D7G

TM 5-2410-237-23P

TECHNICAL MANUAL
Unit and Direct Support Maintenance
REPAIR PARTS AND SPECIAL TOOLS LISTS (RPSTL)
General Support and Depot Maintenance

FOR

TRACTOR, FULL TRACKED, LOW SPEED:

DIESEL ENGINE DRIVEN, MEDIUM DRAWBAR PULL

TRACTOR WITH RIPPER (NSN 2410-01-223-0350) (EIC: EAZ)
TRACTOR WITH WINCH (NSN 2410-01-223-7261) (EIC: EBM)
TRACTOR WITH RIPPER AND WINTERIZED CAB (NSN 2410-01-253-2118)
TRACTOR WITH WINCH AND WINTERIZED CAB
(NSN 2410-01-253-2117) (EIC: EBV)

CATERPILLAR MODEL D7G

RUTHZIL TRATOR COMERCIAL DE PEÇAS LTDA 11 97083-6812 ROLANDO CITRANGULO

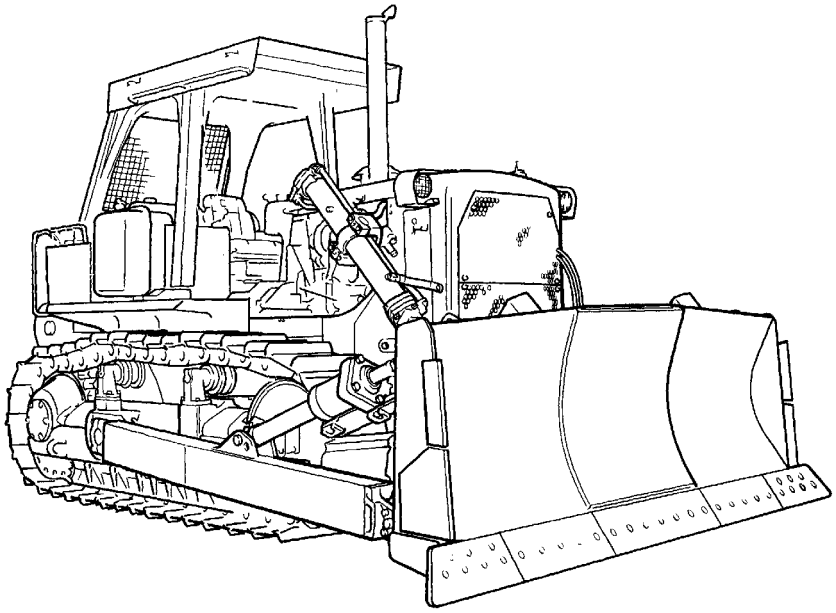

Supersedure Notice - This manual supersedes TM 5-2410-237-24P, dated 5 May 1993.

Distribution Statement A - Approved for public release; distribution is unlimted.

HEADQUARTERS, DEPARTMENT OF THE ARMY
JULY 2005

TM 5-2410-237-23P
Change No. 1

HEADQUARTERS
DEPARTMENT OF THE ARMY
Washington, D.C., 30 July 2006

Unit and Direct Support Maintenance
REPAIR PARTS AND SPECIAL TOOLS LISTS (RPSTL)
General Support and Depot Maintenance

FOR

TRACTOR, FULL TRACKED, LOW SPEED:
DIESEL ENGINE DRIVEN, MEDIUM DRAWBAR PULL

TRACTOR WITH RIPPER (NSN 2410-01-223-0350) (EIC: EAZ)
TRACTOR WITH WINCH (NSN 2410-01-223-7261) (EIC: EBM)
TRACTOR WITH RIPPER AND WINTERIZED CAB (NSN 2410-01-253-2118)
TRACTOR WITH WINCH AND WINTERIZED CAB (NSN 2410-01-253-2117) (EIC: EBV)
CATERPILLAR MODEL D7G

TM 5-2410-237-23P, dated 15 July 2005, is updated as follows:

1. A Service Life Extension Program (SLEP) has been implemented on selected D7G Tractors. SLEP information is included in this change package.
2. File this change sheet in front of the publication for reference purposes.
3. New or changed material is indicated by a vertical bar adjacent to the material and/or change designations at the bottom of the affected page.
4. Remove old pages and insert new pages:

Remove Pages	Insert Pages
A and B	*A and B*
vii thru x	*vii thru x*
185-1 thru Figure 188	*185-1 thru Figure 188*
Figure 192 thru Figure 195	*Figure 192 thru Figure 195*
200-1 thru Figure 201	*200-1 thru Figure 201*
203-1 thru Figure 204	*203-1 thru Figure 204*
205-1 thru Figure 206	*205-1 thru Figure 206*
207-1 thru Figure 208	*207-1 thru Figure 208*
I-1 thru I-176	I-1 thru 176

Distribution Statement A - Approved for public release; distribution is unlimited.

TM 5-2410-237-23P
C1

By Order of the Secretary of the Army:

PETER J. SCHOOMAKER
General, United States Army
Chief of Staff

Official:

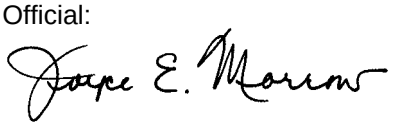

JOYCE E. MORROW
Administrative Assistant to the
Secretary of the Army
0617906

DISTRIBUTION: To be distributed in accordance with the initial distribution number (IDN) 253608, requirements for TM 5-2410-237-23P.

LIST OF EFFECTIVE PAGES

Dates of issue for original and change pages are:

Original. . . . . 0 . . . . . 15 July 2005
Change 1 . . . . . 1 . . . . . 30 July 2006

TOTAL NUMBER OF PAGES IN THIS PUBLICATION IS 760 CONSISTING OF THE FOLLOWING:

Page No.	***Change No.**
Cover (Back Blank)	0
A (B Blank)	1
i thru vi	0
vii and x	1
0001 00-1 thru 0001 00-7	0
Figure 1 thru Figure 185	0
186	1
187	0
188	1
189 thru 191	0
192 thru 195	1
196 thru 199	0
200	1
201 thru 202	0
203	1
204	0
205	1
206	0
207A thru 207H	1
208	0
I-1 thru I-176	1

TECHNICAL MANUAL
TM 5-2410-237-23P

HEADQUARTERS
DEPARTMENT OF THE ARMY
Washington, D.C., 15 July 2005

Unit and Direct Support Maintenance
REPAIR PARTS AND SPECIAL TOOLS LISTS (RPSTL)

General Support and Depot Maintenance

FOR

TRACTOR, FULL TRACKED, LOW SPEED:
DIESEL ENGINE DRIVEN, MEDIUM DRAWBAR PULL

TRACTOR WITH RIPPER (NSN 2410-01-223-0350) (EIC: EAZ)
TRACTOR WITH WINCH (NSN 2410-01-223-7261) (EIC: EBM)
TRACTOR WITH RIPPER AND WINTERIZED CAB (NSN 2410-01-253-2118)
TRACTOR WITH WINCH AND WINTERIZED CAB (NSN 2410-01-253-2117) (EIC: EBV)
CATERPILLAR MODEL D7G

Current as of 17 December 2004

REPORTING ERRORS AND RECOMMENDING IMPROVEMENTS

You can help improve this publication. If you find any mistakes or if you know of a way to improve the procedures, please let us know. Submit your DA Form 2028 (*Recommended Changes to Equipment Technical Publications*), through the Internet, on the Army Electronic Product Support (AEPS) website. The Internet address is http://aeps.ria.army.mil. If you need a password, scroll down and click on "ACCESS REQUEST FORM". The DA Form 2028 is located in the ONLINE FORMS PROCESSING section of the AEPS. Fill out the form and click on SUBMIT. Using this form on the AEPS will enable us to respond quicker to your comments and better manage the DA Form 2028 program. You may also mail, fax or e-mail your letter, DA Form 2028 direct to: AMSTA-LC-LP/TECH PUBS, TACOM-RI, 1 Rock Island Arsenal, Rock Island, IL 61299-7630. The e-mail address is: TACOM-TECH-PUBS@ria.army.mil. The fax number is DSN 793-0726 or Commercial (309) 782-0726.

SUPERSEDURE NOTICE - This manual supersedes TM 5-2410-237-24P, dated 5 May 1993

DISTRIBUTION STATEMENT A - Approved for public release; distribution is unlimited.

TABLE OF CONTENTS

		Illus/ Fig	Page
WP 0001 00	Introduction		0001 00-1
WP 0002 00	Repair Parts List		
GROUP 01	ENGINE		
0100	ENGINE ASSEMBLY		1-1

TABLE OF CONTENTS (Con't)

		Illus/ Fig	Page
	ENGINE MOUNTING HARDWARE	1	1-1
	ENGINE SUPPORT GROUP	2	2-1
0101	CRANKCASE, BLOCK, CYLINDER HEAD		3-1
	CYLINDER BLOCK ASSEMBLY	3	3-1
	CYLINDER HEAD GROUP	4	4-1
0102	CRANKSHAFT		5-1
	CRANKSHAFT GROUP	5	5-1
0103	FLYWHEEL ASSEMBLY		6-1
	FLYWHEEL AND FLYWHEEL HOUSING	6	6-1
0104	PISTONS, CONNECTING RODS		7-1
	PISTON AND ROD GROUP	7	7-1
0105	VALVES, CAMSHAFTS, AND TIMING SYSTEM		8-1
	CAMSHAFT GROUP	8	8-1
	VALVE MECHANISM AND VALVE COVER	9	9-1
	FRONT COVER GROUP	10	10-1
	TIMING GEAR GROUP	11	11-1
0106	ENGINE LUBRICATION SYSTEM		12-1
	OIL PAN GROUP	12	12-1
	ENGINE OIL LINES GROUP	13	13-1
	ENGINE OIL PUMP GROUP	14	14-1
	ENGINE OIL COOLER	15	15-1
	OIL FILLER, OIL LEVEL GAGE AND OIL FILTER	16	16-1
	CRANKCASE BREATHER	17	17-1
	OIL SAMPLING GROUP	18	18-1
	DRAIN LINES	19	19-1
0108	MANIFOLDS		20-1
	EXHAUST MANIFOLD	20	20-1
0109	ACCESSORY DRIVING MECHANISMS		21-1
	DRIVE REAR GEAR GROUP	21	21-1
GROUP 03	FUEL SYSTEM		
0301	CARBURETOR, FUEL INJECTOR		22-1
	FUEL INJECTOR NOZZLE	22	22-1
0302	FUEL PUMPS		23-1
	FUEL INJECTOR LINES	23	23-1
	FUEL PRIMING PUMP AND FILTER GROUP	24	24-1
	FUEL TRANSFER PUMP	25	25-1
	FUEL INJECTION PUMP AND GOVERNOR	26	26-1
	FUEL INJECTION PUMP	27	27-1
0304	AIR CLEANER		28-1
	AIR CLEANER AND DUST EJECTOR	28	28-1

TABLE OF CONTENTS (Con't)

		Illus/ Fig	Page
	AIR LINES GROUP	29	29-1
	AIR LINES GROUP - ENGINE	30	30-1
0305	SUPERCHARGER, BLOWER, TURBOCHARGER OR ALTITUDE COMPENSATOR		31-1
	TURBOCHARGER GROUP	31	31-1
	TURBOCHARGER OIL LINES	32	32-1
0306	TANKS, LINES, FITTINGS, HEADERS		33-1
	LEVER AND VALVE ASSEMBLY	33	33-1
	FUEL LINES	34	34-1
	FUEL TANK GROUP	35	35-1
0308	ENGINE SPEED GOVERNOR AND CONTROLS		36-1
	GOVERNOR CONTROL GROUP	36	36-1
	FUEL RATIO CONTROL	37	37-1
0309	FUEL FILTERS		38-1
	SECONDARY FUEL FILTER	38	38-1
0311	ENGINE STARTING AIDS		39-1
	ETHER AID GROUP	39	39-1
GROUP 04	EXHAUST SYSTEM		
0401	MUFFLER AND PIPES		40-1
	MUFFLER AND EXHAUST	40	40-1
GROUP 05	COOLING SYSTEM		
0501	RADIATOR, EVAPORATIVE COOLER, OR HEAT EXCHANGER		41-1
	RADIATOR GROUP	41	41-1
	RADIATOR TANK ASSEMBLY (NON-SLEP AND SLEP)	42	42-1
0503	WATER MANIFOLD, HEADERS, THERMOSTATS, AND HOUSING GASKET		43-1
	WATER TEMPERATURE HOUSING AND REGULATOR	43	43-1
0504	WATER PUMP		44-1
	WATER LINES GROUP	44	44-1
	WATER PUMP	45	45-1
0505	FAN ASSEMBLY		46-1
	FAN DRIVE	46	46-1
	FAN GROUP	47	47-1
GROUP 06	ELECTRICAL SYSTEM		
0601	GENERATOR, ALTERNATOR		48-1
	ALTERNATOR MOUNTING	48	48-1
	ALTERNATOR	49	49-1
0603	STARTING MOTOR		50-1
	STARTER MOTOR MOUNTING GROUP	50	50-1
	ELECTRIC STARTING MOTOR	51	51-1
	STARTER SOLENOID	52	52-1

TABLE OF CONTENTS (Con't)

		Illus/ Fig	Page
0607	INSTRUMENT OR ENGINE CONTROL PANEL		53-1
	ELECTRICAL GAGE GROUP	53	53-1
	WIRING HARNESS	54	54-1
	STE/ICE WIRING	55	55-1
	DASH PANEL WIRING	56	56-1
0608	MISCELLANEOUS ITEMS		57-1
	SWITCHES	57	57-1
0609	LIGHTS		58-1
	LIGHTING GROUP	58	58-1
0610	SENDING UNITS AND WARNING SWITCHES		59-1
	TRANSMISSION CONTROL WIRING	59	59-1
0611	HORN, SIREN		60-1
	HORN AND BACK-UP ALARM	60	60-1
0612	BATTERIES, STORAGE (WET OR DRY)		61-1
	BATTERIES AND CABLES	61	61-1
0613	HULL OR CHASSIS WIRING HARNESS		62-1
	CHASSIS WIRING MOUNTING GROUP	62	62-1
	WIRING LEADS AND FUSEHOLDERS	63	63-1
	ENGINE WIRING HARNESS	64	64-1
	STARTING RECEPTACLE	65	65-1
	WINTER CAB ELECTRICAL PACKAGE	66	66-1
GROUP 07	TRANSMISSION		
0705	TRANSMISSION SHIFTING COMPONENTS		67-1
	TRANSMISSION CONTROL GROUP	67	67-1
	TRANSMISSION CONTROL LINKAGE	68	68-1
0708	TORQUE CONVERTER OR FLUID COUPLING		69-1
	TORQUE DIVIDER GROUP	69	69-1
	TORQUE DIVIDER ASSEMBLY	70	70-1
0710	TRANSMISSION ASSEMBLY		71-1
	TRANSMISSION ARRANGEMENT	71	71-1
	CARRIER AND CLUTCH HOUSINGS (NO. 2 AND 3)	72	72-1
	PLANETARY TRANSMISSION	73	73-1
	PLANETARY TRANSMISSION, CARRIER AND CLUTCH HOUSINGS (NO. 4 AND 5)	74	74-1
	TRANSMISSION HYDRAULIC CONTROL	75	75-1
	SELECTOR VALVE	76	76-1
	PRESSURE CONTROL VALVE	77	77-1
	TRANSFER GEAR PUMP	78	78-1
0721	COOLERS, PUMPS, MOTORS		79-1
	TORQUE CONVERTER RELIEF VALVE	79	79-1
	TORQUE CONVERTER COOLER LINES	80	80-1
	TORQUE DIVIDER SCAVENGE PUMP	81	81-1
	UPPER POWER TRAIN LINES AND MOUNTING HARDWARE	82	82-1
	POWER TRAIN LINES GROUP	83	83-1

TABLE OF CONTENTS (Con't)

		Illus/ Fig	Page
	TRANSMISSION OIL COOLER	84	84-1
	TRANSMISSION AND STEERING CLUTCH FILTER	85	85-1
	MAGNETIC SCREEN GROUP	86	86-1
	RELIEF VALVE GROUP	87	87-1
	TRANSMISSION OIL PUMP	88	88-1
	TRANSMISSION OIL SAMPLING VALVE	89	89-1
GROUP 08	TRANSFER AND FINAL DRIVE ASSEMBLIES		
0801	POWER TRANSFER AND FINAL DRIVE ASSEMBLIES		90-1
	FINAL DRIVE SPROCKET, SUPPORT AND CASE	90	90-1
	FINAL DRIVE PINION, CAGE, AND SHAFT	91	91-1
GROUP 09	PROPELLER, PROPELLER SHAFTS, UNIVERSAL JOINTS, COUPLER AND CLAMP ASSEMBLY		
0900	PROPELLER SHAFTS		92-1
	DRIVE SHAFT	92	92-1
GROUP 13	WHEELS AND TRACKS		
1301	SUSPENSION ASSEMBLY		93-1
	EQUALIZER BAR	93	93-1
	TRACK ROLLER FRAME	94	94-1
1302	TRACK SUPPORT ROLLERS AND BRACKETS		95-1
	TRACK CARRIER ROLLER	95	95-1
	SINGLE FLANGE TRACK ROLLER	96	96-1
	DOUBLE FLANGE TRACK ROLLER	97	97-1
1303	TRACK IDLERS AND BRACKETS		98-1
	FRONT IDLER SPRING ROD AND CYLINDER	98	98-1
	FRONT IDLER COLLAR AND BEARINGS	99	99-1
1305	TRACK ASSEMBLY		100-1
	TRACK GROUP (20-INCH)	100	100-1
GROUP 14	STEERING		
1403	STEERING BRAKES		101-1
	BRAKE HYDRAULIC CONTROL AND LINES AND FITTINGS	101	101-1
	RIGHT HAND BRAKE HYDRAUILC CONTROL HOUSING	102	102-1
	BRAKE LINKAGE	103	103-1
	BRAKE PEDAL LINKAGE	104	104-1
	BRAKE ACTUATING MECHANISM	105	105-1
	STEERING CONTROL VALVE LINES AND LINKAGE	106	106-1
	STEERING CLUTCH CONTROL LEVER LINKAGE	107	107-1
	STEERING CLUTCH	108	108-1
1414	STEERING SYSTEM VALVES		109-1
	STEERING CLUTCH CONTROL VALVE	109	109-1
GROUP 15	FRAME, TOWING ATTACHMENTS, DRAWBARS, AND ARTICULATION SYSTEMS		
1501	FRAME ASSEMBLY		110-1
	FRAME AND CASE	110	110-1

TABLE OF CONTENTS (Con't)

		Illus/ Fig	Page
GROUP 18	BODY, CAB, HOOD, AND HULL		
1801	BODY, CAB, HOOD, AND HULL ASSEMBLIES		111-1
	CRANKCASE GUARD	111	111-1
	RADIATOR GUARD	112	112-1
	RECOIL MECHANISM GUARD	113	113-1
	TRACK ROLLER GUARD	114	114-1
	HOOD AND DISH PANEL	115	115-1
	ROPS MOUNTING	116	116-1
	PROTECTIVE SCREEN	117	117-1
	WINTERIZED CAB AND FRONT SECTION	118	118-1
	WINTERIZED CAB, RIGHT HAND SIDE	119	119-1
	WINTERIZED CAB, LEFT HAND SIDE	120	120-1
	WINTERIZED CAB - REAR	121	121-1
	CAB NOISE CONTROL COMPONENTS	122	122-1
	HYDRAULIC TANK MOUNTING	123	123-1
1802	FENDERS, RUNNING BOARDS WITH MOUNTING AND ATTACHING PARTS, OUTRIGGERS, WINDSHIELD, GLASS, ETC.		124-1
	FENDER GROUP	124	124-1
1805	FLOORS, SUBFLOORS AND RELATED COMPONENTS		125-1
	FLOOR PLATES	125	125-1
1806	UPHOLSTERY, SEATS, AND CARPETS		126-1
	ADJUSTABLE SEAT GROUP	126	126-1
	SEAT GROUP	127	127-1
	SEAT FRAME	128	128-1
1808	STOWAGE RACKS, BOXES, STRAPS, CARRYING CASES, CABLE REELS, HOSE REELS, ETC.		129-1
	TOOL BOX	129	129-1
	DECONTAMINATION MOUNTING BRACKET	130	130-1
GROUP 20	HOIST, WINCH, CAPSTAN, WINDLASS, POWER CONTROL UNIT AND POWER TAKE-OFF		
2001	HOIST, CAPSTAN, WINDLESS, CRANE, OR WINCH ASSEMBLY		131-1
	WINCH AND MOUNTING HARDWARE	131	131-1
	CABLE GUIDE AND CASE GROUP	132	132-1
	WINCH CONTROL VALVE TUBING	133	133-1
	WINCH GROUP - COVER ASSEMBLY	134	134-1
	SHAFT AND DRUM ASSEMBLY	135	135-1
	DISC AND HUB ASSEMBLY	136	136-1
	GEAR ASSEMBLY	137	137-1
	WINCH BREATHER, WINCH MAGNETIC SCREEN AND WINCH ASSEMBLY (PARTIAL)	138	138-1
	DISC ASSEMBLY	139	139-1
	WINCH OIL FILTER	140	140-1
	WINCH INPUT SHAFT	141	141-1
	WINCH CONTROLS	142	142-1
	WINCH OIL PUMP GROUP	143	143-1
GROUP 22	BODY, CHASSIS AND HULL, AND ACCESSORY ITEMS		
2202	ACCESSORY ITEMS		144-1
	MIRROR GROUP	144	144-1

TABLE OF CONTENTS (Con't)

		Illus/ Fig	Page
2207	WINTERIZATION EQUIPMENT		145-1
	FRONT AND REAR DEFROSTER FAN	145	145-1
	FRONT AND REAR WIPER MOTORS	146	146-1
	24 VOLT HEATER ASSEMBLY	147	147-1
2210	DATA PLATES AND INSTRUCTION HOLDERS		148-1
	PLATES, FILM, TAGS, AND STENCILS	148	148-1
GROUP 24	HYDRAULIC AND FLUID SYSTEMS		
2401	HYDRAULIC PUMP		149-1
	HYDRAULIC PUMP GROUP	149	149-1
2402	MANIFOLD AND/OR CONTROL VALVES		150-1
	WINCH CONTROL VALVE GROUP	150	150-1
	PRESSURE VALVE	151	151-1
	BODY ASSEMBLY	152	152-1
	CONTROL VALVE GROUP	153	153-1
	TILT CONTROL PILOT VALVE GROUP, WITHOUT RIPPER	154	154-1
	VALVE GROUP WITH RIPPER	155	155-1
	RIPPER CONTROL VALVE	156	156-1
	PRESSURE CONTROL VALVE	157	157-1
	BLADE LIFT AND TILT CONTROL VALVE	158	158-1
	BLADE LIFT AND TILT CONTROL VALVE	159	159-1
	VALVE GROUP (QUICK DROP) (LEFT HAND AND RIGHT HAND)	160	160-1
2403	HYDRAULIC CONTROL AND/OR MANUAL CONTROLS		161-1
	CONTROL LINKAGE - DOZER TILT	161	161-1
	CONTROL LINKAGE - RIPPER	162	162-1
2404	TILT CYLINDERS AND TILT CRANK		163-1
	TILT CYLINDER	163	163-1
2406	STRAINERS, FILTERS, LINES AND FITTINGS, ETC.		164-1
	PUMP LINES GROUP	164	164-1
	PUMP LINES GROUP	165	165-1
	BULLDOZER LINES GROUP	166	166-1
	BLADE LIFT AND TILT HOSE AND RELATED PARTS	167	167-1
	HYDRAULIC TILT CYLINDER LINES GROUP	168	168-1
	TILT CYLINDER LINES GROUP	169	169-1
	RIPPER LINES GROUP - SIDE	170	170-1
	RIPPER LINES GROUP - FRONT	171	171-1
	RIPPER LINES GROUP	172	172-1
	WINCH LINES GROUP	173	173-1
2407	HYDRAULIC CYLINDERS		174-1
	CYLINDER AND VALVE GROUP (RIGHT HAND)	174	174-1
	CYLINDER AND VALVE GROUP (LEFT HAND)	175	175-1
	BLADE LIFT CYLINDER (RIGHT HAND AND LEFT HAND)	176	176-1
	BLADE LIFT CYLINDER MOUNTING TUBE	177	177-1
	RIPPER LIFT CYLINDER GROUP	178	178-1
2408	LIQUID TANKS OR RESERVOIRS		179-1
	HYDRAULIC TANK VALVE GROUP	179	179-1
	HYDRAULIC TANK GROUP	180	180-1

TABLE OF CONTENTS (Con't)

		Illus/ Fig	Page
	HYDRAULIC TANK FILTER GROUP	181	181-1
GROUP 33	SPECIAL PURPOSE KITS		
3307	SPECIAL PURPOSE KITS		182-1
	MINE RAKE (1991 MCAP)	182	182-1
	MINE RAKE (1991 MCAP)	183	183-1
	MINE RAKE (1996 AND 2004 MCAP)	184	184-1
	MINE RAKE (1996 AND 2004 MCAP)	185	185-1
	CYLINDER GUARD	186	186-1
	RADIATOR GUARD GROUP	187	187-1
	RIGHT SIDE ENGINE GUARDS (1991 AND 1996 MCAP)	188	188-1
	LEFT AND RIGHT SIDE ENGINE GUARDS	189	189-1
	LEFT SIDE ENGINE GUARD (1991 and 1996 MCAP)	190	190-1
	ENGINE HOOD GUARDS	191	191-1
	FRONT OF CAB	192	192-1
	TOP AND REAR OF CAB	193	193-1
	LEFT SIDE OF CAB	194	194-1
	INSIDE FRAME SUPPORT	195	195-1
	INSIDE FRONT CAB	196	196-1
	INSIDE OF CAB	197	197-1
	DOOR LATCH GROUP	198	198-1
	FRONT CAB VENT	199	199-1
	WINDOW GROUP	200	200-1
	RECIRCULATING FAN AND RELATED PARTS	201	201-1
	FRESH AIR FAN (REAR)	202	202-1
	REAR CAB GUARDS	203	203-1
	LEFT SIDE BATTERY BOX COVER	204	204-1
	HYDRAULIC TANK COVERING	205	205-1
	RIGHT REAR SIDE OF CAB	206	206-1
	REAR BOTTOM GUARD	207	207-1
	BREATHER TUBE AND AUXILIARY DRIVE ASSEMBLY	207A	207A-1
	OIL LEVEL GAGE GUIDE TUBE ASSEMBLY	207B	207B-1
	COMPRESSOR ASSEMBLY	207C	207C-1
	HARNESS ASSEMBLIES	207D	207D-1
	AIR CONDITIONER ASSEMBLY	207E	207E-1
	GUARD ASSEMBLY	207F	207F-1
	AIR CONDITIONER LINES	207G	207G-1
	AIR CONDITIONER ASSEMBLY	207H	207H-1
GROUP 47	GAGES (NON-ELECTRICAL) WEIGHING AND MEASURING DEVICES		
4701	INSTRUMENTS (SPEED AND DISTANCE)		208-1
	TACHOMETER DRIVE GROUP	208	208-1
4702	GAGES, MOUNTINGS, LINES AND FITTINGS		209-1
	GAGE GROUP	209	209-1
GROUP 74	CRANES, SHOVELS, AND EARTH MOVING EQUIPMENT COMPONENTS		
7435	MOLDBOARD ASSEMBLY		210-1
	BLADE GROUP	210	210-1
7436	LIFT ARMS AND PIVOT ASSEMBLIES		211-1
	PUSH ARM GROUP AND TRUNNION GROUP	211	211-1

TABLE OF CONTENTS (Con't)

		Illus/ Fig	Page
7465	ROOTERS, RIPPERS, PLOWS, HARROWS, AND ROTARY TILLERS		212-1
	RIPPER GROUP	212	212-1
	RIPPER MOUNTING GROUP	213	213-1
	RIPPER TOOTH GROUP	214	214-1
GROUP 94	REPAIR KITS AND SETS		
9401	REPAIR KITS		KITS-1
	KITS	KITS	KITS-1
GROUP 95	GENERAL USE STANDARIZED PARTS		
9501	BULK MATERIEL		BULK-1
	BULK MATERIEL	BULK	BULK-1
WP 0003 00	Special Tools		
GROUP 26	TOOLS AND TEST EQUIPMENT		
2604	SPECIAL TOOLS		215-1
	SPECIAL TOOLS, UNIT SUPPORT	215	215-1
	SPECIAL TOOLS, DIRECT SUPPORT	216	216-1
	SPECIAL TOOLS, GENERAL SUPPORT	217	217-1
WP 0004 00	Cross-Reference Indexes		
	NATIONAL STOCK NUMBER INDEX		I-1
	PART NUMBER INDEX		I-56

FIELD MAINTENANCE (UNIT AND DIRECT SUPPORT MAINTENANCE) REPAIR PARTS AND SPECIAL TOOLS LISTS (RPSTL) ALSO INCLUDES SUSTAINMENT MAINTENANCE (GENERAL SUPPORT AND DEPOT MAINTENANCE) INTRODUCTION 0001 00

SCOPE

1. This RPSTL lists and authorizes spares and repair parts; special tools; special test, measurement, and diagnostic equipment (TMDE); and other special support equipment required for performance of Field and Sustainment level maintenance of the Tractor, Full Tracked. The D7G model is covered in this manual. Unless otherwise noted, the illustrations and corresponding parts listing applies to this model. It authorizes the requisitioning, issue, and disposition of spares, repair parts, and special tools as indicated by the source, maintenance, and recoverability (SMR) codes.

2. A Service Life Extension Program (SLEP) has been implemented on the D7G Tractor.

GENERAL

In addition to the Introduction work package, this RPSTL is divided into the following work packages:

a. **Repair Parts Lists Work Package.** Work package containing lists of spares and repair parts authorized by this RPSTL for use in the performance of maintenance. This work package also includes parts which must be removed for replacement of the authorized parts. Parts lists are composed of functional groups in ascending alphanumeric sequence, with the parts in each group listed in ascending figure and item number sequence. Sending units, brackets, filters, and bolts are listed with the component they mount on. Bulk materials are listed by item name in FIG. BULK at the end of the work package. Repair parts kits are listed separately in their own functional group. Items listed are shown on the associated illustrations.

b. **Special Tools List Work Package.** Work package containing lists of special tools, special TMDE, and special support equipment authorized by this RPSTL [as indicated by Basis of Issue (BOI) information in the DESCRIPTION AND USABLE ON CODE (UOC) column]. Tools that are components of common tool sets and/or Class VII are listed.

c. **Cross-Reference Indexes Work Package.** There are two cross-reference indexes in this RPSTL: National Stock Number Index and Part Number Index.

EXPLANATION OF COLUMNS IN THE REPAIR PARTS LISTS AND SPECIAL TOOLS LIST WORK PACKAGES

a. **Item No. (Column 1).** Indicates the number used to identify items called out in the illustration.

b. **SMR Code (Column 2).** The SMR code containing supply/requisitioning information, maintenance level authorization criteria, and disposition instruction, as shown in the following breakout:

SOURCE CODE	MAINTENANCE CODE		RECOVERABILITY CODE
XXxxx	xxXXx		xxxxX
1st two positions	3rd position	4th position	5th position
How you get an item.	Who can install, replace or use the item.	Who can do complete repair* on the item.	Who determines disposition action on an unserviceable item.

* *Complete Repair:* Maintenance capacity, capability, and authority to perform all corrective maintenance tasks of the *"Repair"* function in a use/user environment in order to restore serviceability to a failed item.

EXPLANATION OF COLUMNS IN THE REPAIR PARTS LISTS AND SPECIAL TOOLS LIST WORK PACKAGES - CONTINUED

(1) **Source Code.** The source code tells you how to get an item needed for maintenance, repair, or overhaul of an end item/equipment. Explanations of source codes follow:

Code	Application/Explanation
PA PB PC PD PE PF PG	Stocked items; use the applicable NSN to request/requisition items with these source codes. They are authorized to the maintenance category indicated by the code entered in the third position of the SMR code. *Items coded PC are subject to deterioration.*
KD KF KB	Items with these codes are not to be requested/requisitioned individually. They are part of a kit which is authorized to the maintenance level indicated in the third position of the SMR code. The complete kit must be requisitioned and applied.
MO - Made at Unit/ AVUM level MF - Made at DS/AVIM Level MH - Made at GS Level ML - Made at SRA MD - Made at Depot	Items with these codes are not to be requested/requisitioned individually. They must be made from bulk materiel which is identified by the part number in the DESCRIPTION AND USABLE ON CODE (UOC) column and listed in the bulk materiel group work package of the RPSTL. If the item is authorized to you by the third position of the SMR code, but the source code indicates it is made at a higher level, order the item from the higher level of maintenance.
AO-Assembled by Unit/ AVUM level AF-Assembled by DS/ AVIM level AH-Assembled by GS level AL-Assembled by SRA AD-Assembled by Depot	Items with these codes are not to be requested/requisitioned individually. The parts that make up the assembled item must be requisitioned or fabricated and assembled at the level of maintenance indicated by the source code. If the third position of the SMR code authorizes you to replace the item, but the source code indicates the item is assembled at a higher level, order the item from the higher level of maintenance.
XA	Do not requisition an "XA" coded item. Order the next higher assembly. (Refer to NOTE below).
XB	If an item is not available from salvage, order it using the CAGEC and P/N.
XC	Installation drawings, diagrams, instruction sheets, field service drawings; identified by manufacturer's P/N.
XD	Item is not stocked. Order an XD-coded item through normal supply channels using the CAGEC and P/N given, if no NSN is available.

NOTE

Cannibalization of controlled exchange, when authorized, may be used as a source of supply for items with the above source codes, except for those source coded "XA" or those aircraft support items restricted by requirements of AR 750-1.

EXPLANATION OF COLUMNS IN THE REPAIR PARTS LISTS AND SPECIAL TOOLS LIST WORK PACKAGES - CONTINUED

(2) **Maintenance Code.** Maintenance codes tell you the level(s) of maintenance authorized to use and repair support items. The maintenance codes are entered in the third and fourth positions of the SMR code as follows:

(a) Third Position. The maintenance code entered in the third position tells you the lowest maintenance level authorized to remove, replace, and use an item. The maintenance code entered in the third position will indicate authorization to one of the following levels of maintenance:

Code	Application/Explanation
C	Crew or Operator maintenance done within Unit/AVUM maintenance.
O	Unit Level/AVUM maintenance can remove, replace, and use the item.
F	Direct Support/AVIM maintenance can remove, replace, and use the item.
H	General Support maintenance can remove, replace, and use the item.
L	Specialized Repair Activity (SRA) can remove, replace, and use the item.
D	Depot Maintenance can remove, replace, and use the item.

(b) Fourth Position. The maintenance code entered in the fourth position tells you whether or not the item is to be repaired and identifies the lowest maintenance level with the capability to do complete repair (perform all authorized repair functions).

NOTE

Some limited repair may be done on the item at a lower level of maintenance, if authorized by the Maintenance Allocation Chart (MAC) and SMR codes.

Code	Application/Explanation
O	Unit/AVUM is the lowest level that can do complete repair of the item.
F	Direct Support/AVIM is the lowest level that can do complete repair of the item.
H	General Support is the lowest level that can do complete repair of the item.
L	Specialized Repair Activity (SRA) is the lowest level that can do complete repair of the item.
D	Depot is the lowest level that can do complete repair of the item.
Z	Nonreparable. No repair is authorized.
B	No repair is authorized. No parts or special tools are authorized for the maintenance of a “B”-coded item. However, the item may be reconditioned by adjusting, lubricating, etc., at the user level.

EXPLANATION OF COLUMNS IN THE REPAIR PARTS LISTS AND SPECIAL TOOLS LIST WORK PACKAGES - CONTINUED

(3) **Recoverability Code.** Recoverability codes are assigned to items to indicate the disposition action on unserviceable items. The recoverability code is entered in the fifth position of the SMR code as follows:

Code	Application/Explanation
Z	Nonreparable item. When unserviceable, condemn and dispose of the item at the level of maintenance shown in the third position of the SMR code.
O	Reparable item. When uneconomically reparable, condemn and dispose of the item at the Unit level maintenance.
F	Reparable item. When uneconomically reparable, condemn and dispose of the item at Direct Support level.
H	Reparable item. When uneconomically reparable, condemn and dispose of the item at General Support level.
D	Reparable item. When beyond lower level repair capability, return to depot. Condemnation and disposal of item are not authorized below depot level.
L	Reparable item. Condemnation and disposal of item not authorized below Specialized Repair Activity (SRA).
A	Item requires special handling or condemnation procedures because of specific reasons (e.g., precious metal content, high dollar value, critical material, or hazardous material). Refer to appropriate manuals/directives for specific instructions.

c. **NSN - (Column 3).** The NSN for the item is listed in this column.

d. **CAGEC (Column 4).** The Commercial and Government Entity Code (CAGEC) is a five-digit code which is used to identify the manufacturer, distributor, or Government agency/activity that supplies the item.

e. **PART NUMBER (Column 5).** Indicates the primary number used by the manufacturer (individual, company, firm, corporation, or Government activity), which controls the design and characteristics of the item by means of its engineering drawings, specifications, standards, and inspection requirements to identify an item or range of items.

NOTE

When you use an NSN to requisition an item, the item you receive may have a different part number from the part ordered.

f. **DESCRIPTION AND USABLE ON CODE (UOC) (Column 6).** This column includes the following information:

(1) The Federal item name and, when required, a minimum description to identify the item.

(2) P/Ns of bulk materials are referenced in this column in the line entry to be manufactured or fabricated.

(3) Hardness Critical Item (HCI). A support item that provides the equipment with special protection from electromagnetic pulse (EMP) damage during a nuclear attack.

(4) The statement END OF FIGURE appears just below the last item description in column (6) for a given figure in both the repair parts list and special tools list work packages.

EXPLANATION OF COLUMNS IN THE REPAIR PARTS LISTS AND SPECIAL TOOLS LIST WORK PACKAGES - CONTINUED

g. **QTY (Column 7).** The QTY (quantity per figure) column indicates the quantity of the item used in the breakout shown on the illustration/figure, which is prepared for a functional group, subfunctional group, group or an assembly. A "V" appearing in this column in lieu of a quantity indicates that the quantity is variable and the quantity may vary from application to application.

EXPLANATION OF CROSS-REFERENCE INDEXES WORK PACKAGE FORMAT AND COLUMNS

a. **National Stock Number (NSN) Index Work Package.**

(1) **STOCK NUMBER Column.** This column lists the NSN by National Item Identification Number (NIIN) sequence. The NIIN consists of the last nine digits of the NSN (i.e., NSN 5305-01-674-1467). When using this column to locate an item, ignore the first four digits of the NSN. However, the complete NSN should be used when ordering items by stock number.

(2) **FIG. Column.** This column lists the number of the figure where the item is identified/located. The figures are in numerical order in WP 0002 00 and WP 0003 00.

(3) **ITEM Column.** The item number identifies the item associated with the figure listed in the adjacent FIG. column. This item is also identified by the NSN listed on the same line.

b. **Part Number (P/N) Index Work Package.** Part numbers in this index are listed in ascending alphanumeric sequence (i.e., vertical arrangement of letter and number combination which places the first letter or digit of each group in order A through Z, followed by the numbers 0 through 9 and each following letter or digit in like order).

(1) **PART NUMBER Column.** Indicates the P/N assigned to the item.

(2) **FIG. Column.** This column lists the number of the figure where the item is identified/located in the repair parts list and special tools list work packages.

(3) **ITEM Column.** The item number is the number assigned to the item as it appears in the figure referenced in the adjacent figure number column.

SPECIAL INFORMATION

a. **Remanufactured Parts, Core Values and Dealer Exchange Items.**

(1) Remanufactured parts and/or direct dealer parts exchange are available for select Caterpillar supported items. The user has the option to:

(a) Procure a new part through the normal ordering channels.

(b) Exchange a part through a local Caterpillar dealer and receive a *core value credit towards a new part.*

(c) Exchange a part through a local Caterpillar dealer and receive a *core value credit towards a remanufactured part.*

(2) Extended nomenclature in the DESCRIPTION column identifies those items that are dealer exchange/reman parts (i.e., *DEALER EXCHANGE ITEM, PN OR-9608* or *DEALER EXCHANGE*). If a part is not listed as a dealer exchange item, order it through traditional supply channels.

(3) The core value/exchange is a unit-to-Caterpillar dealer direct transaction. To receive the core value, you must return the part to the local Caterpillar dealer. You will receive a core value (credit) for the returned item. When you buy a new or remanufactured part, the core value credit is automatically calculated for your transaction and deducted from the total price. You can complete this transaction using your IMPAC card.

SPECIAL INFORMATION - CONTINUED

b. ***Cancelled and Replaced By* Part Numbers.** Caterpillar implements a *Modernization through Spares* program for its equipment through the use of *cancelled and replaced by* part numbers. If the part number you ordered has been cancelled and replaced by a new part, the new part will be automatically shipped to you. Install this new part; DO NOT return it.

c. **Usable On Code (UOC).** The UOC appears in the lower left corner of the DESCRIPTION column heading. Usable on codes are shown as "UOC:" in the Description Column (justified left) on the first line under the applicable item/nomenclature. Uncoded items are applicable to all models. Identification of the UOC's used in the RPSTL are:

Code	Used On
WIN	Model D7G W/winch
RIP	Model D7G W/ripper
GRC	Model D7G W/Ripper and Winterized Cab
GWC	Model D7G W/winch and Winterized Cab

d. **Fabrication Instructions.** Bulk materiels required to manufacture items are listed in the Bulk Materiel functional group of this RPSTL. Part numbers for bulk materiel are also referenced in the Description Column of the line item entry for the item to be manufactured/fabricated. Detailed fabrication instructions for items source coded to be manufactured or fabricated are found in TM 5-2410-237-23.

e. **Index Numbers.** Items which have the word BULK in the figure column will have an index number shown in the item number column. This index number is a cross-reference between the NSN/P/N Index work package and the bulk materiel list in the repair parts list work package.

f. **Associated Publications.** The publication(s) listed below pertain to the D7G Tractor and its components:

Publication	Short Title
TM 5-2410-237-10	Operator's Manual for Tractor, Full Tracked, Low Speed
TM 5-2410-237-23	Field Maintenance Manual for Tractor, Full Tracked, Low Speed

HOW TO LOCATE REPAIR PARTS

a. **When National Stock Number is Known:**

(1) **First.** If you have the NSN, look in the STOCK NUMBER column of the NSN index work package. The NSN is arranged in NIIN sequence. Note the figure and item number next to the NSN.

(2) **Second.** Turn to the figure and locate the item number. Verify that the item is the one you are looking for.

b. **When Part Number is Known.**

(1) **First.** If you have the P/N and not the NSN, look in the PART NUMBER column of the P/N index work package. Identify the figure and item number.

(2) **Second.** Look up the item on the figure in the applicable repair parts list work package.

FIELD MAINTENANCE (UNIT AND DIRECT SUPPORT MAINTENANCE) REPAIR PARTS AND SPECIAL TOOLS LISTS (RPSTL) ALSO INCLUDES SUSTAINMENT MAINTENANCE (GENERAL SUPPORT AND DEPOT MAINTENANCE INTRODUCTION - CONTINUED **0001 00**

ABBREVIATIONS

For standard abbreviations see ASME Y14.38-1999, *Abbreviations and Acronyms*.

Abbreviations	Explanation
NIIN	National Item Identification Number (consists of the last 9 digits of the NSN)
RPSTL	Repair Parts and Special Tools Lists
SMR	Source, Maintenance, and Recoverability Code
TMDE	Test, Measurement, and Diagnostic Equipment

END OF WORK PACKAGE

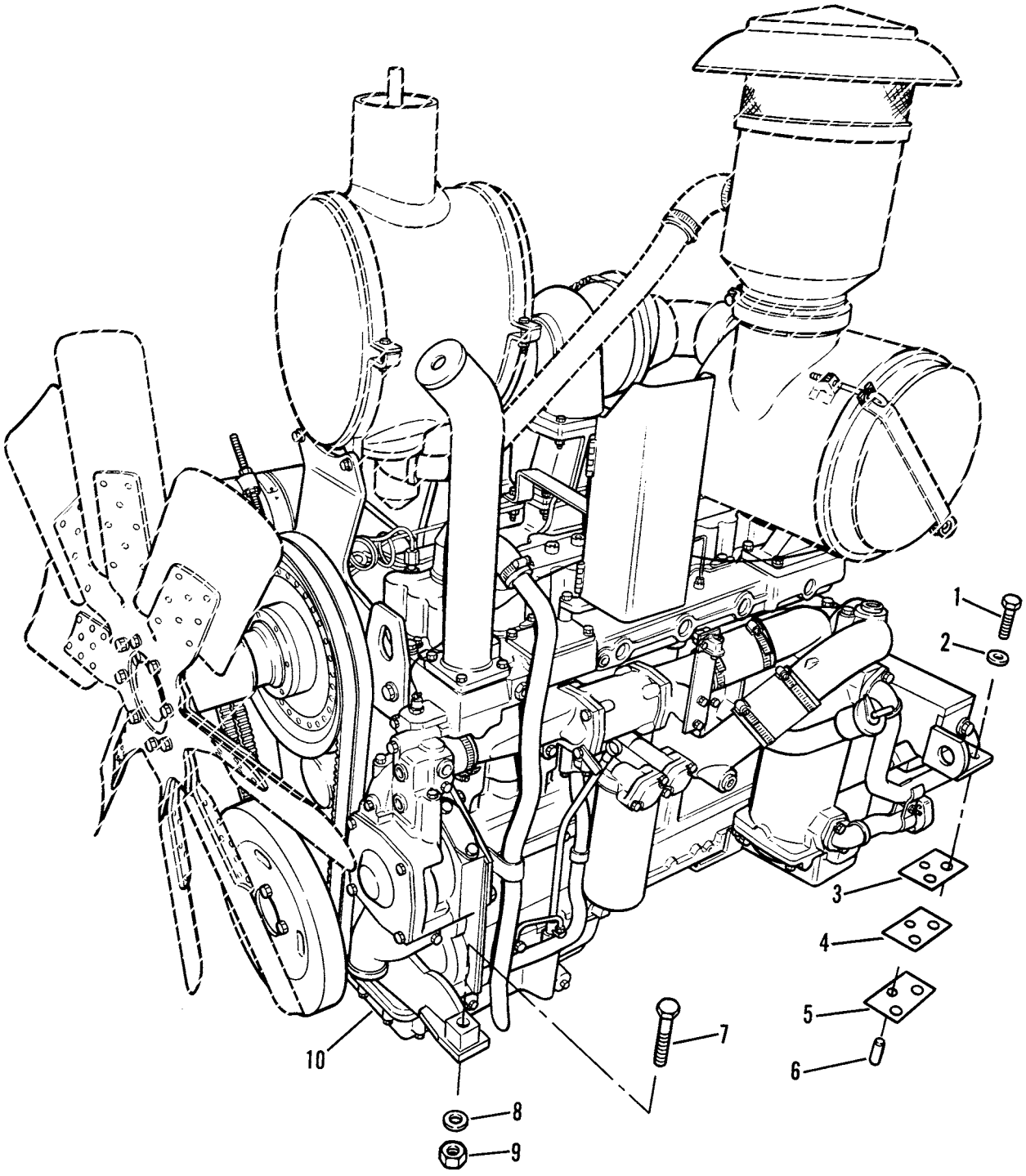

Figure 1. Engine Mounting Hardware

(1) ITEM NO	(2) SMR CODE	(3) NSN	(4) CAGEC	(5) PART NUMBER	(6) DESCRIPTION AND USABLE ON CODES (UOC)	(7) QTY
					GROUP 01 ENGINE	
					GROUP 0100 ENGINE ASSEMBLY	
					FIG. 1 ENGINE MOUNTING HARDWARE	
1	PFFZZ	5306004263405	11083	1D4612	BOLT,MACHINE	4
2	PFFZZ	5310002624789	29510	39422D	WASHER,FLAT	4
3	PFFZZ	5365004341423	11083	9S6730	SPACER,PLATE SHIM .049 IN (1.24 MM) THICK-BRACKET TO FRAME	2
4	PFFZZ	5365004341422	11083	9S6731	SPACER,PLATE SHIM .065 IN (1.65 MM) THICK-BRACKET TO FRAME	2
5	PFFZZ	5365004341421	11083	9S7072	SPACER,PLATE SHIM .083 IN (2.10 MM) THICK-BRACKET TO FRAME	2
6	PFFZZ	5315002550996	11083	2B2994	PIN,STRAIGHT,HEADLE	2
7	PFFZZ	5306004264171	11083	3B2968	BOLT,MACHINE	2
8	PFFZZ	5310004191363	11083	2S0115	WASHER,FLAT	2
9	PFFZZ	5310007638921	96906	MS51967-23	NUT,PLAIN,HEXAGON	2
10	PGFHH	2815012419193	11083	5R7814	ENGINE,DIESEL	1
				END OF FIGURE		

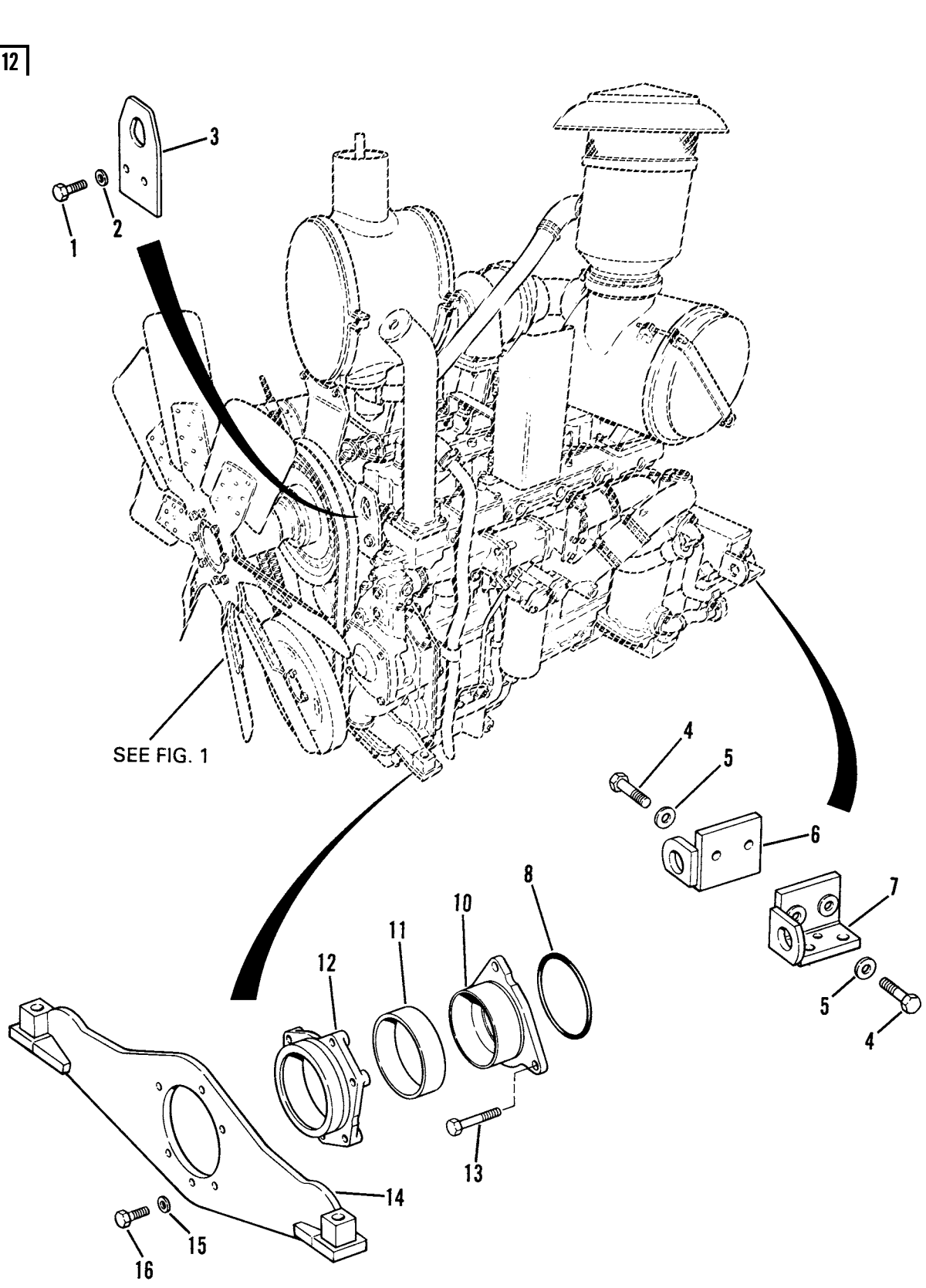

Figure 2. Engine Support Group

(1) ITEM NO	(2) SMR CODE	(3) NSN	(4) CAGEC	(5) PART NUMBER	(6) DESCRIPTION AND USABLE ON CODES (UOC)	(7) QTY
					GROUP 0100 ENGINE ASSEMBLY	
					FIG. 2 ENGINE SUPPORT GROUP	
1	PFFZZ	5305007215322	96906	MS35307-462	SCREW,CAP,HEXAGON H	2
2	PFFZZ	5310011073590	11083	8D5054	WASHER,FLAT	2
3	PFFZZ	5365011575068	11083	8N8721	SPACER,PLATE	1
4	PFFZZ	5305007247221	80204	B1821BH063C175N	SCREW,CAP,HEXAGON H	4
5	PFFZZ	5310001397030	11083	4D3704	WASHER,FLAT	4
6	PFFZZ	2510013515937	11083	9S6987	BRACKET,ENGINE MOUN	1
7	PFFZZ	2510013514026	11083	9S8926	BRACKET,ENGINE MOUN	1
8	PFFZZ	5331010686104	11083	2P1692	O-RING PART OF KIT P/N 1387720 .	1
9	PFFZZ	2510011472252	11083	1W1219	TRUNNION ASSEMBLY	1
10	PFFZZ	2815011259998	11083	8N0081	.TRUNNION	1
11	PCFZZ	5330011552584	11083	2P1487	.PACKING,PREFORMED	1
12	PFFZZ	2510011472252	11083	1W1219	.TRUNNION ASSEMBLY	1
13	PFFZZ	5306002685798	11083	0L1329	BOLT,MACHINE	3
14	PFFZZ	2510013514025	11083	8N5685	BRACKET,ENGINE MOUN	1
15	PFFZZ	5310008095997	96906	MS27183-17	WASHER,FLAT	6
16	PFFZZ	5306011279361	11083	0S1585	BOLT,MACHINE	6
				END OF FIGURE		

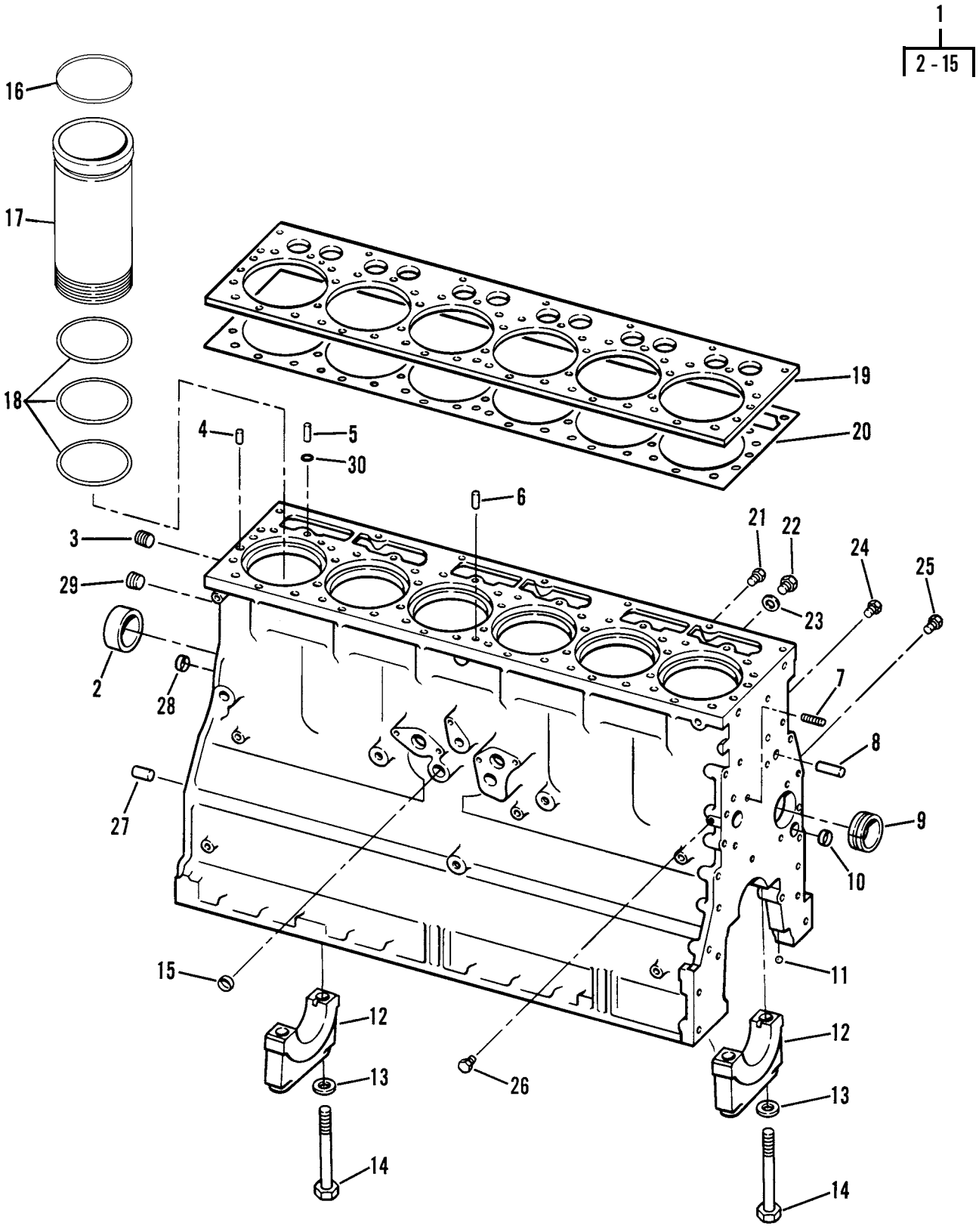

Figure 3. Cylinder Block Assembly

(1) ITEM NO	(2) SMR CODE	(3) NSN	(4) CAGEC	(5) PART NUMBER	(6) DESCRIPTION AND USABLE ON CODES (UOC)	(7) QTY
					GROUP 0101 CRANKCASE, BLOCK, CYLINDER HEAD	
					FIG. 3 CYLINDER BLOCK ASSEMBLY	
1	PFHHH	2815012466227	11083	1N3576	ENGINE BLOCK,DIESEL	1
2	PFHZZ	3120008938317	11083	7M4046	.BEARING,SLEEVE	4
3	PFHZZ	4730002783383	15235	PLG1	.PLUG,PIPE	1
4	PFHZZ	5315011321188	11083	8K1207	.PIN,STRAIGHT,HEADLE	2
5	PFHZZ	2990011036817	11083	1S9540	.DOWEL	2
6	PFHZZ	5315011074226	11083	5B7652	.PIN,STRAIGHT,HEADLE	2
7	PFHZZ	5307004194067	11083	0T0101	.STUD,PLAIN	1
8	PFHZZ	5315004576897	11083	8B6349	.PIN,STRAIGHT,HEADLE	2
9	PFHZZ	3120011281114	11083	8N4110	.BEARING,SLEEVE	1
10	PFHZZ	5340002765832	11083	4B3938	.PLUG,EXPANSION	1
11	PFHZZ	3110000119935	11083	4B9782	.BALL,BEARING	1
12	PFHZZ	3040011495043	11083	6N8003	.CLAMP,HUB	7
13	PFHZZ	5310004317244	11083	2S5658	.WASHER,FLAT	14
14	PFHZZ	5306004504026	11083	7S3224	.BOLT,MACHINE	14
15	PFHZZ	5340004172920	11083	4B5387	.PLUG,EXPANSION	2
16	PFHZZ	5330011773855	11083	2W6134	GASKET	6
17	PFHZZ	2815000244596	11083	1105800	CYLINDER SLEEVE	6
18	PFHZZ	5330004942764	11083	5S6670	PACKING,PREFORMED	18
19	PFHZZ	2815011272912	11083	7N7998	SPACER,DIESEL ENGIN	1
20	PFHZZ	5330011278566	11083	1557550	GASKET PART OF KIT P/N 5R6291 ..	1
21	PFHZZ	4730004606725	11083	3J5389	PLUG,PIPE	2
22	PFHZZ	5365009385568	11083	8M9307	PLUG,MACHINE THREAD	1
23	PFHZZ	5310003627988	11083	6F7062	WASHER,FLAT PART OF KIT P/N 6V2911	1
24	PFHZZ	4730000892515	11083	5M6213	PLUG,PIPE	4
25	PFHZZ	4730000428988	11083	7H3171	PLUG,PIPE	1
26	PFHZZ	4730009247886	11083	5M6214	PLUG,PIPE	2
27	PFHZZ	5315002522959	11083	2A3798	PIN,STRAIGHT,HEADLE	2
28	PFHZZ	5340002765832	11083	4B3938	PLUG,EXPANSION	1
29	PFHZZ	5365012699293	11083	3J6019	PLUG,MACHINE THREAD	1
30	PFHZZ	5331001044371	11083	3S5496	O-RING	1
				END OF FIGURE		

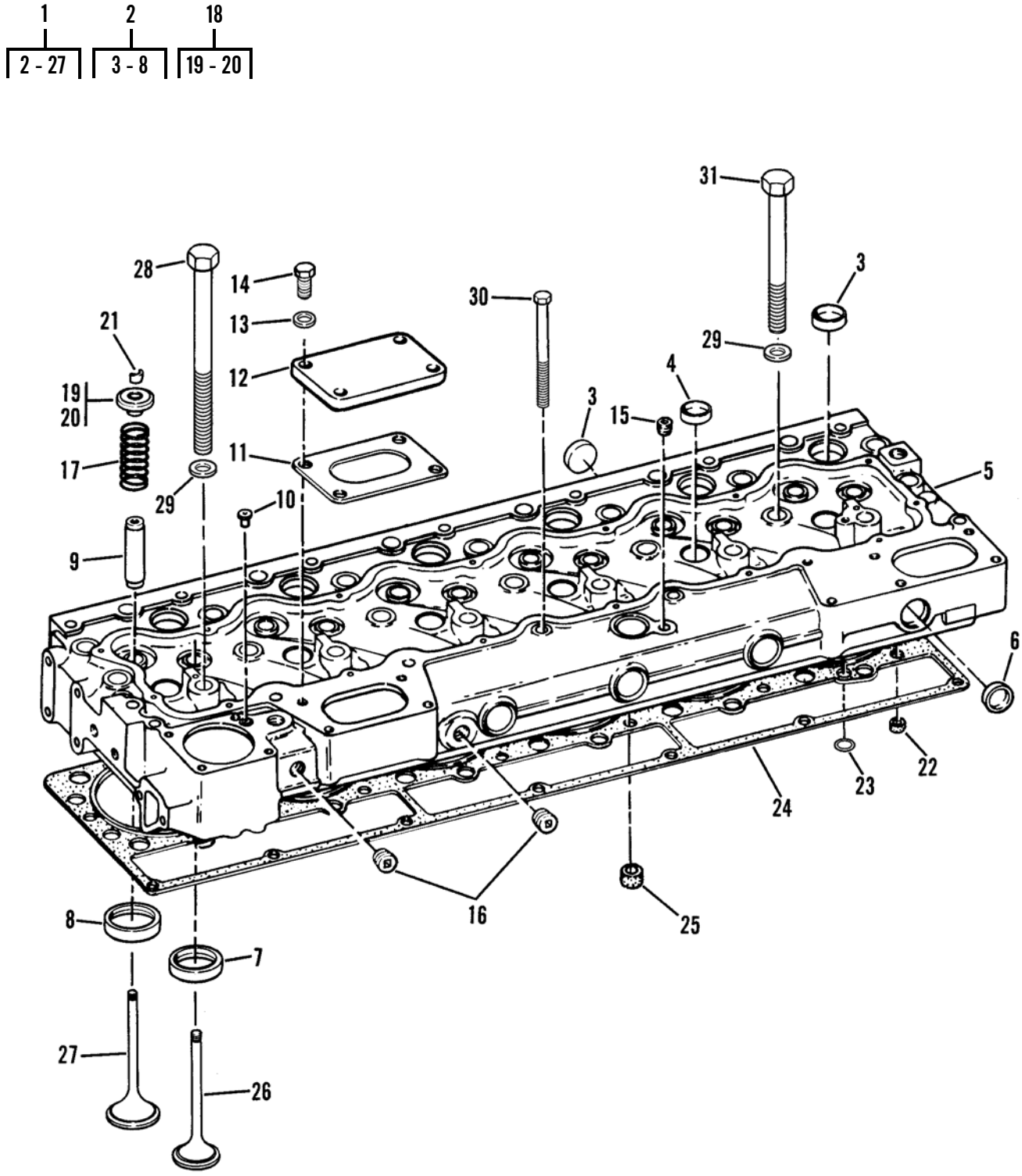

Figure 4. Cylinder Head Group

(1) ITEM NO	(2) SMR CODE	(3) NSN	(4) CAGEC	(5) PART NUMBER	(6) DESCRIPTION AND USABLE ON CODES (UOC)	(7) QTY
					GROUP 0101 CRANKCASE, BLOCK, CYLINDER HEAD	
					FIG. 4 CYLINDER HEAD GROUP	
1	PAHHH	2815011655713	11083	8N6796	CYLINDER HEAD,DIESE DEALER .... EXCHANGE ITEM, PN 0R0836	1
2	KFHHH		11083	7C4006	.HEAD ASSEMBLY PART OF KIT P/N . 5R6291	1
3	PFHZZ	5340011524541	11083	3P1896	..PLUG,EXPANSION PART OF KIT P/N 5R6291	12
4	PFHZZ	5340002299294	11083	3B0623	..PLUG,EXPANSION PART OF KIT P/N 5R6291	6
5	XAHZZ		11083	7C3906	..HEAD,CYL PART OF KIT P/N 5R6291	1
6	PFHZZ	5365004492597	11083	3S8313	..PLUG,MACHINE THREAD PART OF KIT P/N 5R6291	7
7	PFHZZ	5310011300611	11083	1070268	..WASHER,RECESSED PART OF KIT .. P/N 5R6291	6
8	PFHZZ	2815011597706	11083	1070265	..INSERT,ENGINE VALVE PART OF KIT P/N 5R6291	6
9	PFHZZ	4820014860910	11083	148-7425	.GUIDE,VALVE STEM PART OF KIT .. P/N 5R6291	12
10	PFHZZ	4820011044091	11083	8N4485	.VALVE,FLOW CONTROL	1
11	PFHZZ	5330007607367	11083	5S6735	.GASKET	1
12	PFHZZ	5340004078369	11083	1P6367	.COVER,ACCESS	1
13	PFHZZ	5310001174788	11083	9Y2695	.WASHER,FLAT	4
14	PFHZZ	5306002604508	11083	0S1594	.BOLT,MACHINE	4
15	PFHZZ	4730000428988	11083	7H3171	.PLUG,PIPE PART OF KIT P/N 5R6291	1
16	PFHZZ	4730002783383	15235	PLG1	.PLUG,PIPE PART OF KIT P/N 5R6291	3
17	PFHZZ	5360005196605	11083	7S7144	.SPRING,HELICAL,COMP PART OF ... KIT P/N 5R6291	12
18	PFHZZ	2815011464526	11083	1W5300	.ROTOCOIL ASSY PART OF KIT P/N . 5R6291	12
19	PFHZZ	2815004859418	11083	5S5874	..ROTOR,ENGINE POPPET	1
20	PFHZZ	2815011834649	11083	6N7174	..ROTOR,ENGINE POPPET	1
21	PFHZZ	2805002883650	11083	2A4429	.LOCK,VALVE SPRING R PART OF KIT P/N 5R6291	24
22	PFHZZ	5330011284130	11083	7N8018	.SEAL,PLAIN PART OF KIT P/N 5R6291	6
23	PFHZZ	5331001044371	11083	3S5496	.O-RING PART OF KIT P/N 5R6291 .	1
24	PAFZZ	5330014186284	11083	1118015	.GASKET PART OF KIT P/N 5R6291 .	1
25	PFHZZ	5330013324074	11083	9Y1798	.SEAL,PLAIN PART OF KIT P/N 5R6291	18
26	PFHZZ	2815011862371	11083	1007860	.VALVE,POPPET,ENGINE	6
27	PFHZZ	2815011431409	11083	148-7455	.VALVE,POPPET,ENGINE PART OF KIT P/N 5R6291	6
28	PFFZZ	5305004015261	11083	1B7709	SCREW,CAP,HEXAGON H	5
29	PFFZZ	5310004982964	11083	2S0736	WASHER	25
30	PFFZZ	5305009640503	80204	B1821BH038C500N	SCREW,CAP,HEXAGON H	7
31	PFFZZ	5306008146559	11083	1D4595	BOLT,MACHINE	20
				END OF FIGURE		

1
2 - 5

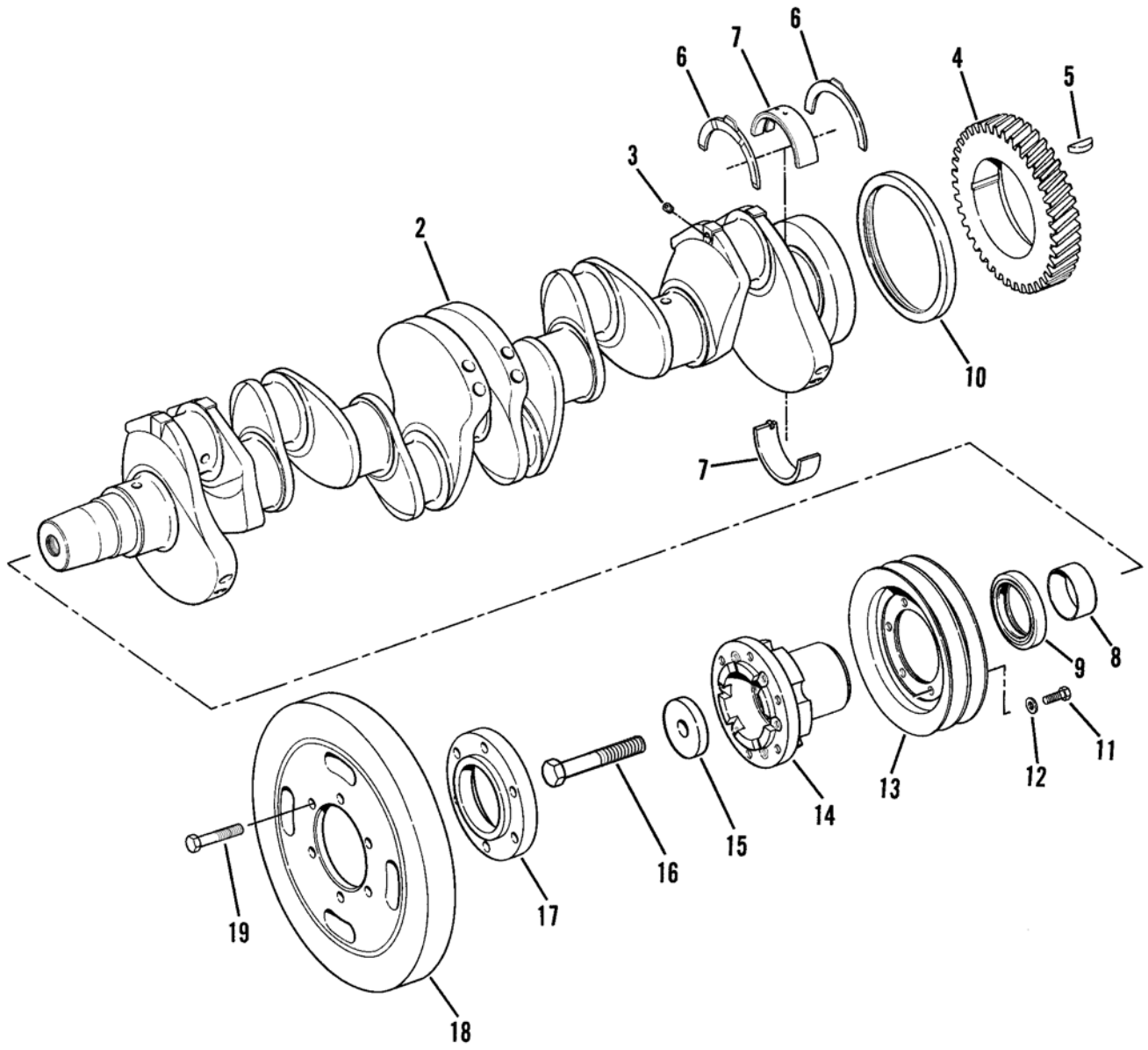

Figure 5. Crankshaft Group

(1) ITEM NO	(2) SMR CODE	(3) NSN	(4) CAGEC	(5) PART NUMBER	(6) DESCRIPTION AND USABLE ON CODES (UOC)	(7) QTY
					GROUP 0102 CRANKSHAFT	
					FIG. 5 CRANKSHAFT GROUP	
1	PAHHH	2815012087164	11083	2W7458	CRANKSHAFT,ENGINE	1
2	XAHZZ		11083	4N7696	.CRANKSHAFT	1
3	PFHZZ	4730000444688	89346	50410DA	.PLUG,PIPE	6
4	PFHZZ	3020011483798	11083	1W4405	.GEAR,HELICAL	1
5	PFHZZ	5315006165522	11083	1B8708	.KEY,WOODRUFF	1
6	PFHZZ	2815011192241	11083	1003652	PLATE,THRUST	2
7	PFHZZ	3120012025894	11083	4W5738	BEARING HALF,SLEEVE ..... STANDARD,BLOCK NOT REBORED, CRANKSHAFT NOT GROUND	7
7	PFHZZ	3120011518371	11083	8N8225	BEARING,SLEEVE UNDERSIZE ..... BEARING, 0.25 MM I.D., BLOCK NOT REBORED, CRANK SHAFTREGROUND	7
7	PFHZZ	3120011569486	11083	8N8226	BEARING,SLEEVE UNDERSIZE ..... BEARING, 0.51 MM I.D., BLOCK NOT REBORED, CRANKSHAFTREGROUND	7
7	PFHZZ	3120011569487	11083	8N8227	BEARING,SLEEVE UNDERSIZE ..... BEARING, 0.76 MM I.D., BLOCK NOT REBORED, CRANKSHAFTREGROUND	7
7	PFHZZ	3120011519299	11083	8N8228	BEARING,SLEEVE STANDARD ..... BEARING,BLOCK REBORED 0.51 MM	7
7	PFHZZ	3120011570913	11083	8N8229	BEARING,SLEEVE UNDERSIZE ..... BEARING,0.25MM I.D., BLOCK REBORED 0.51MM REGROUND	7
8	PFHZZ	3120003944276	11083	2P3859	SLEEVE	2
9	PAHZZ	5330012574528	11083	7C4297	SEAL KIT	1
10	PAHZZ	5330013517093	11083	9Y9895	SEAL,PLAIN ENCASED PART OF KIT . P/N 1387720	1
11	PFFZZ	5306002604508	11083	0S1594	BOLT,MACHINE	6
12	PFFZZ	5310001174788	11083	9Y2695	WASHER,FLAT	6
13	PFFZZ	3020011655716	11083	7N2949	PULLEY	1
14	PFFZZ	3040012534698	11083	7W5687	HUB,BODY	1
15	PFFZZ	5310007576531	11083	5S9948	WASHER,FLAT	1
16	PFFZZ	5306004265835	11083	7B5163	BOLT,MACHINE	1
17	PFFZZ	2815012533451	11083	1N4375	DAMPENER,VIBRATION, ...	1
18	PFFZZ	2815012534646	11083	4W2446	DAMPENER,VIBRATION, ...	1
19	PFFZZ	5306002638978	11083	0S1587	BOLT,MACHINE	6
				END OF FIGURE		

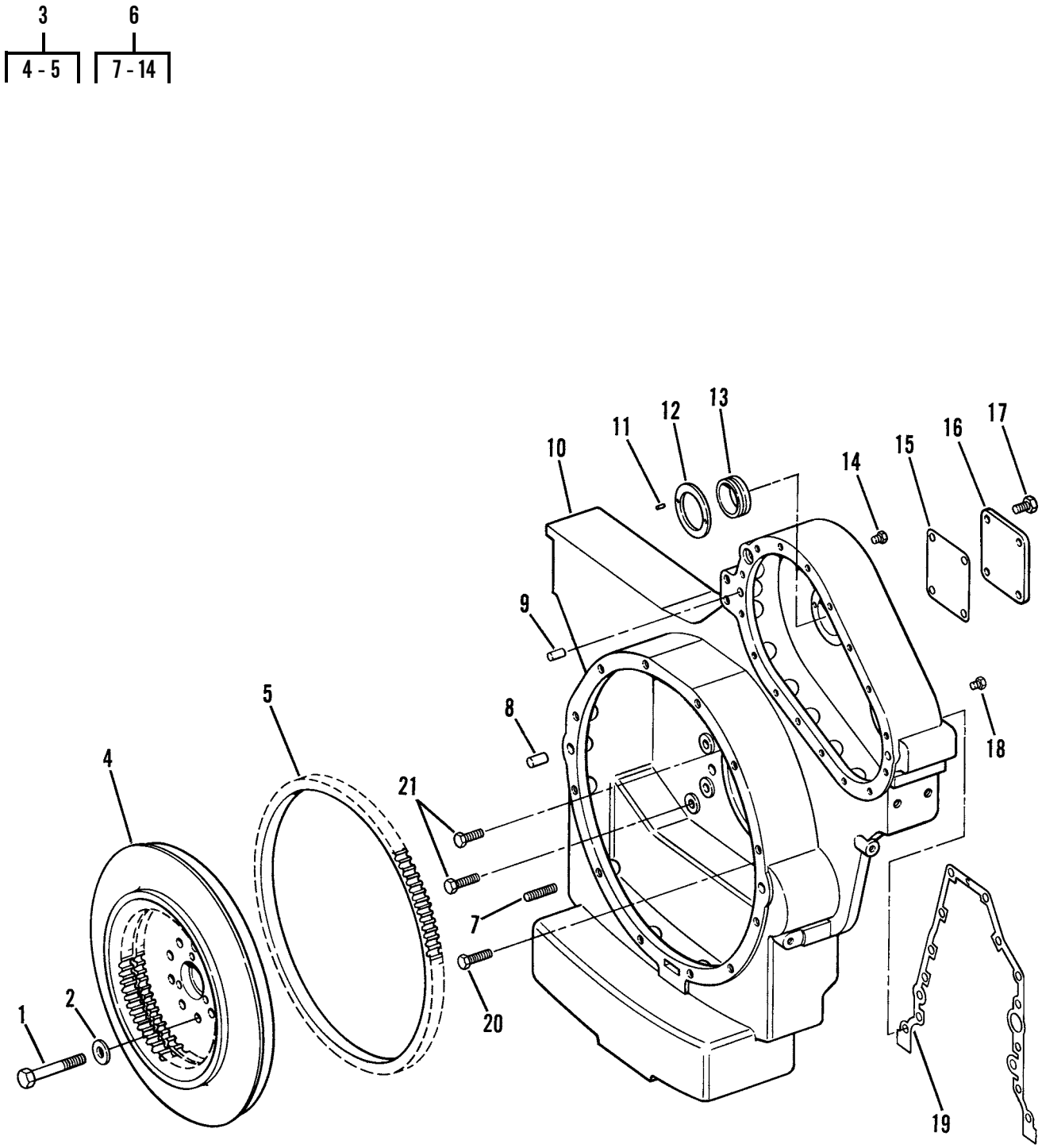

Figure 6. Flywheel and Flywheel Housing

(1) ITEM NO	(2) SMR CODE	(3) NSN	(4) CAGEC	(5) PART NUMBER	(6) DESCRIPTION AND USABLE ON CODES (UOC)	(7) QTY
					GROUP 0103 FLYWHEEL ASSEMBLY	
					FIG. 6 FLYWHEEL AND FLYWHEEL HOUSING	
1	PFFZZ	5305007262559	80204	B1821BH063F400N	SCREW,CAP,HEXAGON H	9
2	PFFZZ	5310010516946	11083	6N0130	WASHER,FLAT	9
3	PFFZZ	2815011075373	11083	1W7612	FLYWHEEL,ENGINE	1
4	XAFZZ		11083	7W2012	.FLYWHEEL	1
5	PFFZZ	3020004547899	11083	2S7037	.GEAR,SPUR	1
6	PFFZZ	2815012533452	11083	2P4691	HOUSING,FLYWHEEL	1
7	PFFZZ	5307004114502	11083	3D0490	.STUD	12
7	PFFZZ	5325009206925	11083	2D8154	.STUD,TAPER LOCK USE ON SERIAL NUMBERS 3ZD01124 THRU 3ZD01213	12
8	PFFZZ	5315002522959	11083	2A3798	.PIN,STRAIGHT,HEADLE	2
9	PFFZZ	5315008250082	11083	3F0957	.PIN,STRAIGHT,HEADLE	4
10	XAFZZ		11083	8N1173	.HOUSING	1
11	PFFZZ	5315000287266	11083	3F6795	.PIN,STRAIGHT,HEADLE	6
12	PFFZZ	3120004219628	11083	7L4265	.BEARING,WASHER,THRU	2
13	PFFZZ	3120004191844	11083	9S6729	.BEARING,SLEEVE	2
14	PFFZZ	4730009247886	11083	5M6214	.PLUG,PIPE	2
15	PFFZZ	5330009298152	11083	2S4750	GASKET	1
16	PFFZZ	5340013029973	11083	8M3107	COVER,ACCESS	1
17	PFFZZ	5306010508014	11083	2P3201	BOLT	4
18	PFFZZ	4730000892515	11083	5M6213	PLUG,PIPE	1
19	PFFZZ	5330000743600	11083	9H5921	GASKET	1
20	PFFZZ	5306002638978	11083	0S1587	BOLT,MACHINE	9
21	PFFZZ	5306011279361	11083	0S1585	BOLT,MACHINE	2
				END OF FIGURE		

3 7
4 - 6 8 - 11

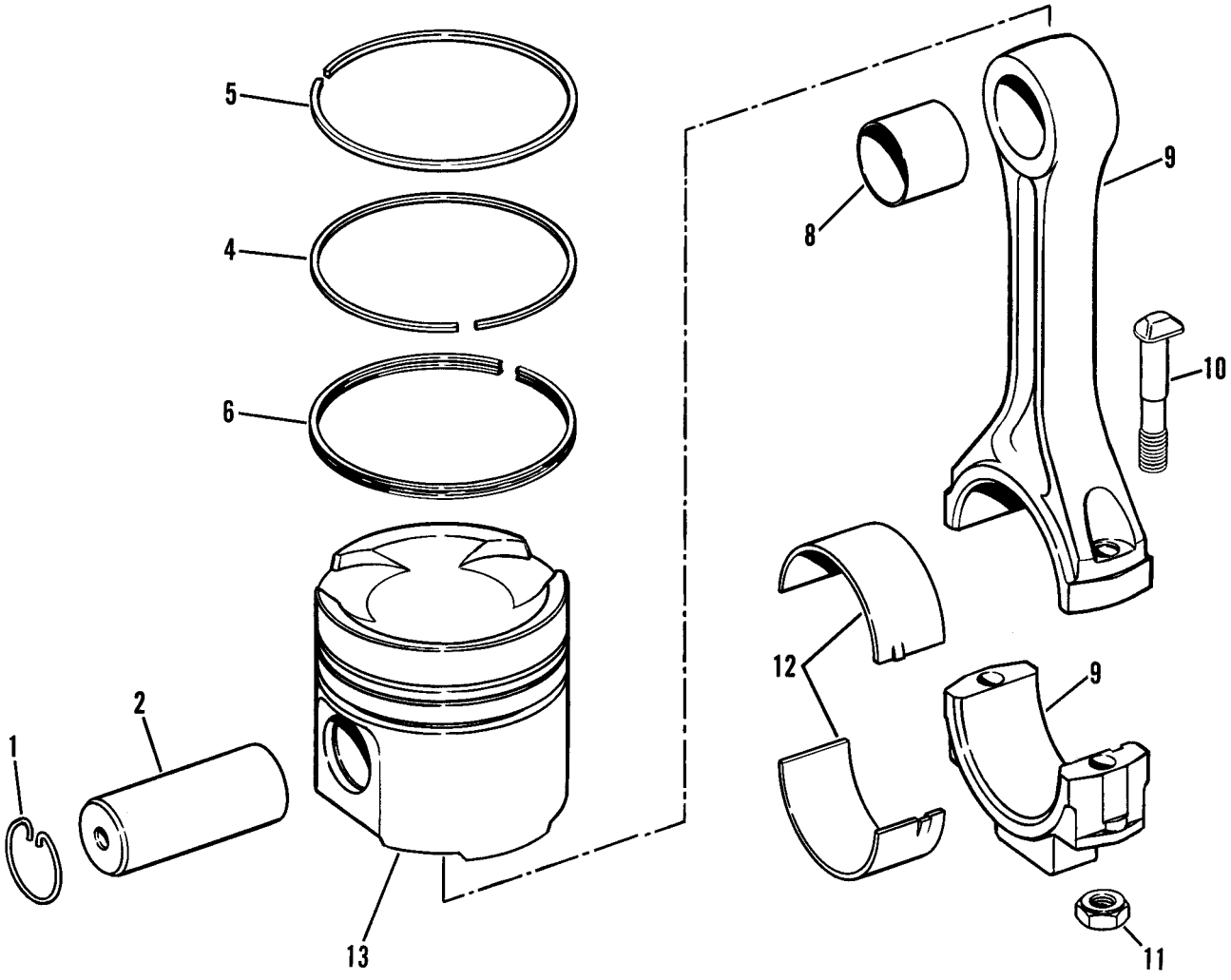

Figure 7. Piston and Rod Group

(1) ITEM NO	(2) SMR CODE	(3) NSN	(4) CAGEC	(5) PART NUMBER	(6) DESCRIPTION AND USABLE ON CODES (UOC)	(7) QTY
					GROUP 0104 PISTONS, CONNECTING RODS	
					FIG. 7 PISTON AND ROD GROUP	
1	PFHZZ	5325001183056	11083	1S9543	RING,RETAINING	12
2	PFHZZ	2815011165920	11083	7N9805	PIN,PISTON	6
3	PAHZZ	2815012070764	11083	2W1709	RING SET,PISTON	6
4	PAHZZ	2815012094543	11083	2W1708	.RING,PISTON	1
5	PAHZZ	4310012095008	11083	2W1707	.RING,PISTON	1
6	PAHZZ	2815011541242	11083	7E6047	.RING,PISTON	1
7	PFHZZ	2815004872840	11083	8N1721	CONNECTING ROD,PIST DEALER .... EXCHANGE ITEM, PN 0R0914	6
8	PFHZZ	3120011309116	11083	8N1849	.BEARING,SLEEVE	6
9	XAHZZ		11083	8N1720	.ROD,PISTON,LINEAR A	6
10	PFHZZ	5306004970342	11083	1P9956	.BOLT,SHOULDER	12
11	PFHZZ	5310005579389	11083	5S6348	.NUT,PLAIN,SINGLE BA	12
12	PFHZZ	3120012100859	11083	4W5739	BEARING,SLEEVE STANDARD	6
12	PFHZZ	3110011848029	11083	8N8221	BEARING .010-INCH UNDERSIZE ...	6
12	PFHZZ	3120011654357	11083	8N8222	BEARING,SLEEVE .020-INCH ..... UNDERSIZE	6
12	PFHZZ	3120011681850	11083	8N8223	BEARING,SLEEVE .030-INCH ..... UNDERSIZE	6
13	XDHZZ		11083	1290338	CYLINDER SLEEVE AND	1
				END OF FIGURE		

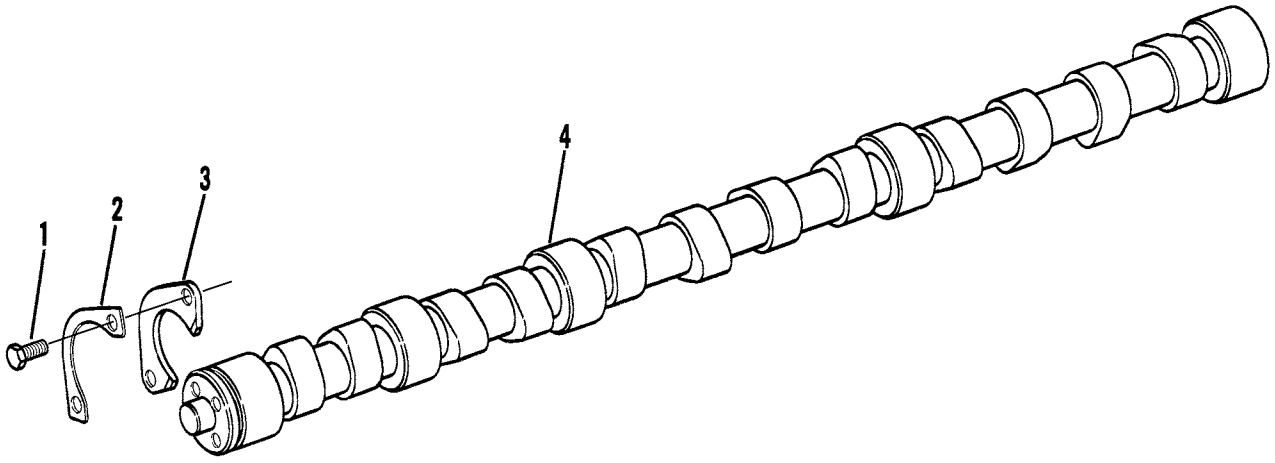

Figure 8. Camshaft Group

(1) ITEM NO	(2) SMR CODE	(3) NSN	(4) CAGEC	(5) PART NUMBER	(6) DESCRIPTION AND USABLE ON CODES (UOC)	(7) QTY
					GROUP 0105 VALVES, CAMSHAFTS, AND TIMING SYSTEM	
					FIG. 8 CAMSHAFT GROUP	
1	PFHZZ	5305002528919	11083	0S0509	SCREW,CAP,HEXAGON H	2
2	PFHZZ	5310005579391	58312	8S1491-00	NUT,SPECIAL PART OF KIT P/N 1387720	1
3	PFHZZ	5310004982967	58312	7S2204-00	WASHER,CAMSHAFT	1
4	PFHZZ	2815013515962	11083	4P2942	CAMSHAFT,ENGINE DEALER ..... EXCHANGE ITEM, PN 0R3023	1
					END OF FIGURE	

16 22
17 - 18 23 - 26

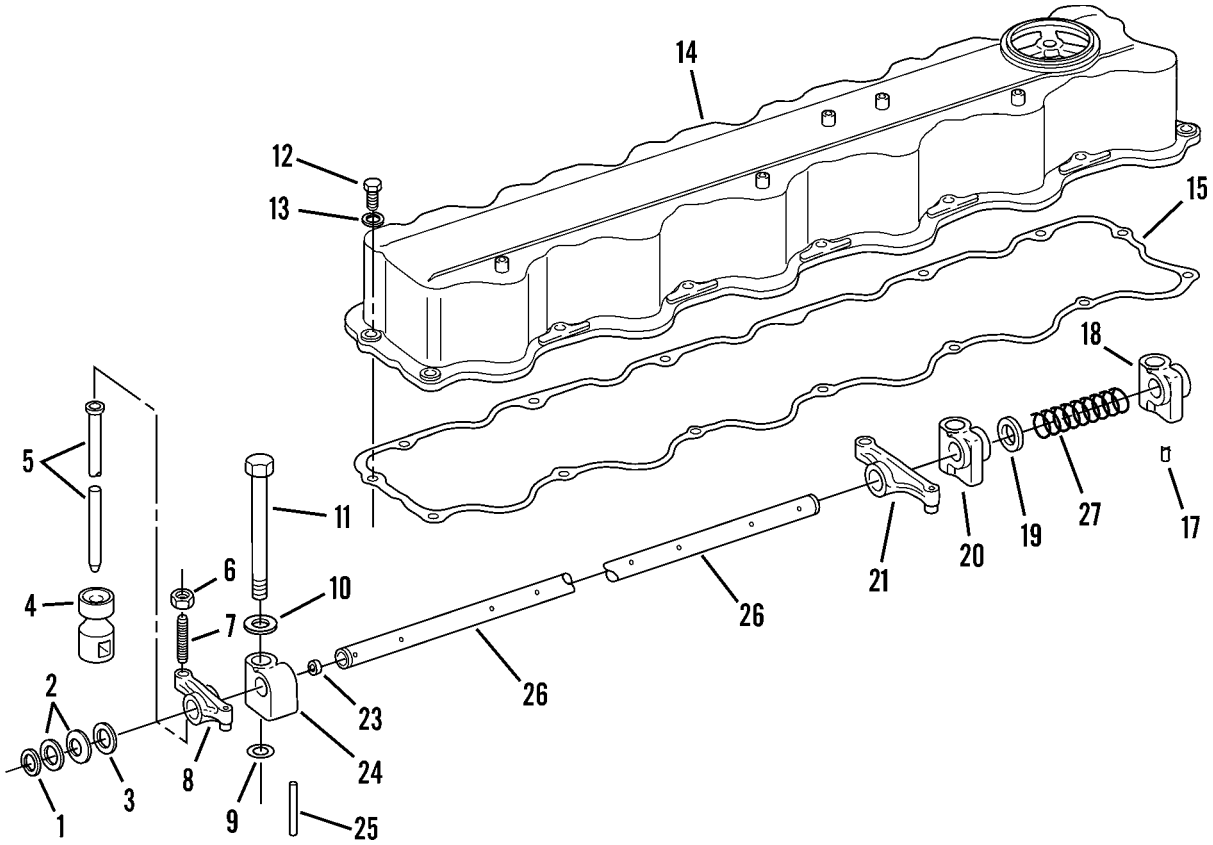

Figure 9. Valve Mechanism and Valve Cover

(1) ITEM NO	(2) SMR CODE	(3) NSN	(4) CAGEC	(5) PART NUMBER	(6) DESCRIPTION AND USABLE ON CODES (UOC)	(7) QTY
					GROUP 0105 VALVES, CAMSHAFTS, AND TIMING SYSTEM	
					FIG. 9 VALVE MECHANISM AND VALVE COVER	
1	PFFZZ	5325009213208	80756	RST-68	RING,RETAINING	2
2	PFFZZ	5310009998287	11083	9H1112	WASHER,SPRING TENSI	2
3	PFFZZ	5310006782152	19207	9093668	WASHER,FLAT	2
4	PFFZZ	2815004509341	11083	7S3161	TAPPET,ENGINE POPPE	12
5	PFFZZ	2815004873123	11083	5S5918	PUSH ROD,ENGINE POP	12
6	PFFZZ	5310007257382	96906	MS35690-624	NUT,PLAIN,HEXAGON	12
7	PFFZZ	2815004571615	11083	5S5917	SCREW,ADJUSTING,VAL	12
8	PAFZZ	2815012541114	11083	7W7556	ROCKER ARM,ENGINE P	6
9	PFFZZ	5331009236958	11083	8M4448	O-RING	1
10	PFFZZ	5310004982964	11083	2S0736	WASHER	1
11	PFFZZ	5305004015261	11083	1B7709	SCREW,CAP,HEXAGON H	1
12	PFOZZ	5306002264825	80204	B1821BH031C075N	BOLT,MACHINE	15
13	PFOZZ	5310004079566	80205	MS35338-45	WASHER,LOCK	15
14	PFOZZ	2815002373756	11083	2N3872	COVER,ENGINE POPPET	1
15	PAOZZ	5330005201552	11083	8S1605	GASKET PART OF KIT P/N 5R6291 ..	1
16	PFFZZ	2815002114462	11083	8S1499	BRACKET ASSEMBLY,RO	1
17	PFFZZ	5315005325746	11083	1L5072	.PIN,STRAIGHT,HEADLE	1
18	PFFZZ	3040011659635	11083	8S1498	.BRACKET,EYE,NONROTA	1
19	PFFZZ	5310009998286	11083	9H1110	WASHER,FLAT	12
20	PFFZZ	5340002398226	11083	5S5879	BRACKET,ANGLE	4
21	PAFZZ	2815011269995	11083	8N3325	ROCKER ARM,ENGINE P DEALER .... EXCHANGE ITEM, PN 10R1713	6
22	AFFFF		11083	8N3252	SHAFT,AV ROCKER	1
23	PFFZZ	5340002299287	11083	0L1026	.PLUG,EXPANSION	2
24	PFFZZ	5342011295917	11083	7N8015	.BRACKET,ROCKER ARM	1
25	PFFZZ	5315007607421	11083	5M4606	.PIN,STRAIGHT,HEADLE	1
26	PFFZZ	3040011324761	11083	8N3251	.SHAFT,STRAIGHT	1
27	PFFZZ	5360002493504	11083	4B4910	SPRING,HELICAL,COMP	5
				END OF FIGURE		

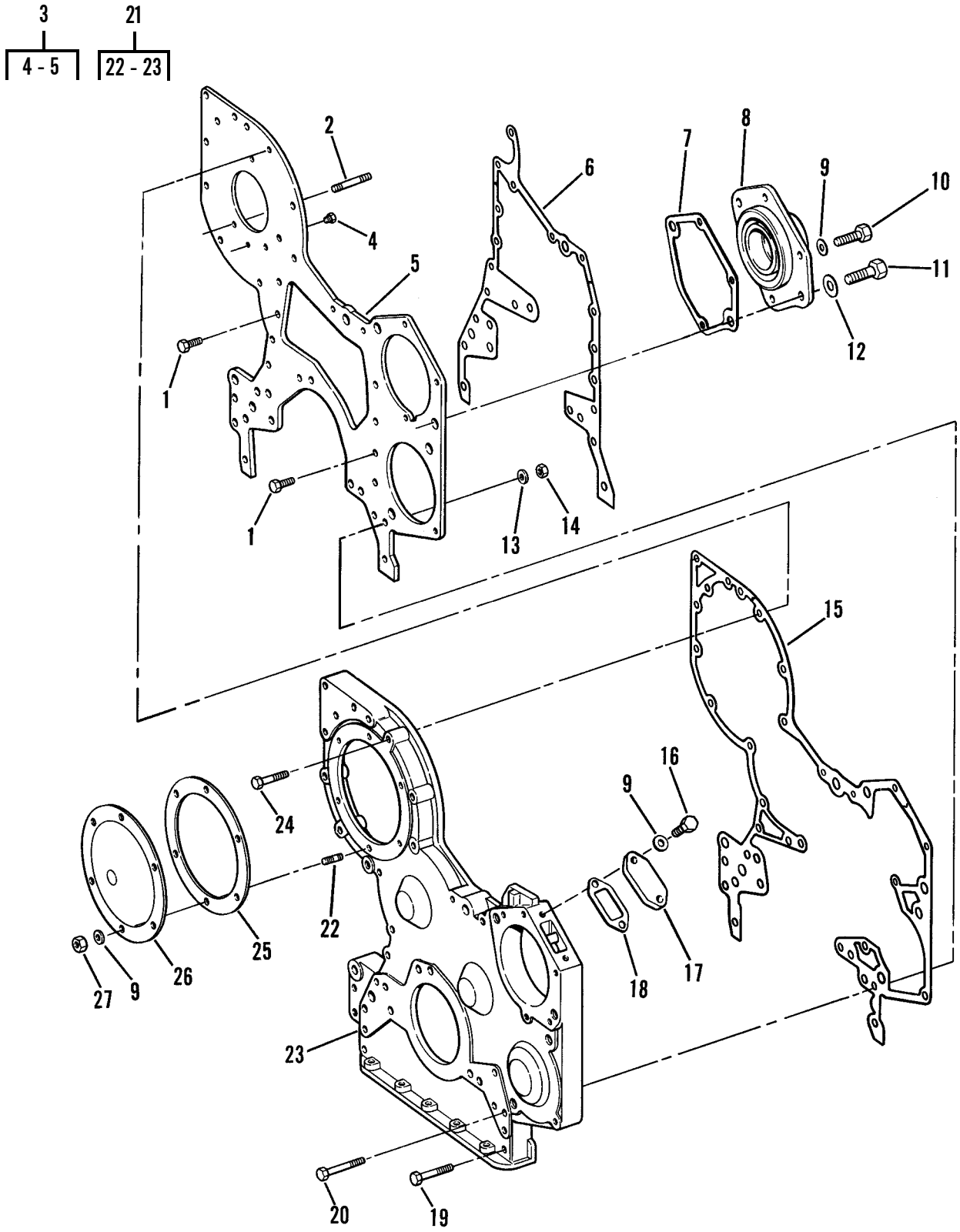

Figure 10. Front Cover Group

(1) ITEM NO	(2) SMR CODE	(3) NSN	(4) CAGEC	(5) PART NUMBER	(6) DESCRIPTION AND USABLE ON CODES (UOC)	(7) QTY
					GROUP 0105 VALVES, CAMSHAFTS, AND TIMING SYSTEM	
					FIG. 10 FRONT COVER GROUP	
1	PFHZZ	5306006906976	03038	LH90725-59	BOLT,MACHINE	6
2	PFHZZ	5307005873434	11083	6H0192	STUD,PLAIN	3
3	PFHZZ	5340011615640	11083	1W7816	PLATE ASSEMBLY	1
4	PFHZZ	4730009247886	11083	5M6214	.PLUG,PIPE	1
5	PFHZZ	2815011774792	11083	1W7110	.PLATE,COVER	1
6	PFHZZ	5330011284137	11083	8N0110	GASKET PART OF KIT P/N 1387720 .	1
7	PFHZZ	5330010691478	11083	2P0220	GASKET PART OF KIT P/N 1387720 .	1
8	PFHZZ	2930011472241	11083	1W4542	HOUSING,COOLANT PUM	1
9	PFHZZ	5310001174788	11083	9Y2695	WASHER,FLAT	11
10	PFHZZ	5306011954681	11083	3B1915	BOLT	3
11	PFHZZ	5306002755012	11083	0S1566	BOLT,MACHINE	4
12	PFHZZ	5310010954631	11083	5P8247	WASHER,FLAT	2
13	PFHZZ	5310001174788	11083	9Y2695	WASHER,FLAT	8
14	PFHZZ	5310014297859	11083	6V8801	NUT,PLAIN,HEXAGON	8
15	PFHZZ	5330011554283	11083	1W3900	GASKET PART OF KIT P/N 1387720 .	1
16	PFHZZ	5306002637301	11083	0L1351	BOLT,MACHINE	2
17	PFHZZ	5340011509810	11083	4N4526	COVER,ACCESS	1
18	PFHZZ	5330010675727	11083	2P2720	GASKET PART OF KIT P/N 1387720 .	1
19	PFHZZ	5306006982150	11083	0L2070	BOLT,MACHINE	13
20	PFHZZ	5306002851368	11083	0L1143	BOLT,MACHINE	3
21	PFHZZ	2815011259819	11083	6I0923	HOUSING ASSEMBLY,FR	1
22	PFHZZ	5307013511404	11083	9X2485	.STUD,PLAIN	6
23	XAHZZ		11083	4P9863	.HOUSING ASSEMBLY,FR	1
24	PFHZZ	5306004238393	11083	1C2251	BOLT,MACHINE	2
25	PAHZZ	5330010937888	11083	6N7887	GASKET PART OF KIT P/N 1387720 .	1
26	PFHZZ	5340011477948	11083	9N5769	COVER,ACCESS	1
27	PFHZZ	5310007257382	96906	MS35690-624	NUT,PLAIN,HEXAGON	6
				END OF FIGURE		

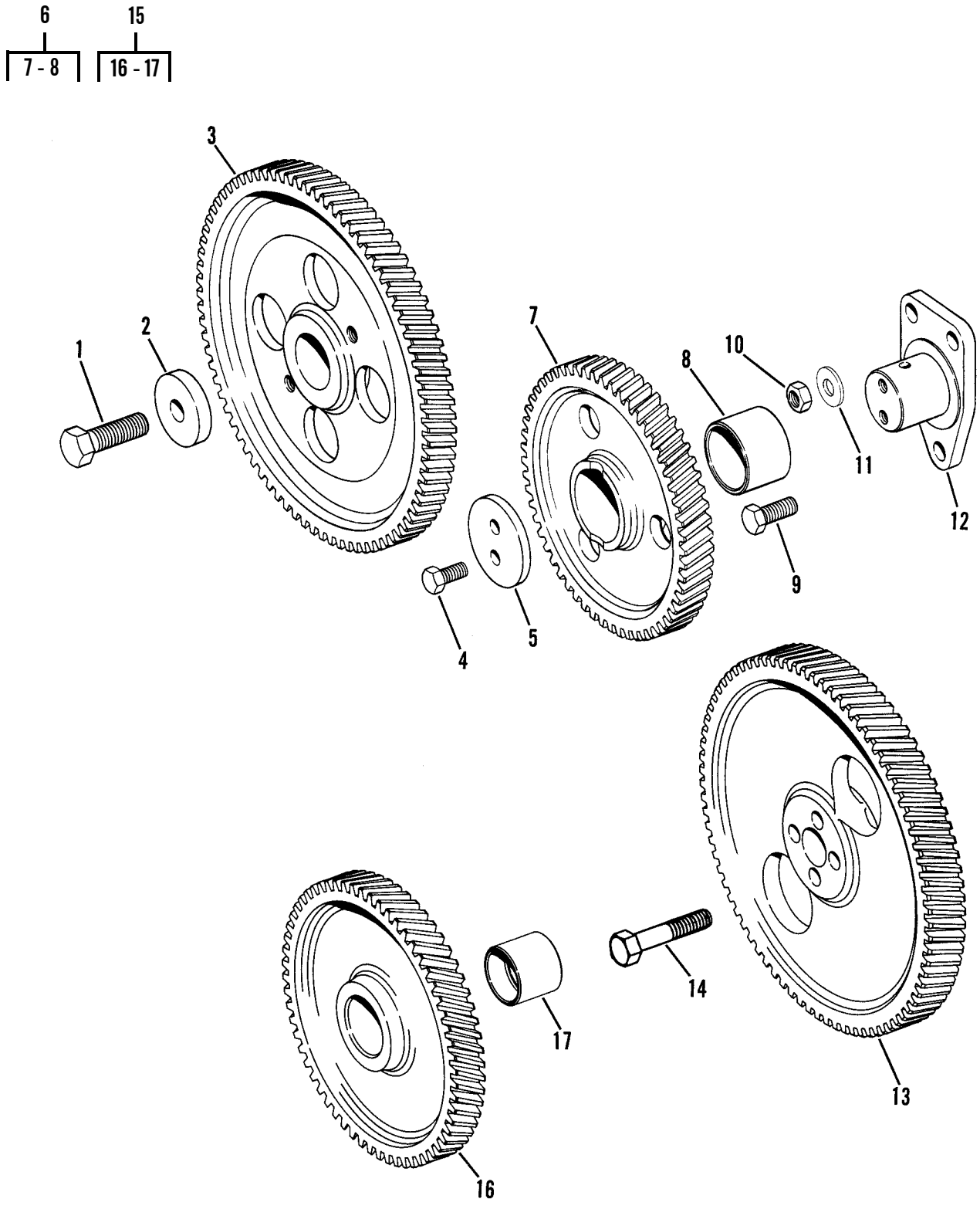

Figure 11. Timing Gear Group

(1) ITEM NO	(2) SMR CODE	(3) NSN	(4) CAGEC	(5) PART NUMBER	(6) DESCRIPTION AND USABLE ON CODES (UOC)	(7) QTY
					GROUP 0105 VALVES, CAMSHAFTS, AND TIMING SYSTEM	
					FIG. 11 TIMING GEAR GROUP	
1	PFHZZ	5305007247222	80204	B1821BH063C200N	SCREW,CAP,HEXAGON H	1
2	PFHZZ	5310011576813	11083	7N2994	WASHER,SHOULDERED	1
3	PFHZZ	3020012539281	11083	7W0508	GEAR,HELICAL	1
4	PFHZZ	5306011169622	11083	0869934	BOLT,MACHINE	2
5	PFHZZ	2815011255535	11083	8N4960	PLATE,THRUST	1
6	PFHZZ	3020011275195	11083	1960029	GEAR,HELICAL	1
7	XAHZZ		11083	7W0546	.GEAR	1
8	PFHZZ	3120004394878	11083	5S7630	.BEARING,SLEEVE USED WITH ..... PN 8N4959	1
8	PFHZZ	3120015034984	11083	1950302	.BEARING,SLEEVE USE WITH PN ... 1707502	1
9	PFHZZ	5306002637301	11083	0L1351	BOLT,MACHINE	2
10	PFHZZ	5310009752075	96906	MS35691-21	NUT,PLAIN,HEXAGON	1
11	PFHZZ	5340004492612	11083	5S7611	LOCKING PLATE,NUT A	1
12	XAHZZ		11083	8N4959	SHAFT,IDLER USE ON BEARING .... PN 5S7630 WITH THIS SHAFT	1
12	PFHZZ	3040014965171	11083	1707502	GEARSHAFT,MULTIPLE USE WITH ... BEARING PN 1950302	1
13	XDHZZ		11083	1W4402	GEAR,HELICAL	1
14	PFHZZ	5306004262939	11083	0S1748	BOLT,MACHINE	4
15	PFHZZ	3020012541227	11083	1960223	GEAR,SPUR	1
16	XAHZZ		11083	7W0449	.GEAR	1
17	PFHZZ	3120010662505	11083	1969988	.BEARING,SLEEVE	1
				END OF FIGURE		

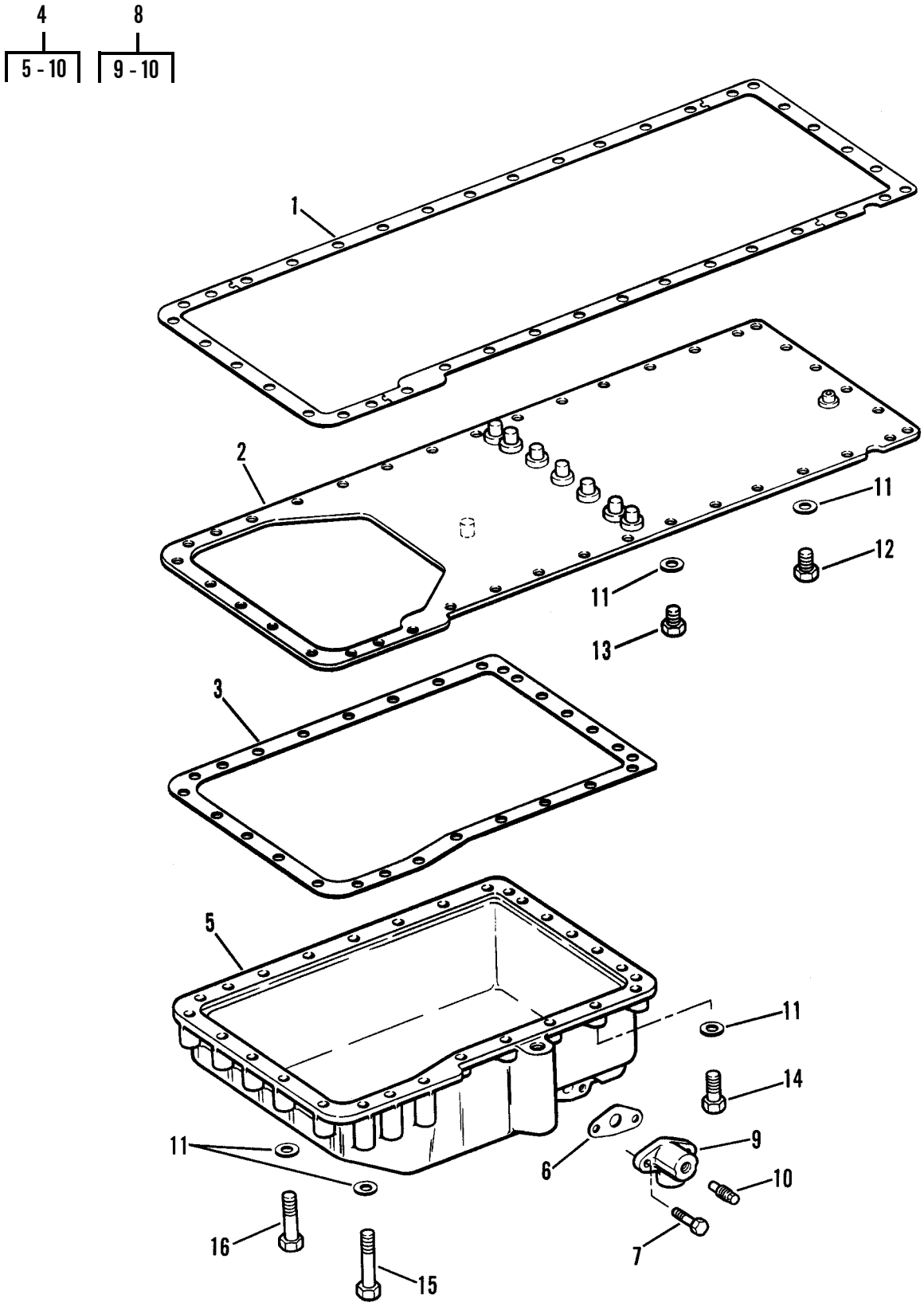

Figure 12. Oil Pan Group

(1) ITEM NO	(2) SMR CODE	(3) NSN	(4) CAGEC	(5) PART NUMBER	(6) DESCRIPTION AND USABLE ON CODES (UOC)	(7) QTY
					GROUP 0106 ENGINE LUBRICATION SYSTEM	
					FIG. 12 OIL PAN GROUP	
1	PAFZZ	5330000743603	11083	1694200	GASKET PART OF KIT P/N 6V2911 ..	1
2	PFFZZ	2815011465926	11083	2P1738	PLATE ASSEMBLY,OIL	1
3	PFFZZ	5330006137468	11083	1694199	GASKET PART OF KIT P/N 6V2911 ..	1
4	AFFZZ		11083	8S6086	OIL PAN	1
5	PFFZZ	2815011619635	11083	8N6184	.OIL PAN	1
6	PFOZZ	5330011519294	11083	8N6854	.GASKET PART OF KIT P/N 6V2911 .	1
7	PFOZZ	5306011954681	11083	3B1915	.BOLT	2
8	PFOZZ	4820012535557	11083	2W6096	.COCK,DRAIN	1
9	PFOZZ	4730011620112	11083	8N6849	..ELBOW,FLANGE TO PIP	1
10	PFOZZ	5365011596679	11083	5N8780	..PLUG,MACHINE THREAD	1
11	PFFZZ	5310001174788	11083	9Y2695	WASHER,FLAT	46
12	PFFZZ	5306004238194	11083	1A2029	BOLT,MACHINE	2
13	PFFZZ	5306002637301	11083	0L1351	BOLT,MACHINE	16
14	PFFZZ	5305010156841	11083	0S1591	SCREW	20
15	PFFZZ	5305008798351	96906	MS35307-371	SCREW,CAP,HEXAGON H	3
16	PFFZZ	2910003099473	11083	0T0573	CAPSCREW,FUEL PUMP	5
				END OF FIGURE		

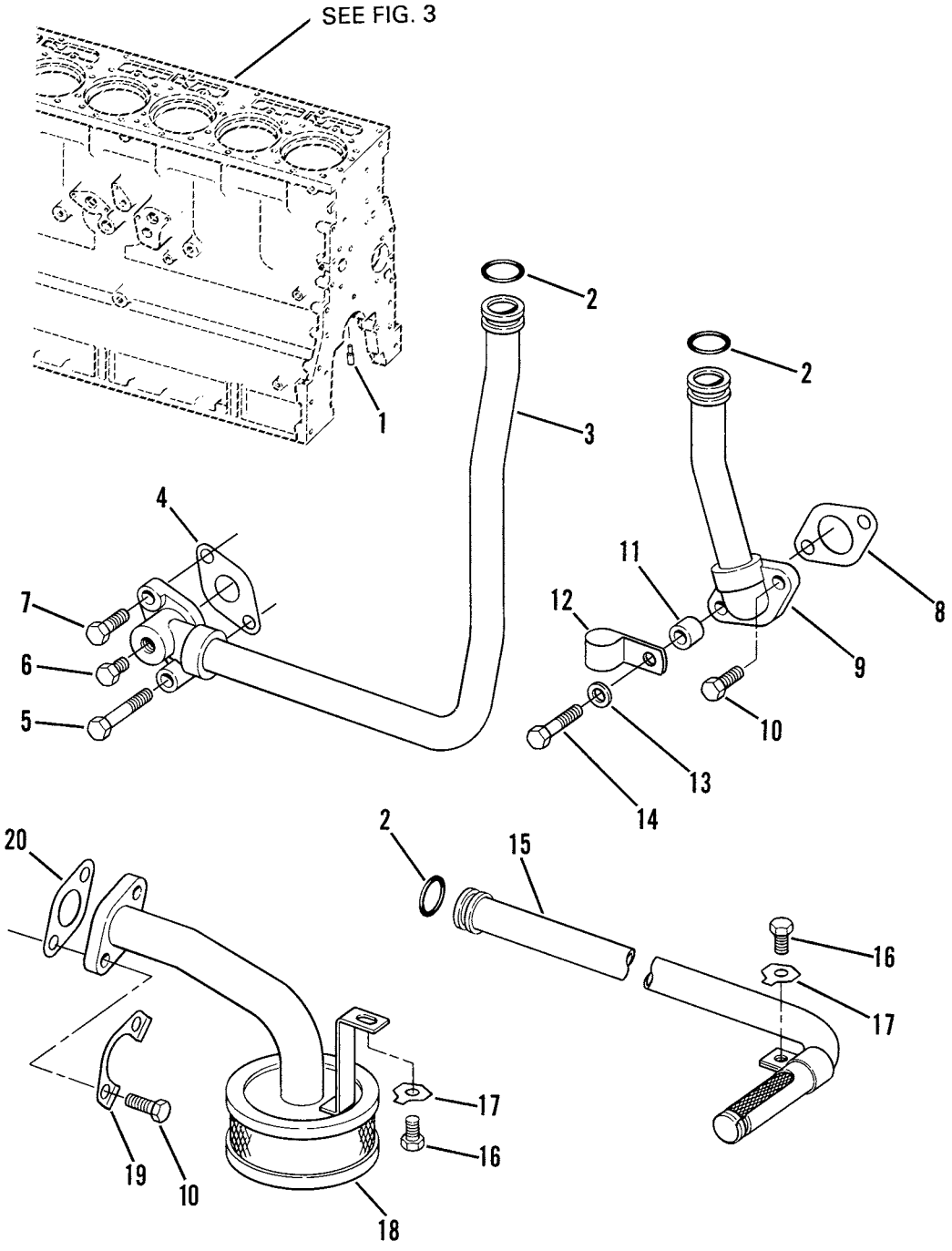

Figure 13. Engine Oil Lines Group

(1) ITEM NO	(2) SMR CODE	(3) NSN	(4) CAGEC	(5) PART NUMBER	(6) DESCRIPTION AND USABLE ON CODES (UOC)	(7) QTY
					GROUP 0106 ENGINE LUBRICATION SYSTEM	
					FIG. 13 ENGINE OIL LINES GROUP	
1	PFOZZ	4730008503812	11083	2S1541	RESTRICTOR,FLUID FL	6
2	PCOZZ	5331014176179	11083	1142687	O-RING PART OF KIT P/N 6V2911 ..	3
3	PFOZZ	4710011295674	11083	8N7318	TUBE ASSEMBLY,METAL	1
4	PFOZZ	5330013826398	11083	2M5407 NON-ASBESTOS	GASKET	1
5	PFOZZ	5306006982150	11083	0L2070	BOLT,MACHINE	1
6	PFOZZ	4730000892515	11083	5M6213	PLUG,PIPE	1
7	PFOZZ	5306004238194	11083	1A2029	BOLT,MACHINE	1
8	PFOZZ	5330002977228	11083	7F7590	GASKET	1
9	PFOZZ	4710011284741	11083	8N7315	TUBE ASSEMBLY,METAL	1
10	PFOZZ	5306002604508	11083	0S1594	BOLT,MACHINE	3
11	PFOZZ	5310011461218	11083	1L5081	WASHER,FLAT	1
12	XDOZZ		11083	4L3641	CLAMP,LOOP	1
13	PFOZZ	5310001174788	11083	9Y2695	WASHER,FLAT	1
14	PFOZZ	5305010269518	11083	0S1571	SCREW,CAP,HEXAGON H	1
15	PFOZZ	4710010683420	11083	2P1739	TUBE ASSEMBLY,OIL	1
16	PFOZZ	5305007215492	80204	B1821BH038C063N	SCREW,CAP,HEXAGON H	2
17	PFOZZ	2930003652152	11083	0L0364	LOCK PLATE PART OF KIT P/N 6V2911	2
18	PFOZZ	2815010688565	11083	2P1751	STRAINER,OIL PUMP	1
19	PFOZZ	5342004941996	11083	8S8874	LOCKING PLATE NUT PART OF KIT P/N 6V2911	1
20	PFOZZ	5330005578489	11083	8M0904	GASKET PART OF KIT P/N 6V2911 ..	1
				END OF FIGURE		

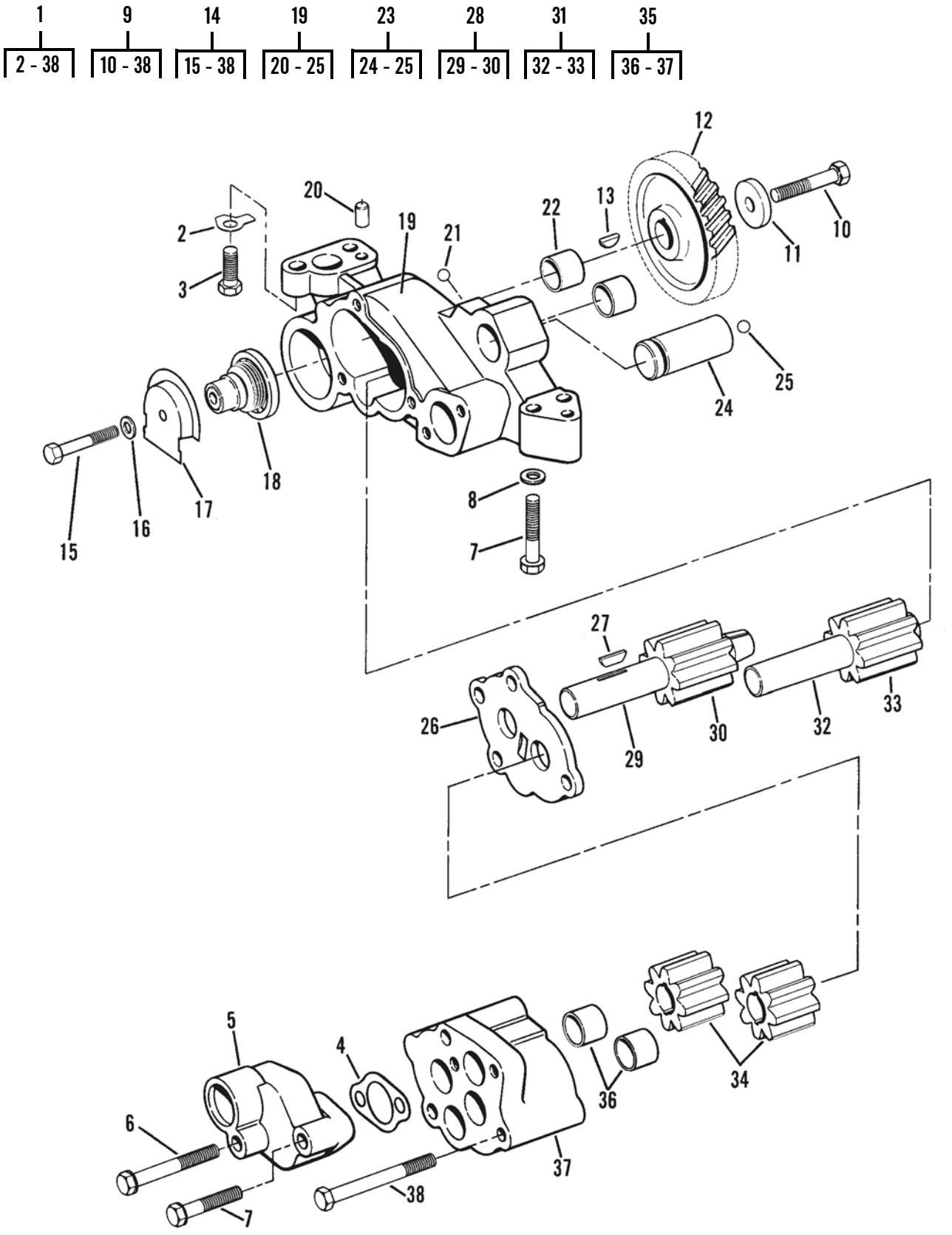

Figure 14. Engine Oil Pump Group

(1) ITEM NO	(2) SMR CODE	(3) NSN	(4) CAGEC	(5) PART NUMBER	(6) DESCRIPTION AND USABLE ON CODES (UOC)	(7) QTY
					GROUP 0106 ENGINE LUBRICATION SYSTEM	
					FIG. 14 ENGINE OIL PUMP GROUP	
1	AHHHH		11083	2P1784	OIL PUMP ASSEMBLY,E	1
2	PFHZZ	5310009228691	11083	8M7587	.L0CK PART OF KIT P/N 6V2911 ...	2
3	PFHZZ	5306011954681	11083	3B1915	.BOLT	2
4	PFHZZ	5330010675729	11083	2P8746	.GASKET PART OF KIT P/N 6V2911 .	1
5	PFHZZ	4730011264892	11083	4N5353	.ELBOW,FLANGE	1
6	PFHZZ	5306004262932	11083	0S1619	.BOLT,MACHINE	1
7	PFHZZ	5306010949106	11083	0S1590	.BOLT,MACHINE	3
8	PFHZZ	5310001174788	11083	9Y2695	.WASHER,FLAT	2
9	AHHHH		11083	6N2642	.OIL PUMP ASSEMBLY,E	1
10	PFHZZ	5306010949106	11083	0S1590	..BOLT,MACHINE	1
11	PFHZZ	5310010512300	11083	1P7346	..WASHER	1
12	PFHZZ	3020012539282	11083	7W0507	..GEAR,HELICAL	1
13	PFHZZ	5315009447035	11083	8M5599	..KEY,WOODRUFF	1
14	AHHZZ		11083	4P4020	..OIL PUMP ASSEMBLY,E DEALER .. EXCHANGE ITEM, PN 0R0920	1
14	PFHZZ	2815010112686	11083	6I1346	..OIL PUMP ASSEMBLY,E REPLACES PN 4P4020	1
15	PFHZZ	5306002264833	80204	B1821BH031C200N	...BOLT,MACHINE	1
16	PFHZZ	5310000814219	96906	MS27183-12	...WASHER,FLAT	1
17	PFHZZ	5340011487396	11083	4N3732	...COVER,ACCESS	1
18	PFHZZ	2815010681729	11083	4P3546	...VALVE,OIL PUMP	1
19	PFHHZ	2990012533454	11083	4W2322	...HOUSING,OIL PUMP AS	1
20	PFHZZ	5315003638794	11083	1F1006	....PIN,STRAIGHT,HEADLE	1
21	PFHZZ	3110009491438	11083	4B9880	....BALL,BEARING	1
22	PFHZZ	3120004408463	11083	8S6511	....BEARING,SLEEVE	2
23	PFHHZ	3040010675649	11083	2P1170	....SHAFT,STRAIGHT	1
24	XAHZZ		11083	2P1169	.....SHAFT	1
25	PFHZZ	3110000119935	11083	4B9782	.....BALL,BEARING	1
26	PFHZZ	5365010690882	11083	2P1781	...SPACER	1
27	PFHZZ	5315006165521	80205	MS35756-13	...KEY,WOODRUFF	1
28	PFHHZ	2815004706352	11083	8S0493	...SHAFT ASSEMBLY,OIL	1
29	PAHZZ	3040012531996	11083	8S0490	....SHAFT,STRAIGHT	1
30	PAHZZ	3020012539284	11083	2P0696	....GEAR,SPUR	1
31	PFHZZ	3040010675675	11083	2P6245	...SHAFT,STRAIGHT USE ONLY WITH PUMP PN 4P4020	1
31	PFHZZ	3040014970540	11083	6I1345	...GEAR AND SHAFT ASSE USE WITH PUMP PN 6I1346 (11083)	1
32	PAHZZ	3040012531995	11083	2P0691	....SHAFT,STRAIGHT USED ONLY .. WITH PUMP 4P4020	1
32	PAHZZ		11083	6I1344	....SHAFT,STRAIGHT USE ONLY ... WITH PUMP PN 6I1346	1
33	PAHZZ	3020012539284	11083	2P0696	....GEAR,SPUR	1
34	PFHZZ	3020004606696	11083	6N1036	...GEAR,SPUR	2
35	PFHZZ	4320012536286	11083	4W2321	...HOUSING,LIQUID PUMP	1
36	PFHZZ	3120004408463	11083	8S6511	....BEARING,SLEEVE	2

(1) ITEM NO	(2) SMR CODE	(3) NSN	(4) CAGEC	(5) PART NUMBER	(6) DESCRIPTION AND USABLE ON CODES (UOC)	(7) QTY
37	XAHZZ		11083	4N4054	....HOUSING,LIQUID PUMP	1
38	PFHZZ	5305002528906	11083	0T0065	...SCREW	3
				END OF FIGURE		

24
25 - 26

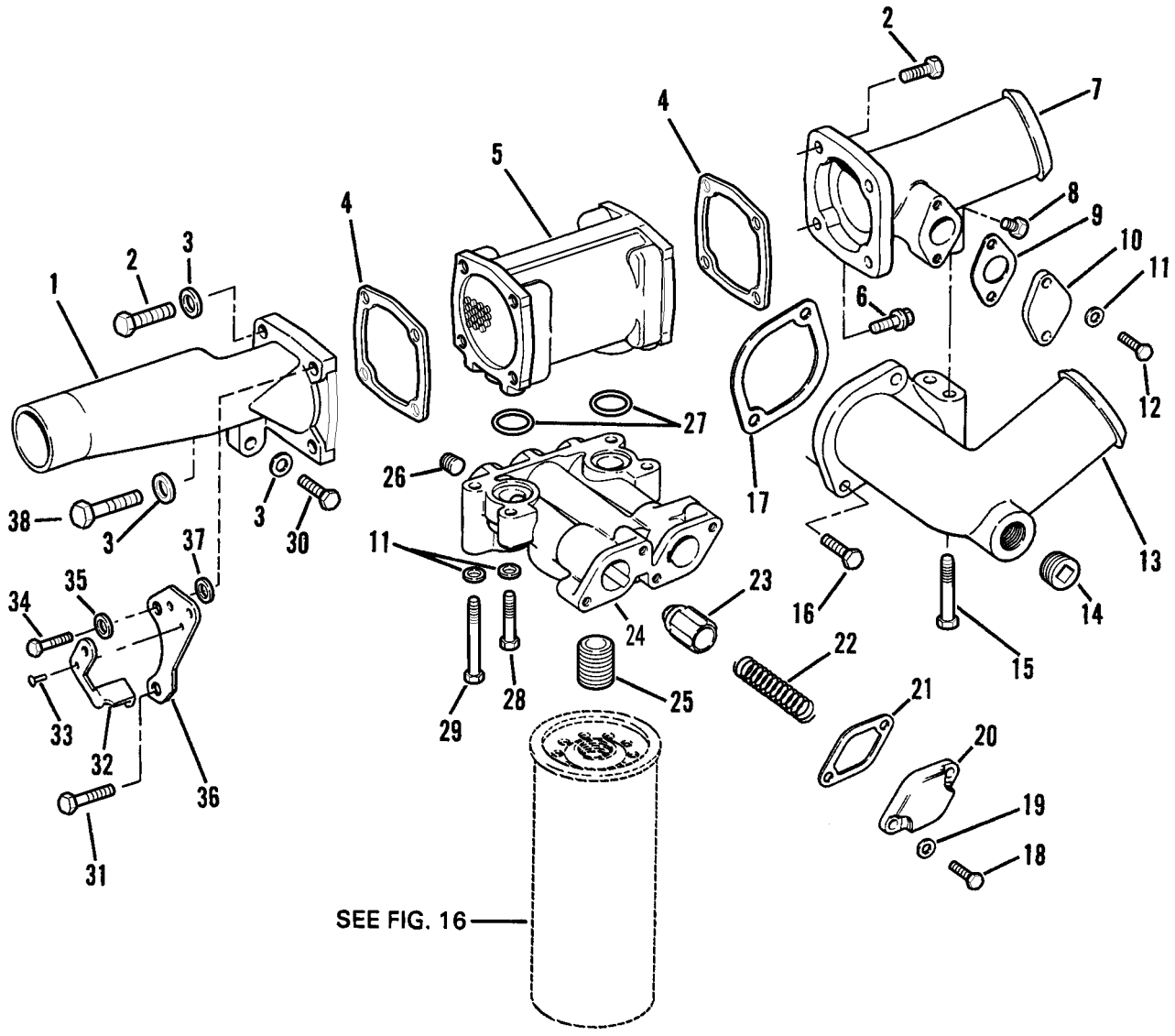

Figure 15. Engine Oil Cooler

(1) ITEM NO	(2) SMR CODE	(3) NSN	(4) CAGEC	(5) PART NUMBER	(6) DESCRIPTION AND USABLE ON CODES (UOC)	(7) QTY
					GROUP 0106 ENGINE LUBRICATION SYSTEM	
					FIG. 15 ENGINE OIL COOLER	
1	XDOZZ		11083	2P2511	HOUSING,MECHANICAL	1
2	PFOZZ	5306004238194	11083	1A2029	BOLT,MACHINE	6
3	PFOZZ	5310001174788	11083	9Y2695	WASHER,FLAT	3
4	PFOZZ	5330005578494	11083	5S6051	GASKET	2
5	PFOZZ	2930004571616	11083	7N0165	CORE ASSEMBLY,FLUID DEALER .... EXCHANGE ITEM, PN 0R3499	1
6	PFOZZ	5306010977874	11083	1T0765	BOLT,MACHINE	1
7	PAOZZ	4730012531981	11083	7N0191	ELBOW,FLANGE TO HOS	1
8	PFOZZ	4730009247886	11083	5M6214	PLUG,PIPE	1
9	PFOZZ	5330010639839	11083	4N3841	GASKET	1
10	PFOZZ	5340011074130	11083	4N3840	COVER,ACCESS	1
11	PFOZZ	5310000814219	96906	MS27183-12	WASHER,FLAT	6
12	PFOZZ	5306002264826	80204	B1821BH031C088N	BOLT,MACHINE	2
13	PAOZZ	4730012531980	11083	7N0190	ELBOW,FLANGE TO HOS	1
14	PFOZZ	4730001223969	58536	AA59616ACBBCE	PLUG,PIPE	1
15	PFOZZ	5306002851368	11083	0L1143	BOLT,MACHINE	2
16	PFOZZ	5306004238194	11083	1A2029	BOLT,MACHINE	2
17	PFOZZ	5330011603989	11083	2W4561	GASKET	1
18	PFOZZ	5306011169622	11083	0869934	BOLT,MACHINE	4
19	PFOZZ	5310000814219	96906	MS27183-12	WASHER,FLAT	4
20	PFOZZ	5340011476397	11083	8N6986	COVER,ACCESS	2
21	PFOZZ	5330011519295	11083	8N6985	GASKET	2
22	PFOZZ	5360009508251	11083	8M3182	SPRING,HELICAL,COMP	2
23	XDOZZ		11083	9M0853	DISK,VALVE	2
24	PFOZZ	2940013518383	11083	9Y7149	HEAD,FLUID FILTER	1
25	PFOZZ	5307010691419	11083	2P2537	.STUD,PLAIN	1
26	PFOZZ	4730002783383	15235	PLG1	.PLUG,PIPE	1
27	PFOZZ	5331009138878	11083	8M4432	O-RING	2
28	PFOZZ	5306002264832	80204	B1821BH031C175N	BOLT,MACHINE	3
29	PFOZZ	5306011581154	80204	B1821BH031C275D	BOLT,MACHINE	1
30	PFOZZ	5305000680511	80204	B1821BH038C125N	SCREW,CAP,HEXAGON H	1
31	PFOZZ	5305010156841	11083	0S1591	SCREW	2
32	PFOZZ	5342012596479	11083	6N1536	HASP,LEVER	1
33	PFOZZ	5320011854702	11083	6N2011	RIVET,TUBULAR	1
34	PFOZZ	5306011954681	11083	3B1915	BOLT	1
35	PFOZZ	5310001174788	11083	9Y2695	WASHER,FLAT	2
36	PFOZZ	5342012544966	11083	6N7325	BRACKET,ENGINE ACCE	1
37	PFOZZ	5310002157524	77445	191663	WASHER,FLAT	1
38	PFOZZ	5306006982150	11083	0L2070	BOLT,MACHINE	1
				END OF FIGURE		

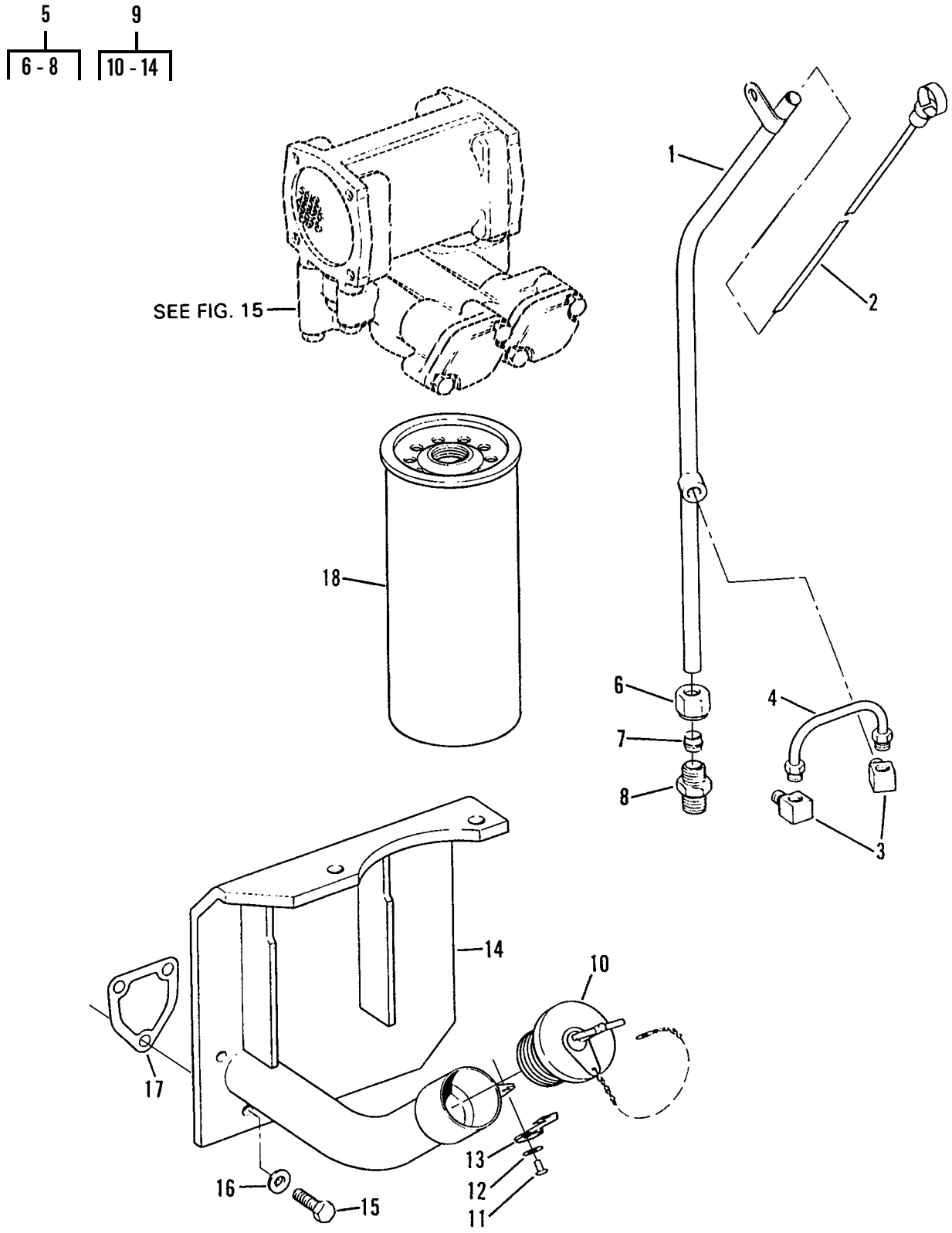

Figure 16. Oil Filler, Oil Level Gage and Oil Filter

(1) ITEM NO	(2) SMR CODE	(3) NSN	(4) CAGEC	(5) PART NUMBER	(6) DESCRIPTION AND USABLE ON CODES (UOC)	(7) QTY
					GROUP 0106 ENGINE LUBRICATION SYSTEM	
					FIG. 16 OIL FILLER, OIL LEVEL GAGE, AND OIL FILTER	
1	PFOZZ	2590011489536	11083	2P2547	FILLER NECK	1
2	PFOZZ	6680004660299	11083	8S3995	GAGE ROD,LIQUID LEV	1
3	PFOZZ	4730010599435	11083	5K9243	ELBOW,PIPE TO TUBE	2
4	PFOZZ	4710010689728	11083	2P2697	TUBE A	1
5	PFOZZ	4730004018098	11083	8S1326	ADAPTER,STRAIGHT,PI	1
6	PFOZZ	4730010487874	79470	1461X8	.NUT,TUBE COUPLING	1
7	PFOZZ	4730011780773	11083	5P4443	.SLEEVE,COMPRESSION, ...	1
8	XDOZZ		93061	2592-00011	.ADAPTER,STRAIGHT,PI	1
9	PFOZZ	2590012533460	11083	6N3574	FILLER NECK,VEHICUL	1
10	PFOZZ	2590010665286	0U276	40733	.CAP,FILLER OPENING	1
11	PFOZZ	5320010150699	81349	M24243/1-A612	.RIVET,BLIND	1
12	PFOZZ	5310008098544	96906	MS27183-7	.WASHER,FLAT	1
13	PFOZZ	2940010534532	11083	2P2717	.HASP	1
14	XAOZZ		11083	8N2280	.TUBE ASSY	1
15	PFOZZ	5306004238194	11083	1A2029	BOLT,MACHINE	3
16	PFOZZ	5310001174788	11083	9Y2695	WASHER,FLAT	3
17	PFOZZ	5330006137263	11083	5S8055	GASKET PART OF KIT P/N 6V2911 ..	1
18	PAOZZ	2940000290388	7X677	6439392	FILTER ELEMENT,FLUI PART OF .... KIT P/N 5R6286	1
					END OF FIGURE	

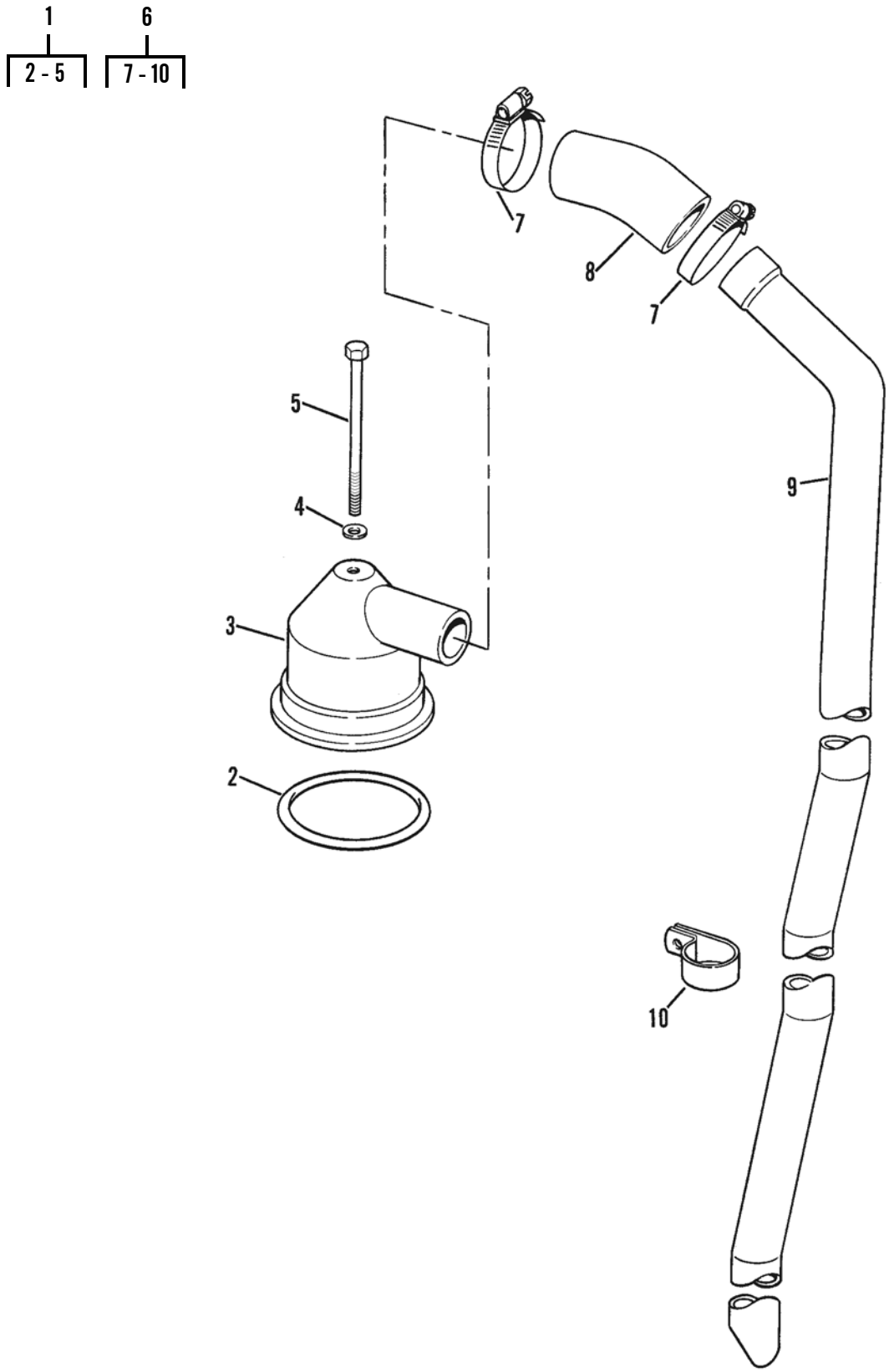

Figure 17. Crankcase Breather

(1) ITEM NO	(2) SMR CODE	(3) NSN	(4) CAGEC	(5) PART NUMBER	(6) DESCRIPTION AND USABLE ON CODES (UOC)	(7) QTY
					GROUP 0106 ENGINE LUBRICATION SYSTEM	
					FIG. 17 CRANKCASE BREATHER	
1	AOOOO		11083	5R7974	BREATHER	1
2	PCOZZ	5330008288639	11083	4L9564	.PACKING,PREFORMED	1
3	PFOZZ	2815001928768	18265	BAS02-0048	.BREATHER	1
4	PAOZZ	5310012086737	11083	4K9890	.WASHER,FLAT	1
5	PFOZZ	5306004725282	11083	3H3243	.BOLT,MACHINE	1
6	AOOOO		11083	3N3392	HOSE AND TUBE ASSEM	1
7	PFOZZ	5342011655721	11083	9M2904	.CLAMP	2
8	PFOZZ	4720010279168	11083	8S0780	.HOSE	1
9	PFOZZ	4710011323997	11083	2P3767	.TUBE,METALLIC	1
10	PFOZZ	5340012572369	11083	1S4557	.CLAMP,LOOP	1
				END OF FIGURE		

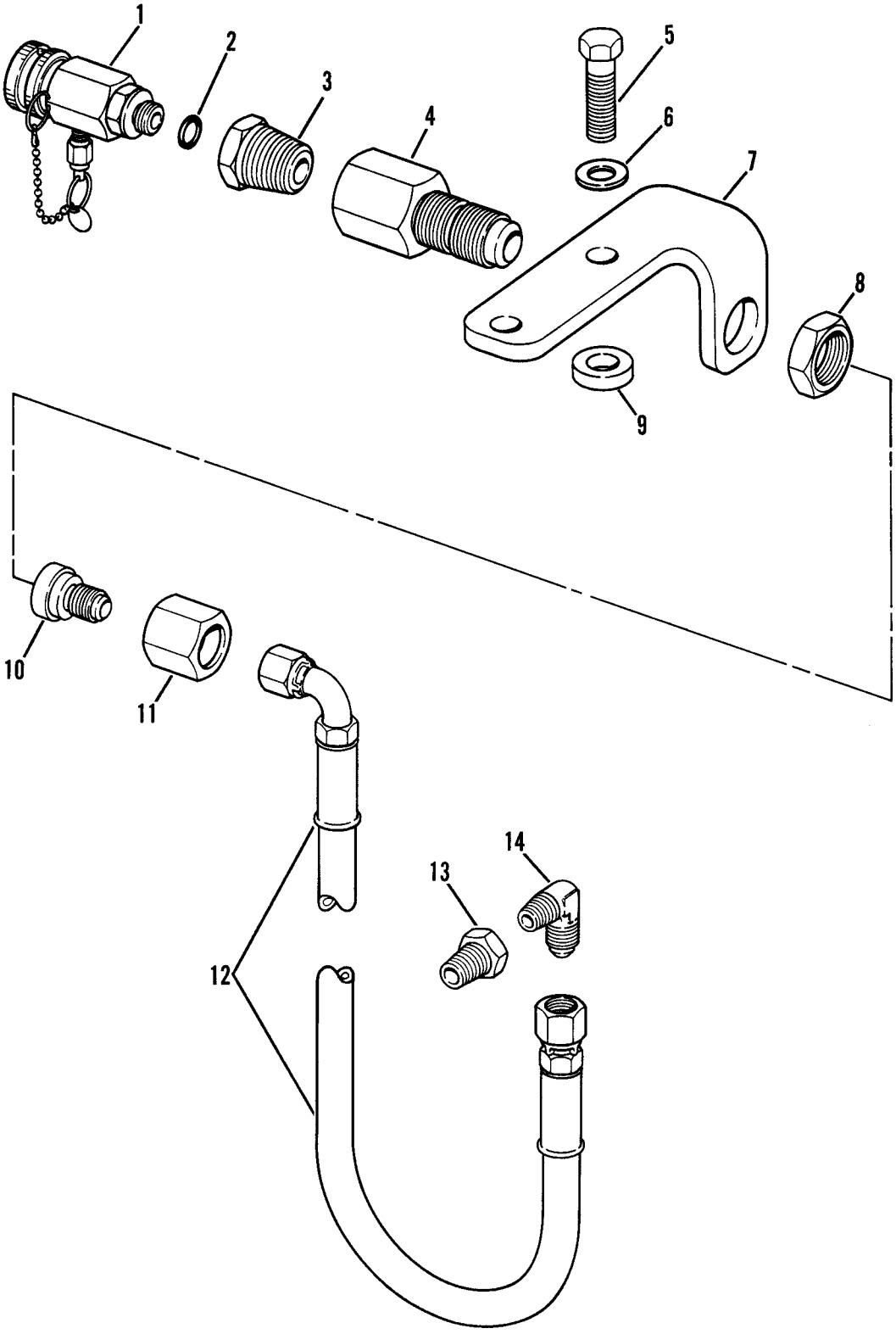

Figure 18. Oil Sampling Group

(1) ITEM NO	(2) SMR CODE	(3) NSN	(4) CAGEC	(5) PART NUMBER	(6) DESCRIPTION AND USABLE ON CODES (UOC)	(7) QTY
					GROUP 0106 ENGINE LUBRICATION SYSTEM	
					FIG. 18 OIL SAMPLING GROUP	
1	PAOZZ	4820011204532	91816	HV22-24	VALVE,BLEEDER,HYDRA	1
2	PCOZZ	5331010491292	81346	ASTM D2000 M6BG910	O-RING	1
3	PFOZZ	4730011522666	11083	5R5304	ADAPTER,STRAIGHT,PI	1
4	PFOZZ	4730011967172	11083	6V2376	ADAPTER,STRAIGHT,PI	1
5	PFOZZ	5305010156841	11083	0S1591	SCREW	2
6	PFOZZ	5310001174788	11083	9Y2695	WASHER,FLAT	2
7	PFOZZ	5340012361850	11083	5R7181	BRACKET,ANGLE	1
8	PFOZZ	4730011439017	96906	MS51860-56Z	LOCKNUT,TUBE FITTIN	1
9	PFOZZ	5365001701725	11083	6B2882	SPACER,SLEEVE	2
10	PFOZZ	4730006763075	96906	MS51534A8-4	REDUCER,TUBE	1
11	PFOZZ	4730007621239	96906	MS51531B8	NUT,TUBE COUPLING	1
12	PFOZZ	4720011967180	11083	9G9501	HOSE ASSEMBLY,NONME	1
13	PFOZZ	3120011275376	11083	4M5317	BUSHING,REDUCER	1
14	PFOZZ	4730006473207	11083	2N1287	ELBOW,PIPE TO TUBE	1
				END OF FIGURE		

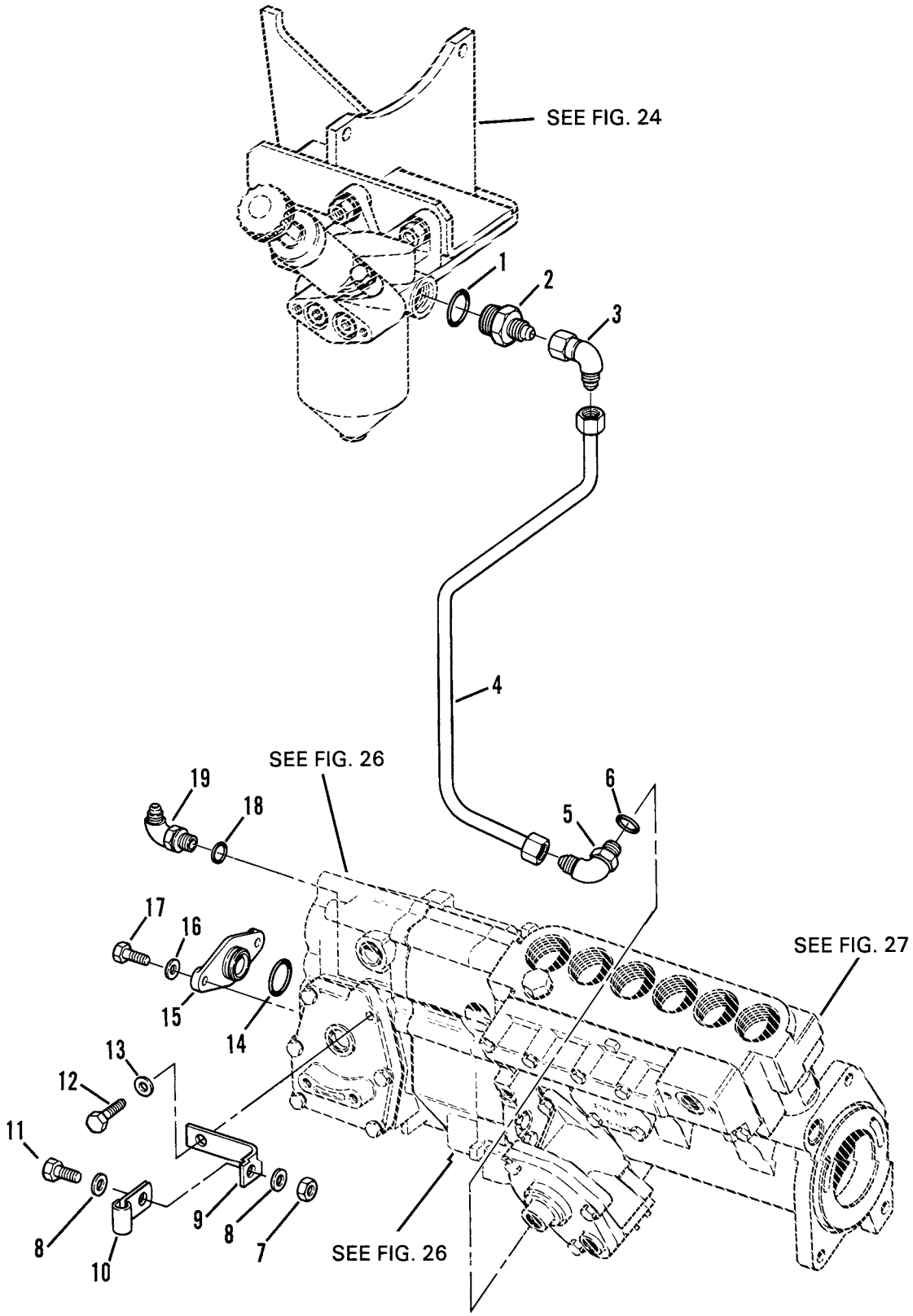

Figure 19. Drain Lines

(1) ITEM NO	(2) SMR CODE	(3) NSN	(4) CAGEC	(5) PART NUMBER	(6) DESCRIPTION AND USABLE ON CODES (UOC)	(7) QTY
					GROUP 0106 ENGINE LUBRICATION SYSTEM	
					FIG. 19 DRAIN LINES	
1	PFOZZ	5331001675174	81343	M83248/2-910	O-RING	1
2	PFOZZ	4730010589100	11083	0308194	ADAPTER,STRAIGHT,TU	1
3	PFOZZ	4730010518745	11083	6K9194	ELBOW,TUBE	1
4	PFOZZ	4710012533533	11083	2W3981	TUBE ASSEMBLY,METAL	1
5	PFOZZ	4730011681050	11083	0307947	ELBOW,TUBE TO BOSS	1
6	PCOZZ	5331008013354	25184	906-737-70	O-RING	1
7	PFOZZ	5310008807744	96906	MS51967-5	NUT,PLAIN,HEXAGON	1
8	PFOZZ	5310000814219	96906	MS27183-12	WASHER,FLAT	2
9	PAOZZ	5340012579188	11083	3N2417	BRACKET,ANGLE	1
10	PAOZZ	5340011845459	11083	6V3265	CLAMP,LOOP	1
11	PFOZZ	5306002264825	80204	B1821BH031C075N	BOLT,MACHINE	1
12	PFOZZ	5306007215679	18876	9054219	BOLT,MACHINE	1
13	PFOZZ	5310008238804	96906	MS27183-9	WASHER,FLAT	1
14	PFOZZ	5331006136522	11083	4M8303	O-RING PART OF KIT P/N 6V2911 ..	1
15	PFOZZ	5340012604944	11083	4W7629	COVER,ACCESS	1
16	PFOZZ	5310008238804	96906	MS27183-9	WASHER,FLAT	2
17	PFOZZ	5306002611153	11083	0S1615	BOLT,MACHINE	2
18	PCOZZ	5331010491292	81346	ASTM D2000 M6BG910	O-RING	1
19	PFOZZ	4730014293246	11083	030-7946	ELBOW,TUBE	1
				END OF FIGURE		

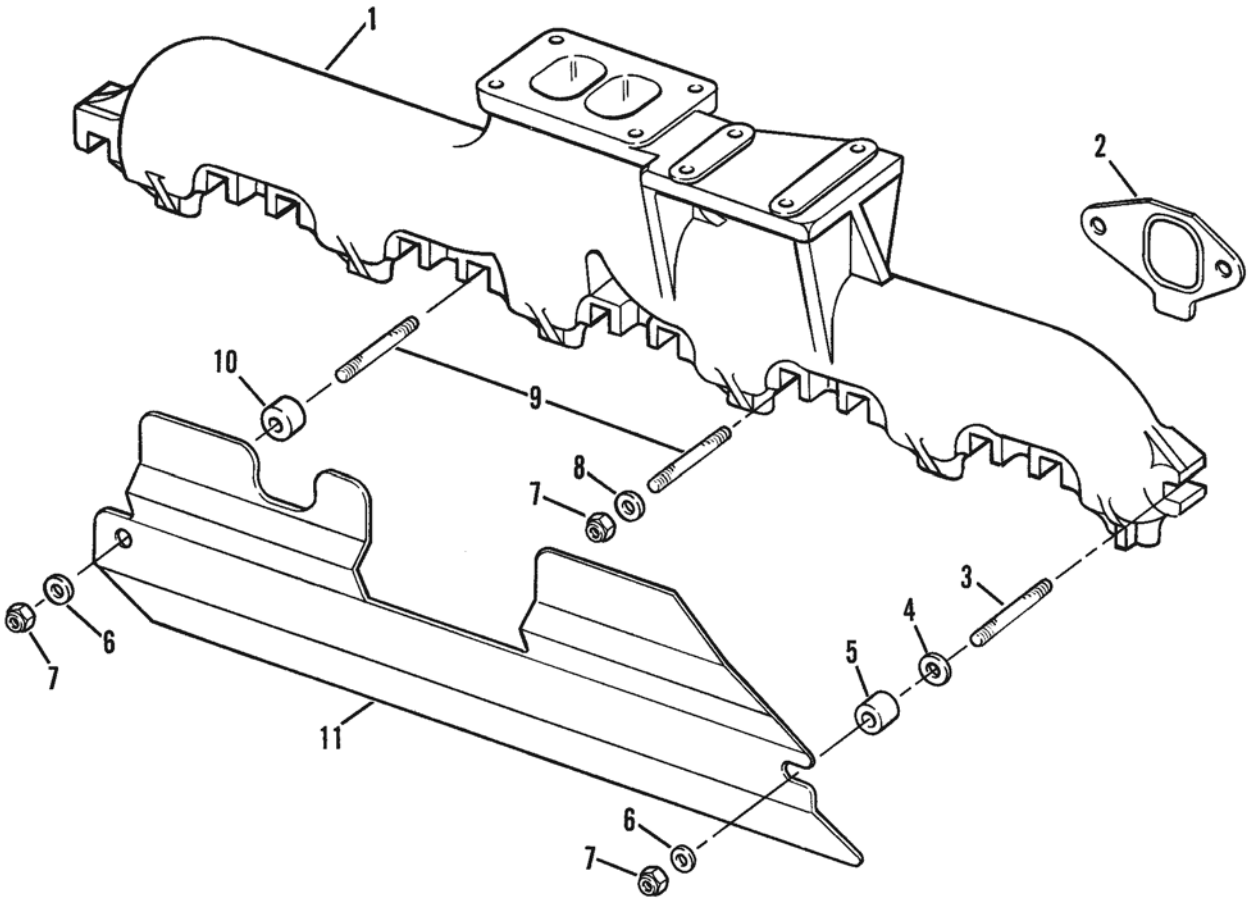

Figure 20. Exhaust Manifold

(1) ITEM NO	(2) SMR CODE	(3) NSN	(4) CAGEC	(5) PART NUMBER	(6) DESCRIPTION AND USABLE ON CODES (UOC)	(7) QTY
					GROUP 0108 MANIFOLDS	
					FIG. 20 EXHAUST MANIFOLD	
1	PFFZZ	2815002373764	11083	9S2354	MANIFOLD,EXHAUST	1
2	PFFZZ	5330013324089	11083	9Y1979	GASKET PART OF KIT P/N 5R6291 ..	3
3	PFFZZ	5307012569782	11083	6V1427	STUD,CONTINUOUS THR PART OF KIT P/N 5R6291	2
4	PFFZZ	5310009998288	11083	9M6527	WASHER,FLAT	1
5	PFFZZ	5365010508008	11083	1B4971	SPACER	1
6	PFFZZ	5310001174788	11083	9Y2695	WASHER,FLAT PART OF KIT P/N 5R6291	2
7	PFFZZ	5310010205126	11083	2N2766	NUT,PLAIN,HEXAGON PART OF KIT .. P/N 5R6291	12
8	PFFZZ	5310009871294	19200	10910174-16	WASHER,FLAT PART OF KIT P/N 5R6291	11
9	PFFZZ	5307012584709	11083	6V1426	STUD,CONTINUOUS THR PART OF KIT P/N 5R6291	10
10	PFFZZ	5365011591562	11083	1M7643	SPACER,SLEEVE	1
11	PFFZZ	2990012533444	11083	1W7546	GUARD,MUFFLER-EXHAU	1
				END OF FIGURE		

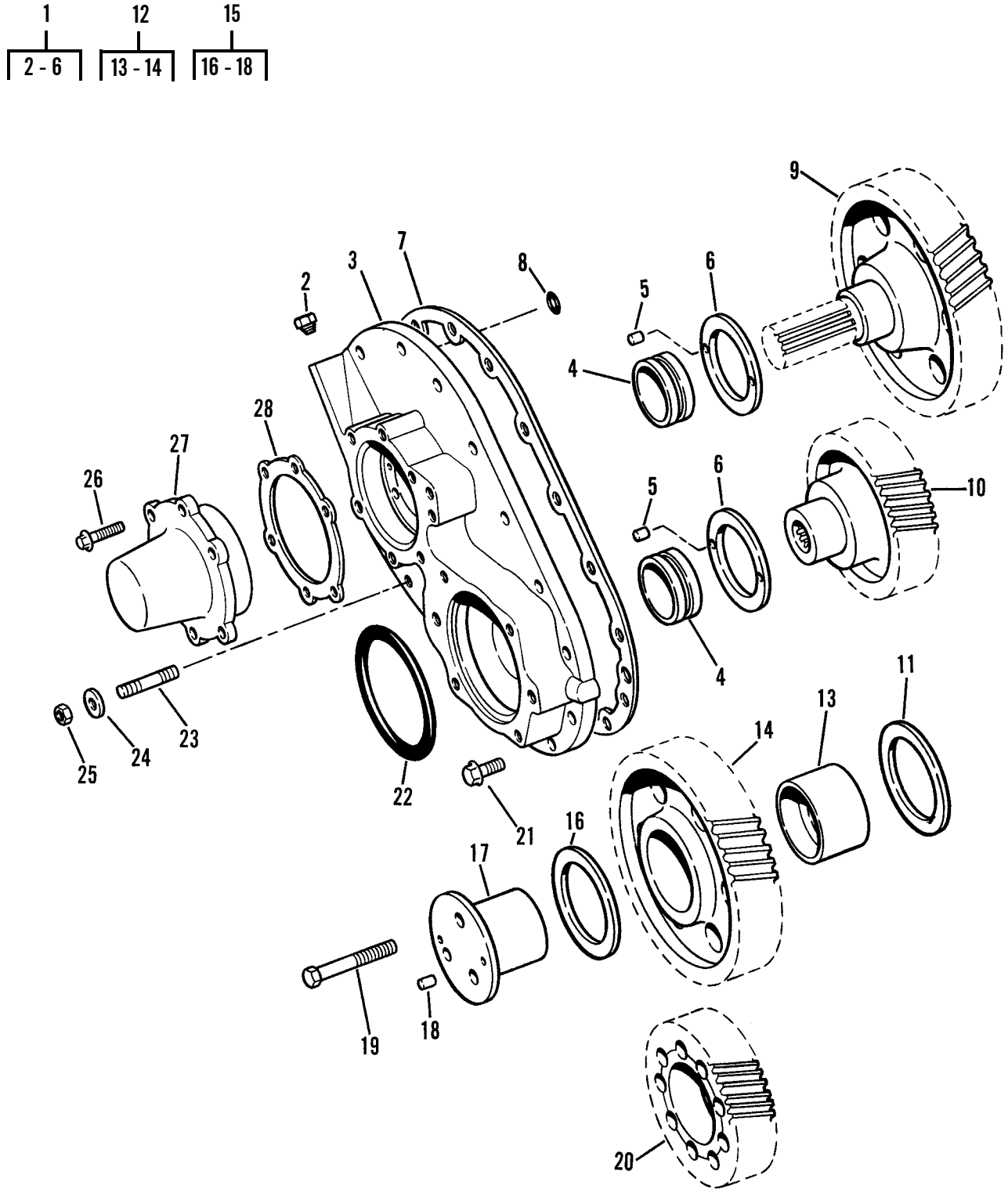

Figure 21. Drive Rear Gear Group

(1) ITEM NO	(2) SMR CODE	(3) NSN	(4) CAGEC	(5) PART NUMBER	(6) DESCRIPTION AND USABLE ON CODES (UOC)	(7) QTY
					GROUP 0109 ACCESSORY DRIVING MECHANISMS	
					FIG. 21 DRIVE REAR GEAR GROUP	
1	PFFZZ	2815002301977	11083	9S7034	COVER ASSEMBLY,POWE	1
2	PFFZZ	4730009247886	11083	5M6214	.PLUG,PIPE	2
3	XDFZZ		11083	9S6739	.HOUSING,MECHANICAL	1
4	PFFZZ	3120004191844	11083	9S6729	.BEARING,SLEEVE	2
5	PFFZZ	5315000287266	11083	3F6795	.PIN,STRAIGHT,HEADLE	4
6	PFFZZ	3120004219628	11083	7L4265	.BEARING,WASHER,THRU	2
7	PFFZZ	5330012748371	11083	9S6762	GASKET	1
8	PFFZZ	5331002867294	11083	3H4970	O-RING	1
9	PFFZZ	3020011357463	11083	7N5825	GEAR,DRIVE MOTION	1
10	PFFZZ	3020011357464	11083	7N5819	GEAR,DRIVE MOTION	1
11	PFFZZ	3120004043688	11083	9S6741	BEARING,WASHER,THRU	1
12	PFFZZ	3020011357462	11083	7N5810	GEAR,DRIVE MOTION	1
13	PFFZZ	3120005147149	11083	2P4698	.BEARING,SLEEVE	1
14	XAFZZ		11083	7N5800	.GEAR	1
15	PFFZZ	4320012473910	11083	2P4701	PARTS KIT,HYDRAULIC	1
16	PFFZZ	3120004043688	11083	9S6741	.BEARING,WASHER,THRU	1
17	XAFZZ		11083	2P4700	.SHAFT	1
18	PFFZZ	5315000287266	11083	3F6795	.PIN,STRAIGHT,HEADLE	2
19	PFFZZ	5305001397071	11083	0V0375	SCREW,CAP,HEXAGON H	3
20	PFFZZ	3020012539283	11083	7N5815	GEAR,HELICAL	1
21	PFFZZ	5306010508015	11083	2P3202	BOLT	13
22	PFFZZ	5331006635709	11083	5F3106	O-RING	1
23	PFFZZ	5307002727047	11083	4F1450	STUD,PLAIN	3
24	PFFZZ	5310001174788	11083	9Y2695	WASHER,FLAT	3
25	PFFZZ	5310007257382	96906	MS35690-624	NUT,PLAIN,HEXAGON	3
26	PFFZZ	5306010508014	11083	2P3201	BOLT ..... UOC:GRC,RIP	6
27	PFFZZ	5340012646022	11083	9M0672	COVER,ACCESS ..... UOC:GRC,RIP	1
28	PFFZZ	5330012852792	11083	9M0673	GASKET ..... UOC:GRC,RIP	1
				END OF FIGURE		

1
2 - 5

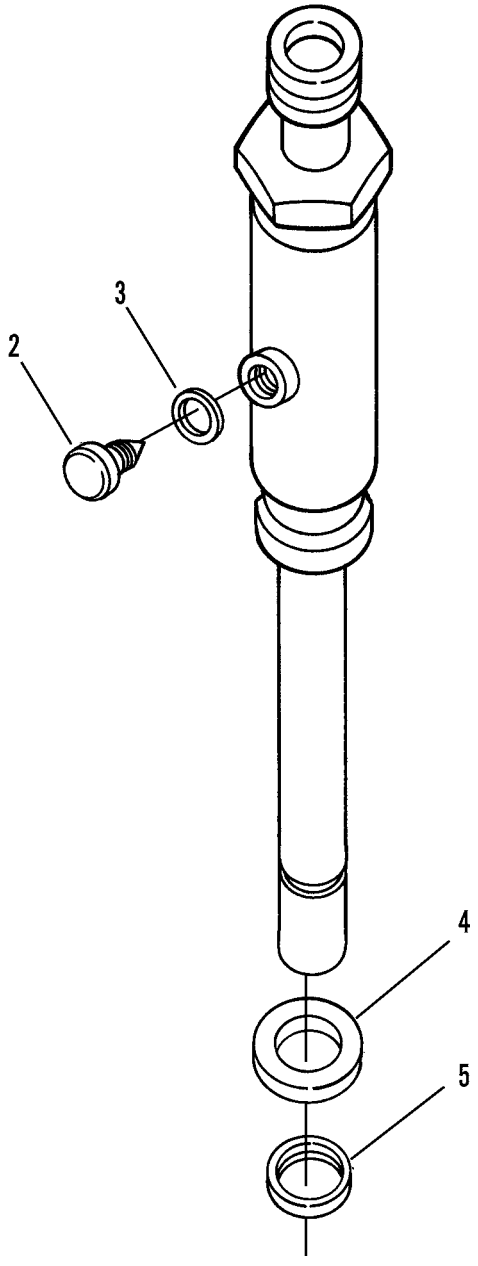

Figure 22. Fuel Injector Nozzle

(1) ITEM NO	(2) SMR CODE	(3) NSN	(4) CAGEC	(5) PART NUMBER	(6) DESCRIPTION AND USABLE ON CODES (UOC)	(7) QTY
					GROUP 03 FUEL SYSTEM	
					GROUP 0301 CARBURETOR, FUEL INJECTOR	
					FIG. 22 FUEL INJECTOR NOZZLE	
1	PAFZZ	2910011699758	11083	8N7005	NOZZLE,FUEL INJECTI DEALER .... EXCHANGE ITEM, PN 0R3418	6
2	PFFZZ	5305013511333	11083	9X2836	.SCREW,CAP,SOCKET HE	1
3	PFFZZ	5330006029471	83259	600-001-6	.PACKING WITH RETAIN	1
4	PFFZZ	5310012572208	11083	7W4486	.WASHER,FLAT	1
5	PFFZZ	5365000220665	84760	16389	.SPACER,SLEEVE PART OF KIT P/N 5R6291	1
					END OF FIGURE	

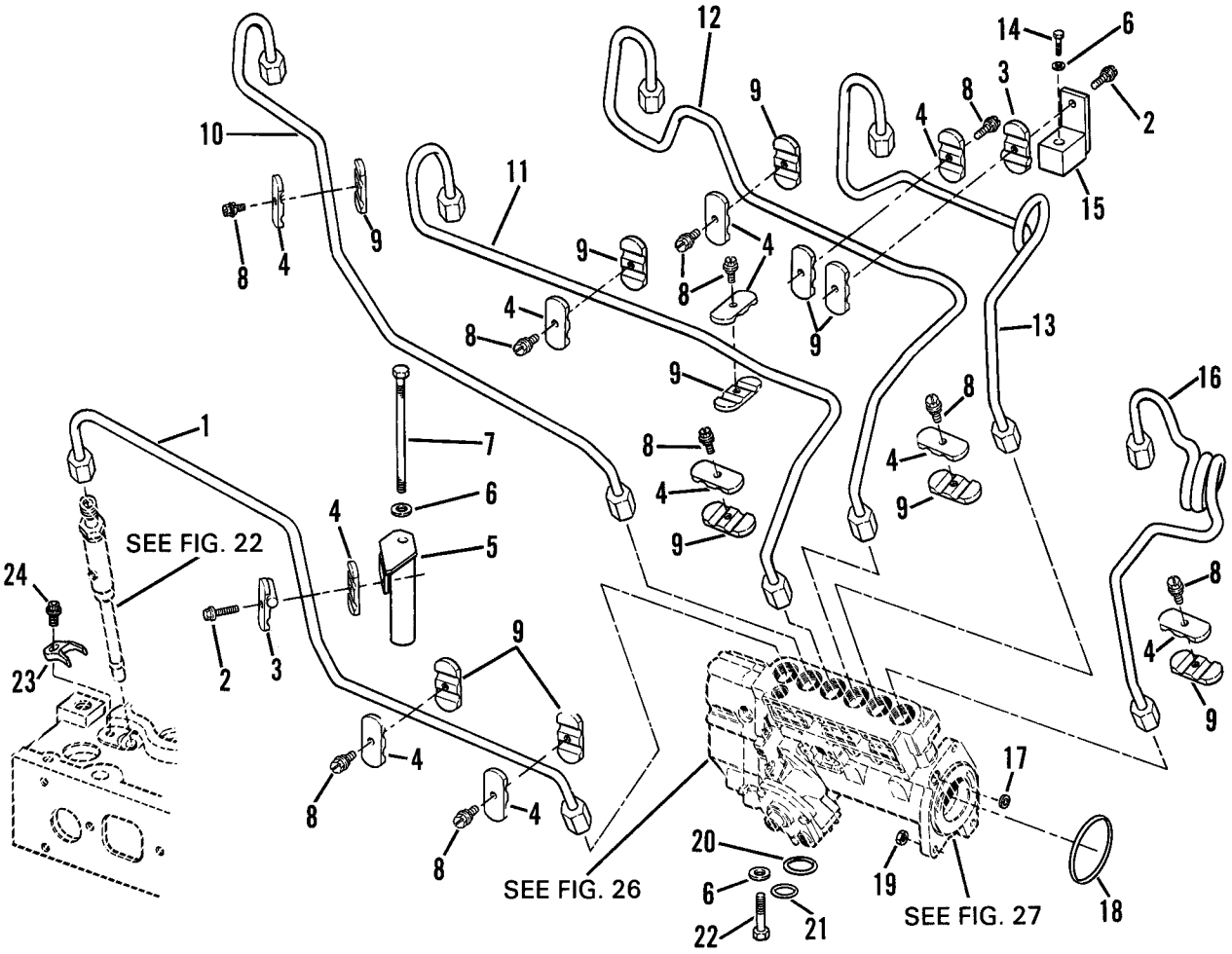

Figure 23. Fuel Injector Lines

(1) ITEM NO	(2) SMR CODE	(3) NSN	(4) CAGEC	(5) PART NUMBER	(6) DESCRIPTION AND USABLE ON CODES (UOC)	(7) QTY
					GROUP 0302 FUEL PUMPS	
					FIG. 23 FUEL INJECTOR LINES	
1	PFOZZ	4710012079959	11083	4P9386	TUBE ASSEMBLY,METAL	1
2	PFOZZ	5342010701592	11083	9N3388	LOCK (SCREW,SELF-LOCKING)	2
3	PFOZZ	5340011538957	11083	1W9167	CLAMP	2
4	PFOZZ	5340011555289	11083	1W9168	CLAMPBLOCK	11
5	PFOZZ	5342012573848	11083	2W0745	BRACKET,SPECIAL	1
6	PFOZZ	5310001174788	11083	9Y2695	WASHER,FLAT	4
7	PFOZZ	5306006374927	11083	1A5183	BOLT,MACHINE	1
8	PFOZZ	5305011073526	11083	5P4939	SCREW,MACHINE	10
9	PFOZZ	5340011557869	11083	1W9169	CLAMPBLOCK	8
10	PFOZZ	4710012079958	11083	4P9385	TUBE ASSEMBLY,METAL	1
11	PFOZZ	4710012079957	11083	4P9384	TUBE ASSEMBLY,METAL	1
12	PFOZZ	4710012079956	11083	4P9383	TUBE ASSEMBLY,METAL	1
13	PFOZZ	4710012079955	11083	4P9382	TUBE ASSEMBLY,METAL	1
14	PFOZZ	5305010156841	11083	0S1591	SCREW	1
15	PFOZZ	5340012580148	11083	2W0743	BRACKET,ANGLE	1
16	PFOZZ	4710012821660	11083	4P9381	TUBE ASSEMBLY,METAL	1
17	PFOZZ	5330011831504	11083	6V6921	PACKING,PREFORMED PART OF KIT .. P/N 1387720	1
18	PCOZZ	5331002917192	09990	2-241N951-75	O-RING PART OF KIT P/N 1387720 .	1
19	PFOZZ	5310007257382	96906	MS35690-624	NUT,PLAIN,HEXAGON	3
20	PCOZZ	5331006334535	11083	2H3932	O-RING (ID 28.17MM)	1
21	PCOZZ	5331003396224	11083	5F7054	O-RING ID 0.734	1
22	PFOZZ	5306006982150	11083	0L2070	BOLT,MACHINE	2
23	PFOZZ	5342011841068	11083	8N5132	BRACKET,FUEL INJECT	6
24	PFOZZ	5306002537879	11083	1T0416	BOLT,MACHINE	6
				END OF FIGURE		

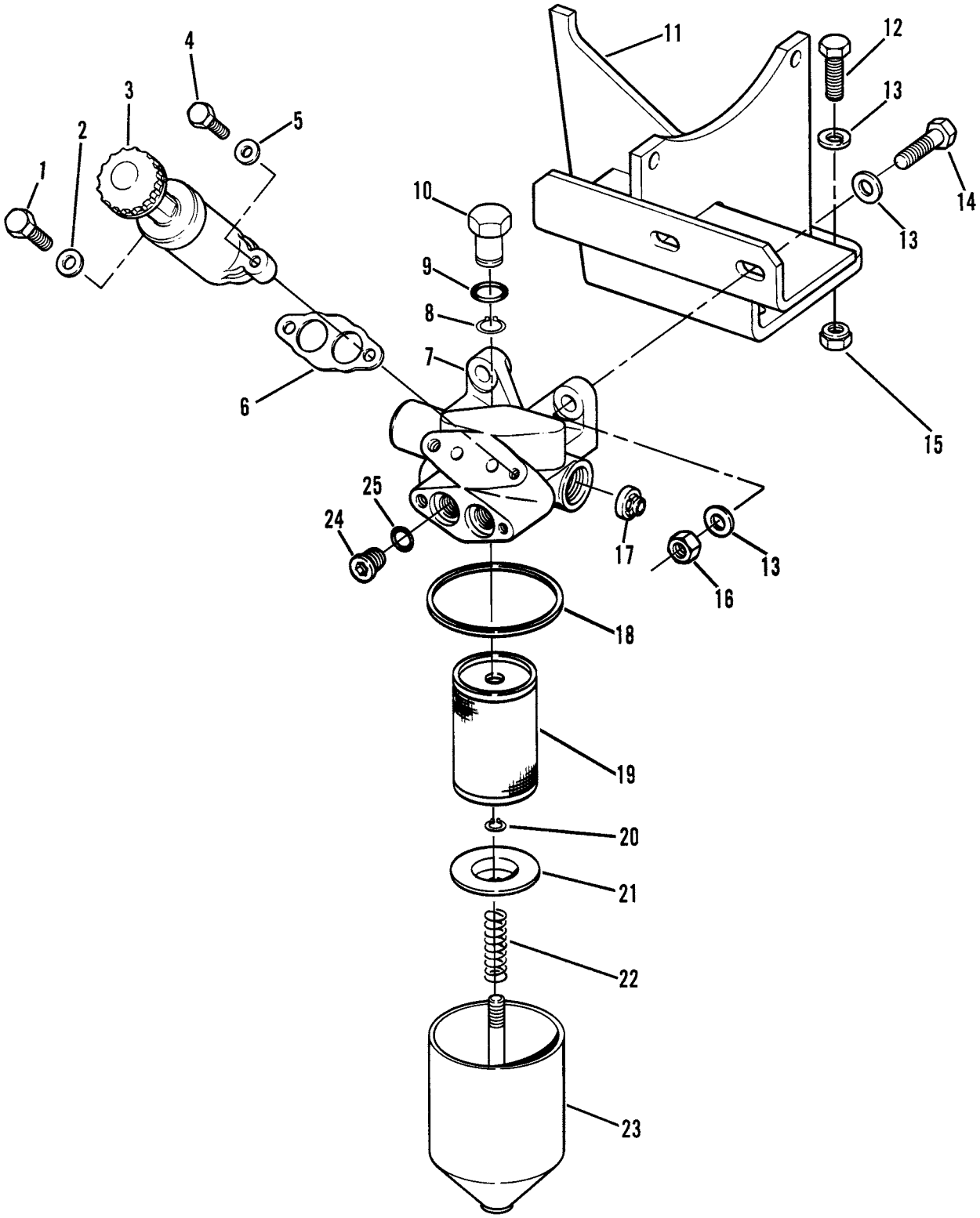

Figure 24. Fuel Priming Pump and Filter Group

(1) ITEM NO	(2) SMR CODE	(3) NSN	(4) CAGEC	(5) PART NUMBER	(6) DESCRIPTION AND USABLE ON CODES (UOC)	(7) QTY
					GROUP 0302 FUEL PUMPS	
					FIG. 24 FUEL PRIMING PUMP AND FILTER GROUP	
1	PFOZZ	5306002264829	80204	B1821BH031C125N	BOLT,MACHINE	1
2	PFOZZ	5310000814219	96906	MS27183-12	WASHER,FLAT	1
3	PFOZZ	2910010211845	11083	1052508	PUMP,ENGINE PRIMING	1
4	PFOZZ	5306004238784	11083	7B2742	BOLT,MACHINE	1
5	PFOZZ	5310010512360	11083	5P0537	WASHER	1
6	PFOZZ	5330010244862	11083	1P0436	GASKET	1
7	PFOZZ	2910012537487	11083	8N0803	HEAD,FLUID FILTER	1
8	PFOZZ	5325004938125	79136	5108-62-S-MD	RING,RETAINING	1
9	PFOZZ	5330008588224	11083	2J0157	PACKING,PREFORMED	1
10	PFOZZ	5310008828876	11083	8H2807	NUT,SLEEVE	1
11	PFOZZ	2990012654960	11083	2W1067	HANGER,ENGINE EXHAU	1
12	PFOZZ	5305000680511	80204	B1821BH038C125N	SCREW,CAP,HEXAGON H	4
13	PFOZZ	5310001174788	11083	9Y2695	WASHER,FLAT	8
14	PFOZZ	5305010156841	11083	0S1591	SCREW	2
15	PFOZZ	5310007320558	96906	MS51967-8	NUT,PLAIN,HEXAGON	4
16	PFOZZ	5310014297859	11083	6V8801	NUT,PLAIN,HEXAGON	2
17	PFOZZ	2910000332200	70040	5622759	VALVE ASSEMBLY,FUEL	1
18	PFOZZ	5330005854284	11083	8H2778	GASKET	1
19	PFOZZ	2910009893388	11083	9M2341	FILTER ELEMENT,FLUI	1
20	PFOZZ	5325007151152	96906	MS16624-1037	RING,RETAINING	1
21	PFOZZ	5340009993230	11083	7H9678	SEAT,HELICAL COMPRE	1
22	PFOZZ	5360001160448	11083	7S9323	SPRING,HELICAL,COMP	1
23	PFOZZ	2910001163227	11083	8H2810	FILTER BODY,FLUID	1
24	PFOZZ	5365010354899	19207	11621436-1	PLUG,MACHINE THREAD	2
25	PFOZZ	5331001651980	82328	714085	O-RING	2
				END OF FIGURE		

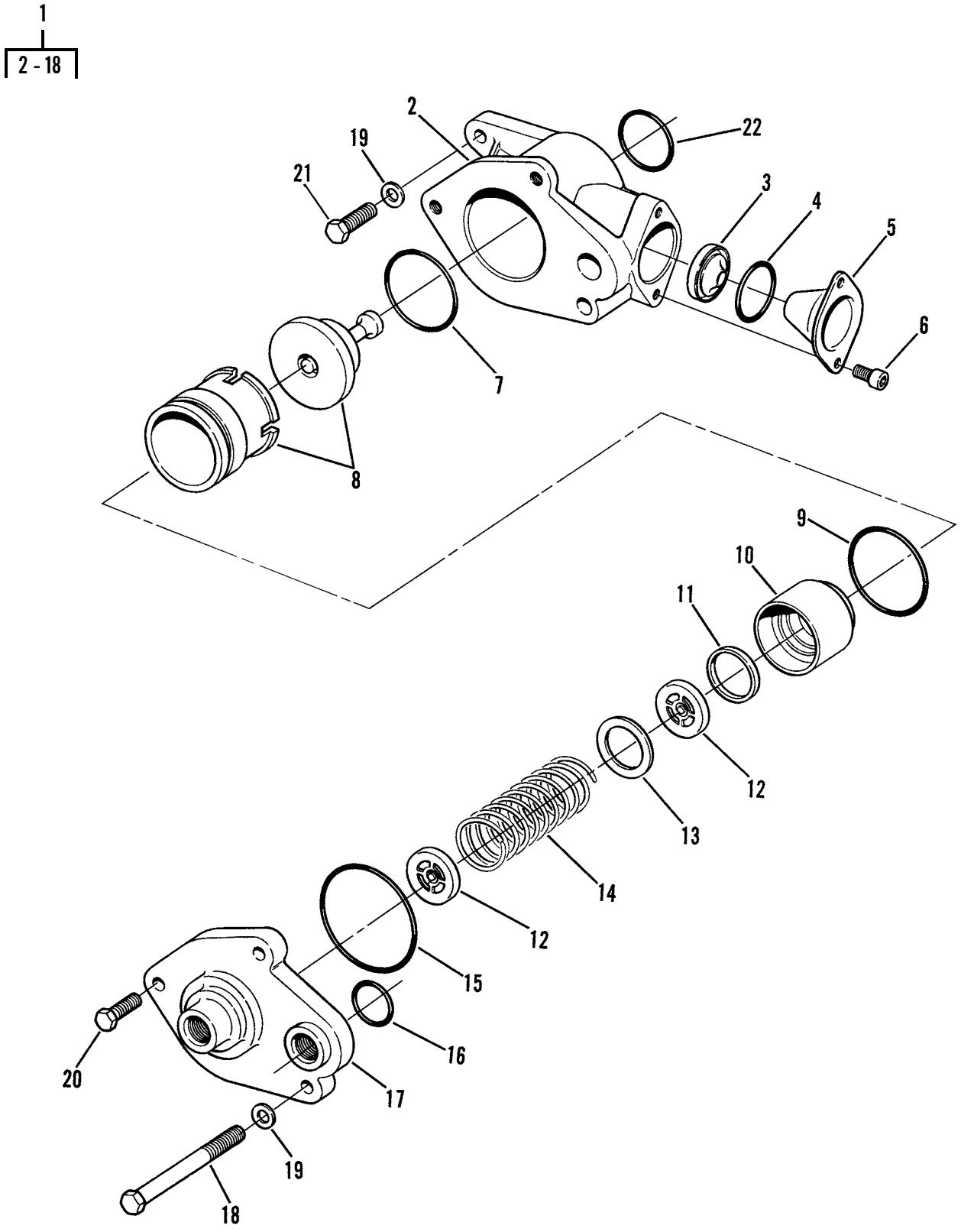

Figure 25. Fuel Transfer Pump

(1) ITEM NO	(2) SMR CODE	(3) NSN	(4) CAGEC	(5) PART NUMBER	(6) DESCRIPTION AND USABLE ON CODES (UOC)	(7) QTY
					GROUP 0302 FUEL PUMPS	
					FIG. 25 FUEL TRANSFER PUMP	
1	PAFZZ	4320011633545	11083	1W1695	PUMP,RECIPROCATING DEALER ..... EXCHANGE ITEM, PN 0R3537	1
2	PFFZZ	3040011789827	11083	1W1698	.HOUSING,MECHANICAL	1
3	PFFZZ	4820013518033	11083	7E2464	.VALVE,VENT	3
4	PCFZZ	5331009448281	11083	3D2824	.O-RING	1
5	PFFZZ	5340011816629	11083	8N2640	.COVER,ACCESS	1
6	PFFZZ	5305011808690	11083	6D8498	.SCREW,CAP,SOCKET HE	2
7	PCFZZ	5331004942763	11083	6J2419	.O-RING	1
8	PFFZZ	2910011789780	11083	1W5912	.TAPPET ASSEMBLY	1
9	PCFZZ	5331002651097	81343	AS29513-129	.O-RING	1
10	PFFZZ	2910011788858	11083	1W1669	.PISTON,FUEL PUMP	1
11	PFFZZ	3120011854724	11083	8N2641	.BEARING,SLEEVE	1
12	PFFZZ	5365012574626	11083	7C0396	.SPACER,RING	1
13	PFFZZ	5310011823071	11083	8N2637	.WASHER,FLAT	1
14	PFFZZ	5360012701351	11083	7W0134	.SPRING,HELICAL,COMP	1
15	PFFZZ	5330007308003	11083	3D2898	.PACKING,PREFORMED	1
16	PCFZZ	5331003106575	11083	6F6672	.O-RING	1
17	PFFZZ	2910011802987	11083	1W1699	.COVER,FUEL TRANSFER	1
18	PFFZZ	5306002611153	11083	0S1615	.BOLT,MACHINE	2
19	PFFZZ	5310008238804	96906	MS27183-9	WASHER,FLAT	2
20	PFFZZ	5306008657377	12436	540247-563	BOLT,MACHINE	1
21	PFFZZ	5305000712505	80204	B1821BH025C088N	SCREW,CAP,HEXAGON H	1
22	PCFZZ	5331009138119	11083	4J8997	O-RING	1
				END OF FIGURE		

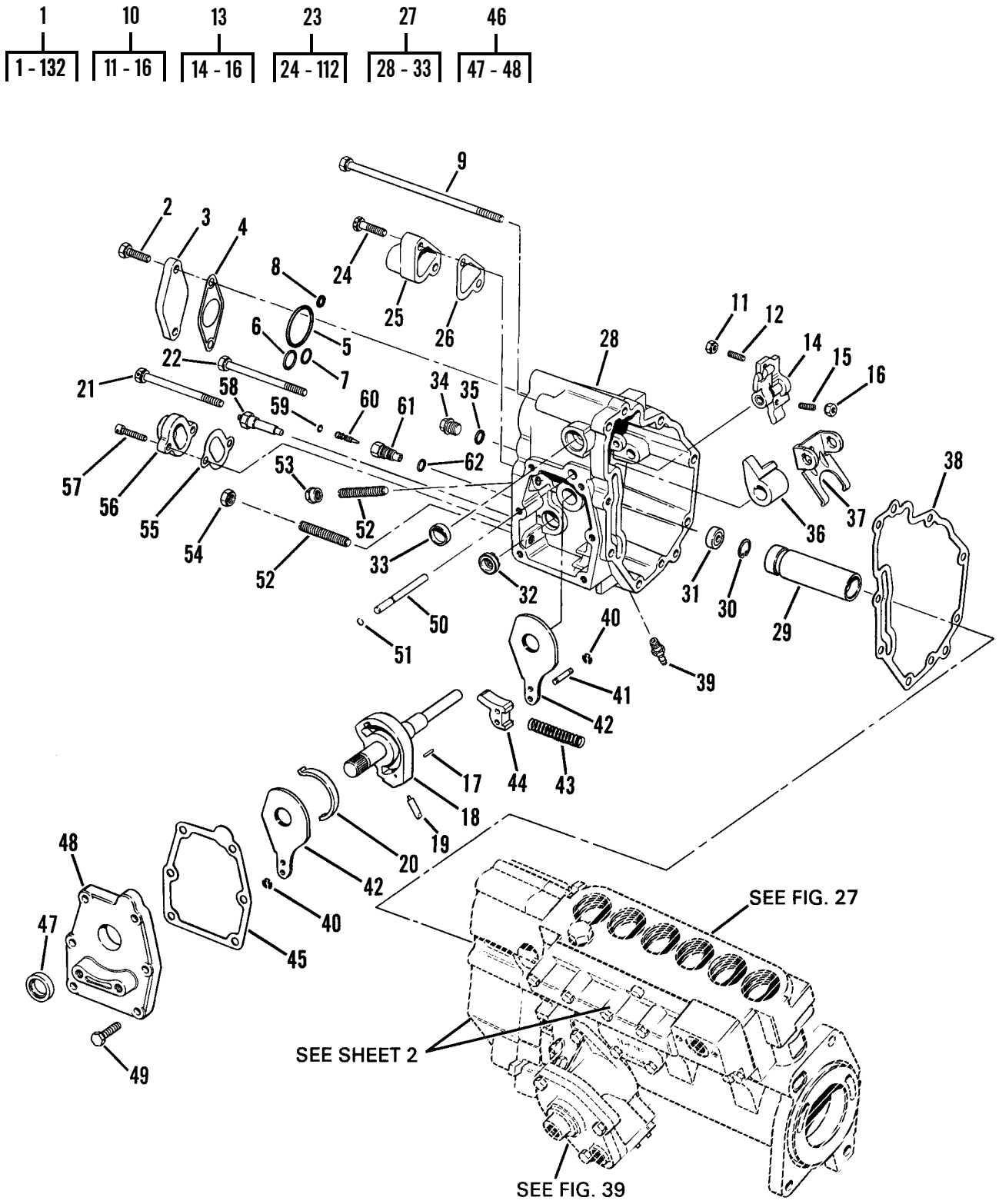

Figure 26. Fuel Injection Pump and Governor (Sheet 1 of 2)

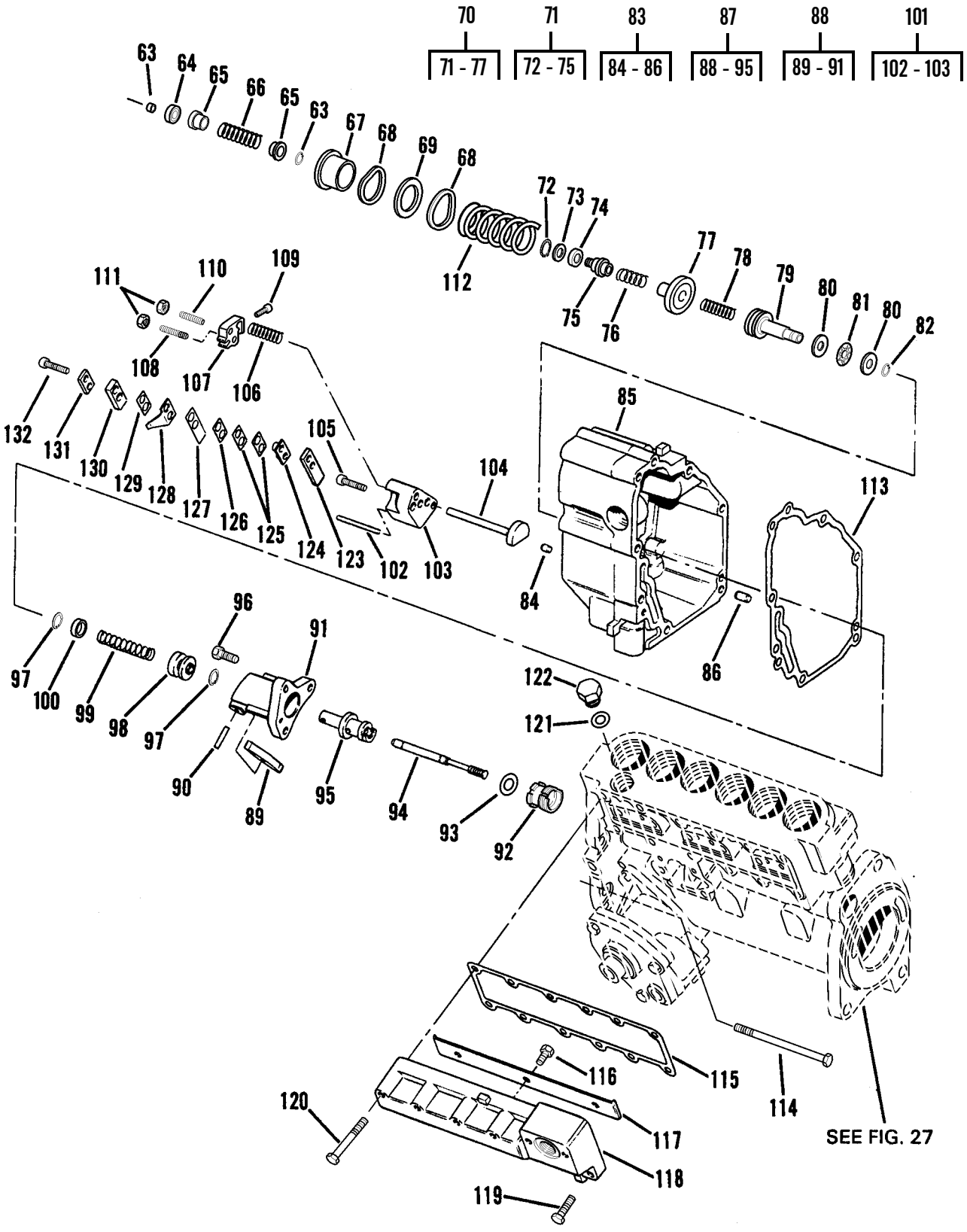

Figure 26. Fuel Injection Pump and Governor (Sheet 2 of 2)

(1) ITEM NO	(2) SMR CODE	(3) NSN	(4) CAGEC	(5) PART NUMBER	(6) DESCRIPTION AND USABLE ON CODES (UOC)	(7) QTY
					GROUP 0302 FUEL PUMPS	
					FIG. 26 FUEL INJECTION PUMP AND GOVERNOR	
1	PAFHH	2910011751952	11083	2401673	PUMP,FUEL,METERING INCLUDES ... GOVERNOR. SEE FIG 27	1
2	PFHZZ	5305000712505	80204	B1821BH025C088N	.SCREW,CAP,HEXAGON H	2
3	PFHZZ	5340011925824	11083	2W5448	.COVER,ACCESS	1
4	PFHZZ	5330013760784	11083	6I2002	.GASKET	1
5	PFHZZ	5331001232727	11083	8M8515	.O-RING	1
6	PCHZZ	5331009017196	11083	5P6620	.O-RING	1
7	PFHZZ	5331012054276	11083	0335879	.O-RING	1
8	PFHZZ	5330011036782	11083	8J8343	.SEAL	1
9	XDHZZ		11083	4N1761	.SCREW,CAP,HEXAGON H	4
10	PFHHH	2990012535580	11083	4W5735	.LEVER,REMOTE CONTRO	1
11	PFHZZ	5310006371058	66289	PD115	..NUT,PLAIN,HEXAGON	1
12	PFHZZ	5305011875879	11083	6V6835	..SETSCREW	1
13	PFHZZ	3040012544974	11083	4W5734	..LEVER,MANUAL CONTRO	1
14	XDHZZ		11083	2W5375	...LEVER,REMOTE CONTRO	1
15	PFHZZ	5305011875879	11083	6V6835	...SETSCREW	1
16	PFHZZ	5310006371058	66289	PD115	...NUT,PLAIN,HEXAGON	1
17	PFHZZ	5315011620426	11083	7N2176	.PIN,SHOULDER,HEADLE	1
18	PFHZZ	3040011541249	11083	8N3088	.SHAFT,SHOULDERED	1
19	PFHZZ	3110001980464	60380	Q8292	.ROLLER,BEARING	1
20	PFHZZ	5360012662679	11083	8N3094	.SPRING,FLAT	1
21	PFHZZ	5306004169180	11083	2S7383	.BOLT,MACHINE	1
22	XDHZZ		11083	8F8178	.BOLT,MACHINE	2
23	PFHZZ	2910012090931	11083	2W2410	.GOVERNOR,DIESEL ENG	1
24	PFHZZ	5305011602007	11083	5B7040	..SCREW,CAP,HEXAGON H	2
25	PFHZZ	5340011549589	11083	8N3259	..COVER,ACCESS	1
26	PFHZZ	5330013760802	11083	6I2003	..GASKET	1
27	PFHHH	2910011500426	11083	8N2501	..HOUSING,GOVERNOR,DI	1
28	XBHZZ		11083	8N2500	...HOUSING	1
29	PAHZZ	2910011500427	11083	8N2499	...GUIDE,SPRING,GOVERN	1
30	PFHZZ	5325006873379	96906	MS16625-1062	...RING,RETAINING	1
31	PFHZZ	5330011074168	11083	4N0260	...SEAL,PLAIN ENCASED	1
32	PFHZZ	2910000332200	70040	5622759	...VALVE ASSEMBLY,FUEL	1
33	PFHZZ	5340003541147	15434	10365-62	...PLUG,EXPANSION	1
34	PFHZZ	5365011544379	11083	1W6523	..PLUG,MACHINE THREAD	1
35	PCHZZ	5331010491292	81346	ASTM D2000 M6BG910	..O-RING	1
36	PFHZZ	2910011503758	11083	8N3168	..LEVER,THROTTLE	1
37	PFHZZ	3040011512660	11083	2W6102	..LEVER,REMOTE CONTRO	1
38	PFHZZ	5330011615518	11083	1503730	..GASKET	1
39	PFHZZ	4730010238633	79470	110-03428	..ADAPTER,STRAIGHT,PI	1
40	PFHZZ	5330012412759	11083	7N3171	..GASKET	4
41	PFHZZ	5315011660687	11083	7N2172	..PIN,GROOVED,HEADLES	2
42	PFHZZ	2910011788857	11083	2W9305	..PLATE,THROTTLE	2
43	PFHZZ	5360012082214	11083	2W7400	..SPRING,HELICAL,COMP	1
44	PFHZZ	2530011512661	11083	8N3087	..DETENT PLATE	1

(1) ITEM NO	(2) SMR CODE	(3) NSN	(4) CAGEC	(5) PART NUMBER	(6) DESCRIPTION AND USABLE ON CODES (UOC)	(7) QTY
45	PFHZZ	5330011572016	11083	1503728	..GASKET	1
46	PFHZZ	2910011497900	11083	7N8780	..COVER ASSEMBLY,GOVE	1
47	PCOZZ	5330012701752	11083	8T2604	...SEAL,PLAIN	1
48	XAHZZ		11083	7N8781	...COVER	1
49	PFHZZ	5305000712505	80204	B1821BH025C088N	..SCREW,CAP,HEXAGON H	6
50	PFHZZ	5315011628741	11083	7N8785	..PIN,GROOVED,HEADLES	1
51	PFHZZ	5325011548559	11083	7N8821	..RING,RETAINING	1
52	PFHZZ	5305011601980	11083	7N2594	..SETSCREW	2
53	XDHZZ		11083	7N8775	..NUT,SLEEVE	1
54	PFHZZ	5310012573230	08928	12NUS-518	..NUT,SELF-LOCKING,HE	1
55	PFHZZ	5330013760803	11083	6I2004	..GASKET	1
56	PFHZZ	5340011512578	11083	8N3258	..COVER,ACCESS	1
57	PFHZZ	5305010689719	11083	1P2497	..SCREW	2
58	PFHZZ	2910010664752	11083	3P0009	..INSULATOR	1
59	PCHZZ	5331009528007	11083	6H9691	..O-RING	1
60	XDHZZ		11083	4N5484	..STEM,NEEDLE VALVE	1
61	PFHZZ	4820011590891	11083	4N5485	..BODY,VALVE	1
62	PCHZZ	5331005913112	11083	5F9144	..O-RING	1
63	PFHZZ	5325011548559	11083	7N8821	..RING,RETAINING	2
64	PFHZZ	3130011746048	11083	4N0432	..BEARING UNIT,BALL	1
65	PFHZZ	5365011548503	11083	7N7270	..SPACER,SLEEVE	2
66	PFHZZ	5360008586273	11083	3K5733	..SPRING,HELICAL,COMP	1
67	PFHZZ	5340010664744	11083	6N3504	..SEAT,HELICAL COMPRE	1
68	PFHZZ	5310001879796	11083	2N0828	..WASHER,SPRING TENSI	2
69	PFHZZ	5310010534777	11083	2P9556	..WASHER	1
70	PFHZZ	2910011500921	11083	8N2503	..DASHPOT ASSEMBLY,GO	1
71	PFHHZ	2990010241509	11083	4N6408	...PISTON ASSEMBLY,DAS	1
72	PAHZZ	5325011479591	79136	5101-35-ZD	....RING,RETAINING	1
74	PAHZZ	2990011495010	59556	K-500-EN-0472	....SPOOL,FUEL INJECTIO	1
75	XAHZZ		11083	4N6403	....DASHPOT	1
76	PAHZZ	5360012872422	11083	4N6410	...SPRING,HELICAL,COMP	1
77	PFHZZ	5340013527643	11083	7N7268	...RETAINER,HELICAL CO	1
78	PFHZZ	5360011552629	11083	7N7267	..SPRING,HELICAL,COMP	1
79	PFHZZ	2990012539489	11083	4W6868	..RISER,GOVERNOR	1
80	PFHZZ	3110011551756	60380	JD-53502	..SEAT,BEARING	2
81	PFHZZ	3110006294111	11083	7M7219	..RETAINER AND ROLLER	1
82	PFHZZ	5325010243727	11083	4N2953	..RING,RETAINING	1
83	XDHHH		11083	8N2495	..HOUSING,GOVERNOR,DI	1
73	PAHZZ	5310011497188	11083	4N6406	....WASHER,FLAT	1
84	PAHZA	5315003639248	11083	4F6024	...PIN,STRAIGHT,HEADLE	2
85	XBHZZ		11083	8N2494	...HOUSING	1
86	PFHZZ	5315004067278	11083	8S6814	...PIN,STRAIGHT,HEADLE	4
87	PFHHF	2910011497902	11083	8N2507	..PISTON ASSEMBLY,GOV	1
88	XDHHH		11083	7C0791	...CYLINDER ASSEMBLY,G	1
89	XAHZZ		11083	7N7271	....LEVER,SLEEVE CONTRO	1
90	PFHZZ	3110001980510	60380	Q-8321	....ROLLER,BEARING	1
91	PFHZZ	2990012539491	11083	8N2507 AND 7C0791	....CYLINDER,GOVERNOR S	1
92	PFHZZ	2990012539490	11083	7W0250	...SLEEVE,GOVERNOR PIS	1

(1) ITEM NO	(2) SMR CODE	(3) NSN	(4) CAGEC	(5) PART NUMBER	(6) DESCRIPTION AND USABLE ON CODES (UOC)	(7) QTY
93	PFHZZ	5331011024354	11083	7R7491	...O-RING	1
94	XDHZZ		11083	8N2505	...SLIDE,DIRECTIONAL C	1
95	PFHZZ	2990011835956	11083	1W4098	...PISTON,GOVERNOR CON	1
96	PFHZZ	5306010951238	78640	310216	..BOLT,MACHINE	3
97	PFHZZ	5325007217680	96906	MS16633-1025	..RING,RETAINING	2
98	PFHZZ	2910011497901	11083	1N3800	..SLEEVE,RACK CONTROL	1
99	PFHZZ	5360011552628	11083	2W2216	..SPRING,HELICAL,COMP	1
100	PFHZZ	2910011515705	11083	1N3802	..RETAINER,HELICAL CO	1
101	XDHHH		11083	2W6104	..BLOCK ASSEMBLY,GOVE	1
102	PFHZZ	5315011823486	60380	QA-54783	...PIN,STRAIGHT,HEADLE	1
103	XBHZZ		11083	8N3257	...BLOCK,LOAD STOP	1
104	PFHZZ	5315012594153	11083	8N2488	..PIN,GROOVED,HEADED	1
105	PFHZZ	5305011074621	11083	6L5897	..SCREW,CAP,SOCKET HE	2
106	PFHZZ	5360011568931	11083	1W4243	..SPRING,HELICAL,COMP	1
107	PAHZZ	3040011515646	11083	8N3256	..COLLAR,LOAD STOP	1
108	PFHZZ	5305011576802	11083	5H6552	..SETSCREW	1
109	PFHZZ	5305009789370	96906	MS16997-32	..SCREW,CAP,SOCKET HE	1
110	PFHZZ	5305011575626	11083	7N5334	..SETSCREW	1
111	PFHZZ	5310006371058	66289	PD115	..NUT,PLAIN,HEXAGON	1
112	PFHZZ	5360012573422	11083	2N2878	..SPRING,HELICAL,COMP	1
113	PFHZZ	5330011573415	11083	1503726	.GASKET	1
114	PFHZZ	5306010691382	11083	6B4198	.BOLT	2
115	PFHZZ	5330011572016	11083	1503728	.GASKET	1
116	PFHZZ	5305000712506	80204	B1821BH025C050N	.SCREW,CAP,HEXAGON H	3
117	PFHZZ	2815012546183	11083	8N5784	.DEFLECTOR,DIRT AND	1
118	PFHZZ	2910012544964	11083	7N9907	.HOUSING,FUEL PUMP	1
119	PFHZZ	5305002253843	80204	B1821BH025C100N	.SCREW,CAP,HEXAGON H	6
120	PFHZZ	5306004240351	11083	8B2377	.BOLT,MACHINE	4
121	PCHZZ	5331008013354	25184	906-737-70	.O-RING	1
122	PFHZZ	5365004114584	11083	9S4191	.PLUG,MACHINE THREAD	1
123	PFHZZ	5365011552642	11083	8N7735	.SPACER,PLATE	1
124	PFHZZ	5970002137747	11083	1P6452	.INSULATOR,BUSHING	1
125	PFHZZ	5365002053664	11083	8L8601	.SHIM	2
126	PFHZZ	5365011037157	11083	9L9347	.SHIM	1
127	PFHZZ	5360012577816	11083	8N7520	.SPRING,FLAT	1
128	PFHZZ	5340011587850	11083	8N3090	.BRACKET,DOUBLE ANGL	1
129	PFHZZ	5365011555316	11083	2P2685	.SPACER,PLATE	1
130	PFHZZ	5365011544399	11083	7N7282	.SPACER,PLATE	1
131	PFHZZ	2910001160407	11083	8M9062	.RETAINER,TORQUE SPR	1
132	PFHZZ	5305004765308	11083	8H0707	.SCREW,CAP,SOCKET HE	2
				END OF FIGURE		

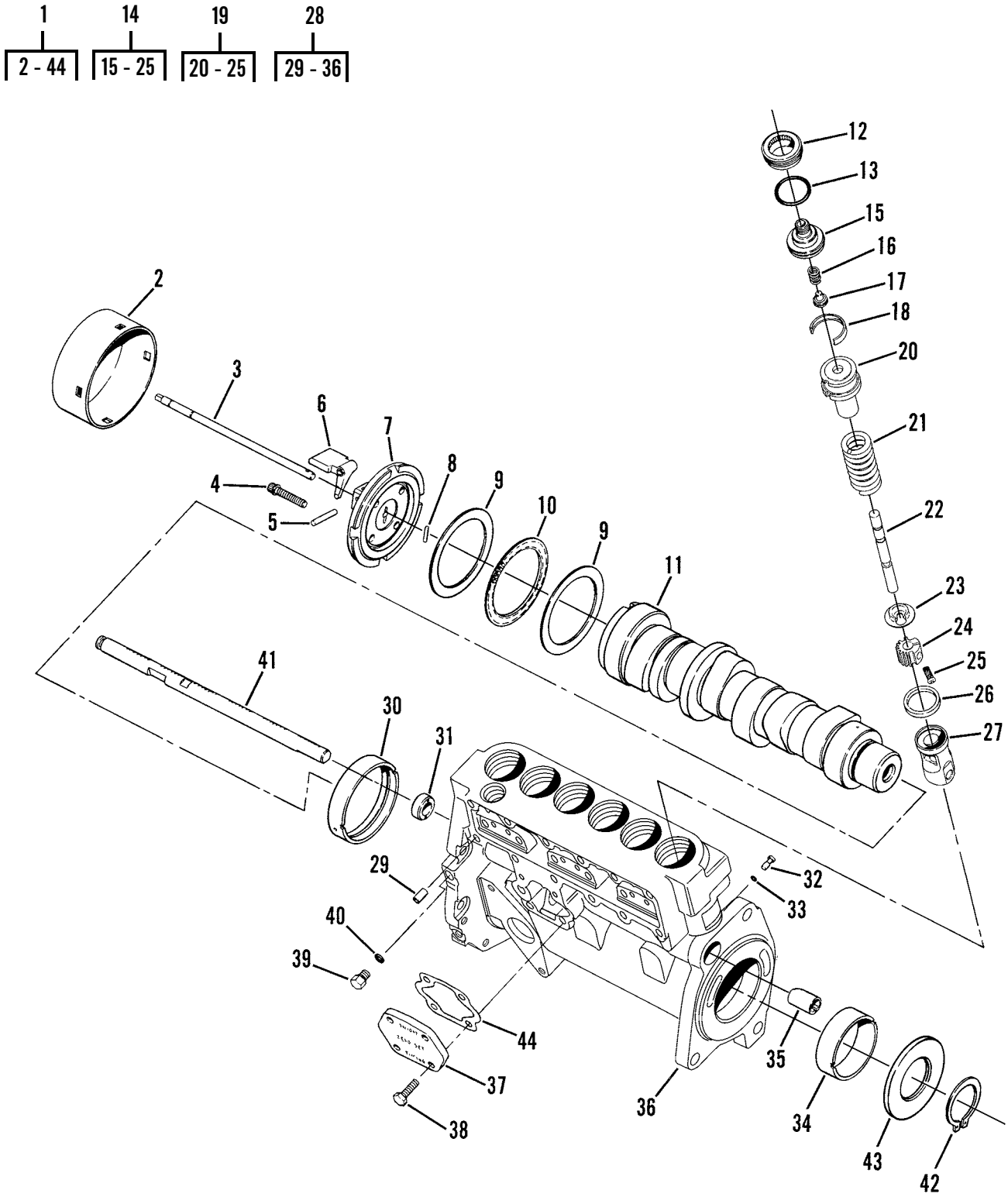

Figure 27. Fuel Injection Pump

(1) ITEM NO	(2) SMR CODE	(3) NSN	(4) CAGEC	(5) PART NUMBER	(6) DESCRIPTION AND USABLE ON CODES (UOC)	(7) QTY
					GROUP 0302 FUEL PUMPS	
					FIG. 27 FUEL INJECTION PUMP	
1	PFFHH	2910012090933	11083	2W0256	.PUMP,FUEL,METERING	1
2	PFHZZ	2910011550276	11083	7N7265	..SHIELD,CARRIER FUEL	1
3	PFHZZ	3040011529216	11083	8N2510	..SHAFT,STRAIGHT	1
4	PFHZZ	5306011574848	11083	5P9087	..BOLT,MACHINE	4
5	PFHZZ	5315001183070	71238	Q13367	..PIN,DOWEL	4
6	PFHZZ	2910011550370	11083	7N7264	..BELL CRANK	4
7	PFHZZ	2990011550277	11083	8N2511	..CARRIER WEIGHT,GOVE	1
8	PFHZZ	5315010678066	11083	4N9019	..DOWEL	1
9	PFHZZ	3110011812425	11083	7N7166	..RING,BEARING,OUTER	2
10	PFHZZ	3110008201466	11083	7L3326	..RETAINER AND ROLLER	1
11	PFHZZ	2910012534650	11083	2W0254	..CAMSHAFT,METERING A	1
12	PFHZZ	5325011602506	11083	8N5117	..INSERT,SCREW THREAD	6
13	PFHZZ	5331003934054	11083	3D2992	..O-RING	6
14	PFHZZ	4320012047180	11083	1W6539	..PUMP,ROTARY	1
15	PFHZZ	4820012537387	11083	1W9171	...CAP,VALVE	1
16	PFHZZ	5360011480305	11083	8N1415	...SPRING,HELICAL,COMP	1
17	PFHZZ	4820012540932	11083	1W6987	...VALVE,RESTRICTOR CH	1
18	PFHZZ	5325012574598	11083	7W1927	...RING,RETAINING	1
19	PFHZZ	2910011550279	11083	1W6541	...PLUNGER AND BARREL, ...	1
20	XAHZZ		11083	7N7169	....BARREL	1
21	PFHZZ	5360011823644	11083	7N1067	....SPRING,HELICAL,COMP	1
22	XAHZZ		11083	1W6540	....PLUNGER	1
23	PAHZZ	5340012594234	11083	7W2808	....SEAT,HELICAL COMPRE	1
24	XAHZZ		11083	7N1068	....GEAR	1
25	PFHZZ	5305011080649	11083	8H9299	....SCREW,CAP,SOCKET HE	1
26	PFHZZ	5365011586377	11083	4W6869	..SPACER,RING	6
27	PFHZZ	2910011794098	11083	4P9832	..LIFTER ASSEMBLY,FUE	1
28	PFHZZ	2910012537394	11083	4P9804	..HOUSING,FUEL PUMP	1
29	PFHZZ	5365011625782	11083	7N7969	...SPACER,SLEEVE	6
30	PAHZZ	3120011612639	11083	8N2518	...BEARING,SLEEVE	1
31	PFHZZ	3120008514696	11083	1S1953	...BEARING,SLEEVE	1
32	PFHZZ	5315011604636	11083	8N3731	...PIN,GROOVED,HEADED	6
33	PFHZZ	5330010622852	11083	3H0442	...RING SEAL	6
34	PFHZZ	3120011644512	11083	7N7970	...BEARING,SLEEVE	1
35	PFHZZ	3120011563801	11083	1W3285	...BEARING,SLEEVE	1
36	XAHZZ		11083	8N2521	...HOUSING	1
37	PFHZZ	5340011810789	11083	7N1047	..COVER,ACCESS	1
38	PFHZZ	5306002611153	11083	0S1615	..BOLT,MACHINE	4
39	PFHZZ	5365010672179	11083	9S4180	..PLUG,MACHINE THREAD	2
40	PFHZZ	5330011485891	59556	K-500-EN-0431	..SEAL	2
41	PFHZZ	3020012541220	11083	1W3286	..GEAR RACK	1
42	PFHZZ	5325012879026	96906	MS16628-1143	..RING,RETAINING	1
43	PFHZZ	3120011625786	11083	8N2487	..BEARING,WASHER,THRU	1
44	PFHZZ	5330011586283	11083	1503724	..GASKET	1
				END OF FIGURE		

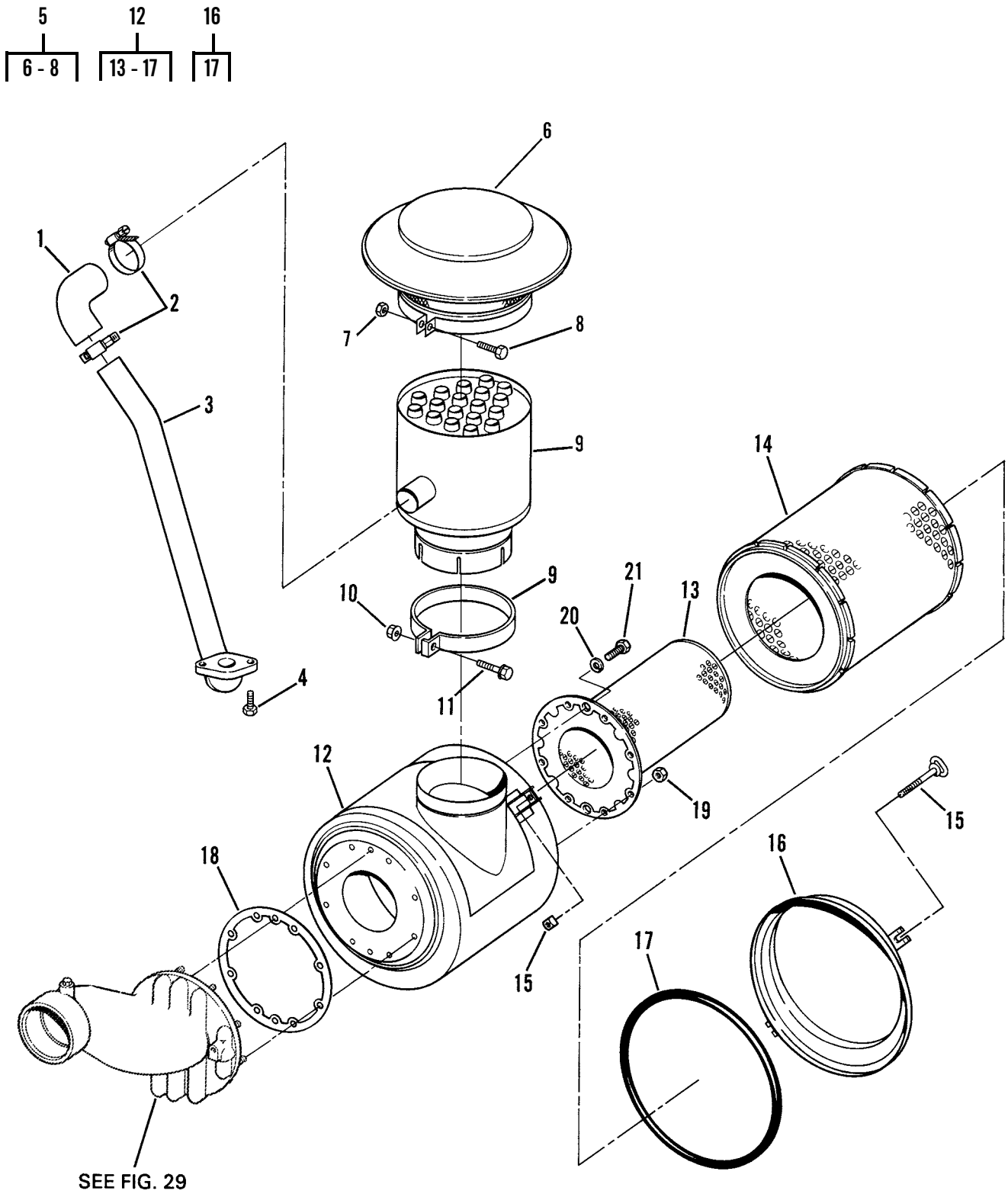

Figure 28. Air Cleaner and Dust Ejector

(1) ITEM NO	(2) SMR CODE	(3) NSN	(4) CAGEC	(5) PART NUMBER	(6) DESCRIPTION AND USABLE ON CODES (UOC)	(7) QTY
					GROUP 0304 AIR CLEANER	
					FIG. 28 AIR CLEANER AND DUST EJECTOR	
1	AOOOO		18265	PCH00-0781	PRECLEANER ASSEMBLY	1
2	PFOZZ	4720009298277	24161	20357	HOSE,PREFORMED	1
3	PFOZZ	4730009098627	08484	HP SIZE 2(HTM-250)	CLAMP,HOSE	2
4	PFOZZ	4710012672114	11083	6N3456	TUBE ASSEMBLY,METAL	1
5	PFOZZ	5306004238194	11083	1A2029	BOLT,MACHINE	2
6	PFOZZ	2940010131324	18265	GAH00-0783	CAP,AIR CLEANER INT	1
7	PFOZZ	5310014297859	11083	6V8801	.NUT,PLAIN,HEXAGON	1
8	PFOZZ	5305010156841	11083	0S1591	.SCREW	1
9	PFOZZ	2940010131323	11083	9S6147	BODY ASSEMBLY	1
10	PFOZZ	2940010588102	11083	7S7680	CLAMP	1
11	PFOZZ	5310007320558	96906	MS51967-8	NUT,PLAIN,HEXAGON	1
12	PFOZZ	5306010545310	11083	2P3206	BOLT,MACHINE	1
13	PFOOO	2940012539588	11083	6I2570	AIR CLEANER,INTAKE	1
14	PAOBZ	2940002441319	18265	P15-8669	.FILTER ELEMENT,INTA	1
15	PAOBZ	2940009103065	12658	PA1634	.FILTER ELEMENT,INTA	1
16	PFOZZ	5306011531362	18265	P10-2533	.BOLT,EYE	2
17	PFOZZ	2940011550285	18265	P11-0223	.CUP ASSEMBLY,AIR CL	1
18	PFOZZ	5330011838680	18265	P527366	..GASKET	1
19	PFOZZ	5330004044964	11083	9S1274	GASKET	1
20	PFOZZ	5310007320558	96906	MS51967-8	NUT,PLAIN,HEXAGON	8
21	PFOZZ	5310006379541	80205	MS35338-46	WASHER,LOCK	2
22	PFOZZ	5306004521354	11083	1T0822	BOLT,MACHINE	2
				END OF FIGURE		

2
3 - 6

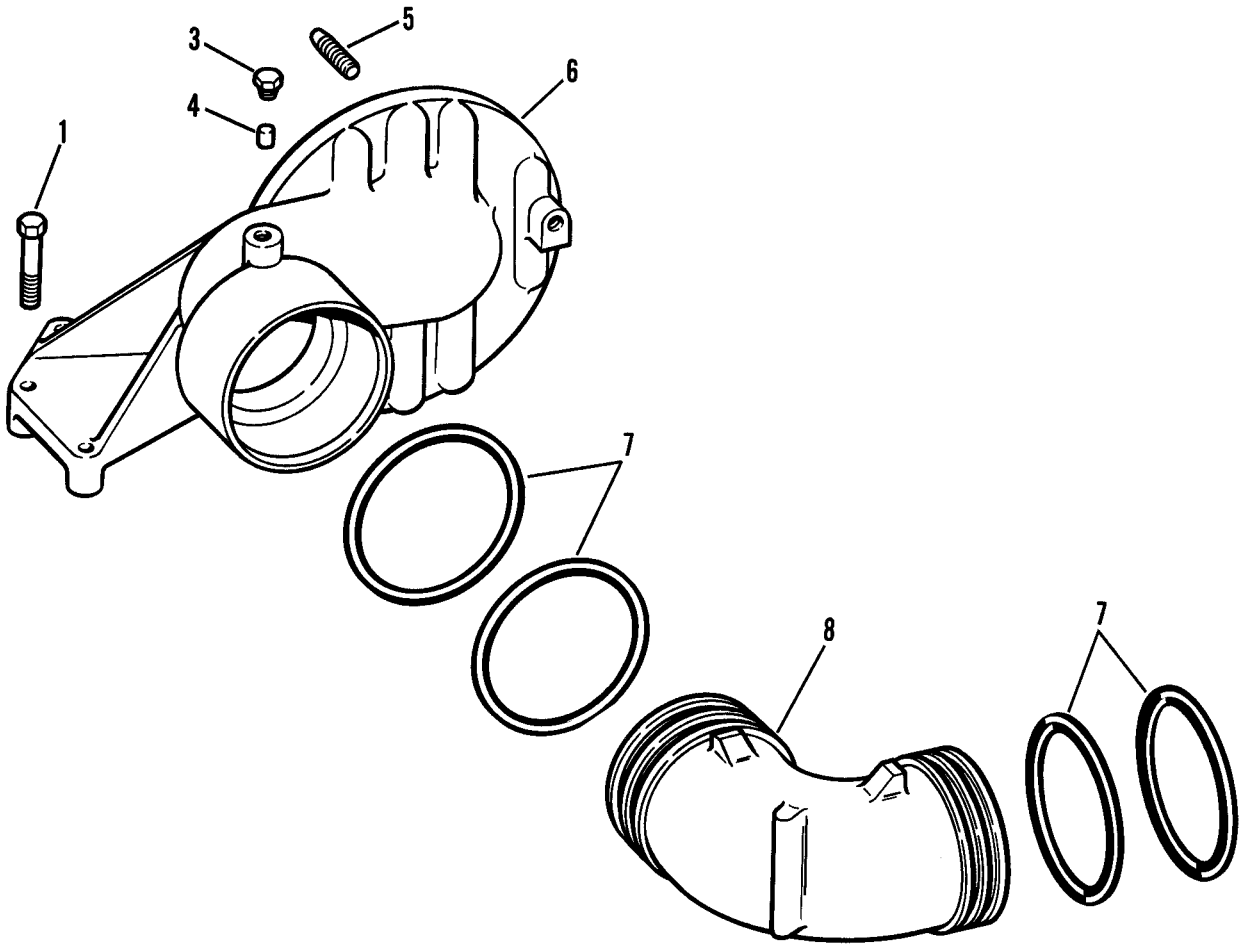

Figure 29. Air Lines Group

(1) ITEM NO	(2) SMR CODE	(3) NSN	(4) CAGEC	(5) PART NUMBER	(6) DESCRIPTION AND USABLE ON CODES (UOC)	(7) QTY
					GROUP 0304 AIR CLEANER	
					FIG. 29 AIR LINES GROUP	
1	PFOZZ	5305010156841	11083	0S1591	SCREW	4
2	PFOZZ	2940012536884	11083	6N2088	BRACKET,INTAKE AIR	1
3	PFOZZ	4730009247886	11083	5M6214	.PLUG,PIPE	1
4	PAOBZ	4730000847543	18265	P10-0128	.STRAINER ELEMENT,SE	1
5	PFOZZ	5307004097208	11083	9M2151	.STUD,CONTINUOUS THR	8
6	XAOZZ		11083	9S7089	.PIPE,AIR CLEANER OU	1
7	PFOZZ	5331007138660	11083	5H7704	O-RING	4
8	PFOZZ	4730004440155	11083	9S7067	ELBOW,HOSE	1
				END OF FIGURE		

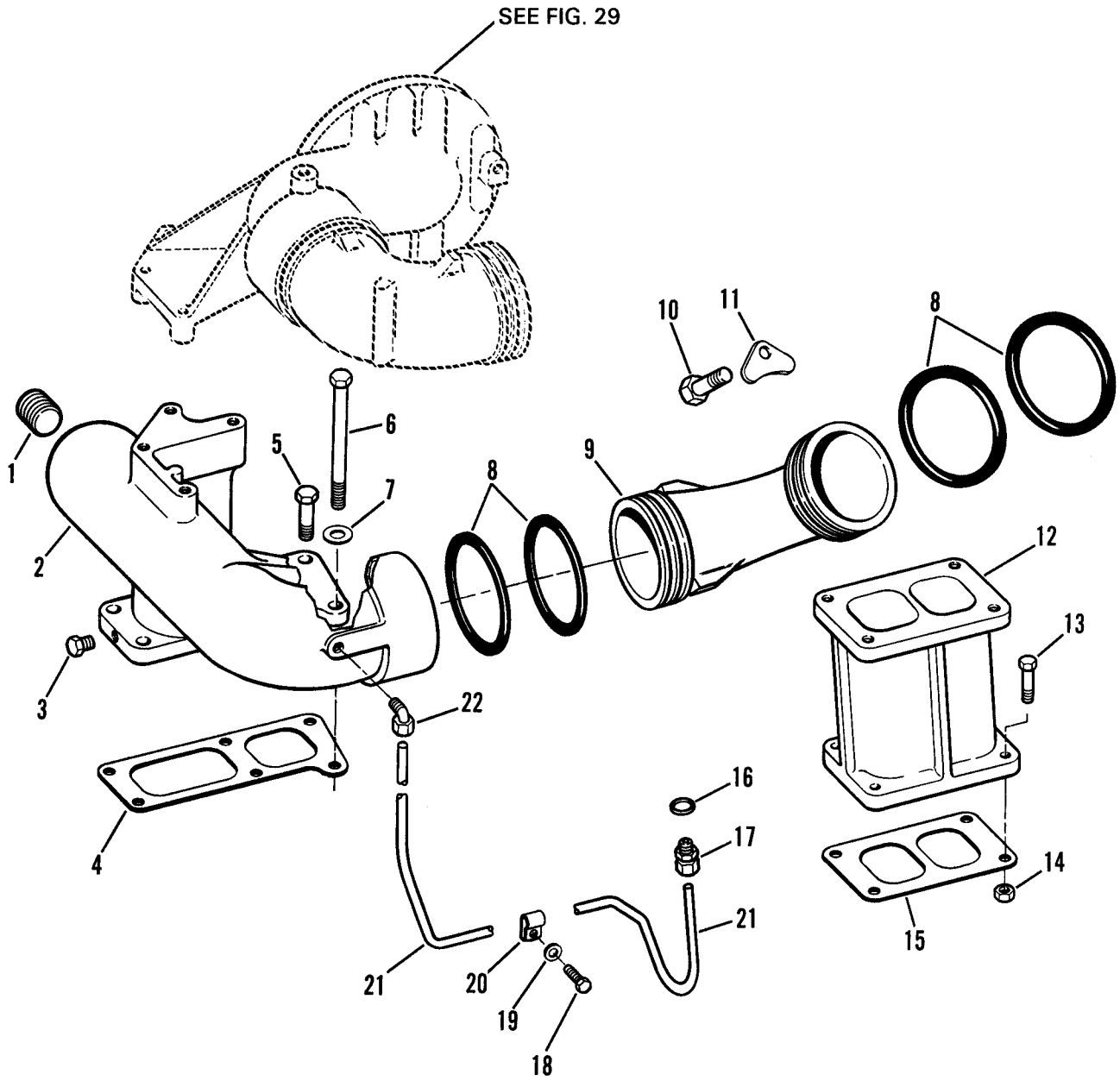

Figure 30. Air Lines Group - Engine

(1) ITEM NO	(2) SMR CODE	(3) NSN	(4) CAGEC	(5) PART NUMBER	(6) DESCRIPTION AND USABLE ON CODES (UOC)	(7) QTY
					GROUP 0304 AIR CLEANER	
					FIG. 30 AIR LINES GROUP-ENGINE	
1	PFOZZ	4730010226066	11083	1B5170	PLUG,PIPE	1
2	PFOZZ	4730012536925	11083	1W7813	ELBOW,FLANGE TO PIP	1
3	PFOZZ	4730009247886	11083	5M6214	PLUG,PIPE	1
4	PFOZZ	5330004029294	11083	9S7083	GASKET PART OF KIT P/N 5R6291 ..	1
5	PFOZZ	5305010156841	11083	0S1591	SCREW	5
6	PFOZZ		11083	7F3425	SCREW,CAP,HEXAGON H	1
7	PFOZZ	5310002058984	19207	11634192	WASHER,FLAT	1
8	PFOZZ	5331000743773	11083	4L8337	O-RING	4
9	PFOZZ	2990012533445	11083	1W7814	CONNECTOR,EXHAUST P	1
10	PFOZZ	5306002637301	11083	0L1351	BOLT,MACHINE	1
11	PFOZZ	5365012573278	11083	7W1944	SPACER,PLATE	1
12	PFOZZ	2815002373760	11083	7S4097	ADAPTER,EXHAUST MAN	1
13	PFOZZ	5305010269518	11083	0S1571	SCREW,CAP,HEXAGON H	4
14	PFOZZ	5310004988409	11083	1B5355	NUT,PLAIN,HEXAGON	4
15	PFOZZ	5330014794599	45152	9CA111	GASKET	1
16	PCOZZ	5331010491292	81346	ASTM D2000 M6BG910	O-RING PART OF KIT P/N 6V2911 ..	1
17	PFOZZ	4730008345035	96906	MS51525A4S	ADAPTER,STRAIGHT,TU	1
18	PFOZZ	5306008148967	11083	2H3755	BOLT,MACHINE	2
19	PFOZZ	5310000814219	96906	MS27183-12	WASHER,FLAT	2
20	PFOZZ	5999003636240	11083	2B2404	CLIP,ELECTRICAL	2
21	PFOZZ	4710012537056	11083	2W0160	TUBE ASSEMBLY,METAL	1
22	PFOZZ	4730006473207	11083	2N1287	ELBOW,PIPE TO TUBE	1
				END OF FIGURE		

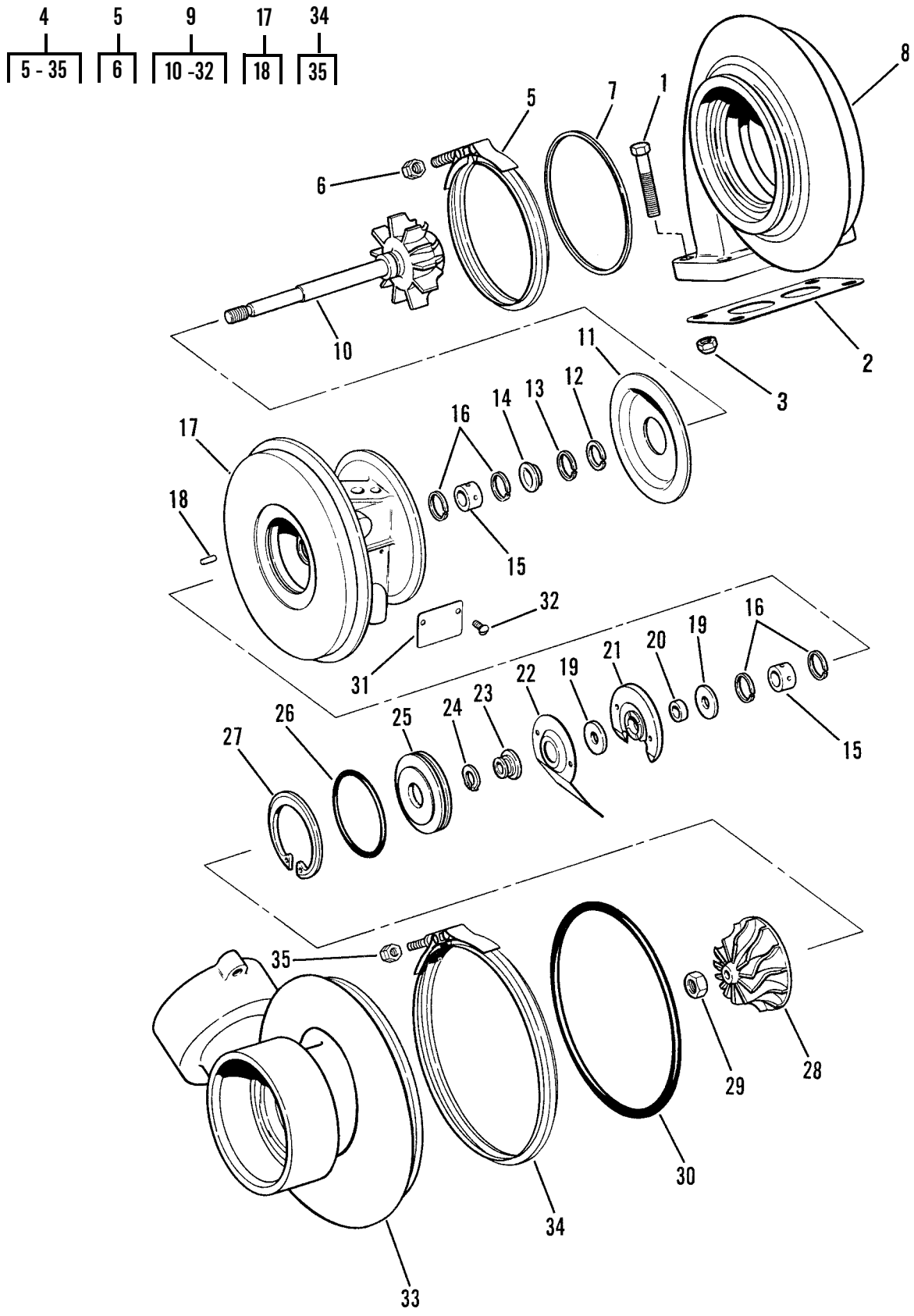

Figure 31. Turbocharger Group

(1) ITEM NO	(2) SMR CODE	(3) NSN	(4) CAGEC	(5) PART NUMBER	(6) DESCRIPTION AND USABLE ON CODES (UOC)	(7) QTY
					GROUP 0305 SUPERCHARGER, BLOWER, TURBOCHARGER OR ALTITUDE COMPENSATOR	
					FIG. 31 TURBOCHARGER GROUP	
1	PFOZZ	5306001191662	11083	7L3195	BOLT,MACHINE	4
2	PFOZZ	5330013826907	11083	1S4295NON-ASBESTOS	GASKET	1
3	PFOZZ	5310010205126	11083	2N2766	NUT,PLAIN,HEXAGON	4
4	PAOHH	2990011655977	53591	183200	TURBOCHARGER ASSEMB	1
5	PFHZZ	5340001916585	11083	5S4517	.CLAMP,LOOP	1
6	PFHZZ	5310000876875	53591	130665	..NUT,SELF-LOCKING,DO	1
7	PFHZZ	5330012426870	11083	4N3955	.GASKET	1
8	PFHZA	2950001676800	11083	9S8996	.HOUSING,TURBINE	1
9	PFHZZ	2990012087128	53591	182865	.CARTRIDGE ASSEMBLY, ...	1
10	PFHHA	2950001676781	11083	9S8993	..WHEEL ASSEMBLY,TURB	1
11	PFHZZ	2950011113964	11083	4N9556	..SHROUD,TURBINE WHEE	1
12	PFHZZ	5325011073896	53591	146808	..RING,RETAINING PART OF KIT ... P/N 2W0725	1
13	PFHZZ	5325008468669	96906	MS16630-4137	..RING,RETAINING	1
14	PFHZZ	3120004016084	53591	142229	..BUSHING,SLEEVE PART OF KIT ... P/N 2W0725	1
15	PFHZZ	3120012252095	53591	138363	..BEARING,SLEEVE	2
16	PFHZZ	5325005141277	96906	MS16627-1087	..RING,RETAINING PART OF KIT ... P/N 2W0725	4
17	PFHZZ	3040012533464	53591	159505	..HOUSING,MECHANICAL	1
18	PFHZZ	5315012370707	11083	5S5199	...PIN,STRAIGHT,HEADED	1
19	PFHZZ	3120012573312	11083	4N7609	..BEARING,WASHER,THRU	2
20	PFHZZ	5365004193286	53591	139572	..SPACER,SLEEVE	1
21	PFHZZ	3120012757678	53591	188379	..BEARING,WASHER,THRU	1
22	PFHZZ	5340004916351	53591	143331	..DEFLECTOR,DIRT AND	1
23	PFHZZ	4730012363066	11083	8S9222	..SLEEVE	1
24	PFHZZ	5330008586206	53591	C125647	..SEAL RING,METAL PART OF KIT .. P/N 2W0725	2
25	PFHZZ	2950001676787	53591	142066	..INSERT RING,TURBOCH	1
26	PFHZZ	5331012433777	11083	5P5757	..O-RING PART OF KIT P/N 2W0725	1
27	PFHZZ	5325012879036	96906	MS16631-1275	..RING,RETAINING	1
28	PFHZZ	2990012534633	53591	159608	..WHEEL,COMPRESSOR	1
29	PAHZZ	5310013533410	11083	7N0239	..NUT,SELF-LOCKING,HE	1
30	PFHZZ	5330001189146	11083	5S4554	..PACKING,PREFORMED PART OF .... KIT P/N 2W0725	1
31	XBHZZ		08179	407852	..NAMEPLATE	2
32	PFHZZ	5305002528917	11083	8H3710	..SCREW,MACHINE	2
33	PFHZZ	4310012598092	53591	156442	.HOUSING,AIR COMPRES	1
34	PFHZZ	5340001676785	11083	5S4558	.CLAMP,LOOP	1
35	PFHZZ	5310000876875	53591	130665	..NUT,SELF-LOCKING,DO	1
				END OF FIGURE		

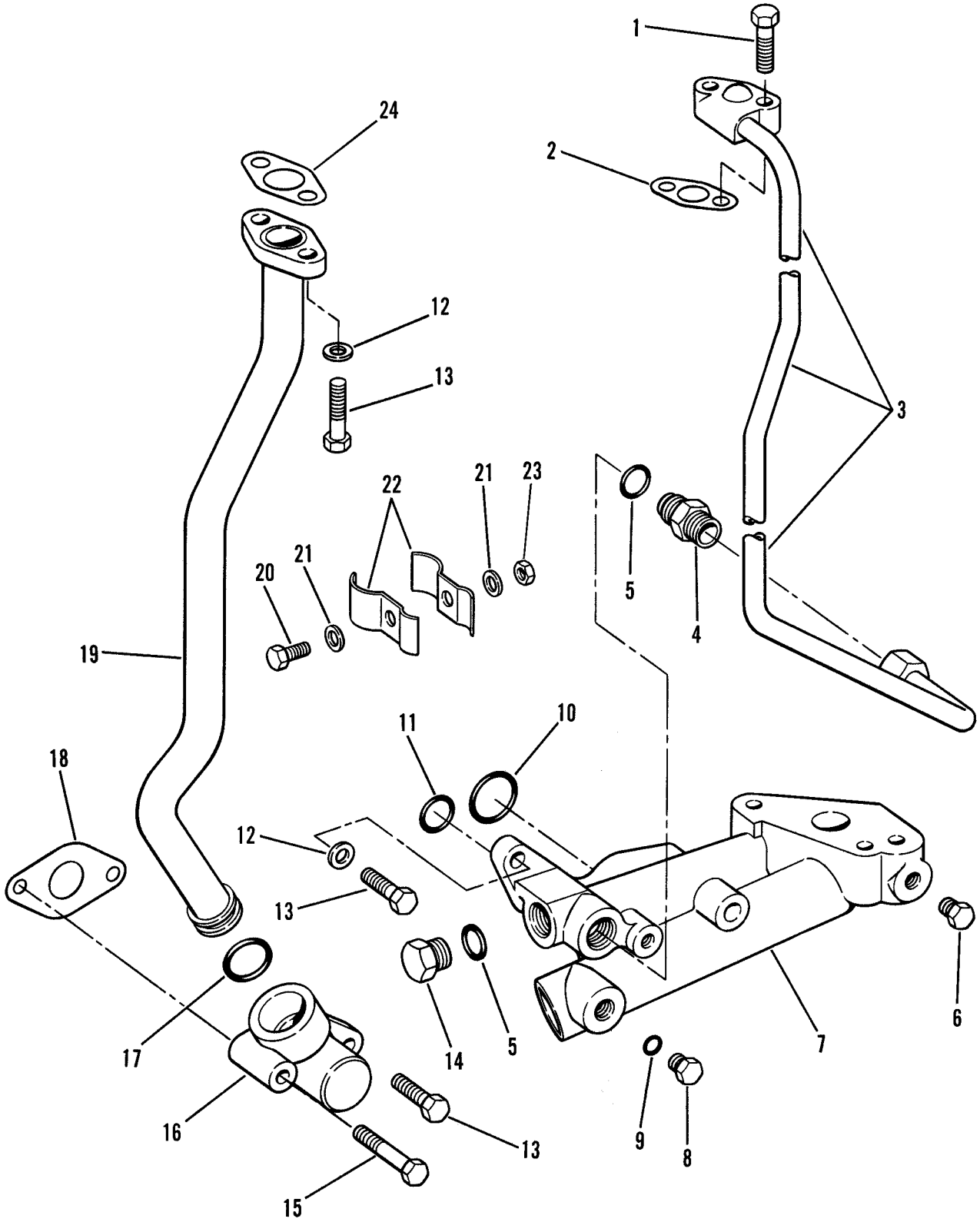

Figure 32. Turbocharger Oil Lines

(1) ITEM NO	(2) SMR CODE	(3) NSN	(4) CAGEC	(5) PART NUMBER	(6) DESCRIPTION AND USABLE ON CODES (UOC)	(7) QTY
					GROUP 0305 SUPERCHARGER, BLOWER, TURBOCHARGER OR ALTITUDE COMPENSATOR	
					FIG. 32 TURBOCHARGER OIL LINES	
1	PFOZZ	5306011954681	11083	3B1915	BOLT	2
2	PFOZZ	5330009318048	11083	1S6595	GASKET	1
3	PFOZZ	4710012534718	11083	4W6081	TUBE ASSEMBLY,METAL	1
4	PFOZZ		11083	8M0505	ADAPTER,STRAIGHT,TU	1
5	PFOZZ	5331009486482	62983	154129	O-RING	2
6	PFFZZ	4730000892515	11083	5M6213	PLUG,PIPE	1
7	PAFZZ	5340013390866	11083	4W1512	BRACKET,MOUNTING	1
8	PFFZZ	5365010911407	96906	MS51840-23SS	PLUG,MACHINE THREAD	1
9	PCFZZ	5331010491292	81346	ASTM D2000 M6BG910	O-RING	1
10	PFFZZ	5331009138872	02697	S1199 2-216	O-RING	2
11	PFFZZ	5330008902235	11083	8M5253	SEAL,RING PART OF KIT P/N 6V2911	1
12	PFFZZ	5310001174788	11083	9Y2695	WASHER,FLAT	4
13	PFFZZ	5306004238194	11083	1A2029	BOLT,MACHINE	5
14	PFFZZ	5365007630120	11083	9S4185	PLUG,MACHINE THREAD	1
15	PFFZZ	5306006982150	11083	0L2070	BOLT,MACHINE	1
16	PFFZZ	4730012533401	11083	8N1149	ELBOW,FLANGE TO PIP	1
17	PFOZZ	5330008474351	11083	9M4849	SEAL,RING	1
18	PFOZZ	5330008935250	11083	4M6480	GASKET PART OF KIT P/N 6V2911 ..	1
19	PFOZZ	4710012534717	11083	2W0157	TUBE ASSEMBLY,METAL	1
20	PFOZZ	5306002264825	80204	B1821BH031C075N	BOLT,MACHINE	1
21	PFOZZ	5310000814219	96906	MS27183-12	WASHER,FLAT	2
22	PFOZZ	5340011687289	11083	6N6033	STRAP,RETAINING	2
23	PFOZZ	5310008807744	96906	MS51967-5	NUT,PLAIN,HEXAGON	1
24	PFOZZ	5330009893295	11083	1S4810	GASKET PART OF KIT P/N 1387720 .	1
				END OF FIGURE		

8
9 - 11

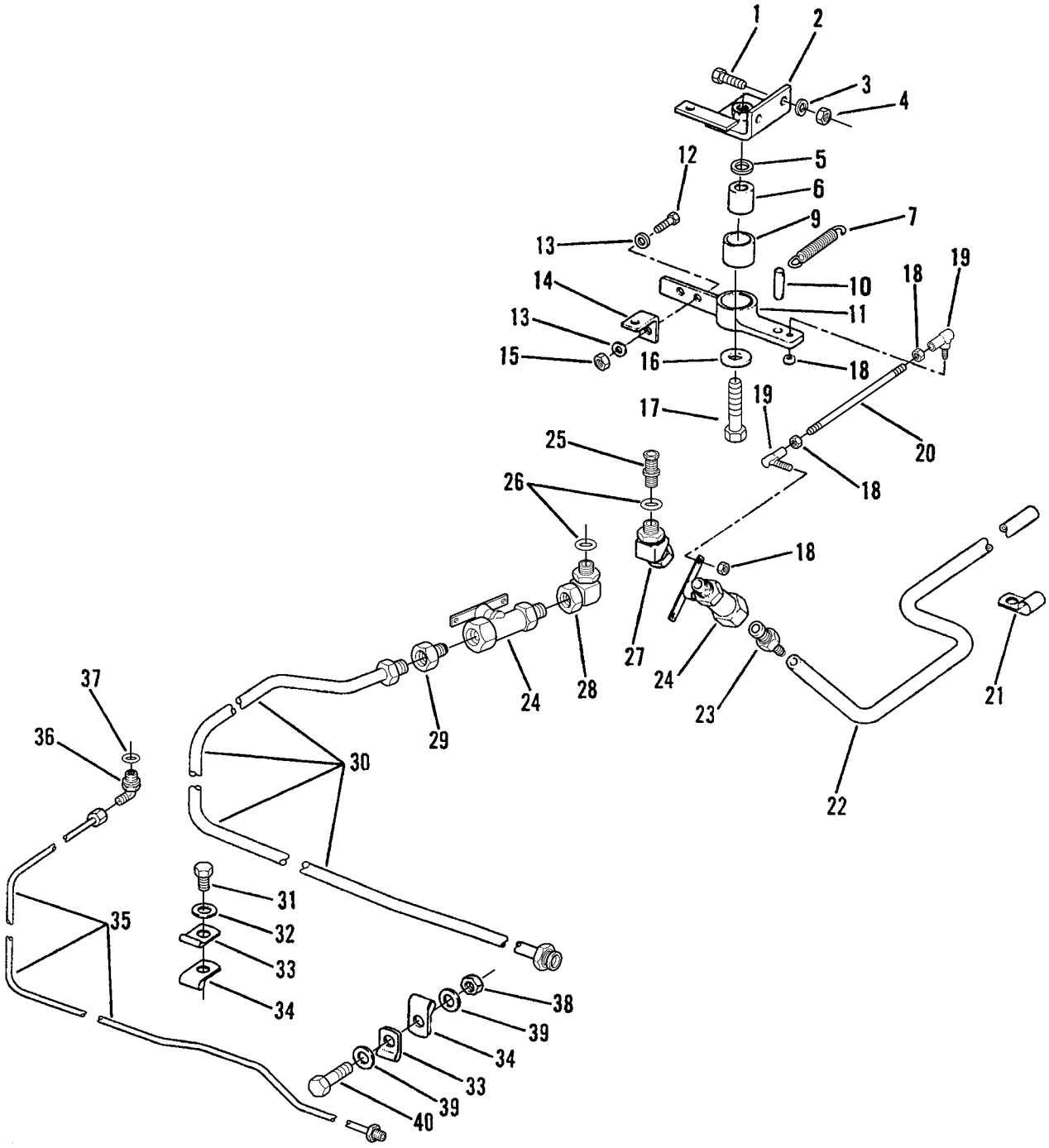

Figure 33. Lever and Valve Assembly

(1) ITEM NO	(2) SMR CODE	(3) NSN	(4) CAGEC	(5) PART NUMBER	(6) DESCRIPTION AND USABLE ON CODES (UOC)	(7) QTY
					GROUP 0306 TANKS, LINES, FITTINGS, HEADERS	
					FIG. 33 LEVER AND VALVE ASSEMBLY	
1	PFOZZ	5306004238194	11083	1A2029	BOLT,MACHINE	2
2	PFOZZ	5342012538655	11083	5R6616	BRACKET,ENGINE ACCE	1
3	PFOZZ	5310006379541	80205	MS35338-46	WASHER,LOCK	2
4	PFOZZ	5310007320558	96906	MS51967-8	NUT,PLAIN,HEXAGON	2
5	PFOZZ	5310001670823	88044	AN960-816	WASHER,FLAT	1
6	PFOZZ	5365001362006	11083	2M7167	SPACER,SLEEVE	1
7	PFOZZ	5360010979196	11083	1S1790	SPRING,HELICAL,EXTE	1
8	PFOOO	3040012535584	11083	5R7003	LEVER,REMOTE CONTRO	1
9	PFOZZ	3120008586240	11083	5H3895	.BUSHING,SLEEVE	1
10	XBOZZ		11083	1A2595	.PIN,STRAIGHT,HEADLE	1
11	PAOZZ	3040012535585	11083	5R8545	.LEVER,REMOTE CONTRO	1
12	PFOZZ	5306011169622	11083	0869934	BOLT,MACHINE	1
13	PFOZZ	5310000814219	96906	MS27183-12	WASHER,FLAT	2
14	PFOZZ	5340012609876	11083	5R6615	BRACKET,ANGLE	1
15	PFOZZ	5310007680318	96906	MS51967-14	NUT,PLAIN,HEXAGON	1
16	PFOZZ	5310005956153	11083	1F7960	WASHER,FLAT	1
17	PFOZZ	5306008097134	11083	2B947	BOLT,MACHINE	1
18	PFOZZ	5310006602649	96906	MS35690-424	NUT,PLAIN,HEXAGON	4
19	PFOZZ	3040012678764	11083	0686091	BALL JOINT	1
20	PFOZZ	5307012601407	11083	5G0766	STUD,PLAIN	1
21	PFOZZ	5340012553577	11083	2B3243	CLAMP,LOOP	1
22	MOOZZ		11083	5P1442-27.6IN	HOSE 27.6 IN, MAKE FROM HOSE .. P/N 5P1442	1
23	PFOZZ	4730011656616	98441	322F-E	ADAPTER,STRAIGHT,PI	1
24	PFOZZ	4820012089337	11083	6V5016	VALVE,FLOW CONTROL	2
25	PFOZZ	4730011620206	11083	9G8856	STRAINER ELEMENT,SE	1
26	PFOZZ	5331009486482	62983	154129	O-RING	2
27	PFOZZ	4730012554341	11083	5P7918	ELBOW,PIPE TO BOSS	1
28	PFOZZ	4730000513731	01276	2068-8-8S	ELBOW,PIPE TO BOSS	1
29	PFOZZ	4730002893261	79470	202X8X8	ADAPTER,STRAIGHT,PI	1
30	PAOZZ	4710012538705	11083	9P0137	TUBE ASSEMBLY,METAL	1
31	PFOZZ	5305007320512	80204	B1821BH050C075N	SCREW,CAP,HEXAGON H	1
32	PFOZZ	5310008095997	96906	MS27183-17	WASHER,FLAT	1
33	PFOZZ	5340009222596	11083	6H3068	CLAMP,LOOP	2
34	PFOZZ	5340007206213	96906	MS21333-59	CLAMP,LOOP	1
35	PFOZZ	4710012842404	11083	3T2641	TUBE ASSEMBLY,METAL	1
36	PFOZZ	4730014293246	11083	030-7946	ELBOW,TUBE	2
37	PCOZZ	5331010491292	81346	ASTM D2000 M6BG910	O-RING	2
38	PFOZZ	5310014297859	11083	6V8801	NUT,PLAIN,HEXAGON	1
39	PFOZZ	5310001174788	11083	9Y2695	WASHER,FLAT	2
40	PFOZZ	5306002637301	11083	0L1351	BOLT,MACHINE	1
				END OF FIGURE		

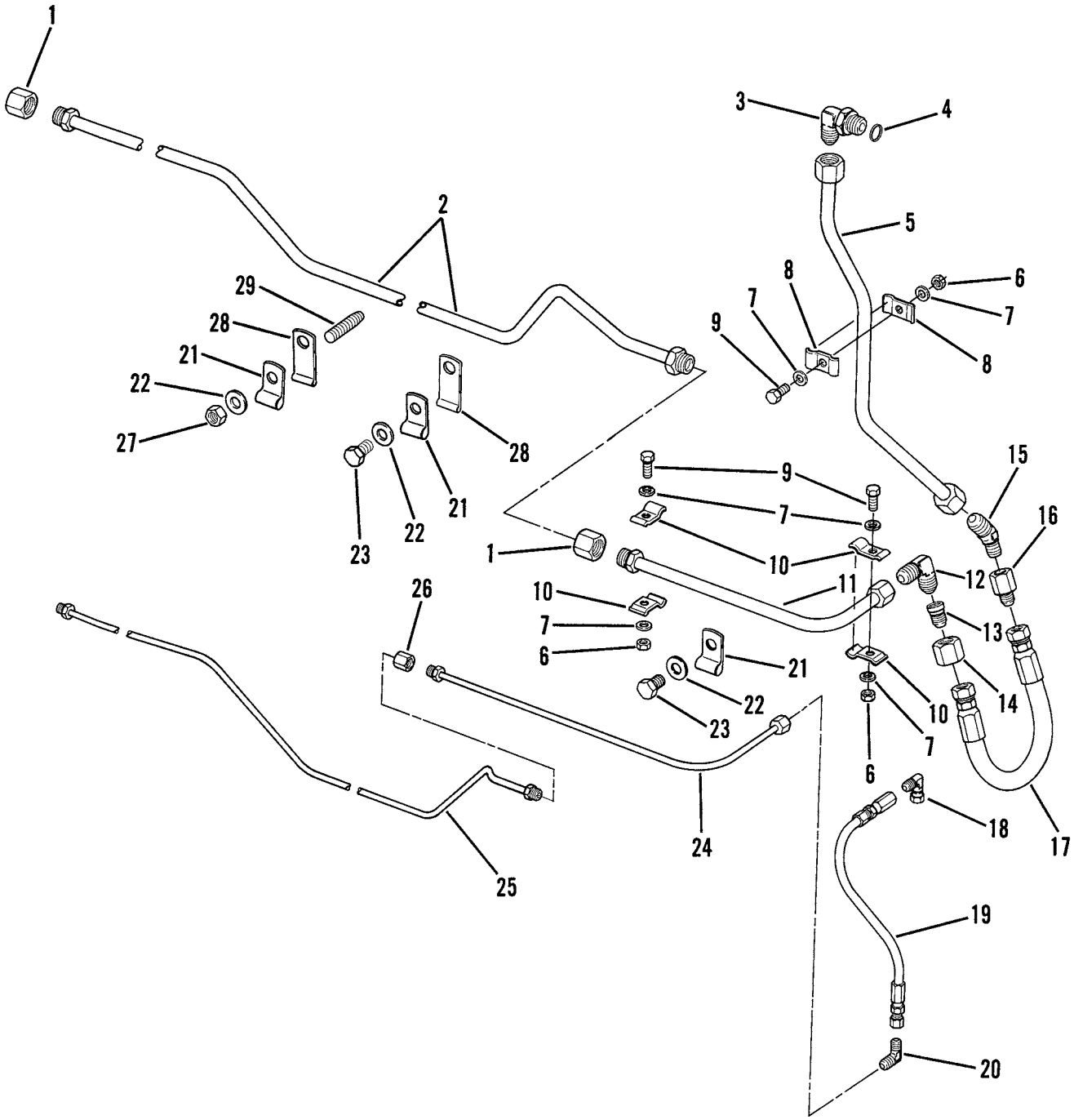

Figure 34. Fuel Lines

(1) ITEM NO	(2) SMR CODE	(3) NSN	(4) CAGEC	(5) PART NUMBER	(6) DESCRIPTION AND USABLE ON CODES (UOC)	(7) QTY
					GROUP 0306 TANKS, LINES, FITTINGS, HEADERS	
					FIG. 34 FUEL LINES	
1	PFOZZ	2940010534692	11083	6K8077	UNION	2
2	PFOZZ	4710012538706	11083	3T9025	TUBE ASSEMBLY,METAL	1
3	PFOZZ	4730008225609	96906	MS51527A8	ELBOW,TUBE TO BOSS	1
4	PFOZZ	5331009486482	11083	3K0360	O-RING	1
5	PFOZZ	4710012538708	11083	6T1188	TUBE ASSEMBLY,METAL	1
6	PFOZZ	5310001887848	11083	1B4202	NUT,PLAIN,HEXAGON	3
7	PFOZZ	5310000814219	96906	MS27183-12	WASHER,FLAT	6
8	PFOZZ	5340012577829	11083	8M5857	STRAP,RETAINING	2
9	PFOZZ	5306002828360	11083	1A2343	BOLT,MACHINE	3
10	PFOZZ	5340012598965	11083	5K5653	STRAP,RETAINING	4
11	PFOZZ	4710012637284	11083	3T9024	TUBE ASSEMBLY,METAL	1
12	PFOZZ	4730012548682	11083	5P6399	ELBOW,TUBE	1
13	PFOZZ	4730010630744	11083	0308144	REDUCER,TUBE	1
14	PFOZZ	4730007621239	96906	MS51531B8	NUT,TUBE COUPLING	1
15	PFOZZ		96906	MS51508-A8	ELBOW,PIPE TO TUBE	1
16	PFOZZ	4730003314279	11083	0530088	ADAPTER,STRAIGHT,PI	1
17	PAOZZ	4720011630677	11083	6N9429	HOSE ASSEMBLY,NONME	1
18	PFOZZ	4730014293246	11083	030-7946	ELBOW,TUBE	2
19	PAOZZ	4720011632611	11083	3N1295	HOSE ASSEMBLY,NONME	1
20	PFOZZ	4730012079892	11083	0676495	ELBOW,TUBE	1
21	PFOZZ	5340007206213	96906	MS21333-59	CLAMP,LOOP	4
22	PFOZZ	5310008095997	96906	MS27183-17	WASHER,FLAT	3
23	PFOZZ	5305007320512	80204	B1821BH050C075N	SCREW,CAP,HEXAGON H	2
24	PFOZZ	4710012637285	11083	3T2643	TUBE ASSEMBLY,METAL	1
25	PFOZZ	4710012538707	11083	3T2642	TUBE ASSEMBLY,METAL	1
26	PFOZZ	4730010690769	11083	5K9242	COUPLING,TUBE	2
27	PFOZZ	5310008807744	96906	MS51967-5	NUT,PLAIN,HEXAGON	1
28	XBOZZ		11083	5K0430	CLIP	2
29	PFOZZ	5307011853555	11083	5M1932	STUD,WELDING	1
				END OF FIGURE		

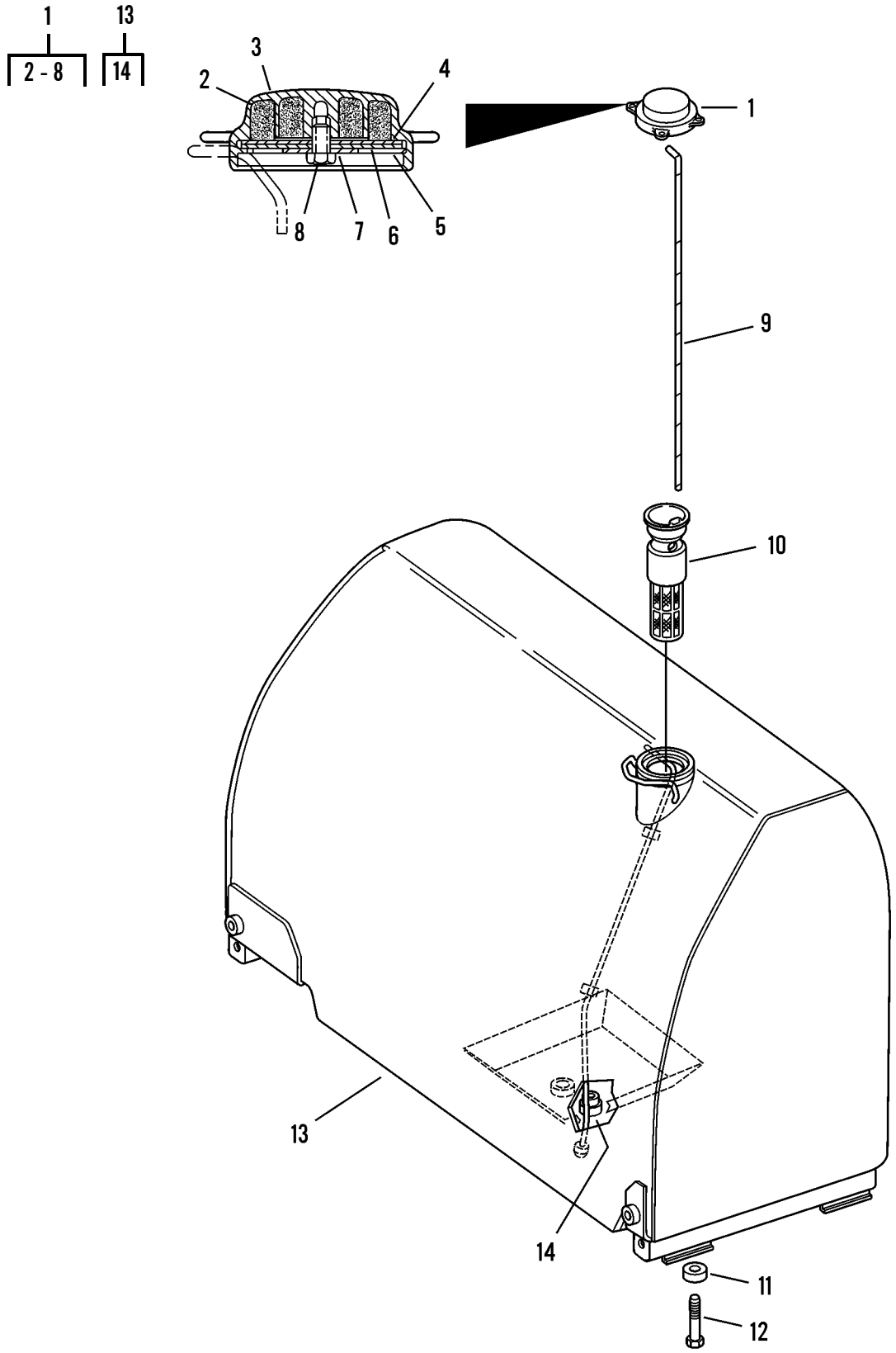

Figure 35. Fuel Tank Group

(1) ITEM NO	(2) SMR CODE	(3) NSN	(4) CAGEC	(5) PART NUMBER	(6) DESCRIPTION AND USABLE ON CODES (UOC)	(7) QTY
					GROUP 0306 TANKS, LINES, FITTINGS, HEADERS	
					FIG. 35 FUEL TANK GROUP	
1	PFOOO	2590013773892	11083	7T2036	CAP,FILLER OPENING	1
2	PAOZZ	2910003675238	11083	4B5949	.FILTER ELEMENT,FLUI	1
3	PFOZZ	2590011769517	11083	8P0408	.CAP,FILLER OPENING	1
4	PFOZZ	5330001438713	11083	4B5423	.GASKET	1
5	PFOZZ	5330012098731	11083	7T2037	.GASKET	1
6	PFOZZ	2910011595883	11083	3F4134	.BAFFLE,FUEL TANK CA	1
7	PFOZZ	5310000809422	60532	WAS125	.WASHER,FLAT	1
8	PFOZZ	5305004754440	11083	3H8389	.SCREW,FUEL TANK FIL	1
9	PFOZZ	6680012543491	11083	8P8786	GAGE ROD,LIQUID LEV	1
10	PAOZZ	2910011647906	11083	9P7121	FILTER ELEMENT,FLUI	1
11	PFOZZ	5310012536496	11083	3P4133	WASHER,FLAT	4
12	PFOZZ	5306004263139	11083	1A8063	BOLT,MACHINE	4
13	PFOZZ	2910012545005	11083	3T2803	TANK,FUEL,ENGINE	1
14	PFOZZ	4730012538590	11083	3T3095	.ADAPTER,STRAIGHT,TU	1
				END OF FIGURE		

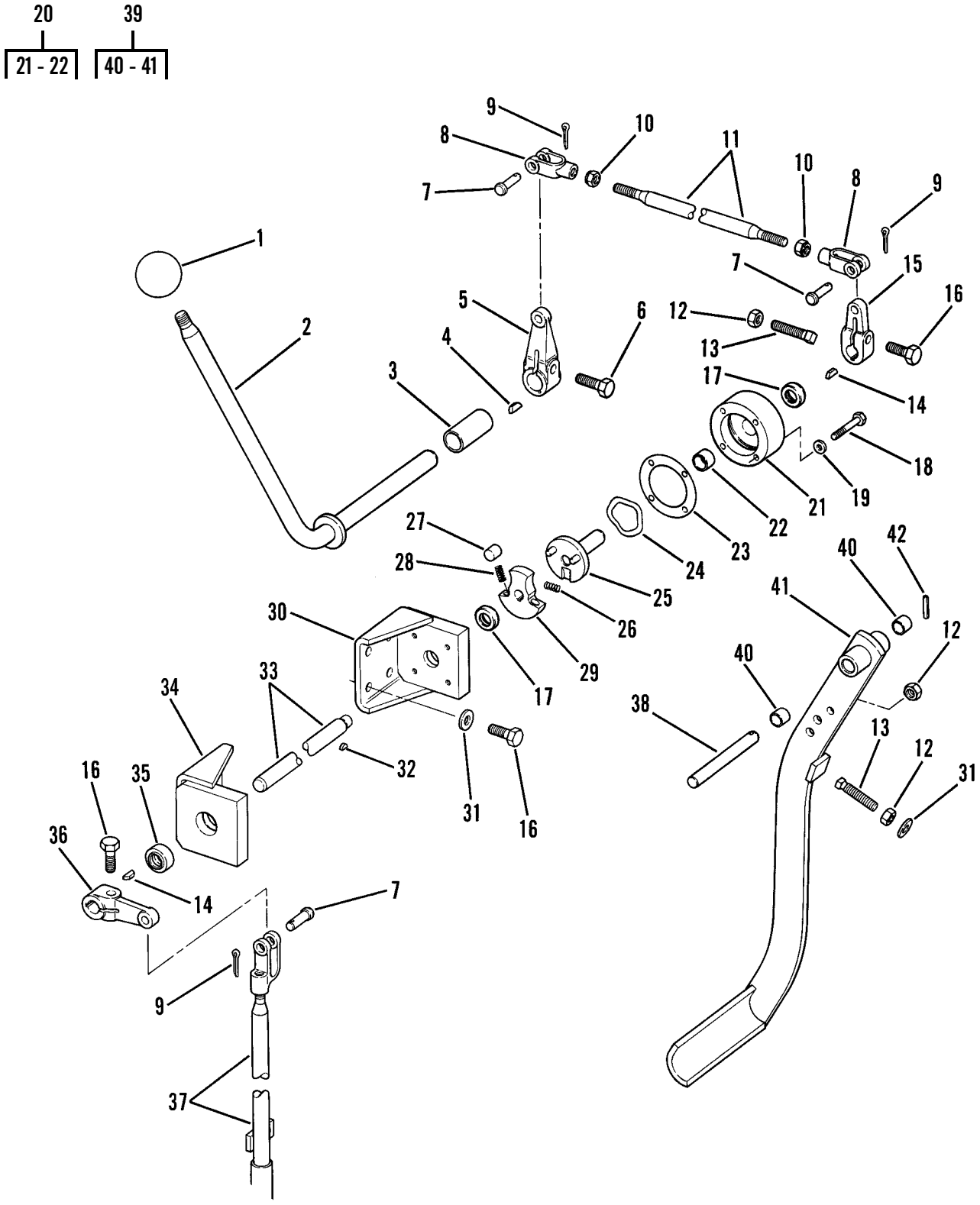

Figure 36. Governor Control Group (Sheet 1 of 2)

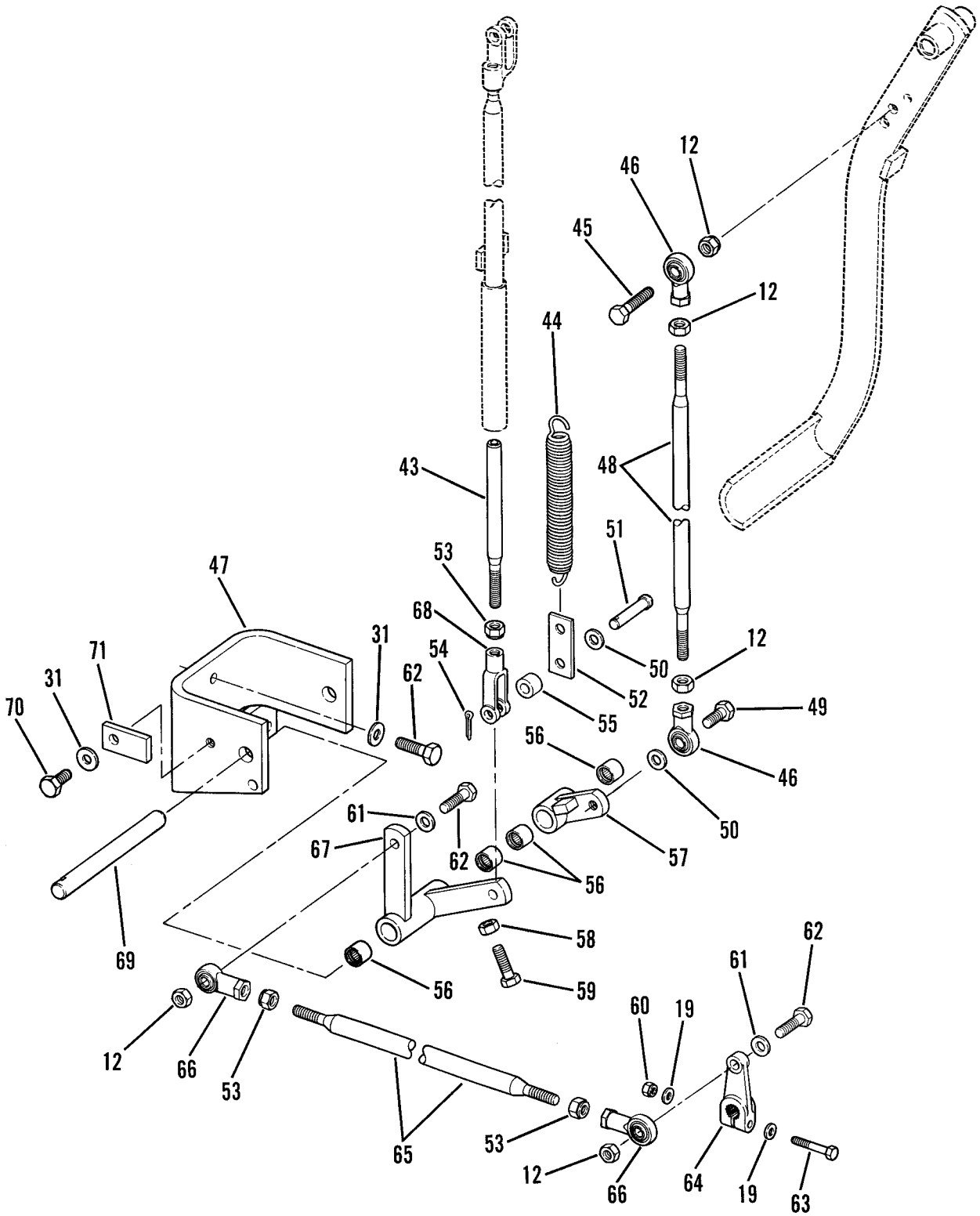

Figure 36. Governor Control Group (Sheet 2 of 2)

(1) ITEM NO	(2) SMR CODE	(3) NSN	(4) CAGEC	(5) PART NUMBER	(6) DESCRIPTION AND USABLE ON CODES (UOC)	(7) QTY
					GROUP 0308 ENGINE SPEED GOVERNOR AND CONTROLS	
					FIG. 36 GOVERNOR CONTROL GROUP	
1	PFOZZ	5355003713370	11083	2A1736	KNOB	1
2	PFOZZ	3040012506495	11083	2P9482	LEVER,MANUAL CONTRO	1
3	PFOZZ	5365012538979	11083	7M0652	SPACER,PLATE	1
4	PFOZZ	5315006165524	80205	MS35756-10	KEY,WOODRUFF	1
5	PFOZZ	3040002479923	11083	5M3306	LEVER,REMOTE CONTRO	1
6	PFOZZ	5305002693238	80204	B1821BH038F125N	SCREW,CAP,HEXAGON H	1
7	PFOZZ	5315002726760	11083	1B0676	PIN,STRAIGHT,HEADED	3
8	PFOZZ	5340004113926	11083	1F5403	CLEVIS,ROD END	2
9	PFOZZ	5315008395821	80205	MS24665-351	PIN,COTTER	3
10	PFOZZ	5310009752075	96906	MS35691-21	NUT,PLAIN,HEXAGON	2
11	PFOZZ	5306012588560	11083	7G2934	ROD,THREADED END	1
12	PFOZZ	5310014297859	11083	6V8801	NUT,PLAIN,HEXAGON	8
13	PFOZZ	5305011850569	11083	4B3610	SETSCREW	2
14	PFOZZ	5315006165526	80205	MS35756-8	KEY,WOODRUFF	2
15	PFOZZ	5342004505589	11083	4K0021	LEVER RMTE CONTROL	1
16	PFOZZ	5306004238194	11083	1A2029	BOLT,MACHINE	8
17	PFOZZ	5330012124617	80201	6143	SEAL,PLAIN ENCASED	2
18	PFOZZ	5306004238313	11083	1B2713	BOLT,MACHINE	4
19	PFOZZ	5310008238804	96906	MS27183-9	WASHER,FLAT	6
20	PFOZZ	3040011036623	11083	9M3025	HOUSING,MECHANICAL	1
21	XAOZZ		11083	9M3024	.HOUSING,MECHANICAL	1
22	PFOZZ	5365010664574	11083	2K2605	.BUSHING	1
23	PFOZZ	5330012576100	11083	9S2308	GASKET	1
24	PFOZZ	5310004982968	11083	9S2309	WASHER	1
25	PFOZZ	3040012545575	11083	8M7836	SHAFT ASSEMBLY,GOVE	1
26	PFOZZ	5360002372158	11083	5H7152	SPRING,HELICAL,COMP	1
27	PFOZZ	3110009241971	11083	8H9182	ROLLER,BEARING	2
28	PFOZZ	5360008986730	11083	8H9186	SPRING,HELICAL,COMP	2
29	PFOZZ	3040011438049	11083	8H7577	CAM,CONTROL	1
30	PFOZZ	5340012579183	11083	7G3333	BRACKET,ANGLE	1
31	PFOZZ	5310008098541	96906	MS27183-27	WASHER,FLAT	11
32	PFOZZ	5315000189576	80205	MS35756-33	KEY,WOODRUFF	1
33	PFOZZ	3040012539424	11083	7G3331	SHAFT,SHOULDERED	1
34	PFOZZ	5340012598758	11083	7G3334	BRACKET,ANGLE	1
35	PFOZZ	3120004469863	21335	EA28899	BEARING,PLAIN,SELF-	1
36	PFOZZ		11083	6D5707	LEVER,REMOTE CONTRO	1
37	PFOZZ	3040012537458	11083	3P7680	CONNECTING LINK,RIG	1
38	PFOZZ	5315012547407	11083	8P5715	PIN,SHOULDER,HEADLE	1
39	PFOZZ	3040012506508	11083	8P5717	LEVER,REMOTE CONTRO	1
40	PFOZZ	3120011648629	11083	9H2400	.BUSHING,SLEEVE	1
41	XAOZZ		11083	8P5719	.LEVER ASSY	1
42	PFOZZ	5315005865103	11083	6H3956	PIN,SPRING	1
43	PFOZZ	5315012679217	11083	3P7682	PIN,SHOULDER,HEADLE	1
44	PFOZZ	5360001499006	11083	1762456	SPRING,HELICAL,EXTE	1
45	PFOZZ	5306001402032	11083	4M0496	BOLT,MACHINE	1

(1) ITEM NO	(2) SMR CODE	(3) NSN	(4) CAGEC	(5) PART NUMBER	(6) DESCRIPTION AND USABLE ON CODES (UOC)	(7) QTY
46	PFOZZ	3120000143507	11083	4M0495	BEARING,PLAIN,ROD E	2
47	PAOZZ	5340012580158	11083	9P5955	BRACKET,DOUBLE ANGL	1
48	PFOZZ	5306012573821	11083	7G9727	ROD,THREADED END	1
49	PFOZZ	5306002604508	11083	0S1594	BOLT,MACHINE	1
50	PFOZZ	5310010402192	11083	0T0431	WASHER,FLAT	2
51	PFOZZ	5315012580222	11083	9K0922	PIN,STRAIGHT,HEADED	1
52	PFOZZ	5365011068771	11083	1V0844	SPACER,PLATE	1
53	PFOZZ	5310007257382	96906	MS35690-624	NUT,PLAIN,HEXAGON	3
54	PFOZZ	5315008161794	00198	PK379	PIN,COTTER	1
55	PFOZZ	5310011461218	11083	1L5081	WASHER,FLAT (SPACER)	1
56	PFOZZ	3110010659108	11083	7K2135	BEARING	4
57	PFOZZ	3040012535579	11083	3P7130	LEVER,REMOTE CONTRO	1
58	PFOZZ	5310008512682	96906	MS35691-17	NUT,PLAIN,HEXAGON	1
59	PFOZZ	5305000680511	80204	B1821BH038C125N	SCREW,CAP,HEXAGON H	1
60	PFOZZ	5310007616882	96906	MS51967-2	NUT,PLAIN,HEXAGON	1
61	PFOZZ	5310001174788	11083	9Y2695	WASHER,FLAT	4
62	PFOZZ	5306011954681	11083	3B1915	BOLT	5
63	PFOZZ	5305011646340	11083	7B8167	SCREW,CAP,HEXAGON H	1
64	PAOZZ	3040012537453	11083	4N7032	LEVER,REMOTE CONTRO	1
65	PFOZZ	5306012588559	11083	9D4571	ROD,THREADED END	1
66	PFOZZ	2910010588075	11083	4D4064	ROD END	2
67	PFOZZ	3040012535576	11083	9P5954	BELL CRANK	1
68	PFOZZ	5340009850823	80205	MS35812-4	CLEVIS,ROD END	1
69	PFOZZ	3040012537349	11083	9P5948	SHAFT,STRAIGHT	1
70	PFOZZ	5306002637301	11083	0L1351	BOLT,MACHINE	1
71	PFOZZ	2530012530440	11083	6P6253	LOCK,SHAFT	1
				END OF FIGURE		

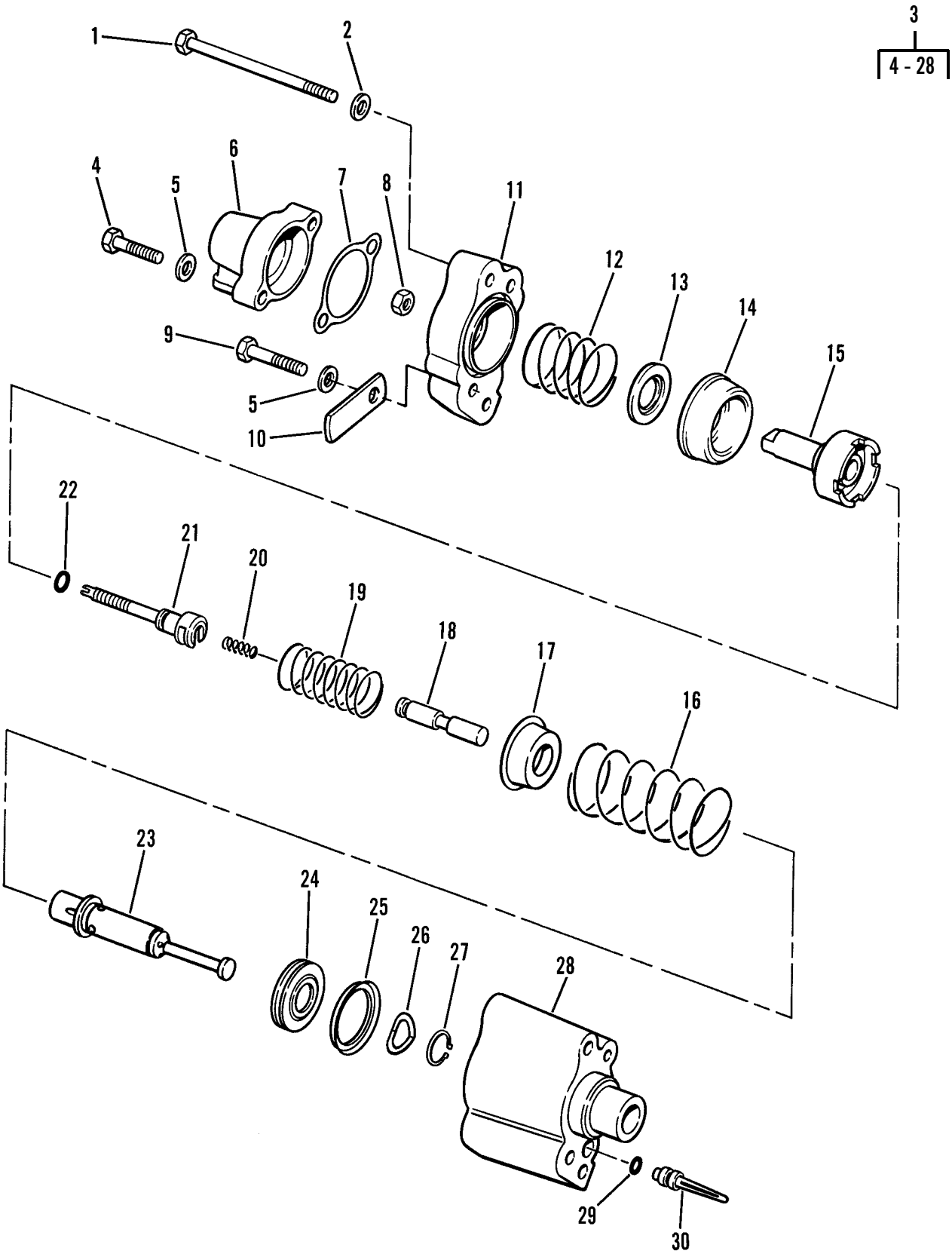

Figure 37. Fuel Ratio Control

(1) ITEM NO	(2) SMR CODE	(3) NSN	(4) CAGEC	(5) PART NUMBER	(6) DESCRIPTION AND USABLE ON CODES (UOC)	(7) QTY
					GROUP 0308 ENGINE SPEED GOVERNOR AND CONTROLS	
					FIG. 37 FUEL RATIO CONTROL	
1	PFHZZ	5305012107417	11083	6V5894	SCREW,CAP,HEXAGON H	2
2	PFHZZ	5310010512360	11083	5P0537	WASHER	2
3	PFHHH	2910012541018	11083	7W2830	CONTROL ASSEMBLY,FU	1
4	PFHZZ	5305011582039	11083	5P6945	.SCREW,CAP,HEXAGON H	2
5	PFHZZ	5310010512360	11083	5P0537	.WASHER	4
6	PAHZZ	4730011590892	11083	1W2076	.ELBOW,FLANGE TO TUB	2
7	PFHZZ	5330011575685	11083	4P9608	.GASKET	2
8	PFHZZ	5310006602649	96906	MS35690-424	.NUT,PLAIN,HEXAGON	2
9	PFHZZ	5306002533376	11083	2A5546	.BOLT,MACHINE	2
10	XAHZZ		11083	7W3369	.TAG	1
11	PFHZZ	5342012662809	11083	7W2829	.COVER,SPECIAL	2
12	XAHZZ		11083	7W2826	.SPRING,HELICAL,COMP	2
13	PAHZZ	5310012701259	11083	7W1691	.WASHER,SHOULDERED A	2
14	XAHZZ		11083	6I1564	.DIAPHRAGM,ACTUATOR	2
15	PAHZZ	5330012662560	11083	4W0924	.RETAINER,OIL SEAL	2
16	PFHZZ	5360011552630	11083	8N5765	.SPRING,HELICAL,COMP	1
17	PFHZZ	5340011596904	11083	7N9035	.RETAINER,HELICAL CO	2
18	PFHZZ	2910011590945	11083	7N9036	.SLIDE,DIRECTIONAL C	1
19	PAHZZ	5360012716110	11083	7W2827	.SPRING,HELICAL,COMP	2
20	PFHZZ	5360012704420	11083	9N1754	.SPRING,HELICAL,COMP	2
21	PFHZZ	3040012670261	11083	7W2015	.EXTENSION SHAFT	2
22	PFHZZ	5330010960912	11083	7J0204	.SEAL,SPECIAL	2
23	XAHZZ		11083	2W9316	.VALVE,REGULATING,FL	1
24	PFHZZ	3040011590937	11083	8N5764	.PISTON,LINEAR ACTUA	1
25	PFHZZ	5330011635831	11083	8N5763	.PACKING,PREFORMED	1
26	PFHZZ	5310001771039	70742	WBR6	.WASHER,SPRING TENSI	2
27	PFHZZ	5325009217106	11083	8F4610	.RING,RETAINING	1
28	XAHZZ		11083	7N9062	.HOUSING,MECHANICAL	2
29	PCHZZ	5331010532907	16764	1894643	O-RING	1
30	PFHZZ	4730011515707	11083	8N6680	RESTRICTOR UNIT,FLU	1
				END OF FIGURE		

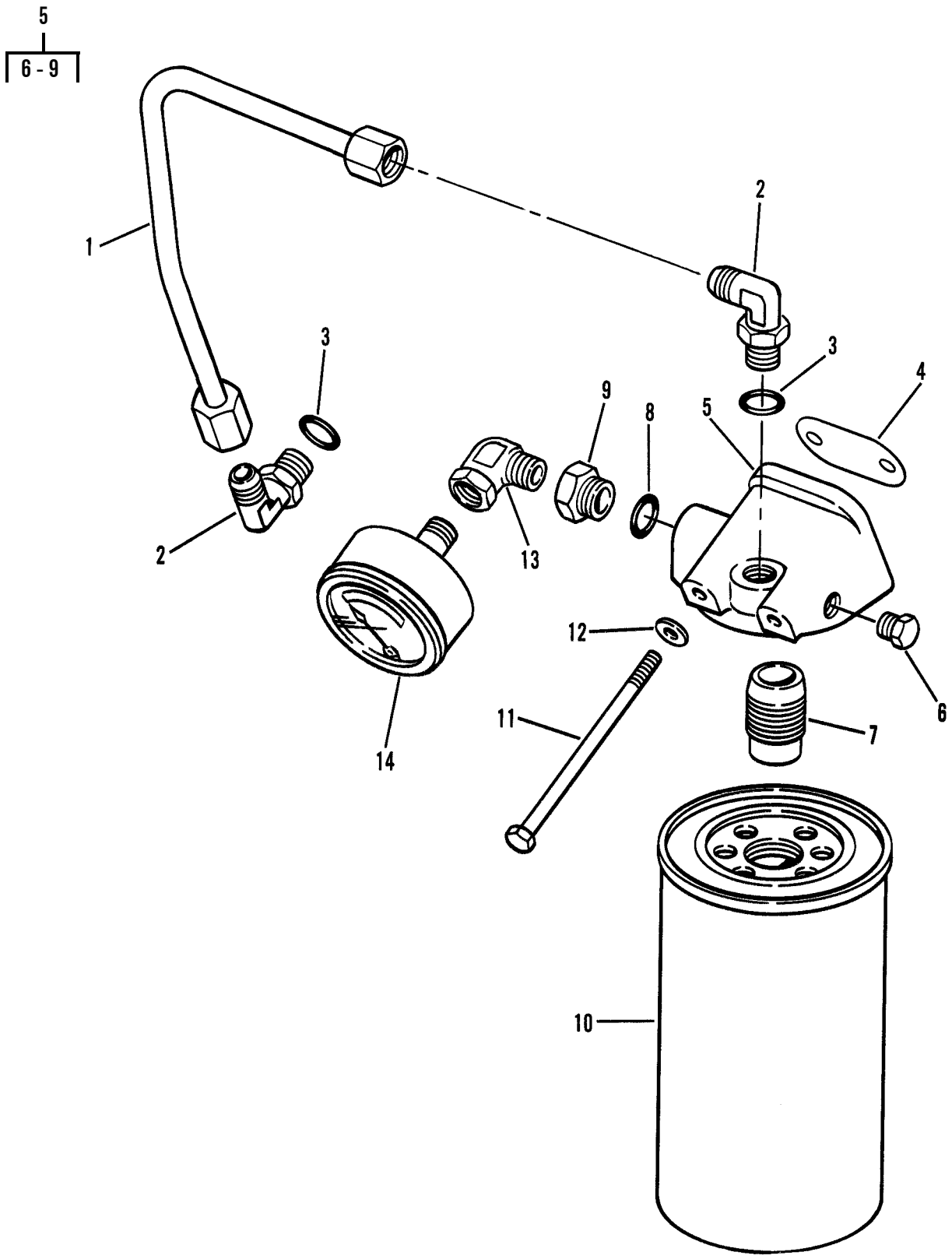

Figure 38. Secondary Fuel Filter

(1) ITEM NO	(2) SMR CODE	(3) NSN	(4) CAGEC	(5) PART NUMBER	(6) DESCRIPTION AND USABLE ON CODES (UOC)	(7) QTY
					GROUP 0309 FUEL FILTERS	
					FIG. 38 SECONDARY FUEL FILTER	
1	PFOZZ	4710012533534	11083	4W9057	TUBE ASSEMBLY,METAL	1
2	PFOZZ	4730011681050	11083	0307947	ELBOW,TUBE TO BOSS	2
3	PCOZZ	5331008013354	25184	906-737-70	O-RING	2
4	PFOZZ	5330011586284	11083	7N9520	GASKET	1
5	PFOZZ	2910011555195	11083	7N9519	HEAD,FLUID FILTER	1
6	PFOZZ	4730009247886	11083	5M6214	.PLUG,PIPE	1
7	PFOZZ	5307010512364	11083	9S4167	.STUD,PLAIN	1
8	PCOZZ	5331008013354	25184	906-737-70	.O-RING	1
9	PFOZZ	4730011722970	11083	3Y2888	.ADAPTER,STRAIGHT,PI	1
10	PAOZZ	2910014449487	11083	1R0750	FILTER,FLUID PART OF KIT P/N 5R6286 ...	1
11	PFOZZ	5306010691382	11083	6B4198	BOLT	2
12	PFOZZ	5310008238804	96906	MS27183-9	WASHER,FLAT	2
13	PFOZZ	4730002315605	11083	3B6552	ELBOW,PIPE	1
14	PFOZZ	6620011582910	03479	05-35-756	GAGE,PRESSURE,DIAL	1
				END OF FIGURE		

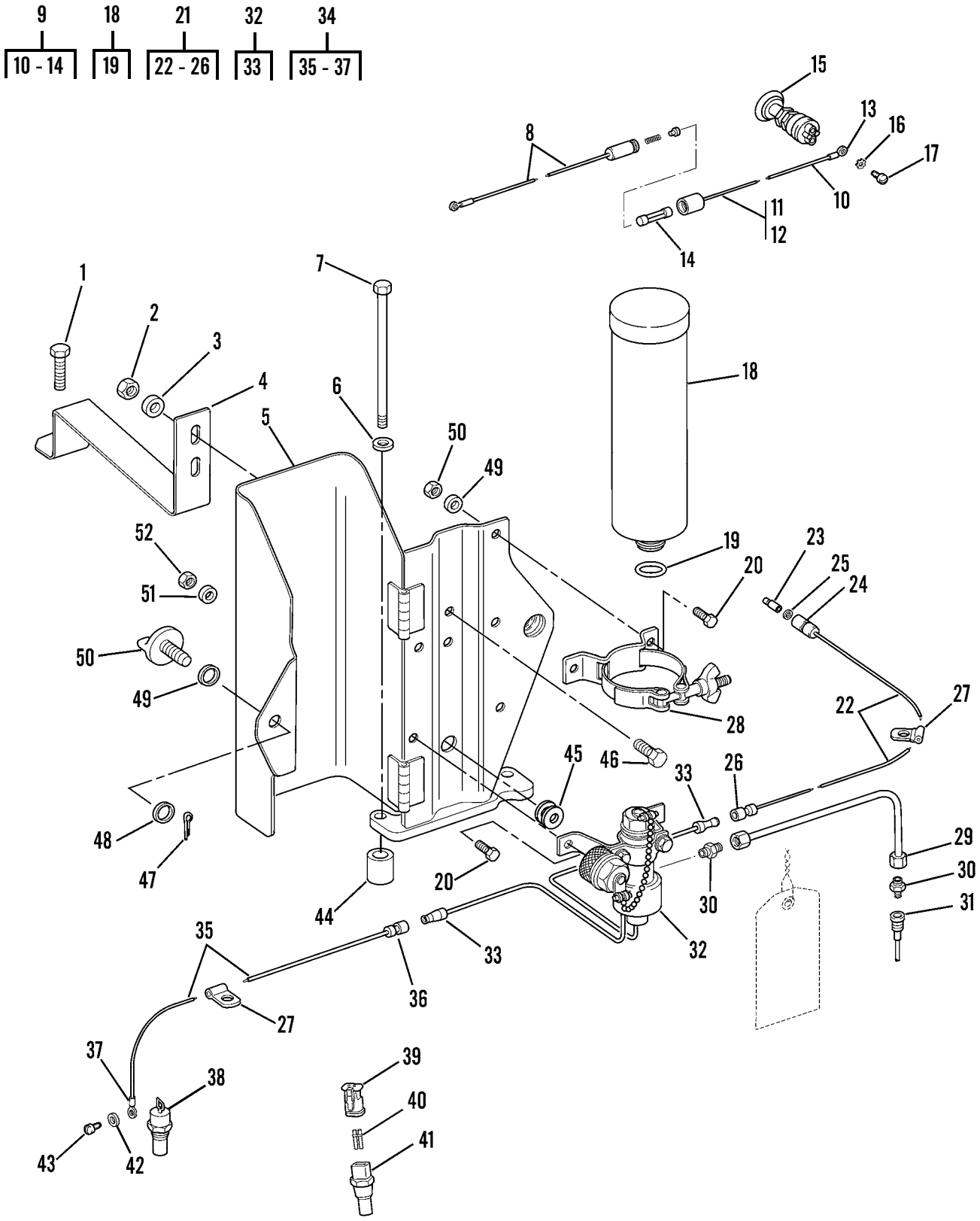

Figure 39. Ether Aid Group

(1) ITEM NO	(2) SMR CODE	(3) NSN	(4) CAGEC	(5) PART NUMBER	(6) DESCRIPTION AND USABLE ON CODES (UOC)	(7) QTY
					GROUP 0311 ENGINE STARTING AIDS	
					FIG. 39 ETHER AID GROUP	
1	PFOZZ	5305010156841	11083	0S1591	SCREW	1
2	PFOZZ	5310014297859	11083	6V-8801	NUT,PLAIN,HEXAGON	2
3	PFOZZ	5310008098541	96906	MS27183-27	WASHER,FLAT	2
4	PFOZZ	5342012676024	11083	3T2290	BRACKET,ENGINE ACCE	1
5	PFOZZ	5975011474455	11083	7G6359	JUNCTION BOX	1
6	PFOZZ	5310001174788	11083	9Y2695	WASHER,FLAT	2
7	PFOZZ	5306004265058	11083	4F0411	BOLT,MACHINE	2
8	PFOZZ		11083	8P9365	WIRE	1
9	AOOOO		11083	3T2927	LEAD,ELECTRICAL	1
10	MOOZZ		11083	3T2927-14	.LEAD,ELECTRICAL 14 IN, MAKE FROM WIRE P/N DA2524-7	1
11	PFOZA	5999010590884	77060	5290793	.CONTACT,ELECTRICAL	1
12	PFOZZ	5920010590882	11083	2S5012	.FUSEHOLDER SUBASSEM	1
13	PFOZZ	5940001434780	96906	MS25036-108	.TERMINAL,LUG	1
14	PAOZZ	5920002846787	81349	F02A250V5A	.FUSE,CARTRIDGE	1
15	PFOZZ	5930011681025	11083	3T0306	SWITCH,PUSH	1
16	PFOZZ	5310005967693	96906	MS35335-31	WASHER,LOCK	2
17	PFOZZ	5305000598263	80205	MS35214-38	SCREW,MACHINE	2
18	PCOZZ	2910006469727	78280	LP-535-1	CYLINDER,ENGINE STA	1
19	PFOZZ	5330013029890	11083	7N9801	.GASKET	1
20	PFOZZ	5306002264825	80204	B1821BH031C075N	BOLT,MACHINE	6
21	AOOOO		11083	3T2288	WIRE ASSY	1
22	MOOZZ		11083	3T2288-35.4	.WIRE,ELECTRICAL 35.4 IN, MAKE FROM WIRE P/N DA2524-7	1
23	PFOZZ	5940001774356	75347	C19303	.TERMINAL,QUICK DISC	1
24	PFOZZ	5935008338561	19207	8338561	.SHELL,ELECTRICAL CO	1
25	PFOZZ	5310002988903	19207	8338570	.WASHER,FLAT	1
26	PFOZZ	5940010973578	11083	6N9587	.TERMINAL,QUICK DISC	1
27	PFOZZ	5340004481795	75272	COV-0413	CLAMP,LOOP	2
28	PFOZZ	5340010882385	53203	300 450	CLAMP,LOOP	2
29	PFOZZ	4710012079960	11083	3T2287	TUBE ASSEMBLY,METAL	1
30	PFOZZ	4730002784339	11083	5P7907	ADAPTER,STRAIGHT,PI	2
31	PFOZZ	2910011550313	11083	9G0343	NOZZLE,QUICK-START	1
32	PFOZZ	2910011497860	61112	QS5-2CT	VALVE,ENGINE START	1
33	PFOZZ	5940002910085	78174	STP163	.TERMINAL,QUICK DISC	2
34	AOOOO		11083	3T2289	LEAD,ELECTRICAL	1
35	MOOZZ		11083	3T2289-20	.LEAD,ELECTRICAL 19.68 IN, MAKE FROM WIRE P/N DA2524-7	1
36	PFOZZ	5940010973578	11083	6N9587	.TERMINAL,QUICK DISC	1
37	PFOZZ	5940001434774	96906	MS25036-153	.TERMINAL,LUG	1
38	PFOZZ	5930011017845	11083	6N5899	SWITCH,THERMOSTATIC REPLACED BY PN'S 1863736, 1552270, 2033220	1
39	PFOZZ	5930014777177	11083	1552270	PLUG,ELECTRICAL USE WITH PN'S 1863736 AND 2033220 TO REPLACE PN 6N5899	1
40	PFOZZ	5935014290888	11083	1863736	CONNECTOR,PLUG,ELEC REPLACE PN 6N5899 WITH PN'S 1863736, 1552270, 2033220	2

(1) ITEM NO	(2) SMR CODE	(3) NSN	(4) CAGEC	(5) PART NUMBER	(6) DESCRIPTION AND USABLE ON CODES (UOC)	(7) QTY
41	PFOZZ	5930014970562	11083	2033220	SWITCH,THERMOSTATIC USE WITH .. PN'S 1863736 AND 1553220 TO REPLACE PN 6N5899	1
42	PFOZZ	5310005590070	96906	MS35333-38	WASHER,LOCK	1
43	PFOZZ	5305011845919	11083	6V8376	SCREW,MACHINE	1
44	PFOZZ	5365012702768	11083	2H9233	SPACER,SLEEVE	2
45	PFOZZ	5325002496345	70485	2758	GROMMET,NONMETALLIC	1
46	PFOZZ	5306002604508	11083	0S1594	BOLT,MACHINE	2
47	PFOZZ	5315008161794	00198	PK379	PIN,COTTER	1
48	PFOZZ	5310002213150	11083	0L1365	WASHER,FLAT	1
49	PFOZZ	5310011648541	11083	0063801	WASHER,FLAT	1
50	PFOZZ	5305011638242	11083	8T3738	THUMBSCREW	1
51	PFOZZ	5310010955910	11083	5P4116	WASHER,SQUARE CONE	6
52	PFOZZ	5310008807744	96906	MS51967-5	NUT,PLAIN,HEXAGON	6
				END OF FIGURE		

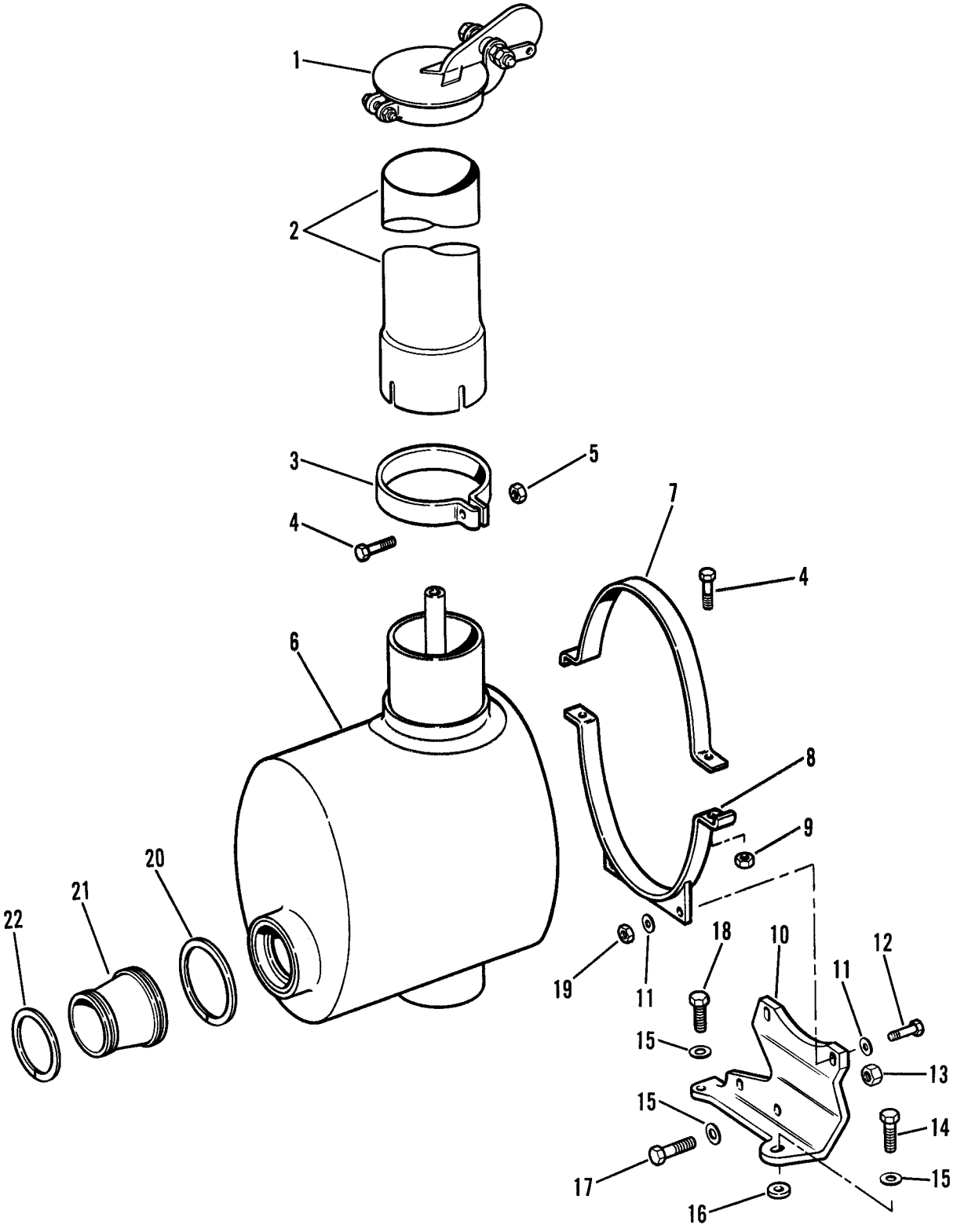

Figure 40. Muffler and Exhaust

(1) ITEM NO	(2) SMR CODE	(3) NSN	(4) CAGEC	(5) PART NUMBER	(6) DESCRIPTION AND USABLE ON CODES (UOC)	(7) QTY
					GROUP 04 EXHAUST SYSTEM	
					GROUP 0401 MUFFLER AND PIPES	
					FIG. 40 MUFFLER AND EXHAUST	
1	PFOZZ	2990002513656	11083	9S7148	CAP ASSEMBLY,PROTEC	1
2	PFOZZ	2990010424776	18265	EEH00-0846	PIPE,EXHAUST	1
3	PFOZZ	5340002409238	11083	8S6783	CLAMP,LOOP	1
4	PFOZZ	5305010269518	11083	0S1571	SCREW,CAP,HEXAGON H	4
5	PFOZZ	5310004988409	11083	1B5355	NUT,PLAIN,HEXAGON	1
6	PFOZZ	2990004171356	18265	MJM12- 0332	MUFFLER,EXHAUST	1
7	PFOZZ	2990012676020	11083	7N6685	HANGER,ENGINE EXHAU	2
8	PFOZZ	2990002379928	11083	7N6686	SUPPORT ASSEMBLY,MU	2
9	PFOZZ	5310014297859	11083	6V8801	NUT,PLAIN,HEXAGON	4
10	PFOZZ	5342012572399	11083	2P8714	BRACKET,SPECIAL	1
11	PFOZZ	5310004705567	11083	8M9024	WASHER,FLAT	8
12	PFOZZ	5305010156841	11083	0S1591	SCREW	4
13	PFOZZ	5310007680318	96906	MS51967-14	NUT,PLAIN,HEXAGON	2
14	PFOZZ	5306002638978	11083	0S1587	BOLT,MACHINE	1
15	PFOZZ	5310008095998	96906	MS27183-18	WASHER,FLAT	4
16	PFOZZ	5365012648512	11083	7N2597	SPACER,SLEEVE	1
17	PFOZZ	5306002736357	11083	1A1460	BOLT,MACHINE	2
18	PFOZZ	5306004238117	11083	0S1595	BOLT,MACHINE	1
19	PFOZZ	5310004988409	11083	1B5355	NUT,PLAIN,HEXAGON	4
20	PFOZZ	2815009208263	11083	2S5301	RING,PISTON	1
21	PFOZZ	2815009208262	11083	2S5551	COUPLING,REDUCER	1
22	PFOZZ	5330009947409	11083	5L8855	SEAL RING,METAL	1
				END OF FIGURE		

1
2 - 8

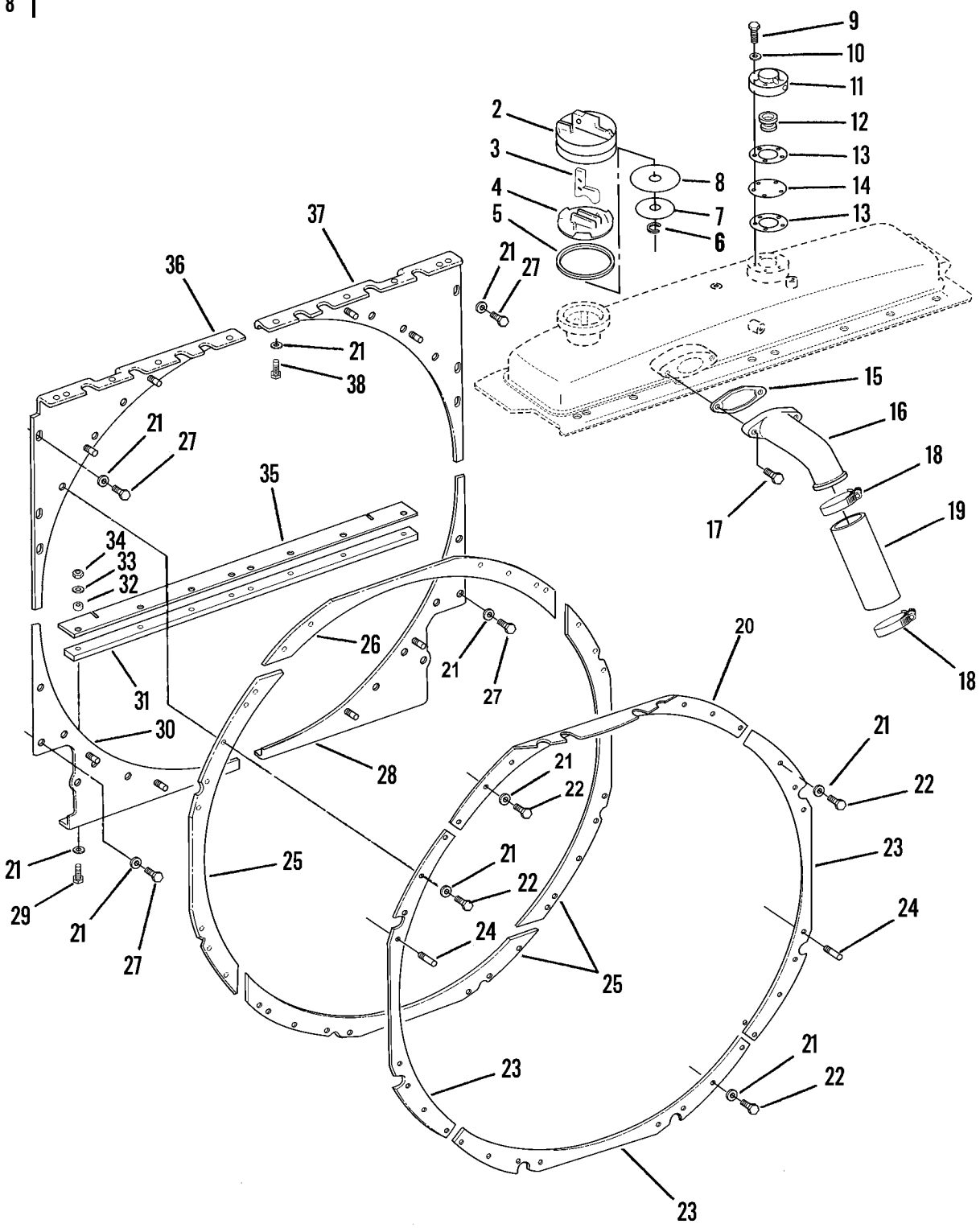

Figure 41. Radiator Group

(1) ITEM NO	(2) SMR CODE	(3) NSN	(4) CAGEC	(5) PART NUMBER	(6) DESCRIPTION AND USABLE ON CODES (UOC)	(7) QTY
					GROUP 05 COOLING SYSTEM	
					GROUP 0501 RADIATOR, EVAPORATIVE COOLER, OR HEAT EXCHANGER	
					FIG. 41 RADIATOR GROUP	
1	PFOZZ	2930008521174	11083	7S7809	CAP,FILLER OPENING	1
2	PFOZZ	2930011430186	11083	7N2957	.COVER	1
3	PFOZZ	2930011430185	11083	2S6097	.TANG	1
4	PFOZZ	2930011272515	11083	7N5565	.CAP,FILLER OPENING	1
5	PFOZZ	2590010647493	11083	9S9979	.RING	1
6	PFOZZ	5325008532384	80756	RRT-500	.RING,RETAINING	1
7	PFOZZ	5310004134983	11083	2S2846	.WASHER,FLAT	1
8	PFOZZ	5330010589176	11083	2P3230	.GASKET	1
9	PFOZZ	5306009305643	11083	1A9579	BOLT,MACHINE	5
10	PFOZZ	5310000814219	96906	MS27183-12	WASHER,FLAT	5
11	PFOZZ	5340002462746	11083	5S1211	COVER,ACCESS	1
12	PFOZZ	6620009129151	11083	5S1218	THERMOSTAT,FLOW CON	1
13	PFOZZ	5330009318011	11083	5S4629	GASKET	2
14	PFOZZ	2930009309098	11083	5S1213	PLATE	1
15	PFOZZ	5330010697444	11083	1P6434	GASKET	1
16	PFOZZ	4730012531982	11083	4N7612	ELBOW,FLANGE TO HOS	1
17	PFOZZ	5306004238117	11083	0S1595	BOLT,MACHINE	2
18	PFOZZ	4730011067246	11083	5P4868	CLAMP,HOSE	2
19	MOOZZ		11083	5P1263-8.27	HOSE,NONMETALLIC UPPER ..... RADIATOR HOSE,8.27IN, MAKE FROM HOSE P/N MS521301A223R	9
20	PFFZZ	2930012541019	11083	6N0028	STRIP,FAN BAFFLE	1
21	PFFZZ	5310001174788	11083	9Y2695	WASHER,FLAT	37
22	PFFZZ	5306002604508	11083	0S1594	BOLT,MACHINE	21
23	PFFZZ	5365012574351	11083	9S9269	SPACER,PLATE	3
24	PFFZZ	5307011612653	11083	6H0406	STUD,PLAIN	4
25	PFFZZ	2930004035498	11083	9S9262	BAFFLE,FAN	3
26	PFFZZ	5365012574352	11083	6N0027	SPACER,PLATE	1
27	PFFZZ	5305000680511	80204	B1821BH038C125N	SCREW,CAP,HEXAGON H	6
28	PFFZZ	2930012541058	11083	6N1613	SHROUD,FAN,RADIATOR	1
29	PFFZZ	5305010156841	11083	0S1591	SCREW	8
30	PFFZZ	2930012541059	11083	4N7682	SHROUD,FAN,RADIATOR	1
31	PFFZZ	2590012534702	11083	4N7688	BEZEL,AUTOMOTIVE TR	1
32	PFFZZ	5365012574395	11083	1S1150	SPACER,SLEEVE	8
33	PFFZZ	5310009542993	77445	107277	WASHER,FLAT	8
34	PFFZZ	5310014297859	11083	6V8801	NUT,PLAIN,HEXAGON	8
35	PFFZZ	2930012539493	11083	8N3877	BAFFLE,RADIATOR	1
36	PFFZZ	2930012541060	11083	4N7987	SHROUD,FAN,RADIATOR	1
37	PFFZZ	2930012541057	11083	4N7683	SHROUD,FAN,RADIATOR	1
38	PFFZZ	5306004238194	11083	1A2029	BOLT,MACHINE	10
				END OF FIGURE		

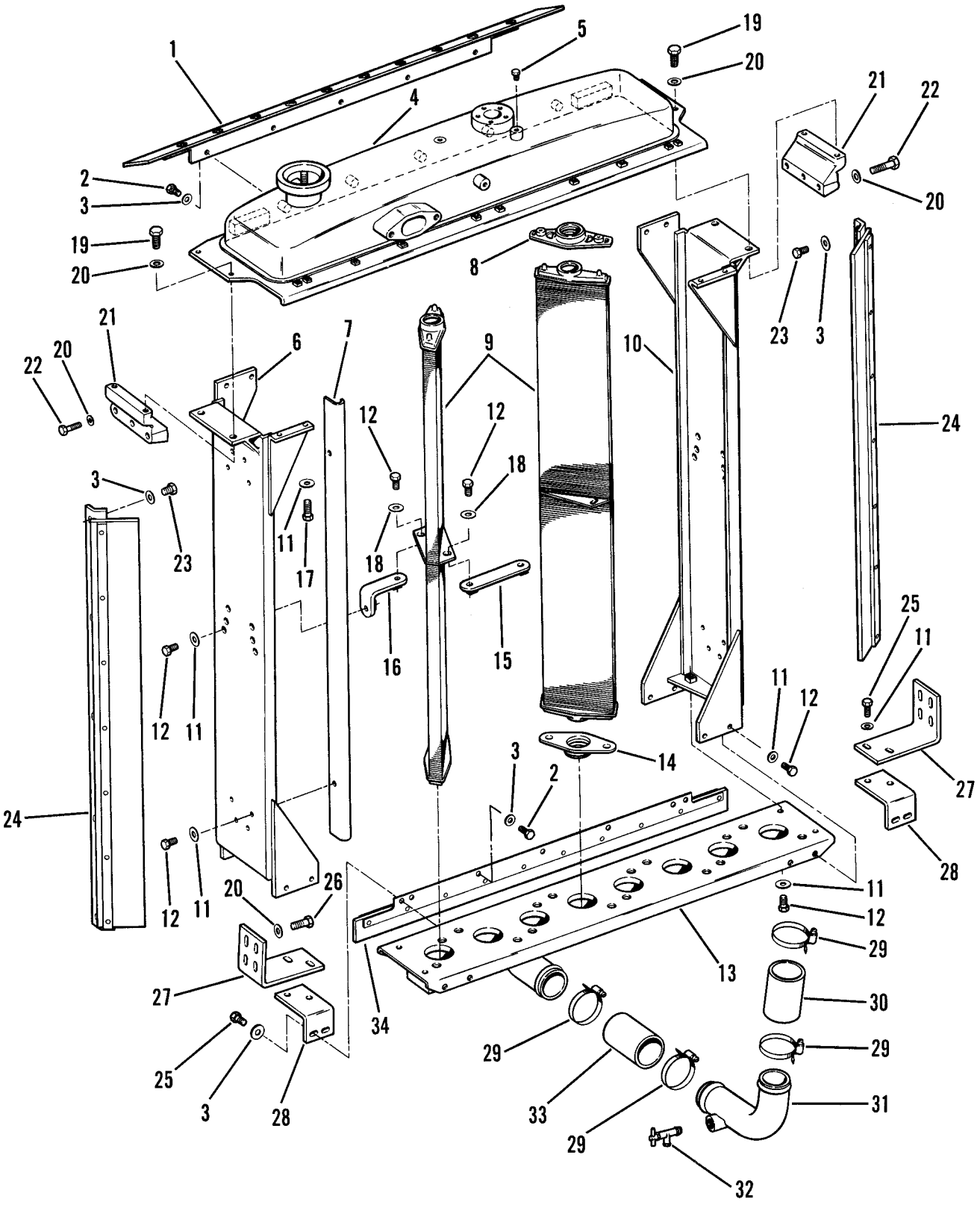

Figure 42. Radiator Tank Assembly (Non-SLEP Machines) (Sheet 1 of 2)

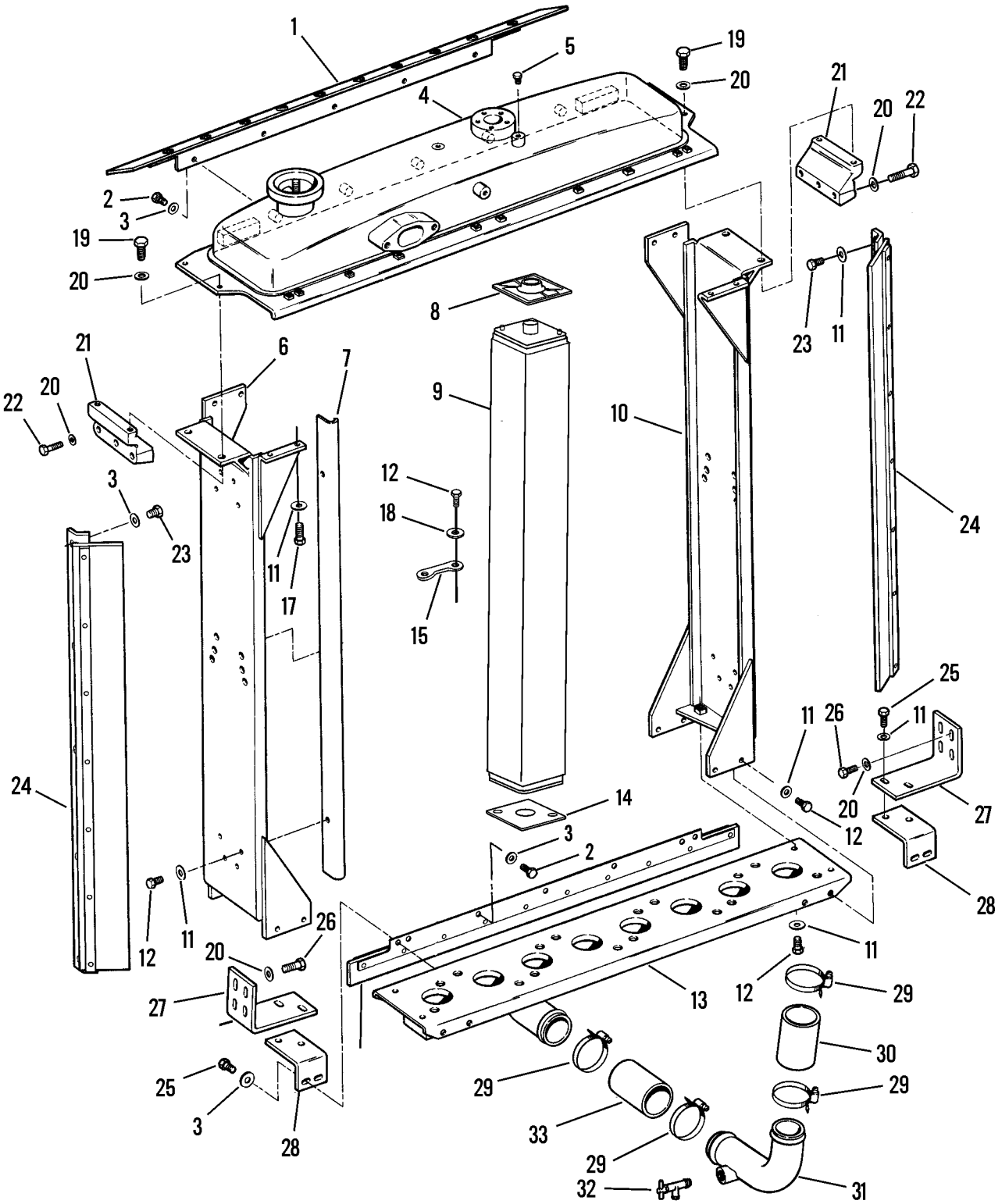

Figure 42. Radiator Tank Assembly (SLEP Machines) (Sheet 2 of 2)

(1) ITEM NO	(2) SMR CODE	(3) NSN	(4) CAGEC	(5) PART NUMBER	(6) DESCRIPTION AND USABLE ON CODES (UOC)	(7) QTY
					GROUP 0501 RADIATOR, EVAPORATIVE COOLER, OR HEAT EXCHANGER	
					FIG. 42 RADIATOR TANK ASSEMBLY (NON-SLEP AND SLEP)	
1	PFFZZ	2930012541020	11083	8N3880	BAFFLE ASSEMBLY,RAD	1
2	PFFZZ	5305002528919	11083	0S0509	SCREW,CAP,HEXAGON H	8
3	PFFZZ	5310001174788	11083	9Y2695	WASHER,FLAT	22
4	PFFZZ	2930012540274	11083	1W2851	TANK SECTION,FLUID	1
5	PFFZZ	4730009247886	11083	5M6214	PLUG,PIPE	2
6	PFFZZ	2510012538659	11083	1W3504	FRAME SECTION,STRUC	1
7	PFFZZ	5340012593955	11083	2W5255	STRAP,RETAINING	2
8	PFFZZ	5330011689562	11083	1606386	SEAL,END TANK,RADIA	8
8	PFFZZ	5330014384201	11083	4P9943	GASKET USE ON SERIAL # ENDING . IN R	8
9	PAFZZ	2930011756489	11083	2W5540	RADIATOR,ENGINE COO	8
9	PAFZZ	2930014983138	11083	4P0894	CORE,RADIATOR USED ON SERIAL # ENDING IN R	8
10	PFFZZ	2510012538658	11083	1W3506	FRAME SECTION,STRUC	1
11	PFFZZ	5310008098541	96906	MS27183-27	WASHER,FLAT	26
12	PFFZZ	5305007175460	80205	NASM35307-359	SCREW,CAP,HEXAGON H	38
13	PFFZZ	2930012540275	11083	1W2856	TANK SECTION,FLUID	1
14	PFFZZ	5330011689561	11083	1606387	SEAL,END TANK,RADIA	8
14	PFFZZ		11083	4P9942	GASKET USE ON SERIAL # ENDING . IN R	8
15	PFFZZ	5340014977032	11083	2W5555	PLATE,MOUNTING USE ON SERIAL # ENDING IN R	7
15	PFFZZ	5340012580212	11083	2W5563	PLATE,MOUNTING	7
16	PFFZZ	5340012580149	11083	2W5567	BRACKET,ANGLE	2
17	PFFZZ	5305010665199	11083	9B7237	SCREW	4
18	PFFZZ	5310012573245	11083	8T2561	WASHER,FLAT	16
19	PFFZZ	5306004238117	11083	0S1595	BOLT,MACHINE	1
20	PFFZZ	5310008095997	96906	MS27183-17	WASHER,FLAT	16
21	PFFZZ	5342012541071	11083	7N0752	BRACKET,ENGINE ACCE	2
22	PFFZZ	5306002736357	11083	1A1460	BOLT,MACHINE	6
23	PFFZZ	5305007215492	80204	B1821BH038C063N	SCREW,CAP,HEXAGON H	10
24	PFFZZ	5342012541072	11083	7N2436	BRACKET,ENGINE ACCE	2
25	PFFZZ	5306002604508	11083	0S1594	BOLT,MACHINE	8
26	PFFZZ	5306004240086	11083	7B3235	BOLT,MACHINE	6
27	PFFZZ	5340012572246	11083	8N3617	BRACKET,ANGLE	2
28	PFFZZ	5340012579186	11083	8N3616	BRACKET,ANGLE	2
29	PFOZZ	4730011067246	11083	5P4868	CLAMP,HOSE	4
30	MOOZZ		11083	5P1262-5	HOSE RADIATOR LOWER 5.0 IN, ... MAKE FROM HOSE P/N MS521301A221R	1
31	PFOZZ	4710012538529	11083	1W2533	TUBE,BENT,METALLIC	1
32	PFOZZ	4820000268473	11083	8F8151	COCK,DRAIN	1
33	MOOZZ		11083	5P1262-6	HOSE RADIATOR LOWER 6.0 IN, ... MAKE FROM HOSE P/N MS521301A221R	1
34	PFFZZ	2510012537397	11083	8N3882	FRAME SECTION,STRUC	1
				END OF FIGURE		

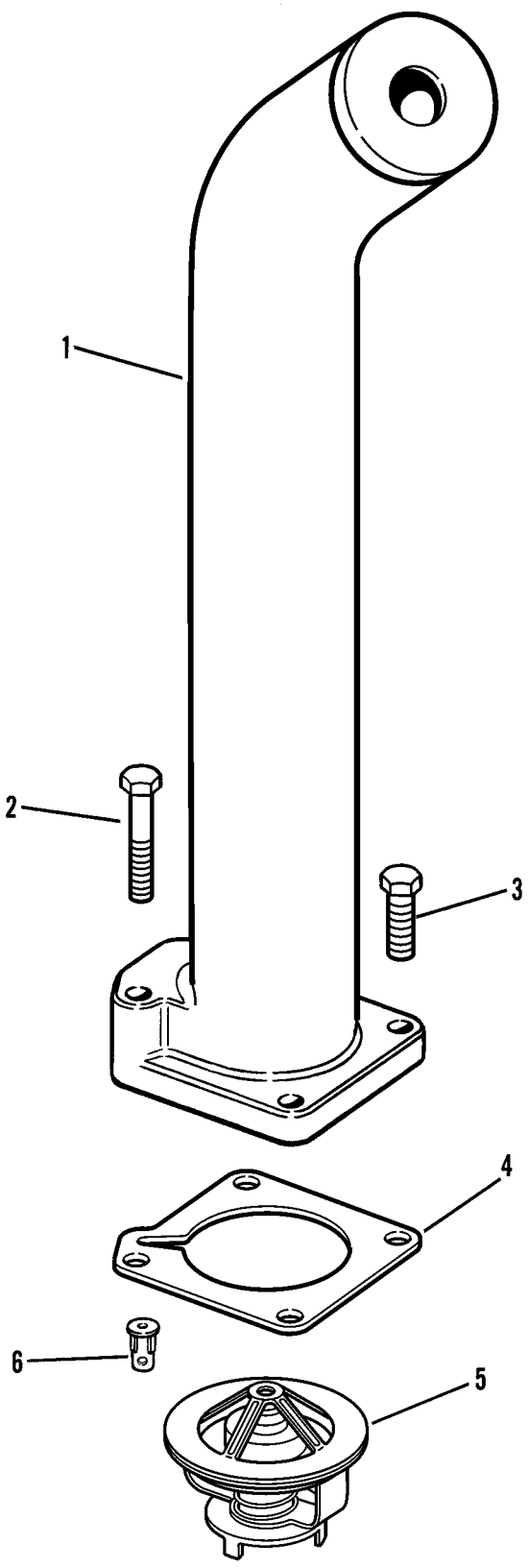

Figure 43. Water Temperature Housing and Regulator

(1) ITEM NO	(2) SMR CODE	(3) NSN	(4) CAGEC	(5) PART NUMBER	(6) DESCRIPTION AND USABLE ON CODES (UOC)	(7) QTY
					GROUP 0503 WATER MANIFOLD, HEADERS, THERMOSTATS AND HOUSING GASKET	
					FIG. 43 WATER TEMPERATURE HOUSING AND REGULATOR	
1	PFOZZ	4730012536926	11083	1W7529	ELBOW,FLANGE TO TUB	1
2	PFOZZ	5306010949106	11083	0S1590	BOLT,MACHINE	1
3	PFOZZ	5305000680511	80204	B1821BH038C125N	SCREW,CAP,HEXAGON H	3
4	PFOZZ	5330010948058	11083	7N0944	GASKET PART OF KIT P/N 5R6291 ..	1
5	PFOZZ	6620010081893	78493	4A308-21	THERMOSTAT,FLOW CON	1
6	PFOZZ	4820011044091	11083	8N4485	VALVE,FLOW CONTROL	1
				END OF FIGURE		

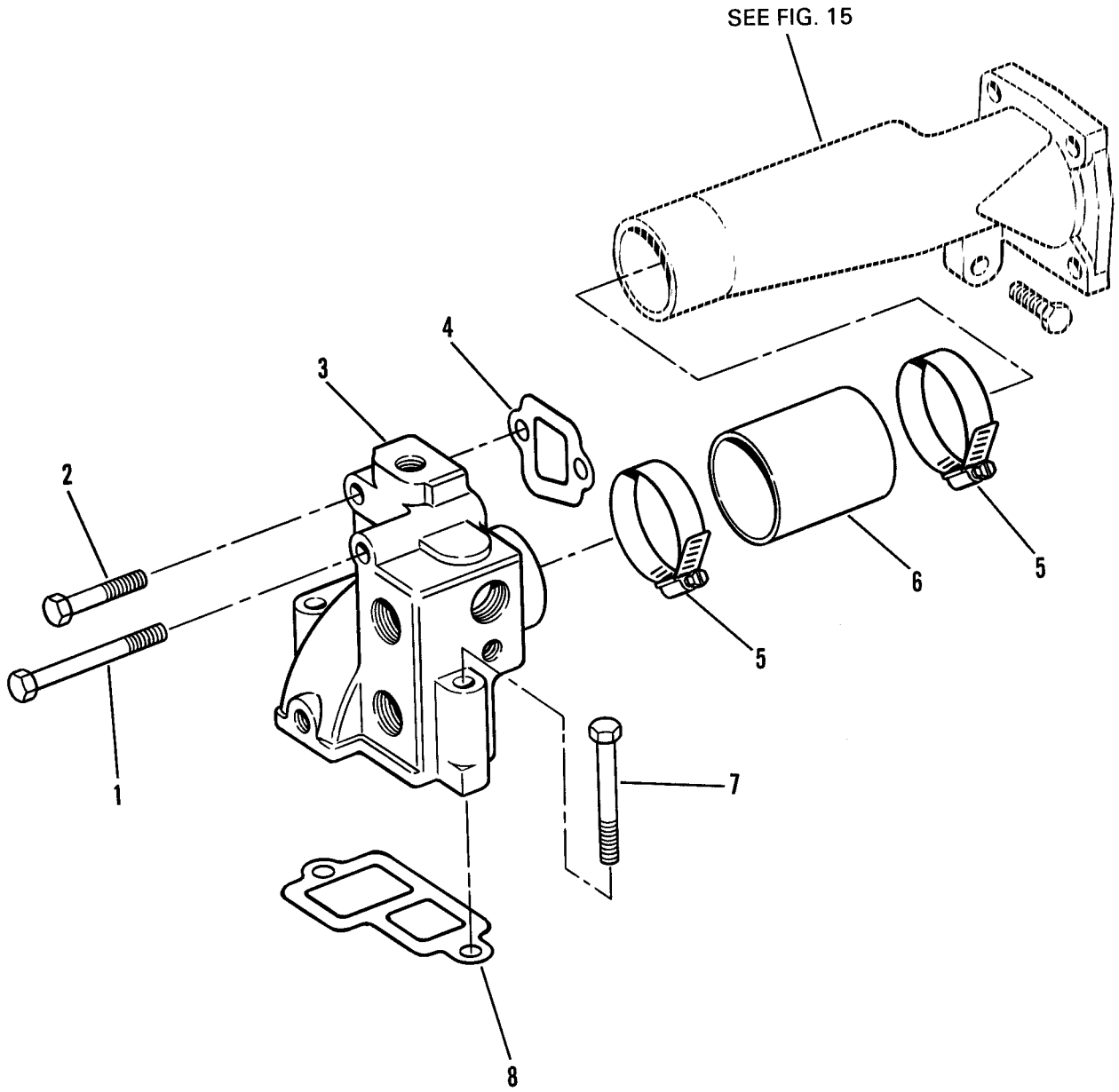

Figure 44. Water Lines Group

(1) ITEM NO	(2) SMR CODE	(3) NSN	(4) CAGEC	(5) PART NUMBER	(6) DESCRIPTION AND USABLE ON CODES (UOC)	(7) QTY
					GROUP 0504 WATER PUMP	
					FIG. 44 WATER LINES GROUP	
1	PFOZZ	5305002528906	11083	0T0065	SCREW	1
2	PFOZZ	5306010949106	11083	0S1590	BOLT,MACHINE	1
3	PFOZZ	2930011496719	11083	1N3958	WATER OUTLET,ENGINE	1
4	PFOZZ	5330010675728	11083	2P6132	GASKET PART OF KIT P/N 5R6291 ..	1
5	PFOZZ	4730011067246	11083	5P4868	CLAMP,HOSE	2
6	MOOZZ		11083	5P1260-3	HOSE,PREFORMED 3.0 IN, MAKE ... FROM HOSE P/N 5P1260	1
7	PFOZZ	5306004262932	11083	0S1619	BOLT,MACHINE	2
8	PFOZZ	5330011278574	11083	7N0200	GASKET	1
				END OF FIGURE		

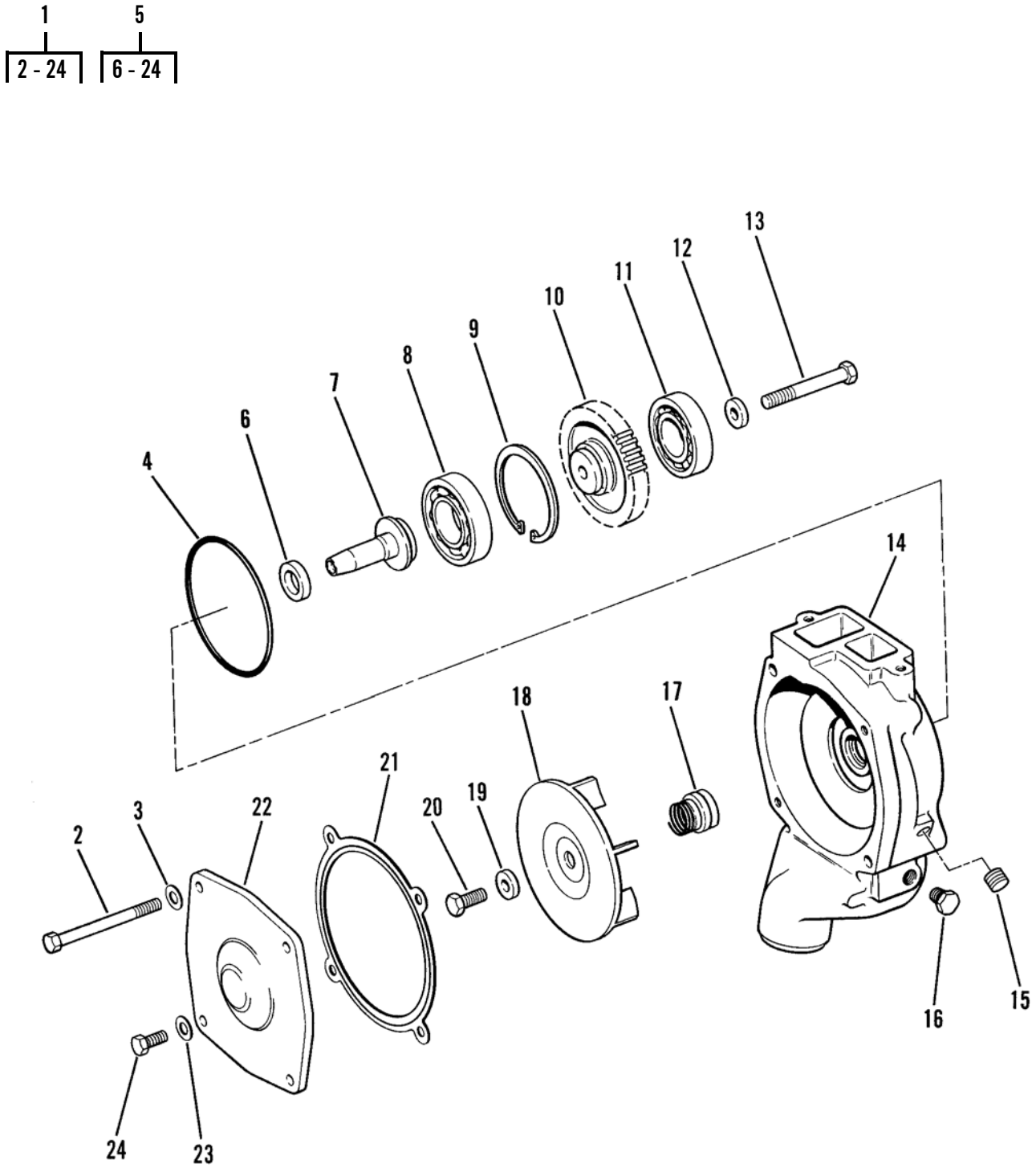

Figure 45. Water Pump

(1) ITEM NO	(2) SMR CODE	(3) NSN	(4) CAGEC	(5) PART NUMBER	(6) DESCRIPTION AND USABLE ON CODES (UOC)	(7) QTY
					GROUP 0504 WATER PUMP	
					FIG. 45 WATER PUMP	
1	AFOFF		11083	7N5909	PUMP,COOLING SYSTEM	1
2	PFOZZ	5306011591513	11083	0T0055	.BOLT,MACHINE	2
3	PFOZZ	5310001174788	11083	9Y2695	.WASHER,FLAT	2
4	PFFZZ	5331006635709	11083	5F3106	.O-RING	1
5	AFFZZ		11083	2W8001	.PUMP,COOLING SYSTEM DEALER ... EXCHANGE ITEM, PN 0R1003	1
5	PFFZZ	2930014982770	11083	1727767	.PUMP,COOLING SYSTEM REPLACES . PN 2W8001,DEALER EXCHANGE ITEM, PN 0R1003	1
6	PFFZZ	5330013517095	11083	8C5210	..SEAL,PLAIN	1
7	PFFZZ	3040014759618	11083	1725185	..SHAFT,SHOULDERED USE WITH ... PUMP PN 1727767 PART OF KIT P/N 1700564	1
7	PFFZZ	3040011780698	11083	2W7255	..SHAFT,SHOULDERED PART OF KIT . P/N 1700564	1
8	PFFZZ	3110005545302	12128	W55	..BEARING,BALL,ANNULA PART OF .. KIT P/N 1700564	1
9	PFFZZ	5365010687087	11083	1K6985	..RING PART OF KIT P/N 1700564 .	1
10	PFFZZ	3020012674337	11083	7W0450	..GEAR,HELICAL	1
11	PFFZZ	3110005165490	11083	8H9789	..BEARING,BALL,ANNULA PART OF .. KIT P/N 1700564	1
12	PFFZZ	5310003750518	61510	CKE42A	..WASHER,FLAT	1
13	PFFZZ	5306002638950	11083	3B8428	..BOLT,MACHINE PART OF KIT P/N . 1700564	1
14	XAFZZ		11083	1W4619	..HOUSING,COOLANT PUM	1
14	PFFZZ	2930014982769	11083	1727827	..HOUSING,COOLANT PUM USE WITH PUMP PN 1727767	1
15	PAFZZ	4330012031250	11083	4N5834	..FILTER ELEMENT,FLUI PART OF .. KIT P/N 1700564	1
16	PFFZZ	4730000892515	11083	5M6213	..PLUG,PIPE	1
17	PFFZZ	5330014693187	11083	1313815	..GASKET SET PART OF KIT P/N ... 1700564	1
18	PFFZZ	2930011264959	11083	7N5910	..IMPELLER,PUMP,CENTR	1
18	PFFZZ	4320014759634	11083	1725189	..IMPELLER,PUMP,CENTR USE WITH PUMP PN 1727767	1
19	PFFZZ	5310009998288	11083	9M6527	..WASHER,FLAT PART OF KIT P/N .. 5R6291	1
20	PFFZZ	5306002604508	11083	OS1594	..BOLT,MACHINE PART OF KIT P/N . 1700564	1
21	KFFZZ		11083	154-4482	..SEAL,PLAIN PART OF KIT P/N ... 1700564	1
21	PFFZA	5330014983662	11083	1720038	..GASKET USE WITH PUMP PN 1727767	1
22	PFFZZ	5340011517395	11083	8N5929	..COVER,ACCESS	1
23	PFFZZ	5310001174788	11083	9Y2695	..WASHER,FLAT	2
24	PFFZZ	5306002637301	11083	0L1351	..BOLT,MACHINE	2
				END OF FIGURE		

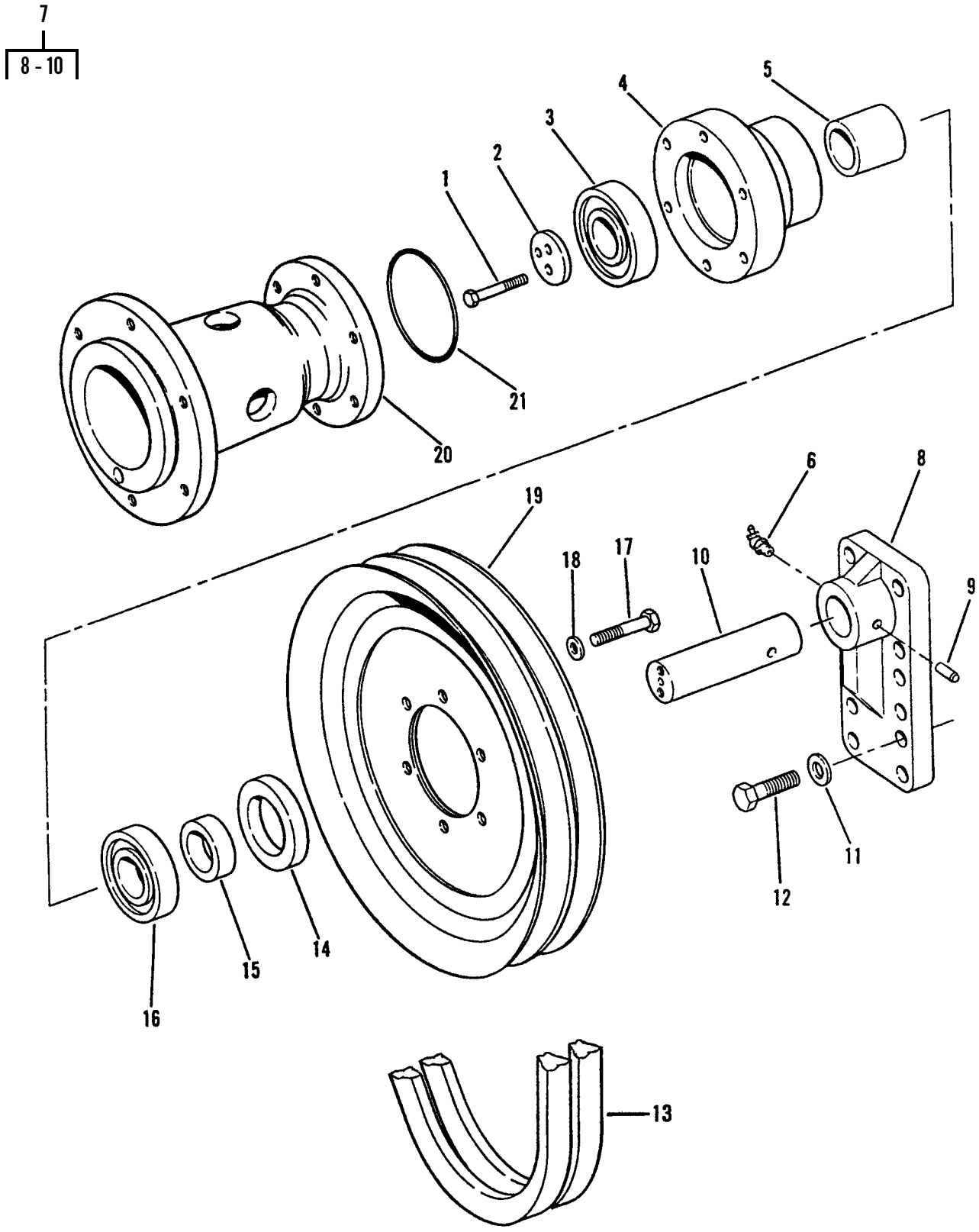

Figure 46. Fan Drive

(1) ITEM NO	(2) SMR CODE	(3) NSN	(4) CAGEC	(5) PART NUMBER	(6) DESCRIPTION AND USABLE ON CODES (UOC)	(7) QTY
					GROUP 0505 FAN ASSEMBLY	
					FIG. 46 FAN DRIVE	
1	PFOZZ	5306011604498	11083	6V4626	BOLT,MACHINE	2
2	PFOZZ	5365004982962	11083	5S7264	SPACER,PLATE	1
3	PFOZZ	3110005555207	6X081	ALA156A128P49	BEARING,BALL,ANNULA	1
4	PFOZZ	2930010508012	11083	2P1757	HUB,FAN CLUTCH	1
5	PFOZZ	5365011470083	11083	8N5305	SPACER,SLEEVE	1
6	PFOZZ	4730001720028	11083	3B8485	FITTING,LUBRICATION	1
7	PFOZZ	5340011489802	11083	1P9945	BRACKET,MOUNTING	1
8	XAOZZ		11083	1P9899	.BRACKET	1
9	PFOZZ	5315003627367	11083	5B5812	.PIN,STRAIGHT,HEADLE	1
10	PFOZZ	3040011476412	11083	1P9946	.SHAFT,STRAIGHT	1
11	PFOZZ	5310008095998	96906	MS27183-18	WASHER,FLAT	4
12	PFOZZ	5306002638978	11083	0S1587	BOLT,MACHINE	4
13	PAOZZ	3030001093857	24161	CX81 SET 2	BELTS,V,MATCHED SET	1
14	PFOZZ	5330004982905	11083	5S2106	SEAL,PLAIN ENCASED PART OF KIT . P/N 1387720	1
15	PFOZZ	5365004982920	11083	5S9062	SPACER	1
16	PFOZZ	3110005165490	11083	8H9789	BEARING,BALL,ANNULA	1
17	PFOZZ	5306006982150	11083	0L2070	BOLT,MACHINE	6
18	PFOZZ	5310001174788	11083	9Y2695	WASHER,FLAT	6
19	PFOZZ	3020012539600	11083	7N9149	PULLEY,GROOVE	1
20	PFOZZ	2930012538644	11083	2P2788	HUB,FAN CLUTCH	1
21	PFOZZ	5331008626861	09990	2-338N951-75	O-RING PART OF KIT P/N 1387720 .	1
				END OF FIGURE		

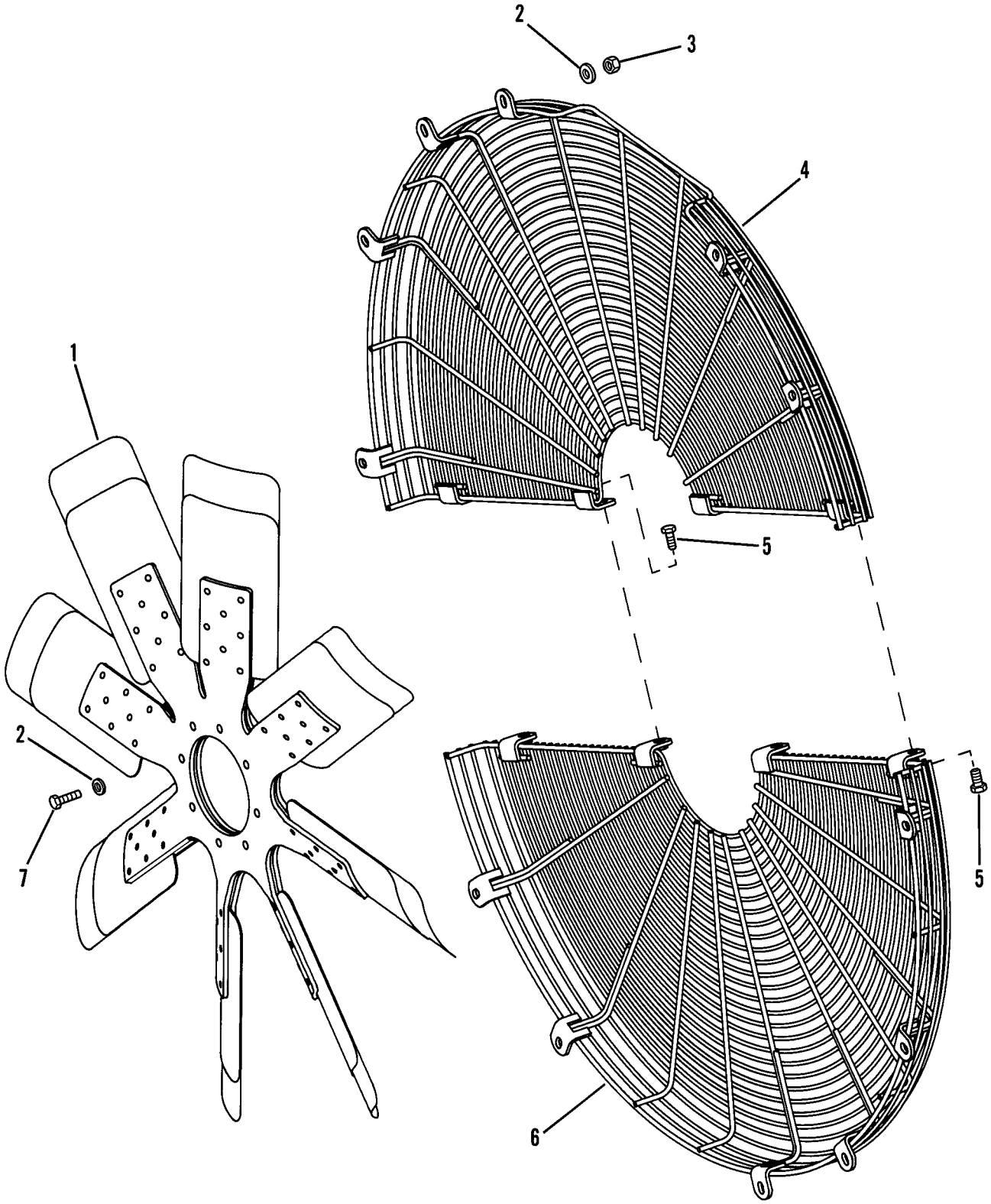

Figure 47. Fan Group

(1) ITEM NO	(2) SMR CODE	(3) NSN	(4) CAGEC	(5) PART NUMBER	(6) DESCRIPTION AND USABLE ON CODES (UOC)	(7) QTY
					GROUP 0505 FAN ASSEMBLY	
					FIG. 47 FAN GROUP	
1	PFOZZ	2930012087097	53591	912258	IMPELLER,FAN,AXIAL	1
1	PFOZZ	2930014999117	11083	1479670	IMPELLER,FAN,AXIAL SERIAL ..... NUMBERS ENDING IN R	1
2	PFOZZ	5310012866079	11083	8T4896	WASHER,FLAT SERIAL NUMBERS .... ENDING IN R	20
2	PFOZZ	5310001174788	11083	9Y2695	WASHER,FLAT	20
3	PFOZZ	5310010588071	11083	2K4973	LOCKNUT	12
4	PFOZZ	4140012529502	67099	2W6340	GUARD,FAN IMPELLER	1
4	PFOZZ	4140012529502	11083	2W6340	GUARD,FAN IMPELLER SERIAL ..... NUMBERS ENDING IN R	1
5	PFOZZ	5306006906976	03038	LH90725-59	BOLT,MACHINE	4
5	PFOZZ	5306001580697	11083	5M3062	BOLT,MACHINE SERIAL NUMBERS ... ENDING IN R	4
6	PFOZZ	4140012529501	67099	2W6339	GUARD,FAN IMPELLER	1
6	PFOZZ	4140014995557	11083	2W6338	GUARD,FAN IMPELLER SERIAL ..... NUMBERS ENDING IN R	1
7	PFOZZ	5305000680511	80204	B1821BH038C125N	SCREW,CAP,HEXAGON H	8
7	PFOZZ	5306004550462	11083	4L9337	BOLT,MACHINE SERIAL NUMBERS ... ENDING IN R	8
					END OF FIGURE	

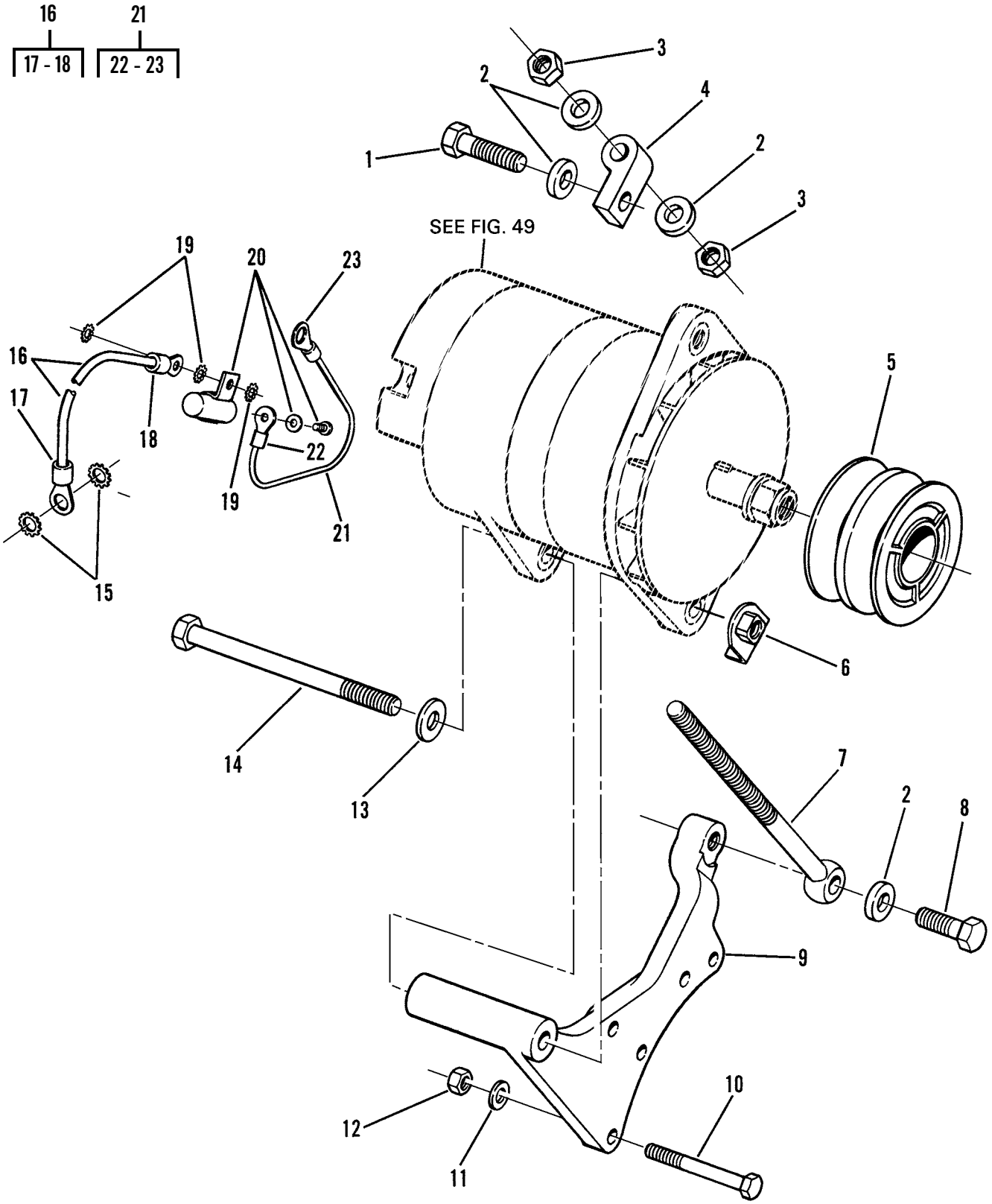

Figure 48. Alternator Mounting

(1) ITEM NO	(2) SMR CODE	(3) NSN	(4) CAGEC	(5) PART NUMBER	(6) DESCRIPTION AND USABLE ON CODES (UOC)	(7) QTY
					GROUP 06 ELECTRICAL SYSTEM	
					GROUP 0601 GENERATOR, ALTERNATOR	
					FIG. 48 ALTERNATOR MOUNTING	
1	PFOZZ	5306002638978	11083	0S1587	BOLT,MACHINE	1
2	PFOZZ	5310008095998	96906	MS27183-18	WASHER,FLAT	4
3	PFOZZ	5310007616882	96906	MS51967-2	NUT,PLAIN,HEXAGON	2
4	PFOZZ	5340012584873	11083	9L6329	CLAMP,SYNCHRO	1
5	PFOZZ	3020012539599	11083	6N0714	PULLEY,GROOVE	1
6	PFOZZ	5310002537918	11083	9S1240	NUT,PLAIN,PLATE	1
7	PFOZZ	3040011647938	11083	9L5134	CONNECTING LINK,RIG	1
8	PFOZZ	5306004240086	11083	7B3235	BOLT,MACHINE	1
9	PFOZZ	5342012538651	11083	2W9286	BRACKET,ENGINE ACCE	1
10	PFOZZ	5306004262932	11083	S1619	BOLT,MACHINE	4
11	PFOZZ	5310001174788	11083	9Y2695	WASHER,FLAT	4
12	PFOZZ	5310014297859	11083	6V8801	NUT,PLAIN,HEXAGON	4
13	PFOZZ	5310002459841	11083	8M4791	WASHER,FLAT	1
14	PFOZZ	5305010322312	80204	B1821BH050C600N	SCREW,CAP,HEXAGON H	1
15	PFOZZ	5310006276128	96906	MS35335-35	WASHER,LOCK	2
16	MOOZZ		11083	5P2759-4	LEAD,ELECTRICAL CUT TO FIT, ... MAKE FROM WIRE P/N 81106S	1
17	PFOZZ	5940005574344	96906	MS25036-120	.TERMINAL,LUG (#8 STUD, 10-12 GAGE ..... WIRE	1
18	PFOZZ	5940001138190	96906	MS25036-122	.TERMINAL,LUG (3/8" STUD, 6 ... GAGE WIRE)	1
19	PFOZZ	5310002090786	96906	MS35335-33	WASHER,LOCK	3
20	PFOZZ	5910011768877	0AFL4	535950	CAPACITOR	1
21	MOOZZ		11083	5P2762-2	LEAD,ELECTRICAL CUT TO FIT, ... MAKE FROM WIRE P/N C10ER	1
22	PFOZZ	5940001434775	81343	MS25036-156	.TERMINAL,LUG (1/4" STUD, 6 GAGE WIRE)	1
23	PFOZZ	5940010590873	11083	2L8071	.TERMINAL,LUG (1/2" STUD, 10-12 GAGE WIRE)	1
					END OF FIGURE	

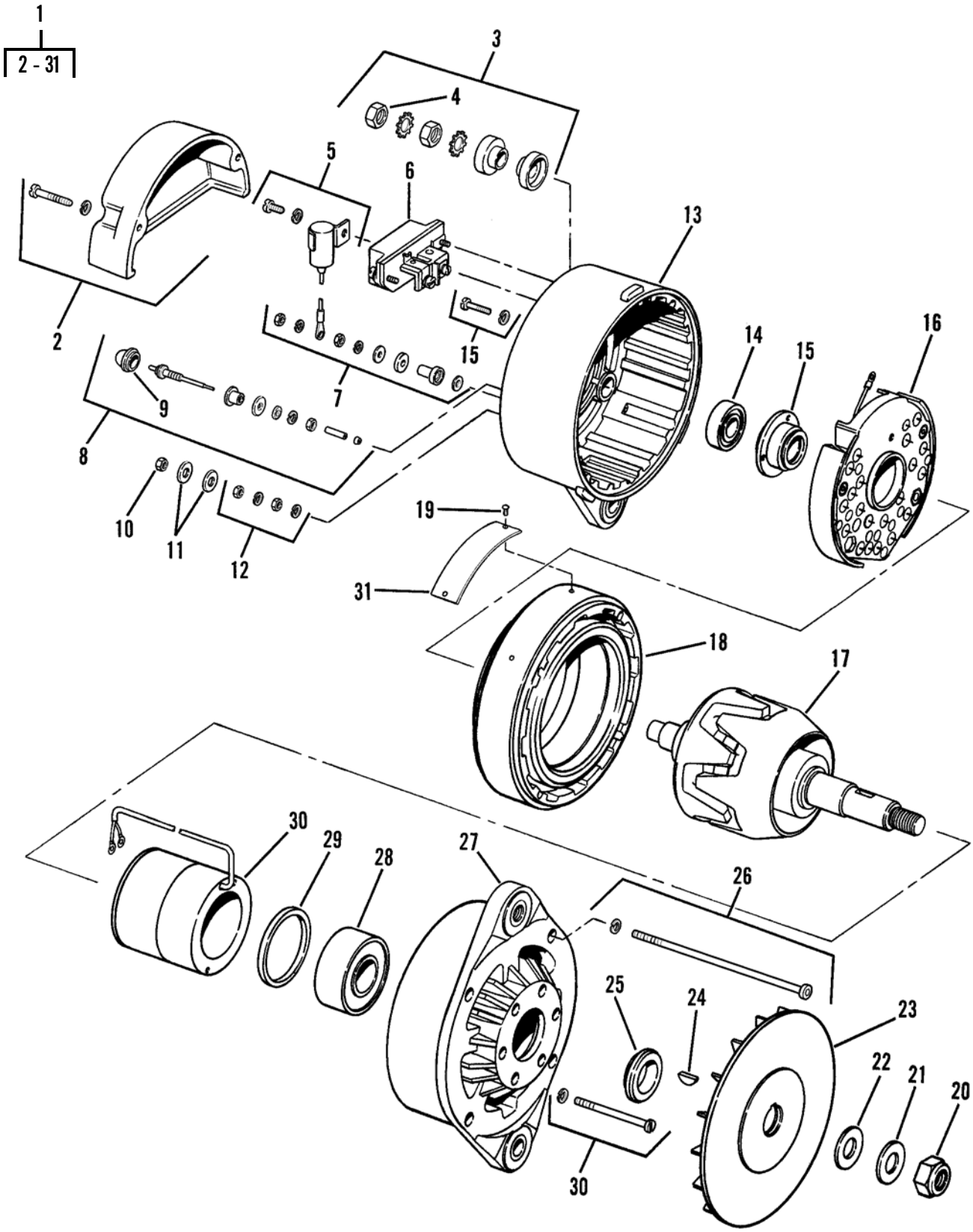

Figure 49. Alternator

(1) ITEM NO	(2) SMR CODE	(3) NSN	(4) CAGEC	(5) PART NUMBER	(6) DESCRIPTION AND USABLE ON CODES (UOC)	(7) QTY
					GROUP 0601 GENERATOR, ALTERNATOR	
					FIG. 49 ALTERNATOR	
1	PAOZZ	6115011847432	53867	0 122 469 004	GENERATOR,ALTERNATI CAN BE .... REPLACED BY PN 100-5045 OR 100-5046	1
1	PAOZZ	2920002317270	11083	1005047	GENERATOR,ENGINE AC	1
2	PFFZZ	2920011786536	53867	1 125 500 024	.COVER,ALTERNATOR	1
3	PAFZZ	2920011786537	53867	1 127 011 074	.PARTS KIT,TERMINAL	1
4	PFFZZ	5310008808189	96906	MS51967-11	.NUT,PLAIN,HEXAGON	1
5	PFFZZ	2920011872113	53867	1 297 011 002	.PARTS KIT,ENGINE GE	1
6	PFFZZ	2920011778505	53867	1 197 011 000	.REGULATOR,ENGINE GE	1
7	PAFZZ	5970011834633	53867	1 127 011 077	.INSULATOR KIT	1
8	PAFZZ	2920011786538	53867	1 127 011 076	.PARTS KIT,TERMINAL	1
9	PFFZA	3895012781610	11083	9L6770	.CAP	1
10	PFFZZ	5310012572204	11083	6V8127	.NUT,PLAIN,HEXAGON	1
11	PFFZZ	5310008094058	96906	MS27183-10	.WASHER,FLAT	2
12	PAFZZ	2920011778566	53867	1 127 011 075	.PARTS KIT,TERMINAL	1
13	XDFZZ		01843	1125885031	.END BELL,ELECTRICAL	1
14	PFFZZ	3110011795935	53867	1 900 910 024	.BEARING,ROLLER,CYLI	1
15	PFFZZ	5330011783728	01843	1 120 222 001	.RETAINER,PACKING	1
16	PFFZZ	5961011748652	53867	1 127 320 503	.RECTIFIER,SEMICONDU	1
17	PFFZZ	2920011780499	01843	1 124 035 017	.ROTOR,GENERATOR	1
18	PFFZZ	2920011762965	53867	1 125 045 116	.STATOR,ENGINE GENER	1
19	PFFZZ	5305002535609	80205	MS21318-13	.SCREW,DRIVE	2
20	PFFZZ	5310009445896	24617	12337822	.NUT,SELF-LOCKING,HE	1
21	PFFZZ	5310010954631	11083	5P8247	.WASHER,FLAT	1
22	PFFZZ	5310002624715	16764	1905406	.WASHER,FLAT	1
23	PFFZZ	4140011762818	53867	1 126 610 061	.IMPELLER,FAN,CENTRI	1
24	PFFZZ	5315006165525	80205	MS35756-9	.KEY,WOODRUFF	1
25	PFFZZ	5310011750630	53867	1 120 220 007	.WASHER,SHOULDERED	1
26	PFFZZ	5305013524223	11083	9X6001	.SCREW,CAP,SOCKET HE WITH ..... WASHER	4
27	PFFZZ	2920011778565	53867	1125825021	.END BELL,ELECTRICAL	1
28	PFFZZ	3110011774667	01843	1129900009	.BEARING,BALL,ANNULA	1
29	PFFZZ	5365011748876	53867	1 120 200 023	.SPACER,RING	1
30	PFFZZ	2920011877193	53867	1 124 210 003	.WINDING,GENERATOR F	1
31	PFFZZ	9905011803839	11083	3T5962	.PLATE,IDENTIFICATIO	1
				END OF FIGURE		

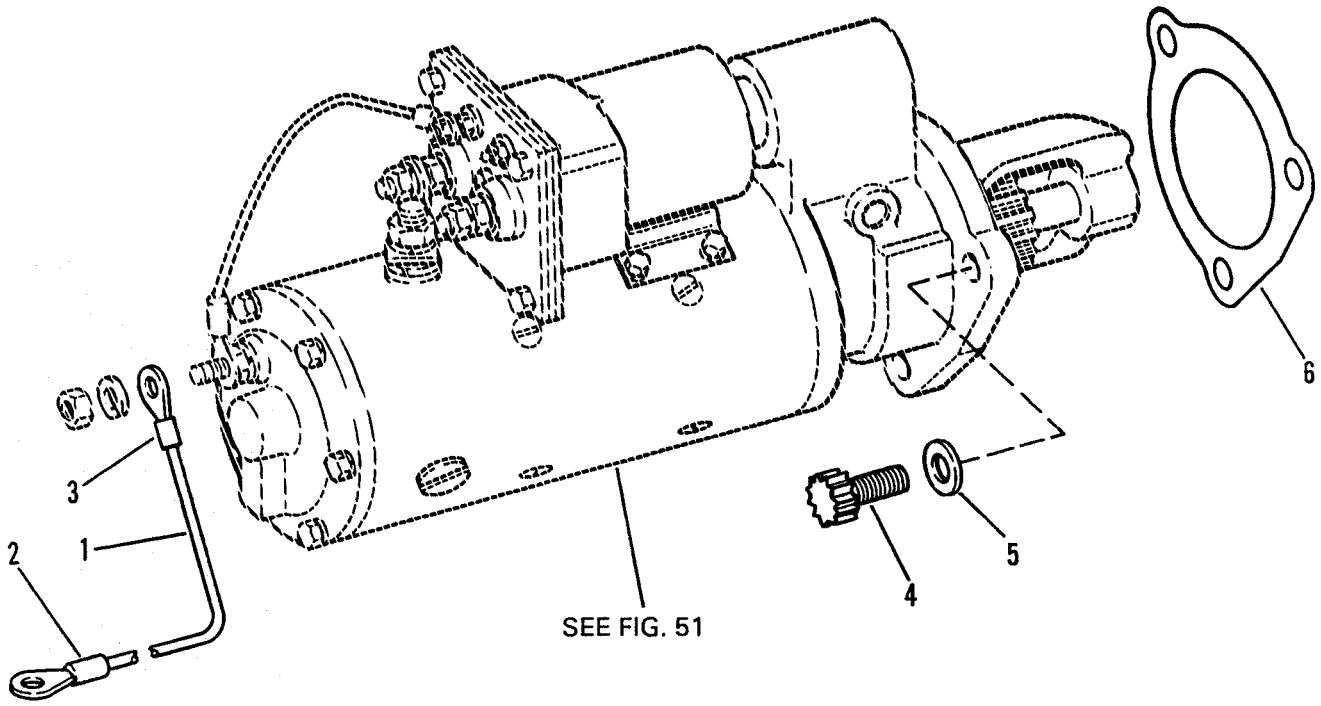

Figure 50. Starter Motor Mounting Group

(1) ITEM NO	(2) SMR CODE	(3) NSN	(4) CAGEC	(5) PART NUMBER	(6) DESCRIPTION AND USABLE ON CODES (UOC)	(7) QTY
					GROUP 0603 STARTING MOTOR	
					FIG. 50 STARTER MOTOR MOUNTING GROUP	
1	MOOZZ		11083	5P5675-12	LEAD,ELECTRICAL CUT TO FIT, ... MAKE FROM WIRE P/N 81106S	1
2	PFOZZ	5940001138190	96906	MS25036-122	TERMINAL,LUG	1
3	PAOZZ	5940001188836	11083	2L8054	TERMINAL,LUG	1
4	PFOZZ	5306010951486	11083	7J8902	BOLT,MACHINE	3
5	PFOZZ	5310011073590	11083	8D5054	WASHER,FLAT	3
6	PFOZZ	5330013984225	11083	4H7869 NON-ASBESTOS	GASKET	1
				END OF FIGURE		

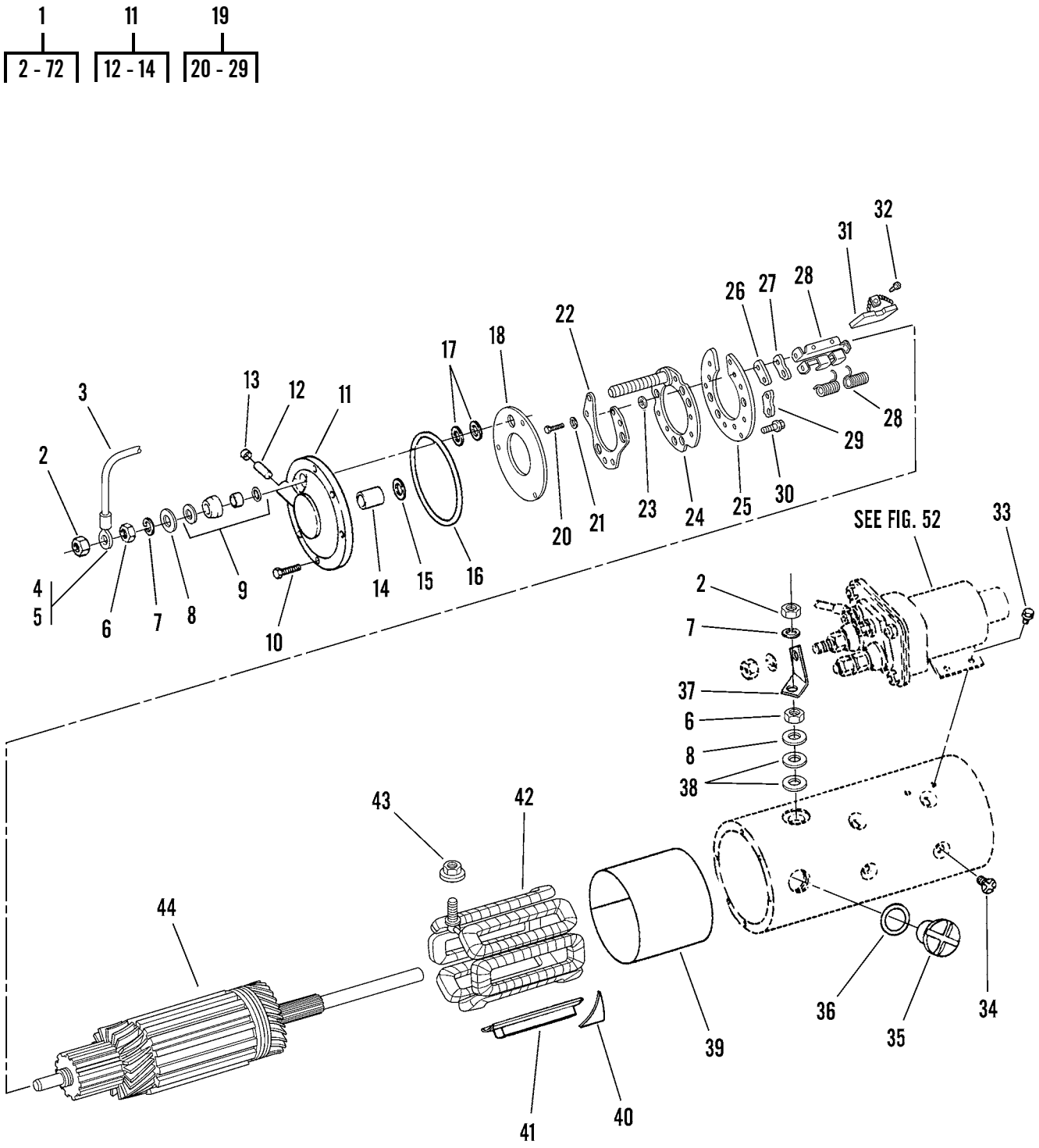

Figure 51. Electric Starting Motor (Sheet 1 of 2)

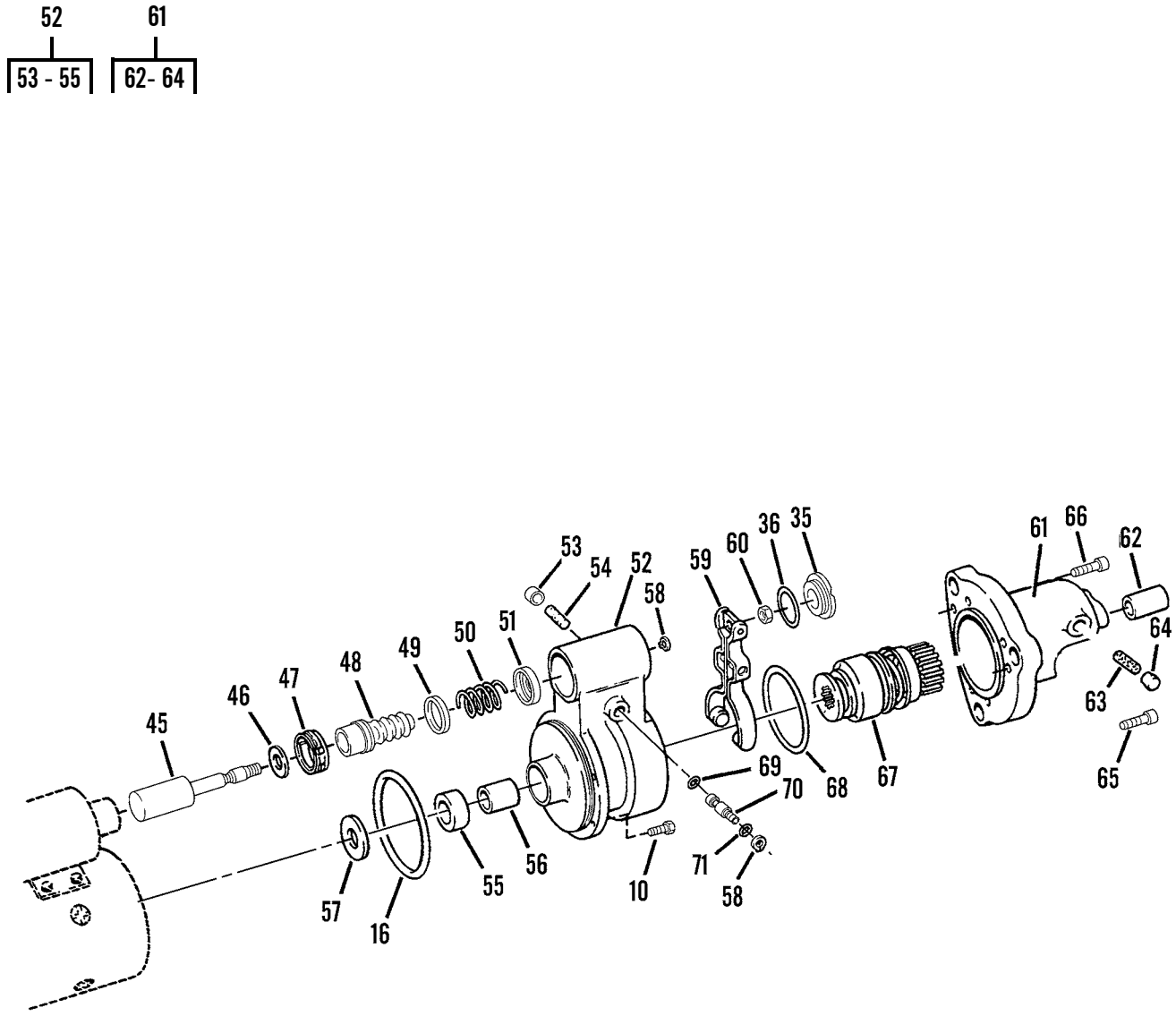

Figure 51. Electric Starting Motor (Sheet 2 of 2)

(1) ITEM NO	(2) SMR CODE	(3) NSN	(4) CAGEC	(5) PART NUMBER	(6) DESCRIPTION AND USABLE ON CODES (UOC)	(7) QTY
					GROUP 0603 STARTING MOTOR	
					FIG. 51 ELECTRIC STARTING MOTOR	
1	PAOZZ	2920004255932	7X677	10461400	STARTER,ENGINE,ELEC	1
2	PFFZZ	5310011182476	16764	1979451	.NUT,PLAIN,EXTENDED	2
3	MFFZZ		11083	5P5621-9	.LEAD ASSEMBLY,ELECT 9.06 IN, . MAKE FROM WIRE P/N 5P5621	1
4	PFFZZ	5940010590873	11083	2L8071	.TERMINAL,LUG (1/2" STUD, 10-12 GAGE WIRE)	1
5	PFFZZ	5940001434794	96906	MS25036-112	.TERMINAL,LUG (#10 STUD, 10-12 GAGE WIRE)	1
6	PFFZZ	5310001787700	11083	3H3680	.NUT,PLAIN,HEXAGON	2
7	PAFZA	5310001780741	11083	9F4976	.WASHER,LOCK	2
8	PFFZZ	5310001670839	18876	8169744	.WASHER,FLAT	2
9	PAFZZ	2920001003403	077S2	1851632	.PARTS KIT,ELECTRICA	1
10	PFFZZ	5306005509129	1LW55	1914869	.BOLT,MACHINE	13
11	PFFFZ	2920011387046	077S2	1945848	.STARTER HOUSING,ENG	1
12	PFFZZ	9390011123500	1LW55	1978754	..WICK	1
13	PFFZZ	5340011153548	10988	A47889	..CAP,PROTECTIVE,DUST	1
14	PFFZZ	3120011015088	7X677	1894638	..BEARING,SLEEVE	1
15	PFFZZ	5310008272821	1LW55	1953237	.WASHER,FLAT	1
16	PFFZZ	5331010249686	1LW55	1945860	.O-RING	2
17	PFFZZ	5310007348959	16764	1913084	.WASHER,FLAT	2
18	PFFZZ	5970005578747	64058	S-4502	.INSULATOR,BRUSH PLA	1
19	PFFFZ	5977012535207	11083	3T9525	.HOLDER ASSEMBLY,ELE	1
20	XDFZZ		11083	5P6298	..SCREW,CAP,HEXAGON H	12
21	PFFZZ	5310001880473	75377	56-941-45	..WASHER,LOCK	12
22	PFFZZ	6105012542722	1LW55	1984981	..PLATE,STATOR,MOTOR	1
23	PFFZZ	5310002914498	16764	1913080	..WASHER,FLAT	6
24	XAFZZ		16764	1984975	..PLATE ASSEMBLY	1
25	PFFZZ	5970011387044	16764	1984978	..PLATE,INSULATOR,STA	1
26	PFFZZ	5970009185568	1LW55	1965093	..INSULATOR,PLATE	3
27	PFFZZ	5970011373420	16764	1979389	..PLATE,INSULATOR HOL	3
28	PFFZZ	5977011530322	077S2	1984979	..HOLDER,ELECTRICAL C	6
29	PFFZZ	5977004234900	30379	1874851	..PLATE,SPACING,BRUSH	3
30	PFFZZ	5305002186387	1LW55	1847807	.SCREW,MACHINE	3
31	PFFZZ	5977011530247	077S2	1852888	.BRUSH,ELECTRICAL CO	6
32	PFFZZ	5305009846192	80205	MS35206-244	.SCREW,MACHINE	6
33	PFOZZ	5306005503023	1LW55	1930611	.BOLT,MACHINE	4
34	PFFZZ	5305004505937	7X677	1968396	.SCREW,MACHINE	12
35	PFFZZ	5365007539528	34623	118906	.PLUG,MACHINE THREAD	4
36	PFFZZ	5330009140703	U1088	1964857	.GASKET	4
37	PFFZZ	5940008288510	16764	1945862	.TERMINAL,LUG	1
38	PFFZZ	5310007195470	1LW55	1922457	.WASHER,FLAT	2
39	PFFZZ	5970004313667	24617	1955989	.INSULATOR,PLATE	1
40	PFFZZ	2920007373225	077S2	1914873	.PLATE,INSULATION	3
41	PFFZZ	2920008910928	55883	IPD7F3488	.POLE SHOE,STARTER	6
42	PFFZZ	2920009934233	077S2	1945853	.WINDING,MOTOR FIELD	1
43	PFFZZ	5970006578133	16764	1965472	.INSULATOR,BUSHING	1

(1) ITEM NO	(2) SMR CODE	(3) NSN	(4) CAGEC	(5) PART NUMBER	(6) DESCRIPTION AND USABLE ON CODES (UOC)	(7) QTY
44	PFFZZ	2920008389344	077S2	1945840	.ARMATURE,MOTOR	1
45	PFFZZ	2920008222287	077S2	1948522	.PLUNGER,SOLENOID	1
46	PFFZZ	5310000622051	1LW55	1948519	.WASHER,FLAT	1
47	PFFZZ	4730002776320	80205	NAS397-28	.CLAMP,HOSE	1
48	PFFZZ	9390008391864	1LW55	801077	.BELLOWS,PROTECTION	1
49	PFFZZ	5310008222236	1LW55	1948520	.WASHER,RECESSED	1
50	PFFZZ	5360008120196	11083	9M7609	.SPRING,HELICAL,COMP	1
51	PFFZZ	5310008222241	1LW55	1948526	.WASHER,RECESSED	1
52	PFFZZ	2920012079671	077S2	1979870	.HOUSING,LEVER	1
53	PFFZZ	5340011153548	10988	A47889	..CAP,PROTECTIVE,DUST	1
54	PFFZZ	9390011123500	1LW55	1978754	..WICK	1
55	PFFZZ	5330009727644	11083	2F6678	..SEAL,STARTER	1
56	PFFZZ	3120011015089	89346	1894637	..BEARING,SLEEVE	1
57	PFFZZ	5310009992527	59556	019-00006-31	.WASHER	1
58	PFFZZ	5325007151152	96906	MS16624-1037	.RING,RETAINING	2
59	PFFZZ	6110007577187	64058	S2122	.LEVER ASSEMBLY	1
60	PFFZZ	5310006603381	80205	MS21083N5	.NUT,SELF-LOCKING,HE	1
61	PFFZZ	2920011387045	077S2	1957846	.STARTER HOUSING,ENG	1
62	PFFZZ	3120008286852	16764	10A1942258	..BUSHING,SLEEVE	1
63	PFFZZ	9390011123500	1LW55	1978754	..WICK	1
64	PFFZZ	5340011153548	10988	A47889	..CAP,PROTECTIVE,DUST	1
65	PFFZZ	5306007835183	1LW55	1948536	.BOLT,INTERNAL WRENC	5
66	PFFZZ	5306007835188	U1088	1948537	.BOLT,INTERNAL WRENC	1
67	PFFZZ	2920011122687	077S2	1893560	.DRIVE,ENGINE,ELECTR	1
68	PFFZZ	5330009764695	1LW55	1945476	.PACKING,PREFORMED	1
69	PCFZZ	5331010537021	1LW55	1894642	.O-RING	1
70	PFFZZ	3040000344216	077S2	1948529	.SHAFT,SHOULDERED	1
71	PCFZZ	5331010532907	16764	1894643	.O-RING	1
				END OF FIGURE		

10 | 11 - 20

17 | 18 - 20

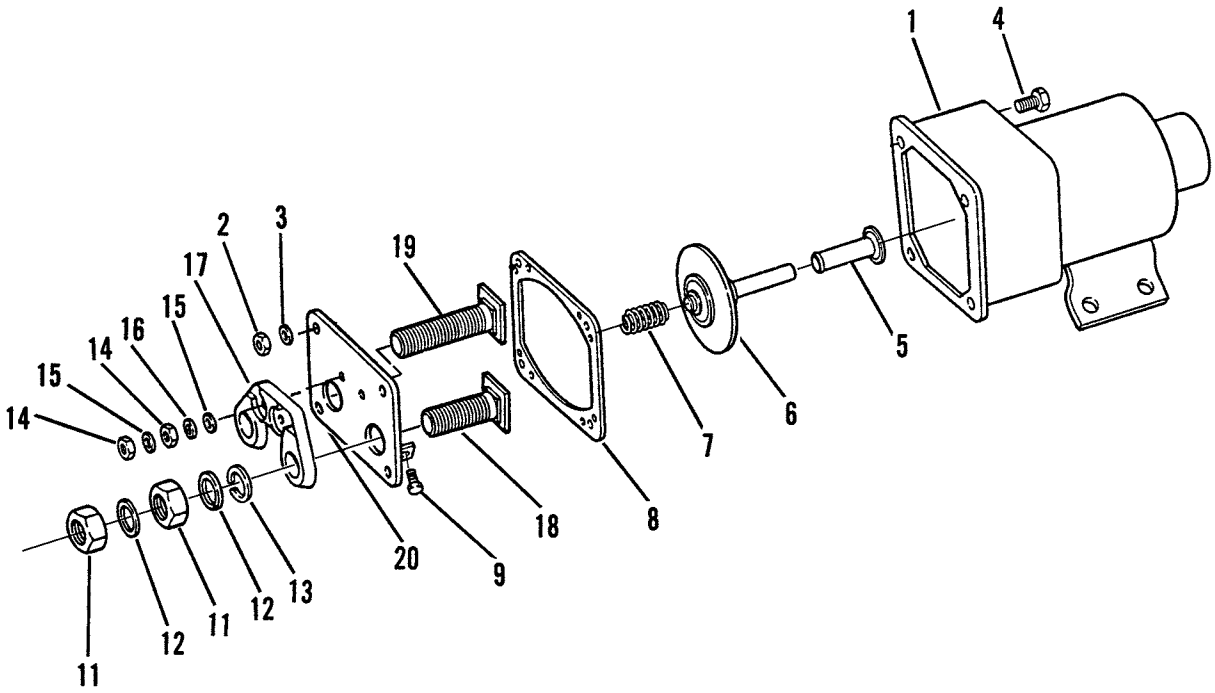

Figure 52. Starter Solenoid

(1) ITEM NO	(2) SMR CODE	(3) NSN	(4) CAGEC	(5) PART NUMBER	(6) DESCRIPTION AND USABLE ON CODES (UOC)	(7) QTY
					GROUP 0603 STARTING MOTOR	
					FIG. 52 STARTER SOLENOID	
1	PAFZZ	2920013147826	11083	3T4704	RELAY-SOLENOID,ENGI	1
2	PFFZZ	5310006371058	66289	PD115	.NUT,PLAIN,HEXAGON	4
3	XDFZZ		11083	4B4274	.WASHER,FLAT	8
4	PAFZZ	5305011870533	11083	0454065	.SCREW,CAP,HEXAGON H	4
5	PFFZZ	3120011668144	16764	1972716	.BEARING,SLEEVE	1
6	PFFZZ	2920011400116	077S2	1977264	.CONTACT ASSEMBLY,EL	1
7	PFFZZ	5360009852253	11083	4M1815	.SPRING,HELICAL,COMP	1
8	PCFZZ	5330012573807	1LW55	10496037	.GASKET	1
9	XDFZZ		24617	1840633	.SCREW,MACHINE	3
10	PFFZZ	5940011631435	16764	1979498	.TERMINAL,FEEDTHRU	1
11	PAFZZ	5310001787700	11083	3H3680	..NUT,PLAIN,HEXAGON	3
12	PFFZZ	5310008095997	96906	MS27183-17	..WASHER,FLAT	3
13	PAFZA	5310001780741	11083	9F4976	..WASHER,LOCK	2
14	PFFZZ	5310006371058	66289	PD115	..NUT,PLAIN,HEXAGON	3
15	XDFZZ		11083	4B4274	..WASHER,FLAT	3
16	PAFZZ	5310008528266	11083	3B4502	..WASHER,LOCK	2
17	PFFZZ	5970011501446	16764	1984705	..INSULATOR,STANDOFF	1
18	PFFZZ	2920009992535	077S2	1953244	...TERMINAL	1
19	PFFZZ	5940008710944	30379	1906049	...TERMINAL,STUD	1
20	XAFZZ		16764	1909499	...PLATE,TERM	1
				END OF FIGURE		

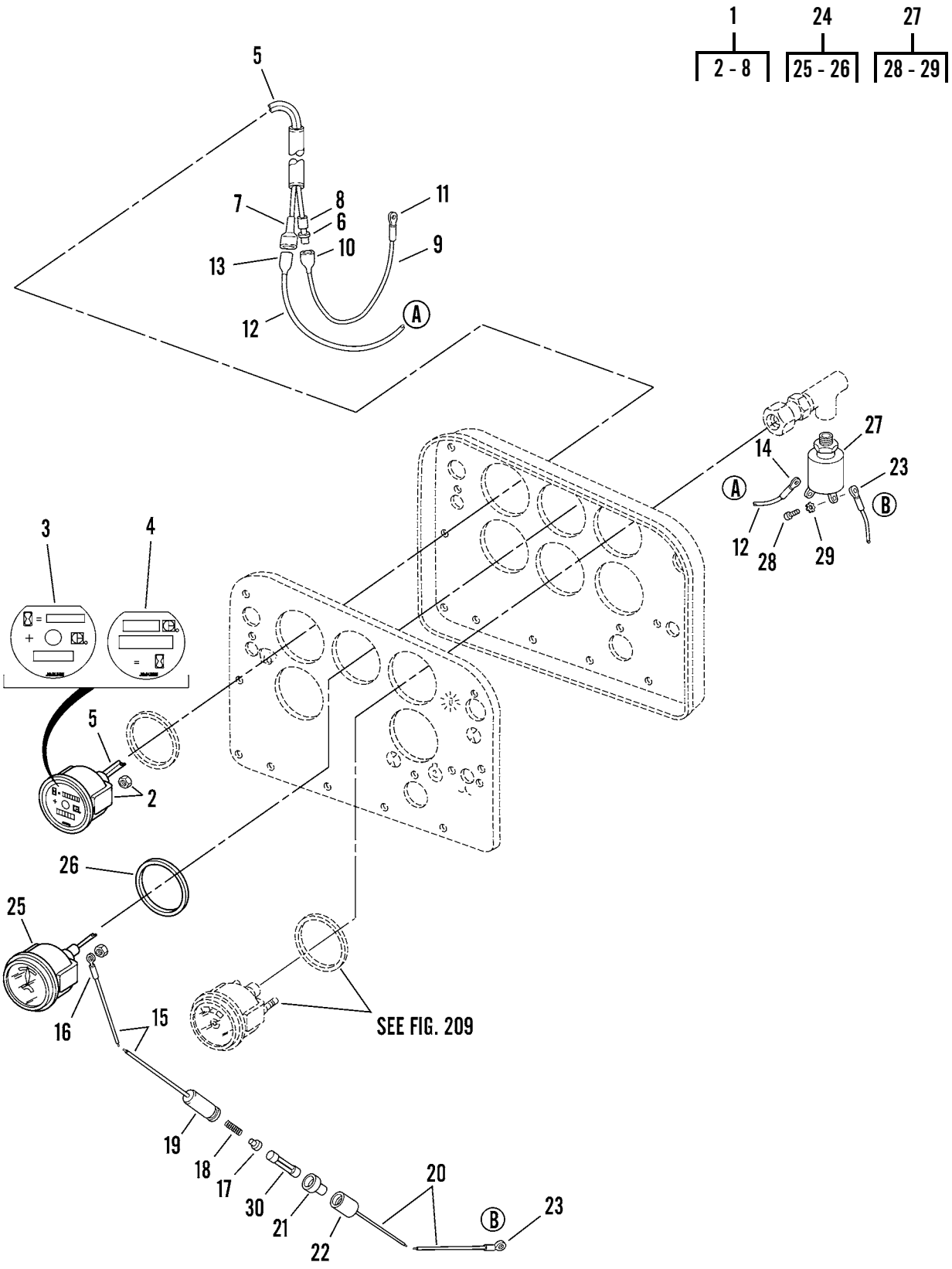

Figure 53. Electrical Gage Group

(1) ITEM NO	(2) SMR CODE	(3) NSN	(4) CAGEC	(5) PART NUMBER	(6) DESCRIPTION AND USABLE ON CODES (UOC)	(7) QTY
					GROUP 0607 INSTRUMENT OR ENGINE CONTROL PANEL	
					FIG. 53 ELECTRICAL GAGE GROUP	
1	PAOZZ	6645006025968	74400	85098-03	METER,TIME TOTALIZI	1
2	PAOZZ	6625012587462	11083	9W1490	.PARTS KIT,ELECTRONI	1
3	PFOZZ	6750012625970	11083	8T0701	.FILM,SERVICE METER	1
4	PCOZZ	7690012627200	11083	8T0702	.MARKER,IDENTIFICATI	1
5	XDOZZ		11083	8C5674	.WIRING HARNESS,BRAN	1
6	PFOZZ	5940006209780	00779	42282-2	.TERMINAL,QUICK DISC	3
7	PFOZZ	5940011210365	11083	7K4474	.TERMINAL,QUICK DISC	1
8	PFOZZ	5940006209780	00779	42282-2	.TERMINAL,QUICK DISC	3
9	PCOZA	6150014994629	11083	8P9364	LEAD,ELECTRICAL	1
10	PFOZZ	5940011036808	11083	5P5694	TERMINAL	1
11	PFOZZ	5940001434793	96906	MS25036-110	TERMINAL,LUG	1
12	PCOZA	6150014994641	11083	8P9363	LEAD,ELECTRICAL	1
13	PFOZZ	5940010589112	11083	5P4571	TERMINAL,QUICK DISC	1
14	PFOZZ	5940001434774	96906	MS25036-153	TERMINAL,LUG	1
15	XDOZZ		11083	8P9365	WIRE	1
16	PFOZZ	5940001434780	96906	MS25036-108	TERMINAL,LUG	1
17	PFOZA	5999010590884	77060	5290793	CONTACT,ELECTRICAL	1
18	PFOZZ	5360010590883	11083	2S5013	SPRING	1
19	PFOZZ	5920010590881	11083	2S5011	FUSEHOLDER SUBASSEM	1
20	XDOZZ		11083	6P5759	WIRE	1
21	PFOZA	5999010590884	77060	5290793	CONTACT,ELECTRICAL	1
22	PFOZZ	5920010590882	11083	2S5012	FUSEHOLDER SUBASSEM	1
23	PFOZZ	5940012929676	11083	7H1189	TERMINAL,LUG	1
24	PAOZZ	6625001133279	11083	8M7892	AMMETER	1
25	XAOZZ		11083	1W8914	.GAGE	1
26	PFOZZ	5330011520601	11083	6V3507	.PACKING,PREFORMED	1
27	PAOZZ	5930010956194	11083	9G8010	SWITCH,PRESSURE OIL BY-PASS ... SWITCH	1
28	PFOZZ	5305011845919	11083	6V8376	.SCREW,MACHINE	2
29	PFOZZ	5310005590070	96906	MS35333-38	.WASHER,LOCK	2
30	PAOZZ	5920002846787	81349	F02A250V5A	FUSE,CARTRIDGE	1
				END OF FIGURE		

1
2 - 33

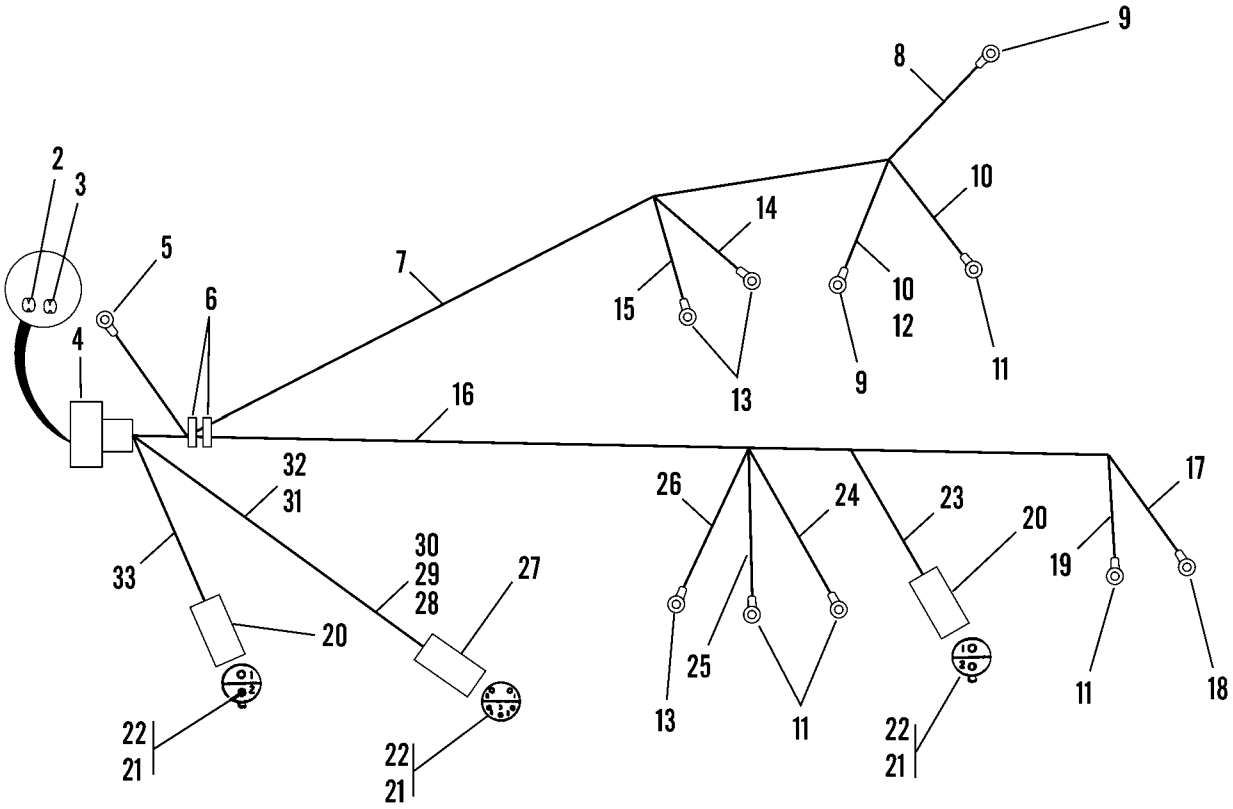

Figure 54. Wiring Harness

(1) ITEM NO	(2) SMR CODE	(3) NSN	(4) CAGEC	(5) PART NUMBER	(6) DESCRIPTION AND USABLE ON CODES (UOC)	(7) QTY
					GROUP 0607 INSTRUMENT OR ENGINE CONTROL PANEL	
					FIG. 54 WIRING HARNESS	
1	AOOOO		11083	5R7842	HARNESS ASSEMBLY	1
2	PFOZZ	5935004568384	77820	10-101033-012	.PLUG,END SEAL,ELECT	15
3	XBOZZ		11083	5R7976	.CONNECTOR,PLUG,ELEC	15
4	XBOZZ		11083	5R7840	.CONNECTOR,RECEPTACL	1
5	PFOZZ	5940010870285	06383	PV14-10LFC	.TERMINAL,LUG	1
6	PFOZZ	2920010589099	11083	3S2093	.STRAP	2
7	MOOZZ		11083	8C6919-99	.WIRE 99.2 IN MAKE FROM CABLE . P/N DA2597	1
8	MOOZZ		11083	5P0658-110	.WIRE 110.23 IN MAKE FROM CABLE P/N 950W	1
9	PFOZZ	5940002835281	81343	MS25036-109	.TERMINAL,LUG	2
10	MOOZZ		11083	8C6919-109	.WIRE 109.05 IN, MAKE FROM CABLE P/N DA2597	1
11	PFOZZ	5940006603633	96906	MS25036-155	.TERMINAL,LUG	4
12	MOOZZ		11083	6A3361-110	.WIRE 110.23 IN, MAKE FROM WIRE P/N 950B	1
13	PFOZZ	5940001434780	96906	MS25036-108	.TERMINAL,LUG	3
14	MOOZZ		11083	5P0653-86	.WIRE 86.6 IN, MAKE FROM WIRE . P/N 13P160RC	1
15	MOOZZ		11083	5P4516-86	.WIRE 86.6 IN, MAKE FROM WIRE . P/N DA3125-5	1
16	MOOZZ		11083	8C6919-47	.CABLE,SPECIAL PURPO 46.82 IN, MAKE FROM CABLE P/N DA2597	1
17	MOOZZ		11083	5P0648-95	.WIRE 94.48 IN, MAKE FROM ..... P/N 950B	1
18	PFOZZ	5940010534521	11083	2L8077	.TERMINAL	1
19	MOOZZ		11083	5P4515-90	.WIRE 90.55 IN, MAKE FROM WIRE P/N DA3125-PINK	1
20	PFOZZ	5935011495165	11083	7N9738	.CONNECTOR BODY,PLUG	2
21	PFOZZ	5999011566314	71468	110238-0195	.PIN,GROOVED,HEADLES	5
22	PFOZZ	5999011508808	11083	7N7779	.CONTACT,ELECTRICAL	4
23	MOOZZ		11083	8C6919-50	.WIRE 49.6 IN, MAKE FROM WIRE . P/N DA2597	2
24	MOOZZ		11083	5P0642-51	.WIRE 51.18 IN, MAKE FROM WIRE P/N 569D1	1
25	MOOZZ		11083	5P0651-51	.WIRE 51.18 IN, MAKE FROM WIRE P/N 13P160RC	1
26	MOOZZ		11083	5P4517-51	.WIRE 51.18 IN, MAKE FROM WIRE P/N DA3125-D6	1
27	PFOZZ	5935011751788	71468	120-1839-000	.CONNECTOR,PLUG,ELEC	1
28	MOOZZ		11083	5P0644-67	.WIRE 66.929 IN, MAKE FROM WIRE P/N DA3125-5	1
29	MOOZZ		11083	5P0659-43	.WIRE 43.3 IN, MAKE FROM WIRE . P/N 81162S	1
30	MOOZZ		11083	6A3359-43	.WIRE 43.3 IN, MAKE FROM WIRE . P/N DA3125-8	1
31	MOOZZ		11083	5P0640-12	.WIRE 11.8 IN, MAKE FROM WIRE . P/N M22759/11-16-0	1

(1) ITEM NO	(2) SMR CODE	(3) NSN	(4) CAGEC	(5) PART NUMBER	(6) DESCRIPTION AND USABLE ON CODES (UOC)	(7) QTY
32	MOOZZ		11083	6A3770-12	.WIRE 11.8 IN, MAKE FROM WIRE . P/N DA3125-D6	1
33	MOOZZ		11083	5P0664-9	.WIRE 8.66 IN, MAKE FROM WIRE . P/N DA3125-D6-9	2
				END OF FIGURE		

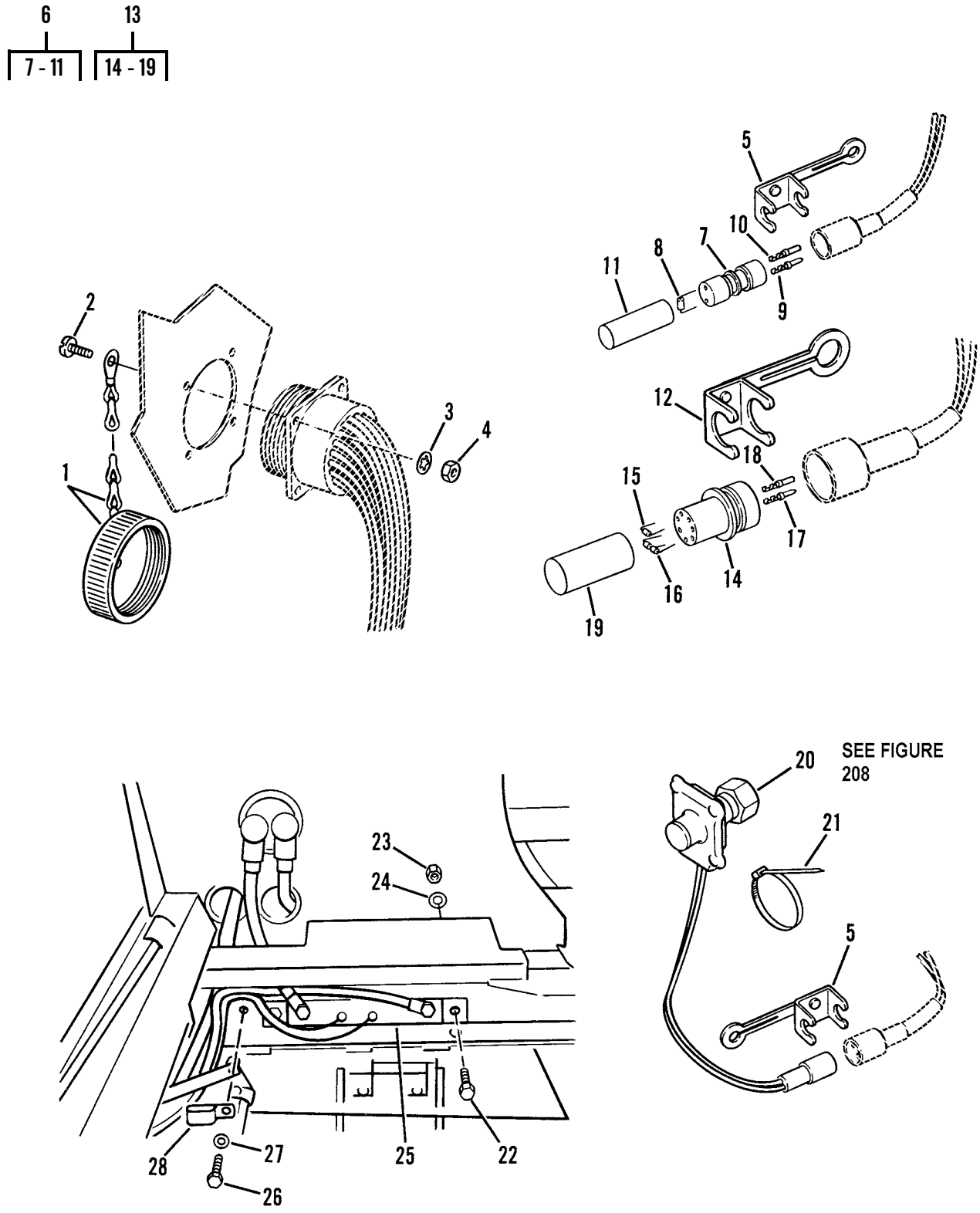

Figure 55. STE/ICE Wiring

(1) ITEM NO	(2) SMR CODE	(3) NSN	(4) CAGEC	(5) PART NUMBER	(6) DESCRIPTION AND USABLE ON CODES (UOC)	(7) QTY
					GROUP 0607 INSTRUMENT OR ENGINE CONTROL PANEL	
					FIG. 55 STE/ICE WIRING	
1	PFOZZ	5935011145354	80064	2601167	COVER,ELECTRICAL CO	1
2	PFOZZ	5305012593531	11083	2N3476	SCREW,MACHINE	4
3	PFOZZ	5310001877070	77900	1206-00	WASHER,LOCK	4
4	PFOZZ	5310010630686	11083	4B2041	NUT	4
5	PFOZZ	5999012620436	11083	3T3048	CLIP,ELECTRICAL	2
6	PFOOO	5905013035617	81349	RNR55E1960BS	RESISTOR,FIXED,FILM	1
7	PFOZZ	5935011508323	11083	7N9737	.CONNECTOR BODY,PLUG	1
8	PFOZZ	5905010053686	81349	RNR55E1960FS	.RESISTOR,FIXED,FILM	1
9	PFOZZ	5999011566314	71468	110238-0195	.PIN,GROOVED,HEADLES (14-18 ... GAGE WIRE)	1
10	PFOZZ	5999011508808	11083	7N7779	.CONTACT,ELECTRICAL (14-18 GAGE WIRE)	1
11	MOOZZ		11083	5P9798	.INSULATION SLEEVING CUT TO ... FIT, MAKE FROM P/N M23056/4-105-0	1
12	PFOZZ	5999012620437	11083	3T3047	CLIP,ELECTRICAL	1
13	AOOOO		11083	5R7845	RESISTOR ASSEMBLY	1
14	PFOZZ		71468	120-1841-000	.INSERT,ELECTRICAL C	1
15	PFOZZ	5905001387420	81349	RNR55E3481FS	.RESISTOR,FIXED,FILM (3.480 ... KILOHMS)	1
16	PFOZZ	5905004342542	81349	RNR55E4021FS	.RESISTOR,FIXED,FILM (4.020 ... KILOHMS)	2
17	PFOZZ	5999011566314	71468	110238-0195	.PIN,GROOVED,HEADLES (14-18 ... GAGE WIRE)	2
18	PFOZZ	5999011508808	11083	7N7779	.CONTACT,ELECTRICAL (14-18 GAGE WIRE)	3
19	PFOZZ	4710014764981	11083	8T2225	.TUBE,METALLIC	1
20	PAOZZ	6680011488875	19207	12258931-2	TACHOMETER,MECHANIC	1
21	PFOZZ	2920010589099	11083	3S2093	STRAP	2
22	PFOZZ	5306004238784	11083	7B2742	BOLT,MACHINE	2
23	PFOZZ	5310006601938	72962	21NU040	NUT,SELF-LOCKING,HE	2
24	PFOZZ	5310011763998	11083	4B4674	WASHER,FLAT	2
25	PFOZZ	6625011692437	56161	10500703	SHUNT,INSTRUMENT	1
26	PFOZZ	5305002528919	11083	0S0509	SCREW,CAP,HEXAGON H	1
27	PFOZZ	5310001174788	11083	9Y2695	WASHER,FLAT	1
28	PFOZZ	5342004982946	30966	T-1213-SL	CLIP	2
					END OF FIGURE	

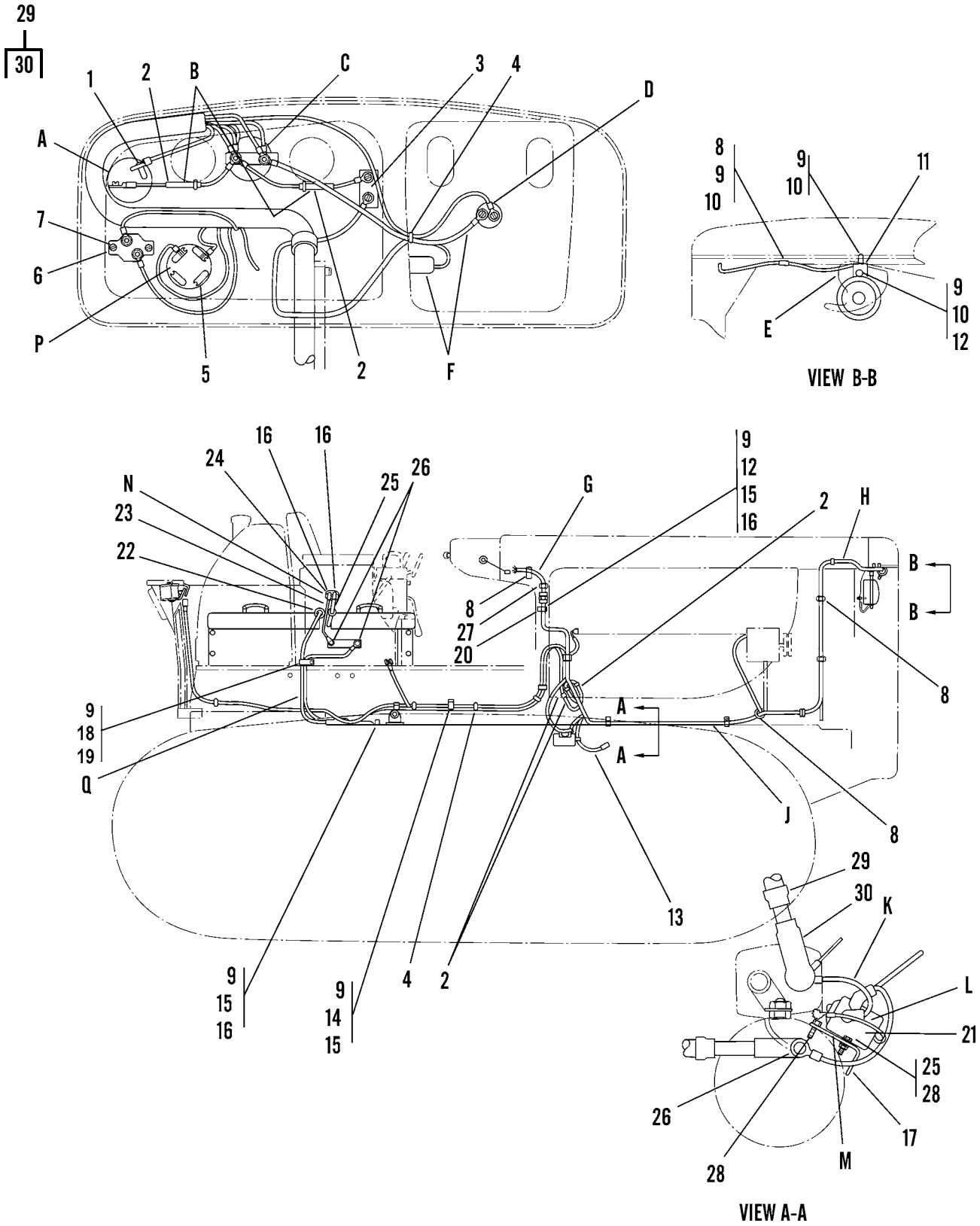

Figure 56. Dash Panel Wiring (Sheet 1 of 2)

A	See Fig. 209-34 for P/N 1W0705, OIL PRESSURE GAGE
B	See Fig. 63-5 for P/N 9G7308, WIRE HARNESS
C	See Fig. 53-24 for P/N 8M7892, AMMETER
D	See Fig. 57-6 for P/N 3T2357, HORN BUTTON
E	See Fig. 63-15 for P/N 7T6988, HORN WIRE HARNESS
F	See Fig. 63-10,12 for P/N 9P2189, HORN WIRE HARNESS and P/N M-4233, DASH LAMP ASSY
G	See Fig. 64-7 for P/N 7G8660, SHUNT WIRE HARNESS
H	See Fig. 64-1 for P/N 7T6985, HORN WIRE HARNESS
J	See Fig. 64-21 for P/N 3T5961, WIRE HARNESS
K	See Fig. 63-18 for P/N 2P9082, WIRE HARNESS
L	See Fig. 63-22 for P/N 2P9081, WIRE HARNESS
M	See Fig. 63-26 for P/N 2P9093, WIRE HARNESS
N	See Fig. 57-19 for P/N 75900-09, BATTERY DISCONNECT SWITCH
P	See Fig. 57-15 for P/N 31-197, ENGINE START SWITCH
Q	See Fig. 61-31 for P/N 5R7288, BATTERY CABLE ASSY.

Figure 56. Dash Panel Wiring (Sheet 2 of 2)

(1) ITEM NO	(2) SMR CODE	(3) NSN	(4) CAGEC	(5) PART NUMBER	(6) DESCRIPTION AND USABLE ON CODES (UOC)	(7) QTY
					GROUP 0607 INSTRUMENT OR ENGINE CONTROL PANEL	
					FIG. 56 DASH PANEL WIRING	
1	PFOZZ	5310005434385	96906	MS35333-46	WASHER,LOCK	1
2	PAOZZ	5920000120151	81349	F02A32V15A	FUSE,CARTRIDGE	1
3	PAOZZ	5930011761699	11083	8D2676	SWITCH,TOGGLE	1
4	PFOZZ	2920010589099	11083	3S2093	STRAP	5
5	PAOZZ	5310012574290	11083	8W3597	WASHER,KEY	1
6	PAOZZ	5925000080548	14859	7851-13-60I	CIRCUIT BREAKER	1
7	PFOZZ	5305009846196	80205	MS35206-248	SCREW,MACHINE	2
8	PFOZZ	6220007787213	11083	1H5166	RETAINER,WIRING HAR	12
9	PFOZZ	5310008098541	96906	MS27183-27	WASHER,FLAT	15
10	PFOZZ	5306002604508	11083	0S1594	BOLT,MACHINE	3
11	PAOZZ	5340012580151	11083	4K8629	BRACKET,ANGLE	1
12	PFOZZ	5310014297859	11083	6V8801	NUT,PLAIN,HEXAGON	4
13	PFOZZ	6150004813708	11083	3S8624	LEAD,ELECTRICAL	1
14	PAOZZ	5340012107562	11083	9M9738	CLAMP,LOOP	1
15	PFOZZ	5305002528919	11083	0S0509	SCREW,CAP,HEXAGON H	2
16	PFOZZ	5310000611258	96906	MS45904-76	WASHER,LOCK	5
17	PAOZZ	5340012589176	11083	2P9025	BRACKET,ANGLE	1
18	PFOZZ	5342004656799	11083	7S1912	CLIP	2
19	PFOZZ	5305007215492	80204	B1821BH038C063N	SCREW,CAP,HEXAGON H	2
20	PAOZZ	4730010618216	11083	2S3440	CLAMP,HOSE	2
21	PFOZZ		16764	1115615	RELAY,ELECTROMAGNET	1
22	PFOZZ	5325004565519	11083	1S1014	GROMMET,SPECIAL	2
23	PFOZZ	6150012533397	11083	3K3147	LEAD,ELECTRICAL	1
24	PFOZZ	2920010643809	11083	8H8648	PLATE	1
25	PFOZZ	5310010980634	78189	WD23875	WASHER,SPRING TENSI	2
26	PFOZZ	5310009887516	78189	4024-32-00-0541	WASHER,LOCK	6
27	PAOZZ	5325012648514	11083	3D6209	GROMMET,NONMETALLIC	1
28	PFOZZ	5305000712506	80204	B1821BH025C050N	SCREW,CAP,HEXAGON H	4
29	PAOZZ	6150012159997	11083	3P2182	LEAD,ELECTRICAL	1
30	PFOZZ	5975014741888	11083	0375197	.CABLE NIPPLE,ELECTR	1
				END OF FIGURE		

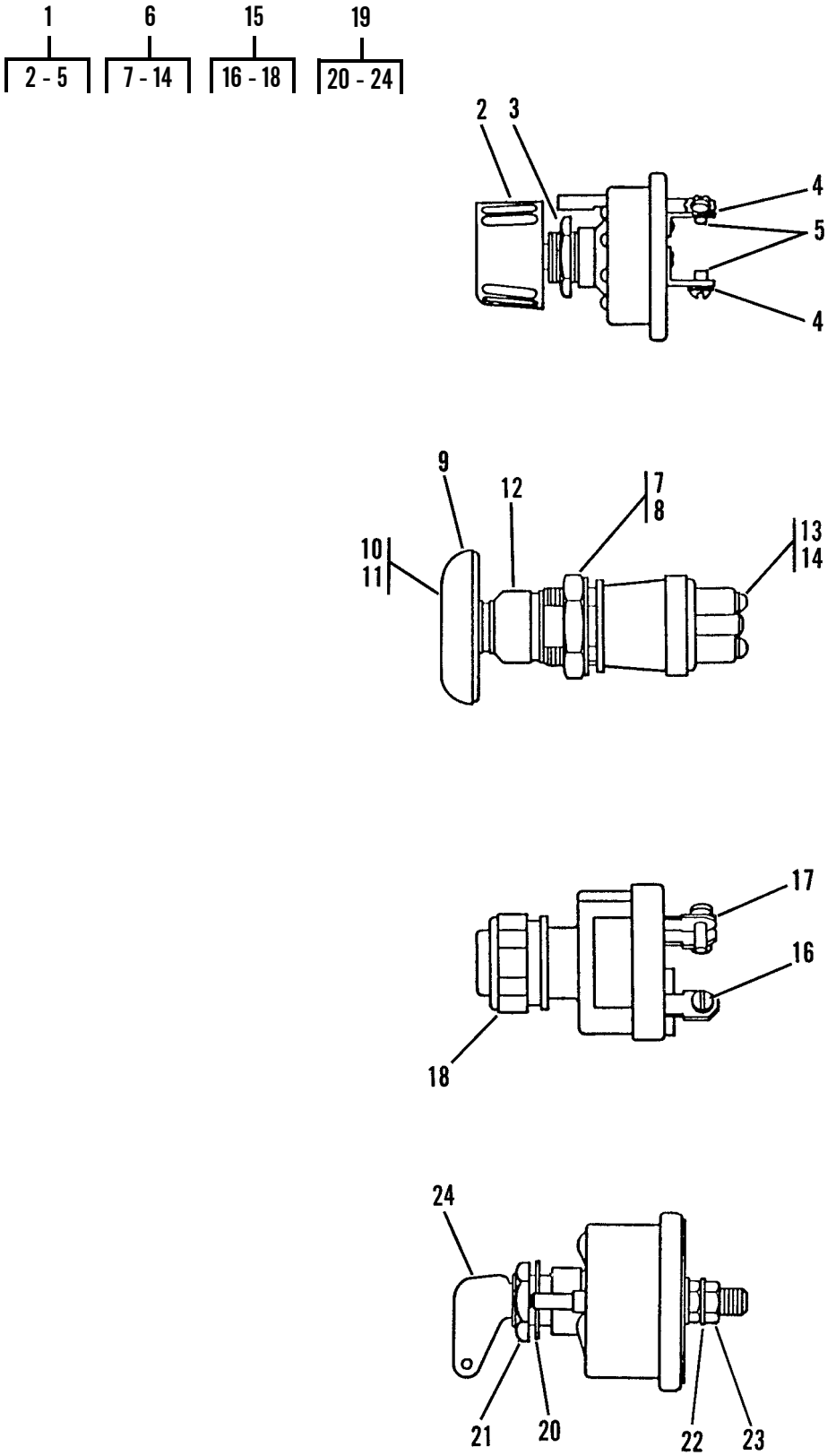

Figure 57. Switches

(1) ITEM NO	(2) SMR CODE	(3) NSN	(4) CAGEC	(5) PART NUMBER	(6) DESCRIPTION AND USABLE ON CODES (UOC)	(7) QTY
					GROUP 0608 MISCELLANEOUS ITEMS	
					FIG. 57 SWITCHES	
1	PAOZZ	5930004349121	11083	7S6402	SWITCH,ROTARY	1
2	PFOZZ	5355000079980	13445	81285	.KNOB	1
3	PFOZZ	5310007576377	16764	1914379	.NUT,PLAIN,HEXAGON	1
4	PFOZZ	5310005967693	96906	MS35335-31	.WASHER,LOCK	3
5	PFOZZ	5305009846189	80205	MS35206-241	.SCREW,MACHINE	3
6	PAOZZ	5930011627312	11083	3T2357	SWITCH,PUSH	1
7	PFOZZ	5310005503714	78189	1232-00	.WASHER,LOCK	1
8	PFOZZ	5310011843539	11083	6V8370	.NUT,PLAIN,HEXAGON	1
9	PFOZZ	5355012845519	11083	7T9515	.KNOB	1
10	PFOZZ	5305010589146	11083	5L7200	.SCREW,MACHINE	1
11	PFOZZ	5310000453299	80205	MS35338-42	.WASHER,LOCK	1
12	PFOZZ	2530012819702	13445	98151	.BOOT,VEHICULAR COMP	1
13	PFOZZ	5310001937486	77926	A02157-121	.WASHER,LOCK	2
14	PFOZZ		11083	6V8363	.SCREW,MACHINE	2
15	PAOZZ	2920012583471	11083	9G7641	SWITCH,LOCK,IGNITIO	1
16	PFOZZ	5305011845915	11083	6V8362	.SCREW,MACHINE	4
17	PFOZZ	5310005590070	96906	MS35333-38	.WASHER,LOCK	4
18	PFOZZ	5310012880094	11083	7T6799	.NUT,PLAIN,KNURLED	1
19	PFOZZ	2920007757691	11083	7N-0718	SWITCH,LOCK,IGNITIO	1
20	PFOZZ	5310005503714	78189	1232-00	.WASHER,LOCK	1
21	PFOZZ	5310000050895	13445	2484-26	.NUT,PLAIN,HEXAGON	1
22	PFOZZ	5310005957237	78189	1220-00	.WASHER,LOCK	2
23	PFOZZ	5310008339298	11083	6F7045	.NUT,PLAIN,HEXAGON	2
24	PFOZZ	5930007151939	13445	8398	.KEY,SWITCH	1
				END OF FIGURE		

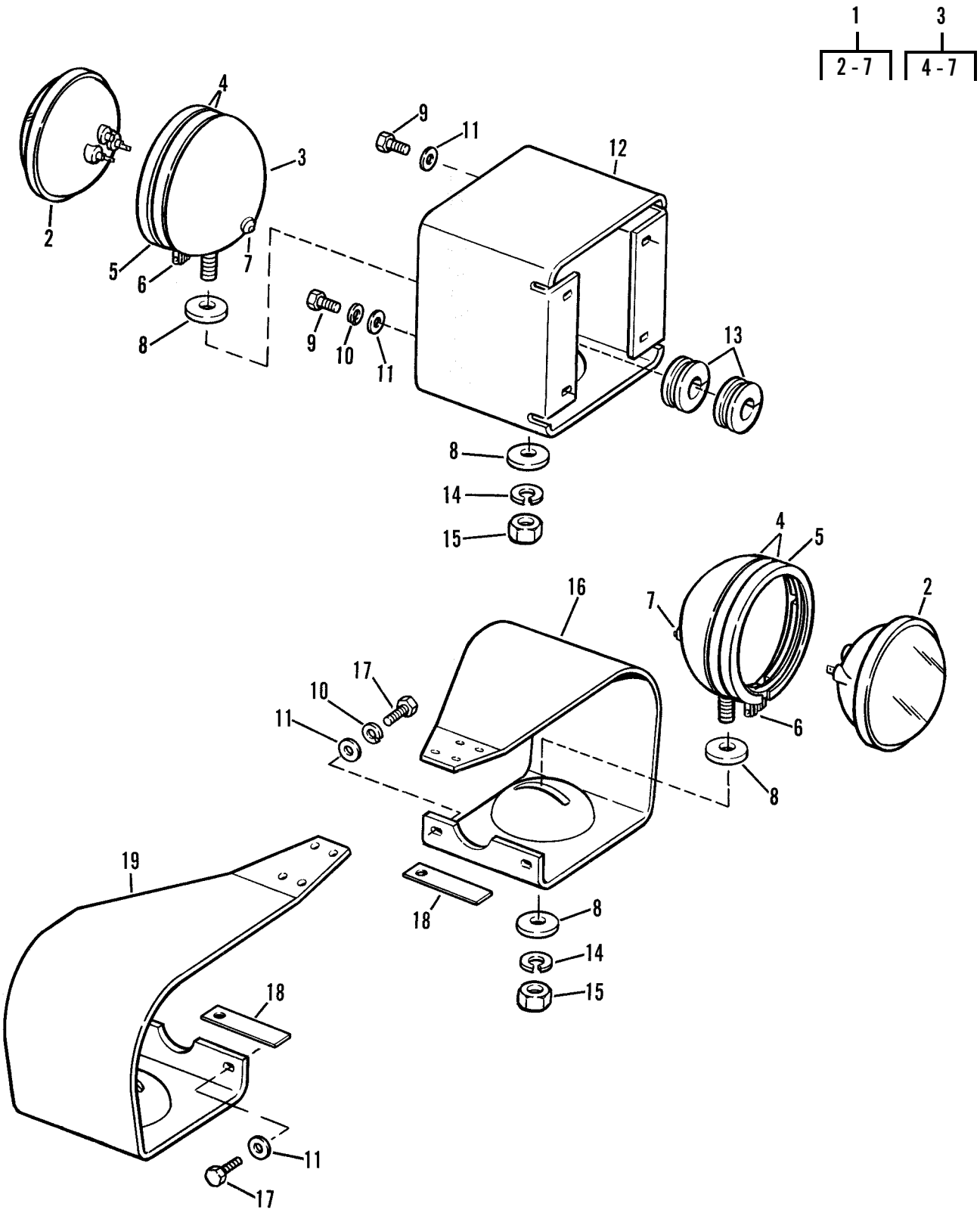

Figure 58. Lighting Group

(1) ITEM NO	(2) SMR CODE	(3) NSN	(4) CAGEC	(5) PART NUMBER	(6) DESCRIPTION AND USABLE ON CODES (UOC)	(7) QTY
					GROUP 0609 LIGHTS	
					FIG. 58 LIGHTING GROUP	
1	PFOZZ	6220009534652	73331	897922	FLOODLIGHT,ELECTRIC	3
2	PAOZZ	6240006430687	24617	E8914-8	.LAMP,INCANDESCENT	3
3	PFOZZ	6220010375622	11083	2P2541	.HOUSING,LIGHT	3
4	PFOZZ	6220008328774	73331	921472	..RETAINER,LENS	6
5	PFOZZ	6220007568787	11083	2M5282	..RETAINER,LENS	3
6	PFOZZ	5305012566783	11083	9W1923	..SCREW,MACHINE	6
7	PFOZZ	5305000420461	61928	420461	..SCREW,ASSEMBLED WAS	3
8	PFOZZ	5310005075727	11083	2B8352	WASHER,SPRING TENSI	6
9	PFOZZ	5306002604508	11083	0S1594	BOLT,MACHINE	4
10	PFOZZ	5310000611258	96906	MS45904-76	WASHER,LOCK	3
11	PFOZZ	5310008098541	96906	MS27183-27	WASHER,FLAT	16
12	PFOZZ	5340012280501	11083	6P5659	BRACKET,ANGLE	1
13	PAOZZ	5325012534416	11083	9K0700	GROMMET,NONMETALLIC	2
14	PFOZZ	5310000455001	96906	MS35340-50	WASHER,LOCK	3
15	PFOZZ	5310007638905	96906	MS51968-20	NUT,PLAIN,HEXAGON	3
16	PFOZZ	6220004335959	11083	1M3069	GUARD,LAMP	1
17	PFOZZ	5306004238194	11083	1A2029	BOLT,MACHINE	12
18	PFOZZ	5340005479875	11083	1H5165	PLATE,MENDING	2
19	PFOZZ	6220003508204	11083	1M3070	GUARD,LAMP	1
				END OF FIGURE		

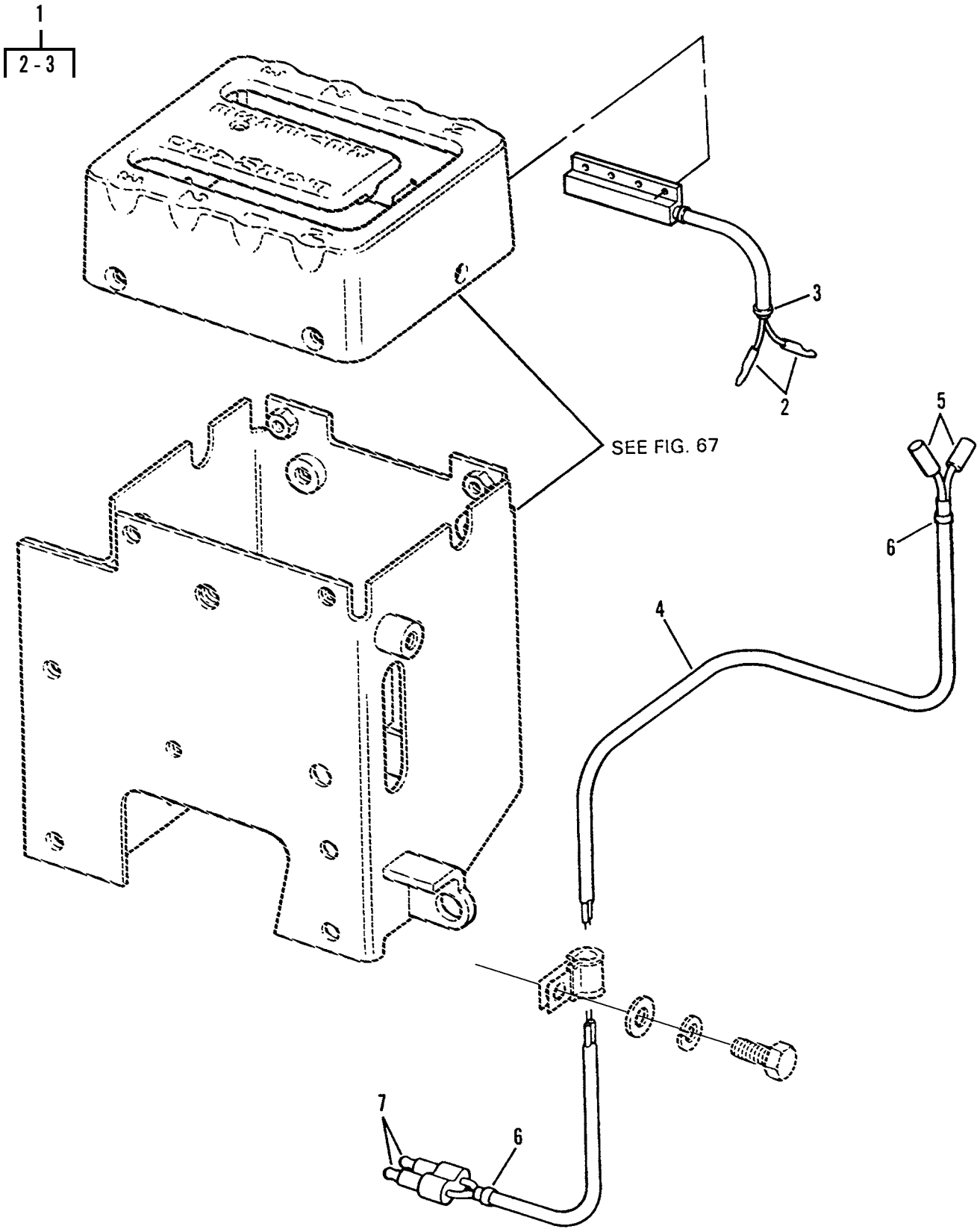

Figure 59. Transmission Control Wiring

(1) ITEM NO	(2) SMR CODE	(3) NSN	(4) CAGEC	(5) PART NUMBER	(6) DESCRIPTION AND USABLE ON CODES (UOC)	(7) QTY
					GROUP 0610 SENDING UNITS AND WARNING SWITCHED	
					FIG. 59 TRANSMISSION CONTROL WIRING	
1	PFOZZ	5930011627313	11083	9P4608	SWITCH,PUSH	1
2	PFOZZ	5940002910085	78174	STP163	.TERMINAL,QUICK DISC	2
3	PFOZZ	2920010589099	11083	3S2093	.STRAP	2
4	PFOZZ	5995012090426	11083	9P5253	WIRING HARNESS,BRAN	1
5	PFOZZ	5940010973578	11083	6N9587	TERMINAL,QUICK DISC	2
6	PFOZZ	5340011602464	11083	1S9593	STRAP,LINE SUPPORTI	2
7	PFOZZ	5940002910085	78174	STP163	TERMINAL,QUICK DISC	2
				END OF FIGURE		

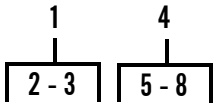

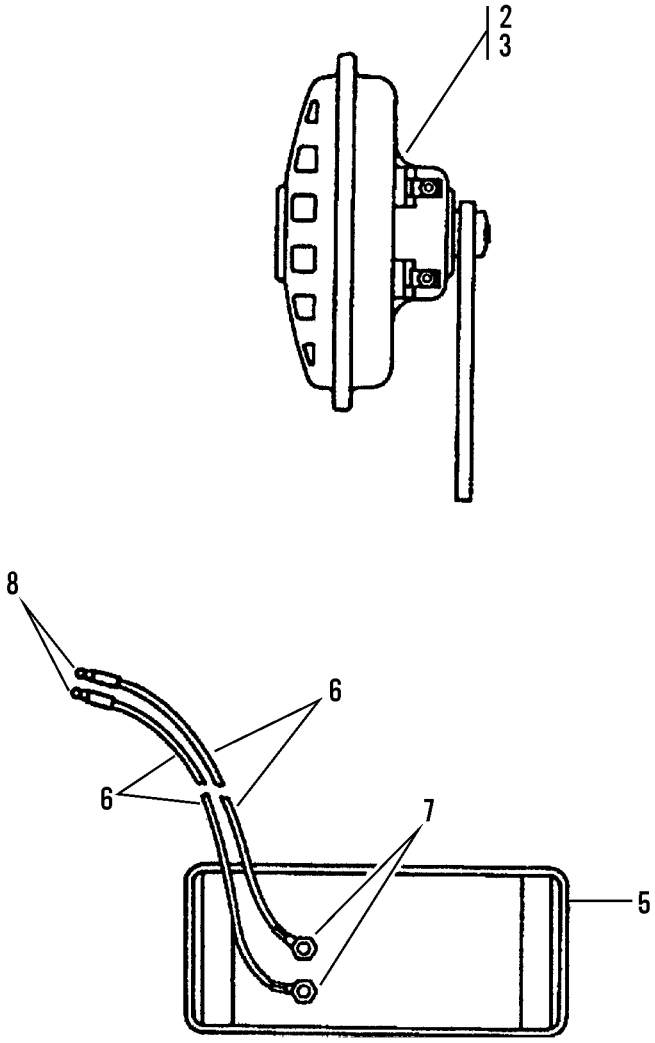

Figure 60. Horn and Back-Up Alarm

(1) ITEM NO	(2) SMR CODE	(3) NSN	(4) CAGEC	(5) PART NUMBER	(6) DESCRIPTION AND USABLE ON CODES (UOC)	(7) QTY
					GROUP 0611 HORN, SIREN	
					FIG. 60 HORN AND BACK-UP ALARM	
1	PAOZZ	2590001356277	11083	5D3570	HORN,TRACTOR	1
2	PFOZZ	5305012566797	11083	6V5210	.SCREW,MACHINE	2
3	PFOZZ	5310005590070	96906	MS35333-38	.WASHER,LOCK	2
4	AOOOO		11083	8P8845	HORN,ELECTRICAL	1
5	PFOZZ	6350011555993	11083	3T1815	.ALARM,BACK-UP,VEHIC	1
6	MOOZZ		11083	6A3626-12	.LEAD,ELECTRICAL 12.0 IN, MAKE FROM WIRE P/N DA2524-7	2
7	PFOZZ	5940001434774	96906	MS25036-153	.TERMINAL,LUG	2
8	PFOZZ	5940002910085	81774	R5302P1	.TERMINAL,QUICK DISC	2
				END OF FIGURE		

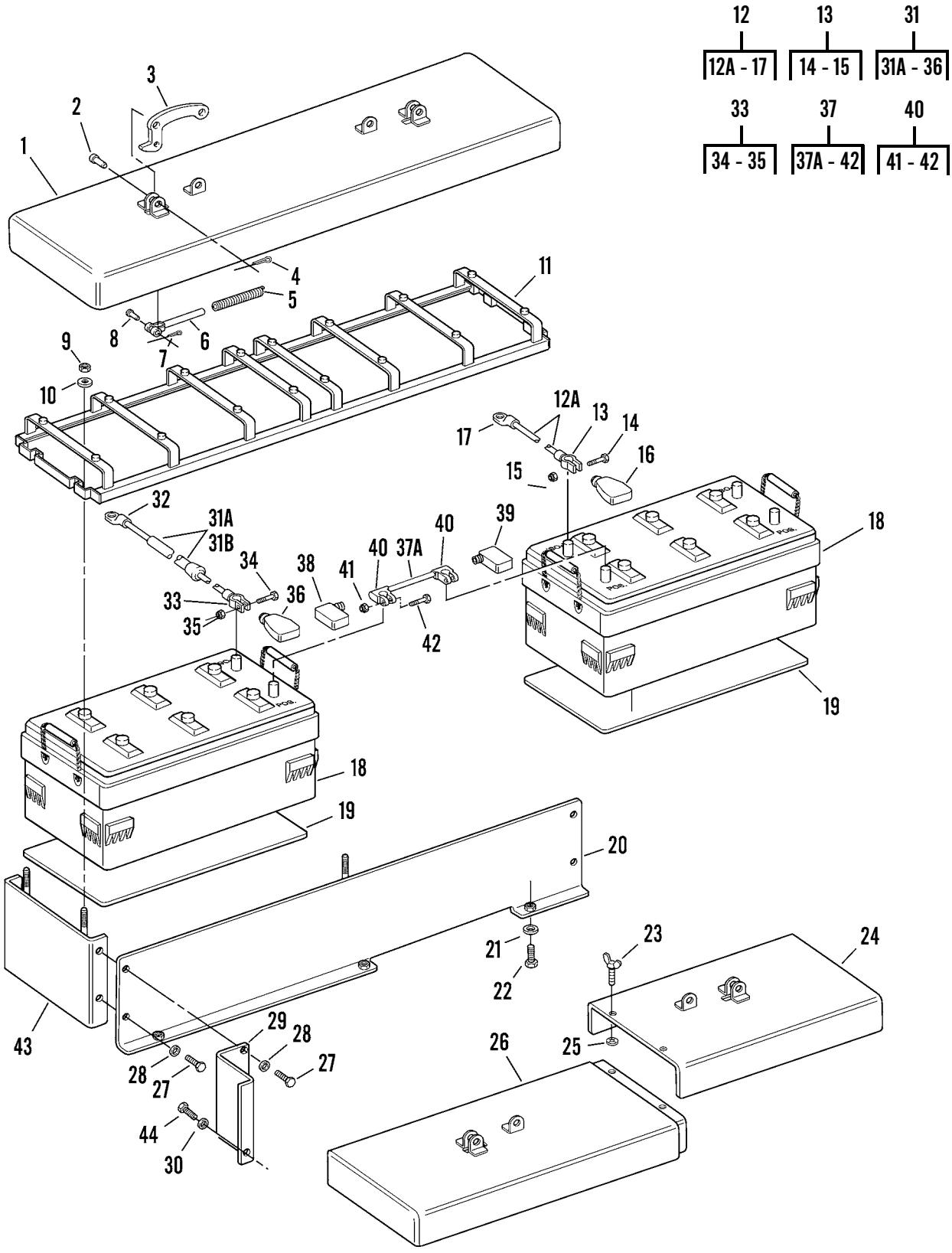

Figure 61. Batteries and Cables

(1) ITEM NO	(2) SMR CODE	(3) NSN	(4) CAGEC	(5) PART NUMBER	(6) DESCRIPTION AND USABLE ON CODES (UOC)	(7) QTY
					GROUP 0612 BATTERIES, STORAGE (WET OR DRY)	
					FIG. 61 BATTERIES AND CABLES	
1	PFOZZ	5340012373387	11083	8S6950	COVER,ACCESS	1
2	PFOZZ	5315003636577	11083	2B2938	PIN	2
3	PFOZZ	2510010630635	11083	1H7365	HANDLE	2
4	PFOZZ	5315008395822	80205	MS24665-353	PIN,COTTER	2
5	PFOZZ	5360000761478	11083	1B9920	SPRING,HELICAL,COMP	2
6	PFOZZ	2510010630636	11083	1H7366	ROD	2
7	PFOZZ	5315008395821	80205	MS24665-351	PIN,COTTER	2
8	PFOZZ	5315006192962	11083	1J4384	PIN,STRAIGHT,HEADED	2
9	PFOZZ	5310011134047	11083	3K6060	NUT,SELF-LOCKING,HE	8
10	PFOZZ	5310008094061	96906	MS27183-15	WASHER,FLAT	6
11	PFOZZ	6160012569854	11083	5S8583	RETAINER,BATTERY	1
12	PFOZZ	6140012774486	11083	9S4611	LEAD,STORAGE BATTER	1
12A	MOOZZ		11083	5P0747-18	.CABLE 19 IN, MAKE FROM CABLE . P/N 1300-25	1
13	PFOZZ	5940002018938	04618	29711	.TERMINAL,LUG	1
14	PAOZZ	5306004388600	11083	1M6119	..BOLT,MACHINE	1
15	PFOZZ	5310004388604	11083	1M6120	..NUT,SLEEVE	1
16	XDOZZ		60237	4301	.COVER,ELECTRICAL	1
17	PFOZZ	2920010660593	11083	1S7252	.TERMINAL	1
18	PCOFA	6140001909828	81348	8D-900-D	BATTERY,STORAGE	2
19	PFOZZ	2540010687114	11083	9M5775	MAT	2
20	PFOZZ	5340012579184	11083	5R6265	BRACKET,ANGLE	2
21	PFOZZ	5310010976720	11083	5P1076	WASHER,SHOULDERED A	6
22	PFOZZ	5306004238117	11083	0S1595	BOLT,MACHINE	6
23	PFOZZ	5305012707335	11083	4K0487	THUMBSCREW ..... UOC:GRC,GWC	2
24	PFOZZ	2590012680306	11083	5R7917	COVER,BATTERY REAR ..... UOC:GRC,GWC	1
25	PFOZZ	5310011846474	55644	PT375125PG	PUSH ON NUT ..... UOC:GRC,GWC	2
26	PAOZZ	6135012755350	11083	5R7915	COVER,BATTERY FRONT ..... UOC:GRC,GWC	1
27	PFOZZ	5306002637301	11083	0L1351	BOLT,MACHINE	8
28	PFOZZ	5310008098541	96906	MS27183-27	WASHER,FLAT	8
29	PFOZZ	5340012729110	11083	5R7949	BRACKET,DOUBLE ANGL ..... UOC:GRC,GWC	1
30	PFOZZ	5310010948810	78189	3320-14-01	WASHER,SQUARE CONE ..... UOC:GRC,GWC	1
31	PFOZZ	5995012084306	11083	5R7288	CABLE ASSEMBLY,SPEC	1
31A	MOOZZ		11083	5P761-150	.CABLE 150 IN, MAKE FROM WIRE . P/N 5P0761	1
31B	MOOZZ		11083	5P695-142	.CONDUIT 142 IN, MAKE FROM .... CONDUIT P/N 5P0695	1
32	PFOZZ	5940010589090	11083	1S7251	.TERMINAL,LUG	1
33	PFOZZ	5940011693889	00779	29712	.TERMINAL,LUG	1
34	PFOZZ	5306004388600	11083	1M6119	..BOLT,MACHINE	1

(1) ITEM NO	(2) SMR CODE	(3) NSN	(4) CAGEC	(5) PART NUMBER	(6) DESCRIPTION AND USABLE ON CODES (UOC)	(7) QTY
35	PAOZZ	5310004388604	11083	1M6120	..NUT,SLEEVE	1
36	PFOZZ	6140011701451	11083	8N1725	.COVER,BATTERY CABLE	1
37	PAOZZ	6150011572931	11083	3P2179	CABLE ASSEMBLY,POWE	1
37A	MOOZZ		11083	5P0747-6	.CABLE 6 IN, MAKE FROM CABLE .. P/N 1300-25	1
38	PFOZZ		11083	9G0003	.COVER,ACCESS	1
39	PFOZZ	5935011580035	11083	9G0004	.COVER,ELECTRICAL CO	1
40	PAOZZ	5940013765755	11083	8T9757	.TERMINAL,LUG (NEG)	1
40	PAOZZ	5940005496581	11083	8C5917	.ADAPTER,BATTERY TER (POS)	1
41	PFOZZ	5310004388604	11083	1M6120	..NUT,SLEEVE	2
42	PFOZZ	5306004388600	11083	1M6119	..BOLT,MACHINE	2
43	PFOZZ	5340012580159	11083	5R6267	BRACKET,DOUBLE ANGL	2
44	PFOZZ	5306002637301	11083	0L1351	BOLT,MACHINE ..... UOC:GRC,GWC	1

END OF FIGURE

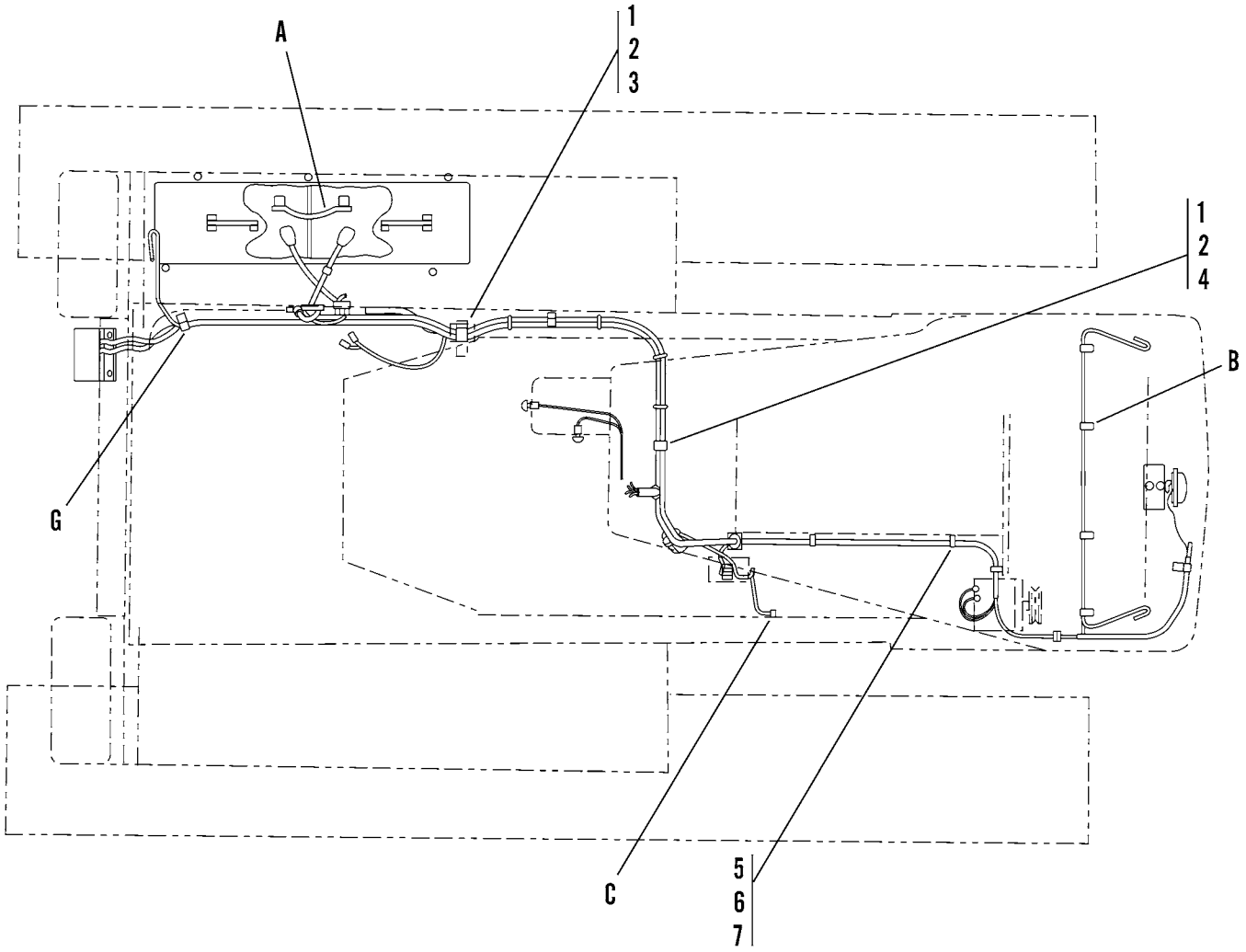

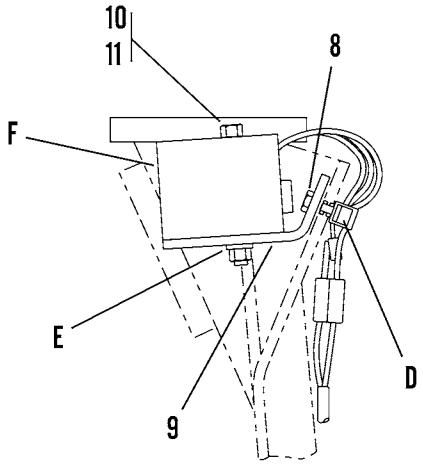

A — See Fig. 61 Item 37

B — See Fig. 56 Item 8

C — See Fig. 56 Items 9, 15, 16, MS90728-55 SCREW and MS45904-76 LOCKWASHER.

D — See Fig. 56 Items 9, 12, 15, MS90728-158 SCREW and MS51967-8 NUT.

E — See Fig. 56 Item 9

F — See Fig. 60 for P/N 8P8845, HORN ALARM ASSY.

G — See Fig. 56 Items 9, 18, 28, 7S1912 CLIP and MS90728-57 SCREW.

Figure 62. Chassis Wiring Mounting Group

(1) ITEM NO	(2) SMR CODE	(3) NSN	(4) CAGEC	(5) PART NUMBER	(6) DESCRIPTION AND USABLE ON CODES (UOC)	(7) QTY
					GROUP 0613 HULL OR CHASSIS WIRING HARNESS	
					FIG. 62 CHASSIS WIRING MOUNTING GROUP	
1	PFOZZ	5340004264819	11083	1S1015	CLAMP,LOOP	1
2	PFOZZ	5305007320512	80204	B1821BH050C075N	SCREW,CAP,HEXAGON H	2
3	PAOZZ	5310010976720	11083	5P1076	WASHER,SHOULDERED A	2
4	PAOZZ	5340009482286	11083	1S0996	CLAMP,LOOP	2
5	PFOZZ	5305007247218	80204	B1821BH063C100N	SCREW,CAP,HEXAGON H	2
6	PFOZZ	5310010516946	11083	6N0130	WASHER,FLAT	2
7	PFOZZ	5340002537912	11083	2M0287	CLIP,SPRING TENSION	2
8	PFOZZ	5305000680511	80204	B1821BH038C125N	SCREW,CAP,HEXAGON H	3
9	PFOZZ	5340012577755	11083	8P4028	BRACKET,ANGLE	1
10	PFOZZ	5306011591513	11083	0T0055	BOLT,MACHINE	2
11	PAOZZ	5310008098541	96906	MS27183-27	WASHER,FLAT	4
				END OF FIGURE		

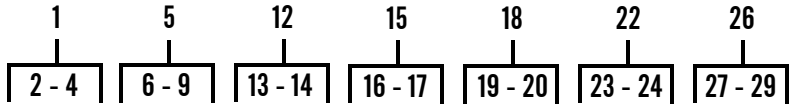

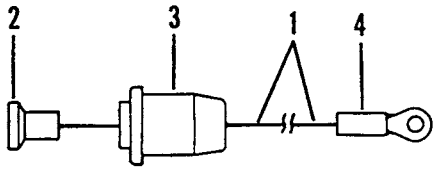

DASH LIGHT TOGGLE SWITCH AND
EXTERNAL LIGHT SWITCH WIRE HARNESS

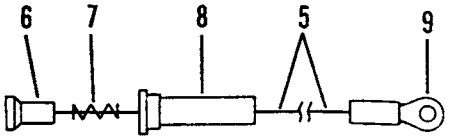

DASH LIGHT TOGGLE SWITCH AND
EXTERNAL LIGHT SWITCH WIRE HARNESS

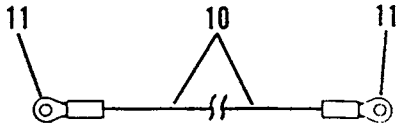

HORN BUTTON WIRE HARNESS

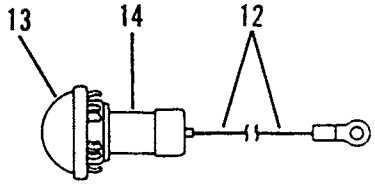

DASH PANEL LAMP WIRE HARNESS

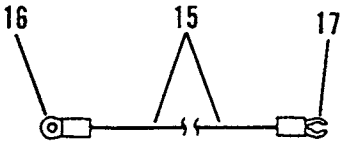

HORN ALARM WIRE HARNESS

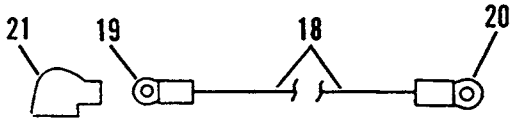

MAGNETIC SWITCH WIRE HARNESS

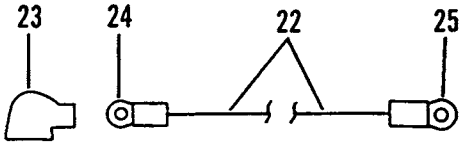

MAGNETIC SWITCH WIRE HARNESS

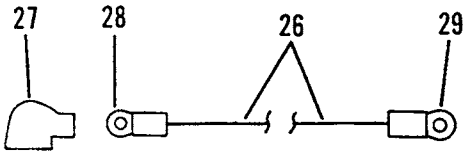

MAGNETIC SWITCH WIRE HARNESS

Figure 63. Wiring Leads and Fuseholders

(1) ITEM NO	(2) SMR CODE	(3) NSN	(4) CAGEC	(5) PART NUMBER	(6) DESCRIPTION AND USABLE ON CODES (UOC)	(7) QTY
					GROUP 0613 HULL OR CHASSIS WIRING HARNESS	
					FIG. 63 WIRING LEADS AND FUSEHOLDERS	
1	PCOZA	6150014994648	11083	9G7309	LEAD,ELECTRICAL	2
2	PFOZA	5999010590884	77060	5290793	.CONTACT,ELECTRICAL	2
3	PFOZZ	5920010590882	11083	2S5012	.FUSEHOLDER SUBASSEM	2
4	PFOZZ	5940001434794	96906	MS25036-112	.TERMINAL,LUG	2
5	PCOZA	6150014994640	11083	9G7308	LEAD,ELECTRICAL	2
6	PFOZA	5999010590884	77060	5290793	.CONTACT,ELECTRICAL	1
7	PFOZZ	5360010590883	11083	2S5013	.SPRING	1
8	PFOZZ	5920010590881	11083	2S5011	.FUSEHOLDER SUBASSEM	1
9	PFOZZ	5940001434794	96906	MS25036-112	.TERMINAL,LUG	1
10	MOOZZ		11083	5P5624-24	LEAD,ELECTRICAL 24.01 IN,HORN . BUTTON MAKE FROM WIRE P/N DA2524-7	1
11	PFOZZ	5940001434780	96906	MS25036-108	TERMINAL,LUG	2
12	PFOZZ	6210001912745	74400	M-4233	LIGHT,PANEL DASH PANEL LAMP ... WIRE HARNESS	1
13	PFOZZ	6240000193093	96787	A6324	.LAMP,INCANDESCENT	1
14	PFOZZ	2990011036635	11083	6N8742	.BODY ASSEMBLY,LAMP	1
15	PCOZA	6150014994642	11083	7T6988	LEAD,ELECTRICAL	1
16	PAOZZ	5940001434793	96906	MS25036-110	.TERMINAL,LUG	1
17	PFOZZ	5940013034978	11083	5P1475	.TERMINAL,LUG	1
18	PCOZA	6150014994636	11083	2P9082	LEAD,ELECTRICAL	1
19	PFOZZ	5940001139826	96906	MS25036-114	.TERMINAL,LUG	1
20	PFOZZ	5940010590873	11083	2L8071	.TERMINAL,LUG	1
21	PFOZZ	5970011560688	77060	2984033	INSULATOR,BOOT	1
22	PCOZA	6150014994633	11083	2P9081	LEAD,ELECTRICAL	1
23	PFOZZ	5970011560688	77060	2984033	.INSULATOR,BOOT	1
24	PFOZZ	5940001139826	96906	MS25036-114	.TERMINAL,LUG	1
25	PFOZZ	5940001434794	96906	MS25036-112	TERMINAL,LUG	1
26	PFOZA	6150014994645	11083	2P9093	LEAD,ELECTRICAL	1
27	PFOZZ	5970011560688	77060	2984033	.INSULATOR,BOOT	1
28	PFOZZ	5940001434794	96906	MS25036-112	.TERMINAL,LUG	1
29	PFOZZ	5940010590873	11083	2L8071	.TERMINAL,LUG	1
				END OF FIGURE		

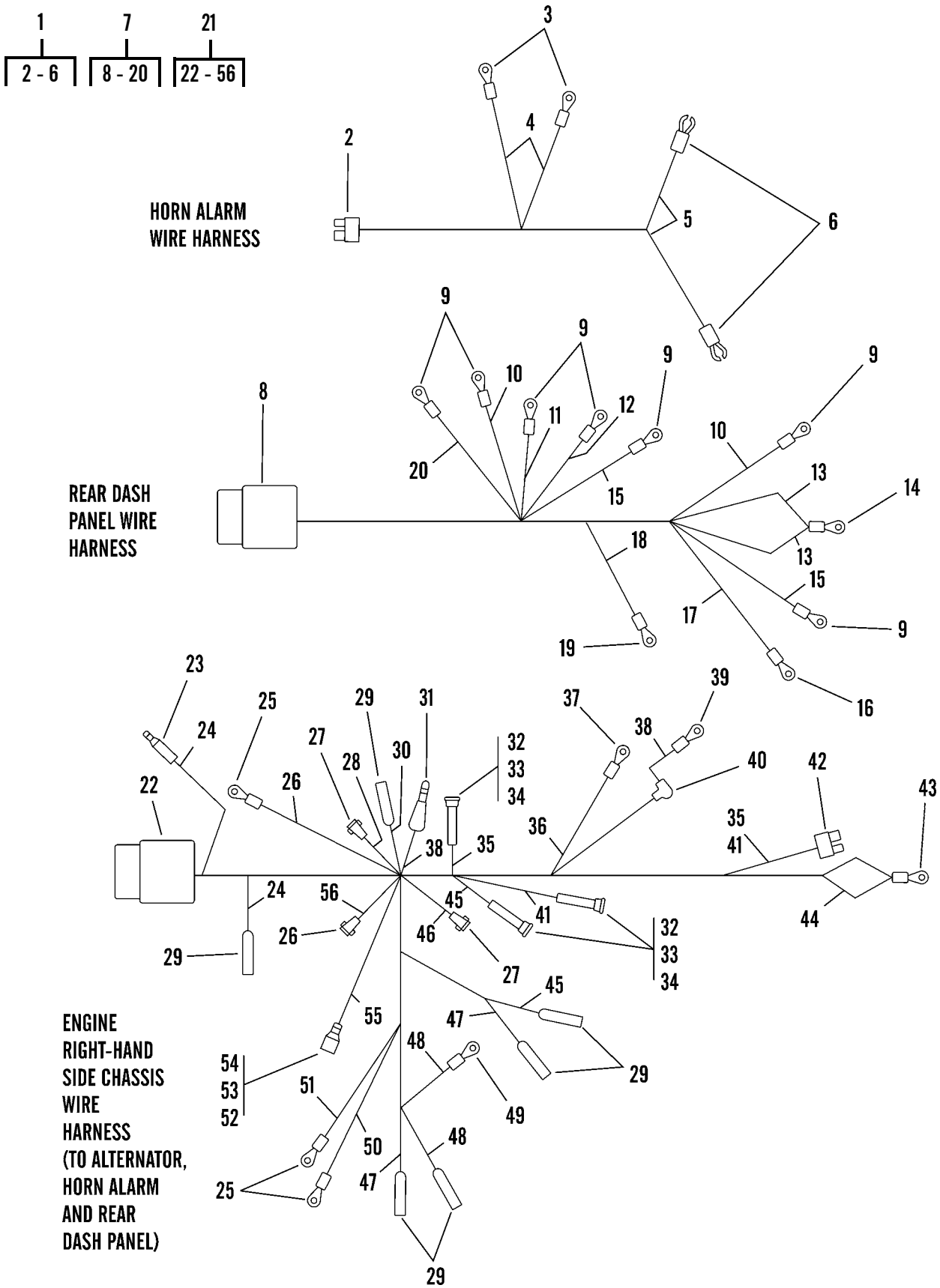

Figure 64. Engine Wiring Harness

(1) ITEM NO	(2) SMR CODE	(3) NSN	(4) CAGEC	(5) PART NUMBER	(6) DESCRIPTION AND USABLE ON CODES (UOC)	(7) QTY
					GROUP 0613 HULL OR CHASSIS WIRING HARNESS	
					FIG. 64 ENGINE WIRING HARNESS	
1	AOOOO		11083	7T6985	HARNESS ASSY HORN ALARM	1
2	XBOZZ		11083	6K7361	.CONNECTOR,PLUG,ELEC	1
3	PFOZZ	5940001434774	96906	MS25036-153	.TERMINAL,LUG	2
4	MOOZZ		11083	5P4510-154	.WIRE 153.54 IN, MAKE FROM WIRE P/N 81144S	2
5	MOOZZ		11083	5P5018-106	.WIRE 106.29 IN, MAKE FROM WIRE P/N 81145S	2
6	PFOZZ	5940004928333	56501	14RB8FX	.TERMINAL,LUG	2
7	AOOOO		11083	7G8660	HARNESS ASSY	1
8	PFOZZ	5935011580364	11083	5P3161	.CONNECTOR,PLUG,ELEC	1
9	PFOZZ	5940001434794	96906	MS25036-112	.TERMINAL,LUG	6
10	MOOZZ		11083	5P3385-28	.WIRE 27.55 IN, MAKE FROM WIRE P/N 81106S	1
11	MOOZZ		11083	5P1204-32	.WIRE 31.49 IN, MAKE FROM WIRE P/N 5P5621	1
12	MOOZZ		11083	5P2762-26	.WIRE 25.59 IN, MAKE FROM WIRE P/N C10ER	1
13	MOOZZ		11083	5P3385-40	.WIRE 39.37 IN, MAKE FROM WIRE P/N 81106S	1
14	PFOZZ	5940001141310	96906	MS25036-119	.TERMINAL,LUG	1
15	MOOZZ		11083	5P2762-30	.WIRE 29.52 IN, MAKE FROM WIRE P/N C10ER	1
16	PFOZZ	5940001434780	96906	MS25036-108	.TERMINAL,LUG	1
17	MOOZZ		11083	5P5018-55	.WIRE 55.1 IN, MAKE FROM WIRE . P/N DA2524-9-0	1
18	MOOZZ		11083	5P4510-28	.WIRE 27.55 IN, MAKE FROM WIRE P/N 81144S	1
19	PFOZZ	5940001434774	96906	MS25036-153	.TERMINAL,LUG	1
20	MOOZZ		11083	6A3369-24	.WIRE 23.62 IN, MAKE FROM WIRE P/N 572D9	1
21	AOOOO		11083	3T5961	HARNESS ASSY ENGINE	1
22	PFOZZ	5935011188884	11083	5P3160	.CONNECTOR,PLUG,ELEC	1
23	PFOZZ	5940002910085	81774	R5302P1	.TERMINAL,QUICK DISC	1
24	MOOZZ		11083	5P2765-35	.WIRE 35.43 IN, MAKE FROM WIRE1 P/N DA2524-9-0	1
25	PFOZZ	5940001434774	96906	MS25036-153	.TERMINAL,LUG	3
26	MOOZZ		11083	5P5017-53	.WIRE 52.75 IN, MAKE FROM WIRE P/N 5P5621	1
27	PFOZZ	5920010590882	11083	2S5012	.FUSEHOLDER SUBASSEM	3
28	MOOZZ		11083	5P5018-41	.WIRE 40.94 IN, MAKE FROM WIRE P/N 81145S	1
29	PFOZZ	5940010973578	11083	6N9587	.TERMINAL,QUICK DISC	6
30	MOOZZ		11083	6A3369-40	.WIRE 40.15 IN, MAKE FROM WIRE P/N 572D9	1
31	PFOZZ	5940012064291	11083	1607700	.TERMINAL,QUICK DISC	1
32	PFOZA	5999010590884	77060	5290793	.CONTACT,ELECTRICAL	6
33	PFOZZ	5360010590883	11083	2S5013	.SPRING	3

(1) ITEM NO	(2) SMR CODE	(3) NSN	(4) CAGEC	(5) PART NUMBER	(6) DESCRIPTION AND USABLE ON CODES (UOC)	(7) QTY
34	PFOZZ	5920010590881	11083	2S5011	.FUSEHOLDER SUBASSEM	3
35	MOOZZ		11083	5P5018-58	.WIRE 57.48 IN, MAKE FROM WIRE P/N 1145S	1
36	MOOZZ		11083	5P2762-70	.WIRE 70.86 IN, MAKE FROM WIRE P/N C10ER	1
37	PFOZZ	5940010590873	11083	2L8071	.TERMINAL,LUG	1
38	MOOZZ		11083	6A3369-38	.WIRE 38.58 IN, MAKE FROM WIRE P/N 572D9	1
39	PFOZZ	5940001434794	96906	MS25036-112	.TERMINAL,LUG	1
40	PFOZZ	5970011560688	77060	2984033	.INSULATOR,BOOT	1
41	MOOZZ		11083	5P4510-58	.WIRE 57.48 IN, MAKE FROM WIRE P/N 81144S	1
42	XBOZZ		11083	6K7361	.CONNECTOR,PLUG,ELEC	1
43	PFOZZ	5940006367891	1NKJ8	YAEV6CL10	.TERMINAL,LUG	1
44	MOOZZ		11083	5P3385-120	.WIRE 120.07 IN, MAKE FROM WIRE P/N 81106S	1
45	MOOZZ		11083	5P2764-98	.WIRE 97.63 IN, MAKE FROM WIRE P/N TYPE GPT 14 AWG RED	1
46	MOOZZ		11083	5P4510-41	.WIRE 40.94 IN, MAKE FROM WIRE P/N 81144S	1
47	MOOZZ		11083	5P5017-98	.WIRE 98.42 IN, MAKE FROM WIRE P/N 5P5621	1
48	MOOZZ		11083	5P5017-14	.WIRE 14.17 IN, MAKE FROM WIRE P/N 5P5621	1
49	PFOZZ	5940001434793	96906	MS25036-110	.TERMINAL,LUG	1
50	MOOZZ		11083	5P4511-186	.WIRE 186.2 IN, MAKE FROM WIRE P/N C14EB	1
51	MOOZZ		11083	5P4511-34	.WIRE 34.25 IN, MAKE FROM P/N . C14EB	1
52	PFOZZ	5935006959077	19207	8338572	SHELL,ELECTRICAL CO	1
53	PFOZZ	5310002988903	19207	8338570	.WASHER,FLAT	1
54	PFOZA	5940001441533	77060	2965638	.TERMINAL,QUICK DISC	1
55	MOOZZ		11083	5P1204-51	.WIRE 51.18 IN, MAKE FROM WIRE P/N 5P5621	1
56	MOOZZ		11083	5P2764-5	.WIRE 4.72 IN, MAKE FROM WIRE . P/N 952R	1

END OF FIGURE

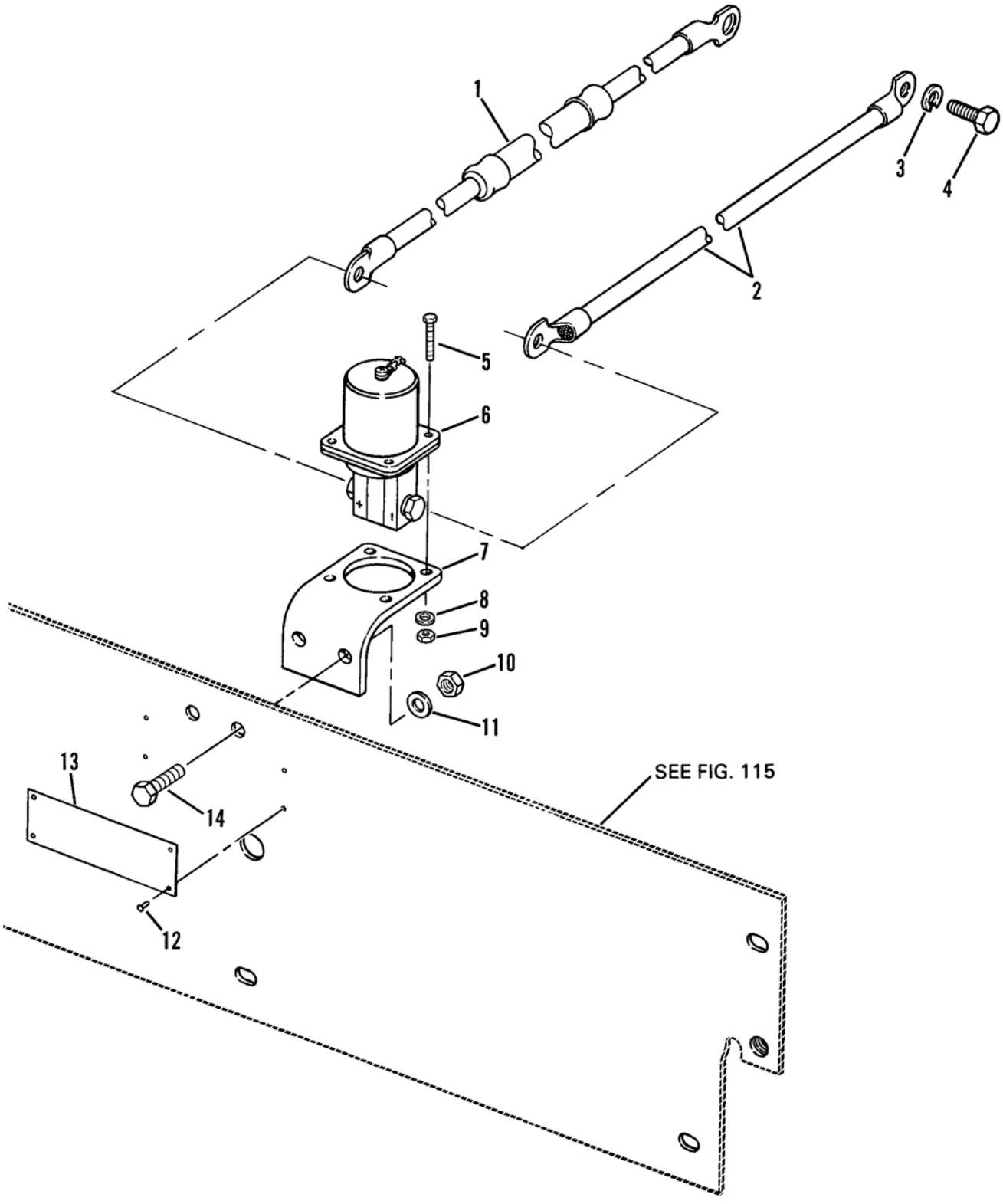

Figure 65. Starting Receptacle

(1) ITEM NO	(2) SMR CODE	(3) NSN	(4) CAGEC	(5) PART NUMBER	(6) DESCRIPTION AND USABLE ON CODES (UOC)	(7) QTY
					GROUP 0613 HULL OR CHASSIS WIRING HARNESS	
					FIG. 65 STARTING RECEPTACLE	
1	PAOZZ	6150012529289	11083	5R6949	CABLE ASSEMBLY,POWE	1
2	PAOZZ	6150012533397	11083	3K3147	LEAD,ELECTRICAL	1
3	PFOZZ	5310000611258	96906	MS45904-76	WASHER,LOCK	1
4	PFOZZ	5306002604508	11083	0S1594	BOLT,MACHINE	1
5	PFOZZ	5305012111465	11083	5P4965	SCREW,CAP,HEXAGON H	4
6	PFOZZ	5935010979974	19207	11674728	CONNECTOR,RECEPTACL	1
7	PFOZZ	5340012661084	11083	5R7811	BRACKET,ANGLE	1
8	PFOZZ		11083	4B4274	WASHER,FLAT	4
9	PFOZZ	5310008808203	04614	S7481-5S	NUT,SELF-LOCKING,HE	4
10	PFOZZ	5310007320558	96906	MS51967-8	NUT,PLAIN,HEXAGON	2
11	PFOZZ	5310001174788	11083	9Y2695	WASHER,FLAT	2
12	PFOZZ	5305002535615	80205	MS21318-21	SCREW,DRIVE	4
13	PFOZZ	9905012603363	11083	5R7816	PLATE,IDENTIFICATIO	1
14	PFOZZ	5305000680511	80204	B1821BH038C125N	SCREW,CAP,HEXAGON H	2
				END OF FIGURE		

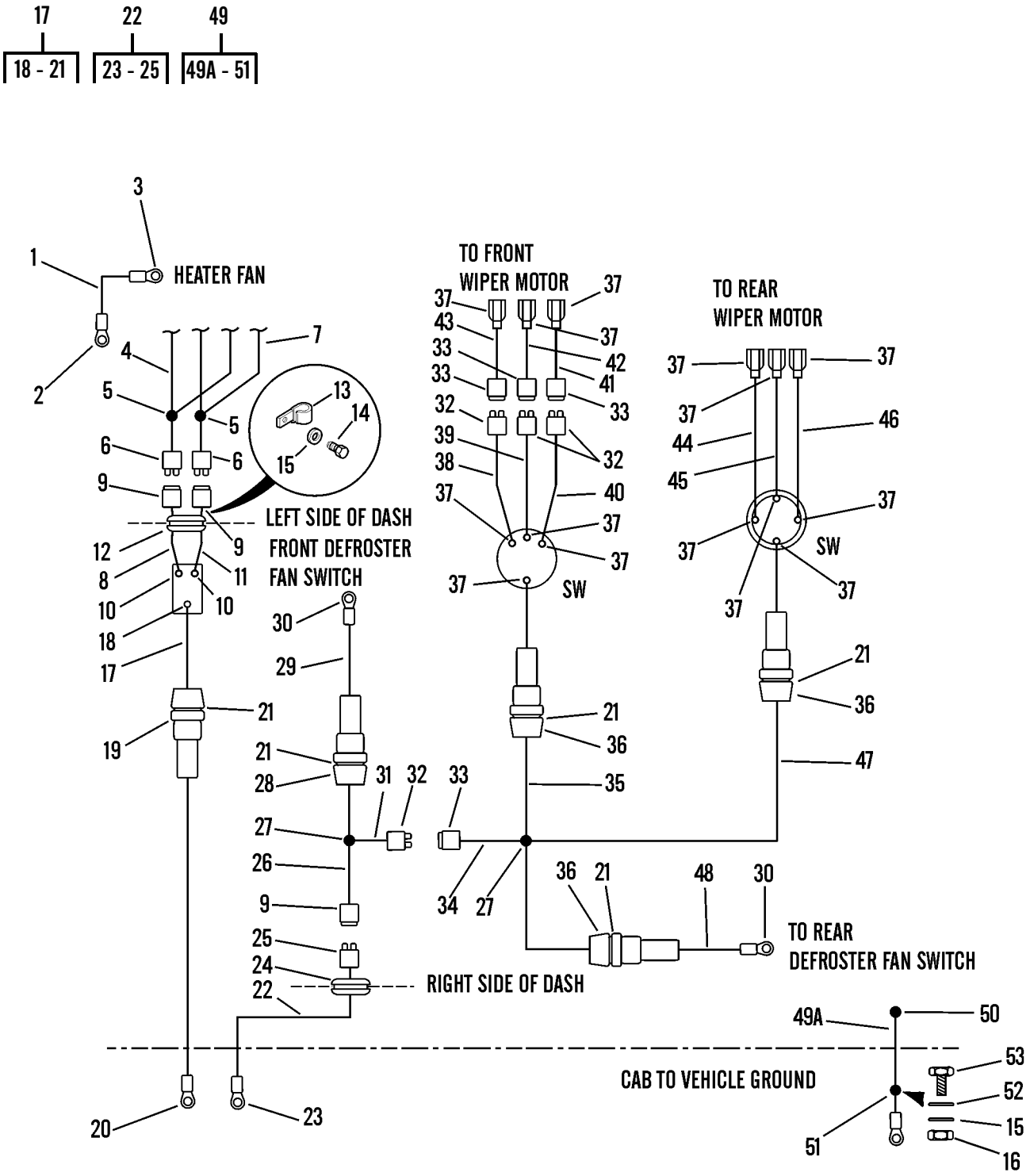

Figure 66. Winter Cab Electrical Package

(1) ITEM NO	(2) SMR CODE	(3) NSN	(4) CAGEC	(5) PART NUMBER	(6) DESCRIPTION AND USABLE ON CODES (UOC)	(7) QTY
					GROUP 0613 HULL OR CHASSIS WIRING HARNESS	
					FIG. 66 WINTER CAB ELECTRICAL PACKAGE	
1	PFOZZ	6150012691853	11083	6H6765	LEAD,ELECTRICAL ..... UOC:GRC,GWC	1
2	PFOZZ	5940002835281	81343	MS25036-109	TERMINAL,LUG ..... UOC:GRC,GWC	1
3	PFOZZ	5940010534521	11083	2L8077	TERMINAL ..... UOC:GRC,GWC	1
4	PCOZZ		11083	5R7947	CABLE ASSEMBLY,SPEC ..... UOC:GRC,GWC	1
5	PFOZZ	5940010791375	81343	M79285-4	SPLICE,CONDUCTOR ..... UOC:GRC,GWC	2
6	PFOZZ	5940011210365	11083	7K4474	TERMINAL,QUICK DISC ..... UOC:GRC,GWC	2
7	MOOZZ		11083	5R7947-ORANGE	WIRE ASSY. CUT TO FIT, MAKE ... FROM WIRE P/N 13P140RC UOC:GRC,GWC	1
8	PCOZZ		11083	5R7946	CABLE ASSEMBLY,SPEC ..... UOC:GRC,GWC	1
9	PFOZZ	5995010989330	11083	7K4475	LEAD,ELECTRICAL ..... UOC:GRC,GWC	3
10	PFOZZ	5940010870285	06383	PV14-10LFC	TERMINAL,LUG ..... UOC:GRC,GWC	2
11	PCOZZ		11083	5R7946	CABLE ASSEMBLY,SPEC ..... UOC:GRC,GWC	1
12	PFOZZ	5325002496345	70485	2758	GROMMET,NONMETALLIC ..... UOC:GRC,GWC	1
13	PFOZZ	5340004264803	11083	8M2772	CLAMP,LOOP ..... UOC:GRC,GWC	1
14	PFOZZ	5305002528919	11083	0S0509	SCREW,CAP,HEXAGON H ..... UOC:GRC,GWC	1
15	PFOZZ	5310000806004	96906	MS27183-14	WASHER,FLAT ..... UOC:GRC,GWC	3
16	PFOZZ	5310007320558	96906	MS51967-8	NUT,PLAIN,HEXAGON ..... UOC:GRC,GWC	1
17	PCOZZ		11083	5R7945	CABLE ASSEMBLY,SPEC ..... UOC:GRC,GWC	1
18	PFOZZ	5940001434774	96906	MS25036-153	.TERMINAL,LUG ..... UOC:GRC,GWC	1
19	PFOZZ	5920007956665	71400	HHJ-B	.FUSEHOLDER,EXTRACTO ..... UOC:GRC,GWC	1
20	PFOZZ	5940001434780	96906	MS25036-108	.TERMINAL,LUG ..... UOC:GRC,GWC	1
21	PFOZZ	5920000120151	81349	F02A32V15A	.FUSE,CARTRIDGE ..... UOC:GRC,GWC	4
22	PCOOO		11083	5R7948	CABLE,ASSEMBLY,SPEC ..... UOC:GRC,GWC	1
23	PFOZZ	5940001434794	96906	MS25036-112	.TERMINAL,LUG ..... UOC:GRC,GWC	1

(1) ITEM NO	(2) SMR CODE	(3) NSN	(4) CAGEC	(5) PART NUMBER	(6) DESCRIPTION AND USABLE ON CODES (UOC)	
24	PFOZZ	5325002496345	70485	2758	.GROMMET,NONMETALLIC ..... UOC:GRC,GWC	1
25	PAOZZ	5940011880009	79550	11856	.TERMINAL,QUICK DISC ..... UOC:GRC,GWC	1
26	MOOZZ		35272	76-8037	WIRE,YELLOW 12 GA. CUT TO FIT, MAKE FROM WIRE P/N 954V UOC:GRC,GWC	57
27	PAOZZ	5940012840989	35272	76-1281	SPLICE,CONDUCTOR ..... UOC:GRC,GWC	2
28	PFOZZ	5920001338663	13445	3031	FUSEHOLDER,EXTRACTO ..... UOC:GRC,GWC	1
29	MOOZZ		35272	76-8020	WIRE, BLACK 14 GA. CUT TO FIT, MAKE FROM WIRE P/N C14EB UOC:GRC,GWC	18
30	PAOZZ	5940012889592	35272	76-1020	TERMINAL,LUG ..... UOC:GRC,GWC	2
31	MOOZZ		35272	76-8020	WIRE, BLACK 14 GA. CUT TO FIT, MAKE FROM WIRE P/N C14EB UOC:GRC,GWC	1
32	PFOZZ	5999011566314	71468	110238-0195	PIN,GROOVED,HEADLES ..... UOC:GRC,GWC	4
33	PFOZZ	5999011508808	11083	7N7779	CONTACT,ELECTRICAL ..... UOC:GRC,GWC	4
34	MOOZZ		35272	76-8020	WIRE, BLACK 14 GA. CUT TO FIT, MAKE FROM WIRE P/N C14EB UOC:GRC,GWC	1
35	MOOZZ		35272	76-8020	WIRE, BLACK 14 GA. CUT TO FIT, MAKE FROM WIRE P/N C14EB UOC:GRC,GWC	1
36	XDOZZ		2Y580	76-4080	FUSEHOLDER,EXTRACTO ..... UOC:GRC,GWC	2
37	PFOZZ	5940009260085	98410	BB-2141	TERMINAL,QUICK DISC ..... UOC:GRC,GWC	14
38	MOOZZ		35272	76-8025	WIRE, RED 14 GA. CUT TO FIT, .. MAKE FROM WIRE P/N 952R UOC:GRC,GWC	1
39	MOOZZ		35272	76-8021	WIRE,BLUE 14 GA. CUT TO FIT, .. MAKE FROM BULK P/N 81145S UOC:GRC,GWC	1
40	MOOZZ		35272	76-8023	WIRE,GREEN 14 GA. CUT TO ..... FIT,MAKE FROM BULK P/N 81144S UOC:GRC,GWC	1
41	MOOZZ		35272	76-8023	WIRE,GREEN 14 GA. CUT TO FIT, . MAKE FROM WIRE P/N 81144S UOC:GRC,GWC	1
42	MOOZZ		35272	76-8021	WIRE,BLUE 14 GA. CUT TO FIT, .. MAKE FROM WIRE P/N 81145S UOC:GRC,GWC	1
43	MOOZZ		35272	76-8025	WIRE, RED 14 GA. CUT TO FIT, .. MAKE FROM WIRE P/N 952R UOC:GRC,GWC	1
44	MOOZZ		35272	76-8025	WIRE, RED 14 GA. CUT TO FIT, .. MAKE FROM WIRE P/N 952R UOC:GRC,GWC	1

(1) ITEM NO	(2) SMR CODE	(3) NSN	(4) CAGEC	(5) PART NUMBER	(6) DESCRIPTION AND USABLE ON CODES (UOC)	
45	MOOZZ		35272	76-8021	WIRE,BLUE 14 GA. CUT TO FIT, .. MAKE FROM WIRE P/N 81145S UOC:GRC,GWC	1
46	MOOZZ		35272	76-8023	WIRE,GREEN 14 GA. CUT TO FIT, MAKE FROM WIRE P/N 81144S UOC:GRC,GWC	1
47	MOOZZ		35272	76-8020	WIRE, BLACK 14 GA. CUT TO FIT, MAKE FROM WIRE P/N C14EB UOC:GRC,GWC	1
48	MOOZZ		35272	76-8020	WIRE, BLACK 14 GA. CUT TO FIT, MAKE FROM WIRE P/N C14EB UOC:GRC,GWC	1
49	AOOOO		11083	3N0539	WIRE ASSY ..... UOC:GRC,GWC	1
49A	MOOZZ		11083	8AA06S-254	.WIRE,ELECTRICAL CUT TO FIT, .. MAKE FROM WIRE P/N 81106S UOC:GRC,GWC	1
50	PFOZZ	5940001188836	11083	2L8054	.TERMINAL,LUG ..... UOC:GRC,GWC	1
51	PFOZZ	5940001138190	96906	MS25036-122	.TERMINAL,LUG ..... UOC:GRC,GWC	1
52	PFOZZ	5310000611258	96906	MS45904-76	WASHER,LOCK ..... UOC:GRC,GWC	2
53	PFOZZ	5305007215492	80204	B1821BH038C063N	SCREW,CAP,HEXAGON H ..... UOC:GRC,GWC	1
				END OF FIGURE		

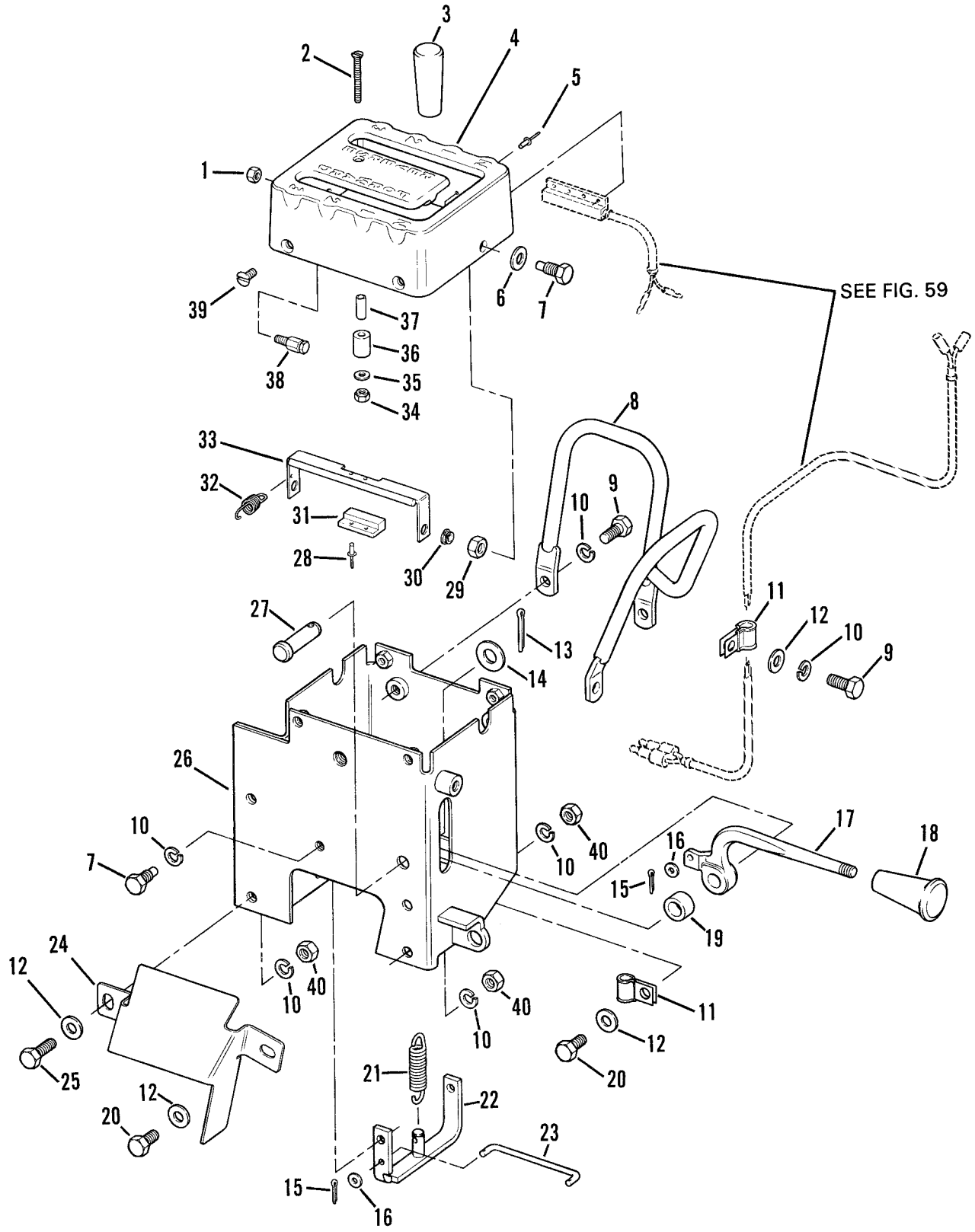

Figure 67. Transmission Control Group

(1) ITEM NO	(2) SMR CODE	(3) NSN	(4) CAGEC	(5) PART NUMBER	(6) DESCRIPTION AND USABLE ON CODES (UOC)	(7) QTY
					GROUP 07 TRANSMISSION	
					GROUP 0705 TRANSMISSION SHIFTING COMPONENTS	
					FIG. 67 TRANSMISSION CONTROL GROUP	
1	PFOZZ	5310000881251	81349	M45913/1-4CG5C	NUT,SELF-LOCKING,HE	1
2	PFOZZ	5305012098693	11083	5P5582	SCREW,MACHINE	1
3	PFOZZ	5355008914401	11083	7M0706	KNOB	1
4	PFOZZ	3040012533465	11083	8P4027	HOUSING,MECHANICAL	1
5	PFOZZ	5320009657109	07707	AD46BS	RIVET,BLIND	2
6	PFOZZ	5310001174788	11083	9Y2695	WASHER,FLAT	5
7	PFOZZ	5305011604505	11083	4D9483	SETSCREW	4
8	PFOZZ	4710012536894	11083	3P2717	TUBE,BENT,METALLIC	1
9	PFOZZ	5306002637301	11083	0L1351	BOLT,MACHINE	8
10	PFOZZ	5310006379541	80205	MS35338-46	WASHER,LOCK	12
11	PFOZZ	5340004264656	11083	4D7794	CLAMP,LOOP	3
12	PFOZZ	5310000806004	96906	MS27183-14	WASHER,FLAT	4
13	PFOZZ	5315008395822	80205	MS24665-353	PIN,COTTER	1
14	PFOZZ	5310008095997	96906	MS27183-17	WASHER,FLAT	1
15	PFOZZ	5315008395820	80205	MS24665-134	PIN,COTTER	2
16	PFOZZ	5310008098544	96906	MS27183-7	WASHER,FLAT	2
17	PFOZZ	3040011505425	11083	1P0929	LEVER,MANUAL CONTRO	1
18	PFOZZ	5355007308027	11083	2M8908	KNOB	1
19	PFOZZ	5365011612642	11083	6L1698	SPACER,SLEEVE	1
20	PFOZZ	5305002528919	11083	0S0509	SCREW,CAP,HEXAGON H	3
21	PFOZZ	5360007572559	11083	4M8799	SPRING,HELICAL,EXTE	1
22	PFOZZ	3040012529527	11083	1P0921	LEVER,MANUAL CONTRO	1
23	PFOZZ	3040012541177	11083	3D5724	CONNECTING LINK,RIG	1
24	PFOZZ	2520012538667	11083	3P2876	GUARD,MECHANICAL DR	1
25	PFOZZ	5306004238194	11083	1A2029	BOLT,MACHINE	1
26	PFOZZ	3040012534655	11083	5R7240	HOUSING,MECHANICAL	1
27	PFOZZ	5315011702228	11083	1J1971	PIN	1
28	PFOZZ	5320010232529	61957	AD-44-BS	RIVET,BLIND	2
29	PFOZZ	5310008512682	96906	MS35691-17	NUT,PLAIN,HEXAGON	2
30	PFOZZ	3120012538946	11083	8P4923	BEARING,WASHER,THRU	2
31	PFOZZ	5340011706336	11083	9P4609	ACTUATOR,MAGNETIC	1
32	PFOZZ	5360012548890	11083	8P2290	SPRING	1
33	PFOZZ	3040012535583	11083	8P4925	LEVER,REMOTE CONTRO	1
34	PFOZZ	5310002416658	81349	M45913/3-5FG8C	NUT,SELF-LOCKING,HE	1
35	PFOZZ		11083	4B4274	WASHER,FLAT	1
36	PFOZZ	5340012609030	11083	8P4029	BUMPER,NONMETALLIC	1
37	PFOZZ	5365012668284	11083	8P7845	SPACER,SLEEVE	1
38	PFOZZ	5340012547173	11083	8P2289	RETAINER,NUT AND BO	1
39	PFOZZ	5305012373324	11083	4B1280	SCREW,MACHINE	4
40	PFOZZ	5310014297859	11083	6V8801	NUT,PLAIN,HEXAGON	3
				END OF FIGURE		

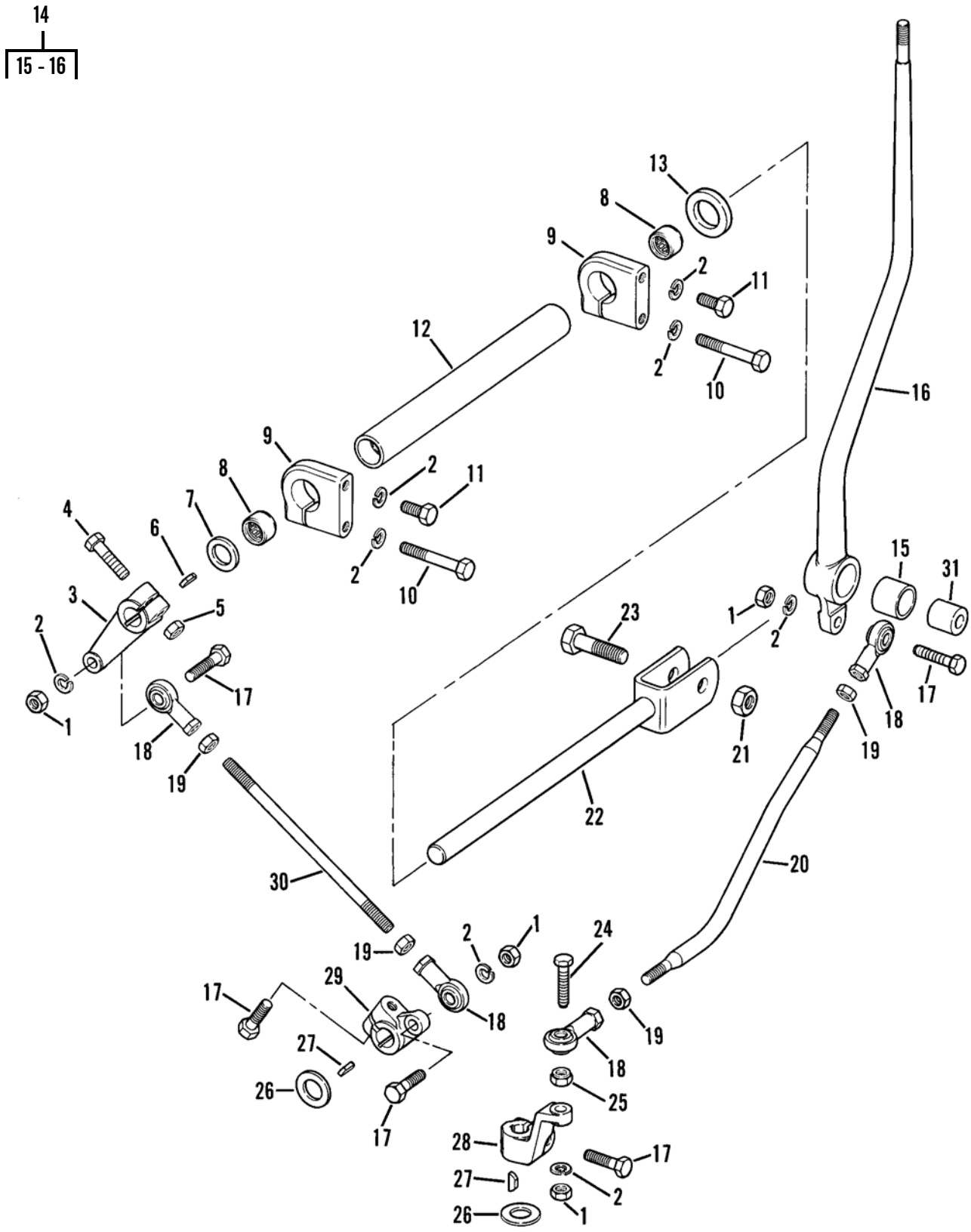

Figure 68. Transmission Control Linkage

(1) ITEM NO	(2) SMR CODE	(3) NSN	(4) CAGEC	(5) PART NUMBER	(6) DESCRIPTION AND USABLE ON CODES (UOC)	(7) QTY
					GROUP 0705 TRANSMISSION SHIFTING COMPONENTS	
					FIG. 68 TRANSMISSION CONTROL LINKAGE	
1	PFOZZ	5310014297859	11083	6V8801	NUT,PLAIN,HEXAGON	7
2	PFOZZ	5310006379541	80205	MS35338-46	WASHER,LOCK	12
3	PAOZZ	3040012534700	11083	1P7708	LEVER,REMOTE CONTRO	1
4	PFOZZ	5305002693240	80204	B1821BH038F150N	SCREW,CAP,HEXAGON H	1
5	PFOZZ	5310007257382	96906	MS35690-624	NUT,PLAIN,HEXAGON	1
6	PFOZZ	5315006165526	80205	MS35756-8	KEY,WOODRUFF	1
7	PFOZZ	5310003503243	11083	1K4706	WASHER,FLAT	1
8	PFOZZ	3110009306289	60380	JTT1211	BEARING,ROLLER,NEED	2
9	PFOZZ	5342004022822	11083	2M8900	CLAMP SHIFTER SUPPO	2
10	PFOZZ	5306002851368	11083	0L1143	BOLT,MACHINE	2
11	PFOZZ	5306002637301	11083	0L1351	BOLT,MACHINE	2
12	PAOZZ	2530012676001	11083	2P0541	SUPPORT,SHIFTER SHA	1
13	PFOZZ	5365011304159	11083	9S1385	SPACER,SLEEVE	1
14	PFOOO	3040012535581	11083	9S4758	LEVER,REMOTE CONTRO	1
15	PFOZZ	3120008586240	11083	5H3895	.BUSHING,SLEEVE	1
16	XAOZZ		11083	9S4759	.LEVER	1
17	PFOZZ	5306011954681	11083	3B1915	BOLT	5
18	PFOZZ	2910010588075	11083	4D4064	ROD END	4
19	PFOZZ	5310009752075	96906	MS35691-21	NUT,PLAIN,HEXAGON	4
20	PFOZZ	3040012533470	11083	3P7651	LEVER,MANUAL CONTRO	1
21	PFOZZ	5310002256993	89257	030051	NUT,SELF-LOCKING,HE	1
22	PAOZZ	3040012535582	11083	2P3983	LEVER,REMOTE CONTRO	1
23	PFOZZ	5306002736357	11083	1A1460	BOLT,MACHINE	1
24	PFOZZ	5306001402032	11083	4M0496	BOLT,MACHINE	1
25	PFOZZ	5310001476143	11083	4M0497	NUT,PLAIN,HEXAGON	1
26	PAOZZ	5310004582019	11083	1K0485	WASHER,FLAT	2
27	PFOZZ	5315006165524	80205	MS35756-10	KEY,WOODRUFF	2
28	PFOZZ	3040012534699	11083	2P3980	LEVER,REMOTE CONTRO	1
29	PFOZZ	3040012533510	11083	3P7649	LEVER,REMOTE CONTRO	1
30	PFOZZ	5307000613607	11083	1P1900	STUD,PLAIN	1
31	PFOZZ	5365001362006	11083	2M7167	SPACER,SLEEVE	1
				END OF FIGURE		

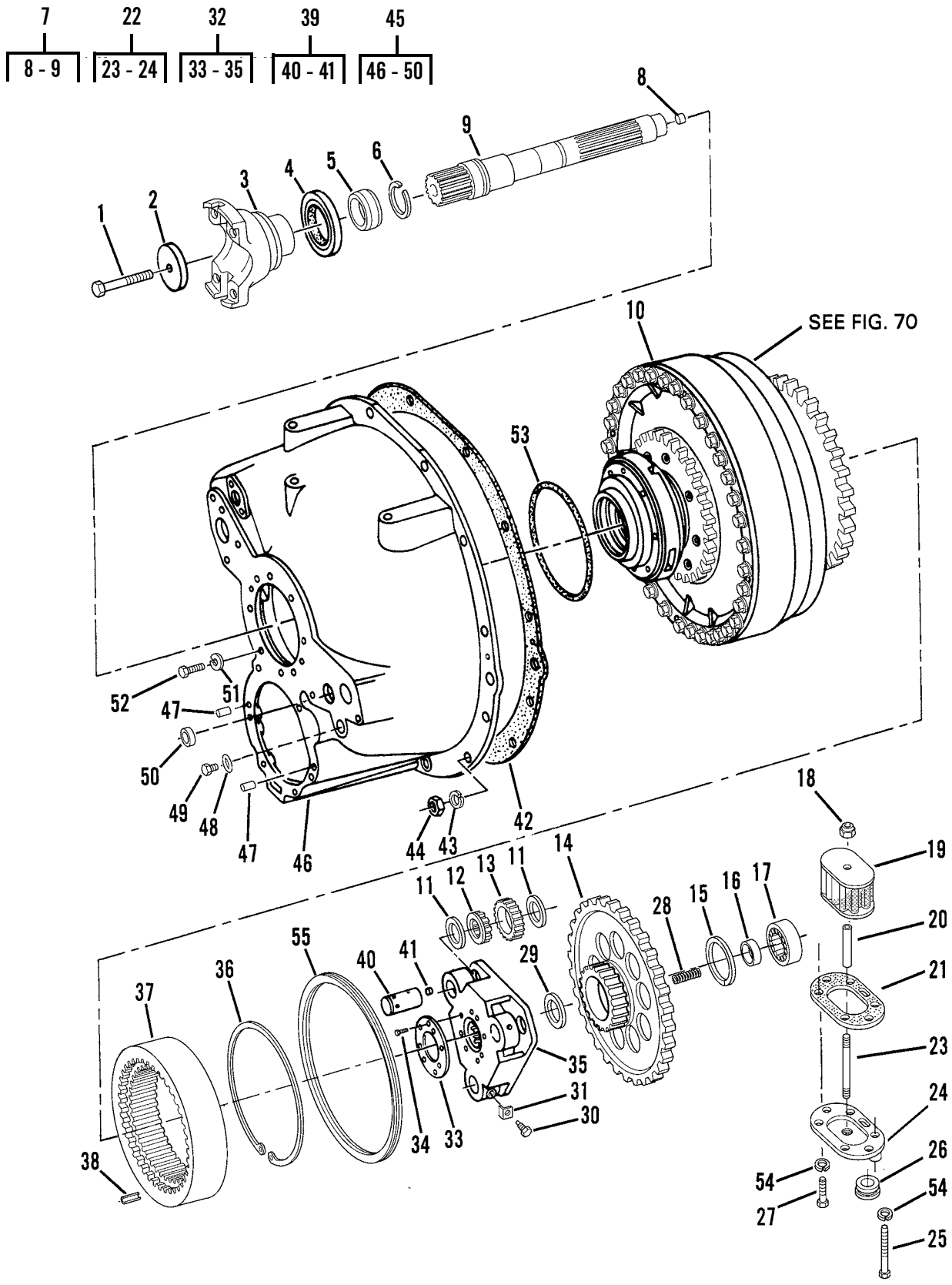

Figure 69. Torque Divider Group

(1) ITEM NO	(2) SMR CODE	(3) NSN	(4) CAGEC	(5) PART NUMBER	(6) DESCRIPTION AND USABLE ON CODES (UOC)	(7) QTY
					GROUP 0708 TORQUE CONVERTER OR FLUID COUPLING	
					FIG. 69 TORQUE DIVIDER GROUP	
1	PFFZZ	5305002693245	80204	B1821BH038F275N	SCREW,CAP,HEXAGON H	1
2	PFFZZ	5310004134757	11083	3S4388	WASHER,FLAT	1
3	PFFZZ	2520012150355	11083	8M8628	PARTS KIT,UNIVERSAL	1
4	PFFZZ	5330004982901	11083	1S6543	SEAL	1
5	PFFZZ	3110001170661	11083	8B5964	RING,BEARING,INNER	1
6	PFFZZ	5330004016203	11083	9M2008	SEAL RING,METAL	1
7	PFFZZ	3040004304207	11083	9S5265	SHAFT,SHOULDERED	1
8	PFFZZ	5342009385530	11083	1M4102	.PLUG,SHAFT	1
9	XAFZZ		11083	9S5264	.SHAFT	1
10	PAFHH	2520001475081	11083	1T0930	TORQUE CONVERTER,VE (SEE FIG. 70)	1
11	PFFZZ	5310006909146	11083	8E8300	WASHER,FLAT	6
12	PAFZZ	3110008627671	60380	BNE25730	BEARING,ROLLER,JOUR	3
13	PFFZZ	3020012540086	11083	7G2474	GEAR,SPUR	3
14	PFFZZ	3020004035296	11083	9M2028	GEAR CLUSTER	1
15	PFFZZ	5325009527573	80756	RRT-224	RING,RETAINING	1
16	PFFZZ	3110002639500	01212	MA1206	RING,BEARING,INNER	1
17	PFFZZ	3110009458399	11083	9H8712	BEARING,ROLLER,CYLI	1
18	PFOZZ	5310000137718	72962	21-NE-064	NUT,SELF-LOCKING,HE	1
19	PFOZZ	2520002374576	11083	7S2747	SCREEN ASSEMBLY,OIL	1
20	PFOZZ	5365011808780	11083	7S2750	SPACER,SLEEVE	1
21	PFOZZ	5330004552772	11083	7S2753	GASKET PART OF KIT P/N 5R6293 ..	1
22	PFOZZ	2910012541210	11083	7S2751	COVER,FLUID FILTER	1
23	PFOZZ	5307004194065	11083	1S9455	.STUD,PLAIN	1
24	XAOZZ		11083	7S2752	.COVER	2
25	PFOZZ	5306006982150	11083	0L2070	BOLT,MACHINE	2
26	PFOZZ	4730004078330	11083	5S4017	PLUG,PIPE,MAGNETIC	1
27	PFOZZ	5306004238194	11083	1A2029	BOLT,MACHINE	4
28	PFFZZ	5360002900851	11083	1K7041	SPRING,HELICAL,COMP	3
29	PFFZZ	5325002856726	80756	RRT-187	RING,RETAINING	1
30	PFFZZ	5306004093684	11083	1K6978	BOLT,MACHINE	3
31	PFFZZ	5340002409269	11083	5M7877	RETAINER,NUT AND BO	3
32	PFFFF	2520011253992	11083	9S5267	CARRIER ASSEMBLY	1
33	PFFZZ	5365011843676	11083	8P1958	.SPACER,PLATE	5
34	PFFZZ	5320012605915	11083	5P6943	.RIVET,TUBULAR	5
35	XAFZZ		11083	9S5266	.CARRIER	1
36	PFFZZ	5325004193212	11083	5M7878	RING,RETAINING	1
37	PFFZZ	3020004035294	11083	5M6208	GEAR,INTERNAL	1
38	PFFZZ	5315010665213	11083	2K5986	PIN	2
39	PFFZZ	2520004010290	11083	1-5M6198,1-2A3746	SHAFT ASSEMBLY	3
40	XAFZZ		11083	5M6198	.SHAFT ASSEMBLY,FLEX	3
41	PFFZZ	5340007373635	19207	7373635	.PLUG,EXPANSION	3
42	PFFZZ	5330004029263	11083	5M6604	GASKET PART OF KIT P/N 5R6293 ..	1
43	PFFZZ	5310005845272	80205	MS35338-48	WASHER,LOCK	12
44	PFFZZ	5310007680318	96906	MS51967-14	NUT,PLAIN,HEXAGON	12
45	AFFFF		11083	3P6273	COVER ASSEMBLY,TORQ	1

(1) ITEM NO	(2) SMR CODE	(3) NSN	(4) CAGEC	(5) PART NUMBER	(6) DESCRIPTION AND USABLE ON CODES (UOC)	(7) QTY
46	PFFZZ	5340012382859	11083	3P6274	.COVER,ACCESS	1
47	PFFZZ	5315003627367	11083	5B5812	.PIN,STRAIGHT,HEADLE	2
48	PFFZZ	5330001012561	11083	8M5127	.SEAL,OIL	1
49	PFFZZ	4730009247886	11083	5M6214	.PLUG,PIPE	1
50	PFFZZ	5340003652167	11083	1A4672	.PLUG,EXPANSION	1
51	PFFZZ	5310006379541	80205	MS35338-46	WASHER,LOCK	8
52	PFFZZ	5306004238194	11083	1A2029	BOLT,MACHINE	8
53	PCFZZ	5331010505024	81343	MS28775-260	O-RING PART OF KIT P/N 5R6293 ..	1
54	PFOZZ	5310005146849	70960	WALH6-3	WASHER,LOCK	2
55	PFFZZ	5325000451884	80756	RR-1075	RING,RETAINING	1
				END OF FIGURE		

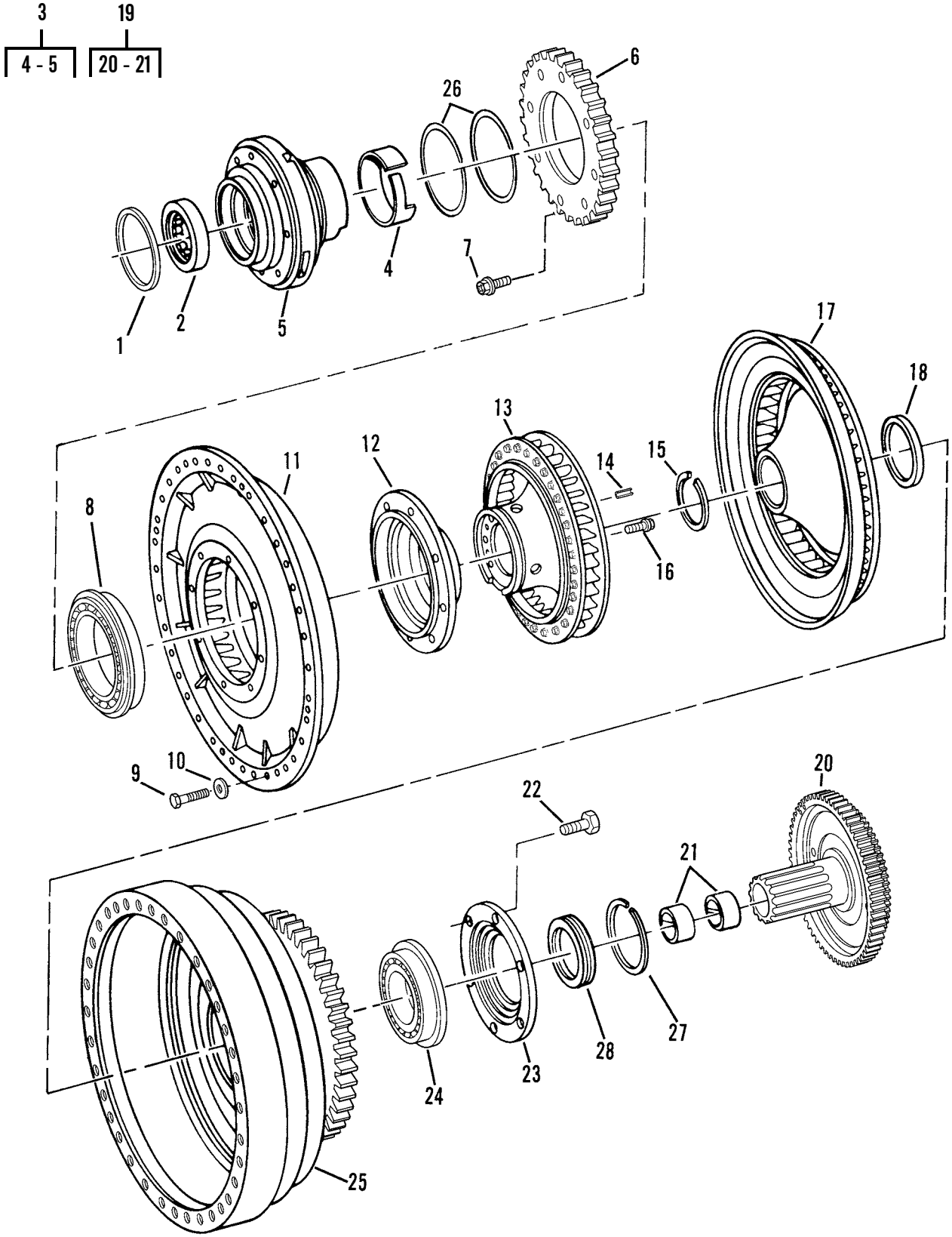

Figure 70. Torque Divider Assembly

(1) ITEM NO	(2) SMR CODE	(3) NSN	(4) CAGEC	(5) PART NUMBER	(6) DESCRIPTION AND USABLE ON CODES (UOC)	(7) QTY
					GROUP 0708 TORQUE CONVERTER OR FLUID COUPLING	
					FIG. 70 TORQUE DIVIDER ASSEMBLY	
1	PFHZZ	5325011905680	80756	RRT-354	RING,RETAINING	1
2	PFHZZ	3110001170696	11083	5H1901	BEARING,ROLLER,CYLI	1
3	PFHHH	3040012197489	61208	X-208746-A	CARRIER ASSEMBLY	1
4	PFHZZ	3120004016060	11083	1T0445	.BUSHING,SLEEVE	1
5	XAHZZ		11083	1T0444	.CARRIER GUIDE	1
6	PFHZZ	3020003498953	11083	1T0436	GEAR,SPUR	1
7	PFHZZ	5305002693238	80204	B1821BH038F125N	SCREW,CAP,HEXAGON H	8
8	PFHZZ	3110002021879	11083	1799579	BEARING,BALL,ANNULA	1
9	PFHZZ	5306002264828	80204	B1821BH031C113N	BOLT,MACHINE	36
10	PFHZZ	5310007251984	81205	BACW10P140S	WASHER,FLAT	36
11	PAHZZ	4320011689593	11083	1T0051	IMPELLER,PUMP,CENTR	1
12	PFHZZ	3110004045484	11083	1T2069	PLATE,RETAINING,BEA	1
13	PFHZZ	2520004035400	11083	1T2052	STATOR ASSEMBLY	1
14	PFHZZ	5315005849792	10001	1592919	PIN,STRAIGHT,HEADLE	6
15	PFHZZ	5325005141706	61208	A-2622-C	RING,RETAINING	1
16	PFHZZ	5306004550467	11083	1T0414	BOLT,MACHINE	8
17	PFHZZ	2520011557937	11083	1T1993	VANE,CONVERTER,TRAN	1
18	PFHZZ	5365007630119	11083	1T0599	SPACER,RING	1
19	PAHZZ	3010012733401	61208	X-208748-A	FLANGE,COMPANION,UN	1
20	XAHZZ		11083	1T0422	.FLANGE	1
21	PFHZZ	3120004190940	11083	1T0902	.BEARING,SLEEVE	2
22	PAHZZ	5305004192866	11083	1T0446	SCREW,CAP,HEXAGON H	6
23	PFHZZ	3110012573337	11083	1T0438	PLATE,RETAINING,BEA	1
24	PFHZZ	3110004435871	11083	1T0441	BEARING,BALL,ANNULA	1
25	XAHZZ		11083	1T0437	HOUSING	1
26	PFHZZ	4310001166763	61208	M1904B	RING,PISTON	2
27	PFHZA	4310001169850	61208	M1904AD	RING,PISTON	1
28	PFHZZ	5330012111506	11083	1T0447	RETAINER,PACKING	1
				END OF FIGURE		

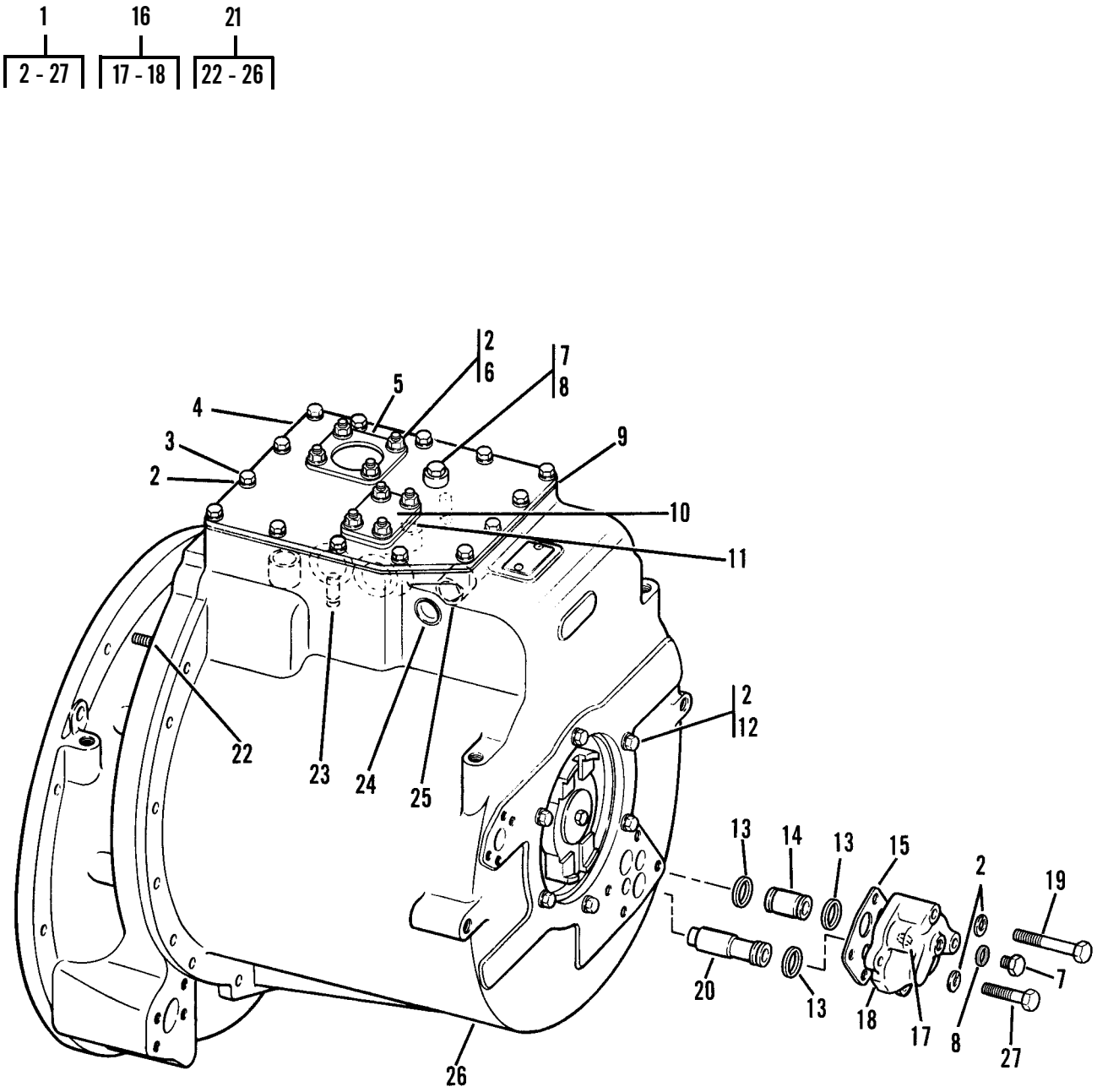

Figure 71. Transmission Arrangement

(1) ITEM NO	(2) SMR CODE	(3) NSN	(4) CAGEC	(5) PART NUMBER	(6) DESCRIPTION AND USABLE ON CODES (UOC)	(7) QTY
					GROUP 0710 TRANSMISSION ASSEMBLY	
					FIG. 71 TRANSMISSION ARRANGEMENT	
1	PAFHH	2520011614941	11083	9P5382	TRANSMISSION,HYDRAU	1
2	PFFZZ	5310006379541	80205	MS35338-46	.WASHER,LOCK	32
3	PFFZZ	5306002604508	11083	0S1594	.BOLT,MACHINE	14
4	PAFZZ	5340012593750	11083	3P0357	.COVER,ACCESS	1
5	PAFZZ	5330002482165	11083	8B9777	.GASKET PART OF KIT P/N 5R6292 .	1
6	PFFZZ	5310014297859	11083	6V8801	.NUT,PLAIN,HEXAGON	8
7	PFFZZ	5365004114584	11083	9S4191	.PLUG,MACHINE THREAD	2
8	PCFZZ	5331008013354	25184	906-737-70	.O-RING	2
9	PFFZZ	5330007607387	11083	9M2051	.GASKET	1
10	PAFZZ	5340012580185	11083	5M9653	.COVER,ACCESS	1
11	PFFZZ	5330009138879	11083	5M9654	.GASKET	1
12	PFHZZ	5306011954681	11083	3B1915	.BOLT	6
13	PFHZZ	5331009425114	11083	8M4437	.O-RING	3
14	PFHZZ	4810012530550	11083	1P0558	.SLEEVE,DIRECTIONAL	1
15	PFHZZ	5330005578572	11083	8M8621	.GASKET	1
16	PFHHH	2520012534635	11083	3P0364	.MANIFOLD,LUBRICATIO	1
17	PFHZZ	5340001183001	11083	4S6517	..PLUG,EXPANSION	1
18	XAHZZ		11083	3P0363	..MANIFOLD	1
19	PFHZZ	5306004262932	11083	S1619	.BOLT,MACHINE	2
20	PFHZZ	2520012540241	11083	1P0559	.SLEEVE,TRANSMISSION	1
21	PAHHH	3040012537402	11083	1P4459	.HOUSING,MECHANICAL	1
22	PFHZZ	5307011853555	11083	5M1932	..STUD,WELDING	3
23	XAHZZ		11083	1M3833	..PIN,GROOVED,HEADLES	2
24	PFHZZ	5340002299294	11083	3B0623	..PLUG,EXPANSION	1
25	PFHZZ	3110009485793	11083	8H8175	..BEARING	4
26	XAHZZ		11083	9M2010	..CASE	1
27	PFHZZ	5305010156841	11083	0S1591	.SCREW	2
				END OF FIGURE		

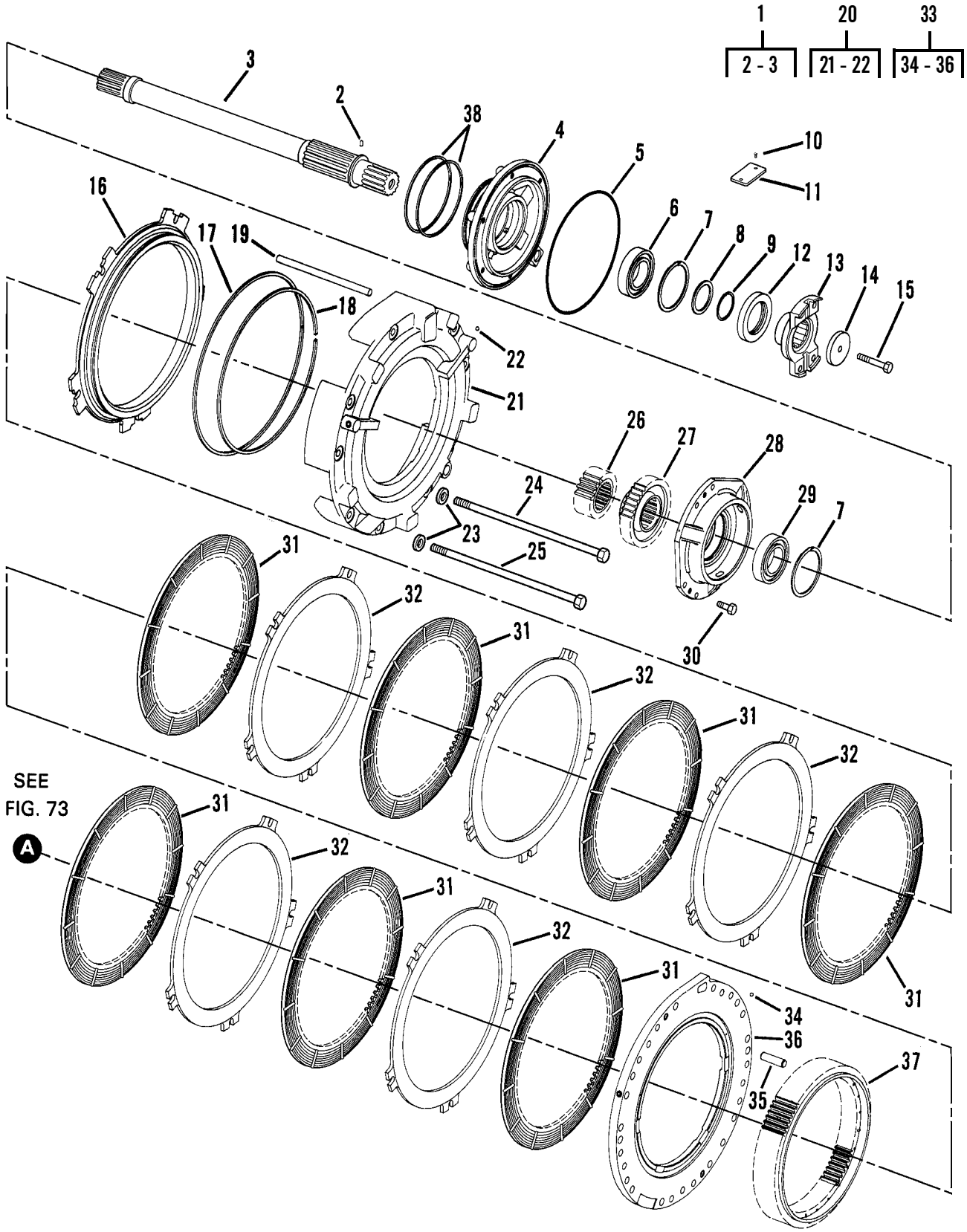

Figure 72. Carrier and Clutch Housing (No. 2 and 3)

(1) ITEM NO	(2) SMR CODE	(3) NSN	(4) CAGEC	(5) PART NUMBER	(6) DESCRIPTION AND USABLE ON CODES (UOC)	(7) QTY
					GROUP 0710 TRANSMISSION ASSEMBLY	
					FIG. 72 CARRIER AND CLUTCH HOUSING (NO. 2 AND 3)	
1	PFHHH	3040012540231	11083	1P8835	SHAFT,SHOULDERED	1
2	XAHZZ		11083	9M2001	.PIN,STRAIGHT,HEADLE	1
3	XAHZZ		11083	2P4368	.SHAFT	1
4	XBHZZ		11083	8M8619	RETAINER,ROLLER,BEA	1
5	PFHZZ	5330002505481	11083	8F6230	SEAL	1
6	PFHZZ	3110005420021	81349	111-05002-0000	BEARING,BALL,ANNULA	1
7	PFHZZ	5325011905680	80756	RRT-354	RING,RETAINING	2
8	PFHZZ	5365012601523	11083	3P5078	SPACER,RING	1
9	PFHZZ	5325001760345	80756	RSN-196	RING,RETAINING	1
10	PFHZZ	5305007083823	11083	7B3028	SCREW,DRIVE	2
11	XDHZZ		11083	6V1720	PLATE,IDENTIFICATIO	1
12	PFHZZ	5330004982901	11083	1S6543	SEAL	1
13	PFHZZ	2520012150355	11083	8M8628	PARTS KIT,UNIVERSAL	1
14	PFHZZ	5310004134757	11083	3S4388	WASHER,FLAT	1
15	PFHZZ	5306004262866	11083	0L0139	BOLT,MACHINE	1
16	PFHZZ	2520011357465	11083	4S6707	PISTON,CLUTCH SHAFT	1
17	PFHZZ	5330011357502	11083	4S6713	SEAL RING,METAL (13.812" OD) ..	1
18	PFHZZ	5330012146546	11083	6P8266	SEAL RING,METAL (12.515" OD) ..	1
19	PFHZZ	5315004725242	19207	11634187	PIN,STRAIGHT,HEADLE	5
20	PAHHH	3040012541102	11083	1P0579	HOUSING,MECHANICAL	1
21	PAHZZ	3040012533468	11083	7S6949	.HOUSING,MECHANICAL	1
22	PFHZZ	3110009921048	11083	2D6642	.BALL,BEARING	2
23	PFHZZ	5310004317239	11083	2M0849	WASHER,FLAT	6
24	PFHZZ	5305012097923	11083	2S8926	SCREW,CAP,HEXAGON H	2
25	PFHZZ	5306004693821	11083	5M7900	BOLT,MACHINE	7
26	PAHZZ	3020004321704	11083	5M6120	GEAR,SPUR	1
27	PAHZZ	3020004318328	11083	8M8623	GEAR,SPUR	1
28	PFHZZ	3130012651251	11083	3P0395	HOUSING,BEARING UNI	1
29	PFHZZ	3110004469696	11083	9M1997	BEARING,BALL,ANNULA	1
30	PFHZZ	5305001726356	11083	5D0353	SCREW,CAP,HEXAGON H	6
31	PFHZZ	2520012087020	11083	7T2336	DISK,CLUTCH	7
32	PFHZZ	2520012090958	11083	9S8789	DISK,CLUTCH DEALER EXCHANGE ... ITEM, PN 0R5017	5
33	PAHHH	2520004302192	11083	8M8646	PLATE ASSEMBLY	1
34	PFHZZ	3110009921048	11083	2D6642	.BALL,BEARING	2
35	XDHZZ		11083	7M8479	.PIN,STRAIGHT,HEADLE	1
36	XAHZZ		11083	8M8640	.HOUSING,MECHANICAL	1
37	PFHZZ	3020012540084	11083	7S6964	GEAR,INTERNAL	1
38	PFHZZ	5330009490210	11083	1M0498	SEAL RING,METAL	2
				END OF FIGURE		

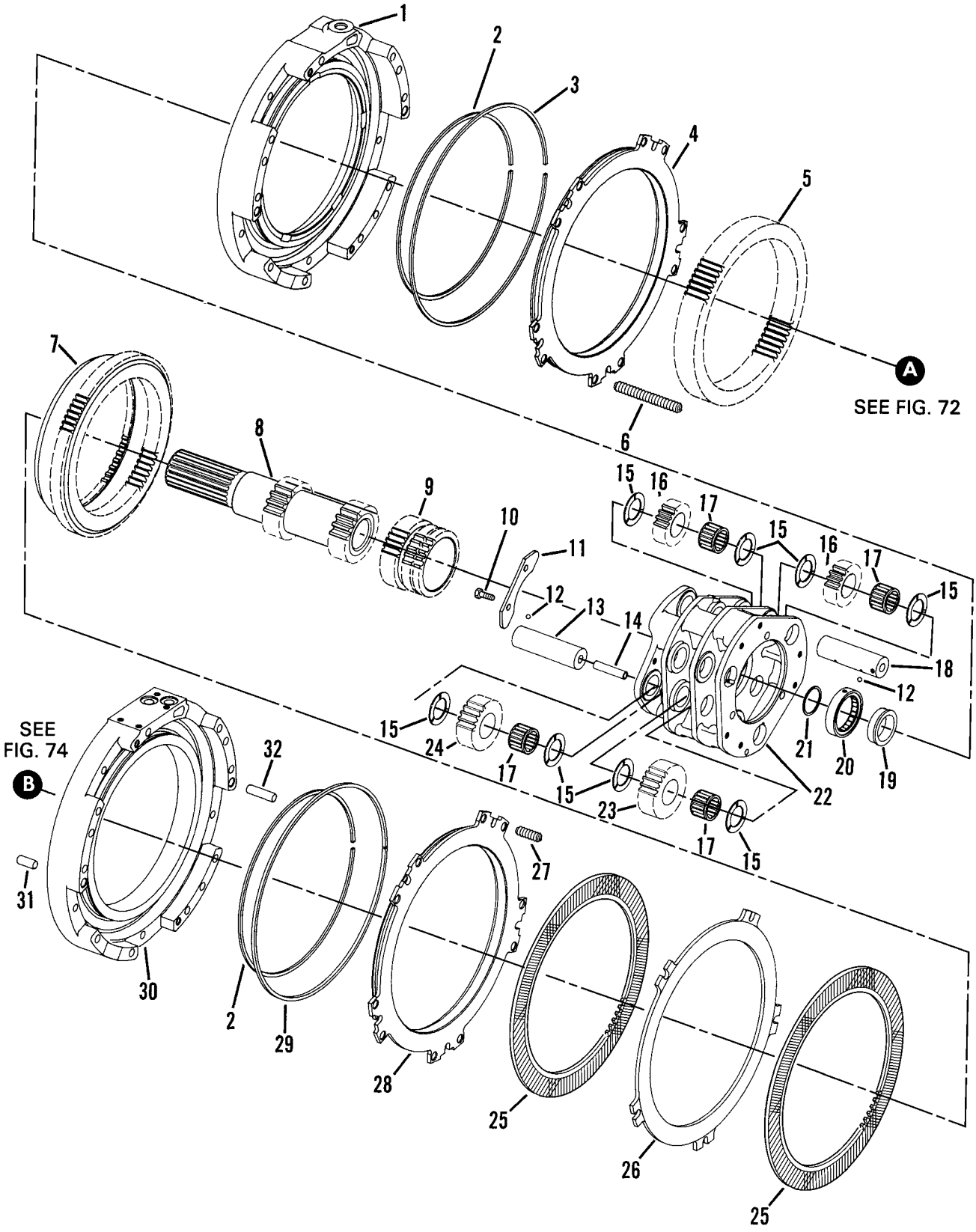

Figure 73. Planetary Transmission

(1) ITEM NO	(2) SMR CODE	(3) NSN	(4) CAGEC	(5) PART NUMBER	(6) DESCRIPTION AND USABLE ON CODES (UOC)	(7) QTY
					GROUP 0710 TRANSMISSION ASSEMBLY	
					FIG. 73 PLANETARY TRANSMISSION	
1	PFHZZ	3040012529510	11083	9P5379	HOUSING,MECHANICAL	1
2	PFHZZ	5330012167951	11083	9P5364	SEAL RING,METAL	2
3	PFHZZ	5330012689498	11083	3T2571	SEAL RING,METAL 0.014IN OVERSIZE SEAL	1
3	PFHZZ	5330012689499	11083	3T2572	SEAL RING,METAL 0.029IN OVERSIZE SEAL	1
4	PFHZZ	4810012530546	11083	9P5363	PISTON,VALVE	1
5	PAHZZ	3020004316448	11083	5M7841	GEAR,INTERNAL	1
6	PFHZZ	5360008947276	11083	9H5536	SPRING,HELICAL COMP	10
7	PFHZZ	3020004316449	11083	5M7869	GEAR,SPUR,INTERNAL, ...	1
8	PFHZZ	3040012539508	11083	2P3598	GEARSHAFT,MULTIPLE	1
9	PAHZZ	3020004316450	11083	9M1995	GEAR,SPUR	1
10	PFHZZ	5306011101130	11083	5K9107	BOLT,MACHINE	6
11	PFHZZ	5340004316452	11083	1S6527	LOCKING PLATE,NUT A	3
12	PFHZZ	3110009921048	11083	2D6642	BALL,BEARING	6
13	PAHZZ	3040004316638	11083	5M6211	SHAFT,STRAIGHT	3
14	PFHZZ	4710010593985	11083	5M6212	TUBE	3
15	PFHZZ	3120011861302	11083	8E8304	BEARING,WASHER,THRU	21
16	PAHZZ	3020012540088	11083	7G2476	GEAR,SPUR	4
17	PFHZZ	3110002397702	11083	5M6126	RETAINER AND ROLLER	10
18	XAHZZ		11083	5M6210	SHAFT	3
19	PFHZZ	3110004324284	51600	L-1010-064	RING,BEARING,INNER	1
20	PFHZZ	3110004328072	11083	5M7936	BEARING,ROLLER,CYLI	1
21	PFHZZ	5325004036449	80756	RST-177S	RING,RETAINING	1
22	PAHZZ	2520011852669	11083	5M7875	CARRIER	1
23	PAHZZ	3020012540087	11083	7G2513	GEAR,SPUR	3
24	PAHZZ	3020012541230	11083	7G2475	GEAR,SPUR	3
25	PFHZZ	2520012090957	11083	6Y5916	DISK,CLUTCH	2
26	PFHZZ	2520012090958	11083	9S8789	DISK,CLUTCH	1
27	PFHZZ	5360004982883	11083	4M9592	SPRING,HELICAL,COMP	15
28	PFHZZ	2520011890581	11083	8M8650	CLUTCH HALF,POSITIV	1
29	PFHZZ	5330012146545	11083	6P8264	SEAL RING,METAL	1
30	PFHZZ	3040012534657	11083	4S8708	HOUSING,MECHANICAL	1
31	PFHZZ	5315001930925	11083	7M8480	PIN,STRAIGHT,HEADLE	4
32	XAHZZ		11083	7M8479	PIN,STRAIGHT,HEADLE	2
				END OF FIGURE		

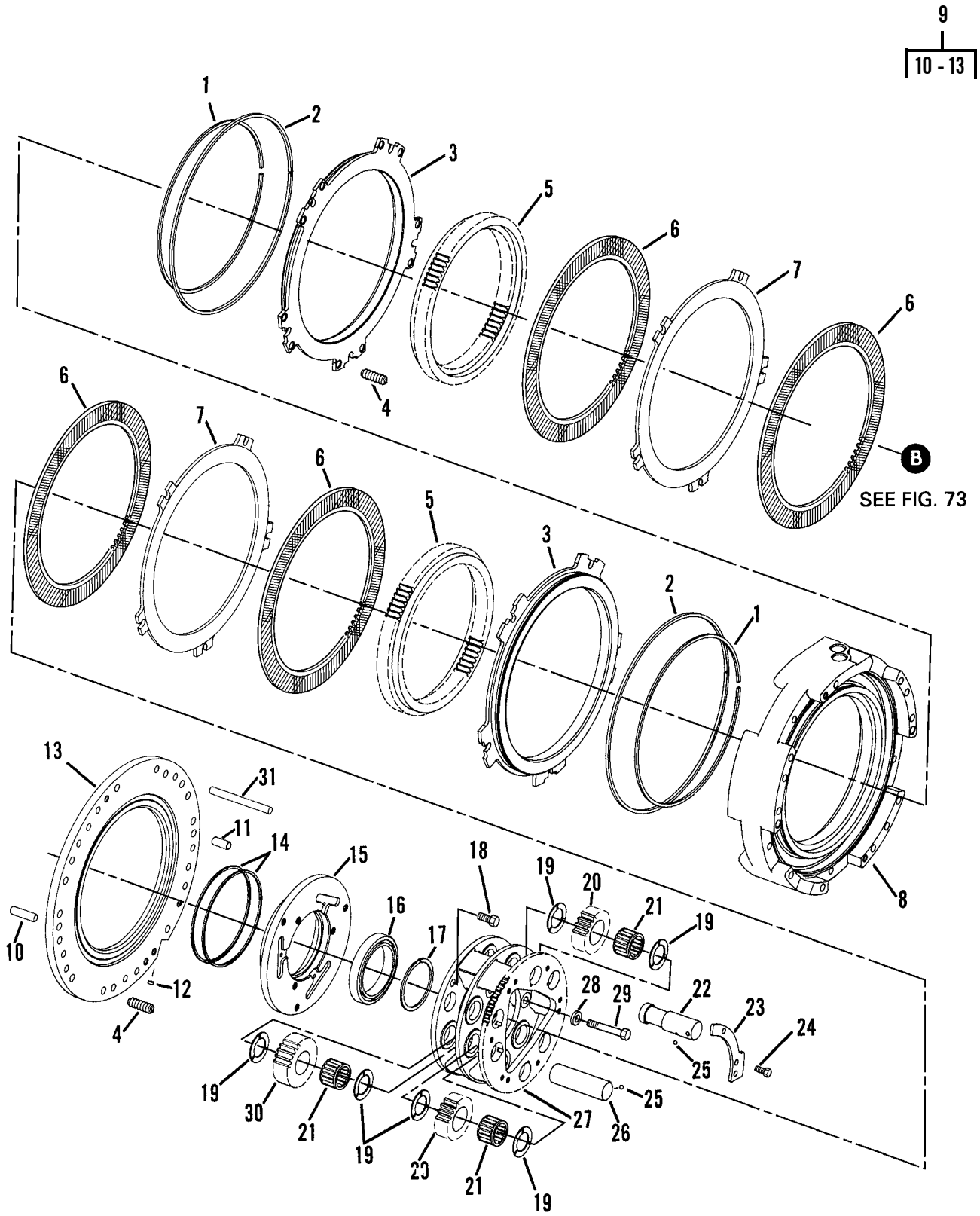

Figure 74. Planetary Transmission Carrier and Clutch Housings (No. 4 and 5)

(1) ITEM NO	(2) SMR CODE	(3) NSN	(4) CAGEC	(5) PART NUMBER	(6) DESCRIPTION AND USABLE ON CODES (UOC)	(7) QTY
					GROUP 0710 TRANSMISSION ASSEMBLY	
					FIG. 74 PLANETARY TRANSMISSION CARRIER AND CLUTCH HOUSINGS (NO. 4 AND 5)	
1	PFHZZ	5330012146546	11083	6P8266	SEAL RING,METAL	2
2	PFHZZ	5330012146545	11083	6P8264	SEAL RING,METAL	2
3	PFHZZ	2520011890581	11083	8M8650	CLUTCH HALF,POSITIV	2
4	PFHZZ	5360004982883	11083	4M9592	SPRING,HELICAL,COMP	15
5	PAHZZ	3020004316451	11083	9M2049	GEAR,SPUR	2
6	PFHZZ	2520012090957	11083	6Y5916	DISK,CLUTCH	4
7	PFHZZ	2520012090958	11083	9S8789	DISK,CLUTCH	2
8	PAHZZ	3040012534656	11083	8M8644	HOUSING,MECHANICAL	1
9	PAHHH	3040012537460	11083	1P0567	PLATE,RETAINING,SHA	1
10	XAHZZ		11083	7M8479	.PIN,STRAIGHT,HEADLE	1
11	PFHZZ	5315001930925	11083	7M8480	.PIN,STRAIGHT,HEADLE	1
12	PFHZZ	5340007373635	19207	7373635	.PLUG,EXPANSION	1
13	XAHZZ		11083	1P0566	.PLATE	1
14	PFHZZ	5330011357503	11083	9M1503	SEAL RING,METAL	2
15	XBHZZ		11083	9M1502	RETAINER,BALL,BEARI	1
16	PFHZZ	3130014743376	11083	1067799	BEARING UNIT,BALL	1
17	PFHZZ	5325008521435	80756	RST-350	RING,RETAINING	1
18	PFHZZ	5306011563738	11083	6K7917	BOLT,MACHINE	3
19	PFHZZ	3120011861302	11083	8E8304	BEARING,WASHER,THRU	21
20	PAHZZ	3020012540088	11083	7G2476	GEAR,SPUR	4
21	PFHZZ	3110002397702	11083	5M6126	RETAINER AND ROLLER	11
22	PAHZZ	3040004321880	11083	9M1996	SHAFT,STRAIGHT	3
23	PFHZZ	3040012533449	11083	9M1501	BRACKET,LEVER	3
24	PFHZZ	5306011101130	11083	5K9107	BOLT,MACHINE	9
25	PFHZZ	3110009921048	11083	2D6642	BALL,BEARING	6
26	PAHZZ	3040012227325	11083	9M1500	GEARSHAFT,HELICAL	3
27	PAHZZ	3040012534634	11083	8M8677	CARRIER,REAR	1
28	PFHZZ	5310008095998	96906	MS27183-18	WASHER,FLAT	6
29	PAHZZ	5306012097895	11083	5P8091	BOLT,MACHINE	3
30	PAHZZ	3020012540087	11083	7G2513	GEAR,SPUR	3
31	PFHZZ	5315004317317	11083	4M1641	PIN,STRAIGHT,HEADLE	5
				END OF FIGURE		

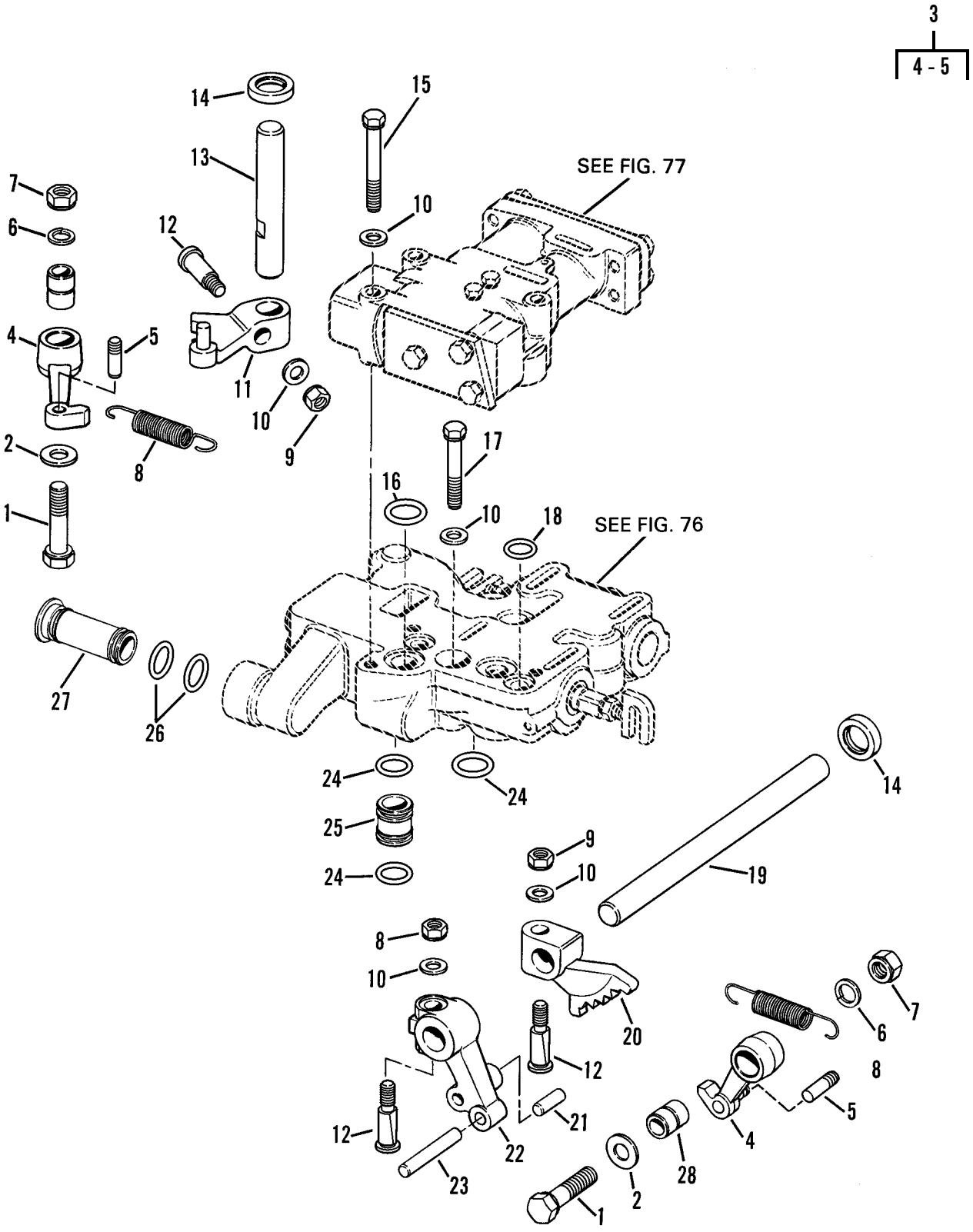

Figure 75. Transmission Hydraulic Control

(1) ITEM NO	(2) SMR CODE	(3) NSN	(4) CAGEC	(5) PART NUMBER	(6) DESCRIPTION AND USABLE ON CODES (UOC)	(7) QTY
					GROUP 0710 TRANSMISSION ASSEMBLY	
					FIG. 75 TRANSMISSION HYDRAULIC CONTROL	
1	PFFZZ	5306002736357	11083	1A1460	BOLT,MACHINE	2
2	PFFZZ	5310009307013	11083	4B4280	WASHER,FLAT	2
3	PFFZZ	3040012533511	11083	8M1040	PAWL	2
4	XAFZZ		11083	7M8575	.DETENT	2
5	XAFZZ		11083	1M3833	.PIN,GROOVED,HEADLES	2
6	PFFZZ	5310005845272	80205	MS35338-48	WASHER,LOCK	2
7	PFFZZ	5310007680318	96906	MS51967-14	NUT,PLAIN,HEXAGON	2
8	PFFZZ	5360010597203	11083	4M1768	SPRING	2
9	PFFZZ	5310007257382	96906	MS35690-624	NUT,PLAIN,HEXAGON	3
10	PFFZZ	5310001174788	11083	9Y2695	WASHER,FLAT	9
11	PFFZZ	3040012533457	11083	8M8658	CAM,CONTROL	1
12	PFFZZ	5315000076034	19207	11634200	PIN,SPECIAL	2
13	PFFZZ	3040010641039	11083	8M8652	SHAFT,STRAIGHT	1
14	PFFZZ	5330009192249	11083	9H0223	SEAL,PLAIN ENCASED	2
15	PFFZZ	2910003099473	11083	0T0573	CAPSCREW,FUEL PUMP	3
16	PFFZZ	5331009145821	11083	8M4445	O-RING	4
17	PFFZZ	5306006982150	11083	0L2070	BOLT,MACHINE	3
18	PFFZZ	5331009236958	11083	8M4448	O-RING	2
19	PAFZZ	3040012541263	11083	9M2020	SHAFT,STRAIGHT	1
20	PFFZZ	3040012537457	11083	8M8653	DETENT PLATE	1
21	PFFZZ	5315011132356	11083	9M2089	PIN,STRAIGHT,HEADLE	1
22	PFFZZ	3040012545018	11083	8M8636	LEVER,REMOTE CONTRO	1
23	PAFZZ	5315012618116	11083	9M2096	PIN,STRAIGHT,HEADLE	1
24	PFFZZ	5331009304064	11083	8M4389	O-RING	6
25	PFFZZ	5365007626113	11083	2S0484	SPACER,SLEEVE	3
26	PFFZZ	5331006136522	11083	4M8303	O-RING	2
27	PAFZZ	2520012685353	11083	2S5718	SLEEVE,OIL,DIRECTIO	1
28	PFFZZ	5365010643788	11083	9S5222	SPACER	2
				END OF FIGURE		

1
2 - 10

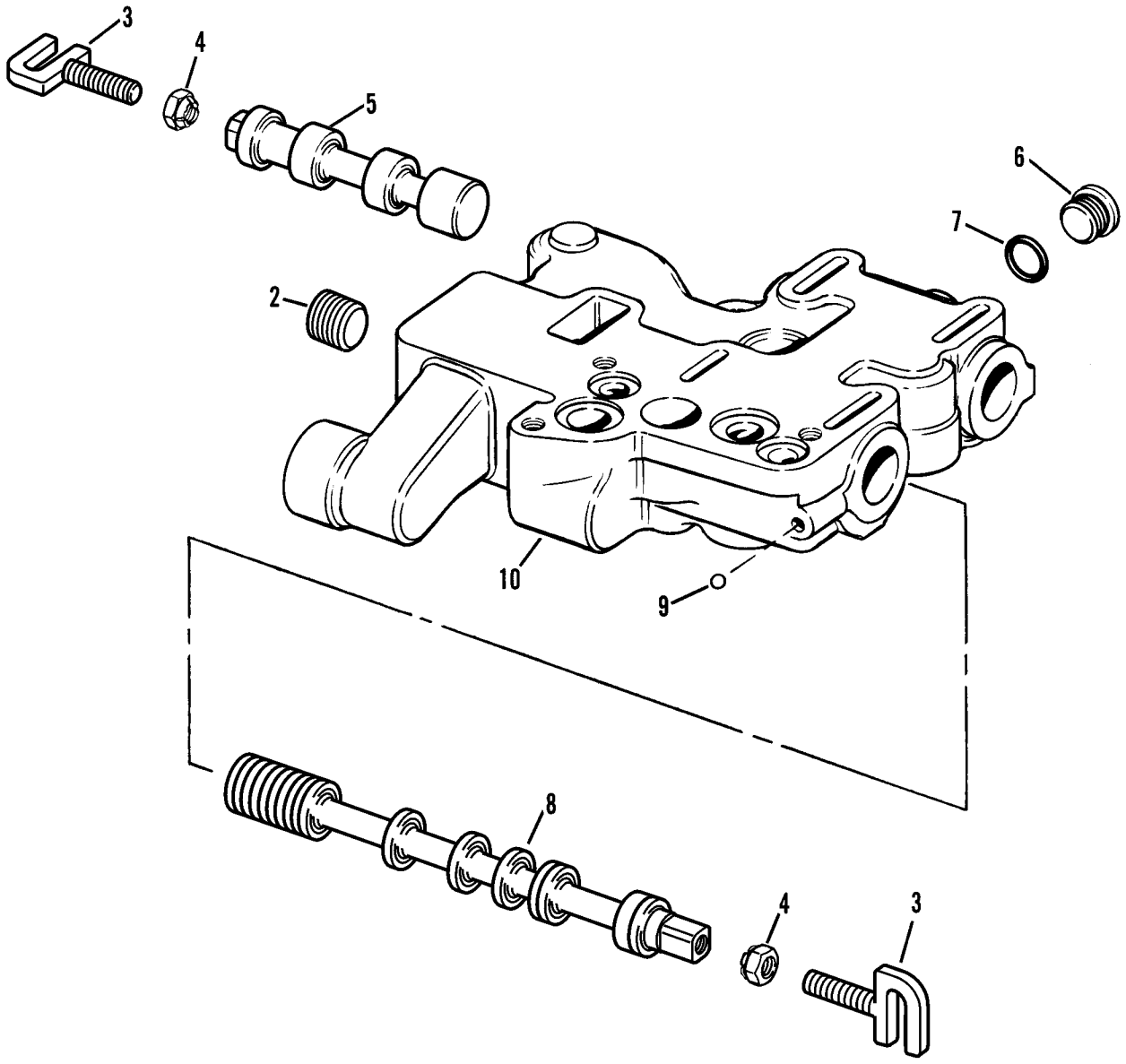

Figure 76. Selector Valve

(1) ITEM NO	(2) SMR CODE	(3) NSN	(4) CAGEC	(5) PART NUMBER	(6) DESCRIPTION AND USABLE ON CODES (UOC)	(7) QTY
					GROUP 0710 TRANSMISSION ASSEMBLY	
					FIG. 76 SELECTOR VALVE	
1	PFFZZ	4820011646960	11083	1P6591	VALVE,LINEAR,DIRECT	1
2	PFHZZ	4730002783383	15235	PLG1	.PLUG,PIPE	2
3	PAHZZ	5340004550326	11083	5S909	.CONNECTOR,ROD END	2
4	PFHZZ	5310009502660	11083	2S5717	.NUT,PLAIN,CASTELLAT	2
5	PFHZZ	4820012365464	11083	5M9567	.VALVE,LINEAR,DIRECT	1
6	PFHZZ	5365010318183	30780	8HP5N-S	.PLUG,MACHINE THREAD	1
7	PFHZZ	5331009486482	62983	154129	.O-RING	1
8	PFHZZ	4820012674335	11083	1P6596	.VALVE,LINEAR,DIRECT	1
9	PFHZZ	3110009921048	11083	2D6642	.BALL,BEARING	1
10	XAHZZ		11083	1P6592	.VALVE	1
				END OF FIGURE		

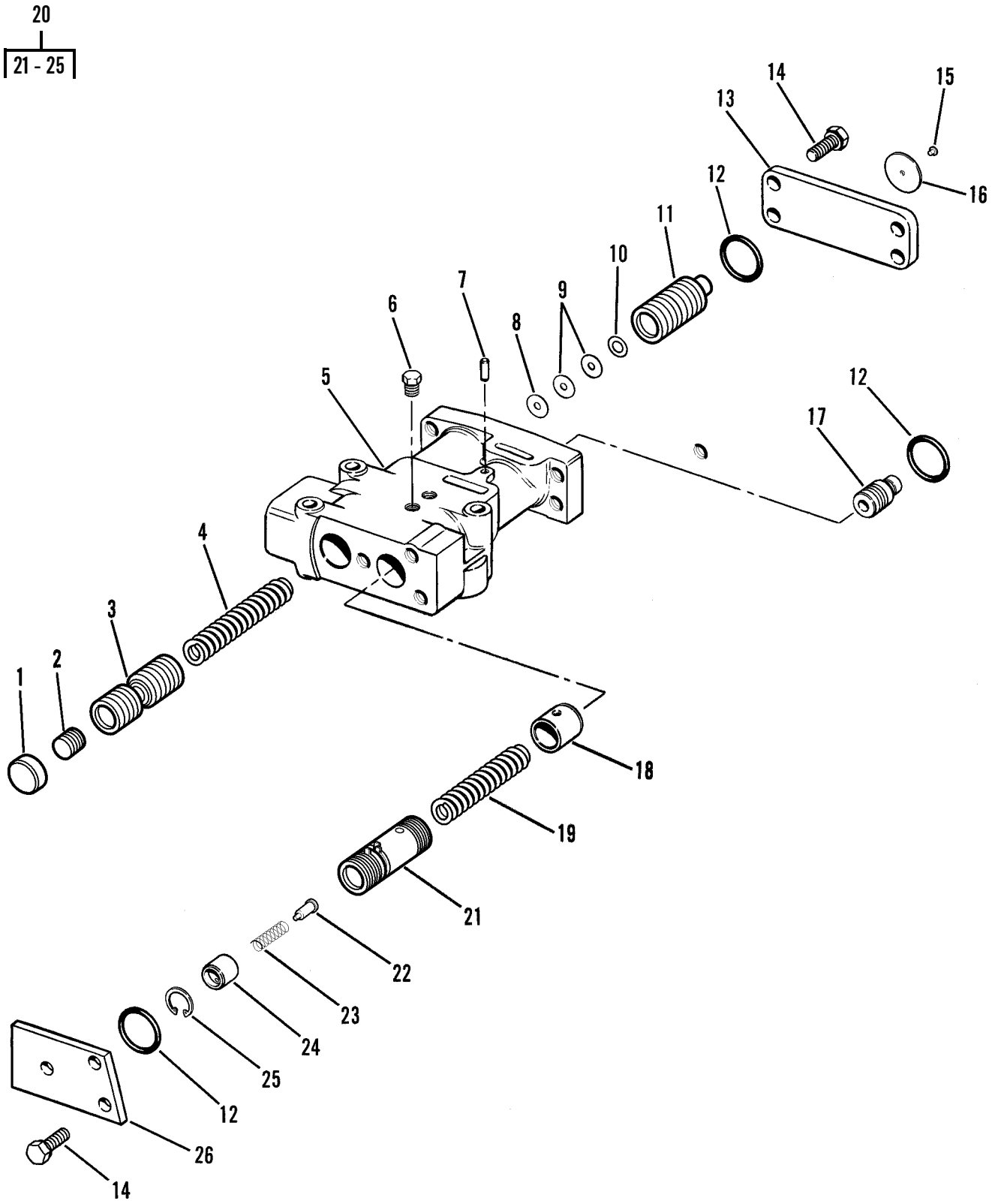

Figure 77. Pressure Control Valve

(1) ITEM NO	(2) SMR CODE	(3) NSN	(4) CAGEC	(5) PART NUMBER	(6) DESCRIPTION AND USABLE ON CODES (UOC)	(7) QTY
					GROUP 0710 TRANSMISSION ASSEMBLY	
					FIG. 77 PRESSURE CONTROL VALVE	
1	PAHZZ	4820012538632	11083	1P8612	STOP,VALVE,PRESSURE	1
2	PFHZZ	4730010687106	11083	2M7041	SLUG	1
3	PFHZZ	4820012371685	11083	9M2025	VALVE,LINEAR,DIRECT	1
4	PFHZZ	5360012651272	11083	9P4213	SPRING,HELICAL,COMP	1
5	PFHZZ	4820011649212	11083	8P7790	VALVE,PRESSURE CONT	1
6	PFHZZ	4730009247886	11083	5M6214	PLUG,PIPE	2
7	PAHZZ	5315012601481	11083	6D3036	PIN,STRAIGHT,HEADLE	2
8	PFHZZ	5365000060678	19207	11634204-2	SHIM	1
9	PFHZZ	5310000060673	11083	5M7915	WASHER,FLAT	2
10	PFHZZ	5365012584656	11083	6J6517	SHIM	1
11	PFHZZ	4320012535572	11083	8S9198	PISTON,PUMP	1
12	PFHZZ	5331009138872	02697	S1199 2-216	O-RING	3
13	PAHZZ	5340012593753	11083	9S2753	COVER,ACCESS	1
14	PFHZZ	5306002604508	11083	0S1594	BOLT,MACHINE	7
15	PFHZZ	5305007083823	11083	7B3028	SCREW,DRIVE	1
16	PCHZZ	7690012533422	11083	9G9075	MARKER,IDENTIFICATI	1
17	PFHZZ	4820012538557	11083	3P0391	VALVE,CHECK	1
18	PAHZZ	5340012598954	11083	1P9665	RETAINER,HELICAL CO	1
19	PFHZZ	5360011570998	11083	8M8132	SPRING,HELICAL,COMP	1
20	PFHZZ	4820011513651	11083	6P4711	SLIDE,DIRECTIONAL C	1
21	XAHZZ		11083	6P9295	.SLIDE,DIRECTIONAL C	1
22	PAHZZ	2530010668462	11083	6P8848	.PLUNGER	1
23	PFHZZ	5360004557142	11083	9H2367	.SPRING,HELICAL,COMP	1
24	PFHZZ	4820011513650	11083	6P4717	.SLEEVE,DIRECTIONAL	1
25	PFHZZ	5325007541082	96906	MS16625-1075	.RING,RETAINING	1
26	PFHZZ	5365012607733	11083	1P8573	SPACER,PLATE	1
				END OF FIGURE		

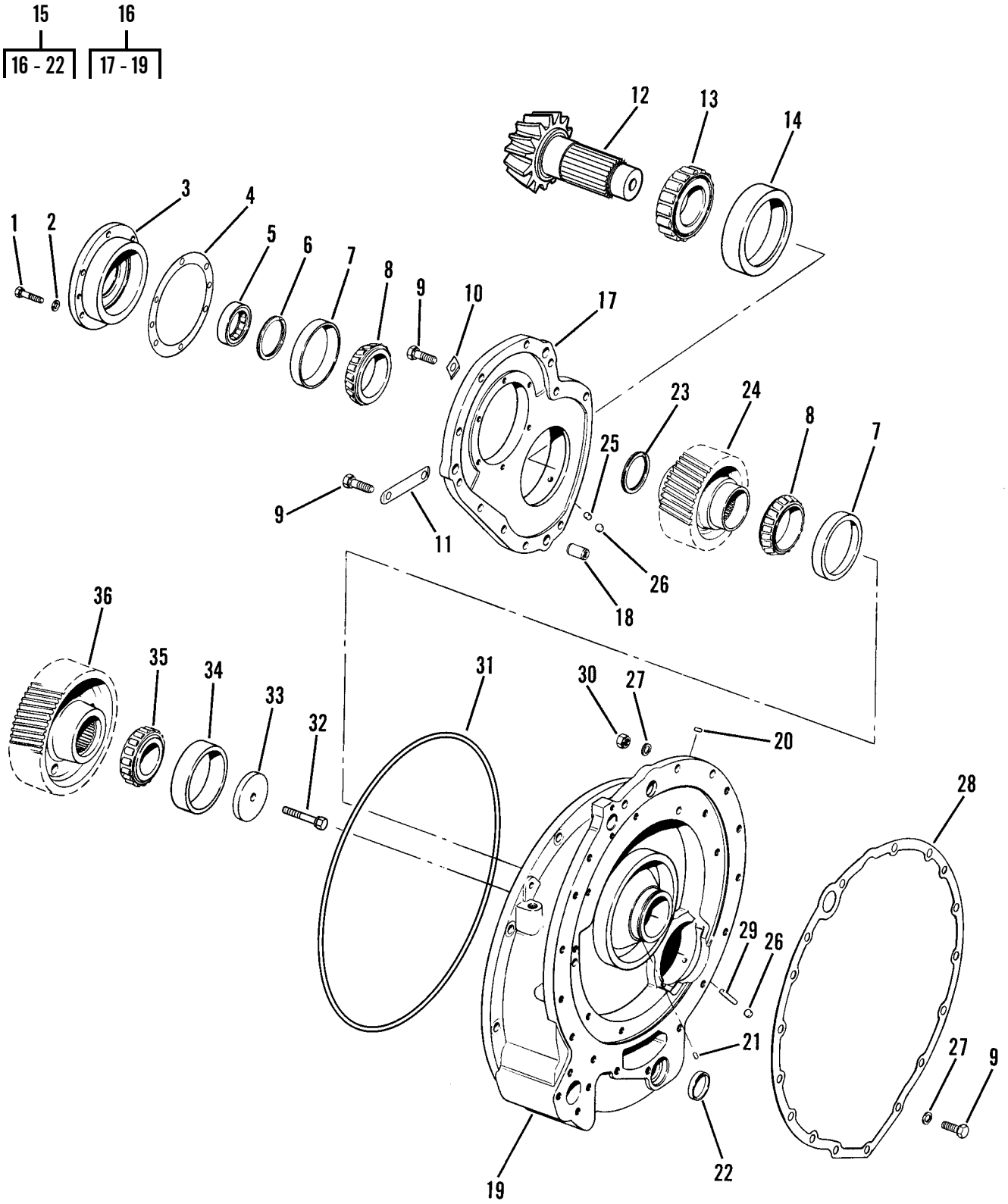

Figure 78. Transfer Gear Group

(1) ITEM NO	(2) SMR CODE	(3) NSN	(4) CAGEC	(5) PART NUMBER	(6) DESCRIPTION AND USABLE ON CODES (UOC)	(7) QTY
					GROUP 0710 TRANSMISSION ASSEMBLY	
					FIG. 78 TRANSFER GEAR GROUP	
1	PFHZZ	5306002634038	11083	2A4639	BOLT,MACHINE	6
2	PFHZZ	5310001174788	11083	9Y2695	WASHER,FLAT	6
3	PFHZZ	3130012573837	11083	2P3660	HOUSING,BEARING UNI	1
4	PFHZZ	5365012573811	11083	2P3661	SHIM	3
5	PFHZZ	3110004469688	01212	M1207EAHL	BEARING,ROLLER,CYLI	1
6	PFHZZ	5325009848500	80756	ARR283	RING,RETAINING	1
7	PFHZZ	2520010646625	11083	9S7949	CUP	2
8	PFHZZ	3010010647524	11083	9S7950	CONE	2
9	PFHZZ	5306011279361	11083	0S1585	BOLT,MACHINE	25
10	PFHZZ	5310002820493	11083	1C0155	WASHER,KEY	1
11	PFHZZ	5340009489809	11083	1S8485	LOCKING PLATE,NUT A	5
12	PFHZZ	3040012539507	11083	2P3669	GEARSHAFT,BEVEL	1
13	PFHZZ	3110002119679	11083	1P0622	BEARING,ROLLER,CYLI	1
14	PFHZZ	3110009494964	11083	1M8923	RING,BEARING,OUTER	1
15	PFHHH	3040012533466	11083	3P9147	HOUSING,MECHANICAL	1
16	XAHHH		11083	3P9145	.CASE	1
17	PAHZZ	3040012532008	11083	3P0233	..HOUSING,MECHANICAL	1
18	XAHZA		11083	8M8659	..PIN,TRANSFER CASE	3
19	XAHZZ		11083	3P9146	..CASE	1
20	PAHZZ	5340011651584	11083	3S2173	.CAP,PROTECTIVE,DUST	1
21	XAHZZ		11083	9M2001	.PIN,STRAIGHT,HEADLE	1
22	XAHZZ		11083	0T0199	.PLUG	1
23	PFHZZ	5325012702896	80756	RSN-243	RING,RETAINING	1
24	PAHZZ	3020012540083	11083	2P2923	GEAR,HELICAL	1
25	XBHZZ		11083	8H1130	NUT,PLAIN,ROUND	1
26	PFHZZ	5340002299287	11083	0L1026	PLUG,EXPANSION	2
27	PFHZZ	5310005845272	80205	MS35338-48	WASHER,LOCK	17
28	PFHZZ	5330002361268	11083	9M2021	GASKET	1
29	PFHZZ	5340012098292	11083	1M5156	STANDOFF,THREADED,S	1
30	PFHZZ	5310007680318	96906	MS51967-14	NUT,PLAIN,HEXAGON	3
31	PAHZZ	5330003675819	11083	9M5892	PACKING,PREFORMED PART OF KIT P/N 5R6292	1
32	PFHZZ	5306014376180	11083	0L1558	BOLT,MACHINE	1
33	PFHZZ	5310011540708	11083	2S6408	WASHER,FLAT	1
34	PFHZZ	3110002787215	11083	8B2570	RING,BEARING,OUTER	1
35	PFHZZ	3110002119680	11083	1P0623	BEARING,ROLLER,CYLI	1
36	PAHZZ	3020012540082	11083	2P2922	GEAR,HELICAL	1
				END OF FIGURE		

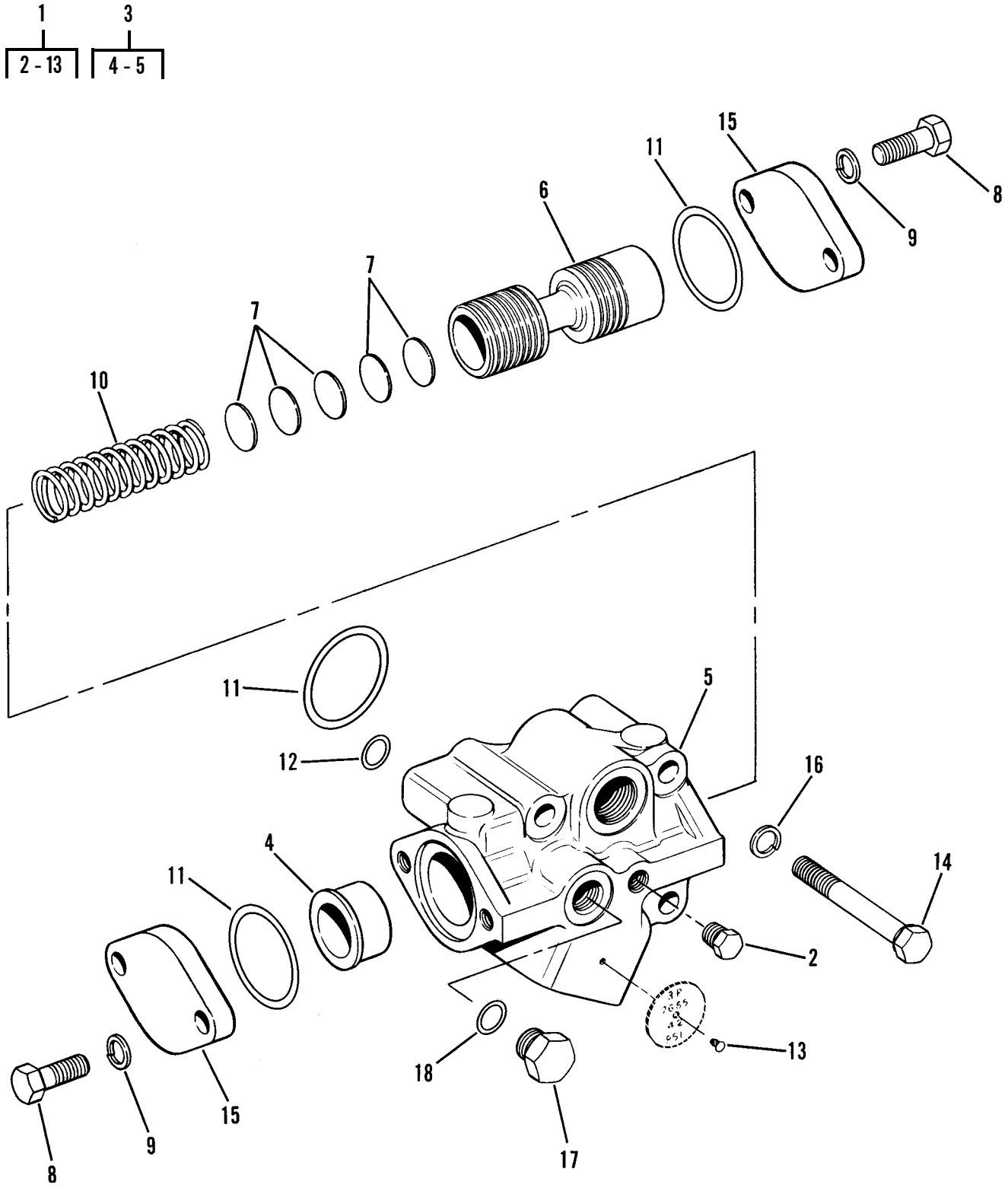

Figure 79. Torque Converter Relief Valve

(1) ITEM NO	(2) SMR CODE	(3) NSN	(4) CAGEC	(5) PART NUMBER	(6) DESCRIPTION AND USABLE ON CODES (UOC)	(7) QTY
					GROUP 0721 COOLERS, PUMPS, MOTORS	
					FIG. 79 TORQUE CONVERTER RELIEF VALVE	
1	PFFZZ	4820010411571	11083	3P7665	VALVE,BODY ASSEMBLY	1
2	PFFZZ	4730009247886	11083	5M6214	.PLUG,PIPE	1
3	XAFZZ		11083	3P7666	.HOUSING ASSY	1
4	XAFZZ		11083	7M1377	..STOP,RELIEF VALVE	1
5	XAFZZ		11083	3P7667	..VALVE GROUP-RELIEF	1
6	PFFZZ	4820011034037	11083	7M1296	.VALVE,RELIEF,PRESSU	1
7	PFFZZ	5310009483280	11083	5M9623	.WASHER BLANK	5
8	PFFZZ	5306002604508	11083	0S1594	.BOLT,MACHINE	4
9	PFFZZ	5310006379541	80205	MS35338-46	.WASHER,LOCK	4
10	PFFZZ	5360009503397	11083	7M1297	.SPRING,VALVE,RELIEF	1
11	PFFZZ	5331009305736	11083	8M4986	.O-RING	3
12	PFFZZ	5331009995505	11083	8M8157	.O-RING PART OF KIT P/N 5R6293 .	1
13	PFFZZ	5305007083823	11083	7B3028	.SCREW,DRIVE	1
14	PFFZZ	5306004262932	11083	S1619	BOLT,MACHINE	3
15	PFFZZ	5340011602240	11083	4M8239	COVER,ACCESS	2
16	PFFZZ	5310006379541	80205	MS35338-46	WASHER,LOCK	3
17	PFFZZ	5365004114584	11083	9S4191	PLUG,MACHINE THREAD	1
18	PCFZZ	5331008013354	25184	906-737-70	O-RING	1
				END OF FIGURE		

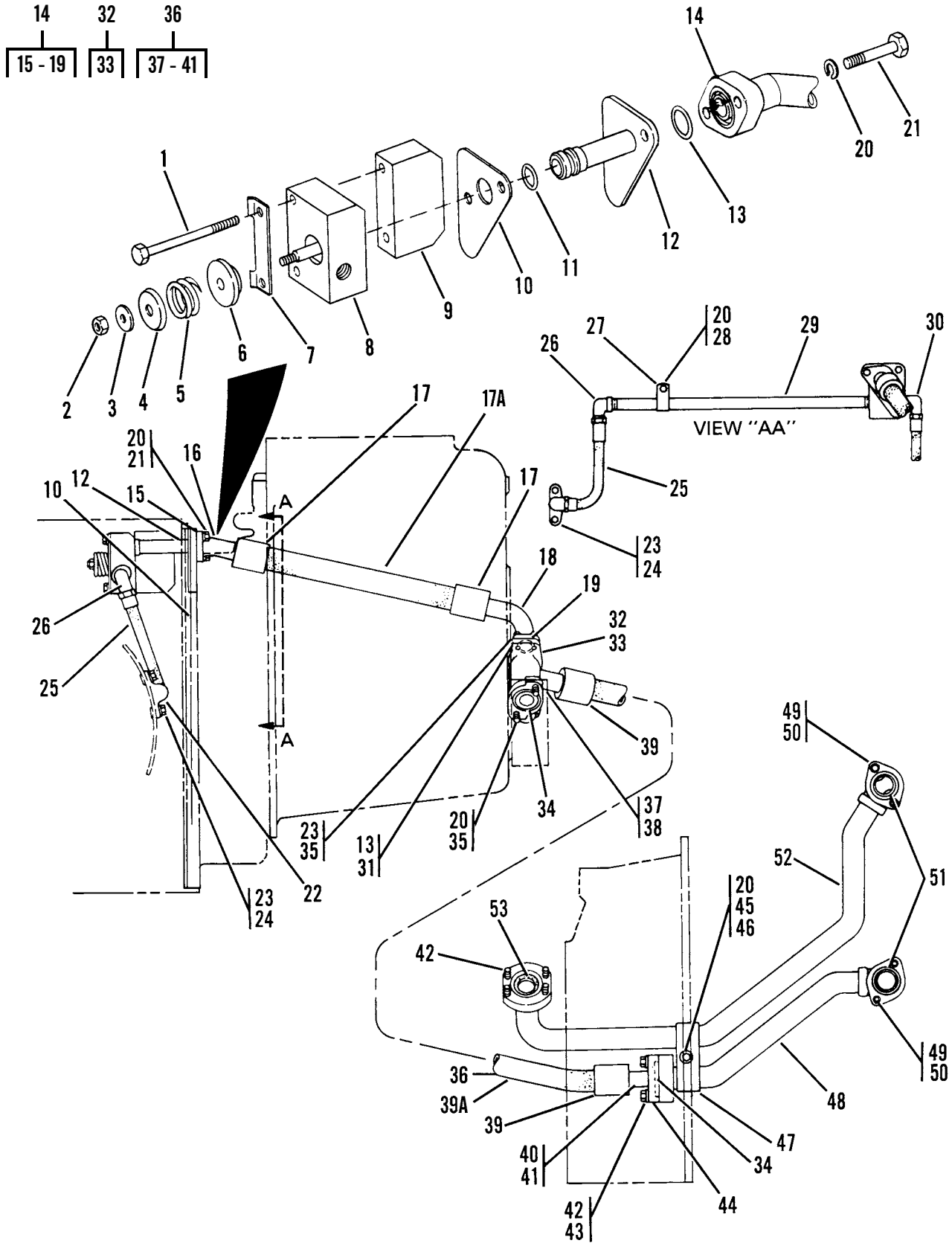

Figure 80. Torque Converter Cooler Lines

(1) ITEM NO	(2) SMR CODE	(3) NSN	(4) CAGEC	(5) PART NUMBER	(6) DESCRIPTION AND USABLE ON CODES (UOC)	(7) QTY
					GROUP 0721 COOLERS, PUMPS, MOTORS	
					FIG. 80 TORQUE CONVERTER COOLER LINES	
1	PFOZZ	5305009640503	80204	B1821BH038C500N	SCREW,CAP,HEXAGON H	2
2	PFOZZ	5310009591488	81349	M45913/2-6FG5C	NUT,SELF-LOCKING,HE	5
3	PFOZZ	5310010618633	11083	9L9132	WASHER	1
4	PFOZZ	5310012559345	11083	2D7091	WASHER,FLAT	1
5	PFOZZ	5360012542385	11083	1S7139	SPRING,HELICAL,COMP	1
6	PFOZZ		11083	1M5471	VALVE,CHECK	1
7	PFOZZ	5310012542486	11083	3S8744	WASHER,LOCK	1
8	PFOZZ	3040012539494	11083	7S7370	BLOCK ASSEMBLY	1
9	PFOZZ	5365012574353	11083	3P5627	SPACER,PLATE	1
10	PFOZZ	5330012098033	11083	3P5625	GASKET	1
11	PFOZZ	5331009145821	11083	8M4445	O-RING	1
12	PFOZZ	4710012534724	11083	3P5626	TUBE AND FITTINGS,M	1
13	PFOZZ	5331009254778	09990	2-219S1032-70	O-RING PART OF KIT P/N 5R6292 ..	3
14	AOOOO		11083	3P5725	HOSE ASSEMBLY,NONME	1
15	PFOZZ	5331009484063	11083	4J522	.O-RING	1
16	PFOZZ	4730012531979	11083	5P0922	.ELBOW,FLANGE TO HOS	1
17	PFOZZ	3120002361319	11083	3S7252	.SLEEVE	2
17A	MOOZZ		11083	3P5725-XX	.HOSE,NONMETALLIC CUT TO FIT, . MAKE FROM HOSE P/N 1650021	1
18	PFOZZ	4730012538598	11083	6D9961	.ELBOW,FLANGE TO HOS	1
19	PCOZZ	5331009136144	11083	4J520	.O-RING	1
20	PFOZZ	5310006379541	80205	MS35338-46	WASHER,LOCK	6
21	PFOZZ	5306002634038	11083	2A4639	BOLT,MACHINE	2
22	PFOZZ		11083	3P5682	ELBOW,FLANGE TO HOS	2
23	PFOZZ	5310001174788	11083	9Y2695	WASHER,FLAT	14
24	PAOZZ	5306012097883	11083	7S9686	BOLT,SHOULDER	4
25	PFOZZ		11083	7G0526	HOSE ASSEMBLY,NONME	1
26	PFOZZ	4730012527837	11083	7S7507	ELBOW,PIPE	1
27	PFOZZ	5340006180246	11083	1S3618	CLIP,SPRING TENSION	1
28	PFOZZ	5305000680511	80204	B1821BH038C125N	SCREW,CAP,HEXAGON H	1
29	PFOZZ	4710012532746	11083	7S7375	TUBE,METALLIC	1
30	PFOZZ	4730009213245	11083	7S7369	ELBOW,PIPE TO TUBE	1
31	PFOZZ	4730010515256	11083	1P4577	FLANGE,PIPE	4
32	PFOZZ	2910012537393	11083	3P4863	DIVERTER,VALVE,EMIS	1
33	PFOZZ	4730012541289	11083	3P0396	.RESTRICTOR,FLUID FL	1
34	PFOZZ	5331009305736	11083	8M4986	O-RING PART OF KIT P/N 5R6293 ..	2
35	PFOZZ	5306011954681	11083	3B1915	BOLT	10
36	AOOOO		11083	3P5724	HOSE ASSEMBLY,NONME	1
37	PFOZZ	4730010608101	11083	5S2105	.ELBOW,FLANGE TO HOS	1
38	PCOZZ	5331009136144	11083	4J520	.O-RING	1
39	PFOZZ	3120002361319	11083	3S7252	.SLEEVE	2
39A	MOOZZ		11083	3P5724-XXX	.HOSE,NONMETALLIC CUT TO FIT, . MAKE FROM HOSE P/N 1650021	1
40	PFOZZ	4730010627184	11083	7S0570	.ADAPTER,STRAIGHT,FL	1
41	PCOZZ	5331009484063	11083	4J522	.O-RING	1

(1) ITEM NO	(2) SMR CODE	(3) NSN	(4) CAGEC	(5) PART NUMBER	(6) DESCRIPTION AND USABLE ON CODES (UOC)	(7) QTY
42	PFOZZ	5306004262983	11083	0T0768	BOLT,MACHINE	8
43	PFOZZ	5310010978955	11083	5P8244	WASHER,FLAT	4
44	PFOZZ	4730010515257	11083	1P4578	FLANGE,PIPE	2
45	PFOZZ	5306010949106	11083	0S1590	BOLT,MACHINE	1
46	PFOZZ	5310014297859	11083	6V8801	NUT,PLAIN,HEXAGON	1
47	PFOZZ		11083	5M6193	STRAP,RETAINING	2
48	PFOZZ	4710012534719	11083	6P3400	TUBE ASSEMBLY,METAL	1
49	PFOZZ	5306002638949	11083	4F8965	BOLT,MACHINE	4
50	PFOZZ	5310002090965	80205	MS35338-47	WASHER,LOCK	4
51	PFOZZ	5331009145773	09990	2-223S1032-70	O-RING PART OF KIT P/N 5R6293 ..	2
52	PFOZZ	4710012538714	11083	9P9715	TUBE AND FITTINGS,M	1
53	PFOZZ	5330010600308	11083	1P3705	SEAL	1
				END OF FIGURE		

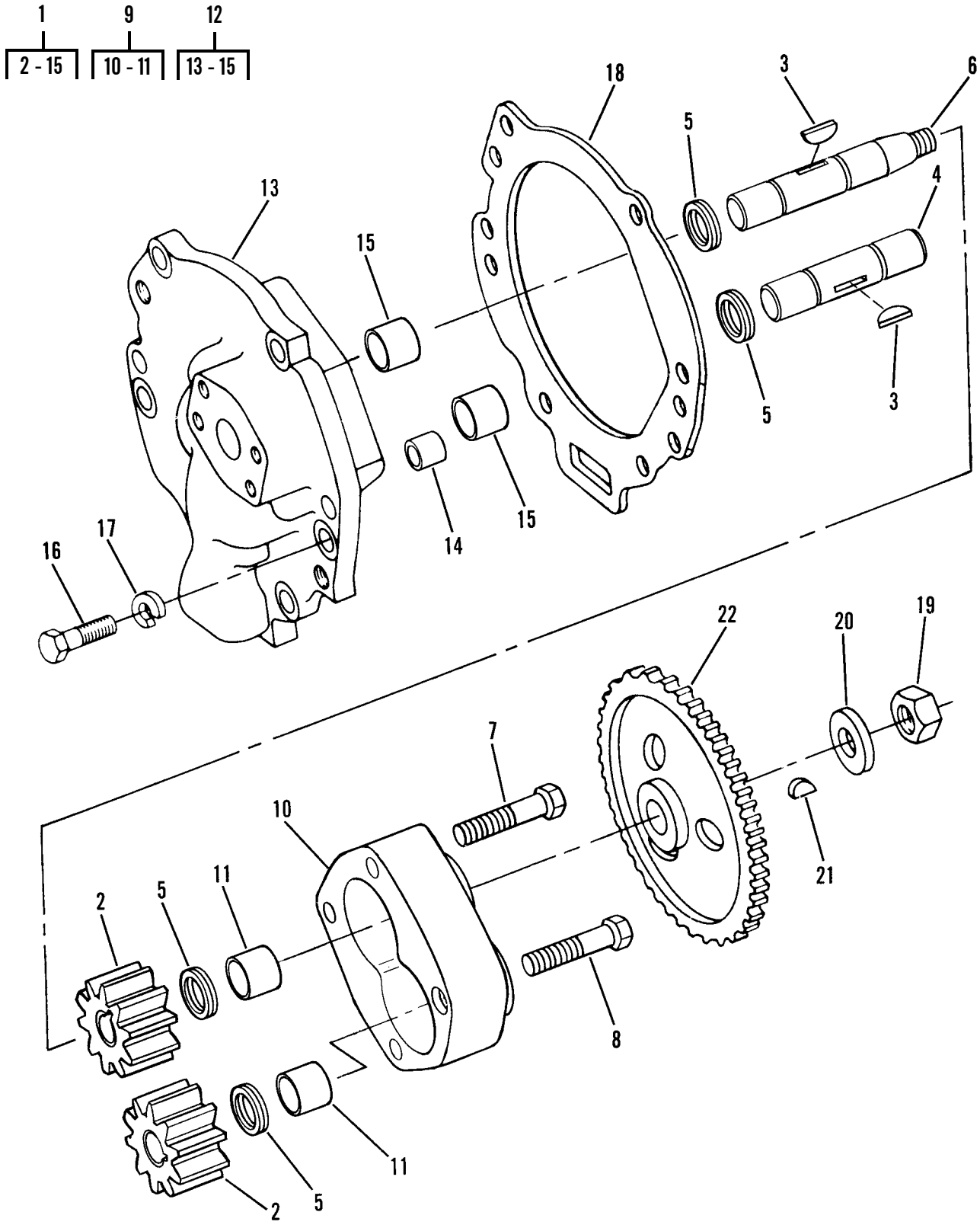

Figure 81.Torque Divider Scavenge Pump

(1) ITEM NO	(2) SMR CODE	(3) NSN	(4) CAGEC	(5) PART NUMBER	(6) DESCRIPTION AND USABLE ON CODES (UOC)	(7) QTY
					GROUP 0721 COOLERS, PUMPS, MOTORS	
					FIG. 81 TORQUE DIVIDER SCAVENGE PUMP	
1	PFFZZ	4320002511785	11083	5M7864	PUMP,ROTARY	1
2	PFFZZ	3020003639254	11083	4M0410	.GEAR,SPUR	2
3	PFFZZ	5315006165525	80205	MS35756-9	.KEY,WOODRUFF	2
4	PFFZZ	3040004105801	11083	4M5890	.SHAFT,SHOULDERED	1
5	PFFZZ	5325012702897	80756	PSC-81	.RING,RETAINING	4
6	PFFZZ	3040004367398	11083	4M5889	.SHAFT,STRAIGHT	1
7	PFFZZ	5306010630652	11083	5D9844	.BOLT,MACHINE	2
8	PFFZZ	5306014267103	11083	0310219	.BOLT,MACHINE	2
9	PFFZZ	2590012365190	11083	4M5857	.BODY ASSY,SCAVENGE	1
10	XAFZZ		11083	4M5856	..BODY	1
11	PFFZZ	3120004655539	11083	4H9705	..BEARING,SLEEVE	2
12	PFFZZ	2520012685354	11083	5M5013	.COVER ASSEMBLY,SCAV	1
13	XAFZZ		11083	5M5012	..COVER	1
14	PAFZA	5315001359672	11083	5M4987	..PIN,HOLLOW	2
15	PFFZZ	3120004655539	11083	4H9705	..BEARING,SLEEVE	2
16	PFFZZ	5306004238194	11083	1A2029	BOLT,MACHINE	6
17	PFFZZ	5310006379541	80205	MS35338-46	WASHER,LOCK	6
18	PFFZZ	5330009183599	11083	2S6458	GASKET PART OF KIT P/N 5R6293 ..	1
19	PFFZZ	5310008434593	11083	1B4430	NUT,PLAIN,HEXAGON	1
20	PFFZZ	5310007102144	11083	3H0449	WASHER,FLAT	1
21	PFFZZ	5315006165525	80205	MS35756-9	KEY,WOODRUFF	1
22	PFFZZ	3020004105512	11083	5M5822	GEAR,SPUR	1
				END OF FIGURE		

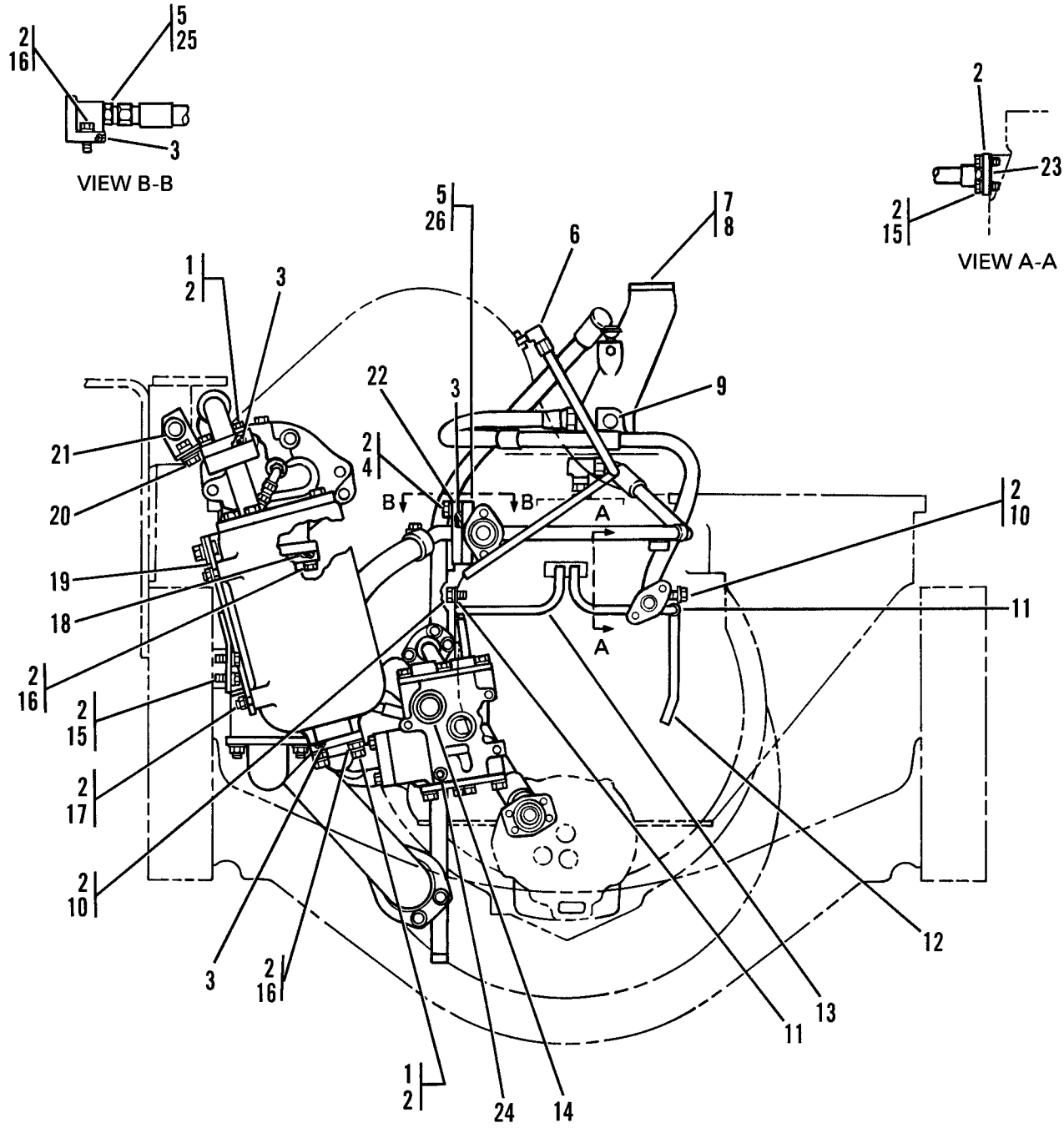

Figure 82. Upper Power Train Lines and Mounting Hardware

(1) ITEM NO	(2) SMR CODE	(3) NSN	(4) CAGEC	(5) PART NUMBER	(6) DESCRIPTION AND USABLE ON CODES (UOC)	(7) QTY
					GROUP 0721 COOLERS, PUMPS, MOTORS	
					FIG. 82 UPPER POWER TRAIN LINES AND MOUNTING HARDWARE	
1	PFOZZ	5305010156841	11083	0S1591	SCREW	6
2	PFOZZ	5310001174788	11083	9Y2695	WASHER,FLAT	33
3	PFOZZ	5331009254778	09990	2-219S1032-70	O-RING	4
4	PFOZZ	5305000680511	80204	B1821BH038C125N	SCREW,CAP,HEXAGON H	14
5	PFOZZ	4730006233889	96906	MS51525A10Z	ADAPTER,STRAIGHT,TU	1
6	PFOZZ	4730008127999	96906	MS51504A6	ELBOW,PIPE TO TUBE	1
7	PFOZZ	4730012498409	11083	5M0902	PLUG,PIPE	1
8	PFOZZ	5330001904255	55883	IDPL1124	GASKET	1
9	PFOZZ	4730002783383	15235	PLG1	PLUG,PIPE	1
10	PFOZZ	5305007215492	80204	B1821BH038C063N	SCREW,CAP,HEXAGON H	2
11	PFOZZ	5340002827505	96906	MS21333-57	CLAMP,LOOP	2
12	PAOZZ	4710002376238	11083	9S6390	TUBE,BENT,METALLIC	1
13	PAOZZ	4710012672600	11083	8P4887	TUBE,BENT,METALLIC	1
14	PAOZZ	5331009138120	09990	2-218S1032-70	O-RING PART OF KIT P/N 5R6293 ..	2
15	PFOZZ	5306002604508	11083	0S1594	BOLT,MACHINE	6
16	PFOZZ	5306004238194	11083	1A2029	BOLT,MACHINE	5
17	PFOZZ	5310014297859	11083	6V8801	NUT,PLAIN,HEXAGON	4
18	PFOZZ	5331009489768	11083	8M4436	O-RING	1
19	PAOZZ	5340012703789	11083	6P5036	BRACKET,MOUNTING	1
20	PFOZZ	5310007680318	96906	MS51967-14	NUT,PLAIN,HEXAGON	2
21	PFOZZ	5340012701286	11083	6P7478	BRACKET,ANGLE	1
22	PAOZZ	4730012675992	11083	1S9353	FLANGE,PIPE	1
23	PFOZZ	5330002975397	11083	4F5640	GASKET PART OF KIT P/N 5R6292 .. PART OF KIT P/N 5R6293	1
24	PFOZZ	5330001012561	11083	8M5127	SEAL,OIL	1
25	PFOZZ	5331001675174	81343	M83248/2-910	O-RING	1
26	PAOZZ	4730011681043	11083	3P9136	ELBOW	1
				END OF FIGURE		

13 57
14 - 17 58 - 61

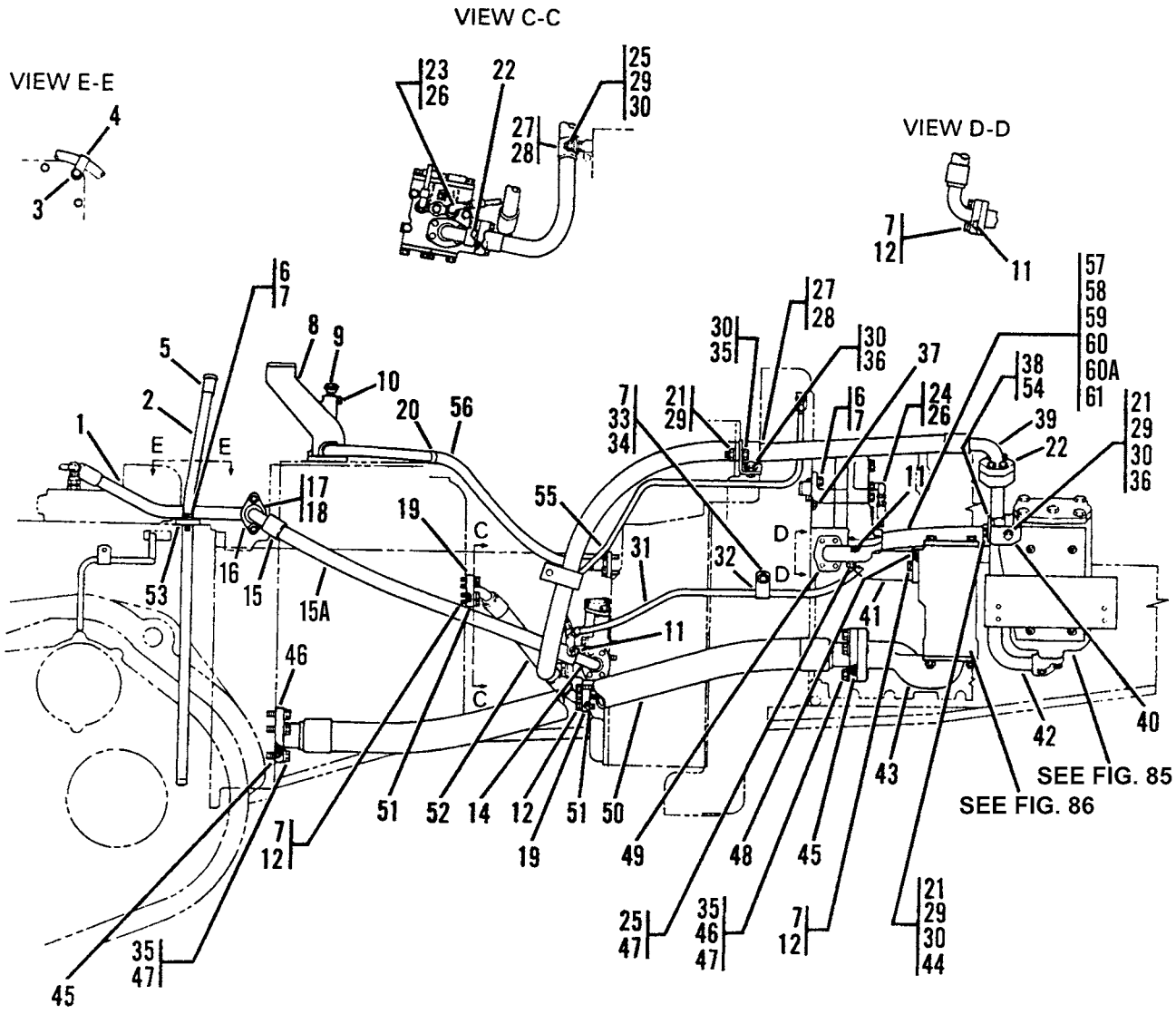

Figure 83. Power Train Lines Group

(1) ITEM NO	(2) SMR CODE	(3) NSN	(4) CAGEC	(5) PART NUMBER	(6) DESCRIPTION AND USABLE ON CODES (UOC)	(7) QTY
					GROUP 0721 COOLERS, PUMPS, MOTORS	
					FIG. 83 POWER TRAIN LINES GROUP	
1	PFOZZ	4720011625114	11083	8P7378	HOSE ASSEMBLY,NONME	1
2	PFOZZ		11083	1M8625	GUIDE ASSY,OIL GAUG	1
3	PFOZZ	5365010534681	11083	4S5719	SPACER	1
4	PFOZZ	5340011519308	11083	1S0994	CLAMP,LOOP	1
5	PFOZZ	5945012503234	11083	6P9003	PLUNGER,SOLENOID	1
6	PFOZZ	5306004238194	11083	1A2029	BOLT,MACHINE	5
7	PFOZZ	5310001174788	11083	9Y2695	WASHER,FLAT	33
8	PFOZZ	2590012685376	11083	1S2254	FILLER NECK	1
9	PAOZZ	2520011640077	92859	203986	BREATHER	1
10	PFOZZ	5365004193254	11083	2S7905	PLUG,MACHINE THREAD	1
11	PFOZZ	5331009254778	09990	2-219S1032-70	O-RING PART OF KIT P/N 5R6293 ..	5
12	PFOZZ	5305000680511	80204	B1821BH038C125N	SCREW,CAP,HEXAGON H	15
13	AFOFF		11083	7G7106	HOSE ASSEMBLY,NONME	1
14	PFFZZ	4730012672634	11083	6V4676	.ELBOW,FLANGE TO HOS	1
15	PFFZZ	5340010516767	11083	3S7166	.PLUNGER,DETENT	2
15A	MFFZZ		11083	7G7106-XX	.HOSE,NONMETALLIC CUT TO FIT, . MAKE FROM HOSE P/N 1650020	1
16	PCFZZ	5331009136144	11083	4J520	.O-RING	2
17	PFFZZ	4730012672635	11083	6V4672	.ELBOW,FLANGE TO HOS	1
18	PFFZZ	4730012715066	11083	2M5762	FLANGE,PIPE	1
19	PFOZZ	4730010513134	11083	1P4576	FLANGE,PIPE	4
20	PFOZZ	5340010986683	11083	3S8665	CLAMP,LOOP	2
21	PFOZZ	5310009307013	11083	4B4280	WASHER,FLAT	8
22	PFOZZ	4730010515256	11083	1P4577	FLANGE,PIPE	10
23	PFOZZ	4730010512312	11083	0307942	ELBOW,TUBE TO BOSS	1
24	PFOZZ	5331010689760	11083	0336042	O-RING PART OF KIT P/N 5R6293 ..	3
25	PFOZZ	2910003099473	11083	0T0573	CAPSCREW,FUEL PUMP	4
26	PFOZZ	4730001433941	96906	MS51527A6	ELBOW,TUBE TO BOSS	2
27	PFOZZ	5340012701356	11083	3P0572	CLIP,SPRING TENSION	2
28	PFOZZ	5340012701357	11083	3P0574	CLIP,SPRING TENSION	2
29	PFOZZ	5310007680318	96906	MS51967-14	NUT,PLAIN,HEXAGON	3
30	PFOZZ	5310008095998	96906	MS27183-18	WASHER,FLAT	5
31	PFOZZ	4720011630678	11083	7G7105	HOSE ASSEMBLY,NONME	1
32	PFOZZ	5342010678043	11083	7B1598	CLIP	1
33	PFOZZ	5306002637301	11083	0L1351	BOLT,MACHINE	1
34	PFOZZ	5310000806004	96906	MS27183-14	WASHER,FLAT	1
35	PFOZZ	5306011279361	11083	0S1585	BOLT,MACHINE	9
36	PFOZZ	5306004238117	11083	0S1595	BOLT,MACHINE	2
37	PFOZZ	5331009390871	09990	2-231S103-70	O-RING	1
38	PFOZZ	5340011783770	11083	6K9550	CLIP,SPRING TENSION	1
39	PFOZZ	4720011651438	11083	6P5064	HOSE ASSEMBLY,NONME	1
40	PFOZZ	5340012701286	11083	6P7478	BRACKET,ANGLE	1
41	PAOZA	4730002374605	11083	9S6391	ELBOW,WATER PUMP	1
42	PFOZZ	4710012672115	11083	6P5061	TUBE ASSEMBLY,METAL	1
43	PAOZZ	2520012685355	11083	6P4052	BASE,MAGNETIC SCREE	1
44	PFOZZ	5306008744001	11083	6H1717	BOLT,MACHINE	1

(1) ITEM NO	(2) SMR CODE	(3) NSN	(4) CAGEC	(5) PART NUMBER	(6) DESCRIPTION AND USABLE ON CODES (UOC)	(7) QTY
45	PFOZZ	5331009995502	11083	8M4390	O-RING	2
46	PFOZZ	4730010532692	11083	1P4582	FLANGE,PIPE	4
47	PFOZZ	5310008095997	96906	MS27183-17	WASHER,FLAT	8
48	PFOZZ	5331009489768	11083	8M4436	O-RING	1
49	PFOZZ	4730012672632	11083	6P4928	ELBOW,FLANGE	1
50	PFOZZ	4720011632612	11083	3P7170	HOSE ASSEMBLY,NONME	1
51	PAOZZ	5331009977230	11083	8M4988	O-RING PART OF KIT P/N 5R6292 ..	2
52	PFOZZ	4720011638585	11083	2P4047	HOSE ASSEMBLY,NONME	1
53	PFOZZ	5330005302525	11083	9F5940	GASKET	1
54	PFOZZ	5340011852058	11083	6K9549	STRAP,RETAINING	1
55	PFOZZ	4710012674395	11083	6T1869	TUBE ASSEMBLY,METAL	1
56	PFOZZ	4720011637827	11083	3P1255	HOSE ASSEMBLY,NONME	1
57	AFOFF		11083	8P2685	HOSE ASSEMBLY,NONME	1
58	PFFZZ	4730010517601	11083	3S8503	.ELBOW,FLANGE TO HOS	1
59	PCFZZ	5331009136144	11083	4J520	.O-RING	2
60	PFFZZ	3120002361319	11083	3S7252	.SLEEVE	2
60A	MFFZZ		11083	8P2685-XX	.HOSE,NONMETALLIC CUT TO FIT, . MAKE FROM HOSE P/N 1650021	1
61	PFFZZ	4730010625204	11083	3S8497	.STEM ASSEMBLY	1
				END OF FIGURE		

8
9 - 12

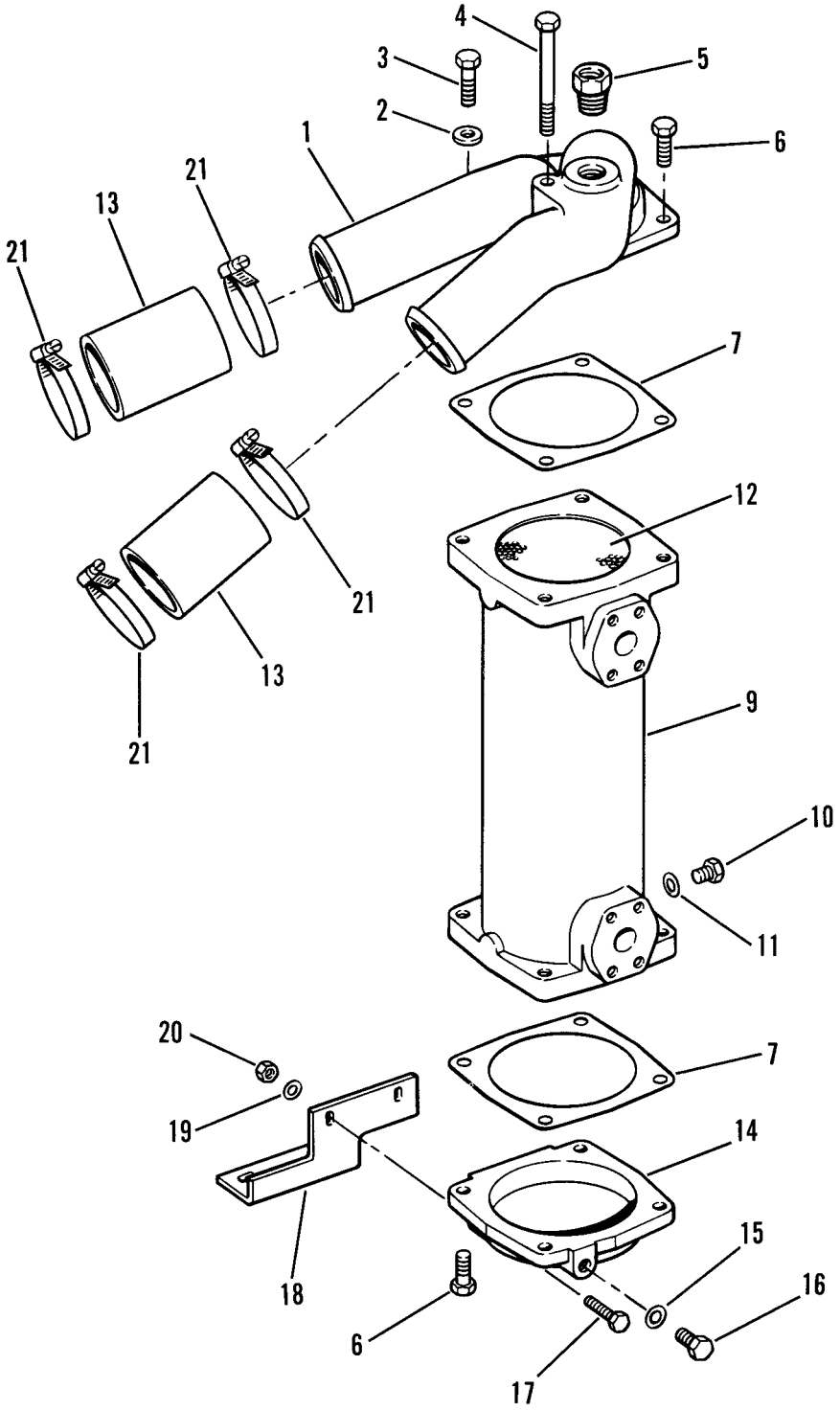

Figure 84. Transmission Oil Cooler

(1) ITEM NO	(2) SMR CODE	(3) NSN	(4) CAGEC	(5) PART NUMBER	(6) DESCRIPTION AND USABLE ON CODES (UOC)	(7) QTY
					GROUP 0721 COOLERS, PUMPS, MOTORS	
					FIG. 84 TRANSMISSION OIL COOLER	
1	PAOZZ	2940012541211	11083	6N1131	HEAD,FLUID FILTER	1
2	PFOZZ	5310004317239	11083	2M0849	WASHER,FLAT	2
3	PFOZZ	5306002638978	11083	0S1587	BOLT,MACHINE	2
4	PFOZZ	5305000085971	11083	8S9089	SCREW,CAP,HEXAGON H	1
5	PFOZZ	4730002633122	11083	3B0551	PLUG,PIPE	1
6	PFOZZ	5306004240086	11083	7B3235	BOLT,MACHINE	5
7	PFOZZ	5330012605902	79150	960	GASKET	2
8	PFOOO	2520012537425	11083	4W5363	COOLER,FLUID,TRANSM DEALER .... EXCHANGE ITEM, PN 0R5538	1
9	PFOZZ		11083	4W5057	.CYLINDER,ACTUATING, ...	1
10	PFOZZ	5365009385568	11083	8M9307	.PLUG,MACHINE THREAD	1
11	PFOZZ	5310003627988	11083	6F7062	.WASHER,FLAT	1
12	XAOZZ		11083	4W5058	.RUBBER ROUND SECTIO	2
13	MOOZZ		11083	5P1263-4.5	HOSE,NONMETALLIC 4.5 IN, MAKE . FROM HOSE P/N MS521301A223R	2
14	PFOZZ	5340012570703	11083	6N1165	COVER,ACCESS	1
15	PFOZZ	5310003627988	11083	6F7062	WASHER,FLAT	1
16	PFOZZ	5365009385568	11083	8M9307	PLUG,MACHINE THREAD	1
17	PFOZZ	5305010156841	11083	0S1591	SCREW	2
18	XAOZZ	5340012572243	11083	6N1166	BRACKET,ANGLE	1
19	PFOZZ	5310001174788	11083	9Y2695	WASHER,FLAT	2
20	AOOZZ	5310014297859	11083	6V8801	NUT,PLAIN,HEXAGON	2
21	PFOZZ	4730010595352	11083	5P0598	CLAMP,HOSE	4
				END OF FIGURE		

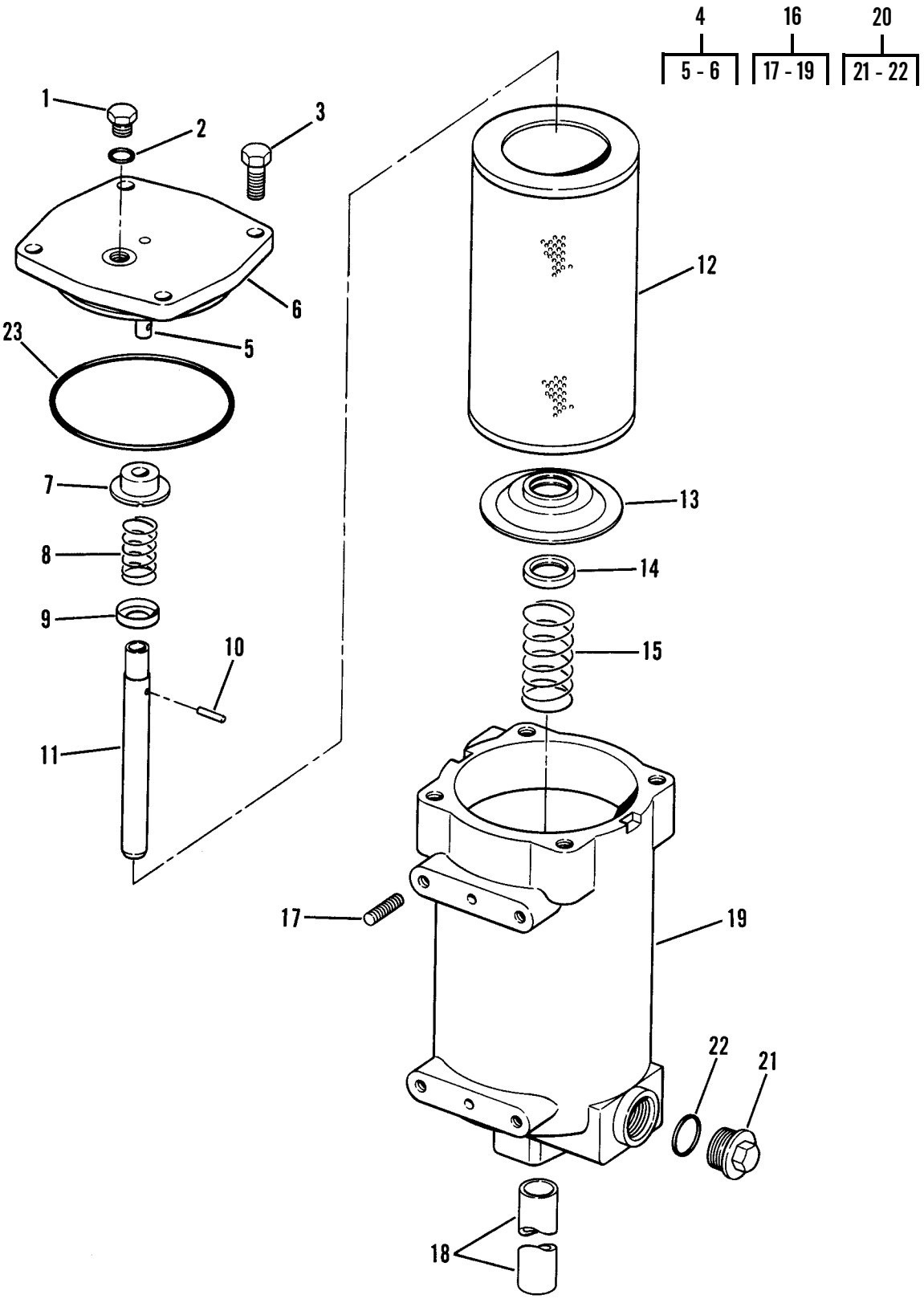

Figure 85. Transmission and Steering Clutch Filter

(1) ITEM NO	(2) SMR CODE	(3) NSN	(4) CAGEC	(5) PART NUMBER	(6) DESCRIPTION AND USABLE ON CODES (UOC)	(7) QTY
					GROUP 0721 COOLERS, PUMPS, MOTORS	
					FIG. 85 TRANSMISSION AND STEERING CLUTCH FILTER	
1	PFOZZ	5365004114584	11083	9S4191	PLUG,MACHINE THREAD	1
2	PCOZZ	5331008013354	25184	906-737-70	O-RING	1
3	PFOZZ	5306004238117	11083	0S1595	BOLT,MACHINE	4
4	PFOZZ	5340012502164	11083	9S7227	COVER,ACCESS	1
5	PFOZZ	5315012849806	11083	9W3254	.PIN,GROOVED,HEADED	1
6	XAOZZ		11083	9S7228	.COVER	1
7	PFOZZ	4810009610640	11083	4S7647	SEAT,VALVE	1
8	PFOZZ	5360008501828	11083	4H1790	SPRING,HELICAL,COMP	1
9	PFOZZ		11083	4S7648	WASHER,RECESSED	1
10	PFOZZ	5315001918305	11083	3F7514	PIN,STRAIGHT,HEADLE	1
11	PAOZZ	4710002514438	11083	4S8975	TUBE,FILLER	1
12	PAOZZ	4330001681861	12658	PT-90-10	FILTER ELEMENT,FLUI PART OF KIT P/N 5R6286 PART OF KIT P/N 5R6292	1
13	PFOZZ	2520009490867	11083	3S1748	RETAINER	1
14	PFOZZ	5330009505450	11083	3S1751	GASKET	1
15	PFOZZ	5360009126674	11083	9M4685	SPRING,HELICAL,COMP	1
16	PFOZZ	2940012672656	11083	5S0788	FILTER BODY,FLUID	1
17	PFOZZ	5307004114501	11083	3D2871	.STUD	4
18	XAOZZ		11083	3S1745	.SPACER,SLEEVE	1
19	XAOZZ		11083	5S0784	.HOUSING,FILTER	1
20	AOOZZ		11083	4S5858	PLUG,MACHINE THREAD	1
21	PFOZZ	5365004904623	11083	9S4205	.PLUG,MACHINE THREAD	1
22	PFOZZ	5330009309407	11083	7M8485	.SEAL,ADAPTER,MOTOR PART OF KIT P/N 5R6286	1
23	PCOZZ	5331005931161	11083	2H9247	O-RING PART OF KIT P/N 5R6286 ..	1
				END OF FIGURE		

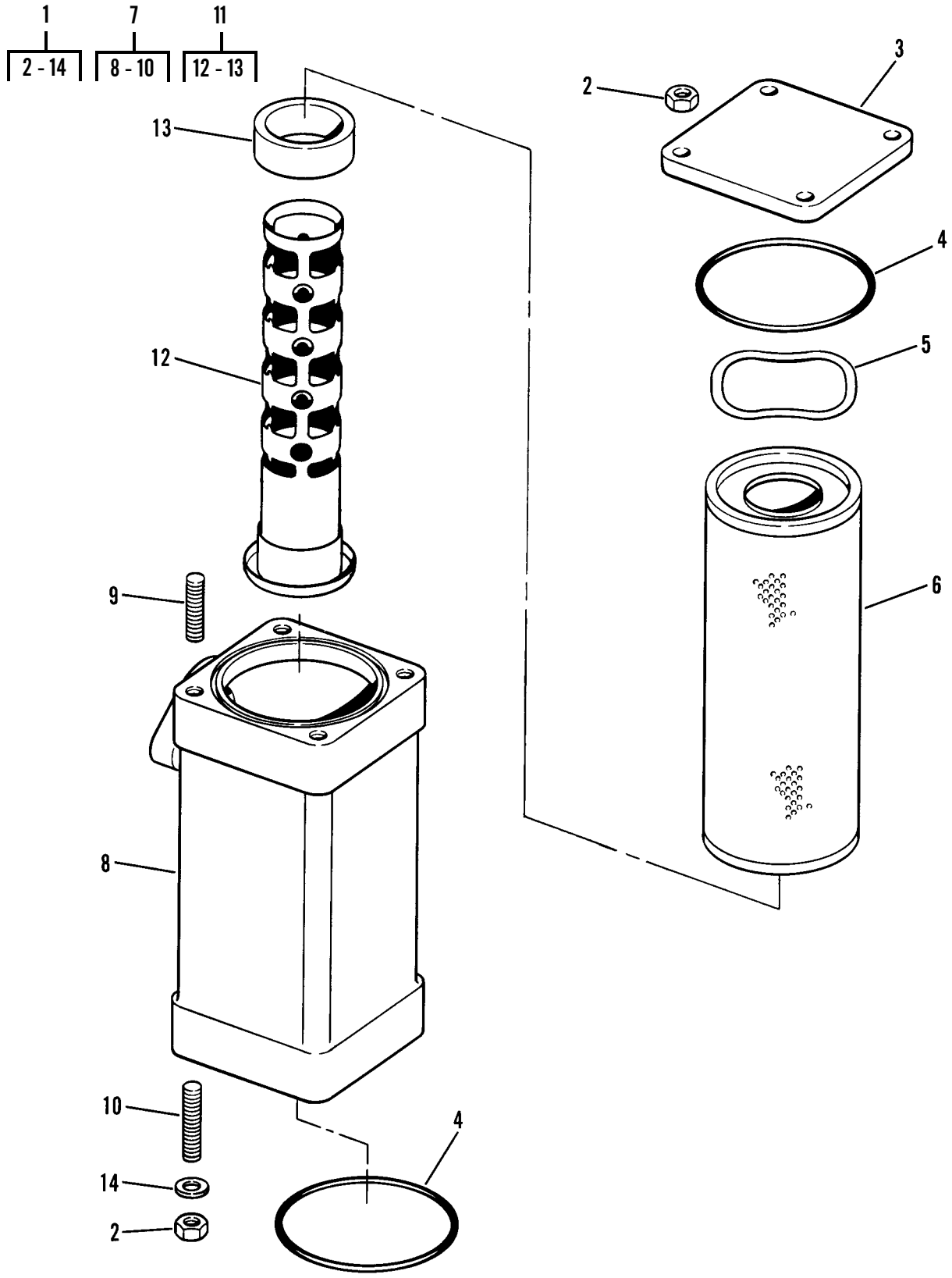

Figure 86. Magnetic Screen Group

(1) ITEM NO	(2) SMR CODE	(3) NSN	(4) CAGEC	(5) PART NUMBER	(6) DESCRIPTION AND USABLE ON CODES (UOC)	(7) QTY
					GROUP 0721 COOLERS, PUMPS, MOTORS	
					FIG. 86 MAGNETIC SCREEN GROUP	
1	PFOOO	4330001035502	11083	9M8669	FILTER,FLUID	1
2	PFOZZ	5310014297859	11083	6V8801	.NUT,PLAIN,HEXAGON	8
3	PFOZZ	2520010690891	11083	3S3439	.COVER	1
4	PAOZZ	5331008635549	11083	5F0149	.O-RING PART OF KIT P/N 5R6286 .	2
5	PFOZZ	5310009506980	11083	3S3440	.WASHER,SPRING TENSI	1
6	PFOZZ	4330009490868	11083	3S3875	.FILTER ELEMENT,FLUI	1
7	AOOOO		11083	9M2942	.BRACKET,EYE,NONROTA	1
8	PFOZZ	2530002439486	11083	8M7166	..HOUSING,STRAINER	1
9	PFOZZ	5307004114501	11083	3D2871	..STUD	4
10	PFOZZ	5307004656789	11083	2M4779	..STUD,PLAIN	4
11	PFOZZ	4710012676003	11083	9W5531	.TUBE ASSEMBLY,MAGNE	1
12	XAOZZ		11083	9W5533	..TUBE	1
13	PFOZZ	2530009490666	11083	8M7160	..MAGNET	4
14	PFOZZ	5310001174788	11083	9Y2695	.WASHER,FLAT	4
				END OF FIGURE		

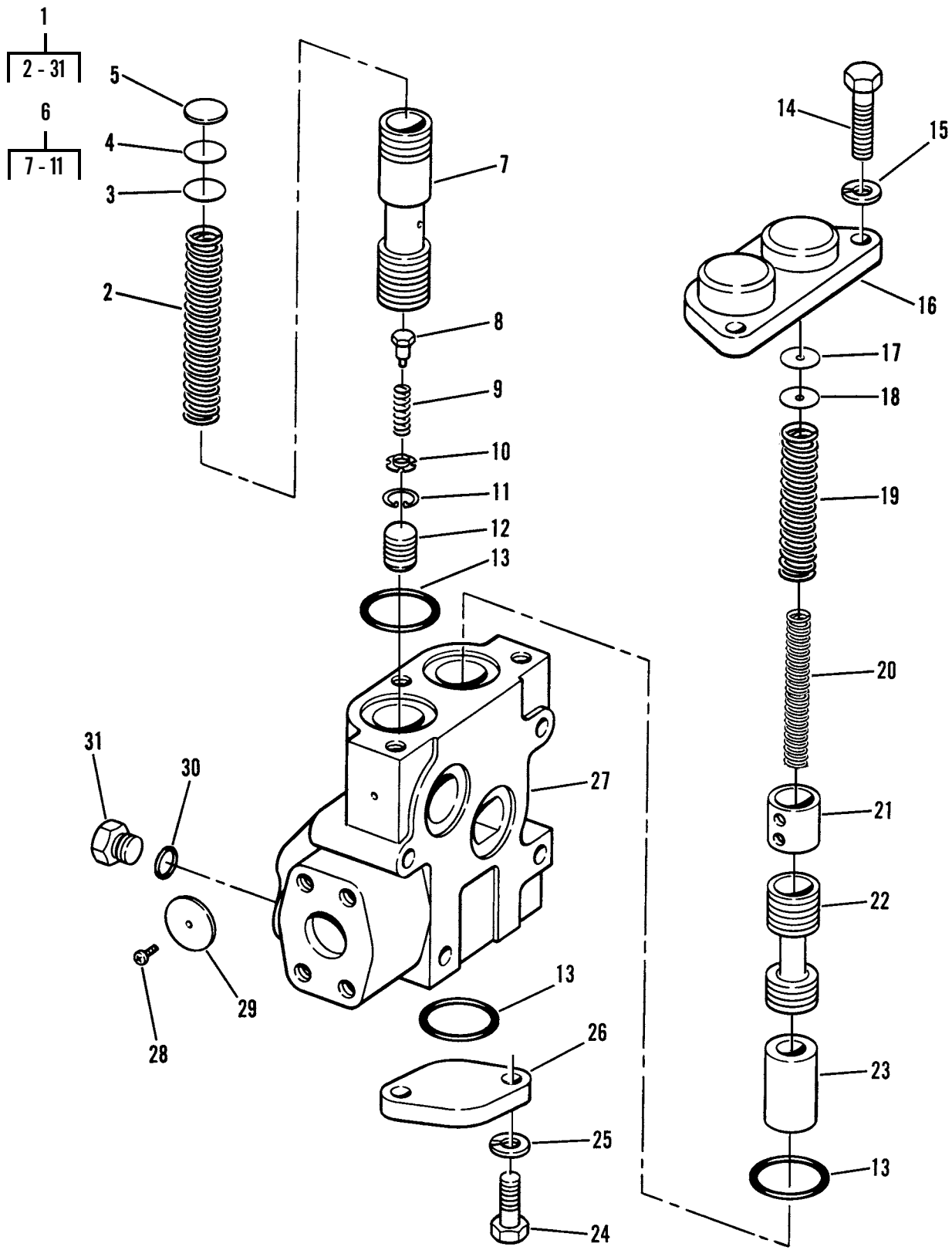

Figure 87. Relief Valve Group

(1) ITEM NO	(2) SMR CODE	(3) NSN	(4) CAGEC	(5) PART NUMBER	(6) DESCRIPTION AND USABLE ON CODES (UOC)	(7) QTY
					GROUP 0721 COOLERS, PUMPS, MOTORS	
					FIG. 87 RELIEF VALVE GROUP	
1	PFFZZ	4820011674300	11083	9P2201	VALVE,LINEAR,DIRECT	1
2	PFFZZ	5360009747122	11083	7M8499	.SPRING,HELICAL,COMP	1
3	PFFZZ	5365009491439	11083	5M9624	.SPACER	1
4	PFFZZ	5310009483280	11083	5M9623	.WASHER BLANK	1
5	PFFZZ	5365007626106	11083	5M9622	.SPACER,PLATE	1
6	XAFZZ		11083	3P2755	.SLIDE,DIRECTIONAL C	1
7	XAFZZ		11083	3P2708	..SPOOL,LINEAR DIRECT	1
8	PFFZZ	2520002374603	11083	1S2121	..PLUNGER,RETARDER CO	1
9	PFFZZ	5360009508041	11083	4M2381	..SPRING,SPECIAL	1
10	PFFZZ	5342010690788	11083	8M1013	..RETAINER	1
11	PFFZZ	5325006873379	96906	MS16625-1062	..RING,RETAINING	1
12	PFFZZ	4730010687106	11083	2M7041	.SLUG	1
13	PAFZZ	5331009138120	09990	2-218S1032-70	.O-RING	4
14	PFFZZ	5305010156841	11083	0S1591	.SCREW	3
15	PFFZZ	5310006379541	80205	MS35338-46	.WASHER,LOCK	3
16	PAFZZ	5340012699285	11083	7M1345	.COVER,ACCESS	1
17	PFFZZ	5310007653237	1VN02	97410ADX	.WASHER,FLAT	2
18	PFFZZ	5365009481600	11083	5M3492	.SPACER	2
19	PFFZZ	5360009502471	11083	8M8627	.SPRING,HELICAL,COMP	1
20	PFFZZ	5360012098805	11083	4M5912	.SPRING,HELICAL,COMP	1
21	PFFZZ	5365012702769	11083	9M2058	.SPACER,SLEEVE	1
22	PAFZZ	4820012376825	11083	1K8362	.SLIDE,DIRECTIONAL C	2
23	PFFZZ	5365012711888	11083	7M5814	.SPACER,SLEEVE	1
24	PFFZZ	5306002604508	11083	0S1594	.BOLT,MACHINE	4
25	PFFZZ	5310006379541	80205	MS35338-46	.WASHER,LOCK	4
26	PAFZZ	5340011528205	11083	2M1656	.COVER,ACCESS	2
27	PFFZZ	4820012674320	11083	3P0362	.BODY,VALVE	1
28	PFFZZ	5305007083823	11083	7B3028	.SCREW,DRIVE	1
29	XBFZZ		11083	9P2215	.PLATE,DESIGNATION	1
30	PCFZZ	5331008013354	25184	906-737-70	.O-RING	2
31	PFFZZ	5365004114584	11083	9S4191	.PLUG,MACHINE THREAD	2
				END OF FIGURE		

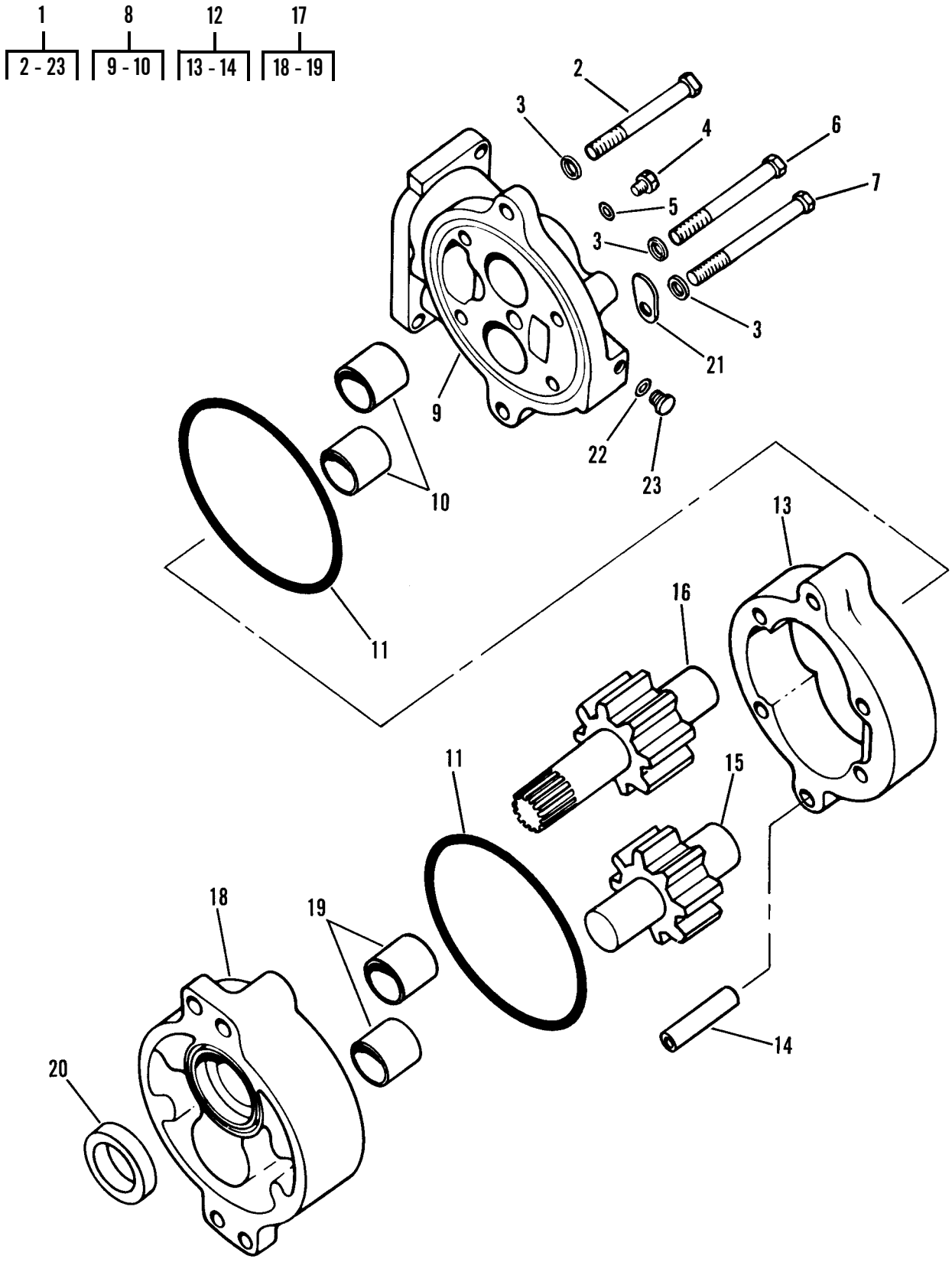

Figure 88. Transmission Oil Pump

(1) ITEM NO	(2) SMR CODE	(3) NSN	(4) CAGEC	(5) PART NUMBER	(6) DESCRIPTION AND USABLE ON CODES (UOC)	(7) QTY
					GROUP 0721 COOLERS, PUMPS, MOTORS	
					FIG. 88 TRANSMISSION OIL PUMP	
1	PFFZZ	4320011633546	11083	1131526	PUMP,ROTARY	1
2	PFFZZ	2910003099473	11083	0T0573	.CAPSCREW,FUEL PUMP	1
3	PAFZA	5310004135144	11083	3S4000	.WASHER,FLAT	6
4	PFFZZ	5365004114584	11083	9S4191	.PLUG,MACHINE THREAD	1
5	PCFZZ	5331008013354	25184	906-737-70	.O-RING	1
6	PFFZZ	5305002528906	11083	0T0065	.SCREW	4
7	PFFZZ	5306004705543	11083	8S9191	.BOLT,MACHINE	1
8	PFFZZ	4730012676077	11083	3P0366	.MANIFOLD,HYDRAULIC	1
9	XAFZZ		11083	3P0365	..MANIFOLD	1
10	PFFZZ	3120009489964	11083	5M3320	..BEARING,SLEEVE	1
11	PFFZZ	5331009829312	11083	2D8009	.O-RING	2
12	PAFFZ	4320012671375	11083	2P9237	.HOUSING,LIQUID PUMP	1
13	XAFZZ		11083	2P9236	..BODY	1
14	PFFZZ	5315007607425	11083	8M8489	..PIN,HOLLOW	4
15	PAFZZ	3040012672077	11083	1144682	.GEARSHAFT,SPUR	1
16	PAFZZ	3040012672078	11083	1144680	.GEARSHAFT,MULTIPLE	1
17	PFFZZ	5340012699284	11083	1P0983	.COVER,ACCESS	1
18	XAFZZ		11083	1P0982	..COVER	1
19	PFFZZ	3120009489964	11083	5M3320	..BEARING,SLEEVE	1
20	PFFZZ	5330009295514	11083	5S6622	.PACKING,PREFORMED	1
21	XBFZZ		11083	2P9238	.TAG,MARKER	1
22	PCFZZ	5331010491292	81346	ASTM D2000 M6BG910	.O-RING	1
23	PFFZZ	5365010911407	96906	MS51840-23SS	.PLUG,MACHINE THREAD	1
				END OF FIGURE		

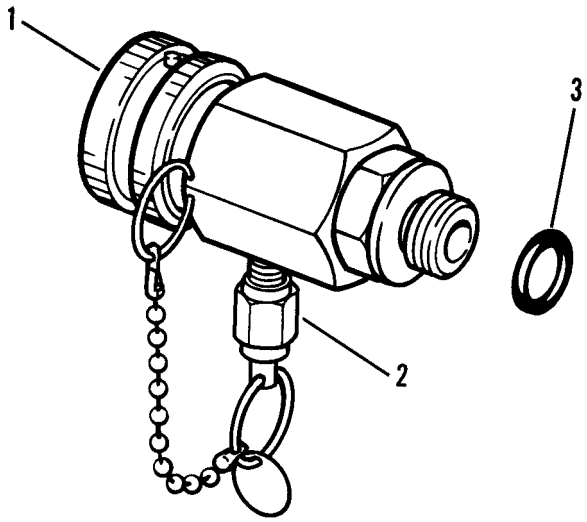

Figure 89. Transmission Oil Sampling Valve

(1) ITEM NO	(2) SMR CODE	(3) NSN	(4) CAGEC	(5) PART NUMBER	(6) DESCRIPTION AND USABLE ON CODES (UOC)	(7) QTY
					GROUP 0721 COOLERS, PUMPS, MOTORS	
					FIG. 89 TRANSMISSION OIL SAMPLING VALVE	
1	PAOZZ	4820011204532	91816	HV22-24	VALVE,BLEEDER,HYDRA	1
2	PFOZZ	5365010911407	96906	MS51840-23SS	PLUG,MACHINE THREAD	1
3	PCOZZ	5331010491292	81346	ASTM D2000 M6BG910	O-RING	1
				END OF FIGURE		

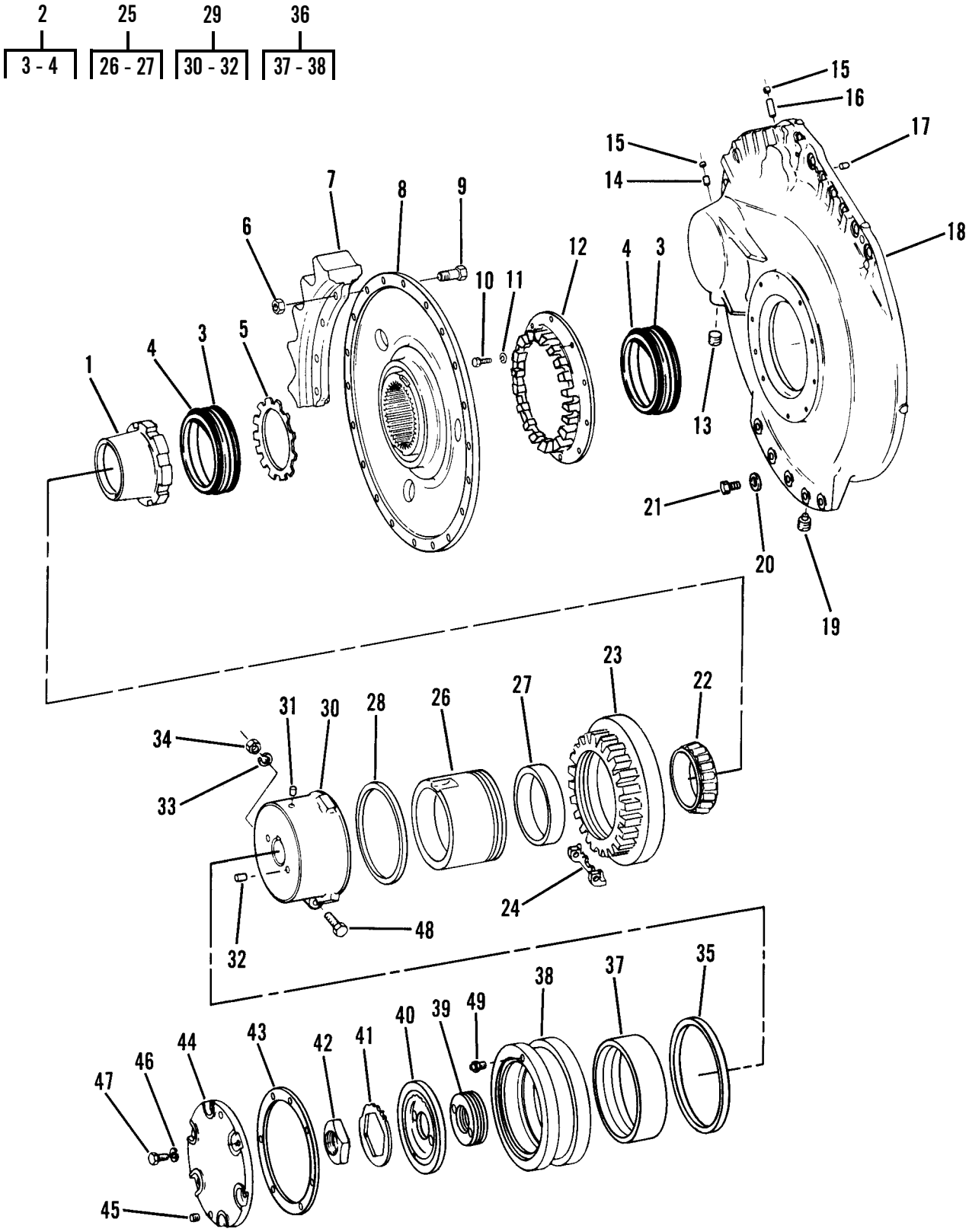

Figure 90. Final Drive Sprocket, Support and Case

(1) ITEM NO	(2) SMR CODE	(3) NSN	(4) CAGEC	(5) PART NUMBER	(6) DESCRIPTION AND USABLE ON CODES (UOC)	(7) QTY
					GROUP 08 TRANSFER AND FINAL DRIVE ASSEMBLIES	
					GROUP 0801 POWER TRANSFER AND FINAL DRIVE ASSEMBLIES	
					FIG. 90 FINAL DRIVE SPROCKET, SUPPORT, AND CASE	
1	PFFZZ	5310001931174	11083	2S7063	NUT,PLAIN,ROUND	2
2	PFFZZ	5330011648342	11083	9G5343	PACKING ASSEMBLY	4
3	XBFZZ		11083	9G5344	.SEAL,PLAIN	4
4	PFFZZ	5330009483306	11083	1M9011	.PACKING,PREFORMED	4
5	PFFZZ	5310009505665	11083	2S7066	WASHER,KEY	2
6	PFOZZ	5310005502992	11083	7H3608	NUT,PLAIN,HEXAGON	40
7	PFOZZ	2530011572989	11083	8E4675	SEGMENT,TRACK SPROC	10
8	PFFZZ	3040011637346	11083	9G0007	PLATE,RETAINING,SHA	2
9	PFOZZ	5306009124853	11083	3S0336	BOLT,SHOULDER	40
10	PFFZZ	5306004238194	11083	1A2029	BOLT,MACHINE	20
11	PFFZZ	5310001174788	11083	9Y2695	WASHER,FLAT	20
12	PFFZZ	3020012670502	11083	8P1654	GUARD,MECHANICAL DR	2
13	PFOZZ	4730002782965	96906	MS27769-3	PLUG,PIPE	2
14	PFFZZ	5315002537668	11083	5H3262	PIN,STRAIGHT,HEADLE	2
15	PFFZZ	5340002299287	11083	0L1026	PLUG,EXPANSION	2
16	PFFZZ	5340012098292	11083	1M5156	STANDOFF,THREADED,S	2
17	PFFZZ	5315002550996	11083	2B2994	PIN,STRAIGHT,HEADLE	6
18	PFFZZ	3040012541103	11083	3P2871	HOUSING,MECHANICAL R.H	1
18	PFFZZ	2530004101892	11083	3P2872	CASE,FINAL DRIVE,TR L.H	1
19	PFOZZ	4730012530509	36540	5064071	PLUG,PIPE,MAGNETIC	2
20	PFFZZ	5310010516946	11083	6N0130	WASHER,FLAT	62
21	PFFZZ	5305007247222	80204	B1821BH063C200N	SCREW,CAP,HEXAGON H	62
22	PFFZZ	3110001011010	11083	5F1248	CONE AND ROLLERS,TA	2
23	PAFZZ	5310012731592	11083	8P1653	NUT,PLAIN,ROUND	2
24	PFFZZ	5342012247990	11083	8S2506	RETAINER	2
25	PFFZZ	3110009480334	11083	7G6576	CAGE,BEARING	2
26	XAFZZ		11083	7G6625	.CAGE	2
27	PFFZZ	3110001000611	60038	67322	.CUP,TAPERED ROLLER	2
28	PFFZZ	5330011292544	11083	6P7639	GASKET	2
29	PFFFF	2520009502421	11083	5S4863	HOLDER,BEARING CAGE	2
30	XAFZZ		11083	5S4862	.HOLDER	2
31	PFFZZ	2520010664723	11083	8M6521	.DOWEL	1
32	PFFZZ	5315001930919	11083	9M4007	.PIN,STRAIGHT,HEADLE	2
33	PFFZZ	5310000455001	96906	MS35340-50	WASHER,LOCK	2
34	PFFZZ	5310007638905	96906	MS51968-20	NUT,PLAIN,HEXAGON	2
35	PFFZZ	5330012098719	11083	1S5347	SEAL,PLAIN ENCASED	2
36	PFFZZ	3040012200104	11083	1P7590	PLATE,RETAINING,SHA	2
37	PFFZZ	3120009494062	11083	1S2233	.BEARING,SLEEVE	1
38	XAFZZ		11083	1S2232	.SUPPORT	1
39	PFFZZ	5365001497252	11083	2S7069	SPACER,PLATE	8
40	PFFZZ	5330009483311	11083	2S7596	RETAINER,PACKING	2
41	PFFZZ	2520009483310	11083	2S7594	RETAINER	2

(1) ITEM NO	(2) SMR CODE	(3) NSN	(4) CAGEC	(5) PART NUMBER	(6) DESCRIPTION AND USABLE ON CODES (UOC)	(7) QTY
42	PFFZZ	5310004364328	11083	5M5017	NUT,PLAIN,HEXAGON	2
43	PFOZZ	5330009496294	11083	8M9441	GASKET	2
44	PFOZZ	3110009490878	11083	2S7064	PLATE,RETAINING,BEA	2
45	PFOZZ	4730000444688	89346	50410DA	PLUG,PIPE	2
46	PFOZZ	5310005845272	80205	MS35338-48	WASHER,LOCK	12
47	PFOZZ	5306011279361	11083	0S1585	BOLT,MACHINE	12
48	PFFZZ	5305004192956	11083	2A2814	SCREW,CAP,HEXAGON H	2
49	PFOZZ	4730000504208	81343	AS15003-1	FITTING,LUBRICATION	2
				END OF FIGURE		

9
10 - 11

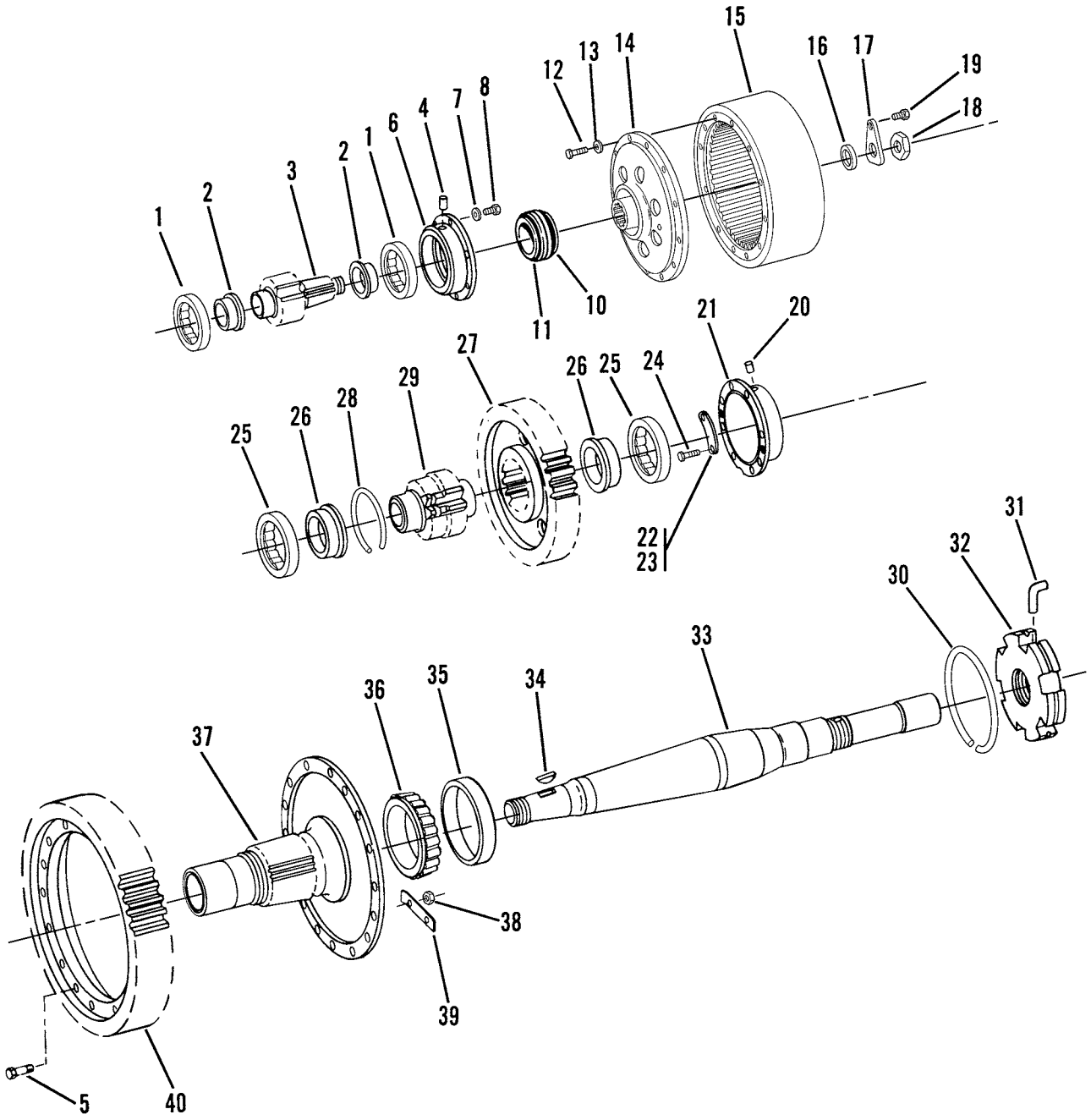

Figure 91. Final Drive Pinion, Cage, and Shaft

(1) ITEM NO	(2) SMR CODE	(3) NSN	(4) CAGEC	(5) PART NUMBER	(6) DESCRIPTION AND USABLE ON CODES (UOC)	(7) QTY
					GROUP 0801 POWER TRANSFER AND FINAL DRIVE ASSEMBLIES	
					FIG. 91 FINAL DRIVE PINION, CAGE, AND SHAFT	
1	PFFZZ	3110009143263	11083	1M8776	BEARING,ROLLER,CYLI	4
2	PFFZZ	3110002119694	11083	2P2811	RING,BEARING,INNER	4
3	PFFZZ	3020011249382	11083	9S6875	PINION,SHAFT	2
4	PFFZZ	5315002459409	11083	2M4537	PIN,STRAIGHT,HEADLE	2
5	PFFZZ	5306001499066	11083	6B4598	BOLT,MACHINE	32
6	PFFZZ	3110012609896	11083	9P0620	PLATE,RETAINING,BEA	2
7	PFFZZ	5310008095998	96906	MS27183-18	WASHER,FLAT	14
8	PFFZZ	5306011279361	11083	0S1585	BOLT,MACHINE	14
9	PFFZZ	5330011260717	11083	5P7143	SEAL	2
10	XAFZZ		11083	5P7144	.SEAL	2
11	PFFZZ	5330011653380	11083	5P7145	.PACKING,PREFORMED	4
12	PFFZZ	5305007247221	80204	B1821BH063C175N	SCREW,CAP,HEXAGON H	24
13	PFFZZ	5310001397030	11083	4D3704	WASHER,FLAT	24
14	PFFZZ	2520009491118	11083	2S7527	FLANGE,TRANSMISSION	2
15	PFFZZ	2520009480019	11083	5M1998	DRUM,STEERING	2
16	PFFZZ	5330009138118	11083	5M1996	GASKET	2
17	PFFZZ	2520009479989	11083	5M1993	LOCKING PLATE	2
18	PFFZZ	5310002537914	11083	0T0030	NUT,PLAIN,HEXAGON	2
19	PFFZZ	5306001332090	11083	1K6705	BOLT,MACHINE	2
20	PFFZZ	5315004264566	11083	3F1953	DOWEL	2
21	XBFZZ		11083	4S5017	LINER,BEARING HOUSI	2
22	PFFZZ	2520009490908	11083	5M6646	LOCK PLATE 3.62 INCHES	4
23	PFFZZ	2520009490909	11083	5M6647	LOCK PLATE 3.37 INCHES	4
24	PFFZZ	5306004240086	11083	7B3235	BOLT,MACHINE	16
25	PFFZZ	3110009138114	11083	3S9669	BEARING,ROLLER,CYLI	2
26	PFFZZ	3110009138895	11083	9S4829	RING,BEARING,INNER	2
27	PAFZZ	3020012674339	11083	2P3424	GEAR,SPUR	2
28	PFFZZ	5325012577822	11083	2P3426	RING,RETAINING	2
29	PFFZZ	3020012541231	11083	2P3425	GEAR,SPUR	2
30	PFFZZ	5325002661948	11083	2B7862	RING,RETAINING	2
31	PFFZZ	5315006228895	11083	2B7906	PIN,LOCK,FINAL DRIV	2
32	PFFZZ	2530009845098	11083	7H2831	PLATE,DRIVE SHAFT	2
33	PFFZZ	2520009502469	11083	2S7062	SHAFT,TRACK SPROCKE	2
34	PFFZZ	5315002460496	11083	1B8744	KEY,WOODRUFF	2
35	PFFZZ	3110009137335	11083	2S6401	CUP,TAPERED ROLLER	2
36	PFFZZ	3110009137012	11083	2S6400	CONE AND ROLLERS,TA	2
37	PFFZZ	2520009491120	11083	2S7099	HUB,GEAR	2
38	PFFZZ	5310007638901	96906	MS51968-23	NUT,PLAIN,HEXAGON	32
39	PFFZZ	5340003713392	11083	3B1472	LOCKING PLATE,NUT A	16
40	PFFZZ	3020001012110	11083	2S3946	GEAR,FINAL DRIVE	2
				END OF FIGURE		

1
2 - 5

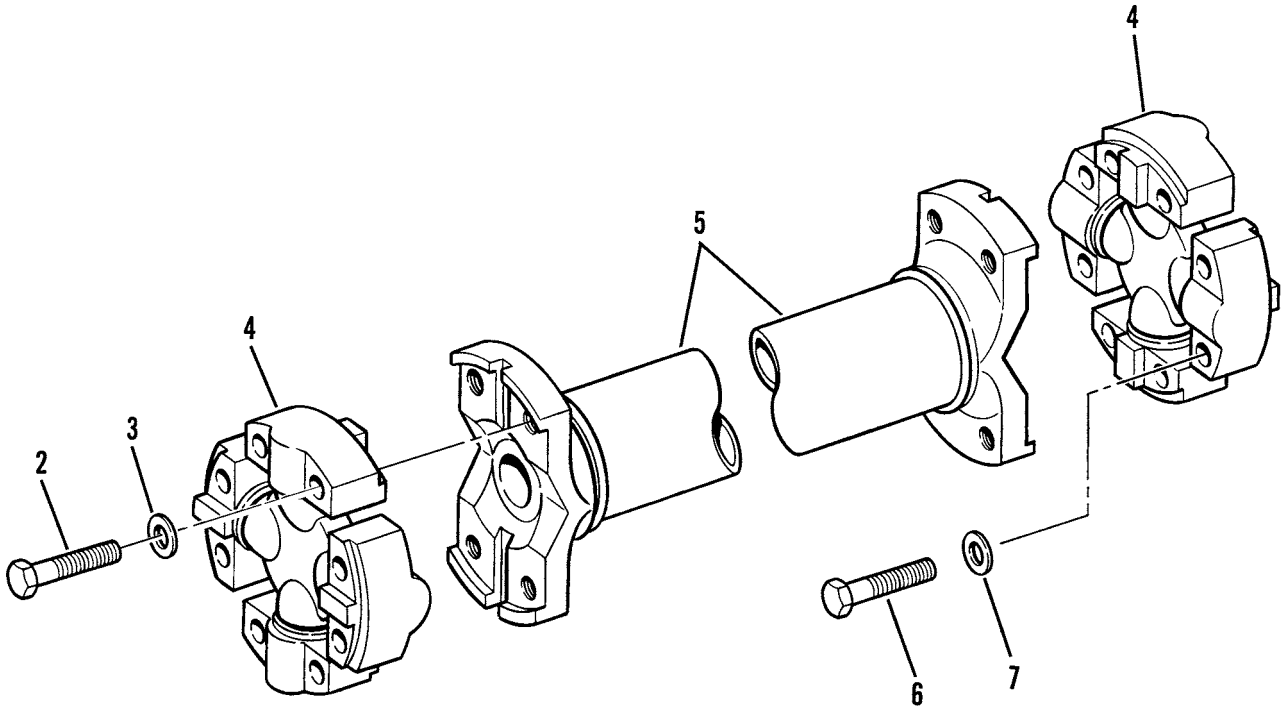

Figure 92. Drive Shaft

(1) ITEM NO	(2) SMR CODE	(3) NSN	(4) CAGEC	(5) PART NUMBER	(6) DESCRIPTION AND USABLE ON CODES (UOC)	(7) QTY
					GROUP 09 PROPELLER, PROPELLER SHAFTS, UNIVERSAL JOINTS, COUPLER, AND CLAMP ASSEMBLY	
					GROUP 0900 PROPELLER SHAFTS	
					FIG. 92 DRIVE SHAFT	
1	PFOZZ	2520011627636	77873	2A-24160-1	UNIVERSAL JOINT,VEH	1
2	PFOZZ	5306011764831	11083	0L0478	.BOLT	8
3	PFOZZ	5310008094061	96906	MS27183-15	.WASHER,FLAT	1
4	PFOZZ	2520008716818	30076	141859	.SPIDER,UNIVERSAL JO	2
5	PFOZZ	2520012676053	11083	7G2038	.UNIVERSAL JOINT,VEH	1
6	PFOZZ	5306011764831	11083	0L0478	BOLT	8
7	PFOZZ	5310011652482	11083	3V2431	WASHER,FLAT	8
				END OF FIGURE		

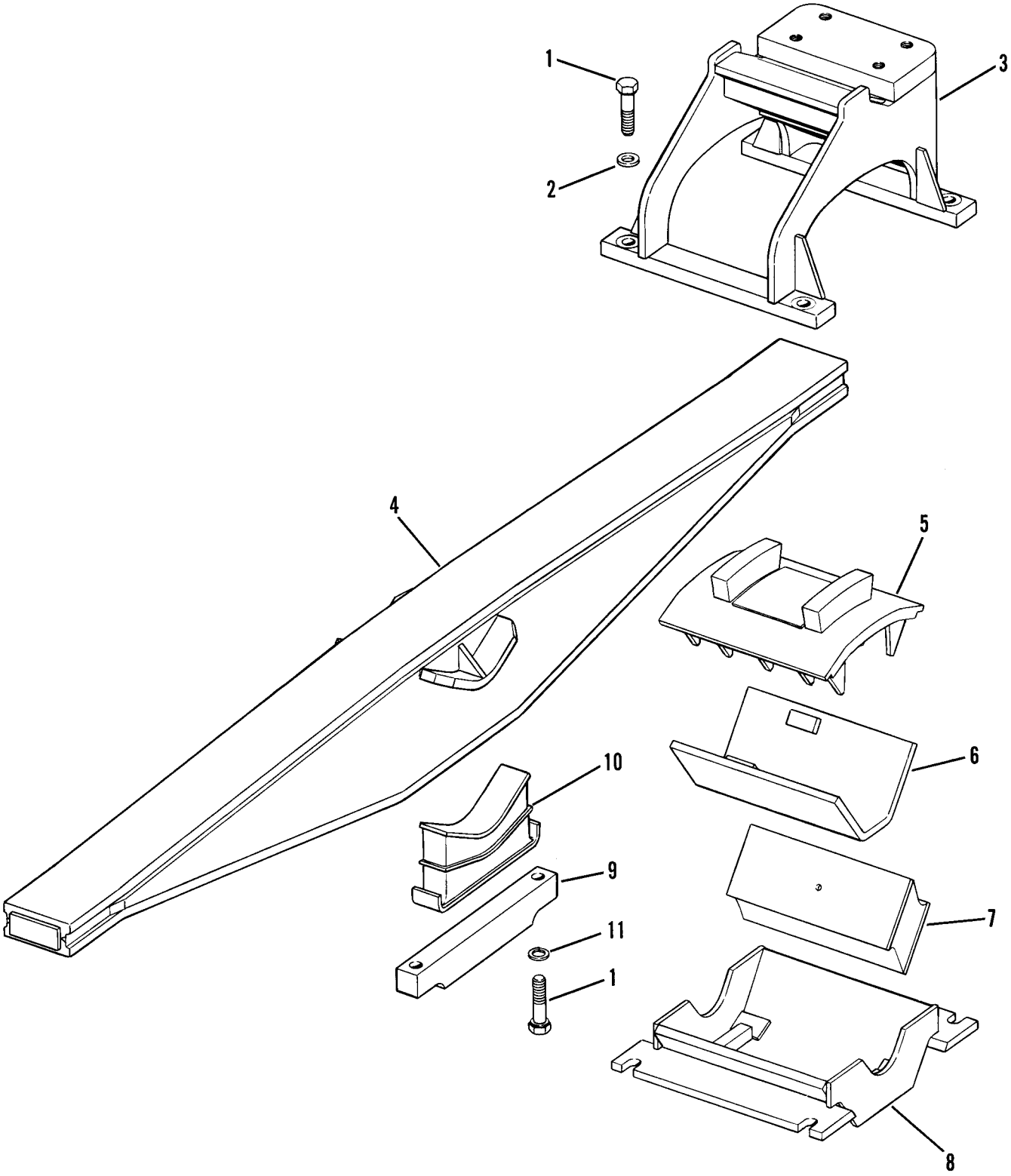

Figure 93. Equalizer Bar

(1) ITEM NO	(2) SMR CODE	(3) NSN	(4) CAGEC	(5) PART NUMBER	(6) DESCRIPTION AND USABLE ON CODES (UOC)	(7) QTY
					GROUP 13 WHEELS AND TRACKS	
					GROUP 1301 SUSPENSION ASSEMBLY	
					FIG. 93 EQUALIZER BAR	
1	PFFZZ	5306004263403	11083	1D4609	BOLT,MACHINE	12
2	PFFZZ	5310002624789	29510	39422D	WASHER,FLAT	8
3	PAFZZ	2510012537358	11083	3P4135	SUPPORT ASSEMBLY,EQ	2
4	PFFZA	2510004773250	11083	8P1865	BAR,STABILIZER	1
5	PAFZZ	2510012539475	11083	3P4142	PLATE,EQUALIZER	2
6	PFFZZ	2510012539478	11083	8S4393	PLATE,EQUALIZER	2
7	PFFZZ	2590009507303	11083	6T0960	PAD,CUSHIONING	4
8	PAFZZ	2510012539476	11083	3P4143	BRACKET,SUSPENSION	2
9	PFFZZ	2510012539477	11083	6P2322	PLATE,SUPPORT	2
10	PFFZZ	5342012598972	11083	6P4327	MOUNT,RESILIENT,WEA	2
11	PFFZZ	5310005847888	96906	MS35338-51	WASHER,LOCK	4
				END OF FIGURE		

16
17 - 19

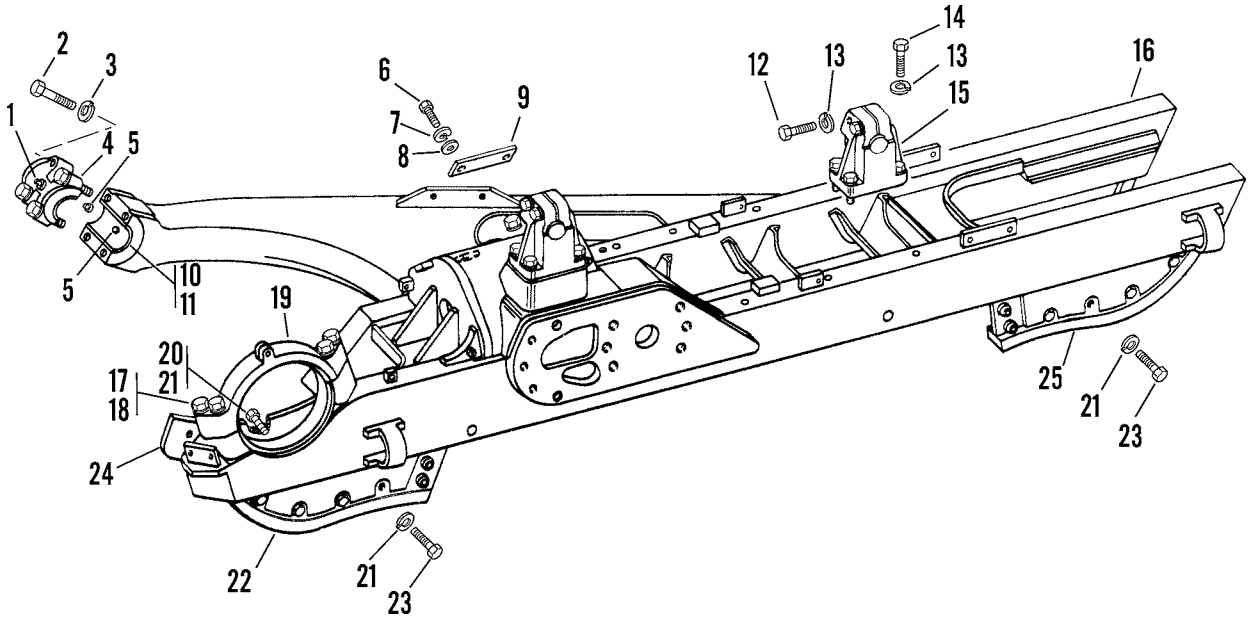

Figure 94. Track Roller Frame

(1) ITEM NO	(2) SMR CODE	(3) NSN	(4) CAGEC	(5) PART NUMBER	(6) DESCRIPTION AND USABLE ON CODES (UOC)	(7) QTY
					GROUP 1301 SUSPENSION ASSEMBLY	
					FIG. 94 TRACK ROLLER FRAME	
1	PAOZZ	4730000481788	11083	3B8490	FITTING,LUBRICATION	2
2	PFFZZ	5306005309235	11083	2A1420	BOLT,MACHINE	8
3	PFFZZ	5310005847889	80205	MS35338-53	WASHER,LOCK	8
4	PFFZZ	3130012577803	11083	3B1464	CAP,PILLOW BLOCK	2
5	PFFZZ	2530001497388	11083	9P7751	CAP ASSEMBLY,DIAGON INCLUDES .. DOWEL PIN	2
6	PFFZZ	5305000680511	80204	B1821BH038C125N	SCREW,CAP,HEXAGON H	2
7	PFFZZ	5310006379541	80205	MS35338-46	WASHER,LOCK	2
8	PFFZZ	5310000806004	96906	MS27183-14	WASHER,FLAT	2
9	PFFZZ	5340012849797	11083	9S0901	COVER,ACCESS	1
10	PFFZZ	3120012576127	11083	7T0204	BEARING HALF,SLEEVE	4
11	PCFZZ	5331012580093	11083	6V8545	O-RING	8
12	PFFZZ	5306004263404	11083	1D4610	BOLT,MACHINE	8
13	PFFZZ	5310005847888	96906	MS35338-51	WASHER,LOCK	24
14	PFFZZ	5306004263605	11083	2A1538	BOLT,MACHINE	16
15	PFFZZ	5342009363816	11083	8S7818	BRACKET,ROLLER,TRAC	4
16	PFFZZ	2510012541076	11083	5R6771	FRAME SECTION,STRUC R.H	1
16	PFFZZ	2510012842313	11083	5R6772	FRAME SECTION,STRUC L.H	1
17	PFFZZ	5305004113768	11083	1D4615	.SCREW,CAP,HEXAGON H	4
18	PFFZZ	5310004191363	11083	2S0115	.WASHER,FLAT	4
19	PFFZZ	3130012577804	11083	6P4948	.CAP,PILLOW BLOCK	1
20	PFFZZ	5305007247221	80204	B1821BH063C175N	SCREW,CAP,HEXAGON H	10
21	PFFZZ	5310000455001	96906	MS35340-50	WASHER,LOCK	34
22	PFFZZ	5342011855068	11083	9S1046	STRIP	3
23	PFFZZ	5306004238116	89926	281047	BOLT,MACHINE	24
24	PFFZZ	2530004490452	11083	1M9029	GUARD,FINAL DRIVE C	2
25	PFFZZ	5342011855071	11083	9S1045	STRIP	3
				END OF FIGURE		

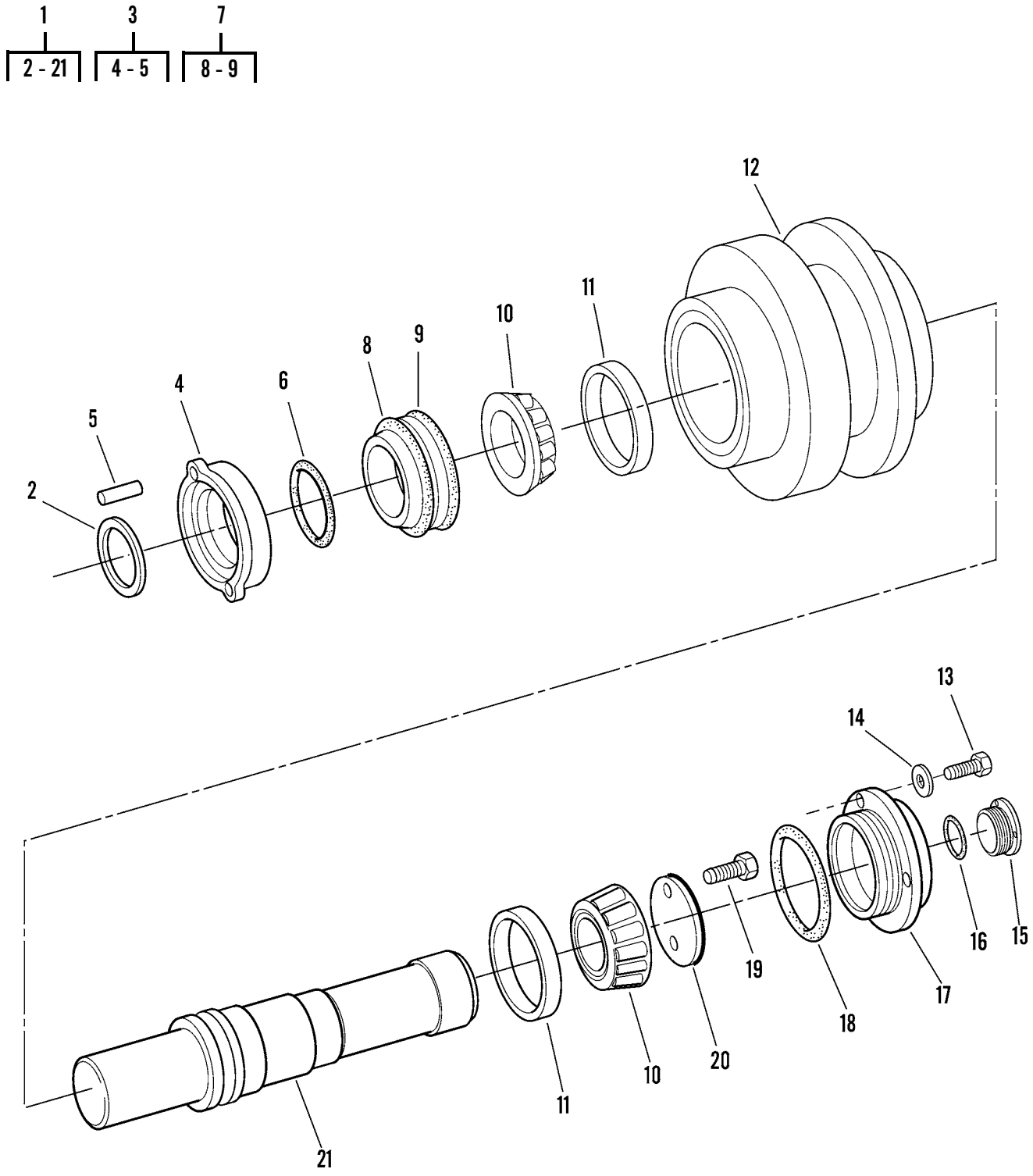

Figure 95. Track Carrier Roller (Sheet 1 of 2)

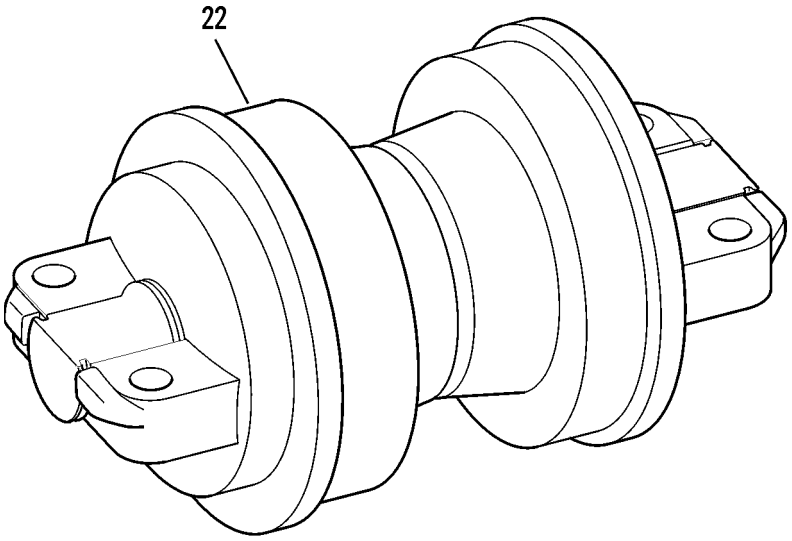

Figure 95. Track Carrier Roller (Sheet 2 of 2)

(1) ITEM NO	(2) SMR CODE	(3) NSN	(4) CAGEC	(5) PART NUMBER	(6) DESCRIPTION AND USABLE ON CODES (UOC)	(7) QTY
					GROUP 1302 TRACK SUPPORT ROLLERS AND BRACKETS	
					FIG. 95 TRACK CARRIER ROLLER	
1	PFFZZ	2530009185451	11083	1P8717	BOGIE WHEEL,TRACKED	4
2	PFFZZ	5325009490369	11083	7H4574	.RING,RETAINING	4
3	PFFZZ	2530009490370	11083	7H4571	.COLLAR ASSEMBLY	4
4	XAFZZ		11083	7H4570	..COLLAR	4
5	PFFZZ	5315001930924	11083	1M4291	..PIN,STRAIGHT,HEADLE	8
6	PFFZZ	5331005553807	11083	1H8720	.O-RING	4
7	PFFZZ	5330007388639	11083	1M8747	.PACKING WITH RETAIN	4
8	PFFZZ	5330007388639	11083	1M8747	..PACKING WITH RETAIN	8
9	PFFZZ	5331008486108	11083	8H2262	..O-RING	8
10	PAFZZ	3110009385084	01212	JLM104948	.CONE AND ROLLERS,TA	8
11	PAFZZ	3110001913923	01212	JLM104910	.CUP,TAPERED ROLLER	8
12	PFFZZ	2530001278934	11083	1P8716	.WHEEL,METAL TIRE	4
13	PFFZZ	5306002604508	11083	0S1594	.BOLT,MACHINE	12
14	PFFZZ	5310006379541	80205	MS35338-46	.WASHER,LOCK	12
15	PFFZZ	2520010669178	11083	2P0347	.PLUG	4
16	PCFZZ	5331000312558	11083	1S8947	.O-RING	4
17	PFFZZ	5340011624077	11083	5M2043	.COVER,ACCESS	4
18	PCFZZ	5331003256310	52788	5660799	.O-RING	4
19	PFFZZ	5305002693234	80204	B1821BH038F075N	.SCREW,CAP,HEXAGON H	8
20	PFFZZ	3110011604714	11083	8P6188	.PLATE,RETAINING,BEA	4
21	PFFZZ	3040012539425	11083	1P8715	.SHAFT,SHOULDERED	4
22	PFFZZ	2530014970242	11083	1885600	HUB,WHEEL,VEHICULAR CLASSIC ... PART, DIRECT REPLACEMENT	4
					END OF FIGURE	

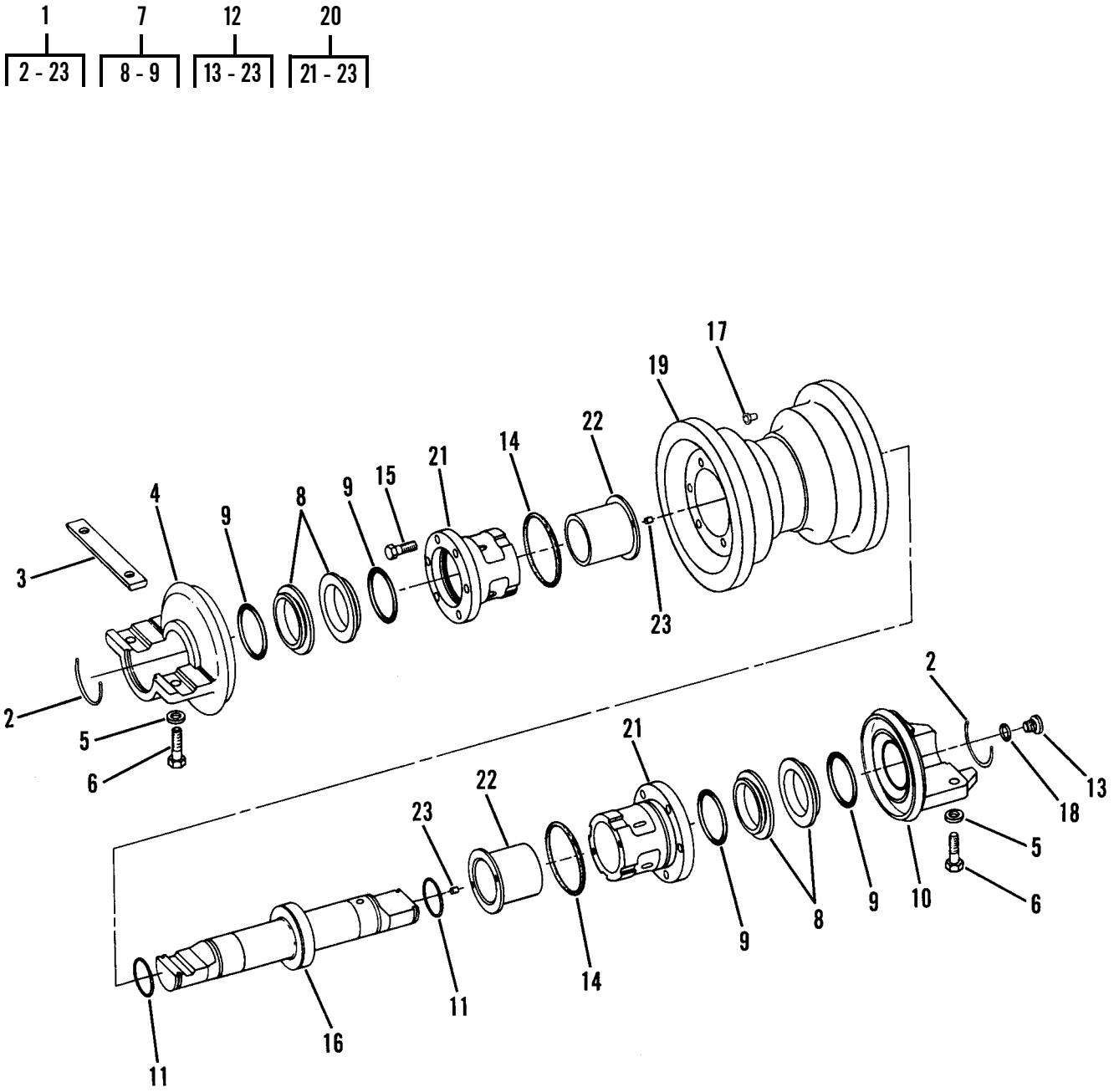

Figure 96. Single Flange Track Roller (Sheet 1 of 2)

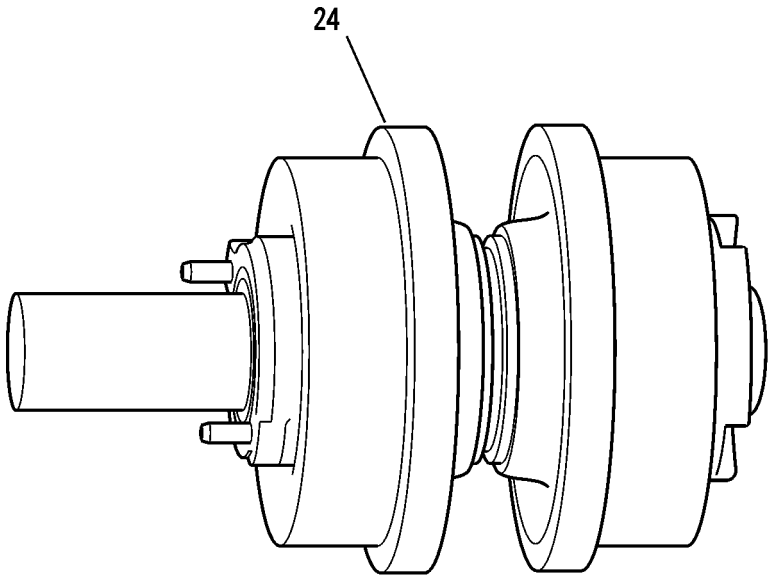

Figure 96. Single Flange Track Roller (Sheet 2 of 2)

(1) ITEM NO	(2) SMR CODE	(3) NSN	(4) CAGEC	(5) PART NUMBER	(6) DESCRIPTION AND USABLE ON CODES (UOC)	(7) QTY
					GROUP 1302 TRACK SUPPORT ROLLERS AND BRACKETS	
					FIG. 96 SINGLE FLANGE TRACK ROLLER	
1	PFFZZ	2530004010301	11083	1181623	ROLLER ASSEMBLY,TRA	6
2	PFFZZ	5325009199402	11083	6H2953	.RING,RETAINING	2
3	PFFZZ	2510011806144	11083	9S0310	.LOCK,COLLAR	1
4	PFFZZ	3830011928281	11083	9S0311	.TRACK,ROLLER,CRAWLE	1
5	PFFZZ	5310009499296	3D6E9	1229T1554	.WASHER,FLAT	4
6	PFFZZ	5305009299442	11083	1D4629	.SCREW,CAP,HEXAGON H	4
7	PFFZZ	5330007388639	11083	1M8747	.PACKING WITH RETAIN	2
8	PFFZZ	5330007388639	11083	1M8747	..PACKING WITH RETAIN	2
9	PFFZZ	5331008486108	11083	8H2262	..O-RING	2
10	PFFZZ	3810011741000	11083	9S0312	.COLLAR,ROLLER	6
11	PFFZZ	5331005064457	11083	8F6711	.O-RING	2
12	PAFZZ	2530004010301	11083	1181623	.ROLLER ASSEMBLY,TRA	6
13	PFFZZ	2520010669178	11083	2P0347	..PLUG	1
14	PFFZZ	5331007819134	11083	4H9105	..O-RING	2
15	PFFZZ	5306010508015	11083	2P3202	..BOLT	12
16	PFFZZ	3040011824395	11083	9S0313	..SHAFT,SHOULDERED	1
17	PFFZZ	2520010668434	11083	1J0245	..PLUG	2
18	PCFZZ	5331000312558	11083	1S8947	..O-RING	1
19	PFFZZ	2530009490397	11083	4S9049	..RIM ASSEMBLY,TRACK	6
20	PFFZZ	3130012164088	11083	1P8787	..BEARING UNIT,PLAIN	12
21	XAFZZ		11083	1P9442	...BUSHING	6
22	PFFZZ	3120004453375	11083	8P6651	...BEARING,SLEEVE	6
23	PFFZZ	5315002672268	11083	9B2289	...PIN,STRAIGHT,HEADLE	12
24	PFFZZ	2530014970276	11083	1885596	ROLLER ASSEMBLY,TRA CLASSIC ... PART, DIRECT REPLACEMENT	6
					END OF FIGURE	

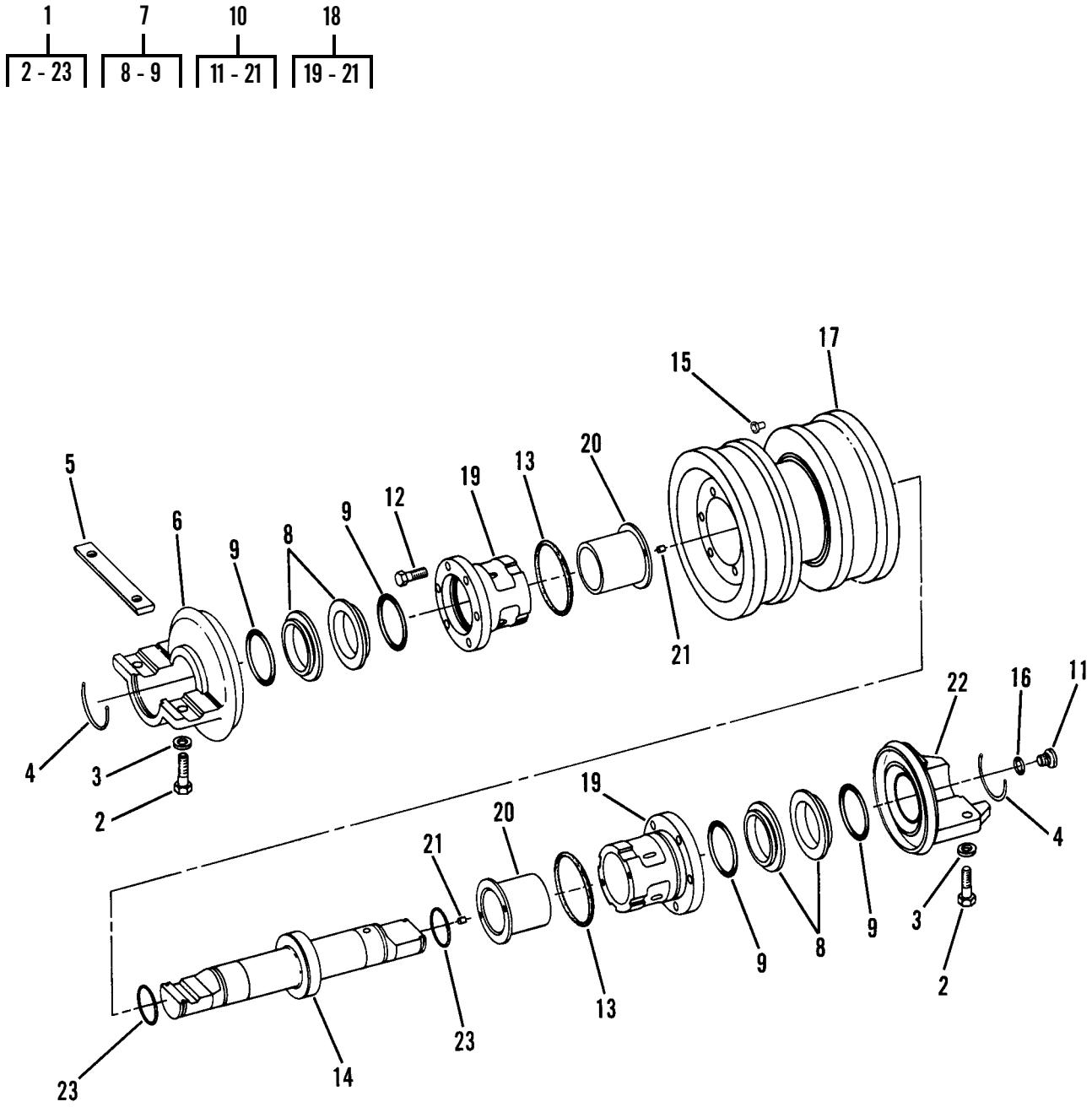

Figure 97. Double Flange Track Roller (Sheet 1 of 2)

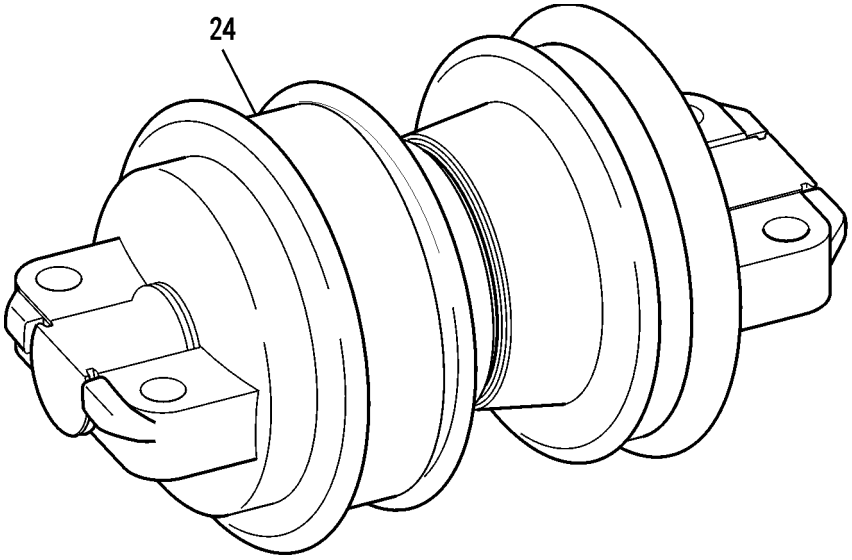

Figure 97. Double Flange Track Roller (Sheet 2 of 2)

(1) ITEM NO	(2) SMR CODE	(3) NSN	(4) CAGEC	(5) PART NUMBER	(6) DESCRIPTION AND USABLE ON CODES (UOC)	(7) QTY
					GROUP 1302 TRACK SUPPORT ROLLERS AND BRACKETS	
					FIG. 97 DOUBLE FLANGE TRACK ROLLER	
1	PFFZZ	2530010794110	11083	1181625	ROLLER ASSEMBLY,TRA	6
2	PFFZZ	5306010508014	11083	2P3201	.BOLT	24
4	PFFZZ	5325009199402	11083	6H2953	.RING,RETAINING	12
5	PFFZZ	3810011741000	11083	9S0312	.COLLAR,ROLLER	6
6	PFFZZ	3830011928281	11083	1181628	.TRACK,ROLLER,CRAWLE	6
7	PFFZZ	5330007388639	11083	6Y0925	.PACKING WITH RETAIN	2
9	PFFZZ	5331007819134	11083	4H9105	..O-RING	2
10	AFFFF		11083	8S2932	.ROLLER AND SHAFT AS	6
11	PFFZZ	2520010669178	11083	2P0347	..PLUG	6
12	PFFZZ	5306010508014	11083	2P3201	..BOLT	72
13	PFFZZ	5331007819134	11083	4H9105	..O-RING	12
14	PFFZZ	3040011824395	11083	9S0313	..SHAFT,SHOULDERED	6
15	PFFZZ	2520010668434	11083	1J0245	..PLUG	12
16	PCFZZ	5331000312558	11083	1S8947	..O-RING	6
17	PFFZZ	2530009491192	11083	8S2931	..ROLLER ASSEMBLY	6
18	PFFZZ	3130012164088	11083	1P8787	..BEARING UNIT,PLAIN	12
19	XAFZZ		11083	1P9442	...BUSHING	6
20	PFFZZ	3120004453375	11083	8P6651	...BEARING,SLEEVE	6
21	PFFZZ	5315002672268	11083	9B2289	...PIN,STRAIGHT,HEADLE	12
22	PFFZZ	3810011741000	11083	9S0312	.COLLAR,ROLLER	6
23	PFFZZ	5331005064457	11083	8F6711	.O-RING	12
24	PFFZZ		11083	1885597	ROLLER ASSEMBLY,TRA CLASSIC ... PART, DIRECT REPLACEMENT	6
					END OF FIGURE	

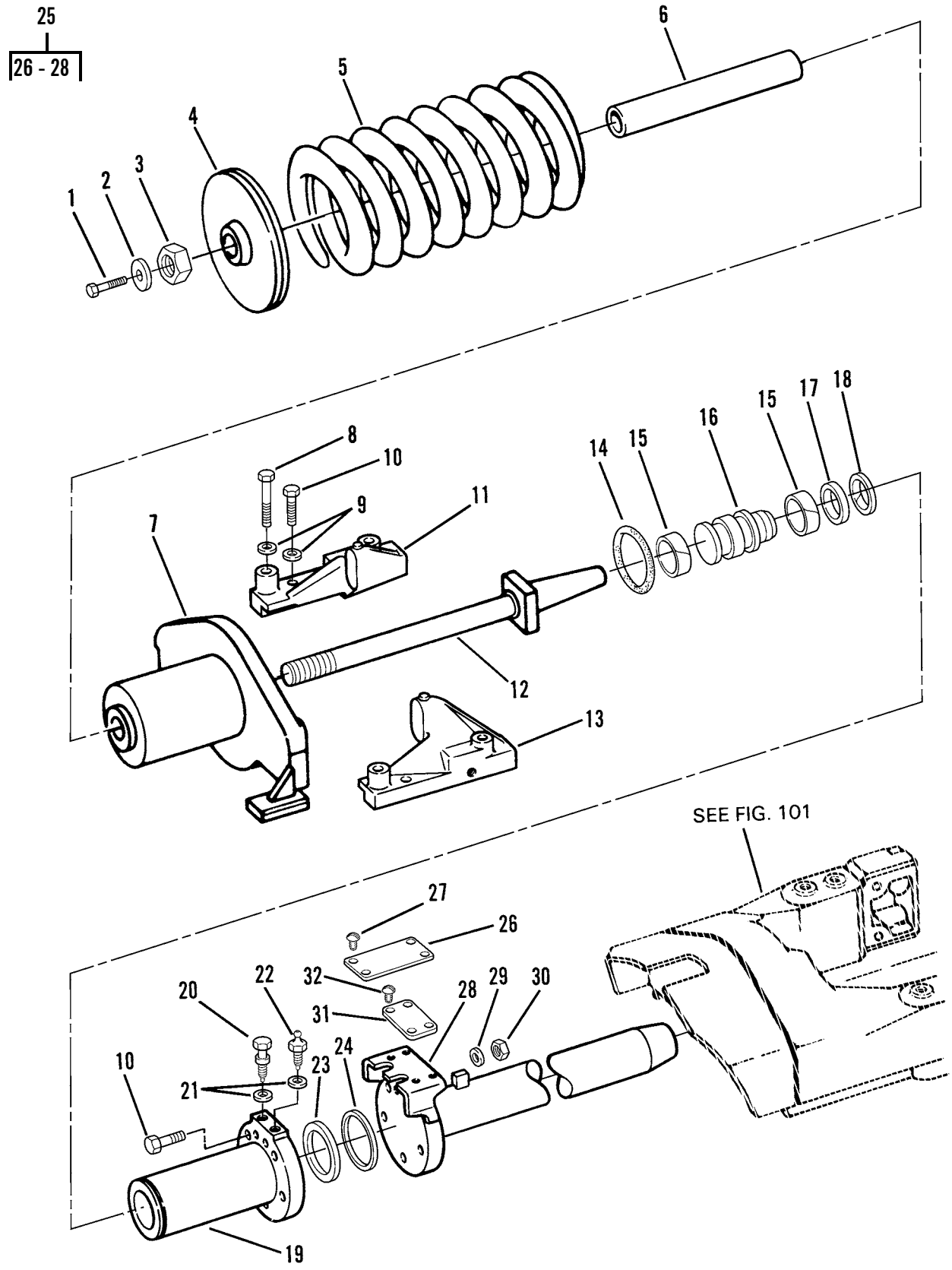

Figure 98. Front Idler Spring Rod and Cylinder

(1) ITEM NO	(2) SMR CODE	(3) NSN	(4) CAGEC	(5) PART NUMBER	(6) DESCRIPTION AND USABLE ON CODES (UOC)	(7) QTY
					GROUP 1303 TRACK IDLERS AND BRACKETS	
					FIG. 98 FRONT IDLER SPRING ROD AND CYLINDER	
1	PFFZZ	5305007320512	80204	B1821BH050C075N	SCREW,CAP,HEXAGON H	2
2	PFFZZ	5310001931076	11083	2S1654	WASHER,FLAT	2
3	PFFZZ	5310003503962	11083	9M3770	NUT,PLAIN,HEXAGON	2
4	PFFZZ	5310009611624	11083	2M0369	WASHER,SHOULDERED	2
5	PFFZZ	5360011852692	11083	3P1885	SPRING	2
6	PFFZZ	4710002236883	11083	2M0398	TUBE,METALLIC	2
7	PFFZZ	2510012539481	11083	8S1061	PILOT ASSEMBLY,IDLE	2
8	PFFZZ	5306004238292	11083	1A8651	BOLT,MACHINE	8
9	PFFZZ	5310001397030	11083	4D3704	WASHER,FLAT	4
10	PFFZZ	5306004263150	11083	1A8537	BOLT,MACHINE	4
11	PFFZZ	2510012539480	11083	3P6561	STOP,RECOIL R.H. INNER, L.H. .. OUTER	2
12	PFFZZ	5306009502427	11083	1S0876	BOLT,RECOIL SPRING	2
13	PFFZZ	2510012539479	11083	3P6560	STOP,SPRING R.H. OUTER, L.H. .. INNER	2
14	PCFZZ	5331005808967	11083	5H8624	O-RING	2
15	PFFZZ	4320009491450	11083	6H6269	RING,WEARING	4
16	PFFZZ	3040009505623	11083	8H7980	PISTON,LINEAR ACTUA	2
17	PAFZZ	5330000104891	11083	4S9006	PACKING,PREFORMED	2
18	PFFZZ	5325008286698	80756	RST-187	RING,RETAINING	2
19	PFFZZ	2530009507009	11083	2M0125	RETAINER,CYLINDER S	2
20	PAFZZ	4820009119224	11083	2S5926	STEM,FLUID VALVE	2
21	PFFZZ	5310007399977	11083	5M6708	WASHER,SHOULDERED	4
22	PAFZZ	4730009119226	74400	G-330670	FITTING,LUBRICATION	2
23	PAFZZ	5330009486668	11083	5M2997	GASKET	2
24	PFFZZ	5330009484039	11083	5M2998	PACKING,PREFORMED	2
25	PFFZZ	3040012534611	11083	6P5343	CYLINDER ASSEMBLY,A	2
26	PFFZZ	9905011639191	11083	2S5927	.PLATE,IDENTIFICATIO	1
27	PFFZZ	5305007083823	11083	7B3028	.SCREW,DRIVE	4
28	PFFZZ	3040012534611	11083	6P5343	.CYLINDER ASSEMBLY,A	1
29	PFFZZ	5310000455001	96906	MS35340-50	WASHER,LOCK	10
30	PFFZZ	5310007638920	96906	MS51967-20	NUT,PLAIN,HEXAGON	10
31	PFFZZ	9905011639191	11083	2S5927	PLATE,IDENTIFICATIO	2
32	PFFZZ	5305007083823	11083	7B3028	SCREW,DRIVE	8
				END OF FIGURE		

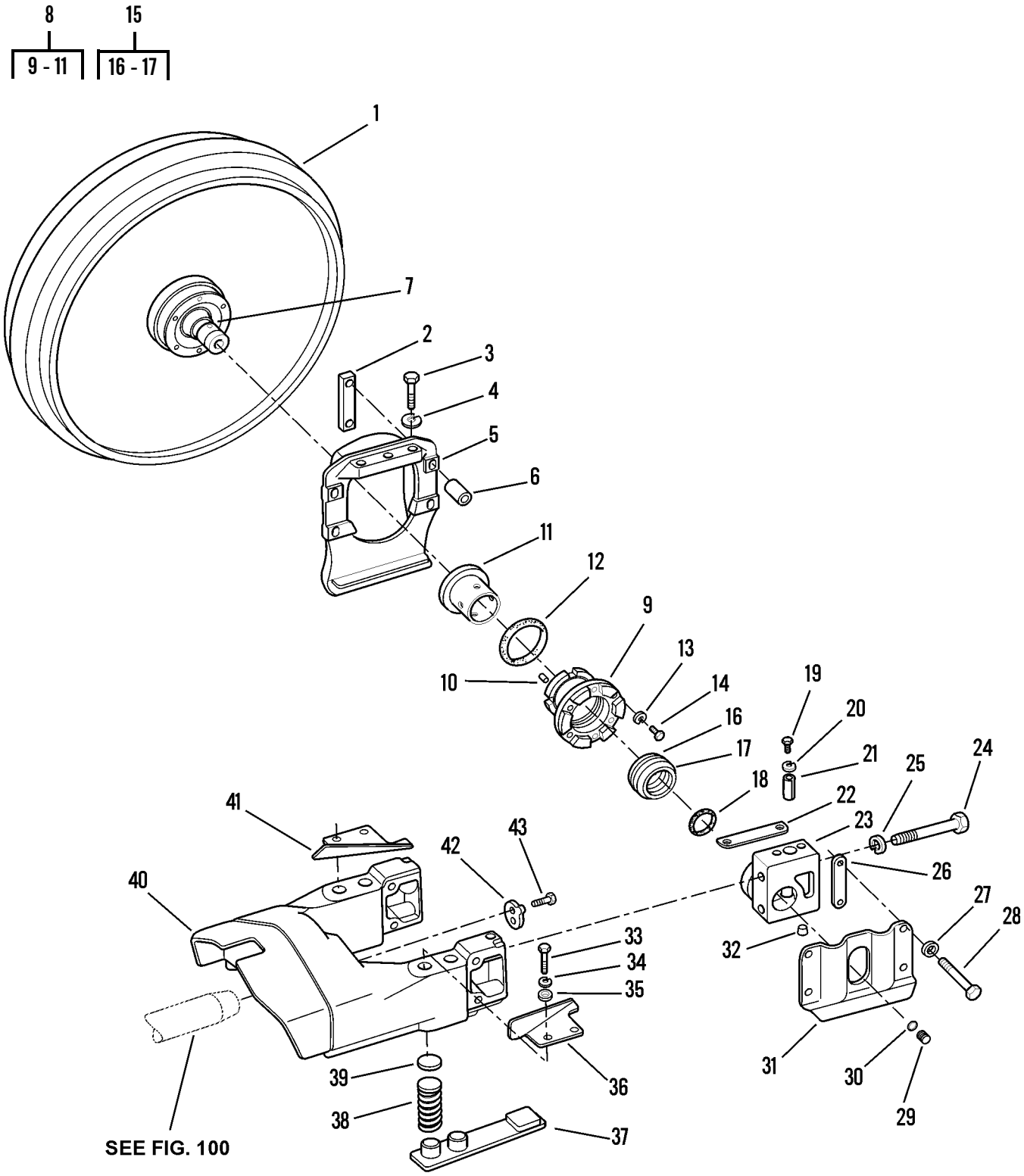

Figure 99. Front Idler Collar and Bearings

(1) ITEM NO	(2) SMR CODE	(3) NSN	(4) CAGEC	(5) PART NUMBER	(6) DESCRIPTION AND USABLE ON CODES (UOC)	(7) QTY
					GROUP 1303 TRACK IDLERS AND BRACKETS	
					FIG. 99 FRONT IDLER COLLAR AND BEARINGS	
1	PFFZZ	2530009119225	11083	9H8489	IDLER ASSEMBLY	2
2	PFFZZ	2530009479925	11083	2M7116	STRIP	8
3	PFFZZ	5306004263209	11083	4W5918	BOLT,MACHINE	12
4	PFFZZ	5310000455001	96906	MS35340-50	WASHER,LOCK	12
5	PFFZZ	2530009479857	11083	6T1980	COLLAR ASSEMBLY,TRA	4
6	PFFZZ	5365009480246	11083	7M6571	SPACER,SLEEVE	8
7	PFFZZ	3040004558791	11083	9M9758	SHAFT,SHOULDERED	2
8	PFFZZ	3120011039406	11083	3P8432	BUSHING	4
9	XAFZZ		11083	2S9313	.BUSHING	1
10	PFFZZ	5315002672268	11083	9B2289	.PIN,STRAIGHT,HEADLE	2
11	PFFZZ	3120004453375	11083	8P6651	.BEARING,SLEEVE	1
12	PFFZZ	5331007819134	11083	4H9105	O-RING	4
13	PFFZZ	5310006379541	80205	MS35338-46	WASHER,LOCK	24
14	PFFZZ	5306011954681	11083	3B1915	BOLT	24
15	PFFZZ	5330007388639	11083	1M8747	PACKING WITH RETAIN INCLUDES .. SEAL	4
16	PFFZZ	5330007388639	11083	1M8747	.PACKING WITH RETAIN	2
17	PFFZZ	5331008486108	11083	8H2262	.O-RING	2
18	PFFZZ	5331005064457	11083	8F6711	O-RING	4
19	PFFZZ	5305004454630	11083	4F5192	SCREW,CAP,HEXAGON H	4
20	PFFZZ	5310002090965	80205	MS35338-47	WASHER,LOCK	4
21	PFFZZ	2530002439530	11083	5M5000	LOCK PIN,IDLER	4
22	PFFZZ	5365012580122	11083	7G1899	SPACER,PLATE	12
23	PAFZZ	3130004045473	11083	7G1901	HOUSING,BEARING UNI R.H. OUTER, L.H. INNER	2
23	PFFZZ	3110011661535	11083	7G1902	BEARING,IDLER SHAFT R.H. INNER, L.H. OUTER	2
24	PFFZZ	5305007102157	11083	6F4991	SCREW,CAP,HEXAGON H	8
25	PFFZZ	5310007542005	80205	MS35338-52	WASHER,LOCK	8
26	PFFZZ	5365012573274	11083	7G1900	SPACER,PLATE	48
27	PFFZZ	5310001397030	11083	4D3704	WASHER,FLAT	16
28	PFFZZ	5306004238252	11083	1A5405	BOLT,MACHINE	16
29	PFFZZ	2520010669178	11083	2P0347	PLUG	2
30	PCFZZ	5331000312558	11083	1S8947	O-RING	2
31	PFFZZ	2530001955819	11083	6P6653	PLATE,IDLER GUIDE	4
32	PFFZZ	9390011855087	11083	2B7558	CORK	4
33	PFFZZ	5306004511552	11083	0S1622	BOLT,MACHINE	8
34	PFFZZ	5310005845272	80205	MS35338-48	WASHER,LOCK	8
35	PFFZZ	5310005284124	19207	5284124	WASHER,FLAT	8
36	PFFZZ	2530009483396	11083	7M5337	GUARD	2
37	PFFZZ	2530009491134	11083	2M1163	PLATE	4
38	PFFZZ	2530001498899	11083	4F5003	SPRING ASSEMBLY,FRO	8
39	PFFZZ	2520001499205	11083	4B1398	PLATE	8
40	PFFZZ	4320012536280	11083	3P4157	YOKE,HYDRAULIC MOTO	2

(1) ITEM NO	(2) SMR CODE	(3) NSN	(4) CAGEC	(5) PART NUMBER	(6) DESCRIPTION AND USABLE ON CODES (UOC)	(7) QTY
41	PFFZZ	2530009483446	11083	7M5338	GUARD	2
42	PFFZZ	5365012576105	11083	2S6313	SPACER,PLATE	2
43	PFFZZ	5306004240086	11083	7B3235	BOLT,MACHINE	4
				END OF FIGURE		

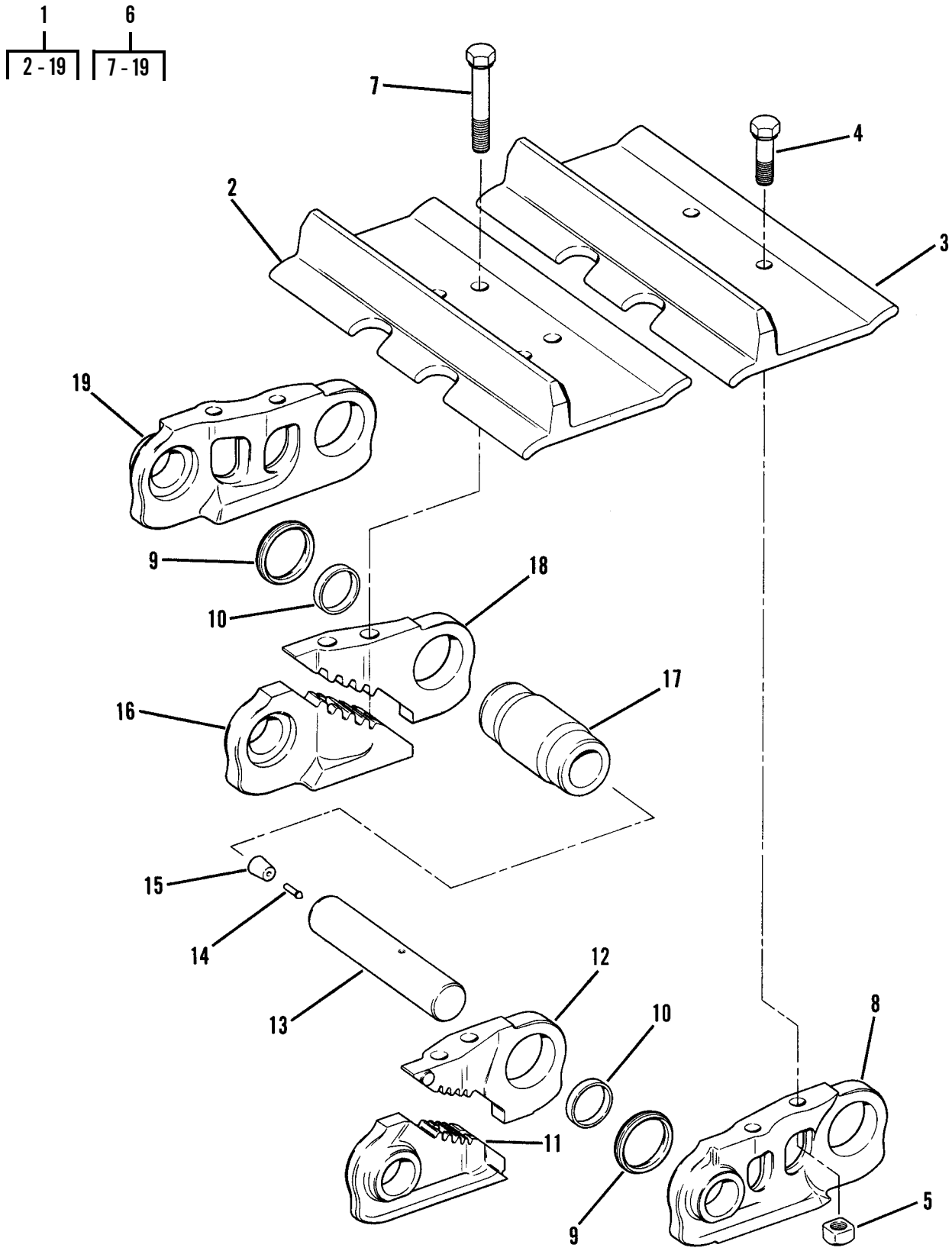

Figure 100. Track Group (20-Inch) (Sheet 1 of 2)

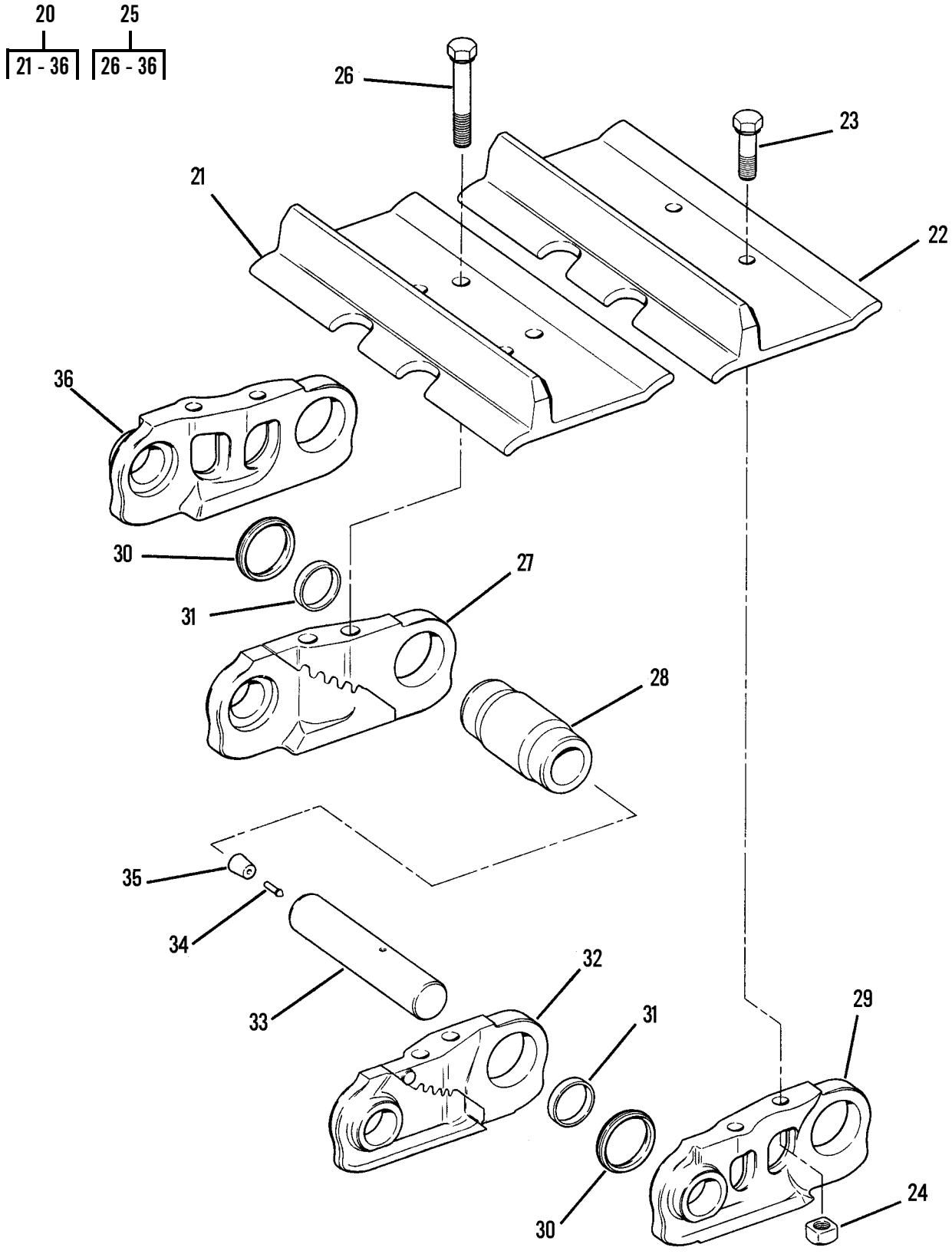

Figure 100. Track Group (20-Inch) (Sheet 2 of 2)

(1) ITEM NO	(2) SMR CODE	(3) NSN	(4) CAGEC	(5) PART NUMBER	(6) DESCRIPTION AND USABLE ON CODES (UOC)	(7) QTY
					GROUP 1305 TRACK ASSEMBLY	
					FIG. 100 TRACK GROUP (20-INCH)	
1	PFOZZ	2530014988028	11083	2009082	LINK ASSEMBLY,TRACK CLASSIC ... PART,DIRECT REPLACEMENT	2
2	PFFZZ	2530011637865	11083	3P0615	.TRACK SHOE,VEHICULA	1
3	PFFZZ	2530003511975	11083	1P9807	.TRACK SHOE,VEHICULA	37
4	PFFZZ	5306005673404	11083	7H3598	.BOLT,MACHINE	148
5	PFFZZ	5310009192244	11083	1S1860	.NUT,PLAIN,SQUARE	148
6	PFFZZ	2530011641850	11083	1171024	.LINK,TRACK SHOE,CON	1
7	PFFZZ	5306011295888	11083	2P9670	..BOLT,MACHINE	4
8	PFFZZ	2530001608597	11083	8S2590	..LINK,TRACK SHOE,CON	37
9	PAFZZ	5330011810486	11083	9W6298	..SEAL	76
10	PFFZZ	5365012101848	11083	3P0623	..SPACER,RING	76
11	PFFZZ	3830011295889	11083	2P9654	..LINK	1
12	PFFZZ	3830011295891	11083	2P9656	..LINK	1
13	PFFZZ	5315012599623	11083	3P0622	..PIN,STRAIGHT,HEADLE	38
14	PFFZZ	5340013086246	11083	6Y0473	..PLUG,PROTECTIVE,DUS	38
15	PAFZZ	5365012142602	11083	7G4332	..BUSHING,NONMETALLIC	38
16	PFFZZ	2530011852675	11083	2P9653	..LINK,TRACK SHOE,CON	1
17	PFFZZ	3120012643665	11083	3P0621	..BUSHING,SLEEVE	38
18	PFFZZ	3830011295890	11083	2P9655	..LINK	1
19	PFFZZ	2530001278672	11083	8S2589	..LINK,TRACK SHOE,CON	37
20	PFOZZ	2530014988028	11083	2009082	LINK ASSEMBLY,TRACK CLASSIC ... PART,DIRECT REPLACEMENT	2
21	PFFZZ	2530011637865	11083	3P0615	.TRACK SHOE,VEHICULA CLASSIC .. PART, DIRECT REPLACEMENT	1
22	PFFZZ	2530003511975	11083	1P9807	.TRACK SHOE,VEHICULA CLASSIC .. PART, DIRECT REPLACEMENT	37
23	PFFZZ	5306014979853	11083	1885636	.BOLT,MACHINE CLASSIC PART, ... DIRECT REPLACEMENT	148
24	PFFZZ	5310014966002	11083	1885856	.NUT,PLAIN,SQUARE CLASSIC PART, DIRECT REPLACEMENT	148
25	PFFZZ	2530014971879	11083	1885595	.PARTS KIT,TRACK SHO CLASSIC .. PART,DIRECT REPLACEMENT	1
26	PFFZZ	5306014975224	11083	1885637	..BOLT,MACHINE CLASSIC PART, .. DIRECT REPLACEMENT	4
27	PFFZZ	2530014987889	11083	1885701	..MASTER LINK,TRACK S L.H. .... CLASSIC PART, USE ONLY WITH PN 1885595	1
28	PFFZZ	3120014974890	11083	1885698	..BUSHING,SLEEVE CLASSIC PART, USE ONLY WITH PN 1885595	38
29	PFFZA	2530014973707	11083	1885252	..LINK,TRACK SHOE,CON CLASSIC . PART, USE ONLY WITH PN 1885595	37
30	PAFZZ	5330014972201	11083	1885697	..SEAL,PLAIN CLASSIC PART, USE ONLY WITH PN 1885595	76
31	PFFZZ	5365014973465	11083	1885721	..SPACER,RING CLASSIC PART, USE ONLY WITH PN 1885595	76
32	PFFZZ	2530014987887	11083	1885700	..MASTER LINK,TRACK S R.H. .... CLASSIC PART, USE ONLY WITH PN 1885595	1

(1) ITEM NO	(2) SMR CODE	(3) NSN	(4) CAGEC	(5) PART NUMBER	(6) DESCRIPTION AND USABLE ON CODES (UOC)	(7) QTY
33	PFFZZ	5315014972251	11083	1885699	..PIN,STRAIGHT,HEADLE CLASSIC . PART, USE ONLY WITH PN 1885595	38
34	PFFZZ	5340013086246	11083	6Y0473	..PLUG,PROTECTIVE,DUS	38
35	PAFZZ	5365012142602	11083	7G4332	..BUSHING,NONMETALLIC	38
36	PFFZZ	2530014971793	11083	188-5251	..LINK,TRACK SHOE,CON CLASSIC . PART, USE ONLY WITH PN 1885595	37
				END OF FIGURE		

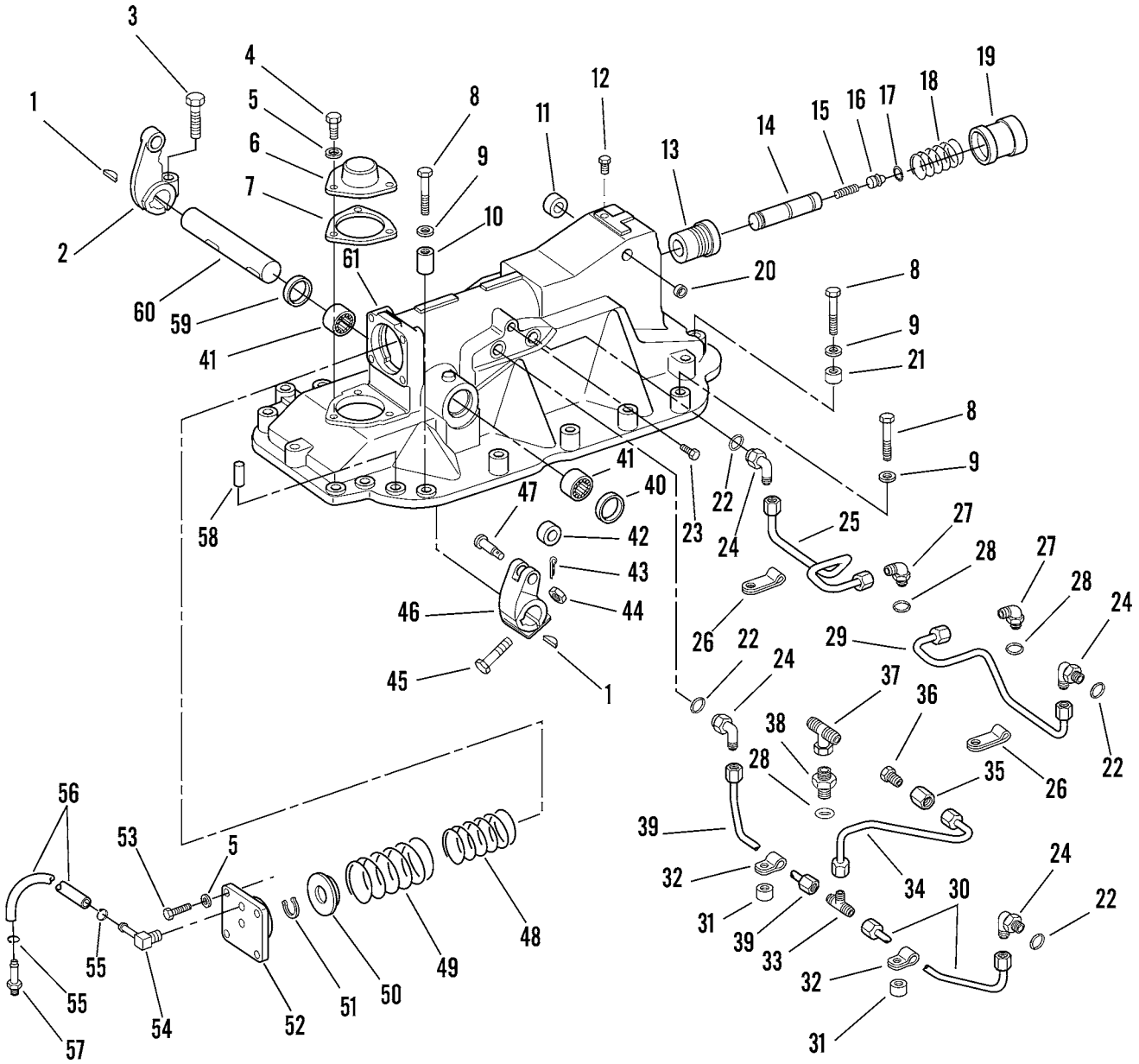

Figure 101. Brake Hydraulic Control and Lines and Fittings

(1) ITEM NO	(2) SMR CODE	(3) NSN	(4) CAGEC	(5) PART NUMBER	(6) DESCRIPTION AND USABLE ON CODES (UOC)	(7) QTY
					GROUP 14 STEERING	
					GROUP 1403 STEERING BRAKES	
					FIG. 101 BRAKE HYDRAULIC CONTROL AND LINES AND FITTINGS	
1	PFFZZ	5315006165499	80205	MS35756-22	KEY,WOODRUFF	4
2	PFFZZ	3040012672100	11083	1M3688	LEVER,REMOTE CONTRO	2
3	PFFZZ	5305007247221	80204	B1821BH063C175N	SCREW,CAP,HEXAGON H	2
4	PFFZZ	5306002637301	11083	0L1351	BOLT,MACHINE	6
5	PFFZZ	5310006379541	80205	MS35338-46	WASHER,LOCK	14
6	PFFZZ	5340012701303	11083	9H8889	COVER,ACCESS	2
7	PFFZZ	5330009138117	11083	9H8890	GASKET	2
8	PFFZZ	5306004550459	11083	9S1366	BOLT,MACHINE	32
9	PFFZZ	5310008095998	96906	MS27183-18	WASHER,FLAT	32
10	PFFZZ	5365012702770	11083	1F1609	SPACER,SLEEVE	4
11	PFFZZ	5330001547528	11083	5H1190	SEAL,PLAIN ENCASED	2
12	PFFZZ	4730000892515	11083	5M6213	PLUG,PIPE	2
13	PFFZZ	3120011604604	11083	2S8359	BUSHING,SLEEVE	1
14	PFFZZ	2530011681038	11083	5S6880	PLUNGER	2
14	PFFZZ	5340014977040	11083	9W8900	PLUNGER,DETENT REPLACES PN .... 5S6880, ALSO USE PN 8C7362 WITH 9W8900	2
15	PFFZZ	5360011606911	11083	5M3389	SPRING,HELICAL,COMP	2
16	PFFZZ	4820011595909	11083	2S8571	SLIDE,DIRECTIONAL C	2
17	PFFZZ	5325011652606	78553	NAN50	RING,RETAINING	2
17	PFFZZ	5325014972354	11083	8C7362	RING,RETAINING USE WITH PN .... 9W8900 REPLACES PN 3P0621	2
18	PFFZZ	5360004557145	11083	3J3370	SPRING,HELICAL,COMP	2
19	PFFZZ	4820012674321	11083	3P5803	PISTON,VALVE	2
20	PFFZZ	5340004239532	11083	5B1866	PLUG,EXPANSION	1
21	PFFZZ	5365012703720	11083	7K4330	SPACER,SLEEVE	1
22	PFFZZ	5331009486482	62983	154129	O-RING	4
23	PFFZZ	4730009247886	11083	5M6214	PLUG,PIPE	2
24	PFFZZ	4730014710277	11083	0054362	ELBOW,QUICK DISCONN	4
25	PFFZZ	4710012672116	11083	3T3643	TUBE ASSEMBLY,METAL	1
26	PFFZZ	5340002827505	96906	MS21333-57	CLAMP,LOOP	2
27	PFFZZ	4730001433941	96906	MS51527A6	ELBOW,TUBE TO BOSS	2
28	PCFZZ	5331008013354	25184	906-737-70	O-RING	3
29	PFFZZ	4710012672117	11083	3T3644	TUBE ASSEMBLY,METAL	1
30	PFFZZ	4710012672118	11083	8P6249	TUBE ASSEMBLY,METAL	1
31	PFFZZ	5365010534681	11083	4S5719	SPACER	2
32	PFFZZ	5340004264794	11083	9S1350	CLAMP,LOOP	2
33	PFFZZ	4730011555055	11083	4S3652	TEE,TUBE	1
34	PFFZZ	4710012672119	11083	8P6253	TUBE ASSEMBLY,METAL	1
35	PFFZZ	4730007621239	96906	MS51531B8	NUT,TUBE COUPLING	1
36	PFFZZ	4730010630744	11083	0308144	REDUCER,TUBE	1
37	PFFZZ	4730004914983	01276	203102-8-8S	TEE,TUBE	1
38	PFFZZ	3805010532703	11083	8M0506	CONNECTOR	1
39	PFFZZ	4710012627728	11083	8P6248	TUBE ASSEMBLY,METAL	1

(1) ITEM NO	(2) SMR CODE	(3) NSN	(4) CAGEC	(5) PART NUMBER	(6) DESCRIPTION AND USABLE ON CODES (UOC)	(7) QTY
40	PFFZZ	5342000076350	11083	3H5552	PLUG	1
41	PFFZZ	3110002274431	7X677	9421004	BEARING,ROLLER,NEED	2
42	PFFZZ	3120001765546	11083	6B7687	ROLLER,LINEAR-ROTAR	2
43	PFFZZ	5315008395822	80205	MS24665-353	PIN,COTTER	2
44	PFFZZ	5310007638920	96906	MS51967-20	NUT,PLAIN,HEXAGON	2
45	PFFZZ	5306004550460	11083	8S9092	BOLT,MACHINE	2
46	PFFZZ		11083	9H7657	LEVER	2
47	PFFZZ	5315008910815	11083	3H1977	PIN,TRACTOR	2
48	PFFZZ	5360001373464	11083	9H7553	SPRING,HELICAL,COMP	2
49	PFFZZ	5360010691390	11083	9H7534	SPRING	2
50	PFFZZ	5340011622864	11083	2S8416	RETAINER,HELICAL CO	2
51	PFFZZ	5325008487439	11083	4H8158	RING,RETAINING	2
52	PFFZZ		11083	8P8255	COVER ASSEMBLY	2
53	PFFZZ	5306004238194	11083	1A2029	BOLT,MACHINE	8
54	PFFZZ	4730011681041	11083	0672935	ELBOW,PIPE TO HOSE	2
55	PFFZZ	5342009217093	11083	3S5096	CLAMP	4
56	MFFZZ		11083	5P1442-10	HOSE 10.0 IN, MAKE FROM HOSE .. P/N 5P1442	1
57	PFFZZ	4730011675458	11083	5P7175	ADAPTER,STRAIGHT,PI	2
58	PAFZZ	5315010625209	11083	5M7937	PIN	4
59	PFFZZ	5330010486001	11083	2P6286	SEAL ASSEMBLY	2
60	PFFZZ	3040012674284	11083	3P5969	SHAFT,STRAIGHT	2
61	PFFZZ	3040012672079	11083	3P5802	HOUSING,MECHANICAL LH	1
				END OF FIGURE		

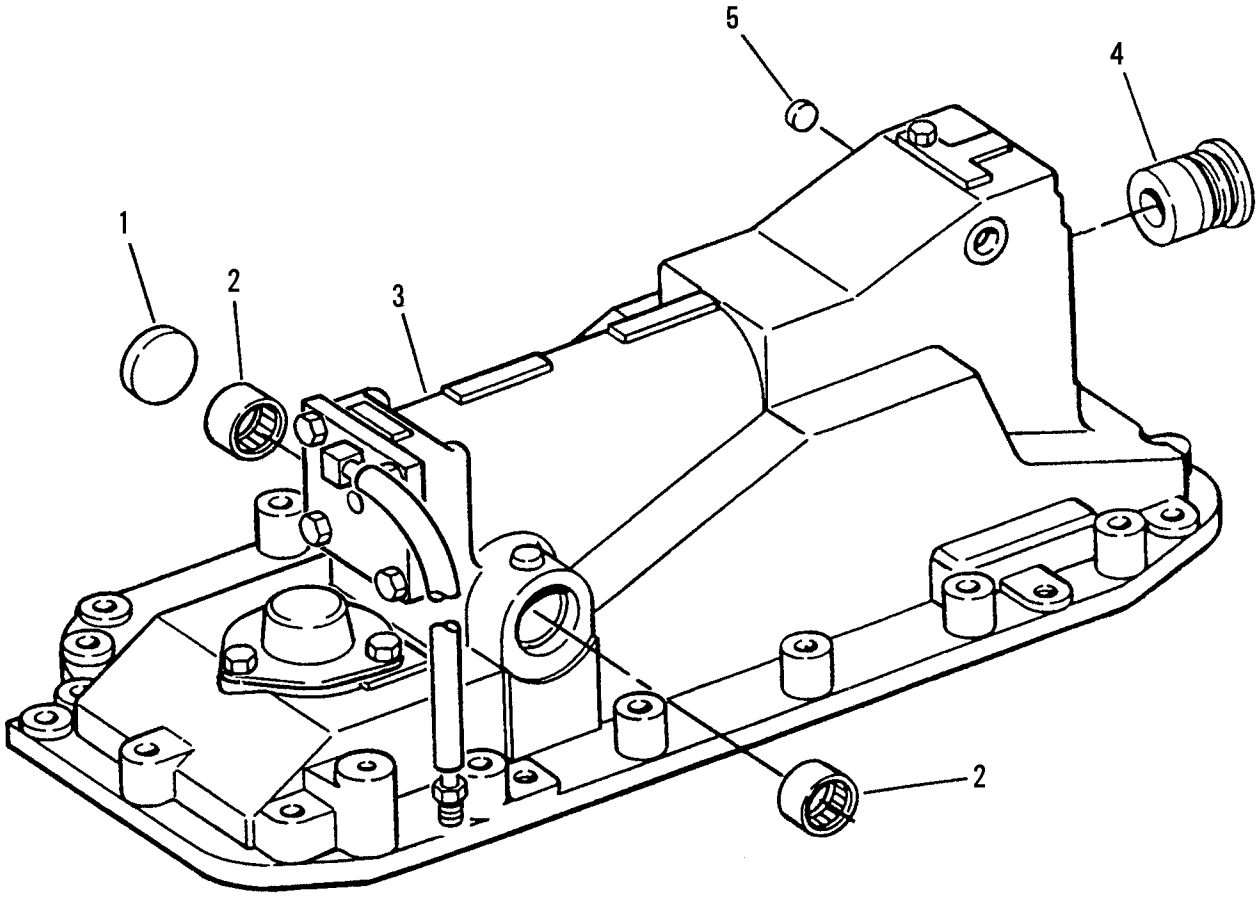

Figure 102. Right Hand Brake Hydraulic Control Housing

(1) ITEM NO	(2) SMR CODE	(3) NSN	(4) CAGEC	(5) PART NUMBER	(6) DESCRIPTION AND USABLE ON CODES (UOC)	(7) QTY
					GROUP 1403 STEERING BRAKES	
					FIG. 102 RIGHT HAND BRAKE HYDRAULIC CONTROL HOUSING	
1	PFFZZ	5342000076350	11083	3H5552	PLUG	1
2	PFFZZ	3110002274431	7X677	9421004	BEARING,ROLLER,NEED	2
3	PFFZZ		11083	3P5799	HOUSING RH	1
4	PFFZZ	3120011604604	11083	2S8359	BUSHING,SLEEVE	1
5	PFFZZ	5340004239532	11083	5B1866	PLUG,EXPANSION	1
				END OF FIGURE		

27 55
28 - 30 56

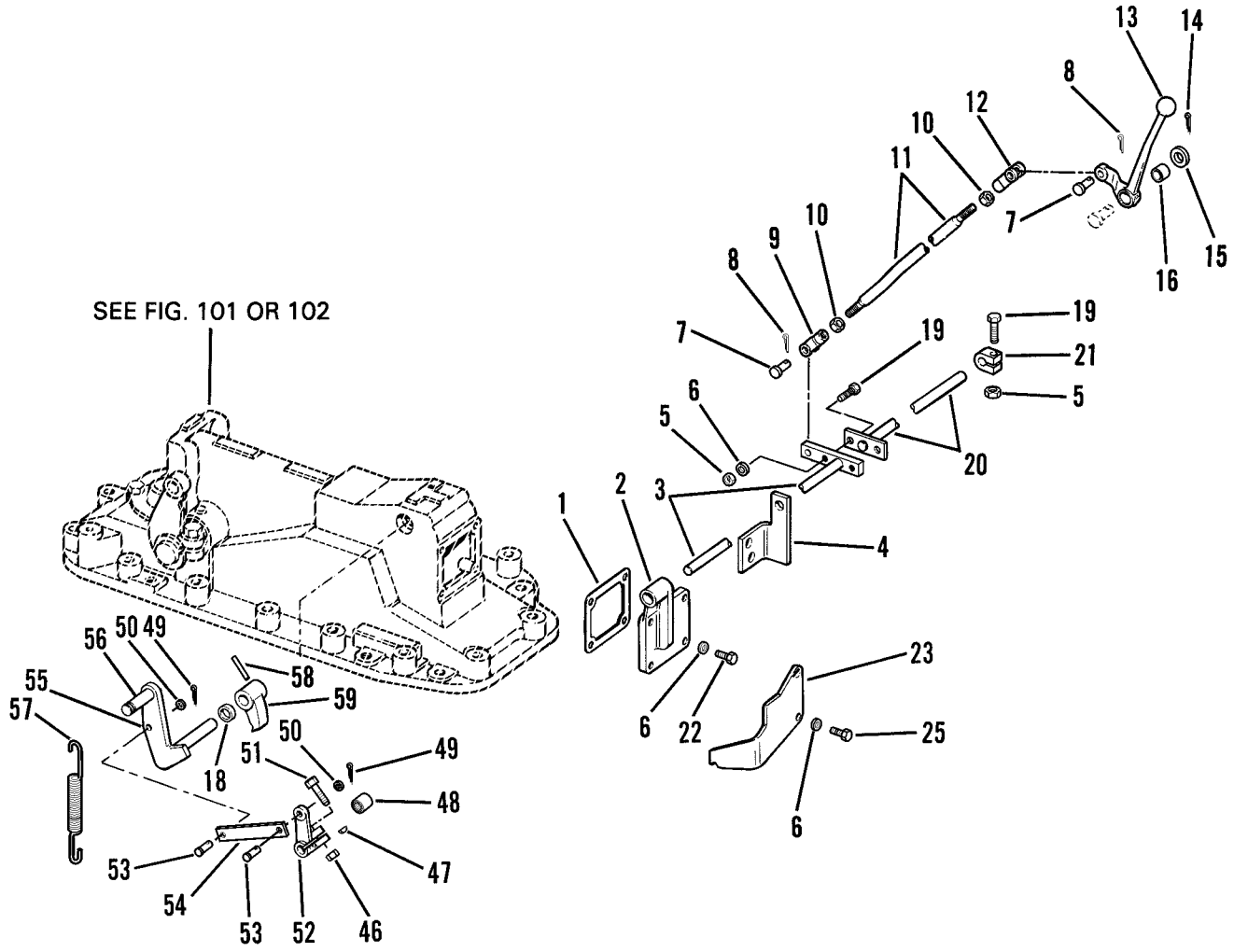

Figure 103. Brake Linkage (Sheet 1 of 2)

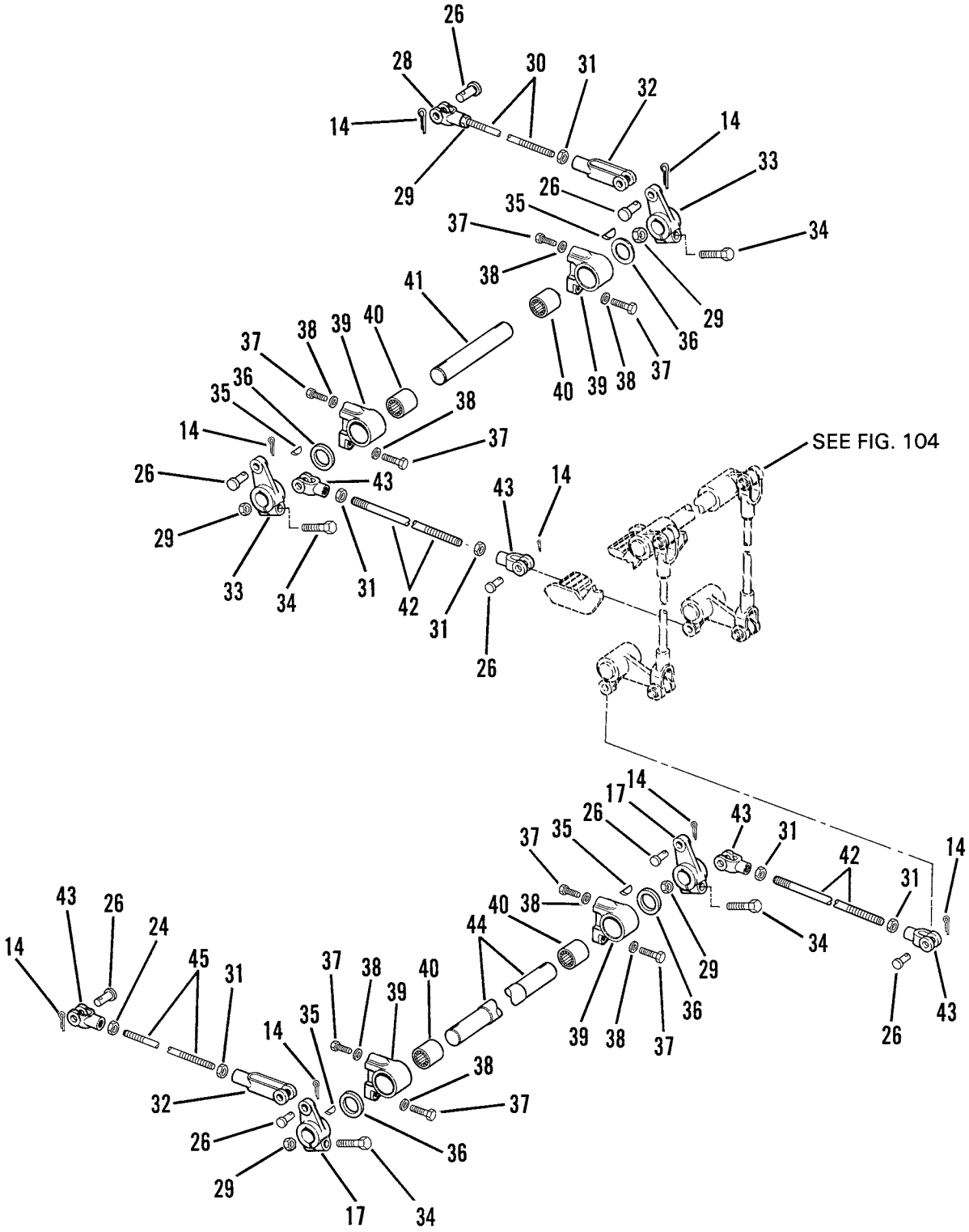

Figure 103. Brake Linkage (Sheet 2 of 2)

(1) ITEM NO	(2) SMR CODE	(3) NSN	(4) CAGEC	(5) PART NUMBER	(6) DESCRIPTION AND USABLE ON CODES (UOC)	(7) QTY
					GROUP 1403 STEERING BRAKES	
					FIG. 103 BRAKE LINKAGE	
1	PFOZZ	5330011673658	11083	7S2780	GASKET	2
2	PAOZZ	5340012641444	11083	7G2032	COVER,ACCESS	2
3	PAOZZ	3040012678649	11083	7G2069	SHAFT,STRAIGHT	1
4	PFOZZ	5340012689063	11083	8P3104	BRACKET,ANGLE	1
5	PFOZZ	5310014297859	11083	6V8801	NUT,PLAIN,HEXAGON	1
6	PFOZZ	5310006379541	80205	MS35338-46	WASHER,LOCK	10
7	PFOZZ	5315002726760	11083	1B0676	PIN,STRAIGHT,HEADED	2
8	PFOZZ	5315008395821	80205	MS24665-351	PIN,COTTER	2
9	PFOZZ	5340010533843	11083	1M1341	CLEVIS,ROD END	1
10	PFOZZ	5310009752075	96906	MS35691-21	NUT,PLAIN,HEXAGON	2
11	PFOZZ	5306012743308	11083	6P4416	ROD,THREADED END	1
12	PFOZZ	5340004113926	11083	1F5403	CLEVIS,ROD END	1
13	PFOZZ	3040012674364	11083	7G2074	BELL CRANK	1
14	PFOZZ	5315008395822	80205	MS24665-353	PIN,COTTER	9
15	PFOZZ	5310004042422	11083	0T0883	WASHER,FLAT	1
16	PFOZZ	5365012573309	11083	0318590	SPACER,SLEEVE	2
17	PAOZZ	3040012537049	11083	3P6286	LEVER,REMOTE CONTRO	2
18	PFOZZ	3110012422751	60380	JTT-810	BEARING,ROLLER,NEED	1
19	PFOZZ	5305002528919	11083	0S0509	SCREW,CAP,HEXAGON H	2
20	PFOZZ	3040012678650	11083	7G2071	SHAFT,STRAIGHT	1
21	PFOZZ	3040012541262	11083	7G2072	CLAMP,HUB	1
22	PFOZZ	5306002604508	11083	0S1594	BOLT,MACHINE	4
23	PAOZZ	5340012587807	11083	7G2067	BRACKET,ANGLE	1
23	PAOZZ	5340012586066	11083	7G2066	BRACKET,ANGLE RH	1
24	PFOZZ	5310007638905	96906	MS51968-20	NUT,PLAIN,HEXAGON	5
25	PFOZZ	5305000680511	80204	B1821BH038C125N	SCREW,CAP,HEXAGON H	4
26	PFOZZ	5315010668470	11083	9S1315	PIN,STRAIGHT,HEADED	8
27	PFOZZ	5340012580343	11083	3P6288	CLEVIS,ROD END	1
28	PFOZZ	5340011604084	11083	4M7930	.CLEVIS,ROD END	1
29	PFOZZ	5310007638905	96906	MS51968-20	.NUT,PLAIN,HEXAGON	1
30	PFOZZ	5306012644262	11083	3P6280	.ROD,THREADED END	1
31	PFOZZ	5310007638905	96906	MS51968-20	NUT,PLAIN,HEXAGON	5
32	PFOZZ	5342010687178	11083	9S1314	ROD END	2
33	PFOZZ	3040012734461	11083	3P6287	LEVER,REMOTE CONTRO	2
34	PFOZZ	5305007262553	80205	B1821BH063F25ON	SCREW,CAP,HEXAGON H	4
35	PFOZZ	5315006165508	80205	MS35756-28	KEY,WOODRUFF	4
36	PFOZZ	5365010538345	11083	7J6871	SHIM	4
37	PFOZZ	5306011279361	11083	0S1585	BOLT,MACHINE	8
38	PFOZZ	5310005845272	80205	MS35338-48	WASHER,LOCK	8
39	PFOZZ	3040012541167	11083	9S4800	BRACKET,EYE,ROTATIN	4
40	PFOZZ		60380	JTT2422	BEARING,ROLLER,NEED	4
41	PAOZZ	3040012544940	11083	3P6281	SHAFT,SHOULDERED	1
42	PFOZZ	5307012573317	11083	3P3843	STUD,PLAIN	2
43	PFOZZ	5340011604084	11083	4M7930	CLEVIS,ROD END	5
44	PAOZZ	3040012537348	11083	9P0690	SHAFT,STRAIGHT	1
45	PFOZZ	5306012644262	11083	3P6280	ROD,THREADED END	1

(1) ITEM NO	(2) SMR CODE	(3) NSN	(4) CAGEC	(5) PART NUMBER	(6) DESCRIPTION AND USABLE ON CODES (UOC)	(7) QTY
46	PFOZZ	5310008807744	96906	MS51967-5	NUT,PLAIN,HEXAGON	2
47	PFOZZ	5315006165515	80205	MS35756-5	KEY,WOODRUFF	2
48	PFOZZ	3110011681031	11083	5P1901	BEARING	2
49	PFOZZ	5315008392326	80205	MS24665-281	PIN,COTTER	4
50	PFOZZ	5310011673641	11083	0L0261	WASHER,FLAT	4
51	PFOZZ	5306002264829	80204	B1821BH031C125N	BOLT,MACHINE	2
52	PFOZZ	3040012678765	11083	7G2065	LEVER,REMOTE CONTRO	2
53	PFOZZ	5315007540848	96906	MS35810-3	PIN,STRAIGHT,HEADED	4
54	PFOZZ	5365012682654	11083	6P2772	SPACER,PLATE	4
55	PFOZZ	3040012677068	11083	7G2079	LEVER,REMOTE CONTRO RH	1
55	PFOZZ	3040012680301	11083	7G2080	LEVER,REMOTE CONTRO LH	1
56	PFOZZ	5315012701877	11083	7G2078	.PIN,STRAIGHT,HEADLE	1
57	PFOZZ	5360012705501	11083	7G6942	SPRING,HELICAL,EXTE	2
58	PFOZZ	5315007102087	11083	1H1200	PIN,SPRING	2
59	PAOZZ	3040011673669	11083	3P5206	PAWL	2
				END OF FIGURE		

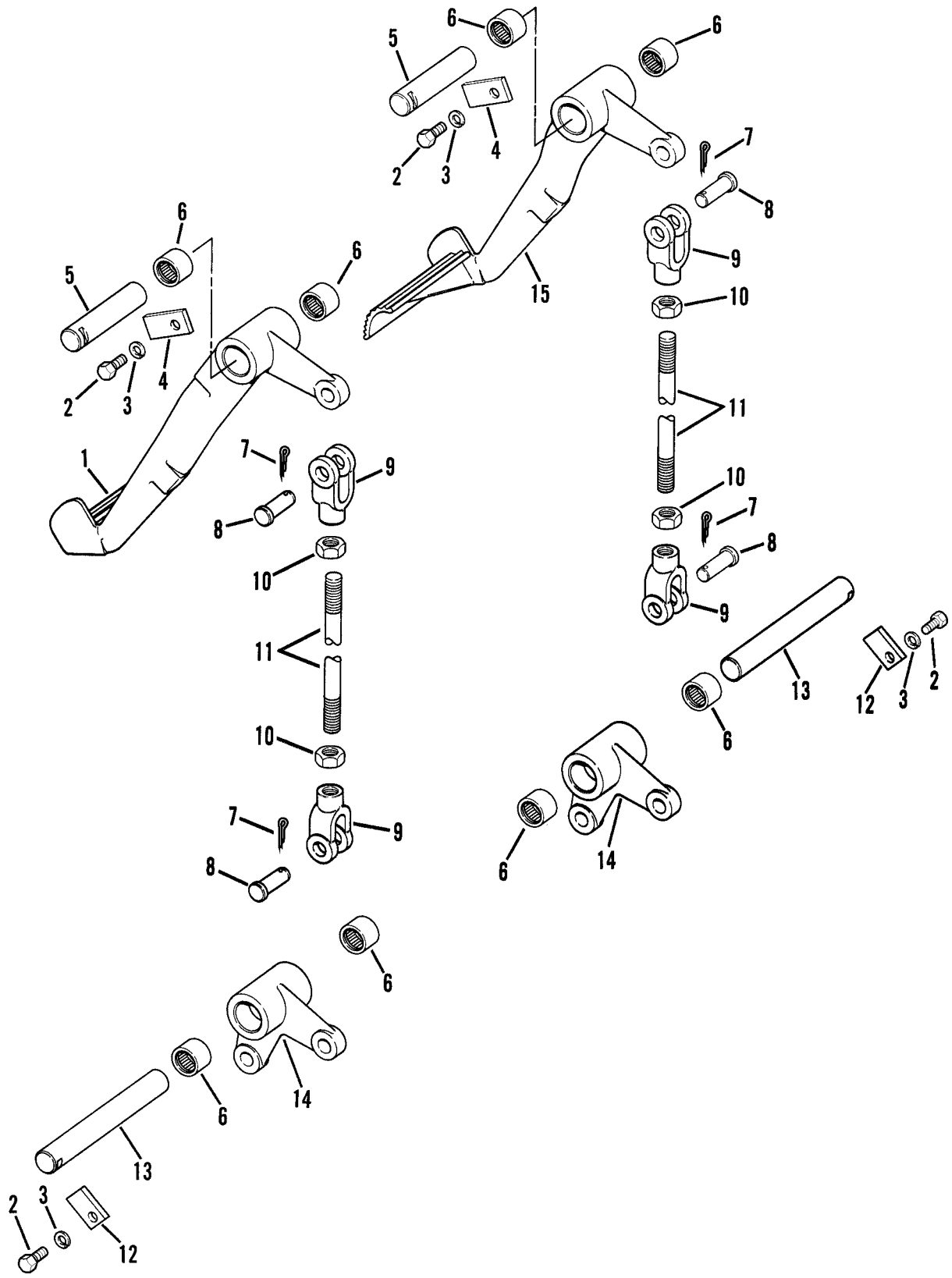

Figure 104. Brake Pedal Linkage

(1) ITEM NO	(2) SMR CODE	(3) NSN	(4) CAGEC	(5) PART NUMBER	(6) DESCRIPTION AND USABLE ON CODES (UOC)	(7) QTY
					GROUP 1403 STEERING BRAKES	
					FIG. 104 BRAKE PEDAL LINKAGE	
1	PFOZZ	2540012535589	11083	3P3656	PEDAL,CONTROL RH	1
2	PFOZZ	5305002528919	11083	0S0509	SCREW,CAP,HEXAGON H	4
3	PFOZZ	5310006379541	80205	MS35338-46	WASHER,LOCK	4
4	PFOZZ	2530012530440	11083	6P6253	LOCK,SHAFT	2
5	PAOZZ	3040012537347	11083	3P3657	SHAFT,STRAIGHT	2
6	PFOZZ	3110010669172	11083	6K8088	BEARING	8
7	PFOZZ	5315008395822	80205	MS24665-353	PIN,COTTER	4
8	PFOZZ	5315010668470	11083	9S1315	PIN,STRAIGHT,HEADED	4
9	PFOZZ	5340011604084	11083	4M7930	CLEVIS,ROD END	4
10	PFOZZ	5310007638905	96906	MS51968-20	NUT,PLAIN,HEXAGON	5
11	PFOZZ	5306012573316	11083	3P3660	ROD,THREADED END	2
12	PFOZZ	3040012726739	11083	0L1032	PLATE,RETAINING,SHA	2
13	PAOZZ	3040012537346	11083	3P3658	SHAFT,STRAIGHT	2
14	PFOZZ	3040012649331	11083	3P3659	BELL CRANK	2
15	PFOZZ	2540012534705	11083	3P3655	PEDAL,CONTROL LH	1
				END OF FIGURE		

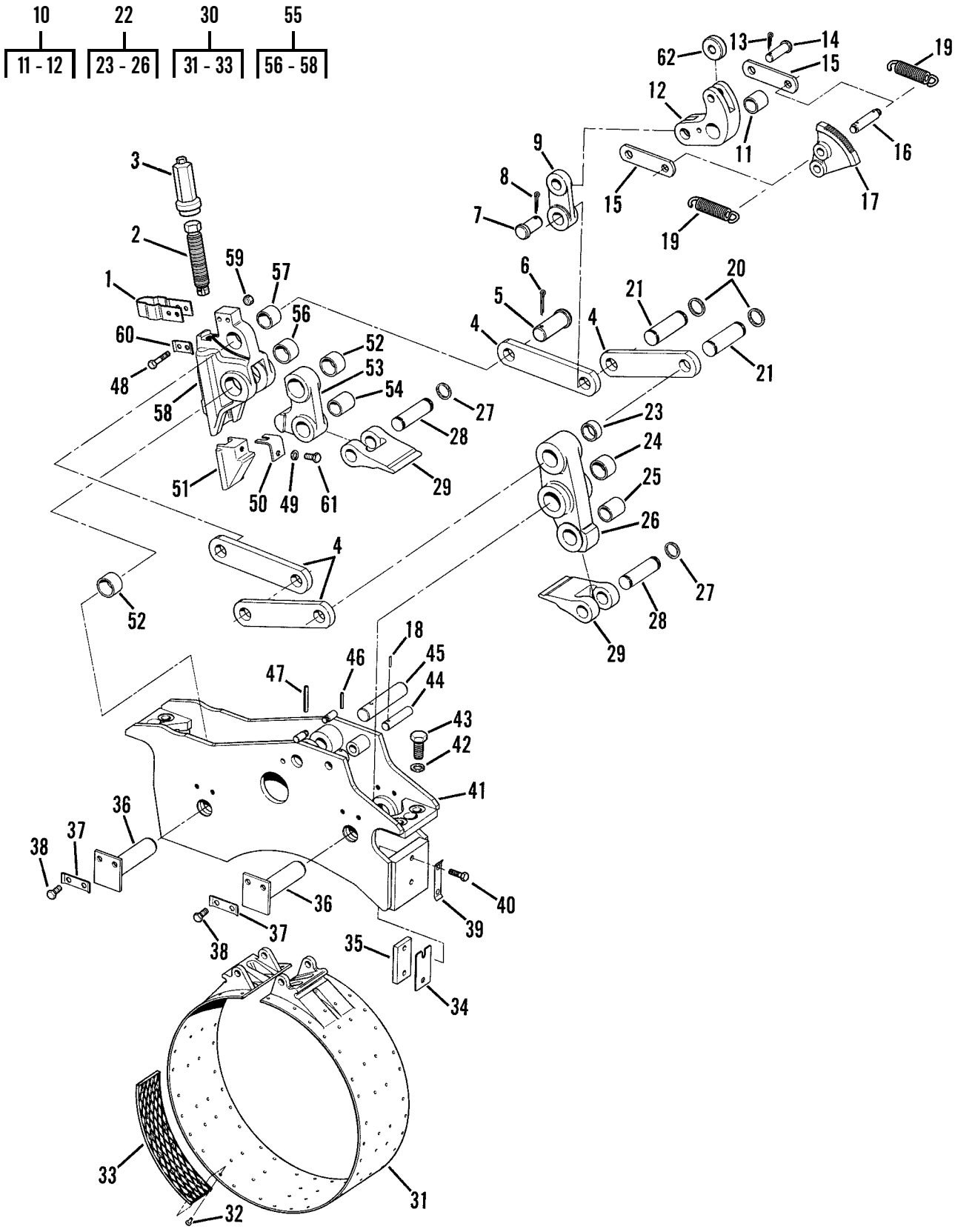

Figure 105. Brake Actuating Mechanism

(1) ITEM NO	(2) SMR CODE	(3) NSN	(4) CAGEC	(5) PART NUMBER	(6) DESCRIPTION AND USABLE ON CODES (UOC)	(7) QTY
					GROUP 1403 STEERING BRAKES	
					FIG. 105 BRAKE ACTUATING MECHANISM	
1	PFFZZ	5360002460489	11083	9S8220	SPRING,FLAT	2
2	PFFZZ	5305009484489	11083	2M7188	SCREW,MACHINE	2
3	PFFZZ		11083	1P4524	SOCKET	2
4	PAFZZ	3040012540310	11083	7S6139	CONNECTING LINK,RIG	8
5	PFFZZ	5315002458844	11083	8H8898	PIN,STRAIGHT,HEADED	2
6	PFFZZ	5315000137258	80205	MS24665-497	PIN,COTTER	2
7	PFFZZ	5315012541307	11083	9H0750	PIN	2
8	PFFZZ	5315010523942	11083	3B4629	PIN,COTTER	2
9	PAFZZ	3040012540311	11083	7S2666	CONNECTING LINK,RIG	2
10	PFFFF	3040012535577	11083	1P3310	BELL CRANK	2
11	PFFZZ	3120011666915	11083	7S2670	.BEARING,SLEEVE	1
12	XAFZZ		11083	1P2083	.BELLCRANK	1
13	PFFZZ	5315008395822	80205	MS24665-353	PIN,COTTER	1
14	PFFZZ	5315002726764	11083	2B0974	PIN,STRAIGHT,HEADED	2
15	PAFZZ	3040012537459	11083	7G2926	CONNECTING LINK,RIG	4
16	PFFZZ	5315012102959	11083	1M0424	PIN,GROOVED,HEADLES	2
17	PFFZZ		11083	3P6105	RATCHET	2
18	PFFZZ	5315009700153	11083	3H6660	PIN,SPRING	4
19	PFFZZ	5360011673644	11083	1H2320	SPRING	4
20	PFFZZ	5325009516973	80756	RST-112	RING,RETAINING	8
21	PAFZA	5315009486454	11083	8H0376	PIN,GROOVED,HEADLES	4
22	AFFFF		11083	7S6149	LEVER,REMOTE CONTRO	2
23	PFFZZ	3120004219629	11083	7S6143	.BEARING,SLEEVE	2
24	PFFZZ	3120002390939	11083	7S6140	.BEARING,SLEEVE	2
25	PFFZZ	3120002390938	11083	7S6145	.BEARING,SLEEVE	1
26	XAFZZ		11083	1M3782	.LEVER	1
27	PFFZZ	5325004750205	80756	RST100	RING,RETAINING	8
28	PAFZA	5315009479737	11083	1M3788	PIN,STRAIGHT,HEADLE	4
29	PFFZZ		11083	1P4799	CLEVIS,ROD END	4
30	PFFZZ	2530011640017	11083	8E7630	BRAKE BAND AND LINI DEALER .... EXCHANGE ITEM, PN 0R2951	2
31	XAFZZ		11083	1P4802	.BAND ASSEMBLY	1
32	PFFZZ	5320001640917	11083	7B5060	.RIVET,LINNING	100
33	PAFZZ	2530013926628	11083	6Y2364	.LINING,FRICTION	10
34	PFFZZ	5365009486452	11083	8H8871	SHIM	4
35	PFFZZ	5340012579182	11083	8H0372	PLATE,MENDING	2
36	PFFZZ	3040009610649	11083	8H0352	SHAFT,BRAKE	4
37	PFFZZ	5340012584854	11083	5B2200	LOCKING PLATE,NUT A	4
38	PFFZZ	5305002528919	11083	0S0509	SCREW,CAP,HEXAGON H	8
39	PFFZZ	5342009486464	11083	6H4208	LOCKPLATE	1
40	PFFZZ	5306011954681	11083	3B1915	BOLT	5
41	PAFZZ	2530012540244	11083	9G7817	SUPPORT ASSEMBLY,BR	2
42	PFFZZ	5310000455001	96906	MS35340-50	WASHER,LOCK	8
43	PFFZZ	5306004239325	11083	4B4043	BOLT,MACHINE	8
44	PFFZZ	5315012542376	11083	9H8918	PIN,STRAIGHT,HEADLE	2

(1) ITEM NO	(2) SMR CODE	(3) NSN	(4) CAGEC	(5) PART NUMBER	(6) DESCRIPTION AND USABLE ON CODES (UOC)	(7) QTY
45	PAFZZ	2520011681030	11083	7S2668	SHAFT	2
46	PFFZZ	5315007102087	11083	1H1200	PIN,SPRING 4.76MM OD X 31.75MM LG	2
47	PFFZZ	5315010978383	11083	4H6996	PIN,SPRING 0.25" OD X 2.00" LG	2
48	PFFZZ	5306002264832	80204	B1821BH031C175N	BOLT,MACHINE	4
49	PFFZZ	5310006379541	80205	MS35338-46	WASHER,LOCK	2
50	PFFZZ	2590001955824	11083	5H6624	BRACKET,VEHICULAR C	2
51	PAFZZ	2520009483308	11083	1M4025	WEDGE	2
52	PFFZZ	3120002390939	11083	7S6140	BEARING,SLEEVE	1
53	PFFZZ		11083	1M3802	LEVER	1
54	PFFZZ	3120002390938	11083	7S6145	BEARING,SLEEVE	1
55	AFFFF		11083	4S9104	LEVER,REMOTE CONTRO	2
56	PFFZZ	3120002390939	11083	7S6140	.BEARING,SLEEVE	2
57	PFFZZ	3120004469860	11083	7S6144	.BEARING,SLEEVE	1
58	XAFZZ		11083	4S9106	.LEVER	1
59	PFFZZ	5310008807744	96906	MS51967-5	NUT,PLAIN,HEXAGON	4
60	PFFZZ	5340003308289	11083	2F6156	LOCKING PLATE,NUT A	4
61	PFFZZ	5306002637301	11083	0L1351	BOLT,MACHINE	2
62	PFFZZ	3120011604111	11083	1P1650	ROLLER,LINEAR-ROTAR	2
				END OF FIGURE		

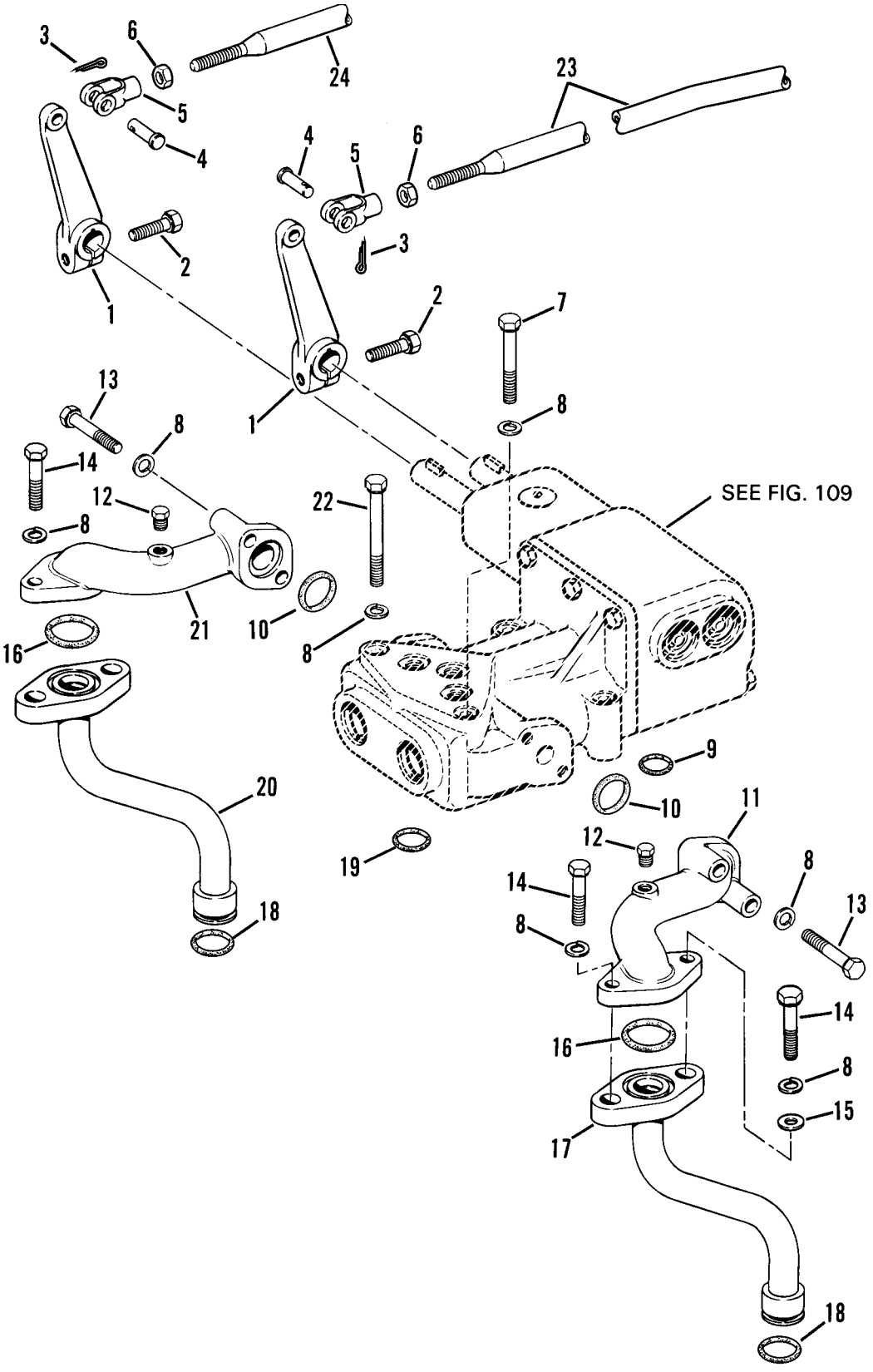

Figure 106. Steering Control Valve Lines and Linkage

(1) ITEM NO	(2) SMR CODE	(3) NSN	(4) CAGEC	(5) PART NUMBER	(6) DESCRIPTION AND USABLE ON CODES (UOC)	(7) QTY
					GROUP 1403 STEERING BRAKES	
					FIG. 106 STEERING CONTROL VALVE LINES AND LINKAGE	
1	PFOZZ	3040012541173	11083	3D8525	LEVER,REMOTE CONTRO	2
2	PFOZZ	5305000680511	80204	B1821BH038C125N	SCREW,CAP,HEXAGON H	2
3	PFOZZ	5315008395821	80205	MS24665-351	PIN,COTTER	6
4	PFOZZ	5315002726760	11083	1B0676	PIN,STRAIGHT,HEADED	4
5	PFOZZ	5340010533843	11083	1M1341	CLEVIS,ROD END	1
6	PFOZZ	5310009752075	96906	MS35691-21	NUT,PLAIN,HEXAGON	1
7	PFOZZ	5305008798351	96906	MS35307-371	SCREW,CAP,HEXAGON H	2
8	PFOZZ	5310006379541	80205	MS35338-46	WASHER,LOCK	8
9	PFOZZ	5331009143320	09990	2-312S1032-70	O-RING	1
10	PAOZZ	5331009977230	11083	8M4988	O-RING	2
11	PFOZZ	4730004010306	11083	3S2471	ELBOW,STEERING	1
12	PFOZZ	4730009247886	11083	5M6214	PLUG,PIPE	2
13	PFOZZ	5306006982150	11083	0L2070	BOLT,MACHINE	4
14	PFOZZ	5306010949106	11083	0S1590	BOLT,MACHINE	4
15	PFOZZ	5310001174788	11083	9Y2695	WASHER,FLAT	2
16	PFOZZ	5331009254778	09990	2-219S1032-70	O-RING	2
17	PFOZZ	4710002236520	11083	2S4299	TUBE ASSEMBLY,METAL	1
18	PFOZZ	5331009995504	11083	8M4446	O-RING	2
19	PFOZZ	5331006136499	11083	1S0004	O-RING	2
20	PFOZZ	4710002236521	11083	2S4300	TUBE ASSEMBLY,METAL	1
21	PFOZZ	4730003498975	11083	3S2472	ELBOW,FLANGE	1
22	PFOZZ	5306002851368	11083	L1143	BOLT,MACHINE	2
23	PFOZZ	5306012708543	11083	3P6904	ROD,THREADED END	1
24	PFOZZ	5306012708544	11083	3P6906	ROD,THREADED END	1
				END OF FIGURE		

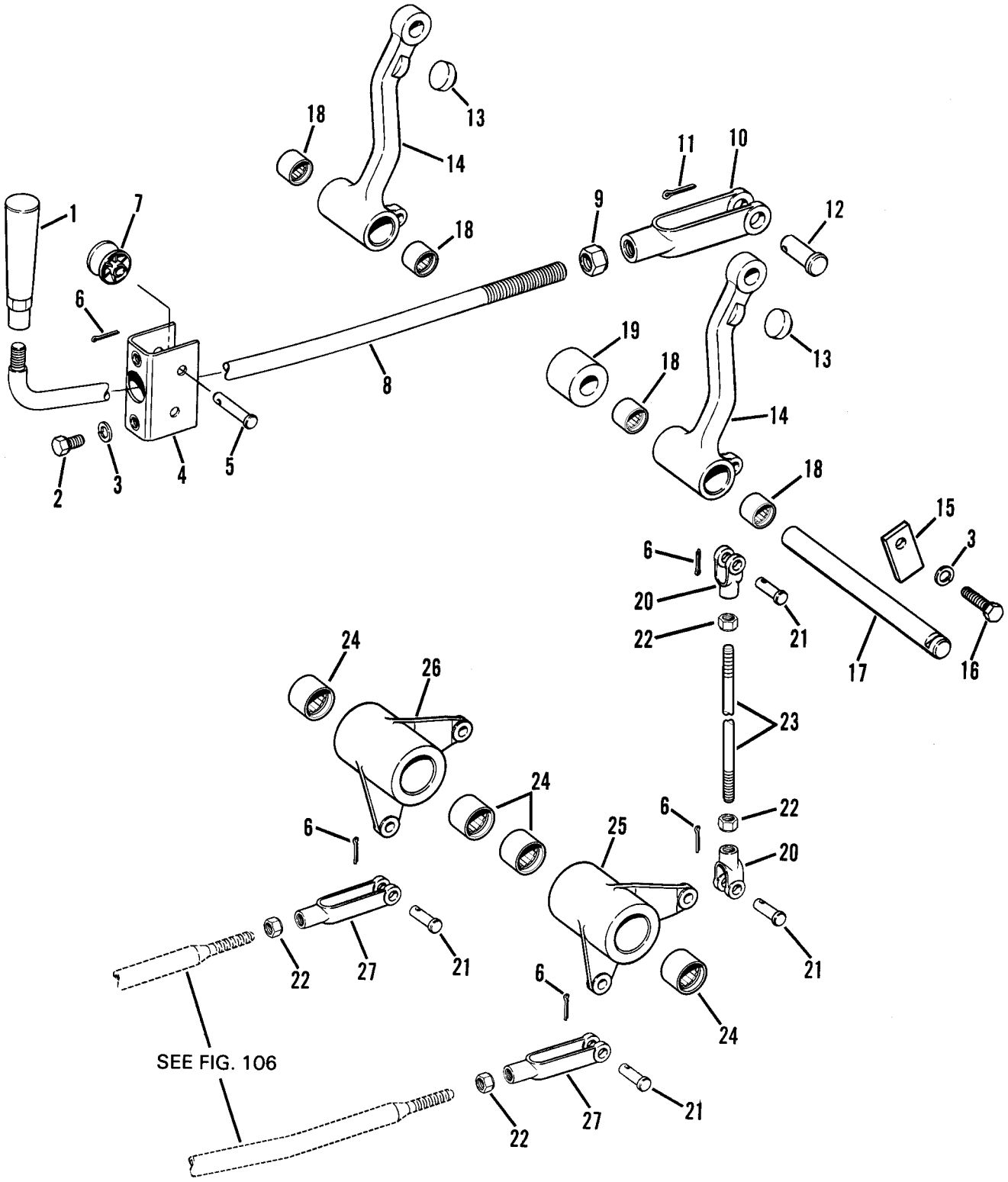

Figure 107. Steering Clutch Control Lever Linkage

(1) ITEM NO	(2) SMR CODE	(3) NSN	(4) CAGEC	(5) PART NUMBER	(6) DESCRIPTION AND USABLE ON CODES (UOC)	(7) QTY
					GROUP 1403 STEERING BRAKES	
					FIG. 107 STEERING CLUTCH CONTROL LEVER LINKAGE	
1	PFOZZ	2520003627883	11083	0L0829	HANDLE,CLUTCH LEVER	2
2	PFOZZ	5305007215492	80204	B1821BH038C063N	SCREW,CAP,HEXAGON H	4
3	PFOZZ	2530009489748	11083	9M6775	LOCK PLATE	8
3	PFOZZ	5310006379541	80205	MS35338-46	WASHER,LOCK	9
4	PAOZZ	5340012580150	11083	3P3525	BRACKET,ANGLE	2
5	PFOZZ	5315011647583	11083	1A8827	PIN,STRAIGHT,HEADED	4
6	PFOZZ	5315008395821	80205	MS24665-351	PIN,COTTER	6
7	PFOZZ	2530010690791	11083	1P2878	ROLLER	4
8	PFOZZ	5306012573822	11083	7G3338	ROD,THREADED END	2
9	PFOZZ	5310007638905	96906	MS51968-20	NUT,PLAIN,HEXAGON	2
10	PFOZZ	5342010687178	11083	9S1314	ROD END	2
11	PFOZZ	5315008395822	80205	MS24665-353	PIN,COTTER	2
12	PFOZZ	5315010668470	11083	9S1315	PIN,STRAIGHT,HEADED	2
13	PFOZZ	5340006644610	70485	2250	BUMPER,NONMETALLIC	2
14	PAOZZ	3040012674365	11083	3P2399	BELL CRANK	2
15	PFOZZ	2530012530440	11083	6P6253	LOCK,SHAFT	1
16	PFOZZ	5305002528919	11083	0S0509	SCREW,CAP,HEXAGON H	1
17	PFOZZ	2530010690799	11083	3P3952	SHAFT	1
18	PFOZZ	3110009306289	60380	JTT1211	BEARING,ROLLER,NEED	4
19	PFOZZ	5365009486480	11083	9H3273	SPACER,SLEEVE	1
20	PFOZZ	5340010533843	11083	1M1341	CLEVIS,ROD END	4
21	PFOZZ	5315002726760	11083	1B0676	PIN,STRAIGHT,HEADED	8
22	PFOZZ	5310009752075	96906	MS35691-21	NUT,PLAIN,HEXAGON	6
23	PFOZZ	5306012593716	11083	4D8991	ROD,THREADED END	2
24	PFOZZ	3110010669172	11083	6K8088	BEARING	4
25	PFOZZ	3040012535578	11083	3P3527	BELL CRANK	1
26	PFOZZ	3040012541280	11083	3P3528	BELL CRANK	1
27	PFOZZ	5340009850823	80205	MS35812-4	CLEVIS,ROD END	2
				END OF FIGURE		

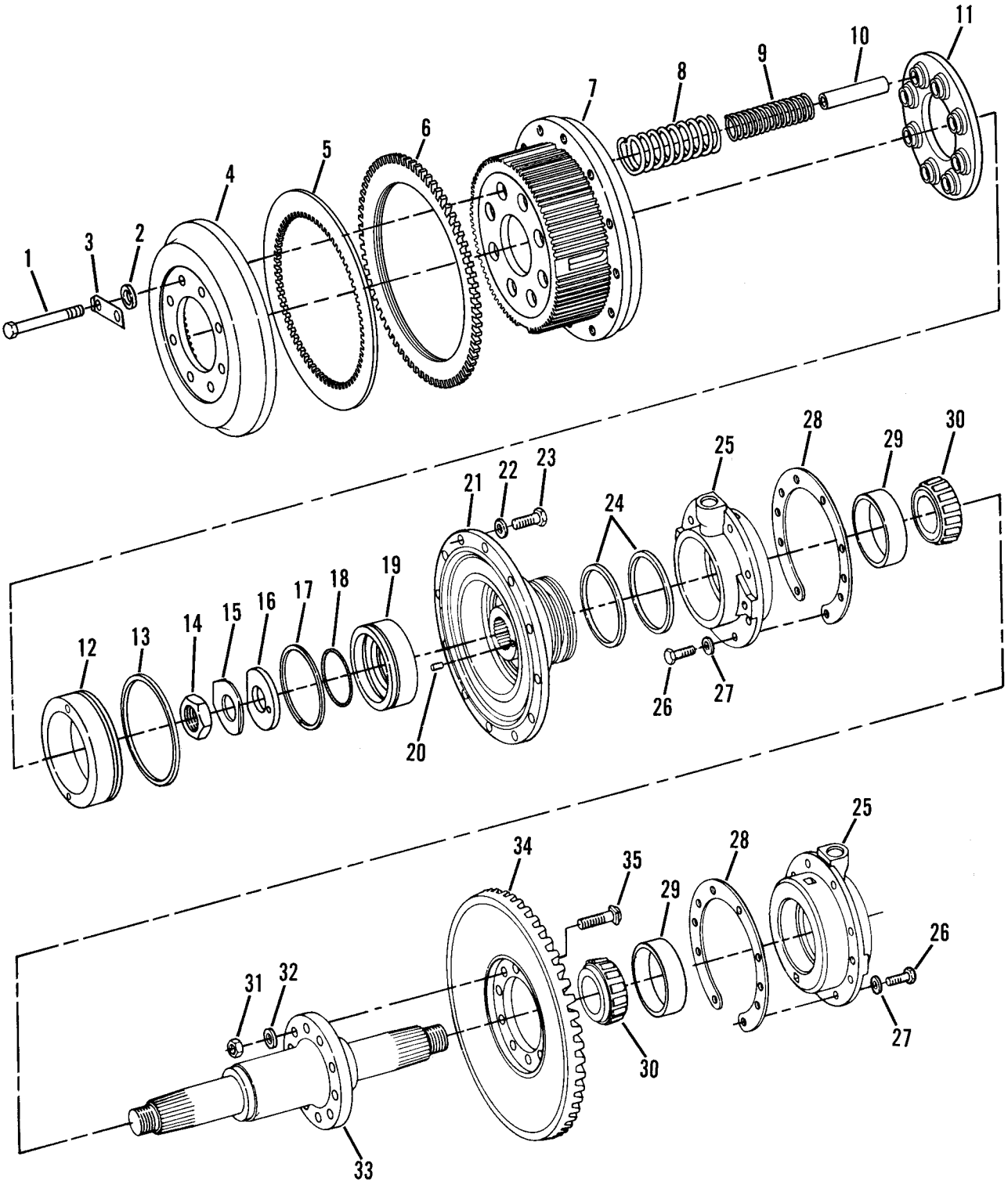

Figure 108. Steering Clutch

(1) ITEM NO	(2) SMR CODE	(3) NSN	(4) CAGEC	(5) PART NUMBER	(6) DESCRIPTION AND USABLE ON CODES (UOC)	(7) QTY
					GROUP 1403 STEERING BRAKES	
					FIG. 108 STEERING CLUTCH	
1	PFFZZ	5306008146559	11083	1D4595	BOLT,MACHINE	16
2	PFFZZ	5365003652281	11083	0L2119	SPACER,RING	16
3	PFFZZ	2530009489748	11083	9M6775	LOCK PLATE	8
4	PFFZZ	3020009104008	11083	5S0073	GEAR,INTERNAL	2
5	PFFZZ	2520001478491	79370	PP2	DISK,CLUTCH	14
6	PFFZZ	2520011630816	11083	9P9382	CLUTCH ASSEMBLY,FRI	16
7	PAFZZ	2530012545614	11083	3T1921	BRAKE DRUM	2
8	PFFZZ	5360012580931	11083	9S9613	SPRING,HELICAL,COMP	16
9	PFFZZ	5360009603633	11083	5M2059	SPRING,HELICAL,COMP	16
10	PFFZZ	5365012573310	11083	5S6720	SPACER,SLEEVE	16
11	PFFZZ	2530009490817	11083	1M9444	RETAINER	2
12	PFFZZ	3010009507143	11083	5M1988	DISK,CLUTCH	2
13	PFFZZ	5330009489776	11083	8M7438	PACKING,PREFORMED	2
14	PFFZZ	5310002537914	11083	0T0030	NUT,PLAIN,HEXAGON	2
15	PFFZZ	2530009490865	11083	5M1994	RETAINER	2
16	PFFZZ	5310001931033	11083	5M1991	WASHER,FLAT	2
17	PFFZZ	5331009489775	11083	8M7437	O-RING	2
18	PFFZZ	5330012071339	11083	2P3538	SEAL	2
19	PFFZZ	2520009490815	11083	5M1990	RETAINER,CLUTCH PLA	2
20	PFFZZ	5315005849792	10001	1592919	PIN,STRAIGHT,HEADLE	2
21	PFFZZ	2530009507468	11083	5M2026	HUB,DRIVE,CLUTCH	2
22	PFFZZ	5310010516946	11083	6N0130	WASHER,FLAT	10
23	PFFZZ	5306004263150	11083	1A8537	BOLT,MACHINE	24
24	PFFZZ	5330009489762	11083	4M3948	PACKING,PREFORMED	4
25	PFFZZ	2530009506897	11083	9S3955	CAGE,BEARING,GEAR	2
26	PFFZZ	5306011279361	11083	0S1585	BOLT,MACHINE	16
27	PFFZZ	5310008095997	96906	MS27183-17	WASHER,FLAT	16
28	PFFZZ	5365009490864	11083	5M2000	SHIM	2
29	PFFZZ	3110005549004	60038	HM212010	CUP,TAPERED ROLLER	2
30	PFFZZ	3110002938566	11083	6H3566	CONE AND ROLLERS,TA	2
31	PFFZZ	5310007638905	96906	MS51968-20	NUT,PLAIN,HEXAGON	10
32	PFFZZ	5310010954631	11083	5P8247	WASHER,FLAT	24
33	PFFZZ	3040004205498	11083	1P0956	SHAFT,SHOULDERED	1
34	PAFZZ	3020012541225	11083	2P3992	GEAR,BEVEL	1
35	PFFZZ	5306001649318	11083	4B0966	BOLT,MACHINE	10
				END OF FIGURE		

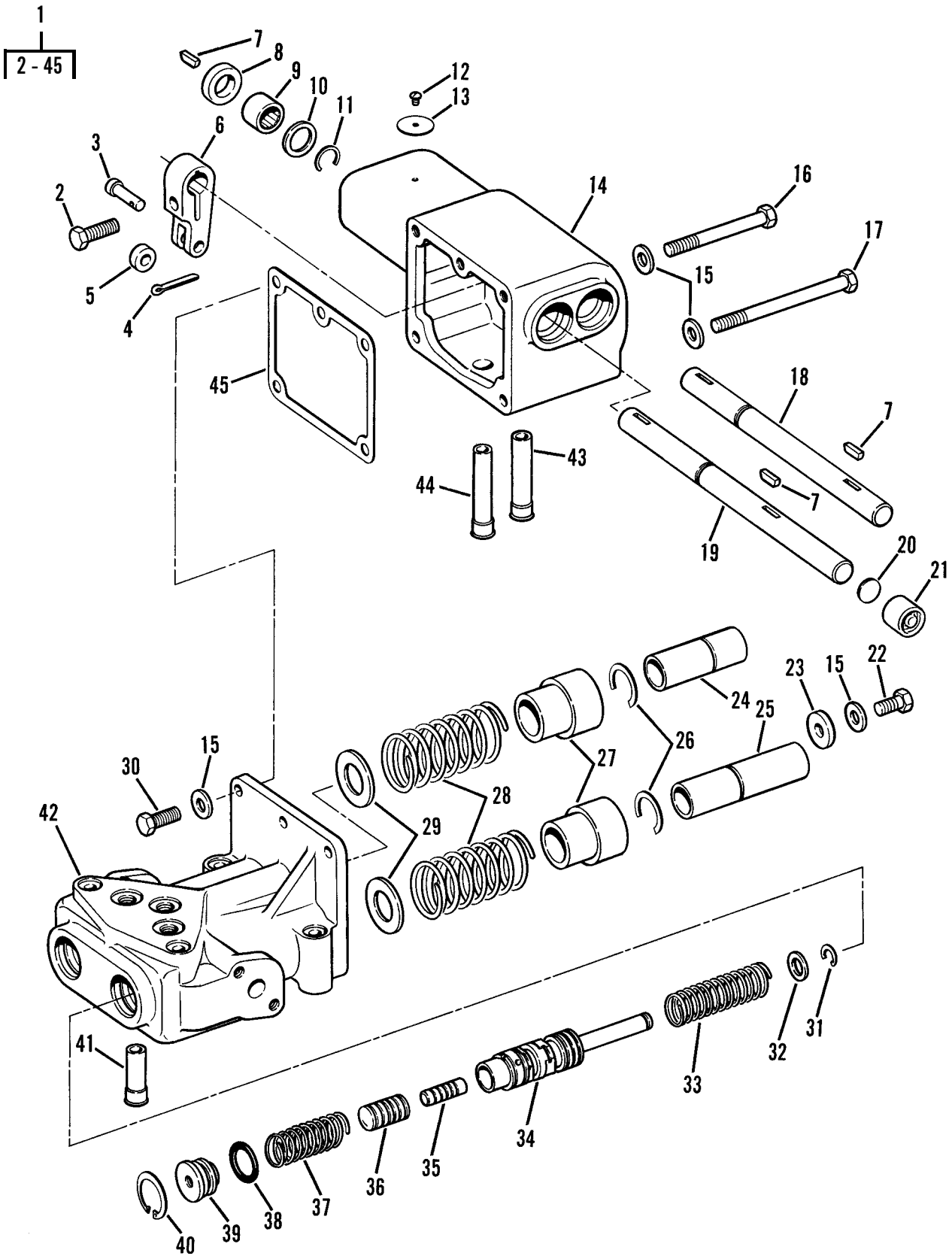

Figure 109. Steering Clutch Control Valve

(1) ITEM NO	(2) SMR CODE	(3) NSN	(4) CAGEC	(5) PART NUMBER	(6) DESCRIPTION AND USABLE ON CODES (UOC)	(7) QTY
					GROUP 1414 STEERING SYSTEM VALVES	
					FIG. 109 STEERING CLUTCH CONTROL VALVE	
1	PFFFF	4820011801044	11083	9P7917	VALVE,LINEAR,DIRECT	1
2	PFFZZ	5305000680511	80204	B1821BH038C125N	.SCREW,CAP,HEXAGON H	2
3	PFFZZ	5315002726760	11083	1B0676	.PIN,STRAIGHT,HEADED	2
4	PFFZZ	5315008395821	80205	MS24665-351	.PIN,COTTER	2
5	PFFZZ	3120009486453	11083	2S8411	.ROLLER,LINEAR-ROTAR	2
6	XAFZZ		11083	2S8396	.LEVER,REMOTE CONTRO	2
7	PFFZZ	5315006165524	80205	MS35756-10	.KEY,WOODRUFF	4
8	PFFZZ	5330009192249	11083	9H0223	.SEAL,PLAIN ENCASED	2
9	XAFZZ		96906	MS17131-23	.BEARING,ROLLER,NEED	2
10	PFFZZ	5310002096512	19207	8392184	.WASHER,FLAT	2
11	PFFZZ	2530009494505	72800	421	.RING	2
12	PFFZZ	5305007083823	11083	7B3028	.SCREW,DRIVE	1
13	PFFZZ	9905012687578	11083	9P3206	.PLATE,DESIGNATION	1
14	PFFZZ	3040011637309	11083	8P8043	.HOUSING,MECHANICAL	1
15	PFFZZ	5310001174788	11083	9Y2695	.WASHER,FLAT	6
16	PFFZZ	5305002528906	11083	0T0065	.SCREW	1
17	PFFZZ	5306006374927	11083	1A5183	.BOLT,MACHINE	1
18	XAFZZ		11083	2S8395	.SHAFT,STRAIGHT	1
19	PFFZZ	3040009507343	11083	2S8380	.SHAFT,STRAIGHT	1
20	PFFZZ	5365012541309	11083	5S6876	.SPACER	2
21	PFFZZ	3110001836784	11083	3J7584	.BEARING,ROLLER,NEED	2
22	PFFZZ	5305002528919	11083	0S0509	.SCREW,CAP,HEXAGON H	1
23	PFFZZ	5310004135060	11083	3K0925	.WASHER,FLAT	1
24	PFFZZ	5315012701315	11083	9P7915	.PIN,GROOVED,HEADLES	1
25	PFFZZ	3120012708933	11083	9P7914	.BUSHING,SLEEVE	1
26	PFFZZ	5325002825047	11083	1H4148	.RING,RETAINING	2
27	PFFZZ	3120011666163	11083	9P7913	.BUSHING,SLEEVE	2
28	PFFZZ	5360010690812	11083	8S5753	.SPRING	2
29	PAFZZ	5310010850881	11083	2H1730	.WASHER	2
30	PFFZZ	5306002604508	11083	0S1594	.BOLT,MACHINE	3
31	PFFZZ	5325002562846	96906	MS16632-1050	.RING,RETAINING	2
32	PFFZZ	5310002213150	11083	0L1365	.WASHER,FLAT	2
33	PFFZZ	5360011702229	11083	5J4698	.SPRING	2
34	PFFZZ	4820012674334	11083	9P3204	.SLIDE,DIRECTIONAL C	2
35	PAFZZ	4820011600852	11083	3P3716	.SLIDE,DIRECTIONAL C	2
36	PAFZZ	4820012670503	11083	9P3203	.SLIDE,DIRECTIONAL C	2
37	PFFZZ	5360009502045	11083	2S8398	.SPRING,HELICAL,COMP	2
38	PFFZZ	5331009145821	11083	8M4445	.O-RING	2
39	PFFZZ	5365012542381	11083	2S8399	.PLUG,MACHINE THREAD	2
40	PFFZZ	5325002524753	96906	MS16625-1165	.RING,RETAINING	2
41	PFFZZ	4710004057326	11083	2S8412	.TUBE,METALLIC	1
42	XAFZZ		11083	6P0968	.HOUSING	1
43	PFFZZ	4710004057327	11083	2S8413	.TUBE,METALLIC	1
44	PFFZZ	4710011709234	11083	8S5716	.TUBE METALLIC,PRECU	1
45	PFFZZ	5330009121586	11083	2S8414	.GASKET	1
					END OF FIGURE	

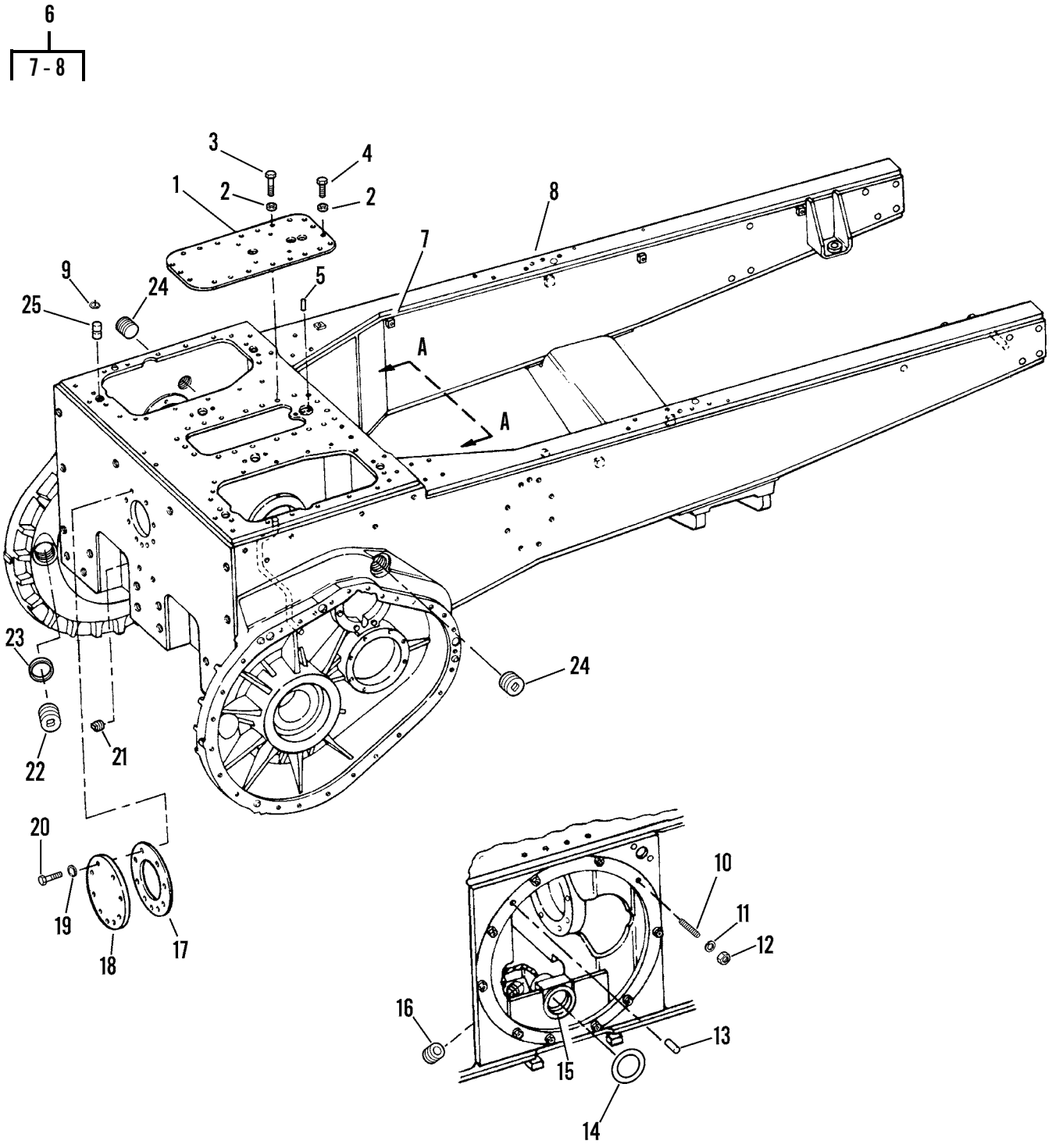

Figure 110. Frame and Case

(1) ITEM NO	(2) SMR CODE	(3) NSN	(4) CAGEC	(5) PART NUMBER	(6) DESCRIPTION AND USABLE ON CODES (UOC)	(7) QTY
					GROUP 15 FRAME, TOWING ATTACHMENTS, DRAWBARS, AND ARTICULATION SYSTEMS	
					GROUP 1501 FRAME ASSEMBLY	
					FIG. 110 FRAME AND CASE	
1	PFFZZ	5342012703778	11083	3P5961	PLATE,SPECIAL	1
2	PFFZZ	5310004705567	11083	8M9024	WASHER,FLAT	21
3	PFFZZ	5305010156841	11083	0S1591	SCREW	3
4	PFFZZ	5306002604508	11083	0S1594	BOLT,MACHINE	18
5	PFFZZ	5315002468066	11083	2L3650	PIN,STRAIGHT,HEADLE	1
6	XBFZZ		11083	5R7979	CASE ASSY, FRAME	1
7	PAFZZ	5310012736260	11083	6B7724	.NUT,PLAIN,PENTAGON	2
8	XBFZZ		11083	3P4467	.CASE ASSY	1
9	PFFZZ	5325005593901	11083	4L6943	RING,RETAINING	4
10	PFFZZ	5307004097212	11083	9H5999	STUD,PLAIN	10
11	PFFZZ	5310000455001	96906	MS35340-50	WASHER,LOCK	10
12	PFFZZ	5310007638905	96906	MS51968-20	NUT,PLAIN,HEXAGON	10
13	PFFZZ	5315008468429	11083	3B2225	PIN,STRAIGHT,HEADLE	1
14	PFFZZ	5331009486040	11083	1M6036	O-RING	1
15	PFFZZ	5365012704450	11083	2M0445	SPACER,RING	1
16	PFFZZ	4730004078330	11083	5S4017	PLUG,PIPE,MAGNETIC	3
17	PFOZZ	5330001497248	11083	2A1466	GASKET ..... UOC:GRC,RIP	1
18	PFOZZ	2520005693839	11083	2A1465	COVER,TRANSMISSION ..... UOC:GRC,RIP	1
19	PFOZZ	5310000455001	96906	MS35340-50	WASHER,LOCK ..... UOC:GRC,RIP	9
20	PFOZZ	5305007247218	80204	B1821BH063C100N	SCREW,CAP,HEXAGON H ..... UOC:GRC,RIP	9
21	PFOZZ	4730002790985	59462	95246	PLUG,PIPE	2
22	PFOZZ	5365004238098	11083	0L0827	PLUG,MACHINE THREAD	2
23	PFOZZ	5330001412476	75165	920	GASKET	2
24	PFOZZ	4730011711981	11083	7B9665	PLUG,PIPE	2
25	PFFZZ		11083	8M2615	PIN,GROOVED,HEADLES	4
				END OF FIGURE		

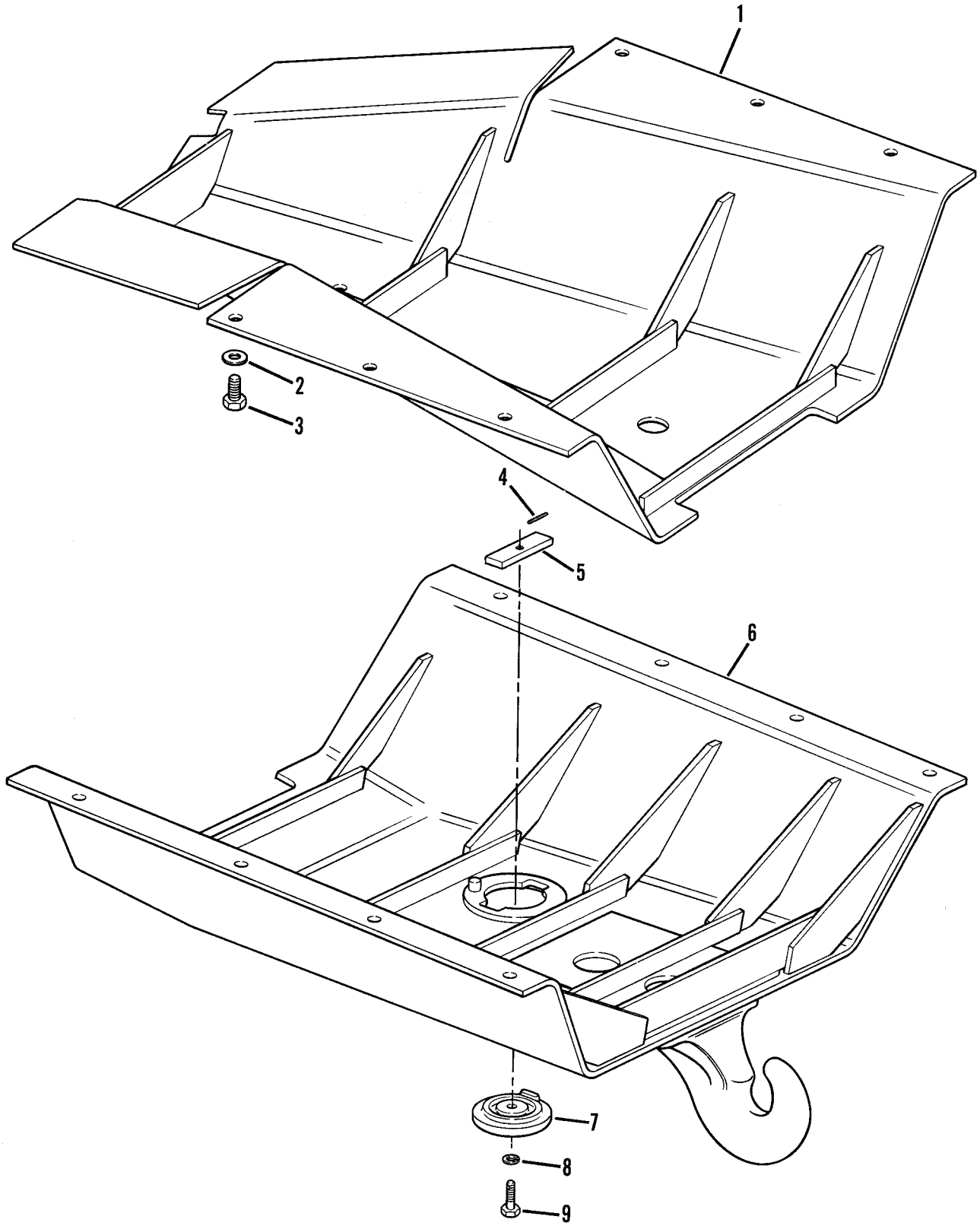

Figure 111. Crankcase Guard

(1) ITEM NO	(2) SMR CODE	(3) NSN	(4) CAGEC	(5) PART NUMBER	(6) DESCRIPTION AND USABLE ON CODES (UOC)	(7) QTY
					GROUP 18 BODY, CAB, HOOD, AND HULL	
					GROUP 1801 BODY, CAB, HOOD, AND HULL ASSEMBLIES	
					FIG. 111 CRANKCASE GUARD	
1	PFOZZ	2510012534675	11083	6P1874	GUARD,MECHANICAL DR	1
2	PFOZZ	5310004191363	11083	2S0115	WASHER,FLAT	14
3	PFOZZ	5306008146588	11083	0S1626	BOLT,MACHINE	14
4	PFOZZ	5315008119214	00141	A1-13	PIN,STRAIGHT,HEADLE	1
5	PFOZZ	5310002240529	11083	2S9434	NUT STRIP	1
6	PFOZZ	3830012538631	11083	6P1872	GUARD ASSEMBLY,HOOK	1
7	PFOZZ	5340001958288	11083	8S8673	COVER,ACCESS	1
8	PFOZZ	5310005845272	80205	MS35338-48	WASHER,LOCK	1
9	PFOZZ	5305002537629	11083	2S9732	SCREW,CAP,HEXAGON H	1
				END OF FIGURE		

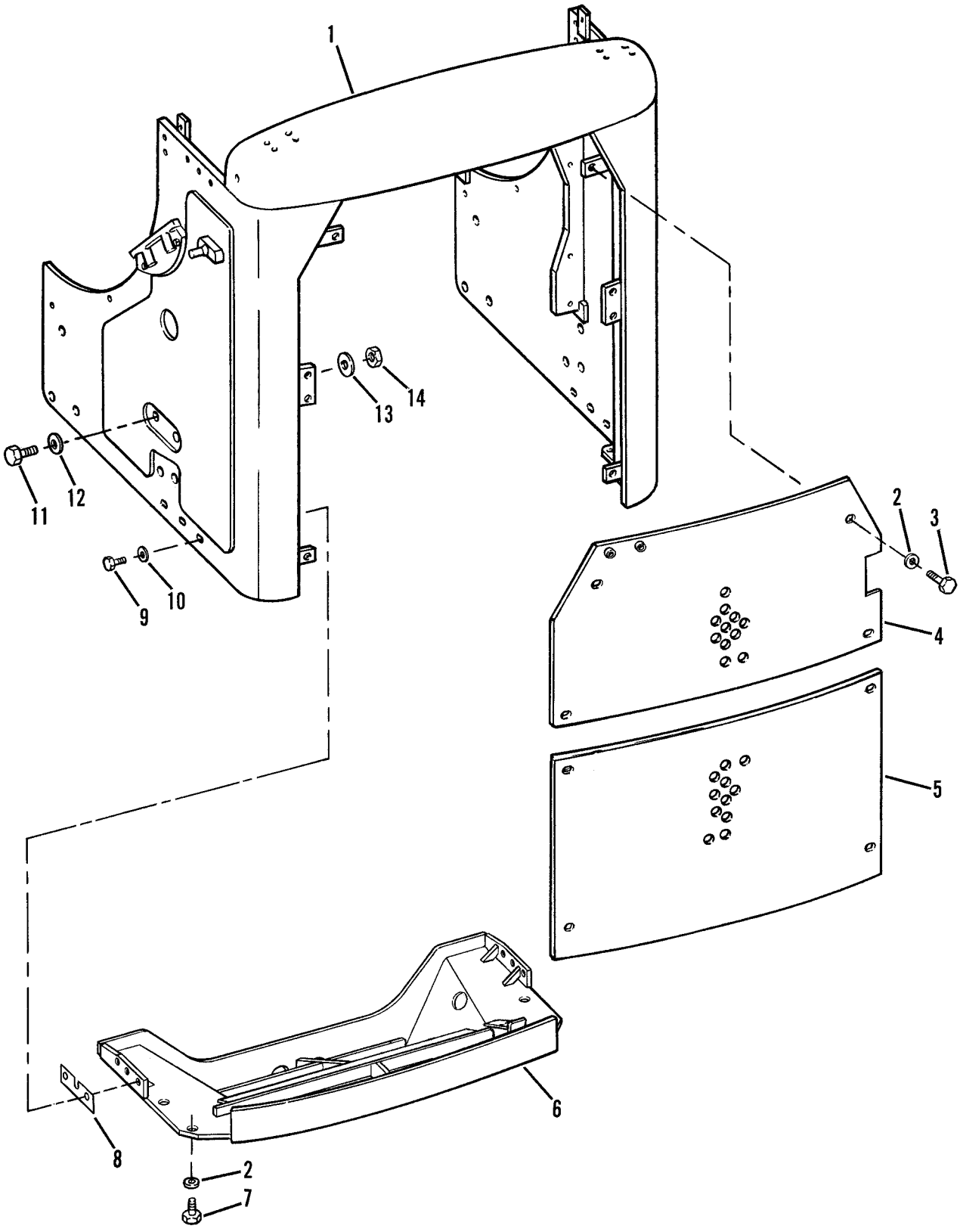

Figure 112. Radiator Guard

(1) ITEM NO	(2) SMR CODE	(3) NSN	(4) CAGEC	(5) PART NUMBER	(6) DESCRIPTION AND USABLE ON CODES (UOC)	(7) QTY
					GROUP 1801 BODY, CAB, HOOD, AND HULL ASSEMBLIES	
					FIG. 112 RADIATOR GUARD	
1	PFOZZ	2930012537390	11083	5R6927	SHROUD,FAN,RADIATOR	1
2	PFOZZ	5310009517209	96906	MS27183-22	WASHER,FLAT	12
3	PFOZZ	5306002755012	11083	0S1566	BOLT,MACHINE	8
4	PFOZZ	2510012874547	11083	5R7977	GRILLE,RADIATOR,VEH	1
5	PFOZZ	2510012534647	11083	3P8275	GRILLE,RADIATOR,VEH	1
6	PFOZZ	2930013169178	11083	5R7978	SHROUD,FAN,RADIATOR	1
7	PFOZZ	5306004238116	89926	281047	BOLT,MACHINE	4
8	PFOZZ	5365012574354	11083	3T3993	SPACER,PLATE	10
9	PFOZZ	5306004240086	11083	7B3235	BOLT,MACHINE	6
10	PFOZZ	5310008095998	96906	MS27183-18	WASHER,FLAT	6
11	PFOZZ	5306004263412	11083	1D4643	BOLT,MACHINE	14
12	PFOZZ	5310011840911	11083	5F6562	WASHER,FLAT	14
13	PFOZZ	5310012101675	11083	6V5734	WASHER,FLAT	14
14	PFOZZ	5310007626248	96906	MS51967-29	NUT,PLAIN,HEXAGON	14
				END OF FIGURE		

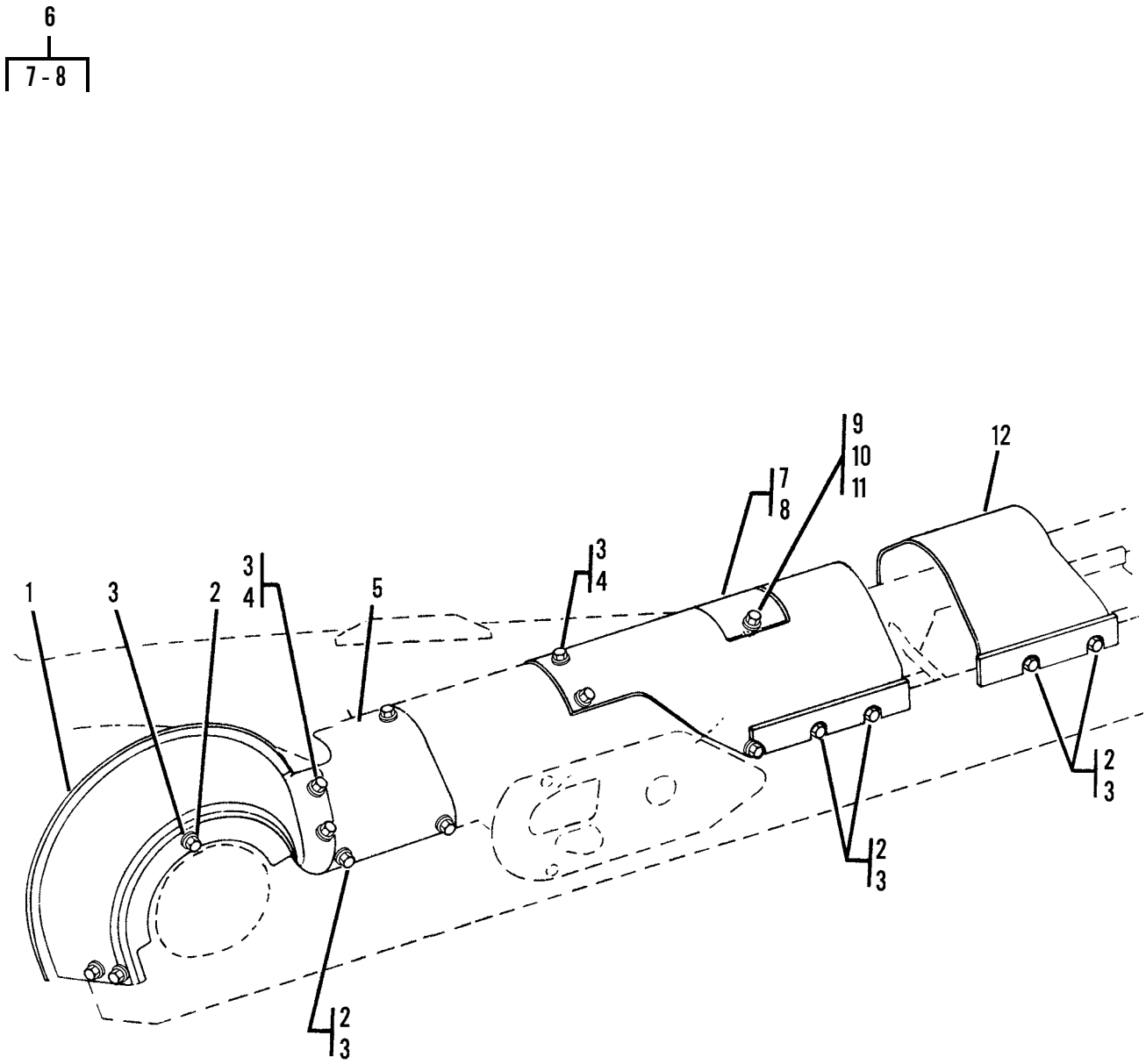

Figure 113. Recoil Mechanism Guard

(1) ITEM NO	(2) SMR CODE	(3) NSN	(4) CAGEC	(5) PART NUMBER	(6) DESCRIPTION AND USABLE ON CODES (UOC)	(7) QTY
					GROUP 1801 BODY, CAB, HOOD, AND HULL ASSEMBLIES	
					FIG. 113 RECOIL MECHANISM GUARD	
1	PFOZZ	2510001044478	11083	3S3917	GUARD ASSEMBLY,SPRO RH	1
1	PFOZZ	2530004211313	11083	3S3918	GUARD ASSEMBLY,TRAC LH	1
2	PFOZZ	5306008744001	11083	6H1717	BOLT,MACHINE	34
3	PFOZZ	5310010976720	11083	5P1076	WASHER,SHOULDERED A	44
4	PFOZZ	5306004240086	11083	7B3235	BOLT,MACHINE	10
5	PFOZZ	3020012538665	11083	8P6275	GUARD,MECHANICAL DR RH	1
5	PFOZZ	2530002236534	11083	8P6274	GUARD,TRACK ROLLER LH	1
6	PFOZZ	2510012534672	11083	6P5172	GUARD,MECHANICAL DR RH	1
6	PFOZZ	2510012541124	11083	6P5173	GUARD,MECHANICAL DR LH	1
7	PFOZZ	5305007083823	11083	7B3028	.SCREW,DRIVE	4
8	PFOZZ	9905011680972	11083	1S5242-4	.PLATE,INSTRUCTION	1
9	PFOZZ	5306011954681	11083	3B1915	BOLT	2
10	PFOZZ	5310000806004	96906	MS27183-14	WASHER,FLAT	2
11	PFOZZ	5310007320558	96906	MS51967-8	NUT,PLAIN,HEXAGON	2
12	PFOZZ	2510012538664	11083	3P4197	GUARD,MECHANICAL DR	2
				END OF FIGURE		

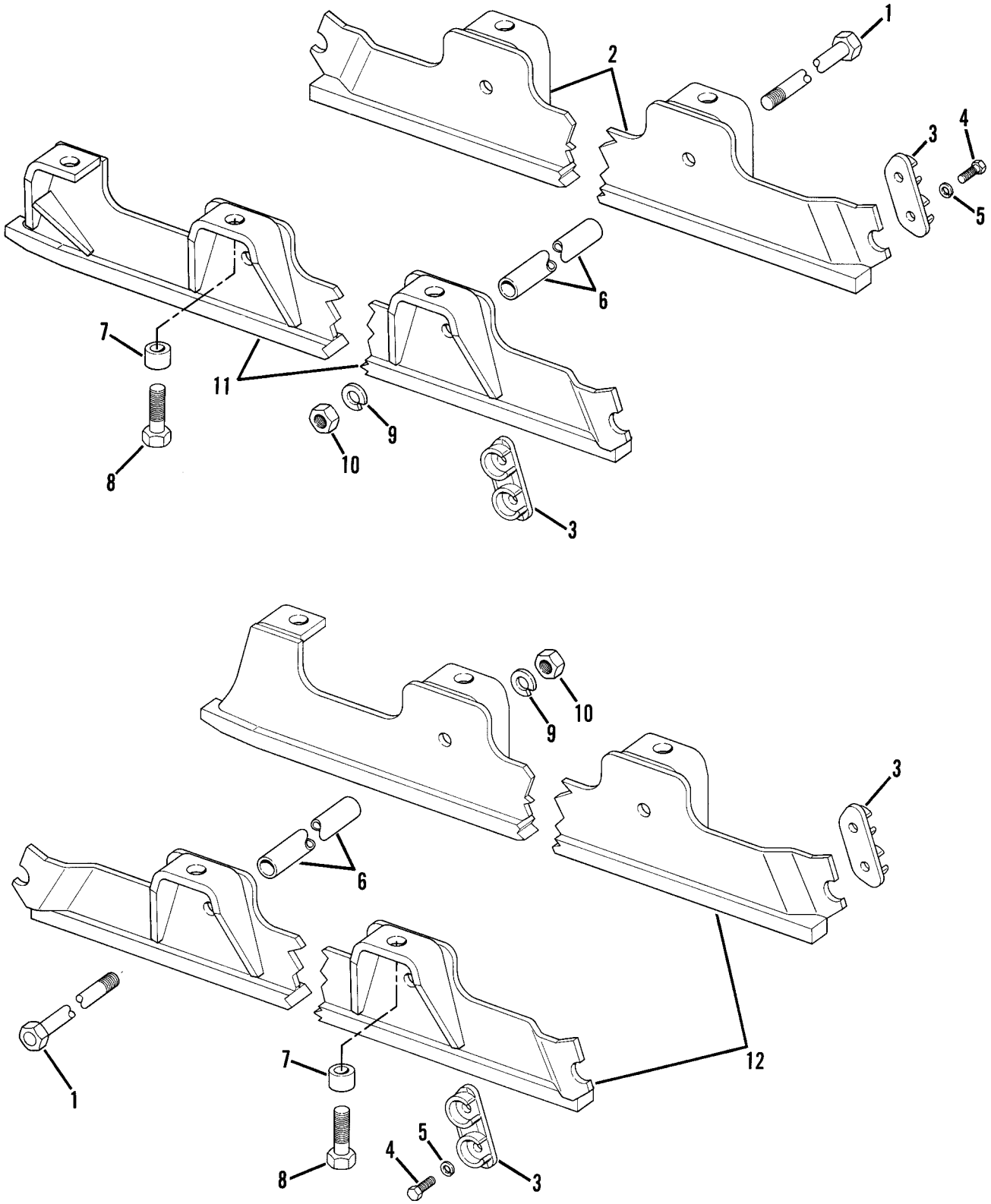

Figure 114. Track Roller Guard

(1) ITEM NO	(2) SMR CODE	(3) NSN	(4) CAGEC	(5) PART NUMBER	(6) DESCRIPTION AND USABLE ON CODES (UOC)	(7) QTY
					GROUP 1801 BODY, CAB, HOOD, AND HULL ASSEMBLIES	
					FIG. 114 TRACK ROLLER GUARD	
1	PFOZZ	5306000508432	11083	8H1383	ROD,THREADED END	10
2	PFOZZ	2530012541125	11083	6P7625	GUARD,MECHANICAL DR RIGHT-HAND INNER	1
3	PFOZZ	2590012362281	11083	2M4668	RETAINER,GUARD,TRAC	6
4	PFOZZ	5306011279361	11083	0S1585	BOLT,MACHINE	12
5	PFOZZ	5310005845272	80205	MS35338-48	WASHER,LOCK	12
6	PFOZZ	5365004263985	11083	2F0025	SPACER,SLEEVE	10
7	PFOZZ	5365012573306	11083	3P8283	SPACER,SLEEVE	22
8	PFOZZ	5305001500967	11083	1D4626	SCREW,CAP,HEXAGON H	22
9	PFOZZ	5310007542005	80205	MS35338-52	WASHER,LOCK	20
10	PFOZZ	5310007638912	96906	MS51968-26	NUT,PLAIN,HEXAGON	10
11	PFOZZ	2530012541126	11083	6P7626	GUARD,MECHANICAL DR LEFT-HAND . INNER	1
12	PFOZZ	2530012541127	11083	6P7627	GUARD,MECHANICAL DR OUTER	2
				END OF FIGURE		

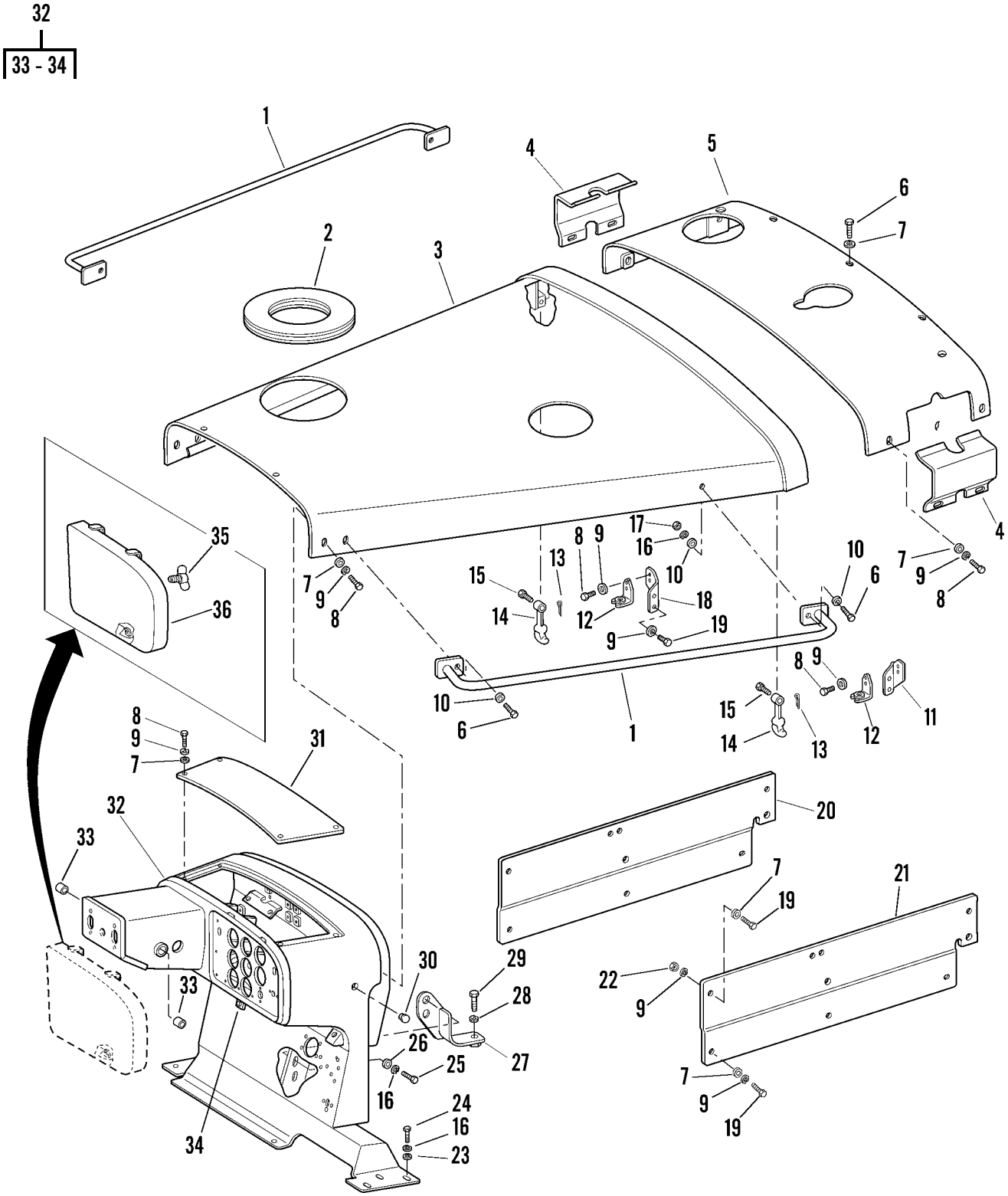

Figure 115. Hood and Dash Panel

(1) ITEM NO	(2) SMR CODE	(3) NSN	(4) CAGEC	(5) PART NUMBER	(6) DESCRIPTION AND USABLE ON CODES (UOC)	(7) QTY
					GROUP 1801 BODY, CAB, HOOD, AND HULL ASSEMBLIES	
					FIG. 115 HOOD AND DASH PANEL	
1	PFOZZ	5340012580340	11083	8P9834	HANDLE,BOW	2
2	PFOZZ	5330012652129	11083	8K4889	GASKET	1
3	PFOZZ	2510012534654	11083	8P4772	HOOD,ENGINE COMPART	1
4	PFOZZ	5340012593749	11083	3T4476	COVER,ACCESS	2
5	PFOZZ	5340012559401	11083	9P0862	COVER,ACCESS	1
6	PFOZZ	5306004238117	11083	0S1595	BOLT,MACHINE	4
7	PFOZZ	5310008094061	96906	MS27183-15	WASHER,FLAT	25
8	PFOZZ	5306002637301	11083	0L1351	BOLT,MACHINE	19
9	PFOZZ	5310006379541	80205	MS35338-46	WASHER,LOCK	33
10	PFOZZ	5310010976720	11083	5P1076	WASHER,SHOULDERED A	8
11	PFOZZ	2510002304093	11083	4S6663	BRACKET ASSEMBLY RI	1
12	PFOZZ	5340004909869	11083	2S2109	BRACKET,ANGLE	2
13	PFOZZ	5315008392326	80205	MS24665-281	PIN,COTTER	2
14	PFOZZ	5342004101903	11083	9M3835	LATCH,HOOD	2
15	PFOZZ	5315007161056	19204	7161056	PIN,STRAIGHT,HEADED	2
16	PFOZZ	5310005845272	80205	MS35338-48	WASHER,LOCK	8
17	PFOZZ	5310007680318	96906	MS51967-14	NUT,PLAIN,HEXAGON	4
18	PFOZZ	5340012593689	11083	4S6664	BRACKET,ANGLE	1
19	PFOZZ	5306002604508	11083	0S1594	BOLT,MACHINE	14
20	PFOZZ	2510012534674	11083	5R7806	GUARD,MECHANICAL DR	1
21	PFOZZ	2510012534673	11083	3P3065	GUARD,MECHANICAL DR	1
22	PFOZZ	5310014297859	11083	6V8801	NUT,PLAIN,HEXAGON	2
23	PFOZZ	5310008095997	96906	MS27183-17	WASHER,FLAT	6
24	PFOZZ	5306002638978	11083	0S1587	BOLT,MACHINE	6
25	PFOZZ	5306011279361	11083	0S1585	BOLT,MACHINE	2
26	PFOZZ	5310001484759	77445	104749	WASHER,FLAT	2
27	PFOZZ	3040012571620	11083	3P7065	BRACKET,EYE,NONROTA	1
28	PFOZZ	5310005847888	96906	MS35338-51	WASHER,LOCK	1
29	PFOZZ	5306004238069	11083	0L1178	BOLT,MACHINE	1
30	PFOZZ	5340012598962	23540	437	CAP,PROTECTIVE,DUST	1
31	PFOZZ	2540004070417	11083	9H4351	COVER,DASH	1
32	PAFZZ	2540012539487	11083	5R7805	INSTRUMENT PANEL,CA	1
33	PFOZZ	3120004788919	11083	5H6822	.BEARING,SLEEVE	2
34	PFOZZ	5340012547175	11083	7M3222	.EYE,PADLOCK	1
35	PFOZZ	5305012707335	11083	4K0487	THUMBSCREW	1
36	PFOZZ	5340012740865	11083	2P9372	COVER,ACCESS	1
				END OF FIGURE		

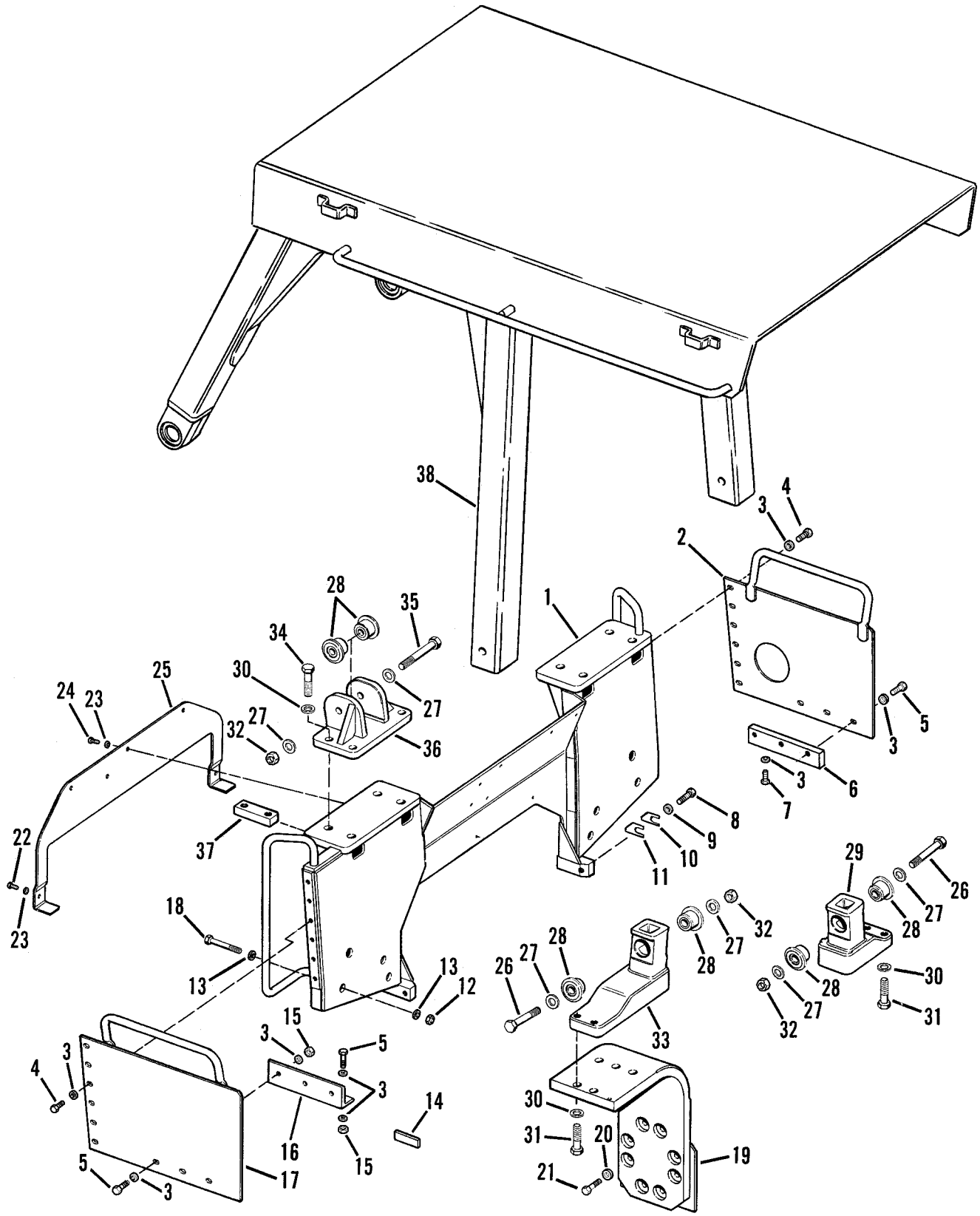

Figure 116. ROPS Mounting

(1) ITEM NO	(2) SMR CODE	(3) NSN	(4) CAGEC	(5) PART NUMBER	(6) DESCRIPTION AND USABLE ON CODES (UOC)	(7) QTY
					GROUP 1801 BODY, CAB, HOOD, AND HULL ASSEMBLIES	
					FIG. 116 ROPS MOUNTING	
1	PFOZZ	2510012539485	11083	6P6464	SUPPORT ASSEMBLY,RO	1
2	PFOZZ	2510012539484	11083	8P9827	PLATE ASSEMBLY,ROLL	1
3	PFOZZ	5310010954631	11083	5P8247	WASHER,FLAT	28
4	PFOZZ	5306004238116	89926	281047	BOLT,MACHINE	12
5	PFOZZ	5305007247222	80204	B1821BH063C200N	SCREW,CAP,HEXAGON H	8
6	PFOZZ	4730012545040	11083	5R6239	MANIFOLD,HYDRAULIC	1
7	PFOZZ	5306002755012	11083	0S1566	BOLT,MACHINE	3
8	PFOZZ	5306004238069	11083	0L1178	BOLT,MACHINE	2
9	PFOZZ	5310004191363	11083	2S0115	WASHER,FLAT	16
10	PFOZZ	5365012574347	11083	8P3293	SPACER,PLATE 1.00MM	4
11	PFOZZ	5365012573275	11083	8P3294	SPACER,PLATE 1.60MM	4
12	PFOZZ	5310007638921	96906	MS51967-23	NUT,PLAIN,HEXAGON	6
13	PFOZZ	5310002624789	29510	39422D	WASHER,FLAT	12
14	PFOZZ	5365012573282	11083	7L0631	SPACER,PLATE	2
15	PFOZZ	5310007638920	96906	MS51967-20	NUT,PLAIN,HEXAGON	5
16	PFOZZ	5340012584683	11083	6P6477	BRACKET,ANGLE	1
17	PFOZZ	2510012541077	11083	8P9828	FRAME SECTION,STRUC	1
18	PFOZZ	5305009474362	80204	B1821BH075C500N	SCREW,CAP,HEXAGON H	2
19	PFOZZ	2510012541078	11083	2P6405	FRAME SECTION,STRUC	2
20	PFOZZ	5310004191363	11083	2S0115	WASHER,FLAT	2
21	PFOZZ	5306004263139	11083	1A8063	BOLT,MACHINE	16
22	PFOZZ	5306002637301	11083	0L1351	BOLT,MACHINE	2
23	PFOZZ	5310008098541	96906	MS27183-27	WASHER,FLAT	5
24	PFOZZ	5305002528919	11083	0S0509	SCREW,CAP,HEXAGON H	3
25	PFOZZ	5340012701304	11083	5R6626	COVER,ACCESS	1
26	PFOZZ	5306002755014	11083	5B5473	BOLT,MACHINE	2
27	PFOZZ	5310010660506	11083	8J7415	WASHER	8
28	PFOZZ	3120012326641	11083	8P3729	BUSHING,SLEEVE	8
29	PFOZZ	2510012538657	11083	8P3730	FRAME SECTION,STRUC	1
30	PFOZZ	5310004709833	11083	3K5234	WASHER,FLAT	14
31	PFOZZ	5306010442199	11083	1D4638	BOLT,MACHINE	6
32	PFOZZ	5310007626248	96906	MS51967-29	NUT,PLAIN,HEXAGON	4
33	PFOZZ	2510012544967	11083	8P3731	FRAME SECTION,STRUC	1
34	PFOZZ	5305001362009	11083	8H5772	SCREW,CAP,HEXAGON H	8
35	PFOZZ	5306011939181	11083	2B7218	BOLT	2
36	PFOZZ	3040012539590	11083	8P4211	BRACKET,EYE,NONROTA	2
37	PFOZZ	5310012573232	11083	2P8515	NUT STRIP	4
38	PFOZZ	2510012385457	11083	6P5213	FRAME,STRUCTURAL,VE	1
				END OF FIGURE		

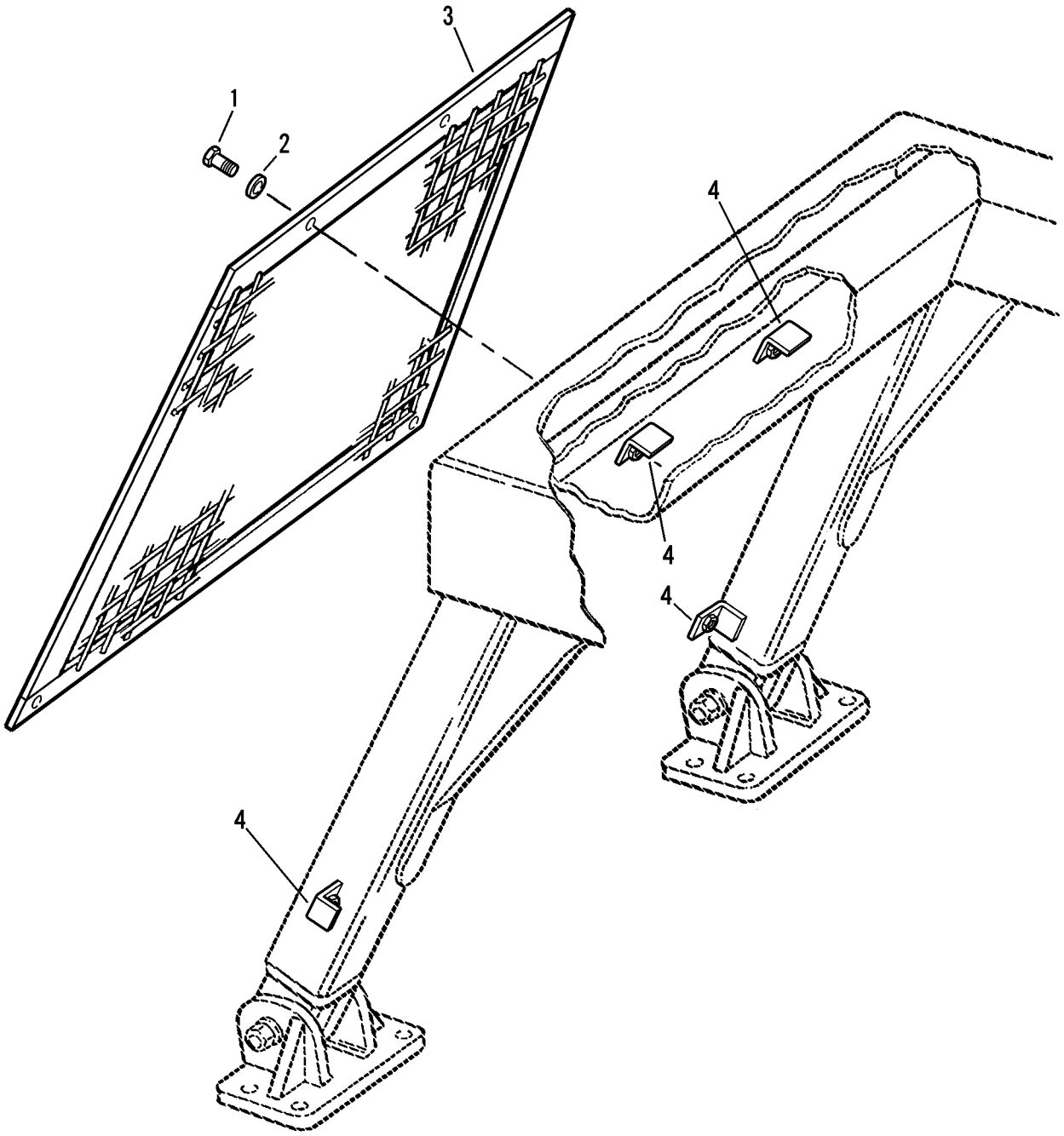

Figure 117. Protective Screen

(1) ITEM NO	(2) SMR CODE	(3) NSN	(4) CAGEC	(5) PART NUMBER	(6) DESCRIPTION AND USABLE ON CODES (UOC)	(7) QTY
					GROUP 1801 BODY, CAB, HOOD, AND HULL ASSEMBLIES	
					FIG. 117 PROTECTIVE SCREEN	
1	PFOZZ	5306004240086	11083	7B3235	BOLT,MACHINE ..... UOC:RIP,WIN	4
2	PFOZZ	5310008095997	96906	MS27183-17	WASHER,FLAT ..... UOC:RIP,WIN	4
3	PFOZZ	2510011840786	11083	6P6496	SCREEN ASSEMBLY ..... UOC:RIP,WIN	1
4	PFFZZ	5340012580141	11083	6P6502	BRACKET,ANGLE	4
					END OF FIGURE	

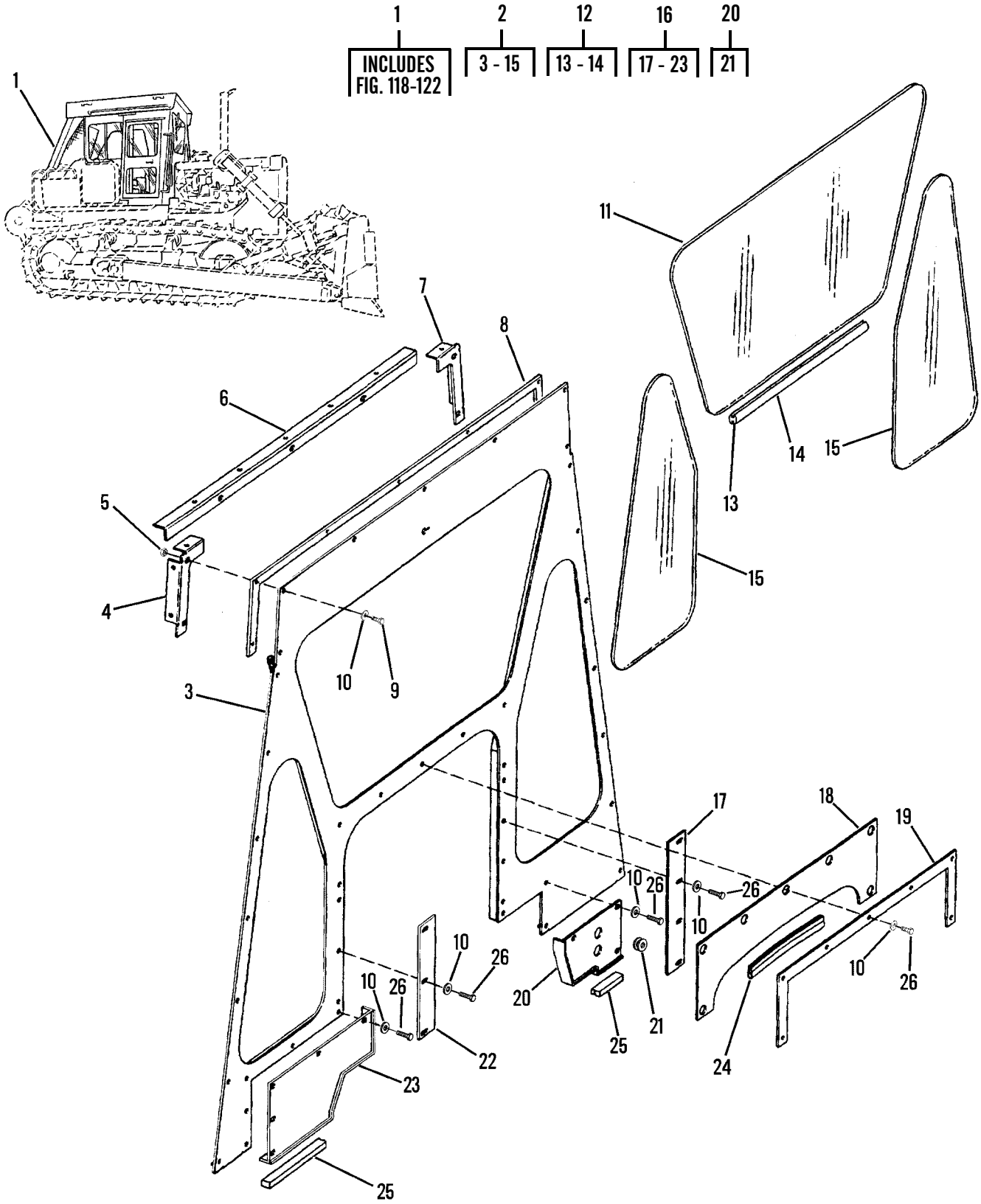

Figure 118. Winterized Cab and Front Section

(1) ITEM NO	(2) SMR CODE	(3) NSN	(4) CAGEC	(5) PART NUMBER	(6) DESCRIPTION AND USABLE ON CODES (UOC)	(7) QTY
					GROUP 1801 BODY, CAB, HOOD, AND HULL ASSEMBLIES	
					FIG. 118 WINTERIZED CAB AND FRONT SECTION	
1	PFOOO	2510012331612	4U735	169-900-002	CAB ASSEMBLY INCLUDES FIGURES . 118-122 UOC:GRC,GWC	1
2	PFOZZ	2510219143489	0RS15	1E08283	.PANEL,BODY,VEHICULA ..... UOC:GRC,GWC	1
3	PFOZZ	2510219143490	0RS15	1E08282	..PANEL,BODY,VEHICULA ..... UOC:GRC,GWC	1
4	PFOZZ	5340219142663	0RS15	1C08337-1	..BRACKET,ANGLE ..... UOC:GRC,GWC	1
5	PFOZZ	5310011831237	11083	9S8752	..NUT,PLAIN,HEXAGON ..... UOC:GRC,GWC	7
6	PFOZZ	5340219142670	0RS15	1B08273	..BRACKET,ANGLE ..... UOC:GRC,GWC	1
7	PFOZZ	5340219142662	0RS15	1C08337-2	..BRACKET,ANGLE ..... UOC:GRC,GWC	1
8	PAOZZ	5330013244004	4U735	1A08284	..GASKET ..... UOC:GRC,GWC	1
9	PFOZZ	5305000680511	80204	B1821BH038C125N	..SCREW,CAP,HEXAGON H ..... UOC:GRC,GWC	7
10	PFOZZ	5330006181654	83259	600-042-3/8	.PACKING WITH RETAIN ..... UOC:GRC,GWC	75
11	PFOZZ	2510219123610	1C834	R575120	..WINDOW,VEHICULAR ..... UOC:GRC,GWC	1
11	PFOZZ	9340219139706	0RS15	1D08468-1	..GLASS,SAFETY,SINGLE OPTIONAL WINDSHIELD GLASS USE WITH S-TYPE RUBBER 595869 UOC:GRC,GWC	1
12	MOOZZ		4U735	595546-30	..WEATHERSTRIP,ASSY 30 IN, MAKE FROM BULK P/N 522-206-001 UOC:GRC,GWC	1
12	MOOZZ		4U735	595869	..RUBBER,S-TYPE OPTIONAL S-TYPE, RUBBER USE WITH,1D08468-1,R575120 GLASS 39 IN, MAKE FROM SEAL P/N 5P5968 UOC:GRC,GWC	1
13	XDOZZ		98933	GCH2	...SEAL,NONMETALLIC ST ..... UOC:GRC,GWC	1
14	PCOZZ	5330013556790	4U735	595193	...RING,WIPER ..... UOC:GRC,GWC	1
15	PFOZZ	9340219139705	0RS15	575122	..GLASS,SAFETY,SINGLE ..... UOC:GRC,GWC	2
15	PFOZZ	9340012690057	4U735	522-003-077	..GLASS,SAFETY,SINGLE OPTIONAL USE WITH S-TYPE RUBBER 595869 UOC:GRC,GWC	2
16	PAOZZ	2510012678665	4U735	735-701-008	.PARTS KIT,CARGO HAT ..... UOC:GRC,GWC	1
17	PAOZZ	2510012674327	4U735	522-913-048	..PANEL,BODY,VEHICULA ..... UOC:GRC,GWC	1

(1) ITEM NO	(2) SMR CODE	(3) NSN	(4) CAGEC	(5) PART NUMBER	(6) DESCRIPTION AND USABLE ON CODES (UOC)	(7) QTY
18	PFOZZ	2510012676030	4U735	522-913-041	..PANEL,BODY,VEHICULA ..... UOC:GRC,GWC	1
19	PFOZZ	2510012676035	4U735	1B08301	..FRAME SECTION,STRUC ..... UOC:GRC,GWC	1
20	PAOZZ	2510012674326	4U735	406 200 008	..PANEL,BODY,VEHICULA ..... UOC:GRC,GWC	1
21	PFOZZ	5325005796134	96906	MS35489-80	...GROMMET,NONMETALLIC ..... UOC:GRC,GWC	2
22	PAOZZ	2510012674328	4U735	522-913-042	..PANEL,BODY,VEHICULA ..... UOC:GRC,GWC	1
23	PAOZZ	2510012674325	4U735	406 200 007	..PANEL,BODY,VEHICULA ..... UOC:GRC,GWC	1
24	MOOZZ		4U735	1A08466-36	.SEAL,RUBBER CUT TO FIT, MAKE . FROM SEAL P/N 5P7211 UOC:GRC,GWC	1
25	MOOZZ		4U735	595502-12	.CAB SEAL RUBBER CUT TO FIT, .. MAKE FROM RUBBER STRIP P/N 522-205-006 UOC:GRC,GWC	1
26	PFOZZ	5305009422196	80204	B1821BH038C100D	.SCREW,CAP,HEXAGON H ..... UOC:GRC,GWC	75
				END OF FIGURE		

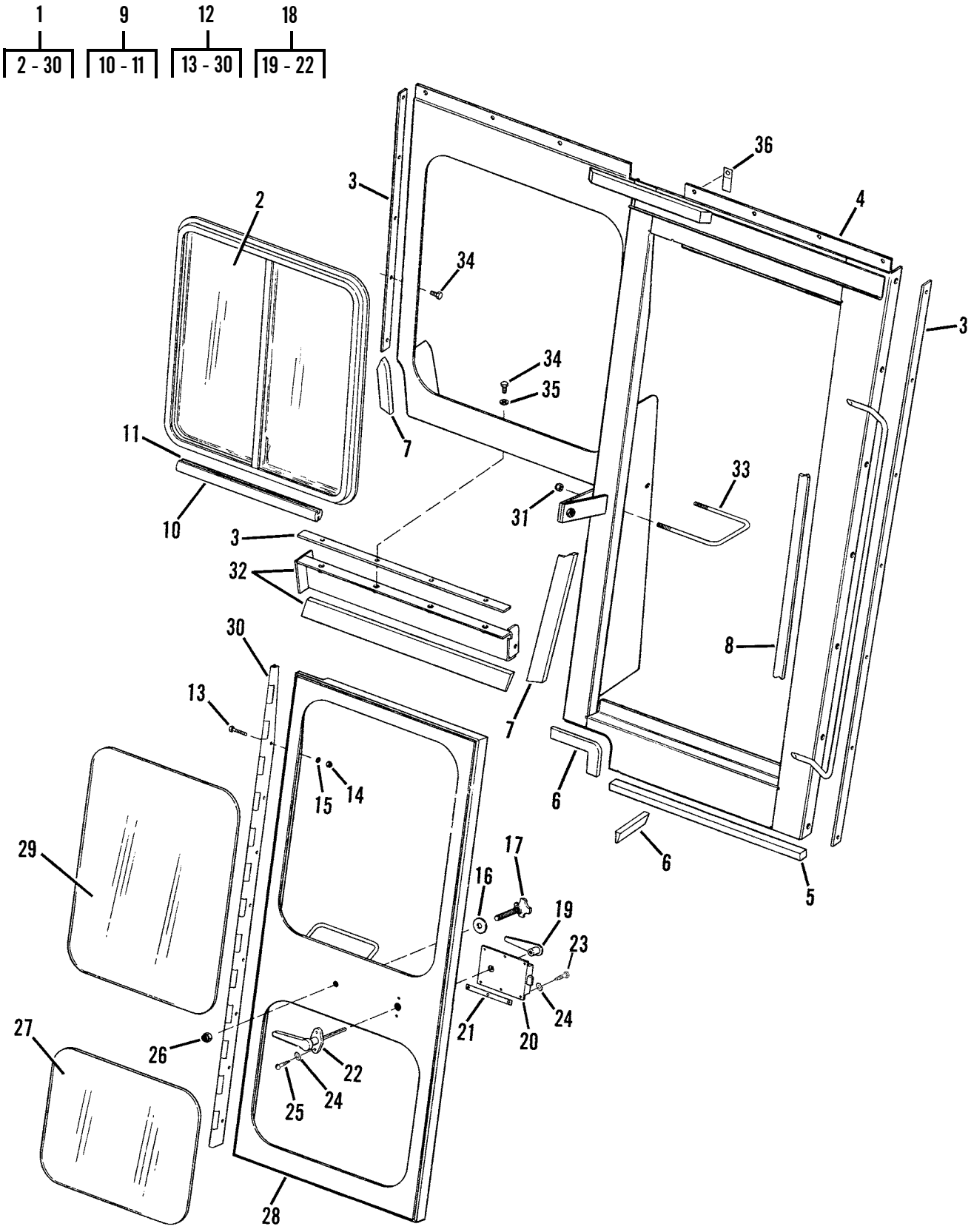

Figure 119. Winterized Cab, Right Hand Side

(1) ITEM NO	(2) SMR CODE	(3) NSN	(4) CAGEC	(5) PART NUMBER	(6) DESCRIPTION AND USABLE ON CODES (UOC)	(7) QTY
					GROUP 1801 BODY, CAB, HOOD, AND HULL ASSEMBLIES	
					FIG. 119 WINTERIZED CAB, RIGHT HAND SIDE	
1	PFOZZ	2510012677931	4U735	1E08320	DOOR AND PANEL ASSE ..... UOC:GRC,GWC	1
2	PFOZZ	2510012680314	4U735	522-003-022	.WINDOW,VEHICULAR ..... UOC:GRC,GWC	1
2	PFOZZ	2510219143487	0RS15	1D08468-4	.WINDOW,VEHICULAR ..... UOC:GRC,GWC	1
3	MOOZZ		4U735	595697-8	.SEAL,RUBBER CUT TO FIT, MAKE . FROM RUBBER STRIP P/N 597-004-000 UOC:GRC,GWC	1
4	PFOZZ	2510012677932	4U735	1E08315	.FRAME,VEHICULAR DOO ..... UOC:GRC,GWC	1
5	MOOZZ		85471	SC-42	.CAB SEAL RUBBER CUT TO FIT, .. MAKE FROM RUBBER STRIP P/N 522-205-006 UOC:GRC,GWC	1
6	MOOZZ		4U735	595042-4	.CAB SEAL RUBBER CUT TO FIT, .. MAKE FROM RUBBER STRIP P/N 522-206-001 UOC:GRC,GWC	1
7	MOOZZ		4U735	595834-5	.CAB SEAL RUBBER CUT TO FIT, .. MAKE FROM RUBBER STRIP P/N 522-205-007 UOC:GRC,GWC	1
8	MOOZZ		11083	5P5968-13	.SEAL,DOOR CUT TO FIT, MAKE FROM SEAL P/N 5P5968 UOC:GRC,GWC	1
8	MOOZZ		4U735	595869	.RUBBER,S-TYPE OPTIONAL USE WITH SLIDER 1D08468-4,9 FT,MAKE FROM SEAL P/N 5P5968 UOC:GRC,GWC	1
9	MOOZZ		4U735	595546-9	.WEATHERSTRIP,ASSY CUT TO FIT, MAKE FROM RUBBER STRIP P/N 522-206-001 UOC:GRC,GWC	1
10	PFOZZ		98933	GCH2	..SEAL,NONMETALLIC ST ..... UOC:GRC,GWC	9
11	MOOZZ		4U735	595193-9FT	..LOCK,STRIP MAKE FROM RING ... WIPER P/N 595193, 9-FEET UOC:GRC,GWC	1
12	PFOZZ	2510219144026	4U735	1C08304	.DOOR,VEHICULAR ..... UOC:GRC,GWC	1
13	PFOZZ	5306004041417	11083	9F7022	..BOLT,MACHINE ..... UOC:GRC,GWC	8
14	PFOZZ	5310000881251	72452	1459-246	..NUT,SELF-LOCKING,HE ..... UOC:GRC,GWC	8
15	PFOZZ	5310005825965	80205	MS35338-44	..WASHER,LOCK ..... UOC:GRC,GWC	8
16	PFOZZ	5310008095997	96906	MS27183-17	..WASHER,FLAT ..... UOC:GRC,GWC	1

(1) ITEM NO	(2) SMR CODE	(3) NSN	(4) CAGEC	(5) PART NUMBER	(6) DESCRIPTION AND USABLE ON CODES (UOC)	(7) QTY
17	PFOZZ		99862	CL-8-HK4T	..KNOB ..... UOC:GRC,GWC	1
18	PFOZZ	2540012678699	1C834	609009	..LATCH,DOOR,VEHICULA ..... UOC:GRC,GWC	1
19	PFOZZ	2540012678729	44735	580077	...HANDLE,DOOR,VEHICUL ..... UOC:GRC,GWC	2
20	PFOZZ	2540013393541	11083	5P5039	...LATCH,DOOR,VEHICULA ..... UOC:GRC,GWC	2
21	PFOZZ	5365219141007	0RS15	102123	...SHIM ..... UOC:GRC,GWC	4
22	PFOZZ	2540012678728	4U735	522-002-004	...HANDLE,DOOR,VEHICUL ..... UOC:GRC,GWC	2
23	PFOZZ	5305012753282	11083	3L2540	..SCREW,CAP,SOCKET HE ..... UOC:GRC,GWC	6
24	PFOZZ	5310005967691	96906	MS35335-32	..WASHER,LOCK ..... UOC:GRC,GWC	8
25	PFOZZ	5305010062053	96906	MS51849-75	..SCREW,MACHINE ..... UOC:GRC,GWC	2
26	PFOZZ	5310007680318	96906	MS51967-14	..NUT,PLAIN,HEXAGON ..... UOC:GRC,GWC	1
27	PFOZZ	2510219123609	0RS15	522-003-049	..WINDOW,VEHICULAR ..... UOC:GRC,GWC	1
27	PFOZZ	9340219139704	0RS15	1C08467-2	..GLASS,SAFETY,SINGLE ..... UOC:GRC,GWC	1
28	PFOZZ	2510219143497	4U735	1C08303	..PANEL,BODY,VEHICULA ..... UOC:GRC,GWC	1
29	PFOZZ	9340012680506	0RS15	522-003-048	..GLASS,SAFETY,SINGLE ..... UOC:GRC,GWC	1
29	PFOZZ	9340219139738	0RS15	522-003-120	..GLASS,SAFETY,SINGLE ..... UOC:GRC,GWC	1
30	PFOZZ	2510012674317	4U735	735-300-033	..HINGE,DOOR,VEHICULA ..... UOC:GRC,GWC	1
31	PFOZZ	5310007320558	96906	MS51967-8	NUT,PLAIN,HEXAGON ..... UOC:GRC,GWC	31
32	PFOZZ	2510012676029	4U735	092919	PANEL,BODY,VEHICULA ..... UOC:GRC,GWC	1
33	PFOZZ	5306013063445	4U735	700-009-000	BOLT,U ..... UOC:GRC,GWC	1
34	PFOZZ	5305009422196	80204	B1821BH038C100D	SCREW,CAP,HEXAGON H ..... UOC:GRC,GWC	9
35	PFOZZ	5330006181654	83259	600-042-3/8	PACKING WITH RETAIN ..... UOC:GRC,GWC	4
36	PAOZZ	5340012707392	11083	2R1913	CLAMP,LOOP ..... UOC:GRC,GWC	8
				END OF FIGURE		

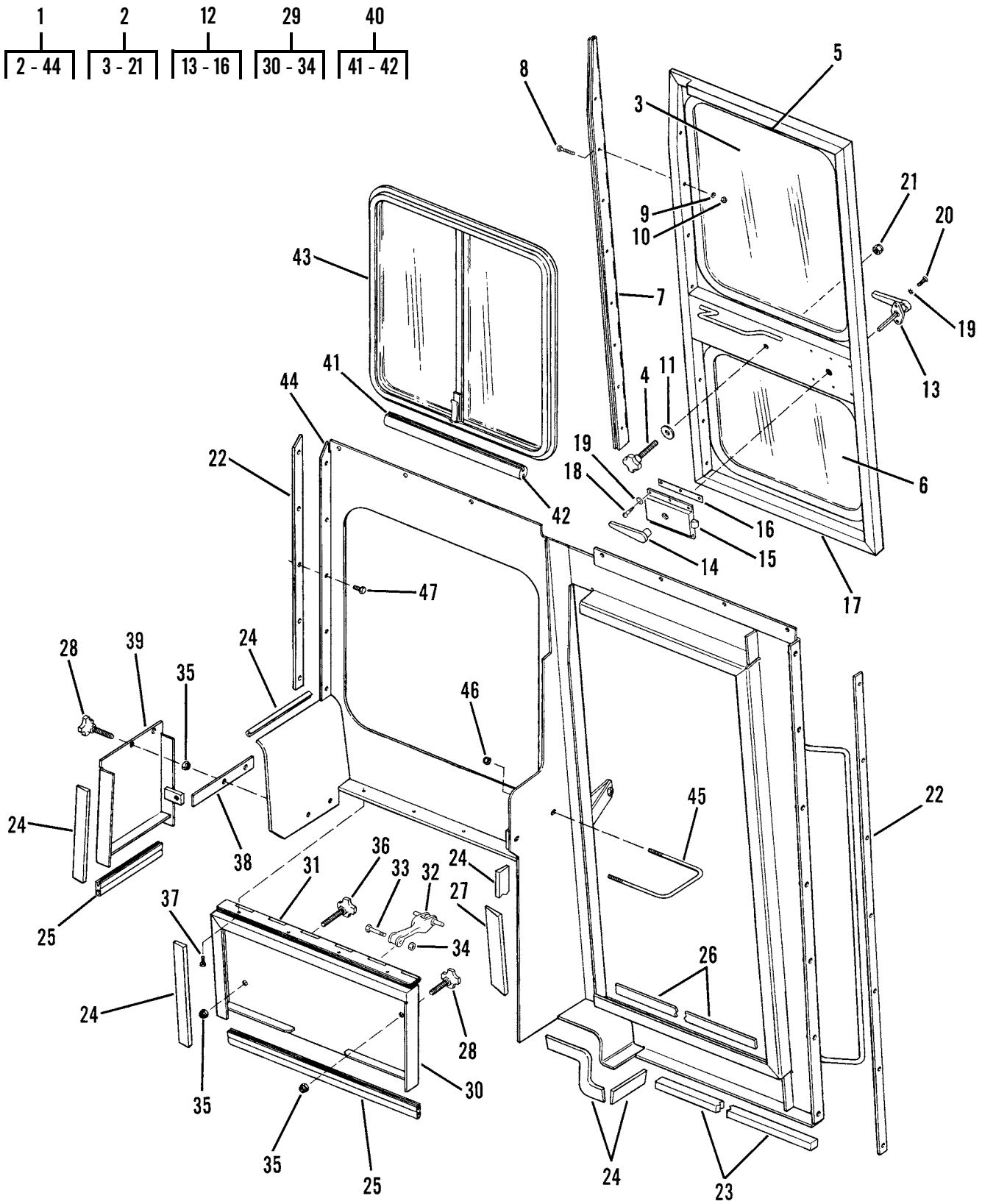

Figure 120. Winterized Cab, Left Hand Side

(1) ITEM NO	(2) SMR CODE	(3) NSN	(4) CAGEC	(5) PART NUMBER	(6) DESCRIPTION AND USABLE ON CODES (UOC)	(7) QTY
					GROUP 1801 BODY, CAB, HOOD, AND HULL ASSEMBLIES	
					FIG. 120 WINTERIZED CAB, LEFT HAND SIDE	
1	PFOZZ	2510219143488	0RS15	406-200-002	PANEL,BODY,VEHICULA ..... UOC:GRC,GWC	1
2	PFOZZ	2510012674318	4U735	402-010-037	.DOOR,VEHICULAR ..... UOC:GRC,GWC	1
3	PFOZZ	9340012680506	0RS15	522-003-048	..GLASS,SAFETY,SINGLE ..... UOC:GRC,GWC	1
3	PFOZZ	9340219139738	0RS15	522-003-120	..GLASS,SAFETY,SINGLE ..... UOC:GRC,GWC	1
4	PFOZZ		99862	CL-8-HK4T	..KNOB ..... UOC:GRC,GWC	1
5	MOOZZ		4U735	595546-13	..WEATHERSTRIP CUT TO FIT, MAKE FROM RUBBER STRIP P/N 522-206-001 UOC:GRC,GWC	1
5	MOOZZ		4U735	595869-13	..SEAL,NONMETALLIC SP OPTIONAL USE WITH WINDOW 1C08467-1, 1C08467-2, MAKE FROM SEAL P/N 824-5P5768 AND CUT TO 13 FT UOC:GRC,GWC	1
6	PFOZZ	2510219123609	0RS15	522-003-049	..WINDOW,VEHICULAR ..... UOC:GRC,GWC	1
6	PFOZZ	9340219139704	0RS15	1C08467-2	..GLASS,SAFETY,SINGLE ..... UOC:GRC,GWC	1
7	PFOZZ	2510012674317	4U735	735-300-033	..HINGE,DOOR,VEHICULA ..... UOC:GRC,GWC	1
8	PFOZZ	5306004041417	11083	9F7022	..BOLT,MACHINE ..... UOC:GRC,GWC	8
9	PFOZZ	5310005825965	80205	MS35338-44	..WASHER,LOCK ..... UOC:GRC,GWC	8
10	PFOZZ	5310000881251	81349	M45913/1-4CG5C	..NUT,SELF-LOCKING,HE ..... UOC:GRC,GWC	8
11	MOOZZ		4U735	595546-192	..RUBBER,WINDOW CUT TO FIT, MAKE FROM SEAL P/N 595546 UOC:GRC,GWC	1
12	PFOZZ	2540012678699	1C834	609009	..LATCH,DOOR,VEHICULA ..... UOC:GRC,GWC	1
13	PFOZZ	2540012678728	4U735	522-002-004	...HANDLE,DOOR,VEHICUL ..... UOC:GRC,GWC	2
14	PFOZZ	2540012678729	44735	580077	...HANDLE,DOOR,VEHICUL ..... UOC:GRC,GWC	2
15	XAOZZ		4U735	595265	...LATCH,DOOR ..... UOC:GRC,GWC	1
16	PFOZZ	5365219141007	0RS15	102123	...SHIM ..... UOC:GRC,GWC	4
17	PFOZZ	2510219143497	4U735	1C08303	..PANEL,BODY,VEHICULA ..... UOC:GRC,GWC	1
18	PFOZZ	5305012753282	11083	3L2540	..SCREW,CAP,SOCKET HE ..... UOC:GRC,GWC	6
19	PFOZZ	5310005967691	96906	MS35335-32	..WASHER,LOCK ..... UOC:GRC,GWC	8

(1) ITEM NO	(2) SMR CODE	(3) NSN	(4) CAGEC	(5) PART NUMBER	(6) DESCRIPTION AND USABLE ON CODES (UOC)	(7) QTY
20	PFOZZ	5305010062053	96906	MS51849-75	...SCREW,MACHINE ..... UOC:GRC,GWC	2
21	PFOZZ	5310007680318	96906	MS51967-14	..NUT,PLAIN,HEXAGON ..... UOC:GRC,GWC	1
22	MOOZZ		4U735	595697-16	.SEAL,RUBBER CUT TO FIT, MAKE . FROM RUBBER STRIP P/N 597-004-000 UOC:GRC,GWC	1
23	MOOZZ		11083	595507	.RUBBER STRIP MAKE FROM ..... RUBBER STRIP P/N 522-205-006, CUT TO FIT UOC:GRC,GWC	2
24	MOOZZ		4U735	595042-15	.CAB SEAL RUBBER CUT TO FIT, .. MAKE FROM RUBBER STRIP P/N 522-206-001 UOC:GRC,GWC	1
25	MOOZZ		11083	5P7211-4FT	.SEAL,RUBBER CUT TO FIT, MAKE . FROM RUBBER STRIP P/N 522-206-001 UOC:GRC,GWC	1
26	MOOZZ		11083	5P5968-30	.SEAL,RUBBER CUT TO FIT, MAKE . FROM SEAL P/N 5P5968 UOC:GRC,GWC	1
27	MOOZZ		4U735	595834-3	.CAB SEAL RUBBER CUT TO FIT, .. MAKE FROM RUBBER STRIP P/N 522-206-007 UOC:GRC,GWC	1
28	PFOZZ	5355012671788	99862	CL-7C-HK4T	.KNOB ..... UOC:GRC,GWC	3
29	PFOZZ	6160013026239	1C834	1C08271	.COVER,BATTERY ..... UOC:GRC,GWC	1
30	PFOZZ	6160012730225	1MA42	402900031	..COVER,BATTERY ..... UOC:GRC,GWC	1
31	PFOZZ	5340012701932	1C834	580532	..HINGE,BUTT ..... UOC:GRC,GWC	1
32	PFOZZ	6135011048935	34623	MA207-20027	..HOOK,BATTERY BOX CO ..... UOC:GRC,GWC	1
33	PFOZZ		1C834	500077	..SCREW,CAP,HEXAGON H ..... UOC:GRC,GWC	1
34	PFOZZ	5310219142570	0RS15	500216	..NUT,SELF-LOCKING,HE ..... UOC:GRC,GWC	1
35	PFOZZ	5310007680318	96906	MS51967-14	.NUT,PLAIN,HEXAGON ..... UOC:GRC,GWC	4
36	PFOZZ		99862	CL-8-HK4T	.KNOB ..... UOC:GRC,GWC	1
37	PFOZZ	5305000680502	80205	MS90725-6	.SCREW,CAP,HEXAGON H ..... UOC:GRC,GWC	4
38	PAOZZ	5330013077787	4U735	597-004-003	.GASKET ..... UOC:GRC,GWC	1
39	PFOZZ	6160219141387	0RS15	1C08293-1	.COVER,BATTERY ..... UOC:GRC,GWC	1
40	MOOZZ		4U735	595546-9	.WEATHERSTIRP,ASSY CUT TO FIT, MAKE FROM RUBBER STRIP P/N 522-206-001 UOC:GRC,GWC	1

(1) ITEM NO	(2) SMR CODE	(3) NSN	(4) CAGEC	(5) PART NUMBER	(6) DESCRIPTION AND USABLE ON CODES (UOC)	(7) QTY
41	PFOZZ		4U735	595192-2	..EXTRUSION,WINDOW	2
42	PFOZZ		5F845	AS789B	..LOCK STRIP ..... UOC:GRC,GWC	1
43	PFOZZ	2510012680314	4U735	522-003-022	.WINDOW,VEHICULAR ..... UOC:GRC,GWC	1
43	PFOZZ	2510219123599	0RS15	522-003-100	.WINDOW,VEHICULAR ..... UOC:GRC,GWC	1
44	PFOZZ	2510219143483	0RS15	1E08300	.PANEL,BODY,VEHICULA ..... UOC:GRC,GWC	1
45	PFOZZ	5306013063445	4U735	700-009-000	BOLT,U ..... UOC:GRC,GWC	1
46	PFOZZ	5310007320558	96906	MS51967-8	NUT,PLAIN,HEXAGON ..... UOC:GRC,GWC	2
47	PFOZZ	5305009422196	80204	B1821BH038C100D	SCREW,CAP,HEXAGON H ..... UOC:GRC,GWC	5
				END OF FIGURE		

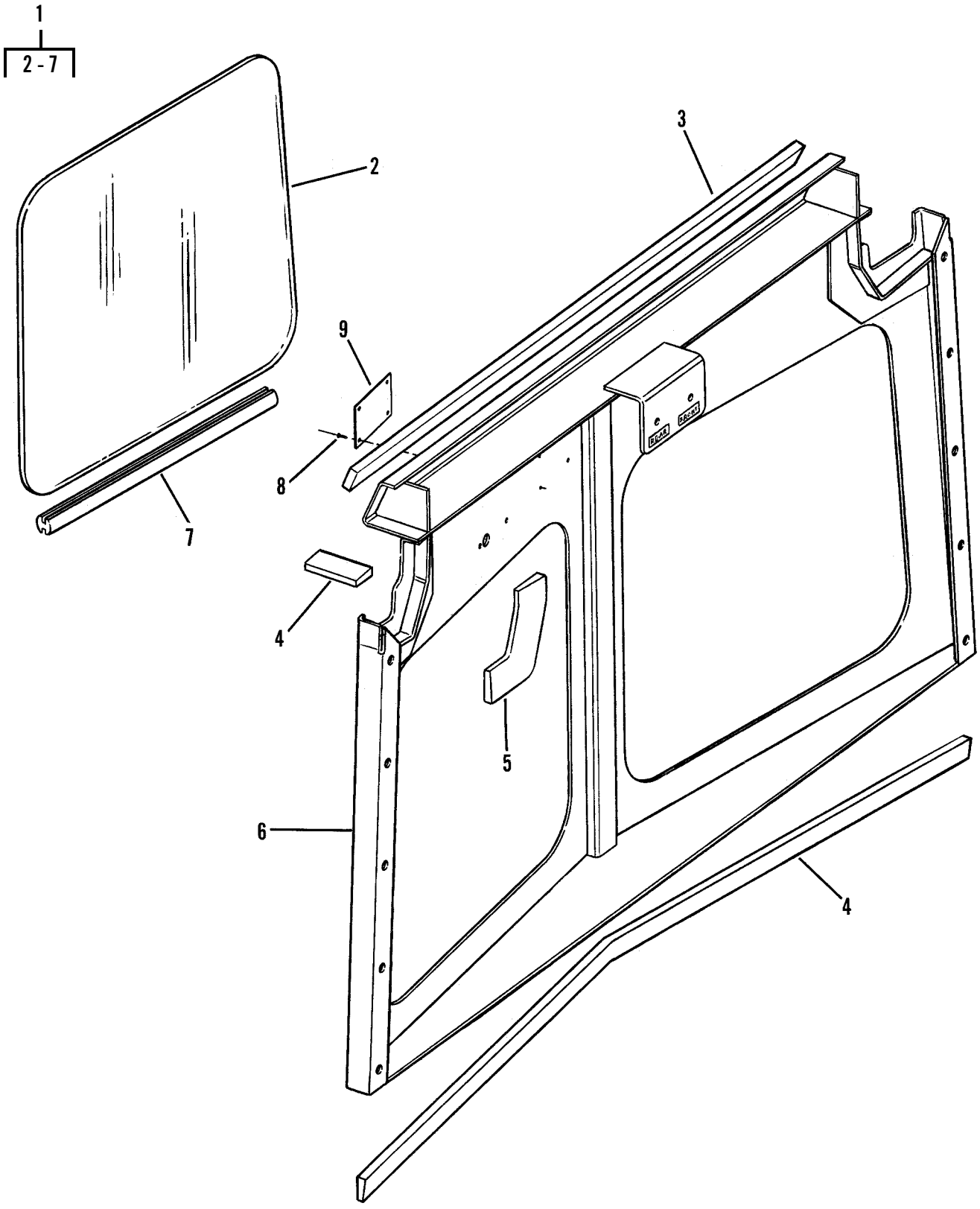

Figure 121. Winterized Cab-Rear

(1) ITEM NO	(2) SMR CODE	(3) NSN	(4) CAGEC	(5) PART NUMBER	(6) DESCRIPTION AND USABLE ON CODES (UOC)	(7) QTY
					GROUP 1801 BODY, CAB, HOOD, AND HULL ASSEMBLIES	
					FIG. 121 WINTERIZED CAB-REAR	
1	PFOZZ	2510219143486	0RS15	1D08287	PANEL,BODY,VEHICULA ..... UOC:GRC,GWC	1
2	PFOZZ	9340012680507	0RS15	522-003-078	.GLASS,SAFETY,SINGLE ..... UOC:GRC,GWC	2
2	PFOZZ	9340012680508	1C834	1C08285	.GLASS,SAFETY,SINGLE OPTIONAL . USE WITH S-TYPE SEAL 595869 UOC:GRC,GWC	2
3	MOOZZ		6N422	SC41-46	.SEAL, CAB CUT TO FIT, MAKE FROM SEAL P/N E30081PC35 UOC:GRC,GWC	1
4	MOOZZ		4U735	595042-92	.CAB SEAL RUBBER CUT TO FIT, .. MAKE FROM RUBBER STRIP P/N 522-206-001 UOC:GRC,GWC	1
5	MOOZZ		1C834	595834-2	.CAB SEAL RUBBER CUT TO FIT, .. MAKE FROM SEAL P/N 522-205-007 UOC:GRC,GWC	1
6	PFOZZ	2510219144109	0RS15	1D08286	.PANEL,BODY,VEHICULA ..... UOC:GRC,GWC	1
7	MOOZZ		4U735	595869	.RUBBER,S-TYPE OPTIONAL USE WITH WINDOW 1C08285,16 FT, MAKE FROM SEAL P/N 824-5P5768 UOC:GRC,GWC	1
8	PFOZZ	5320012699263	11083	0347044	RIVET,SOLID ..... UOC:GRC,GWC	4
9	PFOZZ	9905012732886	1C834	595452	PLATE,IDENTIFICATIO ..... UOC:GRC,GWC	1
				END OF FIGURE		

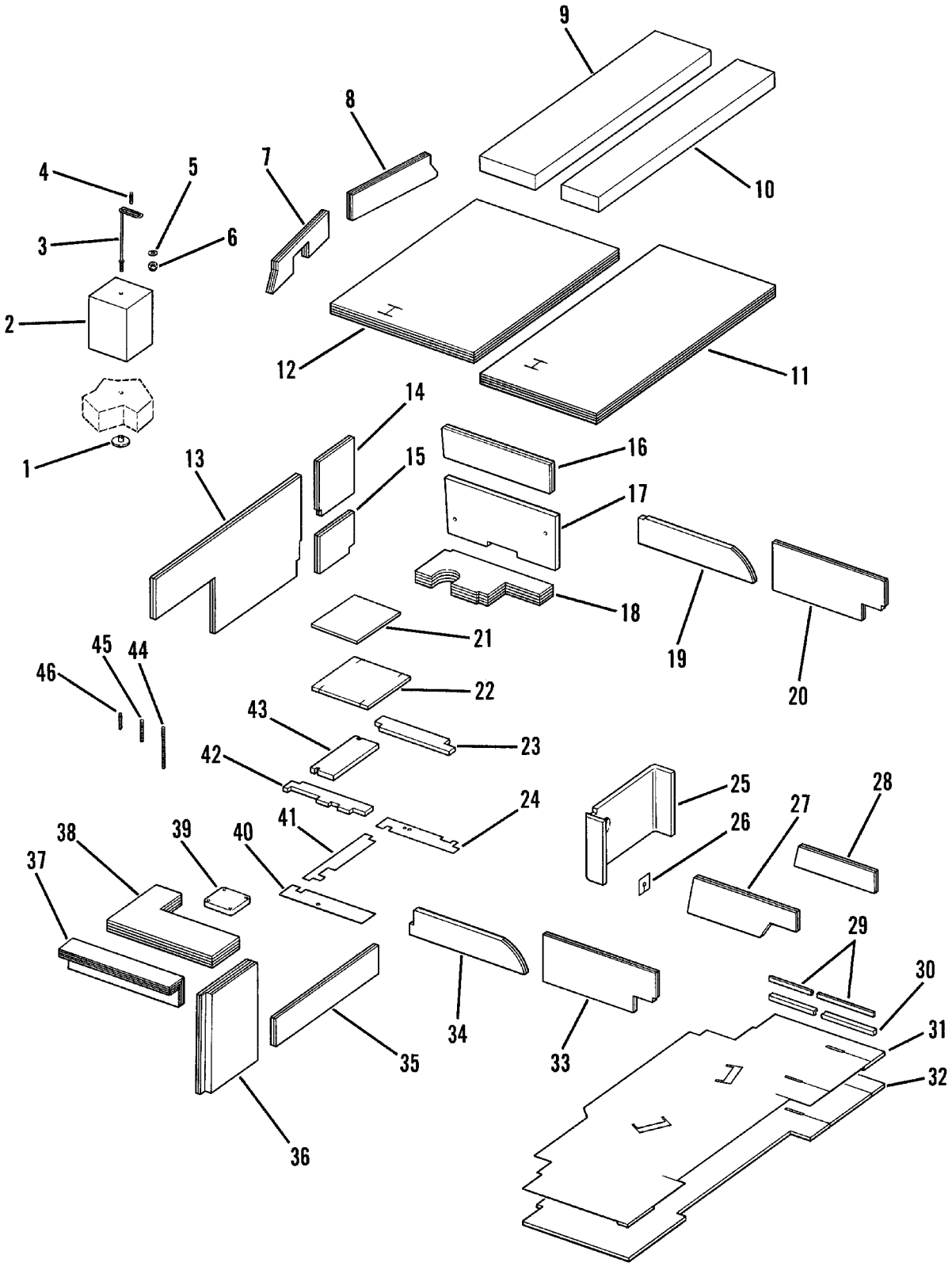

Figure 122. Cab Noise Control Components

(1) ITEM NO	(2) SMR CODE	(3) NSN	(4) CAGEC	(5) PART NUMBER	(6) DESCRIPTION AND USABLE ON CODES (UOC)	(7) QTY
					GROUP 1801 BODY, CAB, HOOD, AND HULL ASSEMBLIES	
					FIG. 122 CAB NOISE CONTROL COMPONENTS	
1	PFOZZ	5355012721748	98933	595387	KNOB ..... UOC:GRC,GWC	175
2	PFOZZ	8140012678752	4U735	804893	PAD,CUSHIONING ..... UOC:GRC,GWC	15
3	PFOZZ	5975219141414	0RS15	735-800-000	HANGER,CABLE ..... UOC:GRC,GWC	15
4	PFOZZ		17773	11235944	STUD,CONTINUOUS THR ..... UOC:GRC,GWC	255
5	PFOZZ	5310008098544	96906	MS27183-7	WASHER,FLAT ..... UOC:GRC,GWC	18
6	PFOZZ		11083	2H7152	NUT ..... UOC:GRC,GWC	18
7	PFOZZ	2510012676069	4U735	735-800-015	WINDOW,VEHICULAR ..... UOC:GRC,GWC	1
8	PFOZZ		4U735	735-800-022	WINDOW,VEHICULAR ..... UOC:GRC,GWC	1
9	PCOZZ	5640219139460	1C834	807100	INSULATION BLANKET, ... UOC:GRC,GWC	1
10	PFOZZ	2540219123604	1C834	807099	INSULATION,ACOUSTIC ..... UOC:GRC,GWC	1
11	PFOZZ	2510219123600	0RS15	408-200-004	INSULATION PANEL,VE ..... UOC:GRC,GWC	1
12	PFOZZ	2510219144108	0RS15	1C08417	PANEL,BODY,VEHICULA ..... UOC:GRC,GWC	1
13	PAOZZ	2910012678672	4U735	1B08349	COVER,FUEL TANK ..... UOC:GRC,GWC	1
14	PCOZZ	2540013151030	4U735	735-800-010	INSULATION,THERMAL, ... UOC:GRC,GWC	1
15	PFOZZ	2510219123601	0RS15	1B08393-2	INSULATION PANEL,VE ..... UOC:GRC,GWC	1
16	PFOZZ		4U735	735-800-020	WINDOW,VEHICULAR ..... UOC:GRC,GWC	1
17	PAOZZ	2590012678783	4U735	735-800-017	COVER,BATTERY BOX ..... UOC:GRC,GWC	1
18	PFOZZ	6160219141390	4U735	1B08391	COVER,BATTERY BOX ..... UOC:GRC,GWC	1
19	PFOZZ		4U735	1B08386	INSULATION BLANKET, ... UOC:GRC,GWC	1
20	PAOZZ	2510012750096	4U735	735-800-011	INSULATION BLANKET, ... UOC:GRC,GWC	1
21	PAOZZ	8140012734458	4U735	808186	PAD,CUSHIONING ..... UOC:GRC,GWC	1
22	PCOZZ	5640219139457	4U735	1B08358	INSULATION BLANKET, ... UOC:GRC,GWC	1
23	PFOZZ	2510012676060	4U735	735-800-016	INSULATION BLANKET, ... UOC:GRC,GWC	1
24	PCOZZ	5330012701771	4U735	808189	GASKET ..... UOC:GRC,GWC	1

(1) ITEM NO	(2) SMR CODE	(3) NSN	(4) CAGEC	(5) PART NUMBER	(6) DESCRIPTION AND USABLE ON CODES (UOC)	(7) QTY
25	PCOZZ	2510012676033	4U735	735-800-018	PANEL,BODY,VEHICULA ..... UOC:GRC,GWC	1
26	PCOZZ	5330012701769	4U735	808423	GASKET ..... UOC:GRC,GWC	6
27	PFOZZ	2510219144036	0RS15	735-800-019	PANEL,BODY,VEHICULA ..... UOC:GRC,GWC	1
28	PCOZZ	2510012676063	4U735	1B08378-2	INSULATION BLANKET, ... UOC:GRC,GWC	1
29	MOOZZ		11083	5P5968-30	SEAL,RUBBER CUT TO FIT, MAKE .. FROM SEAL P/N 5P5968 UOC:GRC,GWC	1
30	MOOZZ		4U735	595502-30	SEAL,RUBBER CUT TO FIT,MAKE FROM RUBBER STRIP P/N 522-205-006 UOC:GRC,GWC	1
31	PFOZZ	2540012674377	4U735	735-800-006	MAT,FLOOR ..... UOC:GRC,GWC	1
32	PFOZZ	2540219144103	0RS15	1C08403-2	MAT,FLOOR ..... UOC:GRC,GWC	1
33	PFOZA	2510219123602	1C834	1B08351-2	INSULATION PANEL,VE ..... UOC:GRC,GWC	1
34	PFOZZ	2510012676068	4U735	735-800-021	WINDOW,VEHICULAR ..... UOC:GRC,GWC	1
35	PFOZZ	2590012678751	4U735	735-800-004	PAD,CUSHIONING ..... UOC:GRC,GWC	1
36	PFOZZ	2510012674350	4U735	735-800-002	PANEL,VEHICULAR OPE ..... UOC:GRC,GWC	1
37	PFOZZ	2510012678780	4U735	1B08380-1	INSULATION BLANKET, ... UOC:GRC,GWC	1
38	PFOZZ	2510219123603	4U735	1B08382	INSULATION PANEL,VE ..... UOC:GRC,GWC	1
39	PCOZZ	5330012701770	4U735	808191	GASKET ..... UOC:GRC,GWC	1
40	PAOZZ	5330012701783	4U735	808188	SEAL,NONMETALLIC ST ..... UOC:GRC,GWC	1
41	PCOZZ	5330012701784	4U735	808190	SEAL,NONMETALLIC ST ..... UOC:GRC,GWC	1
42	PAOZZ	2510012674369	4U735	735-800-012	INSULATION PANEL,VE ..... UOC:GRC,GWC	1
43	PFOZZ	2510219123530	4U735	1B08361	INSULATION PANEL,VE ..... UOC:GRC,GWC	1
44	PAOZZ	5307012713341	1C834	899052	STUD,CONTINUOUS THR (0.19" X .. 4.0") UOC:GRC,GWC	15
45	PFOZZ		1C834	899003	STUD,CONTINUOUS THR ..... UOC:GRC,GWC	115
46	PFOZZ	5307012701825	1C834	899042	STUD,CONTINUOUS THR ..... UOC:GRC,GWC	25
				END OF FIGURE		

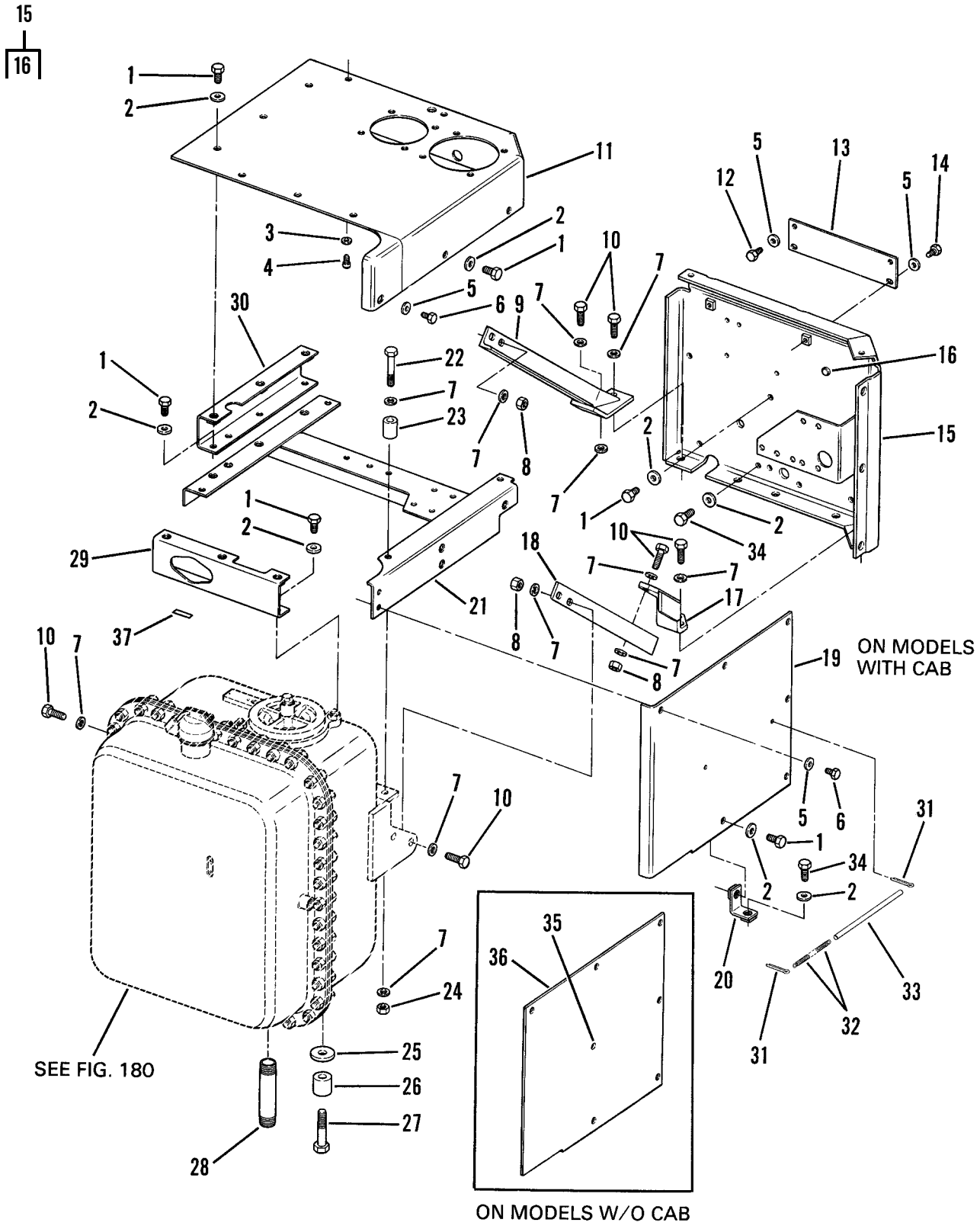

Figure 123. Hydraulic Tank Mounting

(1) ITEM NO	(2) SMR CODE	(3) NSN	(4) CAGEC	(5) PART NUMBER	(6) DESCRIPTION AND USABLE ON CODES (UOC)	(7) QTY
					GROUP 1801 BODY, CAB, HOOD, AND HULL ASSEMBLIES	
					FIG. 123 HYDRAULIC TANK MOUNTING	
1	PFOZZ	5306004262934	11083	0S1621	BOLT,MACHINE	19
2	PFOZZ	5310010976720	11083	5P1076	WASHER,SHOULDERED A	21
3	PFOZZ	5310000806004	96906	MS27183-14	WASHER,FLAT	2
4	PFOZZ	5305012145052	11083	0138253	SCREW,CAP,SOCKET HE	2
5	PFOZZ	5310008098541	96906	MS27183-27	WASHER,FLAT	6
6	PFOZZ	5305002528919	11083	0S0509	SCREW,CAP,HEXAGON H	2
7	PFOZZ	5310008095997	96906	MS27183-17	WASHER,FLAT	25
8	PFOZZ	5310002256993	77445	PWA10132-3	NUT,SELF-LOCKING,HE	6
9	PAOZZ	5340012605791	11083	8P5449	BRACKET,ANGLE	1
10	PFOZZ	5306011279361	11083	0S1585	BOLT,MACHINE	10
11	PFOZZ	5340012664674	11083	3P4126	COVER,ACCESS	1
12	PFOZZ	5305002693236	80204	B1821BH038F100N	SCREW,CAP,HEXAGON H	2
13	PFOZZ	5340012582681	11083	3P4122	PLATE,MENDING	1
14	PFOZZ	5306002637301	11083	0L1351	BOLT,MACHINE	2
15	PFOZZ	5342012573847	11083	3P3178	PLATE,ASSEMBLY	1
16	XAOZA		11083	2B3191	.PIN,STRAIGHT,HEADED	1
17	PAOZZ	5340012593694	11083	8P5446	BRACKET,DOUBLE ANGL	1
18	PAOZZ	5340012580154	11083	8P5447	BRACKET,ANGLE	1
19	PFOZZ	5340012586065	11083	3P5951	BRACKET,ANGLE	1
20	PFOZZ	5340012580140	11083	6P5450	BRACKET,ANGLE	1
21	PFOZZ	2510012598891	11083	3P2945	FRAME SECTION,STRUC	1
22	PFOZZ	5306002685798	11083	0L1329	BOLT,MACHINE	4
23	XBOZZ		11083	3P2943	SPACER	4
24	PFOZZ	5310007680318	96906	MS51967-14	NUT,PLAIN,HEXAGON	4
25	PFOZZ	5310012157318	11083	6F4411	WASHER,FLAT	2
26	PFOZZ	5365012573308	11083	8P5450	SPACER,SLEEVE	2
27	PFOZZ	5305007247236	80204	B1821BH063C325N	SCREW,CAP,HEXAGON H	2
28	PFOZZ		11083	7B9008	NIPPLE,PIPE	1
29	PFOZZ	5340012653359	11083	3P4124	BRACKET,DOUBLE ANGL	1
30	PAOZZ	5340012584685	11083	6P5441	BRACKET,DOUBLE ANGL	1
31	PFOZZ	5315000590206	80205	MS24665-491	PIN,COTTER	2
32	PFOZZ	5360012542681	11083	9S5645	SPRING,HELICAL,EXTE	1
33	MOOZZ		11083	5P5633-12IN	TUBE STK 12 IN, MAKE FROM TUBE P/N 5P5633	1
34	PFOZZ	5306004238117	11083	0S1595	BOLT,MACHINE	2
35	PFOZZ	5340012713534	11083	8J4916	STANDOFF,THREADED,S	1
36	PFOZZ	5340012701305	11083	5R7942	COVER,ACCESS	1
37	PCOZZ	7690013389102	11083	3S7232	MARKER,IDENTIFICATI	1
				END OF FIGURE		

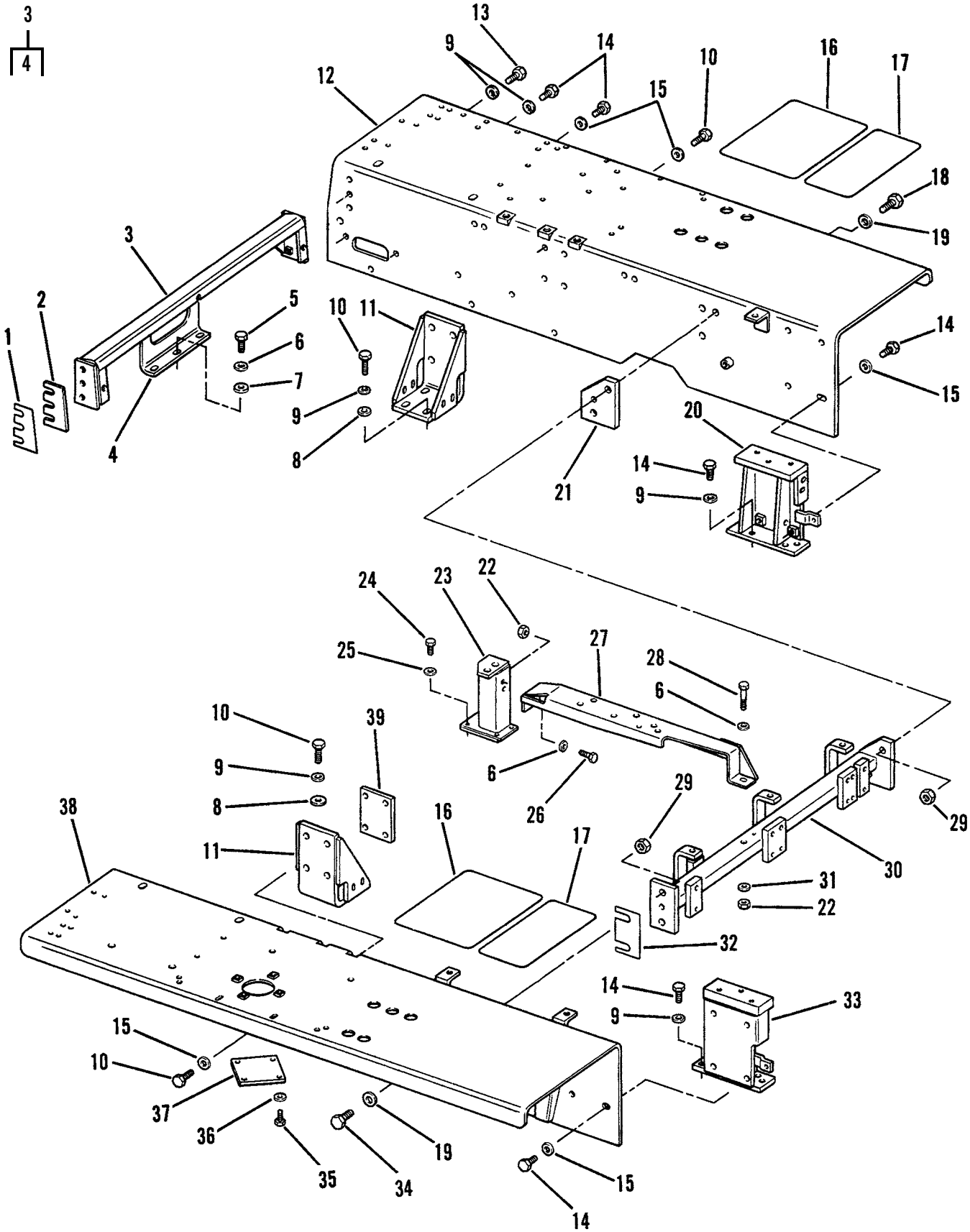

Figure 124. Fender Group

(1) ITEM NO	(2) SMR CODE	(3) NSN	(4) CAGEC	(5) PART NUMBER	(6) DESCRIPTION AND USABLE ON CODES (UOC)	(7) QTY
					GROUP 1802 FENDERS, RUNNING BOARDS WITH MOUNTING AND ATTACHING PARTS, OUTRIGGERS, WINDSHIELD, GLASS, ETC.	
					FIG. 124 FENDER GROUP	
1	PFFZZ	5365012574349	11083	3S6656	SPACER,PLATE (0.036" THK)	2
2	PFFZZ	5365012574348	11083	3S6655	SPACER,PLATE (0.060" THK)	2
3	PFFZZ	2510012569110	11083	3S6654	BRACE,FENDER	1
4	PFFZZ	5310012573228	11083	5B5456	.NUT,PLAIN,SQUARE	3
5	PFFZZ	5306011279361	11083	0S1585	BOLT,MACHINE	3
6	PFFZZ	5310005845272	80205	MS35338-48	WASHER,LOCK	8
7	PFFZZ	5310002758639	80020	A89816-22	WASHER,FLAT	3
8	PFFZZ	5365003652281	11083	0L2119	SPACER,RING	8
9	PFFZZ	5310000455001	96906	MS35340-50	WASHER,LOCK	24
10	PFFZZ	5305007247222	80204	B1821BH063C200N	SCREW,CAP,HEXAGON H	16
11	PAFZZ	5340011454028	11083	3S5267	BRACKET,ANGLE	2
12	PFFZZ	2510012544970	11083	5R6236	FENDER,VEHICULAR	1
13	PFFZZ	5305007247221	80204	B1821BH063C175N	SCREW,CAP,HEXAGON H	6
14	PFFZZ	5306002755012	11083	0S1566	BOLT,MACHINE	30
15	PFFZZ	5310010954631	11083	5P8247	WASHER,FLAT	28
16	PFFZZ	2510012230928	11083	5P5897	TREAD,ANTI SKID	2
17	PFFZZ	2510012545023	11083	5P5896	TREAD,METALLIC,NONS	2
18	PFFZZ	5306004263605	11083	2A1538	BOLT,MACHINE	2
19	PFFZZ	5310005847888	96906	MS35338-51	WASHER,LOCK	4
20	PFFZZ	2510012755282	11083	8P4770	BRACE,FENDER	1
21	PFFZZ	5365012573276	11083	6P6734	SPACER,PLATE	1
22	PFFZZ	5310007680318	96906	MS51967-14	NUT,PLAIN,HEXAGON	3
23	PFFZZ	2510012627646	11083	3P7656	BRACE,FENDER	1
24	PFFZZ	5305000680511	80204	B1821BH038C125N	SCREW,CAP,HEXAGON H	4
25	PFFZZ	5310006379541	80205	MS35338-46	WASHER,LOCK	4
26	PFFZZ	5306004240086	11083	7B3235	BOLT,MACHINE	4
27	PFFZZ	2510012541079	11083	3P7098	FRAME SECTION,STRUC	1
28	PFFZZ	5306004550459	11083	9S1366	BOLT,MACHINE	1
29	PFFZZ	5310007638921	96906	MS51967-23	NUT,PLAIN,HEXAGON	4
30	PFFZZ	2510012539486	11083	9P0689	BEAM ASSEMBLY,FENDE	1
31	PFFZZ	5310008095997	96906	MS27183-17	WASHER,FLAT	3
32	PFFZZ	5365004571485	11083	1P0943	SPACER,PLATE (1MM THK)	2
33	PAFZZ	5340012579189	11083	8P4769	BRACKET,DOUBLE ANGL	1
34	PFFZZ	5306004238069	11083	0L1178	BOLT,MACHINE	2
35	PFFZZ	5306002604508	11083	0S1594	BOLT,MACHINE	4
36	PFFZZ	5310000806004	96906	MS27183-14	WASHER,FLAT	4
37	PFFZZ	5340012596427	11083	3P4333	COVER,ACCESS	1
38	PAFZZ	2510012534653	11083	3P8183	FENDER,VEHICULAR	1
39	PFFZZ	5340012580139	11083	3S5286	PLATE,MENDING	2
				END OF FIGURE		

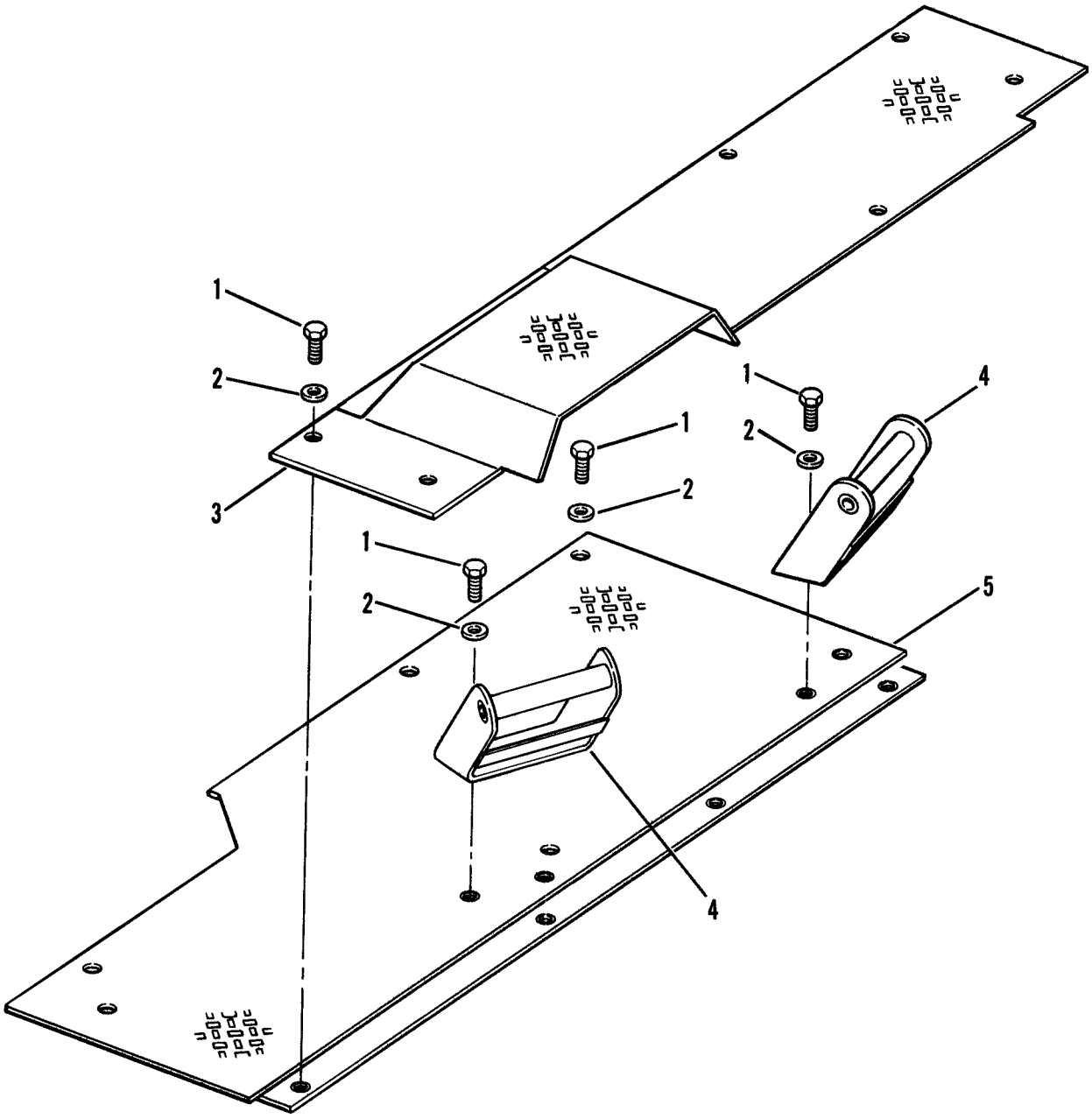

Figure 125. Floor Plates

(1) ITEM NO	(2) SMR CODE	(3) NSN	(4) CAGEC	(5) PART NUMBER	(6) DESCRIPTION AND USABLE ON CODES (UOC)	(7) QTY
					GROUP 1805 FLOORS, SUBFLOORS, AND RELATED COMPONENTS	
					FIG. 125 FLOOR PLATES	
1	PFOZZ	5306004238117	11083	0S1595	BOLT,MACHINE	19
2	PFOZZ	5310008095997	96906	MS27183-17	WASHER,FLAT	20
3	PFOZZ	2510012598093	11083	3P7092	FRAME SECTION,STRUC	1
4	PFOZZ	2510012542771	11083	3P3970	FRAME SECTION,STRUC	2
5	PFOZZ	2510012600645	11083	3P7089	FRAME SECTION,STRUC	1
					END OF FIGURE	

1
2 - 4

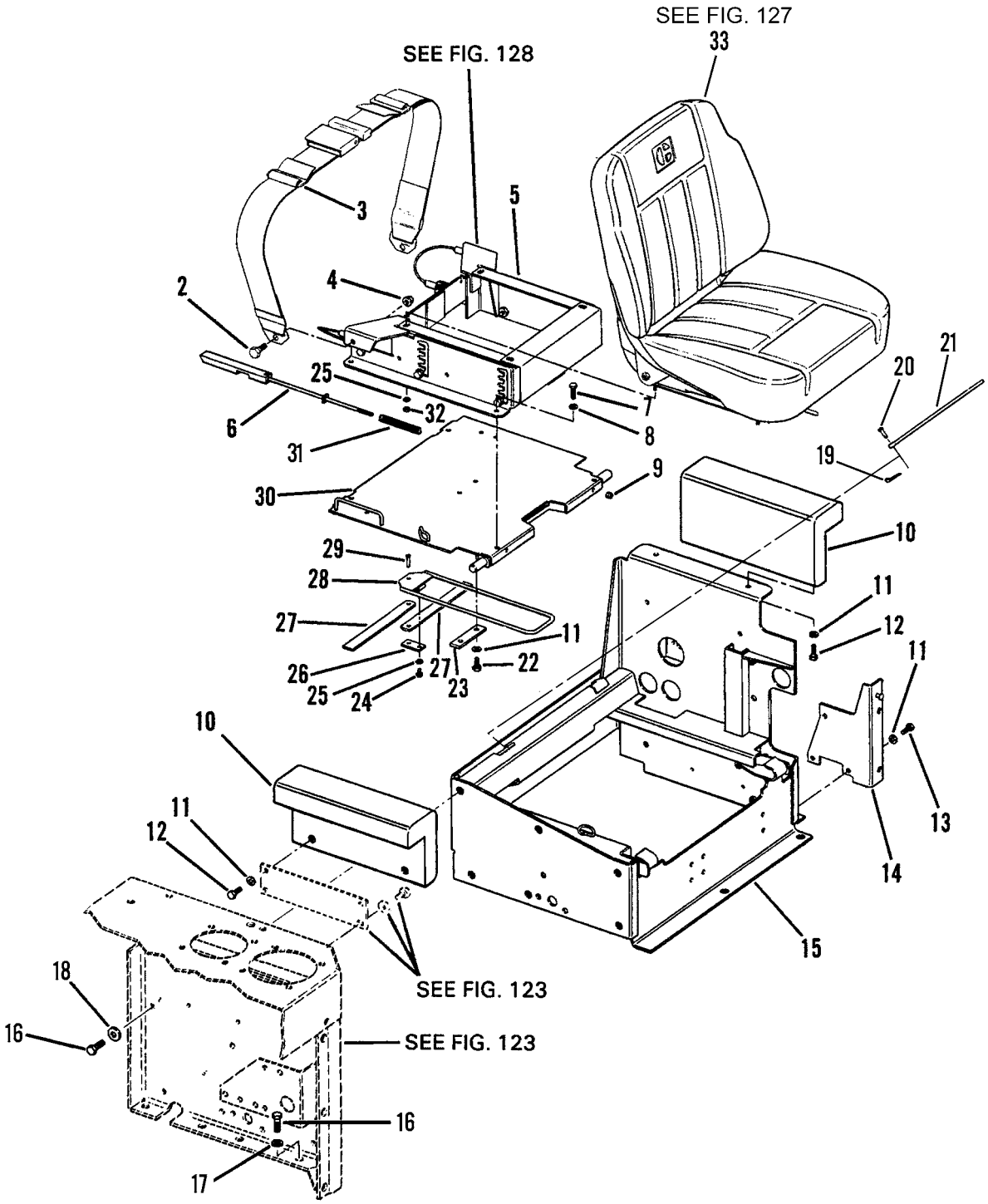

Figure 126. Adjustable Seat Group

(1) ITEM NO	(2) SMR CODE	(3) NSN	(4) CAGEC	(5) PART NUMBER	(6) DESCRIPTION AND USABLE ON CODES (UOC)	(7) QTY
					GROUP 1806 UPHOLSTERY, SEATS AND CARPETS	
					FIG. 126 ADJUSTABLE SEAT GROUP	
1	PFOZZ	2540012382759	11083	8Y4031	BELT,VEHICULAR SAFE	1
2	PFOZZ	5306010643842	11083	8S0933	.BOLT,EYE	2
3	PAOZZ	2540010635730	29944	3831	.BELT,VEHICULAR SAFE	1
4	PFOZZ	5310011191442	11083	8S0934	.NUT,SELF-LOCKING,EX	2
5	PFOOO	2540012539598	11083	6W1506	FRAME,SEAT,VEHICULA (SEE FIG. .. 128)	1
6	PFOZZ	2510012548714	11083	7G2548	LATCH AND ROD ASSEM	2
7	PFOZZ	5306004238194	11083	1A2029	BOLT,MACHINE	4
8	PFOZZ	5310001174788	11083	9Y2695	WASHER,FLAT	4
9	PFOZZ	5310000175121	72962	21NE058	NUT,SELF-LOCKING,HE	2
10	PFOZA	2540012090463	11083	9C3754	CUSHION,SEAT,VEHICU	2
11	PFOZZ	5310008098541	96906	MS27183-27	WASHER,FLAT	10
12	PFOZZ	5305002693236	80204	B1821BH038F100N	SCREW,CAP,HEXAGON H	8
13	PFOZZ	5306002637301	11083	0L1351	BOLT,MACHINE	3
14	PFOZZ		11083	3T5079	FRAME SECTION,STRUC	1
15	PFOZZ	2540012542772	11083	5R6244	FRAME,SEAT,VEHICULA	1
16	PFOZZ	5306004238117	11083	0S1595	BOLT,MACHINE	10
17	PFOZZ	5310008095997	96906	MS27183-17	WASHER,FLAT	6
18	PFOZZ	5310010976720	11083	5P1076	WASHER,SHOULDERED A	4
19	PFOZZ	5315008161794	00198	PK379	PIN,COTTER	1
20	PFOZZ	3120012646067	11083	7G2559	ROD,SPECIAL	1
21	PFOZZ	5315003639729	11083	6B8193	PIN,STRAIGHT,HEADED	1
22	PFOZZ	5305002528919	11083	0S0509	SCREW,CAP,HEXAGON H	2
23	PFOZZ	5365012596380	11083	7G4327	SPACER,PLATE	1
24	PFOZZ	5306002264823	80204	B1821BH031C056N	BOLT,MACHINE	1
25	PFOZZ	5310000814219	96906	MS27183-12	WASHER,FLAT	5
26	PFOZZ	5365012576106	11083	9G6039	SPACER,PLATE	1
27	PFOZZ	3040012539591	11083	7G4631	PLATE,RETAINING,SHA	2
28	PFOZZ	5340012594642	11083	9G6041	HANDLE,BOW	1
29	PFOZZ	5315007540848	96906	MS35810-3	PIN,STRAIGHT,HEADED	1
30	PFOZZ	5340012716280	11083	7G2557	PLATE,MENDING	1
31	PFOZZ	5360012596515	11083	7D9212	SPRING,HELICAL,COMP	2
32	PFOZZ	5310005420091	11083	0314155	NUT,PLAIN,HEXAGON	4
33	PFOOO	2540012545034	11083	9V8786	SEAT,VEHICULAR (SEE FIG. 127) ..	1
				END OF FIGURE		

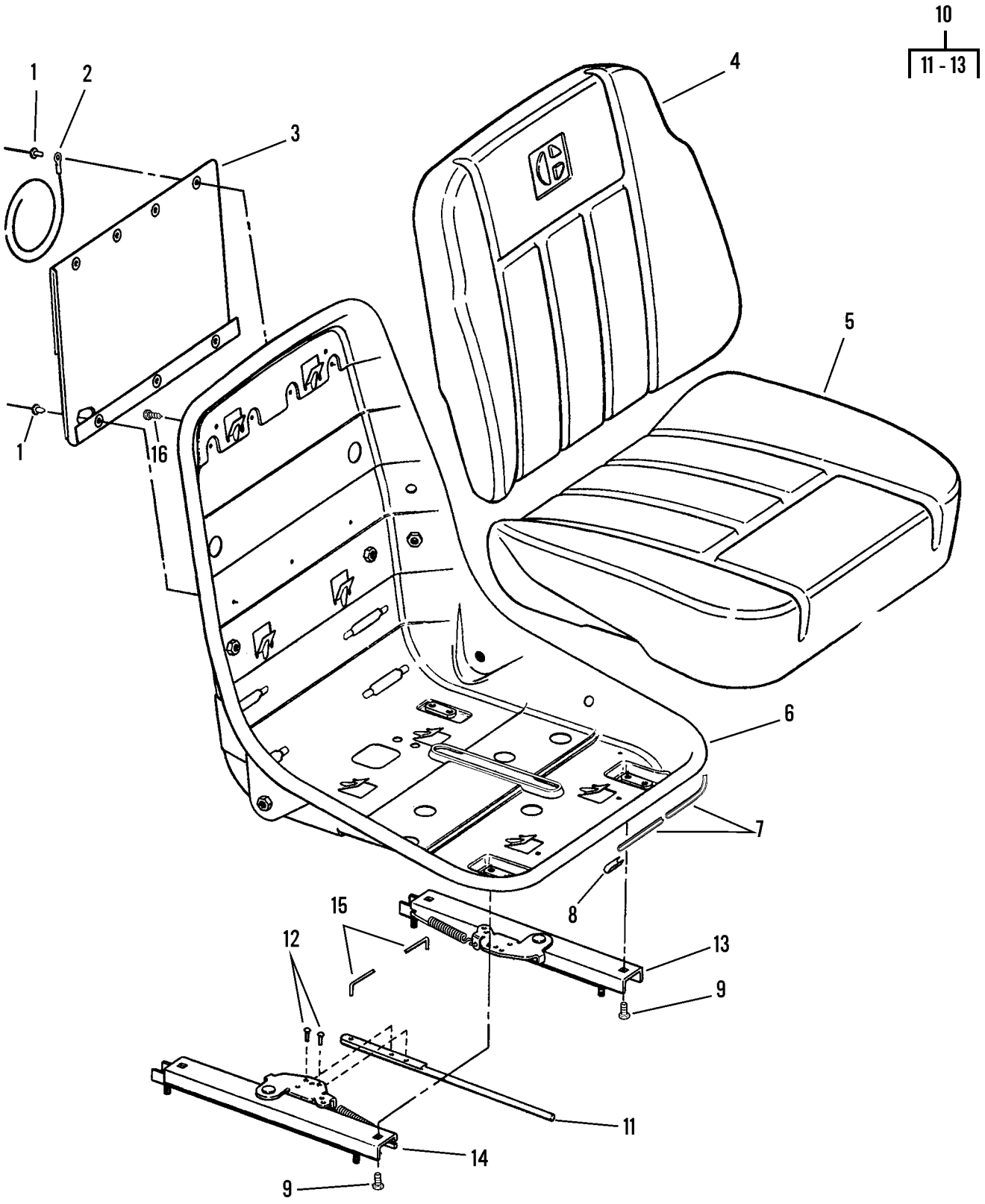

Figure 127. Seat Group

(1) ITEM NO	(2) SMR CODE	(3) NSN	(4) CAGEC	(5) PART NUMBER	(6) DESCRIPTION AND USABLE ON CODES (UOC)	(7) QTY
					GROUP 1806 UPHOLSTERY, SEATS AND CARPETS	
					FIG. 127 SEAT GROUP	
1	PFOZZ	5320012648508	07707	AD64BSLF	.RIVET,BLIND	7
2	PFOZZ	4010011701460	11083	5P7957	.WIRE ROPE ASSEMBLY, ...	1
3	PFOZZ	9905012820103	11083	6W3309	.HOLDER,CARD-LABEL	1
4	PAOZZ	2540012537477	11083	8R2054	.CUSHION,SEAT BACK,V	1
5	PAOZZ	2540012549937	11083	8R2057	.CUSHION,SEAT,VEHICU	1
6	PFOZZ	2540012549938	11083	9V7437	.SEAT,VEHICULAR	1
7	PFOZZ	9390010852839	82654	SF 845	.NONMETALLIC CHANNEL	1
8	PFOZZ	5340012563208	11083	6W5757	.CLIP,SPRING TENSION	1
9	PFOZZ	5306012566771	11083	8T5391	.BOLT,MACHINE	4
10	PFOOO	2540012545577	11083	6W6830	.ADJUSTER ASSEMBLY,S	1
11	PFOZZ	3040012534664	11083	8V3208	..LEVER,MANUAL CONTRO	1
12	PFOZZ	5320012648505	11083	1F1599	..RIVET,SOLID	2
13	PFOZZ	2540012678670	11083	8V3206	..ADJUSTER ASSEMBLY RIGHT HAND	1
14	PFOZZ	2540012678670	11083	8V3206	.ADJUSTER ASSEMBLY LEFT HAND ..	1
15	PFOZZ	3040012545021	11083	9V7445	.CONNECTING LINK,RIG	1
16	PFOZZ	5305011601977	11083	5V1474	.SCREW,TAPPING	4
				END OF FIGURE		

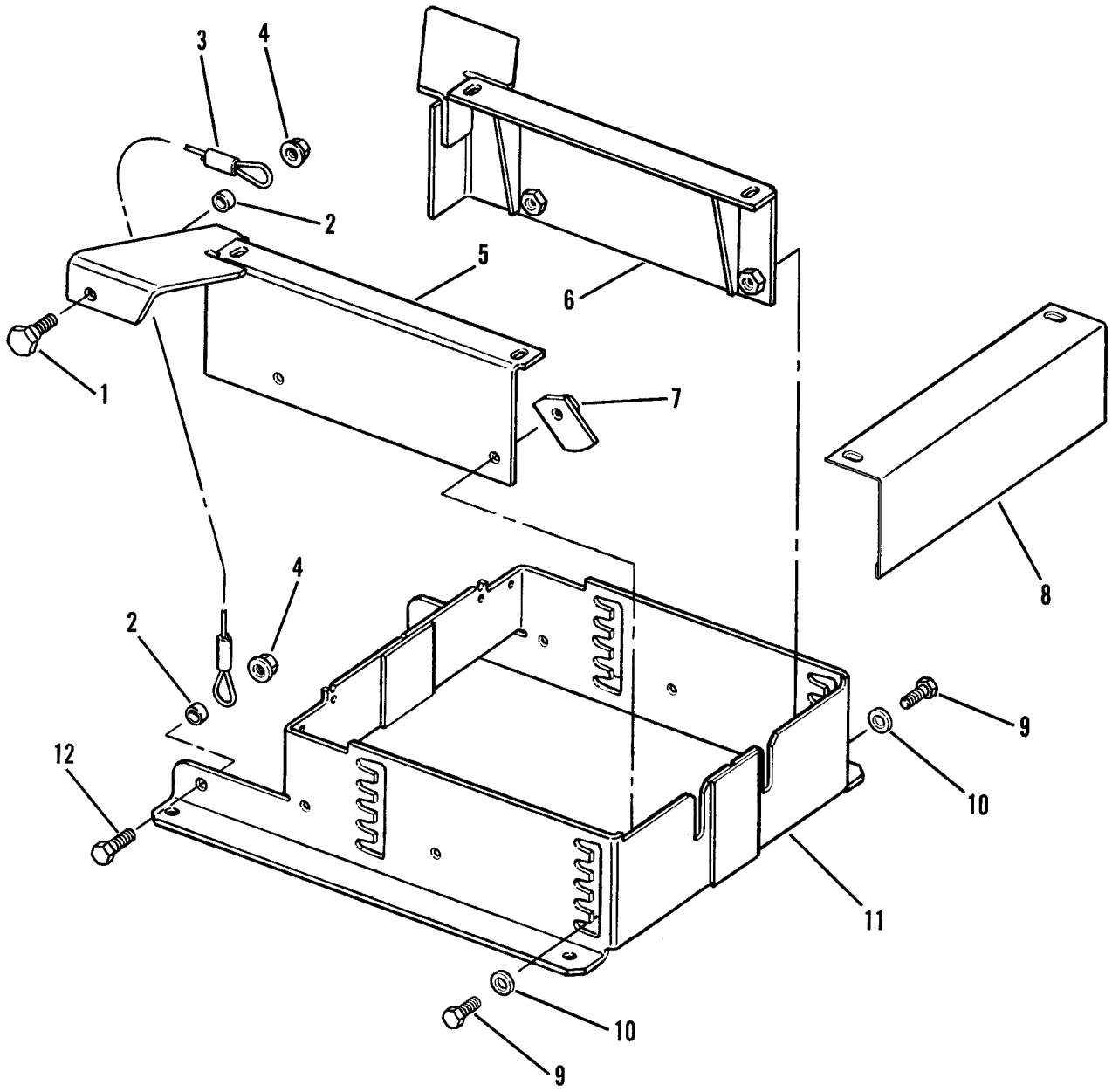

Figure 128. Seat Frame

(1) ITEM NO	(2) SMR CODE	(3) NSN	(4) CAGEC	(5) PART NUMBER	(6) DESCRIPTION AND USABLE ON CODES (UOC)	(7) QTY
					GROUP 1806 UPHOLSTERY, SEATS, AND CARPETS	
					FIG. 128 SEAT FRAME	
1	PAOZZ	5306011620014	29944	10118	BOLT,SHOULDER	2
2	PFOZZ	5365012569289	11083	8S4790	SPACER,SLEEVE	4
3	PFOZZ	4010012605744	11083	6W3628	WIRE ROPE ASSEMBLY, ...	2
4	PFOZZ	5310011191442	11083	8S0934	NUT,SELF-LOCKING,EX	4
5	PFOZZ	5342012573846	11083	6W1496	BRACKET,SPECIAL	1
6	PFOZZ	5342012573845	11083	6W1497	BRACKET,SPECIAL	1
7	PAOZZ	5310012624868	11083	6W2371	NUT,PLAIN,PLATE	1
8	PFOZZ	5340012580152	11083	6W1888	BRACKET,ANGLE	1
9	PFOZZ	5306002286835	11083	4L6454	BOLT,MACHINE	4
10	PFOZZ	5310008098541	96906	MS27183-27	WASHER,FLAT	4
11	PFOZZ	5342012580249	11083	6W0475	BASE,SPECIAL	1
12	PFOZZ	5305000712078	80204	B1821BH050C375N	SCREW,CAP,HEXAGON H	2
					END OF FIGURE	

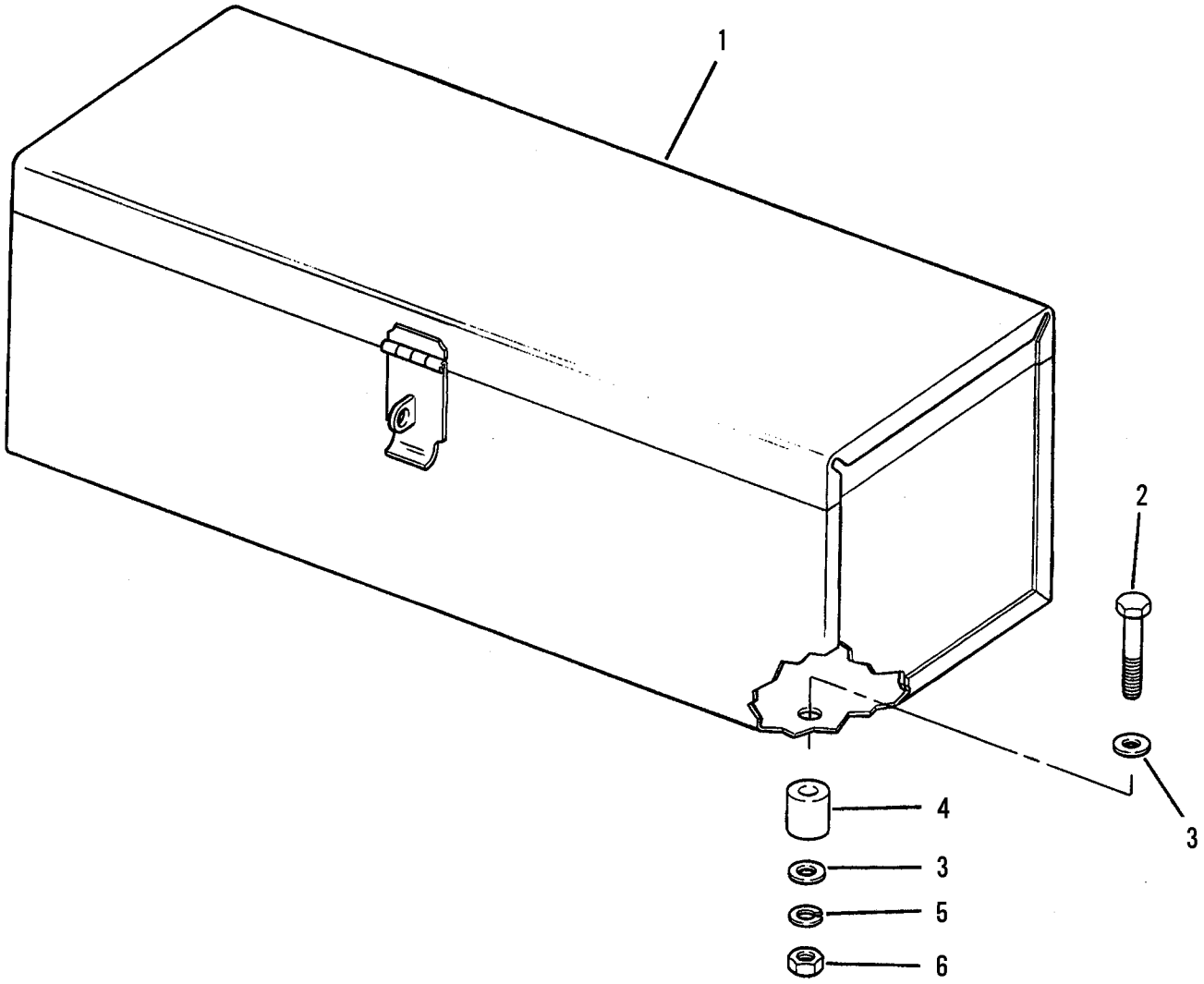

Figure 129. Tool Box

(1) ITEM NO	(2) SMR CODE	(3) NSN	(4) CAGEC	(5) PART NUMBER	(6) DESCRIPTION AND USABLE ON CODES (UOC)	(7) QTY
					GROUP 1808 STOWAGE RACKS, BOXES, STRAPS, CARRYING CASES, CABLE REELS, HOSE REELS, ETC.	
					FIG. 129 TOOL BOX	
1	PFOZZ	5140004264193	11083	3B3427	TOOL BOX,PORTABLE	1
2	PFOZZ	5306010949106	11083	0S1590	BOLT,MACHINE	4
3	PFOZZ	5310001174788	11083	9Y2695	WASHER,FLAT	8
4	PFOZZ	5365010630778	11083	6B7469	SPACER	4
5	PFOZZ	5310006379541	80205	MS35338-46	WASHER,LOCK	4
6	PFOZZ	5310014297859	11083	6V8801	NUT,PLAIN,HEXAGON	4
				END OF FIGURE		

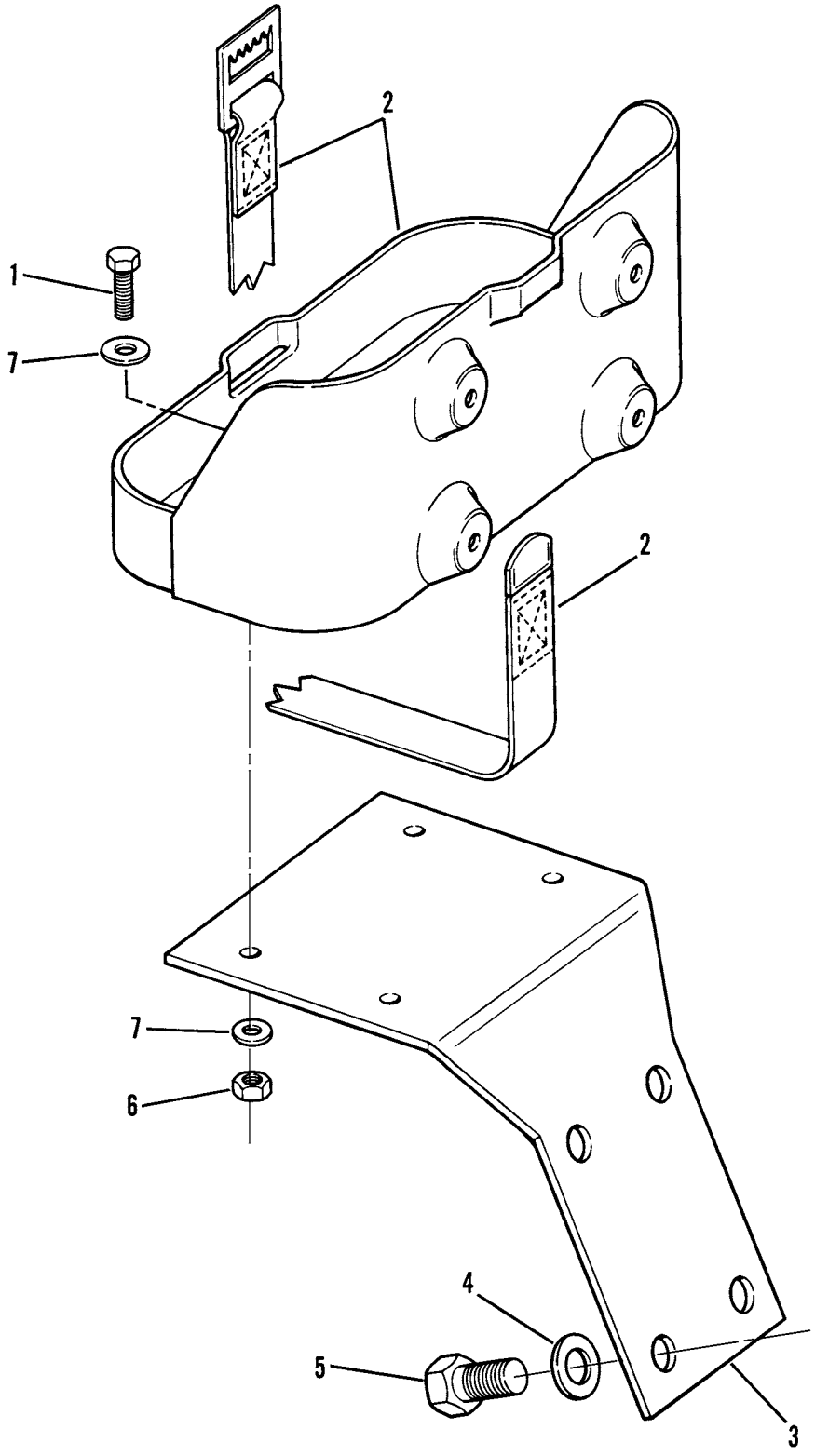

Figure 130. Decontamination Mounting Bracket

(1) ITEM NO	(2) SMR CODE	(3) NSN	(4) CAGEC	(5) PART NUMBER	(6) DESCRIPTION AND USABLE ON CODES (UOC)	(7) QTY
					GROUP 1808 STOWAGE RACKS, BOXES, STRAPS, CARRYING CASES, CABLE REELS, HOSE REELS, ETC.	
					FIG. 130 DECONTAMINATION MOUNTING BRACKET	
1	PFOZZ	5306002604508	11083	0S1594	BOLT,MACHINE	4
2	PFOZZ	2590004736331	07860	C21452	BRACKET,VEHICULAR C	1
3	PFOZZ	5340012579185	11083	5R6245	BRACKET,ANGLE	1
4	PFOZZ	5310008098540	96906	MS27183-25	WASHER,FLAT	4
5	PFOZZ	5306008146588	11083	0S1626	BOLT,MACHINE	4
6	PFOZZ	5310014297859	11083	6V8801	NUT,PLAIN,HEXAGON	4
7	PFOZZ	5310001174788	11083	9Y2695	WASHER,FLAT	8
				END OF FIGURE		

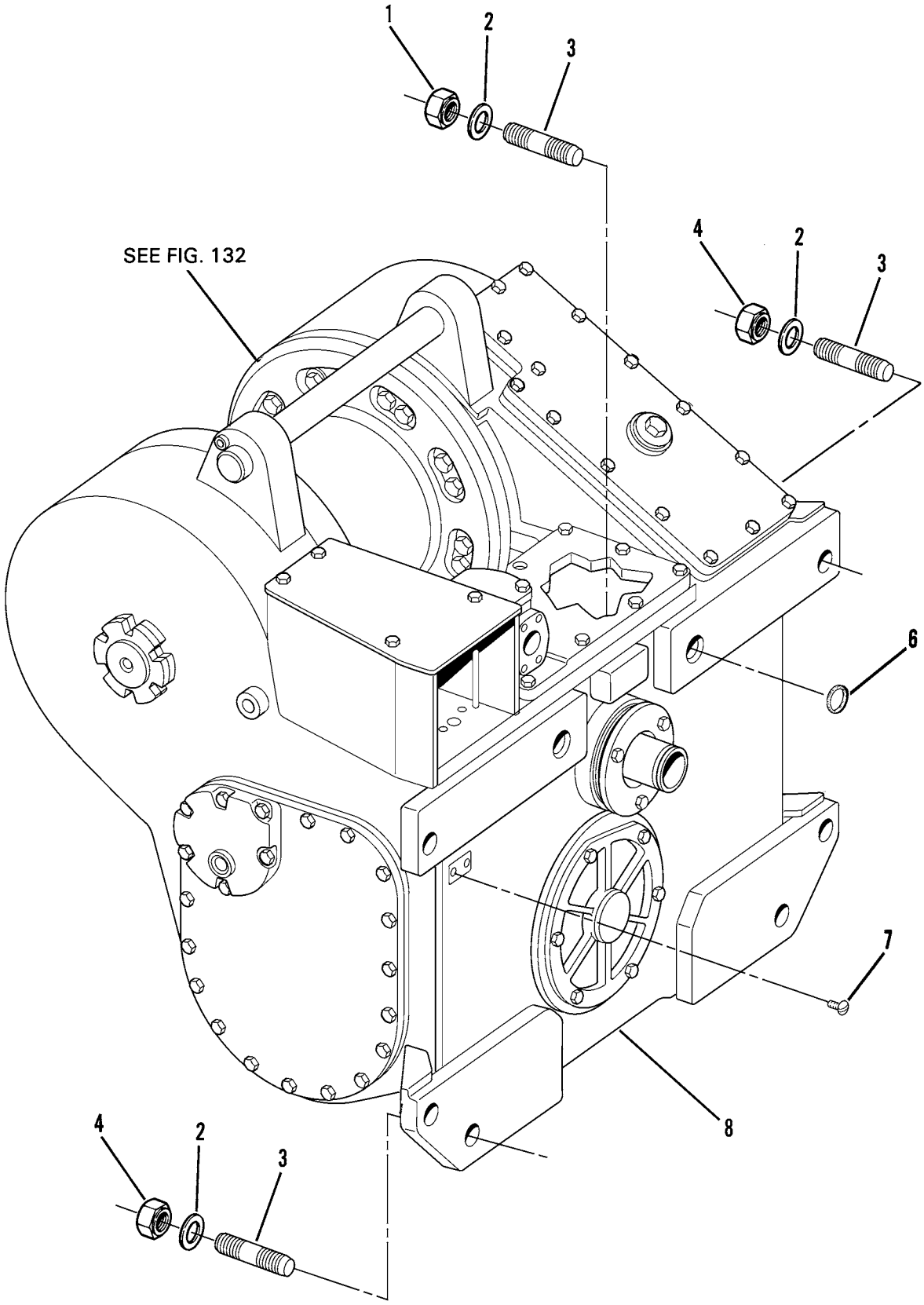

Figure 131. Winch and Mounting Hardware

(1) ITEM NO	(2) SMR CODE	(3) NSN	(4) CAGEC	(5) PART NUMBER	(6) DESCRIPTION AND USABLE ON CODES (UOC)	(7) QTY
					GROUP 20 HOIST, WINCH, CAPSTAN, WINDLASS, POWER CONTROL UNIT, AND POWER TAKE-OFF	
					GROUP 2001 HOIST, CAPSTAN, WINDLASS, CRANE, OR WINCH ASSEMBLY	
					FIG. 131 WINCH AND MOUNTING HARDWARE	
1	PFOZZ	5310011604539	11083	2K7468	NUT,SELF-LOCKING,HE ..... UOC:GWC,WIN	2
2	PFOZZ	5310011626012	11083	4K0684	WASHER,FLAT ..... UOC:GWC,WIN	8
3	PFOZZ	5307012070426	11083	1M2766	STUD,PLAIN ..... UOC:GWC,WIN	4
4	PFOZZ	5310004043787	11083	7H7539	NUT,PLAIN,HEXAGON ..... UOC:GWC,WIN	6
5	PFOZZ	5307011619140	11083	3S2113	STUD,PLAIN ..... UOC:GWC,WIN	4
6	PCOZZ	5331010938484	11083	5M7423	O-RING ..... UOC:GWC,WIN	2
7	PFOZZ	5305002535615	80205	MS21318-21	SCREW,DRIVE ..... UOC:GWC,WIN	2
8	XBOHH		11083	5R7807	WINCH,DRUM,VEHICLE INCLUDES ... ITEMS ON FIG 132-140 & 150,151 AND 153 UOC:GWC,WIN	1
					END OF FIGURE	

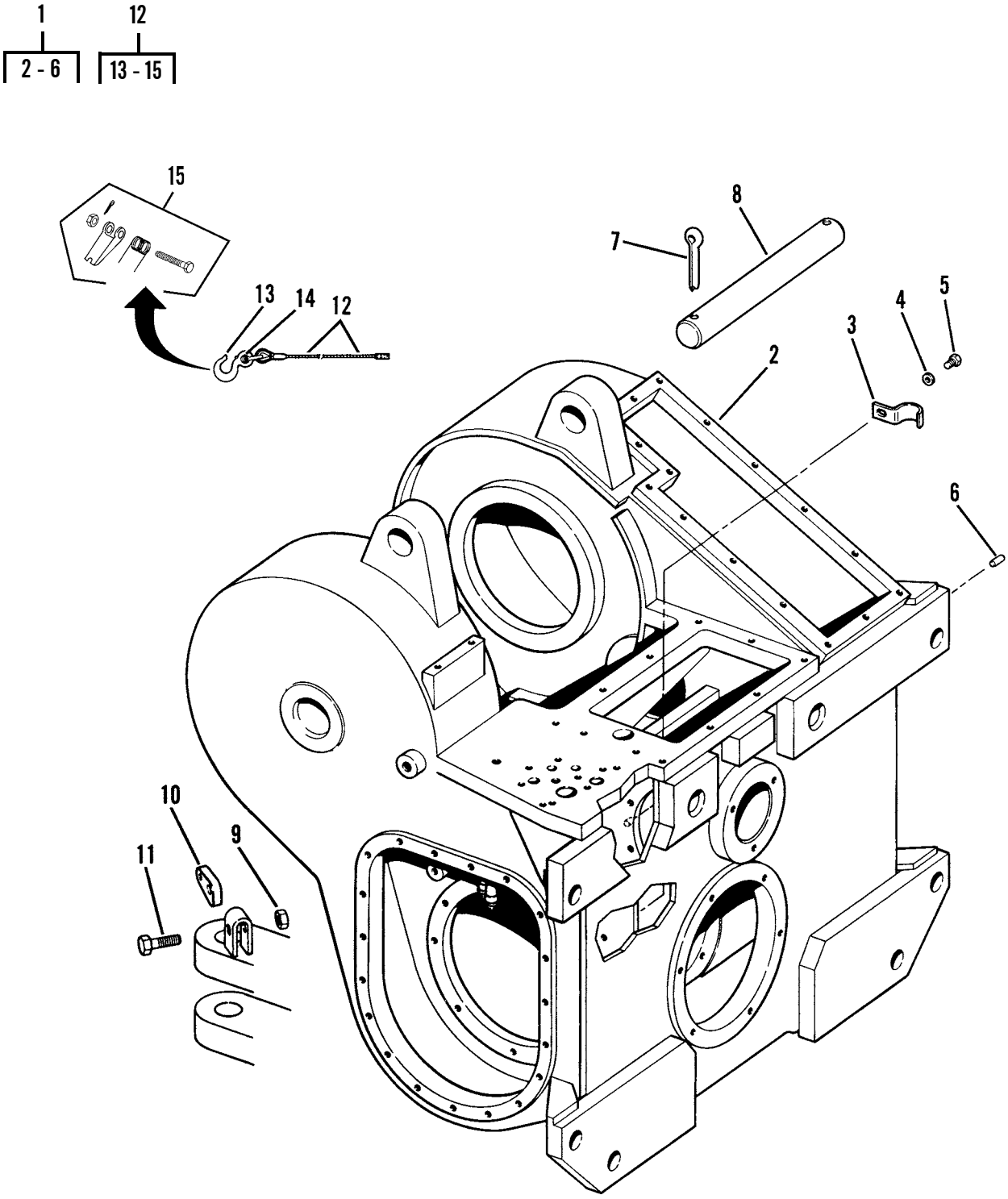

Figure 132. Cable Guide and Case Group

(1) ITEM NO	(2) SMR CODE	(3) NSN	(4) CAGEC	(5) PART NUMBER	(6) DESCRIPTION AND USABLE ON CODES (UOC)	(7) QTY
					GROUP 2001 HOIST, CAPSTAN, WINDLASS, CRANE, OR WINCH ASSEMBLY	
					FIG. 132 CABLE GUIDE AND CASE GROUP	
1	PAHHH	3040012541100	11083	8P0504	HOUSING,MECHANICAL ..... UOC:GWC,WIN	1
2	XAHZZ		11083	8P0502	.HOUSING,MECHANICAL ..... UOC:GWC,WIN	1
3	PAHZZ	5340011628857	11083	2P3572	.STRAP,RETAINING ..... UOC:GWC,WIN	1
4	PFHZZ	5310000806004	96906	MS27183-14	.WASHER,FLAT ..... UOC:GWC,WIN	1
5	PFHZZ	5305007215492	80204	B1821BH038C063N	.SCREW,CAP,HEXAGON H ..... UOC:GWC,WIN	1
6	PFHZZ	5315002459995	11083	8B1312	.PIN,STRAIGHT,HEADLE ..... UOC:GWC,WIN	2
7	PFOZZ	5315000189396	11083	3B5325	PIN,COTTER ..... UOC:GWC,WIN	2
8	PFOZZ	3040012541007	11083	1P2593	SHAFT,STRAIGHT ..... UOC:GWC,WIN	1
9	PFOZZ	5310007638905	96906	MS51968-20	NUT,PLAIN,HEXAGON ..... UOC:GWC,WIN	1
10	PFOZZ	2510001765600	11083	7B0863	LATCH ..... UOC:GWC,WIN	1
11	PFOZZ		11083	0S1577	BOLT,MACHINE ..... UOC:GWC,WIN	1
12	PFOZZ	4010012592713	11083	5R7141	WIRE ROPE ASSEMBLY, 200’ LG ... UOC:GWC,WIN	1
13	PFOZZ	4030012896202	75535	S-320AN-15	.HOOK,HOIST ..... UOC:GWC,WIN	1
14	PFOZZ	4030012872358	75535	1018623	.SHACKLE ..... UOC:GWC,WIN	1
15	PFOZZ		75535	S-4320	.LATCH KIT,HOOK ..... UOC:GWC,WIN	1
					END OF FIGURE	

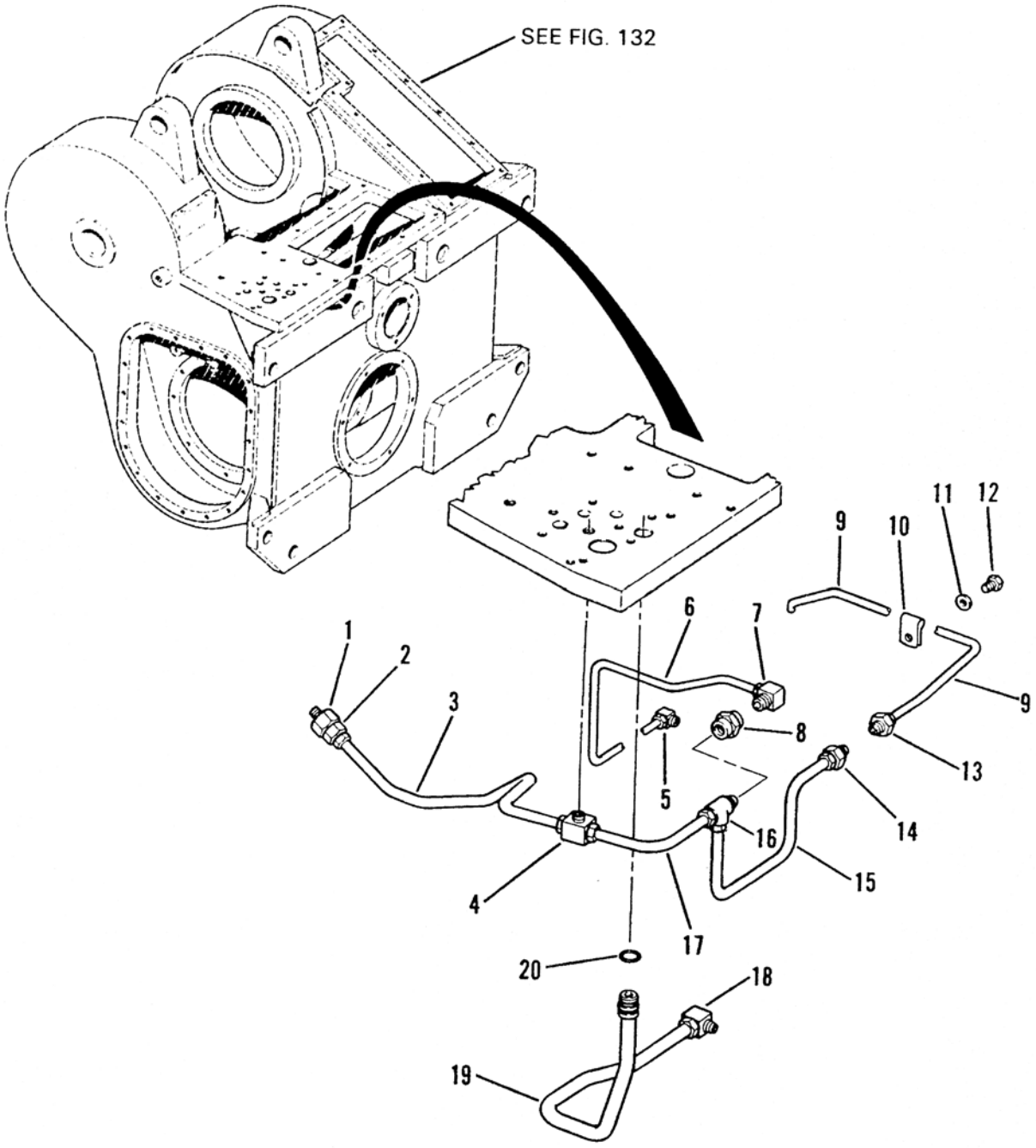

Figure 133. Winch Control Valve Tubing

(1) ITEM NO	(2) SMR CODE	(3) NSN	(4) CAGEC	(5) PART NUMBER	(6) DESCRIPTION AND USABLE ON CODES (UOC)	(7) QTY
					GROUP 2001 HOIST, CAPSTAN, WINDLASS, CRANE, OR WINCH ASSEMBLY	
					FIG. 133 WINCH CONTROL VALVE TUBING	
1	PAHZZ	4730011610160	11083	2P4439	REDUCER,PIPE ..... UOC:GWC,WIN	1
2	PFHZZ	4730010599344	11083	5K9246	ADAPTER,STRAIGHT,PI ..... UOC:GWC,WIN	1
3	XDHZZ		11083	8P0978	TUBE ASSEMBLY,METAL ..... UOC:GWC,WIN	1
4	PAHZZ	4730012023356	11083	5K9989	TEE,PIPE TO TUBE ..... UOC:GWC,WIN	1
5	PFHZZ	4730010599435	11083	5K9243	ELBOW,PIPE TO TUBE ..... UOC:GWC,WIN	1
6	XDHZZ		11083	6P4773	TUBE ASSEMBLY,METAL ..... UOC:GWC,WIN	1
7	PFHZZ	4730010690768	11083	5K9241	FITTING ..... UOC:GWC,WIN	1
8	PAHZZ	4730012023362	11083	3F2779	COUPLING,PIPE ..... UOC:GWC,WIN	1
9	XBHZZ		11083	8P0972	TUBE ASSEMBLY,METAL ..... UOC:GWC,WIN	1
10	PFHZZ	5999003636240	11083	2B2404	CLIP,ELECTRICAL ..... UOC:GWC,WIN	2
11	PFHZZ	5310000806004	96906	MS27183-14	WASHER,FLAT ..... UOC:GWC,WIN	2
12	PFHZZ	5306004265062	11083	4F4879	BOLT,MACHINE ..... UOC:GWC,WIN	2
13	PFHZZ	4730010686081	11083	6L3616	FITTING ..... UOC:GWC,WIN	1
14	PAHZZ	4730012023353	11083	7K1457	ADAPTER,STRAIGHT,PI ..... UOC:GWC,WIN	1
15	XBHZZ		11083	8P0973	TUBE ASSEMBLY,METAL ..... UOC:GWC,WIN	1
16	PAHZZ	4730010633007	11083	6K8498	TEE ..... UOC:GWC,WIN	1
17	XBHZZ		11083	8P0974	TUBE ASSEMBLY,METAL ..... UOC:GWC,WIN	1
18	PFHZZ	4730011434326	11083	5K9240	ELBOW,PIPE TO TUBE ..... UOC:GWC,WIN	1
19	XDHZZ		11083	6P4680	TUBE ASSEMBLY,METAL ..... UOC:GWC,WIN	1
20	PAHZZ	5331005917543	11083	7F8607	O-RING ..... UOC:GWC,WIN	1
				END OF FIGURE		

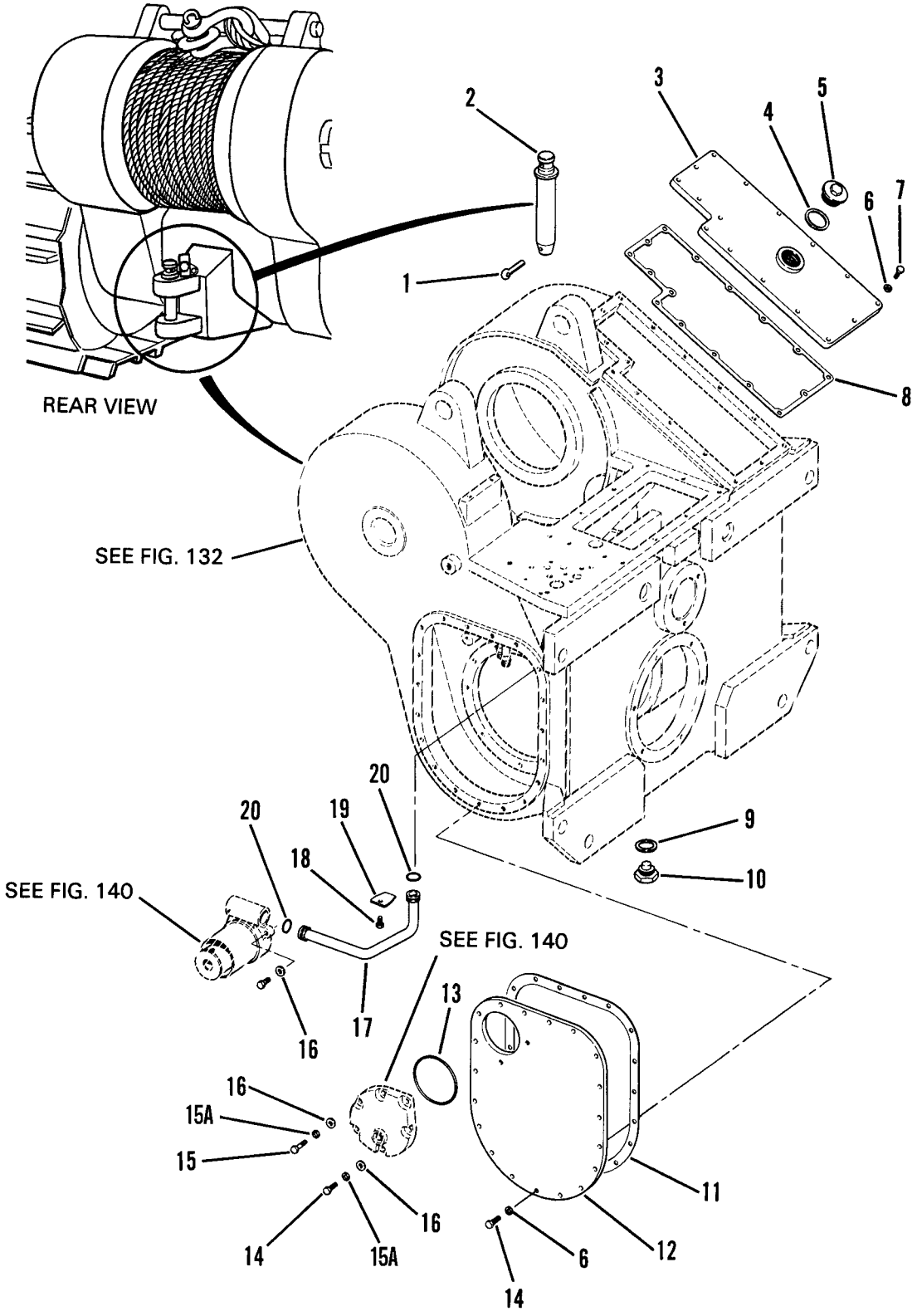

Figure 134. Winch Group - Cover Assembly

(1) ITEM NO	(2) SMR CODE	(3) NSN	(4) CAGEC	(5) PART NUMBER	(6) DESCRIPTION AND USABLE ON CODES (UOC)	(7) QTY
					GROUP 2001 HOIST, CAPSTAN, WINDLASS, CRANE, OR WINCH ASSEMBLY	
					FIG. 134 WINCH GROUP - COVER ASSEMBLY	
1	PFOZZ	5315011647582	11083	3B5319	PIN,COTTER ..... UOC:GWC,WIN	1
2	PAOZZ	5315004265074	11083	7F9541	PIN,DRAWBAR ..... UOC:GRC,GWC,WIN	1
3	PAOZZ	5340012574418	11083	1P8241	COVER,ACCESS ..... UOC:GWC,WIN	1
4	PFOZZ	5330001412476	75165	920	GASKET ..... UOC:GWC,WIN	1
5	PFOZZ	4730010794374	11083	5H7110	PLUG,PIPE ..... UOC:GWC,WIN	1
6	PFOZZ	5310006379541	80205	MS35338-46	WASHER,LOCK ..... UOC:GWC,WIN	31
7	PFOZZ	5306002604508	11083	0S1594	BOLT,MACHINE ..... UOC:GWC,WIN	18
8	PFOZZ	5330012087581	11083	1P8242	GASKET ..... UOC:GWC,WIN	1
9	PFOZZ	5330002976548	11083	6F4868	GASKET ..... UOC:GWC,WIN	1
10	PFOZZ	4730009247974	36540	776Y-28E-1	PLUG,PIPE,MAGNETIC ..... UOC:GWC,WIN	1
11	PFOZZ	5330011648564	11083	2P3637	GASKET ..... UOC:GWC,WIN	1
12	PFOZZ	5340011619146	11083	2P5738	COVER,ACCESS ..... UOC:GWC,WIN	1
13	PFOZZ	5331013112670	11083	5F3999	O-RING ..... UOC:GWC,WIN	1
14	PFOZZ	5305000680511	80204	B1821BH038C125N	SCREW,CAP,HEXAGON H ..... UOC:GWC,WIN	17
15	PFOZZ	5306002634038	11083	2A4639	BOLT,MACHINE ..... UOC:GWC,WIN	4
15A	PFOZZ	5310006379541	80205	MS35338-46	WASHER,LOCK ..... UOC:GWC,WIN	6
16	PFOZZ	5310000806004	96906	MS27183-14	WASHER,FLAT ..... UOC:GWC,WIN	8
17	PAOZZ	4710012540317	11083	8P0980	TUBE ASSEMBLY,METAL ..... UOC:GWC,WIN	1
18	PFOZZ	5305007215492	80204	B1821BH038C063N	SCREW,CAP,HEXAGON H ..... UOC:GWC,WIN	1
19	PFOZZ	5365012573813	11083	6P8677	SPACER,PLATE ..... UOC:GWC,WIN	1
20	PCOZZ	5331002456767	99193	S9413-215	O-RING ..... UOC:GWC,WIN	2
					END OF FIGURE	

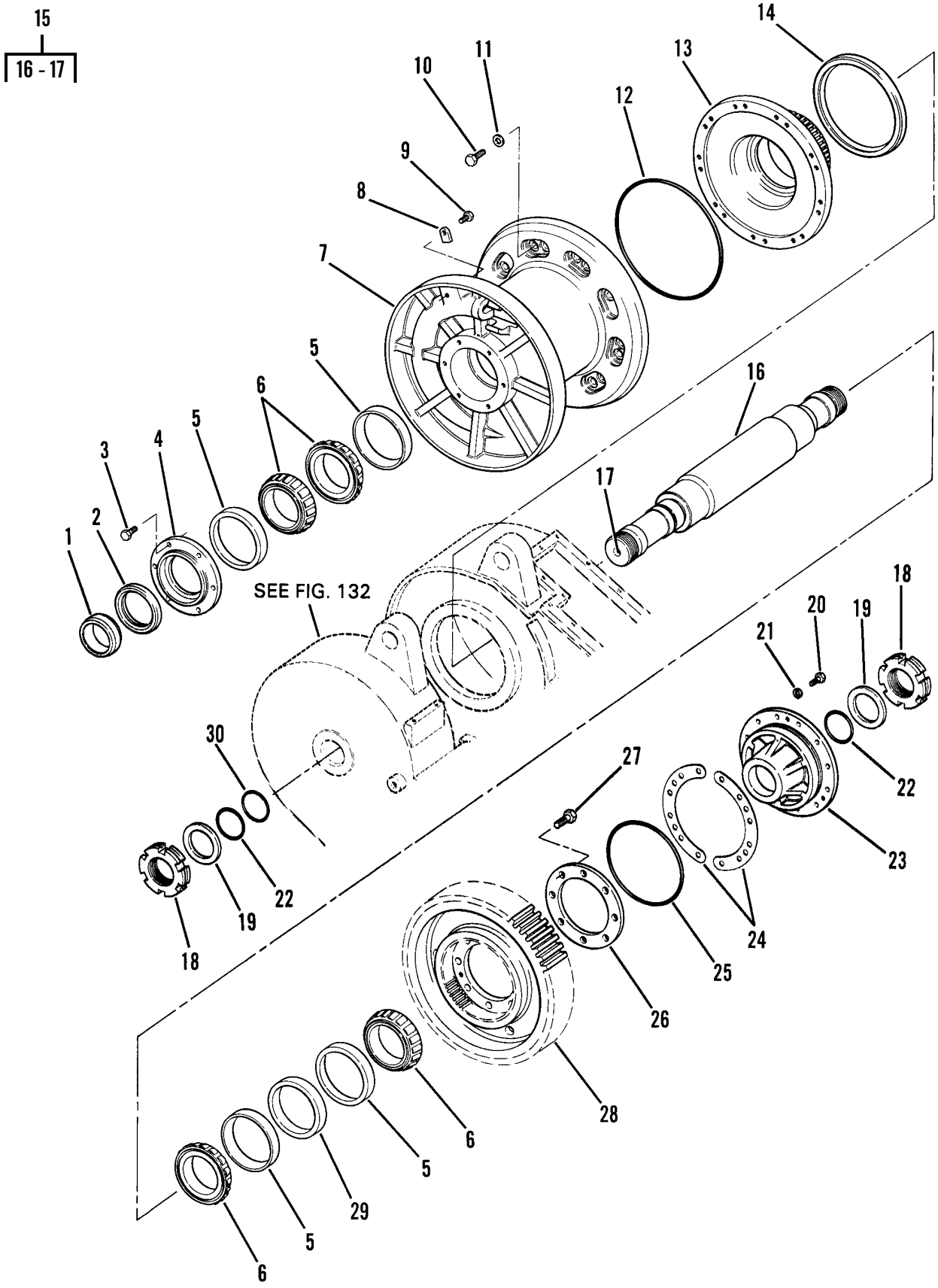

Figure 135. Shaft and Drum Assembly

(1) ITEM NO	(2) SMR CODE	(3) NSN	(4) CAGEC	(5) PART NUMBER	(6) DESCRIPTION AND USABLE ON CODES (UOC)	(7) QTY
					GROUP 2001 HOIST, CAPSTAN, WINDLASS, CRANE, OR WINCH ASSEMBLY	
					FIG. 135 SHAFT AND DRUM ASSEMBLY	
1	PFHZZ	5365012589188	11083	1P6754	SPACER,SLEEVE ..... UOC:GWC,WIN	1
2	PFHZZ	5330001611882	11083	3F1395	SEAL,PLAIN ENCASED ..... UOC:GWC,WIN	1
3	PFHZZ	5306004238117	11083	0S1595	BOLT,MACHINE ..... UOC:GWC,WIN	6
4	PAHZZ	5330012577744	11083	1P4105	RETAINER,OIL SEAL ..... UOC:GWC,WIN	1
5	PFHZZ	2520010634241	01212	JM 822010 CUP	CUP ..... UOC:GWC,WIN	4
6	PFHZZ	2520010634240	01212	JM 822049CONE	CONE ..... UOC:GWC,WIN	4
7	PAHZZ	2590012548749	11083	6Y6585	REEL,CABLE ..... UOC:GWC,WIN	1
8	PFHZZ	5365012662562	11083	6G0773	SPACER,PLATE ..... UOC:GWC,WIN	1
9	PFHZZ	5306004262934	11083	0S1621	BOLT,MACHINE ..... UOC:GWC,WIN	1
10	PFHZZ	5305007247221	80204	B1821BH063C175N	SCREW,CAP,HEXAGON H ..... UOC:GWC,WIN	15
11	PFHZZ	5310001397030	11083	4D3704	WASHER,FLAT ..... UOC:GWC,WIN	15
12	PFHZZ	5331009998364	09990	2-279N951-75	O-RING ..... UOC:GWC,WIN	1
13	PFHZZ	3040012555401	11083	1P2581	HUB,BODY ..... UOC:GWC,WIN	1
14	PFHZZ	5330012098719	11083	1S5347	SEAL,PLAIN ENCASED ..... UOC:GWC,WIN	1
15	PAHFF	3040012545563	11083	2P1978	SHAFT,STRAIGHT ..... UOC:GWC,WIN	1
16	XAHZZ		11083	1P6728	.SHAFT,DRUM ..... UOC:GWC,WIN	1
17	PFHZZ	2815000119934	11083	4B9783	.BALL ..... UOC:GWC,WIN	1
18	PFHZZ	5310006098042	11083	8H3325	NUT ..... UOC:GWC,WIN	2
19	PFHZZ	5310012574299	11083	3P0719	WASHER,FLAT ..... UOC:GWC,WIN	2
20	PFHZZ	5305000680511	80204	B1821BH038C125N	SCREW,CAP,HEXAGON H ..... UOC:GWC,WIN	12
21	PFHZZ	5310006379541	80205	MS35338-46	WASHER,LOCK ..... UOC:GWC,WIN	12
22	PFHZZ	5331002538180	11083	5H2824	O-RING ..... UOC:GWC,WIN	2
23	PAHZZ	3040012689999	11083	8P0847	FLANGE,COMPANION,UN ..... UOC:GWC,WIN	1
24	PFHZZ	5365012580113	11083	1P6181	SHIM ..... UOC:GWC,WIN	2

(1) ITEM NO	(2) SMR CODE	(3) NSN	(4) CAGEC	(5) PART NUMBER	(6) DESCRIPTION AND USABLE ON CODES (UOC)	(7) QTY
25	PFHZZ	5330011893550	11083	1J2890	SEAL ..... UOC:GWC,WIN	1
26	PFHZZ	5365012573815	11083	1P6755	SPACER,PLATE ..... UOC:GWC,WIN	1
27	PFHZZ	5305007247222	80204	B1821BH063C200N	SCREW,CAP,HEXAGON H ..... UOC:GWC,WIN	8
28	PAHZZ	3020012544805	11083	1P6753	GEAR,SPUR ..... UOC:GWC,WIN	1
29	PFHZZ	5365012574625	11083	1P6691	SPACER,RING ..... UOC:GWC,WIN	1
30	PFHZZ	5331003396220	11083	2H6184	O-RING ..... UOC:GWC,WIN	1
				END OF FIGURE		

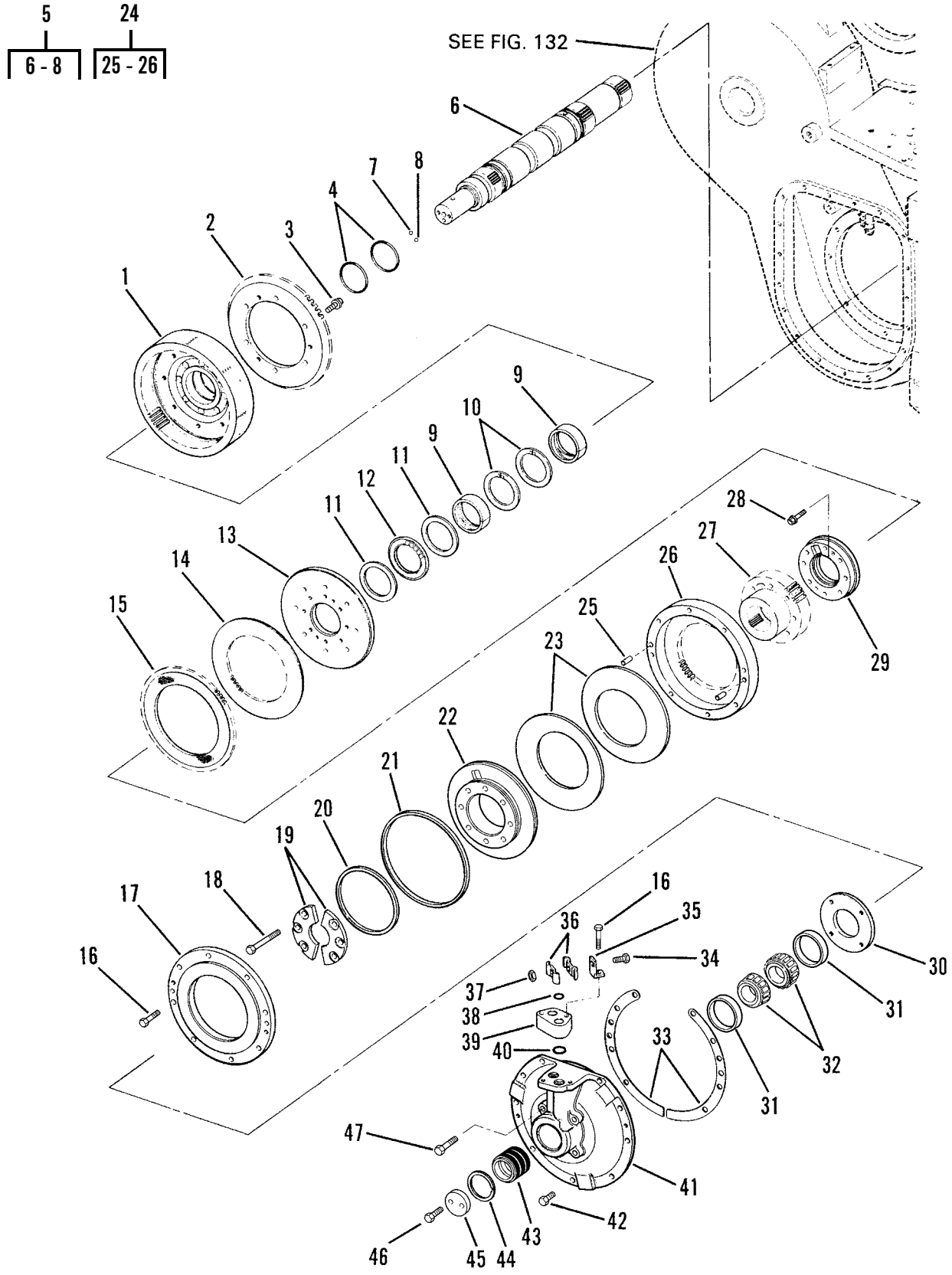

Figure 136. Disc and Hub Assembly

(1) ITEM NO	(2) SMR CODE	(3) NSN	(4) CAGEC	(5) PART NUMBER	(6) DESCRIPTION AND USABLE ON CODES (UOC)	(7) QTY
					GROUP 2001 HOIST, CAPSTAN, WINDLASS, CRANE, OR WINCH ASSEMBLY	
					FIG. 136 DISC AND HUB ASSEMBLY	
1	PAHZZ	3040012541099	11083	2P1980	HOUSING,MECHANICAL ..... UOC:GWC,WIN	2
2	PFHZZ	3020012541224	11083	7T8342	GEAR,BEVEL ..... UOC:GWC,WIN	2
3	PFHZZ	5305011884766	11083	9M6590	SCREW,CAP,HEXAGON H ..... UOC:GWC,WIN	12
4	PFHZZ	5331007412096	11083	6H3977	O-RING ..... UOC:GWC,WIN	4
5	PAHHH	3040012544937	11083	1P6208	SHAFT,SHOULDERED ..... UOC:GWC,WIN	1
6	XAHZZ		11083	1P6184	.SHAFT,CLUTCH ..... UOC:GWC,WIN	1
7	PFHZZ	2815000119934	11083	4B9783	.BALL ..... UOC:GWC,WIN	1
8	PFHZZ	3110000119931	11083	4B9784	.BALL,BEARING ..... UOC:GWC,WIN	1
9	PFHZZ	3120011648623	11083	2P1005	BEARING,SLEEVE ..... UOC:GWC,WIN	4
10	PFHZZ	5325002857939	80756	RR-354	RING,RETAINING ..... UOC:GWC,WIN	4
11	PFHZZ	3120011639375	11083	1P6071	BEARING,WASHER,THRU ..... UOC:GWC,WIN	4
12	PFHZZ	3110010249817	60380	NTA-5266	RETAINER AND ROLLER ..... UOC:GWC,WIN	2
13	PFHZZ	2520011617796	11083	1P6167	DISK,CLUTCH,VEHICUL ..... UOC:GWC,WIN	2
14	PFHZZ	2520011619658	11083	2P4370	DISK,CLUTCH,VEHICUL ..... UOC:GWC,WIN	8
15	PFHZZ	2520012855094	11083	6T4944	DISK,CLUTCH,VEHICUL ..... UOC:GWC,WIN	10
16	PFHZZ	5306010949106	11083	0S1590	BOLT,MACHINE ..... UOC:GWC,WIN	18
17	PFHZZ	3040011624303	11083	1P6153	PLATE,RETAINING,SHA ..... UOC:GWC,WIN	2
18	PFHZZ	5305004263085	55883	IPD /A5964	SCREW,CAP,HEXAGON H ..... UOC:GWC,WIN	16
19	PFHZZ	3110011653725	11083	1P6176	PLATE,RETAINING,BEA ..... UOC:GWC,WIN	2
20	PFHZZ	5330011648576	11083	1S9497	RETAINER,PACKING ..... UOC:GWC,WIN	2
21	PFHZZ	5310004513384	11083	8S3371	WASHER ..... UOC:GWC,WIN	2
22	PFHZZ	3040011633240	11083	1P6158	COLLAR,SHAFT ..... UOC:GWC,WIN	2
23	PAHZZ	5310011988570	11083	6P3767	WASHER,SPRING TENSI ..... UOC:GWC,WIN	4
24	XBHZZ		11083	1P6179	HUB,BODY ..... UOC:GWC,WIN	2

(1) ITEM NO	(2) SMR CODE	(3) NSN	(4) CAGEC	(5) PART NUMBER	(6) DESCRIPTION AND USABLE ON CODES (UOC)	(7) QTY
25	PFHZZ	5315002459995	11083	8B1312	.PIN,STRAIGHT,HEADLE ..... UOC:GWC,WIN	2
26	XAHZZ		11083	1P5293	.HUB,BODY ..... UOC:GWC,WIN	1
27	PFHZZ	3040011674493	11083	1P8651	HUB,BODY ..... UOC:GWC,WIN	2
28	PFHZZ	5306011646317	11083	5P6446	BOLT,MACHINE ..... UOC:GWC,WIN	4
29	PFHZZ	3040011640352	11083	1P6701	COLLAR,SHAFT ..... UOC:GWC,WIN	2
30	PFHZZ	5365011646623	11083	1P4232	SPACER,PLATE ..... UOC:GWC,WIN	1
31	PFHZZ	3110001913923	01212	JLM104910	CUP,TAPERED ROLLER ..... UOC:GWC,WIN	2
32	PFHZZ	3110009385084	01212	JLM104948	CONE AND ROLLERS,TA ..... UOC:GWC,WIN	2
33	PFHZZ	5365011648702	11083	1P6178	SHIM SET ..... UOC:GWC,WIN	2
34	PFHZZ	5305002693238	80204	B1821BH038F125N	SCREW,CAP,HEXAGON H ..... UOC:GWC,WIN	1
35	PFHZZ	5340011648621	11083	2P4438	BRACKET,ANGLE ..... UOC:GWC,WIN	1
36	PFHZZ	5340011648760	11083	2P4437	STRAP,RETAINING ..... UOC:GWC,WIN	2
37	PFHZZ	5310009591488	81349	M45913/2-6FG5C	NUT,SELF-LOCKING,HE ..... UOC:GWC,WIN	1
38	PCHZZ	5331004984556	09990	2-115N709-90	O-RING ..... UOC:GWC,WN	2
39	PFHZZ	2520011650354	11083	2P1053	FLANGE,COMPANION,VE ..... UOC:GWC,WIN	1
40	PCHZZ	5331008507586	11083	5H2767	O-RING ..... UOC:GWC,WIN	2
41	PFHZZ		11083	1P5290	HUB,BODY ..... UOC:GWC,WIN	1
42	PFHZZ	5306002604508	11083	0S1594	BOLT,MACHINE ..... UOC:GWC,WIN	9
43	PFHZZ	5365011619161	11083	1P6172	RING,SPECIAL ..... UOC:GWC,WIN	1
44	PFHZZ	5365001314761	11083	9F7378	RING,SEAL ..... UOC:GWC,WIN	3
45	PFHZZ	3110011648765	11083	1P6180	PLATE,RETAINING,BEA ..... UOC:GWC,WIN	1
46	PFHZZ	5305000680511	80204	B1821BH038C125N	SCREW,CAP,HEXAGON H ..... UOC:GWC,WIN	2
47	PFHZZ	5306002851368	11083	L1143	BOLT,MACHINE ..... UOC:GWC,WIN	4
				END OF FIGURE		

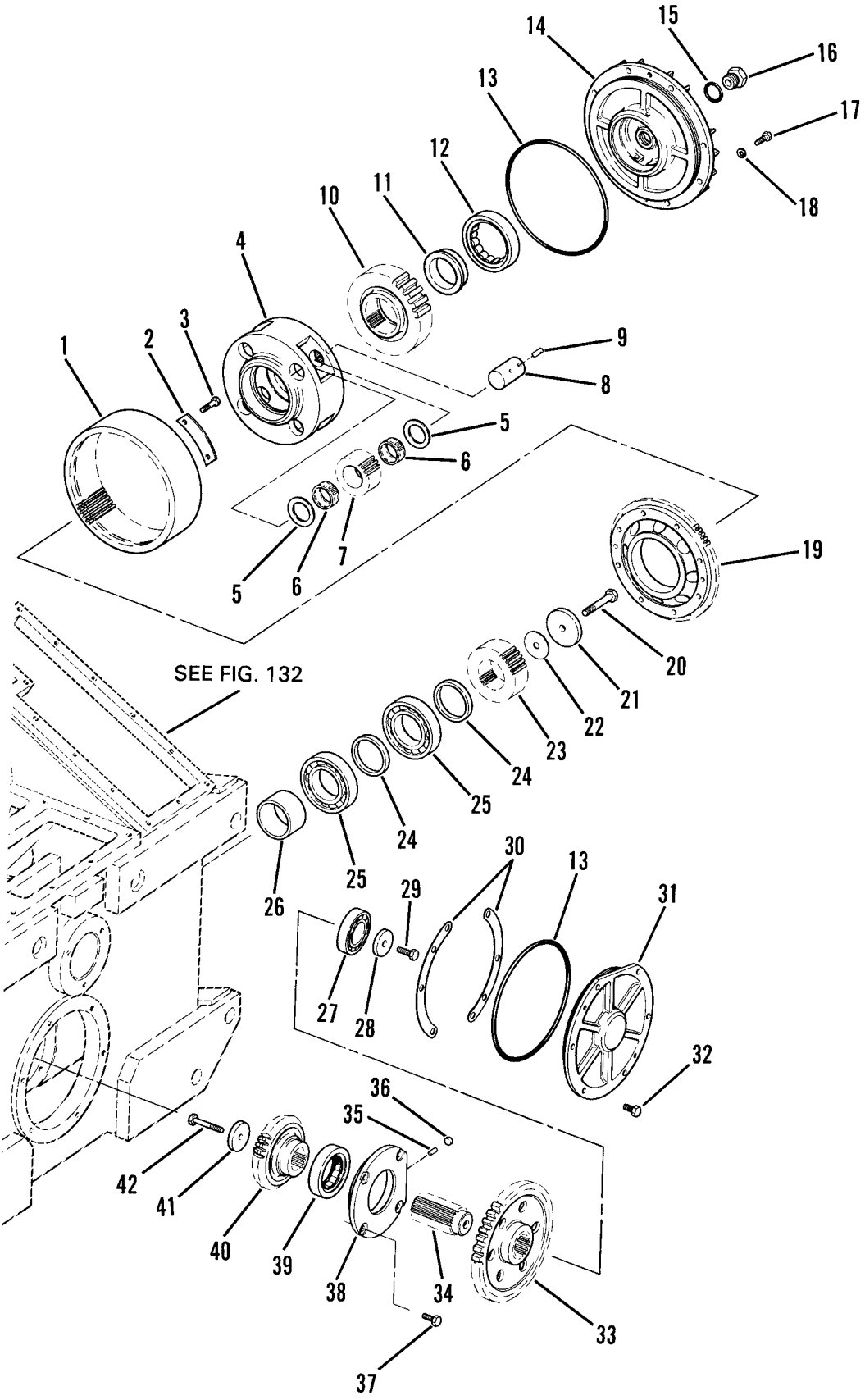

Figure 137. Gear Assembly

(1) ITEM NO	(2) SMR CODE	(3) NSN	(4) CAGEC	(5) PART NUMBER	(6) DESCRIPTION AND USABLE ON CODES (UOC)	(7) QTY
					GROUP 2001 HOIST, CAPSTAN, WINDLASS, CRANE, OR WINCH ASSEMBLY	
					FIG. 137 GEAR ASSEMBLY	
1	PFHZZ	3020012544803	11083	2P1981	GEAR,INTERNAL ..... UOC:GWC,WIN	1
2	PFHZZ	5365012663314	11083	1P6188	SPACER,PLATE ..... UOC:GWC,WIN	4
3	PFHZZ	5306002634038	11083	2A4639	BOLT,MACHINE	8
4	PFHZZ	3040012541028	11083	2P1984	CARRIER ASSEMBLY ..... USED WITH P/N 8E8307 UOC:GWC,WIN	1
4	PFHZZ	3040012541028	11083	1313234	CARRIER ASSEMBLY REPLACES PN .. 2P1984 AND MUST USE WITH PN 1313235	1
5	PFHZZ	2530014682876	11083	8E8307	BEARING,WASHER THRU ..... USE WITH P/N 2P1984 UOC:GWC,WIN	8
5	PFHZZ	5310014972351	11083	1313235	WASHER,FLAT USE WITH PN 1313234 BEARING, WASHER, THRU	8
6	PFHZZ	3110008966819	11083	4M3915	RETAINER AND ROLLER ..... UOC:GWC,WIN	8
7	PFHZZ	3020011844622	11083	7G2500	GEAR,SPUR ..... UOC:GWC,WIN	4
8	PAHZZ	3040012541006	11083	1P4056	SHAFT,STRAIGHT ..... UOC:GWC,WIN	4
9	PFHZZ	5315010597198	11083	3S2708	PIN ..... UOC:GWC,WIN	4
10	PFHZZ	3020012544806	11083	1P6670	GEAR,SPUR ..... UOC:GWC,WIN	1
11	PFHZZ	3110012067429	11083	5S5729	RING,BEARING,INNER ..... UOC:GWC,WIN	1
12	PFHZZ	3110012106265	01212	M1214EAHL	BEARING,ROLLER,CYLI ..... UOC:GWC,WIN	1
13	PFHZZ	5330007388622	11083	5H4909	SEAL,TORQUE CONVERT ..... UOC:GWC,WIN	2
14	PFHZZ	3130012577787	11083	1P5286	HOUSING,BEARING UNI ..... UOC:GWC,WIN	1
15	PFOZZ	5330009309407	11083	7M8485	SEAL,ADAPTER,MOTOR ..... UOC:GWC,WIN	1
16	PFOZZ	6680012531033	24346	CS-2008-156-750	INDICATOR,SIGHT,LIQ ..... UOC:GWC,WIN	1
17	PFHZZ	5305000680511	80204	B1821BH038C125N	SCREW,CAP,HEXAGON H ..... UOC:GWC,WIN	8
18	PFHZZ	5310006379541	80205	MS35338-46	WASHER,LOCK ..... UOC:GWC,WIN	8
19	PFHZZ	3130012599600	11083	1P6209	HOUSING,BEARING UNI ..... UOC:GWC,WIN	1
20	PFHZZ	5305012566874	11083	0L2315	SCREW,CAP,HEXAGON H ..... UOC:GWC,WIN	1
21	PFHZZ	5310011540708	11083	2S6408	WASHER,FLAT ..... UOC:GWC,WIN	1

(1) ITEM NO	(2) SMR CODE	(3) NSN	(4) CAGEC	(5) PART NUMBER	(6) DESCRIPTION AND USABLE ON CODES (UOC)	(7) QTY
22	PFHZZ	5365012556668	11083	2P1985	SHIM SET ..... UOC:GWC,WIN	1
23	PFHZZ	3020012544807	11083	1P6182	GEAR,SPUR ..... UOC:GWC,WIN	1
24	PFHZZ	5365012593960	11083	2P1990	SPACER,RING ..... UOC:GWC,WIN	2
25	PFHZZ	3110001807737	61208	M2748	BEARING,BALL,ANNULA ..... UOC:GWC,WIN	2
26	PFHZZ	5365012573303	11083	2P2046	SPACER,SLEEVE ..... UOC:GWC,WIN	1
27	PFHZZ	3110005420021	81349	111-05002-0000	BEARING,BALL,ANNULA ..... UOC:GWC,WIN	1
28	PAHZZ	5310012574300	11083	5S3552	WASHER,FLAT ..... UOC:GWC,WIN	1
29	PFHZZ	5305002693238	80204	B1821BH038F125N	SCREW,CAP,HEXAGON H ..... UOC:GWC,WIN	1
30	PFHZZ	5365011649962	11083	1P6175	SHIM USE AS REQUIRED TO OBTAIN 0.010 +-0.005 INCH BACKLASH UOC:GWC,WIN	4
31	PFHZZ	3130011660810	11083	1P6174	HOUSING,BEARING UNI ..... UOC:GWC,WIN	1
32	PFHZZ	5306002637301	11083	0L1351	BOLT,MACHINE ..... UOC:GWC,WIN	6
33	PAHZZ	3020012540085	11083	6P4682	GEAR,SPUR ..... UOC:GWC,WIN	1
34	PAHZZ	3040012549895	11083	3P7238	SHAFT,SHOULDERED ..... UOC:GWC,WIN	1
35	PAHZZ	5315012584780	11083	4M1712	PIN,STRAIGHT,HEADLE ..... UOC:GWC,WIN	1
36	PFHZZ	5340002299287	11083	0L1026	PLUG,EXPANSION ..... UOC:GWC,WIN	1
37	PFHZZ	5306002604508	11083	0S1594	BOLT,MACHINE ..... UOC:GWC,WIN	4
38	PFHZZ	3130012573836	11083	1P6173	HOUSING,BEARING UNI ..... UOC:GWC,WIN	1
39	PFHZZ	3110007406784	11083	1J9227	BEARING,ROLLER,CYLI ..... UOC:GWC,WIN	1
40	PAHZZ	3020012544802	11083	7T8341	GEAR,BEVEL ..... UOC:GWC,WIN	1
41	PFHZZ	5310004134757	11083	3S4388	WASHER,FLAT ..... UOC:GWC,WIN	1
42	PFHZZ	5305002693245	80204	B1821BH038F275N	SCREW,CAP,HEXAGON H ..... UOC:GWC,WIN	1

END OF FIGURE

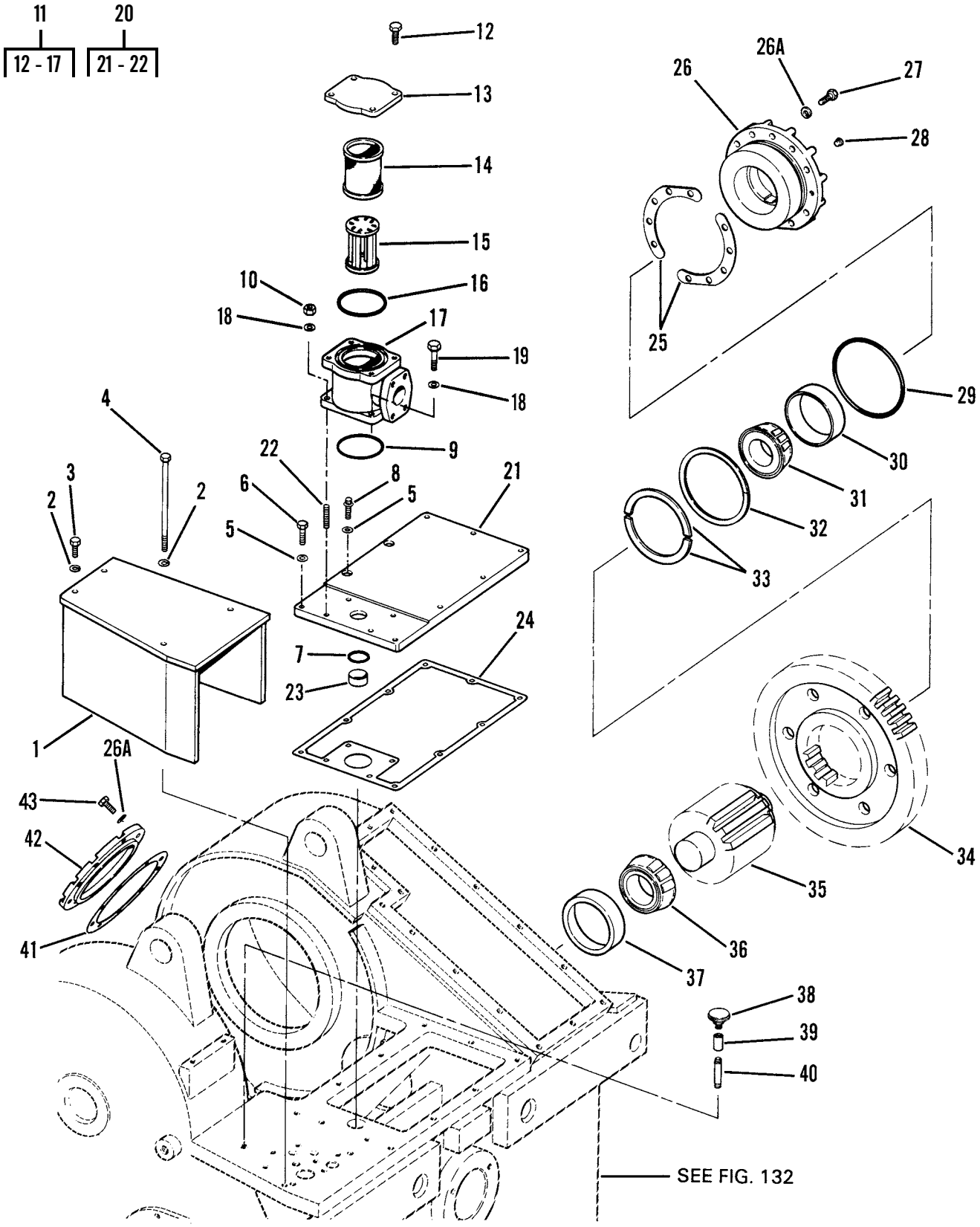

Figure 138. Winch Breather, Winch Magnetic Screen and Winch Assembly (Partial)

(1) ITEM NO	(2) SMR CODE	(3) NSN	(4) CAGEC	(5) PART NUMBER	(6) DESCRIPTION AND USABLE ON CODES (UOC)	(7) QTY
					GROUP 2001 HOIST, CAPSTAN, WINDLASS, CRANE, OR WINCH ASSEMBLY	
					FIG. 138 WINCH BREATHER, WINCH MAGNETIC SCREEN AND WINCH ASSEMBLY (PARTIAL)	
1	PFOZZ	5340012562964	11083	8P1078	COVER,ACCESS ..... UOC:GWC,WIN	1
2	PFOZZ	5310006379541	80205	MS35338-46	WASHER,LOCK 3/8” ..... UOC:GWC,WIN	2
3	PFOZZ	5306002604508	11083	0S1594	BOLT,MACHINE ..... UOC:GWC,WIN	2
4	PFOZZ	5306001183055	11083	6L3670	BOLT,SPECIAL ..... UOC:GWC,WIN	2
5	PFOZZ	5310001174788	11083	9Y2695	WASHER,FLAT ..... UOC:GWC,WIN	7
6	PFOZZ	5306011954681	11083	3B1915	BOLT ..... UOC:GWC,WIN	7
7	PFOZZ	5331000743776	11083	5M5860	O-RING ..... UOC:GWC,WIN	1
8	PFOZZ	5306010977874	11083	1T0765	BOLT,MACHINE ..... UOC:GWC,WIN	2
9	PFOZZ	5331003396220	11083	2H6184	O-RING ..... UOC:GWC,WIN	1
10	PFOZZ	5310014297859	11083	6V8801	NUT,PLAIN,HEXAGON ..... UOC:GWC,WIN	2
11	AOOOO		11083	1P3190	FILTER,FLUID ..... UOC:GWC,WIN	1
12	PFOZZ	5306002604508	11083	0S1594	.BOLT,MACHINE ..... UOC:GWC,WIN	4
13	PFOZZ	5340011616223	11083	1P3262	.COVER,ACCESS ..... UOC:GWC,WIN	1
14	PFOZZ	4730011597840	11083	8S9130	.STRAINER ELEMENT,SE ..... UOC:GWC,WIN	1
15	PAOZZ	4330010667713	11083	8S9129	.FILTER,FLUID ..... UOC:GWC,WIN	1
16	PCOZZ	5331003256310	11083	2H6338	.O-RING ..... UOC:GWC,WIN	1
17	PFOZZ	2940012537420	11083	2P1052	.FILTER BODY,FLUID ..... UOC:GWC,WIN	1
18	PFOZZ	5310001174788	11083	9Y2695	WASHER,FLAT ..... UOC:GWC,WIN	4
19	PFOZZ	5306004238393	11083	1C2251	BOLT,MACHINE ..... UOC:GWC,WIN	2
20	XBOZZ		11083	2P3561	COVER,ACCESS ..... UOC:GWC,WIN	1
21	PFOZZ	5340012593752	11083	1P8229	.COVER,ACCESS ..... UOC:GWC,WIN	1
22	PFOZZ	5307009239983	11083	8M1047	.STUD,CONTINUOUS THR ..... UOC:GWC,WIN	2
23	PFOZZ	5365012574394	11083	2P3560	SPACER,SLEEVE ..... UOC:GWC,WIN	1

(1) ITEM NO	(2) SMR CODE	(3) NSN	(4) CAGEC	(5) PART NUMBER	(6) DESCRIPTION AND USABLE ON CODES (UOC)	(7) QTY
24	PFOZZ	5330012116977	11083	1P8235	GASKET ..... UOC:GWC,WIN	1
25	PFHZZ	5365012573810	11083	1P8598	SHIM ..... UOC:GWC,WIN	2
26	PFHZZ	3130012576174	11083	8P1082	HOUSING,BEARING UNI ..... UOC:GWC,WIN	1
26A	PFHZZ	5310006379541	80205	MS35338-46	WASHER,LOCK 3/8” ..... UOC:GWC,WIN	19
27	PFHZZ	5305000680511	80204	B1821BH038C125N	SCREW,CAP,HEXAGON H ..... UOC:GWC,WIN	10
28	PFHZZ	5365007342114	11083	4B4845	PLUG,MACHINE THREAD ..... UOC:GWC,WIN	1
29	PCHZZ	5331005061475	11083	2K4472	O-RING ..... UOC:GWC,WIN	1
30	PFHZZ	3110010211920	60038	JH307710	CUP,TAPERED ROLLER ..... UOC:GWC,WIN	1
31	PFHZZ	3110010209788	60038	JH307749	CONE AND ROLLERS,TA ..... UOC:GWC,WIN	1
32	PFHZZ	5325005823971	80756	RR587	RING,RETAINING ..... UOC:GWC,WIN	1
33	PFHZZ	5365012574350	11083	1P6669	SPACER,PLATE ..... UOC:GWC,WIN	2
34	PAHZZ	3020012541223	11083	1P6671	GEAR,BEVEL ..... UOC:GWC,WIN	1
35	PFHZZ	3020012541229	11083	3T5648	GEAR,SPUR ..... UOC:GWC,WIN	1
36	PFHZZ	3110010134036	60038	JH211749	CONE AND ROLLERS,TA ..... UOC:GWC,WIN	1
37	PFHZZ	3110010133083	11083	6S2828	CUP,TAPERED ROLLER ..... UOC:GWC,WIN	1
38	PFOZZ	2520011640077	92859	203986	BREATHER ..... UOC:GWC,WIN	1
39	PFOZZ	4730006399167	29510	105409	COUPLING,PIPE ..... UOC:GWC,WIN	1
40	PFOZZ	4730012548683	11083	3B7275	NIPPLE,PIPE ..... UOC:GWC,WIN	1
41	PFHZZ	5330012573808	11083	6P4677	GASKET ..... UOC:GWC,WIN	1
42	PFHZZ	5340012580182	11083	8P0976	COVER,ACCESS ..... UOC:GWC,WIN	1
43	PFHZZ	5306002604508	11083	0S1594	BOLT,MACHINE ..... UOC:GWC,WIN	9
				END OF FIGURE		

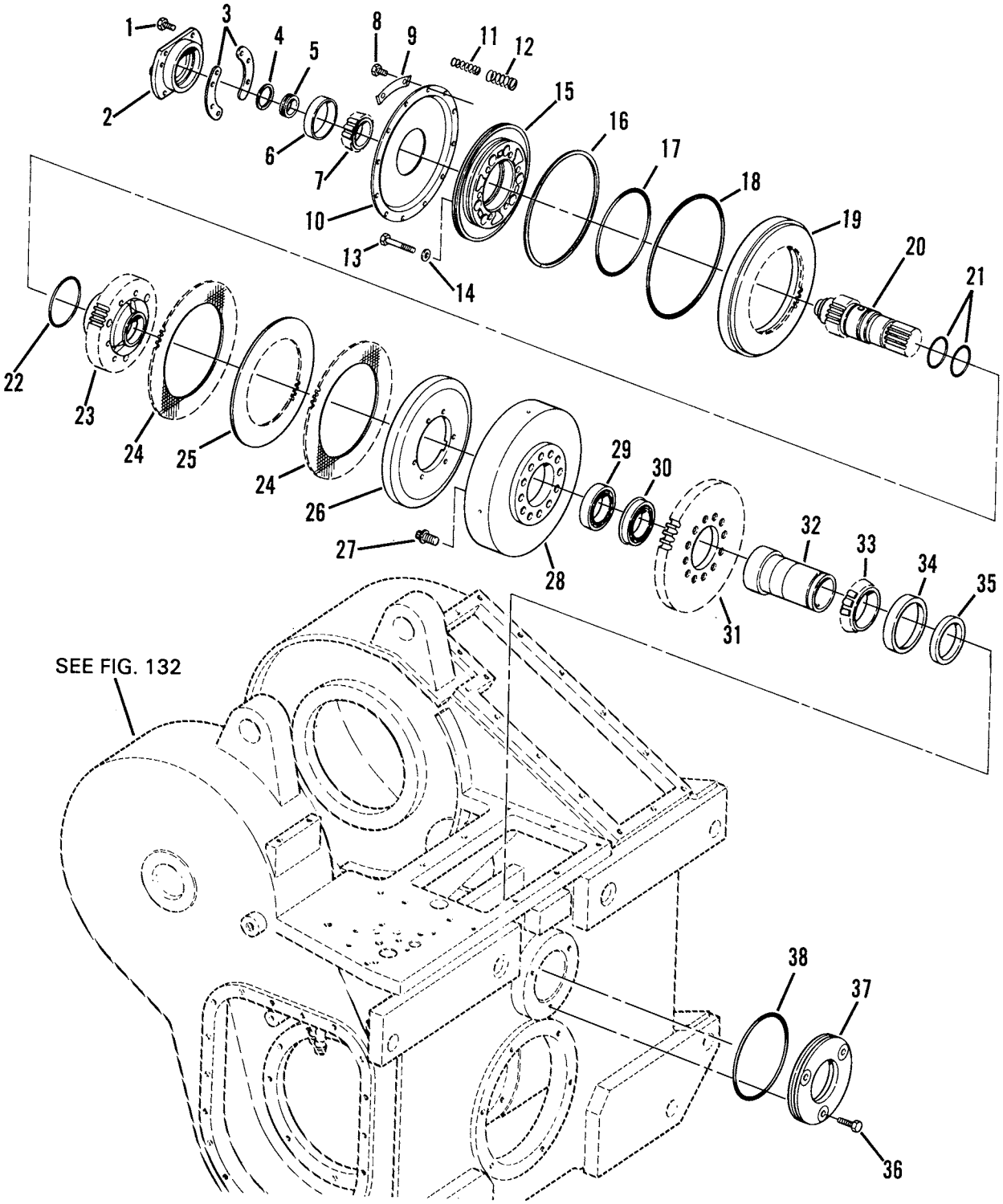

Figure 139. Disc Assembly

(1) ITEM NO	(2) SMR CODE	(3) NSN	(4) CAGEC	(5) PART NUMBER	(6) DESCRIPTION AND USABLE ON CODES (UOC)	(7) QTY
					GROUP 2001 HOIST, CAPSTAN, WINDLASS, CRANE, OR WINCH ASSEMBLY	
					FIG. 139 DISC ASSEMBLY	
1	PFHZZ	5306002604508	11083	0S1594	BOLT,MACHINE ..... UOC:GWC,WIN	4
2	PFHZZ	3130012573835	11083	6P4684	HOUSING,BEARING UNI ..... UOC:GWC,WIN	1
3	PFHZZ	5365012593612	11083	6P4685	SHIM ..... UOC:GWC,WIN	2
4	PFHZZ	5325008575703	11083	2K5957	RING,RETAINING ..... UOC:GWC,WIN	1
5	PFHZZ	4310012548695	11083	5S0969	RING,PISTON ..... UOC:GWC,WIN	1
6	PFHZZ	3110001913923	01212	JLM104910	CUP,TAPERED ROLLER ..... UOC:GWC,WIN	1
7	PFHZZ	3110009385084	01212	JLM104948	CONE AND ROLLERS,TA ..... UOC:GWC,WIN	1
8	PFHZZ	5305002528919	11083	0S0509	SCREW,CAP,HEXAGON H ..... UOC:GWC,WIN	18
9	PFHZZ	5340011827381	11083	5S3618	LOCKING PLATE,NUT A ..... UOC:GWC,WIN	6
10	PFHZZ	2520012545580	11083	5S3664	PISTON,BALANCE ..... UOC:GWC,WIN	1
11	PFHZZ	5360012082213	11083	2P2935	SPRING,HELICAL,COMP ..... UOC:GWC,WIN	6
12	PFHZZ	5360012070690	11083	2P2934	SPRING,HELICAL,COMP ..... UOC:GWC,WIN	6
13	PFHZZ	5306002851368	11083	L1143	BOLT,MACHINE ..... UOC:GWC,WIN	6
14	PFHZZ	5310001174788	11083	9Y2695	WASHER,FLAT ..... UOC:GWC,WIN	6
15	PFHZZ	4730012554468	11083	2P3566	MANIFOLD,HYDRAULIC ..... UOC:GWC,WIN	1
16	PFHZZ	5330012087592	11083	1S9498	GASKET ..... UOC:GWC,WIN	1
17	PFHZZ	5330011648576	11083	1S9497	RETAINER,PACKING ..... UOC:GWC,WIN	1
18	PCHZZ	5331010600745	09990	2-178N951-75	O-RING ..... UOC:GWC,WIN	1
19	PFHZZ	2520012545579	11083	2P1976	PISTON,CLUTCH ..... UOC:GWC,WIN	1
20	PFHZZ	3040012544939	11083	1P2175	SHAFT,SHOULDERED ..... UOC:GWC,WIN	1
21	PFHZZ	5331005064457	11083	8F6711	O-RING ..... UOC:GWC,WIN	2
22	PCHZZ	5331005553810	11083	1H8128	O-RING ..... UOC:GWC,WIN	1
23	PFHZZ	3040012541098	11083	2P1986	HOUSING,MECHANICAL ..... UOC:GWC,WIN	1
24	PFHZZ	2530013922481	11083	6Y7920	DISC,BRAKE ..... UOC:GWC,WIN	2

(1) ITEM NO	(2) SMR CODE	(3) NSN	(4) CAGEC	(5) PART NUMBER	(6) DESCRIPTION AND USABLE ON CODES (UOC)	(7) QTY
25	PFHZZ	2520011619658	11083	2P4370	DISK,CLUTCH,VEHICUL ..... UOC:GWC,WIN	1
26	PFHZZ	3040012545022	11083	8P5163	PLATE,RETAINING,SHA ..... UOC:GWC,WIN	1
27	PFHZZ	5306012067167	11083	1S9808	BOLT,MACHINE ..... UOC:GWC,WIN	12
28	PFHZZ	3040012541027	11083	1P2176	HUB,OUTER CLUTCH ..... UOC:GWC,WIN	1
29	PFHZZ	3110004469696	11083	9M1997	BEARING,BALL,ANNULA ..... UOC:GWC,WIN	1
30	PFHZZ	3110001981796	43334	43L11	BEARING,BALL,ANNULA ..... UOC:GWC,WIN	1
31	PAHZZ	3020012544804	11083	1P2207	GEAR,SPUR ..... UOC:GWC,WIN	1
32	PAHZZ	3010012545016	11083	6P4683	COUPLING,SHAFT,RIGI ..... UOC:GWC,WIN	1
33	PFHZZ	3010010647524	11083	9S7950	CONE ..... UOC:GWC,WIN	1
34	PFHZZ	2520010646625	11083	9S7949	CUP ..... UOC:GWC,WIN	1
35	PFHZZ	5330003627470	11083	4B8024	SEAL,PLAIN ENCASED ..... UOC:GWC,WIN	1
36	PFOZZ	5305000680511	80204	B1821BH038C125N	SCREW,CAP,HEXAGON H ..... UOC:GWC,WIN	3
37	PFOZZ	5330012589166	11083	1P2597	RETAINER,PACKING ..... UOC:GWC,WIN	1
38	PCOZZ	5331010505024	81343	MS28775-260	O-RING ..... UOC:GWC,WIN	1
				END OF FIGURE		

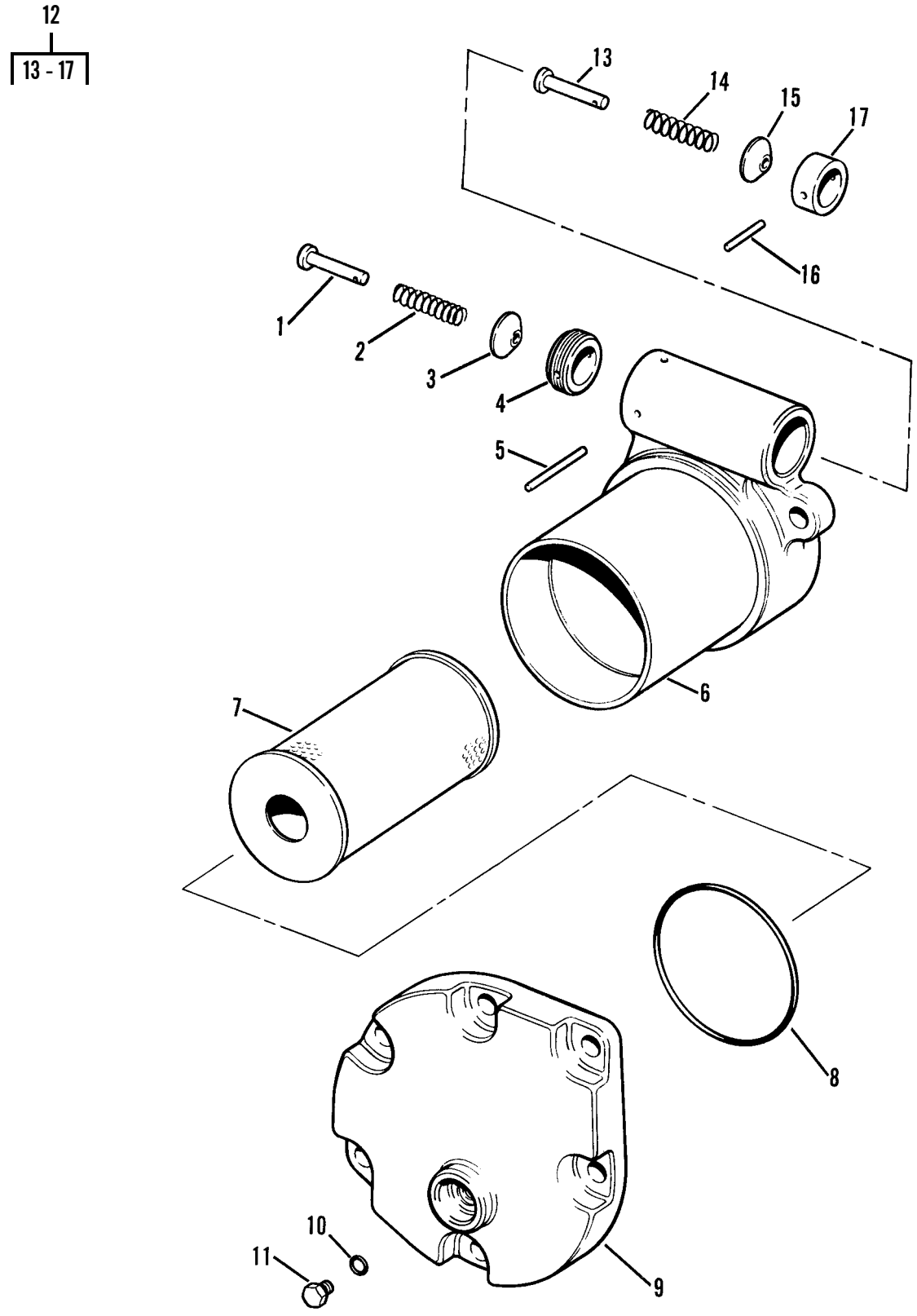

Figure 140. Winch Oil Filter

(1) ITEM NO	(2) SMR CODE	(3) NSN	(4) CAGEC	(5) PART NUMBER	(6) DESCRIPTION AND USABLE ON CODES (UOC)	(7) QTY
					GROUP 2001 HOIST, CAPSTAN, WINDLASS, CRANE, OR WINCH ASSEMBLY	
					FIG. 140 WINCH OIL FILTER	
1	PFOZZ	5315011552618	11083	1P5274	PIN,STRAIGHT,HEADED ..... UOC:GWC,WIN	1
2	PFOZZ	5360011064246	11083	8F2621	SPRING,HELICAL,COMP ..... UOC:GWC,WIN	1
3	PFOZZ	4820011500965	11083	9L672	DISK,VALVE ..... UOC:GWC,WIN	1
4	PFOZZ		11083	6L4470	SEAT,VALVE ..... UOC:GWC,WIN	1
5	PAOZZ	5315012659369	11083	7L0820	PIN,SPRING ..... UOC:GWC,WIN	1
6	PFOZZ	4330011647973	11083	2P5832	HEAD,FLUID FILTER ..... UOC:GWC,WIN	1
7	KFOZZ		11083	1R0746	FILTER ELEMENT,FLUI PART OF KIT P/N 5R6287 UOC:GWC,WIN	1
8	PFOZZ	5330006783369	11083	2H4145	RETAINER,PACKING PART OF KIT P/N 5R6287 UOC:GWC,WIN	1
9	PFOZZ	2940011713389	11083	2P5818	HEAD,FLUID FILTER ..... UOC:GWC,WIN	1
10	PFOZZ	5330011485891	59556	K-500-EN-0431	SEAL ..... UOC:GWC,WIN	1
11	PFOZZ	5365010672179	11083	9S4180	PLUG,MACHINE THREAD ..... UOC:GWC,WIN	1
12	PFOZZ	4820011586839	2J565	1P2195	VALVE,BY PASS ..... UOC:GWC,WIN	1
13	PFOZZ	5315011552618	11083	1P5274	.PIN,STRAIGHT,HEADED ..... UOC:GWC,WIN	1
14	PFOZZ	5360002900851	11083	1K7041	.SPRING,HELICAL,COMP ..... UOC:GWC,WIN	1
15	PFOZZ	2530012986163	11083	9L0672	.VALVE,SAFETY RELIEF ..... UOC:GWC,WIN	1
16	PFOZZ	5315005324359	11083	3H3433	.PIN,SPRING ..... UOC:GWC,WIN	1
17	PAOZZ	3040012544929	11083	9L0674	.COLLAR,SHAFT ..... UOC:GWC,WIN	1
				END OF FIGURE		

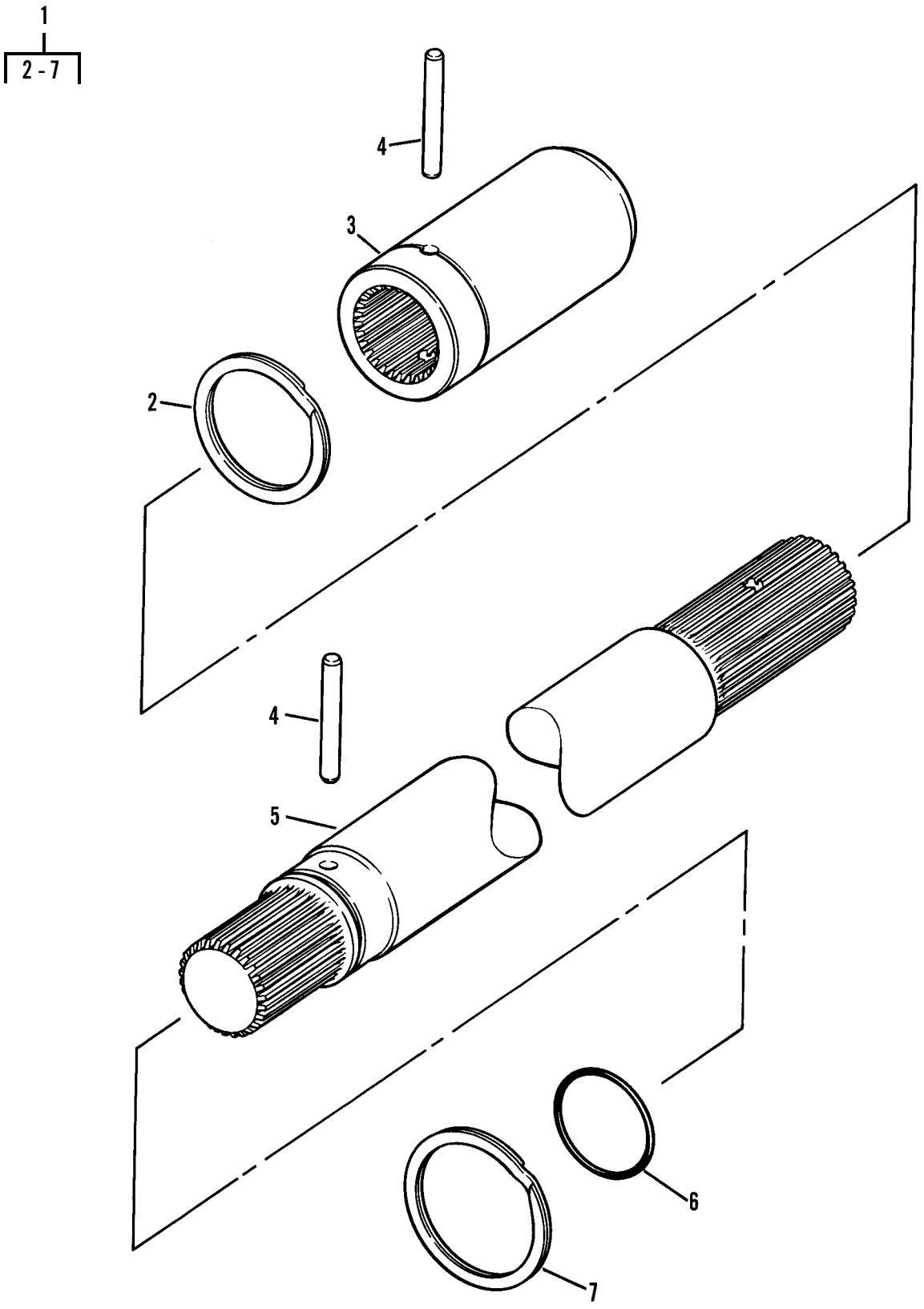

Figure 141. Winch Input Shaft

(1) ITEM NO	(2) SMR CODE	(3) NSN	(4) CAGEC	(5) PART NUMBER	(6) DESCRIPTION AND USABLE ON CODES (UOC)	(7) QTY
					GROUP 2001 HOIST, CAPSTAN, WINDLASS, CRANE, OR WINCH ASSEMBLY	
					FIG. 141 WINCH INPUT SHAFT	
1	AOOOO		11083	3P1735	DRIVE ASSEMBLY,WINC ..... UOC:GWC,WIN	1
2	PFOZZ	5325007639328	80756	RST-275	.RING,RETAINING ..... UOC:GWC,WIN	1
3	PFOZZ	3010012545015	11083	3P1734	.COUPLING,SHAFT,RIGI ..... UOC:GWC,WIN	1
4	PFOZZ	5315012067581	11083	1D4078	.PIN,STRAIGHT,HEADLE ..... UOC:GWC,WIN	2
5	PFOZZ	3040012544938	11083	6P4681	.SHAFT,SHOULDERED ..... UOC:GWC,WIN	1
6	PFOZZ	5331005598786	09990	2-227N951-75	.O-RING ..... UOC:GWC,WIN	1
7	PFOZZ	5325004418849	80756	RST-287	.RING,RETAINING ..... UOC:GWC,WIN	1
				END OF FIGURE		

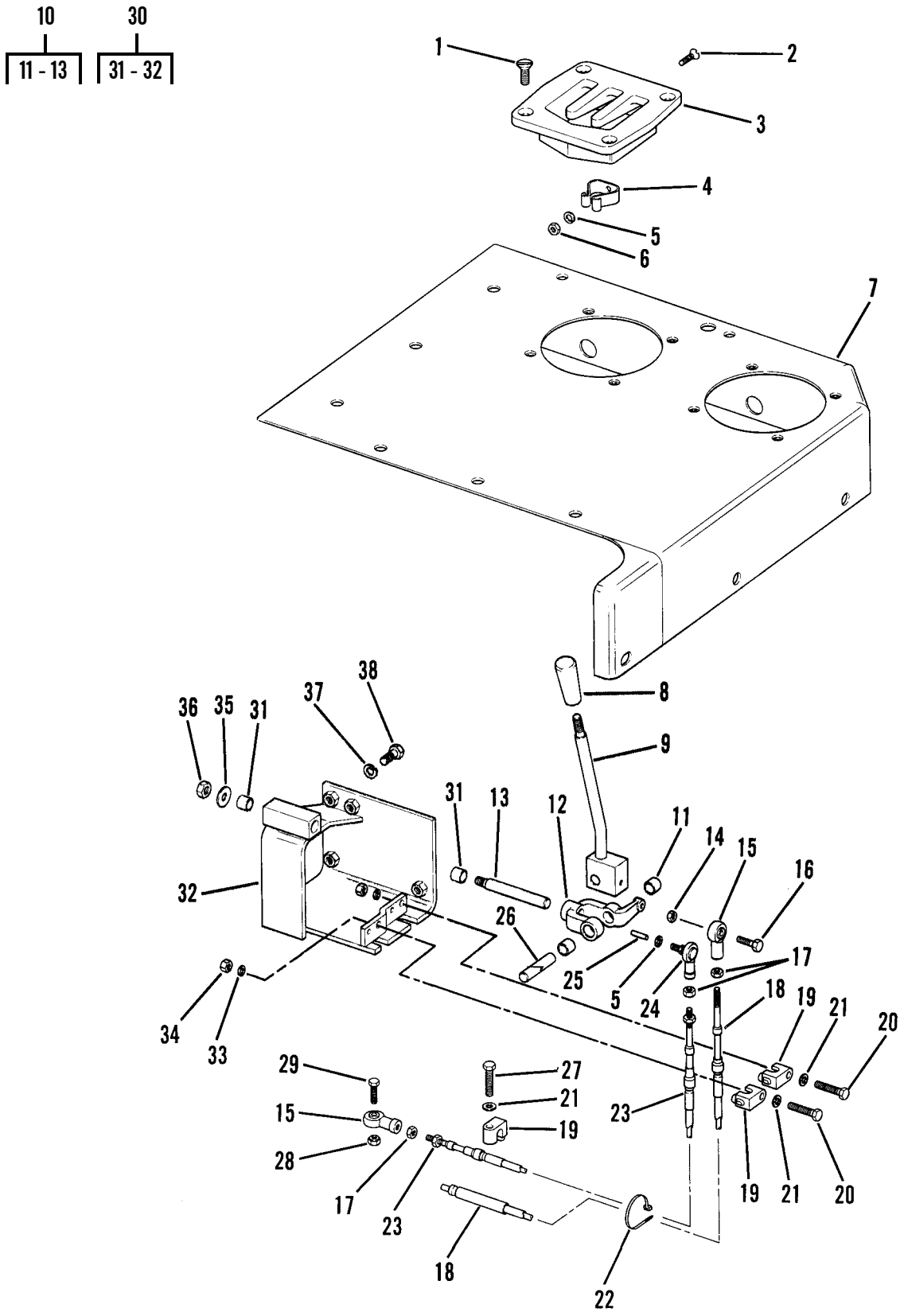

Figure 142. Winch Controls

(1) ITEM NO	(2) SMR CODE	(3) NSN	(4) CAGEC	(5) PART NUMBER	(6) DESCRIPTION AND USABLE ON CODES (UOC)	(7) QTY
					GROUP 2001 HOIST, CAPSTAN, WINDLASS, CRANE, OR WINCH ASSEMBLY	
					FIG. 142 WINCH CONTROLS	
1	PFOZZ	5305009592723	80205	MS35190-319	SCREW,MACHINE ..... UOC:GWC,WIN	4
2	PFOZZ	5305010862370	11083	4B1284	SCREW,MACHINE ..... UOC:GWC,WIN	1
3	PFOZZ	3020011603640	11083	6P5661	GUARD,MECHANICAL DR ..... UOC:GWC,WIN	1
4	PFOZZ	5340011630918	11083	3P5938	CLIP,SPRING TENSION ..... UOC:GWC,WIN	1
5	PFOZZ	5310005825965	80205	MS35338-44	WASHER,LOCK ..... UOC:GWC,WIN	3
6	PFOZZ	5310007616882	96906	MS51967-2	NUT,PLAIN,HEXAGON ..... UOC:GWC,WIN	1
7	PAOZZ	5340012629742	11083	6P6031	COVER,ACCESS ..... UOC:GWC,WIN	1
8	PFOZZ	5355008914401	11083	7M0706	KNOB ..... UOC:GWC,WIN	1
9	PFOZZ	3040012541118	11083	6P6033	LEVER,MANUAL CONTRO ..... UOC:GWC,WIN	1
10	XBOZZ		11083	2P6001	BELL CRANK ASSEMBLY ..... UOC:GWC,WIN	1
11	PFOZZ	3120011648629	11083	9H2400	.BUSHING,SLEEVE ..... UOC:GWC,WIN	2
12	XAOZZ		11083	2P6000	.BELLCRANK ..... UOC:GWC,WIN	1
13	PFOZZ	3040011601057	11083	2P6009	.SHAFT,SHOULDERED ..... UOC:GWC,WIN	1
14	PFOZZ	5310009038282	80205	MS21083N4	NUT,SELF-LOCKING,HE ..... UOC:GWC,WIN	1
15	PFOZZ	2520010660510	11083	6L7751	ROD,END ..... UOC:GWC,WIN	2
16	PFOZZ	5305006512686	11083	0S1597	SCREW,CAP,HEXAGON H ..... UOC:GWC,WIN	1
17	PFOZZ	5310002978836	06848	P16598	NUT,PLAIN,HEXAGON ..... UOC:GWC,WIN	3
18	PFOZZ	2590011762972	11083	3P2300	CONTROL ASSEMBLY,PU ..... UOC:GWC,WIN	1
19	PFOZZ	5342011648709	11083	9G9979	CLAMP ..... UOC:GWC,WIN	3
20	PFOZZ	5306009305643	11083	1A9579	BOLT,MACHINE ..... UOC:GWC,WIN	2
21	PFOZZ	5310000814219	96906	MS27183-12	WASHER,FLAT ..... UOC:GWC,WIN	3
22	PFOZZ	5975001338687	96906	MS3367-5-0	STRAP,TIEDOWN,ELECT ..... UOC:GWC,WIN	3
23	PFOZZ	2590011720861	11083	3P2299	CONTROL ASSEMBLY,PU ..... UOC:GWC,WIN	1
24	PFOZZ	3120011663685	11083	8S7048	BEARING,PLAIN,ROD E ..... UOC:GWC,WIN	1

(1) ITEM NO	(2) SMR CODE	(3) NSN	(4) CAGEC	(5) PART NUMBER	(6) DESCRIPTION AND USABLE ON CODES (UOC)	(7) QTY
25	PFOZZ	5315008443966	80205	MS16562-49	PIN,SPRING ..... UOC:GWC,WIN	1
26	PFOZZ	3040011589329	11083	2P6008	SHAFT,STRAIGHT ..... UOC:GWC,WIN	1
27	PFOZZ	5306002264829	80204	B1821BH031C125N	BOLT,MACHINE ..... UOC:GWC,WIN	1
28	PFOZZ	5310006852973	94135	12Z2007-260	NUT,SELF-LOCKING,HE ..... UOC:GWC,WIN	1
29	PFOZZ	5305002253843	80204	B1821BH025C100N	SCREW,CAP,HEXAGON H ..... UOC:GWC,WIN	1
30	PFOZZ	5342012646075	11083	6P5204	BRACKET ASSEMBLY ..... UOC:GWC,WIN	1
31	PFOZZ	3120011648629	11083	9H2400	.BUSHING,SLEEVE ..... UOC:GWC,WIN	2
32	XAOZZ		11083	6P6028	.BRACKET ASSY ..... UOC:GWC,WIN	1
33	PFOZZ	5310004079566	80205	MS35338-45	WASHER,LOCK ..... UOC:GWC,WIN	2
34	PFOZZ	5310008807744	96906	MS51967-5	NUT,PLAIN,HEXAGON ..... UOC:GWC,WIN	2
35	PFOZZ	5310011620412	11083	3L9689	WASHER,FLAT ..... UOC:GWC,WIN	1
36	PFOZZ	5310010588071	11083	2K4973	LOCKNUT ..... UOC:GWC,WIN	1
37	PFOZZ	5310006379541	80205	MS35338-46	WASHER,LOCK ..... UOC:GWC,WIN	4
38	PFOZZ	5306002604508	11083	0S1594	BOLT,MACHINE ..... UOC:GWC,WIN	4
				END OF FIGURE		

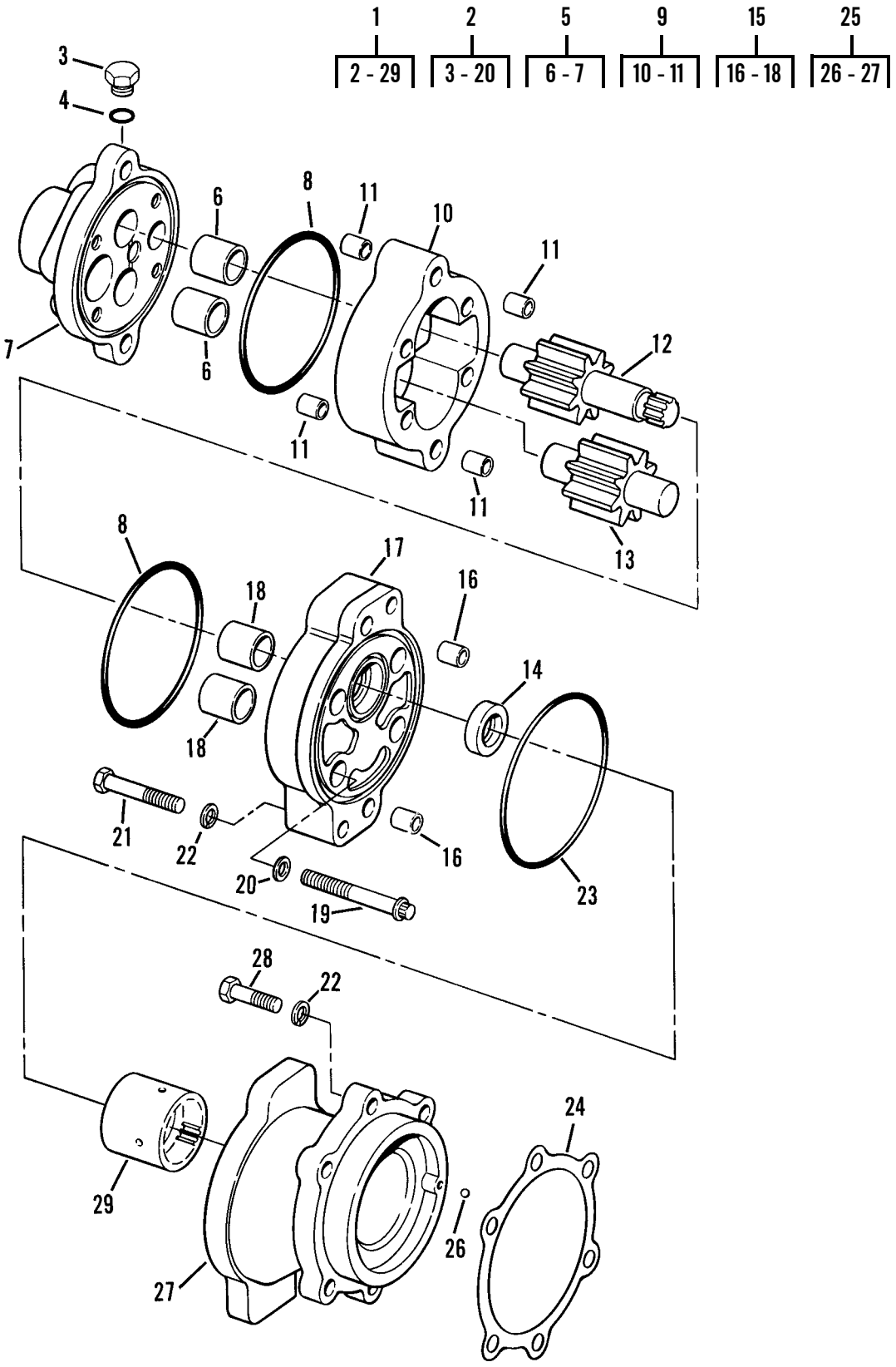

Figure 143. Winch Oil Pump Group

(1) ITEM NO	(2) SMR CODE	(3) NSN	(4) CAGEC	(5) PART NUMBER	(6) DESCRIPTION AND USABLE ON CODES (UOC)	(7) QTY
					GROUP 2001 HOIST, CAPSTAN, WINDLASS, CRANE, OR WINCH ASSEMBLY	
					FIG. 143 WINCH OIL PUMP GROUP	
1	PFOZZ	4320015185731	11083	2169144	PUMP,HYDRAULIC ..... UOC:GWC,WIN	1
2	PFOZZ	4320012025616	11083	1P2187	.PUMP,ROTARY ..... UOC:GWC,WIN	1
3	PFOZZ	5365004114584	11083	9S4191	..PLUG,MACHINE THREAD ..... UOC:GWC,WIN	1
4	PCOZZ	5331008013354	25184	906-737-70	..O-RING ..... UOC:GWC,WIN	1
5	XAFZZ		11083	1P2167	..HOUSING,MECHANICAL ..... UOC:GWC,WIN	1
6	PFOZZ	3120009140691	11083	2S7931	...BEARING,SLEEVE ..... UOC:GWC,WIN	2
7	XAOZZ		11083	1P2166	...MANIFOLD ..... UOC:GWC,WIN	1
8	PFOZZ	5330008389188	11083	4M0189	..SEAL,SPECIAL ..... UOC:GWC,WIN	2
9	PAOZZ	4320012537386	11083	1P9657	..HOUSING,LIQUID PUMP ..... UOC:GWC,WIN	1
10	XAOZZ		11083	1P9656	...BODY ..... UOC:GWC,WIN	1
11	PFOZZ	5315007607425	11083	8M8489	...PIN,HOLLOW ..... UOC:GWC,WIN	4
12	PAOZZ	3040012543188	11083	1P9654	..GEARSHAFT,SPUR ..... UOC:GWC,WIN	1
13	PFOZZ	3020012541228	11083	1P9655	..GEAR,SPUR ..... UOC:GWC,WIN	1
14	PFOZZ	5330000366824	11083	7S3029	..SEAL,PLAIN ..... UOC:GWC,WIN	1
15	PAOZZ	2990012682069	11083	1P2169	..HOUSING,OIL PUMP AS ..... UOC:GWC,WIN	1
16	PFOZZ	5315007607425	11083	8M8489	...PIN,HOLLOW ..... UOC:GWC,WIN	2
17	XAOZZ		11083	1P2168	...COVER ..... UOC:GWC,WIN	1
18	PFOZZ	3120009140691	11083	2S7931	...BEARING,SLEEVE ..... UOC:GWC,WIN	2
19	PAOZZ	5306012566772	11083	4S9002	..BOLT,MACHINE ..... UOC:GWC,WIN	4
20	PFOZZ	5310012574298	11083	8M3175	..WASHER,FLAT ..... UOC:GWC,WIN	4
21	PFOZZ	5306006982150	11083	0L2070	.BOLT,MACHINE ..... UOC:GWC,WIN	2
22	PFOZZ	5310006379541	80205	MS35338-46	.WASHER,LOCK ..... UOC:GWC,WIN	8
23	PFOZZ	5331007819134	11083	4H9105	.O-RING ..... UOC:GWC,WIN	1
24	PFOZZ	5330012852792	11083	9M0673	.GASKET ..... UOC:GWC,WIN	1

(1) ITEM NO	(2) SMR CODE	(3) NSN	(4) CAGEC	(5) PART NUMBER	(6) DESCRIPTION AND USABLE ON CODES (UOC)	(7) QTY
25	PFOZZ	4730012545540	11083	3P5942	.ADAPTER,STRAIGHT,FL ..... UOC:GWC,WIN	1
26	PFOZZ	3110009921048	11083	2D6642	..BALL,BEARING ..... UOC:GWC,WIN	1
27	XAOZZ		11083	3P5928	..ADAPTER ..... UOC:GWC,WIN	1
28	PFOZZ	5306011954681	11083	3B1915	.BOLT ..... UOC:GWC,WIN	6
29	PFOZZ	3010012554450	11083	3P5952	.COUPLING,SHAFT,RIGI ..... UOC:GWC,WIN	1
				END OF FIGURE		

1
2 - 7

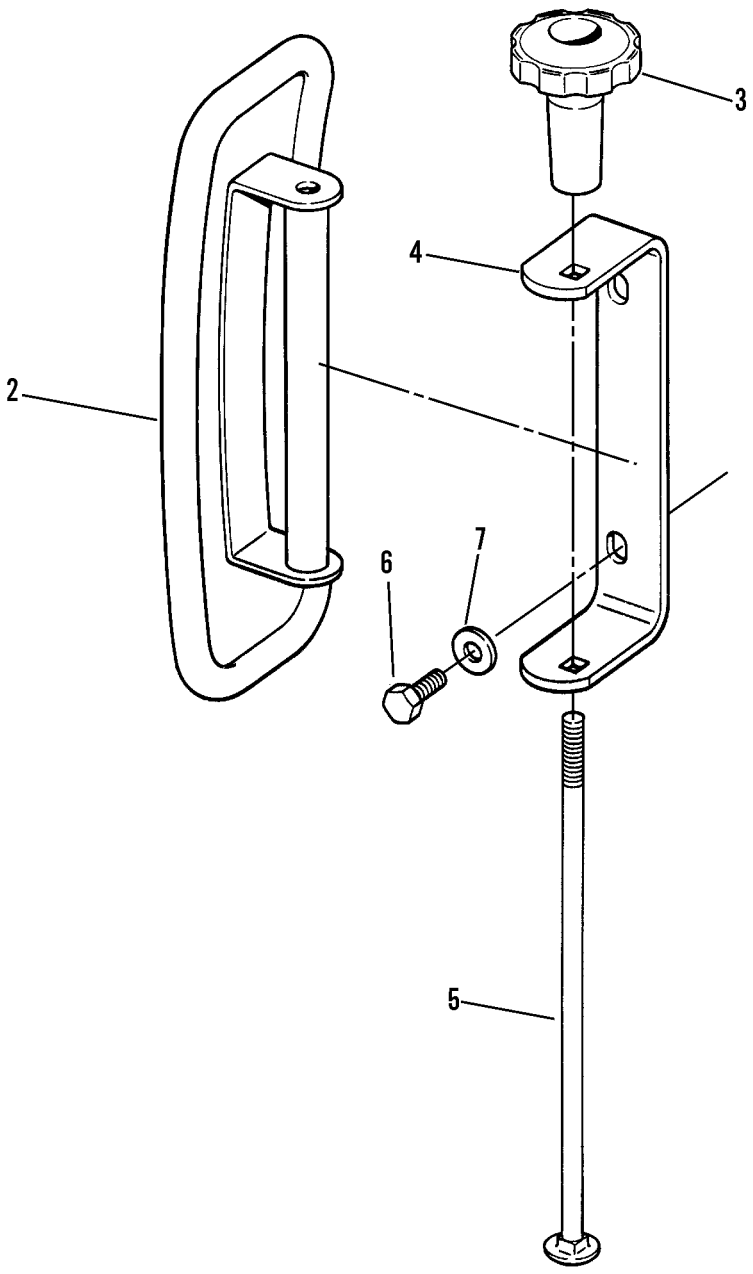

Figure 144. Mirror Group

(1) ITEM NO	(2) SMR CODE	(3) NSN	(4) CAGEC	(5) PART NUMBER	(6) DESCRIPTION AND USABLE ON CODES (UOC)	(7) QTY
					GROUP 22 BODY, CHASSIS AND HULL ACCESSORY ITEMS	
					GROUP 2202 ACCESSORY ITEMS	
					FIG. 144 MIRROR GROUP	
1	AOOZZ		11083	9P9392	MIRROR ASSEMBLY,REA	1
2	PAOZZ	2540011191743	11083	5P6874	.MIRROR HEAD,VEHICUL	1
3	PFOZZ	5355011661721	11083	9P9388	.KNOB	1
4	PFOZZ	5340011649958	11083	9P9390	.STRAP,RETAINING	1
5	PFOZZ	5306011652448	11083	5K9179	.BOLT,SQUARE NECK	1
6	PFOZZ	5305007175460	80205	NASM35307-359	.SCREW,CAP,HEXAGON H	2
7	PFOZZ	5310008098541	96906	MS27183-27	.WASHER,FLAT	2
				END OF FIGURE		

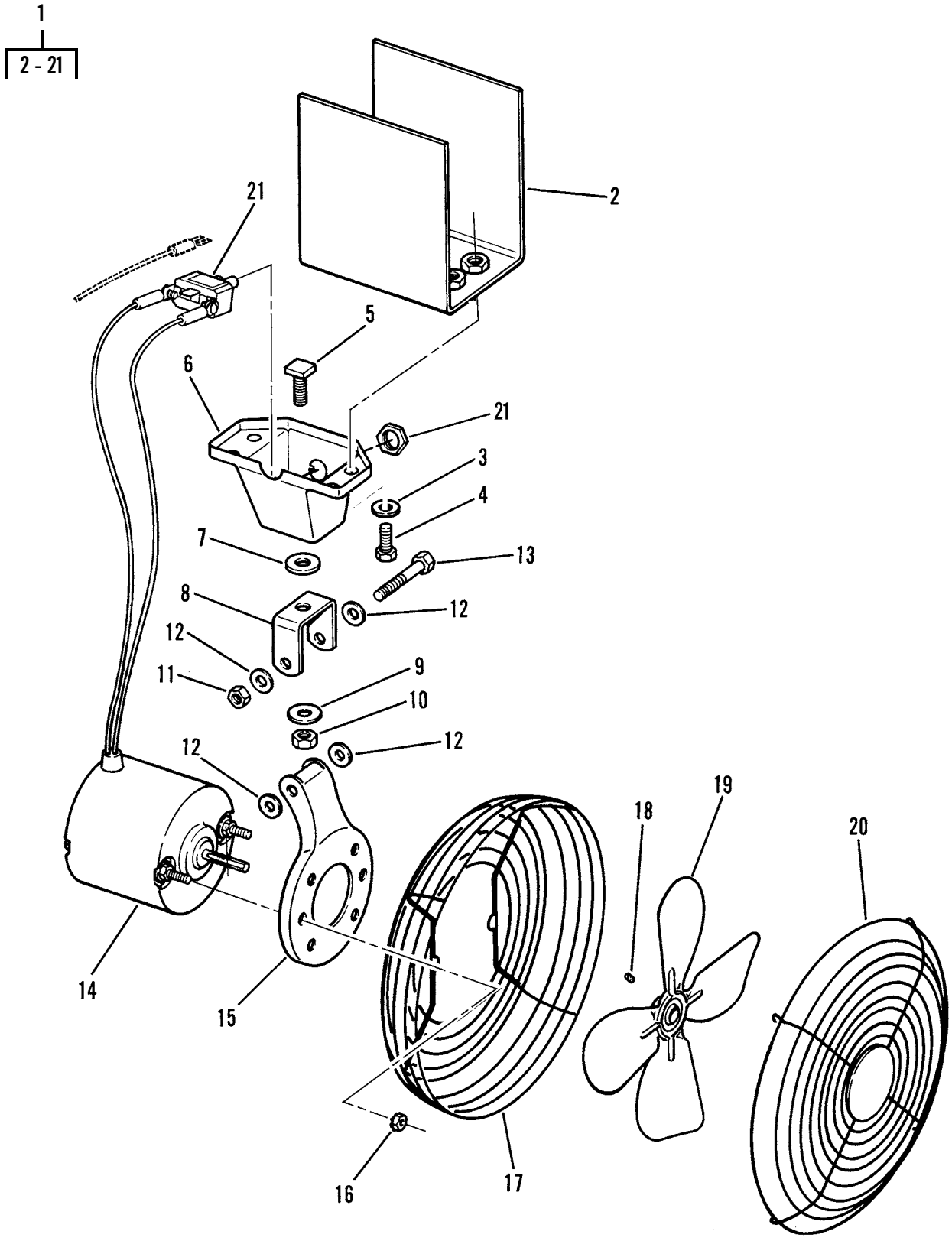

Figure 145. Front and Rear Defroster Fan

(1) ITEM NO	(2) SMR CODE	(3) NSN	(4) CAGEC	(5) PART NUMBER	(6) DESCRIPTION AND USABLE ON CODES (UOC)	(7) QTY
					GROUP 2207 WINTERIZATION EQUIPMENT	
					FIG. 145 FRONT AND REAR DEFROSTER FAN	
1	PFOZZ	4140012674270	02324	FP106	FAN,CIRCULATING ..... UOC:GRC,GWC	2
2	PFOZZ	5340013074345	1C834	E090827	.BRACKET,DOUBLE ANGL ..... UOC:GRC,GWC	2
3	PFOZZ	5310013075841	4U735	E500015	.WASHER,FLAT ..... UOC:GRC,GWC	8
4	PAOZZ	5305012806632	1C834	E500002	.SCREW,CAP,HEXAGON H ..... UOC:GRC,GWC	8
5	PAOZZ	5306012708507	02324	C1-0147-0288	.BOLT,SQUARE NECK ..... UOC:GRC,GWC	1
6	PFOZZ	2540012683834	02324	G8-0019-0000	.MOUNTING BASE,ELECT ..... UOC:GRC,GWC	2
7	PFOZZ	5365013069001	1C834	585171	.SPACER,RING ..... UOC:GRC,GWC	2
8	PAOZZ	5340012742951	02324	G8-0022	.BRACKET,ANGLE ..... UOC:GRC,GWC	1
9	PFOZZ	5310013075840	1C834	500159	.WASHER,FLAT ..... UOC:GRC,GWC	4
10	PFOZZ	5310013075830	1C834	520099	.NUT,SELF-LOCKING,HE ..... UOC:GRC,GWC	2
11	PFOZZ	5310013068991	1C834	500161	.NUT,SELF-LOCKING,HE ..... UOC:GRC,GWC	2
12	PFOZZ	5310012861716	1C834	500099	.WASHER,FLAT ..... UOC:GRC,GWC	8
13	PAOZZ	5305012806633	1C834	500162	.SCREW,CAP,HEXAGON H ..... UOC:GRC,GWC	2
14	PFOZZ	6105012679556	4U735	2807-404-004	.MOTOR,DIRECT CURREN ..... UOC:GRC,GWC	2
15	PFOZZ	5340013069007	1C834	585169	.BRACKET,MOUNTING ..... UOC:GRC,GWC	2
16	PFOZZ	5310013075831	1C834	500165	.NUT,SELF-LOCKING,HE ..... UOC:GRC,GWC	4
17	PFOZZ	3020011733921	02324	H4-0058-2001	.GUARD,MECHANICAL DR ..... UOC:GRC,GWC	1
18	XAOZZ		02324	C1-0007-0018	.SETSCREW ..... UOC:GRC,GWC	2
19	PFOZZ	4140012670377	02324	2850-001-019	.IMPELLER,FAN,AXIAL ..... UOC:GRC,GWC	2
20	PFOZZ	3020011733920	02324	H4-0058-1001	.GUARD,MECHANICAL DR ..... UOC:GRC,GWC	1
21	PFOZZ	5930011758344	02324	C7-0049-0001	.SWITCH,TOGGLE ..... UOC:GRC,GWC	1
				END OF FIGURE		

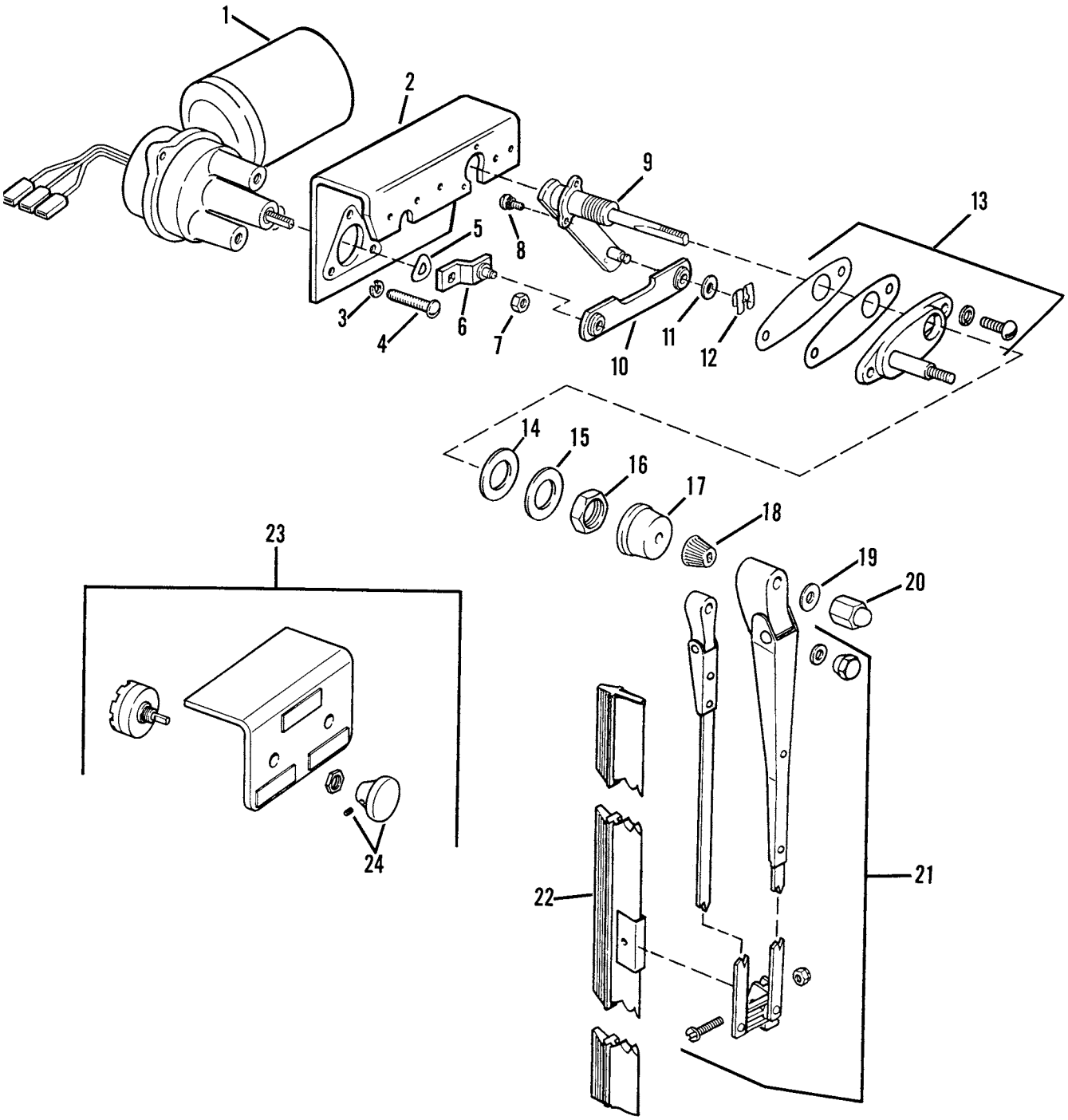

Figure 146. Front and Rear Wiper Motors

(1) ITEM NO	(2) SMR CODE	(3) NSN	(4) CAGEC	(5) PART NUMBER	(6) DESCRIPTION AND USABLE ON CODES (UOC)	(7) QTY
					GROUP 2207 WINTERIZATION EQUIPMENT	
					FIG. 146 FRONT AND REAR WIPER MOTORS	
1	PFOZZ		24956	63024-40 24WJ	MOTOR,WINDSHIELD WI ..... UOC:GRC,GWC	1
2	PFOZZ	5342010858085	10988	D72850	BRACKET ..... UOC:GRC,GWC	1
3	PFOZZ	5310004294747	79500	780831	WASHER,FLAT ..... UOC:GRC,GWC	3
4	PFOZZ	5305000424635	21450	424635	SCREW,ASSEMBLED WAS ..... UOC:GRC,GWC	3
5	PFOZZ	5310009721588	01843	WA1793	WASHER,SPRING TENSI ..... UOC:GRC,GWC	1
6	PFOZZ	2540001237226	24956	LE721125A-1	ARM,DRIVE ..... UOC:GRC,GWC	1
7	PFOZZ	5310009764515	24956	NT1155	NUT ..... UOC:GRC,GWC	1
8	PFOZZ	5305010205235	24956	SC 1160	SCREW,ASSEMBLED WAS ..... UOC:GRC,GWC	2
9	PFOZZ	2540011599779	46717	LA-606-17	PIVOT SHAFT,WINDSHI ..... UOC:GRC,GWC	1
10	PFOZZ	2540000066289	24956	LK721014	LINK,CONNECTOR ..... UOC:GRC,GWC	1
11	PFOZZ	5310001121271	19207	11588985	WASHER,FLAT ..... UOC:GRC,GWC	2
12	PFOZZ	5340012724963	24956	1781540-SP27WC	CLIP,SPRING TENSION ..... UOC:GRC,GWC	2
13	PFOZZ	2540005219785	24956	KT 721040	PARTS KIT,WINDSHIEL ..... UOC:GRC,GWC	1
14	PFOZZ	5310010437753	53867	WA721029	WASHER,FLAT ..... UOC:GRC,GWC	1
15	PFOZZ		80378	CVC754-564S42	WASHER,FLAT ..... UOC:GRC,GWC	1
16	PFOZZ	5310010437748	24956	NT721020	NUT,PLAIN,HEXAGON ..... UOC:GRC,GWC	1
17	PFOZZ	5340010826625	05331	P91586	BOOT,DUST AND MOIST ..... UOC:GRC,GWC	1
18	PFOZZ	5365010399967	70412	80017	BUSHING,WIPER ARM ..... UOC:GRC,GWC	1
19	PFOZZ	5310010350869	24956	WA721033	WASHER,LOCK ..... UOC:GRC,GWC	1
20	PFOZZ	5310010350868	01843	60825	NUT,PLAIN,CAP ..... UOC:GRC,GWC	1
21	PFOZZ	2540010401125	24956	LE721142-17	ARM,WINDSHIELD WIPE ..... UOC:GRC,GWC	1
22	PFOZZ	2540001409816	24956	BD721011-16	BLADE,WINDSHIELD WI ..... UOC:GRC,GWC	1
23	PFOZZ	5930012368779	24956	SW721027S	SWITCH,ROTARY ..... UOC:GRC,GWC	1
24	PFOZZ	5355011599359	46717	LA-606-22	.KNOB ..... UOC:GRC,GWC	1

END OF FIGURE

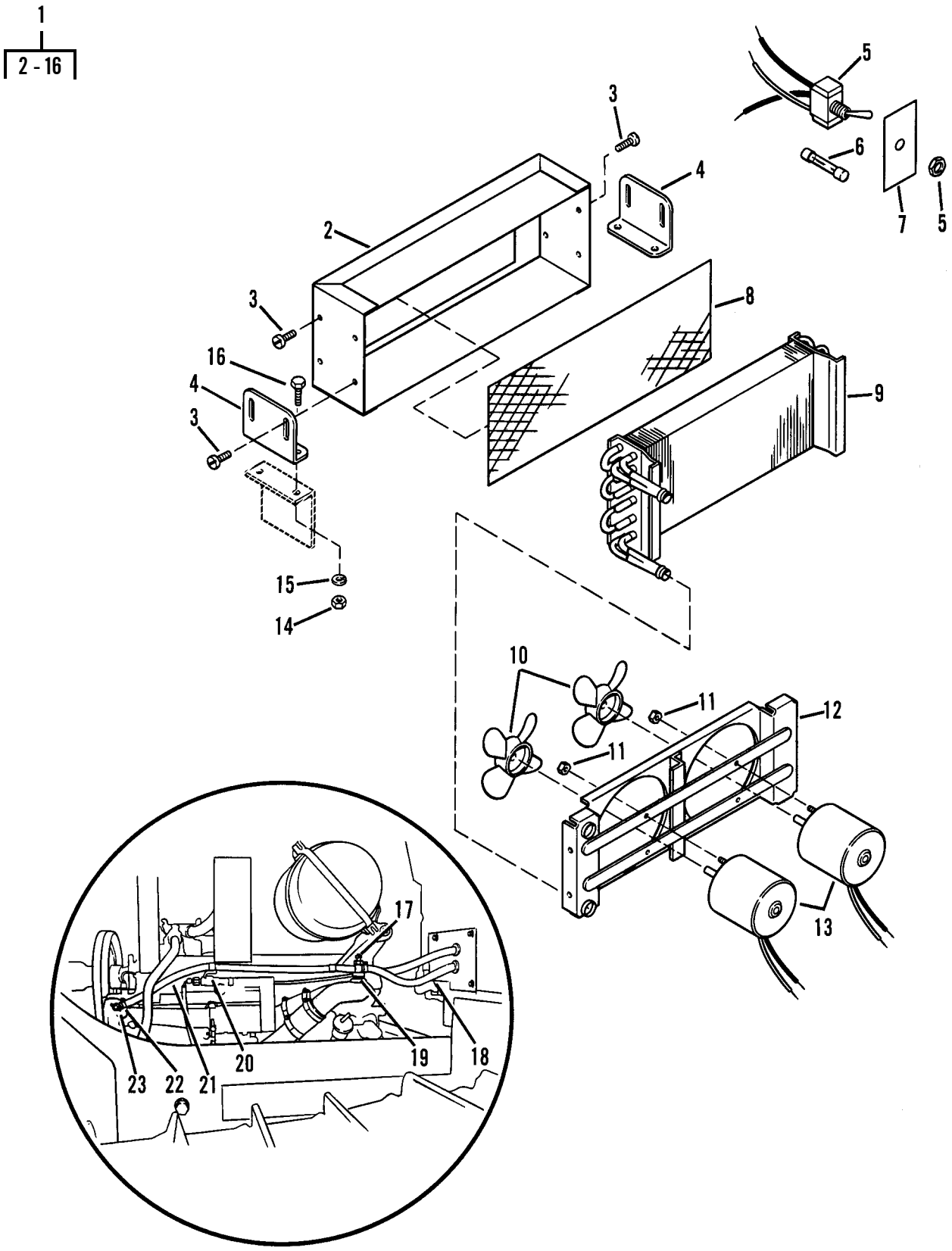

Figure 147. 24 Volt Heater Assembly

(1) ITEM NO	(2) SMR CODE	(3) NSN	(4) CAGEC	(5) PART NUMBER	(6) DESCRIPTION AND USABLE ON CODES (UOC)	(7) QTY
					GROUP 2207 WINTERIZATION EQUIPMENT	
					FIG. 147 24 VOLT HEATER ASSEMBLY	
1	PFOOO	2540012819701	62534	R-255-0-24	HEATER,VEHICULAR,CO ..... UOC:GRC,GWC	1
2	PFOZZ	2540012678598	62534	RD-1-0357-0	.HEATER,VEHICULAR,CO ..... UOC:GRC,GWC	1
3	PAOZZ	5305011722543	62534	RD-5-4628-1-625	.SCREW,CAP,HEXAGON H ..... UOC:GRC,GWC	8
4	PAOZZ	5340011710471	62534	RD-1-0352-0	.BRACKET,ANGLE ..... UOC:GRC,GWC	2
5	PFOZZ	5930004264058	63117	3-12942-6	.SWITCH,TOGGLE ..... UOC:GRC,GWC	1
6	PFOZZ	5920000120151	81349	F02A32V15A	.FUSE,CARTRIDGE ..... UOC:GRC,GWC	1
7	XBOZZ		4U735	1A08471	.PLATE,IDENTIFICATIO ..... UOC:GRC,GWC	1
8	XDOZZ		62534	RD-1-0349-0	.GUARD,MECHANICAL DR ..... UOC:GRC,GWC	1
9	PFOZZ	4520012633147	62534	RD-1-0355-2	.CORE,UNIT HEATER ..... UOC:GRC,GWC	1
10	PFOZZ	4140011669289	62534	73R8050	.FAN,HEATER,CAB ..... UOC:GRC,GWC	2
11	PFOZZ	5310008528593	96906	MS35649-103	.NUT,PLAIN,HEXAGON ..... UOC:GRC,GWC	4
12	PFOZZ	2540012767590	62534	RD-1-0358-0	.SUPPORT,ELECTRIC MO ..... UOC:GRC,GWC	1
13	PFOZZ	6105011887155	62534	RD-3133-4-24V	.MOTOR,DIRECT CURREN ..... UOC:GRC,GWC	2
14	PFOZZ	5310007616882	96906	MS51967-2	.NUT,PLAIN,HEXAGON ..... UOC:GRC,GWC	4
15	PFOZZ	5310005825965	80205	MS35338-44	.WASHER,LOCK ..... UOC:GRC,GWC	4
16	PFOZZ	5306002611153	11083	0S1615	.BOLT,MACHINE ..... UOC:GRC,GWC	4
17	PFOZZ	4820012532787	09990	V404PH-10-6	VALVE,ANGLE ..... UOC:GRC,GWC	2
18	MOOZZ		98441	231-12-20	HOSE,NONMETALLIC CUT TO FIT, .. MAKE FROM HOSE P/N 1540-12 UOC:GRC,GWC	1
19	PFOZZ	3120011701461	11083	6B1628	BUSHING ..... UOC:GRC,GWC	1
20	PFOZZ	5342010632993	11083	4S1962	CLIP ..... UOC:GRC,GWC	2
21	MOOZZ		98441	231-12-59	HOSE,NONMETALLIC CUT TO FIT, .. MAKE FROM HOSE P/N 1540-12 UOC:GRC,GWC	1
22	PFOZZ	4730008776298	58536	A-A-52506-F-10	CLAMP,HOSE ..... UOC:GRC,GWC	4
23	PFOZZ	4730002888546	11083	6B4661	BUSHING,PIPE ..... UOC:GRC,GWC	1
					END OF FIGURE	

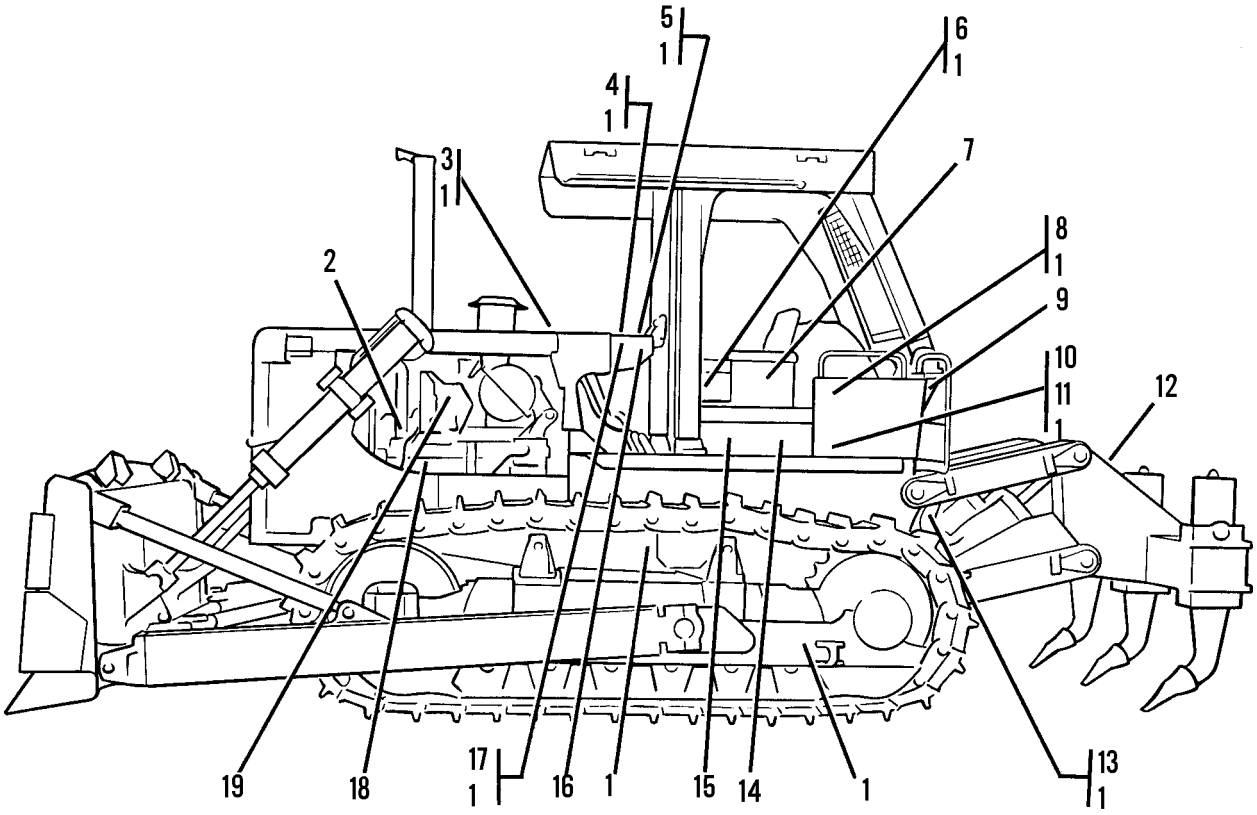

Figure 148. Plates, Film, Tags, and Stencils (Sheet 1 of 8)

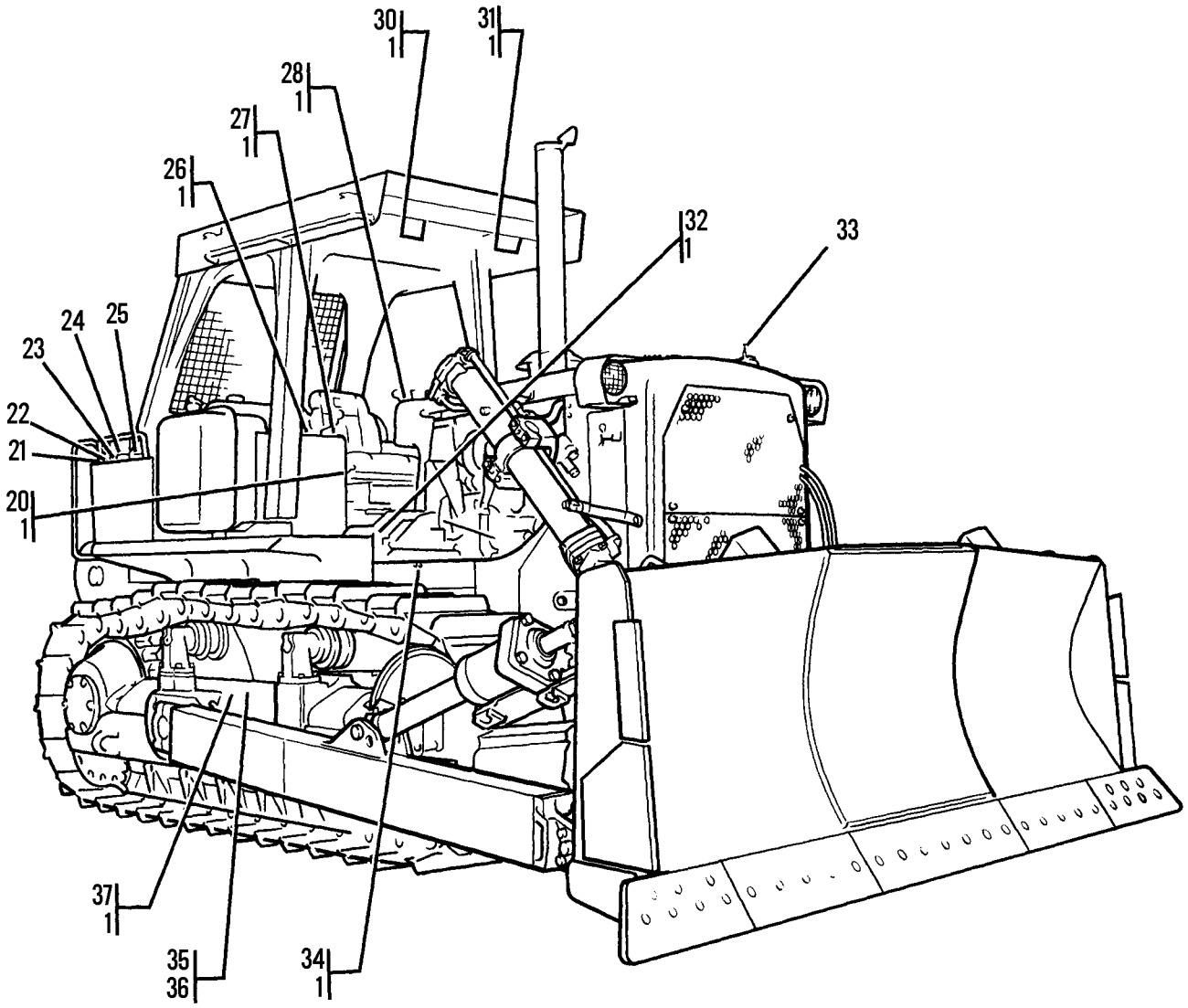

Figure 148. Plates, Film, Tags, and Stencils (Sheet 2 of 8)

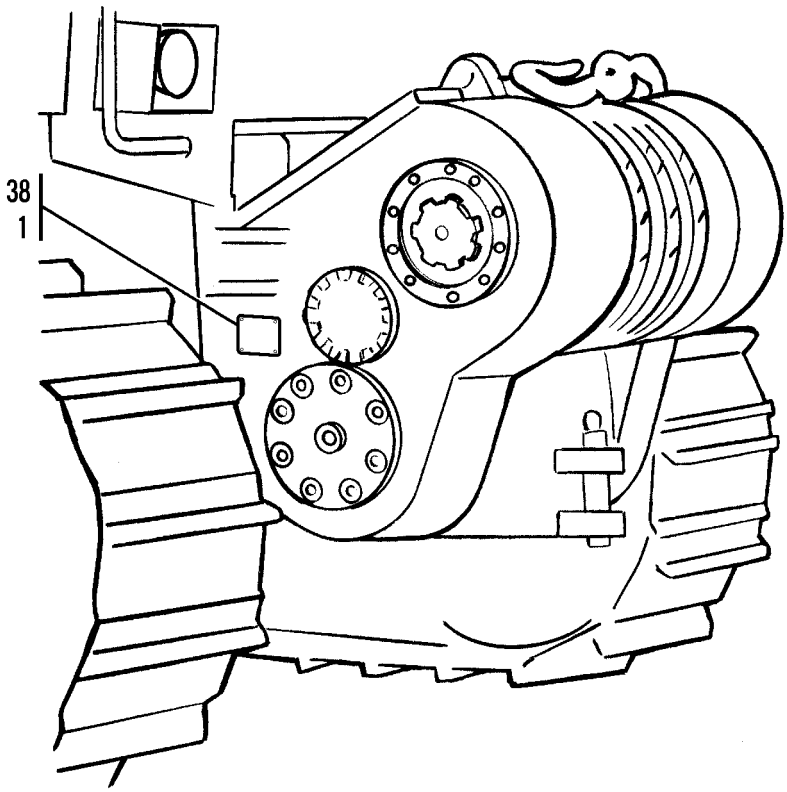

Figure 148. Plates, Film, Tags, and Stencils (Sheet 3 of 8)

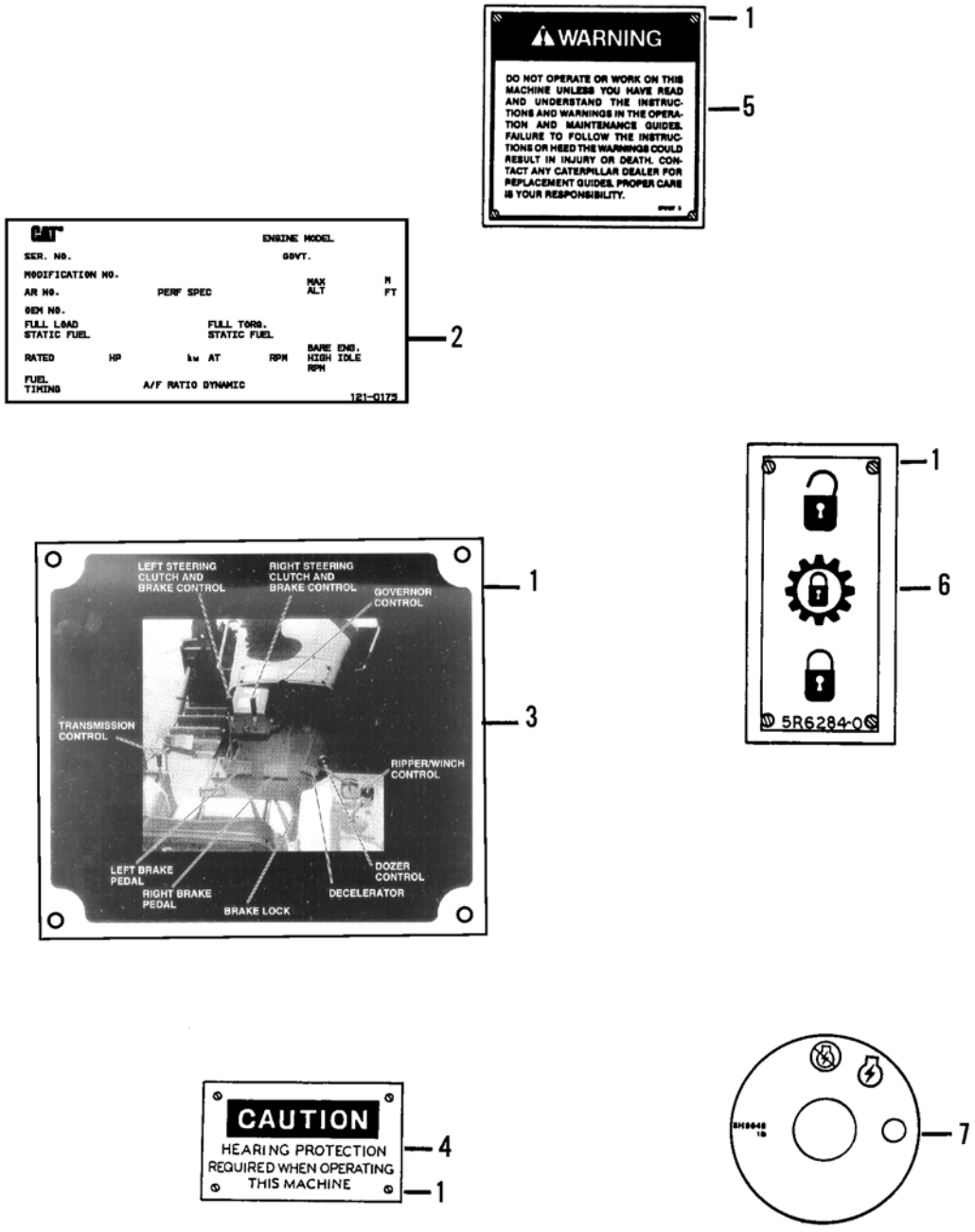

Figure 148. Plates, Film, Tags, and Stencils (Sheet 4 of 8)

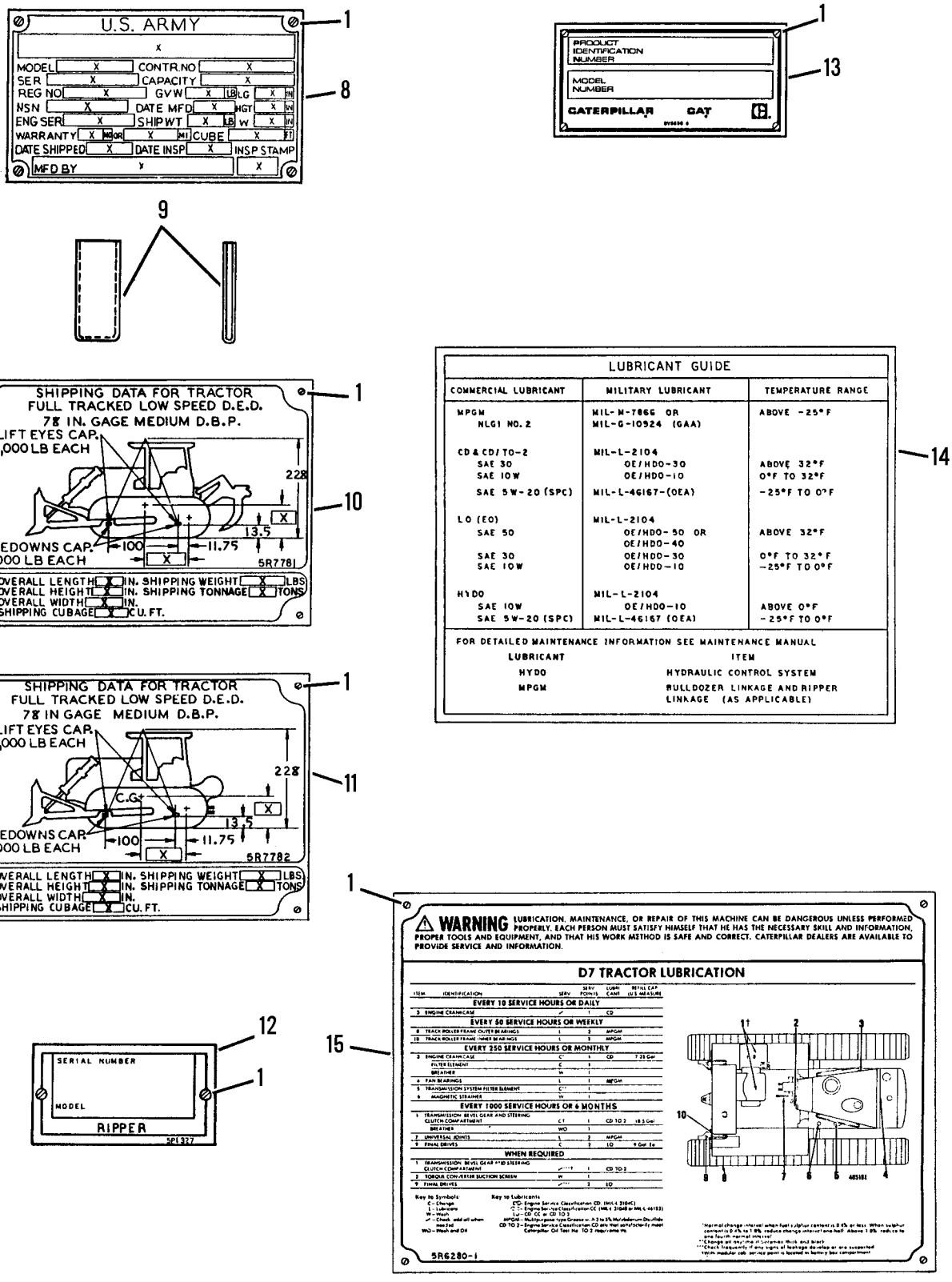

Figure 148. Plates, Film, Tags, and Stencils (Sheet 5 of 8)

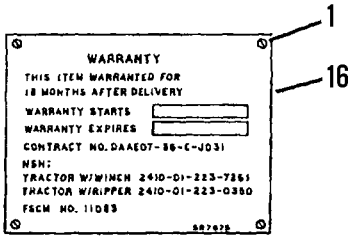

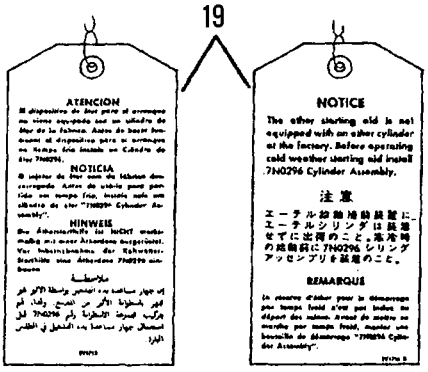

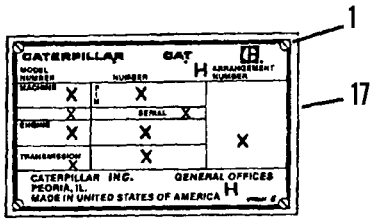

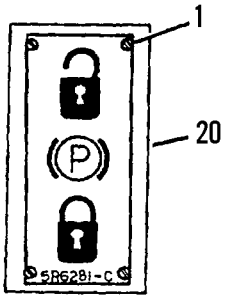

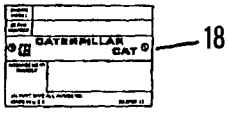

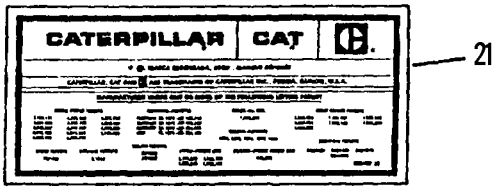

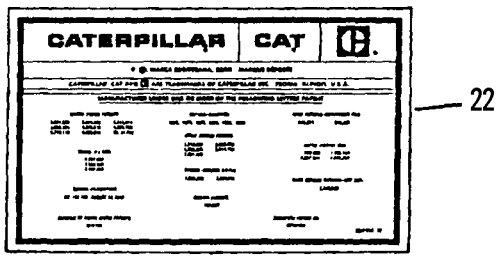

Figure 148. Plates, Film, Tags, and Stencils (Sheet 6 of 8)

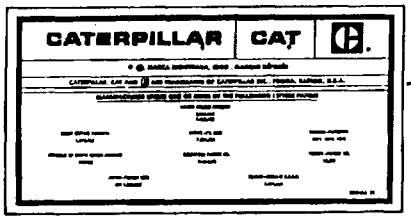

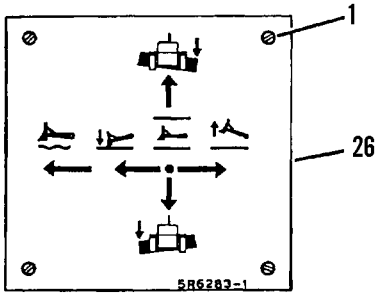

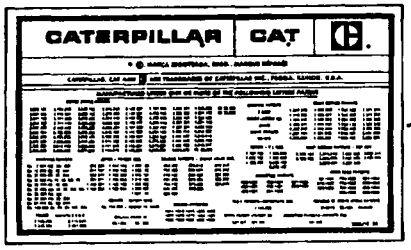

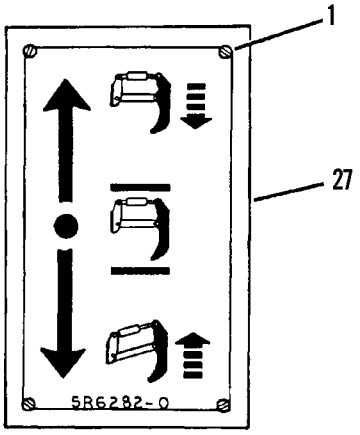



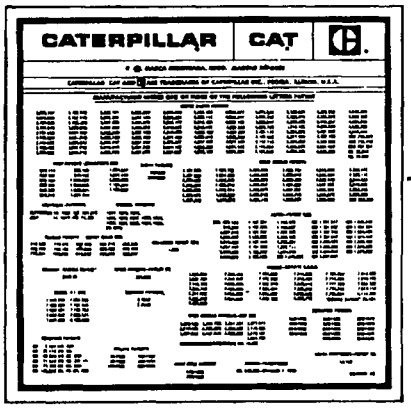

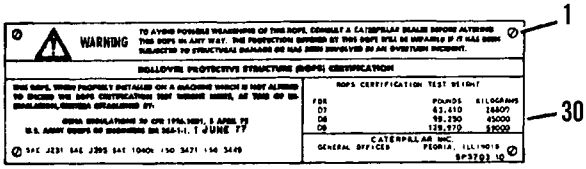

Figure 148. Plates, Film, Tags, and Stencils (Sheet 7 of 8)

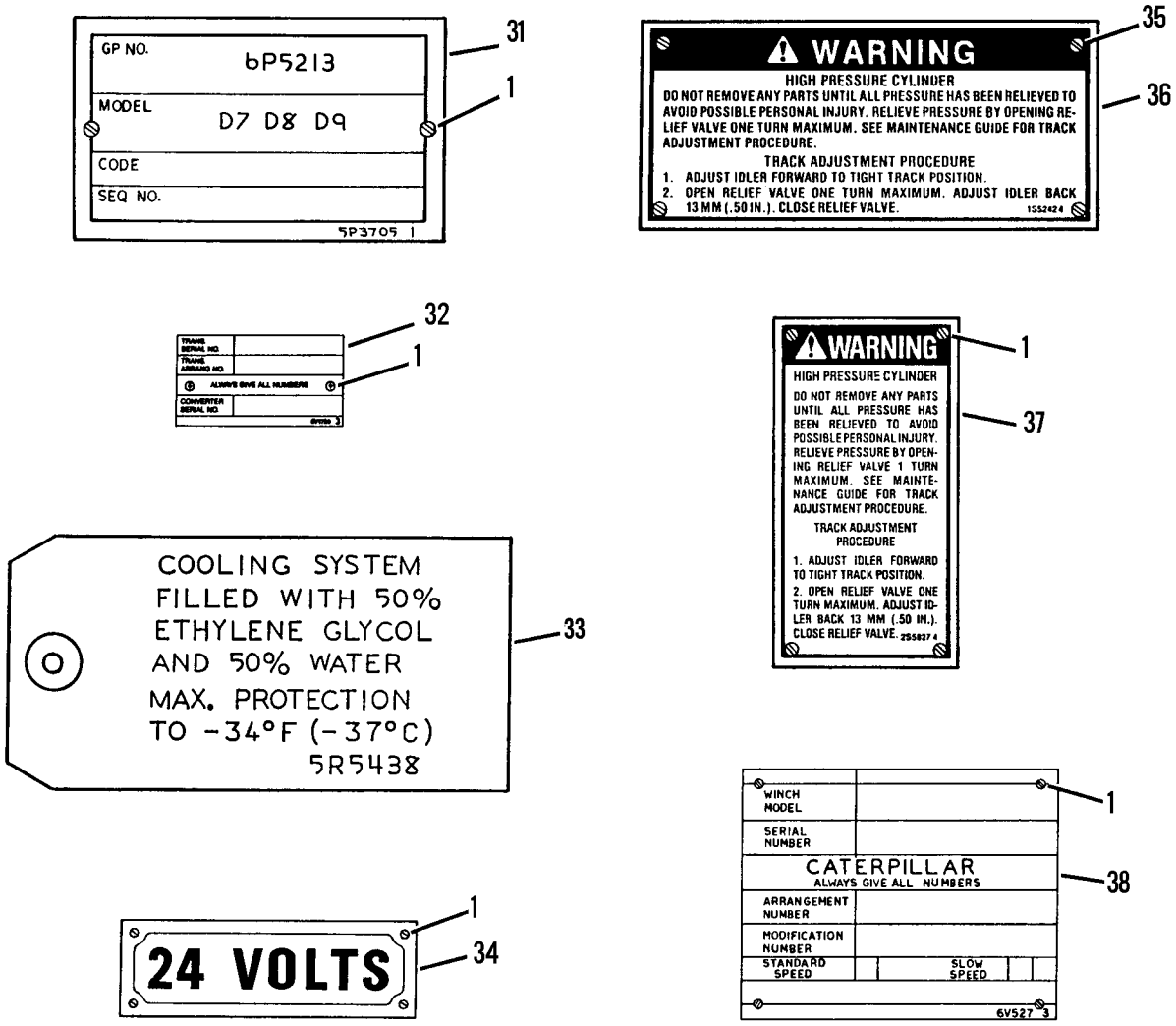

Figure 148. Plates, Film, Tags, and Stencils (Sheet 8 of 8)

(1) ITEM NO	(2) SMR CODE	(3) NSN	(4) CAGEC	(5) PART NUMBER	(6) DESCRIPTION AND USABLE ON CODES (UOC)	(7) QTY
					GROUP 2210 DATA PLATES AND INSTRUCTION HOLDERS	
					FIG. 148 PLATES, FILM, TAGS AND STENCILS	
1	PFOZZ	5305002535615	80205	MS21318-21	SCREW,DRIVE	68
2	PAOZZ	9905013442878	11083	1210175	PLATE,IDENTIFICATIO ..... SPECIFICATIONS, SERIAL AND MODEL NUMBER PLATE	1
3	XDOZZ		11083	5R7829	PLATE,INSTRUCTION FOOT PEDAL .. AND HAND LEVER IDENFTIFICATION DIAGRAM	1
4	PFOZZ	9905011640168	11083	5R5421	PLATE,INSTRUCTION CAUTION-USE . HEARING PROTECTION	1
5	PFOZZ	9905011630029	11083	5P8197	PLATE,INSTRUCTION WARNING-READ MANUAL BEFORE OPERATING THIS MACHINE	1
6	PFOZZ	9905012951907	11083	5R6284	PLATE,IDENTIFICATIO PADLOCK ... PLATE FOR TRANSMISSION LOCK	1
7	PFOZZ	2920010643809	11083	8H8648	PLATE FILM WITH LIGHT SYMBOL ..	1
8	PFOZZ	9905012687580	11083	5R3413	PLATE,IDENTIFICATIO	1
9	XBOZZ		11083	5P9398	GRIP,HANDLE	2
10	XDOZZ		11083	5R7781	PLATE,INSTRUCTION MACHINE ..... DIMENSIONS AND WEIGHT--FOR MODELS WITH RIPPER UOC:GRC,RIP	1
11	XDOZZ		11083	5R7782	PLATE,INSTRUCTION MACHINE ..... DIMENSIONS AND WEIGHT-FOR MODELS WITH WINCH UOC:GWC,WIN	1
12	XDOZZ		11083	5P1327	PLATE,INSTRUCTION SERIAL AND .. MODEL NUMBER PLATE-FOR MODELS WITH RIPPER UOC:GRC,RIP	1
13	XDOZZ		11083	9X1878	PLATE,IDENTIFICATIO SERIAL AND MODEL NUMBER PLATE	1
14	PCOZZ	7690012675497	11083	5R7878	MARKER,IDENTIFICATI LUBRICANT . LISTING-COMMERCIAL AND MILITARY	1
15	XDOZZ		11083	5R6280	PLATE,INSTRUCTION LUBRICATION . INTERVALS AND DIAGRAM	1
16	XDOZZ		11083	5R7875	PLATE,INSTRUCTION WARRANTY .... INFORMATION	1
17	PFOZZ	9905011766171	11083	6V9648	PLATE,IDENTIFICATIO MACHINE ... ENGINE AND TRANSMISSION SERIAL NUMBERS	1
18	XDOZZ		11083	3N3790	PLATE,IDENTIFICATIO ENGINE .... SERIAL NUMBER	1
19	PFOZZ	9905011525326	11083	2V1713	TAG,INSTRUCTION INSTALL ETHER . STARTING AID CYLINDER BEFORE USING	1
20	XDOZZ		11083	5R6281	PLATE,IDENTIFICATIO PADLOCK ... PLATE FOR PARK BRAKE	1
21	XDOZZ		11083	5M7409	MARKER,IDENTIFICATI CATERPILLAR INTERNATIONAL PATENT NUMBERS FOR WINCH	1

(1) ITEM NO	(2) SMR CODE	(3) NSN	(4) CAGEC	(5) PART NUMBER	(6) DESCRIPTION AND USABLE ON CODES (UOC)	(7) QTY
22	XDOZZ		11083	5M7410	MARKER,IDENTIFICATI CATERPILLAR INTERNATIONAL PATENT NUMBERS FOR BULLDOZER	1
23	XDOZZ		11083	5M7405	MARKER,IDENTIFICATI CATERPILLAR INTERNATIONAL PATENT NUMBERS FOR RIPPER	1
24	XDOZZ		11083	9M0016	RETAINER-BEARING CATERPILLAR .. INTERNATIONAL PATENT NUMBERS FOR ENGINE	1
25	XDOZZ		11083	5M7400	MARKER,IDENTIFICATI CATERPILLAR INTERNATIONAL PATENT NUMBERS FOR TRACTOR	1
26	PFOZZ	9905012827263	11083	5R6283	PLATE,INSTRUCTION PICTORIAL ... CONTROL MOVEMENT-DOZER AND BLADE	1
27	PFOZZ	9905012954589	11083	5R6282	PLATE,DESIGNATION PICTORIAL ... CONTROL MOVEMENT-RIPPER	1
28	PFOZZ	9905012734821	11083	0535930	PLATE,INSTRUCTION "SERVICE SAME AS SERIAL NUMBER..."	1
29	PFOZZ	5305012062164	11083	3F5535	SCREW,DRIVE	4
30	PFOZZ	9905012692302	11083	5P3703	PLATE,INSTRUCTION ROPS ..... INSTALLATION CERTIFICATION	1
31	XDOZZ		11083	5P3705	PLATE,INSTRUCTION ROPS CANOPY . GROUP AND SERIAL NUMBERS	1
32	XDOZZ		11083	6V1720	PLATE,IDENTIFICATIO TRANSMISSION GROUP AND SERIAL NUMBERS	1
33	XDOZZ		11083	5R5438	TAG,INSTRUCTION COOLING SYSTEM MIXTURE	1
34	PFOZZ	9905012603363	11083	5R7816	PLATE,IDENTIFICATIO "24 VOLTS"	1
35	PFOZZ	5305007083823	11083	7B3028	SCREW,DRIVE	8
36	XDOZZ		11083	1S5242	PLATE,INSTRUCTION WARNING-HIGH PRES. CYLINDER. BRIEF NOTATION FOR TRACK ADJUSTMENT	2
37	PFOZZ	9905011639191	11083	2S5927	PLATE,IDENTIFICATIO WARNING-HIGH PRESSURE CYLINDER. BRIEF NOTATION FOR TRACK ADJUSTMENT	2
38	XDOZZ		11083	6V0527	PLATE,IDENTIFICATIO NUMBERS ...	1
				END OF FIGURE		

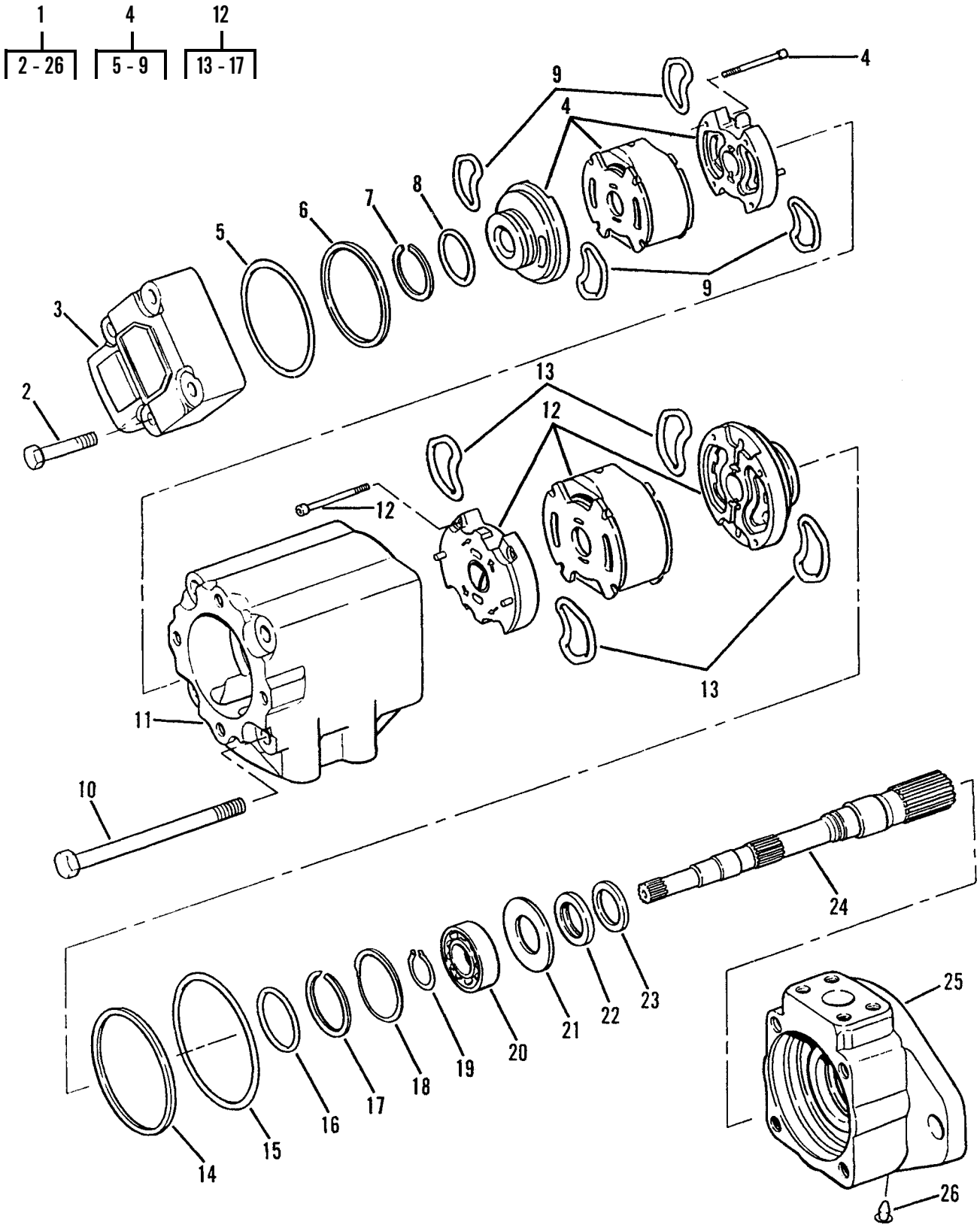

Figure 149. Hydraulic Pump Group

(1) ITEM NO	(2) SMR CODE	(3) NSN	(4) CAGEC	(5) PART NUMBER	(6) DESCRIPTION AND USABLE ON CODES (UOC)	(7) QTY
					GROUP 24 HYDRAULIC AND FLUID SYSTEMS	
					GROUP 2401 PUMP AND MOTOR	
					FIG. 149 HYDRAULIC PUMP GROUP	
1	PFOFF	2530012141578	16452	F10-2520VQ21A14S-112AC21L-167	PUMP ASSEMBLY,POWER	1
2	PFFZZ	5306002604512	11083	0T0319	.BOLT,MACHINE	4
3	PFFZZ	4320004074862	62983	250824	.CONNECTOR,FLUID,PUM	1
4	PFFZZ	4320012102743	11083	3G7658	.PARTS KIT,HYDRAULIC DEALER ... EXCHANGE ITEM, PN 0R1478	1
5	PFFZZ	5331001651954	11083	6V1196	..O-RING	1
6	PFFZZ	5330011861269	11083	3G2716	..RETAINER,PACKING	1
7	PFFZZ	5331011887450	11083	6V1557	..O-RING	1
8	PFFZZ	5330010794740	11083	0617540	..SEAL,PLAIN	1
9	PFFZZ	5330011846503	62983	433762	..PACKING WITH RETAIN	4
10	PFFZZ	5305010322312	80204	B1821BH050C600N	.SCREW,CAP,HEXAGON H	4
11	PAFZZ	4320011858231	62983	251263	.COVER,HYDRAULIC,PUM	1
12	PFFFF	4320011841056	62983	421574L	.PUMP SUBASSEMBLY,RO	1
13	PFFZZ		62983	433764	..O-RING	4
14	PFFZZ	5365011033640	62983	419673	..RING,SEAL	1
15	PFFZZ	5331011802417	11083	6V1197	..O-RING	1
16	PFFZZ	5331011831281	11083	8J4351	..O-RING	1
17	PFFZZ	5330012113120	11083	6V1556	..PACKING,PREFORMED	1
18	PFFZZ	5325005505176	11083	4M7652	.RING,RETAINING	1
19	PFFZZ	2520010669196	96906	MS16624-98	.RING	1
20	PFFZZ	3110001448518	11083	6B1124	.BEARING,BALL,ANNULA	1
21	PFFZZ	5310002031111	62983	190362	.WASHER,FLAT	1
22	PFFZZ	5330011835649	62983	429286	.SEAL,PLAIN	1
23	PFFZZ	5330011244418	11083	3G9193	.SEAL,PLAIN	1
24	PFFZZ	3040012537352	11083	9J5104	.SHAFT,SHOULDERED	1
25	PFFZZ	3130012586105	11083	1U3966	.HOUSING,BEARING UNI	1
26	PFFZZ	4820011586861	62983	431832	.VALVE,SAFETY RELIEF	1
				END OF FIGURE		

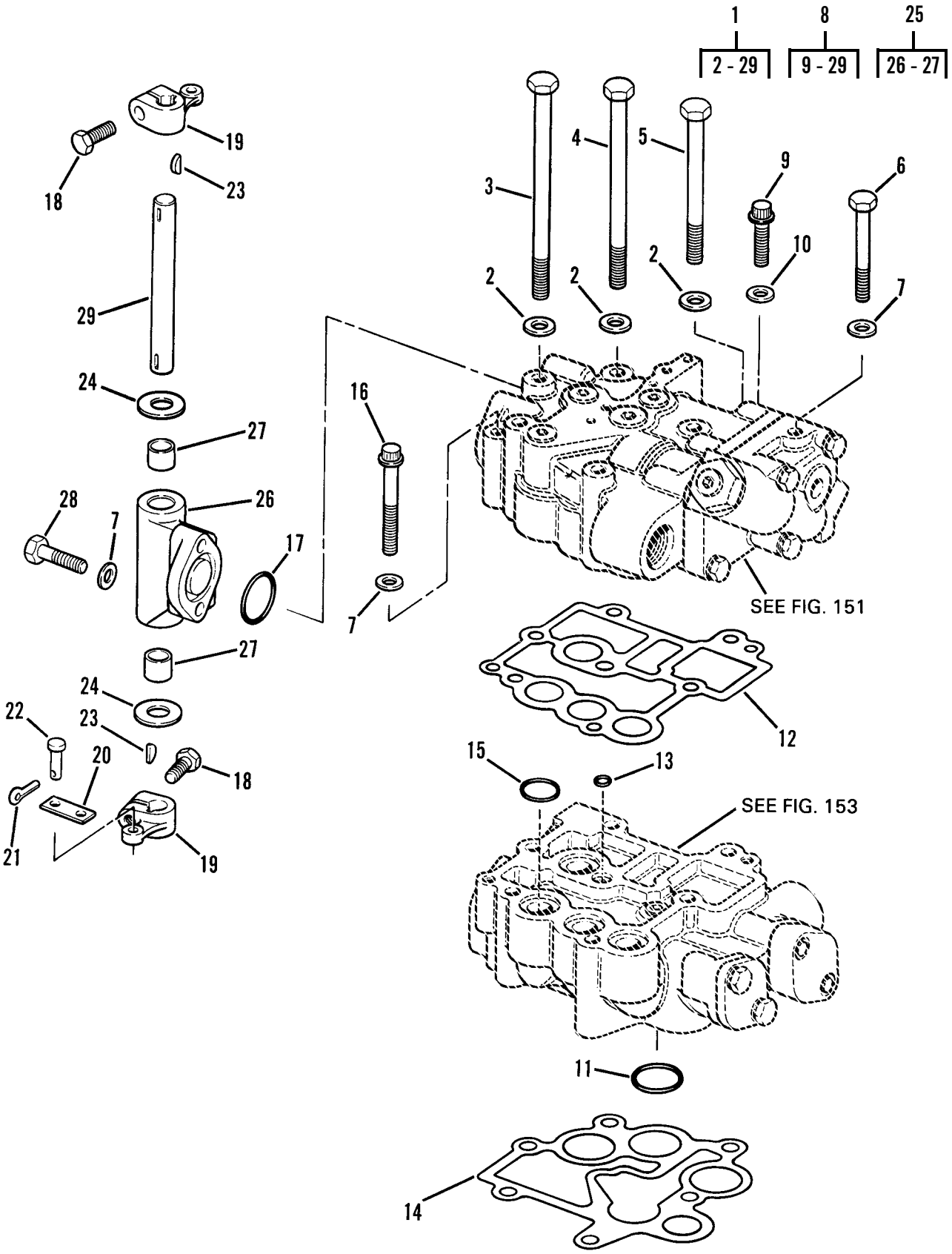

Figure 150. Winch Control Valve Group

(1) ITEM NO	(2) SMR CODE	(3) NSN	(4) CAGEC	(5) PART NUMBER	(6) DESCRIPTION AND USABLE ON CODES (UOC)	(7) QTY
					GROUP 2402 MANIFOLD AND/OR CONTROL VALVES	
					FIG. 150 WINCH CONTROL VALVE GROUP	
1	AHOHH		11083	1P7528	VALVE,CALIBRATED FL ..... UOC:GWC,WIN	1
2	PFOZZ	5310001174788	11083	9Y2695	.WASHER,FLAT ..... UOC:GWC,WIN	6
3	PFOZZ		11083	7F3425	.SCREW,CAP,HEXAGON H ..... UOC:GWC,WIN	4
4	PFOZZ	5305003627336	11083	5B2638	.SCREW,CAP,HEXAGON H ..... UOC:GWC,WIN	1
5	PFOZZ	5306004705543	11083	8S9191	.BOLT,MACHINE ..... UOC:GWC,WIN	1
6	PFOZZ	5306002264835	80204	B1821BH031C250N	.BOLT,MACHINE ..... UOC:GWC,WIN	1
7	PFOZZ	5310000814219	96906	MS27183-12	.WASHER,FLAT ..... UOC:GWC,WIN	1
8	AHHHH		11083	3T8650	.VALVE,CALIBRATED FL ..... UOC:GWC,WIN	1
9	PFHZZ	5306010599566	11083	6L4783	..BOLT,MACHINE ..... UOC:GWC,WIN	1
10	PFHZZ	5310000814219	96906	MS27183-12	..WASHER,FLAT ..... UOC:GWC,WIN	4
11	PCHZZ	5331002475972	11083	8B4967	..O-RING ..... UOC:GWC,WIN	3
12	PFHZZ	5330011610895	11083	2P3650	..GASKET ..... UOC:GWC,WIN	1
13	PFHZZ	5331008588223	11083	2H5001	..O-RING ..... UOC:GWC,WIN	1
14	PFHZZ	5330011648563	11083	8P0016	..GASKET ..... UOC:GWC,WIN	1
15	PCHZZ	5331003396224	11083	5F7054	..O-RING ..... UOC:GWC,WIN	4
16	PFHZZ	5306002682449	11083	3S4346	..BOLT,MACHINE ..... UOC:GWC,WIN	1
17	PFHZZ	5331003934054	11083	3D2992	..O-RING ..... UOC:GWC,WIN	1
18	PFHZZ	5306002264826	80204	B1821BH031C088N	..BOLT,MACHINE ..... UOC:GWC,WIN	2
19	PFHZZ	3040011593041	11083	6P9367	..LEVER,REMOTE CONTRO ..... UOC:GWC,WIN	2
20	PFHZZ		11083	1P5130	..CONNECTING LINK,RIG ..... UOC:GWC,WIN	2
21	PAHZZ	5315008392326	80205	MS24665-281	..PIN,COTTER ..... UOC:GWC,WIN	2
22	PFHZZ	5315001698105	11083	9S1303	..PIN,STRAIGHT,HEADED ..... UOC:GWC,WIN	2
23	PFHZZ	5315006165514	80205	MS35756-6	..KEY,WOODRUFF ..... UOC:GWC,WIN	2
24	PFHZZ	5310008095997	96906	MS27183-17	..WASHER,FLAT ..... UOC:GWC,WIN	2

(1) ITEM NO	(2) SMR CODE	(3) NSN	(4) CAGEC	(5) PART NUMBER	(6) DESCRIPTION AND USABLE ON CODES (UOC)	(7) QTY
25	PFHZZ		11083	2P6971	..RETAINER,BEARING ..... UOC:GWC,WIN	1
26	XAHZZ		11083	2P6970	...BRACKET ..... UOC:GWC,WIN	1
27	PFHZZ	3120011648629	11083	9H2400	...BUSHING,SLEEVE ..... UOC:GWC,WIN	2
28	PFHZZ	5306002264829	80204	B1821BH031C125N	..BOLT,MACHINE ..... UOC:GWC,WIN	2
29	PFHZZ		11083	2P6969	..SHAFT,STRAIGHT ..... UOC:GWC,WIN	1
				END OF FIGURE		

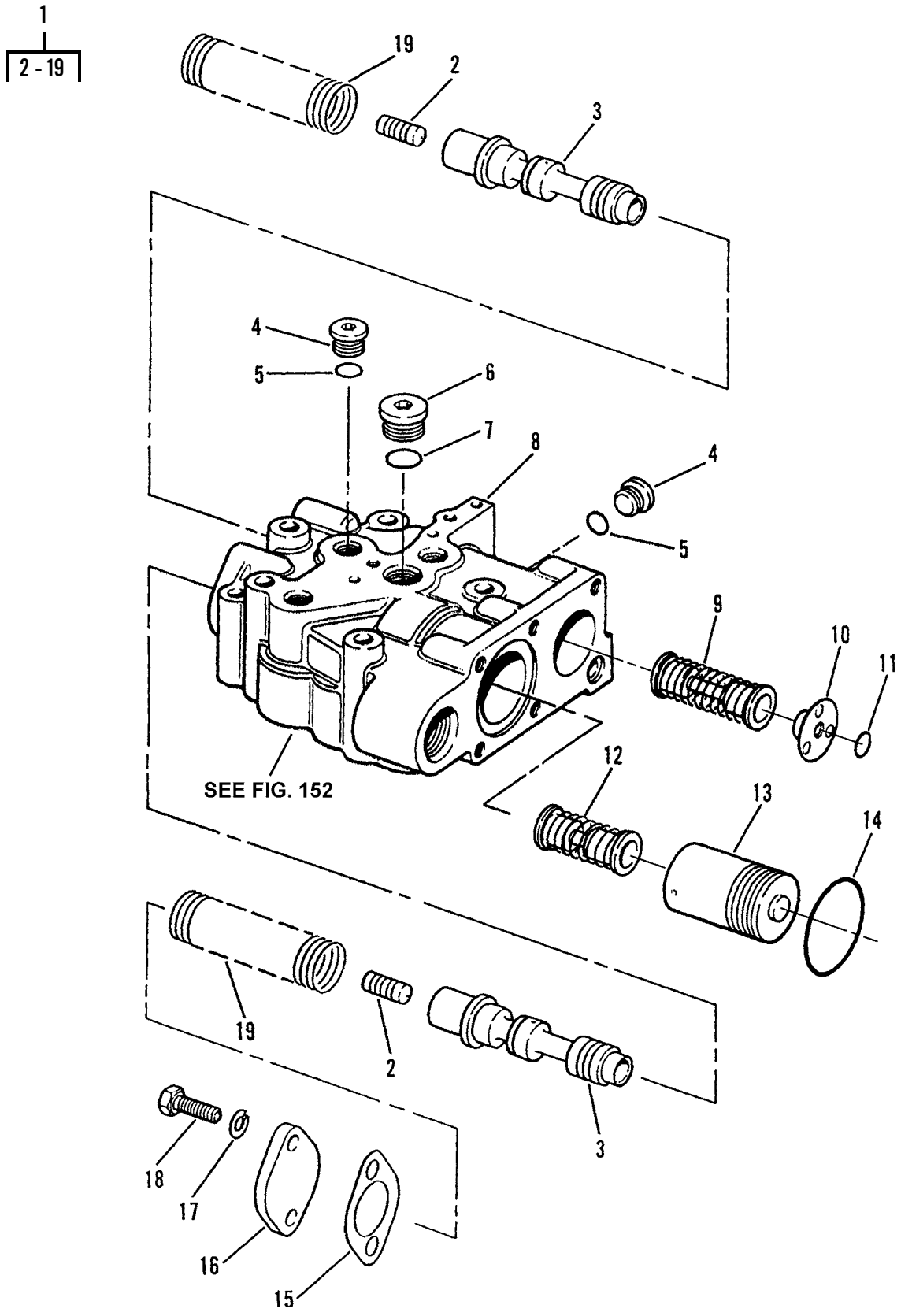

Figure 151. Pressure Valve

(1) ITEM NO	(2) SMR CODE	(3) NSN	(4) CAGEC	(5) PART NUMBER	(6) DESCRIPTION AND USABLE ON CODES (UOC)	(7) QTY
					GROUP 2402 MANIFOLD AND/OR CONTROL VALVES	
					FIG. 151 PRESSURE VALVE	
1	PFHZZ	4820011628950	11083	3T8649	VALVE,LINEAR,DIRECT ..... UOC:GWC,WIN	1
2	PFHZZ	2520010599381	11083	2M1168	.SLUG ..... UOC:GWC,WIN	2
3	XAHZZ		11083	3P2767	.SLIDE,DIRECTIONAL C ..... UOC:GWC,WIN	2
4	PFHZZ	5365010249868	30780	6HP5N-SS	.PLUG,MACHINE THREAD ..... UOC:GWC,WIN	4
5	PCHZZ	5331008013354	25184	906-737-70	.O-RING ..... UOC:GWC,WIN	4
6	PFHZZ	5365010318183	19207	11621436-3	.PLUG,MACHINE THREAD ..... UOC:GWC,WIN	1
7	PFHZZ	5331009486482	62983	154129	.O-RING ..... UOC:GWC,WIN	1
8	XAHZZ		11083	8P0015	.BODY,VALVE ..... UOC:GWC,WIN	1
9	PFHZZ	5342011628768	11083	3P5169	.RETAINER ..... UOC:GWC,WIN	1
10	PFHZZ	5340011619175	11083	3P2847	.RETAINER,HELICAL CO ..... UOC:GWC,WIN	1
11	PFHZZ	5331010686073	11083	4K2039	.O-RING ..... UOC:GWC,WIN	1
12	PFHZZ	5342011628767	11083	3P5168	.RETAINER ..... UOC:GWC,WIN	1
13	XAHZZ		11083	2P3646	.PISTON,LINEAR ACTUA ..... UOC:GWC,WIN	1
14	PCHZZ	5331005801226	11083	1H9696	.O-RING ..... UOC:GWC,WIN	1
15	PFHZZ	5330011612429	11083	3P0218	.GASKET ..... UOC:GWC,WIN	2
16	PFHZA	2940010253284	11083	6B0830	.COVER ..... UOC:GWC,WIN	2
17	PFHZZ	5310004079566	80205	MS35338-45	.WASHER,LOCK ..... UOC:GWC,WIN	2
18	PFHZZ	5306002264826	80204	B1821BH031C088N	.BOLT,MACHINE ..... UOC:GWC,WIN	4
19	PAHZZ	5360011622847	11083	1P3216	.SPRING,HELICAL,COMP ..... UOC:GWC,WIN	2
					END OF FIGURE	

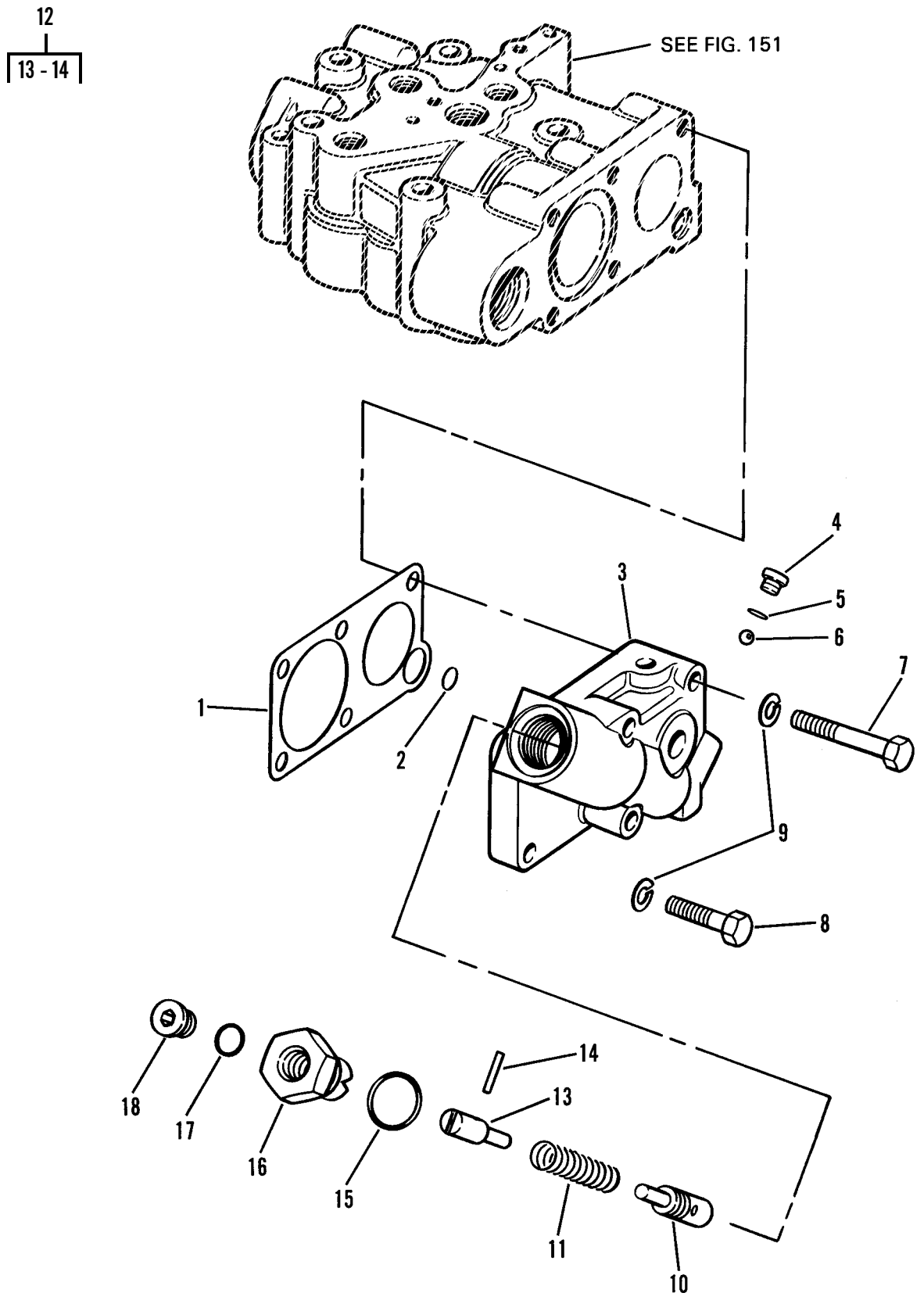

Figure 152. Body Assembly

(1) ITEM NO	(2) SMR CODE	(3) NSN	(4) CAGEC	(5) PART NUMBER	(6) DESCRIPTION AND USABLE ON CODES (UOC)	(7) QTY
					GROUP 2402 MANIFOLD AND/OR CONTROL VALVES	
					FIG. 152 BODY ASSEMBLY	
1	PFHZZ	5330011628587	11083	2P3644	.GASKET ..... UOC:GWC,WIN	1
2	PFHZZ	5331005801215	11083	6F5559	.O-RING ..... UOC:GWC,WIN	1
3	PAHZZ	4820012199334	11083	8P0345	.BODY,VALVE ..... UOC:GWC,WIN	1
4	PFHZZ	5365011242945	30780	2HP5N-S	.PLUG,MACHINE THREAD ..... UOC:GWC,WIN	1
5	PFHZZ	5330011485891	59556	K-500-EN-0431	.SEAL ..... UOC:GWC,WIN	1
6	PFHZZ	3110009491438	11083	4B9880	.BALL,BEARING ..... UOC:GWC,WIN	1
7	PFHZZ	5306002264833	80204	B1821BH031C200N	.BOLT,MACHINE ..... UOC:GWC,WIN	3
8	PFHZZ	5306002264829	80204	B1821BH031C125N	.BOLT,MACHINE ..... UOC:GWC,WIN	1
9	PFHZZ	5310004079566	80205	MS35338-45	.WASHER,LOCK ..... UOC:GWC,WIN	4
10	PFHZZ		11083	3P4660	.VALVE,LINEAR,DIRECT ..... UOC:GWC,WIN	1
11	PFHZZ	5360011622848	11083	8P0346	.SPRING,HELICAL,COMP ..... UOC:GWC,WIN	1
12	PFHZZ		11083	8P0325	.STOP ASSEMBLY,TRACT ..... UOC:GWC,WIN	1
13	XAHZZ		11083	8P0326	..STOP ..... UOC:GWC,WIN	1
14	PAHZZ	5315011647589	11083	5H9809	..PIN,STRAIGHT,HEADLE ..... UOC:GWC,WIN	1
15	PFHZZ	5331001675174	81343	M83248/2-910	.O-RING ..... UOC:GWC,WIN	1
16	PFHZZ		11083	6P9959	.PLUG,ADJUSTING,BALL ..... UOC:GWC,WIN	1
17	PFHZZ	5331001651980	82328	714085	.O-RING ..... UOC:GWC,WIN	1
18	PFHZZ	5365010354899	19207	11621436-1	.PLUG,MACHINE THREAD ..... UOC:GWC,WIN	1
				END OF FIGURE		

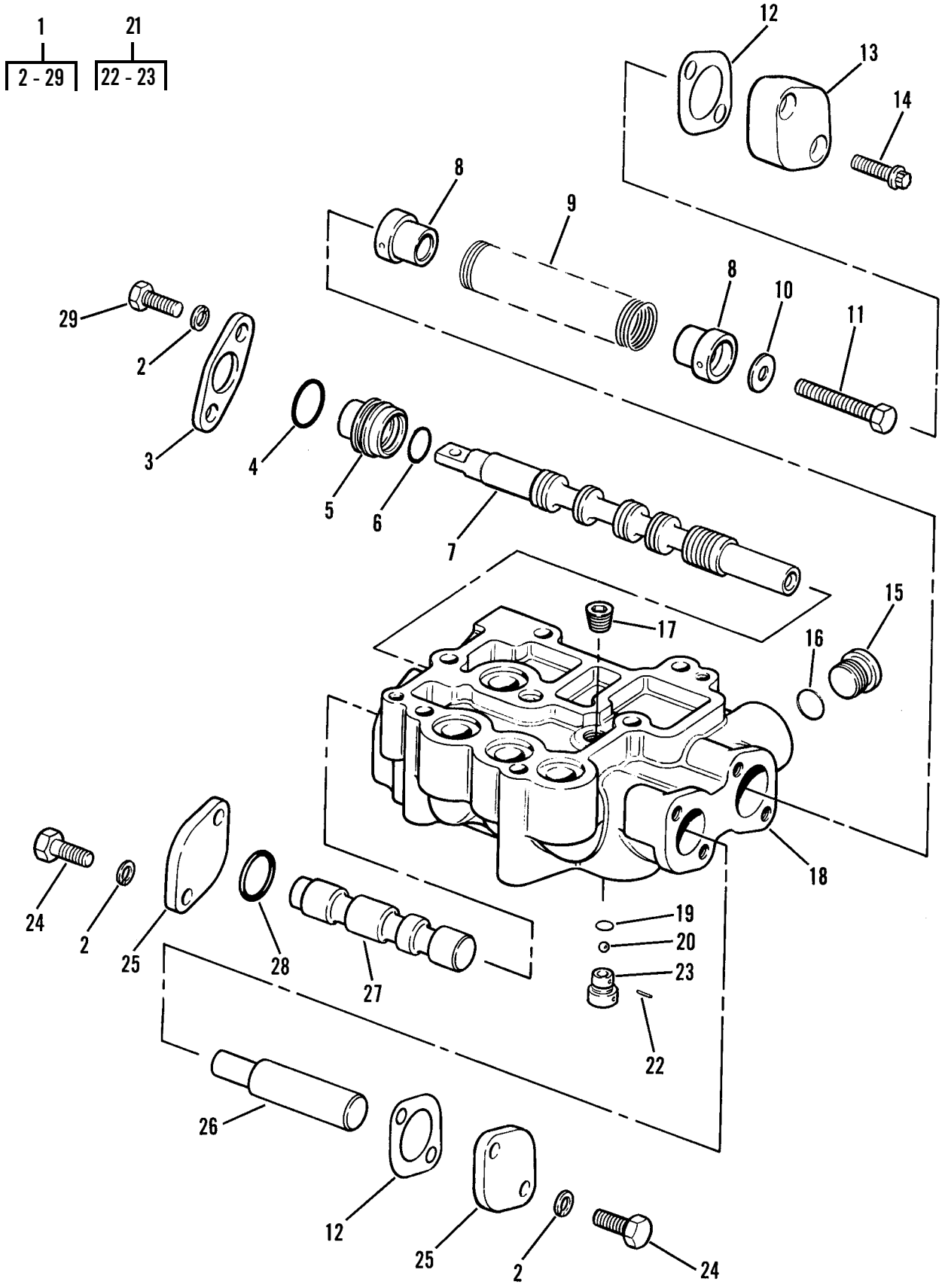

Figure 153. Control Valve Group

(1) ITEM NO	(2) SMR CODE	(3) NSN	(4) CAGEC	(5) PART NUMBER	(6) DESCRIPTION AND USABLE ON CODES (UOC)	(7) QTY
					GROUP 2402 MANIFOLD AND/OR CONTROL VALVES	
					FIG. 153 CONTROL VALVE GROUP	
1	PFHHH	4820011628951	11083	3P4121	VALVE,LINEAR,DIRECT ..... UOC:GWC,WIN	1
2	PFHZZ	5310004079566	80205	MS35338-45	.WASHER,LOCK ..... UOC:GWC,WIN	6
3	XAHZZ		11083	1P6217	.FLANGE,PIPE ..... UOC:GWC,WIN	1
4	PFHZZ	5330004982906	11083	4D9986	.SEAL ..... UOC:GWC,WIN	1
5	PFHZZ	3120011673402	11083	3S2682	.BUSHING,SLEEVE ..... UOC:GWC,WIN	1
6	PFHZZ	5331004317140	11083	8M5260	.O-RING ..... UOC:GWC,WIN	1
7	XAHZZ		11083	2P3617	.SLIDE,DIRECTIONAL C ..... UOC:GWC,WIN	1
8	PAHZZ	5340012593949	11083	9W4023	.RETAINER,HELICAL CO ..... UOC:GWC,WIN	2
9	PFHZZ	5360011653674	11083	3P3202	.SPRING,HELICAL,COMP ..... UOC:GWC,WIN	1
10	PFHZZ	5310001183044	61208	A-2888-AW	.WASHER,SPECIAL ..... UOC:GWC,WIN	1
11	PFHZZ	5306011169622	11083	0869934	.BOLT,MACHINE ..... UOC:GWC,WIN	1
12	PFHZZ	5330011612429	11083	3P0218	.GASKET ..... UOC:GWC,WIN	2
13	PAHZZ	5340011647556	11083	8P4299	.COVER,ACCESS ..... UOC:GWC,WIN	1
14	PFHZZ	5306004550467	11083	1T0414	.BOLT,MACHINE ..... UOC:GWC,WIN	2
15	PFHZZ	5365010318183	19207	11621436-3	.PLUG,MACHINE THREAD ..... UOC:GWC,WIN	1
16	PFHZZ	5331009486482	11083	3K0360	.O-RING ..... UOC:GWC,WIN	1
17	PFHZZ	5340010600744	11083	3K5762	.PLUG,FUSIBLE ..... UOC:GWC,WIN	1
18	XAHZZ		11083	3P4120	.BODY,VALVE ..... UOC:GWC,WIN	1
19	PCHZZ	5331005913112	11083	5F9144	.O-RING ..... UOC:GWC,WIN	1
20	PFHZZ	3110001006149	96906	MS19059-2412	.BALL,BEARING ..... UOC:GWC,WIN	1
21	XAHZZ		11083	3P4117	.VALVE,CHECK ..... UOC:GWC,WIN	1
22	XAHZZ		11083	1L5316	..PIN ..... UOC:GWC,WIN	1
23	XAHZZ		11083	3P4116	..BODY,VALVE ..... UOC:GWC,WIN	1
24	PFHZZ	5306002264826	80204	B1821BH031C088N	.BOLT,MACHINE ..... UOC:GWC,WIN	4

(1) ITEM NO	(2) SMR CODE	(3) NSN	(4) CAGEC	(5) PART NUMBER	(6) DESCRIPTION AND USABLE ON CODES (UOC)	(7) QTY
25	PFHZA	2940010253284	11083	6B0830	.COVER ..... UOC:GWC,WIN	2
26	PFHZZ	5315011649838	11083	2P3683	.PIN,SHOULDER,HEADLE ..... UOC:GWC,WIN	1
27	XAHZZ		11083	2P3639	.SLIDE,DIRECTIONAL C ..... UOC:GWC,WIN	1
28	PCHZZ	5331005931192	11083	3H0107	.O-RING ..... UOC:GWC,WIN	1
29	PFHZZ	5306002264825	80204	B1821BH031C075N	.BOLT,MACHINE ..... UOC:GWC,WIN	2
				END OF FIGURE		

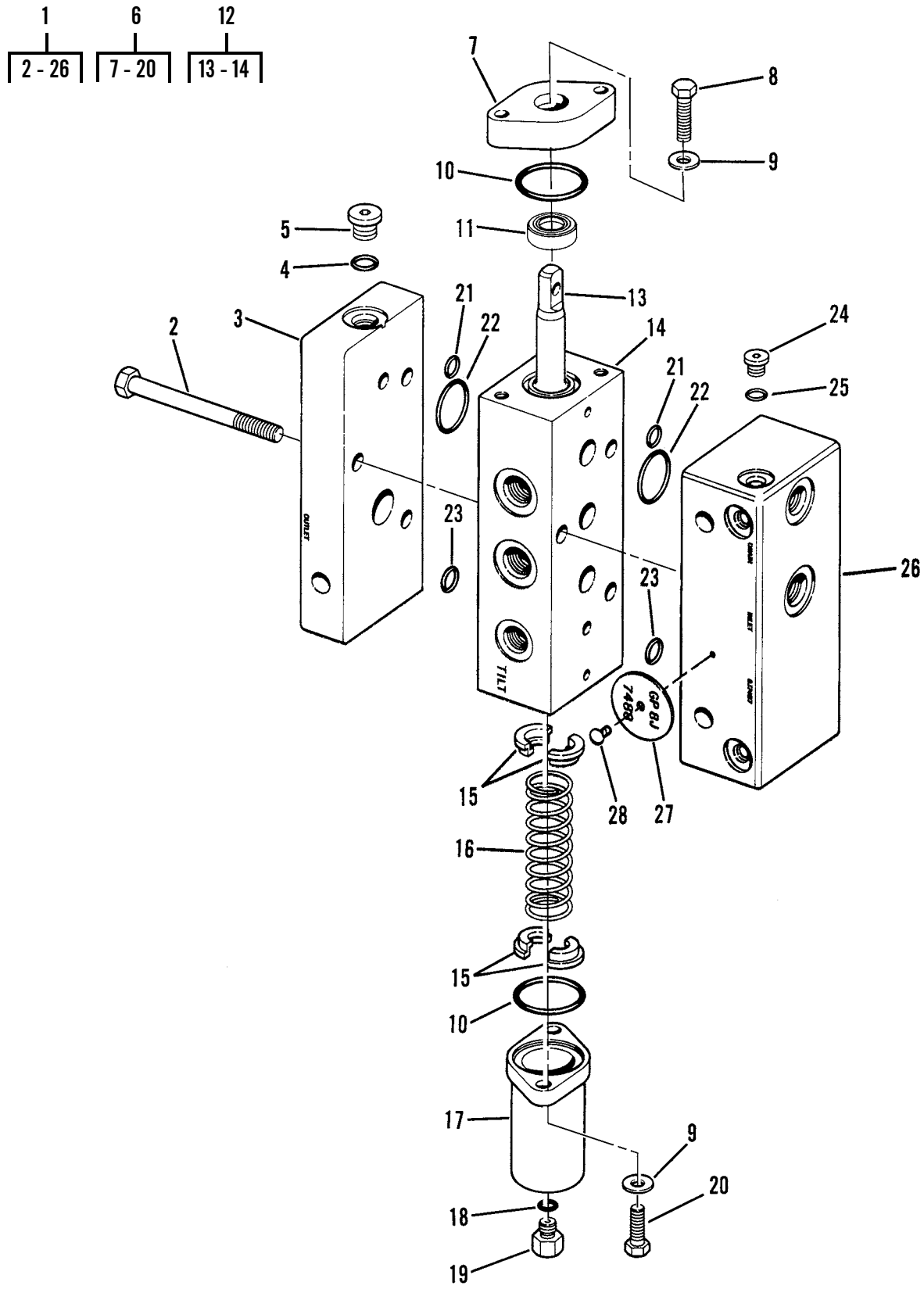

Figure 154. Tilt Control Pilot Valve Group, Without Ripper

(1) ITEM NO	(2) SMR CODE	(3) NSN	(4) CAGEC	(5) PART NUMBER	(6) DESCRIPTION AND USABLE ON CODES (UOC)	(7) QTY
					GROUP 2402 MANIFOLD AND/OR CONTROL VALVES	
					FIG. 154 TILT CONTROL PILOT VALVE GROUP, WITHOUT RIPPER	
1	PFOFF	4820011801045	11083	8J7488	VALVE,LINEAR,DIRECT ..... UOC:GWC,WIN	1
2	PFFZZ	5306000877178	11083	1F5842	.BOLT,MACHINE ..... UOC:GWC,WIN	3
3	PFFZZ	4730012537483	11083	8J7498	.MANIFOLD,HYDRAULIC ..... UOC:GWC,WIN	1
4	PCFZZ	5331010491292	81346	ASTM D2000 M6BG910	.O-RING ..... UOC:GWC,WIN	2
5	PFFZZ	5365010429079	30780	4 HP50N-S	.PLUG,MACHINE THREAD ..... UOC:GWC,WIN	2
6	PFFFF	4820010488597	11083	8J7494	.VALVE,PILOT ..... UOC:GWC,WIN	1
7	PFFZZ	5340012580436	11083	9J8714	..RETAINER,HELICAL CO ..... UOC:GWC,WIN	1
8	PFFZZ	5305002253843	80204	B1821BH025C100N	..SCREW,CAP,HEXAGON H ..... UOC:GWC,WIN	2
9	PFFZZ	5310008238804	96906	MS27183-9	..WASHER,FLAT ..... UOC:GWC,WIN	4
10	PFFZZ	5331009375155	11083	2K8199	..O-RING ..... UOC:GWC,WIN	2
11	PFFZZ	5330012098720	11083	6V1949	..SEAL,PLAIN ENCASED ..... UOC:GWC,WIN	1
12	XAFFF		11083	8J7495	..VALVE GP.-TILT & RI ..... UOC:GWC,WIN	1
13	XAFZZ		11083	8J7491	...SLIDE,DIRECTIONAL C ..... UOC:GWC,WIN	1
14	XAFZZ		11083	8J7490	...BODY ..... UOC:GWC,WIN	1
15	PFFZZ	5365012573304	11083	7J7844	..SPACER,SLEEVE ..... UOC:GWC,WIN	4
16	PFFZZ	5360010671728	11083	9J4800	..SPRING ..... UOC:GWC,WIN	1
17	PFFZZ	5340012580437	11083	9J4772	..RETAINER,HELICAL CO ..... UOC:GWC,WIN	1
18	PFFZZ	5330011485891	59556	K-500-EN-0431	..SEAL ..... UOC:GWC,WIN	1
19	PFFZZ	5365010672179	11083	9S4180	..PLUG,MACHINE THREAD ..... UOC:GWC,WIN	1
20	PFFZZ	5306002611153	11083	0S1615	..BOLT,MACHINE ..... UOC:GWC,WIN	2
21	PFFZZ	5331010648276	11083	8J1699	.O-RING ..... UOC:GWC,WIN	4
22	PFFZZ	5330010690801	11083	5P3108	.SEAL-O-RING ..... UOC:GWC,WIN	6
23	PFFZZ	5330010648247	11083	6J3134	.SEAL ..... UOC:GWC,WIN	2
24	PFFZZ	5365011242945	30780	2HP5N-S	.PLUG,MACHINE THREAD ..... UOC:GWC,WIN	4

(1) ITEM NO	(2) SMR CODE	(3) NSN	(4) CAGEC	(5) PART NUMBER	(6) DESCRIPTION AND USABLE ON CODES (UOC)	(7) QTY
25	PFFZZ	5330011485891	59556	K-500-EN-0431	.SEAL ..... UOC:GWC,WIN	4
26	PFFZZ	4730012537484	11083	8J7497	.MANIFOLD,HYDRAULIC ..... UOC:GWC,WIN	1
27	XBFZZ		11083	3G0660	PLATE,IDENTIFICATION ..... UOC:GWC,WIN	1
28	PFFZZ	5305007083823	11083	7B3028	SCREW,DRIVE ..... UOC:GWC,WIN	1
				END OF FIGURE		

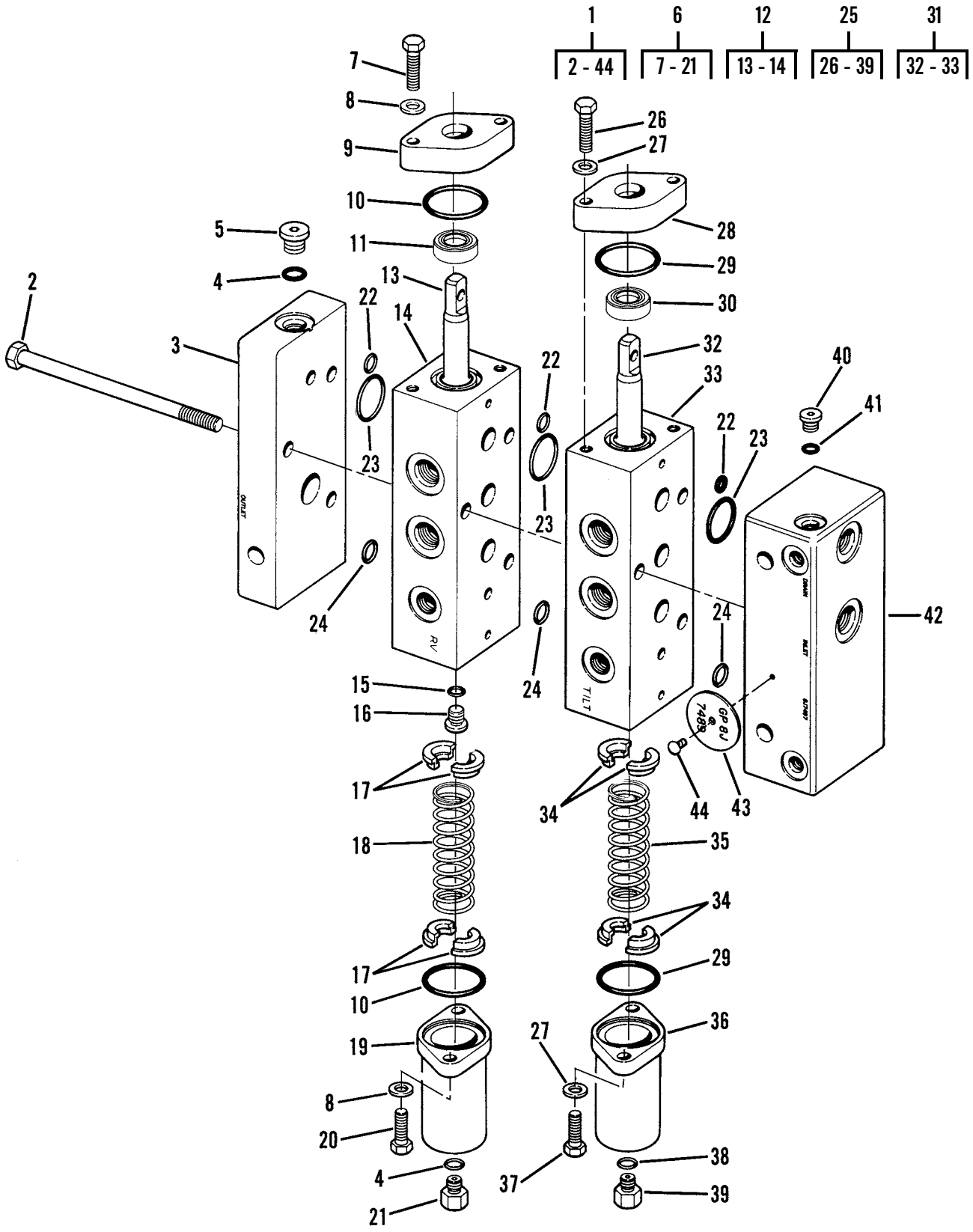

Figure 155. Valve Group with Ripper

(1) ITEM NO	(2) SMR CODE	(3) NSN	(4) CAGEC	(5) PART NUMBER	(6) DESCRIPTION AND USABLE ON CODES (UOC)	(7) QTY
					GROUP 2402 MANIFOLD AND/OR CONTROL VALVES	
					FIG. 155 VALVE GROUP WITH RIPPER	
1	PFOFF	4810012081802	11083	8J7489	VALVE ASSEMBLY,MANI ..... UOC:GRC,RIP	1
2	PFFZZ	5306004725282	11083	3H3243	.BOLT,MACHINE ..... UOC:GRC,RIP	3
3	PFFZZ	4730012537483	11083	8J7498	.MANIFOLD,HYDRAULIC ..... UOC:GRC,RIP	1
4	PCFZZ	5331010491292	81346	ASTM D2000 M6BG910	.O-RING ..... UOC:GRC,RIP	3
5	PFFZZ	5365010429079	30780	4 HP50N-S	.PLUG,MACHINE THREAD ..... UOC:GRC,RIP	2
6	PFFFF	3830010483942	11083	8J7499	.VALVE,PILOT,HYDRAUL ..... UOC:GRC,RIP	1
7	PFFZZ	5305002253843	80204	B1821BH025C100N	..SCREW,CAP,HEXAGON H ..... UOC:GRC,RIP	2
8	PFFZZ	5310008238804	96906	MS27183-9	..WASHER,FLAT ..... UOC:GRC,RIP	4
9	PFFZZ	5340012580436	11083	9J8714	..RETAINER,HELICAL CO ..... UOC:GRC,RIP	1
10	PFFZZ	5331009375155	11083	2K8199	..O-RING ..... UOC:GRC,RIP	2
11	PFFZZ	5330012098720	11083	6V1949	..SEAL,PLAIN ENCASED ..... UOC:GRC,RIP	1
12	PAFFF	4820012535568	11083	8J7500	..VALVE,LINEAR,DIRECT ..... UOC:GRC,RIP	1
13	PFFZZ	4810012532003	11083	8J7496	...STEM,FLUID VALVE ..... UOC:GRC,RIP	1
14	XAFZZ		11083	8J7490	...BODY ..... UOC:GRC,RIP	1
15	PFFZZ	5330011485891	59556	K-500-EN-0431	..SEAL ..... UOC:GRC,RIP	1
16	PFFZZ	5365011242945	30780	2HP5N-S	..PLUG,MACHINE THREAD ..... UOC:GRC,RIP	1
17	PFFZZ	5365012573304	11083	7J7844	..SPACER,SLEEVE ..... UOC:GRC,RIP	4
18	PFFZZ	5360012107606	11083	1U3243	..SPRING,HELICAL,COMP ..... UOC:GRC,RIP	1
19	PFFZZ	5340012580437	11083	9J4772	..RETAINER,HELICAL CO ..... UOC:GRC,RIP	1
20	PFFZZ	5306002611153	11083	0S1615	..BOLT,MACHINE ..... UOC:GRC,RIP	2
21	PFFZZ	5365010672179	11083	9S4180	..PLUG,MACHINE THREAD ..... UOC:GRC,RIP	1
22	PFFZZ	5331010648276	11083	8J1699	.O-RING ..... UOC:GRC,RIP	6
23	PFFZZ	5330010690801	11083	5P3108	.SEAL-O-RING ..... UOC:GRC,RIP	9
24	PFFZZ	5330010648247	11083	6J3134	SEAL ..... UOC:GRC,RIP	3

(1) ITEM NO	(2) SMR CODE	(3) NSN	(4) CAGEC	(5) PART NUMBER	(6) DESCRIPTION AND USABLE ON CODES (UOC)	(7) QTY
25	PFFFF	4820010488597	11083	8J7494	.VALVE,PILOT ..... UOC:GRC,RIP	1
26	PFFZZ	5305002253843	80204	B1821BH025C100N	..SCREW,CAP,HEXAGON H ..... UOC:GRC,RIP	2
27	PFFZZ	5310008238804	96906	MS27183-9	..WASHER,FLAT ..... UOC:GRC,RIP	4
28	PFFZZ	5340012580436	11083	9J8714	..RETAINER,HELICAL CO ..... UOC:GRC,RIP	1
29	PFFZZ	5331009375155	11083	2K8199	..O-RING ..... UOC:GRC,RIP	2
30	PFFZZ	5330012098720	11083	6V1949	..SEAL,PLAIN ENCASED ..... UOC:GRC,RIP	1
31	XAFFF		11083	8J7495	..VALVE GP.-TILT & RI ..... UOC:GRC,RIP	1
32	XAFZZ		11083	8J7491	...SLIDE,DIRECTIONAL C ..... UOC:GRC,RIP	1
33	XAFZZ		11083	8J7490	...BODY ..... UOC:GRC,RIP	1
34	PFFZZ	5365012573304	11083	7J7844	..SPACER,SLEEVE ..... UOC:GRC,RIP	4
35	PFFZZ	5360010671728	11083	9J4800	..SPRING ..... UOC:GRC,RIP	1
36	PFFZZ	5340012580437	11083	9J4772	..RETAINER,HELICAL CO ..... UOC:GRC,RIP	1
37	PFFZZ	5306002611153	11083	0S1615	..BOLT,MACHINE ..... UOC:GRC,RIP	2
38	PFFZZ	5330011485891	59556	K-500-EN-0431	..SEAL ..... UOC:GRC,RIP	1
39	PFFZZ	5365010672179	11083	9S4180	..PLUG,MACHINE THREAD ..... UOC:GRC,RIP	1
40	PFFZZ	5365011242945	30780	2HP5N-S	.PLUG,MACHINE THREAD ..... UOC:GRC,RIP	4
41	PFFZZ	5330011485891	59556	K-500-EN-0431	.SEAL ..... UOC:GRC,RIP	4
42	PFFZZ	4730012537484	11083	8J7497	.MANIFOLD,HYDRAULIC ..... UOC:GRC,RIP	1
43	XBFZZ		11083	3G0662	.PLATE,IDENTIFICATION ..... UOC:GRC,RIP	1
44	PFFZZ	5305007083823	11083	7B3028	.SCREW,DRIVE ..... UOC:GRC,RIP	1
				END OF FIGURE		

6
7 - 18

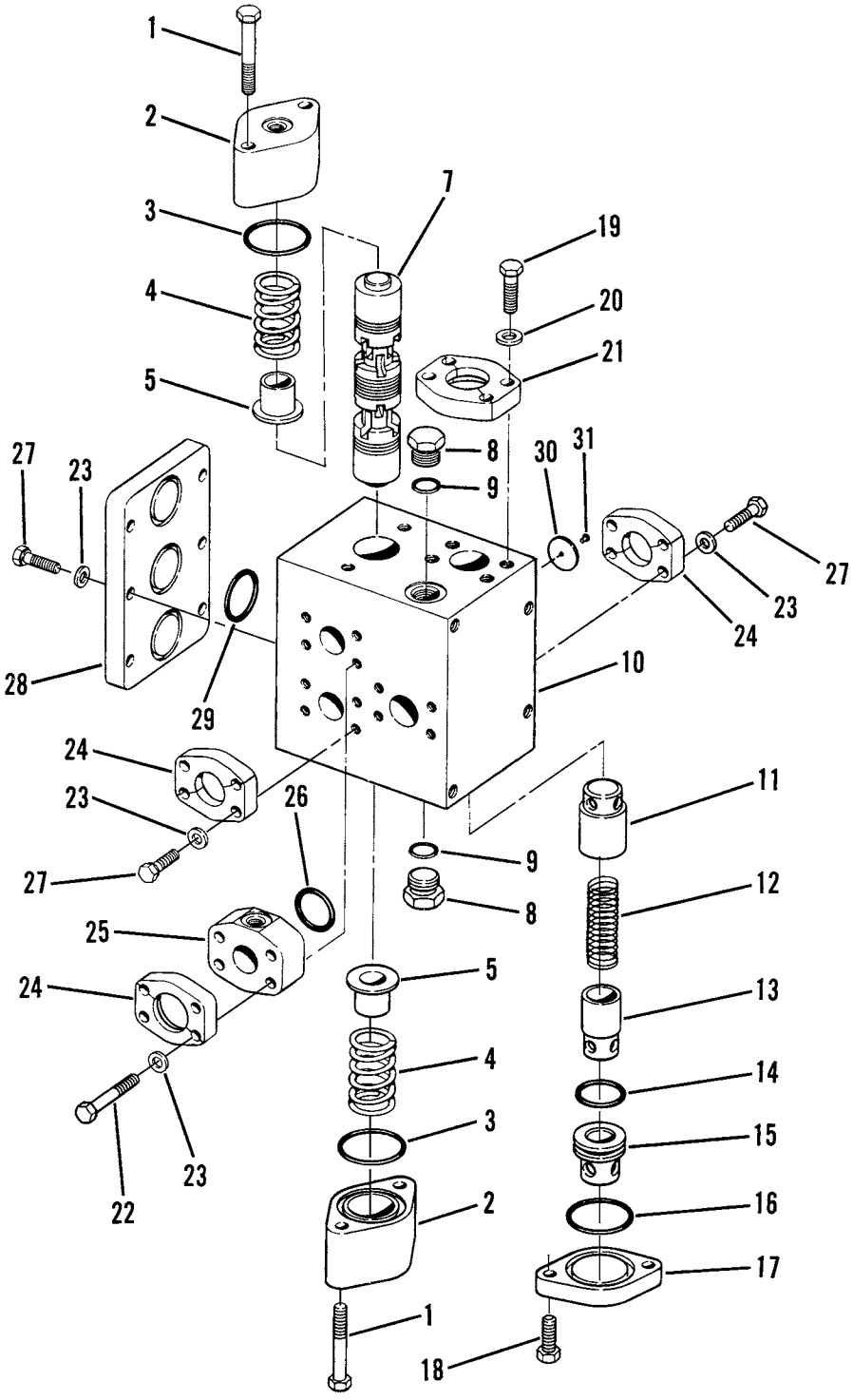

Figure 156. Ripper Control Valve

(1) ITEM NO	(2) SMR CODE	(3) NSN	(4) CAGEC	(5) PART NUMBER	(6) DESCRIPTION AND USABLE ON CODES (UOC)	(7) QTY
					GROUP 2402 MANIFOLD AND/OR CONTROL VALVES	
					FIG. 156 RIPPER CONTROL VALVE	
1	PFOZZ	5306006982177	11083	1D4556	BOLT,MACHINE ..... UOC:GRC,RIP	4
2	PFFZZ	5340012646101	11083	9J2916	RETAINER,HELICAL CO ..... UOC:GRC,RIP	2
3	PCFZZ	5331009226275	11083	4J0525	O-RING ..... UOC:GRC,RIP	2
4	PFFZZ	5360012573420	11083	1U2760	SPRING,HELICAL,COMP ..... UOC:GRC,RIP	2
5	PFFZZ	3120012574386	11083	3G0596	BUSHING,SLEEVE ..... UOC:GRC,RIP	2
6	PFFZZ	4820012533474	11083	3G1772	VALVE,LINEAR,DIRECT ..... UOC:GRC,RIP	1
7	XAFZZ		11083	3G1770	.STEM,FLUID VALVE ..... UOC:GRC,RIP	1
8	PFFZZ	5365010530180	11083	9S4190	.PLUG,MACHINE THREAD ..... UOC:GRC,RIP	2
9	PFFZZ	5331001675174	81343	M83248/2-910	.O-RING ..... UOC:GRC,RIP	2
10	XAFZZ		11083	8J8546	.BODY ..... UOC:GRC,RIP	1
11	PFFZZ	4820012530549	11083	8J8338	.SLEEVE,DIRECTIONAL ..... UOC:GRC,RIP	1
12	PFFZZ	5360012577811	11083	4H1718	.SPRING,HELICAL,COMP ..... UOC:GRC,RIP	1
13	PFFZZ	4820012533472	11083	8J8336	.SLEEVE,DIRECTIONAL ..... UOC:GRC,RIP	1
14	PFFZZ	5331001661111	81349	M83248/2-220	.O-RING ..... UOC:GRC,RIP	1
15	PFFZZ	4820012531987	11083	8J8497	.SEAT,VALVE ..... UOC:GRC,RIP	1
16	PCFZZ	5331009226275	11083	4J0525	.O-RING ..... UOC:GRC,RIP	1
17	PAFZZ	5340012646023	11083	9J2915	.COVER,ACCESS ..... UOC:GRC,RIP	1
18	PFFZZ	5306012593523	11083	0T0320	.BOLT,MACHINE ..... UOC:GRC,RIP	2
19	PFFZZ	5306004003518	73342	427564	BOLT,MACHINE ..... UOC:GRC,RIP	4
20	PFFZZ	5310010978955	11083	5P8244	WASHER,FLAT ..... UOC:GRC,RIP	4
21	PFFZZ	4730010515257	11083	1P4578	FLANGE,PIPE ..... UOC:GRC,RIP	2
22	PFFZZ	5306002851368	11083	L1143	BOLT,MACHINE ..... UOC:GRC,RIP	4
23	PFFZZ	5310001174788	11083	9Y2695	WASHER,FLAT ..... UOC:GRC,RIP	22
24	PFFZZ	4730010515256	11083	1P4577	FLANGE,PIPE ..... UOC:GRC,RIP	8

(1) ITEM NO	(2) SMR CODE	(3) NSN	(4) CAGEC	(5) PART NUMBER	(6) DESCRIPTION AND USABLE ON CODES (UOC)	(7) QTY
25	PFFZZ	4810012578821	11083	9J3866	HEAD,VALVE ..... UOC:GRC,RIP	1
26	PCFZZ	5331009136144	11083	4J520	O-RING ..... UOC:GRC,RIP	4
27	PFFZZ	5305000680511	80204	B1821BH038C125N	SCREW,CAP,HEXAGON H ..... UOC:GRC,RIP	18
28	PFFZZ	5340012580319	11083	8J8496	PLATE,RETAINING,SEA ..... UOC:GRC,RIP	1
29	PCFZZ	5331009484063	11083	4J522	O-RING ..... UOC:GRC,RIP	3
30	XBFZZ		11083	3G1806	PLATE,IDENTIFICATION ..... UOC:GRC,RIP	1
31	PFFZZ	5305002535615	80205	MS21318-21	SCREW,DRIVE ..... UOC:GRC,RIP	1
				END OF FIGURE		

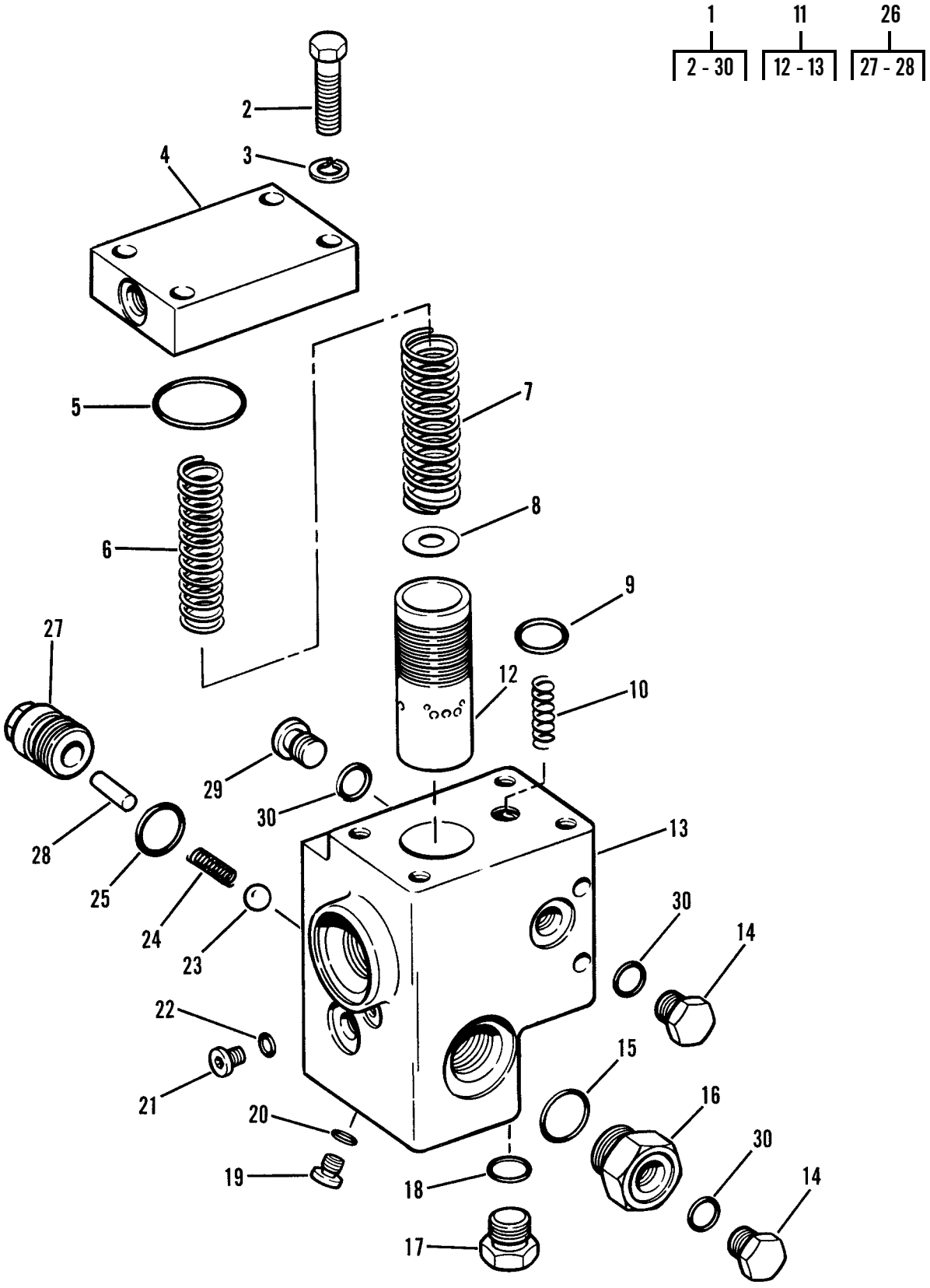

Figure 157. Pressure Control Valve

(1) ITEM NO	(2) SMR CODE	(3) NSN	(4) CAGEC	(5) PART NUMBER	(6) DESCRIPTION AND USABLE ON CODES (UOC)	(7) QTY
					GROUP 2402 MANIFOLD AND/OR CONTROL VALVES	
					FIG. 157 PRESSURE CONTROL VALVE	
1	PFOZZ	4820010487098	11083	9J5169	VALVE,CONTROL,PRESS	1
2	PFFZZ	5305010156841	11083	0S1591	.SCREW	4
3	PFFZZ	5310006379541	80205	MS35338-46	.WASHER,LOCK	4
4	PAFZZ	4320012623317	11083	9J3578	.VALVE PLATE,HYDRAUL	1
5	PCFZZ	5331002919572	09990	2-221N951-75	.O-RING	1
6	PAFZZ	5360012573419	11083	9J5490	.SPRING,HELICAL,COMP	1
7	PAFZZ	5360012577810	11083	9J5491	.SPRING,HELICAL,COMP	1
8	PFFZZ	5365010641030	11083	4J8224	.SHIM	6
9	PCFZZ	5331003396224	11083	5F7054	.O-RING	1
10	PAFZZ	5360010671730	11083	9J7753	.SPRING	1
11	XAFZZ		11083	5R0940	.STRAP,RETAINING	1
12	XAFZZ		11083	8J9283	..VALVE	1
13	XAFZZ		11083	9J4832	..BODY,VALVE	1
14	PFFZZ	5365004114584	11083	9S4191	.PLUG,MACHINE THREAD	2
15	PCFZZ	5331009448281	11083	3D2824	.O-RING	1
16	PFFZZ	4730012045258	055L4	719-FSO-12-06	.ADAPTER,STRAIGHT,TU	1
17	PFFZZ	5365007630120	11083	9S4185	.PLUG,MACHINE THREAD	1
18	PFFZZ	5331009486482	62983	154129	.O-RING	1
19	PFFZZ	5365012574480	11083	9S8007	.PLUG,MACHINE THREAD	1
20	PFFZZ	5330010960912	11083	7J0204	.SEAL,SPECIAL	1
21	PFFZZ	5365011242945	30780	2HP5N-S	.PLUG,MACHINE THREAD	1
22	PFFZZ	5330011485891	59556	K-500-EN-0431	.SEAL	1
23	PFFZZ	4820010647477	11083	9J4871	.BALL	1
24	PFFZZ	5360009508041	11083	4M2381	.SPRING,SPECIAL	1
25	PFFZZ	5331011442252	81349	M83248/2-118	.O-RING	1
26	PAFZZ	4730012537340	11083	3G2202	.PLUG,TUBE FITTING,T	1
27	XAFZZ		11083	3G2203	..PLUG	1
28	XAFZZ		11083	3D6509	..PIN,STRAIGHT,HEADLE	1
29	PFFZZ	5365010249868	30780	6HP5N-SS	.PLUG,MACHINE THREAD	1
30	PCFZZ	5331008013354	25184	906-737-70	.O-RING	3
				END OF FIGURE		

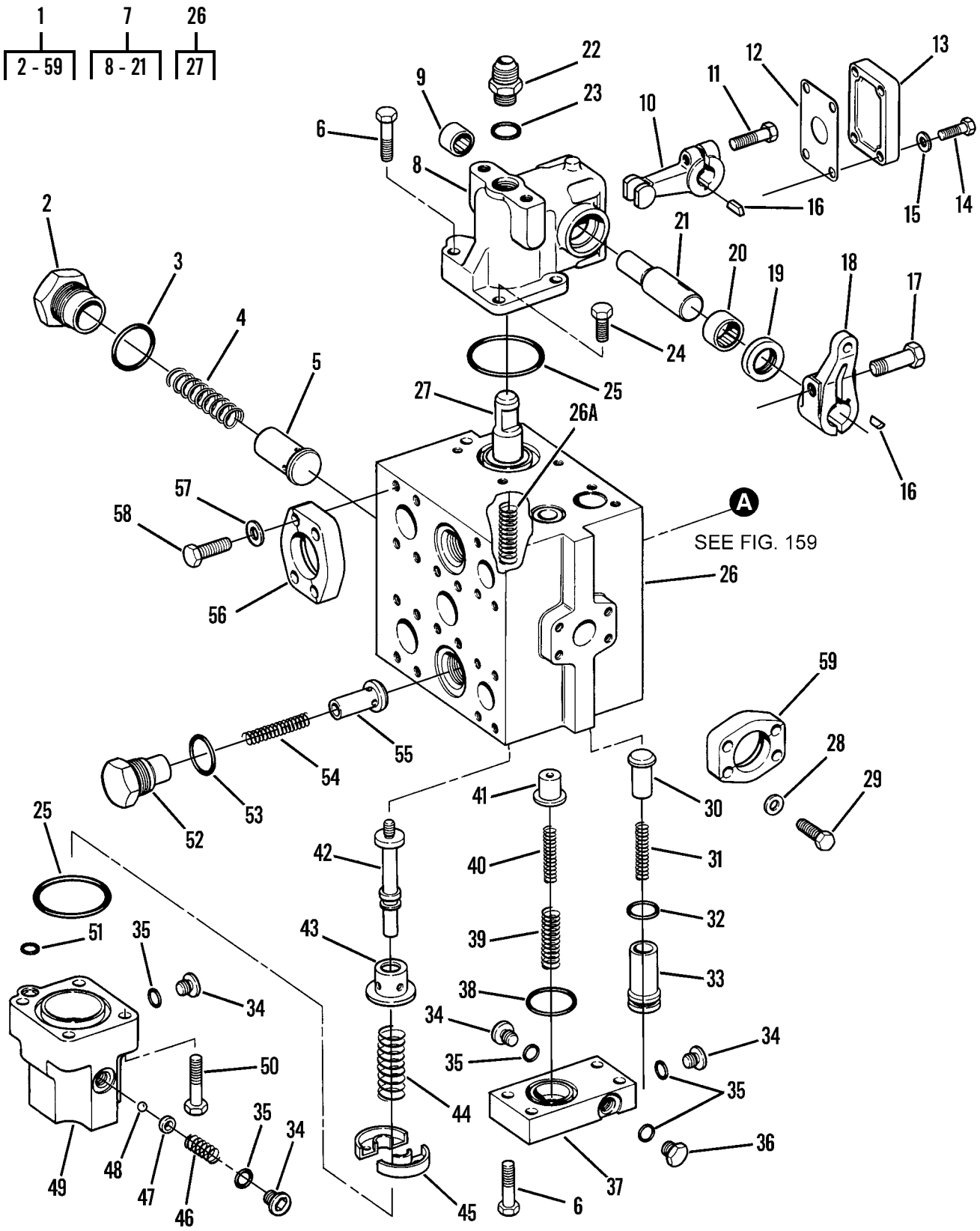

Figure 158. Blade Lift and Tilt Control Valve

(1) ITEM NO	(2) SMR CODE	(3) NSN	(4) CAGEC	(5) PART NUMBER	(6) DESCRIPTION AND USABLE ON CODES (UOC)	(7) QTY
					GROUP 2402 MANIFOLD AND/OR CONTROL VALVES	
					FIG. 158 BLADE LIFT AND TILT CONTROL VALVE	
1	PFFZZ	4810012535569	11083	1U1819	VALVE,LINEAR,DIRECT INCLUDES FIG 159	1
2	PFHZZ	5365012599622	11083	8J7360	.PLUG,MACHINE THREAD	1
3	PFHZZ	5331004293542	11083	2S4078	.O-RING	1
4	PFHZZ	5360011555301	11083	1L4418	.SPRING,HELICAL,COMP	1
5	XAHZZ		11083	9T3746	.DISK,VALVE	1
6	PFHZZ	5306002634038	11083	2A4639	.BOLT,MACHINE	9
7	AHHHH		11083	1U1818	.BODY,VALVE	1
8	PAHZZ	4810012541016	11083	9J0791	..BODY,VALVE	1
9	PFHZZ	3110010672160	11083	5J3241	..BEARING	1
10	PFHZZ	2520004321627	11083	3J7582	..LEVER,REMOTE CONTRO	1
11	PFHZZ	5306002637299	11083	2A4996	..BOLT,MACHINE	1
12	PFHZZ	5330001190794	11083	3J5552	..GASKET	1
13	PAHZZ	5340012651164	11083	7J2596	..COVER,ACCESS	1
14	PFHZZ	5306002264828	80204	B1821BH031C113N	..BOLT,MACHINE	4
15	PFHZZ	5310000814219	96906	MS27183-12	..WASHER,FLAT	4
16	PFHZZ	5315006165523	80205	MS35756-11	..KEY,WOODRUFF	2
17	PFHZZ	5306011279361	11083	0S1585	..BOLT,MACHINE	1
18	PFHZZ	2520012538693	11083	1U1817	..LEVER,REMOTE CONTRO	1
19	PCHZZ	5330012573805	11083	6V4253	..PACKING,PREFORMED	1
20	PFHZZ	3110009024269	10988	K620039	..BEARING,ROLLER,NEED	1
21	PAHZZ	2530010672164	11083	9J1302	..SHAFT	1
22	PFHZZ	4730010740907	96906	MS51525A8-10Z	.ADAPTER,STRAIGHT,TU	1
23	PFHZZ	5331001675174	81343	M83248/2-910	.O-RING	1
24	PFHZZ	5306002604508	11083	0S1594	.BOLT,MACHINE	3
25	PFHZZ	5331005553807	11083	1H8720	.O-RING	2
26	PFHHH	4820012539513	11083	1305853	.VALVE,LINEAR,DIRECT	1
26A	PFHZZ	5360014972345	11083	1267142	..SPRING,HELICAL,COMP	1
27	XAHZZ		11083	9T4360	..STEM,VALVE	1
28	PFHZZ	5310001174788	11083	9Y2695	.WASHER,FLAT	12
29	PFHZZ	5305000680511	80204	B1821BH038C125N	.SCREW,CAP,HEXAGON H	12
30	PAHZZ	4820010687249	11083	8J7349	.VALVE,FLOW CONTROL	2
31	PFHZZ	5360010700532	11083	2N7029	.SPRING	2
32	PFHZZ	5331009486924	11083	4J8996	.O-RING	2
33	PAHZZ	4820012535554	11083	8J7366	.VALVE,PLUG	2
34	PFHZZ	5365010249868	30780	6HP5N-SS	.PLUG,MACHINE THREAD	7
35	PCHZZ	5331008013354	25184	906-737-70	.O-RING	8
36	PFHZZ	5365004114584	11083	9S4191	.PLUG,MACHINE THREAD	1
37	PFHZZ	4810012534644	11083	3G8415	.HEAD,VALVE	2
38	PFHZZ	5331009484063	11083	4J522	.O-RING	2
39	XAHZZ		11083	9J5754	.SPRING	2
40	XAHZZ		11083	9J5753	.SPRING	2
41	PFHZZ	5342010680011	11083	3G1258	.RETAINER	2
42	PAHZZ	4730012206669	11083	3G5766	.BOLT,FLUID PASSAGE	1

(1) ITEM NO	(2) SMR CODE	(3) NSN	(4) CAGEC	(5) PART NUMBER	(6) DESCRIPTION AND USABLE ON CODES (UOC)	(7) QTY
43	PFHZZ	3120012599569	11083	3G8149	.BEARING,SLEEVE	1
44	PAHZZ	5360012573421	11083	3G9182	.SPRING,HELICAL,COMP	1
45	PAHZZ	5330012605905	11083	3G8148	.RETAINER,PACKING	2
46	XAHZZ		11083	5J1389	.SPRING	2
47	PFHZZ	2995010689670	11083	9J1999	.SEAT	2
48	PFHZZ	3110010515285	11083	3D2891	.BALL,BEARING	2
49	PFHZZ	3040012539509	11083	8J7467	.HOUSING,MECHANICAL	1
50	PFHZZ	5305010269518	11083	0S1571	.SCREW,CAP,HEXAGON H	4
51	PFHZZ	5331005801227	11083	5H6005	.O-RING	2
52	PFHZZ	5365012594550	11083	3G8710	.PLUG,MACHINE THREAD	2
53	PFHZZ	5330009309407	11083	7M8485	.SEAL,ADAPTER,MOTOR	2
54	PFHZZ	5360012098806	11083	3G3475	.SPRING,HELICAL,COMP	2
55	PAHZZ	4820012539603	11083	3G8711	.DISK,VALVE	2
56	PFHZZ	4730010515257	11083	1P4578	.FLANGE,PIPE	6
57	PFHZZ	5310010978955	11083	5P8244	.WASHER,FLAT	12
58	PFHZZ	5306004003518	73342	427564	.BOLT,MACHINE	12
59	PFHZZ	4730010515256	11083	1P4577	.FLANGE,PIPE	6
				END OF FIGURE		

27
28 - 37

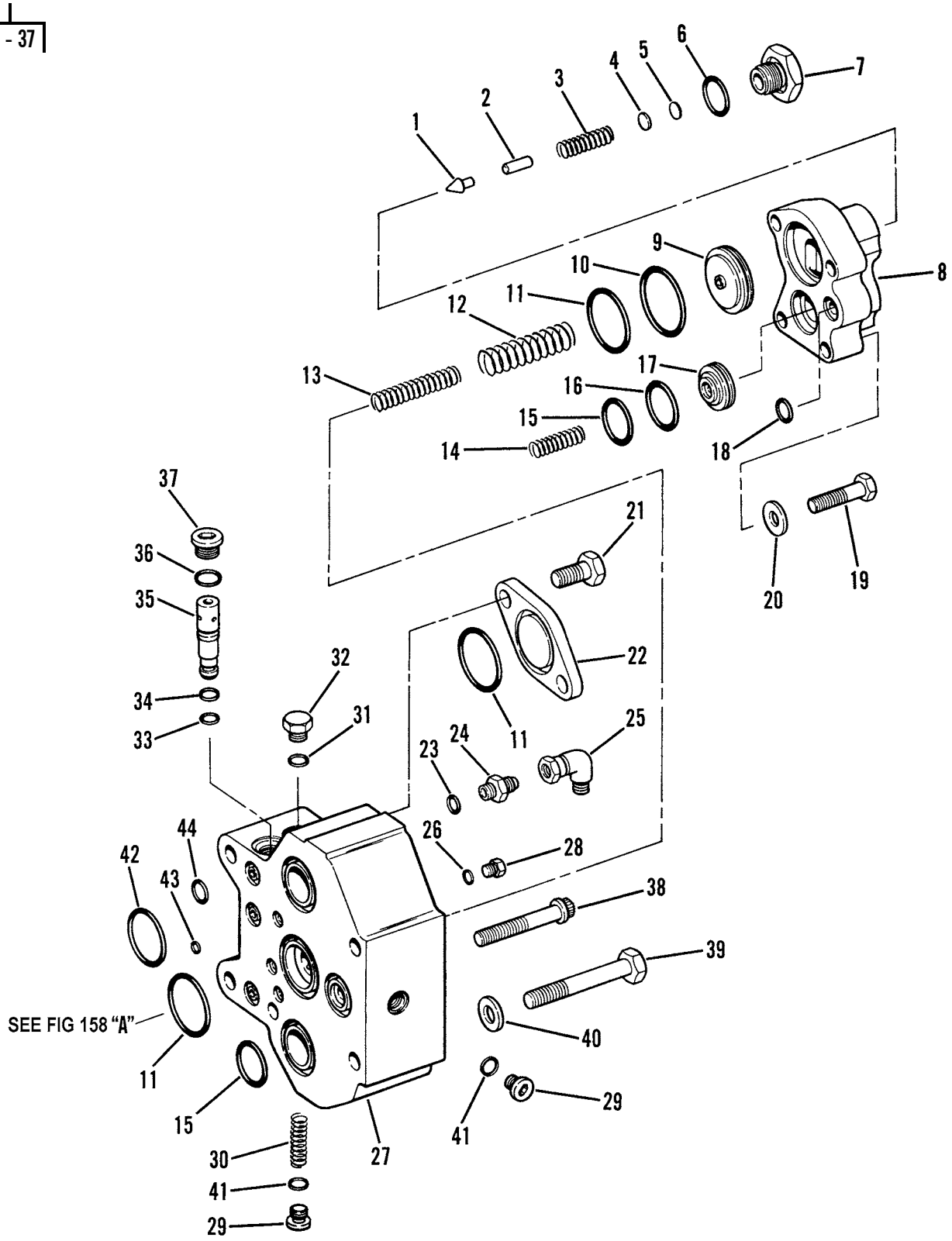

Figure 159. Blade Lift and Tilt Control Valve

(1) ITEM NO	(2) SMR CODE	(3) NSN	(4) CAGEC	(5) PART NUMBER	(6) DESCRIPTION AND USABLE ON CODES (UOC)	(7) QTY
					GROUP 2402 MANIFOLD AND/OR CONTROL VALVES	
					FIG. 159 BLADE LIFT AND TILT CONTROL VALVE	
1	PFHZZ	4820009237042	11083	1J8497	.VALVE	2
2	PAHZA	5315002460998	11083	6J1311	.PIN,STRAIGHT,HEADLE	2
3	XAHZZ		11083	2J6089	.SPRING,HELICAL,COMP	2
4	PFHZZ	5365009440863	11083	3J7473	.SHIM	12
5	PFHZZ	5340009490311	11083	3J7470	.DISK,SOLID,PLAIN	4
6	PFHZZ	5331007410674	11083	5F1678	.O-RING	2
7	PFHZZ	5365004255471	11083	3J3429	.PLUG,MACHINE THREAD	2
8	PAHZZ	4820012541017	11083	8J7317	.BODY,VALVE	1
9	PAHZZ	2895010689667	11083	8J7466	.SEAT	1
10	PFHZZ	5330010480983	11083	7D9749	.SEAL,PACKING	1
11	PAHZZ	5331010062129	11083	4J0523	.O-RING	3
12	PFHZZ	5360010702809	11083	9J5498	.SPRING	1
13	PAHZZ	5360010675611	11083	9J5499	.SPRING	1
14	PAHZZ	5360010675653	11083	5J4664	.SPRING	1
15	PCHZZ	5331009138119	11083	4J8997	.O-RING	2
16	PCFZZ	5331008507586	09990	2-213N951-75	.O-RING	1
17	XAHZZ		11083	8J7462	.SEAT	1
18	PFHZZ	5331000743768	11083	2M4453	.O-RING	1
19	PFHZZ	5306004262983	11083	T768	.BOLT,MACHINE	4
20	PFHZZ	5310010978955	11083	5P8244	.WASHER,FLAT	4
21	PFHZZ	5306004262934	11083	0S1621	.BOLT,MACHINE	2
22	PFHZZ	5365012580123	11083	7J1592	.SPACER,PLATE	1
23	PCHZZ	5331010491292	81346	ASTM D2000 M6BG910	.O-RING	1
24	PFHZZ	4730010629928	22031	6400-6-4	.ADAPTER,STRAIGHT,TU	1
25	PFHZZ	4730010518745	11083	6K9194	.ELBOW,TUBE	1
26	PFHZZ	5330011485891	59556	K-500-EN-0431	.SEAL	3
27	XBHHH		11083	9T1184	.VALVE,LINEAR,DIRECT REPLACED BY P/N 9T5769	1
27	PFHHZ	4810012535570	11083	9T5769	.VALVE,LINEAR,DIRECT REPLACES PN 9T1184 NO LONGER SERVICED AS ASSEMBLY	1
28	PFHZZ	5365010672179	11083	9S4180	..PLUG,MACHINE THREAD	3
29	PFHZZ	5365010249868	30780	6HP5N-SS	..PLUG,MACHINE THREAD	4
30	PFHZZ	5360010675614	11083	9J5756	..SPRING	1
31	PCHZZ	5331008013354	25184	906-737-70	..O-RING	5
31	PAHZZ	5331013336444	11083	3J1907	..O-RING USE WITH VALVE PN 9T5769	5
32	PFHZZ	5365012574481	11083	5P6719	..PLUG,MACHINE THREAD	1
32	PFHZZ	5365010360010	11083	9S8004	..PLUG,MACHINE THREAD USED ON . VALVE PN 9T5769	1
33	PFHZZ	5330010648247	11083	6J3134	..SEAL	1
34	PFHZZ	5331009489764	11083	4J9535	..O-RING	1
35	PFHZZ	4820012087017	11083	3G8463	..VALVE,CHECK	1
35	XAHZZ		11083	4T4073	..VALVE,SHUTTLE USE WITH VALVE PN 9T5769	1

(1) ITEM NO	(2) SMR CODE	(3) NSN	(4) CAGEC	(5) PART NUMBER	(6) DESCRIPTION AND USABLE ON CODES (UOC)	(7) QTY
36	PFHZZ	5331009486482	62983	154129	..O-RING	1
36	XAHZZ		11083	8L2777	..O-RING USED ON VALVE PN 9T5769	1
37	PFHZZ	5365010318183	30780	8HP5N-S	..PLUG,MACHINE THREAD	1
38	PAHZZ	5306012098685	11083	5P7892	.BOLT,MACHINE	1
39	PFHZZ	5306004263397	11083	1D4566	.BOLT,MACHINE	4
40	PFHZZ	5310008095997	96906	MS27183-17	.WASHER,FLAT	4
41	PCHZZ	5331008013354	25184	906-737-70	.O-RING	2
42	PCHZZ	5331009484063	11083	4J522	.O-RING	2
43	PFHZZ	5330010690856	11083	9J6491	.SEAL-O-RING	3
44	PFHZZ	5331010661469	11083	6J1038	.O-RING	3
				END OF FIGURE		

1
2 - 9

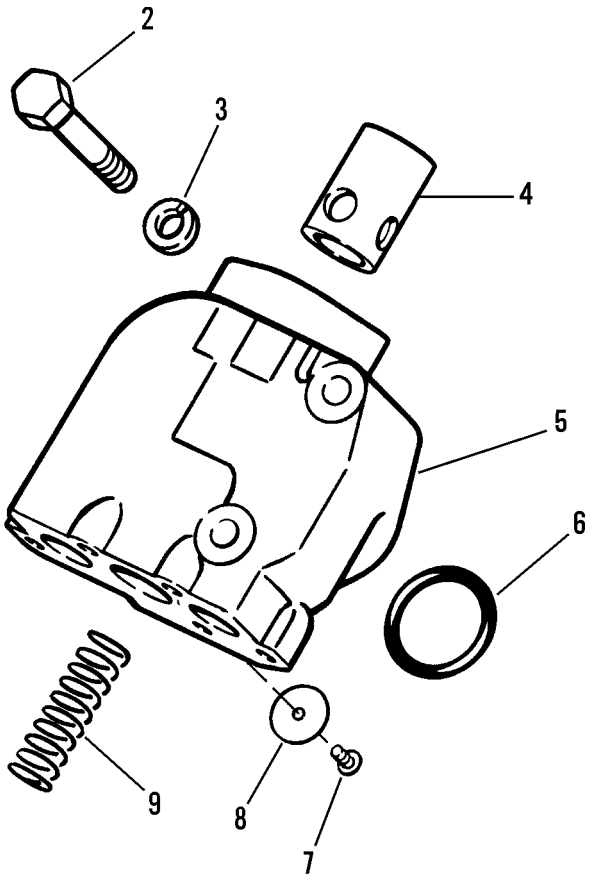

Figure 160. Valve Group (Quick Drop) (Left-Hand and Right-Hand)

(1) ITEM NO	(2) SMR CODE	(3) NSN	(4) CAGEC	(5) PART NUMBER	(6) DESCRIPTION AND USABLE ON CODES (UOC)	(7) QTY
					GROUP 2402 MANIFOLD AND/OR CONTROL VALVES	
					FIG. 160 VALVE GROUP (QUICK DROP) (LEFT-HAND AND RIGHT-HAND)	
1	PFOFF	4820004835353	11083	5J3863	VALVE ASSEMBLY	1
2	PFFZZ	5306010517598	20680	6028	.BOLT,MACHINE	2
3	PFFZZ	5310000455001	96906	MS35340-50	.WASHER,LOCK	2
4	PAFZZ	4320012670639	11083	4J7101	.CYLINDER SLEEVE	1
5	XAFZZ		11083	5J3721	.VALVE,LINEAR,DIRECT	1
6	PFFZZ	5331005598786	09990	2-227N951-75	.O-RING	1
7	PFFZZ	5305007083823	11083	7B3028	.SCREW,DRIVE	1
8	PAFZZ	4320012376819	11083	5J7880	.VALVE PLATE,HYDRAUL	1
9	PFFZZ	5360012704421	11083	5J3719	.SPRING,HELICAL,COMP	1
				END OF FIGURE		

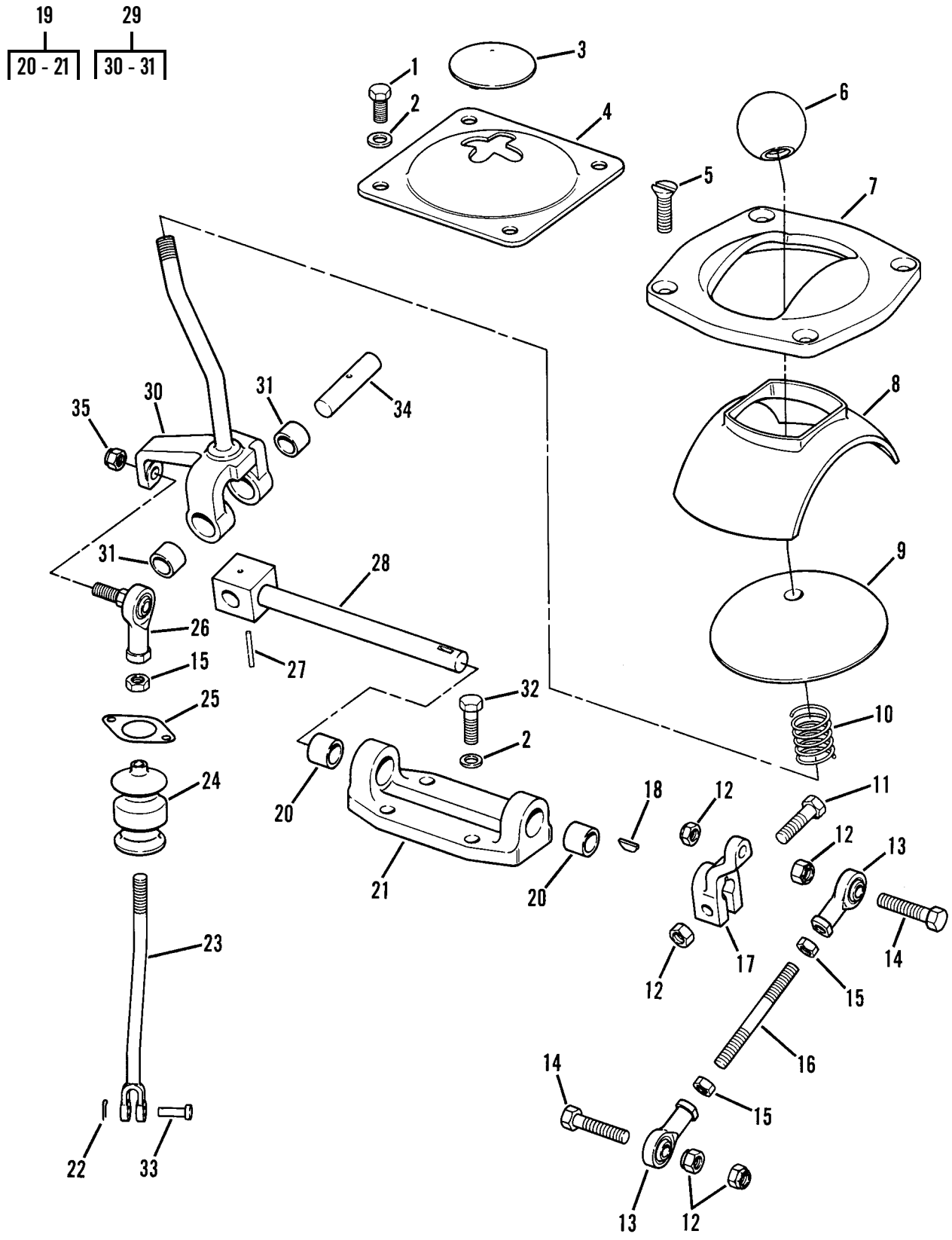

Figure 161. Control Linkage - Dozer Tilt

(1) ITEM NO	(2) SMR CODE	(3) NSN	(4) CAGEC	(5) PART NUMBER	(6) DESCRIPTION AND USABLE ON CODES (UOC)	(7) QTY
					GROUP 2403 HYDRAULIC CONTROLS AND/OR MANUAL CONTROLS	
					FIG. 161 CONTROL LINKAGE - DOZER TILT	
1	PFOZZ	5305002528919	11083	0S0509	SCREW,CAP,HEXAGON H	4
2	PFOZZ	5310001174788	11083	9Y2695	WASHER,FLAT	8
3	PFOZZ	5340012594238	11083	3P4219	BUTTON,PLUG	1
4	PFOZZ	5340012638737	11083	6P5386	COVER,ACCESS	1
5	PFOZZ	5305009592723	80205	MS35190-319	SCREW,MACHINE	4
6	PFOZZ	5355003713370	11083	2A1736	KNOB	1
7	PFOZZ	5340011635981	11083	6P5209	COVER,ACCESS	1
8	PFOZZ	3040011713357	11083	6P5208	GUIDE,LEVER	1
9	PFOZZ	5330010686110	11083	6P5207	SEAL	1
10	PFOZZ	5360011666940	11083	2J7295	SPRING,HELICAL,COMP	1
11	PFOZZ	5305010156841	11083	0S1591	SCREW	1
12	PFOZZ	5310007320558	96906	MS51967-8	NUT,PLAIN,HEXAGON	5
13	PFOZZ	2910010588075	11083	4D4064	ROD END	2
14	PFOZZ	5306001402032	11083	4M0496	BOLT,MACHINE	2
15	PFOZZ	5310009752075	96906	MS35691-21	NUT,PLAIN,HEXAGON	3
16	PAOZZ	5307011519304	11083	4L7551	STUD,PLAIN	1
17	PFOZZ	3040012537456	11083	3P3938	LEVER,REMOTE CONTRO	1
18	PFOZZ	5315006165526	80205	MS35756-8	KEY,WOODRUFF	1
19	AOOOO		11083	6P5205	BRACKET,DOUBLE ANGL	1
20	PFOZZ	3120000641275	11083	9F5647	.BUSHING,SLEEVE	2
21	PAOZZ	5340011619162	11083	6P5206	.BRACKET,DOUBLE ANGL	1
22	PFOZZ	5315008392326	80205	MS24665-281	PIN,COTTER	1
23	PFOZZ	5340012589225	11083	3P3945	CLEVIS,ROD END	1
24	PFOZZ	9390012533521	11083	9P3697	BELLOWS,PROTECTION	1
25	PFOZZ	4730012540232	11083	9P7361	FLANGE,PIPE	1
26	PFOZZ	2990011033652	11083	5J5315	BALL ROD END	1
27	PFOZZ	5315012577800	11083	7L0811	PIN,STRAIGHT,HEADLE	1
28	PAOZZ	5315012669238	11083	3P3935	PIN,STRAIGHT,HEADED	1
29	PFOZZ	3040012534662	11083	3P3931	LEVER,MANUAL CONTRO	1
30	XAOZZ		11083	3P3932	.LEVER	1
31	PFOZZ	3120000641275	11083	9F5647	.BUSHING,SLEEVE	2
32	PFOZZ	5306004238194	11083	1A2029	BOLT,MACHINE	4
33	PFOZZ	5315001698105	11083	9S1303	PIN,STRAIGHT,HEADED	1
34	PFOZZ	3040012537350	11083	3P3937	SHAFT,STRAIGHT	1
35	PFOZZ	5310009591488	81349	M45913/2-6FG5C	NUT,SELF-LOCKING,HE	1
				END OF FIGURE		

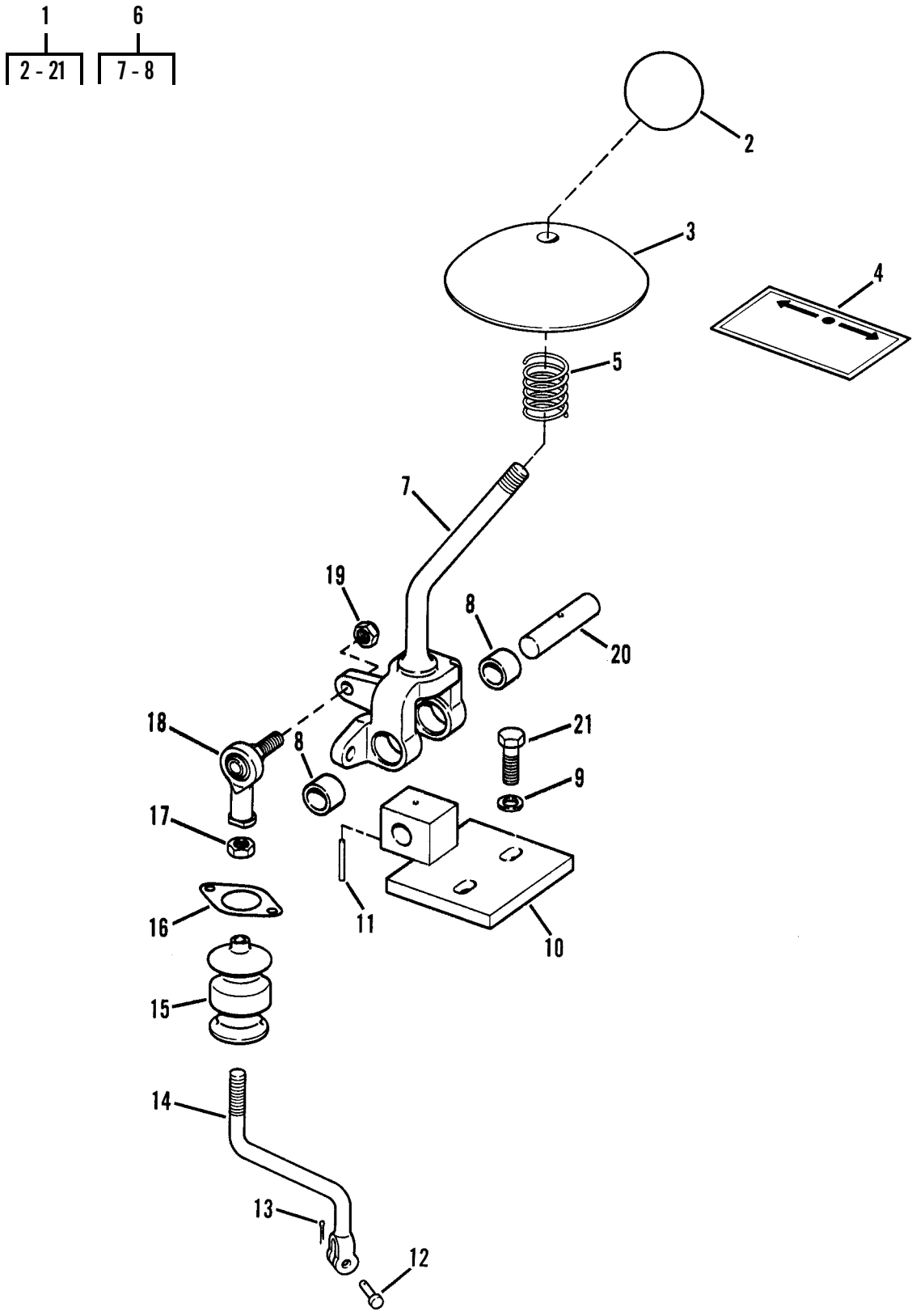

Figure 162. Control Linkage - Ripper

(1) ITEM NO	(2) SMR CODE	(3) NSN	(4) CAGEC	(5) PART NUMBER	(6) DESCRIPTION AND USABLE ON CODES (UOC)	(7) QTY
					GROUP 2403 HYDRAULIC CONTROLS AND/OR MANUAL CONTROLS	
					FIG. 162 CONTROL LINKAGE - RIPPER	
1	PFOZZ	2520012539488	11083	3P3277	LINKAGE,IMPLEMENT ..... UOC:GRC,RIP	1
2	PFOZZ	5355003713370	11083	2A1736	.KNOB ..... UOC:GRC,RIP	1
3	PFOZZ	5330010686110	11083	6P5207	.SEAL ..... UOC:GRC,RIP	1
4	PCOZZ	7690012675468	11083	5P0532	.MARKER,IDENTIFICATI ..... UOC:GRC,RIP	1
5	PFOZZ	5360011666940	11083	2J7295	.SPRING,HELICAL,COMP ..... UOC:GRC,RIP	1
6	PFOZZ	3040012537454	11083	3P3943	.LEVER,REMOTE CONTRO ..... UOC:GRC,RIP	1
7	XAOZZ		11083	3P3944	..LEVER ..... UOC:GRC,RIP	1
8	PFOZZ	3120000641275	11083	9F5647	..BUSHING,SLEEVE ..... UOC:GRC,RIP	2
9	PFOZZ	5310008098541	96906	MS27183-27	.WASHER,FLAT ..... UOC:GRC,RIP	2
10	PAOZZ	3040012535575	11083	8P0753	.BRACKET,EYE,ROTATIN ..... UOC:GRC,RIP	1
11	PFOZZ	5315012577800	11083	7L0811	.PIN,STRAIGHT,HEADLE ..... UOC:GRC,RIP	1
12	PFOZZ	5315001698105	11083	9S1303	.PIN,STRAIGHT,HEADED ..... UOC:GRC,RIP	1
13	PFOZZ	5315008392326	80205	MS24665-281	.PIN,COTTER ..... UOC:GRC,RIP	1
14	PFOZZ	5340012589225	11083	3P3945	.CLEVIS,ROD END ..... UOC:GRC,RIP	1
15	PFOZZ	9390012533521	11083	9P3697	.BELLOWS,PROTECTION ..... UOC:GRC,RIP	1
16	PFOZZ	4730012540232	11083	9P7361	.FLANGE,PIPE ..... UOC:GRC,RIP	1
17	PFOZZ	5310009752075	96906	MS35691-21	.NUT,PLAIN,HEXAGON ..... UOC:GRC,RIP	1
18	PFOZZ	2990011033652	11083	5J5315	.BALL ROD END ..... UOC:GRC,RIP	1
19	PFOZZ	5310009591488	81349	M45913/2-6FG5C	.NUT,SELF-LOCKING,HE ..... UOC:GRC,RIP	1
20	PFOZZ	3040012537350	11083	3P3937	.SHAFT,STRAIGHT ..... UOC:GRC,RIP	1
21	PFOZZ	5306004238194	11083	1A2029	.BOLT,MACHINE ..... UOC:GRC,RIP	2
				END OF FIGURE		

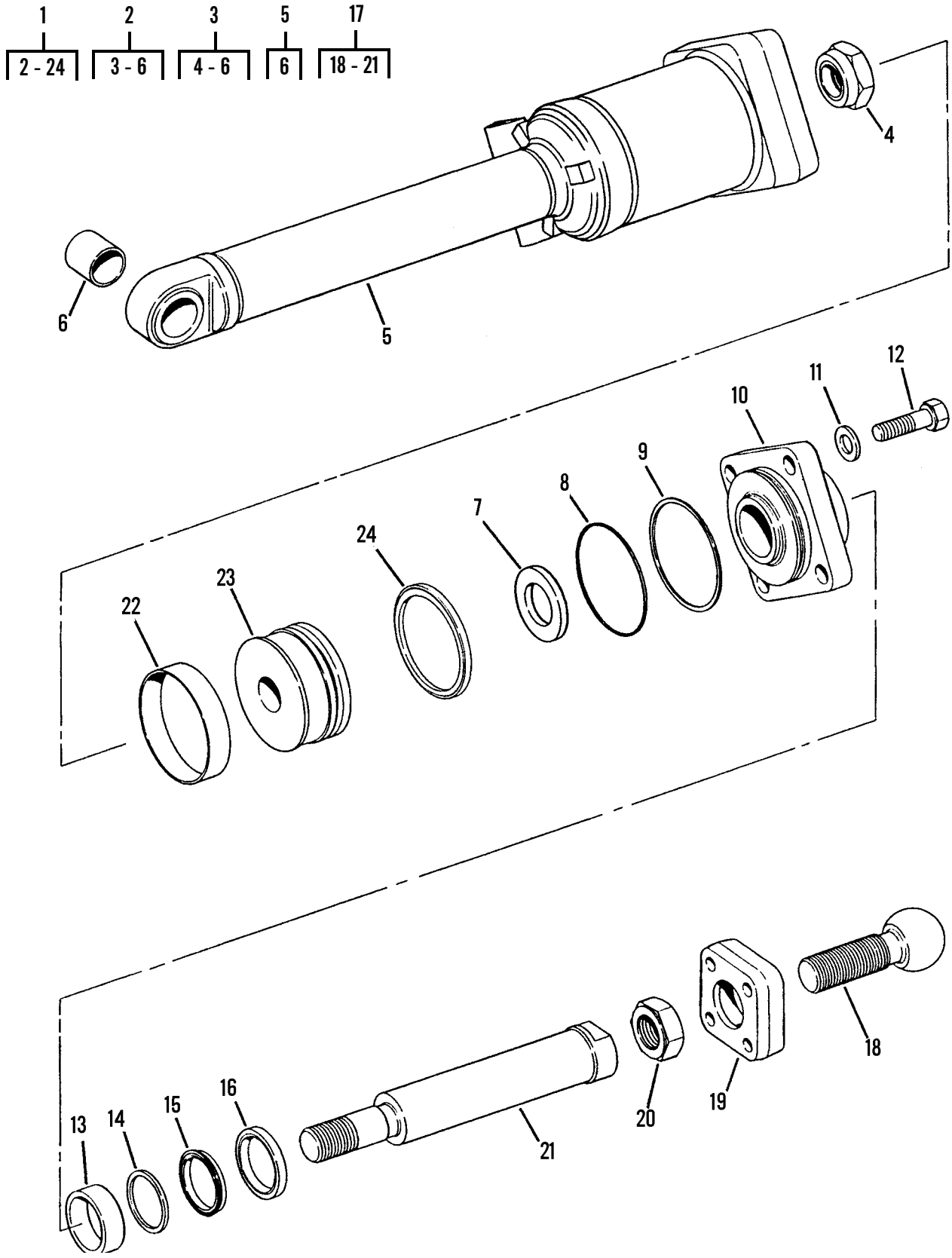

Figure 163. Tilt Cylinder

(1) ITEM NO	(2) SMR CODE	(3) NSN	(4) CAGEC	(5) PART NUMBER	(6) DESCRIPTION AND USABLE ON CODES (UOC)	(7) QTY
					GROUP 2404 TILT CYLINDERS AND TILT CRANK	
					FIG. 163 TILT CYLINDERS	
1	PFOFF	3930011637339	11083	9J8748	CYLINDER ASSEMBLY,A	1
2	PFFFF	3040012672092	11083	9J8749	.CYLINDER ASSEMBLY,A DEALER ... EXCHANGE ITEM, PN 0R3104	1
3	XAFFF		11083	9J8750	..TUBE ASSEMBLY	1
4	PFFZZ	5310004659342	11083	2J0564	...NUT,SELF-LOCKING,HE	1
5	XAFZZ		11083	4J4517	...HEAD,LINEAR ACTUATI	1
6	PFFZZ	3120009498863	11083	1J2087	...BEARING,SLEEVE PART OF KIT P/N 5R6290	1
7	PFFZZ	5310012701258	11083	6J9747	.WASHER,RECESSED	1
8	PCFZZ	5331005061475	11083	2K4472	.O-RING PART OF KIT P/N 5R6290 .	1
9	PFFZZ	5365005865062	11083	2K4473	.RING,BACKUP PART OF KIT P/N ... 5R6290	1
10	PFFZZ	4310012672083	11083	6E5527	.CYLINDER HEAD,COMPR	1
11	PFFZZ	5310011573394	11083	5P8250	.WASHER,FLAT	4
12	PFFZZ	5306011236133	11083	1D4637	.BOLT,MACHINE	4
13	PFFZZ	3120013386334	11083	9T0094	.BUSHING,SLEEVE PART OF KIT P/N 5R6290	1
14	PAFZZ	5330015166085	11083	1672208	.GASKET ASSORTMENT REPLACE .... WITH PN: 2017747 PART OF KIT P/N 5R6290	1
14	KFFZZ		11083	2017747	.SEAL REPLACE WITH P/N: 1672208 PART OF KIT P/N 5R6290	1
15	KFFZZ		11083	1672319	.SEAL REPLACE WITH P/N: 8J0248 PART OF KIT P/N 5R6290	1
15	KFFZZ		11083	8J0248	.SEAL REPLACE WITH P/N: 167-2319 PART OF KIT P/N 5R6290	1
16	KFFZZ		11083	1672469	.SEAL PART OF KIT P/N 5R6290 ...	1
17	PFFZZ	5306012708940	11083	6J9751	.ROD,THREADED END DEALER ..... EXCHANGE ITEM, PN 0R1308	1
18	PFFZZ	5307013362303	11083	6J9749	..STUD,BALL	1
19	PFFZZ	3830009489826	11083	3J2452	..SOCKET,BALL JOINT	1
20	PFFZZ	5310013365335	11083	1J4143	..NUT,PLAIN,HEXAGON	1
21	XAFZZ		11083	6J9750	..ROD	1
22	PFFZZ	4310012086566	11083	3J9703	.RING,PISTON PART OF KIT P/N 5R6290	1
23	PFFZZ	3040012672084	11083	6J9748	.PISTON,LINEAR ACTUA	1
24	PFFZZ	3930009006470	11083	5J4991	.PARTS KIT,SEAL REPL PART OF KIT P/N 5R6290	1
					END OF FIGURE	

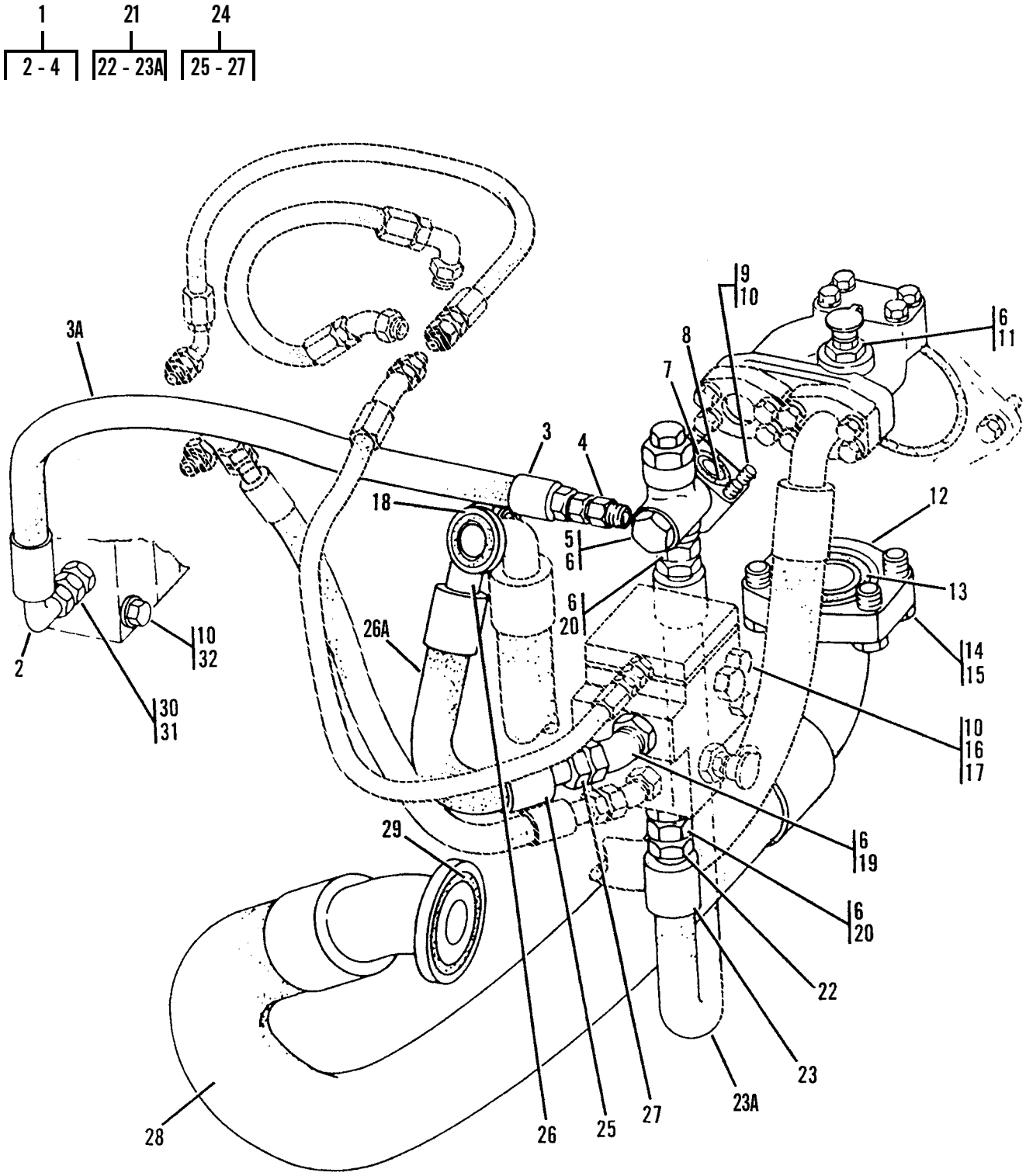

Figure 164. Pump Lines Group

(1) ITEM NO	(2) SMR CODE	(3) NSN	(4) CAGEC	(5) PART NUMBER	(6) DESCRIPTION AND USABLE ON CODES (UOC)	(7) QTY
					GROUP 2406 STRAINERS, FILTERS, LINES AND FITTINGS, ETC.	
					FIG. 164 PUMP LINES GROUP	
1	AFOFF		11083	5R7250	HOSE ASSEMBLY	1
2	PFFZZ	4730010689756	11083	8S6391	.ELBOW,TUBE TO HOSE	1
3	PFFZZ	4720010517602	11083	3S8606	.SLEEVE	2
3A	MFFZZ		11083	5P0179-49	.HOSE,NONMETALLIC CUT TO FIT, . MAKE FROM HOSE P/N 1650017	1
4	PFFZZ	4730010517605	11083	8S4055	.ADAPTER,STRAIGHT,TU	1
5	PFOZZ	5365004782920	11083	9S4183	PLUG,ASSEMBLY	1
6	PCOZZ	5331009448281	11083	3D2824	O-RING	6
7	PAOZZ	4730012537011	11083	8P5941	MANIFOLD,FUELING	1
8	PCOZZ	5331009138119	11083	4J8997	O-RING	1
9	PFOZZ	5306006982150	11083	0L2070	BOLT,MACHINE	4
10	PFOZZ	5310001174788	11083	9Y2695	WASHER,FLAT	9
11	PFOZZ	2520010625198	79470	8033X12X6Y	PLUG	2
12	PFOZZ	2520011769574	11083	1P4584	FLANGE,HALF	2
13	PCOZZ	5331005931247	11083	5H8848	O-RING	1
14	PFOZZ	5306002638978	11083	0S1587	BOLT,MACHINE	4
15	PFOZZ	5310008095997	96906	MS27183-17	WASHER,FLAT	4
16	PFOZZ	5310014297859	11083	6V8801	NUT,PLAIN,HEXAGON	2
17	PFOZZ	5306011591513	11083	0T0055	BOLT,MACHINE	2
18	PCOZZ	5331009136144	11083	4J520	O-RING	1
19	PFOZZ	4730009624176	13174	854-FS0-12X12	ELBOW,TUBE TO BOSS	1
20	PFOZZ	4730007105571	96906	MS51525A12	ADAPTER,STRAIGHT,TU	2
21	AFOFF		11083	5R6248	HOSE ASSEMBLY	1
22	PFFZZ	4730011789643	11083	6V4657	.ADAPTER,STRAIGHT,TU	2
23	PFFZZ	5340010516767	11083	3S7166	.PLUNGER,DETENT	2
23A	MFFZZ		11083	5P0180-65	.HOSE,NONMETALLIC CUT TO FIT, . MAKE FROM HOSE P/N 1650020	1
24	AFOFF		11083	5R7249	HOSE ASSY	1
25	PFFZZ	5340010516767	11083	3S7166	.PLUNGER,DETENT	2
26	PFFZZ	4730012672634	11083	6V4676	.ELBOW,FLANGE TO HOS	1
26A	MFFZZ		11083	5P0180-40	.HOSE,NONMETALLIC CUT TO FIT, . MAKE FROM HOSE P/N 1650020	1
27	PFFZZ	4730011789643	11083	6V4657	.ADAPTER,STRAIGHT,TU	1
28	PFOZZ	4720012087076	11083	3P4828	HOSE ASSEMBLY,NONME	1
29	PCOZZ	5331003256310	52788	5660799	O-RING PART OF KIT P/N 5R6287 ..	1
30	PFOZZ		11083	8M0505	ADAPTER,STRAIGHT,TU	2
31	PFOZZ	5331009486482	62983	154129	O-RING	2
32	PFOZZ	5305008798351	96906	MS35307-371	SCREW,CAP,HEXAGON H	3
				END OF FIGURE		

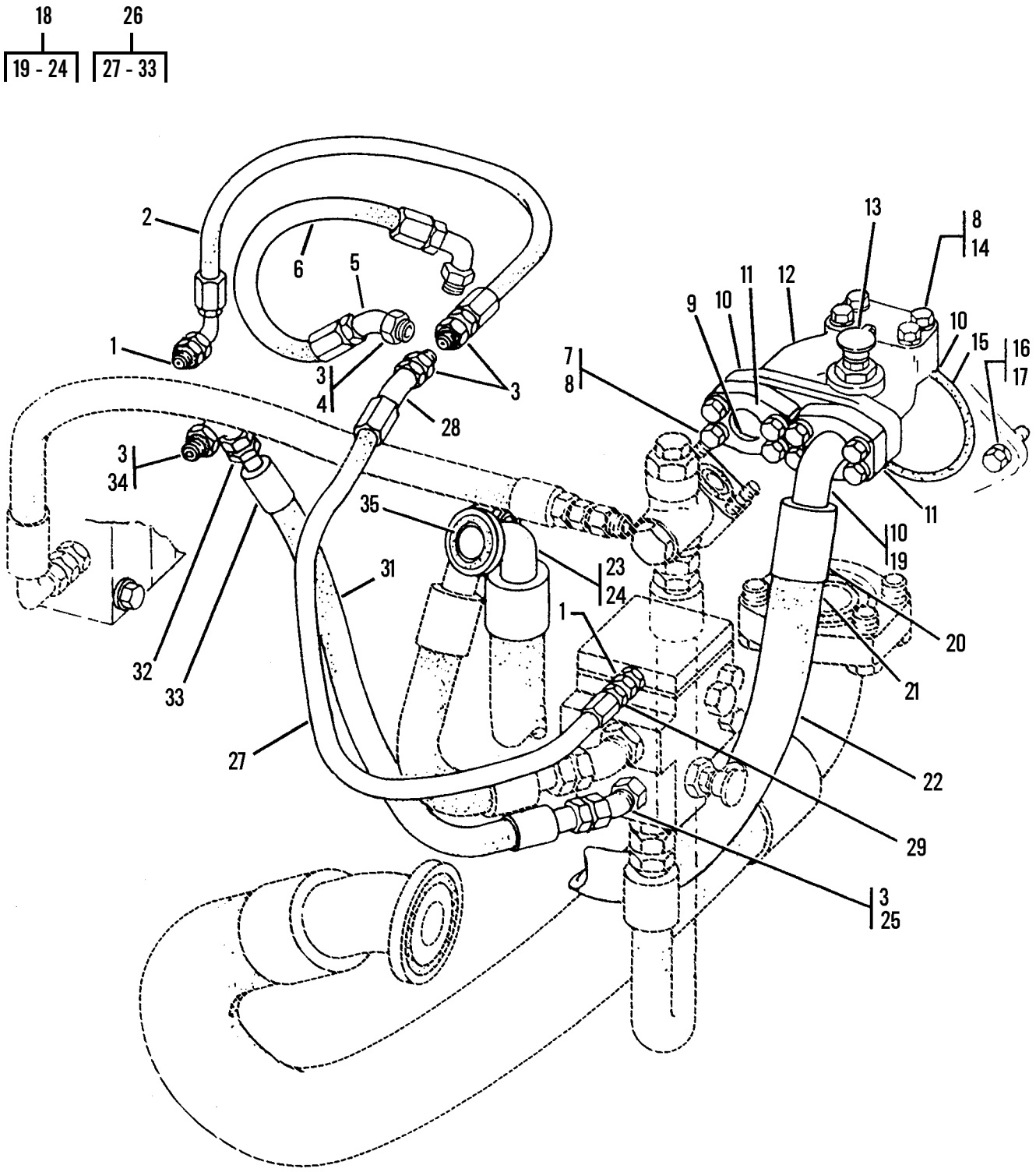

Figure 165. Pump Lines Group (Sheet 1 of 2)

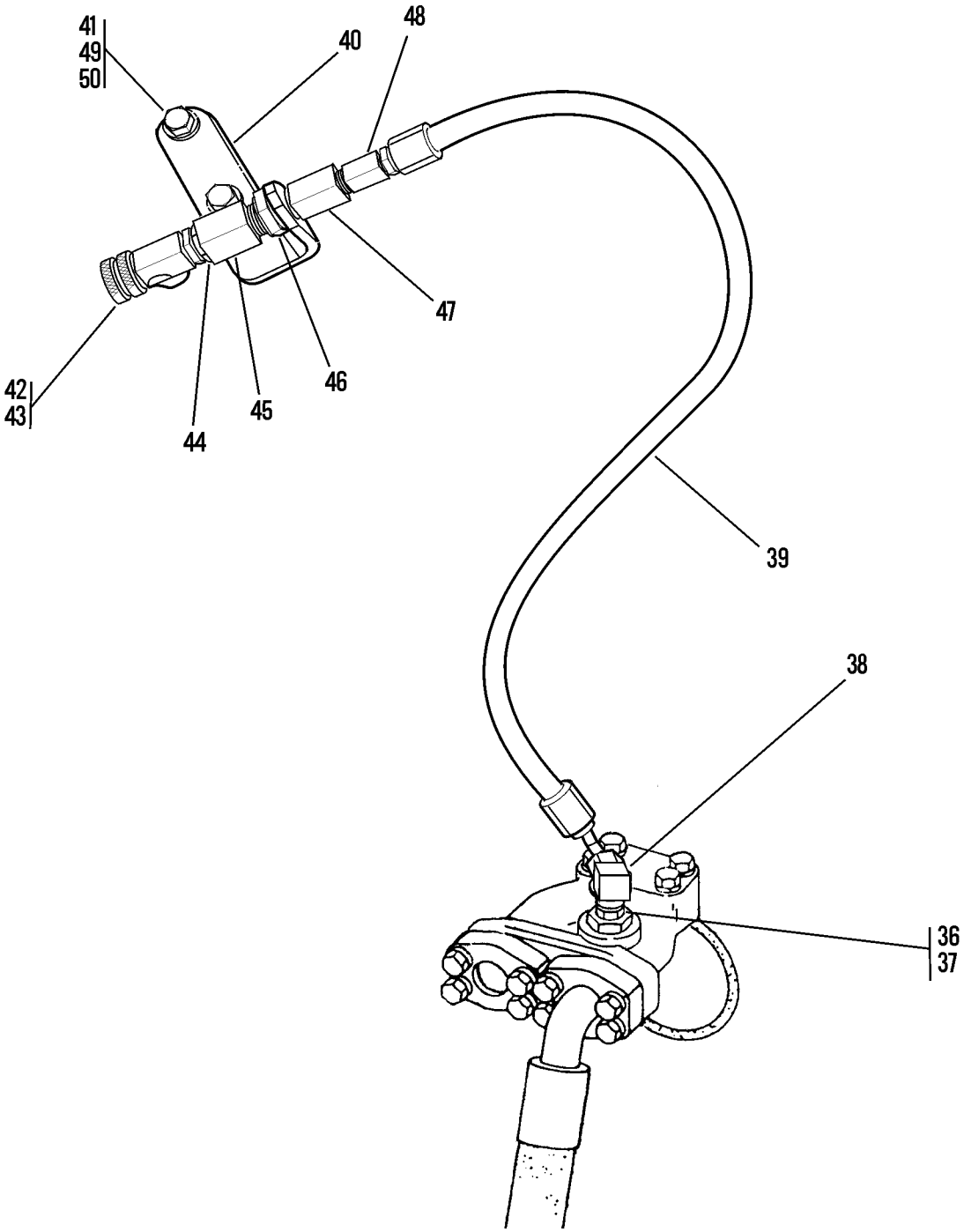

Figure 165. Pump Lines Group (Sheet 2 of 2)

(1) ITEM NO	(2) SMR CODE	(3) NSN	(4) CAGEC	(5) PART NUMBER	(6) DESCRIPTION AND USABLE ON CODES (UOC)	(7) QTY
					GROUP 2406 STRAINERS, FILTERS, LINES AND FITTINGS, ETC.	
					FIG. 165 PUMP LINES GROUP	
1	PFOZZ	5331001651980	82328	714085	O-RING	2
2	PFOZZ	4720012087077	11083	6P5353	HOSE ASSEMBLY,NONME	1
3	PCOZZ	5331008013354	25184	906-737-70	O-RING	8
4	PFOZZ	3805010532703	11083	8M0506	CONNECTOR	1
5	PFOZZ	4730010647491	11083	307963	ELBOW,TUBE	1
6	PFOZZ	4720012089237	11083	6P5159	HOSE ASSEMBLY,NONME	1
7	PFOZZ	5306011954681	11083	3B1915	BOLT	8
8	PFOZZ	5310001174788	11083	9Y2695	WASHER,FLAT	12
9	PFOZZ	2815011655737	11083	5H4019	COVER,CYL VALVE	1
10	PCOZZ	5331009136144	11083	4J520	O-RING	3
11	PFOZZ	4730010515256	11083	1P4577	FLANGE,PIPE	4
12	PFOZZ	2805012533495	11083	3P4832	MANIFOLD,INTAKE	1
13	PFOZZ	5365004114584	11083	9S4191	PLUG,MACHINE THREAD	2
14	PFOZZ	5306002851368	11083	L1143	BOLT,MACHINE	4
15	PFOZZ	5331006635709	11083	5F3106	O-RING	1
16	PFOZZ	5305007247221	80204	B1821BH063C175N	SCREW,CAP,HEXAGON H	2
17	PFOZZ	5310010954631	11083	5P8247	WASHER,FLAT	2
18	AFOFF		11083	3P4833	HOSE ASSEMBLY,NONME	1
19	PAFZZ	4730012540176	11083	3S8501	.ELBOW,FLANGE TO HOS	1
20	PFFZZ	3120002361319	11083	3S7252	.SLEEVE	2
21	PCFZZ	5331009136144	11083	4J520	.O-RING	1
22	MFFZZ		11083	3P4833-XX	.HOSE,NONMETALLIC CUT TO FIT,MAKE FROM HOSE P/N 1650021	1
23	PFFZZ	4730010958459	11083	7S0574	.ELBOW,FLANGE TO HOS	1
24	PCFZZ	5331009484063	11083	4J522	.O-RING	1
25	PFOZZ	4730010512312	11083	0307942	ELBOW,TUBE TO BOSS	1
26	AFOFF		11083	3P6146	HOSE ASSEMBLY,NONME	1
27	MFFZZ		11083	3P6146-XX	.HOSE,NONMETALLIC CUT TO FIT, MAKE FROM HOSE P/N 9X2364	1
28	PFFZZ	4730012536919	98441	30000-6-6S	.ELBOW,TUBE TO HOSE	1
29	PAFZZ	4730012676972	13174	BT05-06FT	.COUPLING,HOSE	1
30	AFOFF		11083	5R6259	HOSE ASSEMBLY	1
31	MFFZZ		11083	5P0178-42	.HOSE,NONMETALLIC CUT TO FIT, MAKE FROM HOSE P/N 1650016	1
32	PFFZZ	4730010947469	11083	8S6417	.ADAPTER,STRAIGHT,TU	2
33	PFFZZ	4730010950075	11083	4S5414	.SLEEVE,HOSE CONNECT	2
34	PFOZZ	4730001433941	96906	MS51527-A6	ELBOW,TUBE TO BOSS	1
35	PCOZZ	5331009484063	11083	4J522	O-RING	1
36	PFOZZ	4730011722970	11083	3Y2888	ADAPTER,STRAIGHT,PI WITH SERIAL NUMBER ENDING IN "R"	1
37	PFOZZ	5331013336444	11083	3J1907	O-RING WITH SERIAL NUMBER ENDING IN R	1
38	PFOZZ	4730006473207	11083	2N1287	ELBOW,PIPE TO TUBE WITH SERIAL NUMBER ENDING IN R	1
39	PFOZZ	4720011967180	11083	9G9501	HOSE ASSEMBLY,NONME WITH SERIAL NUMBER ENDING IN R	1

(1) ITEM NO	(2) SMR CODE	(3) NSN	(4) CAGEC	(5) PART NUMBER	(6) DESCRIPTION AND USABLE ON CODES (UOC)	(7) QTY
40	PFOZZ	5340012361850	11083	5R7181	BRACKET,ANGLE WITH SERIAL ..... NUMBER ENDING IN R	1
41	PFOZZ	5305010156841	11083	0S1591	SCREW WITH SERIAL NUMBER ..... ENDING IN R	2
42	PFOZZ	4820014735061	11083	1246889	VALVE,PURGE WITH SERIAL NUMBER ENDING IN R	1
43	PCOZZ	5331010491292	81346	ASTM D2000 M6BG910	O-RING WITH SERIAL NUMBER ..... ENDING IN R	1
44	PFOZZ	4730011522666	11083	5R5304	ADAPTER,STRAIGHT,PI WITH SERIAL NUMBER ENDING IN R	1
45	PFOZZ	4730011967172	11083	6V2376	ADAPTER,STRAIGHT,PI WITH SERIAL NUMBER ENDING IN R	1
46	PFOZZ	4730011439017	96906	MS51860-56Z	LOCKNUT,TUBE FITTIN WITH SERIAL NUMBER ENDING IN R	1
47	PFOZZ	4730007621239	11083	1P1441	NUT,TUBE COUPLING WITH SERIAL . NUMBER ENDING IN R	1
48	PFOZZ	4730006473343	11083	7J5614	REDUCER,TUBE WITH SERIAL ..... NUMBER ENDING IN R	1
49	PFOZZ	5365001701725	11083	6B2882	SPACER,SLEEVE WITH SERIAL ..... NUMBER ENDING IN R	2
50	PFOZZ	5310001174788	11083	9Y2695	WASHER,FLAT WITH SERIAL NUMBER ENDING IN R	2
				END OF FIGURE		

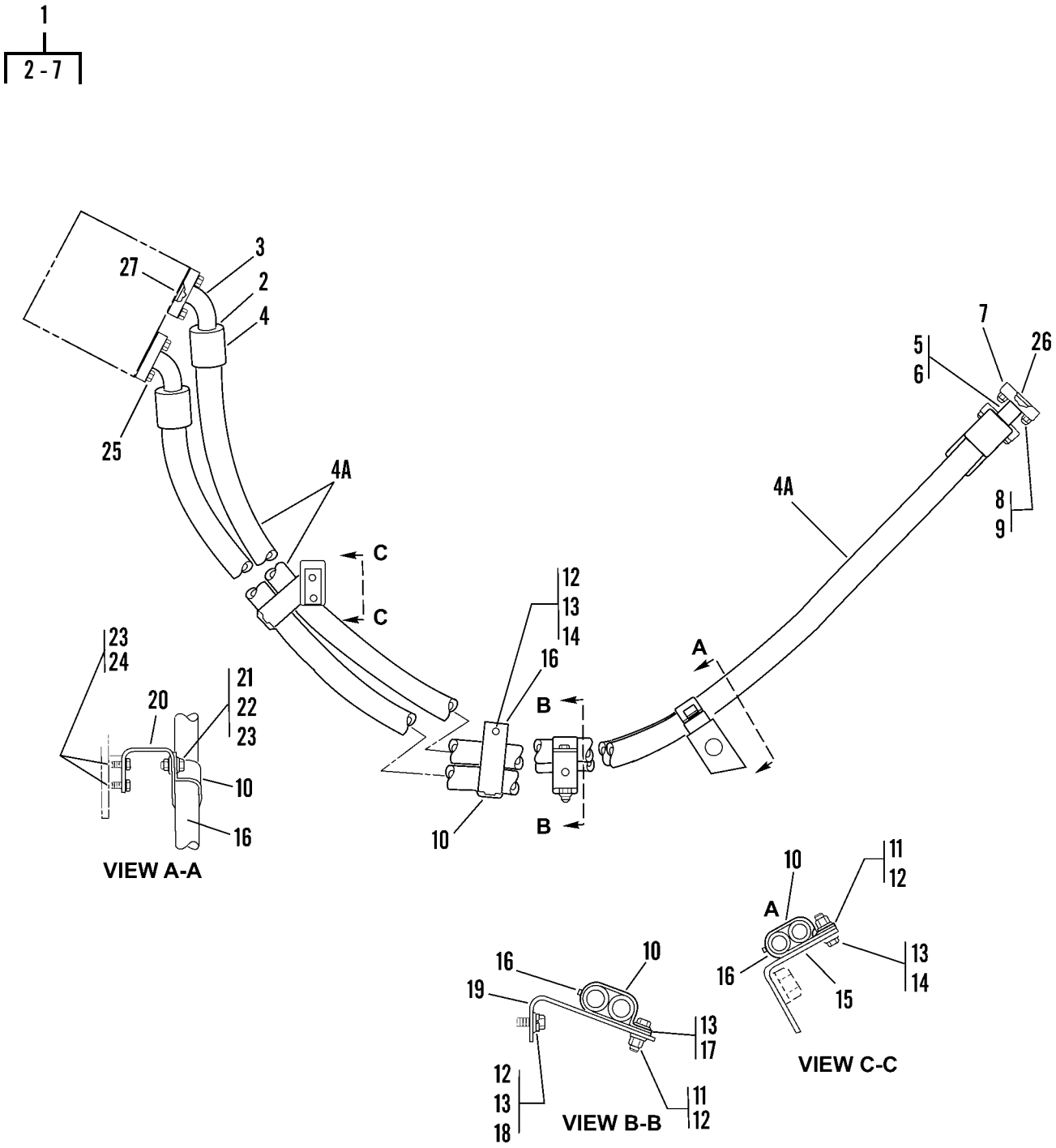

Figure 166. Bulldozer Lines Group

(1) ITEM NO	(2) SMR CODE	(3) NSN	(4) CAGEC	(5) PART NUMBER	(6) DESCRIPTION AND USABLE ON CODES (UOC)	(7) QTY
					GROUP 2406 STRAINERS, FILTERS, LINES AND FITTINGS, ETC.	
					FIG. 166 BULLDOZER LINES GROUP	
1	AFOFF		11083	3P4825	HOSE ASSEMBLY,NONME	2
2	PCFZZ	5331009484063	11083	4J522	.O-RING	1
3	PFFZZ	4730010958459	11083	7S0574	.ELBOW,FLANGE TO HOS	1
4	PFFZZ	3120002361319	11083	3S7252	.SLEEVE	4
4A	MFFZZ		11083	3P4825-XXX	.HOSE,NONMETALLIC CUT TO FIT, . MAKE FROM HOSE P/N 1650021	1
5	PFFZZ	4730010517600	11083	3S8496	.ADAPTER,STRAIGHT,FL	1
6	PCFZZ	5331009136144	11083	4J520	.O-RING	2
7	PFOZZ	4730010515256	11083	1P4577	.FLANGE,PIPE	2
8	PFOZZ	5310001174788	11083	9Y2695	WASHER,FLAT	8
9	PFOZZ	5310014297859	11083	6V8801	NUT,PLAIN,HEXAGON	8
10	PFOZZ	5340012584865	11083	2P6470	STRAP,RETAINING	4
11	PFOZZ	5310007680318	96906	MS51967-14	NUT,PLAIN,HEXAGON	2
12	PFOZZ	5310005845272	80205	MS35338-48	WASHER,LOCK	4
13	PFOZZ	5310009307013	11083	4B4280	WASHER,FLAT	5
14	PFOZZ	5306004238117	11083	0S1595	BOLT,MACHINE	2
15	PFOZZ	5340012580145	11083	2P6472	BRACKET,ANGLE	1
16	PFOZZ	5340012592588	11083	2P6471	STRAP,RETAINING	4
17	PFOZZ	5306002638978	11083	0S1587	BOLT,MACHINE	1
18	PFOZZ	5306004240086	11083	7B3235	BOLT,MACHINE	1
19	PFOZZ	5340012683459	11083	6P6084	BRACKET,ANGLE	1
20	PAOZZ	5340012573853	11083	3P4826	STRAP,RETAINING	1
21	PFOZZ	5310000806004	96906	MS27183-14	WASHER,FLAT	1
22	PFOZZ	5305000680511	80204	B1821BH038C125N	SCREW,CAP,HEXAGON H	1
23	PFOZZ	5310006379541	80205	MS35338-46	WASHER,LOCK	3
24	PFOZZ	5306002637301	11083	0L1351	BOLT,MACHINE	2
25	PFOZZ	5306011954681	11083	3B1915	BOLT	8
26	PCOZZ	5331009484063	11083	4J522	O-RING	2
27	PCOZZ	5331009136144	11083	4J520	O-RING	2
				END OF FIGURE		

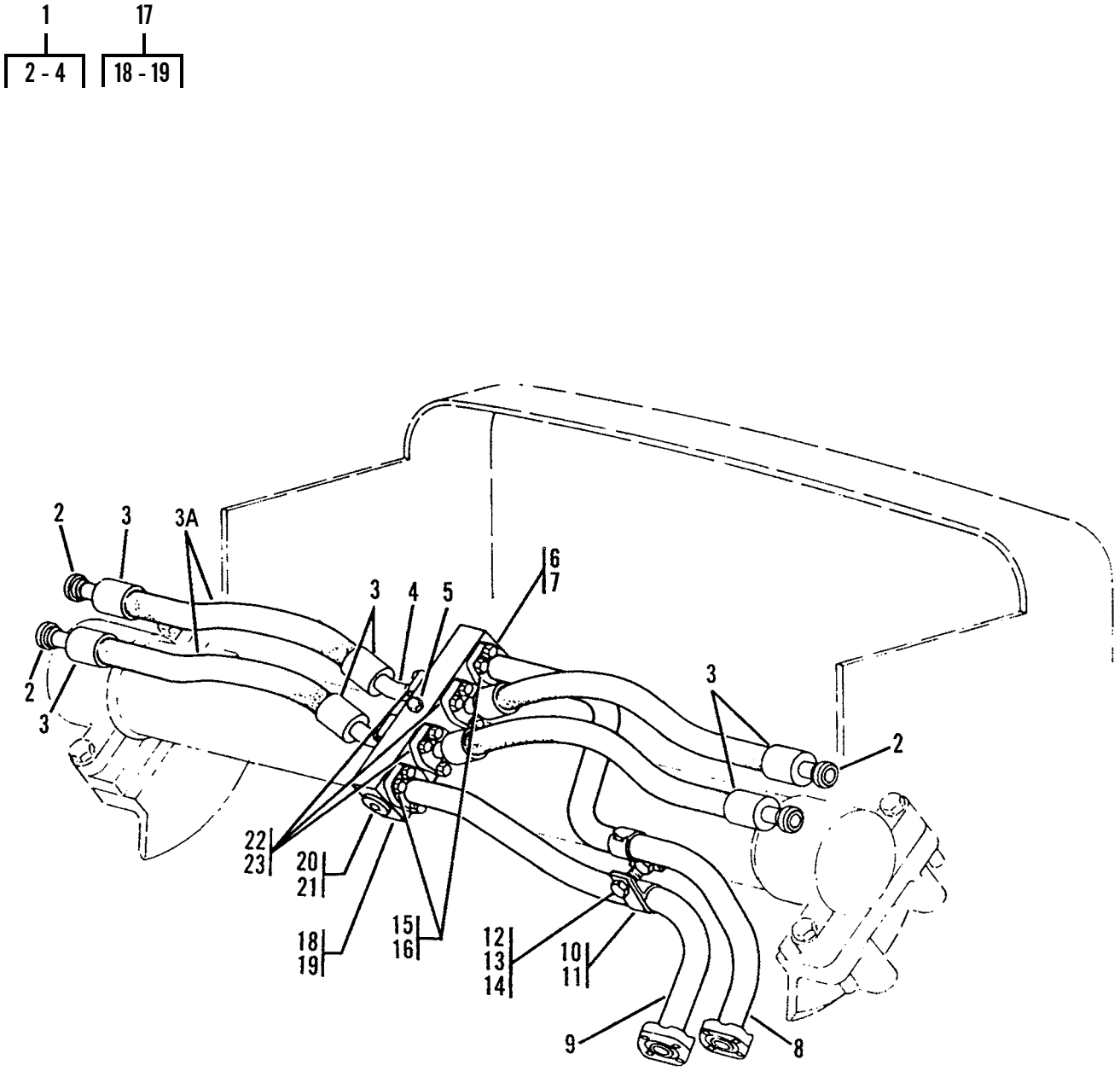

Figure 167. Blade Lift and Tilt Hose and Related Parts

(1) ITEM NO	(2) SMR CODE	(3) NSN	(4) CAGEC	(5) PART NUMBER	(6) DESCRIPTION AND USABLE ON CODES (UOC)	(7) QTY
					GROUP 2406 STRAINERS, FILTERS, LINES AND FITTINGS, ETC.	
					FIG. 167 BLADE LIFT AND TILT HOSE AND RELATED PARTS	
1	PFOFF	4720012942586	11083	5R6247	HOSE ASSEMBLY,NONME	4
2	PFFZZ	4730011850026	11083	6V4651	.ADAPTER,STRAIGHT,FL	1
3	PFFZZ	5340010516767	11083	3S7166	.PLUNGER,DETENT	2
3A	MFFZZ		11083	5R6247-XX	.HOSE,NONMETALLIC,CUT TO FIT, .. MAKE FROM HOSE P/N 1650020	1
4	PFFZZ	4730011624358	11083	6V4658	.ELBOW,FLANGE TO HOS	1
5	PFOZZ	5306004262922	11083	0S1573	BOLT,MACHINE	1
6	PFOZZ	5305000680511	80204	B1821BH038C125N	SCREW,CAP,HEXAGON H	24
7	PFOZZ	5310001174788	11083	9Y2695	WASHER,FLAT	24
8	PFOZZ	4710012672121	11083	9P4184	TUBE AND FITTINGS,M	1
9	PFOZZ	4710012672122	11083	9P4185	TUBE AND FITTINGS,M	1
10	PFOZZ	5340012707426	11083	8S0024	STRAP,RETAINING	2
11	PFOZZ	5340011697516	11083	8S0023	STRAP,RETAINING	2
12	PFOZZ	5306011279361	11083	0S1585	BOLT,MACHINE	2
13	PFOZZ	5310005845272	80205	MS35338-48	WASHER,LOCK	3
14	PFOZZ	5310008095997	96906	MS27183-17	WASHER,FLAT	2
15	PFOZZ	4730010515256	11083	1P4577	FLANGE,PIPE	4
16	PCOZZ	5331009136144	11083	4J520	O-RING	2
17	PFFZZ	4730012676078	11083	9S7840	MANIFOLD,HYDRAULIC	1
18	PFFZZ	5315003638794	11083	1F1006	.PIN,STRAIGHT,HEADLE	2
19	XAFZZ		11083	9S6797	.MANIFOLD	1
20	PFOZZ	5365004520344	11083	9S8009	PLUG,MACHINE THREAD	2
21	PFOZZ	5331010886106	81349	M83248/2-914	O-RING	2
22	PFOZZ	4730009624579	11083	2K0190	FLANGE,PIPE	16
23	PFOZZ	5331010176535	81349	M83248/2-214	O-RING	8
				END OF FIGURE		

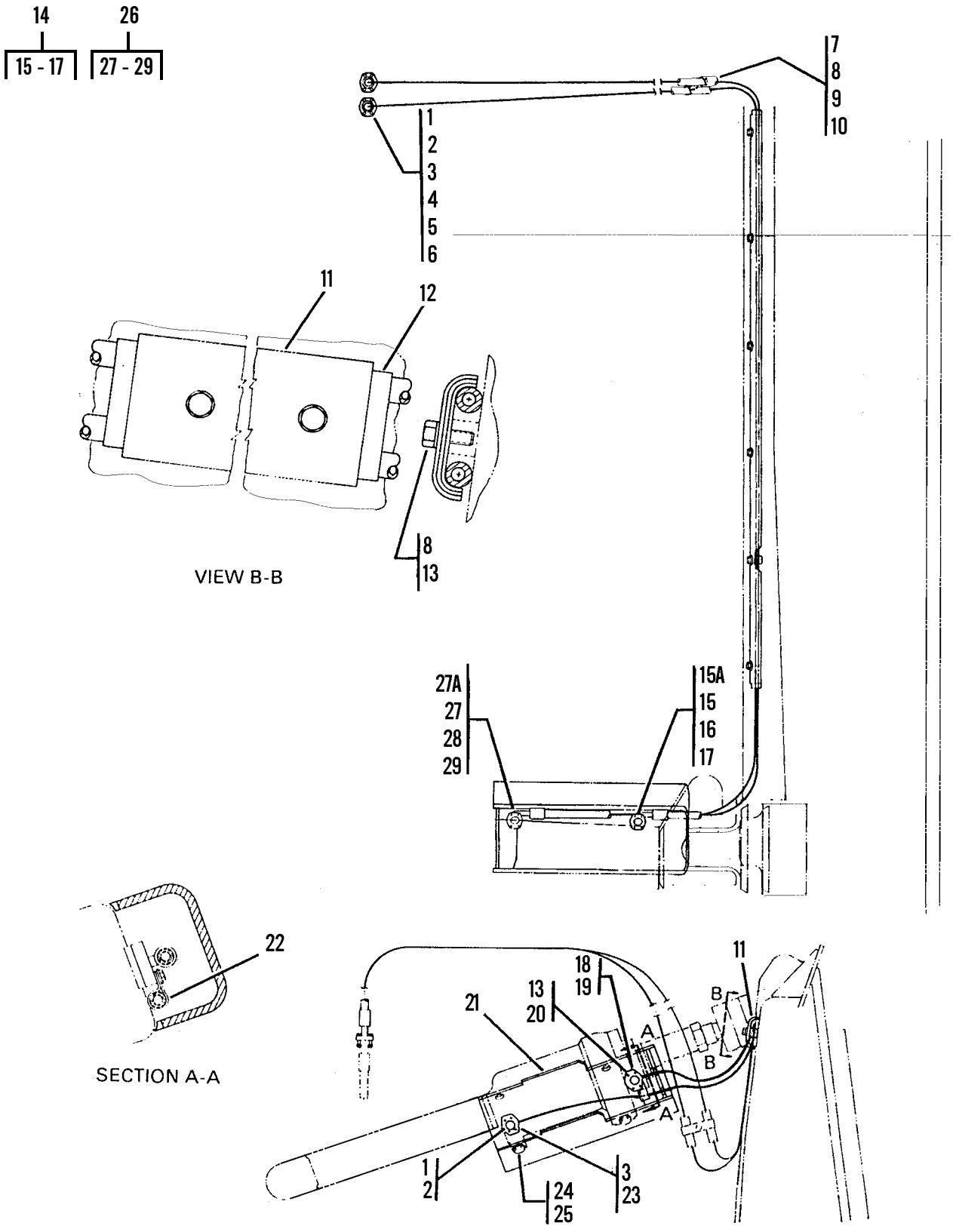

Figure 168. Hydraulic Tilt Cylinder Lines Group

(1) ITEM NO	(2) SMR CODE	(3) NSN	(4) CAGEC	(5) PART NUMBER	(6) DESCRIPTION AND USABLE ON CODES (UOC)	(7) QTY
					GROUP 2406 STRAINERS, FILTERS, LINES AND FITTINGS, ETC.	
					FIG. 168 HYDRAULIC TILT CYLINDER LINES GROUP	
1	PFOZZ	5342000079934	11083	1P4574	FLANGE,HALF	10
2	PCOZZ	5331009136145	11083	4J5140	O-RING PART OF KIT P/N 5R6290 ..	5
3	PFOZZ	5310000814219	96906	MS27183-12	WASHER,FLAT	20
4	PFOZZ	5310008807744	96906	MS51967-5	NUT,PLAIN,HEXAGON	8
5	PFOZZ	5340012701800	11083	3H6274	PLATE,MENDING	2
6	PFOZZ	5306002264832	80204	B1821BH031C175N	BOLT,MACHINE	8
7	PFOZZ	5340012849885	11083	1H5948	STRAP,RETAINING	2
8	PFOZZ	5306002604508	11083	0S1594	BOLT,MACHINE	6
9	PFOZZ	5310000806004	96906	MS27183-14	WASHER,FLAT	2
10	PFOZZ	5310014297859	11083	6V8801	NUT,PLAIN,HEXAGON	1
11	PFOZZ	2590012674332	11083	4T1471	GUARD,MECHANICAL DR	1
12	PCOZZ	5330012701276	11083	3Y5405	GASKET	6
13	PFOZZ	5310001174788	11083	9Y2695	WASHER,FLAT	10
14	AFOFF		11083	5R6258	HOSE ASSEMBLY,NONME	1
15	PFFZZ	4730012532808	11083	3S8617	.ADAPTER,STRAIGHT,FL	1
15A	MFFZZ		11083	5P0179-393	.HOSE,NONMETALLIC CUT TO FIT, . MAKE FROM HOSE P/N 1650017	1
16	PFFZZ	4720010517602	11083	3S8606	.SLEEVE	2
17	PFFZZ	4730012619432	11083	5S9593	.ELBOW,FLANGE TO HOS	1
18	PFOZZ	4730010513134	11083	1P4576	FLANGE,PIPE	2
19	PFOZZ	5331010176535	81349	M83248/2-214	O-RING PART OF KIT P/N 5R6290 ..	1
20	PFOZZ	5305000680511	80204	B1821BH038C125N	SCREW,CAP,HEXAGON H	4
21	PFOZZ	2590012674333	11083	9J5957	GUARD,MECHANICAL DR	1
22	PFOZZ	5340012707393	11083	4D6672	CLAMP,LOOP	1
23	PFOZZ	5306002264829	80204	B1821BH031C125N	BOLT,MACHINE	4
24	PFOZZ	5306008146588	11083	0S1626	BOLT,MACHINE	4
25	PFOZZ	5310011022477	11083	5P8248	WASHER,FLAT	4
26	AFOFF		11083	5R6257	HOSE ASSEMBLY,NONME	1
27	PFFZZ	4730012676987	11083	3S8975	.ELBOW,FLANGE TO HOS	1
27A	MFFZZ		11083	5P0179-426	.HOSE,NONMETALLIC CUT TO FIT, . MAKE FROM HOSE P/N 1650017	1
28	PFFZZ	4720010517602	11083	3S8606	.SLEEVE	2
29	PFFZZ	4730012532808	11083	3S8617	.ADAPTER,STRAIGHT,FL	1
				END OF FIGURE		

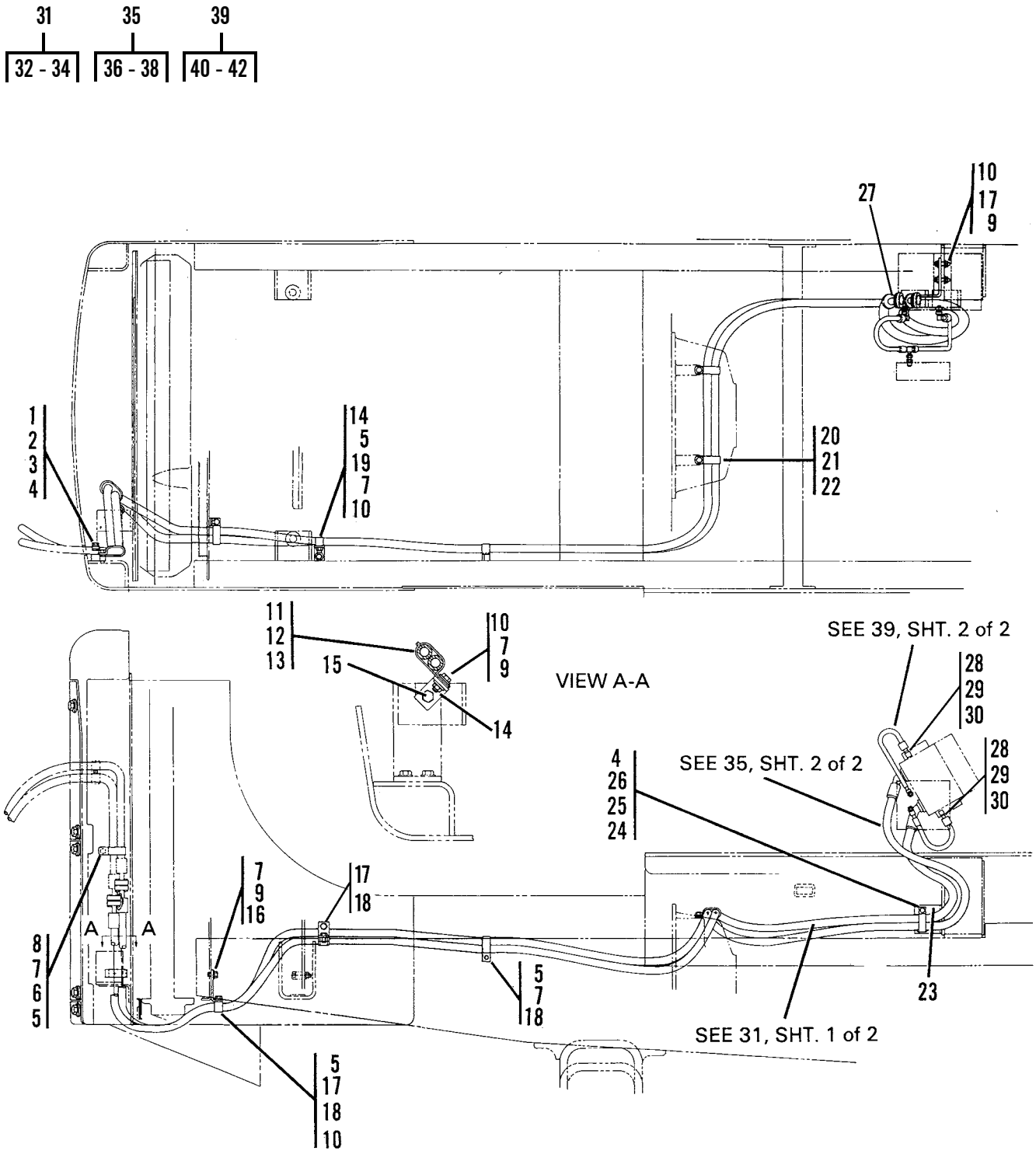

Figure 169. Tilt Cylinder Lines Group (Sheet 1 of 2)

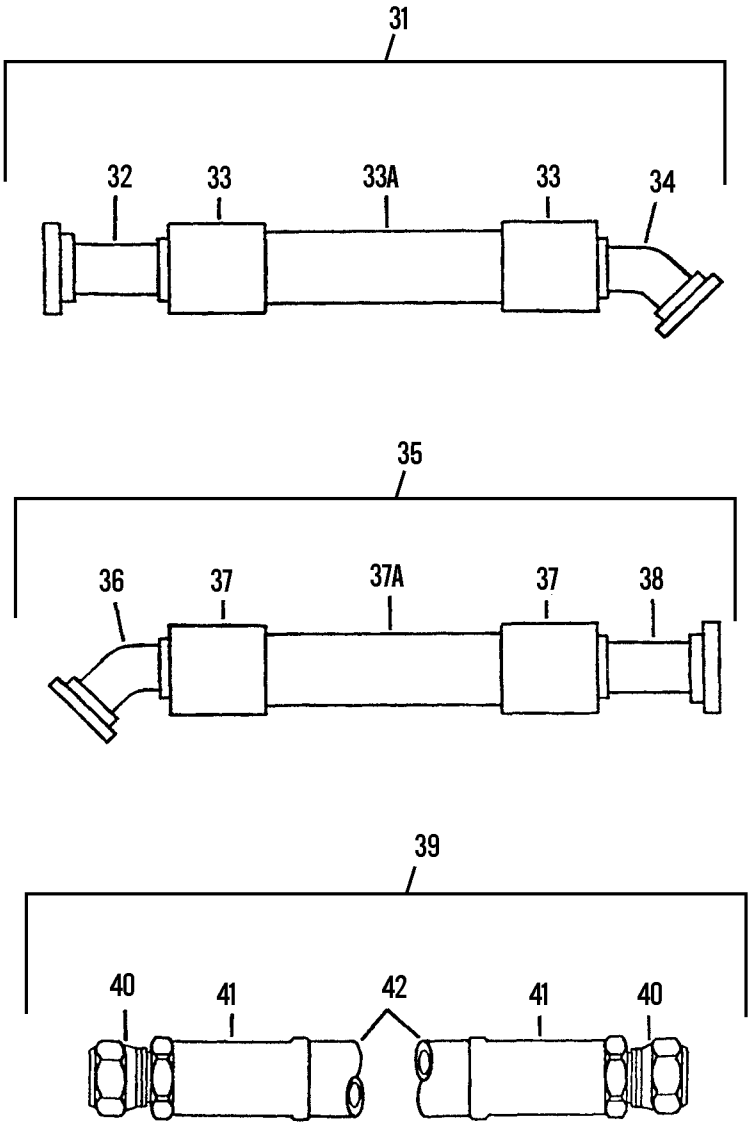

Figure 169. Tilt Cylinder Lines Group (Sheet 2 of 2)

(1) ITEM NO	(2) SMR CODE	(3) NSN	(4) CAGEC	(5) PART NUMBER	(6) DESCRIPTION AND USABLE ON CODES (UOC)	(7) QTY
					GROUP 2406 STRAINERS, FILTERS, LINES AND FITTINGS, ETC.	
					FIG. 169 TILT CYLINDER LINES GROUP	
1	PFOZZ	5365012648511	11083	2J9900	SPACER,SLEEVE	1
2	PFOZZ	5340012580942	11083	1J7468	STRAP,RETAINING	1
3	PFOZZ	5306002638978	11083	0S1587	BOLT,MACHINE	1
4	PFOZZ	5310008095997	96906	MS27183-17	WASHER,FLAT	3
5	PFOZZ	5342010647512	11083	6D1641	CLIP	3
6	PFOZZ	5306011954681	11083	3B1915	BOLT	1
7	PFOZZ	5310001174788	11083	9Y2695	WASHER,FLAT	10
8	PFOZZ	5365011632015	11083	9M4136	SPACER,SLEEVE	1
9	PFOZZ	5305000680511	80204	B1821BH038C125N	SCREW,CAP,HEXAGON H	5
10	PFOZZ	5310014297859	11083	6V8801	NUT,PLAIN,HEXAGON	6
11	PFOZZ	5340012724966	11083	3G8054	CLIP,SPRING TENSION	1
12	PFOZZ	5325012839263	11083	3G8047	GROMMET,NONMETALLIC	1
13	PFOZZ	5340012790358	11083	3G8057	STRAP,RETAINING	1
14	PFOZZ	5340012580153	11083	5S8995	BRACKET,ANGLE	2
15	PFOZZ	5306004238194	11083	1A2029	BOLT,MACHINE	1
16	PFOZZ	5340011630631	11083	2P8977	BRACKET,ANGLE	1
17	PFOZZ	5310008098541	96906	MS27183-27	WASHER,FLAT	6
18	PFOZZ	5306004238194	11083	1A2029	BOLT,MACHINE	2
19	PFOZZ	5306002637301	11083	0L1351	BOLT,MACHINE	2
20	PFOZZ	5306004239325	11083	4B4043	BOLT,MACHINE	2
21	PFOZZ	5340012579215	11083	4D6351	CLAMP,LOOP	2
22	PFOZZ	5310010954631	11083	5P8247	WASHER,FLAT	2
23	PFOZZ	5340012580144	11083	3P4824	BRACKET,ANGLE	1
24	PFOZZ	5306004238117	11083	0S1595	BOLT,MACHINE	1
25	PAOZZ	5340012584867	11083	6P5327	STRAP,RETAINING	1
26	PFOZF	5310007680318	96906	MS51967-14	NUT,PLAIN,HEXAGON	1
27	PCOZZ	5331009136144	11083	4J520	O-RING	2
28	PCOZZ	5331008013354	25184	906-737-70	O-RING	4
29	PFOZZ	4730004919576	96906	MS51525-A6	ADAPTER,STRAIGHT,TU	4
30	PFOZZ	4730010518745	11083	6K9194	ELBOW,TUBE	4
31	AFOFF		11083	5R6250	HOSE ASSEMBLY	1
32	PFFZZ	4730012532808	11083	3S8617	.ADAPTER,STRAIGHT,FL	1
33	PFFZZ	4720010517602	11083	3S8606	.SLEEVE	2
33A	MFFZZ		11083	5P0179-435	.HOSE,NONMETALLIC CUT TO FIT, . MAKE FROM HOSE P/N 1650017	1
34	PFFZZ	4730012534589	11083	5S9614	.ELBOW,FLANGE TO HOS	1
35	AFOFF		11083	5R6249	HOSE ASSEMBLY,NONME	1
36	PFFZZ	4730012534589	11083	5S9614	.ELBOW,FLANGE TO HOS	1
37	PFFZZ	4720010517602	11083	3S8606	.SLEEVE	2
37A	MFFZZ		11083	5P0179-455	.HOSE,NONMETALLIC CUT TO FIT, . MAKE FROM HOSE P/N 1650017	1
38	PFFZZ	4730012532808	11083	3S8617	.ADAPTER,STRAIGHT,FL	1
39	AFOFF		11083	9D5988	HOSE ASSEMBLY,NONME	2
40	PFFZZ	4730010947469	11083	8S6417	.ADAPTER,STRAIGHT,TU	4

(1) ITEM NO	(2) SMR CODE	(3) NSN	(4) CAGEC	(5) PART NUMBER	(6) DESCRIPTION AND USABLE ON CODES (UOC)	(7) QTY
41	PFFZZ	4730010950075	11083	4S5414	.SLEEVE,HOSE CONNECT	4
42	MFFZZ		11083	5P0178-29	.HOSE,NONMETALLIC CUT TO FIT, . MAKE FROM HOSE P/N 1650016	1

END OF FIGURE

10 | 11 - 13A
14 | 15 - 19
20 | 21 - 22
23 | 24 - 26
27 | 28 - 30

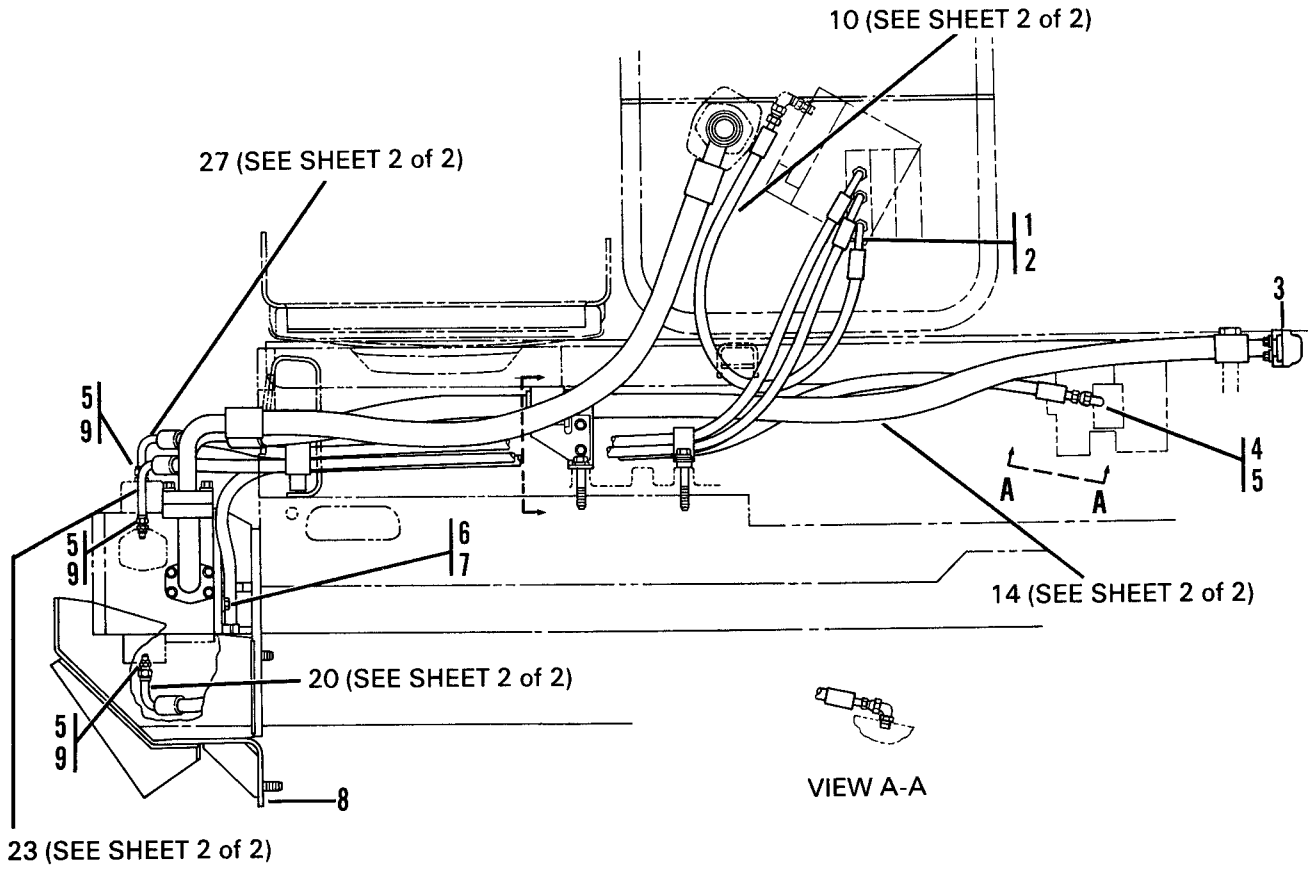

Figure 170. Ripper Lines Group - Side (Sheet 1 of 2)

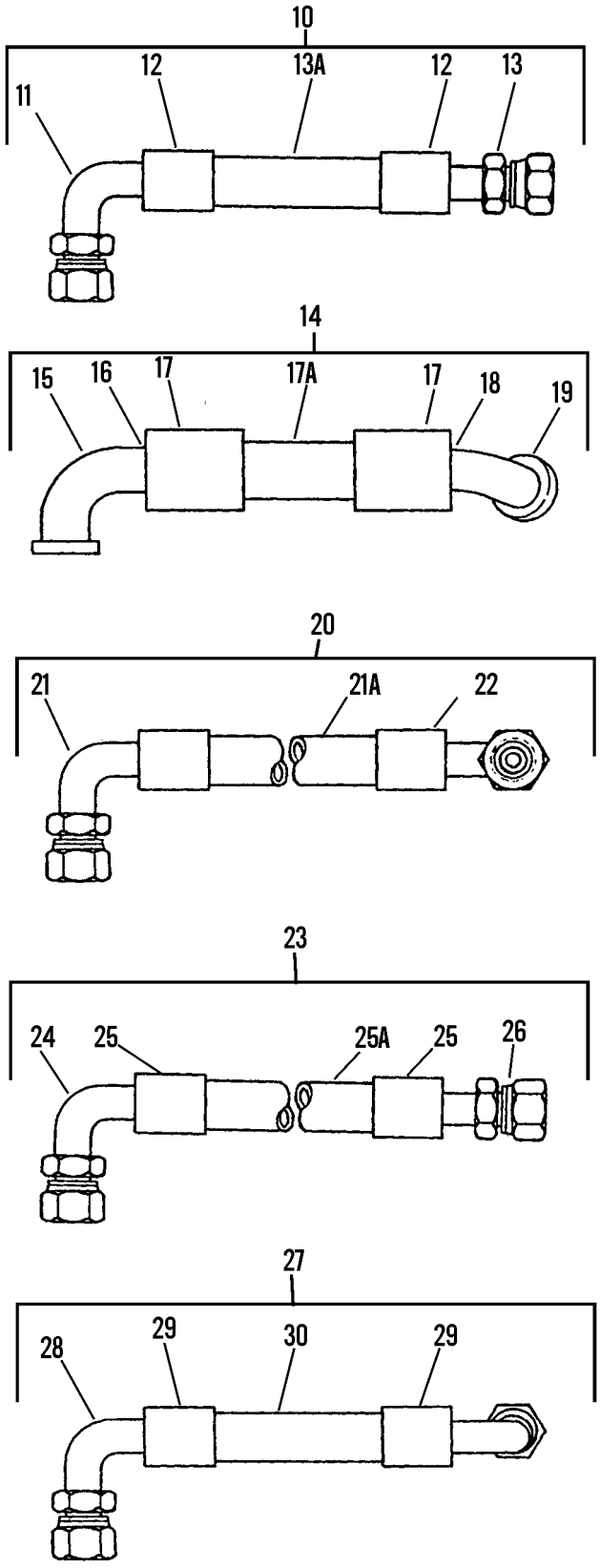

Figure 170. Ripper Lines Group - Side (Sheet 2 of 2)

(1) ITEM NO	(2) SMR CODE	(3) NSN	(4) CAGEC	(5) PART NUMBER	(6) DESCRIPTION AND USABLE ON CODES (UOC)	(7) QTY
					GROUP 2406 STRAINERS, FILTERS, LINES AND FITTINGS, ETC.	
					FIG. 170 RIPPER LINES GROUP-SIDE	
1	PFOZZ	4730010629928	22031	6400-6-4	ADAPTER,STRAIGHT,TU ..... UOC:GRC,RIP	1
2	PCOZZ	5331010491292	81346	ASTM D2000 M6BG910	O-RING ..... UOC:GRC,RIP	1
3	PCOZZ	5331009136144	11083	4J520	O-RING ..... UOC:GRC,RIP	1
4	PFOZZ	4730001433941	96906	MS51527-A6	ELBOW,TUBE TO BOSS ..... UOC:GRC,RIP	1
5	PCOZZ	5331008013354	25184	906-737-70	O-RING ..... UOC:GRC,RIP	4
6	PFOZZ	5306002638949	11083	4F8965	BOLT,MACHINE ..... UOC:GRC,RIP	4
7	PFOZZ	5310003750518	61510	CKE42A	WASHER,FLAT ..... UOC:GRC,RIP	4
8	PFOZZ	2540012534676	11083	9P4775	GUARD,MECHANICAL DR ..... UOC:GRC,RIP	1
9	PFOZZ	4730004919576	96906	MS51525-A6	ADAPTER,STRAIGHT,TU ..... UOC:GRC,RIP	3
10	AFOFF		11083	5R6252	HOSE ASSY ..... UOC:GRC,RIP	1
11	PFFZZ	4730010950833	11083	8S6393	.ELBOW,TUBE TO HOSE ..... UOC:GRC,RIP	1
12	PFFZZ	4730010950075	11083	4S5414	.SLEEVE,HOSE CONNECT ..... UOC:GRC,RIP	2
13	PFFZZ	4730010947469	11083	8S6417	ADAPTER,STRAIGHT,TU ..... UOC:GRC,RIP	1
13A	MFFZZ		11083	5P0178-50	.HOSE,NONMETALLIC CUT TO FIT, . MAKE FROM HOSE P/N 1650016 UOC:GRC,RIP	1
14	AFOFF		11083	3P6022	HOSE ASSY ..... UOC:GRC,RIP	1
15	PFFZZ	4730010625197	11083	2P4813	.STEM ASSEMBLY ..... UOC:GRC,RIP	1
16	PCFZZ	5331009136144	11083	4J520	.O-RING ..... UOC:GRC,RIP	1
17	PFFZZ	3120002361319	11083	3S7252	.SLEEVE ..... UOC:GRC,RIP	2
17A	MFFZZ		11083	5P0181-171	.HOSE,NONMETALLIC CUT TO FIT, . MAKE FROM HOSE P/N 1650021 UOC:GRC,RIP	1
18	PCFZZ	5331009484063	11083	4J522	.O-RING ..... UOC:GRC,RIP	1
19	PFFZZ	4730010625204	11083	3S8497	.STEM ASSEMBLY ..... UOC:GRC,RIP	1
20	AFOFF		11083	5R6254	HOSE ASSY ..... UOC:GRC,RIP	1
21	PFFZZ	4730010950833	11083	8S6393	.ELBOW,TUBE TO HOSE ..... UOC:GRC,RIP	2

(1) ITEM NO	(2) SMR CODE	(3) NSN	(4) CAGEC	(5) PART NUMBER	(6) DESCRIPTION AND USABLE ON CODES (UOC)	(7) QTY
21A	MFFZZ		11083	5P0178-188	.HOSE,NONMETALLIC CUT TO FIT, . MAKE FROM HOSE P/N 1650016 UOC:GRC,RIP	1
22	PFFZZ	4730010950075	11083	4S5414	.SLEEVE,HOSE CONNECT ..... UOC:GRC,RIP	2
23	AFOFF		11083	5R6251	HOSE ASSY ..... UOC:GRC,RIP	1
24	PFFZZ	4730010950835	11083	8S6392	.ELBOW,TUBE TO HOSE ..... UOC:GRC,RIP	1
25	PFFZZ	4730010950075	11083	4S5414	.SLEEVE,HOSE CONNECT ..... UOC:GRC,RIP	2
25A	MFFZZ		11083	5P0178-160	.HOSE,NONMETALLIC CUT TO FIT, . MAKE FROM HOSE P/N 1650016 UOC:GRC,RIP	1
26	PFFZZ	4730010947469	11083	8S6417	.ADAPTER,STRAIGHT,TU ..... UOC:GRC,RIP	1
27	AFOFF		11083	5R6263	HOSE ASSY ..... UOC:GRC,RIP	1
28	PFFZZ	4730010950833	11083	8S6393	.ELBOW,TUBE TO HOSE ..... UOC:GRC,RIP	2
29	PFFZZ	4730010950075	11083	4S5414	.SLEEVE,HOSE CONNECT ..... UOC:GRC,RIP	2
30	MFFZZ		11083	5P0178-141	.HOSE,NONMETALLIC CUT TO FIT, . MAKE FROM HOSE P/N 1650021 UOC:GRC,RIP	1
				END OF FIGURE		

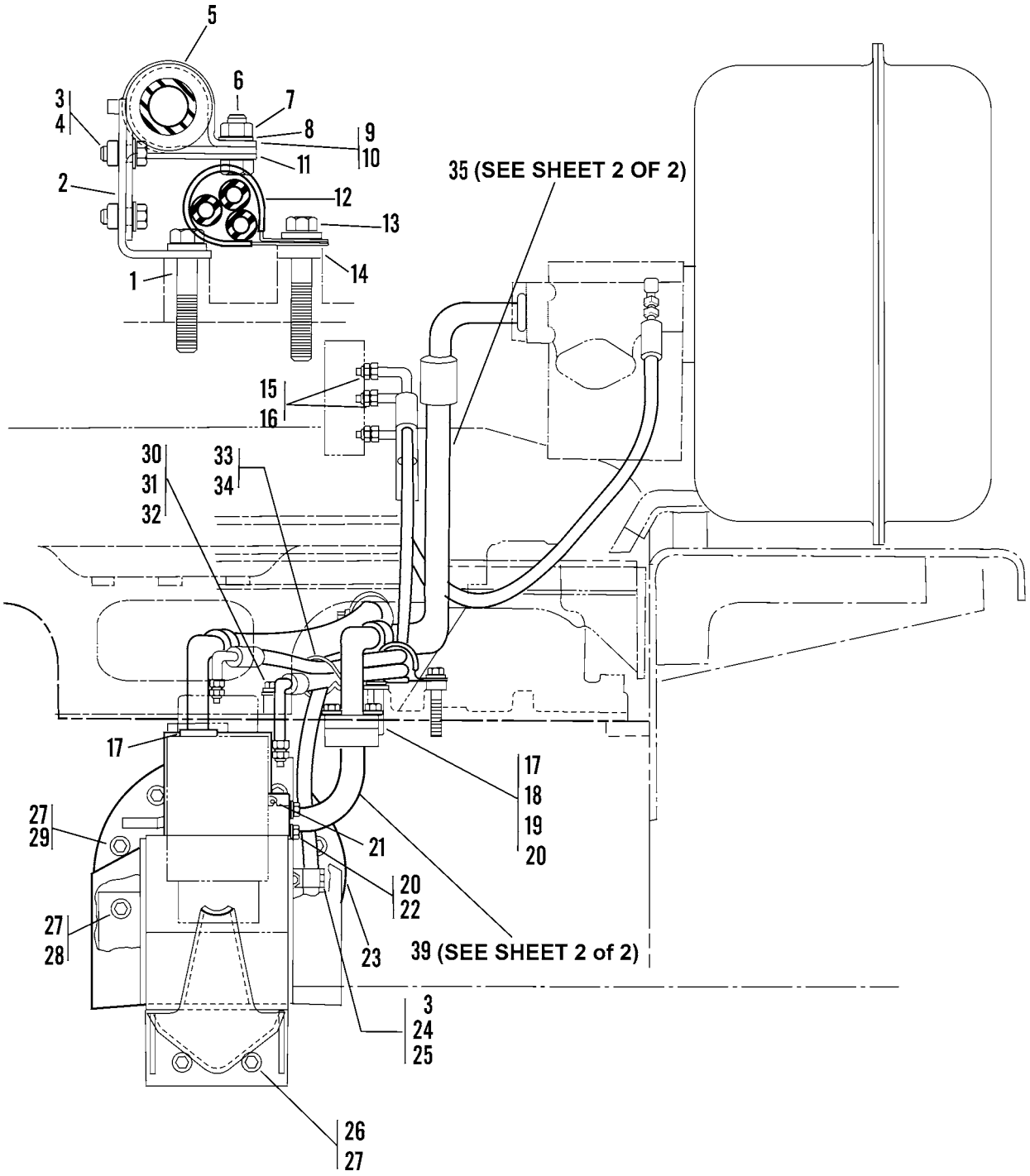

Figure 171. Ripper Lines Group - Front (Sheet 1 of 2)

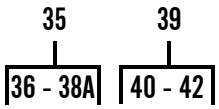

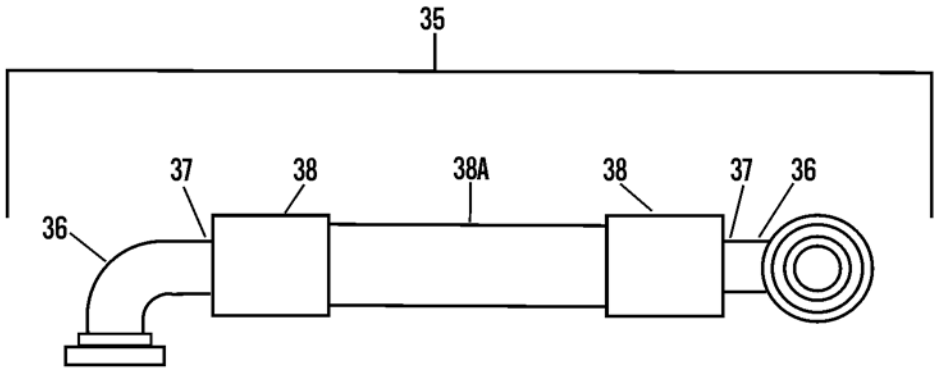

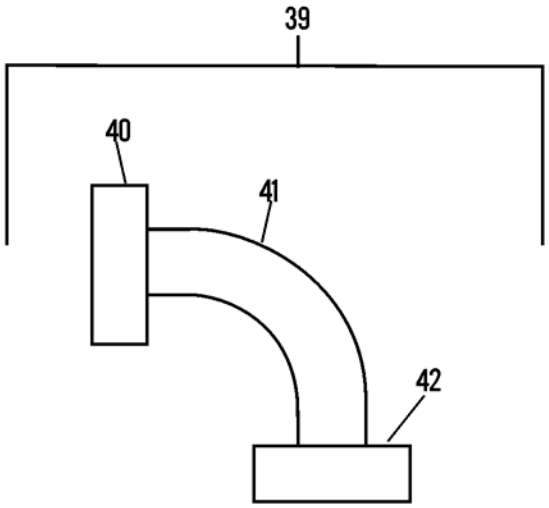

Figure 171. Ripper Lines Group - Front (Sheet 2 of 2)

(1) ITEM NO	(2) SMR CODE	(3) NSN	(4) CAGEC	(5) PART NUMBER	(6) DESCRIPTION AND USABLE ON CODES (UOC)	(7) QTY
					GROUP 2406 STRAINERS, FILTERS, LINES AND FITTINGS, ETC.	
					FIG. 171 RIPPER LINES GROUP - FRONT	
1	PFOZZ	5306004263080	11083	1A5822	BOLT,MACHINE ..... UOC:GRC,RIP	1
2	PAOZZ	5340012580143	11083	3P6095	BRACKET,ANGLE ..... UOC:GRC,RIP	1
3	PFOZZ	5305002528919	11083	0S0509	SCREW,CAP,HEXAGON H ..... UOC:GRC,RIP	3
4	PFOZZ	5310001174788	11083	9Y2695	WASHER,FLAT ..... UOC:GRC,RIP	3
5	PFOZZ	5325011647555	11083	5P8444	GROMMET,NONMETALLIC ..... UOC:GRC,RIP	1
6	PFOZZ	5306008744001	11083	6H1717	BOLT,MACHINE ..... UOC:GRC,RIP	1
7	PFOZZ	5310007680318	96906	MS51967-14	NUT,PLAIN,HEXAGON ..... UOC:GRC,RIP	1
8	PFOZZ	5310011029866	11083	5P7213	WASHER,FLAT ..... UOC:GRC,RIP	1
9	PAOZZ	5340011639459	11083	5P7468	CLIP,SPRING TENSION ..... UOC:GRC,RIP	1
10	PAOZZ	5340011636175	11083	5P7469	CLIP,SPRING TENSION ..... UOC:GRC,RIP	1
11	PFOZZ	5340012589178	11083	6T2866	BRACKET,ANGLE ..... UOC:GRC,RIP	1
12	PAOZZ	5340012580215	11083	5P2370	CLAMP,LOOP ..... UOC:GRC,RIP	1
13	PFOZZ	5305001397071	11083	0V0375	SCREW,CAP,HEXAGON H ..... UOC:GRC,RIP	1
14	PFOZZ	5365012573307	11083	5B0546	SPACER,SLEEVE ..... UOC:GRC,RIP	1
15	PCOZZ	5331008013354	25184	906-737-70	O-RING ..... UOC:GRC,RIP	2
16	PFOZZ	4730004919576	96906	MS51525-A6	ADAPTER,STRAIGHT,TU ..... UOC:GRC,RIP	2
17	PCOZZ	5331009484063	11083	4J522	O-RING ..... UOC:GRC,RIP	3
18	PFOZZ	5306004003518	73342	427564	BOLT,MACHINE ..... UOC:GRC,RIP	4
19	PFOZZ	4730010515257	11083	1P4578	FLANGE,PIPE ..... UOC:GRC,RIP	2
20	PFOZZ	5310010978955	11083	5P8244	WASHER,FLAT ..... UOC:GRC,RIP	8
21	PFOZZ	5330010523917	11083	1P3704	SEAL ..... UOC:GRC,RIP	1
22	PFOZZ	5306004262983	11083	T768	BOLT,MACHINE ..... UOC:GRC,RIP	4
23	PFOZZ	5342012576196	11083	9P2751	BRACKET,ASSEMBLY ..... UOC:GRC,RIP	1
24	PFOZZ	5340012580454	11083	5R0940	STRAP,RETAINING ..... UOC:GRC,RIP	1

(1) ITEM NO	(2) SMR CODE	(3) NSN	(4) CAGEC	(5) PART NUMBER	(6) DESCRIPTION AND USABLE ON CODES (UOC)	(7) QTY
25	PFOZZ	5340012593959	11083	5R0939	CLAMP,SYNCHRO ..... UOC:GRC,RIP	1
26	PFOZZ	5306004238116	89926	281047	BOLT,MACHINE ..... UOC:GRC,RIP	2
27	PFOZZ	5310010954631	11083	5P8247	WASHER,FLAT ..... UOC:GRC,RIP	11
28	PFOZZ	5305007247221	80204	B1821BH063C175N	SCREW,CAP,HEXAGON H ..... UOC:GRC,RIP	2
29	PFOZZ	5306004239325	11083	4B4043	BOLT,MACHINE ..... UOC:GRC,RIP	7
30	PFOZZ	5306004550459	11083	9S1366	BOLT,MACHINE ..... UOC:GRC,RIP	1
31	PFOZZ	5365012702768	11083	2H9233	SPACER,SLEEVE ..... UOC:GRC,RIP	1
32	PFOZZ	5310008095997	96906	MS27183-17	WASHER,FLAT ..... UOC:GRC,RIP	1
33	PFOZZ	5340011636173	11083	6K6167	CLIP,SPRING TENSION ..... UOC:GRC,RIP	1
34	PFOZZ	5340011636174	11083	6K6164	CLIP,SPRING TENSION ..... UOC:GRC,RIP	1
35	AFOFF		11083	9P2895	HOSE ASSY ..... UOC:GRC,RIP	1
36	PFFZZ	4730010625197	11083	2P4813	.STEM ASSEMBLY ..... UOC:GRC,RIP	2
37	PCFZZ	5331009484063	11083	4J522	.O-RING ..... UOC:GRC,RIP	2
38	PFFZZ	3120002361319	11083	3S7252	.SLEEVE ..... UOC:GRC,RIP	2
38A	MFFZZ		11083	9P2895-XX	.HOSE,NONMETALLIC CUT TO FIT, MAKE FROM HOSE P/N 1650021 UOC:GRC,RIP	1
39	PAOZZ	4710012534715	11083	6P3713	TUBE ASSEMBLY,METAL ..... UOC:GRC,RIP	1
40	XAOZZ		11083	7J1113	.FLANGE,PIPE ..... UOC:GRC,RIP	1
41	XAOZZ		11083	6P3711	.TUBE ..... UOC:GRC,RIP	1
42	XAOZZ		11083	3P1968	.FLANGE ..... UOC:GRC,RIP	1
				END OF FIGURE		

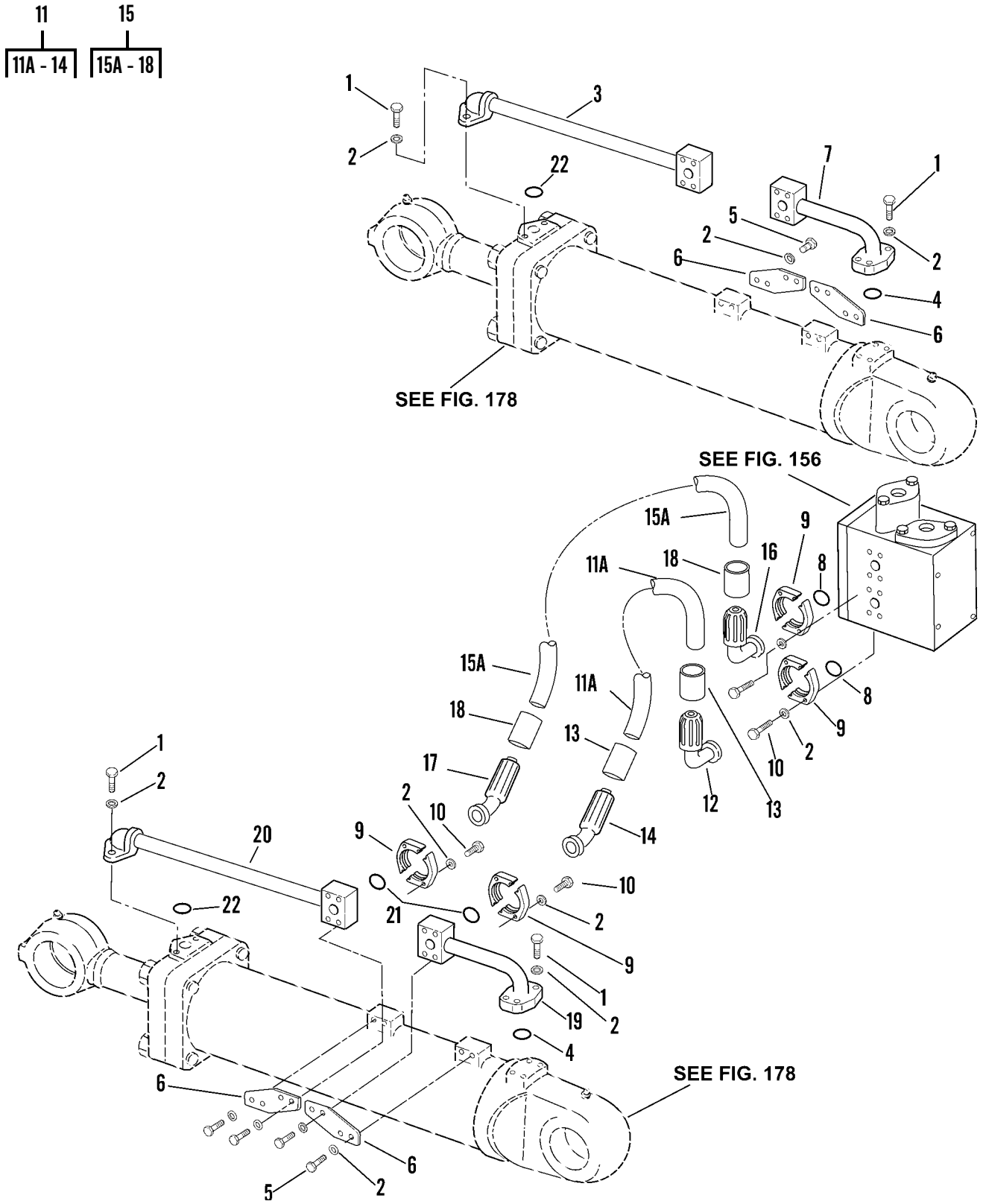

Figure 172. Ripper Lines Group

(1) ITEM NO	(2) SMR CODE	(3) NSN	(4) CAGEC	(5) PART NUMBER	(6) DESCRIPTION AND USABLE ON CODES (UOC)	(7) QTY
					GROUP 2406 STRAINERS, FILTERS, LINES AND FITTINGS, ETC.	
					FIG. 172 RIPPER LINES GROUP	
1	PFOZZ	5306011954681	11083	3B1915	BOLT ..... UOC:GRC,RIP	12
2	PFOZZ	5310001174788	11083	9Y2695	WASHER,FLAT ..... UOC:GRC,RIP	44
3	PFOZZ	4710012545627	11083	4T9705	TUBE ASSEMBLY,METAL ..... UOC:GRC,RIP	1
4	PFOZZ	5330010435564	11083	1P3702	PACKING,PREFORMED ..... UOC:GRC,RIP	2
5	PFOZZ	5306002637301	11083	0L1351	BOLT,MACHINE ..... UOC:GRC,RIP	16
6	PFOZZ	5340012582680	11083	5J5522	PLATE,MENDING ..... UOC:GRC,RIP	4
7	PFOZZ	4710012541292	11083	5J5530	TUBE ASSEMBLY,METAL ..... UOC:GRC,RIP	1
8	PCOZZ	5331009136144	11083	4J0520	O-RING ..... UOC:GRC,RIP	4
9	PFOZZ	4730010513134	11083	1P4576	FLANGE,PIPE ..... UOC:GRC,RIP	8
10	PFOZZ	5305000680511	80204	B1821BH038C125N	SCREW,CAP,HEXAGON H ..... UOC:GRC,RIP	16
11	AFOFF		11083	5R6256	HOSE ASSEMBLY,NONME ..... UOC:GRC,RIP	2
11A	MFFZZ		11083	5P0180-88	.HOSE,NONMETALLIC CUT TO FIT, . MAKE FROM HOSE P/N 1650020 UOC:GRC,RIP	1
12	PFFZZ	4730012672634	11083	6V4676	.ELBOW,FLANGE TO HOS ..... UOC:GRC,RIP	1
13	PFFZZ	5340010516767	11083	3S7166	.PLUNGER,DETENT ..... UOC:GRC,RIP	2
14	PFFZZ	4820012025710	11083	6V4664	.STEM,HOSE ..... UOC:GRC,RIP	1
15	AFOFF		11083	5R6255	HOSE ASSY ..... UOC:GRC,RIP	2
15A	MFFZZ		11083	5P0180-75	.HOSE,NONMETALLIC CUT TO FIT, . MAKE FROM HOSE P/N 1650020 UOC:GRC,RIP	1
16	PFFZZ	4730012540177	11083	6V4679	.ELBOW,FLANGE TO HOS ..... UOC:GRC,RIP	2
17	PFFZZ	4820012025710	11083	6V4664	.STEM,HOSE ..... UOC:GRC,RIP	2
18	PFFZZ	5340010516767	11083	3S7166	.PLUNGER,DETENT ..... UOC:GRC,RIP	4
19	PFOZZ	4710012376752	11083	5J5529	TUBE ASSEMBLY,METAL ..... UOC:GRC,RIP	1
20	PFOZZ	4710012541291	11083	4T9704	TUBE ASSEMBLY,METAL ..... UOC:GRC,RIP	1
21	PFOZZ	5331010176535	81349	M83248/2-214	O-RING ..... UOC:GRC,RIP	4
22	PCOZZ	5331009484063	11083	4J522	O-RING ..... UOC:GRC,RIP	2
					END OF FIGURE	

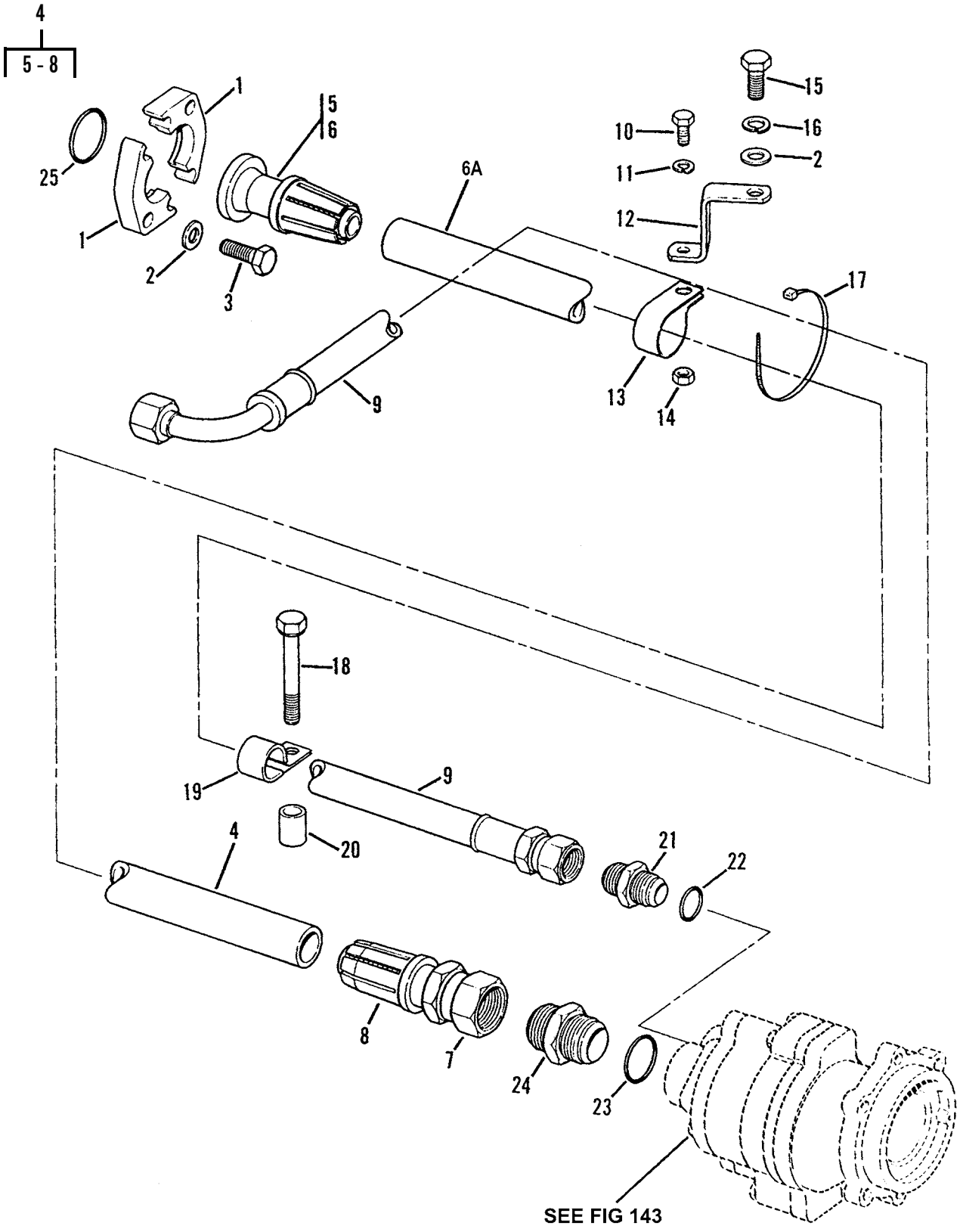

Figure 173. Winch Lines Group

(1) ITEM NO	(2) SMR CODE	(3) NSN	(4) CAGEC	(5) PART NUMBER	(6) DESCRIPTION AND USABLE ON CODES (UOC)	(7) QTY
					GROUP 2406 STRAINERS, FILTERS, LINES AND FITTINGS, ETC.	
					FIG. 173 WINCH LINES GROUP	
1	PFOZZ	5340010600309	11083	1P4579	FLANGE ..... UOC:GWC,WIN	2
2	PFOZZ	5310008095997	96906	MS27183-17	WASHER,FLAT ..... UOC:GWC,WIN	5
3	PFOZZ	5306011279361	11083	0S1585	BOLT,MACHINE ..... UOC:GWC,WIN	4
4	PFOFF	4720014999113	11083	2P6434	HOSE ASSEMBLY,NONME ..... UOC:GWC,WIN	1
5	PFFZZ	4730010625932	11083	5S3779	.ADAPTER,STRAIGHT,FL ..... UOC:GWC,WIN	1
6	PCFZZ	5331009145846	11083	4J0524	.O-RING ..... UOC:GWC,WIN	1
6A	MFFZZ		11083	2P6434-XX	.HOSE,NONMETALLIC CUT TO FIT, . MAKE FROM HOSE P/N 1650023 UOC:GWC,WIN	1
7	PFFZZ	4730012029311	11083	2P0988	.ADAPTER,STRAIGHT,TU ..... UOC:GWC,WIN	1
8	PFFZZ	5365010671426	11083	3S7116	.SLEEVE ..... UOC:GWC,WIN	2
9	PFOZZ	4720012034781	11083	2P6435	HOSE ASSEMBLY,NONME ..... UOC:GWC,WIN	1
10	PFOZZ	5306002637301	11083	0L1351	BOLT,MACHINE ..... UOC:GWC,WIN	1
11	PFOZZ	5310006379541	80205	MS35338-46	WASHER,LOCK ..... UOC:GWC,WIN	1
12	PFOZZ	5340012588535	11083	3P7108	BRACKET,DOUBLE ANGL ..... UOC:GWC,WIN	1
13	PFOZZ	5340012577789	11083	7L6326	CLAMP,LOOP ..... UOC:GWC,WIN	1
14	PFOZZ	5310014297859	11083	6V8801	NUT,PLAIN,HEXAGON ..... UOC:GWC,WIN	1
15	PFOZZ	5306004238117	11083	0S1595	BOLT,MACHINE ..... UOC:GWC,WIN	1
16	PFOZZ	5310005845272	80205	MS35338-48	WASHER,LOCK ..... UOC:GWC,WIN	1
17	PFOZZ	2815010534712	11083	7K1181	STRAP ..... UOC:GWC,WIN	3
18	PFOZZ	5306004238316	11083	1B2886	BOLT,MACHINE ..... UOC:GWC,WIN	1
19	PFOZZ	5340010614018	11083	3P2404	CLAMP,LOOP ..... UOC:GWC,WIN	1
20	PFOZZ	5365012569290	11083	6S4183	SPACER,SLEEVE ..... UOC:GWC,WIN	1
21	PFOZZ	4730007105571	96906	MS51525A12	ADAPTER,STRAIGHT,TU ..... UOC:GWC,WIN	2
22	PCOZZ	5331009448281	11083	3D2824	O-RING ..... UOC:GWC,WIN	2
23	PFOZZ	5331004293542	11083	2S4078	O-RING ..... UOC:GWC,WIN	1

(1) ITEM NO	(2) SMR CODE	(3) NSN	(4) CAGEC	(5) PART NUMBER	(6) DESCRIPTION AND USABLE ON CODES (UOC)	(7) QTY
24	PFOZZ	4730011569977	11083	0318759	ADAPTER,STRAIGHT,TU ..... UOC:GWC,WIN	1
25	PCOZZ	5331009145846	11083	4J0524	O-RING ..... UOC:GWC,WIN	1
				END OF FIGURE		

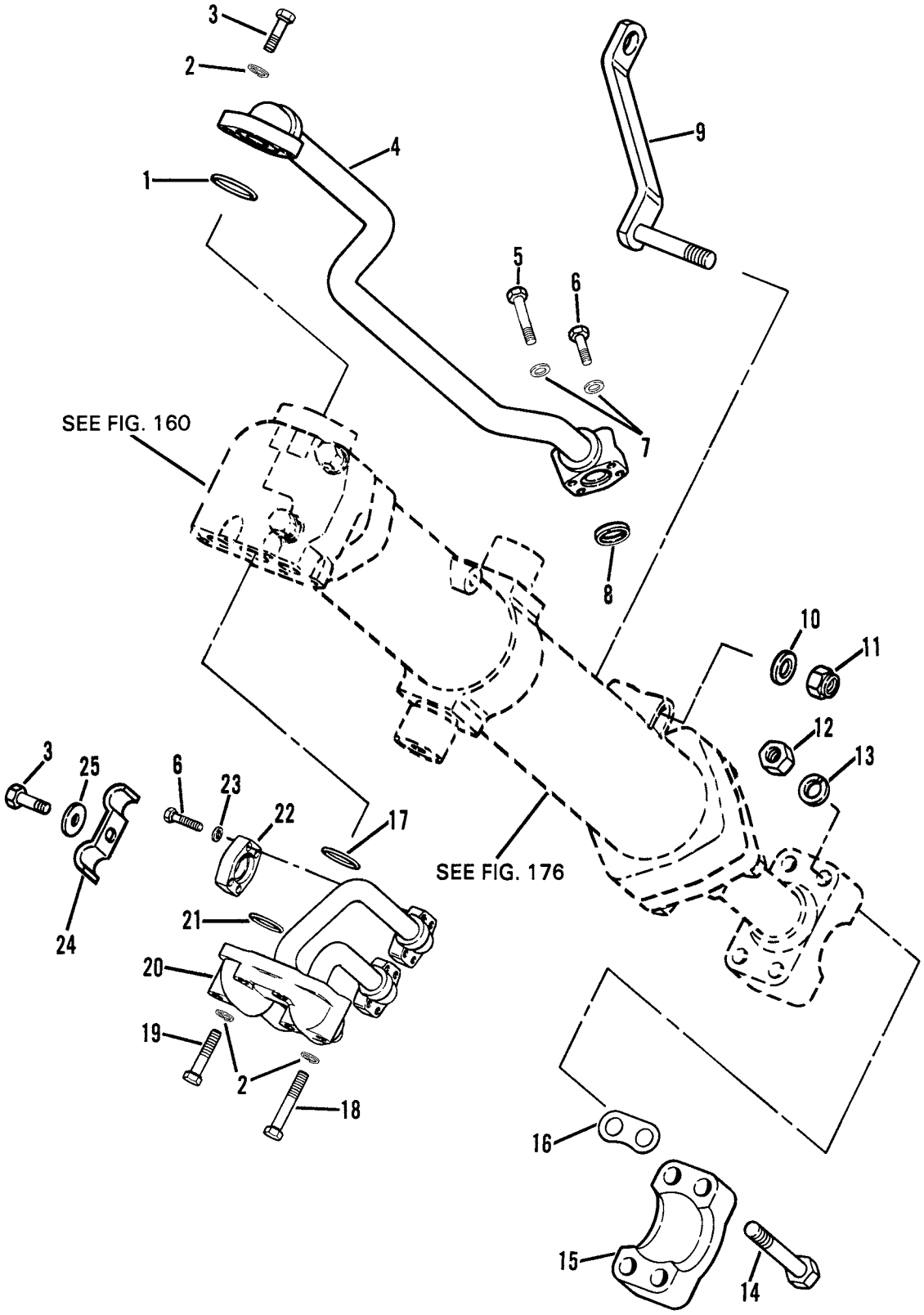

Figure 174. Cylinder and Valve Group (Right Hand)

(1) ITEM NO	(2) SMR CODE	(3) NSN	(4) CAGEC	(5) PART NUMBER	(6) DESCRIPTION AND USABLE ON CODES (UOC)	(7) QTY
					GROUP 2407 HYDRAULIC CYLINDERS	
					FIG. 174 CYLINDER AND VALVE GROUP (RIGHT HAND)	
1	PCOZZ	5331009226275	11083	4J0525	O-RING PART OF KIT P/N 5R6288 ..	1
2	PFOZZ	5310005845272	80205	MS35338-48	WASHER,LOCK	7
3	PFOZZ	5306011279361	11083	0S1585	BOLT,MACHINE	3
4	PFOZZ	4710012672123	11083	3T0731	TUBE AND FITTINGS,M	1
5	PFOZZ	5306002851368	11083	L1143	BOLT,MACHINE	2
6	PFOZZ	5305010156841	11083	0S1591	SCREW	2
7	PFOZZ	5310006379541	80205	MS35338-46	WASHER,LOCK	4
8	PFOZZ	5330010435565	11083	1P3703	PACKING,PREFORMED PART OF KIT P/N 5R6288	1
9	PFOZZ	2520012697945	11083	3P9109	SUPPORT ASSEMBLY,CY	1
10	PFOZZ	5310008098540	96906	MS27183-25	WASHER,FLAT	1
11	PFOZZ	5310011604538	11083	3F7673	NUT,SELF-LOCKING,HE	1
12	PFOZZ	5310007638921	96906	MS51967-23	NUT,PLAIN,HEXAGON	4
13	PFOZZ	5310005847888	96906	MS35338-51	WASHER,LOCK	4
14	PFOZZ	5305004113768	11083	1D4615	SCREW,CAP,HEXAGON H	1
15	PFOZZ	3120012509928	11083	8J2880	BEARING,PLAIN,SELF-	1
16	PFOZZ	5365011648782	11083	3J6572	SPACER,PLATE	12
17	PAOZZ	5331010062129	11083	4J0523	O-RING 44.04MM ID PART OF KIT . P/N 5R6288	1
18	PFOZZ	5306002685798	11083	0L1329	BOLT,MACHINE	3
19	PFOZZ	5306008097134	11083	2B947	BOLT,MACHINE	2
20	PFOZZ	4710012672120	11083	6P9734	TUBE ASSEMBLY,METAL	1
21	PCOZZ	5331009484063	11083	4J522	O-RING 37.69MM ID PART OF KIT . P/N 5R6288	2
22	PFOZZ	4730010515256	11083	1P4577	FLANGE,PIPE	2
23	PFOZZ	5310001174788	11083	9Y2695	WASHER,FLAT	8
24	PFOZZ	5340012729267	11083	9S6803	STRAP,RETAINING	2
25	PFOZZ	5310008095998	96906	MS27183-18	WASHER,FLAT	1
				END OF FIGURE		

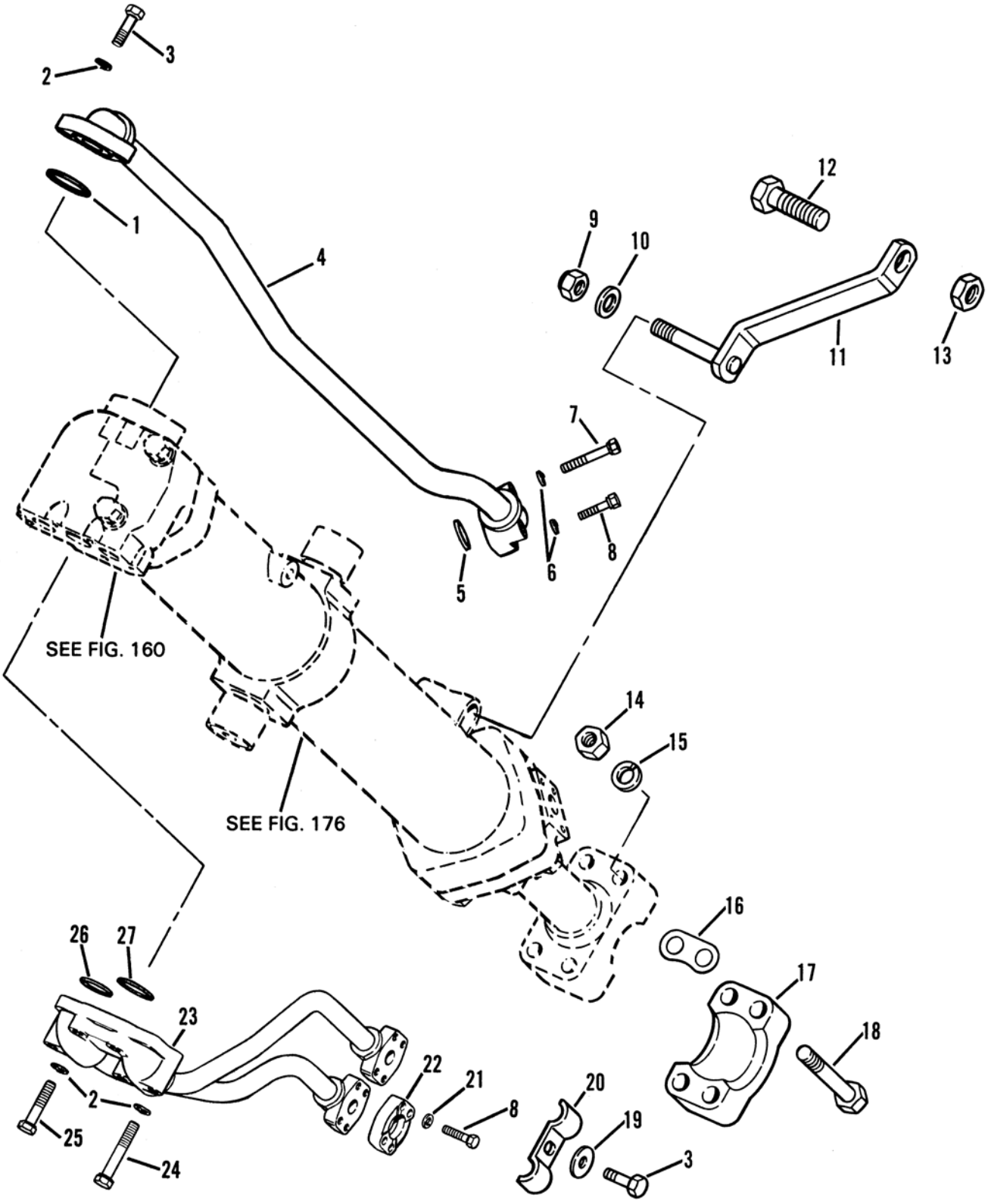

Figure 175. Cylinder and Valve Group (Left-Hand)

(1) ITEM NO	(2) SMR CODE	(3) NSN	(4) CAGEC	(5) PART NUMBER	(6) DESCRIPTION AND USABLE ON CODES (UOC)	(7) QTY
					GROUP 2407 HYDRAULIC CYLINDERS	
					FIG. 175 CYLINDER AND VALVE GROUP (LEFT-HAND)	
1	PCOZZ	5331009226275	11083	4J0525	O-RING PART OF KIT P/N 5R6288 ..	1
2	PFOZZ	5310005845272	80205	MS35338-48	WASHER,LOCK	7
3	PFOZZ	5306011279361	11083	0S1585	BOLT,MACHINE	3
4	PFOZZ	4710012674393	11083	3T0732	TUBE ASSEMBLY,METAL	1
5	PFOZZ	5330010435565	11083	1P3703	PACKING,PREFORMED PART OF KIT P/N 5R6288	1
6	PFOZZ	5310006379541	80205	MS35338-46	WASHER,LOCK	4
7	PFOZZ	5306002851368	11083	L1143	BOLT,MACHINE	1
8	PFOZZ	5305010156841	11083	0S1591	SCREW	2
9	PFOZZ	5310011604538	11083	3F7673	NUT,SELF-LOCKING,HE	1
10	PFOZZ	5310008098540	96906	MS27183-25	WASHER,FLAT	1
11	PFOZZ	2520012697945	11083	3P9109	SUPPORT ASSEMBLY,CY	1
12	PFOZZ	5306012593523	11083	0T0320	BOLT,MACHINE	2
13	PFOZZ	5310004317237	11083	1P1396	NUT	2
14	PFOZZ	5310007638921	96906	MS51967-23	NUT,PLAIN,HEXAGON	4
15	PFOZZ	5310005847888	96906	MS35338-51	WASHER,LOCK	4
16	PFOZZ	5365011648782	11083	3J6572	SPACER,PLATE	12
17	PFOZZ	3120012509928	11083	8J2880	BEARING,PLAIN,SELF-	1
18	PFOZZ	5305004113768	11083	1D4615	SCREW,CAP,HEXAGON H	4
19	PFOZZ	5310008095998	96906	MS27183-18	WASHER,FLAT	1
20	PFOZZ	5340012729267	11083	9S6803	STRAP,RETAINING	2
21	PFOZZ	5310001174788	11083	9Y2695	WASHER,FLAT	8
22	PFOZZ	4730010515256	11083	1P4577	FLANGE,PIPE	2
23	PFOZZ	4710012674394	11083	6P9733	TUBE ASSEMBLY,METAL	1
24	PFOZZ	5306002685798	11083	0L1329	BOLT,MACHINE	3
25	PFOZZ	5306008097134	11083	2B947	BOLT,MACHINE	2
26	PCOZZ	5331009484063	11083	4J522	O-RING 1.484 ID PART OF KIT P/N 5R6288	2
27	PAOZZ	5331010062129	11083	4J0523	O-RING 1.474 ID PART OF KIT P/N 5R6288	1
					END OF FIGURE	

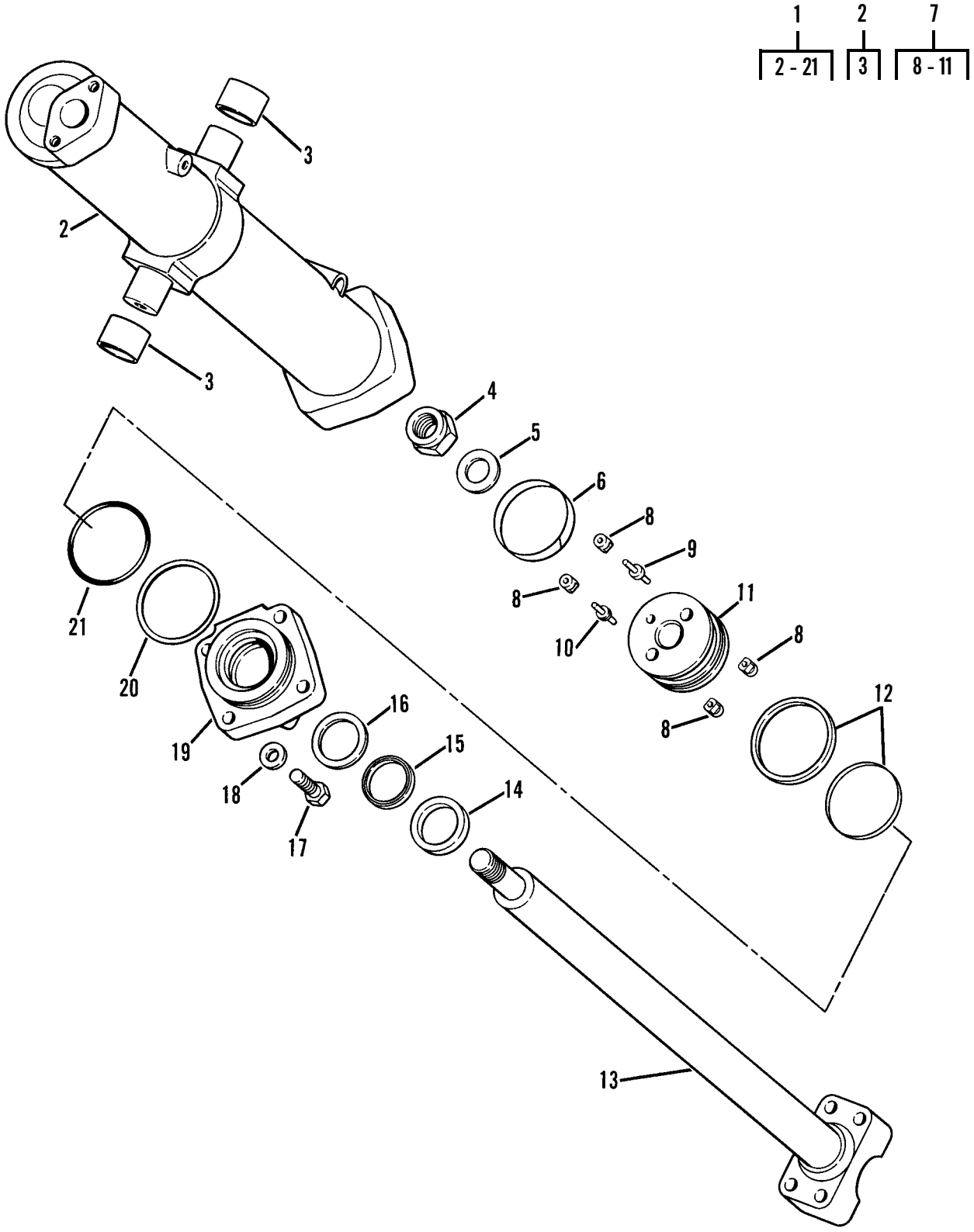

Figure 176. Blade Lift Cylinder (Right-Hand and Left-Hand)

(1) ITEM NO	(2) SMR CODE	(3) NSN	(4) CAGEC	(5) PART NUMBER	(6) DESCRIPTION AND USABLE ON CODES (UOC)	(7) QTY
					GROUP 2407 HYDRAULIC CYLINDERS	
					FIG. 176 BLADE LIFT CYLINDER (RIGHT-HAND AND LEFT-HAND)	
1	PFOFF	3930011637337	11083	1U2135	CYLINDER ASSEMBLY,A RIGHT-HAND	1
1	PFOFF	3930011637338	11083	1U2136	CYLINDER ASSEMBLY,A LEFT-HAND .	1
2	PFFZZ	3830004872799	11083	7J3337	.HOUSING ASSEMBLY,CY DEALER ... EXCHANGE ITEM, PN 0R1281	1
3	PFFZZ	3120009484594	11083	4J6167	..BEARING,SLEEVE PART OF KIT P/N 5R6288	2
4	PFFZZ	5310005579415	11083	2J3950	.NUT,SELF-LOCKING,HE	1
5	PFFZZ	5310004219686	11083	2R0219	.WASHER,FLAT	1
6	PFFZZ	5365009467258	11083	4J3342	.SPACER,RING PART OF KIT P/N ... 5R6288	1
7	PFFFF	3830002236595	11083	6J0713	.PISTON ASSEMBLY	1
8	PFFZZ	5342009462133	11083	2J3781	..INSERT	4
9	PFFZZ	2530010672159	11083	5J2528	..PLUNGER	1
10	PAFZZ	5315012701317	11083	6J0714	..PIN,SHOULDER,HEADLE	1
11	XAFZZ		11083	4J5483	..PISTON	1
12	PFFZZ	5330009484494	11083	4T8588	.RETAINER,PACKING PART OF KIT P/N 5R6288	1
13	PFFZZ	3040012672085	11083	7J3338	.ROD,PISTON,LINEAR A DEALER ... EXCHANGE ITEM, PN 0R1282	1
14	PFFZZ	5330002610990	11083	1672463	.SEAL,PLAIN ENCASED	1
15	PFFZZ	5330004557065	11083	5J0964	.PACKING,PREFORMED PART OF KIT . P/N 5R6288	1
16	PFFZZ	5330001437173	11083	1672201	.GASKET PART OF KIT P/N 5R6288 .	1
17	PFFZZ	5306004263139	11083	1A8063	.BOLT,MACHINE	4
18	PFFZZ	5310011022477	11083	5P8248	.WASHER,FLAT	4
19	PFFZZ	4730012674288	11083	1U1805	.FLANGE,PIPE	1
20	PFFZZ	5331009502091	11083	2J3961	.O-RING 4.627 ID PART OF KIT P/N 5R6288	1
21	PCFZZ	5331008590396	09990	2-246N951-75	.O-RING 4.474 ID PART OF KIT P/N 5R6288	1
					END OF FIGURE	

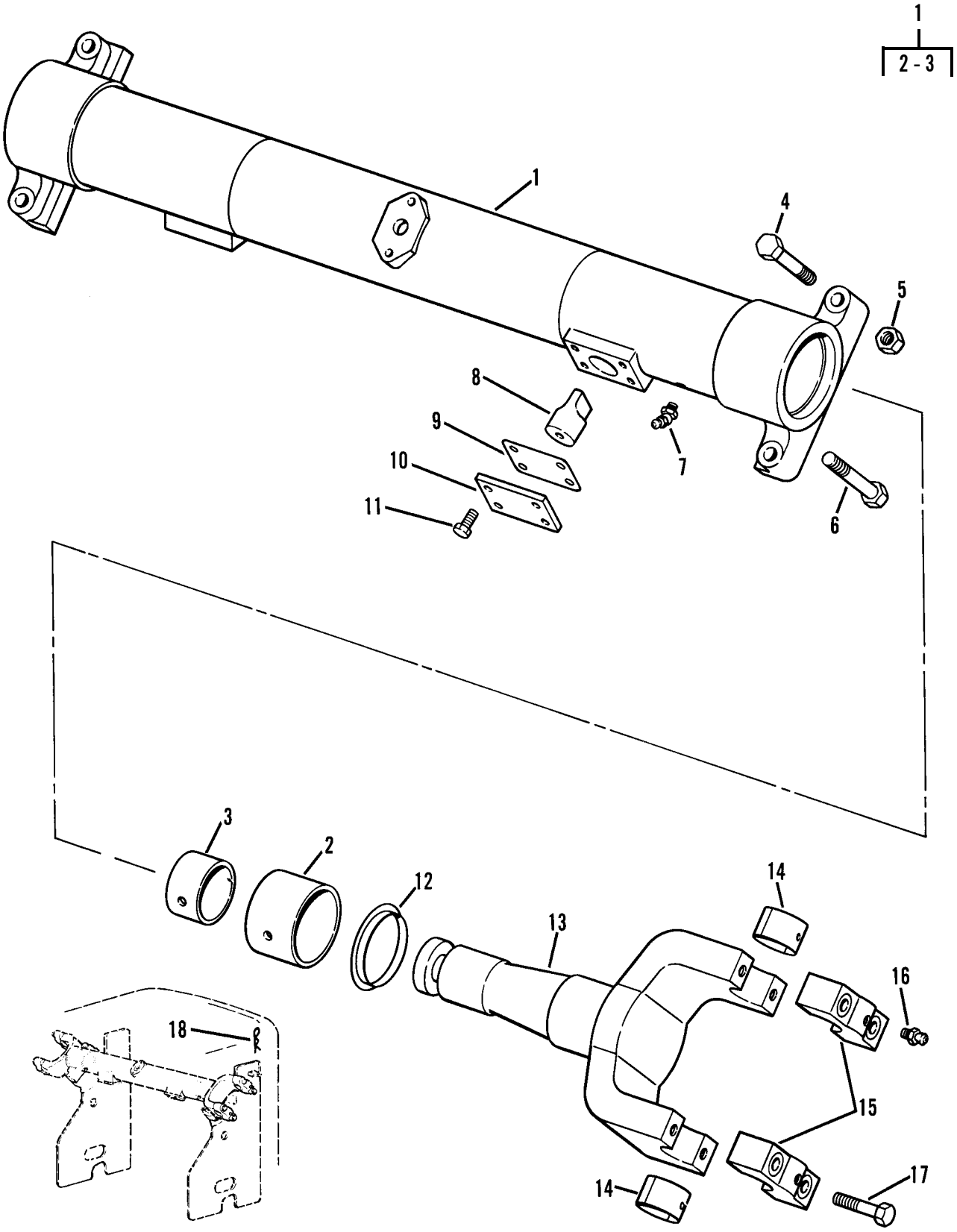

Figure 177. Blade Lift Cylinder Mounting Tube

(1) ITEM NO	(2) SMR CODE	(3) NSN	(4) CAGEC	(5) PART NUMBER	(6) DESCRIPTION AND USABLE ON CODES (UOC)	(7) QTY
					GROUP 2407 HYDRAULIC CYLINDERS	
					FIG. 177 BLADE LIFT CYLINDER MOUNTING TUBE	
1	PFOZZ	4710012677078	11083	7J4904	TUBE ASSEMBLY,METAL	1
2	PFOZZ	3120004219622	11083	7J1334	.BEARING,SLEEVE	2
3	PFOZZ	3120004191413	11083	7J1333	.BEARING,SLEEVE	2
4	PFOZZ	5306004369896	11083	3B6753	BOLT,MACHINE	4
5	PFOZZ	5310007638921	96906	MS51967-23	NUT,PLAIN,HEXAGON	4
6	PFOZZ	5305004113768	11083	1D4615	SCREW,CAP,HEXAGON H	4
7	PFOZZ	4730001720028	11083	3B8485	FITTING,LUBRICATION	2
8	PAOZZ	5315002460648	11083	5J6242	PIN,SHOULDER,HEADLE	2
9	PFOZZ	5330012701776	11083	3J3726	GASKET	2
10	PAOZZ	5340012503368	11083	5J6241	COVER,ACCESS	2
11	PFOZZ	5306004262934	11083	0S1621	BOLT,MACHINE	8
12	PFOZZ	5330009192248	11083	2J5973	SEAL,PLAIN	2
13	PFOZZ	3010012676054	11083	7J4827	YOKE,UNIVERSAL JOIN	2
14	PFOZZ	3120009482181	11083	3J2443	BEARING HALF,SLEEVE	4
15	PFOZZ	3130009489825	11083	2J5812	CAP,PILLOW BLOCK	4
16	PFOZZ	4730000504208	81343	AS15003-1	FITTING,LUBRICATION	4
17	PFOZZ	5306004263209	11083	4W5918	BOLT,MACHINE	8
18	PFOZZ	5315011873541	11083	5P8837	PIN,LOCK	2
				END OF FIGURE		

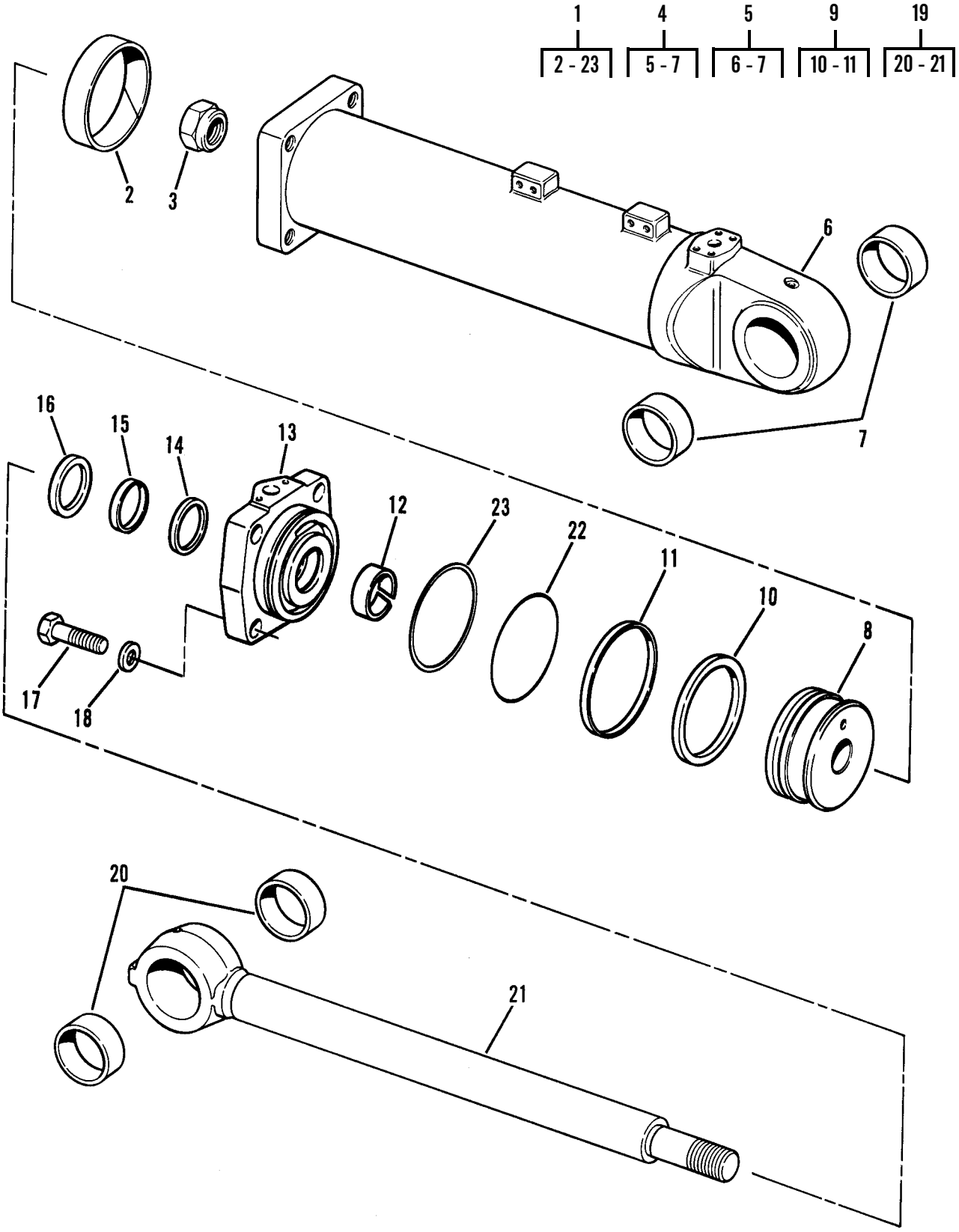

Figure 178. Ripper Lift Cylinder Group

(1) ITEM NO	(2) SMR CODE	(3) NSN	(4) CAGEC	(5) PART NUMBER	(6) DESCRIPTION AND USABLE ON CODES (UOC)	(7) QTY
					GROUP 2407 HYDRAULIC CYLINDERS	
					FIG. 178 RIPPER LIFT CYLINDER GROUP	
1	PCOFF	3040012848745	11083	4T9290	CYLINDER ASSEMBLY,A ..... UOC:GRC,RIP	2
2	PFFZZ	5365007568621	11083	1J0708	.SPACER,RING ..... UOC:GRC,RIP	2
3	PFFZZ	5310004608239	72962	53NTU7947-2812	.NUT,SELF-LOCKING,HE ..... UOC:GRC,RIP	2
4	PFFFF	3040000662416	11083	3J6438	.CYLINDER,ACTUATING, ... UOC:GRC,RIP	2
5	XAFZZ		11083	3J6199	..CYLINDER ASSY ..... UOC:GRC,RIP	2
6	XAFZZ		11083	3J6200	...HEAD-BASE ENG ..... UOC:GRC,RIP	2
7	PFFZZ	3120000639785	11083	3J6442	...BEARING,SLEEVE ..... UOC:GRC,RIP	4
8	PFFZZ	2520001956018	11083	4J2062	.PISTON ..... UOC:GRC,RIP	2
9	PFFZZ	5330000618361	11083	5J4989	.SEAL ASSEMBLY ..... UOC:GRC,RIP	2
10	XAFZZ		11083	5J4418	..SEAL ..... UOC:GRC,RIP	1
11	XAFZZ		11083	5J4419	..RING ..... UOC:GRC,RIP	1
12	PFFZZ	3120012573297	11083	8T0785	.BEARING,SLEEVE ..... UOC:GRC,RIP	2
13	PFFZZ	3040012545607	11083	9T0416	.HEAD,LINEAR ACTUATI ..... UOC:GRC,RIP	2
14	PFFZZ	5330001437173	11083	1672201	.GASKET ..... UOC:GRC,RIP	2
15	PFFZZ	5330004557065	11083	5J0964	.PACKING,PREFORMED ..... UOC:GRC,RIP	2
16	PFFZZ	5330002610990	11083	1672463	.SEAL,PLAIN ENCASED ..... UOC:GRC,RIP	2
17	PFFZZ	5306007327714	11083	1D4627	.BOLT,MACHINE ..... UOC:GRC,RIP	8
18	PFFZZ	5310011625733	11083	5P8249	.WASHER,FLAT ..... UOC:GRC,RIP	8
19	PFFZZ	3120012551755	11083	3J6441	.BEARING,PLAIN,ROD E ..... UOC:GRC,RIP	2
20	PFFZZ	3120000639785	11083	3J6442	..BEARING,SLEEVE ..... UOC:GRC,RIP	4
21	PFFZZ	3040013390482	11083	3J6440	..ROD,PISTON,LINEAR A ..... UOC:GRC,RIP	2
22	PCFZZ	5331007568795	11083	5H3252	.O-RING ..... UOC:GRC,RIP	2
23	PFFZZ	5365004984621	11083	2K3258	.RING ..... UOC:GRC,RIP	2
					END OF FIGURE	

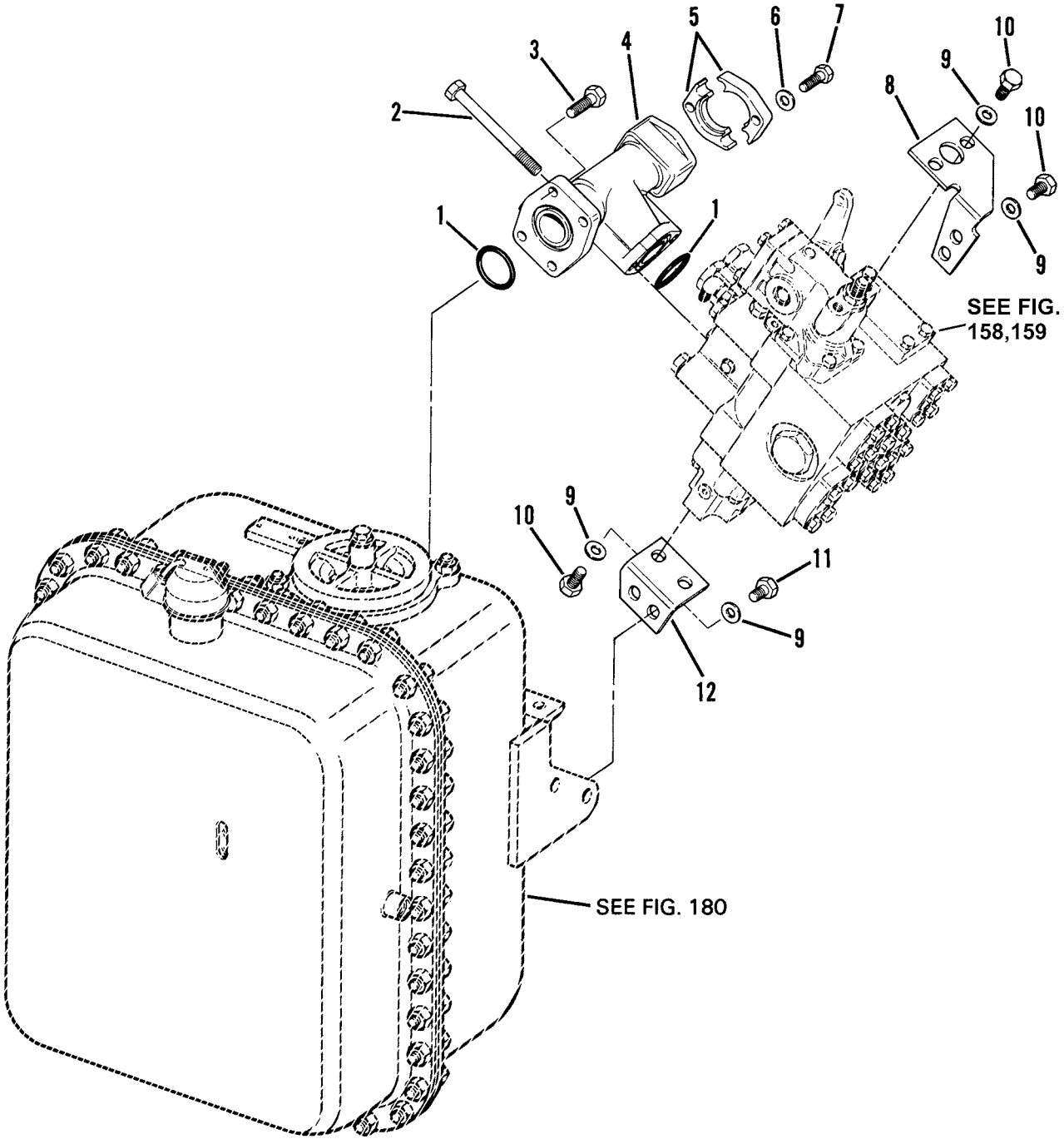

Figure 179. Hydraulic Tank Valve Group

(1) ITEM NO	(2) SMR CODE	(3) NSN	(4) CAGEC	(5) PART NUMBER	(6) DESCRIPTION AND USABLE ON CODES (UOC)	(7) QTY
					GROUP 2408 LIQUID TANKS OR RESERVOIRS	
					FIG. 179 HYDRAULIC TANK VALVE GROUP	
1	PFFZZ	5331010534684	09990	2-239N951-75	O-RING	2
2	PFFZZ	5305002638947	11083	6F5282	SCREW,CAP,HEXAGON H	2
3	PFFZZ	5306002638978	11083	0S1587	BOLT,MACHINE	4
4	PFFZZ	2520010689665	11083	8J7461	MANIFOLD	1
5	PFFZZ	4730010515257	11083	1P4578	FLANGE,PIPE	2
6	PFFZZ	5310010978955	11083	5P8244	WASHER,FLAT	4
7	PFFZZ	5305000712055	80204	B1821BH044C150N	SCREW,CAP,HEXAGON H	4
8	PFFZZ	5340012580147	11083	8J8634	BRACKET,ANGLE	1
9	PFFZZ	5310008095997	96906	MS27183-17	WASHER,FLAT	8
10	PFFZZ	5306004262934	11083	0S1621	BOLT,MACHINE	6
11	PFFZZ	5306001384466	11083	2H3855	BOLT,MACHINE	2
12	PAFZZ	5340012580146	11083	8J8633	BRACKET,ANGLE	1
				END OF FIGURE		

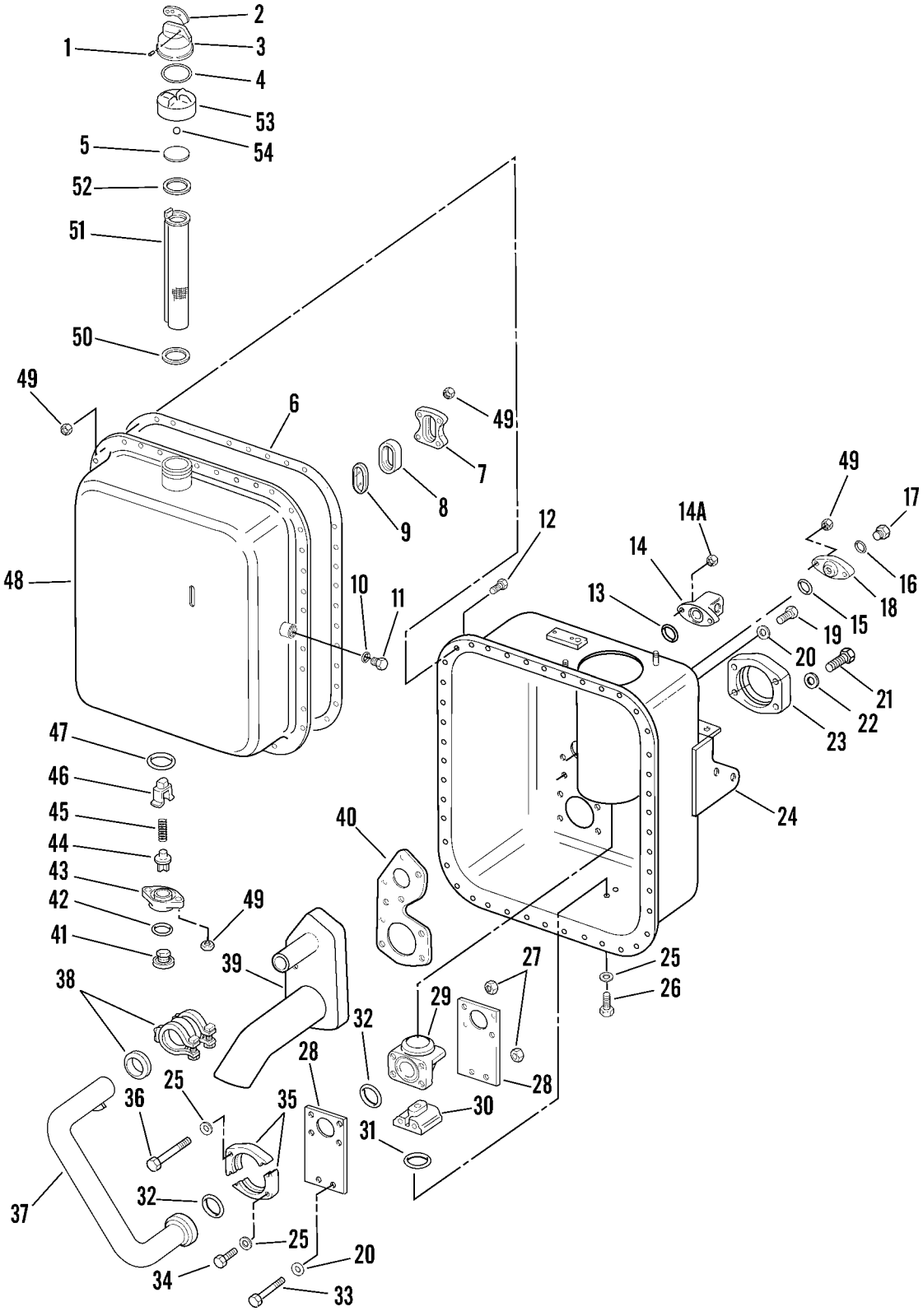

Figure 180. Hydraulic Tank Group

(1) ITEM NO	(2) SMR CODE	(3) NSN	(4) CAGEC	(5) PART NUMBER	(6) DESCRIPTION AND USABLE ON CODES (UOC)	(7) QTY
					GROUP 2408 LIQUID TANKS OR RESERVOIRS	
					FIG. 180 HYDRAULIC TANK GROUP	
1	PFOZZ	5315005325746	11083	1L5072	PIN,STRAIGHT,HEADLE	1
2	PFOZZ	2540011810999	11083	9M7394	LEVER,REMOTE CONTRO	1
3	PFOZZ	2590011793017	11083	5D1911	COVER,HYDRAULIC CAP	1
4	PFOZZ	5325005823115	80756	RR-312	RING,RETAINING	1
5	PFOZZ	2520010288096	11083	6H5139	PLATE,PRESSURE	1
6	PFFZZ	5330010671490	11083	8J7409	GASKET	1
7	PFOZZ	2590011655746	11083	8J6913	RETAINER	1
8	PFOZZ	5325010686227	11083	4J8251	GROMMET,NONMETALLIC	1
9	PFOZZ	6680001384143	11083	4J8252	GLASS,LIQUID SIGHT	1
10	PCHZZ	5331008013354	25184	906-737-70	O-RING	3
11	PFHZZ	5365004114584	11083	9S4191	PLUG,MACHINE THREAD	3
12	PFHZZ	5306004238194	11083	1A2029	BOLT,MACHINE	44
13	PFHZZ	5331005621073	11083	4F7391	O-RING	1
14	PAHZZ	4730012537012	11083	6P5391	MANIFOLD,FUELING	1
14A	PAHZZ	5310011134047	11083	3K6060	NUT,SELF-LOCKING,HE	2
15	PCHZZ	5331002456767	99193	S9413-215	O-RING	1
16	PFHZZ	5331009486482	11083	3K0360	O-RING	1
17	PFHZZ	5365007630120	11083	9S4185	PLUG,MACHINE THREAD	1
18	PAHZZ	4730012537353	11083	9J3473	FLANGE,PIPE	1
19	PFHZZ	5306004238117	11083	0S1595	BOLT,MACHINE	1
20	PFHZZ	5310008095998	96906	MS27183-18	WASHER,FLAT	3
21	PFOZZ	5306004550460	11083	8S9092	BOLT,MACHINE	4
22	PFOZZ	5310010954631	11083	5P8247	WASHER,FLAT	4
23	PFOZZ	4730011637270	11083	1P4585	FLANGE,PIPE	2
24	PFHZZ	2815012544958	11083	3G5500	OIL PAN TANK HALF	1
25	PFHZZ	5310008095997	96906	MS27183-17	WASHER,FLAT	6
26	PFHZZ	5306011279361	11083	0S1585	BOLT,MACHINE	2
27	PFHZZ	5310002256993	77445	PWA10132-3	NUT,SELF-LOCKING,HE	4
28	PFHZZ	5365012573277	11083	8J8438	SPACER,PLATE	2
29	PFHZZ	4730012541255	11083	8J8422	ELBOW,FLANGE TO HOS	1
30	PAHZZ	3040012534681	11083	8J8437	HEAD,LINEAR ACTUATI	1
31	PFHZZ	5331006919950	11083	4F7390	O-RING	1
32	PFHZZ	5330010532691	11083	1P3707	PACKING,PREFORMED	2
33	PFHZZ	5306004262922	11083	0S1573	BOLT,MACHINE	2
34	PAHZZ	5306012601348	11083	6V0314	BOLT,MACHINE	2
35	PFHZZ	2510010537306	11083	1P5763	FLANGE-HALF	2
36	PFHZZ	5305010626007	11083	2H6488	SCREW,CAP,HEXAGON H	2
37	PAHZZ	4710012533532	11083	3G0335	TUBE ASSEMBLY,METAL	1
38	PFHZZ	4710012940344	01276	NH1625C175B0350	JOINT ASSY,TUBE	1
39	PAHZZ	4710012538713	11083	3G0333	TUBE AND FITTINGS,M	1
40	PFHZZ	5330010671491	11083	8J8424	GASKET	1
41	PFOZZ	4730011659540	11083	9J7031	PLUG,PIPE	1
42	PFOZZ	5331008558047	09990	2-126N951-75	O-RING	1
43	PFHZZ	4730011647821	11083	8J8782	FLANGE,PIPE	1
44	PFHZZ	4820011633581	11083	8J8783	SLIDE,DIRECTIONAL C	1

(1) ITEM NO	(2) SMR CODE	(3) NSN	(4) CAGEC	(5) PART NUMBER	(6) DESCRIPTION AND USABLE ON CODES (UOC)	(7) QTY
45	PFHZZ	5360005978341	11083	7B3039	SPRING,HELICAL,COMP	1
46	PFHZZ	3805011679159	11083	1U2827	GUIDE,VALVE,HYDRAUL	1
47	PFHZZ	5331009489768	11083	8M4436	O-RING	1
48	PFHZZ	5340012643675	11083	8J8626	COVER,ACCESS TANK HALF	1
49	PFOZZ	5310011134047	11083	3K6060	NUT,SELF-LOCKING,HE	42
50	PFOZZ	5325009549666	80756	RRT212C	RING,RETAINING	1
51	PFOZZ	4730012537423	11083	3G7250	FILTER ELEMENT,FLUI	1
52	PFOZZ	5330008489950	11083	9H6454	GASKET	1
53	PFOZZ	2930006358296	11083	7H1447	CAP,FILLER OPENING	1
54	PFOZZ	3110000119935	11083	4B9782	BALL,BEARING	1
				END OF FIGURE		

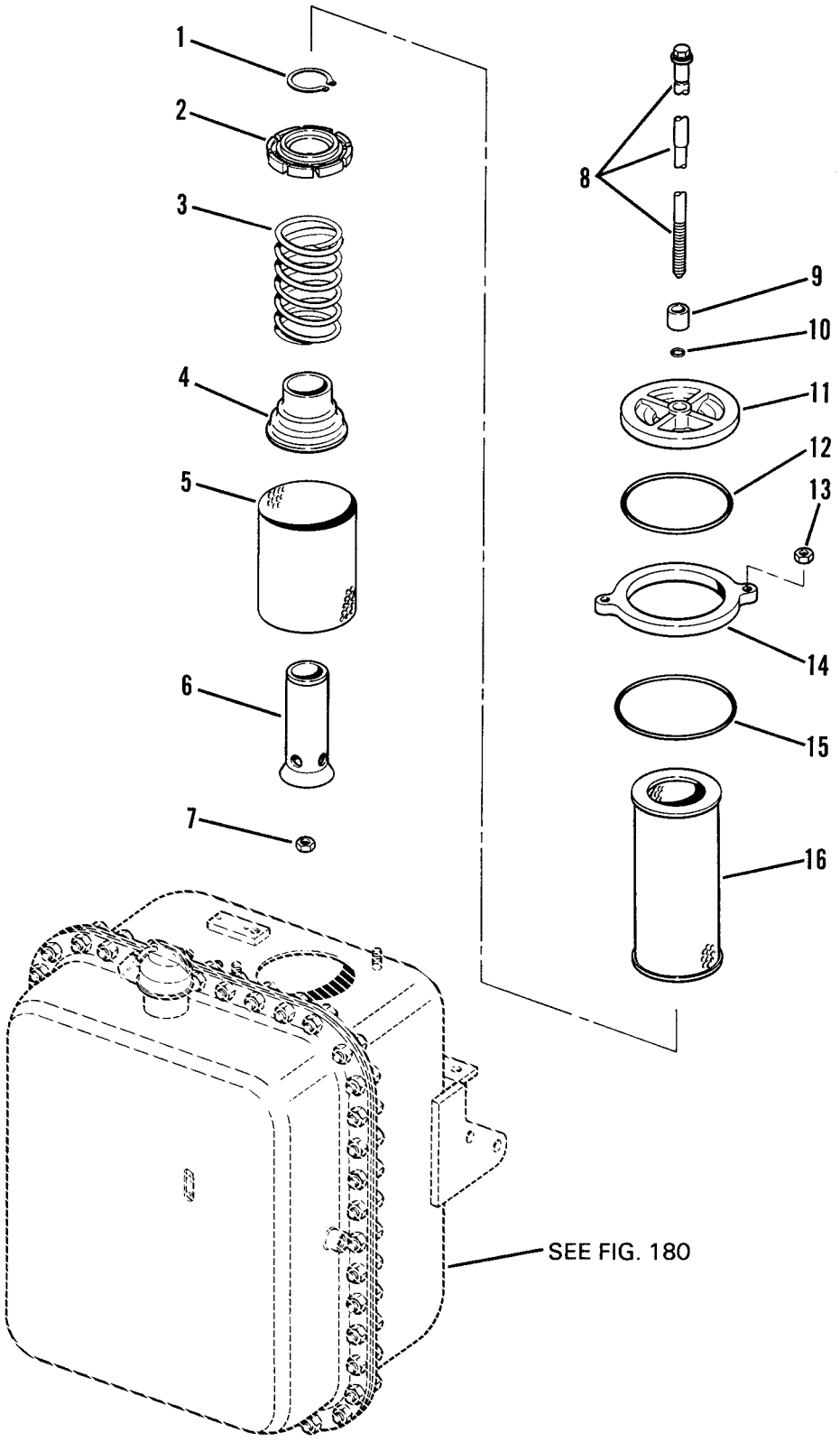

Figure 181. Hydraulic Tank Filter Group

(1) ITEM NO	(2) SMR CODE	(3) NSN	(4) CAGEC	(5) PART NUMBER	(6) DESCRIPTION AND USABLE ON CODES (UOC)	(7) QTY
					GROUP 2408 LIQUID TANKS OR RESERVOIRS	
					FIG. 181 HYDRAULIC TANK FILTER GROUP	
1	PFOZZ	5365010686063	11083	8J8322	RING	1
2	PFOZZ	5365012574621	11083	9J2914	SPACER,STEPPED	1
3	PFOZZ		11083	8J8443	SPRING	1
4	PFOZZ	4820010686064	11083	8J8468	VALVE,FLOW CONTROL	1
5	PFOZZ	2990011033642	11083	3G3267	SCREEN ASSEMBLY	1
6	PFOZZ	4710012532747	11083	8J8436	TUBE,METALLIC	1
7	PFOZZ	5310007638920	96906	MS51967-20	NUT,PLAIN,HEXAGON	1
8	PFOZZ	5306012101640	11083	8J8439	BOLT,SHOULDER	1
9	PFOZZ	5365012573305	11083	1J6309	SPACER,SLEEVE	1
10	PCOZZ	5331005992938	11083	8F9206	O-RING	1
11	PFOZZ	2910012539604	11083	9T3264	COVER,FLUID FILTER	1
12	PCOZZ	5331012664995	11083	032770	O-RING	1
13	PFOZZ	5310011134047	11083	3K6060	NUT,SELF-LOCKING,HE	2
14	PFOZZ	5365012573281	11083	9J4994	SPACER,PLATE	1
15	PFOZZ	5331000743771	11083	5L5032	O-RING PART OF KIT P/N 5R6287 ..	1
16	PAOZZ	2910014376111	11083	1R0722	FILTER ELEMENT,FLUI PART OF KIT P/N 5R6287	1
					END OF FIGURE	

1
2 - 22
AND
FIG.183

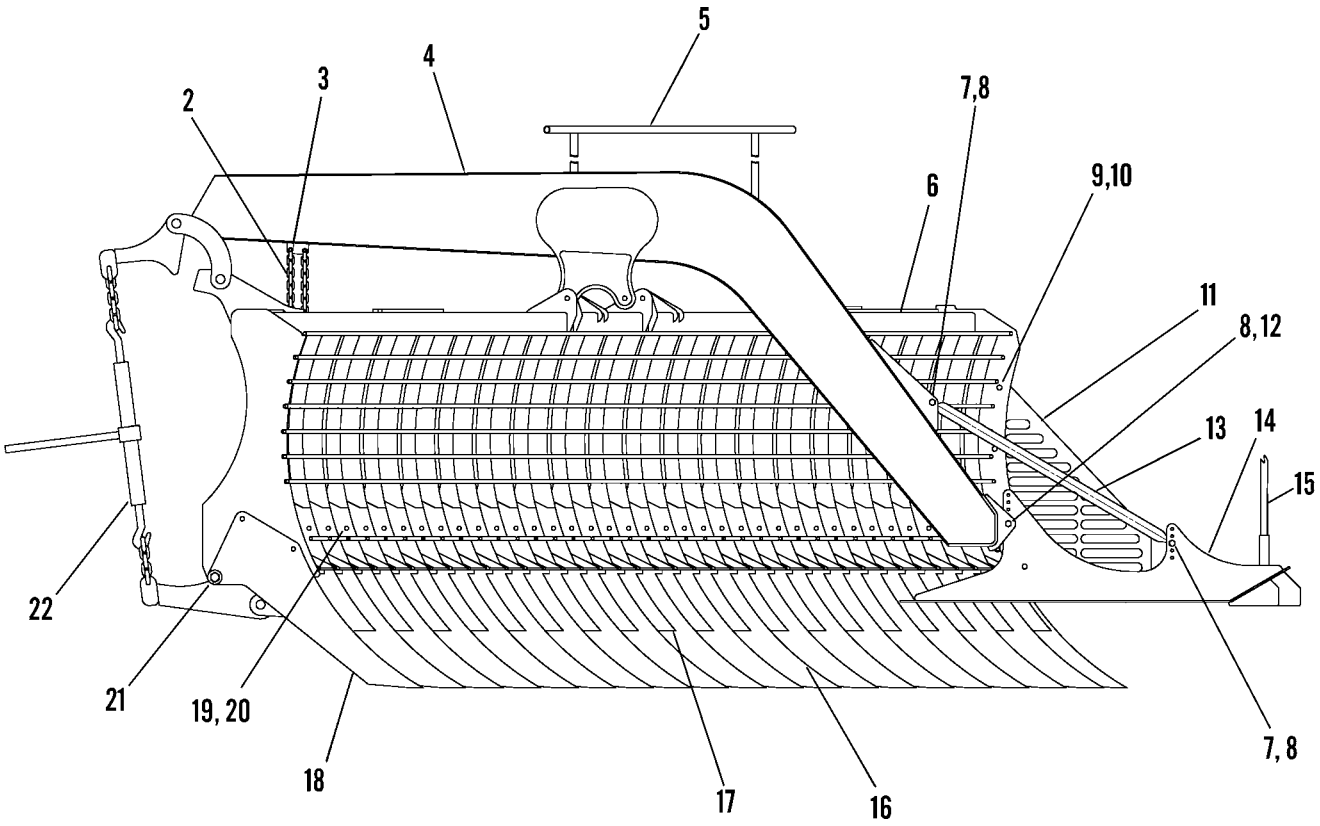

Figure 182. Mine Rake (1991 MCAP)

(1) ITEM NO	(2) SMR CODE	(3) NSN	(4) CAGEC	(5) PART NUMBER	(6) DESCRIPTION AND USABLE ON CODES (UOC)	(7) QTY
					GROUP 33 SPECIAL PURPOSE KITS	
					GROUP 3307 SPECIAL PURPOSE KITS	
					FIG. 182 MINE RAKE (1991 MCAP)	
1	XBOFF		11083	F7X6645	RAKE,MINE CLEARING	1
2	PFOZZ	3020015064088	11083	4R9528	.CHAIN,CABLE 1/4 X 33 IN	1
3	PFOZZ	3020015063839	11083	4R9529	.LINK-LEAF CHAIN DOUBLE CLEVIS (1/4 TO 5/16)	2
4	PAOZZ	2590015035904	11083	4R9530	.ARM ASSEMBLY,LIFT B	1
5	PFOZZ	2540015072355	11083	4R9531	.SIGHT ASSEMBLY	1
6	PAOZZ	2590015035906	11083	4R9536	.BLADE,MINE CLEARING	1
7	XDOZZ		11083	7X0290	.BOLT,MACHINE 3/8 X 3 1/2	2
8	PFOZZ	5310010588071	11083	2K4973	.LOCKNUT 3/8	4
9	PFOZZ	5306012979000	11083	7X0345	.BOLT,MACHINE 5/8 X 1 3/4	4
10	PFOZZ	5310010665275	11083	3K2889	.NUT 5/8	4
11	PFOZA	9535015071395	11083	4R9537	.PLATE,METAL	1
12	PFOZZ	5306004550462	11083	4L9337	.BOLT,MACHINE 3/8 X 1 1/2	2
13	PFOZA	9530015071406	11083	4R9532	.BAR METAL	1
14	PAOZZ	2590015035914	11083	4R9533	.SHOE ASSEMBLY	1
15	PFOZA	9530015071407	11083	4R9535	.BAR METAL	1
16	PFOZZ	3830015075644	11083	4R9538	.SCARIFIER TOOTH LONG	18
17	PFOZZ	3830015075648	11083	4R9539	.SCARIFIER TOOTH SHORT	19
18	PFOZZ	3830015075673	11083	4R9540	.SCARIFIER TOOTH END	2
19	PFOZZ	5305000712069	11083	5P2566	.SCREW,CAP,HEXAGON H 1/2 X 1 1/2	37
20	PFOZZ	5310011843538	11083	6V8188	.NUT,PLAIN,HEXAGON 1/2	37
21	PFOZZ	5306014294064	11083	8T9393	.BOLT,CLOSE TOLERANC CLOSE .... TOLERANCE 5/8 X 1 1/2	6
22	PFOZZ	5340015068940	11083	4R9534	.TURNBUCKLE	2
				END OF FIGURE		

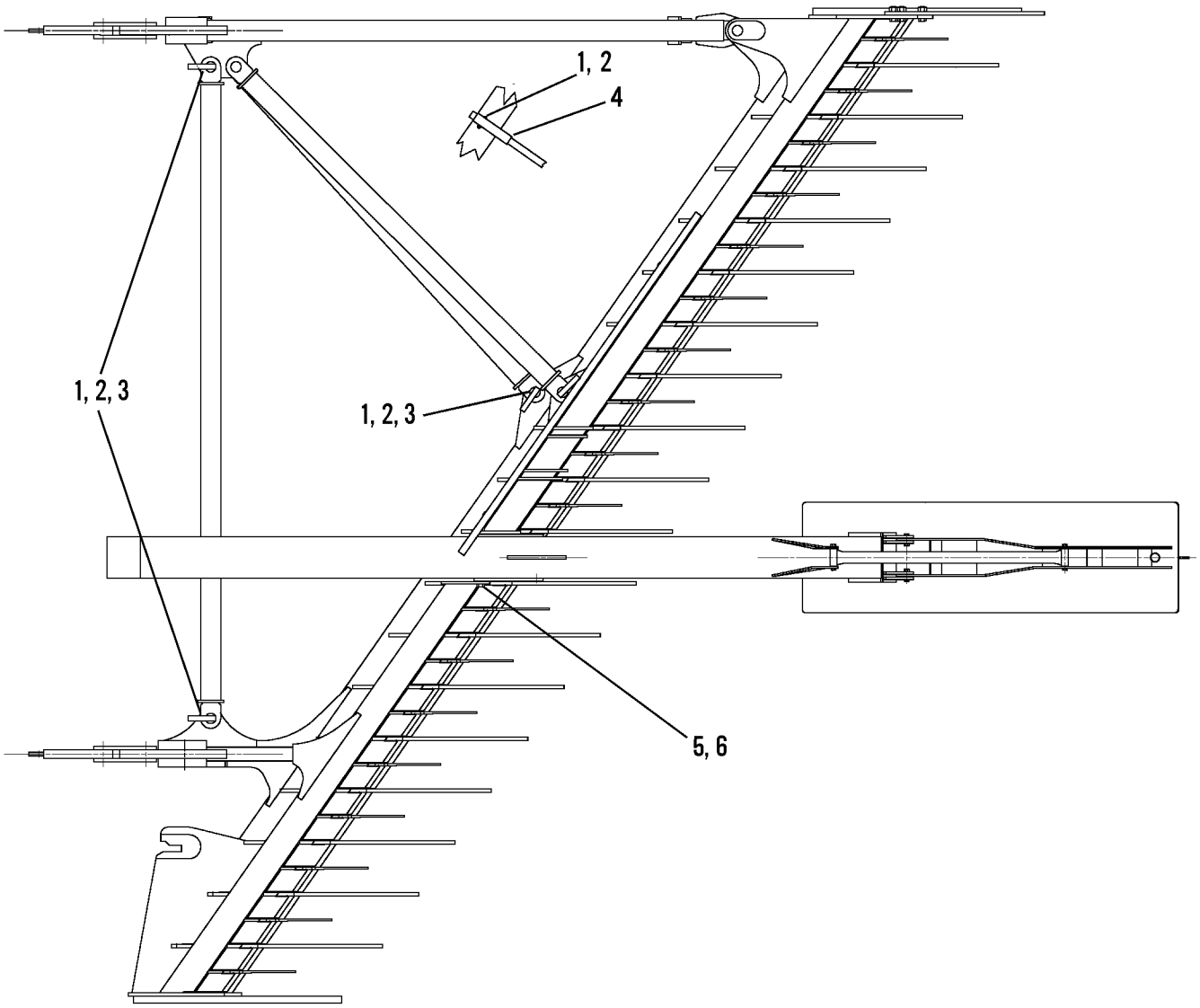

Figure 183. Mine Rake (1991 MCAP)

(1) ITEM NO	(2) SMR CODE	(3) NSN	(4) CAGEC	(5) PART NUMBER	(6) DESCRIPTION AND USABLE ON CODES (UOC)	(7) QTY
					GROUP 3307 SPECIAL PURPOSE KITS	
					FIG. 183 MINE RAKE (1991 MCAP)	
1	PFOZZ	5310011602034	11083	2D6235	NUT,SELF-LOCKING,HE 1/4	7
2	PFOZZ	5306014741533	11083	8T9367	BOLT,MACHINE 1/4 X 2	7
3	PFOZZ	5315015064366	11083	4R9541	PIN STRAIGHT,HEADED	4
4	PFOZZ	2540015072355	11083	4R9531	SIGHT ASSEMBLY	1
5	PFOZZ	5305014212120	11083	8T6871	SCREW,CAP,HEXAGON H 5/8 X 2 1/2	2
6	PFOZZ	5310010665275	11083	3K2889	NUT 5/8	2
				END OF FIGURE		

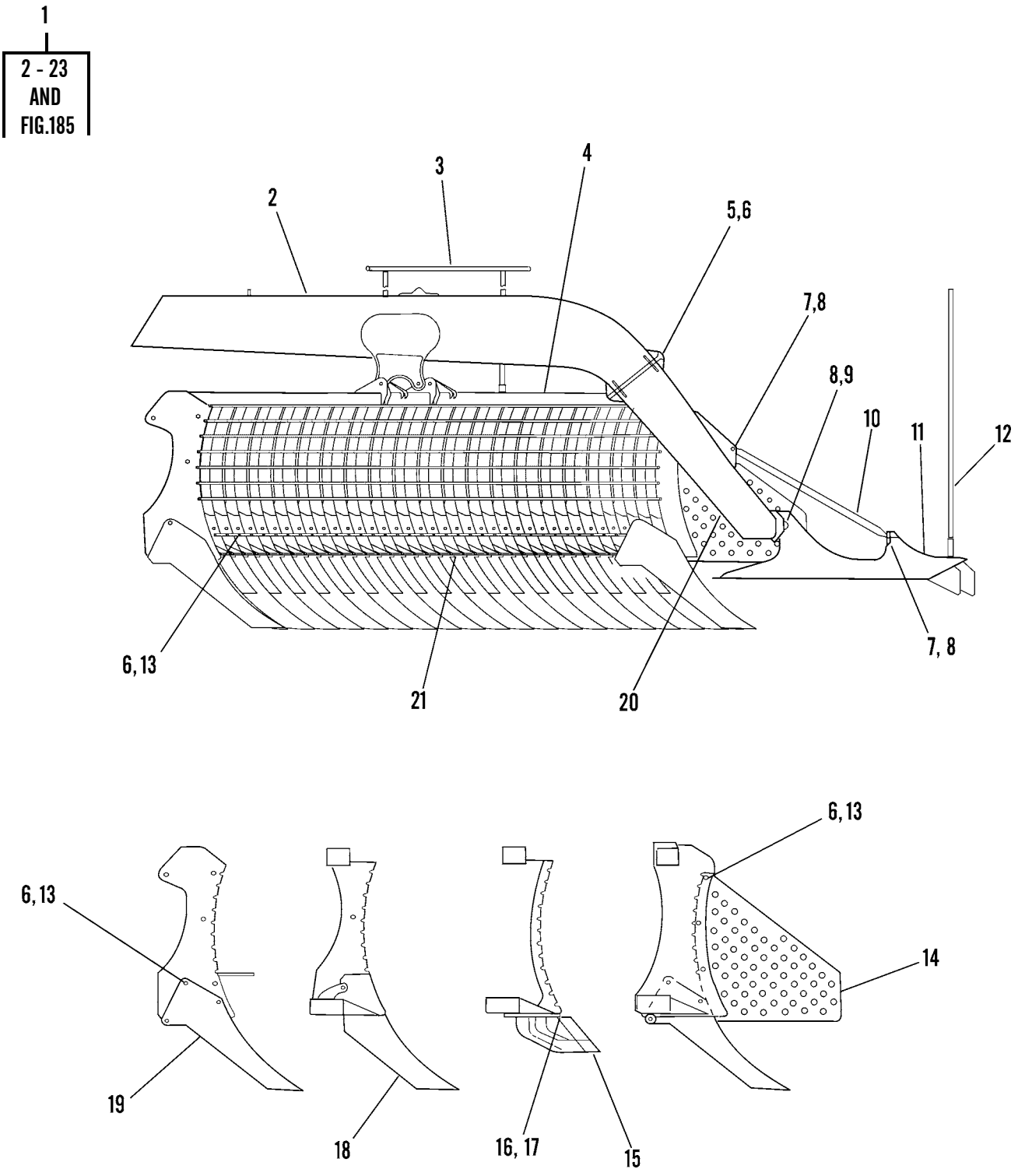

Figure 184. Mine Rake (1996 and 2004 MCAP)

(1) ITEM NO	(2) SMR CODE	(3) NSN	(4) CAGEC	(5) PART NUMBER	(6) DESCRIPTION AND USABLE ON CODES (UOC)	(7) QTY
					GROUP 3307 SPECIAL PURPOSE KITS	
					FIG. 184 MINE RAKE (1996 AND 2004 MCAP)	
1	PAOFF	2590014408717	11083	122-6956	SUPPLEMENTARY EQUIP INCLUDES .. ITEMS ON FIG. 184 & 185 UOC:GRC,WIN	1
2	PFOZZ	2590015042526	11083	1234384	.LOCK,BLADE,VEHICULA REAR	1
3	PFOZZ	2540015072355	11083	4R9531	.SIGHT ASSEMBLY INCLUDED IN 1000 HR SERVICE KIT	1
4	PFOZZ	2590015042521	11083	1234385	.BLADE,MINE CLEARING	1
5	PFOZZ	5306012979000	11083	7X0345	.BOLT,MACHINE 5/8 X 1 3/4 ..... INCLUDED IN 1000 HR SERVICE KIT	10
6	PFOZZ	5310014239059	11083	7X0448	.NUT,PLAIN,HEXAGON 5/8 INCLUDED IN 300 & 1000 HR SERVICE KIT	10
7	PFOZZ	5306014736489	11083	7X0328	.BOLT,MACHINE 1/2 X 3 1/2 ..... INCLUDED IN 1000 HR SERVICE KIT	2
8	PFOZZ	5310000443339	19207	443339	.NUT,SELF-LOCKING,HE 1/2 ..... INCLUDED IN 1000 HR SERVICE KIT	4
9	PFOZZ	5305000712069	11083	5P2566	.SCREW,CAP,HEXAGON H 1/2 X 1 1/2 INCLUDED IN 1000 HR SERVICE KIT	2
10	PFOZZ	2590015065474	11083	4R9924	.BAR,STABILIZER INCLUDED IN 1000 HR SERVICE KIT	1
11	PFOZZ	2590015042524	11083	4R9504	.BRACKET,VEHICULAR C INCLUDED IN 1000 HR SERVICE KIT	1
12	PFOZA	9530015071407	11083	4R9535	.BAR METAL	1
13	PFOZZ	5306014309053	11083	7X0347	.BOLT,MACHINE 5/8 X 2 1/4 ..... INCLUDED IN 300 & 1000 HR SERVICE KIT	28
14	PFOZA	9535015072404	11083	1234386	.PLATE,METAL INCLUDED IN 300 & 1000 HR SERVICE KIT	1
15	PFOZZ	3830015075679	11083	1234383	.SCARIFIER TOOTH SHORT, INCLUDED IN 300 & 1000 HR SERVICE KIT	19
16	PFOZZ	5306014294065	11083	8T9398	.BOLT,CLOSE TOLERANC 3/4 X 1 3/4,INCLUDED IN 300 & 1000 HR SERVICE KIT	19
17	PFOZZ	5310002696340	11083	1K6870	.NUT,SELF-LOCKING,HE 3/4, ... INCLUDED IN 300 & 1000 HR SERVICE KIT	19
18	PFOZZ	3830015075677	11083	1234382	.SCARIFIER TOOTH LONG, INCLUDED IN 300 & 1000 HR SERVICE KIT	18
19	PFOZZ	3830015075675	11083	1234381	.SCARIFIER TOOTH END, INCLUDED IN 300 & 1000 HR SERVICE KIT	2
20	PFOZZ	2590015042529	11083	4R9516	.BRACKET,VEHICULAR C FRONT, ... INCLUDED IN 1000 HR SERVICE KIT	1
21	PFOZZ	3805015127425	11083	1237041	.MOLDBOARD,EARTHMOVI INCLUDED . IN 1000 HR SERVICE KIT	3
22	PAFZZ	2590014390300	11083	133-9705	PARTS KIT,BLADE INCLUDES ITEMS 6, 13-19 ON FIG. 184 300 HOUR KIT UOC:WIN	1
23	PAFZZ	2590014390299	11083	133-9700	PARTS KIT,BLADE INCLUDES ITEMS 3,5-21 ON FIG 184 AND ITEMS 11, 14, 18-21, 24 AND 25 ON FIG 185 1000 HOUR KIT UOC:WIN	1

END OF FIGURE

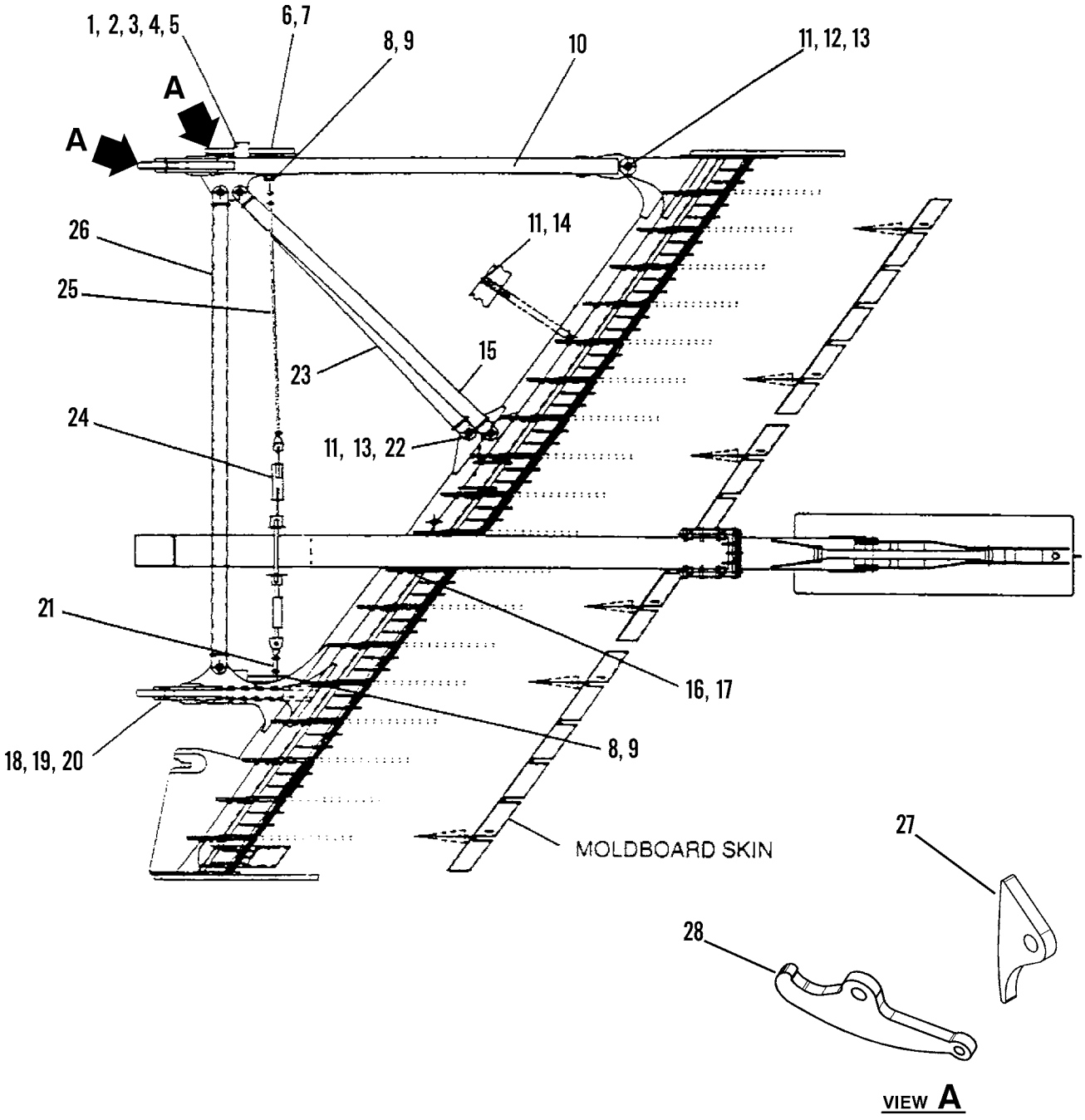

Figure 185. Mine Rake (1996 and 2004 MCAP)

(1) ITEM NO	(2) SMR CODE	(3) NSN	(4) CAGEC	(5) PART NUMBER	(6) DESCRIPTION AND USABLE ON CODES (UOC)	(7) QTY
					GROUP 3307 SPECIAL PURPOSE KITS	
					FIG. 185 MINE RAKE (1996 AND 2004 MCAP)	
1	PFOZZ	5315015064365	11083	1234387	PIN STRAIGHT HEADLE	2
2	PFOZZ	5305012857096	11083	5P2228	SCREW,CAP,HEXAGON H 1/2 X 1.00	12
3	PFOZZ	5310010980624	11083	8T4223	WASHER,FLAT 1/2	4
4	PFOZZ	5340015068965	11083	1266600	LEVER MANUAL CONTRO	2
5	PFOZZ	5342015063730	11083	1266601	RECEPTACLE,QUICK RE	2
6	PFOZZ	5306014309056	11083	7X0366	BOLT,MACHINE 3/4 X 2	2
7	PFOZZ	5310012983199	11083	8T4994	WASHER,FLAT 3/4	24
8	PFOZZ	5310010588071	11083	2K4973	LOCKNUT 3/8	4
9	PFOZZ	5306015066459	11083	8T7003	BOLT,MACHINE 3/8 X 3	2
10	PFOZZ	2540015072366	11083	1234388	CYLINDER ASSEBLY RE	1
11	PFOZZ	5310011602034	11083	2D6235	NUT,SELF-LOCKING,HE 1/4, ... INCLUDED IN 1000 HR SERVICE KIT	12
12	PFOZZ	5315015065027	11083	4R9509	PIN STRAIGHT HEADED	2
13	PFOZZ	5306014741533	11083	8T9367	BOLT,MACHINE 1/4 X 2	10
14	PFOZZ	5305000712510	11083	5P2675	SCREW,CAP,HEXAGON H 1/4 X 1 3/4, INCLUDED IN 1000 HR SERVICE KIT	2
15	PFOZZ	2590015069689	11083	1234390	TUBE,ASSEMBLY METAL	1
16	PFOZZ	5305014212120	11083	8T6871	SCREW,CAP,HEXAGON H 5/8 X 2 1/2	2
17	PFOZZ	5310014239059	11083	7X0448	NUT,PLAIN,HEXAGON 5/8	2
18	PFOZZ		11083	6V6380	ASSEMBLY,PIN INCLUDED IN 1000 HR SERVICE KIT	2
19	PFOZZ		11083	7X0310	BOLT,MACHINE 7/16 X 2.0, ... INCLUDED IN 1000 HR SERVICE KIT	2
20	PFOZZ	5310012028343	11083	6V5729	NUT,SELF-LOCKING,HE 7/6, ... INCLUDED IN 1000 HR SERVICE KIT	2
21	PFOZZ	4010015084065	11083	4R9929	BOLT,INTERNALLY REL RH, INCLUDED IN 1000 HR SERVICE KIT	1
22	PFOZZ	5315015064366	11083	4R9541	PIN STRAIGHT,HEADED	8
23	PFOZZ	2590015069690	11083	1234391	TUBE ASSEMBLY METAL	1
24	PFOZZ	5340015065794	11083	1234713	TURNBUCKLE INCLUDED IN 1000 HR SERVICE KIT	2
25	PFOZZ	4010015065614	11083	4R9930	ROPE WIRE LH, INCLUDED IN 1000 HR SERVICE KIT	1
26	PFOZZ	2590015069686	11083	1234389	TUBE ASSEMBLY METAL	2
27	PCFZZ	5340015117092	11083	2378282	PLATE,MOUNTING (EAR) ON BLADE . USED ON 1996 MCAP ONLY	1
28	PFOZZ	3040015115739	11083	2378283	PLATE,LEVER USED ON 1996 MCAP . ONLY	1
					END OF FIGURE	

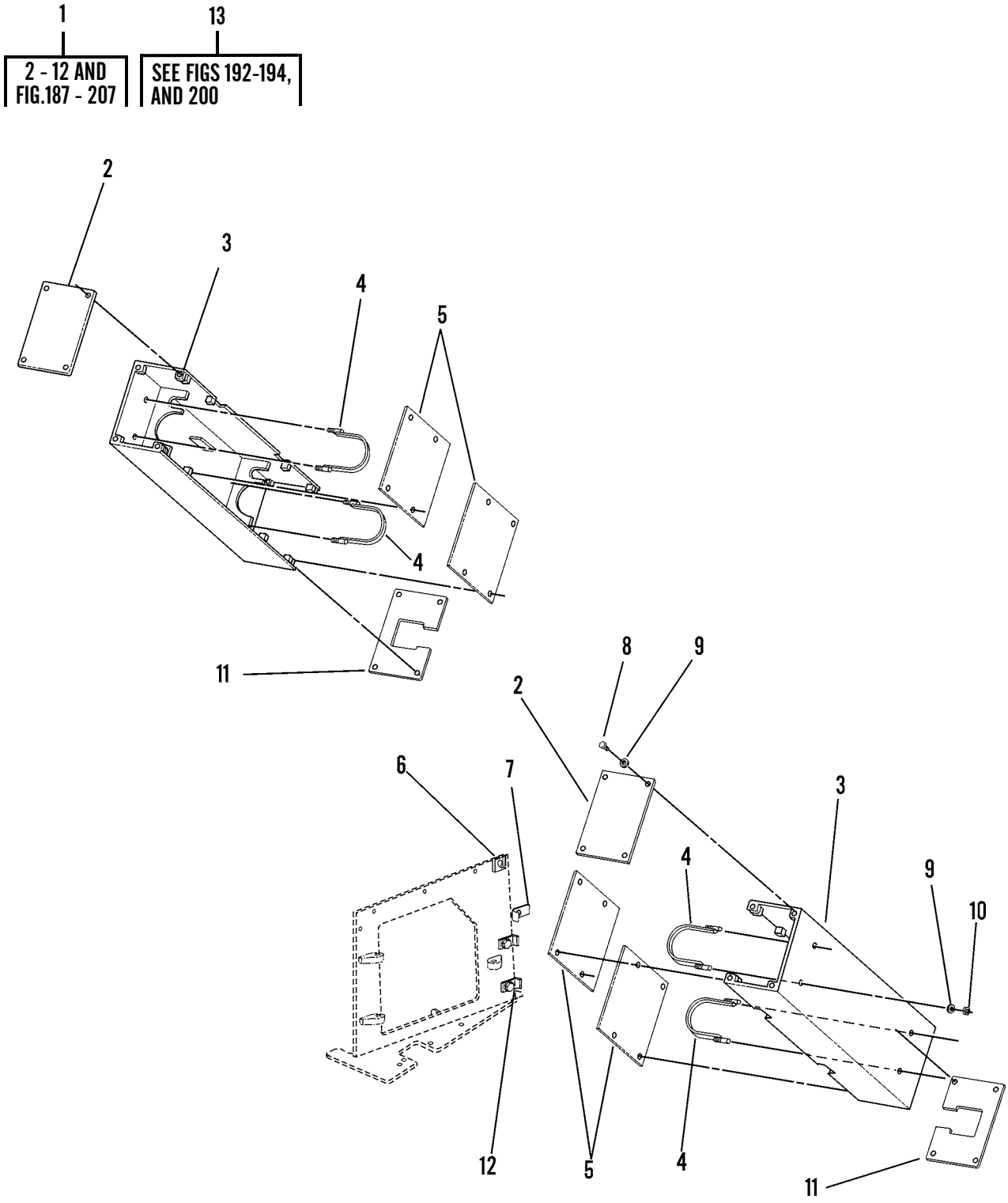

Figure 186. Cylinder Guard

(1) ITEM NO	(2) SMR CODE	(3) NSN	(4) CAGEC	(5) PART NUMBER	(6) DESCRIPTION AND USABLE ON CODES (UOC)	(7) QTY
					GROUP 3307 SPECIAL PURPOSE KITS	
					FIG. 186 CYLINDER GUARD	
*1	PAOZZ	2546015203155	11083	2537823	(2004 MCAP)	1
1	XBOZZ		11083	4R9542	ARMOR PROTECTION AS (1991 MCAP)	1
1	PAFZZ	2590014390295	11083	133-9220	ARMOR PLATING (1996 MCAP)	1
2	PAOZZ	5340015035908	11083	4R9583	.COVER,ACCESS TOP CYINDER ..... COVER	2
3	PAOZZ	5340015035910	11083	4R9582	.GUARD,CYLINDER	2
4	PAOZZ		11083	4R9586	.BRACKET LIFT CYLINDER	4
5	PAOZZ	5340015035911	11083	4R9585	.COVER,ACCESS INNER	4
6	PAOZZ	5340015035915	11083	4R9564	.PLATE,MOUNTING RETAINING	1
7	PAOZZ		11083	4R9576	.BRACKET,ANGLE ENGINE RIGHT SIDE	1
8	PFOZZ	5305000712069	11083	5P2566	.SCREW,CAP,HEXAGON H 1/2 X 1 1/2	23
9	PFOZZ	5310010976720	11083	5P1076	.WASHER,SHOULDERED A 1/2	32
10	PFOZZ	5310011843538	11083	6V8188	.NUT,PLAIN,HEXAGON 1/2	8
11	PAOZZ	5340015035917	11083	4R9584	.COVER,ACCESS BOTTOM	2
12	PAOZZ	5340015035918	11083	4R9577	.BRACKET,MOUNTING RH	2
*13	PAOZZ	2540015198287	11083	2556270	KIT,ARMOR CONVERSIO (2004 MCAP . CONVERION KIT)	1
					END OF FIGURE	

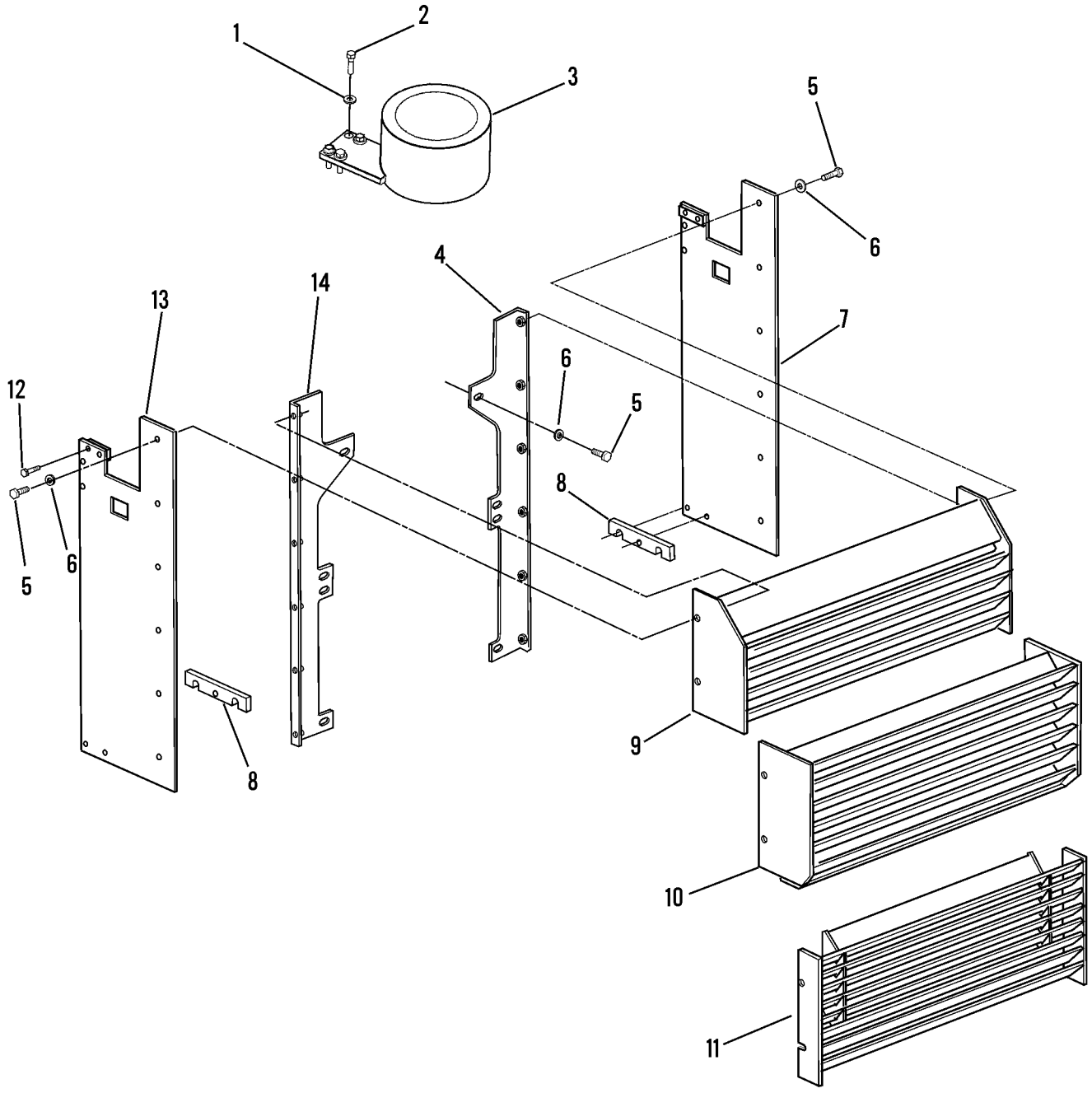

Figure 187. Radiator Guard Group

(1) ITEM NO	(2) SMR CODE	(3) NSN	(4) CAGEC	(5) PART NUMBER	(6) DESCRIPTION AND USABLE ON CODES (UOC)	(7) QTY
					GROUP 3307 SPECIAL PURPOSE KITS	
					FIG. 187 RADIATOR GUARD GROUP	
1	PFOZZ	5310010948810	11083	5P1075	WASHER,SQUARE CONE 3/8	4
2	PFOZZ	5306004550462	11083	4L9337	BOLT,MACHINE 3/8 X 1 1/2	4
3	PAOZZ	5340015035920	11083	4R9552	COVER,ACCESS RADIATOR CAP	1
4	PFOZZ	2590015064661	11083	4R9545	SUPPORT ASSEMBLY LH	1
5	PFOZZ	5306014309057	11083	7X0346	BOLT,MACHINE 5/8 X 2.0	20
6	PFOZZ	5310014219919	11083	7X0515	WASHER,FLAT 5/8	20
7	PAOZZ	5340015035922	11083	4R9551	BRACKET,MOUNTING LH	1
8	PFOZZ	5365015061840	11083	4R9550	SPACER,PLATE	2
9	PAOZZ	2510015035923	11083	4R9548	GRILLE,RADIATOR,VEH UPPER	1
10	PAOZZ	2510015035924	11083	4R9547	GRILLE,RADIATOR,VEH CENTER	1
11	PAOZZ	2510015035925	11083	4R9546	GRILLE,RADIATOR,VEH LOWER	1
					UOC:GRC	
12	PFOZZ	5306014389845	11083	7X0325	BOLT,MACHINE 1/2 X 2 1/2	10
13	PAOZZ	5340015035937	11083	4R9549	BRACKET,MOUNTING RH	1
14	PFOZZ	2590015064668	11083	4R9544	SUPPORT ASSEMBLY RH	1
				END OF FIGURE		

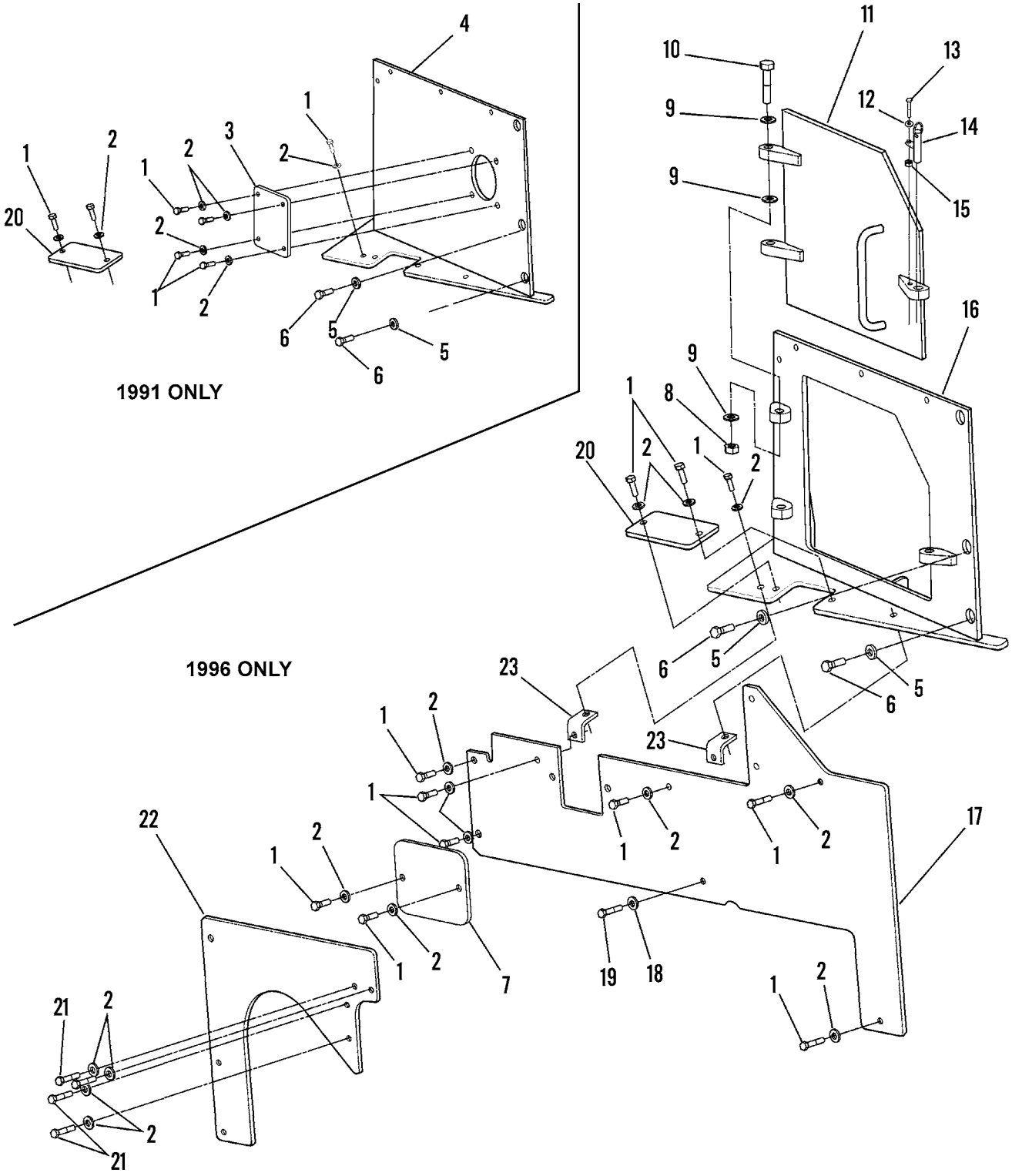

Figure 188. Right Side Engine Guards (1991 and 1996 MCAP)

(1) ITEM NO	(2) SMR CODE	(3) NSN	(4) CAGEC	(5) PART NUMBER	(6) DESCRIPTION AND USABLE ON CODES (UOC)	(7) QTY
					GROUP 3307 SPECIAL PURPOSE KITS	
					FIG. 188 RIGHT SIDE ENGINE GUARDS (1991 & 1996 MCAP)	
1	PFOZZ	5305000712069	11083	5P2566	SCREW,CAP,HEXAGON H USE QTY OF 11 ON 1996 MCAP	15
2	PFOZZ	5310010976720	11083	5P1076	WASHER,SHOULDERED A USE QTY OF 18 ON 1996 MCAP	22
3	PAOZZ	5340015035938	11083	4R9563	COVER,ACCESS RH (1991 MCAP ONLY)	1
4	PAOZZ	5340015035945	11083	4R9558	COVER,ACCESS RH (1991 MCAP ONLY)	1
5	PFOZZ	5310014219919	11083	7X0515	WASHER,FLAT 5/8	2
6	PFOZZ	5306014309057	11083	7X0346	BOLT,MACHINE 5/8 X 2.0	2
7	PAOZZ	5340015035947	11083	4R9565	COVER,ACCESS SIDE-NATO USED ON (1996 MCAP ONLY)	1
8	PFOZZ	5310002696340	11083	1K6870	NUT,SELF-LOCKING,HE 3/4 (USED ON 1996 MCAP ONLY)	2
9	PFOZZ	5310012983199	11083	8T4994	WASHER,FLAT 3/4 (STET ON 1996 . MCAP ONLY)	6
10	PFOZZ	5306014309063	11083	7X0370	BOLT,MACHINE 3/4 X 3 1/2 (USED ON 1996 MCAP ONLY)	2
11	PAOZZ	2510015035954	11083	4R9962	DOOR,HATCH,VEHICLE RH (USED ON 1996 MCAP ONLY)	1
12	PFOZZ	5310010980634	11083	5P4115	WASHER,SPRING TENSI 1/4 (USED ON 1996 MCAP ONLY)	1
13	PFOZZ	5305000712510	11083	5P2675	SCREW,CAP,HEXAGON H 1/4 X 1 3/4 (USED ON 1996 MCAP ONLY)	1
14	PFOZZ	5315015065042	11083	1326182	PIN STRAIGHT HEADED (USED ON .. 1996 MCAP ONLY)	1
15	PFOZZ	5310014290779	11083	3E9865	NUT,PLAIN,HEXAGON 1/4 (USED ON 1996 MCAP ONLY)	1
16	PAOZZ	5670015035960	11083	4R9961	DOOR FRAME,METAL RH (USED ON .. 1996 MCAP ONLY)	1
17	PAOZZ	9515015035965	11083	4R9580	ARMOR PLATE RH LOWER	1
18	PFOZZ	5310010948810	11083	5P1075	WASHER,SQUARE CONE 3/8	1
19	PFOZZ	5306014138763	11083	8T2501	BOLT,SHOULDER 3/8 X 2.0	1
20	PAOZZ	5340015035968	11083	4R9566	COVER,ACCESS TOP-NATO	1
21	PFOZZ	5306014389845	11083	7X0325	BOLT,MACHINE 1/2 X 2 1/2	7
22	PAOZZ	5340015035970	11083	4R9555	BRACKET,MOUNTING RH LOWER	1
23	PFOZZ	5340015065801	11083	4R9567	BRACKET MOUNTING	2
				END OF FIGURE		

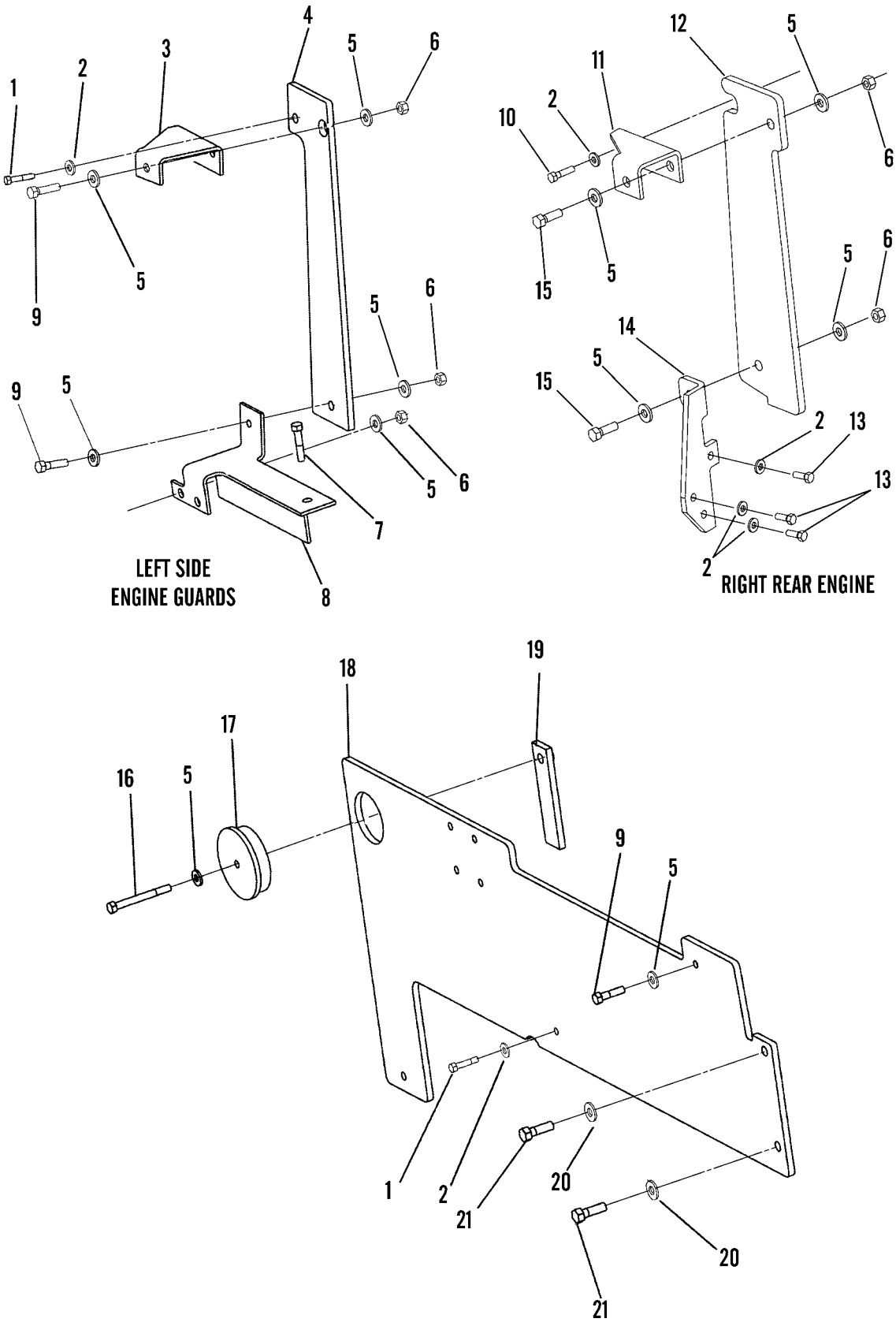

Figure 189. Left and Right Side Engine Guards

(1) ITEM NO	(2) SMR CODE	(3) NSN	(4) CAGEC	(5) PART NUMBER	(6) DESCRIPTION AND USABLE ON CODES (UOC)	(7) QTY
					GROUP 3307 SPECIAL PURPOSE KITS	
					FIG. 189 LEFT AND RIGHT SIDE ENGINE GUARDS	
1	PFOZZ	5306014138763	11083	8T2501	BOLT,SHOULDER 3/8 X 2.0	2
2	PFOZZ	5310010948810	11083	5P1075	WASHER,SQUARE CONE 3/8	2
3	PFOZZ	5340015065818	11083	4R9579	BRACKET MOUNTING LH	1
4	PAOZZ	9515015040756	11083	4R9556	ARMOR PLATE LH	1
5	PFOZZ	5310010976720	11083	5P1076	WASHER,SHOULDERED A 1/2	7
6	PFOZZ	5310011843538	11083	6V8188	NUT,PLAIN,HEXAGON 1/2	3
7	PFOZZ	5306014389845	11083	7X0325	BOLT,MACHINE 1/2 X 2 1/2	1
8	PFOZZ	5340015065808	11083	4R9559	BRACKET MOUNTING	1
9	PFOZZ	5306014293170	11083	8T4835	BOLT,MACHINE 1/2 X 2.0	3
10	PFOZZ	5306004550462	11083	4L9337	BOLT,MACHINE 3/8 X 1 1/2	1
11	PFOZZ	5340015065805	11083	4R9575	BRACKET MOUNTING RH REAR	1
12	PAOZZ	9515015040759	11083	4R9574	ARMOR PLATE ENGINE,RH	1
13	PFOZZ	5306002286835	11083	4L6454	BOLT,MACHINE (3/8 X 1)	3
14	PFOZZ	5340015065826	11083	4R9562	BRACKET MOUNTING RH ENGINE GUARD	1
15	PFOZZ	5305000712069	11083	5P2566	SCREW,CAP,HEXAGON H (1/2 X 1-1/2)	2
16	PFOZZ	5306014309050	11083	7X0333	BOLT,MACHINE (1/2 X 4-3/4)	1
17	PAOZZ	5340015040823	11083	4R9557	PLATE,MOUNTING RETAINER	1
18	PAOZZ	9515015040760	11083	4R9554	ARMOR PLATE ENGINE GUARD,LOWER LH	1
19	PFOZZ	5340015065820	11083	4R9578	PLATE MOUNTING FLAT	1
20	PFOZZ	5310014219919	11083	7X0515	WASHER,FLAT (5/8)	2
21	PFOZZ	5306014309057	11083	7X0346	BOLT,MACHINE (5/8 X 2)	2
				END OF FIGURE		

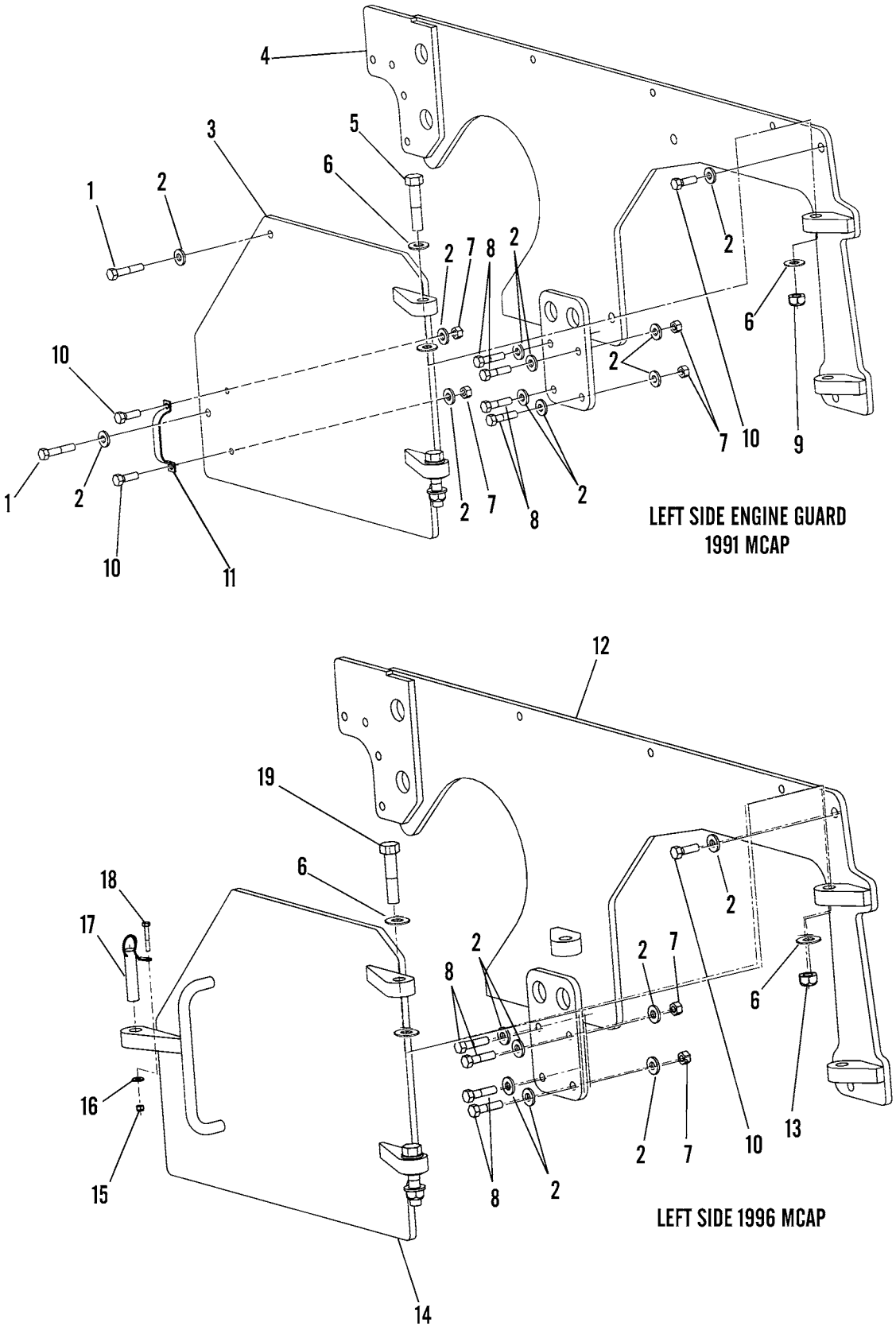

Figure 190. Left Side Engine Guard (1991 and 1996 MCAP)

(1) ITEM NO	(2) SMR CODE	(3) NSN	(4) CAGEC	(5) PART NUMBER	(6) DESCRIPTION AND USABLE ON CODES (UOC)	(7) QTY
					GROUP 3307 SPECIAL PURPOSE KITS	
					FIG. 190 LEFT SIDE ENGINE GUARD (1991 AND 1996 MCAP ONLY)	
1	PFOZZ	5306014389845	11083	7X0325	BOLT,MACHINE (1/2 X 2-12) USED ON 1991 MCAP ONLY	2
2	PFOZZ	5310010976720	11083	5P1076	WASHER,SHOULDERED A (1/2) USED ON 1991 MCAP ONLY	21
3	PAOZZ	9515015040762	11083	4R9560	ARMOR PLATE ENGINE FILTER, USED ON 1991 MCAP ONLY	1
4	PAOZZ	9515015040764	11083	4R9561	ARMOR PLATE ENGINE,LH, USED ON 1991 MCAP ONLY	1
5	PFOZZ	5305014212122	11083	8C8842	SCREW,CAP,HEXAGON H USED ON ... 1991 MCAP ONLY	2
6	PFOZZ	5310012983199	11083	8T4994	WASHER,FLAT (3/4)	6
7	PFOZZ	5310011843538	11083	6V8188	NUT,PLAIN,HEXAGON (1/2),USED ON 1991 MCAP ONLY	7
8	PFOZZ	5306014293170	11083	8T4835	BOLT,MACHINE (1/2 X 2),USED ON 1991 MCAP ONLY	4
9	PFOZZ	5310014150234	11083	6V8182	NUT,PLAIN,HEXAGON USED ON 1991 MCAP ONLY	4
10	PFOZZ	5305000712069	11083	5P2566	SCREW,CAP,HEXAGON H (1/2 X .... 1-1/2) USED ON 1991 MCAP ONLY	8
11	PFOZZ	5340015069448	11083	7D0941	HANDLE DOOR USED ON 1991 MCAP . ONLY	1
12	PAOZZ	9515015040765	11083	1067443	ARMOR PLATE ENGINE,LH, USED ON 1996 MCAP ONLY	1
13	PFOZZ	5310002696340	11083	1K6870	NUT,SELF-LOCKING,HE (3/4),USED ON ..... 1996 MCAP ONLY	2
14	PAOZZ	2815015040817	11083	1067444	GUARD,DIESEL ENGINE ENGINE .... FILTER, USED ON 1996 MCAP ONLY	1
15	PFOZZ	5310014290779	11083	3E9865	NUT,PLAIN,HEXAGON (1/4),USED ON 1996 MCAP ONLY	1
16	PFOZZ	5310010980634	11083	5P4115	WASHER,SPRING TENSI (1/4),USED ON 1996 MCAP ONLY	1
17	PFOZZ	5315015065042	11083	1326182	PIN STRAIGHT HEADED USED ON 1996 MCAP ONLY	1
18	PFOZZ	5305000712510	11083	5P2675	SCREW,CAP,HEXAGON H (1/4 X .... 1-3/4), USED ON 1996 MCAP ONLY	1
19	PFOZZ	5306014309063	11083	7X0370	BOLT,MACHINE (3/4 X 3-1/2),USED ON 1996 MCAP ONLY	2
				END OF FIGURE		

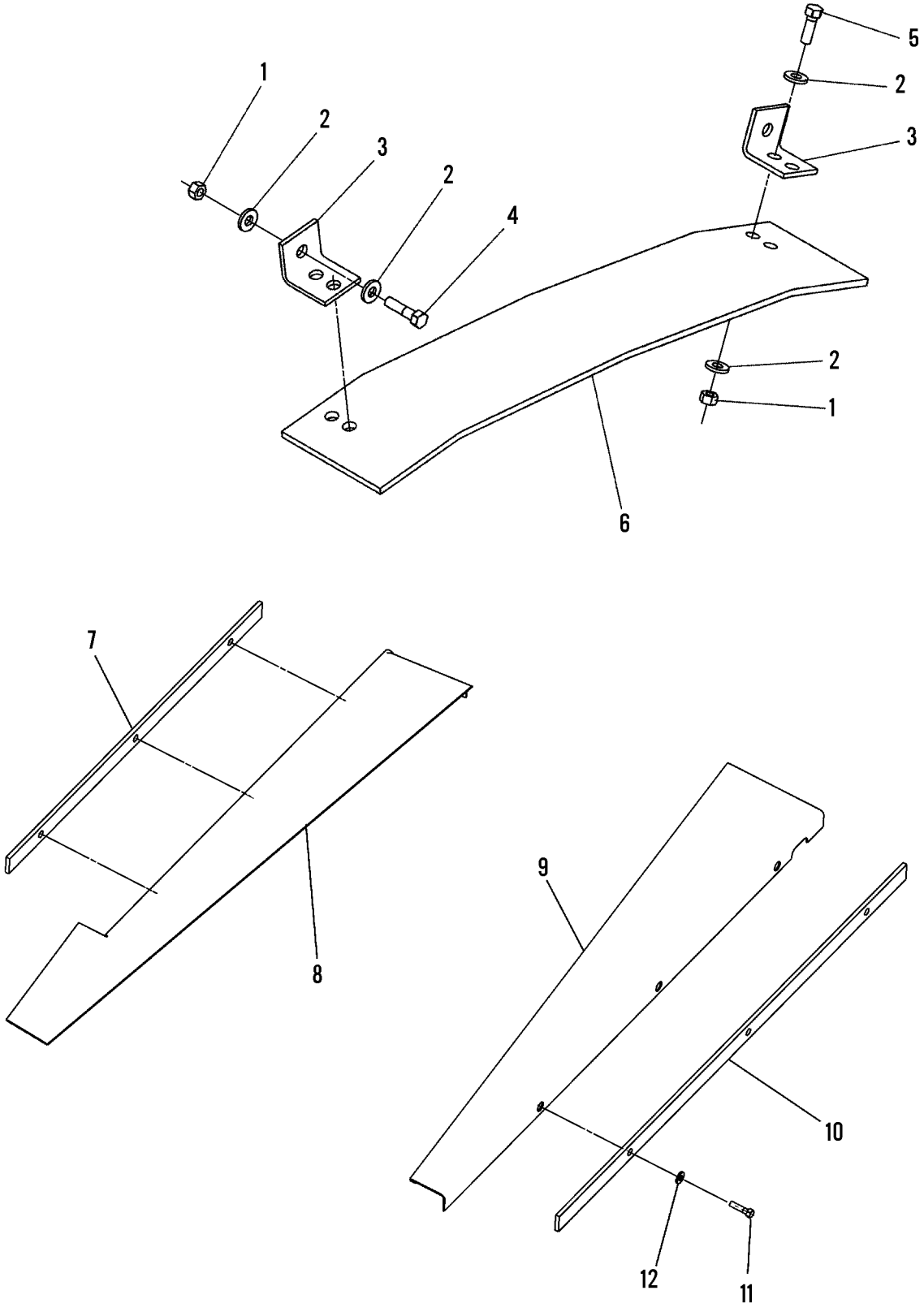

Figure 191. Engine Hood Guards

(1) ITEM NO	(2) SMR CODE	(3) NSN	(4) CAGEC	(5) PART NUMBER	(6) DESCRIPTION AND USABLE ON CODES (UOC)	(7) QTY
					GROUP 3307 SPECIAL PURPOSE KITS	
					FIG. 191 ENGINE HOOD GUARDS	
1	PFOZZ	5310011843538	11083	6V8188	NUT,PLAIN,HEXAGON (1/2)	6
2	PFOZZ	5310010976720	11083	5P1076	WASHER,SHOULDERED A (1/2)	12
3	PFOZZ	5340015069452	11083	4R9568	BRACKET,ANGLE	2
4	PFOZZ	5306014293170	11083	8T4835	BOLT,MACHINE (1/2 X 2)	2
5	PFOZZ	5305000712069	11083	5P2566	SCREW,CAP,HEXAGON H (1/2 X 1-1/2)	4
6	PAOZZ	9515015040768	11083	4R9571	ARMOR PLATE	1
7	PAOZZ	9515015040770	11083	4R9570	ARMOR PLATE RH SCREEN	1
8	PAOZZ	9515015040577	11083	4R9569	ARMOR PLATE ENGINE,RH	1
9	PAOZZ	9515015040581	11083	4R9572	ARMOR PLATE ENGINE,LH	1
10	PAOZZ	9515015040586	11083	4R9573	ARMOR PLATE LH SCREEN	1
11	PFOZZ	5306004550462	11083	4L9337	BOLT,MACHINE (3/8 X 1-1/2)	6
12	PFOZZ	5310010948810	11083	5P1075	WASHER,SQUARE CONE (3/8)	6
				END OF FIGURE		

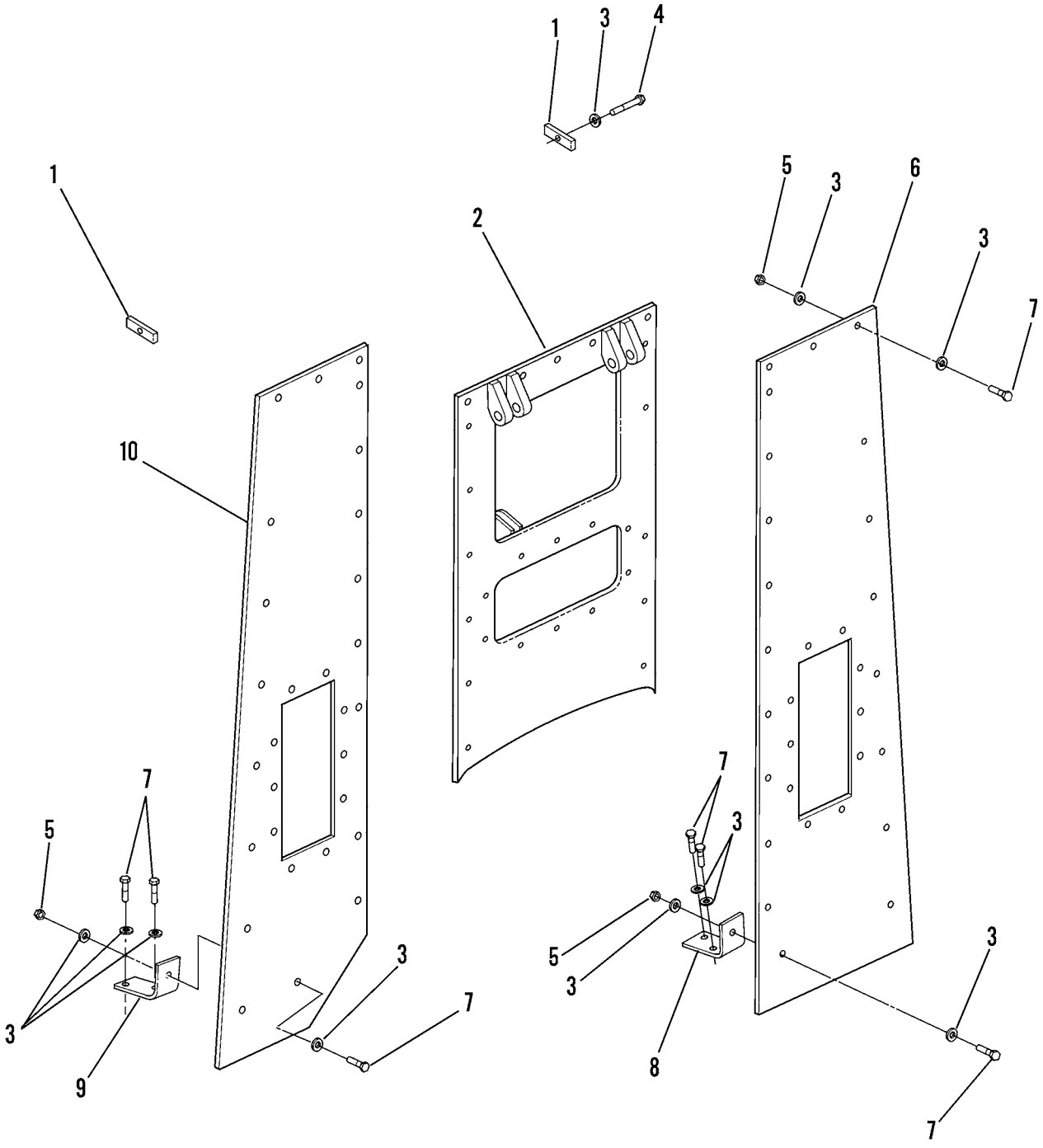

MCAP 1991, 1996

Figure 192. Front of Cab (Sheet 1 of 2)

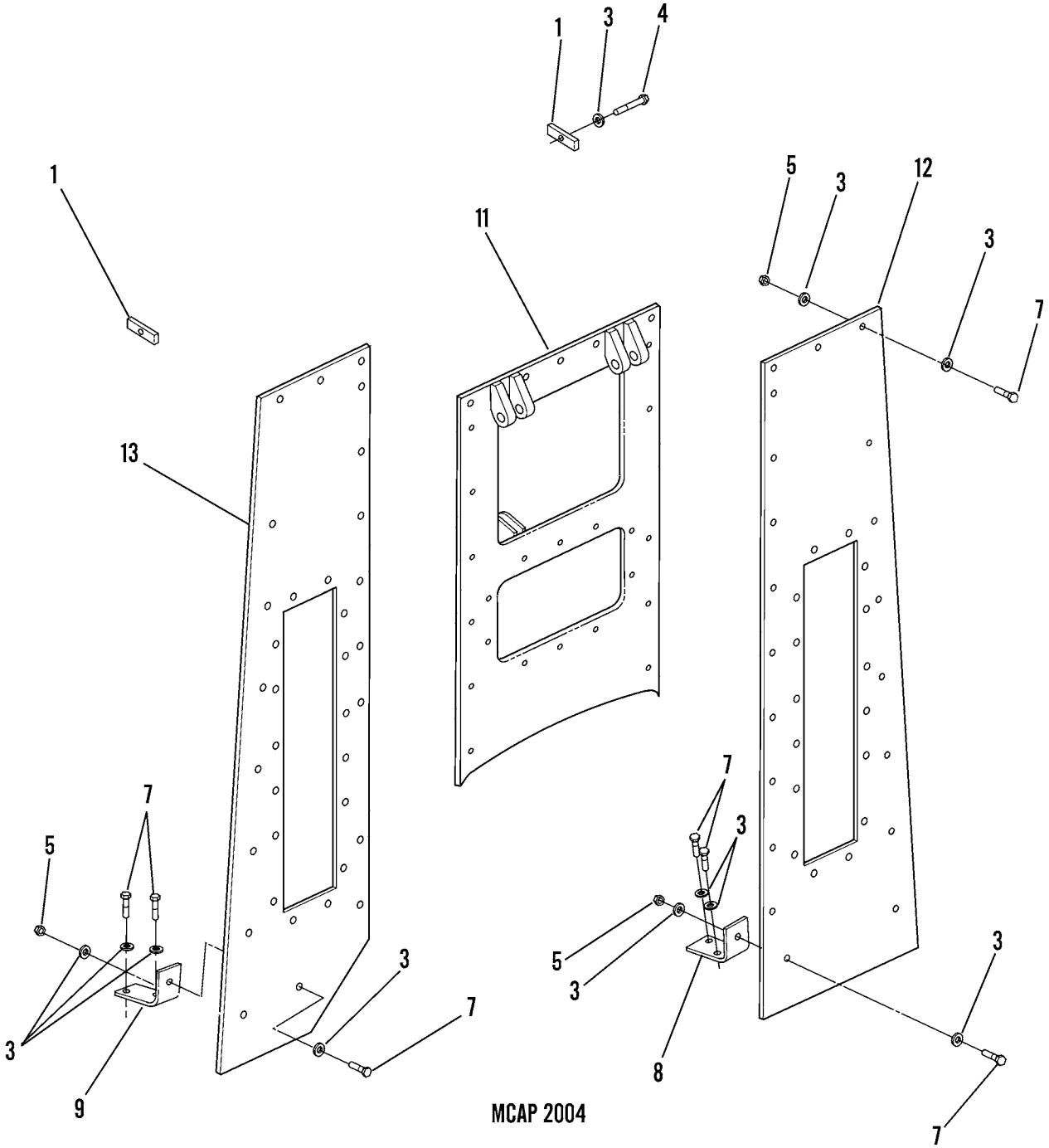

Figure 192. Front of Cab (Sheet 2 of 2)

(1) ITEM NO	(2) SMR CODE	(3) NSN	(4) CAGEC	(5) PART NUMBER	(6) DESCRIPTION AND USABLE ON CODES (UOC)	(7) QTY
					GROUP 3307 SPECIAL PURPOSE KITS	
					FIG. 192 FRONT OF CAB	
1	PFOZZ	5340015069457	11083	4R9645	PLATE MOUNTING FLAT CANOPY	4
2	PAOZZ	9515015040589	11083	4R9601	ARMOR PLATE CENTER	1
3	PFOZZ	5310010976720	11083	5P1076	WASHER,SHOULDERED A (1/2)	34
4	PFOZZ	5306014736489	11083	7X0328	BOLT,MACHINE (1/2 X 3-1/2)	4
5	PFOZZ	5310011843538	11083	6V8188	NUT,PLAIN,HEXAGON (1/2)	13
6	PAOZZ	9515015040535	11083	4R9600	ARMOR PLATE LH	1
7	PFOZZ	5306014293170	11083	8T4835	BOLT,MACHINE (1/2 X 2)	17
8	PFOZZ	5340015069464	11083	4R9605	BRACKET MOUNTING RH	1
9	PFOZZ	5340015069427	11083	4R9606	BRACKET,ANGLE LH	1
10	PAOZZ	9515015040550	11083	4R9599	ARMOR PLATE RH	1
*11	PAOZZ	9515015244207	11083	2537800	ARMOR PLATE CENTER (2004 MCAP) INCLUDED IN 2004 CONVERSION KIT	1
*12	PAOZZ	9515015244209	11083	2537802	ARMOR PLATE LH (2004 MCAP) .... INCLUDED IN 2004 CONVERSION KIT	1
*13	PAOZZ	9515015244210	11083	2537799	ARMOR PLATE RH (2004 MCAP) .... INCLUDED IN 2004 CONVERSION KIT	1
					END OF FIGURE	

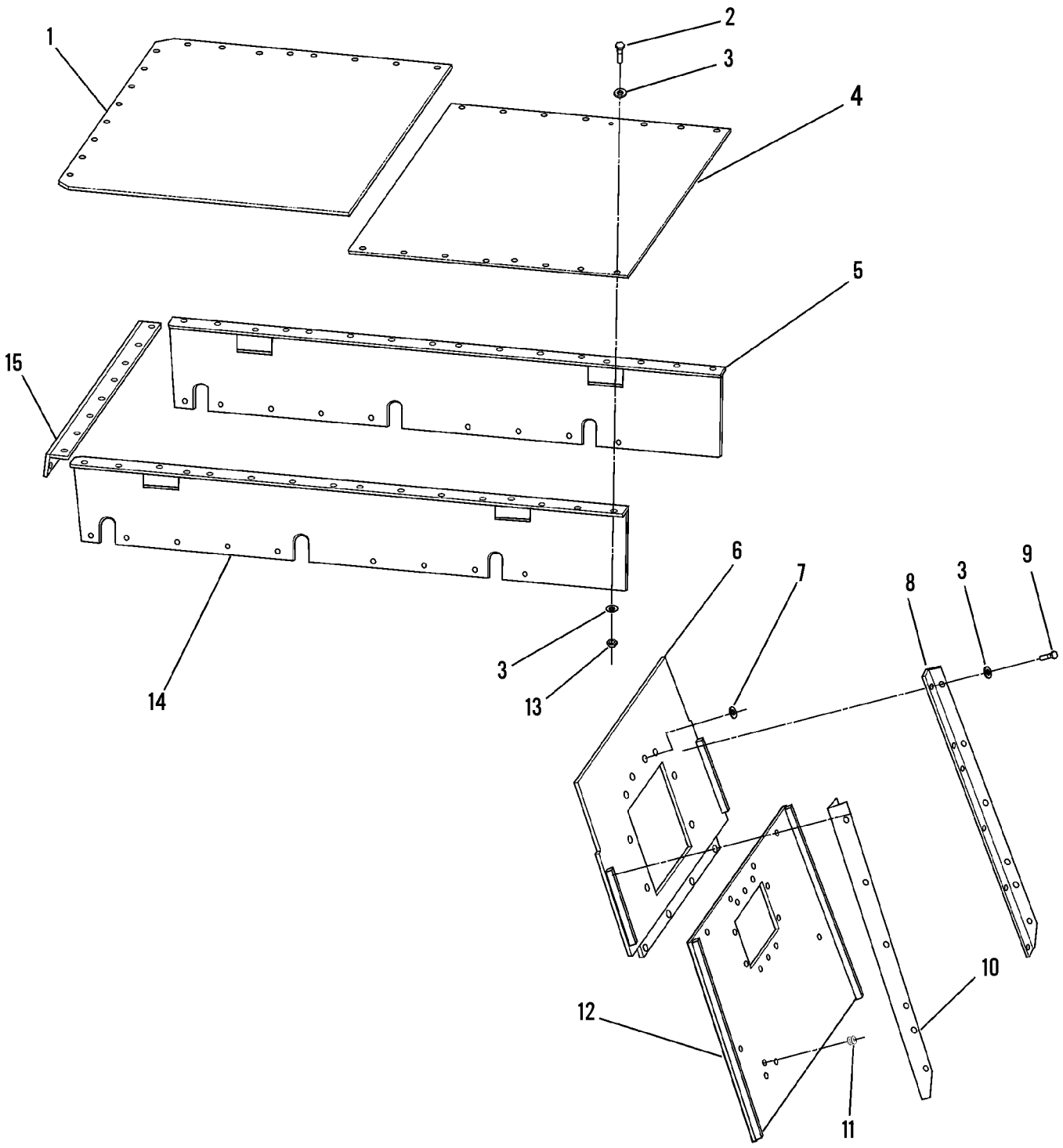

Figure 193. Top and Rear of Cab

(1) ITEM NO	(2) SMR CODE	(3) NSN	(4) CAGEC	(5) PART NUMBER	(6) DESCRIPTION AND USABLE ON CODES (UOC)	(7) QTY
					GROUP 3307 SPECIAL PURPOSE KITS	
					FIG. 193 TOP AND REAR OF CAB	
1	PAOZZ	9515015040563	11083	4R9718	ARMOR PLATE TOP FRONT	1
2	PFOZZ	5305000712069	11083	5P2566	SCREW,CAP,HEXAGON H (1/2 X 1-1/2)	40
3	PFOZZ	5310010976720	11083	5P1076	WASHER,SHOULDERED A (1/2)	88
4	PAOZZ	9515015040571	11083	4R9719	ARMOR PLATE TOP REAR	1
5	PAOZZ	9515015040578	11083	4R9588	ARMOR PLATE RH	1
6	PAOZZ	9515015040582	11083	4R9596	ARMOR PLATE CAB REAR TOP	1
7	PFOZZ	5310014219919	11083	7X0515	WASHER,FLAT (5/8)	4
8	PFOZZ		11083	4R9657	STRIP,METAL RH	1
9	PFOZZ	5305012857096	11083	5P2228	SCREW,CAP,HEXAGON H (1/2 X 1) .	12
10	PFOZA	9535015071387	11083	4R9658	STRIP,METAL LH	1
11	PFOZZ	5325015067583	11083	4D0012	GROMMET,NONMETALLIC	1
12	PAOZZ	9515015040592	11083	4R9597	ARMOR PLATE CAB REAR CENTER ...	1
*12	PAOZZ	9515015244211	11083	2538711	ARMOR PLATE CAB CENTER (2004 MCAP INCLUDED IN 2004 CONVERSION KIT) ..	1
13	PFOZZ	5310011843538	11083	6V8188	NUT,PLAIN,HEXAGON (1/2)	36
14	PAOZZ	9515015040596	11083	4R9589	ARMOR PLATE LH	1
15	PFOZZ	5340015069446	11083	4R9611	BRACKET,ANGLE CAB,TOP	1
				END OF FIGURE		

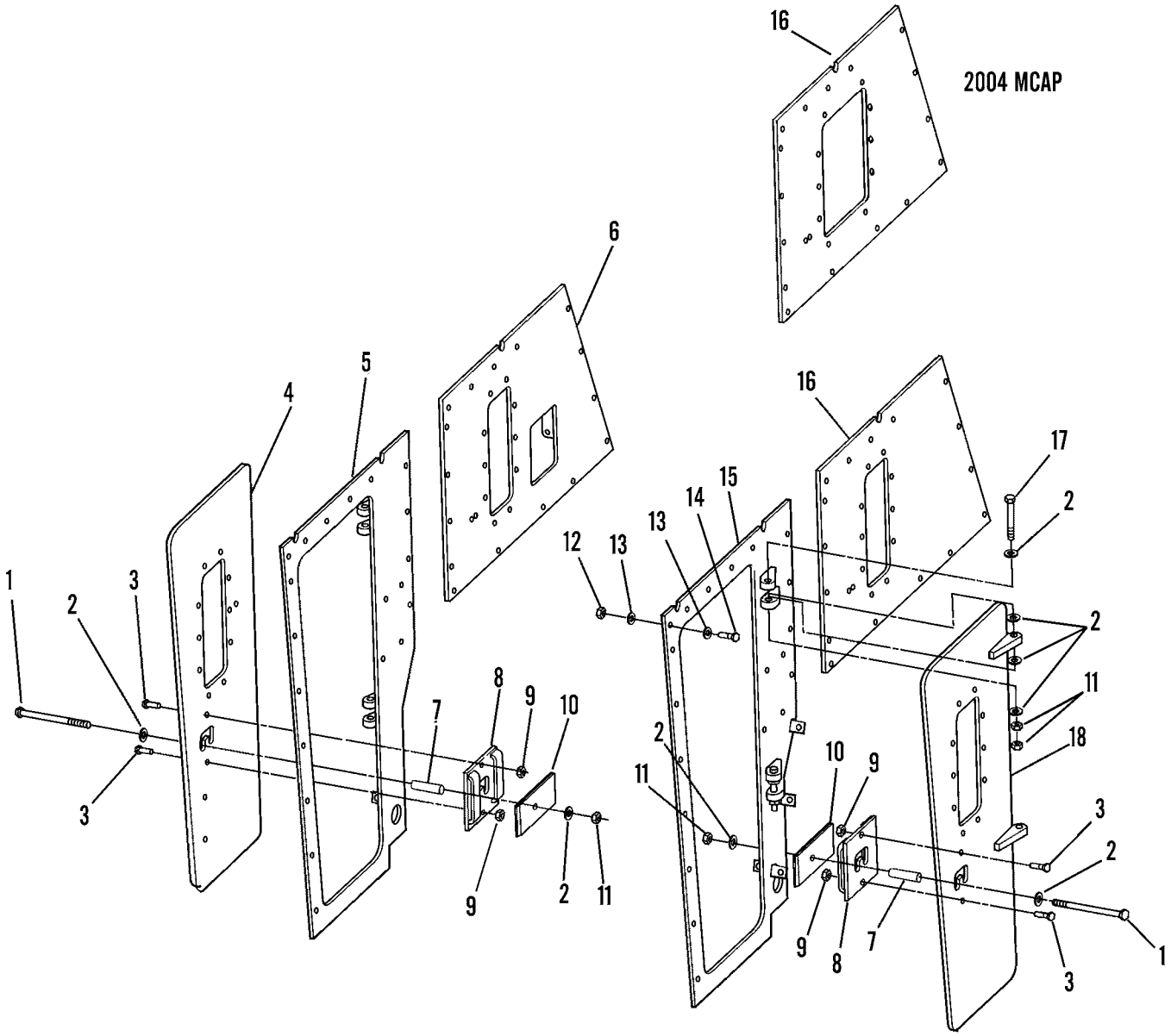

Figure 194. Left Side of Cab

(1) ITEM NO	(2) SMR CODE	(3) NSN	(4) CAGEC	(5) PART NUMBER	(6) DESCRIPTION AND USABLE ON CODES (UOC)	(7) QTY
					GROUP 3307 SPECIAL PURPOSE KITS	
					FIG. 194 LEFT SIDE OF CAB	
1	PFOZZ		11083	8F4225	BOLT,MACHINE (3/4 X 9)	2
2	PFOZZ	5310012983199	11083	8T4994	WASHER,FLAT (3/4)	24
3	PFOZZ	5306014309057	11083	7X0346	BOLT,MACHINE (5/8 X 2)	4
4	PAOZZ	9515015040602	11083	4R9609	ARMOR PLATE RH	1
*4	PAOZZ	9515015244212	11083	2537812	ARMOR PLATE RH (2004 MCAP ..... INCLUDED IN 2004 CONVERSION KIT)	1
5	PAOZZ	9515015040609	11083	4R9594	ARMOR PLATE RH	1
6	PAOZZ	9515015040580	11083	4R9963	ARMOR PLATE	1
*6	PAOZZ	9515015244213	11083	2537804	ARMOR PLATE (2004 MCAP ..... INCLUDED IN 2004 CONVERSION KIT)	1
7	PFOZZ		11083	4R9662	LATCH,DOOR,VEHICULA	4
8	PFOZZ	5340015069449	11083	4R9650	BRACKET,MOUNTING DOOR	2
9	PFOZZ	5310014239059	11083	7X0448	NUT,PLAIN,HEXAGON (5/8)	4
10	PFOZZ	5340015069547	11083	4R9651	PLATE,MOUNTING DEADBOLT	2
11	PFOZZ	5310014150234	11083	6V8182	NUT,PLAIN,HEXAGON (3/4)	10
12	PFOZZ	5310011843538	11083	6V8188	NUT,PLAIN,HEXAGON	26
13	PFOZZ	5310010976720	11083	5P1076	WASHER,SHOULDERED A (1/2)	52
14	PFOZZ	5306014293170	11083	8T4835	BOLT,MACHINE (1/2 X 2)	26
15	PAOZZ	9515015040585	11083	4R9595	ARMOR PLATE LH	1
16	PAOZZ	9515015040546	11083	4R9602	ARMOR PLATE REAR,LH	1
*16	PAOZZ	9515015244214	11083	2537807	ARMOR PLATE LH REAR (2004 MCAP INCLUDED IN 2004 CONVERSION KIT)	1
17	PFOZZ		11083	7X0374	BOLT,MACHINE (3/4 X 5-3/4)	4
18	PAOZZ	9515015040547	11083	4R9610	ARMOR PLATE LH	1
*18	PAOZZ	9515015244215	11083	2537813	ARMOR PLATE LH (2004 MCAP .... INCLUDED IN 2004 CONVERSION KIT)	1

END OF FIGURE

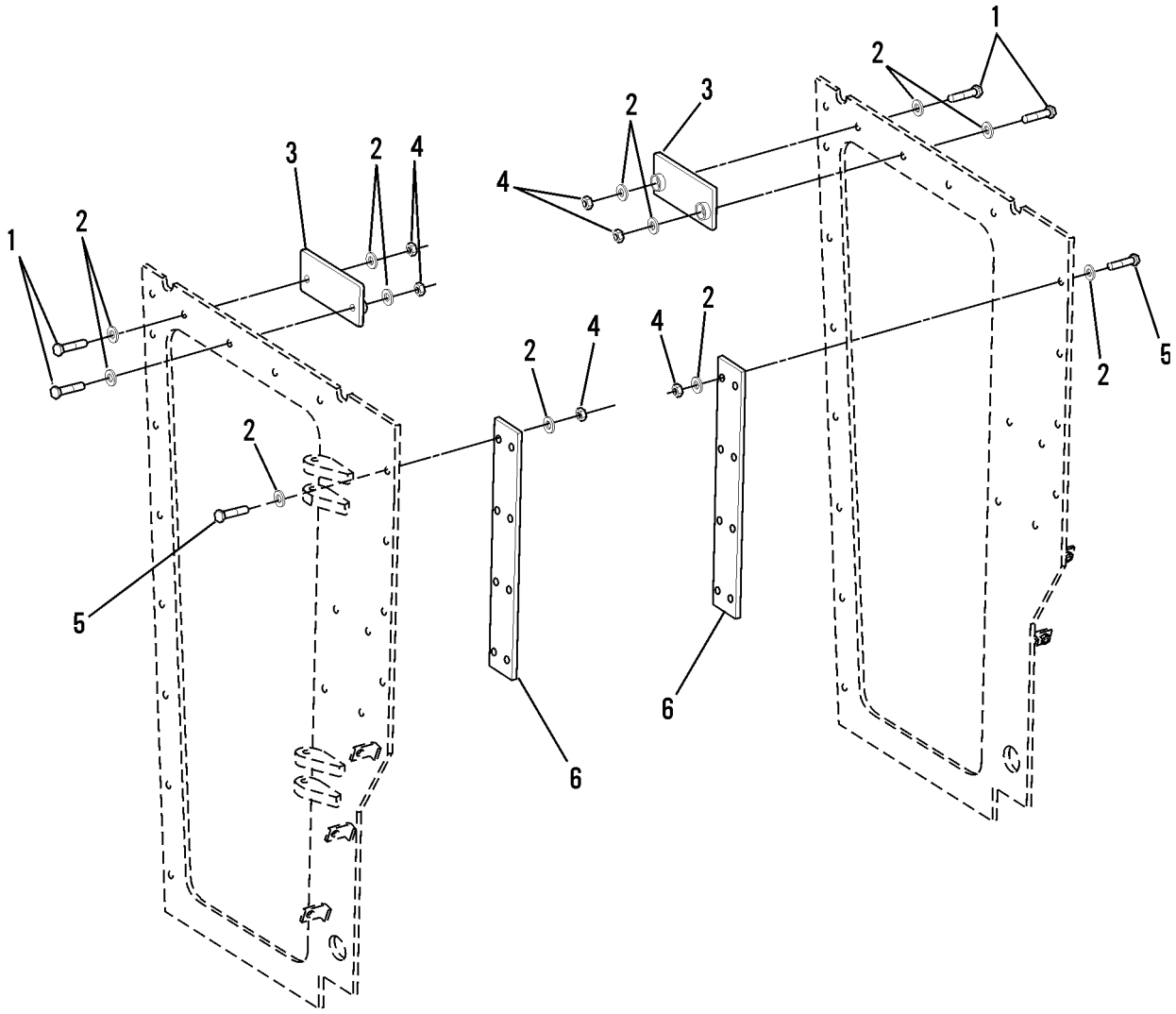

Figure 195. Inside Frame Support

(1) ITEM NO	(2) SMR CODE	(3) NSN	(4) CAGEC	(5) PART NUMBER	(6) DESCRIPTION AND USABLE ON CODES (UOC)	(7) QTY
					GROUP 3307 SPECIAL PURPOSE KITS	
					FIG. 195 INSIDE FRAME SUPPORT	
1	PFOZZ	5305014212093	11083	8T9389	SCREW,CAP,HEXAGON H (1/2 X 2-3/4)	4
2	PFOZZ	5310010976720	11083	5P1076	WASHER,SHOULDERED A (1/2)	40
3	PFOZZ	5340015131951	11083	4R9661	PLATE,MOUNTING COVER,REAR	2
4	PFOZZ	5310011843538	11083	6V8188	NUT,PLAIN,HEXAGON (1/2)	20
5	PFOZZ	5306014293170	11083	8T4835	BOLT,MACHINE (1/2 X 2)	16
6	PFOZZ	5340015074091	11083	4R9617	PLATE,MOUNTING DOOR FRAME	2
				END OF FIGURE		

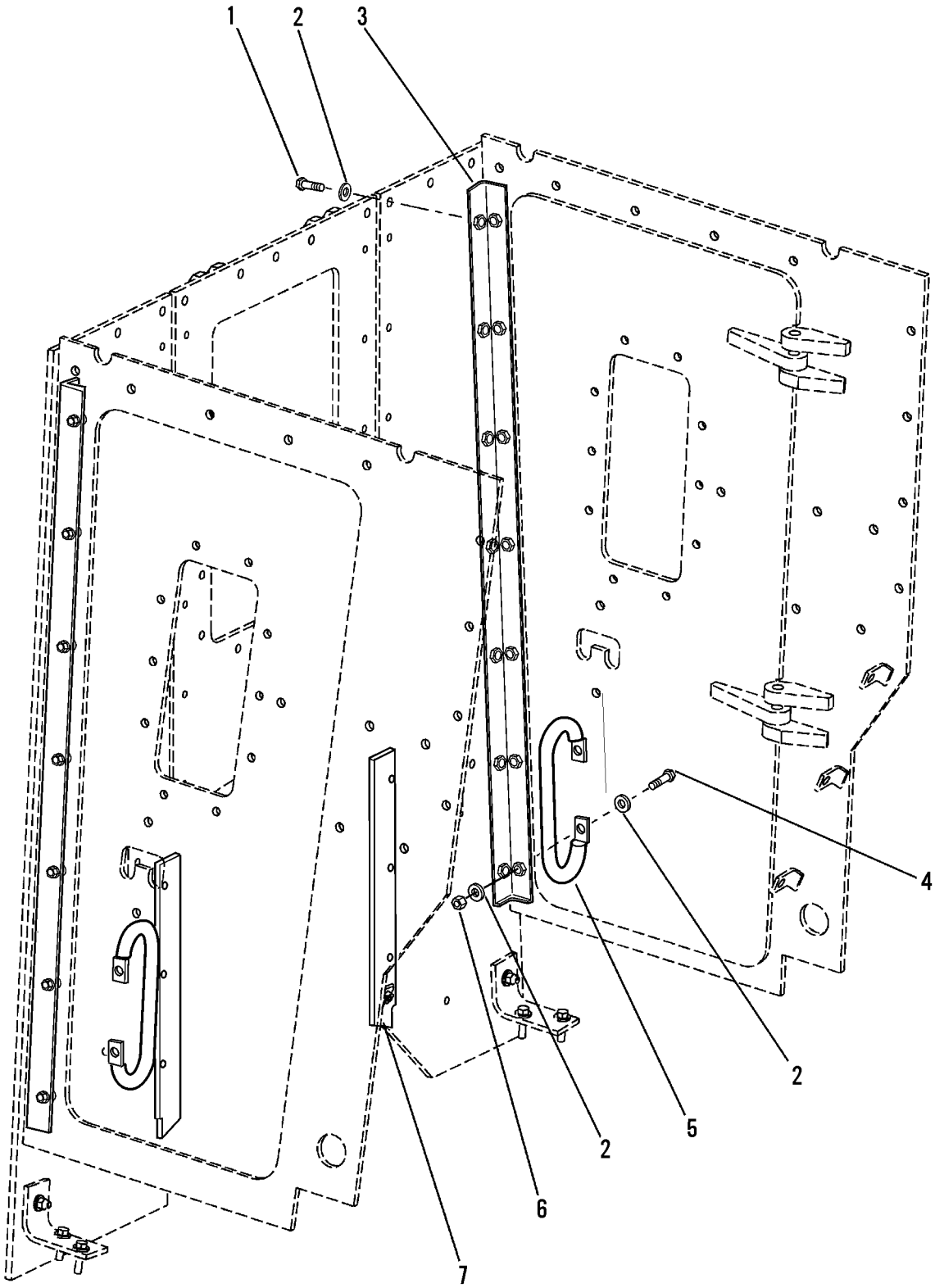

Figure 196. Inside Front Cab

(1) ITEM NO	(2) SMR CODE	(3) NSN	(4) CAGEC	(5) PART NUMBER	(6) DESCRIPTION AND USABLE ON CODES (UOC)	(7) QTY
					GROUP 3307 SPECIAL PURPOSE KITS	
					FIG. 196 INSIDE FRONT CAB	
1	PFOZZ	5305000712069	11083	5P2566	SCREW,CAP,HEXAGON H (1/2 X 1-1/2)	36
2	PFOZZ	5310010976720	11083	5P1076	WASHER,SHOULDERED A (1/2)	56
3	PFOZZ	5340015069482	11083	4R9608	BRACKET,ANGLE CAB FRONT	2
4	PFOZZ	5306014293170	11083	8T4835	BOLT,MACHINE (1/2 X 2)	4
5	PFOZZ	5340015069486	11083	3W3896	HANDLE,BOW	4
6	PFOZZ	5310011843538	11083	6V8188	NUT,PLAIN,HEXAGON (1/2)	12
7	PFOZZ	5340015069490	11083	4R9615	PLATE,MOUNTING BACK STRIP	2
				END OF FIGURE		

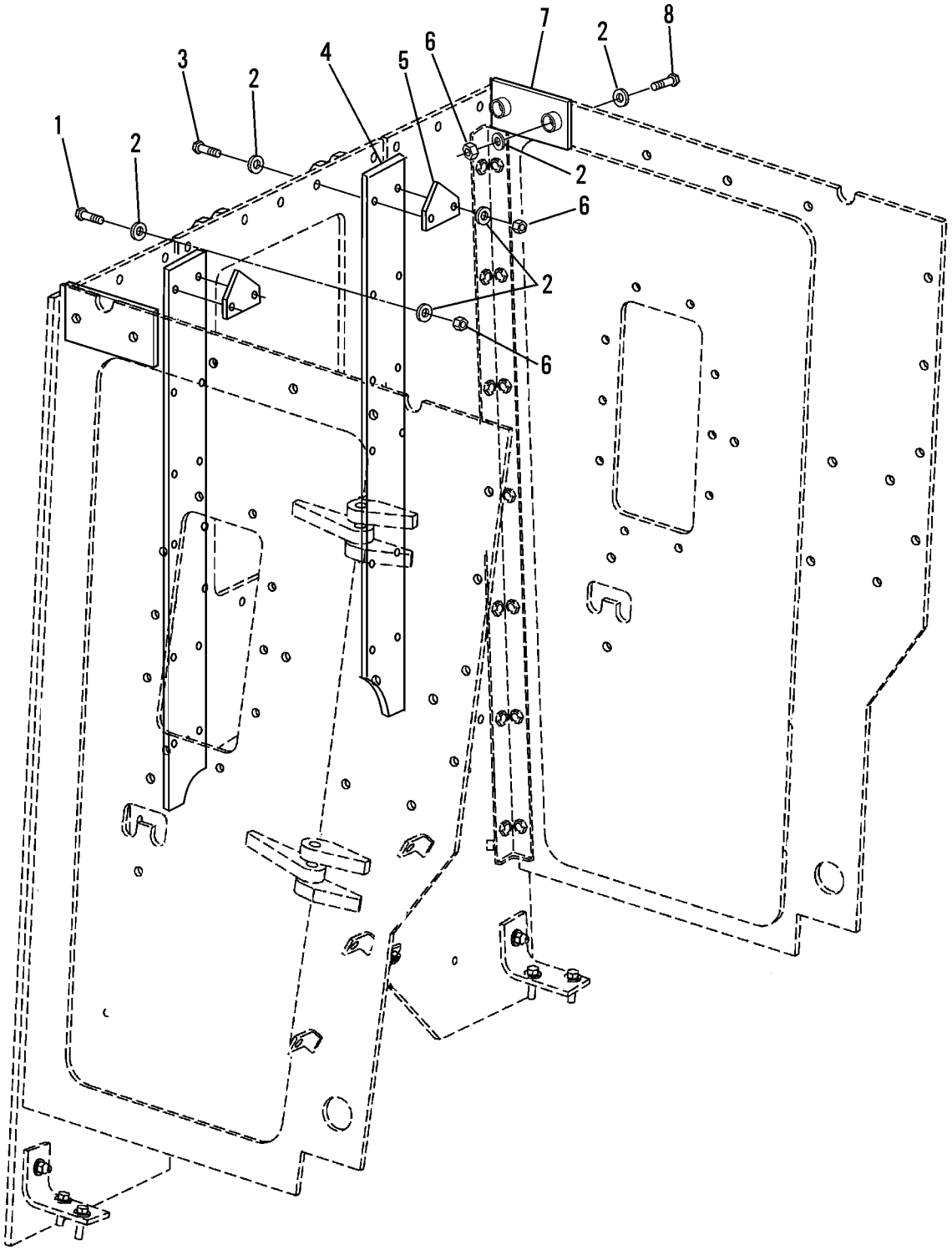

Figure 197. Inside of Cab

(1) ITEM NO	(2) SMR CODE	(3) NSN	(4) CAGEC	(5) PART NUMBER	(6) DESCRIPTION AND USABLE ON CODES (UOC)	(7) QTY
					GROUP 3307 SPECIAL PURPOSE KITS	
					FIG. 197 INSIDE OF CAB	
1	PFOZZ	5306014293170	11083	8T4835	BOLT,MACHINE (1/2 X 2)	20
2	PFOZZ	5310010976720	11083	5P1076	WASHER,SHOULDERED A (1/2)	56
3	PFOZZ	5306014389845	11083	7X0325	BOLT,MACHINE (1/2 X 2-1/2)	4
4	PFOZZ	5340015065409	11083	4R9616	PLATE,MOUNTING	2
5	PFOZZ	5340015065488	11083	4R9656	PLATE,MOUNTING TOP	2
6	PFOZZ	5310011843538	11083	6V8188	NUT,PLAIN,HEXAGON (1/2)	28
7	PFOZZ	5340015065504	11083	4R9660	PLATE,MOUNTING FRONT	2
8	PFOZZ	5305014212093	11083	8T9389	SCREW,CAP,HEXAGON H (1/2 X .... 1-1/2)	4
					END OF FIGURE	

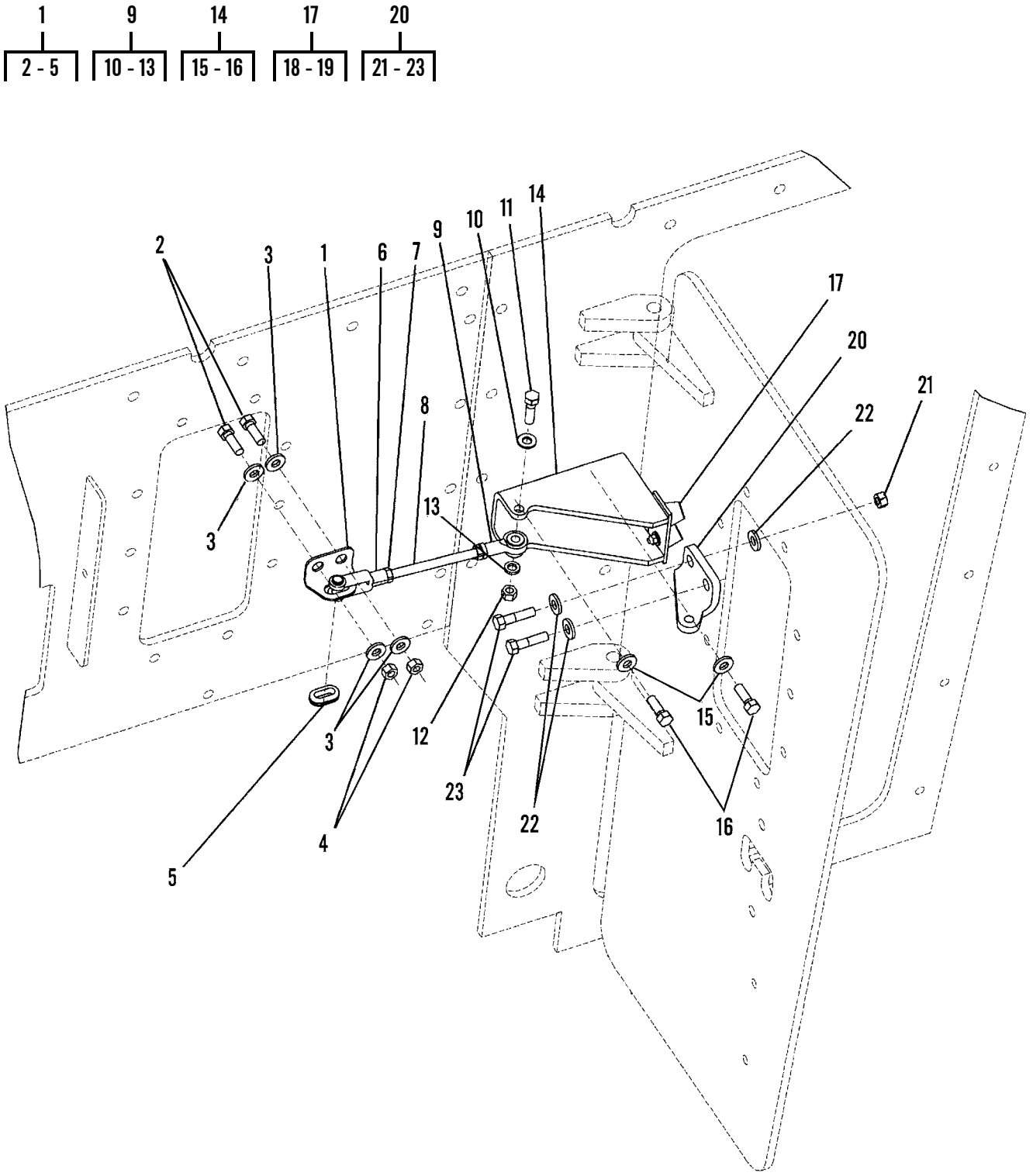

Figure 198. Door Latch Group

(1) ITEM NO	(2) SMR CODE	(3) NSN	(4) CAGEC	(5) PART NUMBER	(6) DESCRIPTION AND USABLE ON CODES (UOC)	(7) QTY
					GROUP 3307 SPECIAL PURPOSE KITS	
					FIG. 198 DOOR LATCH GROUP	
1	PFOZZ	5340015065855	11083	4R9663	BRACKET,ANGLE	2
2	PFOZZ	5305000712069	11083	5P2566	.SCREW,CAP,HEXAGON H (1/2 X 1-1/2) ...	4
3	PFOZZ	5310010976720	11083	5P1076	.WASHER,SHOULDERED A (1/2)	8
4	PFOZZ	5310011843538	11083	6V8188	.NUT,PLAIN,HEXAGON (1/2)	4
5	PFOZZ	5325010627138	11083	3K9520	.GROMMET	2
6	PFOZZ	3830012453804	11083	9P9374	END ASSEMBLY,ROLLOV	2
7	PFOZZ	5310008434593	11083	1B4430	NUT,PLAIN,HEXAGON (1/2)	4
8	PFOZZ	5307015069551	11083	4F7504	ROD,THREADED END	2
9	PFOZZ	3120011635957	11083	4D4065	BEARING,PLAIN,ROD E	2
10	PFOZZ	5310009307013	11083	4B4280	WASHER,FLAT (1/2)	2
11	PFOZZ	5306014293168	11083	8T8919	.BOLT,MACHINE (1/2 X 3/4)	2
12	PFOZZ	5310011843538	11083	6V8188	.NUT,PLAIN,HEXAGON (1/2)	2
13	PFOZZ	5310012369975	11083	3B4508	.WASHER,LOCK (1/2)	2
14	PFOZZ	5340015065879	11083	4R9669	BRACKET,MOUNTING	2
15	PFOZZ	5310010976720	11083	5P1076	.WASHER,SHOULDERED A (1/2)	4
16	PFOZZ	5305000712069	11083	5P2566	.SCREW,CAP,HEXAGON H (1/2 X 1-1/2) ...	4
17	PAOZZ	2540011095817	11083	5G0817	BUMPER,CONICAL	4
18	PFOZZ	5310010955910	11083	5P4116	.WASHER,SQUARE CONE (5/16)	2
19	PFOZZ	5310014135909	11083	6V8186	.NUT,PLAIN,HEXAGON (5/16)	2
20	PFOZZ	5340015042072	11083	4R9667	BRACKET,MOUNTING RH	1
20	PFOZZ	5340015042077	11083	4R9668	BRACKET,MOUNTING LH	1
21	PFOZZ	5310011843538	11083	6V8188	.NUT,PLAIN,HEXAGON (1/2)	2
22	PFOZZ	5310010976720	11083	5P1076	.WASHER,SHOULDERED A (1/2)	6
23	PFOZZ	5306014293170	11083	8T4835	.BOLT,MACHINE (1/2 X 2)	4
				END OF FIGURE		

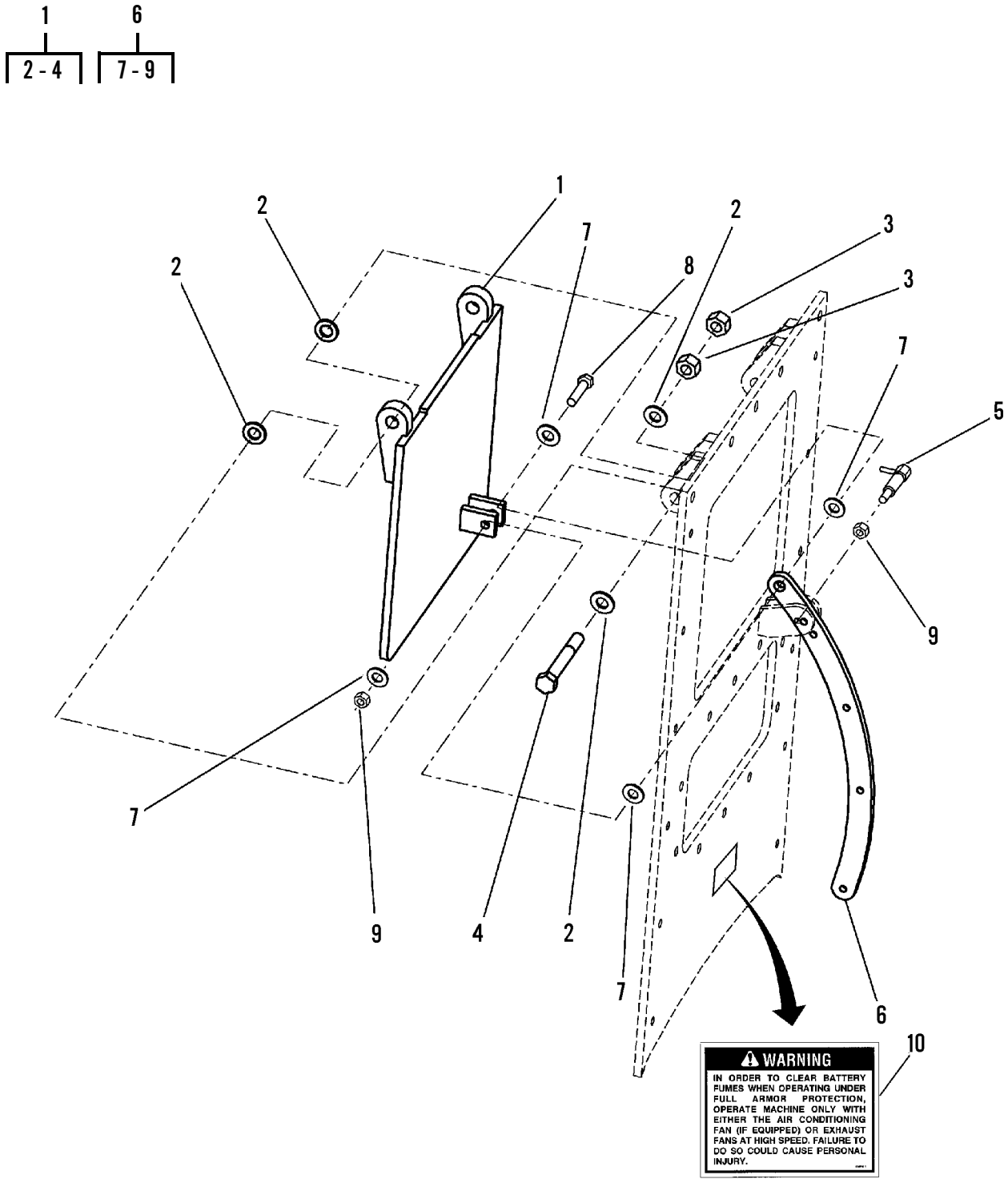

Figure 199. Front Cab Vent

(1) ITEM NO	(2) SMR CODE	(3) NSN	(4) CAGEC	(5) PART NUMBER	(6) DESCRIPTION AND USABLE ON CODES (UOC)	(7) QTY
					GROUP 3307 SPECIAL PURPOSE KITS	
					FIG. 199 FRONT CAB VENT	
1	PAOZZ	2510015042536	11083	4R9612	VENT WING ASSEMBLY, FRONT	1
2	PAOZZ	5310012983199	11083	8T4994	.WASHER,FLAT (3/4)	8
3	PAOZZ	5310014150234	11083	6V8182	.NUT,PLAIN,HEXAGON (3/4)	4
4	PFOZZ	5306014389848	11083	7X0374	.BOLT,MACHINE	2
5	PAOZZ	5340015069927	11083	4R9659	PLUNGER,DETENT	1
6	PFOZZ	5340015070024	11083	4R9653	LEVER,MANUAL CONTRO	1
7	PFOZZ	5310010976720	11083	5P1076	.WASHER,SHOULDERED A (1/2)	6
8	PFOZZ	5306014389845	11083	7X0325	.BOLT,MACHINE	1
9	PFOZZ	5310011843538	11083	6V8188	.NUT,PLAIN,HEXAGON (1/2)	2
10	PFOZZ	9905015047383	11083	4R9715	PLATE,INSTRUCTION WARNING	1
				END OF FIGURE		

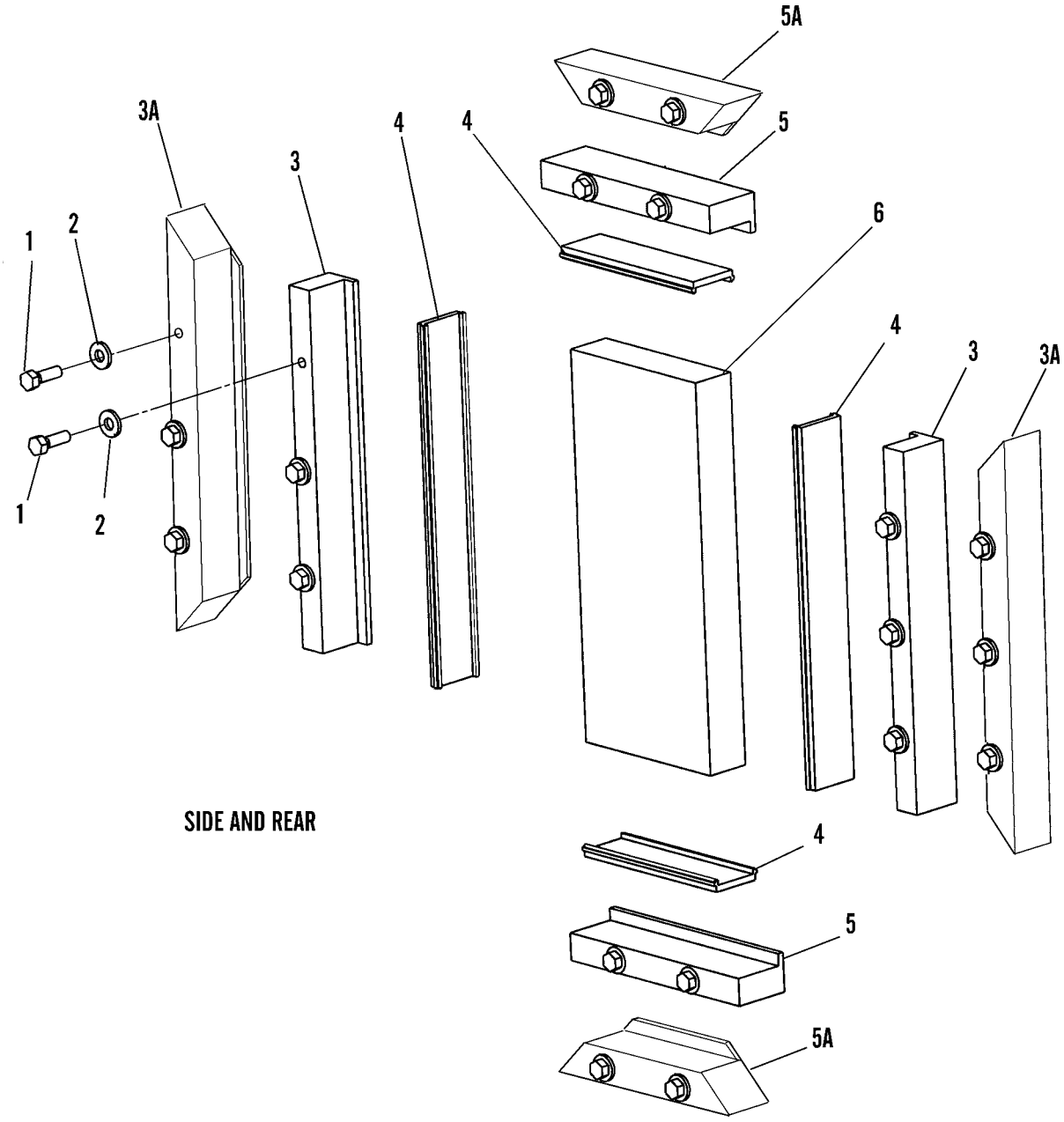

Figure 200. Window Group (Sheet 1 of 2)

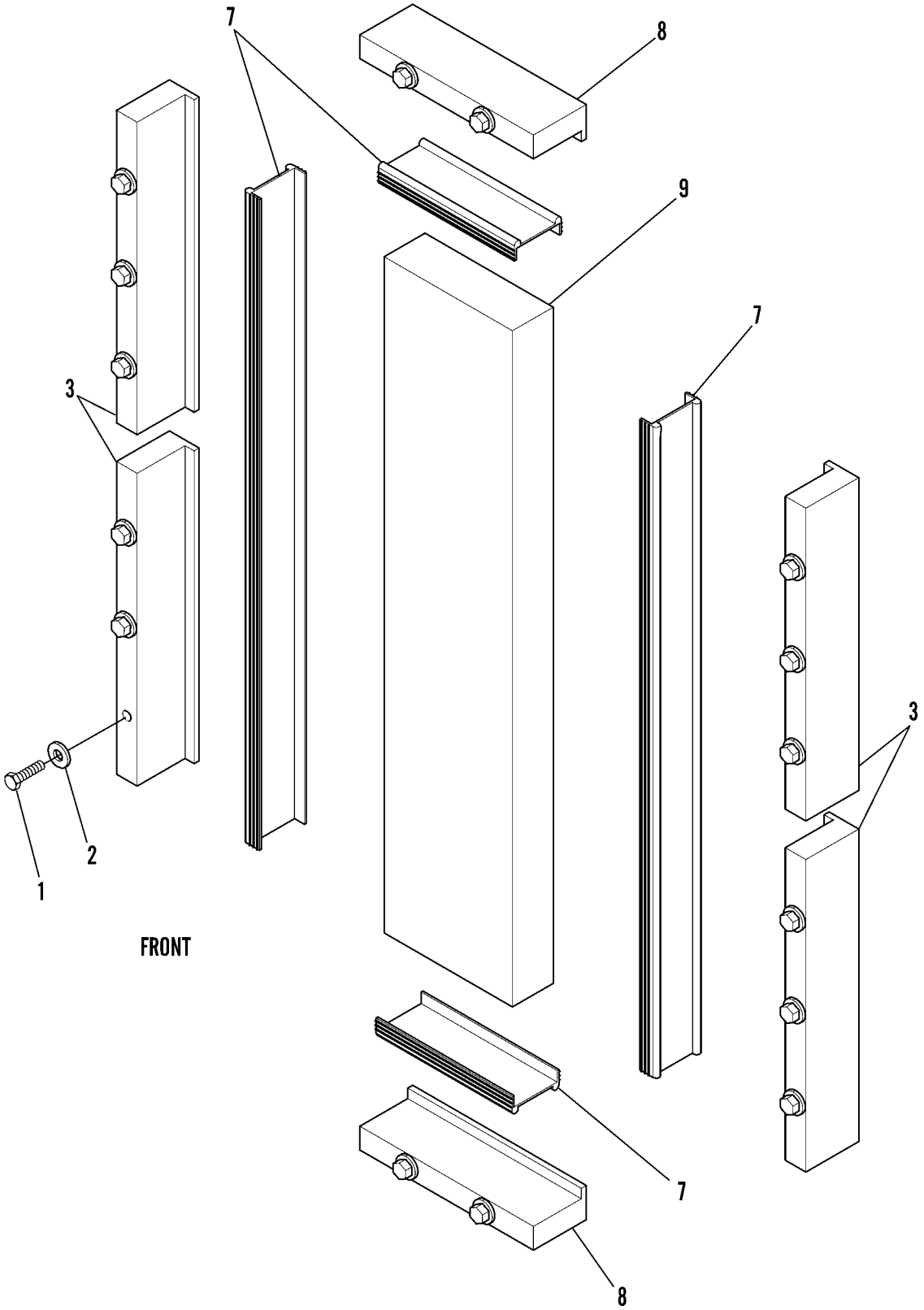

Figure 200. Window Group (Sheet 2 of 2)

(1) ITEM NO	(2) SMR CODE	(3) NSN	(4) CAGEC	(5) PART NUMBER	(6) DESCRIPTION AND USABLE ON CODES (UOC)	(7) QTY
					GROUP 3307 SPECIAL PURPOSE KITS	
					FIG. 200 WINDOW GROUP	
1	PFOZZ	5305000712069	11083	5P2566	SCREW,CAP,HEXAGON H	80
2	PFOZZ	5310010976720	11083	5P1076	WASHER,SHOULDERED A	80
3	PFOZZ	2510015077056	11083	4R9525	FRAME SECTION,WINDO USED ON ... 1996 MCAP ONLY	16
*3	PAOZZ	2510015244636	11083	2546766	FRAME SECTION,WINDO (2004 MCAP INCLUDED IN 2004 CONVERSION KIT)	8
3A	PFOZZ	2510015086838	11083	2369942	FRAME,WINDOW,VEHICU USED ON ... 1991 MCAP ONLY	16
4	PFOZZ	9390014943531	11083	4R9414	MOULDING,GLASS WINDOW , MCAP .. ONLY UOC:GRC,WIN	8
5	PFOZZ	2510015077069	11083	4R9524	FRAME SECTION,WINDO USED ON ... 1996 MCAP ONLY	16
5A	PFOZZ	2510015086839	11083	2369941	FRAME,WINDOW,VEHICU USED ON ... 1991 MCAP ONLY	16
6	PAOZA	9340014943540	11083	4R9413	GLASS,LAMINATED USED ON MCAP .. ONLY UOC:GRC,WIN	8
*6	PAOZZ	9340015246658	11083	2537820	GLASS,LAMINATED (2004 MCAP .... INCLUDED IN 2004 CONVESION KIT)	6
*7	PAOZZ	9390015247569	11083	2537818	MOULDING,GLASS (2004 MCAP INCLUDED IN 2004 CONVESION KIT)	6
*7	PAOZZ	2510015244635	11083	2537819	FRAME SECTION,WINDO MOLDING, ... GLASS (2004 MCAP INCLUDED IN 2004 CONVESION KIT)	2
*8	PAOZZ	2510015247568	11083	2537816	FRAME SECTION,WINDO (2004 MCAP INCLUDED IN 2004 CONVESION KIT) SIDE AND REAR	12
*8	PAOZZ	9390015249455	11083	2546765	FRAME SECTION WINDO MOLDING,GLASS FRONT (2004 MCAP INCLUDED IN 2004 CONVESION KIT)	4
*9	PAOZZ	9340015246661	11083	2537821	GLASS,LAMINATED (2004 MCAP) ... INCLUDED IN 2004 CONVERSION KIT	2
					END OF FIGURE	

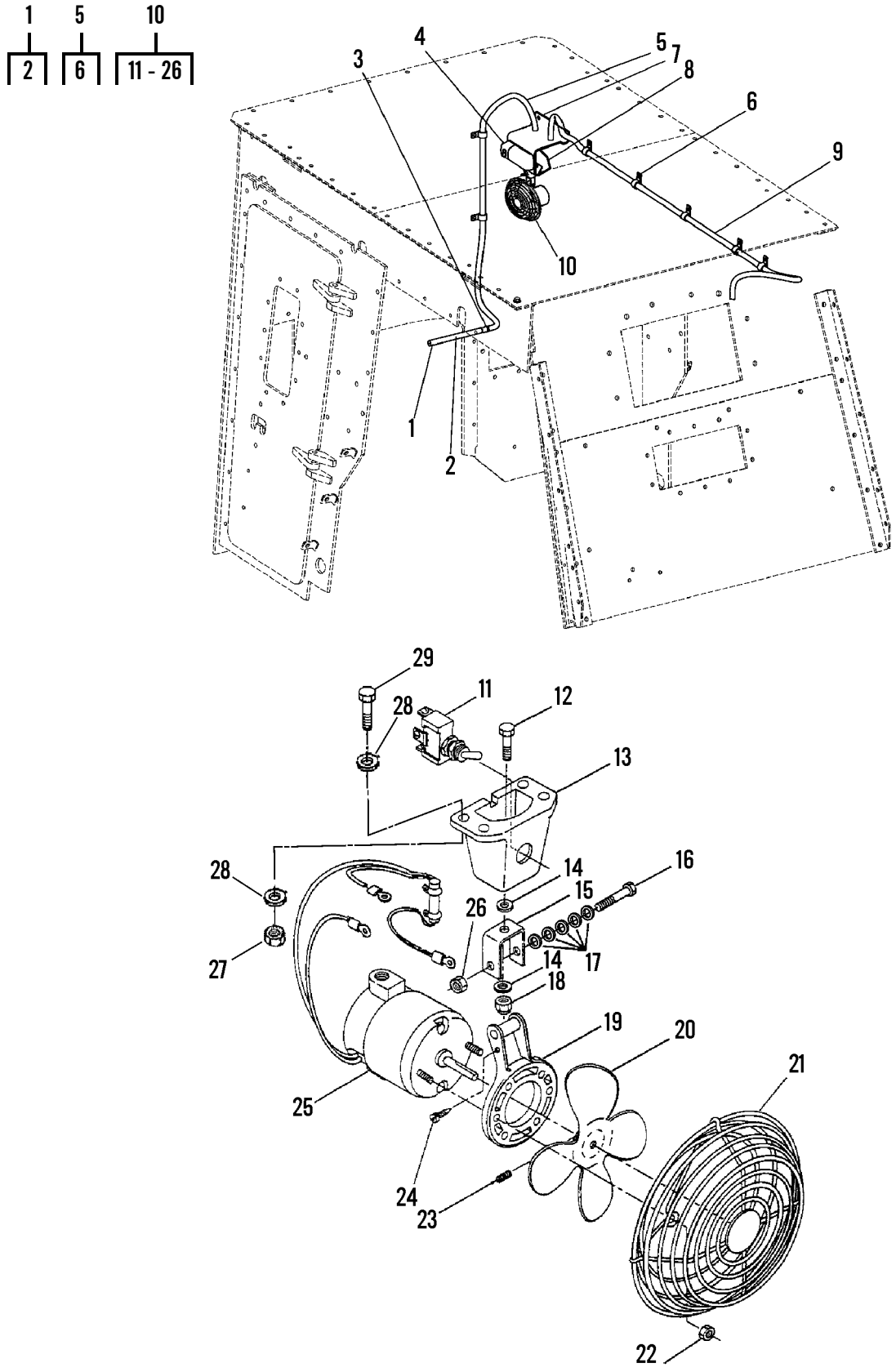

Figure 201. Recirculating Fan and Related Parts

(1) ITEM NO	(2) SMR CODE	(3) NSN	(4) CAGEC	(5) PART NUMBER	(6) DESCRIPTION AND USABLE ON CODES (UOC)	(7) QTY
					GROUP 3307 SPECIAL PURPOSE KITS	
					FIG. 201 RECIRCULATING FAN AND RELATED PARTS	
1	PFOZA	6150015066241	11083	4R9708	WIRING HARNESS DASH	1
2	PFOZZ	5920000120151	81349	F02A32V15A	.FUSE,CARTRIDGE	1
3	PFOZZ	5325012312134	11083	9M5870	GROMMET	1
4	PFOZZ	6240013010717	11083	6T4864	LAMP,INCANDESCENT	1
5	PFOZA	6150015066245	11083	4R9709	WIRING HARNESS DASH TO FAN	1
6	PFOZZ	5340010538025	11083	6D4636	.CLIP	7
7	PFOZZ	5340015070054	11083	4R9467	BRACKET,MULTIPLE AN	1
8	PFOZA	6150015066238	11083	4R9707	WIRING HARNESS LAMP AND FAN ...	1
9	PFOZA	6150015066246	11083	4R9710	WIRING HARNESS FAN GP TO FAN GP	1
10	PAOZZ	4140010974340	99688	B2-28S	FAN,CIRCULATING	1
11	PFOZZ	5930001188034	11083	3D8754	.SWITCH,ELECTRICAL	1
12	PFOZZ	5305014727230	11083	7T0582	.SCREW ASSEMBLY,ADJU	1
13	PFOZZ	5340014723706	11083	9X1332	.BRACKET,MOUNTING	1
14	PFOZZ	5310003628168	61208	M2048F	.WASHER,FLAT	2
15	PFOZZ	5340012287803	11083	3D8747	.BRACKET,FAN	1
16	PFOZZ	5306014713865	11083	8T9368	.BOLT,MACHINE	1
17	PFOZZ	5310008094058	96906	MS27183-10	.WASHER,FLAT	5
18	PFOZZ	5310010951247	11083	3D8752	.NUT,SELF-LOCKING,HE	1
19	PFOZZ	5342011811929	99688	44640	.BRACKET,FAN,DEFROST	1
20	PFOZZ	4140011905493	99688	5083	.IMPELLER,FAN,AXIAL	1
21	PFOZZ	3020011818557	99688	8195	.GUARD,MECHANICAL DR	1
22	PFOZZ	5310011325309	11083	1M1230	.NUT,PLAIN,ASSEMBLED	2
23	PFOZZ	5305010947378	11083	7L8316	.SETSCREW	1
24	PFOZZ	5305011808691	11083	7H4543	.SCREW,TAPPING	1
25	PFOZZ	6105010978661	11083	1741503	.MOTOR,DIRECT CURREN	1
26	PFOZZ	5310011602034	11083	2D6235	.NUT,SELF-LOCKING,HE	1
27	PFOZZ	5310011843538	11083	6V8188	NUT,PLAIN,HEXAGON (1/2)	2
28	PFOZZ	5310010976720	11083	5P1076	WASHER,SHOULDERED A (1/2)	4
29	PFOZZ	5306014389845	11083	7X0325	BOLT,MACHINE (1/2 X 2-1/2)	2
				END OF FIGURE		

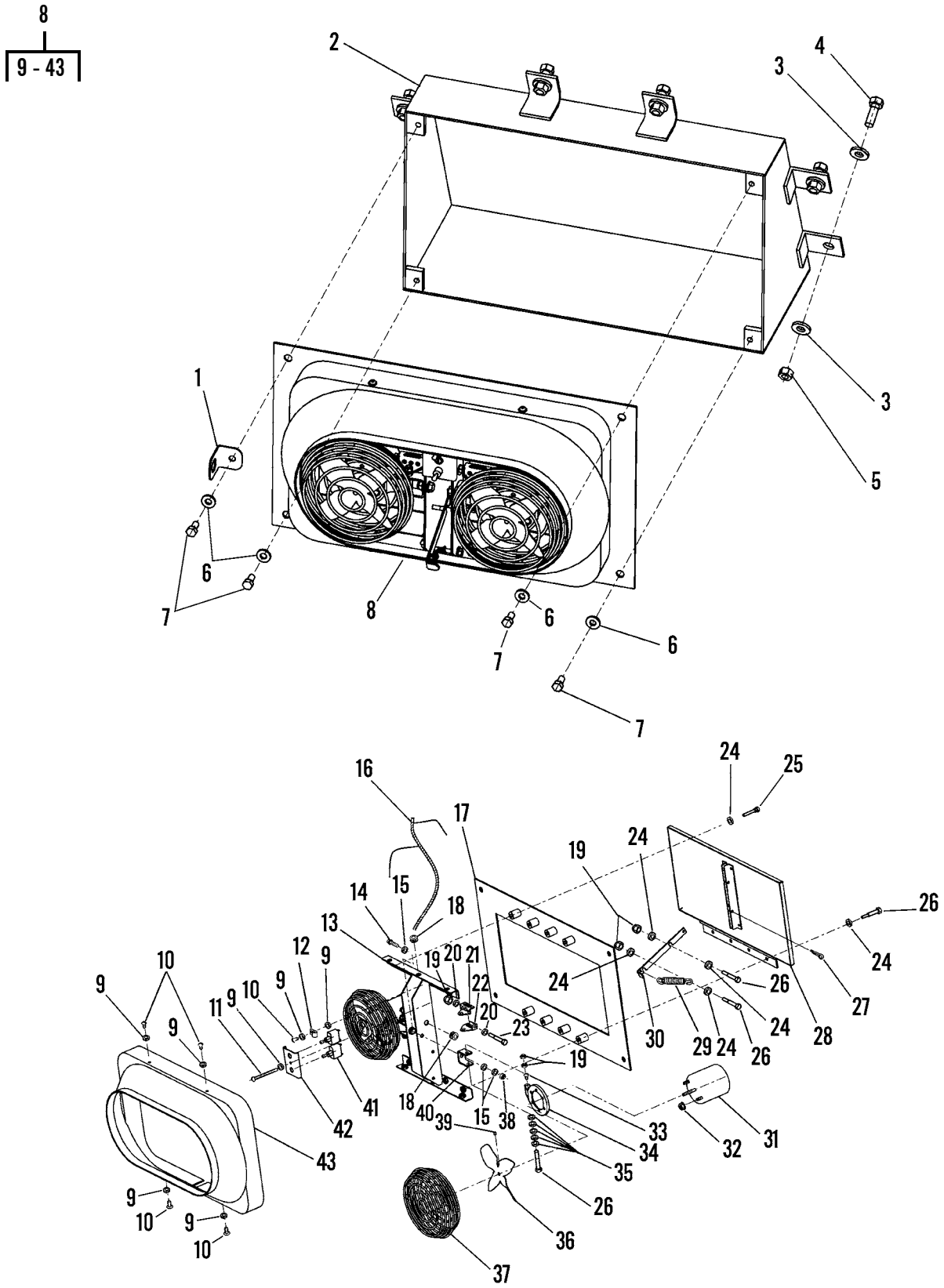

Figure 202. Fresh Air Fan (Rear) (Sheet 1 of 2)

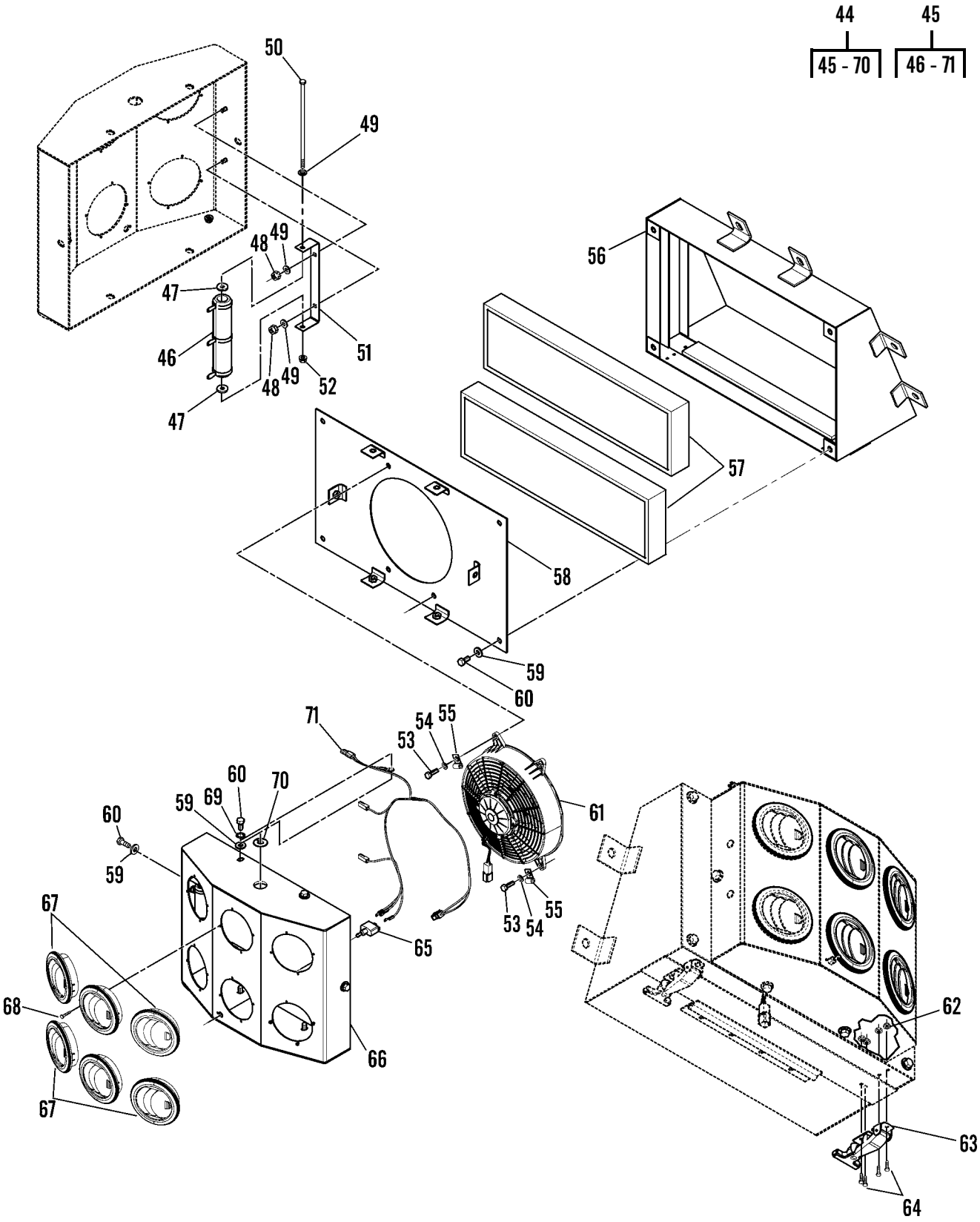

Figure 202. Fresh Air Fan (Rear) (Sheet 2 of 2)

(1) ITEM NO	(2) SMR CODE	(3) NSN	(4) CAGEC	(5) PART NUMBER	(6) DESCRIPTION AND USABLE ON CODES (UOC)	(7) QTY
					GROUP 3307 SPECIAL PURPOSE KITS	
					FIG. 202 FRESH AIR FAN (REAR)	
1	PFOZZ	5340015070056	11083	4R9711	BRACKET,ANGLE	1
2	XDOZZ		11083	4R9665	HOUSING CENTRIFUGAL VENT	1
3	PFOZZ	5310010976720	11083	5P1076	WASHER,SHOULDERED A (1/2)	14
4	PFOZZ	5305000712069	11083	5P2566	SCREW,CAP,HEXAGON H (1/2 X .... 1-1/2)	12
5	PFOZZ	5310011843538	11083	6V8188	NUT,PLAIN,HEXAGON (1/2)	2
6	PFOZZ	5310010948810	78189	3320-14-01	WASHER,SQUARE CONE (3/8)	4
7	PFOZZ	5306001580697	11083	5M3062	BOLT,MACHINE (3/8 X 3/4)	4
8	PAOOO	4140015065810	11083	4R9698	FAN ASSEMBLY,CENTRI FRESH AIR . INTAKE	1
9	PFOZZ		11083	4B4274	.WASHER,FLAT	7
10	PFOZZ	5305011522589	11083	6V2687	.SCREW,TAPPING	5
11	PFOZZ	5305015066463	11083	3S6516	.SCREW,MACHINE	1
12	PFOZZ	5340011666926	11083	8M2771	.CLAMP,LOOP	1
13	PFOZZ	5340015070060	11083	4R9702	.BRACKET,ASSEMBLY	1
14	PFOZZ	5306010664721	11083	4M0061	.BOLT	2
15	PFOZZ	5310003628168	61208	M2048F	.WASHER,FLAT	6
16	PFOZA	6150015066244	11083	4R9704	.WIRING HARNESS	1
17	PFOZZ	5340015069557	11083	4R9703	.PLATE MOUNTING	1
18	PFOZZ	3120014376086	11083	0329828	.BEARING,WASHER,THRU	3
19	PFOZZ	5310011602034	11083	2D6235	.NUT,SELF-LOCKING,HE	8
20	PFOZZ	5310012574292	72741	437-007	.WASHER,FLAT	4
21	PFOZZ	5340015069559	11083	6T9255	.BRACKET,ANGLE	2
22	PFOZZ	5340015069560	11083	6T8943	.BRACKET,ANGLE	2
23	PFOZZ	5306014741533	11083	8T9367	.BOLT,MACHINE	2
24	PFOZZ	5310010980634	78189	WD23875	.WASHER,SPRING TENSI	12
25	PFOZZ	5306000227687	11083	4M5282	.BOLT,MACHINE	4
26	PFOZZ	5306014713865	11083	8T9368	.BOLT,MACHINE	8
27	PFOZZ	5315000590206	80205	MS24665-491	.PIN,COTTER	1
28	PFOZZ	5340015069561	11083	4R9701	.PLATE,MOUNTING	1
29	PFOZZ	5360015067628	11083	3W6485	.SPRING,HELICAL,EXTE	1
30	PFOZZ	5340015070138	11083	4R9700	.BRACKET,MOUNTING	1
31	PFOZZ	6105010978661	11083	1741503	.MOTOR,DIRECT CURREN	2
32	PFOZZ	5310011325309	11083	1M1230	.NUT,PLAIN,ASSEMBLED	4
33	PFOZZ	5305011808691	11083	7H4543	.SCREW,TAPPING	2
34	PFOZZ	5342011811929	99688	44640	.BRACKET,FAN,DEFROST	2
35	PFOZZ	5310008094058	96906	MS27183-10	.WASHER,FLAT	10
36	PFOZZ	4140011905493	99688	5083	.IMPELLER,FAN,AXIAL	2
37	PFOZZ	3020011818557	99688	8195	.GUARD,MECHANICAL DR	2
38	PFOZZ	5310005420091	11083	0314155	.NUT,PLAIN,HEXAGON	2
39	PFOZZ	5305010947378	11083	7L8316	.SETSCREW	2
40	PFOZZ	5340012287803	11083	3D8747	.BRACKET,FAN	2
41	PFOZZ	5930001188034	11083	3D8754	.SWITCH,ELECTRICAL	2
42	PFOZZ	5340015070165	11083	8V2365	.BRACKET,MOUNTING	1
43	XAOZZ		11083	4R9699	.SHROUD,FAN,AXIAL	1
44	PAOZZ	4140015198288	11083	2556296	KIT,FAN CONVERSION (2004 MCAP)	1

(1) ITEM NO	(2) SMR CODE	(3) NSN	(4) CAGEC	(5) PART NUMBER	(6) DESCRIPTION AND USABLE ON CODES (UOC)	(7) QTY
45	PAOOO	4140015247572	11083	2538281	.FAN GROUP,CIRCULATI (2004 MCAP)	1
46	PAOZZ	5905014294032	11083	9G1950	..RESISTOR ASSEMBLY (2004 MCAP)	1
47	PAOZZ	5310014297105	11083	6V1668	..WASHER,FLAT (2004 MCAP)	2
48	PAOZZ	5310014290779	11083	3E9865	..NUT,PLAIN,HEXAGON (2004 MCAP)	2
49	PAOZZ	5310008412576	11083	8T4205	..WASHER,FLAT (2004 MCAP)	4
50	PAOZZ		11083	1419784	..BOLT,MACHINE (2004 MCAP)	1
51	PAOZZ	5340015246663	11083	2538947	..BRACKET,MOUNTING (2004 MCAP)	1
52	PAOZZ	5310011602034	11083	2D6235	..NUT,SELF-LOCKING,HE (2004 ... MCAP)	1
53	PAOZZ	5325015145408	11083	4N9170	..FASTENER,POSITIVE L (2004 ... MCAP)	3
54	PAOZZ	5306003119307	11083	4M6425	..BOLT,MACHINE (2004 MCAP)	4
55	PAOZZ	5310004324064	11083	9M1974	..WASHER,FLAT (2004 MCAP)	4
56	PAOZZ	4140015246662	11083	2538128	..CASE ASSEMBLY (2004 MCAP) ...	1
57	PAOZZ	4130015247575	11083	8S0468	..FILTER ELEMENT (2004 MCAP) ..	2
58	PAOZZ	5340015246659	11083	2538131	..PLATE,MOUNTING (2004 MCAP) ..	1
59	PAOZZ	5310010948810	11083	5P1075	..WASHER,SQUARE CONE (2004 MCAP)	10
60	PAOZZ	5306001580697	11083	5M3062	..BOLT,MACHINE (2004 MCAP)	10
61	PAOZZ	4140015246666	11083	1697434	..FAN,VENTILATING (2004 MCAP) .	1
62	PAOZZ	4730014713774	11083	0310249	..LOCKNUT,PIPE (2004 MCAP)	8
63	PAOZZ	2540015246664	11083	2G9524	..LATCH,HOOD,VEHICULA (2004 ... MCAP)	2
64	PAOZZ	5305011833993	11083	1H2387	..SCREW,MACHINE (2004 MCAP) ...	8
65	PAOZZ	5930001188034	11083	3D8754	..SWITCH,ELECTRICAL (2004 MCAP)	1
66	PAOZZ	4140015246665	11083	2538640	..SHROUD,FAN,AXIAL (2004 MCAP)	1
67	PAOZZ	2540015246660	11083	1714046	..LOUVER ASSEMBLY (2004 MCAP) .	6
68	PAOZZ	5305015055701	11083	1042091	..SCREW,SHOULDER (2004 MCAP) ..	24
69	PAOZZ	5310014381899	11083	4D1326	..WASHER,KEY (2004 MCAP)	1
70	PAOZZ		11083	9X7345	..GROMMET,NONMETALLIC (2004 ... MCAP)	1
71	PAOZZ		11083	2539332	..WIRING,HARNESS,BRAN (2004 ... MCAP)	1

END OF FIGURE

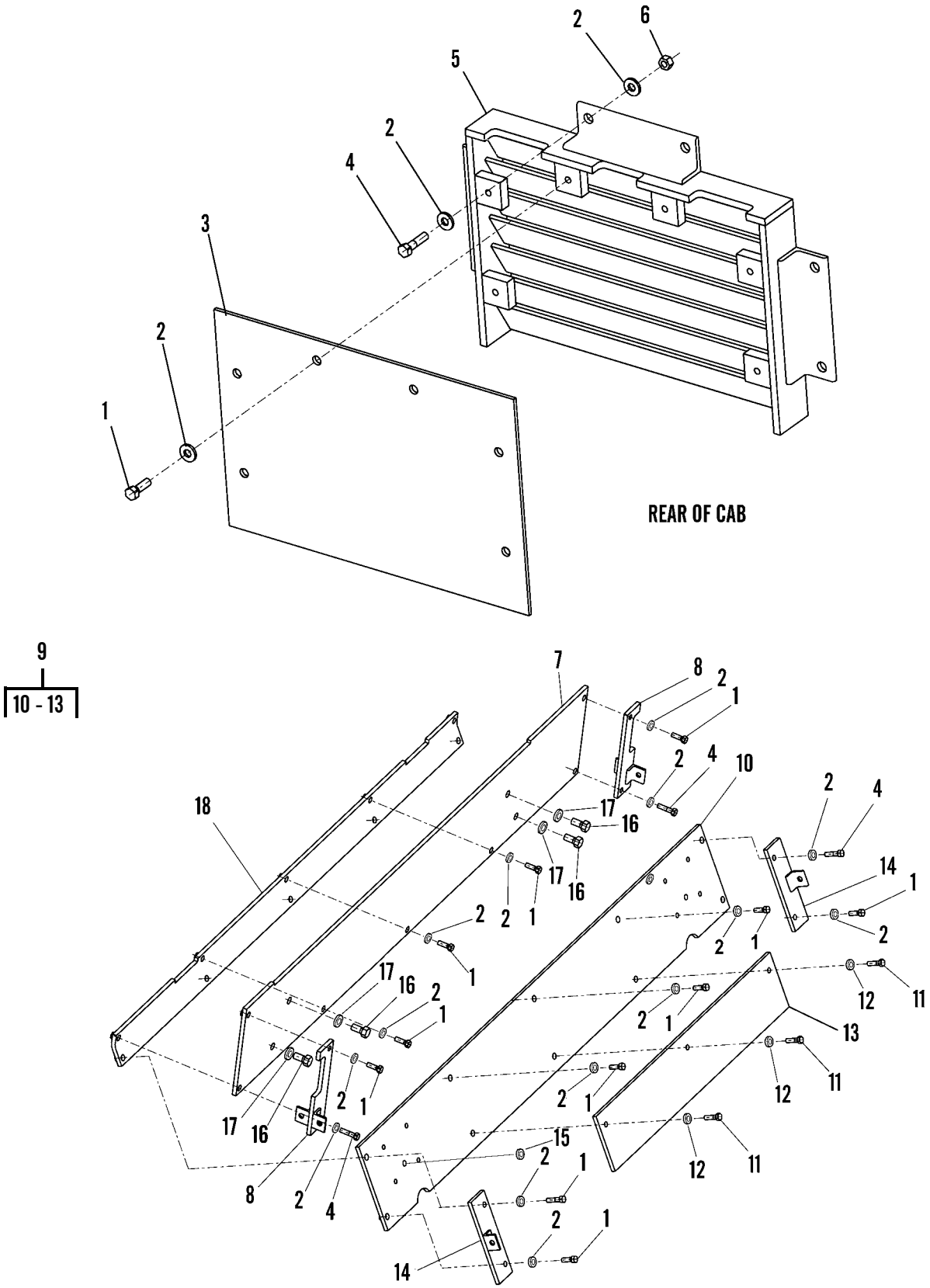

Figure 203. Rear Cab Guards

(1) ITEM NO	(2) SMR CODE	(3) NSN	(4) CAGEC	(5) PART NUMBER	(6) DESCRIPTION AND USABLE ON CODES (UOC)	(7) QTY
					GROUP 3307 SPECIAL PURPOSE KITS	
					FIG. 203 REAR CAB GUARDS	
*1	PFOZZ	5305000712069	11083	5P2566	SCREW,CAP,HEXAGON H (1/2 X 1-1/2)	12
2	PFOZZ	5310010976720	11083	5P1076	WASHER,SHOULDERED A (1/2)	18
3	PFOZZ	9515015142234	11083	4R9666	ARMOR PLATE LOUVER	1
4	PFOZZ	5306014293170	11083	8T4835	BOLT,MACHINE (1/2 X 2)	6
5	PAOZZ	2040015040574	11083	4R9664	VENTILATOR,AIR CIRC VENT	1
6	PFOZZ	5310011843538	11083	6V8188	NUT,PLAIN,HEXAGON (1/2)	6
7	PAOZZ	9515015040540	11083	4R9598	ARMOR PLATE FUEL,TOP	1
8	PFOZZ	5340015070151	11083	4R9654	BRACKET,MOUNTING BACK UP,LOWER REAR	2
9	PAOZZ	9515015040548	11083	2307087	ARMOR PLATE FUEL,BOTTOM	1
10	PAOZZ	9515015040557	11083	2307062	.ARMOR PLATE	1
11	PFOZZ	5306014293168	11083	8T8919	.BOLT,MACHINE (1/2 X 1-3/4) ...	3
12	PFOZZ	5310010976720	11083	5P1076	.WASHER,SHOULDERED A (1/2)	3
13	PAOZZ	9515015040531	11083	2307063	.ARMOR PLATE	1
14	PFOZZ	5340015070157	11083	4R9655	PLATE,MOUNTING BACK UP,LOWER .. REAR	2
15	PFOZZ	5325015067583	11083	4D0012	GROMMET,NONMETALLIC	1
16	PFOZZ	5306014309059	11083	7X0365	BOLT,MACHINE	4
17	PFOZZ	5310012983199	11083	8T4994	WASHER,FLAT (3/4)	4
18	PAOZZ	9515015040567	11083	4R9604	ARMOR PLATE	1
				END OF FIGURE		

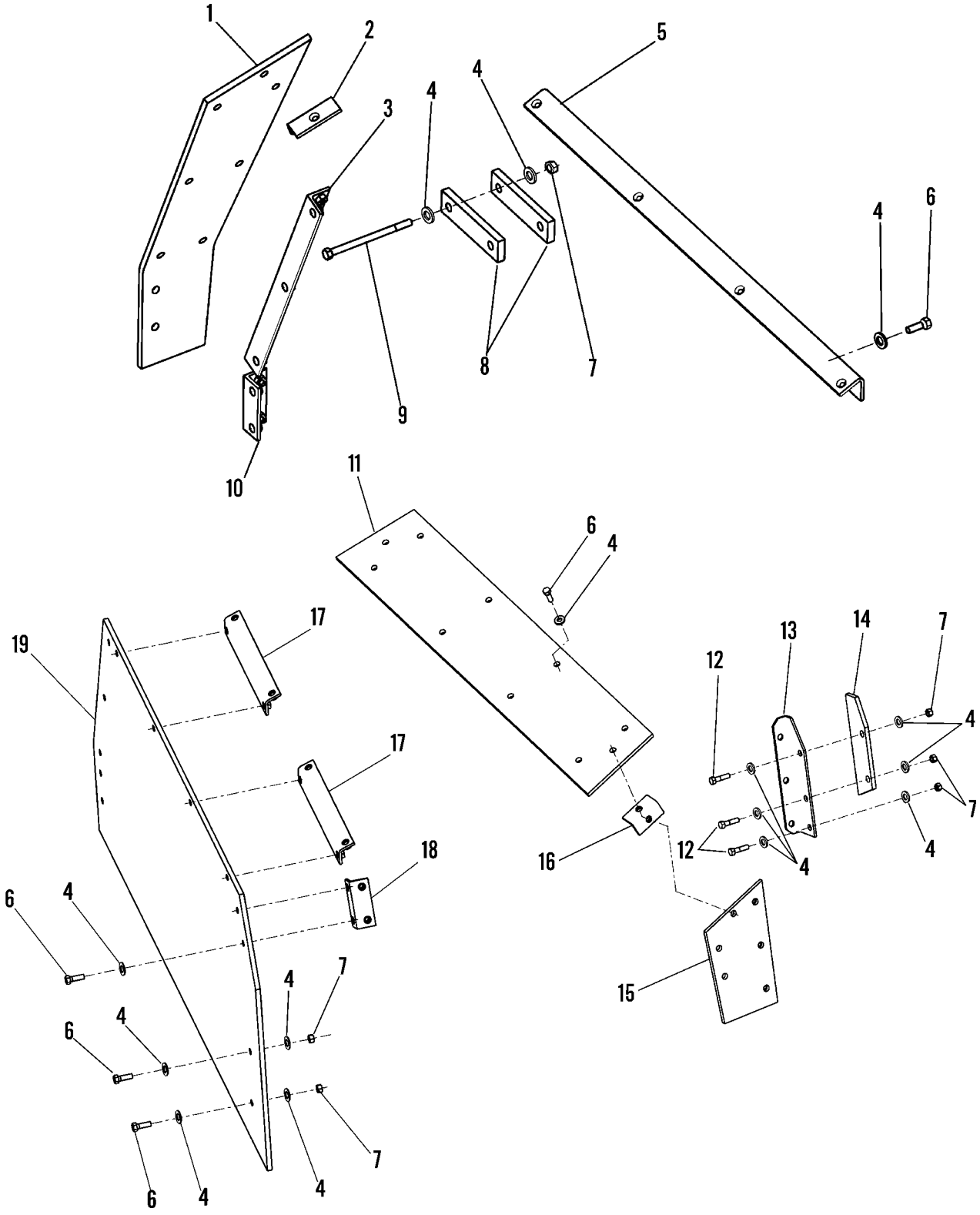

Figure 204. Left Side Battery Box Cover

(1) ITEM NO	(2) SMR CODE	(3) NSN	(4) CAGEC	(5) PART NUMBER	(6) DESCRIPTION AND USABLE ON CODES (UOC)	(7) QTY
					GROUP 3307 SPECIAL PURPOSE KITS	
					FIG. 204 LEFT SIDE BATTERY BOX COVER	
1	PAOZZ	9515015040544	11083	4R9675	ARMOR PLATE FRONT LH	1
2	PFOZZ	5340015070200	11083	4R9681	BRACKE,ANGLE	1
3	PFOZZ	5340015070203	11083	4R9682	BRACKET,ANGLE	1
4	PFOZZ	5310010976720	11083	5P1076	WASHER,SHOULDERED A	21
5	PFOZZ	5340015156360	11083	4R9679	BRACKET,ANGLE	1
6	PFOZZ	5305000712069	11083	5P2566	SCREW,CAP,HEXAGON H (1/2 X 1-1/2)	13
7	PFOZZ	5310011843538	11083	6V8188	NUT,PLAIN,HEXAGON (1/2)	4
8	PFOZZ	5340015070207	11083	4R9607	BRACKET,MOUNTING	4
9	PFOZZ	5306015069388	11083	8T9392	BOLT,MACHINE (1/2 X 7-1/2)	4
10	PFOZZ	5340015070209	11083	4R9683	BRACKET,ANGLE	1
11	PAOZZ	9515015040542	11083	4R9676	ARMOR PLATE TOP,LH	1
12	PFOZZ	5306014293170	11083	8T4835	BOLT,MACHINE (1/2 X 2)	3
13	PFOZZ	5340015068561	11083	4R9685	BRACKET,ANGLE	1
14	PFOZZ	5340015068592	11083	4R9652	BRACKET,MOUNTING	1
15	PAOZZ	9515015040541	11083	4R9677	ARMOR PLATE REAR	1
16	PFOZZ	5340015070200	11083	4R9681	BRACKE,ANGLE	1
17	PFOZZ	5340015068584	11083	4R9680	BRACKET,ANGLE	2
18	PFOZZ	5340015070209	11083	4R9683	BRACKET,ANGLE	1
19	PAOZZ	9515015040539	11083	4R9721	ARMOR PLATE	1
				END OF FIGURE		

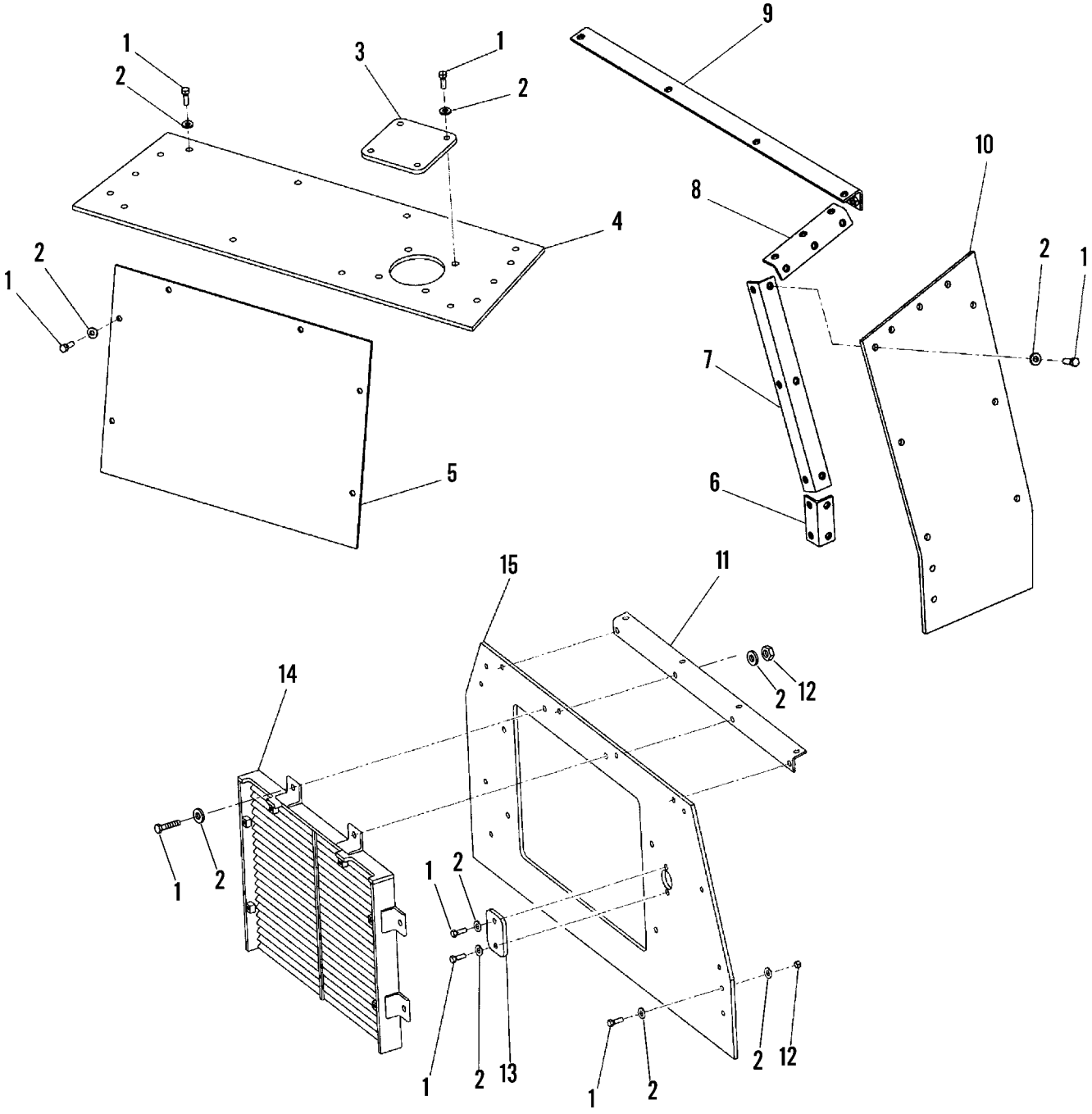

Figure 205. Hydraulic Tank Covering

(1) ITEM NO	(2) SMR CODE	(3) NSN	(4) CAGEC	(5) PART NUMBER	(6) DESCRIPTION AND USABLE ON CODES (UOC)	(7) QTY
					GROUP 3307 SPECIAL PURPOSE KITS	
					FIG. 205 HYDRAULIC TANK COVERING	
1	PFOZZ	5305000712069	11083	5P2566	SCREW,CAP,HEXAGON H (1/2 X 1-1/2)	24
2	PFOZZ	5310010976720	11083	5P1076	WASHER,SHOULDERED A (1/2)	24
3	PAOZZ	5340015035938	11083	4R9563	COVER,ACCESS	1
4	PAOZZ	9515015040551	11083	4R9674	ARMOR PLATE HYDRAULIC TANK,TOP RH	1
5	PAOZZ	9515015040555	11083	4R9692	ARMOR PLATE HYDRAULIC LOUVER ..	1
6	PFOZZ	5340015070209	11083	4R9683	BRACKET,ANGLE	1
*7	PFOZZ	5340015070203	11083	4R9682	BRACKET,ANGLE	1
8	PFOZZ	5340015068579	11083	4R9690	BRACKET,ANGLE	1
9	PFOZZ	5340015068581	11083	4R9688	BRACKET,ANGLE	1
10	PAOZZ	9515015040556	11083	4R9673	ARMOR PLATE HYDRAULIC TANK, FRONT RH ...	1
11	PFOZZ	5340015131946	11083	4R9689	BRACKET,ANGLE HYDRAULIC TANK ..	1
12	PFOZZ	5310011843538	11083	6V8188	NUT,PLAIN,HEXAGON (1/2)	2
13	PFOZZ	5340015068590	11083	4R9693	COVER,ACCESS HYDRAULIC LEVEL ..	1
14	PAOZZ	2540015040562	11083	4R9691	VENTILATOR,AIR CIRC HYDRAULIC TANK .	1
15	PAOZZ	9515015040565	11083	4R9672	ARMOR PLATE HYDRAULIC TANK,SIDE	1
				END OF FIGURE		

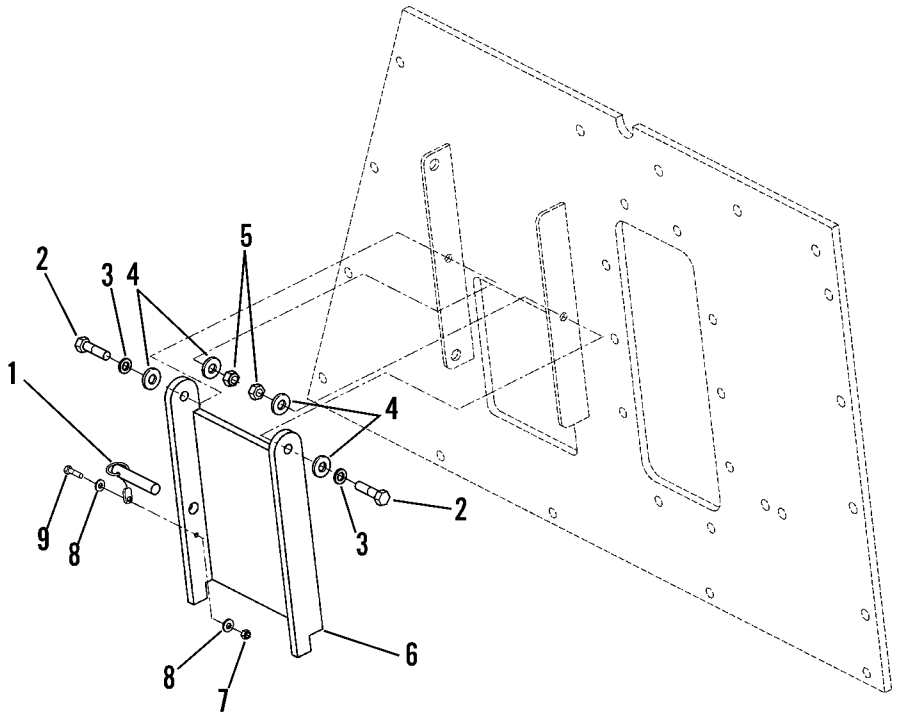

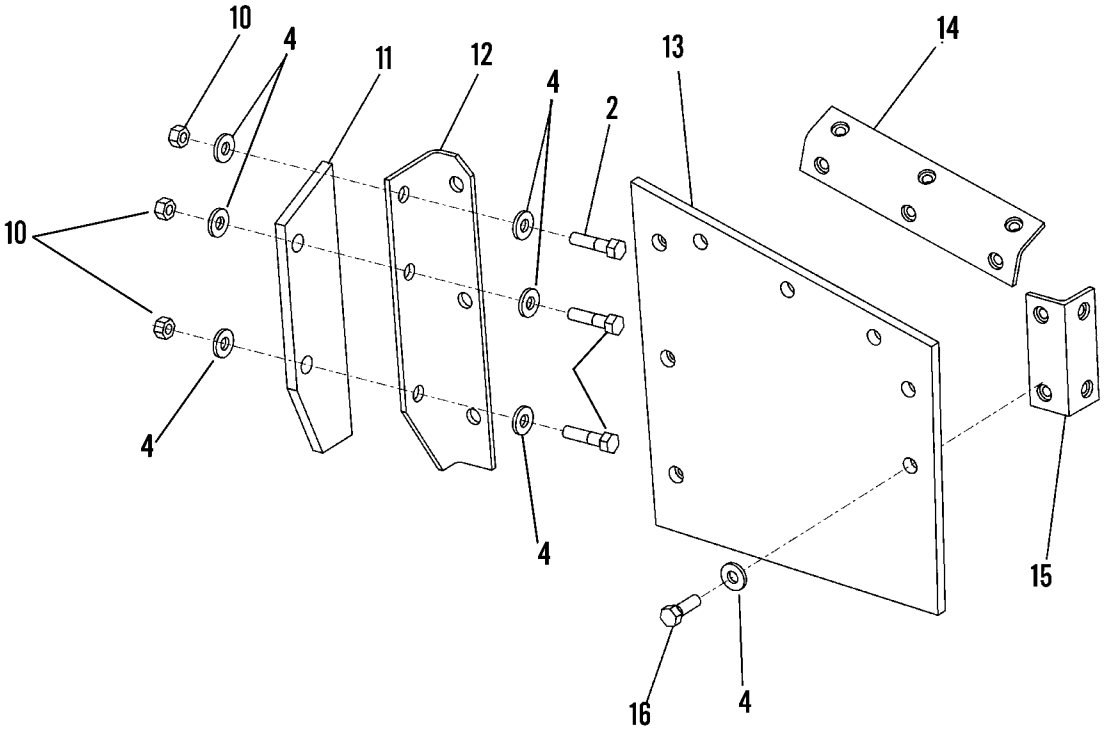

Figure 206. Right Rear Side of Cab

(1) ITEM NO	(2) SMR CODE	(3) NSN	(4) CAGEC	(5) PART NUMBER	(6) DESCRIPTION AND USABLE ON CODES (UOC)	(7) QTY
					GROUP 3307 SPECIAL PURPOSE KITS	
					FIG. 206 RIGHT REAR SIDE OF CAB	
1	PFOZZ	5315015064364	11083	1326183	PIN,STRAIGHT,HEADLE	1
2	PFOZZ	5306014293170	11083	8T4835	BOLT,MACHINE (1/2 X 2)	5
3	PFOZZ	5310012369975	11083	3B4508	WASHER,LOCK	2
4	PFOZZ	5310010976720	11083	5P1076	WASHER,SHOULDERED A	20
5	PFOZZ	5310000443339	19207	443339	NUT,SELF-LOCKING,HE	2
6	PAOZZ	5340015085348	11083	4R9964	COVER,ACCESS FUEL,CAB RH	1
7	PFOZZ	4730014713774	11083	0310249	LOCKNUT,PIPE	1
8	PFOZZ		11083	4B4274	WASHER,FLAT	2
9	PFOZZ	5306001183091	11083	7M9910	BOLT,MACHINE (#10 X 1)	1
10	PFOZZ	5310011843538	11083	6V8188	NUT,PLAIN,HEXAGON (1/2)	3
11	PFOZZ	5340015068592	11083	4R9652	BRACKET,MOUNTING	1
12	PFOZZ	5340015068577	11083	4R9686	BRACKET,ANGLE	1
13	PAOZZ	9515015040570	11083	4R9671	ARMOR PLATE HYDRAULIC TANK,REAR	1
14	PFOZZ	5340015068571	11083	4R9687	BRACKET,ANGLE	1
15	PFOZZ	5340015070209	11083	4R9683	BRACKET,ANGLE	1
16	PFOZZ	5305000712069	11083	5P2566	SCREW,CAP,HEXAGON H (1/2 X .... 1-1/2)	10
					END OF FIGURE	

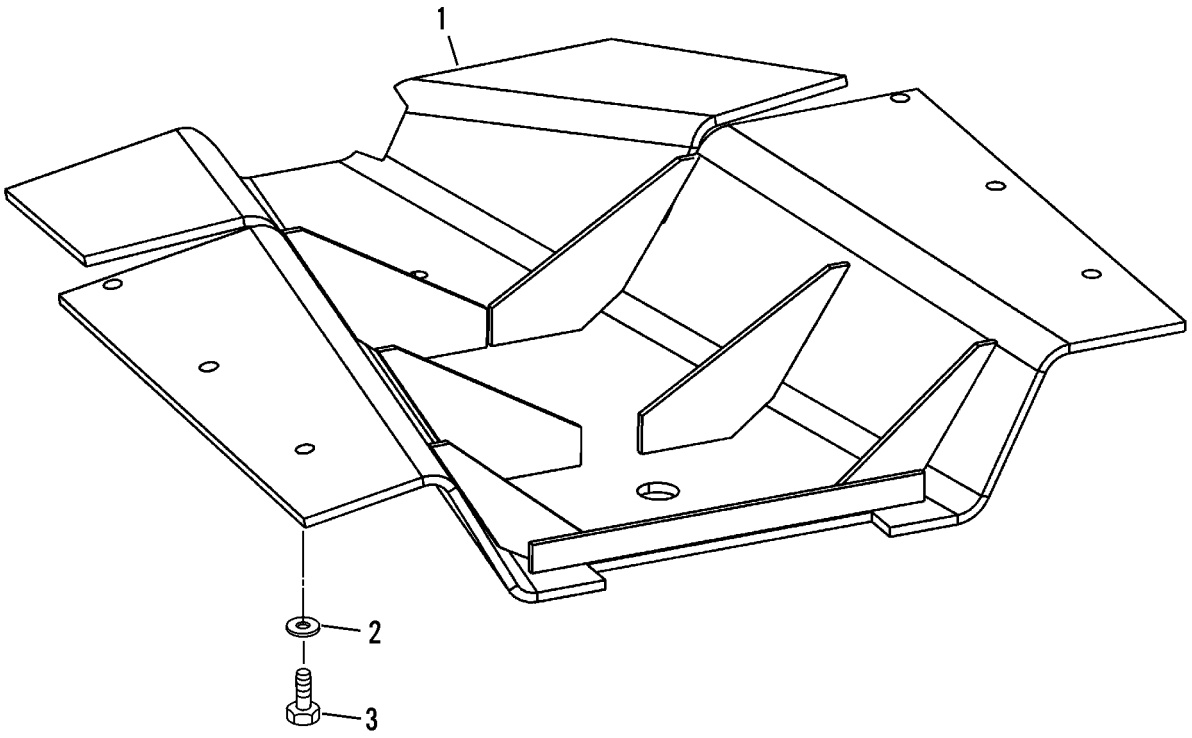

Figure 207. Rear Bottom Guard

(1) ITEM NO	(2) SMR CODE	(3) NSN	(4) CAGEC	(5) PART NUMBER	(6) DESCRIPTION AND USABLE ON CODES (UOC)	(7) QTY
					GROUP 3307 SPECIAL PURPOSE KITS	
					FIG. 207 REAR BOTTOM GUARD	
1	PAOZZ	9515015040575	11083	4R9713	ARMOR PLATE BOTTOM	1
2	PFOZZ	5310012983199	11083	8T4994	WASHER,FLAT (3/4)	6
3	PFOZZ	5306014294065	11083	8T9398	BOLT,CLOSE TOLERANC (3/4 X .... 1-3/4)	6
					END OF FIGURE	

1 2 - 24

1 Figure 207B thru Figure 207H

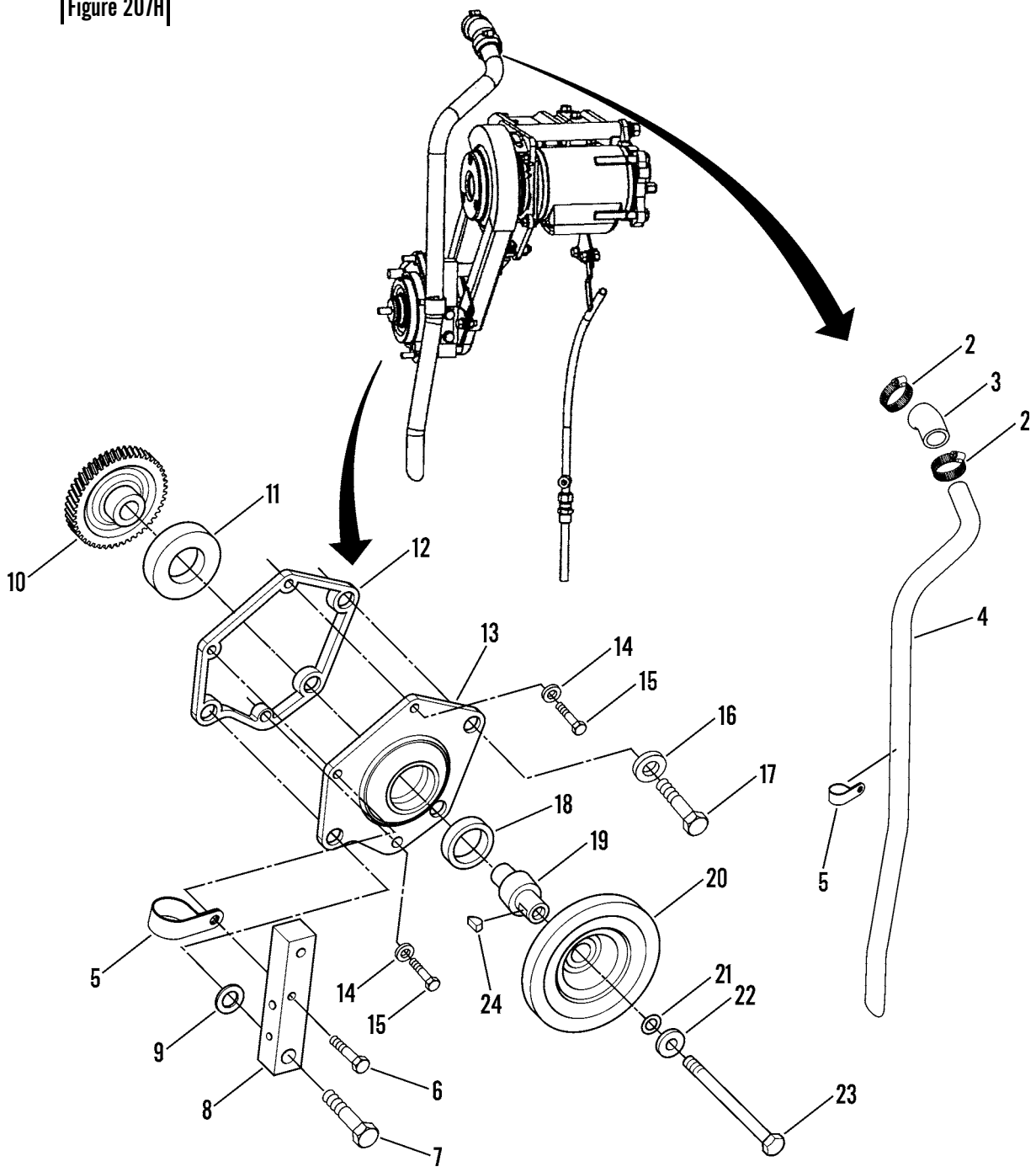

Figure 207A. Breather Tube and Auxiliary Drive Assembly

(1) ITEM NO	(2) SMR CODE	(3) NSN	(4) CAGEC	(5) PART NUMBER	(6) DESCRIPTION AND USABLE ON CODES (UOC)	(7) QTY
					GROUP 3307 SPECIAL PURPOSE KITS	
					FIG. 207A BREATHER TUBE AND AUXILIARY DRIVE ASSEMBLY	
1	PAOFF	4130015211783	11083	1796044	PARTS KIT,AIR CONDI INCLUDES ... FIG'S 207B THRU 207H	1
2	PFFZZ	5342011655721	11083	9M2904	.CLAMP	2
3	PFFZZ	4720010279168	11083	8S0780	.HOSE	1
4	PFFZZ		11083	4N5516	.TUBE	1
5	PFFZZ		11083	1345645	.CLIP-LOOP	1
6	PFFZZ	5306002851368	11083	0L1143	.BOLT,MACHINE 3/8-16 X 2 1/2 ...	1
7	PFFZZ	5306004263150	11083	1A8537	.BOLT,MACHINE	1
8	PFFZZ		11083	6N7398	.BLOCK	1
9	PFFZZ		11083	1K3047	.WASHER	1
10	PFFZZ	3020011789843	11083	2W7678	.GEAR,HELICAL	1
11	PFFZZ	3110005545302	81348	FFB171/04J08A2E	.BEARING,BALL,ANNULA	1
12	PFFZZ	5330010691478	11083	2P0220	.GASKET	1
13	PFFZZ		11083	3N4922	.COVER-WATER PUMP	1
14	PFFZZ	5310001174788	11083	5M2894	.WASHER,FLAT 3/8	3
15	PFFZZ	5306011954681	11083	3B1915	.BOLT	3
16	PFFZZ	5310010954631	11083	5P8247	.WASHER,FLAT 5/8 ..... UOC:GRC	2
17	PFFZZ	5306002755012	11083	0S1566	.BOLT,MACHINE	2
18	PFFZZ	5330003627996	11083	7B2174	.SEAL,PLAIN ENCASED	1
19	PFFZZ		11083	4W6955	.SHAFT-AUX DRIVE	1
20	PFFZZ		11083	4N6139	.PULLEY-AUX DRIVE	1
21	PFFZZ		11083	6V5759	.SEAL-O-RING	1
22	PFFZZ		11083	2S0932	.WASHER-HARD	1
23	PFFZZ	5306004239609	11083	5B5059	.BOLT,MACHINE 7/16-14 X 5.00 ...	1
24	PFFZA	5315009206927	11083	1B8705	.KEY,WOODRUFF	1
					END OF FIGURE	

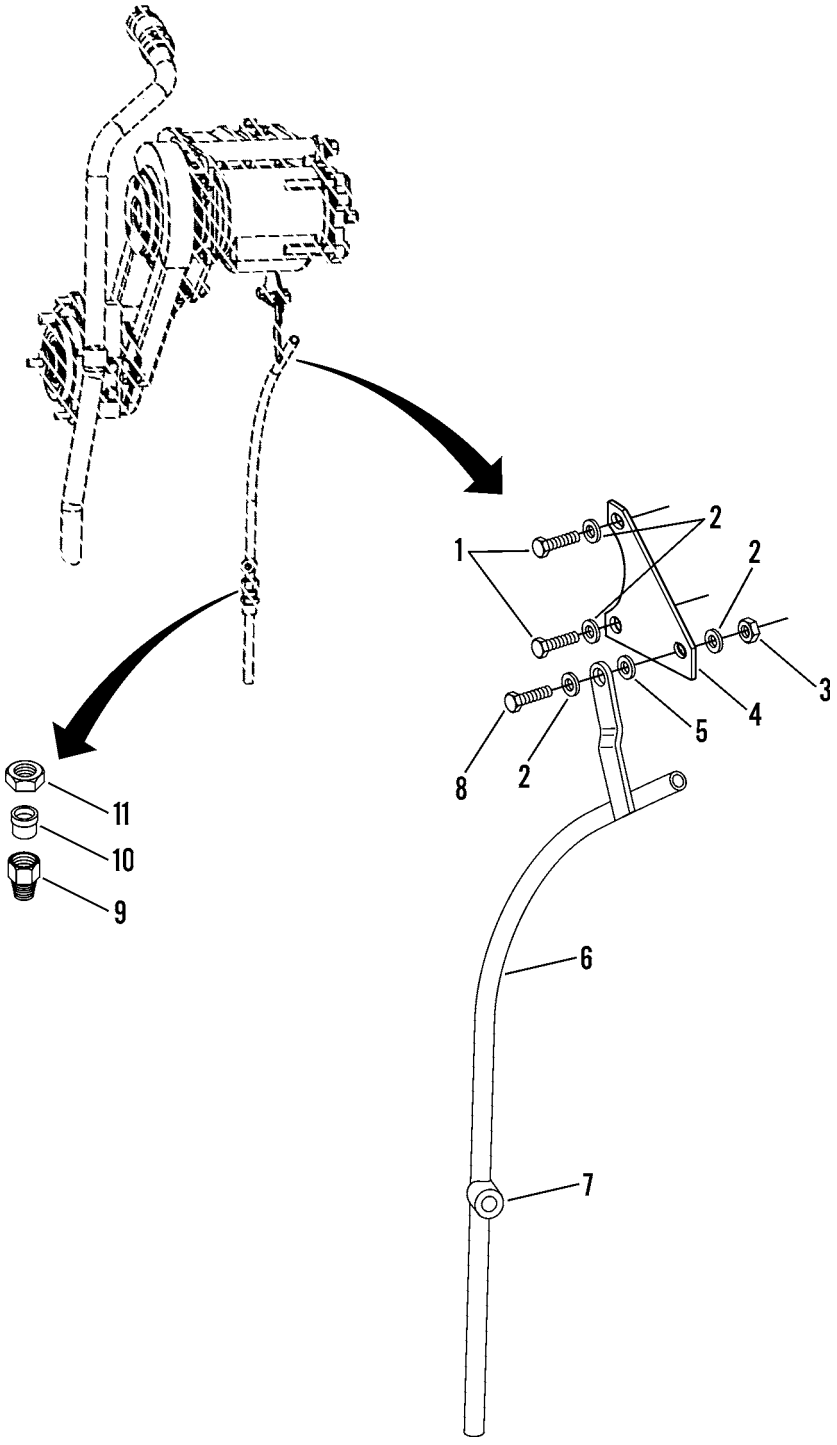

Figure 207B. Oil Level Gage Guide Tube Assembly

(1) ITEM NO	(2) SMR CODE	(3) NSN	(4) CAGEC	(5) PART NUMBER	(6) DESCRIPTION AND USABLE ON CODES (UOC)	(7) QTY
					GROUP 3307 SPECIAL PURPOSE KITS	
					FIG. 207B OIL LEVEL GAGE GUIDE TUBE ASSEMBLY	
1	PFFZZ	5306011954681	11083	3B1915	BOLT 3/8	2
2	PFFZZ	5310001174788	11083	5M2894	WASHER,FLAT 3/8	4
3	PFFZZ	5310014297859	11083	6V8801	NUT,PLAIN,HEXAGON 3/8	1
4	PFFZZ		11083	4N5889	PLATE	1
5	PFFZZ	5310012662481	11083	4B4278	WASHER,FLAT 3/8	1
6	PFFZZ		11083	2P9551	TUBE AS-GUIDE	1
7	PFFZZ		11083	9S1758	BOSS	1
8	PFFZZ	5306002637301	11083	0L1351	BOLT,MACHINE 3/8	1
9	PFFZZ	4730004018098	11083	8S1326	ADAPTER,STRAIGHT,PI	1
10	PFFZZ	4730011780773	11083	5P4443	SLEEVE,COMPRESSION, ...	1
11	PFFZZ	4730010487874	11083	5P4448	NUT,TUBE COUPLING	1
					END OF FIGURE	

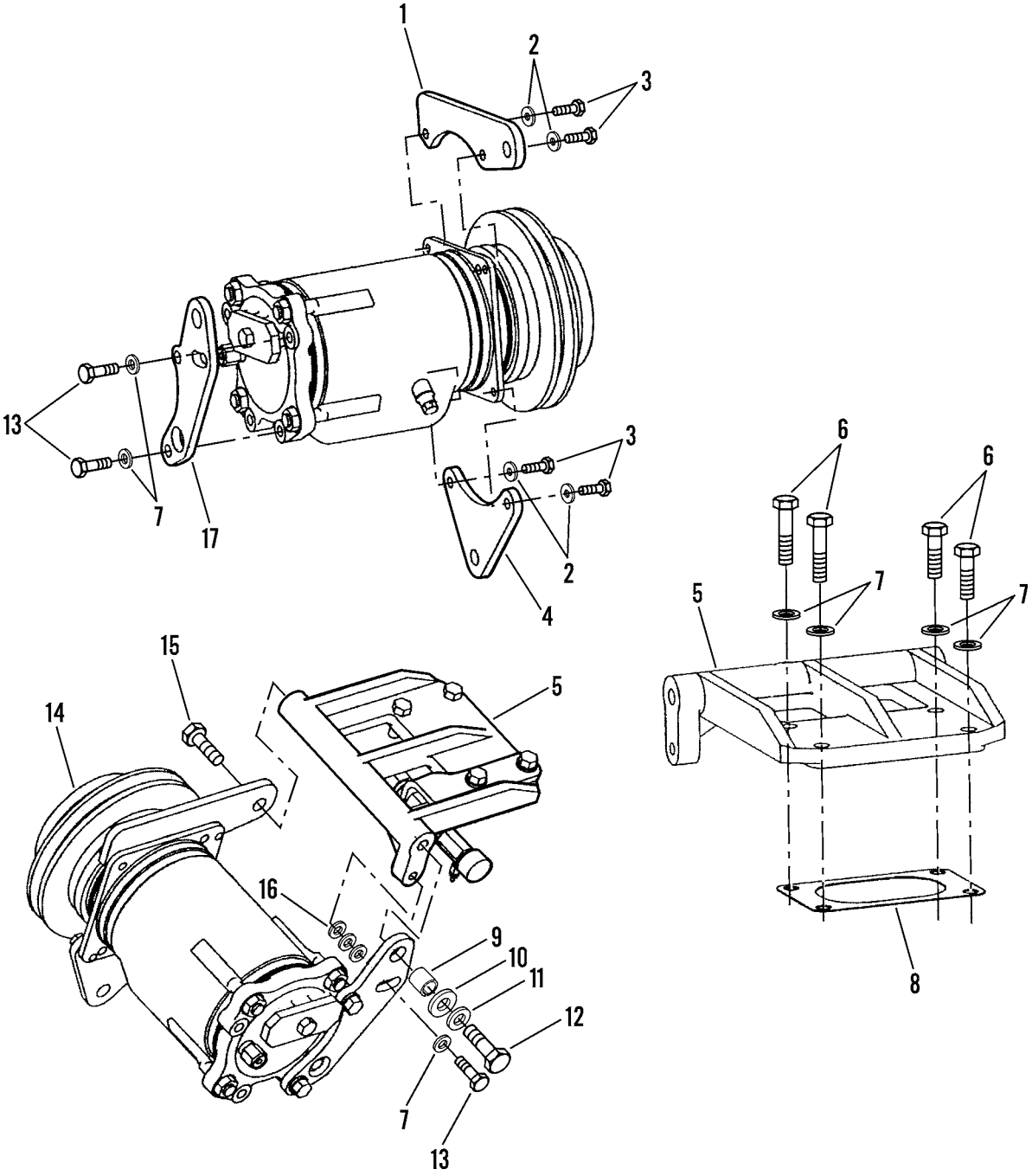

Figure 207C. Compressor Assembly (Sheet 1 of 2)

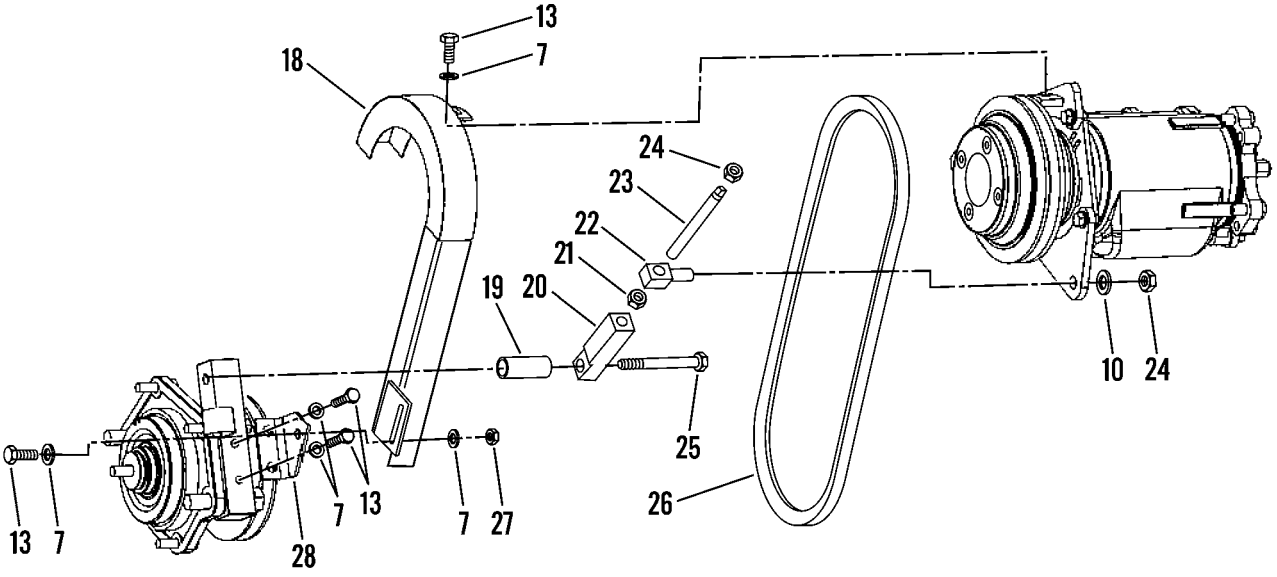

Figure 207C. Compressor Assembly (Sheet 2 of 2)

(1) ITEM NO	(2) SMR CODE	(3) NSN	(4) CAGEC	(5) PART NUMBER	(6) DESCRIPTION AND USABLE ON CODES (UOC)	(7) QTY
					GROUP 3307 SPECIAL PURPOSE KITS	
					FIG. 207C COMPRESSOR ASSEMBLY	
1	PFFZZ		11083	7N0659	BRACKET AS	1
2	PFFZZ	5310003628168	11083	4B4277	WASHER,FLAT 5/16	4
3	PFFZZ	5306002828360	11083	1A2343	BOLT,MACHINE	4
4	PFFZZ		11083	4N6120	PLATE	1
5	PFFZZ		11083	4N6140	BRACKET-COMPR	1
6	PFFZZ	5306004238194	11083	1A2029	BOLT,MACHINE 3/8-16 X 1 1/8	4
7	PFFZZ	5310001174788	11083	5M2894	WASHER,FLAT 3/8	12
8	PFFZZ	5330007607367	11083	5S6735	GASKET	1
9	PFFZZ		11083	8N3525	SPACER	1
10	PFFZZ	5310009307013	11083	4B4280	WASHER,FLAT 1/2	2
11	PFFZZ	5310012369975	11083	3B4508	WASHER,LOCK	1
12	PFFZZ	5306011279361	11083	0S1585	BOLT,MACHINE 1/2-13 X 1 1/2	1
13	PFFZZ	5306002604508	11083	0S1594	BOLT,MACHINE	7
14	PFFZZ		11083	1984564	COMPRESSOR GP	1
15	PFFZZ	5306004262934	11083	0S1621	BOLT,MACHINE	1
16	PFFZZ	5310010633001	11083	5M1822	WASHER	3
17	PFFZZ		11083	4N5890	PLATE	1
18	PFFZZ		11083	6N7399	GUARD AS-BELT	1
19	PFFZZ		11083	6J0427	SPACER	1
20	PFFZZ	5340012001539	11083	1P9742	CONNECTOR,ROD END	1
21	PFFZZ	5310002089476	11083	1D5117	NUT,PLAIN,HEXAGON 1/2-13	1
22	PFFZZ		11083	1P2237	SWIVEL-ADJUSTING	1
23	PFFZZ	5307011973394	11083	1P2236	STUD,RECESSED	1
24	PFFZZ	5310012369899	11083	1D4719	NUT,PLAIN,HEXAGON 1/2-13	2
25	PFFZZ	5306004238316	11083	1B2886	BOLT,MACHINE 1/2-13 X 3 3/4	1
26	PFFZZ	3030015053134	11083	4N7335	BELT,VEE SPECIAL	1
27	PFFZZ	5310014297859	11083	6V8801	NUT,PLAIN,HEXAGON 3/8	1
28	PFFFF		11083	6N7392	BRACKET	1
					END OF FIGURE	

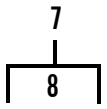

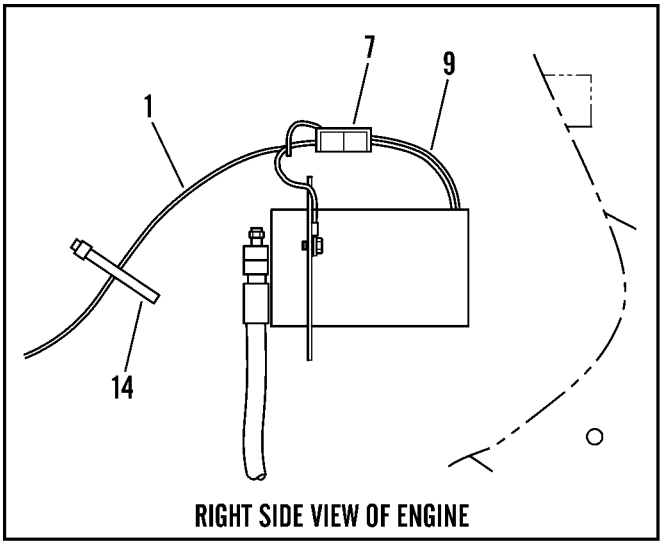

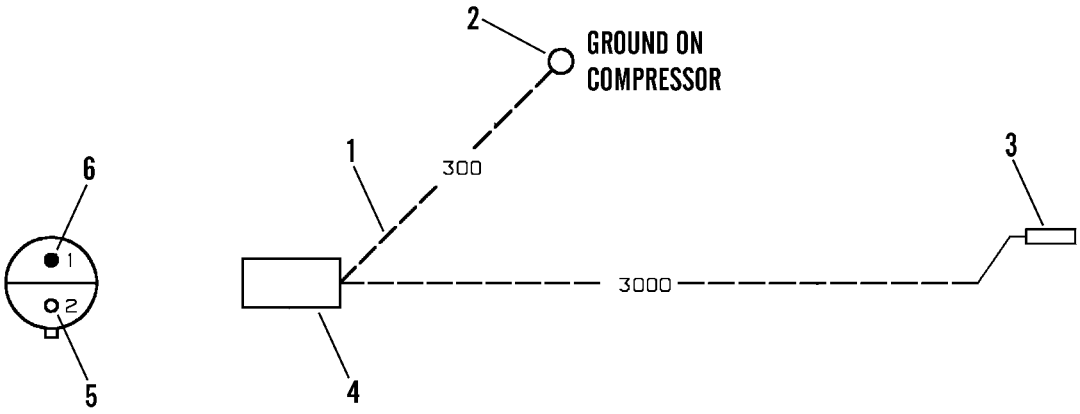

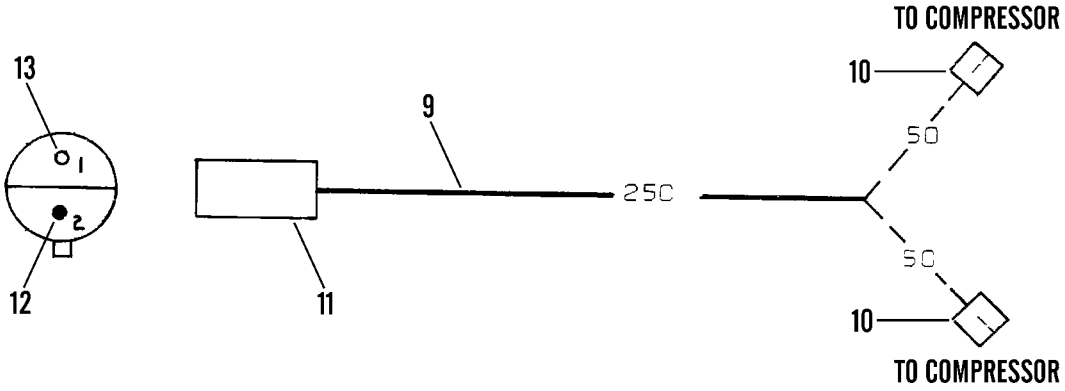

Figure 207D. Harness Assemblies (Sheet 1 of 2)

16

17 - 20

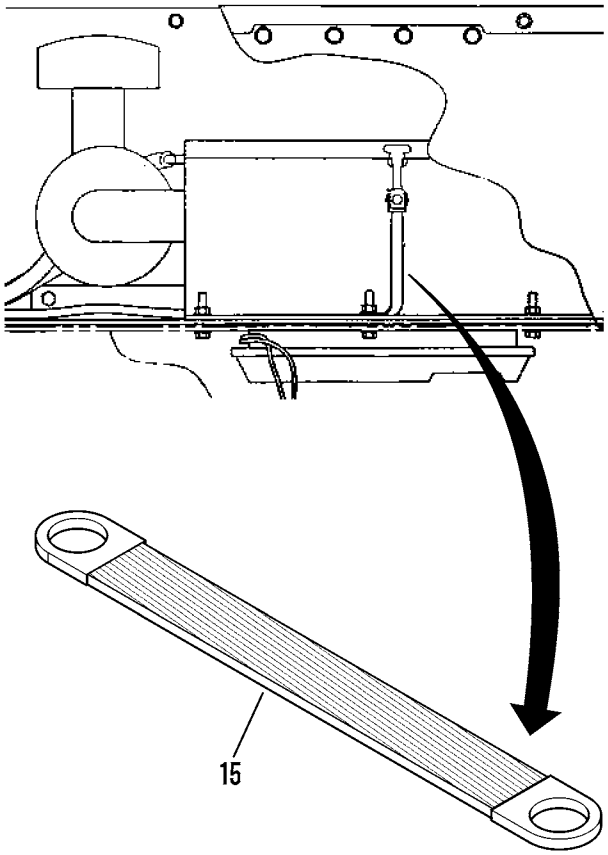

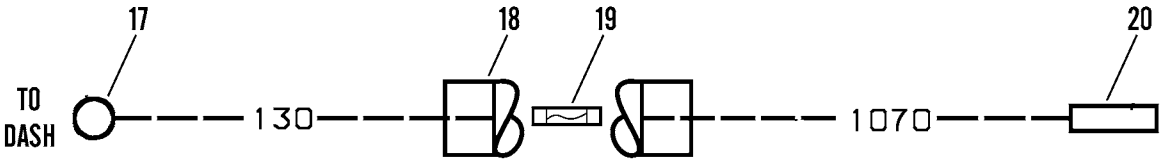

Figure 207D. Harness Assemblies (Sheet 2 of 2)

(1) ITEM NO	(2) SMR CODE	(3) NSN	(4) CAGEC	(5) PART NUMBER	(6) DESCRIPTION AND USABLE ON CODES (UOC)	(7) QTY
					GROUP 3307 SPECIAL PURPOSE KITS	
					FIG. 207D HARNESS ASSEMBLIES	
1	PFFFF		11083	4R9940	HARNESS ASSEMBLY	1
2	PFFZZ	5940001434793	96906	MS25036-110	.TERMINAL,LUG	1
3	PFFZZ	5940010791375	81343	M7928/5-4	.SPLICE,CONDUCTOR	1
4	PFFZZ	5935011508323	11083	7N9737	.CONNECTOR BODY,PLUG	1
5	PFFZZ	5999011508808	11083	7N7779	.CONTACT,ELECTRICAL	1
6	PFFZZ		11083	7N7780	.CONTACT,ELECTRICAL	1
7	PFFZZ	5999012620436	11083	3T3048	CLIP,ELECTRICAL	1
8	PFFZZ	5340011910289	11083	9G9151	.STRAP,RETAINING	1
9	PFFFF		11083	7T5181	HARNESSS ASSEMBLY	1
10	PFFZZ		11083	3M6018	.TERMINAL	1
11	PFFZZ	5935011495165	11083	7N9738	.CONNECTOR BODY,PLUG	1
12	PFFZZ		11083	7N7780	.CONTACT,ELECTRICAL	1
13	PFFZZ	5999011508808	11083	7N7779	.CONTACT,ELECTRICAL	1
14	PFFZZ	5975001338687	96906	MS3367-5-0	STRAP,TIEDOWN,ELECT	6
15	PFFZZ		11083	1V6622	STRAP AS-GROUND	1
16	PFFFF		11083	4R9939	HARNESS ASSEMBLY	1
17	PFFZZ	5940012511326	11083	7H1186	.TERMINAL,LUG SERVICE ..... REPLACEMENT 2L-8066	1
18	PFFZZ		11083	0315637	.HOLDER-FUSE	1
19	PFFZZ	5920000120151	81349	F02A32V15A	.FUSE,CARTRIDGE 15 AMP	1
20	PFFZZ	2540010630736	11083	2S1043	.BUTT	1
					END OF FIGURE	

1
2 - 9

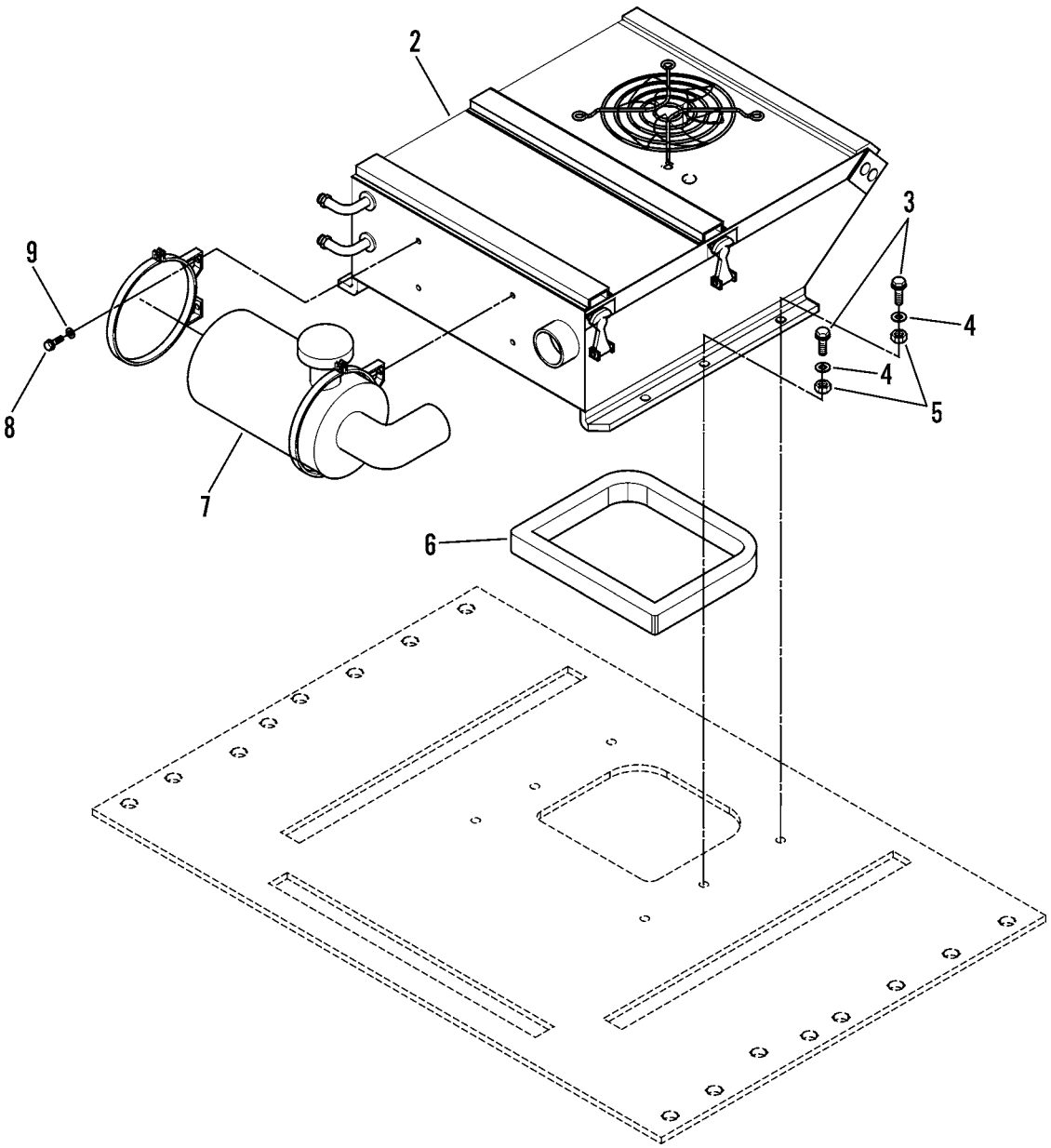

Figure 207E. Air Conditioner Assembly

(1) ITEM NO	(2) SMR CODE	(3) NSN	(4) CAGEC	(5) PART NUMBER	(6) DESCRIPTION AND USABLE ON CODES (UOC)	(7) QTY
					GROUP 3307 SPECIAL PURPOSE KITS	
					FIG. 207E AIR CONDITIONER ASSEMBLY	
1	PFFFF	4130015211783	11083	1796044	PARTS KIT,AIR CONDI	1
2	PFFFF		11083	4R9911	.CONDITIONER UNIT,AC SEE FIG. 207H FOR COMPONENT PARTS ..	1
3	PFFZZ	5305014398547	11083	8T8916	.SCREW,MACHINE 7/16-14 X 1 1/2 .	6
4	PFFZZ	5310010978955	11083	5P8244	.WASHER,FLAT 7/16	12
5	PFFZZ	5310013533403	11083	7X0447	.NUT,PLAIN,HEXAGON 7/16-14	6
6	PFFZZ		11083	8T9022	.GASKET-SILICONE	1
7	PFFZZ		11083	4R9912	.FILTER GP	1
8	PFFZZ	5306010664721	11083	4M0061	.BOLT 5/16-18 X 3/4	4
9	PFFZZ	5310013598806	11083	8T4224	.WASHER,FLAT 5/16	4
					END OF FIGURE	

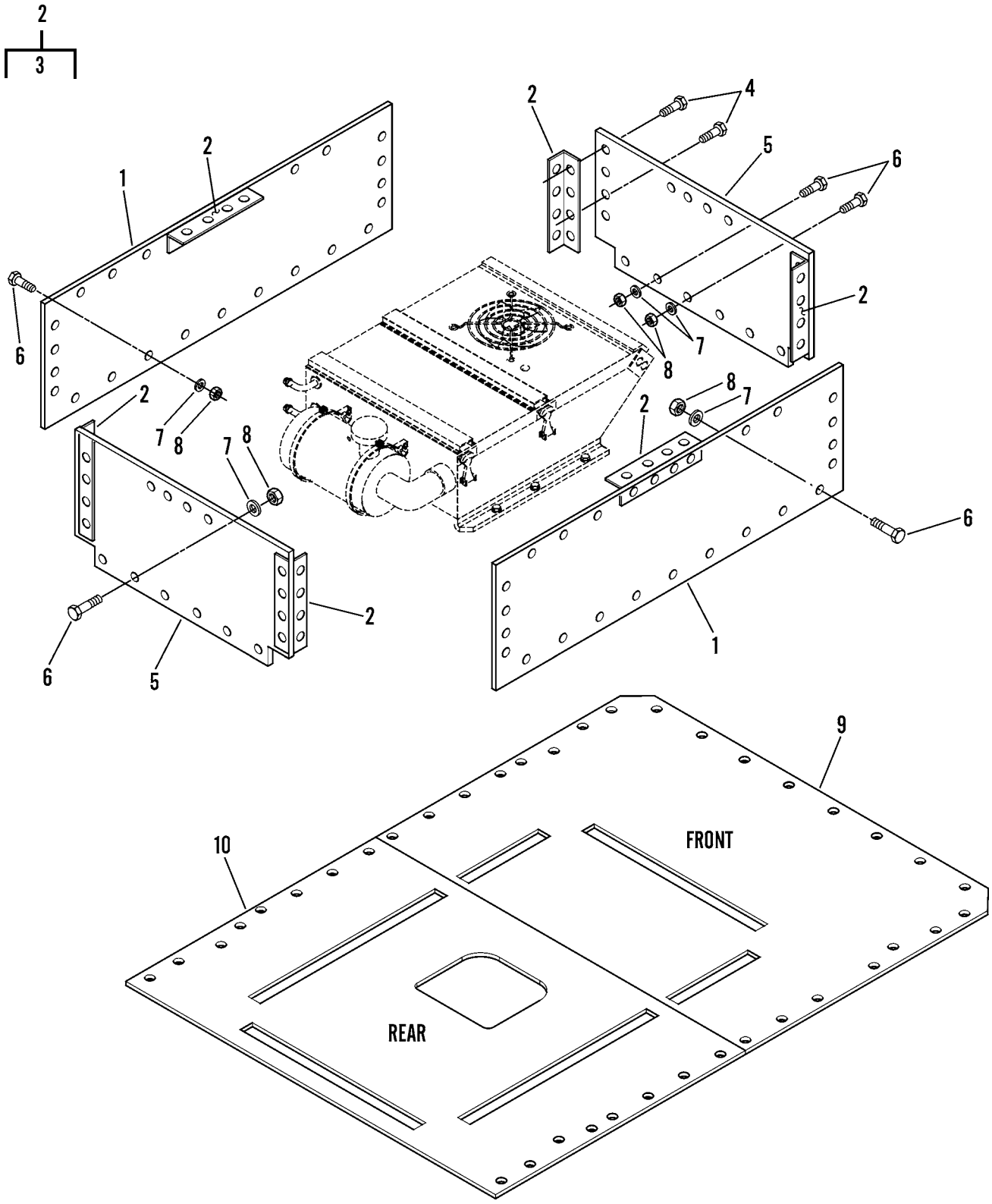

Figure 207F. Guard Assembly (Sheet 1 of 2)

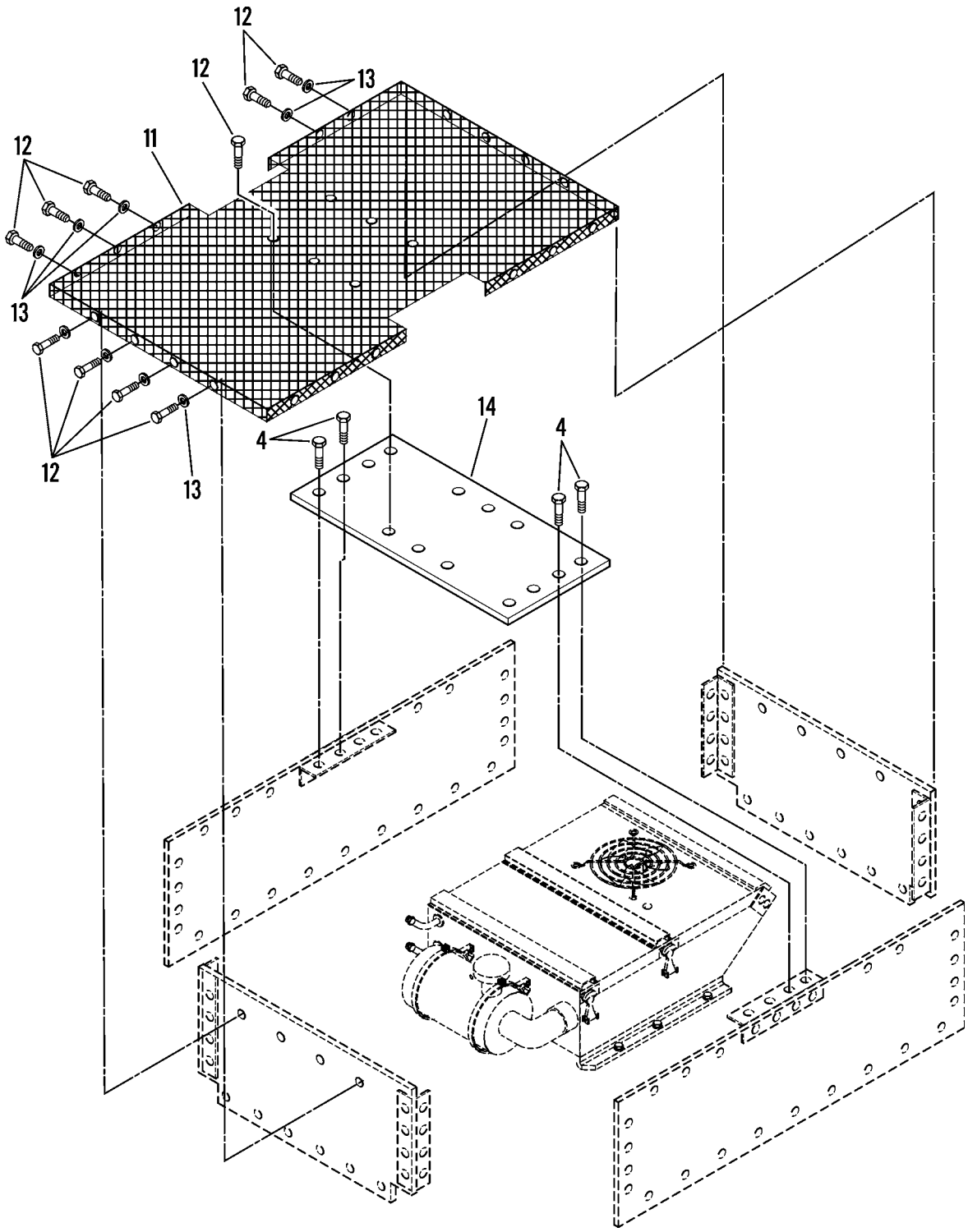

Figure 207F. Guard Assembly (Sheet 2 of 2)

(1) ITEM NO	(2) SMR CODE	(3) NSN	(4) CAGEC	(5) PART NUMBER	(6) DESCRIPTION AND USABLE ON CODES (UOC)	(7) QTY
					GROUP 3307 SPECIAL PURPOSE KITS	
					FIG. 207F GUARD ASSEMBLY	
1	PFFZZ		11083	4R9905	PLATE,ARMOR LH & RH SIDES	2
2	PFFZZ		11083	4R9907	ANGLE AS	6
3	PFFZZ	5310004454632	11083	1F0748	NUT,PLAIN,WELDING 1/2-13	8
4	PFFZZ	5306014294756	11083	8C4436	BOLT,MACHINE 1/2-13 X 1 3/8	48
5	PFFZZ		11083	4R9904	PLATE,ARMOR FRONT & REAR SIDES .	2
6	PFFZZ	5306014293168	11083	8T8919	BOLT,MACHINE 1/2-13 X 1 3/4	30
7	PFFZZ	5310010980624	11083	5P8245	WASHER,FLAT 1/2	108
8	PFFZZ	5310011843538	11083	6V8188	NUT,PLAIN,HEXAGON 1/2-13	30
9	PFFZZ		11083	4R9908	PLATE ASSY,ARMOR TOP FRONT ARMOR	1
10	PFFZZ		11083	4R9909	PLATE ASSY,ARMOR TOP REAR ARMOR	1
11	PFFZZ		11083	4R9910	SCREEN TOP	1
12	PFFZZ	5306002286835	11083	4L6454	BOLT,MACHINE 3/8-16 X 1.00	24
13	PFFZZ	5310014309026	11083	7X0578	WASHER,FLAT 3/8 FENDER	24
14	PFFZZ		11083	4R9906	PLATE,ARMOR TOP	1
					END OF FIGURE	

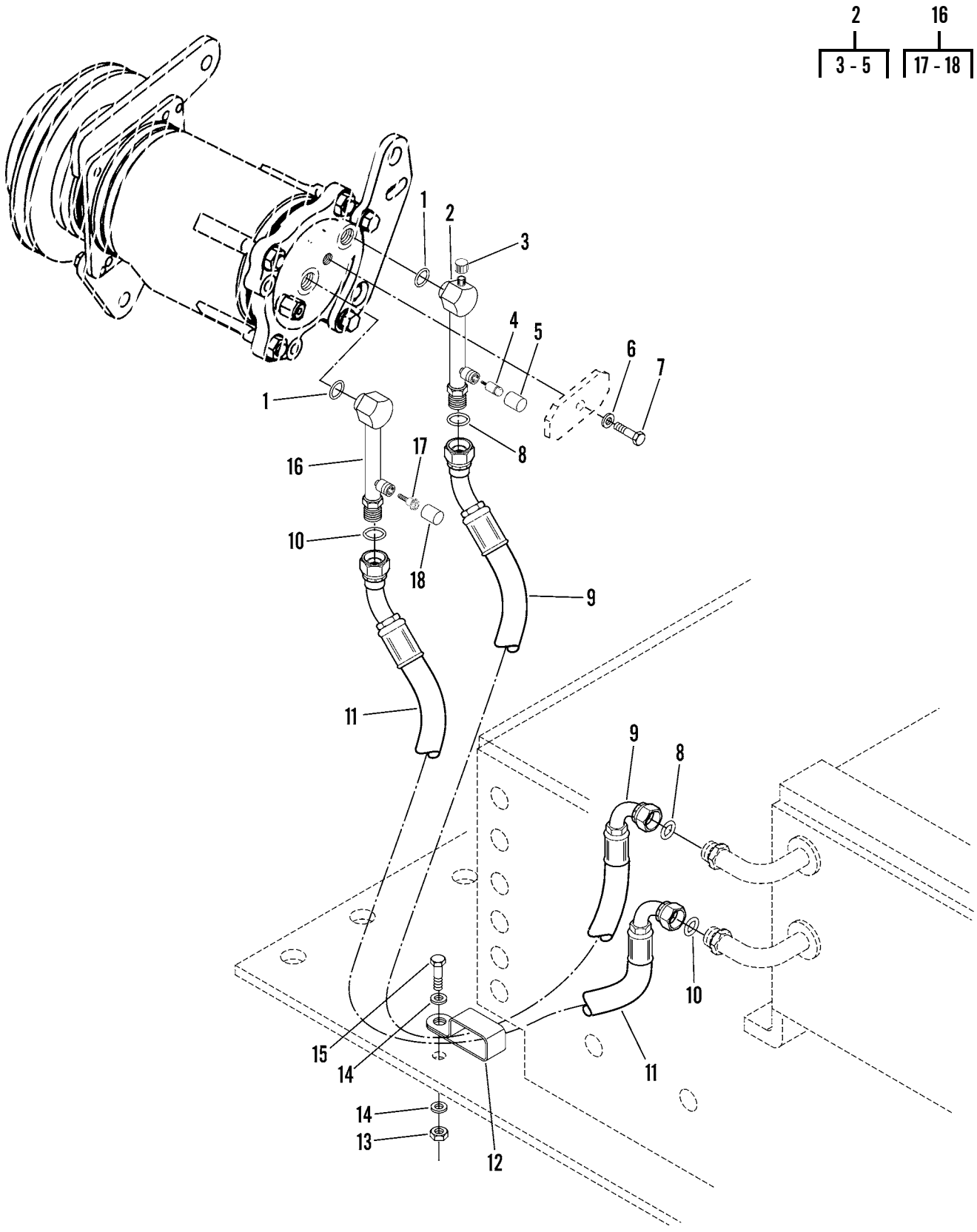

Figure 207G. Air Conditioner Lines

(1) ITEM NO	(2) SMR CODE	(3) NSN	(4) CAGEC	(5) PART NUMBER	(6) DESCRIPTION AND USABLE ON CODES (UOC)	(7) QTY
					GROUP 3307 SPECIAL PURPOSE KITS	
					FIG. 207G AIR CONDITIONER LINES	
1	PFFZZ	2530009309778	11083	1H8171	SEAL,COVER ASSEMBLY	2
2	PFFFF		11083	3E4060	TUBE ASSEMBLY,METAL	1
3	PFFZZ		11083	2L1224	.CAP-VALVE	1
4	PFFZZ	4820015057294	11083	3E4058	.BODY,VALVE	1
5	PFFZZ		11083	3E4052	.PLUG,MACHINE THREAD	1
6	PFFZZ	5310001174788	11083	5M2894	WASHER,FLAT 3/8	1
7	PFFZZ	5306004262939	11083	0S1748	BOLT,MACHINE 3/8-24 X 2.00	1
8	PFFZZ	5331014392613	11083	9X7381	O-RING	2
9	PFFZZ		11083	2821737	HOSE ASSY,NONMETALL	1
10	PFFZZ	5331014392615	11083	9X7382	O-RING	2
11	PFFZZ		11083	2821738	HOSE ASSY,NONMETALL	1
12	PFFZZ	5340014296196	11083	5D0718	CLAMP,LOOP	6
13	PFFZZ	5310011843538	11083	6V8188	NUT,PLAIN,HEXAGON 1/2-13	1
14	PFFZZ	5310010980624	11083	8T4223	WASHER,FLAT 1/2	2
15	PFFZZ	5305012857096	11083	5P2228	SCREW,CAP,HEXAGON H 1/2-13 X 3/4	1
16	PFFFZ	4730014735826	11083	3E4054	ELBOW,TUBE	1
17	PFFZZ	4820015057292	11083	3E4057	.BODY,VALVE ..... UOC:GRC	1
18	PFFZZ	5365015057291	11083	3E4051	.PLUG,MACHINE THREAD ..... UOC:GRC	1
					END OF FIGURE	

1
2 - 39

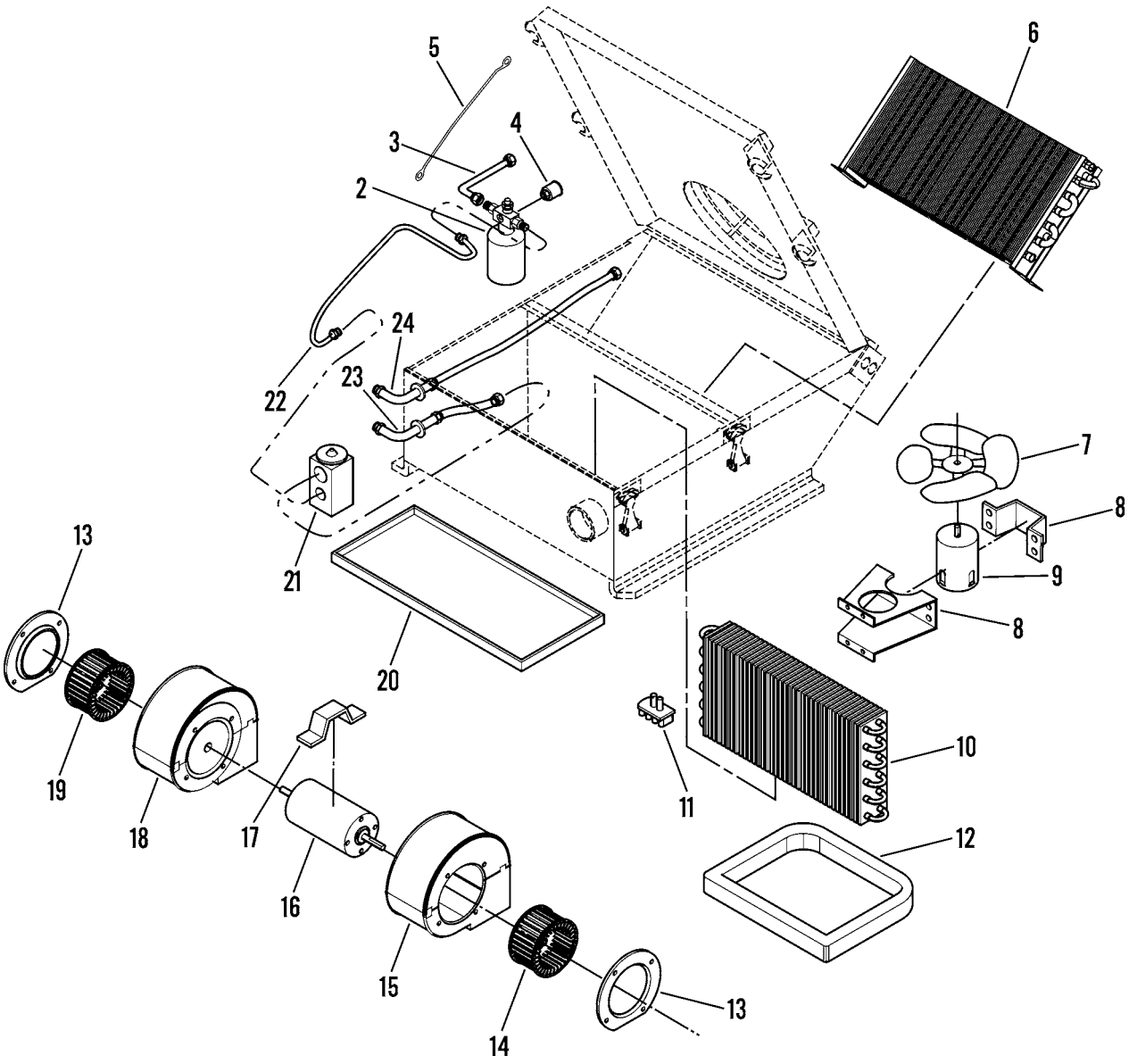

Figure 207H. Air Conditioner Assembly (Sheet 1 of 2)

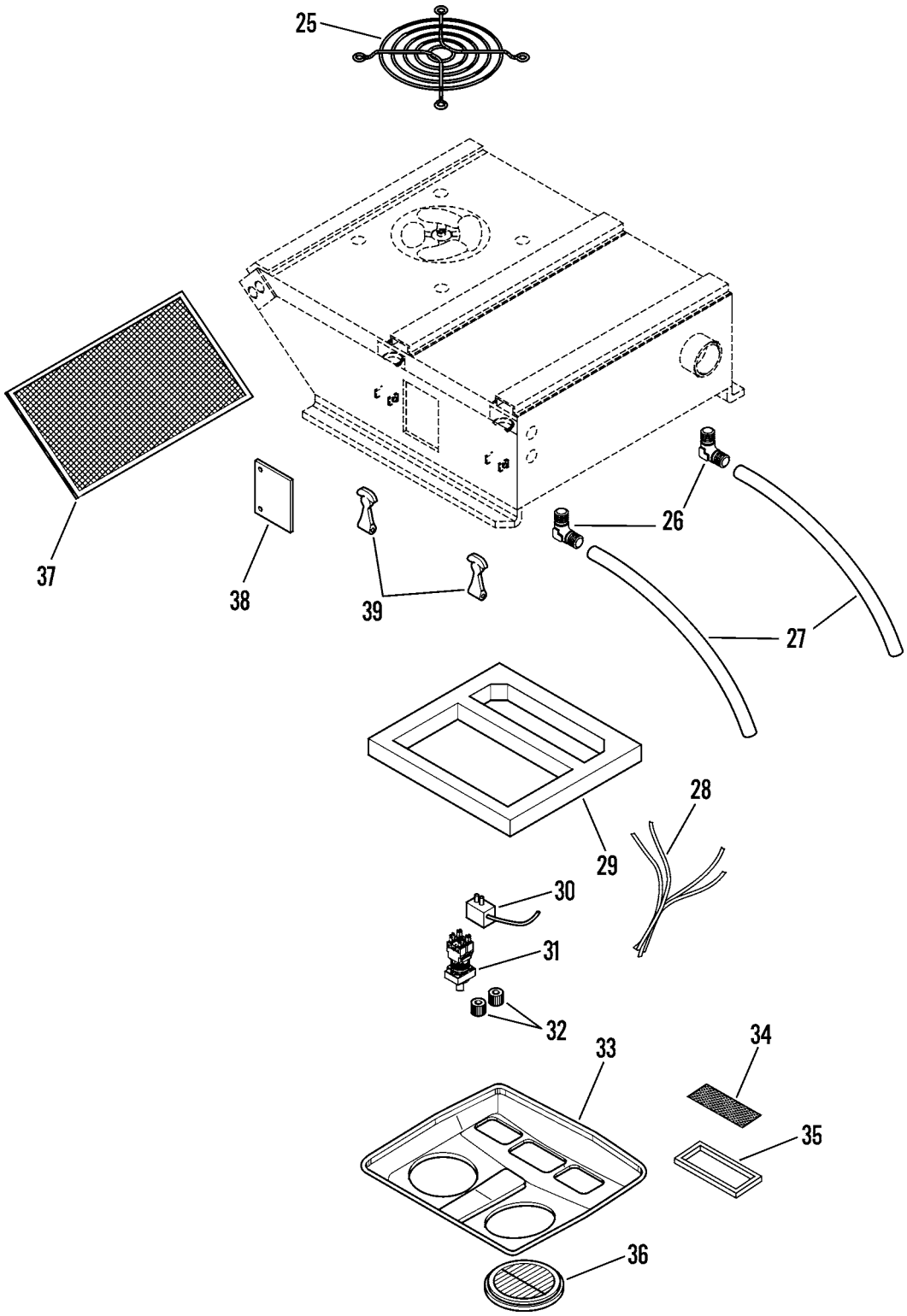

Figure 207H. Air Conditioner Assembly (Sheet 2 of 2)

(1) ITEM NO	(2) SMR CODE	(3) NSN	(4) CAGEC	(5) PART NUMBER	(6) DESCRIPTION AND USABLE ON CODES (UOC)	(7) QTY
					GROUP 3307 SPECIAL PURPOSE KITS	
					FIG. 207H AIR CONDITIONER ASSEMBLY	
1	PFFFF		11083	2792069	BLOWER UNIT ASSY	1
2	PFFZZ		11083	2792097	.RECEIVER DRIER	1
3	PFFZZ		11083	2792076	.HOSE ASSEMLY,NONMET	1
4	PFFZZ		11083	2792098	.SWITCH-PRESSURE,BIN	1
5	PFFZZ		11083	2792099	.CABLE RETAIN.,COVER	2
6	PFFFF		11083	2792072	.CONDENSER ASSY	1
7	PFFZZ		11083	2792100	.IMPELLER,FAN,AXIAL	1
8	PFFZZ		11083	2792095	.MOTOR MT ASSY COND	1
9	PFFZZ		11083	2792106	.MOTOR,24 VDC (COND)	1
10	PFFFF		11083	2792073	.EVAPORATOR ASSY	1
11	PFFZZ		11083	2792079	.RESISTOR	1
12	PFFZZ		11083	2792096	.ROOF SEAL ASSY	1
13	PFFZZ		11083	2792101	.ENTRY RING	2
14	PFFZZ		11083	2792102	.BLOWER WHEEL	1
15	PFFZZ		11083	2792104	.BLOWER ASSY	1
16	PFFZZ		11083	2792107	.MOTOR,24 VDC (BLWR)	1
17	PFFZZ		11083	2792111	.RETAINER,MOTOR	1
18	PFFZZ		11083	2792105	.BLOWER ASSY	1
19	PFFZZ		11083	2792103	.BLOWER WHEEL	1
20	PFFZZ		11083	2792070	.DRAIN PAN ASSY	1
21	PFFZZ		11083	2792081	.EXPANSION VALVE	1
22	PFFZZ		11083	2792077	.TUBE ASSEMBLY,METAL	2
23	PFFZZ		11083	2792074	.CRIMP-ON HOSE ASSY #10	1
24	PFFZZ		11083	2792075	.CRIMP-ON HOSE ASSY #8	1
25	PFFZZ		11083	2792078	.FAN GUARD	1
26	PFFZZ		11083	2792092	.FITTING ELBOW	2
27	PFFZZ		11083	2792093	.DRAIN HOSE	2
28	PFFZZ		11083	2792109	.WIRING KIT	1
29	PFFZZ		11083	2792071	.GASKET (PLENUM)	1
30	PFFZZ		11083	2792083	.THERMOSTAT	1
31	PFFZZ		11083	2792086	.3 SPEED SWITCH	1
32	PFFZZ		11083	2792088	.KNOB	2
33	PFFFF		11083	2792089	.PLENUM DIFFUSER	1
34	PFFZZ		11083	2792113	.FILTER-RECIRC	1
35	PFFZZ		11083	2792114	.RETAINER FILTER	1
36	PFFZZ		11083	2792090	.LOUVER ASSY 4 1/2"	2
37	PFFZZ		11083	2792110	.SCREEN-CONDENSER	1
38	PFFZZ		11083	2792112	.PNL. ACCESS,EXP,VAL	1
39	PFFZZ		11083	2792108	.ANCHOR,RUBBER	1
					END OF FIGURE	

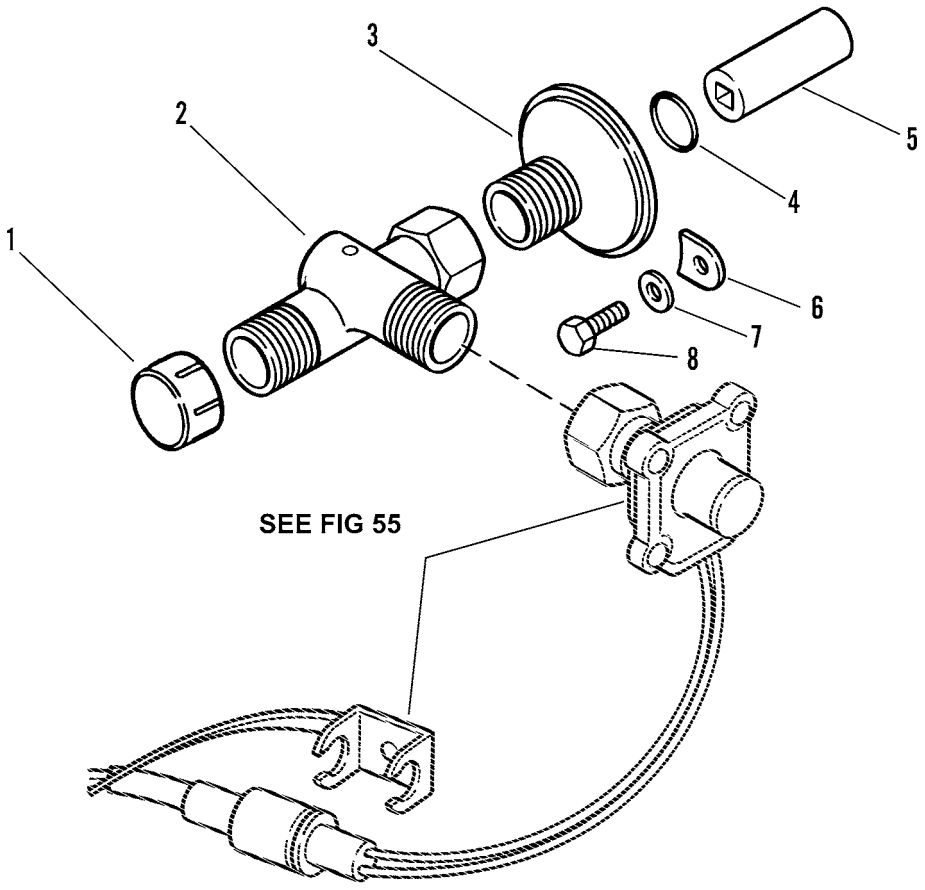

Figure 208. Tachometer Drive Group

(1) ITEM NO	(2) SMR CODE	(3) NSN	(4) CAGEC	(5) PART NUMBER	(6) DESCRIPTION AND USABLE ON CODES (UOC)	(7) QTY
					GROUP 47 GAGES (NON-ELECTRICAL), WEIGHING AND MEASURING DEVICES	
					GROUP 4701 INSTRUMENTS (SPEED AND DISTANCE)	
					FIG. 208 TACHOMETER DRIVE GROUP	
1	PFOZZ	5340012699343	11083	4W5235	CAP,PROTECTIVE,DUST	2
2	PFOZZ	6680011794546	33203	AD2H23MA16	ADAPTER,SPEEDOMETER	1
3	PFOZZ	2520012537035	05662	SP238	ADAPTER,SPEEDOMETER	1
4	PFOZZ	5331006136522	11083	4M8303	O-RING	1
5	PFOZZ	3120012573300	11083	4N0538	BUSHING,SLEEVE	1
6	PFOZZ	5340011074111	11083	9S0211	CLAMP,SYNCHRO	2
7	PFOZZ	5310005501130	96906	MS35333-40	WASHER,LOCK	2
8	PFOZZ	5306002611153	11083	0S1615	BOLT,MACHINE	2
				END OF FIGURE		

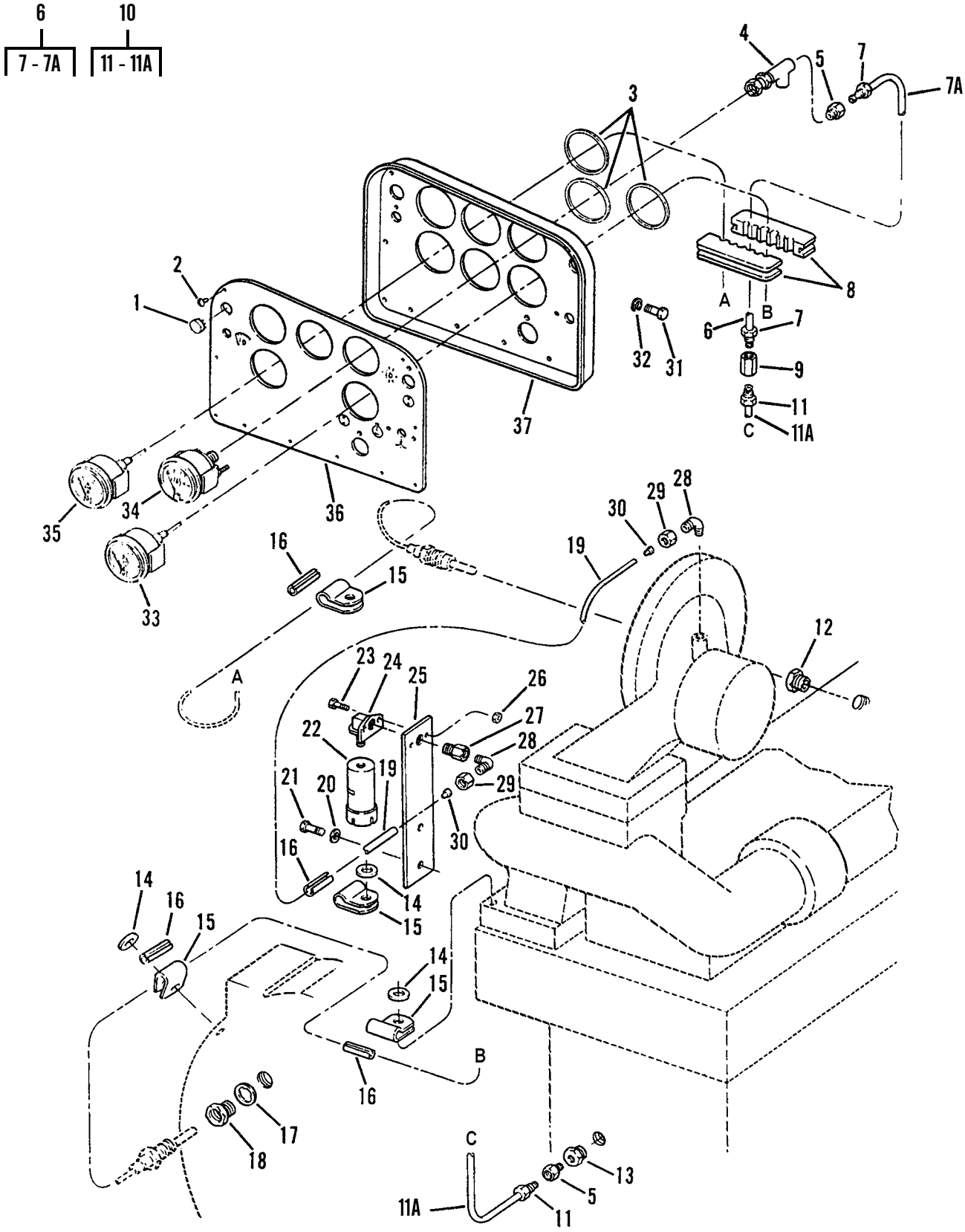

Figure 209. Gage Group

(1) ITEM NO	(2) SMR CODE	(3) NSN	(4) CAGEC	(5) PART NUMBER	(6) DESCRIPTION AND USABLE ON CODES (UOC)	(7) QTY
					GROUP 4702 GAGES, MOUNTINGS, LINES AND FITTINGS	
					FIG. 209 GAGE GROUP	
1	PFOZZ	5340012598962	23540	437	CAP,PROTECTIVE,DUST	1
2	PFOZZ	5305002535615	80205	MS21318-21	SCREW,DRIVE	10
3	PFOZZ	5330011520601	11083	6V3507	PACKING,PREFORMED	4
4	PFOZZ	4730003076426	11083	5P3741	TEE,PIPE	1
5	PFOZZ	4730010686081	11083	6L3616	FITTING	2
6	AOOOO		11083	3P6685	TUBE ASSY	1
7	PFOZZ	4730000137397	11083	4B8756	.INVERTED NUT,TUBE C	2
7A	MOOZZ		11083	5P0189-50	.TUBING,NONMETALLIC CUT TO FIT, MAKE FROM TUBING P/N 5P1198	1
8	PFOZZ	5325010686229	11083	3P5334	GROMMET,NONMETALLIC	2
9	PFOZZ	4730010690769	11083	5K9242	COUPLING,TUBE	1
10	AOOOO		11083	9G1951	TUBE ASSEMBLY	1
11	PFOZZ	4730000137397	11083	4B8756	.INVERTED NUT,TUBE C	2
11A	MOOZZ		11083	5P0189-67	.TUBING,NONMETALIIC CUT TO FIT, MAKE FROM TUBING P/N 5P1198	1
12	PFOZZ	4730009232126	11083	6H6699	ADAPTER,STRAIGHT,PI	1
13	PFOZZ	4730011592998	11083	2H5547	BUSHING,PIPE	1
14	PFOZZ	5310001174788	11083	9Y2695	WASHER,FLAT	5
15	PFOZZ	5999003636240	11083	2B2404	CLIP,ELECTRICAL	6
16	PFOZZ	5325009234575	11083	8F244	GROMMET	6
17	PFOZZ	5365004238884	11083	2B5721	SPACER,RING	1
18	PFOZZ	5310004239538	11083	5B1959	NUT,THERMOCOUPLE AD	1
19	MOOZZ		11083	5P0580-44IN	TUBE MAKE FROM BULK TUBING P/N 5P5630	1
20	PFOZZ	5310000814219	96906	MS27183-12	WASHER,FLAT	2
21	PFOZZ	5306011169622	11083	0869934	BOLT,MACHINE	2
22	PAOZZ	2940011666834	11083	1W0613	INDICATOR,FILTER WA AIR FILTER INDICATOR	1
23	PFOZZ	5306002611153	11083	0S1615	BOLT,MACHINE	2
24	PFOZZ	4730010668443	11083	1P6886	ADAPTER	1
25	PFOZZ	5340012645983	11083	3T6467	PLATE,MENDING	1
26	PFOZZ	5310000881251	72452	1459-246	NUT,SELF-LOCKING,HE	2
27	PFOZZ	4730011632608	11083	8F0390	COUPLING,PIPE	1
28	PFOZZ	4730012500855	11083	5P6315	ELBOW,PIPE	2
29	PFOZZ	4730000679801	96906	MS39176-1	NUT,TUBE COUPLING	2
30	PFOZZ	4730002392503	96906	MS51825-1A	SLEEVE,CLINCH,TUBE	2
31	PFOZZ	5306002637301	11083	0L1351	BOLT,MACHINE	1
32	PFOZZ	5310000611258	96906	MS45904-76	WASHER,LOCK	1
33	PAOZZ	6620011784771	11083	1W0701	TRANSMITTER,PRESSUR TORQUE .... CONVERTER OIL TEMPERATURE	1
34	PAOZZ	6620011582909	11083	1W0705	GAGE,PRESSURE,DIAL ENGINE OIL . PRESSURE	1
35	PAOZZ	6620011784439	11083	1W0698	TRANSMITTER,ENGINE	1
36	PFOZZ	5895012537447	11083	5R6260	PANEL,INDICATOR	1
37	PFOZZ	2510012539304	11083	9G0994	PANEL,VEHICULAR OPE	1
				END OF FIGURE		

10
11 - 15

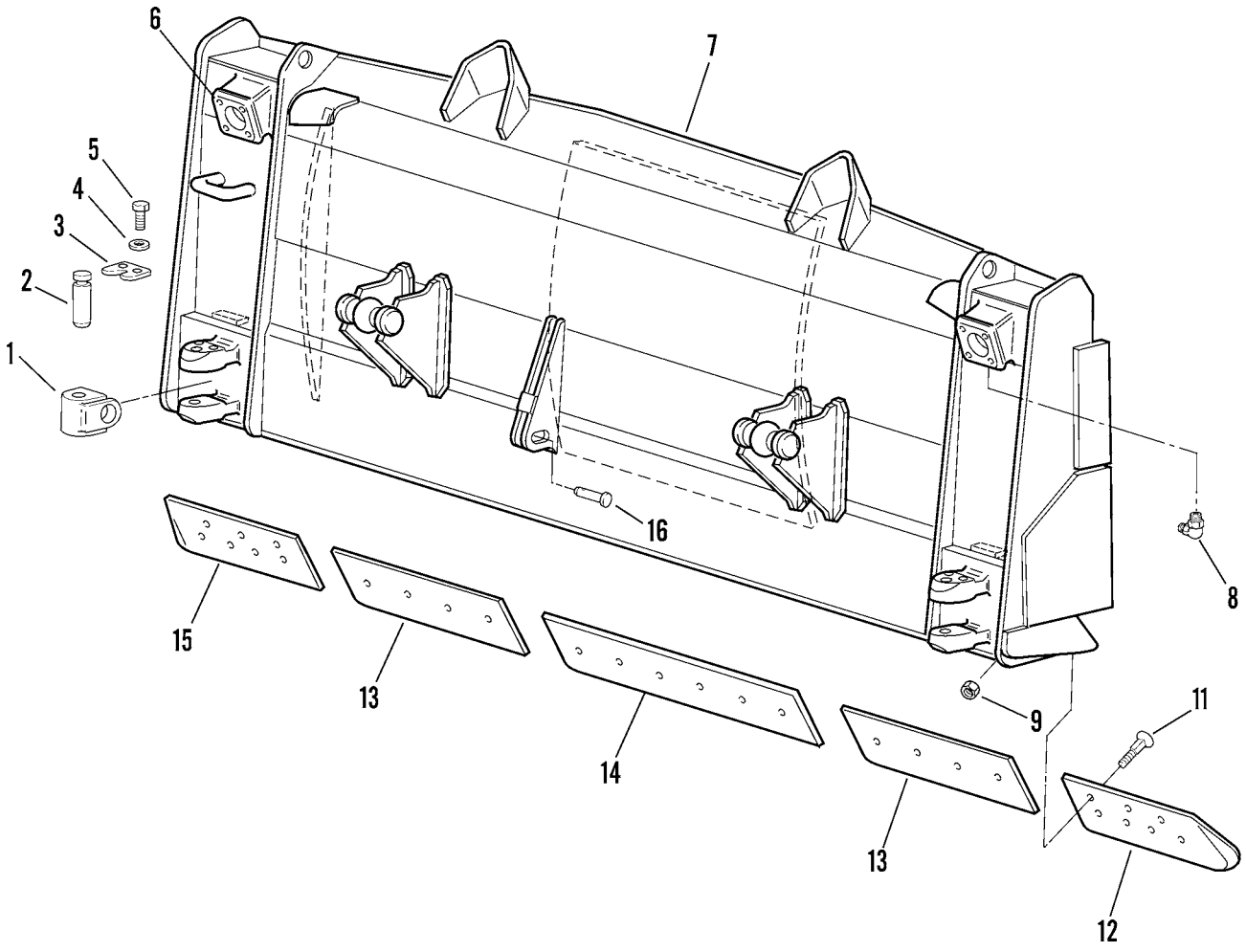

Figure 210. Blade Group

(1) ITEM NO	(2) SMR CODE	(3) NSN	(4) CAGEC	(5) PART NUMBER	(6) DESCRIPTION AND USABLE ON CODES (UOC)	(7) QTY
					GROUP 74 CRANES, SHOVELS, AND EARTH MOVING EQUIPMENT COMPONENTS	
					GROUP 7435 MOLDBOARD ASSEMBLY	
					FIG. 210 BLADE GROUP	
1	PFOZZ	5342012708582	11083	5J5643	COUPLING,CLAMP,GROO	2
2	PFOZZ	5315012701876	11083	6J6229	PIN,GROOVED,HEADLES	2
3	PFOZZ	5365012685530	11083	6J5342	SPACER,PLATE	2
4	PFOZZ	5310005847888	96906	MS35338-51	WASHER,LOCK	4
5	PFOZZ	5306002450953	11083	1A0458	BOLT,MACHINE	4
6	PFOZZ	8125002005640	11083	2B7561	STOPPER,BOTTLE	8
7	PFOZZ	3830012670459	11083	5R6929	BLADE,BULLDOZER,EAR	1
8	PFOZZ	4730001720034	81343	AS15003-6	FITTING,LUBRICATION	2
9	PAOZZ	5310009192242	11083	2J3505	NUT,PLAIN,HEXAGON	31
10	AOOZZ		11083	7J2358	CUTTING EDGE,MOLDBO	1
11	PAOZZ	5306001384602	11083	5J4772	.BOLT,SQUARE NECK	31
12	PAOZZ	3830001279413	11083	3G8293	.END BIT,MOLDBOARD	1
13	PAOZZ	3830003414384	11083	4T2922	.CUTTING EDGE,MOLDBO	2
14	PAOZZ	3830003414386	11083	4T2921	.CUTTING EDGE,MOLDBO	1
15	PAOZZ	3830012099720	11083	3G8294	.END BIT,MOLDBOARD	1
16	PFOZZ	5315009222592	11083	5B5489	PIN,STRAIGHT,HEADED	1
				END OF FIGURE		

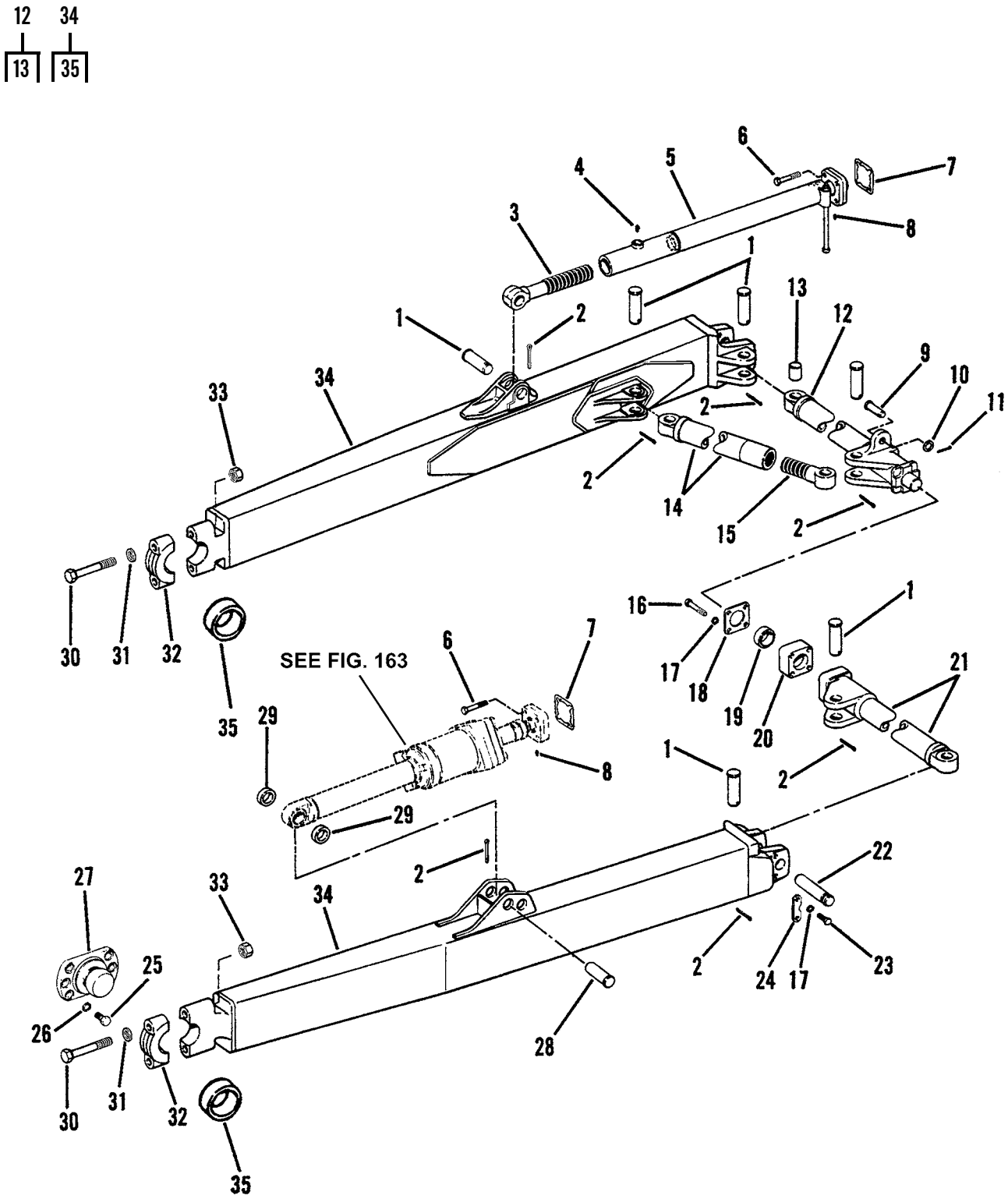

Figure 211. Push Arm Group and Trunnion Group

(1) ITEM NO	(2) SMR CODE	(3) NSN	(4) CAGEC	(5) PART NUMBER	(6) DESCRIPTION AND USABLE ON CODES (UOC)	(7) QTY
					GROUP 7436 LIFT ARMS AND PIVOT ASSEMBLIES	
					FIG. 211 PUSH ARM GROUP AND TRUNNION GROUP	
1	PFOZZ	5315003527540	11083	3F4971	PIN,STRAIGHT,HEADED	7
2	PFOZZ	5315012098775	11083	3B5326	PIN,COTTER	8
3	PFOZZ	5306012736844	11083	6J5349	BOLT,EYE	1
4	PFOZZ	4730000504208	81343	AS15003-1	FITTING,LUBRICATION	1
5	PFOZZ	3830012674305	11083	6J5365	BRACE ASSEMBLY,TILT	1
6	PFOZZ	5306004262941	11083	0S1756	BOLT,MACHINE	8
7	PFOZZ	5365004264587	11083	3F4956	SHIM	V
8	PFOZZ	4730002888055	81348	WW-P-471AASBCA	PLUG,PIPE	2
9	PFOZZ	5315009222592	11083	5B5489	PIN,STRAIGHT,HEADED	1
10	PFOZZ	5310012099403	11083	2A3198	WASHER,FLAT	2
11	PFOZZ	5315002341672	46717	L6451-95	PIN,COTTER	1
12	PFOZZ	2510012674389	11083	6J5378	STRUT ASSEMBLY,VEHI	1
13	PFOZZ	3110012701813	11083	9J3787	.BEARING,BALL,ROD EN	1
14	PFOZZ	3040012670625	11083	6J5359	CONNECTING LINK,RIG	2
15	PFOZZ	5306012708494	11083	1J8265	BOLT,EYE	2
16	PFOZZ	5306004262937	11083	0S1627	BOLT,MACHINE	4
17	PFOZZ	5310005847888	96906	MS35338-51	WASHER,LOCK	8
18	PFOZZ	3040012674368	11083	6J5348	PLATE,RETAINING,SHA	1
19	PFOZZ	3120012714376	60380	EA40720	BEARING,PLAIN,SELF-	1
20	PFOZZ	3110012711919	11083	6J5370	PLATE,RETAINING,BEA	1
21	PFOZZ	2510012674390	11083	6J5377	STRUT ASSEMBLY,VEHI	1
22	PFOZZ	5315012701876	11083	6J6229	PIN,GROOVED,HEADLES	2
23	PFOZZ	5306002450953	11083	1A0458	BOLT,MACHINE	4
24	PFOZZ	5340012701284	11083	6J5372	PLATE,MENDING	2
25	PFOZZ	5306004369893	11083	1J5257	BOLT,MACHINE	12
26	PFOZZ	5310005847889	80205	MS35338-53	WASHER,LOCK	12
27	PFOZZ	2590012676006	11083	6J9258	TRUNNION ASSEMBLY,B	2
28	PFOZZ	5315013367808	11083	4S8797	PIN,STRAIGHT,HEADED	1
29	PFOZZ	5365013365964	11083	7K5426	SPACER,SLEEVE	2
30	PFOZZ	5306001311660	11083	1J6775	BOLT,MACHINE	4
31	PFOZZ	5310011626012	11083	4K0684	WASHER,FLAT	4
32	PFOZZ	3130001311832	11083	6F7523	CAP,PILLOW BLOCK	2
33	PFOZZ	5310001364398	11083	6F7522	NUT,PLAIN,SQUARE	4
34	PFOZZ	2590012676007	11083	9J5363	ARM ASSEMBLY,LIFT B RIGHT-HAND	1
34	PAOZZ	2590012676008	11083	6J7850	ARM ASSEMBLY,LIFT B LEFT-HAND .	1
35	PFOZZ	3110012701812	11083	1J6740	.BEARING,ROLLER,THRU	2
				END OF FIGURE		

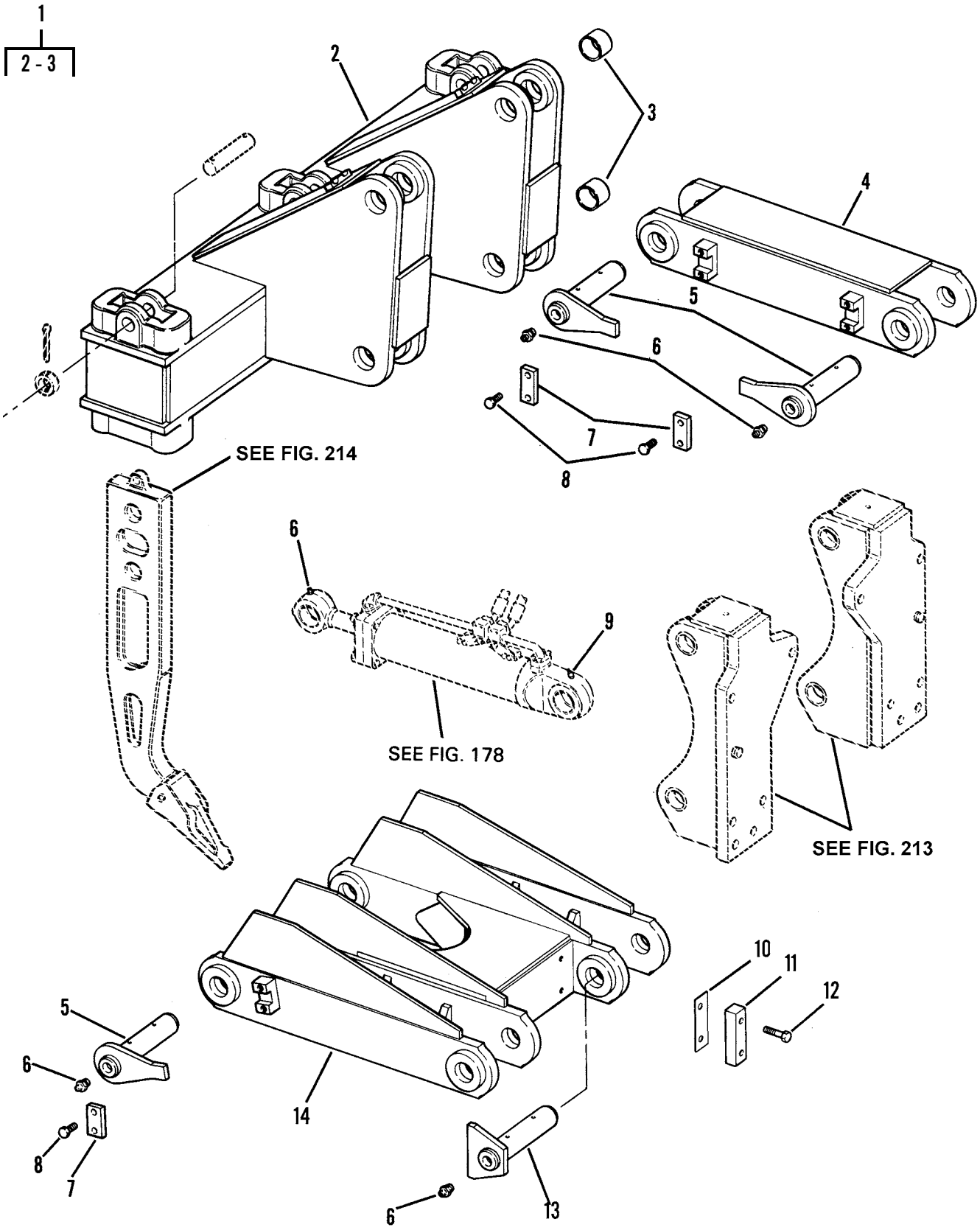

Figure 212. Ripper Group

(1) ITEM NO	(2) SMR CODE	(3) NSN	(4) CAGEC	(5) PART NUMBER	(6) DESCRIPTION AND USABLE ON CODES (UOC)	(7) QTY
					GROUP 7465 ROOTERS, RIPPERS, PLOWS, HARROWS, AND ROTARY TILLERS	
					FIG. 212 RIPPER GROUP	
1	PFOZZ	2510012625232	11083	3G2025	BEAM ASSEMBLY ..... UOC:GRC,RIP	1
2	XAOZZ		11083	3G2031	.BEAM ..... UOC:GRC,RIP	1
3	PFOZZ	3120009355601	11083	3J6167	.BUSHING,SLEEVE ..... UOC:GRC,RIP	8
4	PFOZZ	3040012205900	11083	3J6179	CONNECTING LINK,RIG ..... UOC:GRC,RIP	2
5	PFOZZ	3830004010585	11083	3J6182	PIN ASSEMBLY ..... UOC:GRC,RIP	6
6	PFOZZ	4730000504208	81343	AS15003-1	FITTING,LUBRICATION ..... UOC:GRC,RIP	2
7	PFOZZ	5342012278610	11083	3J6034	PLATE ..... UOC:GRC,RIP	6
8	PFOZZ	5306002450953	11083	1A0458	BOLT,MACHINE ..... UOC:GRC,RIP	12
9	PFOZZ	4730001720028	11083	3B8485	FITTING,LUBRICATION ..... UOC:GRC,RIP	2
10	PFOZZ	5365012218712	11083	3J6192	SPACER,PLATE ..... UOC:GRC,RIP	10
11	PFOZZ	5365012298157	11083	3J6190	SPACER,PLATE ..... UOC:GRC,RIP	2
12	PFOZZ	5306004263403	11083	1D4609	BOLT,MACHINE ..... UOC:GRC,RIP	4
13	PFOZZ	5315012134939	11083	3J6204	PIN ASSEMBLY ..... UOC:GRC,RIP	2
14	PFOZZ	3830012205738	11083	3J6195	FRAME ASSEMBLY ..... UOC:GRC,RIP	1
					END OF FIGURE	

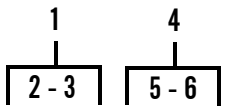

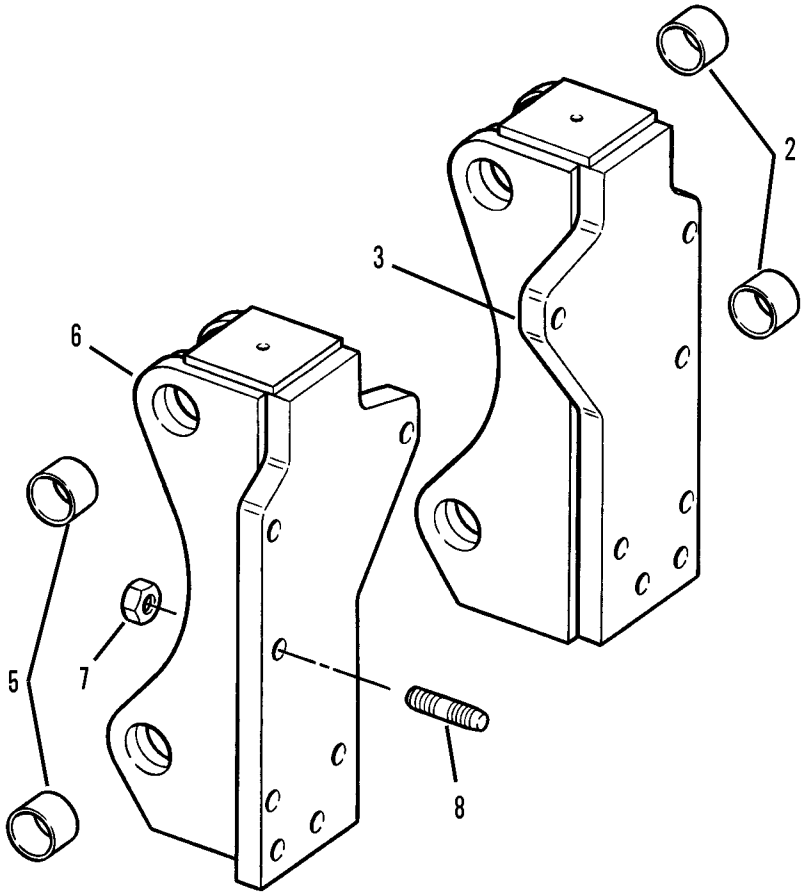

Figure 213. Ripper Mounting Group

(1) ITEM NO	(2) SMR CODE	(3) NSN	(4) CAGEC	(5) PART NUMBER	(6) DESCRIPTION AND USABLE ON CODES (UOC)	(7) QTY
					GROUP 7465 ROOTERS, RIPPERS, PLOWS, HARROWS, AND ROTARY TILLERS	
					FIG. 213 RIPPER MOUNTING GROUP	
1	PFOZZ	5342012727316	11083	3J6170	BRACKET ASSY LEFT-HAND ..... UOC:GRC,RIP	1
2	PFOZZ	3120009355601	11083	3J6167	.BUSHING,SLEEVE ..... UOC:GRC,RIP	4
3	PFOZZ	5342012646074	11083	3J6172	.BRACKET ASSEMBLY ..... UOC:GRC,RIP	1
4	PAOZZ	2510012548724	11083	3J6169	BRACKET,ENGINE MOUN RIGHT-HAND UOC:GRC,RIP	1
5	PFOZZ	3120009355601	11083	3J6167	.BUSHING,SLEEVE ..... UOC:GRC,RIP	4
6	XAOZZ		11083	3J6171	.BRACKET ASSY ..... UOC:GRC,RIP	1
7	PFOZZ	5310004043787	11083	7H7539	NUT,PLAIN,HEXAGON ..... UOC:GRC,RIP	14
8	PFOZZ	5307012070426	11083	1M2766	STUD,PLAIN ..... UOC:GRC,RIP	14
				END OF FIGURE		

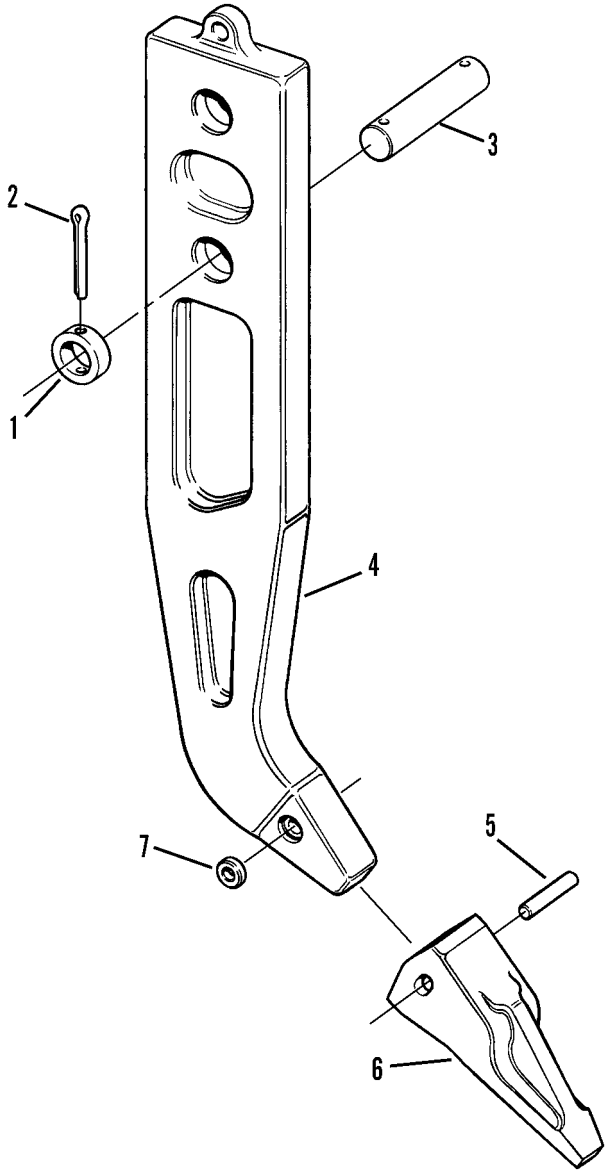

Figure 214. Ripper Tooth Group

(1) ITEM NO	(2) SMR CODE	(3) NSN	(4) CAGEC	(5) PART NUMBER	(6) DESCRIPTION AND USABLE ON CODES (UOC)	(7) QTY
					GROUP 7465 ROOTERS, RIPPERS, PLOWS, HARROWS, AND ROTARY TILLERS	
					FIG. 214 RIPPER TOOTH GROUP	
1	PFOZZ	5342000625335	11083	4J5241	RETAINER,SHAFT ..... UOC:GRC,RIP	2
2	PFOZZ		11083	1J2919	PIN,COTTER,SOLID ..... UOC:GRC,RIP	2
3	PFOZZ	5315004484687	11083	4J5240	PIN,STRAIGHT,HEADLE ..... UOC:GRC,RIP	1
4	PFOZZ	3830012671373	11083	9W7382	SHANK-TOOTH,SURFACE ..... UOC:GRC,RIP	1
5	PAOZZ	5315010676880	11083	8E6358	PIN ..... UOC:GRC,RIP	3
6	PAOZZ	5342011036789	11083	6Y0359	TIP RIPPER,TOOTH ..... UOC:GRC,RIP	3
7	PAOZZ	5310012136996	11083	1U2405	WASHER,SPLIT ..... UOC:GRC,RIP	3
					END OF FIGURE	

(1) ITEM NO	(2) SMR CODE	(3) NSN	(4) CAGEC	(5) PART NUMBER	(6) DESCRIPTION AND USABLE ON CODES (UOC)	(7) QTY
					GROUP 94 REPAIR KITS AND SETS	
					GROUP 9401 REPAIR KITS	
					FIG. KITS	
	PFHZZ	5330012133785	11083	2W0725	PARTS KIT,SEAL	V
					BUSHING,SLEEVE (1) 31-14	
					O-RING (1) 31-26	
					PACKING,PREFORMED (1) 31-30	
					RING,RETAINING (4) 31-16	
					RING,RETAINING (1) 31-12	
					SEAL RING,METAL (2) 31-24	
	PFOZZ	2990012676005	11083	5R6286	SERVICE KIT,ENGINE	V
					FILTER ELEMENT,FLUI (1) 16-18	
					FILTER ELEMENT,FLUI (1) 85-12	
					FILTER,FLUID (1) 38-10	
					O-RING (1) 85-23	
					O-RING (2) 86-4	
					SEAL,ADAPTER,MOTOR (1) 85-22	
	PFOZZ	2590012672066	11083	5R6287	PARTS KIT,WINCH ..... UOC:WIN	V
					FILTER ELEMENT,FLUI (1) 181-16	
					FILTER ELEMENT,FLUI (1) 140-7	
					O-RING (1) 164-29	
					O-RING (1) 181-15	
					RETAINER,PACKING (1) 140-8	
	PAFZZ	3830012668190	11083	5R6288	PARTS KIT,LINEAR AC	1
					BEARING,SLEEVE (2) 176-3	
					GASKET (1) 176-16	
					O-RING (2) 174-21	
					O-RING (1) 176-20	
					O-RING (1) 176-21	
					O-RING (1) 174-1	
					O-RING (1) 174-17	
					O-RING (2) 175-26	
					O-RING (1) 175-1	
					O-RING (1) 175-27	
					PACKING,PREFORMED (1) 176-15	
					PACKING,PREFORMED (1) 174-8	
					PACKING,PREFORMED (1) 175-5	
					RETAINER,PACKING (1) 176-12	
					SPACER,RING (1) 176-6	
	PAFZZ	3830012668191	11083	5R6290	PARTS KIT,LINEAR AC	V
					BEARING,SLEEVE (1) 163-6	
					BUSHING,SLEEVE (1) 163-13	
					GASKET ASSORTMENT (1) 163-14	
					O-RING (5) 168-2	
					O-RING (1) 168-19	
					O-RING (1) 163-8	

(1) ITEM NO	(2) SMR CODE	(3) NSN	(4) CAGEC	(5) PART NUMBER	(6) DESCRIPTION AND USABLE ON CODES (UOC)	(7) QTY
					PARTS KIT,SEAL REPL (1) 163-24	
					RING,BACKUP (1) 163-9	
					RING,PISTON (1) 163-22	
					SEAL (1) 163-14	
					SEAL (1) 163-15	
					SEAL (1) 163-15	
					SEAL (1) 163-16	
	PFHZZ	2815012674290	11083	5R6291	PARTS KIT,CYLINDER V	
					GASKET (1) 3-20	
					GASKET (3) 20-2	
					GASKET (1) 30-4	
					GASKET (1) 44-4	
					GASKET (1) 43-4	
					GASKET (1) 4-24	
					GASKET (1) 9-15	
					GUIDE,VALVE STEM (12) 4-9	
					HEAD ASSEMBLY (1) 4-2	
					HEAD,CYL (1) 4-5	
					INSERT,ENGINE VALVE (6) 4-8	
					LOCK,VALVE SPRING R (24) 4-21	
					NUT,PLAIN,HEXAGON (12) 20-7	
					O-RING (1) 4-23	
					PLUG,EXPANSION (6) 4-4	
					PLUG,EXPANSION (12) 4-3	
					PLUG,MACHINE THREAD (7) 4-6	
					PLUG,PIPE (3) 4-16	
					PLUG,PIPE (1) 4-15	
					ROTOCOIL ASSY (12) 4-18	
					SEAL,PLAIN (18) 4-25	
					SEAL,PLAIN (6) 4-22	
					SPACER,SLEEVE (1) 22-5	
					SPRING,HELICAL,COMP (12) 4-17	
					STUD,CONTINUOUS THR (10) 20-9	
					STUD,CONTINUOUS THR (2) 20-3	
					VALVE,POPPET,ENGINE (6) 4-27	
					WASHER,FLAT (11) 20-8	
					WASHER,FLAT (2) 20-6	
					WASHER,FLAT (1) 45-19	
					WASHER,RECESSED (6) 4-7	
	PFFZZ	2520012670417	11083	5R6292	PARTS KIT,SEAL REPL V	
					FILTER ELEMENT,FLUI (1) 85-12	
					GASKET (1) 71-5	
					GASKET (1) 82-23	
					O-RING (2) 83-51	
					O-RING (3) 80-13	
					PACKING,PREFORMED (1) 78-31	

(1) ITEM NO	(2) SMR CODE	(3) NSN	(4) CAGEC	(5) PART NUMBER	(6) DESCRIPTION AND USABLE ON CODES (UOC)	(7) QTY
	PFFZZ	2930012668193	11083	5R6293	PARTS KIT,SEAL REPL V	
					GASKET (1) 69-21	
					GASKET (1) 69-42	
					GASKET (1) 81-18	
					GASKET (1) 82-23	
					O-RING (1) 69-53	
					O-RING (1) 79-12	
					O-RING (5) 83-11	
					O-RING (2) 82-14	
					O-RING (3) 83-24	
					O-RING (2) 80-34	
					O-RING (2) 80-51	
	PFOZZ	5330012593828	11083	6V2911	SEAL KIT V	
					GASKET (1) 12-1	
					GASKET (1) 12-6	
					GASKET (1) 12-3	
					GASKET (1) 14-4	
					GASKET (1) 16-17	
					GASKET (1) 13-20	
					GASKET (1) 32-18	
					LOCK PLATE (2) 13-17	
					LOCKING PLATE NUT (1) 13-19	
					L0CK (2) 14-2	
					O-RING (3) 13-2	
					O-RING (1) 30-16	
					O-RING (1) 19-14	
					SEAL,RING (1) 32-11	
					WASHER,FLAT (1) 3-23	
	PFHZZ	5330012086239	11083	1387720	GASKET AND SEAL SET V	
					GASKET (1) 10-18	
					GASKET (1) 10-7	
					GASKET (1) 10-25	
					GASKET (1) 10-6	
					GASKET (1) 10-15	
					GASKET (1) 32-24	
					NUT,SPECIAL (1) 8-2	
					O-RING (1) 2-8	
					O-RING (1) 23-18	
					O-RING (1) 46-21	
					PACKING,PREFORMED (1) 23-17	
					SEAL,PLAIN ENCASED (1) 5-10	
					SEAL,PLAIN ENCASED (1) 46-14	

(1) ITEM NO	(2) SMR CODE	(3) NSN	(4) CAGEC	(5) PART NUMBER	(6) DESCRIPTION AND USABLE ON CODES (UOC)	(7) QTY
	PAFZZ	2930012670416	11083	1700564	PARTS KIT,ENGINE WA	V
					BEARING,BALL,ANNULA (1)	45-11
					BEARING,BALL,ANNULA (1)	45-8
					BOLT,MACHINE (1)	45-13
					BOLT,MACHINE (1)	45-20
					FILTER ELEMENT,FLUI (1)	45-15
					GASKET SET (1)	45-17
					RING (1)	45-9
					SEAL,PLAIN (1)	45-21
					SHAFT,SHOULDERED (1)	45-7
					SHAFT,SHOULDERED (1)	45-7

END OF FIGURE

(1) ITEM NO	(2) SMR CODE	(3) NSN	(4) CAGEC	(5) PART NUMBER	(6) DESCRIPTION AND USABLE ON CODES (UOC)	(7) QTY
					GROUP 95 GENERAL USE STANDARDIZED PARTS	
					GROUP 9501 BULK MATERIEL	
					FIG. BULK	
1	PFOZZ	2990011033696	81774	1300-25	CABLE	V
2	PFOZZ	6145012790549	28105	DA2597	CABLE,SPECIAL PURPO	V
3	PAOZZ	5975011033695	11083	5P0695	CONDUIT	V
4	PFOZZ	4720011033697	11083	5P1260	HOSE,NONMETALLIC	V
5	PFOZZ	4720010516773	11083	1650020	HOSE,NONMETALLIC	V
6	PFOZZ	4720009818519	11083	1650021	HOSE,NONMETALLIC	V
7	PFOZZ	4720010937331	11083	5P1442	HOSE,NONMETALLIC	V
8	PFFZZ	4720010664587	11083	1650016	HOSE,NONMETALLIC ..... UOC:GRC,RIP	V
9	PFFZZ	4720001985808	11083	1650017	HOSE,NONMETALLIC	V
10	PFFZZ	4720012513118	11083	9X2364	HOSE,NONMETALLIC	V
11	PFFZZ	4720006878759	11083	1650023	HOSE,NONMETALLIC ..... UOC:GWC,WIN	V
12	PFOZZ	4720005402778	01276	1540-12	HOSE,NONMETALLIC ..... UOC:GRC,GWC	V
13	PAOZZ	4720004047277	96906	MS521301A223R	HOSE,NONMETALLIC	V
14	PAOZZ	4720000879122	96906	MS521301A221R	HOSE,PREFORMED	V
15	PCOZZ	5970010848651	81349	M23053/4-105-0	INSULATION SLEEVING	V
16	PFOZZ	533013556790	4U735	595193	RING,WIPER	V
17	PAOZZ	5330013077812	4U735	522-206-001	RUBBER STRIP	V
18	PAOZZ	5330013077813	4U735	522-205-007	RUBBER STRIP ..... UOC:GRC,GWC	V
19	PFOZZ	5330013074360	4U735	597-004-000	RUBBER STRIP ..... UOC:GRC,GWC	V
20	PFOZZ		4U735	522-205-006	RUBBER STRIP ..... UOC:GRC,GWC	V
21	PCOZZ	5330012780257	11083	5P5968	SEAL	V
22	PFOZZ	5330000702086	13420	E30081PC35	SEAL,NONMETALLIC ST	V
23	PFOZZ	5330011288991	55683	824-5P5768	SEAL,NONMETALLIC SP ..... UOC:GRC,GWC	V
24	PFOZZ	5330012924293	11083	5P7211	SEAL,NONMETALLIC SP ..... UOC:GRC,GWC	V
25	PFOZZ	4710010687274	11083	5P1198	TUBE,METALLIC	V
26	PFOZZ	4720011033700	11083	5P5630	TUBING,NONMETALLIC	V
27	PFOZZ	4710012511007	11083	5P5633	TUBING,NONMETALLIC	V
28	PFOZZ	6145012820453	28105	DA2524-7	WIRE,ELECTRICAL	V
29	PAOZZ	6145003102590	81343	TYPE GPT 14 AWG RED	WIRE,ELECTRICAL	V

(1) ITEM NO	(2) SMR CODE	(3) NSN	(4) CAGEC	(5) PART NUMBER	(6) DESCRIPTION AND USABLE ON CODES (UOC)	(7) QTY
30	PFOZZ	6145012294128	64488	81106S	WIRE,ELECTRICAL	V
31	PAOZZ	6145010201095	78174	C10ER	WIRE,ELECTRICAL	V
32	PFOZZ	6145011913320	11083	5P5621	WIRE,ELECTRICAL	V
33	PFOZZ	6145012771168	28105	DA2524-9-0	WIRE,ELECTRICAL	V
34	PAOZZ	6145008898551	77060	6296173	WIRE,ELECTRICAL	V
35	PAOZZ	6145004710428	16764	950B	WIRE,ELECTRICAL	V
36	PFOZZ	6145003102598	78174	C14EB	WIRE,ELECTRICAL	V
37	PFOZZ	6145009504922	64488	81144S	WIRE,ELECTRICAL	V
38	PFOZZ	6145012302517	64488	81145S	WIRE,ELECTRICAL	V
39	PFOZZ	6145011893864	11083	5P0761	WIRE,ELECTRICAL	V
40	PFOZZ	6145004681260	79550	572D9	WIRE,ELECTRICAL	V
41	PAOZZ	6145012771169	28105	DA3125-D6-9	WIRE,ELECTRICAL	V
42	PFOZZ	6145004681259	16764	950W	WIRE,ELECTRICAL	V
43	XDOZZ		28105	DA3125-5	WIRE,ELECTRICAL	V
44	PAOZZ	6145012767544	28105	DA3125-PINK	WIRE,ELECTRICAL	V
45	PFOZZ	6145004710429	79550	569D1	WIRE,ELECTRICAL	V
46	PAOZZ	6145012767545	28105	DA3125-D6	WIRE,ELECTRICAL	V
47	PFOZZ	6145012302519	81774	13P160RC	WIRE,ELECTRICAL	V
48	XDOZZ		28105	DA3125-8	WIRE,ELECTRICAL	V
49	PFOZZ	6145012299666	64488	81162S	WIRE,ELECTRICAL	V
50	PFOZZ	6145011655633	81774	13P140RC	WIRE,ELECTRICAL ..... UOC:GRC,GWC	V
51	XDOZZ		77060	954V	WIRE,ELECTRICAL ..... UOC:GRC,GWC	V
52	PAOZA	6145006006052	81349	M22759/11-16-0	WIRE,ELECTRICAL	V
				END OF FIGURE		

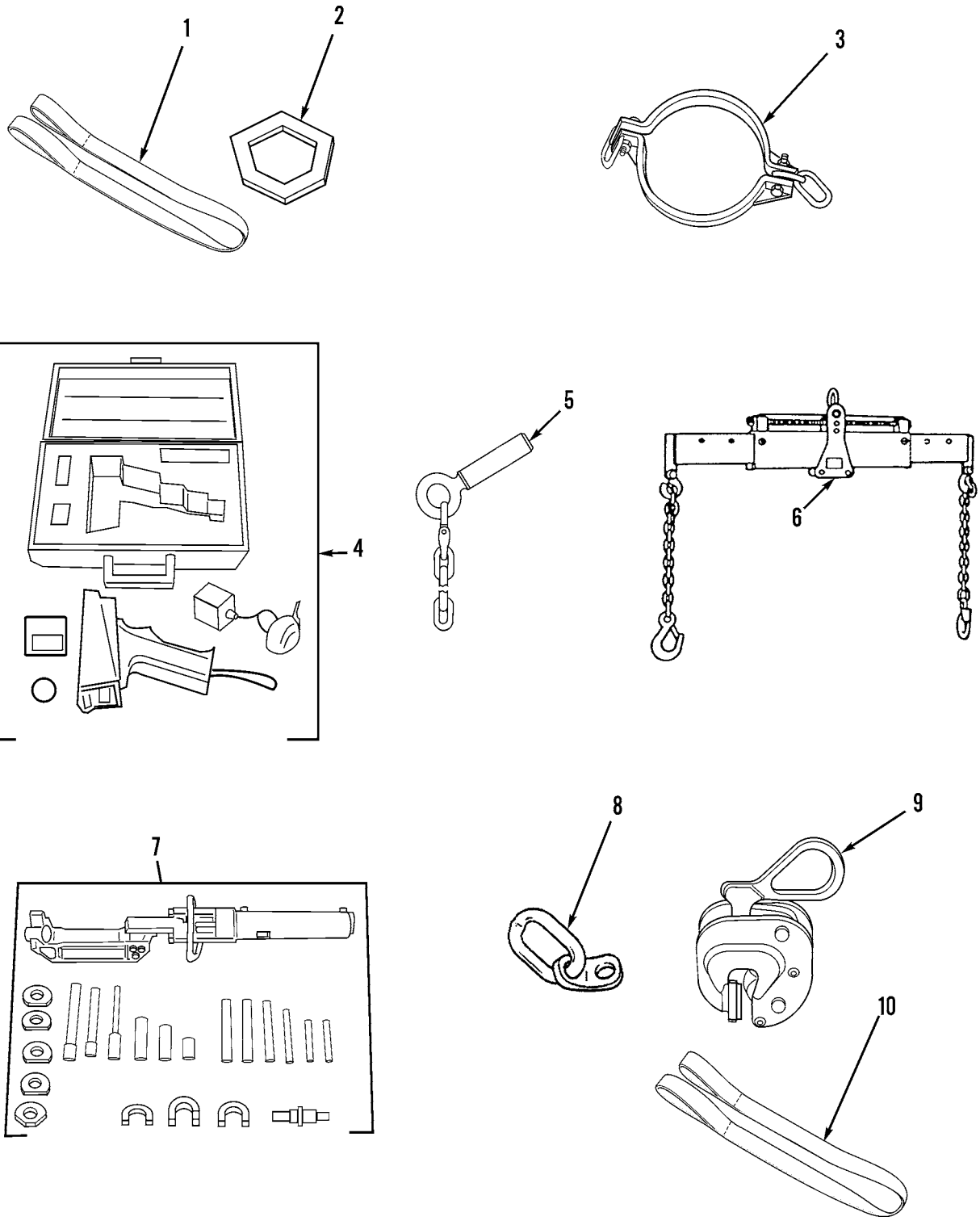

Figure 215. Special Tools, Unit Support

(1) ITEM NO	(2) SMR CODE	(3) NSN	(4) CAGEC	(5) PART NUMBER	(6) DESCRIPTION AND USABLE ON CODES (UOC)	(7) QTY
					GROUP 26 TOOLS AND TEST EQUIPMENT	
					GROUP 2604 SPECIAL TOOLS	
					FIG. 215 SPECIAL TOOLS, UNIT SUPPORT	
1	PEOZZ	2835010782081	91796	4-8FTX2IN	SLING,NYLON	
2	PEOZZ	5210012251132	11083	5P8617	GAGE,SPROCKET WEAR	
3	PEOZZ	4010012689869	11083	5P9736	LINK,CHAIN,END (LINK BRACKETS), USE WITH 1387575	
4	PEOZZ		11083	1U6602	TACHOMETER.STROBOSC	
5	PEOZZ		11083	1P7402	COUPLING TOOL (TRACK ASSEMBLY)	
6	PEOZZ	3950012639513	45225	60842	LEVER,LOAD	
7	XDFZZ		11083	5P2379	TOOL SET,TRACK REPA	
8	PAOZZ	5120014511401	11083	1387575	LINK,BEARING USED ON MCAP	
9	PEOZZ	3940015157742	11083	4R9712	CLAMP,MATERIAL LIFT USED ON MCAP	
10	PEOZZ	3940015127412	11083	1U8236	SLING, EYE USE WITH 1387575 ...	
				END OF FIGURE		

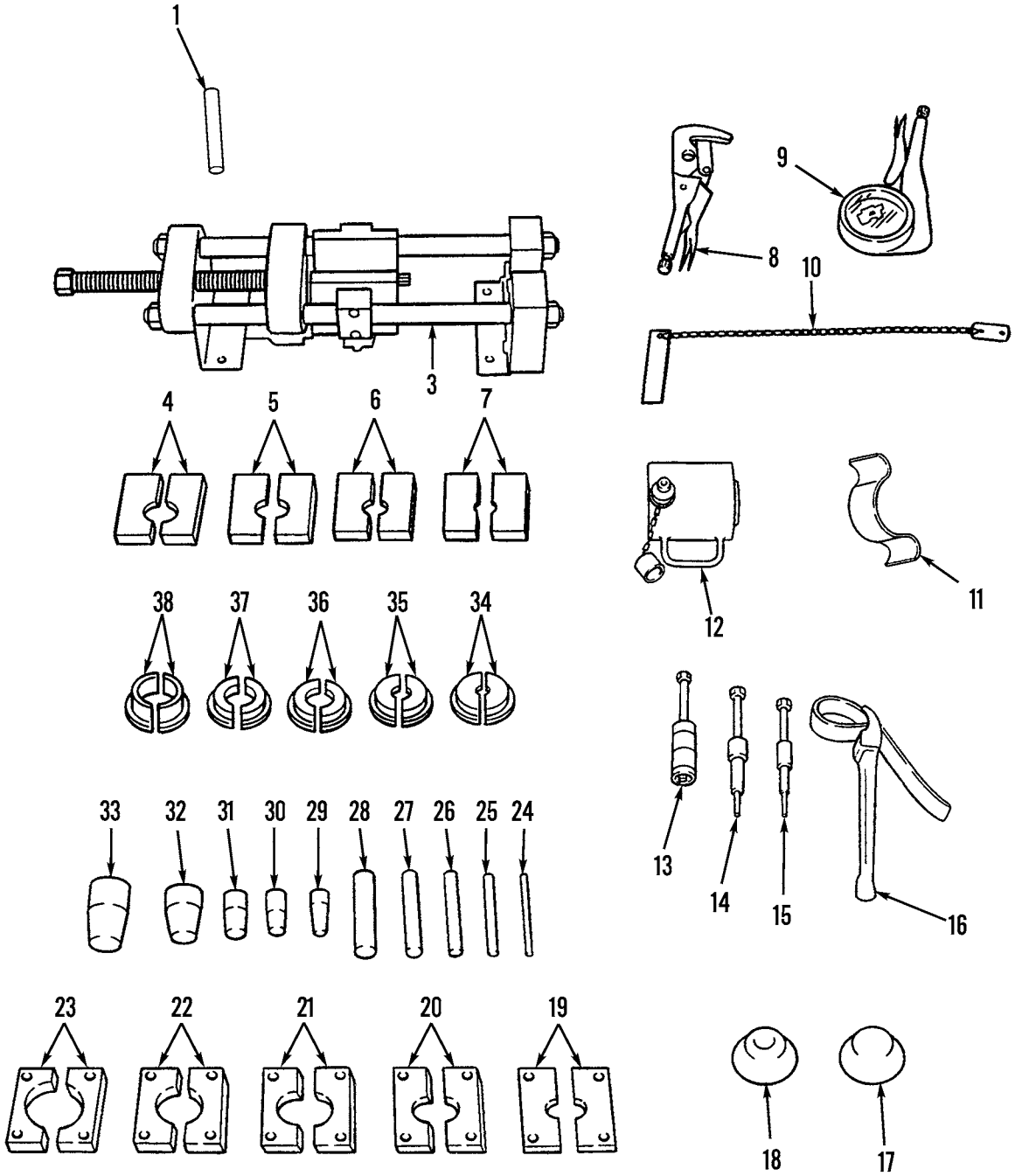

Figure 216. Special Tools, Direct Support (Sheet 1 of 12)

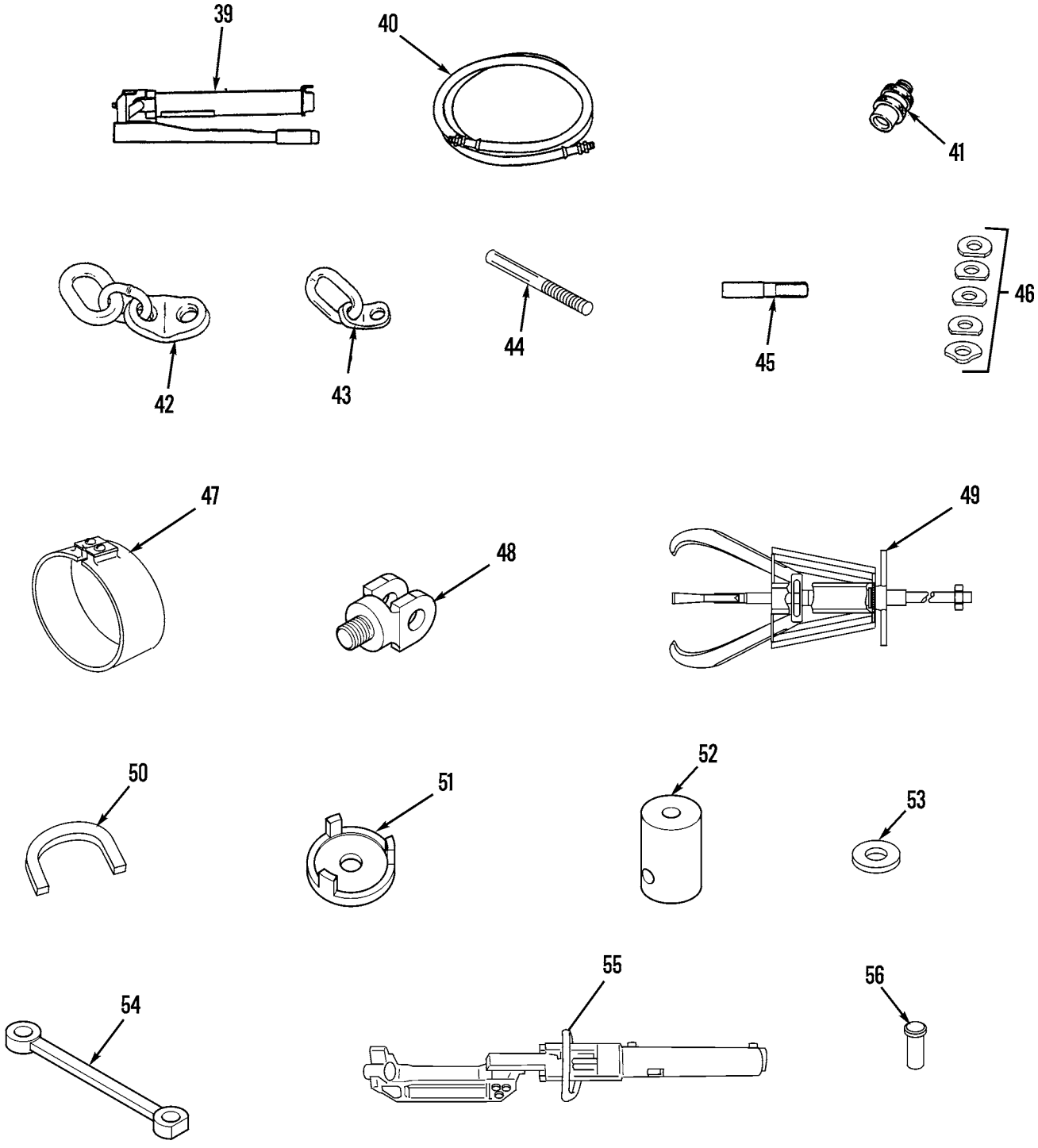

Figure 216. Special Tools, Direct Support (Sheet 2 of 12)

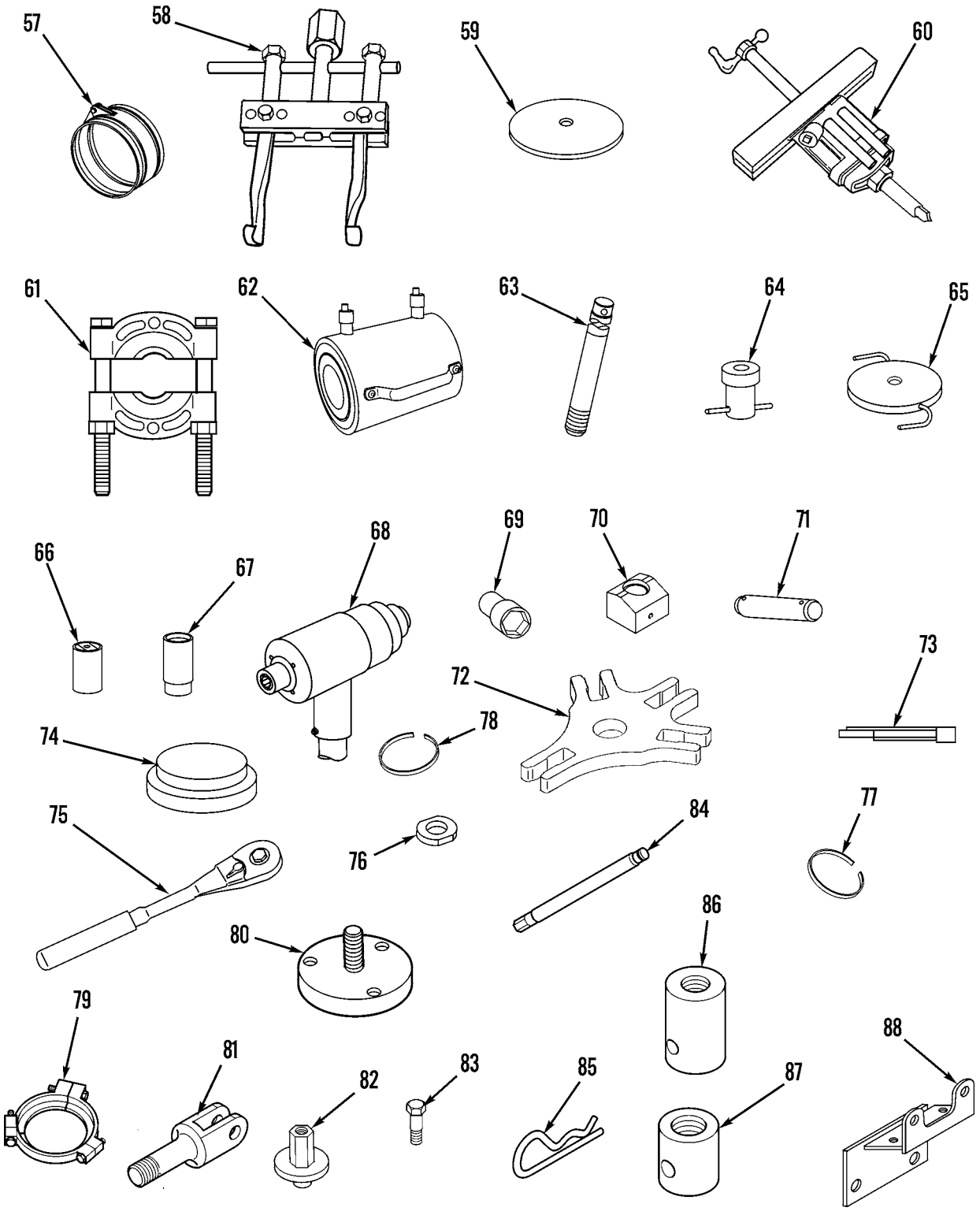

Figure 216. Special Tools, Direct Support (Sheet 3 of 12)

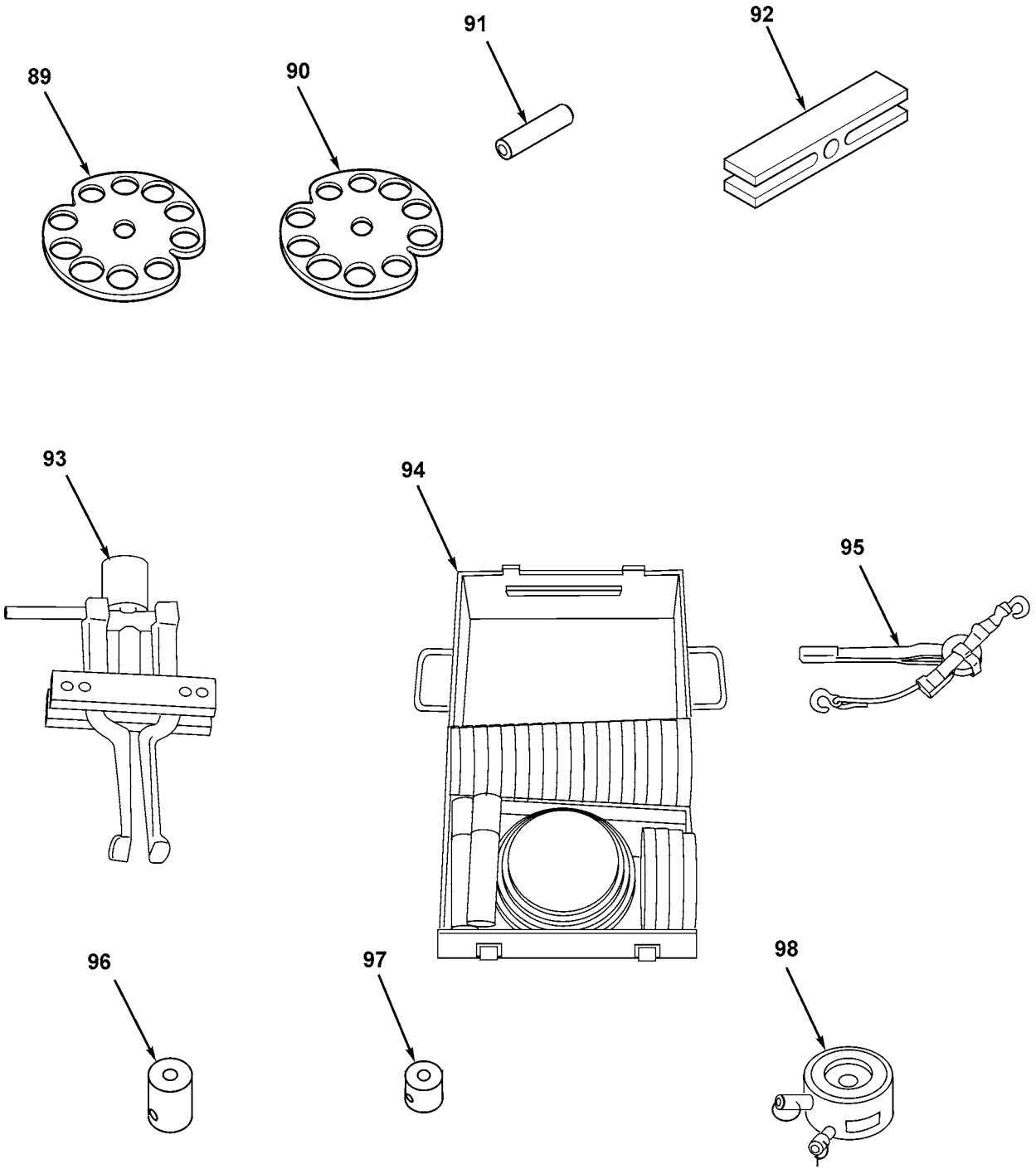

Figure 216. Special Tools, Direct Support (Sheet 4 of 12)

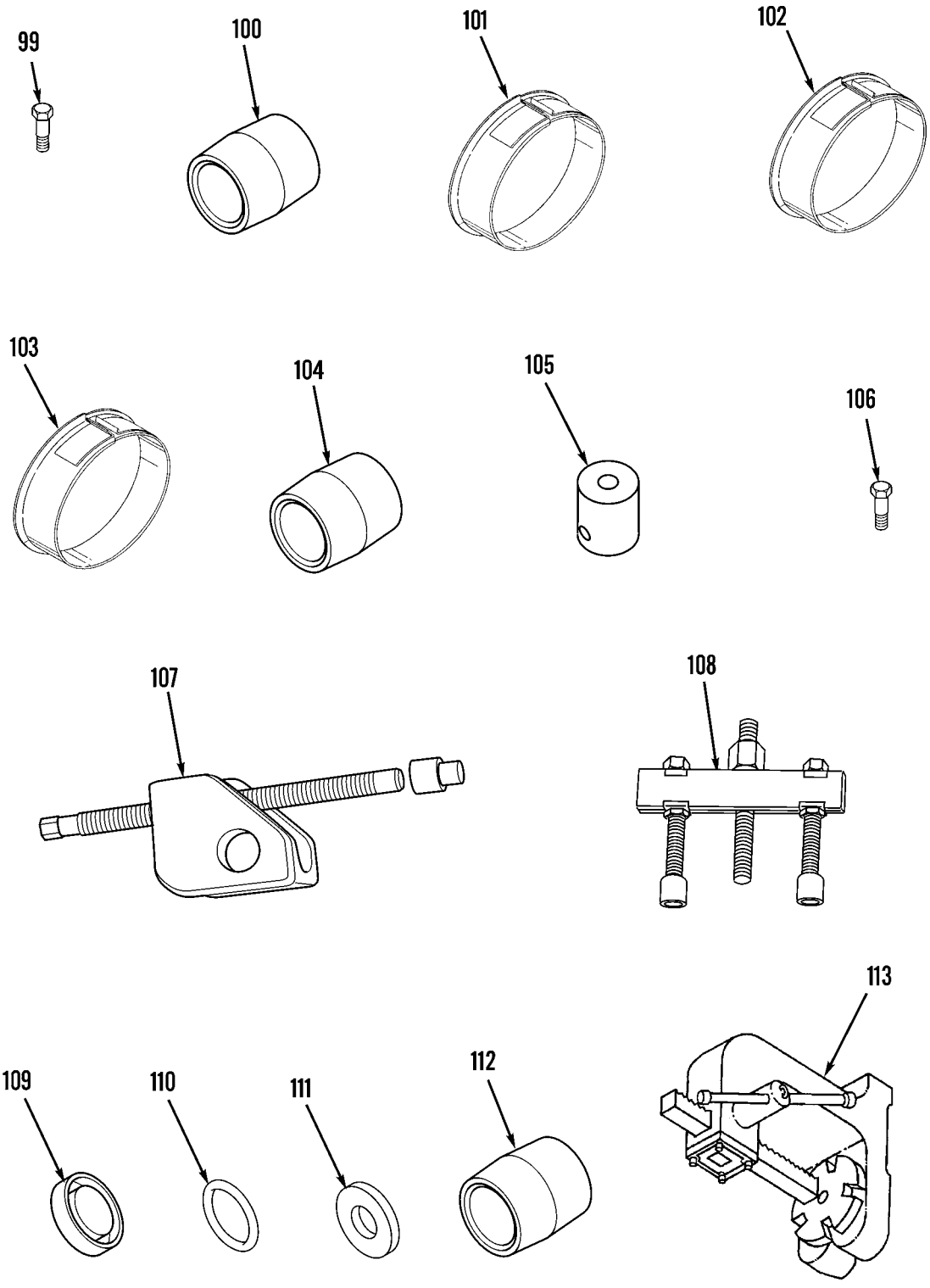

Figure 216. Special Tools, Direct Support (Sheet 5 of 12)

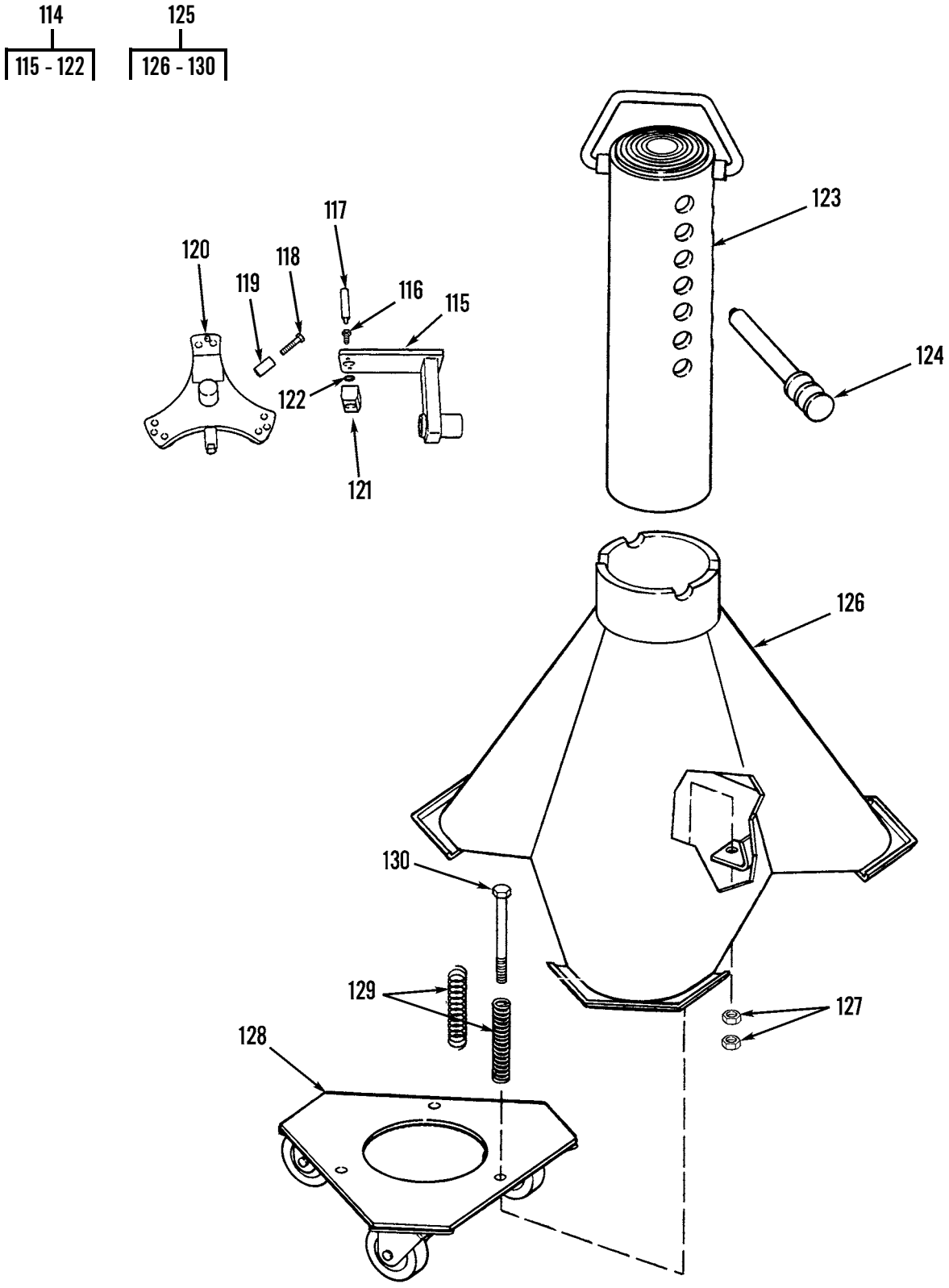

Figure 216. Special Tools, Direct Support (Sheet 6 of 12)

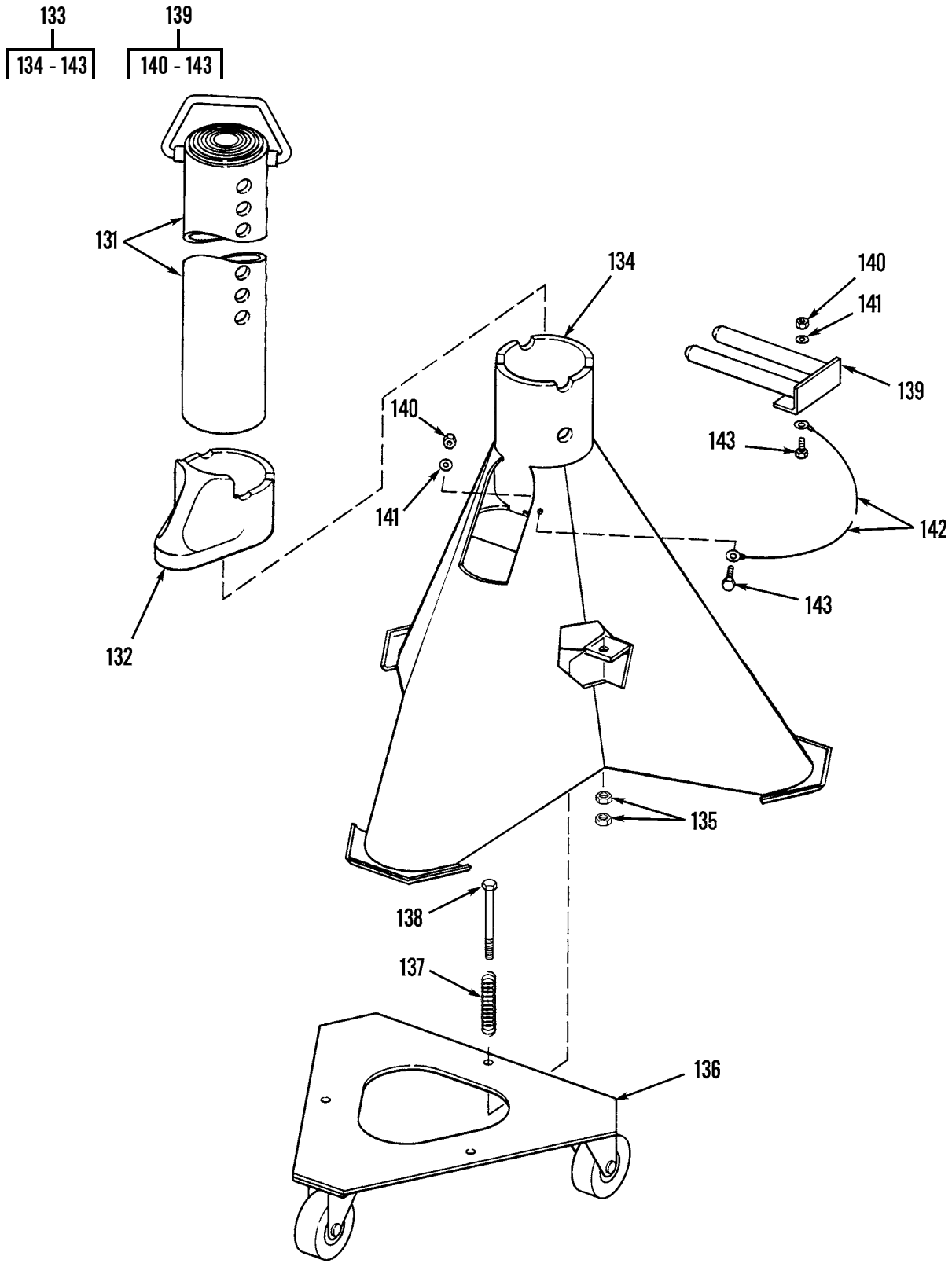

Figure 216. Special Tools, Direct Support (Sheet 7 of 12)

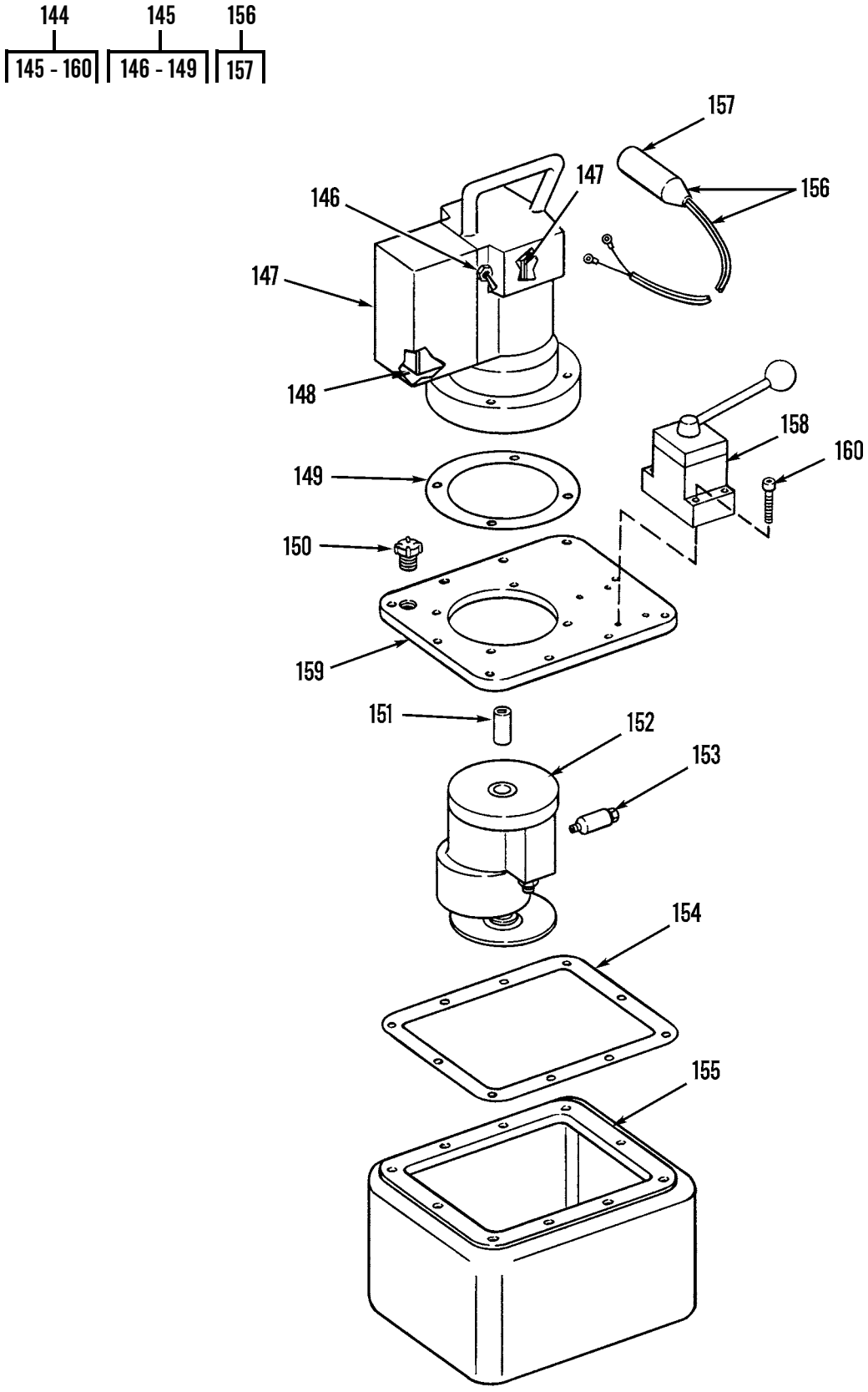

Figure 216. Special Tools, Direct Support (Sheet 8 of 12)

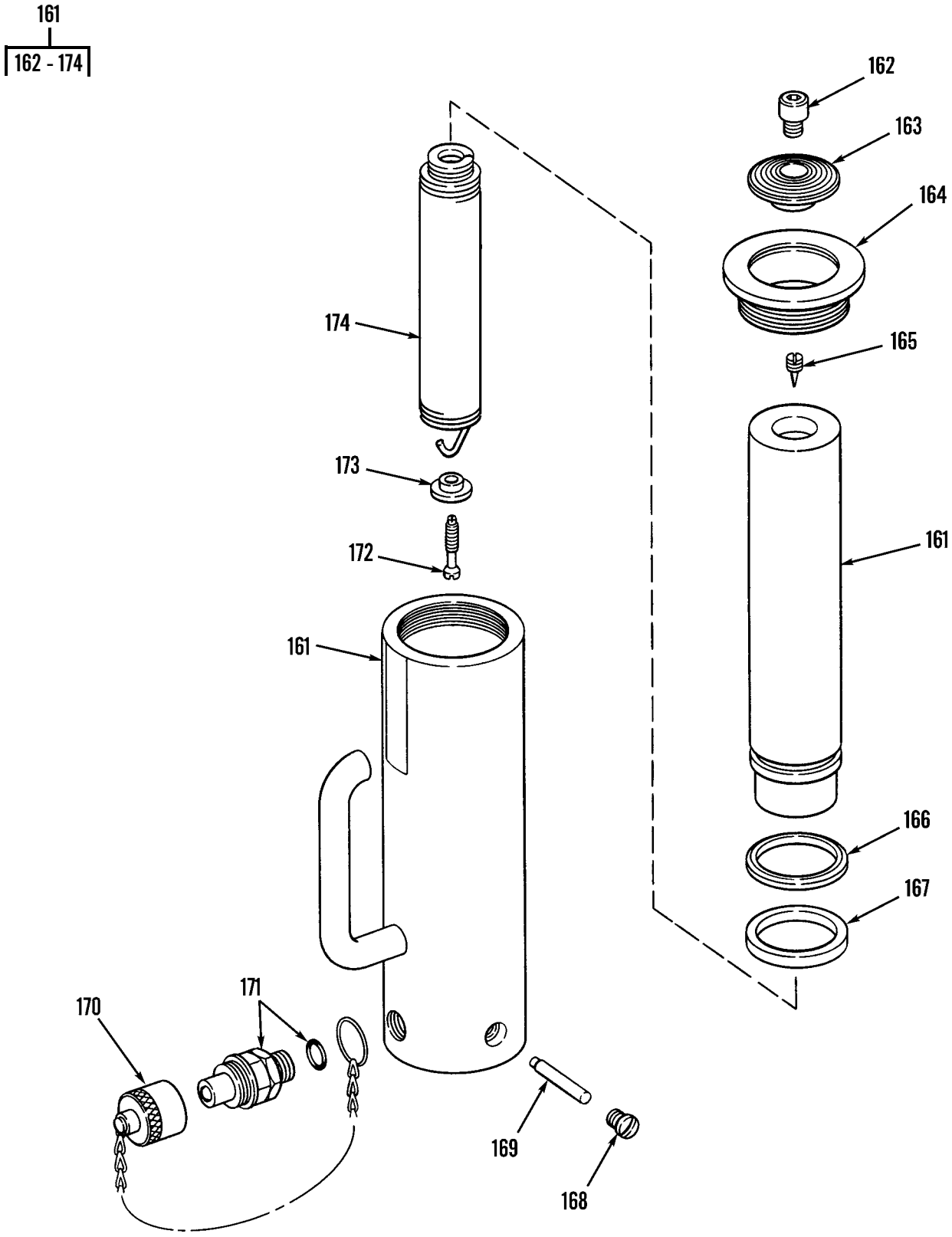

Figure 216. Special Tools, Direct Support (Sheet 9 of 12)

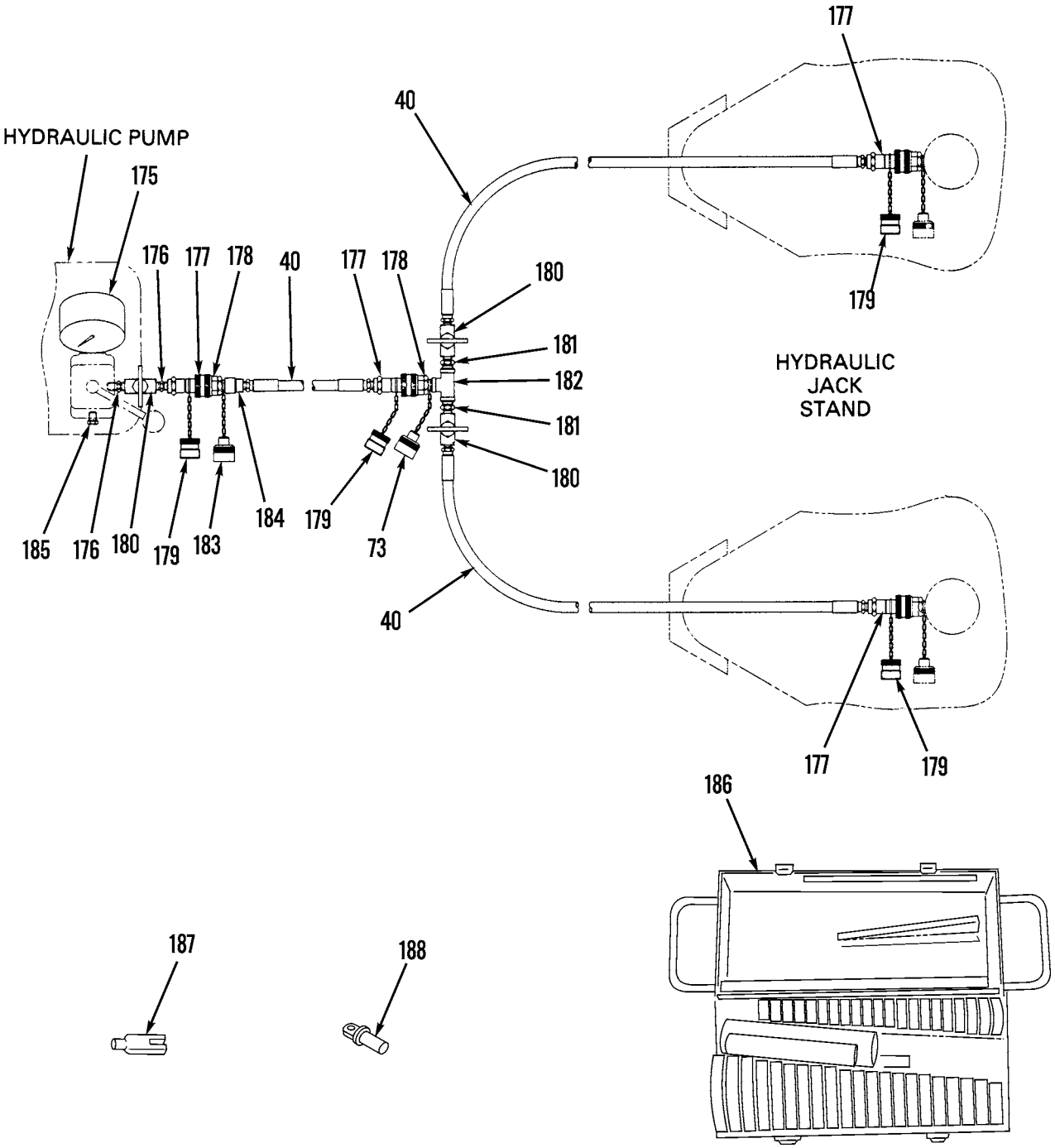

Figure 216. Special Tools, Direct Support (Sheet 10 of 12)

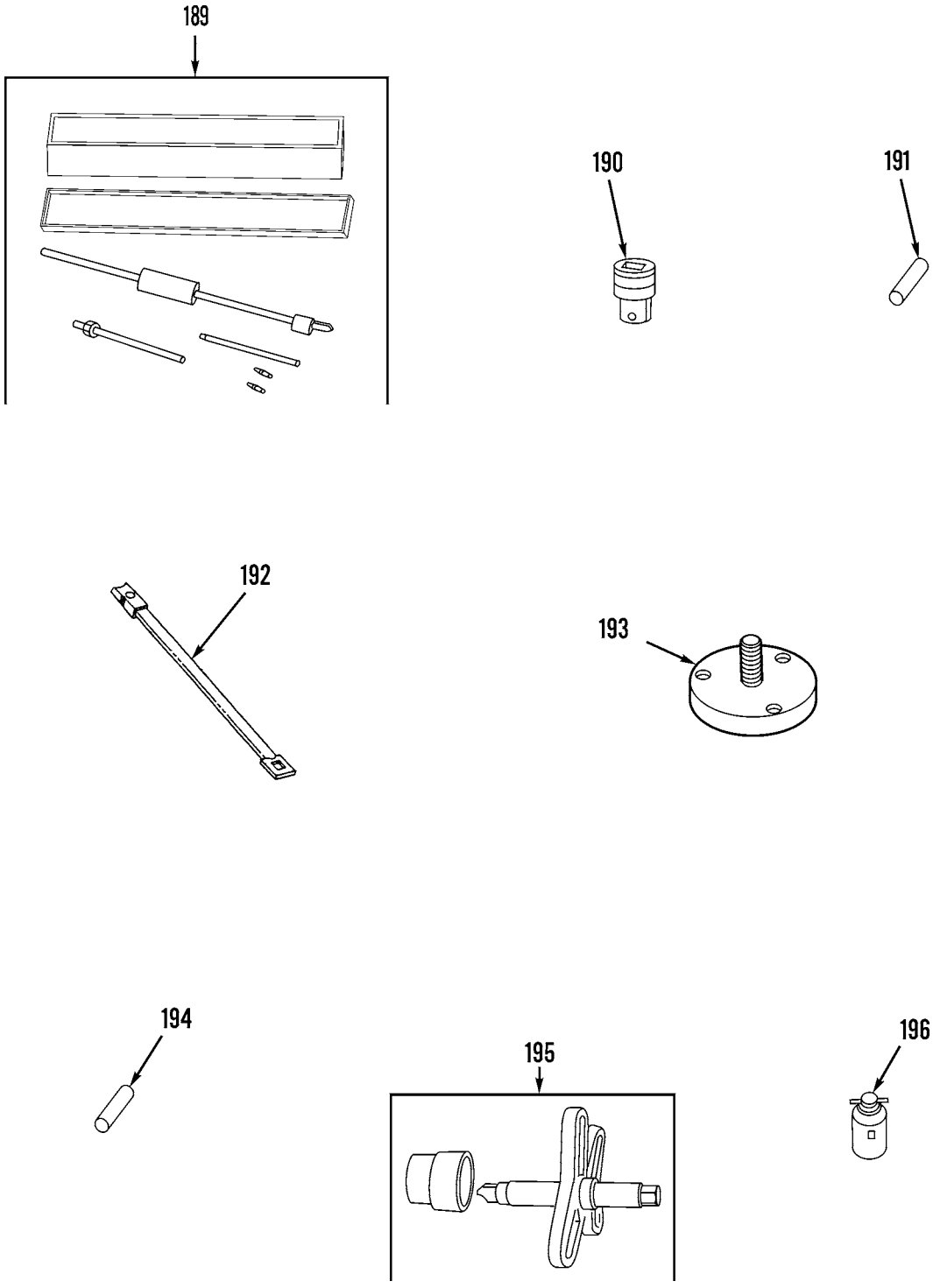

Figure 216. Special Tools, Direct Support (Sheet 11 of 12)

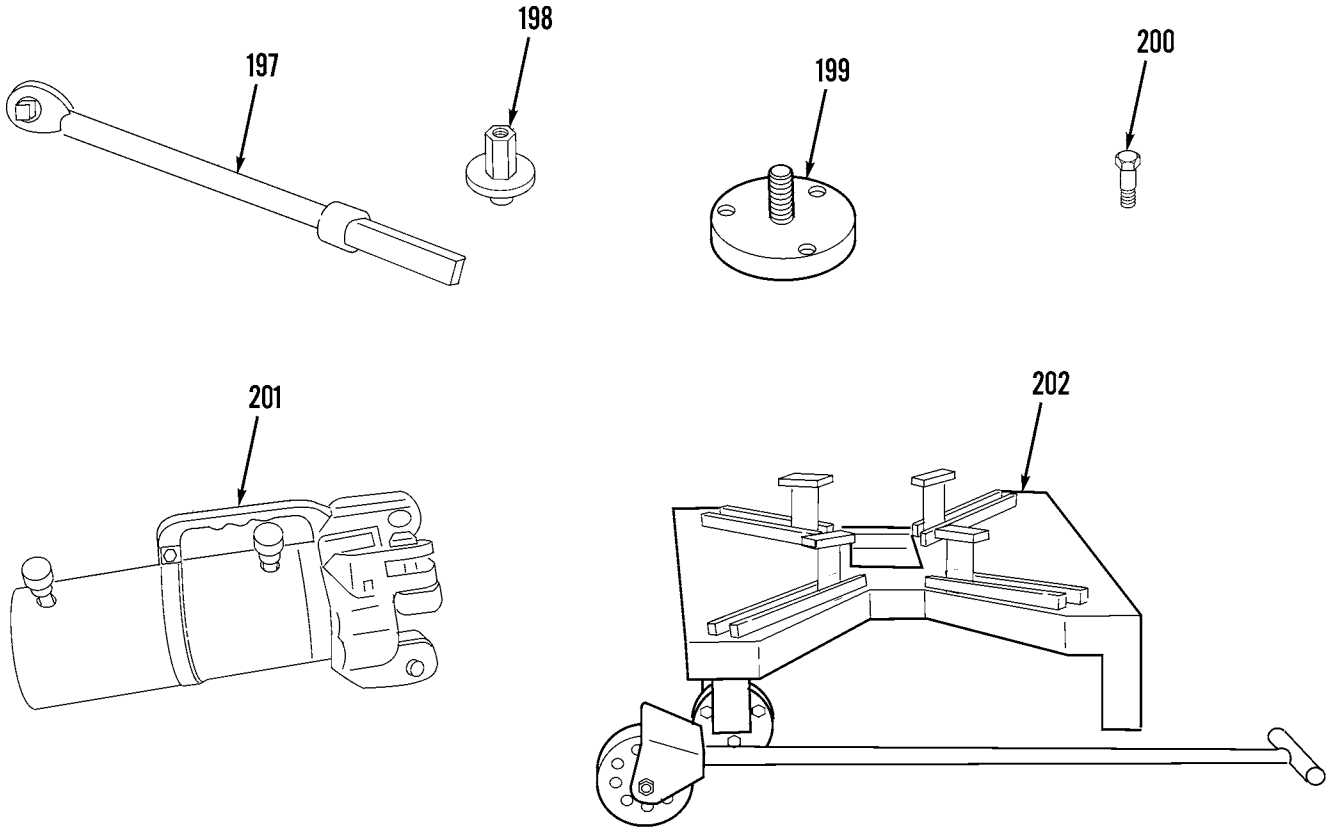

Figure 216. Special Tools, Direct Support (Sheet 12 of 12)

(1) ITEM NO	(2) SMR CODE	(3) NSN	(4) CAGEC	(5) PART NUMBER	(6) DESCRIPTION AND USABLE ON CODES (UOC)	(7) QTY
					GROUP 2604 SPECIAL TOOLS	
					FIG. 216 SPECIAL TOOLS, DIRECT SUPPORT	
1	PEFZZ	5120002270633	42225	1107	LEG,MECHANICAL PULL	
2	PEFFF	4940012722839	11083	2159672	PRESS,HYDRAULIC,POR	
3	XAFZZ		11083	5P0173	.PRESS GR-FRAME	
4	PEFZZ	3460012756204	45225	35089	.COLLET,STEM	
5	PEFZZ	3460012752467	45225	34454	.COLLET,STEM	
6	PEFZZ	3040012751768	45225	34452	.PLATE,RETAINING,SHA	
7	PEFZZ	3040012751769	45225	34453	.PLATE,RETAINING,SHA	
8	PEFZZ	4940010840426	11083	7S1126	.SKIVING TOOL,HOSE	
9	PEFZZ	5120012900761	11083	7S1125	.WRENCH,PLIER	
10	PEFZZ	5210012736451	11083	6V6022	.GAGE,HOSE SKIVING	
11	PEFZZ	5340012741632	11083	5P8735	.STRAP,RETAINING	
12	PEFZZ	4320012879576	11083	1U7541	.RAM,HYDRAULIC	
13	PEFZZ	4820013127710	11083	5P5232	.STEM,EXPANSION HOSE	
14	PEFZZ	4940013409595	11083	5P5233	.EXPANDER ASSEMBLY,S	
15	PEFZZ	5120012759345	11083	5P5234	.EXPANDER TOOL	
16	PEFZZ	5120010183203	55719	CW12	.WRENCH,CHAIN	
17	PEFZZ	4940012756205	45225	34660	.ABUTMENT,REAR	
18	PEFZZ	3460012804867	45225	34520	.COLLET,REAR,ABUTMEN	
19	PEFZZ	3460012804157	45225	34516	.COLLET,HALF,HOSE TO ..... BOI:2 AUTH BY BN AND BDE TYPE HQ (EXCEPT WHEN BN OR BDE HAS SVC CO)	
20	PEFZZ	3460012808176	45225	34518	.COLLET,SLEEVE	
21	PEFZZ	3460012804158	45225	34517	.COLLET,SLEEVE	
22	PEFZZ	4940012752468	45225	34519	.COLLET HALF,SLEEVE, ...	
23	PEFZZ	3460012765003	11083	5P0278	.COLLET,SLEEVE,TOOL	
24	PEFZZ	5120012720767	11083	5S2840	.PUNCH,DRIVE PIN	
25	PEFZZ	5120012720766	11083	5S2834	.PUNCH,DRIVE PIN	
26	PEFZZ		45225	1110	LEG,MECHANICAL PULL	
27	PEFZZ	5120012716313	11083	5S2814	.PUNCH,DRIVE PIN	
28	PEFZZ	5120012720764	11083	5S2808	.PUNCH,DRIVE PIN	
29	PEFZZ	4940013110139	11083	5S2837	.EXPANDER,HOSE EXPAN	
30	PEFZZ	4940013110140	11083	5P0973	.EXPANDER,HOSE EXPAN	
31	PEFZZ	4940013110138	11083	5S2823	.EXPANDER,HOSE EXPAN	
32	PEFZZ	4730013120343	11083	5S2811	.RING,EXPANSION,HOSE	
33	PEFZZ	4940012820161	11083	5S2805	.EXPANDER,FINGER	
34	PEFZZ	3460012773431	45225	34447	.COLLET,HOSE	
35	PEFZZ	3460012773430	45225	34446	.COLLET,HOSE	
36	PEFZZ	3460012752466	45225	34445	.COLLET,HALF,HOSE TO	
37	PEFZZ	4940012763504	45225	34444	.COLLET HALF,HOSE,TO	
38	PEFZZ	3460012752465	45225	34443	.COLLET,HALF,HOSE TO	
39	PEFZZ	4320012719831	45225	304401	PUMP,HYDRAULIC RAM, ...	
40	PEFZZ	3442008766522	11083	8F0024	HOSE ASSEMBLY	
41	PEFZZ	4730012750057	97111	1108	COUPLING ASSEMBLY,Q	
42	PEFZZ	5340014761734	11083	1387574	BRACKET,LINK	

(1) ITEM NO	(2) SMR CODE	(3) NSN	(4) CAGEC	(5) PART NUMBER	(6) DESCRIPTION AND USABLE ON CODES (UOC)	(7) QTY
43	PEFZZ	5120014511401	11083	1387575	LINK,BEARING	
44	PEFZZ	5315012682194	11083	6V4186	PIN,TIMING	
45	PEFZZ	5120001781267	11083	8S2244	EXTRACTOR,FUEL INJE	
46	PEFZZ		11083	1P3482	ADAPTER,PIN	
47	PEFZZ	5120011191736	11083	1U8842	INSERTER,SEAL (DUO-CONE SEAL .. INSERTER)	
48	PEFZZ	5120011191716	11083	1P3054	ADAPTER	
49	PEFZZ		11083	1U6415	PULLER ASSEMBLY	
50	PEFZZ	5120004263787	11083	2B2003	YOKE	
51	PEFZZ		11083	2P2345	WRENCH,SPANNER	
52	PEFZZ	5120013933420	11083	3P2248	REMOVER,BEARING AND	
53	PEFZZ	5310003082227	11083	4B5273	WASHER,FLAT	
54	PEFZZ	5120009715507	11083	5F9306	PULLER,SPROCKET ARM	
55	PEFZZ		11083	8S9903	PUSHER,ROLLOVER	
56	PEFZZ	5315012650418	11083	5F9892	PIN	
57	PEFZZ	5120011191736	11083	1U8842	INSERTER,SEAL	
58	PEFZZ	5120015127167	11083	1H3112	ADAPTER,MECHANICAL	
59	PEFZZ	5120015105654	11083	1P0492	PLATE	
60	PEFZZ		11083	1P0820	PULLER,CRANK PULLEY	
61	PEFZZ	5120002886756	11083	8B7551	PULLER ATTACHMENT,M MECHANICAL	
62	PEFZZ		11083	5P5201	PULLER,HYDRAULIC	
63	PEFZZ	5120015139583	11083	5P5207	STUD,PLAIN	
64	PEFZA	5310015072390	11083	5P5208	NUT,PLAIN ROUND	
65	PEFZZ	5120015190129	11083	5P-5212	PLATE,SPROCKET INST	
66	PEFZZ	5365015061820	11083	5P6220	SPACER SLEEVE	
67	PEFZZ	5120015127168	11083	5P6222	ADAPTER,SPROCKET IN	
68	PEFZZ	5120015076929	11083	5P3508	WRENCH,TORQUE:1 IN	
69	PEFZZ		11083	5S6087	SOCKET,SOCKET WRENC	
70	PEFZA	5310015072374	11083	6V3124	NUT,PLAIN ROUND	
71	PEFZZ	5315015065030	11083	6V3126	PIN,STRAIGHT HEADLE	
72	PEFZZ	5120015184822	11083	6V4000	HEAD,SPROCKET REMOV	
73	PEFZZ	5120011191748	11083	5P7312	TOOL,DISTORTER	
74	PEFZZ	5120004736921	11083	8B7560	STEP PLATE,MECHANIC PULLER	
75	PEFZZ	5120011235881	11083	8H0684	WRENCH,RATCHET	
76	PEFZA		11083	8M9395	INSERTER,SEAL (DUO-CONE SEAL .. INSERTER),USE 1U6436 AND 1U6437	
77	PEFZZ	5120011191749	11083	5P7313	RING,SLEEVE DISTORT	
78	PEFZZ	5120011191750	11083	5P7315	DISTORTER,SLEEVE	
79	PEFZZ	5315011191754	11083	6H4158	PIN	
80	PEHZZ	5120010303575	11083	9S8871	LOCATOR,SEAL AND WE (SEAL ..... LOCATOR)	
81	PEFZZ		11083	6V3123	ADAPTER	
82	PEFZA	5310010388318	11083	9S8858	NUT,SLEEVE	
83	PEFZZ	5306010269992	11083	9S8890	BOLT,MACHINE	
84	PEFZZ		11083	6V3127	LOCK	
85	PEFZZ	5340003778758	11083	7B2499	CLIP,RETAINING	
86	PEFZZ	5120011191764	11083	7M9773	ADAPTER	
87	PEFZZ	5120011191765	11083	7M9774	ADAPTER,COUPLING	

(1) ITEM NO	(2) SMR CODE	(3) NSN	(4) CAGEC	(5) PART NUMBER	(6) DESCRIPTION AND USABLE ON CODES (UOC)	(7) QTY
88	PEFZZ	5340012701290	11083	5P1762	BRACKET,DOUBLE ANGL	
89	PEFZZ	5120003719610	11083	5F5034	PLATE,COMPRESSOR,ST	
90	PEFZZ	5120011191733	11083	5F5096	PLATE	
91	PEFZZ	5315012705495	11083	7S7112	PIN	
92	PEFZZ	5120006335085	11083	8B7548	PULLER,MECHANICAL	
93	PEFZZ	5120002931430	11083	8B7554	PULLER ATTACHMENT	
94	PEFZZ	5120010394811	11083	1P0520	BUSHING DRIVER SET	
95	PEFZZ	5120012752286	11083	8S9906	PULLER,RATCHET LEVE	
96	PEFZZ	5120015189738	11083	6V3094	ADAPTER,CLUTCH HUB	
97	PEFZZ	5365011191769	11083	8M9008	SPACER	
98	PEFZZ		11083	1S4233	PULLER,HYDRAULIC	
99	PEFZZ	5306004263150	11083	1A8537	BOLT,MACHINE	
100	PEFZZ		11083	2P8301	GUIDE,SEAL	
101	PEFZZ	5120012951535	11083	4S9456	INSERTER,SEAL	
102	PEFZZ	5120012890367	11083	4S9450	INSERTER,SEAL	
103	PEFZZ	5120012890635	11083	4S9453	INSERTER,SEAL	
104	PEFZZ		11083	SP8565	GUIDE SEAL	
105	PEFZZ	5130012890100	11083	8M9011	PULLER	
106	PEFZZ	5305012712004	11083	8F1156	SCREW,CAP,HEXAGON H	
107	PEFZZ	2910012501608	11083	6V6980	NOZZLE,PULLER GROUP	
108	PEFZZ	5120006335074	45225	939	PULLER,MECHANICAL	
109	PEFZZ	5340011628676	11083	5H4018	COVER,ACCESS	
110	PEFZZ	5331007410674	11083	5F1678	O-RING	
111	PEFZZ		11083	3H0467	WASHER,FLAT	
112	PEFZZ		11083	5P6156	GUIDE,SEAL	
113	PEFZZ	3440004497295	11083	AA59384-12A60	PRESS,ARBOR,HAND OP	
114	PEFFF	5120012724055	11083	6V0082	ADJUSTING TOOL,BEAR	
115	PEFZZ	5120011191751	11083	5P8631	.DRIVER	
116	PEFZZ	5306011279361	11083	0S1585	.BOLT,MACHINE	
117	PEFZZ	5315012701888	11083	5P8635	.PIN,SHOULDER,HEADLE	
118	PEFZZ	5306008097134	11083	2B947	.BOLT,MACHINE	
119	PEFZZ	5365012702772	11083	5P8634	.SPACER,SLEEVE	
120	PEFZZ	5120011191752	11083	5P8632	.TRUNNION	
121	PEFZZ	5120012720763	11083	5P8630	.HEAD,DRIVER ASSEMBL	
122	PEFZZ	5331005901064	11083	5H7370	.O-RING	
123	PEFZZ	4910012650428	11083	8S7611	TOOL,SPECIAL USED WITH REAR ... JACKS STANDS	
124	PEFZZ	5315012702832	11083	8S7615	PIN,SHOULDER,HEADLE USED WITH . FRONT AND REAR JACK STANDS	
125	PEFHH	4910012644777	11083	8S7640	STAND ASSEMBLY REAR JACK ..... STANDS	
126	PEFZZ		11083	8S7647	.STAND, JACK	
127	PEFZZ	5310007616882	96906	MS51967-2	.NUT,PLAIN,HEXAGON	
128	PEFZZ		11083	5P8577	.BASE, STAND	
129	PEFZZ	5360013367960	11083	1M9351	.SPRING,HELICAL,COMP	
130	PEFZZ	5305013365930	11083	0L0557	.SCREW,CAP,HEXAGON H	
131	PEFHH	4910012644778	11083	8S7621	REPAIR TOOL,SPECIAL USED WITH . FRONT JACK STANDS	

(1) ITEM NO	(2) SMR CODE	(3) NSN	(4) CAGEC	(5) PART NUMBER	(6) DESCRIPTION AND USABLE ON CODES (UOC)	(7) QTY
132	PEFHH	3040012952500	11083	8S7625	COLLAR,SHAFT USED WITH FRONT .. JACK STANDS	
133	PEFHH	5120013438085	11083	4C6486	STAND,LIFTING AND B FRONT JACK STANDS	
134	PEFZZ		11083	8S7632	.STAND, JACK	
135	PEFZZ	5310007616882	96906	MS51967-2	.NUT,PLAIN,HEXAGON	
136	PEFZZ		11083	5P8564	.BASE, STAND	
137	PEFZZ	5360013367960	11083	1M9351	.SPRING,HELICAL,COMP	
138	PEFZZ	5305013365930	11083	0L0557	.SCREW,CAP,HEXAGON H	
139	PEFZZ	2590013379173	11083	4C6562	.BRACKET,VEHICULAR C	
140	PEFZZ	5310006371058	66289	PD115	..NUT,PLAIN,HEXAGON	
141	PEFZZ	5310001435722	11083	4B4274	..WASHER,FLAT	
142	PEFZZ		11083	4C6709	..LANYARD ASSY	
143	PEFZZ	5305011027337	11083	3K6168	..SCREW,CAP,SOCKET HE	
144	PEFFF	4320010686009	11083	3S6224	PUMPING UNIT,HYDRAU USED WITH . FRONT JACK STANDS	
145	PEFZZ	6105013382386	11083	2P2274	.MOTOR,ALTERNATING C	
146	PEFZZ	5930013405771	11083	2P2327	..SWITCH,TOGGLE	
147	PEFZZ	5977013385694	11083	2P2276	..BRUSH,ELECTRICAL CO	
148	PEFZZ	5945013361744	11083	2P2281	..RELAY,ELECTROMAGNET	
149	PEFZZ	5330013363238	11083	2P2277	..GASKET	
150	PEFZZ	5342013385592	11083	5P4232	.CAP,FILLER OPENING	
151	PEFZZ	3010013383035	11083	2P2286	.COUPLING,SHAFT,RIGI	
152	PEFZZ	4320013368164	11083	2P2283	.PUMP,ROTARY	
153	PEFZZ	4820013373876	11083	2P2284	.VALVE,SAFETY RELIEF	
154	PEFZZ	5330013363239	11083	2P2285	.GASKET	
155	PEFZZ	4320013368200	11083	5P4234	.RESERVOIR,HYDRAULIC	
156	PEFZZ	5930013363289	11083	5P7278	.SWITCH,SENSITIVE	
157	PEFZZ	5930013363018	11083	4C4040	..SWITCH,SENSITIVE	
158	PEFZZ		0PFG7	9500	.VALVE,LINEAR,DIRECT	
159	PEFZZ	5340014449172	45225	40064-WH2	.PLATE,MOUNTING	
160	PEFZZ	5305012806556	45225	10854	.SCREW,MACHINE	
161	PEFFF	3040012649538	11083	8S7650	CYLINDER ASSEMBLY,A USED WITH . FRONT JACK STANDS	
162	PEFZZ	5305013362987	11083	8S2696	.SCREW,CAP,SOCKET HE	
163	PEFZZ	5120013441301	11083	9S1557	.SADDLE,CYLINDER	
164	PEFZZ	4730013370790	11083	9S1555	.PACKING NUT	
165	PEFZZ	5305013362239	11083	9S1556	.SETSCREW	
166	PEFZZ	5365013366668	11083	9S1560	.SPACER,RING	
167	PEFZZ	3120013363008	11083	9S1563	.BEARING,WASHER,THRU	
168	PEFZZ	5365013366536	11083	9S1558	.PLUG,MACHINE THREAD	
169	PEFZZ	5340013366623	11083	9S1559	.HOLDER,SPRING	
170	PEFZZ	5340012921734	11083	1P7437	.CAP,PROTECTIVE,DUST	
171	PEFZZ	4730012953790	11083	1P2375	.COUPLING HALF,QUICK	
172	PEFZZ	5305013363898	11083	9S1561	.SETSCREW	
173	PEFZZ		11083	9S1562	.BUSHING,SLEEVE	
174	PEFZZ	5360013375669	11083	9S1554	.SPRING,HELICAL,EXTE	
175	PEFZZ	6620014867681	11083	8T0820	.GAGE,PRESSURE,DIAL	

(1) ITEM NO	(2) SMR CODE	(3) NSN	(4) CAGEC	(5) PART NUMBER	(6) DESCRIPTION AND USABLE ON CODES (UOC)	(7) QTY
176	PEFZZ	4730011620102	11083	5P8998	NIPPLE,PIPE	
177	PEFZZ	4730012750057	97111	1108	COUPLING ASSEMBLY,Q	
178	PEFZZ	4730012953790	11083	1P2375	COUPLING HALF,QUICK	
179	PEFZZ	5340013712357	11083	1P2377	PLUG,PROTECTIVE,DUS	
180	PEFZZ	4810011275377	11083	1S8937	VALVE,NEEDLE	
181	PEFZZ	4730007261103	22031	5404-6-4	REDUCER,PIPE	
182	PEFZZ	4730001199861	96906	MS14303-2R06	TEE,PIPE	
183	PEFZZ	5340012921734	11083	1P7437	CAP,PROTECTIVE,DUST	
184	PEFZZ	4730013735625	11083	5B6009	REDUCER,PIPE	
185	PEFZZ	4730000892515	11083	5M6213	PLUG,PIPE	
186	PEFZZ	5120010301626	11083	1P0510	BUSHING DRIVER SET	
187	PEFZZ		11083	1P3052	LINK,PIN	
188	PEFZZ		11083	1P3053	ADAPTER,PIN	
189	PEFZZ	5180011241903	11083	1P3075	PULLER KIT,UNIVERSA (SLIDE .... HAMMER PULLER GROUP),USE 1U7600	
190	PEFZZ	5120015089182	11083	2P8261	ADAPTER,SOCKET WREN	
191	PEFZZ	5315009318963	11083	3J1770	PIN,LOCK	
192	PEFZZ	5120015129821	11083	5P8675	EXTENSION HANDLE,WR	
193	PEFZZ	5120013490341	11083	6V7876	INSTALLER	
194	PEFZZ	5315009222595	11083	7M9772	PIN,STRAIGHT,HEADLE	
195	PEFZZ	5120011280725	11083	8S2264	PULLER GROUP	
196	PEFZZ		11083	9H3992	HEAD,SOCKET INSTALL	
197	PEFZZ		11083	9S7351	WRENCH,TORQUE (600FT LBS/ 3/4 IN SQUARE DRIVE)	
198	PEFZZ	5310010388318	11083	9S8858	NUT,SLEEVE	
199	PEFZZ	5120010303575	11083	9S8871	REMOVER AND REPLACE	
200	PEFZZ	5306010269992	11083	9S8890	BOLT,MACHINE	
201	PEFZZ	5130012882786	11083	9S8900	PULLER,HYDRAULIC	
202	PEFZZ		11083	1P2420	STAND,TRANSMISSION	
				END OF FIGURE		

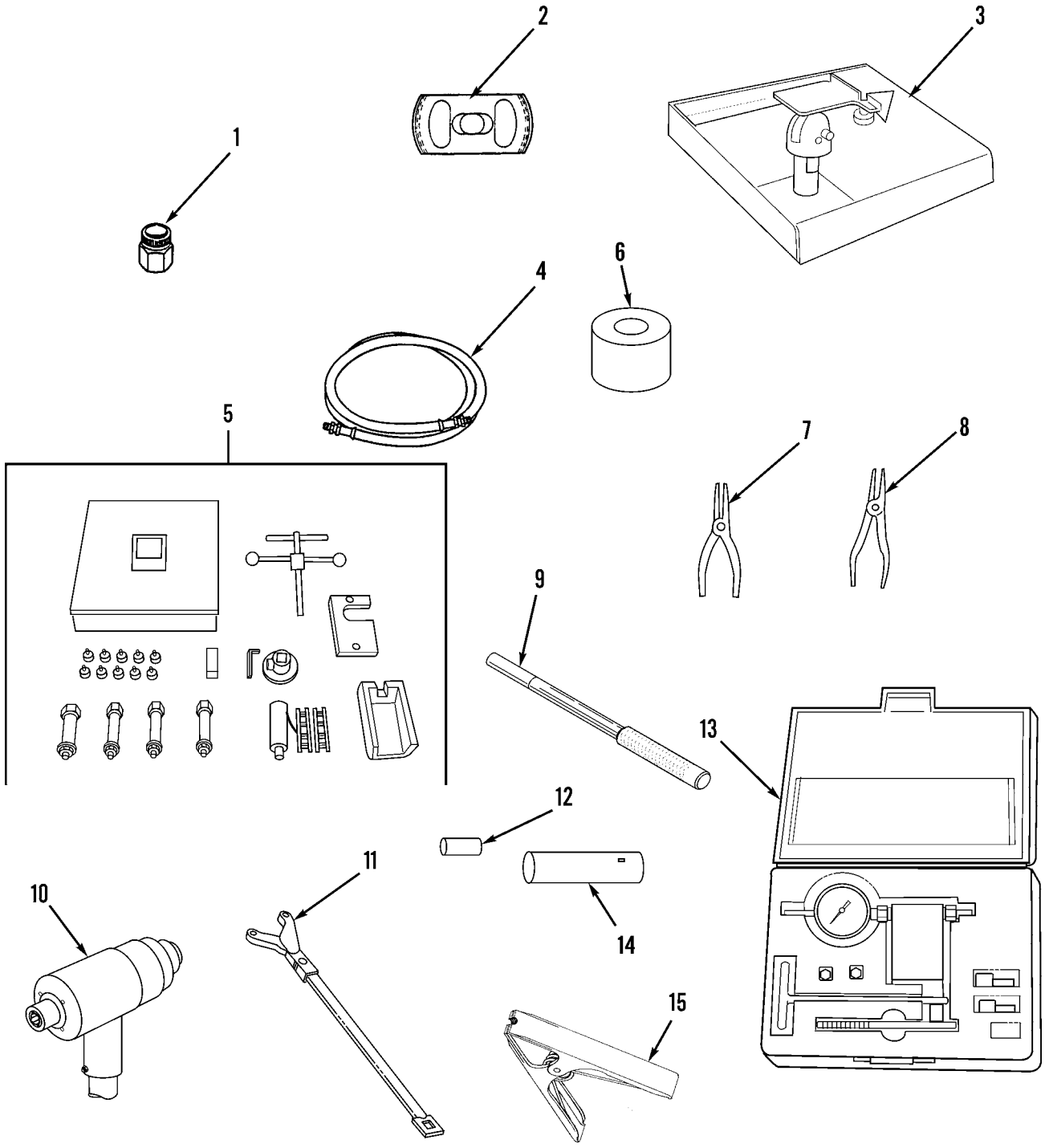

Figure 217. Special Tools, General Support (Sheet 1 of 2)

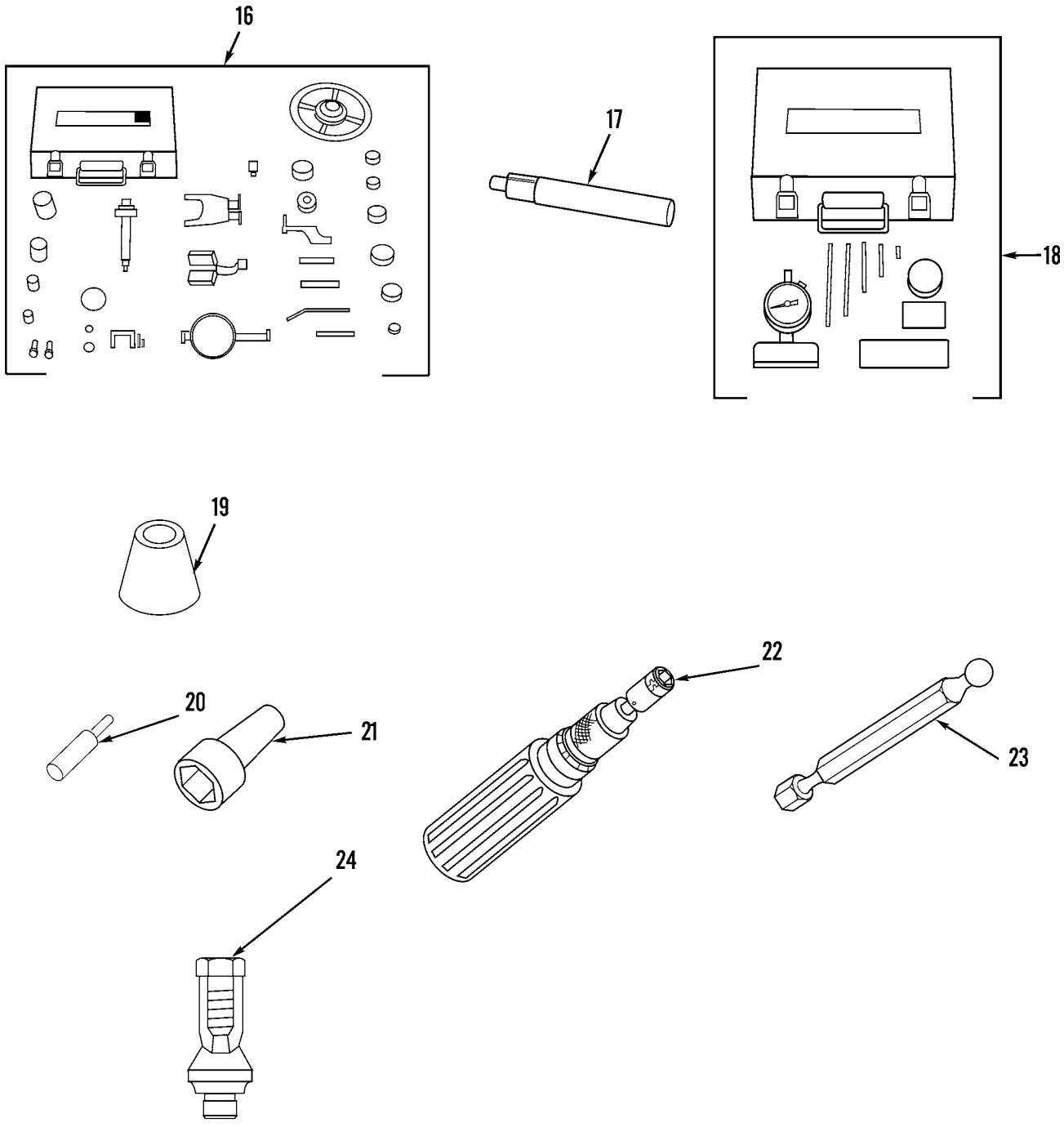

Figure 217. Special Tools, General Support (Sheet 2 of 2)

(1) ITEM NO	(2) SMR CODE	(3) NSN	(4) CAGEC	(5) PART NUMBER	(6) DESCRIPTION AND USABLE ON CODES (UOC)	(7) QTY
					GROUP 2604 SPECIAL TOOLS	
					FIG. 217 SPECIAL TOOLS, GENERAL SUPPORT	
1	PEHZZ	5120012667433	11083	8T5287	WRENCH,BONNET	
2	PEHZZ	5120013387733	11083	1P2393	PLATE,MECHANICAL PU	
3	PEHZZ	4910012644024	11083	9S6363	FIXTURE ASSEMBLY, T	
4	PFHZZ	3442008766522	11083	8F0024	HOSE ASSEMBLY	
5	PEHZZ	4910012963862	11083	1667441	EXTRACTOR,GROUP VAL	
6	PEHZZ	5120015105653	11083	1P0464	STEP PLATE,MECH PUL INCLUDED .. WITH PN: 1P0510	
7	PEHZZ		11083	1P1855	PLIERS	
8	PEHZZ		11083	1P1860	PLIERS	
9	PEHZZ	5315012853476	11083	3P1544	PIN,SHOULDER,HEADLE	
10	PEHZZ	5120012964235	11083	6V6080	MULTIPLIER,TORQUE W (1 IN. .... SQUARE DRIVE)	
11	PEHZZ	5120015128936	11083	5P3520	WRENCH,SPANNER	
12	PEHZZ	5365015061837	11083	5P5215	ADAPTER,SLEEVE (USED ON FINAL . DRIVE)	
13	PEHZZ		11083	5P6577	PARTS KIT,DIESEL EN	
14	PEHZZ		11083	5S1430	PULLER,MECHANICAL	
15	PEHZZ		11083	6V2163	CLAMP	
16	PEHZZ	5180013583781	11083	6V4180	TOOL SET,OFF-ENGINE	
17	PEHZZ		11083	6V4818	PUNCH DRIVER	
18	PEHZZ	5280015058509	11083	6V7926	GAGE,SET,INSPECTION	
19	PEHZZ	5130015131143	11083	9U6630	PULLER KIT,CYLINDER	
20	PEHZZ		11083	6V4163	BIT	
21	PEHZZ		11083	6V4164	HOLDER,SCREWDRIVER	
22	PEHZZ		11083	4C9738	DRIVER,SCREW,TORQUE	
23	PEHZZ		11083	6V6072	BIT,SCREWDRIVER	
24	PEHZZ	5120001570718	11083	5F8353	WRENCH,PRECOMBUSTIO	
				END OF FIGURE		

CROSS-REFERENCE INDEXES

NSN INDEX

NSN	FIG.	ITEM NO.	NSN	FIG	ITEM NO.
5306-00-003-0683	194	1	5305-00-042-4635	146	4
5310-00-005-0895	57	21	4730-00-042-8988	3	25
5310-00-006-0673	77	9		4	15
5365-00-006-0678	77	8	5310-00-044-3339	184	8
2540-00-006-6289	146	10		206	5
5315-00-007-6034	75	12	4730-00-044-4688	5	3
5342-00-007-6350	101	40		90	45
	102	1	5325-00-045-1884	69	55
5342-00-007-9934	168	1	5310-00-045-3299	57	11
5355-00-007-9980	57	2	5310-00-045-5001	58	14
5925-00-008-0548	56	6		90	33
5305-00-008-5971	84	4		94	21
5330-00-010-4891	98	17		98	29
3110-00-011-9931	136	8		99	4
2815-00-011-9934	135	17		105	42
	136	7		110	11
3110-00-011-9935	3	11		110	19
	14	25		124	9
	180	54		160	3
5920-00-012-0151	56	2	4730-00-048-1788	94	1
	66	21	4730-00-050-4208	90	49
	147	6		177	16
	201	2		211	4
	207D	19		212	6
5315-00-013-7258	105	6	5306-00-050-8432	114	1
4730-00-013-7397	209	7	4730-00-051-3731	33	28
	209	11	5315-00-059-0206	123	31
5310-00-013-7718	69	18		202	27
3120-00-014-3507	36	46	5305-00-059-8263	39	17
5310-00-017-5121	126	9	5310-00-061-1258	56	16
5315-00-018-9396	132	7		58	10
5315-00-018-9576	36	32		65	3
6240-00-019-3093	63	13		66	52
5365-00-022-0665	22	5		209	32
5306-00-022-7687	202	25	5307-00-061-3607	68	30
2815-00-024-4596	3	17	5330-00-061-8361	178	9
4820-00-026-8473	42	32	5310-00-062-2051	51	46
5315-00-028-7266	6	11	5342-00-062-5335	214	1
	21	5	3120-00-063-9785	178	7
	21	18		178	20
2940-00-029-0388	16	18	3120-00-064-1275	161	20
5331-00-031-2558	95	16		161	31
	96	18		162	8
	97	16	3040-00-066-2416	178	4
	99	30	4730-00-067-9801	209	29
2910-00-033-2200	24	17	5305-00-068-0502	120	37
	26	32	5305-00-068-0511	15	30
3040-00-034-4216	51	70		24	12
5330-00-036-6824	143	14		36	59
5305-00-042-0461	58	7		41	27

CROSS-REFERENCE INDEXES

NSN INDEX

NSN	FIG.	ITEM NO.	NSN	FIG	ITEM NO.
5305-00-068-0511	43	3	5305-00-071-2510	185	14
	47	7		188	13
	62	8		190	18
	65	14	5330-00-074-3600	6	19
	80	28	5330-00-074-3603	12	1
	82	4	5331-00-074-3768	159	18
	83	12	5331-00-074-3771	181	15
	94	6	5331-00-074-3773	30	8
	103	25	5331-00-074-3776	138	7
	106	2	5360-00-076-1478	61	5
	109	2	5310-00-080-6004	66	15
	118	9		67	12
	124	24		83	34
	134	14		94	8
	135	20		113	10
	136	46		123	3
	137	17		124	36
	138	27		132	4
	139	36		133	11
	156	27		134	16
	158	29		166	21
	166	22		168	9
	167	6	5310-00-080-9422	35	7
	168	20	5310-00-081-4219	14	16
	169	9		15	11
	172	10		15	19
5305-00-071-2055	179	7		19	8
5305-00-071-2069	182	19		24	2
	184	9		30	19
	186	8		32	21
	188	1		33	13
	189	15		34	7
	190	10		41	10
	191	5		126	25
	193	2		142	21
	196	1		150	7
	198	2		150	10
	198	16		158	15
	200	1		168	3
	202	4		209	20
	203	1	4730-00-084-7543	29	4
	204	6	5310-00-087-6875	31	6
	205	1		31	35
	206	16	5306-00-087-7178	154	2
5305-00-071-2078	128	12	4720-00-087-9122	BULK	14
5305-00-071-2505	25	21	5310-00-088-1251	67	1
	26	2		119	14
	26	49		120	10
5305-00-071-2506	26	116		209	26
	56	28	4730-00-089-2515	3	24

CROSS-REFERENCE INDEXES

NSN INDEX

NSN	FIG.	ITEM NO.	NSN	FIG	ITEM NO.
4730-00-089-2515	6	18	5940-00-118-8836	66	50
	13	6	5330-00-118-9146	31	30
	32	6	5330-00-119-0794	158	12
	45	16	5306-00-119-1662	31	1
	101	12	4730-00-119-9861	216	182
	216	185	4730-00-122-3969	15	14
3110-00-100-0611	90	27	5331-00-123-2727	26	5
2920-00-100-3403	51	9	2540-00-123-7226	146	6
3110-00-100-6149	153	20	2530-00-127-8672	100	19
5330-00-100-7248	118	13	2530-00-127-8934	95	12
	119	10	3830-00-127-9413	210	12
3110-00-101-1010	90	22	5306-00-131-1660	211	30
3020-00-101-2110	91	40	3130-00-131-1832	211	32
5330-00-101-2561	69	48	5365-00-131-4761	136	44
	82	24	5306-00-133-2090	91	19
2540-00-101-4723	126	10	5920-00-133-8663	66	28
4330-00-103-5502	86	1	5975-00-133-8687	142	22
5331-00-104-4371	3	30		207D	14
	4	23	2590-00-135-6277	60	1
2510-00-104-4478	113	1	5315-00-135-9672	81	14
3030-00-109-3857	46	13	5365-00-136-2006	33	6
5310-00-112-1271	146	11		68	31
6625-00-113-3279	53	24	5305-00-136-2009	116	34
5940-00-113-8190	48	18	5310-00-136-4398	211	33
	50	2	5360-00-137-3464	101	48
	66	51	6680-00-138-4143	180	9
5940-00-113-9826	63	19	5306-00-138-4466	179	11
	63	24	5306-00-138-4602	210	11
5940-00-114-1310	64	14	5905-00-138-7420	55	15
2910-00-116-0407	26	131	5310-00-139-7030	2	5
5360-00-116-0448	24	22		91	13
2910-00-116-3227	24	23		98	9
4310-00-116-6763	70	26		99	27
4310-00-116-9850	70	27		135	11
3110-00-117-0661	69	5	5305-00-139-7071	21	19
3110-00-117-0696	70	2		171	13
5310-00-117-4788	207A	14	5306-00-140-2032	36	45
	207B	2		68	24
	207C	7		161	14
	207G	6	2540-00-140-9816	146	22
5340-00-118-3001	71	17	4730-00-143-3941	83	26
5310-00-118-3044	153	10		101	27
5306-00-118-3055	138	4		165	34
5325-00-118-3056	7	1		170	4
5315-00-118-3070	27	5	5940-00-143-4774	39	37
5306-00-118-3091	206	9		53	14
5930-00-118-8034	201	11		60	7
	202	41		64	3
	202	65		64	19
5940-00-118-8836	50	3		64	25

CROSS-REFERENCE INDEXES

NSN INDEX

NSN	FIG.	ITEM NO.	NSN	FIG	ITEM NO.
5940-00-143-4774	66	18	5320-00-164-0917	105	32
5940-00-143-4775	48	22	5306-00-164-9318	108	35
5940-00-143-4780	39	13	5331-00-165-1954	149	5
	53	16	5331-00-165-1980	24	25
	54	13		152	17
	63	11		165	1
	64	16	5331-00-166-1111	156	14
	66	20	5310-00-167-0823	33	5
5940-00-143-4793	53	11	5310-00-167-0839	51	8
	63	16	5331-00-167-5174	19	1
	64	49		82	25
	207D	2		152	15
5940-00-143-4794	51	5		156	9
	63	4		158	23
	63	9	2950-00-167-6781	31	10
	63	25	5340-00-167-6785	31	34
	63	28	2950-00-167-6787	31	25
	64	9	2950-00-167-6800	31	8
	64	39	4330-00-168-1861	85	12
	66	23	5315-00-169-8105	150	22
5310-00-143-5722	52	3		161	33
	52	15		162	12
	65	8	5365-00-170-1725	18	9
	67	35		165	49
	202	9	4730-00-172-0028	46	6
	206	8		177	7
	216	141		212	9
5330-00-143-7173	176	16	4730-00-172-0034	210	8
	178	14	5305-00-172-6356	72	30
5330-00-143-8713	35	4	5325-00-176-0345	72	9
5940-00-144-1533	64	54	3120-00-176-5546	101	42
3110-00-144-8518	149	20	2510-00-176-5600	132	10
2520-00-147-5081	69	10	5310-00-177-1039	37	26
5310-00-147-6143	68	25	5940-00-177-4356	39	23
2520-00-147-8491	108	5	5310-00-178-0741	51	7
5330-00-149-7248	110	17		52	13
5365-00-149-7252	90	39	5120-00-178-1267	216	45
2530-00-149-7388	94	5	5310-00-178-7700	51	6
2530-00-149-8899	99	38		52	11
5360-00-149-9006	36	44	3110-00-180-7737	137	25
5306-00-149-9066	91	5	3110-00-183-6730	109	9
2520-00-149-9205	99	39	3110-00-183-6784	109	21
5305-00-150-0967	114	8	5310-00-187-7070	55	3
5330-00-154-7528	101	11	5310-00-187-9796	26	68
5120-00-157-0718	217	24	5310-00-188-0473	51	21
5306-00-158-0697	47	5	5310-00-188-7848	34	6
	202	7	6140-00-190-9828	61	18
	202	60	6210-00-191-2745	63	12
2530-00-160-8597	100	8	3110-00-191-3923	95	11
5330-00-161-1882	135	2		136	31

CROSS-REFERENCE INDEXES

NSN INDEX

NSN	FIG.	ITEM NO.	NSN	FIG	ITEM NO.
3110-00-191-3923	139	6	5310-00-224-0529	111	5
5340-00-191-6585	31	5	5305-00-225-3843	26	119
5315-00-191-8305	85	10		142	29
2815-00-192-8768	17	3		154	8
5315-00-193-0904	72	35		155	7
	73	32		155	26
	74	10	5310-00-225-6993	68	21
5315-00-193-0919	90	32		123	8
5315-00-193-0924	95	5		180	27
5315-00-193-0925	73	31	5306-00-226-4823	126	24
	74	11	5306-00-226-4825	9	12
5310-00-193-1033	108	16		19	11
5315-00-193-1069	78	18		32	20
5310-00-193-1076	98	2		39	20
5310-00-193-1174	90	1		153	29
5310-00-193-7486	57	13	5306-00-226-4826	15	12
2530-00-195-5819	99	31		150	18
2590-00-195-5824	105	50		151	18
2520-00-195-6018	178	8		153	24
5340-00-195-8288	111	7	5306-00-226-4828	70	9
4730-00-197-6625	123	28		158	14
3110-00-198-0464	26	19	5306-00-226-4829	24	1
3110-00-198-0510	26	90		103	51
3110-00-198-1796	139	30		142	27
4720-00-198-5808	BULK	9		150	28
8125-00-200-5640	210	6		152	8
5940-00-201-8938	61	13		168	23
3110-00-202-1879	70	8	5306-00-226-4832	15	28
5310-00-203-1111	149	21		105	48
5365-00-205-3664	26	125		168	6
5310-00-205-8984	30	7	5306-00-226-4833	14	15
5310-00-208-9476	207C	21		152	7
5310-00-209-0786	48	19	5306-00-226-4835	150	6
5310-00-209-0965	80	50	5120-00-227-0633	216	1
	99	20	3110-00-227-4431	101	41
5310-00-209-6512	109	10		102	2
2815-00-211-4462	9	16	5306-00-228-6835	128	9
3110-00-211-9679	78	13		189	13
3110-00-211-9680	78	35		207F	12
3110-00-211-9694	91	2	5340-00-229-9287	9	23
5970-00-213-7747	26	124		78	26
5310-00-215-7524	15	37		90	15
5305-00-218-6387	51	30		137	36
5310-00-221-3150	39	48	5340-00-229-9294	4	4
	109	32		71	24
4710-00-223-6520	106	17	2815-00-230-1977	21	1
4710-00-223-6521	106	20	2510-00-230-4093	115	11
2530-00-223-6534	113	5	4730-00-231-5605	38	13
3830-00-223-6595	176	7	2920-00-231-7270	49	1
4710-00-223-6883	98	6	5315-00-234-1672	211	11

CROSS-REFERENCE INDEXES

NSN INDEX

NSN	FIG.	ITEM NO.	NSN	FIG	ITEM NO.
5330-00-236-1268	78	28	5315-00-246-8066	110	5
3120-00-236-1319	80	17	5331-00-247-5972	150	11
	80	39	3040-00-247-9923	36	5
	83	60	5330-00-248-2165	71	5
	165	20	5360-00-249-3504	9	27
	166	4	5325-00-249-6345	39	45
	170	17		66	12
	171	38		66	24
5360-00-237-2158	36	26	5330-00-250-5481	72	5
2815-00-237-3756	9	14	4320-00-251-1785	81	1
2815-00-237-3760	30	12	2990-00-251-3656	40	1
2815-00-237-3764	20	1	4710-00-251-4438	85	11
2520-00-237-4576	69	19	5315-00-252-2959	3	27
2520-00-237-4603	87	8		6	8
4730-00-237-4605	83	41	5325-00-252-4753	109	40
2520-00-237-4608	83	2	5305-00-252-8906	14	38
4710-00-237-6238	82	12		44	1
2990-00-237-9928	40	8		88	6
3120-00-239-0938	105	25		109	16
	105	54	5305-00-252-8917	31	32
3120-00-239-0939	105	24	5305-00-252-8919	8	1
	105	52		42	2
	105	56		55	26
4730-00-239-2503	209	30		56	15
3110-00-239-7702	73	17		66	14
	74	21		67	20
5340-00-239-8226	9	20		103	19
5340-00-240-9238	40	3		104	2
5340-00-240-9269	69	31		105	38
5310-00-241-6658	67	34		107	16
2530-00-243-9486	86	8		109	22
2530-00-243-9530	99	21		116	24
4820-00-243-9575	79	4		123	6
2940-00-244-1319	28	14		126	22
5306-00-245-0953	210	5		139	8
	211	23		161	1
	212	8		171	3
5331-00-245-6767	134	20	5306-00-253-3376	37	9
	180	15	5305-00-253-5609	49	19
5315-00-245-8844	105	5	5305-00-253-5615	65	12
5315-00-245-9317	110	25		131	7
5315-00-245-9409	91	4		148	1
5310-00-245-9841	48	13		156	31
5315-00-245-9995	132	6		209	2
	136	25	5305-00-253-7629	111	9
5360-00-246-0489	105	1	5315-00-253-7668	90	14
5315-00-246-0496	91	34	5306-00-253-7879	23	24
5315-00-246-0648	177	8	5340-00-253-7912	62	7
5315-00-246-0998	159	2	5310-00-253-7914	91	18
5340-00-246-2746	41	11		108	14

CROSS-REFERENCE INDEXES

NSN INDEX

NSN	FIG.	ITEM NO.	NSN	FIG	ITEM NO.
5310-00-253-7918	48	6	5306-00-261-1153	155	37
5331-00-253-8180	135	22		208	8
5315-00-255-0996	1	6		209	23
	90	17	5310-00-262-4715	49	22
5325-00-256-2846	109	31	5310-00-262-4789	1	2
5306-00-260-4508	4	14		93	2
	5	11		116	13
	13	10	4730-00-263-3122	84	5
	36	49	5306-00-263-4038	78	1
	39	46		80	21
	41	22		134	15
	42	25		137	3
	45	20		158	6
	56	10	5306-00-263-7299	158	11
	58	9	5306-00-263-7301	10	16
	65	4		11	9
	71	3		12	13
	77	14		30	10
	79	8		33	40
	82	15		36	70
	87	24		45	24
	95	13		61	27
	103	22		61	44
	109	30		67	9
	110	4		68	11
	115	19		83	33
	124	35		101	4
	130	1		105	61
	134	7		115	8
	136	42		116	22
	137	37		123	14
	138	3		126	13
	138	12		137	32
	138	43		166	24
	139	1		169	19
	142	38		172	5
	158	24		173	10
	168	8		209	31
	207C	13		207B	8
5306-00-260-4512	149	2	5305-00-263-8947	179	2
5306-00-260-4513	156	18	5306-00-263-8949	80	49
	175	12		170	6
5330-00-261-0990	176	14	5306-00-263-8950	45	13
	178	16	5306-00-263-8978	5	19
5306-00-261-1153	19	17		6	20
	25	18		40	14
	27	38		46	12
	147	16		48	1
	154	20		84	3
	155	20		115	24

CROSS-REFERENCE INDEXES

NSN INDEX

NSN	FIG.	ITEM NO.	NSN	FIG	ITEM NO.
5306-00-263-8978	164	14	4730-00-278-3383	4	16
	166	17		15	26
	169	3		76	2
	179	3		82	9
3110-00-263-9500	69	16	4730-00-278-3885	209	13
5315-00-265-0418	216	56	4730-00-278-4339	39	30
5325-00-266-1948	91	30	3110-00-278-7215	78	34
5315-00-267-2268	96	23	4730-00-279-0985	110	21
	97	21	5310-00-282-0493	78	10
	99	10	5325-00-282-5047	109	26
5306-00-268-2449	150	16	5340-00-282-7505	82	11
5306-00-268-5798	2	13		101	26
	123	22	5306-00-282-8360	34	9
	174	18		207C	3
	175	24	5940-00-283-5281	54	9
5305-00-269-3234	95	19		66	2
5305-00-269-3236	123	12	5920-00-284-6787	39	14
	126	12		53	30
5305-00-269-3238	36	6	5306-00-285-1368	10	20
	70	7		15	15
	136	34		68	10
	137	29		106	22
5305-00-269-3240	68	4		136	47
5305-00-269-3245	69	1		139	13
	137	42		156	22
5310-00-269-6340	184	17		165	14
	188	8		174	5
	190	13		175	7
5315-00-272-6760	36	7		207A	6
	103	7	5325-00-285-6726	69	29
	106	4	5325-00-285-7939	136	10
	107	21	5331-00-286-7294	21	8
	109	3	2805-00-288-3650	4	21
5307-00-272-7047	21	23	5120-00-288-6756	216	61
5306-00-273-6357	40	17	4730-00-288-8055	211	8
	42	22	4730-00-288-8546	147	23
	68	23	4730-00-289-3261	33	29
	75	1	5360-00-290-0851	69	28
5306-00-275-5012	10	11		140	14
	112	3	5940-00-291-0085	39	33
	116	7		59	2
	124	14		59	7
	207A	17		60	8
5306-00-275-5014	116	26		64	23
5310-00-275-8639	124	7	5310-00-291-4498	51	23
5340-00-276-5832	3	10	5331-00-291-7192	23	18
	3	28	5331-00-291-9572	157	5
4730-00-277-6320	51	47	5120-00-293-1430	216	93
4730-00-278-2965	90	13	3110-00-293-8566	108	30
4730-00-278-3383	3	3	5330-00-297-6548	134	9

CROSS-REFERENCE INDEXES

NSN INDEX

NSN	FIG.	ITEM NO.	NSN	FIG	ITEM NO.
5310-00-297-8836	142	17	5315-00-363-8794	167	18
5310-00-298-8903	39	25	5315-00-363-9248	26	84
	64	53	3020-00-363-9254	81	2
4730-00-307-6426	209	4	5315-00-363-9729	126	21
5310-00-308-2227	120	11	2930-00-365-2152	13	17
	216	53	5340-00-365-2167	69	50
2910-00-309-9473	12	16	5365-00-365-2281	108	2
	75	15		124	8
	83	25	2910-00-367-5238	35	2
	88	2	5330-00-367-5819	78	31
5331-00-310-6575	25	16	5355-00-371-3370	36	1
5306-00-311-9307	202	54		161	6
5331-00-325-6310	95	18		162	2
	138	16	5340-00-371-3392	91	39
	164	29	5310-00-375-0518	45	12
5340-00-330-8289	105	60		170	7
4730-00-331-4279	34	16	5340-00-377-8758	216	85
5331-00-339-6220	135	30	5331-00-393-4054	27	13
	138	9		150	17
5331-00-339-6224	23	21	3120-00-394-4276	5	8
	150	15	2520-00-401-0290	69	39
	157	9	2530-00-401-0301	96	1
3830-00-341-4384	210	13		96	12
3830-00-341-4386	210	14	4730-00-401-0306	106	11
3020-00-349-8953	70	6	3830-00-401-0585	212	5
4730-00-349-8975	106	21	5305-00-401-5261	4	28
5310-00-350-3243	68	7		9	11
5310-00-350-3962	98	3	3120-00-401-6060	70	4
6220-00-350-8204	58	19	3120-00-401-6084	31	14
2530-00-351-1975	100	3	5330-00-401-6203	69	6
	100	22	4730-00-401-8098	16	5
5315-00-352-7540	211	1		207B	9
5340-00-354-1147	26	33	5342-00-402-2822	68	9
5305-00-362-7336	150	4	5330-00-402-9263	69	42
5315-00-362-7367	46	9	5330-00-402-9294	30	4
	69	47	3020-00-403-5294	69	37
5330-00-362-7470	139	35	3020-00-403-5296	69	14
2520-00-362-7883	107	1	2520-00-403-5400	70	13
5310-00-362-7988	3	23	2930-00-403-5498	41	25
	84	11	5325-00-403-6449	73	21
	84	15	5306-00-404-1417	119	13
5330-00-362-7996	207A	18		120	8
5310-00-362-8168	201	14	5310-00-404-2422	103	15
	202	15	3120-00-404-3688	21	11
	207C	2		21	16
5999-00-363-6240	30	20	5310-00-404-3787	131	4
	133	10		213	7
	209	15	5330-00-404-4964	28	19
5315-00-363-6577	61	2	3130-00-404-5473	99	23
5315-00-363-8794	14	20	3110-00-404-5484	70	12

CROSS-REFERENCE INDEXES

NSN INDEX

NSN	FIG.	ITEM NO.	NSN	FIG	ITEM NO.
4720-00-404-7277	BULK	13	3120-00-419-0940	70	21
4710-00-405-7326	109	41	5310-00-419-1363	1	8
4710-00-405-7327	109	43		94	18
5315-00-406-7278	26	86		111	2
2540-00-407-0417	115	31		116	9
4320-00-407-4862	149	3		116	20
4730-00-407-8330	69	26	3120-00-419-1413	177	3
	110	16	3120-00-419-1844	6	13
5340-00-407-8369	4	12		21	4
5310-00-407-9566	9	13	5305-00-419-2866	70	22
	142	33	5305-00-419-2956	90	48
	151	17	5325-00-419-3212	69	36
	152	9	5365-00-419-3254	83	10
	153	2	5365-00-419-3286	31	20
5306-00-409-3684	69	30	5307-00-419-4065	69	23
5307-00-409-7208	29	5	5307-00-419-4067	3	7
5307-00-409-7212	110	10	3040-00-420-5498	108	33
2530-00-410-1892	90	18	2530-00-421-1313	113	1
5342-00-410-1903	115	14	3120-00-421-9622	177	2
3020-00-410-5512	81	22	3120-00-421-9628	6	12
3040-00-410-5801	81	4		21	6
5305-00-411-3768	94	17	3120-00-421-9629	105	23
	174	14	5310-00-421-9686	176	5
	175	18	5977-00-423-4900	51	29
	177	6	5306-00-423-8069	115	29
5340-00-411-3926	36	8		116	8
	103	12		124	34
5307-00-411-4501	85	17	5365-00-423-8098	110	22
	86	9	5306-00-423-8116	94	23
5307-00-411-4502	6	7		112	7
5365-00-411-4584	26	122		116	4
	71	7		171	26
	79	17	5306-00-423-8117	40	18
	85	1		41	17
	87	31		42	19
	88	4		61	22
	143	3		83	36
	157	14		85	3
	158	36		115	6
	165	13		123	34
	180	11		125	1
5310-00-413-4757	69	2		126	16
	72	14		135	3
	137	41		166	14
5310-00-413-4983	41	7		169	24
5310-00-413-5060	109	23		173	15
5310-00-413-5144	88	3		180	19
5306-00-416-9180	26	21	5306-00-423-8194	12	12
2990-00-417-1356	40	6		13	7
5340-00-417-2920	3	15		15	2

CROSS-REFERENCE INDEXES

NSN INDEX

NSN	FIG.	ITEM NO.	NSN	FIG	ITEM NO.
5306-00-423-8194	15	16	5306-00-424-0351	26	120
	16	15	5365-00-425-5471	159	7
	28	5	2920-00-425-5932	51	1
	32	13	5306-00-426-2866	72	15
	33	1	5306-00-426-2922	167	5
	36	16		180	33
	41	38	5306-00-426-2932	14	6
	58	17		44	7
	67	25		48	10
	69	27		71	19
	69	52		79	14
	81	16	5306-00-426-2934	123	1
	82	16		135	9
	83	6		159	21
	90	10		177	11
	101	53		179	10
	126	7		207C	15
	161	32	5306-00-426-2937	211	16
	162	21	5306-00-426-2939	11	14
	169	15		207G	7
	169	18	5306-00-426-2941	211	6
	180	12	5306-00-426-2983	80	42
	207C	6		159	19
5306-00-423-8252	99	28		171	22
5306-00-423-8292	98	8	5306-00-426-3080	171	1
5306-00-423-8313	36	18	5305-00-426-3085	136	18
5306-00-423-8316	173	18	5306-00-426-3139	35	12
	207C	25		116	21
5306-00-423-8393	10	24		176	17
	138	19	5306-00-426-3150	98	10
5306-00-423-8784	24	4		108	23
	55	22		216	99
5365-00-423-8884	209	17		207A	7
5306-00-423-9325	105	43	5306-00-426-3209	99	3
	169	20		177	17
	171	29	5306-00-426-3397	159	39
5340-00-423-9532	101	20	5306-00-426-3403	93	1
	102	5		212	12
5310-00-423-9538	209	18	5306-00-426-3404	94	12
5306-00-423-9609	207A	23	5306-00-426-3405	1	1
5306-00-424-0086	42	26	5306-00-426-3412	112	11
	48	8	5306-00-426-3605	94	14
	84	6		124	18
	91	24	5120-00-426-3787	216	50
	99	43	5365-00-426-3985	114	6
	112	9	5930-00-426-4058	147	5
	113	4	5306-00-426-4171	1	7
	117	1	5140-00-426-4193	129	1
	124	26	5315-00-426-4566	91	20
	166	18	5365-00-426-4587	211	7

CROSS-REFERENCE INDEXES

NSN INDEX

NSN	FIG.	ITEM NO.	NSN	FIG	ITEM NO.
5340-00-426-4656	67	11	5325-00-441-8849	141	7
5340-00-426-4794	101	32	3110-00-443-5871	70	24
5340-00-426-4803	66	13	4730-00-444-0155	29	8
5340-00-426-4819	62	1	3120-00-445-3375	96	22
5306-00-426-5058	39	7		97	20
5306-00-426-5062	133	12		99	11
5315-00-426-5074	134	2	5305-00-445-4630	99	19
5306-00-426-5835	5	16	5310-00-445-4632	207F	3
5331-00-429-3542	158	3	3110-00-446-9688	78	5
	173	23	3110-00-446-9696	72	29
5310-00-429-4747	146	3		139	29
2520-00-430-2192	72	33	3120-00-446-9860	105	57
3040-00-430-4207	69	7	3120-00-446-9863	36	35
5970-00-431-3667	51	39	5340-00-448-1795	39	27
3020-00-431-6448	73	5	5315-00-448-4687	214	3
3020-00-431-6449	73	7	2530-00-449-0452	94	24
3020-00-431-6451	74	5	5365-00-449-2597	4	6
5340-00-431-6452	73	11	5340-00-449-2612	11	11
3040-00-431-6638	73	13	3444-00-449-7295	216	113
5331-00-431-7140	153	6	5306-00-450-4026	3	14
5310-00-431-7237	175	13	5342-00-450-5589	36	15
5310-00-431-7239	72	23	5305-00-450-5937	51	34
	84	2	2815-00-450-9341	9	4
5310-00-431-7244	3	13	5306-00-451-1552	99	33
5315-00-431-7317	74	31	5310-00-451-3384	136	21
2520-00-432-1627	158	10	5365-00-452-0344	167	20
3020-00-432-1704	72	26	5306-00-452-1354	28	22
3040-00-432-1880	74	22	3020-00-454-7899	6	5
5310-00-432-4064	202	55	5340-00-455-0326	76	3
3110-00-432-4284	73	19	5306-00-455-0459	101	8
3110-00-432-8072	73	20		124	28
6220-00-433-5959	58	16		171	30
5365-00-434-1421	1	5	5306-00-455-0460	101	45
5365-00-434-1422	1	4		180	21
5365-00-434-1423	1	3	5306-00-455-0462	47	7
5905-00-434-2542	55	16		182	12
5930-00-434-9121	57	1		187	2
5310-00-436-4328	90	42		189	10
3040-00-436-7398	81	6		191	11
5306-00-436-9893	211	25	5306-00-455-0467	70	16
5306-00-436-9896	177	4		153	14
5306-00-438-8600	61	14	5330-00-455-2772	69	21
	61	34	5330-00-455-7065	176	15
	61	42		178	15
5310-00-438-8604	61	15	5360-00-455-7142	77	23
	61	35	5360-00-455-7145	101	18
	61	41	3040-00-455-8791	99	7
3120-00-439-4878	11	8	5325-00-456-5519	56	22
3120-00-440-8463	14	22	5935-00-456-8384	54	2
	14	36	4820-00-456-9921	80	6

CROSS-REFERENCE INDEXES

NSN INDEX

NSN	FIG.	ITEM NO.	NSN	FIG	ITEM NO.
5365-00-457-1485	124	32	5331-00-494-2763	25	7
2815-00-457-1615	9	7	5330-00-494-2764	3	18
2930-00-457-1616	15	5	5306-00-497-0342	7	10
5315-00-457-6897	3	8	5360-00-498-2883	73	27
5310-00-458-2019	68	26		74	4
3020-00-460-6696	14	34	5330-00-498-2901	69	4
4730-00-460-6725	3	21		72	12
5310-00-460-8239	178	3	5330-00-498-2905	46	14
5307-00-465-6789	86	10	5330-00-498-2906	153	4
5342-00-465-6799	56	18	5365-00-498-2920	46	15
5310-00-465-9342	163	4	5342-00-498-2946	55	28
6680-00-466-0299	16	2	5365-00-498-2962	46	2
6145-00-468-1259	BULK	29	5310-00-498-2964	4	29
5306-00-469-3821	72	25		9	10
5306-00-470-5543	88	7	5310-00-498-2967	8	3
	150	5	5310-00-498-2968	36	24
5310-00-470-5567	40	11	5331-00-498-4556	136	38
	110	2	5365-00-498-4621	178	23
2815-00-470-6352	14	28	5310-00-498-8409	30	14
5310-00-470-9833	116	30		40	5
6145-00-471-0428	BULK	27		40	19
6145-00-471-0429	BULK	32	5331-00-506-4457	96	11
5315-00-472-5242	72	19		97	23
5306-00-472-5282	17	5		99	18
	155	2		139	21
2590-00-473-6331	130	2	5310-00-507-5727	58	8
5120-00-473-6921	216	74	5325-00-514-1277	31	16
5325-00-475-0205	105	27	5325-00-514-1706	70	15
5305-00-475-4440	35	8	5310-00-514-6849	69	54
5305-00-476-5308	26	132	3120-00-514-7149	21	13
2510-00-477-3250	93	4	3110-00-516-5490	45	11
5365-00-478-2920	164	5		46	16
3120-00-478-8919	115	33	5360-00-519-6605	4	17
5315-00-479-2833	153	22	5330-00-520-1552	9	15
6150-00-481-3708	56	13	2540-00-521-9785	146	13
4820-00-483-5353	160	1	5310-00-528-4124	99	35
2815-00-485-9418	4	19	5330-00-530-2525	83	53
3830-00-487-2799	176	2	5306-00-530-9235	94	2
2815-00-487-2840	7	7	5315-00-532-4359	140	16
2815-00-487-3123	9	5	5315-00-532-5746	9	17
5365-00-490-4623	85	21		180	1
5340-00-490-9869	115	12	4720-00-540-2778	BULK	12
4730-00-491-4983	101	37	3110-00-542-0021	72	6
5340-00-491-6351	31	22		137	27
4730-00-491-9576	169	29	5310-00-542-0091	126	32
	170	9		202	38
	171	16	5310-00-543-4385	56	1
5940-00-492-8333	64	6	5340-00-547-9875	58	18
5325-00-493-8125	24	8	5940-00-549-6581	61	40
5342-00-494-1996	13	19	5310-00-550-1130	208	7

CROSS-REFERENCE INDEXES

NSN INDEX

NSN	FIG.	ITEM NO.	NSN	FIG	ITEM NO.
5310-00-550-2992	90	6	5310-00-584-5272	115	16
5306-00-550-3023	51	33		124	6
5310-00-550-3714	57	7		166	12
	57	20		167	13
5325-00-550-5176	149	18		173	16
5306-00-550-9129	51	10		174	2
3110-00-554-5302	45	8		175	2
	207A	11	5310-00-584-7888	93	11
3110-00-554-9004	108	29		94	13
5331-00-555-3807	95	6		115	28
	158	25		124	19
5331-00-555-3810	139	22		174	13
3110-00-555-5207	46	3		175	15
5940-00-557-4344	48	17		210	4
5330-00-557-8489	13	20		211	17
5330-00-557-8494	15	4	5310-00-584-7889	94	3
5330-00-557-8572	71	15		211	26
5970-00-557-8747	51	18	5315-00-584-9792	70	14
5310-00-557-9389	7	11		108	20
5310-00-557-9391	8	2	5330-00-585-4284	24	18
5310-00-557-9415	176	4	5365-00-586-5062	163	9
5310-00-559-0070	39	42	5315-00-586-5103	36	42
	53	29	5307-00-587-3434	10	2
	57	17	5331-00-590-1064	216	122
	60	3	5331-00-591-3112	26	62
5325-00-559-3901	110	9		153	19
5331-00-559-8786	141	6	5331-00-591-7543	133	20
	160	6	5331-00-593-1161	85	23
5331-00-562-1073	180	13	5331-00-593-1192	153	28
5306-00-567-3404	100	4	5331-00-593-1247	164	13
2520-00-569-3839	110	18	5310-00-595-6153	33	16
5325-00-579-6134	118	21	5310-00-595-7237	57	22
5331-00-580-1215	152	2	5310-00-596-7691	119	24
5331-00-580-1226	151	14		120	19
5331-00-580-1227	158	51	5310-00-596-7693	39	16
5331-00-580-8967	98	14		57	4
5325-00-582-3115	180	4	5360-00-597-8341	180	45
5325-00-582-3971	138	32	5331-00-599-2938	181	10
5310-00-582-5965	119	15	6145-00-600-6052	BULK	39
	120	9	6645-00-602-5968	53	1
	142	5	5330-00-602-9471	22	3
	147	15	5310-00-609-8042	135	18
5310-00-584-5272	69	43	5331-00-613-6499	106	19
	75	6	5331-00-613-6522	19	14
	78	27		75	26
	90	46		208	4
	99	34	5330-00-613-7263	16	17
	103	38	5330-00-613-7468	12	3
	111	8	5315-00-616-5499	101	1
	114	5	5315-00-616-5508	103	35

CROSS-REFERENCE INDEXES

NSN INDEX

NSN	FIG.	ITEM NO.	NSN	FIG	ITEM NO.
5315-00-616-5514	150	23	5310-00-637-9541	101	5
5315-00-616-5515	103	47		103	6
5315-00-616-5521	14	27		104	3
5315-00-616-5522	5	5		105	49
5315-00-616-5523	158	16		106	8
5315-00-616-5524	36	4		107	3
	68	27		115	9
	109	7		124	25
5315-00-616-5525	49	24		129	5
	81	3		134	6
	81	21		135	21
5315-00-616-5526	36	14		137	18
	68	6		138	2
	161	18		138	26A
5340-00-618-0246	80	27		142	37
5315-00-619-2962	61	8		143	22
5940-00-620-9780	53	6		157	3
	53	8		166	23
5315-00-622-8895	91	31		173	11
4730-00-623-3889	82	5		174	7
5310-00-627-6128	48	15		175	6
3110-00-629-4111	26	81	4730-00-639-9167	138	39
5331-00-633-4535	23	20	6240-00-643-0687	58	2
5120-00-633-5074	216	108	2910-00-646-9727	39	18
5120-00-633-5085	216	92	4730-00-647-3207	18	14
2930-00-635-8296	180	53		30	22
5940-00-636-7891	64	43		165	38
5310-00-637-1058	26	11	4730-00-647-3343	165	48
	26	16	5305-00-651-2686	142	16
	26	111	5970-00-657-8133	51	43
	52	2	5310-00-660-1938	55	23
	52	14	5310-00-660-2649	33	18
	216	140		37	8
5306-00-637-4927	23	7	5310-00-660-3381	51	60
	109	17	5940-00-660-3633	54	11
5310-00-637-9541	28	21	5331-00-663-5709	21	22
	33	3		45	4
	67	10		165	15
	68	2	5340-00-664-4610	107	13
	69	51	4730-00-676-3075	18	10
	71	2	5310-00-678-2152	9	3
	79	9	5330-00-678-3369	140	8
	79	16	5310-00-685-2973	142	28
	80	20	5325-00-687-3379	26	30
	81	17		87	11
	87	15	4720-00-687-8759	BULK	11
	87	25	5306-00-690-6976	10	1
	94	7		47	5
	95	14	5310-00-690-9146	69	11
	99	13	5331-00-691-9950	180	31

CROSS-REFERENCE INDEXES

NSN INDEX

NSN	FIG.	ITEM NO.	NSN	FIG	ITEM NO.
5935-00-695-9077	64	52	5305-00-724-7221	2	4
5306-00-698-2150	10	19		91	12
	13	5		94	20
	15	38		101	3
	23	22		124	13
	32	15		135	10
	46	17		165	16
	69	25		171	28
	75	17	5305-00-724-7222	11	1
	106	13		90	21
	143	21		116	5
	164	9		124	10
5306-00-698-2177	156	1		135	27
5305-00-708-3823	72	10	5305-00-724-7236	123	27
	77	15	5310-00-725-1984	70	10
	79	13	5310-00-725-7382	9	6
	87	28		10	27
	98	27		21	25
	98	32		23	19
	109	12		36	53
	113	7		68	5
	148	35		75	9
	154	28	4730-00-726-1103	216	181
	155	44	5305-00-726-2553	103	34
	160	7	5305-00-726-2559	6	1
5310-00-710-2144	81	20	5330-00-730-8003	25	15
5305-00-710-2157	99	24	5355-00-730-8027	67	18
4730-00-710-5571	164	20	5305-00-732-0512	33	31
	173	21		34	23
5331-00-713-8660	29	7		62	2
5325-00-715-1152	24	20		98	1
	51	58	5310-00-732-0558	24	15
5930-00-715-1939	57	24		28	11
5315-00-716-1056	115	15		28	20
5310-00-719-5470	51	38		33	4
5340-00-720-6213	33	34		65	10
	34	21		66	16
5305-00-721-5322	2	1		113	11
5305-00-721-5492	13	16		119	31
	42	23		120	46
	56	19		161	12
	66	53	5306-00-732-7714	178	17
	82	10	5365-00-734-2114	138	28
	107	2	5310-00-734-8959	51	17
	132	5	2920-00-737-3225	51	40
	134	18	5340-00-737-3635	69	41
5306-00-721-5679	19	12		74	12
5325-00-721-7680	26	97	5330-00-738-8622	137	13
5305-00-724-7218	62	5	5330-00-738-8639	95	7
	110	20		95	8

CROSS-REFERENCE INDEXES

NSN INDEX

NSN	FIG.	ITEM NO.	NSN	FIG	ITEM NO.
5330-00-738-8639	96	7	5310-00-763-8905	58	15
	96	8		90	34
	97	7		103	24
	99	15		103	29
	99	16		103	31
5310-00-739-9977	98	21		104	10
3110-00-740-6784	137	39		107	9
5331-00-741-0674	159	6		108	31
	216	110		110	12
5331-00-741-2096	136	4		132	9
5365-00-753-9528	51	35	5310-00-763-8912	114	10
5315-00-754-0848	103	53	5310-00-763-8920	98	30
	126	29		101	44
5325-00-754-1082	77	25		116	15
5310-00-754-2005	99	25		181	7
	114	9	5310-00-763-8921	1	9
5365-00-756-8621	178	2		116	12
6220-00-756-8787	58	5		124	29
5331-00-756-8795	178	22		174	12
5360-00-757-2559	67	21		175	14
5310-00-757-6377	57	3		177	5
5310-00-757-6531	5	15	5325-00-763-9328	141	2
6110-00-757-7187	51	59	5310-00-765-3237	87	17
5330-00-760-7367	4	11	5310-00-768-0318	33	15
	207C	8		40	13
5330-00-760-7387	71	9		69	44
5315-00-760-7421	9	25		75	7
5315-00-760-7424	78	21		78	30
5315-00-760-7425	88	14		82	20
	143	11		83	29
	143	16		115	17
5310-00-761-6882	36	60		119	26
	48	3		120	21
	142	6		120	35
	147	14		123	24
	216	127		124	22
	216	135		166	11
4730-00-762-1239	18	11		169	26
	34	14		171	7
	101	35	2920-00-775-7691	57	19
	165	47	6220-00-778-7213	56	8
5365-00-762-6106	87	5	5331-00-781-9134	96	14
5365-00-762-6113	75	25		97	9
5310-00-762-6248	112	14		97	13
	116	32		99	12
5365-00-763-0119	70	18		143	23
5365-00-763-0120	32	14	5306-00-783-5183	51	65
	157	17	5306-00-783-5188	51	66
	180	17	5920-00-795-6665	66	19
5310-00-763-8901	91	38	5331-00-801-3354	19	6

CROSS-REFERENCE INDEXES

NSN INDEX

NSN	FIG.	ITEM NO.	NSN	FIG	ITEM NO.
5331-00-801-3354	26	121	5310-00-809-5998	40	15
	38	3		46	11
	38	8		48	2
	71	8		74	28
	79	18		83	30
	85	2		91	7
	87	30		101	9
	88	5		112	10
	101	28		174	25
	143	4		175	19
	151	5		180	20
	157	30	5306-00-809-7134	33	17
	158	35		174	19
	159	31		175	25
	159	41		216	118
	165	3	5310-00-809-8540	130	4
	169	28		174	10
	170	5		175	10
	171	15	5310-00-809-8541	36	31
	180	10		39	3
5310-00-809-4058	49	11		42	11
	201	17		56	9
	202	35		58	11
5310-00-809-4061	61	10		61	28
	92	3		62	11
	115	7		116	23
5310-00-809-5997	2	15		123	5
	33	32		126	11
	34	22		128	10
	42	20		144	7
	52	12		162	9
	67	14		169	17
	83	47	5310-00-809-8544	16	12
	108	27		67	16
	115	23		122	5
	117	2	5315-00-811-9214	111	4
	119	16	5360-00-812-0196	51	50
	123	7	4730-00-812-7999	82	6
	124	31	5306-00-814-6559	4	31
	125	2		108	1
	126	17	5306-00-814-6588	111	3
	150	24		130	5
	159	40		168	24
	164	15	5306-00-814-8967	30	18
	167	14	5315-00-816-1794	36	54
	169	4		39	47
	171	32		126	19
	173	2	3110-00-820-1466	27	10
	179	9	5310-00-822-2236	51	49
	180	25	5310-00-822-2241	51	51

CROSS-REFERENCE INDEXES

NSN INDEX

NSN	FIG.	ITEM NO.	NSN	FIG	ITEM NO.
2920-00-822-2287	51	45	5331-00-848-6108	96	9
4730-00-822-5609	34	3		99	17
5310-00-823-8804	19	13	5325-00-848-7439	101	51
	19	16	5330-00-848-9950	180	52
	25	19	5360-00-850-1828	85	8
	36	19	4730-00-850-3812	13	1
	38	12	5331-00-850-7586	136	40
	154	9		159	16
	155	8	5310-00-851-2682	36	58
	155	27		67	29
3110-00-824-3707	103	40	3120-00-851-4696	27	31
5310-00-827-2821	51	15	2930-00-852-1174	41	1
5325-00-828-6698	98	18	5325-00-852-1435	74	17
3120-00-828-6852	51	62	5310-00-852-8266	52	16
5940-00-828-8510	51	37	5310-00-852-8593	147	11
5330-00-828-8639	17	2	5325-00-853-2384	41	6
6220-00-832-8774	58	4	5331-00-855-8047	180	42
5935-00-833-8561	39	24	5315-00-857-3258	103	58
5310-00-833-9298	57	23		105	46
4730-00-834-5035	30	17	5325-00-857-5703	139	4
5330-00-838-9188	143	8	5330-00-858-6206	31	24
2920-00-838-9344	51	44	3120-00-858-6240	33	9
9390-00-839-1864	51	48		68	15
5315-00-839-2326	103	49	5360-00-858-6273	26	66
	115	13	5331-00-858-8223	150	13
	150	21	5330-00-858-8224	24	9
	161	22	5331-00-859-0396	176	21
	162	13	5331-00-862-6861	46	21
5315-00-839-5820	67	15	3110-00-862-7671	69	12
5315-00-839-5821	36	9	5331-00-863-5549	86	4
	61	7	5306-00-865-7377	25	20
	103	8	5940-00-871-0944	52	19
	106	3	2520-00-871-6818	92	4
	107	6	5306-00-874-4001	83	44
	109	4		113	2
5315-00-839-5822	61	4		171	6
	67	13	3442-00-876-6522	216	40
	101	43		217	4
	103	14	4730-00-877-6298	147	22
	104	7	5305-00-879-8351	12	15
	105	13		106	7
	107	11		164	32
5310-00-841-2576	202	49	5310-00-880-7744	19	7
5310-00-843-4593	81	19		32	23
	198	7		34	27
5315-00-844-3966	142	25		39	52
5315-00-846-8429	110	13		103	46
5325-00-846-8669	31	13		105	59
5330-00-847-4351	32	17		142	34
5331-00-848-6108	95	9		168	4

CROSS-REFERENCE INDEXES

NSN INDEX

NSN	FIG.	ITEM NO.	NSN	FIG	ITEM NO.
5310-00-880-8189	49	4	5331-00-913-8120	82	14
5310-00-880-8203	65	9		87	13
5310-00-882-8876	24	10	5331-00-913-8872	32	10
5330-00-890-2235	32	11		77	12
5315-00-891-0815	101	47	5331-00-913-8878	15	27
2920-00-891-0928	51	41	5330-00-913-8879	71	11
5355-00-891-4401	67	3	3110-00-913-8895	91	26
	142	8	3120-00-914-0691	143	6
3120-00-893-8317	3	2		143	18
5360-00-894-7276	73	6	5330-00-914-0703	51	36
3110-00-896-6819	137	6	3110-00-914-3263	91	1
5360-00-898-6730	36	28	5331-00-914-3320	106	9
3930-00-900-6470	163	24	5331-00-914-5773	80	51
5331-00-901-7196	26	6	5331-00-914-5821	75	16
3110-00-902-4269	158	20		80	11
5310-00-903-8282	142	14		109	38
4730-00-909-8627	28	3	5330-00-918-3599	81	18
2940-00-910-3065	28	15	2530-00-918-5451	95	1
3020-00-910-4008	108	4	5970-00-918-5568	51	26
4820-00-911-9224	98	20	5310-00-919-2242	210	9
2530-00-911-9225	99	1	5310-00-919-2244	100	5
4730-00-911-9226	98	22	5330-00-919-2248	177	12
5330-00-912-1586	109	45	5330-00-919-2249	75	14
5306-00-912-4853	90	9		109	8
5360-00-912-6674	85	15	5325-00-919-9402	96	2
6620-00-912-9151	41	12		97	4
5331-00-913-6144	80	19	5325-00-920-6925	6	7
	80	38	5315-00-920-6927	207A	24
	83	16	2815-00-920-8262	40	21
	83	59	2815-00-920-8263	40	20
	156	26	5325-00-921-3208	9	1
	164	18	4730-00-921-3245	80	30
	165	10	5342-00-921-7093	101	55
	165	21	5325-00-921-7106	37	27
	166	6	5315-00-922-2592	210	16
	166	27		211	9
	167	16	5315-00-922-2595	216	194
	169	27	5340-00-922-2596	33	33
	170	3	5331-00-922-6275	156	3
	170	16		156	16
	172	8		174	1
5331-00-913-6145	168	2		175	1
3110-00-913-7012	91	36	5310-00-922-8691	14	2
3110-00-913-7335	91	35	4730-00-923-2126	209	12
3110-00-913-8114	91	25	5325-00-923-4575	209	16
5330-00-913-8117	101	7	5331-00-923-6958	9	9
5330-00-913-8118	91	16		75	18
5331-00-913-8119	25	22	4820-00-923-7042	159	1
	159	15	5307-00-923-9983	138	22
	164	8	3110-00-924-1971	36	27

CROSS-REFERENCE INDEXES

NSN INDEX

NSN	FIG.	ITEM NO.	NSN	FIG	ITEM NO.
4730-00-924-7886	3	26	5331-00-937-5155	154	10
	6	14		155	10
	10	4		155	29
	15	8	3110-00-938-5084	95	10
	21	2		136	32
	29	3		139	7
	30	3	5342-00-938-5530	69	8
	38	6	5365-00-938-5568	3	22
	42	5		84	10
	69	49		84	16
	77	6	5331-00-939-0871	83	37
	79	2	5305-00-942-2196	118	26
	101	23		119	34
	106	12		120	47
4730-00-924-7974	134	10	5331-00-942-5114	71	13
5331-00-925-4778	80	13	5365-00-944-0863	159	4
	82	3	5310-00-944-5896	49	20
	83	11	5315-00-944-7035	14	13
	106	16	5331-00-944-8281	25	4
5940-00-926-0085	66	37		157	15
5330-00-929-5514	88	20		164	6
5360-00-929-5516	159	3		173	22
5330-00-929-8152	6	15	3110-00-945-8399	69	17
4720-00-929-8277	28	2	5342-00-946-2133	176	8
5305-00-929-9442	96	6	5365-00-946-7258	176	6
5331-00-930-4064	75	24	5305-00-947-4362	116	18
5306-00-930-5643	41	9	5315-00-947-9737	105	28
	142	20	2530-00-947-9857	99	5
5331-00-930-5736	79	11	2530-00-947-9925	99	2
	80	34	2520-00-947-9989	91	17
3110-00-930-6289	68	8	2520-00-948-0019	91	15
	107	18	5365-00-948-0246	99	6
5310-00-930-7013	75	2	3110-00-948-0334	90	25
	83	21	5365-00-948-1600	87	18
	166	13	3120-00-948-2181	177	14
	198	10	5340-00-948-2286	62	4
	207C	10	5310-00-948-3280	79	7
2930-00-930-9098	41	14		87	4
5330-00-930-9407	85	22	5330-00-948-3306	90	4
	137	15	2520-00-948-3308	105	51
	158	53	2520-00-948-3310	90	41
2530-00-930-9778	207G	1	5330-00-948-3311	90	40
5330-00-931-8011	41	13	2530-00-948-3396	99	36
5330-00-931-8048	32	2	2530-00-948-3446	99	41
5315-00-931-8963	216	191	5330-00-948-4039	98	24
4730-00-933-9520	153	3	5331-00-948-4063	80	15
3120-00-935-5601	212	3		80	41
	213	2		156	29
	213	5		158	38
5342-00-936-3816	94	15		159	42

CROSS-REFERENCE INDEXES

NSN INDEX

NSN	FIG.	ITEM NO.	NSN	FIG	ITEM NO.
5331-00-948-4063	165	24	2530-00-949-0370	95	3
	165	35	2530-00-949-0397	96	19
	166	2	2530-00-949-0666	86	13
	166	26	2520-00-949-0815	108	19
	170	18	2530-00-949-0817	108	11
	171	17	5365-00-949-0864	108	28
	171	37	2530-00-949-0865	108	15
	172	22	2520-00-949-0867	85	13
	174	21	4330-00-949-0868	86	6
	175	26	3110-00-949-0878	90	44
5305-00-948-4489	105	2	2520-00-949-0908	91	22
5330-00-948-4494	176	12	2520-00-949-0909	91	23
3120-00-948-4594	176	3	2520-00-949-1118	91	14
3110-00-948-5793	71	25	2520-00-949-1120	91	37
5331-00-948-6040	110	14	2530-00-949-1134	99	37
5365-00-948-6452	105	34	2530-00-949-1192	97	17
3120-00-948-6453	109	5	3110-00-949-1438	14	21
5315-00-948-6454	105	21		152	6
5342-00-948-6464	105	39	5365-00-949-1439	87	3
5365-00-948-6480	107	19	4320-00-949-1450	98	15
5331-00-948-6482	32	5	3120-00-949-4062	90	37
	33	26	2530-00-949-4505	109	11
	34	4	3110-00-949-4964	78	14
	76	7	3120-00-949-8863	163	6
	101	22	5310-00-949-9296	96	5
	151	7	5310-00-950-2036	85	9
	153	16	5360-00-950-2045	109	37
	157	18	5331-00-950-2091	176	20
	159	36	2520-00-950-2421	90	29
	164	31	5306-00-950-2427	98	12
	180	16	2520-00-950-2469	91	33
5330-00-948-6668	98	23	5360-00-950-2471	87	19
5331-00-948-6924	158	32	5310-00-950-2660	76	4
2530-00-948-9748	107	3	5360-00-950-3397	79	10
	108	3	5330-00-950-5450	85	14
5330-00-948-9762	108	24	3040-00-950-5623	98	16
5331-00-948-9764	159	34	5310-00-950-5665	90	5
5331-00-948-9768	82	18	2530-00-950-6897	108	25
	83	48	5310-00-950-6980	86	5
	180	47	2530-00-950-7009	98	19
5331-00-948-9775	108	17	3010-00-950-7143	108	12
5330-00-948-9776	108	13	2590-00-950-7303	93	7
5340-00-948-9809	78	11	3040-00-950-7343	109	19
3130-00-948-9825	177	15	2530-00-950-7468	108	21
3830-00-948-9826	163	19	5360-00-950-8041	87	9
3120-00-948-9964	88	10		157	24
	88	19	5360-00-950-8251	15	22
5330-00-949-0210	72	38	5325-00-951-6973	105	20
5340-00-949-0311	159	5	5310-00-951-7209	112	2
5325-00-949-0369	95	2	5325-00-952-7573	69	15

CROSS-REFERENCE INDEXES

NSN INDEX

NSN	FIG.	ITEM NO.	NSN	FIG	ITEM NO.
5331-00-952-8007	26	59	3110-00-992-1048	73	12
6220-00-953-4652	58	1		74	25
5310-00-954-2993	41	33		76	9
5325-00-954-9666	180	50		143	26
5310-00-959-1488	80	2	2920-00-993-4233	51	42
	136	37	5330-00-994-7409	40	22
	161	35	5331-00-997-7230	83	51
	162	19		106	10
5305-00-959-2723	142	1	5310-00-999-2527	51	57
	161	5	2920-00-999-2535	52	18
5360-00-960-3633	108	9	5340-00-999-3230	24	21
4810-00-961-0640	85	7	5331-00-999-5502	83	45
3040-00-961-0649	105	36	5331-00-999-5504	106	18
5310-00-961-1624	98	4	5331-00-999-5505	79	12
4730-00-962-4176	164	19	5310-00-999-8286	9	19
4730-00-962-4579	167	22	5310-00-999-8287	9	2
5305-00-964-0503	4	30	5310-00-999-8288	20	4
	80	1		45	19
5320-00-965-7109	67	5	5331-00-999-8364	135	12
5120-00-971-5507	216	54	5905-01-005-3686	55	8
5310-00-972-1588	146	5	5305-01-006-2053	119	25
5330-00-972-7644	51	55		120	20
5360-00-974-7122	87	2	5331-01-006-2129	159	11
5310-00-975-2075	11	10		174	17
	36	10		175	27
	68	19	6620-01-008-1893	43	5
	103	10	2815-01-011-2686	14	14
	106	6	2940-01-013-1323	28	9
	107	22	2940-01-013-1324	28	6
	161	15	3110-01-013-3083	138	37
	162	17	3110-01-013-4036	138	36
5310-00-976-4515	146	7	5320-01-015-0699	16	11
5330-00-976-4695	51	68	5305-01-015-6841	12	14
5305-00-978-9370	26	109		15	31
4720-00-981-8519	BULK	6		18	5
5331-00-982-9312	88	11		23	14
2530-00-984-5098	91	32		24	14
5305-00-984-6189	57	5		28	8
5305-00-984-6192	51	32		29	1
5305-00-984-6196	56	7		30	5
5325-00-984-8500	78	6		39	1
5340-00-985-0823	36	68		40	12
	107	27		41	29
5360-00-985-2253	52	7		71	27
5310-00-987-1294	20	8		82	1
5310-00-988-7516	56	26		84	17
5330-00-989-3295	32	24		87	14
2910-00-989-3388	24	19		110	3
3110-00-992-1048	72	22		157	2
	72	34		161	11

CROSS-REFERENCE INDEXES

NSN INDEX

NSN	FIG.	ITEM NO.	NSN	FIG	ITEM NO.
5305-01-015-6841	165	41	6220-01-037-5622	58	3
	174	6	5310-01-038-8318	216	82
	175	8		216	198
5331-01-017-6535	167	23	5120-01-039-4811	216	94
	168	19	5365-01-039-9967	146	18
	172	21	5310-01-040-2192	36	50
5120-01-018-3203	216	16	4820-01-041-1571	79	1
5310-01-020-5126	20	7	2990-01-042-4776	40	2
	31	3	5365-01-042-9079	154	5
5305-01-020-5235	146	8		155	5
3110-01-020-9788	138	31	5330-01-043-5564	172	4
2910-01-021-1845	24	3	5330-01-043-5565	174	8
3110-01-021-1920	138	30		175	5
4730-01-022-6066	30	1	5310-01-043-7748	146	16
5320-01-023-2529	67	28	5310-01-043-7753	146	14
4730-01-023-8633	26	39	5306-01-044-2199	116	31
2990-01-024-1509	26	71	5330-01-048-0983	159	10
5325-01-024-3727	26	82	3830-01-048-3942	155	6
5330-01-024-4862	24	6	5330-01-048-6001	101	59
5331-01-024-9686	51	16	4820-01-048-7098	157	1
3110-01-024-9817	136	12	4730-01-048-7874	16	6
5365-01-024-9868	151	4		207B	11
	157	29	4820-01-048-8597	154	6
	158	34		155	25
	159	29	5331-01-049-1292	18	2
2940-01-025-3284	151	16		19	18
	153	25		26	35
5305-01-026-9518	13	14		30	16
	30	13		32	9
	40	4		33	37
	158	50		88	22
5306-01-026-9992	216	83		89	3
	216	200		154	4
4720-01-027-9168	17	8		155	4
	207A	3		159	23
2520-01-028-8096	180	5		165	43
5120-01-030-1626	216	186		170	2
5120-01-030-3575	216	80	5331-01-050-5024	69	53
	216	199		139	38
5365-01-031-8183	76	6	5365-01-050-8008	20	5
	151	6	2930-01-050-8012	46	4
	153	15	5306-01-050-8014	6	17
	159	37		21	26
5305-01-032-2312	48	14		97	2
	149	10		97	12
5310-01-035-0868	146	20	5306-01-050-8015	21	21
5310-01-035-0869	146	19		96	15
5365-01-035-4899	24	24	5310-01-051-2300	14	11
	152	18	4730-01-051-2312	83	23
5365-01-036-0010	159	32		165	25

CROSS-REFERENCE INDEXES

NSN INDEX

NSN	FIG.	ITEM NO.	NSN	FIG	ITEM NO.
5310-01-051-2360	24	5	3805-01-053-2703	101	38
	37	2		165	4
	37	5	5331-01-053-2907	37	29
5307-01-051-2364	38	7		51	71
4730-01-051-3134	83	19	5340-01-053-3843	103	9
	168	18		106	5
	172	9		107	20
4730-01-051-5256	80	31	5940-01-053-4521	54	18
	83	22		66	3
	156	24	2940-01-053-4532	16	13
	158	59	5365-01-053-4681	83	3
	165	11		101	31
	166	7	5331-01-053-4684	179	1
	167	15	2940-01-053-4692	34	1
	174	22	2815-01-053-4712	173	17
	175	22	5310-01-053-4777	26	69
4730-01-051-5257	80	44	5331-01-053-7021	51	69
	156	21	2510-01-053-7306	180	35
	158	56	5340-01-053-8025	201	6
	171	19	5365-01-053-8345	103	36
	179	5	5306-01-054-5310	28	12
3110-01-051-5285	158	48	5310-01-058-8071	47	3
5340-01-051-6767	83	15		142	36
	164	23		182	8
	164	25		185	8
	167	3	2910-01-058-8075	36	66
	172	13		68	18
	172	18		161	13
4720-01-051-6773	BULK	5	2940-01-058-8102	28	10
5310-01-051-6946	6	2	5940-01-058-9090	61	32
	62	6	2920-01-058-9099	54	6
	90	20		55	21
	108	22		56	4
5306-01-051-7598	160	2		59	3
4730-01-051-7600	166	5	4730-01-058-9100	19	2
4730-01-051-7601	83	58	5940-01-058-9112	53	13
4720-01-051-7602	164	3	5305-01-058-9146	57	10
	168	16	5330-01-058-9176	41	8
	168	28	5940-01-059-0873	48	23
	169	33		51	4
	169	37		63	20
4730-01-051-7605	164	4		63	29
4730-01-051-8745	19	3		64	37
	159	25	5920-01-059-0881	53	19
	169	30		63	8
5330-01-052-3917	171	21		64	34
5315-01-052-3942	105	8	5920-01-059-0882	39	12
5365-01-053-0180	156	8		53	22
5330-01-053-2691	180	32		63	3
4730-01-053-2692	83	46		64	27

CROSS-REFERENCE INDEXES

NSN INDEX

NSN	FIG.	ITEM NO.	NSN	FIG	ITEM NO.
5360-01-059-0883	53	18	5310-01-063-3001	207C	16
	63	7	4730-01-063-3007	133	16
	64	33	2520-01-063-4240	135	6
5999-01-059-0884	39	11	2520-01-063-4241	135	5
	53	17	2540-01-063-5730	126	3
	53	21	5330-01-063-9839	15	9
	63	2	5365-01-064-1030	157	8
	63	6	3040-01-064-1039	75	13
	64	32	5365-01-064-3788	75	28
4710-01-059-3985	73	14	2920-01-064-3809	56	24
4730-01-059-5352	84	21		148	7
5315-01-059-7198	137	9	5306-01-064-3842	126	2
5360-01-059-7203	75	8	2520-01-064-6625	78	7
4730-01-059-9344	133	2		139	34
2520-01-059-9381	151	2	4820-01-064-7477	157	23
4730-01-059-9435	16	3	4730-01-064-7491	165	5
	133	5	2590-01-064-7493	41	5
5306-01-059-9566	150	9	5342-01-064-7512	169	5
5330-01-060-0308	80	53	3010-01-064-7524	78	8
5340-01-060-0309	173	1		139	33
5340-01-060-0744	153	17	5330-01-064-8247	154	23
5331-01-060-0745	139	18		155	24
5315-01-060-3748	157	28		159	33
4730-01-060-8101	80	37	5331-01-064-8276	154	21
5340-01-061-4018	173	19		155	22
4730-01-061-8216	56	20	3110-01-065-9108	36	56
5310-01-061-8633	80	3	5310-01-066-0506	116	27
5330-01-062-2852	27	33	2520-01-066-0510	142	15
4730-01-062-5197	170	15	2920-01-066-0593	61	17
	171	36	5331-01-066-1469	159	44
2520-01-062-5198	164	11	3120-01-066-2505	11	17
4730-01-062-5204	83	61	5365-01-066-4574	36	22
	170	19	4730-01-066-4586	32	4
5315-01-062-5209	101	58		164	30
4730-01-062-5932	173	5	4720-01-066-4587	BULK	8
5305-01-062-6007	180	36	5306-01-066-4721	202	14
5325-01-062-7138	198	5		207E	8
4730-01-062-7184	80	40	2520-01-066-4723	90	31
4730-01-062-9928	159	24	5340-01-066-4744	26	67
	170	1	2910-01-066-4752	26	58
2510-01-063-0635	61	3	5305-01-066-5199	42	17
2510-01-063-0636	61	6	5315-01-066-5213	69	38
5306-01-063-0652	81	7	5310-01-066-5275	182	10
5310-01-063-0686	55	4		183	6
2540-01-063-0736	207D	20	2590-01-066-5286	16	10
4730-01-063-0744	34	13	4330-01-066-7713	138	15
	101	36	2520-01-066-8434	96	17
5365-01-063-0778	129	4		97	15
5310-01-063-2968	122	6	4730-01-066-8443	209	24
5342-01-063-2993	147	20	2530-01-066-8462	77	22

CROSS-REFERENCE INDEXES

NSN INDEX

NSN	FIG.	ITEM NO.	NSN	FIG	ITEM NO.
5315-01-066-8470	103	26	5330-01-068-6110	161	9
	104	8		162	3
	107	12	5325-01-068-6227	180	8
3110-01-066-9172	104	6	5325-01-068-6229	209	8
	107	24	5365-01-068-7087	45	9
2520-01-066-9178	95	15	4730-01-068-7106	77	2
	96	13		87	12
	97	11	2540-01-068-7114	61	19
	99	29	5342-01-068-7178	103	32
2520-01-066-9192	78	22		107	10
2520-01-066-9196	149	19	4820-01-068-7249	158	30
5360-01-067-1418	181	3	4710-01-068-7274	BULK	21
5365-01-067-1426	173	8	2815-01-068-8565	13	18
5330-01-067-1490	180	6	2520-01-068-9665	179	4
5330-01-067-1491	180	40	2995-01-068-9666	159	17
5360-01-067-1728	154	16	2895-01-068-9667	159	9
	155	35	2995-01-068-9670	158	47
5360-01-067-1730	157	10	5305-01-068-9719	26	57
2530-01-067-2159	176	9	4710-01-068-9728	16	4
3110-01-067-2160	158	9	4730-01-068-9756	164	2
2530-01-067-2164	158	21	5331-01-068-9760	83	24
5365-01-067-2179	27	39	4730-01-069-0768	133	7
	140	11	4730-01-069-0769	34	26
	154	19		209	9
	155	21	5342-01-069-0788	87	10
	155	39	2530-01-069-0791	107	7
	159	28	2530-01-069-0799	107	17
5360-01-067-5611	159	13	5330-01-069-0801	154	22
5360-01-067-5612	158	40		155	23
5360-01-067-5613	158	39	5360-01-069-0812	109	28
5360-01-067-5614	159	30	5330-01-069-0856	159	43
3040-01-067-5649	14	23	5365-01-069-0882	14	26
5360-01-067-5653	159	14	2520-01-069-0891	86	3
3040-01-067-5675	14	31	5306-01-069-1382	26	114
5330-01-067-5727	10	18		38	11
5330-01-067-5728	44	4	5360-01-069-1390	101	49
5330-01-067-5729	14	4	5307-01-069-1419	15	25
5315-01-067-6880	214	5	5330-01-069-1478	10	7
5342-01-067-8043	83	32		207A	12
5315-01-067-8066	27	8	5330-01-069-7444	41	15
5342-01-068-0011	158	41	5360-01-070-0531	158	46
2815-01-068-1729	14	18	5360-01-070-0532	158	31
4710-01-068-3420	13	15	5342-01-070-1592	23	2
4320-01-068-6009	216	144	5360-01-070-2809	159	12
5365-01-068-6063	181	1	4730-01-074-0907	158	22
4820-01-068-6064	181	4	2835-01-078-2081	215	1
5331-01-068-6073	151	11	5940-01-079-1375	66	5
4730-01-068-6081	133	13		207D	3
	209	5	2530-01-079-4110	97	1
5331-01-068-6104	2	8	4730-01-079-4374	134	5

CROSS-REFERENCE INDEXES

NSN INDEX

NSN	FIG.	ITEM NO.	NSN	FIG	ITEM NO.
5330-01-079-4740	149	8	4730-01-095-0835	170	24
5340-01-082-6625	146	17	5306-01-095-1238	26	96
4940-01-084-0426	216	8	5310-01-095-1247	201	18
5970-01-084-8651	BULK	15	5306-01-095-1486	50	4
5310-01-085-0881	109	29	5305-01-095-3292	30	6
9390-01-085-2839	127	7		150	3
5342-01-085-8085	146	2	5310-01-095-4631	10	12
5305-01-086-2370	142	2		49	21
5940-01-087-0285	54	5		108	32
	66	10		116	3
5340-01-088-2385	39	28		124	15
5331-01-088-6106	167	21		165	17
3040-01-090-6865	101	46		169	22
5365-01-091-1407	32	8		171	27
	88	23		180	22
	89	2		207A	16
4720-01-093-7331	BULK	7	5310-01-095-5910	39	51
5330-01-093-7888	10	25		198	18
5331-01-093-8484	131	6	5930-01-095-6194	53	27
5305-01-094-7378	201	23	4730-01-095-8459	165	23
	202	39		166	3
4730-01-094-7469	165	32	5330-01-096-0912	37	22
	169	40		157	20
	170	13	5940-01-097-3578	39	26
	170	26		39	36
5330-01-094-8058	43	4		59	5
5310-01-094-8810	61	30		64	29
	187	1	4140-01-097-4340	201	10
	188	18	5310-01-097-6720	61	21
	189	2		62	3
	191	12		113	3
	202	6		115	10
	202	59		123	2
5306-01-094-9106	14	7		126	18
	14	10		186	9
	43	2		188	2
	44	2		189	5
	80	45		190	2
	106	14		191	2
	129	2		192	3
	136	16		193	3
4730-01-095-0075	165	33		194	13
	169	41		195	2
	170	12		196	2
	170	22		197	2
	170	25		198	3
	170	29		198	15
4730-01-095-0833	170	11		198	22
	170	21		199	7
	170	28		200	2

CROSS-REFERENCE INDEXES

NSN INDEX

NSN	FIG.	ITEM NO.	NSN	FIG	ITEM NO.
5310-01-097-6720	201	28	5330-01-103-6782	26	8
	202	3	5342-01-103-6789	214	6
	203	2	5940-01-103-6808	53	10
	203	12	2990-01-103-6817	3	5
	204	4	5365-01-103-7157	26	126
	205	2	3120-01-103-9406	99	8
	206	4	4820-01-104-4091	4	10
5306-01-097-7874	15	6		43	6
	138	8	6135-01-104-8935	120	32
5315-01-097-8383	105	47	5360-01-106-4246	140	2
6105-01-097-8661	201	25	4730-01-106-7246	41	18
	202	31		42	29
5310-01-097-8955	80	43		44	5
	156	20	5365-01-106-8771	36	52
	158	57	5305-01-107-3526	23	8
	159	20	5310-01-107-3590	2	2
	171	20		50	5
	179	6	5325-01-107-3896	31	12
	207E	4	5340-01-107-4111	208	6
5360-01-097-9196	33	7	5340-01-107-4130	15	10
5935-01-097-9974	65	6	5330-01-107-4168	26	31
5310-01-098-0624	185	3	5315-01-107-4226	3	6
	207F	7	5305-01-107-4621	26	105
	207G	14	5305-01-107-5161	137	20
5310-01-098-0634	56	25	2815-01-107-5373	6	3
	188	12	5305-01-108-0649	27	25
	190	16	2540-01-109-5817	198	17
	202	24	5306-01-110-1130	73	10
5340-01-098-6683	83	20		74	24
5995-01-098-9330	66	9	2950-01-111-3964	31	11
5310-01-101-0622	146	15	2920-01-112-2687	51	67
3120-01-101-5088	51	14	9390-01-112-3500	51	12
3120-01-101-5089	51	56		51	54
5930-01-101-7845	39	38		51	63
5310-01-102-2477	168	25	5315-01-113-2356	75	21
	176	18	5310-01-113-4047	61	9
5331-01-102-4354	26	93		180	14A
5305-01-102-7337	216	143		180	49
5310-01-102-9866	171	8		181	13
5365-01-103-3640	149	14	5935-01-114-5354	55	1
2990-01-103-3642	181	5	5340-01-115-3548	51	13
2990-01-103-3652	161	26		51	53
	162	18		51	64
5975-01-103-3695	BULK	3	2815-01-116-5920	7	2
2990-01-103-3696	BULK	1	5306-01-116-9622	11	4
4720-01-103-3697	BULK	4		15	18
4720-01-103-3700	BULK	22		33	12
4820-01-103-4037	79	6		153	11
3040-01-103-6623	36	20		209	21
2990-01-103-6635	63	14	5310-01-118-2476	51	2

CROSS-REFERENCE INDEXES

NSN INDEX

NSN	FIG.	ITEM NO.	NSN	FIG	ITEM NO.
5935-01-118-8884	64	22	5306-01-127-9361	2	16
5310-01-119-1442	126	4		6	21
	128	4		78	9
5120-01-119-1716	216	48		83	35
5120-01-119-1736	216	47		90	47
	216	57		91	8
2540-01-119-1743	144	2		103	37
5120-01-119-1748	216	73		108	26
5120-01-119-1749	216	77		114	4
5120-01-119-1750	216	78		115	25
5120-01-119-1751	216	115		123	10
5120-01-119-1752	216	120		124	5
5315-01-119-1754	216	79		158	17
5120-01-119-1764	216	86		167	12
5120-01-119-1765	216	87		173	3
2815-01-119-2241	5	6		174	3
4820-01-120-4532	18	1		175	3
	89	1		180	26
5355-01-120-9450	119	17		216	116
	120	4		207C	12
	120	36	5120-01-128-0725	216	195
5940-01-121-0365	53	7	3120-01-128-1114	3	9
	66	6	5330-01-128-4130	4	22
5120-01-123-5881	216	75	5330-01-128-4137	10	6
5306-01-123-6133	163	12	4710-01-128-4741	13	9
5120-01-124-1732	216	60	5330-01-128-8991	BULK	19
5180-01-124-1903	216	189	5330-01-129-2544	90	28
5365-01-124-2945	152	4	4710-01-129-5674	13	3
	154	24	5306-01-129-5888	100	7
	155	16	3830-01-129-5889	100	11
	155	40	3830-01-129-5890	100	18
	157	21	3830-01-129-5891	100	12
5330-01-124-4418	149	23	5342-01-129-5917	9	24
3020-01-124-9382	91	3	5310-01-130-0611	4	7
2520-01-125-3992	69	32	5365-01-130-4159	68	13
2815-01-125-5535	11	5	3120-01-130-9116	7	8
2815-01-125-9819	10	21	5315-01-132-1188	3	4
	10	23	4710-01-132-3997	17	9
2815-01-125-9998	2	10	3040-01-132-4761	9	26
5330-01-126-0717	91	9	5310-01-132-5309	201	22
4730-01-126-4892	14	5		202	32
2930-01-126-4959	45	18	3020-01-135-7462	21	12
2815-01-126-9995	9	21	3020-01-135-7463	21	9
2930-01-127-2515	41	4	3020-01-135-7464	21	10
2815-01-127-2912	3	19	2520-01-135-7465	72	16
3020-01-127-5195	11	6	5330-01-135-7502	72	17
3120-01-127-5376	18	13	5330-01-135-7503	74	14
4810-01-127-5377	216	180	5970-01-137-3420	51	27
5330-01-127-8566	3	20	5970-01-138-7044	51	25
5330-01-127-8574	44	8	2920-01-138-7045	51	61

CROSS-REFERENCE INDEXES

NSN INDEX

NSN	FIG.	ITEM NO.	NSN	FIG	ITEM NO.
2920-01-138-7046	51	11	2910-01-150-0426	26	27
2920-01-140-0116	52	6	2910-01-150-0427	26	29
2930-01-143-0185	41	3	2910-01-150-0921	26	70
2930-01-143-0186	41	2	4820-01-150-0965	140	3
2815-01-143-1409	4	27	5970-01-150-1446	52	17
4730-01-143-4326	133	18	2910-01-150-3758	26	36
3040-01-143-8049	36	29	4820-01-150-3860	87	6
4730-01-143-9017	18	8	3040-01-150-5425	67	17
	165	46	5935-01-150-8323	55	7
5331-01-144-2252	157	25		207D	4
5340-01-145-4028	124	11	5999-01-150-8808	54	22
5310-01-146-1218	13	11		55	10
	36	55		55	18
2815-01-146-4526	4	18		66	33
2815-01-146-5926	12	2		207D	5
5365-01-147-0083	46	5		207D	13
2930-01-147-2241	10	8	5340-01-150-9810	10	17
2510-01-147-2252	2	9	5340-01-151-2578	26	56
	2	12	3040-01-151-2660	26	37
5975-01-147-4455	39	5	2530-01-151-2661	26	44
5340-01-147-6397	15	20	4820-01-151-3650	77	24
3040-01-147-6412	46	10	4820-01-151-3651	77	20
5340-01-147-7948	10	26	3040-01-151-5646	26	107
5325-01-147-9591	26	72	2910-01-151-5705	26	100
5360-01-148-0305	27	16	4730-01-151-5707	37	30
3020-01-148-3798	5	4	5340-01-151-7395	45	22
5330-01-148-5891	27	40	3120-01-151-8371	5	7
	140	10	5330-01-151-9294	12	6
	152	5	5330-01-151-9295	15	21
	154	18	3120-01-151-9299	5	7
	154	25	5307-01-151-9304	161	16
	155	15	5340-01-151-9308	83	4
	155	38	5330-01-152-0601	53	26
	155	41		209	3
	157	22	5305-01-152-2589	202	10
	159	26	4730-01-152-2666	18	3
5340-01-148-7396	14	17		165	44
6680-01-148-8875	55	20	5340-01-152-4541	4	3
2590-01-148-9536	16	1	9905-01-152-5326	148	19
5340-01-148-9802	46	7	5340-01-152-8205	87	26
2990-01-149-5010	26	74	3040-01-152-9216	27	3
3040-01-149-5043	3	12	5977-01-153-0247	51	31
5935-01-149-5165	54	20	5977-01-153-0322	51	28
	207D	11	5306-01-153-1362	28	16
2930-01-149-6719	44	3	5340-01-153-8957	23	3
5310-01-149-7188	26	73	5310-01-154-0708	78	33
2910-01-149-7860	39	32		137	21
2910-01-149-7900	26	46	2815-01-154-1242	7	6
2910-01-149-7901	26	98	3040-01-154-1249	26	18
2910-01-149-7902	26	87	5365-01-154-4379	26	34

CROSS-REFERENCE INDEXES

NSN INDEX

NSN	FIG.	ITEM NO.	NSN	FIG	ITEM NO.
5365-01-154-8503	26	65	5310-01-157-6813	11	2
5325-01-154-8559	26	51	5935-01-158-0035	61	39
	26	63	5935-01-158-0364	64	8
5340-01-154-9589	26	25	5306-01-158-1154	15	29
2910-01-155-0276	27	2	5305-01-158-2039	37	4
2990-01-155-0277	27	7	6620-01-158-2909	209	34
2910-01-155-0279	27	19	6620-01-158-2910	38	14
2940-01-155-0285	28	17	5330-01-158-6283	27	44
2910-01-155-0313	39	31	5330-01-158-6284	38	4
2910-01-155-0370	27	6	5365-01-158-6377	27	26
3110-01-155-1756	26	80	4820-01-158-6839	140	12
5330-01-155-2584	2	11	4820-01-158-6861	149	26
5315-01-155-2618	140	1	5935-01-158-8952	55	14
	140	13	3040-01-158-9329	142	26
5360-01-155-2628	26	99	4820-01-159-0852	140	4
5360-01-155-2630	37	16	4820-01-159-0891	26	61
5330-01-155-4283	10	15	4730-01-159-0892	37	6
4730-01-155-5055	101	33	3040-01-159-0937	37	24
2910-01-155-5195	38	5	2910-01-159-0945	37	18
5340-01-155-5289	23	4	5306-01-159-1513	45	2
5360-01-155-5301	158	4		62	10
6350-01-155-5993	60	5		164	17
5340-01-155-7869	23	9	5365-01-159-1562	20	10
2520-01-155-7937	70	17	2530-01-159-5870	101	52
5970-01-156-0688	63	21	2910-01-159-5883	35	6
	63	23	4820-01-159-5909	101	16
	63	27	5365-01-159-6679	12	10
	64	40	2815-01-159-7706	4	8
5306-01-156-3738	74	18	4730-01-159-7840	138	14
3120-01-156-3801	27	35	5355-01-159-9359	146	24
5999-01-156-6314	54	21	2540-01-159-9779	146	9
	55	9	4820-01-160-0852	109	35
	55	17	3040-01-160-1057	142	13
	66	32	5305-01-160-1977	127	16
5360-01-156-8931	26	106	5305-01-160-1980	26	52
3120-01-156-9486	5	7	5310-01-160-2034	183	1
3120-01-156-9487	5	7		185	11
4730-01-156-9977	173	24		201	26
3120-01-157-0913	5	7		202	19
5360-01-157-0998	77	19		202	52
5330-01-157-2016	26	45	5340-01-160-2240	79	15
	26	115	5340-01-160-2464	59	6
6150-01-157-2931	61	37	5325-01-160-2506	27	12
2530-01-157-2989	90	7	3020-01-160-3640	142	3
5310-01-157-3394	163	11	5330-01-160-3989	15	17
5330-01-157-3415	26	113	5340-01-160-4084	103	28
5306-01-157-4848	27	4		103	43
5365-01-157-5068	2	3		104	9
5305-01-157-5626	26	110	3120-01-160-4111	105	62
5330-01-157-5685	37	7	5306-01-160-4498	46	1

CROSS-REFERENCE INDEXES

NSN INDEX

NSN	FIG.	ITEM NO.	NSN	FIG	ITEM NO.
5305-01-160-4505	67	7	5330-01-162-8587	152	1
5310-01-160-4538	174	11	5340-01-162-8676	216	109
	175	9	5315-01-162-8741	26	50
5310-01-160-4539	131	1	5342-01-162-8767	151	12
3120-01-160-4604	101	13	5342-01-162-8768	151	9
	102	4	5340-01-162-8857	132	3
5315-01-160-4636	27	32	4820-01-162-8950	151	1
3110-01-160-4714	95	20	4820-01-162-8951	153	1
5360-01-160-6911	101	15	4820-01-162-8996	153	27
4730-01-161-0160	133	1	4820-01-162-8997	151	3
5330-01-161-0895	150	12	9905-01-163-0029	148	5
5330-01-161-2429	151	15	5340-01-163-0631	169	16
	153	12	4720-01-163-0677	34	17
3120-01-161-2639	27	30	4720-01-163-0678	83	31
5365-01-161-2642	67	19	2520-01-163-0816	108	6
5307-01-161-2653	41	24	5340-01-163-0918	142	4
2520-01-161-4941	71	1	5940-01-163-1435	52	10
5330-01-161-5518	26	38	5365-01-163-2015	169	8
5340-01-161-5640	10	3	4730-01-163-2608	209	27
5340-01-161-6223	138	13	4720-01-163-2611	34	19
2520-01-161-7796	136	13	4720-01-163-2612	83	50
5307-01-161-9140	131	5	3040-01-163-3240	136	22
5340-01-161-9146	134	12	4320-01-163-3545	25	1
5365-01-161-9161	136	43	4320-01-163-3546	88	1
5340-01-161-9162	161	21	4820-01-163-3581	180	44
5340-01-161-9175	151	10	5330-01-163-5831	37	25
2815-01-161-9635	12	5	3120-01-163-5957	198	9
2520-01-161-9658	136	14	5340-01-163-5981	161	7
	139	25	5340-01-163-6173	171	33
5306-01-162-0014	128	1	5340-01-163-6174	171	34
4730-01-162-0102	216	176	5340-01-163-6175	171	10
4730-01-162-0112	12	9	4720-01-163-7177	80	36
4730-01-162-0206	33	25	4730-01-163-7270	180	23
5310-01-162-0412	142	35	3040-01-163-7309	109	14
5315-01-162-0426	26	17	3040-01-163-7317	151	13
5360-01-162-2847	151	19	3930-01-163-7337	176	1
5360-01-162-2848	152	11	3930-01-163-7338	176	1
5340-01-162-2864	101	50	3930-01-163-7339	163	1
5340-01-162-4077	95	17	3040-01-163-7346	90	8
4730-01-162-4358	167	4	4720-01-163-7827	83	56
4720-01-162-5114	83	1	2530-01-163-7865	100	2
5310-01-162-5733	178	18		100	21
5365-01-162-5782	27	29	5305-01-163-8242	39	50
3120-01-162-5786	27	43	4720-01-163-8585	83	52
5310-01-162-6012	131	2	9905-01-163-9191	98	26
	211	31		98	31
5930-01-162-7312	57	6		148	37
5930-01-162-7313	59	1	3120-01-163-9375	136	11
4720-01-162-7336	83	13	5340-01-163-9459	171	9
2520-01-162-7636	92	1	2530-01-164-0017	105	30

CROSS-REFERENCE INDEXES

NSN INDEX

NSN	FIG.	ITEM NO.	NSN	FIG	ITEM NO.
2520-01-164-0077	83	9	6145-01-165-5633	BULK	37
	138	38	2815-01-165-5713	4	1
9905-01-164-0168	148	4	3020-01-165-5716	5	13
3040-01-164-0352	136	29	5342-01-165-5721	17	7
3120-01-164-4512	27	34		207A	2
5306-01-164-6317	136	28	2815-01-165-5737	165	9
5305-01-164-6340	36	63	2590-01-165-5746	180	7
5365-01-164-6623	136	30	2990-01-165-5977	31	4
4820-01-164-6960	76	1	4730-01-165-6616	33	23
5325-01-164-7555	171	5	4820-01-165-8251	152	10
5340-01-164-7556	153	13	4730-01-165-9540	180	41
5315-01-164-7582	134	1	3040-01-165-9635	9	18
5315-01-164-7583	107	5	5315-01-166-0687	26	41
5315-01-164-7589	152	14	3130-01-166-0810	137	31
4730-01-164-7821	180	43	3110-01-166-1535	99	23
2910-01-164-7906	35	10	5355-01-166-1721	144	3
3040-01-164-7938	48	7	3120-01-166-3685	142	24
4330-01-164-7973	140	6	3120-01-166-6163	109	27
5330-01-164-8342	90	2	2940-01-166-6834	209	22
5310-01-164-8541	39	49	3120-01-166-6915	105	11
5330-01-164-8563	150	14	5340-01-166-6926	202	12
5330-01-164-8564	134	11	5360-01-166-6940	161	10
5330-01-164-8576	136	20		162	5
	139	17	3120-01-166-8144	52	5
5340-01-164-8621	136	35	4140-01-166-9289	147	10
3120-01-164-8623	136	9	4720-01-167-0831	83	57
3120-01-164-8629	36	40	3120-01-167-3402	153	5
	142	11	5310-01-167-3641	103	50
	142	31	5360-01-167-3644	105	19
	150	27	3040-01-167-3669	103	59
5365-01-164-8702	136	33	4820-01-167-4300	87	1
5342-01-164-8709	142	19	3040-01-167-4493	136	27
5340-01-164-8760	136	36	4730-01-167-5458	101	57
3110-01-164-8765	136	45	3805-01-167-9159	180	46
5365-01-164-8782	174	16	9905-01-168-0972	113	8
	175	16	5930-01-168-1025	39	15
4820-01-164-9212	77	5	2520-01-168-1030	105	45
5315-01-164-9838	153	26	3110-01-168-1031	103	48
5340-01-164-9958	144	4	2530-01-168-1038	101	14
5365-01-164-9962	137	30	4730-01-168-1041	101	54
2520-01-165-0354	136	39	4730-01-168-1043	82	26
4720-01-165-1438	83	39	4730-01-168-1050	19	5
5340-01-165-1584	78	20		38	2
5306-01-165-2448	144	5	3120-01-168-1850	7	12
5310-01-165-2482	92	7	5340-01-168-7289	32	22
5325-01-165-2606	101	17	5330-01-168-9561	42	14
5330-01-165-3380	91	11	5330-01-168-9562	42	8
5360-01-165-3674	153	9	4320-01-168-9593	70	11
3110-01-165-3725	136	19	6625-01-169-2437	55	25
3120-01-165-4357	7	12	5940-01-169-3889	61	33

CROSS-REFERENCE INDEXES

NSN INDEX

NSN	FIG.	ITEM NO.	NSN	FIG	ITEM NO.
5340-01-169-7516	167	11	3040-01-178-0698	45	7
2910-01-169-9758	22	1	4730-01-178-0773	16	7
6140-01-170-1451	61	36		207B	10
5210-01-170-1455	39	8	5330-01-178-3728	49	15
	53	15	5340-01-178-3770	83	38
4010-01-170-1460	127	2	6620-01-178-4439	209	35
3120-01-170-1461	147	19	6620-01-178-4771	209	33
5315-01-170-2228	67	27	4720-01-178-4845	169	39
5360-01-170-2229	109	33	2920-01-178-6536	49	2
5340-01-170-6336	67	31	2920-01-178-6537	49	3
4710-01-170-9234	109	44	2920-01-178-6538	49	8
5340-01-171-0471	147	4	2910-01-178-8857	26	42
4730-01-171-1981	110	24	2910-01-178-8858	25	10
3040-01-171-3357	161	8	4730-01-178-9643	164	22
2940-01-171-3389	140	9		164	27
2590-01-172-0861	142	23	2910-01-178-9780	25	8
5305-01-172-2543	147	3	3040-01-178-9827	25	2
4730-01-172-2970	38	9	3020-01-178-9843	207A	10
	165	36	2590-01-179-3017	180	3
3020-01-173-3920	145	20	2910-01-179-4098	27	27
3020-01-173-3921	145	17	6680-01-179-4546	208	2
3810-01-174-1000	96	10	3110-01-179-5935	49	14
	97	5	4820-01-180-1044	109	1
	97	22	4820-01-180-1045	154	1
3130-01-174-6048	26	64	5331-01-180-2417	149	15
5961-01-174-8652	49	16	2910-01-180-2987	25	17
5365-01-174-8876	49	29	9905-01-180-3839	49	31
5310-01-175-0630	49	25	2510-01-180-6144	96	3
5935-01-175-1788	54	27	5305-01-180-8690	25	6
2910-01-175-1952	26	1	5305-01-180-8691	201	24
2930-01-175-6489	42	9		202	33
5930-01-175-8344	145	21	5365-01-180-8780	69	20
5930-01-176-1699	56	3	5330-01-181-0486	100	9
4140-01-176-2818	49	23	5340-01-181-0789	27	37
2920-01-176-2965	49	18	2540-01-181-0999	180	2
2590-01-176-2972	142	18	5342-01-181-1929	201	19
5310-01-176-3998	55	24		202	34
5306-01-176-4831	92	2	3110-01-181-2425	27	9
	92	6	5340-01-181-6629	25	5
9905-01-176-6171	148	17	3020-01-181-8557	201	21
5910-01-176-8877	48	20		202	37
2590-01-176-9517	35	3	5310-01-182-3071	25	13
2520-01-176-9574	164	12	5315-01-182-3486	26	102
5330-01-177-3855	3	16	5360-01-182-3644	27	21
3110-01-177-4667	49	28	3040-01-182-4395	96	16
2815-01-177-4792	10	5		97	14
2920-01-177-8505	49	6	5340-01-182-7381	139	9
2920-01-177-8565	49	27	5310-01-183-1237	118	5
2920-01-177-8566	49	12	5331-01-183-1281	149	16
2920-01-178-0499	49	17	5330-01-183-1504	23	17

CROSS-REFERENCE INDEXES

NSN INDEX

NSN	FIG.	ITEM NO.	NSN	FIG	ITEM NO.
5305-01-183-3993	202	64	5307-01-185-3555	34	29
5970-01-183-4633	49	7		71	22
2815-01-183-4649	4	20	5320-01-185-4702	15	33
5330-01-183-5649	149	22	3120-01-185-4724	25	11
2990-01-183-5956	26	95	5342-01-185-5068	94	22
5330-01-183-8680	28	18	5342-01-185-5071	94	25
2510-01-184-0786	117	3	9390-01-185-5087	99	32
5310-01-184-0911	112	12	4320-01-185-8231	149	11
4320-01-184-1056	149	12	5330-01-186-1269	149	6
5342-01-184-1068	23	23	3120-01-186-1302	73	15
5310-01-184-3538	182	20		74	19
	186	10	2815-01-186-2371	4	26
	189	6	5305-01-187-0533	52	4
	190	7	2920-01-187-2113	49	5
	191	1	5315-01-187-3541	177	18
	192	5	5305-01-187-5879	26	12
	193	13		26	15
	194	12	2920-01-187-7193	49	30
	195	4	5940-01-188-0009	66	25
	196	6	5340-01-188-1579	207G	12
	197	6	5305-01-188-4766	136	3
	198	4	6105-01-188-7155	147	13
	198	12	2520-01-189-0581	73	28
	198	21		74	3
	199	9	5330-01-189-3550	135	25
	201	27	4140-01-190-5493	201	20
	202	5		202	36
	203	6	5325-01-190-5680	70	1
	204	7		72	7
	205	12	5340-01-191-0289	207D	8
	206	10	6145-01-191-3320	BULK	26
	207F	8	5305-01-192-5731	57	14
	207G	13	5340-01-192-5824	26	3
5310-01-184-3539	57	8	3830-01-192-8281	96	4
5365-01-184-3676	69	33		97	6
3020-01-184-4622	137	7	5306-01-193-9181	116	35
5340-01-184-5459	19	10	5306-01-195-4681	10	10
5305-01-184-5915	57	16		12	7
5305-01-184-5919	39	43		14	3
	53	28		15	34
5310-01-184-6474	61	25		32	1
5330-01-184-6503	149	9		36	62
6115-01-184-7432	49	1		68	17
3110-01-184-8029	7	12		71	12
4730-01-185-0026	167	2		80	35
5305-01-185-0569	36	13		99	14
5340-01-185-2058	83	54		105	40
2520-01-185-2669	73	22		113	9
2530-01-185-2675	100	16		138	6
5360-01-185-2692	98	5		143	28

CROSS-REFERENCE INDEXES

NSN INDEX

NSN	FIG.	ITEM NO.	NSN	FIG	ITEM NO.
5306-01-195-4681	165	7	5330-01-208-6239	KIT	
	166	25	4310-01-208-6566	163	22
	169	6	5310-01-208-6737	17	4
	172	1	4820-01-208-7017	159	35
	207A	15	2520-01-208-7020	72	31
	207B	1	4720-01-208-7076	164	28
4730-01-196-7172	18	4	4720-01-208-7077	165	2
	165	45	2930-01-208-7097	47	1
4720-01-196-7180	18	12	2990-01-208-7128	31	9
	165	39	2815-01-208-7164	5	1
5307-01-197-3394	207C	23	5330-01-208-7581	134	8
5310-01-198-8570	136	23	5330-01-208-7592	139	16
5340-01-200-1539	207C	20	4720-01-208-9237	165	6
4730-01-202-3353	133	14	4820-01-208-9337	33	24
4730-01-202-3356	133	4	5995-01-209-0426	59	4
4730-01-202-3362	133	8	4720-01-209-0854	166	1
4820-01-202-3575	152	12	2910-01-209-0931	26	23
4320-01-202-5616	143	2	2910-01-209-0933	27	1
4820-01-202-5710	172	14	2520-01-209-0957	73	25
	172	17		74	6
3120-01-202-5894	5	7	2520-01-209-0958	72	32
5310-01-202-8343	185	20		73	26
4730-01-202-9311	173	7		74	7
4330-01-203-1250	45	15	2815-01-209-4543	7	4
4720-01-203-4781	173	9	4310-01-209-5008	7	5
4730-01-204-5258	157	16	5306-01-209-7883	80	24
4320-01-204-7180	27	14	5306-01-209-7895	74	29
5331-01-205-4276	26	7	5305-01-209-7923	72	24
5305-01-206-2164	148	29	5330-01-209-8033	80	10
5940-01-206-4291	64	31	5340-01-209-8292	78	29
5306-01-206-7167	139	27		90	16
3110-01-206-7429	137	11	5306-01-209-8685	159	38
5315-01-206-7581	141	4	5305-01-209-8693	67	2
5307-01-207-0426	131	3	5330-01-209-8719	90	35
	213	8		135	14
5360-01-207-0690	139	12	5330-01-209-8720	154	11
2815-01-207-0764	7	3		155	11
5330-01-207-1339	108	18		155	30
2920-01-207-9671	51	52	5330-01-209-8731	35	5
4730-01-207-9892	34	20	5315-01-209-8775	211	2
4710-01-207-9955	23	13	5360-01-209-8805	87	20
4710-01-207-9956	23	12	5360-01-209-8806	158	54
4710-01-207-9957	23	11	5310-01-209-9403	211	10
4710-01-207-9958	23	10	3830-01-209-9720	210	15
4710-01-207-9959	23	1	3120-01-210-0859	7	12
4710-01-207-9960	39	29	5306-01-210-1640	181	8
4810-01-208-1802	155	1	5310-01-210-1675	112	13
5360-01-208-2213	139	11	5365-01-210-1848	100	10
5360-01-208-2214	26	43	4320-01-210-2743	149	4
5995-01-208-4306	61	31	5315-01-210-2959	105	16

CROSS-REFERENCE INDEXES

NSN INDEX

NSN	FIG.	ITEM NO.	NSN	FIG	ITEM NO.
3110-01-210-6265	137	12	5340-01-236-1850	18	7
5305-01-210-7417	37	1		165	40
5340-01-210-7562	56	14	2590-01-236-2281	114	3
5360-01-210-7606	155	18	4730-01-236-3066	31	23
5305-01-211-1465	65	5	2590-01-236-5190	81	9
5330-01-211-1506	70	28	4820-01-236-5464	76	5
5330-01-211-3120	149	17	5930-01-236-8779	146	23
5330-01-211-6977	138	24	5310-01-236-9899	207C	24
5330-01-212-4617	36	17	5310-01-236-9975	198	13
5330-01-213-3785	KIT			206	3
5315-01-213-4939	212	13		207C	11
5310-01-213-6996	214	7	5315-01-237-0707	31	18
2530-01-214-1578	149	1	4820-01-237-1685	77	3
5365-01-214-2602	100	15	5305-01-237-3324	67	39
	100	35	5340-01-237-3387	61	1
5305-01-214-5052	123	4	4710-01-237-6752	172	19
5330-01-214-6545	73	29	4320-01-237-6819	160	8
	74	2	4820-01-237-6825	87	22
5330-01-214-6546	72	18	2540-01-238-2759	126	1
	74	1	5340-01-238-2859	69	46
2520-01-215-0355	69	3	2510-01-238-5457	116	38
	72	13	5330-01-241-2759	26	40
5310-01-215-7318	123	25	2815-01-241-9193	1	10
6150-01-215-9997	56	29	3110-01-242-2751	103	18
3130-01-216-4088	96	20	5330-01-242-6870	31	7
	97	18	5331-01-243-3777	31	26
5330-01-216-7951	73	2	3830-01-245-3804	198	6
3040-01-219-7489	70	3	2815-01-246-6227	3	1
4820-01-219-9334	152	3	4320-01-247-3910	21	15
3040-01-220-0104	90	36	4730-01-249-8409	82	7
3830-01-220-5738	212	14	4730-01-250-0855	209	28
3040-01-220-5900	212	4	2910-01-250-1608	216	107
4730-01-220-6669	158	42	5945-01-250-3234	83	5
5365-01-221-8712	212	10	5340-01-250-3368	177	10
3040-01-222-7325	74	26	3040-01-250-6495	36	2
2510-01-223-0928	124	16	3040-01-250-6508	36	39
5342-01-224-7990	90	24	3120-01-250-9928	174	15
5210-01-225-1132	215	2		175	17
3120-01-225-2095	31	15	4710-01-251-1007	BULK	23
5342-01-227-8610	212	7	5940-01-251-1326	207D	17
5340-01-228-0501	58	12	4720-01-251-3118	BULK	10
5340-01-228-7803	201	15	4730-01-252-7837	80	26
	202	40	6150-01-252-9289	65	1
6145-01-229-4128	BULK	25	4140-01-252-9501	47	6
5365-01-229-8157	212	11	4140-01-252-9502	47	4
6145-01-229-9666	BULK	36		47	4
6145-01-230-2519	BULK	34	3040-01-252-9510	73	1
5325-01-231-2134	201	3	3040-01-252-9527	67	22
3120-01-232-6641	116	28	2530-01-253-0440	36	71
2510-01-233-1612	118	1		104	4

CROSS-REFERENCE INDEXES

NSN INDEX

NSN	FIG.	ITEM NO.	NSN	FIG	ITEM NO.
2530-01-253-0440	107	15	4730-01-253-4589	169	34
4730-01-253-0509	90	19		169	36
4810-01-253-0546	73	4	3040-01-253-4611	98	25
4820-01-253-0549	156	11		98	28
4810-01-253-0550	71	14	2990-01-253-4633	31	28
6680-01-253-1033	137	16	3040-01-253-4634	74	27
4730-01-253-1979	80	16	2520-01-253-4635	71	16
4730-01-253-1980	15	13	4810-01-253-4644	158	37
4730-01-253-1981	15	7	2815-01-253-4646	5	18
4730-01-253-1982	41	16	2510-01-253-4647	112	5
4820-01-253-1987	156	15	2910-01-253-4650	27	11
3040-01-253-1995	14	32	2510-01-253-4653	124	38
3040-01-253-1996	14	29	2510-01-253-4654	115	3
4810-01-253-2003	155	13	3040-01-253-4655	67	26
3040-01-253-2008	78	17	3040-01-253-4656	74	8
4710-01-253-2746	80	29	3040-01-253-4662	161	29
4710-01-253-2747	181	6	3040-01-253-4664	127	11
4820-01-253-2787	147	17	2510-01-253-4672	113	6
4730-01-253-2808	168	15	2510-01-253-4673	115	21
	168	29	2510-01-253-4674	115	20
	169	32	2510-01-253-4675	111	1
	169	38	2540-01-253-4676	170	8
6150-01-253-3397	56	23	3040-01-253-4681	180	30
	65	2	3040-01-253-4698	5	14
4730-01-253-3401	32	16	3040-01-253-4699	68	28
7690-01-253-3422	77	16	3040-01-253-4700	68	3
2990-01-253-3444	20	11	2590-01-253-4702	41	31
2990-01-253-3445	30	9	2540-01-253-4705	104	15
3040-01-253-3449	74	23	4710-01-253-4715	171	39
2815-01-253-3451	5	17	4710-01-253-4717	32	19
2815-01-253-3452	6	6	4710-01-253-4718	32	3
2990-01-253-3454	14	19	4710-01-253-4719	80	48
3040-01-253-3457	75	11	4710-01-253-4724	80	12
2590-01-253-3460	16	9	5977-01-253-5207	51	19
3040-01-253-3464	31	17	4820-01-253-5554	158	33
3040-01-253-3465	67	4	4820-01-253-5557	12	8
3040-01-253-3466	78	15	4820-01-253-5568	155	12
3040-01-253-3468	72	21	4810-01-253-5569	158	1
3040-01-253-3470	68	20	4810-01-253-5570	159	27
4820-01-253-3472	156	13	4320-01-253-5572	77	11
4820-01-253-3474	156	6	3040-01-253-5575	162	10
2805-01-253-3495	165	12	3040-01-253-5576	36	67
3040-01-253-3510	68	29	3040-01-253-5577	105	10
3040-01-253-3511	75	3	3040-01-253-5578	107	25
9390-01-253-3521	161	24	3040-01-253-5579	36	57
	162	15	2990-01-253-5580	26	10
4710-01-253-3532	180	37	3040-01-253-5581	68	14
4710-01-253-3533	19	4	3040-01-253-5582	68	22
4710-01-253-3534	38	1	3040-01-253-5583	67	33
5325-01-253-4416	58	13	3040-01-253-5584	33	8

CROSS-REFERENCE INDEXES

NSN INDEX

NSN	FIG.	ITEM NO.	NSN	FIG	ITEM NO.
3040-01-253-5585	33	11	4730-01-253-8598	80	18
2540-01-253-5589	104	1	3830-01-253-8631	111	6
4320-01-253-6280	99	40	4820-01-253-8632	77	1
4320-01-253-6286	14	35	2930-01-253-8644	46	20
5310-01-253-6496	35	11	5342-01-253-8651	48	9
2940-01-253-6884	29	2	5342-01-253-8655	33	2
4710-01-253-6894	67	8	2510-01-253-8657	116	29
4730-01-253-6919	165	28	2510-01-253-8658	42	10
4730-01-253-6925	30	2	2510-01-253-8659	42	6
4730-01-253-6926	43	1	2510-01-253-8664	113	12
4730-01-253-7011	164	7	3020-01-253-8665	113	5
4730-01-253-7012	180	14	2520-01-253-8667	67	24
2520-01-253-7035	208	3	2520-01-253-8693	158	18
3040-01-253-7049	103	17	4710-01-253-8705	33	30
4710-01-253-7056	30	21	4710-01-253-8706	34	2
4730-01-253-7340	157	26	4710-01-253-8707	34	25
3040-01-253-7346	104	13	4710-01-253-8708	34	5
3040-01-253-7347	104	5	4710-01-253-8713	180	39
3040-01-253-7348	103	44	4710-01-253-8714	80	52
3040-01-253-7349	36	69	3120-01-253-8946	67	30
3040-01-253-7350	161	34	5365-01-253-8979	36	3
	162	20	3020-01-253-9281	11	3
3040-01-253-7352	149	24	3020-01-253-9282	14	12
4730-01-253-7353	180	18	3020-01-253-9283	21	20
2510-01-253-7358	93	3	3020-01-253-9284	14	30
4320-01-253-7386	143	9		14	33
4820-01-253-7387	27	15	2510-01-253-9304	209	37
2930-01-253-7390	112	1	3040-01-253-9424	36	33
2910-01-253-7393	80	32	3040-01-253-9425	95	21
2910-01-253-7394	27	28	2510-01-253-9475	93	5
2510-01-253-7397	42	34	2510-01-253-9476	93	8
3040-01-253-7402	71	21	2510-01-253-9477	93	9
2940-01-253-7420	138	17	2510-01-253-9478	93	6
4730-01-253-7423	180	51	2510-01-253-9479	98	13
2520-01-253-7425	84	8	2510-01-253-9480	98	11
5895-01-253-7447	209	36	2510-01-253-9481	98	7
3040-01-253-7453	36	64	2530-01-253-9483	97	10
3040-01-253-7454	162	6	2510-01-253-9484	116	2
3040-01-253-7456	161	17	2510-01-253-9485	116	1
3040-01-253-7457	75	20	2510-01-253-9486	124	30
3040-01-253-7458	36	37	2540-01-253-9487	115	32
3040-01-253-7459	105	15	2520-01-253-9488	162	1
3040-01-253-7460	74	9	2990-01-253-9489	26	79
2540-01-253-7477	127	4	2990-01-253-9490	26	92
4730-01-253-7484	154	26	2990-01-253-9491	26	91
	155	42	2930-01-253-9493	41	35
2910-01-253-7487	24	7	3040-01-253-9494	80	8
4710-01-253-8529	42	31	3040-01-253-9507	78	12
4820-01-253-8557	77	17	3040-01-253-9508	73	8
4730-01-253-8590	35	14	3040-01-253-9509	158	49

CROSS-REFERENCE INDEXES

NSN INDEX

NSN	FIG.	ITEM NO.	NSN	FIG	ITEM NO.
4820-01-253-9513	158	26	3040-01-254-1100	132	1
2940-01-253-9588	28	13	3040-01-254-1102	72	20
3040-01-253-9590	116	36	3040-01-254-1103	90	18
3040-01-253-9591	126	27	2815-01-254-1114	9	8
2540-01-253-9598	126	5	3040-01-254-1118	142	9
3020-01-253-9599	48	5	2510-01-254-1124	113	6
3020-01-253-9600	46	19	2530-01-254-1125	114	2
4820-01-253-9603	158	55	2530-01-254-1126	114	11
2910-01-253-9604	181	11	2530-01-254-1127	114	12
3020-01-254-0082	78	36	3040-01-254-1167	103	39
3020-01-254-0083	78	24	3040-01-254-1173	106	1
3020-01-254-0084	72	37	3040-01-254-1177	67	23
3020-01-254-0085	137	33	2910-01-254-1210	69	22
3020-01-254-0086	69	13	2940-01-254-1211	84	1
3020-01-254-0088	73	16	3020-01-254-1220	27	41
	74	20	3020-01-254-1223	138	34
4730-01-254-0176	165	19	3020-01-254-1224	136	2
4730-01-254-0177	172	16	3020-01-254-1225	108	34
3040-01-254-0231	72	1	3020-01-254-1227	11	15
4730-01-254-0232	161	25	3020-01-254-1228	143	13
	162	16	3020-01-254-1229	138	35
2520-01-254-0241	71	20	3020-01-254-1230	73	24
2530-01-254-0244	105	41	3020-01-254-1231	91	29
2930-01-254-0274	42	4	3040-01-254-1262	103	21
2930-01-254-0275	42	13	3040-01-254-1263	75	19
3040-01-254-0310	105	4	3040-01-254-1280	107	26
3040-01-254-0311	105	9	4730-01-254-1289	80	33
4710-01-254-0317	134	17	4710-01-254-1291	172	20
4820-01-254-0932	27	17	4710-01-254-1292	172	7
3040-01-254-1006	137	8	5315-01-254-1307	105	7
3040-01-254-1007	132	8	5365-01-254-1309	109	20
4810-01-254-1016	158	8	5315-01-254-2376	105	44
4820-01-254-1017	159	8	5365-01-254-2381	109	39
2910-01-254-1018	37	3	5360-01-254-2385	80	5
2930-01-254-1019	41	20	5310-01-254-2486	80	7
2930-01-254-1020	42	1	5360-01-254-2681	123	32
3040-01-254-1027	139	28	6105-01-254-2722	51	22
3040-01-254-1028	137	4	2510-01-254-2771	125	4
2930-01-254-1057	41	37	2540-01-254-2772	126	15
2930-01-254-1058	41	28	3040-01-254-3188	143	12
2930-01-254-1059	41	30	6680-01-254-3491	35	9
2930-01-254-1060	41	36	3020-01-254-4802	137	40
5342-01-254-1071	42	21	3020-01-254-4804	139	31
5342-01-254-1072	42	24	3020-01-254-4805	135	28
2510-01-254-1076	94	16	3020-01-254-4806	137	10
2510-01-254-1077	116	17	3020-01-254-4807	137	23
2510-01-254-1078	116	19	3040-01-254-4929	140	17
2510-01-254-1079	124	27	3040-01-254-4937	136	5
3040-01-254-1098	139	23	3040-01-254-4938	141	5
3040-01-254-1099	136	1	3040-01-254-4939	139	20

CROSS-REFERENCE INDEXES

NSN INDEX

NSN	FIG.	ITEM NO.	NSN	FIG	ITEM NO.
3040-01-254-4940	103	41	5306-01-256-6772	143	19
5430-01-254-4958	180	24	5305-01-256-6783	58	6
2910-01-254-4964	26	118	5305-01-256-6797	60	2
5342-01-254-4966	15	36	2510-01-256-9110	124	3
2510-01-254-4967	116	33	5365-01-256-9289	128	2
2510-01-254-4970	124	12	5365-01-256-9290	173	20
3040-01-254-4974	26	13	5307-01-256-9782	20	3
2910-01-254-5005	35	13	6160-01-256-9854	61	11
3010-01-254-5015	141	3	5340-01-257-0703	84	14
3010-01-254-5016	139	32	3040-01-257-1620	115	27
3040-01-254-5018	75	22	5310-01-257-2204	49	10
3040-01-254-5021	127	15	5310-01-257-2208	22	4
3040-01-254-5022	139	26	5340-01-257-2243	84	18
2510-01-254-5023	124	17	5340-01-257-2246	42	27
2540-01-254-5034	126	33	5340-01-257-2369	17	10
4730-01-254-5040	116	6	5342-01-257-2399	40	10
4730-01-254-5540	143	25	5310-01-257-3228	124	4
3040-01-254-5563	135	15	5310-01-257-3230	26	54
3040-01-254-5575	36	25	5310-01-257-3232	116	37
2540-01-254-5577	127	10	5310-01-257-3245	42	18
2520-01-254-5579	139	19	5365-01-257-3274	99	26
2520-01-254-5580	139	10	5365-01-257-3275	116	11
3040-01-254-5607	178	13	5365-01-257-3276	124	21
2530-01-254-5614	108	7	5365-01-257-3277	180	28
4710-01-254-5627	172	3	5365-01-257-3278	30	11
2815-01-254-6183	26	117	5365-01-257-3281	181	14
5340-01-254-7173	67	38	5365-01-257-3282	116	14
5340-01-254-7175	115	34	3120-01-257-3297	178	12
4730-01-254-8682	34	12	3120-01-257-3300	208	5
4730-01-254-8683	138	40	5365-01-257-3303	137	26
4310-01-254-8695	139	5	5365-01-257-3304	154	15
2510-01-254-8714	126	6		155	17
2510-01-254-8724	213	4		155	34
2590-01-254-8749	135	7	5365-01-257-3305	181	9
5360-01-254-8890	67	32	5365-01-257-3306	114	7
3040-01-254-9895	137	34	5365-01-257-3307	171	14
2540-01-254-9937	127	5	5365-01-257-3308	123	26
2540-01-254-9938	127	6	5365-01-257-3309	103	16
3120-01-255-1755	178	19	5365-01-257-3310	108	10
5340-01-255-3577	33	21	3120-01-257-3312	31	19
4730-01-255-4341	33	27	5306-01-257-3316	104	11
3010-01-255-4450	143	29	5307-01-257-3317	103	42
4730-01-255-4468	139	15	3110-01-257-3337	70	23
3040-01-255-5401	135	13	5360-01-257-3419	157	6
5365-01-255-6668	137	22	5360-01-257-3420	156	4
5310-01-255-9345	80	4	5360-01-257-3421	158	44
5340-01-255-9401	115	5	5360-01-257-3422	26	112
5340-01-256-2964	138	1	5330-01-257-3805	158	19
5340-01-256-3208	127	8	5330-01-257-3807	52	8
5306-01-256-6771	127	9	5330-01-257-3808	138	41

CROSS-REFERENCE INDEXES

NSN INDEX

NSN	FIG.	ITEM NO.	NSN	FIG	ITEM NO.
5365-01-257-3810	138	25	3130-01-257-7804	94	19
5365-01-257-3811	78	4	5360-01-257-7810	157	7
5365-01-257-3813	134	19	5360-01-257-7811	156	12
5365-01-257-3815	135	26	5360-01-257-7816	26	127
5306-01-257-3821	36	48	5325-01-257-7822	91	28
5306-01-257-3822	107	8	5340-01-257-7829	34	8
3130-01-257-3835	139	2	4810-01-257-8821	156	25
3130-01-257-3836	137	38	5340-01-257-9183	36	30
3130-01-257-3837	78	3	5340-01-257-9184	61	20
5342-01-257-3845	128	6	5340-01-257-9185	130	3
5342-01-257-3846	128	5	5340-01-257-9186	42	28
5342-01-257-3847	123	15	5340-01-257-9188	19	9
5342-01-257-3848	23	5	5340-01-257-9189	124	33
5340-01-257-3853	166	20	5340-01-257-9215	169	21
5310-01-257-4290	56	5	5331-01-258-0093	94	11
5310-01-257-4292	202	20	5365-01-258-0113	135	24
5310-01-257-4299	135	19	5365-01-258-0122	99	22
5310-01-257-4300	137	28	5365-01-258-0123	159	22
5365-01-257-4347	116	10	5340-01-258-0139	124	39
5365-01-257-4348	124	2	5340-01-258-0140	123	20
5365-01-257-4349	124	1	5340-01-258-0141	117	4
5365-01-257-4350	138	33	5340-01-258-0143	171	2
5365-01-257-4351	41	23	5340-01-258-0144	169	23
5365-01-257-4352	41	26	5340-01-258-0145	166	15
5365-01-257-4353	80	9	5340-01-258-0146	179	12
5365-01-257-4354	112	8	5340-01-258-0147	179	8
3120-01-257-4386	156	5	5340-01-258-0148	23	15
5365-01-257-4394	138	23	5340-01-258-0149	42	16
5365-01-257-4395	41	32	5340-01-258-0150	107	4
5340-01-257-4418	134	3	5340-01-258-0151	56	11
5365-01-257-4480	157	19	5340-01-258-0152	128	8
5365-01-257-4481	159	32	5340-01-258-0153	169	14
5330-01-257-4528	5	9	5340-01-258-0154	123	18
5325-01-257-4598	27	18	5340-01-258-0158	36	47
5365-01-257-4621	181	2	5340-01-258-0159	61	43
5365-01-257-4625	135	29	5340-01-258-0182	138	42
5365-01-257-4626	25	12	5340-01-258-0185	71	10
5330-01-257-6100	36	23	5340-01-258-0212	42	15
5365-01-257-6105	99	42	5340-01-258-0215	171	12
5365-01-257-6106	126	26	5315-01-258-0222	36	51
3120-01-257-6127	94	10	5342-01-258-0249	128	11
3130-01-257-6174	138	26	5340-01-258-0319	156	28
5342-01-257-6196	171	23	5340-01-258-0340	115	1
5330-01-257-7744	135	4	5340-01-258-0343	103	27
5340-01-257-7755	62	9	5340-01-258-0436	154	7
3130-01-257-7787	137	14		155	9
5340-01-257-7789	173	13		155	28
5315-01-257-7800	161	27	5340-01-258-0437	154	17
	162	11		155	19
3130-01-257-7803	94	4		155	36

CROSS-REFERENCE INDEXES

NSN INDEX

NSN	FIG.	ITEM NO.	NSN	FIG	ITEM NO.
5340-01-258-0453	80	47	5365-01-259-4550	158	52
5340-01-258-0454	171	24	5340-01-259-4642	126	28
5360-01-258-0931	108	8	5365-01-259-6380	126	23
5340-01-258-0942	169	2	5340-01-259-6427	124	37
5340-01-258-2680	172	6	5342-01-259-6479	15	32
5340-01-258-2681	123	13	5360-01-259-6515	126	31
2920-01-258-3471	57	15	4310-01-259-8092	31	33
5365-01-258-4656	77	10	2510-01-259-8093	125	3
5340-01-258-4683	116	16	5340-01-259-8758	36	34
5340-01-258-4685	123	30	2510-01-259-8891	123	21
5307-01-258-4709	20	9	5340-01-259-8954	77	18
5315-01-258-4780	137	35	5340-01-259-8962	115	30
5340-01-258-4854	105	37		209	1
5340-01-258-4865	166	10	5340-01-259-8965	34	10
5340-01-258-4867	169	25	5342-01-259-8972	93	10
5340-01-258-4873	48	4	3120-01-259-9569	158	43
5340-01-258-6065	123	19	3130-01-259-9600	137	19
5340-01-258-6066	103	23	5365-01-259-9622	158	2
3130-01-258-6105	149	25	5315-01-259-9623	100	13
6625-01-258-7462	53	2	2510-01-260-0645	125	5
5340-01-258-7807	103	23	5306-01-260-1348	180	34
5340-01-258-8535	173	12	5307-01-260-1407	33	20
5306-01-258-8559	36	65	5315-01-260-1481	77	7
5306-01-258-8560	36	11	5365-01-260-1523	72	8
5330-01-258-9166	139	37	9905-01-260-3363	65	13
5340-01-258-9176	56	17		148	34
5340-01-258-9178	171	11	5340-01-260-4944	19	15
5365-01-258-9188	135	1	4010-01-260-5744	128	3
5340-01-258-9225	161	23	5340-01-260-5791	123	9
	162	14	5330-01-260-5902	84	7
5340-01-259-2559	105	29	5330-01-260-5905	158	45
5340-01-259-2588	166	16	5320-01-260-5915	69	34
4010-01-259-2713	132	12	5365-01-260-7733	77	26
5305-01-259-3531	55	2	5340-01-260-9030	67	36
5365-01-259-3612	139	3	5340-01-260-9876	33	14
5340-01-259-3689	115	18	3110-01-260-9896	91	6
5340-01-259-3694	123	17	5315-01-261-8116	75	23
5306-01-259-3716	107	23	4730-01-261-9432	168	17
5340-01-259-3749	115	4	5999-01-262-0436	55	5
5340-01-259-3750	71	4		207D	7
5340-01-259-3752	138	21	5999-01-262-0437	55	12
5340-01-259-3753	77	13	4320-01-262-3317	157	4
5330-01-259-3828	KIT		5310-01-262-4868	128	7
5340-01-259-3949	153	8	2510-01-262-5232	212	1
5340-01-259-3955	42	7	6750-01-262-5970	53	3
5340-01-259-3959	171	25	7690-01-262-7200	53	4
5365-01-259-3960	137	24	2510-01-262-7646	124	23
5315-01-259-4153	26	104	4710-01-262-7728	101	39
5340-01-259-4234	27	23	5340-01-262-9742	142	7
5340-01-259-4238	161	3	4520-01-263-3147	147	9

CROSS-REFERENCE INDEXES

NSN INDEX

NSN	FIG.	ITEM NO.	NSN	FIG	ITEM NO.
4710-01-263-7284	34	11	3040-01-267-0261	37	21
4710-01-263-7285	34	24	4140-01-267-0377	145	19
5340-01-263-8737	161	4	2930-01-267-0416	KIT	
3950-01-263-9513	215	6	2520-01-267-0417	KIT	
5340-01-264-1444	103	2	3830-01-267-0459	210	7
3120-01-264-3665	100	17	3020-01-267-0502	90	12
5430-01-264-3675	180	48	4820-01-267-0503	109	36
4910-01-264-4024	217	3	3040-01-267-0625	211	14
5306-01-264-4262	103	30	4320-01-267-0639	160	4
	103	45	3830-01-267-1373	214	4
4910-01-264-4777	216	125	4320-01-267-1375	88	12
4910-01-264-4778	216	131	5355-01-267-1788	120	28
5340-01-264-5983	209	25	2590-01-267-2066	KIT	
5340-01-264-6022	21	27	3040-01-267-2077	88	15
5340-01-264-6023	156	17	3040-01-267-2078	88	16
3120-01-264-6067	126	20	3040-01-267-2079	101	61
5342-01-264-6074	213	3	4310-01-267-2083	163	10
5342-01-264-6075	142	30	3040-01-267-2084	163	23
5340-01-264-6101	156	2	3040-01-267-2085	176	13
5320-01-264-8505	127	12	3040-01-267-2092	163	2
5320-01-264-8508	127	1	3040-01-267-2100	101	2
5365-01-264-8511	169	1	4710-01-267-2114	28	4
5365-01-264-8512	40	16	4710-01-267-2115	83	42
5325-01-264-8514	56	27	4710-01-267-2116	101	25
3040-01-264-9331	104	14	4710-01-267-2117	101	29
3040-01-264-9538	216	161	4710-01-267-2118	101	30
4910-01-265-0428	216	123	4710-01-267-2119	101	34
5340-01-265-1164	158	13	4710-01-267-2120	174	20
3130-01-265-1251	72	28	4710-01-267-2121	167	8
5360-01-265-1272	77	4	4710-01-267-2122	167	9
5330-01-265-2129	115	2	4710-01-267-2123	174	4
4910-01-265-2624	216	202	4710-01-267-2600	82	13
5340-01-265-3359	123	29	4730-01-267-2632	83	49
2990-01-265-4960	24	11	4730-01-267-2634	83	14
5315-01-265-9369	140	5		164	26
5340-01-266-1084	65	7		172	12
5310-01-266-2481	207B	5	4730-01-267-2635	83	17
5330-01-266-2560	37	15	2940-01-267-2656	85	16
5365-01-266-2562	135	8	4140-01-267-4270	145	1
5360-01-266-2679	26	20	3040-01-267-4284	101	60
5342-01-266-2809	37	11	4730-01-267-4288	176	19
5365-01-266-3314	137	2	2815-01-267-4290	KIT	
5340-01-266-4674	123	11	3830-01-267-4305	211	5
5331-01-266-4995	181	12	2510-01-267-4317	119	30
5120-01-266-7433	217	1		120	7
3830-01-266-8190	KIT		2510-01-267-4318	120	2
3830-01-266-8191	KIT		4820-01-267-4320	87	27
2930-01-266-8193	KIT		4820-01-267-4321	101	19
5365-01-266-8284	67	37	2510-01-267-4325	118	23
5315-01-266-9238	161	28	2510-01-267-4326	118	20

CROSS-REFERENCE INDEXES

NSN INDEX

NSN	FIG.	ITEM NO.	NSN	FIG	ITEM NO.
2510-01-267-4327	118	17	3040-01-267-8650	103	20
2510-01-267-4328	118	22	2510-01-267-8665	118	16
2590-01-267-4332	168	11	2540-01-267-8670	127	13
2590-01-267-4333	168	21		127	14
4820-01-267-4334	109	34	2910-01-267-8672	122	13
4820-01-267-4335	76	8	2540-01-267-8728	119	22
3020-01-267-4337	45	10		120	13
3020-01-267-4339	91	27	2540-01-267-8729	119	19
2510-01-267-4350	122	36		120	14
3040-01-267-4364	103	13	2590-01-267-8751	122	35
3040-01-267-4365	107	14	8140-01-267-8752	122	2
3040-01-267-4368	211	18	3040-01-267-8764	33	19
2510-01-267-4369	122	42	3040-01-267-8765	103	52
2540-01-267-4377	122	31	2590-01-267-8783	122	17
2510-01-267-4389	211	12	2510-01-267-8788	122	16
2510-01-267-4390	211	21	5315-01-267-9217	36	43
4710-01-267-4393	175	4	6105-01-267-9556	145	14
4710-01-267-4394	175	23	3040-01-268-0301	103	55
4710-01-267-4395	83	55	2590-01-268-0306	61	24
7690-01-267-5468	162	4	2510-01-268-0314	119	2
7690-01-267-5497	148	14		120	43
4730-01-267-5992	82	22	9340-01-268-0507	121	2
2530-01-267-6001	68	12	2990-01-268-2069	143	15
4710-01-267-6003	86	11	5315-01-268-2194	216	44
2990-01-267-6005	KIT		4940-01-268-2200	215	4
2590-01-267-6006	211	27	5365-01-268-2654	103	54
2590-01-267-6007	211	34	5340-01-268-3459	166	19
2590-01-267-6008	211	34	2540-01-268-3834	145	6
2990-01-267-6020	40	7	2520-01-268-5353	75	27
5342-01-267-6024	39	4	2520-01-268-5354	81	12
2510-01-267-6029	119	32	2520-01-268-5355	83	43
2510-01-267-6030	118	18	2590-01-268-5376	83	8
2510-01-267-6033	122	25	5365-01-268-5530	210	3
2510-01-267-6035	118	19	9905-01-268-7578	109	13
2520-01-267-6053	92	5	9905-01-268-7580	148	8
3010-01-267-6054	177	13	5340-01-268-9063	103	4
2510-01-267-6060	122	23	5330-01-268-9498	73	3
2510-01-267-6063	122	28	5330-01-268-9499	73	3
2510-01-267-6068	122	34	4010-01-268-9869	215	3
2510-01-267-6069	122	7	3040-01-268-9999	135	23
4730-01-267-6077	88	8	9340-01-269-0057	118	15
4730-01-267-6078	167	17	6150-01-269-1853	66	1
4730-01-267-6972	165	29	9905-01-269-2302	148	30
4730-01-267-6987	168	27	2520-01-269-7945	174	9
3040-01-267-7068	103	55		175	11
4710-01-267-7078	177	1	5320-01-269-9263	121	8
2510-01-267-7931	119	1	5340-01-269-9284	88	17
2510-01-267-7932	119	4	5340-01-269-9285	87	16
2540-01-267-8598	147	2	5365-01-269-9293	3	29
3040-01-267-8649	103	3	5340-01-269-9343	208	1

CROSS-REFERENCE INDEXES

NSN INDEX

NSN	FIG.	ITEM NO.	NSN	FIG	ITEM NO.
5310-01-270-1258	163	7	5340-01-270-7426	167	10
5310-01-270-1259	37	13	5306-01-270-8494	211	15
5330-01-270-1276	168	12	5306-01-270-8507	145	5
5340-01-270-1284	211	24	5306-01-270-8543	106	23
5340-01-270-1286	82	21	5306-01-270-8544	106	24
	83	40	5342-01-270-8582	210	1
5340-01-270-1290	216	88	3120-01-270-8933	109	25
5340-01-270-1303	101	6	5306-01-270-8940	163	17
5340-01-270-1304	116	25	5365-01-271-1888	87	23
5340-01-270-1305	123	36	3110-01-271-1919	211	20
5315-01-270-1315	109	24	5305-01-271-2044	216	106
5315-01-270-1317	176	10	5307-01-271-3341	122	44
5360-01-270-1351	25	14	5340-01-271-3534	123	35
5340-01-270-1356	83	27	3120-01-271-4376	211	19
5340-01-270-1357	83	28	4730-01-271-5066	83	18
5330-01-270-1752	26	47	5360-01-271-6110	37	19
5330-01-270-1769	122	26	5340-01-271-6280	126	30
5330-01-270-1770	122	39	5120-01-271-6313	216	27
5330-01-270-1771	122	24	4320-01-271-9831	216	39
5330-01-270-1776	177	9	5120-01-272-0763	216	121
5330-01-270-1783	122	40	5120-01-272-0764	216	28
5330-01-270-1784	122	41	5120-01-272-0766	216	25
5340-01-270-1800	168	5	5120-01-272-0767	216	24
3110-01-270-1812	211	35	4940-01-272-2839	216	2
3110-01-270-1813	211	13	5120-01-272-4055	216	114
5307-01-270-1825	122	46	5340-01-272-4963	146	12
5315-01-270-1876	210	2	5340-01-272-4966	169	11
	211	22	3040-01-272-6739	104	12
5315-01-270-1877	103	56	5342-01-272-7316	213	1
5315-01-270-1888	216	117	5340-01-272-9110	61	29
5365-01-270-2768	39	44	5340-01-272-9267	174	24
	171	31		175	20
5365-01-270-2769	87	21	6160-01-273-0225	120	30
5365-01-270-2770	101	10	5310-01-273-1592	90	23
5365-01-270-2772	216	119	9905-01-273-2886	121	9
5315-01-270-2832	216	124	3010-01-273-3401	70	19
5325-01-270-2896	78	23	8140-01-273-4458	122	21
5325-01-270-2897	81	5	3040-01-273-4461	103	33
5365-01-270-3720	101	21	9905-01-273-4821	148	28
5342-01-270-3778	110	1	5310-01-273-6260	110	7
5340-01-270-3789	82	19	5210-01-273-6451	216	10
5360-01-270-4420	37	20	5306-01-273-6844	211	3
5360-01-270-4421	160	9	5340-01-274-0865	115	36
5365-01-270-4450	110	15	5340-01-274-1632	216	11
5315-01-270-5495	216	91	5340-01-274-2951	145	8
5360-01-270-5501	103	57	5306-01-274-3308	103	11
5305-01-270-7335	61	23	5330-01-274-8371	21	7
	115	35	4730-01-275-0057	216	41
5340-01-270-7392	119	36		216	177
5340-01-270-7393	168	22	2510-01-275-0096	122	20

CROSS-REFERENCE INDEXES

NSN INDEX

NSN	FIG.	ITEM NO.	NSN	FIG	ITEM NO.
3040-01-275-1768	216	6	5340-01-284-9885	168	7
3040-01-275-1769	216	7	5330-01-285-2792	21	28
5120-01-275-2286	216	95		143	24
3460-01-275-2465	216	38	5315-01-285-3476	217	9
3460-01-275-2466	216	36	2520-01-285-5094	136	15
3460-01-275-2467	216	5	5305-01-285-7096	185	2
4940-01-275-2468	216	22		193	9
5305-01-275-3282	119	23		207G	15
	120	18	5310-01-286-6079	47	2
2510-01-275-5282	124	20	4030-01-287-2358	132	14
6160-01-275-5350	61	26	5360-01-287-2422	26	76
3460-01-275-6204	216	4	2510-01-287-4547	112	4
4940-01-275-6205	216	17	5325-01-287-9026	27	42
3120-01-275-7678	31	21	5325-01-287-9036	31	27
5120-01-275-9345	216	15	4320-01-287-9576	216	12
4940-01-276-3504	216	37	5310-01-288-0094	57	18
3460-01-276-5003	216	23	5130-01-288-2786	216	201
6145-01-276-7544	BULK	31	5940-01-288-9592	66	30
6145-01-276-7545	BULK	33	5130-01-289-0100	216	105
2540-01-276-7590	147	12	5120-01-289-0635	216	103
6145-01-277-1169	BULK	28	5120-01-289-0637	216	102
3460-01-277-3430	216	35	4030-01-289-6202	132	13
3460-01-277-3431	216	34	5120-01-290-0761	216	9
6150-01-277-4486	61	12	5340-01-292-1734	216	170
5330-01-278-0257	BULK	18		216	183
3895-01-278-1610	49	9	5330-01-292-4293	BULK	20
5340-01-279-0358	169	13	5940-01-292-9676	53	23
6145-01-279-0549	BULK	2	4710-01-294-0344	180	38
3460-01-280-4157	216	19	5340-01-294-0761	105	53
3460-01-280-4158	216	21	4720-01-294-2586	167	1
3460-01-280-4867	216	18	5120-01-295-1535	216	101
5305-01-280-6556	216	160	9905-01-295-1907	148	6
5305-01-280-6632	145	4	3040-01-295-2500	216	132
5305-01-280-6633	145	13	4730-01-295-3790	216	171
3460-01-280-8176	216	20		216	178
2540-01-281-9701	147	1	9905-01-295-4589	148	27
2530-01-281-9702	57	12	4910-01-296-3862	217	5
9905-01-282-0103	127	3	5120-01-296-4235	216	68
4940-01-282-0161	216	33		217	10
6145-01-282-0453	BULK	24	5306-01-297-9000	182	9
4710-01-282-1660	23	16		184	5
9905-01-282-7263	148	26	5310-01-298-3199	185	7
5325-01-283-9263	169	12		188	9
5940-01-284-0989	66	27		190	6
2510-01-284-2313	94	16		194	2
4710-01-284-2404	33	35		199	2
5355-01-284-5519	57	9		203	17
3040-01-284-8745	178	1		207	2
5340-01-284-9797	94	9	2530-01-298-6163	140	15
5315-01-284-9806	85	5	6240-01-301-0717	201	4

CROSS-REFERENCE INDEXES

NSN INDEX

NSN	FIG.	ITEM NO.	NSN	FIG	ITEM NO.
6160-01-302-6239	120	29	4730-01-337-0790	216	164
5330-01-302-9890	39	19	4820-01-337-3876	216	153
5340-01-302-9973	6	16	5360-01-337-5669	216	174
5940-01-303-4978	63	17	2590-01-337-9173	216	139
5905-01-303-5617	55	6	6105-01-338-2386	216	145
5306-01-306-3445	119	33	3010-01-338-3035	216	151
	120	45	5342-01-338-5592	216	150
5330-01-307-4360	BULK	17	5977-01-338-5694	216	147
5330-01-307-7787	120	38	3120-01-338-6334	163	13
5330-01-307-7813	BULK	16	7690-01-338-9102	123	37
5340-01-308-6246	100	14	3040-01-339-0482	178	21
	100	34	5340-01-339-0866	32	7
4940-01-311-0138	216	31	2540-01-339-3541	119	20
4940-01-311-0139	216	29	5930-01-340-5771	216	146
4940-01-311-0140	216	30	4940-01-340-9595	216	14
5331-01-311-2670	134	13	5120-01-343-8085	216	133
4730-01-312-0343	216	32	5120-01-344-1301	216	163
4820-01-312-7710	216	13	9905-01-344-2878	148	2
2920-01-314-7826	52	1	5330-01-347-9688	32	18
2540-01-315-1030	122	14	5120-01-349-0341	216	193
2930-01-316-9178	112	6	5305-01-351-1333	22	2
5315-01-320-3517	214	2	5307-01-351-1404	10	22
5330-01-324-4004	118	8	2510-01-351-4025	2	14
4730-01-324-5071	34	15	2510-01-351-4026	2	7
5330-01-332-4074	4	25	2510-01-351-5937	2	6
5330-01-332-4089	20	2	2815-01-351-5962	8	4
5331-01-333-6444	159	31	5330-01-351-7093	5	10
	165	37	5330-01-351-7095	45	6
5305-01-336-2239	216	165	4820-01-351-8033	25	3
5307-01-336-2303	163	18	2940-01-351-8383	15	24
5305-01-336-2987	216	162	5305-01-352-4223	49	26
3120-01-336-3005	216	173	5340-01-352-7643	26	77
3120-01-336-3008	216	167	5310-01-353-3403	207E	5
5930-01-336-3018	216	157	5310-01-353-3410	31	29
5330-01-336-3238	216	149	5330-01-355-6790	118	14
5330-01-336-3239	216	154	5180-01-358-3781	217	16
5930-01-336-3289	216	156	5310-01-359-8806	207E	9
5305-01-336-3898	216	172	5340-01-371-2357	216	179
5310-01-336-5335	163	20	4720-01-371-6691	168	26
5305-01-336-5930	216	130	4730-01-373-5625	216	184
	216	138	5330-01-374-7678	90	43
5365-01-336-5964	211	29	5330-01-376-0784	26	4
5365-01-336-6536	216	168	5330-01-376-0802	26	26
5340-01-336-6623	216	169	5330-01-376-0803	26	55
5365-01-336-6668	216	166	5940-01-376-5755	61	40
5315-01-336-7808	211	28	2590-01-377-3892	35	1
5360-01-336-7960	216	129	5330-01-379-9806	82	23
	216	137	5330-01-382-6398	13	4
4320-01-336-8164	216	152	5330-01-382-6907	30	15
4320-01-336-8200	216	155		31	2

CROSS-REFERENCE INDEXES

NSN INDEX

NSN	FIG.	ITEM NO.	NSN	FIG	ITEM NO.
5330-01-383-7898	13	8	4730-01-429-3246	19	19
2530-01-392-2481	139	24		33	36
4820-01-392-4000	158	5		34	18
2530-01-392-6628	105	33	5905-01-429-4032	202	46
5120-01-393-3420	216	52	5306-01-429-4064	182	21
2910-01-394-8803	140	7	5306-01-429-4065	184	16
5330-01-398-4225	50	6		207	3
5310-01-413-5909	198	19	5306-01-429-4756	207F	4
5306-01-413-8763	188	19	5310-01-429-7105	202	47
	189	1	5310-01-429-7859	10	14
5310-01-415-0234	190	9		24	16
	194	11		28	7
	199	3		33	38
5331-01-417-6179	13	2		36	12
5330-01-418-6284	4	24		39	2
5305-01-421-2093	195	1		40	9
	197	8		41	34
5305-01-421-2120	183	5		48	12
	185	16		56	12
5305-01-421-2122	190	5		67	40
5310-01-421-9919	187	6		68	1
	188	5		71	6
	189	20		80	46
	193	7		82	17
5310-01-423-9059	184	6		84	20
	185	17		86	2
	194	9		103	5
5331-01-424-3527	159	36		115	22
4820-01-424-9847	216	158		129	6
4820-01-425-6626	159	35		130	6
5306-01-426-7103	81	8		138	10
5310-01-429-0779	188	15		164	16
	190	15		166	9
	202	48		168	10
5935-01-429-0888	39	40		169	10
5306-01-429-3168	198	11		173	14
	203	11		207B	3
	207F	6		207C	27
5306-01-429-3170	189	9	5310-01-430-9026	207F	13
	190	8	5306-01-430-9050	189	16
	191	4	5306-01-430-9053	184	13
	192	7	5306-01-430-9056	185	6
	194	14	5306-01-430-9057	187	5
	195	5		188	6
	196	4		189	21
	197	1		194	3
	198	23	5306-01-430-9059	203	16
	203	4	5306-01-430-9063	188	10
	204	12		190	19
	206	2	2910-01-437-6111	181	16

CROSS-REFERENCE INDEXES

NSN INDEX

NSN	FIG.	ITEM NO.	NSN	FIG	ITEM NO.
5306-01-437-6180	78	32	9390-01-494-3531	200	4
5310-01-438-1899	202	69	9340-01-494-3540	200	6
5306-01-438-9840	185	19	3040-01-496-5171	11	12
5306-01-438-9845	187	12	5310-01-496-6002	100	24
	188	21	2530-01-497-0242	95	22
	189	7	2530-01-497-0276	96	24
	190	1	3040-01-497-0540	14	31
	197	3	5930-01-497-0562	39	41
	199	8	2530-01-497-1793	100	36
	201	29	2530-01-497-1879	100	6
5306-01-438-9848	194	17		100	25
	199	4	5330-01-497-2201	100	30
2590-01-439-0295	186	1	5360-01-497-2345	158	26A
2590-01-439-0299	184	23	5310-01-497-2351	137	5
2590-01-439-0300	184	22	5325-01-497-2354	101	17
5331-01-439-2613	207G	8	5365-01-497-3465	100	31
5331-01-439-2615	207G	10	2530-01-497-3707	100	29
5305-01-439-8547	207E	3	3120-01-497-4890	100	28
2590-01-440-8717	184	1	5306-01-497-5224	100	26
5340-01-444-9172	216	159	5340-01-497-7032	42	15
2910-01-444-9487	38	10	5340-01-497-7040	101	14
5120-01-451-1401	215	8	5306-01-497-9853	100	23
	216	43	2930-01-498-2769	45	14
2910-01-456-6768	37	14	2930-01-498-2770	45	5
5940-01-467-1020	61	38	2930-01-498-3138	42	9
2530-01-468-2876	137	5	5330-01-498-3662	45	21
5330-01-469-3187	45	17	2530-01-498-7887	100	32
4730-01-471-0277	101	24	2530-01-498-7889	100	27
4730-01-471-3774	202	62	2530-01-498-8028	100	1
	206	7		100	20
5306-01-471-3865	201	16	6150-01-499-4629	53	9
	202	26	6150-01-499-4633	63	22
5340-01-472-3706	201	13	6150-01-499-4636	63	18
5305-01-472-7230	201	12	6150-01-499-4640	63	5
4820-01-473-5061	165	42	6150-01-499-4641	53	12
4730-01-473-5826	207G	16	6150-01-499-4642	63	15
5306-01-473-6489	184	7	6150-01-499-4645	63	26
	192	4	6150-01-499-4648	63	1
5306-01-474-1533	183	2	4140-01-499-5557	47	6
	185	13	4720-01-499-9113	173	4
	202	23	2930-01-499-9117	47	1
5975-01-474-1888	56	30	5330-01-500-8947	82	8
3130-01-474-3376	74	16	3120-01-503-4984	11	8
3040-01-475-9618	45	7	2590-01-503-5904	182	4
4320-01-475-9634	45	18	2590-01-503-5906	182	6
5340-01-476-1734	216	42	5340-01-503-5908	186	2
4710-01-476-4981	55	19	5340-01-503-5910	186	3
5930-01-477-7177	39	39	5340-01-503-5911	186	5
4820-01-486-0910	4	9	2590-01-503-5914	182	14
6620-01-486-7681	216	175	5340-01-503-5915	186	6

CROSS-REFERENCE INDEXES

NSN INDEX

NSN	FIG.	ITEM NO.	NSN	FIG	ITEM NO.
5340-01-503-5917	186	11	9515-01-504-0602	194	4
5340-01-503-5918	186	12	9515-01-504-0609	194	5
5340-01-503-5920	187	3	9515-01-504-0756	189	4
5340-01-503-5922	187	7	9515-01-504-0759	189	12
2510-01-503-5923	187	9	9515-01-504-0760	189	18
2510-01-503-5924	187	10	9515-01-504-0762	190	3
2510-01-503-5925	187	11	9515-01-504-0764	190	4
5340-01-503-5937	187	13	9515-01-504-0765	190	12
5340-01-503-5938	188	3	9515-01-504-0768	191	6
	205	3	9515-01-504-0770	191	7
5340-01-503-5945	188	4	2815-01-504-0817	190	14
5340-01-503-5947	188	7	5340-01-504-0823	189	17
2510-01-503-5954	188	11	5340-01-504-2072	198	20
5670-01-503-5960	188	16	5340-01-504-2077	198	20
9515-01-503-5965	188	17	2590-01-504-2521	184	4
5340-01-503-5968	188	20	2590-01-504-2524	184	11
5340-01-503-5970	188	22	2590-01-504-2526	184	2
9515-01-504-0531	203	13	2590-01-504-2529	184	20
9515-01-504-0535	192	6	2510-01-504-2536	199	1
9515-01-504-0539	204	19	9905-01-504-7383	199	10
9515-01-504-0540	203	7	3030-01-505-3134	207C	26
9515-01-504-0541	204	15	5305-01-505-5701	202	68
9515-01-504-0542	204	11	4820-01-505-7292	207G	17
9515-01-504-0544	204	1	4820-01-505-7294	207G	4
9515-01-504-0546	194	16	5280-01-505-8509	217	18
9515-01-504-0547	194	18	5365-01-506-1820	216	66
9515-01-504-0548	203	9	5365-01-506-1837	217	12
9515-01-504-0550	192	10	5365-01-506-1840	187	8
9515-01-504-0551	205	4	5342-01-506-3730	185	5
9515-01-504-0555	205	5	3020-01-506-3839	182	3
9515-01-504-0556	205	10	3020-01-506-4088	182	2
9515-01-504-0557	203	10	5315-01-506-4364	206	1
2540-01-504-0562	205	14	5315-01-506-4365	185	1
9515-01-504-0563	193	1	5315-01-506-4366	183	3
9515-01-504-0565	205	15		185	22
9515-01-504-0567	203	18	2590-01-506-4661	187	4
9515-01-504-0570	206	13	2590-01-506-4668	187	14
9515-01-504-0571	193	4	5315-01-506-5027	185	12
2040-01-504-0574	203	5	5315-01-506-5030	216	71
9515-01-504-0575	207	1	5315-01-506-5042	188	14
9515-01-504-0577	191	8		190	17
9515-01-504-0578	193	5	5340-01-506-5409	197	4
9515-01-504-0580	194	6	2590-01-506-5474	184	10
9515-01-504-0581	191	9	5340-01-506-5488	197	5
9515-01-504-0582	193	6	5340-01-506-5504	197	7
9515-01-504-0585	194	15	4010-01-506-5614	185	25
9515-01-504-0586	191	10	5340-01-506-5794	185	24
9515-01-504-0589	192	2	5340-01-506-5801	188	23
9515-01-504-0592	193	12	5340-01-506-5805	189	11
9515-01-504-0596	193	14	5340-01-506-5808	189	8

CROSS-REFERENCE INDEXES

NSN INDEX

NSN	FIG.	ITEM NO.	NSN	FIG	ITEM NO.
4140-01-506-5810	202	8	5340-01-507-0056	202	1
5340-01-506-5818	189	3	5340-01-507-0060	202	13
5340-01-506-5820	189	19	5340-01-507-0138	202	30
5340-01-506-5826	189	14	5340-01-507-0151	203	8
5340-01-506-5855	198	1	5340-01-507-0157	203	14
5340-01-506-5879	198	14	5340-01-507-0165	202	42
6150-01-506-6238	201	8	5340-01-507-0200	204	2
6150-01-506-6241	201	1		204	16
6150-01-506-6244	202	16	5340-01-507-0203	204	3
6150-01-506-6245	201	5		205	7
6150-01-506-6246	201	9	5340-01-507-0207	204	8
5306-01-506-6459	185	9	5340-01-507-0209	204	10
5305-01-506-6463	202	11		204	18
5325-01-506-7583	193	11		205	6
	203	15		206	15
5360-01-506-7628	202	29	9535-01-507-1387	193	10
5340-01-506-8561	204	13	9535-01-507-1395	182	11
5340-01-506-8571	206	14	9530-01-507-1406	182	13
5340-01-506-8577	206	12	9530-01-507-1407	182	15
5340-01-506-8579	205	8		184	12
5340-01-506-8581	205	9	2540-01-507-2355	182	5
5340-01-506-8584	204	17		183	4
5340-01-506-8590	205	13		184	3
5340-01-506-8592	204	14	2540-01-507-2366	185	10
	206	11	5310-01-507-2374	216	70
5340-01-506-8940	182	22	5310-01-507-2390	216	64
5340-01-506-8965	185	4	9535-01-507-2404	184	14
5306-01-506-9388	204	9	5340-01-507-4091	195	6
5340-01-506-9427	192	9	3830-01-507-5644	182	16
5340-01-506-9446	193	15	3830-01-507-5648	182	17
5340-01-506-9448	190	11	3830-01-507-5673	182	18
5340-01-506-9449	194	8	3830-01-507-5675	184	19
5340-01-506-9452	191	3	3830-01-507-5677	184	18
5340-01-506-9457	192	1	3830-01-507-5679	184	15
5340-01-506-9464	192	8	2510-01-507-7056	200	3
5340-01-506-9482	196	3	2510-01-507-7069	200	5
5340-01-506-9486	196	5	4010-01-508-4065	185	21
5340-01-506-9490	196	7	5340-01-508-5348	206	6
5340-01-506-9547	194	10	2510-01-508-6838	200	3A
5307-01-506-9551	198	8	2510-01-508-6839	200	5A
5340-01-506-9557	202	17	5120-01-508-9182	216	190
5340-01-506-9559	202	21	5120-01-510-5653	217	6
5340-01-506-9560	202	22	5120-01-510-5654	216	59
5340-01-506-9561	202	28	3040-01-511-5739	185	28
2590-01-506-9686	185	26	5340-01-511-7092	185	27
2590-01-506-9689	185	15	5120-01-512-7167	216	58
2590-01-506-9690	185	23	5120-01-512-7168	216	67
5340-01-506-9927	199	5	3940-01-512-7412	215	10
5340-01-507-0024	199	6	3805-01-512-7425	184	21
5340-01-507-0054	201	7	5120-01-512-8936	217	11

CROSS-REFERENCE INDEXES

NSN INDEX

NSN	FIG.	ITEM NO.	NSN	FIG	ITEM NO.
5340-01-513-1946	205	11	5120-01-527-2421	216	112
5340-01-513-1951	195	3	5120-01-527-2422	216	51
5120-01-513-9583	216	63	5130-01-527-9779	216	98
9515-01-514-2234	203	3	5130-01-527-9780	217	23
5325-01-514-5408	202	53	5130-01-527-9781	217	20
5340-01-515-6360	204	5	5130-01-527-9782	216	84
3940-01-515-7742	215	9	5330-01-528-1086	120	41
5330-01-516-6085	163	14	2510-01-528-2468	120	42
5120-01-518-4822	216	72	2540-01-528-8406	146	21
4320-01-518-5731	143	1	5120-01-531-1452	217	22
5120-01-518-9738	216	96	5365-01-533-9734	207C	19
5120-01-519-0129	216	65	5310-01-533-9767	207A	9
2540-01-519-8287	186	13	5335-01-533-9772	207F	11
4140-01-519-8288	202	44	6150-01-533-9810	207D	1
2540-01-520-3155	186	1	5330-01-533-9928	207H	12
4130-01-521-1783	207A	1	5340-01-533-9935	207B	4
	207E	1	6150-01-533-9957	207D	9
9515-01-524-4207	192	11	5310-01-533-9968	207A	22
9515-01-524-4209	192	12	5340-01-533-9971	207H	8
9515-01-524-4210	192	13	4010-01-533-9975	207H	5
9515-01-524-4211	193	12	6105-01-533-9980	207H	16
9515-01-524-4212	194	4	6150-01-534-0004	207H	28
9515-01-524-4213	194	6	5920-01-534-0393	207D	18
9515-01-524-4214	194	16	5930-01-534-0395	207H	30
9515-01-524-4215	194	18	5930-01-534-0396	207H	31
2510-01-524-4635	200	7	5930-01-534-0398	207H	4
2510-01-524-4636	200	3	5999-01-534-0404	207D	15
9340-01-524-6658	200	6	2940-01-534-0451	207E	7
5340-01-524-6659	202	58	5920-01-534-0694	207D	16
2540-01-524-6660	202	67	5330-01-534-0739	207H	29
9340-01-524-6661	200	9	4710-01-534-0816	207H	3
4140-01-524-6662	202	56	4710-01-534-0818	207H	22
5340-01-524-6663	202	51	4710-01-534-0819	207H	24
2540-01-524-6664	202	63	4730-01-534-0828	207B	7
4140-01-524-6665	202	66	5340-01-534-0831	207H	38
4140-01-524-6666	202	61	5340-01-534-0833	207C	17
2510-01-524-7568	200	8	3040-01-534-0877	207A	19
9390-01-524-7569	200	7	5340-01-534-0998	207C	4
4140-01-524-7572	202	45	4330-01-534-1026	207H	35
4130-01-524-7575	202	57	4720-01-534-1029	207H	27
9390-01-524-9455	200	8	5340-01-534-1131	207C	5
4030-01-525-1233	132	15	5340-01-534-1442	207H	39
5120-01-525-5523	216	49	3020-01-534-1809	207A	20
5120-01-525-7078	216	81	5940-01-534-1929	207D	10
5120-01-526-1023	216	104	4130-01-534-1930	207C	14
5310-01-526-7006	216	111	4140-01-534-2550	207H	19
5306-01-526-8480	202	50	4140-01-534-2552	207H	14
6150-01-527-0147	202	71	4130-01-534-2597	207H	34
5325-01-527-0351	202	70	5340-01-534-2896	207H	17
5120-01-527-2419	216	100	4130-01-534-3642	207H	2

CROSS-REFERENCE INDEXES

NSN INDEX

NSN	FIG.	ITEM NO.	NSN	FIG	ITEM NO.
4730-01-534-3863	207H	26	5310-21-914-2574	145	16
4710-01-534-3864	207H	23	5340-21-914-2658	145	15
4720-01-534-3866	207A	4	5340-21-914-2661	145	2
2930-01-534-3975	207A	13	5340-21-914-2662	118	7
4730-01-534-4341	207G	2	5340-21-914-2663	118	4
4820-01-534-4466	207H	21	5340-21-914-2670	118	6
5365-01-534-4467	207C	9	5310-21-914-2850	145	12
5340-01-534-4553	207C	1	5310-21-914-2851	145	9
5355-01-534-4714	207H	32	5310-21-914-2870	145	11
5340-01-534-4719	207A	5	2510-21-914-3483	120	44
5340-01-534-4721	207F	2	2510-21-914-3486	121	1
5340-01-534-4722	207A	8	2510-21-914-3487	119	2
5340-01-534-4726	207C	28	2510-21-914-3488	120	1
5340-01-534-4769	207H	13	2510-21-914-3489	118	2
4140-01-534-4813	207H	25	2510-21-914-3490	118	3
4140-01-534-4814	207H	15	2510-21-914-3497	119	28
4140-01-534-4823	207H	7		120	17
4130-01-534-4825	207H	10	2510-21-914-4026	119	12
4120-01-534-4915	207E	2	2510-21-914-4036	122	27
4720-01-534-6074	207B	6	2540-21-914-4103	122	32
2510-21-912-3530	122	43	2510-21-914-4108	122	12
2510-21-912-3599	120	43	2510-21-914-4109	121	6
2510-21-912-3600	122	11			
2510-21-912-3601	122	15			
2510-21-912-3602	122	33			
2510-21-912-3603	122	38			
2540-21-912-3604	122	10			
2510-21-912-3609	119	27			
	120	6			
2510-21-912-3610	118	11			
5640-21-913-9457	122	22			
5640-21-913-9459	122	19			
5640-21-913-9460	122	9			
9340-21-913-9703	121	2			
9340-21-913-9704	119	27			
	120	6			
9340-21-913-9705	118	15			
9340-21-913-9706	118	11			
9340-21-913-9738	119	29			
	120	3			
5365-21-914-1006	145	7			
5365-21-914-1007	119	21			
	120	16			
6160-21-914-1387	120	39			
6160-21-914-1390	122	18			
5975-21-914-1414	122	3			
9340-21-914-1860	119	29			
	120	3			
5310-21-914-2570	120	34			
5310-21-914-2573	145	10			

CROSS-REFERENCE INDEXES

PART NUMBER INDEX

CAGEC	PART NUMBER	NSN	FIG	ITEM
58536	A-A-52506-F-10	4730-00-877-6298	147	22
61208	A-2622-C	5325-00-514-1706	70	15
58536	AA59384-12A060	3444-00-449-7295	216	113
58536	AA59616ACBBCE	4730-00-122-3969	15	14
61957	AD-44-BS	5320-01-023-2529	67	28
33203	AD2H23MA16	6680-01-179-4546	208	2
07707	AD46BS	5320-00-965-7109	67	5
07707	AD64BSLF	5320-01-264-8508	127	1
88044	AN960-816	5310-00-167-0823	33	5
80756	ARR283	5325-00-984-8500	78	6
81346	ASTM D2000 M6BG910	5331-01-049-1292	18	2
			19	18
			26	35
			30	16
			32	9
			33	37
			88	22
			89	3
			154	4
			155	4
			159	23
			165	43
			170	2
81343	AS15003-1	4730-00-050-4208	90	49
			177	16
			211	4
			212	6
81343	AS15003-6	4730-00-172-0034	210	8
81343	AS29513-129		25	9
5F845	AS789B	2510-01-528-2468	120	42
00141	A1-13	5315-00-811-9214	111	4
61208	A2888AW	5310-00-118-3044	153	10
10988	A47889	5340-01-115-3548	51	13
			51	53
			51	64
82199	A520806	5310-00-193-7486	57	13
96787	A6324	6240-00-019-3093	63	13
80020	A89816-22	5310-00-275-8639	124	7
81205	BACW10P140S	5310-00-725-1984	70	10
18265	BAS02-0048	2815-00-192-8768	17	3
98410	BB-2141	5940-00-926-0085	66	37
24956	BD721011-16	2540-00-140-9816	146	22
60380	BNE25730	3110-00-862-7671	69	12
13174	BT05-06FT	4730-01-267-6972	165	29
80204	B1821BH025C050N	5305-00-071-2506	26	116
			56	28
80204	B1821BH025C088N	5305-00-071-2505	25	21
			26	2
			26	49
80204	B1821BH025C100N	5305-00-225-3843	26	119

CROSS-REFERENCE INDEXES

PART NUMBER INDEX

CAGEC	PART NUMBER	NSN	FIG	ITEM
80204	B1821BH025C100N	5305-00-225-3843	142	29
			154	8
			155	7
			155	26
80204	B1821BH031C056N	5306-00-226-4823	126	24
80204	B1821BH031C075N	5306-00-226-4825	9	12
			19	11
			32	20
			39	20
			153	29
80204	B1821BH031C088N	5306-00-226-4826	15	12
			150	18
			151	18
			153	24
80204	B1821BH031C113N	5306-00-226-4828	70	9
			158	14
80204	B1821BH031C125N	5306-00-226-4829	24	1
			103	51
			142	27
			150	28
			152	8
			168	23
80204	B1821BH031C175N	5306-00-226-4832	15	28
			105	48
			168	6
80204	B1821BH031C200N	5306-00-226-4833	14	15
			152	7
80204	B1821BH031C250N	5306-00-226-4835	150	6
80204	B1821BH031C275D	5306-01-158-1154	15	29
80204	B1821BH038C063N	5305-00-721-5492	13	16
			42	23
			56	19
			66	53
			82	10
			107	2
			132	5
			134	18
80204	B1821BH038C100D	5305-00-942-2196	118	26
			119	34
			120	47
80204	B1821BH038C125N	5305-00-068-0511	15	30
			24	12
			36	59
			41	27
			43	3
			47	7
			62	8
			65	14
			80	28
			82	4
			83	12

CROSS-REFERENCE INDEXES

PART NUMBER INDEX

CAGEC	PART NUMBER	NSN	FIG	ITEM
80204	B1821BH038C125N	5305-00-068-0511	94	6
			103	25
			106	2
			109	2
			118	9
			124	24
			134	14
			135	20
			136	46
			137	17
			138	27
			139	36
			156	27
			158	29
			166	22
			167	6
			168	20
			169	9
			172	10
80204	B1821BH038C500N	5305-00-964-0503	4	30
			80	1
80204	B1821BH038F075N	5305-00-269-3234	95	19
80204	B1821BH038F100N	5305-00-269-3236	123	12
			126	12
80204	B1821BH038F125N	5305-00-269-3238	36	6
			70	7
			136	34
			137	29
80204	B1821BH038F150N	5305-00-269-3240	68	4
80204	B1821BH038F275N	5305-00-269-3245	69	1
			137	42
80204	B1821BH044C150N	5305-00-071-2055	179	7
80204	B1821BH050C075N	5305-00-732-0512	33	31
			34	23
			62	2
			98	1
80204	B1821BH050C375N	5305-00-071-2078	128	12
80204	B1821BH050C600N	5305-01-032-2312	48	14
			149	10
80204	B1821BH063C100N	5305-00-724-7218	62	5
			110	20
80204	B1821BH063C175N	5305-00-724-7221	2	4
			91	12
			94	20
			101	3
			124	13
			135	10
			165	16
			171	28
80204	B1821BH063C200N	5305-00-724-7222	11	1
			90	21

CROSS-REFERENCE INDEXES

PART NUMBER INDEX

CAGEC	PART NUMBER	NSN	FIG	ITEM
80204	B1821BH063C200N	5305-00-724-7222	116	5
			124	10
			135	27
80204	B1821BH063C325N	5305-00-724-7236	123	27
80205	B1821BH063F25ON	5305-00-726-2553	103	34
80204	B1821BH063F400N	5305-00-726-2559	6	1
80204	B1821BH075C500N	5305-00-947-4362	116	18
99688	B2-28S	4140-01-097-4340	201	10
61510	CKE42A	5310-00-375-0518	45	12
			170	7
99862	CL-7C-HK4T	5355-01-267-1788	120	28
99862	CL-8-HK4T	5355-01-120-9450	119	17
			120	4
			120	36
75272	COV-0413	5340-00-448-1795	39	27
24346	CS-2008-156-750	6680-01-253-1033	137	16
80378	CVC754-564S42	5310-01-101-0622	146	15
55719	CW12	5120-01-018-3203	216	16
24161	CX81 SET 2	3030-00-109-3857	46	13
02324	C1-0007-0018		145	18
02324	C1-0147-0288	5306-01-270-8507	145	5
53591	C125647	5330-00-858-6206	31	24
53591	C130665	5310-00-087-6875	31	6
			31	35
75347	C19303	5940-00-177-4356	39	23
07860	C21452	2590-00-473-6331	130	2
02324	C7-0049-0001	5930-01-175-8344	145	21
28105	DA2524-7	6145-01-282-0453	BULK	24
28105	DA2597	6145-01-279-0549	BULK	2
28105	DA3125-D6	6145-01-276-7545	BULK	33
28105	DA3125-D6-9	6145-01-277-1169	BULK	28
28105	DA3125-PINK	6145-01-276-7544	BULK	31
28105	DA3125-5		BULK	30
28105	DA3125-8		BULK	35
10988	D72850	5342-01-085-8085	146	2
21335	EA28899	3120-00-446-9863	36	35
60380	EA40720	3120-01-271-4376	211	19
18265	EEH00-0846	2990-01-042-4776	40	2
0RS15	E090827	5340-21-914-2661	145	2
1C834	E500002	5305-01-280-6632	145	4
0RS15	E500015		145	3
24617	E8914-8	6240-00-643-0687	58	2
81348	FFB171/04J08A2E	3110-00-554-5302	207A	11
02324	FP106	4140-01-267-4270	145	1
81349	F02A250V5A	5920-00-284-6787	39	14
			53	30
81349	F02A32V15A	5920-00-012-0151	56	2
			66	21
			147	6
			201	2
			207D	19

CROSS-REFERENCE INDEXES

PART NUMBER INDEX

CAGEC	PART NUMBER	NSN	FIG	ITEM
16452	F10-2520VQ21A14S -112AC21L-167	2530-01-214-1578	149	1
11083	F7X6645		182	1
74400	G-330670	4730-00-911-9226	98	22
18265	GAH00-0783	2940-01-013-1324	28	6
98933	GCH2	5330-00-100-7248	118	13
			119	10
02324	G8-0019-0000	2540-01-268-3834	145	6
02324	G8-0022	5340-01-274-2951	145	8
71400	HHJ-B	5920-00-795-6665	66	19
60038	HM212010	3110-00-554-9004	108	29
08484	HP SIZE 2(HTM-250)	4730-00-909-8627	28	3
91816	HV22-24	4820-01-120-4532	18	1
			89	1
02324	H4-0058-1001	3020-01-173-3920	145	20
02324	H4-0058-2001	3020-01-173-3921	145	17
55883	IPD /A5964	5305-00-426-3085	136	18
55883	IPD2H3934	5331-00-291-7192	23	18
55883	IPD7F3488	2920-00-891-0928	51	41
60380	JD-53502	3110-01-155-1756	26	80
60038	JH211749	3110-01-013-4036	138	36
60038	JH307710	3110-01-021-1920	138	30
60038	JH307749	3110-01-020-9788	138	31
01212	JLM104910	3110-00-191-3923	95	11
			136	31
			139	6
60038	JLM104948	3110-00-938-5084	95	10
			136	32
			139	7
01212	JM 822010 CUP	2520-01-063-4241	135	5
01212	JM 822049CONE	2520-01-063-4240	135	6
60380	JTT-810	3110-01-242-2751	103	18
60380	JTT1211	3110-00-930-6289	68	8
			107	18
60380	JTT2422	3110-00-824-3707	103	40
59556	K-500-EN-0431	5330-01-148-5891	27	40
			140	10
			152	5
			154	18
			154	25
			155	15
			155	38
			155	41
			157	22
			159	26
59556	K-500-EN-0472	2990-01-149-5010	26	74
24956	KT 721040	2540-00-521-9785	146	13
51600	L-1010-064	3110-00-432-4284	73	19
46717	LA-606-17	2540-01-159-9779	146	9
46717	LA-606-22	5355-01-159-9359	146	24

CROSS-REFERENCE INDEXES

PART NUMBER INDEX

CAGEC	PART NUMBER	NSN	FIG	ITEM
24956	LE721125A-1	2540-00-123-7226	146	6
03038	LH90725-59	5306-00-690-6976	10	1
			47	5
24956	LK721014	2540-00-006-6289	146	10
78280	LP-535-1	2910-00-646-9727	39	18
11083	L1143	5306-00-285-1368	106	22
			136	47
			139	13
			156	22
			165	14
			174	5
			175	7
11083	L2315	5305-01-107-5161	137	20
46717	L6451-95	5315-00-234-1672	211	11
74400	M-4233	6210-00-191-2745	63	12
01212	MA1206	3110-00-263-9500	69	16
34623	MA207-20027	6135-01-104-8935	120	32
18265	MJM12- 0332	2990-00-417-1356	40	6
96906	MS14303-2R06	4730-00-119-9861	216	182
80205	MS16562-145	5315-00-857-3258	103	58
			105	46
80205	MS16562-49	5315-00-844-3966	142	25
96906	MS16624-1037	5325-00-715-1152	24	20
			51	58
96906	MS16624-98	2520-01-066-9196	149	19
96906	MS16625-1062	5325-00-687-3379	26	30
			87	11
96906	MS16625-1075	5325-00-754-1082	77	25
96906	MS16625-1165	5325-00-252-4753	109	40
96906	MS16627-1087	5325-00-514-1277	31	16
96906	MS16628-1143	5325-01-287-9026	27	42
96906	MS16630-4137	5325-00-846-8669	31	13
96906	MS16631-1275	5325-01-287-9036	31	27
96906	MS16632-1050	5325-00-256-2846	109	31
96906	MS16633-1025	5325-00-721-7680	26	97
96906	MS16997-32	5305-00-978-9370	26	109
96906	MS17131-23	3110-00-183-6730	109	9
96906	MS19059-2412	3110-00-100-6149	153	20
80205	MS21083N4	5310-00-903-8282	142	14
80205	MS21083N5	5310-00-660-3381	51	60
80205	MS21318-13	5305-00-253-5609	49	19
80205	MS21318-21	5305-00-253-5615	65	12
			131	7
			148	1
			156	31
			209	2
96906	MS21333-57	5340-00-282-7505	82	11
			101	26
96906	MS21333-59	5340-00-720-6213	33	34
			34	21
80205	MS24665-134	5315-00-839-5820	67	15

CROSS-REFERENCE INDEXES

PART NUMBER INDEX

CAGEC	PART NUMBER	NSN	FIG	ITEM
80205	MS24665-281	5315-00-839-2326	103	49
			115	13
			150	21
			161	22
			162	13
80205	MS24665-351	5315-00-839-5821	36	9
			61	7
			103	8
			106	3
			107	6
			109	4
80205	MS24665-353	5315-00-839-5822	61	4
			67	13
			101	43
			103	14
			104	7
			105	13
			107	11
80205	MS24665-491	5315-00-059-0206	123	31
			202	27
80205	MS24665-497	5315-00-013-7258	105	6
96906	MS25036-108	5940-00-143-4780	39	13
			53	16
			54	13
			63	11
			64	16
			66	20
81343	MS25036-109	5940-00-283-5281	54	9
			66	2
96906	MS25036-110	5940-00-143-4793	53	11
			63	16
			64	49
			207D	2
81343	MS25036-112	5940-00-143-4794	51	5
			63	4
			63	9
			63	25
			63	28
			64	9
			64	39
			66	23
96906	MS25036-114	5940-00-113-9826	63	19
			63	24
96906	MS25036-119	5940-00-114-1310	64	14
96906	MS25036-120	5940-00-557-4344	48	17
96906	MS25036-122	5940-00-113-8190	48	18
			50	2
			66	51
96906	MS25036-153	5940-00-143-4774	39	37
			53	14
			60	7

CROSS-REFERENCE INDEXES

PART NUMBER INDEX

CAGEC	PART NUMBER	NSN	FIG	ITEM
96906	MS25036-153	5940-00-143-4774	64	3
			64	19
			64	25
			66	18
96906	MS25036-155	5940-00-660-3633	54	11
81343	MS25036-156	5940-00-143-4775	48	22
96906	MS27183-10	5310-00-809-4058	49	11
			201	17
			202	35
96906	MS27183-12	5310-00-081-4219	14	16
			15	11
			15	19
			19	8
			24	2
			30	19
			32	21
			33	13
			34	7
			41	10
			126	25
			142	21
			150	7
			150	10
			158	15
			168	3
			209	20
96906	MS27183-14	5310-00-080-6004	66	15
			67	12
			83	34
			94	8
			113	10
			123	3
			124	36
			132	4
			133	11
			134	16
			166	21
			168	9
96906	MS27183-15	5310-00-809-4061	61	10
			92	3
			115	7
96906	MS27183-17	5310-00-809-5997	2	15
			33	32
			34	22
			42	20
			52	12
			67	14
			83	47
			108	27
			115	23
			117	2

CROSS-REFERENCE INDEXES

PART NUMBER INDEX

CAGEC	PART NUMBER	NSN	FIG	ITEM
96906	MS27183-17	5310-00-809-5997	119	16
			123	7
			124	31
			125	2
			126	17
			150	24
			159	40
			164	15
			167	14
			169	4
			171	32
			173	2
			179	9
			180	25
96906	MS27183-18	5310-00-809-5998	40	15
			46	11
			48	2
			74	28
			83	30
			91	7
			101	9
			112	10
			174	25
			175	19
			180	20
96906	MS27183-22	5310-00-951-7209	112	2
96906	MS27183-25	5310-00-809-8540	130	4
			174	10
			175	10
96906	MS27183-27	5310-00-809-8541	36	31
			39	3
			42	11
			56	9
			58	11
			61	28
			62	11
			116	23
			123	5
			126	11
			128	10
			144	7
			162	9
			169	17
96906	MS27183-7	5310-00-809-8544	16	12
			67	16
			122	5
96906	MS27183-9	5310-00-823-8804	19	13
			19	16
			25	19
			36	19
			38	12

CROSS-REFERENCE INDEXES

PART NUMBER INDEX

CAGEC	PART NUMBER	NSN	FIG	ITEM
96906	MS27183-9	5310-00-823-8804	154	9
			155	8
			155	27
96906	MS27769-3	4730-00-278-2965	90	13
81343	MS28775-260	5331-01-050-5024	69	53
			139	38
96906	MS3367-5-0	5975-00-133-8687	142	22
			207D	14
80205	MS35190-319	5305-00-959-2723	142	1
			161	5
80205	MS35206-241	5305-00-984-6189	57	5
80205	MS35206-244	5305-00-984-6192	51	32
80205	MS35206-248	5305-00-984-6196	56	7
80205	MS35214-38	5305-00-059-8263	39	17
96906	MS35307-371	5305-00-879-8351	12	15
			106	7
			164	32
96906	MS35307-462	5305-00-721-5322	2	1
80205	MS35333-38	5310-00-559-0070	39	42
			53	29
			57	17
			60	3
80205	MS35333-40	5310-00-550-1130	208	7
96906	MS35333-46	5310-00-543-4385	56	1
96906	MS35335-31	5310-00-596-7693	39	16
			57	4
96906	MS35335-32	5310-00-596-7691	119	24
			120	19
96906	MS35335-33	5310-00-209-0786	48	19
96906	MS35335-35	5310-00-627-6128	48	15
80205	MS35338-42	5310-00-045-3299	57	11
80205	MS35338-44	5310-00-582-5965	119	15
			120	9
			142	5
			147	15
80205	MS35338-45	5310-00-407-9566	9	13
			142	33
			151	17
			152	9
			153	2
80205	MS35338-46	5310-00-637-9541	28	21
			33	3
			67	10
			68	2
			69	51
			71	2
			79	9
			79	16
			80	20
			81	17
			87	15

CROSS-REFERENCE INDEXES

PART NUMBER INDEX

CAGEC	PART NUMBER	NSN	FIG	ITEM
80205	MS35338-46	5310-00-637-9541	87	25
			94	7
			95	14
			99	13
			101	5
			103	6
			104	3
			105	49
			106	8
			107	3
			115	9
			124	25
			129	5
			134	6
			135	21
			137	18
			138	2
			138	26A
			142	37
			143	22
			157	3
			166	23
			173	11
			174	7
			175	6
80205	MS35338-47	5310-00-209-0965	80	50
			99	20
80205	MS35338-48	5310-00-584-5272	69	43
			75	6
			78	27
			90	46
			99	34
			103	38
			111	8
			114	5
			115	16
			124	6
			166	12
			167	13
			173	16
			174	2
			175	2
96906	MS35338-51	5310-00-584-7888	93	11
			94	13
			115	28
			124	19
			174	13
			175	15
			210	4
			211	17
80205	MS35338-52	5310-00-754-2005	99	25

CROSS-REFERENCE INDEXES

PART NUMBER INDEX

CAGEC	PART NUMBER	NSN	FIG	ITEM
80205	MS35338-52	5310-00-754-2005	114	9
80205	MS35338-53	5310-00-584-7889	94	3
			211	26
96906	MS35340-50	5310-00-045-5001	58	14
			90	33
			94	21
			98	29
			99	4
			105	42
			110	11
			110	19
			124	9
			160	3
96906	MS35489-80	5325-00-579-6134	118	21
96906	MS35649-103	5310-00-852-8593	147	11
96906	MS35690-424	5310-00-660-2649	33	18
			37	8
96906	MS35690-624	5310-00-725-7382	9	6
			10	27
			21	25
			23	19
			36	53
			68	5
			75	9
96906	MS35691-17	5310-00-851-2682	36	58
			67	29
96906	MS35691-21	5310-00-975-2075	11	10
			36	10
			68	19
			103	10
			106	6
			107	22
			161	15
			162	17
80205	MS35756-10	5315-00-616-5524	36	4
			68	27
			109	7
80205	MS35756-11	5315-00-616-5523	158	16
80205	MS35756-13	5315-00-616-5521	14	27
80205	MS35756-22	5315-00-616-5499	101	1
80205	MS35756-28	5315-00-616-5508	103	35
80205	MS35756-33	5315-00-018-9576	36	32
80205	MS35756-5	5315-00-616-5515	103	47
80205	MS35756-6	5315-00-616-5514	150	23
80205	MS35756-8	5315-00-616-5526	36	14
			68	6
			161	18
80205	MS35756-9	5315-00-616-5525	49	24
			81	3
			81	21
96906	MS35810-3	5315-00-754-0848	103	53

CROSS-REFERENCE INDEXES

PART NUMBER INDEX

CAGEC	PART NUMBER	NSN	FIG	ITEM
96906	MS35810-3	5315-00-754-0848	126	29
80205	MS35812-4	5340-00-985-0823	36	68
			107	27
96906	MS39176-1	4730-00-067-9801	209	29
96906	MS45904-76	5310-00-061-1258	56	16
			58	10
			65	3
			66	52
			209	32
96906	MS51504A6	4730-00-812-7999	82	6
96906	MS51508A8Z	4730-01-324-5071	34	15
96906	MS51525-A6	4730-00-491-9576	169	29
			170	9
			171	16
96906	MS51525A10Z	4730-00-623-3889	82	5
96906	MS51525A12	4730-00-710-5571	164	20
			173	21
96906	MS51525A4S	4730-00-834-5035	30	17
96906	MS51525A8-10Z	4730-01-074-0907	158	22
96906	MS51527-A6	4730-00-143-3941	165	34
			170	4
96906	MS51527A6	4730-00-143-3941	83	26
			101	27
96906	MS51527A8	4730-00-822-5609	34	3
96906	MS51531B8	4730-00-762-1239	18	11
			34	14
			101	35
96906	MS51534A8-4	4730-00-676-3075	18	10
96906	MS51825-1A	4730-00-239-2503	209	30
96906	MS51840-23SS	5365-01-091-1407	32	8
			88	23
			89	2
96906	MS51849-75	5305-01-006-2053	119	25
			120	20
96906	MS51860-56Z	4730-01-143-9017	18	8
			165	46
96906	MS51953-132B	4730-00-197-6625	123	28
96906	MS51967-11	5310-00-880-8189	49	4
96906	MS51967-14	5310-00-768-0318	33	15
			40	13
			69	44
			75	7
			78	30
			82	20
			83	29
			115	17
			119	26
			120	21
			120	35
			123	24
			124	22

CROSS-REFERENCE INDEXES

PART NUMBER INDEX

CAGEC	PART NUMBER	NSN	FIG	ITEM
96906	MS51967-14	5310-00-768-0318	166	11
			169	26
			171	7
96906	MS51967-2	5310-00-761-6882	36	60
			48	3
			142	6
			147	14
			216	127
			216	135
96906	MS51967-20	5310-00-763-8920	98	30
			101	44
			116	15
			181	7
96906	MS51967-23	5310-00-763-8921	1	9
			116	12
			124	29
			174	12
			175	14
			177	5
96906	MS51967-29	5310-00-762-6248	112	14
			116	32
96906	MS51967-5	5310-00-880-7744	19	7
			32	23
			34	27
			39	52
			103	46
			105	59
			142	34
			168	4
96906	MS51967-8	5310-00-732-0558	24	15
			28	11
			28	20
			33	4
			65	10
			66	16
			113	11
			119	31
			120	46
			161	12
96906	MS51968-20	5310-00-763-8905	58	15
			90	34
			103	24
			103	29
			103	31
			104	10
			107	9
			108	31
			110	12
			132	9
96906	MS51968-23	5310-00-763-8901	91	38
96906	MS51968-26	5310-00-763-8912	114	10

CROSS-REFERENCE INDEXES

PART NUMBER INDEX

CAGEC	PART NUMBER	NSN	FIG	ITEM
96906	MS521301A221R	4720-00-087-9122	BULK	14
96906	MS521301A223R	4720-00-404-7277	BULK	13
80205	MS90725-6	5305-00-068-0502	120	37
01212	M1207EAHL	3110-00-446-9688	78	5
01212	M1214EAHL	3110-01-210-6265	137	12
61208	M1904AD	4310-00-116-9850	70	27
61208	M1904B	4310-00-116-6763	70	26
61208	M2048F	5310-00-362-8168	201	14
			202	15
81349	M22759/11-16-0	6145-00-600-6052	BULK	39
81343	M23053/4-105-0	5970-01-084-8651	BULK	15
81349	M24243/1-A612	5320-01-015-0699	16	11
61208	M2748	3110-00-180-7737	137	25
81349	M45913/1-4CG5C	5310-00-088-1251	67	1
			120	10
81349	M45913/2-6FG5C	5310-00-959-1488	80	2
			136	37
			161	35
			162	19
81349	M45913/3-5FG8C	5310-00-241-6658	67	34
81343	M7928/5-4	5940-01-079-1375	207D	3
81343	M79285-4	5940-01-079-1375	66	5
81349	M83248/2-118	5331-01-144-2252	157	25
81349	M83248/2-214	5331-01-017-6535	167	23
			168	19
			172	21
81349	M83248/2-220	5331-00-166-1111	156	14
81343	M83248/2-910	5331-00-167-5174	19	1
			82	25
			152	15
			156	9
			158	23
81349	M83248/2-914	5331-01-088-6106	167	21
78553	NAN50	5325-01-165-2606	101	17
80205	NASM35307-359		42	12
			144	6
80205	NAS397-28	4730-00-277-6320	51	47
01276	NH1625C175B0350	4710-01-294-0344	180	38
60380	NTA-5266	3110-01-024-9817	136	12
24956	NT1155	5310-00-976-4515	146	7
24956	NT721020	5310-01-043-7748	146	16
11083	OS1594	5306-00-260-4508	45	20
12658	PA1634	2940-00-910-3065	28	15
18265	PCH00-0781		28	1
66289	PD115	5310-00-637-1058	26	11
			26	16
			26	111
			52	2
			52	14
			216	140
00198	PK379	5315-00-816-1794	36	54

CROSS-REFERENCE INDEXES

PART NUMBER INDEX

CAGEC	PART NUMBER	NSN	FIG	ITEM
00198	PK379	5315-00-816-1794	39	47
			126	19
15235	PLG1	4730-00-278-3383	3	3
			4	16
			15	26
			76	2
			82	9
79370	PP2	2520-00-147-8491	108	5
80756	PSC-81	5325-01-270-2897	81	5
12658	PT-90-10	4330-00-168-1861	85	12
55644	PT375125PG	5310-01-184-6474	61	25
06383	PV14-10LFC	5940-01-087-0285	54	5
			66	10
77445	PWA10132-3	5310-00-225-6993	123	8
			180	27
18265	P10-0128	4730-00-084-7543	29	4
18265	P10-2533	5306-01-153-1362	28	16
18265	P11-0223	2940-01-155-0285	28	17
18265	P15-8669	2940-00-244-1319	28	14
06848	P16598	5310-00-297-8836	142	17
18265	P527366	5330-01-183-8680	28	18
05331	P91586	5340-01-082-6625	146	17
60380	Q-8321	3110-00-198-0510	26	90
60380	QA-54783	5315-01-182-3486	26	102
61112	QS5-2CT	2910-01-149-7860	39	32
71238	Q13367	5315-00-118-3070	27	5
60380	Q8292	3110-00-198-0464	26	19
62534	R-255-0-24	2540-01-281-9701	147	1
62534	RD-1-0349-0		147	8
62534	RD-1-0352-0	5340-01-171-0471	147	4
62534	RD-1-0355-2	4520-01-263-3147	147	9
62534	RD-1-0357-0	2540-01-267-8598	147	2
62534	RD-1-0358-0	2540-01-276-7590	147	12
62534	RD-3133-4-24V	6105-01-188-7155	147	13
62534	RD-5-4628-1-625	5305-01-172-2543	147	3
81349	RNR55E1960BS	5905-01-303-5617	55	6
81349	RNR55E1960FS	5905-01-005-3686	55	8
81349	RNR55E3481FS	5905-00-138-7420	55	15
81349	RNR55E4021FS	5905-00-434-2542	55	16
80756	RR-1075	5325-00-045-1884	69	55
80756	RR-312	5325-00-582-3115	180	4
80756	RR-354	5325-00-285-7939	136	10
80756	RRT-187	5325-00-285-6726	69	29
80756	RRT-224	5325-00-952-7573	69	15
80756	RRT-354	5325-01-190-5680	70	1
			72	7
80756	RRT-500	5325-00-853-2384	41	6
80756	RRT212C	5325-00-954-9666	180	50
80756	RR587	5325-00-582-3971	138	32
80756	RSN-196	5325-00-176-0345	72	9
80756	RSN-243	5325-01-270-2896	78	23

CROSS-REFERENCE INDEXES

PART NUMBER INDEX

CAGEC	PART NUMBER	NSN	FIG	ITEM
80756	RST-112	5325-00-951-6973	105	20
80756	RST-177S	5325-00-403-6449	73	21
80756	RST-187	5325-00-828-6698	98	18
80756	RST-275	5325-00-763-9328	141	2
80756	RST-287	5325-00-441-8849	141	7
80756	RST-350	5325-00-852-1435	74	17
80756	RST-68	5325-00-921-3208	9	1
80756	RST100	5325-00-475-0205	105	27
81774	R5302P1	5940-00-291-0085	60	8
			64	23
1C834	R575120	2510-21-912-3610	118	11
75535	S-320AN-15	4030-01-289-6202	132	13
64058	S-4502	5970-00-557-8747	51	18
24956	SC 1160	5305-01-020-5235	146	8
85471	SC-42		119	5
			120	23
6N422	SC41-46		121	3
82654	SF 845	9390-01-085-2839	127	7
05662	SP238	2520-01-253-7035	208	3
78174	STP163	5940-00-291-0085	39	33
			59	2
			59	7
24956	SW721027S	5930-01-236-8779	146	23
02697	S1199 2-216	5331-00-913-8872	32	10
			77	12
11083	S1577		132	11
11083	S1619	5306-00-426-2932	48	10
			71	19
			79	14
04614	S7481-5S	5310-00-880-8203	65	9
99193	S9413-215	5331-00-245-6767	134	20
			180	15
30966	T-1213-SL	5342-00-498-2946	55	28
11083	T768	5306-00-426-2983	159	19
			171	22
09990	V404PH-10-6	4820-01-253-2787	147	17
70960	WALH6-3	5310-00-514-6849	69	54
60532	WAS125	5310-00-080-9422	35	7
01843	WA1793	5310-00-972-1588	146	5
53867	WA721029	5310-01-043-7753	146	14
24956	WA721033	5310-01-035-0869	146	19
70742	WBR6	5310-00-177-1039	37	26
78189	WD23875	5310-01-098-0634	56	25
			202	24
81348	WW-P-471AASBCA	4730-00-288-8055	211	8
12128	W55	3110-00-554-5302	45	8
61208	X-208746-A	3040-01-219-7489	70	3
61208	X-208748-A	3010-01-273-3401	70	19
1NKJ8	YAEV6CL10	5940-00-636-7891	64	43
53867	0 122 469 004	6115-01-184-7432	49	1
11083	0L0139	5306-00-426-2866	72	15

CROSS-REFERENCE INDEXES

PART NUMBER INDEX

CAGEC	PART NUMBER	NSN	FIG	ITEM
11083	0L0261	5310-01-167-3641	103	50
11083	0L0364	2930-00-365-2152	13	17
11083	0L0478	5306-01-176-4831	92	2
			92	6
11083	0L0557	5305-01-336-5930	216	130
			216	138
11083	0L0827	5365-00-423-8098	110	22
11083	0L0829	2520-00-362-7883	107	1
11083	0L1026	5340-00-229-9287	9	23
			78	26
			90	15
			137	36
11083	0L1032	3040-01-272-6739	104	12
11083	0L1124 NON-ASBESTOS	5330-01-500-8947	82	8
11083	0L1143	5306-00-285-1368	10	20
			15	15
			68	10
			207A	6
11083	0L1178	5306-00-423-8069	115	29
			116	8
			124	34
11083	0L1329	5306-00-268-5798	2	13
			123	22
			174	18
			175	24
11083	0L1351	5306-00-263-7301	10	16
			11	9
			12	13
			30	10
			33	40
			36	70
			45	24
			61	27
			61	44
			67	9
			68	11
			83	33
			101	4
			105	61
			115	8
			116	22
			123	14
			126	13
			137	32
			166	24
			169	19
			172	5
			173	10
			209	31
			207B	8

CROSS-REFERENCE INDEXES

PART NUMBER INDEX

CAGEC	PART NUMBER	NSN	FIG	ITEM
11083	0L1365	5310-00-221-3150	39	48
			109	32
11083	0L1558	5306-01-437-6180	78	32
11083	0L2070	5306-00-698-2150	10	19
			13	5
			15	38
			23	22
			32	15
			46	17
			69	25
			75	17
			106	13
			143	21
			164	9
11083	0L2119	5365-00-365-2281	108	2
			124	8
11083	0S0509	5305-00-252-8919	8	1
			42	2
			55	26
			56	15
			66	14
			67	20
			103	19
			104	2
			105	38
			107	16
			109	22
			116	24
			123	6
			126	22
			139	8
			161	1
			171	3
11083	0S1566	5306-00-275-5012	10	11
			112	3
			116	7
			124	14
			207A	17
11083	0S1571	5305-01-026-9518	13	14
			30	13
			40	4
			158	50
11083	0S1573	5306-00-426-2922	167	5
			180	33
11083	0S1585	5306-01-127-9361	2	16
			6	21
			78	9
			83	35
			90	47
			91	8
			103	37

CROSS-REFERENCE INDEXES

PART NUMBER INDEX

CAGEC	PART NUMBER	NSN	FIG	ITEM
11083	0S1585	5306-01-127-9361	108	26
			114	4
			115	25
			123	10
			124	5
			158	17
			167	12
			173	3
			174	3
			175	3
			180	26
			216	116
			207C	12
11083	0S1587	5306-00-263-8978	5	19
			6	20
			40	14
			46	12
			48	1
			84	3
			115	24
			164	14
			166	17
			169	3
			179	3
11083	0S1590	5306-01-094-9106	14	7
			14	10
			43	2
			44	2
			80	45
			106	14
			129	2
			136	16
11083	0S1591	5305-01-015-6841	12	14
			15	31
			18	5
			23	14
			24	14
			28	8
			29	1
			30	5
			39	1
			40	12
			41	29
			71	27
			82	1
			84	17
			87	14
			110	3
			157	2
			161	11
			165	41

CROSS-REFERENCE INDEXES

PART NUMBER INDEX

CAGEC	PART NUMBER	NSN	FIG	ITEM
11083	0S1591	5305-01-015-6841	174	6
			175	8
11083	0S1594	5306-00-260-4508	4	14
			5	11
			13	10
			36	49
			39	46
			41	22
			42	25
			56	10
			58	9
			65	4
			71	3
			77	14
			79	8
			82	15
			87	24
			95	13
			103	22
			109	30
			110	4
			115	19
			124	35
			130	1
			134	7
			136	42
			137	37
			138	3
			138	12
			138	43
			139	1
			142	38
			158	24
			168	8
			207C	13
11083	0S1595	5306-00-423-8117	40	18
			41	17
			42	19
			61	22
			83	36
			85	3
			115	6
			123	34
			125	1
			126	16
			135	3
			166	14
			169	24
			173	15
			180	19
11083	0S1597	5305-00-651-2686	142	16

CROSS-REFERENCE INDEXES

PART NUMBER INDEX

CAGEC	PART NUMBER	NSN	FIG	ITEM
11083	0S1615	5306-00-261-1153	19	17
			25	18
			27	38
			147	16
			154	20
			155	20
			155	37
			208	8
			209	23
11083	0S1619	5306-00-426-2932	14	6
			44	7
11083	0S1621	5306-00-426-2934	123	1
			135	9
			159	21
			177	11
			179	10
			207C	15
11083	0S1622	5306-00-451-1552	99	33
11083	0S1626	5306-00-814-6588	111	3
			130	5
			168	24
11083	0S1627	5306-00-426-2937	211	16
11083	0S1748	5306-00-426-2939	11	14
			207G	7
11083	0S1756	5306-00-426-2941	211	6
11083	0T0030	5310-00-253-7914	91	18
			108	14
11083	0T0055	5306-01-159-1513	45	2
			62	10
			164	17
11083	0T0065	5305-00-252-8906	14	38
			44	1
			88	6
			109	16
11083	0T0101	5307-00-419-4067	3	7
11083	0T0199	2520-01-066-9192	78	22
11083	0T0319	5306-00-260-4512	149	2
11083	0T0320	5306-00-260-4513	156	18
			175	12
11083	0T0431	5310-01-040-2192	36	50
11083	0T0573	2910-00-309-9473	12	16
			75	15
			83	25
			88	2
11083	0T0768	5306-00-426-2983	80	42
11083	0T0883	5310-00-404-2422	103	15
11083	0V0375	5305-00-139-7071	21	19
			171	13
11083	0054362	4730-01-471-0277	101	24
11083	0063801	5310-01-164-8541	39	49
11083	0138253	5305-01-214-5052	123	4

CROSS-REFERENCE INDEXES

PART NUMBER INDEX

CAGEC	PART NUMBER	NSN	FIG	ITEM
59556	019-00006-31	5310-00-999-2527	51	57
11083	030-7946	4730-01-429-3246	19	19
			33	36
			34	18
89257	030051	5310-00-225-6993	68	21
11083	0307942	4730-01-051-2312	83	23
			165	25
11083	0307947	4730-01-168-1050	19	5
			38	2
11083	0308144	4730-01-063-0744	34	13
			101	36
11083	0308194	4730-01-058-9100	19	2
11083	0310219	5306-01-426-7103	81	8
11083	0310249	4730-01-471-3774	202	62
			206	7
11083	0314155	5310-00-542-0091	126	32
			202	38
11083	0315637	5920-01-534-0393	207D	18
11083	0318590	5365-01-257-3309	103	16
11083	0318759	4730-01-156-9977	173	24
11083	032770	5331-01-266-4995	181	12
11083	0329828		202	18
11083	0335879	5331-01-205-4276	26	7
11083	0336042	5331-01-068-9760	83	24
11083	0347044	5320-01-269-9263	121	8
11083	0375197	5975-01-474-1888	56	30
11083	0454065	5305-01-187-0533	52	4
03479	05-35-756	6620-01-158-2910	38	14
11083	0530088	4730-00-331-4279	34	16
11083	0535930	9905-01-273-4821	148	28
11083	0617540	5330-01-079-4740	149	8
11083	0672935	4730-01-168-1041	101	54
11083	0676495	4730-01-207-9892	34	20
11083	0686091	3040-01-267-8764	33	19
11083	0869934	5306-01-116-9622	11	4
			15	18
			33	12
			153	11
			209	21
4U735	092919	2510-01-267-6029	119	32
53867	1 120 200 023	5365-01-174-8876	49	29
53867	1 120 220 007	5310-01-175-0630	49	25
01843	1 120 222 001	5330-01-178-3728	49	15
01843	1 124 035 017	2920-01-178-0499	49	17
53867	1 124 210 003	2920-01-187-7193	49	30
53867	1 125 045 116	2920-01-176-2965	49	18
53867	1 125 500 024	2920-01-178-6536	49	2
53867	1 126 610 061	4140-01-176-2818	49	23
53867	1 127 011 077	5970-01-183-4633	49	7
53867	1 127 320 503	5961-01-174-8652	49	16
53867	1 197 011 000	2920-01-177-8505	49	6

CROSS-REFERENCE INDEXES

PART NUMBER INDEX

CAGEC	PART NUMBER	NSN	FIG	ITEM
53867	1 297 011 002	2920-01-187-2113	49	5
53867	1 900 910 024	3110-01-179-5935	49	14
11083	1-5M6198,1-2A3746	2520-00-401-0290	69	39
11083	1A0458	5306-00-245-0953	210	5
			211	23
			212	8
4U735	1A08284	5330-01-324-4004	118	8
4U735	1A08466-36		118	24
4U735	1A08471		147	7
11083	1A1460	5306-00-273-6357	40	17
			42	22
			68	23
			75	1
11083	1A2029	5306-00-423-8194	12	12
			13	7
			15	2
			15	16
			16	15
			28	5
			32	13
			33	1
			36	16
			41	38
			58	17
			67	25
			69	27
			69	52
			81	16
			82	16
			83	6
			90	10
			101	53
			126	7
			161	32
			162	21
			169	15
			169	18
			180	12
			207C	6
11083	1A2343	5306-00-282-8360	34	9
			207C	3
11083	1A2595		33	10
11083	1A4672	5340-00-365-2167	69	50
11083	1A5183	5306-00-637-4927	23	7
			109	17
11083	1A5405	5306-00-423-8252	99	28
11083	1A5822	5306-00-426-3080	171	1
11083	1A8063	5306-00-426-3139	35	12
			116	21
			176	17

CROSS-REFERENCE INDEXES

PART NUMBER INDEX

CAGEC	PART NUMBER	NSN	FIG	ITEM
11083	1A8537	5306-00-426-3150	98	10
			108	23
			216	99
			207A	7
11083	1A8651	5306-00-423-8292	98	8
11083	1A8827	5315-01-164-7583	107	5
11083	1A9579	5306-00-930-5643	41	9
			142	20
11083	1B0676	5315-00-272-6760	36	7
			103	7
			106	4
			107	21
			109	3
0RS15	1B08273	5340-21-914-2670	118	6
4U735	1B08301	2510-01-267-6035	118	19
4U735	1B08349	2910-01-267-8672	122	13
1C834	1B08351-2	2510-21-912-3602	122	33
4U735	1B08358	5640-21-913-9457	122	22
4U735	1B08361	2510-21-912-3530	122	43
4U735	1B08378-2	2510-01-267-6063	122	28
4U735	1B08380-1		122	37
4U735	1B08382	2510-21-912-3603	122	38
0RS15	1B08386	5640-21-913-9459	122	19
4U735	1B08391	6160-21-914-1390	122	18
0RS15	1B08393-2	2510-21-912-3601	122	15
11083	1B2713	5306-00-423-8313	36	18
11083	1B2886	5306-00-423-8316	173	18
			207C	25
11083	1B4202	5310-00-188-7848	34	6
11083	1B4430	5310-00-843-4593	81	19
			198	7
11083	1B4971	5365-01-050-8008	20	5
11083	1B5170	4730-01-022-6066	30	1
11083	1B5355	5310-00-498-8409	30	14
			40	5
			40	19
11083	1B7709	5305-00-401-5261	4	28
			9	11
11083	1B8705	5315-00-920-6927	207A	24
11083	1B8708	5315-00-616-5522	5	5
11083	1B8744	5315-00-246-0496	91	34
11083	1B9920	5360-00-076-1478	61	5
11083	1C0155	5310-00-282-0493	78	10
1C834	1C08271	6160-01-302-6239	120	29
0RS15	1C08285	9340-21-913-9703	121	2
0RS15	1C08293-1	6160-21-914-1387	120	39
4U735	1C08303	2510-21-914-3497	119	28
			120	17
4U735	1C08304	2510-21-914-4026	119	12
0RS15	1C08337-1	5340-21-914-2663	118	4
0RS15	1C08337-2	5340-21-914-2662	118	7

CROSS-REFERENCE INDEXES

PART NUMBER INDEX

CAGEC	PART NUMBER	NSN	FIG	ITEM
0RS15	1C08403-2	2540-21-914-4103	122	32
0RS15	1C08417	2510-21-914-4108	122	12
0RS15	1C08467-2	9340-21-913-9704	119	27
			120	6
11083	1C2251	5306-00-423-8393	10	24
			138	19
0RS15	1D08286	2510-21-914-4109	121	6
0RS15	1D08287	2510-21-914-3486	121	1
0RS15	1D08468-1	9340-21-913-9706	118	11
0RS15	1D08468-4	2510-21-914-3487	119	2
11083	1D4078	5315-01-206-7581	141	4
11083	1D4556	5306-00-698-2177	156	1
11083	1D4566	5306-00-426-3397	159	39
11083	1D4595	5306-00-814-6559	4	31
			108	1
11083	1D4609	5306-00-426-3403	93	1
			212	12
11083	1D4610	5306-00-426-3404	94	12
11083	1D4612	5306-00-426-3405	1	1
11083	1D4615	5305-00-411-3768	94	17
			174	14
			175	18
			177	6
11083	1D4626	5305-00-150-0967	114	8
11083	1D4627	5306-00-732-7714	178	17
11083	1D4629	5305-00-929-9442	96	6
11083	1D4637	5306-01-123-6133	163	12
11083	1D4638	5306-01-044-2199	116	31
11083	1D4643	5306-00-426-3412	112	11
3HKX1	1D4717	5310-00-143-5722	52	3
			52	15
			65	8
			67	35
			202	9
			206	8
			216	141
11083	1D4719	5310-01-236-9899	207C	24
11083	1D5117	5310-00-208-9476	207C	21
0RS15	1E08282	2510-21-914-3490	118	3
0RS15	1E08283	2510-21-914-3489	118	2
0RS15	1E08300	2510-21-914-3483	120	44
4U735	1E08315	2510-01-267-7932	119	4
4U735	1E08320	2510-01-267-7931	119	1
11083	1F0748	5310-00-445-4632	207F	3
11083	1F1006	5315-00-363-8794	14	20
			167	18
11083	1F1599	5320-01-264-8505	127	12
11083	1F1609	5365-01-270-2770	101	10
11083	1F5403	5340-00-411-3926	36	8
			103	12
11083	1F5842	5306-00-087-7178	154	2

CROSS-REFERENCE INDEXES

PART NUMBER INDEX

CAGEC	PART NUMBER	NSN	FIG	ITEM
11083	1F7960	5310-00-595-6153	33	16
11083	1H2320	5360-01-167-3644	105	19
11083	1H2387	5305-01-183-3993	202	64
11083	1H3112	5120-01-512-7167	216	58
11083	1H4148	5325-00-282-5047	109	26
11083	1H5165	5340-00-547-9875	58	18
11083	1H5166	6220-00-778-7213	56	8
11083	1H5948	5340-01-284-9885	168	7
11083	1H7365	2510-01-063-0635	61	3
11083	1H7366	2510-01-063-0636	61	6
11083	1H8128	5331-00-555-3810	139	22
11083	1H8171	2530-00-930-9778	207G	1
11083	1H8720	5331-00-555-3807	95	6
			158	25
11083	1H9696	5331-00-580-1226	151	14
11083	1J0245	2520-01-066-8434	96	17
			97	15
11083	1J0708	5365-00-756-8621	178	2
11083	1J1971	5315-01-170-2228	67	27
11083	1J2087	3120-00-949-8863	163	6
11083	1J2890	5330-01-189-3550	135	25
11083	1J2919	5315-01-320-3517	214	2
11083	1J4143	5310-01-336-5335	163	20
11083	1J4384	5315-00-619-2962	61	8
11083	1J5257	5306-00-436-9893	211	25
11083	1J6309	5365-01-257-3305	181	9
11083	1J6740	3110-01-270-1812	211	35
11083	1J6775	5306-00-131-1660	211	30
11083	1J7468	5340-01-258-0942	169	2
11083	1J8265	5306-01-270-8494	211	15
11083	1J8497	4820-00-923-7042	159	1
11083	1J9227	3110-00-740-6784	137	39
11083	1K0485	5310-00-458-2019	68	26
11083	1K3047	5310-01-533-9767	207A	9
11083	1K4706	5310-00-350-3243	68	7
11083	1K6705	5306-00-133-2090	91	19
11083	1K6870	5310-00-269-6340	184	17
			188	8
			190	13
11083	1K6978	5306-00-409-3684	69	30
11083	1K6985	5365-01-068-7087	45	9
11083	1K7041	5360-00-290-0851	69	28
			140	14
11083	1K8362	4820-01-237-6825	87	22
11083	1L4418	5360-01-155-5301	158	4
11083	1L5072	5315-00-532-5746	9	17
			180	1
11083	1L5081	5310-01-146-1218	13	11
			36	55
11083	1L5316	5315-00-479-2833	153	22
11083	1M0424	5315-01-210-2959	105	16

CROSS-REFERENCE INDEXES

PART NUMBER INDEX

CAGEC	PART NUMBER	NSN	FIG	ITEM
11083	1M0498	5330-00-949-0210	72	38
11083	1M1230	5310-01-132-5309	201	22
			202	32
11083	1M1341	5340-01-053-3843	103	9
			106	5
			107	20
11083	1M2766	5307-01-207-0426	131	3
			213	8
11083	1M3069	6220-00-433-5959	58	16
11083	1M3070	6220-00-350-8204	58	19
11083	1M3688	3040-01-267-2100	101	2
11083	1M3782		105	26
11083	1M3788	5315-00-947-9737	105	28
11083	1M3802	5340-01-294-0761	105	53
11083	1M3833		71	23
			75	5
11083	1M4025	2520-00-948-3308	105	51
11083	1M4102	5342-00-938-5530	69	8
11083	1M4291	5315-00-193-0924	95	5
11083	1M5156	5340-01-209-8292	78	29
			90	16
11083	1M5471	4820-00-456-9921	80	6
11083	1M6036	5331-00-948-6040	110	14
11083	1M6119	5306-00-438-8600	61	14
			61	34
			61	42
11083	1M6120	5310-00-438-8604	61	15
			61	35
			61	41
11083	1M7643	5365-01-159-1562	20	10
11083	1M8625	2520-00-237-4608	83	2
11083	1M8747	5330-00-738-8639	95	7
			95	8
			96	7
			96	8
			99	15
			99	16
11083	1M8776	3110-00-914-3263	91	1
11083	1M8923	3110-00-949-4964	78	14
11083	1M9011	5330-00-948-3306	90	4
11083	1M9029	2530-00-449-0452	94	24
11083	1M9351	5360-01-336-7960	216	129
			216	137
11083	1M9444	2530-00-949-0817	108	11
11083	1N3576	2815-01-246-6227	3	1
11083	1N3800	2910-01-149-7901	26	98
11083	1N3802	2910-01-151-5705	26	100
11083	1N3958	2930-01-149-6719	44	3
11083	1N4375	2815-01-253-3451	5	17
11083	1P0436	5330-01-024-4862	24	6
11083	1P0464	5120-01-510-5653	217	6

CROSS-REFERENCE INDEXES

PART NUMBER INDEX

CAGEC	PART NUMBER	NSN	FIG	ITEM
11083	1P0492	5120-01-510-5654	216	59
11083	1P0510	5120-01-030-1626	216	186
11083	1P0520	5120-01-039-4811	216	94
11083	1P0558	4810-01-253-0550	71	14
11083	1P0559	2520-01-254-0241	71	20
11083	1P0566		74	13
11083	1P0567	3040-01-253-7460	74	9
11083	1P0579	3040-01-254-1102	72	20
11083	1P0622	3110-00-211-9679	78	13
11083	1P0623	3110-00-211-9680	78	35
11083	1P0820	5120-01-124-1732	216	60
11083	1P0921	3040-01-252-9527	67	22
11083	1P0929	3040-01-150-5425	67	17
11083	1P0943	5365-00-457-1485	124	32
11083	1P0956	3040-00-420-5498	108	33
11083	1P0982		88	18
11083	1P0983	5340-01-269-9284	88	17
11083	1P1396	5310-00-431-7237	175	13
11083	1P1441	4730-00-762-1239	165	47
11083	1P1650	3120-01-160-4111	105	62
11083	1P1855		217	7
11083	1P1860		217	8
11083	1P1900	5307-00-061-3607	68	30
11083	1P2083		105	12
11083	1P2166		143	7
11083	1P2167		143	5
11083	1P2168		143	17
11083	1P2169	2990-01-268-2069	143	15
11083	1P2175	3040-01-254-4939	139	20
11083	1P2176	3040-01-254-1027	139	28
11083	1P2187	4320-01-202-5616	143	2
2J565	1P2195	4820-01-158-6839	140	12
11083	1P2207	3020-01-254-4804	139	31
11083	1P2236	5307-01-197-3394	207C	23
11083	1P2237		207C	22
11083	1P2375	4730-01-295-3790	216	171
			216	178
11083	1P2377	5340-01-371-2357	216	179
11083	1P2393		217	2
11083	1P2420	4910-01-265-2624	216	202
11083	1P2497	5305-01-068-9719	26	57
11083	1P2581	3040-01-255-5401	135	13
11083	1P2593	3040-01-254-1007	132	8
11083	1P2597	5330-01-258-9166	139	37
11083	1P2878	2530-01-069-0791	107	7
11083	1P3052		216	187
11083	1P3053		216	188
11083	1P3054	5120-01-119-1716	216	48
11083	1P3075	5180-01-124-1903	216	189
11083	1P3190		138	11
11083	1P3216	5360-01-162-2847	151	19

CROSS-REFERENCE INDEXES

PART NUMBER INDEX

CAGEC	PART NUMBER	NSN	FIG	ITEM
11083	1P3262	5340-01-161-6223	138	13
11083	1P3310	3040-01-253-5577	105	10
11083	1P3482		216	46
11083	1P3702	5330-01-043-5564	172	4
11083	1P3703	5330-01-043-5565	174	8
			175	5
11083	1P3704	5330-01-052-3917	171	21
11083	1P3705	5330-01-060-0308	80	53
11083	1P3707	5330-01-053-2691	180	32
11083	1P4056	3040-01-254-1006	137	8
11083	1P4105	5330-01-257-7744	135	4
11083	1P4232	5365-01-164-6623	136	30
11083	1P4459	3040-01-253-7402	71	21
11083	1P4524		105	3
11083	1P4574	5342-00-007-9934	168	1
11083	1P4576	4730-01-051-3134	83	19
			168	18
			172	9
11083	1P4577	4730-01-051-5256	80	31
			83	22
			156	24
			158	59
			165	11
			166	7
			167	15
			174	22
			175	22
11083	1P4578	4730-01-051-5257	80	44
			156	21
			158	56
			171	19
			179	5
11083	1P4579	5340-01-060-0309	173	1
11083	1P4582	4730-01-053-2692	83	46
11083	1P4584	2520-01-176-9574	164	12
11083	1P4585	4730-01-163-7270	180	23
11083	1P4799	5340-01-259-2559	105	29
11083	1P4802		105	31
11083	1P5130		150	20
11083	1P5274	5315-01-155-2618	140	1
			140	13
11083	1P5286	3130-01-257-7787	137	14
11083	1P5290		136	41
11083	1P5293		136	26
11083	1P5763	2510-01-053-7306	180	35
11083	1P6071	3120-01-163-9375	136	11
11083	1P6153		136	17
11083	1P6158	3040-01-163-3240	136	22
11083	1P6167	2520-01-161-7796	136	13
11083	1P6172	5365-01-161-9161	136	43
11083	1P6173	3130-01-257-3836	137	38

CROSS-REFERENCE INDEXES

PART NUMBER INDEX

CAGEC	PART NUMBER	NSN	FIG	ITEM
11083	1P6174	3130-01-166-0810	137	31
11083	1P6175	5365-01-164-9962	137	30
11083	1P6176	3110-01-165-3725	136	19
11083	1P6178	5365-01-164-8702	136	33
11083	1P6179		136	24
11083	1P6180	3110-01-164-8765	136	45
11083	1P6181	5365-01-258-0113	135	24
11083	1P6182	3020-01-254-4807	137	23
11083	1P6184		136	6
11083	1P6188	5365-01-266-3314	137	2
11083	1P6208	3040-01-254-4937	136	5
11083	1P6209	3130-01-259-9600	137	19
11083	1P6367	5340-00-407-8369	4	12
11083	1P6434	5330-01-069-7444	41	15
11083	1P6452	5970-00-213-7747	26	124
11083	1P6591	4820-01-164-6960	76	1
11083	1P6592		76	10
11083	1P6596	4820-01-267-4335	76	8
11083	1P6669	5365-01-257-4350	138	33
11083	1P6670	3020-01-254-4806	137	10
11083	1P6671	3020-01-254-1223	138	34
11083	1P6691	5365-01-257-4625	135	29
11083	1P6701	3040-01-164-0352	136	29
11083	1P6728		135	16
11083	1P6753	3020-01-254-4805	135	28
11083	1P6754	5365-01-258-9188	135	1
11083	1P6755	5365-01-257-3815	135	26
11083	1P6886	4730-01-066-8443	209	24
11083	1P7346	5310-01-051-2300	14	11
11083	1P7402		215	5
11083	1P7437	5340-01-292-1734	216	170
			216	183
11083	1P7528		150	1
11083	1P7590	3040-01-220-0104	90	36
11083	1P7708	3040-01-253-4700	68	3
11083	1P8229	5340-01-259-3752	138	21
11083	1P8235	5330-01-211-6977	138	24
11083	1P8241	5340-01-257-4418	134	3
11083	1P8242	5330-01-208-7581	134	8
11083	1P8573	5365-01-260-7733	77	26
11083	1P8598	5365-01-257-3810	138	25
11083	1P8612	4820-01-253-8632	77	1
11083	1P8651	3040-01-167-4493	136	27
11083	1P8715	3040-01-253-9425	95	21
11083	1P8716	2530-00-127-8934	95	12
11083	1P8717	2530-00-918-5451	95	1
11083	1P8787	3130-01-216-4088	96	20
			97	18
11083	1P8835	3040-01-254-0231	72	1
11083	1P9442		96	21
			97	19

CROSS-REFERENCE INDEXES

PART NUMBER INDEX

CAGEC	PART NUMBER	NSN	FIG	ITEM
11083	1P9654	3040-01-254-3188	143	12
11083	1P9655	3020-01-254-1228	143	13
11083	1P9656		143	10
11083	1P9657	4320-01-253-7386	143	9
11083	1P9665	5340-01-259-8954	77	18
11083	1P9742	5340-01-200-1539	207C	20
11083	1P9807	2530-00-351-1975	100	3
			100	22
11083	1P9899		46	8
11083	1P9945	5340-01-148-9802	46	7
11083	1P9946	3040-01-147-6412	46	10
11083	1P9956	5306-00-497-0342	7	10
11083	1R-0746	2910-01-394-8803	140	7
11083	1R0722	2910-01-437-6111	181	16
11083	1R0750	2910-01-444-9487	38	10
11083	1S0004	5331-00-613-6499	106	19
11083	1S0876	5306-00-950-2427	98	12
11083	1S0994	5340-01-151-9308	83	4
11083	1S0996	5340-00-948-2286	62	4
11083	1S1014	5325-00-456-5519	56	22
11083	1S1015	5340-00-426-4819	62	1
11083	1S1150	5365-01-257-4395	41	32
11083	1S1790	5360-01-097-9196	33	7
11083	1S1860	5310-00-919-2244	100	5
11083	1S1953	3120-00-851-4696	27	31
11083	1S2121	2520-00-237-4603	87	8
11083	1S2232		90	38
11083	1S2233	3120-00-949-4062	90	37
11083	1S2254	2590-01-268-5376	83	8
11083	1S3618	5340-00-618-0246	80	27
11083	1S4233	5130-01-527-9779	216	98
11083	1S4295 NON-ASBESTOS	5330-01-382-6907	30	15
11083	1S4295NON-ASBESTOS	5330-01-382-6907	31	2
11083	1S4557	5340-01-257-2369	17	10
11083	1S4810	5330-00-989-3295	32	24
11083	1S5242		148	36
11083	1S5242-4	9905-01-168-0972	113	8
11083	1S5347	5330-01-209-8719	90	35
			135	14
11083	1S6527	5340-00-431-6452	73	11
11083	1S6543	5330-00-498-2901	69	4
			72	12
11083	1S6595	5330-00-931-8048	32	2
11083	1S7139	5360-01-254-2385	80	5
11083	1S7251	5940-01-058-9090	61	32
11083	1S7252	2920-01-066-0593	61	17
11083	1S8485	5340-00-948-9809	78	11
11083	1S8937	4810-01-127-5377	216	180
11083	1S8947	5331-00-031-2558	95	16

CROSS-REFERENCE INDEXES

PART NUMBER INDEX

CAGEC	PART NUMBER	NSN	FIG	ITEM
11083	1S8947	5331-00-031-2558	96	18
			97	16
			99	30
11083	1S9353	4730-01-267-5992	82	22
11083	1S9455	5307-00-419-4065	69	23
11083	1S9497	5330-01-164-8576	136	20
			139	17
11083	1S9498	5330-01-208-7592	139	16
11083	1S9540	2990-01-103-6817	3	5
11083	1S9543	5325-00-118-3056	7	1
11083	1S9593	5340-01-160-2464	59	6
11083	1S9808	5306-01-206-7167	139	27
11083	1T0051	4320-01-168-9593	70	11
11083	1T0414	5306-00-455-0467	70	16
			153	14
11083	1T0416	5306-00-253-7879	23	24
11083	1T0422		70	20
11083	1T0436	3020-00-349-8953	70	6
11083	1T0437		70	25
11083	1T0438	3110-01-257-3337	70	23
11083	1T0441	3110-00-443-5871	70	24
11083	1T0444		70	5
11083	1T0445	3120-00-401-6060	70	4
11083	1T0446	5305-00-419-2866	70	22
11083	1T0447	5330-01-211-1506	70	28
11083	1T0599	5365-00-763-0119	70	18
11083	1T0765	5306-01-097-7874	15	6
			138	8
11083	1T0822	5306-00-452-1354	28	22
11083	1T0902	3120-00-419-0940	70	21
11083	1T0930	2520-00-147-5081	69	10
11083	1T1993	2520-01-155-7937	70	17
11083	1T2052	2520-00-403-5400	70	13
11083	1T2069	3110-00-404-5484	70	12
11083	1U1805	4730-01-267-4288	176	19
11083	1U1817	2520-01-253-8693	158	18
11083	1U1818		158	7
11083	1U1819	4810-01-253-5569	158	1
11083	1U2135	3930-01-163-7337	176	1
11083	1U2136	3930-01-163-7338	176	1
11083	1U2405	5310-01-213-6996	214	7
11083	1U2760	5360-01-257-3420	156	4
11083	1U2827	3805-01-167-9159	180	46
11083	1U3243	5360-01-210-7606	155	18
11083	1U3966	3130-01-258-6105	149	25
11083	1U6415	5120-01-525-5523	216	49
11083	1U7541	4320-01-287-9576	216	12
11083	1U8236	3940-01-512-7412	215	10
11083	1U8842	5120-01-119-1736	216	47
			216	57
11083	1V0844	5365-01-106-8771	36	52

CROSS-REFERENCE INDEXES

PART NUMBER INDEX

CAGEC	PART NUMBER	NSN	FIG	ITEM
11083	1V6622	5999-01-534-0404	207D	15
11083	1W0613	2940-01-166-6834	209	22
11083	1W0698	6620-01-178-4439	209	35
11083	1W0701	6620-01-178-4771	209	33
11083	1W0705	6620-01-158-2909	209	34
11083	1W1219	2510-01-147-2252	2	9
			2	12
11083	1W1669	2910-01-178-8858	25	10
11083	1W1695	4320-01-163-3545	25	1
11083	1W1698	3040-01-178-9827	25	2
11083	1W1699	2910-01-180-2987	25	17
11083	1W2076	4730-01-159-0892	37	6
11083	1W2533	4710-01-253-8529	42	31
11083	1W2851	2930-01-254-0274	42	4
11083	1W2856	2930-01-254-0275	42	13
11083	1W3285	3120-01-156-3801	27	35
11083	1W3286	3020-01-254-1220	27	41
11083	1W3504	2510-01-253-8659	42	6
11083	1W3506	2510-01-253-8658	42	10
11083	1W3900	5330-01-155-4283	10	15
11083	1W4098	2990-01-183-5956	26	95
11083	1W4243	5360-01-156-8931	26	106
11083	1W4402		11	13
11083	1W4405	3020-01-148-3798	5	4
11083	1W4542	2930-01-147-2241	10	8
11083	1W4619		45	14
11083	1W5300	2815-01-146-4526	4	18
11083	1W5912	2910-01-178-9780	25	8
11083	1W6523	5365-01-154-4379	26	34
11083	1W6539	4320-01-204-7180	27	14
11083	1W6540		27	22
11083	1W6541	2910-01-155-0279	27	19
11083	1W6987	4820-01-254-0932	27	17
11083	1W7110	2815-01-177-4792	10	5
11083	1W7529	4730-01-253-6926	43	1
11083	1W7546	2990-01-253-3444	20	11
11083	1W7612	2815-01-107-5373	6	3
11083	1W7813	4730-01-253-6925	30	2
11083	1W7814	2990-01-253-3445	30	9
11083	1W7816	5340-01-161-5640	10	3
11083	1W8914		53	25
11083	1W9167	5340-01-153-8957	23	3
11083	1W9168	5340-01-155-5289	23	4
11083	1W9169	5340-01-155-7869	23	9
11083	1W9171	4820-01-253-7387	27	15
77820	10-101033-012	5935-00-456-8384	54	2
16764	10A1942258	3120-00-828-6852	51	62
11083	1003652	2815-01-119-2241	5	6
11083	1005047	2920-00-231-7270	49	1
11083	1007860	2815-01-186-2371	4	26
29944	10118	5306-01-162-0014	128	1

CROSS-REFERENCE INDEXES

PART NUMBER INDEX

CAGEC	PART NUMBER	NSN	FIG	ITEM
75535	1018623	4030-01-287-2358	132	14
0RS15	102123	5365-21-914-1007	119	21
			120	16
11083	1035962	3110-01-066-9172	104	6
			107	24
15434	10365-62	5340-00-354-1147	26	33
11083	1042091	5305-01-505-5701	202	68
7X677	10461400	2920-00-425-5932	51	1
77445	104749		115	26
1LW55	10496037	5330-01-257-3807	52	8
56161	10500703	6625-01-169-2437	55	25
11083	1052508	2910-01-021-1845	24	3
29510	105409	4730-00-639-9167	138	39
11083	1067443	9515-01-504-0765	190	12
11083	1067444	2815-01-504-0817	190	14
11083	1067799	3130-01-474-3376	74	16
11083	1070265	2815-01-159-7706	4	8
11083	1070268	5310-01-130-0611	4	7
77445	107277	5310-00-954-2993	41	33
45225	10854	5305-01-280-6556	216	160
19200	10910174-16	5310-00-987-1294	20	8
75535	1096657	4030-01-525-1233	132	15
79470	110-03428	4730-01-023-8633	26	39
71468	110238-0195	5999-01-156-6314	54	21
			55	9
			55	17
			66	32
11083	1105800	2815-00-024-4596	3	17
45225	1107	5120-00-227-0633	216	1
97111	1108	4730-01-275-0057	216	41
			216	177
81349	111-05002-0000	3110-00-542-0021	72	6
			137	27
45225	1110		216	26
16764	1115615		56	21
11083	1118015	5330-01-418-6284	4	24
17773	11235944		122	4
53867	1125825021	2920-01-177-8565	49	27
01843	1125885031		49	13
53867	1127011074	2920-01-178-6537	49	3
53867	1127011075	2920-01-177-8566	49	12
53867	1127011076	2920-01-178-6538	49	8
01843	1129900009	3110-01-177-4667	49	28
11083	1131526	4320-01-163-3546	88	1
11083	1142687	5331-01-417-6179	13	2
11083	1144680	3040-01-267-2078	88	16
11083	1144682	3040-01-267-2077	88	15
19207	11588985	5310-00-112-1271	146	11
19207	11598468	4730-00-933-9520	153	3
19207	11621436-1	5365-01-035-4899	24	24
			152	18

CROSS-REFERENCE INDEXES

PART NUMBER INDEX

CAGEC	PART NUMBER	NSN	FIG	ITEM
19207	11621436-3	5365-01-031-8183	151	6
			153	15
19207	11634187	5315-00-472-5242	72	19
19207	11634192	5310-00-205-8984	30	7
19207	11634200	5315-00-007-6034	75	12
19207	11634204-2	5365-00-006-0678	77	8
19207	11674728	5935-01-097-9974	65	6
11083	1171024	2530-01-497-1879	100	6
11083	1181623	2530-00-401-0301	96	1
			96	12
11083	1181625	2530-01-079-4110	97	1
11083	1181628	3830-01-192-8281	97	6
79550	11856	5940-01-188-0009	66	25
34623	118906	5365-00-753-9528	51	35
08928	12NUS-518	5310-01-257-3230	26	54
94135	12Z2007-260	5310-00-685-2973	142	28
71468	120-1839-000	5935-01-175-1788	54	27
71468	120-1841-000	5935-01-158-8952	55	14
77900	1206-00	5310-00-187-7070	55	3
11083	1210175	9905-01-344-2878	148	2
11083	122-6956	2590-01-440-8717	184	1
78189	1220-00	5310-00-595-7237	57	22
19207	12258931-2	6680-01-148-8875	55	20
3D6E9	1229T1554	5310-00-949-9296	96	5
78189	1232-00	5310-00-550-3714	57	7
			57	20
24617	12337822	5310-00-944-5896	49	20
11083	1234381	3830-01-507-5675	184	19
11083	1234382	3830-01-507-5677	184	18
11083	1234383	3830-01-507-5679	184	15
11083	1234384	2590-01-504-2526	184	2
11083	1234385	2590-01-504-2521	184	4
11083	1234386	9535-01-507-2404	184	14
11083	1234387	5315-01-506-4365	185	1
11083	1234388	2540-01-507-2366	185	10
11083	1234389	2590-01-506-9686	185	26
11083	1234390	2590-01-506-9689	185	15
11083	1234391	2590-01-506-9690	185	23
11083	1234713	5340-01-506-5794	185	24
11083	1237041	3805-01-512-7425	184	21
11083	1246889	4820-01-473-5061	165	42
11083	1266600	5340-01-506-8965	185	4
11083	1266601	5342-01-506-3730	185	5
11083	1267142	5360-01-497-2345	158	26A
11083	1290338		7	13
81774	13P140RC	6145-01-165-5633	BULK	37
81774	13P160RC	6145-01-230-2519	BULK	34
81774	1300-25	2990-01-103-3696	BULK	1
11083	1305853	4820-01-253-9513	158	26
11083	1313234	3040-01-254-1028	137	4
11083	1313235	5310-01-497-2351	137	5

CROSS-REFERENCE INDEXES

PART NUMBER INDEX

CAGEC	PART NUMBER	NSN	FIG	ITEM
11083	1313815	5330-01-469-3187	45	17
11083	1326182	5315-01-506-5042	188	14
			190	17
11083	1326183	5315-01-506-4364	206	1
11083	133-9220	2590-01-439-0295	186	1
11083	133-9700	2590-01-439-0299	184	23
11083	133-9705	2590-01-439-0300	184	22
11083	1345645	5340-01-534-4719	207A	5
53591	138363	3120-01-225-2095	31	15
11083	1387574	5340-01-476-1734	216	42
11083	1387575	5120-01-451-1401	215	8
			216	43
11083	1387720	5330-01-208-6239	KIT	
11083	1389507	5330-01-270-1752	26	47
53591	139572	5365-00-419-3286	31	20
56501	14RB8FX	5940-00-492-8333	64	6
30076	141859	2520-00-871-6818	92	4
11083	1419784	5306-01-526-8480	202	50
53591	142066	2950-00-167-6787	31	25
53591	142229	3120-00-401-6084	31	14
53591	143331	5340-00-491-6351	31	22
72452	1459-246	5310-00-088-1251	119	14
			209	26
79470	1461X8	4730-01-048-7874	16	6
53591	146808	5325-01-107-3896	31	12
11083	1479670	2930-01-499-9117	47	1
11083	148-7425	4820-01-486-0910	4	9
11083	148-7455	2815-01-143-1409	4	27
11083	1503724	5330-01-158-6283	27	44
11083	1503726	5330-01-157-3415	26	113
11083	1503728	5330-01-157-2016	26	45
			26	115
11083	1503730	5330-01-161-5518	26	38
11083	154-4482		45	21
01276	1540-12	4720-00-540-2778	BULK	12
62983	154129	5331-00-948-6482	32	5
			33	26
			76	7
			101	22
			151	7
			157	18
			159	36
			164	31
11083	1552270	5930-01-477-7177	39	39
11083	1557550	5330-01-127-8566	3	20
53591	156442	4310-01-259-8092	31	33
10001	1592919	5315-00-584-9792	70	14
			108	20
53591	159505	3040-01-253-3464	31	17
53591	159608	2990-01-253-4633	31	28
11083	1606386	5330-01-168-9562	42	8

CROSS-REFERENCE INDEXES

PART NUMBER INDEX

CAGEC	PART NUMBER	NSN	FIG	ITEM
11083	1606387	5330-01-168-9561	42	14
11083	1607700	5940-01-206-4291	64	31
11083	1631201	2590-00-135-6277	60	1
84760	16389	5365-00-022-0665	22	5
11083	1650016	4720-01-066-4587	BULK	8
11083	1650017	4720-00-198-5808	BULK	9
11083	1650020	4720-01-051-6773	BULK	5
11083	1650021	4720-00-981-8519	BULK	6
11083	1650023	4720-00-687-8759	BULK	11
11083	1667441	4910-01-296-3862	217	5
11083	1672201	5330-00-143-7173	176	16
			178	14
11083	1672208	5330-01-516-6085	163	14
11083	1672319		163	15
11083	1672463	5330-00-261-0990	176	14
			178	16
11083	1672469		163	16
4U735	169-900-002	2510-01-233-1612	118	1
11083	1694199	5330-00-613-7468	12	3
11083	1694200	5330-00-074-3603	12	1
11083	1697434	4140-01-524-6666	202	61
11083	1700564	2930-01-267-0416	KIT	
11083	1707502	3040-01-496-5171	11	12
11083	1714046	2540-01-524-6660	202	67
11083	1720038	5330-01-498-3662	45	21
11083	1725185	3040-01-475-9618	45	7
11083	1725189	4320-01-475-9634	45	18
11083	1727767	2930-01-498-2770	45	5
11083	1727827	2930-01-498-2769	45	14
11083	1741503	6105-01-097-8661	201	25
			202	31
11083	1762456	5360-00-149-9006	36	44
24956	1781540-SP27WC	5340-01-272-4963	146	12
11083	1796044	4130-01-521-1783	207A	1
			207E	1
11083	1799579	3110-00-202-1879	70	8
53591	182865	2990-01-208-7128	31	9
53591	183200	2990-01-165-5977	31	4
24617	1840633		52	9
1LW55	1847807	5305-00-218-6387	51	30
077S2	1851632	2920-00-100-3403	51	9
077S2	1852888	5977-01-153-0247	51	31
11083	1863736	5935-01-429-0888	39	40
30379	1874851	5977-00-423-4900	51	29
11083	188-5251	2530-01-497-1793	100	36
53591	188379	3120-01-275-7678	31	21
11083	1885252	2530-01-497-3707	100	29
11083	1885595	2530-01-497-1879	100	25
11083	1885596	2530-01-497-0276	96	24
11083	1885597		97	24
11083	1885600	2530-01-497-0242	95	22

CROSS-REFERENCE INDEXES

PART NUMBER INDEX

CAGEC	PART NUMBER	NSN	FIG	ITEM
11083	1885636	5306-01-497-9853	100	23
11083	1885637	5306-01-497-5224	100	26
11083	1885697	5330-01-497-2201	100	30
11083	1885698	3120-01-497-4890	100	28
11083	1885699		100	33
11083	1885700	2530-01-498-7887	100	32
11083	1885701	2530-01-498-7889	100	27
11083	1885721	5365-01-497-3465	100	31
11083	1885856	5310-01-496-6002	100	24
077S2	1893560	2920-01-112-2687	51	67
89346	1894637	3120-01-101-5089	51	56
7X677	1894638	3120-01-101-5088	51	14
1LW55	1894642	5331-01-053-7021	51	69
16764	1894643	5331-01-053-2907	37	29
			51	71
62983	190362	5310-00-203-1111	149	21
16764	1905406	5310-00-262-4715	49	22
30379	1906049	5940-00-871-0944	52	19
16764	1909499		52	20
1LW55	1913080	5310-00-291-4498	51	23
16764	1913084	5310-00-734-8959	51	17
16764	1914379	5310-00-757-6377	57	3
1LW55	1914869	5306-00-550-9129	51	10
077S2	1914873	2920-00-737-3225	51	40
77445	191663	5310-00-215-7524	15	37
1LW55	1922457	5310-00-719-5470	51	38
1LW55	1930611	5306-00-550-3023	51	33
1LW55	1945476	5330-00-976-4695	51	68
1LW55	1945484	6110-00-757-7187	51	59
077S2	1945840	2920-00-838-9344	51	44
077S2	1945848	2920-01-138-7046	51	11
077S2	1945853	2920-00-993-4233	51	42
1LW55	1945860	5331-01-024-9686	51	16
1LW55	1945862	5940-00-828-8510	51	37
1LW55	1948519	5310-00-062-2051	51	46
1LW55	1948520	5310-00-822-2236	51	49
077S2	1948522	2920-00-822-2287	51	45
1LW55	1948526	5310-00-822-2241	51	51
077S2	1948529	3040-00-034-4216	51	70
1LW55	1948536	5306-00-783-5183	51	65
U1088	1948537	5306-00-783-5188	51	66
11083	1950302	3120-01-503-4984	11	8
1LW55	1953237	5310-00-827-2821	51	15
077S2	1953244	2920-00-999-2535	52	18
24617	1955989	5970-00-431-3667	51	39
077S2	1957846	2920-01-138-7045	51	61
11083	1960029	3020-01-127-5195	11	6
11083	1960223	3020-01-254-1227	11	15
U1088	1964857	5330-00-914-0703	51	36
1LW55	1965093	5970-00-918-5568	51	26
16764	1965472	5970-00-657-8133	51	43

CROSS-REFERENCE INDEXES

PART NUMBER INDEX

CAGEC	PART NUMBER	NSN	FIG	ITEM
7X677	1968396	5305-00-450-5937	51	34
11083	1969988	3120-01-066-2505	11	17
16764	1972716	3120-01-166-8144	52	5
077S2	1977264	2920-01-140-0116	52	6
1LW55	1978754	9390-01-112-3500	51	12
			51	54
			51	63
16764	1979389	5970-01-137-3420	51	27
16764	1979451	5310-01-118-2476	51	2
16764	1979498	5940-01-163-1435	52	10
077S2	1979870	2920-01-207-9671	51	52
11083	1984564	4130-01-534-1930	207C	14
16764	1984705	5970-01-150-1446	52	17
16764	1984975		51	24
16764	1984978	5970-01-138-7044	51	25
077S2	1984979	5977-01-153-0322	51	28
1LW55	1984981	6105-01-254-2722	51	22
09990	2-115N709-90	5331-00-498-4556	136	38
09990	2-126N951-75	5331-00-855-8047	180	42
09990	2-178N951-75	5331-01-060-0745	139	18
09990	2-213N951-75	5331-00-850-7586	159	16
09990	2-218S1032-70	5331-00-913-8120	82	14
			87	13
09990	2-219S1032-70	5331-00-925-4778	80	13
			82	3
			83	11
			106	16
09990	2-221N951-75	5331-00-291-9572	157	5
09990	2-223S1032-70	5331-00-914-5773	80	51
09990	2-227N951-75	5331-00-559-8786	141	6
			160	6
09990	2-231S103-70	5331-00-939-0871	83	37
09990	2-239N951-75	5331-01-053-4684	179	1
09990	2-246N951-75	5331-00-859-0396	176	21
09990	2-279N951-75	5331-00-999-8364	135	12
09990	2-312S1032-70	5331-00-914-3320	106	9
09990	2-338N951-75	5331-00-862-6861	46	21
77873	2A-24160-1	2520-01-162-7636	92	1
11083	2A1420	5306-00-530-9235	94	2
11083	2A1465	2520-00-569-3839	110	18
11083	2A1466	5330-00-149-7248	110	17
11083	2A1538	5306-00-426-3605	94	14
			124	18
11083	2A1736	5355-00-371-3370	36	1
			161	6
			162	2
11083	2A2814	5305-00-419-2956	90	48
11083	2A3198	5310-01-209-9403	211	10
11083	2A3798	5315-00-252-2959	3	27
			6	8
11083	2A4429	2805-00-288-3650	4	21

CROSS-REFERENCE INDEXES

PART NUMBER INDEX

CAGEC	PART NUMBER	NSN	FIG	ITEM
11083	2A4639	5306-00-263-4038	78	1
			80	21
			134	15
			137	3
			158	6
11083	2A4996	5306-00-263-7299	158	11
11083	2A5546	5306-00-253-3376	37	9
11083	2B0974		105	14
11083	2B2003	5120-00-426-3787	216	50
11083	2B2404	5999-00-363-6240	30	20
			133	10
			209	15
11083	2B2938	5315-00-363-6577	61	2
11083	2B2994	5315-00-255-0996	1	6
			90	17
11083	2B3191		123	16
11083	2B3243	5340-01-255-3577	33	21
11083	2B5721	5365-00-423-8884	209	17
11083	2B7218	5306-01-193-9181	116	35
11083	2B7558	9390-01-185-5087	99	32
11083	2B7561	8125-00-200-5640	210	6
11083	2B7862	5325-00-266-1948	91	30
11083	2B7906	5315-00-622-8895	91	31
11083	2B8352	5310-00-507-5727	58	8
11083	2B947	5306-00-809-7134	33	17
			174	19
			175	25
			216	118
11083	2D6235	5310-01-160-2034	183	1
			185	11
			201	26
			202	19
			202	52
11083	2D6642	3110-00-992-1048	72	22
			72	34
			73	12
			74	25
			76	9
			143	26
11083	2D7091	5310-01-255-9345	80	4
11083	2D8009	5331-00-982-9312	88	11
11083	2D8154	5325-00-920-6925	6	7
11083	2F0025	5365-00-426-3985	114	6
11083	2F6156	5340-00-330-8289	105	60
11083	2F6678	5330-00-972-7644	51	55
11083	2G9524	2540-01-524-6664	202	63
30780	2HP5N-S	5365-01-124-2945	152	4
			154	24
			155	16
			155	40
			157	21

CROSS-REFERENCE INDEXES

PART NUMBER INDEX

CAGEC	PART NUMBER	NSN	FIG	ITEM
11083	2H1730	5310-01-085-0881	109	29
11083	2H3755	5306-00-814-8967	30	18
11083	2H3855	5306-00-138-4466	179	11
11083	2H3932	5331-00-633-4535	23	20
11083	2H4145	5330-00-678-3369	140	8
11083	2H5001	5331-00-858-8223	150	13
11083	2H5547	4730-00-278-3885	209	13
11083	2H6184	5331-00-339-6220	135	30
			138	9
11083	2H6338	5331-00-325-6310	138	16
11083	2H6488	5305-01-062-6007	180	36
11083	2H7152	5310-01-063-2968	122	6
11083	2H9233	5365-01-270-2768	39	44
			171	31
11083	2H9247	5331-00-593-1161	85	23
11083	2J0157	5330-00-858-8224	24	9
11083	2J0564	5310-00-465-9342	163	4
11083	2J3505	5310-00-919-2242	210	9
11083	2J3781	5342-00-946-2133	176	8
11083	2J3950	5310-00-557-9415	176	4
11083	2J3961	5331-00-950-2091	176	20
11083	2J5812	3130-00-948-9825	177	15
11083	2J5973	5330-00-919-2248	177	12
11083	2J6089	5360-00-929-5516	159	3
11083	2J7295	5360-01-166-6940	161	10
			162	5
11083	2J9900	5365-01-264-8511	169	1
11083	2K0190	4730-00-962-4579	167	22
11083	2K2605	5365-01-066-4574	36	22
11083	2K3258	5365-00-498-4621	178	23
11083	2K4472		138	29
			163	8
11083	2K4473	5365-00-586-5062	163	9
11083	2K4973	5310-01-058-8071	47	3
			142	36
			182	8
			185	8
11083	2K5957	5325-00-857-5703	139	4
11083	2K5986	5315-01-066-5213	69	38
11083	2K7468	5310-01-160-4539	131	1
11083	2K8199	5331-00-937-5155	154	10
			155	10
			155	29
11083	2L1224		207G	3
11083	2L3308	5330-01-383-7898	13	8
11083	2L3650	5315-00-246-8066	110	5
11083	2L8054	5940-00-118-8836	50	3
			66	50
11083	2L8071	5940-01-059-0873	48	23
			51	4
			63	20

CROSS-REFERENCE INDEXES

PART NUMBER INDEX

CAGEC	PART NUMBER	NSN	FIG	ITEM
11083	2L8071	5940-01-059-0873	63	29
			64	37
11083	2L8077	5940-01-053-4521	54	18
			66	3
11083	2M0125	2530-00-950-7009	98	19
11083	2M0287	5340-00-253-7912	62	7
11083	2M0369	5310-00-961-1624	98	4
11083	2M0398	4710-00-223-6883	98	6
11083	2M0445	5365-01-270-4450	110	15
11083	2M0849	5310-00-431-7239	72	23
			84	2
11083	2M1163	2530-00-949-1134	99	37
11083	2M1168	2520-01-059-9381	151	2
11083	2M1656	5340-01-152-8205	87	26
11083	2M4453	5331-00-074-3768	159	18
11083	2M4537	5315-00-245-9409	91	4
11083	2M4668	2590-01-236-2281	114	3
11083	2M4779	5307-00-465-6789	86	10
11083	2M5282	6220-00-756-8787	58	5
11083	2M5407	5330-01-382-6398	13	4
11083	2M5762	4730-01-271-5066	83	18
11083	2M7041	4730-01-068-7106	77	2
			87	12
11083	2M7116	2530-00-947-9925	99	2
11083	2M7167	5365-00-136-2006	33	6
			68	31
11083	2M7188	5305-00-948-4489	105	2
11083	2M8900	5342-00-402-2822	68	9
11083	2M8908	5355-00-730-8027	67	18
11083	2N0828	5310-00-187-9796	26	68
11083	2N1287	4730-00-647-3207	18	14
			30	22
			165	38
11083	2N2766	5310-01-020-5126	20	7
			31	3
11083	2N2878	5360-01-257-3422	26	112
11083	2N3476	5305-01-259-3531	55	2
11083	2N3872	2815-00-237-3756	9	14
11083	2N7029	5360-01-070-0532	158	31
11083	2P0220	5330-01-069-1478	10	7
			207A	12
11083	2P0347	2520-01-066-9178	95	15
			96	13
			97	11
			99	29
11083	2P0541	2530-01-267-6001	68	12
11083	2P0691	3040-01-253-1995	14	32
11083	2P0696	3020-01-253-9284	14	30
			14	33
11083	2P0988	4730-01-202-9311	173	7
11083	2P1005	3120-01-164-8623	136	9

CROSS-REFERENCE INDEXES

PART NUMBER INDEX

CAGEC	PART NUMBER	NSN	FIG	ITEM
11083	2P1052	2940-01-253-7420	138	17
11083	2P1053	2520-01-165-0354	136	39
11083	2P1169		14	24
11083	2P1170	3040-01-067-5649	14	23
11083	2P1487	5330-01-155-2584	2	11
11083	2P1692	5331-01-068-6104	2	8
11083	2P1738	2815-01-146-5926	12	2
11083	2P1739	4710-01-068-3420	13	15
11083	2P1751	2815-01-068-8565	13	18
11083	2P1757	2930-01-050-8012	46	4
11083	2P1781	5365-01-069-0882	14	26
11083	2P1784		14	1
11083	2P1976	2520-01-254-5579	139	19
11083	2P1978	3040-01-254-5563	135	15
11083	2P1980	3040-01-254-1099	136	1
11083	2P1981		137	1
11083	2P1984		137	4
11083	2P1985	5365-01-255-6668	137	22
11083	2P1986	3040-01-254-1098	139	23
11083	2P1990	5365-01-259-3960	137	24
11083	2P2046	5365-01-257-3303	137	26
11083	2P2274	6105-01-338-2386	216	145
11083	2P2276	5977-01-338-5694	216	147
11083	2P2277	5330-01-336-3238	216	149
11083	2P2281		216	148
11083	2P2283	4320-01-336-8164	216	152
11083	2P2284	4820-01-337-3876	216	153
11083	2P2285	5330-01-336-3239	216	154
11083	2P2286	3010-01-338-3035	216	151
11083	2P2327	5930-01-340-5771	216	146
11083	2P2345	5120-01-527-2422	216	51
11083	2P2511		15	1
11083	2P2537	5307-01-069-1419	15	25
11083	2P2541	6220-01-037-5622	58	3
11083	2P2547	2590-01-148-9536	16	1
11083	2P2685		26	129
11083	2P2697	4710-01-068-9728	16	4
11083	2P2717	2940-01-053-4532	16	13
11083	2P2720	5330-01-067-5727	10	18
11083	2P2788	2930-01-253-8644	46	20
11083	2P2811	3110-00-211-9694	91	2
11083	2P2922	3020-01-254-0082	78	36
11083	2P2923	3020-01-254-0083	78	24
11083	2P2934	5360-01-207-0690	139	12
11083	2P2935	5360-01-208-2213	139	11
11083	2P3201	5306-01-050-8014	6	17
			21	26
			97	2
			97	12
11083	2P3202	5306-01-050-8015	21	21
			96	15

CROSS-REFERENCE INDEXES

PART NUMBER INDEX

CAGEC	PART NUMBER	NSN	FIG	ITEM
11083	2P3206	5306-01-054-5310	28	12
11083	2P3230	5330-01-058-9176	41	8
11083	2P3424	3020-01-267-4339	91	27
11083	2P3425	3020-01-254-1231	91	29
11083	2P3426	5325-01-257-7822	91	28
11083	2P3538	5330-01-207-1339	108	18
11083	2P3560	5365-01-257-4394	138	23
11083	2P3561		138	20
11083	2P3566	4730-01-255-4468	139	15
11083	2P3572	5340-01-162-8857	132	3
11083	2P3598	3040-01-253-9508	73	8
11083	2P3617		153	7
11083	2P3637	5330-01-164-8564	134	11
11083	2P3639	4820-01-162-8996	153	27
11083	2P3644	5330-01-162-8587	152	1
11083	2P3646	3040-01-163-7317	151	13
11083	2P3650	5330-01-161-0895	150	12
11083	2P3660	3130-01-257-3837	78	3
11083	2P3661	5365-01-257-3811	78	4
11083	2P3669	3040-01-253-9507	78	12
11083	2P3683	5315-01-164-9838	153	26
11083	2P3767	4710-01-132-3997	17	9
11083	2P3859	3120-00-394-4276	5	8
11083	2P3980	3040-01-253-4699	68	28
11083	2P3983	3040-01-253-5582	68	22
11083	2P3992	3020-01-254-1225	108	34
11083	2P4047	4720-01-163-8585	83	52
11083	2P4368		72	3
11083	2P4370	2520-01-161-9658	136	14
			139	25
11083	2P4437	5340-01-164-8760	136	36
11083	2P4438	5340-01-164-8621	136	35
11083	2P4439	4730-01-161-0160	133	1
11083	2P4691	2815-01-253-3452	6	6
11083	2P4698	3120-00-514-7149	21	13
11083	2P4700		21	17
11083	2P4701	4320-01-247-3910	21	15
11083	2P4813	4730-01-062-5197	170	15
			171	36
11083	2P5738	5340-01-161-9146	134	12
11083	2P5818	2940-01-171-3389	140	9
11083	2P5832	4330-01-164-7973	140	6
11083	2P6000		142	12
11083	2P6001		142	10
11083	2P6008	3040-01-158-9329	142	26
11083	2P6009	3040-01-160-1057	142	13
11083	2P6132	5330-01-067-5728	44	4
11083	2P6245	3040-01-067-5675	14	31
11083	2P6286	5330-01-048-6001	101	59
11083	2P6405	2510-01-254-1078	116	19
11083	2P6434	4720-01-499-9113	173	4

CROSS-REFERENCE INDEXES

PART NUMBER INDEX

CAGEC	PART NUMBER	NSN	FIG	ITEM
11083	2P6434-XX		173	6A
11083	2P6435	4720-01-203-4781	173	9
11083	2P6470	5340-01-258-4865	166	10
11083	2P6471	5340-01-259-2588	166	16
11083	2P6472	5340-01-258-0145	166	15
11083	2P6969		150	29
11083	2P6970		150	26
11083	2P6971		150	25
11083	2P8261	5120-01-508-9182	216	190
11083	2P8301	5120-01-527-2419	216	100
11083	2P8515	5310-01-257-3232	116	37
11083	2P8714	5342-01-257-2399	40	10
11083	2P8746	5330-01-067-5729	14	4
11083	2P8977	5340-01-163-0631	169	16
11083	2P9025	5340-01-258-9176	56	17
11083	2P9081	6150-01-499-4633	63	22
11083	2P9082	6150-01-499-4636	63	18
11083	2P9093	6150-01-499-4645	63	26
11083	2P9236		88	13
11083	2P9237	4320-01-267-1375	88	12
11083	2P9238		88	21
11083	2P9372	5340-01-274-0865	115	36
11083	2P9482	3040-01-250-6495	36	2
11083	2P9551	4720-01-534-6074	207B	6
11083	2P9556	5310-01-053-4777	26	69
11083	2P9653	2530-01-185-2675	100	16
11083	2P9654	3830-01-129-5889	100	11
11083	2P9655	3830-01-129-5890	100	18
11083	2P9656	3830-01-129-5891	100	12
11083	2P9670	5306-01-129-5888	100	7
11083	2R0219	5310-00-421-9686	176	5
11083	2R1913	5340-01-270-7392	119	36
11083	2S0115	5310-00-419-1363	1	8
			94	18
			111	2
			116	9
			116	20
11083	2S0484	5365-00-762-6113	75	25
11083	2S0736	5310-00-498-2964	4	29
			9	10
11083	2S0932	5310-01-533-9968	207A	22
11083	2S1043	2540-01-063-0736	207D	20
11083	2S1541	4730-00-850-3812	13	1
11083	2S1654	5310-00-193-1076	98	2
11083	2S2109	5340-00-490-9869	115	12
11083	2S2846	5310-00-413-4983	41	7
11083	2S3440	4730-01-061-8216	56	20
11083	2S3946	3020-00-101-2110	91	40
11083	2S4078	5331-00-429-3542	158	3
			173	23
11083	2S4299	4710-00-223-6520	106	17

CROSS-REFERENCE INDEXES

PART NUMBER INDEX

CAGEC	PART NUMBER	NSN	FIG	ITEM
11083	2S4300	4710-00-223-6521	106	20
11083	2S4750	5330-00-929-8152	6	15
11083	2S5011	5920-01-059-0881	53	19
			63	8
			64	34
11083	2S5012	5920-01-059-0882	39	12
			53	22
			63	3
			64	27
11083	2S5013	5360-01-059-0883	53	18
			63	7
			64	33
11083	2S5301	2815-00-920-8263	40	20
11083	2S5551	2815-00-920-8262	40	21
11083	2S5658	5310-00-431-7244	3	13
11083	2S5717	5310-00-950-2660	76	4
11083	2S5718	2520-01-268-5353	75	27
11083	2S5926	4820-00-911-9224	98	20
11083	2S5927	9905-01-163-9191	98	26
			98	31
			148	37
11083	2S6097	2930-01-143-0185	41	3
11083	2S6313	5365-01-257-6105	99	42
11083	2S6400	3110-00-913-7012	91	36
11083	2S6401	3110-00-913-7335	91	35
11083	2S6408	5310-01-154-0708	78	33
			137	21
11083	2S6458	5330-00-918-3599	81	18
11083	2S7037	3020-00-454-7899	6	5
11083	2S7062	2520-00-950-2469	91	33
11083	2S7063	5310-00-193-1174	90	1
11083	2S7064	3110-00-949-0878	90	44
11083	2S7066	5310-00-950-5665	90	5
11083	2S7069	5365-00-149-7252	90	39
11083	2S7099	2520-00-949-1120	91	37
11083	2S7383	5306-00-416-9180	26	21
11083	2S7527	2520-00-949-1118	91	14
11083	2S7594	2520-00-948-3310	90	41
11083	2S7596	5330-00-948-3311	90	40
11083	2S7905	5365-00-419-3254	83	10
11083	2S7931	3120-00-914-0691	143	6
			143	18
11083	2S8359	3120-01-160-4604	101	13
			102	4
11083	2S8380	3040-00-950-7343	109	19
11083	2S8395		109	18
11083	2S8396		109	6
11083	2S8398	5360-00-950-2045	109	37
11083	2S8399	5365-01-254-2381	109	39
11083	2S8411	3120-00-948-6453	109	5
11083	2S8412	4710-00-405-7326	109	41

CROSS-REFERENCE INDEXES

PART NUMBER INDEX

CAGEC	PART NUMBER	NSN	FIG	ITEM
11083	2S8413	4710-00-405-7327	109	43
11083	2S8414	5330-00-912-1586	109	45
11083	2S8416	5340-01-162-2864	101	50
11083	2S8571	4820-01-159-5909	101	16
11083	2S8926	5305-01-209-7923	72	24
11083	2S9313		99	9
11083	2S9434	5310-00-224-0529	111	5
11083	2S9732	5305-00-253-7629	111	9
11083	2V1713	9905-01-152-5326	148	19
11083	2W0157	4710-01-253-4717	32	19
11083	2W0160	4710-01-253-7056	30	21
11083	2W0254	2910-01-253-4650	27	11
11083	2W0256	2910-01-209-0933	27	1
11083	2W0725	5330-01-213-3785	KIT	
11083	2W0743	5340-01-258-0148	23	15
11083	2W0745	5342-01-257-3848	23	5
11083	2W1067	2990-01-265-4960	24	11
11083	2W1707	4310-01-209-5008	7	5
11083	2W1708	2815-01-209-4543	7	4
11083	2W1709	2815-01-207-0764	7	3
11083	2W2216	5360-01-155-2628	26	99
11083	2W2410	2910-01-209-0931	26	23
11083	2W3981	4710-01-253-3533	19	4
11083	2W4561	5330-01-160-3989	15	17
11083	2W5255	5340-01-259-3955	42	7
11083	2W5375		26	14
11083	2W5448	5340-01-192-5824	26	3
11083	2W5540	2930-01-175-6489	42	9
11083	2W5555	5340-01-497-7032	42	15
11083	2W5563	5340-01-258-0212	42	15
11083	2W5567	5340-01-258-0149	42	16
11083	2W6096	4820-01-253-5557	12	8
11083	2W6102	3040-01-151-2660	26	37
11083	2W6104		26	101
11083	2W6134	5330-01-177-3855	3	16
11083	2W6338	4140-01-499-5557	47	6
67099	2W6339	4140-01-252-9501	47	6
11083	2W6340	4140-01-252-9502	47	4
			47	4
11083	2W7255	3040-01-178-0698	45	7
11083	2W7400	5360-01-208-2214	26	43
11083	2W7458	2815-01-208-7164	5	1
11083	2W7678	3020-01-178-9843	207A	10
11083	2W8001		45	5
11083	2W9286	5342-01-253-8651	48	9
11083	2W9305	2910-01-178-8857	26	42
11083	2W9316		37	23
11083	2009082	2530-01-498-8028	100	1
			100	20
11083	2017747		163	14
79470	202X8X8	4730-00-289-3261	33	29

CROSS-REFERENCE INDEXES

PART NUMBER INDEX

CAGEC	PART NUMBER	NSN	FIG	ITEM
01276	203102-8-8S	4730-00-491-4983	101	37
11083	2033220	5930-01-497-0562	39	41
24161	20357	4720-00-929-8277	28	2
92859	203986	2520-01-164-0077	83	9
			138	38
01276	2068-8-8S	4730-00-051-3731	33	28
72962	21NE058	5310-00-017-5121	126	9
72962	21NE064	5310-00-013-7718	69	18
72962	21NU040	5310-00-660-1938	55	23
11083	2159672	4940-01-272-2839	216	2
11083	2169144	4320-01-518-5731	143	1
70485	2250	5340-00-664-4610	107	13
11083	2307062	9515-01-504-0557	203	10
11083	2307063	9515-01-504-0531	203	13
11083	2307087	9515-01-504-0548	203	9
98441	231-12-20		147	18
98441	231-12-59		147	21
11083	2369941	2510-01-508-6839	200	5A
11083	2369942	2510-01-508-6838	200	3A
11083	2378282	5340-01-511-7092	185	27
11083	2378283	3040-01-511-5739	185	28
11083	2401673	2910-01-175-1952	26	1
13445	2484-26	5310-00-005-0895	57	21
62983	250824	4320-00-407-4862	149	3
62983	251263	4320-01-185-8231	149	11
11083	2537799	9515-01-524-4210	192	13
11083	2537800	9515-01-524-4207	192	11
11083	2537802	9515-01-524-4209	192	12
11083	2537804	9515-01-524-4213	194	6
11083	2537807	9515-01-524-4214	194	16
11083	2537812	9515-01-524-4212	194	4
11083	2537813	9515-01-524-4215	194	18
11083	2537816	2510-01-524-7568	200	8
11083	2537818	9390-01-524-7569	200	7
11083	2537819	2510-01-524-4635	200	7
11083	2537820	9340-01-524-6658	200	6
11083	2537821	9340-01-524-6661	200	9
11083	2537823	2540-01-520-3155	186	1
11083	2538128	4140-01-524-6662	202	56
11083	2538131	5340-01-524-6659	202	58
11083	2538281	4140-01-524-7572	202	45
11083	2538640	4140-01-524-6665	202	66
11083	2538711	9515-01-524-4211	193	12
11083	2538947	5340-01-524-6663	202	51
11083	2539332	6150-01-527-0147	202	71
11083	2546765	9390-01-524-9455	200	8
11083	2546766	2510-01-524-4636	200	3
11083	2556270	2540-01-519-8287	186	13
11083	2556296	4140-01-519-8288	202	44
93061	2592-00011		16	8
80064	2601167	5935-01-114-5354	55	1

CROSS-REFERENCE INDEXES

PART NUMBER INDEX

CAGEC	PART NUMBER	NSN	FIG	ITEM
70485	2758	5325-00-249-6345	39	45
			66	12
			66	24
11083	2792069		207H	1
11083	2792070		207H	20
11083	2792071	5330-01-534-0739	207H	29
11083	2792072		207H	6
11083	2792073	4130-01-534-4825	207H	10
11083	2792074	4710-01-534-3864	207H	23
11083	2792075	4710-01-534-0819	207H	24
11083	2792076	4710-01-534-0816	207H	3
11083	2792077	4710-01-534-0818	207H	22
11083	2792078	4140-01-534-4813	207H	25
11083	2792079		207H	11
11083	2792081	4820-01-534-4466	207H	21
11083	2792083	5930-01-534-0395	207H	30
11083	2792086	5930-01-534-0396	207H	31
11083	2792088	5355-01-534-4714	207H	32
11083	2792089		207H	33
11083	2792090		207H	36
11083	2792092	4730-01-534-3863	207H	26
11083	2792093	4720-01-534-1029	207H	27
11083	2792095	5340-01-533-9971	207H	8
11083	2792096	5330-01-533-9928	207H	12
11083	2792097	4130-01-534-3642	207H	2
11083	2792098	5930-01-534-0398	207H	4
11083	2792099	4010-01-533-9975	207H	5
11083	2792100	4140-01-534-4823	207H	7
11083	2792101	5340-01-534-4769	207H	13
11083	2792102	4140-01-534-2552	207H	14
11083	2792103	4140-01-534-2550	207H	19
11083	2792104	4140-01-534-4814	207H	15
11083	2792105		207H	18
11083	2792106		207H	9
11083	2792107	6105-01-533-9980	207H	16
11083	2792108	5340-01-534-1442	207H	39
11083	2792109	6150-01-534-0004	207H	28
11083	2792110		207H	37
11083	2792111	5340-01-534-2896	207H	17
11083	2792112	5340-01-534-0831	207H	38
11083	2792113	4130-01-534-2597	207H	34
11083	2792114	4330-01-534-1026	207H	35
4U735	2807-404-004	6105-01-267-9556	145	14
89926	281047	5306-00-423-8116	94	23
			112	7
			116	4
			171	26
11083	2821737		207G	9
11083	2821738		207G	11
02324	2850-001-019	4140-01-267-0377	145	19
77060	2965638	5940-00-144-1533	64	54

CROSS-REFERENCE INDEXES

PART NUMBER INDEX

CAGEC	PART NUMBER	NSN	FIG	ITEM
04618	29711	5940-00-201-8938	61	13
00779	29712	5940-01-169-3889	61	33
77060	2984033	5970-01-156-0688	63	21
			63	23
			63	27
			64	40
63117	3-12942-6	5930-00-426-4058	147	5
11083	3B0551	4730-00-263-3122	84	5
11083	3B0623	5340-00-229-9294	4	4
			71	24
11083	3B1464	3130-01-257-7803	94	4
11083	3B1472	5340-00-371-3392	91	39
11083	3B1915	5306-01-195-4681	10	10
			12	7
			14	3
			15	34
			32	1
			36	62
			68	17
			71	12
			80	35
			99	14
			105	40
			113	9
			138	6
			143	28
			165	7
			166	25
			169	6
			172	1
			207A	15
			207B	1
11083	3B2225	5315-00-846-8429	110	13
11083	3B2968	5306-00-426-4171	1	7
11083	3B3427	5140-00-426-4193	129	1
11083	3B4502	5310-00-852-8266	52	16
11083	3B4508	5310-01-236-9975	198	13
			206	3
			207C	11
11083	3B4629	5315-01-052-3942	105	8
11083	3B5319	5315-01-164-7582	134	1
11083	3B5325	5315-00-018-9396	132	7
11083	3B5326	5315-01-209-8775	211	2
11083	3B6552	4730-00-231-5605	38	13
11083	3B6753	5306-00-436-9896	177	4
11083	3B7275	4730-01-254-8683	138	40
11083	3B8428	5306-00-263-8950	45	13
11083	3B8485	4730-00-172-0028	46	6
			177	7
			212	9
11083	3B8490	4730-00-048-1788	94	1

CROSS-REFERENCE INDEXES

PART NUMBER INDEX

CAGEC	PART NUMBER	NSN	FIG	ITEM
11083	3D0490	5307-00-411-4502	6	7
11083	3D2824	5331-00-944-8281	25	4
			157	15
			164	6
			173	22
11083	3D2871	5307-00-411-4501	85	17
			86	9
11083	3D2891	3110-01-051-5285	158	48
11083	3D2898	5330-00-730-8003	25	15
11083	3D2992	5331-00-393-4054	27	13
			150	17
11083	3D5724	3040-01-254-1177	67	23
11083	3D6209	5325-01-264-8514	56	27
11083	3D6509	5315-01-060-3748	157	28
11083	3D8525	3040-01-254-1173	106	1
11083	3D8747	5340-01-228-7803	201	15
			202	40
11083	3D8752	5310-01-095-1247	201	18
11083	3D8754	5930-00-118-8034	201	11
			202	41
			202	65
11083	3E4051		207G	18
11083	3E4052		207G	5
11083	3E4054	4730-01-473-5826	207G	16
11083	3E4057	4820-01-505-7292	207G	17
11083	3E4058	4820-01-505-7294	207G	4
11083	3E4060	4730-01-534-4341	207G	2
11083	3E9865	5310-01-429-0779	188	15
			190	15
			202	48
11083	3F0957		6	9
11083	3F1395	5330-00-161-1882	135	2
11083	3F1953	5315-00-426-4566	91	20
11083	3F2779	4730-01-202-3362	133	8
11083	3F4134	2910-01-159-5883	35	6
11083	3F4956	5365-00-426-4587	211	7
11083	3F4971	5315-00-352-7540	211	1
11083	3F5535	5305-01-206-2164	148	29
11083	3F6795	5315-00-028-7266	6	11
			21	5
			21	18
11083	3F7514	5315-00-191-8305	85	10
11083	3F7673	5310-01-160-4538	174	11
			175	9
11083	3G0333	4710-01-253-8713	180	39
11083	3G0335	4710-01-253-3532	180	37
11083	3G0596	3120-01-257-4386	156	5
11083	3G0660		154	27
11083	3G0662		155	43
11083	3G1258	5342-01-068-0011	158	41
11083	3G1770		156	7

CROSS-REFERENCE INDEXES

PART NUMBER INDEX

CAGEC	PART NUMBER	NSN	FIG	ITEM
11083	3G1772	4820-01-253-3474	156	6
11083	3G1806		156	30
11083	3G2025	2510-01-262-5232	212	1
11083	3G2031		212	2
11083	3G2202	4730-01-253-7340	157	26
11083	3G2203		157	27
11083	3G2716	5330-01-186-1269	149	6
11083	3G3267	2990-01-103-3642	181	5
11083	3G3475	5360-01-209-8806	158	54
11083	3G5500	5430-01-254-4958	180	24
11083	3G5766	4730-01-220-6669	158	42
11083	3G7250	4730-01-253-7423	180	51
11083	3G7658	4320-01-210-2743	149	4
11083	3G8047	5325-01-283-9263	169	12
11083	3G8054	5340-01-272-4966	169	11
11083	3G8057	5340-01-279-0358	169	13
11083	3G8148	5330-01-260-5905	158	45
11083	3G8149	3120-01-259-9569	158	43
11083	3G8293	3830-00-127-9413	210	12
11083	3G8294	3830-01-209-9720	210	15
11083	3G8415	4810-01-253-4644	158	37
11083	3G8463	4820-01-208-7017	159	35
11083	3G8710	5365-01-259-4550	158	52
11083	3G8711	4820-01-253-9603	158	55
11083	3G9055		149	13
11083	3G9182	5360-01-257-3421	158	44
11083	3G9193	5330-01-124-4418	149	23
11083	3H0107	5331-00-593-1192	153	28
11083	3H0442	5330-01-062-2852	27	33
11083	3H0449	5310-00-710-2144	81	20
11083	3H0467	5310-01-526-7006	216	111
11083	3H1977	5315-00-891-0815	101	47
11083	3H3243	5306-00-472-5282	17	5
			155	2
11083	3H3433	5315-00-532-4359	140	16
11083	3H3680	5310-00-178-7700	51	6
			52	11
11083	3H4970	5331-00-286-7294	21	8
11083	3H5552	5342-00-007-6350	101	40
			102	1
11083	3H6274	5340-01-270-1800	168	5
11083	3H6660		105	18
11083	3H8389	5305-00-475-4440	35	8
11083	3J1770	5315-00-931-8963	216	191
11083	3J1907	5331-01-333-6444	159	31
			165	37
11083	3J2443	3120-00-948-2181	177	14
11083	3J2452	3830-00-948-9826	163	19
11083	3J3370	5360-00-455-7145	101	18
11083	3J3429	5365-00-425-5471	159	7
11083	3J3726	5330-01-270-1776	177	9

CROSS-REFERENCE INDEXES

PART NUMBER INDEX

CAGEC	PART NUMBER	NSN	FIG	ITEM
11083	3J5389	4730-00-460-6725	3	21
11083	3J5552	5330-00-119-0794	158	12
11083	3J6019	5365-01-269-9293	3	29
11083	3J6034	5342-01-227-8610	212	7
11083	3J6167	3120-00-935-5601	212	3
			213	2
			213	5
11083	3J6169	2510-01-254-8724	213	4
11083	3J6170	5342-01-272-7316	213	1
11083	3J6171		213	6
11083	3J6172	5342-01-264-6074	213	3
11083	3J6179	3040-01-220-5900	212	4
11083	3J6182	3830-00-401-0585	212	5
11083	3J6190	5365-01-229-8157	212	11
11083	3J6192	5365-01-221-8712	212	10
11083	3J6195	3830-01-220-5738	212	14
11083	3J6199		178	5
11083	3J6200		178	6
11083	3J6204	5315-01-213-4939	212	13
11083	3J6438	3040-00-066-2416	178	4
11083	3J6440	3040-01-339-0482	178	21
11083	3J6441	3120-01-255-1755	178	19
11083	3J6442	3120-00-063-9785	178	7
			178	20
11083	3J6572	5365-01-164-8782	174	16
			175	16
11083	3J7470	5340-00-949-0311	159	5
11083	3J7473	5365-00-944-0863	159	4
11083	3J7582	2520-00-432-1627	158	10
11083	3J7584	3110-00-183-6784	109	21
11083	3J9703	4310-01-208-6566	163	22
11083	3K0360	5331-00-948-6482	34	4
			153	16
			180	16
11083	3K0925	5310-00-413-5060	109	23
11083	3K2889	5310-01-066-5275	182	10
			183	6
11083	3K3147	6150-01-253-3397	56	23
			65	2
11083	3K5234	5310-00-470-9833	116	30
11083	3K5733	5360-00-858-6273	26	66
11083	3K5762	5340-01-060-0744	153	17
11083	3K6060	5310-01-113-4047	61	9
			180	14A
			180	49
			181	13
11083	3K6168	5305-01-102-7337	216	143
11083	3K9520	5325-01-062-7138	198	5
11083	3L1425	3110-00-555-5207	46	3
11083	3L2540	5305-01-275-3282	119	23
			120	18

CROSS-REFERENCE INDEXES

PART NUMBER INDEX

CAGEC	PART NUMBER	NSN	FIG	ITEM
11083	3L9689	5310-01-162-0412	142	35
11083	3M6018	5940-01-534-1929	207D	10
11083	3N0539		66	49
11083	3N1295	4720-01-163-2611	34	19
11083	3N2417	5340-01-257-9188	19	9
11083	3N3392		17	6
11083	3N3790		148	18
11083	3N4922	2930-01-534-3975	207A	13
11083	3P0009	2910-01-066-4752	26	58
11083	3P0218	5330-01-161-2429	151	15
			153	12
11083	3P0233	3040-01-253-2008	78	17
11083	3P0357	5340-01-259-3750	71	4
11083	3P0362	4820-01-267-4320	87	27
11083	3P0363		71	18
11083	3P0364	2520-01-253-4635	71	16
11083	3P0365		88	9
11083	3P0366	4730-01-267-6077	88	8
11083	3P0391	4820-01-253-8557	77	17
11083	3P0395	3130-01-265-1251	72	28
11083	3P0396	4730-01-254-1289	80	33
11083	3P0572	5340-01-270-1356	83	27
11083	3P0574	5340-01-270-1357	83	28
11083	3P0615	2530-01-163-7865	100	2
			100	21
11083	3P0621	3120-01-264-3665	100	17
11083	3P0622	5315-01-259-9623	100	13
11083	3P0623	5365-01-210-1848	100	10
11083	3P0719	5310-01-257-4299	135	19
11083	3P1255	4720-01-163-7827	83	56
11083	3P1544	5315-01-285-3476	217	9
11083	3P1734	3010-01-254-5015	141	3
11083	3P1735		141	1
11083	3P1885	5360-01-185-2692	98	5
11083	3P1896	5340-01-152-4541	4	3
11083	3P1968		171	42
11083	3P2179	6150-01-157-2931	61	37
11083	3P2182	6150-01-215-9997	56	29
11083	3P2248	5120-01-393-3420	216	52
11083	3P2299	2590-01-172-0861	142	23
11083	3P2300	2590-01-176-2972	142	18
11083	3P2399	3040-01-267-4365	107	14
11083	3P2404	5340-01-061-4018	173	19
11083	3P2708		87	7
11083	3P2717	4710-01-253-6894	67	8
11083	3P2755	4820-01-150-3860	87	6
11083	3P2767	4820-01-162-8997	151	3
11083	3P2847	5340-01-161-9175	151	10
11083	3P2871	3040-01-254-1103	90	18
11083	3P2872	2530-00-410-1892	90	18
11083	3P2876	2520-01-253-8667	67	24

CROSS-REFERENCE INDEXES

PART NUMBER INDEX

CAGEC	PART NUMBER	NSN	FIG	ITEM
11083	3P2943		123	23
11083	3P2945	2510-01-259-8891	123	21
11083	3P3065	2510-01-253-4673	115	21
11083	3P3178	5342-01-257-3847	123	15
11083	3P3202	5360-01-165-3674	153	9
11083	3P3277	2520-01-253-9488	162	1
11083	3P3525	5340-01-258-0150	107	4
11083	3P3527	3040-01-253-5578	107	25
11083	3P3528	3040-01-254-1280	107	26
11083	3P3655	2540-01-253-4705	104	15
11083	3P3656	2540-01-253-5589	104	1
11083	3P3657	3040-01-253-7347	104	5
11083	3P3658	3040-01-253-7346	104	13
11083	3P3659	3040-01-264-9331	104	14
11083	3P3660	5306-01-257-3316	104	11
11083	3P3716	4820-01-160-0852	109	35
11083	3P3843	5307-01-257-3317	103	42
11083	3P3931	3040-01-253-4662	161	29
11083	3P3932		161	30
11083	3P3935	5315-01-266-9238	161	28
11083	3P3937	3040-01-253-7350	161	34
			162	20
11083	3P3938	3040-01-253-7456	161	17
11083	3P3943	3040-01-253-7454	162	6
11083	3P3944		162	7
11083	3P3945	5340-01-258-9225	161	23
			162	14
11083	3P3952	2530-01-069-0799	107	17
11083	3P3970	2510-01-254-2771	125	4
11083	3P4116		153	23
11083	3P4117		153	21
11083	3P4120		153	18
11083	3P4121	4820-01-162-8951	153	1
11083	3P4122	5340-01-258-2681	123	13
11083	3P4124	5340-01-265-3359	123	29
11083	3P4126	5340-01-266-4674	123	11
11083	3P4133	5310-01-253-6496	35	11
11083	3P4135	2510-01-253-7358	93	3
11083	3P4142	2510-01-253-9475	93	5
11083	3P4143	2510-01-253-9476	93	8
11083	3P4157	4320-01-253-6280	99	40
11083	3P4197	2510-01-253-8664	113	12
11083	3P4219	5340-01-259-4238	161	3
11083	3P4333	5340-01-259-6427	124	37
11083	3P4467		110	8
11083	3P4660	4820-01-165-8251	152	10
11083	3P4824	5340-01-258-0144	169	23
11083	3P4825	4720-01-209-0854	166	1
11083	3P4825-XXX		166	4A
11083	3P4826	5340-01-257-3853	166	20
11083	3P4828	4720-01-208-7076	164	28

CROSS-REFERENCE INDEXES

PART NUMBER INDEX

CAGEC	PART NUMBER	NSN	FIG	ITEM
11083	3P4832	2805-01-253-3495	165	12
11083	3P4833		165	18
11083	3P4833-XX		165	22
11083	3P4863	2910-01-253-7393	80	32
11083	3P5078	5365-01-260-1523	72	8
11083	3P5168	5342-01-162-8767	151	12
11083	3P5169	5342-01-162-8768	151	9
11083	3P5206	3040-01-167-3669	103	59
11083	3P5334	5325-01-068-6229	209	8
11083	3P5625	5330-01-209-8033	80	10
11083	3P5626	4710-01-253-4724	80	12
11083	3P5627	5365-01-257-4353	80	9
11083	3P5682		80	22
11083	3P5724	4720-01-163-7177	80	36
11083	3P5724-XXX		80	39A
11083	3P5725		80	14
11083	3P5725-XX		80	17A
11083	3P5799		102	3
11083	3P5802	3040-01-267-2079	101	61
11083	3P5803	4820-01-267-4321	101	19
11083	3P5928		143	27
11083	3P5938	5340-01-163-0918	142	4
11083	3P5942	4730-01-254-5540	143	25
11083	3P5951	5340-01-258-6065	123	19
11083	3P5952	3010-01-255-4450	143	29
11083	3P5961	5342-01-270-3778	110	1
11083	3P5969	3040-01-267-4284	101	60
11083	3P6022		170	14
11083	3P6095	5340-01-258-0143	171	2
11083	3P6105		105	17
11083	3P6146		165	26
11083	3P6146-XX		165	27
11083	3P6273		69	45
11083	3P6274	5340-01-238-2859	69	46
11083	3P6280	5306-01-264-4262	103	30
			103	45
11083	3P6281	3040-01-254-4940	103	41
11083	3P6286	3040-01-253-7049	103	17
11083	3P6287	3040-01-273-4461	103	33
11083	3P6288	5340-01-258-0343	103	27
11083	3P6560	2510-01-253-9479	98	13
11083	3P6561	2510-01-253-9480	98	11
11083	3P6685		209	6
11083	3P6904	5306-01-270-8543	106	23
11083	3P6906	5306-01-270-8544	106	24
11083	3P7065	3040-01-257-1620	115	27
11083	3P7089	2510-01-260-0645	125	5
11083	3P7092	2510-01-259-8093	125	3
11083	3P7098	2510-01-254-1079	124	27
11083	3P7108	5340-01-258-8535	173	12
11083	3P7130	3040-01-253-5579	36	57

CROSS-REFERENCE INDEXES

PART NUMBER INDEX

CAGEC	PART NUMBER	NSN	FIG	ITEM
11083	3P7170	4720-01-163-2612	83	50
11083	3P7238	3040-01-254-9895	137	34
11083	3P7649	3040-01-253-3510	68	29
11083	3P7651	3040-01-253-3470	68	20
11083	3P7656	2510-01-262-7646	124	23
11083	3P7665	4820-01-041-1571	79	1
11083	3P7666		79	3
11083	3P7667		79	5
11083	3P7680	3040-01-253-7458	36	37
11083	3P7682	5315-01-267-9217	36	43
11083	3P8183	2510-01-253-4653	124	38
11083	3P8275	2510-01-253-4647	112	5
11083	3P8283	5365-01-257-3306	114	7
11083	3P8432	3120-01-103-9406	99	8
11083	3P9109	2520-01-269-7945	174	9
			175	11
11083	3P9136	4730-01-168-1043	82	26
11083	3P9145		78	16
11083	3P9146		78	19
11083	3P9147	3040-01-253-3466	78	15
11083	3R2683	2540-00-101-4723	126	10
11083	3S0004	5310-00-413-5144	88	3
11083	3S0336	5306-00-912-4853	90	9
11083	3S1745		85	18
11083	3S1748	2520-00-949-0867	85	13
11083	3S1751	5330-00-950-5450	85	14
11083	3S2093	2920-01-058-9099	54	6
			55	21
			56	4
			59	3
11083	3S2113	5307-01-161-9140	131	5
11083	3S2173	5340-01-165-1584	78	20
11083	3S2471	4730-00-401-0306	106	11
11083	3S2472	4730-00-349-8975	106	21
11083	3S2682	3120-01-167-3402	153	5
11083	3S2708	5315-01-059-7198	137	9
11083	3S3439	2520-01-069-0891	86	3
11083	3S3440	5310-00-950-6980	86	5
11083	3S3875	4330-00-949-0868	86	6
11083	3S3917	2510-00-104-4478	113	1
11083	3S3918	2530-00-421-1313	113	1
11083	3S4346	5306-00-268-2449	150	16
11083	3S4388	5310-00-413-4757	69	2
			72	14
			137	41
11083	3S5096	5342-00-921-7093	101	55
11083	3S5267	5340-01-145-4028	124	11
11083	3S5286	5340-01-258-0139	124	39
11083	3S5496	5331-00-104-4371	3	30
			4	23
11083	3S6224	4320-01-068-6009	216	144

CROSS-REFERENCE INDEXES

PART NUMBER INDEX

CAGEC	PART NUMBER	NSN	FIG	ITEM
11083	3S6516	5305-01-506-6463	202	11
11083	3S6654	2510-01-256-9110	124	3
11083	3S6655	5365-01-257-4348	124	2
11083	3S6656	5365-01-257-4349	124	1
11083	3S7116	5365-01-067-1426	173	8
11083	3S7166	5340-01-051-6767	83	15
			164	23
			164	25
			167	3
			172	13
			172	18
11083	3S7232	7690-01-338-9102	123	37
11083	3S7252	3120-00-236-1319	80	17
			80	39
			83	60
			165	20
			166	4
			170	17
			171	38
11083	3S8313	5365-00-449-2597	4	6
11083	3S8496	4730-01-051-7600	166	5
11083	3S8497	4730-01-062-5204	83	61
			170	19
11083	3S8501	4730-01-254-0176	165	19
11083	3S8503	4730-01-051-7601	83	58
11083	3S8606	4720-01-051-7602	164	3
			168	16
			168	28
			169	33
			169	37
11083	3S8617	4730-01-253-2808	168	15
			168	29
			169	32
			169	38
11083	3S8624	6150-00-481-3708	56	13
11083	3S8665	5340-01-098-6683	83	20
11083	3S8744	5310-01-254-2486	80	7
11083	3S8975	4730-01-267-6987	168	27
11083	3S9669	3110-00-913-8114	91	25
11083	3T0306	5930-01-168-1025	39	15
11083	3T0731	4710-01-267-2123	174	4
11083	3T0732	4710-01-267-4393	175	4
11083	3T1815	6350-01-155-5993	60	5
11083	3T1921	2530-01-254-5614	108	7
11083	3T2287	4710-01-207-9960	39	29
11083	3T2288		39	21
11083	3T2288-35.4		39	22
11083	3T2289		39	34
11083	3T2289-20		39	35
11083	3T2290	5342-01-267-6024	39	4
11083	3T2357	5930-01-162-7312	57	6

CROSS-REFERENCE INDEXES

PART NUMBER INDEX

CAGEC	PART NUMBER	NSN	FIG	ITEM
11083	3T2571	5330-01-268-9498	73	3
11083	3T2572	5330-01-268-9499	73	3
11083	3T2641	4710-01-284-2404	33	35
11083	3T2642	4710-01-253-8707	34	25
11083	3T2643	4710-01-263-7285	34	24
11083	3T2803	2910-01-254-5005	35	13
11083	3T2927		39	9
11083	3T2927-14		39	10
11083	3T3047	5999-01-262-0437	55	12
11083	3T3048	5999-01-262-0436	55	5
			207D	7
11083	3T3095	4730-01-253-8590	35	14
11083	3T3643	4710-01-267-2116	101	25
11083	3T3644	4710-01-267-2117	101	29
11083	3T3993	5365-01-257-4354	112	8
11083	3T4476	5340-01-259-3749	115	4
11083	3T4704	2920-01-314-7826	52	1
11083	3T5079		126	14
11083	3T5648	3020-01-254-1229	138	35
11083	3T5961		64	21
11083	3T5962	9905-01-180-3839	49	31
11083	3T6467	5340-01-264-5983	209	25
11083	3T8649	4820-01-162-8950	151	1
11083	3T8650		150	8
11083	3T9024	4710-01-263-7284	34	11
11083	3T9025	4710-01-253-8706	34	2
11083	3T9525	5977-01-253-5207	51	19
11083	3V2431	5310-01-165-2482	92	7
11083	3W3896	5340-01-506-9486	196	5
11083	3W6485	5360-01-506-7628	202	29
11083	3Y2888	4730-01-172-2970	38	9
			165	36
11083	3Y5405	5330-01-270-1276	168	12
53203	300 450	5340-01-088-2385	39	28
98441	30000-6-6S	4730-01-253-6919	165	28
13445	3031	5920-00-133-8663	66	28
45225	304401	4320-01-271-9831	216	39
11083	307963	4730-01-064-7491	165	5
78640	310216	5306-01-095-1238	26	96
98441	322F-E	4730-01-165-6616	33	23
78189	3320-14-01	5310-01-094-8810	61	30
			202	6
45225	34443	3460-01-275-2465	216	38
45225	34444	4940-01-276-3504	216	37
45225	34445	3460-01-275-2466	216	36
45225	34446	3460-01-277-3430	216	35
45225	34447	3460-01-277-3431	216	34
45225	34452	3040-01-275-1768	216	6
45225	34453	3040-01-275-1769	216	7
45225	34454	3460-01-275-2467	216	5
45225	34516	3460-01-280-4157	216	19

CROSS-REFERENCE INDEXES

PART NUMBER INDEX

CAGEC	PART NUMBER	NSN	FIG	ITEM
45225	34517	3460-01-280-4158	216	21
45225	34518	3460-01-280-8176	216	20
45225	34519	4940-01-275-2468	216	22
45225	34520	3460-01-280-4867	216	18
45225	34660	4940-01-275-6205	216	17
45225	35089	3460-01-275-6204	216	4
29944	3831	2540-01-063-5730	126	3
29510	39422D	5310-00-262-4789	1	2
			93	2
			116	13
30780	4 HP50N-S	5365-01-042-9079	154	5
			155	5
91796	4-8FTX2IN	2835-01-078-2081	215	1
78493	4A308-21	6620-01-008-1893	43	5
11083	4B0966	5306-00-164-9318	108	35
11083	4B1280	5305-01-237-3324	67	39
11083	4B1284	5305-01-086-2370	142	2
11083	4B1398	2520-00-149-9205	99	39
11083	4B2041	5310-01-063-0686	55	4
11083	4B3610	5305-01-185-0569	36	13
11083	4B3938	5340-00-276-5832	3	10
			3	28
11083	4B4043	5306-00-423-9325	105	43
			169	20
			171	29
11083	4B4277	5310-00-362-8168	207C	2
11083	4B4278	5310-01-266-2481	207B	5
11083	4B4280	5310-00-930-7013	75	2
			83	21
			166	13
			198	10
			207C	10
11083	4B4674	5310-01-176-3998	55	24
11083	4B4845	5365-00-734-2114	138	28
11083	4B4910	5360-00-249-3504	9	27
11083	4B5273	5310-00-308-2227	120	11
			216	53
11083	4B5387	5340-00-417-2920	3	15
11083	4B5423	5330-00-143-8713	35	4
11083	4B5949	2910-00-367-5238	35	2
11083	4B8024	5330-00-362-7470	139	35
11083	4B8756	4730-00-013-7397	209	7
			209	11
11083	4B9782	3110-00-011-9935	3	11
			14	25
			180	54
11083	4B9783	2815-00-011-9934	135	17
			136	7
11083	4B9784	3110-00-011-9931	136	8
11083	4B9880	3110-00-949-1438	14	21
			152	6

CROSS-REFERENCE INDEXES

PART NUMBER INDEX

CAGEC	PART NUMBER	NSN	FIG	ITEM
11083	4C4040	5930-01-336-3018	216	157
11083	4C6486	5120-01-343-8085	216	133
11083	4C6562	2590-01-337-9173	216	139
11083	4C6709		216	142
11083	4C9738	5120-01-531-1452	217	22
11083	4D0012	5325-01-506-7583	193	11
			203	15
11083	4D1326	5310-01-438-1899	202	69
11083	4D3704	5310-00-139-7030	2	5
			91	13
			98	9
			99	27
			135	11
11083	4D4064	2910-01-058-8075	36	66
			68	18
			161	13
11083	4D4065	3120-01-163-5957	198	9
11083	4D6351	5340-01-257-9215	169	21
11083	4D6672	5340-01-270-7393	168	22
11083	4D7794	5340-00-426-4656	67	11
11083	4D8991	5306-01-259-3716	107	23
11083	4D9483	5305-01-160-4505	67	7
11083	4D9986	5330-00-498-2906	153	4
11083	4F0411	5306-00-426-5058	39	7
11083	4F1450	5307-00-272-7047	21	23
11083	4F4879	5306-00-426-5062	133	12
11083	4F5003	2530-00-149-8899	99	38
11083	4F5192	5305-00-445-4630	99	19
11083	4F5640 NON-ASBESTOS	5330-01-379-9806	82	23
11083	4F6024	5315-00-363-9248	26	84
11083	4F7390	5331-00-691-9950	180	31
11083	4F7391	5331-00-562-1073	180	13
11083	4F7504	5307-01-506-9551	198	8
11083	4F8965	5306-00-263-8949	80	49
			170	6
11083	4H1718	5360-01-257-7811	156	12
11083	4H1790	5360-00-850-1828	85	8
11083	4H6996	5315-01-097-8383	105	47
11083	4H7869 NON-ASBESTOS	5330-01-398-4225	50	6
11083	4H8158	5325-00-848-7439	101	51
11083	4H9105	5331-00-781-9134	96	14
			97	9
			97	13
			99	12
			143	23
11083	4H9705		81	11
			81	15
11083	4J0520	5331-00-913-6144	172	8
11083	4J0523	5331-01-006-2129	159	11

CROSS-REFERENCE INDEXES

PART NUMBER INDEX

CAGEC	PART NUMBER	NSN	FIG	ITEM
11083	4J0523	5331-01-006-2129	174	17
			175	27
11083	4J0524		173	6
			173	25
11083	4J0525	5331-00-922-6275	156	3
			156	16
			174	1
			175	1
11083	4J2062	2520-00-195-6018	178	8
11083	4J3342	5365-00-946-7258	176	6
11083	4J4517		163	5
11083	4J5140	5331-00-913-6145	168	2
11083	4J520	5331-00-913-6144	80	19
			80	38
			83	16
			83	59
			156	26
			164	18
			165	10
			165	21
			166	6
			166	27
			167	16
			169	27
			170	3
			170	16
11083	4J522	5331-00-948-4063	80	15
			80	41
			156	29
			158	38
			159	42
			165	24
			165	35
			166	2
			166	26
			170	18
			171	17
			171	37
			172	22
			174	21
			175	26
11083	4J5240	5315-00-448-4687	214	3
11083	4J5241	5342-00-062-5335	214	1
11083	4J5483		176	11
11083	4J6167	3120-00-948-4594	176	3
11083	4J7101	4320-01-267-0639	160	4
11083	4J8224	5365-01-064-1030	157	8
11083	4J8251	5325-01-068-6227	180	8
11083	4J8252	6680-00-138-4143	180	9
11083	4J8996	5331-00-948-6924	158	32
11083	4J8997	5331-00-913-8119	25	22

CROSS-REFERENCE INDEXES

PART NUMBER INDEX

CAGEC	PART NUMBER	NSN	FIG	ITEM
11083	4J8997	5331-00-913-8119	159	15
			164	8
11083	4J9535	5331-00-948-9764	159	34
11083	4K0021	5342-00-450-5589	36	15
11083	4K0487	5305-01-270-7335	61	23
			115	35
11083	4K0684	5310-01-162-6012	131	2
			211	31
11083	4K2039	5331-01-068-6073	151	11
11083	4K8629	5340-01-258-0151	56	11
11083	4K9890	5310-01-208-6737	17	4
11083	4L3641		13	12
11083	4L6454	5306-00-228-6835	128	9
			189	13
			207F	12
11083	4L6943	5325-00-559-3901	110	9
11083	4L7551	5307-01-151-9304	161	16
11083	4L8337	5331-00-074-3773	30	8
11083	4L9337	5306-00-455-0462	47	7
			182	12
			187	2
			189	10
			191	11
11083	4L9564	5330-00-828-8639	17	2
11083	4M0061	5306-01-066-4721	202	14
			207E	8
11083	4M0189	5330-00-838-9188	143	8
11083	4M0410	3020-00-363-9254	81	2
11083	4M0495	3120-00-014-3507	36	46
11083	4M0496	5306-00-140-2032	36	45
			68	24
			161	14
11083	4M0497	5310-00-147-6143	68	25
11083	4M1641	5315-00-431-7317	74	31
11083	4M1712	5315-01-258-4780	137	35
11083	4M1768	5360-01-059-7203	75	8
11083	4M1815	5360-00-985-2253	52	7
11083	4M2381	5360-00-950-8041	87	9
			157	24
11083	4M3915	3110-00-896-6819	137	6
11083	4M3948	5330-00-948-9762	108	24
11083	4M5282	5306-00-022-7687	202	25
11083	4M5317	3120-01-127-5376	18	13
11083	4M5856		81	10
11083	4M5857	2590-01-236-5190	81	9
11083	4M5889	3040-00-436-7398	81	6
11083	4M5890	3040-00-410-5801	81	4
11083	4M5912	5360-01-209-8805	87	20
11083	4M6425	5306-00-311-9307	202	54
11083	4M6480	5330-01-347-9688	32	18
11083	4M7652	5325-00-550-5176	149	18

CROSS-REFERENCE INDEXES

PART NUMBER INDEX

CAGEC	PART NUMBER	NSN	FIG	ITEM
11083	4M7930	5340-01-160-4084	103	28
			103	43
			104	9
11083	4M8239	5340-01-160-2240	79	15
11083	4M8303	5331-00-613-6522	19	14
			75	26
			208	4
11083	4M8799	5360-00-757-2559	67	21
11083	4M9592	5360-00-498-2883	73	27
			74	4
11083	4N0260	5330-01-107-4168	26	31
11083	4N0432	3130-01-174-6048	26	64
11083	4N0538	3120-01-257-3300	208	5
11083	4N1761		26	9
11083	4N2953	5325-01-024-3727	26	82
11083	4N3732	5340-01-148-7396	14	17
11083	4N3840	5340-01-107-4130	15	10
11083	4N3841	5330-01-063-9839	15	9
11083	4N3955	5330-01-242-6870	31	7
11083	4N4054		14	37
11083	4N4526	5340-01-150-9810	10	17
11083	4N5353	4730-01-126-4892	14	5
11083	4N5484		26	60
11083	4N5485	4820-01-159-0891	26	61
11083	4N5516	4720-01-534-3866	207A	4
11083	4N5834	4330-01-203-1250	45	15
11083	4N5889	5340-01-533-9935	207B	4
11083	4N5890	5340-01-534-0833	207C	17
11083	4N6120	5340-01-534-0998	207C	4
11083	4N6139	3020-01-534-1809	207A	20
11083	4N6140	5340-01-534-1131	207C	5
11083	4N6403		26	75
11083	4N6406	5310-01-149-7188	26	73
11083	4N6408	2990-01-024-1509	26	71
11083	4N6410	5360-01-287-2422	26	76
11083	4N7032	3040-01-253-7453	36	64
11083	4N7335	3030-01-505-3134	207C	26
11083	4N7609	3120-01-257-3312	31	19
11083	4N7612	4730-01-253-1982	41	16
11083	4N7682	2930-01-254-1059	41	30
11083	4N7683	2930-01-254-1057	41	37
11083	4N7688	2590-01-253-4702	41	31
11083	4N7696		5	2
11083	4N7987	2930-01-254-1060	41	36
11083	4N9019	5315-01-067-8066	27	8
11083	4N9170	5325-01-514-5408	202	53
11083	4N9556	2950-01-111-3964	31	11
11083	4P0894	2930-01-498-3138	42	9
11083	4P2942	2815-01-351-5962	8	4
11083	4P3546	2815-01-068-1729	14	18
11083	4P4020		14	14

CROSS-REFERENCE INDEXES

PART NUMBER INDEX

CAGEC	PART NUMBER	NSN	FIG	ITEM
11083	4P9381	4710-01-282-1660	23	16
11083	4P9382	4710-01-207-9955	23	13
11083	4P9383	4710-01-207-9956	23	12
11083	4P9384	4710-01-207-9957	23	11
11083	4P9385	4710-01-207-9958	23	10
11083	4P9386	4710-01-207-9959	23	1
11083	4P9608	5330-01-157-5685	37	7
11083	4P9804	2910-01-253-7394	27	28
11083	4P9832	2910-01-179-4098	27	27
11083	4P9863	2815-01-125-9819	10	23
11083	4P9942		42	14
11083	4P9943		42	8
11083	4R9413	9340-01-494-3540	200	6
11083	4R9414	9390-01-494-3531	200	4
11083	4R9467	5340-01-507-0054	201	7
11083	4R9504	2590-01-504-2524	184	11
11083	4R9509	5315-01-506-5027	185	12
11083	4R9516	2590-01-504-2529	184	20
11083	4R9524	2510-01-507-7069	200	5
11083	4R9525	2510-01-507-7056	200	3
11083	4R9528	3020-01-506-4088	182	2
11083	4R9529	3020-01-506-3839	182	3
11083	4R9530	2590-01-503-5904	182	4
11083	4R9531	2540-01-507-2355	182	5
			183	4
			184	3
11083	4R9532	9530-01-507-1406	182	13
11083	4R9533	2590-01-503-5914	182	14
11083	4R9534	5340-01-506-8940	182	22
11083	4R9535	9530-01-507-1407	182	15
			184	12
11083	4R9536	2590-01-503-5906	182	6
11083	4R9537	9535-01-507-1395	182	11
11083	4R9538	3830-01-507-5644	182	16
11083	4R9539	3830-01-507-5648	182	17
11083	4R9540	3830-01-507-5673	182	18
11083	4R9541	5315-01-506-4366	183	3
			185	22
11083	4R9542		186	1
11083	4R9544	2590-01-506-4668	187	14
11083	4R9545	2590-01-506-4661	187	4
11083	4R9546	2510-01-503-5925	187	11
11083	4R9547	2510-01-503-5924	187	10
11083	4R9548	2510-01-503-5923	187	9
11083	4R9549	5340-01-503-5937	187	13
11083	4R9550	5365-01-506-1840	187	8
11083	4R9551	5340-01-503-5922	187	7
11083	4R9552	5340-01-503-5920	187	3
11083	4R9554	9515-01-504-0760	189	18
11083	4R9555	5340-01-503-5970	188	22
11083	4R9556	9515-01-504-0756	189	4

CROSS-REFERENCE INDEXES

PART NUMBER INDEX

CAGEC	PART NUMBER	NSN	FIG	ITEM
11083	4R9557	5340-01-504-0823	189	17
11083	4R9558	5340-01-503-5945	188	4
11083	4R9559	5340-01-506-5808	189	8
11083	4R9560	9515-01-504-0762	190	3
11083	4R9561	9515-01-504-0764	190	4
11083	4R9562	5340-01-506-5826	189	14
11083	4R9563	5340-01-503-5938	188	3
			205	3
11083	4R9564	5340-01-503-5915	186	6
11083	4R9565	5340-01-503-5947	188	7
11083	4R9566	5340-01-503-5968	188	20
11083	4R9567	5340-01-506-5801	188	23
11083	4R9568	5340-01-506-9452	191	3
11083	4R9569	9515-01-504-0577	191	8
11083	4R9570	9515-01-504-0770	191	7
11083	4R9571	9515-01-504-0768	191	6
11083	4R9572	9515-01-504-0581	191	9
11083	4R9573	9515-01-504-0586	191	10
11083	4R9574	9515-01-504-0759	189	12
11083	4R9575	5340-01-506-5805	189	11
11083	4R9576		186	7
11083	4R9577	5340-01-503-5918	186	12
11083	4R9578	5340-01-506-5820	189	19
11083	4R9579	5340-01-506-5818	189	3
11083	4R9580	9515-01-503-5965	188	17
11083	4R9582	5340-01-503-5910	186	3
11083	4R9583	5340-01-503-5908	186	2
11083	4R9584	5340-01-503-5917	186	11
11083	4R9585	5340-01-503-5911	186	5
11083	4R9586		186	4
11083	4R9588	9515-01-504-0578	193	5
11083	4R9589	9515-01-504-0596	193	14
11083	4R9594	9515-01-504-0609	194	5
11083	4R9595	9515-01-504-0585	194	15
11083	4R9596	9515-01-504-0582	193	6
11083	4R9597	9515-01-504-0592	193	12
11083	4R9598	9515-01-504-0540	203	7
11083	4R9599	9515-01-504-0550	192	10
11083	4R9600	9515-01-504-0535	192	6
11083	4R9601	9515-01-504-0589	192	2
11083	4R9602	9515-01-504-0546	194	16
11083	4R9604	9515-01-504-0567	203	18
11083	4R9605	5340-01-506-9464	192	8
11083	4R9606	5340-01-506-9427	192	9
11083	4R9607	5340-01-507-0207	204	8
11083	4R9608	5340-01-506-9482	196	3
11083	4R9609	9515-01-504-0602	194	4
11083	4R9610	9515-01-504-0547	194	18
11083	4R9611	5340-01-506-9446	193	15
11083	4R9612	2510-01-504-2536	199	1
11083	4R9615	5340-01-506-9490	196	7

CROSS-REFERENCE INDEXES

PART NUMBER INDEX

CAGEC	PART NUMBER	NSN	FIG	ITEM
11083	4R9616	5340-01-506-5409	197	4
11083	4R9617	5340-01-507-4091	195	6
11083	4R9645	5340-01-506-9457	192	1
11083	4R9650	5340-01-506-9449	194	8
11083	4R9651	5340-01-506-9547	194	10
11083	4R9652	5340-01-506-8592	204	14
			206	11
11083	4R9653	5340-01-507-0024	199	6
11083	4R9654	5340-01-507-0151	203	8
11083	4R9655	5340-01-507-0157	203	14
11083	4R9656	5340-01-506-5488	197	5
11083	4R9657		193	8
11083	4R9658	9535-01-507-1387	193	10
11083	4R9659	5340-01-506-9927	199	5
11083	4R9660	5340-01-506-5504	197	7
11083	4R9661	5340-01-513-1951	195	3
11083	4R9662		194	7
11083	4R9663	5340-01-506-5855	198	1
11083	4R9664	2040-01-504-0574	203	5
11083	4R9665		202	2
11083	4R9666	9515-01-514-2234	203	3
11083	4R9667	5340-01-504-2072	198	20
11083	4R9668	5340-01-504-2077	198	20
11083	4R9669	5340-01-506-5879	198	14
11083	4R9671	9515-01-504-0570	206	13
11083	4R9672	9515-01-504-0565	205	15
11083	4R9673	9515-01-504-0556	205	10
11083	4R9674	9515-01-504-0551	205	4
11083	4R9675	9515-01-504-0544	204	1
11083	4R9676	9515-01-504-0542	204	11
11083	4R9677	9515-01-504-0541	204	15
11083	4R9679	5340-01-515-6360	204	5
11083	4R9680	5340-01-506-8584	204	17
11083	4R9681	5340-01-507-0200	204	2
			204	16
11083	4R9682	5340-01-507-0203	204	3
			205	7
11083	4R9683	5340-01-507-0209	204	10
			204	18
			205	6
			206	15
11083	4R9685	5340-01-506-8561	204	13
11083	4R9686	5340-01-506-8577	206	12
11083	4R9687	5340-01-506-8571	206	14
11083	4R9688	5340-01-506-8581	205	9
11083	4R9689	5340-01-513-1946	205	11
11083	4R9690	5340-01-506-8579	205	8
11083	4R9691	2540-01-504-0562	205	14
11083	4R9692	9515-01-504-0555	205	5
11083	4R9693	5340-01-506-8590	205	13
11083	4R9698	4140-01-506-5810	202	8

CROSS-REFERENCE INDEXES

PART NUMBER INDEX

CAGEC	PART NUMBER	NSN	FIG	ITEM
11083	4R9699		202	43
11083	4R9700	5340-01-507-0138	202	30
11083	4R9701	5340-01-506-9561	202	28
11083	4R9702	5340-01-507-0060	202	13
11083	4R9703	5340-01-506-9557	202	17
11083	4R9704	6150-01-506-6244	202	16
11083	4R9707	6150-01-506-6238	201	8
11083	4R9708	6150-01-506-6241	201	1
11083	4R9709	6150-01-506-6245	201	5
11083	4R9710	6150-01-506-6246	201	9
11083	4R9711	5340-01-507-0056	202	1
11083	4R9712	3940-01-515-7742	215	9
11083	4R9713	9515-01-504-0575	207	1
11083	4R9715	9905-01-504-7383	199	10
11083	4R9718	9515-01-504-0563	193	1
11083	4R9719	9515-01-504-0571	193	4
11083	4R9721	9515-01-504-0539	204	19
11083	4R9904		207F	5
11083	4R9905		207F	1
11083	4R9906		207F	14
11083	4R9907	5340-01-534-4721	207F	2
11083	4R9908		207F	9
11083	4R9909		207F	10
11083	4R9910	5335-01-533-9772	207F	11
11083	4R9911	4120-01-534-4915	207E	2
11083	4R9912	2940-01-534-0451	207E	7
11083	4R9924	2590-01-506-5474	184	10
11083	4R9929	4010-01-508-4065	185	21
11083	4R9930	4010-01-506-5614	185	25
11083	4R9939	5920-01-534-0694	207D	16
11083	4R9940	6150-01-533-9810	207D	1
11083	4R9961	5670-01-503-5960	188	16
11083	4R9962	2510-01-503-5954	188	11
11083	4R9963	9515-01-504-0580	194	6
11083	4R9964	5340-01-508-5348	206	6
11083	4S1962	5342-01-063-2993	147	20
11083	4S3652	4730-01-155-5055	101	33
11083	4S5017		91	21
11083	4S5414	4730-01-095-0075	165	33
			169	41
			170	12
			170	22
			170	25
			170	29
11083	4S5719	5365-01-053-4681	83	3
			101	31
11083	4S5858		85	20
11083	4S6517	5340-00-118-3001	71	17
11083	4S6663	2510-00-230-4093	115	11
11083	4S6664	5340-01-259-3689	115	18
11083	4S6707	2520-01-135-7465	72	16

CROSS-REFERENCE INDEXES

PART NUMBER INDEX

CAGEC	PART NUMBER	NSN	FIG	ITEM
11083	4S6713	5330-01-135-7502	72	17
11083	4S7647	4810-00-961-0640	85	7
11083	4S7648	5310-00-950-2036	85	9
11083	4S8708		73	30
11083	4S8797	5315-01-336-7808	211	28
11083	4S8975	4710-00-251-4438	85	11
11083	4S9002	5306-01-256-6772	143	19
11083	4S9006	5330-00-010-4891	98	17
11083	4S9049	2530-00-949-0397	96	19
11083	4S9104		105	55
11083	4S9106		105	58
11083	4S9450	5120-01-289-0637	216	102
11083	4S9453	5120-01-289-0635	216	103
11083	4S9456	5120-01-295-1535	216	101
11083	4T1471	2590-01-267-4332	168	11
11083	4T2921	3830-00-341-4386	210	14
11083	4T2922	3830-00-341-4384	210	13
11083	4T4073	4820-01-425-6626	159	35
11083	4T8588	5330-00-948-4494	176	12
11083	4T9290	3040-01-284-8745	178	1
11083	4T9704	4710-01-254-1291	172	20
11083	4T9705	4710-01-254-5627	172	3
11083	4W0924	5330-01-266-2560	37	15
11083	4W1512	5340-01-339-0866	32	7
11083	4W2321	4320-01-253-6286	14	35
11083	4W2322	2990-01-253-3454	14	19
11083	4W2446	2815-01-253-4646	5	18
11083	4W5057		84	9
11083	4W5058		84	12
11083	4W5235	5340-01-269-9343	208	1
11083	4W5363	2520-01-253-7425	84	8
11083	4W5734	3040-01-254-4974	26	13
11083	4W5735	2990-01-253-5580	26	10
11083	4W5738	3120-01-202-5894	5	7
11083	4W5739	3120-01-210-0859	7	12
11083	4W5918	5306-00-426-3209	99	3
			177	17
11083	4W6081	4710-01-253-4718	32	3
11083	4W6868	2990-01-253-9489	26	79
11083	4W6869	5365-01-158-6377	27	26
11083	4W6955	3040-01-534-0877	207A	19
11083	4W7629	5340-01-260-4944	19	15
11083	4W9057	4710-01-253-3534	38	1
45225	40064-WH2	5340-01-444-9172	216	159
4U735	402-010-037	2510-01-267-4318	120	2
78189	4024-32-00-0541	5310-00-988-7516	56	26
1MA42	402900031	6160-01-273-0225	120	30
4U735	406 200 007	2510-01-267-4325	118	23
4U735	406 200 008	2510-01-267-4326	118	20
0RS15	406-200-002	2510-21-914-3488	120	1
0U276	40733	2590-01-066-5286	16	10

CROSS-REFERENCE INDEXES

PART NUMBER INDEX

CAGEC	PART NUMBER	NSN	FIG	ITEM
08179	407852		31	31
0RS15	408-200-004	2510-21-912-3600	122	11
62983	419673	5365-01-103-3640	149	14
61928	420461	5305-00-042-0461	58	7
72800	421	2530-00-949-4505	109	11
62983	421574L	4320-01-184-1056	149	12
00779	42282-2	5940-00-620-9780	53	6
			53	8
21450	424635	5305-00-042-4635	146	4
73342	427564		156	19
			158	58
			171	18
62983	429286	5330-01-183-5649	149	22
43334	43L11	3110-00-198-1796	139	30
60237	4301		61	16
62983	431832	4820-01-158-6861	149	26
62983	433762	5330-01-184-6503	149	9
23540	437	5340-01-259-8962	115	30
			209	1
72741	437-007	5310-01-257-4292	202	20
19207	443339	5310-00-044-3339	184	8
			206	5
99688	44640	5342-01-181-1929	201	19
			202	34
11083	5B0546	5365-01-257-3307	171	14
11083	5B1866	5340-00-423-9532	101	20
			102	5
11083	5B1959	5310-00-423-9538	209	18
11083	5B2200	5340-01-258-4854	105	37
11083	5B2638	5305-00-362-7336	150	4
11083	5B5059	5306-00-423-9609	207A	23
11083	5B5456	5310-01-257-3228	124	4
11083	5B5473	5306-00-275-5014	116	26
11083	5B5489	5315-00-922-2592	210	16
			211	9
11083	5B5812	5315-00-362-7367	46	9
			69	47
11083	5B6009	4730-01-373-5625	216	184
11083	5B7040		26	24
11083	5B7652	5315-01-107-4226	3	6
11083	5D0353	5305-00-172-6356	72	30
11083	5D0718	5340-01-188-1579	207G	12
11083	5D1911	2590-01-179-3017	180	3
11083	5D9844	5306-01-063-0652	81	7
11083	5F0149	5331-00-863-5549	86	4
11083	5F1248	3110-00-101-1010	90	22
11083	5F1678	5331-00-741-0674	159	6
			216	110
11083	5F3106	5331-00-663-5709	21	22
			45	4
			165	15

CROSS-REFERENCE INDEXES

PART NUMBER INDEX

CAGEC	PART NUMBER	NSN	FIG	ITEM
11083	5F3999	5331-01-311-2670	134	13
11083	5F5034		216	89
11083	5F5096		216	90
11083	5F6562	5310-01-184-0911	112	12
11083	5F7054	5331-00-339-6224	23	21
			150	15
			157	9
11083	5F8353	5120-00-157-0718	217	24
11083	5F9144	5331-00-591-3112	26	62
			153	19
11083	5F9306	5120-00-971-5507	216	54
11083	5F9892	5315-00-265-0418	216	56
11083	5G0766	5307-01-260-1407	33	20
11083	5G0817	2540-01-109-5817	198	17
11083	5H1190	5330-00-154-7528	101	11
11083	5H1901	3110-00-117-0696	70	2
11083	5H2767	5331-00-850-7586	136	40
11083	5H2824	5331-00-253-8180	135	22
11083	5H3252	5331-00-756-8795	178	22
11083	5H3262	5315-00-253-7668	90	14
11083	5H3895	3120-00-858-6240	33	9
			68	15
11083	5H4018	5340-01-162-8676	216	109
11083	5H4019	2815-01-165-5737	165	9
11083	5H4909	5330-00-738-8622	137	13
11083	5H6005	5331-00-580-1227	158	51
11083	5H6552		26	108
11083	5H6624	2590-00-195-5824	105	50
11083	5H6822	3120-00-478-8919	115	33
11083	5H7110	4730-01-079-4374	134	5
11083	5H7152	5360-00-237-2158	36	26
11083	5H7370	5331-00-590-1064	216	122
11083	5H7704	5331-00-713-8660	29	7
11083	5H8624	5331-00-580-8967	98	14
11083	5H8848	5331-00-593-1247	164	13
11083	5H9809	5315-01-164-7589	152	14
11083	5J0964	5330-00-455-7065	176	15
			178	15
11083	5J1389	5360-01-070-0531	158	46
11083	5J2528	2530-01-067-2159	176	9
11083	5J3241	3110-01-067-2160	158	9
11083	5J3719	5360-01-270-4421	160	9
11083	5J3721		160	5
11083	5J3863	4820-00-483-5353	160	1
11083	5J4418		178	10
11083	5J4419		178	11
11083	5J4664	5360-01-067-5653	159	14
11083	5J4698	5360-01-170-2229	109	33
11083	5J4772	5306-00-138-4602	210	11
11083	5J4989	5330-00-061-8361	178	9
11083	5J4991	3930-00-900-6470	163	24

CROSS-REFERENCE INDEXES

PART NUMBER INDEX

CAGEC	PART NUMBER	NSN	FIG	ITEM
11083	5J5315	2990-01-103-3652	161	26
			162	18
11083	5J5522	5340-01-258-2680	172	6
11083	5J5529	4710-01-237-6752	172	19
11083	5J5530	4710-01-254-1292	172	7
11083	5J5643	5342-01-270-8582	210	1
11083	5J6241	5340-01-250-3368	177	10
11083	5J6242	5315-00-246-0648	177	8
11083	5J7880	4320-01-237-6819	160	8
11083	5K0430		34	28
11083	5K5653	5340-01-259-8965	34	10
11083	5K9107	5306-01-110-1130	73	10
			74	24
11083	5K9179	5306-01-165-2448	144	5
11083	5K9240	4730-01-143-4326	133	18
11083	5K9241	4730-01-069-0768	133	7
11083	5K9242	4730-01-069-0769	34	26
			209	9
11083	5K9243	4730-01-059-9435	16	3
			133	5
11083	5K9246	4730-01-059-9344	133	2
11083	5K9989	4730-01-202-3356	133	4
11083	5L5032	5331-00-074-3771	181	15
11083	5L7200	5305-01-058-9146	57	10
11083	5L8855	5330-00-994-7409	40	22
11083	5M0902	4730-01-249-8409	82	7
11083	5M1822	5310-01-063-3001	207C	16
11083	5M1932	5307-01-185-3555	34	29
			71	22
11083	5M1988	3010-00-950-7143	108	12
11083	5M1990	2520-00-949-0815	108	19
11083	5M1991	5310-00-193-1033	108	16
11083	5M1993	2520-00-947-9989	91	17
11083	5M1994	2530-00-949-0865	108	15
11083	5M1996	5330-00-913-8118	91	16
11083	5M1998	2520-00-948-0019	91	15
11083	5M2000	5365-00-949-0864	108	28
11083	5M2026	2530-00-950-7468	108	21
11083	5M2043	5340-01-162-4077	95	17
11083	5M2059	5360-00-960-3633	108	9
11083	5M2894	5310-00-117-4788	207A	14
			207B	2
			207C	7
			207G	6
11083	5M2997	5330-00-948-6668	98	23
11083	5M2998	5330-00-948-4039	98	24
11083	5M3062	5306-00-158-0697	47	5
			202	7
			202	60
11083	5M3306	3040-00-247-9923	36	5
11083	5M3320	3120-00-948-9964	88	10

CROSS-REFERENCE INDEXES

PART NUMBER INDEX

CAGEC	PART NUMBER	NSN	FIG	ITEM
11083	5M3320	3120-00-948-9964	88	19
11083	5M3389	5360-01-160-6911	101	15
11083	5M3492	5365-00-948-1600	87	18
11083	5M4606	5315-00-760-7421	9	25
11083	5M4987	5315-00-135-9672	81	14
11083	5M5000	2530-00-243-9530	99	21
11083	5M5012		81	13
11083	5M5013	2520-01-268-5354	81	12
11083	5M5017	5310-00-436-4328	90	42
11083	5M5822	3020-00-410-5512	81	22
11083	5M5860	5331-00-074-3776	138	7
11083	5M6120	3020-00-432-1704	72	26
11083	5M6126	3110-00-239-7702	73	17
			74	21
11083	5M6193	5340-01-258-0453	80	47
11083	5M6198		69	40
11083	5M6208	3020-00-403-5294	69	37
11083	5M6210		73	18
11083	5M6211	3040-00-431-6638	73	13
11083	5M6212	4710-01-059-3985	73	14
11083	5M6213	4730-00-089-2515	3	24
			6	18
			13	6
			32	6
			45	16
			101	12
			216	185
11083	5M6214	4730-00-924-7886	3	26
			6	14
			10	4
			15	8
			21	2
			29	3
			30	3
			38	6
			42	5
			69	49
			77	6
			79	2
			101	23
			106	12
11083	5M6604	5330-00-402-9263	69	42
11083	5M6646	2520-00-949-0908	91	22
11083	5M6647	2520-00-949-0909	91	23
11083	5M6708	5310-00-739-9977	98	21
11083	5M7400		148	25
11083	5M7405		148	23
11083	5M7409		148	21
11083	5M7410		148	22
11083	5M7423	5331-01-093-8484	131	6
11083	5M7841	3020-00-431-6448	73	5

CROSS-REFERENCE INDEXES

PART NUMBER INDEX

CAGEC	PART NUMBER	NSN	FIG	ITEM
11083	5M7864	4320-00-251-1785	81	1
11083	5M7869	3020-00-431-6449	73	7
11083	5M7875	2520-01-185-2669	73	22
11083	5M7877	5340-00-240-9269	69	31
11083	5M7878	5325-00-419-3212	69	36
11083	5M7900	5306-00-469-3821	72	25
11083	5M7915	5310-00-006-0673	77	9
11083	5M7936	3110-00-432-8072	73	20
11083	5M7937	5315-01-062-5209	101	58
11083	5M9567	4820-01-236-5464	76	5
11083	5M9622	5365-00-762-6106	87	5
11083	5M9623	5310-00-948-3280	79	7
			87	4
11083	5M9624	5365-00-949-1439	87	3
11083	5M9653	5340-01-258-0185	71	10
11083	5M9654	5330-00-913-8879	71	11
11083	5N8780	5365-01-159-6679	12	10
11083	5P-5212	5120-01-519-0129	216	65
11083	5P0173		216	3
11083	5P0178-141		170	30
11083	5P0178-160		170	25A
11083	5P0178-188		170	21A
11083	5P0178-29		169	42
11083	5P0178-42		165	31
11083	5P0178-50		170	13A
11083	5P0179-393		168	15A
11083	5P0179-426		168	27A
11083	5P0179-435		169	33A
11083	5P0179-455		169	37A
11083	5P0179-49		164	3A
11083	5P0180-40		164	26A
11083	5P0180-65		164	23A
11083	5P0180-75		172	15A
11083	5P0180-88		172	11A
11083	5P0181-171		170	17A
11083	5P0189-50		209	7A
11083	5P0189-67		209	11A
11083	5P0278	3460-01-276-5003	216	23
11083	5P0532	7690-01-267-5468	162	4
11083	5P0537	5310-01-051-2360	24	5
			37	2
			37	5
11083	5P0580-44IN		209	19
11083	5P0598	4730-01-059-5352	84	21
11083	5P0640-12		54	31
11083	5P0642-51		54	24
11083	5P0644-67		54	28
11083	5P0648-95		54	17
11083	5P0651-51		54	25
11083	5P0653-86		54	14
11083	5P0658-110		54	8

CROSS-REFERENCE INDEXES

PART NUMBER INDEX

CAGEC	PART NUMBER	NSN	FIG	ITEM
11083	5P0659-43		54	29
11083	5P0664-9		54	33
11083	5P0695	5975-01-103-3695	BULK	3
11083	5P0747-18		61	12A
11083	5P0747-6		61	37A
11083	5P0922	4730-01-253-1979	80	16
11083	5P0973	4940-01-311-0140	216	30
11083	5P1075	5310-01-094-8810	187	1
			188	18
			189	2
			191	12
			202	59
11083	5P1076	5310-01-097-6720	61	21
			62	3
			113	3
			115	10
			123	2
			126	18
			186	9
			188	2
			189	5
			190	2
			191	2
			192	3
			193	3
			194	13
			195	2
			196	2
			197	2
			198	3
			198	15
			198	22
			199	7
			200	2
			201	28
			202	3
			203	2
			203	12
			204	4
			205	2
			206	4
11083	5P1198	4710-01-068-7274	BULK	21
11083	5P1204-32		64	11
11083	5P1204-51		64	55
11083	5P1260	4720-01-103-3697	BULK	4
11083	5P1260-3		44	6
11083	5P1262-5		42	30
11083	5P1262-6		42	33
11083	5P1263-4.5		84	13
11083	5P1263-8.27		41	19
11083	5P1327		148	12

CROSS-REFERENCE INDEXES

PART NUMBER INDEX

CAGEC	PART NUMBER	NSN	FIG	ITEM
11083	5P1442	4720-01-093-7331	BULK	7
11083	5P1442-10		101	56
11083	5P1442-27.6IN		33	22
11083	5P1475	5940-01-303-4978	63	17
11083	5P1762	5340-01-270-1290	216	88
11083	5P1901	3110-01-168-1031	103	48
11083	5P2228	5305-01-285-7096	185	2
			193	9
			207G	15
11083	5P2370	5340-01-258-0215	171	12
11083	5P2379		215	7
11083	5P2566	5305-00-071-2069	182	19
			184	9
			186	8
			188	1
			189	15
			190	10
			191	5
			193	2
			196	1
			198	2
			198	16
			200	1
			202	4
			203	1
			204	6
			205	1
			206	16
11083	5P2675	5305-00-071-2510	185	14
			188	13
			190	18
11083	5P2759-4		48	16
11083	5P2762-2		48	21
11083	5P2762-26		64	12
11083	5P2762-30		64	15
11083	5P2762-70		64	36
11083	5P2764-5		64	56
11083	5P2764-98		64	45
11083	5P2765-35		64	24
11083	5P3108	5330-01-069-0801	154	22
			155	23
11083	5P3160	5935-01-118-8884	64	22
11083	5P3161	5935-01-158-0364	64	8
11083	5P3385-120		64	44
11083	5P3385-28		64	10
11083	5P3385-40		64	13
11083	5P3520	5120-01-512-8936	217	11
11083	5P3703	9905-01-269-2302	148	30
11083	5P3705		148	31
11083	5P3741	4730-00-307-6426	209	4
11083	5P4115	5310-01-098-0634	188	12

CROSS-REFERENCE INDEXES

PART NUMBER INDEX

CAGEC	PART NUMBER	NSN	FIG	ITEM
11083	5P4115	5310-01-098-0634	190	16
11083	5P4116	5310-01-095-5910	39	51
			198	18
11083	5P4232	5342-01-338-5592	216	150
11083	5P4234	4320-01-336-8200	216	155
11083	5P4443	4730-01-178-0773	16	7
			207B	10
11083	5P4448	4730-01-048-7874	207B	11
11083	5P4510-154		64	4
11083	5P4510-28		64	18
11083	5P4510-41		64	46
11083	5P4510-58		64	41
11083	5P4511-186		64	50
11083	5P4511-34		64	51
11083	5P4515-90		54	19
11083	5P4516-86		54	15
11083	5P4517-51		54	26
11083	5P4571	5940-01-058-9112	53	13
11083	5P4868	4730-01-106-7246	41	18
			42	29
			44	5
11083	5P4939	5305-01-107-3526	23	8
11083	5P4965	5305-01-211-1465	65	5
11083	5P5017-14		64	48
11083	5P5017-53		64	26
11083	5P5017-98		64	47
11083	5P5018-106		64	5
11083	5P5018-41		64	28
11083	5P5018-55		64	17
11083	5P5018-58		64	35
11083	5P5039	2540-01-339-3541	119	20
11083	5P5201		216	62
11083	5P5207	5120-01-513-9583	216	63
11083	5P5208	5310-01-507-2390	216	64
11083	5P5215	5365-01-506-1837	217	12
11083	5P5232	4820-01-312-7710	216	13
11083	5P5233	4940-01-340-9595	216	14
11083	5P5234	5120-01-275-9345	216	15
11083	5P5582	5305-01-209-8693	67	2
11083	5P5621	6145-01-191-3320	BULK	26
11083	5P5621-9		51	3
11083	5P5624-24		63	10
11083	5P5630	4720-01-103-3700	BULK	22
11083	5P5633	4710-01-251-1007	BULK	23
11083	5P5633-12IN		123	33
11083	5P5675-12		50	1
11083	5P5694	5940-01-103-6808	53	10
11083	5P5757	5331-01-243-3777	31	26
11083	5P5896	2510-01-254-5023	124	17
11083	5P5897	2510-01-223-0928	124	16
11083	5P5968	5330-01-278-0257	BULK	18

CROSS-REFERENCE INDEXES

PART NUMBER INDEX

CAGEC	PART NUMBER	NSN	FIG	ITEM
11083	5P5968-13		119	8
11083	5P5968-30		120	26
			122	29
11083	5P6156	5120-01-527-2421	216	112
11083	5P6220	5365-01-506-1820	216	66
11083	5P6222	5120-01-512-7168	216	67
11083	5P6298		51	20
11083	5P6315	4730-01-250-0855	209	28
11083	5P6399	4730-01-254-8682	34	12
11083	5P6446	5306-01-164-6317	136	28
11083	5P6577		217	13
11083	5P6620	5331-00-901-7196	26	6
11083	5P6719	5365-01-257-4481	159	32
11083	5P6874	2540-01-119-1743	144	2
11083	5P6943	5320-01-260-5915	69	34
11083	5P6945	5305-01-158-2039	37	4
11083	5P695-142		61	31B
11083	5P7143	5330-01-126-0717	91	9
11083	5P7144		91	10
11083	5P7145	5330-01-165-3380	91	11
11083	5P7175	4730-01-167-5458	101	57
11083	5P7211	5330-01-292-4293	BULK	20
11083	5P7211-4FT		120	25
11083	5P7213	5310-01-102-9866	171	8
11083	5P7278	5930-01-336-3289	216	156
11083	5P7312	5120-01-119-1748	216	73
11083	5P7313	5120-01-119-1749	216	77
11083	5P7315	5120-01-119-1750	216	78
11083	5P7468	5340-01-163-9459	171	9
11083	5P7469	5340-01-163-6175	171	10
11083	5P761-150		61	31A
11083	5P7892	5306-01-209-8685	159	38
11083	5P7907	4730-00-278-4339	39	30
11083	5P7918	4730-01-255-4341	33	27
11083	5P7957	4010-01-170-1460	127	2
11083	5P8091	5306-01-209-7895	74	29
11083	5P8197	9905-01-163-0029	148	5
11083	5P8244	5310-01-097-8955	80	43
			156	20
			158	57
			159	20
			171	20
			179	6
			207E	4
11083	5P8245	5310-01-098-0624	207F	7
11083	5P8247	5310-01-095-4631	10	12
			49	21
			108	32
			116	3
			124	15
			165	17

CROSS-REFERENCE INDEXES

PART NUMBER INDEX

CAGEC	PART NUMBER	NSN	FIG	ITEM
11083	5P8247	5310-01-095-4631	169	22
			171	27
			180	22
			207A	16
11083	5P8248	5310-01-102-2477	168	25
			176	18
11083	5P8249	5310-01-162-5733	178	18
11083	5P8250	5310-01-157-3394	163	11
11083	5P8444	5325-01-164-7555	171	5
11083	5P8564		216	136
11083	5P8565	5120-01-526-1023	216	104
11083	5P8577		216	128
11083	5P8617	5210-01-225-1132	215	2
11083	5P8630	5120-01-272-0763	216	121
11083	5P8631	5120-01-119-1751	216	115
11083	5P8632	5120-01-119-1752	216	120
11083	5P8634	5365-01-270-2772	216	119
11083	5P8635	5315-01-270-1888	216	117
11083	5P8675		216	192
11083	5P8735	5340-01-274-1632	216	11
11083	5P8837	5315-01-187-3541	177	18
11083	5P8998	4730-01-162-0102	216	176
11083	5P9087	5306-01-157-4848	27	4
11083	5P9398		148	9
11083	5P9736	4010-01-268-9869	215	3
11083	5P9798		55	11
11083	5R0939	5340-01-259-3959	171	25
11083	5R0940		157	11
		5340-01-258-0454	171	24
11083	5R3413	9905-01-268-7580	148	8
11083	5R5304	4730-01-152-2666	18	3
			165	44
11083	5R5421	9905-01-164-0168	148	4
11083	5R5438		148	33
11083	5R6236	2510-01-254-4970	124	12
11083	5R6239	4730-01-254-5040	116	6
11083	5R6244	2540-01-254-2772	126	15
11083	5R6245	5340-01-257-9185	130	3
11083	5R6247	4720-01-294-2586	167	1
11083	5R6247-XX		167	3A
11083	5R6248		164	21
11083	5R6249		169	35
11083	5R6250		169	31
11083	5R6251		170	23
11083	5R6252		170	10
11083	5R6254		170	20
11083	5R6255		172	15
11083	5R6256		172	11
2J565	5R6257	4720-01-371-6691	168	26
11083	5R6258		168	14
11083	5R6259		165	30

CROSS-REFERENCE INDEXES

PART NUMBER INDEX

CAGEC	PART NUMBER	NSN	FIG	ITEM
11083	5R6260	5895-01-253-7447	209	36
11083	5R6263		170	27
11083	5R6265	5340-01-257-9184	61	20
11083	5R6267	5340-01-258-0159	61	43
11083	5R6280		148	15
11083	5R6281		148	20
11083	5R6282	9905-01-295-4589	148	27
11083	5R6283	9905-01-282-7263	148	26
11083	5R6284	9905-01-295-1907	148	6
11083	5R6286	2990-01-267-6005	KIT	
11083	5R6287	2590-01-267-2066	KIT	
11083	5R6288	3830-01-266-8190	KIT	
11083	5R6290	3830-01-266-8191	KIT	
11083	5R6291	2815-01-267-4290	KIT	
11083	5R6292	2520-01-267-0417	KIT	
11083	5R6293	2930-01-266-8193	KIT	
11083	5R6615	5340-01-260-9876	33	14
11083	5R6616	5342-01-253-8655	33	2
11083	5R6626	5340-01-270-1304	116	25
11083	5R6771	2510-01-254-1076	94	16
11083	5R6772	2510-01-284-2313	94	16
11083	5R6927	2930-01-253-7390	112	1
11083	5R6929	3830-01-267-0459	210	7
11083	5R6949	6150-01-252-9289	65	1
11083	5R7003	3040-01-253-5584	33	8
11083	5R7141	4010-01-259-2713	132	12
11083	5R7181	5340-01-236-1850	18	7
			165	40
11083	5R7240	3040-01-253-4655	67	26
11083	5R7249		164	24
11083	5R7250		164	1
11083	5R7288	5995-01-208-4306	61	31
11083	5R7781		148	10
11083	5R7782		148	11
11083	5R7805	2540-01-253-9487	115	32
11083	5R7806	2510-01-253-4674	115	20
11083	5R7807		131	8
11083	5R7811	5340-01-266-1084	65	7
11083	5R7814	2815-01-241-9193	1	10
11083	5R7816	9905-01-260-3363	65	13
			148	34
11083	5R7829		148	3
11083	5R7840		54	4
11083	5R7842		54	1
11083	5R7845		55	13
11083	5R7875		148	16
11083	5R7878	7690-01-267-5497	148	14
11083	5R7915	6160-01-275-5350	61	26
11083	5R7917	2590-01-268-0306	61	24
11083	5R7942	5340-01-270-1305	123	36
11083	5R7945		66	17

CROSS-REFERENCE INDEXES

PART NUMBER INDEX

CAGEC	PART NUMBER	NSN	FIG	ITEM
11083	5R7946		66	8
			66	11
11083	5R7947		66	4
11083	5R7947-ORANGE		66	7
11083	5R7948		66	22
11083	5R7949	5340-01-272-9110	61	29
11083	5R7974		17	1
11083	5R7976		54	3
11083	5R7977	2510-01-287-4547	112	4
11083	5R7978	2930-01-316-9178	112	6
11083	5R7979		110	6
11083	5R8545	3040-01-253-5585	33	11
11083	5S0073	3020-00-910-4008	108	4
11083	5S0784		85	19
11083	5S0788	2940-01-267-2656	85	16
11083	5S0969	4310-01-254-8695	139	5
11083	5S1211	5340-00-246-2746	41	11
11083	5S1213	2930-00-930-9098	41	14
11083	5S1218	6620-00-912-9151	41	12
11083	5S1430		217	14
11083	5S2105	4730-01-060-8101	80	37
11083	5S2106	5330-00-498-2905	46	14
11083	5S2805	4940-01-282-0161	216	33
11083	5S2808	5120-01-272-0764	216	28
11083	5S2811	4730-01-312-0343	216	32
11083	5S2814	5120-01-271-6313	216	27
11083	5S2823	4940-01-311-0138	216	31
11083	5S2834	5120-01-272-0766	216	25
11083	5S2837	4940-01-311-0139	216	29
11083	5S2840	5120-01-272-0767	216	24
11083	5S3552	5310-01-257-4300	137	28
11083	5S3618	5340-01-182-7381	139	9
11083	5S3664	2520-01-254-5580	139	10
11083	5S3779	4730-01-062-5932	173	5
11083	5S4017	4730-00-407-8330	69	26
			110	16
11083	5S4517	5340-00-191-6585	31	5
11083	5S4554	5330-00-118-9146	31	30
11083	5S4558	5340-00-167-6785	31	34
11083	5S4629	5330-00-931-8011	41	13
11083	5S4862		90	30
11083	5S4863	2520-00-950-2421	90	29
11083	5S5199	5315-01-237-0707	31	18
11083	5S5729	3110-01-206-7429	137	11
11083	5S5874	2815-00-485-9418	4	19
11083	5S5879	5340-00-239-8226	9	20
11083	5S5917	2815-00-457-1615	9	7
11083	5S5918	2815-00-487-3123	9	5
11083	5S6051	5330-00-557-8494	15	4
11083	5S6087		216	69
11083	5S6348	5310-00-557-9389	7	11

CROSS-REFERENCE INDEXES

PART NUMBER INDEX

CAGEC	PART NUMBER	NSN	FIG	ITEM
11083	5S6622	5330-00-929-5514	88	20
11083	5S6670	5330-00-494-2764	3	18
11083	5S6720	5365-01-257-3310	108	10
11083	5S6735	5330-00-760-7367	4	11
			207C	8
11083	5S6876	5365-01-254-1309	109	20
11083	5S6880	2530-01-168-1038	101	14
11083	5S7264	5365-00-498-2962	46	2
11083	5S7611	5340-00-449-2612	11	11
11083	5S7630	3120-00-439-4878	11	8
11083	5S8055	5330-00-613-7263	16	17
11083	5S8583	6160-01-256-9854	61	11
11083	5S8995	5340-01-258-0153	169	14
11083	5S9062	5365-00-498-2920	46	15
11083	5S909	5340-00-455-0326	76	3
11083	5S9593	4730-01-261-9432	168	17
11083	5S9614	4730-01-253-4589	169	34
			169	36
11083	5S9948	5310-00-757-6531	5	15
11083	5V1474	5305-01-160-1977	127	16
0RS15	500099	5310-21-914-2850	145	12
0RS15	500159	5310-21-914-2851	145	9
0RS15	500161	5310-21-914-2870	145	11
1C834	500162	5305-01-280-6633	145	13
0RS15	500165	5310-21-914-2574	145	16
0RS15	500216	5310-21-914-2570	120	34
89346	50410DA	4730-00-044-4688	5	3
			90	45
36540	5064071	4730-01-253-0509	90	19
99688	5083	4140-01-190-5493	201	20
			202	36
79136	5101-35-ZD	5325-01-147-9591	26	72
79136	5108-62-S-MD	5325-00-493-8125	24	8
0RS15	520099	5310-21-914-2573	145	10
4U735	522-002-004	2540-01-267-8728	119	22
			120	13
4U735	522-003-022	2510-01-268-0314	119	2
			120	43
0RS15	522-003-048	9340-21-914-1860	119	29
			120	3
0RS15	522-003-049	2510-21-912-3609	119	27
			120	6
4U735	522-003-077	9340-01-269-0057	118	15
0RS15	522-003-078	9340-01-268-0507	121	2
0RS15	522-003-100	2510-21-912-3599	120	43
0RS15	522-003-120	9340-21-913-9738	119	29
			120	3
4U735	522-108-002	2540-01-528-8406	146	21
4U735	522-205-007	5330-01-307-7813	BULK	16
4U735	522-913-041	2510-01-267-6030	118	18
4U735	522-913-042	2510-01-267-4328	118	22

CROSS-REFERENCE INDEXES

PART NUMBER INDEX

CAGEC	PART NUMBER	NSN	FIG	ITEM
4U735	522-913-048	2510-01-267-4327	118	17
19207	5284124	5310-00-528-4124	99	35
77060	5290793	5999-01-059-0884	39	11
			53	17
			53	21
			63	2
			63	6
			64	32
72962	53NTU7947-2812	5310-00-460-8239	178	3
0AFL4	535950	5910-01-176-8877	48	20
12436	540247-563	5306-00-865-7377	25	20
22031	5404-6-4	4730-00-726-1103	216	181
75377	56-941-45	5310-00-188-0473	51	21
70040	5622759	2910-00-033-2200	24	17
			26	32
52788	5660799	5331-00-325-6310	95	18
			164	29
79550	569D1	6145-00-471-0429	BULK	32
4U735	571-001-003		120	33
0RS15	575122	9340-21-913-9705	118	15
44735	580077	2540-01-267-8729	119	19
			120	14
1C834	580532		120	31
0RS15	585169	5340-21-914-2658	145	15
0RS15	585171	5365-21-914-1006	145	7
4U735	595042-15		120	24
4U735	595042-4		119	6
4U735	595042-92		121	4
4U735	595192-2	5330-01-528-1086	120	41
4U735	595193	5330-01-355-6790	118	14
4U735	595193-9FT		119	11
4U735	595265		120	15
98933	595387		122	1
1C834	595452	9905-01-273-2886	121	9
4U735	595502-12		118	25
4U735	595502-30		122	30
4U735	595546-13		120	5
4U735	595546-30		118	12
4U735	595546-9		119	9
			120	40
4U735	595697-16		120	22
4U735	595697-8		119	3
1C834	595834-2		121	5
4U735	595834-3		120	27
4U735	595834-5		119	7
4U735	595869		118	12
			119	8
			121	7
4U735	595869-13		120	5
4U735	597-004-000	5330-01-307-4360	BULK	17
4U735	597-004-003	5330-01-307-7787	120	38

CROSS-REFERENCE INDEXES

PART NUMBER INDEX

CAGEC	PART NUMBER	NSN	FIG	ITEM
11083	6A3359-43		54	30
11083	6A3361-110		54	12
11083	6A3369-24		64	20
11083	6A3369-38		64	38
11083	6A3369-40		64	30
11083	6A3626-12		60	6
11083	6A3770-12		54	32
11083	6B0830	2940-01-025-3284	151	16
			153	25
11083	6B1124	3110-00-144-8518	149	20
11083	6B1628	3120-01-170-1461	147	19
11083	6B2882	5365-00-170-1725	18	9
			165	49
11083	6B4198	5306-01-069-1382	26	114
			38	11
11083	6B4598	5306-00-149-9066	91	5
11083	6B4661	4730-00-288-8546	147	23
11083	6B7469	5365-01-063-0778	129	4
11083	6B7687	3120-00-176-5546	101	42
11083	6B7724	5310-01-273-6260	110	7
11083	6B8193	5315-00-363-9729	126	21
11083	6D1641	5342-01-064-7512	169	5
11083	6D3036	5315-01-260-1481	77	7
11083	6D4636	5340-01-053-8025	201	6
11083	6D5707		36	36
11083	6D8498	5305-01-180-8690	25	6
11083	6D9961	4730-01-253-8598	80	18
11083	6E5527	4310-01-267-2083	163	10
11083	6F4411	5310-01-215-7318	123	25
11083	6F4868	5330-00-297-6548	134	9
11083	6F4991	5305-00-710-2157	99	24
11083	6F5282	5305-00-263-8947	179	2
11083	6F5559	5331-00-580-1215	152	2
11083	6F6672	5331-00-310-6575	25	16
11083	6F7045	5310-00-833-9298	57	23
11083	6F7062	5310-00-362-7988	3	23
			84	11
			84	15
11083	6F7522	5310-00-136-4398	211	33
11083	6F7523	3130-00-131-1832	211	32
11083	6G0773	5365-01-266-2562	135	8
30780	6HP5N-SS	5365-01-024-9868	151	4
			157	29
			158	34
			159	29
11083	6H0192	5307-00-587-3434	10	2
11083	6H0406	5307-01-161-2653	41	24
11083	6H1717	5306-00-874-4001	83	44
			113	2
			171	6
11083	6H2953	5325-00-919-9402	96	2

CROSS-REFERENCE INDEXES

PART NUMBER INDEX

CAGEC	PART NUMBER	NSN	FIG	ITEM
11083	6H2953	5325-00-919-9402	97	4
11083	6H3068	5340-00-922-2596	33	33
11083	6H3566	3110-00-293-8566	108	30
11083	6H3956	5315-00-586-5103	36	42
11083	6H3977	5331-00-741-2096	136	4
11083	6H4158	5315-01-119-1754	216	79
11083	6H4208	5342-00-948-6464	105	39
11083	6H5139	2520-01-028-8096	180	5
11083	6H6269	4320-00-949-1450	98	15
11083	6H6699	4730-00-923-2126	209	12
11083	6H6765	6150-01-269-1853	66	1
11083	6H9691	5331-00-952-8007	26	59
11083	6I0923	2815-01-125-9819	10	21
11083	6I1344		14	32
11083	6I1345	3040-01-497-0540	14	31
11083	6I1346	2815-01-011-2686	14	14
11083	6I1564	2910-01-456-6768	37	14
11083	6I2002	5330-01-376-0784	26	4
11083	6I2003	5330-01-376-0802	26	26
11083	6I2004	5330-01-376-0803	26	55
11083	6I2570	2940-01-253-9588	28	13
11083	6J0427	5365-01-533-9734	207C	19
11083	6J0713	3830-00-223-6595	176	7
11083	6J0714	5315-01-270-1317	176	10
11083	6J1038	5331-01-066-1469	159	44
11083	6J1311	5315-00-246-0998	159	2
11083	6J2419	5331-00-494-2763	25	7
11083	6J3134	5330-01-064-8247	154	23
			155	24
			159	33
11083	6J5342	5365-01-268-5530	210	3
11083	6J5348	3040-01-267-4368	211	18
11083	6J5349	5306-01-273-6844	211	3
11083	6J5359	3040-01-267-0625	211	14
11083	6J5365	3830-01-267-4305	211	5
11083	6J5370	3110-01-271-1919	211	20
11083	6J5372	5340-01-270-1284	211	24
11083	6J5377	2510-01-267-4390	211	21
11083	6J5378	2510-01-267-4389	211	12
11083	6J6229	5315-01-270-1876	210	2
			211	22
11083	6J6517	5365-01-258-4656	77	10
11083	6J7850	2590-01-267-6008	211	34
11083	6J9258	2590-01-267-6006	211	27
11083	6J9747	5310-01-270-1258	163	7
11083	6J9748	3040-01-267-2084	163	23
11083	6J9749	5307-01-336-2303	163	18
11083	6J9750		163	21
11083	6J9751	5306-01-270-8940	163	17
11083	6K6164	5340-01-163-6174	171	34
11083	6K6167	5340-01-163-6173	171	33

CROSS-REFERENCE INDEXES

PART NUMBER INDEX

CAGEC	PART NUMBER	NSN	FIG	ITEM
11083	6K7361		64	2
			64	42
11083	6K7917	5306-01-156-3738	74	18
11083	6K8077	2940-01-053-4692	34	1
11083	6K8498	4730-01-063-3007	133	16
11083	6K9194	4730-01-051-8745	19	3
			159	25
			169	30
11083	6K9549	5340-01-185-2058	83	54
11083	6K9550	5340-01-178-3770	83	38
11083	6L1698	5365-01-161-2642	67	19
11083	6L3616	4730-01-068-6081	133	13
			209	5
11083	6L3670	5306-00-118-3055	138	4
11083	6L4470	4820-01-159-0852	140	4
11083	6L4783	5306-01-059-9566	150	9
11083	6L5897	5305-01-107-4621	26	105
11083	6L7751	2520-01-066-0510	142	15
11083	6N0027	5365-01-257-4352	41	26
11083	6N0028	2930-01-254-1019	41	20
11083	6N0130	5310-01-051-6946	6	2
			62	6
			90	20
			108	22
11083	6N0714	3020-01-253-9599	48	5
11083	6N1036	3020-00-460-6696	14	34
11083	6N1131	2940-01-254-1211	84	1
11083	6N1165	5340-01-257-0703	84	14
11083	6N1166	5340-01-257-2243	84	18
11083	6N1536	5342-01-259-6479	15	32
11083	6N1613	2930-01-254-1058	41	28
11083	6N2011	5320-01-185-4702	15	33
11083	6N2088	2940-01-253-6884	29	2
11083	6N2642		14	9
11083	6N3456	4710-01-267-2114	28	4
11083	6N3504	5340-01-066-4744	26	67
11083	6N3574	2590-01-253-3460	16	9
11083	6N5899	5930-01-101-7845	39	38
11083	6N6033	5340-01-168-7289	32	22
11083	6N7174	2815-01-183-4649	4	20
11083	6N7325	5342-01-254-4966	15	36
11083	6N7392	5340-01-534-4726	207C	28
11083	6N7398	5340-01-534-4722	207A	8
11083	6N7399		207C	18
11083	6N7887	5330-01-093-7888	10	25
11083	6N8003	3040-01-149-5043	3	12
11083	6N8742	2990-01-103-6635	63	14
11083	6N9429	4720-01-163-0677	34	17
11083	6N9587	5940-01-097-3578	39	26
			39	36
			59	5

CROSS-REFERENCE INDEXES

PART NUMBER INDEX

CAGEC	PART NUMBER	NSN	FIG	ITEM
11083	6N9587	5940-01-097-3578	64	29
11083	6P0968		109	42
11083	6P1872	3830-01-253-8631	111	6
11083	6P1874	2510-01-253-4675	111	1
11083	6P2322	2510-01-253-9477	93	9
11083	6P2772	5365-01-268-2654	103	54
11083	6P3400	4710-01-253-4719	80	48
11083	6P3711		171	41
11083	6P3713	4710-01-253-4715	171	39
11083	6P3767	5310-01-198-8570	136	23
11083	6P4052	2520-01-268-5355	83	43
11083	6P4327	5342-01-259-8972	93	10
11083	6P4416	5306-01-274-3308	103	11
11083	6P4677	5330-01-257-3808	138	41
11083	6P4680		133	19
11083	6P4681	3040-01-254-4938	141	5
11083	6P4682	3020-01-254-0085	137	33
11083	6P4683	3010-01-254-5016	139	32
11083	6P4684	3130-01-257-3835	139	2
11083	6P4685	5365-01-259-3612	139	3
11083	6P4711	4820-01-151-3651	77	20
11083	6P4717	4820-01-151-3650	77	24
11083	6P4773		133	6
11083	6P4928	4730-01-267-2632	83	49
11083	6P4948	3130-01-257-7804	94	19
11083	6P5036	5340-01-270-3789	82	19
11083	6P5061	4710-01-267-2115	83	42
11083	6P5064	4720-01-165-1438	83	39
11083	6P5159	4720-01-208-9237	165	6
11083	6P5172	2510-01-253-4672	113	6
11083	6P5173	2510-01-254-1124	113	6
11083	6P5204	5342-01-264-6075	142	30
11083	6P5205		161	19
11083	6P5206	5340-01-161-9162	161	21
11083	6P5207	5330-01-068-6110	161	9
			162	3
11083	6P5208	3040-01-171-3357	161	8
11083	6P5209	5340-01-163-5981	161	7
11083	6P5213	2510-01-238-5457	116	38
11083	6P5327	5340-01-258-4867	169	25
11083	6P5343	3040-01-253-4611	98	25
			98	28
11083	6P5353	4720-01-208-7077	165	2
11083	6P5386	5340-01-263-8737	161	4
11083	6P5391	4730-01-253-7012	180	14
11083	6P5441	5340-01-258-4685	123	30
11083	6P5450	5340-01-258-0140	123	20
11083	6P5659	5340-01-228-0501	58	12
11083	6P5661	3020-01-160-3640	142	3
11083	6P5759		53	20
11083	6P6028		142	32

CROSS-REFERENCE INDEXES

PART NUMBER INDEX

CAGEC	PART NUMBER	NSN	FIG	ITEM
11083	6P6031	5340-01-262-9742	142	7
11083	6P6033	3040-01-254-1118	142	9
11083	6P6084	5340-01-268-3459	166	19
11083	6P6253	2530-01-253-0440	36	71
			104	4
			107	15
11083	6P6464	2510-01-253-9485	116	1
11083	6P6477	5340-01-258-4683	116	16
11083	6P6496	2510-01-184-0786	117	3
11083	6P6502	5340-01-258-0141	117	4
11083	6P6653	2530-00-195-5819	99	31
11083	6P6734	5365-01-257-3276	124	21
11083	6P7478	5340-01-270-1286	82	21
			83	40
11083	6P7625	2530-01-254-1125	114	2
11083	6P7626	2530-01-254-1126	114	11
11083	6P7627	2530-01-254-1127	114	12
11083	6P7639	5330-01-129-2544	90	28
11083	6P8264	5330-01-214-6545	73	29
			74	2
11083	6P8266	5330-01-214-6546	72	18
			74	1
11083	6P8677	5365-01-257-3813	134	19
11083	6P8848	2530-01-066-8462	77	22
11083	6P9003	5945-01-250-3234	83	5
11083	6P9295		77	21
11083	6P9367		150	19
11083	6P9733	4710-01-267-4394	175	23
11083	6P9734	4710-01-267-2120	174	20
11083	6P9959		152	16
11083	6S2828	3110-01-013-3083	138	37
11083	6S4183	5365-01-256-9290	173	20
11083	6T0960	2590-00-950-7303	93	7
11083	6T1188	4710-01-253-8708	34	5
11083	6T1869	4710-01-267-4395	83	55
11083	6T1980	2530-00-947-9857	99	5
11083	6T2866	5340-01-258-9178	171	11
11083	6T4864	6240-01-301-0717	201	4
11083	6T4944	2520-01-285-5094	136	15
11083	6T8943	5340-01-506-9560	202	22
11083	6T9255	5340-01-506-9559	202	21
11083	6V-8801	5310-01-429-7859	39	2
11083	6V0082	5120-01-272-4055	216	114
11083	6V0314	5306-01-260-1348	180	34
11083	6V0527		148	38
11083	6V1196	5331-00-165-1954	149	5
11083	6V1197	5331-01-180-2417	149	15
11083	6V1426	5307-01-258-4709	20	9
11083	6V1427	5307-01-256-9782	20	3
11083	6V1556	5330-01-211-3120	149	17
11083	6V1557		149	7

CROSS-REFERENCE INDEXES

PART NUMBER INDEX

CAGEC	PART NUMBER	NSN	FIG	ITEM
11083	6V1668	5310-01-429-7105	202	47
11083	6V1720		72	11
			148	32
11083	6V1949	5330-01-209-8720	154	11
			155	11
			155	30
11083	6V2163		217	15
11083	6V2376	4730-01-196-7172	18	4
			165	45
11083	6V2687	5305-01-152-2589	202	10
11083	6V2911	5330-01-259-3828	KIT	
11083	6V3094	5120-01-518-9738	216	96
11083	6V3123	5120-01-525-7078	216	81
11083	6V3124	5310-01-507-2374	216	70
11083	6V3126	5315-01-506-5030	216	71
11083	6V3127	5130-01-527-9782	216	84
11083	6V3265	5340-01-184-5459	19	10
11083	6V3507	5330-01-152-0601	53	26
			209	3
11083	6V4000	5120-01-518-4822	216	72
11083	6V4163	5130-01-527-9781	217	20
11083	6V4164		217	21
11083	6V4180	5180-01-358-3781	217	16
11083	6V4186	5315-01-268-2194	216	44
11083	6V4253	5330-01-257-3805	158	19
11083	6V4626	5306-01-160-4498	46	1
11083	6V4651	4730-01-185-0026	167	2
11083	6V4657	4730-01-178-9643	164	22
			164	27
11083	6V4658	4730-01-162-4358	167	4
11083	6V4664	4820-01-202-5710	172	14
			172	17
11083	6V4672	4730-01-267-2635	83	17
11083	6V4676	4730-01-267-2634	83	14
			164	26
			172	12
11083	6V4679	4730-01-254-0177	172	16
11083	6V4818		217	17
11083	6V5016	4820-01-208-9337	33	24
11083	6V5210	5305-01-256-6797	60	2
11083	6V5729	5310-01-202-8343	185	20
11083	6V5734	5310-01-210-1675	112	13
11083	6V5759		207A	21
11083	6V5894	5305-01-210-7417	37	1
11083	6V6022	5210-01-273-6451	216	10
11083	6V6072	5130-01-527-9780	217	23
11083	6V6080	5120-01-296-4235	216	68
			217	10
11083	6V6380		185	18
11083	6V6835	5305-01-187-5879	26	12
			26	15

CROSS-REFERENCE INDEXES

PART NUMBER INDEX

CAGEC	PART NUMBER	NSN	FIG	ITEM
11083	6V6921	5330-01-183-1504	23	17
11083	6V6980	2910-01-250-1608	216	107
11083	6V7876	5120-01-349-0341	216	193
11083	6V7926	5280-01-505-8509	217	18
11083	6V8127	5310-01-257-2204	49	10
11083	6V8182	5310-01-415-0234	190	9
			194	11
			199	3
11083	6V8186	5310-01-413-5909	198	19
11083	6V8188	5310-01-184-3538	182	20
			186	10
			189	6
			190	7
			191	1
			192	5
			193	13
			194	12
			195	4
			196	6
			197	6
			198	4
			198	12
			198	21
			199	9
			201	27
			202	5
			203	6
			204	7
			205	12
			206	10
			207F	8
			207G	13
11083	6V8362	5305-01-184-5915	57	16
11083	6V8363	5305-01-192-5731	57	14
11083	6V8370	5310-01-184-3539	57	8
11083	6V8376	5305-01-184-5919	39	43
			53	28
11083	6V8545	5331-01-258-0093	94	11
11083	6V8801	5310-01-429-7859	10	14
			24	16
			28	7
			33	38
			36	12
			40	9
			41	34
			48	12
			56	12
			67	40
			68	1
			71	6
			80	46

CROSS-REFERENCE INDEXES

PART NUMBER INDEX

CAGEC	PART NUMBER	NSN	FIG	ITEM
11083	6V8801	5310-01-429-7859	82	17
			84	20
			86	2
			103	5
			115	22
			129	6
			130	6
			138	10
			164	16
			166	9
			168	10
			169	10
			173	14
			207B	3
			207C	27
11083	6V9648	9905-01-176-6171	148	17
11083	6W0475	5342-01-258-0249	128	11
11083	6W1496	5342-01-257-3846	128	5
11083	6W1497	5342-01-257-3845	128	6
11083	6W1506	2540-01-253-9598	126	5
11083	6W1888	5340-01-258-0152	128	8
11083	6W2371	5310-01-262-4868	128	7
11083	6W3309	9905-01-282-0103	127	3
11083	6W3628	4010-01-260-5744	128	3
11083	6W5757	5340-01-256-3208	127	8
11083	6W6830	2540-01-254-5577	127	10
11083	6Y0359	5342-01-103-6789	214	6
11083	6Y0473	5340-01-308-6246	100	14
			100	34
11083	6Y0925	5330-00-738-8639	97	7
11083	6Y2364	2530-01-392-6628	105	33
11083	6Y5916	2520-01-209-0957	73	25
			74	6
11083	6Y6585	2590-01-254-8749	135	7
11083	6Y7920	2530-01-392-2481	139	24
83259	600-001-6	5330-00-602-9471	22	3
83259	600-042-3/8		118	10
			119	35
20680	6028	5306-01-051-7598	160	2
01843	60825	5310-01-035-0868	146	20
45225	60842	3950-01-263-9513	215	6
1C834	609009		119	18
			120	12
80201	6143	5330-01-212-4617	36	17
24956	63024-40 24WJ		146	1
22031	6400-6-4	4730-01-062-9928	159	24
			170	1
7X677	6439392	2940-00-029-0388	16	18
60038	67322	3110-00-100-0611	90	27
11083	7B0863	2510-00-176-5600	132	10
11083	7B1598	5342-01-067-8043	83	32

CROSS-REFERENCE INDEXES

PART NUMBER INDEX

CAGEC	PART NUMBER	NSN	FIG	ITEM
11083	7B2174	5330-00-362-7996	207A	18
11083	7B2499	5340-00-377-8758	216	85
11083	7B2742	5306-00-423-8784	24	4
			55	22
11083	7B3028	5305-00-708-3823	72	10
			77	15
			79	13
			87	28
			98	27
			98	32
			109	12
			113	7
			148	35
			154	28
			155	44
			160	7
11083	7B3039	5360-00-597-8341	180	45
11083	7B3235	5306-00-424-0086	42	26
			48	8
			84	6
			91	24
			99	43
			112	9
			113	4
			117	1
			124	26
			166	18
11083	7B5060	5320-00-164-0917	105	32
11083	7B5163	5306-00-426-5835	5	16
11083	7B8167	5305-01-164-6340	36	63
11083	7B9665	4730-01-171-1981	110	24
11083	7C0396	5365-01-257-4626	25	12
11083	7C0791		26	88
11083	7C3906		4	5
11083	7C4006		4	2
11083	7C4297	5330-01-257-4528	5	9
11083	7D0941	5340-01-506-9448	190	11
11083	7D9212	5360-01-259-6515	126	31
11083	7D9749	5330-01-048-0983	159	10
11083	7E2464	4820-01-351-8033	25	3
11083	7E6047	2815-01-154-1242	7	6
11083	7F3425	5305-01-095-3292	30	6
			150	3
11083	7F8607	5331-00-591-7543	133	20
11083	7F9541	5315-00-426-5074	134	2
11083	7G0526		80	25
11083	7G1899	5365-01-258-0122	99	22
11083	7G1900	5365-01-257-3274	99	26
11083	7G1901	3130-00-404-5473	99	23
11083	7G1902	3110-01-166-1535	99	23
11083	7G2032	5340-01-264-1444	103	2

CROSS-REFERENCE INDEXES

PART NUMBER INDEX

CAGEC	PART NUMBER	NSN	FIG	ITEM
11083	7G2038	2520-01-267-6053	92	5
11083	7G2065	3040-01-267-8765	103	52
11083	7G2066	5340-01-258-6066	103	23
11083	7G2067	5340-01-258-7807	103	23
11083	7G2069	3040-01-267-8649	103	3
11083	7G2071	3040-01-267-8650	103	20
11083	7G2072	3040-01-254-1262	103	21
11083	7G2074	3040-01-267-4364	103	13
11083	7G2078	5315-01-270-1877	103	56
11083	7G2079	3040-01-267-7068	103	55
11083	7G2080	3040-01-268-0301	103	55
11083	7G2474	3020-01-254-0086	69	13
11083	7G2475	3020-01-254-1230	73	24
11083	7G2476	3020-01-254-0088	73	16
			74	20
11083	7G2500	3020-01-184-4622	137	7
11083	7G2513		73	23
			74	30
11083	7G2548	2510-01-254-8714	126	6
11083	7G2557	5340-01-271-6280	126	30
11083	7G2559	3120-01-264-6067	126	20
11083	7G2926	3040-01-253-7459	105	15
11083	7G2934	5306-01-258-8560	36	11
11083	7G3331	3040-01-253-9424	36	33
11083	7G3333	5340-01-257-9183	36	30
11083	7G3334	5340-01-259-8758	36	34
11083	7G3338	5306-01-257-3822	107	8
11083	7G4327	5365-01-259-6380	126	23
11083	7G4332	5365-01-214-2602	100	15
			100	35
11083	7G4631	3040-01-253-9591	126	27
11083	7G6359	5975-01-147-4455	39	5
11083	7G6576	3110-00-948-0334	90	25
11083	7G6625		90	26
11083	7G6942	5360-01-270-5501	103	57
11083	7G7105	4720-01-163-0678	83	31
11083	7G7106	4720-01-162-7336	83	13
11083	7G7106-XX		83	15A
11083	7G8660		64	7
11083	7G9727	5306-01-257-3821	36	48
11083	7H1186	5940-01-251-1326	207D	17
11083	7H1189	5940-01-292-9676	53	23
11083	7H1447	2930-00-635-8296	180	53
11083	7H2831	2530-00-984-5098	91	32
11083	7H3171	4730-00-042-8988	3	25
			4	15
11083	7H3598	5306-00-567-3404	100	4
11083	7H3608	5310-00-550-2992	90	6
11083	7H4543	5305-01-180-8691	201	24
			202	33
11083	7H4570		95	4

CROSS-REFERENCE INDEXES

PART NUMBER INDEX

CAGEC	PART NUMBER	NSN	FIG	ITEM
11083	7H4571	2530-00-949-0370	95	3
11083	7H4574	5325-00-949-0369	95	2
11083	7H7539	5310-00-404-3787	131	4
			213	7
11083	7H9678	5340-00-999-3230	24	21
11083	7J0204	5330-01-096-0912	37	22
			157	20
11083	7J1113		171	40
11083	7J1333	3120-00-419-1413	177	3
11083	7J1334	3120-00-421-9622	177	2
11083	7J1592	5365-01-258-0123	159	22
11083	7J2358		210	10
11083	7J2596	5340-01-265-1164	158	13
11083	7J3337	3830-00-487-2799	176	2
11083	7J3338	3040-01-267-2085	176	13
11083	7J4827	3010-01-267-6054	177	13
11083	7J4904	4710-01-267-7078	177	1
11083	7J5614	4730-00-647-3343	165	48
11083	7J6871	5365-01-053-8345	103	36
11083	7J7844	5365-01-257-3304	154	15
			155	17
			155	34
11083	7J8902	5306-01-095-1486	50	4
11083	7K1181	2815-01-053-4712	173	17
11083	7K1457	4730-01-202-3353	133	14
11083	7K2135	3110-01-065-9108	36	56
11083	7K4330	5365-01-270-3720	101	21
11083	7K4474	5940-01-121-0365	53	7
			66	6
11083	7K4475	5995-01-098-9330	66	9
11083	7K5426	5365-01-336-5964	211	29
11083	7L0631	5365-01-257-3282	116	14
11083	7L0811	5315-01-257-7800	161	27
			162	11
11083	7L0820	5315-01-265-9369	140	5
11083	7L3195	5306-00-119-1662	31	1
11083	7L3326	3110-00-820-1466	27	10
11083	7L4265	3120-00-421-9628	6	12
			21	6
11083	7L6326	5340-01-257-7789	173	13
11083	7L8316	5305-01-094-7378	201	23
			202	39
11083	7M0652	5365-01-253-8979	36	3
11083	7M0706	5355-00-891-4401	67	3
			142	8
11083	7M1296	4820-01-103-4037	79	6
11083	7M1297	5360-00-950-3397	79	10
11083	7M1345	5340-01-269-9285	87	16
11083	7M1377	4820-00-243-9575	79	4
11083	7M3222	5340-01-254-7175	115	34
11083	7M4046	3120-00-893-8317	3	2

CROSS-REFERENCE INDEXES

PART NUMBER INDEX

CAGEC	PART NUMBER	NSN	FIG	ITEM
11083	7M5337	2530-00-948-3396	99	36
11083	7M5338	2530-00-948-3446	99	41
11083	7M5814	5365-01-271-1888	87	23
11083	7M6571	5365-00-948-0246	99	6
11083	7M7219	3110-00-629-4111	26	81
11083	7M8479	5315-00-193-0904	72	35
			73	32
			74	10
11083	7M8480	5315-00-193-0925	73	31
			74	11
11083	7M8485	5330-00-930-9407	85	22
			137	15
			158	53
11083	7M8499	5360-00-974-7122	87	2
11083	7M8575		75	4
11083	7M9772	5315-00-922-2595	216	194
11083	7M9773	5120-01-119-1764	216	86
11083	7M9774	5120-01-119-1765	216	87
11083	7M9910	5306-00-118-3091	206	9
11083	7N-0718	2920-00-775-7691	57	19
11083	7N0165	2930-00-457-1616	15	5
11083	7N0190	4730-01-253-1980	15	13
11083	7N0191	4730-01-253-1981	15	7
11083	7N0200	5330-01-127-8574	44	8
11083	7N0239	5310-01-353-3410	31	29
11083	7N0659	5340-01-534-4553	207C	1
11083	7N0752	5342-01-254-1071	42	21
11083	7N0944	5330-01-094-8058	43	4
11083	7N1047	5340-01-181-0789	27	37
11083	7N1067	5360-01-182-3644	27	21
11083	7N1068		27	24
11083	7N2172	5315-01-166-0687	26	41
11083	7N2176	5315-01-162-0426	26	17
11083	7N2436	5342-01-254-1072	42	24
11083	7N2594	5305-01-160-1980	26	52
11083	7N2597	5365-01-264-8512	40	16
11083	7N2949	3020-01-165-5716	5	13
11083	7N2957	2930-01-143-0186	41	2
11083	7N2994	5310-01-157-6813	11	2
11083	7N3171	5330-01-241-2759	26	40
11083	7N5334	5305-01-157-5626	26	110
11083	7N5565	2930-01-127-2515	41	4
11083	7N5800		21	14
11083	7N5810	3020-01-135-7462	21	12
11083	7N5815	3020-01-253-9283	21	20
11083	7N5819	3020-01-135-7464	21	10
11083	7N5825	3020-01-135-7463	21	9
11083	7N5909		45	1
11083	7N5910	2930-01-126-4959	45	18
11083	7N6685	2990-01-267-6020	40	7
11083	7N6686	2990-00-237-9928	40	8

CROSS-REFERENCE INDEXES

PART NUMBER INDEX

CAGEC	PART NUMBER	NSN	FIG	ITEM
11083	7N7166	3110-01-181-2425	27	9
11083	7N7169		27	20
11083	7N7264	2910-01-155-0370	27	6
11083	7N7265	2910-01-155-0276	27	2
11083	7N7267		26	78
11083	7N7268	5340-01-352-7643	26	77
11083	7N7270	5365-01-154-8503	26	65
11083	7N7271		26	89
11083	7N7282		26	130
11083	7N7779	5999-01-150-8808	54	22
			55	10
			55	18
			66	33
			207D	5
			207D	13
11083	7N7780		207D	6
			207D	12
11083	7N7969	5365-01-162-5782	27	29
11083	7N7970	3120-01-164-4512	27	34
11083	7N7998	2815-01-127-2912	3	19
11083	7N8015	5342-01-129-5917	9	24
11083	7N8018	5330-01-128-4130	4	22
11083	7N8775		26	53
11083	7N8780	2910-01-149-7900	26	46
11083	7N8781		26	48
11083	7N8785	5315-01-162-8741	26	50
11083	7N8821	5325-01-154-8559	26	51
			26	63
11083	7N9035		37	17
11083	7N9036	2910-01-159-0945	37	18
11083	7N9062		37	28
11083	7N9149	3020-01-253-9600	46	19
11083	7N9519	2910-01-155-5195	38	5
11083	7N9520	5330-01-158-6284	38	4
11083	7N9737	5935-01-150-8323	55	7
			207D	4
11083	7N9738	5935-01-149-5165	54	20
			207D	11
11083	7N9801	5330-01-302-9890	39	19
11083	7N9805	2815-01-116-5920	7	2
11083	7N9907	2910-01-254-4964	26	118
11083	7R7491	5331-01-102-4354	26	93
11083	7S0570	4730-01-062-7184	80	40
11083	7S0574	4730-01-095-8459	165	23
			166	3
11083	7S1125	5120-01-290-0761	216	9
11083	7S1126	4940-01-084-0426	216	8
11083	7S1912	5342-00-465-6799	56	18
58312	7S2204-00	5310-00-498-2967	8	3
11083	7S2666	3040-01-254-0311	105	9
11083	7S2668	2520-01-168-1030	105	45

CROSS-REFERENCE INDEXES

PART NUMBER INDEX

CAGEC	PART NUMBER	NSN	FIG	ITEM
11083	7S2670	3120-01-166-6915	105	11
11083	7S2747	2520-00-237-4576	69	19
11083	7S2750	5365-01-180-8780	69	20
11083	7S2751	2910-01-254-1210	69	22
11083	7S2752		69	24
11083	7S2753	5330-00-455-2772	69	21
11083	7S2780		103	1
11083	7S3029	5330-00-036-6824	143	14
11083	7S3161	2815-00-450-9341	9	4
11083	7S3224	5306-00-450-4026	3	14
11083	7S4097	2815-00-237-3760	30	12
11083	7S6139	3040-01-254-0310	105	4
11083	7S6140	3120-00-239-0939	105	24
			105	52
			105	56
11083	7S6143	3120-00-421-9629	105	23
11083	7S6144	3120-00-446-9860	105	57
11083	7S6145	3120-00-239-0938	105	25
			105	54
11083	7S6149		105	22
11083	7S6402	5930-00-434-9121	57	1
11083	7S6949	3040-01-253-3468	72	21
11083	7S6964	3020-01-254-0084	72	37
11083	7S7112	5315-01-270-5495	216	91
11083	7S7144	5360-00-519-6605	4	17
11083	7S7369	4730-00-921-3245	80	30
11083	7S7370	3040-01-253-9494	80	8
11083	7S7375	4710-01-253-2746	80	29
11083	7S7507	4730-01-252-7837	80	26
11083	7S7680	2940-01-058-8102	28	10
11083	7S7809	2930-00-852-1174	41	1
11083	7S9323	5360-00-116-0448	24	22
11083	7S9686	5306-01-209-7883	80	24
11083	7T0204	3120-01-257-6127	94	10
11083	7T0582	5305-01-472-7230	201	12
11083	7T2036	2590-01-377-3892	35	1
11083	7T2037	5330-01-209-8731	35	5
11083	7T2336	2520-01-208-7020	72	31
11083	7T5181	6150-01-533-9957	207D	9
11083	7T6799	5310-01-288-0094	57	18
11083	7T6985		64	1
11083	7T6988	6150-01-499-4642	63	15
11083	7T8341	3020-01-254-4802	137	40
11083	7T8342	3020-01-254-1224	136	2
11083	7T9515	5355-01-284-5519	57	9
11083	7W0134	5360-01-270-1351	25	14
11083	7W0250	2990-01-253-9490	26	92
11083	7W0449		11	16
11083	7W0450	3020-01-267-4337	45	10
11083	7W0507	3020-01-253-9282	14	12
11083	7W0508	3020-01-253-9281	11	3

CROSS-REFERENCE INDEXES

PART NUMBER INDEX

CAGEC	PART NUMBER	NSN	FIG	ITEM
11083	7W0546		11	7
11083	7W1691	5310-01-270-1259	37	13
11083	7W1927	5325-01-257-4598	27	18
11083	7W1944	5365-01-257-3278	30	11
11083	7W2012		6	4
11083	7W2015	3040-01-267-0261	37	21
11083	7W2808	5340-01-259-4234	27	23
11083	7W2826		37	12
11083	7W2827	5360-01-271-6110	37	19
11083	7W2829	5342-01-266-2809	37	11
11083	7W2830	2910-01-254-1018	37	3
11083	7W3369		37	10
11083	7W4486	5310-01-257-2208	22	4
11083	7W5687	3040-01-253-4698	5	14
11083	7W7556	2815-01-254-1114	9	8
11083	7X0290		182	7
11083	7X0310	5306-01-438-9840	185	19
11083	7X0325	5306-01-438-9845	187	12
			188	21
			189	7
			190	1
			197	3
			199	8
			201	29
11083	7X0328	5306-01-473-6489	184	7
			192	4
11083	7X0333	5306-01-430-9050	189	16
11083	7X0345	5306-01-297-9000	182	9
			184	5
11083	7X0346	5306-01-430-9057	187	5
			188	6
			189	21
			194	3
11083	7X0347	5306-01-430-9053	184	13
11083	7X0365	5306-01-430-9059	203	16
11083	7X0366	5306-01-430-9056	185	6
11083	7X0370	5306-01-430-9063	188	10
			190	19
11083	7X0374	5306-01-438-9848	194	17
			199	4
11083	7X0447	5310-01-353-3403	207E	5
11083	7X0448	5310-01-423-9059	184	6
			185	17
			194	9
11083	7X0515	5310-01-421-9919	187	6
			188	5
			189	20
			193	7
11083	7X0578	5310-01-430-9026	207F	13
4U735	700-009-000	5306-01-306-3445	119	33
			120	45

CROSS-REFERENCE INDEXES

PART NUMBER INDEX

CAGEC	PART NUMBER	NSN	FIG	ITEM
82328	714085	5331-00-165-1980	24	25
			152	17
			165	1
19204	7161056	5315-00-716-1056	115	15
055L4	719-FSO-12-06	4730-01-204-5258	157	16
62534	73R8050	4140-01-166-9289	147	10
4U735	735-300-033	2510-01-267-4317	119	30
			120	7
4U735	735-701-008	2510-01-267-8665	118	16
0RS15	735-800-000	5975-21-914-1414	122	3
4U735	735-800-002	2510-01-267-4350	122	36
4U735	735-800-004	2590-01-267-8751	122	35
4U735	735-800-006	2540-01-267-4377	122	31
4U735	735-800-010	2540-01-315-1030	122	14
4U735	735-800-011	2510-01-275-0096	122	20
4U735	735-800-012	2510-01-267-4369	122	42
4U735	735-800-015	2510-01-267-6069	122	7
4U735	735-800-016	2510-01-267-6060	122	23
4U735	735-800-017	2590-01-267-8783	122	17
4U735	735-800-018	2510-01-267-6033	122	25
0RS15	735-800-019	2510-21-914-4036	122	27
4U735	735-800-021	2510-01-267-6068	122	34
4U735	735-800-022		122	8
19207	7373635	5340-00-737-3635	69	41
			74	12
35272	76-1020	5940-01-288-9592	66	30
35272	76-1281	5940-01-284-0989	66	27
2Y580	76-4080		66	36
35272	76-8020		66	29
			66	31
			66	34
			66	35
			66	47
			66	48
35272	76-8021		66	39
			66	42
			66	45
35272	76-8023		66	40
			66	41
			66	46
35272	76-8025		66	38
			66	43
			66	44
35272	76-8037		66	26
36540	776Y-28E-1	4730-00-924-7974	134	10
79500	780831	5310-00-429-4747	146	3
14859	7851-13-60I	5925-00-008-0548	56	6
11083	8AA06S-254		66	49A
11083	8B1312	5315-00-245-9995	132	6
			136	25
11083	8B2377	5306-00-424-0351	26	120

CROSS-REFERENCE INDEXES

PART NUMBER INDEX

CAGEC	PART NUMBER	NSN	FIG	ITEM
11083	8B2570	3110-00-278-7215	78	34
11083	8B4967	5331-00-247-5972	150	11
11083	8B5964	3110-00-117-0661	69	5
11083	8B6349	5315-00-457-6897	3	8
11083	8B7548	5120-00-633-5085	216	92
11083	8B7551	5120-00-288-6756	216	61
11083	8B7554	5120-00-293-1430	216	93
11083	8B7560	5120-00-473-6921	216	74
11083	8B9777	5330-00-248-2165	71	5
11083	8C4436	5306-01-429-4756	207F	4
11083	8C5210	5330-01-351-7095	45	6
11083	8C5674		53	5
11083	8C5917	5940-00-549-6581	61	40
11083	8C6919-109		54	10
11083	8C6919-47		54	16
11083	8C6919-50		54	23
11083	8C6919-99		54	7
11083	8C7362	5325-01-497-2354	101	17
11083	8C8842	5305-01-421-2122	190	5
81348	8D-900-D	6140-00-190-9828	61	18
11083	8D2676	5930-01-176-1699	56	3
11083	8D5054	5310-01-107-3590	2	2
			50	5
11083	8E4675	2530-01-157-2989	90	7
11083	8E6358	5315-01-067-6880	214	5
11083	8E7630	2530-01-164-0017	105	30
11083	8E8300	5310-00-690-9146	69	11
11083	8E8304	3120-01-186-1302	73	15
			74	19
11083	8E8307	2530-01-468-2876	137	5
11083	8F0024	3442-00-876-6522	216	40
			217	4
11083	8F0390	4730-01-163-2608	209	27
11083	8F1156	5305-01-271-2044	216	106
11083	8F244	5325-00-923-4575	209	16
11083	8F2621	5360-01-106-4246	140	2
11083	8F4225	5306-00-003-0683	194	1
11083	8F4610	5325-00-921-7106	37	27
11083	8F6230	5330-00-250-5481	72	5
11083	8F6711	5331-00-506-4457	96	11
			97	23
			99	18
			139	21
11083	8F8151	4820-00-026-8473	42	32
11083	8F8178		26	22
11083	8F9206	5331-00-599-2938	181	10
30780	8HP5N-S	5365-01-031-8183	76	6
			159	37
11083	8H0352	3040-00-961-0649	105	36
11083	8H0376	5315-00-948-6454	105	21
11083	8H0684	5120-01-123-5881	216	75

CROSS-REFERENCE INDEXES

PART NUMBER INDEX

CAGEC	PART NUMBER	NSN	FIG	ITEM
11083	8H0707	5305-00-476-5308	26	132
11083	8H1130		78	25
11083	8H1383	5306-00-050-8432	114	1
11083	8H2262	5331-00-848-6108	95	9
			96	9
			99	17
11083	8H2778	5330-00-585-4284	24	18
11083	8H2807	5310-00-882-8876	24	10
11083	8H2810	2910-00-116-3227	24	23
11083	8H3325	5310-00-609-8042	135	18
11083	8H3710	5305-00-252-8917	31	32
11083	8H3722		105	35
11083	8H5772	5305-00-136-2009	116	34
11083	8H7577	3040-01-143-8049	36	29
11083	8H7980	3040-00-950-5623	98	16
11083	8H8175	3110-00-948-5793	71	25
11083	8H8648	2920-01-064-3809	56	24
			148	7
11083	8H8871	5365-00-948-6452	105	34
11083	8H8898	5315-00-245-8844	105	5
11083	8H9182	3110-00-924-1971	36	27
11083	8H9186	5360-00-898-6730	36	28
11083	8H9299	5305-01-108-0649	27	25
11083	8H9789	3110-00-516-5490	45	11
			46	16
11083	8J0248		163	15
11083	8J1699	5331-01-064-8276	154	21
			155	22
11083	8J2880	3120-01-250-9928	174	15
			175	17
11083	8J4351	5331-01-183-1281	149	16
11083	8J4916	5340-01-271-3534	123	35
11083	8J6913	2590-01-165-5746	180	7
11083	8J7317	4820-01-254-1017	159	8
11083	8J7349	4820-01-068-7249	158	30
11083	8J7360	5365-01-259-9622	158	2
11083	8J7366	4820-01-253-5554	158	33
11083	8J7409	5330-01-067-1490	180	6
11083	8J7415	5310-01-066-0506	116	27
11083	8J7461	2520-01-068-9665	179	4
11083	8J7462	2995-01-068-9666	159	17
11083	8J7466	2895-01-068-9667	159	9
11083	8J7467	3040-01-253-9509	158	49
11083	8J7488	4820-01-180-1045	154	1
11083	8J7489	4810-01-208-1802	155	1
11083	8J7490		154	14
			155	14
			155	33
11083	8J7491		154	13
			155	32
11083	8J7494	4820-01-048-8597	154	6

CROSS-REFERENCE INDEXES

PART NUMBER INDEX

CAGEC	PART NUMBER	NSN	FIG	ITEM
11083	8J7494	4820-01-048-8597	155	25
11083	8J7495		154	12
			155	31
11083	8J7496	4810-01-253-2003	155	13
11083	8J7497	4730-01-253-7484	154	26
			155	42
11083	8J7498		154	3
			155	3
11083	8J7499	3830-01-048-3942	155	6
11083	8J7500	4820-01-253-5568	155	12
11083	8J8322	5365-01-068-6063	181	1
11083	8J8336	4820-01-253-3472	156	13
11083	8J8338	4820-01-253-0549	156	11
11083	8J8343	5330-01-103-6782	26	8
11083	8J8422		180	29
11083	8J8424	5330-01-067-1491	180	40
11083	8J8436	4710-01-253-2747	181	6
11083	8J8437	3040-01-253-4681	180	30
11083	8J8438	5365-01-257-3277	180	28
11083	8J8439	5306-01-210-1640	181	8
11083	8J8443	5360-01-067-1418	181	3
11083	8J8468	4820-01-068-6064	181	4
11083	8J8496	5340-01-258-0319	156	28
11083	8J8497	4820-01-253-1987	156	15
11083	8J8546		156	10
11083	8J8626	5430-01-264-3675	180	48
11083	8J8633	5340-01-258-0146	179	12
11083	8J8634	5340-01-258-0147	179	8
11083	8J8782	4730-01-164-7821	180	43
11083	8J8783	4820-01-163-3581	180	44
11083	8J9283		157	12
11083	8K1207	5315-01-132-1188	3	4
11083	8K4889	5330-01-265-2129	115	2
11083	8L2777	5331-01-424-3527	159	36
11083	8L8601	5365-00-205-3664	26	125
11083	8M0505	4730-01-066-4586	32	4
			164	30
11083	8M0506	3805-01-053-2703	101	38
			165	4
11083	8M0904	5330-00-557-8489	13	20
11083	8M1013	5342-01-069-0788	87	10
11083	8M1040	3040-01-253-3511	75	3
11083	8M1047	5307-00-923-9983	138	22
11083	8M2615	5315-00-245-9317	110	25
11083	8M2771	5340-01-166-6926	202	12
11083	8M2772	5340-00-426-4803	66	13
11083	8M3107	5340-01-302-9973	6	16
11083	8M3175		143	20
11083	8M3182	5360-00-950-8251	15	22
11083	8M4389	5331-00-930-4064	75	24
11083	8M4390	5331-00-999-5502	83	45

CROSS-REFERENCE INDEXES

PART NUMBER INDEX

CAGEC	PART NUMBER	NSN	FIG	ITEM
11083	8M4432	5331-00-913-8878	15	27
11083	8M4436	5331-00-948-9768	82	18
			83	48
			180	47
11083	8M4437	5331-00-942-5114	71	13
11083	8M4445	5331-00-914-5821	75	16
			80	11
			109	38
11083	8M4446	5331-00-999-5504	106	18
11083	8M4448	5331-00-923-6958	9	9
			75	18
11083	8M4791	5310-00-245-9841	48	13
11083	8M4986	5331-00-930-5736	79	11
			80	34
11083	8M4988	5331-00-997-7230	83	51
			106	10
11083	8M5127	5330-00-101-2561	69	48
			82	24
11083	8M5253	5330-00-890-2235	32	11
11083	8M5260	5331-00-431-7140	153	6
11083	8M5599	5315-00-944-7035	14	13
11083	8M5857	5340-01-257-7829	34	8
11083	8M6521	2520-01-066-4723	90	31
11083	8M7160	2530-00-949-0666	86	13
11083	8M7166	2530-00-243-9486	86	8
11083	8M7437	5331-00-948-9775	108	17
11083	8M7438	5330-00-948-9776	108	13
11083	8M7587	5310-00-922-8691	14	2
11083	8M7836	3040-01-254-5575	36	25
11083	8M7892	6625-00-113-3279	53	24
11083	8M8132	5360-01-157-0998	77	19
11083	8M8157	5331-00-999-5505	79	12
11083	8M8489	5315-00-760-7425	88	14
			143	11
			143	16
11083	8M8515	5331-00-123-2727	26	5
11083	8M8619		72	4
11083	8M8621	5330-00-557-8572	71	15
11083	8M8623		72	27
11083	8M8627	5360-00-950-2471	87	19
11083	8M8628	2520-01-215-0355	69	3
			72	13
11083	8M8636	3040-01-254-5018	75	22
11083	8M8640		72	36
11083	8M8644	3040-01-253-4656	74	8
11083	8M8646	2520-00-430-2192	72	33
11083	8M8650	2520-01-189-0581	73	28
			74	3
11083	8M8652	3040-01-064-1039	75	13
11083	8M8653	3040-01-253-7457	75	20
11083	8M8658	3040-01-253-3457	75	11

CROSS-REFERENCE INDEXES

PART NUMBER INDEX

CAGEC	PART NUMBER	NSN	FIG	ITEM
11083	8M8659	5315-00-193-1069	78	18
11083	8M8677	3040-01-253-4634	74	27
11083	8M9008		216	97
11083	8M9011	5130-01-289-0100	216	105
11083	8M9024	5310-00-470-5567	40	11
			110	2
11083	8M9062	2910-00-116-0407	26	131
11083	8M9307	5365-00-938-5568	3	22
			84	10
			84	16
11083	8M9395		216	76
11083	8M9441 NON-ASBESTOS	5330-01-374-7678	90	43
11083	8N0081	2815-01-125-9998	2	10
11083	8N0110	5330-01-128-4137	10	6
11083	8N0803	2910-01-253-7487	24	7
11083	8N1149	4730-01-253-3401	32	16
11083	8N1173		6	10
11083	8N1415	5360-01-148-0305	27	16
11083	8N1720		7	9
11083	8N1721	2815-00-487-2840	7	7
11083	8N1725	6140-01-170-1451	61	36
11083	8N1849	3120-01-130-9116	7	8
11083	8N2280		16	14
11083	8N2487	3120-01-162-5786	27	43
11083	8N2488	5315-01-259-4153	26	104
11083	8N2494		26	85
11083	8N2495		26	83
11083	8N2499	2910-01-150-0427	26	29
11083	8N2500		26	28
11083	8N2501	2910-01-150-0426	26	27
11083	8N2503	2910-01-150-0921	26	70
11083	8N2505		26	94
11083	8N2507	2910-01-149-7902	26	87
11083	8N2507 AND 7C0791	2990-01-253-9491	26	91
11083	8N2510	3040-01-152-9216	27	3
11083	8N2511	2990-01-155-0277	27	7
11083	8N2518	3120-01-161-2639	27	30
11083	8N2521		27	36
11083	8N2637	5310-01-182-3071	25	13
11083	8N2640	5340-01-181-6629	25	5
11083	8N2641	3120-01-185-4724	25	11
11083	8N3087	2530-01-151-2661	26	44
11083	8N3088	3040-01-154-1249	26	18
11083	8N3090		26	128
11083	8N3094	5360-01-266-2679	26	20
11083	8N3168	2910-01-150-3758	26	36
11083	8N3251	3040-01-132-4761	9	26
11083	8N3252		9	22
11083	8N3256	3040-01-151-5646	26	107

CROSS-REFERENCE INDEXES

PART NUMBER INDEX

CAGEC	PART NUMBER	NSN	FIG	ITEM
11083	8N3257		26	103
11083	8N3258	5340-01-151-2578	26	56
11083	8N3259	5340-01-154-9589	26	25
11083	8N3325	2815-01-126-9995	9	21
11083	8N3525	5365-01-534-4467	207C	9
11083	8N3616	5340-01-257-9186	42	28
11083	8N3617	5340-01-257-2246	42	27
11083	8N3731	5315-01-160-4636	27	32
11083	8N3877	2930-01-253-9493	41	35
11083	8N3880	2930-01-254-1020	42	1
11083	8N3882	2510-01-253-7397	42	34
11083	8N4110	3120-01-128-1114	3	9
11083	8N4485	4820-01-104-4091	4	10
			43	6
11083	8N4959		11	12
11083	8N4960	2815-01-125-5535	11	5
11083	8N5117	5325-01-160-2506	27	12
11083	8N5132	5342-01-184-1068	23	23
11083	8N5305	5365-01-147-0083	46	5
11083	8N5685	2510-01-351-4025	2	14
11083	8N5763	5330-01-163-5831	37	25
11083	8N5764	3040-01-159-0937	37	24
11083	8N5765	5360-01-155-2630	37	16
11083	8N5784	2815-01-254-6183	26	117
11083	8N5929	5340-01-151-7395	45	22
11083	8N6184	2815-01-161-9635	12	5
11083	8N6680	4730-01-151-5707	37	30
11083	8N6796	2815-01-165-5713	4	1
11083	8N6849	4730-01-162-0112	12	9
11083	8N6854	5330-01-151-9294	12	6
11083	8N6985	5330-01-151-9295	15	21
11083	8N6986	5340-01-147-6397	15	20
11083	8N7005	2910-01-169-9758	22	1
11083	8N7315	4710-01-128-4741	13	9
11083	8N7318	4710-01-129-5674	13	3
11083	8N7520	5360-01-257-7816	26	127
11083	8N7735		26	123
11083	8N8221	3110-01-184-8029	7	12
11083	8N8222	3120-01-165-4357	7	12
11083	8N8223	3120-01-168-1850	7	12
11083	8N8225	3120-01-151-8371	5	7
11083	8N8226	3120-01-156-9486	5	7
11083	8N8227	3120-01-156-9487	5	7
11083	8N8228	3120-01-151-9299	5	7
11083	8N8229	3120-01-157-0913	5	7
11083	8N8721	5365-01-157-5068	2	3
11083	8P0015		151	8
11083	8P0016	5330-01-164-8563	150	14
11083	8P0326		152	13
11083	8P0345	4820-01-219-9334	152	3
11083	8P0346	5360-01-162-2848	152	11

CROSS-REFERENCE INDEXES

PART NUMBER INDEX

CAGEC	PART NUMBER	NSN	FIG	ITEM
11083	8P0408	2590-01-176-9517	35	3
11083	8P0502		132	2
11083	8P0504	3040-01-254-1100	132	1
11083	8P0753	3040-01-253-5575	162	10
11083	8P0847	3040-01-268-9999	135	23
11083	8P0972		133	9
11083	8P0973		133	15
11083	8P0974		133	17
11083	8P0976	5340-01-258-0182	138	42
11083	8P0978		133	3
11083	8P0980	4710-01-254-0317	134	17
11083	8P1078	5340-01-256-2964	138	1
11083	8P1082	3130-01-257-6174	138	26
11083	8P1653	5310-01-273-1592	90	23
11083	8P1654	3020-01-267-0502	90	12
11083	8P1865	2510-00-477-3250	93	4
11083	8P1958	5365-01-184-3676	69	33
11083	8P2289	5340-01-254-7173	67	38
11083	8P2290	5360-01-254-8890	67	32
11083	8P2685	4720-01-167-0831	83	57
11083	8P2685-XX		83	60A
11083	8P3104	5340-01-268-9063	103	4
11083	8P325	4820-01-202-3575	152	12
11083	8P3293	5365-01-257-4347	116	10
11083	8P3294	5365-01-257-3275	116	11
11083	8P3729	3120-01-232-6641	116	28
11083	8P3730	2510-01-253-8657	116	29
11083	8P3731	2510-01-254-4967	116	33
11083	8P4027	3040-01-253-3465	67	4
11083	8P4028	5340-01-257-7755	62	9
11083	8P4029	5340-01-260-9030	67	36
11083	8P4211	3040-01-253-9590	116	36
11083	8P4299	5340-01-164-7556	153	13
11083	8P4769	5340-01-257-9189	124	33
11083	8P4770	2510-01-275-5282	124	20
11083	8P4772	2510-01-253-4654	115	3
11083	8P4887	4710-01-267-2600	82	13
11083	8P4923	3120-01-253-8946	67	30
11083	8P4925	3040-01-253-5583	67	33
11083	8P5163	3040-01-254-5022	139	26
11083	8P5446	5340-01-259-3694	123	17
11083	8P5447	5340-01-258-0154	123	18
11083	8P5449	5340-01-260-5791	123	9
11083	8P5450	5365-01-257-3308	123	26
11083	8P5715		36	38
11083	8P5717	3040-01-250-6508	36	39
11083	8P5719		36	41
11083	8P5941	4730-01-253-7011	164	7
11083	8P6188	3110-01-160-4714	95	20
11083	8P6248	4710-01-262-7728	101	39
11083	8P6249	4710-01-267-2118	101	30

CROSS-REFERENCE INDEXES

PART NUMBER INDEX

CAGEC	PART NUMBER	NSN	FIG	ITEM
11083	8P6253	4710-01-267-2119	101	34
11083	8P6274	2530-00-223-6534	113	5
11083	8P6275	3020-01-253-8665	113	5
11083	8P6651	3120-00-445-3375	96	22
			97	20
			99	11
11083	8P7378	4720-01-162-5114	83	1
11083	8P7790	4820-01-164-9212	77	5
11083	8P7845	5365-01-266-8284	67	37
11083	8P8043	3040-01-163-7309	109	14
11083	8P8255	2530-01-159-5870	101	52
11083	8P8786	6680-01-254-3491	35	9
11083	8P8845		60	4
11083	8P9363	6150-01-499-4641	53	12
11083	8P9364	6150-01-499-4629	53	9
11083	8P9365	5210-01-170-1455	39	8
			53	15
11083	8P9827	2510-01-253-9484	116	2
11083	8P9828	2510-01-254-1077	116	17
11083	8P9834	5340-01-258-0340	115	1
11083	8R2054	2540-01-253-7477	127	4
11083	8R2057	2540-01-254-9937	127	5
11083	8S0023	5340-01-169-7516	167	11
11083	8S0024	5340-01-270-7426	167	10
11083	8S0468	4130-01-524-7575	202	57
11083	8S0490	3040-01-253-1996	14	29
11083	8S0493	2815-00-470-6352	14	28
11083	8S0780	4720-01-027-9168	17	8
			207A	3
11083	8S0933	5306-01-064-3842	126	2
11083	8S0934	5310-01-119-1442	126	4
			128	4
11083	8S1061	2510-01-253-9481	98	7
11083	8S1326	4730-00-401-8098	16	5
			207B	9
58312	8S1491-00	5310-00-557-9391	8	2
11083	8S1498	3040-01-165-9635	9	18
11083	8S1499	2815-00-211-4462	9	16
11083	8S1605	5330-00-520-1552	9	15
11083	8S2244	5120-00-178-1267	216	45
11083	8S2264	5120-01-128-0725	216	195
11083	8S2506	5342-01-224-7990	90	24
11083	8S2589	2530-00-127-8672	100	19
11083	8S2590	2530-00-160-8597	100	8
11083	8S2696	5305-01-336-2987	216	162
11083	8S2931	2530-00-949-1192	97	17
11083	8S2932	2530-01-253-9483	97	10
11083	8S3371	5310-00-451-3384	136	21
11083	8S3995	6680-00-466-0299	16	2
11083	8S4055	4730-01-051-7605	164	4
11083	8S4393	2510-01-253-9478	93	6

CROSS-REFERENCE INDEXES

PART NUMBER INDEX

CAGEC	PART NUMBER	NSN	FIG	ITEM
11083	8S4790	5365-01-256-9289	128	2
11083	8S5716	4710-01-170-9234	109	44
11083	8S5753	5360-01-069-0812	109	28
11083	8S6086		12	4
11083	8S6391	4730-01-068-9756	164	2
11083	8S6392	4730-01-095-0835	170	24
11083	8S6393	4730-01-095-0833	170	11
			170	21
			170	28
11083	8S6417	4730-01-094-7469	165	32
			169	40
			170	13
			170	26
11083	8S6511	3120-00-440-8463	14	22
			14	36
11083	8S6783	5340-00-240-9238	40	3
11083	8S6814	5315-00-406-7278	26	86
11083	8S6950	5340-01-237-3387	61	1
11083	8S7048	3120-01-166-3685	142	24
11083	8S7611	4910-01-265-0428	216	123
11083	8S7615	5315-01-270-2832	216	124
11083	8S7621	4910-01-264-4778	216	131
11083	8S7625	3040-01-295-2500	216	132
11083	8S7632		216	134
11083	8S7640	4910-01-264-4777	216	125
11083	8S7647		216	125
11083	8S7650	3040-01-264-9538	216	161
11083	8S7818	5342-00-936-3816	94	15
11083	8S8673	5340-00-195-8288	111	7
11083	8S8874	5342-00-494-1996	13	19
11083	8S9089	5305-00-008-5971	84	4
11083	8S9092	5306-00-455-0460	101	45
			180	21
11083	8S9129	4330-01-066-7713	138	15
11083	8S9130	4730-01-159-7840	138	14
11083	8S9191	5306-00-470-5543	88	7
			150	5
11083	8S9198	4320-01-253-5572	77	11
11083	8S9222	4730-01-236-3066	31	23
11083	8S9903		216	55
11083	8S9906	5120-01-275-2286	216	95
11083	8T0701	6750-01-262-5970	53	3
11083	8T0702	7690-01-262-7200	53	4
11083	8T0785	3120-01-257-3297	178	12
11083	8T0820	6620-01-486-7681	216	175
11083	8T2225	4710-01-476-4981	55	19
11083	8T2501	5306-01-413-8763	188	19
			189	1
11083	8T2561	5310-01-257-3245	42	18
11083	8T3738	5305-01-163-8242	39	50
11083	8T4205	5310-00-841-2576	202	49

CROSS-REFERENCE INDEXES

PART NUMBER INDEX

CAGEC	PART NUMBER	NSN	FIG	ITEM
11083	8T4223	5310-01-098-0624	185	3
			207G	14
11083	8T4224	5310-01-359-8806	207E	9
11083	8T4835	5306-01-429-3170	189	9
			190	8
			191	4
			192	7
			194	14
			195	5
			196	4
			197	1
			198	23
			203	4
			204	12
			206	2
11083	8T4896	5310-01-286-6079	47	2
11083	8T4994	5310-01-298-3199	185	7
			188	9
			190	6
			194	2
			199	2
			203	17
			207	2
11083	8T5287	5120-01-266-7433	217	1
11083	8T5391	5306-01-256-6771	127	9
11083	8T6871	5305-01-421-2120	183	5
			185	16
11083	8T7003	5306-01-506-6459	185	9
11083	8T8916	5305-01-439-8547	207E	3
11083	8T8919	5306-01-429-3168	198	11
			203	11
			207F	6
11083	8T9022		207E	6
11083	8T9367	5306-01-474-1533	183	2
			185	13
			202	23
11083	8T9368	5306-01-471-3865	201	16
			202	26
11083	8T9389	5305-01-421-2093	195	1
			197	8
11083	8T9392	5306-01-506-9388	204	9
11083	8T9393	5306-01-429-4064	182	21
11083	8T9398	5306-01-429-4065	184	16
			207	3
11083	8T9757	5940-01-376-5755	61	40
11083	8V2365	5340-01-507-0165	202	42
11083	8V3206	2540-01-267-8670	127	13
			127	14
11083	8V3208	3040-01-253-4664	127	11
11083	8W3597	5310-01-257-4290	56	5
11083	8Y4031	2540-01-238-2759	126	1

CROSS-REFERENCE INDEXES

PART NUMBER INDEX

CAGEC	PART NUMBER	NSN	FIG	ITEM
70412	80017	5365-01-039-9967	146	18
1LW55	801077	9390-00-839-1864	51	48
79470	8033X12X6Y	2520-01-062-5198	164	11
4U735	804893	8140-01-267-8752	122	2
1C834	807099	2540-21-912-3604	122	10
1C834	807100	5640-21-913-9460	122	9
4U735	808186	8140-01-273-4458	122	21
4U735	808188	5330-01-270-1783	122	40
4U735	808189	5330-01-270-1771	122	24
4U735	808190	5330-01-270-1784	122	41
4U735	808191	5330-01-270-1770	122	39
4U735	808423	5330-01-270-1769	122	26
64488	81106S	6145-01-229-4128	BULK	25
64488	81162S	6145-01-229-9666	BULK	36
13445	81285	5355-00-007-9980	57	2
18876	8169744	5310-00-167-0839	51	8
99688	8195	3020-01-181-8557	201	21
			202	37
55683	824-5P5768	5330-01-128-8991	BULK	19
19207	8338561	5935-00-833-8561	39	24
19207	8338570	5310-00-298-8903	39	25
			64	53
19207	8338572	5935-00-695-9077	64	52
19207	8392184	5310-00-209-6512	109	10
13445	8398	5930-00-715-1939	57	24
74400	85098-03	6645-00-602-5968	53	1
4U735	852032	2510-01-267-8788	122	16
13174	854-FS0-12X12	4730-00-962-4176	164	19
73331	897922	6220-00-953-4652	58	1
1C834	899003		122	45
1C834	899042	5307-01-270-1825	122	46
1C834	899052	5307-01-271-3341	122	44
11083	9B2289	5315-00-267-2268	96	23
			97	21
			99	10
11083	9B7237	5305-01-066-5199	42	17
11083	9D4571	5306-01-258-8559	36	65
11083	9D5988	4720-01-178-4845	169	39
11083	9F4976	5310-00-178-0741	51	7
			52	13
11083	9F5647	3120-00-064-1275	161	20
			161	31
			162	8
11083	9F5940	5330-00-530-2525	83	53
11083	9F7022	5306-00-404-1417	119	13
			120	8
11083	9F7378	5365-00-131-4761	136	44
11083	9G0003	5940-01-467-1020	61	38
11083	9G0004	5935-01-158-0035	61	39
11083	9G0007	3040-01-163-7346	90	8
11083	9G0343	2910-01-155-0313	39	31

CROSS-REFERENCE INDEXES

PART NUMBER INDEX

CAGEC	PART NUMBER	NSN	FIG	ITEM
11083	9G0994	2510-01-253-9304	209	37
11083	9G1950	5905-01-429-4032	202	46
11083	9G1951		209	10
11083	9G5343	5330-01-164-8342	90	2
11083	9G5344		90	3
11083	9G6039	5365-01-257-6106	126	26
11083	9G6041	5340-01-259-4642	126	28
11083	9G7308	6150-01-499-4640	63	5
11083	9G7309	6150-01-499-4648	63	1
11083	9G7641	2920-01-258-3471	57	15
11083	9G7817	2530-01-254-0244	105	41
11083	9G8010	5930-01-095-6194	53	27
11083	9G8856	4730-01-162-0206	33	25
11083	9G9075	7690-01-253-3422	77	16
11083	9G9151	5340-01-191-0289	207D	8
11083	9G9501	4720-01-196-7180	18	12
			165	39
11083	9G9979	5342-01-164-8709	142	19
11083	9H0223	5330-00-919-2249	75	14
			109	8
11083	9H0750	5315-01-254-1307	105	7
11083	9H1110	5310-00-999-8286	9	19
11083	9H1112	5310-00-999-8287	9	2
11083	9H2367	5360-00-455-7142	77	23
11083	9H2400	3120-01-164-8629	36	40
			142	11
			142	31
			150	27
11083	9H3273	5365-00-948-6480	107	19
11083	9H3992		216	196
11083	9H4351	2540-00-407-0417	115	31
11083	9H5536	5360-00-894-7276	73	6
11083	9H5921	5330-00-074-3600	6	19
11083	9H5999	5307-00-409-7212	110	10
11083	9H6454	5330-00-848-9950	180	52
11083	9H7534	5360-01-069-1390	101	49
11083	9H7553	5360-00-137-3464	101	48
11083	9H7657	3040-01-090-6865	101	46
11083	9H8489	2530-00-911-9225	99	1
11083	9H8712	3110-00-945-8399	69	17
11083	9H8889	5340-01-270-1303	101	6
11083	9H8890	5330-00-913-8117	101	7
11083	9H8918	5315-01-254-2376	105	44
11083	9J0791	4810-01-254-1016	158	8
11083	9J1302	2530-01-067-2164	158	21
11083	9J1999	2995-01-068-9670	158	47
11083	9J2914	5365-01-257-4621	181	2
11083	9J2915	5340-01-264-6023	156	17
11083	9J2916	5340-01-264-6101	156	2
11083	9J3473	4730-01-253-7353	180	18
11083	9J3578	4320-01-262-3317	157	4

CROSS-REFERENCE INDEXES

PART NUMBER INDEX

CAGEC	PART NUMBER	NSN	FIG	ITEM
11083	9J3787	3110-01-270-1813	211	13
11083	9J3866	4810-01-257-8821	156	25
11083	9J4772	5340-01-258-0437	154	17
			155	19
			155	36
11083	9J4800	5360-01-067-1728	154	16
			155	35
11083	9J4832		157	13
11083	9J4871	4820-01-064-7477	157	23
11083	9J4994	5365-01-257-3281	181	14
11083	9J5104	3040-01-253-7352	149	24
11083	9J5169	4820-01-048-7098	157	1
11083	9J5363	2590-01-267-6007	211	34
11083	9J5490	5360-01-257-3419	157	6
11083	9J5491	5360-01-257-7810	157	7
11083	9J5498	5360-01-070-2809	159	12
11083	9J5499	5360-01-067-5611	159	13
11083	9J5753	5360-01-067-5612	158	40
11083	9J5754	5360-01-067-5613	158	39
11083	9J5756	5360-01-067-5614	159	30
11083	9J5957	2590-01-267-4333	168	21
11083	9J6491	5330-01-069-0856	159	43
11083	9J7031	4730-01-165-9540	180	41
11083	9J7753	5360-01-067-1730	157	10
11083	9J8714	5340-01-258-0436	154	7
			155	9
			155	28
11083	9J8748	3930-01-163-7339	163	1
11083	9J8749	3040-01-267-2092	163	2
11083	9J8750		163	3
11083	9K0700	5325-01-253-4416	58	13
11083	9K0922	5315-01-258-0222	36	51
11083	9L0672	2530-01-298-6163	140	15
11083	9L0674	3040-01-254-4929	140	17
11083	9L5134	3040-01-164-7938	48	7
11083	9L6329	5340-01-258-4873	48	4
11083	9L672	4820-01-150-0965	140	3
11083	9L6770	3895-01-278-1610	49	9
11083	9L9132	5310-01-061-8633	80	3
11083	9L9347	5365-01-103-7157	26	126
11083	9M0016		148	24
11083	9M0672	5340-01-264-6022	21	27
11083	9M0673	5330-01-285-2792	21	28
			143	24
11083	9M0853		15	23
11083	9M1500	3040-01-222-7325	74	26
11083	9M1501	3040-01-253-3449	74	23
11083	9M1502		74	15
11083	9M1503	5330-01-135-7503	74	14
11083	9M1974	5310-00-432-4064	202	55
11083	9M1995		73	9

CROSS-REFERENCE INDEXES

PART NUMBER INDEX

CAGEC	PART NUMBER	NSN	FIG	ITEM
11083	9M1996	3040-00-432-1880	74	22
11083	9M1997	3110-00-446-9696	72	29
			139	29
11083	9M2001		72	2
		5315-00-760-7424	78	21
11083	9M2008	5330-00-401-6203	69	6
11083	9M2010		71	26
11083	9M2020	3040-01-254-1263	75	19
11083	9M2021	5330-00-236-1268	78	28
11083	9M2025	4820-01-237-1685	77	3
11083	9M2028	3020-00-403-5296	69	14
11083	9M2049	3020-00-431-6451	74	5
11083	9M2051	5330-00-760-7387	71	9
11083	9M2058	5365-01-270-2769	87	21
11083	9M2089	5315-01-113-2356	75	21
11083	9M2096	5315-01-261-8116	75	23
11083	9M2151	5307-00-409-7208	29	5
11083	9M2341	2910-00-989-3388	24	19
11083	9M2904	5342-01-165-5721	17	7
			207A	2
11083	9M2942		86	7
11083	9M3024		36	21
11083	9M3025	3040-01-103-6623	36	20
11083	9M3770	5310-00-350-3962	98	3
11083	9M3835	5342-00-410-1903	115	14
11083	9M4007	5315-00-193-0919	90	32
11083	9M4136	5365-01-163-2015	169	8
11083	9M4685	5360-00-912-6674	85	15
11083	9M4849	5330-00-847-4351	32	17
11083	9M5775	2540-01-068-7114	61	19
11083	9M5870	5325-01-231-2134	201	3
11083	9M5892	5330-00-367-5819	78	31
11083	9M6527	5310-00-999-8288	20	4
			45	19
11083	9M6590	5305-01-188-4766	136	3
11083	9M6775	2530-00-948-9748	107	3
			108	3
11083	9M7394	2540-01-181-0999	180	2
11083	9M7609	5360-00-812-0196	51	50
11083	9M8669	4330-00-103-5502	86	1
11083	9M9738	5340-01-210-7562	56	14
11083	9M9758	3040-00-455-8791	99	7
11083	9N1754	5360-01-270-4420	37	20
11083	9N3388	5342-01-070-1592	23	2
11083	9N5769	5340-01-147-7948	10	26
11083	9P0137	4710-01-253-8705	33	30
11083	9P0620	3110-01-260-9896	91	6
11083	9P0689	2510-01-253-9486	124	30
11083	9P0690	3040-01-253-7348	103	44
11083	9P0862	5340-01-255-9401	115	5
11083	9P2201	4820-01-167-4300	87	1

CROSS-REFERENCE INDEXES

PART NUMBER INDEX

CAGEC	PART NUMBER	NSN	FIG	ITEM
11083	9P2215		87	29
11083	9P2751	5342-01-257-6196	171	23
11083	9P2895		171	35
11083	9P2895-XX		171	38A
11083	9P3203	4820-01-267-0503	109	36
11083	9P3204	4820-01-267-4334	109	34
11083	9P3206	9905-01-268-7578	109	13
11083	9P3697	9390-01-253-3521	161	24
			162	15
11083	9P4184	4710-01-267-2121	167	8
11083	9P4185	4710-01-267-2122	167	9
11083	9P4213	5360-01-265-1272	77	4
11083	9P4608	5930-01-162-7313	59	1
11083	9P4609	5340-01-170-6336	67	31
11083	9P4775	2540-01-253-4676	170	8
11083	9P5253	5995-01-209-0426	59	4
11083	9P5363	4810-01-253-0546	73	4
11083	9P5364	5330-01-216-7951	73	2
11083	9P5379	3040-01-252-9510	73	1
11083	9P5382	2520-01-161-4941	71	1
11083	9P5948	3040-01-253-7349	36	69
11083	9P5954	3040-01-253-5576	36	67
11083	9P5955	5340-01-258-0158	36	47
11083	9P7121	2910-01-164-7906	35	10
11083	9P7361	4730-01-254-0232	161	25
			162	16
11083	9P7751	2530-00-149-7388	94	5
11083	9P7913	3120-01-166-6163	109	27
11083	9P7914	3120-01-270-8933	109	25
11083	9P7915	5315-01-270-1315	109	24
11083	9P7917	4820-01-180-1044	109	1
11083	9P9374	3830-01-245-3804	198	6
11083	9P9382	2520-01-163-0816	108	6
11083	9P9388	5355-01-166-1721	144	3
11083	9P9390	5340-01-164-9958	144	4
11083	9P9392		144	1
11083	9P9715	4710-01-253-8714	80	52
11083	9S0211	5340-01-107-4111	208	6
11083	9S0310	2510-01-180-6144	96	3
11083	9S0311	3830-01-192-8281	96	4
11083	9S0312	3810-01-174-1000	96	10
			97	5
			97	22
11083	9S0313	3040-01-182-4395	96	16
			97	14
11083	9S0901	5340-01-284-9797	94	9
11083	9S1045	5342-01-185-5071	94	25
11083	9S1046	5342-01-185-5068	94	22
11083	9S1240	5310-00-253-7918	48	6
11083	9S1274	5330-00-404-4964	28	19
11083	9S1303	5315-00-169-8105	150	22

CROSS-REFERENCE INDEXES

PART NUMBER INDEX

CAGEC	PART NUMBER	NSN	FIG	ITEM
11083	9S1303	5315-00-169-8105	161	33
			162	12
11083	9S1314	5342-01-068-7178	103	32
			107	10
11083	9S1315	5315-01-066-8470	103	26
			104	8
			107	12
11083	9S1350	5340-00-426-4794	101	32
11083	9S1366	5306-00-455-0459	101	8
			124	28
			171	30
11083	9S1385	5365-01-130-4159	68	13
11083	9S1554	5360-01-337-5669	216	174
11083	9S1555	4730-01-337-0790	216	164
11083	9S1556	5305-01-336-2239	216	165
11083	9S1557	5120-01-344-1301	216	163
11083	9S1558	5365-01-336-6536	216	168
11083	9S1559	5340-01-336-6623	216	169
11083	9S1560	5365-01-336-6668	216	166
11083	9S1561	5305-01-336-3898	216	172
11083	9S1562	3120-01-336-3005	216	173
11083	9S1563	3120-01-336-3008	216	167
11083	9S1758	4730-01-534-0828	207B	7
11083	9S2308	5330-01-257-6100	36	23
11083	9S2309	5310-00-498-2968	36	24
11083	9S2354	2815-00-237-3764	20	1
11083	9S2753	5340-01-259-3753	77	13
11083	9S3955	2530-00-950-6897	108	25
11083	9S4167	5307-01-051-2364	38	7
11083	9S4180	5365-01-067-2179	27	39
			140	11
			154	19
			155	21
			155	39
			159	28
11083	9S4183	5365-00-478-2920	164	5
11083	9S4185	5365-00-763-0120	32	14
			157	17
			180	17
11083	9S4190	5365-01-053-0180	156	8
11083	9S4191	5365-00-411-4584	26	122
			71	7
			79	17
			85	1
			87	31
			88	4
			143	3
			157	14
			158	36
			165	13
			180	11

CROSS-REFERENCE INDEXES

PART NUMBER INDEX

CAGEC	PART NUMBER	NSN	FIG	ITEM
11083	9S4205	5365-00-490-4623	85	21
11083	9S4611	6150-01-277-4486	61	12
11083	9S4758	3040-01-253-5581	68	14
11083	9S4759		68	16
11083	9S4800	3040-01-254-1167	103	39
11083	9S4829	3110-00-913-8895	91	26
11083	9S5222	5365-01-064-3788	75	28
11083	9S5264		69	9
11083	9S5265	3040-00-430-4207	69	7
11083	9S5266		69	35
11083	9S5267	2520-01-125-3992	69	32
11083	9S5645	5360-01-254-2681	123	32
11083	9S6147	2940-01-013-1323	28	9
11083	9S6363	4910-01-264-4024	217	3
11083	9S6390	4710-00-237-6238	82	12
11083	9S6391	4730-00-237-4605	83	41
11083	9S6729	3120-00-419-1844	6	13
			21	4
11083	9S6730	5365-00-434-1423	1	3
11083	9S6731	5365-00-434-1422	1	4
11083	9S6739		21	3
11083	9S6741	3120-00-404-3688	21	11
			21	16
11083	9S6762	5330-01-274-8371	21	7
11083	9S6797		167	19
11083	9S6803	5340-01-272-9267	174	24
			175	20
11083	9S6875	3020-01-124-9382	91	3
11083	9S6987	2510-01-351-5937	2	6
11083	9S7034	2815-00-230-1977	21	1
11083	9S7067	4730-00-444-0155	29	8
11083	9S7072	5365-00-434-1421	1	5
11083	9S7083	5330-00-402-9294	30	4
11083	9S7089		29	6
11083	9S7148	2990-00-251-3656	40	1
11083	9S7227		85	4
11083	9S7228		85	6
11083	9S7351		216	197
11083	9S7840	4730-01-267-6078	167	17
11083	9S7949	2520-01-064-6625	78	7
			139	34
11083	9S7950	3010-01-064-7524	78	8
			139	33
11083	9S8004	5365-01-036-0010	159	32
11083	9S8007	5365-01-257-4480	157	19
11083	9S8009	5365-00-452-0344	167	20
11083	9S8220	5360-00-246-0489	105	1
11083	9S8752	5310-01-183-1237	118	5
11083	9S8789	2520-01-209-0958	72	32
			73	26
			74	7

CROSS-REFERENCE INDEXES

PART NUMBER INDEX

CAGEC	PART NUMBER	NSN	FIG	ITEM
11083	9S8858	5310-01-038-8318	216	82
			216	198
11083	9S8871	5120-01-030-3575	216	80
			216	199
11083	9S8890	5306-01-026-9992	216	83
			216	200
11083	9S8900	5130-01-288-2786	216	201
11083	9S8926	2510-01-351-4026	2	7
11083	9S8993	2950-00-167-6781	31	10
11083	9S8996	2950-00-167-6800	31	8
11083	9S9262	2930-00-403-5498	41	25
11083	9S9269	5365-01-257-4351	41	23
11083	9S9613	5360-01-258-0931	108	8
11083	9S9979	2590-01-064-7493	41	5
11083	9T0094	3120-01-338-6334	163	13
11083	9T0416	3040-01-254-5607	178	13
11083	9T1184		159	27
11083	9T3264	2910-01-253-9604	181	11
11083	9T3746	4820-01-392-4000	158	5
11083	9T4360		158	27
11083	9T5769	4810-01-253-5570	159	27
11083	9U6630		217	19
11083	9U7400	4940-01-268-2200	215	4
11083	9V7437	2540-01-254-9938	127	6
11083	9V7445	3040-01-254-5021	127	15
11083	9V8786	2540-01-254-5034	126	33
11083	9W1490	6625-01-258-7462	53	2
11083	9W1923	5305-01-256-6783	58	6
11083	9W3254	5315-01-284-9806	85	5
11083	9W4023	5340-01-259-3949	153	8
11083	9W5531	4710-01-267-6003	86	11
11083	9W5533		86	12
11083	9W6298	5330-01-181-0486	100	9
11083	9W7382	3830-01-267-1373	214	4
11083	9W8900	5340-01-497-7040	101	14
11083	9X1332	5340-01-472-3706	201	13
11083	9X1878		148	13
11083	9X2364	4720-01-251-3118	BULK	10
11083	9X2485	5307-01-351-1404	10	22
11083	9X2836	5305-01-351-1333	22	2
11083	9X6001	5305-01-352-4223	49	26
11083	9X7345	5325-01-527-0351	202	70
11083	9X7381	5331-01-439-2613	207G	8
11083	9X7382	5331-01-439-2615	207G	10
11083	9Y1798	5330-01-332-4074	4	25
11083	9Y1979	5330-01-332-4089	20	2
11083	9Y2695		4	13
			5	12
			10	9
			10	13
			12	11

CROSS-REFERENCE INDEXES

PART NUMBER INDEX

CAGEC	PART NUMBER	NSN	FIG	ITEM
11083	9Y2695		13	13
			14	8
			15	3
			15	35
			16	16
			18	6
			20	6
			21	24
			23	6
			24	13
			32	12
			33	39
			36	61
			39	6
			41	21
			42	3
			45	3
			45	23
			46	18
			47	2
			48	11
			55	27
			65	11
			67	6
			75	10
			78	2
			80	23
			82	2
			83	7
			84	19
			86	14
			90	11
			106	15
			109	15
			126	8
			129	3
			130	7
			138	5
			138	18
			139	14
			150	2
			156	23
			158	28
			161	2
			164	10
			165	8
			165	50
			166	8
			167	7
			168	13
			169	7

CROSS-REFERENCE INDEXES

PART NUMBER INDEX

CAGEC	PART NUMBER	NSN	FIG	ITEM
11083	9Y2695		171	4
			172	2
			174	23
			175	21
			209	14
11083	9Y7149	2940-01-351-8383	15	24
11083	9Y9895	5330-01-351-7093	5	10
18876	9054219	5306-00-721-5679	19	12
25184	906-737-70	5331-00-801-3354	19	6
			26	121
			38	3
			38	8
			71	8
			79	18
			85	2
			87	30
			88	5
			101	28
			143	4
			151	5
			157	30
			158	35
			159	31
			159	41
			165	3
			169	28
			170	5
			171	15
			180	10
19207	9093668	5310-00-678-2152	9	3
53591	912258	2930-01-208-7097	47	1
75165	920		110	23
			134	4
73331	921472	6220-00-832-8774	58	4
45225	939	5120-00-633-5074	216	108
7X677	9421004	3110-00-227-4431	101	41
			102	2
16764	950B	6145-00-471-0428	BULK	27
16764	950W	6145-00-468-1259	BULK	29
0PFG7	9500	4820-01-424-9847	216	158
59462	95246	4730-00-279-0985	110	21
77060	954V		BULK	38
79150	960	5330-01-260-5902	84	7
10988	96423C1	3110-00-902-4269	158	20
1VN02	97410ADX	5310-00-765-3237	87	17
13445	98151	2530-01-281-9702	57	12

By Order of the Secretary of the Army:

PETER J. SCHOOMAKER
General, United States Army
Chief of Staff

Official:

SANDRA R. RILEY
Administrative Assistant to the
Secretary of the Army
0515903

DISTRIBUTION: To be distributed in accordance with the initial distribution requirements for IDN: 253608 requirements for TM 5-2410-237-23P.

RECOMMENDED CHANGES TO PUBLICATIONS AND BLANK FORMS For use of this form, see AR 25-30; the proponent agency is OAASA	Use Part II *(reverse)* for Repair Parts and Special Tool Lists (RPSTL) and Supply Catalogs/Supply Manuals (SC/SM).	DATE
TO: *(Forward to proponent of publication or form) (Include ZIP Code)*	**FROM:** *(Activity and location) (Include ZIP Code)*	

PART I - ALL PUBLICATIONS (EXCEPT RPSTL AND SC/SM) AND BLANK FORMS

PUBLICATION/FORM NUMBER	DATE	TITLE

ITEM	PAGE	PARA-	LINE	FIGURE NO.	TABLE	RECOMMENDED CHANGES AND REASON

SAMPLE

TYPED NAME, GRADE OR TITLE	TELEPHONE EXCHANGE/AUTOVON, PLUS EXTENSION	SIGNATURE

TO: *(Forward direct to addressee listed in publication)*	FROM: *(Activity and location) (Include ZIP Code)*	DATE
		1 July 2005

PART II - REPAIR PARTS AND SPECIAL TOOL LISTS AND SUPPLY CATALOGS/SUPPLY MANUALS

PUBLICATION NUMBER	DATE	TITLE
TM 5-3410-237-23P	15 July 2005	Unit, DS and GS Support Including Depot Maintenance Repair Parts and Special Tools List (RPSTL) for D7G Dozer

PAGE NO.	COLM NO.	LINE NO.	NATIONAL STOCK NUMBER	REFERENCE NO.	FIGURE NO.	ITEM NO.	TOTAL NO. OF MAJOR ITEMS SUPPORTED	RECOMMENDED ACTION
					50			Missing Items 2 in Illustration

SAMPLE

PART III - REMARKS *(Use this part for any explanatory remarks or recommendations, or suggestions for improvement of publications and blank forms. Additional blank sheets may be used if more space is needed.)*

TYPED NAME, GRADE OR TITLE	TELEPHONE EXCHANGE/AUTOVON, PLUS EXTENSION	SIGNATURE

RECOMMENDED CHANGES TO PUBLICATIONS AND BLANK FORMS For use of this form, see AR 25-30; the proponent agency is OAASA	Use Part II *(reverse)* for Repair Parts and Special Tool Lists (RPSTL) and Supply Catalogs/Supply Manuals (SC/SM).	DATE
TO: *(Forward to proponent of publication or form) (Include ZIP Code)*	**FROM:** *(Activity and location) (Include ZIP Code)*	

PART I - ALL PUBLICATIONS (EXCEPT RPSTL AND SC/SM) AND BLANK FORMS

PUBLICATION/FORM NUMBER	DATE	TITLE

ITEM	PAGE	PARA-	LINE	FIGURE NO.	TABLE	RECOMMENDED CHANGES AND REASON

TYPED NAME, GRADE OR TITLE	TELEPHONE EXCHANGE/AUTOVON, PLUS EXTENSION	SIGNATURE

DA FORM 2028, FEB 74 REPLACES DA FORM 2028, 1 DEC 68, WHICH WILL BE USED. APD V4.00

TO: *(Forward direct to addressee listed in publication)*	FROM: *(Activity and location) (Include ZIP Code)*	DATE

PART II - REPAIR PARTS AND SPECIAL TOOL LISTS AND SUPPLY CATALOGS/SUPPLY MANUALS

PUBLICATION NUMBER	DATE	TITLE
TM 5-3410-237-23P	15 July 2005	Unit, DS and GS Support Including Depot Maintenance Repair Parts and Special Tools List (RPSTL) for D7G Dozer

PAGE NO.	COLM NO.	LINE NO.	NATIONAL STOCK NUMBER	REFERENCE NO.	FIGURE NO.	ITEM NO.	TOTAL NO. OF MAJOR ITEMS SUPPORTED	RECOMMENDED ACTION

PART III - REMARKS *(Any general remarks or recommendations, or suggestions for improvement of publications and blank forms. Additional blank sheets may be used if more space is needed.)*

TYPED NAME, GRADE OR TITLE	TELEPHONE EXCHANGE/AUTOVON, PLUS EXTENSION	SIGNATURE

RECOMMENDED CHANGES TO PUBLICATIONS AND BLANK FORMS For use of this form, see AR 25-30; the proponent agency is OAASA	Use Part II *(reverse)* for Repair Parts and Special Tool Lists (RPSTL) and Supply Catalogs/Supply Manuals (SC/SM).	DATE
TO: *(Forward to proponent of publication or form) (Include ZIP Code)*	**FROM:** *(Activity and location) (Include ZIP Code)*	

PART I - ALL PUBLICATIONS (EXCEPT RPSTL AND SC/SM) AND BLANK FORMS

PUBLICATION/FORM NUMBER	DATE	TITLE

ITEM	PAGE	PARA-	LINE	FIGURE NO.	TABLE	RECOMMENDED CHANGES AND REASON

TYPED NAME, GRADE OR TITLE	TELEPHONE EXCHANGE/AUTOVON, PLUS EXTENSION	SIGNATURE

DA FORM 2028, FEB 74 REPLACES DA FORM 2028, 1 DEC 68, WHICH WILL BE USED. APD V4.00

TO: *(Forward direct to addressee listed in publication)*	FROM: *(Activity and location) (Include ZIP Code)*	DATE

PART II - REPAIR PARTS AND SPECIAL TOOL LISTS AND SUPPLY CATALOGS/SUPPLY MANUALS

PUBLICATION NUMBER	DATE	TITLE
TM 5-3410-237-23P	15 July 2005	Unit, DS and GS Support Including Depot Maintenance Repair Parts and Special Tools List (RPSTL) for D7G Dozer

PAGE NO.	COLM NO.	LINE NO.	NATIONAL STOCK NUMBER	REFERENCE NO.	FIGURE NO.	ITEM NO.	TOTAL NO. OF MAJOR ITEMS SUPPORTED	RECOMMENDED ACTION

PART III - REMARKS *(Any general remarks or recommendations, or suggestions for improvement of publications and blank forms. Additional blank sheets may be used if more space is needed.)*

TYPED NAME, GRADE OR TITLE	TELEPHONE EXCHANGE/AUTOVON, PLUS EXTENSION	SIGNATURE

RECOMMENDED CHANGES TO PUBLICATIONS AND BLANK FORMS For use of this form, see AR 25-30; the proponent agency is OAASA	Use Part II *(reverse)* for Repair Parts and Special Tool Lists (RPSTL) and Supply Catalogs/Supply Manuals (SC/SM).	DATE
TO: *(Forward to proponent of publication or form) (Include ZIP Code)*	**FROM:** *(Activity and location) (Include ZIP Code)*	

PART I - ALL PUBLICATIONS (EXCEPT RPSTL AND SC/SM) AND BLANK FORMS

PUBLICATION/FORM NUMBER	DATE	TITLE

ITEM	PAGE	PARA-	LINE	FIGURE NO.	TABLE	RECOMMENDED CHANGES AND REASON

TYPED NAME, GRADE OR TITLE	TELEPHONE EXCHANGE/AUTOVON, PLUS EXTENSION	SIGNATURE

DA FORM 2028, FEB 74 REPLACES DA FORM 2028, 1 DEC 68, WHICH WILL BE USED. APD V4.00

TO: *(Forward direct to addressee listed in publication)*	FROM: *(Activity and location) (Include ZIP Code)*	DATE

PART II - REPAIR PARTS AND SPECIAL TOOL LISTS AND SUPPLY CATALOGS/SUPPLY MANUALS

PUBLICATION NUMBER	DATE	TITLE
TM 5-3410-237-23P	15 July 2005	Unit, DS and GS Support Including Depot Maintenance Repair Parts and Special Tools List (RPSTL) for D7G Dozer

PAGE NO.	COLM NO.	LINE NO.	NATIONAL STOCK NUMBER	REFERENCE NO.	FIGURE NO.	ITEM NO.	TOTAL NO. OF MAJOR ITEMS SUPPORTED	RECOMMENDED ACTION

PART III - REMARKS *(Any general remarks or recommendations, or suggestions for improvement of publications and blank forms. Additional blank sheets may be used if more space is needed.)*

TYPED NAME, GRADE OR TITLE	TELEPHONE EXCHANGE/AUTOVON, PLUS EXTENSION	SIGNATURE

PIN: 082534-000

This fine document...

Was brought to you by me:



Liberated Manuals -- free army and government manuals

Why do I do it? I am tired of sleazy CD-ROM sellers, who take publicly available information, slap “watermarks” and other junk on it, and sell it. Those masters of search engine manipulation make sure that their sites that sell free information, come up first in search engines. They did not create it... They did not even scan it... Why should they get your money? Why are not letting you give those free manuals to your friends?

I am setting this document FREE. This document was made by the US Government and is NOT protected by Copyright. Feel free to share, republish, sell and so on.

I am not asking you for donations, fees or handouts. If you can, please provide a link to liberatedmanuals.com, so that free manuals come up first in search engines:

<A HREF=http://www.liberatedmanuals.com/>Free Military and Government Manuals</A>

– Sincerely
  Igor Chudov
  http://igor.chudov.com/