CATERPILLAR®

SEBP5818
February 2012

RUTHZIL TRATOR COMERCIAL DE PEÇAS LTDA 11 97083-6812 ROLANDO CITRANGULO

Parts Manual

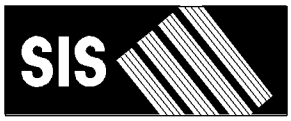

See "General Information" for New Parts Manual Features.

D7R TRACK-TYPE TRACTOR
STD, XR, LGP

DJR1-Up (Machine)
DLN1-Up (Machine)
DSH1-Up (Machine)
THX28268-Up (Engine)
JNA1-Up (Transmission)
LBB1-Up (Ripper)
RHC1-Up (Torque Converter)
HAJ1-Up (Blade)
RAG1-Up (Blade)

Powered By C9 Engine

SAFETY.CAT.COM

Product and Dealer Information

Note: For product identification plate locations, see the section “Product Identification Information” in the Operation and Maintenance Manual.

Delivery Date: _____

Product Information

Model: _____

Product Identification Number: _____

Engine Serial Number: _____

Transmission Serial Number: _____

Generator Serial Number: _____

Attachment Serial Numbers: _____

Attachment Information: _____

Customer Equipment Number: _____

Dealer Equipment Number: _____

Dealer Information

Name: _____ Branch: _____

Address: _____

_____

_____

	Dealer Contact	Phone Number	Hours
Sales:	_____	_____	_____
Parts:	_____	_____	_____
Service:	_____	_____	_____

MEMORANDA

TABLE OF CONTENTS

Name	Page
GENERAL INFORMATION	A5
REPAIR ALTERNATIVES	A8
SUPPLEMENTAL COOLANT ADDITIVES	A9
MAINTENANCE PARTS	A10
INDEX	A13
MACHINE ARRANGEMENT	1
CHASSIS AR	1
COLD WEATHER AR	3
GENERAL AR	6
INSTALLATION AR	7
STOCKPILE AR	8
ENGINE ARRANGEMENT	9
ENGINE AR	9
ENGINE AR-COMPLETE	10
ENGINE AR-CORE	11
BASIC ENGINE	12
CAMSHAFT GP	12
COVER GP-CYLINDER BLOCK	13
COVER GP-FRONT HOUSING	14
COVER GP-VALVE MECHANISM	16
CRANKSHAFT GP	17
CYLINDER BLOCK AS	18
CYLINDER BLOCK GP	20
CYLINDER HEAD AS	23
CYLINDER HEAD GP	25
DAMPER & PULLEY GP	28
DRAIN GP-ENGINE OIL	29
DRIVE GP-FAN	30
DRIVE GP-PUMP	32
FASTENER GP-CYLINDER HEAD	33
FASTENER GP-FRONT COVER	34
FASTENER GP-VALVE COVER	35
FASTENER GP-VALVE COVER BASE	36
FLYWHEEL GP	37
GEAR GP-FRONT	38
GEAR GP-REAR	40
HOUSING AS-FLYWHEEL	41
HOUSING GP-FLYWHEEL	42
HOUSING GP-FRONT	44
LIFTING GP-ENGINE	45
MOUNTING GP-ALTERNATOR	46
MOUNTING GP-ENGINE	47
MOUNTING GP-FAN DRIVE	48
PAN GP-OIL	49
PISTON & ROD GP	50
PLUG GP-ENGINE	51
PULLEY GP-FAN & ALT DRIVE	52
ROCKER ARM GP	56
SEAL GP-CRANKSHAFT	58
SUPPORT GP-ENGINE	60
TRUNNION GP-ENGINE	61
VALVE MECHANISM GP	62
YOKE GP	64
LUBRICATION SYSTEM	65
FILLER GP-ENGINE OIL	65
FILTER GP-ENGINE OIL	66
FUMES DISPOSAL GP	69
GAUGE GP-OIL LEVEL (DIPSTICK)	71
LINES GP-ENGINE OIL	72
LINES GP-TURBOCHARGER OIL	73
OIL CHANGE GP-HIGH SPEED	74
PUMP GP-ENGINE OIL	76
VALVE GP-FLUID SAMPLING	77
COOLING SYSTEM	78
COOLER GP-ENGINE OIL	78
FAN GP-BLOWER	79
FAN GP-EJECTOR	80
FAN GP-REVERSIBLE	81
GUARD GP-FAN	82
HOUSING & REGULATOR GP	83
LINES GP-WATER	84
PUMP GP-WATER	86
RADIATOR GP	89
TANK GP-WATER	94
AIR INLET AND EXHAUST SYSTEM	96
AFTERCOOLER GP-AIR	96
AIR CLEANER GP	97
DUST EJECTOR GP	99
ELBOW GP-AIR INLET	100
LINES GP-AIR	101
MANIFOLD GP-EXHAUST	105
MUFFLER GP	106
PRECLEANER AR	107
PRECLEANER GP	108
SHIELD GP-EXHAUST	110
TURBOCHARGER GP	111
FUEL SYSTEM	113
ADAPTER GP-FAST FILL FUEL	113
FILTER & LINES GP-FUEL	115
FILTER GP-WATER SEP & FUEL	118
INJECTOR GP-FUEL	119
LINES GP-FUEL	120
PUMP & MTG GP-UNIT INJ HYD	125
PUMP GP-FUEL INJECTION	127
PUMP GP-FUEL PRIMING	128
PUMP GP-UNIT INJECTOR HYD	129
REGULATOR GP-FUEL PRESSURE	131
TANK GP-FUEL	132

TABLE OF CONTENTS

Name	Page
ELECTRICAL AND STARTING SYSTEM	134
ALARM GP	134
ALTERNATOR GP-CHARGING	135
BATTERY & WIRING GP	141
BATTERY GP	147
CLUTCH GP-ELECTRIC	148
CONTROL & MTG GP-ENGINE ELEK	149
CONTROL GP-COMMUNICATION	150
CONTROL GP-ENGINE ELECTRONIC	154
CONVERTER GP-ELECTRICAL	155
ELECTRONICS GP-COMMUNICATION	156
GRADE CONTROL AR	156
GRADE CONTROL GP	157
HEATER GP-FUEL	158
HEATER GP-JACKET WATER	160
INSTALLATION GP-COMMUNICATION	161
LAMP GP-DOME	168
LAMP GP-FLOOD	169
LIGHTING GP-FLOOD	170
LIGHTING GP-RIPPER	178
MOUNTING GP-GRADE CONTROL	180
PANEL GP-FUSE	181
SENSOR GP-ENGINE	183
SENSOR GP-POSITION	184
SENSOR GP-PRESSURE	185
SENSOR GP-SPEED	190
SENSOR GP-TEMPERATURE	191
STARTING AID GP-ETHER	194
STARTING MOTOR GP-ELECTRIC	196
SWITCH GP-BYPASS	200
SWITCH GP-DISCONNECT	201
SWITCH GP-MAGNETIC	202
SWITCH GP-PUSH BUTTON	204
VALVE GP-ETHER STARTING	205
WIRING GP-BOX	206
WIRING GP-ELECTRONIC CONTROL	208
WIRING GP-ENGINE	210
WIRING GP-GRADE CONTROL	215
WIRING GP-PLATFORM	219
POWER TRAIN	224
AXLE GP	224
BASE GP-OIL FILTER	226
BRAKE & DIFFERENTIAL DRIVE GP	227
BRAKE & PLANETARY GP	232
CASE & PARTS GP-PLANETARY	234
CASE GP-TRANSMISSION	236
CONTROL GP-TRANSMISSION HYD	237
COOLER GP-TRANSMISSION OIL	239
COUPLING & GUARD GP	241
COUPLING GP-PUMP	242
DRAIN GP-ECOLOGY	243
DRIVE GP-FINAL	247
FILTER GP-OIL	255
GEAR GP-BEVEL & TRANSFER	256
LINES GP-DRAIN	259
LINES GP-POWER TRAIN OIL	260
MOUNTING GP-FINAL DRIVE	266
MOUNTING GP-TRANSMISSION	267
PLANETARY GP-TRANSMISSION	269
POWER TRAIN AR	279
PUMP GP-GEAR	280
SCREEN GP-MAGNETIC	283
SEGMENT GP-SPROCKET	284
SHAFT GP-DRIVE	285
TORQUE CONVERTER & HOUSING GP	286
TORQUE CONVERTER GP	288
TRANSMISSION AR	292
VALVE GP-PRIORITY	293
VALVE GP-RELIEF	294
VALVE GP-SELECTOR & PRESS CONT	295
VALVE GP-TRANSMISSION CONTROL	297
FRAME AND BODY	298
BOX GP-BATTERY	298
CASE & FRAME GP	301
DOOR GP-ACCESS	303
DRAWBAR GP	305
ENCLOSURE GP	306
ENCLOSURE GP-ENGINE	308
FENDER GP	312
GRID GP-SAND BLAST ERODING	317
GRILL GP-RADIATOR	318
GUARD GP-BOTTOM	319
GUARD GP-ENGINE	323
GUARD GP-FUEL TANK	325
GUARD GP-POWER TRAIN	327
GUARD GP-RADIATOR	328
HOOD GP	330
STEP GP	331
SWEEP AR	332
SWEEP GP	333
UNDERCARRIAGE	334
BAR GP-EQUALIZER	334
CAP GP-TRACK IDLER	340
FRAME GP-TELESCOPING RECOIL	342
GUARD GP-TRACK GUIDE	351
GUARD GP-TRACK ROLLER	353
GUIDING AR-UNDERCARRIAGE	355
IDLER GP-FRONT	356
IDLER GP-TRACK	357
LINK AS-TRACK	360
LUBRICATION GP-PIVOT SHAFT	363
MOUNTING GP-CARRIER ROLLER	365
ROLLER AR-TRACK	366

TABLE OF CONTENTS

Name	Page
ROLLER AR-TRACK CARRIER	367
ROLLER GP-TRACK CARRIER	368
ROLLER GP-TRACK-DOUBLE FLANGE	371
ROLLER GP-TRACK-SINGLE FLANGE	376
TRACK ADJUSTER & RECOIL GP	380
TRACK GP	381
UNDERCARRIAGE AR	383
STEERING AND BRAKING SYSTEM	385
CONTROL GP-STEERING & XMSN	385
MOTOR GP-PISTON	391
ROTATING GP-MOTOR	392
VALVE & LINES GP-BRAKE	394
VALVE & MTG GP-CONTROL	397
VALVE GP-BRAKE CONTROL	399
VALVE GP-CONTROL	401
HYDRAULIC SYSTEM	403
ACCUMULATOR GP-PILOT OIL	403
ADAPTER GP-MOTOR	404
CONTROL AR-HYDRAULIC	405
COOLER GP-HYDRAULIC OIL	406
CYLINDER & LINES GP	408
CYLINDER & LINES GP-LIFT	412
CYLINDER GP-BULLDOZER LIFT	416
CYLINDER GP-RIPPER	422
CYLINDER GP-TILT	426
HYDRAULIC AR	428
LINES GP-LIFT CYLINDER	429
LINES GP-PILOT	431
LINES GP-PUMP	438
LINES GP-RIPPER	443
LINES GP-TILT CYLINDER	446
MANIFOLD GP-CONTROL	452
MANIFOLD GP-VALVE	453
MOUNTING GP-CYLINDER	454
PUMP & MOUNTING GP	455
PUMP GP-PISTON	456
TANK & FILTER GP-HYDRAULIC	459
TANK & MTG GP-HYDRAULIC	463
VALVE & MTG GP-BULLDOZER	464
VALVE & MTG GP-COUNTERBALANCE	465
VALVE & MTG GP-IMPLEMENT CONT	466
VALVE GP-BANK 3	467
VALVE GP-BANK 5	469
VALVE GP-CHECK	471
VALVE GP-CONTROL	472
VALVE GP-COUNTERBALANCE	479
VALVE GP-PILOT	480
VALVE GP-PILOT CARTRIDGE	486
VALVE GP-PRESSURE REDUCING	488
VALVE GP-PUMP CONTROL	489
VALVE GP-QUICK-DROP	491
VALVE GP-RELIEF	494
VALVE GP-SHUTTLE	499
VALVE GP-SOLENOID	500
IMPLEMENTS	503
BULLDOZER AR-SEMI-UNIVERSAL	503
BULLDOZER AR-STRAIGHT	505
LINK GP-STABILIZER	507
PUSH ARM GP	509
PUSH ARM GP-STABILIZER	511
OPERATOR STATION	514
ADJUSTER GP-SEAT	514
AIR CONDITIONER AR	515
AIR CONDITIONER GP	516
BLOWER GP-CAB	517
CAB AR	519
CAB GP	522
CANOPY AR	533
COMPRESSOR GP-REFRIGERANT	534
CONDENSER & MTG GP-REFRIGERANT	537
CONDENSER GP-REFRIGERANT	541
CONTROL GP-GOVERNOR & BRAKE	543
CONTROL GP-HANDLE	546
CONTROL GP-PILOT OPERATED HYD	548
COVER GP-CAB	549
COVER GP-CONSOLE	550
GUARD GP-WINDOW	553
HANDHOLD GP	555
HEATER GP-CAB	556
HOUSING GP-SEAT SUSPENSION	557
INSTALLATION GP-RADIO	559
INSTRUMENT GP	560
KNOB GP	566
LINER GP-CAB	567
LINES GP-AIR CONDITIONER	571
LINES GP-HEATER	579
MIRROR GP-REAR VIEW	581
MOTOR GP-WINDOW WIPER	583
MOUNTING GP-ANTENNA	587
MOUNTING GP-CAB	588
MOUNTING GP-MONITOR	589
MOUNTING GP-PLATFORM	591
MOUNTING GP-ROPS	592
OPERATOR AR	593
PAN GP-BACKREST	594
PANEL GP-INSTRUMENT	597
PLATFORM GP	600
PLATFORM GP-OPERATOR	601
PRESSURIZER GP-CAB	607
RECLINER GP-SEAT	609
ROD GP	611
ROPS GP	612

TABLE OF CONTENTS

Name	Page	Name	Page
SCREEN GP-PROTECTION	615		
SEAT GP	617		
SEAT GP-SUSPENSION	626		
SUSPENSION GP-SEAT	630		
TANK GP-WINDOW WASHER	634		
WASHER GP-WINDOW	637		
WINDOW GP-CAB	639		
WINDOW GP-SLIDING	648		
WIPER GP-WINDOW	649		
WIPER PIVOT GP	651		
WORK TOOLS	652		
BLADE & EDGE GP-SEMI-UNIVERSAL	652		
BLADE & EDGE GP-STRAIGHT	655		
BLADE AS-SEMI-UNIVERSAL	657		
BLADE AS-STRAIGHT	659		
BLADE GP-SEMI-UNIVERSAL	661		
BLADE GP-STRAIGHT	664		
EDGE GP-BIT & CUTTING	666		
FRAME GP-RIPPER	668		
MOUNTING GP-RIPPER	670		
RIPPER AR	671		
RIPPER GP	672		
TOOTH GP-RIPPER	673		
SERVICE EQUIPMENT AND SUPPLIES	674		
FILM GP	674		
PLATE & FILM GP	677		
SERVICE CENTER GP	685		
PART NUMBER INDEX	B1		

GENERAL INFORMATION

1. MACHINE IDENTIFICATION

Caterpillar machines are identified by Product Identification Numbers (PIN). Some components included in a machine may be identified by Serial Numbers (S/N). Typical components that will be serialized include engines, transmissions, bulldozers, and rippers. The machine and engine are further identified by arrangement numbers and in some cases modification numbers. These numbers are shown on the product identification plate(s) and on the master plate in the operator's compartment.

Caterpillar dealers need all of these numbers to determine accurate parts identification.

SIS *New Feature*

Effective First Quarter 2001 the Caterpillar Product Identification Number (PIN) changed from 8 to 17 characters. In an effort to provide uniform equipment identification, Caterpillar and other construction equipment manufacturers are moving to comply with the latest version of the product identification numbering standard. Non-road machine PINs are defined by ISO 10261. The new PIN format will apply to all Caterpillar machines and generator sets. The PIN plates and frame marking will display the 17 character PIN. The new format will look like the following:

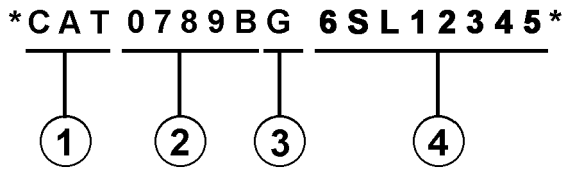

Where:

1. Caterpillar's World Manufacturing Code (characters 1-3)

2. Machine Descriptor (characters 4-8)

3. Check Character (character 9)

4. Machine Indicator Section (MIS) or Product Sequence Number (characters 10-17). These were previously referred to as the Serial Number.

Machines and generator sets produced before First Quarter 2001 will maintain their 8 character PIN format.

Components such as engines, transmissions, axles, etc. and work tools will continue to use an 8 character Serial Number (S/N).

2. ORDERING PARTS

⚠ WARNING

When replacement parts are required for this product Caterpillar recommends using Caterpillar replacement parts or parts with equivalent specifications including, but not limited to, physical dimensions, type, strength and material.

Failure to heed this warning can lead to premature failures, product damage, personal injury or death.

Quality Caterpillar replacement parts are available from Caterpillar dealers throughout the world. Their parts inventories are up to date and include all parts normally required to protect your investment in Caterpillar machines. Dealers may offer repair kits or remanufactured parts to allow selection of the most effective repair alternative for a particular situation. When ordering parts, your order should specify the quantity, part number, part name, and the serial number/product identification number of the machine for which the parts are needed.

3. PARTS MANUAL ORGANIZATION

Product information in this manual is presented as "information elements" that represent all of the components for the specific model. Engine Arrangement and Seat Group are examples of information elements. The information elements are organized alphabetically by part name and secondarily by part number within each major section of the manual.

4. TABLE OF CONTENTS

A table of contents (TOC) is found at the beginning of the manual. The TOC lists each section of the manual with a complete list of all information elements organized as they appear in the manual. Page numbers are provided for quick reference to detailed parts identification illustrations and serviceable consist lists.

5. MAINTENANCE PARTS INDEX

The Maintenance Parts Index, located near the beginning of the manual, references most frequently used maintenance part numbers, providing description, quantity, usage and page number. This information is organized alphabetically by part description.

GENERAL INFORMATION

6. INDEX

The index located near the front of the manual is an alphabetical listing of all information elements included in the manual. Page numbers are provided for quick reference to detailed parts identification illustrations and serviceable consist lists.

7. PART NUMBER INDEX

A numerical index listing all part numbers and the corresponding page number(s) appears at the back of the manual.

8. CAPTIONS

Captions located at the beginning of each information element identify the part number and part name along with additional descriptive information. PIN and S/N information found in each caption should be used to select correct information for a specific machine. Field replacement options, identification of optional attachment components, and where used ("part of") information is also provided.

The first line of a caption is shown in larger type font to indicate the beginning of an information element. Captions for additional pages that may be required to illustrate an information element will be shown in standard type font and will include the term *(contd.)* .

9. NON-SERVICED PARTS

In some instances it is necessary to display non-serviced parts that are a link to a lower level serviceable consist lists. These non-serviced part numbers are shown in *italic* type indicating that they are not available.

10. PARTS LIST REFERENCE NUMBERS

Numbers shown in the Ref No column correspond to numbers used in the associated graphic(s). An alphabetic suffix may be added to a reference number to identify lower level consist items. Numbers shown in the Graphic Ref column refer to the graphic number identifier displayed in the lower left corner of each illustration. The Graphic Ref number may be used in combination with the item Ref No to determine the correct part number. There may be intentional omission of a Ref No in a consist list as information is updated to reflect the latest serviceable part numbers.

11. INDENTED PART NAMES

When a part name is indented in a parts list, it is part of (included in) the group or assembly under which it is indented.

12. ILLUSTRATION REFERENCE LETTERS

When necessary, illustrations contain reference letters (A, B, C etc.) that are intended to track lines and harnesses from one point to another. They are also used to show where to reconnect illustrations that have been separated.

13. ABBREVIATIONS AND SYMBOLS

O.D. – Outside Diameter
I.D. – Inside Diameter
A – Not Part Of This Group
B – Use As Required
C – Change From Previous Type
D – Order By The Meter
E – Order By The Centimeter
F – Not Shown
G – Order By The Inch
I – Refer To Hydraulic Information System
M – Metric Part
R – Remfg Part May Be Available
Y – Separate Illustration
Z – Not Serviced Separately

SIS *New Feature*

14. DESCRIPTION OF TYPE CHANGES

Type - A type is defined as any configuration change that requires an additional Information Element for an Arrangement, Group, or Assembly. If serial number breaks for types are not available, a type # (Type 1, Type 2, etc.) will be displayed in the caption. These "type" changes are identified with a "C" note (change from previous type) in the Parts List. Only the "types" that apply to this Parts Manual will be included. Additional types may exist causing "C" notes to appear on an Information Element when no other types are shown.

15.<END>

This symbol indicates the end of an information element.

NOTE:

Continuing improvement and advancement of product design may cause changes to your machine which may not be included in this publication. Whenever a question arises regarding your Caterpillar product or this publication, please consult your Caterpillar dealer for the latest available information.

FRAME AND BODY

8E-3299 PLATFORM GP-CAB

PIN 3SK1-99999

SMCS-7253 100090751

NOTE	REF NO	GRAPHIC REF	PART NUMBER	QTY	PART NAME 1 2 3 4 5 6 (PRODUCT LEVEL)	SEE PAGE
	*	1	3T-3953	1	PLATE AS	
	2	1	6E-2992	25	BOLT (3/8-16X.750IN)	
	3	1	6P-1076	41	WASHER-HARD (3MM THK)	
	4	1	9P-1444	2	SUPPORT AS-FOOT	
	5	1	7P-2229	19	BOLT (1/2-13X1IN)	
		1	6P-	19	WASHER-HARD (4MM THK)	
	6	1	6E-6136		COVER AS-LH	
		1	9F-2978	5	NUT-WELD (3/8-16 THD)	
		1	1P-0188	1	CLIP	
	7	1	7S-3411	4	COVER	
	8		9J-0488	18	SCREW-HEAD (3/8-16X.875IN)	
	9	1	-4474	1	COVER	
		1	6E-897		GASKET	
	10	1	6E-3249	1		
		1	6E-3250	1	GASKET	
	11	1	3T-3638	1	HANDHOLD	
	12	1	6E-8978	1	COVER AS	
		1	9F-2978	8	NUT-WELD (3/8-16 THD)	
		1	6E-8979	1	GASKET	
	13	1	7T-0131	1	FLOORPLATE AS	
		1	1F-0748	4	NUT-WELD (1/2-13 THD)	
	14	1	7V-8067	1	PLUG-BUTTON	
	15	1	7T-0136	1	PLATE AS	
		1	9F-2978	5	NUT-WELD (3/8-16 THD)	
	16	1	7T-8066	1	COVER	
		1	7T-9779	1	GASKET	
	17	1	3T-3861	1	PLATE AS	
	18	1	6T-8364	4	BOLT (1/4-20X.625IN)	
M		1	9T-4205	4	WASHER-HARD (2MM THK)	
	19	1	6L-8494	1	FLOOR MAT	
	20	1	6E-6846	1	MODULE AS-OPERATOR	
	21	1	3T-3834	1	HANDHOLD	
	22	1	9P-8671	2	PLUG	
	23	2	6T-8364	4	BOLT (1/4-20X.625IN)	
M		2	9T-4205	4	WASHER-HARD (2MM THK)	
	24	2	6B-3062	17	BOLT (3/8-16X.750IN)	
	26	2	6P-1076	21	WASHER-HARD (3MM THK)	
	26	2	7T-0135	1	SEAL	
	27	2	7X-0075	2	BOLT (3/4-10X5IN)	
		2	7X-0682	2	WASHER-HARD (6MM THK)	
	28	2	3T-3462	2	PLATE	
	29	2	3T-8290	1	PLATE AS	
		2	7S-6828	8	SPACER	
	30	2	3T-8281	1	SEAL	
	31	2	7S-8817	1	GASKET	
	32	2	7S-8816	1	COVER AS	
		2	2R-3276	2	WASHER	
		2	6P-8626	2	SCREW-KNURLED	
	33	2	9W-3429	1	COVER	
	34	2	6E-8697	1	COVER	
	35	2	6D-3931	8	SCREW-SOCKET HEAD	
	36	2	9W-3142	8	MOUNTING	
	37	2	9W-8027	2	PLATE	
	38	2	7X-0090	2	BOLT (7/8-9X5IN)	
		2	7X-0672	2	WASHER-HARD	
	39	2	4L-6454	4	BOLT (3/8-16X1.0IN)	
	40	2	3T-4788	1	COVER	

12 FRAME AND BODY 1 of 4 SELP4570-01

FRAME AND BODY

8E-3299 PLATFORM GP-CAB (contd.)

100090751

NOTE	REF NO	GRAPHIC REF	PART NUMBER	QTY	PART NAME 1 2 3 4 5 6 (PRODUCT LEVEL)	SEE PAGE
	41	2	6E-2516	1	COVER	
	42	2	7T-0134	1	PLATE	
	43	2	7T-0138	1	GASKET	
	44	2	7S-8724	1	GASKET	
	45	2	7S-8723	1	COVER	
	46	2	6V-1950	2	PLUG-BUTTON	

M-METRIC PART

SELP4570-01 2 of 4 FRAME AND BODY 13

FRAME AND BODY

8E-3299 PLATFORM GP-CAB (contd.)

100090751

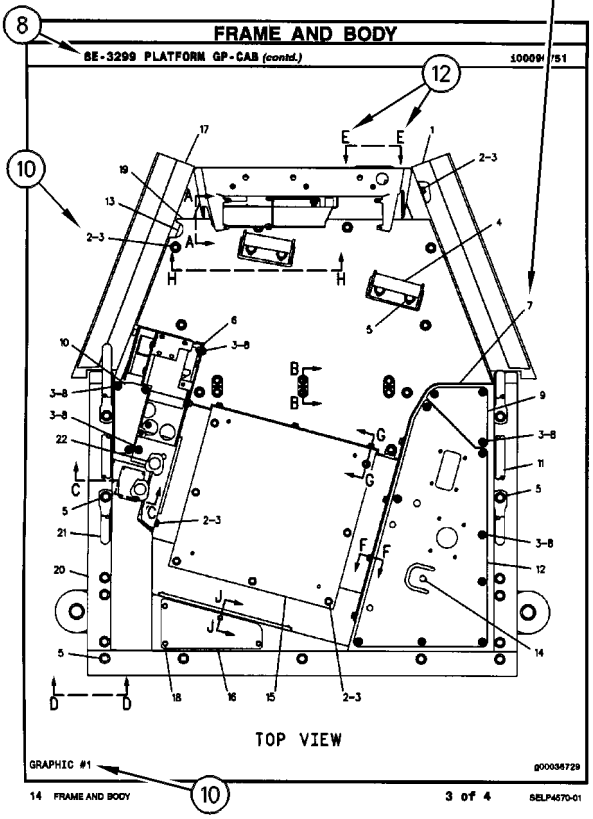

14 FRAME AND BODY 3 of 4 SELP4570-01

FRAME AND BODY

8E-3299 PLATFORM GP-CAB (contd.)

100090751

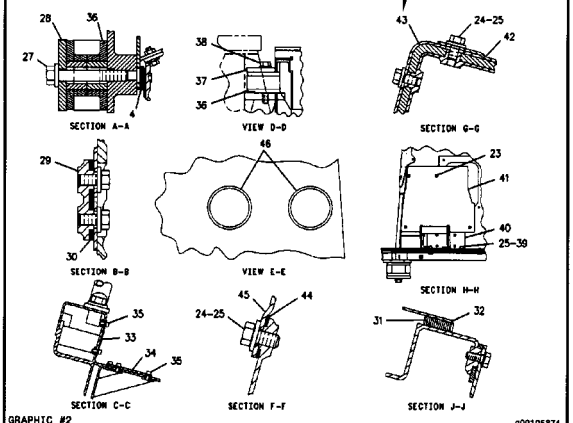

SELP4570-01 4 of 4 FRAME AND BODY 15

REPAIR ALTERNATIVES

REMANUFACTURED COMPONENTS

As an option when making repairs consider Caterpillar Remanufactured Components. Components that are available through the Caterpillar Remanufactured Program are identified three ways in the parts book:

- with the letter R in the note field of the parts list
- with an R* at the beginning of the first line of the caption
- with an *R at the end of the first line of the caption

Typical components included in the Remanufacturing Program include:

ALTERNATORS
CONNECTING RODS
CRANKSHAFTS - UNDERSIZE
CRANKSHAFTS - UPGRADE TO NEW
CYLINDER HEADS
ELECTRONIC CONTROL MODULES (ECM)
ELECTRONIC SENSORS
FUEL INJECTORS
FUEL NOZZLES
FUEL PUMPS
GOVERNORS
OIL PUMPS
PISTONS
SHORT BLOCKS
STARTERS
TURBOCHARGERS - COMPLETE
TURBOCHARGER CARTRIDGES
WATER PUMPS

Caterpillar Remanufactured engines for many engine arrangements are also available.

SUPPLEMENTAL COOLANT ADDITIVES

CUSTOMER BENEFITS:

Protects against cavitation, foam, erosion, corrosion, and scale buildup in cooling systems.

- Provides measured coolant conditioner.

DESCRIPTION:

Additives deplete from the coolant with normal operation. For this reason, Supplemental Coolant Additives (SCA) must be added to all heavy duty coolants at regular intervals. In addition, when not using a fully formulated, pre-charged antifreeze, like Caterpillar's DEAC, an initial charge of SCA must be added to the cooling system. The amount of SCA added to the system is dependent on the capacity of the system.

The SCA for initial fill is provided as a liquid. SCA's for maintenance intervals are available in liquid form and as a spin-on element. (No Spin-on available for 3600 Family of Engines)

NOTE:

The amount of SCA added at initial fill is not the same as the amount added at maintenance intervals.

The coolant additive elements can be used with any ethylene or propylene glycol type antifreeze which meets ASTM D4985 or ASTM D5345 Specifications.

NOTE:

For use with standard heavy duty coolant only, not for use with Extended Life Coolant.

PARTS NEEDED:

Cooling System Capacity		Liquid SCA at Initial Fill	Liquid SCA at Maintenance*	Spin-on SCA Maintenance Element*
Liters	Gallons			
22-30	(6-8)	3P-2044 (1)	6V-3542 (1)	111-2370 (1)
30-38	(8-10)	3P-2044 (1) 6V-3542 (1)	111-2372 (1)	111-2369 (1)
38-49	(10-13)	3P-2044 (1) 8T-1589 (1)	111-2372 (1)	111-2369 (1)
49-64	(13-17)	3P-2044 (2)	8T-1589 (1)	9N-3368 (1)
64-83	(17-22)	3P-2044 (2) 8T-1589 (1)	111-2372 (1) 6V-3542 (1)	111-2371 (1)
83-114	(22-30)	3P-2044 (3) 8T-1589 (1)	3P-2044 (1)	9N-3718 (1)
114-163	(30-43)	3P-2044 (5)	3P-2044 (1) 6V-3542 (1)	111-2371 (2)
163-242	(43-64)	3P-2044 (8)	3P-2044 (2)	9N-3718 (2)

** Normal maintenance period is 250 hrs. See your Operation and Maintenance Manual for complete coolant maintenance instructions.*

( ) Indicates quantity required.

MAINTENANCE PARTS

DESCRIPTION	PART NUMBER	QTY	WHERE USED	PAGE
AIR INLET AND EXHAUST SYSTEM				
FILTER ELEMENT AS-AIR (PRIMARY, STANDARD EFFICIENCY)	6I-2501	1	AIR CLEANER GP	97
FILTER ELEMENT AS-AIR (SECONDARY)	6I-2502	1	AIR CLEANER GP	97
BASIC ENGINE				
BELT-SERPENTINE	241-4981	1	PULLEY GP-FAN & ALT DRIVE	52
		1	PULLEY GP-FAN & ALT DRIVE	54
BREATHER AS (CRANKCASE)	204-4444	1	COVER GP-VALVE MECHANISM	16
	240-0041	1	COVER GP-CYLINDER BLOCK	13
FILTER ELEMENT-BREATHER (CRANKCASE)	185-3159	1	COVER GP-VALVE MECHANISM	16
PLUG-MAGNETIC	118-3619	1	DRAIN GP-ENGINE OIL	29
V-BELT (FAN DRIVE)	6N-5338	3	PULLEY GP-FAN & ALT DRIVE	54
V-BELT SET (INCLUDES 3-BELTS)	6N-5337	1	PULLEY GP-FAN & ALT DRIVE	52
		1	PULLEY GP-FAN & ALT DRIVE	54
COOLING SYSTEM				
CAP AS-RADIATOR	031-1119	1	TANK GP-WATER	94
GASKET (WATER REGULATOR HOUSING)	191-4457	1	HOUSING & REGULATOR GP	83
HOSE-RADIATOR	187-3961	1	LINES GP-WATER	84
REGULATOR-TEMPERATURE (92-DEG C) (WATER, COOLANT)	248-5513	1	HOUSING & REGULATOR GP	83
ELECTRICAL AND STARTING SYSTEM				
BATTERY (12-VOLT, 1125-CCA)	153-5700	2	BATTERY & WIRING GP	141
BATTERY GP (12-VOLT)	9X-9731	2	BATTERY GP	147
CAP-RECEPTACLE (ET CONNECTOR)	8C-6354	1	WIRING GP-PLATFORM	219
		1	WIRING GP-PLATFORM	220
CIRCUIT BREAKER AS (15-AMPERE) (BLOWER)	6T-3643	1	PANEL GP-FUSE	181
FILTER (ETHER START)	358-4889	1	STARTING AID GP-ETHER	194
FUSE (10-AMPERE)	9W-1442	7	PANEL GP-FUSE	181
FUSE (15-AMPERE)	9W-1441	15	PANEL GP-FUSE	181
FUSE (175-AMPERE) (ALTERNATOR)	239-8107	1	PANEL GP-FUSE	181
FUSE (175-AMPERE) (SPARE)	239-8107	1	WIRING GP-PLATFORM	219
FUSE (20-AMPERE)	9W-1446	2	PANEL GP-FUSE	181
KEY (BATTERY DISCONNECT)	8H-5306	1	SWITCH GP-DISCONNECT	201
LAMP (24-VOLT)	7N-9943	1	LAMP GP-DOME	168
LAMP-HALOGEN (24-VOLT, 70-WATT)	351-9918	1	LAMP GP-FLOOD	169
FRAME AND BODY				
PLUG-DRAIN (TRANSMISSION CASE)	106-8187	1	CASE & FRAME GP	301
FUEL SYSTEM				
CAP AS-FUEL (VENTED)	7X-7700	1	TANK GP-FUEL	133
CAP-DUST	6V-0852	1	FILTER & LINES GP-FUEL	115
FILTER AS-WATER SEP & FUEL (PRIMARY)	326-1644	1	FILTER GP-WATER SEP & FUEL	118
FILTER-FUEL (ADVANCED EFFICIENCY)	1R-0762	1	FILTER & LINES GP-FUEL	115
STRAINER-FUEL (TANK)	9P-7121	1	TANK GP-FUEL	133

MAINTENANCE PARTS

DESCRIPTION	PART NUMBER	QTY	WHERE USED	PAGE
HYDRAULIC SYSTEM				
CAP-DUST	6V-0852	2	LINES GP-PILOT	435
		1	LINES GP-PUMP	438
CAP-FILLER (HYDRAULIC TANK)	7H-1447	1	TANK & FILTER GP-HYDRAULIC	459
END-STRAINER	5F-3488	1	TANK & FILTER GP-HYDRAULIC	459
FILTER ELEMENT AS-OIL (ADVANCED EFFICIENCY) (HYDRAULIC)	1R-0777	2	TANK & FILTER GP-HYDRAULIC	459
PLUG-DRAIN (HYDRAULIC TANK OIL)	9J-7031	1	TANK & FILTER GP-HYDRAULIC	459
SCREEN (IMPLEMENT PILOT OIL)	6E-5066	1	MANIFOLD GP-CONTROL	452
SCREEN AS (HYDRAULIC TANK)	3G-3267	2	TANK & FILTER GP-HYDRAULIC	459
STRAINER AS-OIL (HYDRAULIC TANK)	5D-7927	1	TANK & FILTER GP-HYDRAULIC	459
LUBRICATION SYSTEM				
CAP AS-FILLER (ENGINE OIL)	6N-2985	1	FILLER GP-ENGINE OIL	65
FILTER-ENGINE OIL (ADVANCED EFFICIENCY)	1R-1808	1	FILTER GP-ENGINE OIL	66
MACHINE ARRANGEMENT				
REGULATOR-WATER TEMPERATURE (98-DEG C)	247-7133	1	COLD WEATHER AR	5
OPERATOR STATION				
BLADE AS-WIPER (350-MM) (DOOR, RH, LH)	6V-5849	2	WIPER GP-WINDOW	649
BLADE AS-WIPER (400-MM) (FRONT WINDOW)	6V-5851	1	WIPER GP-WINDOW	649
BLADE AS-WIPER (500-MM) (REAR)	146-6433	1	WIPER GP-WINDOW	649
CAP-VENTED (WINDOW WASHER RESERVOIR)	8E-8292	1	TANK GP-WINDOW WASHER	634
DRYER AS-REFRIGERANT	257-3227	1	LINES GP-AIR CONDITIONER	571
DRYER-REFRIGERANT (IN-LINE)	257-3226	1	LINES GP-AIR CONDITIONER	575
FILTER ELEMENT-CAB AIR (AIR RECIRCULATION)	6T-5068	1	PRESSURIZER GP-CAB	607
FILTER ELEMENT-CAB AIR (STANDARD EFFICIENCY)	6T-0988	1	PRESSURIZER GP-CAB	607
FILTER ELEMENT-CAB AIR (ULTRA HIGH EFFICIENCY)	175-2831	1	PRESSURIZER GP-CAB	607
LAMP (24-VOLT)	123-9294	2	INSTRUMENT GP	563
		2	PANEL GP-INSTRUMENT	597
LAMP (24-VOLT) (PANEL)	123-9294	2	INSTRUMENT GP	560
SCREEN AS	387-3580	1	SCREEN GP-PROTECTION	615
SEAT BELT GP (RETRACTABLE, 3-IN)	222-0345	1	SEAT GP	619
		1	SEAT GP	623
V-BELT (REFRIGERANT COMPRESSOR)	1N-4556	1	COMPRESSOR GP-REFRIGERANT	535

MAINTENANCE PARTS

DESCRIPTION	PART NUMBER	QTY	WHERE USED	PAGE
POWER TRAIN				
BREATHER (TRANSMISSION)	183-3873	1	LINES GP-POWER TRAIN OIL	260
CAP AS-FILLER (POWER TRAIN OIL)	6N-2985	1	LINES GP-POWER TRAIN OIL	260
CAP-DUST	6V-0852	3	LINES GP-POWER TRAIN OIL	260
FILTER ELEMENT AS-OIL (ADVANCED EFFICIENCY)	328-3655	1	FILTER GP-OIL	255
GASKET-COVER	8P-0058	1	CASE & PARTS GP-PLANETARY	234
PLUG-DRAIN (TRANSMISSION)	4B-7739	1	DRAIN GP-ECOLOGY	245
PLUG-MAGNETIC (FINAL DRIVE OIL FILL)	6V-3298	1	DRIVE GP-FINAL	249
PLUG-MAGNETIC (FINAL DRIVE, OIL FILL, CHECK)	6V-3298	1	DRIVE GP-FINAL	247
		1	DRIVE GP-FINAL	251
		1	DRIVE GP-FINAL	253
SCREEN AS (TORQUE CONVERTER SCAVENGE)	3T-6471	1	LINES GP-POWER TRAIN OIL	260
SCREEN GP-MAGNETIC (POWER TRAIN)	240-8259	1	SCREEN GP-MAGNETIC	283
SCREEN-SUCTION (POWER TRAIN)	4S-8598	1	SCREEN GP-MAGNETIC	283
SCREEN-SUCTION (TRANSMISSION SCAVENGE)	8S-9130	1	CASE & PARTS GP-PLANETARY	234
UNDERCARRIAGE				
BREATHER (PIVOT SHAFT OIL TANK)	9G-5127	1	LUBRICATION GP-PIVOT SHAFT	363
CAP AS-OIL FILLER (PIVOT SHAFT)	9W-8277	1	LUBRICATION GP-PIVOT SHAFT	363
PLUG-DRAIN	4T-2069	2	FRAME GP-TELESCOPING RECOIL	342
		2	FRAME GP-TELESCOPING RECOIL	345
		2	FRAME GP-TELESCOPING RECOIL	348

INDEX

Name	Page
A	
ACCUMULATOR GP-PILOT OIL (UNCHARGED)	435
ACCUMULATOR GP-PILOT OIL–UNCHARGED	403
ACCUMULATOR-REFRIGERANT	571
	575
ADAPTER GP-FAST FILL FUEL	113
ADAPTER GP-MOTOR	404
ADJUSTER GP-SEAT	514
AFTERCOOLER GP-AIR–ATAAC	96
AIR CLEANER GP	97
	98
AIR CONDITIONER AR–ROPS MOUNTED CONDENSER	515
AIR CONDITIONER GP	516
ALARM GP	134
ALTERNATOR GP-CHARGING	135
	137
	139
ALTERNATOR GP-CHARGING (24-VOLT, 150-AMPERE)	137
AXLE GP	224
	225
B	
BAR GP-EQUALIZER	334
	336
	338
	339
BASE GP-OIL FILTER	226
BASE GP-VALVE COVER	16
BATTERY & WIRING GP	141
BATTERY (12-VOLT, 1125-CCA)	141
BATTERY GP (12-VOLT)	147
BATTERY GP–HEAVY-DUTY	147
BELT-SERPENTINE	52
	54
BLADE & EDGE GP-SEMI-UNIVERSAL	652
	653
	654
BLADE & EDGE GP-STRAIGHT	655
	656
BLADE AS-SEMI-UNIVERSAL	657
	658
BLADE AS-STRAIGHT	659
	660
BLADE AS-WIPER (350-MM) (DOOR, RH, LH)	649
BLADE AS-WIPER (400-MM) (FRONT WINDOW)	649
BLADE AS-WIPER (500-MM) (REAR)	649
BLADE GP-SEMI-UNIVERSAL	661
	662
	663
BLADE GP-STRAIGHT	664
	665
BLOWER GP-CAB	517
BOX GP-BATTERY	298
	300
BRAKE & DIFFERENTIAL DRIVE GP	227
BRAKE & PLANETARY GP	232
BREATHER (PIVOT SHAFT OIL TANK)	363
BREATHER (TRANSMISSION)	260
BREATHER AS (CRANKCASE)	13
	16
BULLDOZER AR-SEMI-UNIVERSAL	503
BULLDOZER AR-STRAIGHT	505
C	
CAB AR	519
	520
CAB AR–COLD WEATHER	521
CAB AR–DUAL PANE GLASS	519
CAB GP	522
	525
	530
CAMSHAFT GP	12
CANOPY AR	533
CAP AS-FILLER (ENGINE OIL)	65
CAP AS-FILLER (POWER TRAIN OIL)	260
CAP AS-FUEL (VENTED)	133
CAP AS-OIL FILLER (PIVOT SHAFT)	363
CAP AS-RADIATOR	94
CAP GP-TRACK IDLER	340
	341
CAP-DUST	115
	260
	435
	438
CAP-FILLER (HYDRAULIC TANK)	459
CAP-RECEPTACLE (ET CONNECTOR)	219
	220
CAP-VENTED (WINDOW WASHER RESERVOIR)	634
CASE & FRAME GP	301
CASE & PARTS GP-PLANETARY	234
CASE GP-TRANSMISSION	236
CHASSIS AR	1
	2
	3
CIRCUIT BREAKER AS (15-AMPERE) (BLOWER)	181
CLUTCH GP-ELECTRIC	148
COLD WEATHER AR	3
	4
	5
	6

INDEX

Name	Page
COLD WEATHER AR–EXTREME SERVICE	4, 5
COMPRESSOR GP-REFRIGERANT	534, 535
CONDENSER & MTG GP-REFRIGERANT	539
CONDENSER & MTG GP-REFRIGERANT–ROPS MOUNTED	537
CONDENSER GP-REFRIGERANT	539, 541
CONTROL & MTG GP-ENGINE ELEK	149
CONTROL AR-HYDRAULIC–ACCUGRADE	405
CONTROL AR-HYDRAULIC–BULLDOZER, RIPPER, STEERING	405
CONTROL GP-COMMUNICATION–PRODUCT LINK 321SR	150
CONTROL GP-COMMUNICATION–PRODUCT LINK 522	151
CONTROL GP-COMMUNICATION–PRODUCT LINK 522, CHINA	152
CONTROL GP-COMMUNICATION–PRODUCT LINK CELLULAR	153
CONTROL GP-COMMUNICATION–PRODUCT LINK CELLULAR, CHINA	153
CONTROL GP-ENGINE ELECTRONIC	154
CONTROL GP-GOVERNOR & BRAKE	543
CONTROL GP-HANDLE–BULLDOZER	546, 547
CONTROL GP-PILOT OPERATED HYD–BULLDOZER	548
CONTROL GP-STEERING & XMSN	385, 389
CONTROL GP-TRANSMISSION HYD	237
CONTROL GP-UNPROGRAMMED (MACHINE ECM)	215
CONVERTER GP-ELECTRICAL	155
COOLER GP-ENGINE OIL	78
COOLER GP-HYDRAULIC OIL	406, 407
COOLER GP-TRANSMISSION OIL	239
CORE AS	148
CORE AS-AFTERCOOLER	96
CORE AS-OIL COOLER (ENGINE)	78
CORE AS-OIL COOLER (HYDRAULIC)	406, 407
CORE AS-OIL COOLER (TRANSMISSION)	239
CORE AS-RADIATOR	89
CORE AS-RADIATOR (LH SIDE)	91
CORE AS-RADIATOR (RH SIDE)	91
COUPLING & GUARD GP	241
COUPLING GP-PUMP	242
COVER GP-CAB	549
COVER GP-CONSOLE	550, 552
COVER GP-CYLINDER BLOCK	13
COVER GP-FRONT HOUSING	15
COVER GP-FRONT HOUSING–ACCESSORY DRIVE	14
COVER GP-VALVE MECHANISM	16
CRANKSHAFT GP	17
CYLINDER & LINES GP–LH	410
CYLINDER & LINES GP–RH	408
CYLINDER & LINES GP-LIFT–LH	414
CYLINDER & LINES GP-LIFT–RH	412
CYLINDER BLOCK AS	18
CYLINDER BLOCK GP	20, 22
CYLINDER GP-BULLDOZER LIFT	416, 418, 420, 421
CYLINDER GP-RIPPER	671
CYLINDER GP-RIPPER–LIFT	422
CYLINDER GP-RIPPER–TILT	424
CYLINDER GP-TILT	426
CYLINDER HEAD AS	23
CYLINDER HEAD GP	25, 27

D

Name	Page
DAMPER & PULLEY GP	28
DOOR GP-ACCESS–LH	303
DOOR GP-ACCESS–RH	304
DRAIN GP-ECOLOGY	243, 245
DRAIN GP-ENGINE OIL	29
DRAWBAR GP	305
DRIVE GP-FAN	30, 31
DRIVE GP-FINAL	247, 249
DRIVE GP-FINAL–COLD WEATHER	251, 253
DRIVE GP-PUMP	32
DRYER AS-REFRIGERANT	571
DRYER-REFRIGERANT (IN-LINE)	575
DUST EJECTOR GP–PRECLEANER	99

E

Name	Page
EDGE GP-BIT & CUTTING	666, 667
ELBOW GP-AIR INLET	100
ELECTRONICS GP-COMMUNICATION–PRODUCT LINK 121SR	156
ELECTRONICS GP-COMMUNICATION–PRODUCT LINK 300	156
ENCLOSURE GP	306
ENCLOSURE GP-ENGINE	308
ENCLOSURE GP-ENGINE–LH	310

INDEX

Name	Page
ENCLOSURE GP-ENGINE–RH	311
END-STRAINER	459
ENGINE AR	9
ENGINE AR-COMPLETE	10
ENGINE AR-CORE	11
EXTENSION GP-BACKREST (CLOTH)	619
EXTENSION GP-BACKREST (VINYL)	623
F	
FAN GP-BLOWER	79
FAN GP-EJECTOR–BLOWER	80
FAN GP-REVERSIBLE	81
FASTENER GP-CYLINDER HEAD	33
FASTENER GP-FRONT COVER	34
FASTENER GP-VALVE COVER	35
FASTENER GP-VALVE COVER BASE	36
FENDER GP	312
FENDER GP–LH	315
FENDER GP–RH	316
FILLER GP-ENGINE OIL	65
FILM GP	674
	675
	676
	677
FILM-CIRCUIT BREAKER	181
FILM-IDENTIFICATION (GROUP NO., SEQUENCE NO.)	541
FILM-IDENTIFICATION (HYDRAULIC OIL)	3
	4
	5
FILM-IDENTIFICATION (INSTRUMENT PANEL)	561
	563
FILM-IDENTIFICATION (JOYSTICK) (GRADE CONTROL)	156
FILM-IDENTIFICATION (WATER HEATER)	160
FILM-IDENTIFICATION (WINDOW WIPER CONTROLS)	567
FILM-INFORMATION (PRODUCT LINK, READ OMM)	161
	163
	165
FILM-INFORMATION (TRANSMISSION OIL LEVEL)	678
	680
	682
FILM-INSTRUCTION (KEY START SWITCH)	563
FILM-INSTRUCTION (READ OMM, STEERING)	677
FILM-INSTRUCTION (RIPPER CONTROL)	405
FILM-INSTRUCTION (SEAT ADJUSTMENT)	630
	632
FILM-NOTICE (RADIO)	559
FILM-STRIPE (ROUND RED REFLECTIVE)	678
	680
	683
FILM-WARNING (DO NOT OPERATE, READ OMM)	677
	679
	680
	683
FILM-WARNING (HIGH PRESSURE CYLINDER)	403
FILM-WARNING (HIGH PRESSURE, READ OMM, INTL)	677
	678
	680
	683
FILM-WARNING (NO WELD, NO DRILL, READ OMM)	533
	677
	678
	680
	683
FILM-WARNING (PRODUCT LINK RADIO, U.S.)	161
	165
FILM-WARNING (RECOIL SPRING)	342
	345
	348
FILTER & LINES GP-FUEL	115
FILTER (ETHER START)	194
FILTER AS-WATER SEP & FUEL (PRIMARY)	118
FILTER ELEMENT AS-AIR (PRIMARY, STANDARD EFFICIENCY)	97
FILTER ELEMENT AS-AIR (SECONDARY)	97
FILTER ELEMENT AS-OIL (ADVANCED EFFICIENCY)	255
FILTER ELEMENT AS-OIL (ADVANCED EFFICIENCY) (HYDRAULIC)	459
FILTER ELEMENT-BREATHER (CRANKCASE)	16
FILTER ELEMENT-CAB AIR (AIR RECIRCULATION)	607
FILTER ELEMENT-CAB AIR (STANDARD EFFICIENCY)	607
FILTER ELEMENT-CAB AIR (ULTRA HIGH EFFICIENCY)	607
FILTER GP-ENGINE OIL	66
FILTER GP-OIL–POWER TRAIN	255
FILTER GP-WATER SEP & FUEL	118
FILTER-ENGINE OIL (ADVANCED EFFICIENCY)	66
FILTER-FUEL (ADVANCED EFFICIENCY)	115
FINAL DRIVE GP	247
	249
	251
	253
FLOOR MAT	549

INDEX

Name	Page
	601
FLOOR MAT (FRONT)	550
FLOOR MAT (REAR)	550
FLYWHEEL GP	37
FRAME GP-RIPPER	668
FRAME GP-TELESCOPING RECOIL	342
	345
	348
FUMES DISPOSAL GP	69
	70
FUSE (10-AMPERE)	181
FUSE (15-AMPERE)	181
FUSE (175-AMPERE) (ALTERNATOR)	181
FUSE (175-AMPERE) (SPARE)	219
FUSE (20-AMPERE)	181
G	
GASKET (WATER REGULATOR HOUSING)	83
GASKET-COVER	234
GAUGE AS-OIL LEVEL (DIPSTICK) (ENGINE)	71
GAUGE AS-OIL LEVEL (DIPSTICK) (TRANSMISSION CASE)	260
GAUGE GP-OIL LEVEL (DIPSTICK)	71
GAUGE-SIGHT (HYDRAULIC TANK OIL)	459
GAUGE-SIGHT (WATER TANK)	94
GEAR GP-BEVEL & TRANSFER	256
GEAR GP-FRONT	38
GEAR GP-REAR	40
GENERAL AR	6
	7
GRADE CONTROL AR	156
GRADE CONTROL GP	157
GRID GP-SAND BLAST ERODING	317
GRILL GP-RADIATOR–HEAVY-DUTY	318
GUARD GP-BOTTOM	319
GUARD GP-BOTTOM–HEAVY-DUTY, SEALED	321
GUARD GP-CYLINDER	503
	505
GUARD GP-ENGINE–LH	323
GUARD GP-ENGINE–RH	324
GUARD GP-FAN	82
GUARD GP-FUEL TANK	325
	326
GUARD GP-POWER TRAIN	327
GUARD GP-RADIATOR	328
GUARD GP-TRACK GUIDE	351
	352
GUARD GP-TRACK ROLLER	353
	354
GUARD GP-WINDOW	553
GUIDING AR-UNDERCARRIAGE–HEAVY-DUTY	355
GUIDING AR-UNDERCARRIAGE–MODERATE SERVICE	355
H	
HANDHOLD GP	555
HARNESS AS-ALARM	141
HARNESS AS-CONSOLE	219
HARNESS AS-CONTROL	216
HARNESS AS-DASH	560
	597
HARNESS AS-ENGINE	210
HARNESS AS-ENGINE (ELECTRONIC CONTROL MODULE)	208
HARNESS AS-ENGINE (UNIT INJECTOR)	208
HARNESS AS-FRONT LIGHTING	141
HARNESS AS-HEATER & AIR COND	541
HARNESS AS-LIGHTING	176
	178
HARNESS AS-LIGHTING (CYLINDER)	172
HARNESS AS-LIGHTING (FLOODLIGHT)	172
HARNESS AS-LIGHTING (FLOODLIGHTS, REAR)	170
HARNESS AS-LIGHTING (FRONT FLOODLIGHTS)	170
HARNESS AS-LIGHTING (FRONT)	174
HARNESS AS-LIGHTING (REAR)	174
HARNESS AS-MONITOR (ADVISOR)	590
HARNESS AS-MONITOR (GPS)	590
HARNESS AS-MOTOR	517
HARNESS AS-PANEL	563
HARNESS AS-PANEL (FUSE BLOCK)	206
HARNESS AS-PLATFORM	219
HARNESS AS-POWER	155
HARNESS AS-SENSOR (HOOD)	141
HARNESS AS-SENSOR (INPUT)	216
HARNESS AS-SENSOR (OUTPUT)	216
HARNESS AS-SWITCH	571
HARNESS AS-VALVE (SEAT AIR COMPRESSOR)	632
HARNESS AS-WIRING	161
	163
HARNESS AS-WIRING (AIR CONDITIONER COMPRESSOR)	571
	575
HARNESS AS-WIRING (CRANK WITHOUT INJECT)	210
HARNESS AS-WIRING (CYLINDER, LH)	215
HARNESS AS-WIRING (FENDER, RH)	141
HARNESS AS-WIRING (FUEL PRESSURE)	120
HARNESS AS-WIRING (GPS)	215
HARNESS AS-WIRING (LIGHT BAR)	215
HARNESS AS-WIRING (PRODUCT LINK)	165
HARNESS AS-WIRING (RADIATOR GUARD)	215
HARNESS AS-WIRING (WINDOW WASHER)	634

INDEX

Name	Page
HEATER GP-CAB	556
HEATER GP-FUEL	158
HEATER GP-JACKET WATER	160
HOOD GP	330
HOSE-RADIATOR	84
HOUSING & REGULATOR GP–WATER TEMPERATURE REGULATOR	83
HOUSING AS-FLYWHEEL	41
HOUSING GP-FILTER	255
HOUSING GP-FLYWHEEL	42
HOUSING GP-FRONT	44
HOUSING GP-SEAT SUSPENSION	557
HYDRAULIC AR	428

I

IDLER GP-FRONT–COLD WEATHER	356
IDLER GP-TRACK	357 358
IDLER GP-TRACK–COLD WEATHER	359
INJECTOR GP-FUEL	119
INSTALLATION AR	7
INSTALLATION GP-COMMUNICATION–PRODUCT LINK 321SR	163
INSTALLATION GP-COMMUNICATION–PRODUCT LINK CELLULAR	161
INSTALLATION GP-COMMUNICATION–PRODUCT LINK CELLULAR, CHINA	165
INSTALLATION GP-RADIO	559
INSTRUMENT GP	560 563

K

KEY (BATTERY DISCONNECT)	201
KNOB GP	566

L

LAMP (24-VOLT)	168 563 597
LAMP (24-VOLT) (PANEL)	560
LAMP GP-DOME	168
LAMP GP-FLOOD	169
LAMP-HALOGEN (24-VOLT, 70-WATT)	169
LIFTING GP-ENGINE	45
LIGHTING GP-FLOOD–CYLINDER, FUEL TANK	172
LIGHTING GP-FLOOD–ROPS	176
LIGHTING GP-FLOOD–ROPS, FUEL TANK, CYLINDER	174
LIGHTING GP-FLOOD–SWEEPS	170
LIGHTING GP-RIPPER	178
LINER GP-CAB	567 569
LINES GP-AIR	104
LINES GP-AIR–ATAAC	101
LINES GP-AIR CONDITIONER	578
LINES GP-AIR CONDITIONER–ROPS MOUNTED	571
LINES GP-AIR CONDITIONER–UNDERHOOD	575
LINES GP-DRAIN	259
LINES GP-ENGINE OIL	72
LINES GP-FUEL	120 122
LINES GP-HEATER	579
LINES GP-LIFT CYLINDER	429
LINES GP-PILOT	433 435
LINES GP-PILOT–RIPPER	431
LINES GP-POWER TRAIN OIL	260
LINES GP-PUMP	438
LINES GP-RIPPER	443 444
LINES GP-TILT CYLINDER	446
LINES GP-TILT CYLINDER–DUAL	448 450
LINES GP-TURBOCHARGER OIL	73
LINES GP-WATER	84
LINK AS-TRACK	360 361 362
LINK GP-STABILIZER	507 508
LITERATURE GP	1 2 3 533
LOCK GP	597
LUBRICATION GP-PIVOT SHAFT	363

M

MANIFOLD GP-CONTROL	452
MANIFOLD GP-EXHAUST	105
MANIFOLD GP-VALVE	453
MIRROR GP-REAR VIEW	581 582
MODULE GP-DISPLAY (INSTRUMENT CLUSTER)	560 563 597
MOTOR GP-ELECTRIC (CONDENSER BLOWER MOTOR)	541
MOTOR GP-PISTON–STEERING	391
MOTOR GP-WINDOW WIPER–DOOR, LH	585
MOTOR GP-WINDOW WIPER–DOOR, RH	586
MOTOR GP-WINDOW WIPER–FRONT	583

INDEX

Name	Page
MOTOR GP-WINDOW WIPER–REAR	584
MOUNTING GP-ALTERNATOR	46
MOUNTING GP-ANTENNA–GRADE CONTROL	587
MOUNTING GP-CAB	588
MOUNTING GP-CARRIER ROLLER	365
MOUNTING GP-CYLINDER	454
MOUNTING GP-ENGINE	47
MOUNTING GP-FAN DRIVE	48
MOUNTING GP-FINAL DRIVE	266
MOUNTING GP-GRADE CONTROL	180
MOUNTING GP-MONITOR–GRADE CONTROL	589 590
MOUNTING GP-PLATFORM	591
MOUNTING GP-RIPPER	670
MOUNTING GP-ROPS	592
MOUNTING GP-TRANSMISSION	267
MUFFLER GP	106

O

OIL CHANGE GP-HIGH SPEED	74
OPERATOR AR	593
ORIFICE AS-AIR CONDITIONER	571

P

PADLOCK GP	122 158 298 389 533
PAN GP-BACKREST–CLOTH	594
PAN GP-BACKREST–LUMBAR	595
PAN GP-BACKREST–VINYL	596
PAN GP-OIL–ENGINE	49
PANEL GP-FUSE	181
PANEL GP-INSTRUMENT–OPEN ROPS	597
PISTON & ROD GP	50
PLANETARY GP-TRANSMISSION	269
PLATE & FILM GP	677 679 682 684
PLATE & FILM GP–CHINESE	681
PLATE-IDENTIFICATION	681
PLATE-INSTRUCTION (AIR CONDITIONER)	677 679 682
PLATE-SERIAL NUMBER (BLADE)	503 505
PLATE-SERIAL NUMBER (RIPPER)	671
PLATE-SERIAL NUMBER (TRANSMISSION)	234
PLATE-WARNING (HIGH PRESSURE CYLINDER)	342 345 348
PLATE-WARNING (RECOIL SPRING)	342 345 348
PLATE-WARNING (ROPS, FOPS, READ OMM)	533
PLATFORM GP	600
PLATFORM GP-OPERATOR	603
PLATFORM GP-OPERATOR–OPEN ROPS	601
PLUG GP-ENGINE	51
PLUG-DRAIN	342 345 348
PLUG-DRAIN (HYDRAULIC TANK OIL)	459
PLUG-DRAIN (TRANSMISSION CASE)	301
PLUG-DRAIN (TRANSMISSION)	245
PLUG-MAGNETIC	29
PLUG-MAGNETIC (FINAL DRIVE OIL FILL)	249
PLUG-MAGNETIC (FINAL DRIVE, OIL FILL, CHECK)	247 251 253
POWER TRAIN AR	279
PRECLEANER AR–WITH PRESCREEN	107
PRECLEANER GP–WITH PRESCREEN	108
PRESSURIZER GP-CAB	607
PULLEY GP-FAN & ALT DRIVE	52 54
PUMP & MOUNTING GP–IMPLEMENT, STEERING	455
PUMP & MTG GP-UNIT INJ HYD	125
PUMP GP-ENGINE OIL	76
PUMP GP-FUEL INJECTION	127
PUMP GP-FUEL PRIMING	128
PUMP GP-FUEL TRANSFER	129
PUMP GP-GEAR–POWER TRAIN	280 281
PUMP GP-PISTON–IMPLEMENT, STEERING	456
PUMP GP-UNIT INJECTOR HYD	129
PUMP GP-WATER	86 87 88
PUSH ARM GP–LH	509
PUSH ARM GP–RH	510
PUSH ARM GP-STABILIZER	511 512

R

RADIATOR GP	89 91 92

INDEX

Name	Page
RECLINER GP-SEAT	609, 610
REGULATOR AS-VOLTAGE (24-VOLT) (ALTERNATOR)	135
REGULATOR GP-FUEL PRESSURE	131
REGULATOR-TEMPERATURE (92-DEG C) (WATER, COOLANT)	83
REGULATOR-WATER TEMPERATURE (98-DEG C)	5
RELAY AS (24-VOLT)	560, 597
RELAY AS (24-VOLT) (ALARM)	563
RELAY AS (24-VOLT) (CONDENSER FAN MOTOR)	541
RELAY AS (24-VOLT) (WINCH)	219
RIPPER AR	671
RIPPER GP	672
ROCKER ARM GP–EXHAUST	56
ROCKER ARM GP–INLET	57
ROD GP	611
ROLLER AR-TRACK	366
ROLLER AR-TRACK CARRIER	367
ROLLER GP-TRACK CARRIER	368, 370
ROLLER GP-TRACK-DOUBLE FLANGE	371, 372, 375
ROLLER GP-TRACK-DOUBLE FLANGE–COLD WEATHER	373, 374
ROLLER GP-TRACK-SINGLE FLANGE	376, 377
ROLLER GP-TRACK-SINGLE FLANGE–COLD WEATHER	378, 379
ROPS GP	612, 613
ROTATING GP-MOTOR–STEERING	392

S

Name	Page
SCREEN (IMPLEMENT PILOT OIL)	452
SCREEN AS	615
SCREEN AS (HYDRAULIC TANK)	459
SCREEN AS (TORQUE CONVERTER SCAVENGE)	260
SCREEN GP-MAGNETIC (POWER TRAIN)	283
SCREEN GP-MAGNETIC–TRANSMISSION	283
SCREEN GP-PROTECTION–REAR	615, 616
SCREEN-SUCTION (POWER TRAIN)	283
SCREEN-SUCTION (TRANSMISSION SCAVENGE)	234
SEAL GP-CRANKSHAFT	58, 59
SEAL GP-DUO-CONE	247, 249, 356, 357, 358, 359, 368, 373
SEAL-CRANKSHAFT (FRONT)	58
SEAT BELT GP (RETRACTABLE, 3-IN)	619, 623
SEAT GP–CLOTH	617, 619, 625
SEAT GP–CLOTH, AIR	624
SEAT GP–VINYL	621, 623
SEAT GP-SUSPENSION–CLOTH	627
SEAT GP-SUSPENSION–CLOTH, AIR	628
SEAT GP-SUSPENSION–VINYL	626, 629
SEGMENT GP-SPROCKET	284
SENDER AS-FUEL LEVEL	132
SENSOR AS-PRESSURE (ENGINE OIL)	183
SENSOR GP-ENGINE	11, 183
SENSOR GP-POSITION	184
SENSOR GP-POSITION (ROTARY) (DECELERATOR PEDAL)	543
SENSOR GP-PRESSURE	185, 186, 187, 188, 189
SENSOR GP-PRESSURE (AIR INLET MANIFOLD)	183
SENSOR GP-PRESSURE (ATMOSPHERIC)	183
SENSOR GP-PRESSURE (FUEL)	120
SENSOR GP-PRESSURE (IMPLEMENT PILOT PRESSURE)	215
SENSOR GP-PRESSURE (INJECTION ACTUATION)	183
SENSOR GP-PRESSURE (TURBOCHARGER INLET)	141
SENSOR GP-SPEED	190
SENSOR GP-SPEED (ENGINE TIMING)	183
SENSOR GP-SPEED–ENGINE TIMING	190
SENSOR GP-TEMPERATURE	191, 192, 193
SENSOR GP-TEMPERATURE (HYDRAULIC OIL TEMP)	141
SENSOR GP-TEMPERATURE (TRANSMISSION SUMP)	210
SERVICE CENTER GP	685

INDEX

Name	Page
SHAFT GP-DRIVE	285
SHIELD GP-EXHAUST	110
SOFTWARE GP-COMMUNICATION	151, 153
SOFTWARE GP-COMMUNICATION (PRODUCT LINK 121SR)	156
SOFTWARE GP-COMMUNICATION (PRODUCT LINK 300)	156
SOFTWARE GP-COMMUNICATION (PRODUCT LINK 522)	153
SOFTWARE GP-ELECTRONIC	152
SOLENOID AS-STARTING MOTOR (24-VOLT)	198
STARTING AID GP-ETHER	194
STARTING MOTOR GP-ELECTRIC	196, 197
STEP GP	331
STOCKPILE AR	8
STRAINER AS-OIL (HYDRAULIC TANK)	459
STRAINER-FUEL (TANK)	133
SUPPORT GP-ENGINE	60
SUSPENSION GP-SEAT	630
SUSPENSION GP-SEAT–AIR	632
SWEEP AR	332
SWEEP GP	333
SWITCH AS (BACKUP ALARM)	385
SWITCH AS (NEUTRAL START)	385
SWITCH AS-PRESSURE (AIR CONDITIONER)	571
SWITCH AS-PRESSURE (REFRIGERANT)	575
SWITCH AS-PUSH BUTTON (IMPLEMENT)	547
SWITCH AS-ROCKER (24-VOLT) (AIR CONDITIONER CONTROL)	564
SWITCH AS-ROCKER (24-VOLT) (AIR CONDITIONER)	561
SWITCH AS-ROCKER (24-VOLT) (FLOODLIGHTS, REAR)	563
SWITCH AS-ROCKER (FLOODLIGHTS)	597
SWITCH AS-ROCKER (FLOODLIGHTS, REAR)	560
SWITCH AS-ROCKER (HYDRAULIC LOCKOUT)	219
SWITCH AS-ROCKER (THROTTLE)	219
SWITCH AS-ROTARY (BLOWER FAN SPEED)	560
SWITCH AS-ROTARY (DOOR, LH)	567
SWITCH AS-ROTARY (DOOR, RH)	567
SWITCH AS-ROTARY (FAN SPEED)	563
SWITCH AS-ROTARY (FRONT)	567
SWITCH AS-ROTARY (LIGHT SWITCH)	597
SWITCH AS-ROTARY (LIGHTS)	560, 563
SWITCH AS-ROTARY (REAR)	567
SWITCH AS-START (KEY)	560, 563, 597
SWITCH GP-BYPASS– POWER TRAIN OIL FILTER	200
SWITCH GP-DISCONNECT–BATTERY	201
SWITCH GP-MAGNETIC (24-VOLT) (MAIN RELAY)	181
SWITCH GP-MAGNETIC–MAIN RELAY	203
SWITCH GP-MAGNETIC–START RELAY	202
SWITCH GP-PUSH BUTTON (HORN)	219
SWITCH GP-PUSH BUTTON (PRIMING PUMP)	141
SWITCH GP-PUSH BUTTON–HORN	204

T

Name	Page
TANK & FILTER GP-HYDRAULIC	459
TANK & MTG GP-HYDRAULIC	463
TANK GP-COOLANT	94
TANK GP-FUEL	132, 133
TANK GP-WATER	94
TANK GP-WINDOW WASHER	634, 636
TOOTH GP-RIPPER	673
TORQUE CONVERTER & HOUSING GP	286
TORQUE CONVERTER GP	288, 290
TRACK ADJUSTER & RECOIL GP	380
TRACK GP–2-REQUIRED	381, 382, 383
TRACK GP–2-REQUIRED, HEAVY-DUTY	382
TRANSMISSION AR	292
TRUNNION GP-BULLDOZER	503, 505
TRUNNION GP-ENGINE	61
TURBOCHARGER GP	111, 112

U

Name	Page
UNDERCARRIAGE AR	383, 384
UNIVERSAL JOINT GP	285

V

Name	Page
V-BELT (FAN DRIVE)	54
V-BELT (REFRIGERANT COMPRESSOR)	535
V-BELT SET (INCLUDES 3-BELTS)	52, 54
VALVE & LINES GP-BRAKE	394
VALVE & MTG GP-BULLDOZER– GRADE CONTROL	464
VALVE & MTG GP-CONTROL–BRAKE	397
VALVE & MTG GP-COUNTERBALANCE	465

INDEX

Name	Page
VALVE & MTG GP-IMPLEMENT CONT	466
VALVE AS-PRESSURE RELIEF (REFRIGERANT COMPRESSOR)	534
VALVE GP-BANK 3–BULLDOZER, STEERING	467
VALVE GP-BANK 5– BULLDOZER, RIPPER, STEERING	469
VALVE GP-BRAKE (PARKING)	394
VALVE GP-BRAKE CONTROL	399
VALVE GP-CHECK	471
VALVE GP-CONTROL–BULLDOZER LIFT	472
VALVE GP-CONTROL–BULLDOZER TILT	475
VALVE GP-CONTROL–RIPPER LIFT, TILT	477
VALVE GP-CONTROL–STEERING	401
VALVE GP-COUNTERBALANCE	479
VALVE GP-ETHER STARTING	205
VALVE GP-FLOW CONTROL	401
VALVE GP-FLUID SAMPLING–ENGINE OIL	77
VALVE GP-PILOT–BULLDOZER	484
VALVE GP-PILOT–BULLDOZER LIFT, TILT	482
VALVE GP-PILOT CARTRIDGE– BULLDOZER LIFT, LOWER	486
VALVE GP-PILOT CARTRIDGE–RIPPER– BLADE TILT RIGHT, LEFT	487
VALVE GP-PILOT–RIPPER	480
VALVE GP-PRESSURE REDUCING– IMPLEMENT PILOT OIL	488
VALVE GP-PRIORITY– LUBRICATION DISTRIBUTION	293
VALVE GP-PUMP CONTROL– PRESSURE, FLOW COMPENSATOR– IMPLEMENT, STEERING	489
VALVE GP-QUICK-DROP	491 492
VALVE GP-RELIEF–CROSSOVER	495
VALVE GP-RELIEF–IMPLEMENT PILOT OIL	498
VALVE GP-RELIEF–MAIN	494
VALVE GP-RELIEF–PILOT OIL PRESSURE	496 497
VALVE GP-RELIEF– TORQUE CONVERTER OUTLET	294
VALVE GP-SELECTOR & PRESS CONT	295
VALVE GP-SHUTOFF (COOLANT)	579
VALVE GP-SHUTTLE	499
VALVE GP-SOLENOID	500 501 502
VALVE GP-SOLENOID (BLADE CONTROL)	464
VALVE GP-SOLENOID (BOOST)	464
VALVE GP-SOLENOID (HYDRAULIC LOCKOUT)	452
VALVE GP-TRANSMISSION CONTROL	297
VALVE MECHANISM GP	62 63
VALVE-BREAKER RELIEF (HYDRAULIC TANK)	463

W

Name	Page
WASHER GP-WINDOW	637
WINDOW GP-CAB–LH	642 645
WINDOW GP-CAB–RH	641 647
WINDOW GP-CAB–SLIDING, LH	640 644
WINDOW GP-CAB–SLIDING, RH	639 643
WINDOW GP-SLIDING–LH	648
WINDOW GP-SLIDING–RH	648
WIPER GP-WINDOW	649
WIPER PIVOT GP	651
WIRING GP-BOX	206
WIRING GP-ELECTRONIC CONTROL	208
WIRING GP-ENGINE	210
WIRING GP-GRADE CONTROL	215
WIRING GP-PLATFORM	219

Y

Name	Page
YOKE GP	64

MEMORANDA

MACHINE ARRANGEMENT

313-3338 CHASSIS AR

S/N: DSH1-UP

PART OF 313-3337 GENERAL AR

SMCS-7000 **i04775800**

NOTE	PART NUMBER	QTY	PART NAME 1 2 3 4 5 6 (PRODUCT LEVEL)	SEE PAGE
Y	*321-5816*	1	BATTERY & WIRING GP	141
Y	*386-1151*	1	BOX GP-BATTERY	298
Y	*308-5435*	1	CASE & FRAME GP	301
Y	*374-4179*	1	COVER GP-CAB	549
Y	*373-9494*	1	CYLINDER & LINES GP (RH)	408
Y	*373-9495*	1	CYLINDER & LINES GP (LH)	410
Y	*387-2578*	1	ENCLOSURE GP	306
Y	*331-9273*	1	ENCLOSURE GP-ENGINE	308
Y	*375-6723*	1	FENDER GP	312
Y	*331-1334*	1	GUARD GP-BOTTOM	319
Y	*323-5991*	1	GUARD GP-RADIATOR	328
Y	*374-0785*	1	LIGHTING GP-FLOOD	172
Y	*358-8129*	1	LINES GP-AIR CONDITIONER	575
Y	*323-0927*	1	LINES GP-FUEL	122
Y	*324-8985*	1	LINES GP-HEATER	579
Y	*164-2879*	1	LUBRICATION GP-PIVOT SHAFT	363
Y	*373-9491*	1	MOUNTING GP-CYLINDER	454
Y	*374-4178*	1	MOUNTING GP-PLATFORM	591
Y	*163-8744*	1	MOUNTING GP-ROPS	592
Y	*380-7900*	1	OPERATOR AR	593
Y	*329-2694*	1	PLATE & FILM GP	677
Y	*163-8746*	1	ROPS GP	612
Y	*223-2205*	1	SEAT GP	625
Y	*386-1150*	1	TANK GP-FUEL	132
Y	*387-0556*	1	TANK GP-WINDOW WASHER	636
	6V-1970	1	LITERATURE GP	
	5P-7958	1	SLEEVE-CABLE SPLICE	
	5P-8500	2	KEY	

Y-SEPARATE ILLUSTRATION

<END>

MACHINE ARRANGEMENT

313-3759 CHASSIS AR

S/N: DLN1-UP

PART OF 313-3758 GENERAL AR

SMCS-7000 **i04730310**

NOTE	PART NUMBER	QTY	PART NAME 1 2 3 4 5 6 (PRODUCT LEVEL)	SEE PAGE
Y	*321-5816*	1	BATTERY & WIRING GP	141
Y	*386-1151*	1	BOX GP-BATTERY	298
Y	*308-5435*	1	CASE & FRAME GP	301
Y	*374-4179*	1	COVER GP-CAB	549
Y	*373-9497*	1	CYLINDER & LINES GP-LIFT (RH)	412
Y	*373-9498*	1	CYLINDER & LINES GP-LIFT (LH)	414
Y	*387-2578*	1	ENCLOSURE GP	306
Y	*331-9273*	1	ENCLOSURE GP-ENGINE	308
Y	*375-6723*	1	FENDER GP	312
Y	*331-1334*	1	GUARD GP-BOTTOM	319
Y	*323-5991*	1	GUARD GP-RADIATOR	328
Y	*374-0785*	1	LIGHTING GP-FLOOD	172
Y	*358-8129*	1	LINES GP-AIR CONDITIONER	575
Y	*323-0927*	1	LINES GP-FUEL	122
Y	*324-8985*	1	LINES GP-HEATER	579
Y	*164-2879*	1	LUBRICATION GP-PIVOT SHAFT	363
Y	*373-9491*	1	MOUNTING GP-CYLINDER	454
Y	*374-4178*	1	MOUNTING GP-PLATFORM	591
Y	*163-8744*	1	MOUNTING GP-ROPS	592
Y	*380-7900*	1	OPERATOR AR	593
Y	*329-2697*	1	PLATE & FILM GP	679
Y	*163-8746*	1	ROPS GP	612
Y	*223-2205*	1	SEAT GP	625
Y	*386-1150*	1	TANK GP-FUEL	132
Y	*387-0556*	1	TANK GP-WINDOW WASHER	636
	6V-1970	1	LITERATURE GP	
	5P-7958	1	SLEEVE-CABLE SPLICE	
	5P-8500	2	KEY	

Y-SEPARATE ILLUSTRATION

<END>

MACHINE ARRANGEMENT

379-6225 CHASSIS AR

S/N: DJR1-UP

PART OF 379-6224 GENERAL AR

SMCS-7000 **i04769632**

NOTE	PART NUMBER	QTY	PART NAME 1 2 3 4 5 6 (PRODUCT LEVEL)	SEE PAGE
Y	*321-5816*	1	BATTERY & WIRING GP	141
Y	*386-1151*	1	BOX GP-BATTERY	298
Y	*308-5435*	1	CASE & FRAME GP	301
Y	*374-4179*	1	COVER GP-CAB	549
Y	*373-9494*	1	CYLINDER & LINES GP (RH)	408
Y	*373-9495*	1	CYLINDER & LINES GP (LH)	410
Y	*387-2578*	1	ENCLOSURE GP	306
Y	*331-9273*	1	ENCLOSURE GP-ENGINE	308
Y	*375-6723*	1	FENDER GP	312
Y	*331-1334*	1	GUARD GP-BOTTOM	319
Y	*323-5991*	1	GUARD GP-RADIATOR	328
Y	*374-0785*	1	LIGHTING GP-FLOOD	172
Y	*358-8129*	1	LINES GP-AIR CONDITIONER	575
Y	*323-0927*	1	LINES GP-FUEL	122
Y	*324-8985*	1	LINES GP-HEATER	579
Y	*164-2879*	1	LUBRICATION GP-PIVOT SHAFT	363
Y	*373-9491*	1	MOUNTING GP-CYLINDER	454
Y	*374-4178*	1	MOUNTING GP-PLATFORM	591
Y	*163-8744*	1	MOUNTING GP-ROPS	592
Y	*380-7900*	1	OPERATOR AR	593
Y	*377-5058*	1	PLATE & FILM GP	682
Y	*163-8746*	1	ROPS GP	612
Y	*223-2205*	1	SEAT GP	625
Y	*386-1150*	1	TANK GP-FUEL	132
Y	*387-0556*	1	TANK GP-WINDOW WASHER	636
	6V-1970	1	LITERATURE GP	
	5P-7958	1	SLEEVE-CABLE SPLICE	
	5P-8500	2	KEY	

Y-SEPARATE ILLUSTRATION

<END>

375-9603 COLD WEATHER AR

S/N: DSH1-UP

PART OF 378-2270 COLD WEATHER AR

AN ATTACHMENT

SMCS-7000 **i04629311**

NOTE	PART NUMBER	QTY	PART NAME 1 2 3 4 5 6 (PRODUCT LEVEL)	SEE PAGE
Y	*141-4942*	2	DRIVE GP-FINAL	251
Y	**248-5316**	4	IDLER GP-FRONT	356
Y	*248-5318*	6	ROLLER GP-TRACK-DOUBLE FLANGE	374
Y	*248-5320*	8	ROLLER GP-TRACK-SINGLE FLANGE	379
	158-7864	1	FILM-IDENTIFICATION (HYDRAULIC OIL)	
			(ON TOP OF HYDRAULIC TANK ADJACENT TO FILLER SPOUT)	

Y-SEPARATE ILLUSTRATION

<END>

MACHINE ARRANGEMENT

378-2269 COLD WEATHER AR

S/N: DSH1-UP; DLN1-UP; DJR1-UP

AN ATTACHMENT

SMCS-7000 **i04769321**

NOTE	PART NUMBER	QTY	PART NAME 1 2 3 4 5 6 (PRODUCT LEVEL)	SEE PAGE
Y	*112-9051*	1	BATTERY GP (HEAVY-DUTY)	147
Y	*377-4980*	1	FAN GP-REVERSIBLE	81
Y	*380-7185*	1	HEATER GP-FUEL	158
Y	*380-3504*	1	HEATER GP-JACKET WATER	160
Y	*377-9734*	1	HOOD GP	330
Y	*374-0773*	1	PULLEY GP-FAN & ALT DRIVE	54
Y	*327-9900*	1	STARTING AID GP-ETHER	194
Y-SEPARATE ILLUSTRATION				

<END>

378-2270 COLD WEATHER AR—EXTREME SERVICE

S/N: DSH1-UP

FOR USE WITH 378-2269—PAGE 4

AN ATTACHMENT

SMCS-7000 **i04772026**

NOTE	PART NUMBER	QTY	PART NAME 1 2 3 4 5 6 (PRODUCT LEVEL)	SEE PAGE
Y	*387-0554*	1	COLD WEATHER AR	6
Y	*375-9603*	1	COLD WEATHER AR	3
Y-SEPARATE ILLUSTRATION				

<END>

384-9811 COLD WEATHER AR

S/N: DLN1-UP

PART OF 385-6481 COLD WEATHER AR

AN ATTACHMENT

SMCS-7000 **i04769331**

NOTE	PART NUMBER	QTY	PART NAME 1 2 3 4 5 6 (PRODUCT LEVEL)	SEE PAGE
Y	*248-8646*	2	DRIVE GP-FINAL	253
Y	**248-5316**	4	IDLER GP-FRONT	356
Y	*248-5318*	6	ROLLER GP-TRACK-DOUBLE FLANGE	374
Y	*248-5320*	8	ROLLER GP-TRACK-SINGLE FLANGE	379
	158-7864	1	FILM-IDENTIFICATION (HYDRAULIC OIL)	
			(ON TOP OF HYD TANK - ADJACENT TO HYD TANK FILLER SPOUT)	
Y-SEPARATE ILLUSTRATION				

<END>

MACHINE ARRANGEMENT

384-9812 COLD WEATHER AR

S/N: DJR1-UP
PART OF 385-6480 COLD WEATHER AR
AN ATTACHMENT

SMCS-7000 **i04769333**

NOTE	PART NUMBER	QTY	PART NAME 1 2 3 4 5 6 (PRODUCT LEVEL)	SEE PAGE
Y	*141-4942*	2	DRIVE GP-FINAL	251
Y	**385-0957**	4	IDLER GP-TRACK	359
Y	*248-5318*	8	ROLLER GP-TRACK-DOUBLE FLANGE	374
Y	*248-5320*	8	ROLLER GP-TRACK-SINGLE FLANGE	379
	158-7864	1	FILM-IDENTIFICATION (HYDRAULIC OIL)	
			(ON TOP OF HYD TANK - ADJACENT TO HYD TANK FILLER SPOUT)	

Y-SEPARATE ILLUSTRATION

<END>

385-6480 COLD WEATHER AR—EXTREME SERVICE

S/N: DJR1-UP
FOR USE WITH 378-2269—PAGE 4
AN ATTACHMENT

SMCS-7000 **i04708989**

NOTE	PART NUMBER	QTY	PART NAME 1 2 3 4 5 6 (PRODUCT LEVEL)	SEE PAGE
Y	*327-9363*	1	CAB AR	519
Y	*384-9812*	1	COLD WEATHER AR	5
	247-7133	1	REGULATOR-WATER TEMPERATURE (98-DEG C)	

Y-SEPARATE ILLUSTRATION

<END>

385-6481 COLD WEATHER AR—EXTREME SERVICE

S/N: DLN1-UP
FOR USE WITH 378-2269—PAGE 4
AN ATTACHMENT

SMCS-7000 **i04709180**

NOTE	PART NUMBER	QTY	PART NAME 1 2 3 4 5 6 (PRODUCT LEVEL)	SEE PAGE
Y	*327-9363*	1	CAB AR	519
Y	*384-9811*	1	COLD WEATHER AR	4
	247-7133	1	REGULATOR-WATER TEMPERATURE (98-DEG C)	

Y-SEPARATE ILLUSTRATION

<END>

MACHINE ARRANGEMENT

387-0554 COLD WEATHER AR

S/N: DSH1-UP
PART OF 378-2270 COLD WEATHER AR
AN ATTACHMENT

SMCS-7000 **i04772027**

NOTE	PART NUMBER	QTY	PART NAME 1 2 3 4 5 6 (PRODUCT LEVEL)	SEE PAGE
Y	*387-0549*	1	BOX GP-BATTERY	300
Y	*387-0547*	1	CAB AR	521
Y	*375-4845*	1	CONTROL GP-GOVERNOR & BRAKE	543
Y	*380-7870*	1	CONTROL GP-STEERING & XMSN	389
Y	*387-0548*	1	FILM GP	677
Y	*317-9070*	1	INSTRUMENT GP	560
Y	*317-4155*	1	PLATFORM GP-OPERATOR	603
Y	*327-9902*	1	WIRING GP-PLATFORM	219

Y-SEPARATE ILLUSTRATION

<END>

313-3337 GENERAL AR

S/N: DSH1-UP

SMCS-7000 **i04730091**

NOTE	PART NUMBER	QTY	PART NAME 1 2 3 4 5 6 (PRODUCT LEVEL)	SEE PAGE
Y	*313-3338*	1	CHASSIS AR	1
Y	**318-1906**	1	ENGINE AR-COMPLETE	10
Y	*313-3756*	1	HYDRAULIC AR	428
Y	*313-3757*	1	INSTALLATION AR	7
Y	*313-3755*	1	POWER TRAIN AR	279
Y	*379-3579*	1	UNDERCARRIAGE AR	384

Y-SEPARATE ILLUSTRATION

<END>

313-3758 GENERAL AR

S/N: DLN1-UP

SMCS-7000 **i04730309**

NOTE	PART NUMBER	QTY	PART NAME 1 2 3 4 5 6 (PRODUCT LEVEL)	SEE PAGE
Y	*313-3759*	1	CHASSIS AR	2
Y	**318-1906**	1	ENGINE AR-COMPLETE	10
Y	*313-3756*	1	HYDRAULIC AR	428
Y	*313-3757*	1	INSTALLATION AR	7
Y	*314-8870*	1	POWER TRAIN AR	279
Y	*387-3578*	1	UNDERCARRIAGE AR	384

Y-SEPARATE ILLUSTRATION

<END>

MACHINE ARRANGEMENT

379-6224 GENERAL AR

S/N: DJR1-UP

SMCS-7000 **i04730251**

NOTE	PART NUMBER	QTY	PART NAME 1 2 3 4 5 6 (PRODUCT LEVEL)	SEE PAGE
Y	*379-6225*	1	CHASSIS AR	3
Y	**318-1906**	1	ENGINE AR-COMPLETE	10
Y	*313-3756*	1	HYDRAULIC AR	428
Y	*313-3757*	1	INSTALLATION AR	7
Y	*313-3755*	1	POWER TRAIN AR	279
Y	*379-3578*	1	UNDERCARRIAGE AR	383

Y-SEPARATE ILLUSTRATION

<END>

313-3757 INSTALLATION AR

S/N: DSH1-UP; DLN1-UP; DJR1-UP

PART OF 313-3337, 313-3758, 379-6224 GENERAL AR

SMCS-7000 **i04728713**

NOTE	PART NUMBER	QTY	PART NAME 1 2 3 4 5 6 (PRODUCT LEVEL)	SEE PAGE
Y	*332-4155*	1	AFTERCOOLER GP-AIR	96
Y	*206-9000*	1	AIR CLEANER GP	98
Y	*323-7992*	1	ALTERNATOR GP-CHARGING	139
Y	*324-2433*	1	COMPRESSOR GP-REFRIGERANT	535
Y	*357-7835*	1	CONDENSER & MTG GP-REFRIGERANT	539
Y	*357-7845*	1	COOLER GP-HYDRAULIC OIL	406
Y	*329-4441*	1	DRIVE GP-FAN	30
Y	*323-0932*	1	DUST EJECTOR GP	99
Y	*358-9215*	1	FAN GP-BLOWER	79
Y	*323-0935*	1	FILTER & LINES GP-FUEL	115
Y	*324-0244*	1	FUMES DISPOSAL GP	70
Y	*323-0933*	1	LINES GP-AIR	101
Y	*323-0934*	1	LINES GP-AIR	104
Y	*380-1022*	1	LINES GP-DRAIN	259
Y	*332-2967*	1	LINES GP-WATER	84
Y	*223-0556*	1	MOUNTING GP-ENGINE	47
Y	*239-3686*	1	MUFFLER GP	106
Y	*323-3269*	1	PULLEY GP-FAN & ALT DRIVE	52
Y	*377-4981*	1	RADIATOR GP	92
Y	*237-2737*	1	SHIELD GP-EXHAUST	110
Y	*209-8423*	1	STARTING MOTOR GP-ELECTRIC	196
Y	*323-3772*	1	TANK GP-WATER	94
Y	*327-9901*	1	WIRING GP-ENGINE	210
Y	*271-1482*	1	YOKE GP	64

Y-SEPARATE ILLUSTRATION

<END>

MACHINE ARRANGEMENT

378-2273 STOCKPILE AR

S/N: DSH1-UP; DLN1-UP; DJR1-UP

AN ATTACHMENT

SMCS-7000 **i04674610**

NOTE	PART NUMBER	QTY	PART NAME 1 2 3 4 5 6 (PRODUCT LEVEL)	SEE PAGE
Y	*380-9961*	1	AIR CONDITIONER AR	515
Y	*323-7444*	1	ALTERNATOR GP-CHARGING	137
Y	*377-4991*	1	FAN GP-EJECTOR	80
Y	*377-9734*	1	HOOD GP	330
Y	*375-2980*	1	LIGHTING GP-FLOOD	174
Y	*378-7488*	1	PRECLEANER AR (WITH PRESCREEN)	107
Y	*375-3127*	1	RADIATOR GP	91

Y-SEPARATE ILLUSTRATION

<END>

ENGINE ARRANGEMENT

387-8953 ENGINE AR

S/N: THX28268-UP

PART OF 318-1906 ENGINE AR-COMPLETE

SMCS-1000 **i04766574**

NOTE	PART NUMBER	QTY	PART NAME 1 2 3 4 5 6 (PRODUCT LEVEL)	SEE PAGE
Y	*385-2783*	1	ENGINE AR-CORE	11
Y	*388-9547*	1	PLATE & FILM GP	684
	361-2441	1	ELECTRONICS GP-ENGINE RATINGS	

Y-SEPARATE ILLUSTRATION

ENGINE ARRANGEMENT

318-1906 ENGINE AR-COMPLETE

S/N: THX28268-UP
193 BRAKE KW (258 BHP) AT 2100 RPM
PART OF 313-3337, 313-3758, 379-6224 GENERAL AR

SMCS-1000 **i04735089**

NOTE	PART NUMBER	QTY	PART NAME 1 2 3 4 5 6 (PRODUCT LEVEL)	SEE PAGE
Y	*246-9365*	1	CONTROL & MTG GP-ENGINE ELEK	149
Y	*238-1116*	1	COOLER GP-TRANSMISSION OIL	239
Y	*388-4887*	1	COVER GP-CYLINDER BLOCK	13
Y	*118-1727*	1	COVER GP-FRONT HOUSING (ACCESSORY DRIVE)	14
Y	*217-8669*	1	COVER GP-FRONT HOUSING	15
Y	*222-1783*	1	COVER GP-VALVE MECHANISM	16
Y	*338-2145*	1	DAMPER & PULLEY GP	28
Y	*338-5362*	1	DRAIN GP-ENGINE OIL	29
Y	*246-0599*	1	DRIVE GP-PUMP	32
Y	*338-2149*	1	ELBOW GP-AIR INLET	100
Y	*387-8953*	1	ENGINE AR	9
Y	*219-8681*	1	FASTENER GP-FRONT COVER	34
Y	*236-7315*	1	FASTENER GP-VALVE COVER	35
Y	*233-0423*	1	FASTENER GP-VALVE COVER BASE	36
Y	*389-8270*	1	FILLER GP-ENGINE OIL	65
Y	*183-2097*	1	FILTER GP-ENGINE OIL	66
Y	*241-3718*	1	FLYWHEEL GP	37
Y	*241-3719*	1	FUMES DISPOSAL GP	69
Y	*338-5335*	1	GAUGE GP-OIL LEVEL (DIPSTICK) (ENGINE)	71
Y	*165-6879*	1	GEAR GP-REAR	40
Y	*165-4461*	1	HOUSING & REGULATOR GP	83
Y	*219-8666*	1	HOUSING GP-FLYWHEEL	42
Y	*245-3262*	1	HOUSING GP-FRONT	44
Y	*338-2147*	1	LIFTING GP-ENGINE	45
Y	*329-2579*	1	LINES GP-ENGINE OIL	72
Y	*264-2014*	1	LINES GP-FUEL	120
Y	*266-9810*	1	LINES GP-TURBOCHARGER OIL	73
Y	*165-4445*	1	MANIFOLD GP-EXHAUST	105
Y	*246-0600*	1	MOUNTING GP-ALTERNATOR	46
Y	*335-8389*	1	MOUNTING GP-FAN DRIVE	48
Y	*245-3786*	1	PAN GP-OIL	49
Y	*252-1567*	1	PLUG GP-ENGINE	51
Y	*189-9306*	1	SEAL GP-CRANKSHAFT	58
Y	*166-1790*	1	SUPPORT GP-ENGINE	60
Y	*166-1792*	1	TRUNNION GP-ENGINE	61
Y	*359-1008*	1	TURBOCHARGER GP	112
Y	*198-0921*	1	VALVE GP-FLUID SAMPLING	77
Y	*235-8203*	1	WIRING GP-ELECTRONIC CONTROL	208
			PLEASE USE THE GASKET KIT LINK IN SIS OR CONTACT YOUR LOCAL DEALER FOR THE LATEST GASKET KIT INFORMATION	

Y-SEPARATE ILLUSTRATION

ENGINE ARRANGEMENT

385-2783 ENGINE AR-CORE

S/N: THX28268-UP

PART OF 387-8953 ENGINE AR

SMCS-1000 **i04743469**

NOTE	PART NUMBER	QTY	PART NAME 1 2 3 4 5 6 (PRODUCT LEVEL)	SEE PAGE
Y	*242-0674*	1	CAMSHAFT GP	12
Y	*188-3826*	1	COOLER GP-ENGINE OIL	78
Y	*164-6148*	1	CRANKSHAFT GP	17
Y	*161-3406*	1	CYLINDER BLOCK GP	20
Y	*384-5590*	1	CYLINDER HEAD GP	27
Y	*205-1321*	1	GEAR GP-FRONT	38
YR	*265-1400*	6	PISTON & ROD GP	50
Y	*220-8233*	1	PUMP & MTG GP-UNIT INJ HYD	125
Y	*195-8098*	1	PUMP GP-ENGINE OIL	76
Y	*267-9715*	6	PUMP GP-FUEL INJECTION	127
Y	*211-1812*	1	PUMP GP-WATER	86
Y	*231-1978*	1	SENSOR GP-ENGINE	183
Y	*242-0447*	1	VALVE MECHANISM GP	63

R-REMFG PART MAY BE AVAILABLE
Y-SEPARATE ILLUSTRATION

BASIC ENGINE

242-0674 CAMSHAFT GP

S/N: THX28268-UP

PART OF 385-2783 ENGINE AR-CORE

SMCS-1210 **i04017461**

NOTE	REF NO	GRAPHIC REF	PART NUMBER	QTY	PART NAME 1 2 3 4 5 6 (PRODUCT LEVEL)	SEE PAGE
	1	1	**107-7694**	1	PLATE-THRUST	
R	2	1	**242-0673**	1	CAMSHAFT AS	
	2A	1	**1B-8705**	1	KEY-WOODRUFF	
	2B	1	**224-3247**	1	GEAR (100-TEETH)	
M	3		**6V-3940**	2	BOLT (M8X1.25X25-MM)	

M-METRIC PART
R-REMFG PART MAY BE AVAILABLE

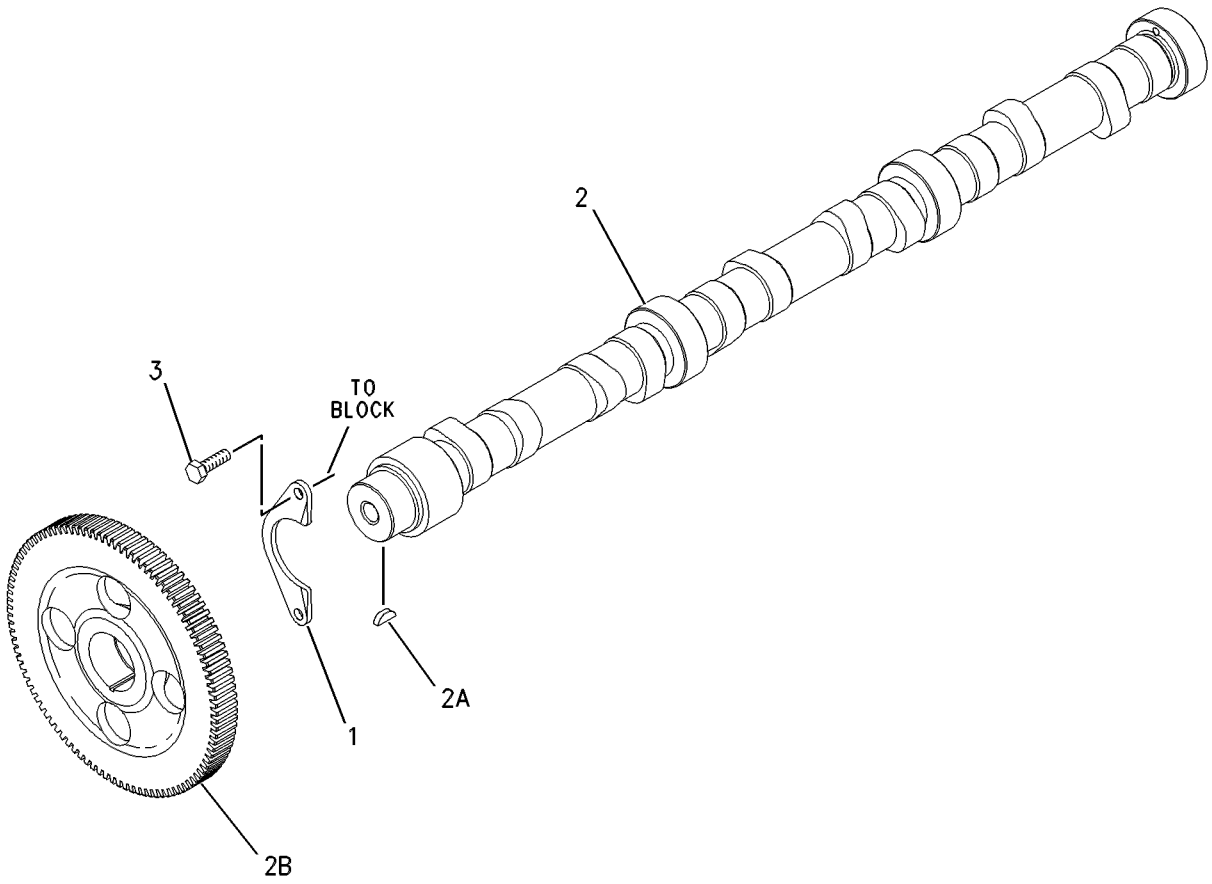

GRAPHIC #1 **<END>** g00626400

388-4887 COVER GP-CYLINDER BLOCK

S/N: THX28268-UP

PART OF 318-1906 ENGINE AR-COMPLETE

SMCS-1201 **i04735049**

NOTE	REF NO	GRAPHIC REF	PART NUMBER	QTY	PART NAME 1 2 3 4 5 6 (PRODUCT LEVEL)	SEE PAGE
	1	1	**5N-4185**	1	WASHER-SPECIAL	
	2	1	**9M-1974**	11	WASHER-HARD (8.8X16X2-MM THK)	
	3	1	**205-5285**	1	GASKET	
	4	1	**215-4441**	1	COVER	
	5	1	**240-0041**	1	BREATHER AS (CRANKCASE)	
M	6	1	**3E-8005**	1	BOLT (M8X1.25X160-MM)	
M	7	1	**6V-3918**	2	BOLT (M8X1.25X50-MM)	
M	8	1	**6V-3940**	9	BOLT (M8X1.25X25-MM)	
	9	1	**9F-4446**	1	SEAL-O-RING	

M-METRIC PART

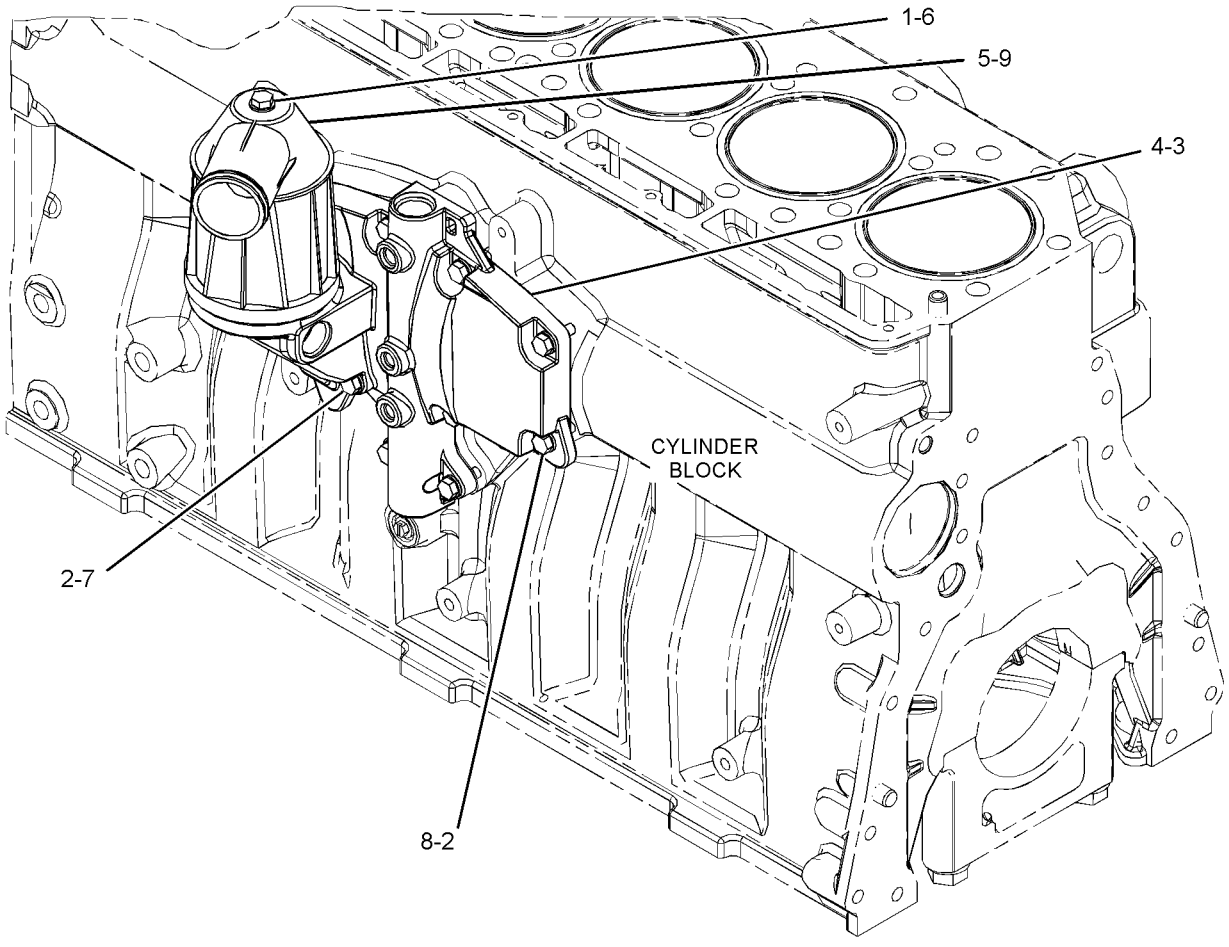

GRAPHIC #1 **<END>** g02840657

118-1727 COVER GP-FRONT HOUSING–ACCESSORY DRIVE

S/N: THX28268-UP

REQUIRED ON ENGINES WITHOUT FACTORY INSTALLED AIR COMPRESSOR

PART OF 318-1906 ENGINE AR-COMPLETE

SMCS-1151, 1166 **i04017411**

NOTE	REF NO	GRAPHIC REF	PART NUMBER	QTY	PART NAME 1 2 3 4 5 6 (PRODUCT LEVEL)	SEE PAGE
	1	1	**5P-8245**	4	WASHER-HARD (13.5X25.5X3-MM THK)	
M	2	1	**6V-5696**	2	BOLT (M12X1.75X80-MM)	
	3	1	**4W-2026**	1	COVER	
	4	1	**135-9819**	1	SEAL-INTEGRAL	
M	5	1	**6V-8149**	2	NUT (M12X1.75-THD)	

M-METRIC PART

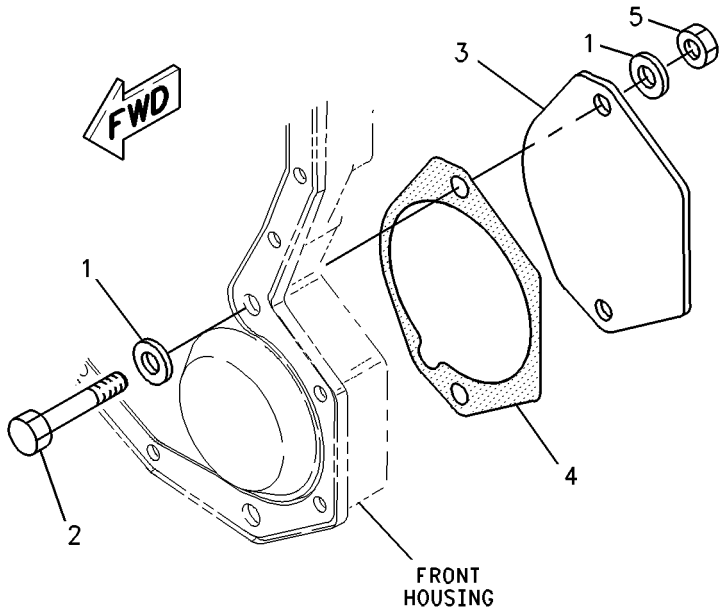

GRAPHIC #1 **<END>** g00897312

217-8669 COVER GP-FRONT HOUSING

S/N: THX28268-UP

PART OF 318-1906 ENGINE AR-COMPLETE

SMCS-1151, 1166 **i04017473**

NOTE	REF NO	GRAPHIC REF	PART NUMBER	QTY	PART NAME 1 2 3 4 5 6 (PRODUCT LEVEL)	SEE PAGE
	1	1	**209-0760**	1	COVER AS-FRONT	
	1A	1	**126-1757**	2	WASHER (10.85X19.3X1.27-MM THK)	
	1B	1	**136-0822**	2	STUD	
	2	1	**209-0762**	1	GASKET AS	

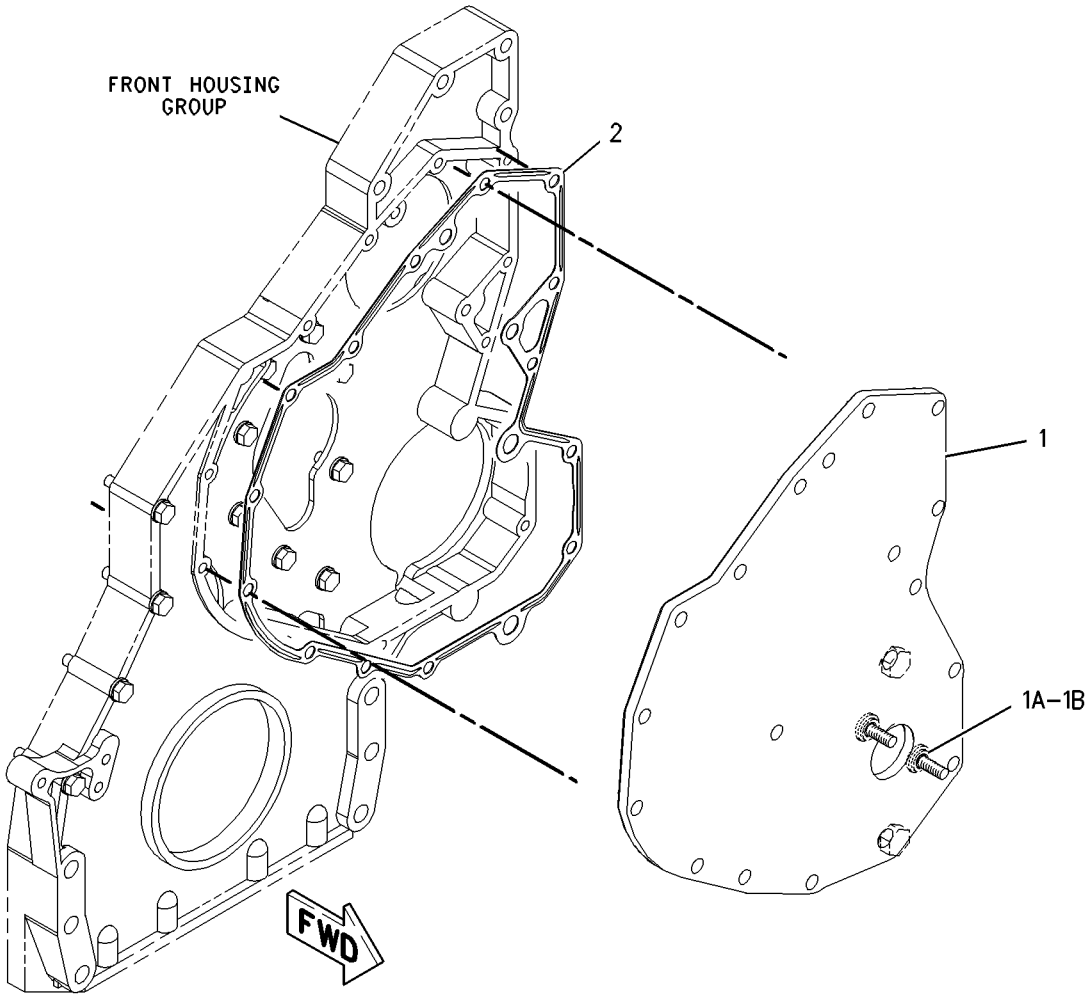

GRAPHIC #1 **<END>** g00849279

BASIC ENGINE

222-1783 COVER GP-VALVE MECHANISM

S/N: THX28268-UP

PART OF 318-1906 ENGINE AR-COMPLETE

SMCS-1107 **i04019311**

NOTE	REF NO	GRAPHIC REF	PART NUMBER	QTY	PART NAME 1 2 3 4 5 6 (PRODUCT LEVEL)	SEE PAGE
	1	1	**358-7876**	11	SLEEVE-SPACER	
	2	1	**358-7872**	1	COVER GP-VALVE MECHANISM	
	2A	1	**285-4106**	1	SEAL-VALVE COVER	
	3	1	**353-6988**	1	BASE GP-VALVE COVER	
	3A	1	**268-3490**	1	SEAL-VALVE COVER	
	4	1	**204-4444**	1	BREATHER AS (CRANKCASE)	
		1	**160-0526**	1	SEAL-O-RING	
		1	**185-3159**	1	FILTER ELEMENT-BREATHER (CRANKCASE)	
		1	**341-0979**	1	SEAL-O-RING	

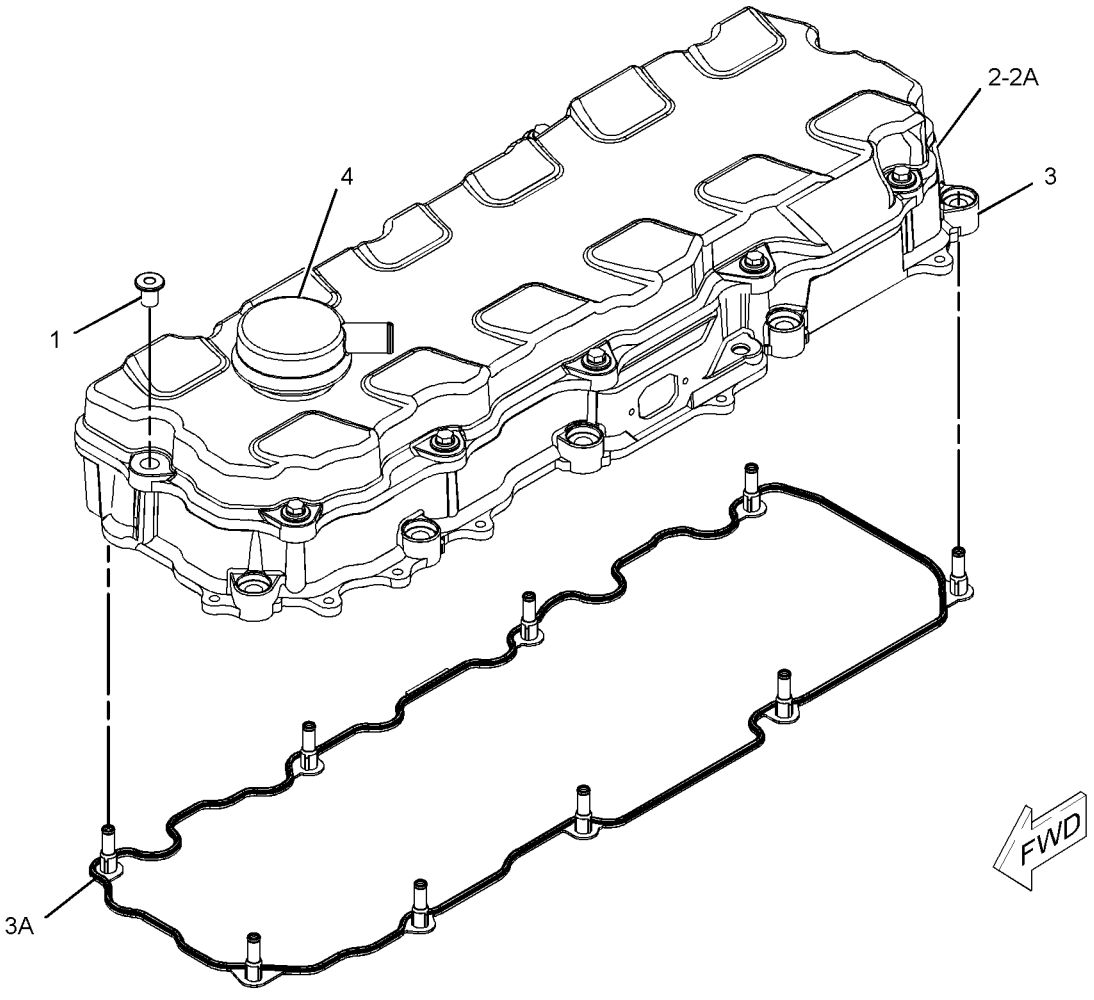

GRAPHIC #1 **<END>** g01304662

BASIC ENGINE

164-6148 CRANKSHAFT GP

S/N: THX28268-UP

PART OF 385-2783 ENGINE AR-CORE

SMCS-1202 **i04720939**

NOTE	REF NO	GRAPHIC REF	PART NUMBER	QTY	PART NAME 1 2 3 4 5 6 (PRODUCT LEVEL)	SEE PAGE
J	1	1	**151-2939**	7	BEARING-MAIN (STANDARD)	
AB			**282-1771**	7	BEARING-MAIN (0.25-MM US)	
AB			**282-1772**	7	BEARING-MAIN (0.51-MM US)	
R	2	1	**261-1544**	1	CRANKSHAFT AS	
	2A	1	**1B-8705**	1	KEY-WOODRUFF	
	2B	1	**2W-8147**	1	GEAR (50-TEETH)	
	2C	1	**9Y-0810**	1	SLEEVE-WEAR	
J	3	1	**246-3150**	2	PLATE-THRUST	
					AVAILABLE REPAIR KIT(S):	
AJ			**243-6716**		KIT-BEARING (STANDARD)	
					(INCLUDES A COMPLETE SET OF MAIN BEARINGS AND THRUST PLATES)	

A-NOT PART OF THIS GROUP
B-USE AS REQUIRED
J-KIT MARKED J INCLUDES PARTS MARKED J
R-REMFG PART MAY BE AVAILABLE

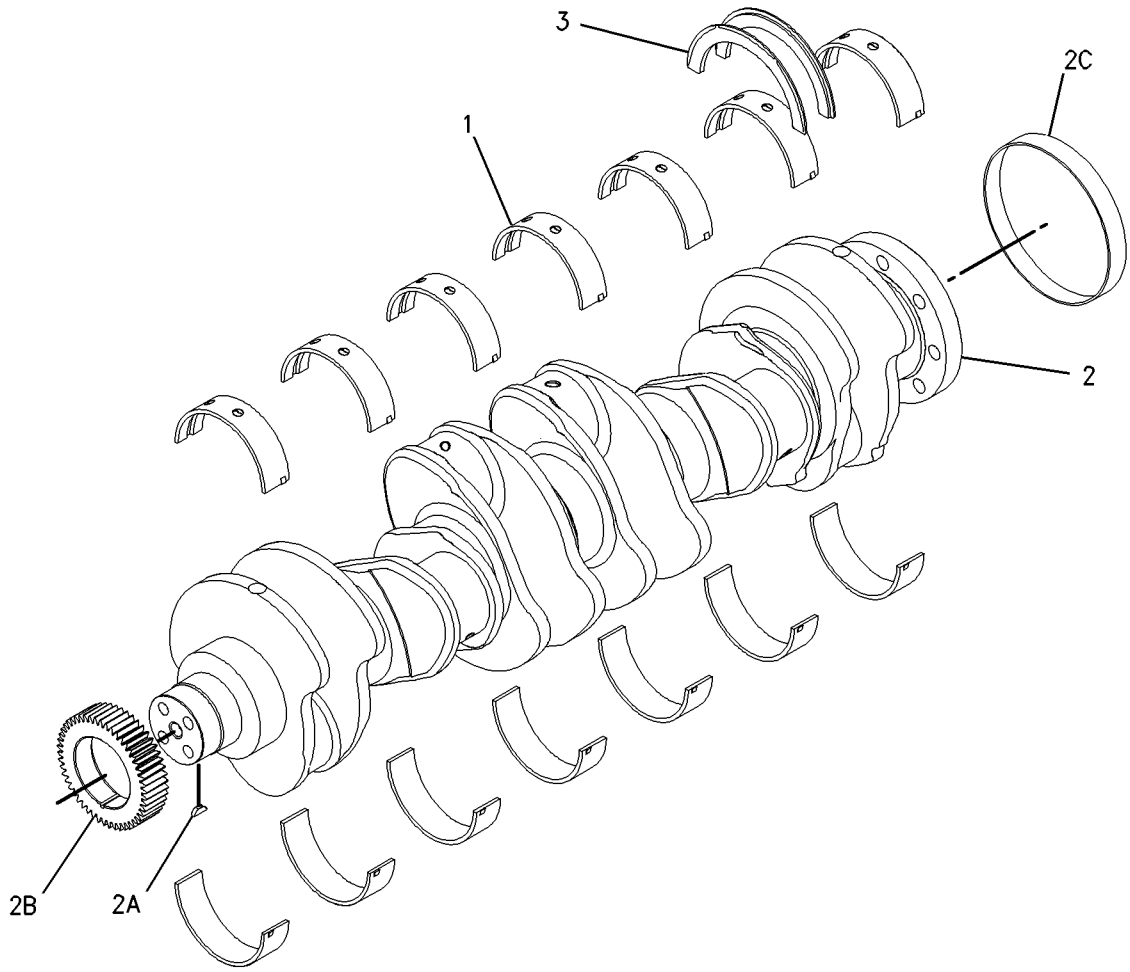

GRAPHIC #1 **<END>** g00789955

BASIC ENGINE

325-3915 CYLINDER BLOCK AS*R

S/N: THX28268-UP

PART OF 220-1952 CYLINDER BLOCK GP

SMCS-1201 **i04017478**

NOTE	REF NO	GRAPHIC REF	PART NUMBER	QTY	PART NAME 1 2 3 4 5 6 (PRODUCT LEVEL)	SEE PAGE
	1	1	**0L-1026**	2	PLUG-CUP	
	2	1	**3B-0623**	2	PLUG-CUP	
	3	1	**4F-5695**	4	PLUG-CUP	
M	4	1	**175-0454**	14	BOLT (M16X2X160-MM)	
	5	1	**203-5805**	2	BEARING-SLEEVE	
	6	1	**203-6090**	1	BEARING-SLEEVE	
	7	1	**212-7002**	7	CAP-BEARING	
	8	1	**216-5586**	1	BEARING-SLEEVE (CAMSHAFT)	
	9	1	**9X-8268**	14	WASHER (17.5X30X3.5-MM THK)	

M-METRIC PART

325-3915 CYLINDER BLOCK AS *(contd.)* **i04017478**

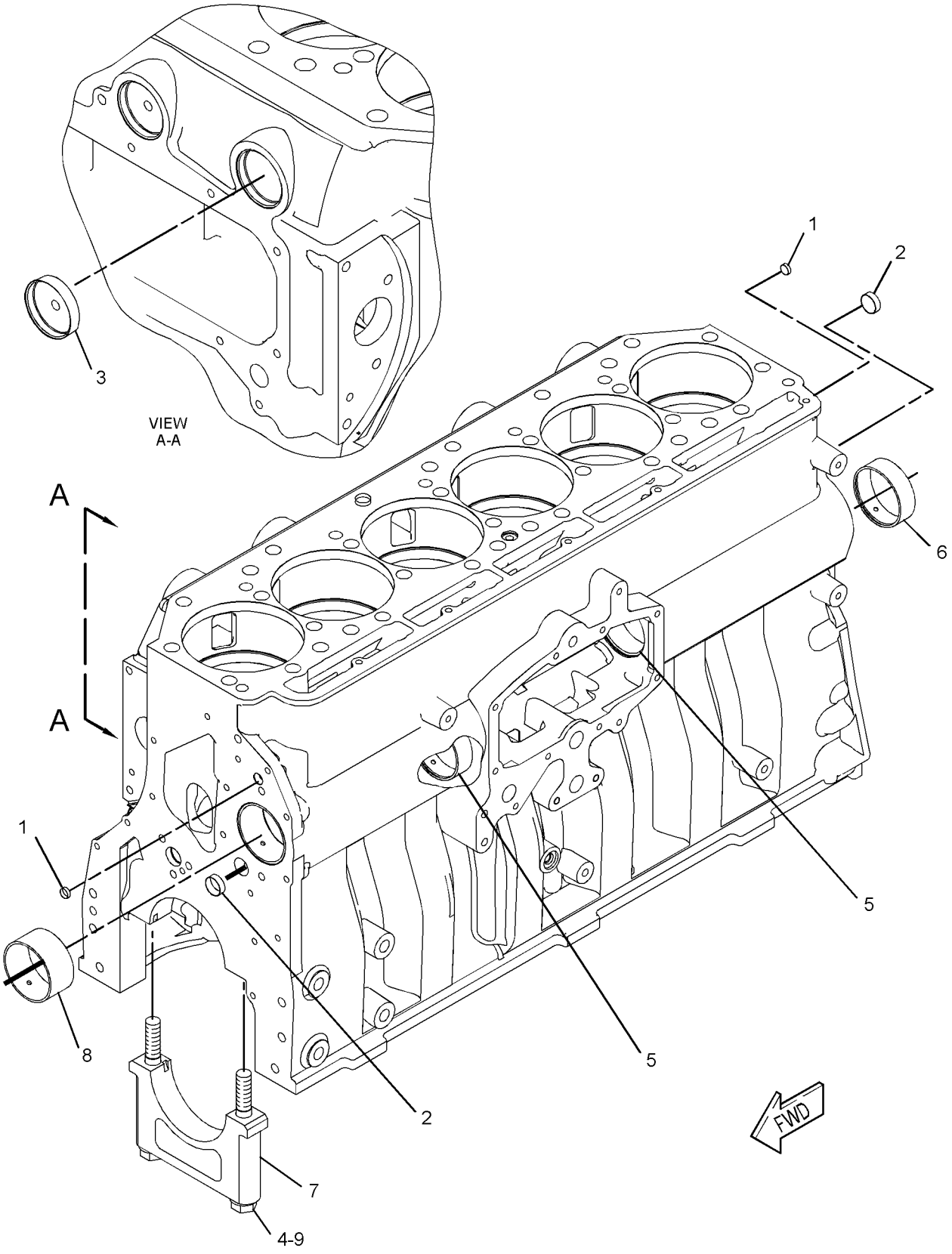

GRAPHIC #1 **<END>** g02073913

BASIC ENGINE

161-3406 CYLINDER BLOCK GP

S/N: THX28268-UP

PART OF 385-2783 ENGINE AR-CORE

SMCS-1201 **i04769701**

NOTE	REF NO	GRAPHIC REF	PART NUMBER	QTY	PART NAME 1 2 3 4 5 6 (PRODUCT LEVEL)	SEE PAGE
	1	1	**0S-0519**	1	PLUG-CUP	
Y	2	1	*220-1952*	1	CYLINDER BLOCK GP	22
	3	1	**1W-8407**	2	SLEEVE	
	4	1	*307-2671*	1	PLUG AS	
		1	**9S-8002**	1	PLUG-O-RING	
		1	**214-7566**	1	SEAL-O-RING	
	5	1	**4G-4972**	1	SEAL-O-RING	
	6	1	**6V-3538**	2	DOWEL	
	7	1	**7N-5683**	2	DOWEL	

Y-SEPARATE ILLUSTRATION

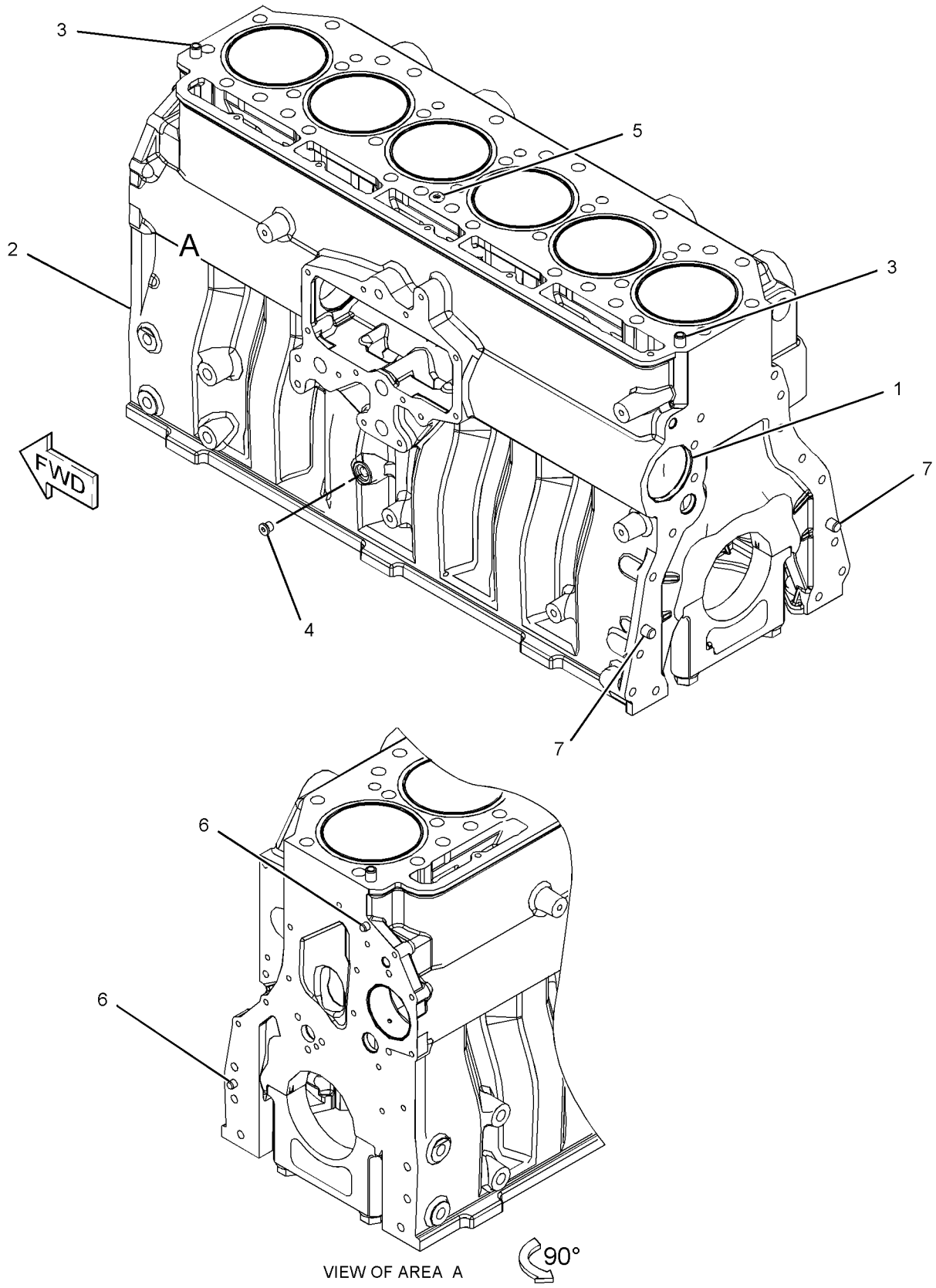

VIEW OF AREA A

GRAPHIC #1 **<END>** g02727107

BASIC ENGINE

220-1952 CYLINDER BLOCK GP

S/N: THX28268-UP

PART OF 161-3406 CYLINDER BLOCK GP

SMCS-1201 **i04017477**

NOTE	REF NO	GRAPHIC REF	PART NUMBER	QTY	PART NAME 1 2 3 4 5 6 (PRODUCT LEVEL)	SEE PAGE
	1	1	**167-0024**	6	SEAL-LINER	
	2	1	**190-3562**	6	LINER-CYLINDER BLOCK	
YR	3	1	*325-3915*	1	CYLINDER BLOCK AS	18

R-REMFG PART MAY BE AVAILABLE
Y-SEPARATE ILLUSTRATION

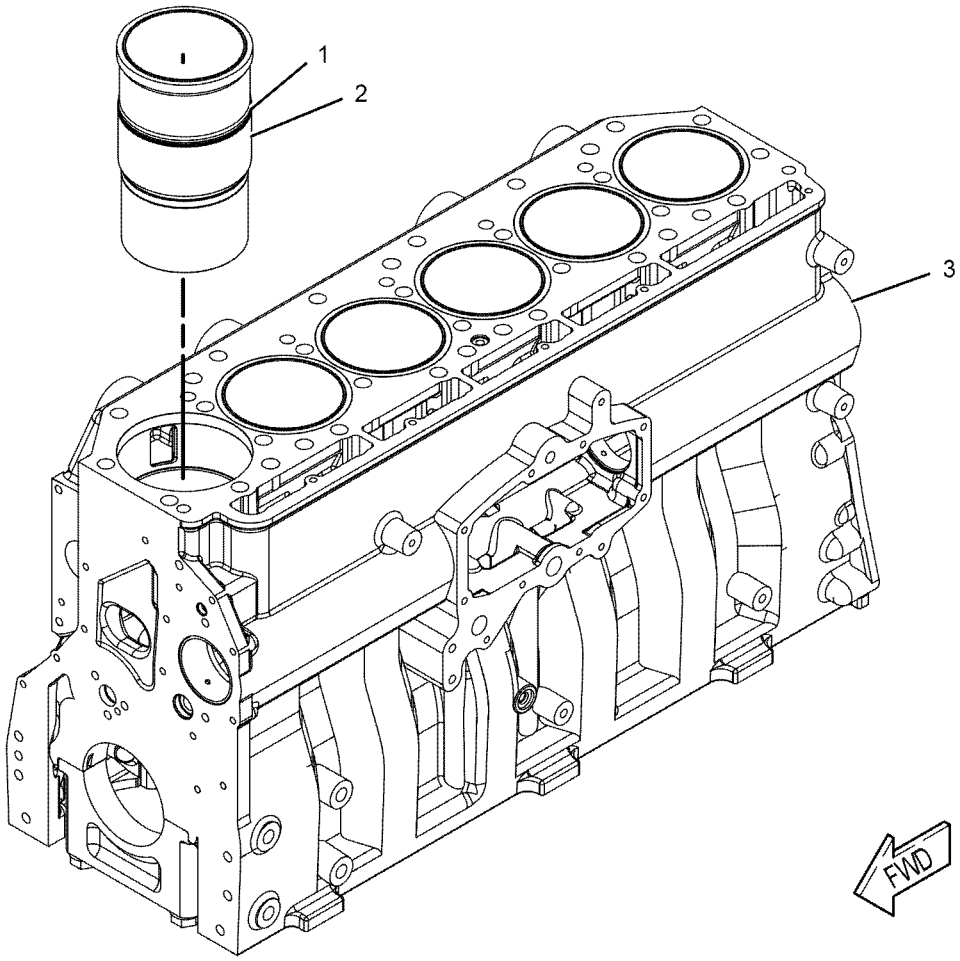

GRAPHIC #1 **<END>** g01032547

BASIC ENGINE

332-3619 CYLINDER HEAD AS

S/N: THX28268-UP

PART OF 344-2149 CYLINDER HEAD GP

SMCS-1100, 1101 **i04453660**

NOTE	REF NO	GRAPHIC REF	PART NUMBER	QTY	PART NAME 1 2 3 4 5 6 (PRODUCT LEVEL)	SEE PAGE
	1	1	**6V-7604**	7	PLUG-CUP (MARKED X)	
	2	1	**8M-5860**	18	PLUG-CUP (MARKED Z)	
	3	1	**212-8917**	12	INSERT-VALVE SEAT (EXHAUST) (STANDARD)	
AB		1	**317-7210**		INSERT-VALVE SEAT (0.127-MM OS, EXHAUST)	
AB		1	**317-7211**		INSERT-VALVE SEAT (0.25-MM OS, EXHAUST)	
AB		1	**254-3947**		INSERT-VALVE SEAT (0.508-MM OS, EXHAUST)	
	4	1	**227-1200**	6	SLEEVE-INJECTOR	
	5	1	**241-8388**	12	INSERT-VALVE SEAT (INLET) (STANDARD)	
AB		1	**317-7212**		INSERT-VALVE SEAT (0.127-MM OS, INLET)	
AB		1	**317-7213**		INSERT-VALVE SEAT (0.25-MM OS, INLET)	
AB		1	**254-3946**		INSERT-VALVE SEAT (0.508-MM OS, INLET)	
	6	1	**310-7255**	6	SEAL-O-RING	
	7	1	**310-7257**	6	SEAL-O-RING	

A-NOT PART OF THIS GROUP
B-USE AS REQUIRED

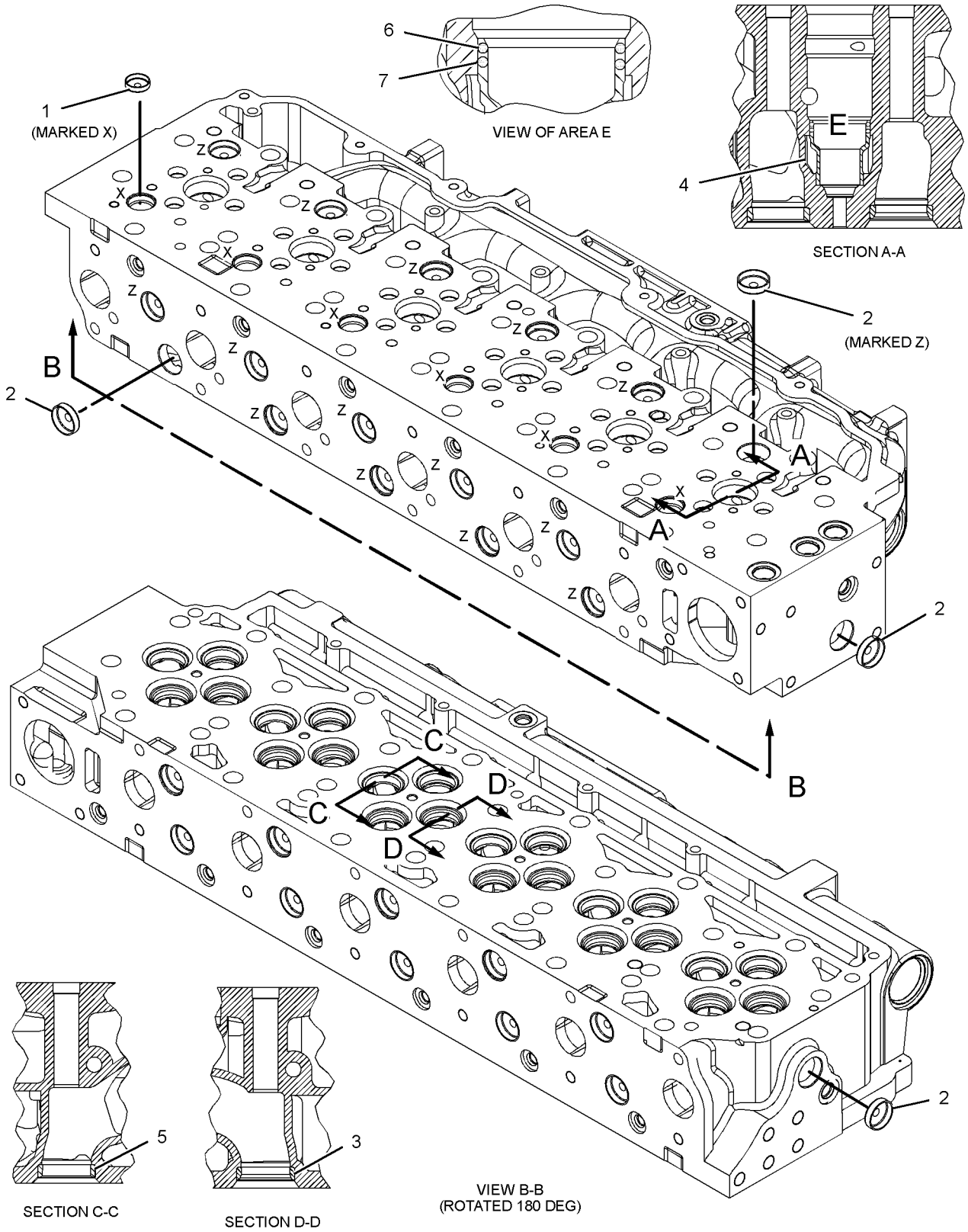

GRAPHIC #1 **<END>** g01414571

344-2149 CYLINDER HEAD GP*R

S/N: THX28268-UP

PART OF 384-5590 CYLINDER HEAD GP

SMCS-1100 **i04721254**

NOTE	REF NO	GRAPHIC REF	PART NUMBER	QTY	PART NAME 1 2 3 4 5 6 (PRODUCT LEVEL)	SEE PAGE
	1	1	**1W-2715**	24	LOCK-RETAINER (INLET)	
	2	1	**2A-4429**	24	LOCK-RETAINER (EXHAUST)	
	3	1	**163-2478**	12	SEAL-VALVE STEM (EXHAUST)	
	4	1	**190-6115**	12	SPRING-VALVE (INNER)	
	5	1	**190-6117**	12	SPRING-VALVE (OUTER)	
	6	1	**211-2134**	12	RETAINER (VALVE SPRING)	
	7	1	**217-0609**	6	SEAT-VALVE SPRING	
	8	1	**241-8383**	12	VALVE-EXHAUST	
	9	1	**241-8384**	12	RETAINER (VALVE SPRING)	
	10	1	**241-8386**	12	SPRING-VALVE (INNER)	
	11	1	**241-8385**	12	SPRING-VALVE (OUTER)	
	12	1	**241-8387**	6	SEAT	
	13	1	**241-8390**	12	SEAL-VALVE STEM	
	14	1	**252-7803**	12	VALVE-INLET	
	15	1	**259-5829**	12	GUIDE-VALVE (STANDARD, INTAKE)	
AB		1	**254-3941**		GUIDE-VALVE (0.13-MM OS)	
AB		1	**254-3942**		GUIDE-VALVE (0.5-MM OS)	
	16	1	**260-4856**	12	GUIDE-VALVE (STANDARD, EXHAUST)	
AB		1	**203-3237**		GUIDE-VALVE (0.13-MM OS, EXHAUST)	
AB		1	**203-3238**		GUIDE-VALVE (0.5-MM OS, EXHAUST)	
Y	17	1	*332-3619*	1	CYLINDER HEAD AS	23
	18	1	*319-6237*	2	PLUG AS	
					(EACH INCLUDES)	
		1	**228-7096**	1	SEAL-O-RING	
		1	**271-7442**	1	PLUG	
	19	1	*321-8638*	6	PLUG AS	
					(EACH INCLUDES)	
		1	**214-7568**	1	SEAL-O-RING	
		1	**321-8635**	1	PLUG	
	20	1	*307-2673*	2	PLUG AS	
					(EACH INCLUDES)	
		1	**9S-8005**	1	PLUG-O-RING	
		1	**238-5080**	1	SEAL-O-RING	
	21	1	**8T-6757**	2	PLUG-PIPE	

A-NOT PART OF THIS GROUP
B-USE AS REQUIRED
Y-SEPARATE ILLUSTRATION

344-2149 CYLINDER HEAD GP *(contd.)* **i04721254**

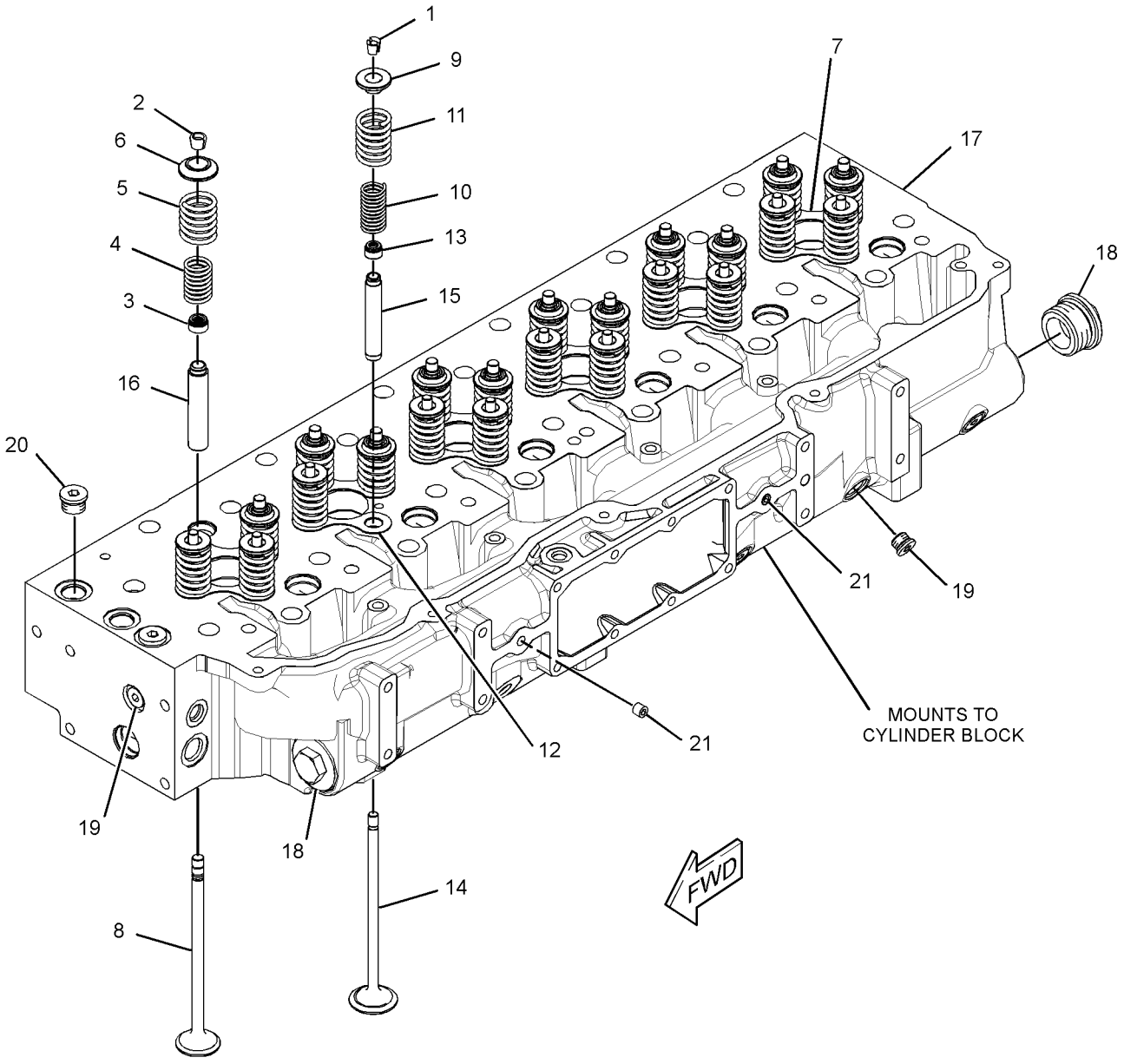

GRAPHIC #1 **<END>** g02236094

384-5590 CYLINDER HEAD GP

S/N: THX28268-UP

PART OF 385-2783 ENGINE AR-CORE

SMCS-1100 **i04743470**

NOTE	REF NO	GRAPHIC REF	PART NUMBER	QTY	PART NAME 1 2 3 4 5 6 (PRODUCT LEVEL)	SEE PAGE
	1	1	**2A-3746**	1	PLUG-CUP	
	2	1	**187-1315**	1	GASKET AS	
Y	3	1	*213-4363*	1	FASTENER GP-CYLINDER HEAD	33
YR	4	1	**344-2149**	1	CYLINDER HEAD GP	25

R-REMFG PART MAY BE AVAILABLE
Y-SEPARATE ILLUSTRATION

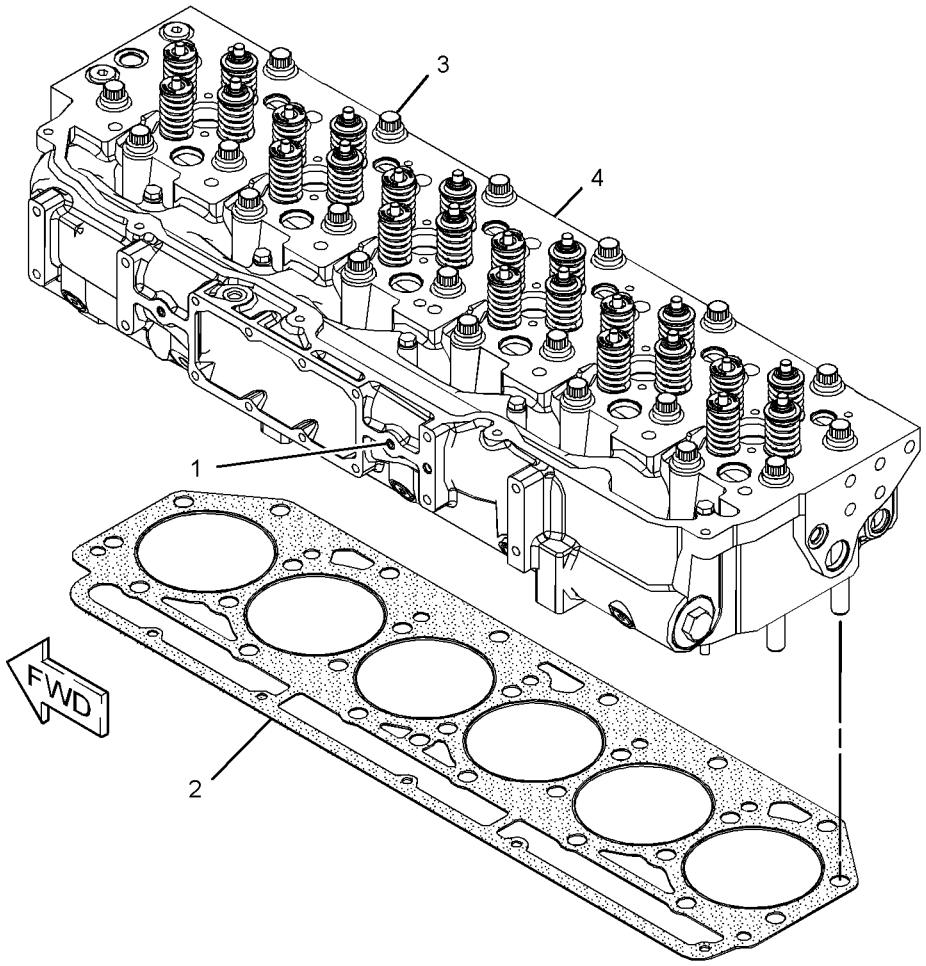

GRAPHIC #1 **<END>** g02802637

BASIC ENGINE

338-2145 DAMPER & PULLEY GP

S/N: THX28268-UP

PART OF 318-1906 ENGINE AR-COMPLETE

SMCS-1205 **i04727910**

NOTE	REF NO	GRAPHIC REF	PART NUMBER	QTY	PART NAME 1 2 3 4 5 6 (PRODUCT LEVEL)	SEE PAGE
	1	1	**2W-7381**	1	PLATE-CLAMP	
	2	1	**208-9619**	1	DAMPER AS-VIBRATION	
	3	1	**228-3621**	1	SPACER (101.5X167X8-MM THK)	
	4	1	**236-8239**	1	PULLEY-CRANKSHAFT	
	5	1	**262-2031**	1	PULLEY	
M	6	1	**6V-1819**	8	BOLT (M10X1.5X100-MM)	
M	7	1	**8T-3666**	4	BOLT (M14X2X60-MM)	

M-METRIC PART

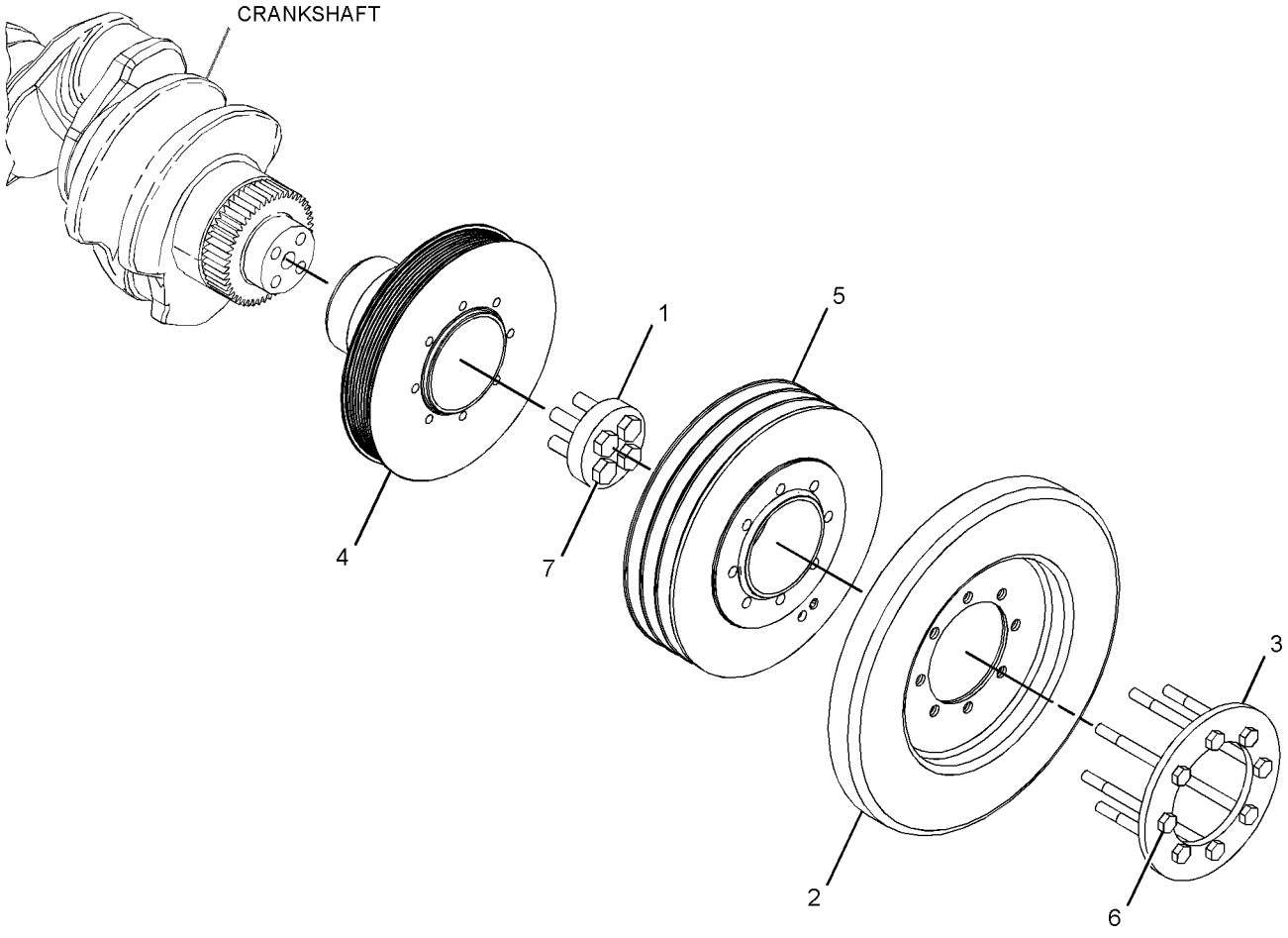

GRAPHIC #1 **<END>** g02848933

338-5362 DRAIN GP-ENGINE OIL

S/N: THX28268-UP

PART OF 318-1906 ENGINE AR-COMPLETE

SMCS-1302 **i04735051**

NOTE	REF NO	GRAPHIC REF	PART NUMBER	QTY	PART NAME 1 2 3 4 5 6 (PRODUCT LEVEL)	SEE PAGE
	1	1	**7E-4761**	1	VALVE-DRAIN	
	2	1	**118-3619**	1	PLUG-MAGNETIC	
	3	1	**238-5080**	2	SEAL-O-RING	

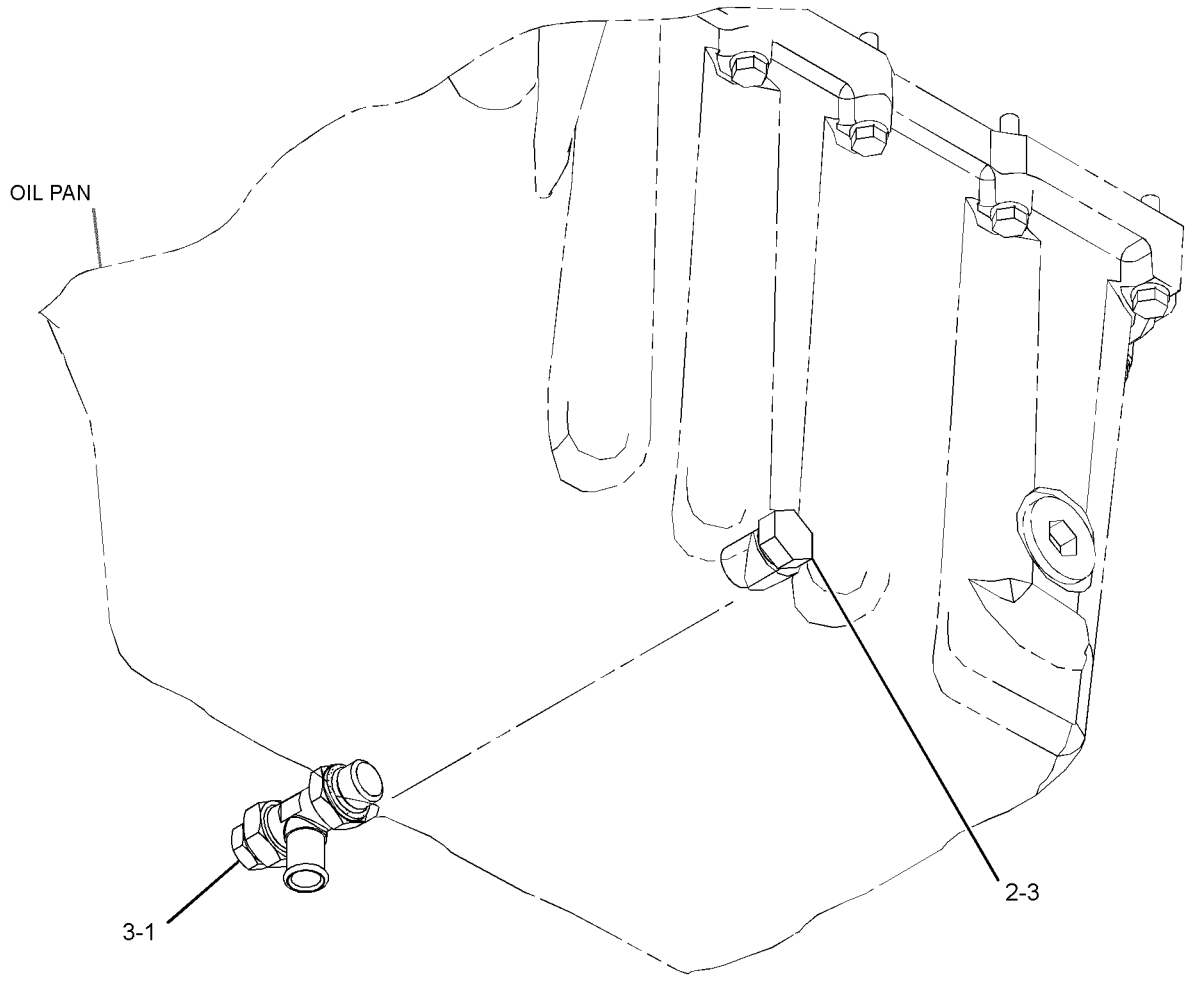

GRAPHIC #1 **<END>** g02841396

BASIC ENGINE

329-4441 DRIVE GP-FAN

S/N: DSH1-UP; DLN1-UP; DJR1-UP
PART OF 313-3757 INSTALLATION AR

SMCS-1359 **i04658819**

NOTE	REF NO	GRAPHIC REF	PART NUMBER	QTY	PART NAME 1 2 3 4 5 6 (PRODUCT LEVEL)	SEE PAGE
Y	1	1	**329-4474**	1	DRIVE GP-FAN	31
	2	1	**8T-4121**	4	WASHER-HARD (11X21X2.5-MM THK)	
M	3	1	**8T-4182**	4	BOLT (M10X1.5X45-MM)	

M-METRIC PART
Y-SEPARATE ILLUSTRATION

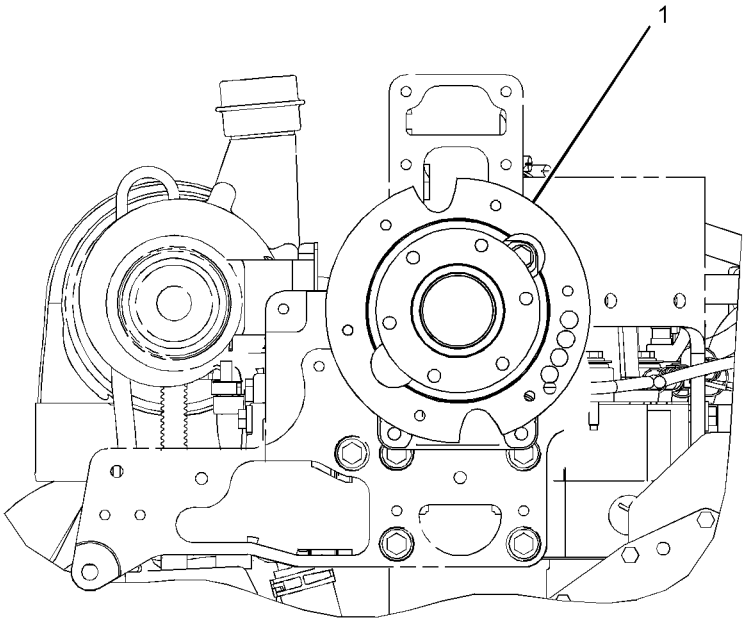

FRONT VIEW OF ENGINE

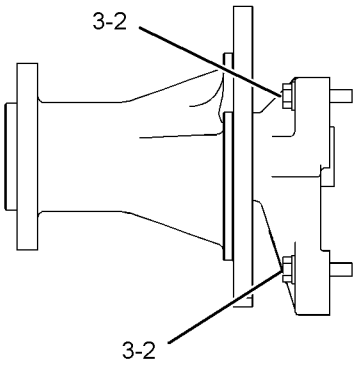

LEFT SIDE VIEW

GRAPHIC #1 **<END>** g02822477

329-4474 DRIVE GP-FAN

S/N: DSH1-UP; DLN1-UP; DJR1-UP
PART OF 329-4441 DRIVE GP-FAN

SMCS-1359 **i04658823**

NOTE	REF NO	GRAPHIC REF	PART NUMBER	QTY	PART NAME 1 2 3 4 5 6 (PRODUCT LEVEL)	SEE PAGE
	1	1	**4B-4098**	1	PLUG-CUP	
	2	1	**4W-1203**	2	CUP-BEARING	
	3	1	**4W-1204**	2	CONE-BEARING	
	4	1	**7C-8634**	1	PLATE	
	5	1	**212-5839**	1	HUB	
	6	1	**212-5844**	1	SPACER (35.3X45.5X93-MM THK)	
	7	1	**329-4475**	1	BRACKET AS	
	8	1	**5S-9062**	1	SPACER (35.032X50.8X15.88-MM THK)	
M	9	1	**6V-7673**	1	BOLT (M12X1.75X50-MM)	
	10	1	**6V-9748**	1	SEAL-LIP TYPE	

M-METRIC PART

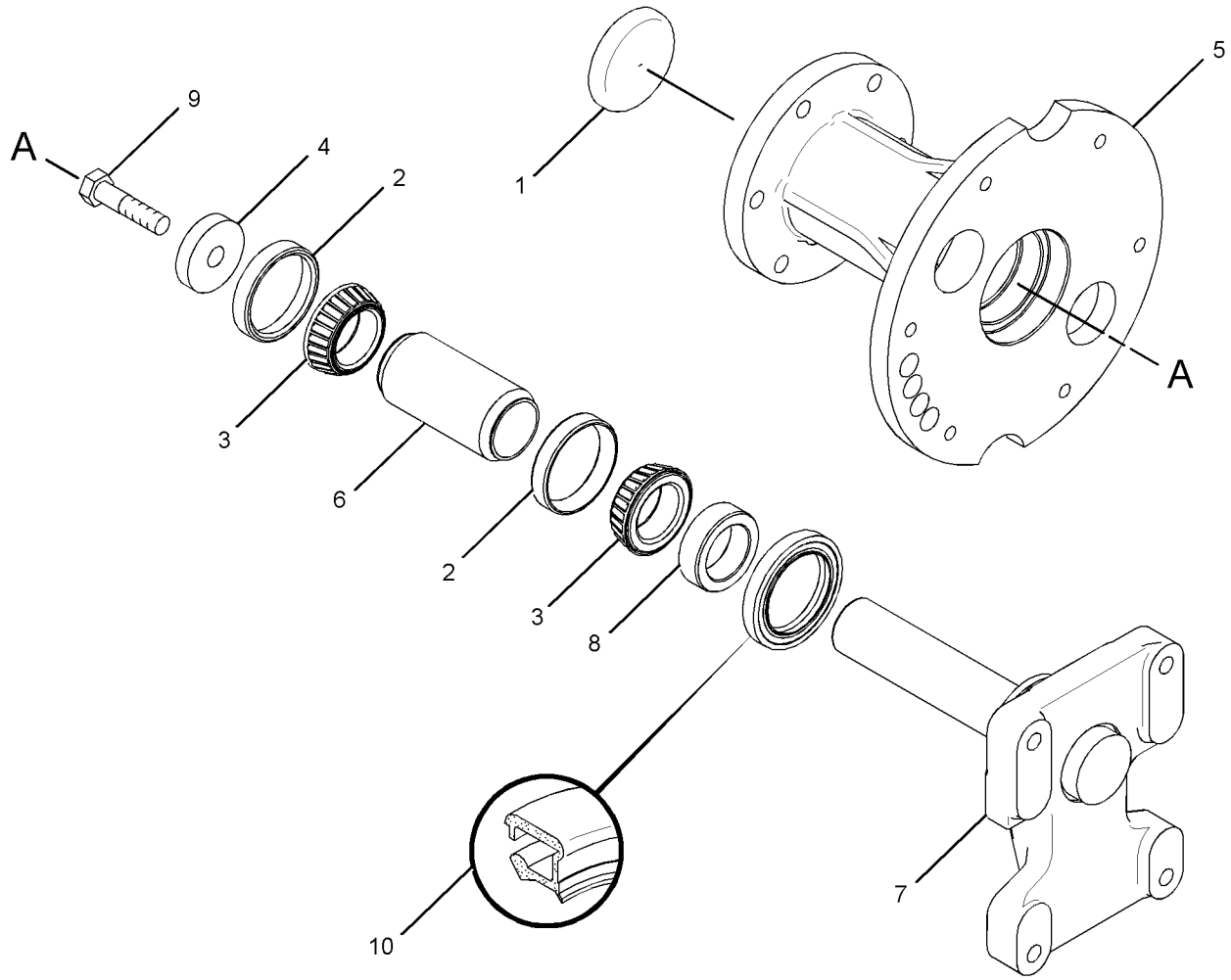

GRAPHIC #1 **<END>** g01316481

BASIC ENGINE

246-0599 DRIVE GP-PUMP

S/N: THX28268-UP

PART OF 318-1906 ENGINE AR-COMPLETE

SMCS-1207, 3108 **i04017545**

NOTE	REF NO	GRAPHIC REF	PART NUMBER	QTY	PART NAME 1 2 3 4 5 6 (PRODUCT LEVEL)	SEE PAGE
	1	1	**236-8240**	1	PULLEY	
M	2	1	**6V-2317**	4	BOLT (M8X1.25X30-MM)	
	3	1	**9M-1974**	4	WASHER-HARD (8.8X16X2-MM THK)	

M-METRIC PART

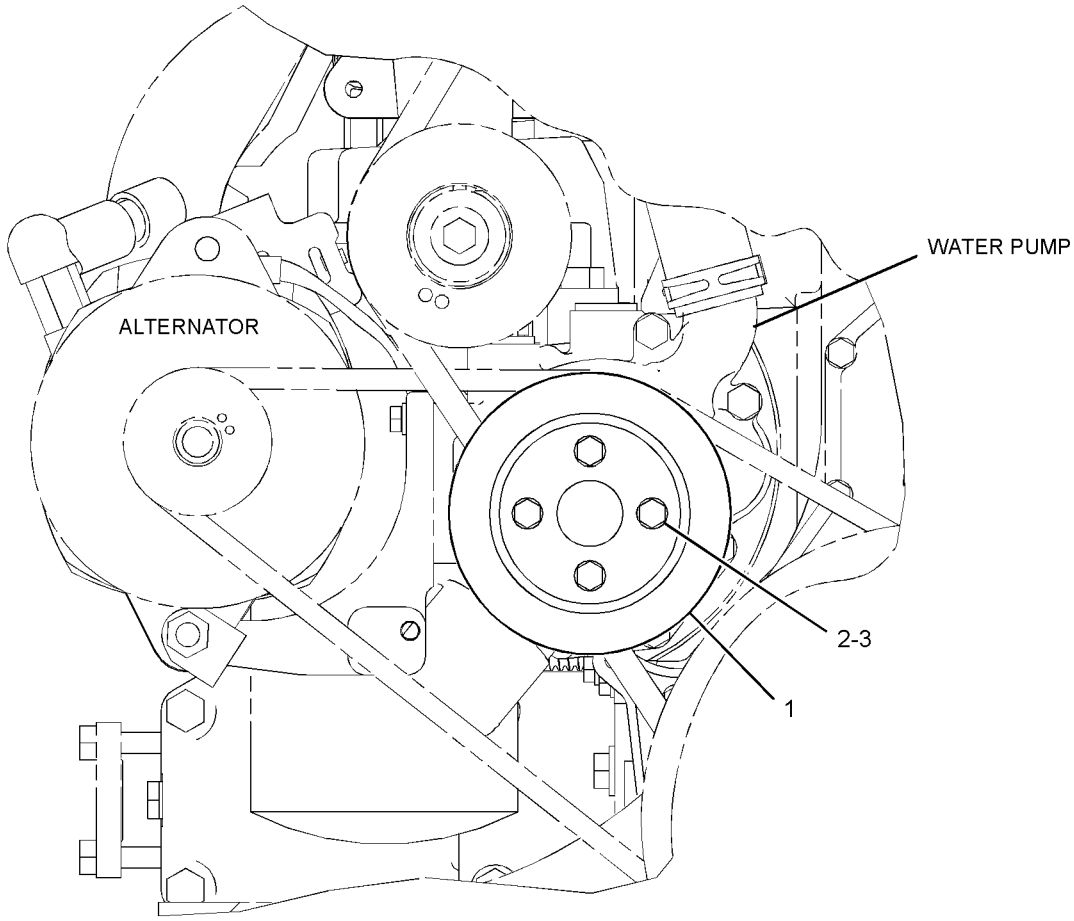

FRONT VIEW

GRAPHIC #1 **<END>** g01205602

213-4363 FASTENER GP-CYLINDER HEAD

S/N: THX28268-UP

PART OF 384-5590 CYLINDER HEAD GP

SMCS-1100 **i04769708**

NOTE	REF NO	GRAPHIC REF	PART NUMBER	QTY	PART NAME 1 2 3 4 5 6 (PRODUCT LEVEL)	SEE PAGE
	1	1	*290-6884*	26	FASTENER GP-CYLINDER HEAD	
					(EACH INCLUDES)	
		1	**9X-8268**	1	WASHER (17.5X30X3.5-MM THK)	
M		1	**263-2915**	1	BOLT-12 POINT HEAD (M16X2X180-MM)	
M	2	1	**8C-4984**	5	BOLT (M8X1.25X150-MM)	
	3	1	**9M-1974**	5	WASHER-HARD (8.8X16X2-MM THK)	

M-METRIC PART

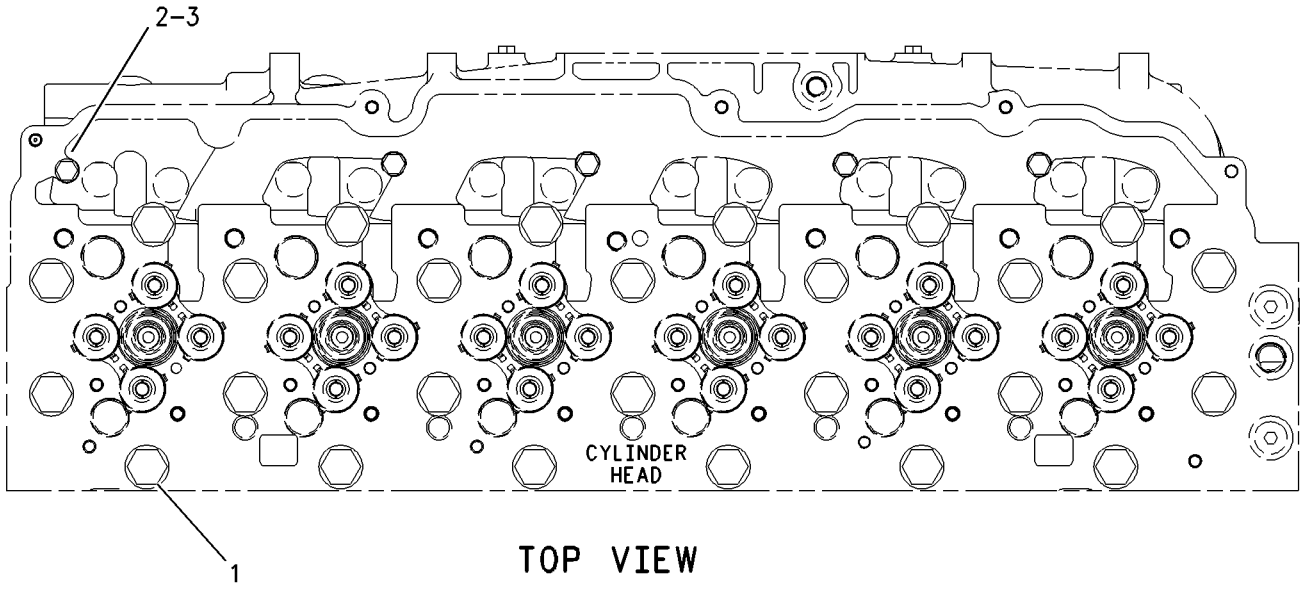

TOP VIEW

GRAPHIC #1 **<END>** g00919169

BASIC ENGINE

219-8681 FASTENER GP-FRONT COVER

S/N: THX28268-UP

PART OF 318-1906 ENGINE AR-COMPLETE

SMCS-1151, 1166 **i04017587**

NOTE	REF NO	GRAPHIC REF	PART NUMBER	QTY	PART NAME 1 2 3 4 5 6 (PRODUCT LEVEL)	SEE PAGE
M	1	1	**9X-2099**	6	STUD (M8X1.25X52.75-MM)	
M	2	1	**6V-2317**	6	BOLT (M8X1.25X30-MM)	
M	3	1	**8T-0100**	2	BOLT (M8X1.25X60-MM)	

M-METRIC PART

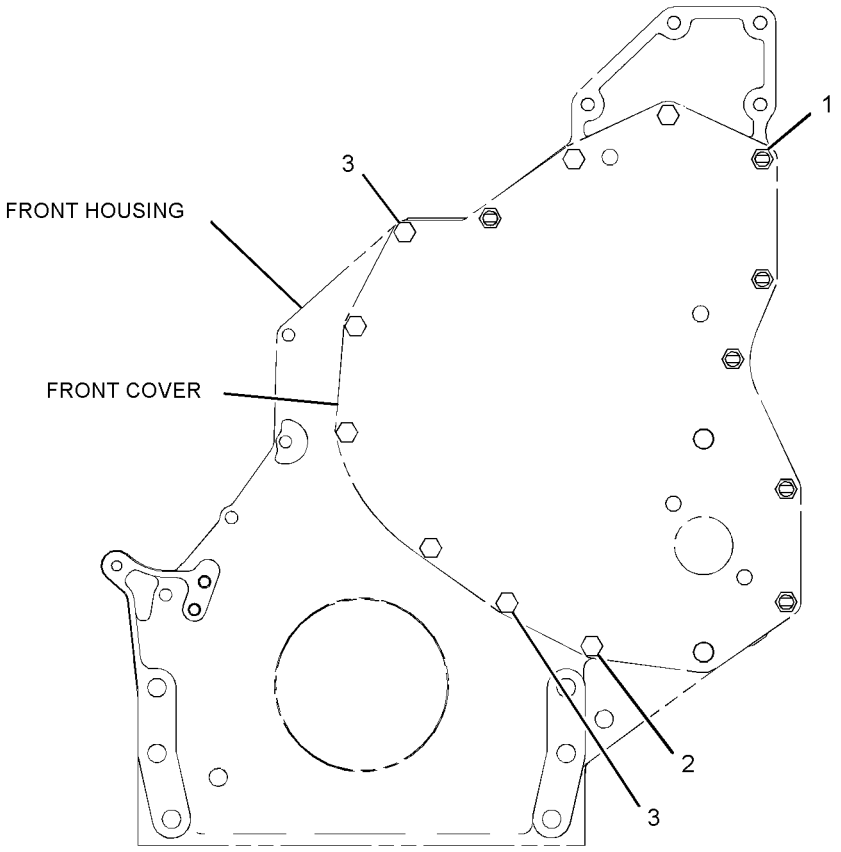

FRONT VIEW

GRAPHIC #1 **<END>** g01146786

236-7315 FASTENER GP-VALVE COVER

S/N: THX28268-UP

PART OF 318-1906 ENGINE AR-COMPLETE

SMCS-1107 **i04017556**

NOTE	REF NO	GRAPHIC REF	PART NUMBER	QTY	PART NAME 1 2 3 4 5 6 (PRODUCT LEVEL)	SEE PAGE
M	1	1	**8T-6912**	11	BOLT (M8X1.25X50-MM)	
	2	1	**8T-4224**	11	WASHER-HARD (8.8X16X2-MM THK)	

M-METRIC PART

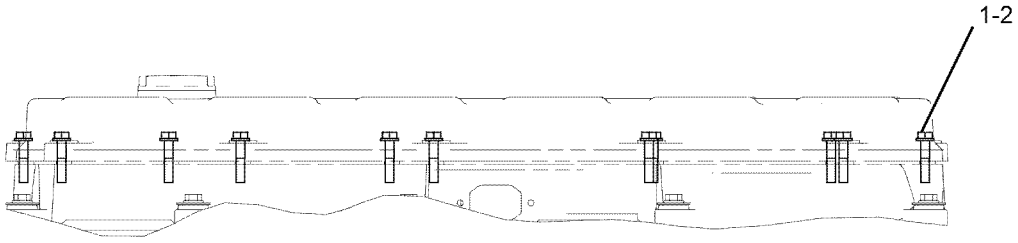

GRAPHIC #1 **<END>** g01013698

233-0423 FASTENER GP-VALVE COVER BASE

S/N: THX28268-UP

PART OF 318-1906 ENGINE AR-COMPLETE

SMCS-1120 **i04769709**

NOTE	REF NO	GRAPHIC REF	PART NUMBER	QTY	PART NAME 1 2 3 4 5 6 (PRODUCT LEVEL)	SEE PAGE
	1	1	**244-4500**	9	SPRING	
M	2	1	**8T-0100**	9	BOLT (M8X1.25X60-MM)	
	3	1	**9N-0869**	9	WASHER-HARD (8.8X25.5X2-MM THK)	

M-METRIC PART

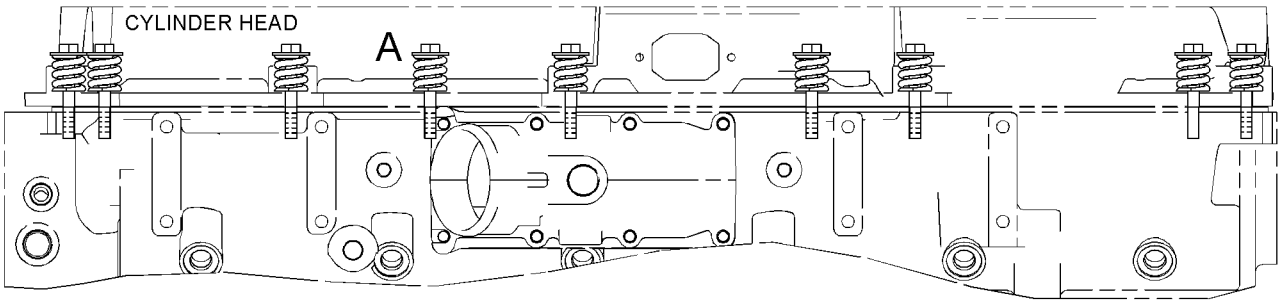

LEFT SIDE VIEW

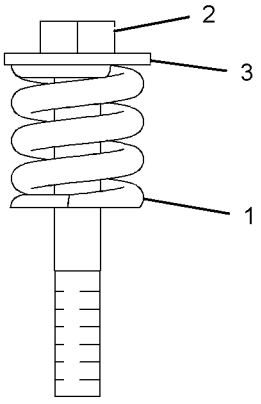

VIEW OF AREA A

GRAPHIC #1 **<END>** g01207018

BASIC ENGINE

241-3718 FLYWHEEL GP

S/N: THX28268-UP

PART OF 318-1906 ENGINE AR-COMPLETE

SMCS-1156 **i04017551**

NOTE	REF NO	GRAPHIC REF	PART NUMBER	QTY	PART NAME 1 2 3 4 5 6 (PRODUCT LEVEL)	SEE PAGE
M	1	1	**9X-2053**	8	BOLT	
	2	1	**237-0229**	1	FLYWHEEL AS	
		1	**4N-2514**	1	GEAR (113-TEETH)	
	3	1	**9X-8268**	8	WASHER (17.5X30X3.5-MM THK)	

M-METRIC PART

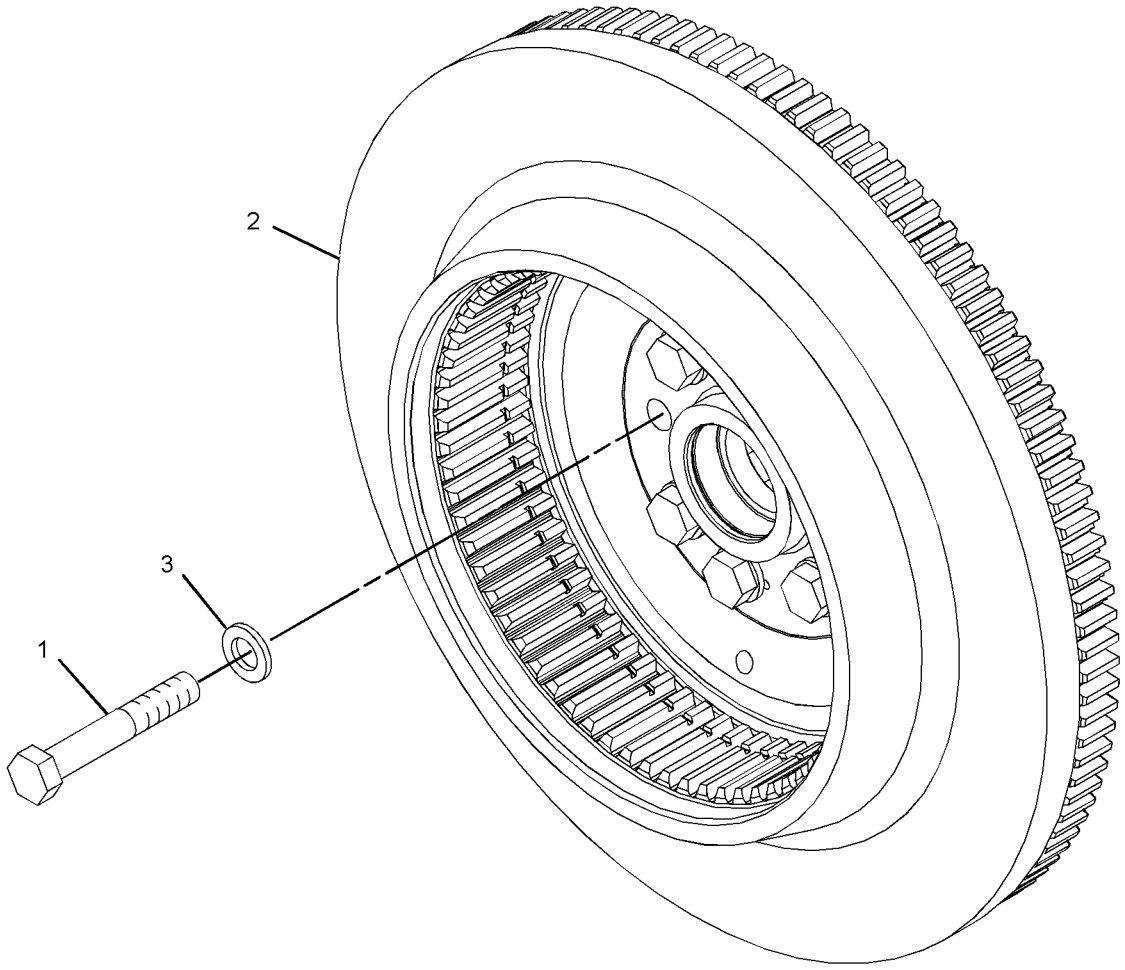

GRAPHIC #1 **<END>** g01205624

BASIC ENGINE

205-1321 GEAR GP-FRONT

S/N: THX28268-UP

PART OF 385-2783 ENGINE AR-CORE

SMCS-1151, 1162, 1206 **i04017501**

NOTE	REF NO	GRAPHIC REF	PART NUMBER	QTY	PART NAME 1 2 3 4 5 6 (PRODUCT LEVEL)	SEE PAGE
	1	1	**113-6069**	1	PLATE-THRUST	
	2	1	**115-4219**	1	PLATE-RETAINING	
	3	1	**200-4495**	1	SHAFT-IDLER	
	4	1	**205-1320**	1	GEAR AS-IDLER (50-TEETH)	
	4A	1	**115-4072**	1	BEARING	
M	5	1	**136-4183**	1	BOLT-12 POINT HEAD (M10X1.5X30-MM)	
M	6	1	**6V-5843**	2	BOLT (M10X1.5X45-MM)	

M-METRIC PART

205-1321 **GEAR GP-FRONT** *(contd.)* **i04017501**

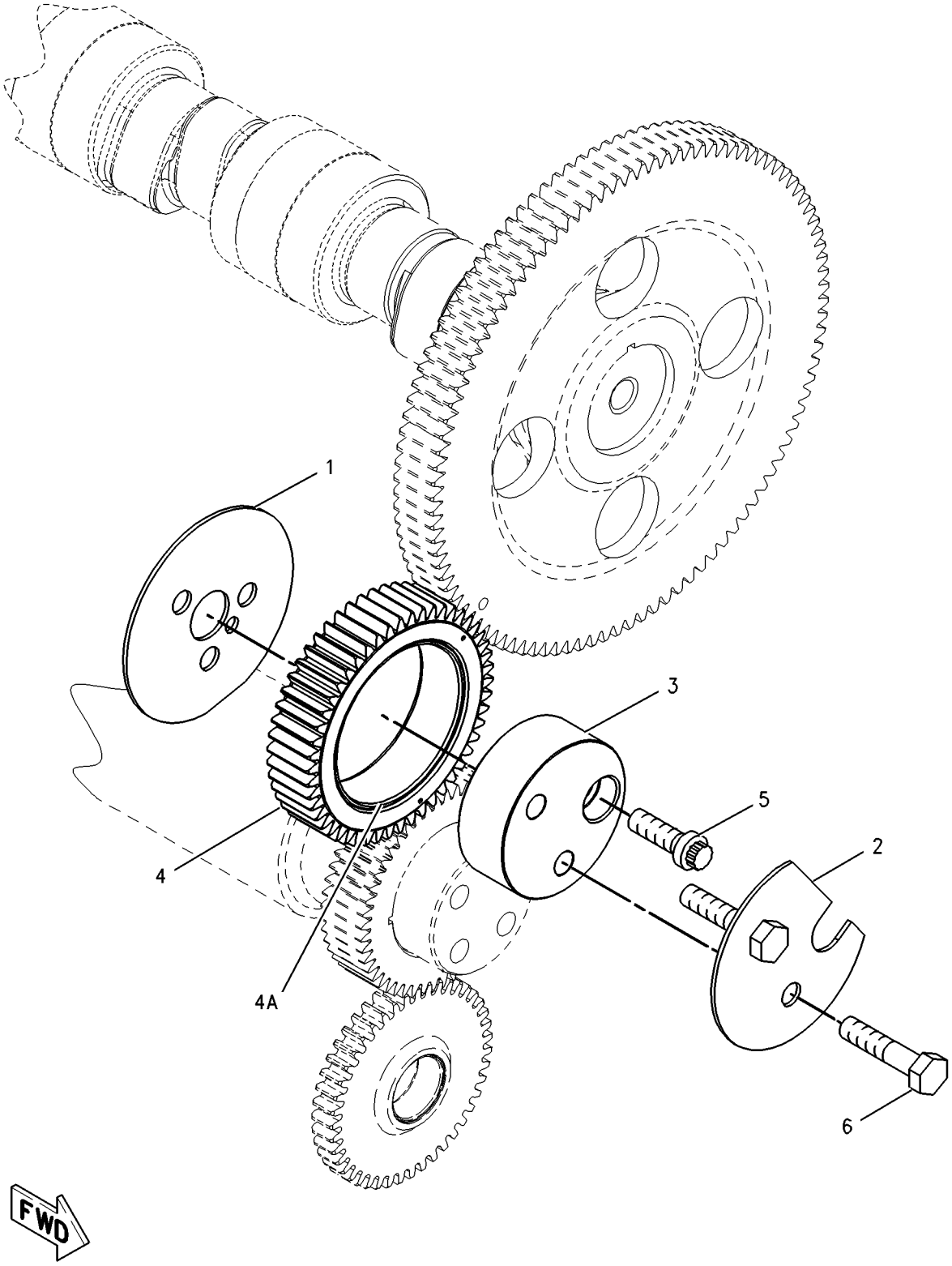

GRAPHIC #1 **<END>** g00870175

BASIC ENGINE

165-6879 GEAR GP-REAR

S/N: THX28268-UP

PART OF 318-1906 ENGINE AR-COMPLETE

SMCS-1204 **i04727911**

NOTE	REF NO	GRAPHIC REF	PART NUMBER	QTY	PART NAME 1 2 3 4 5 6 (PRODUCT LEVEL)	SEE PAGE
	6	1	**1W-4741**	2	GEAR AS-IDLER (70-TEETH)	
					(EACH INCLUDES)	
		1	**1W-4738**	1	BUSHING	
	7	1	**1W-4746**	2	RETAINER-GEAR	
	8	1	**154-3358**	1	GEAR-ADAPTER (68-TEETH)	
	9	1	**187-8194**	1	GEAR AS-DRIVE (64-TEETH)	
		1	**4F-6024**	1	PIN	
	10	1	**187-8195**	1	GEAR AS-DRIVE (64-TEETH)	
		1	**4F-6024**	1	PIN	
	11	1	**187-8222**	1	ADAPTER AS-PUMP	
		1	**160-8184**	1	BUSHING	
	12	1	**187-8223**	1	ADAPTER AS	
		1	**160-8184**	1	BUSHING	
	14	1	**4N-1230**	2	SEAL-O-RING	
M	15	1	**6V-1820**	12	BOLT (M10X1.5X30-MM)	
	17	1	**6V-5839**	12	WASHER (11X21X2.5-MM THK)	
M	18	1	**6V-7673**	6	BOLT (M12X1.75X50-MM)	

M-METRIC PART

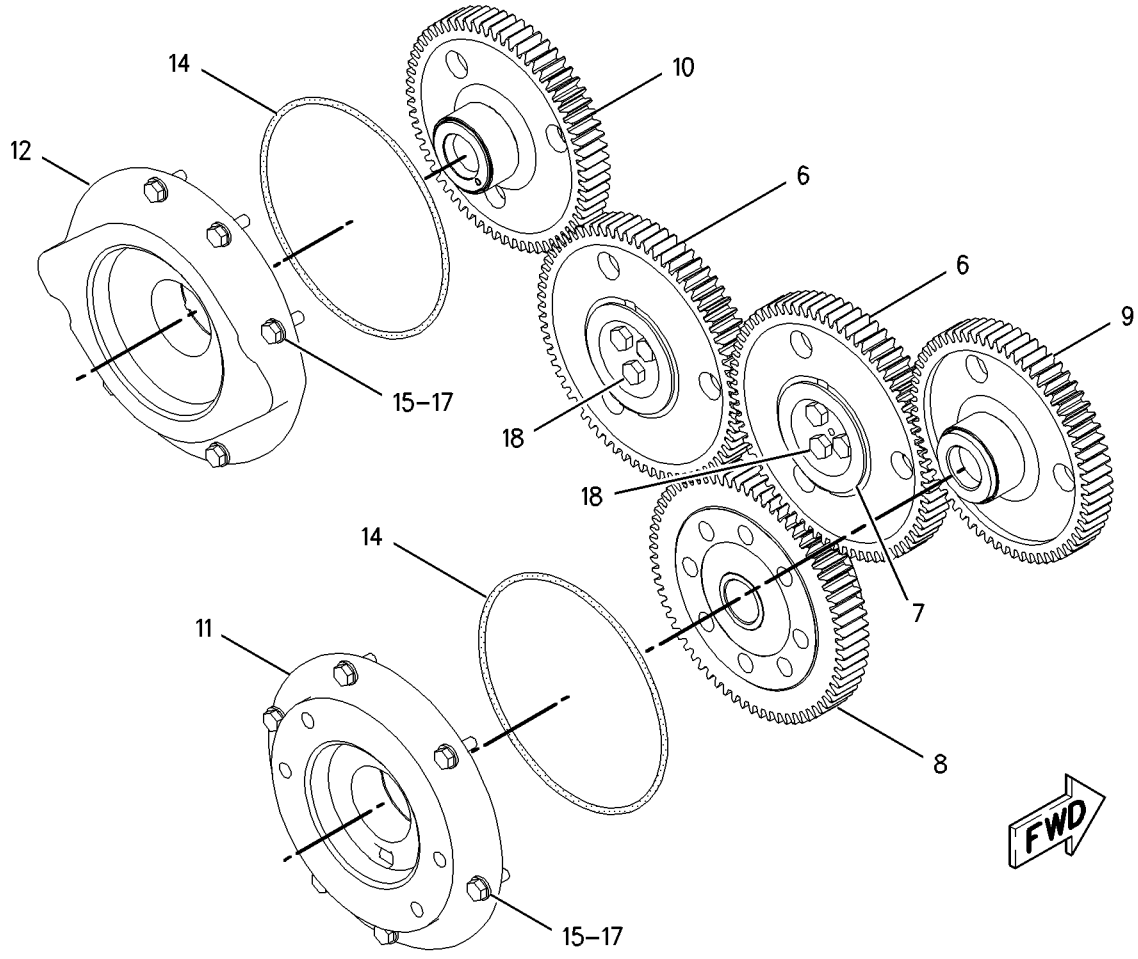

GRAPHIC #1 **<END>** g00825439

BASIC ENGINE

221-5461 HOUSING AS-FLYWHEEL

S/N: THX28268-UP

PART OF 219-8666 HOUSING GP-FLYWHEEL

SMCS-1157 **i04557101**

NOTE	REF NO	GRAPHIC REF	PART NUMBER	QTY	PART NAME 1 2 3 4 5 6 (PRODUCT LEVEL)	SEE PAGE
	1	1	**2A-1162**	1	GASKET	
	2	1	**5F-0304**	1	PLUG	
	3	1	**316-8663**	1	HOUSING AS-FLYWHEEL	
		1	**229-9281**	1	HOUSING-FLYWHEEL	
	3A	1	**8M-9315**	2	BUSHING	
	4	1	**307-2673**	2	PLUG AS	
					(EACH INCLUDES)	
		1	**9S-8005**	1	PLUG-O-RING	
	4A	1	**238-5080**	1	SEAL-O-RING	
	5	1	*307-2671*	1	PLUG AS	
		1	**9S-8002**	1	PLUG-O-RING	
	5A	1	**214-7568**		SEAL-O-RING	
	6	1	*183-3407*	4	PLUG AS	
					(EACH INCLUDES)	
		1	**9S-8004**	1	PLUG-O-RING	
	6A	1	**214-7568**	1	SEAL-O-RING	
	7	1	*321-8642*	1	PLUG AS	
		1	**9S-8003**	1	PLUG	
	7A	1	**214-7567**	1	SEAL-O-RING	

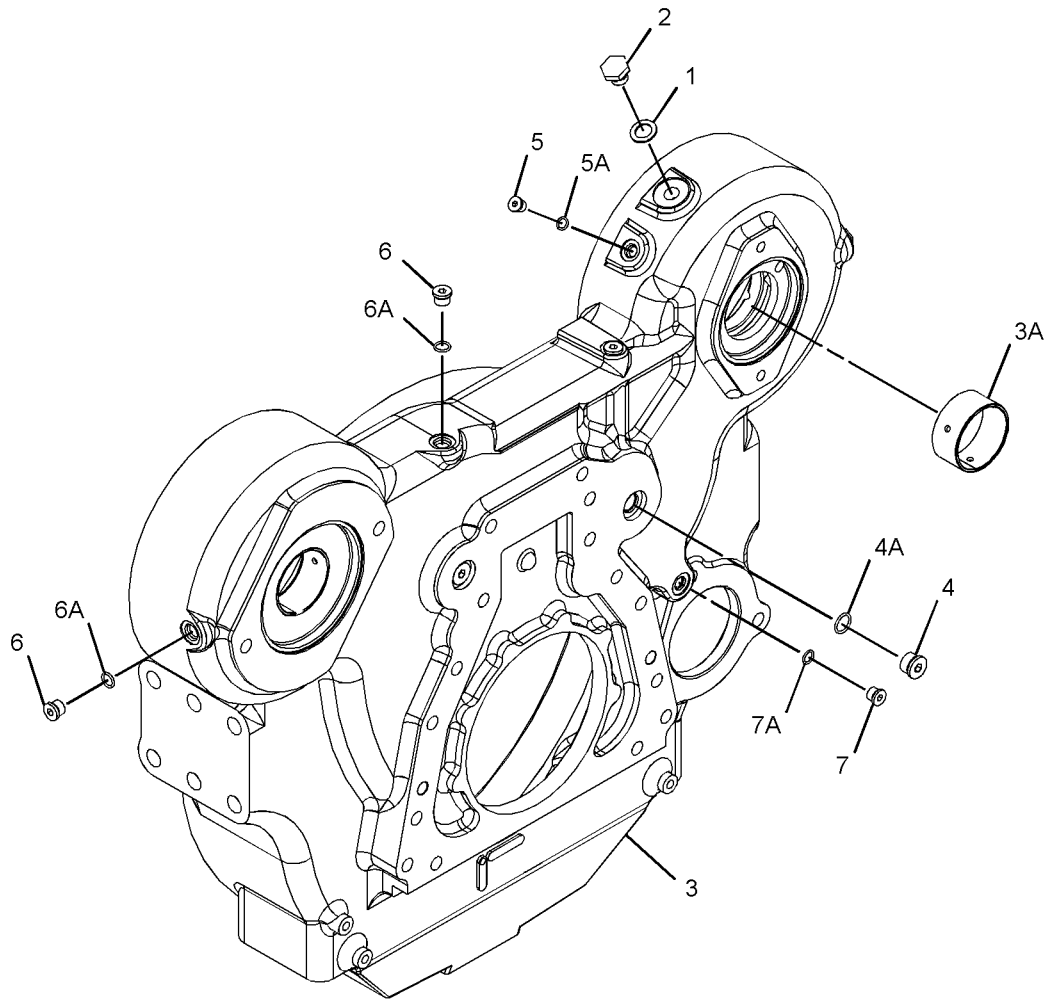

GRAPHIC #1 **<END>** g02728081

BASIC ENGINE

219-8666 HOUSING GP-FLYWHEEL

S/N: THX28268-UP

PART OF 318-1906 ENGINE AR-COMPLETE

SMCS-1157 **i04017583**

NOTE	REF NO	GRAPHIC REF	PART NUMBER	QTY	PART NAME 1 2 3 4 5 6 (PRODUCT LEVEL)	SEE PAGE
	1	1	**9X-8268**	2	WASHER (17.5X30X3.5-MM THK)	
	2	1	**175-3721**	1	COVER	
Y	3	1	**221-5461**	1	HOUSING AS-FLYWHEEL	41
	4	1	**101-3934**	1	COVER	
	5	1	**3F-5792**	1	SEAL-O-RING	
	6	1	**4M-0189**	1	SEAL-O-RING	
	7	1	**5P-8245**	17	WASHER-HARD (13.5X25.5X3-MM THK)	
M	8	1	**6A-5591**	2	BOLT (M12X1.75X25-MM)	
M	9	1	**6V-5844**	2	BOLT (M16X2X35-MM)	
M	10	1	**6V-8197**	9	BOLT (M12X1.75X40-MM)	
M	11	1	**6V-8336**	6	BOLT (M12X1.75X70-MM)	
BF			**1U-8846**		SEALANT-GASKET (10-ML)	

B-USE AS REQUIRED
F-NOT SHOWN
M-METRIC PART
Y-SEPARATE ILLUSTRATION

219-8666 **HOUSING GP-FLYWHEEL** *(contd.)* **i04017583**

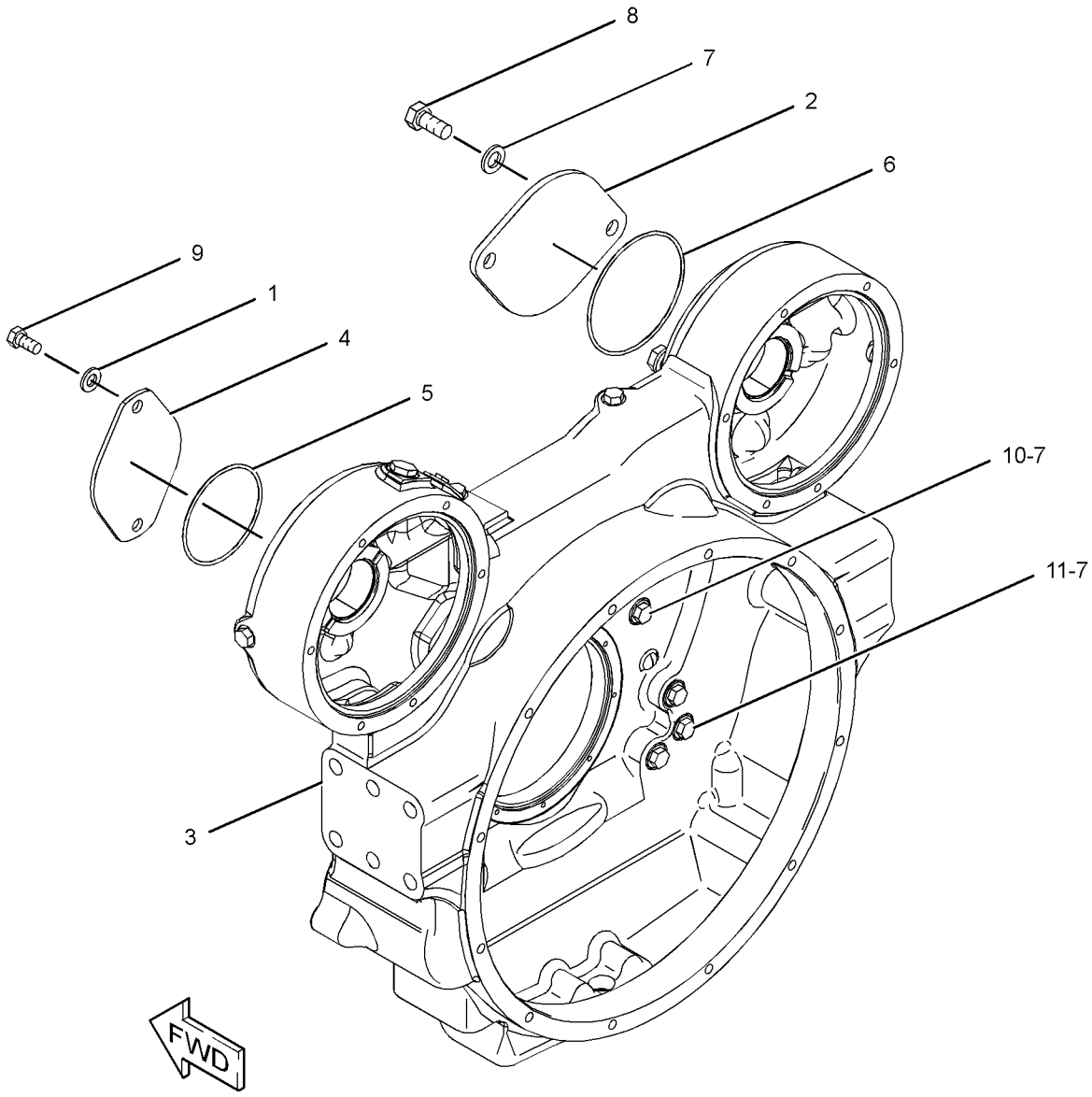

GRAPHIC #1 **<END>** g01208984

BASIC ENGINE

245-3262 HOUSING GP-FRONT

S/N: THX28268-UP

PART OF 318-1906 ENGINE AR-COMPLETE

SMCS-1151, 1162, 1206 **i04017502**

NOTE	REF NO	GRAPHIC REF	PART NUMBER	QTY	PART NAME 1 2 3 4 5 6 (PRODUCT LEVEL)	SEE PAGE
	1	1	**245-3261**	1	HOUSING-FRONT	
M	2	1	**6V-3918**	4	BOLT (M8X1.25X50-MM)	
M	3	1	**6V-5217**	8	BOLT (M8X1.25X20-MM)	
	4	1	**9M-1974**	12	WASHER-HARD (8.8X16X2-MM THK)	
B	5	1	**1U-8846**		SEALANT-GASKET	

B-USE AS REQUIRED
M-METRIC PART

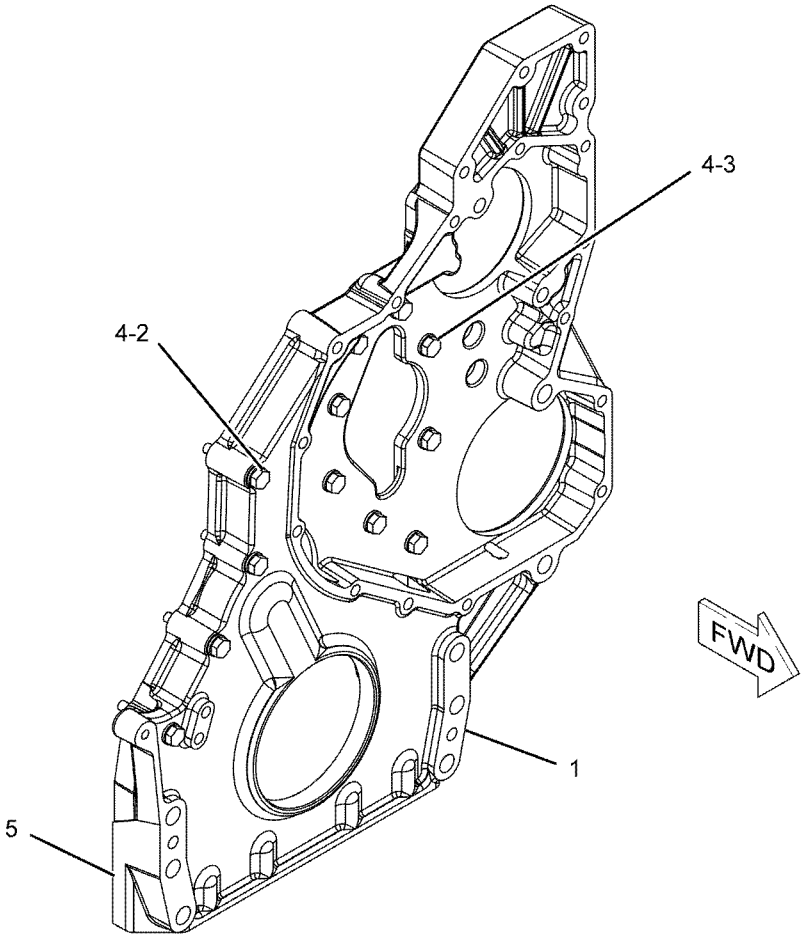

GRAPHIC #1 **<END>** g01141811

BASIC ENGINE

338-2147 LIFTING GP-ENGINE

S/N: THX28268-UP

PART OF 318-1906 ENGINE AR-COMPLETE

SMCS-1122 **i04727912**

NOTE	REF NO	GRAPHIC REF	PART NUMBER	QTY	PART NAME 1 2 3 4 5 6 (PRODUCT LEVEL)	SEE PAGE
	1	1	**188-1017**	1	PLATE-LIFTING	
	2	1	**324-6217**	1	BRACKET AS	
M		1	**159-3042**	5	NUT-WELD (M10X1.5-THD)	
	3	1	**3E-4353**	2	WASHER-HARD (11X25X3-MM THK)	
	4	1	**4P-7428**	2	CLIP	
	5	1	**5P-8245**	6	WASHER-HARD (13.5X25.5X3-MM THK)	
M	6	1	**6V-1820**	2	BOLT (M10X1.5X30-MM)	
M	7	1	**6V-5684**	2	BOLT (M12X1.75X45-MM)	
M	8	1	**6V-8197**	2	BOLT (M12X1.75X40-MM)	
M	9	1	**6V-8675**	4	BOLT (M12X1.75X35-MM)	
	10	1	**7D-1649**	4	WASHER-HARD (13.5X32X5-MM THK)	

M-METRIC PART

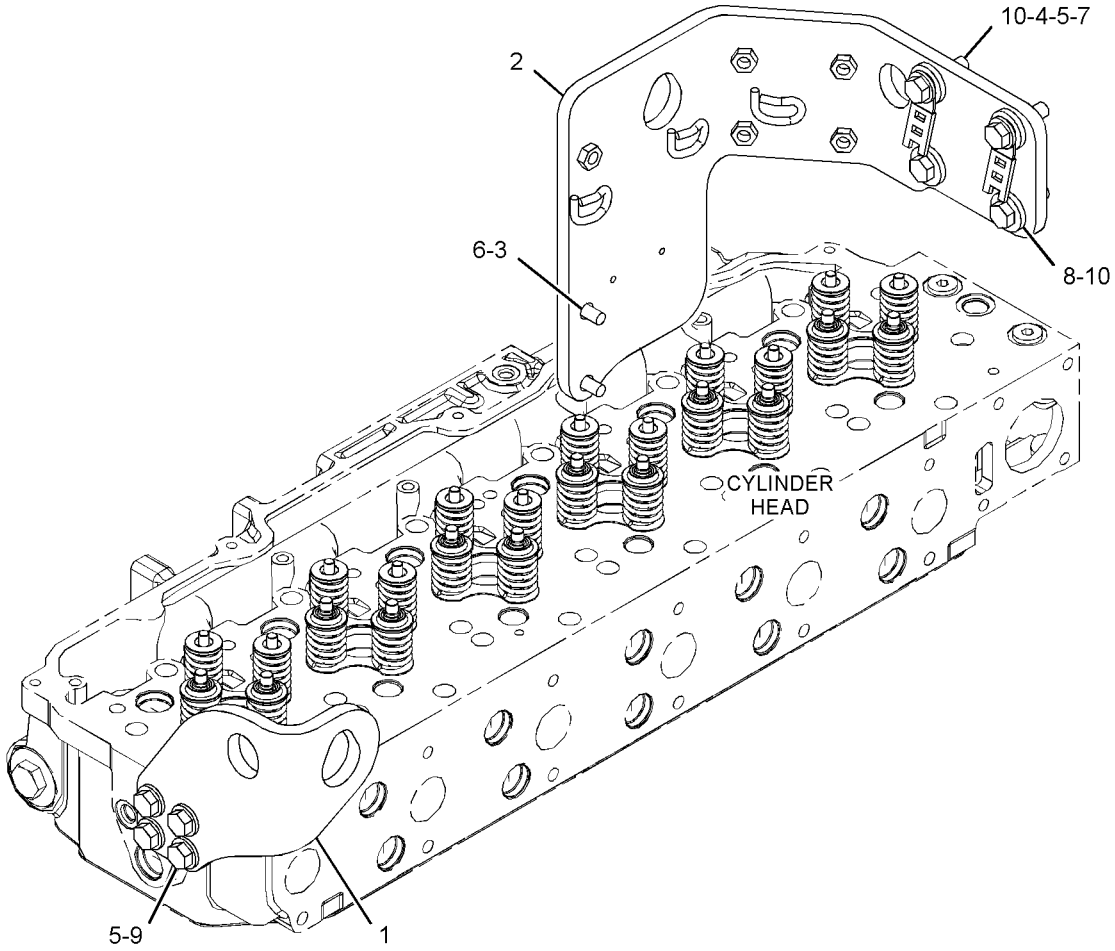

GRAPHIC #1 **<END>** g02848948

BASIC ENGINE

246-0600 MOUNTING GP-ALTERNATOR

S/N: THX28268-UP

PART OF 318-1906 ENGINE AR-COMPLETE

SMCS-1405 **i04017544**

NOTE	REF NO	GRAPHIC REF	PART NUMBER	QTY	PART NAME 1 2 3 4 5 6 (PRODUCT LEVEL)	SEE PAGE
	1	1	**7W-3872**	2	SLEEVE	
	2	1	**241-8475**	1	BRACKET	
M	3	1	**6V-2317**	4	BOLT (M8X1.25X30-MM)	
	4	1	**9M-1974**	4	WASHER-HARD (8.8X16X2-MM THK)	

M-METRIC PART

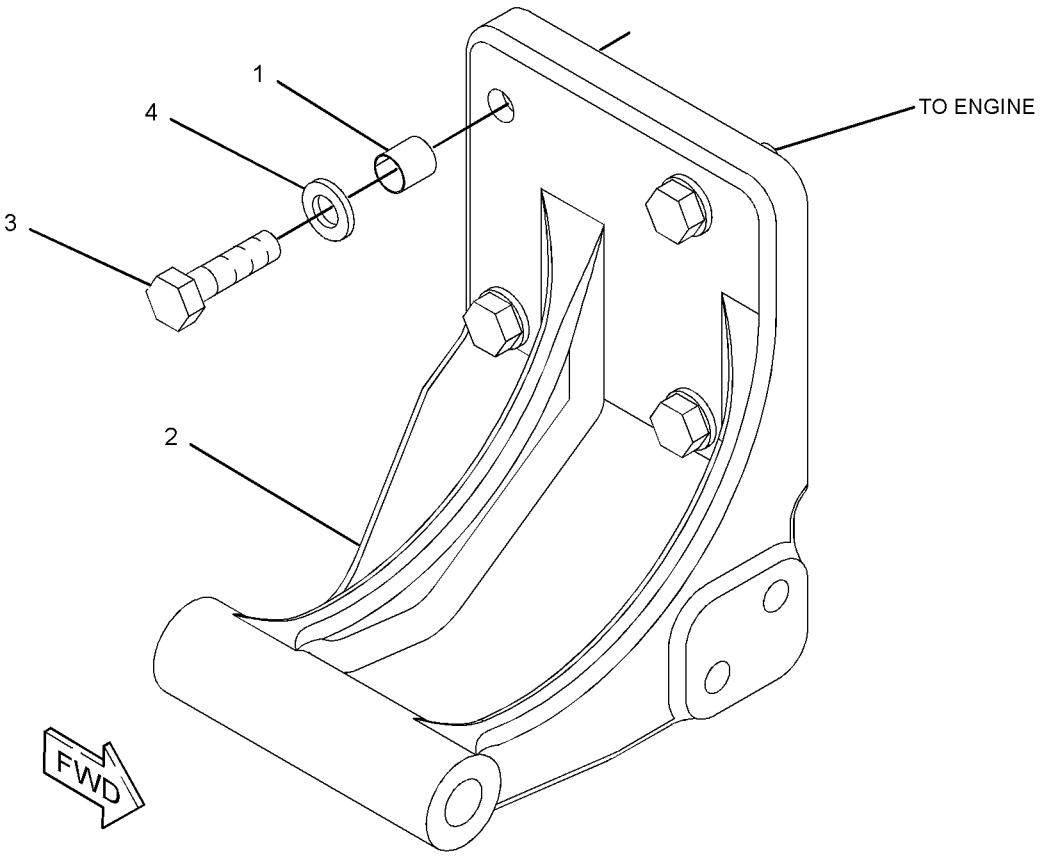

GRAPHIC #1 **<END>** g01206788

223-0556 MOUNTING GP-ENGINE

S/N: DSH1-UP; DLN1-UP; DJR1-UP
PART OF 313-3757 INSTALLATION AR

SMCS-1152, 1153, 1154 **i03984590**

NOTE	REF NO	GRAPHIC REF	PART NUMBER	QTY	PART NAME 1 2 3 4 5 6 (PRODUCT LEVEL)	SEE PAGE
	1	1	**7C-3567**	2	MOUNT AS	
	2	1	**183-9374**	2	BLOCK	
	3	1	**224-2695**	2	SUPPORT-ENGINE	
	4	1	**236-8191**	2	CAP-MOUNT	
	5	1	**7X-0515**	4	WASHER-HARD (17X35X5-MM THK)	
	6	1	**8T-4123**	16	WASHER (22X35X3.5-MM THK)	
M	7	1	**8T-4170**	4	BOLT (M20X2.5X150-MM)	
M	8	1	**8T-4193**	4	BOLT (M16X2X50-MM)	
M	9	1	**8T-6430**	12	BOLT (M20X2.5X50-MM)	

M-METRIC PART

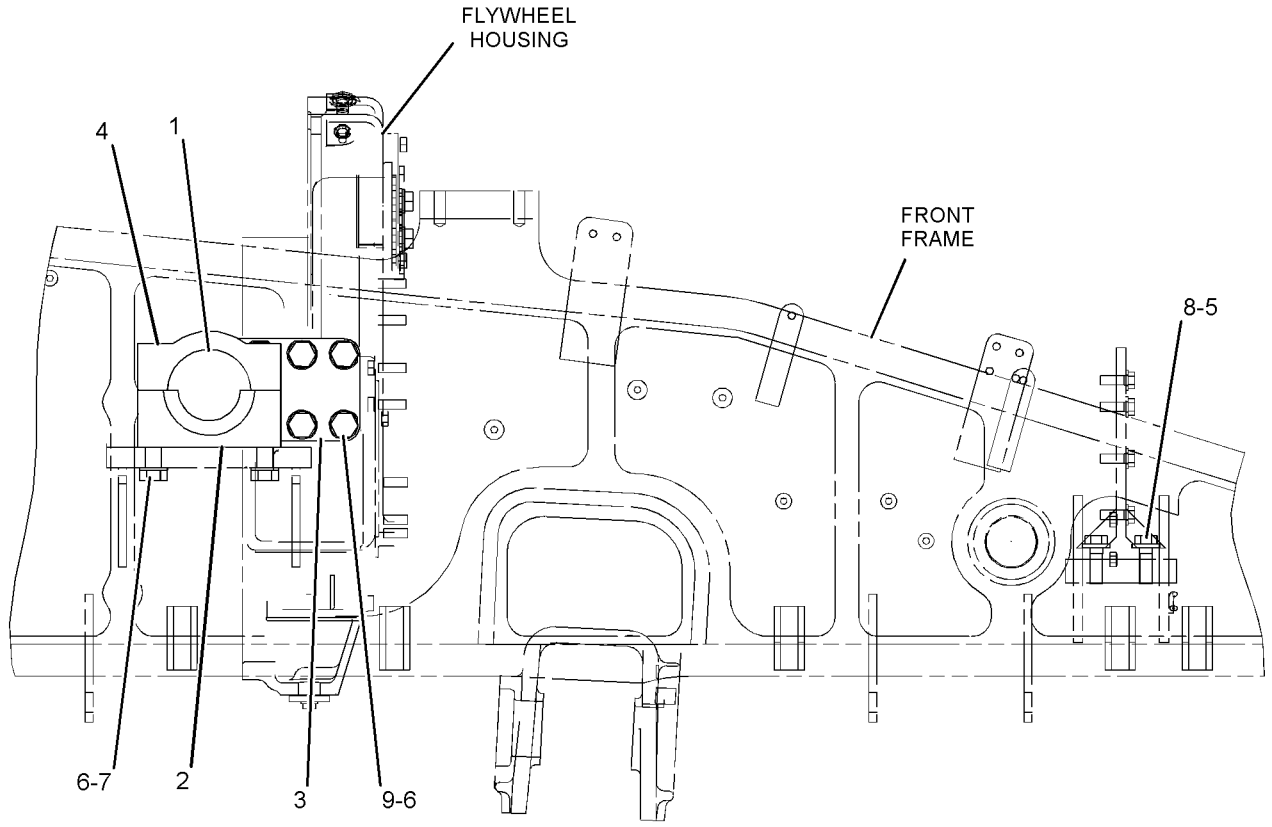

RIGHT SIDE VIEW

GRAPHIC #1 **<END>** g01209988

BASIC ENGINE

335-8389 MOUNTING GP-FAN DRIVE

S/N: THX28268-UP

PART OF 318-1906 ENGINE AR-COMPLETE

SMCS-1359 **i04727914**

NOTE	REF NO	GRAPHIC REF	PART NUMBER	QTY	PART NAME 1 2 3 4 5 6 (PRODUCT LEVEL)	SEE PAGE
	1	1	**324-6202**	1	SUPPORT-FAN DRIVE	
	2	1	**3E-4353**	5	WASHER-HARD (11X25X3-MM THK)	
M	3	1	**6V-5843**	5	BOLT (M10X1.5X45-MM)	

M-METRIC PART

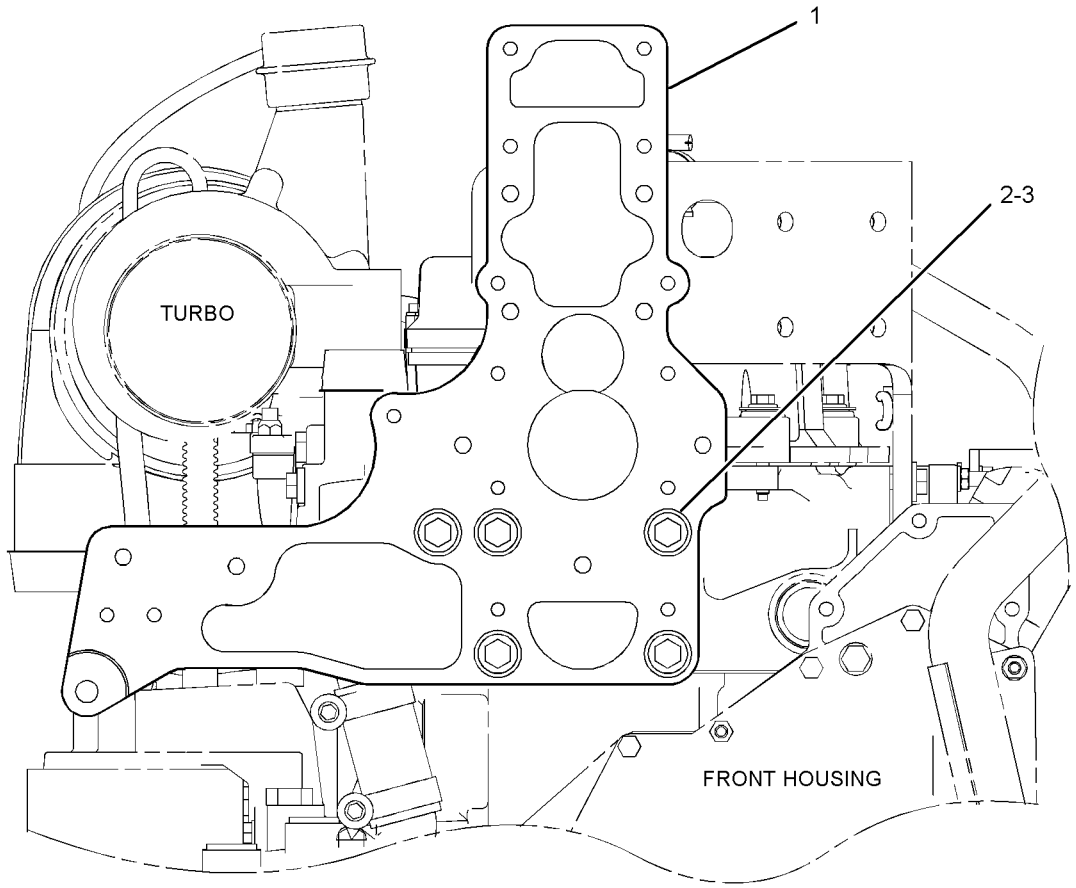

FRONT VIEW OF ENGINE

GRAPHIC #1 **<END>** g02848912

245-3786 PAN GP-OIL—ENGINE

S/N: THX28268-UP
26 LITER FRONT SUMP FOR PACCAR APPLICATIONS
PART OF 318-1906 ENGINE AR-COMPLETE

SMCS-1302 **i04727915**

NOTE	REF NO	GRAPHIC REF	PART NUMBER	QTY	PART NAME 1 2 3 4 5 6 (PRODUCT LEVEL)	SEE PAGE
	1	1	**241-4695**	1	PAN-OIL	
	2	1	**190-6114**	1	GASKET-OIL PAN	
M	3	1	**6V-3918**	32	BOLT (M8X1.25X50-MM)	
	4	1	**9M-1974**	32	WASHER-HARD (8.8X16X2-MM THK)	
	5	1	*319-6234*	2	PLUG AS	
					(EACH INCLUDES)	
		1	**238-5084**	1	SEAL-O-RING	
		1	**9S-9334**	1	PLUG-O-RING	
B	6	1	**4C-9612**		SEALANT-SILICONE	

B-USE AS REQUIRED
M-METRIC PART

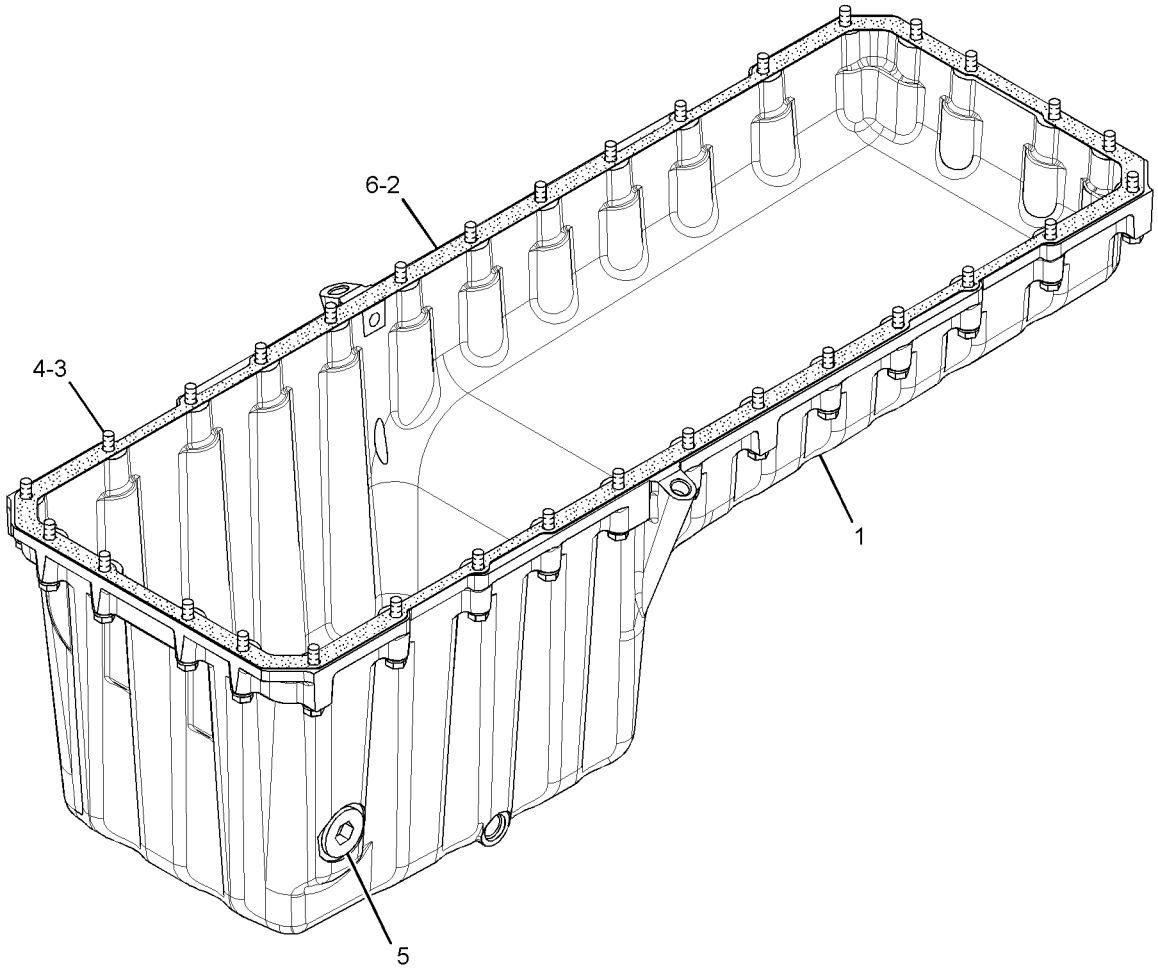

GRAPHIC #1 **<END>** g02723875

BASIC ENGINE

265-1400 PISTON & ROD GP

S/N: THX28268-UP
16.1:1 COMPRESSION RATIO
PART OF 385-2783 ENGINE AR-CORE

SMCS-1225 **i04017504**

NOTE	REF NO	GRAPHIC REF	PART NUMBER	QTY	PART NAME 1 2 3 4 5 6 (PRODUCT LEVEL)	SEE PAGE
	1	1	**213-3190**	1	BEARING (CONNECTING ROD)	
R	2	1	**160-8199**	1	ROD AS	
	2A	1	**160-8194**	1	BEARING (CONNECTING ROD)	
M	2B	1	**160-8197**	2	BOLT	
	3	1	**166-3648**	1	PIN-PISTON	
	4	1	**168-7211**	1	RING-PISTON (OIL CONTROL)	
	5	1	**265-1401**	1	CROWN AS-PISTON	
	6	1	**161-3424**	1	RING-PISTON (INTERMEDIATE)	
	7	1	**197-9367**	1	TUBE AS (PISTON COOLING JET)	
	8	1	**197-9392**	1	RING-PISTON (TOP)	
	9	1	**324-7380**	1	SKIRT-PISTON	
M	10	1	**6V-3940**	1	BOLT (M8X1.25X25-MM)	
	11	1	**7X-2908**	2	RING-RETAINING	

M-METRIC PART
R-REMFG PART MAY BE AVAILABLE

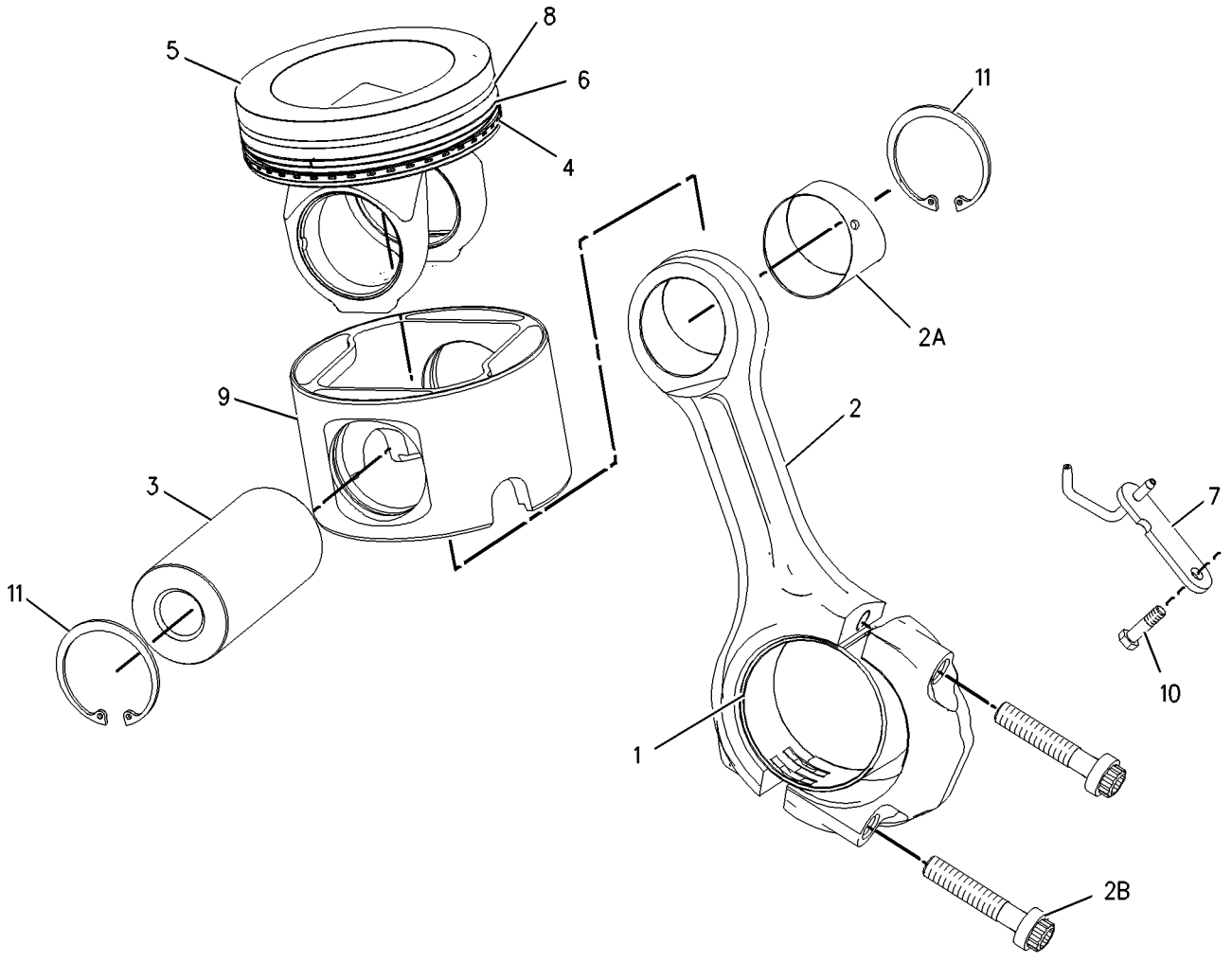

GRAPHIC #1 **<END>** g00922644

BASIC ENGINE

252-1567 PLUG GP-ENGINE

S/N: THX28268-UP

PART OF 318-1906 ENGINE AR-COMPLETE

SMCS-1000 **i04017538**

NOTE	REF NO	GRAPHIC REF	PART NUMBER	QTY	PART NAME 1 2 3 4 5 6 (PRODUCT LEVEL)	SEE PAGE
	1	1	*315-9859*	1	PLUG AS	
		1	**238-5082**	1	SEAL-O-RING	
		1	**9S-8008**	1	PLUG-O-RING	
	2	1	*183-3407*	1	PLUG AS	
		1	**214-7568**	1	SEAL-O-RING	
		1	**9S-8004**	1	PLUG-O-RING	
	3	1	*307-2673*	1	PLUG AS	
		1	**238-5080**	1	SEAL-O-RING	
		1	**9S-8005**	1	PLUG-O-RING	

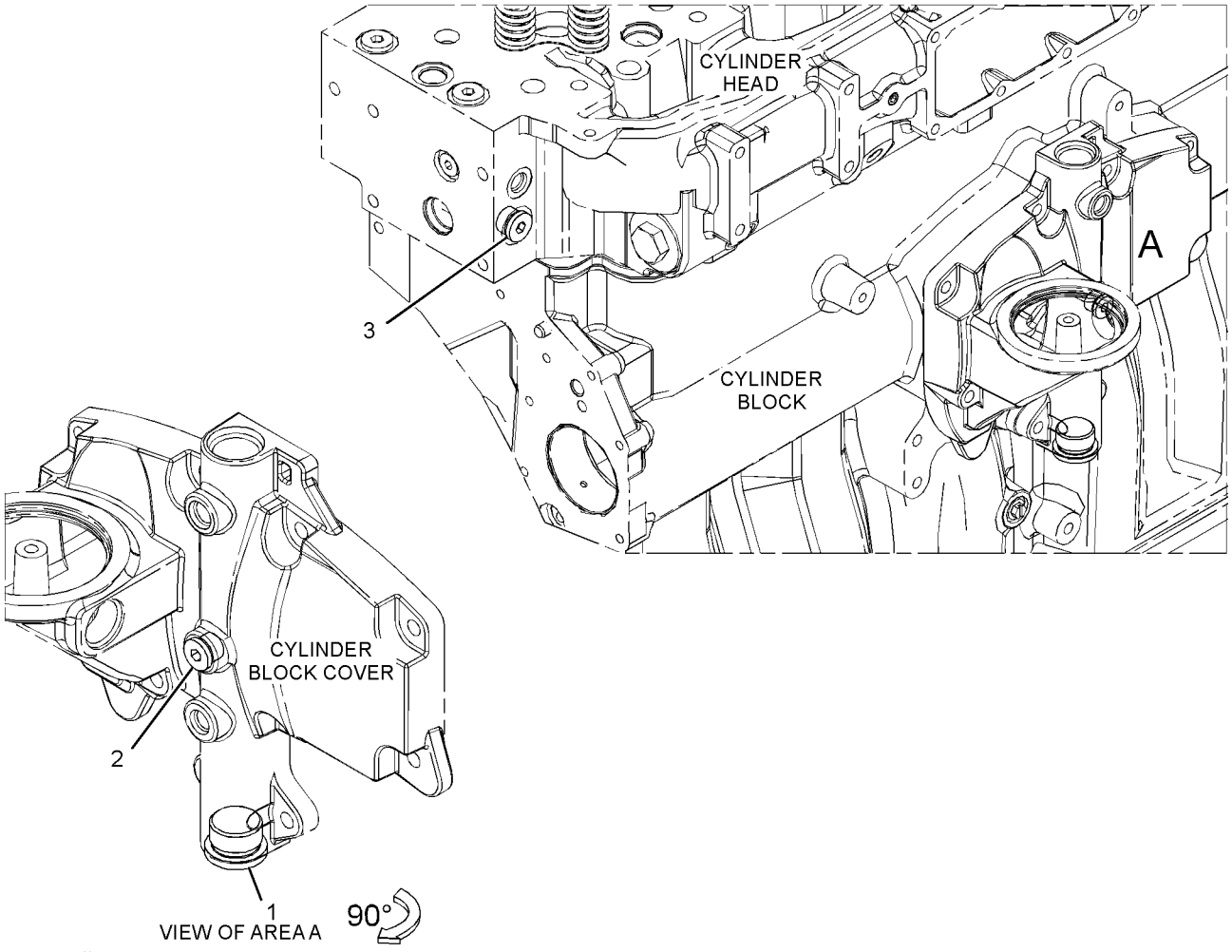

GRAPHIC #1 **<END>** g02163416

BASIC ENGINE

323-3269 PULLEY GP-FAN & ALT DRIVE

S/N: DSH1-UP; DLN1-UP; DJR1-UP
PART OF 313-3757 INSTALLATION AR

SMCS-1359, 1425 **i04657315**

NOTE	REF NO	GRAPHIC REF	PART NUMBER	QTY	PART NAME 1 2 3 4 5 6 (PRODUCT LEVEL)	SEE PAGE
	1	1	**1L-8545**	1	SPACER (1X1.25X0.99-IN THK)	
	2	1	**5M-9735**	1	SEAL-LIP TYPE	
	3	1	**6B-1124**	2	BALL BEARING	
	4	1	**6N-5337**	1	V-BELT SET (INCLUDES 3-BELTS)	
	5	1	**7C-8370**	1	CAP-DUST	
	6	1	**123-0790**	1	PULLEY (8-GROOVE)	
	7	1	**185-0838**	1	ROD-ADJUSTING	
	8	1	**215-3296**	1	ARM AS	
		1	**3E-4999**	1	PIN-SPRING	
	9	1	**222-9151**	1	WASHER-HARD (11X32X5-MM THK)	
	10	1	**241-4981**	1	BELT-SERPENTINE	
	11	1	**267-7509**	1	PULLEY	
	12	1	**329-4498**	1	ADAPTER-FAN	
	13	1	**357-7848**	1	PULLEY-FAN	
	14	1	**5P-1076**	1	WASHER-HARD (13.5X30X4-MM THK)	
M	15	1	**6V-4248**	1	BOLT (M10X1.5X25-MM)	
	16	1	**7C-2164**	1	BLOCK	
	17	1	**8T-4121**	14	WASHER-HARD (11X21X2.5-MM THK)	
M	18	1	**8T-4186**	7	BOLT (M10X1.5X40-MM)	
M	19	1	**8T-4196**	7	BOLT (M10X1.5X35-MM)	
	20	1	**8T-4223**	3	WASHER-HARD (13.5X25.5X3-MM THK)	
M	21	1	**8T-4244**	2	NUT (M12X1.75-THD)	
M	22	1	**8T-4910**	1	BOLT (M12X1.75X60-MM)	
M	23	1	**8T-6868**	1	BOLT (M12X1.75X80-MM)	

M-METRIC PART

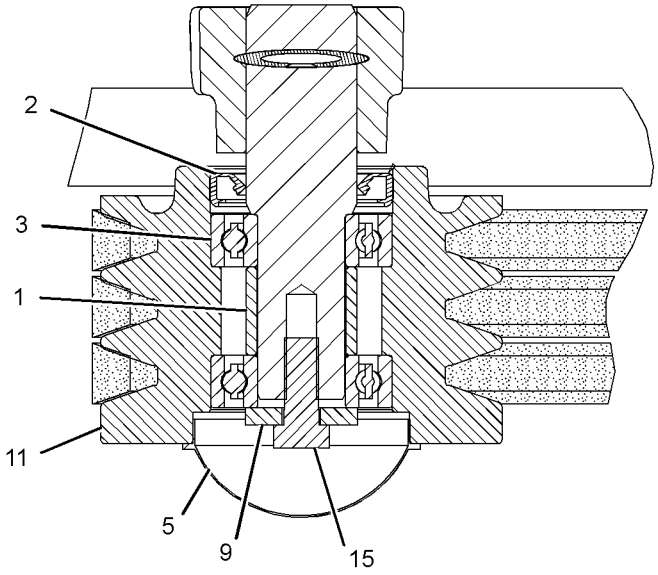

SECTION A-A

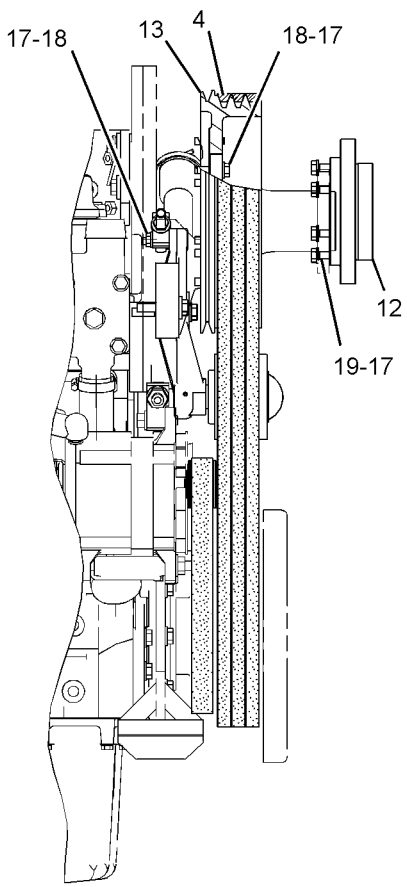

VIEW B-B

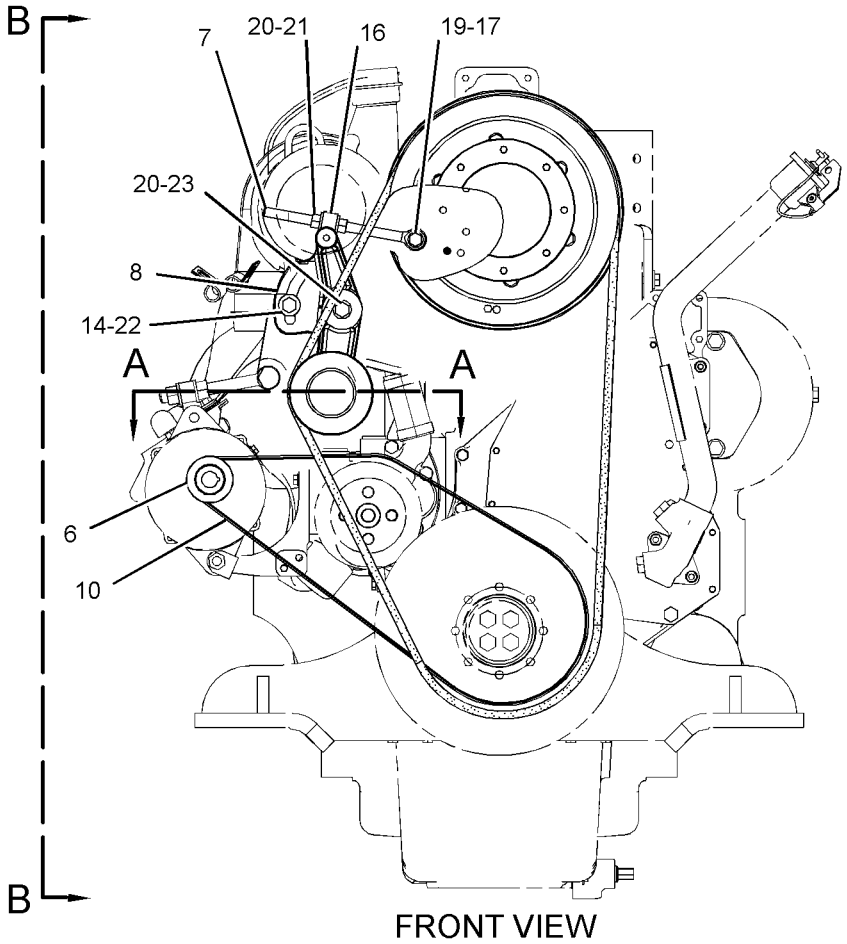

FRONT VIEW

GRAPHIC #1 **<END>** g02820157

BASIC ENGINE

374-0773 PULLEY GP-FAN & ALT DRIVE

S/N: DSH1-UP; DLN1-UP; DJR1-UP
PART OF 378-2269 COLD WEATHER AR
AN ATTACHMENT

SMCS-1359, 1425 **i04769339**

NOTE	REF NO	GRAPHIC REF	PART NUMBER	QTY	PART NAME 1 2 3 4 5 6 (PRODUCT LEVEL)	SEE PAGE
	1	1	**1L-8545**	1	SPACER (1X1.25X0.99-IN THK)	
	2	1	**5M-9735**	1	SEAL-LIP TYPE	
	3	1	**6B-1124**	2	BALL BEARING	
	4	1	**6N-5337**	1	V-BELT SET (INCLUDES 3-BELTS)	
		1	**6N-5338**	3	V-BELT (FAN DRIVE)	
	5	1	**7C-8370**	1	CAP-DUST	
	6	1	**123-0790**	1	PULLEY (8-GROOVE)	
	7	1	**185-0838**	1	ROD-ADJUSTING	
	8	1	**215-3296**	1	ARM AS	
		1	**3E-4999**	1	PIN-SPRING	
	9	1	**222-9151**	1	WASHER-HARD (11X32X5-MM THK)	
	10	1	**241-4981**	1	BELT-SERPENTINE	
	11	1	**267-7509**	1	PULLEY	
	12	1	**357-7848**	1	PULLEY-FAN	
	13	1	**380-2009**	1	ADAPTER-FAN	
	14	1	**5P-1076**	1	WASHER-HARD (13.5X30X4-MM THK)	
M	15	1	**6V-4248**	1	BOLT (M10X1.5X25-MM)	
	16	1	**7C-2164**	1	BLOCK	
	17	1	**8T-4121**	14	WASHER-HARD (11X21X2.5-MM THK)	
M	18	1	**8T-4186**	7	BOLT (M10X1.5X40-MM)	
M	19	1	**8T-4196**	7	BOLT (M10X1.5X35-MM)	
	20	1	**8T-4223**	3	WASHER-HARD (13.5X25.5X3-MM THK)	
M	21	1	**8T-4244**	2	NUT (M12X1.75-THD)	
M	22	1	**8T-4910**	1	BOLT (M12X1.75X60-MM)	
M	23	1	**8T-6868**	1	BOLT (M12X1.75X80-MM)	

M-METRIC PART

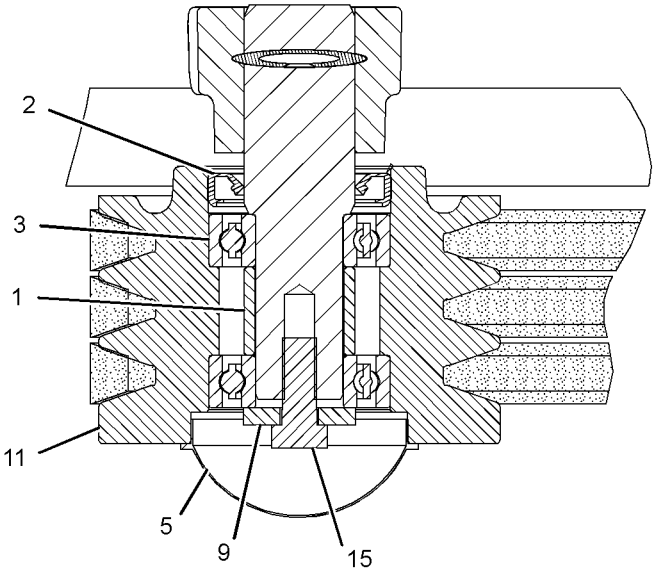

SECTION A-A

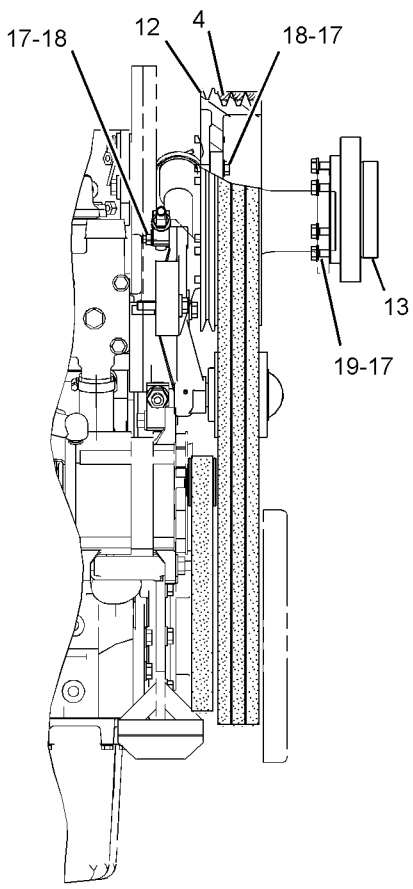

VIEW B-B

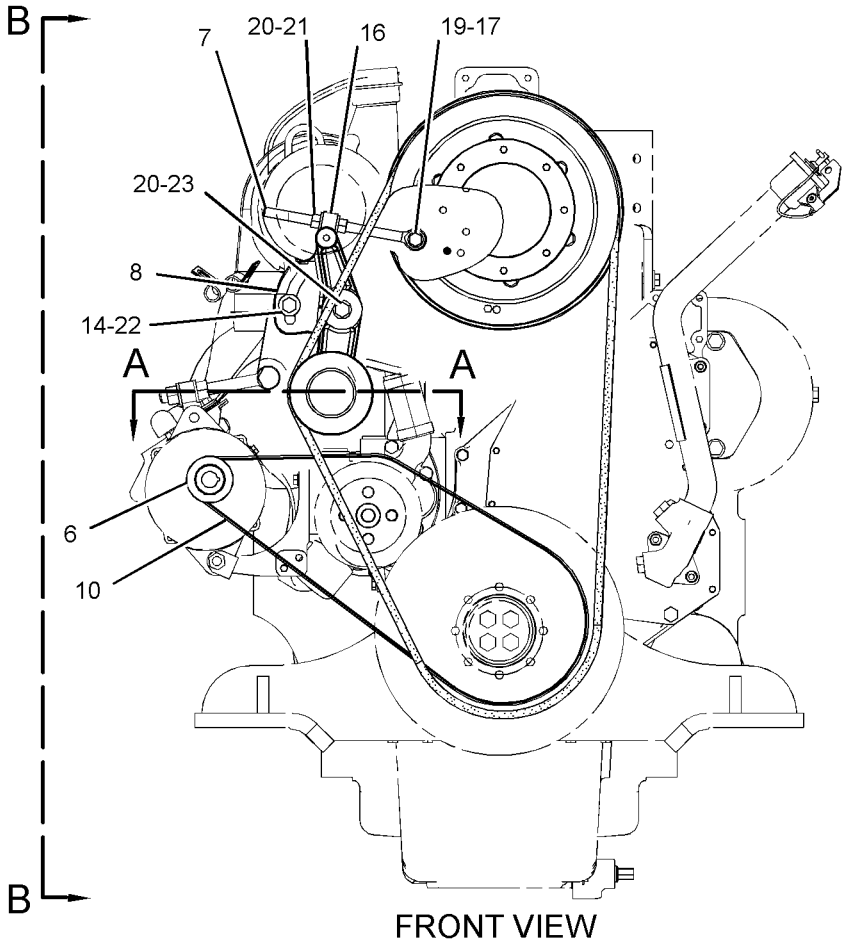

FRONT VIEW

GRAPHIC #1 **<END>** g02826996

BASIC ENGINE

213-9320 ROCKER ARM GP–EXHAUST

S/N: THX28268-UP

PART OF 212-8926 VALVE MECHANISM GP

SMCS-1123 **i04017519**

NOTE	REF NO	GRAPHIC REF	PART NUMBER	QTY	PART NAME 1 2 3 4 5 6 (PRODUCT LEVEL)	SEE PAGE
R	1	1	**163-2447**	1	ROCKER ARM AS	
M	2	1	**260-7524**	1	SCREW-VALVE ADJUSTMENT (M10X1.5-THD)	
M	3	1	**2Y-5829**	1	NUT (M10X1.5-THD)	

M-METRIC PART
R-REMFG PART MAY BE AVAILABLE

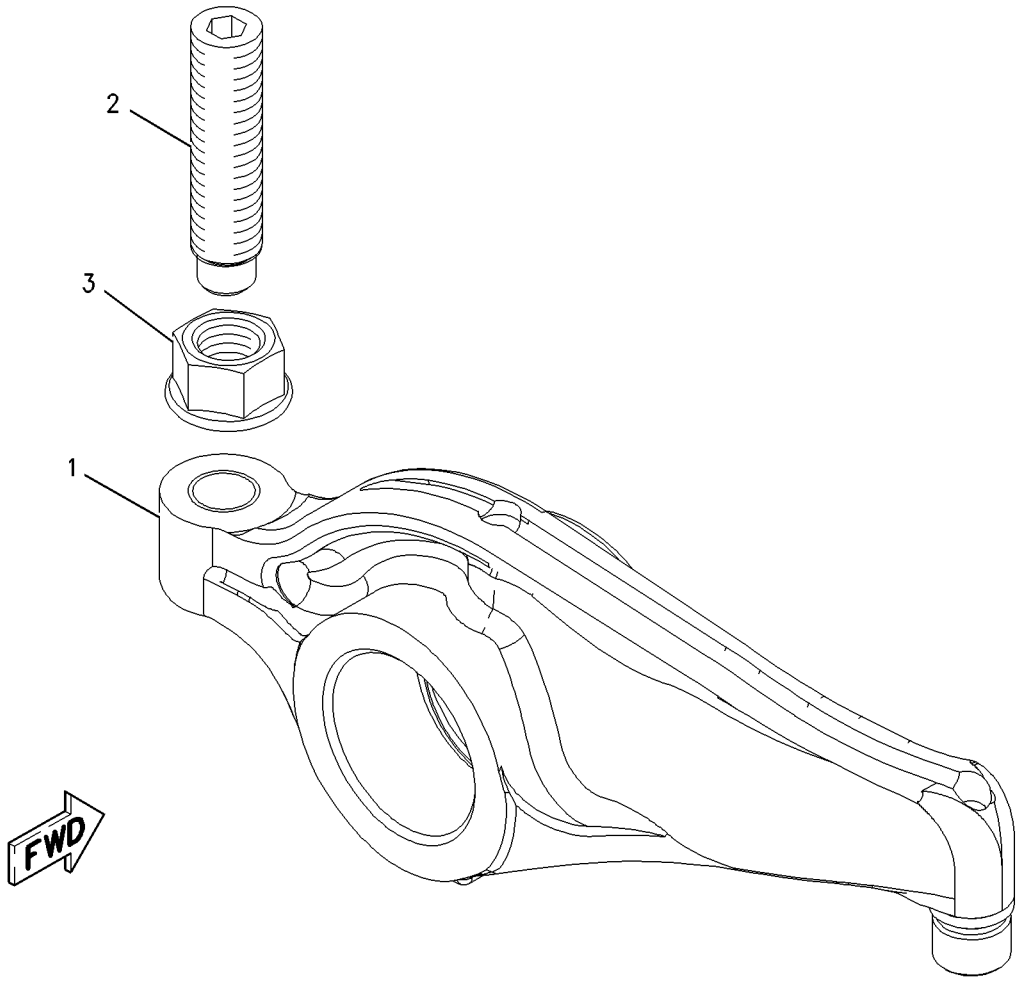

GRAPHIC #1 **<END>** g00848359

242-0329 ROCKER ARM GP–INLET

S/N: THX28268-UP

PART OF 212-8926 VALVE MECHANISM GP

SMCS-1123 **i04017530**

NOTE	REF NO	GRAPHIC REF	PART NUMBER	QTY	PART NAME 1 2 3 4 5 6 (PRODUCT LEVEL)	SEE PAGE
M	1	1	**260-7524**	1	SCREW-VALVE ADJUSTMENT (M10X1.5-THD)	
R	2	1	**242-0328**	1	ROCKER ARM AS	
M	3	1	**2Y-5829**	1	NUT (M10X1.5-THD)	

M-METRIC PART
R-REMFG PART MAY BE AVAILABLE

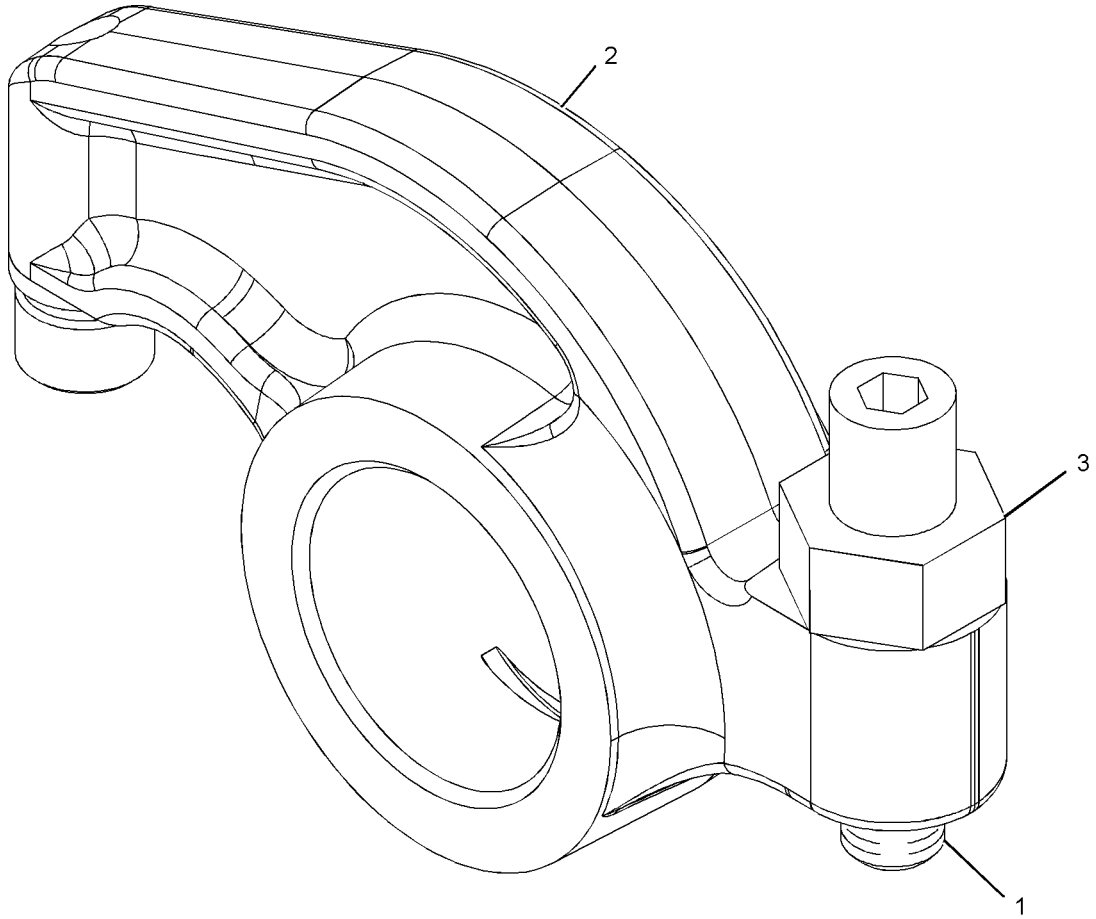

GRAPHIC #1 **<END>** g01056688

189-9306 SEAL GP-CRANKSHAFT

S/N: THX28268-UP
FRONT AND REAR
PART OF 318-1906 ENGINE AR-COMPLETE
FOR USE WITH WET FLYWHEEL HOUSING AND FRONT DUST EXCLUDER

SMCS-1160, 1161 **i04017424**

NOTE	REF NO	GRAPHIC REF	PART NUMBER	QTY	PART NAME 1 2 3 4 5 6 (PRODUCT LEVEL)	SEE PAGE
	1	1	**4R-9999**	1	EXCLUDER-CRANKSHAFT SEAL	
M	2	1	**206-3719**	9	BOLT AS	
	3	1	**245-7339**	1	SEAL-CRANKSHAFT (FRONT)	
Y	4	1	**285-4074**	1	SEAL GP-CRANKSHAFT (REAR)	59

M-METRIC PART
Y-SEPARATE ILLUSTRATION

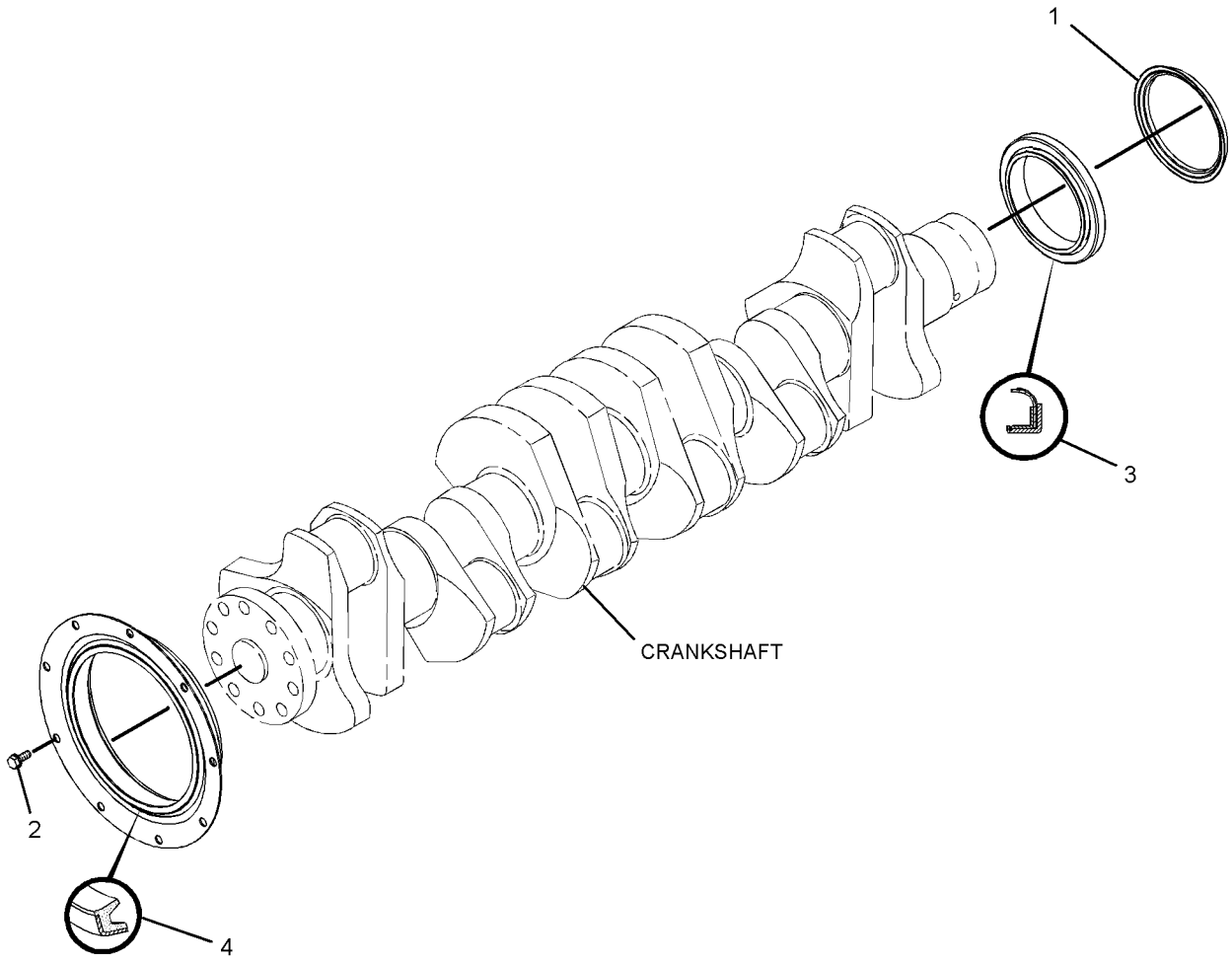

GRAPHIC #1 **<END>** g01439940

BASIC ENGINE

285-4074 SEAL GP-CRANKSHAFT

S/N: THX28268-UP

PART OF 189-9306 SEAL GP-CRANKSHAFT

SMCS-1160, 1161 **i04023102**

NOTE	REF NO	GRAPHIC REF	PART NUMBER	QTY	PART NAME 1 2 3 4 5 6 (PRODUCT LEVEL)	SEE PAGE
					(NO SERVICED PARTS)	

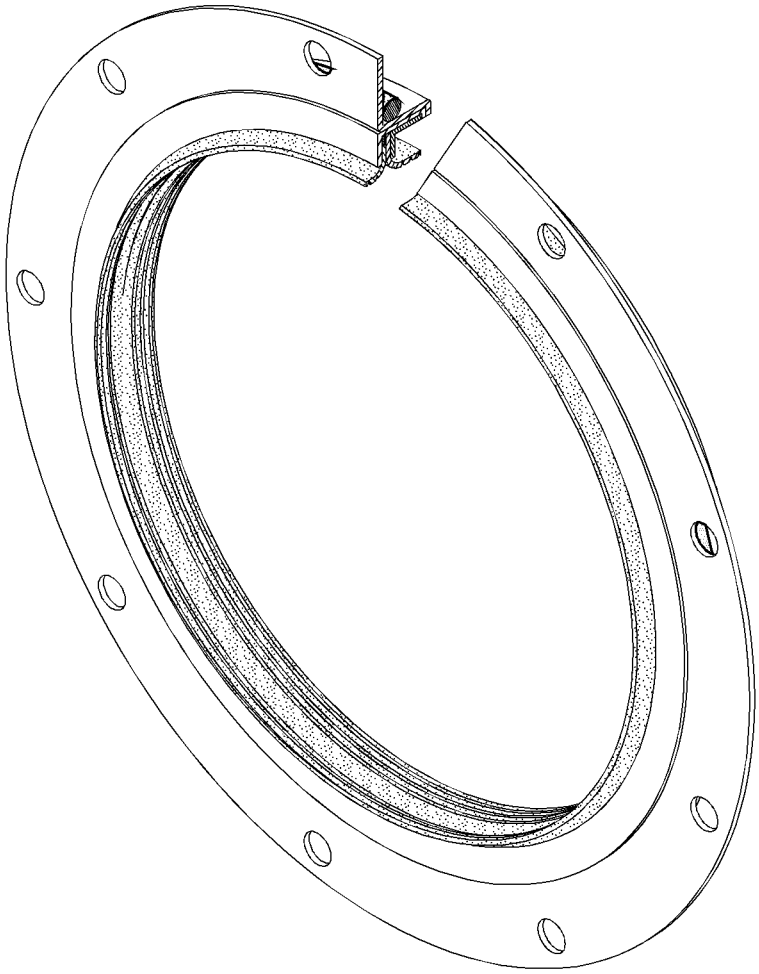

GRAPHIC #1 **<END>** g02202493

166-1790 SUPPORT GP-ENGINE

S/N: THX28268-UP
PART OF 318-1906 ENGINE AR-COMPLETE
FOR USE WITH FRONT TRUNNION ENGINE SUPPORT

SMCS-1152, 1153, 1154 **i04017421**

NOTE	REF NO	GRAPHIC REF	PART NUMBER	QTY	PART NAME 1 2 3 4 5 6 (PRODUCT LEVEL)	SEE PAGE
	1	1	**169-3899**	1	SUPPORT AS-ENGINE	
M	1A	1	**8T-3490**	4	NUT-WELD (M10X1.5 THD)	
	2	1	**5P-8245**	6	WASHER-HARD (13.5X25.5X3-MM THK)	
M	3	1	**6V-8675**	6	BOLT (M12X1.75X35-MM)	

M-METRIC PART

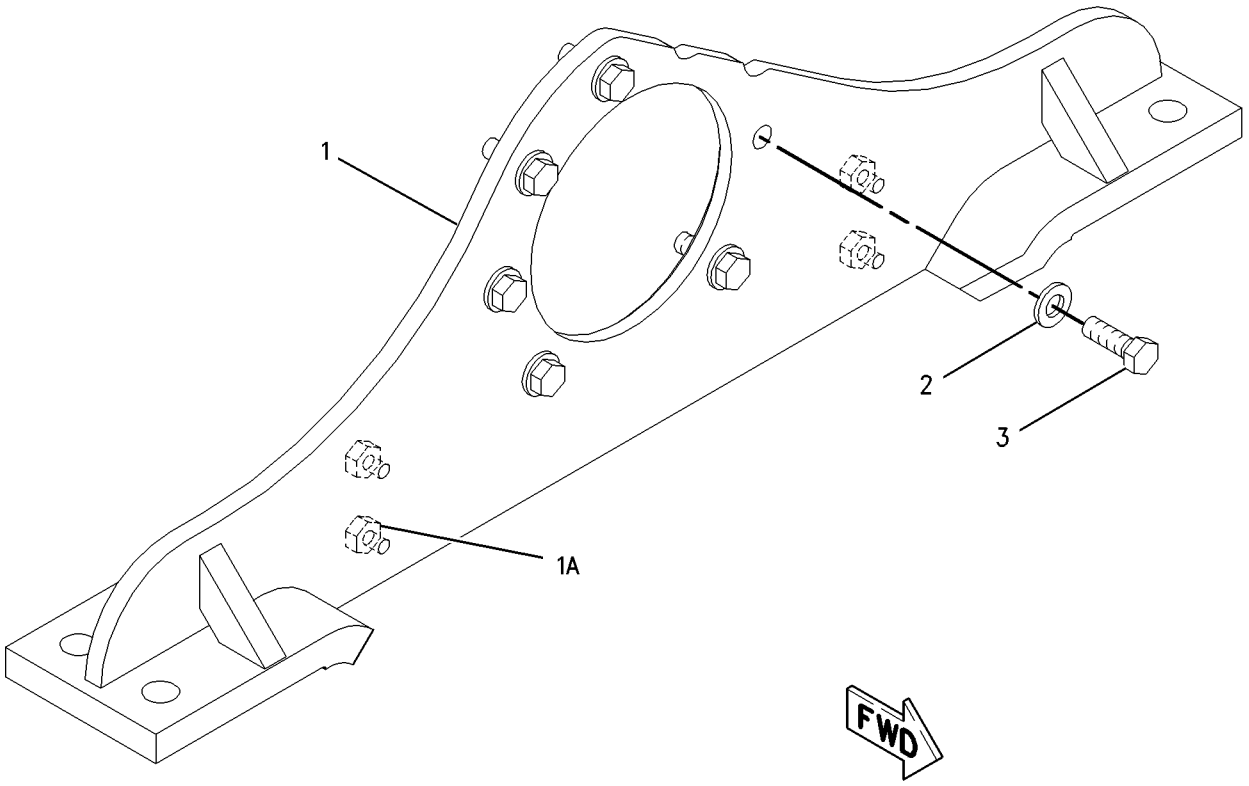

GRAPHIC #1 **<END>** g00852403

BASIC ENGINE

166-1792 TRUNNION GP-ENGINE

S/N: THX28268-UP

PART OF 318-1906 ENGINE AR-COMPLETE

SMCS-1153 **i04017420**

NOTE	REF NO	GRAPHIC REF	PART NUMBER	QTY	PART NAME 1 2 3 4 5 6 (PRODUCT LEVEL)	SEE PAGE
	1	1	**169-3895**	1	TRUNNION AS	
	2	1	**5P-8245**	6	WASHER-HARD (13.5X25.5X3-MM THK)	
M	3	1	**6V-5696**	6	BOLT (M12X1.75X80-MM)	

M-METRIC PART

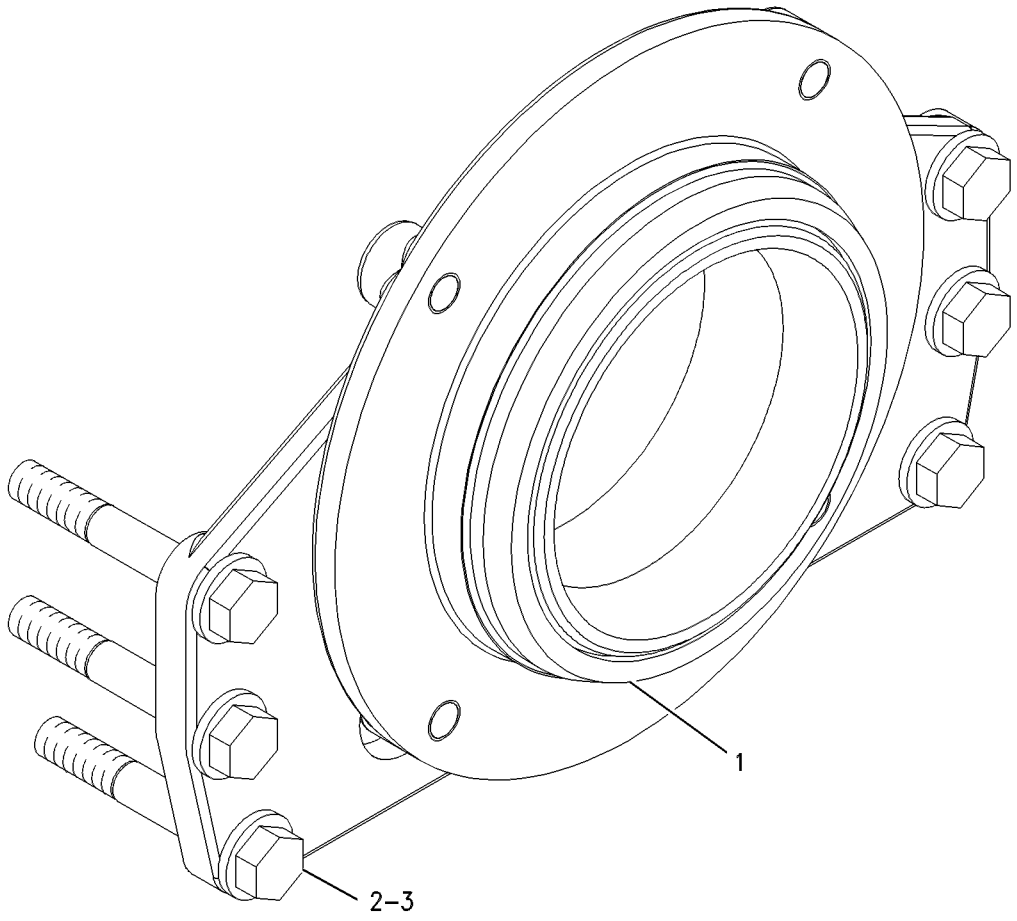

GRAPHIC #1 **<END>** g00644918

BASIC ENGINE

212-8926 VALVE MECHANISM GP

S/N: THX28268-UP

PART OF 242-0447 VALVE MECHANISM GP

SMCS-1102, 1121, 1123 **i04017517**

NOTE	REF NO	GRAPHIC REF	PART NUMBER	QTY	PART NAME 1 2 3 4 5 6 (PRODUCT LEVEL)	SEE PAGE
	1	1	**163-2445**	1	SHAFT AS-ROCKER ARM	
		1	**8F-6575**	2	PLUG-CUP	
	2	1	**163-2459**	6	SPRING	
	3	1	**164-5669**	2	STAND (END)	
	4	1	**176-5913**	4	STAND (MIDDLE)	
	5	1	**176-5914**	1	STAND (OIL)	
Y	6	1	*213-9320*	6	ROCKER ARM GP (EXHAUST)	56
Y	7	1	*242-0329*	6	ROCKER ARM GP (INLET)	57
	8	1	**5P-8245**	7	WASHER-HARD (13.5X25.5X3-MM THK)	
M	9	1	**8T-0646**	7	BOLT (M12X1.75X110-MM)	

M-METRIC PART
Y-SEPARATE ILLUSTRATION

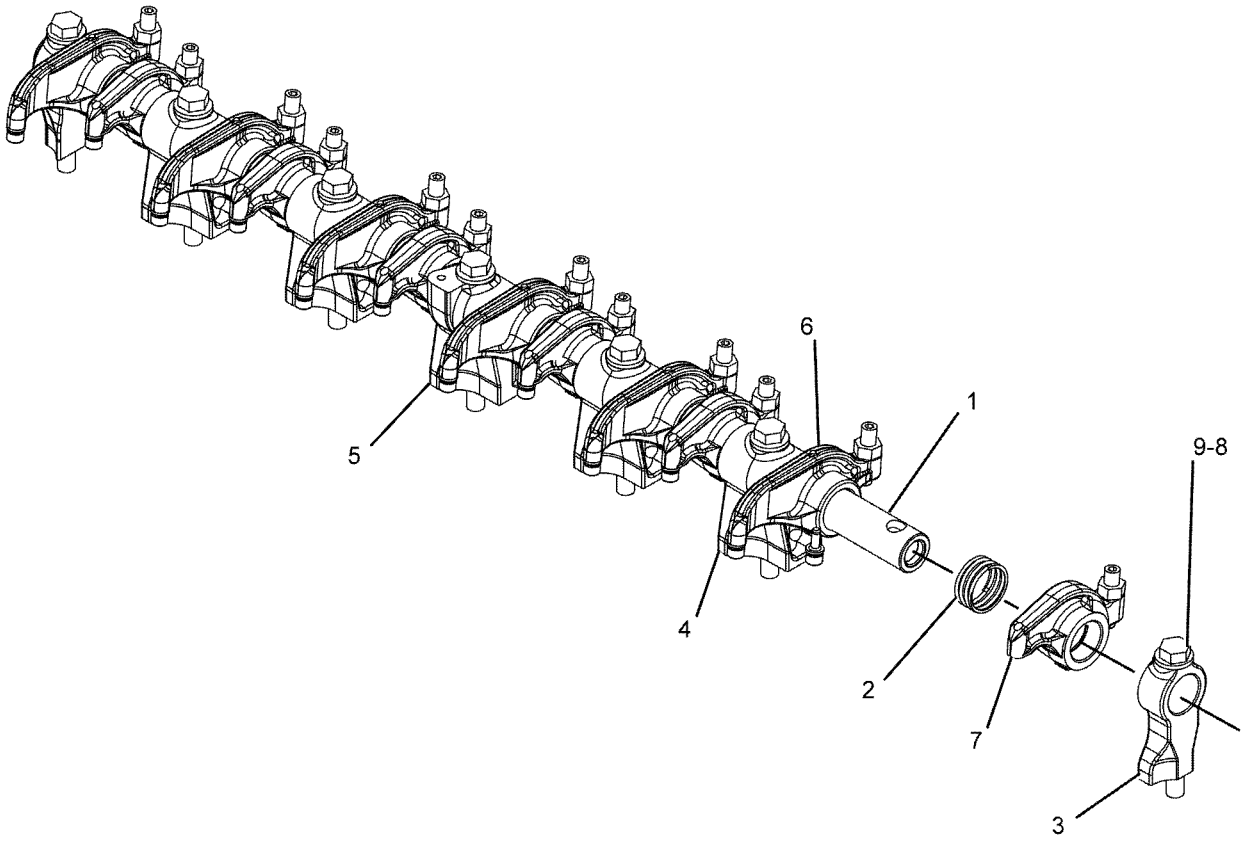

GRAPHIC #1 **<END>** g01069313

242-0447 VALVE MECHANISM GP

S/N: THX28268-UP

PART OF 385-2783 ENGINE AR-CORE

SMCS-1102, 1121, 1123 **i04683233**

NOTE	REF NO	GRAPHIC REF	PART NUMBER	QTY	PART NAME 1 2 3 4 5 6 (PRODUCT LEVEL)	SEE PAGE
	1	1	**384-4171**	12	SPRING-GUIDE	
	2	1	**264-6156**	12	ROD-VALVE PUSH	
	3	1	**384-4172**	12	LIFTER AS-VALVE	
Y	4	1	*212-8926*	1	VALVE MECHANISM GP	62
	5	1	**244-5891**	6	BRIDGE-VALVE	
	6	1	**255-8674**	6	BRIDGE-VALVE	

Y-SEPARATE ILLUSTRATION

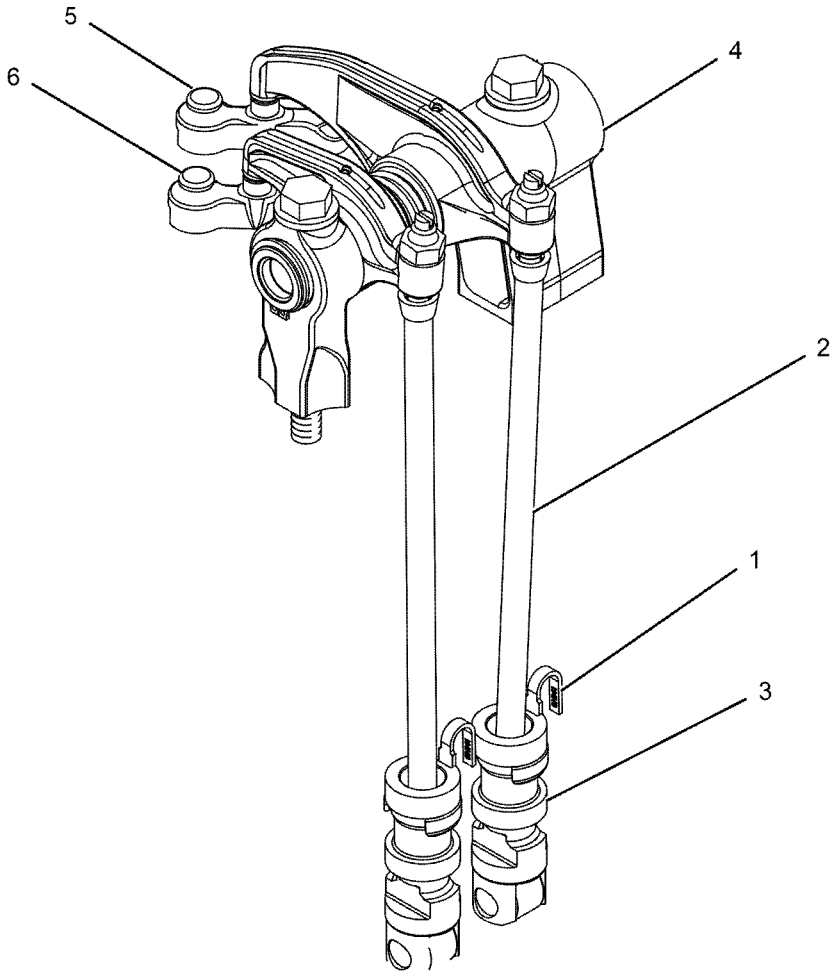

GRAPHIC #1 **<END>** g01043825

271-1482 YOKE GP

S/N: DSH1-UP; DLN1-UP; DJR1-UP
PART OF 313-3757 INSTALLATION AR

SMCS-3108 **i04656837**

NOTE	REF NO	GRAPHIC REF	PART NUMBER	QTY	PART NAME 1 2 3 4 5 6 (PRODUCT LEVEL)	SEE PAGE
	1	1	**128-3341**	1	COVER	
	2	1	**224-2694**	1	FLANGE	
	3	1	**128-3813**	1	SEAL-LIP TYPE	
	4	1	**1L-4775**	1	RING-RETAINING	
	5	1	**2S-3029**	1	BALL BEARING	
	6	1	**6V-8260**	1	SEAL-O-RING	
M	7	1	**8T-4779**	2	BOLT (M16X2X35-MM)	
	8	1	**9X-8257**	2	WASHER (17.5X30X3.5-MM THK)	

M-METRIC PART

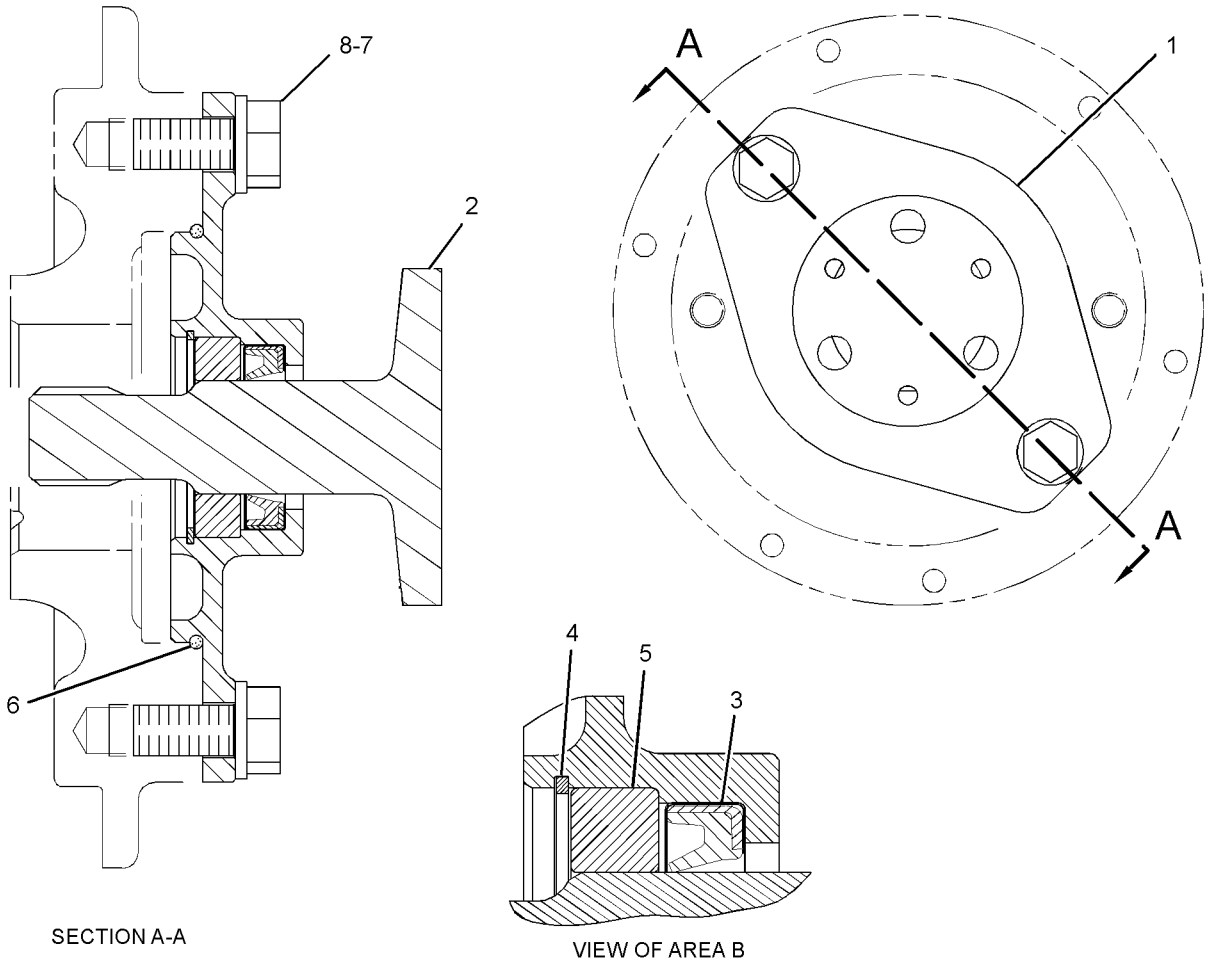

SECTION A-A

VIEW OF AREA B

GRAPHIC #1 **<END>** g01287178

389-8270 FILLER GP-ENGINE OIL

S/N: THX28268-UP

PART OF 318-1906 ENGINE AR-COMPLETE

SMCS-1316 **i04735052**

NOTE	REF NO	GRAPHIC REF	PART NUMBER	QTY	PART NAME 1 2 3 4 5 6 (PRODUCT LEVEL)	SEE PAGE
	1	1	**206-5887**	1	TUBE AS	
		1	**2P-2717**	1	HASP	
		1	**4N-6045**	1	LUG	
		1	**6N-2985**	1	CAP AS-FILLER (ENGINE OIL)	
	2	1	**061-9455**	1	SEAL-O-RING	
M	3	1	**5P-7970**	4	NUT (M8X1.25-THD)	
	4	1	**9M-1974**	4	WASHER-HARD (8.8X16X2-MM THK)	

M-METRIC PART

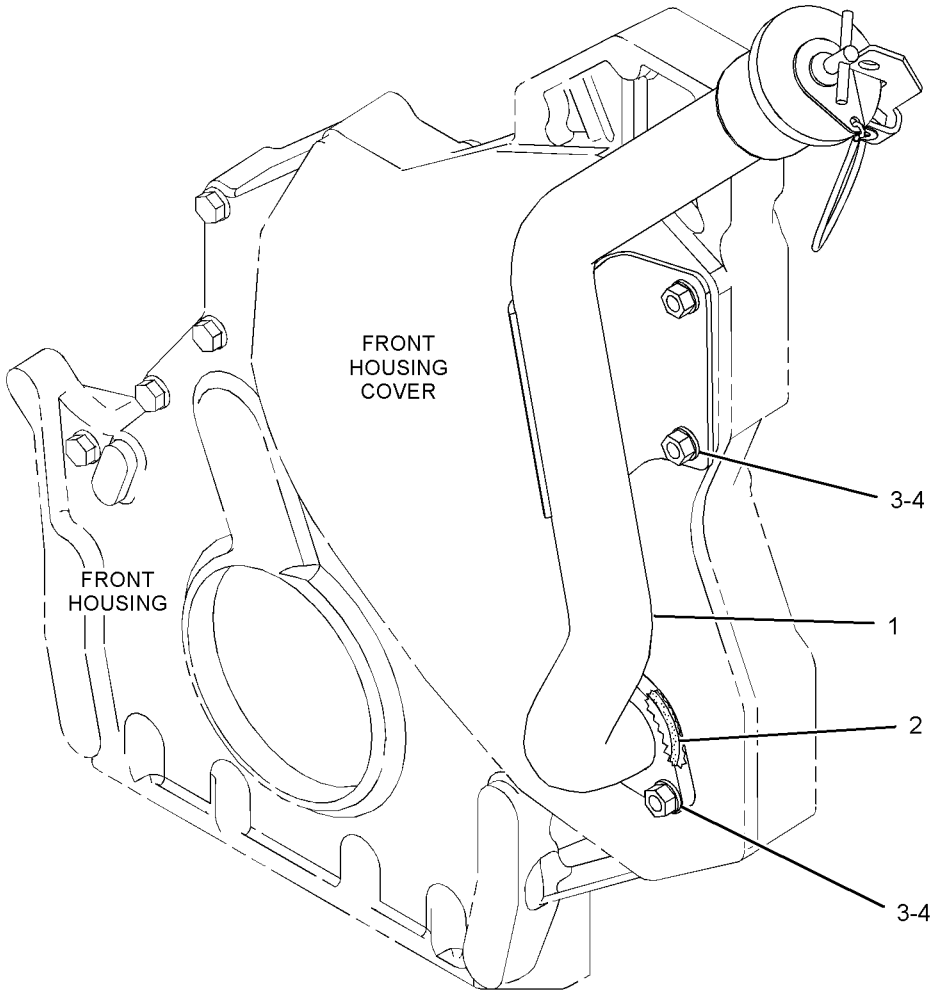

GRAPHIC #1 **<END>** g02841557

LUBRICATION SYSTEM

183-2097 FILTER GP-ENGINE OIL

S/N: THX28268-UP

PART OF 318-1906 ENGINE AR-COMPLETE

SMCS-1306, 1308 **i04565076**

NOTE	REF NO	GRAPHIC REF	PART NUMBER	QTY	PART NAME 1 2 3 4 5 6 (PRODUCT LEVEL)	SEE PAGE
	1	2	**7C-1493**	2	VALVE AS-BYPASS (ENGINE OIL FILTER)	
	2	2	**209-7290**	1	GASKET	
	3	2	*352-6498*	1	TEE AS	
		2	**8T-8902**	1	TEE	
		2	**228-7089**	1	SEAL-O-RING	
	4	2	**352-8839**	1	BASE AS-OIL FILTER (ENGINE)	
		2	**2P-4304**	1	STUD-HOLLOW	
		2	*347-4428*	4	PLUG AS	
					(EACH INCLUDES)	
		2	**230-5040**	1	PLUG	
		2	**238-5085**	1	SEAL-O-RING	
	5	2	**1R-1808**	1	FILTER-ENGINE OIL (ADVANCED EFFICIENCY)	
	6	2	**242-3864**	2	SPRING	
	7	2	*307-2673*	1	PLUG AS	
		2	**9S-8005**	1	PLUG-O-RING	
		2	**238-5080**	1	SEAL-O-RING	
	8	2	*309-5131*	3	PLUG AS	
					(EACH INCLUDES)	
		2	**9S-8006**	1	PLUG-O-RING	
		2	**238-5081**	1	SEAL-O-RING	
	9	2	*315-9840*	1	ELBOW AS	
		2	**6V-8077**	1	ELBOW	
		2	**214-7568**	1	SEAL-O-RING	
	10	2	*319-6208*	1	ADAPTER AS	
		2	**5P-9617**	1	ADAPTER	
		2	**214-7568**	1	SEAL-O-RING	
	11	2	**321-8649**	1	VALVE AS-FLUID SAMPLING (ENGINE OIL)	
		2	**8C-3446**	1	VALVE-FLUID SAMPLING (ENGINE OIL)	
		2	**214-7566**	1	SEAL-O-RING	
	12	2	*329-5511*	1	ELBOW AS	
		2	**6V-8723**	1	ELBOW	
		2	**228-7089**	1	SEAL-O-RING	
		2	**238-5080**	1	SEAL-O-RING	
M	13	1	**6V-5218**	2	BOLT (M8X1.25X35-MM)	
M	14	1	**6V-5219**	8	BOLT (M8X1.25X40-MM)	
M	15	1	**6V-5220**	2	BOLT (M8X1.25X65-MM)	
	16	2	**8C-3445**	1	CAP-DUST	
	17	1	**9M-1974**	12	WASHER-HARD (8.8X16X2-MM THK)	

M-METRIC PART

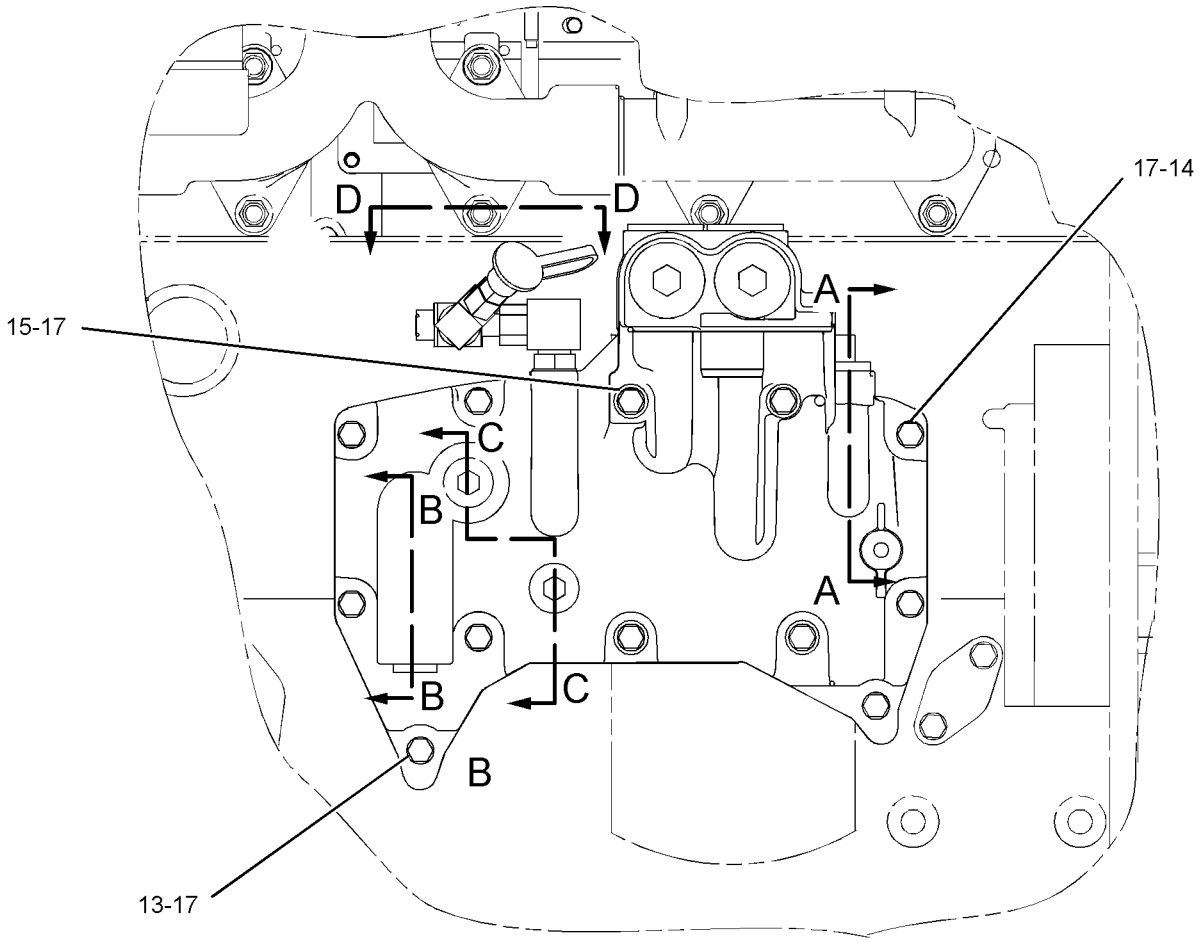

RIGHT SIDE VIEW

GRAPHIC #1 g02750116

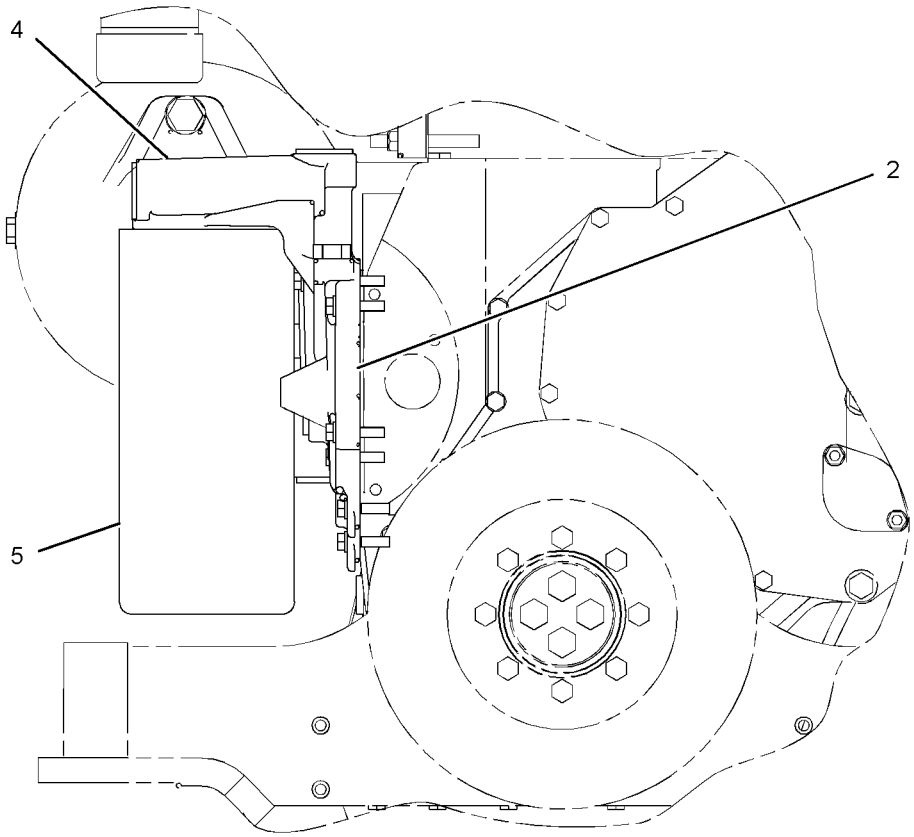

FRONT VIEW

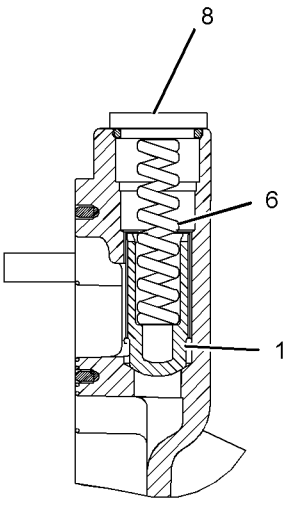

SECTION A-A

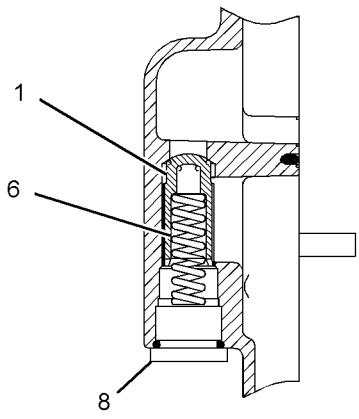

SECTION B-B

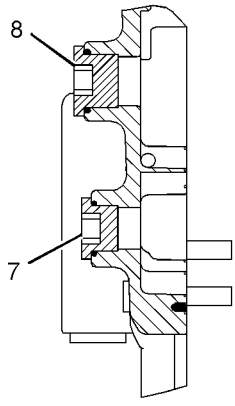

SECTION C-C

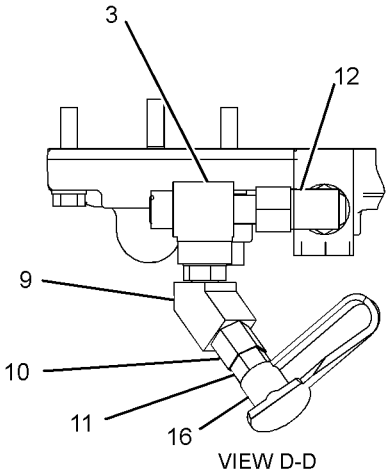

VIEW D-D

GRAPHIC #2 **<END>** g02750118

241-3719 FUMES DISPOSAL GP

S/N: THX28268-UP

PART OF 318-1906 ENGINE AR-COMPLETE

SMCS-1317 **i04561151**

NOTE	REF NO	GRAPHIC REF	PART NUMBER	QTY	PART NAME 1 2 3 4 5 6 (PRODUCT LEVEL)	SEE PAGE
	1	1	**9M-7958**	2	CLAMP-HOSE	
	2	1	*384-9220*	1	CONNECTOR AS	
		1	**069-4269**	1	ADAPTER	
		1	**238-5082**	1	SEAL-O-RING	
	3	1	**295-1771**	1	HOSE-FUMES DISPOSAL (CRANKCASE)	
	4	1	**4D-7388**	1	CLIP	
M	5	1	**6V-4248**	1	BOLT (M10X1.5X25-MM)	
	6	1	**6V-5839**	1	WASHER (11X21X2.5-MM THK)	

M-METRIC PART

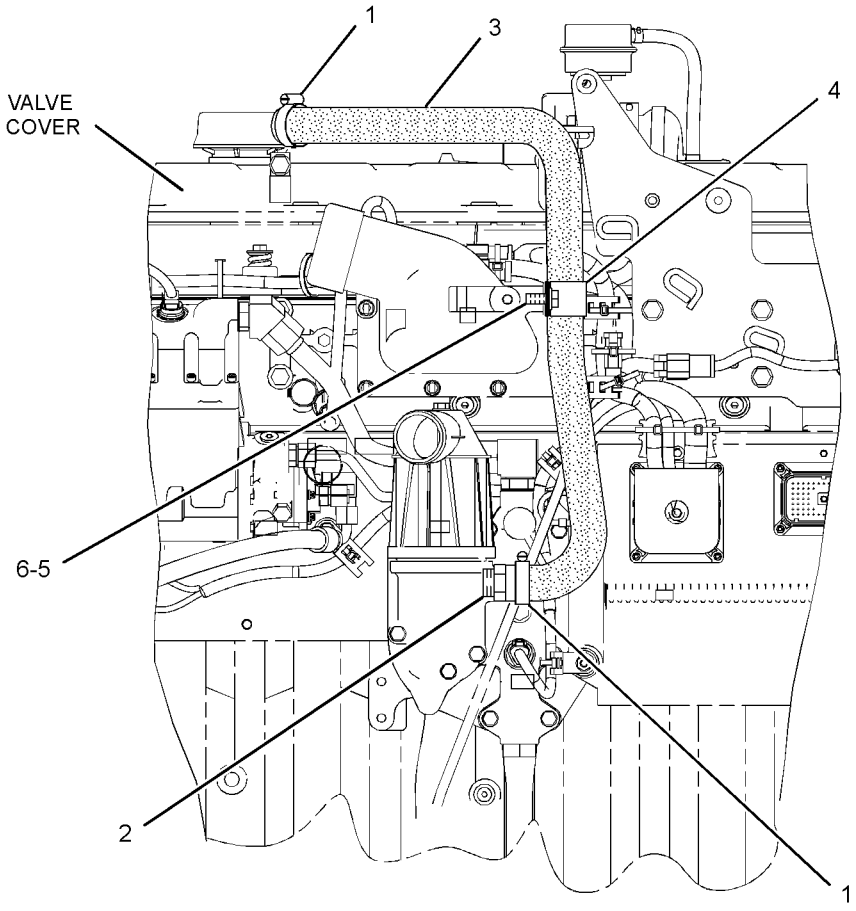

LEFT SIDE VIEW OF ENGINE

GRAPHIC #1 **<END>** g02084753

LUBRICATION SYSTEM

324-0244 FUMES DISPOSAL GP

S/N: DSH1-UP; DLN1-UP; DJR1-UP
PART OF 313-3757 INSTALLATION AR

SMCS-1317 **i04728650**

NOTE	REF NO	GRAPHIC REF	PART NUMBER	QTY	PART NAME 1 2 3 4 5 6 (PRODUCT LEVEL)	SEE PAGE
	1	1	**2S-3440**	1	CLAMP-HOSE	
	2	1	**9M-0164**	1	CLAMP-HOSE	
	3	1	**230-9796**	1	DUCT AS	
	4	1	**6V-1889**	2	CLIP	
	5	1	**8T-4121**	2	WASHER-HARD (11X21X2.5-MM THK)	
M	6	1	**8T-4137**	2	BOLT (M10X1.5X20-MM)	

M-METRIC PART

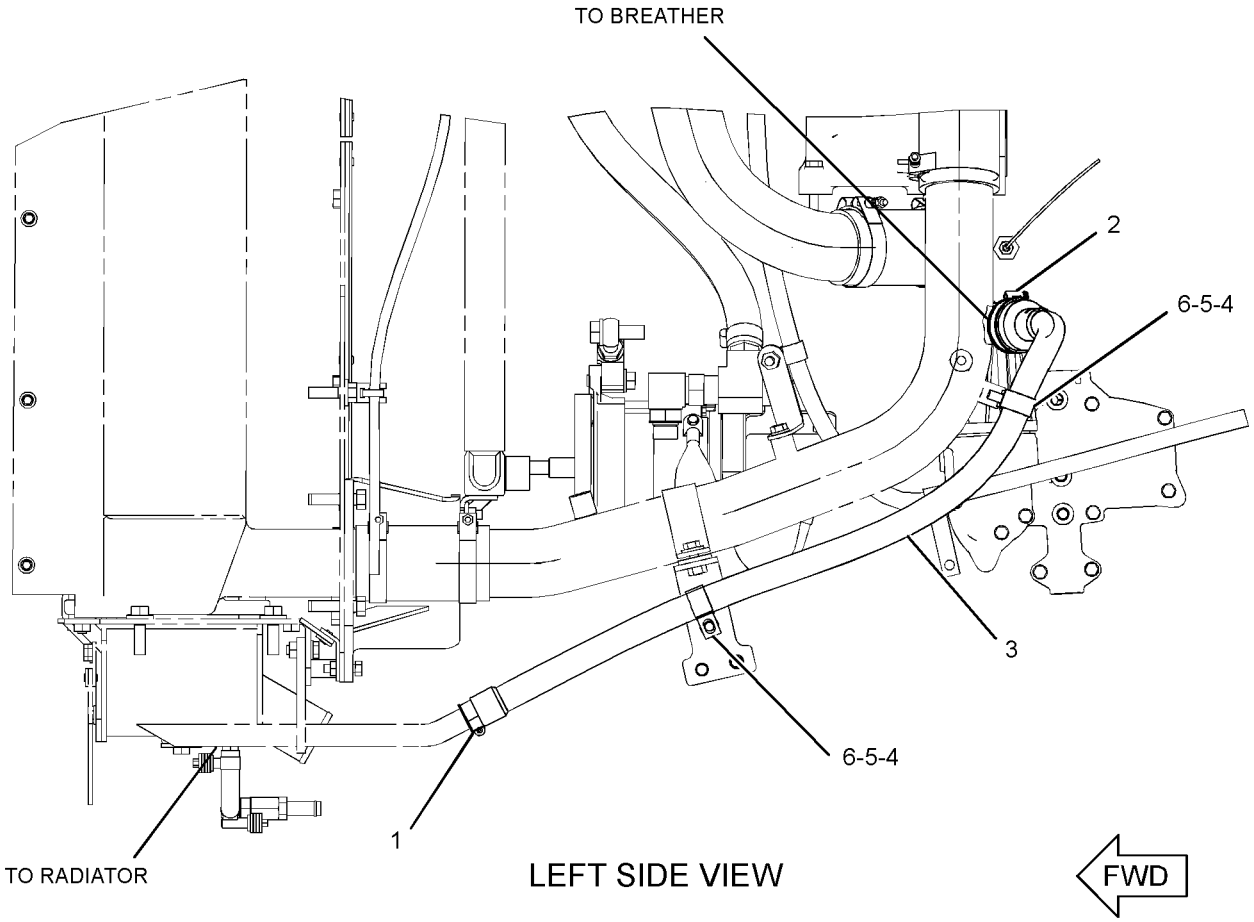

GRAPHIC #1 **<END>** g02842216

338-5335 GAUGE GP-OIL LEVEL (DIPSTICK)

S/N: THX28268-UP

PART OF 318-1906 ENGINE AR-COMPLETE

SMCS-1326 **i04734969**

NOTE	REF NO	GRAPHIC REF	PART NUMBER	QTY	PART NAME 1 2 3 4 5 6 (PRODUCT LEVEL)	SEE PAGE
	1	1	**1S-2563**	1	PLUG	
	2	1	**340-0691**	1	GAUGE AS-OIL LEVEL (DIPSTICK) (ENGINE)	
	3	1	**340-5624**	1	BRACKET AS	
M		1	**8T-3490**	1	NUT-WELD (M10X1.5-THD)	
	4	1	**359-3732**	1	TUBE AS-OIL GAUGE	
	5	1	**124-9633**	1	CLIP	
M	6	1	**5P-7970**	1	NUT (M8X1.25-THD)	
	7	1	**9M-1974**	1	WASHER-HARD (8.8X16X2-MM THK)	

M-METRIC PART

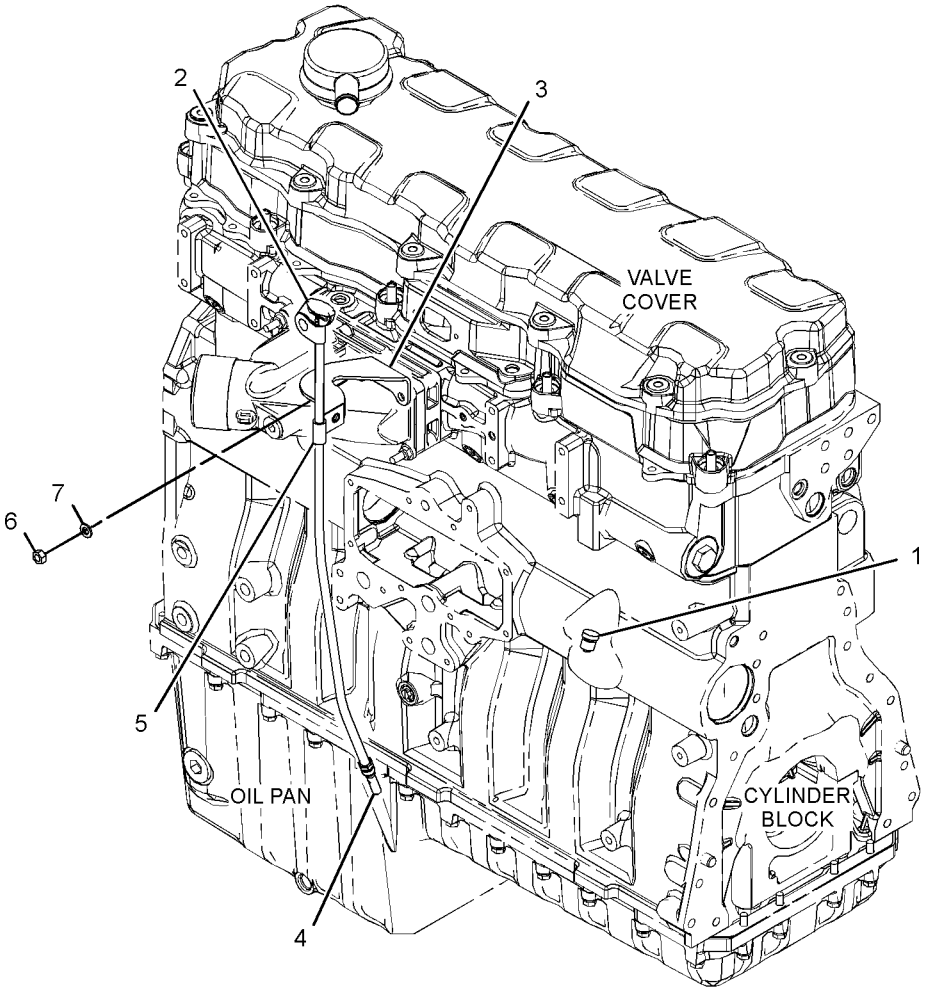

GRAPHIC #1 **<END>** g02841696

LUBRICATION SYSTEM

329-2579 LINES GP-ENGINE OIL

S/N: THX28268-UP

PART OF 318-1906 ENGINE AR-COMPLETE

SMCS-1307 **i04734829**

NOTE	REF NO	GRAPHIC REF	PART NUMBER	QTY	PART NAME 1 2 3 4 5 6 (PRODUCT LEVEL)	SEE PAGE
	1	1	**195-0452**	1	GASKET	
M	2	1	**208-9282**	1	BOLT (M8X1.25X25-MM)	
	3	1	**234-0203**	1	ELBOW-OUTLET	
	4	1	**331-6078**	1	FLANGE	
	5	1	**331-8059**	1	TUBE AS	
	6	1	**033-6034**	1	SEAL-O-RING	
	7	1	**5P-7530**	1	SEAL-O-RING	
	8	1	**5P-8068**	1	SEAL-O-RING	
M	9	1	**6V-5217**	2	BOLT (M8X1.25X20-MM)	
M	10	1	**8T-0276**	2	BOLT (M8X1.25X45-MM)	
M	11	1	**8T-0292**	1	BOLT (M8X1.25X90-MM)	
	12	1	**9M-1974**	5	WASHER-HARD (8.8X16X2-MM THK)	

M-METRIC PART

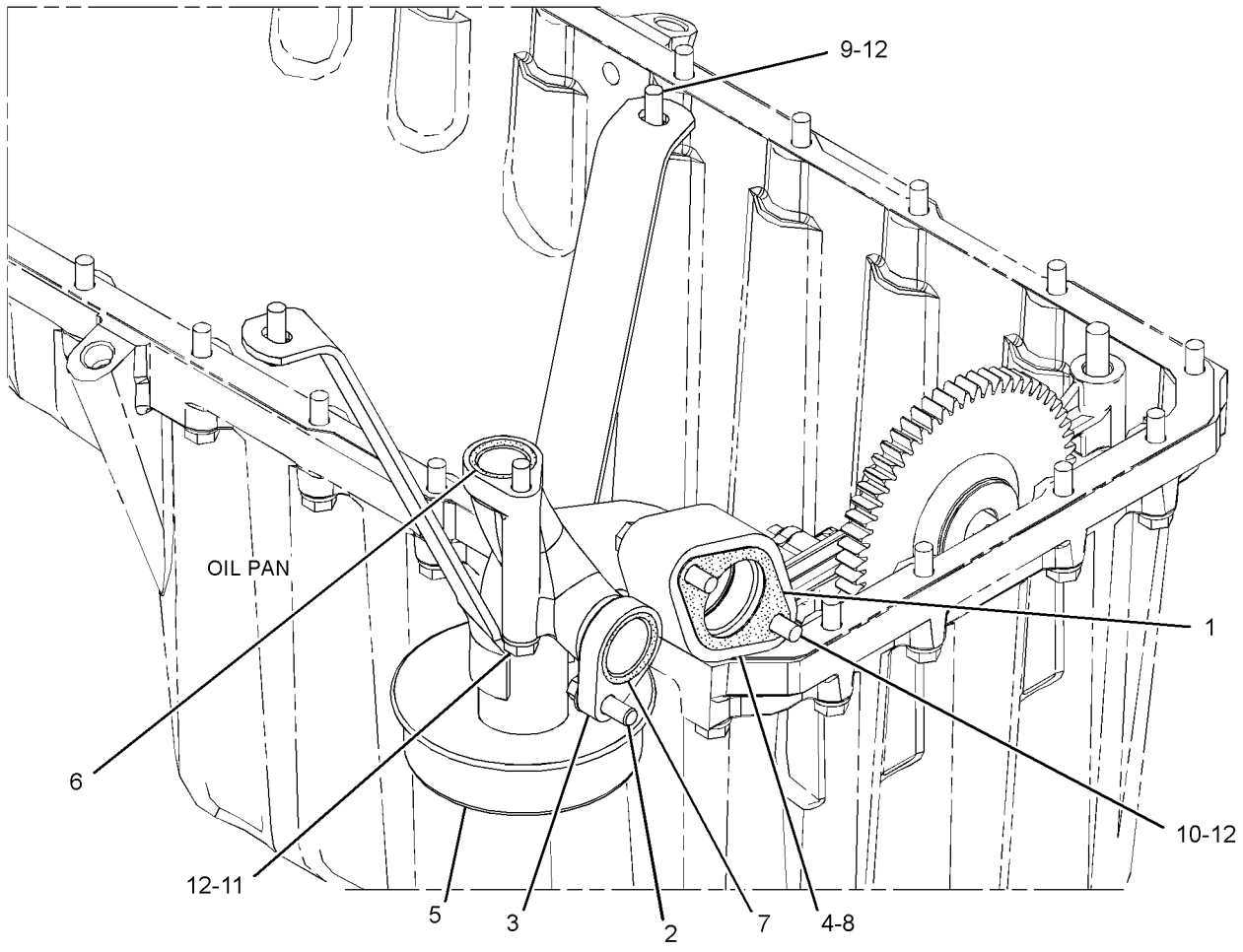

GRAPHIC #1 **<END>** g02839857

LUBRICATION SYSTEM

266-9810 LINES GP-TURBOCHARGER OIL

S/N: THX28268-UP

PART OF 318-1906 ENGINE AR-COMPLETE

SMCS-1052, 1307 **i04496090**

NOTE	REF NO	GRAPHIC REF	PART NUMBER	QTY	PART NAME 1 2 3 4 5 6 (PRODUCT LEVEL)	SEE PAGE
	1	1	**9N-4685**	1	BLOCK	
	2	1	**167-0168**	1	HOSE AS-OIL SUPPLY	
	3	1	*183-3399*	1	CONNECTOR AS	
		1	**214-7568**	1	SEAL-O-RING	
		1	**6V-8636**	1	CONNECTOR	
		1	**228-7089**	1	SEAL-O-RING	
	4	1	**197-8419**	1	GASKET	
	5	1	**246-6036**	1	HOSE	
	6	1	**257-5858**	1	TUBE AS	
	7	1	**263-3464**	1	TUBE AS	
	8	1	**284-3502**	2	CLAMP-BAND	
	9	1	**124-0174**	1	CLIP	
M	10	1	**8T-4133**	1	NUT (M10X1.5-THD)	
	11	1	**5P-7530**	1	SEAL-O-RING	
M	12	1	**6V-3940**	2	BOLT (M8X1.25X25-MM)	
M	13	1	**8T-4185**	1	BOLT (M10X1.5X50-MM)	
M	14	1	**6V-5218**	2	BOLT (M8X1.25X35-MM)	
	15	1	**8T-4121**	2	WASHER-HARD (11X21X2.5-MM THK)	
	16	1	**1S-0724**	1	CLIP	
	17	1	**9M-1974**	4	WASHER-HARD (8.8X16X2-MM THK)	

M-METRIC PART

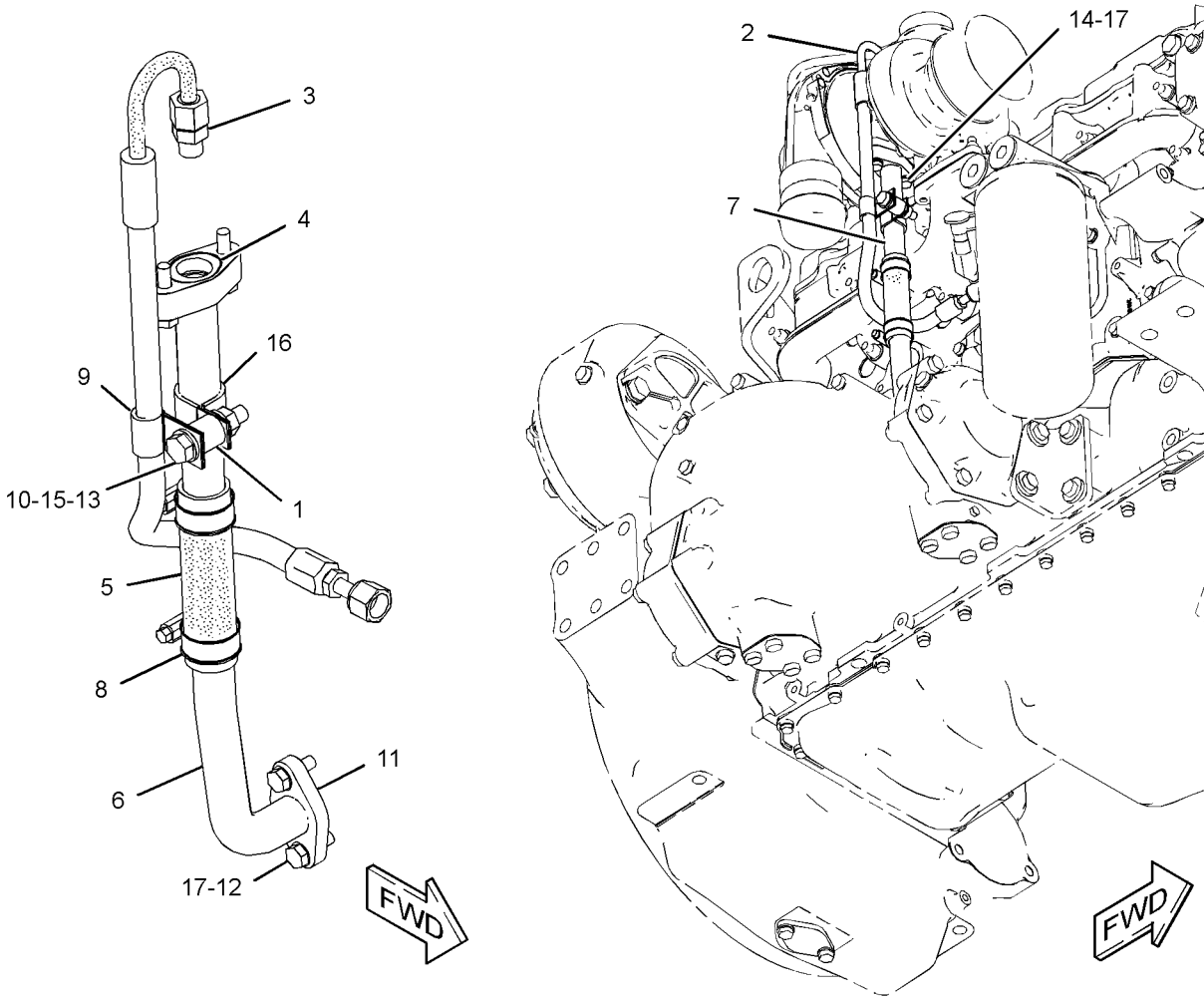

GRAPHIC #1 **<END>** g01214244

LUBRICATION SYSTEM

377-4467 OIL CHANGE GP-HIGH SPEED

S/N: DSH1-UP; DLN1-UP; DJR1-UP
PART OF 377-0337 SERVICE CENTER GP
AN ATTACHMENT

SMCS-1325 **i04673512**

NOTE	REF NO	GRAPHIC REF	PART NUMBER	QTY	PART NAME 1 2 3 4 5 6 (PRODUCT LEVEL)	SEE PAGE
	1	1	**2P-1286**	1	LOCKNUT-BULKHEAD (1-5/16-12-THD)	
	2	1	**2V-2043**	1	NUT-BULKHEAD (1-5/8-12-THD)	
	3	1	**4N-0205**	1	SPACER (0.42X0.75X0.6-IN THK)	
	4	1	**110-8319**	1	FITTING AS (QUICK DISCONNECT)	
	5	1	**110-8827**	1	FITTING (QUICK DISCONNECT, MALE)	
	6	1	**124-6998**	1	PLATE	
	7	1	**340-7313**	1	BRACKET	
I	8	1	**385-6489**	1	HOSE AS	
I	9	1	**385-6490**	1	HOSE AS	
	10	1	**385-6491**	1	BRACKET AS	
	11	1	**092-7385**	1	CLIP	
	12	1	**108-8089**	1	COVER-TOP	
	13	1	*148-8347*	2	ELBOW AS	
					(EACH INCLUDES)	
		1	**3D-2824**	1	SEAL-O-RING	
		1	**6V-9007**	1	ELBOW	
		1	**6V-9746**	1	SEAL-O-RING	
	14	1	*148-8359*	1	ELBOW AS	
		1	**3K-0360**	1	SEAL-O-RING	
		1	**6V-9746**	1	SEAL-O-RING	
		1	**6V-9877**	1	ELBOW	
	15	1	*148-8360*	1	ELBOW AS	
		1	**6V-9182**	1	ELBOW	
		1	**6V-9746**	1	SEAL-O-RING	
		1	**7M-8485**	1	SEAL-O-RING	
	16	1	**331-8540**	1	CLIP	
	17	1	**5P-7854**	3	CLIP	
M	18	1	**6V-4248**	1	BOLT (M10X1.5X25-MM)	
	19	1	**8T-4121**	6	WASHER-HARD (11X21X2.5-MM THK)	
M	20	1	**8T-4133**	2	NUT (M10X1.5-THD)	
M	21	1	**8T-4136**	2	BOLT (M10X1.5X25-MM)	
M	22	1	**8T-4186**	1	BOLT (M10X1.5X40-MM)	
M	23	1	**8T-4192**	1	BOLT (M12X1.75X25-MM)	
M	24	1	**8T-4195**	3	BOLT (M10X1.5X30-MM)	
	25	1	**8T-4223**	1	WASHER-HARD (13.5X25.5X3-MM THK)	

I-REFER TO HYDRAULIC INFORMATION SYSTEM
M-METRIC PART

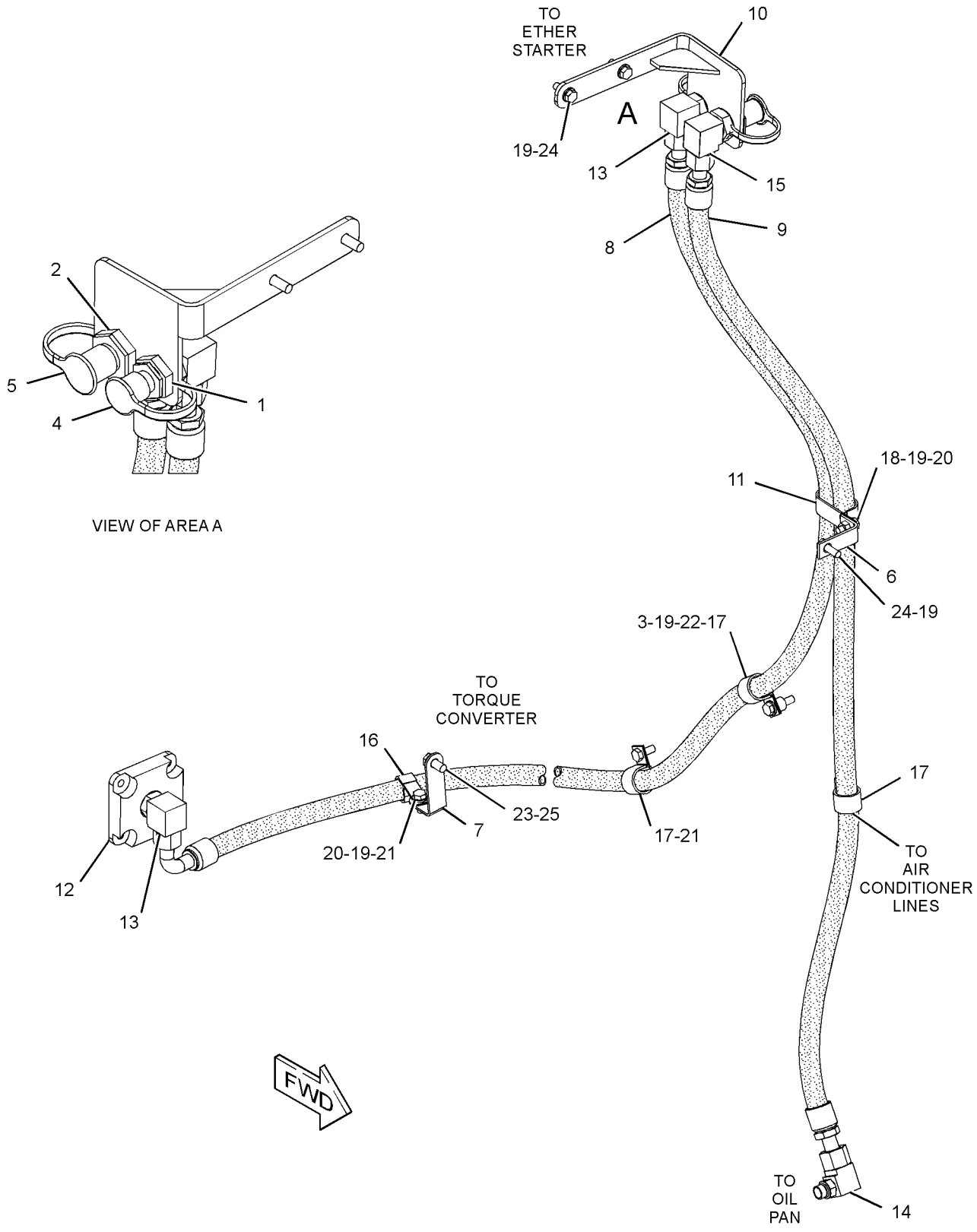

GRAPHIC #1 **<END>** g02848357

LUBRICATION SYSTEM

195-8098 PUMP GP-ENGINE OIL

S/N: THX28268-UP

PART OF 385-2783 ENGINE AR-CORE

SMCS-1304, 1315 **i04769705**

NOTE	REF NO	GRAPHIC REF	PART NUMBER	QTY	PART NAME 1 2 3 4 5 6 (PRODUCT LEVEL)	SEE PAGE
	1	1	*331-8906*	1	PUMP GP-ENGINE OIL	
	1A	1	**221-0144**	1	GEAR AS (60-TEETH)	
R		1	**331-8905**	1	PUMP AS-ENGINE OIL	
M	2	1	**6V-1819**	2	BOLT (M10X1.5X100-MM)	
	3	1	**6V-5839**	2	WASHER (11X21X2.5-MM THK)	

M-METRIC PART
R-REMFG PART MAY BE AVAILABLE

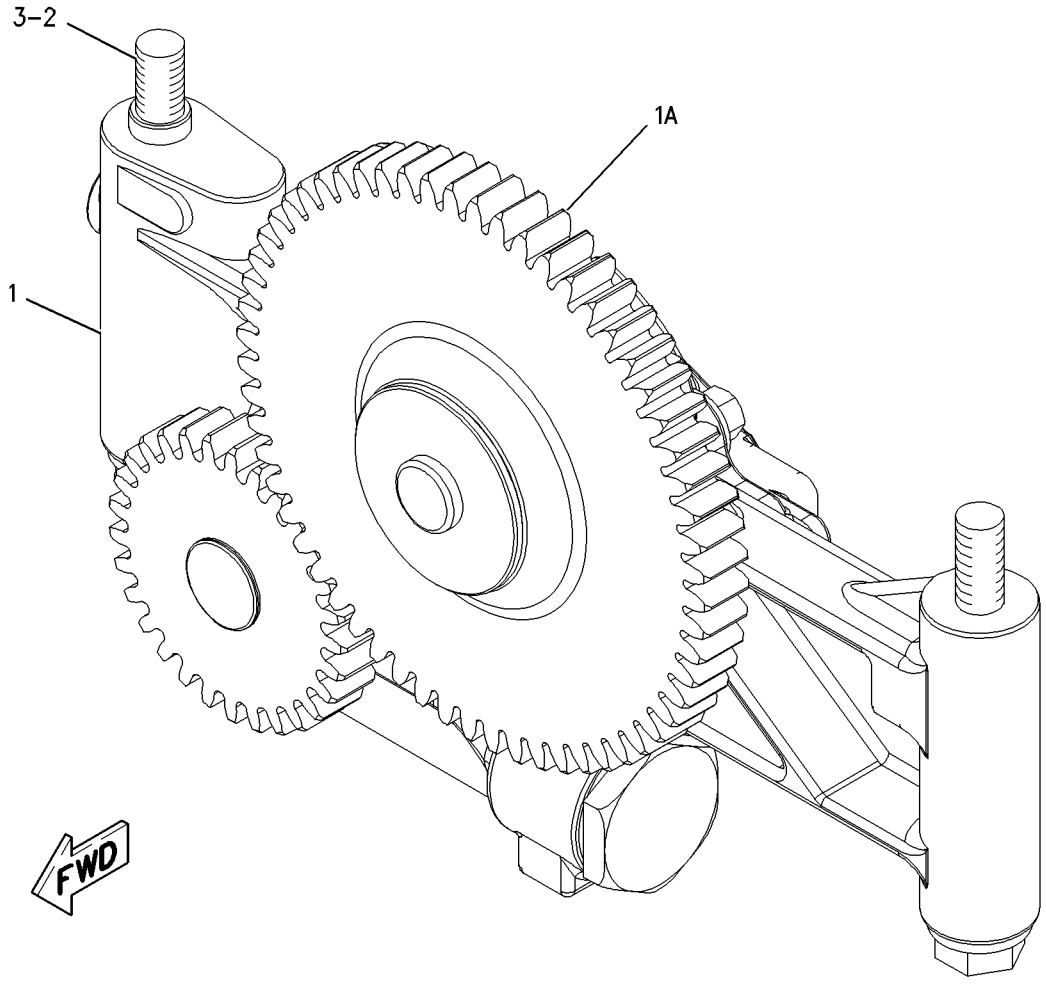

GRAPHIC #1 **<END>** g00909910

198-0921 VALVE GP-FLUID SAMPLING–ENGINE OIL

S/N: THX28268-UP

PART OF 318-1906 ENGINE AR-COMPLETE

SMCS-7542 **i04017427**

NOTE	REF NO	GRAPHIC REF	PART NUMBER	QTY	PART NAME 1 2 3 4 5 6 (PRODUCT LEVEL)	SEE PAGE
	2	1	**6V-0852**	1	CAP-DUST	
	3	1	**6V-3965**	1	FITTING (QUICK DISCONNECT)	
	4	1	**6V-5049**	1	SEAL-O-RING	

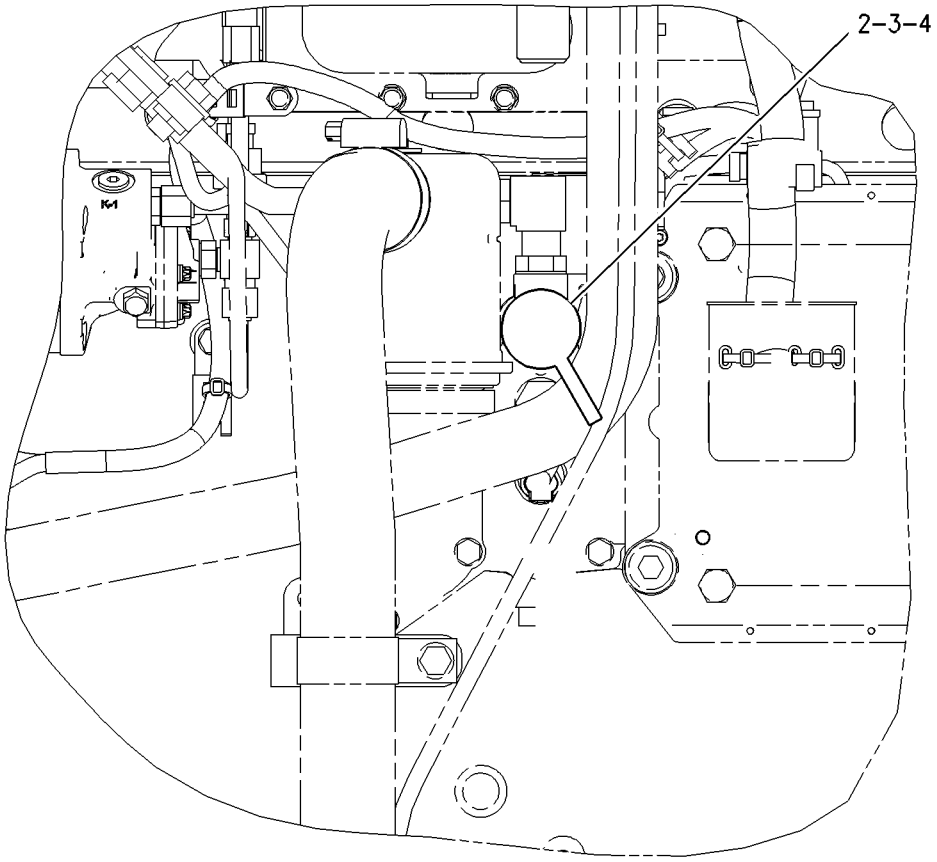

LEFT SIDE VIEW

GRAPHIC #1 **<END>** g00852655

COOLING SYSTEM

188-3826 COOLER GP-ENGINE OIL

S/N: THX28268-UP

PART OF 385-2783 ENGINE AR-CORE

SMCS-1378 **i04769704**

NOTE	REF NO	GRAPHIC REF	PART NUMBER	QTY	PART NAME 1 2 3 4 5 6 (PRODUCT LEVEL)	SEE PAGE
	1	1	**209-7293**	1	GASKET	
R	2	1	**293-9367**	1	CORE AS-OIL COOLER (ENGINE)	

R-REMFG PART MAY BE AVAILABLE

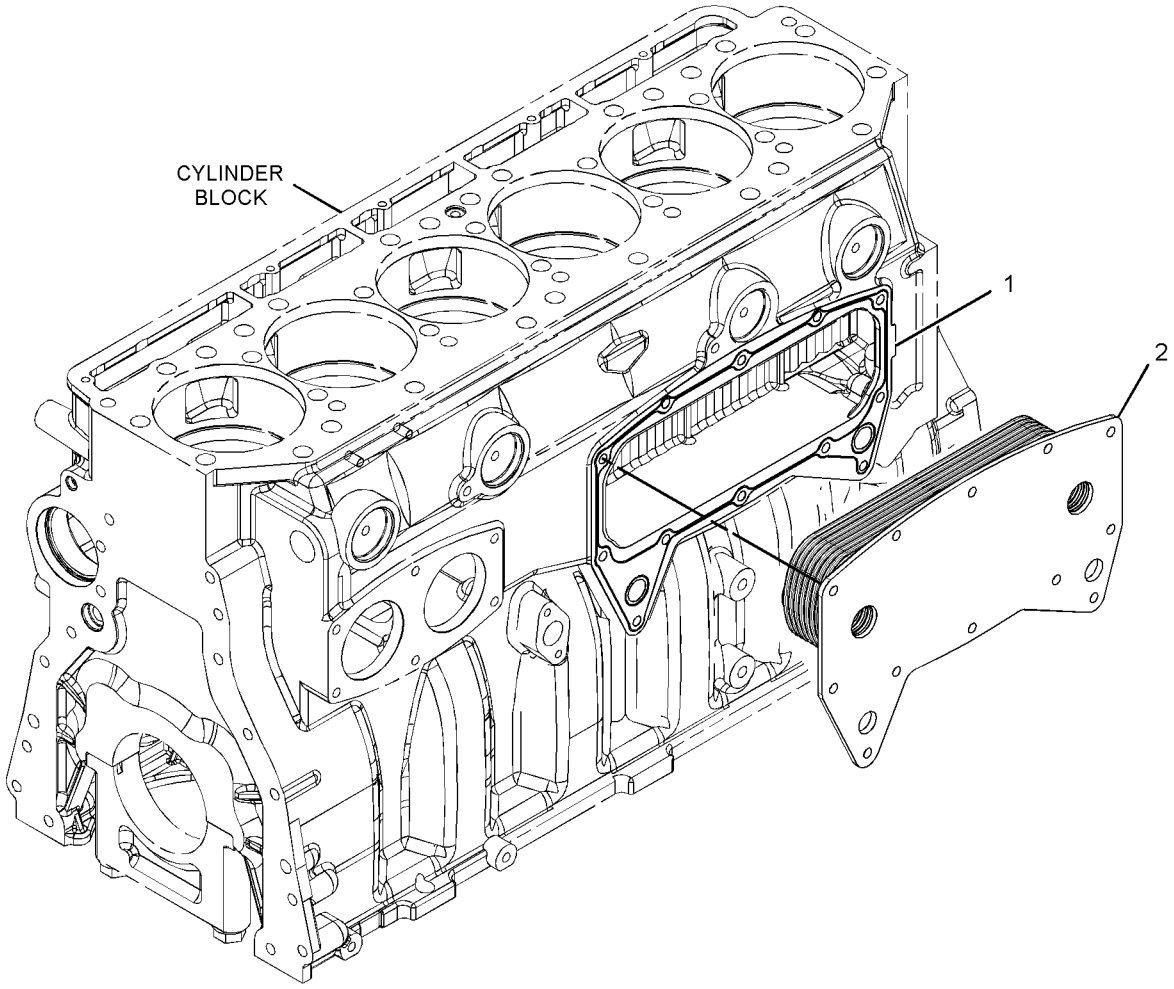

GRAPHIC #1 **<END>** g01419332

358-9215 FAN GP-BLOWER

S/N: DSH1-UP; DLN1-UP; DJR1-UP
PART OF 313-3757 INSTALLATION AR

SMCS-1356, 1360 **i04658889**

NOTE	REF NO	GRAPHIC REF	PART NUMBER	QTY	PART NAME 1 2 3 4 5 6 (PRODUCT LEVEL)	SEE PAGE
	1	1	**358-1297**	1	GUARD AS-FAN	
	2	1	**358-1298**	1	GUARD AS-FAN	
	3	1	**358-9211**	1	SPIDER AS-FAN (8-BLADE)	
	4	1	**7X-7729**	6	WASHER (11X25X3-MM THK)	
M	5	1	**8T-4137**	1	BOLT (M10X1.5X20-MM)	
M	6	1	**8T-4186**	8	BOLT (M10X1.5X40-MM)	
M	7	1	**8T-4196**	6	BOLT (M10X1.5X35-MM)	
	8	1	**8T-4222**	1	WASHER-PLATED (11X32X2.5-MM THK)	
	9	1	**8T-4896**	8	WASHER-HARD (10.2X18.5X2.5-MM THK)	

M-METRIC PART

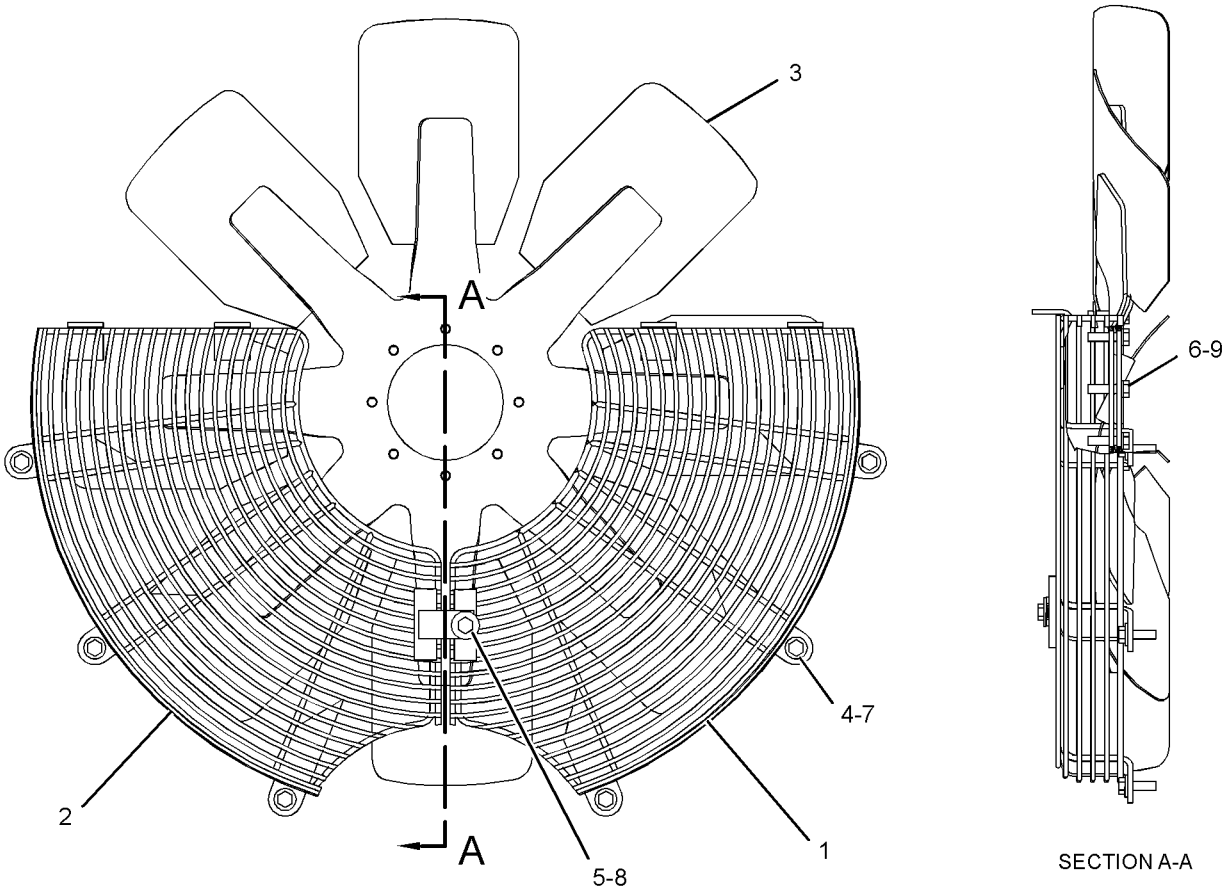

GRAPHIC #1 **<END>** g02826958

COOLING SYSTEM

377-4991 FAN GP-EJECTOR–BLOWER

S/N: DSH1-UP; DLN1-UP; DJR1-UP
PART OF 378-2273 STOCKPILE AR
AN ATTACHMENT

SMCS-1356, 1360 **i04769340**

NOTE	REF NO	GRAPHIC REF	PART NUMBER	QTY	PART NAME 1 2 3 4 5 6 (PRODUCT LEVEL)	SEE PAGE
	1	1	**358-9212**	1	FAN AS (8-BLADE)	

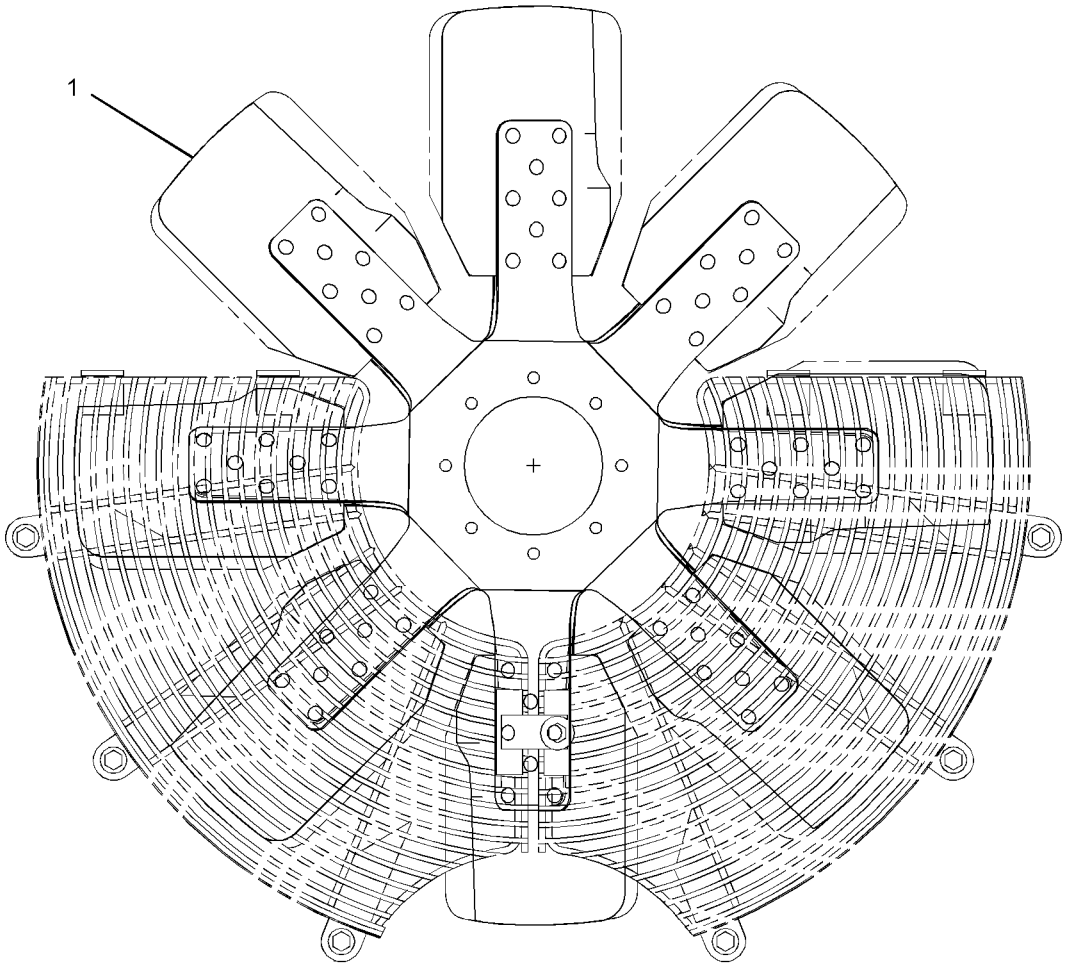

GRAPHIC #1 **<END>** g02821396

COOLING SYSTEM

377-4980 FAN GP-REVERSIBLE

S/N: DSH1-UP; DLN1-UP; DJR1-UP
PART OF 378-2269 COLD WEATHER AR
AN ATTACHMENT

SMCS-1356, 1360 **i04673649**

NOTE	REF NO	GRAPHIC REF	PART NUMBER	QTY	PART NAME 1 2 3 4 5 6 (PRODUCT LEVEL)	SEE PAGE
	1	1	**2W-5825**	1	PLATE	
	2	1	**358-9213**	1	FAN AS-REVERSIBLE (8-BLADE)	
	3	1	**377-4979**	1	GUARD AS-FAN	
	4	1	**7X-7729**	12	WASHER (11X25X3-MM THK)	
M	5	1	**8T-4137**	2	BOLT (M10X1.5X20-MM)	
M	6	1	**8T-4185**	8	BOLT (M10X1.5X50-MM)	
M	7	1	**8T-4196**	10	BOLT (M10X1.5X35-MM)	

M-METRIC PART

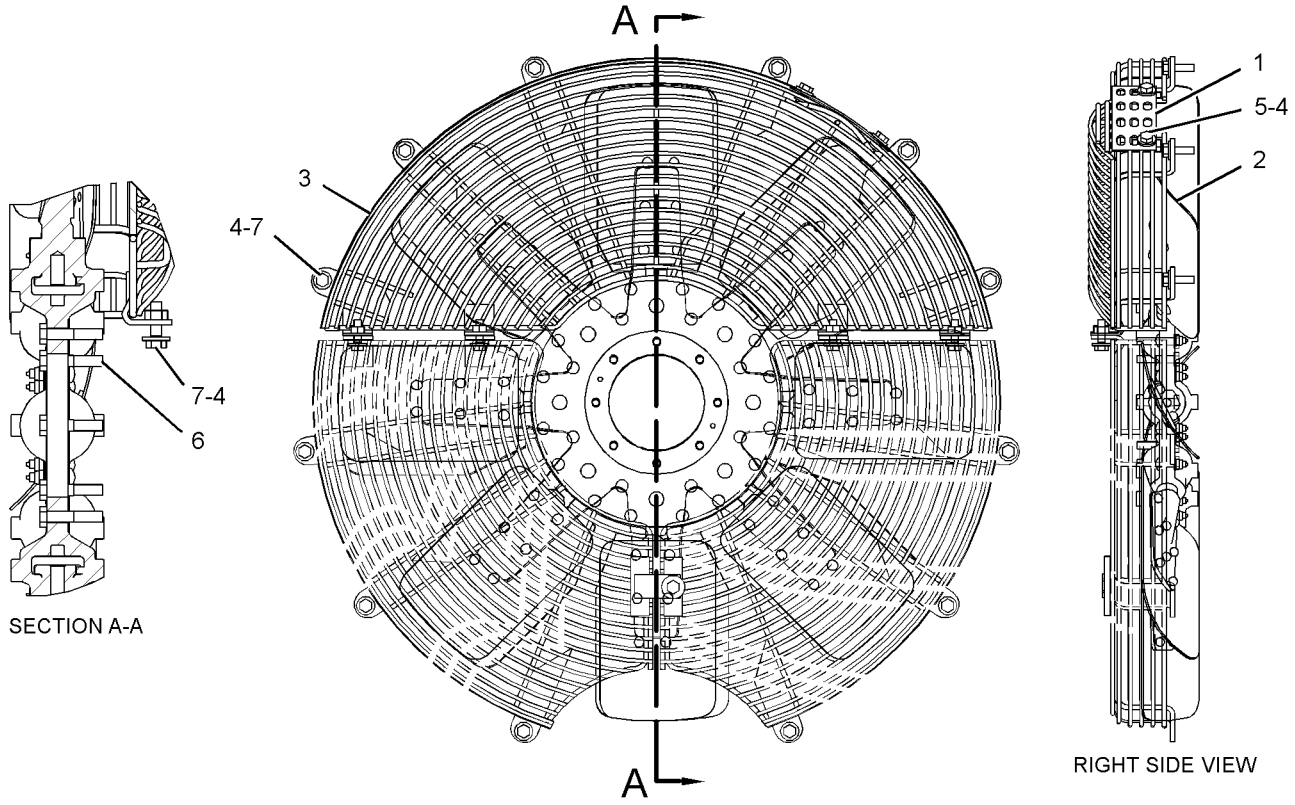

SECTION A-A

RIGHT SIDE VIEW

GRAPHIC #1 **<END>** g02830425

COOLING SYSTEM

377-4974 GUARD GP-FAN

S/N: DSH1-UP; DLN1-UP; DJR1-UP
PART OF 380-9961 AIR CONDITIONER AR
AN ATTACHMENT

SMCS-1360 **i04674591**

NOTE	REF NO	GRAPHIC REF	PART NUMBER	QTY	PART NAME 1 2 3 4 5 6 (PRODUCT LEVEL)	SEE PAGE
	1	1	**358-1299**	1	GUARD AS-FAN	
	2	1	**7X-7729**	10	WASHER (11X25X3-MM THK)	
M	3	1	**8T-4196**	10	BOLT (M10X1.5X35-MM)	

M-METRIC PART

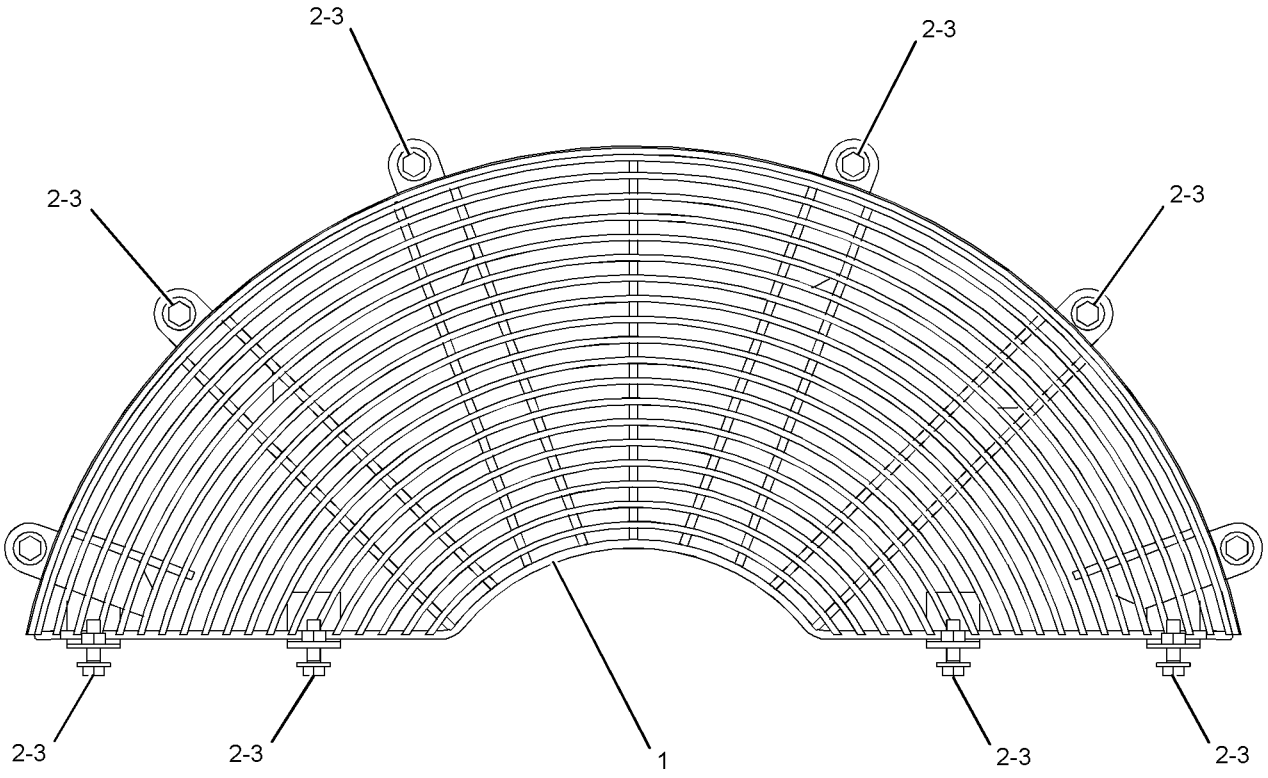

GRAPHIC #1 **<END>** g02808057

165-4461 HOUSING & REGULATOR GP–
WATER TEMPERATURE REGULATOR
S/N: THX28268-UP

PART OF 318-1906 ENGINE AR-COMPLETE

SMCS-1355, 1393 **i04340162**

NOTE	REF NO	GRAPHIC REF	PART NUMBER	QTY	PART NAME 1 2 3 4 5 6 (PRODUCT LEVEL)	SEE PAGE
	1	1	**248-5513**	1	REGULATOR-TEMPERATURE (92-DEG C) (WATER, COOLANT)	
	2	1	**347-3148**	2	CLAMP-BAND	
	3	1	**280-6794**	1	HOSE	
	4	1	**191-4457**	1	GASKET (WATER REGULATOR HOUSING)	
	5	1	**217-5200**	1	HOUSING AS	
		1	**217-5199**	1	HOUSING	
	5A	1	**3S-9643**	1	SEAL-LIP TYPE (WATER TEMPERATURE REGULATOR)	
	6	1	*341-0087*	2	PLUG AS	
					(EACH INCLUDES)	
		1	**9S-4185**	1	PLUG-O-RING	
	6A	1	**6V-6609**	1	SEAL-O-RING	
	7	1	**4S-9191**	4	WASHER (12X22.5X5-MM THK)	
M	8	1	**8T-0644**	4	BOLT (M10X1.5X90-MM)	
	9	1	**8T-6762**	1	PLUG-PIPE	

M-METRIC PART

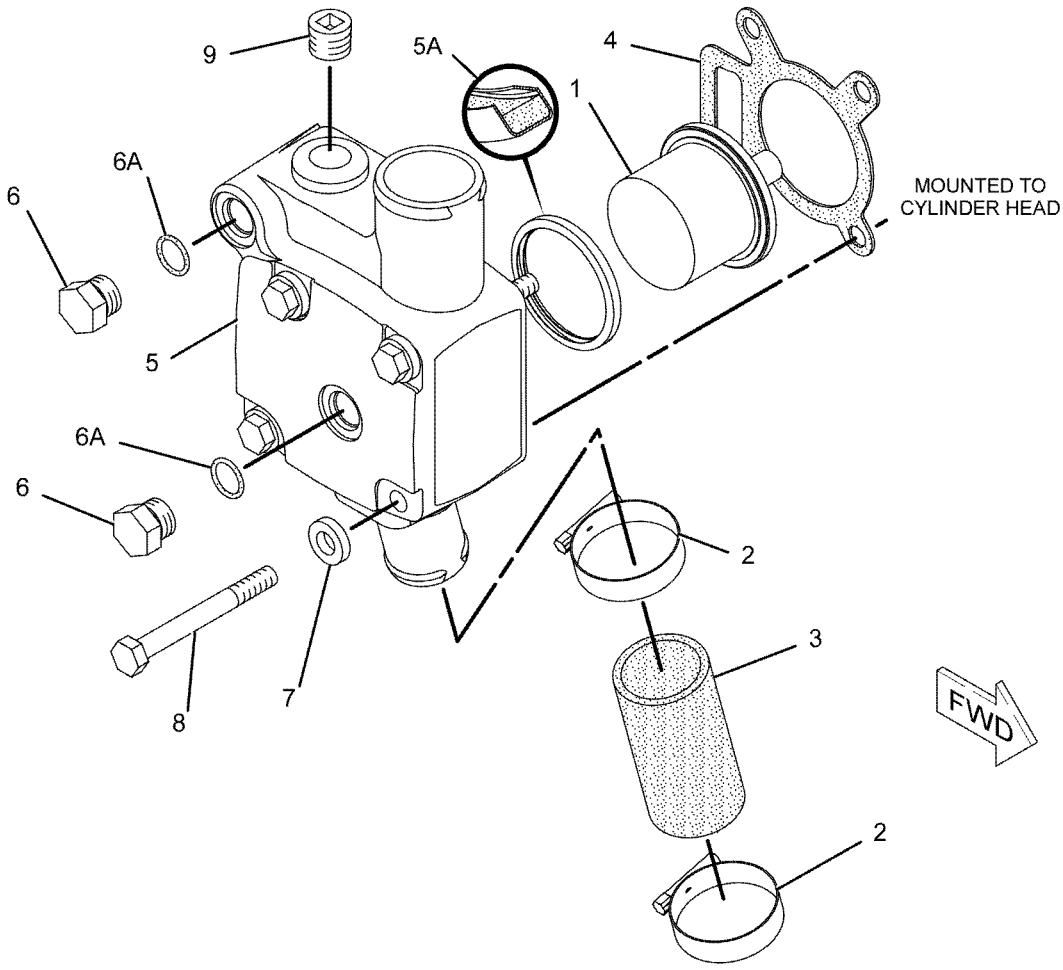

GRAPHIC #1 **<END>** g01142330

COOLING SYSTEM

332-2967 LINES GP-WATER

S/N: DSH1-UP; DLN1-UP; DJR1-UP
PART OF 313-3757 INSTALLATION AR

SMCS-1380 **i04658829**

NOTE	REF NO	GRAPHIC REF	PART NUMBER	QTY	PART NAME 1 2 3 4 5 6 (PRODUCT LEVEL)	SEE PAGE
	1	1	**8T-4984**	5	CLAMP-HOSE	
	2	1	**157-0670**	1	CAP-DUST	
	3	1	**185-0845**	1	TUBE AS	
	4	1	**187-3961**	1	HOSE-RADIATOR	
	5	1	**219-3305**	1	BRACKET AS	
M		1	**8T-3490**	1	NUT-WELD (M10X1.5-THD)	
	6	1	**254-5524**	1	BRACKET AS	
	7	1	**290-3970**	1	BRACKET AS	
	8	1	**332-2968**	1	HOSE	
	9	1	**332-2969**	1	HOSE	
	10	1	**379-4774**	1	BRACKET AS	
	11	1	**3E-9867**	2	CLIP (SLOT)	
	12	1	**3E-9868**	2	CLIP (TAB)	
	13	1	**3J-1907**	1	SEAL-O-RING	
	14	1	**3J-7354**	1	SEAL-O-RING	
	15	1	**5P-9617**	1	ADAPTER	
	16	1	**6V-1581**	3	CLIP (SLOT)	
	17	1	**6V-1582**	3	CLIP (TAB)	
	18	1	**7X-7729**	5	WASHER (11X25X3-MM THK)	
	19	1	**8C-3446**	1	VALVE-FLUID SAMPLING	
	20	1	**8T-4121**	6	WASHER-HARD (11X21X2.5-MM THK)	
M	21	1	**8T-4136**	2	BOLT (M10X1.5X25-MM)	
M	22	1	**8T-4137**	4	BOLT (M10X1.5X20-MM)	
M	23	1	**8T-4195**	5	BOLT (M10X1.5X30-MM)	
	24	1	**8T-6703**	1	CLAMP-HOSE	

M-METRIC PART

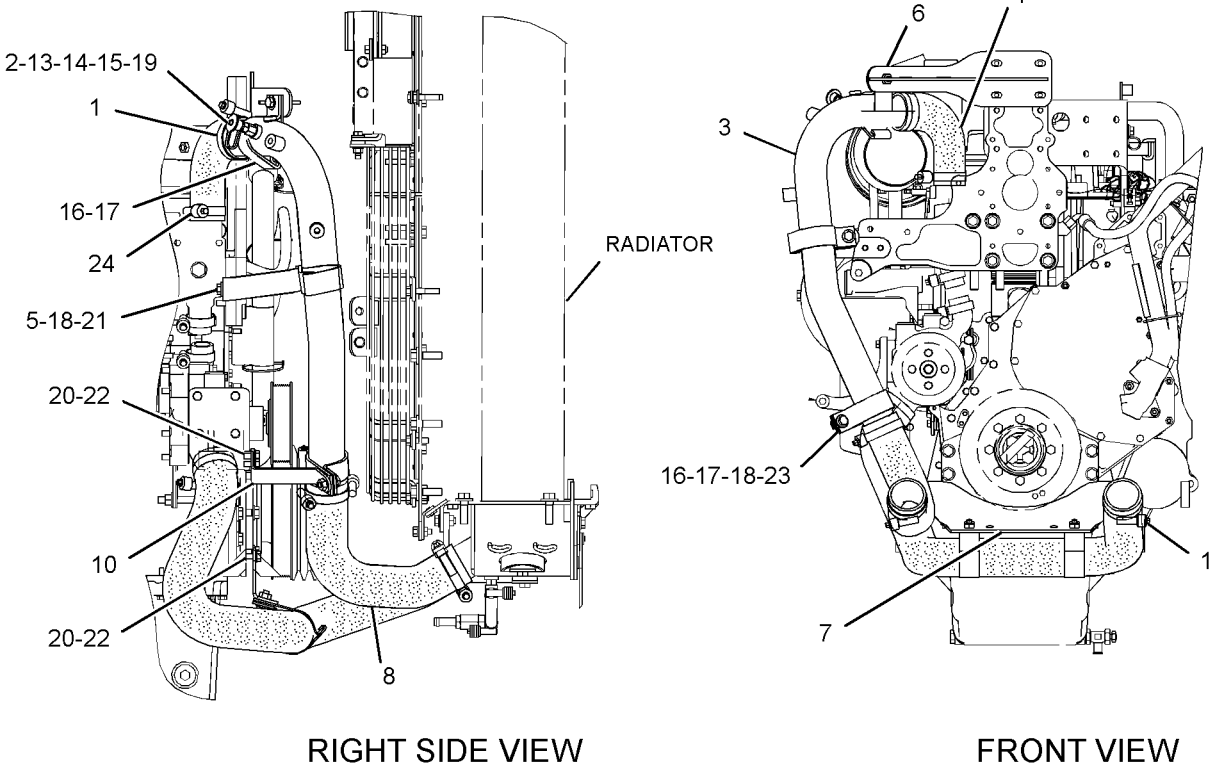

RIGHT SIDE VIEW

FRONT VIEW

BOTTOM VIEW

GRAPHIC #1 **<END>** g02827796

COOLING SYSTEM

211-1812 PUMP GP-WATER

S/N: THX28268-UP

PART OF 385-2783 ENGINE AR-CORE

SMCS-1361 **i04769707**

NOTE	REF NO	GRAPHIC REF	PART NUMBER	QTY	PART NAME 1 2 3 4 5 6 (PRODUCT LEVEL)	SEE PAGE
YR	1	1	*350-2536*	1	PUMP GP-WATER	88
	2	1	**2M-4453**	1	SEAL-O-RING	
	3	1	**4J-0525**	1	SEAL-O-RING	
M	4	1	**8T-0644**	4	BOLT (M10X1.5X90-MM)	

M-METRIC PART
R-REMFG PART MAY BE AVAILABLE
Y-SEPARATE ILLUSTRATION

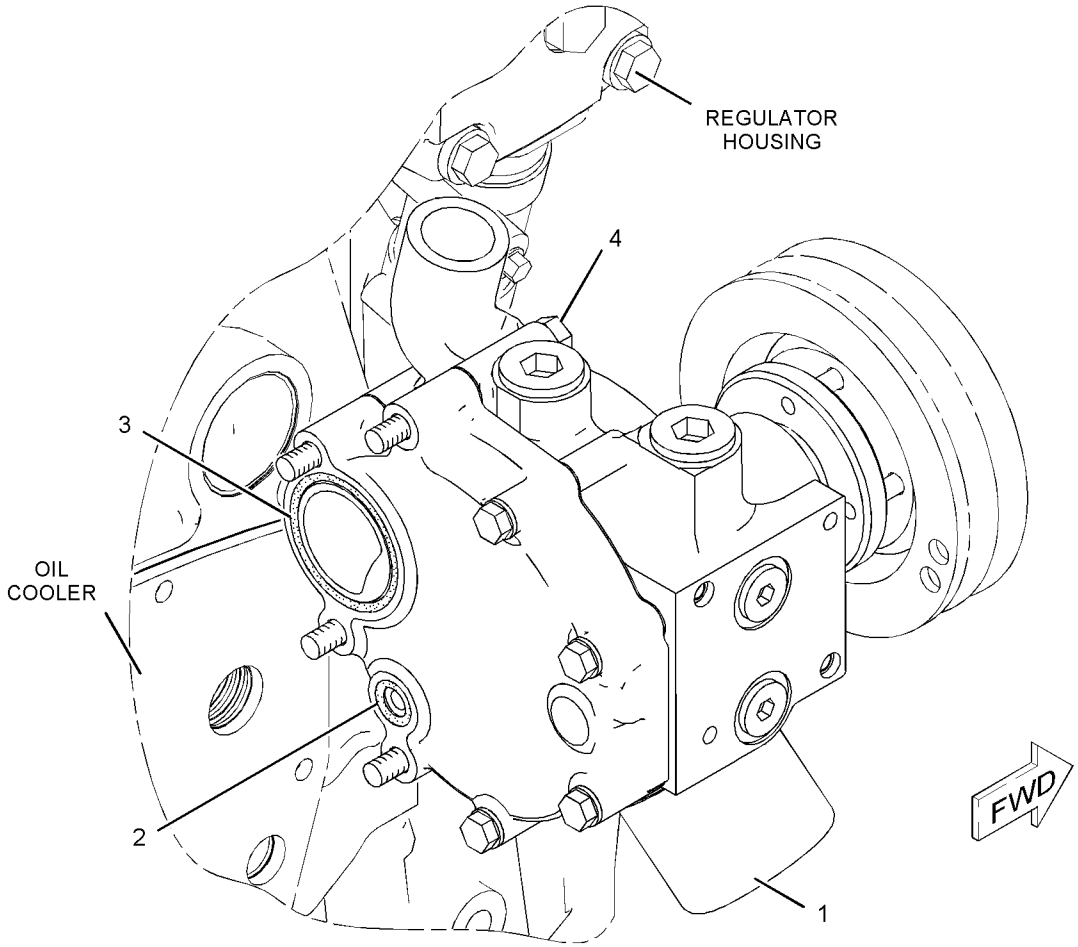

GRAPHIC #1 **<END>** g01038761

349-6123 PUMP GP-WATER

S/N: THX28268-UP

PART OF 350-2536 PUMP GP-WATER

SMCS-1361 **i04437373**

NOTE	REF NO	GRAPHIC REF	PART NUMBER	QTY	PART NAME 1 2 3 4 5 6 (PRODUCT LEVEL)	SEE PAGE
	1	1	**350-5417**	1	SEAL	
	2	1	**177-1050**	1	SHAFT AS	
	3	1	**177-1056**	1	IMPELLER-PUMP	
	4	1	**209-6692**	1	HUB	
	5	1	**347-3110**	1	HOUSING AS-WATER PUMP	
		1	**177-1058**	1	PLUG	

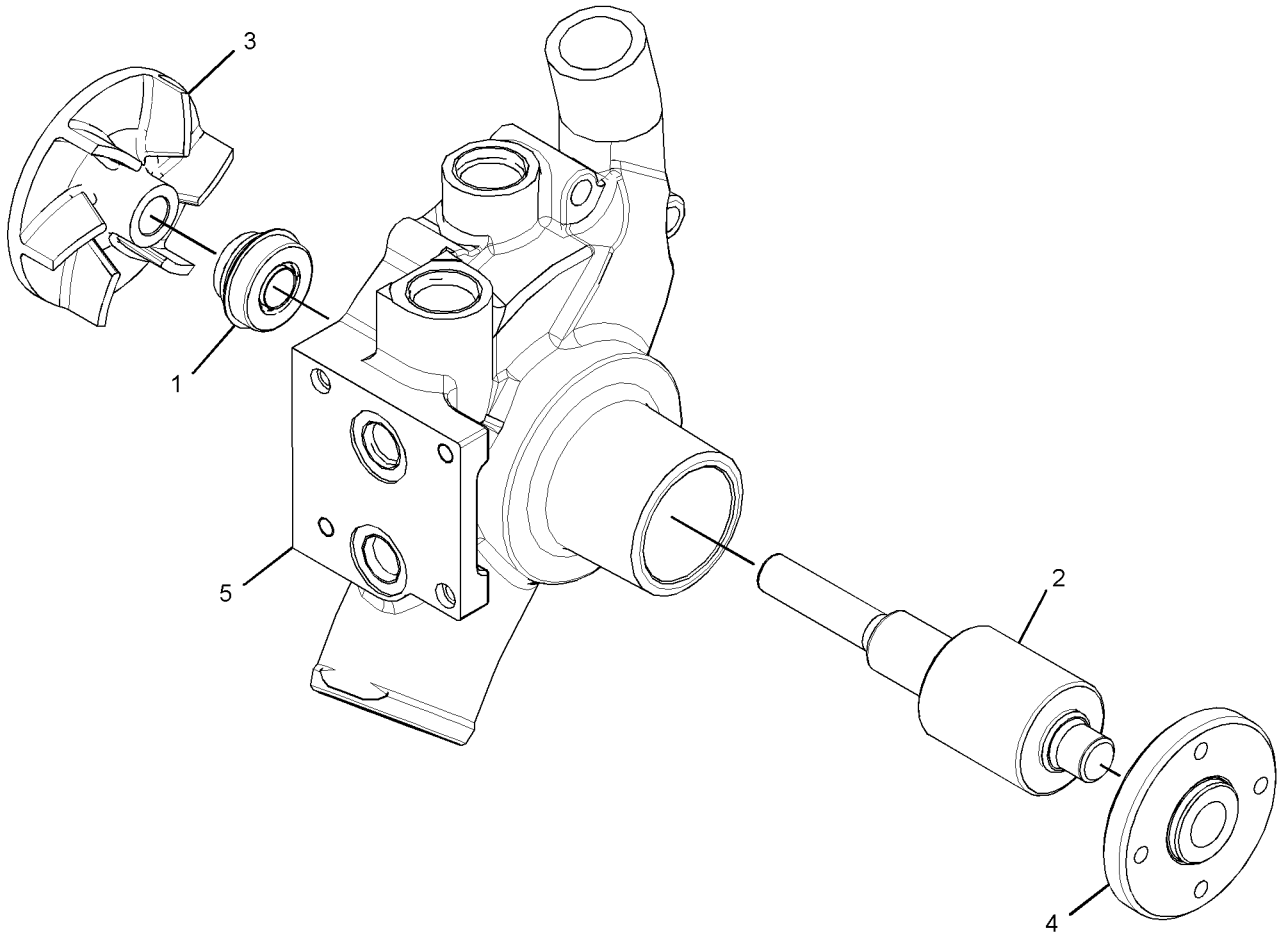

GRAPHIC #1 **<END>** g02064913

COOLING SYSTEM

350-2536 PUMP GP-WATER

S/N: THX28268-UP

PART OF 211-1812 PUMP GP-WATER

SMCS-1361 **i04017432**

NOTE	REF NO	GRAPHIC REF	PART NUMBER	QTY	PART NAME 1 2 3 4 5 6 (PRODUCT LEVEL)	SEE PAGE
	1	1	**177-1044**	1	COVER	
	2	1	**183-2931**	4	BOLT AS	
	3	1	**222-3901**	1	GASKET	
Y	4	1	*349-6123*	1	PUMP GP-WATER	87
	5	1	**3D-2824**	1	SEAL-O-RING	
	6	1	**3K-0360**	2	SEAL-O-RING	
	7	1	**9S-8005**	2	PLUG-O-RING	
	8	1	**9S-8008**	1	PLUG-O-RING	

Y-SEPARATE ILLUSTRATION

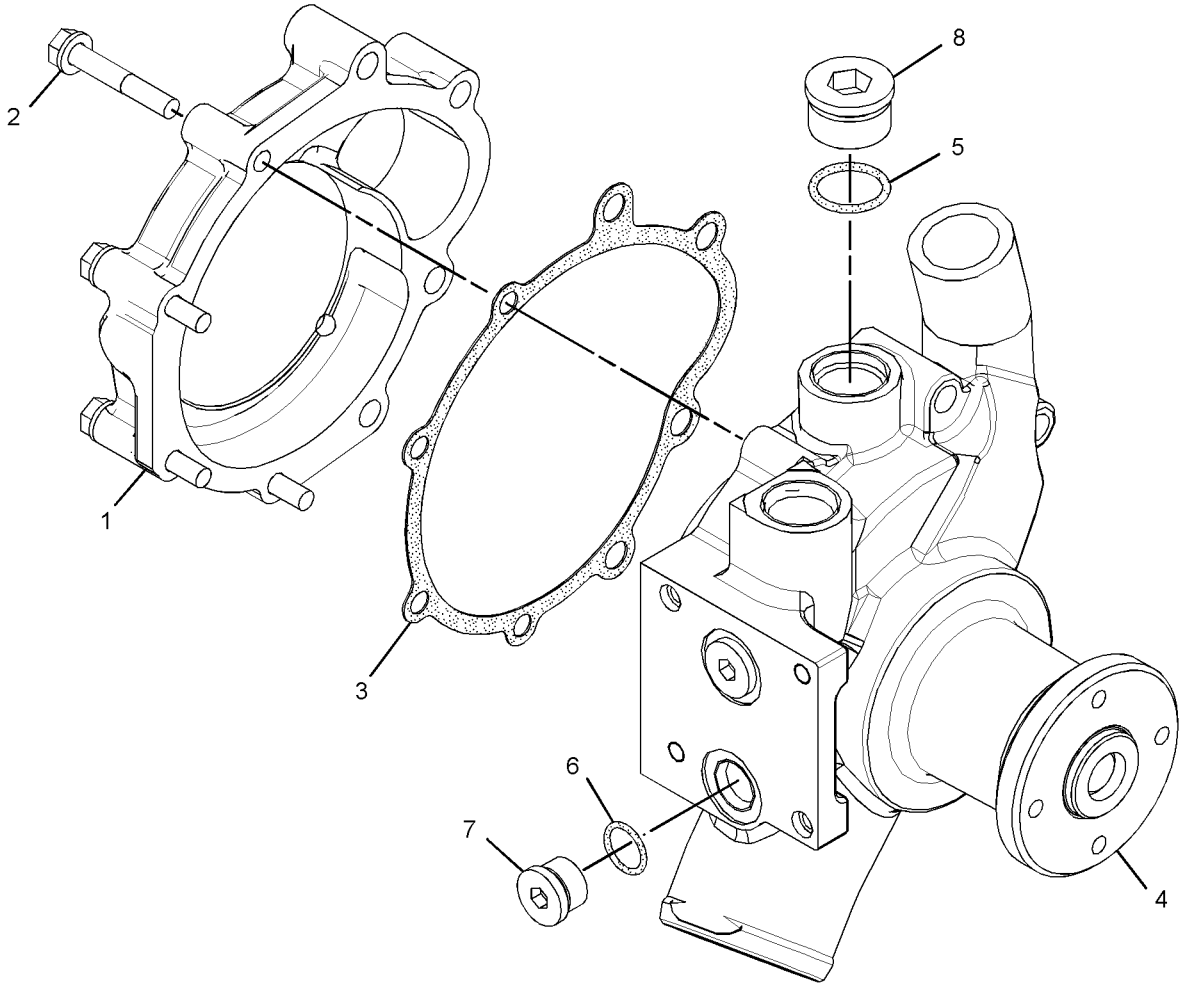

GRAPHIC #1 **<END>** g02064914

COOLING SYSTEM

371-2459 RADIATOR GP

S/N: DSH1-UP; DLN1-UP; DJR1-UP
PART OF 377-4981 RADIATOR GP

SMCS-1353 **i04658910**

NOTE	REF NO	GRAPHIC REF	PART NUMBER	QTY	PART NAME 1 2 3 4 5 6 (PRODUCT LEVEL)	SEE PAGE
	1	1	**3W-2568**	4	MOUNTING	
	2	1	**6I-2435**	2	SPACER (RUBBER)	
	3	1	**230-4962**	2	BRACKET AS	
	4	1	**243-2076**	4	WASHER-HARD (12.2X45.5X4.4-MM THK)	
	5	1	**245-9941**	4	WASHER-HARD (12.2X55.1X3.2-MM THK)	
	6	1	**358-9214**	1	BRACKET AS	
	7	1	**371-2460**	1	BRACKET AS	
	8	1	**371-2461**	1	CORE AS-RADIATOR	
	9	1	**371-2462**	1	CORE AS-RADIATOR	
	10	1	**371-2464**	1	PLATE AS	
	11	1	**371-2465**	1	SUPPORT AS	
	12	1	**371-2466**	1	TUBE AS	
	13	1	**372-6387**	1	HOSE	
	14	1	**377-4985**	1	BRACKET AS	
	15	1	*337-8767*	2	CONNECTOR AS	
					(EACH INCLUDES)	
		1	**238-5079**	1	SEAL-O-RING	
		1	**337-8766**	1	CONNECTOR	
	16	1	**5P-1075**	4	WASHER-HARD (10.2X22.5X3-MM THK)	
	17	1	**5P-1076**	8	WASHER-HARD (13.5X30X4-MM THK)	
	18	1	**5P-2566**	4	BOLT (1/2-13X1.5-IN)	
	19	1	**8T-2502**	2	BOLT (3/8-16X1.125-IN)	
	20	1	**8T-4121**	13	WASHER-HARD (11X21X2.5-MM THK)	
M	21	1	**8T-4136**	5	BOLT (M10X1.5X25-MM)	
M	22	1	**8T-4192**	2	BOLT (M12X1.75X25-MM)	
M	23	1	**8T-4195**	8	BOLT (M10X1.5X30-MM)	
M	24	1	**8T-4910**	4	BOLT (M12X1.75X60-MM)	
	25	1	**8T-4984**	2	CLAMP-HOSE	
	26	1	**8T-8919**	4	BOLT (1/2-13X1.75-IN)	
	27	1	**9B-7237**	2	BOLT (3/8-16X1.25-IN)	
E	28	1	**122-2358**		SEAL (85-CM)	
E	29	1	**146-0414**		SEAL (110-CM EACH)	
E	29A	1	**146-0414**		SEAL (85-CM)	

E-ORDER BY THE CENTIMETER
M-METRIC PART

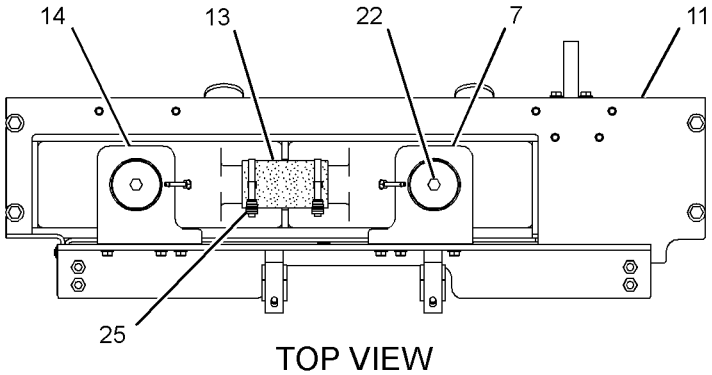

TOP VIEW

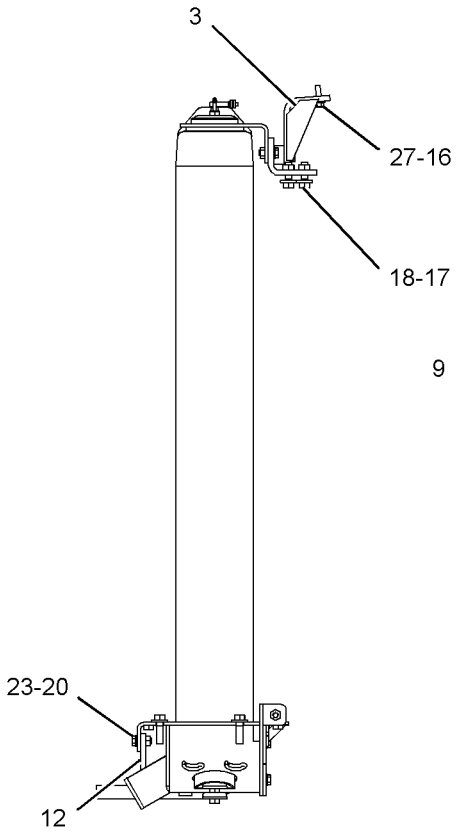

LEFT SIDE VIEW

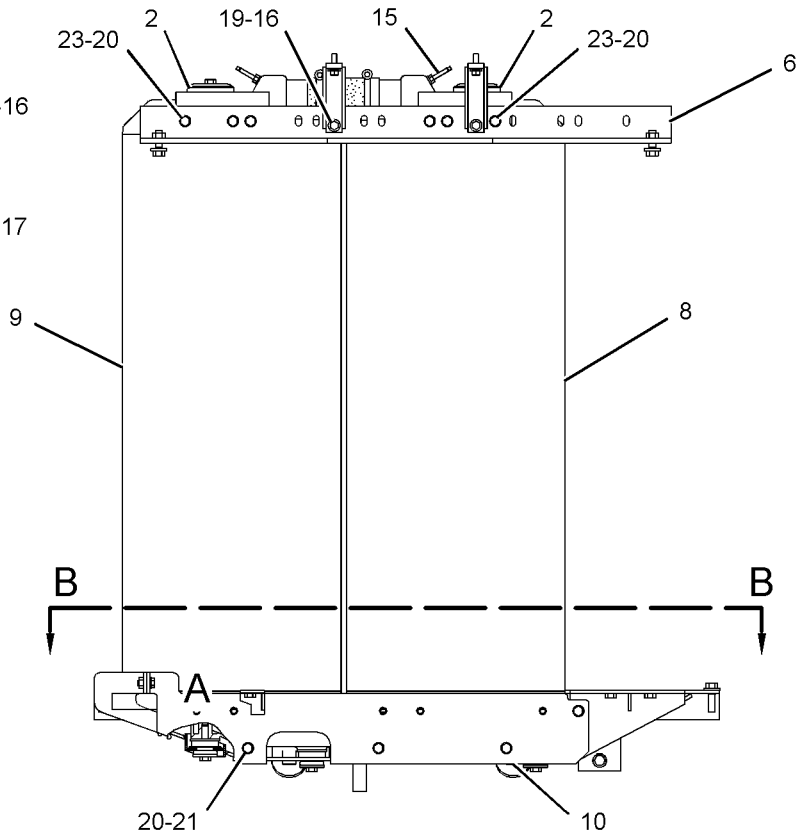

FRONT VIEW

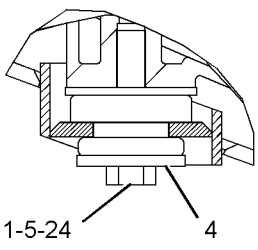

VIEW OF AREA A

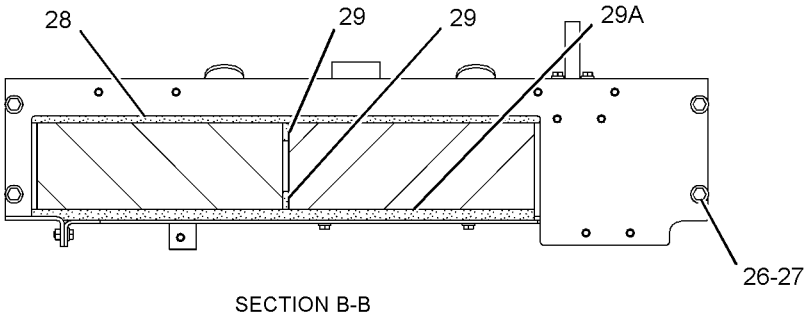

SECTION B-B

GRAPHIC #1 **<END>** g02849005

COOLING SYSTEM

375-3127 RADIATOR GP

S/N: DSH1-UP; DLN1-UP; DJR1-UP
PART OF 378-2273 STOCKPILE AR
AN ATTACHMENT

SMCS-1353 **i04674230**

NOTE	REF NO	GRAPHIC REF	PART NUMBER	QTY	PART NAME 1 2 3 4 5 6 (PRODUCT LEVEL)	SEE PAGE
	1	1	**377-4972**	1	CORE AS-RADIATOR (LH SIDE)	
	2	1	**377-4973**	1	CORE AS-RADIATOR (RH SIDE)	

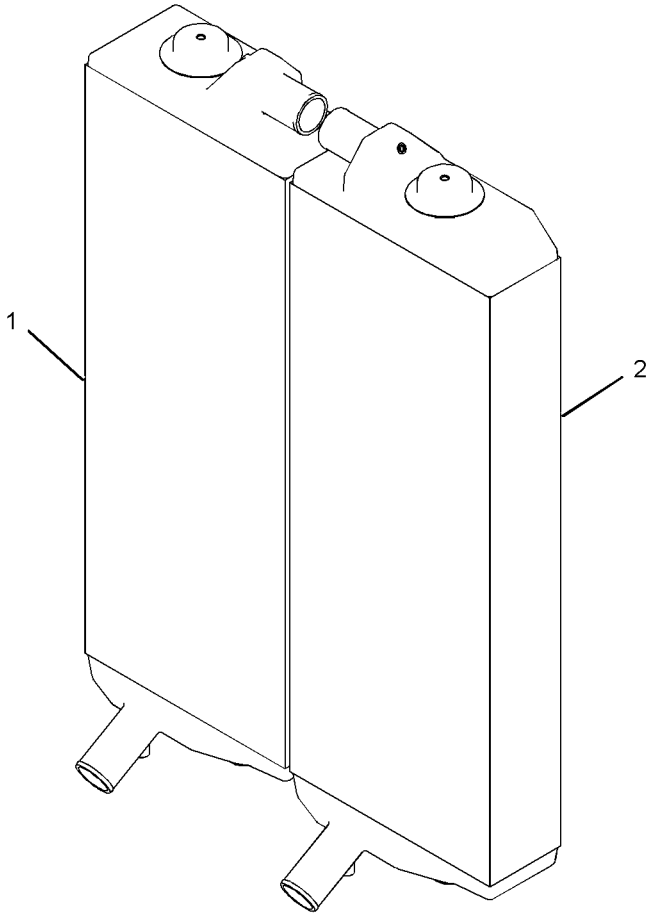

GRAPHIC #1 **<END>** g02819596

COOLING SYSTEM

377-4981 RADIATOR GP

S/N: DSH1-UP; DLN1-UP; DJR1-UP
PART OF 313-3757 INSTALLATION AR

SMCS-1353 **i04658909**

NOTE	REF NO	GRAPHIC REF	PART NUMBER	QTY	PART NAME 1 2 3 4 5 6 (PRODUCT LEVEL)	SEE PAGE
	1	1	**112-3462**	2	STRIP	
	2	1	**185-1047**	2	ADAPTER	
	3	1	**357-7849**	1	SHIELD AS	
	4	1	**357-7850**	1	SHIELD AS-TOP	
	5	1	**363-2581**	1	SHIELD AS-TOP	
	6	1	**363-2582**	1	SHIELD AS	
Y	7	1	*371-2459*	1	RADIATOR GP	89
	8	1	**371-2463**	2	HOSE	
	9	1	**377-4977**	1	BAFFLE AS (LH)	
		1	**7G-5186**	5	SPACER (13X19X4.5-MM THK)	
	10	1	**377-4978**	1	BAFFLE AS (RH)	
		1	**7G-5186**	5	SPACER (13X19X4.5-MM THK)	
	11	1	**377-4984**	1	BAFFLE AS-FRONT	
		1	**6B-4594**	7	RIVET	
	12	1	**377-4986**	1	BAFFLE AS-UPPER	
		1	**1F-0750**	12	NUT-WELD (3/8-16-THD)	
		1	**6B-4594**	8	RIVET	
	13	1	**377-4987**	1	BAFFLE AS-REAR	
		1	**1F-0750**	4	NUT-WELD (3/8-16-THD)	
		1	**6B-4594**	6	RIVET	
	14	1	**159-1503**	4	CLAMP-HOSE	
	15	1	**168-8806**	1	CONNECTOR	
	16	1	**219-0669**	2	SEAL-O-RING	
	17	1	**309-5140**	1	CONNECTOR	
	18	1	**9B-7237**	10	BOLT (3/8-16X1.25-IN)	
	19	1	**3K-0360**	2	SEAL-O-RING	
	20	1	**4L-6454**	7	BOLT (3/8-16X1-IN)	
	21	1	**5P-1075**	15	WASHER-HARD (10.2X22.5X3-MM THK)	
	22	1	**5P-1076**	10	WASHER-HARD (13.5X30X4-MM THK)	
	23	1	**7X-7729**	4	WASHER (11X25X3-MM THK)	
M	24	1	**8T-4136**	5	BOLT (M10X1.5X25-MM)	
M	25	1	**8T-4196**	4	BOLT (M10X1.5X35-MM)	
	26	1	**8T-4896**	7	WASHER-HARD (10.2X18.5X2.5-MM THK)	
	27	1	**8T-8919**	10	BOLT (1/2-13X1.75-IN)	

M-METRIC PART
Y-SEPARATE ILLUSTRATION

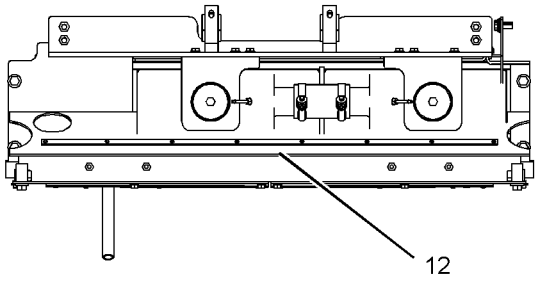

TOP VIEW

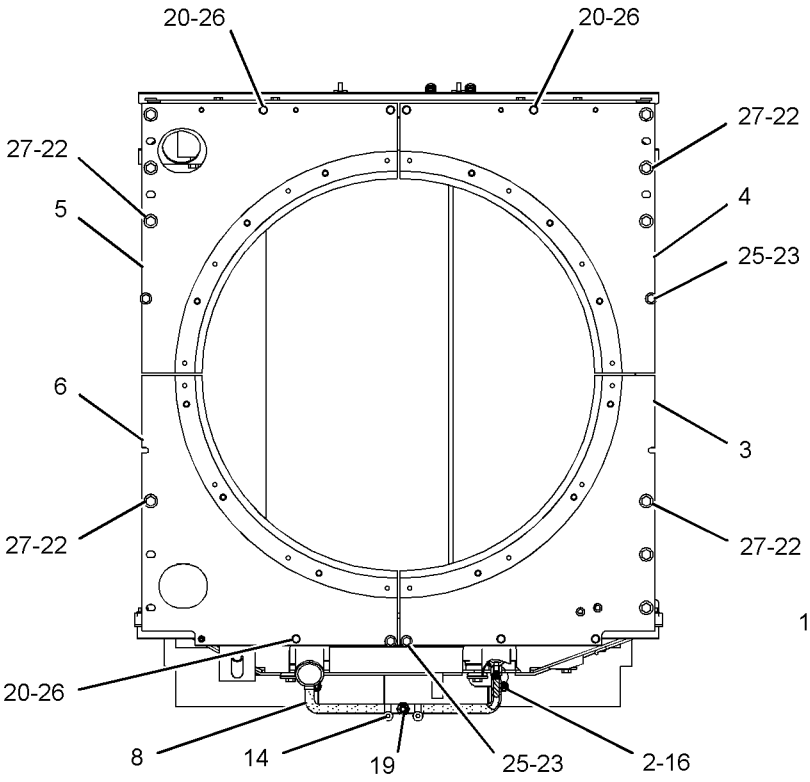

FRONT VIEW

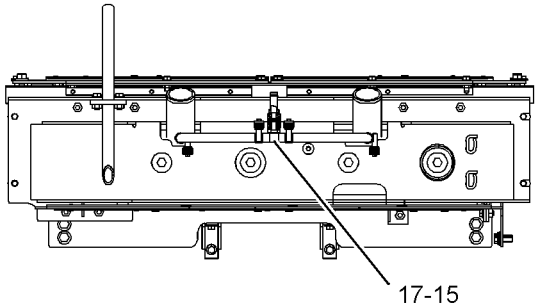

BOTTOM VIEW

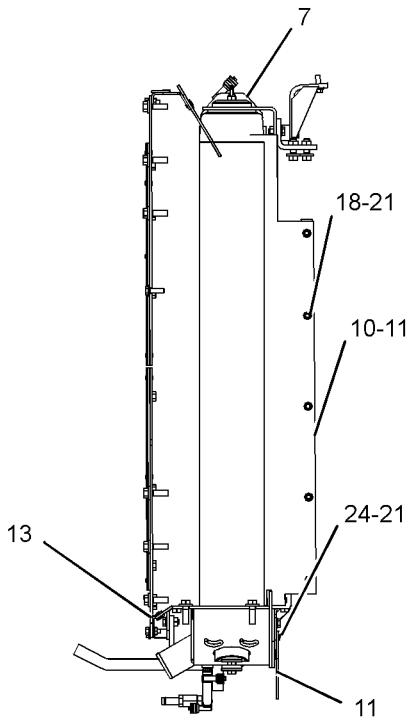

LEFT SIDE VIEW

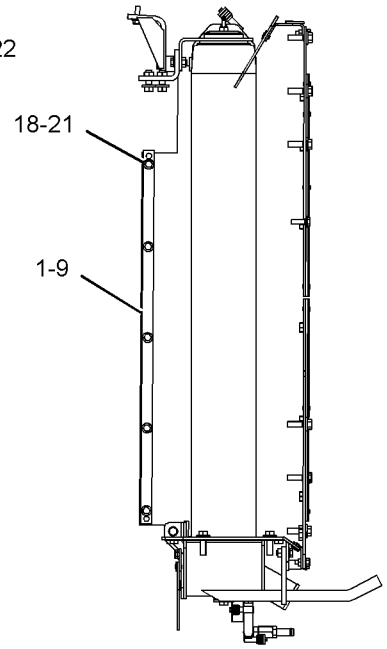

RIGHT SIDE VIEW

GRAPHIC #1 **<END>** g02849126

COOLING SYSTEM

323-3772 TANK GP-WATER

S/N: DSH1-UP; DLN1-UP; DJR1-UP
PART OF 313-3757 INSTALLATION AR

SMCS-1354, 1377 **i04769345**

NOTE	REF NO	GRAPHIC REF	PART NUMBER	QTY	PART NAME 1 2 3 4 5 6 (PRODUCT LEVEL)	SEE PAGE
	1	1	**3S-2093**	5	STRAP-CABLE	
	2	1	**110-2445**	2	CLAMP-HOSE	
	3	1	**113-6364**	2	BAFFLE AS	
	4	1	**165-6940**	1	TANK GP-COOLANT	
		1	**031-1119**	1	CAP AS-RADIATOR	
	5	1	*188-3034*	3	ELBOW AS	
		1	**3J-7354**	1	SEAL-O-RING	
		1	**6V-1355**	1	ELBOW	
	6	1	**196-9858**	1	TEE-SWIVEL	
	7	1	**372-1457**	1	BRACKET AS	
	8	1	**069-4269**	1	ADAPTER	
	9	1	**113-6363**	2	STRIP	
	10	1	*148-8347*	1	ELBOW AS	
		1	**3D-2824**	1	SEAL-O-RING	
		1	**6V-9007**	1	ELBOW	
		1	**6V-9746**	1	SEAL-O-RING	
	11	1	**352-3969**	2	CLIP	
	12	1	**1P-4278**	6	CLAMP-HOSE	
	13	1	**2V-4868**	1	FITTING	
	14	1	**3D-2824**	1	SEAL-O-RING	
	15	1	**3J-7354**	3	SEAL-O-RING	
	16	1	**4L-6454**	4	BOLT (3/8-16X1-IN)	
	17	1	**4P-7429**	1	CLIP	
	18	1	**5P-1075**	4	WASHER-HARD (10.2X22.5X3-MM THK)	
	19	1	**7D-7233**	2	CLIP	
	20	1	**7M-8485**	1	SEAL-O-RING	
	21	1	**8L-5008**	1	ELBOW-PIPE	
	22	1	**8T-2502**	4	BOLT (3/8-16X1.125-IN)	
	23	1	**8T-4121**	3	WASHER-HARD (11X21X2.5-MM THK)	
M	24	1	**8T-4136**	2	BOLT (M10X1.5X25-MM)	
M	25	1	**8T-4137**	1	BOLT (M10X1.5X20-MM)	
	26	1	**8T-4896**	4	WASHER-HARD (10.2X18.5X2.5-MM THK)	
	27	1	**9S-4182**	2	PLUG-O-RING	
	28	1	**9Y-9236**	1	GAUGE-SIGHT (WATER TANK)	
E	29	1	**5P-1251**		HOSE (134-CM)	
E	30	1	**5P-1465**		HOSE (37-CM)	
E	30A	1	**5P-1465**		HOSE (20-CM)	
E	30B	1	**5P-1465**		HOSE (86-CM)	
E	31	1	**8C-3681**		HOSE (180-CM)	

E-ORDER BY THE CENTIMETER
M-METRIC PART

323-3772 **TANK GP-WATER** *(contd.)* **i04769345**

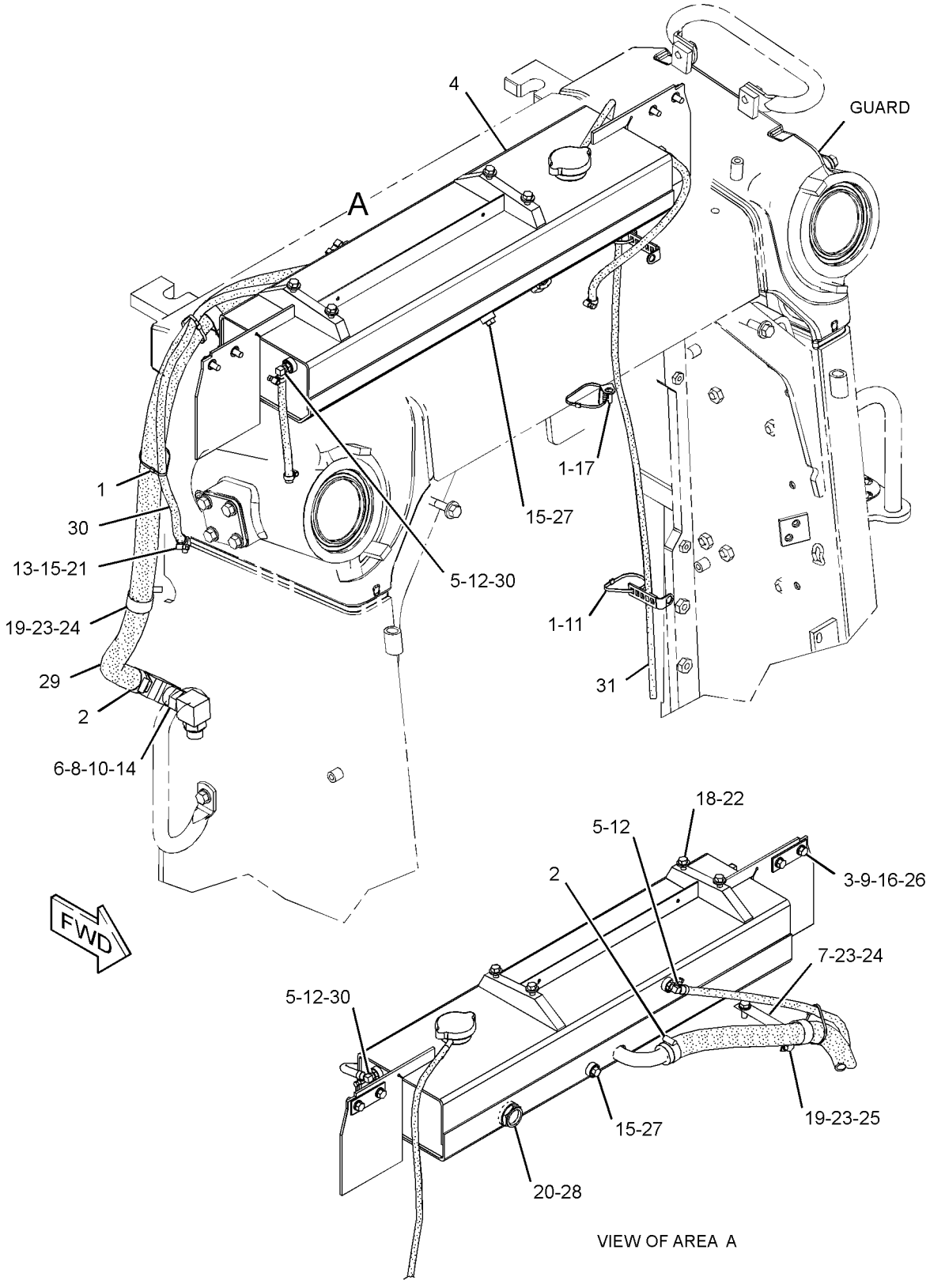

GRAPHIC #1 **<END>** g02790661

AIR INLET AND EXHAUST SYSTEM

332-4155 AFTERCOOLER GP-AIR–ATAAC

S/N: DSH1-UP; DLN1-UP; DJR1-UP
PART OF 313-3757 INSTALLATION AR

SMCS-1063 **i04658851**

NOTE	REF NO	GRAPHIC REF	PART NUMBER	QTY	PART NAME 1 2 3 4 5 6 (PRODUCT LEVEL)	SEE PAGE
	1	1	**313-3766**	2	SLEEVE	
	2	1	**313-3769**	2	CUSHION-RUBBER	
	3	1	**314-6506**	2	CUSHION-RUBBER	
	4	1	**314-6509**	2	WASHER-PLATE	
	5	1	**331-9867**	2	MOUNT AS	
	6	1	**332-4156**	1	CORE AS-AFTERCOOLER	
	7	1	**8T-4121**	6	WASHER-HARD (11X21X2.5-MM THK)	
M	8	1	**8T-4133**	2	NUT (M10X1.5-THD)	
M	9	1	**8T-4182**	2	BOLT (M10X1.5X45-MM)	
M	10	1	**8T-4185**	4	BOLT (M10X1.5X50-MM)	
E	11	1	**122-2358**		SEAL (110-CM)	

E-ORDER BY THE CENTIMETER
M-METRIC PART

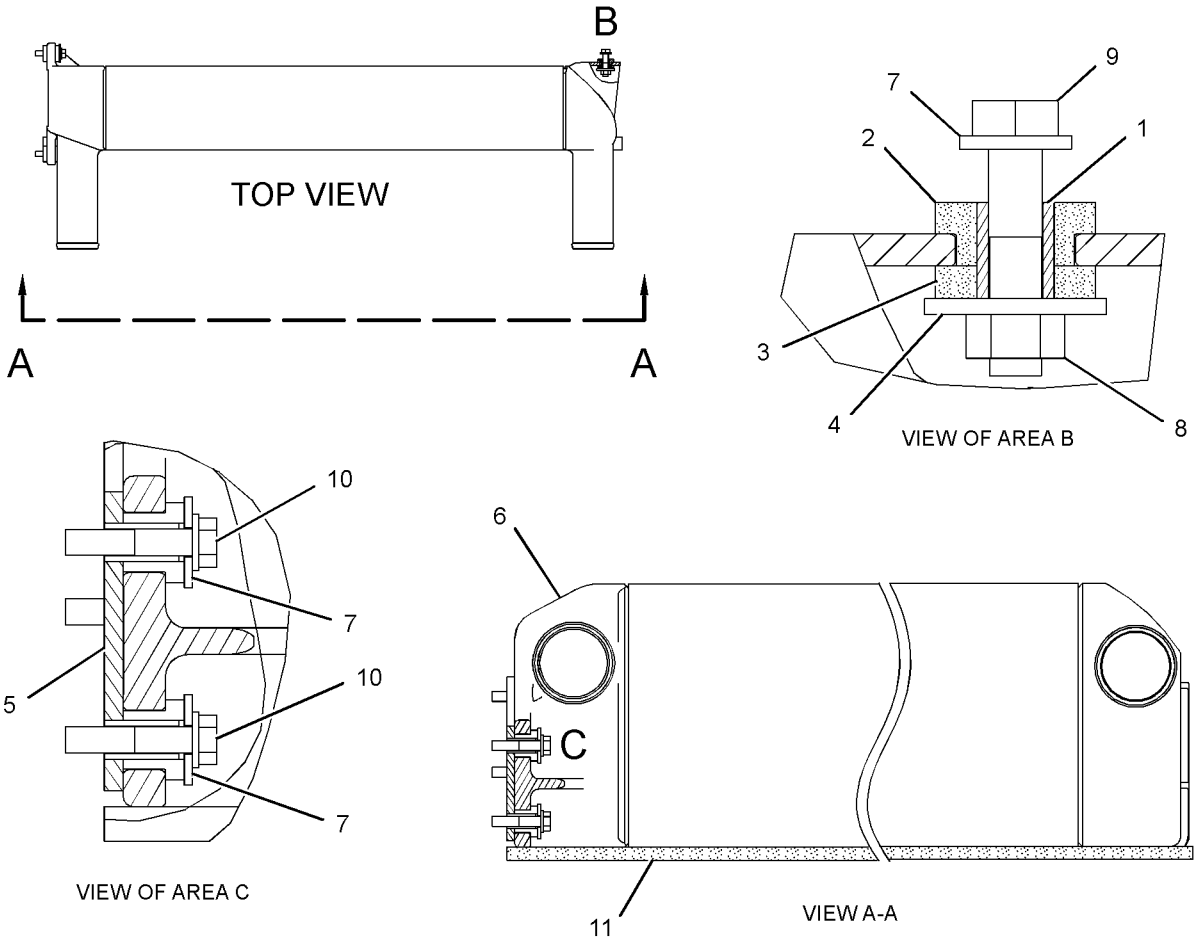

GRAPHIC #1 **<END>** g02831303

AIR INLET AND EXHAUST SYSTEM

205-8674 AIR CLEANER GP

S/N: DSH1-UP; DLN1-UP; DJR1-UP
PART OF 206-9000 AIR CLEANER GP

SMCS-1051, 1054 **i03984477**

NOTE	REF NO	GRAPHIC REF	PART NUMBER	QTY	PART NAME 1 2 3 4 5 6 (PRODUCT LEVEL)	SEE PAGE
	1	1	**6I-2501**	1	FILTER ELEMENT AS-AIR (PRIMARY, STANDARD EFFICIENCY)	
	2	1	**6I-2502**	1	FILTER ELEMENT AS-AIR (SECONDARY)	
	3	1	**6I-4464**	1	COVER AS-AIR CLEANER	
		1	**4P-5524**	1	SEAL-O-RING	
	4	1	**8N-4617**	2	KIT-AIR CLEANER CLAMP	
					(EACH INCLUDES CLIP AS & RIVET)	

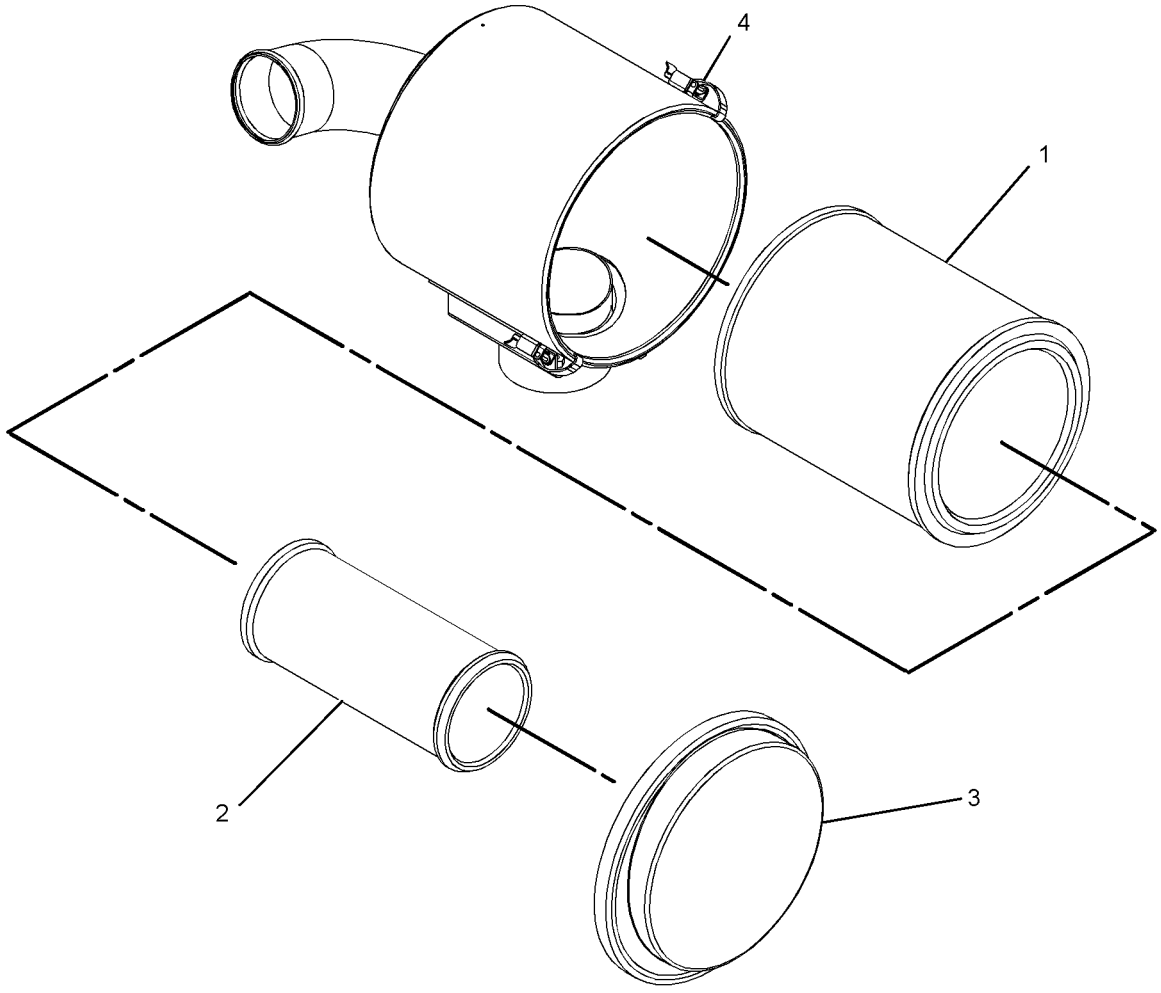

GRAPHIC #1 **<END>** g01123031

AIR INLET AND EXHAUST SYSTEM

206-9000 AIR CLEANER GP

S/N: DSH1-UP; DLN1-UP; DJR1-UP
PART OF 313-3757 INSTALLATION AR

SMCS-1051, 1054 **i03984475**

NOTE	REF NO	GRAPHIC REF	PART NUMBER	QTY	PART NAME 1 2 3 4 5 6 (PRODUCT LEVEL)	SEE PAGE
	1	1	**9S-6758**	1	PRECLEANER AS	
		1	**0S-1591**	1	BOLT (3/8-16X1.5-IN)	
		1	**9S-8752**	1	NUT-FULL (3/8-16-THD)	
Y	2	1	**205-8674**	1	AIR CLEANER GP	97
	3	1	**205-8681**	1	BODY AS (PRECLEANER)	
	4	1	**250-9290**	1	BRACKET AS	
	5	1	**7X-7729**	7	WASHER (11X25X3-MM THK)	
	6	1	**8T-4121**	8	WASHER-HARD (11X21X2.5-MM THK)	
M	7	1	**8T-4133**	2	NUT (M10X1.5-THD)	
M	8	1	**8T-4136**	9	BOLT (M10X1.5X25-MM)	
M	9	1	**8T-4137**	4	BOLT (M10X1.5X20-MM)	

M-METRIC PART
Y-SEPARATE ILLUSTRATION

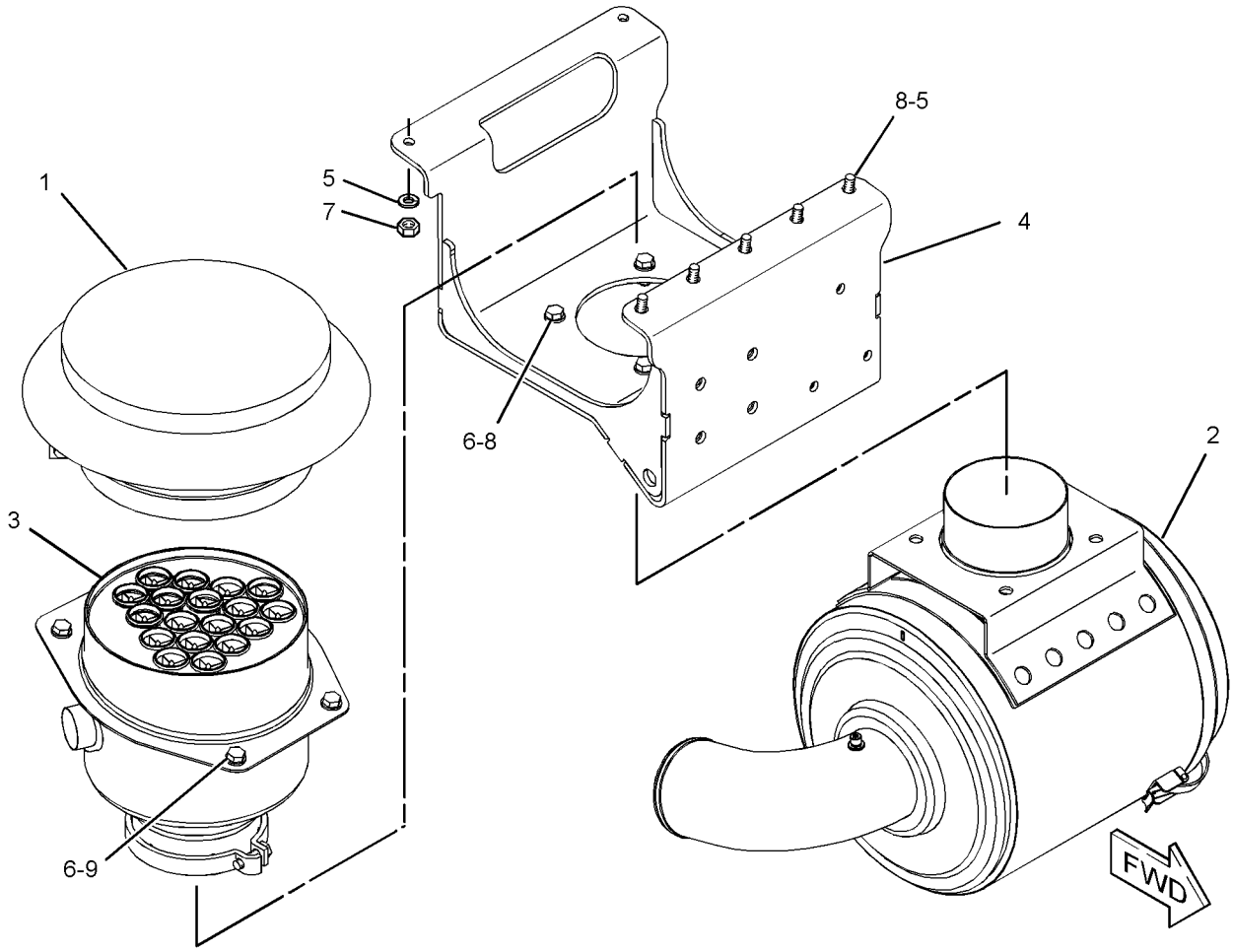

GRAPHIC #1 **<END>** g01181353

323-0932 DUST EJECTOR GP–PRECLEANER

S/N: DSH1-UP; DLN1-UP; DJR1-UP
PART OF 313-3757 INSTALLATION AR

SMCS-1068 **i04657191**

NOTE	REF NO	GRAPHIC REF	PART NUMBER	QTY	PART NAME 1 2 3 4 5 6 (PRODUCT LEVEL)	SEE PAGE
	1	1	**9M-2904**	2	CLAMP-HOSE	
	2	1	**241-4354**	1	EJECTOR AS-EXHAUST	
	3	1	**308-7112**	1	CLAMP-WIRE	
E	4	1	**5P-2817**		HOSE (55-CM)	

E-ORDER BY THE CENTIMETER

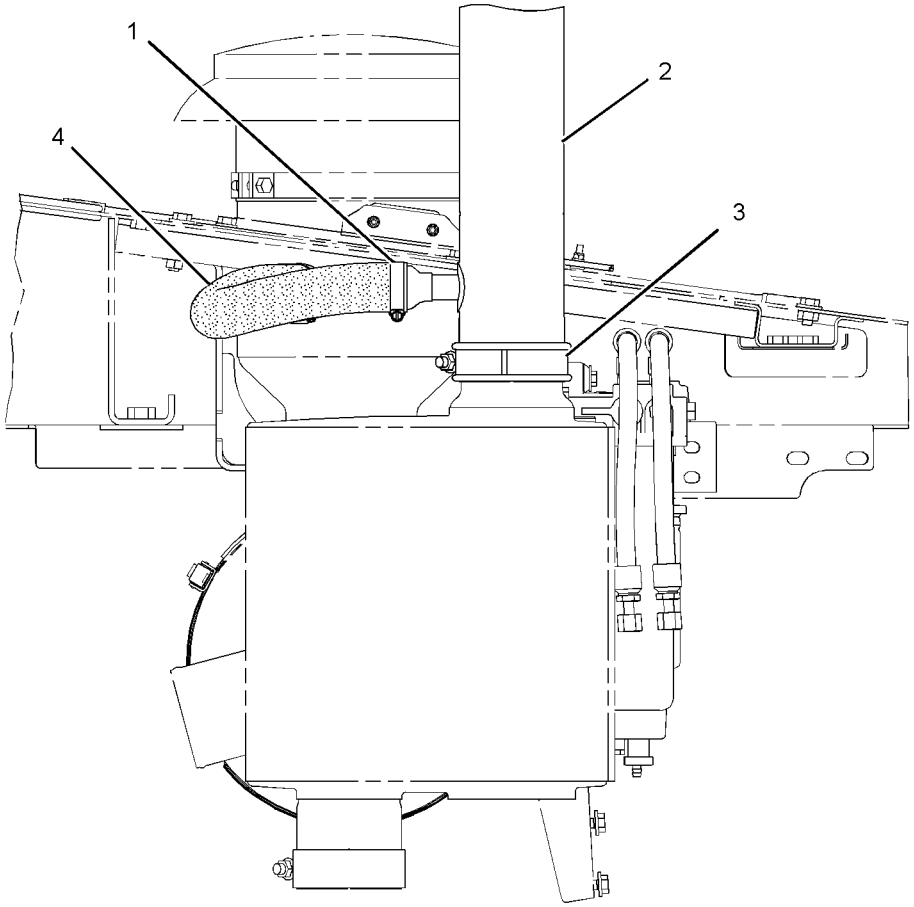

RIGHT SIDE VIEW

GRAPHIC #1 **<END>** g02793908

AIR INLET AND EXHAUST SYSTEM

338-2149 ELBOW GP-AIR INLET

S/N: THX28268-UP

PART OF 318-1906 ENGINE AR-COMPLETE

SMCS-1087 **i04735050**

NOTE	REF NO	GRAPHIC REF	PART NUMBER	QTY	PART NAME 1 2 3 4 5 6 (PRODUCT LEVEL)	SEE PAGE
	1	1	**257-8299**	1	ELBOW-AIR INLET	
	2	1	**347-5684**	1	PLATE-SPACER	
M	3	1	**131-0353**	4	STUD (M8X1.25X82.75-MM)	
	4	1	*307-2673*	1	PLUG AS	
		1	**9S-8005**	1	PLUG-O-RING	
		1	**238-5080**	1	SEAL-O-RING	
	5	1	*309-5131*	1	PLUG AS	
		1	**9S-8006**	1	PLUG-O-RING	
		1	**238-5081**	1	SEAL-O-RING	
	6	1	**7S-6369**	8	WASHER (0.344X0.75X0.188-IN THK)	
M	7	1	**8T-0100**	4	BOLT (M8X1.25X60-MM)	
B	8	1	**1U-8846**		SEALANT-GASKET	

B-USE AS REQUIRED
M-METRIC PART

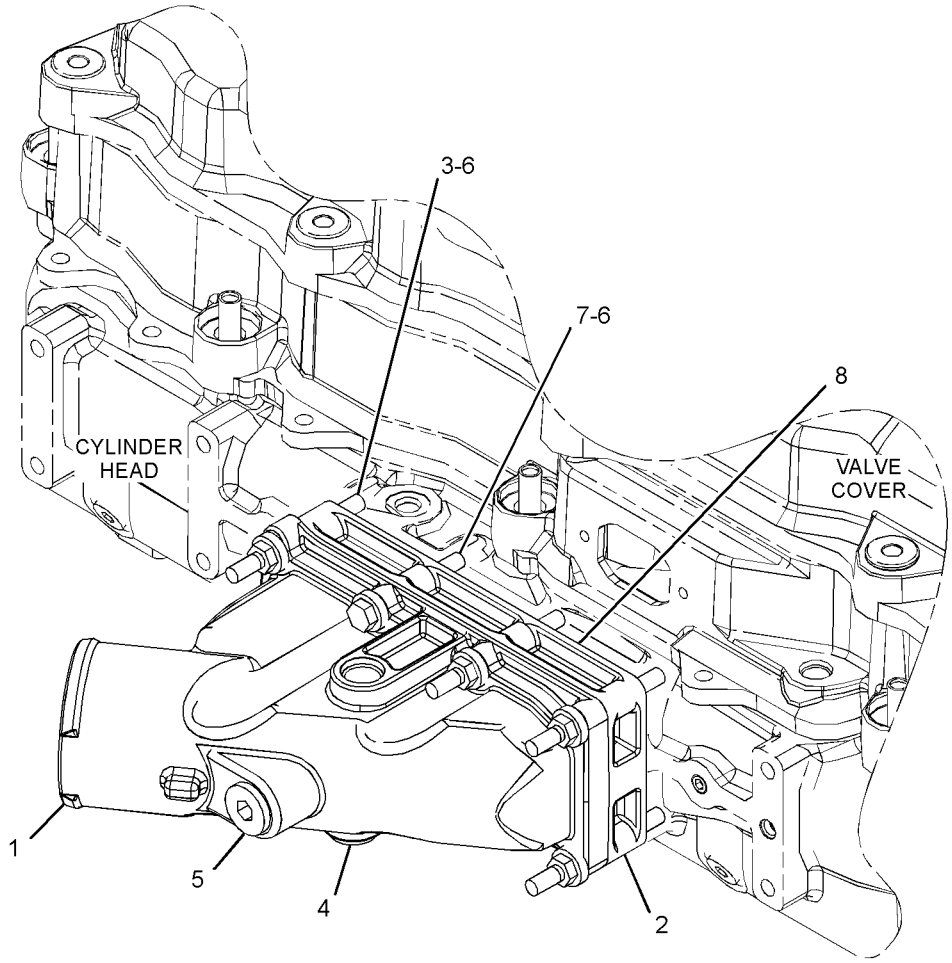

GRAPHIC #1 **<END>** g02841519

AIR INLET AND EXHAUST SYSTEM

323-0933 LINES GP-AIR–ATAAC

S/N: DSH1-UP; DLN1-UP; DJR1-UP

PART OF 313-3757 INSTALLATION AR

SMCS-1071 **i04689934**

NOTE	REF NO	GRAPHIC REF	PART NUMBER	QTY	PART NAME 1 2 3 4 5 6 (PRODUCT LEVEL)	SEE PAGE
	1	1	**201-1260**	2	HOSE	
	2	1	**334-8520**	1	HOSE	
	3	2	**386-1976**	1	TUBE	
	4	1	**386-1977**	1	PLATE AS	
	5	2	**386-1978**	1	HOSE	
	6	2	**386-2758**	1	BRACKET AS	
	7	1	**386-2766**	1	TUBE AS	
	8	1	**386-2767**	1	PLATE AS	
	9	2	**387-2081**	1	TUBE AS	
	10	1	**391-4763**	1	HOSE	
	11	2	**208-6055**	6	CLAMP	
	12	1	**209-4581**	4	CLAMP	
M	13	2	**6V-4249**	2	BOLT (M10X1.5X50-MM)	
	14	2	**6V-5839**	2	WASHER (11X21X2.5-MM THK)	
	15	1,2	**7X-7729**	4	WASHER (11X25X3-MM THK)	
	16	1	**8T-4121**	2	WASHER-HARD (11X21X2.5-MM THK)	
M	17	1	**8T-4136**	1	BOLT (M10X1.5X25-MM)	
M	18	1	**8T-4182**	1	BOLT (M10X1.5X45-MM)	
M	19	2	**8T-4192**	2	BOLT (M12X1.75X25-MM)	
M	20	1	**8T-4195**	2	BOLT (M10X1.5X30-MM)	
M	21	1,2	**8T-4196**	2	BOLT (M10X1.5X35-MM)	
	22	2	**8T-4223**	2	WASHER-HARD (13.5X25.5X3-MM THK)	
	23	1,2	**9X-2646**	4	CLIP (SLOT)	
	24	1,2	**9X-2647**	4	CLIP (TAB)	

M-METRIC PART

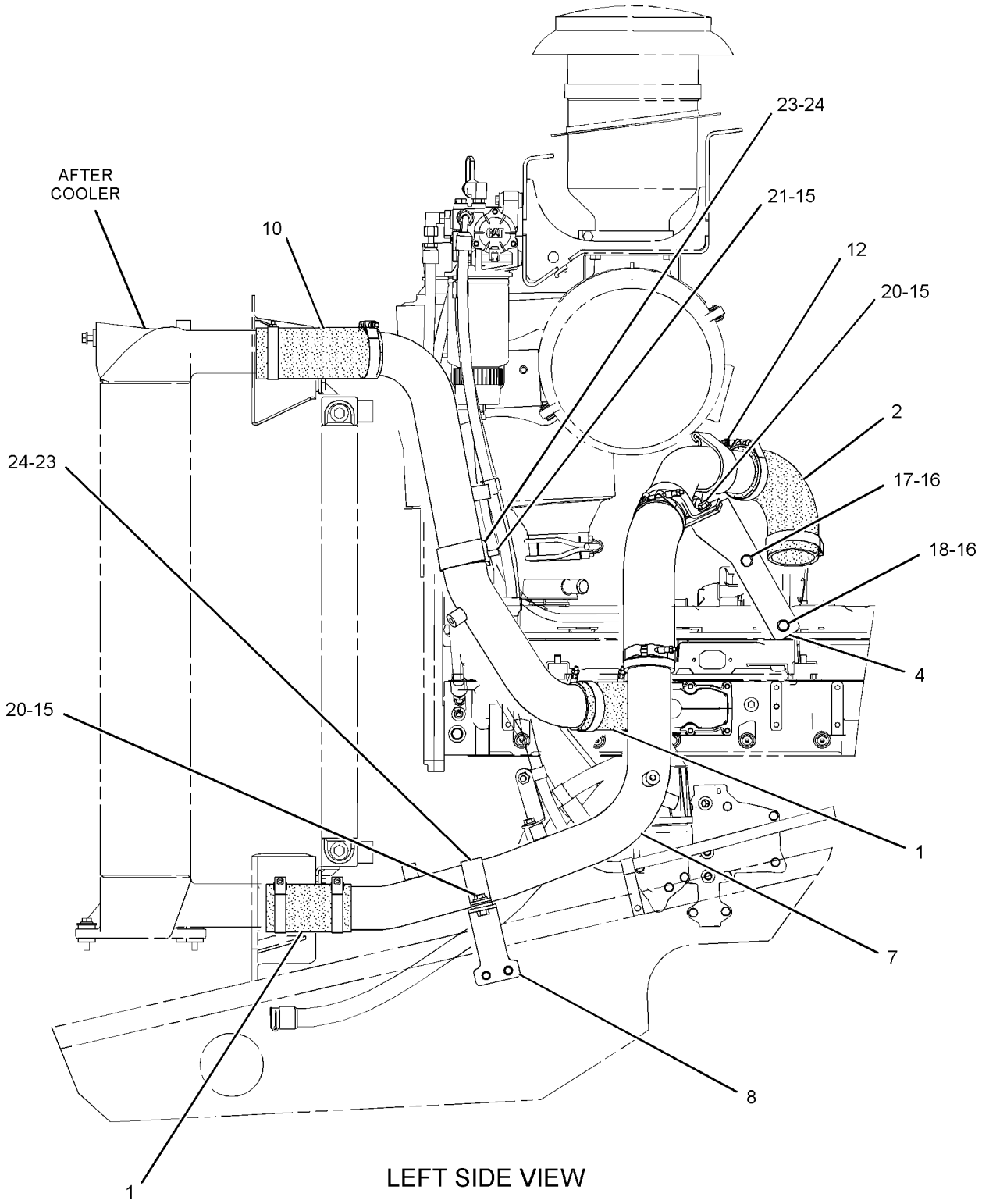

LEFT SIDE VIEW

GRAPHIC #1 g02851403

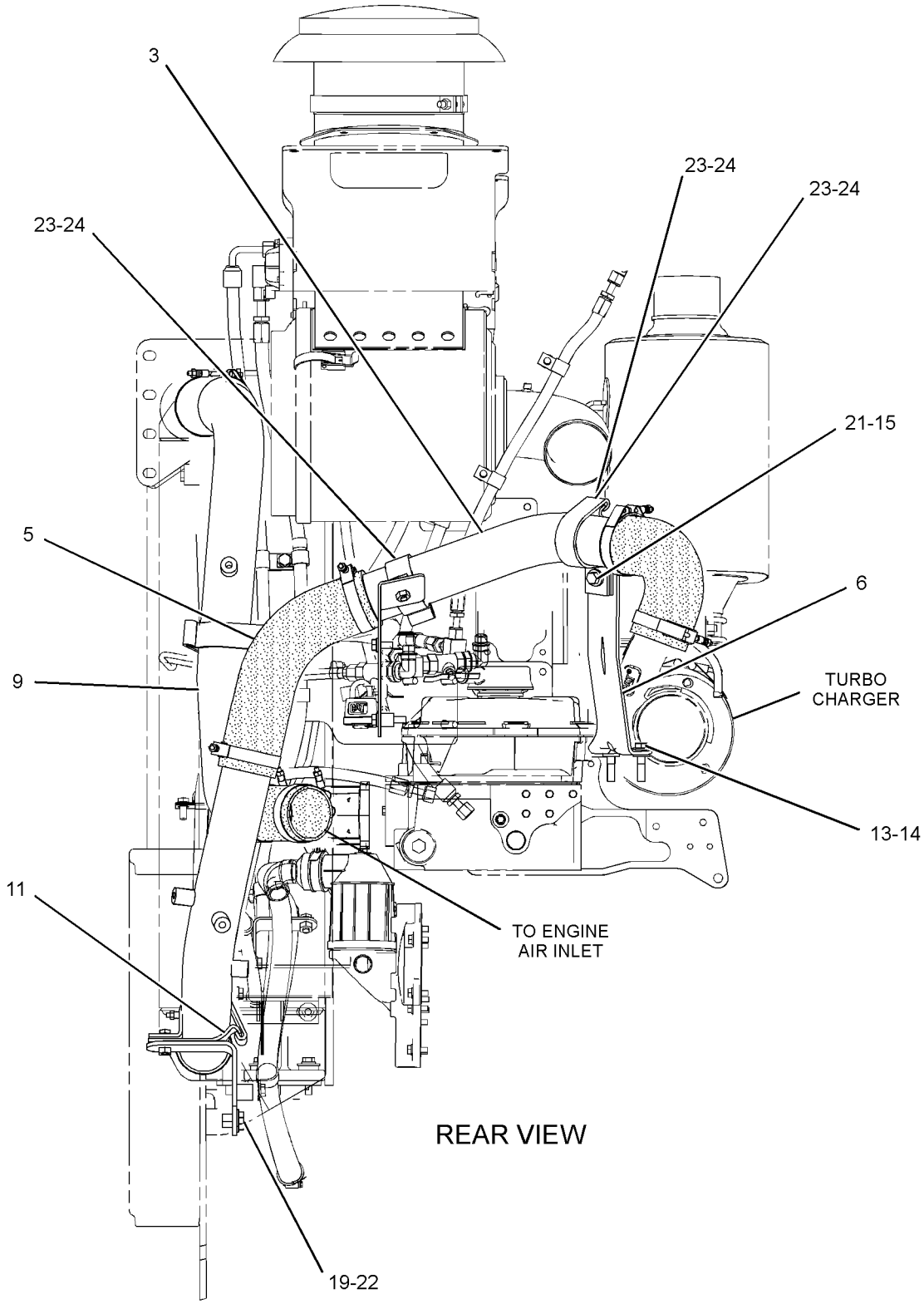

GRAPHIC #2 **<END>** g02852698

AIR INLET AND EXHAUST SYSTEM

323-0934 LINES GP-AIR

S/N: DSH1-UP; DLN1-UP; DJR1-UP
PART OF 313-3757 INSTALLATION AR

SMCS-1071 **i04607269**

NOTE	REF NO	GRAPHIC REF	PART NUMBER	QTY	PART NAME 1 2 3 4 5 6 (PRODUCT LEVEL)	SEE PAGE
	1	1	**1W-2431**	1	CLAMP-BAND	
	2	1	**6N-1558**	1	RING-SEAL	
	3	1	**8T-4986**	4	CLAMP-HOSE	
	4	1	**169-3883**	1	COUPLING	
	5	1	**214-1645**	1	ELBOW-EXHAUST	
	6	1	**243-1588**	1	HOSE	
	7	1	**334-8514**	1	TUBE AS	
	8	1	**334-8527**	1	HOSE	
M	9	1	**6V-4249**	3	BOLT (M10X1.5X50-MM)	
	10	1	**6V-5839**	3	WASHER (11X21X2.5-MM THK)	

M-METRIC PART

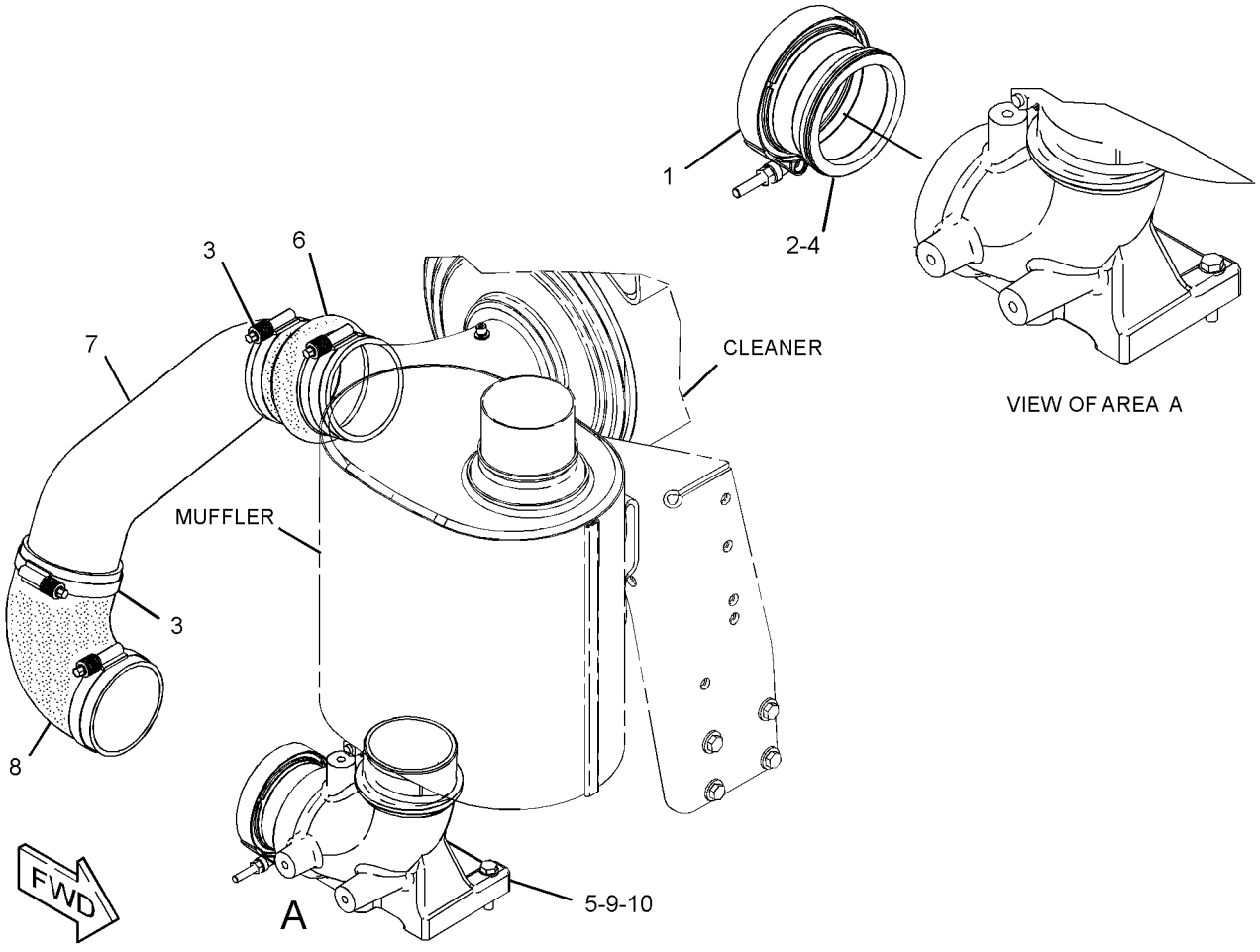

GRAPHIC #1 **<END>** g02788977

AIR INLET AND EXHAUST SYSTEM

165-4445 MANIFOLD GP-EXHAUST

S/N: THX28268-UP

PART OF 318-1906 ENGINE AR-COMPLETE

SMCS-1059 **i04017412**

NOTE	REF NO	GRAPHIC REF	PART NUMBER	QTY	PART NAME 1 2 3 4 5 6 (PRODUCT LEVEL)	SEE PAGE
M	1	1	**3E-8017**	12	LOCKNUT (M10X1.5-MM THD)	
	2	1	**161-3398**	1	MANIFOLD-EXHAUST	
	3	1	**161-3411**	6	GASKET	
	4	1	**167-0172**	1	MANIFOLD-EXHAUST	
	5	1	**203-7775**	1	MANIFOLD-EXHAUST	
M	6	1	**116-3715**	12	STUD-TAPERLOCK (M10X1.5X85-MM)	
	7	1	**4P-4369**	6	SPACER (12X19X23.5-MM THK)	
	8	1	**6V-5839**	12	WASHER (11X21X2.5-MM THK)	
M	9	1	**8T-7044**	4	STUD-TAPERLOCK (M10X1.5X40-MM)	

M-METRIC PART

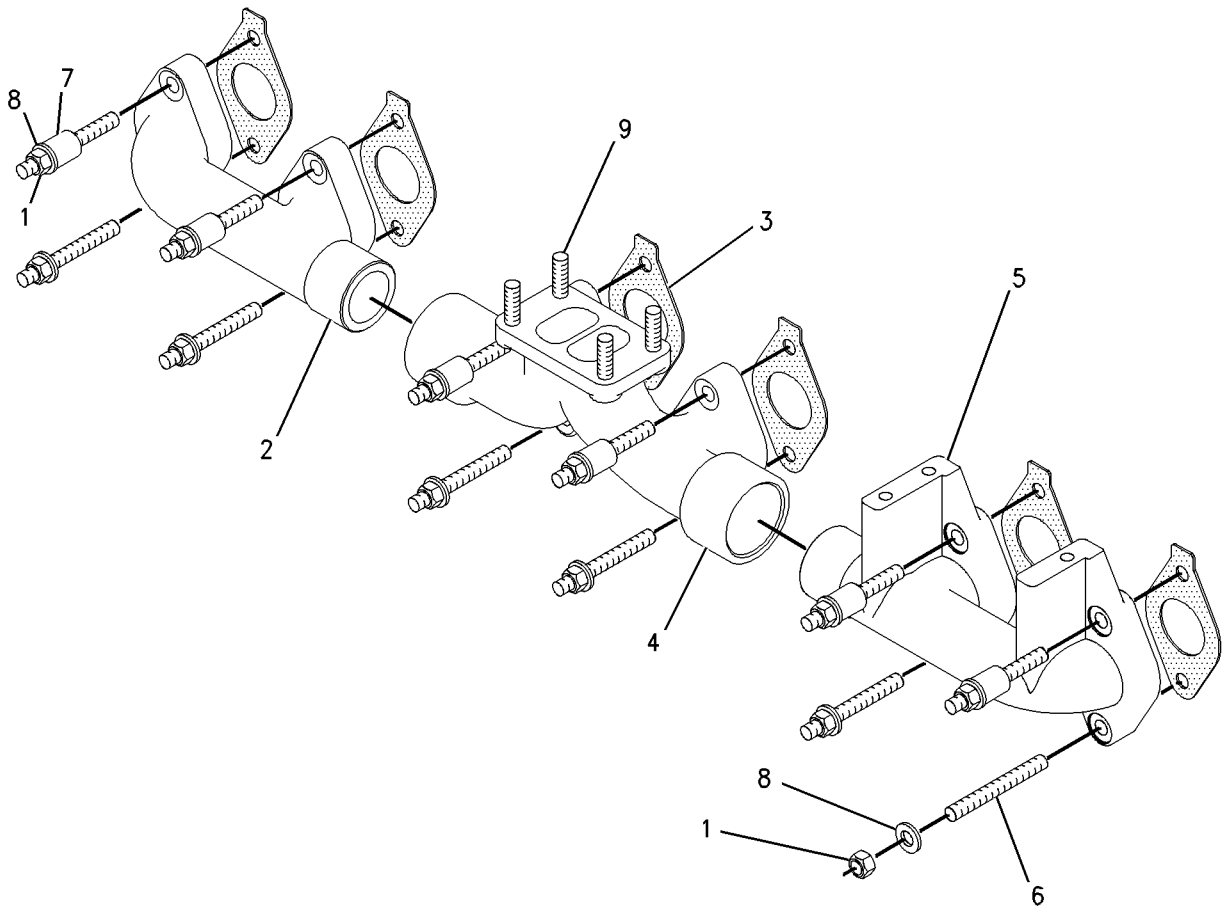

GRAPHIC #1 **<END>** g00741421

AIR INLET AND EXHAUST SYSTEM

239-3686 MUFFLER GP

S/N: DSH1-UP; DLN1-UP; DJR1-UP
PART OF 313-3757 INSTALLATION AR

SMCS-1062 **i04002913**

NOTE	REF NO	GRAPHIC REF	PART NUMBER	QTY	PART NAME 1 2 3 4 5 6 (PRODUCT LEVEL)	SEE PAGE
	1	1	**308-7112**	1	CLAMP-WIRE	
	2	1	**229-9601**	1	MUFFLER AS	
M		1	**8T-3490**	2	NUT-WELD (M10X1.5-THD)	
	3	1	**250-9286**	1	BRACKET AS	
		1	**7T-1099**	3	LINK	
	4	1	**7X-7729**	6	WASHER (11X25X3-MM THK)	
M	5	1	**8T-4196**	6	BOLT (M10X1.5X35-MM)	

M-METRIC PART

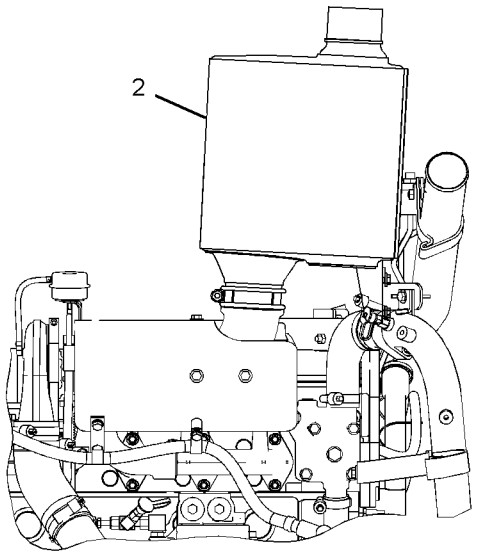

RIGHT SIDE VIEW

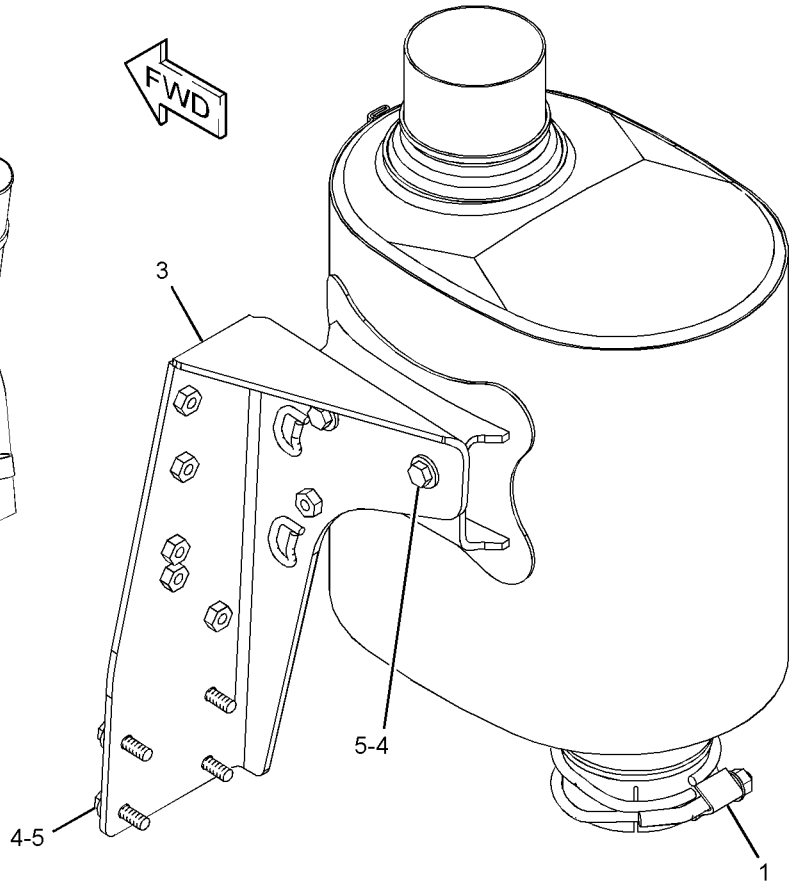

GRAPHIC #1 **<END>** g01391058

AIR INLET AND EXHAUST SYSTEM

378-7488 PRECLEANER AR—WITH PRESCREEN

S/N: DSH1-UP; DLN1-UP; DJR1-UP
PART OF 378-2273 STOCKPILE AR
AN ATTACHMENT

SMCS-1055 **i04629258**

NOTE	REF NO	GRAPHIC REF	PART NUMBER	QTY	PART NAME 1 2 3 4 5 6 (PRODUCT LEVEL)	SEE PAGE
	1	1	**1W-4877**	1	HOSE-REDUCER	
	2	1	**1W-8620**	1	VALVE AS-CHECK (EXHAUST)	
	3	1	**4N-3861**	1	TUBE	
	4	1	**5P-0597**	6	CLAMP-HOSE	
	5	1	**5P-0599**	1	CLAMP-BAND	
	6	1	**202-2605**	1	HOSE	
Y	7	1	*237-9251*	1	PRECLEANER GP (TURBINE)	108
	8	1	**380-5775**	1	BASE AS	
	9	1	**5P-3860**	1	CLAMP-HOSE	
	10	1	**7X-7729**	5	WASHER (11X25X3-MM THK)	
M	11	1	**8T-4136**	5	BOLT (M10X1.5X25-MM)	
E	12	1	**263-9959**		HOSE (43-CM)	

E-ORDER BY THE CENTIMETER
M-METRIC PART
Y-SEPARATE ILLUSTRATION

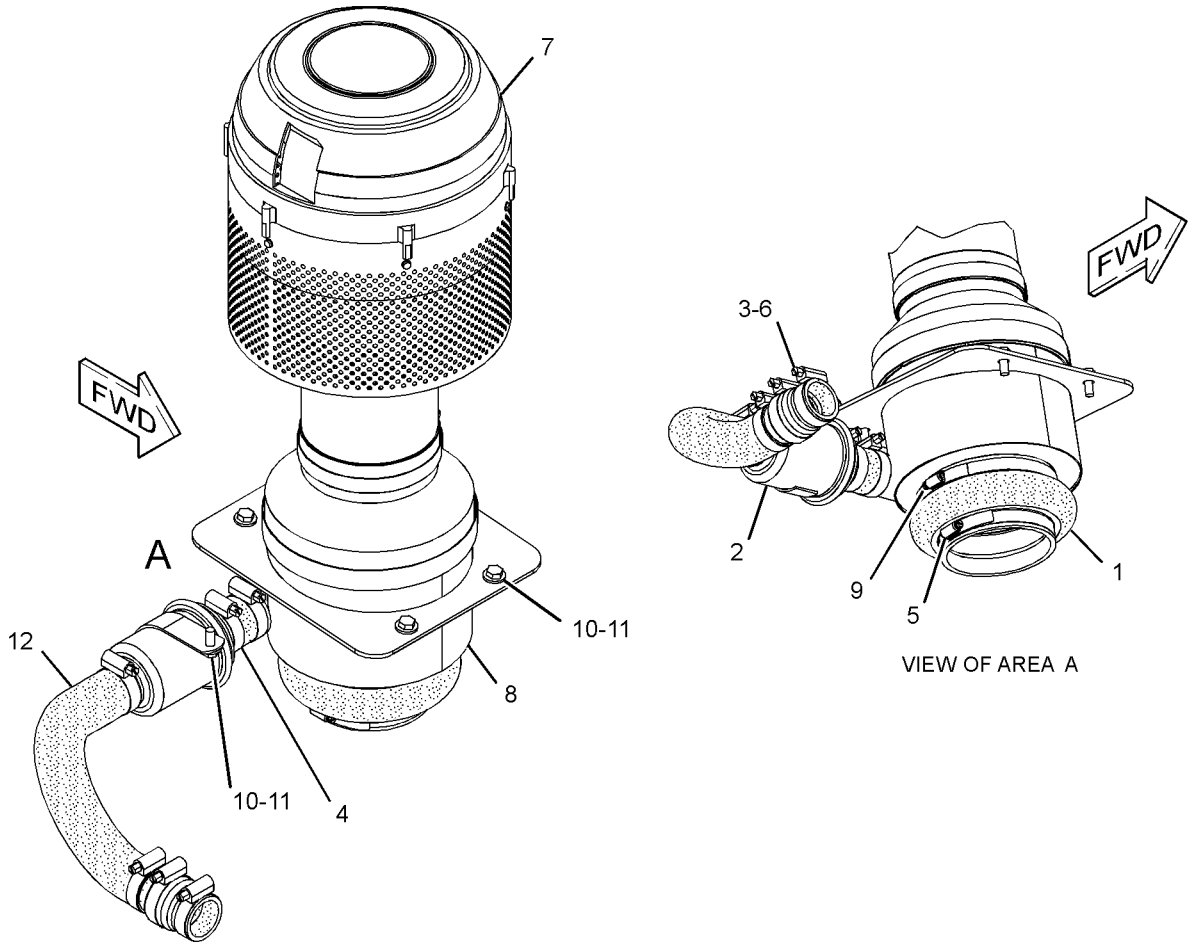

GRAPHIC #1 **<END>** g02791281

AIR INLET AND EXHAUST SYSTEM

237-9251 PRECLEANER GP—WITH PRESCREEN

S/N: DSH1-UP; DLN1-UP; DJR1-UP
PART OF 378-7488 PRECLEANER AR
AN ATTACHMENT

SMCS-1055 **i04002887**

NOTE	REF NO	GRAPHIC REF	PART NUMBER	QTY	PART NAME 1 2 3 4 5 6 (PRODUCT LEVEL)	SEE PAGE
	1	1	**130-3280**	1	PRECLEANER AS	
	1A	1	**174-5415**	1	CLAMP	
HZ	2	1		1	PRESCREEN	
	3	1	**145-6669**	6	SCREW-SELF-TAPPING (10X0.75-IN)	
J	4	1	**237-9252**	1	TUBE AS	
J	5	1	**237-9255**	1	TUBE AS	
					AVAILABLE REPAIR KIT(S):	
H			**153-1277**	1	KIT-SCREEN (PRECLEANER)	
					(INCLUDES PRESCREEN, DAMPER, CLAMP, SCREWS, & TUBE)	
J			**237-9254**	1	KIT-PRECLEANER (TURBINE)	
					(INCLUDES VALVE AS, TUBE, CLAMPS, HOSE, TUBE ASSEMBLIES, WASHERS & BOLTS)	

H-PART MARKED H INCLUDED IN KIT MARKED H
J-PART MARKED J INCLUDED IN KIT MARKED J
Z-NOT SERVICED SEPARATELY

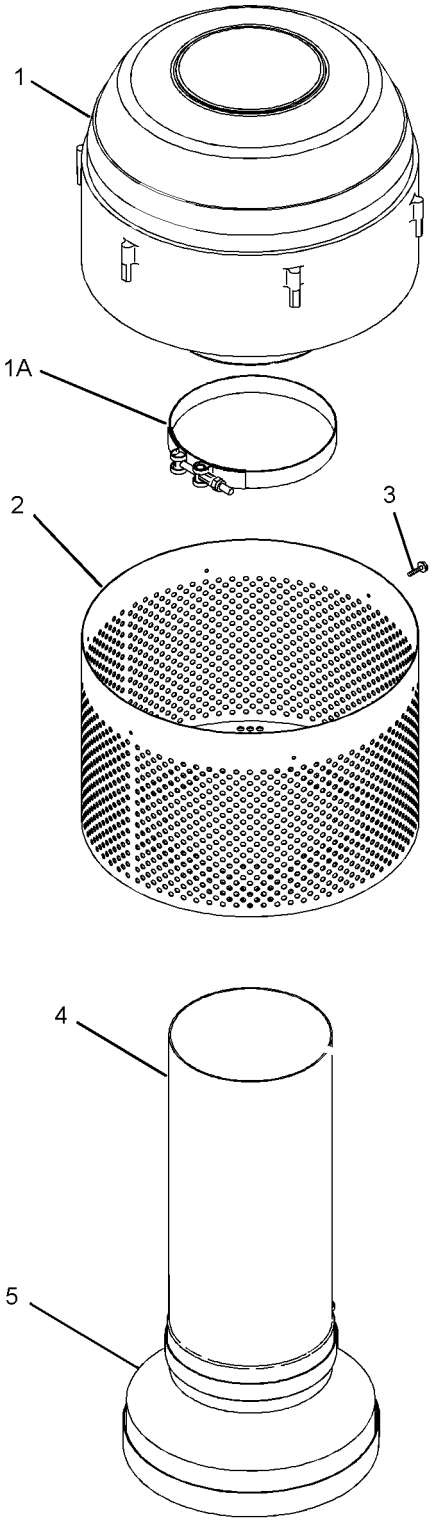

GRAPHIC #1 **<END>** g01146470

AIR INLET AND EXHAUST SYSTEM

237-2737 SHIELD GP-EXHAUST

S/N: DSH1-UP; DLN1-UP; DJR1-UP
PART OF 313-3757 INSTALLATION AR

SMCS-1067 **i04008951**

NOTE	REF NO	GRAPHIC REF	PART NUMBER	QTY	PART NAME 1 2 3 4 5 6 (PRODUCT LEVEL)	SEE PAGE
	1	1	**237-2738**	1	SHIELD AS-EXHAUST	
M		1	**9R-2613**	2	BOSS-WELD (M10X1.5X25-MM)	
	2	1	**7X-7729**	3	WASHER (11X25X3-MM THK)	
M	3	1	**8T-4136**	3	BOLT (M10X1.5X25-MM)	

M-METRIC PART

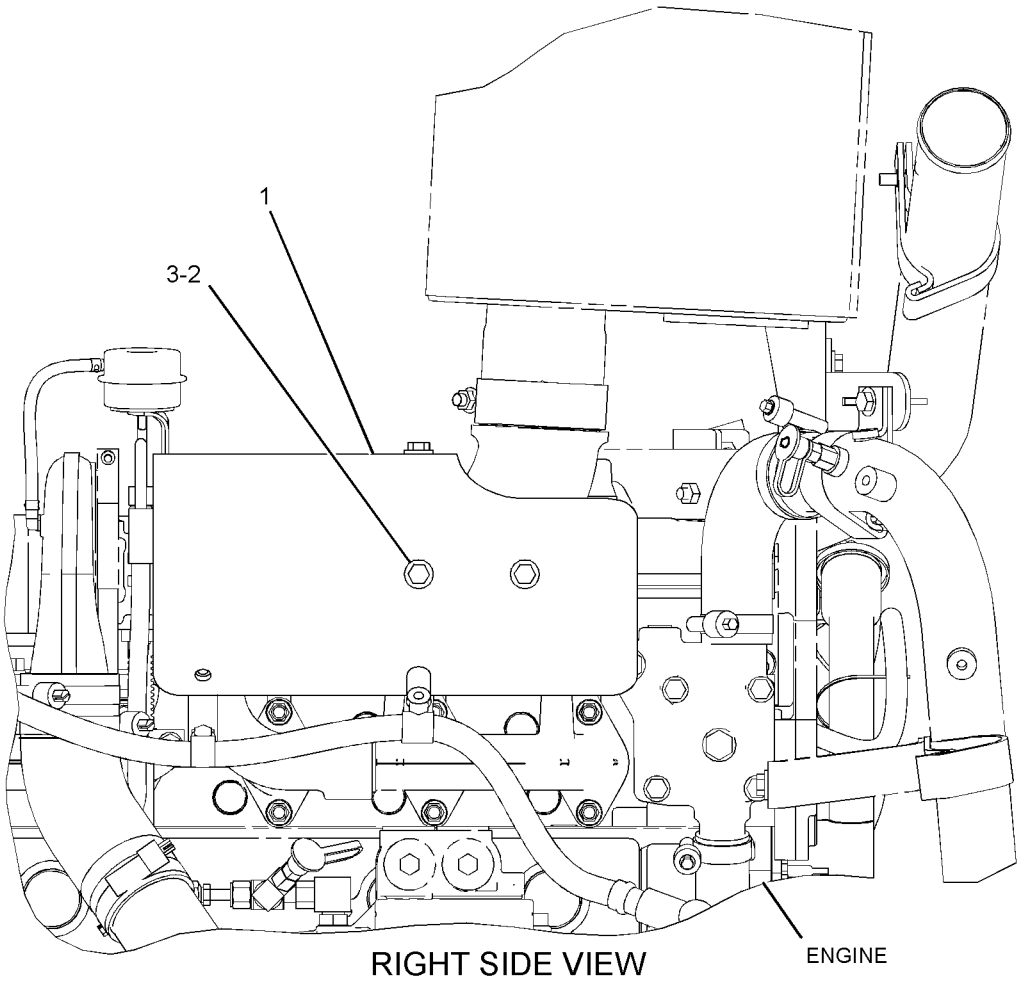

RIGHT SIDE VIEW

GRAPHIC #1 **<END>** g01209236

AIR INLET AND EXHAUST SYSTEM

252-5165 TURBOCHARGER GP

S/N: THX28268-UP

PART OF 359-1008 TURBOCHARGER GP

SMCS-1052, 1053 **i04017515**

NOTE	REF NO	GRAPHIC REF	PART NUMBER	QTY	PART NAME 1 2 3 4 5 6 (PRODUCT LEVEL)	SEE PAGE
	1	1	**137-1602**	1	CLAMP AS (TURBINE)	
	2	1	**158-6072**	1	CLAMP AS (COMPRESSOR)	
	3	1	**161-6963**	2	CLAMP	
	4	1	**262-2870**	1	CARTRIDGE GP-TURBOCHARGER	
E	5	1	**242-3360**		HOSE (25-CM)	

E-ORDER BY THE CENTIMETER

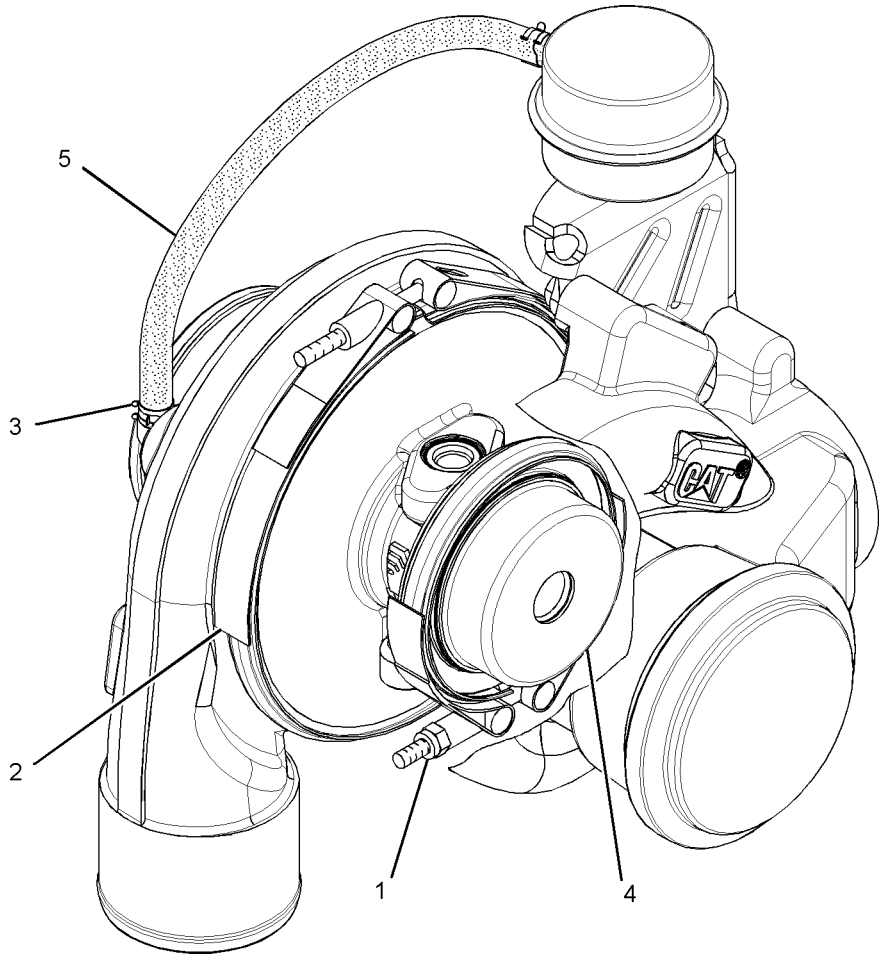

GRAPHIC #1 **<END>** g01526440

AIR INLET AND EXHAUST SYSTEM

359-1008 TURBOCHARGER GP

S/N: THX28268-UP

PART OF 318-1906 ENGINE AR-COMPLETE

SMCS-1052, 1053 **i04727916**

NOTE	REF NO	GRAPHIC REF	PART NUMBER	QTY	PART NAME 1 2 3 4 5 6 (PRODUCT LEVEL)	SEE PAGE
YR	1	1	**252-5165**	1	TURBOCHARGER GP	111
M	2	1	**3E-8017**	4	LOCKNUT (M10X1.5-THD)	
	3	1	**7C-7431**	1	GASKET	

M-METRIC PART
R-REMFG PART MAY BE AVAILABLE
Y-SEPARATE ILLUSTRATION

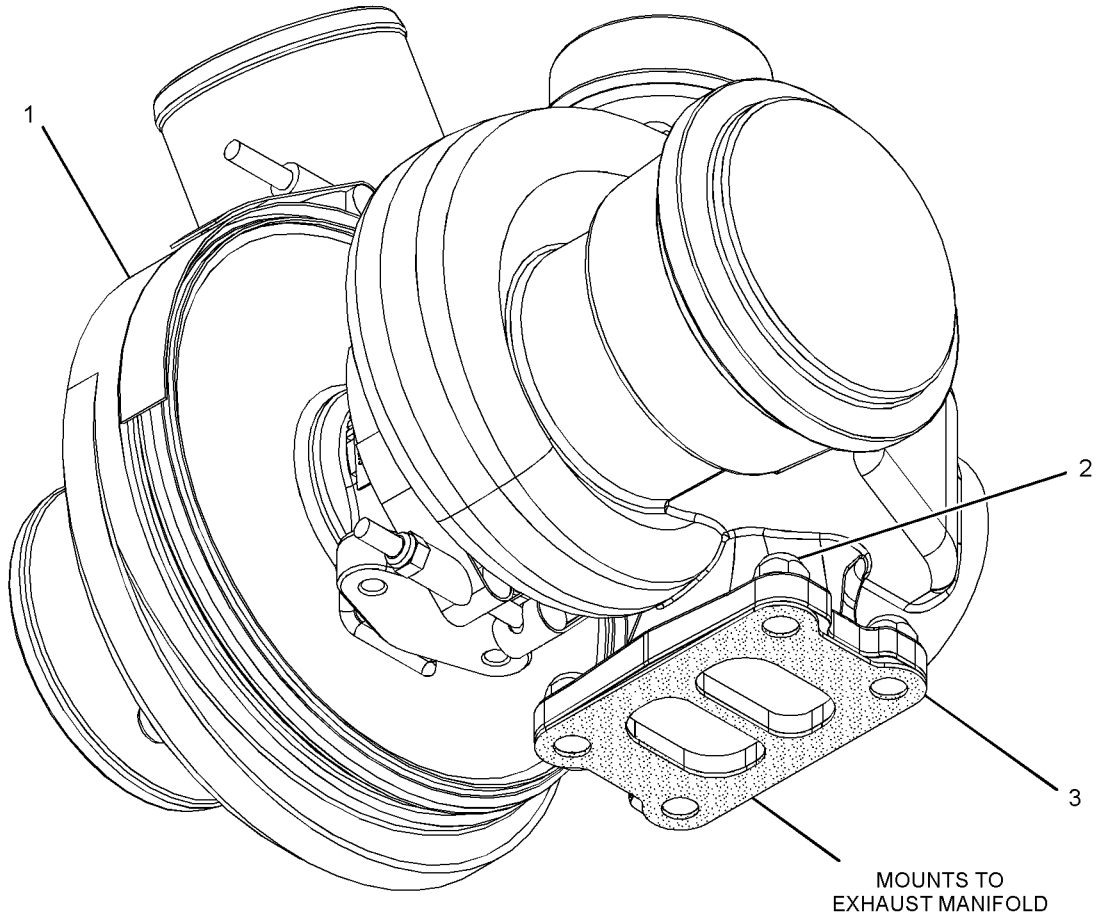

GRAPHIC #1 **<END>** g02848980

273-9183 ADAPTER GP-FAST FILL FUEL

S/N: DSH1-UP; DLN1-UP; DJR1-UP
PART OF 377-0337 SERVICE CENTER GP
AN ATTACHMENT

SMCS-1273, 1710 **i04673509**

NOTE	REF NO	GRAPHIC REF	PART NUMBER	QTY	PART NAME 1 2 3 4 5 6 (PRODUCT LEVEL)	SEE PAGE
	1	1	**0T-0883**	1	WASHER (0.531X1X0.065-IN THK)	
	2	1	**6D-1746**	1	BOLT (1/2-13X1.32-IN)	
	3	1	**8C-8583**	1	HINGE AS	
	4	1	**9D-0630**	1	CAP-DUST	
	5	1	**124-2463**	1	ADAPTER-FAST FILL FUEL	
	6	1	**193-1598**	1	ELBOW	
	7	1	**223-4869**	1	HOSE AS	
	8	1	**252-5805**	1	VENT AS	
	9	1	**252-5806**	1	VALVE AS-SHUTOFF (FAST FILL FUEL)	
M	10	1	**105-3484**	6	BOLT-SOCKET HEAD (M10X1.5X25-MM)	
	11	1	**1J-9671**	2	SEAL-O-RING	
	12	1	**3B-4610**	1	PIN-COTTER	
	13	1	**3E-6773**	1	SEAL-O-RING	
	14	1	**4J-0527**	1	SEAL-O-RING	
	15	1	**5P-2618**	2	CONNECTOR	
	16	1	**8T-4121**	12	WASHER-HARD (11X21X2.5-MM THK)	
M	17	1	**8T-4136**	6	BOLT (M10X1.5X25-MM)	
	18	1	**8T-4223**	4	WASHER-HARD (13.5X25.5X3-MM THK)	
M	19	1	**8T-4648**	4	BOLT (M12X1.75X70-MM)	
	20	1	**9X-7287**	1	SEAL-O-RING	

M-METRIC PART

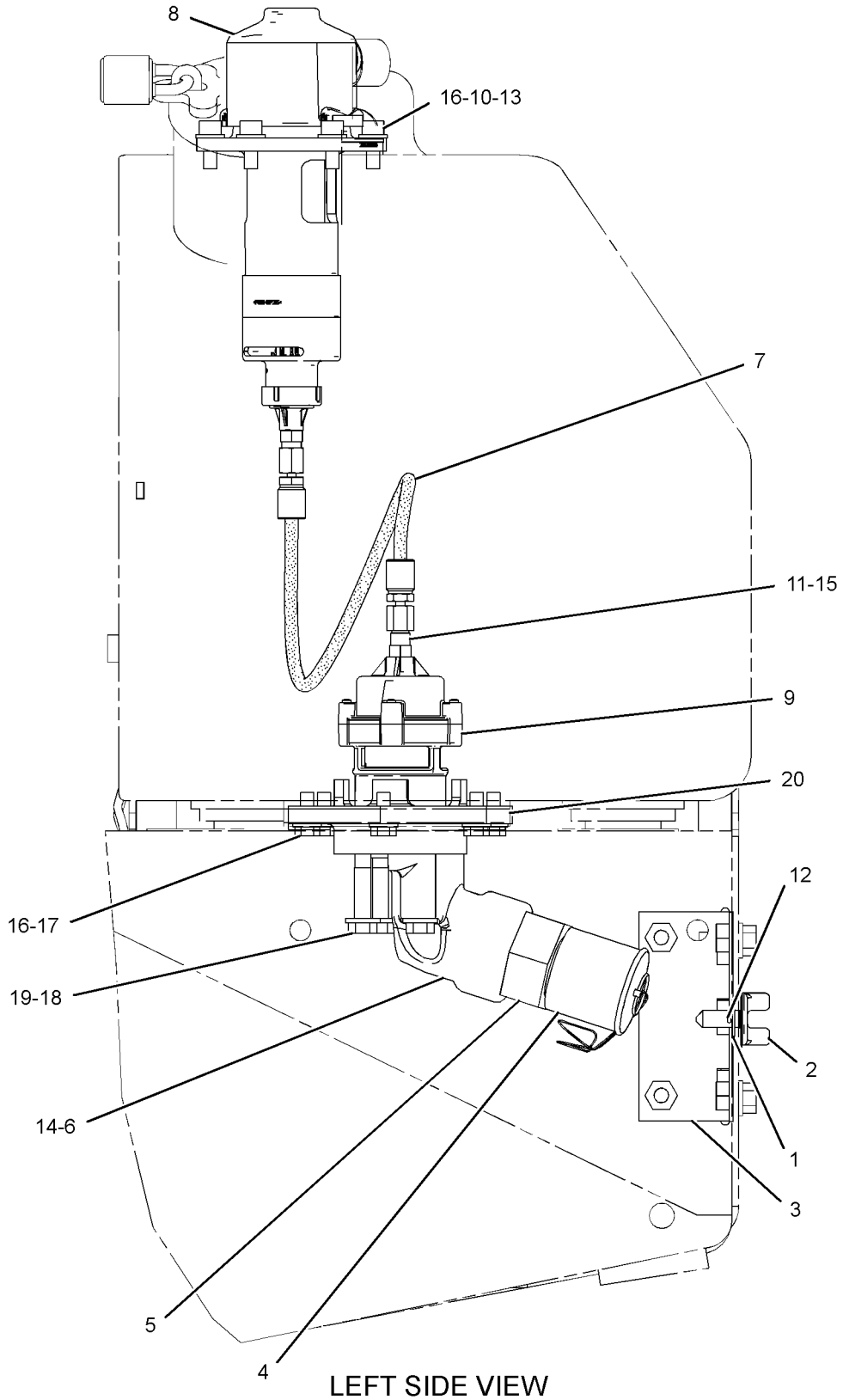

LEFT SIDE VIEW

GRAPHIC #1 **<END>** g02820636

323-0935 FILTER & LINES GP-FUEL

S/N: DSH1-UP; DLN1-UP; DJR1-UP
PART OF 313-3757 INSTALLATION AR

SMCS-1261, 1274 **i04728631**

NOTE	REF NO	GRAPHIC REF	PART NUMBER	QTY	PART NAME 1 2 3 4 5 6 (PRODUCT LEVEL)	SEE PAGE
	1	1	**1P-4278**	1	CLAMP-HOSE	
	2	1	**1R-0762**	1	FILTER-FUEL (ADVANCED EFFICIENCY)	
	3	1	**6V-0852**	1	CAP-DUST	
	4	1	**8T-9655**	6	MOUNT-ISOLATION	
I	5	1	**8W-2521**	1	HOSE AS	
	6	1	**174-7599**	1	BASE AS-FUEL FILTER	
		1	**9S-4167**	1	STUD-HOLLOW (1-14X1.47-IN)	
Y	7	1	*174-9570*	1	FILTER GP-WATER SEP & FUEL	118
Y	8	1	**190-8970**	1	PUMP GP-FUEL PRIMING	128
	9	1	**191-1782**	1	SPACER (8.5X12.7X38.2-MM THK)	
	10	1	**191-1783**	2	SPACER (8.5X12.7X87.3-MM THK)	
	11	1	*241-6215*	1	ELBOW AS	
		1	**3J-1907**	1	SEAL-O-RING	
		1	**6V-8076**	1	ELBOW	
	12	1	**375-8775**	1	HOSE & TUBE AS	
	13	1	**375-8776**	1	HOSE & TUBE AS	
	14	1	**385-3186**	1	BRACKET AS	
		1	**4P-0489**	2	SPACER (11X25X26.8-MM THK)	
M		1	**8T-3490**	1	NUT-WELD (M10X1.5-THD)	
M		1	**8Y-4489**	1	BOSS (M10X1.5-THD)	
	15	1	**385-3187**	1	BRACKET AS	
M		1	**8T-3490**	1	NUT-WELD (M10X1.5-THD)	
	16	1	**385-3188**	1	BRACKET AS	
M		1	**8T-3490**	2	NUT-WELD (M10X1.5-THD)	
	17	1	*148-8319*	1	CONNECTOR AS	
		1	**2M-9780**	1	SEAL-O-RING	
		1	**6V-8397**	1	SEAL-O-RING	
		1	**6V-8715**	1	CONNECTOR	
	18	1	*148-8378*	2	ELBOW AS	
					(EACH INCLUDES)	
		1	**3J-1907**	1	SEAL-O-RING	
		1	**6V-8397**	1	SEAL-O-RING	
		1	**6V-8724**	1	ELBOW	
	19	1	*164-5567*	1	COUPLER AS-QUICK DISCONNECT (MALE)	
		1	**6V-3965**	1	FITTING (QUICK DISCONNECT)	
		1	**214-7568**	1	SEAL-O-RING	
	20	1	**1S-0994**	1	CLIP	
	21	1	**1S-1015**	1	CLIP	
	22	1	*244-3712*	4	PLUG AS	
					(EACH INCLUDES)	
		1	**9S-4191**	1	PLUG-O-RING	
		1	**214-7568**	1	SEAL-O-RING	
	23	1	*313-3492*	2	PLUG AS	
					(EACH INCLUDES)	
		1	**9S-4190**	1	PLUG-O-RING	
		1	**238-5081**	1	SEAL-O-RING	
	24	1	**336-8613**	2	CLIP	
	25	1	**7X-0579**	6	WASHER-HARD (8.8X25.5X2-MM THK)	
M	26	1	**7X-2539**	2	BOLT (M8X1.25X110-MM)	
	27	1	**7X-7729**	7	WASHER (11X25X3-MM THK)	
	28	1	**8M-2773**	2	CLIP	
	29	1	**8T-4121**	6	WASHER-HARD (11X21X2.5-MM THK)	
M	30	1	**8T-4136**	3	BOLT (M10X1.5X25-MM)	
M	31	1	**8T-4195**	4	BOLT (M10X1.5X30-MM)	
M	32	1	**8T-4196**	5	BOLT (M10X1.5X35-MM)	
M	33	1	**8T-6466**	1	BOLT (M10X1.5X60-MM)	

323-0935 FILTER & LINES GP-FUEL *(contd.)* i04728631

NOTE	REF NO	GRAPHIC REF	PART NUMBER	QTY	PART NAME 1 2 3 4 5 6 (PRODUCT LEVEL)	SEE PAGE
M	34	1	**8T-6869**	1	BOLT (M8X1.25X60-MM)	
D	35	1	**5P-5991**		HOSE (0.7-M)	

D-ORDER BY THE METER
I-REFER TO HYDRAULIC INFORMATION SYSTEM
M-METRIC PART
Y-SEPARATE ILLUSTRATION

323-0935 **FILTER & LINES GP-FUEL** *(contd.)* **i04728631**

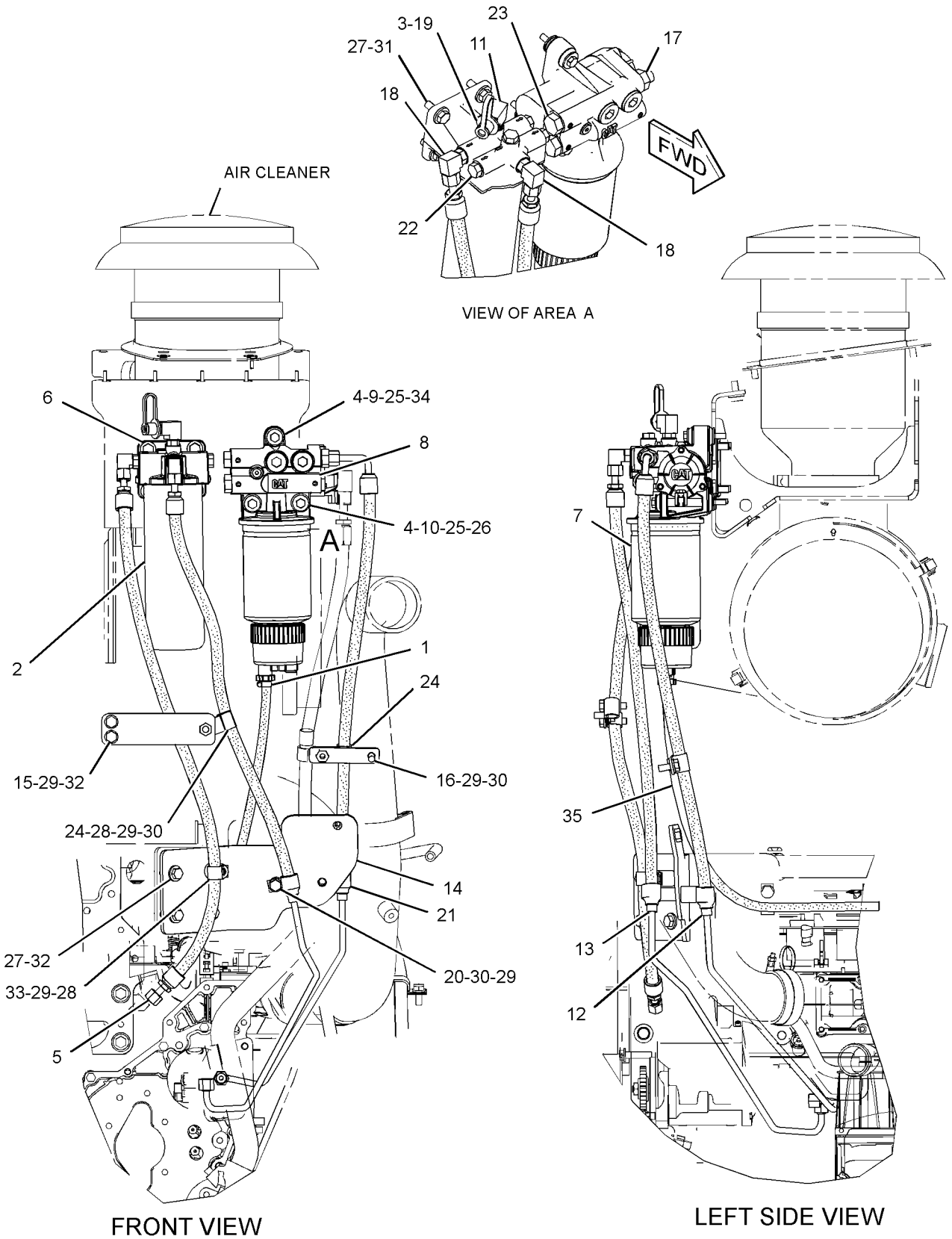

GRAPHIC #1 **<END>** g02836096

174-9570 FILTER GP-WATER SEP & FUEL

S/N: DSH1-UP; DLN1-UP; DJR1-UP

PART OF 323-0935 FILTER & LINES GP-FUEL

SMCS-1261, 1263 **i04393491**

NOTE	REF NO	GRAPHIC REF	PART NUMBER	QTY	PART NAME 1 2 3 4 5 6 (PRODUCT LEVEL)	SEE PAGE
	1	1	**326-1644**	1	FILTER AS-WATER SEP & FUEL (PRIMARY)	
	1A	1	**220-8678**	1	SEAL-RING	
	2	1	**343-5527**	1	BOWL AS	
	2A	1	**3J-1907**	1	SEAL-O-RING	
	2B	1	**5F-9144**	1	SEAL-O-RING	
	2C	1	**8F-7219**	1	SEAL-O-RING	
	2D	1	**9S-8004**	1	PLUG-O-RING (DRAIN)	

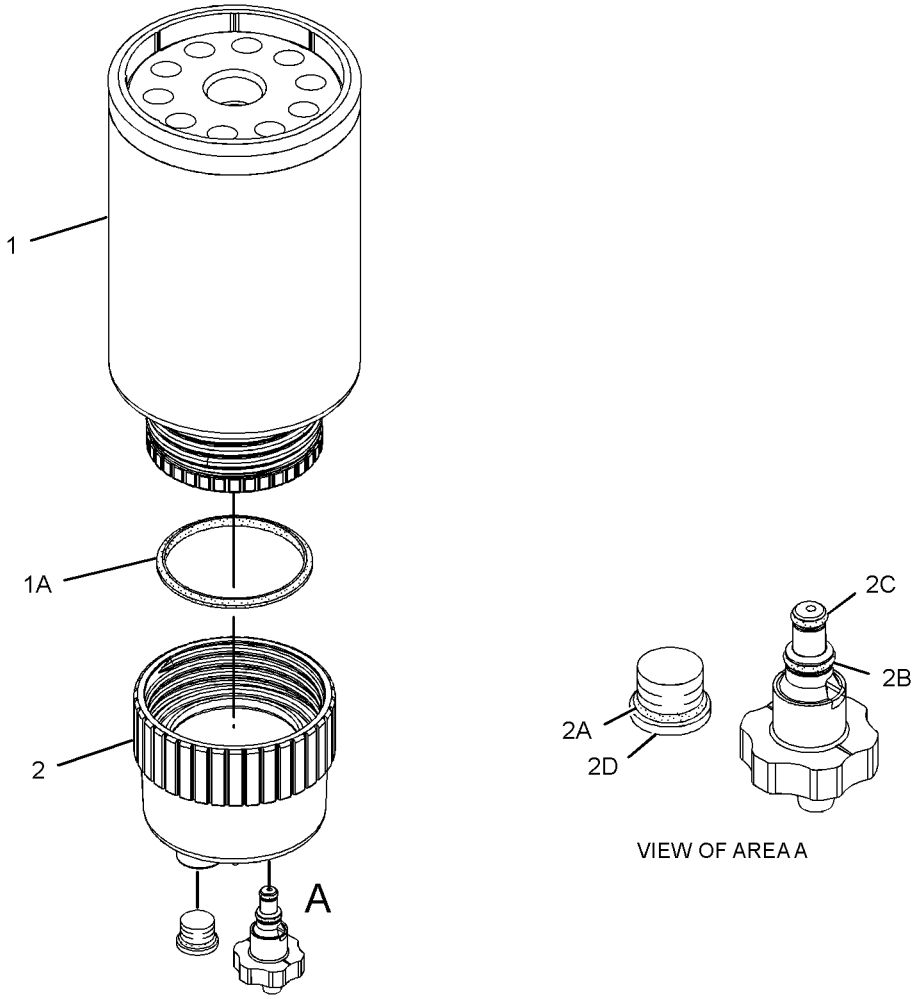

GRAPHIC #1 **<END>** g01960053

FUEL SYSTEM

328-2573 INJECTOR GP-FUEL*R

S/N: THX28268-UP

PART OF 267-9715 PUMP GP-FUEL INJECTION

SMCS-1251, 1254, 1290 **i04017513**

NOTE	REF NO	GRAPHIC REF	PART NUMBER	QTY	PART NAME 1 2 3 4 5 6 (PRODUCT LEVEL)	SEE PAGE
	1	1	**149-5240**	1	RING-BACKUP	
	2	1	**293-0730**	1	RING-BACKUP	
	3	1	**109-3207**	1	SEAL-O-RING	
	4	1	**148-2903**	2	SEAL-O-RING (FUEL SYSTEM)	

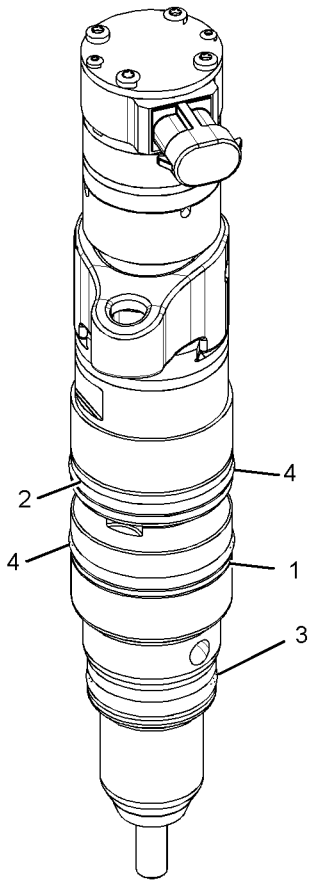

GRAPHIC #1 **<END>** g01623404

FUEL SYSTEM

264-2014 LINES GP-FUEL

S/N: THX28268-UP

PART OF 318-1906 ENGINE AR-COMPLETE

SMCS-1274 **i04020751**

NOTE	REF NO	GRAPHIC REF	PART NUMBER	QTY	PART NAME 1 2 3 4 5 6 (PRODUCT LEVEL)	SEE PAGE
	1	1	**3E-7410**	1	TEE-O-RING	
	2	1	**3S-2093**	1	STRAP-CABLE	
	3	1	**183-3401**	1	ELBOW AS	
		1	**6V-5049**	1	SEAL-O-RING	
		1	**6V-9001**	1	ELBOW	
		1	**8L-2779**	1	SEAL-O-RING	
Y	4	1	**194-6725**	1	SENSOR GP-PRESSURE (FUEL)	186
	5	1	*295-1803*	1	ELBOW AS	
		1	**6V-5049**	1	SEAL-O-RING	
		1	**196-6838**	1	ELBOW	
Y	6	1	*232-0343*	1	REGULATOR GP-FUEL PRESSURE	131
	7	1	**263-7731**	1	HARNESS AS-WIRING (FUEL PRESSURE)	
		1	**102-8803**	1	KIT-RECEPTACLE (3-PIN)	
					(INCLUDES RECEPTACLE AS & WEDGE)	
		1	**102-8806**		KIT-RECEPTACLE (8-PIN)	
					(INCLUDES RECEPTACLE AS & WEDGE)	
	8	1	**1S-0994**	1	CLIP	
I	9	1	**224-2228**	1	HOSE AS	
M	10	1	**6V-4248**	1	BOLT (M10X1.5X25-MM)	
	11	1	**6V-5048**	1	SEAL-O-RING	
	12	1	**6V-5049**	5	SEAL-O-RING	
	13	1	**6V-5839**	1	WASHER (11X21X2.5-MM THK)	
	14	1	**6V-8636**	2	CONNECTOR	
	15	1	**6V-8724**	1	ELBOW	
	16	1	**8L-2779**	3	SEAL-O-RING	
	17	1	**9X-0261**	1	ADAPTER	

I-REFER TO HYDRAULIC INFORMATION SYSTEM
M-METRIC PART
Y-SEPARATE ILLUSTRATION

264-2014 **LINES GP-FUEL** *(contd.)* **i04020751**

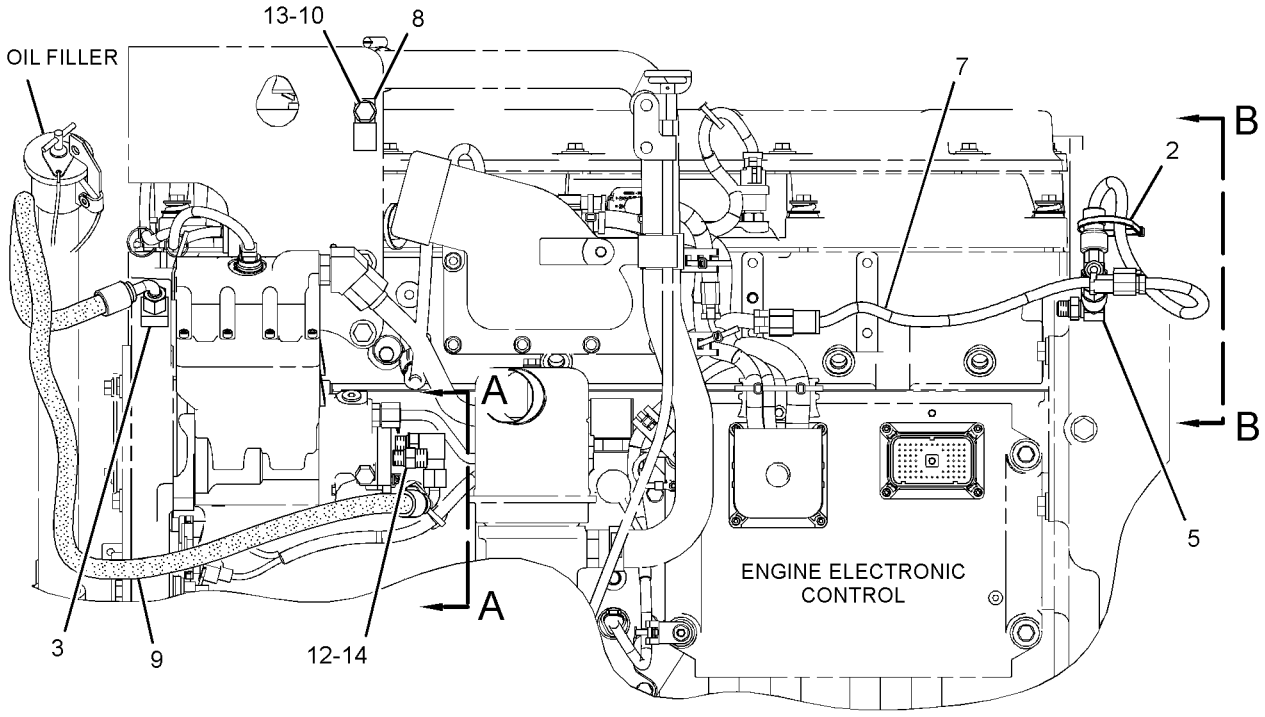

LEFT SIDE VIEW OF ENGINE

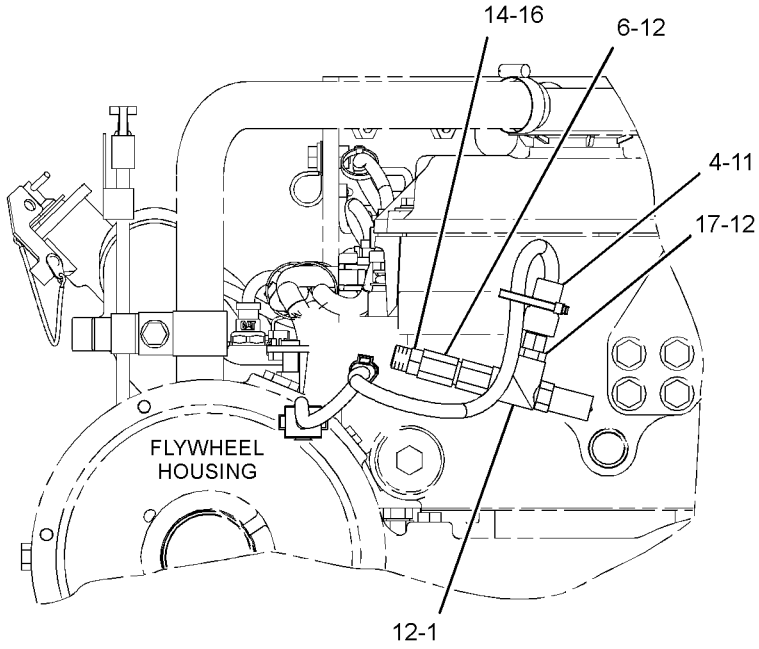

VIEW B-B

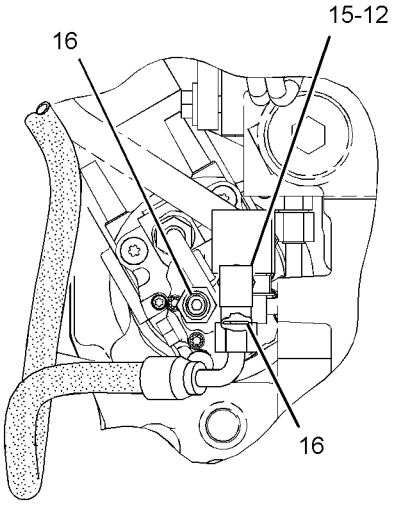

VIEW A-A

GRAPHIC #1 **<END>** g01394622

FUEL SYSTEM

323-0927 LINES GP-FUEL

S/N: DSH1-UP; DLN1-UP; DJR1-UP

PART OF 313-3338, 313-3759, 379-6225 CHASSIS AR

SMCS-1274 **i04726329**

NOTE	REF NO	GRAPHIC REF	PART NUMBER	QTY	PART NAME 1 2 3 4 5 6 (PRODUCT LEVEL)	SEE PAGE
	1	2	**5P-1046**	1	CONNECTOR	
	2	2	**5P-4961**	1	CLAMP-HOSE	
	3	2	**246-2641**	1	PADLOCK GP	
		2	**5P-8500**	1	KEY	
	4	2	**8T-0119**	2	ELBOW	
	5	2	**8T-6723**	1	VALVE-BALL	
	6	2	**8T-6724**	1	VALVE-BALL	
I	7	1	**8W-6153**	1	HOSE AS	
	8	2	**227-9511**	1	BRACKET AS	
I	9	1	**323-0928**	1	HOSE AS	
	10	2	**323-0936**	1	BRACKET AS	
I	11	1	**377-5963**	1	HOSE AS	
	12	1	**391-4758**	1	BRACKET AS	
M		1	**8T-3490**	1	NUT-WELD (M10X1.5-THD)	
	13	1	**100-4336**	3	CLIP	
	14	2	*148-8313*	1	ADAPTER AS	
		2	**5P-6944**	1	ADAPTER	
		2	**3K-0360**	1	SEAL-O-RING	
	15	2	*148-8364*	1	ELBOW AS	
		2	**6V-8625**	1	ELBOW	
		2	**3K-0360**	1	SEAL-O-RING	
		2	**6V-8398**	1	SEAL-O-RING	
	16	1	*148-8372*	1	ELBOW AS	
		1	**6V-8721**	1	ELBOW	
		1	**2M-9780**	1	SEAL-O-RING	
		1	**6V-8398**	1	SEAL-O-RING	
	17	1	*148-8374*	1	ELBOW AS	
		1	**6V-8723**	1	ELBOW	
		1	**3K-0360**	1	SEAL-O-RING	
		1	**6V-8397**	1	SEAL-O-RING	
	18	1	*148-8458*	1	UNION AS	
		1	**6V-9807**	1	UNION	
		1	**6V-8397**	2	SEAL-O-RING	
	19	1	**1S-0994**	3	CLIP	
	20	1	**1S-1015**	1	CLIP	
	21	2	**3J-1907**	1	SEAL-O-RING	
	22	2	**3K-0360**	4	SEAL-O-RING	
	23	1,2	**8D-9671**	2	CLIP	
	24	1,2	**8M-2773**	4	CLIP	
	25	1,2	**8T-4121**	11	WASHER-HARD (11X21X2.5-MM THK)	
M	26	1,2	**8T-4136**	8	BOLT (M10X1.5X25-MM)	
M	27	1	**8T-4137**	1	BOLT (M10X1.5X20-MM)	
M	28	1,2	**8T-4195**	2	BOLT (M10X1.5X30-MM)	
E	29	2	**5P-1442**		HOSE (45-CM)	

E-ORDER BY THE CENTIMETER
I-REFER TO HYDRAULIC INFORMATION SYSTEM
M-METRIC PART

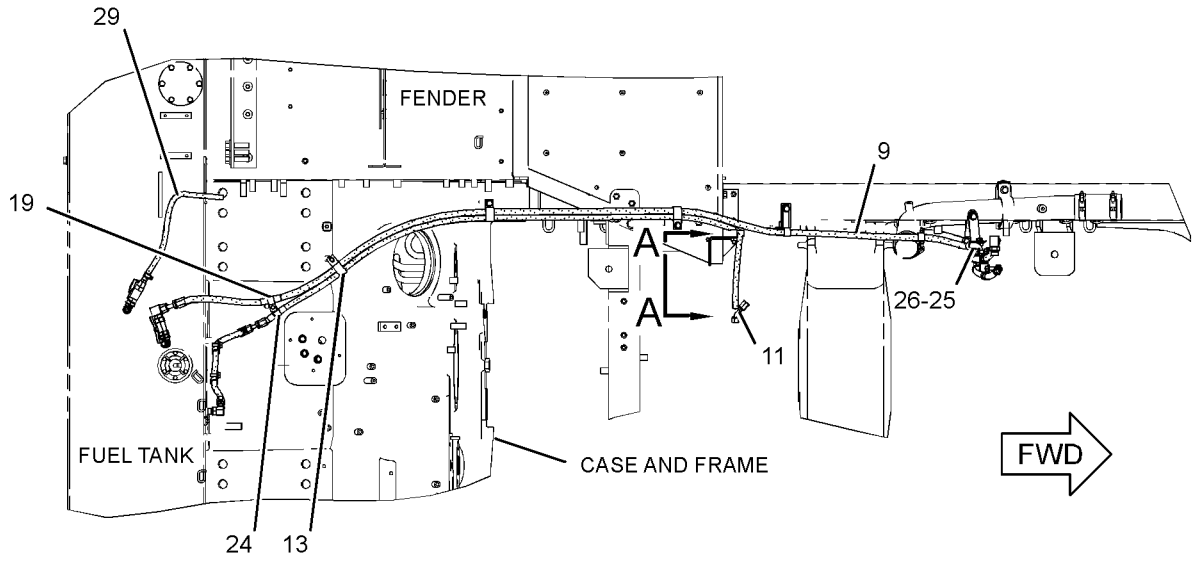

TOP VIEW

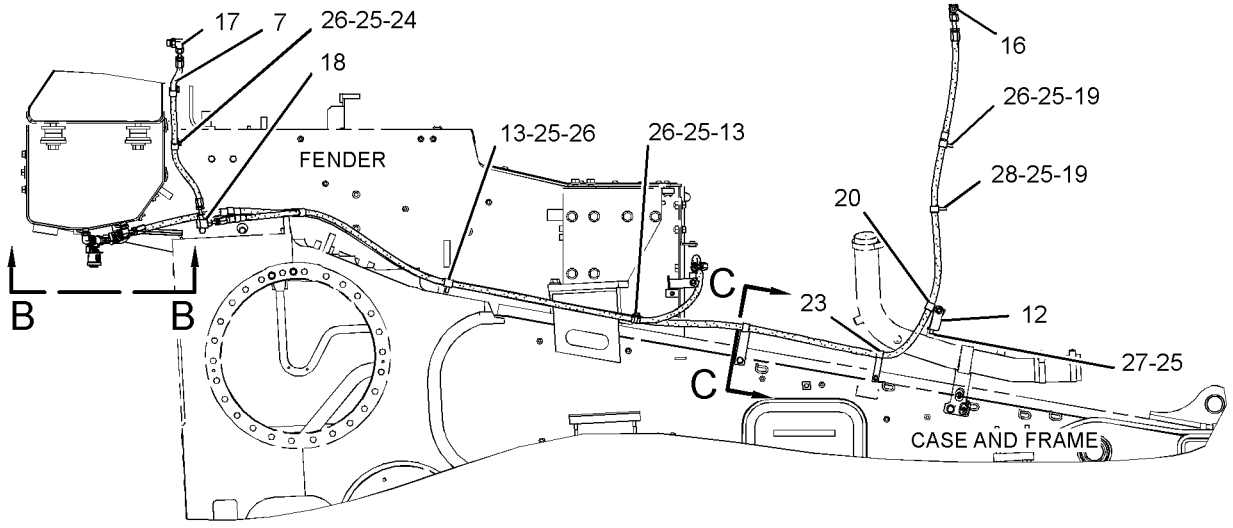

RIGHT SIDE VIEW

REFER TO ALL ILLUSTRATIONS OF
THIS GROUP FOR AUXILIARY VIEWS

GRAPHIC #1 g02840377

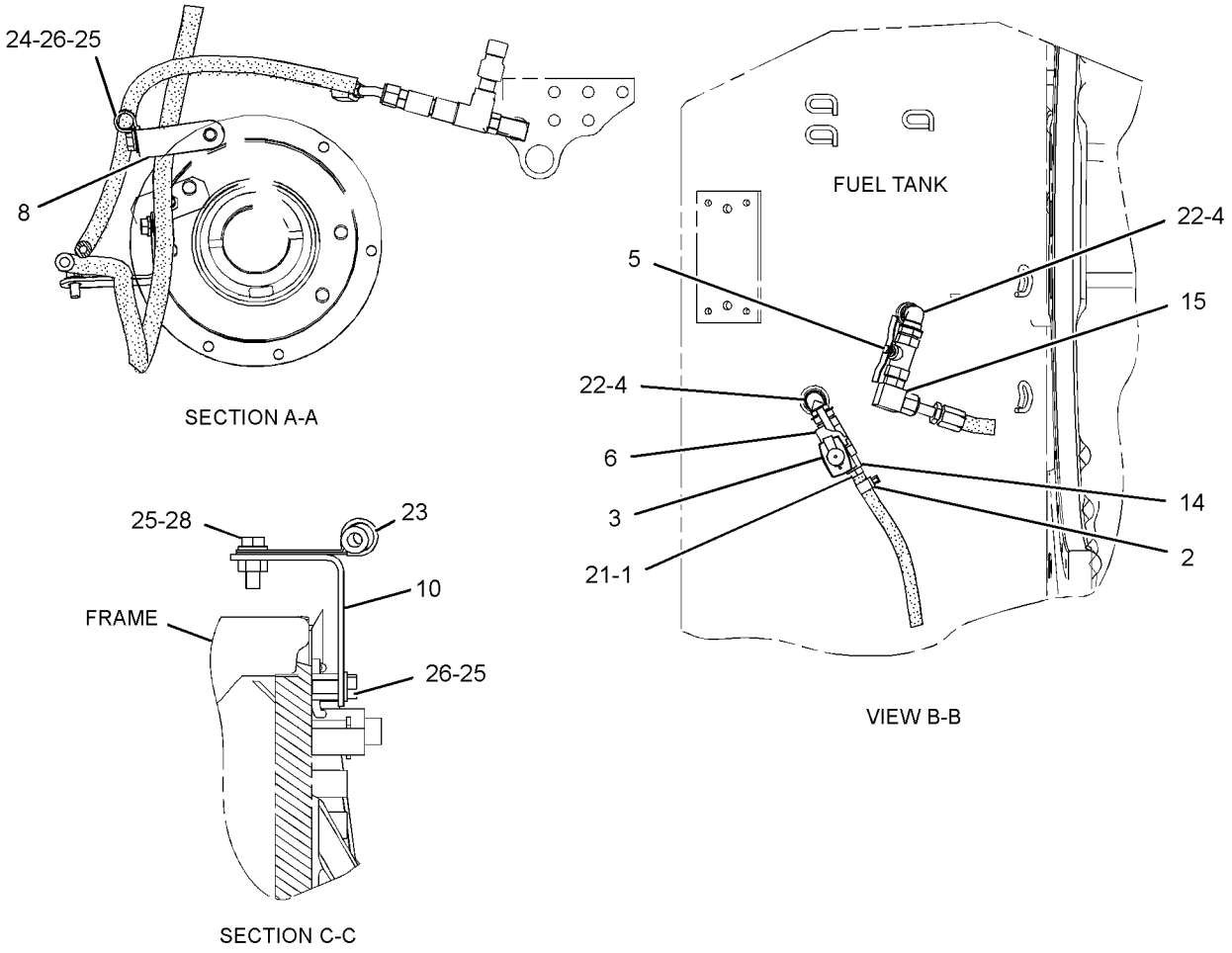

GRAPHIC #2 **<END>** g02840402

220-8233 PUMP & MTG GP-UNIT INJ HYD

S/N: THX28268-UP
1.61 RATIO
PART OF 385-2783 ENGINE AR-CORE

SMCS-1714 **i04727632**

NOTE	REF NO	GRAPHIC REF	PART NUMBER	QTY	PART NAME 1 2 3 4 5 6 (PRODUCT LEVEL)	SEE PAGE
	1	1	*371-7191*	1	ELBOW AS	
		1	**228-7090**	1	SEAL-O-RING	
		1	**214-7568**	1	SEAL-O-RING	
		1	**371-7190**	1	ADAPTER-ELBOW	
	2	1	*183-3407*	1	PLUG AS	
		1	**9S-8004**	1	PLUG-O-RING	
		1	**214-7568**	1	SEAL-O-RING	
	3	1	**227-5904**	1	SEAL-O-RING	
	4	1	**376-7673**	1	TUBE AS	
	5	1	**209-3172**	1	TUBE AS	
CYR	6	1	**319-0678**	1	PUMP GP-UNIT INJECTOR HYD	129
	7	1	*357-4619*	1	ELBOW AS	
		1	**030-7950**	1	ELBOW	
		1	**238-5082**	1	SEAL-O-RING	
	8	1	**5P-3264**	1	ELBOW	
	9	1	**238-5081**	1	SEAL-O-RING	
	10	1	*319-6240*	1	CONNECTOR AS	
		1	**6V-9873**	1	CONNECTOR	
		1	**214-7568**	1	SEAL-O-RING	
		1	**228-7090**	1	SEAL-O-RING	
	11	1	**6V-5839**	2	WASHER (11X21X2.5-MM THK)	
M	12	1	**6V-7981**	2	BOLT (M10X1.5X70-MM)	
	13	1	**3E-9412**	1	DOWEL	

C-CHANGE FROM PREVIOUS TYPE
M-METRIC PART
R-REMFG PART MAY BE AVAILABLE
Y-SEPARATE ILLUSTRATION

220-8233 **PUMP & MTG GP-UNIT INJ HYD** *(contd.)* **i04727632**

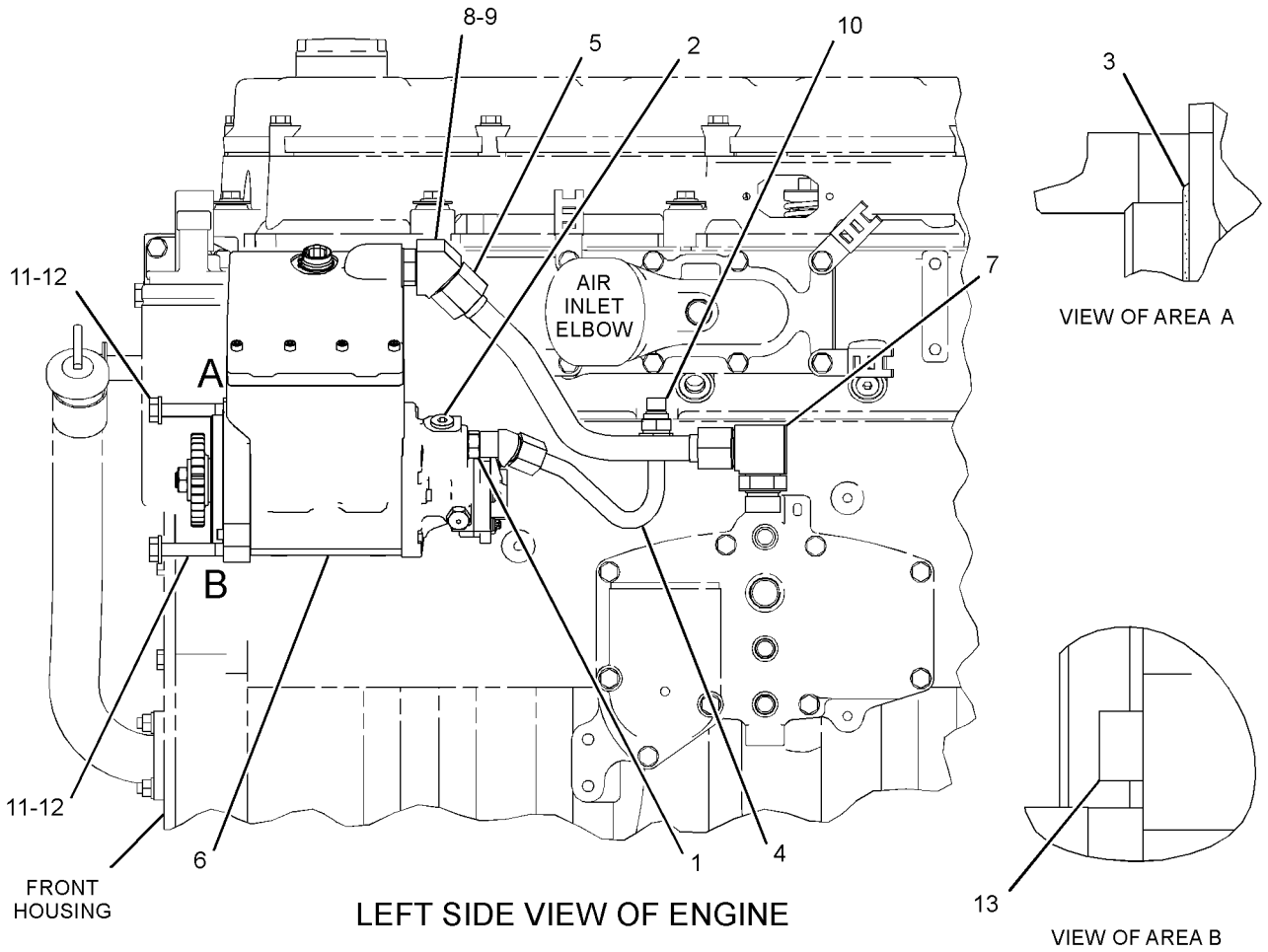

GRAPHIC #1 **<END>** g02862617

267-9715 PUMP GP-FUEL INJECTION

S/N: THX28268-UP

PART OF 385-2783 ENGINE AR-CORE

SMCS-1251, 1290 **i04017512**

NOTE	REF NO	GRAPHIC REF	PART NUMBER	QTY	PART NAME 1 2 3 4 5 6 (PRODUCT LEVEL)	SEE PAGE
	1	1	**235-9651**	2	BOLT-SOCKET HEAD (M8X1.25X65-MM)	
CYR	2	1	**328-2573**	1	INJECTOR GP-FUEL	119

C-CHANGE FROM PREVIOUS TYPE
R-REMFG PART MAY BE AVAILABLE
Y-SEPARATE ILLUSTRATION

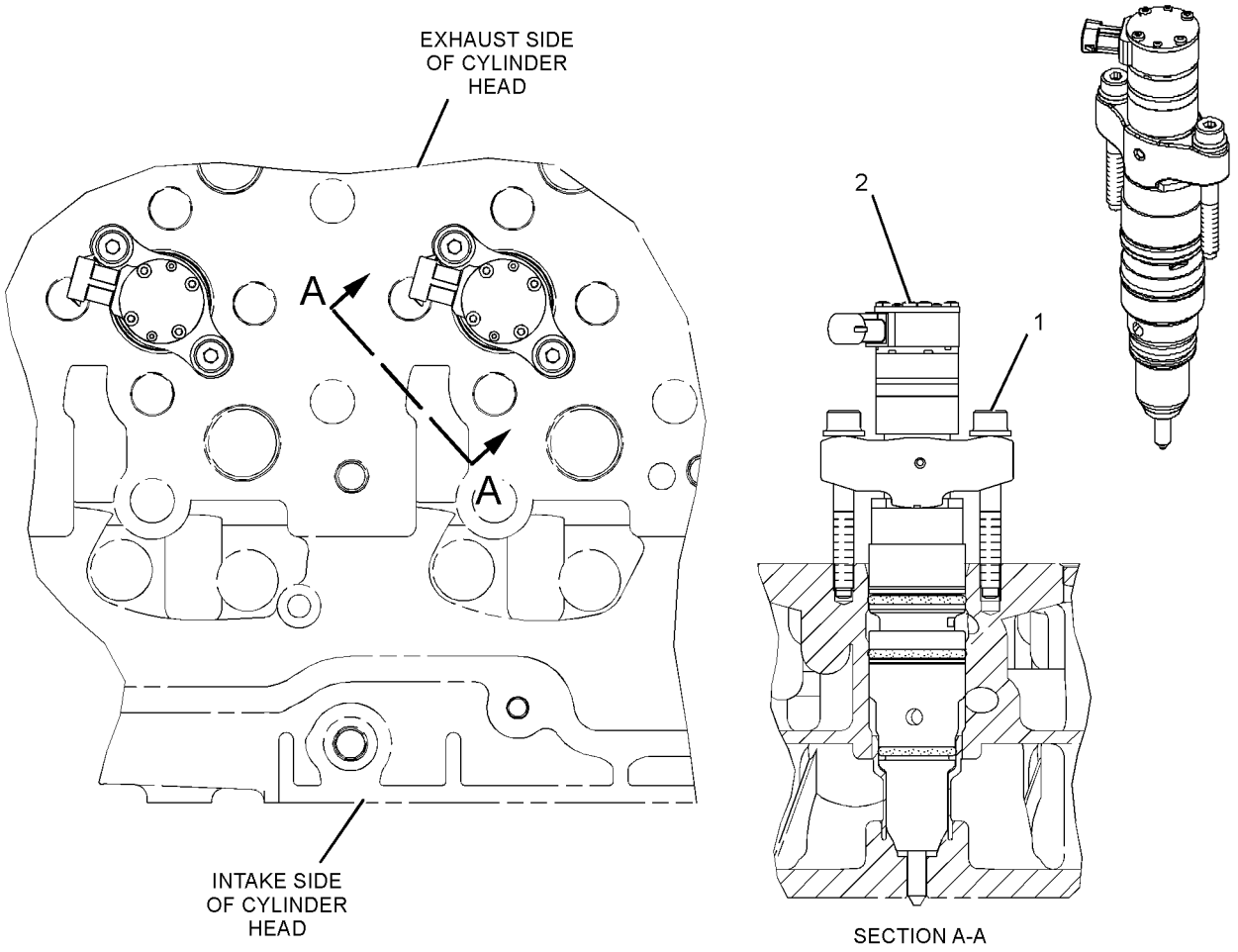

GRAPHIC #1 **<END>** g01221290

190-8970 PUMP GP-FUEL PRIMING

S/N: DSH1-UP; DLN1-UP; DJR1-UP

PART OF 323-0935 FILTER & LINES GP-FUEL

SMCS-1258 **i04728630**

NOTE	REF NO	GRAPHIC REF	PART NUMBER	QTY	PART NAME 1 2 3 4 5 6 (PRODUCT LEVEL)	SEE PAGE
	1	1	**9S-8002**	1	PLUG-O-RING	
	2	1	**125-1372**	2	SEAL-O-RING	
	3	1	**162-2220**	2	VALVE-CHECK	
	4	1	**162-2222**	2	SPRING	
	5	1	**173-1016**	2	RING-BACKUP	
	6	1	**179-7400**	2	SEAL (FUEL)	
	7	1	**188-7536**	1	SEAL	
	8	1	**188-7541**	1	SEAL	
	9	1	**205-9169**	1	SEAL	
	10	1	**4L-1250**	1	LOCKNUT (10-32-THD)	
	11	1	**6D-5801**	1	LOCKNUT (8-32-THD)	

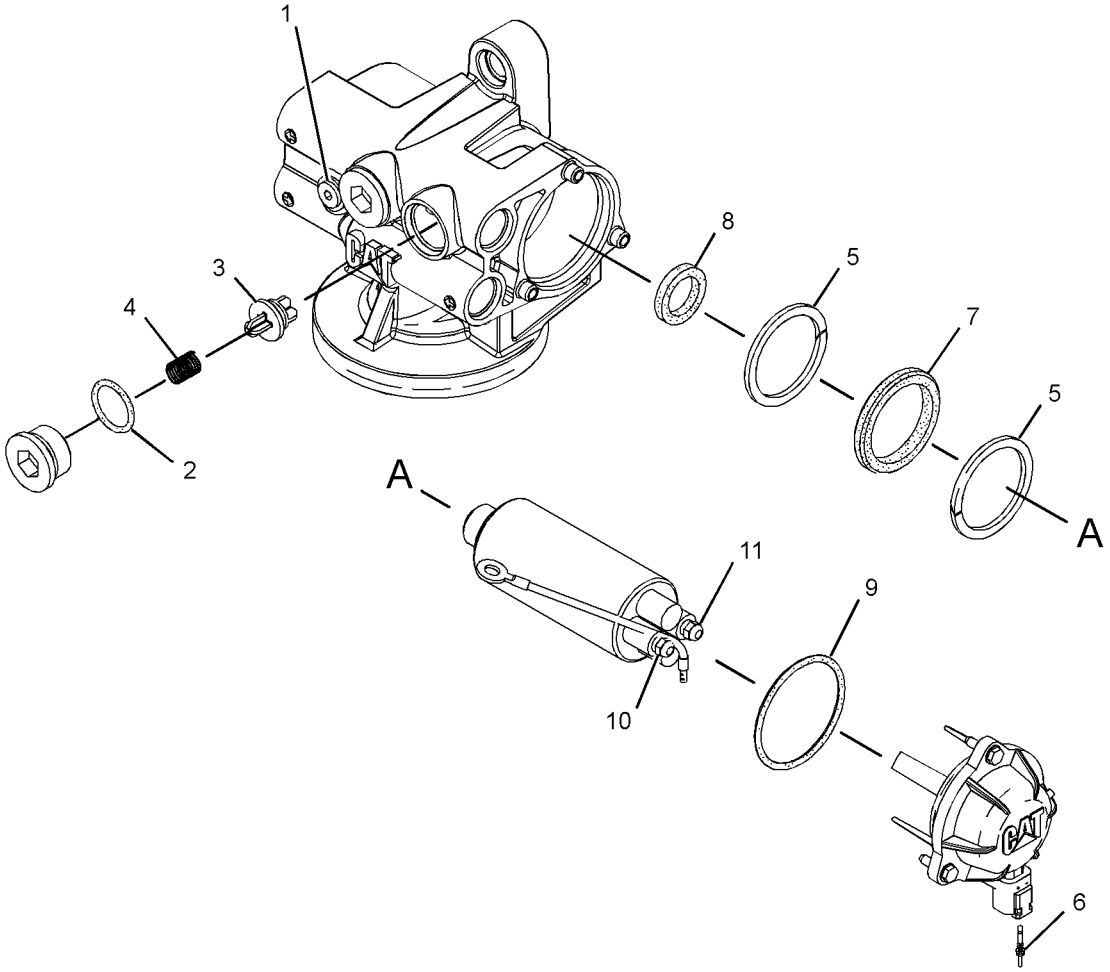

GRAPHIC #1 **<END>** g02838521

319-0678 PUMP GP-UNIT INJECTOR HYD*R

S/N: THX28268-UP

PART OF 220-8233 PUMP & MTG GP-UNIT INJ HYD

SMCS-1714 **i04017508**

NOTE	REF NO	GRAPHIC REF	PART NUMBER	QTY	PART NAME 1 2 3 4 5 6 (PRODUCT LEVEL)	SEE PAGE
M	1	1	**223-9848**	1	NUT (M12X1.25-THD)	
	2	1	**318-6357**	1	PUMP GP-FUEL TRANSFER	
		1	**5P-7814**	1	SEAL-O-RING	
		1	**7S-5005**	1	DOWEL	
		1	**8C-3079**	1	SEAL-O-RING	
	3	1	**179-8128**	1	SEAL-O-RING (FUEL SYSTEM)	
M	4	1	**228-5897**	4	BOLT-TORX (M8X1.25X136.7-MM)	
	5	1	**1F-7960**	1	WASHER (13.5X32X6-MM THK)	
	6	1	**239-2402**	3	SEAL-O-RING	

M-METRIC PART

REFER TO ALL ILLUSTRATIONS OF
THIS GROUP FOR AUXILIARY VIEWS

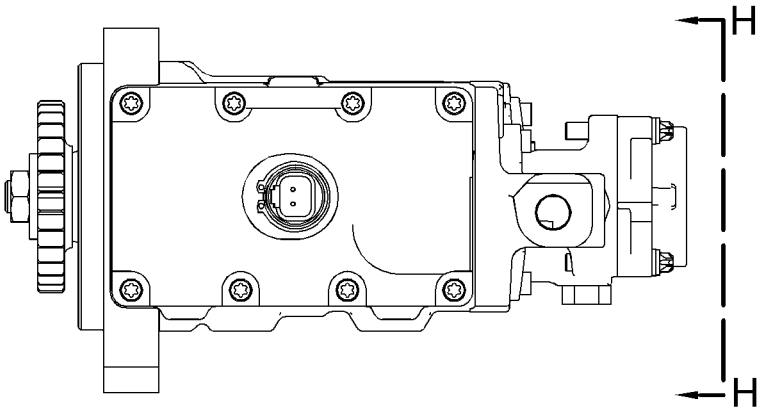

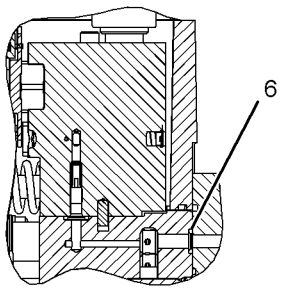

SECTION C-C

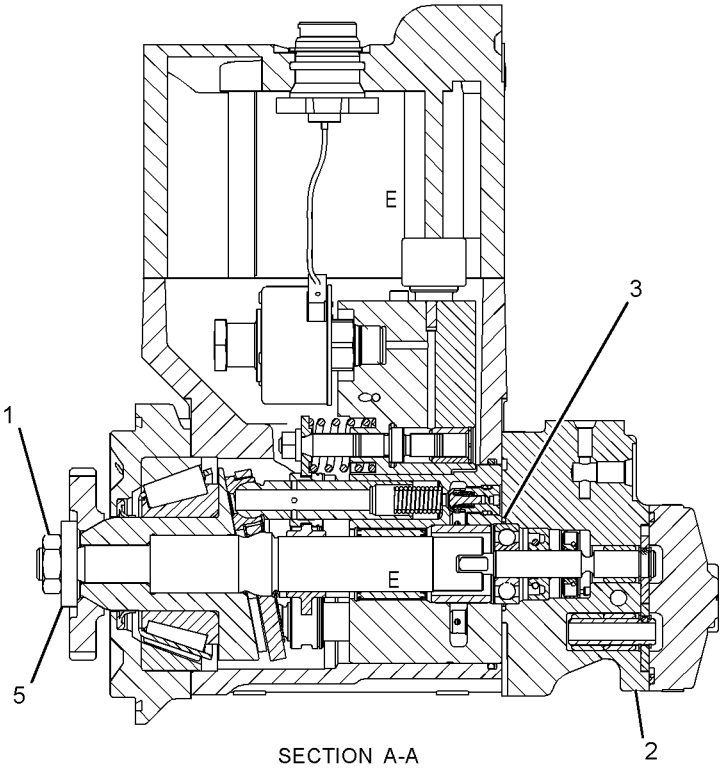

SECTION A-A

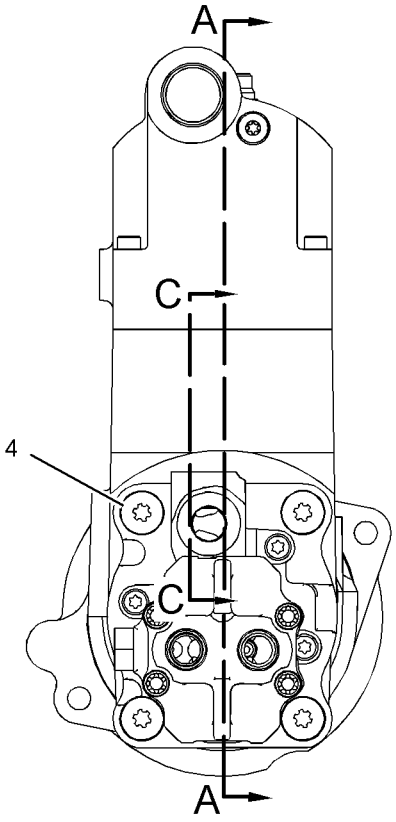

VIEW H-H

GRAPHIC #1 **<END>** g01455897

232-0343 REGULATOR GP-FUEL PRESSURE

S/N: THX28268-UP

PART OF 264-2014 LINES GP-FUEL

SMCS-1270 **i04017536**

NOTE	REF NO	GRAPHIC REF	PART NUMBER	QTY	PART NAME 1 2 3 4 5 6 (PRODUCT LEVEL)	SEE PAGE
	1	1	**6V-5049**	1	SEAL-O-RING	
	2	1	**294-8620**	1	REGULATOR AS (FUEL PRESSURE)	

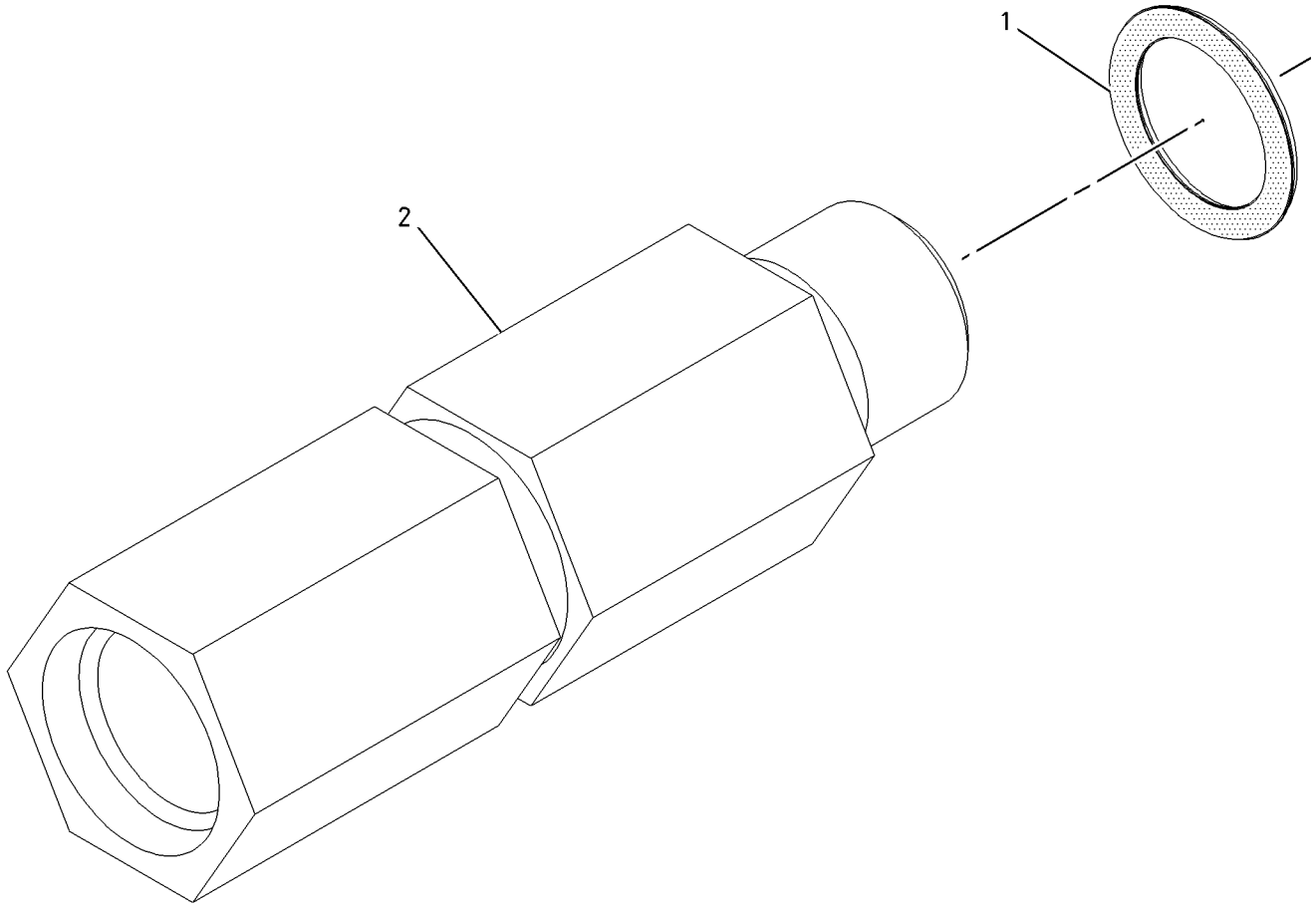

GRAPHIC #1 **<END>** g01004480

FUEL SYSTEM

386-1150 TANK GP-FUEL

S/N: DSH1-UP; DLN1-UP; DJR1-UP
481-L (127-US GAL)
PART OF 313-3338, 313-3759, 379-6225 CHASSIS AR

SMCS-1273 **i04712453**

NOTE	REF NO	GRAPHIC REF	PART NUMBER	QTY	PART NAME 1 2 3 4 5 6 (PRODUCT LEVEL)	SEE PAGE
	1	1	**6T-1698**	8	MOUNT	
	2	1	**7K-1181**	1	STRAP-CABLE	
	3	1	**160-1823**	1	SENDER AS-FUEL LEVEL	
		1	**6C-3060**	1	GASKET	
		1	**363-4122**	1	GASKET	
		1	**376-1549**	1	KIT-DIAL SENSOR	
		1	**8T-8729**	2	PIN-CONNECTOR (16-GA TO 18-GA)	
		1	**102-8802**	1	KIT-RECEPTACLE (2-PIN)	
					(INCLUDES RECEPTACLE AS & WEDGE)	
	4	1	**241-2501**	4	WASHER (22X82.55X11-MM THK)	
Y	5	1	**387-4677**	1	TANK GP-FUEL	133
M	6	1	**5C-9553**	6	BOLT (M6X1X16-MM)	
	7	1	**6C-3060**	1	GASKET	
	8	1	**6N-7523**	6	WASHER (6.48X11.9X1.57-MM THK)	
M	9	1	**7X-2565**	4	BOLT (M20X2.5X100-MM)	
	10	1	**8T-5439**	4	WASHER-HARD (21.5X45X6-MM THK)	

M-METRIC PART
Y-SEPARATE ILLUSTRATION

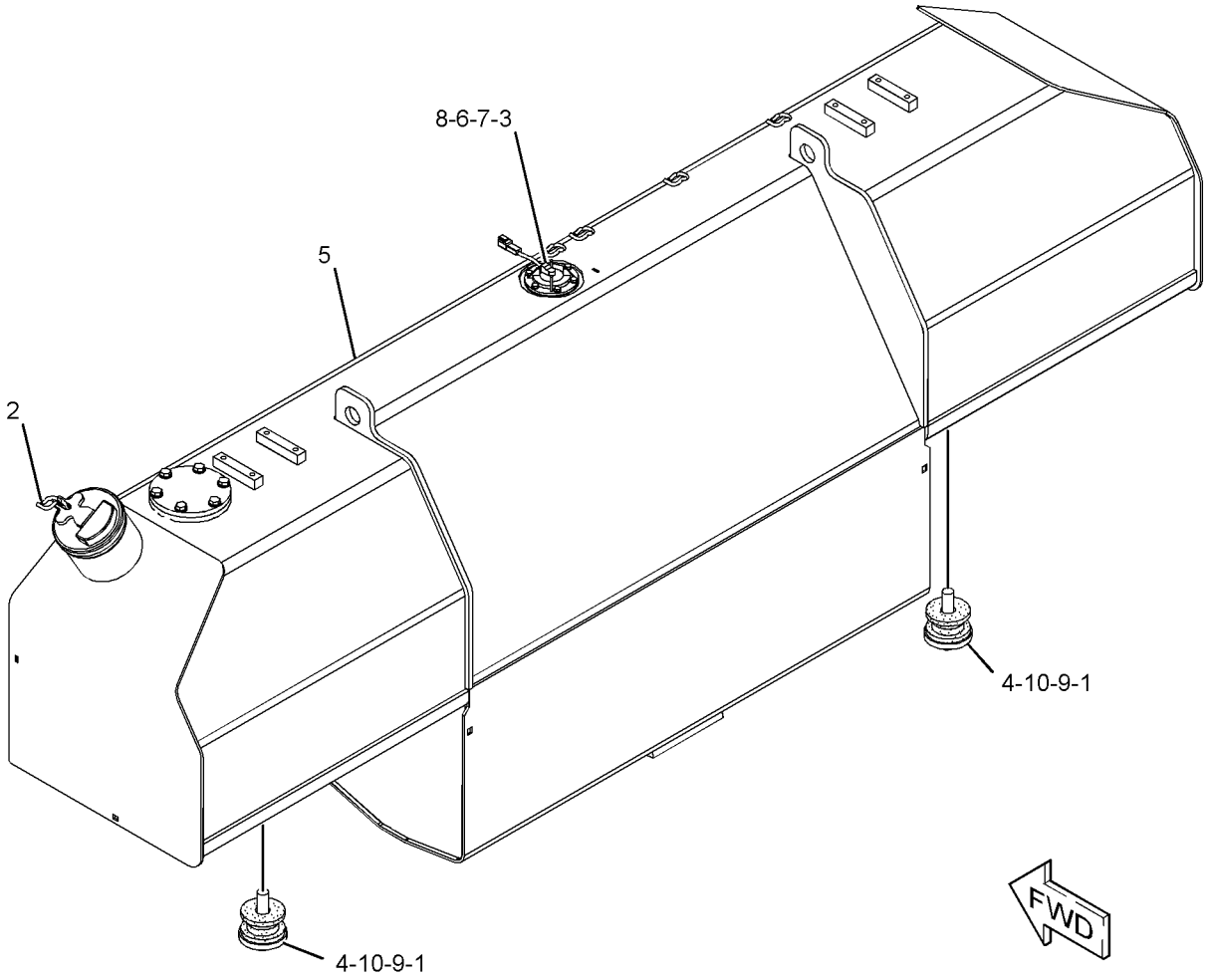

GRAPHIC #1 **<END>** g02848519

FUEL SYSTEM

387-4677 TANK GP-FUEL

S/N: DSH1-UP; DLN1-UP; DJR1-UP
481-L (127-US GAL)
PART OF 386-1150 TANK GP-FUEL

SMCS-1273 **i04712538**

NOTE	REF NO	GRAPHIC REF	PART NUMBER	QTY	PART NAME 1 2 3 4 5 6 (PRODUCT LEVEL)	SEE PAGE
	1	1	**7X-7700**	1	CAP AS-FUEL (VENTED)	
		1	**9X-2205**	1	KIT-CAP FILTER (FUEL TANK)	
					(INCLUDES FILTER AS, SCREWS, GASKETS & VALVE)	
		1	**9X-8600**	1	SEAL-O-RING	
	2	1	**9P-7121**	1	STRAINER-FUEL (TANK)	
	3	1	**164-3417**	1	COVER	
	4	1	**187-1679**	1	COVER	
	5	1	**387-4671**	1	TANK AS-FUEL	
	6	1	**1H-8128**	1	SEAL-O-RING	
	7	1	**5H-6734**	1	SEAL-O-RING	
	8	1	**8T-4121**	12	WASHER-HARD (11X21X2.5-MM THK)	
M	9	1	**8T-4136**	12	BOLT (M10X1.5X25-MM)	

M-METRIC PART

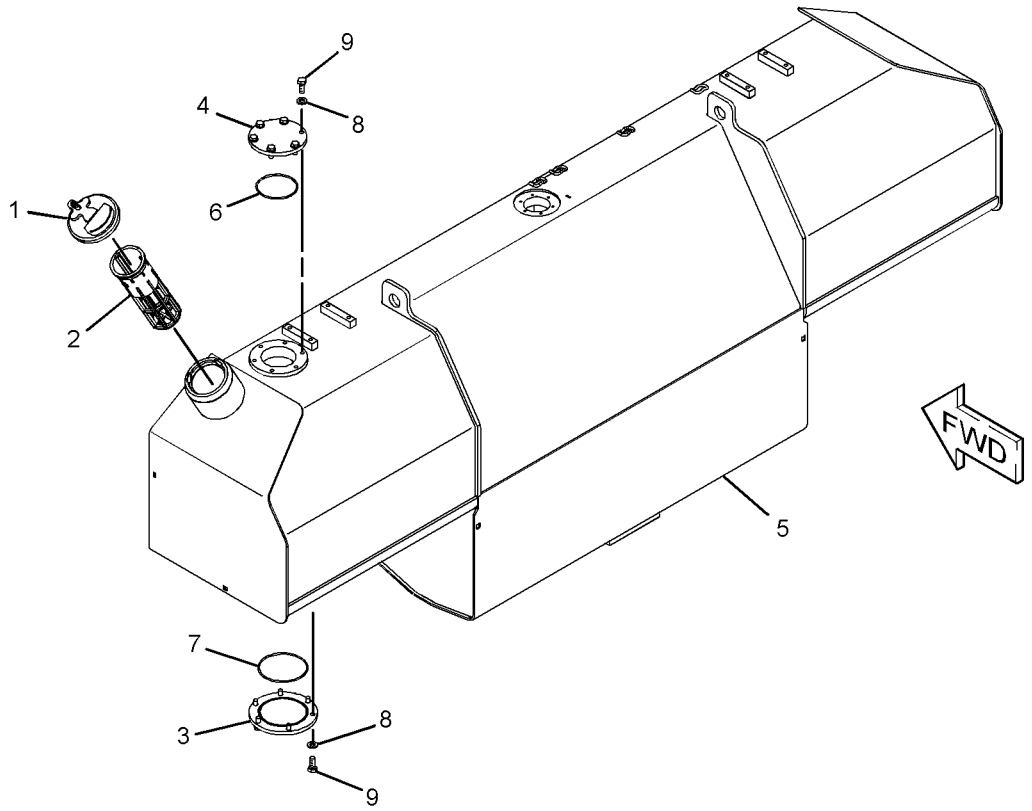

GRAPHIC #1 **<END>** g01289597

3E-6328 ALARM GP

S/N: DSH1-UP; DLN1-UP; DJR1-UP
24-VOLT
PART OF 327-9902 WIRING GP-PLATFORM
ALSO AN ATTACHMENT

SMCS-7400, 7402, 7407 **i04009229**

NOTE	REF NO	GRAPHIC REF	PART NUMBER	QTY	PART NAME 1 2 3 4 5 6 (PRODUCT LEVEL)	SEE PAGE
	1	1	**102-8802**	1	KIT-RECEPTACLE (2-PIN)	
					(INCLUDES RECEPTACLE AS & WEDGE)	
	2	1	**186-3735**	2	PIN-CONNECTOR (16-GA TO 18-GA)	
	3	1	**3E-3365**	1	WEDGE-RECEPTACLE LOCK (2-PIN)	

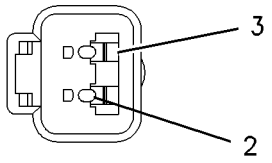

VIEW A–A

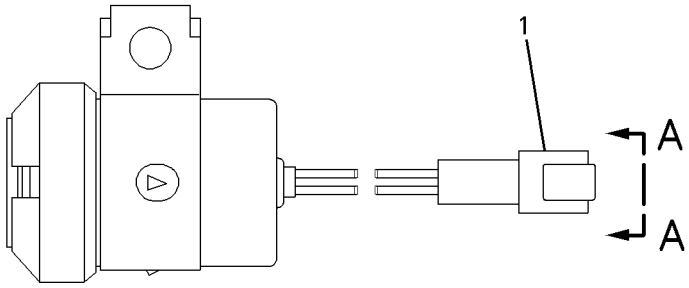

GRAPHIC #1 **<END>** g00826023

197-8820 ALTERNATOR GP-CHARGING*R

S/N: DSH1-UP; DLN1-UP; DJR1-UP
24-VOLT, 95-AMPERE
PART OF 323-7992 ALTERNATOR GP-CHARGING

SMCS-1405 **i03991549**

NOTE	REF NO	GRAPHIC REF	PART NUMBER	QTY	PART NAME 1 2 3 4 5 6 (PRODUCT LEVEL)	SEE PAGE
	1	1	**185-2653**	1	FRAME	
	2	1	**5S-7349**	1	BOLT (1/4-20X0.5-IN)	
	3	1	**185-2639**	1	FAN AS	
	4	1	**1H-3244**	1	LOCKWASHER	
	5	1	**185-2645**	1	FRAME	
	6	1	**2K-4821**	1	LOCKNUT (5/8-18-THD)	
	7	1	**5P-8247**	1	WASHER-HARD (17X32X3.5-MM THK)	
	8	1	**185-2651**	1	COVER	
	9	1	**8T-4205**	1	WASHER-HARD (7.2X14.5X2-MM THK)	
	10	1	**185-2647**	1	GROMMET	
	11	1	**9L-6770**	1	CAP-DUST	
	12	1	**205-0626**	1	STATOR AS-ALTERNATOR	
	13	1	**185-2638**	2	COLLAR	
	14	1	**185-2654**	1	PLATE	
	15	1	**185-2650**	1	ROTOR AS (ALTERNATOR)	
	16	1	**185-2644**	1	COIL AS	
	17	1	**185-2648**	1	REGULATOR AS-VOLTAGE (24-VOLT) (ALTERNATOR)	
	18	1	**6V-8189**	1	NUT (5/16-18-THD)	
	19	1	**8T-4224**	1	WASHER-HARD (8.8X16X2-MM THK)	
	20	1	**3F-9556**	1	LOCKWASHER	
					AVAILABLE REPAIR KIT(S):	
			185-2655	1	KIT-BEARING	
					(INCLUDES BEARINGS)	
			185-2656	1	KIT-TERMINAL (ALTERNATOR AIR)	
					(INCLUDES HOLDER AS, PLATE, INSULATOR, PIN, BOLTS, GROMMET & NUT)	
			185-2657	1	KIT-TERMINAL	
					(INCLUDES INSULATORS, WASHERS & NUTS)	
			185-2658	1	KIT-HARDWARE (ALTERNATOR AIR)	
					(INCLUDES BOLTS)	

197-8820 **ALTERNATOR GP-CHARGING** *(contd.)* **i03991549**

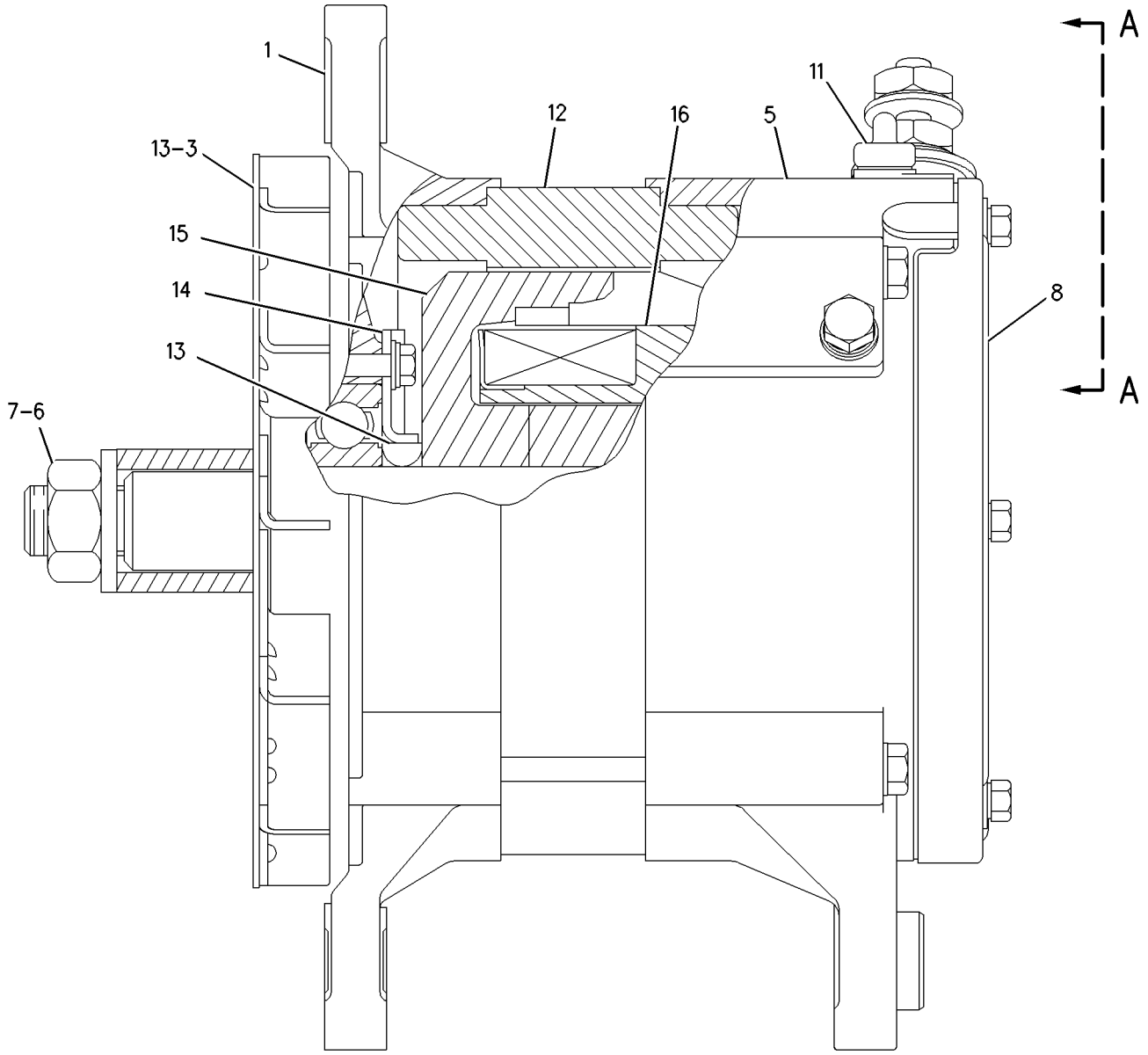

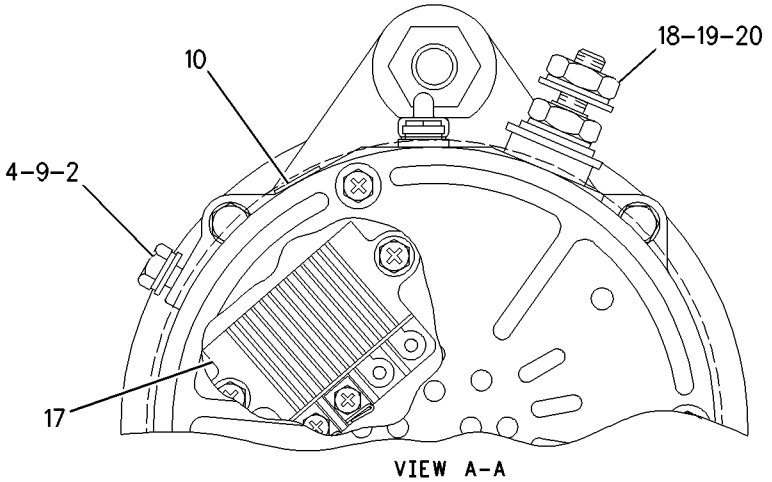

VIEW A-A

GRAPHIC #1 **<END>** g00873198

323-7444 ALTERNATOR GP-CHARGING

S/N: DSH1-UP; DLN1-UP; DJR1-UP
24-VOLT, 150-AMPERE
PART OF 378-2273 STOCKPILE AR
AN ATTACHMENT

SMCS-1405 **i03991469**

NOTE	REF NO	GRAPHIC REF	PART NUMBER	QTY	PART NAME 1 2 3 4 5 6 (PRODUCT LEVEL)	SEE PAGE
	1	1	**7K-1181**	1	STRAP-CABLE	
	2	1	**9S-1240**	1	BRACKET AS	
		1	**1F-0748**	1	NUT-WELD (1/2-13-THD)	
	3	1	**208-4622**	1	STRAP AS	
	4	1	**211-1044**	1	BLOCK	
	5	1	**214-9492**	1	ROD-ADJUSTING	
R	6	1	**249-0313**	1	ALTERNATOR GP-CHARGING (24-VOLT, 150-AMPERE)	
	7	1	**292-4906**	1	GUARD AS-ALTERNATOR	
	8	1	**306-8040**	1	BRACKET AS	
M	9	1	**160-8497**	2	BOLT (M5X0.8X65-MM)	
	10	1	**4L-6454**	1	BOLT (3/8-16X1-IN)	
	11	1	**4P-7581**	1	CLIP	
	12	1	**5P-1075**	1	WASHER-HARD (10.2X22.5X3-MM THK)	
	13	1	**7X-0339**	1	BOLT (1/2-13X6.25-IN)	
M	14	1	**8T-0638**	1	BOLT (M5X0.8X50-MM)	
	15	1	**8T-4121**	1	WASHER-HARD (11X21X2.5-MM THK)	
M	16	1	**8T-4132**	2	NUT (M16X2-THD)	
M	17	1	**8T-4137**	1	BOLT (M10X1.5X20-MM)	
M	18	1	**8T-4193**	1	BOLT (M16X2X50-MM)	
	19	1	**8T-4223**	2	WASHER-HARD (13.5X25.5X3-MM THK)	
	20	1	**8T-8919**	1	BOLT (1/2-13X1.75-IN)	
	21	1	**9X-8250**	1	CLIP	
	22	1	**9X-8256**	3	WASHER (6.6X12X2-MM THK)	
	23	1	**9X-8257**	3	WASHER (17.5X30X3.5-MM THK)	

M-METRIC PART
R-REMFG PART MAY BE AVAILABLE

323-7444 **ALTERNATOR GP-CHARGING** *(contd.)* **i03991469**

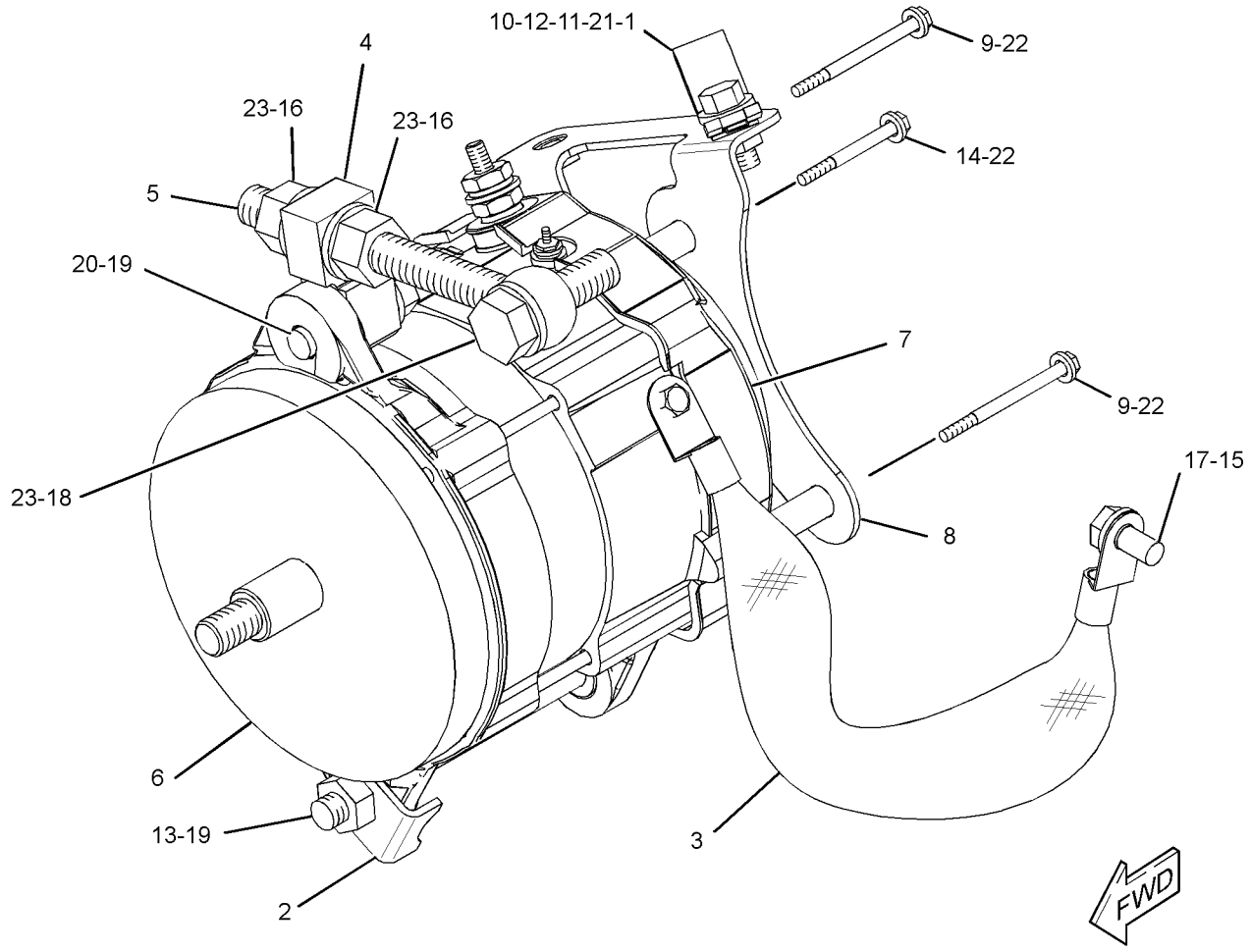

GRAPHIC #1 **<END>** g02173599

323-7992 ALTERNATOR GP-CHARGING

S/N: DSH1-UP; DLN1-UP; DJR1-UP
24-VOLT, 95-AMPERE
PART OF 313-3757 INSTALLATION AR

SMCS-1405 **i03991511**

NOTE	REF NO	GRAPHIC REF	PART NUMBER	QTY	PART NAME 1 2 3 4 5 6 (PRODUCT LEVEL)	SEE PAGE
	1	1	**7K-1181**	1	STRAP-CABLE	
	2	1	**9S-1240**	1	BRACKET AS	
		1	**1F-0748**	1	NUT-WELD (1/2-13-THD)	
YR	3	1	**197-8820**	1	ALTERNATOR GP-CHARGING (24-VOLT, 95-AMPERE)	135
	4	1	**208-4622**	1	STRAP AS	
	5	1	**211-1044**	1	BLOCK	
	6	1	**214-9492**	1	ROD-ADJUSTING	
	7	1	**239-7854**	1	GUARD-ALTERNATOR	
	8	1	**329-5070**	1	BRACKET AS	
M		1	**8T-3490**	2	NUT-WELD (M10X1.5-THD)	
	9	1	**4P-7581**	1	CLIP	
	10	1	**7X-0339**	1	BOLT (1/2-13X6.25-IN)	
M	11	1	**8T-0638**	3	BOLT (M5X0.8X50-MM)	
	12	1	**8T-4121**	2	WASHER-HARD (11X21X2.5-MM THK)	
M	13	1	**8T-4132**	2	NUT (M16X2-THD)	
M	14	1	**8T-4136**	1	BOLT (M10X1.5X25-MM)	
M	15	1	**8T-4137**	1	BOLT (M10X1.5X20-MM)	
M	16	1	**8T-4193**	1	BOLT (M16X2X50-MM)	
	17	1	**8T-4223**	2	WASHER-HARD (13.5X25.5X3-MM THK)	
	18	1	**8T-8919**	1	BOLT (1/2-13X1.75-IN)	
	19	1	**9X-8250**	1	CLIP	
	20	1	**9X-8256**	3	WASHER (6.6X12X2-MM THK)	
	21	1	**9X-8257**	3	WASHER (17.5X30X3.5-MM THK)	

M-METRIC PART
R-REMFG PART MAY BE AVAILABLE
Y-SEPARATE ILLUSTRATION

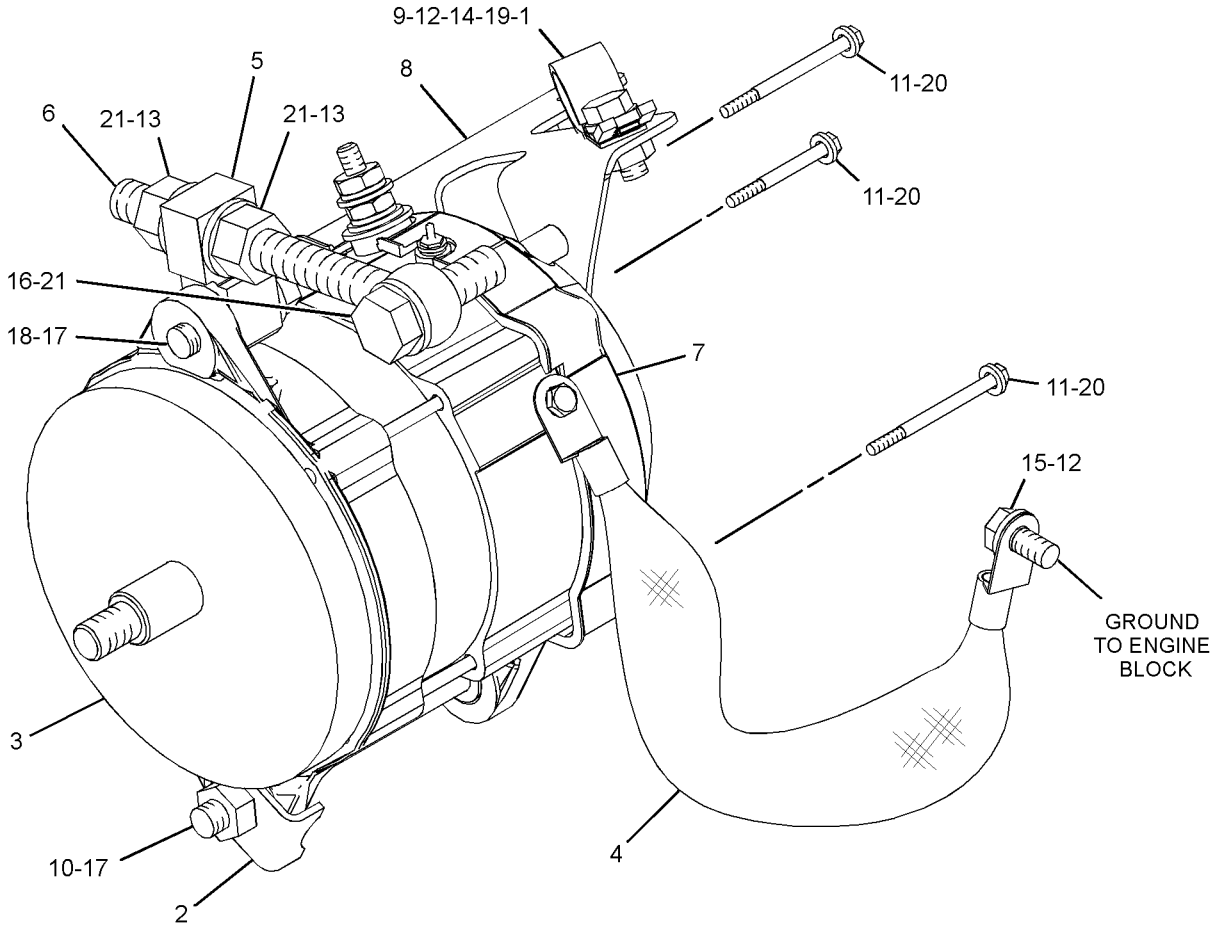

GRAPHIC #1 **<END>** g02174021

ELECTRICAL AND STARTING SYSTEM

321-5816 BATTERY & WIRING GP

S/N: DSH1-UP; DLN1-UP; DJR1-UP

PART OF 313-3338, 313-3759, 379-6225 CHASSIS AR

SMCS-1401, 1402, 1408 **i04711475**

NOTE	REF NO	GRAPHIC REF	PART NUMBER	QTY	PART NAME 1 2 3 4 5 6 (PRODUCT LEVEL)	SEE PAGE
	1	1,2,3	**7K-1181**	49	STRAP-CABLE	
	2	3	**140-0860**	1	STRAP AS-GROUND	
Y	3	2	**145-7028**	1	SENSOR GP-TEMPERATURE (HYDRAULIC OIL TEMP)	191
	4	2	**153-5700**	2	BATTERY (12-VOLT, 1125-CCA)	
	5	2	**153-6281**	1	HOLD-DOWN-BATTERY	
Y	6	2	**158-6632**	1	SWITCH GP-PUSH BUTTON (PRIMING PUMP)	204
Y	7	2	**161-9926**	1	SENSOR GP-PRESSURE (TURBOCHARGER INLET)	185
	8	3	**174-7875**	1	HORN AS (24-VOLT, HIGH TONE)	
	9	3	**163-1201**	1	HORN AS (24-VOLT, LOW TONE)	
	10	1	**185-7157**	1	HARNESS AS-FRONT LIGHTING	
		1	**102-8802**	2	KIT-RECEPTACLE (2-PIN)	
		1	**102-8803**	1	KIT-RECEPTACLE (3-PIN)	
					(EACH RECEPTACLE KIT INCLUDES RECEPTACLE AS & WEDGE)	
		1	**9G-3695**	4	PLUG-SEAL	
E		1	**114-8843**		SLEEVE-PLASTIC (100-CM)	
E		1	**119-3662**		TUBE-HEAT SHRINK (10.85-MM DIA) (20-CM)	
		1	**126-1767**	3	PIN-CONNECTOR (14-GA TO 16-GA)	
		1	**126-1768**	8	SOCKET-CONNECTOR (14-GA TO 16-GA)	
		1	**155-2270**	4	KIT-CONNECTING PLUG (2-PIN)	
					(EACH INCLUDES PLUG AS, WEDGE & INTERFACE SEAL)	
	11	3	**204-7563**	1	HARNESS AS-ALARM	
		3	**102-8802**	1	KIT-RECEPTACLE (2-PIN)	
					(INCLUDES RECEPTACLE AS & WEDGE)	
E		3	**114-8843**		SLEEVE-PLASTIC (40-CM)	
		3	**9X-3402**	2	SOCKET-CONNECTOR (16-GA TO 18-GA)	
					—OR—	
		3	**126-1768**	2	SOCKET-CONNECTOR (14-GA TO 16-GA)	
		3	**9X-3401**	2	PIN-CONNECTOR (16-GA TO 18-GA)	
					—OR—	
		3	**126-1767**	2	PIN-CONNECTOR (14-GA TO 16-GA)	
		3	**155-2270**	1	KIT-CONNECTING PLUG (2-PIN)	
					(INCLUDES PLUG AS, WEDGE & INTERFACE SEAL)	
	12	3	**213-9100**	1	ALARM AS	
		3	**102-8802**	1	KIT-RECEPTACLE (2-PIN)	
					(INCLUDES RECEPTACLE AS & WEDGE)	
D		3	**5P-5623**		WIRE-ELECTRICAL (16-GA, BLACK) (0.4-M)	
		3	**8T-8729**	2	PIN-CONNECTOR (16-GA TO 18-GA)	
E		3	**9X-1813**		SLEEVE (29-CM)	
	13	2	**320-5895**	1	HARNESS AS-SENSOR (HOOD)	
		2	**102-8803**	1	KIT-RECEPTACLE (3-PIN)	
		2	**102-8806**	1	KIT-RECEPTACLE (8-PIN)	
					(EACH RECEPTACLE KIT INLCUDES RECEPTACLE AS & WEDGE)	
		2	**8T-8737**	3	PLUG-SEAL	
E		2	**114-8843**		SLEEVE-PLASTIC (60-CM)	
		2	**9X-3402**	4	SOCKET-CONNECTOR (16-GA TO 18-GA)	
					—OR—	
		2	**126-1768**	4	SOCKET-CONNECTOR (14-GA TO 16-GA)	
		2	**9X-3401**	8	PIN-CONNECTOR (16-GA TO 18-GA)	
					—OR—	
		2	**126-1767**	8	PIN-CONNECTOR (14-GA TO 16-GA)	
		2	**155-2270**	2	KIT-CONNECTING PLUG (2-PIN)	
					(EACH INCLUDES PLUG AS, WEDGE & INTERFACE SEAL)	
	14	2	**320-5896**	1	HARNESS AS-WIRING (FENDER, RH)	

321-5816 **BATTERY & WIRING GP** *(contd.)* **i04711475**

NOTE	REF NO	GRAPHIC REF	PART NUMBER	QTY	PART NAME 1 2 3 4 5 6 (PRODUCT LEVEL)	SEE PAGE
		2	**102-8801**	1	KIT-RECEPTACLE (12-PIN)	
					(INCLUDES RECEPTACLE AS & WEDGE)	
		2	**8T-8737**	7	PLUG-SEAL	
E		2	**114-8843**		SLEEVE-PLASTIC (40-CM)	
E		2	**125-7874**		TUBE-HEAT SHRINK (5.72-MM DIA) (5-CM)	
		2	**9X-3402**	6	SOCKET-CONNECTOR (16-GA TO 18-GA)	
					—OR—	
		2	**126-1768**	6	SOCKET-CONNECTOR (14-GA TO 16-GA)	
		2	**9X-3401**	5	PIN-CONNECTOR (16-GA TO 18-GA)	
					—OR—	
		2	**126-1767**	5	PIN-CONNECTOR (14-GA TO 16-GA)	
		2	**155-2270**	3	KIT-CONNECTING PLUG (2-PIN)	
					(EACH INCLUDES PLUG AS, WEDGE & INTERFACE SEAL)	
	15	1	**321-5815**	1	CABLE AS	
		1	**1M-4986**	1	TERMINAL-RING (0-GA, 1/2-IN SCREW)	
		1	**1S-4915**	2	LINER (CONDUIT)	
E		1	**5P-0695**		CONDUIT (283-CM)	
E		1	**159-8049**		CABLE (00-GA, RED) (328-CM)	
		1	**8N-1725**	1	COVER AS-TERMINAL (RED)	
		1	**8L-8413**	1	STRAP-CABLE (WHITE)	
E		1	**8T-2225**		TUBE-HEAT SHRINK (25.4-MM DIA) (32-CM)	
		1	**3S-6049**	1	TERMINAL AS-BATTERY (POSITIVE)	
		1	**1M-6119**	1	BOLT (5/16-18X1.375-IN)	
		1	**1M-6120**	1	NUT (5/16-18-THD)	
E		1	**114-8843**		SLEEVE-PLASTIC (20-CM)	
E		1	**119-3662**		TUBE-HEAT SHRINK (10.85-MM DIA) (7-CM)	
B		1	**1P-0810**		TAPE-ELECTRICAL	
	16	3	**323-9637**	1	HARNESS AS-CHASSIS	
		3	**102-8802**	1	KIT-RECEPTACLE (2-PIN)	
		3	**102-8803**	3	KIT-RECEPTACLE (3-PIN)	
		3	**102-8804**	3	KIT-RECEPTACLE (4-PIN)	
		3	**102-8801**	2	KIT-RECEPTACLE (12-PIN)	
		3	**190-7615**	1	KIT-RECEPTACLE (12-PIN)	
					(EACH RECEPTACLE KIT INCLUDES RECEPTACLE AS & WEDGE)	
		3	**8T-8737**	35	PLUG-SEAL	
E		3	**114-8843**		SLEEVE-PLASTIC (140-CM)	
E		3	**114-8845**		SLEEVE-PLASTIC (20-CM)	
E		3	**119-3662**		TUBE-HEAT SHRINK (10.85-MM DIA) (26-CM)	
E		3	**125-7875**		TUBE-HEAT SHRINK (7.44-MM DIA) (5-CM)	
		3	**9X-3402**	17	SOCKET-CONNECTOR (16-GA TO 18-GA)	
					—OR—	
		3	**126-1768**	17	SOCKET-CONNECTOR (14-GA TO 16-GA)	
		3	**126-1767**	10	PIN-CONNECTOR (14-GA TO 16-GA)	
		3	**126-1768**	12	SOCKET-CONNECTOR (14-GA TO 16-GA)	
		3	**9X-3401**	20	PIN-CONNECTOR (16-GA TO 18-GA)	
					—OR—	
		3	**126-1767**	20	PIN-CONNECTOR (14-GA TO 16-GA)	
		3	**155-2255**	1	KIT-CONNECTING PLUG (12-PIN)	
		3	**155-2260**	3	KIT-CONNECTING PLUG (3-PIN)	
		3	**155-2270**	3	KIT-CONNECTING PLUG (2-PIN)	
		3	**155-2271**	2	KIT-CONNECTING PLUG (4-PIN)	
					(EACH PLUG KIT INCLUDES PLUG AS, WEDGE & INTERFACE SEAL)	
	17	2	**091-9035**	1	SPACER (11X25X20-MM THK)	
	18	1,2	**122-4026**	2	SPACER (13X25X25-MM THK)	
	19	1	**130-5300**	2	CLIP	
	20	1	**132-5789**	2	CLIP	
	21	1	**170-4068**	1	CABLE AS	

321-5816 **BATTERY & WIRING GP** *(contd.)* **i04711475**

NOTE	REF NO	GRAPHIC REF	PART NUMBER	QTY	PART NAME 1 2 3 4 5 6 (PRODUCT LEVEL)	SEE PAGE
		1	**1S-7252**	1	TERMINAL-CABLE (00-GA, 3/8-IN SCREW)	
E		1	**159-8050**		CABLE (00-GA, BLACK) (24-CM)	
		1	**9G-0003**	1	COVER AS-TERMINAL (BLACK)	
		1	**8L-8413**	1	STRAP-CABLE (WHITE)	
		1	**8T-9757**	1	TERMINAL AS-BATTERY (NEGATIVE)	
		1	**1M-6119**	1	BOLT (5/16-18X1.375-IN)	
		1	**1M-6120**	1	NUT (5/16-18-THD)	
		1	**037-5197**	1	BOOT	
	22	2	**170-4859**	1	CABLE AS	
		2	**1S-4915**	2	LINER (CONDUIT)	
		2	**1S-7251**	1	TERMINAL-CABLE (00-GA, 1/2-IN SCREW)	
		2	**4D-1248**	1	TERMINAL (00-GA, 3/8-IN SCREW)	
E		2	**5P-0695**		CONDUIT (74-CM)	
E		2	**8T-2225**		TUBE-HEAT SHRINK (25.4-MM DIA) (16-CM)	
E		2	**159-8050**		CABLE (00-GA, BLACK) (103-CM)	
	23	3	**1H-7459**	1	GROMMET	
	24	1,2	**1J-8668**	4	STUD-TAPERLOCK (3/8-16X1.97-IN)	
	25	1,2	**1S-0994**	7	CLIP	
	26	2	**1S-1015**	1	CLIP	
	27	1,2	**1S-9130**	2	STUD (3/8-16X3.03-IN)	
	28	2	**238-0303**	1	KNOB	
	29	3	**322-2943**	2	GROMMET	
	30	2	**3D-0490**	1	STUD-TAPERLOCK (1/2-13X1.97-IN)	
	31	2	**3J-7354**	1	SEAL-O-RING	
	32	1,2	**3K-6060**	8	LOCKNUT (3/8-16-THD)	
	33	3	**4P-7581**	1	CLIP	
	34	2	**4S-1962**	1	CLIP	
	35	1,3	**5M-3062**	4	BOLT (3/8-16X0.75-IN)	
	36	1,2	**5P-1075**	10	WASHER-HARD (10.2X22.5X3-MM THK)	
	37	3	**6V-8801**	2	NUT (3/8-16-THD)	
	38	2	**7J-0204**	1	SEAL-O-RING	
Y	39	2	**7N-0718**	1	SWITCH GP-DISCONNECT (BATTERY)	201
	40	1,2,3	**8T-4121**	4	WASHER-HARD (11X21X2.5-MM THK)	
M	41	1,2,3	**8T-4137**	3	BOLT (M10X1.5X20-MM)	
M	42	2	**8T-4186**	1	BOLT (M10X1.5X40-MM)	
	43	2	**8T-4223**	1	WASHER-HARD (13.5X25.5X3-MM THK)	
	44	3	**8T-4896**	6	WASHER-HARD (10.2X18.5X2.5-MM THK)	
	45	1	**8V-0622**	1	CABLE AS-BATTERY	
		1	**8C-5917**	1	TERMINAL AS-BATTERY (POSITIVE)	
		1	**8T-9757**	1	TERMINAL AS-BATTERY (NEGATIVE)	
					(EACH BATTERY TERMINAL AS INCLUDES)	
		1	**1M-6119**	1	BOLT (5/16-18X1.375-IN)	
		1	**1M-6120**	1	NUT (5/16-18-THD)	
		1	**1M-6119**	2	BOLT (5/16-18X1.375-IN)	
		1	**1M-6120**	2	NUT (5/16-18-THD)	
E		1	**159-8049**		CABLE (00-GA, RED) (16-CM)	
		1	**9G-0003**	1	COVER AS-TERMINAL (BLACK)	
		1	**9G-0004**	1	COVER AS-TERMINAL (RED)	
					(EACH TERMINAL COVER AS INCLUDES)	
		1	**8L-8413**	1	STRAP-CABLE (WHITE)	
	46	3	**9B-7237**	2	BOLT (3/8-16X1.25-IN)	
	47	2	**9X-0941**	1	LOCKNUT (1/2-13-THD)	

B-USE AS REQUIRED
D-ORDER BY THE METER
E-ORDER BY THE CENTIMETER
M-METRIC PART
Y-SEPARATE ILLUSTRATION

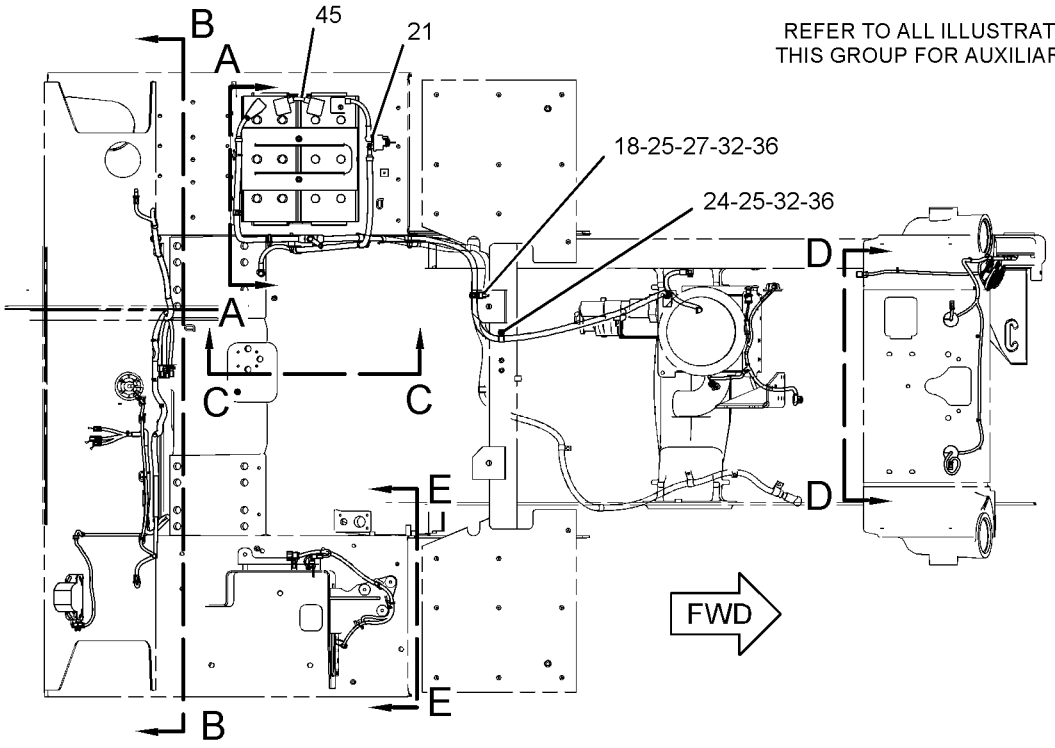

TOP VIEW

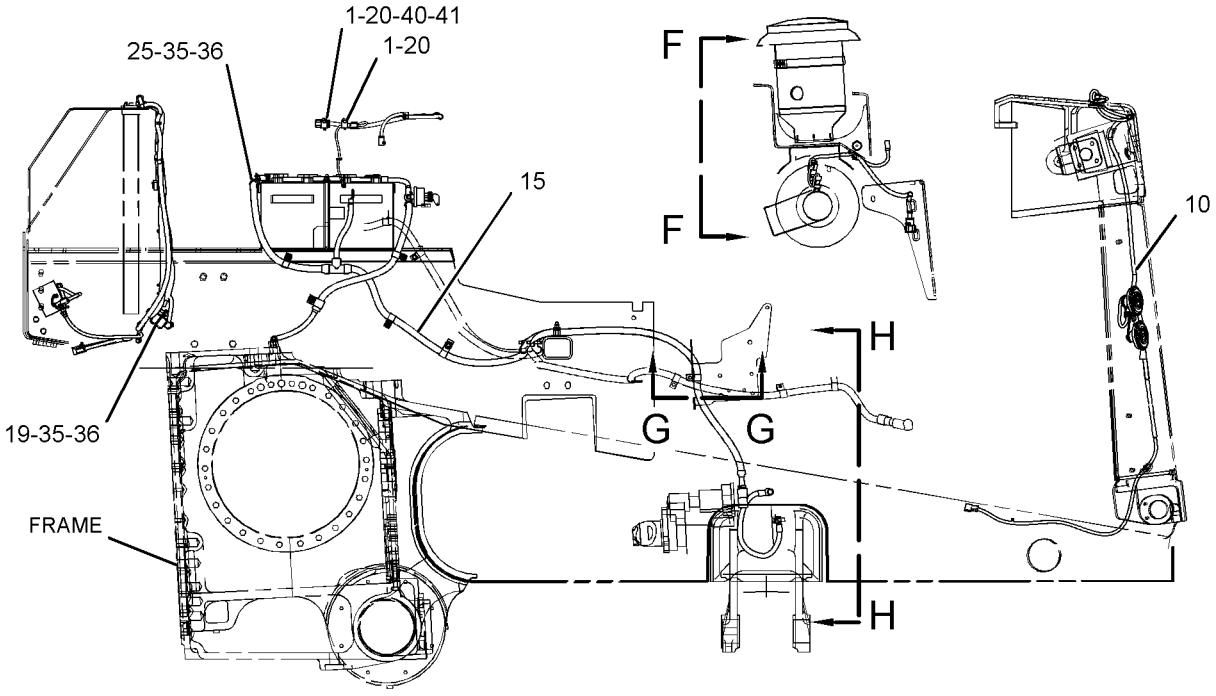

RIGHT SIDE VIEW

GRAPHIC #1 g02850917

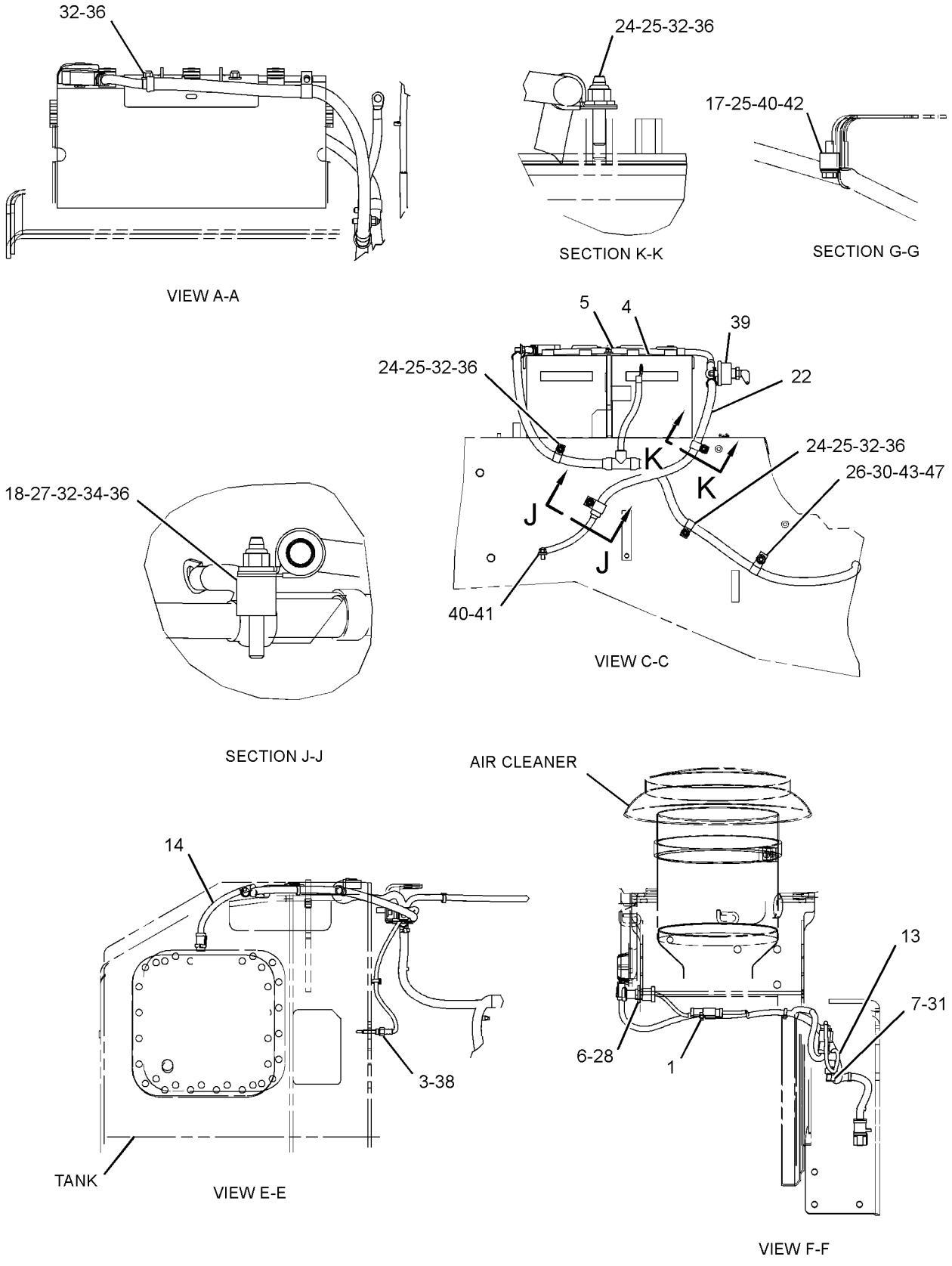

GRAPHIC #2

g02850918

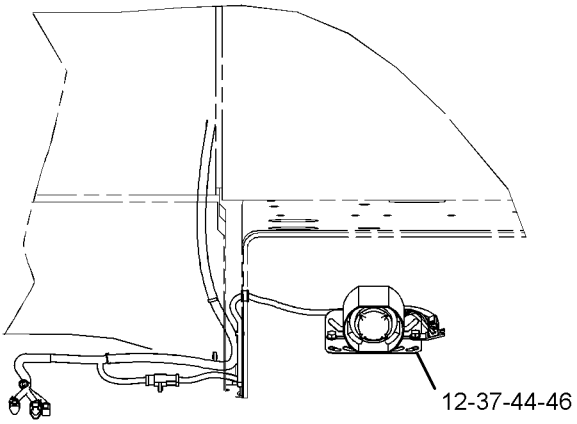

REAR VIEW

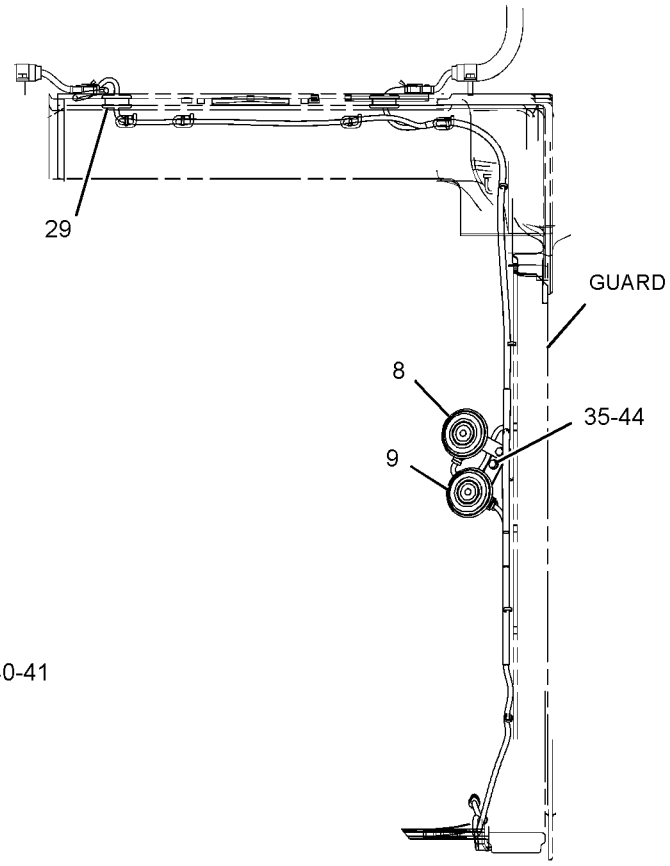

VIEW D-D

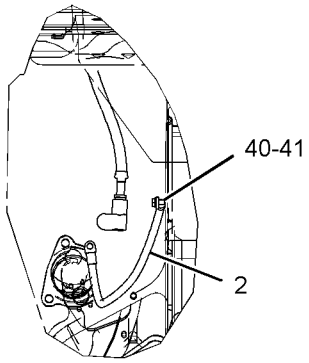

VIEW H-H

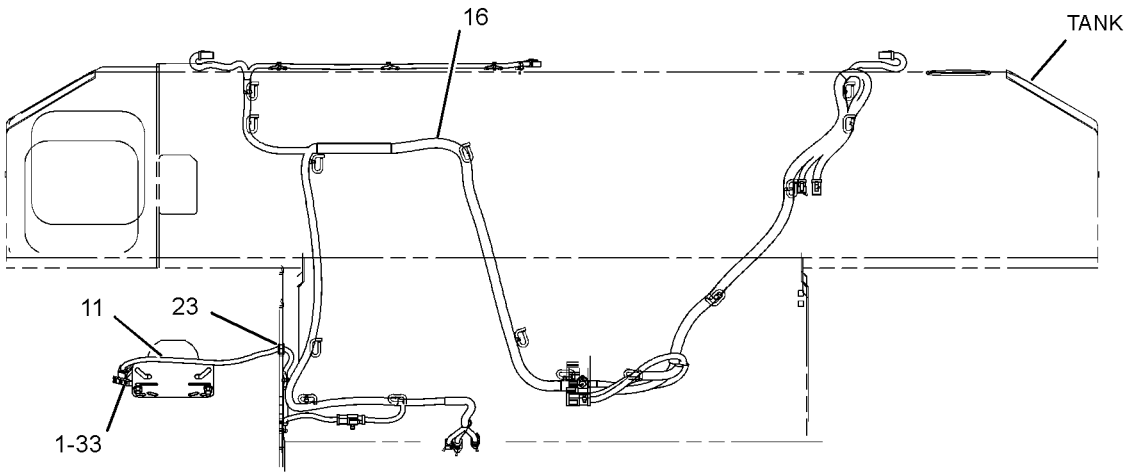

VIEW B-B

GRAPHIC #3 **<END>** g02850921

112-9051 BATTERY GP–HEAVY-DUTY

S/N: DSH1-UP; DLN1-UP; DJR1-UP
PART OF 378-2269 COLD WEATHER AR
AN ATTACHMENT

SMCS-1401 **i04660492**

NOTE	PART NUMBER	QTY	PART NAME 1 2 3 4 5 6 (PRODUCT LEVEL)	SEE PAGE
	9X-9731	2	BATTERY GP (12-VOLT)	
	7N-0060	6	VENT AS	

<END>

258-8473 CLUTCH GP-ELECTRIC

S/N: DSH1-UP; DLN1-UP; DJR1-UP

PART OF 106-5122 COMPRESSOR GP-REFRIGERANT

SMCS-7320 **i03988710**

NOTE	REF NO	GRAPHIC REF	PART NUMBER	QTY	PART NAME 1 2 3 4 5 6 (PRODUCT LEVEL)	SEE PAGE
	1	1	**258-8477**	1	NUT	
	2	1	**258-8478**	3	BOLT	
	3	1	**258-8479**	1	COVER-DUST	
	4	1	**258-8480**	1	COVER-BEARING	
	5	1	**258-8481**	1	ARMATURE AS	
	6	1	**258-8482**	1	CORE AS	
	7	1	**258-8483**	1	ROTOR AS	
					PARTS SHOWN IN GRAPHIC(S) WITHOUT A REFERENCE NUMBER ARE NOT SERVICED SEPARATELY	

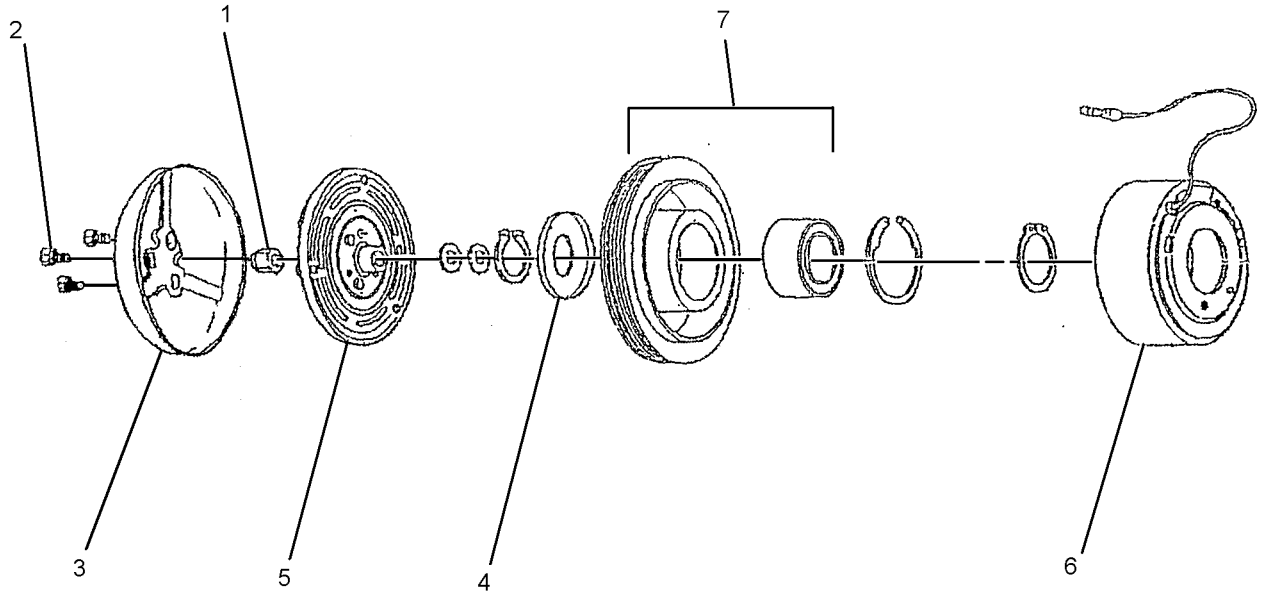

GRAPHIC #1 **<END>** g02168556

246-9365 CONTROL & MTG GP-ENGINE ELEK

S/N: THX28268-UP
AIR COOLED
PART OF 318-1906 ENGINE AR-COMPLETE

SMCS-1901, 7620 **i04029204**

NOTE	REF NO	GRAPHIC REF	PART NUMBER	QTY	PART NAME 1 2 3 4 5 6 (PRODUCT LEVEL)	SEE PAGE
	1	1	**8T-9655**	8	MOUNT-ISOLATION	
	2	1	**101-3128**	4	SPACER-SPECIAL	
M	3	1	**143-9392**	4	STUD (M8X1.25-THD)	
Y	4	1	*226-7473*	1	CONTROL GP-ENGINE ELECTRONIC	154
	6	1	**233-0891**	1	BRACKET AS	
M		1	**232-1693**	1	BOLT-FLANGE HEAD (M6X1X35-MM)	
	7	1	**9M-1974**	4	WASHER-HARD (8.8X16X2-MM THK)	
	8	1	**9N-0869**	4	WASHER-HARD (8.8X25.5X2-MM THK)	

M-METRIC PART
Y-SEPARATE ILLUSTRATION

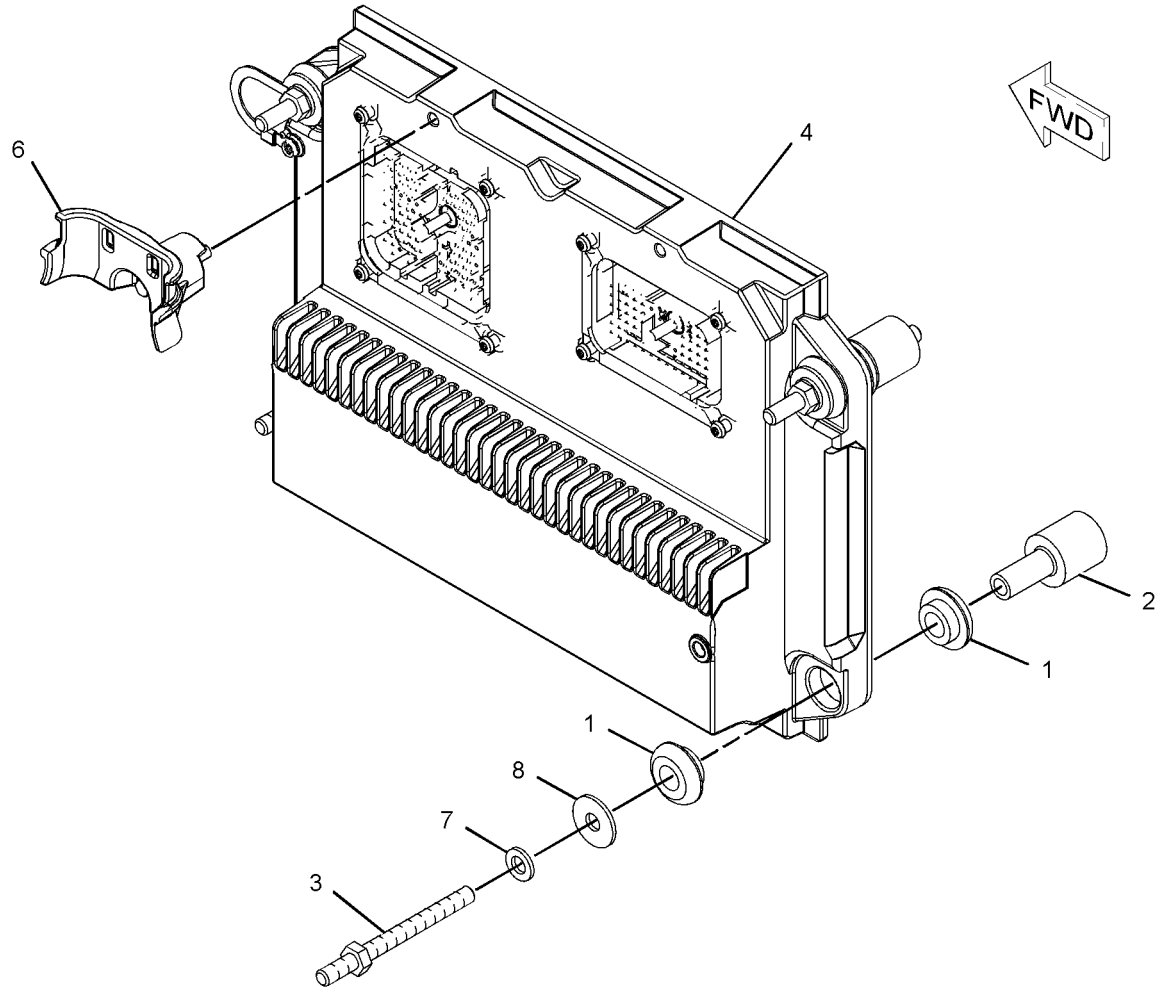

GRAPHIC #1 **<END>** g01131857

344-3393 CONTROL GP-COMMUNICATION–PRODUCT LINK 321SR

S/N: DSH1-UP; DLN1-UP; DJR1-UP
PART OF 377-5881 INSTALLATION GP-COMMUNICATION
AN ATTACHMENT

SMCS-7610, 7620 **i04629351**

NOTE	PART NUMBER	QTY	PART NAME 1 2 3 4 5 6 (PRODUCT LEVEL)	SEE PAGE
Y	**262-1421**	1	ELECTRONICS GP-COMMUNICATION (PRODUCT LINK 300)	156
Y	**336-3545**	1	ELECTRONICS GP-COMMUNICATION (PRODUCT LINK 121SR)	156

Y-SEPARATE ILLUSTRATION

<END>

351-8490 CONTROL GP-COMMUNICATION–PRODUCT LINK 522

S/N: DSH1-UP; DLN1-UP; DJR1-UP
PART OF 376-6478 CONTROL GP-COMMUNICATION
AN ATTACHMENT

SMCS-7610, 7620 **i04564610**

NOTE	REF NO	GRAPHIC REF	PART NUMBER	QTY	PART NAME 1 2 3 4 5 6 (PRODUCT LEVEL)	SEE PAGE
	1	1	**346-7763**	1	COVER AS	
	2	1	**351-8488**	1	CARD-MEMORY (SUBSCRIBER IDENTITY MODULE)	
	3	1	**7X-6315**	1	STRAP AS-GROUND	
	4	1	**342-9022**	4	SCREW-PAN HEAD (M2.5X0.45-THD)	
	5	1	**342-9290**	1	SCREW-PAN HEAD (M4X0.7-THD)	
	6	1	**134-4126**	1	WASHER (4.52X8.28X0.76-MM THK)	
F			**382-5982**	1	SOFTWARE GP-COMMUNICATION	

F-NOT SHOWN

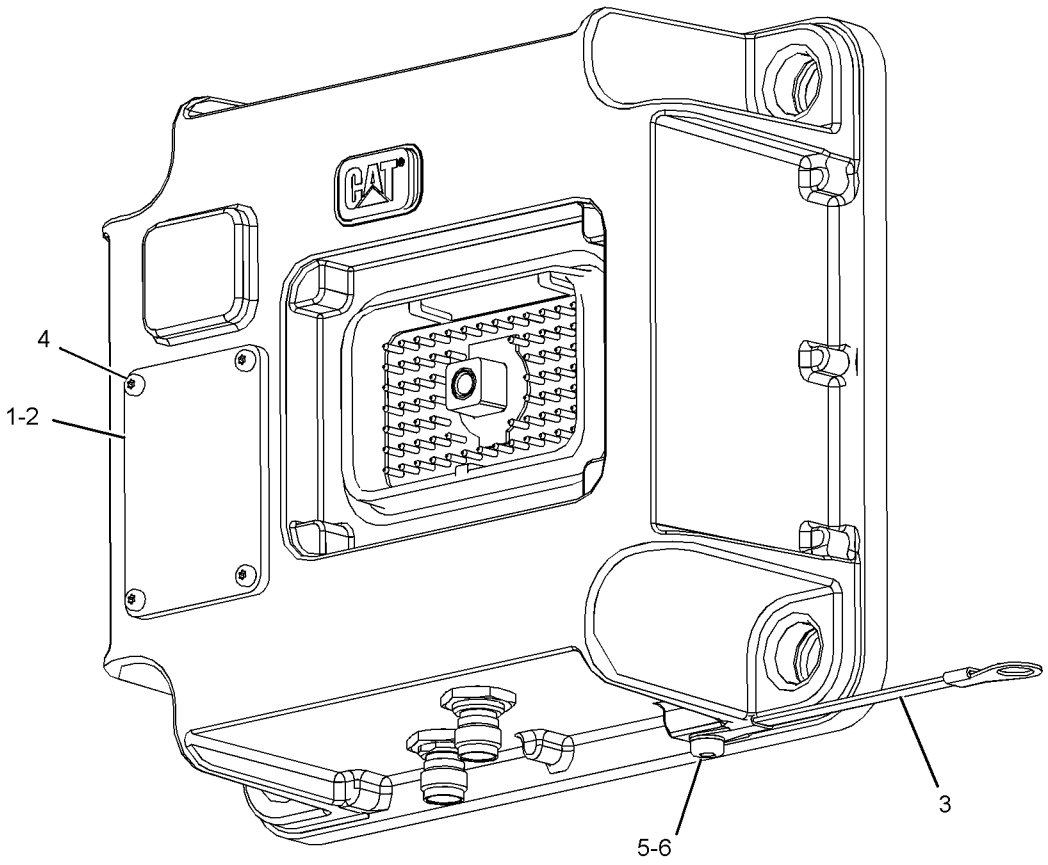

GRAPHIC #1 **<END>** g02330133

372-4531 CONTROL GP-COMMUNICATION–

PRODUCT LINK 522, CHINA
S/N: DSH1-UP; DLN1-UP; DJR1-UP
PART OF 376-4616 CONTROL GP-COMMUNICATION
AN ATTACHMENT

SMCS-7610, 7620 **i04733611**

NOTE	REF NO	GRAPHIC REF	PART NUMBER	QTY	PART NAME 1 2 3 4 5 6 (PRODUCT LEVEL)	SEE PAGE
	1	1	**346-7763**	1	COVER AS	
	2	1	**372-4532**	1	CARD-MEMORY (SUBSCRIBER IDENTITY MODULE)	
	3	1	**7X-6315**	1	STRAP AS-GROUND	
	4	1	**342-9022**	4	SCREW-PAN HEAD (M2.5X0.45-THD)	
	5	1	**342-9290**	1	SCREW-PAN HEAD (M4X0.7-THD)	
	6	1	**134-4126**	1	WASHER (4.52X8.28X0.76-MM THK)	
F			**376-7248**	1	SOFTWARE GP-ELECTRONIC	

F-NOT SHOWN

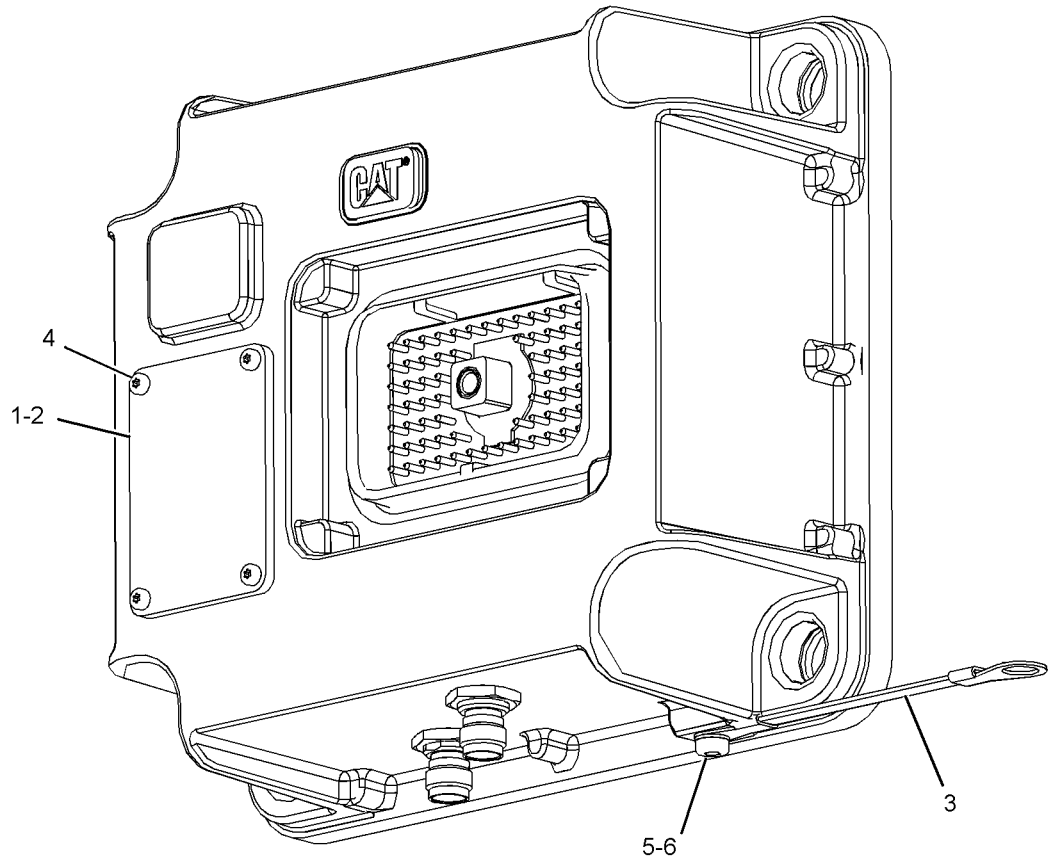

GRAPHIC #1 **<END>** g02330133

376-4616 CONTROL GP-COMMUNICATION–
PRODUCT LINK CELLULAR, CHINA
S/N: DSH1-UP; DLN1-UP; DJR1-UP
PART OF 390-7292 INSTALLATION GP-COMMUNICATION
AN ATTACHMENT

SMCS-7610, 7620 **i04769584**

NOTE	PART NUMBER	QTY	PART NAME 1 2 3 4 5 6 (PRODUCT LEVEL)	SEE PAGE
Y	**372-4531**	1	CONTROL GP-COMMUNICATION (PRODUCT LINK 522, CHINA)	152
	375-7128	1	SOFTWARE GP-COMMUNICATION	

Y-SEPARATE ILLUSTRATION

<END>

376-6478 CONTROL GP-COMMUNICATION–
PRODUCT LINK CELLULAR
S/N: DSH1-UP; DLN1-UP; DJR1-UP
PART OF 377-5880 INSTALLATION GP-COMMUNICATION
AN ATTACHMENT

SMCS-7610, 7620 **i04729470**

NOTE	PART NUMBER	QTY	PART NAME 1 2 3 4 5 6 (PRODUCT LEVEL)	SEE PAGE
Y	**351-8490**	1	CONTROL GP-COMMUNICATION (PRODUCT LINK 522)	151
	380-9732	1	SOFTWARE GP-COMMUNICATION (PRODUCT LINK 522)	

Y-SEPARATE ILLUSTRATION

<END>

ELECTRICAL AND STARTING SYSTEM

226-7473 CONTROL GP-ENGINE ELECTRONIC

S/N: THX28268-UP

PART OF 246-9365 CONTROL & MTG GP-ENGINE ELEK

SMCS-1901 **i04453656**

NOTE	REF NO	GRAPHIC REF	PART NUMBER	QTY	PART NAME 1 2 3 4 5 6 (PRODUCT LEVEL)	SEE PAGE
	1	1	**372-2905**	1	CONTROL GP-ELECTRONIC (ENGINE)	

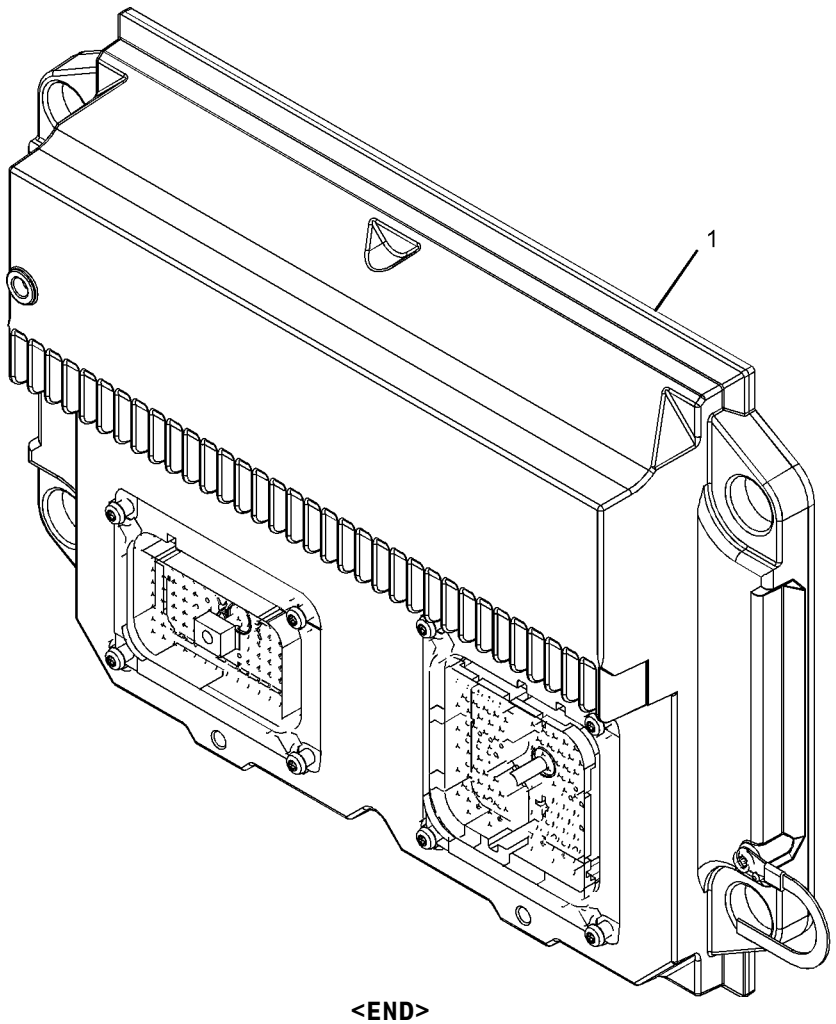

GRAPHIC #1 **<END>** g01101798

317-6571 CONVERTER GP-ELECTRICAL

S/N: DSH1-UP; DLN1-UP; DJR1-UP
20-AMPERE, 12-VOLT
AN ATTACHMENT

SMCS-1421 **i03997516**

NOTE	REF NO	GRAPHIC REF	PART NUMBER	QTY	PART NAME 1 2 3 4 5 6 (PRODUCT LEVEL)	SEE PAGE
	1	1	**239-3902**	1	CONVERTER-ELECTRICAL (24-VOLT TO 12-VOLT)	
	2	1	**321-5802**	1	HARNESS AS-POWER	
		1	**177-9653**	1	KIT-RECEPTACLE (4-PIN)	
					(INCLUDES RECEPTACLE AS & WEDGE)	
		1	**7T-0094**	10	SOCKET-CONNECTOR (12-GA TO 14-GA)	
		1	**8T-8737**	11	PLUG-SEAL	
		1	**177-9656**	1	KIT-CONNECTING PLUG (4-PIN)	
					(INCLUDES PLUG AS & WEDGE)	
E		1	**114-8843**		SLEEVE-PLASTIC (80-CM)	
E		1	**119-3662**		TUBE-HEAT SHRINK (10.85-MM DIA) (7-CM)	
		1	**126-1768**	1	SOCKET-CONNECTOR (14-GA TO 16-GA)	
		1	**155-2274**	1	KIT-CONNECTING PLUG (6-PIN)	
					(INCLUDES PLUG AS, WEDGE & INTERFACE SEAL)	
	3	1	**7K-1181**	2	STRAP-CABLE	
M	4	1	**8T-0267**	4	BOLT-SOCKET HEAD (M6X1X12-MM)	
	5	1	**9X-8256**	4	WASHER (6.6X12X2-MM THK)	

E-ORDER BY THE CENTIMETER
M-METRIC PART

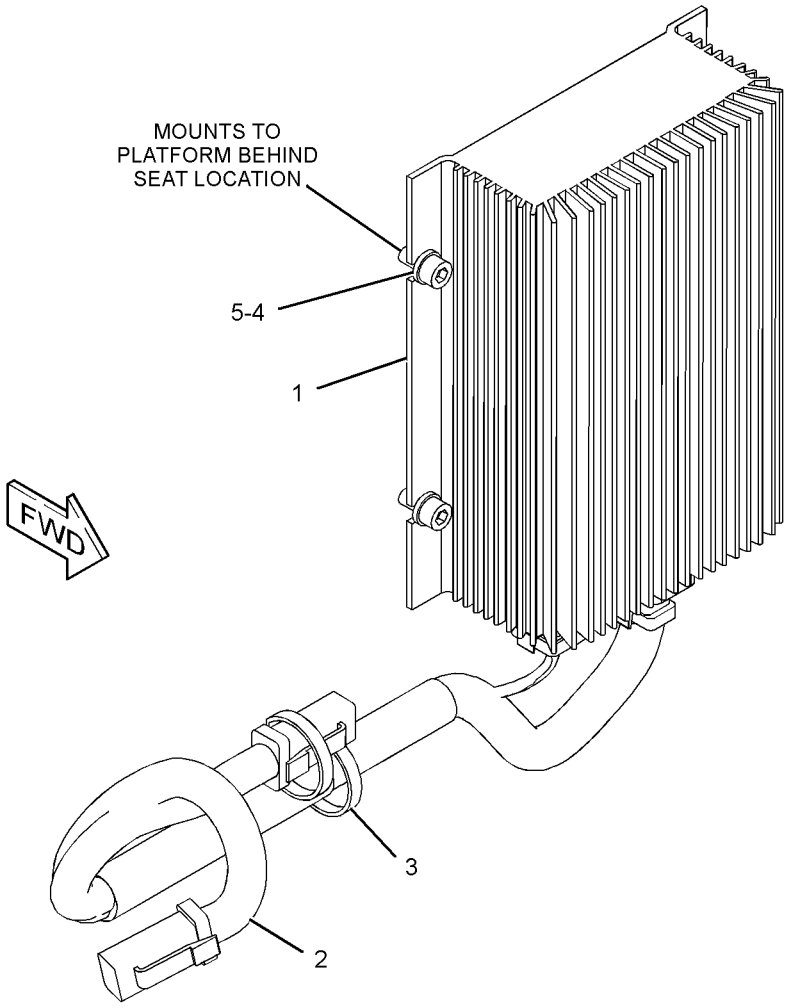

GRAPHIC #1 **<END>** g02188273

262-1421 ELECTRONICS GP-COMMUNICATION–
PRODUCT LINK 300
S/N: DSH1-UP; DLN1-UP; DJR1-UP
PART OF 344-3393 CONTROL GP-COMMUNICATION
AN ATTACHMENT

SMCS-7606, 7610, 7620 **i04504511**

NOTE	PART NUMBER	QTY	PART NAME 1 2 3 4 5 6 (PRODUCT LEVEL)	SEE PAGE
	355-5105	1	SOFTWARE GP-COMMUNICATION (PRODUCT LINK 300)	
			-OR-	
	355-9764	1	SERVICE GP-COMMUNICATION (PRODUCT LINK 300)	
			(OPTIONAL SERVICE REPLACEMENT)(INCLUDES CONTROL GP & SOFTWARE)	
	7X-6315	1	STRAP AS-GROUND	
	126-7574	1	SCREW-PAN HEAD (8-32X9.52-MM)	
	134-4126	1	WASHER (4.52X8.28X0.76-MM THK)	

<END>

336-3545 ELECTRONICS GP-COMMUNICATION–
PRODUCT LINK 121SR
S/N: DSH1-UP; DLN1-UP; DJR1-UP
PART OF 344-3393 CONTROL GP-COMMUNICATION
AN ATTACHMENT

SMCS-7606, 7610, 7620 **i04630042**

NOTE	PART NUMBER	QTY	PART NAME 1 2 3 4 5 6 (PRODUCT LEVEL)	SEE PAGE
	377-4844	1	SOFTWARE GP-COMMUNICATION (PRODUCT LINK 121SR)	

<END>

379-5228 GRADE CONTROL AR
S/N: DSH1-UP; DLN1-UP; DJR1-UP
AN ATTACHMENT

SMCS-7220 **i04708669**

NOTE	PART NUMBER	QTY	PART NAME 1 2 3 4 5 6 (PRODUCT LEVEL)	SEE PAGE
Y	*317-6580*	1	GRADE CONTROL GP (CAB)	157
Y	*317-6566*	1	MOUNTING GP-MONITOR (GRADE CONTROL)	590
Y	*374-4269*	1	WIRING GP-GRADE CONTROL	215
	297-0693	1	FILM-IDENTIFICATION (JOYSTICK) (GRADE CONTROL)	
			(ON RAISED SURFACE TO RIGHT OF CONTROL BELOW BULLDOZER CONTROL FILM)	

Y-SEPARATE ILLUSTRATION

<END>

317-6580 GRADE CONTROL GP

S/N: DSH1-UP; DLN1-UP; DJR1-UP
PART OF 379-5228 GRADE CONTROL AR
AN ATTACHMENT

SMCS-7220 **i04000857**

NOTE	PART NUMBER	QTY	PART NAME 1 2 3 4 5 6 (PRODUCT LEVEL)	SEE PAGE
Y	*237-9140*	1	MOUNTING GP-ANTENNA (GRADE CONTROL)	587
Y	*317-6579*	1	MOUNTING GP-GRADE CONTROL	180

Y-SEPARATE ILLUSTRATION

<END>

ELECTRICAL AND STARTING SYSTEM

380-7185 HEATER GP-FUEL

S/N: DSH1-UP; DLN1-UP; DJR1-UP
PART OF 378-2269 COLD WEATHER AR
AN ATTACHMENT

SMCS-1296 **i04673711**

NOTE	REF NO	GRAPHIC REF	PART NUMBER	QTY	PART NAME 1 2 3 4 5 6 (PRODUCT LEVEL)	SEE PAGE
	1	1	**5P-4961**	1	CLAMP-HOSE	
	2	1	**246-2641**	1	PADLOCK GP	
		1	**5P-8500**	1	KEY	
	3	1	**7K-1181**	1	STRAP-CABLE	
	4	1	**8T-0119**	2	ELBOW	
	5	1	**8T-6723**	1	VALVE-BALL	
	6	1	**8T-6724**	1	VALVE-BALL	
I	7	1	**8W-6153**	1	HOSE AS	
	8	1	**224-9772**	1	HEATER AS-FUEL	
	9	1	**227-9511**	1	BRACKET AS	
	10	1	**323-0936**	1	BRACKET AS	
I	11	1	**377-5963**	1	HOSE AS	
	12	1	**378-6138**	1	BRACKET AS	
I	13	1	**380-7186**	1	HOSE AS	
I	14	1	**380-7187**	1	HOSE AS	
	15	1	**391-4758**	1	BRACKET AS	
	16	1	**100-4336**	3	CLIP	
	17	1	*148-8313*	1	ADAPTER AS	
		1	**3K-0360**	1	SEAL-O-RING	
		1	**5P-6944**	1	ADAPTER	
	18	1	*148-8358*	1	ELBOW AS	
		1	**2M-9780**	1	SEAL-O-RING	
		1	**6V-8398**	1	SEAL-O-RING	
		1	**6V-8624**	1	ELBOW	
	19	1	*148-8364*	1	ELBOW AS	
		1	**3K-0360**	1	SEAL-O-RING	
		1	**6V-8398**	1	SEAL-O-RING	
		1	**6V-8625**	1	ELBOW	
	20	1	*148-8372*	2	ELBOW AS	
					(EACH INCLUDES)	
		1	**2M-9780**	1	SEAL-O-RING	
		1	**6V-8398**	1	SEAL-O-RING	
		1	**6V-8721**	1	ELBOW	
	21	1	*148-8374*	1	ELBOW AS	
		1	**3K-0360**	1	SEAL-O-RING	
		1	**6V-8397**	1	SEAL-O-RING	
		1	**6V-8723**	1	ELBOW	
	22	1	*148-8458*	1	UNION AS	
		1	**6V-8397**	2	SEAL-O-RING	
		1	**6V-9807**	1	UNION	
M	23	1	**151-6282**	2	BOLT-SOCKET HEAD (M6X1X40-MM)	
M	24	1	**191-8921**	2	BOLT-SOCKET HEAD (M6X1X25-MM)	
	25	1	**1S-0994**	3	CLIP	
	26	1	**1S-1015**	1	CLIP	
	27	1	**3J-1907**	1	SEAL-O-RING	
	28	1	**3K-0360**	4	SEAL-O-RING	
	29	1	**4P-8134**	1	CLIP	
	30	1	**5P-1046**	1	CONNECTOR	
	31	1	**8D-9671**	2	CLIP	
	32	1	**8M-2773**	4	CLIP	
	33	1	**8T-4121**	12	WASHER-HARD (11X21X2.5-MM THK)	
M	34	1	**8T-4136**	8	BOLT (M10X1.5X25-MM)	
M	35	1	**8T-4137**	2	BOLT (M10X1.5X20-MM)	
M	36	1	**8T-4195**	2	BOLT (M10X1.5X30-MM)	
	37	1	**8T-4205**	4	WASHER-HARD (7.2X14.5X2-MM THK)	

380-7185 **HEATER GP-FUEL** *(contd.)* **i04673711**

NOTE	REF NO	GRAPHIC REF	PART NUMBER	QTY	PART NAME 1 2 3 4 5 6 (PRODUCT LEVEL)	SEE PAGE
	38	1	**8T-4896**	3	WASHER-HARD (10.2X18.5X2.5-MM THK)	
M	39	1	**8T-5436**	3	BOLT (M10X1.5X130-MM)	
E	40	1	**5P-1442**		HOSE (45-CM)	

E-ORDER BY THE CENTIMETER
I-REFER TO HYDRAULIC INFORMATION SYSTEM
M-METRIC PART

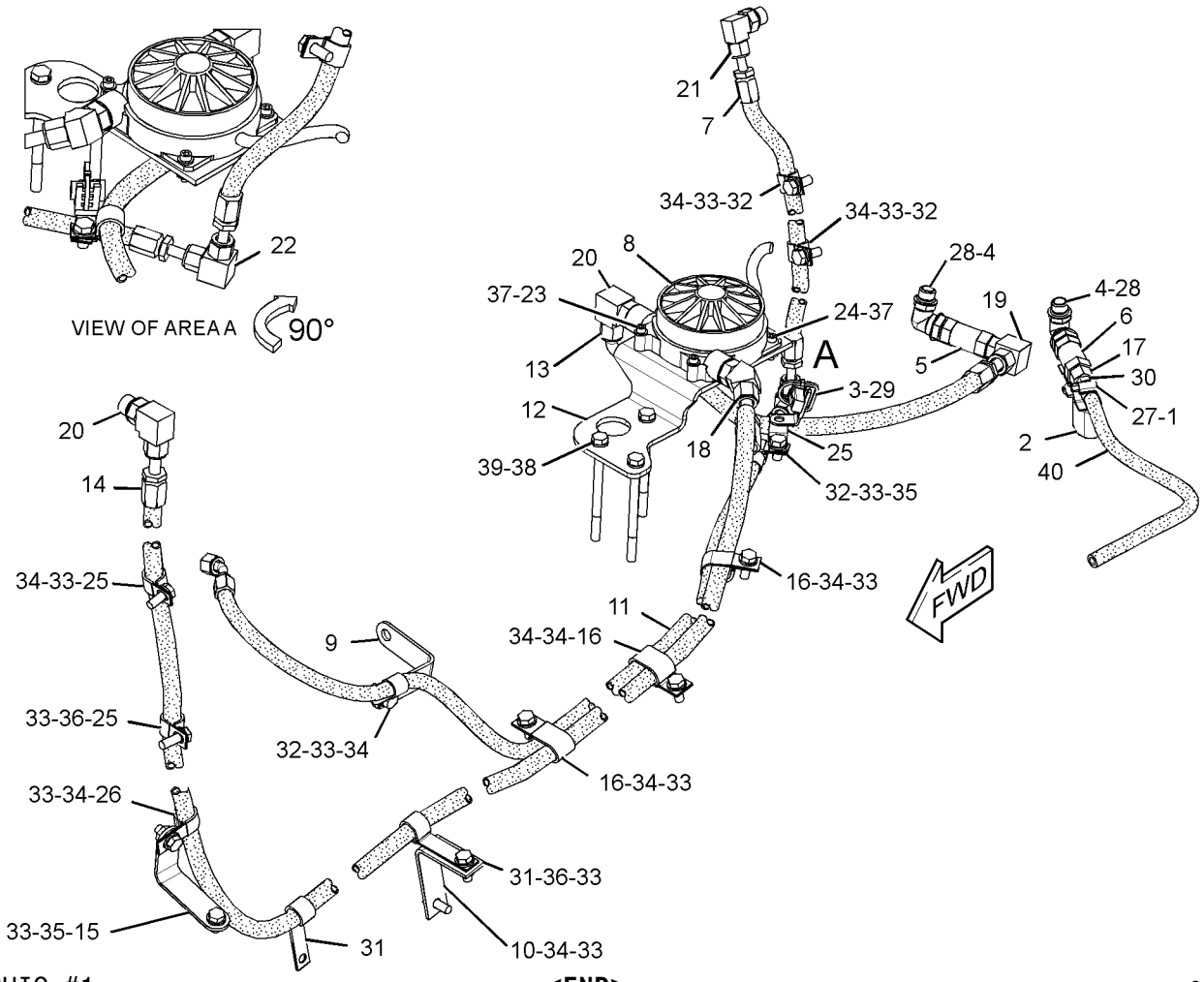

GRAPHIC #1 **<END>** g02857736

380-3504 HEATER GP-JACKET WATER

S/N: DSH1-UP; DLN1-UP; DJR1-UP
240-VOLT, 1500-WATT
PART OF 378-2269 COLD WEATHER AR
AN ATTACHMENT

SMCS-1383 **i04673713**

NOTE	REF NO	GRAPHIC REF	PART NUMBER	QTY	PART NAME 1 2 3 4 5 6 (PRODUCT LEVEL)	SEE PAGE
	1	1	**5P-0492**	1	ADAPTER	
	2	1	**6T-3764**	1	ELEMENT AS-JACKET WATER HEATER (240-VOLT, 1500-WATT)	
	3	1	**214-9389**	1	FILM-IDENTIFICATION (WATER HEATER)	
	4	1	**217-5912**	1	CORD AS	
	5	1	**4P-7581**	1	CLIP	
	6	1	**4P-8134**	4	CLIP	
	7	1	**7K-1181**	9	STRAP-CABLE	
	8	1	**7M-8485**	1	SEAL-O-RING	

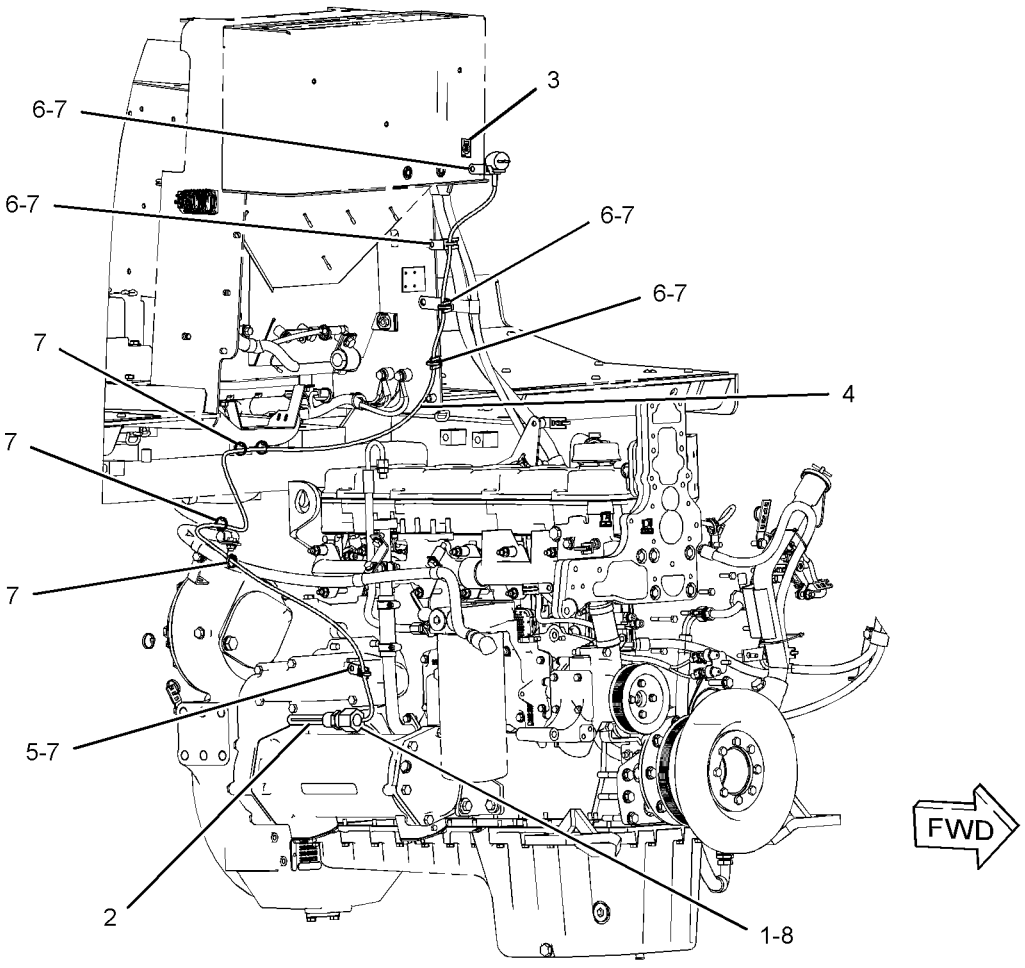

GRAPHIC #1 **<END>** g02830060

377-5880 INSTALLATION GP-COMMUNICATION–
PRODUCT LINK CELLULAR
S/N: DSH1-UP; DLN1-UP; DJR1-UP
AN ATTACHMENT

SMCS-7606 **i04729509**

NOTE	REF NO	GRAPHIC REF	PART NUMBER	QTY	PART NAME 1 2 3 4 5 6 (PRODUCT LEVEL)	SEE PAGE
	1	1	**8C-5608**	4	SPACER (6.5X9.5X25.4-MM THK)	
	2	1	**230-1340**	1	FILM-WARNING (PRODUCT LINK RADIO, U.S.)	
	3	1	**306-0177**	1	BRACKET	
	4	1	**307-0047**	1	FILM-INFORMATION (PRODUCT LINK, READ OMM)	
	5	1	**320-5898**	1	HARNESS AS-WIRING	
		1	**8T-8737**	64	PLUG-SEAL	
		1	**9X-6772**	2	STRAP-CABLE	
E		1	**114-8844**		SLEEVE-PLASTIC (40-CM)	
		1	**9X-3402**	26	SOCKET-CONNECTOR (16-GA TO 18-GA)	
					–OR–	
		1	**126-1768**	26	SOCKET-CONNECTOR (14-GA TO 16-GA)	
		1	**126-1774**	1	COVER-CONNECTOR	
		1	**155-2255**		KIT-CONNECTING PLUG (12-PIN)	
		1	**155-2265**	1	KIT-CONNECTING PLUG (8-PIN)	
					(EACH PLUG KIT INCLUDES PLUG AS, WEDGE & INTERFACE SEAL)	
		1	**160-7690**	1	PLUG AS-CONNECTOR (70-PIN)	
		1	**159-9322**	1	SEAL-O-RING	
	6	1	**346-9376**	1	ANTENNA AS (50-CM)	
		1	**355-1213**	1	PLUG	
		1	**361-1045**	1	NUT-SPECIAL (5/8-18-THD)	
Y	7	1	*376-6478*	1	CONTROL GP-COMMUNICATION (PRODUCT LINK CELLULAR)	153
	8	1	**354-0703**	1	CABLE AS-COAXIAL	
	9	1	**129-8331**	1	PLATE AS	
	10	1	**4H-2558**	1	GROMMET	
	11	1	**7K-1181**	15	STRAP-CABLE	
	12	1	**7X-0365**	2	BOLT (3/4-10X1.5-IN)	
M	13	1	**8C-8451**	4	BOLT (M6X1X40-MM)	
	14	1	**7X-7729**	2	WASHER (11X25X3-MM THK)	
	15	1	**8C-5607**	8	MOUNT-ISOLATION	
M	16	1	**8T-4136**	2	BOLT (M10X1.5X25-MM)	
	17	1	**8T-4994**	2	WASHER-HARD (20X36.5X3.5-MM THK)	
	18	1	**9D-3769**	2	GROMMET	
	19	1	**9X-6165**	4	WASHER (6.5X22X2.5-MM THK)	

E-ORDER BY THE CENTIMETER
M-METRIC PART
Y-SEPARATE ILLUSTRATION

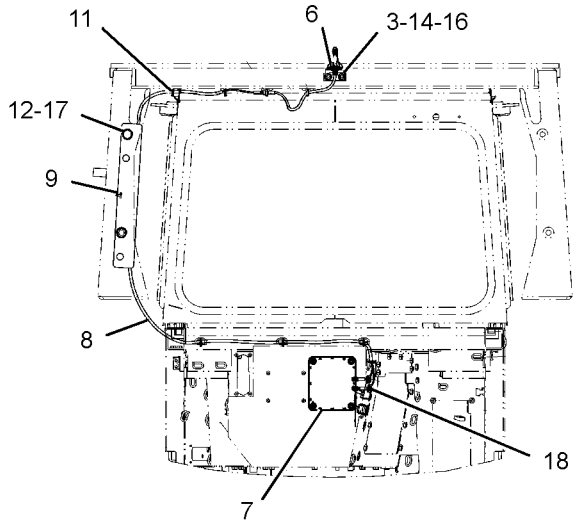

REAR VIEW

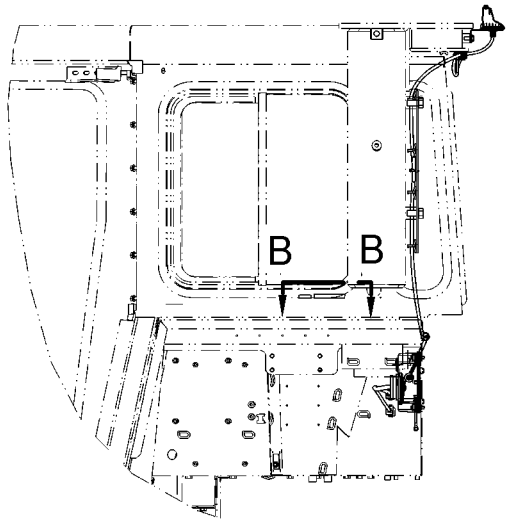

LEFT SIDE VIEW

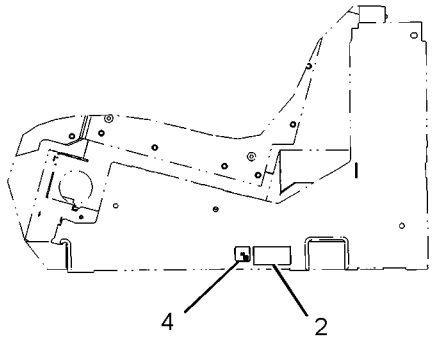

VIEW B-B

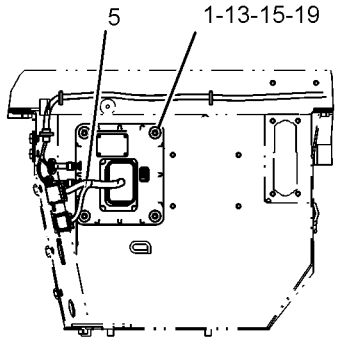

VIEW A-A

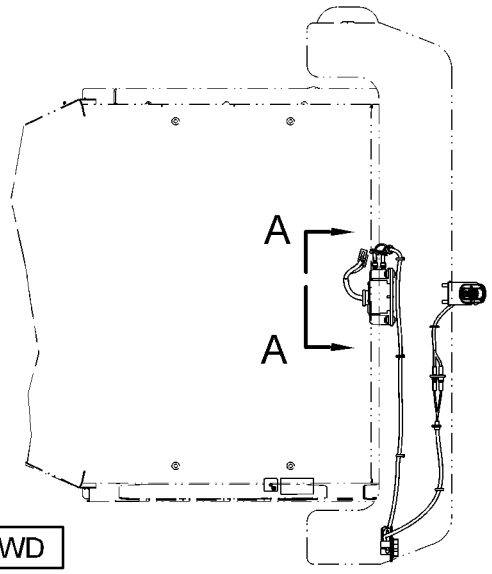

TOP VIEW

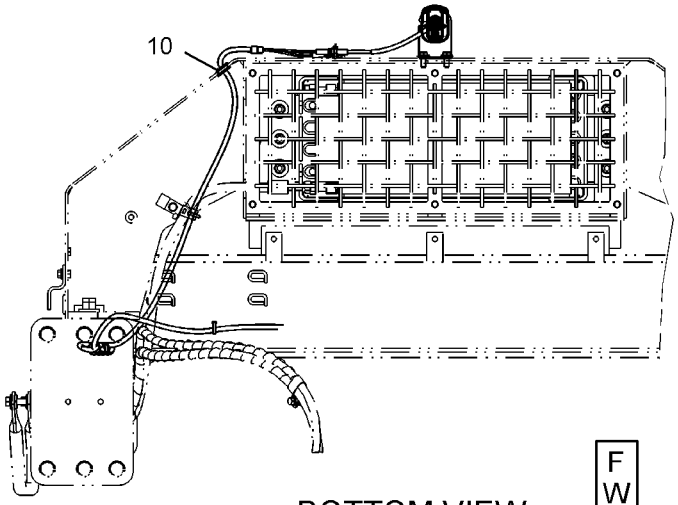

BOTTOM VIEW

GRAPHIC #1 **<END>** g02843537

377-5881 INSTALLATION GP-COMMUNICATION–
PRODUCT LINK 321SR
S/N: DSH1-UP; DLN1-UP; DJR1-UP
AN ATTACHMENT

SMCS-7606 **i04729589**

NOTE	REF NO	GRAPHIC REF	PART NUMBER	QTY	PART NAME 1 2 3 4 5 6 (PRODUCT LEVEL)	SEE PAGE
	1	1	**8C-5607**	8	MOUNT-ISOLATION	
	2	1	**8C-5608**	4	SPACER (6.5X9.5X25.4-MM THK)	
	3	1	**129-8331**	1	PLATE AS	
	4	1	**230-1340**	1	FILM-WARNING (PRODUCT LINK RADIO, U.S.)	
	5	1	**284-8532**	1	ANTENNA AS	
		1	**301-0589**	1	ANTENNA (FLEXIBLE)	
		1	**355-0598**	1	NUT-SPECIAL	
	6	1	**306-0177**	1	BRACKET	
	7	1	**307-0047**	1	FILM-INFORMATION (PRODUCT LINK, READ OMM)	
	8	1	**320-5898**	1	HARNESS AS-WIRING	
		1	**8T-8737**	64	PLUG-SEAL	
		1	**9X-6772**	2	STRAP-CABLE	
E		1	**114-8844**		SLEEVE-PLASTIC (40-CM)	
		1	**9X-3402**	26	SOCKET-CONNECTOR (16-GA TO 18-GA)	
					–OR–	
		1	**126-1768**	26	SOCKET-CONNECTOR (14-GA TO 16-GA)	
		1	**126-1774**	1	COVER-CONNECTOR	
		1	**155-2255**		KIT-CONNECTING PLUG (12-PIN)	
		1	**155-2265**	1	KIT-CONNECTING PLUG (8-PIN)	
					(EACH PLUG KIT INCLUDES PLUG AS, WEDGE & INTERFACE SEAL)	
		1	**160-7690**	1	PLUG AS-CONNECTOR (70-PIN)	
		1	**159-9322**	1	SEAL-O-RING	
Y	9	1	*344-3393*	1	CONTROL GP-COMMUNICATION (PRODUCT LINK 321SR)	150
	10	1	**4H-2558**	1	GROMMET	
	11	1	**7K-1181**	13	STRAP-CABLE	
	12	1	**7X-0365**	2	BOLT (3/4-10X1.5-IN)	
	13	1	**7X-7729**	2	WASHER (11X25X3-MM THK)	
M	14	1	**8C-8451**	4	BOLT (M6X1X40-MM)	
M	15	1	**8T-4136**	2	BOLT (M10X1.5X25-MM)	
M	16	1	**8T-4181**	4	BOLT (M6X1X20-MM)	
	17	1	**8T-4994**	2	WASHER-HARD (20X36.5X3.5-MM THK)	
	18	1	**9X-6165**	4	WASHER (6.5X22X2.5-MM THK)	
	19	1	**9X-8256**	4	WASHER (6.6X12X2-MM THK)	
	20	1	**4P-7581**	4	CLIP	

E-ORDER BY THE CENTIMETER
M-METRIC PART
Y-SEPARATE ILLUSTRATION

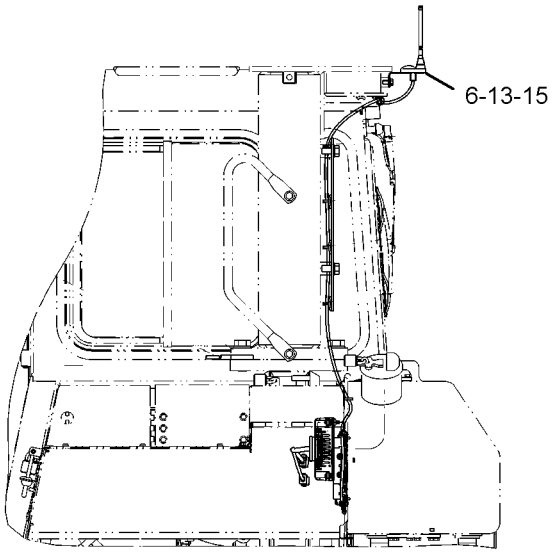

LEFT SIDE VIEW

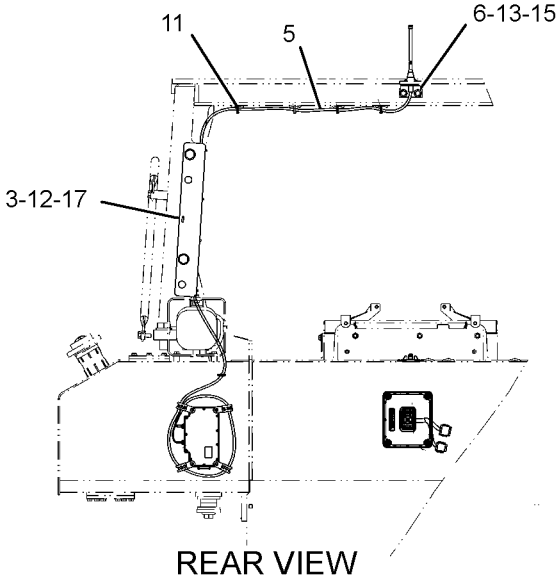

REAR VIEW

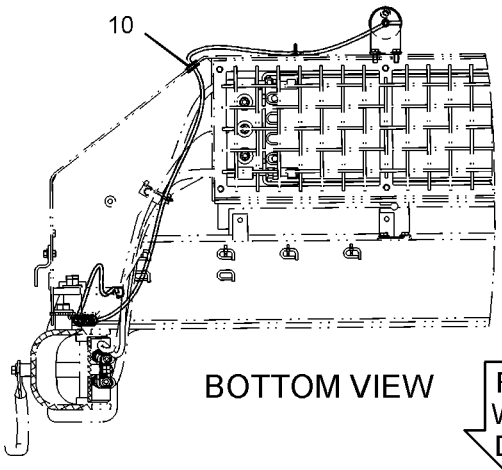

BOTTOM VIEW

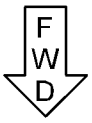

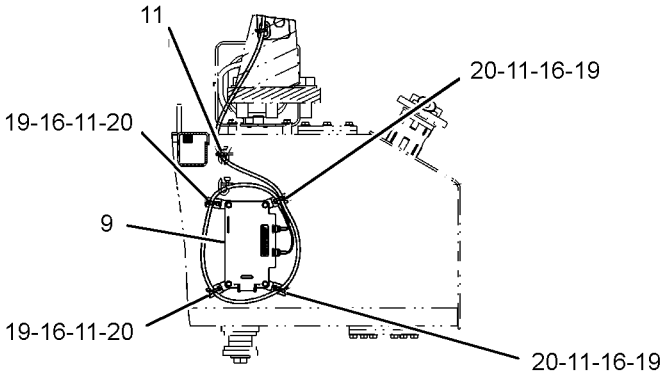

SECTION A-A

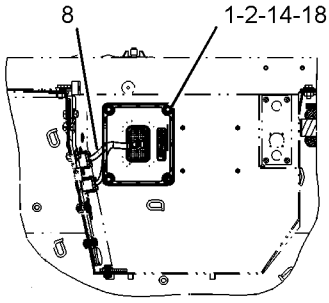

SECTION B-B

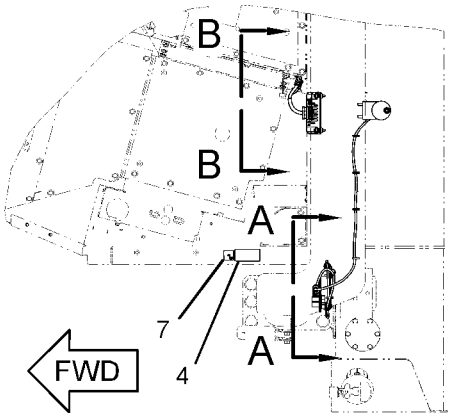

TOP VIEW

GRAPHIC #1 **<END>** g02849272

390-7292 INSTALLATION GP-COMMUNICATION–
PRODUCT LINK CELLULAR, CHINA
S/N: DSH1-UP; DLN1-UP; DJR1-UP
AN ATTACHMENT

SMCS-7606 **i04733729**

NOTE	REF NO	GRAPHIC REF	PART NUMBER	QTY	PART NAME 1 2 3 4 5 6 (PRODUCT LEVEL)	SEE PAGE
	1	1	**8C-5608**	4	SPACER (6.5X9.5X25.4-MM THK)	
	2	1	**230-1340**	1	FILM-WARNING (PRODUCT LINK RADIO, U.S.)	
	3	1	**306-0177**	1	BRACKET	
	4	1	**307-0047**	1	FILM-INFORMATION (PRODUCT LINK, READ OMM)	
	5	1	**354-0703**	1	CABLE AS-COAXIAL	
Y	6	1	*376-4616*	1	CONTROL GP-COMMUNICATION (PRODUCT LINK CELLULAR, CHINA)	153
	7	1	**129-8331**	1	PLATE AS	
	8	1	**320-5898**	1	HARNESS AS-WIRING (PRODUCT LINK)	
		1	**8T-8737**	64	PLUG-SEAL	
		1	**9X-6772**	2	STRAP-CABLE	
		1	**9X-3402**	26	SOCKET-CONNECTOR (16-GA TO 18-GA)	
					–OR–	
		1	**126-1768**	26	SOCKET-CONNECTOR (14-GA TO 16-GA)	
		1	**126-1774**	1	COVER-CONNECTOR	
		1	**155-2255**	1	KIT-CONNECTING PLUG (12-PIN)	
		1	**155-2265**	1	KIT-CONNECTING PLUG (8-PIN)	
					(EACH PLUG KIT INCLUDES PLUG AS, WEDGE & INTERFACE SEAL)	
		1	**160-7690**	1	PLUG AS-CONNECTOR (70-PIN)	
		1	**159-9322**	1	SEAL-O-RING	
	9	1	**346-9376**	1	ANTENNA AS (50-CM) (PRODUCT LINK)	
		1	**355-1213**	1	PLUG	
		1	**361-1045**	1	NUT-SPECIAL (5/8-18-THD)	
	10	2	**4H-2558**	1	GROMMET	
	11	1	**7K-1181**	14	STRAP-CABLE	
	12	1	**7X-0365**	2	BOLT (3/4-10X1.5-IN)	
	13	1	**7X-7729**	2	WASHER (11X25X3-MM THK)	
	14	1	**8C-5607**	8	MOUNT-ISOLATION	
M	15	1	**8C-8451**	4	BOLT (M6X1X40-MM)	
M	16	1	**8T-4136**	2	BOLT (M10X1.5X25-MM)	
	17	1	**8T-4994**	2	WASHER-HARD (20X36.5X3.5-MM THK)	
	18	1	**9D-3769**	2	GROMMET	
	19	1	**9X-6165**	4	WASHER (6.5X22X2.5-MM THK)	

M-METRIC PART
Y-SEPARATE ILLUSTRATION

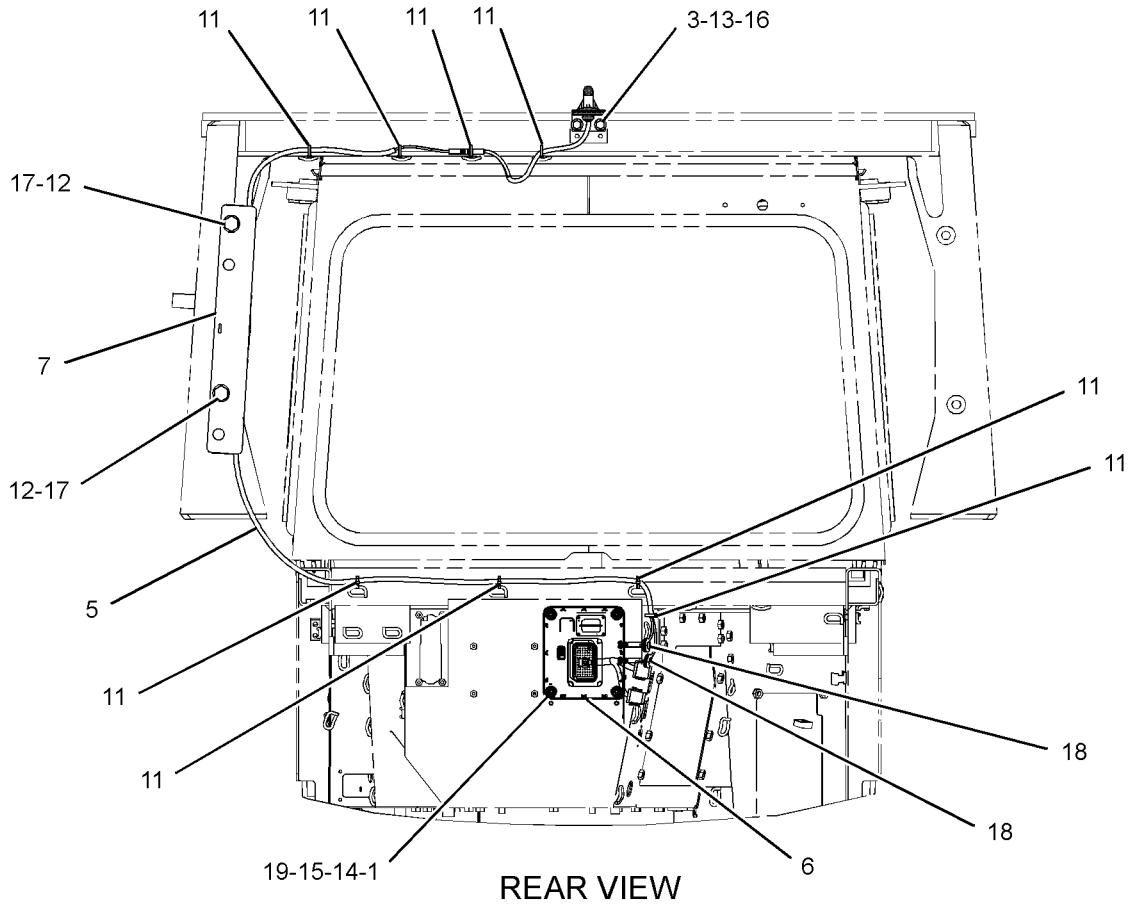

REAR VIEW

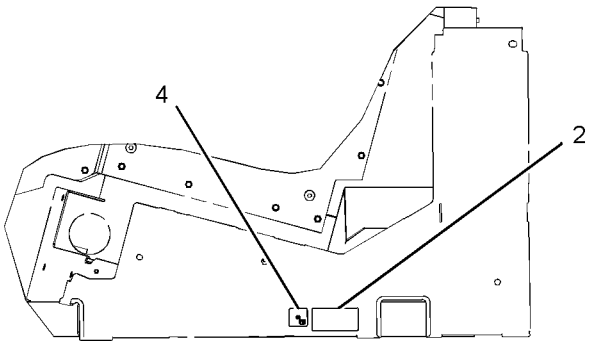

VIEW OF A-A

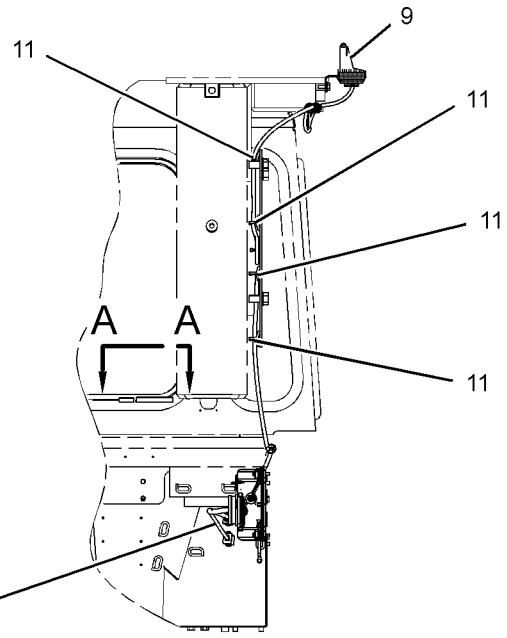

LEFT SIDE VIEW

REFER TO ALL ILLUSTRATIONS OF
THIS GROUP FOR AUXILIARY VIEWS

GRAPHIC #1

g02849308

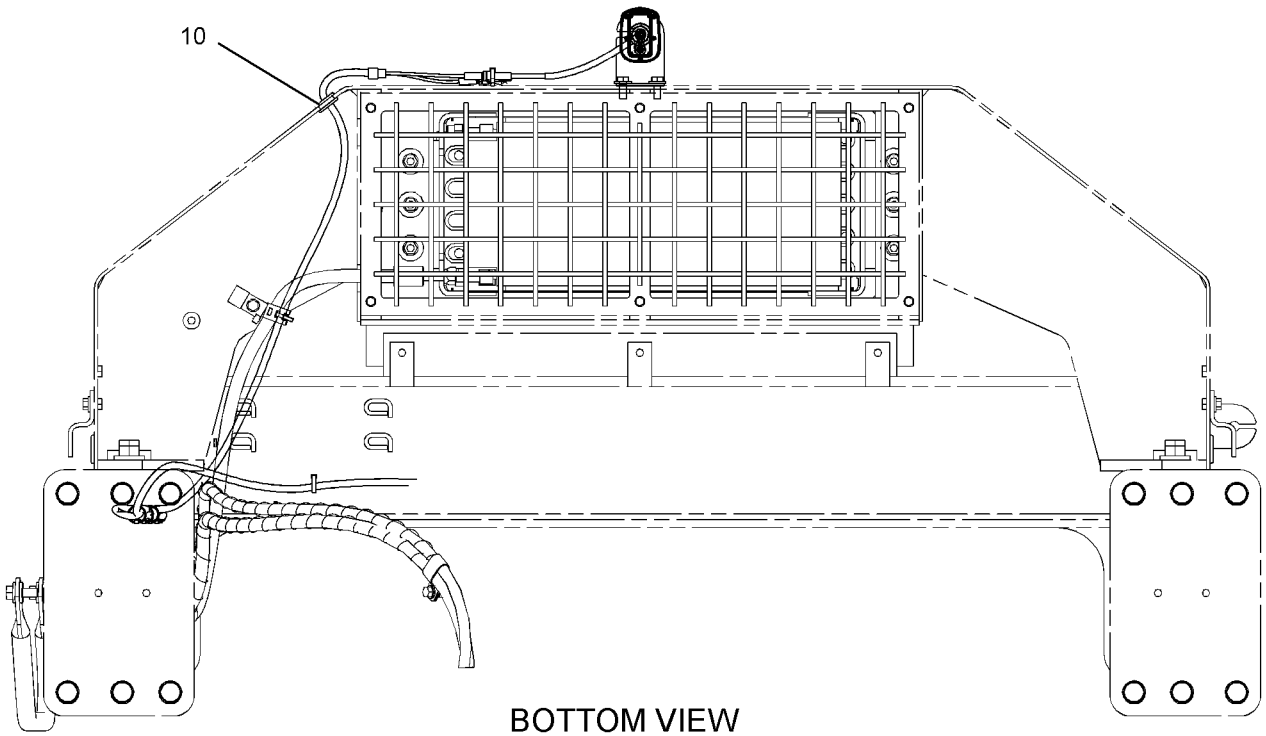

BOTTOM VIEW
(WITH ENCLOSED ROPS)

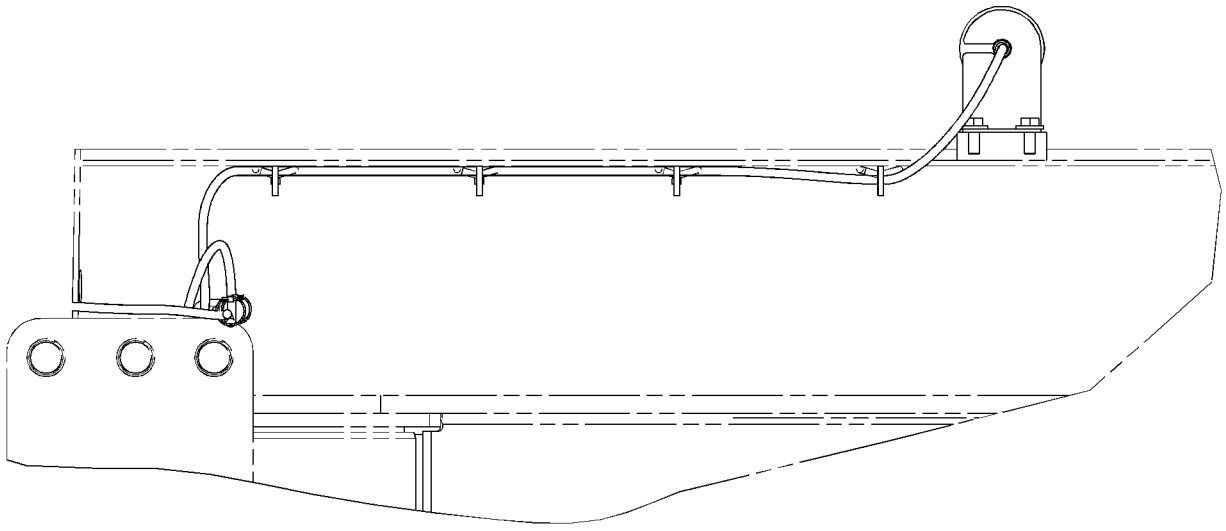

AUXILIARY BOTTOM VIEW
(WITH CANOPY)

GRAPHIC #2 **<END>** g02850224

3E-6389 LAMP GP-DOME

S/N: DSH1-UP; DLN1-UP; DJR1-UP
24-VOLT
PART OF 317-6561 LINER GP-CAB
ALSO AN ATTACHMENT

SMCS-1433 **i03994914**

NOTE	REF NO	GRAPHIC REF	PART NUMBER	QTY	PART NAME 1 2 3 4 5 6 (PRODUCT LEVEL)	SEE PAGE
	1	1	**7N-9943**	1	LAMP (24-VOLT)	
	2	1	**102-8803**	1	KIT-RECEPTACLE (3-PIN)	
					(INCLUDES RECEPTACLE AS & WEDGE)	
	3	1	**186-3735**	3	PIN-CONNECTOR (16-GA TO 18-GA)	
	4	1	**7T-0020**	1	LENS-DOME LAMP	

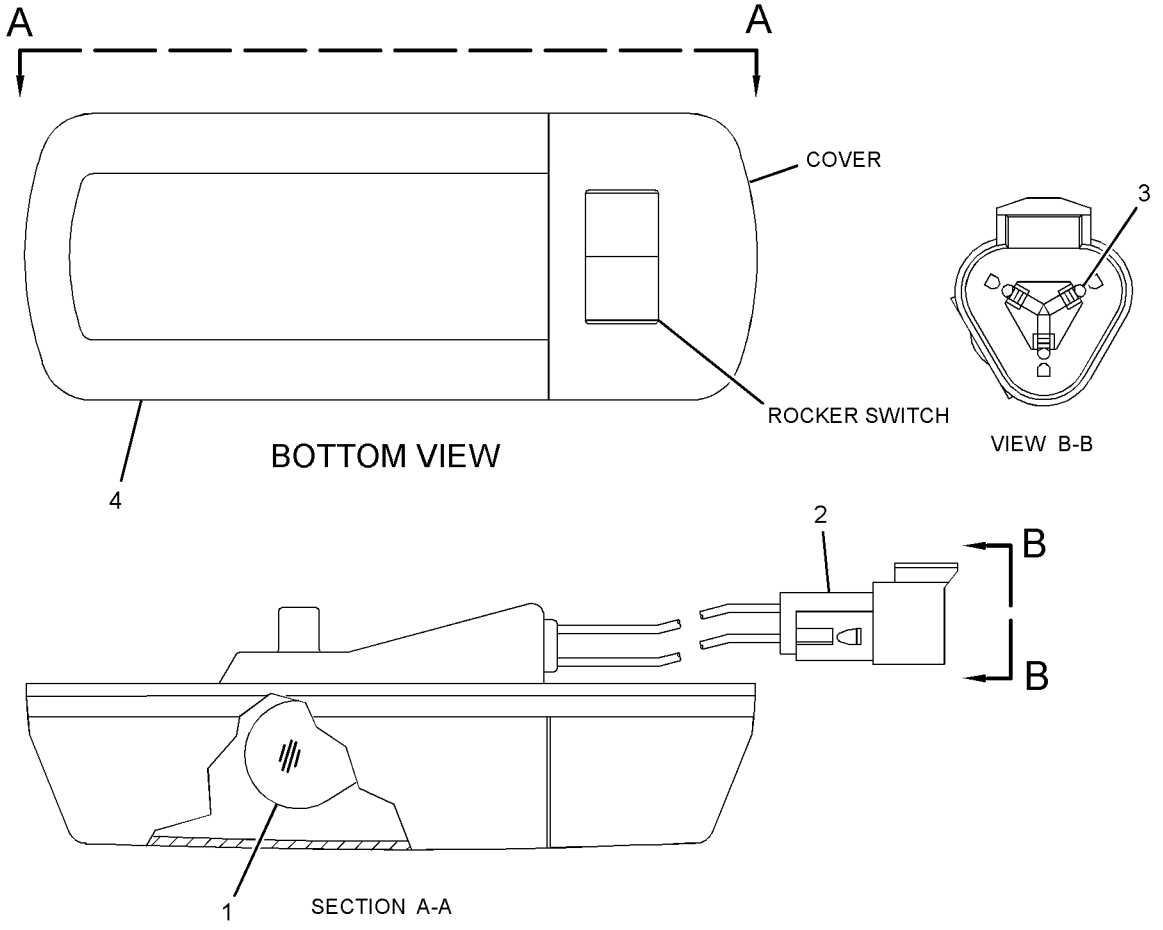

GRAPHIC #1 **<END>** g01428127

254-8155 LAMP GP-FLOOD

S/N: DSH1-UP; DLN1-UP; DJR1-UP
24-VOLT, 70-WATT
PART OF 327-9903, 374-0785, 375-2980, 375-8135 LIGHTING GP-FLOOD, 380-2511 LIGHTING GP-RIPPER
ALSO AN ATTACHMENT

SMCS-1434 **i04389758**

NOTE	REF NO	GRAPHIC REF	PART NUMBER	QTY	PART NAME 1 2 3 4 5 6 (PRODUCT LEVEL)	SEE PAGE
	1	1	**351-9918**	1	LAMP-HALOGEN (24-VOLT, 70-WATT)	
M	2	1	**8T-4154**	1	BOLT (M8X1.25X35-MM)	
M	3	1	**5C-7261**	1	NUT (M8X1.25-THD)	
	4	1	**8T-4224**	2	WASHER-HARD (8.8X16X2-MM THK)	
	5	1	**9X-4244**	2	SCREW-SPECIAL (M4X1.79X25-MM)	
	6	1	**202-6614**	1	LENS AS	
	7	1	**175-4292**	1	BODY AS	
	8	1	**164-7556**	1	BRACKET (LAMP RETAINING)	
	9	1	**175-4291**	1	BRACKET AS	

M-METRIC PART

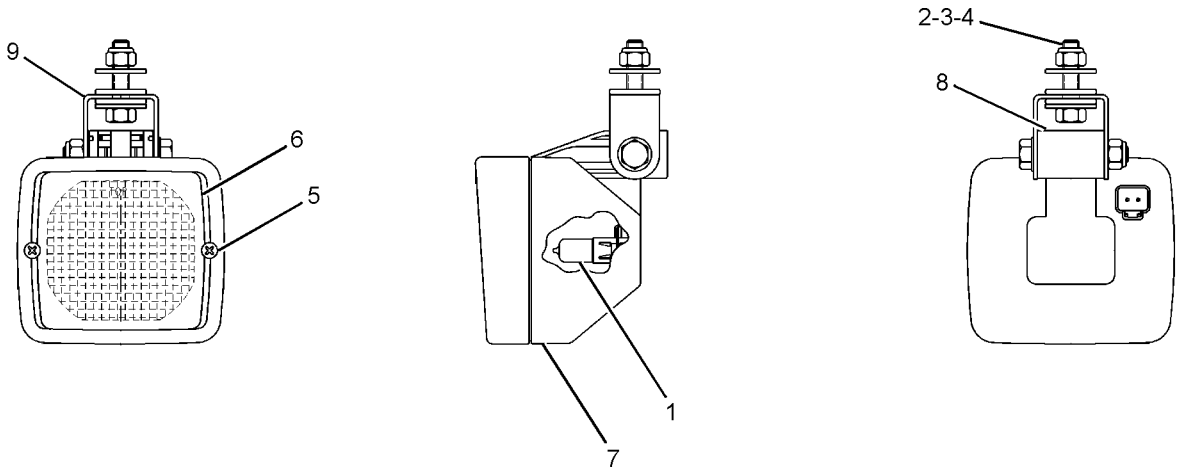

GRAPHIC #1 **<END>** g01205426

327-9903 LIGHTING GP-FLOOD—SWEEPS

S/N: DSH1-UP; DLN1-UP; DJR1-UP
PART OF 378-2602 SWEEP AR
AN ATTACHMENT

SMCS-1434 **i04675229**

NOTE	REF NO	GRAPHIC REF	PART NUMBER	QTY	PART NAME 1 2 3 4 5 6 (PRODUCT LEVEL)	SEE PAGE
	1	1	**9W-4361**	16	MOUNT-FLEXIBLE	
	2	1	**129-8331**	2	PLATE AS	
	3	1	**337-6811**	2	BRACKET	
	4	1	**383-1730**	4	GUARD	
	5	1	**383-1731**	6	GUARD AS-LAMP	
	6	1	**384-0071**	2	GUARD AS-LAMP	
	7	1	**168-8655**	2	HARNESS AS-LIGHTING (FRONT FLOODLIGHTS)	
					(EACH INCLUDES)	
		1	**102-8802**	1	KIT-RECEPTACLE (2-PIN)	
					(INCLUDES RECEPTACLE AS & WEDGE)	
E		1	**114-8843**		SLEEVE-PLASTIC (60-CM)	
E		1	**119-3662**		TUBE-HEAT SHRINK (10.85-MM DIA) (13-CM)	
		1	**126-1767**	2	PIN-CONNECTOR (14-GA TO 16-GA)	
		1	**126-1768**	4	SOCKET-CONNECTOR (14-GA TO 16-GA)	
		1	**155-2270**	2	KIT-CONNECTING PLUG (2-PIN)	
					(EACH INCLUDES PLUG AS, WEDGE & INTERFACE SEAL)	
	8	1	**186-0636**	2	HARNESS AS-LIGHTING (FLOODLIGHTS, REAR)	
					(EACH INCLUDES)	
		1	**102-8804**	1	KIT-RECEPTACLE (4-PIN)	
					(INCLUDES RECEPTACLE AS & WEDGE)	
E		1	**114-8843**		SLEEVE-PLASTIC (60-CM)	
		1	**126-1767**	4	PIN-CONNECTOR (14-GA TO 16-GA)	
		1	**126-1768**	4	SOCKET-CONNECTOR (14-GA TO 16-GA)	
		1	**155-2270**	2	KIT-CONNECTING PLUG (2-PIN)	
					(EACH INCLUDES PLUG AS, WEDGE & INTERFACE SEAL)	
Y	9	1	**254-8155**	8	LAMP GP-FLOOD (24-VOLT) (SWEEP)	169
	10	1	**385-7303**	2	PLATE	
	11	1	**4D-7794**	2	CLIP	
	12	1	**5P-1075**	48	WASHER-HARD (10.2X22.5X3-MM THK)	
	13	1	**6V-8188**	6	NUT (1/2-13-THD)	
	14	1	**6V-8801**	32	NUT (3/8-16-THD)	
	15	1	**7K-1181**	34	STRAP-CABLE	
	16	1	**7X-0365**	4	BOLT (3/4-10X1.5-IN)	
	17	1	**8T-4121**	6	WASHER-HARD (11X21X2.5-MM THK)	
M	18	1	**8T-4136**	16	BOLT (M10X1.5X25-MM)	
M	19	1	**8T-4196**	2	BOLT (M10X1.5X35-MM)	
	20	1	**8T-4223**	12	WASHER-HARD (13.5X25.5X3-MM THK)	
	21	1	**8T-4994**	4	WASHER-HARD (20X36.5X3.5-MM THK)	
	22	1	**8T-8917**	6	BOLT (1/2-13X1.25-IN)	
M	23	1	**6V-5217**	2	BOLT (M8X1.25X20-MM)	
M	24	1	**5C-7261**	2	NUT (M8X1.25-THD)	
	25	1	**8T-4224**	4	WASHER-HARD (8.8X16X2-MM THK)	
	26	1	**4P-7581**	2	CLIP	
	27	1	**6H-4005**	2	GROMMET	
M	28	1	**8T-4137**	4	BOLT (M10X1.5X20-MM)	

E-ORDER BY THE CENTIMETER
M-METRIC PART
Y-SEPARATE ILLUSTRATION

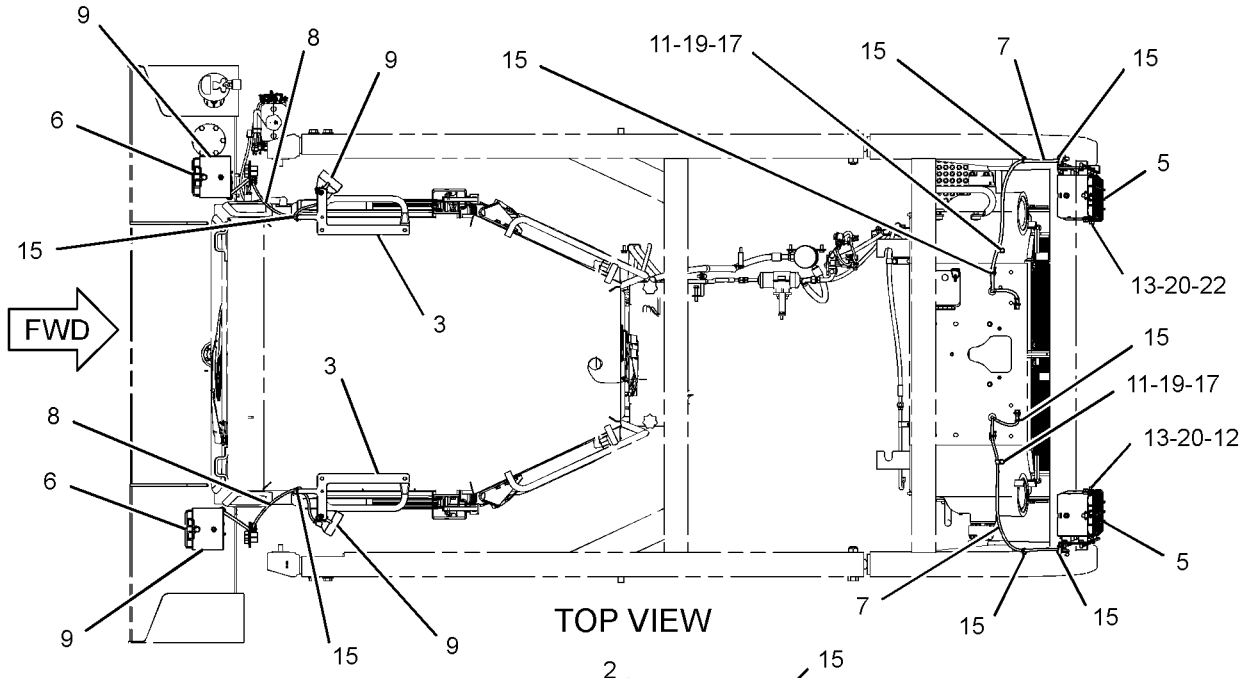

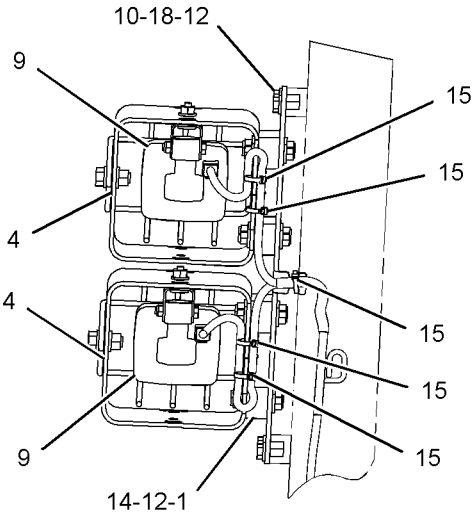

VIEW A-A

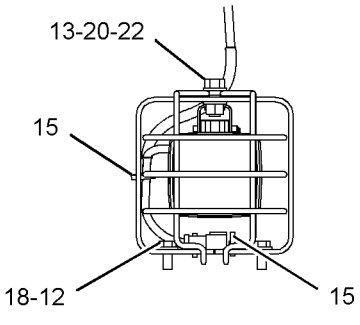

VIEW B-B

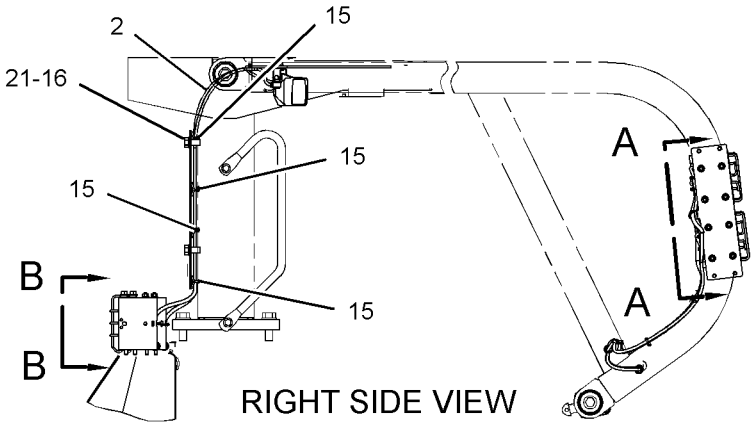

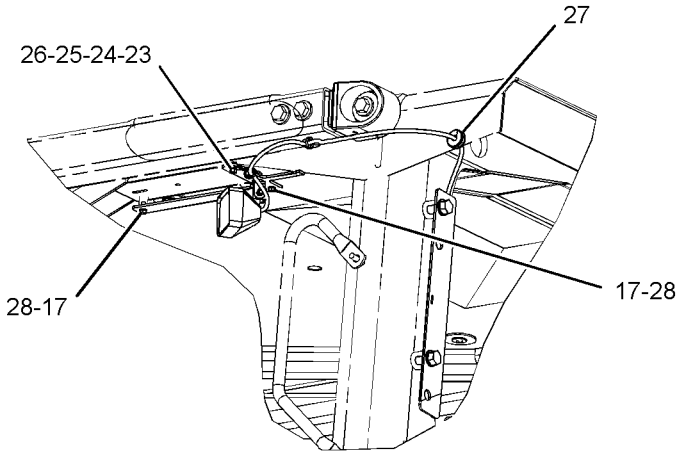

AUXILIARY VIEW
(WITH CANOPY)

GRAPHIC #1 **<END>** g02853060

374-0785 LIGHTING GP-FLOOD—CYLINDER, FUEL TANK

S/N: DSH1-UP; DLN1-UP; DJR1-UP

PART OF 313-3338, 313-3759, 379-6225 CHASSIS AR

SMCS-1434 **i04690269**

NOTE	REF NO	GRAPHIC REF	PART NUMBER	QTY	PART NAME 1 2 3 4 5 6 (PRODUCT LEVEL)	SEE PAGE
	1	1	**9W-4361**	8	MOUNT-FLEXIBLE	
	2	1	**195-4989**	2	HARNESS AS-LIGHTING (FLOODLIGHT)	
					(EACH INCLUDES)	
		1	**102-8804**	1	KIT-RECEPTACLE (4-PIN)	
					(INCLUDES RECEPTACLE AS & WEDGE)	
		1	**8T-8737**	2	PLUG-SEAL	
		1	**126-1767**	2	PIN-CONNECTOR (14-GA TO 16-GA)	
		1	**126-1768**	2	SOCKET-CONNECTOR (14-GA TO 16-GA)	
		1	**155-2270**	1	KIT-CONNECTING PLUG (2-PIN)	
					(INCLUDES PLUG AS, WEDGE & INTERFACE SEAL)	
	3	1	**384-0071**	4	GUARD AS-LAMP	
	4	1	**385-7302**	2	HARNESS AS-LIGHTING (CYLINDER)	
					(EACH INCLUDES)	
		1	**102-8802**	1	KIT-RECEPTACLE (2-PIN)	
					(INCLUDES RECEPTACLE AS & WEDGE)	
E		1	**114-8843**		SLEEVE-PLASTIC (40-CM)	
		1	**126-1767**	2	PIN-CONNECTOR (14-GA TO 16-GA)	
		1	**126-1768**	2	SOCKET-CONNECTOR (14-GA TO 16-GA)	
		1	**155-2270**	1	KIT-CONNECTING PLUG (2-PIN)	
					(INCLUDES PLUG AS, WEDGE & INTERFACE SEAL)	
	5	1	**132-5789**	2	CLIP	
Y	6	1	**254-8155**	4	LAMP GP-FLOOD (24-VOLT) (CYLINDER, FUEL TANK)	169
	7	1	**5P-1075**	24	WASHER-HARD (10.2X22.5X3-MM THK)	
	8	1	**5P-8522**	2	GROMMET	
	9	1	**5P-9085**	6	CLIP	
	10	1	**6K-4934**	4	CLIP (SLOT)	
	11	1	**6K-4935**	4	CLIP (TAB)	
	12	1	**6V-8801**	16	NUT (3/8-16-THD)	
	13	1	**7K-1181**	14	STRAP-CABLE	
	14	1	**8T-4121**	14	WASHER-HARD (11X21X2.5-MM THK)	
M	15	1	**8T-4133**	6	NUT (M10X1.5-THD)	
M	16	1	**8T-4136**	14	BOLT (M10X1.5X25-MM)	
M	17	1	**8T-4196**	2	BOLT (M10X1.5X35-MM)	

E-ORDER BY THE CENTIMETER
M-METRIC PART
Y-SEPARATE ILLUSTRATION

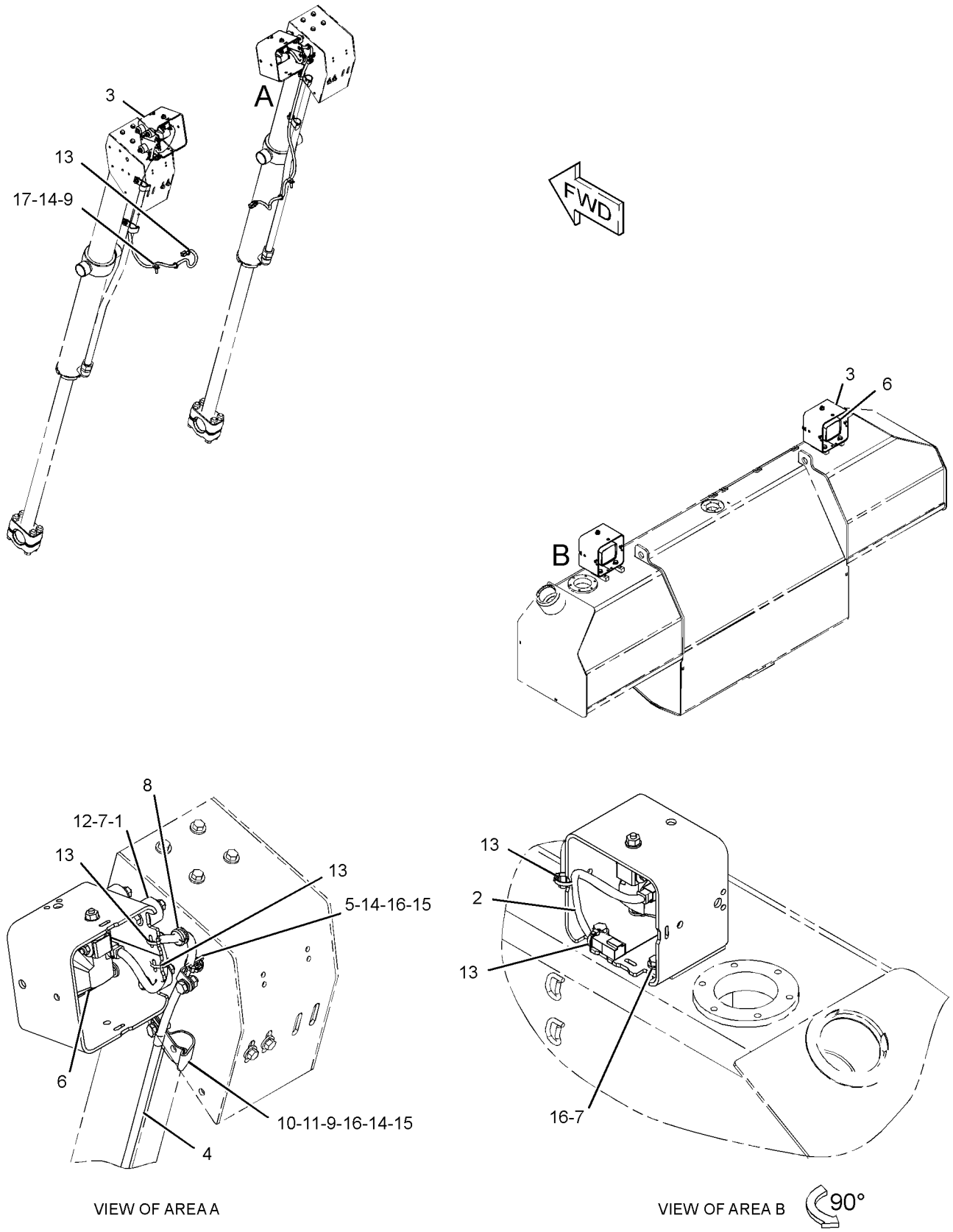

GRAPHIC #1 **<END>** g02833636

375-2980 LIGHTING GP-FLOOD—ROPS, FUEL TANK, CYLINDER

S/N: DSH1-UP; DLN1-UP; DJR1-UP
PART OF 378-2273 STOCKPILE AR
AN ATTACHMENT

SMCS-1434 **i04672389**

NOTE	REF NO	GRAPHIC REF	PART NUMBER	QTY	PART NAME 1 2 3 4 5 6 (PRODUCT LEVEL)	SEE PAGE
	1	1	**9W-4361**	16	MOUNT-FLEXIBLE	
	2	1	**129-8331**	2	PLATE AS	
	3	1	**175-0451**	2	HARNESS AS-LIGHTING (REAR)	
					(EACH INCLUDES)	
		1	**102-8804**	1	KIT-RECEPTACLE (4-PIN)	
					(INCLUDES RECEPTACLE AS & WEDGE)	
E		1	**114-8843**		SLEEVE-PLASTIC (80-CM)	
E		1	**119-3662**		TUBE-HEAT SHRINK (10.85-MM DIA) (13-CM)	
		1	**126-1767**	4	PIN-CONNECTOR (14-GA TO 16-GA)	
		1	**126-1768**	6	SOCKET-CONNECTOR (14-GA TO 16-GA)	
		1	**155-2270**	3	KIT-CONNECTING PLUG (2-PIN)	
					(EACH INCLUDES PLUG AS, WEDGE & INTERFACE SEAL)	
	4	1	**189-5368**	2	HARNESS AS-LIGHTING (FRONT)	
					(EACH INCLUDES)	
		1	**102-8802**	1	KIT-RECEPTACLE (2-PIN)	
					(INCLUDES RECEPTACLE AS & WEDGE)	
E		1	**114-8843**		SLEEVE-PLASTIC (60-CM)	
E		1	**119-3662**		TUBE-HEAT SHRINK (10.85-MM DIA) (13-CM)	
		1	**126-1767**	2	PIN-CONNECTOR (14-GA TO 16-GA)	
		1	**126-1768**	4	SOCKET-CONNECTOR (14-GA TO 16-GA)	
		1	**155-2270**	2	KIT-CONNECTING PLUG (2-PIN)	
					(EACH INCLUDES PLUG AS, WEDGE & INTERFACE SEAL)	
	5	1	**375-9270**	1	PLATE	
	6	1	**375-9271**	1	PLATE	
	7	1	**384-0071**	2	GUARD AS-LAMP	
	8	1	**384-0072**	1	BRACKET AS	
	9	1	**384-0073**	1	BRACKET AS	
	10	1	**387-4661**	2	GUARD AS-LAMP	
Y	11	1	**254-8155**	6	LAMP GP-FLOOD (24-VOLT) (ROPS, FUEL TANK, CYLINDER)	169
	12	1	**4D-7794**	8	CLIP	
	13	1	**4P-7581**	2	CLIP	
	14	1	**5P-1075**	32	WASHER-HARD (10.2X22.5X3-MM THK)	
	15	1	**5P-8522**	2	GROMMET	
	16	1	**5S-7379**	4	BOLT (3/8-16X0.875-IN)	
	17	1	**6H-4005**	2	GROMMET	
	18	1	**6K-4934**	4	CLIP (SLOT)	
	19	1	**6K-4935**	4	CLIP (TAB)	
	20	1	**6V-8801**	32	NUT (3/8-16-THD)	
	21	1	**7K-1181**	30	STRAP-CABLE	
	22	1	**7X-0365**	4	BOLT (3/4-10X1.5-IN)	
	23	1	**8T-4121**	14	WASHER-HARD (11X21X2.5-MM THK)	
M	24	1	**8T-4133**	6	NUT (M10X1.5-THD)	
M	25	1	**8T-4136**	6	BOLT (M10X1.5X25-MM)	
M	26	1	**8T-4196**	2	BOLT (M10X1.5X35-MM)	
	27	1	**8T-4896**	4	WASHER-HARD (10.2X18.5X2.5-MM THK)	
	28	1	**8T-4994**	6	WASHER-HARD (20X36.5X3.5-MM THK)	
	29	1	**8T-9399**	2	BOLT (3/4-10X2.25-IN)	

E-ORDER BY THE CENTIMETER
M-METRIC PART
Y-SEPARATE ILLUSTRATION

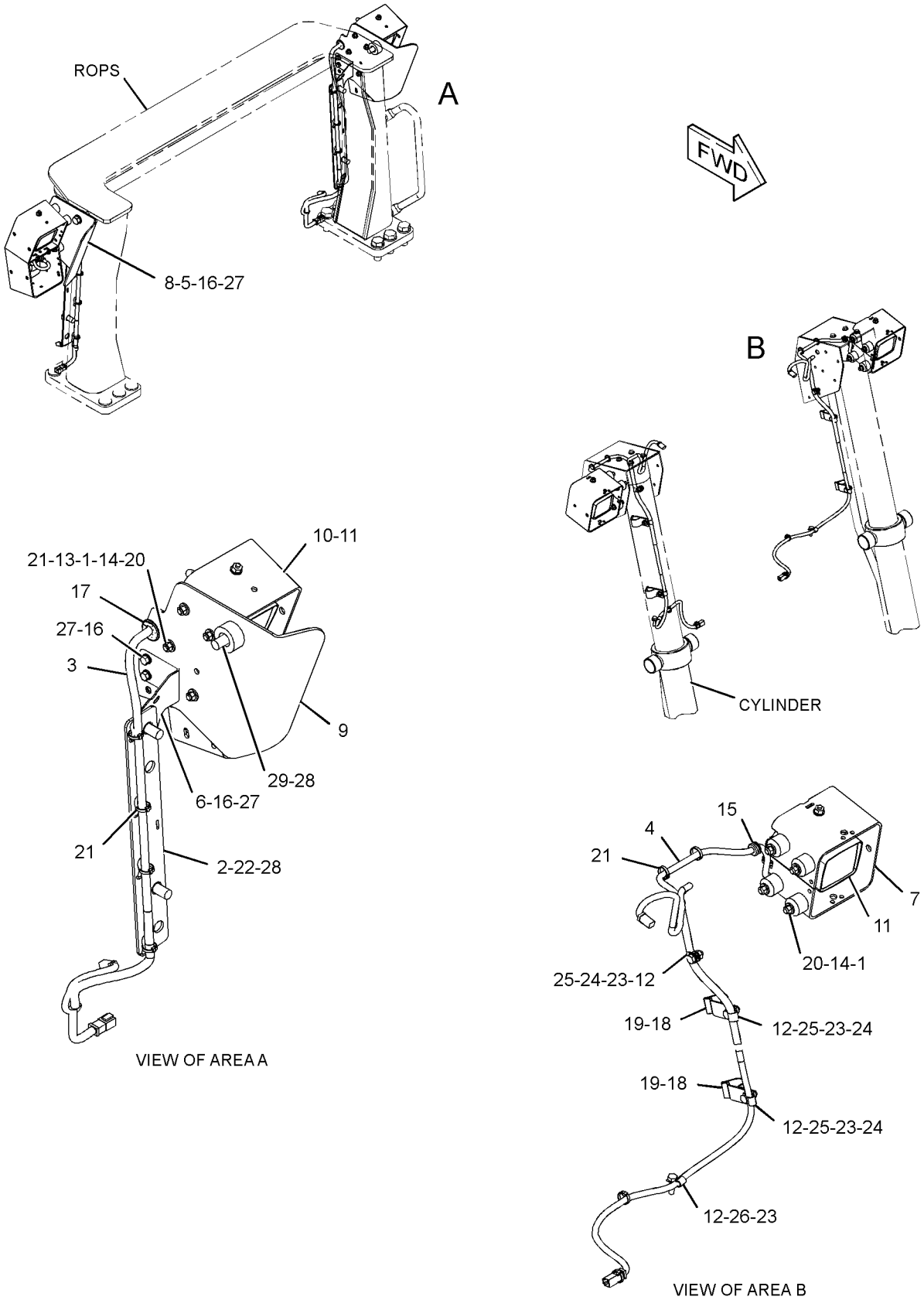

GRAPHIC #1 **<END>** g02831341

ELECTRICAL AND STARTING SYSTEM

375-8135 LIGHTING GP-FLOOD—ROPS

S/N: DSH1-UP; DLN1-UP; DJR1-UP

AN ATTACHMENT

SMCS-1434 **i04769356**

NOTE	REF NO	GRAPHIC REF	PART NUMBER	QTY	PART NAME 1 2 3 4 5 6 (PRODUCT LEVEL)	SEE PAGE
	1	1	**9W-4361**	8	MOUNT-FLEXIBLE	
	2	1	**129-8331**	2	PLATE AS	
	3	1	**185-9607**	2	HARNESS AS-LIGHTING	
					(EACH INCLUDES)	
		1	**102-8804**	1	KIT-RECEPTACLE (4-PIN)	
					(INCLUDES RECEPTACLE AS & WEDGE)	
		1	**126-1767**	4	PIN-CONNECTOR (14-GA TO 16-GA)	
		1	**126-1768**	4	SOCKET-CONNECTOR (14-GA TO 16-GA)	
		1	**155-2270**	2	KIT-CONNECTING PLUG (2-PIN)	
					(EACH INCLUDES PLUG AS, WEDGE & INTERFACE SEAL)	
	4	1	**375-9270**	1	PLATE (RH)	
	5	1	**375-9271**	1	PLATE (LH)	
	6	1	**383-1730**	2	GUARD	
	7	1	**384-0072**	1	BRACKET AS (RH)	
	8	1	**384-0073**	1	BRACKET AS (LH)	
Y	9	1	**254-8155**	2	LAMP GP-FLOOD (24-VOLT) (ROPS)	169
	10	1	**5P-1075**	20	WASHER-HARD (10.2X22.5X3-MM THK)	
	11	1	**5S-7379**	4	BOLT (3/8-16X0.875-IN)	
	12	1	**6H-4005**	2	GROMMET	
	13	1	**6V-8801**	16	NUT (3/8-16-THD)	
	14	1	**7K-1181**	12	STRAP-CABLE	
	15	1	**7X-0365**	4	BOLT (3/4-10X1.5-IN)	
	16	1	**8T-4994**	6	WASHER-HARD (20X36.5X3.5-MM THK)	
	17	1	**8T-9399**	2	BOLT (3/4-10X2.25-IN)	

Y-SEPARATE ILLUSTRATION

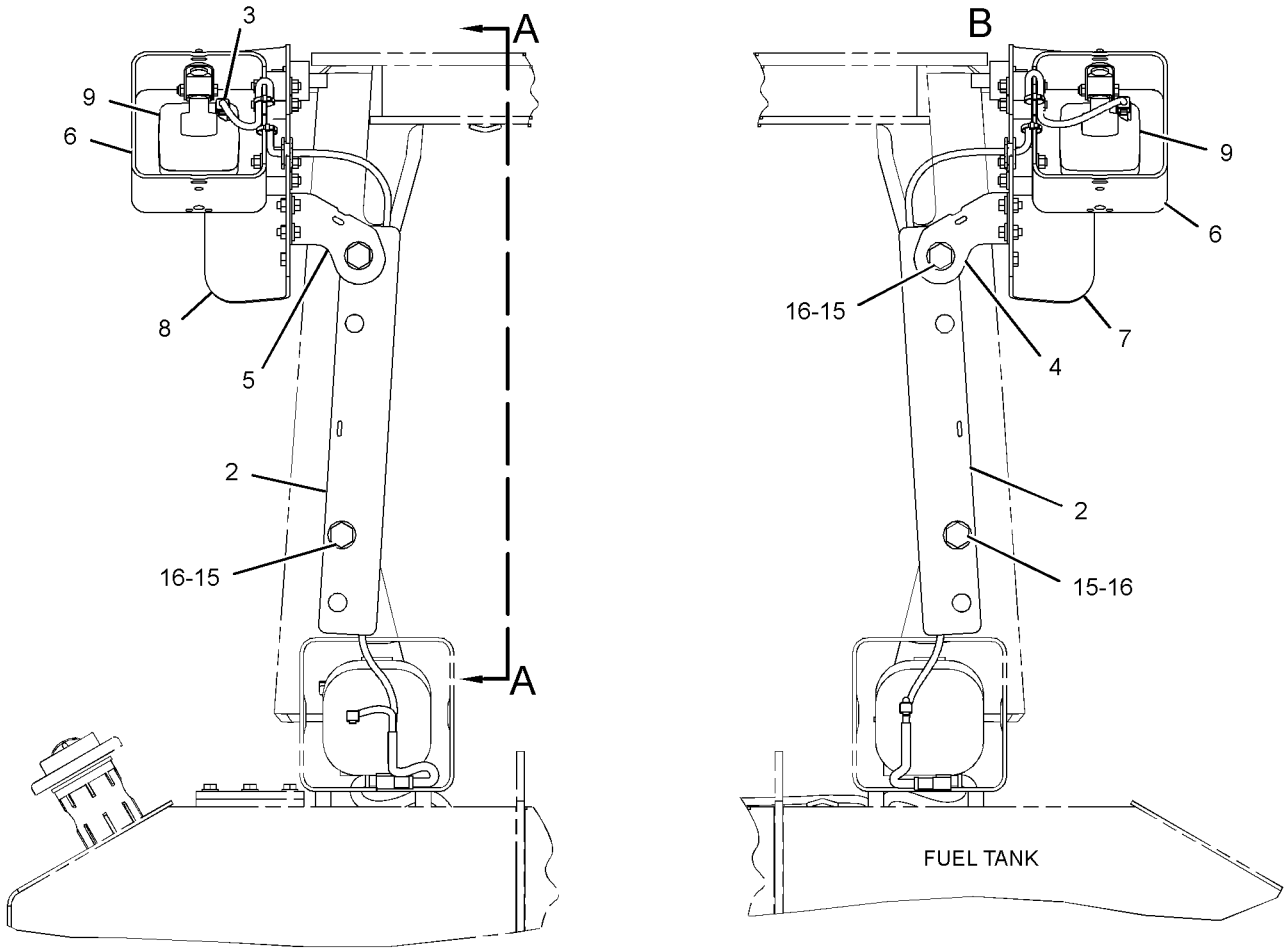

REAR VIEW

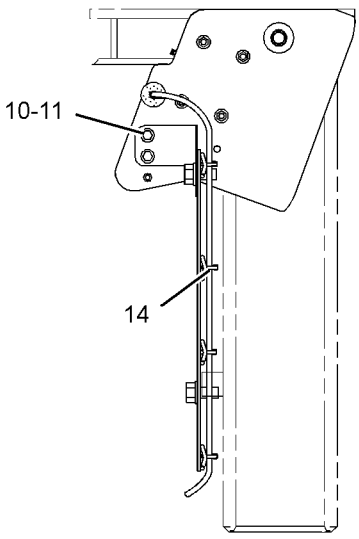

VIEW A-A

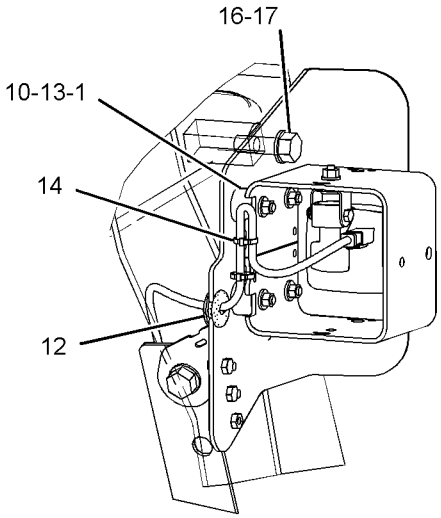

VIEW OF AREA B

GRAPHIC #1 **<END>** g02830398

380-2511 LIGHTING GP-RIPPER

S/N: DSH1-UP; DLN1-UP; DJR1-UP
PART OF 379-7862 CONTROL AR-HYDRAULIC
AN ATTACHMENT

SMCS-1429 **i04729869**

NOTE	REF NO	GRAPHIC REF	PART NUMBER	QTY	PART NAME 1 2 3 4 5 6 (PRODUCT LEVEL)	SEE PAGE
	1	1	**290-2612**	1	HARNESS AS-LIGHTING	
		1	**102-8802**	1	KIT-RECEPTACLE (2-PIN)	
E		1	**114-8843**		SLEEVE-PLASTIC (40-CM)	
		1	**9X-3402**	2	SOCKET-CONNECTOR (16-GA TO 18-GA)	
					—OR—	
		1	**126-1768**	2	SOCKET-CONNECTOR (14-GA TO 16-GA)	
		1	**9X-3401**	2	PIN-CONNECTOR (16-GA TO 18-GA)	
					—OR—	
		1	**126-1767**	2	PIN-CONNECTOR (14-GA TO 16-GA)	
		1	**155-2270**	1	KIT-CONNECTING PLUG (2-PIN)	
	2	1	**386-9830**	1	BRACKET	
Y	3	1	**254-8155**	1	LAMP GP-FLOOD (24-VOLT)	169
M	4	1	**3T-0852**	1	LOCKNUT (M8X1.25-THD)	
	5	1	**4P-8134**	2	CLIP	
	6	1	**7K-1181**	3	STRAP-CABLE	
	7	1	**8T-4121**	1	WASHER-HARD (11X21X2.5-MM THK)	
M	8	1	**8T-4137**	1	BOLT (M10X1.5X20-MM)	
M	9	1	**8T-6912**	1	BOLT (M8X1.25X50-MM)	

E-ORDER BY THE CENTIMETER
M-METRIC PART
Y-SEPARATE ILLUSTRATION

380-2511 **LIGHTING GP-RIPPER** ***(contd.)*** **i04729869**

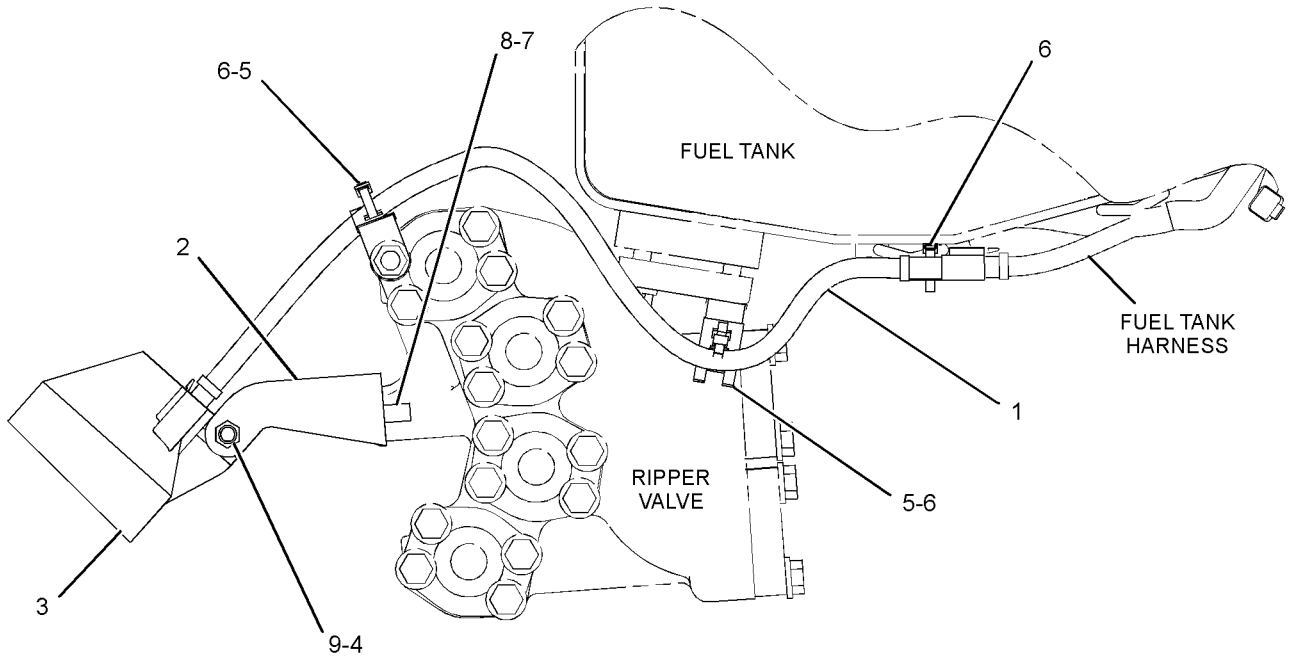

RIGHT SIDE VIEW

GRAPHIC #1 **<END>** g02848959

317-6579 MOUNTING GP-GRADE CONTROL

S/N: DSH1-UP; DLN1-UP; DJR1-UP
PART OF 317-6580 GRADE CONTROL GP
AN ATTACHMENT

SMCS-7220 **i04000859**

NOTE	REF NO	GRAPHIC REF	PART NUMBER	QTY	PART NAME 1 2 3 4 5 6 (PRODUCT LEVEL)	SEE PAGE
	1	1	**226-9169**	1	MODULE AS-POWER SUPPLY (ELECTRICAL ENCLOSURE)	
	2	1	**241-7913**	1	COVER AS-ACCESS	
	3	1	**242-8399**	1	PANEL-ACOUSTICAL	
	4	1	**323-7443**	1	PANEL AS-INSTRUMENT	
M	5	1	**5C-9553**	4	BOLT (M6X1X16-MM)	
	6	1	**9X-8256**	4	WASHER (6.6X12X2-MM THK)	

M-METRIC PART

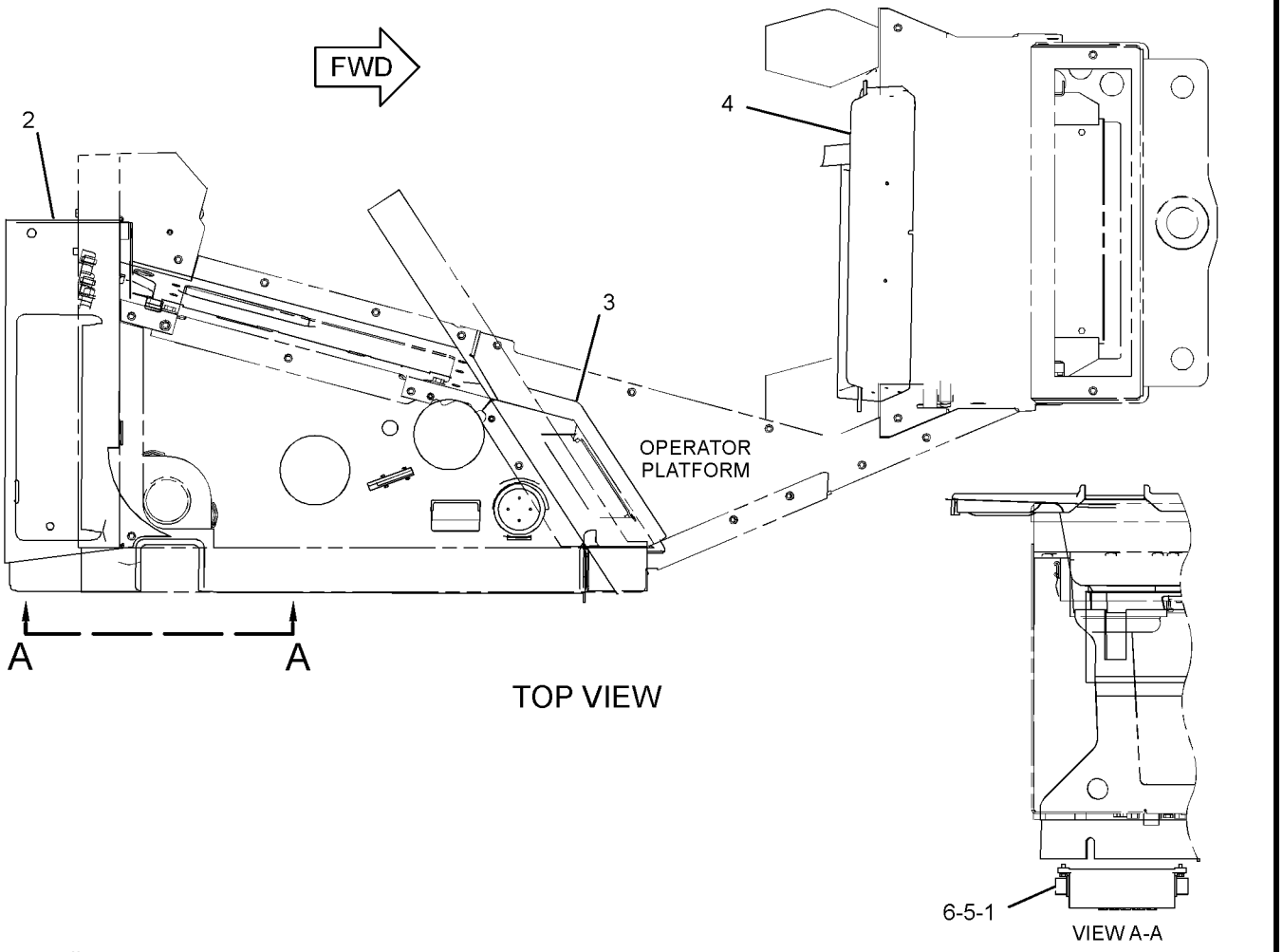

TOP VIEW

VIEW A-A

GRAPHIC #1 **<END>** g02188099

322-1360 PANEL GP-FUSE

S/N: DSH1-UP; DLN1-UP; DJR1-UP
PART OF 327-9902 WIRING GP-PLATFORM
ALSO AN ATTACHMENT

SMCS-1417 **i04769359**

NOTE	REF NO	GRAPHIC REF	PART NUMBER	QTY	PART NAME 1 2 3 4 5 6 (PRODUCT LEVEL)	SEE PAGE
	1	1	**7K-1181**	4	STRAP-CABLE	
	2	1	**9W-1441**	15	FUSE (15-AMPERE)	
	3	1	**9W-1442**	7	FUSE (10-AMPERE)	
	4	1	**9W-1446**	2	FUSE (20-AMPERE)	
Y	5	1	**125-1302**	1	SWITCH GP-MAGNETIC (24-VOLT) (START RELAY)	202
	6	1	**172-4863**	1	JUNCTION BLOCK	
	7	1	**223-8173**	1	HOLDER AS-FUSE	
	8	1	**237-0048**	1	PANEL AS	
	9	1	**237-0050**	1	STRAP	
	10	1	**237-0051**	1	STRAP	
	11	1	**237-0052**	1	STRAP	
	12	1	**237-0053**	1	STRAP	
	13	1	**237-0225**	1	STRAP	
	14	1	**238-2014**	1	WIRE AS	
	15	1	**239-3354**	1	CAP AS	
		1	**232-3402**	1	FILM-WARNING (ELECTRICAL SHOCK)	
	16	1	**239-8107**	1	FUSE (175-AMPERE) (ALTERNATOR)	
	17	1	**240-8917**	1	FILM-CIRCUIT BREAKER	
Y	18	1	**241-8368**	1	SWITCH GP-MAGNETIC (24-VOLT) (MAIN RELAY)	203
Y	19	1	**322-1359**	1	WIRING GP-BOX (FUSE)	206
M	20	1	**5C-2890**	4	NUT (M6X1-THD)	
M	21	1	**5C-7883**	7	BOLT-SOCKET HEAD (M6X1X16-MM)	
	22	1	**6T-3643**	1	CIRCUIT BREAKER AS (15-AMPERE) (BLOWER)	
		1	**6V-8376**	2	SCREW-MACHINE (8-32X0.25-IN)	
		1	**9B-7233**	2	LOCKWASHER	
	23	1	**6V-5645**	4	SCREW-MACHINE (10-32X0.87-IN)	
	24	1	**7U-4892**	2	SCREW (8-32X0.75-IN)	
M	25	1	**7X-2548**	2	BOLT (M12X1.75X16-MM)	
M	26	1	**8T-3992**	4	SCREW (M6X1X12-MM)	
	27	1	**8T-4121**	2	WASHER-HARD (11X21X2.5-MM THK)	
M	28	1	**8T-4191**	2	BOLT (M10X1.5X16-MM)	
M	29	1	**8T-4199**	3	BOLT (M8X1.25X12-MM)	
M	30	1	**8T-4200**	1	BOLT (M8X1.25X16-MM)	
	31	1	**8T-4223**	2	WASHER-HARD (13.5X25.5X3-MM THK)	
	32	1	**8T-4224**	4	WASHER-HARD (8.8X16X2-MM THK)	
	33	1	**9X-8256**	4	WASHER (6.6X12X2-MM THK)	

M-METRIC PART
Y-SEPARATE ILLUSTRATION

322-1360 **PANEL GP-FUSE** *(contd.)* **i04769359**

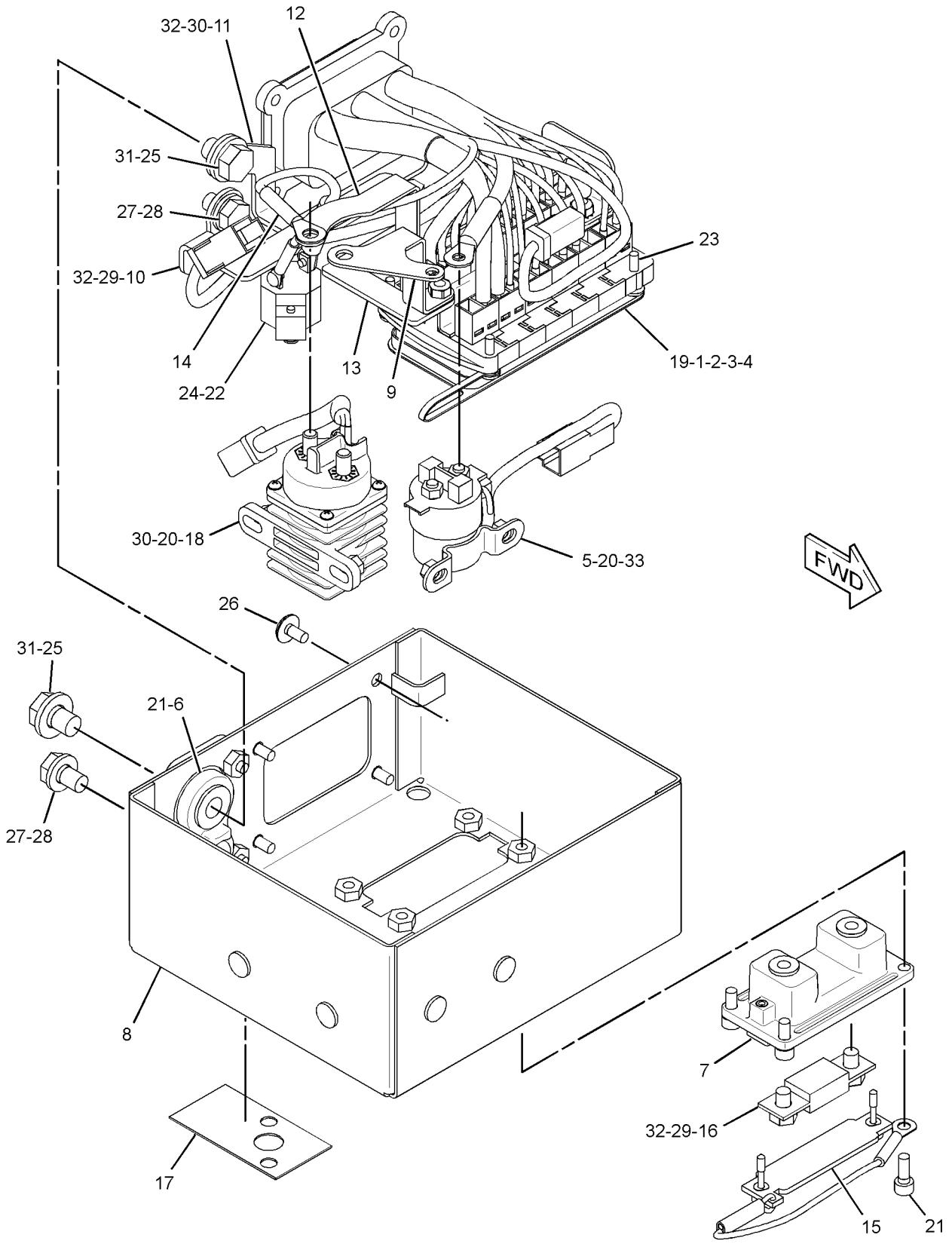

GRAPHIC #1 **<END>** g02191376

231-1978 SENSOR GP-ENGINE

S/N: THX28268-UP

PART OF 385-2783 ENGINE AR-CORE

SMCS-1000, 1718, 1906, 1907, 1912, 1917, 1923, 1924, 1925, 1928, 1929, 7400, 7422 **i04726112**

NOTE	REF NO	GRAPHIC REF	PART NUMBER	QTY	PART NAME 1 2 3 4 5 6 (PRODUCT LEVEL)	SEE PAGE
	1	1	*353-5112*	1	ADAPTER AS	
		1	**9X-0262**	1	ADAPTER	
		1	**214-7566**	2	SEAL-O-RING	
Y	2	1	*274-7395*	1	SENSOR GP-TEMPERATURE (AIR INLET MANIFOLD)	192
Y	3	1	*274-7396*	1	SENSOR GP-TEMPERATURE (WATER, COOLANT)	193
Y	4	1	*197-8393*	1	SENSOR GP-PRESSURE (ATMOSPHERIC)	187
	5	1	**161-1705**	1	SENSOR AS-PRESSURE (ENGINE OIL)	
	6	1	**161-1704**	1	SENSOR GP-PRESSURE (AIR INLET MANIFOLD)	
Y	7	1	*236-6220*	1	SENSOR GP-PRESSURE (INJECTION ACTUATION)	189
Y	8	1	*236-6221*	1	SENSOR GP-SPEED (ENGINE TIMING)	190
	9	1	**3E-4352**	1	WASHER-HARD (8.8X20.5X2.5-MM THK)	
M	10	1	**6V-3940**	1	BOLT (M8X1.25X25-MM)	
	11	1	*329-5451*	1	ADAPTER AS	
		1	**9X-0261**	1	ADAPTER	
		1	**214-7566**	1	SEAL-O-RING	
		1	**214-7568**	1	SEAL-O-RING	

M-METRIC PART
Y-SEPARATE ILLUSTRATION

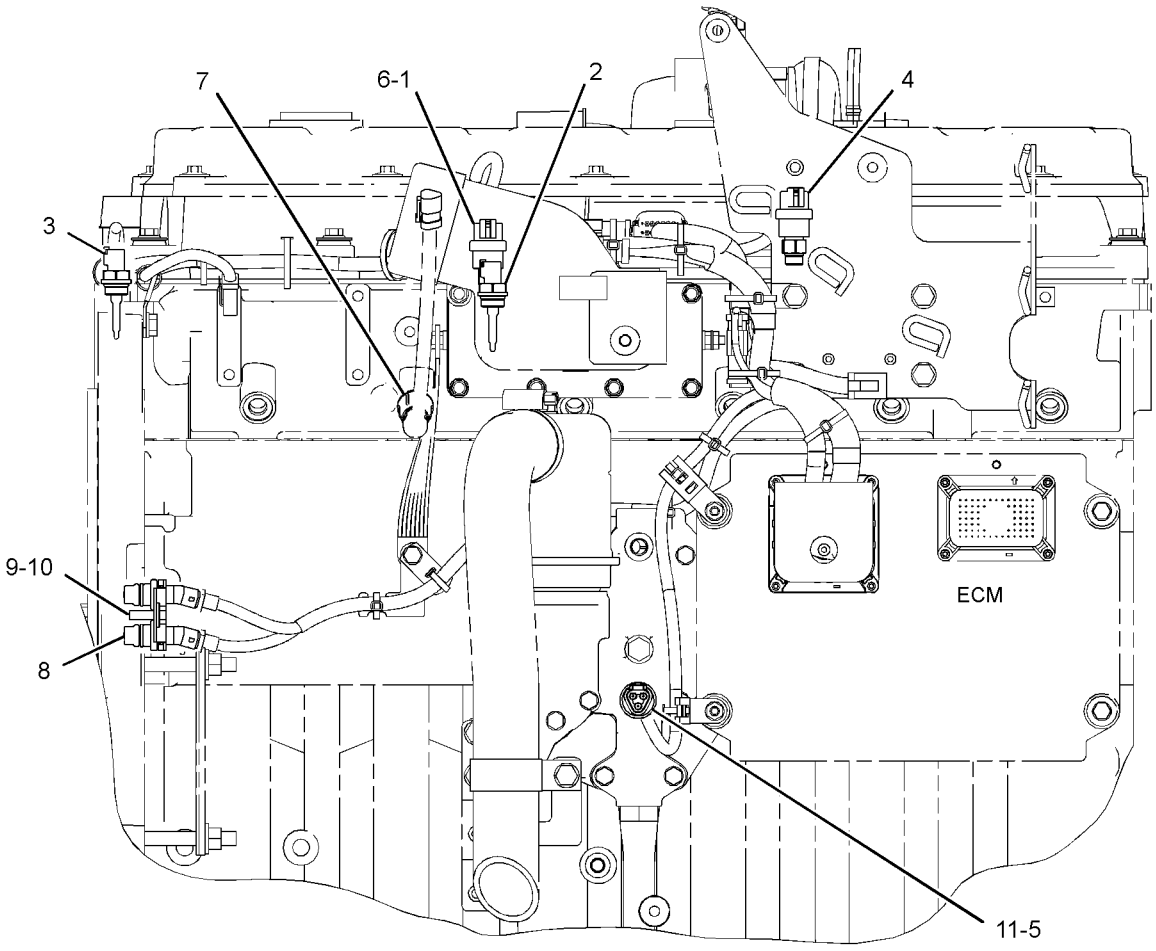

LEFT SIDE VIEW

GRAPHIC #1 **<END>** g02847276

266-1467 SENSOR GP-POSITION

S/N: DSH1-UP; DLN1-UP; DJR1-UP
PART OF 375-4845 CONTROL GP-GOVERNOR & BRAKE
ALSO AN ATTACHMENT

SMCS-1905, 1911, 430S **i03976351**

NOTE	REF NO	GRAPHIC REF	PART NUMBER	QTY	PART NAME 1 2 3 4 5 6 (PRODUCT LEVEL)	SEE PAGE
	1	1	**9X-3401**	3	PIN-CONNECTOR (16-GA TO 18-GA)	
					—OR—	
		1	**126-1767**	3	PIN-CONNECTOR (14-GA TO 16-GA)	
	2	1	**102-8803**	1	KIT-RECEPTACLE (3-PIN)	
					(INCLUDES RECEPTACLE AS & WEDGE)	

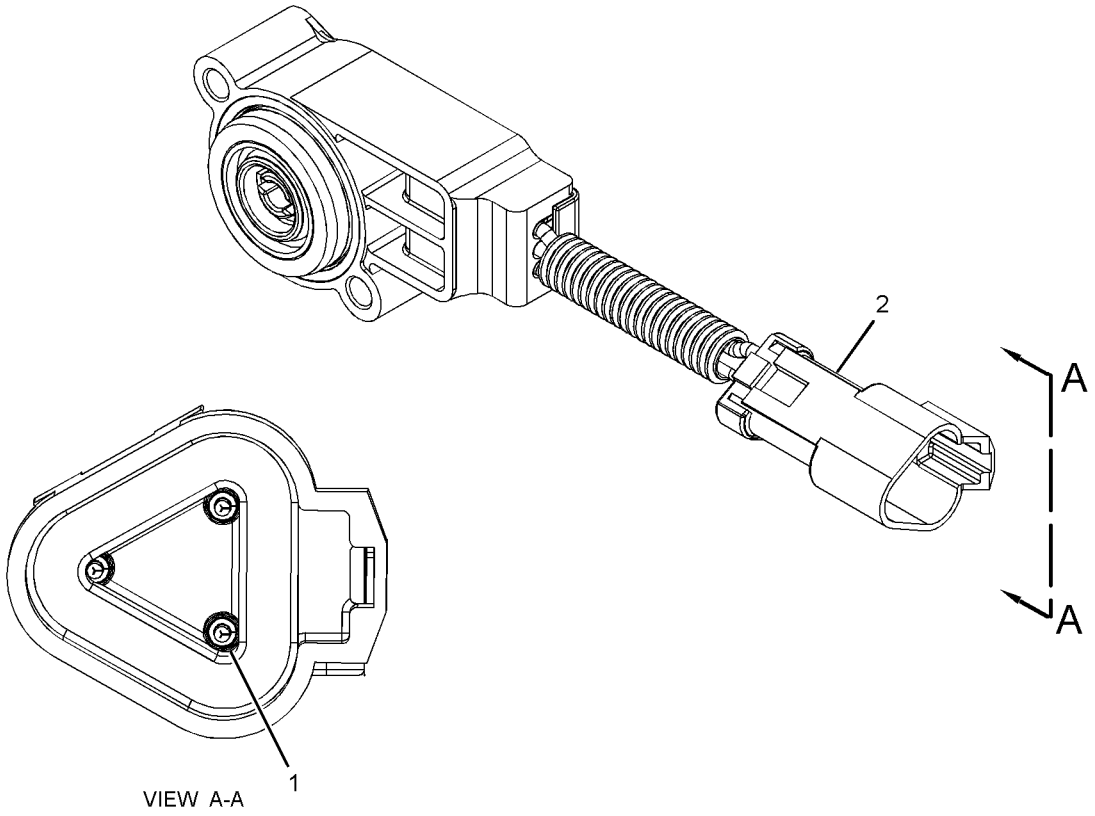

GRAPHIC #1 **<END>** g01740694

161-9926 SENSOR GP-PRESSURE

S/N: DSH1-UP; DLN1-UP; DJR1-UP
PART OF 321-5816 BATTERY & WIRING GP

SMCS-1718, 1916, 1917, 1923, 1924, 1925 **i04001364**

NOTE	REF NO	GRAPHIC REF	PART NUMBER	QTY	PART NAME 1 2 3 4 5 6 (PRODUCT LEVEL)	SEE PAGE
E	1	1	**9X-1813**		SLEEVE (34-CM)	
	2	1	**155-2260**	1	KIT-CONNECTING PLUG (3-PIN)	
					(INCLUDES PLUG AS, WEDGE & INTERFACE SEAL)	
	3	1	**180-9340**	3	SOCKET-CONNECTOR (14-GA TO 18-GA)	

E-ORDER BY THE CENTIMETER

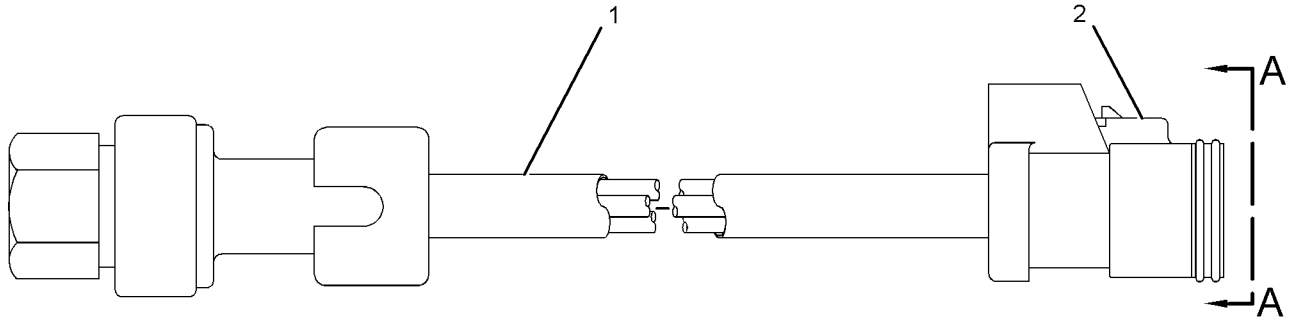

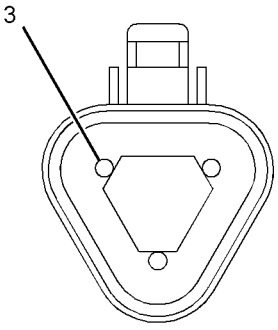

VIEW A-A

GRAPHIC #1 **<END>** g01820867

194-6725 SENSOR GP-PRESSURE

S/N: THX28268-UP

PART OF 264-2014 LINES GP-FUEL

SMCS-1718, 1916, 1917, 1923, 1924, 1925 **i04017535**

NOTE	REF NO	GRAPHIC REF	PART NUMBER	QTY	PART NAME 1 2 3 4 5 6 (PRODUCT LEVEL)	SEE PAGE
E	1	1	**9X-1813**		SLEEVE (34-CM)	
	2	1	**155-2260**	1	KIT-CONNECTING PLUG (3-PIN)	
					(INCLUDES PLUG AS, INTERFACE SEAL & WEDGE)	
	3	1	**180-9340**	3	SOCKET-CONNECTOR (14-GA TO 18-GA)	

E-ORDER BY THE CENTIMETER

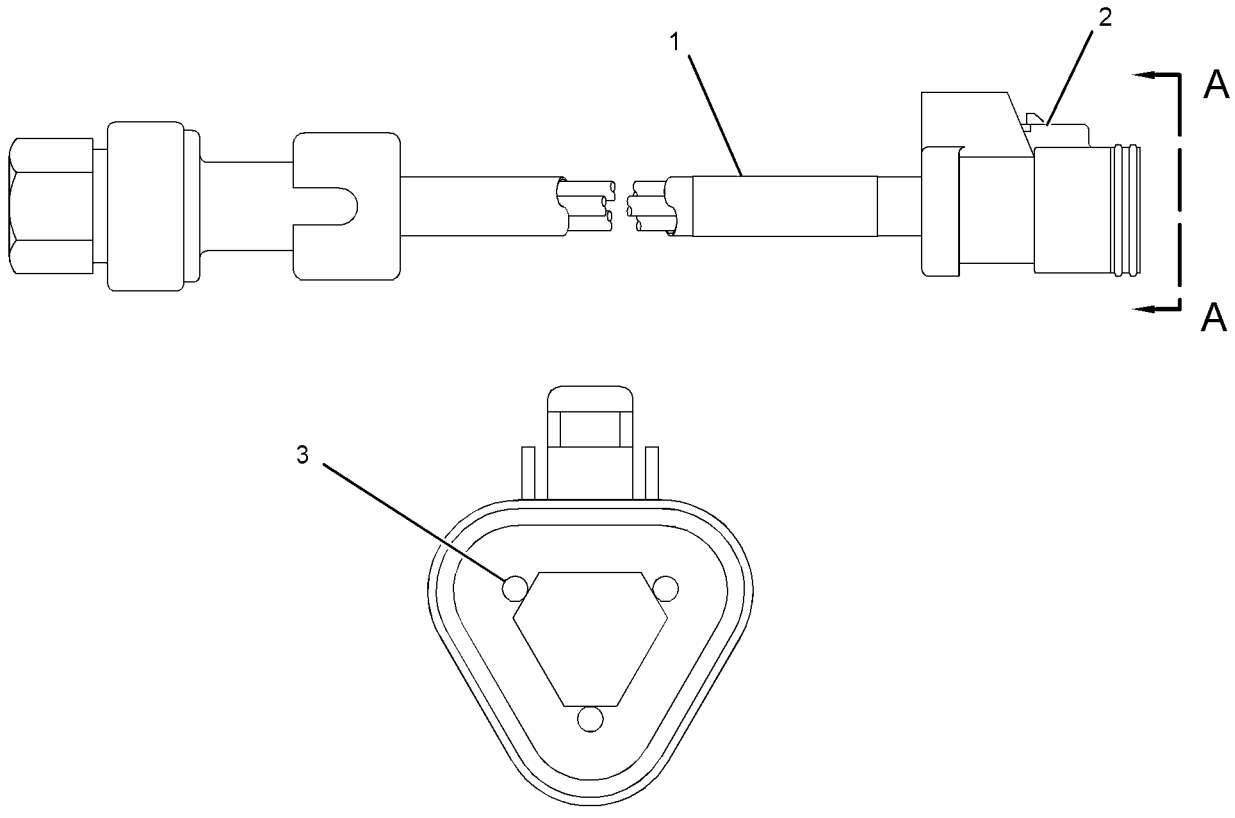

VIEW A-A

GRAPHIC #1 **<END>** g01662003

197-8393 SENSOR GP-PRESSURE

S/N: THX28268-UP

PART OF 231-1978 SENSOR GP-ENGINE

SMCS-1718, 1916, 1917, 1923, 1924, 1925 **i04547566**

NOTE	REF NO	GRAPHIC REF	PART NUMBER	QTY	PART NAME 1 2 3 4 5 6 (PRODUCT LEVEL)	SEE PAGE
	1	1	**161-1703**	1	SENSOR GP-PRESSURE	
	2	1	**214-7568**	1	SEAL-O-RING	

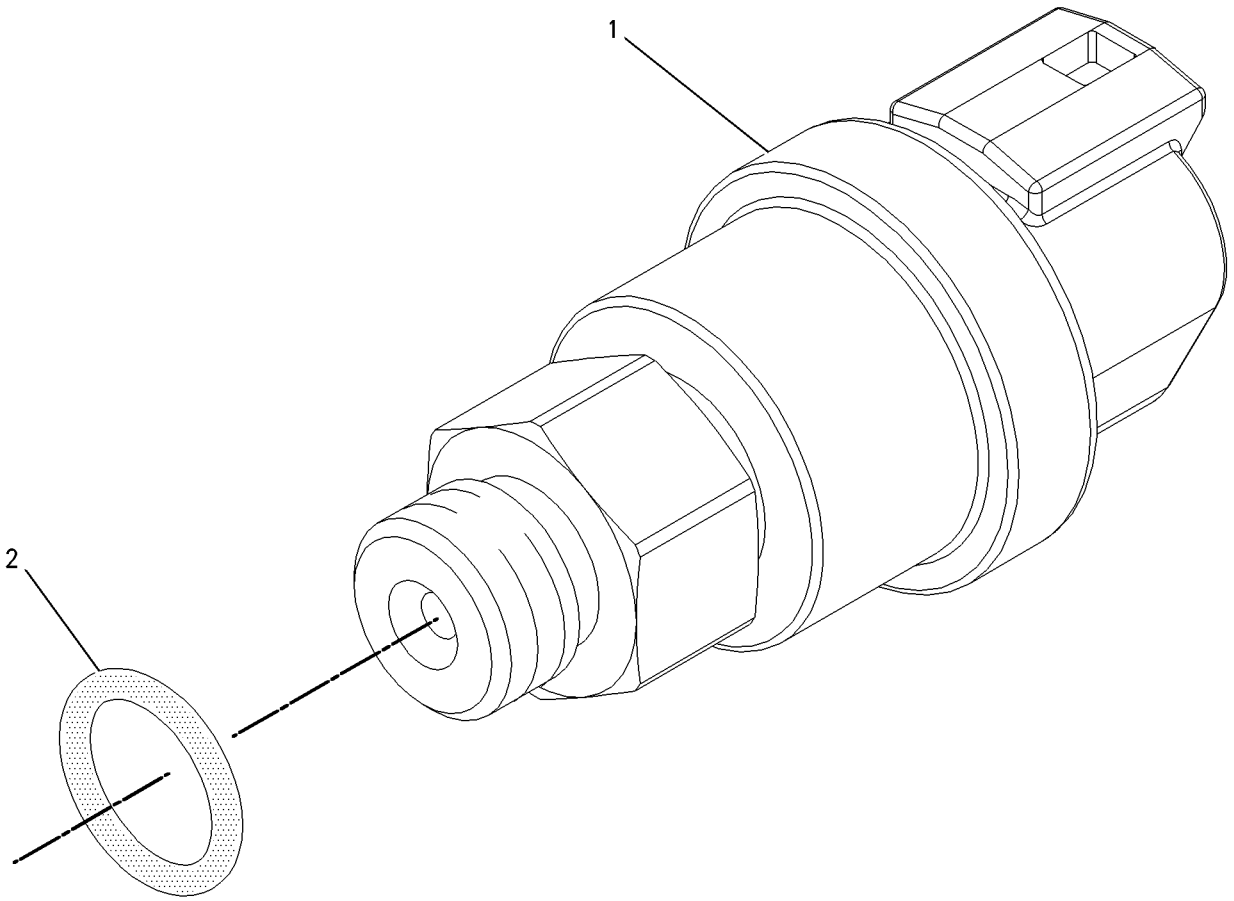

GRAPHIC #1 **<END>** g00855973

224-4536 SENSOR GP-PRESSURE

S/N: THX28268-UP

PART OF 236-6220 SENSOR GP-PRESSURE

SMCS-1718, 1916, 1917, 1923, 1924, 1925 **i03979237**

NOTE	REF NO	GRAPHIC REF	PART NUMBER	QTY	PART NAME 1 2 3 4 5 6 (PRODUCT LEVEL)	SEE PAGE
E	1	1	**9X-1813**		SLEEVE (35-CM)	
	2	1	**155-2260**	1	KIT-CONNECTING PLUG (3-PIN)	
					(INCLUDES PLUG AS, WEDGES & INTERFACE SEAL)	
	3	1	**194-5226**	3	WIRE AS (16-GA) (PRESSURE SENSOR)	
					—OR—	
		1	**194-5227**	3	WIRE AS (14-GA) (PRESSURE SENSOR)	
E-ORDER BY THE CENTIMETER						

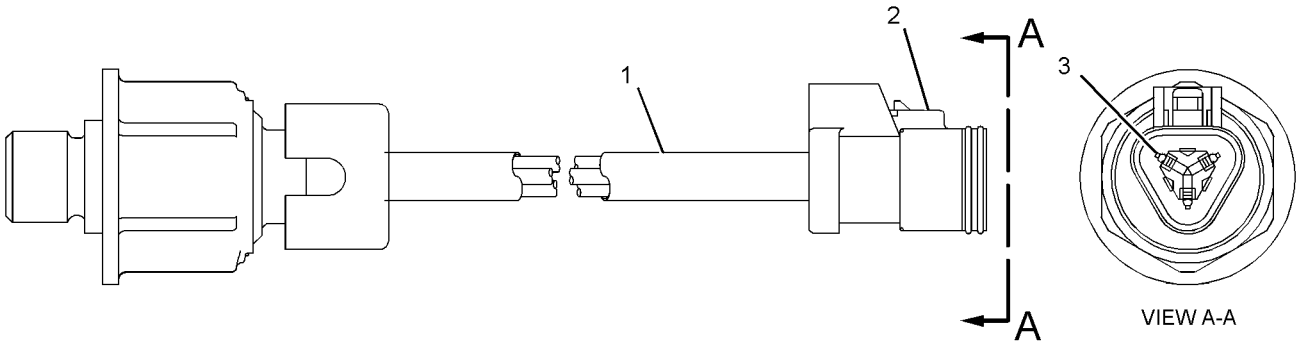

GRAPHIC #1 **<END>** g02164578

236-6220 SENSOR GP-PRESSURE

S/N: THX28268-UP

PART OF 231-1978 SENSOR GP-ENGINE

SMCS-1718, 1916, 1917, 1923, 1924, 1925 **i04017579**

NOTE	REF NO	GRAPHIC REF	PART NUMBER	QTY	PART NAME 1 2 3 4 5 6 (PRODUCT LEVEL)	SEE PAGE
	1	1	**214-7567**	1	SEAL-O-RING	
Y	2	1	**224-4536**	1	SENSOR GP-PRESSURE	188

Y-SEPARATE ILLUSTRATION

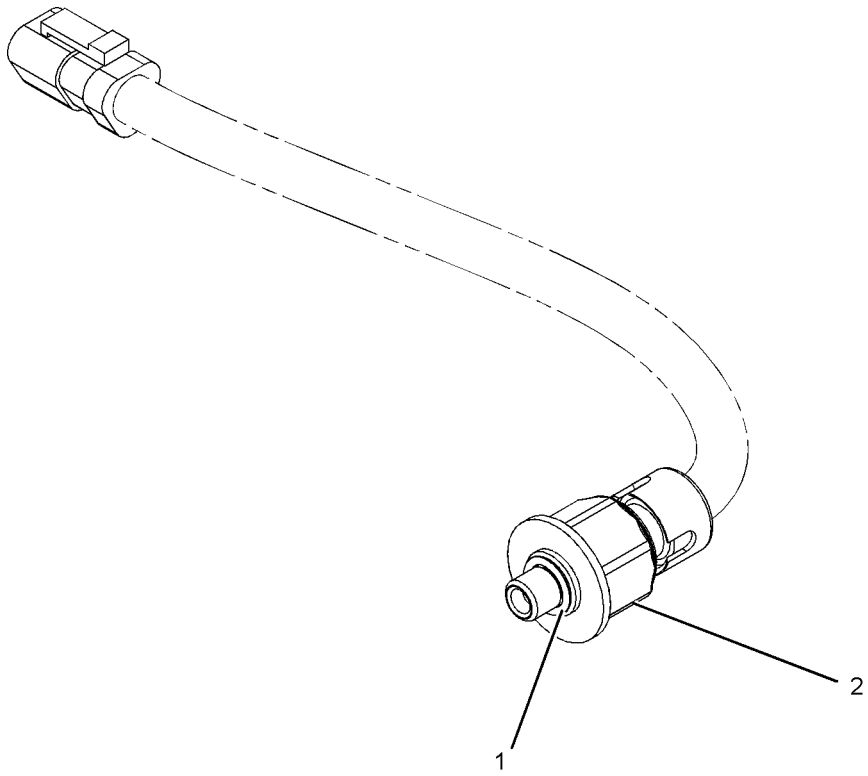

GRAPHIC #1 **<END>** g01054528

236-6221 SENSOR GP-SPEED–ENGINE TIMING

S/N: THX28268-UP

PART OF 231-1978 SENSOR GP-ENGINE

SMCS-1907 **i04017582**

NOTE	REF NO	GRAPHIC REF	PART NUMBER	QTY	PART NAME 1 2 3 4 5 6 (PRODUCT LEVEL)	SEE PAGE
	1	1	**3P-0647**	2	SEAL-O-RING	
	2	1	**245-4630**	1	SENSOR GP-SPEED	

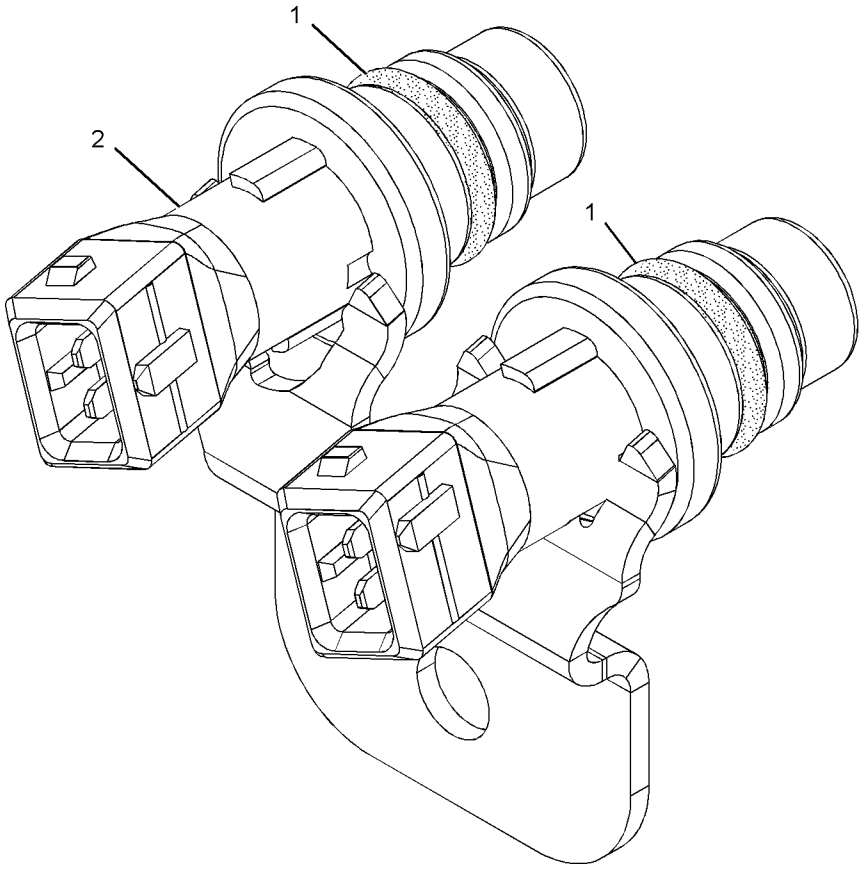

GRAPHIC #1 **<END>** g01013894

145-7028 SENSOR GP-TEMPERATURE

S/N: DSH1-UP; DLN1-UP; DJR1-UP

PART OF 321-5816 BATTERY & WIRING GP, 327-9901 WIRING GP-ENGINE

SMCS-1906, 1919, 1921, 1922, 1928, 1929 **i04009001**

NOTE	REF NO	GRAPHIC REF	PART NUMBER	QTY	PART NAME 1 2 3 4 5 6 (PRODUCT LEVEL)	SEE PAGE
	1	1	**102-8802**	1	KIT-RECEPTACLE (2-PIN)	
					(INCLUDES RECEPTACLE AS & WEDGE)	
J	2	1	**153-5043**		SLEEVE (2.8-DM)	
	3	1	**186-3735**	2	PIN-CONNECTOR (16-GA TO 18-GA)	

J-ORDER BY THE DECIMETER

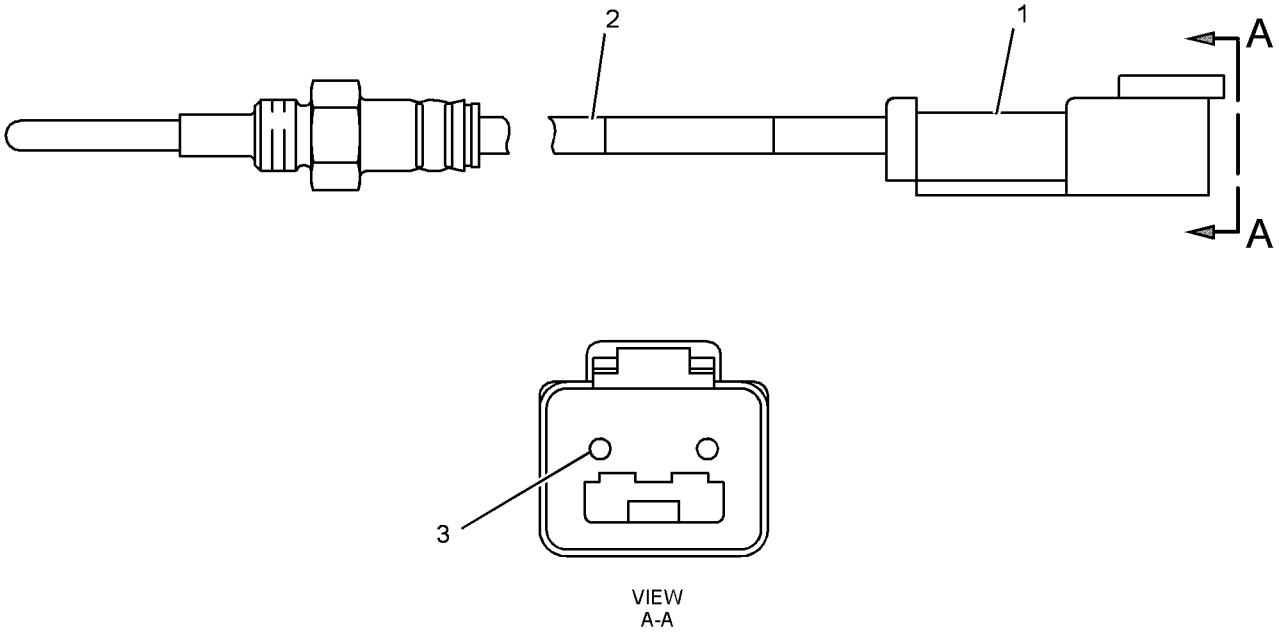

GRAPHIC #1 **<END>** g01740798

274-7395 SENSOR GP-TEMPERATURE

S/N: THX28268-UP

PART OF 231-1978 SENSOR GP-ENGINE

SMCS-1906, 1919, 1921, 1922, 1928, 1929 **i03886181**

NOTE	REF NO	GRAPHIC REF	PART NUMBER	QTY	PART NAME 1 2 3 4 5 6 (PRODUCT LEVEL)	SEE PAGE
	1	1	**130-9811**	1	SENSOR GP-TEMPERATURE	
		1	**137-6645**	1	PAD-CONNECTOR	
	2	1	**238-5080**	1	SEAL-O-RING	

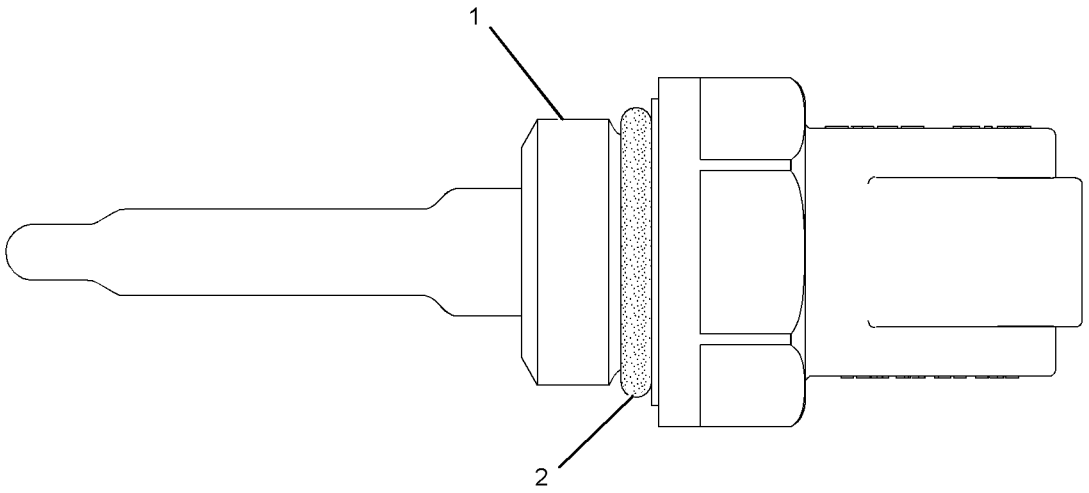

GRAPHIC #1 **<END>** g01199840

274-7396 SENSOR GP-TEMPERATURE

S/N: THX28268-UP

PART OF 231-1978 SENSOR GP-ENGINE

SMCS-1906, 1919, 1921, 1922, 1928, 1929 **i04029214**

NOTE	REF NO	GRAPHIC REF	PART NUMBER	QTY	PART NAME 1 2 3 4 5 6 (PRODUCT LEVEL)	SEE PAGE
	1	1	**130-9811**	1	SENSOR GP-TEMPERATURE	
		1	**137-6645**	1	PAD-CONNECTOR	
	2	1	**6V-6609**	1	SEAL-O-RING	

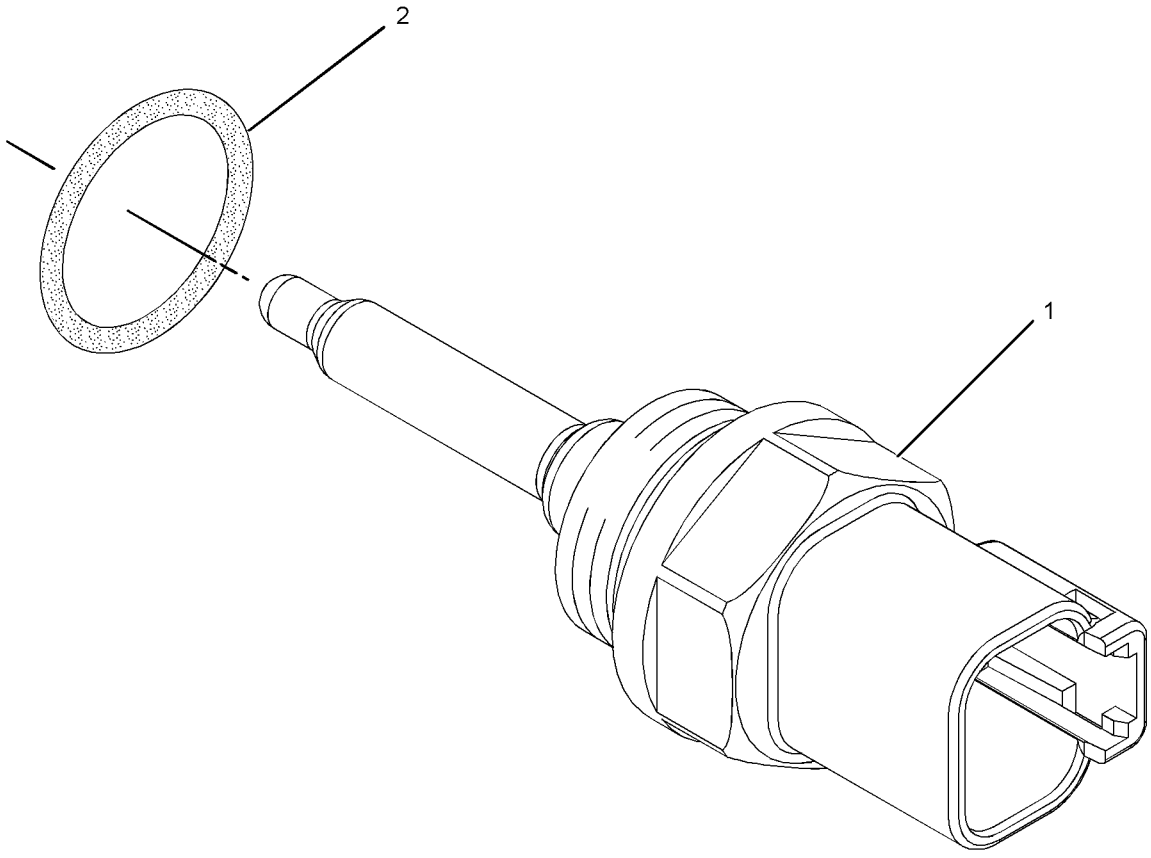

GRAPHIC #1 **<END>** g01209558

ELECTRICAL AND STARTING SYSTEM

327-9900 STARTING AID GP-ETHER

S/N: DSH1-UP; DLN1-UP; DJR1-UP
PART OF 378-2269 COLD WEATHER AR
AN ATTACHMENT

SMCS-1456 **i04673549**

NOTE	REF NO	GRAPHIC REF	PART NUMBER	QTY	PART NAME 1 2 3 4 5 6 (PRODUCT LEVEL)	SEE PAGE
	1	1	**7N-2059**	1	CLAMP AS	
	2	1	**127-7443**	1	ATOMIZER AS	
		1	**236-4545**	1	NUT-SLEEVE (5/16-24-THD)	
Y	3	1	**239-1134**	1	VALVE GP-ETHER STARTING (24-VOLT)	205
		1	**7N-9801**	1	GASKET	
		1	**8T-8729**	2	PIN-CONNECTOR (16-GA TO 18-GA)	
		1	**102-8802**	1	KIT-RECEPTACLE (2-PIN)	
					(INCLUDES RECEPTACLE AS & WEDGE)	
		1	**358-4889**	1	FILTER (ETHER START)	
	4	1	**241-4194**	1	FITTING AS (CONTROL)	
		1	**236-4545**	1	NUT-SLEEVE (5/16-24-THD)	
	5	1	**260-3799**	1	BRACKET AS	
M		1	**8T-3612**	4	NUT-WELD (M8X1.25-THD)	
	6	1	*260-9198*	1	ADAPTER AS	
		1	**2M-9780**	1	SEAL-O-RING	
		1	**260-9197**	1	ADAPTER	
	7	1	**4H-1225**	2	WASHER (11X22X6-MM THK)	
	8	1	**4P-8134**	1	CLIP	
	9	1	**5P-4116**	4	WASHER-HARD (8.8X20.5X2-MM THK)	
	10	1	**6V-2686**	1	CLIP	
M	11	1	**8T-4189**	4	BOLT (M8X1.25X20-MM)	
M	12	1	**8T-6466**	2	BOLT (M10X1.5X60-MM)	
E	13	1	**174-9169**		TUBE (70-CM)	
A			**7N-0296**	1	CYLINDER AS-ETHER	
					(MUST BE PROCURED LOCALLY FROM YOUR CAT DEALER)	

A-NOT PART OF THIS GROUP
E-ORDER BY THE CENTIMETER
M-METRIC PART
Y-SEPARATE ILLUSTRATION

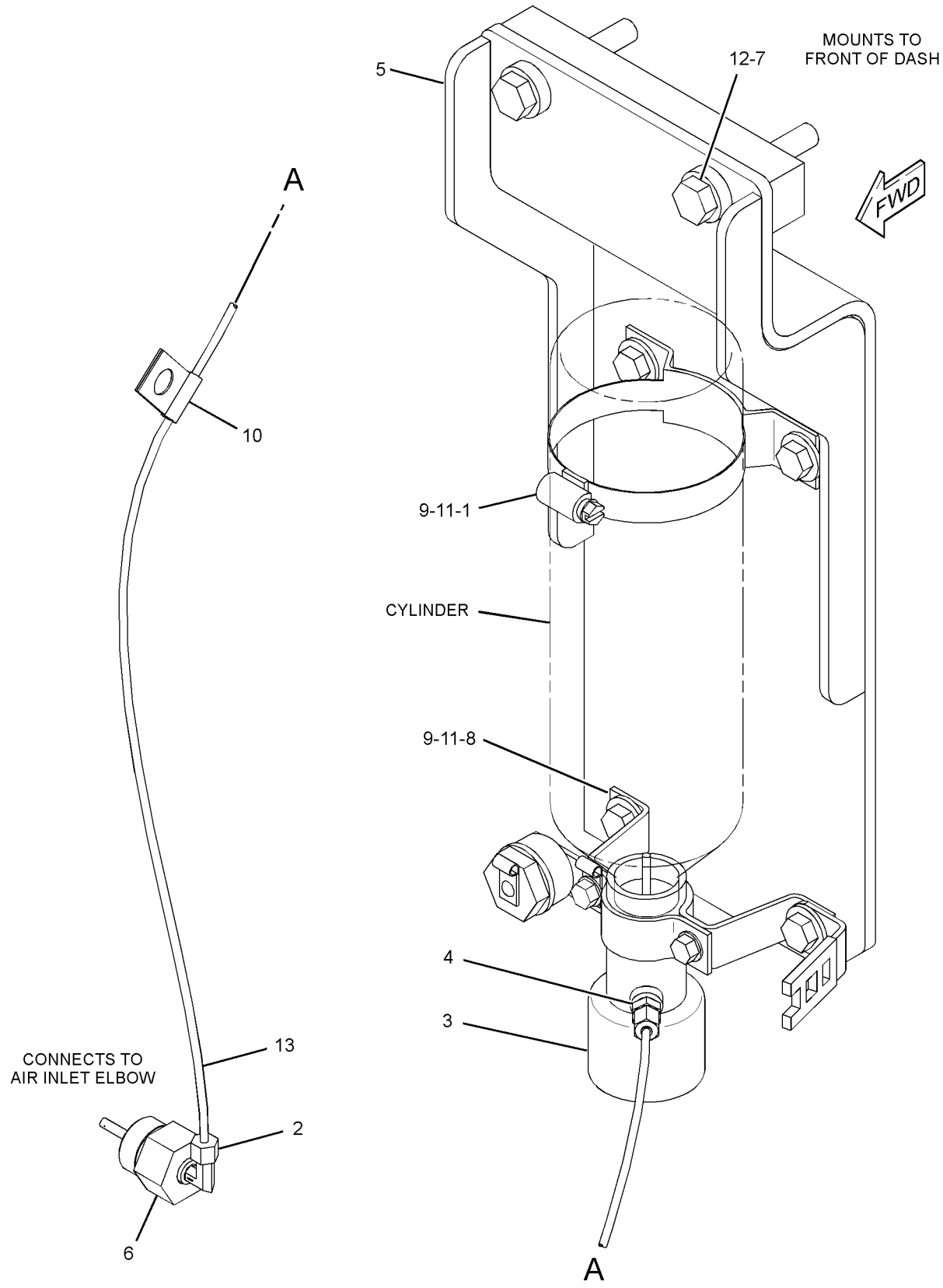

GRAPHIC #1

<END>

g02828656

209-8423 STARTING MOTOR GP-ELECTRIC

S/N: DSH1-UP; DLN1-UP; DJR1-UP
24-VOLT
PART OF 313-3757 INSTALLATION AR

SMCS-1453 **i03991730**

NOTE	REF NO	GRAPHIC REF	PART NUMBER	QTY	PART NAME 1 2 3 4 5 6 (PRODUCT LEVEL)	SEE PAGE
	1	1	**4N-1059**	1	GASKET	
	2	1	**185-6393**	1	CABLE AS-STARTING MOTOR	
		1	**1M-4986**		TERMINAL-RING (0-GA, 1/2-IN SCREW)	
E		1	**5P-0746**		CABLE (0-GA, BLACK) (30-CM)	
		1	**030-1707**	1	TERMINAL-RING (0-GA, 3/8-IN SCREW)	
YR	3	1	**237-1962**	1	STARTING MOTOR GP-ELECTRIC (24-VOLT)	197
	4	1	**220-0771**	3	BOLT-12 POINT HEAD (M16X2X45-MM)	

E-ORDER BY THE CENTIMETER
R-REMFG PART MAY BE AVAILABLE
Y-SEPARATE ILLUSTRATION

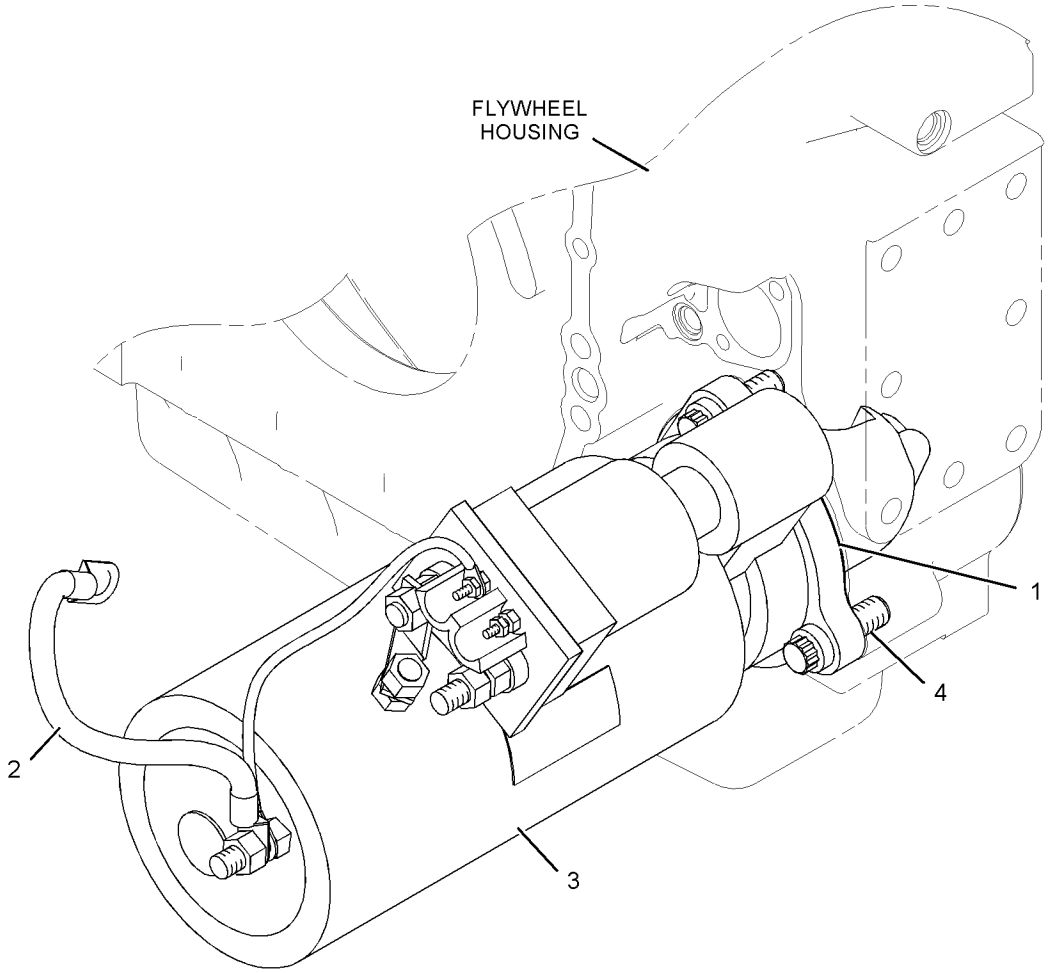

GRAPHIC #1 **<END>** g01023567

ELECTRICAL AND STARTING SYSTEM

237-1962 STARTING MOTOR GP-ELECTRIC*R

S/N: DSH1-UP; DLN1-UP; DJR1-UP

24-VOLT

PART OF 209-8423 STARTING MOTOR GP-ELECTRIC

SMCS-1453 **i03991749**

NOTE	REF NO	GRAPHIC REF	PART NUMBER	QTY	PART NAME 1 2 3 4 5 6 (PRODUCT LEVEL)	SEE PAGE
	1	1	**7M-0326**	1	CONNECTOR	
	2	1	**9H-3757**	2	WASHER (0.516X1X0.094-IN THK)	
	3	1	**1S-7446**	3	SCREW-MACHINE (8-32X0.437-IN)	
	4	1	**8C-9660**	3	WASHER (4.6X7.9X0.8-MM THK)	
	5	1	**9S-2544**	9	SCREW-HEX HEAD (8-32X11.13-MM)	
	6	1	**7M-0327**	1	WASHER-THRUST (17.4X25.4X1.6-MM THK)	
	7	1	**3T-3418**	1	FRAME AS-END	
		1	**3T-3423**	1	CUP	
		1	**3T-3424**	1	PLUG-FELT	
		1	**9G-4101**	1	BUSHING-END	
	8	1	**3T-9525**	1	PLATE AS-BRUSH	
	8A	1	**6T-0371**	1	INSULATOR	
	8B	1	**5P-6298**	12	SCREW-MACHINE (10-32X0.5-IN)	
		1	**9F-5599**	12	LOCKWASHER	
	8C	1	**7F-3525**	6	WASHER-BUSHING (0.207X0.39X0.09-IN THK)	
	8D	1	**6T-0372**	1	PLATE	
	8E	1	**3T-4709**	3	PLATE	
	8F	1	**2L-6679**	3	PLATE-INSULATOR	
	8G	1	**3T-4710**	3	PLATE	
	8H	1	**6T-0363**	6	HOLDER AS-BRUSH (STARTING MOTOR)	
					(EACH INCLUDES)	
	8J	1	**3T-9494**	1	SPRING	
	9	1	**7F-3491**	2	WASHER (0.516X1X0.094-IN THK)	
	10	1	**3T-3422**	1	WIRE AS (STARTING MOTOR)	
	11	1	**2J-8163**	2	SEAL-O-RING	
	12	1	**7X-3373**	1	BOLT (5/16-18X0.88-IN)	
	13	1	**3T-3434**	6	PLUG	
	14	1	**5J-5314**	5	BOLT (5/16-18X1.5-IN)	
	15	1	**3L-3380**	1	BUSHING-TERMINAL	
	16	1	**036-9821**	1	WASHER	
	17	1	**4M-1828**	1	RETAINER-SPRING	
	18	1	**306-3998**	1	BOOT-RUBBER	
	19	1	**9M-7609**	1	SPRING (SHIFT LEVER)	
	20	1	**4M-1827**	1	RETAINER-SPRING	
	21	1	**8C-3089**	1	SEAL-O-RING	
	22	1	**4M-1853**	1	LEVER AS-SHIFT	
	23	1	**5M-3034**	1	LOCKNUT (5/16-24-THD)	
	24	1	**7L-2894**	4	GASKET	
	25	1	**4M-1831**	4	PLUG-LEVER HOUSING	
	26	1	**4M-1854**	1	SHAFT-LEVER	
	27	1	**1H-1023**	1	SEAL-O-RING	
	28	1	**2D-6392**	1	SEAL-O-RING	
	29	1	**7T-3974**	1	HOUSING AS-DRIVE	
	30	1	**6N-3826**	1	DRIVE AS-MOTOR	
	31	1	**2H-3429**	2	RING-RETAINING	
	32	1	**6V-1322**	4	BOLT (1/4-20X0.375-IN)	
	33	1	**8T-4205**	4	WASHER-HARD (7.2X14.5X2-MM THK)	
	34	1	**6N-3279**	1	INSULATOR	
	35	1	**0S-1597**	13	BOLT (1/4-28X1-IN)	
	36	1	**1M-9971**	1	SPACER (0.835X1.72X0.188-IN THK)	
	37	1	**1H-2629**	3	STRIP-INSULATION	
	38	1	**7M-0324**	1	COIL AS-FIELD	
	39	1	**3R-8797**	12	SCREW & WASHER AS (3/8-24X0.72-IN)	
	40	1	**7F-3488**	6	SHOE-POLE	
	41	1	**7M-8651**	1	ARMATURE AS	

237-1962 **STARTING MOTOR GP-ELECTRIC** *(contd.)* **i03991749**

NOTE	REF NO	GRAPHIC REF	PART NUMBER	QTY	PART NAME 1 2 3 4 5 6 (PRODUCT LEVEL)	SEE PAGE
	42	1	**7M-0325**	1	INSULATOR	
	43	1	**3T-9524**	6	BRUSH AS	
	44	1	**3N-3763**	1	KIT-TERMINAL (STARTING MOTOR)	
					(INCLUDES BUSHINGS & WASHERS)	
	45	1	**125-6537**	1	INSULATOR	
	46	1	**3R-8801**	1	CLAMP	
	47	1	**8F-1434**	2	LOCKWASHER	
	48	1	**6V-8188**	6	NUT (1/2-13-THD)	
	49	1	**7X-0562**	6	WASHER-HARD (13.5X19X0.8-MM THK)	
	50	1	**4B-2049**	6	NUT (10-32-THD)	
	51	1	**8T-0328**	10	WASHER-HARD (5.5X10X1-MM THK)	
	52	1	**3T-9494**	6	SPRING (STARTING MOTOR)	
	53	1	**3E-7771**	1	HOUSING AS (STARTING MOTOR)	
	54	1	**9G-4101**	1	BUSHING-END	
	55	1	**3T-3424**	3	PLUG-FELT	
	56	1	**3T-3423**	3	CUP	
	57	1	**1M-9968**	1	BUSHING	
	58	1	**2F-6678**	1	SEAL-LIP TYPE	
	59	1	**4L-2729**	1	WASHER (0.844X1.9X0.188-IN THK)	
	60	1	**4M-1896**	1	BUSHING-TERMINAL	
	61	1	**045-4065**	4	SCREW-MACHINE (10-32X0.75-IN)	
	62	1	**125-6535**	1	COVER-STARTING MOTOR	
	63	1	**7T-9123**	1	GASKET-PLATE	
	64	1	**318-2082**	1	SOLENOID AS-STARTING MOTOR (24-VOLT)	
	65	1	**125-6536**	1	TERMINAL AS	

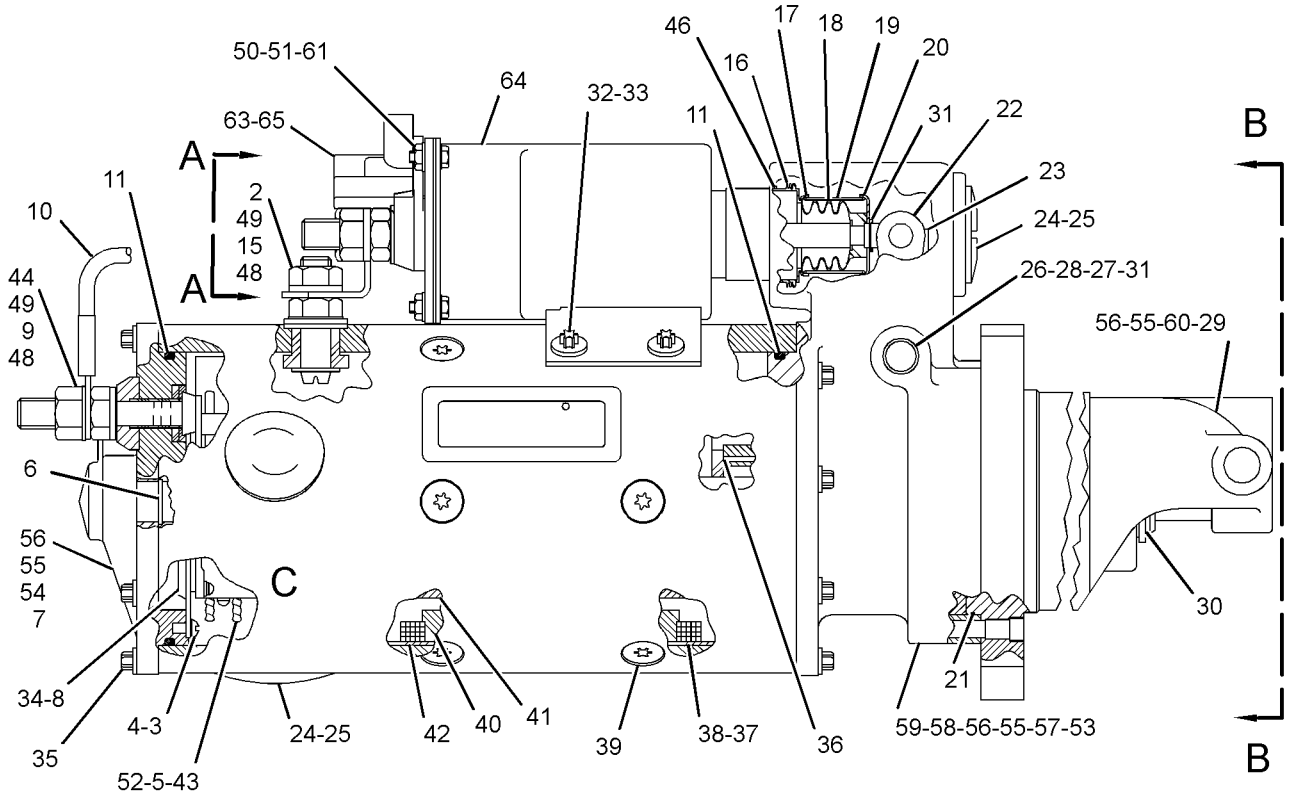

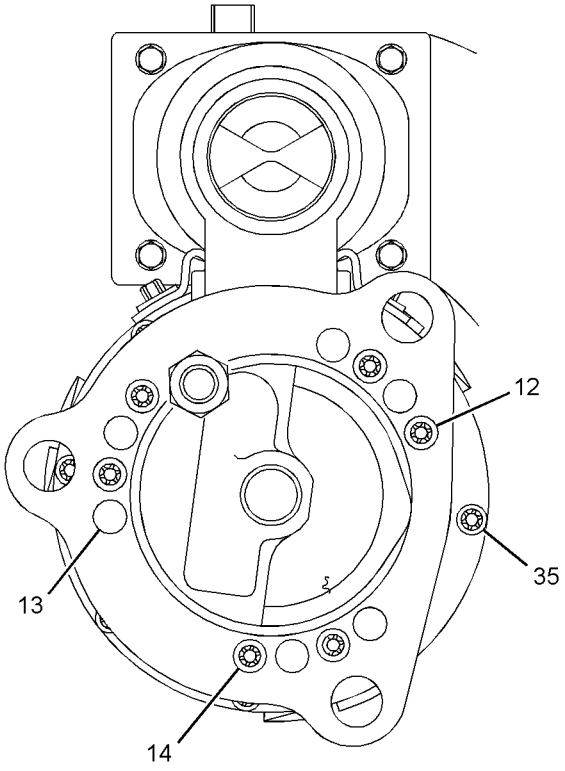

VIEW B-B

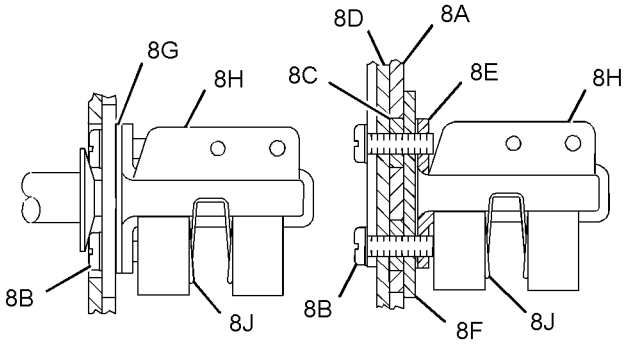

VIEW OF AREA C

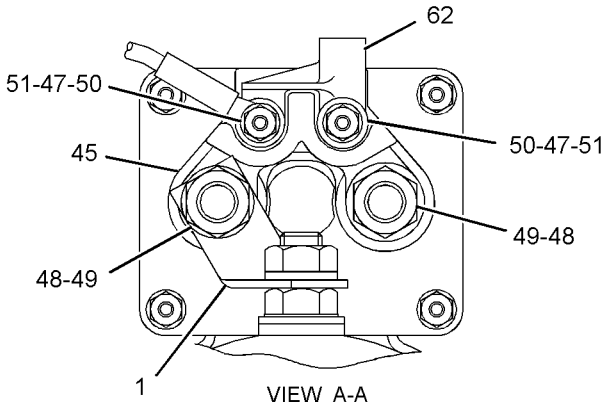

VIEW A-A

GRAPHIC #1 **<END>** g01453239

164-7577 SWITCH GP-BYPASS–POWER TRAIN OIL FILTER

S/N: DSH1-UP; DLN1-UP; DJR1-UP

PART OF 333-9308 BASE GP-OIL FILTER

SMCS-1408, 1435 **i04022069**

NOTE	REF NO	GRAPHIC REF	PART NUMBER	QTY	PART NAME 1 2 3 4 5 6 (PRODUCT LEVEL)	SEE PAGE
E	1	1	**9X-1813**		SLEEVE (19-CM)	
	2	1	**102-8802**	1	KIT-RECEPTACLE (2-PIN)	
					(INCLUDES RECEPTACLE AS & WEDGE)	
	3	1	**186-3735**	2	PIN-CONNECTOR (16-GA TO 18-GA)	
	4	1	**3D-2824**	1	SEAL-O-RING	

E-ORDER BY THE CENTIMETER

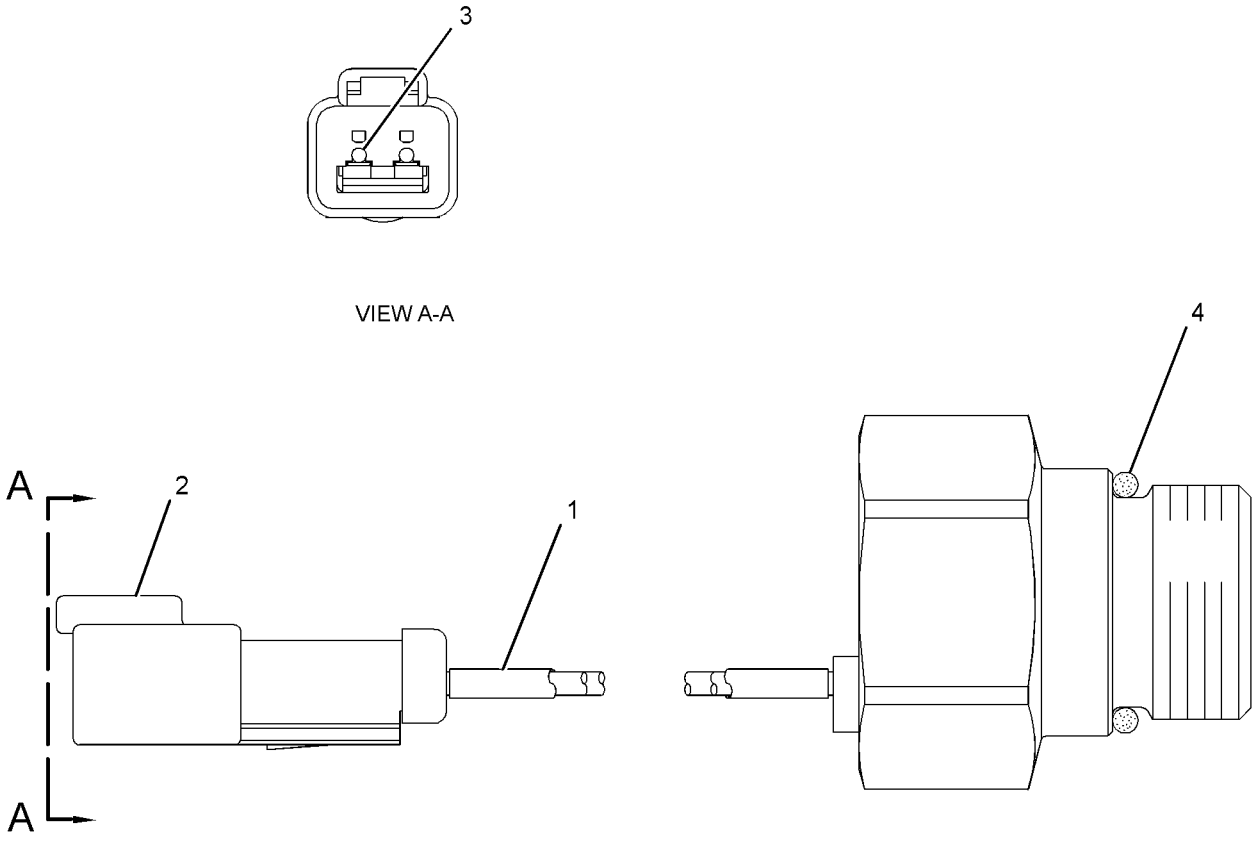

GRAPHIC #1 **<END>** g02157795

7N-0718 SWITCH GP-DISCONNECT–BATTERY

S/N: DSH1-UP; DLN1-UP; DJR1-UP

12-VOLT

PART OF 321-5816 BATTERY & WIRING GP

SMCS-1411 **i04654151**

NOTE	REF NO	GRAPHIC REF	PART NUMBER	QTY	PART NAME 1 2 3 4 5 6 (PRODUCT LEVEL)	SEE PAGE
	1	1	**8H-5306**	1	KEY (BATTERY DISCONNECT)	
	2	1	**8H-5303**	1	NUT (3/4-16-THD)	
	3	1	**2H-3922**	2	LOCKWASHER	
	4	1	**9F-5644**	2	LOCKWASHER	
	5	1	**6F-7045**	2	NUT-FULL (3/8-24-THD)	

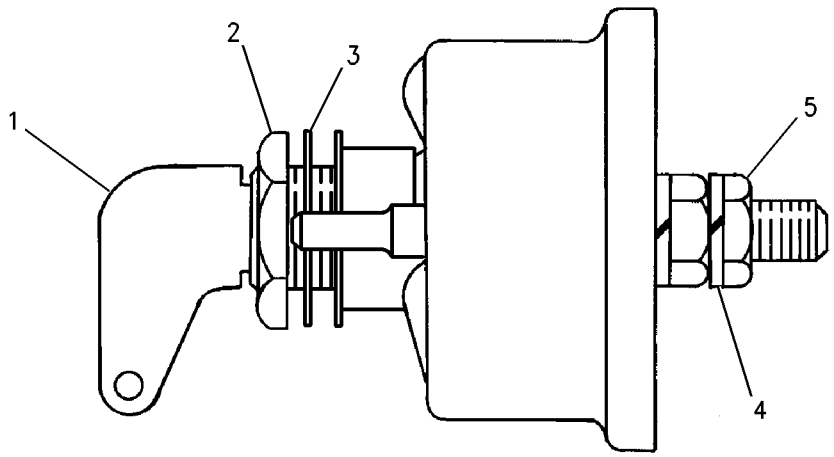

GRAPHIC #1 **<END>** g00715584

125-1302 SWITCH GP-MAGNETIC–START RELAY

S/N: DSH1-UP; DLN1-UP; DJR1-UP
PART OF 322-1360 PANEL GP-FUSE
ALSO AN ATTACHMENT

SMCS-7499 **i04009269**

NOTE	REF NO	GRAPHIC REF	PART NUMBER	QTY	PART NAME 1 2 3 4 5 6 (PRODUCT LEVEL)	SEE PAGE
	1	1	**102-8802**	1	KIT-RECEPTACLE (2-PIN)	
					(INCLUDES RECEPTACLE AS & WEDGE)	
	2	1	**186-3735**	2	PIN-CONNECTOR (16-GA TO 18-GA)	
	3	1	**1H-3338**	2	LOCKWASHER (EXTERNAL TOOTH)	
	4	1	**012-0380**	2	LOCKWASHER	
M	5	1	**5C-2890**	2	NUT (M6X1-THD)	
E	6	1	**9X-1813**		SLEEVE (16-CM)	

E-ORDER BY THE CENTIMETER
M-METRIC PART

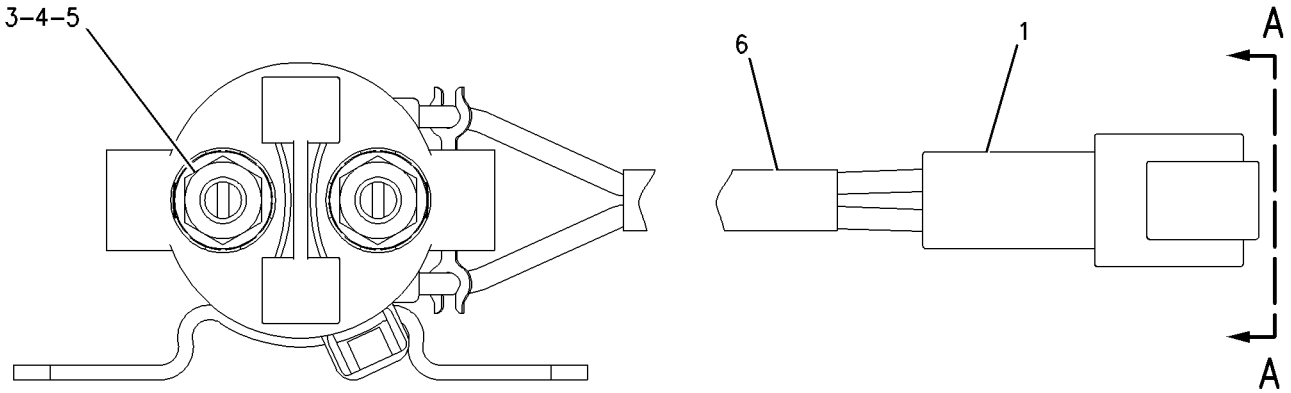

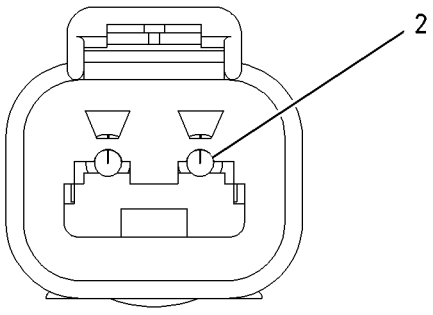

VIEW A–A

GRAPHIC #1 **<END>** g00988001

241-8368 SWITCH GP-MAGNETIC—MAIN RELAY

S/N: DSH1-UP; DLN1-UP; DJR1-UP
24-VOLT
PART OF 322-1360 PANEL GP-FUSE
ALSO AN ATTACHMENT

SMCS-7499 **i04009312**

NOTE	REF NO	GRAPHIC REF	PART NUMBER	QTY	PART NAME 1 2 3 4 5 6 (PRODUCT LEVEL)	SEE PAGE
	1	1	**155-2270**	1	KIT-CONNECTING PLUG (2-PIN)	
					(INCLUDES PLUG AS, WEDGE & INTERFACE SEAL)	
	2	1	**4F-2294**	2	NUT-JAM (5/16-24-THD)	
	3	1	**186-3736**	2	SOCKET-CONNECTOR (16-GA TO 18-GA)	

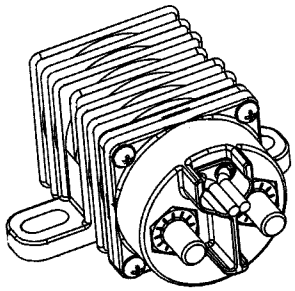

ISOMETRIC VIEW

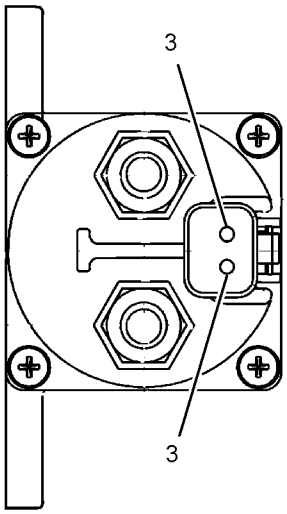

VIEW A-A

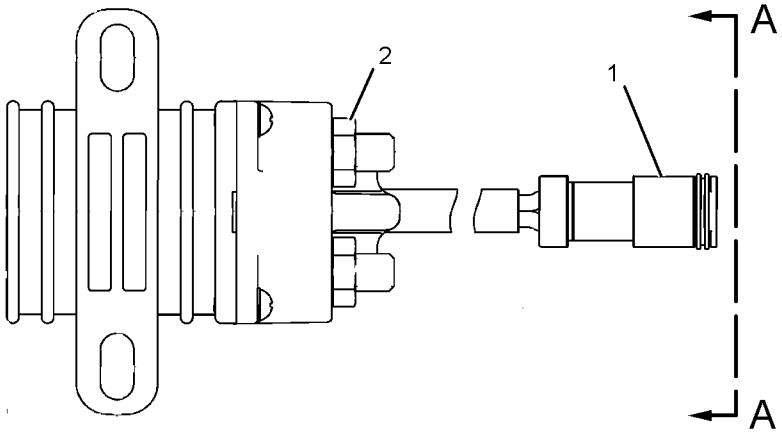

GRAPHIC #1 **<END>** g01077362

158-6632 SWITCH GP-PUSH BUTTON–HORN

S/N: DSH1-UP; DLN1-UP; DJR1-UP
PART OF 321-5816 BATTERY & WIRING GP, 327-9902 WIRING GP-PLATFORM
ALSO AN ATTACHMENT

SMCS-1435, 7332 **i03995519**

NOTE	REF NO	GRAPHIC REF	PART NUMBER	QTY	PART NAME 1 2 3 4 5 6 (PRODUCT LEVEL)	SEE PAGE
	1	1	**9X-0199**	1	BOOT-SWITCH	
	2	1	**7T-9515**	1	KNOB-HORN	
	3	1	**5L-7200**	1	SCREW (8-32X0.375-IN)	
	4	1	**3B-4501**	1	LOCKWASHER	
	5	1	**6V-8370**	1	NUT-HEX (3/4-32-THD)	
	6	1	**2H-3922**	1	LOCKWASHER	
	7	1	**102-8802**	1	KIT-RECEPTACLE (2-PIN)	
					(INCLUDES RECEPTACLE AS & WEDGE)	
	8	1	**9X-3401**	2	PIN-CONNECTOR (16-GA TO 18-GA)	

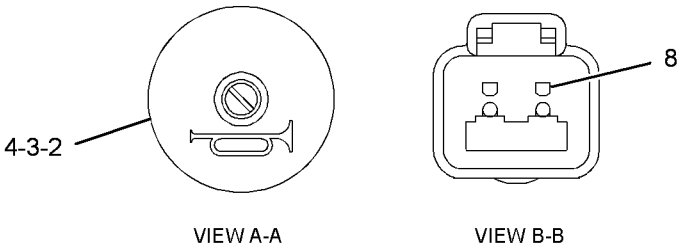

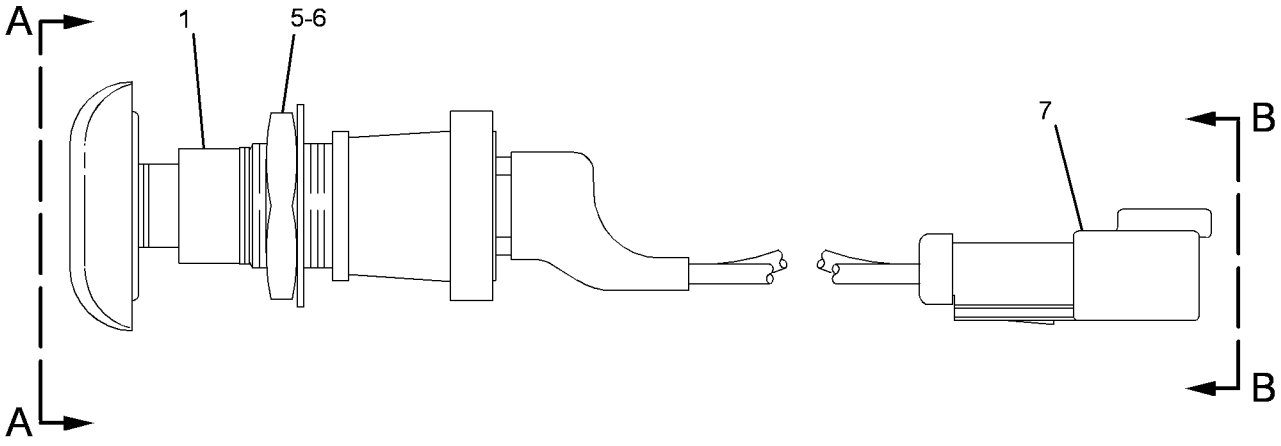

GRAPHIC #1 **<END>** g02173962

239-1134 VALVE GP-ETHER STARTING

S/N: DSH1-UP; DLN1-UP; DJR1-UP
24-VOLT
PART OF 327-9900 STARTING AID GP-ETHER
AN ATTACHMENT

SMCS-1456 **i04009069**

NOTE	REF NO	GRAPHIC REF	PART NUMBER	QTY	PART NAME 1 2 3 4 5 6 (PRODUCT LEVEL)	SEE PAGE
	1	1	**7N-9801**	1	GASKET	
	2	1	**102-8802**	1	KIT-RECEPTACLE (2-PIN)	
					(INCLUDES RECEPTACLE AS & WEDGE)	
	3	1	**186-3735**	2	PIN-CONNECTOR (16-GA TO 18-GA)	

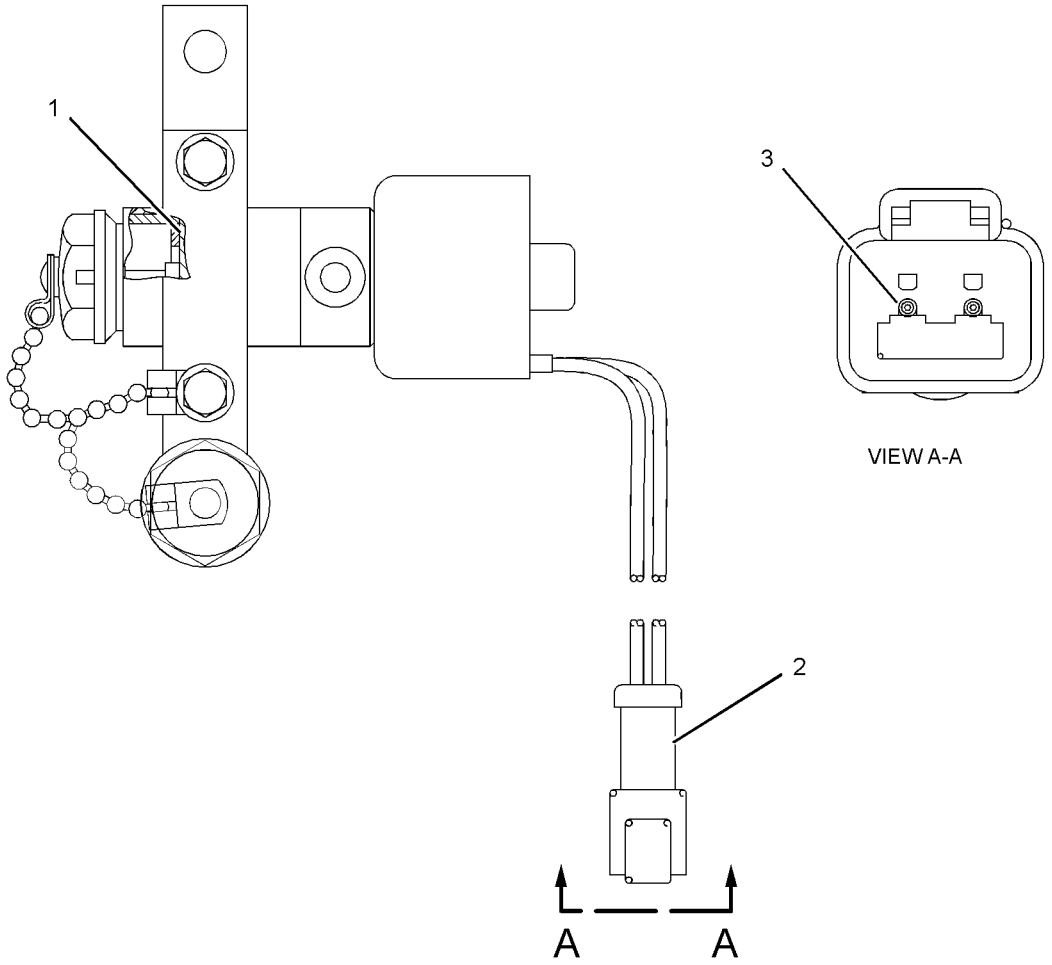

GRAPHIC #1 **<END>** g01375620

322-1359 WIRING GP-BOX

S/N: DSH1-UP; DLN1-UP; DJR1-UP
PART OF 322-1360 PANEL GP-FUSE
ALSO AN ATTACHMENT

SMCS-1408 **i04012872**

NOTE	REF NO	GRAPHIC REF	PART NUMBER	QTY	PART NAME 1 2 3 4 5 6 (PRODUCT LEVEL)	SEE PAGE
	1	1	**225-8553**	1	BLOCK AS-FUSE	
		1	**151-1398**	3	KIT-TERMINAL (LOCK) (FUSE BLOCK)	
					(EACH KIT INCLUDES LOCK)	
		1	**227-0912**	1	BLOCK AS-FUSE	
		1	**1H-3244**	2	LOCKWASHER	
		1	**6V-8185**	2	NUT (1/4-20-THD)	
		1	**8T-4205**	2	WASHER-HARD (7.2X14.5X2-MM THK)	
		1	**180-5737**	1	COVER	
	2	1	*320-5903*	1	HARNESS AS-PANEL (FUSE BLOCK)	
		1	**102-8802**	1	KIT-RECEPTACLE (2-PIN)	
					(INCLUDES RECEPTACLE AS & WEDGE)	
		1	**9G-3695**	37	PLUG-SEAL	
		1	**9W-2032**	3	TERMINAL-BLADE (10-GA TO 12-GA)	
		1	**9W-2033**	12	TERMINAL-BLADE (14-GA TO 16-GA)	
E		1	**119-3662**		TUBE-HEAT SHRINK (10.85-MM DIA) (13-CM)	
		1	**9X-3402**	2	SOCKET-CONNECTOR (16-GA TO 18-GA)	
					-OR-	
		1	**126-1768**	2	SOCKET-CONNECTOR (14-GA TO 16-GA)	
		1	**126-1767**	23	PIN-CONNECTOR (14-GA TO 16-GA)	
		1	**131-1488**	1	TERMINAL AS-RING (6-GA TO 8-GA)	
		1	**2L-8075**	1	TERMINAL-RING (14-GA TO 16-GA, NO. 8 SCREW)	
		1	**9X-3401**	12	PIN-CONNECTOR (16-GA TO 18-GA)	
					-OR-	
		1	**126-1767**	12	PIN-CONNECTOR (14-GA TO 16-GA)	
		1	**155-2270**	1	KIT-CONNECTING PLUG (2-PIN)	
					(INCLUDES PLUG AS, WEDGE & INTERFACE SEAL)	
		1	**214-4208**	1	RECEPTACLE AS-CONNECTOR (70-PIN)	
		1	**230-8792**	5	TERMINAL	

E-ORDER BY THE CENTIMETER

322-1359 WIRING GP-BOX *(contd.)* **i04012872**

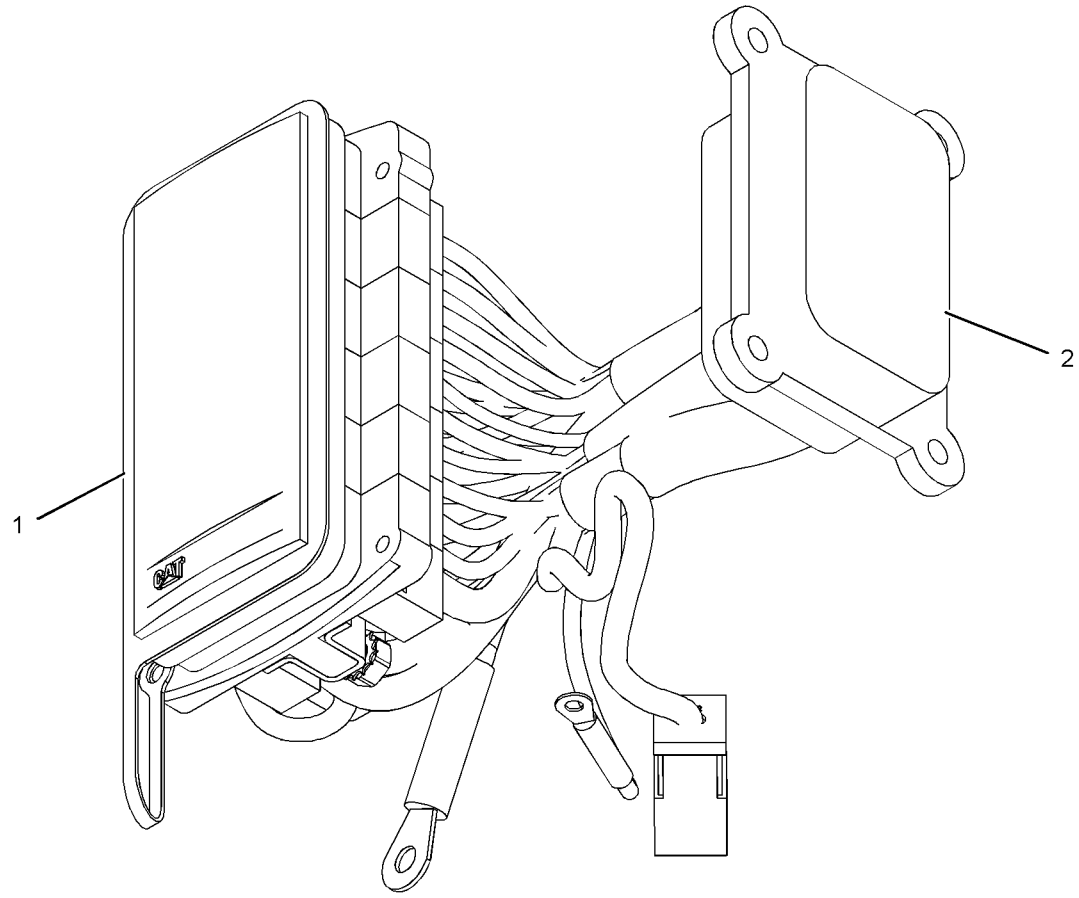

GRAPHIC #1 **<END>** g02189954

ELECTRICAL AND STARTING SYSTEM

235-8203 WIRING GP-ELECTRONIC CONTROL

S/N: THX28268-UP

PART OF 318-1906 ENGINE AR-COMPLETE

SMCS-1408, 1900 **i04017557**

NOTE	REF NO	GRAPHIC REF	PART NUMBER	QTY	PART NAME 1 2 3 4 5 6 (PRODUCT LEVEL)	SEE PAGE
	1	1	**3S-2093**	19	STRAP-CABLE	
	2	1	**9M-1974**	5	WASHER-HARD (8.8X16X2-MM THK)	
	3	1	**160-8124**	1	PLUG AS (2-PIN)	
		1	**8T-8737**	2	PLUG-SEAL	
		1	**102-8802**	1	KIT-RECEPTACLE (2-PIN)	
					(INCLUDES RECEPTACLE AS & WEDGE)	
	4	1	**196-9654**	1	BRACKET AS	
		1	**3W-9139**	1	BOSS	
M		1	**6V-9632**	2	NUT-WELD (M6X1-THD)	
		1	**7T-1099**	7	LINK	
M		1	**8T-3490**	1	NUT-WELD (M10X1.5-THD)	
	5	1	**215-3249**	1	HARNESS AS-ENGINE (UNIT INJECTOR)	
		1	**3S-2093**	5	STRAP-CABLE	
		1	**105-1797**	5	MOUNT	
		1	**191-7823**	1	RECEPTACLE AS	
	6	1	**235-8202**	1	HARNESS AS-ENGINE (ELECTRONIC CONTROL MODULE)	
		1	**227-4002**	1	PLUG AS-CONNECTOR (108-PIN)	
		1	**8T-8737**	12	PLUG-SEAL	
		1	**264-5732**	1	PLUG AS-CONNECTOR (120-PIN)	
		1	**155-2265**	1	KIT-CONNECTING PLUG (8-PIN)	
					(INCLUDES PLUG AS. AND WEDGE)	
		1	**155-2270**	5	KIT-CONNECTING PLUG (2-PIN)	
					(EACH INCLUDES PLUG AS. AND WEDGE)	
		1	**155-2260**	3	KIT-CONNECTING PLUG (3-PIN)	
					(EACH INCLUDES PLUG AS. AND WEDGE)	
		1	**119-3662**		TUBE-HEAT SHRINK (10.85-MM DIA) (33-CM)	
		1	**125-7874**		TUBE-HEAT SHRINK (5.72-MM DIA) (5-CM)	
		1	**125-7875**		TUBE-HEAT SHRINK (7.44-MM DIA) (10-CM)	
		1	**172-6062**	1	PLUG AS-CONNECTOR (18-PIN)	
		1	**211-6807**	1	COVER (CONNECTOR)	
		1	**102-8802**	1	KIT-RECEPTACLE (2-PIN)	
					(INCLUDES RECEPTACLE AS. AND WEDGE)	
		1	**102-8803**	1	KIT-RECEPTACLE (3-PIN)	
					(INCLUDES RECEPTACLE AS. AND WEDGE)	
		1	**100-3320**	1	PLUG AS-CONNECTOR (2-PIN)	
		1	**126-5011**	1	SEAL-CONNECTOR	
		1	**111-2416**	1	PLUG AS-CONNECTOR (2-PIN)	
		1	**126-5011**	1	SEAL-CONNECTOR	
	7	1	**4P-7581**	5	CLIP	
	8	1	**4P-8134**	2	CLIP	
M	9	1	**5P-7970**	2	NUT (M8X1.25-THD)	
	10	1	**6V-4369**	1	CLIP	
M	11	1	**6V-5217**	1	BOLT (M8X1.25X20-MM)	
	12	1	**6V-5839**	5	WASHER (11X21X2.5-MM THK)	
M	13	1	**6V-6317**	4	BOLT (M10X1.5X20-MM)	
M	14	1	**7I-2272**	2	BOLT (M5X0.8X12-MM)	
	15	1	**8T-0328**	2	WASHER-HARD (5.5X10X1-MM THK)	
M	16	1	**8T-4137**	1	BOLT (M10X1.5X20-MM)	
	17	1	**8T-4205**	1	WASHER-HARD (7.2X14.5X2-MM THK)	
M	18	1	**8T-5451**	1	BOLT (M6X1X12-MM)	

M-METRIC PART

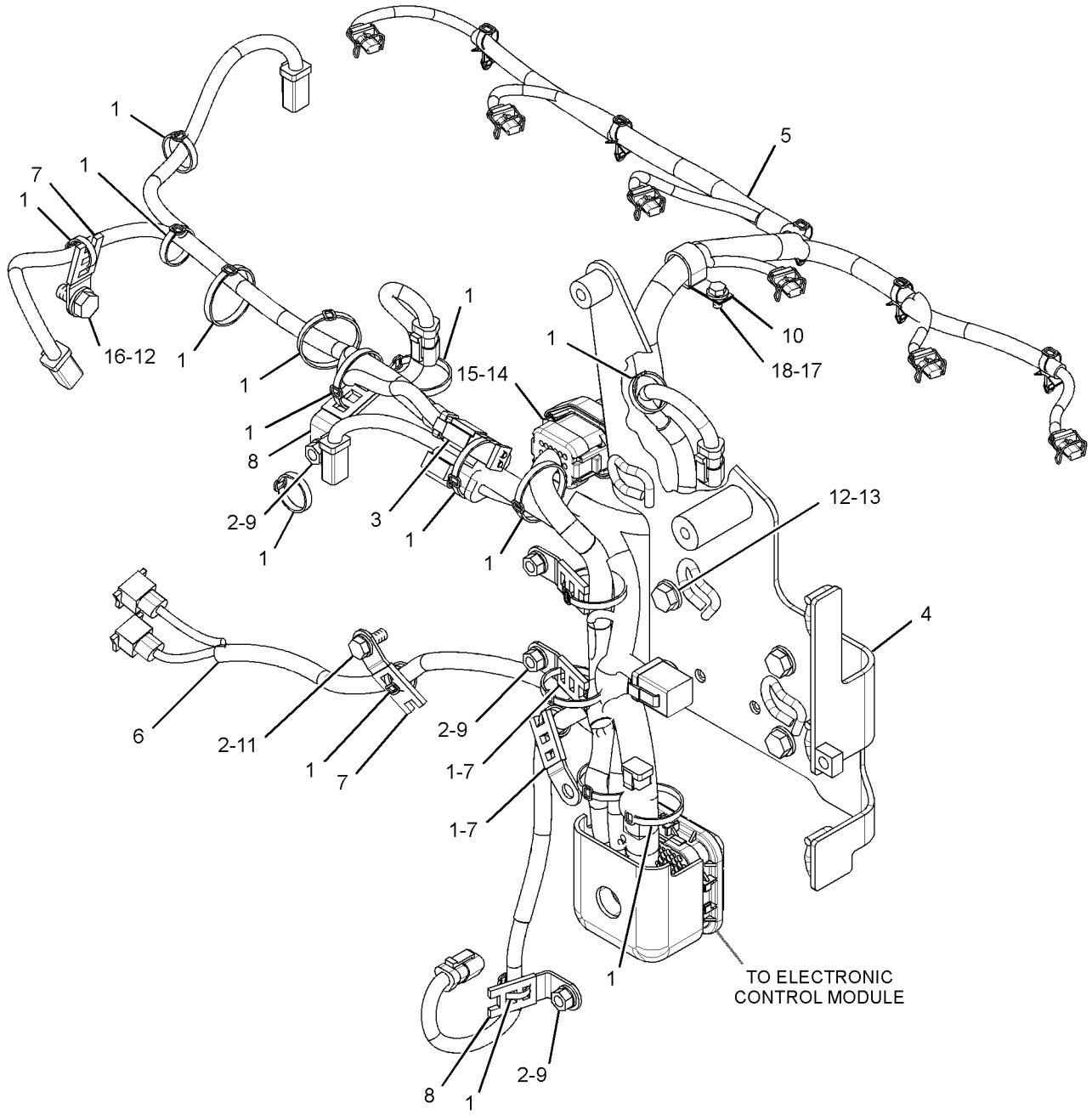

GRAPHIC #1 **<END>** g01684160

ELECTRICAL AND STARTING SYSTEM

327-9901 WIRING GP-ENGINE

S/N: DSH1-UP; DLN1-UP; DJR1-UP
PART OF 313-3757 INSTALLATION AR

SMCS-1000, 1408 **i04728710**

NOTE	REF NO	GRAPHIC REF	PART NUMBER	QTY	PART NAME 1 2 3 4 5 6 (PRODUCT LEVEL)	SEE PAGE
	1	3	**8E-3430**	1	STRIP AS	
		3	**1F-0750**	1	NUT-WELD (3/8-16-THD)	
		3	**8E-3431**	1	PLATE	
	2	1	**121-2844**	1	HARNESS AS-WIRING (CRANK WITHOUT INJECT)	
		1	**102-8803**	2	KIT-RECEPTACLE (3-PIN)	
					(EACH INCLUDES RECEPTACLE AS & WEDGE)	
		1	**8T-8729**	4	PIN-CONNECTOR (16-GA TO 18-GA)	
		1	**8T-8737**	5	PLUG-SEAL	
		1	**155-2260**	1	KIT-CONNECTING PLUG (3-PIN)	
					(INCLUDES PLUG AS, WEDGE & INTERFACE SEAL)	
Y	3	3	**145-7028**	2	SENSOR GP-TEMPERATURE (TRANSMISSION SUMP)	191
	4	3	**147-3150**	1	ANGLE AS	
	5	1	**183-4274**	1	BRACKET	
	6	2	**203-2789**	1	BRACKET AS	
	7	1	**204-2281**	1	STRAP-CABLE	
	8	2	**266-2404**	1	BRACKET AS	
M		2	**8T-3490**	1	NUT-WELD (M10X1.5-THD)	
		2	**124-6998**	1	PLATE	
	9	2	**271-2322**	1	BRACKET AS	
	10	1	**328-1861**	1	HARNESS AS-ENGINE	
		1	**102-8802**	1	KIT-RECEPTACLE (2-PIN)	
					(INCLUDES RECEPTACLE AS & WEDGE)	
		1	**8N-1544**	1	PIN-CONNECTOR (8-GA)	
		1	**8T-8737**	59	PLUG-SEAL	
E		1	**114-8843**		SLEEVE-PLASTIC (180-CM)	
E		1	**119-3662**		TUBE-HEAT SHRINK (10.85-MM DIA) (20-CM)	
E		1	**125-7874**		TUBE-HEAT SHRINK (5.72-MM DIA) (25-CM)	
E		1	**125-7875**		TUBE-HEAT SHRINK (7.44-MM DIA) (5-CM)	
		1	**9X-3402**	93	SOCKET-CONNECTOR (16-GA TO 18-GA)	
					—OR—	
		1	**126-1768**	93	SOCKET-CONNECTOR (14-GA TO 16-GA)	
		1	**126-1767**	1	PIN-CONNECTOR (14-GA TO 16-GA)	
		1	**126-1768**	15	SOCKET-CONNECTOR (14-GA TO 16-GA)	
		1	**126-1774**	1	COVER-CONNECTOR	
		1	**127-5486**	1	RECEPTACLE AS-CONNECTOR (1-PIN)	
		1	**2L-8049**	1	TERMINAL-RING (6-GA, NO. 10 SCREW)	
					—OR—	
		1	**2L-8057**	1	TERMINAL-RING (8-GA, NO. 10 SCREW)	
		1	**2L-8071**	1	TERMINAL-RING (10-GA TO 12-GA, 1/2-IN SCREW)	
		1	**134-2540**	1	RESISTOR AS-CONNECTION (3-PIN)	
		1	**9X-3401**	1	PIN-CONNECTOR (16-GA TO 18-GA)	
					—OR—	
		1	**126-1767**	1	PIN-CONNECTOR (14-GA TO 16-GA)	
		1	**155-2265**	1	KIT-CONNECTING PLUG (8-PIN)	
		1	**155-2260**	2	KIT-CONNECTING PLUG (3-PIN)	
		1	**155-2270**	5	KIT-CONNECTING PLUG (2-PIN)	
		1	**174-0503**	1	KIT-CONNECTING PLUG (3-PIN)	
					(EACH PLUG KIT INCLUDES PLUG AS, WEDGE & INTERFACE SEAL)	
		1	**160-7689**	2	PLUG AS-CONNECTOR (70-PIN)	
		1	**159-9322**	1	SEAL-O-RING	
		1	**160-8124**	1	PLUG AS (2-PIN)	
		1	**102-8802**	1	KIT-RECEPTACLE (2-PIN)	
					(INCLUDES RECEPTACLE AS & WEDGE)	
		1	**8T-8737**	2	PLUG-SEAL	

327-9901 **WIRING GP-ENGINE** ***(contd.)*** **i04728710**

NOTE	REF NO	GRAPHIC REF	PART NUMBER	QTY	PART NAME 1 2 3 4 5 6 (PRODUCT LEVEL)	SEE PAGE
		1	*361-6052*	1	RESISTOR AS	
		1	**102-8802**	1	KIT-RECEPTACLE (2-PIN)	
					(INCLUDES RECEPTACLE AS & WEDGE)	
		1	**8T-8729**	2	PIN-CONNECTOR (16-GA TO 18-GA)	
	11	1	**328-1862**	1	CABLE AS	
		1	**1S-4915**	2	LINER (CONDUIT)	
E		1	**5P-0695**		CONDUIT (285-CM)	
		1	**8N-0869**	1	COVER-TERMINAL (RED)	
E		1	**8T-2225**		TUBE-HEAT SHRINK (25.4-MM DIA) (16-CM)	
		1	**030-1707**	1	TERMINAL-RING (0-GA, 3/8-IN SCREW)	
E		1	**159-8047**		CABLE-ELECTRICAL (0-GA, RED) (303-CM)	
B		1	**1P-0810**		TAPE-ELECTRICAL	
	12	2	**104-6202**	1	CLIP	
	13	1	**132-5789**	2	CLIP	
	14	2	**1J-8668**	3	STUD-TAPERLOCK (3/8-16X1.97-IN)	
	15	2,3	**1S-0994**	7	CLIP	
	16	2	**302-3908**	1	SPACER (11X20X30-MM THK)	
	17	2	**3K-6060**	3	LOCKNUT (3/8-16-THD)	
	18	1	**4P-7429**	2	CLIP	
	19	1,3	**4P-7581**	5	CLIP	
	20	2	**4P-7582**	2	CLIP	
	21	2	**4P-8134**	5	CLIP	
M	22	1,3	**5C-7261**	2	NUT (M8X1.25-THD)	
	23	3	**5M-3062**	1	BOLT (3/8-16X0.75-IN)	
	24	2	**5P-1075**	3	WASHER-HARD (10.2X22.5X3-MM THK)	
	25	3	**5P-7464**	1	CLIP (SLOT)	
	26	3	**5P-7465**	1	CLIP (TAB)	
M	27	1	**6V-3822**	1	BOLT (M10X1.5X35-MM)	
	28	2	**7J-0204**	2	SEAL-O-RING	
	29	1,2,3	**7K-1181**	45	STRAP-CABLE	
	30	2	**7X-0515**	1	WASHER-HARD (17X35X5-MM THK)	
	31	2	**8S-0948**	2	CLIP	
	32	3	**8T-2920**	1	GROMMET	
	33	1,2	**8T-4121**	10	WASHER-HARD (11X21X2.5-MM THK)	
M	34	1	**8T-4136**	3	BOLT (M10X1.5X25-MM)	
M	35	1,2	**8T-4137**	6	BOLT (M10X1.5X20-MM)	
M	36	2	**8T-4185**	1	BOLT (M10X1.5X50-MM)	
M	37	2	**8T-4190**	1	BOLT (M16X2X25-MM)	
M	38	3	**8T-4192**	1	BOLT (M12X1.75X25-MM)	
	39	3	**8T-4223**	1	WASHER-HARD (13.5X25.5X3-MM THK)	
	40	1,3	**8T-4224**	2	WASHER-HARD (8.8X16X2-MM THK)	
	41	3	**8T-4896**	1	WASHER-HARD (10.2X18.5X2.5-MM THK)	

B-USE AS REQUIRED
E-ORDER BY THE CENTIMETER
M-METRIC PART
Y-SEPARATE ILLUSTRATION

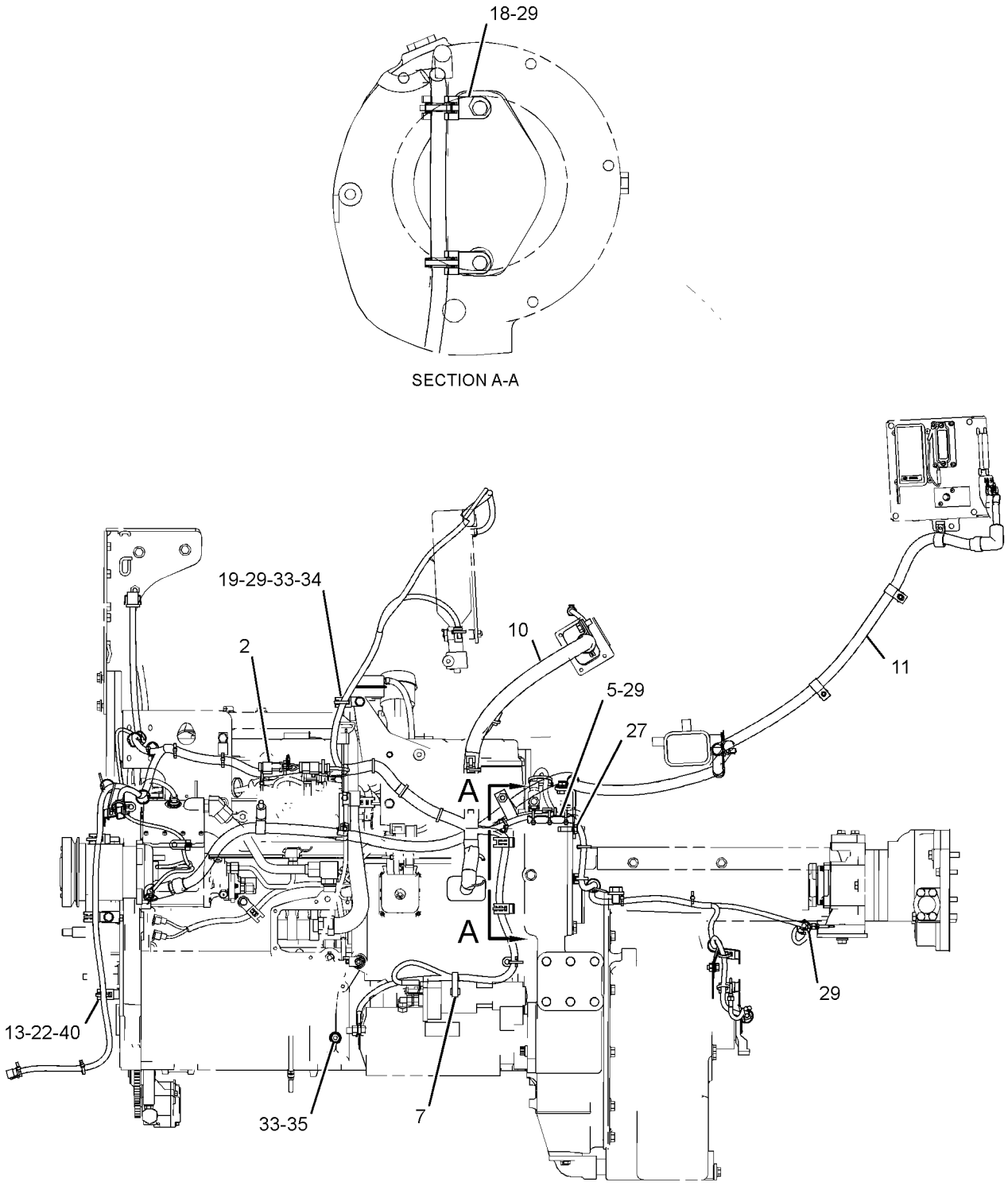

LEFT SIDE VIEW

GRAPHIC #1 g02855197

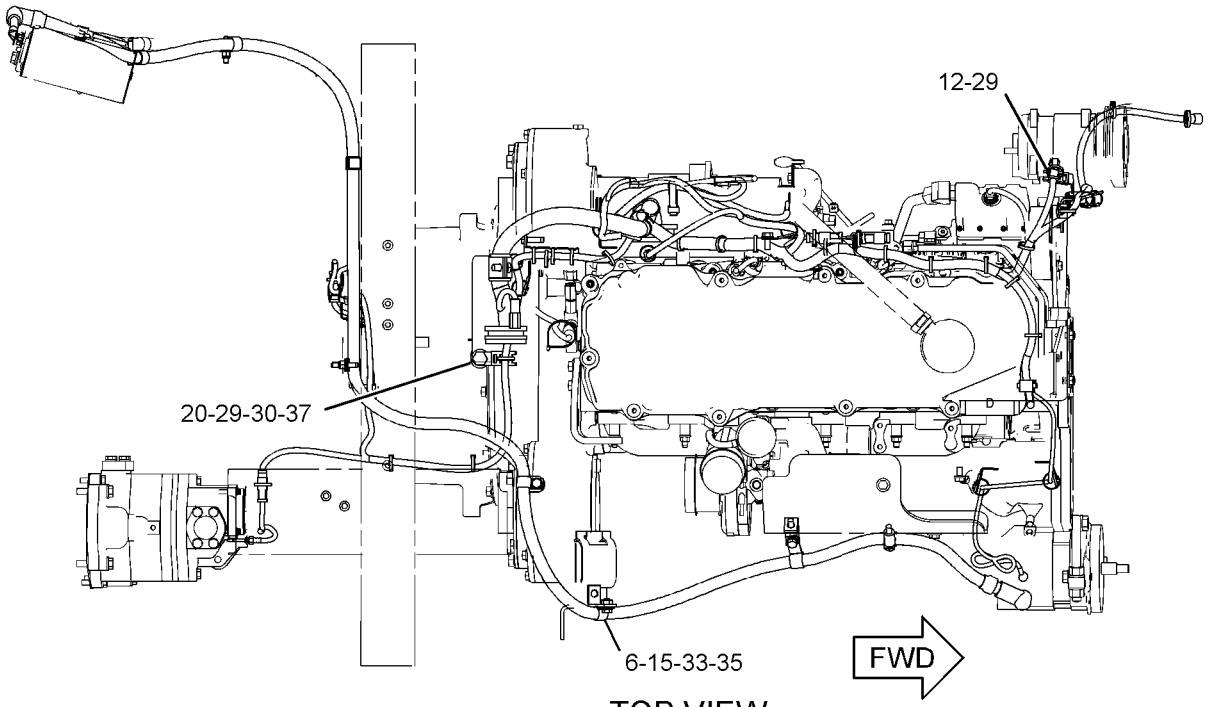

TOP VIEW

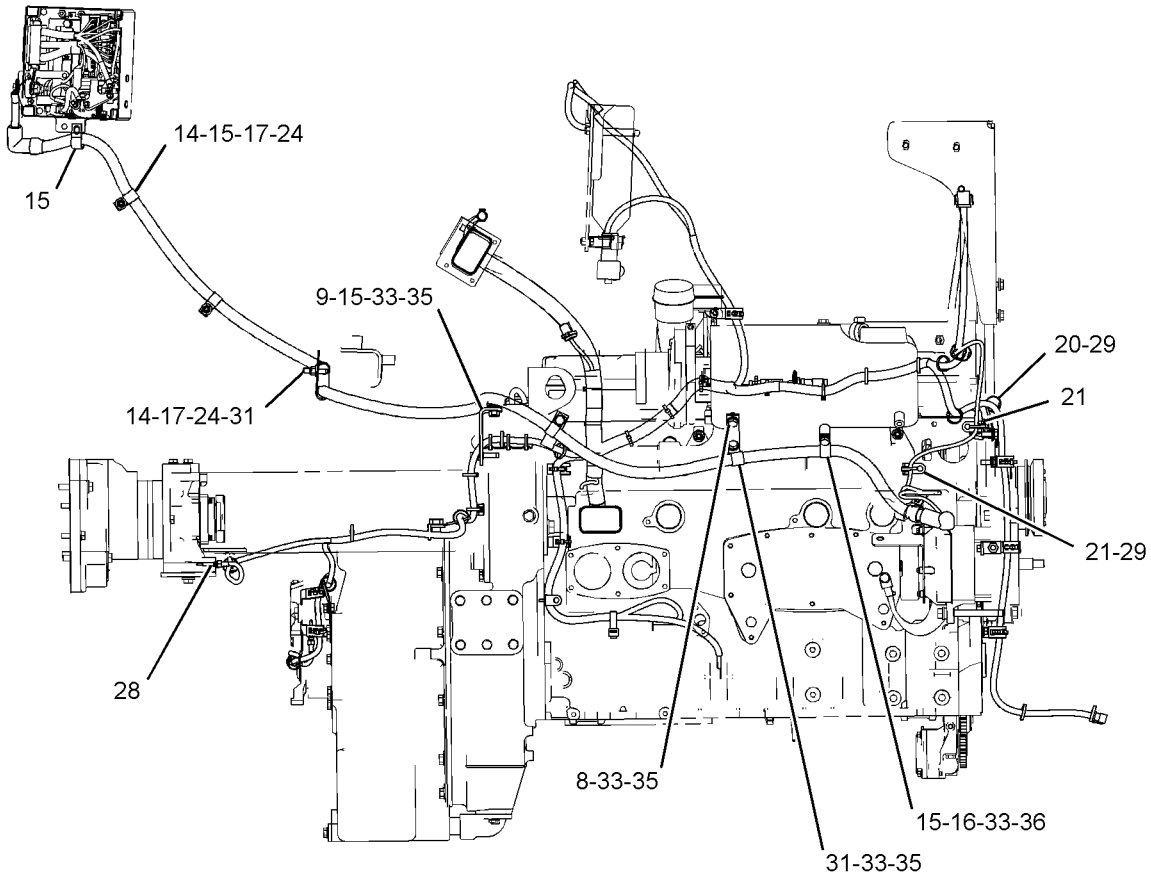

RIGHT SIDE VIEW

GRAPHIC #2 g02855198

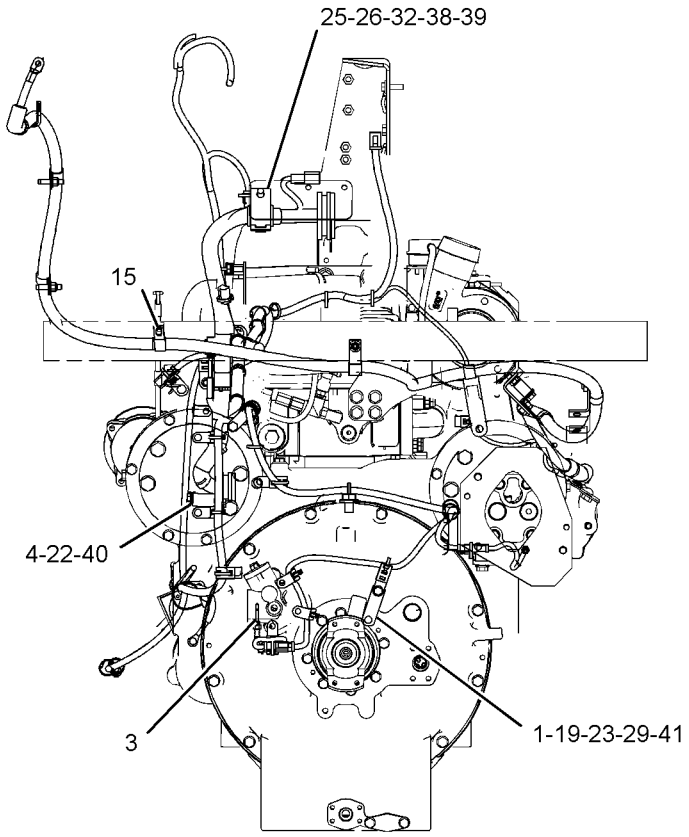

REAR VIEW

GRAPHIC #3 **<END>** g02855200

374-4269 WIRING GP-GRADE CONTROL

S/N: DSH1-UP; DLN1-UP; DJR1-UP
PART OF 379-5228 GRADE CONTROL AR
AN ATTACHMENT

SMCS-1408 **i04729771**

NOTE	REF NO	GRAPHIC REF	PART NUMBER	QTY	PART NAME 1 2 3 4 5 6 (PRODUCT LEVEL)	SEE PAGE
	1	1	**6D-3033**	12	SCREW-SOCKET HEAD (4-40X0.5-IN)	
	2	1	**6I-1418**	4	SPACER (8.2X12.7X28.7-MM THK)	
	3	1	**7R-3029**	3	CAP-DUST	
	4	1	**8T-9655**	8	MOUNT-ISOLATION	
	5	1	**9X-7449**	2	GROMMET	
	6	1	**132-8487**	3	NUT-RING	
	7	1	**236-8826**	3	BOSS (1-1/8-18X0.708-IN)	
R	8	1	**304-5687**	1	CONTROL GP-UNPROGRAMMED (MACHINE ECM)	
	9	1	**319-3753**	1	HARNESS AS-WIRING (LIGHT BAR)	
		1	**102-8804**	1	KIT-RECEPTACLE (4-PIN)	
					(INCLUDES RECEPTACLE AS & WEDGE)	
		1	**8T-8737**	4	PLUG-SEAL	
E		1	**125-7874**		TUBE-HEAT SHRINK (5.72-MM DIA) (15-CM)	
		1	**9X-3402**	9	SOCKET-CONNECTOR (16-GA TO 18-GA)	
					—OR—	
		1	**126-1768**	9	SOCKET-CONNECTOR (14-GA TO 16-GA)	
		1	**9X-3401**	3	PIN-CONNECTOR (16-GA TO 18-GA)	
					—OR—	
		1	**126-1767**	3	PIN-CONNECTOR (14-GA TO 16-GA)	
		1	**230-5008**	3	PLUG AS-CONNECTOR (4-PIN)	
					(EACH INCLUDES)	
		1	**264-7031**	1	SEAL-CONNECTOR	
	10	1	**319-3758**	1	HARNESS AS-WIRING (GPS)	
		1	**102-8801**	1	KIT-RECEPTACLE (12-PIN)	
					(INCLUDES RECEPTACLE AS & WEDGE)	
		1	**8T-8737**	5	PLUG-SEAL	
E		1	**125-7875**		TUBE-HEAT SHRINK (7.44-MM DIA) (5-CM)	
		1	**126-1767**	2	PIN-CONNECTOR (14-GA TO 16-GA)	
		1	**9X-3401**	5	PIN-CONNECTOR (16-GA TO 18-GA)	
					—OR—	
		1	**126-1767**	5	PIN-CONNECTOR (14-GA TO 16-GA)	
		1	**167-8987**	1	PLUG AS-CONNECTOR (8-PIN)	
		1	**268-3371**	1	CAP AS-CONNECTOR	
	11	1	**320-3065**	1	SENSOR GP-PRESSURE (IMPLEMENT PILOT PRESSURE)	
	12	1	**320-5892**	1	HARNESS AS-WIRING (RADIATOR GUARD)	
		1	**8T-8737**	5	PLUG-SEAL	
E		1	**119-3662**		TUBE-HEAT SHRINK (10.85-MM DIA) (26-CM)	
E		1	**125-7874**		TUBE-HEAT SHRINK (5.72-MM DIA) (50-CM)	
		1	**9X-3402**	18	SOCKET-CONNECTOR (16-GA TO 18-GA)	
					—OR—	
		1	**126-1768**	18	SOCKET-CONNECTOR (14-GA TO 16-GA)	
		1	**126-1768**	15	SOCKET-CONNECTOR (14-GA TO 16-GA)	
		1	**134-2540**	2	RESISTOR AS-CONNECTION (3-PIN)	
		1	**155-2255**	1	KIT-CONNECTING PLUG (12-PIN)	
		1	**155-2257**	1	KIT-CONNECTING PLUG (12-PIN)	
		1	**155-2265**	1	KIT-CONNECTING PLUG (8-PIN)	
		1	**174-0503**	2	KIT-CONNECTING PLUG (3-PIN)	
					(EACH PLUG KIT INCLUDES PLUG AS, WEDGE, & INTERFACE SEAL)	
	13	1	**320-5893**	1	HARNESS AS-WIRING (CYLINDER, LH)	
		1	**102-8801**	1	KIT-RECEPTACLE (12-PIN)	
		1	**190-7615**	1	KIT-RECEPTACLE (12-PIN)	
					(EACH RECEPTACLE KIT INCLUDES RECEPTACLE AS & WEDGE)	
		1	**126-1767**	6	PIN-CONNECTOR (14-GA TO 16-GA)	

374-4269 **WIRING GP-GRADE CONTROL** *(contd.)* **i04729771**

NOTE	REF NO	GRAPHIC REF	PART NUMBER	QTY	PART NAME 1 2 3 4 5 6 (PRODUCT LEVEL)	SEE PAGE
		1	**9X-3401**	6	PIN-CONNECTOR (16-GA TO 18-GA)	
					—OR—	
		1	**126-1767**	6	PIN-CONNECTOR (14-GA TO 16-GA)	
B		1	**1P-0810**		TAPE-ELECTRICAL	
		1	**228-3323**	2	CLIP-SPRING	
	14	1	**320-5902**	1	HARNESS AS-CONTROL	
		1	**8T-8737**	157	PLUG-SEAL	
E		1	**125-7874**		TUBE-HEAT SHRINK (5.72-MM DIA) (5-CM)	
		1	**9X-3402**	51	SOCKET-CONNECTOR (16-GA TO 18-GA)	
					—OR—	
		1	**126-1768**	51	SOCKET-CONNECTOR (14-GA TO 16-GA)	
		1	**126-1768**	2	SOCKET-CONNECTOR (14-GA TO 16-GA)	
		1	**147-1445**	1	PLUG AS-CONNECTOR (70-PIN)	
		1	**147-1446**	1	PLUG AS-CONNECTOR (70-PIN)	
		1	**160-7689**	1	PLUG AS-CONNECTOR (70-PIN)	
					(EACH PLUG AS INCLUDES)	
		1	**159-9322**	1	SEAL-O-RING	
	15	1	**334-9544**	2	BRACKET AS	
	16	1	**334-9545**	2	COVER AS	
	17	1	**349-5766**	4	CLAMP	
	18	1	**354-1681**	1	HARNESS AS-SENSOR (INPUT)	
		1	**8T-8737**	6	PLUG-SEAL	
		1	**9X-3401**	6	PIN-CONNECTOR (16-GA TO 18-GA)	
		1	**230-4010**	1	RECEPTACLE AS-CONNECTOR (12-PIN)	
	19	1	**354-1683**	1	HARNESS AS-SENSOR (OUTPUT)	
		1	**8T-8737**	4	PLUG-SEAL	
		1	**9X-3402**	8	SOCKET-CONNECTOR (16-GA TO 18-GA)	
		1	**230-4009**	1	PLUG AS-CONNECTOR (12-PIN)	
		1	**264-7034**	1	SEAL-CONNECTOR	
	20	1	**372-0294**	1	HARNESS AS-WIRING (CYLINDER, RH)	
		1	**102-8801**	1	KIT-RECEPTACLE (12-PIN)	
					(INCLUDES RECEPTACLE AS & WEDGE)	
		1	**8T-8737**	3	PLUG-SEAL	
		1	**126-1767**	5	PIN-CONNECTOR (14-GA TO 16-GA)	
		1	**9X-3401**	4	PIN-CONNECTOR (16-GA TO 18-GA)	
					—OR—	
		1	**126-1767**	4	PIN-CONNECTOR (14-GA TO 16-GA)	
B		1	**1P-0810**		TAPE-ELECTRICAL	
		1	**228-3323**	1	CLIP-SPRING	
	21	1	**381-3299**	1	HARNESS AS-CHASSIS	
		1	**102-8806**	1	KIT-RECEPTACLE (8-PIN)	
		1	**102-8801**	1	KIT-RECEPTACLE (12-PIN)	
		1	**190-7615**	1	KIT-RECEPTACLE (12-PIN)	
					(EACH RECEPTACLE AS INCLUDES RECEPTACLE AS & WEDGE)	
		1	**8T-8737**	6	PLUG-SEAL	
E		1	**114-8843**		SLEEVE-PLASTIC (100-CM)	
E		1	**119-3662**		TUBE-HEAT SHRINK (10.85-MM DIA) (7-CM)	
		1	**9X-3402**	13	SOCKET-CONNECTOR (16-GA TO 18-GA)	
					—OR—	
		1	**126-1768**	13	SOCKET-CONNECTOR (14-GA TO 16-GA)	
		1	**126-1767**	8	PIN-CONNECTOR (14-GA TO 16-GA)	
		1	**9X-3401**	18	PIN-CONNECTOR (16-GA TO 18-GA)	
					—OR—	
		1	**126-1767**	18	PIN-CONNECTOR (14-GA TO 16-GA)	
		1	**155-2270**	5	KIT-CONNECTING PLUG (2-PIN)	
					(EACH INCLUDES PLUG AS, WEDGE, & INTERFACE SEAL)	
B		1	**1P-0810**		TAPE-ELECTRICAL	
		1	**237-0227**	1	PLUG AS-CONNECTOR (3-PIN)	

374-4269 **WIRING GP-GRADE CONTROL** *(contd.)* **i04729771**

NOTE	REF NO	GRAPHIC REF	PART NUMBER	QTY	PART NAME 1 2 3 4 5 6 (PRODUCT LEVEL)	SEE PAGE
		1	**264-7030**	1	SEAL-CONNECTOR	
	22	1	**129-8331**	1	PLATE AS	
		1	**7T-1099**	4	LINK	
	23	1	**130-5300**	2	CLIP	
M	24	1	**131-3539**	3	SCREW-FLAT HEAD (M8X1.25X30-MM)	
	25	1	**1S-6420**	2	CLIP	
	26	1	**200-6345**	1	MOUNT (DUAL SWIVEL)	
	27	1	**214-7568**	1	SEAL-O-RING	
	28	1	**302-3908**	1	SPACER (11X20X30-MM THK)	
	29	1	**3E-4352**	10	WASHER-HARD (8.8X20.5X2.5-MM THK)	
	30	1	**4P-7581**	2	CLIP	
	31	1	**5P-1075**	1	WASHER-HARD (10.2X22.5X3-MM THK)	
	32	1	**7K-1181**	47	STRAP-CABLE	
	33	1	**7X-0365**	2	BOLT (3/4-10X1.5-IN)	
M	34	1	**7X-0818**	4	BOLT (M8X1.25X45-MM)	
	35	1	**8T-2501**	1	BOLT (3/8-16X2-IN)	
M	36	1	**8T-4139**	2	BOLT (M12X1.75X30-MM)	
M	37	1	**8T-4189**	2	BOLT (M8X1.25X20-MM)	
	38	1	**8T-4223**	2	WASHER-HARD (13.5X25.5X3-MM THK)	
M	39	1	**8T-4908**	8	BOLT (M8X1.25X25-MM)	
	40	1	**8T-4994**	2	WASHER-HARD (20X36.5X3.5-MM THK)	
	41	1	**9N-0869**	4	WASHER-HARD (8.8X25.5X2-MM THK)	

B-USE AS REQUIRED
E-ORDER BY THE CENTIMETER
M-METRIC PART
R-REMFG PART MAY BE AVAILABLE

374-4269 **WIRING GP-GRADE CONTROL** *(contd.)* **i04729771**

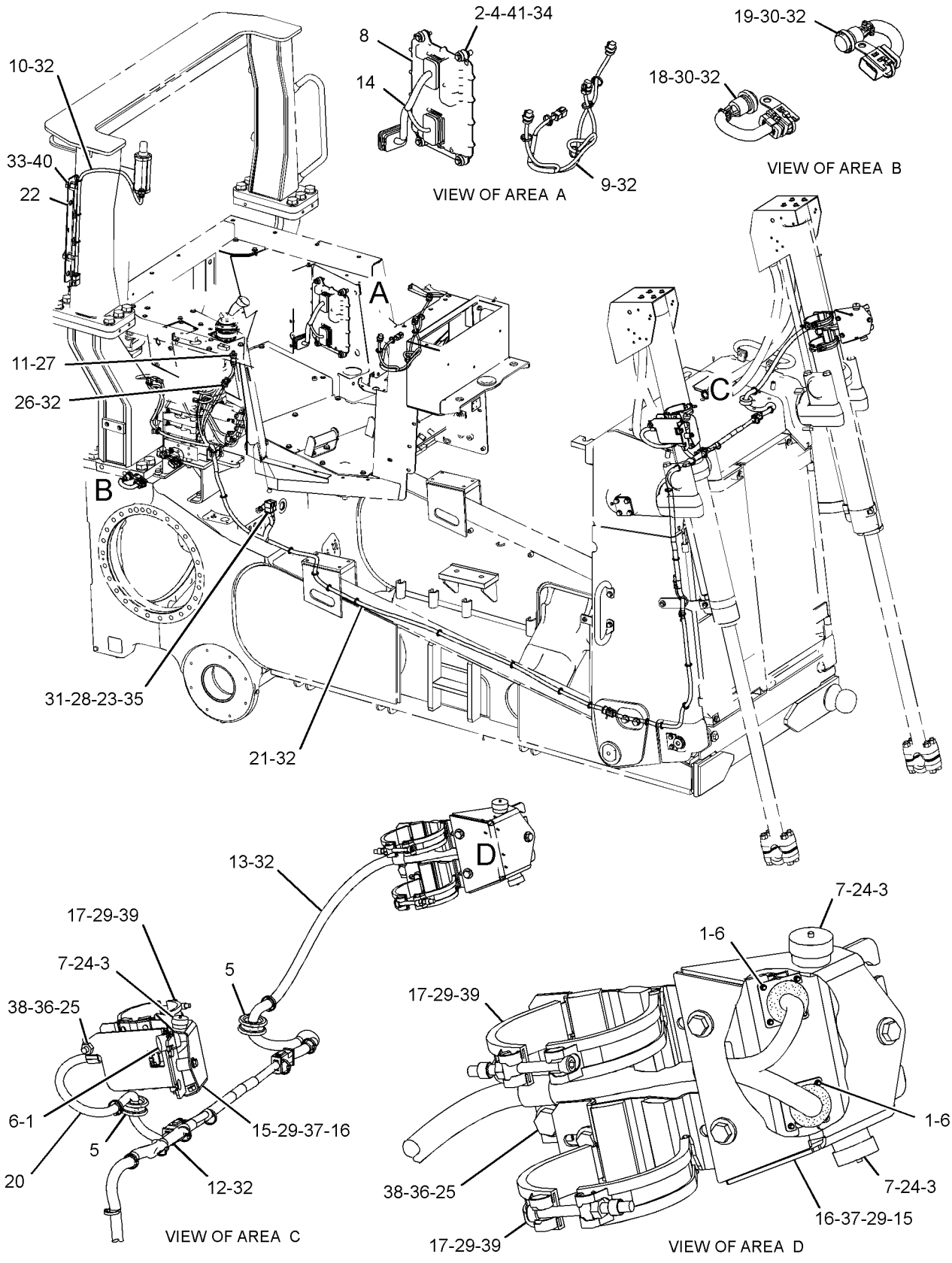

GRAPHIC #1 **<END>** g02852537

327-9902 WIRING GP-PLATFORM

S/N: DSH1-UP; DLN1-UP; DJR1-UP
PART OF 387-0554 COLD WEATHER AR, 380-7900 OPERATOR AR
ALSO AN ATTACHMENT

SMCS-1408 **i04769374**

NOTE	REF NO	GRAPHIC REF	PART NUMBER	QTY	PART NAME 1 2 3 4 5 6 (PRODUCT LEVEL)	SEE PAGE
	1	1	**3E-5239**	1	RELAY AS (24-VOLT) (WINCH)	
Y	2	2	**3E-6328**	1	ALARM GP (24-VOLT)	134
	3	1	**117-2311**	2	SOCKET-AUXILIARY POWER (12-VOLT)	
	4	2	**149-9818**	1	PLATE	
Y	5	1	**158-6632**	1	SWITCH GP-PUSH BUTTON (HORN)	204
	6	2	**172-4860**	1	WIRE AS	
	7	2	**202-4327**	1	PULLER-FUSE	
	8	2	**204-8000**	1	MOUNTING-CABLE TIE	
	9	2	**224-9222**	1	BRACKET	
	10	2	**239-3355**	1	GASKET	
	11	1	**239-7392**	1	PLATE AS	
	12	2	**239-8107**	1	FUSE (175-AMPERE) (SPARE)	
	13	1	**249-5481**	1	SWITCH AS-ROCKER (THROTTLE)	
	14	1	**261-7990**	1	GROMMET	
	15	2	**281-3179**	1	BRACKET	
	16	1	**284-3623**	1	SWITCH AS-ROCKER (HYDRAULIC LOCKOUT)	
	17	2	**317-6574**	1	PLATE AS	
	18	2	**9X-8256**	9	WASHER (6.6X12X2-MM THK)	
	19	1	**320-5889**	1	HARNESS AS-CONSOLE	
		1	**102-8802**	3	KIT-RECEPTACLE (2-PIN)	
					(EACH INCLUDES RECEPTACLE AS & WEDGE)	
		1	**8T-8737**	9	PLUG-SEAL	
		1	**9X-1054**	1	PLUG AS-CONNECTOR (4-PIN)	
		1	**100-5041**	4	TERMINAL-RECEPTACLE (18-GA TO 20-GA)	
E		1	**114-8843**		SLEEVE-PLASTIC (100-CM)	
E		1	**119-3662**		TUBE-HEAT SHRINK (10.85-MM DIA) (7-CM)	
E		1	**125-7874**		TUBE-HEAT SHRINK (5.72-MM DIA) (15-CM)	
E		1	**125-7875**		TUBE-HEAT SHRINK (7.44-MM DIA) (15-CM)	
		1	**9X-3402**	21	SOCKET-CONNECTOR (16-GA TO 18-GA)	
					—OR—	
		1	**126-1768**	21	SOCKET-CONNECTOR (14-GA TO 16-GA)	
		1	**5P-4571**	2	TERMINAL-BLADE (14-GA TO 16-GA)	
		1	**9X-3401**	2	PIN-CONNECTOR (16-GA TO 18-GA)	
					—OR—	
		1	**126-1767**	2	PIN-CONNECTOR (14-GA TO 16-GA)	
		1	**155-2255**	1	KIT-CONNECTING PLUG (12-PIN)	
		1	**155-2270**	4	KIT-CONNECTING PLUG (2-PIN)	
		1	**155-2274**	1	KIT-CONNECTING PLUG (6-PIN)	
					(EACH PLUG KIT INCLUDES PLUG AS, WEDGE & INTERFACE SEAL)	
		1	**202-5397**	5	PLUG	
		1	**204-1297**	15	TERMINAL AS-BLADE (18-GA TO 20-GA)	
		1	**245-7434**	2	KIT-CONNECTING PLUG (10-PIN)	
					(EACH INCLUDES PLUGS & WIRE AS)	
Y	20	2	*322-1360*	1	PANEL GP-FUSE	181
	21	2	**322-2095**	1	BRACKET AS	
	22	1	**334-6370**	1	HARNESS AS-PLATFORM	
		1	**102-8802**	5	KIT-RECEPTACLE (2-PIN)	
		1	**102-8804**	1	KIT-RECEPTACLE (4-PIN)	
		1	**102-8805**	1	KIT-RECEPTACLE (6-PIN)	
		1	**102-8801**	4	KIT-RECEPTACLE (12-PIN)	
					(EACH RECEPTACLE KIT INCLUDES RECEPTACLE AS & WEDGE)	
		1	**9X-0196**	2	TERMINAL AS	
		1	**8C-6354**	1	CAP-RECEPTACLE (ET CONNECTOR)	

327-9902 **WIRING GP-PLATFORM** ***(contd.)*** **i04769374**

NOTE	REF NO	GRAPHIC REF	PART NUMBER	QTY	PART NAME 1 2 3 4 5 6 (PRODUCT LEVEL)	SEE PAGE
		1	**8N-1545**	1	SOCKET-CONNECTOR (8-GA)	
		1	**8T-8736**	1	RECEPTACLE-CONNECTOR (9-PIN)	
		1	**8T-8737**	305	PLUG-SEAL	
		1	**9G-3695**	43	PLUG-SEAL	
		1	**9W-1951**	1	RECEPTACLE-CONNECTOR (9-PIN)	
E		1	**114-8843**		SLEEVE-PLASTIC (300-CM)	
		1	**115-3519**	3	PIN-CONNECTOR (12-GA TO 14-GA)	
E		1	**119-3662**		TUBE-HEAT SHRINK (10.85-MM DIA) (59-CM)	
E		1	**125-7874**		TUBE-HEAT SHRINK (5.72-MM DIA) (190-CM)	
E		1	**125-7875**		TUBE-HEAT SHRINK (7.44-MM DIA) (20-CM)	
		1	**9X-3402**	160	SOCKET-CONNECTOR (16-GA TO 18-GA)	
					—OR—	
		1	**126-1768**	164	SOCKET-CONNECTOR (14-GA TO 16-GA)	
		1	**126-1773**	1	CAP-CONNECTOR	
		1	**127-5485**	1	PLUG AS-CONNECTOR (1-PIN)	
		1	**2L-8069**	6	TERMINAL-RING (2-GA TO 10-GA, 3/8-IN SCREW)	
		1	**134-2540**		RESISTOR AS-CONNECTION (3-PIN)	
		1	**9X-3401**	132	PIN-CONNECTOR (16-GA TO 18-GA)	
					—OR—	
		1	**126-1767**	132	PIN-CONNECTOR (14-GA TO 16-GA)	
		1	**155-2255**	5	KIT-CONNECTING PLUG (12-PIN)	
		1	**155-2257**	2	KIT-CONNECTING PLUG (12-PIN)	
		1	**155-2260**	2	KIT-CONNECTING PLUG (3-PIN)	
		1	**155-2270**	5	KIT-CONNECTING PLUG (2-PIN)	
		1	**155-2271**	2	KIT-CONNECTING PLUG (4-PIN)	
		1	**155-2274**	1	KIT-CONNECTING PLUG (6-PIN)	
		1	**174-0503**	3	KIT-CONNECTING PLUG (3-PIN)	
					(EACH PLUG KIT INCLUDES PLUG AS, WEDGE & INTERFACE SEAL)	
		1	**160-7689**	2	PLUG AS-CONNECTOR (70-PIN)	
					(EACH INCLUDES)	
		1	**159-9322**	1	SEAL-O-RING	
B		1	**1P-0810**		TAPE-ELECTRICAL	
		1	**166-5229**	1	KIT-RECEPTACLE (12-PIN)	
		1	**190-7615**	1	KIT-RECEPTACLE (12-PIN)	
		1	**194-4254**	1	KIT-RECEPTACLE (8-PIN)	
		1	**265-2106**	1	KIT-RECEPTACLE (4-PIN)	
					(EACH RECEPTACLE KIT INCLUDES RECEPTACLE AS & WEDGE)	
		1	**214-4208**	3	RECEPTACLE AS-CONNECTOR (70-PIN)	
		1	**230-4009**	2	PLUG AS-CONNECTOR (12-PIN)	
					(EACH INCLUDES)	
		1	**264-7034**	1	SEAL-CONNECTOR	
		1	**230-4010**	2	RECEPTACLE AS-CONNECTOR (12-PIN)	
	23	1	**339-9514**	1	CAP AS	
D		1	**5P-5677**		WIRE (18-GA, BLACK) (0.3-M)	
		1	**8C-6354**	1	CAP-RECEPTACLE (ET CONNECTOR)	
E		1	**125-7875**		TUBE-HEAT SHRINK (7.44-MM DIA) (3-CM)	
		1	**2L-8077**	1	TERMINAL-RING (14-GA TO 16-GA, 1/4-IN SCREW)	
	24	1	**340-7161**	1	CONVERTER-POWER (24-VOLT TO 12-VOLT)	
M	25	1,2	**107-3786**	4	BOLT (M4X0.7X12-MM)	
	26	1	**130-5300**	2	CLIP	
	27	2	**132-5789**	1	CLIP	
	28	1	**141-4976**	4	SCREW-WASHER HEAD (4-40X0.5-IN)	
M	29	1	**150-4086**	2	SCREW (M4X0.7X16-MM)	
M	30	1	**153-8001**	2	BOLT-SOCKET HEAD (M4X0.7X20-MM)	
	31	1	**199-4317**	4	BOLT (M10X1.5X115-MM)	
	32	2	**204-2281**	38	STRAP-CABLE	
	33	1	**4B-4863**	4	WASHER (4.7X11X1.2-MM THK)	

327-9902 **WIRING GP-PLATFORM** *(contd.)* **i04769374**

NOTE	REF NO	GRAPHIC REF	PART NUMBER	QTY	PART NAME 1 2 3 4 5 6 (PRODUCT LEVEL)	SEE PAGE
	34	2	**4L-6454**	1	BOLT (3/8-16X1-IN)	
M	35	1	**5C-8312**	2	NUT (M4X0.7-THD)	
	36	2	**5F-9757**	3	GROMMET	
	37	2	**5M-3062**	1	BOLT (3/8-16X0.75-IN)	
	38	1,2	**5P-1075**	4	WASHER-HARD (10.2X22.5X3-MM THK)	
	39	2	**6D-4244**	2	CLIP	
	40	2	**7K-1181**	36	STRAP-CABLE	
	41	1	**8T-0328**	2	WASHER-HARD (5.5X10X1-MM THK)	
M	42	1	**8T-0389**	2	LOCKNUT (M10X1.5-THD)	
	43	2	**8T-2502**	2	BOLT (3/8-16X1.125-IN)	
M	44	1	**8T-2659**	2	LOCKNUT (M4X0.7-THD)	
	45	1,2	**8T-4121**	14	WASHER-HARD (11X21X2.5-MM THK)	
M	46	1,2	**8T-4137**	8	BOLT (M10X1.5X20-MM)	
M	47	2	**8T-4138**	8	BOLT (M6X1X20-MM)	
M	48	1	**8T-4171**	1	BOLT (M6X1X12-MM)	
M	49	2	**8T-4191**	2	BOLT (M10X1.5X16-MM)	
M	50	2	**8T-4199**	1	BOLT (M8X1.25X12-MM)	
	51	2	**8T-4224**	1	WASHER-HARD (8.8X16X2-MM THK)	
	52	2	**8T-4896**	2	WASHER-HARD (10.2X18.5X2.5-MM THK)	
	53	1	**8T-7934**	1	WASHER-HARD (11X21X5-MM THK)	
M	54	1	**8T-9405**	2	BOLT-SOCKET HEAD (M4X0.7X16-MM)	
M	55	2	**9X-2042**	4	SCREW-TRUSS HEAD (M6X1X12-MM)	

B-USE AS REQUIRED
D-ORDER BY THE METER
E-ORDER BY THE CENTIMETER
M-METRIC PART
Y-SEPARATE ILLUSTRATION

327-9902 **WIRING GP-PLATFORM** *(contd.)* **i04769374**

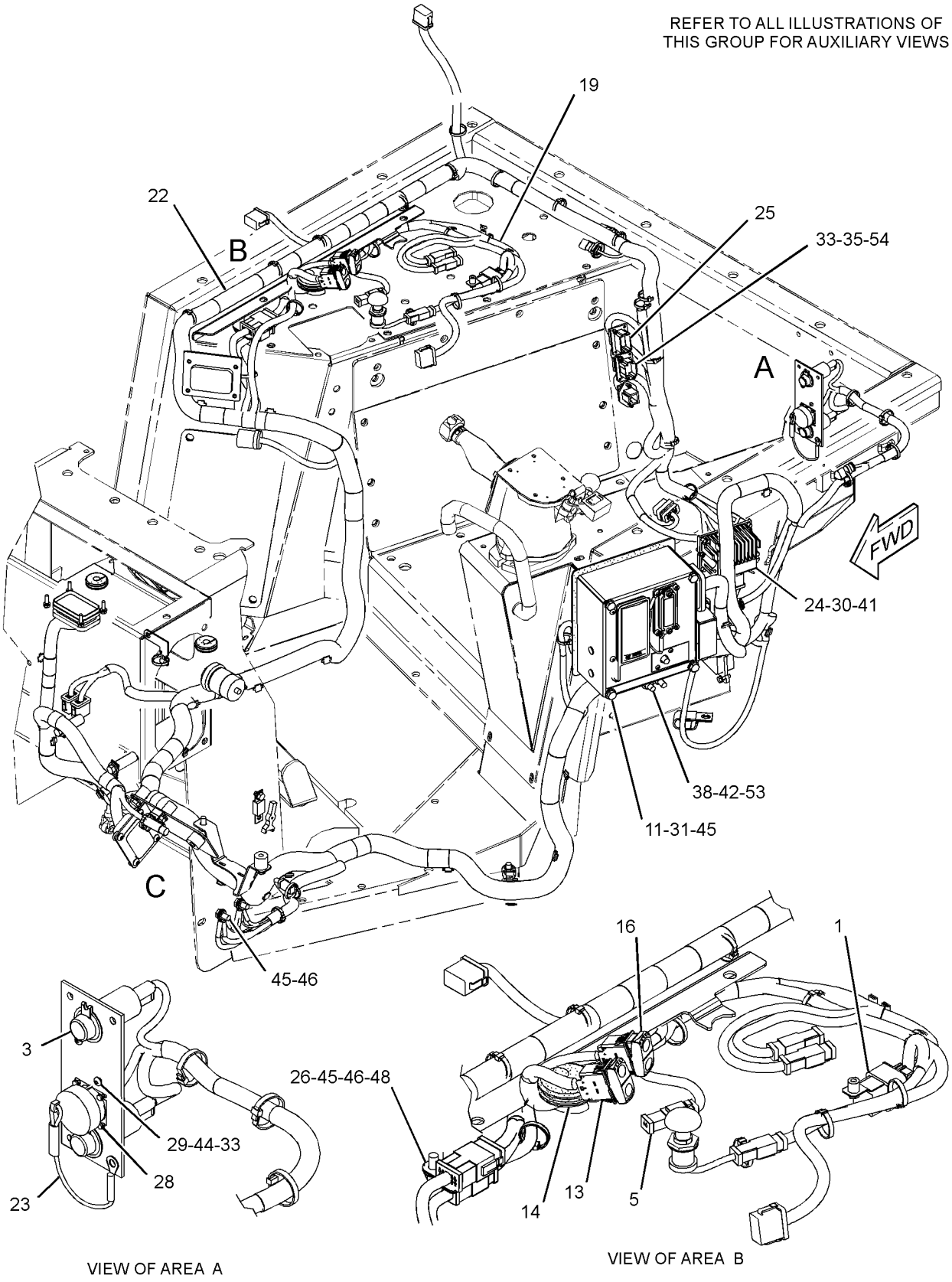

GRAPHIC #1 g02793396

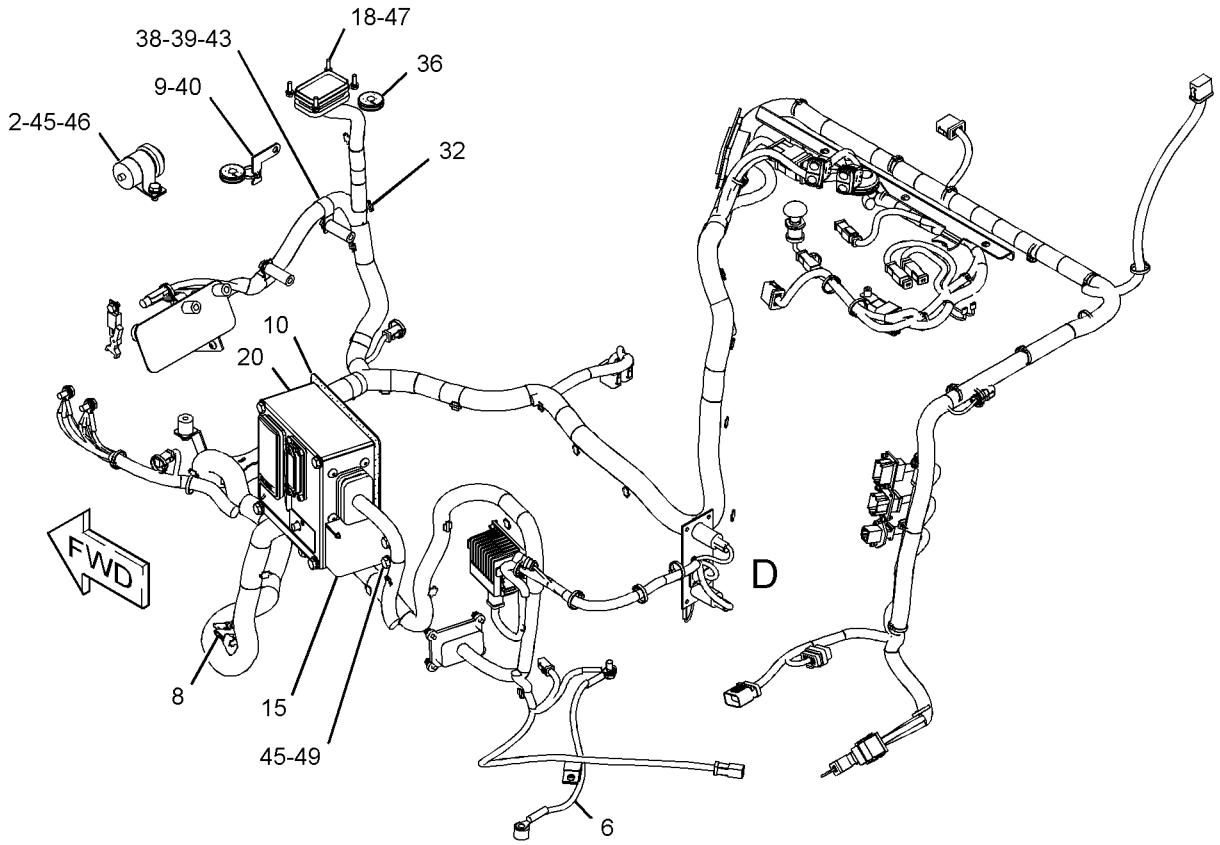

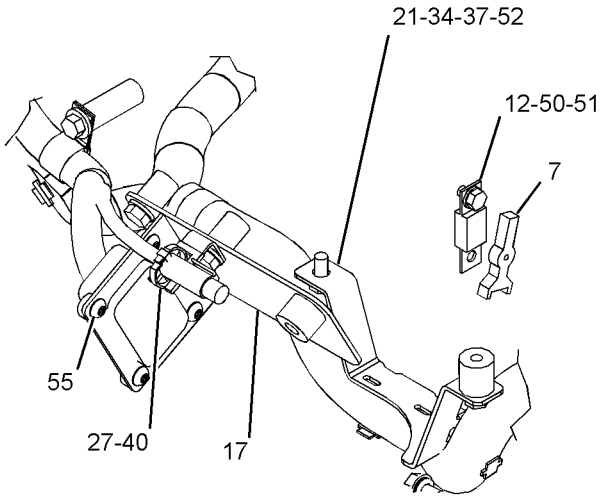

VIEW OF AREA C

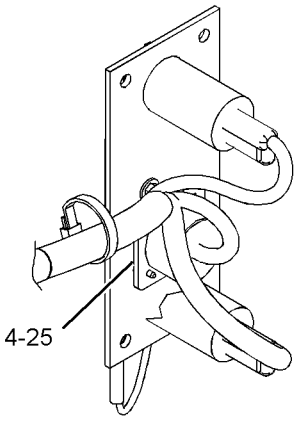

VIEW OF AREA D

GRAPHIC #2 **<END>** g02793397

3T-9986 AXLE GP

S/N: DSH1-UP; DJR1-UP

PART OF 313-3755 POWER TRAIN AR

SMCS-3282 **i04655710**

NOTE	REF NO	GRAPHIC REF	PART NUMBER	QTY	PART NAME 1 2 3 4 5 6 (PRODUCT LEVEL)	SEE PAGE
	1	1	**8E-3507**	1	SHAFT AS-LH	
		1	**8E-0618**	1	BEARING-THRUST	
	2	1	**3T-5851**	1	SHAFT (FINAL DRIVE, CENTER)	
	3	1	**8E-3508**	1	SHAFT AS (RH)	
		1	**8E-0618**	1	BEARING-THRUST	

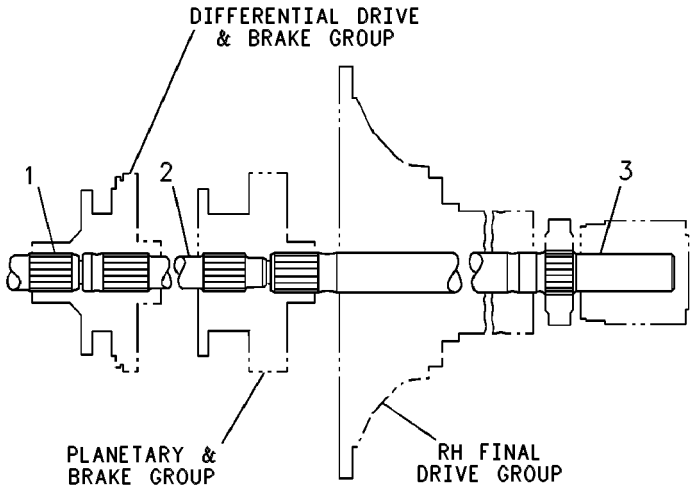

GRAPHIC #1 **<END>** g00255292

POWER TRAIN

9W-4709 AXLE GP

S/N: DLN1-UP

PART OF 314-8870 POWER TRAIN AR

SMCS-3282 **i04718276**

NOTE	REF NO	GRAPHIC REF	PART NUMBER	QTY	PART NAME 1 2 3 4 5 6 (PRODUCT LEVEL)	SEE PAGE
	1	1	**8E-3520**	1	SHAFT AS-LH	
		1	**8E-0618**	1	BEARING-THRUST	
	2	1	**3T-5851**	1	SHAFT (FINAL DRIVE, CENTER)	
	3	1	**8E-3509**	1	SHAFT AS (RH)	
		1	**8E-0618**	1	BEARING-THRUST	

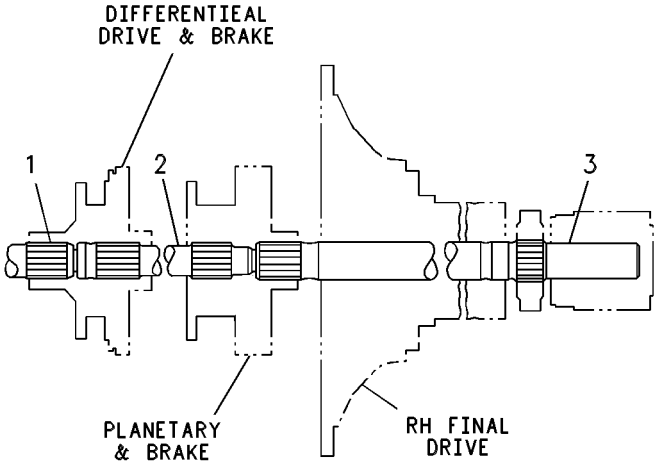

GRAPHIC #1 **<END>** g00266493

333-9308 BASE GP-OIL FILTER

S/N: DSH1-UP; DLN1-UP; DJR1-UP
INTERNAL BYPASS
PART OF 333-6437 FILTER GP-OIL

SMCS-3004 **i04031129**

NOTE	REF NO	GRAPHIC REF	PART NUMBER	QTY	PART NAME 1 2 3 4 5 6 (PRODUCT LEVEL)	SEE PAGE
	1	1	**3T-9549**	1	ADAPTER	
	2	1	**7G-4998**	1	SPOOL-BYPASS	
Y	3	1	**164-7577**	1	SWITCH GP-BYPASS (POWER TRAIN OIL FILTER)	200
	4	1	**334-2679**	1	SPRING	
	5	1	**334-2680**	1	SPRING	
	6	1	**5P-7815**	1	SEAL-O-RING	
	7	1	**6V-5050**	1	SEAL-O-RING	
	8	1	**9S-8008**	1	PLUG-O-RING	
					PARTS SHOWN IN GRAPHIC(S) WITHOUT A REFERENCE NUMBER ARE NOT SERVICED SEPARATELY	

Y-SEPARATE ILLUSTRATION

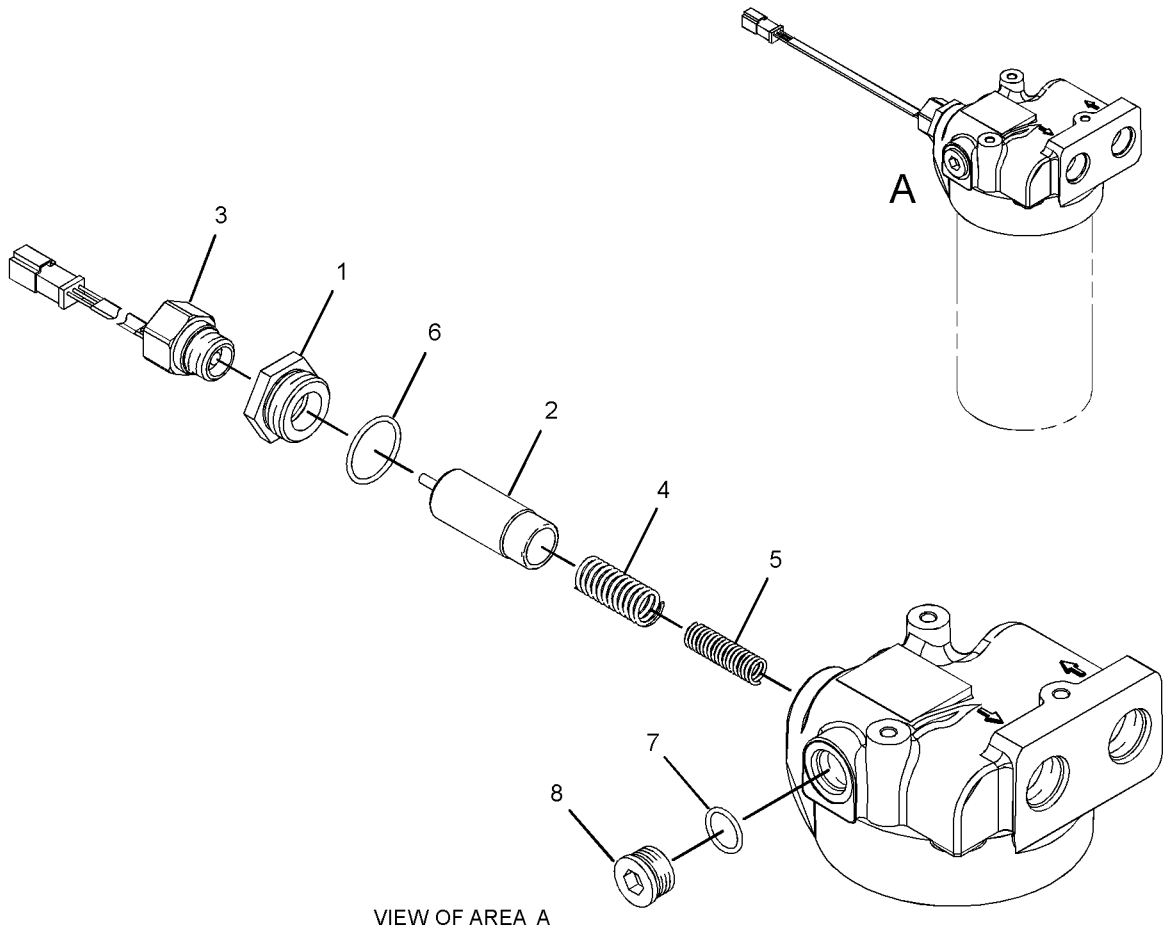

VIEW OF AREA A
(EXPLODED)

GRAPHIC #1 **<END>** g01863853

POWER TRAIN

231-5968 BRAKE & DIFFERENTIAL DRIVE GP

S/N: DSH1-UP; DLN1-UP; DJR1-UP

PART OF 313-3755, 314-8870 POWER TRAIN AR

SMCS-4131 **i04655781**

NOTE	REF NO	GRAPHIC REF	PART NUMBER	QTY	PART NAME 1 2 3 4 5 6 (PRODUCT LEVEL)	SEE PAGE
	1	2	**2K-5069**	1	CUP-BEARING (TAPERED ROLLER)	
	2	3	**2K-9295**	1	BEARING AS-TAPERED ROLLER	
	3	3	**3B-4124**	1	CUP-BEARING (TAPERED ROLLER)	
	4	1	**3S-2708**	7	PIN-SPRING	
	5	1	**3T-4568**	3	SHAFT-PLANETARY	
	6	1	**3T-4824**	4	GEAR-PLANETARY (30-TEETH)	
	7	1	**3T-5021**	1	CARRIER-PLANETARY	
	8	1	**3T-5200**	1	CARRIER-PLANETARY	
	9	1	**3T-6963**	1	SEAL-RING	
B	10	3	**3T-9272**	1	SHIM PACK (INCLUDES 8-SHIMS)	
	11	1	**5M-0578**	3	BEARING AS-ROLLER	
	12	1	**5M-7925**	4	BEARING AS-ROLLER	
	13	1	**6I-8724**	1	RING-LOCK	
	14	2	**6P-1735**	1	LOCKWASHER	
	15	2	**6P-1736**	1	WASHER (55.17X76.2X2.67-MM THK)	
	16	2	**6T-0062**	1	PLATE	
	17	1	**6T-0064**	4	SHAFT-PLANETARY	
	18	3	**6T-0850**	2	WASHER-THRUST (255X287.25X2.75-MM THK)	
	19	2	**6V-0855**	1	BEARING AS-TAPERED ROLLER	
	20	2	**6V-7646**	3	WASHER-HARD (7.2X25X2-MM THK)	
	21	1	**6Y-0926**	3	GEAR-PLANETARY (23-TEETH)	
	22	2	**6Y-0984**	1	GEAR-RING (75-TEETH)	
	23	3	**6Y-2704**	1	SPRING-DISC	
	24	3	**6Y-9373**	4	DISC-FRICTION	
	25	1	**7G-1596**	1	RING-RETAINING	
	26	2	**7H-4566**	2	CUP-BEARING (TAPERED ROLLER)	
	27	3	**7T-1885**	1	RING	
	28	3	**7T-6994**	3	PLATE-CLUTCH & BRAKE	
	29	1	**7T-8130**	1	RING-RETAINING	
	30	3	**7T-9788**	1	HUB	
	31	3	**7T-9832**	1	RETAINER	
	32	3	**7T-9837**	1	PLATE	
	33	1	**8E-8307**	6	DISC-THRUST	
	34	1	**8E-8310**	8	DISC-THRUST	
	35	2	**9B-0576**	1	LOCKNUT-BEARING	
	36	1	**9W-1571**	1	SLINGER	
B	37	2	**9W-2853**	1	SHIM PACK (INCLUDES 21-SHIMS)	
	38	1	**9W-6102**	1	GEAR-RING (84-TEETH)	
	39	1	**9W-6103**	1	RING-THRUST	
	40	2	**005-4834**	2	BEARING AS-TAPERED ROLLER	
	41	2	**136-1595**	1	HOUSING-ROTATING	
	42	3	**214-3573**	1	PISTON	
	43	2	**216-7431**	1	CARRIER	
	44	3	**217-2293**	1	RETAINER	
	45	2	**227-2451**	1	HOUSING AS	
		2	**1A-1460**	12	BOLT (1/2-13X2-IN)	
		2	**1A-2223**	2	DOWEL	
		2	**5P-8245**	12	WASHER-HARD (13.5X25.5X3-MM THK)	
	46	2	**227-4246**	1	PINION-BEVEL	
	47	1	**227-4247**	1	GEAR-BEVEL (68-TEETH)	
	48	1	**292-2016**	1	GEAR AS-SUN (30/24-TEETH) (24-TEETH)	
	49	1	**030-2135**	4	BOLT-LOCKING (5/16-18X0.625-IN)	
	50	1	**0L-1143**	21	BOLT (3/8-16X2.5-IN)	
	51	2	**0S-1614**	3	BOLT (1/4-20X0.5-IN)	
	52	3	**1A-1460**	6	BOLT (1/2-13X2-IN)	
	53	2,3	**1A-2029**	7	BOLT (3/8-16X1.125-IN)	

231-5968 **BRAKE & DIFFERENTIAL DRIVE GP** *(contd.)* **i04655781**

NOTE	REF NO	GRAPHIC REF	PART NUMBER	QTY	PART NAME 1 2 3 4 5 6 (PRODUCT LEVEL)	SEE PAGE
	54	2	**3K-0360**	2	SEAL-O-RING	
	55	2	**5K-9107**	3	BOLT-LOCKING (3/8-16X0.75-IN)	
	56	2,3	**5M-2894**	7	WASHER-HARD (10.2X18.5X2.5-MM THK)	
	57	3	**5P-8245**	6	WASHER-HARD (13.5X25.5X3-MM THK)	
	58	3	**6P-5317**	1	RING-SEAL (EXTERNAL)	
	59	2	**7W-6534**	4	PLUG-PIPE	
	60	2	**8M-4438**	1	SEAL-O-RING	
	61	3	**8P-8357**	1	RING-SEAL (INTERNAL)	
	62	1	**9L-9132**	3	WASHER (10.2X25.5X2.5-MM THK)	
	63	2	**9S-8005**	2	PLUG-O-RING	
B	64	1	**1U-8846**		SEALANT-GASKET	

B-USE AS REQUIRED

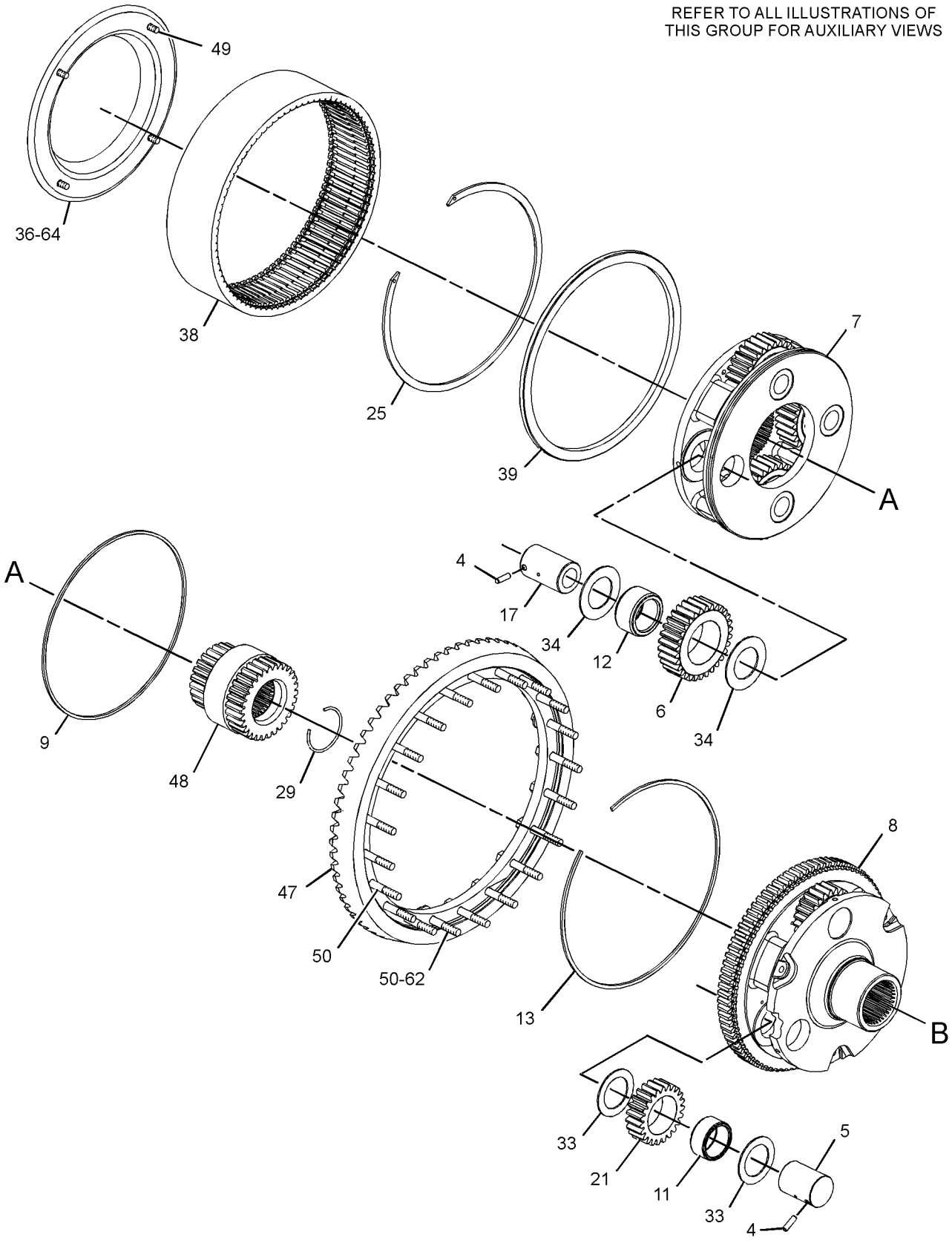

GRAPHIC #1

g01287687

REFER TO ALL ILLUSTRATIONS OF
THIS GROUP FOR AUXILIARY VIEWS

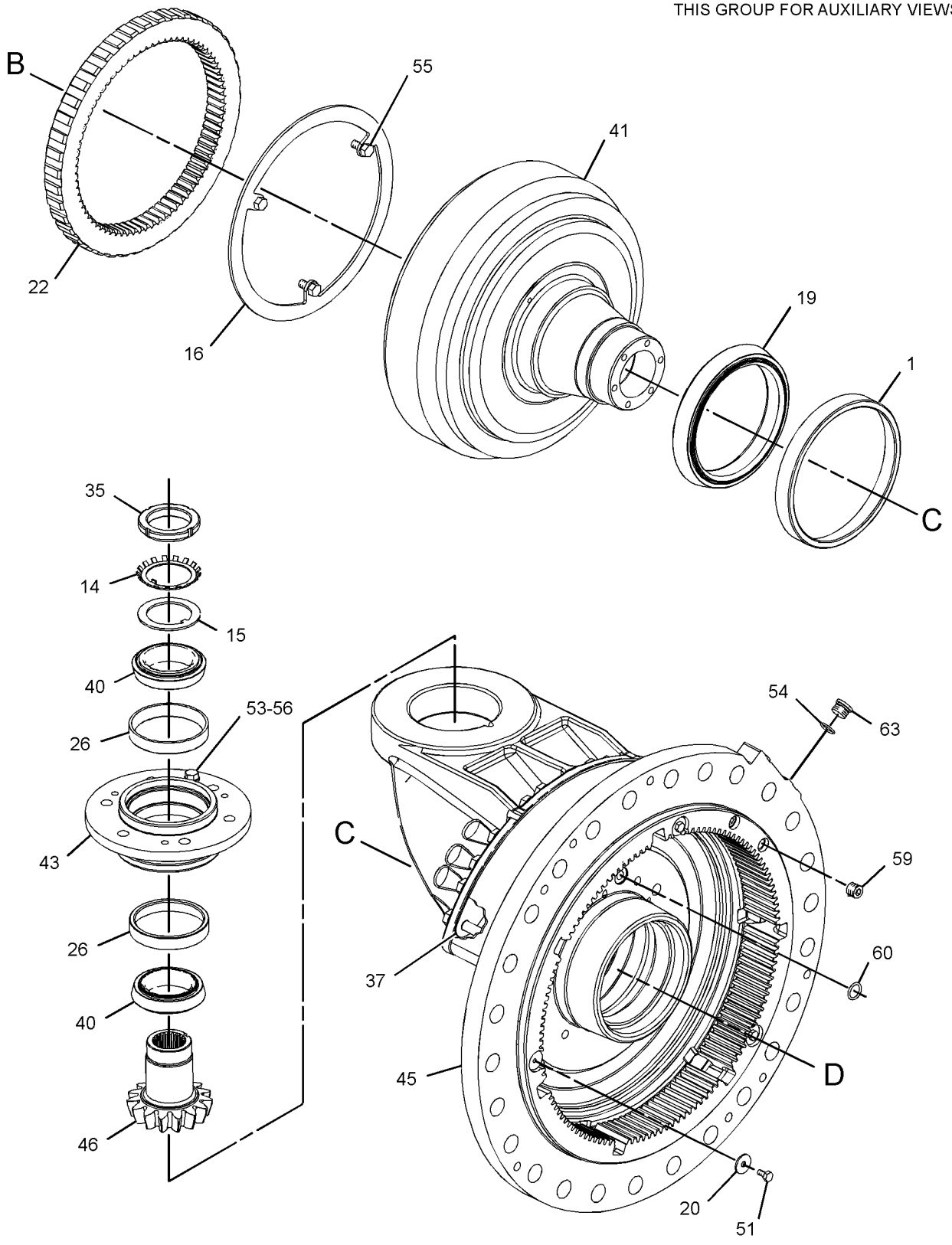

GRAPHIC #2

g01287688

REFER TO ALL ILLUSTRATIONS OF
THIS GROUP FOR AUXILIARY VIEWS

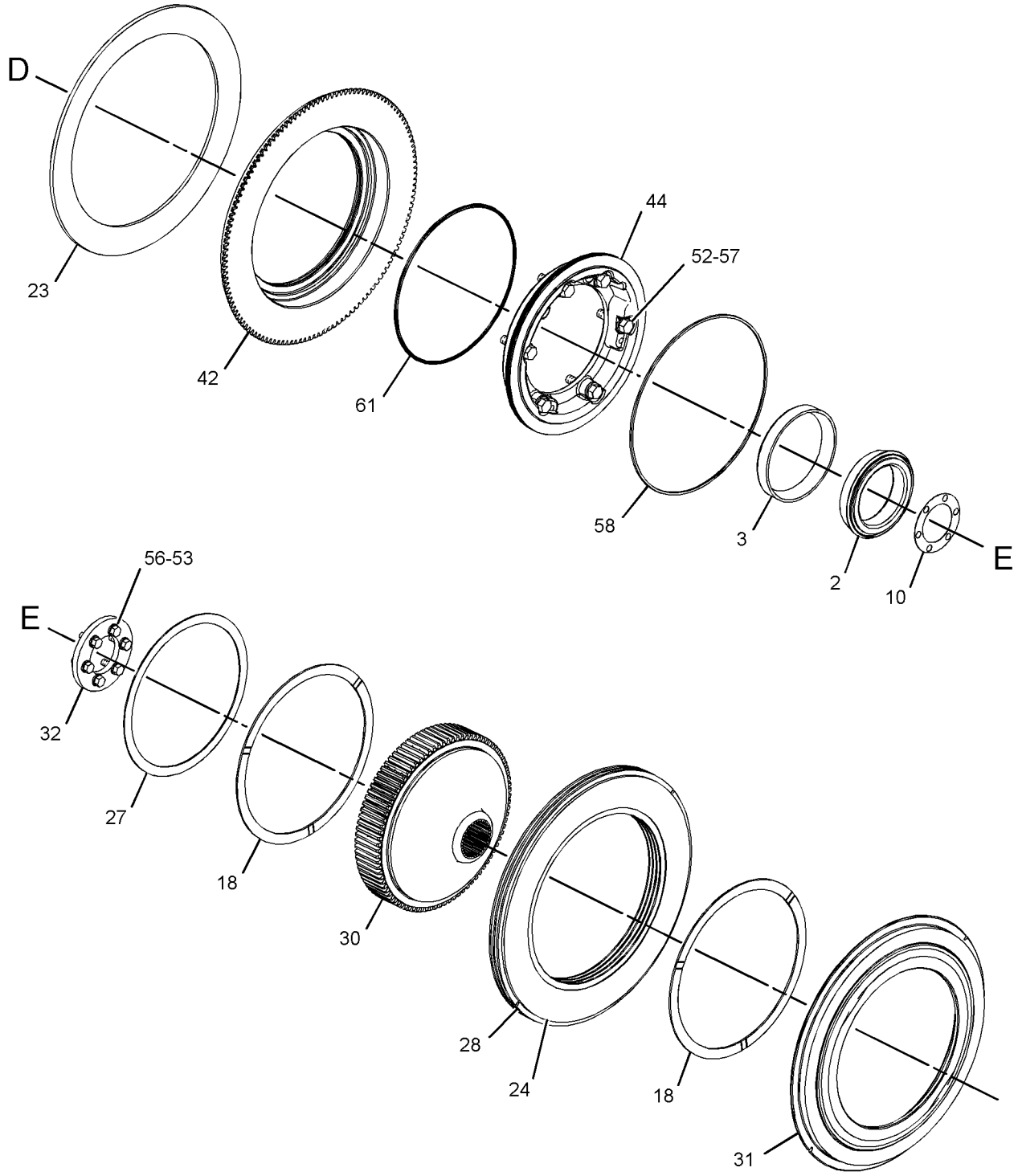

GRAPHIC #3 **<END>** g01287689

231-5990 BRAKE & PLANETARY GP

S/N: DSH1-UP; DLN1-UP; DJR1-UP

PART OF 313-3755, 314-8870 POWER TRAIN AR

SMCS-4011, 4255 **i04011838**

NOTE	REF NO	GRAPHIC REF	PART NUMBER	QTY	PART NAME 1 2 3 4 5 6 (PRODUCT LEVEL)	SEE PAGE
	1	1	**3S-2708**	3	PIN-SPRING	
	2	1	**3T-5807**	1	SLINGER	
	3	1	**5M-0578**	6	BEARING AS-ROLLER	
	4	1	**6Y-2704**	1	SPRING-DISC	
	5	1	**6Y-9373**	4	DISC-FRICTION	
	6	1	**7T-1885**	1	RING	
	7	1	**7T-6994**	3	PLATE-CLUTCH & BRAKE	
	8	1	**7T-8136**	3	SHAFT-PLANETARY	
	9	1	**7T-9031**	1	GEAR-RING (75-TEETH)	
	10	1	**7T-9837**	1	PLATE	
	11	1	**8E-8307**	6	DISC-THRUST	
	12	1	**9W-7925**	2	BEARING AS-TAPERED ROLLER	
	13	1	**9W-7926**	2	CUP-BEARING	
	14	1	**244-2310**	3	GEAR-PLANETARY (23-TEETH)	
	15	1	**344-0875**	1	GEAR AS-SUN (30-TEETH)	
		1	**3E-4354**	2	BALL	
	16	1	**205-5314**	1	HOUSING	
	17	1	**209-7193**	1	CARRIER	
	18	1	**214-3573**	1	PISTON	
	19	1	**216-4591**	1	RETAINER AS	
		1	**8S-0527**	1	PLUG-CUP	
	20	1	**0S-1585**	12	BOLT (1/2-13X1.5-IN)	
	21	1	**1A-1460**	6	BOLT (1/2-13X2-IN)	
	22	1	**1A-2029**	6	BOLT (3/8-16X1.125-IN)	
	23	1	**1C-0569**	6	BOLT (5/16-18X0.5-IN)	
	24	1	**3K-0360**	2	SEAL-O-RING	
	25	1	**5M-2894**	6	WASHER-HARD (10.2X18.5X2.5-MM THK)	
	26	1	**5P-8245**	18	WASHER-HARD (13.5X25.5X3-MM THK)	
	28	1	**6P-5317**	1	RING-SEAL (EXTERNAL)	
	30	1	**8M-4438**	1	SEAL-O-RING	
	31	1	**8P-8357**	1	RING-SEAL (INTERNAL)	
	32	1	**9S-8005**	2	PLUG-O-RING	
B	33	1	**1U-8846**		SEALANT-GASKET	

B-USE AS REQUIRED

231-5990 **BRAKE & PLANETARY GP** *(contd.)* **i04011838**

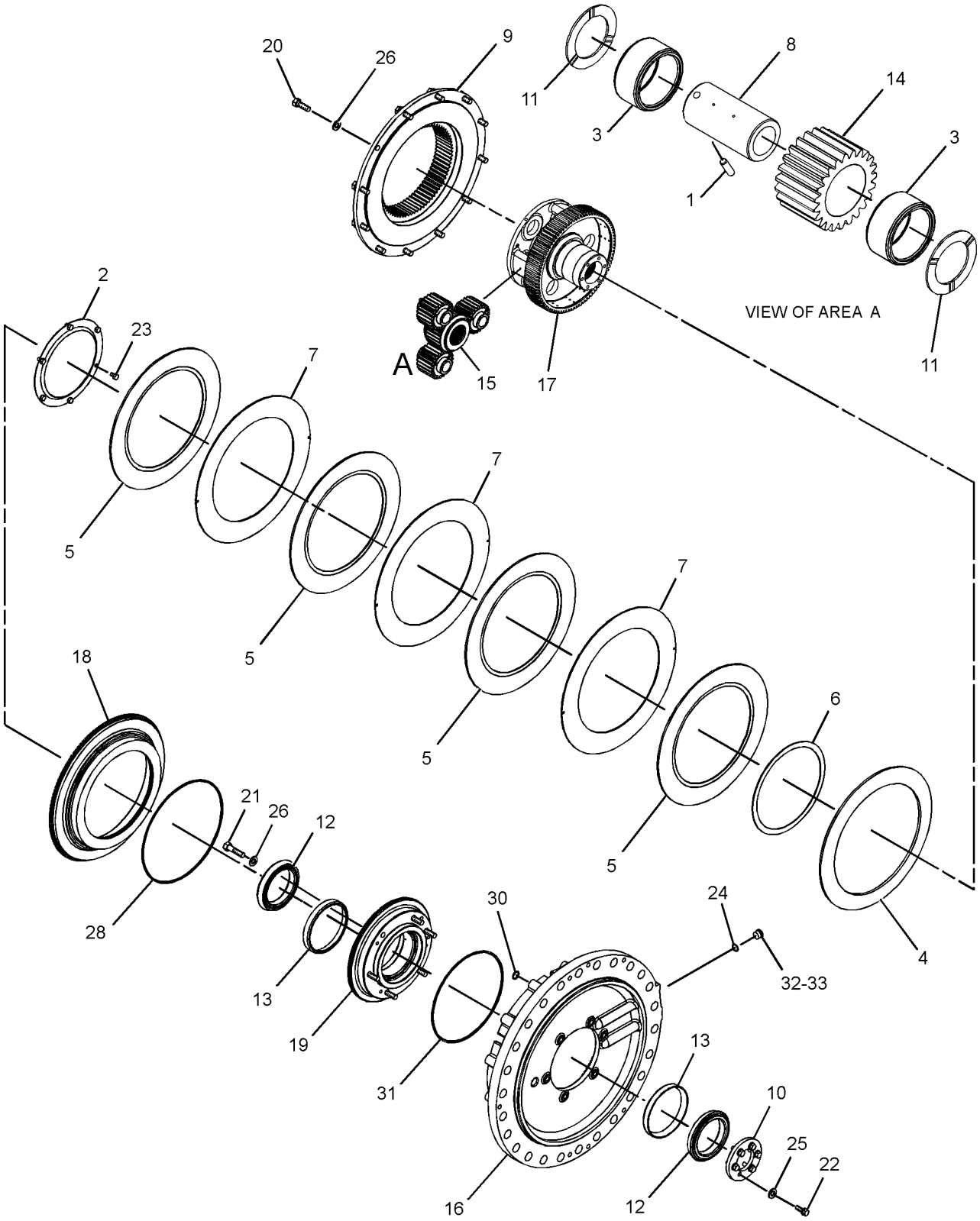

GRAPHIC #1 **<END>** g02185773

315-9961 CASE & PARTS GP-PLANETARY

S/N: JNA1-UP

PART OF 315-9963 TRANSMISSION AR

SMCS-3030, 3064, 3160 **i04607070**

NOTE	REF NO	GRAPHIC REF	PART NUMBER	QTY	PART NAME 1 2 3 4 5 6 (PRODUCT LEVEL)	SEE PAGE
	1	1	**3T-9921**	1	COVER-TRANSMISSION CASE	
	3	1	**5K-9246**	1	CONNECTOR	
	4	1	**5K-9988**	1	TEE-INVERTED FLARED	
	5	1	**6K-8498**	1	TEE-FLARED	
	6	1	**6V-0852**	3	CAP-DUST	
	7	1	**6V-1720**	1	PLATE-SERIAL NUMBER (TRANSMISSION)	
	8	1	**7T-8875**	1	TUBE AS	
	9	1	**7T-8876**	1	TUBE AS	
	10	1	**8S-9130**	1	SCREEN-SUCTION (TRANSMISSION SCAVENGE)	
	11	1	**9G-8615**	1	COVER	
	13	1	**9S-7710**	1	ELBOW-FLARED	
	14	1	**9W-4159**	1	TUBE AS	
	15	1	**9W-5334**	1	TUBE AS	
Y	16	1	**190-2278**	1	CASE GP-TRANSMISSION	236
	17	1	**203-2288**	1	GASKET-COVER	
	18	1	**315-9962**	1	COVER	
	20	1	**0S-1585**	21	BOLT (1/2-13X1.5-IN)	
	21	1	**0T-0102**	1	BOLT (3/8-16X0.625-IN)	
	22	1	*164-5567*	3	COUPLER AS-QUICK DISCONNECT (MALE)	
					(EACH INCLUDES)	
		1	**6V-3965**	1	FITTING (QUICK DISCONNECT)	
		1	**214-7568**	1	SEAL-O-RING	
C	23	1	*326-0316*	2	PLUG AS	
					(EACH INCLUDES)	
		1	**9S-6130**	1	PLUG	
		1	**228-7096**	1	SEAL-O-RING	
	24	1	**3S-7781**	1	GASKET	
	25	1	**4H-5440**	1	COVER	
	26	1	**5M-2894**	1	WASHER-HARD (10.2X18.5X2.5-MM THK)	
	27	1	**5P-4057**	1	SEAL-O-RING	
	28	1	**5P-8245**	21	WASHER-HARD (13.5X25.5X3-MM THK)	
	29	1	**5P-8998**	1	FITTING	
	30	1	**7J-8611**	1	ELBOW-PIPE	
	31	1	**7B-1597**	1	CLIP	
	32	1	**8M-2530**	4	BOLT-12 POINT HEAD (1/2-13X1.25-IN)	
C	34	1	**061-9455**	1	SEAL-O-RING	
	35	1	**8P-0058**	1	GASKET-COVER	
C	36	1	**5P-5846**	3	SEAL-O-RING	
CM	37	1	**9X-2125**	22	BOLT-LOCKING (M10X1.5X25-MM)	

C-CHANGE FROM PREVIOUS TYPE
M-METRIC PART
Y-SEPARATE ILLUSTRATION

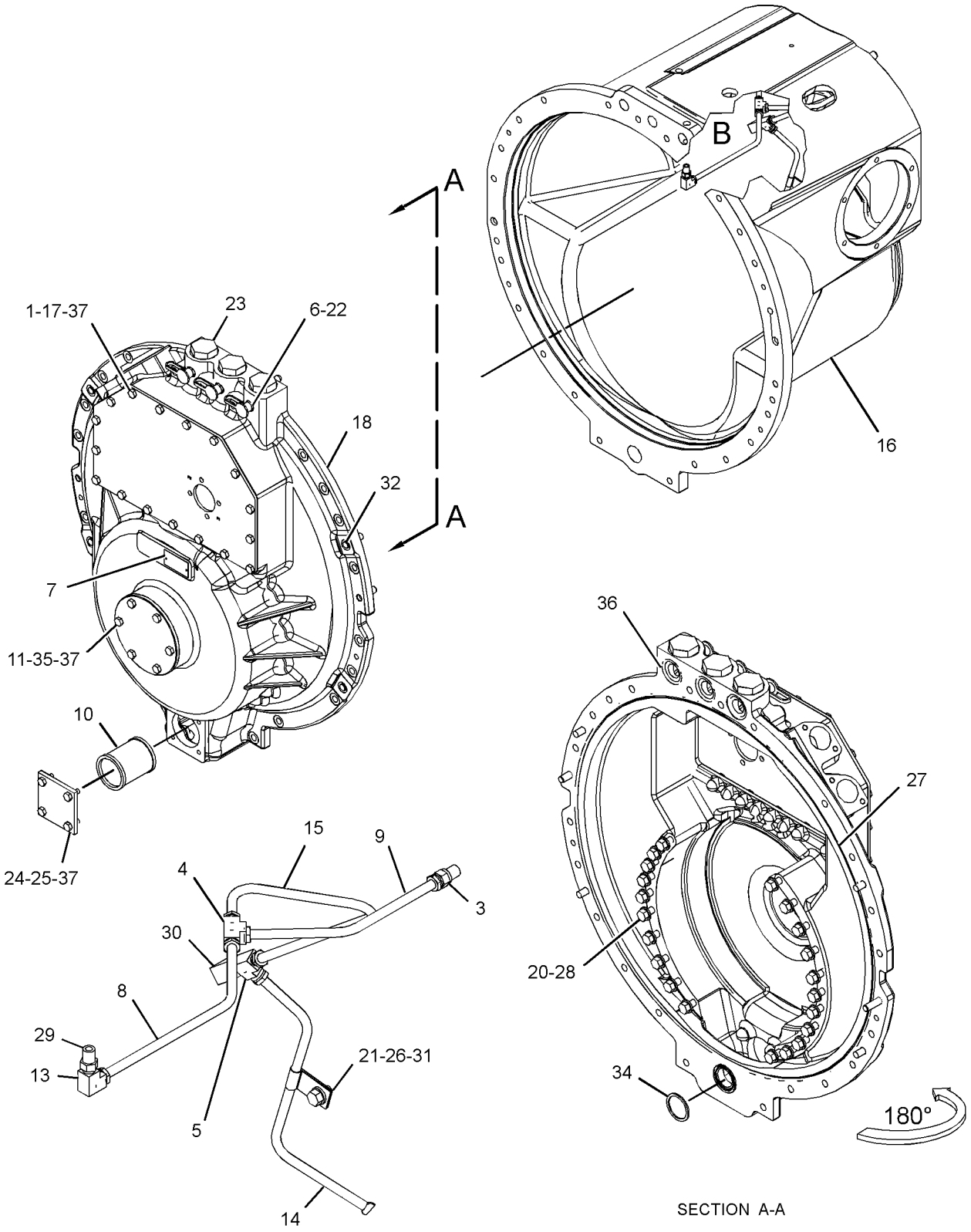

VIEW OF AREA B

SECTION A-A

GRAPHIC #1 **<END>** g02776476

POWER TRAIN

190-2278 CASE GP-TRANSMISSION

S/N: JNA1-UP

PART OF 315-9961 CASE & PARTS GP-PLANETARY

SMCS-3064 **i03982596**

NOTE	REF NO	GRAPHIC REF	PART NUMBER	QTY	PART NAME 1 2 3 4 5 6 (PRODUCT LEVEL)	SEE PAGE
	1	1	**4B-9785**	1	BALL	
	2	1	**1A-2610**	1	DOWEL	
	3	1	**7M-1201**	1	DOWEL	
	4	1	**3F-3442**	2	DOWEL	
	5	1	**4B-9782**	1	BALL	
	6	1	**146-6669**	1	GASKET	
	7	1	**146-6670**	1	COVER	
	8	1	**9X-6458**	6	WASHER-HARD (10.2X22.5X3-MM THK)	
	9	1	**0S-1594**	6	BOLT (3/8-16X1-IN)	
F			**196-8884**	1	BRACKET AS	
			8C-3334	2	RIVET-TUBULAR	
			124-9401	4	CLIP	
F			**0S-1620**	1	BOLT (1/2-13X0.75-IN)	
F			**5P-8245**	1	WASHER-HARD (13.5X25.5X3-MM THK)	

F-NOT SHOWN

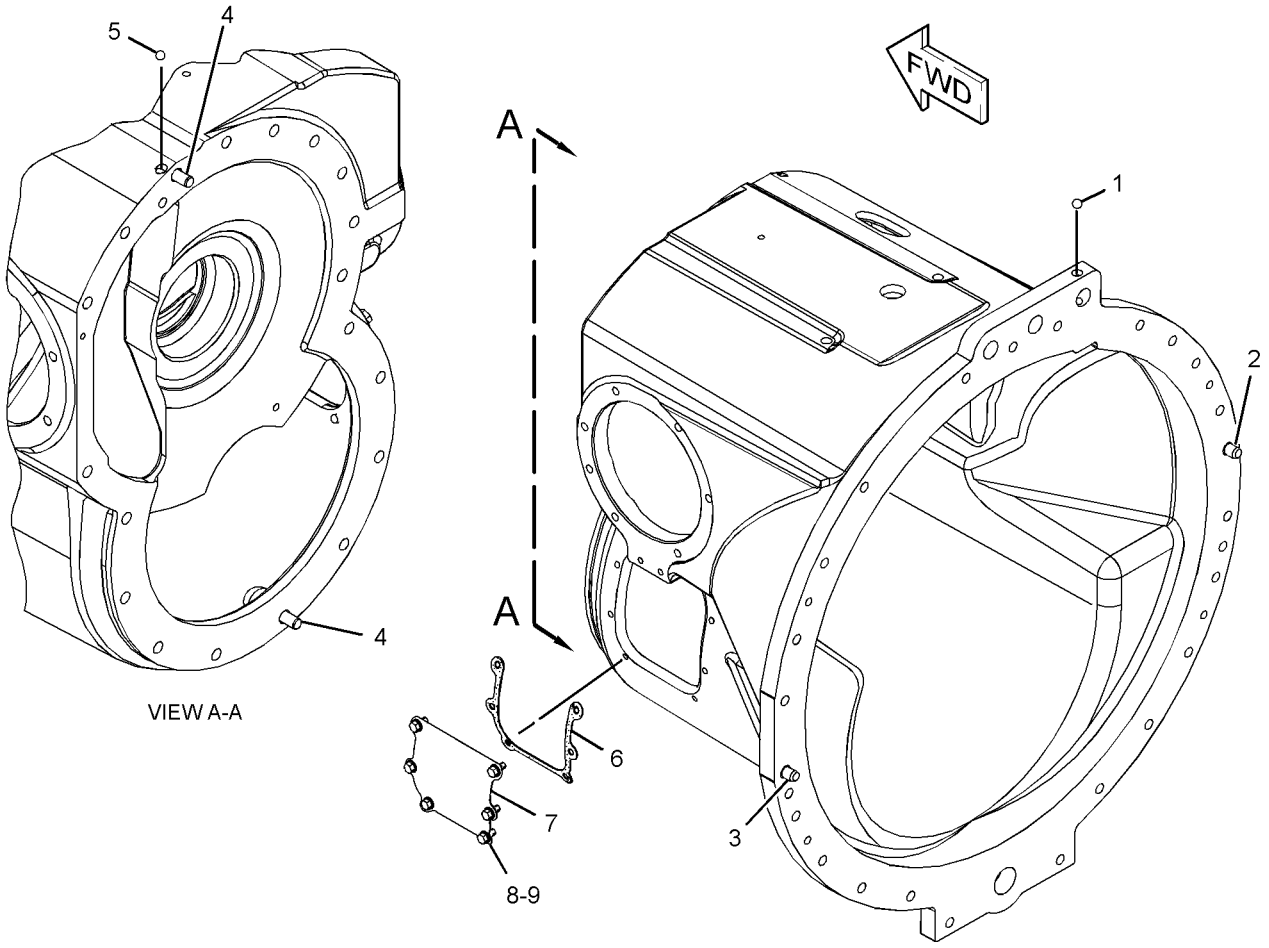

GRAPHIC #1 **<END>** g01857854

315-9964 CONTROL GP-TRANSMISSION HYD

S/N: JNA1-UP

PART OF 315-9963 TRANSMISSION AR

SMCS-3073, 3167 **i04400091**

NOTE	REF NO	GRAPHIC REF	PART NUMBER	QTY	PART NAME 1 2 3 4 5 6 (PRODUCT LEVEL)	SEE PAGE
	1	1	**3T-4403**	2	SPRING	
	2	1	**6S-6646**	2	PIN-COTTER	
	3	1	**9G-2459**	1	SLEEVE	
	4	1	**9G-2460**	1	SLEEVE	
	5	1	**9G-2461**	1	ADAPTER	
	6	1	**9P-1480**	2	SLEEVE	
	7	1	**9P-5977**	2	LEVER AS	
					(EACH INCLUDES)	
		1	**2H-3429**	2	RING-RETAINING	
		1	**8H-8175**	1	BUSHING	
		1	**9P-6217**	1	DOWEL	
Y	8	1	**315-9965**	1	VALVE GP-PRIORITY (LUBRICATION DISTRIBUTION)	293
Y	9	1	**315-9966**	1	VALVE GP-TRANSMISSION CONTROL	297
	10	1	**0L-1351**	4	BOLT (3/8-16X0.875-IN)	
	11	1	**1D-4539**	4	BOLT (5/16-18X2.5-IN)	
	12	1	*244-3712*	2	PLUG AS	
					(EACH INCLUDES)	
		1	**9S-4191**	1	PLUG-O-RING	
		1	**214-7568**	1	SEAL-O-RING	
	13	1	**2J-4672**	1	GASKET	
	14	1	**4H-1394**	6	WASHER (19.4X34.9X1.2-MM THK)	
	15	1	**5F-4899**	4	BOLT (3/8-16X5.5-IN)	
	16	1	**5M-2894**	4	WASHER-HARD (10.2X18.5X2.5-MM THK)	
	17	1	**6V-4365**	4	SEAL-O-RING	
	18	1	**8M-4432**	4	SEAL-O-RING	
	19	1	**8M-4986**	2	SEAL-O-RING	
	20	1	**9M-1974**	4	WASHER-HARD (8.8X16X2-MM THK)	

Y-SEPARATE ILLUSTRATION

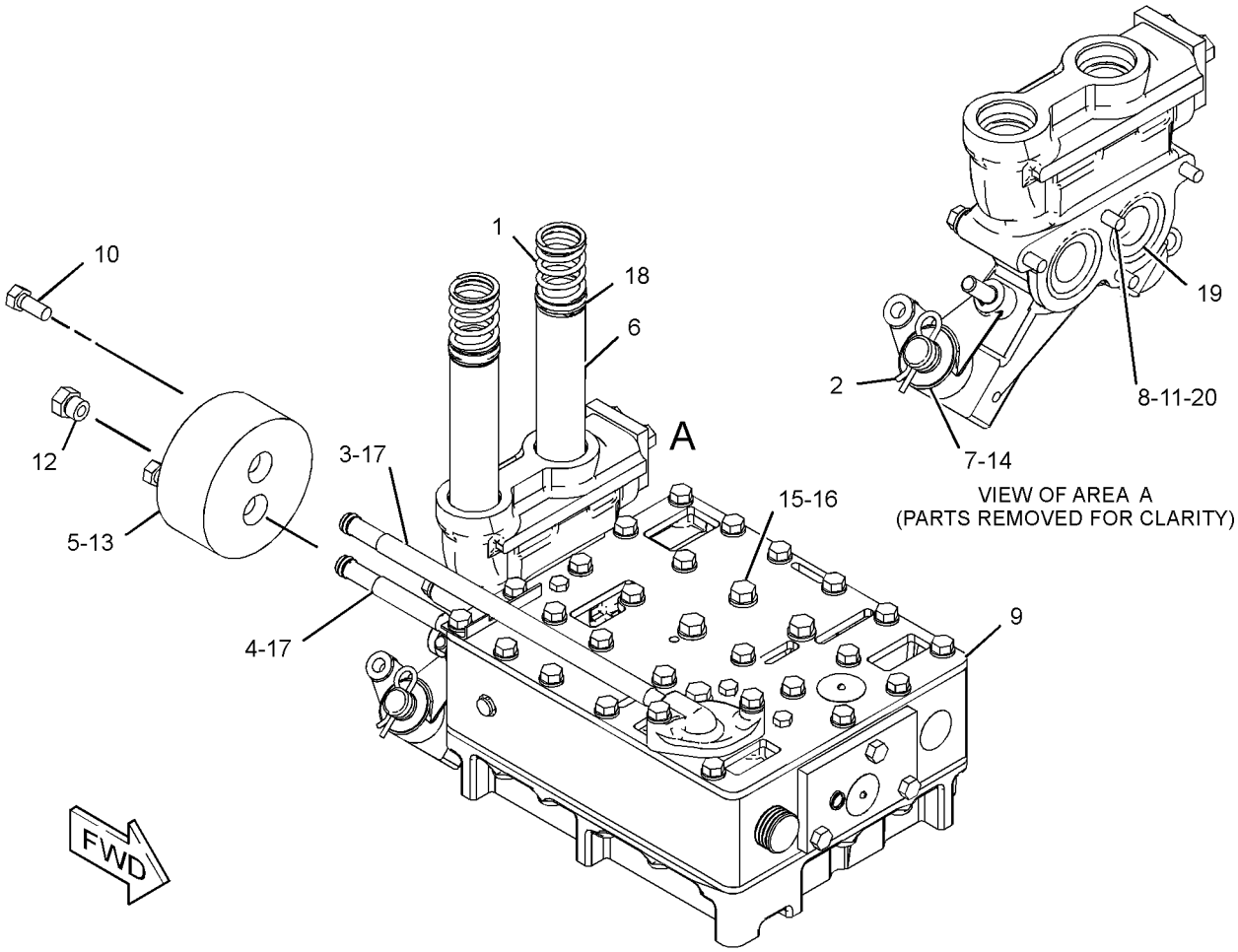

GRAPHIC #1 **<END>** g02177231

238-1116 COOLER GP-TRANSMISSION OIL

S/N: THX28268-UP

PART OF 318-1906 ENGINE AR-COMPLETE

SMCS-1375 **i04017555**

NOTE	REF NO	GRAPHIC REF	PART NUMBER	QTY	PART NAME 1 2 3 4 5 6 (PRODUCT LEVEL)	SEE PAGE
	1	1	**2S-0795**	2	GASKET	
	2	1	**6F-7062**	1	WASHER (12.7X19.05X1.83-MM THK)	
	3	1	**8M-9307**	1	PLUG (TRANSMISSION OIL COOLER)	
	4	1	**8S-4304**	1	BONNET-XMSN OIL COOLER	
	5	1	**180-3907**	1	SEAL-INTEGRAL	
R	6	1	**187-3523**	1	CORE AS-OIL COOLER (TRANSMISSION)	
	6A	1	**8T-6764**	1	PLUG-PIPE (1/8-27-THD)	
	7	1	**198-3462**	1	DIVERTER	
	8	1	**238-1117**	1	BONNET	
	9	1	**348-5792**	1	BRACKET	
	10	1	*148-8407*	1	PLUG AS	
		1	**3J-1907**	1	SEAL-O-RING	
		1	**9S-4191**	1	PLUG-O-RING	
	11	1	*148-8411*	1	PLUG AS	
		1	**3K-0360**	1	SEAL-O-RING	
		1	**9S-4185**	1	PLUG-O-RING	
	12	1	*164-4180*	1	PLUG AS	
		1	**7M-8485**	1	SEAL-O-RING	
		1	**9S-4181**	1	PLUG-O-RING	
M	13	1	**6V-3668**	4	BOLT (M12X1.75X30-MM)	
M	14	1	**6V-3823**	2	BOLT (M12X1.75X60-MM)	
M	15	1	**6V-5696**	6	BOLT (M12X1.75X80-MM)	
	16	1	**7D-1649**	3	WASHER-HARD (13.5X32X5-MM THK)	
M	17	1	**8T-5030**	2	BOLT (M10X1.5X120-MM)	
	18	1	**8T-6761**	1	PLUG-PIPE	
M	19	1	**8T-6854**	4	BOLT (M10X1.5X200-MM)	
M	20	1	**6V-8675**	1	BOLT (M12X1.75X35-MM)	

M-METRIC PART
R-REMFG PART MAY BE AVAILABLE

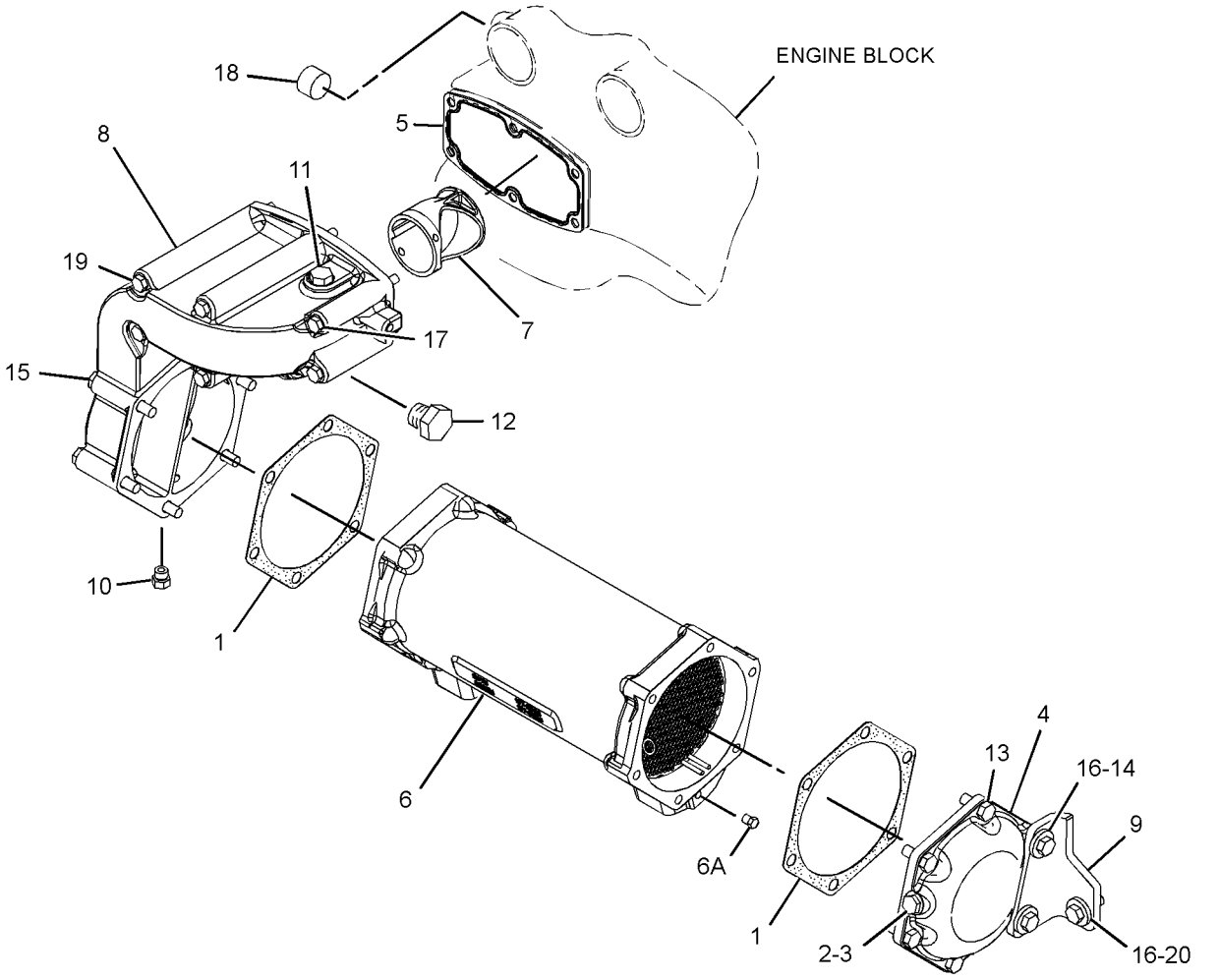

GRAPHIC #1 **<END>** g02129633

326-3854 COUPLING & GUARD GP

S/N: DSH1-UP; DLN1-UP; DJR1-UP
PART OF 313-3755, 314-8870 POWER TRAIN AR

SMCS-3279 **i04656372**

NOTE	REF NO	GRAPHIC REF	PART NUMBER	QTY	PART NAME 1 2 3 4 5 6 (PRODUCT LEVEL)	SEE PAGE
	1	1	**9W-3365**	1	BRACKET AS	
	2	1	**325-8061**	1	GUARD AS	
Y	3	1	**326-3853**	1	COUPLING GP-PUMP	242
	4	1	**330-7934**	1	GUARD AS	
	5	1	**8T-4121**	10	WASHER-HARD (11X21X2.5-MM THK)	
M	6	1	**8T-4136**	10	BOLT (M10X1.5X25-MM)	

M-METRIC PART
Y-SEPARATE ILLUSTRATION

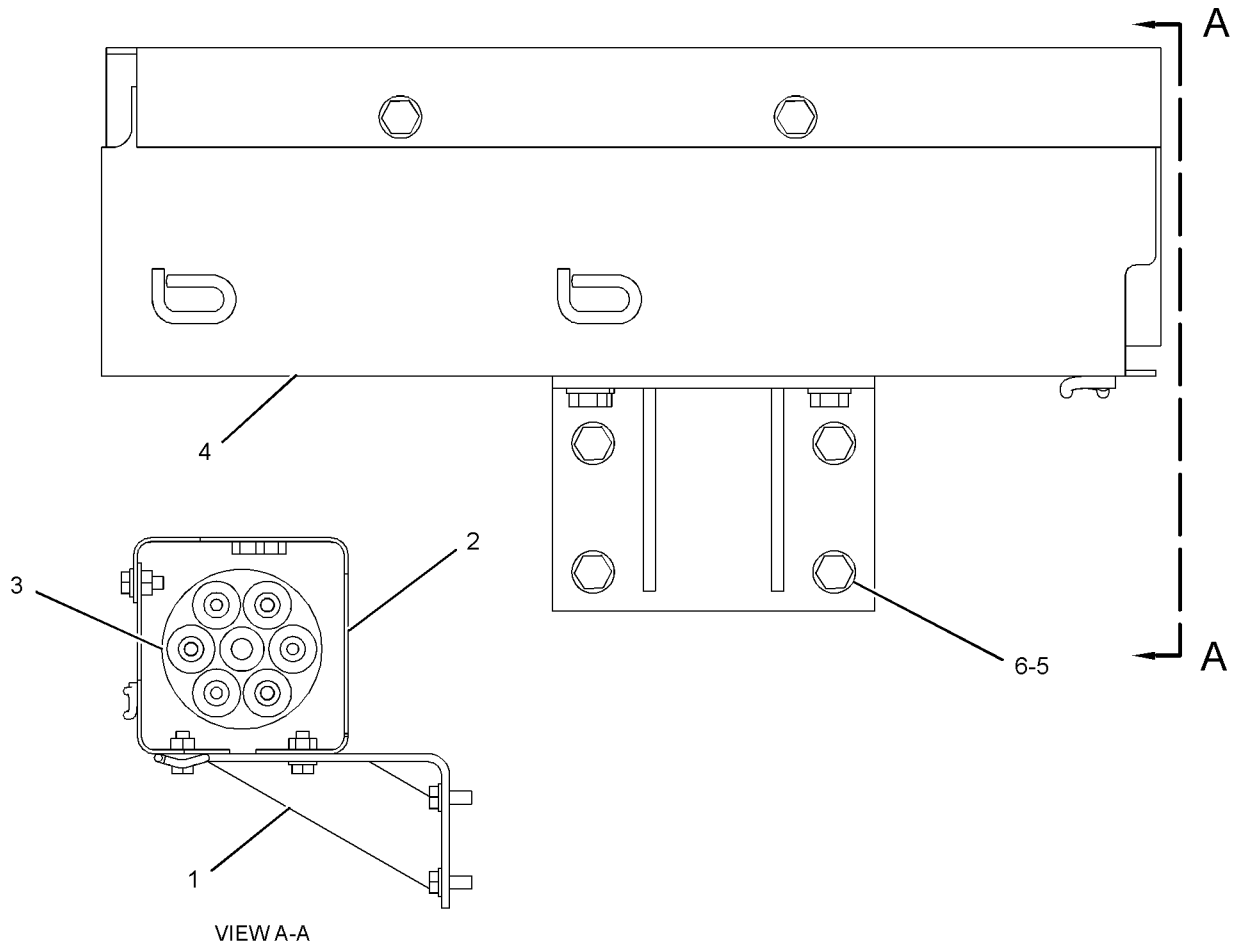

VIEW A-A

GRAPHIC #1 **<END>** g02822196

POWER TRAIN

326-3853 COUPLING GP-PUMP

S/N: DSH1-UP; DLN1-UP; DJR1-UP
PART OF 326-3854 COUPLING & GUARD GP

SMCS-5062 **i04656371**

NOTE	REF NO	GRAPHIC REF	PART NUMBER	QTY	PART NAME 1 2 3 4 5 6 (PRODUCT LEVEL)	SEE PAGE
	1	1	**211-9087**	2	COUPLING AS	
					(EACH INCLUDES)	
	1A	1	**6Y-2130**	3	BUSHING AS	
					(EACH INCLUDES)	
		1	**8E-5170**	1	SLEEVE	
	1B	1	**211-9085**	3	BUSHING AS	
	2	1	**326-3852**	1	TUBE AS	
	3	1	**8T-4121**	12	WASHER-HARD (11X21X2.5-MM THK)	
M	4	1	**8T-4182**	6	BOLT (M10X1.5X45-MM)	
M	5	1	**8T-4185**	6	BOLT (M10X1.5X50-MM)	

M-METRIC PART

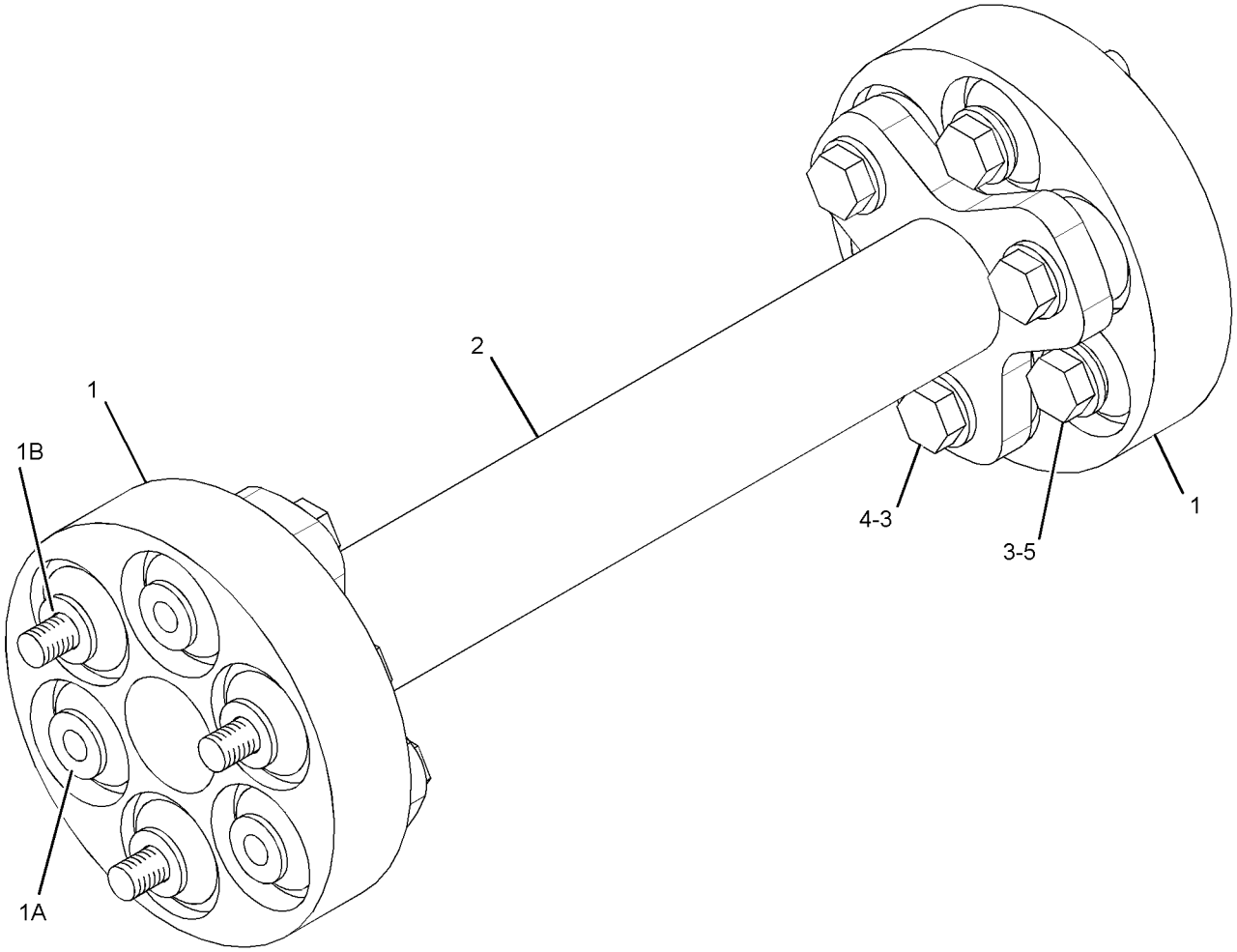

GRAPHIC #1 **<END>** g02793904

106-4150 DRAIN GP-ECOLOGY

S/N: DSH1-UP; DLN1-UP; DJR1-UP
PART OF 256-9988 DRAIN GP-ECOLOGY
AN ATTACHMENT

SMCS-3100 **i03998319**

NOTE	REF NO	GRAPHIC REF	PART NUMBER	QTY	PART NAME 1 2 3 4 5 6 (PRODUCT LEVEL)	SEE PAGE
	1	1	**4N-3808**	1	PIN-SPRING	
	2	1	**5P-9658**	1	SEAL-O-RING	

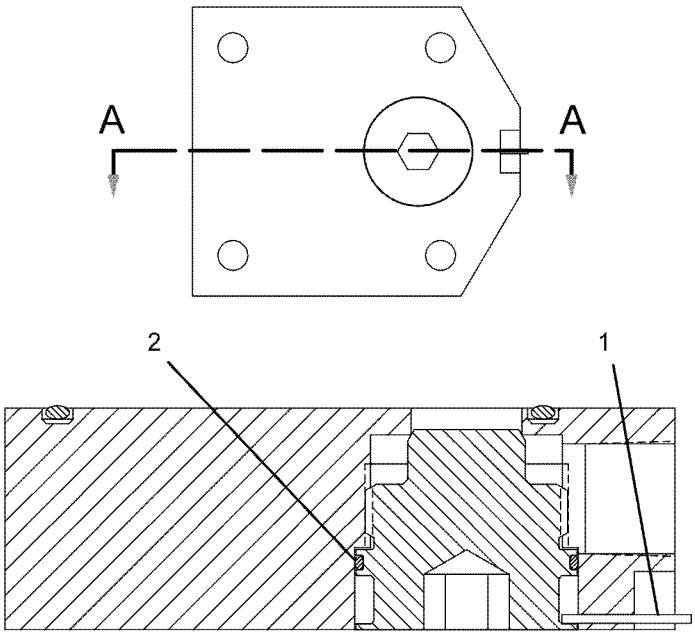

SEC-
TION
A-A

GRAPHIC #1 **<END>** g01083446

256-9988 DRAIN GP-ECOLOGY

S/N: DSH1-UP; DLN1-UP; DJR1-UP

AN ATTACHMENT

SMCS-3100 **i03997829**

NOTE	REF NO	GRAPHIC REF	PART NUMBER	QTY	PART NAME 1 2 3 4 5 6 (PRODUCT LEVEL)	SEE PAGE
	1	1	**4B-7739**	1	PLUG-DRAIN (TRANSMISSION)	
	2	1	**8H-9819**	1	ADAPTER-PLUG	
Y	3	1	**106-4150**	1	DRAIN GP-ECOLOGY	243
	4	1	**2B-0858**	2	PLUG-PIPE	
	5	1	**2H-3931**	1	SEAL-O-RING	
	6	1	**8H-9818**	1	GASKET	
M	7	1	**8T-4136**	2	BOLT (M10X1.5X25-MM)	
M	8	1	**8T-4185**	4	BOLT (M10X1.5X50-MM)	

M-METRIC PART
Y-SEPARATE ILLUSTRATION

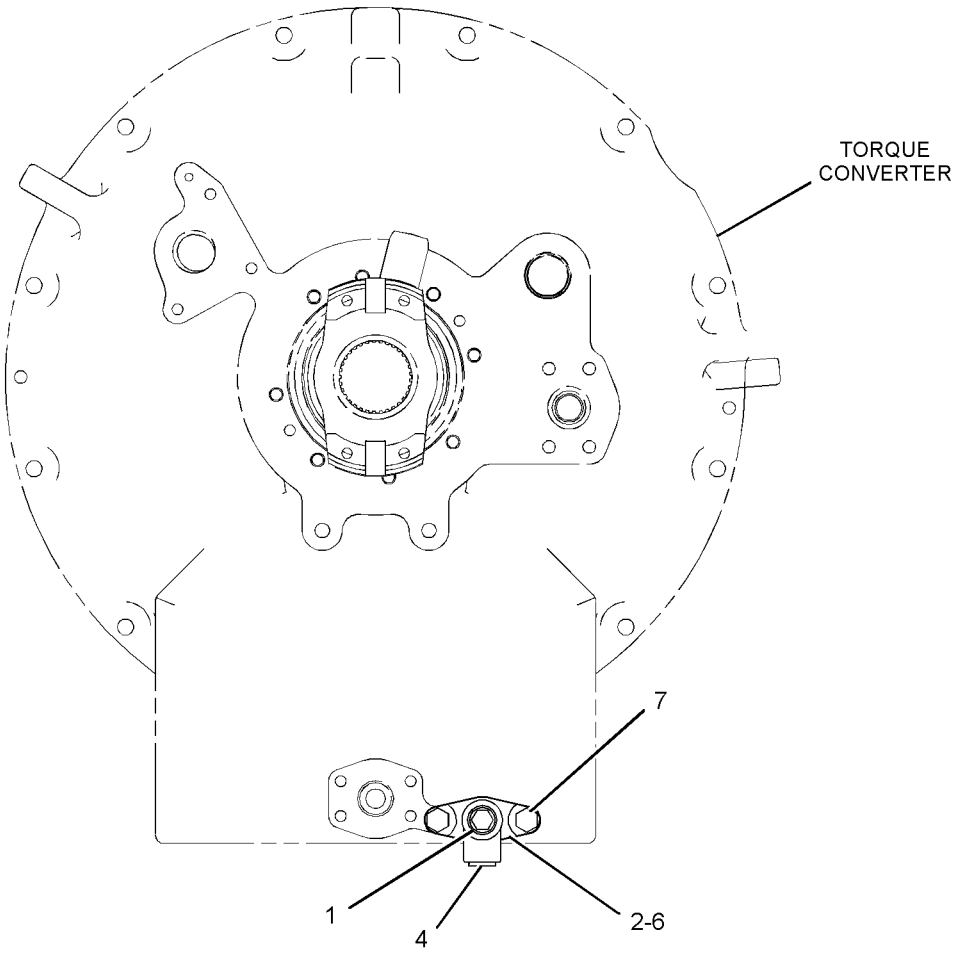

FRONT VIEW

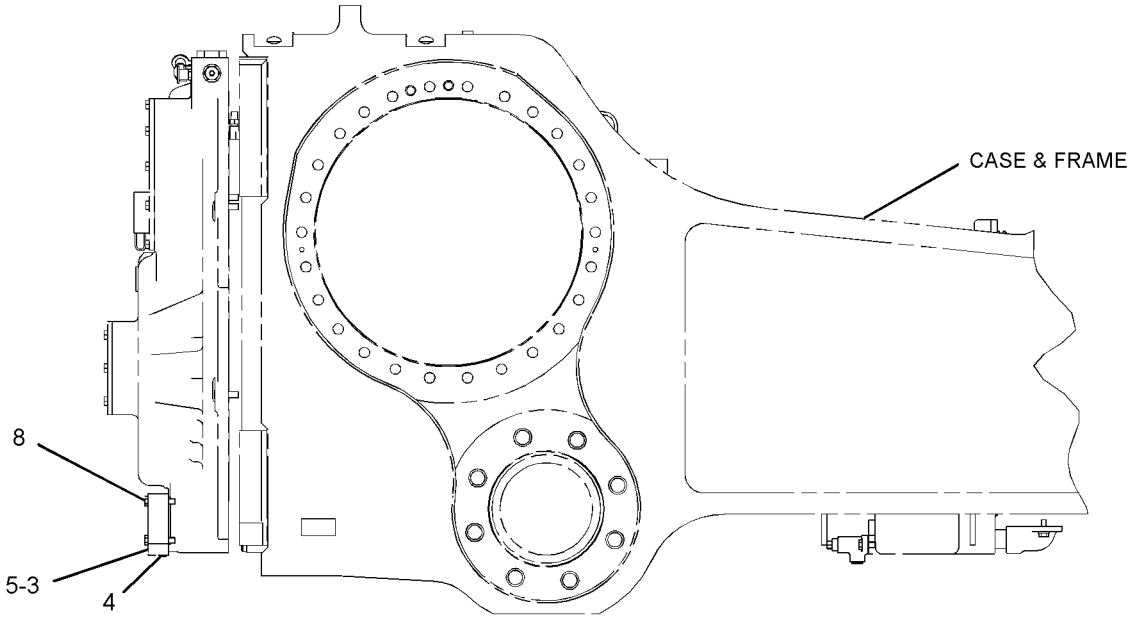

RIGHT SIDE VIEW

GRAPHIC #1 **<END>** g02175806

9W-0593 DRIVE GP-FINAL*R

S/N: DSH1-UP; DJR1-UP

PART OF 313-3755 POWER TRAIN AR

SMCS-4050 **i04655731**

NOTE	REF NO	GRAPHIC REF	PART NUMBER	QTY	PART NAME 1 2 3 4 5 6 (PRODUCT LEVEL)	SEE PAGE
	1	1	**3T-5923**	1	RETAINER	
	2	1	**3T-5926**	1	COVER	
	3	1	**3T-5928**	1	GEAR (24-TEETH)	
	4	1	**3T-5929**	1	GEAR (18-TEETH)	
	5	1	**4B-3693**	6	RACE & ROLLER AS-INNER	
	6	1	**5F-2465**	1	CUP-BEARING	
	7	1	**6T-1746**	1	HUB-REACTION	
R	8	1	**6T-2394**	1	HUB-SPINDLE	
	9	1	**6V-3298**	1	PLUG-MAGNETIC (FINAL DRIVE, OIL FILL, CHECK)	
	10	1	**6Y-0859**	1	SEAL GP-DUO-CONE	
		1	**1M-9011**	2	RING-TORIC	
	11	1	**7G-5684**	1	CARRIER-PLANETARY	
	12	1	**7G-5777**	3	COVER	
	13	1	**7G-5780**	3	SHAFT-PLANETARY	
	14	1	**7G-5783**	3	GEAR (18-TEETH)	
	15	1	**7G-5784**	3	GEAR-PLANETARY (21-TEETH)	
	16	1	**7G-5831**	1	RING-RETAINING	
	17	1	**7G-5832**	1	RETAINER	
	18	1	**7G-5833**	1	GEAR (63-TEETH)	
	19	1	**7G-5837**	1	HUB-SPROCKET	
	20	1	**7T-2530**	2	RING-THRUST	
	21	1	**7T-2531**	1	CARRIER-PLANETARY	
	22	1	**9W-3232**	1	RETAINER	
	23	1	**269-4739**	1	SEAL-LIP TYPE	
	24	1	**034-3557**	6	BOLT-LOCKING (3/8-16X1.125-IN)	
	25	1	**090-3093**	3	SEAL-QUAD RING	
	26	1	**2P-1370**	6	CUP-BEARING	
	27	1	**2S-4078**	1	SEAL-O-RING	
	28	1	**3K-0360**	1	SEAL-O-RING	
	29	1	**5F-7054**	1	SEAL-O-RING	
	30	1	**5H-3193**	3	PIN-SPRING	
	31	1	**5K-8454**	15	BOLT (1/2-13X1.12-IN)	
	32	1	**5P-8472**	1	RING-RETAINING	
	33	1	**6T-2173**	15	PIN	
	34	1	**6V-0661**	6	CONE-BEARING	
	35	1	**6V-0662**	1	CUP-BEARING	
	36	1	**6V-0663**	1	CONE-BEARING	
	37	1	**6V-0664**	1	CONE-BEARING	
	38	1	**7G-5776**	3	SHAFT-PLANETARY	
	39	1	**7X-0366**	29	BOLT (3/4-10X2-IN)	
	40	1	**8J-1665**	1	SEAL-O-RING	
	41	1	**8T-4223**	3	WASHER-HARD (13.5X25.5X3-MM THK)	
	42	1	**8T-4896**	6	WASHER-HARD (10.2X18.5X2.5-MM THK)	
	43	1	**8T-4994**	29	WASHER-HARD (20X36.5X3.5-MM THK)	
	44	1	**8T-8917**	3	BOLT (1/2-13X1.25-IN)	
	45	1	**9H-0846**	1	SEAL-O-RING	
	46	1	**9S-4185**	1	PLUG-O-RING (FINAL DRIVE, OIL DRAIN)	

R-REMFG PART MAY BE AVAILABLE

9W-0593 DRIVE GP-FINAL *(contd.)* **i04655731**

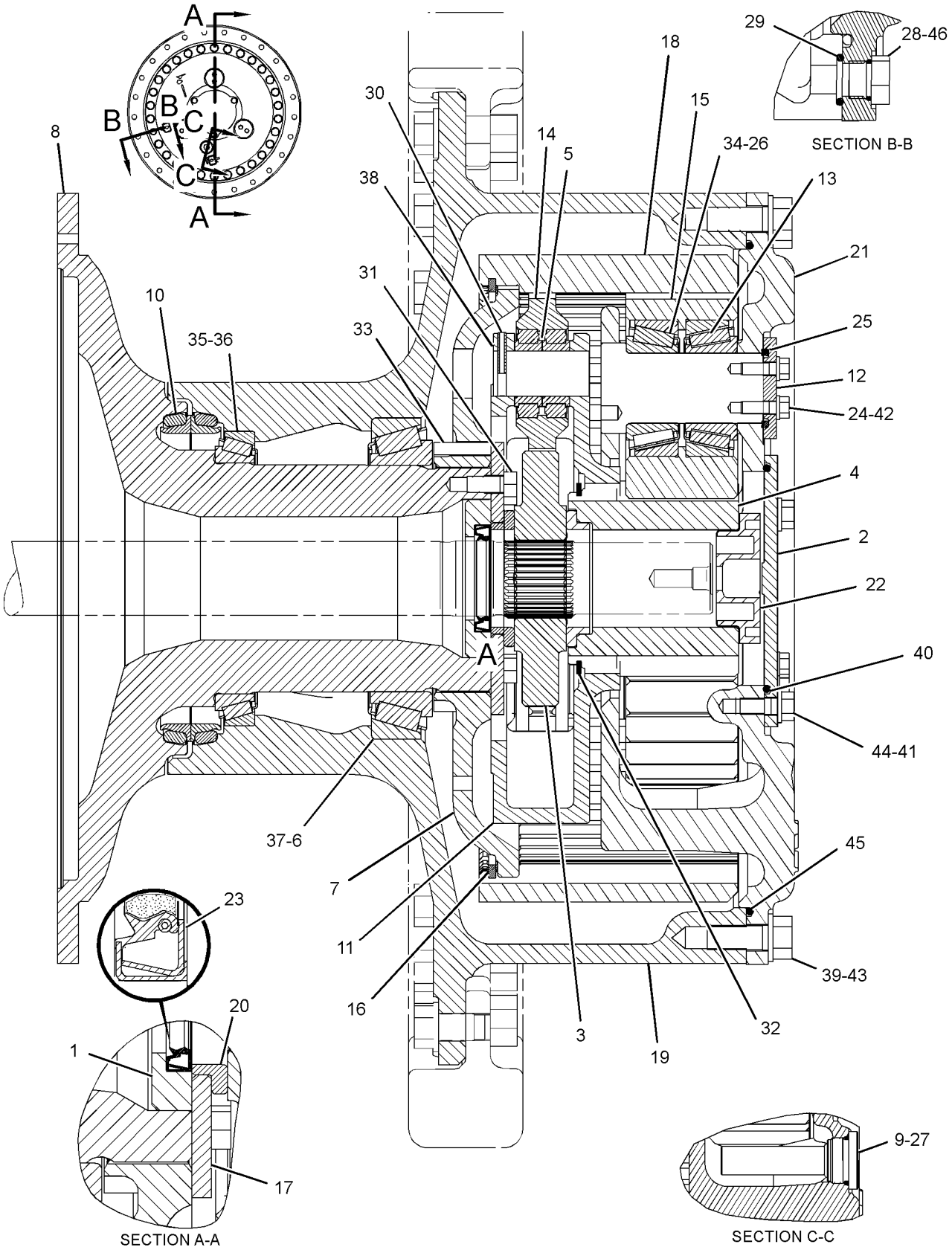

GRAPHIC #1 **<END>** g02725578

9W-0594 DRIVE GP-FINAL*R

S/N: DLN1-UP

PART OF 314-8870 POWER TRAIN AR

SMCS-4050 **i04718176**

NOTE	REF NO	GRAPHIC REF	PART NUMBER	QTY	PART NAME 1 2 3 4 5 6 (PRODUCT LEVEL)	SEE PAGE
	1	1	**3T-5923**	1	RETAINER	
	2	1	**3T-5926**	1	COVER	
	3	1	**3T-5928**	1	GEAR (24-TEETH)	
	4	1	**3T-5929**	1	GEAR (18-TEETH)	
	5	1	**6T-1746**	1	HUB-REACTION	
	6	1	**6T-2395**	1	HUB-SPINDLE	
	7	1	**6V-3298**	1	PLUG-MAGNETIC (FINAL DRIVE OIL FILL)	
	8	1	**7G-5684**	1	CARRIER-PLANETARY	
	9	1	**7G-5777**	3	COVER	
	10	1	**7G-5780**	3	SHAFT-PLANETARY	
	11	1	**7G-5783**	3	GEAR (18-TEETH)	
	12	1	**7G-5784**	3	GEAR-PLANETARY (21-TEETH)	
	13	1	**7G-5831**	1	RING-RETAINING	
	14	1	**7G-5832**	1	RETAINER	
	15	1	**7G-5833**	1	GEAR (63-TEETH)	
	16	1	**7G-5837**	1	HUB-SPROCKET	
	17	1	**7T-2530**	2	RING-THRUST	
	18	1	**7T-2531**	1	CARRIER-PLANETARY	
	19	1	**9W-3232**	1	RETAINER	
	20	1	**269-4739**	1	SEAL-LIP TYPE	
	21	1	**326-9200**	1	SEAL GP-DUO-CONE	
		1	**1M-9011**	2	RING-TORIC	
	22	1	**034-3557**	6	BOLT-LOCKING (3/8-16X1.125-IN)	
	23	1	**090-3093**	3	SEAL-QUAD RING	
	24	1	**2P-1370**	6	CUP-BEARING	
	25	1	**2S-4078**	1	SEAL-O-RING	
	26	1	**3K-0360**	1	SEAL-O-RING	
	27	1	**4B-3693**	6	RACE & ROLLER AS-INNER	
	28	1	**5F-2465**	1	CUP-BEARING	
	29	1	**5F-7054**	1	SEAL-O-RING	
	30	1	**5H-3193**	3	PIN-SPRING	
	31	1	**5K-8454**	15	BOLT (1/2-13X1.12-IN)	
	32	1	**5P-8472**	1	RING-RETAINING	
	33	1	**6T-2173**	15	PIN	
	34	1	**6V-0661**	6	CONE-BEARING	
	35	1	**6V-0662**	1	CUP-BEARING	
	36	1	**6V-0663**	1	CONE-BEARING	
	37	1	**6V-0664**	1	CONE-BEARING	
	38	1	**7G-5776**	3	SHAFT-PLANETARY	
	39	1	**7X-0366**	29	BOLT (3/4-10X2-IN)	
	40	1	**8J-1665**	1	SEAL-O-RING	
	41	1	**8T-4223**	3	WASHER-HARD (13.5X25.5X3-MM THK)	
	42	1	**8T-4896**	6	WASHER-HARD (10.2X18.5X2.5-MM THK)	
	43	1	**8T-4994**	29	WASHER-HARD (20X36.5X3.5-MM THK)	
	44	1	**8T-8917**	3	BOLT (1/2-13X1.25-IN)	
	45	1	**9H-0846**	1	SEAL-O-RING	
	46	1	**9S-4185**	1	PLUG-O-RING (FINAL DRIVE OIL DRAIN)	

9W-0594 DRIVE GP-FINAL *(contd.)* i04718176

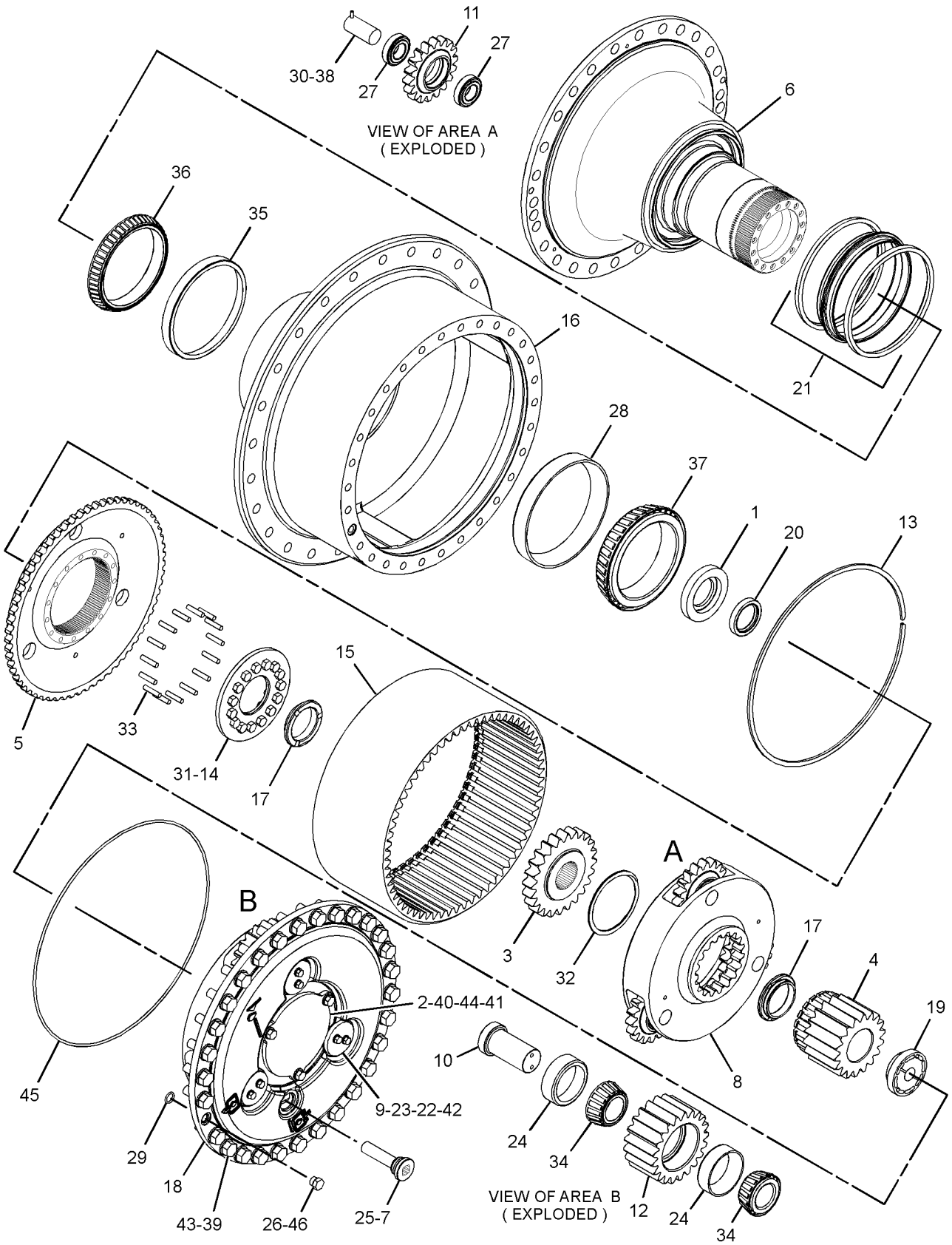

GRAPHIC #1 **<END>** g02832899

141-4942 DRIVE GP-FINAL–COLD WEATHER

S/N: DSH1-UP; DJR1-UP
PART OF 375-9603, 384-9812 COLD WEATHER AR
AN ATTACHMENT

SMCS-4050 **i04769382**

NOTE	REF NO	GRAPHIC REF	PART NUMBER	QTY	PART NAME 1 2 3 4 5 6 (PRODUCT LEVEL)	SEE PAGE
	1	1	**3T-5923**	1	RETAINER	
	2	1	**3T-5926**	1	COVER	
	3	1	**3T-5928**	1	GEAR (24-TEETH)	
	4	1	**3T-5929**	1	GEAR (18-TEETH)	
	5	1	**6T-1746**	1	HUB-REACTION	
R	6	1	**6T-2394**	1	HUB-SPINDLE	
	7	1	**6V-3298**	1	PLUG-MAGNETIC (FINAL DRIVE, OIL FILL, CHECK)	
	8	1	**6Y-6277**	1	SEAL GP-DUO-CONE	
		1	**5P-1606**	2	RING-TORIC	
	9	1	**7G-5684**	1	CARRIER-PLANETARY	
	10	1	**7G-5777**	3	COVER	
	11	1	**7G-5780**	3	SHAFT-PLANETARY	
	12	1	**7G-5783**	3	GEAR (18-TEETH)	
	13	1	**7G-5784**	3	GEAR-PLANETARY (21-TEETH)	
	14	1	**7G-5831**	1	RING-RETAINING	
	15	1	**7G-5832**	1	RETAINER	
	16	1	**7G-5833**	1	GEAR (63-TEETH)	
	17	1	**7G-5837**	1	HUB-SPROCKET	
	18	1	**7T-2530**	2	RING-THRUST	
	19	1	**7T-2531**	1	CARRIER-PLANETARY	
	20	1	**9W-3232**	1	RETAINER	
	21	1	**034-3557**	6	BOLT-LOCKING (3/8-16X1.125-IN)	
	22	1	**090-3093**	3	SEAL-QUAD RING	
	23	1	**2P-1370**	6	CUP-BEARING	
	24	1	**2S-4078**	1	SEAL-O-RING	
	25	1	**3K-0360**	1	SEAL-O-RING	
	26	1	**4B-3693**	6	RACE & ROLLER AS-INNER	
	27	1	**5F-2465**	1	CUP-BEARING	
	28	1	**5F-7054**	1	SEAL-O-RING	
	29	1	**5H-3193**	3	PIN-SPRING	
	30	1	**5K-8454**	15	BOLT (1/2-13X1.12-IN)	
	31	1	**5P-8472**	1	RING-RETAINING	
	32	1	**6T-2173**	15	PIN	
	33	1	**6V-0661**	6	CONE-BEARING	
	34	1	**6V-0662**	1	CUP-BEARING	
	35	1	**6V-0663**	1	CONE-BEARING	
	36	1	**6V-0664**	1	CONE-BEARING	
	37	1	**7G-5776**	3	SHAFT-PLANETARY	
	38	1	**7X-0366**	29	BOLT (3/4-10X2-IN)	
	39	1	**8J-1665**	1	SEAL-O-RING	
	40	1	**8T-4223**	3	WASHER-HARD (13.5X25.5X3-MM THK)	
	41	1	**8T-4896**	6	WASHER-HARD (10.2X18.5X2.5-MM THK)	
	42	1	**8T-4994**	29	WASHER-HARD (20X36.5X3.5-MM THK)	
	43	1	**8T-8917**	3	BOLT (1/2-13X1.25-IN)	
	44	1	**9H-0846**	1	SEAL-O-RING	
	45	1	**9S-4185**	1	PLUG-O-RING (FINAL DRIVE, OIL DRAIN)	
	46	1	**9X-7363**	1	SEAL-LIP TYPE	

R-REMFG PART MAY BE AVAILABLE

141-4942 **DRIVE GP-FINAL** *(contd.)* **i04769382**

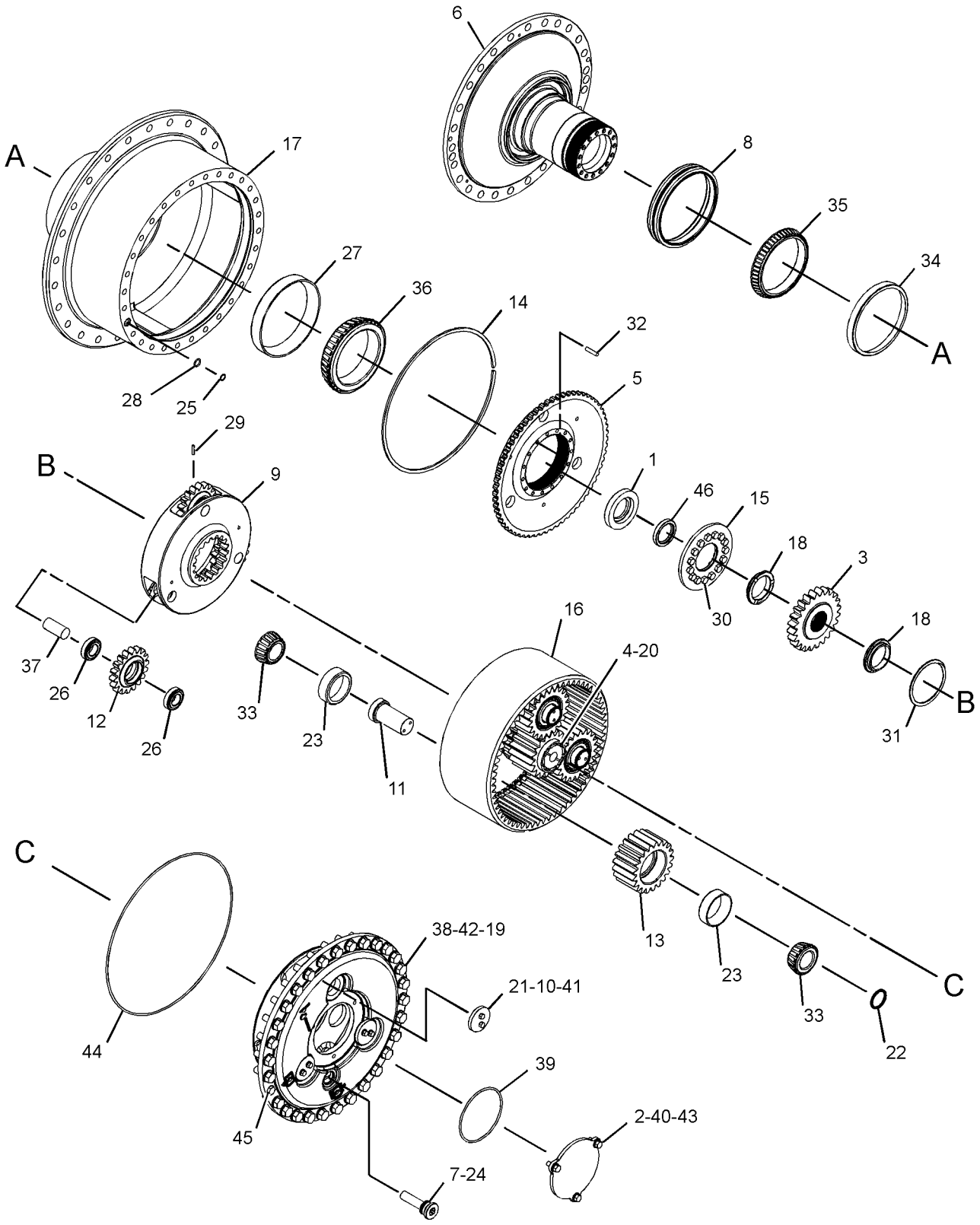

GRAPHIC #1 **<END>** g02788335

248-8646 DRIVE GP-FINAL—COLD WEATHER

S/N: DLN1-UP
PART OF 384-9811 COLD WEATHER AR
AN ATTACHMENT

SMCS-4050 **i04709110**

NOTE	REF NO	GRAPHIC REF	PART NUMBER	QTY	PART NAME 1 2 3 4 5 6 (PRODUCT LEVEL)	SEE PAGE
	1	1	**3T-5923**	1	RETAINER	
	2	1	**3T-5926**	1	COVER	
	3	1	**3T-5928**	1	GEAR (24-TEETH)	
	4	1	**3T-5929**	1	GEAR (18-TEETH)	
	5	1	**6T-1746**	1	HUB-REACTION	
	6	1	**6T-2395**	1	HUB-SPINDLE	
	7	1	**6V-3298**	1	PLUG-MAGNETIC (FINAL DRIVE, OIL FILL, CHECK)	
	8	1	**6Y-6277**	1	SEAL GP-DUO-CONE	
		1	**5P-1606**	2	RING-TORIC	
	9	1	**7G-5684**	1	CARRIER-PLANETARY	
	10	1	**7G-5777**	3	COVER	
	11	1	**7G-5780**	3	SHAFT-PLANETARY	
	12	1	**7G-5783**	3	GEAR (18-TEETH)	
	13	1	**7G-5784**	3	GEAR-PLANETARY (21-TEETH)	
	14	1	**7G-5831**	1	RING-RETAINING	
	15	1	**7G-5832**	1	RETAINER	
	16	1	**7G-5833**	1	GEAR (63-TEETH)	
	17	1	**7G-5837**	1	HUB-SPROCKET	
	18	1	**7T-2530**	2	RING-THRUST	
	19	1	**7T-2531**	1	CARRIER-PLANETARY	
	20	1	**9W-3232**	1	RETAINER	
	21	1	**034-3557**	6	BOLT-LOCKING (3/8-16X1.125-IN)	
	22	1	**090-3093**	3	SEAL-QUAD RING	
	23	1	**2P-1370**	6	CUP-BEARING	
	24	1	**2S-4078**	1	SEAL-O-RING	
	25	1	**3K-0360**	1	SEAL-O-RING	
	26	1	**4B-3693**	6	RACE & ROLLER AS-INNER	
	27	1	**5F-2465**	1	CUP-BEARING	
	28	1	**5F-7054**	1	SEAL-O-RING	
	29	1	**5H-3193**	3	PIN-SPRING	
	30	1	**5K-8454**	15	BOLT (1/2-13X1.12-IN)	
	31	1	**5P-8472**	1	RING-RETAINING	
	32	1	**6T-2173**	15	PIN	
	33	1	**6V-0661**	6	CONE-BEARING	
	34	1	**6V-0662**	1	CUP-BEARING	
	35	1	**6V-0663**	1	CONE-BEARING	
	36	1	**6V-0664**	1	CONE-BEARING	
	37	1	**7G-5776**	3	SHAFT-PLANETARY	
	38	1	**7X-0366**	29	BOLT (3/4-10X2-IN)	
	39	1	**8J-1665**	1	SEAL-O-RING	
	40	1	**8T-4223**	3	WASHER-HARD (13.5X25.5X3-MM THK)	
	41	1	**8T-4896**	6	WASHER-HARD (10.2X18.5X2.5-MM THK)	
	42	1	**8T-4994**	29	WASHER-HARD (20X36.5X3.5-MM THK)	
	43	1	**8T-8917**	3	BOLT (1/2-13X1.25-IN)	
	44	1	**9H-0846**	1	SEAL-O-RING	
	45	1	**9S-4185**	1	PLUG-O-RING (FINAL DRIVE, OIL DRAIN)	
	46	1	**9X-7363**	1	SEAL-LIP TYPE	

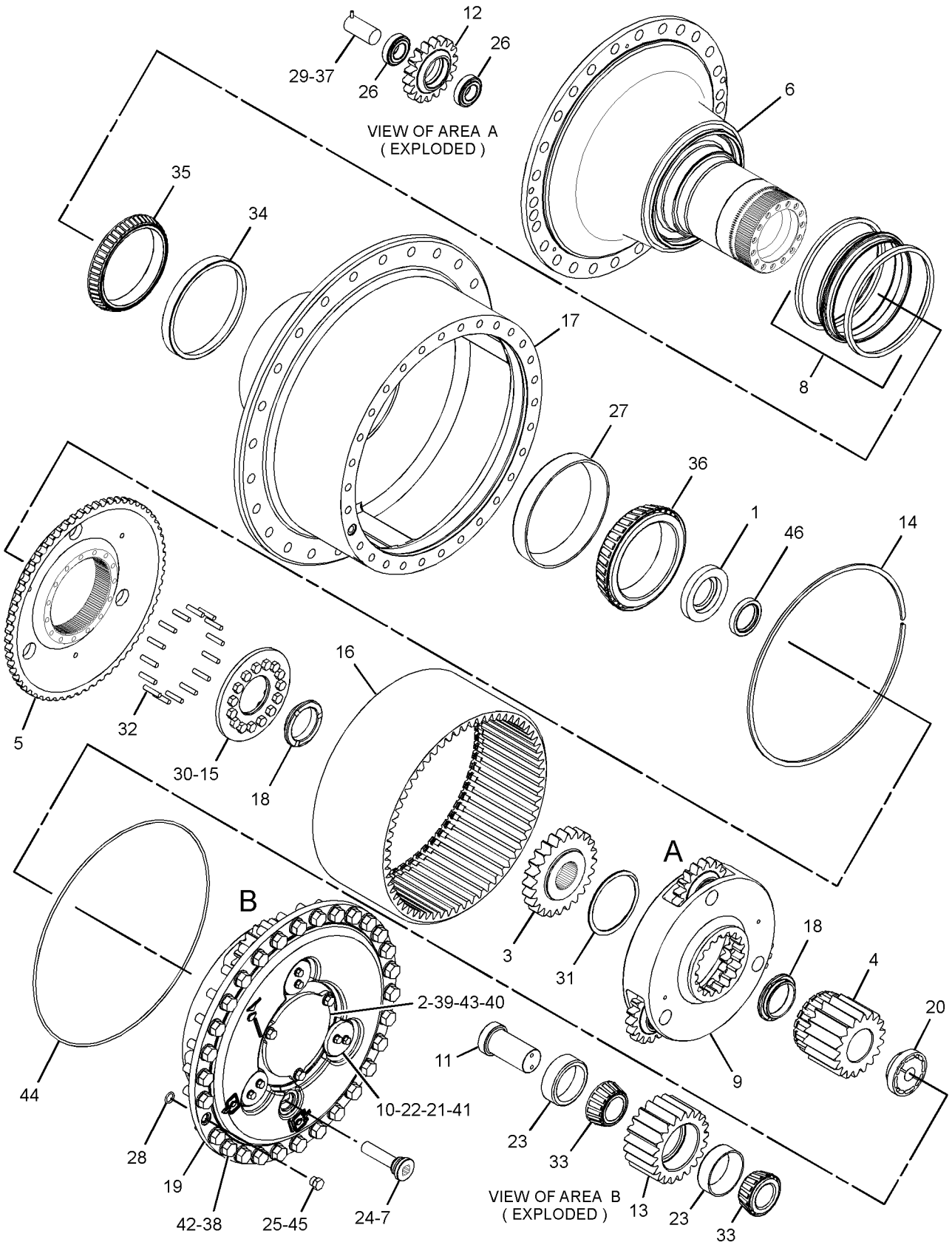

GRAPHIC #1 **<END>** g02827616

333-6437 FILTER GP-OIL—POWER TRAIN

S/N: DSH1-UP; DLN1-UP; DJR1-UP

PART OF 323-5693 LINES GP-POWER TRAIN OIL

SMCS-3004, 3067 **i04030658**

NOTE	REF NO	GRAPHIC REF	PART NUMBER	QTY	PART NAME 1 2 3 4 5 6 (PRODUCT LEVEL)	SEE PAGE
	1	1	**6V-0852**	1	CAP-DUST	
	2	1	**8C-3447**	1	CAP-DUST	
	3	1	**321-5967**	1	HOUSING GP-FILTER	
		1	**3J-1907**	1	SEAL-O-RING	
		1	**9S-8004**	1	PLUG-O-RING	
	4	1	**328-3655**	1	FILTER ELEMENT AS-OIL (ADVANCED EFFICIENCY)	
Y	5	1	**333-9308**	1	BASE GP-OIL FILTER	226
	6	1	**214-7568**	1	SEAL-O-RING	
	7	1	**6V-5048**	1	SEAL-O-RING	
	8	1	**6V-3965**	1	FITTING (QUICK DISCONNECT)	
	9	1	**8C-3446**	1	VALVE-FLUID SAMPLING	
	10	1	**130-0229**	1	SEAL-O-RING	
	11	1	**8L-2786**	1	SEAL-O-RING	
	12	1	**3P-1932**	1	ADAPTER	

Y-SEPARATE ILLUSTRATION

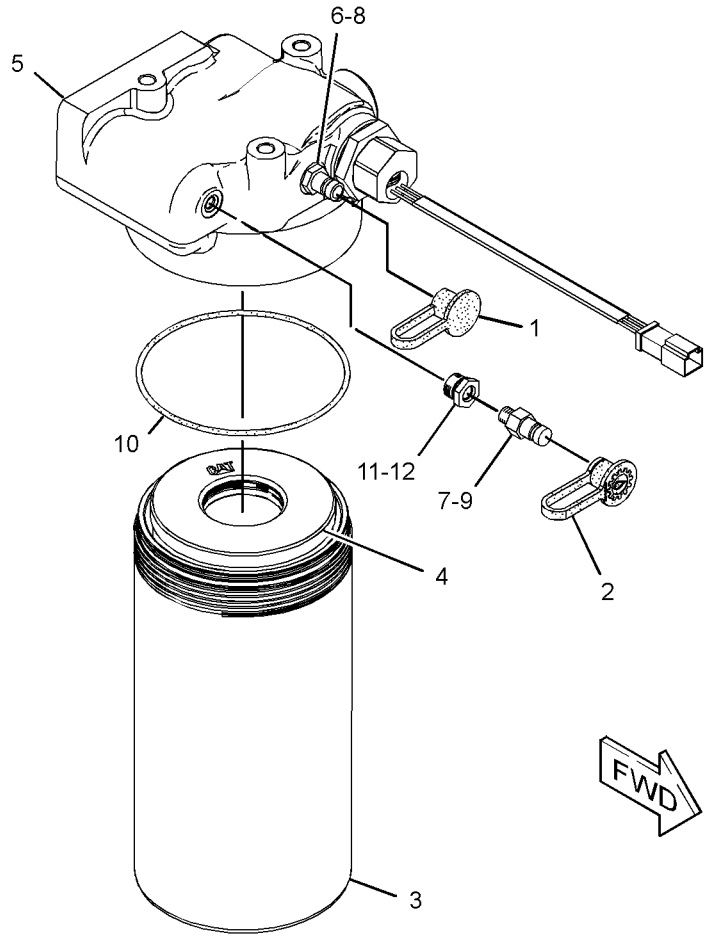

GRAPHIC #1 **<END>** g01888573

POWER TRAIN

162-6874 GEAR GP-BEVEL & TRANSFER

S/N: JNA1-UP

PART OF 315-9963 TRANSMISSION AR

SMCS-3011 **i04606971**

NOTE	REF NO	GRAPHIC REF	PART NUMBER	QTY	PART NAME 1 2 3 4 5 6 (PRODUCT LEVEL)	SEE PAGE
	1	1	**190-2277**	1	CASE AS	
		1	**2D-6642**	1	BALL	
	2	1	**160-3588**	1	GEAR (34-TEETH)	
B	3	1	**9P-1922**	1	SHIM PACK (INCLUDES 14-SHIMS)	
	4	1	**9W-2992**	1	CAGE-BEARING	
	5	1	**3T-6742**	1	RETAINER	
	6	1	**0S-1569**	1	BOLT (5/8-11X4-IN)	
	7	2	**1L-6957**	1	LOCKNUT-BEARING	
	8	2	**6V-2404**	1	LOCKWASHER-BEARING	
	9	1	**7H-7628**	1	BEARING	
	10	1	**0S-1591**	4	BOLT (3/8-16X1.5-IN)	
	11	1	**5M-2894**	4	WASHER-HARD (10.2X18.5X2.5-MM THK)	
	12	2	**7D-1649**	2	WASHER-HARD (13.5X32X5-MM THK)	
	13	1	**6I-8507**	1	PLATE-RETAINER	
	14	2	**9P-7072**	1	WASHER (90.6X115X2.5-MM THK)	
	15	1	**6I-8511**	1	CAGE-BEARING	
B	16	1	**9P-1921**	1	SHIM PACK (INCLUDES 14-SHIMS)	
	17	1	**216-0273**	1	SEAL-LIP TYPE	
	18	1	**160-3585**	1	GEAR-TRANSFER (43-TEETH)	
	19	1	**8D-1817**	2	CUP-BEARING	
	20	1	**8D-1819**	2	CONE-BEARING	
	21	1	**6S-2829**	2	CONE-BEARING	
	22	1	**6S-2828**	2	CUP-BEARING	
	23	1	**9W-3660**	1	PINION-BEVEL (20-TEETH)	
	24	1,2	**7B-3235**	24	BOLT (1/2-13X1.375-IN)	
	25	1,2	**5P-8245**	24	WASHER-HARD (13.5X25.5X3-MM THK)	
	26	1	**0L-1169**	12	BOLT (5/8-11X3.75-IN)	
	27	1	**5P-8247**	16	WASHER-HARD (17X32X3.5-MM THK)	
	28	2	**4H-0019**	1	RACE & ROLLER AS	
	29	2	**9W-1570**	1	CAGE AS-BEARING	
		2	**4B-9880**	1	BALL	
		2	**9W-1569**	1	PLUG-ORIFICE	
B	30	2	**9P-1478**	2	SHIM PACK (INCLUDES 14-SHIMS)	
	31	2	**5P-7592**	1	RACE-ROLLER BEARING	
	32	2	**6T-0364**	1	RING-RETAINING	
	33	2	**9W-8612**	1	SPACER-BEARING	
	34	2	**1P-3934**	2	CUP-BEARING	
	35	2	**1P-3935**	2	CONE-BEARING	
	36	2	**9W-5150**	1	SHAFT-BEVEL GEAR	
	37	2	**0S-1897**	12	BOLT (3/4-16X2.25-IN)	
	38	2	**1S-1860**	12	NUT-TRACK (3/4-16-THD)	
	39	2	**9P-1925**	1	GEAR-BEVEL (35-TEETH)	
	40	2	**9G-0832**	1	DOWEL	
	41	2	**7T-9946**	1	CAGE-BEARING	
	42	2	**6J-3473**	1	RING-SNAP	
	43	2	**6T-3853**	2	SLEEVE	
	44	2	**1A-5822**	2	BOLT (1/2-13X2.75-IN)	
	45	2	**6T-3852**	2	ROLLER	
	46	2	**7T-1475**	1	BRACKET-ROLLER	
	47	2	**7T-1474**	1	BRACKET-ROLLER	
	48	2	**1D-4601**	4	BOLT (5/8-11X8.5-IN)	

B-USE AS REQUIRED

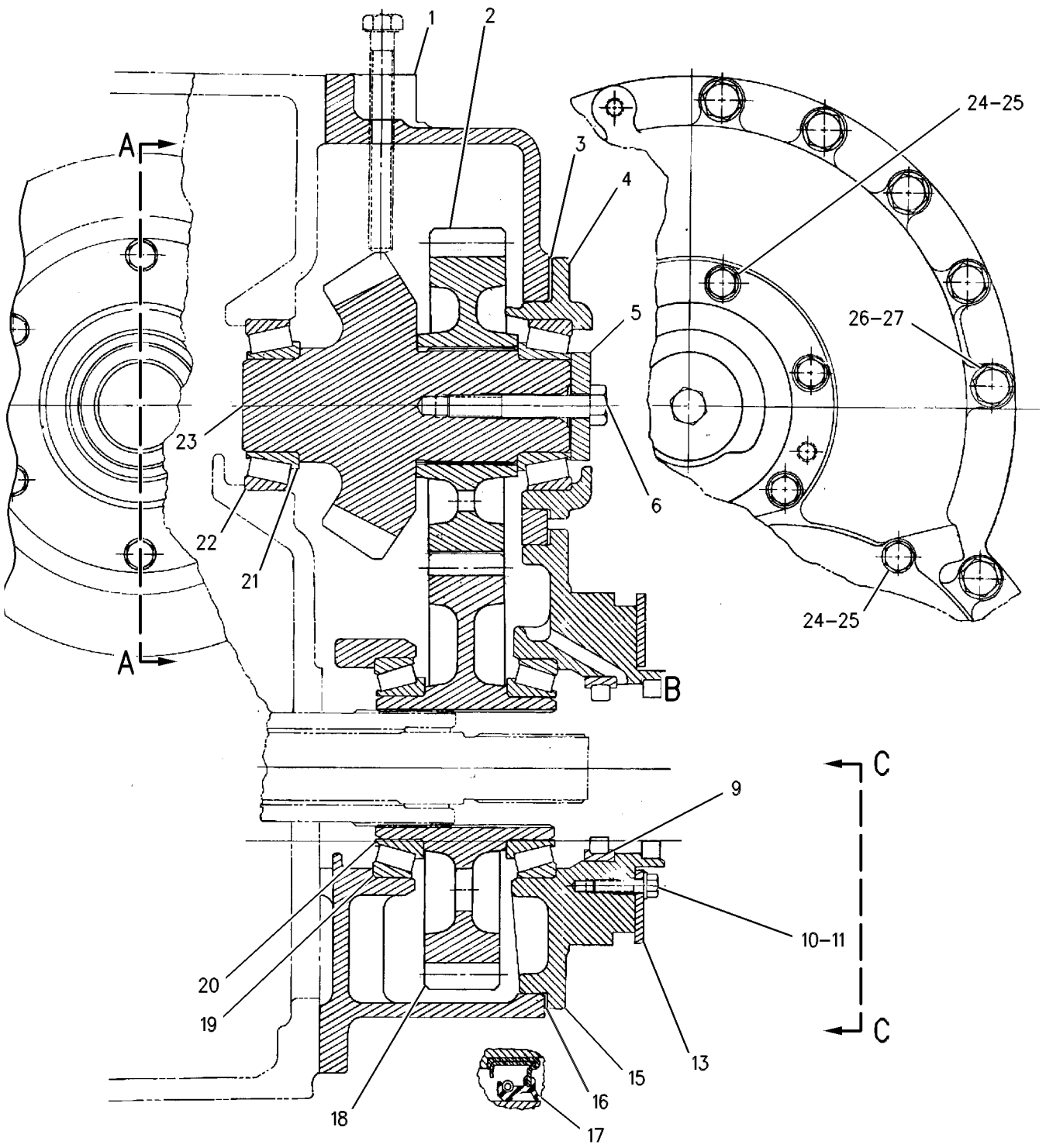

VIEW OF AREA B

REFER TO ALL ILLUSTRATIONS OF THIS GROUP FOR AUXILIARY VIEWS

GRAPHIC #1

g00572040

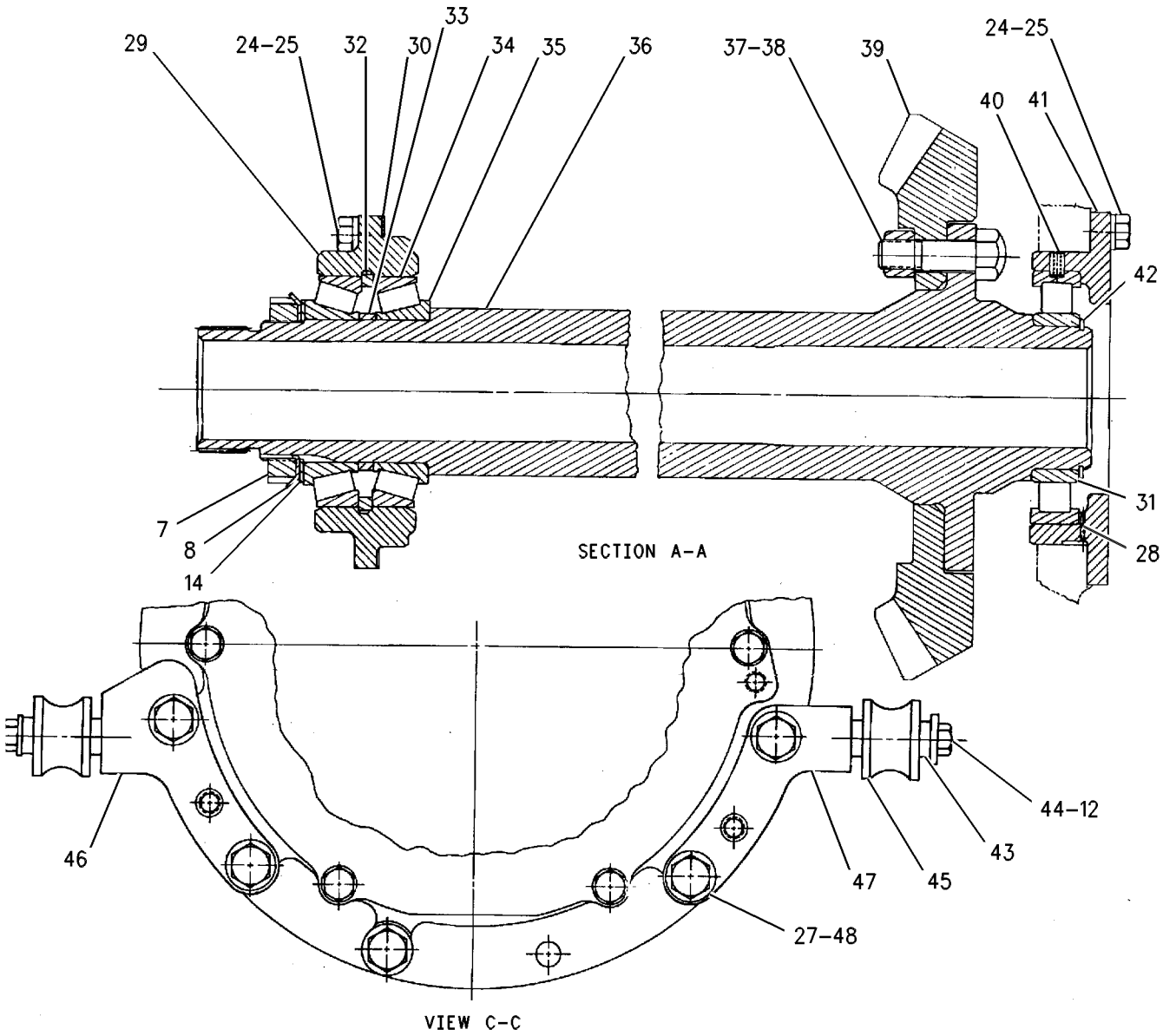

GRAPHIC #2 **<END>** g00572042

380-1022 LINES GP-DRAIN

S/N: DSH1-UP; DLN1-UP; DJR1-UP
PART OF 313-3757 INSTALLATION AR

SMCS-3016 **i04609711**

NOTE	REF NO	GRAPHIC REF	PART NUMBER	QTY	PART NAME 1 2 3 4 5 6 (PRODUCT LEVEL)	SEE PAGE
	1	1	*170-0967*	1	ELBOW AS	
		1	**3K-0360**	1	SEAL-O-RING	
		1	**5P-4906**	1	ELBOW	
	2	1	*365-0582*	1	VALVE AS-SHUTOFF	
		1	**6V-6609**	1	SEAL-O-RING	
		1	**6V-7238**	1	VALVE-SHUTOFF	
	3	1	**379-8787**	1	BRACKET AS	
	4	1	**379-8788**	1	BRACKET AS	
	5	1	**159-1503**	2	CLAMP-HOSE	
	6	1	**6V-5839**	1	WASHER (11X21X2.5-MM THK)	
M	7	1	**6V-6317**	1	BOLT (M10X1.5X20-MM)	
	8	1	**7C-4354**	1	CLIP	
E	9	1	**5P-0767**		HOSE (70-CM)	

E-ORDER BY THE CENTIMETER
M-METRIC PART

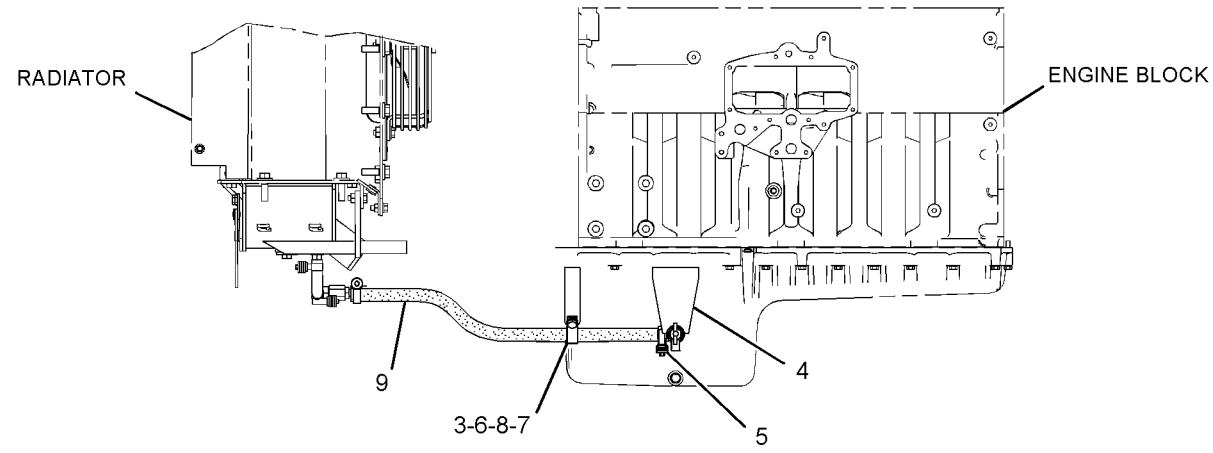

LEFT SIDE VIEW

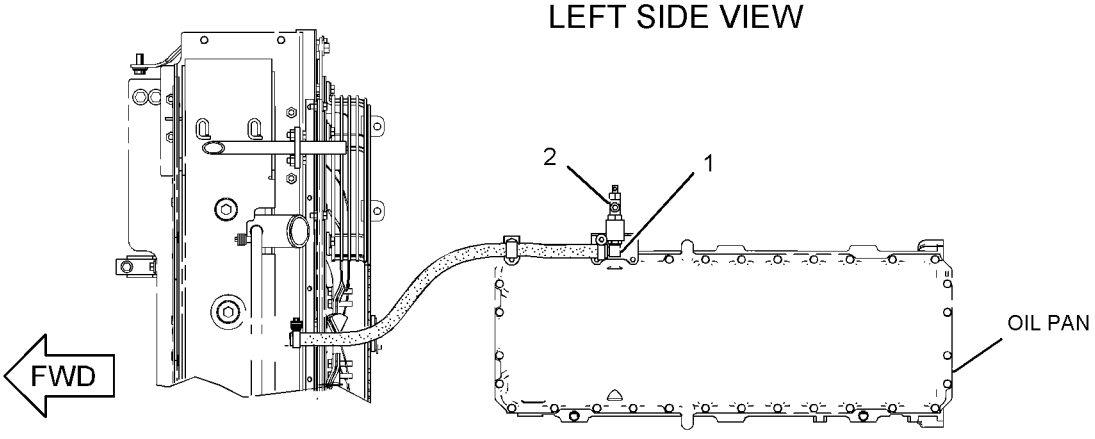

BOTTOM VIEW

GRAPHIC #1 **<END>** g02790740

POWER TRAIN

323-5693 LINES GP-POWER TRAIN OIL

S/N: DSH1-UP; DLN1-UP; DJR1-UP

PART OF 313-3755, 314-8870 POWER TRAIN AR

SMCS-3016 **i04769415**

NOTE	REF NO	GRAPHIC REF	PART NUMBER	QTY	PART NAME 1 2 3 4 5 6 (PRODUCT LEVEL)	SEE PAGE
	1	3	**3T-5301**	1	TUBE	
	2	3	**3T-5302**	1	FLANGE	
	3	3	**3T-6471**	1	SCREEN AS (TORQUE CONVERTER SCAVENGE)	
		3	**3T-6469**	1	WASHER (19X26X1.6-MM THK)	
	4	2	**6N-2985**	1	CAP AS-FILLER (POWER TRAIN OIL)	
	5	3	**6T-3714**	1	GASKET	
	6	1,3	**6V-0852**	3	CAP-DUST	
	7	3	**6V-5387**	1	PLATE-ORIFICE	
	8	3	**7V-8532**	1	SPACER	
	9	2	**8C-3443**	2	CONNECTOR	
	10	1	**9D-7924**	3	MOUNTING	
I	11	1	**115-4337**	1	HOSE AS	
	12	3	*169-5863*	2	ADAPTER AS	
					(EACH INCLUDES)	
		3	**4J-5477**	1	SEAL-O-RING	
		3	**7X-7945**	1	ADAPTER	
	13	2	**183-3873**	1	BREATHER (TRANSMISSION)	
Y	14	1	**220-1418**	1	VALVE GP-RELIEF (TORQUE CONVERTER OUTLET)	294
Y	15	1	*231-4166*	1	SCREEN GP-MAGNETIC (TRANSMISSION)	283
	16	3	**235-4514**	1	BRACKET	
	17	3	**270-5291**	1	BRACKET AS	
M		3	**8T-3490**	1	NUT-WELD (M10X1.5-THD)	
	18	1	**270-5292**	1	BRACKET AS	
	19	3	**270-5293**	1	BRACKET AS	
	20	1	**272-6541**	1	TUBE AS	
I	21	2	**272-6552**	1	HOSE AS	
	22	1	**273-8981**	1	GAUGE AS-OIL LEVEL (DIPSTICK) (TRANSMISSION CASE)	
	23	2	**323-5695**	1	PLATE	
I	24	1	**325-7496**	1	HOSE AS	
I	25	1	**325-7497**	1	HOSE AS	
I	26	2	**325-7498**	1	HOSE AS	
I	27	1	**325-7499**	1	HOSE AS	
I	28	1	**331-4865**	1	HOSE AS	
I	29	2	**331-4866**	1	HOSE AS	
Y	30	1	*333-6437*	1	FILTER GP-OIL (POWER TRAIN)	255
	31	1	**340-4612**	1	SPACER	
Y	32	1	*377-5482*	1	PUMP GP-GEAR (POWER TRAIN)	280
I	33	1	**378-6126**	1	HOSE AS	
	34	2	**378-6135**	1	TUBE AS	
	35	2	**378-6136**	1	TUBE AS	
	36	1,3	**033-8248**	6	CLIP	
	37	2	**112-9783**	1	ADAPTER	
	38	2	*148-8335*	2	CONNECTOR AS	
					(EACH INCLUDES)	
		2	**5K-9090**	1	SEAL-O-RING	
		2	**6V-8635**	1	CONNECTOR	
		2	**7M-8485**	1	SEAL-O-RING	
	39	2	*148-8368*	1	ELBOW AS	
		2	**3J-1907**	1	SEAL-O-RING	
		2	**4J-5477**	1	SEAL-O-RING	
		2	**6V-8627**	1	ELBOW	
	40	3	*148-8374*	1	ELBOW AS	
		3	**3K-0360**	1	SEAL-O-RING	
		3	**6V-8397**	1	SEAL-O-RING	
		3	**6V-8723**	1	ELBOW	

323-5693 LINES GP-POWER TRAIN OIL *(contd.)* i04769415

NOTE	REF NO	GRAPHIC REF	PART NUMBER	QTY	PART NAME 1 2 3 4 5 6 (PRODUCT LEVEL)	SEE PAGE
	41	1	*150-3065*	1	ADAPTER AS	
		1	**3J-1907**	1	SEAL-O-RING	
		1	**6V-0484**	1	ELBOW	
	42	2	*153-6243*	1	TEE AS	
		2	**2S-4078**	1	SEAL-O-RING	
		2	**5K-9090**	1	SEAL-O-RING	
		2	**6V-9746**	1	SEAL-O-RING	
		2	**8T-1120**	1	TEE-O-RING PORT	
	43	2	*155-7327*	1	CONNECTOR AS	
		2	**3J-1907**	1	SEAL-O-RING	
		2	**5H-8853**	1	SEAL-O-RING	
		2	**6V-8636**	1	CONNECTOR	
	44	1,3	*164-5567*	3	COUPLER AS-QUICK DISCONNECT (MALE)	
					(EACH INCLUDES)	
		1,3	**6V-3965**	1	FITTING (QUICK DISCONNECT)	
		1,3	**214-7568**	1	SEAL-O-RING	
	45	2	**180-4362**	2	SEAL-RECTANGULAR	
	46	3	**1H-5728**	1	SEAL-O-RING	
	47	3	**1P-4578**	4	FLANGE-HALF	
	48	2	**290-6891**	1	CLIP-2 PIECE	
	49	2	**290-6892**	1	CLIP	
	50	3	**2K-8257**	1	SEAL-O-RING	
	51	3	**2P-1279**	2	LOCKNUT (9/16-18-THD)	
	52	1	**3G-4214**	2	CLIP (SLOT)	
	53	1	**3G-4218**	2	CLIP (TAB)	
	54	2	**3K-0360**	1	SEAL-O-RING	
	55	2	**4J-0522**	1	SEAL-O-RING	
	56	2	**4J-5477**	1	SEAL-O-RING	
	57	3	**4K-6177**	1	CLIP	
	58	2	**5K-9090**	2	SEAL-O-RING	
	59	3	**5M-3062**	1	BOLT (3/8-16X0.75-IN)	
	60	1	**5P-1076**	1	WASHER-HARD (13.5X30X4-MM THK)	
	61	1	**5P-2566**	1	BOLT (1/2-13X1.5-IN)	
	62	3	**5P-7468**	1	CLIP (SLOT)	
	63	3	**5P-7469**	1	CLIP (TAB)	
	64	2	**5P-8215**	2	SEAL-O-RING	
	65	3	**6F-6673**	2	SEAL-O-RING	
	66	3	**6L-1649**	2	SEAL-O-RING	
	67	1,3	**6L-5359**	2	SEAL-O-RING	
	68	2	**7G-3832**	1	GROMMET	
	69	2	**7G-3833**	1	CLIP (TAB)	
	70	2	**7G-3834**	1	CLIP (SLOT)	
	71	2	**7J-8611**	1	ELBOW-PIPE	
	72	2	**7M-8485**	2	SEAL-O-RING	
	73	3	**7S-3912**	1	CLIP (TAB)	
	74	3	**7S-3913**	1	CLIP (SLOT)	
M	75	2	**7X-2536**	1	BOLT (M8X1.25X14-MM)	
	76	2,3	**8C-3206**	6	FLANGE-HALF	
	77	1,2,3	**8M-4986**	5	SEAL-O-RING	
	78	1,2	**8M-4987**	4	SEAL-O-RING	
	79	3	**8M-8157**	1	SEAL-O-RING	
	80	1	**8T-1899**	1	CLIP (SLOT)	
	81	1	**8T-1900**	1	CLIP (TAB)	
	82	1,2,3	**8T-4121**	47	WASHER-HARD (11X21X2.5-MM THK)	
M	83	2	**8T-4133**	4	NUT (M10X1.5-THD)	
M	84	1,3	**8T-4136**	3	BOLT (M10X1.5X25-MM)	
M	85	1,3	**8T-4137**	4	BOLT (M10X1.5X20-MM)	
M	86	2	**8T-4172**	3	BOLT (M10X1.5X80-MM)	
M	87	3	**8T-4182**	8	BOLT (M10X1.5X45-MM)	

323-5693 LINES GP-POWER TRAIN OIL *(contd.)* i04769415

NOTE	REF NO	GRAPHIC REF	PART NUMBER	QTY	PART NAME 1 2 3 4 5 6 (PRODUCT LEVEL)	SEE PAGE
M	88	1	**8T-4183**	8	BOLT (M12X1.75X40-MM)	
M	89	3	**8T-4185**	4	BOLT (M10X1.5X50-MM)	
M	90	3	**8T-4186**	4	BOLT (M10X1.5X40-MM)	
M	91	1	**8T-4194**	4	BOLT (M12X1.75X50-MM)	
M	92	1,2,3	**8T-4195**	6	BOLT (M10X1.5X30-MM)	
M	93	2	**8T-4196**	4	BOLT (M10X1.5X35-MM)	
	94	1	**8T-4223**	12	WASHER-HARD (13.5X25.5X3-MM THK)	
	95	2	**8T-4224**	1	WASHER-HARD (8.8X16X2-MM THK)	
	96	1	**8T-4226**	6	WASHER-PLATED (10.5X45X3-MM THK)	
	97	3	**8T-4896**	5	WASHER-HARD (10.2X18.5X2.5-MM THK)	
M	98	3	**8T-5005**	4	BOLT (M10X1.5X70-MM)	
M	99	1	**8T-6466**	3	BOLT (M10X1.5X60-MM)	
	100	3	**9B-7237**	4	BOLT (3/8-16X1.25-IN)	
	101	3	**9X-8257**	2	WASHER (17.5X30X3.5-MM THK)	

I-REFER TO HYDRAULIC INFORMATION SYSTEM
M-METRIC PART
Y-SEPARATE ILLUSTRATION

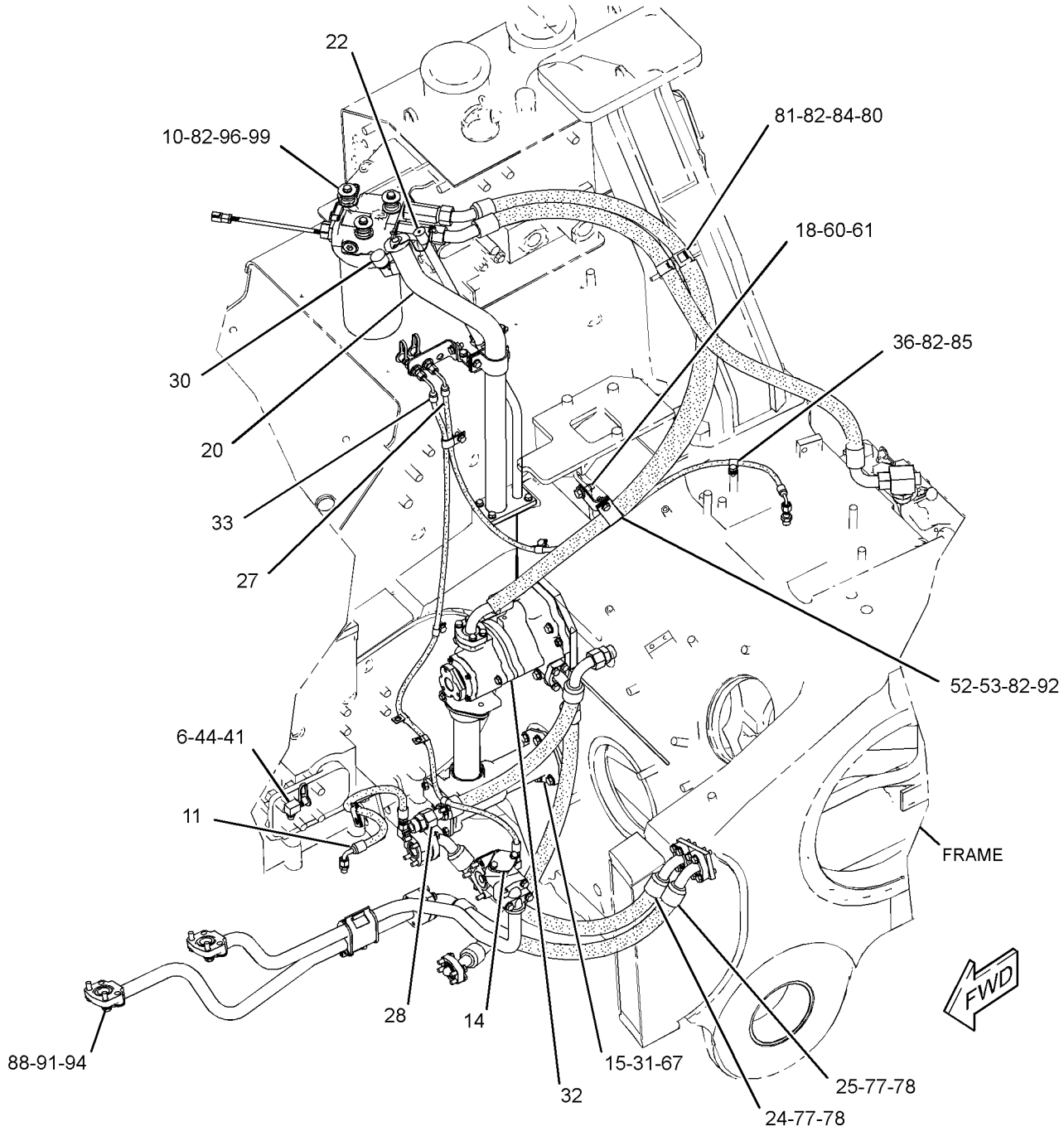

GRAPHIC #1

g02830377

323-5693 **LINES GP-POWER TRAIN OIL** *(contd.)* **i04769415**

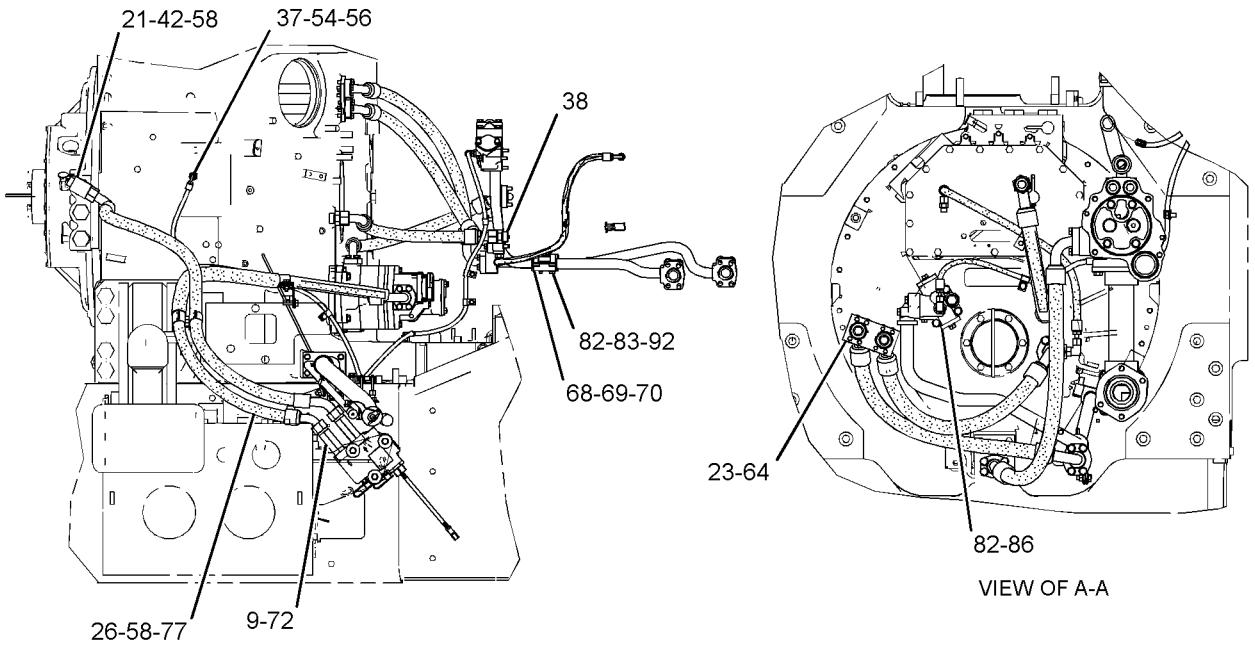

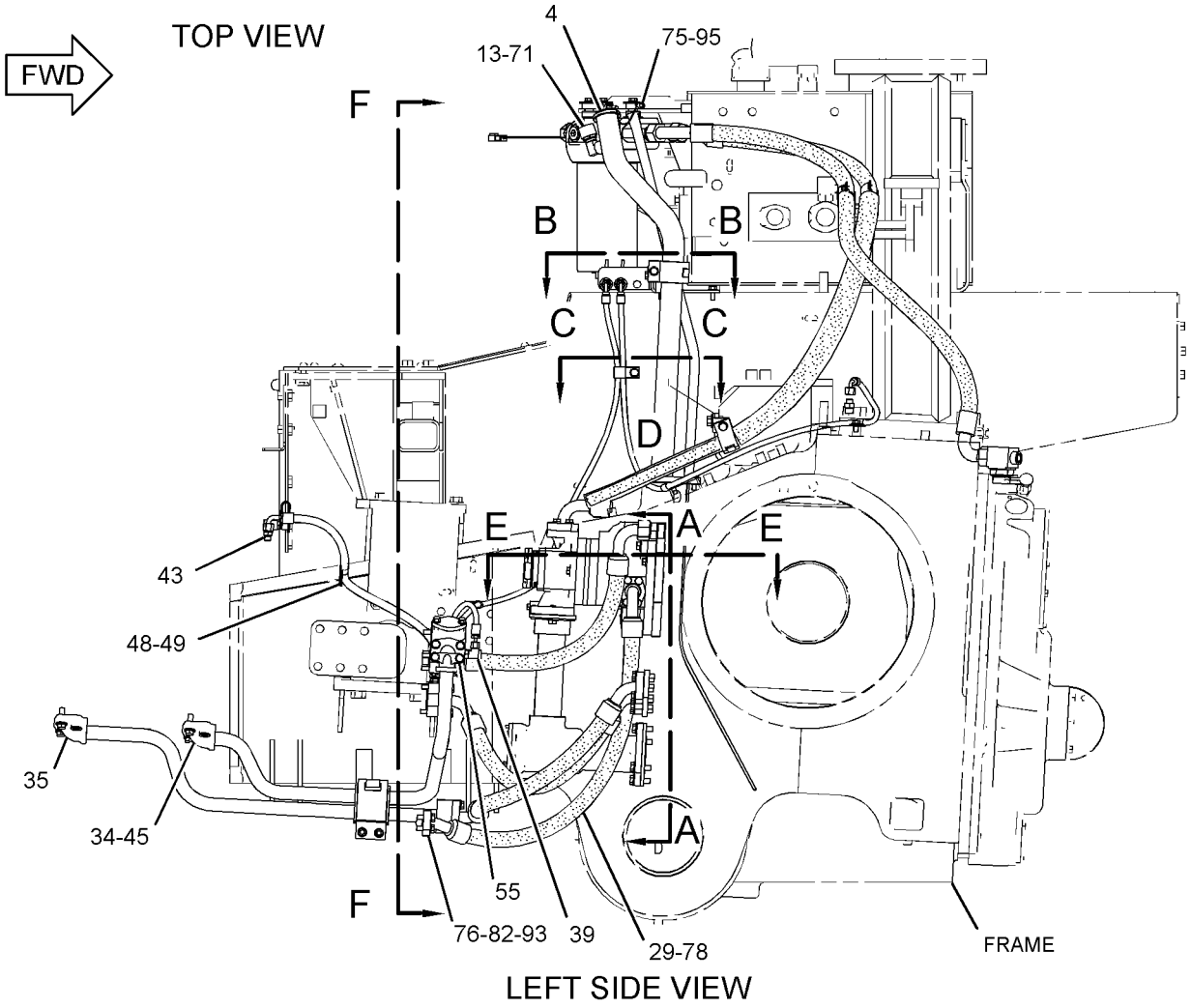

GRAPHIC #2 g02830379

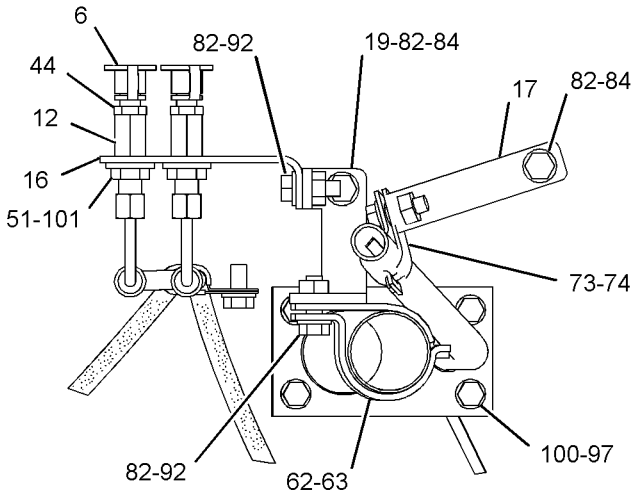

SECTION B-B

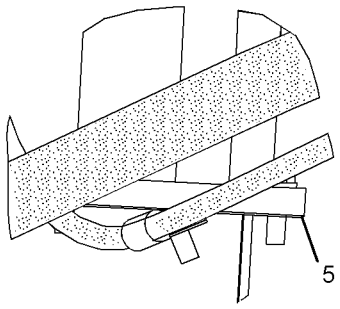

VIEW OF AREA D

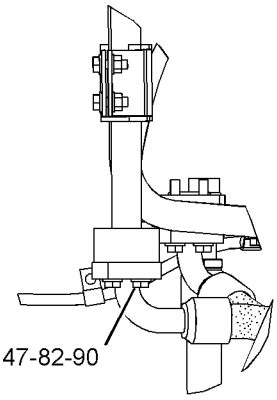

SECTION G-G

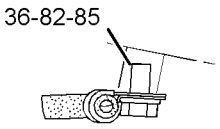

SECTION E-E

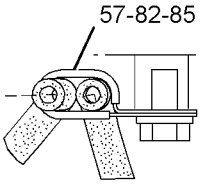

SECTION C-C

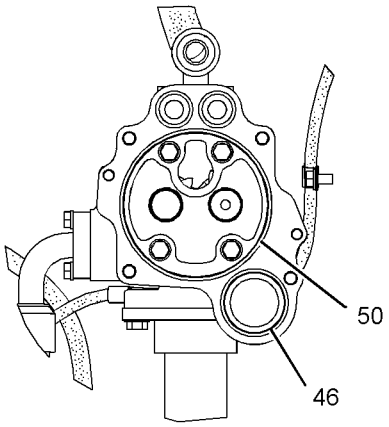

VIEW OF AREA J

SECTION F-F

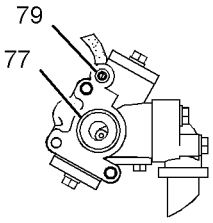

VIEW OF AREA H

GRAPHIC #3 **<END>** g02830380

218-0114 MOUNTING GP-FINAL DRIVE

S/N: DSH1-UP; DLN1-UP; DJR1-UP

PART OF 313-3755, 314-8870 POWER TRAIN AR

SMCS-4050 **i04655771**

NOTE	REF NO	GRAPHIC REF	PART NUMBER	QTY	PART NAME 1 2 3 4 5 6 (PRODUCT LEVEL)	SEE PAGE
	1	1	**8D-4771**	2	SEAL-O-RING	
	2	1	**219-4481**	52	BOLT (M22X2.5X85-MM)	
	3	1	**2R-0098**	2	SEAL-O-RING	
B	4	1	**6F-6673**	4	SEAL-O-RING	
	5	1	**8C-6913**	52	WASHER-HARD (24X41.5X4-MM THK)	
M	6	1	**8T-4182**	4	BOLT (M10X1.5X45-MM)	
	7	1	**8T-4223**	4	WASHER-HARD (13.5X25.5X3-MM THK)	
	8	1	**8T-8919**	4	BOLT (1/2-13X1.75-IN)	
	9	1	**9X-2027**	4	WASHER (11X18X2-MM THK)	

B-USE AS REQUIRED
M-METRIC PART

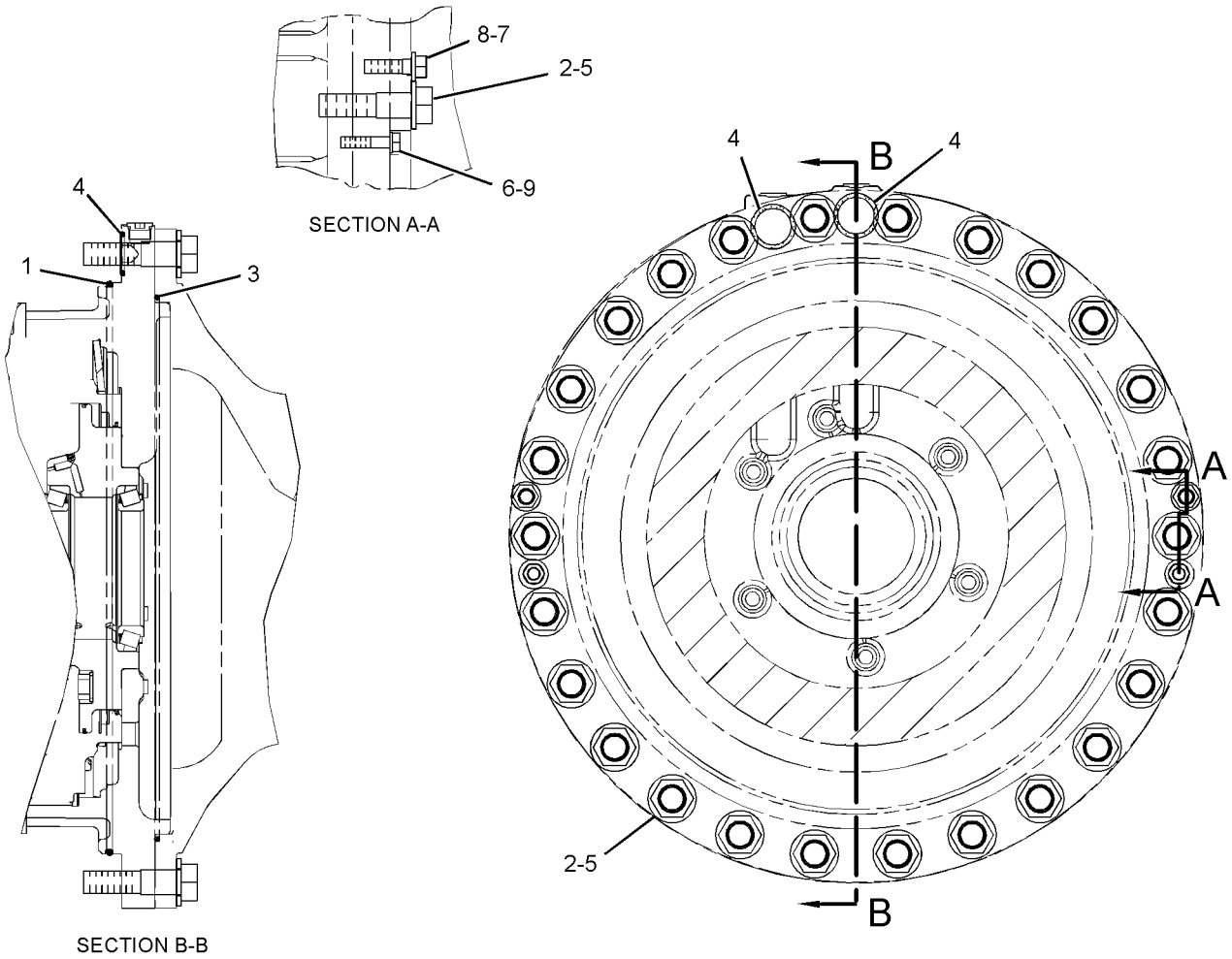

GRAPHIC #1 **<END>** g01860054

374-0187 MOUNTING GP-TRANSMISSION

S/N: DSH1-UP; DLN1-UP; DJR1-UP

PART OF 313-3755, 314-8870 POWER TRAIN AR

SMCS-3082 **i04629254**

NOTE	REF NO	GRAPHIC REF	PART NUMBER	QTY	PART NAME 1 2 3 4 5 6 (PRODUCT LEVEL)	SEE PAGE
	1	1	**5S-7008**	4	SPRING	
	2	1	**9W-6359**	2	TUBE AS	
	3	1	**1H-1200**	2	PIN-SPRING	
	4	1	**1M-9011**	1	RING-TORIC	
	5	1	**2D-6506**	1	SEAL-O-RING	
M	6	1	**6V-7744**	4	LOCKNUT (M10X1.5-THD)	
	7	1	**8M-4390**	1	SEAL-O-RING	
	8	1	**8T-4121**	8	WASHER-HARD (11X21X2.5-MM THK)	
M	9	1	**8T-4196**	4	BOLT (M10X1.5X35-MM)	
	10	1	**8T-4223**	22	WASHER-HARD (13.5X25.5X3-MM THK)	
M	11	1	**8T-4648**	19	BOLT (M12X1.75X70-MM)	
M	12	1	**8T-5041**	3	BOLT (M12X1.75X120-MM)	
	13	1	**8T-5360**	4	WASHER (12X22.5X2.5-MM THK)	
	14	1	**9M-7002**	3	SEAL-O-RING	

M-METRIC PART

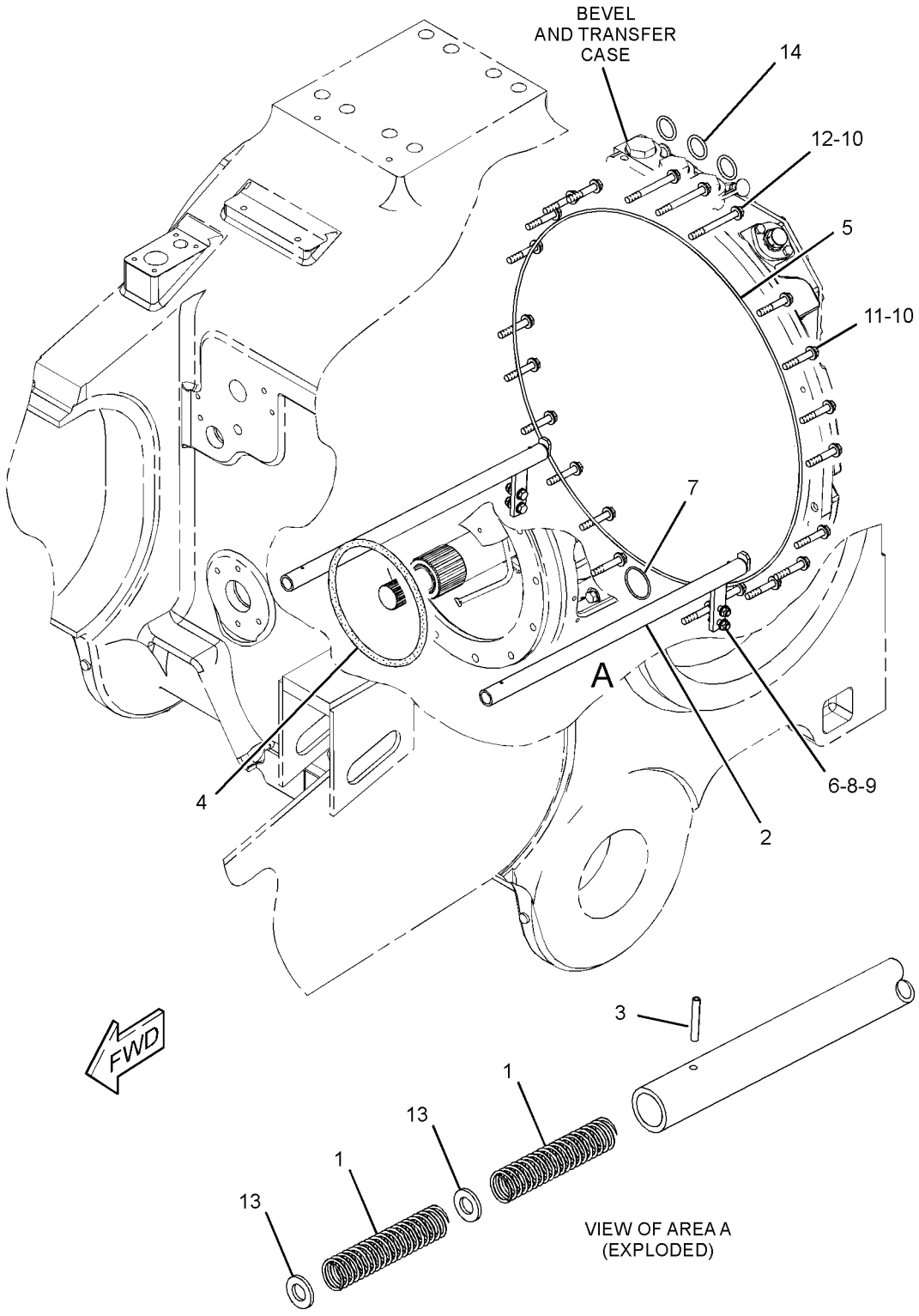

GRAPHIC #1 **<END>** g02783620

318-6191 PLANETARY GP-TRANSMISSION

S/N: JNA1-UP

PART OF 315-9963 TRANSMISSION AR

SMCS-3160 **i04607129**

NOTE	REF NO	GRAPHIC REF	PART NUMBER	QTY	PART NAME 1 2 3 4 5 6 (PRODUCT LEVEL)	SEE PAGE
	1	1,6	**3T-4377**	2	SEAL-RING	
	2	3,4,8	**4M-9592**	20	SPRING	
	3	3	**5M-6126**	8	BEARING AS-ROLLER	
	4	4	**5P-3930**	3	BEARING AS-ROLLER	
	5	5,7	**5P-8194**	1	RING-RETAINING	
	6	3,4,7	**6I-8500**	3	PLATE-CLUTCH	
	7	2,3,6	**6V-0473**	3	RING-RETAINING	
	8	4,7	**6V-2478**	1	RING-RETAINING	
	9	2	**6Y-2811**	4	BEARING AS-ROLLER	
	10	1,6	**6Y-4771**	1	COUPLING	
	11	2,6	**6Y-4834**	1	PLATE AS	
		2,6	**3S-2708**	1	PIN-SPRING	
		2,6	**8T-1445**	2	DOWEL	
	12	1	**6Y-4846**	1	CARRIER-PLANETARY	
	13	3	**7G-2516**	8	GEAR-PLANETARY (24-TEETH)	
	14	5,7	**7G-2830**	2	RING-SEAL	
	15	4	**7G-7218**	1	CARRIER-PLANETARY	
	16	5,7	**7G-7724**	1	PISTON-CLUTCH	
	17	1,6,7	**7H-7658**	10	SPRING	
	18	1	**7T-6578**	4	GEAR-PLANETARY (24-TEETH)	
	19	2	**7T-6580**	1	GEAR-RING (82-TEETH)	
	20	1	**7T-6581**	4	SHAFT-PLANETARY	
	21	2,6	**7T-9272**	1	GEAR-SUN (34-TEETH)	
	22	4,7	**7T-9370**	1	GEAR-SUN (51-TEETH)	
	23	2	**7T-9542**	1	GEAR-RING (90-TEETH)	
	24	4	**8E-8299**	6	DISC-THRUST	
	25	1	**8E-8303**	8	DISC-THRUST	
	26	3	**8E-8304**	16	DISC-THRUST	
	27	4,8	**8P-1892**	1	PISTON-CLUTCH	
	28	4	**8P-1916**	3	GEAR-PLANETARY (20-TEETH)	
	29	4,7	**8P-1964**	3	PLATE-CLUTCH	
R	30	1,2,6	**8P-2051**	8	PLATE-CLUTCH	
	31	3,8	**8P-2053**	1	SEAL-RING	
	32	1,3,7	**8P-9507**	1	PISTON-CLUTCH	
	33	6	**9G-0280**	1	PISTON-CLUTCH	
	34	2,6	**9G-0284**	1	HOUSING-CLUTCH	
	35	2,6	**9G-0285**	1	PISTON-CLUTCH	
	36	4	**9G-0289**	3	SHAFT-PLANETARY	
	37	4,7	**9G-0290**	1	HUB-CLUTCH	
	38	4,7	**9G-8020**	1	PLATE-RETAINER	
	39	3,7	**9M-4355**	10	DAMPER-BOLT	
	40	1,2,6	**9P-7390**	10	DISC AS-FRICTION	
	41	2,6	**9P-7757**	1	GEAR-SUN (42-TEETH)	
	42	4,7	**9P-8614**	1	GEAR-RING (90-TEETH)	
	43	3,7	**9P-8626**	1	GEAR-SUN (42-TEETH)	
	44	5,8	**348-8603**	1	TUBE AS	
	45	4,7	**9W-8270**	1	GEAR-RING (90-TEETH)	
	46	5,7	**105-8183**	1	HOUSING AS	
		5,7	**6B-6863**	1	PIN-SPRING	
		5,7	**6P-7704**	1	CARRIER-RING	
	47	1,6	**109-3196**	1	HOUSING AS	
		1,6	**3F-5022**	1	PLUG-CUP	
	48	3	**112-4511**	4	PIN-SPRING	
	49	3	**112-5585**	4	SHAFT-PLANETARY	
	50	3	**112-8042**	1	CARRIER-PLANETARY	
	51	8	**117-7826**	1	HOUSING AS-CLUTCH	

318-6191 **PLANETARY GP-TRANSMISSION** *(contd.)* **i04607129**

NOTE	REF NO	GRAPHIC REF	PART NUMBER	QTY	PART NAME 1 2 3 4 5 6 (PRODUCT LEVEL)	SEE PAGE
		8	**1A-2223**	4	DOWEL	
	52	1,7	**131-4091**	1	SEAL-RING	
	53	1,3,4,7	**144-4284**	3	RING-LOCK	
	54	5,7	**144-7878**	1	MANIFOLD	
	55	1,6,8	**231-8855**	1	SHAFT AS-INPUT	
		1,6,8	**156-4406**	1	PLUG-PIPE	
	56	3,6,8	**234-9994**	1	SHAFT AS-OUTPUT	
	56A	6	**3T-8729**	1	BUSHING	
	56B	6	**9G-6744**	1	BUSHING	
	57	3,4,7,8	**328-4374**	5	DISC-FRICTION	
	58	4,8	**328-4375**	4	DISC-FRICTION	
	59	4,7	**346-2033**	1	PLATE-REACTION	
	60	5,8	**0S-1585**	2	BOLT (1/2-13X1.5-IN)	
	61	1,2,6	**061-6711**	2	RING-RETAINING	
	62	1,6	**068-8093**	2	RING-RETAINING	
	63	2,6	**1A-5183**	2	BOLT (3/8-16X4.75-IN)	
	64	5,8	**1L-7388**	1	RING-RETAINING	
	65	5,8	**1M-8657**	2	BOLT (1/2-13X15.69-IN)	
	66	1,2,7	**3K-2511**	10	DOWEL-REACTION	
	67	1,4	**3S-2708**	7	PIN-SPRING	
	68	5,8	**4M-2442**	8	BOLT (1/2-13X12.32-IN)	
	69	2,4,8	**5M-3038**	2	SEAL-O-RING	
	70	5,8	**5P-5045**	1	BALL BEARING	
	71	3,4,5,8	**5P-5296**	2	RING-RETAINING	
	72	5,8	**5P-5297**	1	RING-RETAINING (EXTERNAL)	
	73	5,8	**5P-8245**	12	WASHER-HARD (13.5X25.5X3-MM THK)	
	74	5,7	**7G-2343**	3	SPRING-DISC	
	75	2,3,7	**7T-8816**	3	BALL BEARING	
	76	5,8	**8D-9739**	1	SEAL-RING	
	77	1,6	**8H-5352**	2	BALL BEARING	
	78	1,6	**8M-5010**	2	SEAL-O-RING	
	79	5,8	**8M-5255**	1	SEAL-O-RING	
	80	5,8	**8M-5266**	1	SEAL-O-RING	
	81	7,8	**8P-2019**	2	RING-SEAL	
	82	2,3,4,7,8	**8P-2022**	4	RING-SEAL	
	83	5,8	**8P-2023**	1	RING-SEAL	
	84	6	**9G-0281**	1	RING-SEAL	
	85	1,2,3,4,7	**9G-0286**	1	RING-SEAL	
	86	8	**346-2134**	1	BRACKET AS	
	87	5,8	**6V-5185**	1	CLIP (SLOT)	
	88	8	**6V-5186**	1	CLIP (TAB)	
	89	8	**8M-4432**	1	SEAL-O-RING	

R-REMFG PART MAY BE AVAILABLE

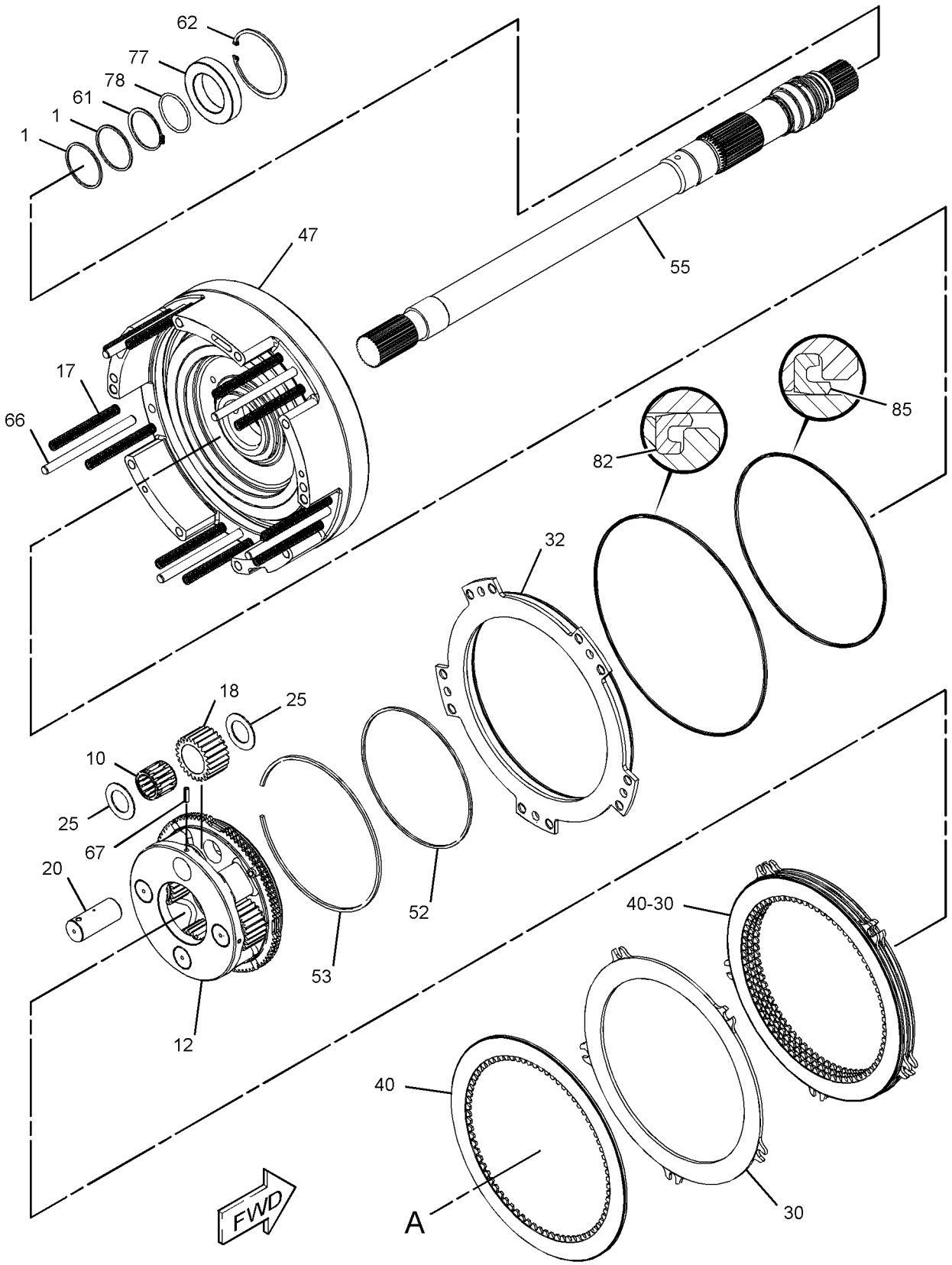

GRAPHIC #1 g02827843

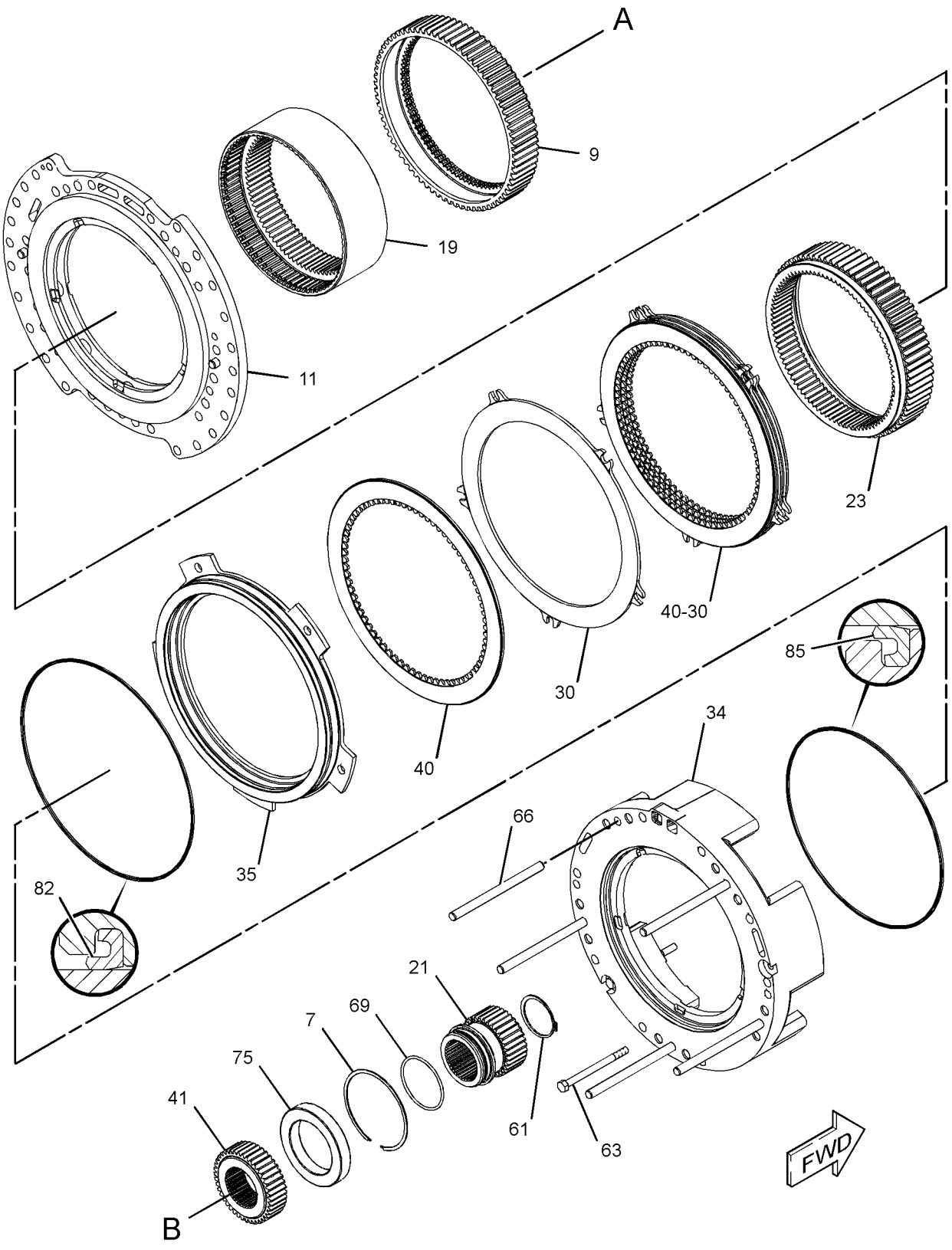

GRAPHIC #2 g02827844

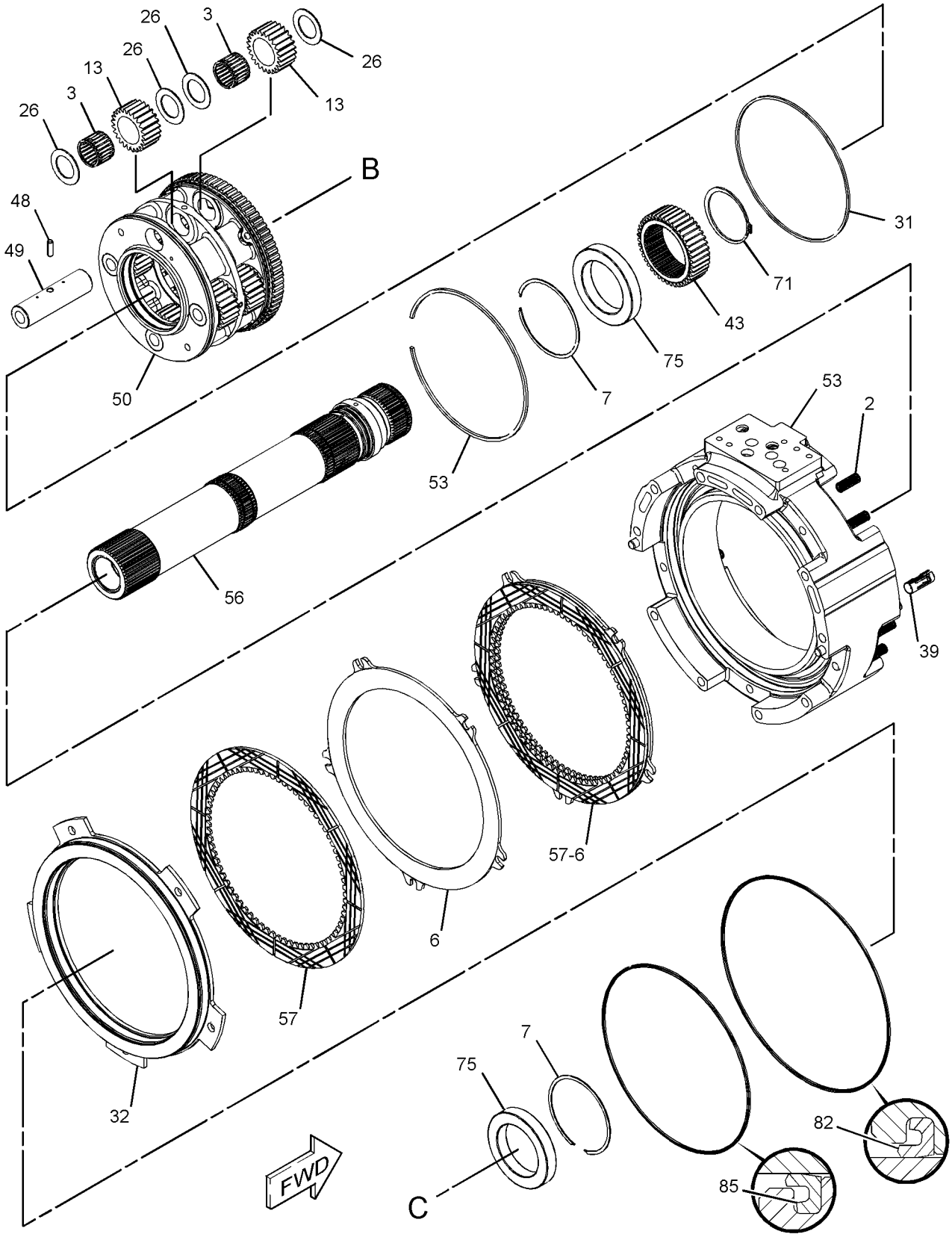

GRAPHIC #3

g02827846

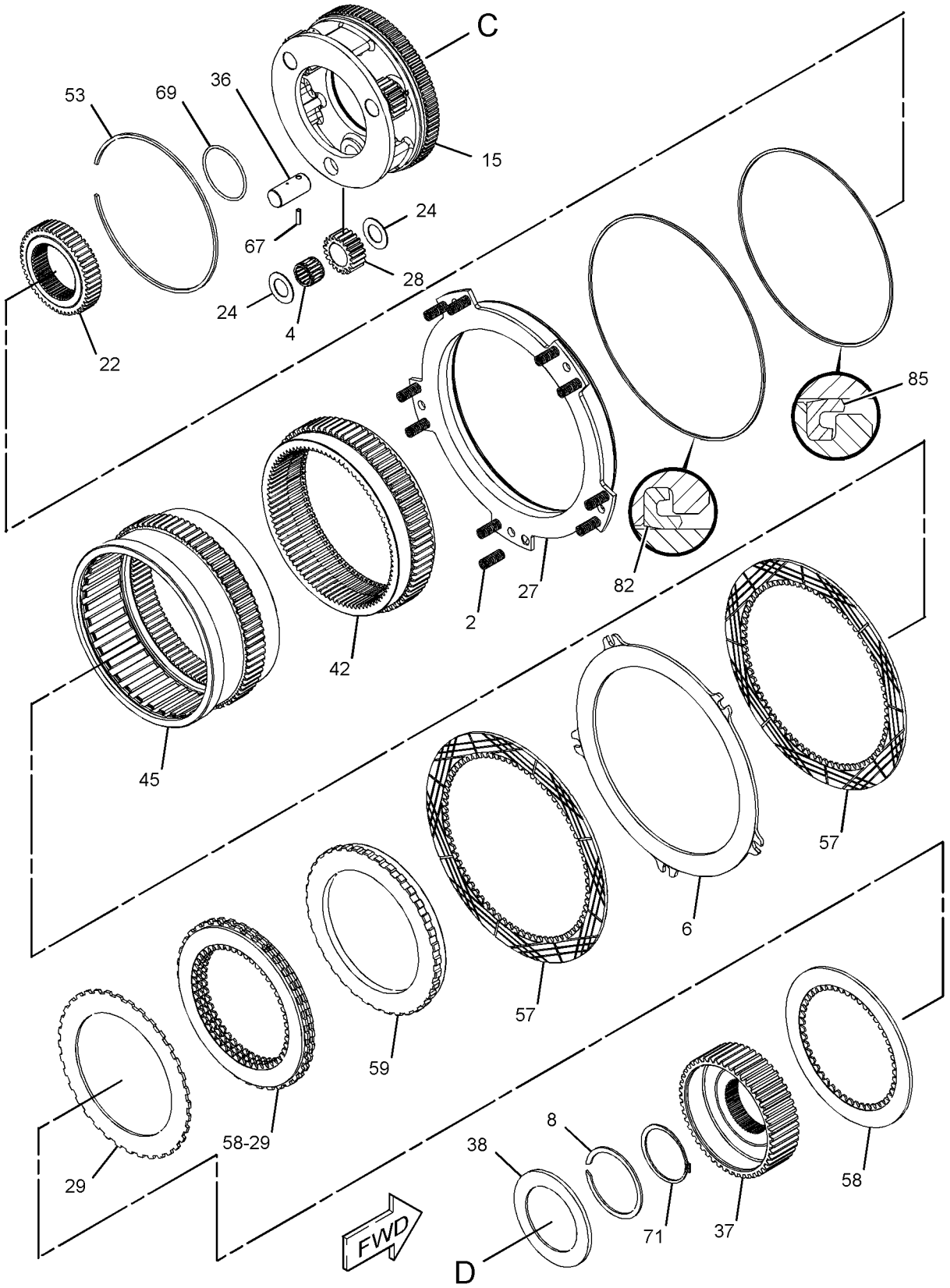

GRAPHIC #4 g02827848

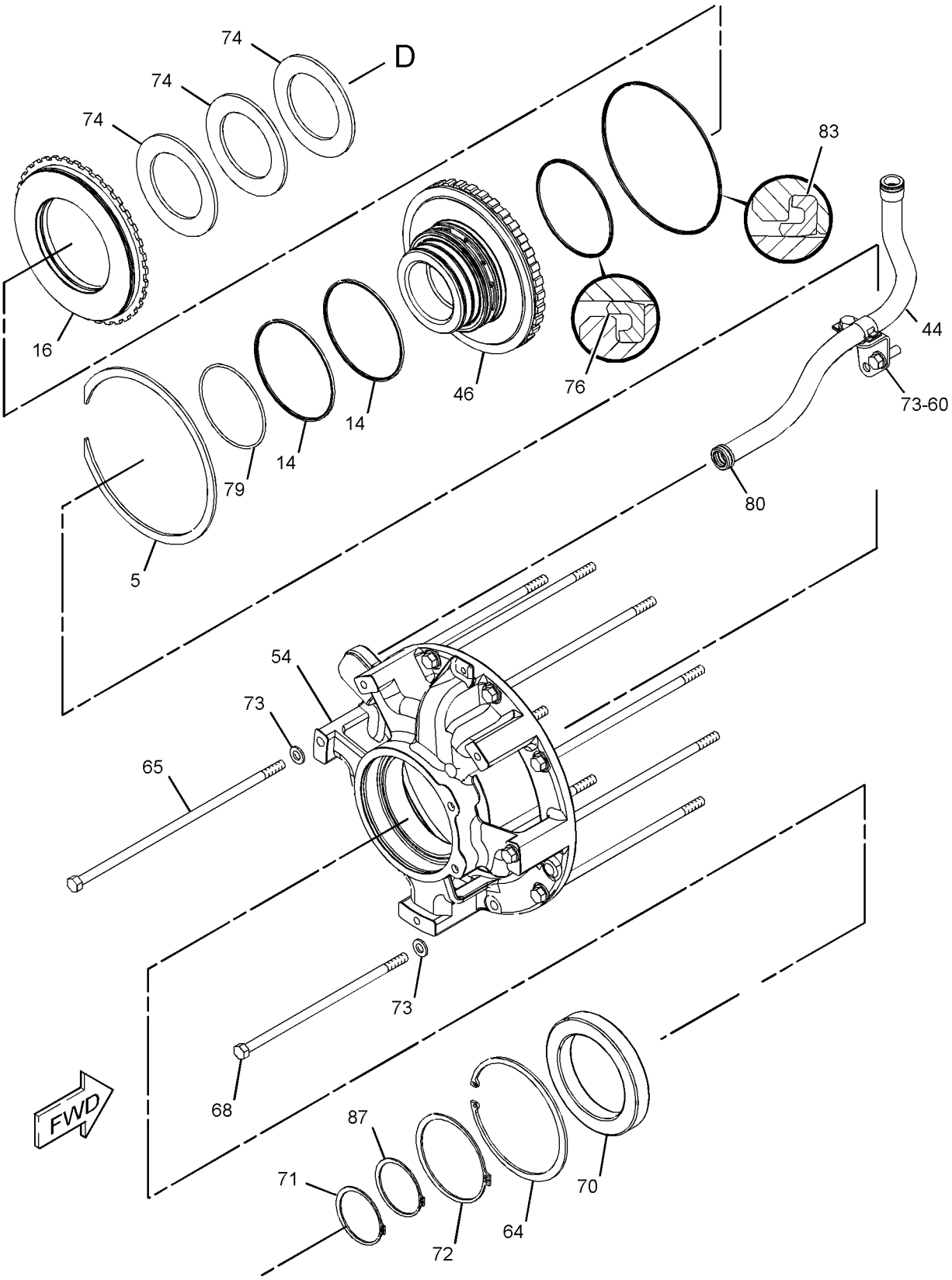

GRAPHIC #5

g02827849

REFER TO ALL ILLUSTRATIONS OF
THIS GROUP FOR AUXILIARY VIEWS

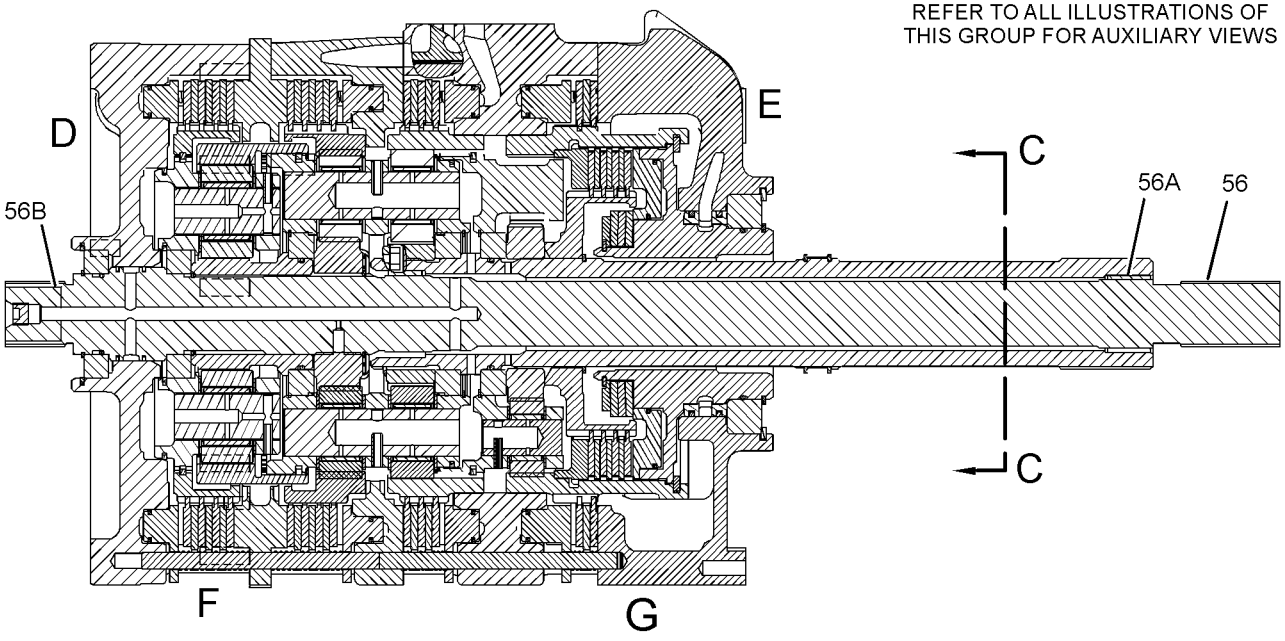

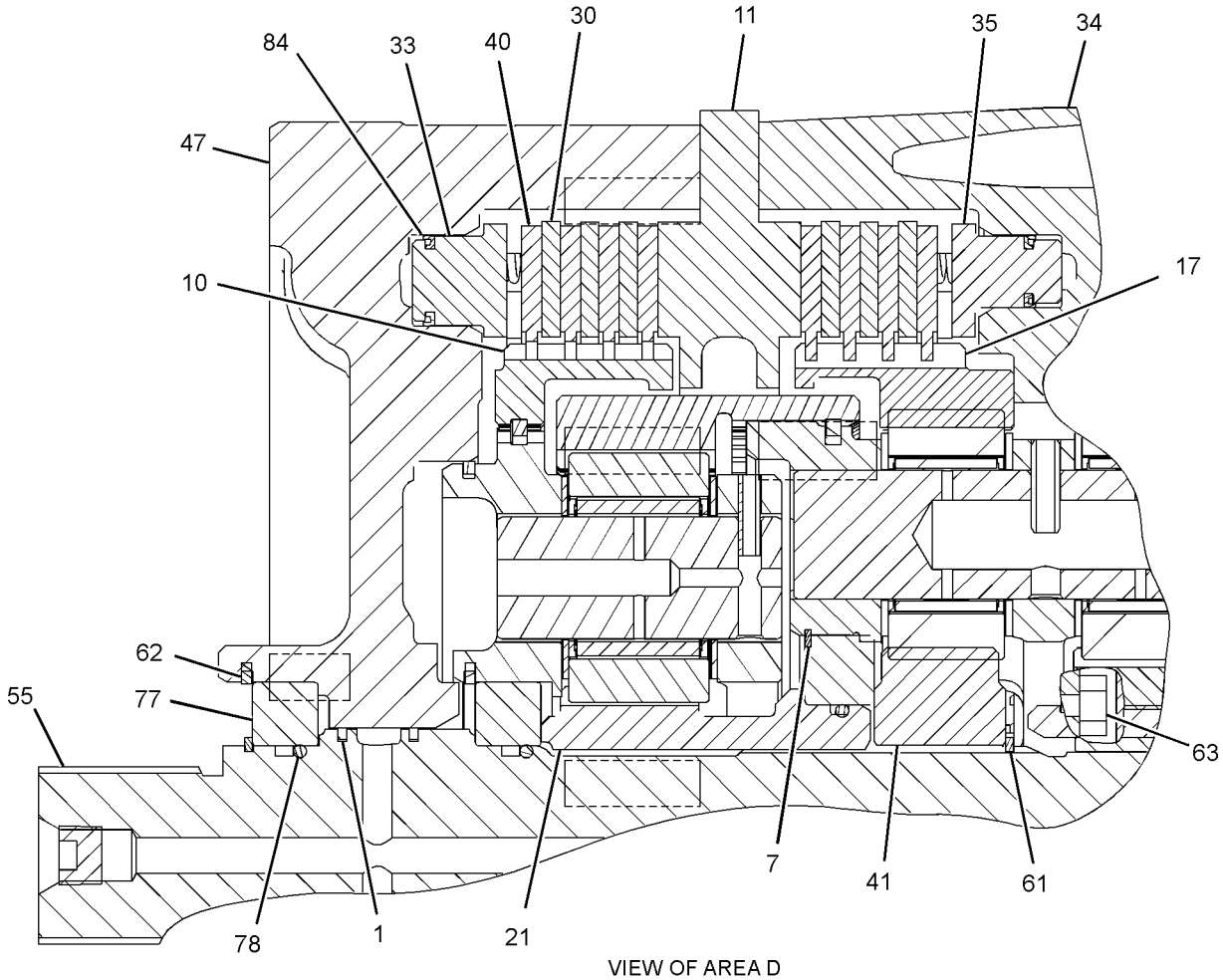

VIEW OF AREA D

GRAPHIC #6 g02827850

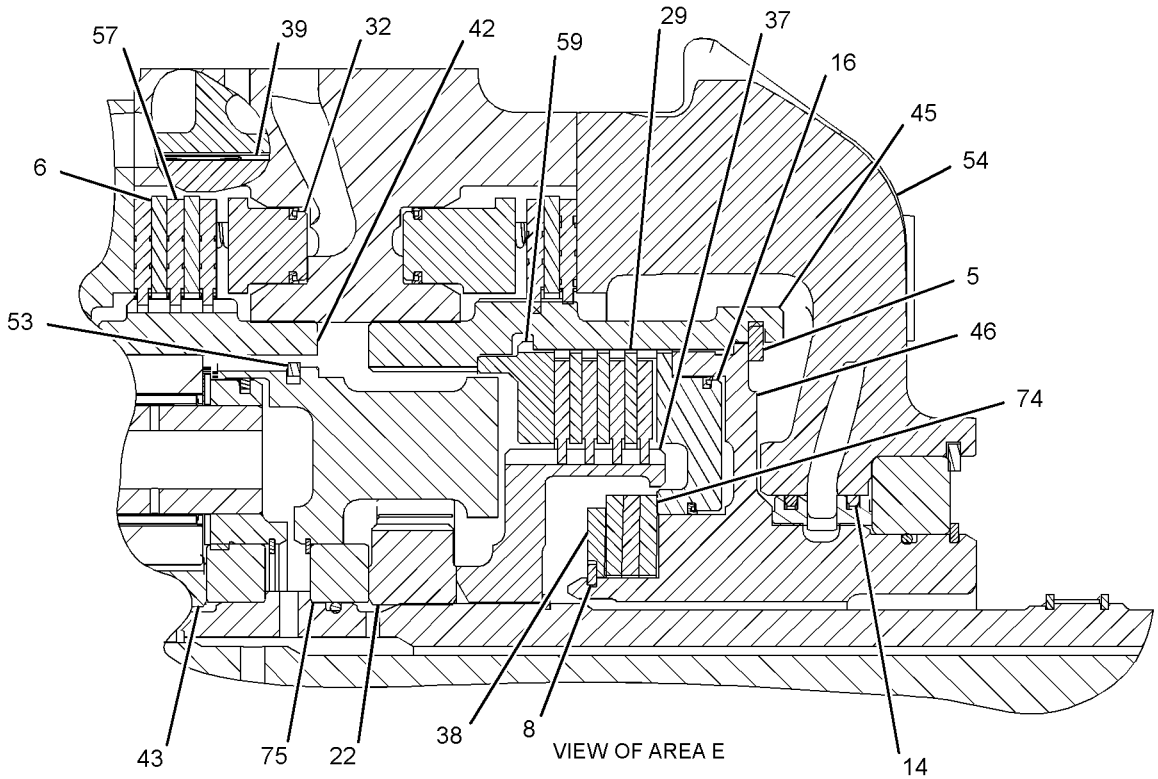

VIEW OF AREA E

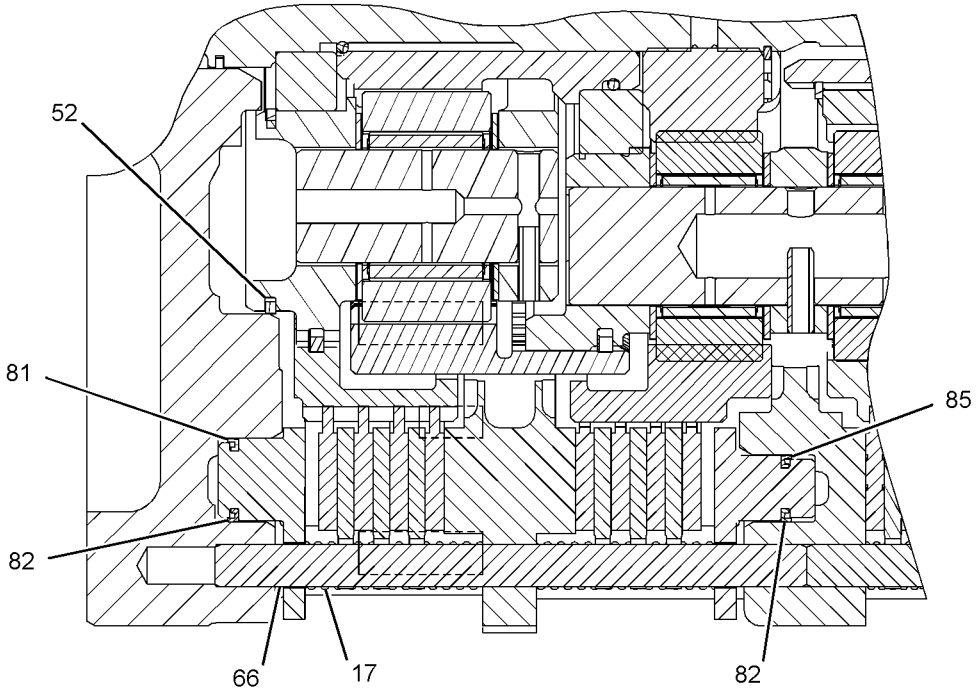

VIEW OF AREA F

GRAPHIC #7 g02827851

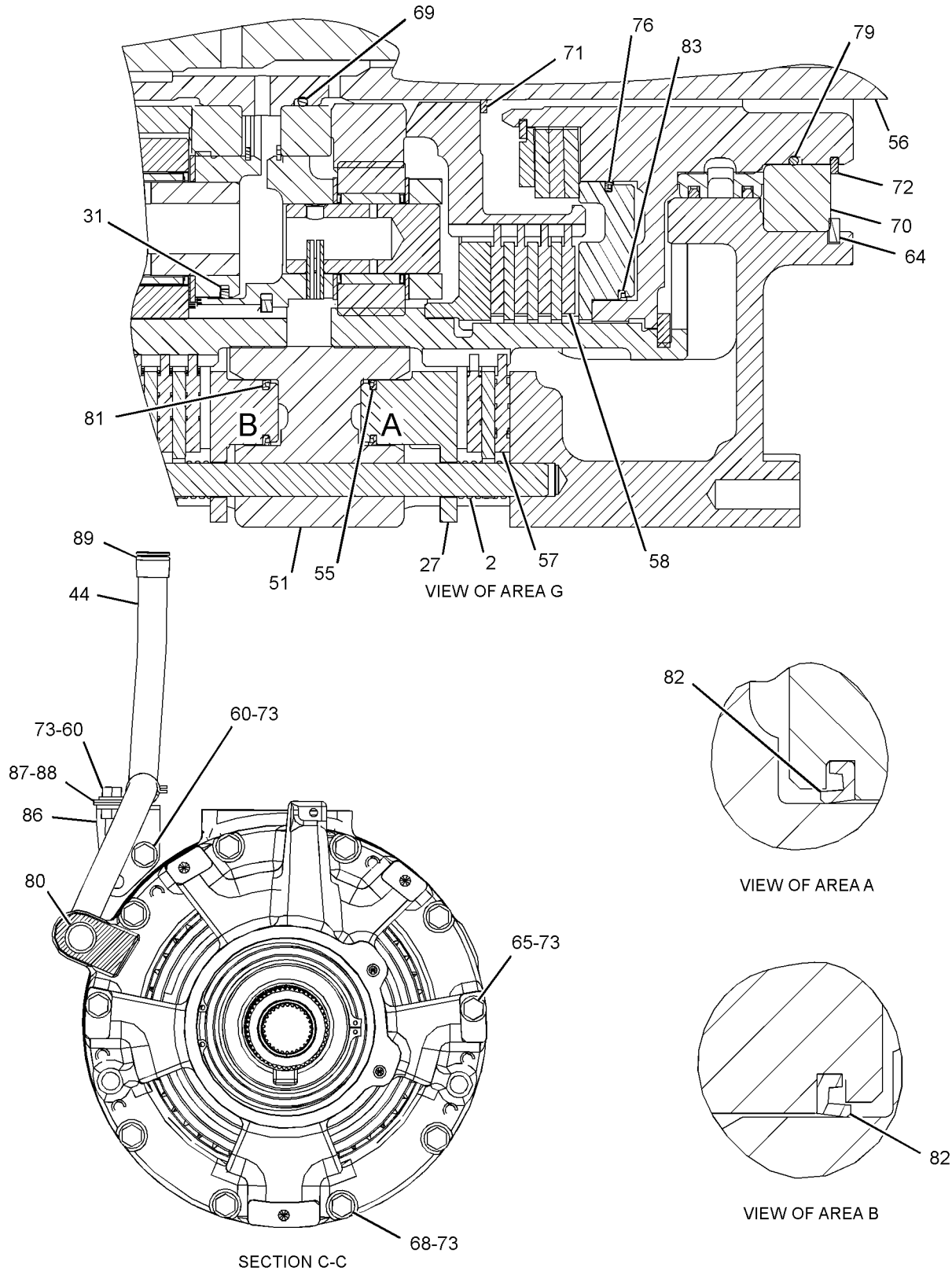

GRAPHIC #8 **<END>** g02827852

POWER TRAIN

313-3755 POWER TRAIN AR

S/N: DSH1-UP; DJR1-UP

PART OF 313-3337, 379-6224 GENERAL AR

SMCS-3000, 4000 **i04774953**

NOTE	PART NUMBER	QTY	PART NAME 1 2 3 4 5 6 (PRODUCT LEVEL)	SEE PAGE
Y	*3T-9986*	1	AXLE GP	224
Y	*231-5968*	1	BRAKE & DIFFERENTIAL DRIVE GP	227
Y	*231-5990*	1	BRAKE & PLANETARY GP	232
Y	*326-3854*	1	COUPLING & GUARD GP (POWERSHIFT)	241
YR	**9W-0593**	2	DRIVE GP-FINAL	247
Y	*323-5693*	1	LINES GP-POWER TRAIN OIL	260
Y	*218-0114*	1	MOUNTING GP-FINAL DRIVE	266
Y	*374-0187*	1	MOUNTING GP-TRANSMISSION	267
Y	*331-4709*	1	SHAFT GP-DRIVE	285
Y	*322-8959*	1	TORQUE CONVERTER & HOUSING GP	286
Y	**315-9963**	1	TRANSMISSION AR	292
Y	*380-7880*	1	VALVE & LINES GP-BRAKE	394
Y	*375-4880*	1	VALVE & MTG GP-CONTROL (BRAKE)	397

R-REMFG PART MAY BE AVAILABLE
Y-SEPARATE ILLUSTRATION

<END>

314-8870 POWER TRAIN AR

S/N: DLN1-UP

PART OF 313-3758 GENERAL AR

SMCS-3000, 4000 **i04769566**

NOTE	PART NUMBER	QTY	PART NAME 1 2 3 4 5 6 (PRODUCT LEVEL)	SEE PAGE
Y	*9W-4709*	1	AXLE GP	225
Y	**231-5968**	1	BRAKE & DIFFERENTIAL DRIVE GP	227
Y	*231-5990*	1	BRAKE & PLANETARY GP	232
Y	*326-3854*	1	COUPLING & GUARD GP	241
YR	**9W-0594**	2	DRIVE GP-FINAL	249
Y	*323-5693*	1	LINES GP-POWER TRAIN OIL	260
Y	*218-0114*	1	MOUNTING GP-FINAL DRIVE	266
Y	*374-0187*	1	MOUNTING GP-TRANSMISSION	267
Y	*331-4709*	1	SHAFT GP-DRIVE	285
Y	*322-8959*	1	TORQUE CONVERTER & HOUSING GP	286
Y	**315-9963**	1	TRANSMISSION AR	292
Y	*380-7880*	1	VALVE & LINES GP-BRAKE	394
Y	*375-4880*	1	VALVE & MTG GP-CONTROL (BRAKE)	397

R-REMFG PART MAY BE AVAILABLE
Y-SEPARATE ILLUSTRATION

<END>

377-5482 PUMP GP-GEAR–POWER TRAIN

S/N: DSH1-UP; DLN1-UP; DJR1-UP

PART OF 323-5693 LINES GP-POWER TRAIN OIL

SMCS-3066, 3115, 5073 **i04611969**

NOTE	REF NO	GRAPHIC REF	PART NUMBER	QTY	PART NAME 1 2 3 4 5 6 (PRODUCT LEVEL)	SEE PAGE
	1	1	**3T-5356**	1	CAGE-BEARING	
	2	1	**5H-4279**	1	PLUG-CUP	
	3	1	**5P-9439**	1	BALL BEARING	
	4	1	**212-2301**	1	FLANGE	
Y	5	1	**377-5483**	1	PUMP GP-GEAR	281
M	6	1	**8T-0372**	2	BOLT (M12X1.75X90-MM)	
	7	1	**111-4919**	1	SEAL-LIP TYPE	
	8	1	**1P-4577**	2	FLANGE-HALF	
	9	1	**1P-4578**	2	FLANGE-HALF	
	10	1	**2M-3974**	1	RING-RETAINING	
	11	1	**5M-2894**	10	WASHER-HARD (10.2X18.5X2.5-MM THK)	
	12	1	**5P-8245**	6	WASHER-HARD (13.5X25.5X3-MM THK)	
	13	1	**6H-3977**	1	SEAL-O-RING	
	14	1	**6L-4783**	4	BOLT-12 POINT HEAD (5/16-18X1.25-IN)	
M	15	1	**6V-3822**	8	BOLT (M10X1.5X35-MM)	
M	16	1	**6V-3823**	2	BOLT (M12X1.75X60-MM)	
M	17	1	**6V-8675**	2	BOLT (M12X1.75X35-MM)	

M-METRIC PART
Y-SEPARATE ILLUSTRATION

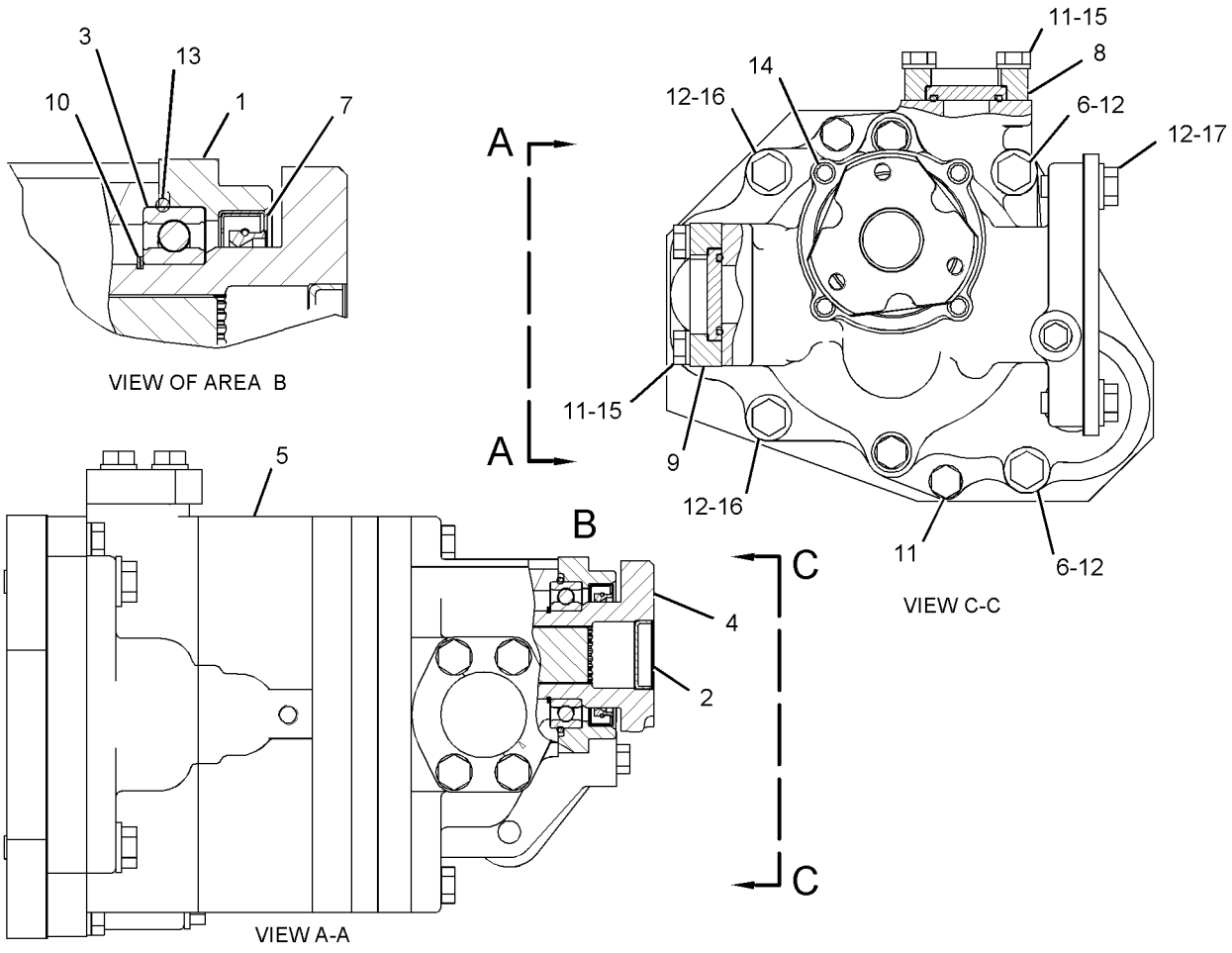

GRAPHIC #1 **<END>** g02778556

377-5483 PUMP GP-GEAR—POWER TRAIN

S/N: DSH1-UP; DLN1-UP; DJR1-UP

PART OF 377-5482 PUMP GP-GEAR

SMCS-3066, 3115, 5073 **i04611972**

NOTE	REF NO	GRAPHIC REF	PART NUMBER	QTY	PART NAME 1 2 3 4 5 6 (PRODUCT LEVEL)	SEE PAGE
	1	1	**9W-9890**	1	COVER AS-PUMP	
		1	**8M-8489**	2	DOWEL	
		1	**9M-4370**	2	BEARING	
	2	1	**162-2792**	2	GEAR (12-TEETH)	
	3	1	**318-0692**	1	COVER AS-OIL PUMP	
	4	1	**323-6360**	2	GEAR (12-TEETH)	
	5	1	**323-6361**	1	BODY-OIL PUMP	
	6	1	**323-6362**	1	BODY AS-OIL PUMP	
		1	**8M-8489**	2	DOWEL	
	7	1	**323-6366**	1	GEAR AS-OIL PUMP	
		1	**2B-9373**	1	KEY-WOODRUFF	
	8	1	**323-6367**	1	GEAR AS-OIL PUMP	
		1	**2B-9373**	1	KEY-WOODRUFF	
	9	1	**325-7402**	1	BODY AS-OIL PUMP	
		1	**5M-4987**	4	DOWEL	
	10	1	**377-6171**	1	SPACER (OIL PUMP)	
	11	1	**377-6173**	1	BODY AS-OIL PUMP	
		1	**7C-7225**	2	SLEEVE (10.8X12.54X27-MM)	
	12	1	**377-6175**	2	GEAR (8-TEETH)	
M	13	1	**8T-9085**	2	BOLT (M10X1.5X150-MM)	
	14	1	**161-8068**	6	SEAL-O-RING	
	15	1	**1B-8705**	3	KEY-WOODRUFF	
	16	1	**1H-5728**	1	SEAL-O-RING	
	17	1	**5M-2894**	6	WASHER-HARD (10.2X18.5X2.5-MM THK)	
	18	1	**6F-6673**	3	SEAL-O-RING	
M	19	1	**7X-2547**	4	BOLT (M10X1.5X200-MM)	

M-METRIC PART

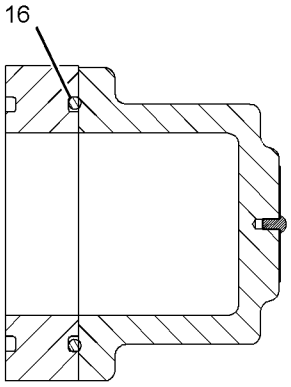

SECTION B-B

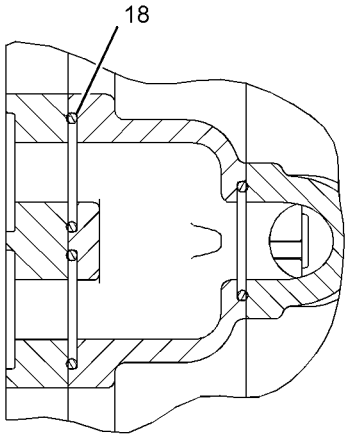

SECTION C-C

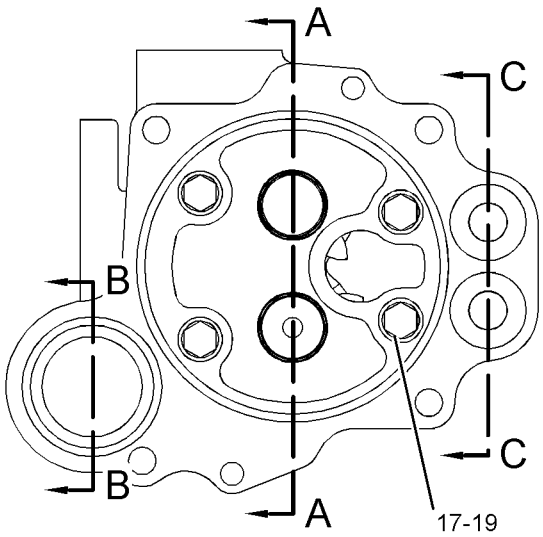

VIEW E-E

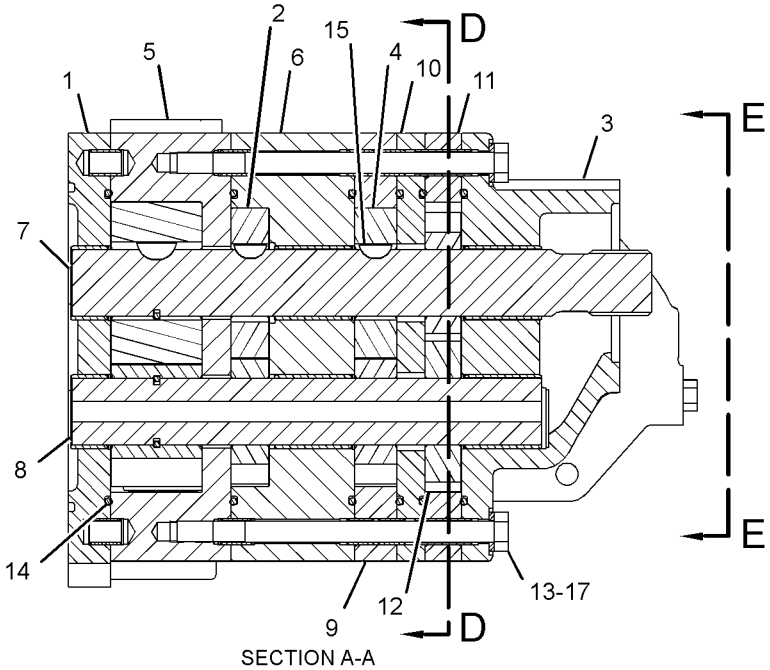

SECTION A-A

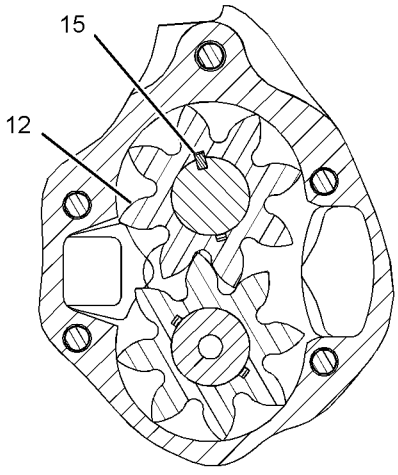

SECTION D-D

GRAPHIC #1 **<END>** g02775976

231-4166 SCREEN GP-MAGNETIC—TRANSMISSION

S/N: DSH1-UP; DLN1-UP; DJR1-UP

PART OF 323-5693 LINES GP-POWER TRAIN OIL

SMCS-3067 **i04009769**

NOTE	REF NO	GRAPHIC REF	PART NUMBER	QTY	PART NAME 1 2 3 4 5 6 (PRODUCT LEVEL)	SEE PAGE
	1	1	**3S-3440**	1	WASHER-WAVE (68.1X80.8X0.5-MM THK)	
	2	1	**4S-8598**	1	SCREEN-SUCTION (POWER TRAIN)	
	3	1	**240-8259**	1	SCREEN GP-MAGNETIC (POWER TRAIN)	
		1	**8M-7160**	3	MAGNET	
	4	1	**231-4167**	1	HOUSING AS-SCREEN	
	5	1	**3S-3439**	1	COVER-TOP	
	6	1	**6L-5359**	1	SEAL-O-RING	
	7	1	**6V-5188**	1	SEAL-O-RING	
M	8	1	**8T-4133**	4	NUT (M10X1.5-THD)	

M-METRIC PART

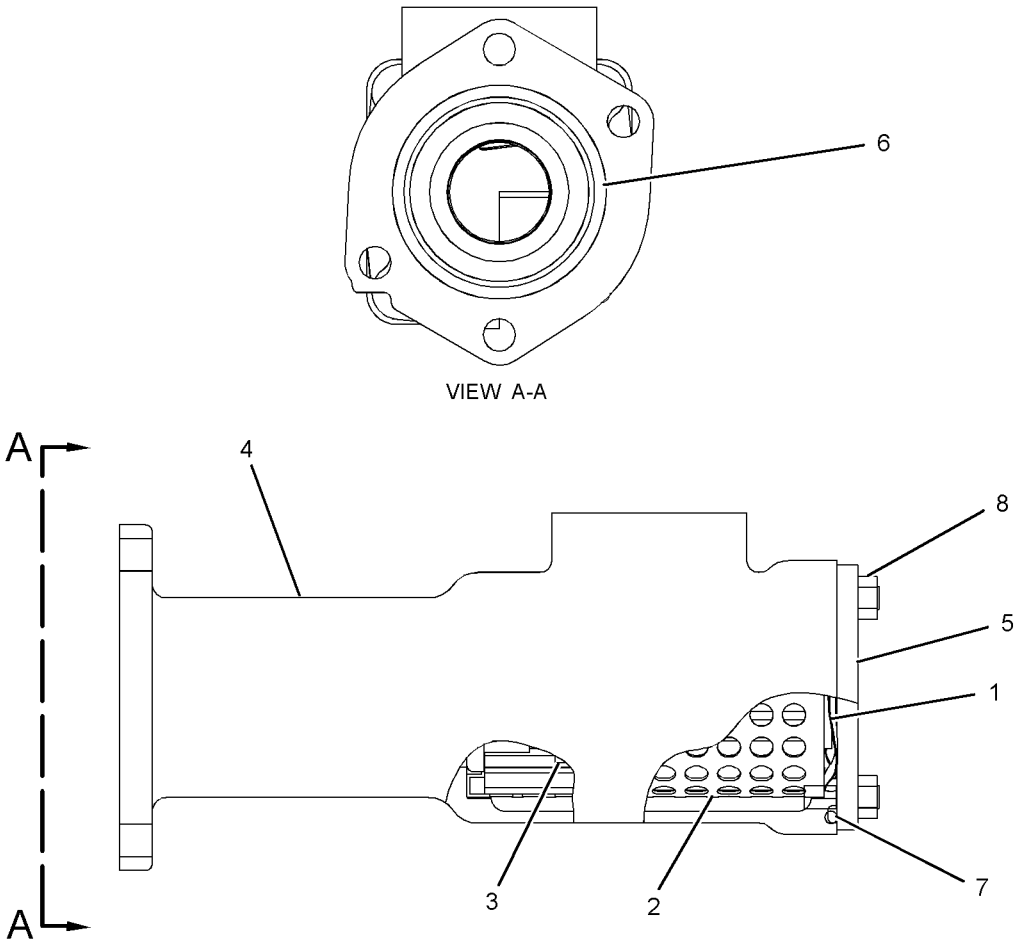

GRAPHIC #1 **<END>** g01209036

156-5341 SEGMENT GP-SPROCKET

S/N: DSH1-UP; DLN1-UP; DJR1-UP
215.9-MM PITCH
PART OF 379-3578, 379-3579, 387-3578 UNDERCARRIAGE AR

SMCS-4155 **i04659371**

NOTE	REF NO	GRAPHIC REF	PART NUMBER	QTY	PART NAME 1 2 3 4 5 6 (PRODUCT LEVEL)	SEE PAGE
	1	1	**6V-5841**	25	WASHER-HARD (22X38X4-MM THK)	
	2	1	**314-5462**	5	SEGMENT-SPROCKET (7 HOLE SEGMENT)	
	3	1	**5P-7665**	25	BOLT (3/4-16X2.5-IN)	
	4	1	**7H-3608**	25	NUT (3/4-16-THD)	

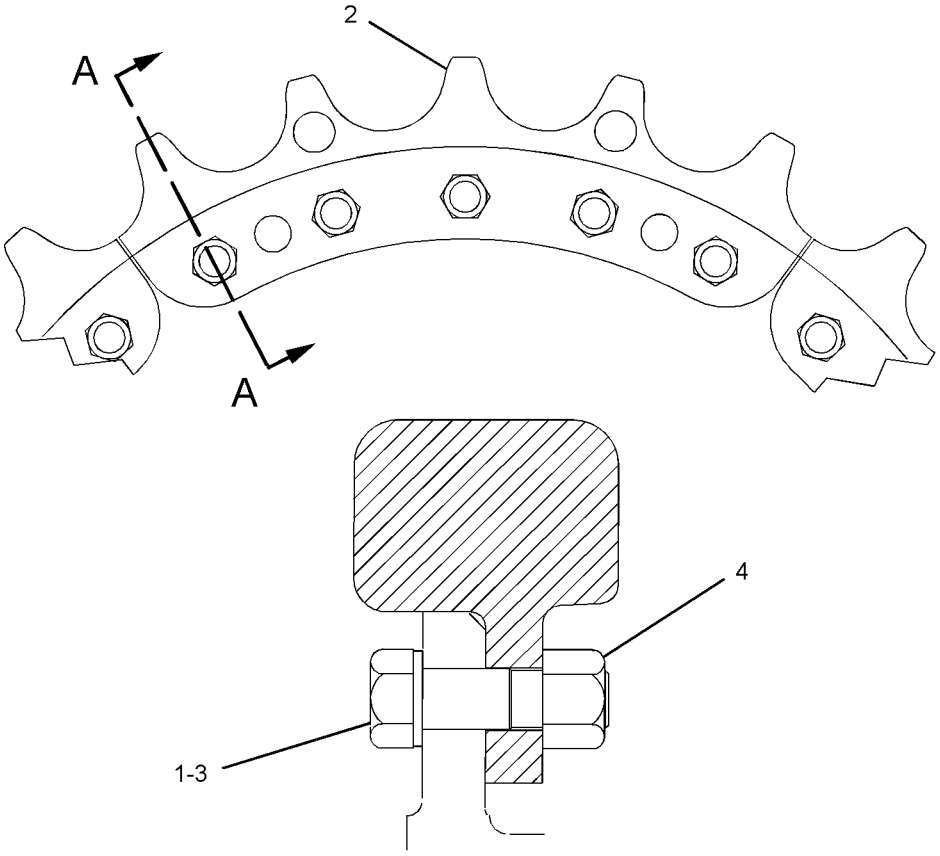

SECTION A-A

GRAPHIC #1 **<END>** g02795285

331-4709 SHAFT GP-DRIVE

S/N: DSH1-UP; DLN1-UP; DJR1-UP
PART OF 313-3755, 314-8870 POWER TRAIN AR

SMCS-3253 **i04656449**

NOTE	REF NO	GRAPHIC REF	PART NUMBER	QTY	PART NAME 1 2 3 4 5 6 (PRODUCT LEVEL)	SEE PAGE
	1	1	**9G-1930**	1	YOKE AS	
		1	**7D-1677**	1	RACE-BEARING INNER	
		1	**8H-2768**	1	PLUG-CUP	
	2	1	**331-4710**	1	UNIVERSAL JOINT GP	
	2A	1	**9P-0356**	2	SPIDER & BEARING AS	
	2B	1	**0S-0484**	8	BOLT (1/2-20X2.25-IN)	
	3	1	**0S-0484**	8	BOLT (1/2-20X2.25-IN)	

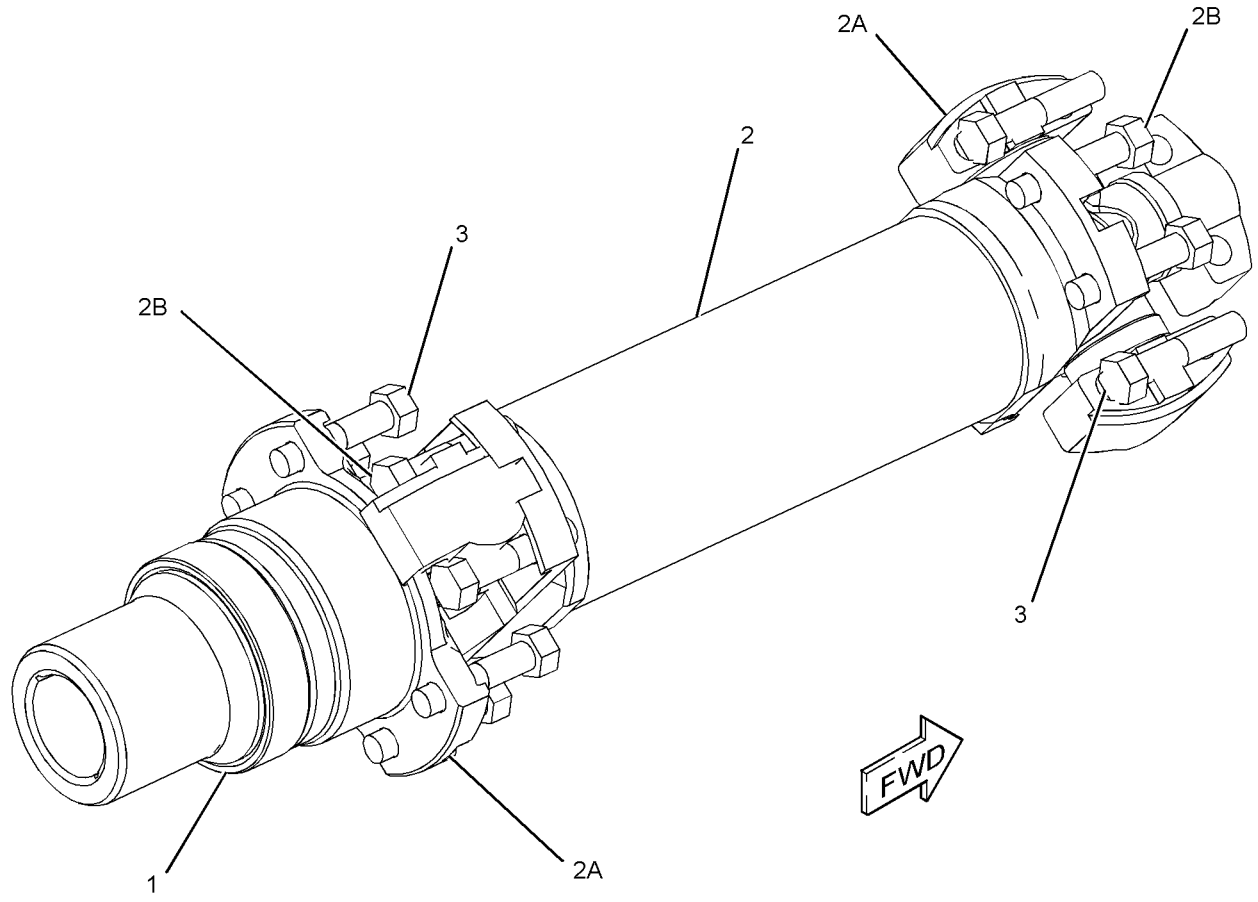

GRAPHIC #1 **<END>** g02822549

POWER TRAIN

322-8959 TORQUE CONVERTER & HOUSING GP

S/N: DSH1-UP; DLN1-UP; DJR1-UP

PART OF 313-3755, 314-8870 POWER TRAIN AR

SMCS-3101, 3105 **i04655809**

NOTE	REF NO	GRAPHIC REF	PART NUMBER	QTY	PART NAME 1 2 3 4 5 6 (PRODUCT LEVEL)	SEE PAGE
	1	1	**2D-1523**	1	RING-RETAINING	
	2	1	**2S-2251**	1	SEAL-O-RING	
	3	1	**8H-9818**	1	GASKET	
	4	1	**8S-9008**	1	SLEEVE	
	5	1	**9H-8712**	1	BEARING AS	
	6	1	**9M-1976**	1	RING-RETAINING	
	7	1	**9P-3709**	1	GEAR-SUN (35-TEETH)	
	8	1	**108-6953**	1	YOKE-UNIVERSAL JOINT	
	9	1	**155-5161**	1	SEAL-OIL	
	10	1	**210-4458**	1	ELBOW	
	11	1	**223-3400**	1	HOUSING-TORQUE CONVERTER	
	12	1	**232-6411**	1	RETAINER-SHAFT	
Y	13	1	**338-0944**	1	TORQUE CONVERTER GP	290
	14	1	**110-0510**	1	COVER	
	15	1	**136-2216**	1	SEAL-LIP TYPE	
	16	1	**165-4854**	2	SEAL-O-RING	
	17	1	**1S-9799**	1	SEAL-O-RING	
	18	1	**3K-0360**	1	SEAL-O-RING	
	19	1	**6F-4718**	1	SEAL-O-RING	
	20	1	**8T-4121**	12	WASHER-HARD (11X21X2.5-MM THK)	
M	21	1	**8T-4136**	2	BOLT (M10X1.5X25-MM)	
M	22	1	**8T-4137**	2	BOLT (M10X1.5X20-MM)	
M	23	1	**8T-4139**	12	BOLT (M12X1.75X30-MM)	
M	24	1	**8T-4176**	1	BOLT (M12X1.75X90-MM)	
M	25	1	**8T-4195**	8	BOLT (M10X1.5X30-MM)	
	26	1	**8T-4223**	12	WASHER-HARD (13.5X25.5X3-MM THK)	
	27	1	**9H-0846**	1	SEAL-O-RING	
	28	1	**9S-4185**	1	PLUG-O-RING	

M-METRIC PART
Y-SEPARATE ILLUSTRATION

322-8959 **TORQUE CONVERTER & HOUSING GP** *(contd.)* **i04655809**

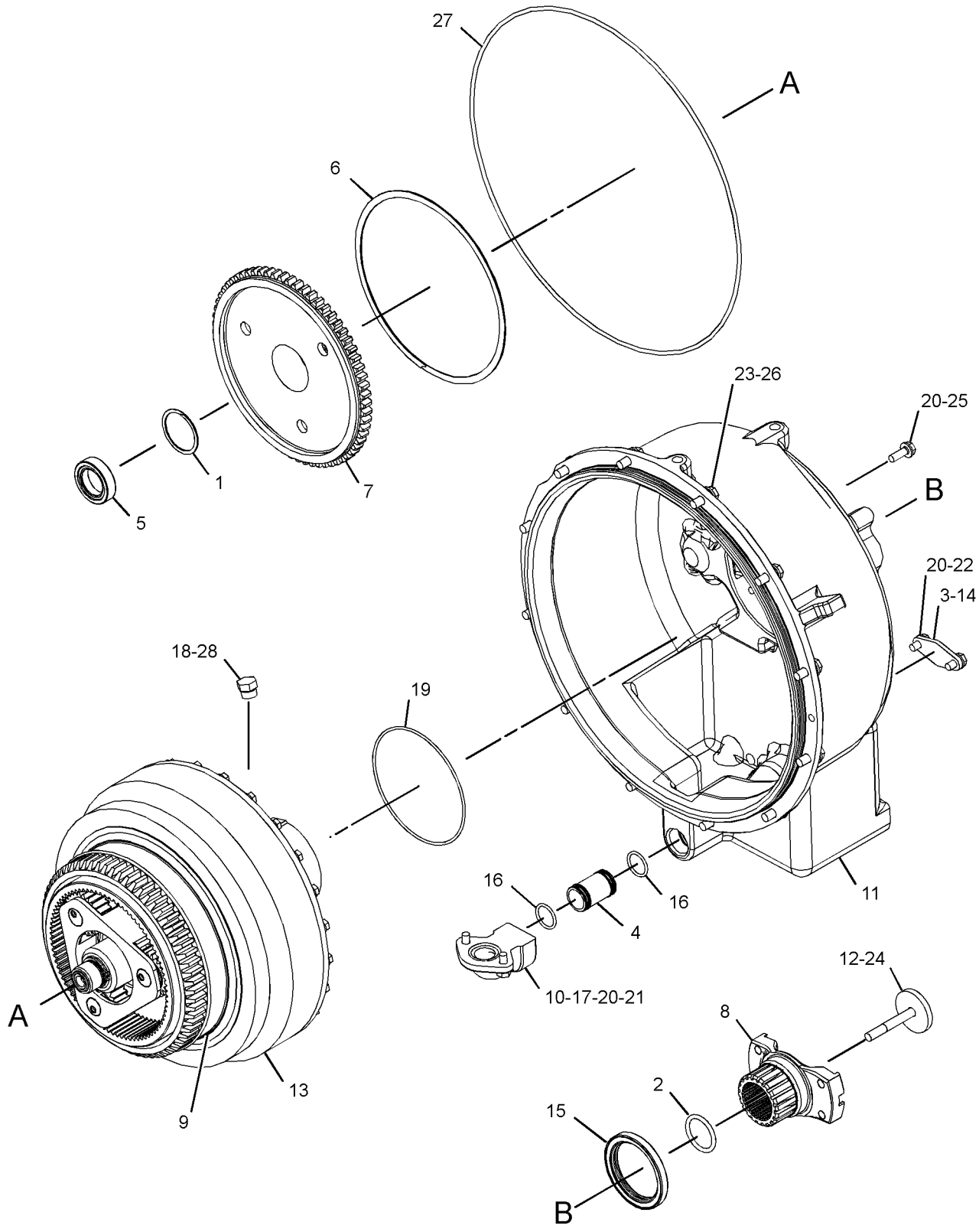

GRAPHIC #1 **<END>** g02832977

338-0942 TORQUE CONVERTER GP

S/N: RHC1-UP

PART OF 338-0944 TORQUE CONVERTER GP

SMCS-3101 **i04670892**

NOTE	REF NO	GRAPHIC REF	PART NUMBER	QTY	PART NAME 1 2 3 4 5 6 (PRODUCT LEVEL)	SEE PAGE
	1	1	**1T-0069**	1	RING-METAL SEAL	
	2	1	**1T-0097**	1	RING-METAL SEAL	
	3	1	**1T-0438**	1	RETAINER-BEARING	
	4	1	**1T-0446**	6	BOLT (3/8-16X0.75-IN)	
	5	1	**1T-0447**	1	CARRIER-RING	
	6	1	**1T-0599**	1	SPACER (65.1X85X9.52-MM THK)	
	7	1	**1T-1993**	1	WHEEL-TURBINE	
	8	1	**1T-2052**	1	STATOR AS	
	9	1	**1T-2069**	1	CARRIER-BEARING	
	10	1	**1T-2070**	1	RETAINER-BEARING	
	11	1	**1T-2079**	1	IMPELLER-CONVERTER	
	12	1	**1T-2080**	1	HOUSING-ROTATING	
	13	1	**1T-2086**	1	FLANGE AS-OUTPUT	
	13A	1	**1T-0902**	2	BUSHING	
	14	1	**304-9651**	1	BALL BEARING	
	15	1	**336-2433**	1	CARRIER AS-STATOR	
		1	**4S-8537**	1	DOWEL	
	16	1	**1A-2029**	24	BOLT (3/8-16X1.125-IN)	
	17	1	**1A-2209**	8	BOLT (3/8-24X1.25-IN)	
	18	1	**1T-0414**	8	BOLT-12 POINT HEAD (5/16-18X1-IN)	
	19	1	**1T-0441**	1	BALL BEARING	
	20	1	**3F-3727**	1	RING-SNAP	
	21	1	**4H-1440**	6	PIN-SPRING	
	22	1	**5B-0582**	1	DOWEL	
	23	1	**5M-2894**	24	WASHER-HARD (10.2X18.5X2.5-MM THK)	

338-0942 **TORQUE CONVERTER GP** *(contd.)* **i04670892**

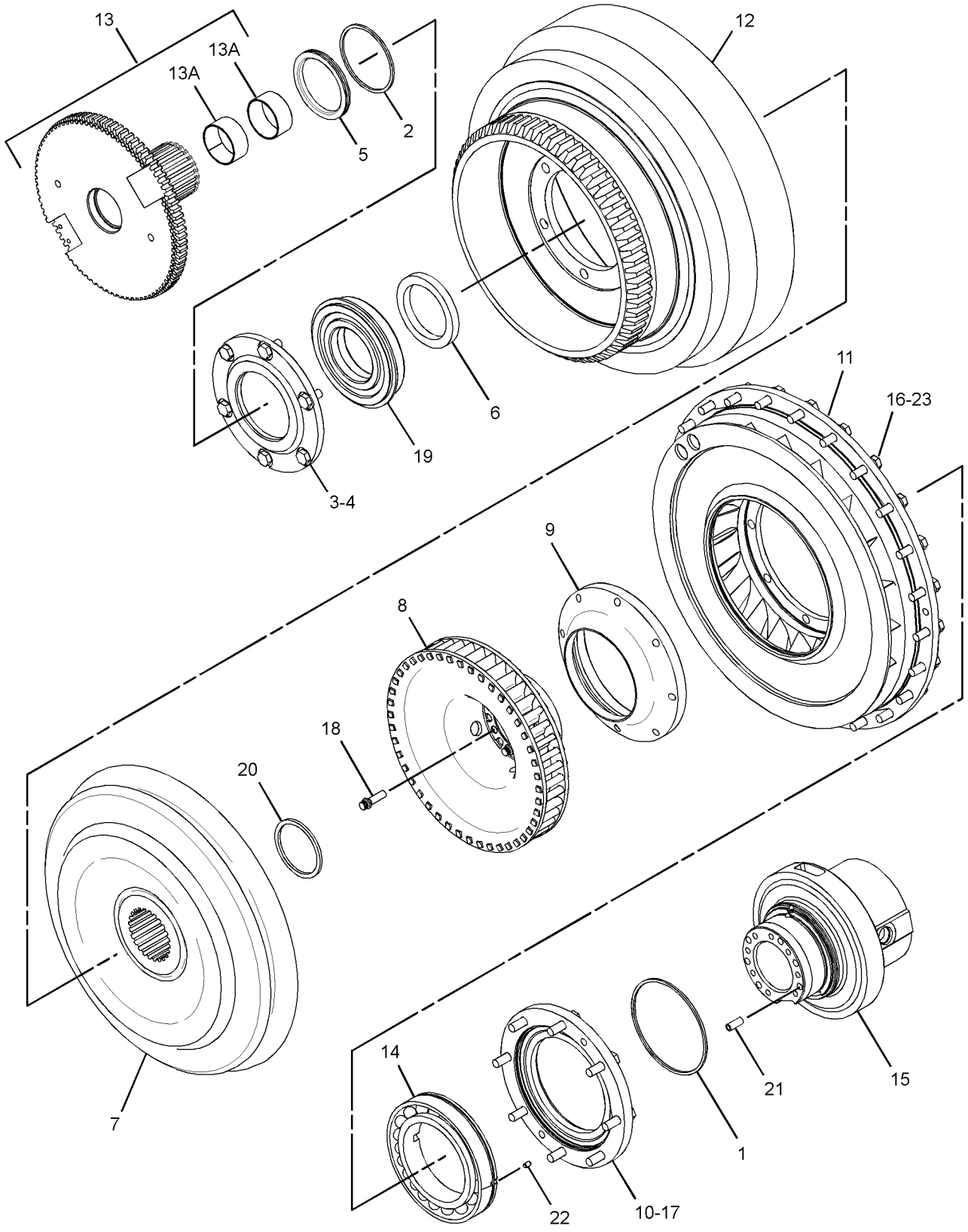

GRAPHIC #1 **<END>** g02833037

338-0944 TORQUE CONVERTER GP

S/N: RHC1-UP

PART OF 322-8959 TORQUE CONVERTER & HOUSING GP

SMCS-3101 **i04670893**

NOTE	REF NO	GRAPHIC REF	PART NUMBER	QTY	PART NAME 1 2 3 4 5 6 (PRODUCT LEVEL)	SEE PAGE
	1	1	**3T-4007**	1	CARRIER-PLANETARY	
	2	1	**3T-4008**	3	GEAR-PLANETARY (23-TEETH)	
	3	1	**3T-4009**	1	GEAR-RING (82-TEETH)	
	4	1	**3T-4011**	3	SHAFT AS-PLANETARY	
					(EACH INCLUDES)	
		1	**2A-3746**	1	PLUG-CUP	
	5	1	**3T-4013**	1	RETAINER-CARRIER	
	6	1	**5M-7878**	1	RING-SNAP	
	7	1	**5P-3930**	3	BEARING AS-ROLLER	
	8	1	**8E-8300**	6	DISC-THRUST	
	9	1	**9M-2008**	1	RING-METAL SEAL	
	10	1	**233-0668**	1	SHAFT AS	
		1	**5J-7386**	1	PLUG-ORIFICE	
Y	11	1	**338-0942**	1	TORQUE CONVERTER GP	288
	12	1	**2D-5658**	1	BALL BEARING	
	13	1	**2K-5986**	2	PIN-SPRING	
	14	1	**3S-2708**	3	PIN-SPRING	
	15	1	**5J-3964**	1	RING-LOCK	
	16	1	**5P-7679**	1	RACE-SPECIAL ROLLER BEARING	
	17	1	**6K-3630**	1	RING	
	18	1	**6V-4583**	1	RING-RETAINING	

Y-SEPARATE ILLUSTRATION

338-0944 **TORQUE CONVERTER GP** *(contd.)* **i04670893**

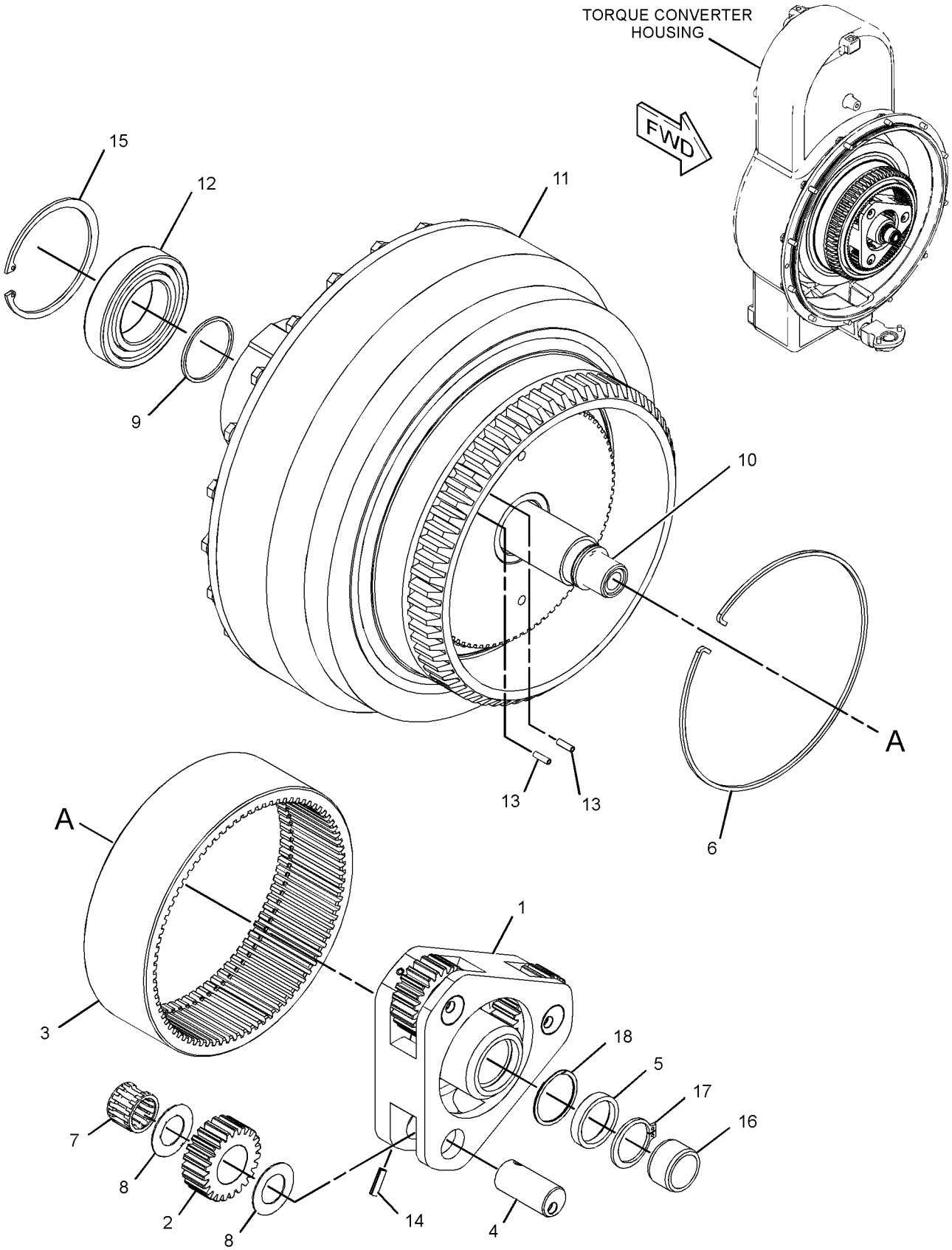

GRAPHIC #1 **<END>** g02282914

POWER TRAIN

315-9963 TRANSMISSION AR

S/N: JNA1-UP

PART OF 313-3755, 314-8870 POWER TRAIN AR

SMCS-3030 **i04606692**

NOTE	REF NO	GRAPHIC REF	PART NUMBER	QTY	PART NAME 1 2 3 4 5 6 (PRODUCT LEVEL)	SEE PAGE
Y	1	1	*162-6874*	1	GEAR GP-BEVEL & TRANSFER	256
Y	2	1	*315-9961*	1	CASE & PARTS GP-PLANETARY	234
Y	3	1	*315-9964*	1	CONTROL GP-TRANSMISSION HYD	237
Y	4	1	*318-6191*	1	PLANETARY GP-TRANSMISSION	269

Y-SEPARATE ILLUSTRATION

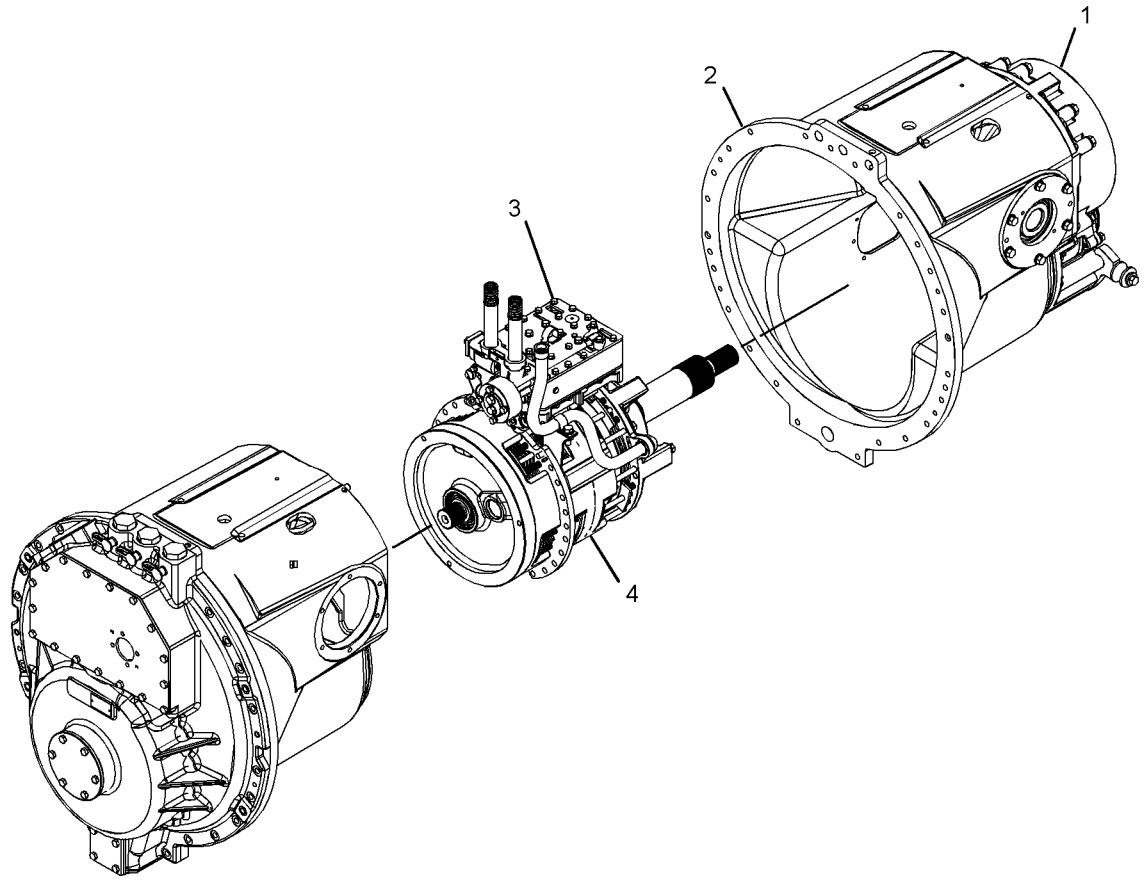

GRAPHIC #1 **<END>** g02778236

315-9965 VALVE GP-PRIORITY—LUBRICATION DISTRIBUTION

S/N: JNA1-UP

PART OF 315-9964 CONTROL GP-TRANSMISSION HYD

SMCS-3180 **i03977093**

NOTE	REF NO	GRAPHIC REF	PART NUMBER	QTY	PART NAME 1 2 3 4 5 6 (PRODUCT LEVEL)	SEE PAGE
	1	1	**2M-7041**	1	SLUG	
	2	1	**5M-9622**	1	SHIM (1.6-MM THK)	
B	3	1	**5M-9624**	6	SHIM (0.25-MM THK)	
	4	1	**5S-4437**	1	SPOOL AS	
		1	**3D-8317**	1	RING-RETAINING	
		1	**4B-9880**	1	BALL	
		1	**4M-2381**	1	SPRING	
		1	**8M-1013**	1	RETAINER	
	5	1	**6T-2307**	1	BODY-VALVE	
	6	1	**4H-4737**	2	PIN-SPRING	
	7	1	**7T-8556**	1	SPRING	
	8	1	**8P-0311**	2	SHAFT	
	9	1	**9S-2792**	1	COVER	
	10	1	**0L-1351**	2	BOLT (3/8-16X0.875-IN)	

B-USE AS REQUIRED

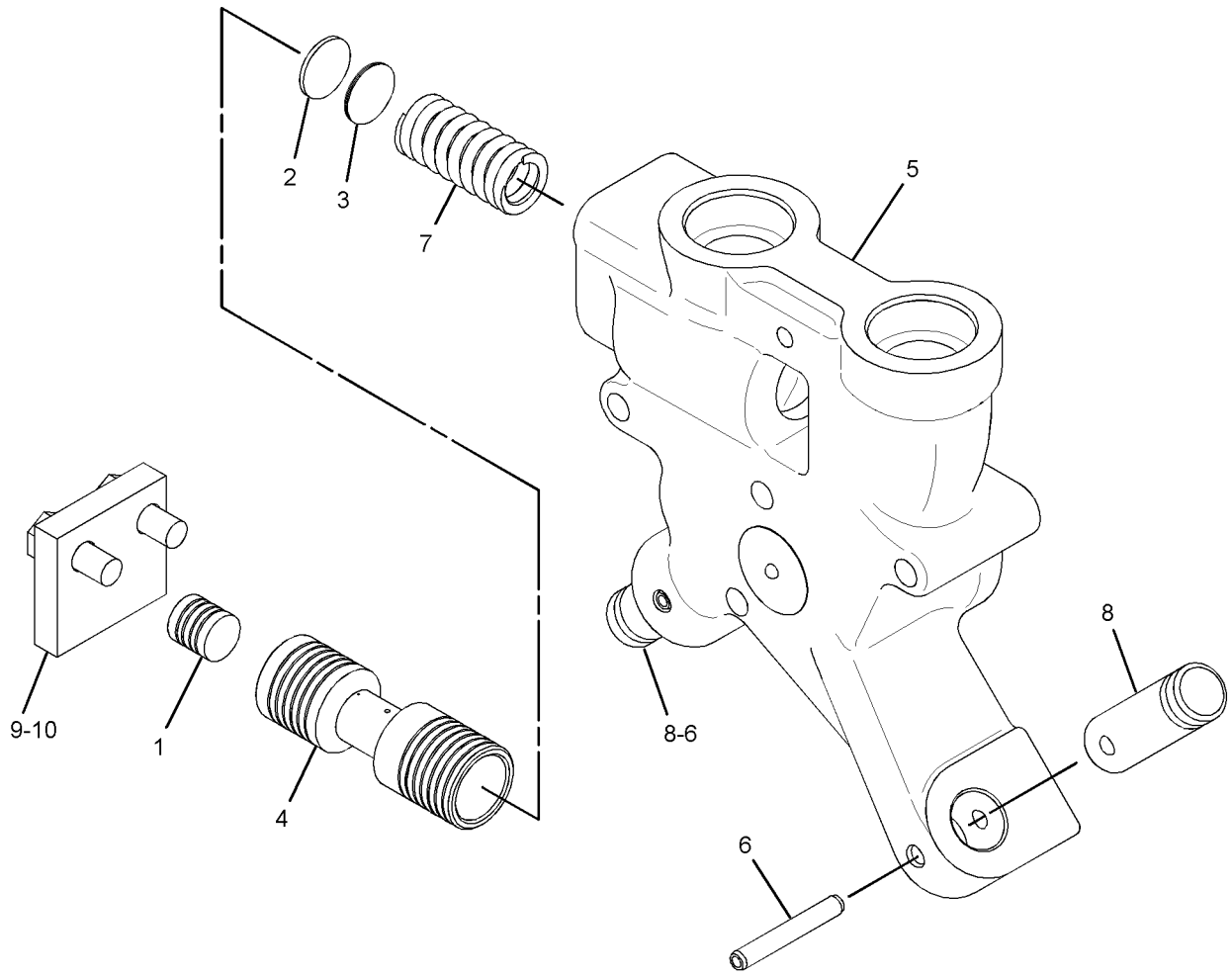

GRAPHIC #1 **<END>** g02178200

220-1418 VALVE GP-RELIEF–TORQUE CONVERTER OUTLET

S/N: DSH1-UP; DLN1-UP; DJR1-UP

PART OF 323-5693 LINES GP-POWER TRAIN OIL

SMCS-3133, 3182 **i04009669**

NOTE	REF NO	GRAPHIC REF	PART NUMBER	QTY	PART NAME 1 2 3 4 5 6 (PRODUCT LEVEL)	SEE PAGE
	1	1	**225-6363**	1	HOUSING AS-RELIEF VALVE	
		1	**7M-1377**	1	STOP-VALVE	
	2	1	**4M-8239**	2	COVER	
	3	1	**7M-1296**	1	VALVE-RELIEF	
B	4	1	**5M-9623**	5	SHIM (0.9-MM THK)	
M	5	1	**8T-4136**	4	BOLT (M10X1.5X25-MM)	
	6	1	**8T-4121**	7	WASHER-HARD (11X21X2.5-MM THK)	
	7	1	**7M-1297**	1	SPRING	
	8	1	**8M-4986**	2	SEAL-O-RING	
	11	1	**9W-5595**	1	SPRING	
M	12	1	**8T-4172**	3	BOLT (M10X1.5X80-MM)	

B-USE AS REQUIRED
M-METRIC PART

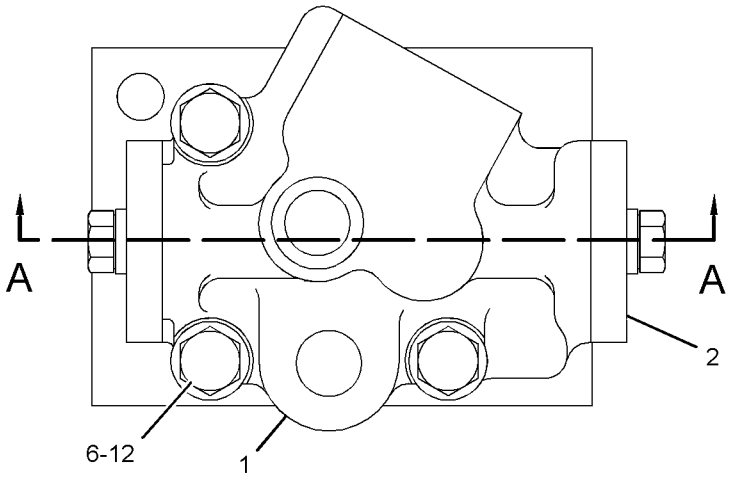

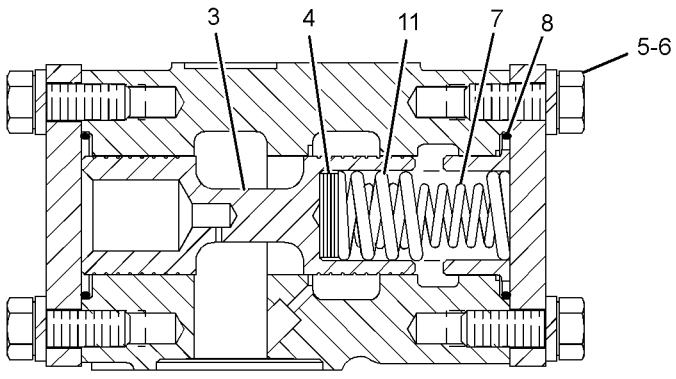

SECTION A-A

GRAPHIC #1 **<END>** g01206826

318-8531 VALVE GP-SELECTOR & PRESS CONT

S/N: JNA1-UP

PART OF 315-9966 VALVE GP-TRANSMISSION CONTROL

SMCS-3083 **i03977090**

NOTE	REF NO	GRAPHIC REF	PART NUMBER	QTY	PART NAME 1 2 3 4 5 6 (PRODUCT LEVEL)	SEE PAGE
	1	1	**6I-9875**	1	BODY AS	
	1A	1	**5H-8985**	4	PIN-SPRING	
	2	1	**6Y-4082**	1	SPOOL-SPEED SELECTOR	
	3	1	**6P-4940**	1	STOP	
	4	1	**9W-5568**	1	SLUG	
	5	1	**9W-5567**	1	SPOOL AS-RELIEF	
	5A	1	**3D-8317**	1	RING-RETAINING	
	5B	1	**8M-1013**	1	RETAINER	
	5C	1	**4M-2381**	1	SPRING	
	5D	1	**4B-9880**	1	BALL	
	6	1	**7G-4842**	1	SPRING (OUTER)	
	7	1	**9P-3041**	1	SPRING (INNER)	
	8	1	**6P-4971**	2	STOP	
	9	1	**6P-4939**	1	PISTON-LOAD	
B	10	1	**5M-9622**	1	SHIM (1.6-MM THK)	
B	11	1	**5M-9623**	1	SHIM (0.9-MM THK)	
B	12	1	**5M-9624**	3	SHIM (0.25-MM THK)	
	13	1	**6F-6673**	2	SEAL-O-RING	
	14	1	**6P-4938**	1	COVER	
	15	1	**6P-9786**	1	RETAINER	
	16	1	**6P-9785**	1	SPRING	
	17	1	**3P-8485**	1	RING-RETAINING	
	18	1	**6Y-3033**	1	SPOOL AS-DIFFERENTIAL	
	19	1	**6P-9783**	1	SPRING (INNER)	
	20	1	**6P-9784**	1	SPRING (OUTER)	
	21	1	**6Y-5500**	1	SPOOL-SELECTOR	
	22	1	**2S-4872**	1	STOP	
	23	1	**3T-4215**	1	SLUG	
	24	1	**3T-3494**	1	SPOOL-RATIO	
	25	1	**8P-6321**	1	DOWEL	
	26	1	**2S-0696**	2	DOWEL	
	27	1	**7G-9476**	1	ORIFICE-PLUG	
	28	1	**9U-8388**	4	DETENT AS	
	29	1	**1P-8116**	4	SEAL-O-RING	
	30	1	**238-5508**	1	PLUG AS-ORIFICE	
		1	**8L-2779**	1	SEAL-O-RING	
	31	1	**1J-5353**	2	PIN-SPRING	
	32	1	**2H-2995**	1	SETSCREW (10-24X0.438-IN)	
	33	1	**2B-2695**	3	BOLT (5/16-18X0.875-IN)	

B-USE AS REQUIRED

318-8531 VALVE GP-SELECTOR & PRESS CONT *(contd.)* i03977090

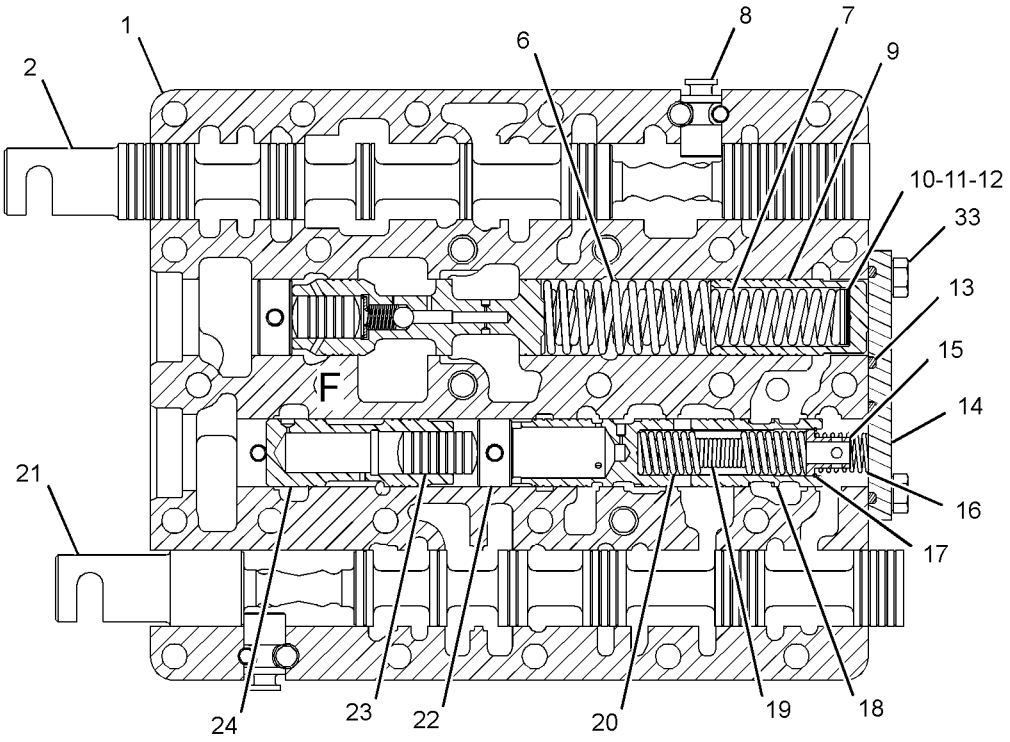

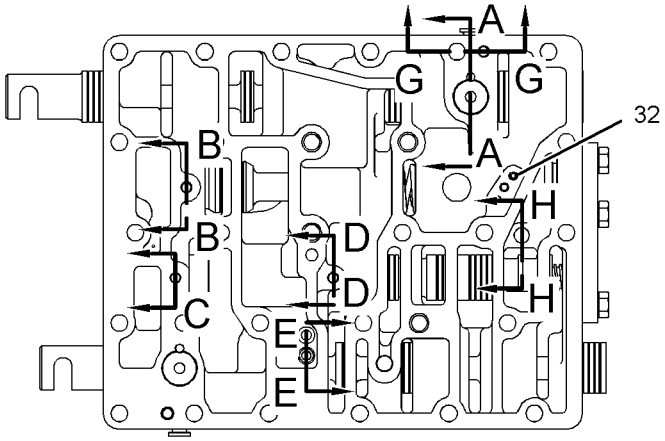

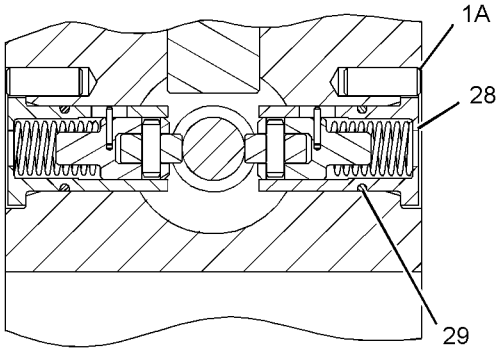

SECTION A-A

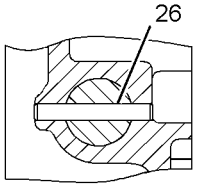

SECTION D-D

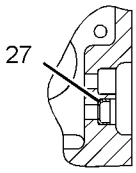

SECTION E-E

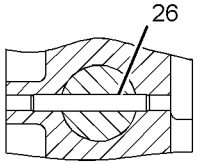

SECTION B-B

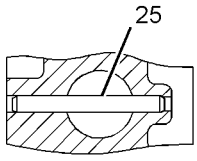

SECTION C

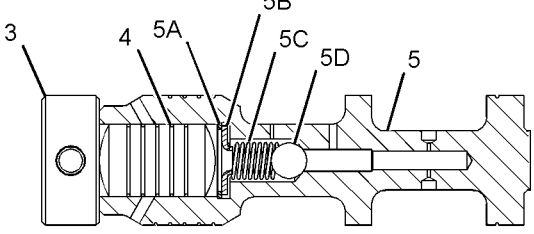

VIEW OF AREA F

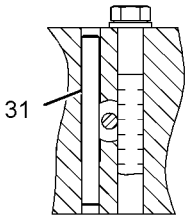

SECTION G-G

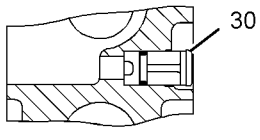

SECTION H-H

GRAPHIC #1 **<END>** g02166425

315-9966 VALVE GP-TRANSMISSION CONTROL

S/N: JNA1-UP

PART OF 315-9964 CONTROL GP-TRANSMISSION HYD

SMCS-3073, 3167 **i03977095**

NOTE	REF NO	GRAPHIC REF	PART NUMBER	QTY	PART NAME 1 2 3 4 5 6 (PRODUCT LEVEL)	SEE PAGE
	1	1	**6T-8710**	1	MANIFOLD-BOTTOM	
	2	1	**9G-8551**	1	PLATE	
Y	3	1	**318-8531**	1	VALVE GP-SELECTOR & PRESS CONT	295
	4	1	**9P-5928**	1	PLATE	
	5	1	**4B-0831**	24	BOLT (5/16-18X3.75-IN)	
	6	1	**9M-1974**	26	WASHER-HARD (8.8X16X2-MM THK)	
	7	1	**5M-6214**	3	PLUG-PIPE	
	8	1	**9G-2375**	1	ELBOW	
	9	1	**5F-9657**	1	SEAL-O-RING	
	10	1	**3H-3243**	2	BOLT (5/16-18X4.75-IN)	
	11	1	**9W-3330**	1	SUPPORT	

Y-SEPARATE ILLUSTRATION

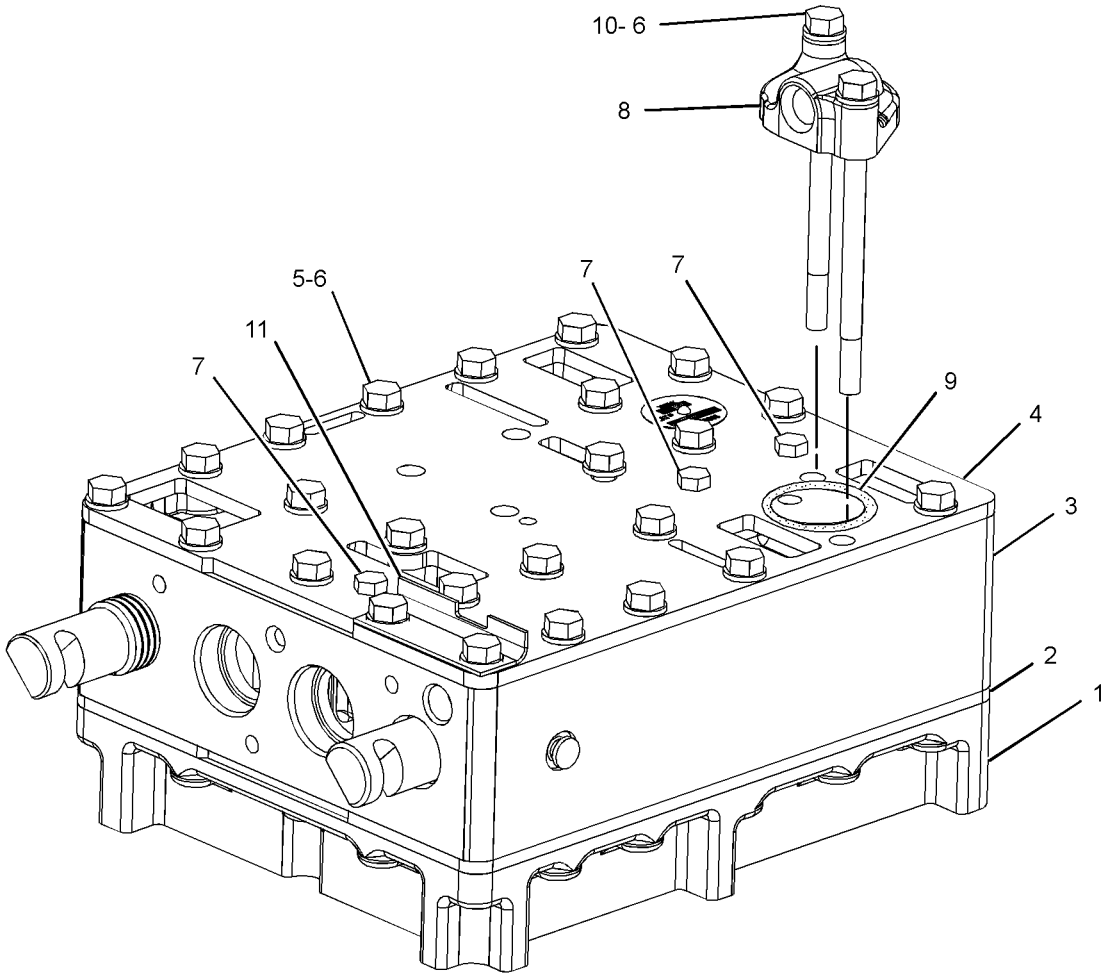

GRAPHIC #1 **<END>** g02176652

FRAME AND BODY

386-1151 BOX GP-BATTERY

S/N: DSH1-UP; DLN1-UP; DJR1-UP

PART OF 313-3338, 313-3759, 379-6225 CHASSIS AR

SMCS-7257 **i04712616**

NOTE	REF NO	GRAPHIC REF	PART NUMBER	QTY	PART NAME 1 2 3 4 5 6 (PRODUCT LEVEL)	SEE PAGE
	1	1	**162-2480**	9	RIVET	
	2	1	**3B-4610**	2	PIN-COTTER	
	3	1	**246-2641**	1	PADLOCK GP	
		1	**5P-8500**	1	KEY	
	4	1	**5V-1496**	2	RETAINER	
	5	1	**6D-1746**	2	BOLT (1/2-13X1.32-IN)	
	6	1	**6Y-3973**	1	LINK	
	7	1	**7K-1181**	1	STRAP-CABLE	
	8	1	**8B-4624**	1	SHIM (0.032-IN THK)	
	9	1	**8E-3621**	1	BRACKET AS	
		1	**1F-0750**	3	NUT-WELD (3/8-16-THD)	
	10	1	**8E-3623**	1	BRACKET AS	
		1	**1F-0750**	2	NUT-WELD (3/8-16-THD)	
	11	1	**8E-7561**	1	KNOB AS (DOOR ACCESS)	
		1	**7S-2042**	1	STUD (3/8-16X1.5-IN)	
		1	**8E-1205**	1	KNOB	
		1	**8T-7566**	1	PIN-SPRING	
	12	1	**9M-3835**	2	LATCH-RUBBER	
	13	1	**9S-8230**	1	PLATE AS	
		1	**1F-0750**	1	NUT-WELD (3/8-16-THD)	
	14	1	**9W-7543**	1	HINGE	
	15	1	**194-1738**	1	SUPPORT AS	
		1	**1F-0750**	12	NUT-WELD (3/8-16-THD)	
		1	**7T-0029**	1	PLATE	
		1	**7T-1099**	3	LINK	
		1	**8D-3508**	1	BOSS (3/8-16X1-IN)	
		1	**9F-6445**	2	NUT-WELD (1/4-20-THD)	
	16	1	**194-4227**	1	DOOR AS	
	17	1	**194-4231**	1	PLATE AS	
	18	1	**293-5033**	1	BRACKET AS	
	19	1	**387-3559**	1	COVER AS	
	20	1	**387-3561**	1	PLATE	
	21	1	**389-3202**	1	COVER AS	
		1	**1F-0748**	1	NUT-WELD (1/2-13-THD)	
		1	**1S-6385**	1	LUG	
		1	**6K-1049**	1	HINGE	
		1	**8P-0612**	2	BRACKET	
	22	1	**2M-5795**	2	PIN-CLEVIS	
	23	1	**3B-4609**	2	PIN-COTTER	
	24	1	**4H-1641**	1	PIN-SPRING	
	25	1	**4L-6454**	4	BOLT (3/8-16X1-IN)	
	26	1	**5M-3062**	9	BOLT (3/8-16X0.75-IN)	
	27	1	**5P-1075**	24	WASHER-HARD (10.2X22.5X3-MM THK)	
	28	1	**5S-7379**	10	BOLT (3/8-16X0.875-IN)	
	29	1	**8T-4121**	6	WASHER-HARD (11X21X2.5-MM THK)	
M	30	1	**8T-4136**	4	BOLT (M10X1.5X25-MM)	
M	31	1	**8T-4191**	2	BOLT (M10X1.5X16-MM)	
	32	1	**8T-4222**	2	WASHER-PLATED (11X32X2.5-MM THK)	
	33	1	**8T-4223**	1	WASHER-HARD (13.5X25.5X3-MM THK)	

M-METRIC PART

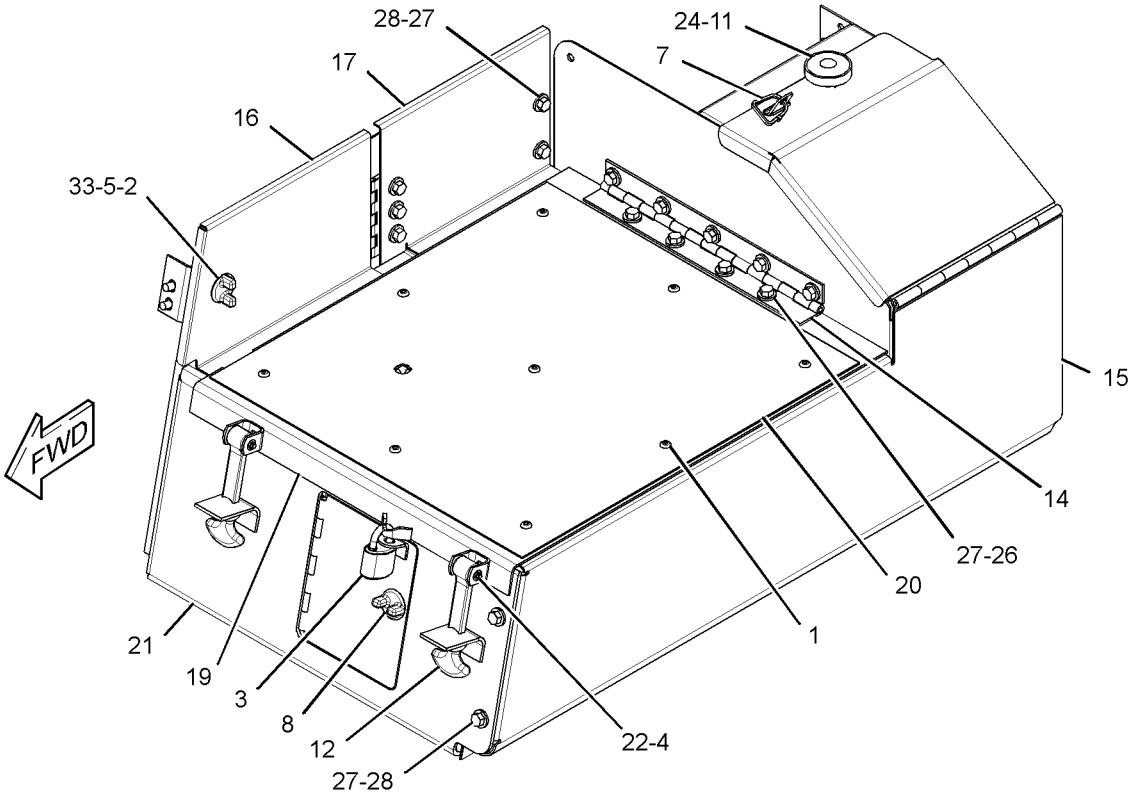

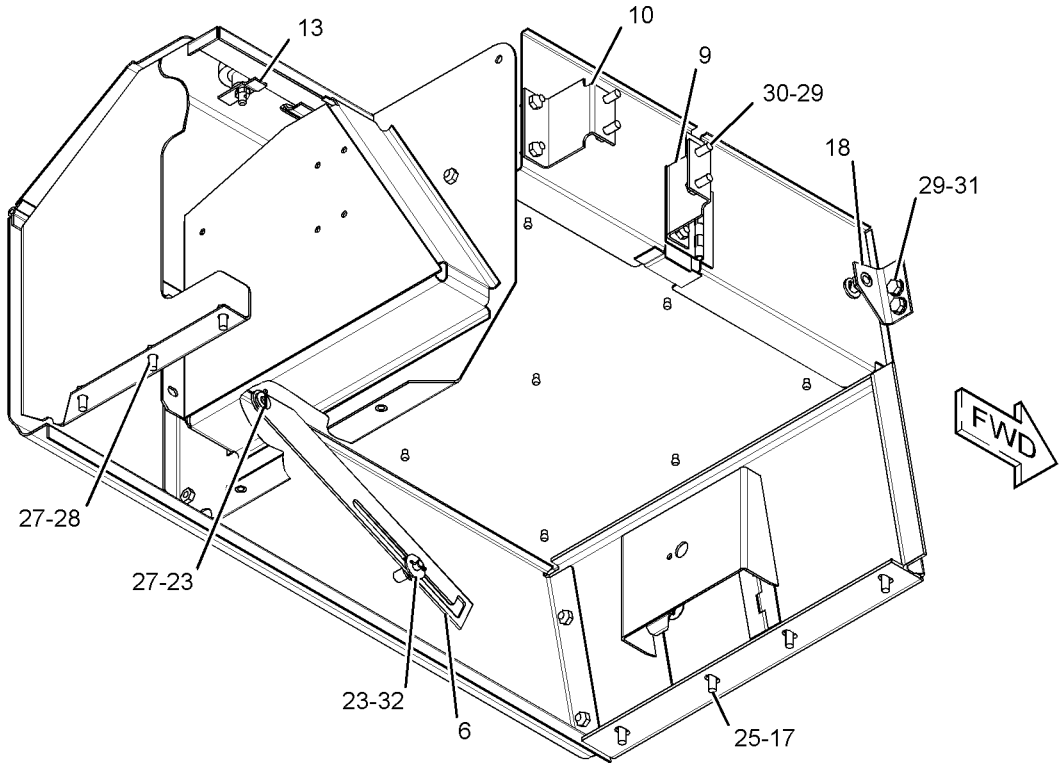

GRAPHIC #1 **<END>** g02849858

FRAME AND BODY

387-0549 BOX GP-BATTERY

S/N: DSH1-UP; DLN1-UP; DJR1-UP
PART OF 387-0554 COLD WEATHER AR, 380-7900 OPERATOR AR
ALSO AN ATTACHMENT

SMCS-7257 **i04748233**

NOTE	REF NO	GRAPHIC REF	PART NUMBER	QTY	PART NAME 1 2 3 4 5 6 (PRODUCT LEVEL)	SEE PAGE
	1	1	**3B-4610**	2	PIN-COTTER	
	2	1	**6D-1746**	2	BOLT (1/2-13X1.32-IN)	
	3	1	**8E-3621**	1	BRACKET AS	
		1	**1F-0750**	3	NUT-WELD (3/8-16-THD)	
	4	1	**8E-3623**	1	BRACKET AS	
		1	**1F-0750**	2	NUT-WELD (3/8-16-THD)	
	5	1	**194-4227**	1	DOOR AS	
	6	1	**194-4231**	1	PLATE AS	
	7	1	**293-5033**	1	BRACKET AS	
		1	**1F-0748**	1	NUT-WELD (1/2-13-THD)	
	8	1	**5P-1075**	5	WASHER-HARD (10.2X22.5X3-MM THK)	
	9	1	**5S-7379**	5	BOLT (3/8-16X0.875-IN)	
	10	1	**8T-4121**	6	WASHER-HARD (11X21X2.5-MM THK)	
M	11	1	**8T-4136**	4	BOLT (M10X1.5X25-MM)	
M	12	1	**8T-4191**	2	BOLT (M10X1.5X16-MM)	
	13	1	**8T-4223**	1	WASHER-HARD (13.5X25.5X3-MM THK)	

M-METRIC PART

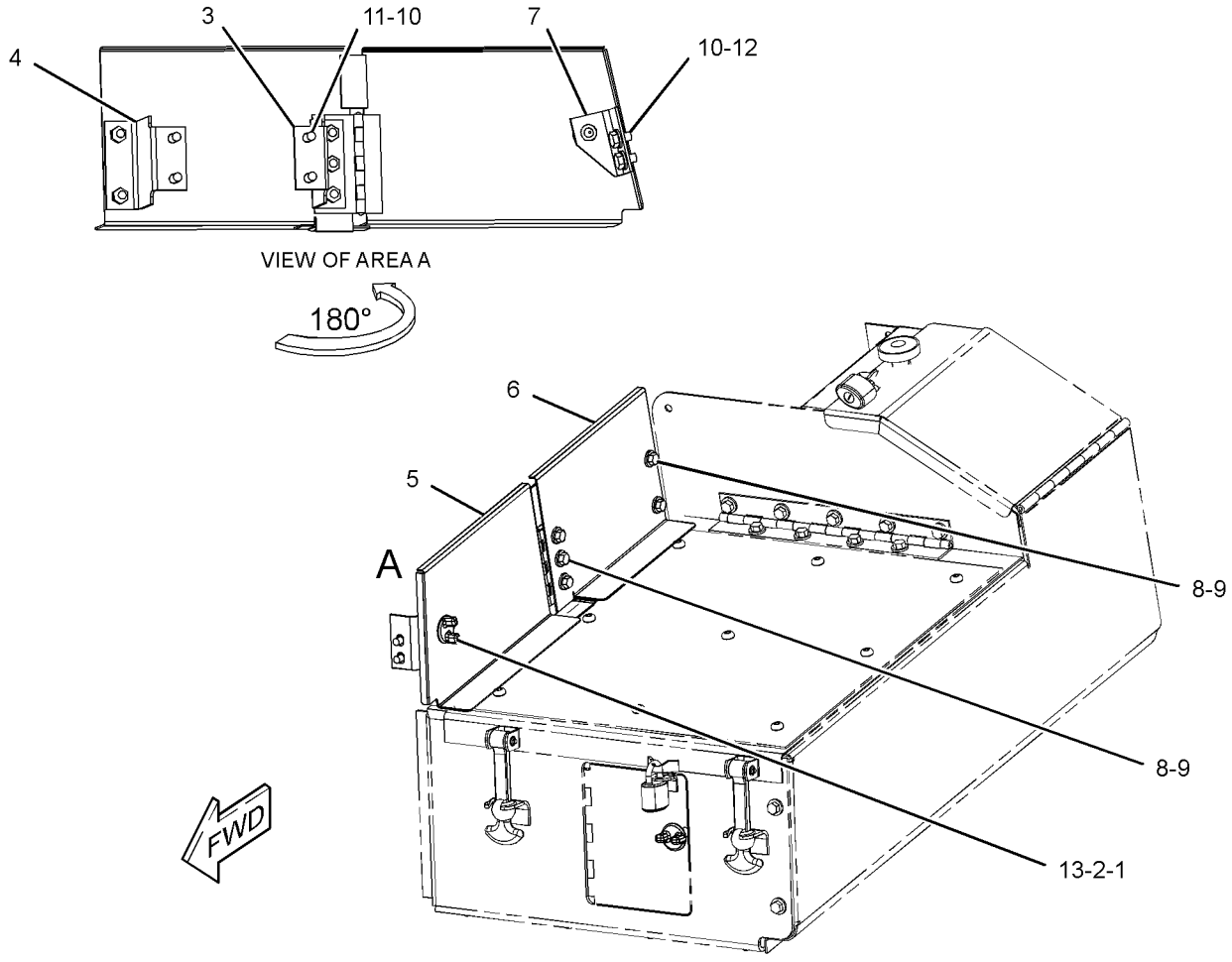

GRAPHIC #1 **<END>** g02849279

FRAME AND BODY

308-5435 CASE & FRAME GP

S/N: DSH1-UP; DLN1-UP; DJR1-UP

PART OF 313-3338, 313-3759, 379-6225 CHASSIS AR

SMCS-7051 **i04606670**

NOTE	REF NO	GRAPHIC REF	PART NUMBER	QTY	PART NAME 1 2 3 4 5 6 (PRODUCT LEVEL)	SEE PAGE
	1	1	**106-8186**	1	VALVE AS-DRAIN (ECOLOGY)	
		1	**077-3241**	1	SEAL-O-RING	
	2	1	**106-8187**	1	PLUG-DRAIN (TRANSMISSION CASE)	
	3	1	**258-0769**	2	BUSHING	
	4	1	**258-2303**	2	BUSHING	
M	5	1	**264-0168**	2	STUD-TAPERLOCK (M10X1.5X50-MM)	
	6	1	**308-5436**	1	CASE & FRAME AS	
	6A	1	**3T-0395**	4	SLEEVE	
	6B	1	**8G-4386**	8	SLEEVE	
	6C	1	**3T-4516**	1	TRUNNION AS	
		1	**9T-0066**	1	TRUNNION	
	7	1	**3T-4238**	2	BUSHING	
	8	1	**6F-0711**	1	SEAL-O-RING	
	9	1	**7M-8485**	1	SEAL-O-RING	
	10	1	**9S-4181**	1	PLUG-O-RING	
	11	1	**8T-0232**	18	PLUG	

M-METRIC PART

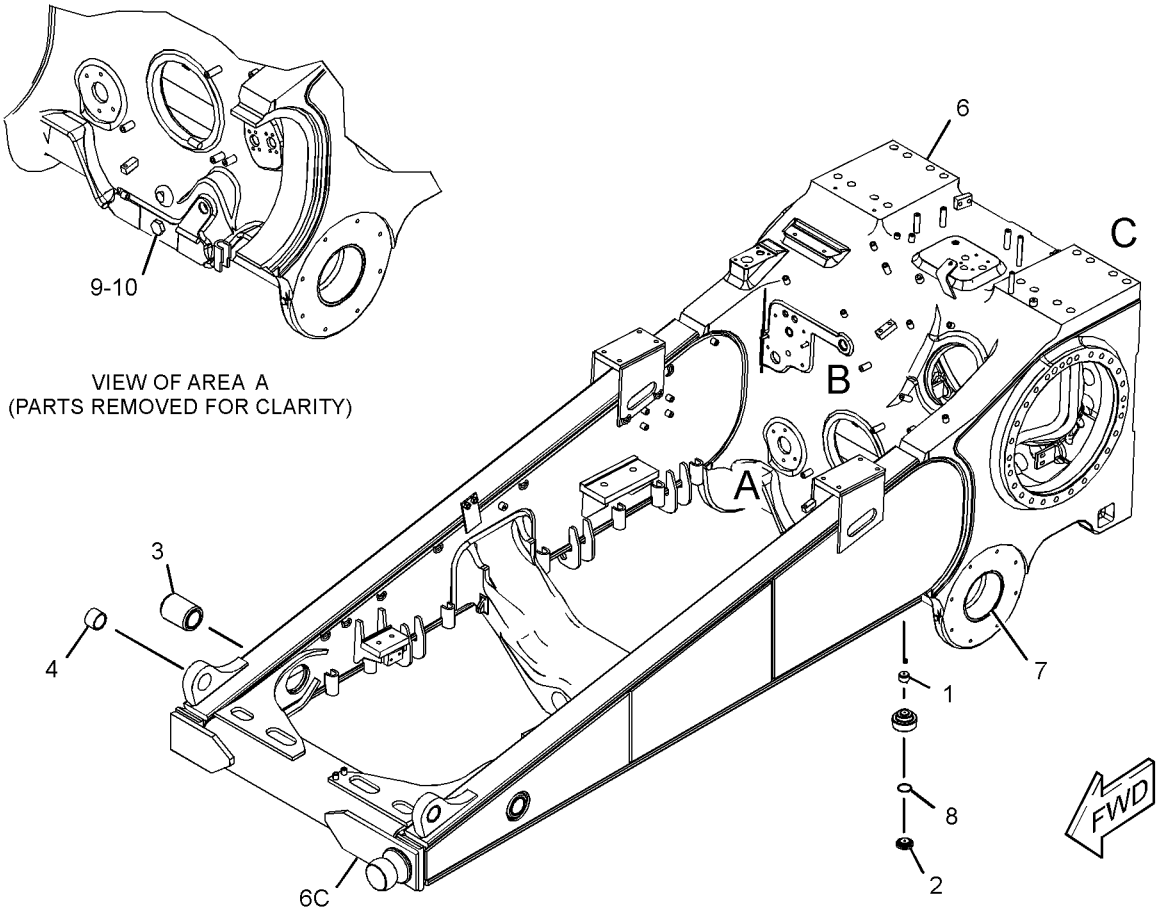

VIEW OF AREA A
(PARTS REMOVED FOR CLARITY)

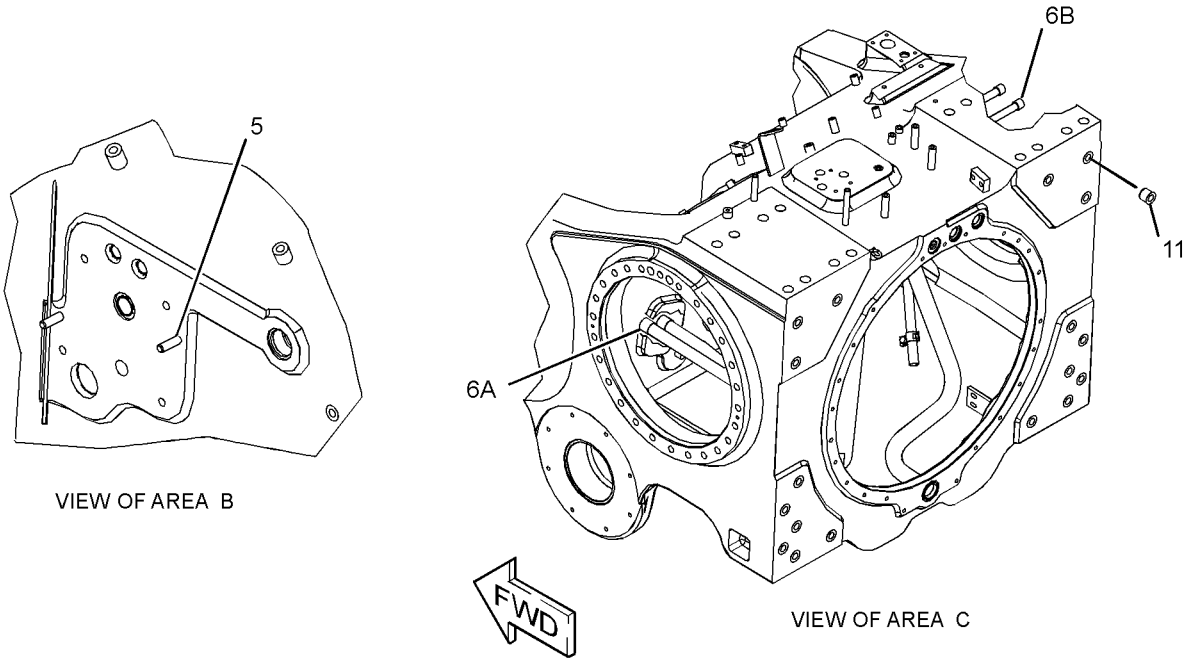

VIEW OF AREA B

VIEW OF AREA C

GRAPHIC #1 **<END>** g02789379

380-1632 DOOR GP-ACCESS–LH

S/N: DSH1-UP; DLN1-UP; DJR1-UP

PART OF 380-1630 ENCLOSURE GP-ENGINE

SMCS-7273 **i04609776**

NOTE	REF NO	GRAPHIC REF	PART NUMBER	QTY	PART NAME 1 2 3 4 5 6 (PRODUCT LEVEL)	SEE PAGE
	1	1	**3V-9399**	1	ROD AS	
		1	**4B-4278**	2	WASHER (10.2X20.5X1.6-MM THK)	
	2	1	**4B-4278**	1	WASHER (10.2X20.5X1.6-MM THK)	
	3	1	**8T-4121**	2	WASHER-HARD (11X21X2.5-MM THK)	
	4	1	**8T-9496**	2	LOCKNUT (9/16-18-THD)	
	5	1	**8Y-4000**	1	LATCH AS (T-BAR, COMPARTMENT)	
	6	1	**9W-8084**	1	PAWL	
	7	1	**9W-8940**	1	PLATE	
	8	1	**3B-4605**	1	PIN-COTTER	
	9	1	**4H-2558**	1	GROMMET	
	10	1	**4M-7470**	1	GROMMET	
M	11	1	**6V-7744**	2	LOCKNUT (M10X1.5-THD)	
M	12	1	**8C-8585**	6	SCREW-BUTTON HEAD (M10X1.5X20-MM)	
M	13	1	**8T-4136**	2	BOLT (M10X1.5X25-MM)	

M-METRIC PART

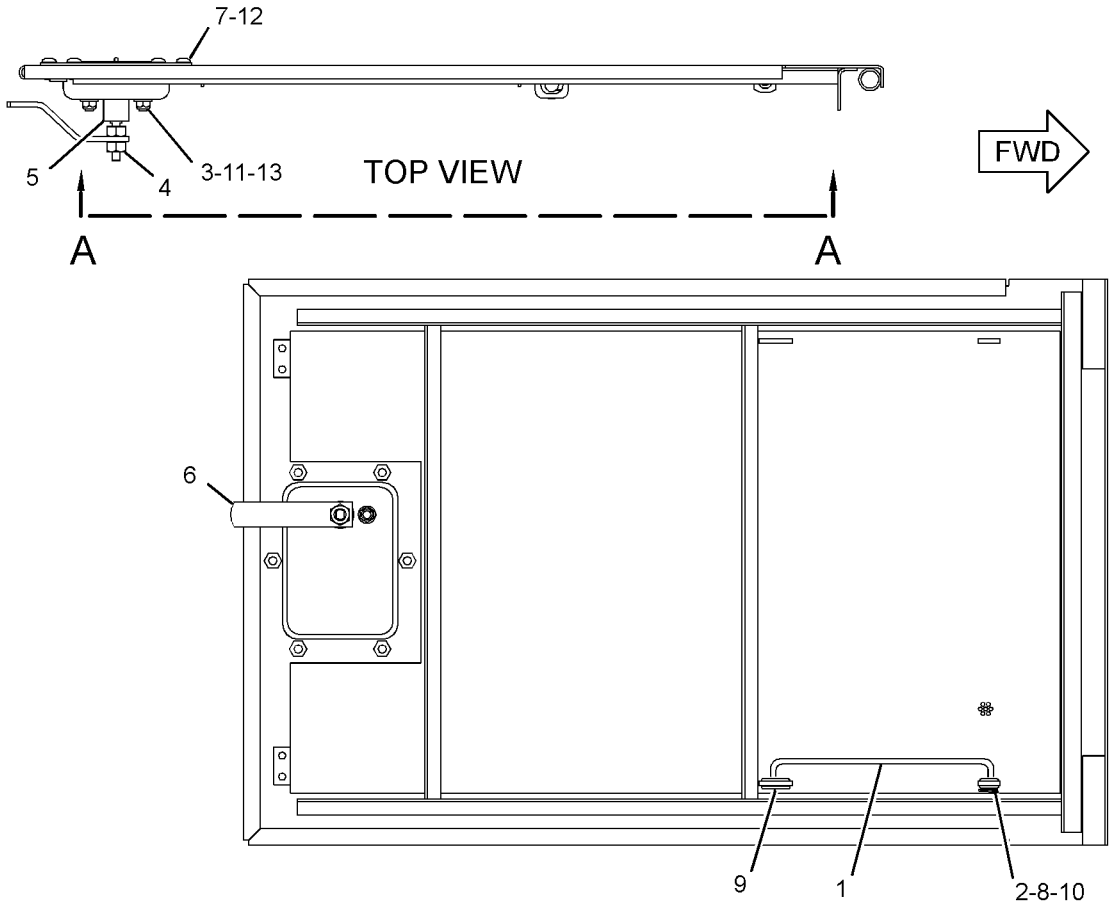

VIEW A-A

RIGHT SIDE VIEW

GRAPHIC #1 **<END>** g02790195

FRAME AND BODY

380-1633 DOOR GP-ACCESS—RH

S/N: DSH1-UP; DLN1-UP; DJR1-UP
PART OF 380-1631 ENCLOSURE GP-ENGINE

SMCS-7273 **i04609849**

NOTE	REF NO	GRAPHIC REF	PART NUMBER	QTY	PART NAME 1 2 3 4 5 6 (PRODUCT LEVEL)	SEE PAGE
	1	1	**3V-9399**	1	ROD AS	
		1	**4B-4278**	2	WASHER (10.2X20.5X1.6-MM THK)	
	2	1	**4B-4278**	1	WASHER (10.2X20.5X1.6-MM THK)	
	3	1	**8T-4121**	2	WASHER-HARD (11X21X2.5-MM THK)	
	4	1	**8T-9496**	2	LOCKNUT (9/16-18-THD)	
	5	1	**8Y-4000**	1	LATCH AS (T-BAR, COMPARTMENT)	
	6	1	**9W-8084**	1	PAWL	
	7	1	**380-1634**	1	DOOR AS-ACCESS	
	8	1	**3B-4605**	1	PIN-COTTER	
	9	1	**4H-2558**	1	GROMMET	
	10	1	**4M-7470**	1	GROMMET	
M	11	1	**6V-7744**	2	LOCKNUT (M10X1.5-THD)	
M	12	1	**8C-8585**	6	SCREW-BUTTON HEAD (M10X1.5X20-MM)	
M	13	1	**8T-4136**	2	BOLT (M10X1.5X25-MM)	
	14	1	**9W-8940**	1	PLATE	

M-METRIC PART

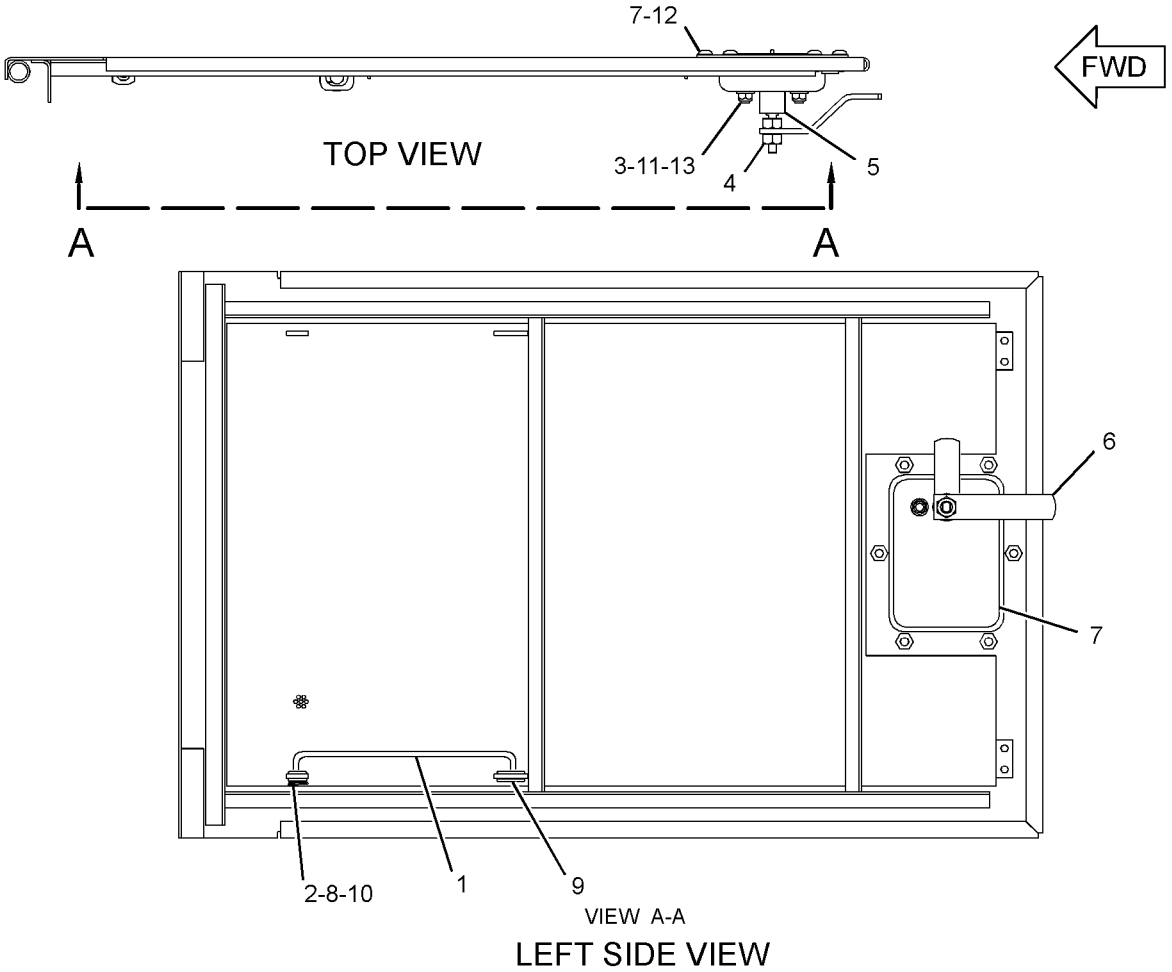

GRAPHIC #1 **<END>** g02790219

FRAME AND BODY

164-5675 DRAWBAR GP

S/N: DSH1-UP; DLN1-UP; DJR1-UP

AN ATTACHMENT

SMCS-7105, 7119 **i04728969**

NOTE	REF NO	GRAPHIC REF	PART NUMBER	QTY	PART NAME 1 2 3 4 5 6 (PRODUCT LEVEL)	SEE PAGE
	1	1	**2R-0179**	1	PIN AS-HEADLESS	
	2	1	**3T-6239**	1	CLEVIS	
	3	1	**7B-0863**	1	LATCH-PIN	
	4	1	**9W-3423**	1	BRACKET AS	
	5	1	**9W-3425**	1	BRACKET AS	
	6	1	**3K-2889**	1	LOCKNUT (5/8-11-THD)	
	7	1	**6V-8190**	4	NUT (1-8-THD)	
	8	1	**7X-0418**	4	BOLT (1-8X9.5-IN)	
	9	1	**7X-0428**	8	BOLT (1-1/4-7X4-IN)	
	10	1	**7X-0533**	8	WASHER-HARD (34X55X6-MM THK)	
	11	1	**8T-5361**	8	WASHER-HARD (28X49X5-MM THK)	
	12	1	**8T-6871**	1	BOLT (5/8-11X2.5-IN)	

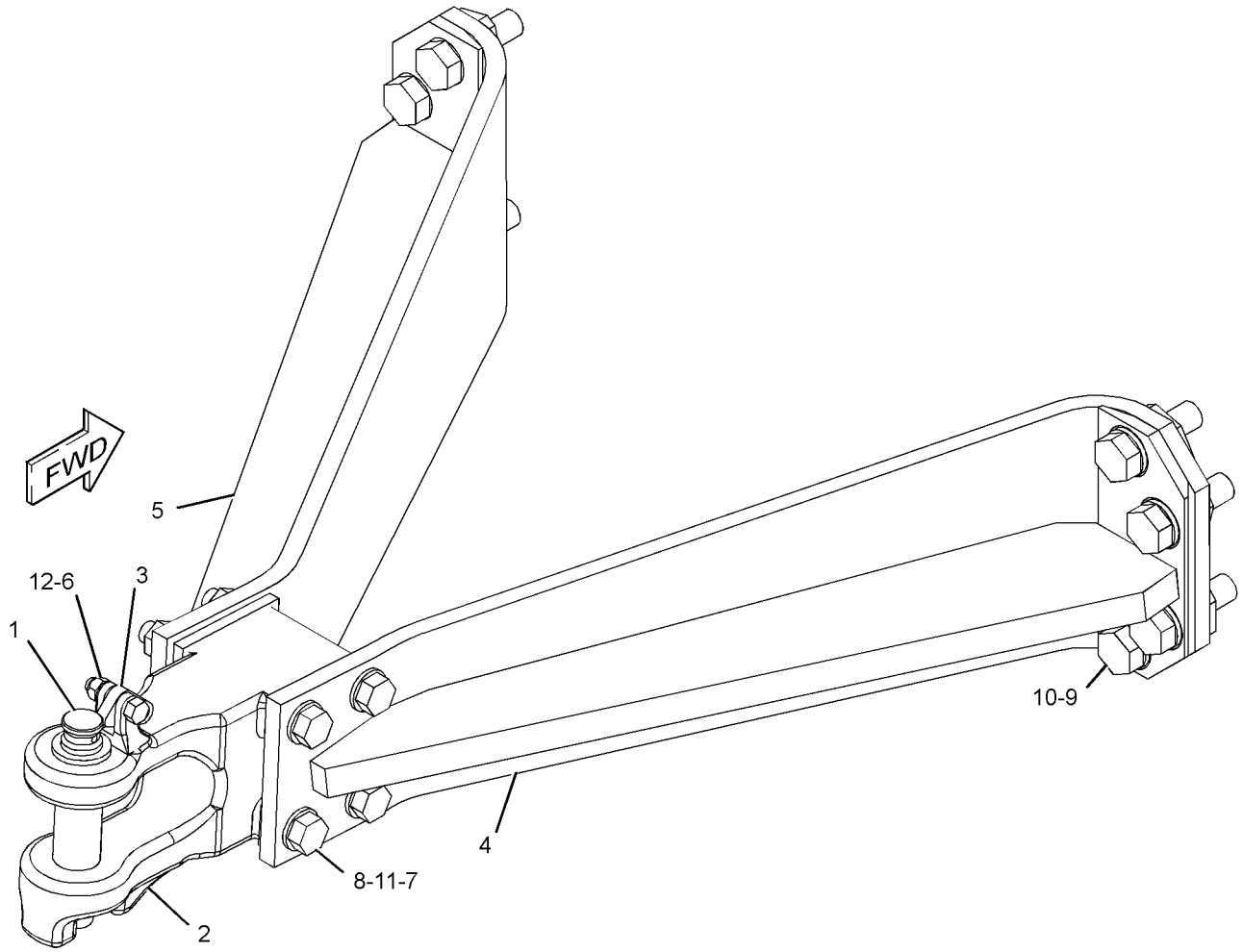

GRAPHIC #1 **<END>** g02836398

FRAME AND BODY

387-2578 ENCLOSURE GP

S/N: DSH1-UP; DLN1-UP; DJR1-UP

PART OF 313-3338, 313-3759, 379-6225 CHASSIS AR

SMCS-7267, 7276 **i04713929**

NOTE	REF NO	GRAPHIC REF	PART NUMBER	QTY	PART NAME 1 2 3 4 5 6 (PRODUCT LEVEL)	SEE PAGE
	1	1	**7K-1181**	2	STRAP-CABLE	
	2	1	**142-3331**	1	BRACKET AS	
		1	**2W-7940**	1	BRACKET	
M		1	**8T-3490**	1	NUT-WELD (M10X1.5-THD)	
	3	1	**241-6498**	1	BRACKET AS	
	4	1	**273-3834**	1	PLATE	
	5	1	**273-3843**	1	COVER AS-ACCESS	
		1	**4H-1641**	2	PIN-SPRING	
		1	**7T-0030**	2	HINGE	
		1	**8E-7561**	2	KNOB AS	
					(EACH INCLUDES)	
		1	**7S-2042**	1	STUD (3/8-16X1.5-IN)	
		1	**8E-1205**	1	KNOB	
		1	**8T-7566**	1	PIN-SPRING	
		1	**8T-4223**	2	WASHER-HARD (13.5X25.5X3-MM THK)	
		1	**9S-8230**	2	PLATE AS	
					(EACH INCLUDES)	
		1	**1F-0750**	1	NUT-WELD (3/8-16-THD)	
	6	1	**4L-6454**	1	BOLT (3/8-16X1-IN)	
	7	1	**5S-7379**	2	BOLT (3/8-16X0.875-IN)	
	8	1	**7X-7729**	10	WASHER (11X25X3-MM THK)	
M	9	1	**8T-4136**	7	BOLT (M10X1.5X25-MM)	

M-METRIC PART

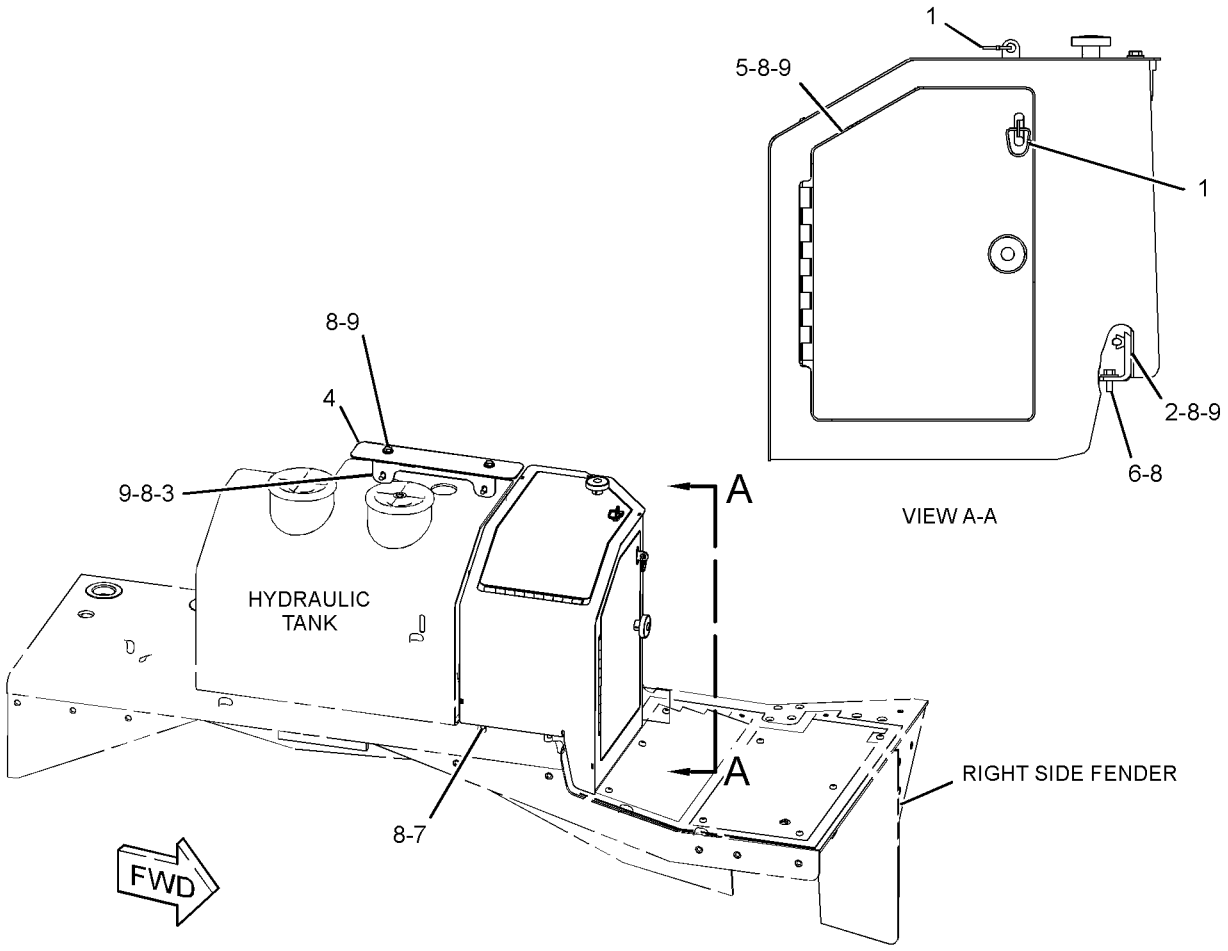

GRAPHIC #1 **<END>** g02829676

FRAME AND BODY

331-9273 ENCLOSURE GP-ENGINE

S/N: DSH1-UP; DLN1-UP; DJR1-UP

PART OF 313-3338, 313-3759, 379-6225 CHASSIS AR

SMCS-7263 **i04712090**

NOTE	REF NO	GRAPHIC REF	PART NUMBER	QTY	PART NAME 1 2 3 4 5 6 (PRODUCT LEVEL)	SEE PAGE
	1	1	**376-9482**	2	PLATE	
Y	2	1	*380-1630*	1	ENCLOSURE GP-ENGINE (LH)	310
Y	3	1	*380-1631*	1	ENCLOSURE GP-ENGINE (RH)	311
	4	1	**6P-8269**	1	WASHER (20.5X88X6-MM THK)	
	5	1	**6T-9807**	2	GROMMET	
	6	1	**6T-9927**	2	SLIDE	
	7	1	**6T-9928**	2	PLATE	
	8	1	**6T-9929**	2	PLATE	
	9	1	**6Y-0123**	2	PLATE AS	
	10	1	**7K-1181**	2	STRAP-CABLE	
	11	1	**9F-3691**	2	SPACER (0.281X0.438X0.26-IN THK)	
	12	1	**9P-3066**	2	MOUNTING	
	13	1	**331-9274**	1	HOOD AS	
	14	1	**6T-9808**	2	SUPPORT	
M	15	1	**6V-7357**	2	BOLT (M6X1X25-MM)	
M	16	1	**6V-7743**	2	LOCKNUT (M6X1-THD)	
M	17	1	**7X-2555**	1	BOLT (M16X2X80-MM)	
	18	1	**7X-7729**	32	WASHER (11X25X3-MM THK)	
	19	1	**8T-2502**	2	BOLT (3/8-16X1.125-IN)	
	20	1	**8T-2561**	4	WASHER-HARD (10.5X28.5X5-MM THK)	
	21	1	**8T-4121**	16	WASHER-HARD (11X21X2.5-MM THK)	
	22	1	**8T-4122**	1	WASHER-HARD (17X32X3.5-MM THK)	
	23	1	**8T-4123**	2	WASHER (22X35X3.5-MM THK)	
M	24	1	**8T-4133**	8	NUT (M10X1.5-THD)	
M	25	1	**8T-4136**	20	BOLT (M10X1.5X25-MM)	
M	26	1	**8T-4137**	20	BOLT (M10X1.5X20-MM)	
M	27	1	**8T-4176**	4	BOLT (M12X1.75X90-MM)	
M	28	1	**8T-4196**	4	BOLT (M10X1.5X35-MM)	
	29	1	**8T-4223**	4	WASHER-HARD (13.5X25.5X3-MM THK)	
	30	1	**8T-4897**	4	WASHER (10.2X35X6-MM THK)	
M	31	1	**8T-6466**	4	BOLT (M10X1.5X60-MM)	
	32	1	**9X-8256**	4	WASHER (6.6X12X2-MM THK)	
	33	1	**9X-8266**	2	WASHER (10.2X63.5X6-MM THK)	
D	34	1	**5P-7211**		SEAL (1.2-M)	
D	34A	1	**5P-7211**		SEAL (0.7-M EACH)	
D	35	1	**5P-7483**		SEAL (2.5-M EACH)	

D-ORDER BY THE METER
M-METRIC PART
Y-SEPARATE ILLUSTRATION

331-9273 **ENCLOSURE GP-ENGINE** *(contd.)* **i04712090**

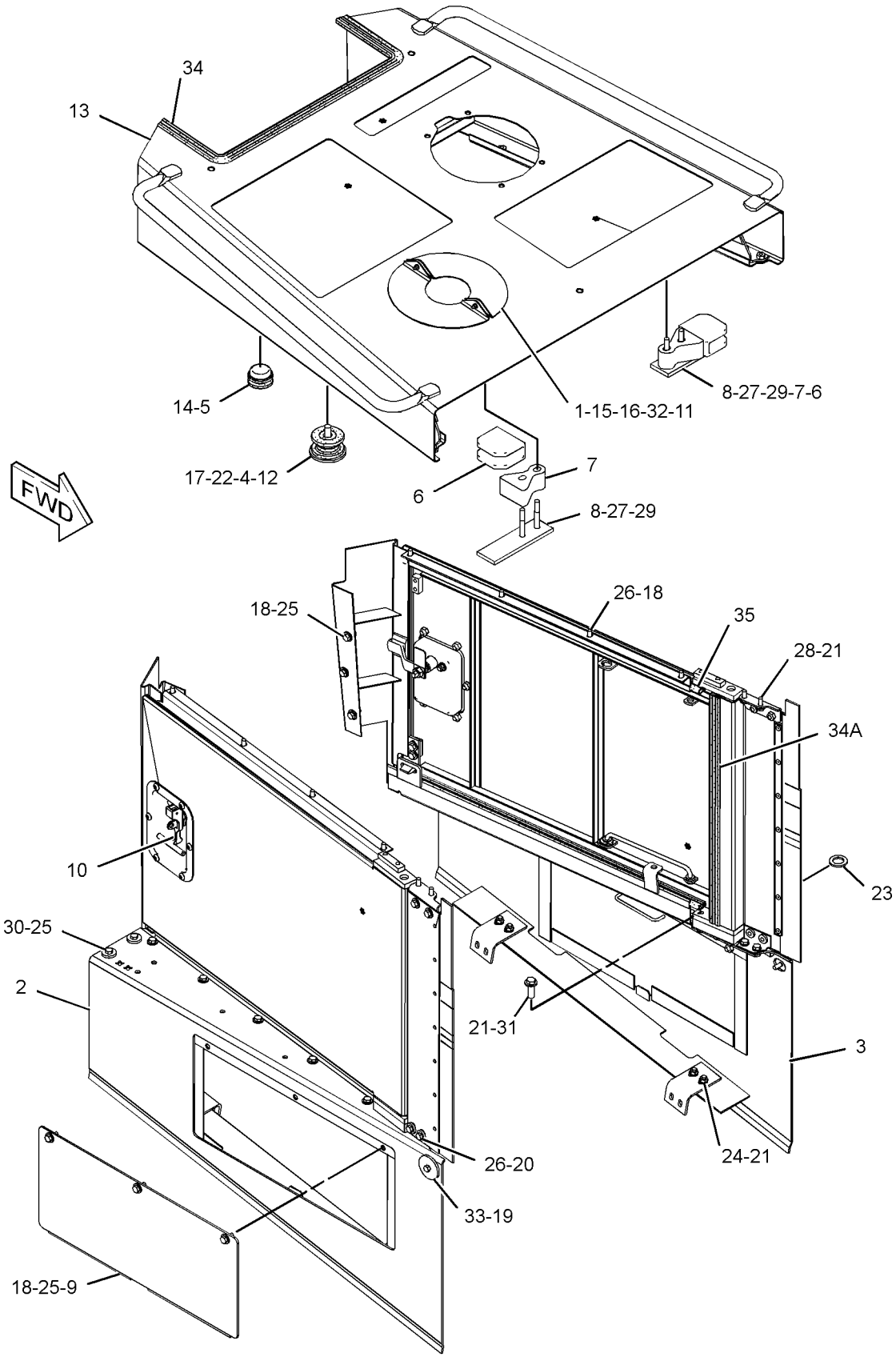

GRAPHIC #1 **<END>** g02846977

FRAME AND BODY

380-1630 ENCLOSURE GP-ENGINE–LH

S/N: DSH1-UP; DLN1-UP; DJR1-UP
PART OF 331-9273 ENCLOSURE GP-ENGINE

SMCS-7263 **i04609749**

NOTE	REF NO	GRAPHIC REF	PART NUMBER	QTY	PART NAME 1 2 3 4 5 6 (PRODUCT LEVEL)	SEE PAGE
	1	1	**6T-9509**	1	HINGE AS (RH)	
	2	1	**6T-9510**	1	HINGE AS (LH)	
	3	1	**6T-9512**	1	PLATE	
	4	1	**9W-5290**	1	PLATE AS	
	5	1	**9W-9044**	1	PLATE	
	6	1	**164-9461**	1	PLATE AS (LH)	
M		1	**8T-3490**	3	NUT-WELD (M10X1.5-THD)	
Y	7	1	*380-1632*	1	DOOR GP-ACCESS (LH)	303
	8	1	**196-3763**	1	ANGLE AS (LH)	
M		1	**8T-3490**	2	NUT-WELD (M10X1.5-THD)	
	9	1	**199-7232**	1	BLOCK	
	10	1	**380-1638**	1	PLATE AS (LH)	
		1	**6B-4594**	7	RIVET	
	11	1	**217-4616**	2	BRACKET	
Y	12	1	*380-1642*	1	GUARD GP-ENGINE (LH)	323

M-METRIC PART
Y-SEPARATE ILLUSTRATION

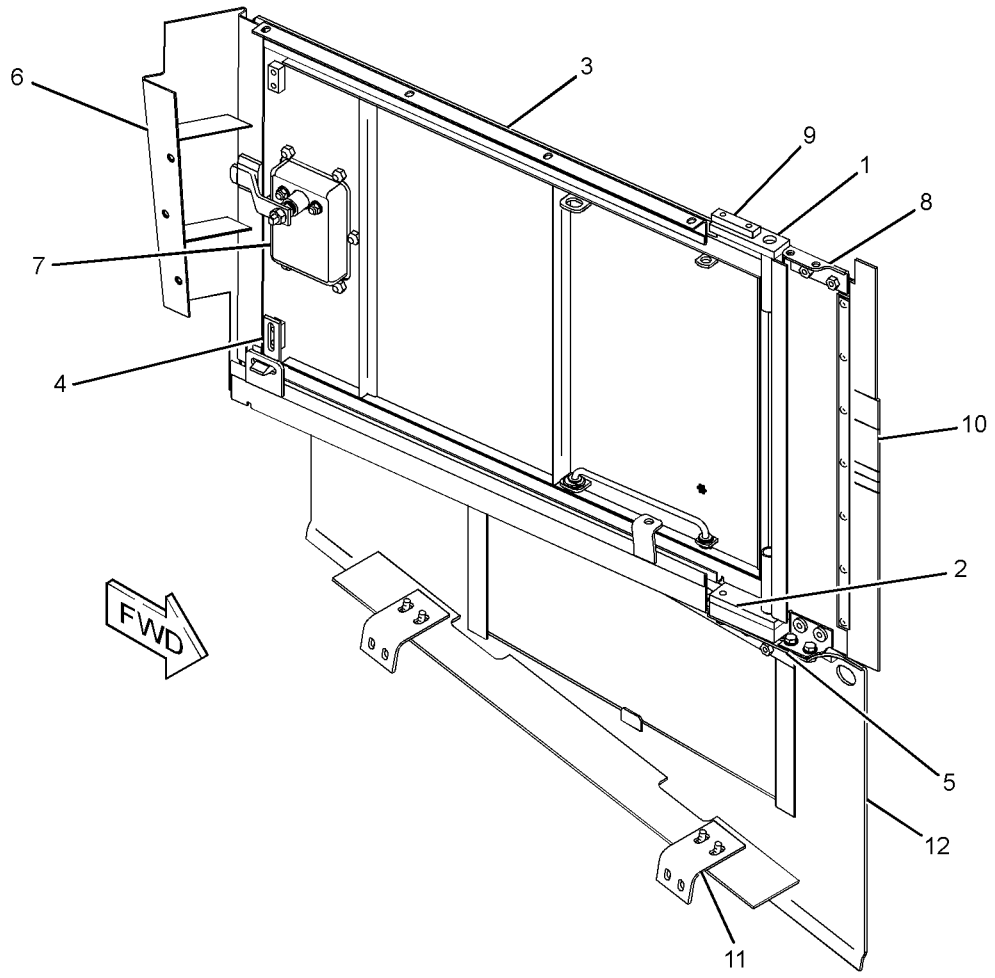

GRAPHIC #1 **<END>** g01178164

FRAME AND BODY

380-1631 ENCLOSURE GP-ENGINE–RH

S/N: DSH1-UP; DLN1-UP; DJR1-UP
PART OF 331-9273 ENCLOSURE GP-ENGINE

SMCS-7263 **i04712069**

NOTE	REF NO	GRAPHIC REF	PART NUMBER	QTY	PART NAME 1 2 3 4 5 6 (PRODUCT LEVEL)	SEE PAGE
Y	1	1	*380-1633*	1	DOOR GP-ACCESS	304
	2	1	**380-1639**	1	PLATE AS	
	3	1	**6T-9509**	1	HINGE AS (RH)	
	4	1	**6T-9510**	1	HINGE AS (LH)	
	5	1	**6T-9512**	1	PLATE	
	6	1	**9W-5290**	1	PLATE AS	
	7	1	**9W-9044**	1	PLATE	
	8	1	**164-9456**	1	PLATE AS (RH)	
M		1	**8T-3490**	3	NUT-WELD (M10X1.5-THD)	
	9	1	**196-3764**	1	ANGLE AS (RH)	
M		1	**8T-3490**	2	NUT-WELD (M10X1.5-THD)	
	10	1	**199-7232**	1	BLOCK	
Y	11	1	*380-1643*	1	GUARD GP-ENGINE (RH)	324
	12	1	**393-0832**	2	BRACKET	

M-METRIC PART
Y-SEPARATE ILLUSTRATION

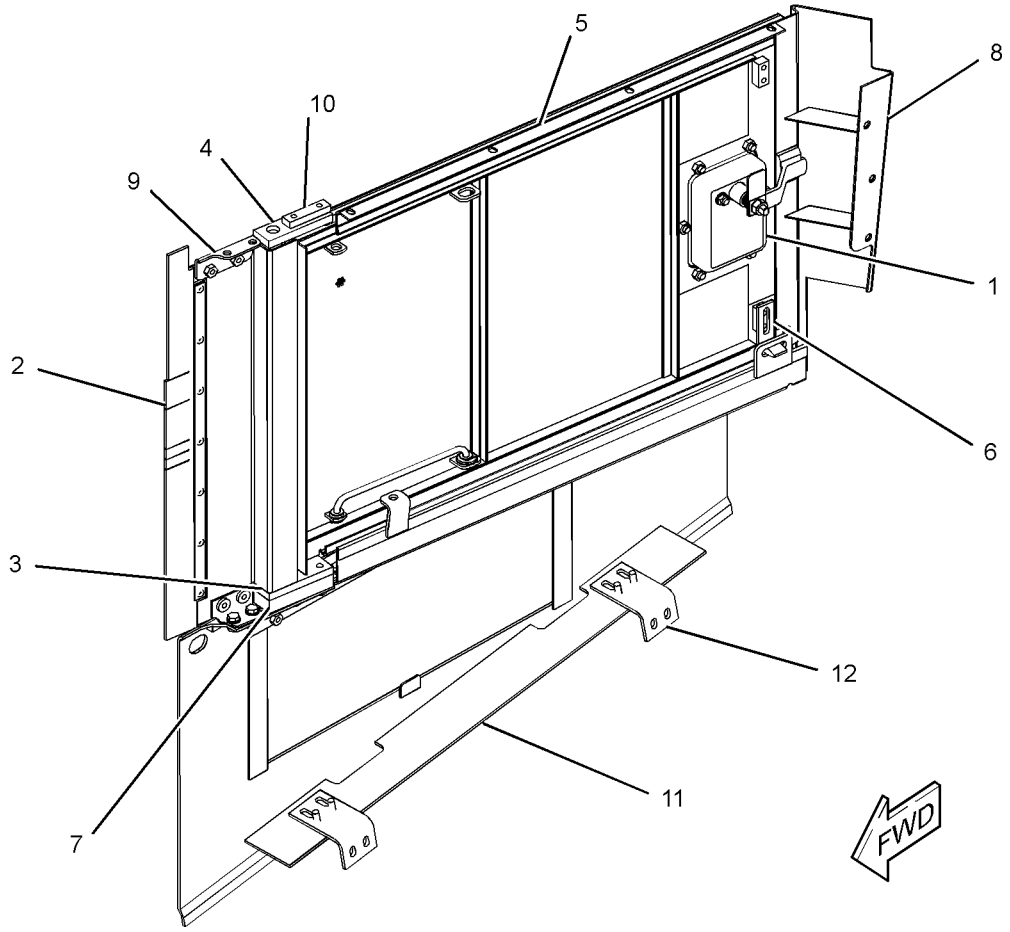

GRAPHIC #1 **<END>** g02847037

FRAME AND BODY

375-6723 FENDER GP

S/N: DSH1-UP; DLN1-UP; DJR1-UP

PART OF 313-3338, 313-3759, 379-6225 CHASSIS AR

SMCS-7252 **i04726769**

NOTE	REF NO	GRAPHIC REF	PART NUMBER	QTY	PART NAME 1 2 3 4 5 6 (PRODUCT LEVEL)	SEE PAGE
	1	2	**3W-3896**	2	HANDHOLD	
	2	1	**6Y-0563**	2	DOOR	
	3	1	**6Y-7233**	2	BRACKET AS	
					(EACH INCLUDES)	
		1	**1F-0748**	4	NUT-WELD (1/2-13-THD)	
	4	1	**7T-9280**	1	PLATE AS	
	5	2	**167-1138**	1	PLATE AS (LH)	
	6	2	**167-1140**	1	PLATE AS (RH)	
	7	2	**169-2692**	1	PLATE AS (RH)	
	8	2	**169-2693**	1	PLATE AS (LH)	
	9	2	**375-6724**	1	BEAM AS	
Y	10	2	*387-2733*	1	FENDER GP (LH)	315
Y	11	2	*387-2734*	1	FENDER GP (RH)	316
	12	1	**5C-6565**	6	BOLT (1/2-13X1.125-IN)	
	13	1	**5P-1075**	3	WASHER-HARD (10.2X22.5X3-MM THK)	
	14	2	**5P-1076**	10	WASHER-HARD (13.5X30X4-MM THK)	
	15	1	**5S-7379**	3	BOLT (3/8-16X0.875-IN)	
	16	2	**7X-0346**	8	BOLT (5/8-11X2-IN)	
	17	1,2	**7X-0349**	15	BOLT (5/8-11X3-IN)	
	18	1,2	**7X-0515**	26	WASHER-HARD (17X35X5-MM THK)	
	19	1	**7X-0582**	8	WASHER-HARD (20X44.5X6-MM THK)	
	20	1	**7X-0618**	2	WASHER-HARD (13.5X40X5-MM THK)	
	21	1	**7X-3327**	2	BOLT-LOCKING (1/2-13X1.25-IN)	
	22	2	**8C-4436**	4	BOLT (1/2-13X1.375-IN)	
	23	1	**8C-6857**	8	BOLT (3/4-10X2.75-IN)	
	24	1	**8T-4122**	4	WASHER-HARD (17X32X3.5-MM THK)	
	25	1,2	**8T-4223**	18	WASHER-HARD (13.5X25.5X3-MM THK)	
	26	1	**8T-4896**	1	WASHER-HARD (10.2X18.5X2.5-MM THK)	
	27	2	**8T-6871**	3	BOLT (5/8-11X2.5-IN)	
	28	1	**8T-8917**	8	BOLT (1/2-13X1.25-IN)	
	29	2	**8T-9389**	10	BOLT (1/2-13X2.75-IN)	
	30	1	**8T-9393**	4	BOLT (5/8-11X1.5-IN)	
	31	1	**9B-7237**	1	BOLT (3/8-16X1.25-IN)	

Y-SEPARATE ILLUSTRATION

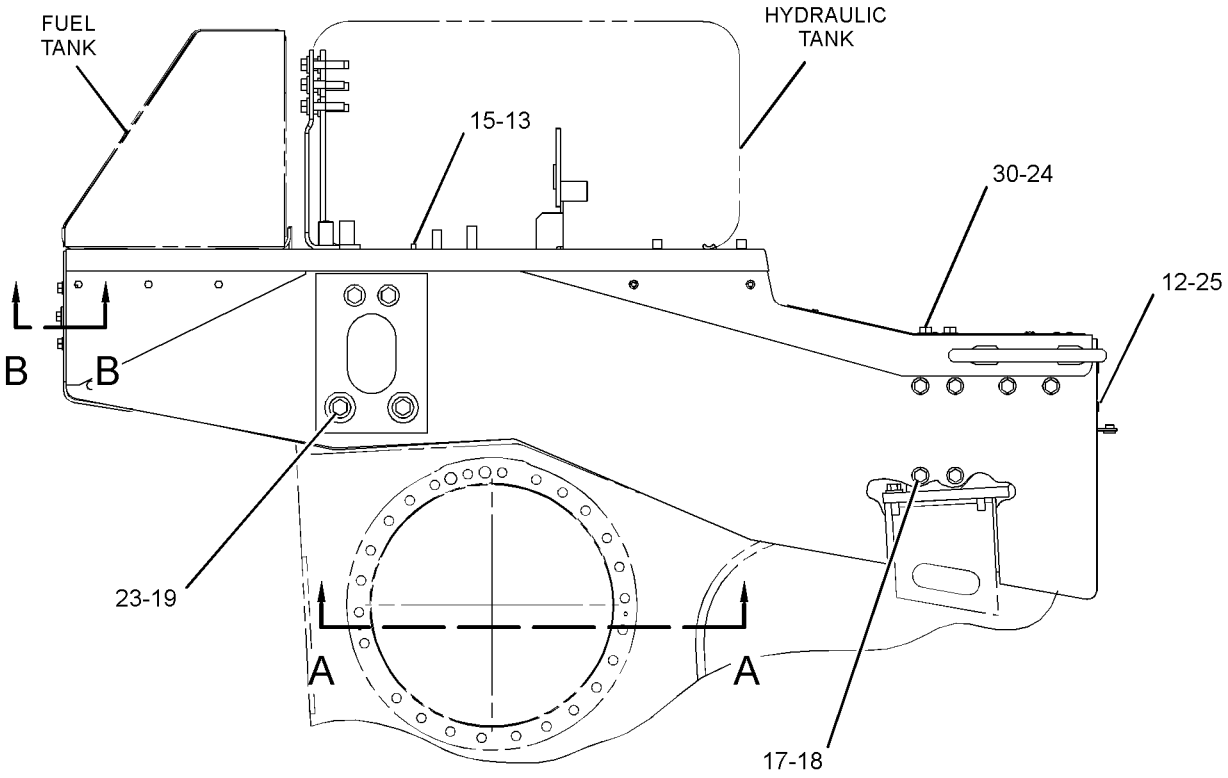

RIGHT SIDE VIEW

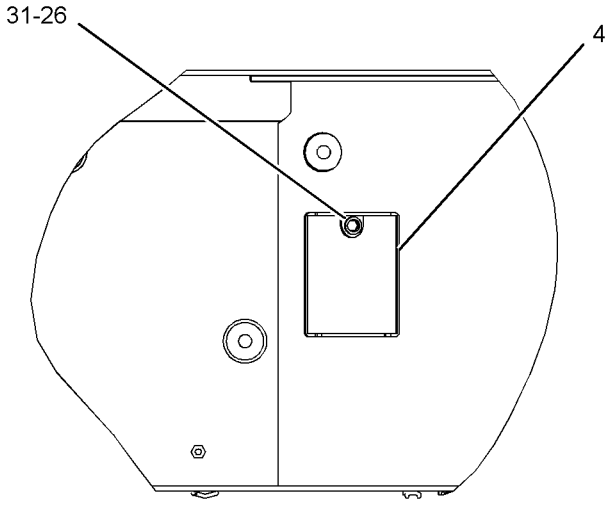

VIEW A-A

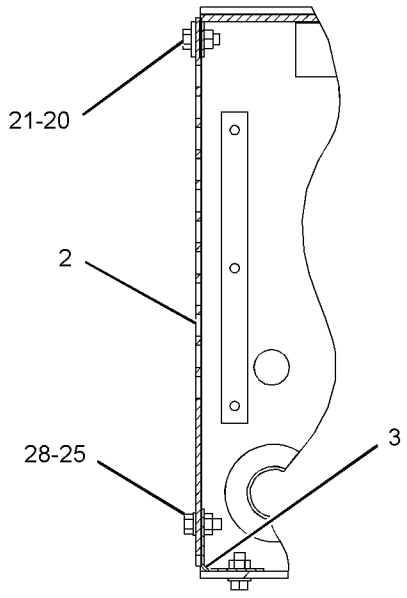

VIEW B-B

GRAPHIC #1 g02842420

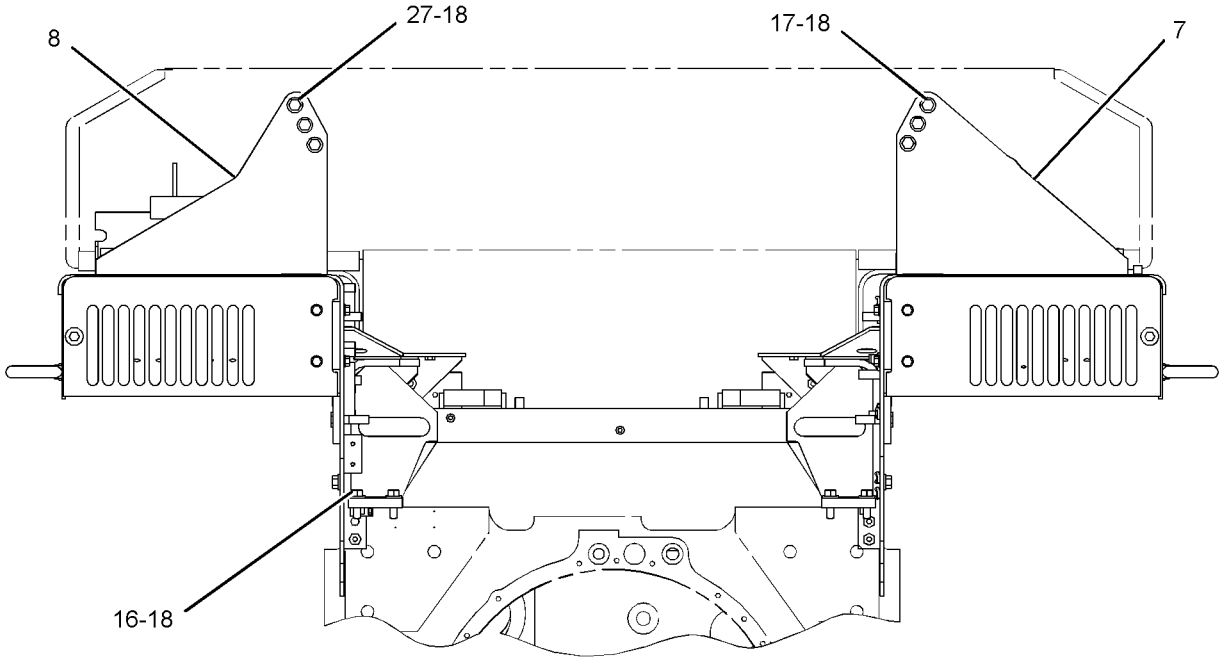

REAR VIEW

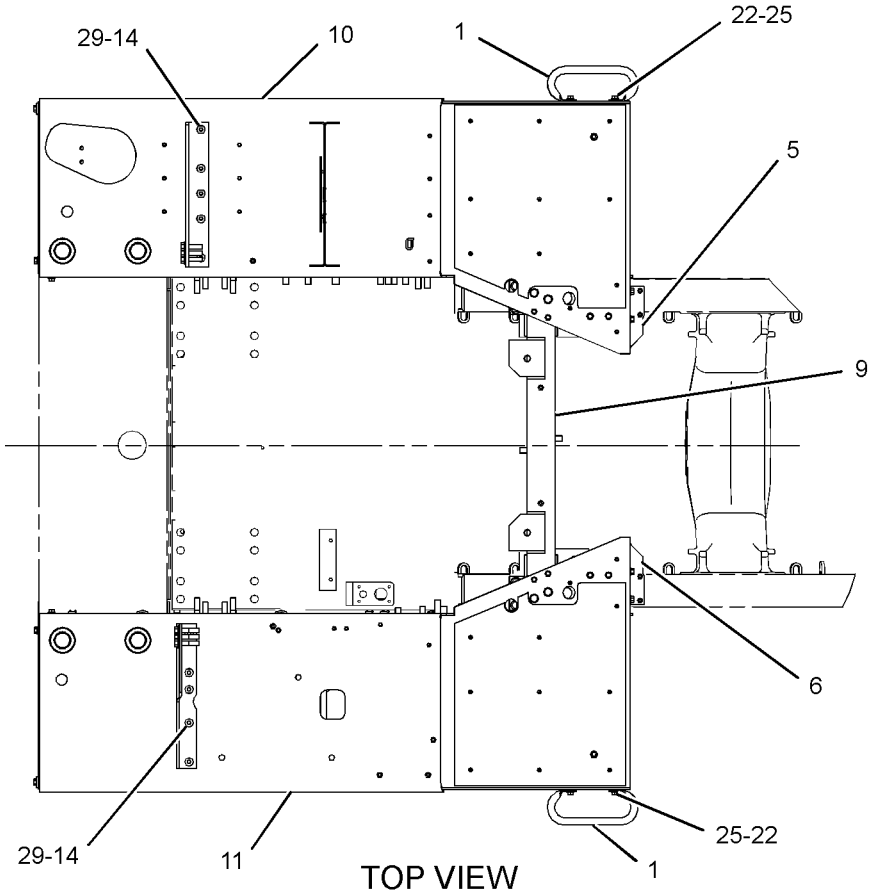

TOP VIEW

GRAPHIC #2 **<END>** g02842876

FRAME AND BODY

387-2733 FENDER GP–LH

S/N: DSH1-UP; DLN1-UP; DJR1-UP
PART OF 375-6723 FENDER GP

SMCS-7252 **i04726733**

NOTE	REF NO	GRAPHIC REF	PART NUMBER	QTY	PART NAME 1 2 3 4 5 6 (PRODUCT LEVEL)	SEE PAGE
	1	1	**162-2480**	9	RIVET	
	2	1	**387-2735**	1	PLATE (LH)	
	3	1	**387-2737**	1	FENDER AS (LH)	

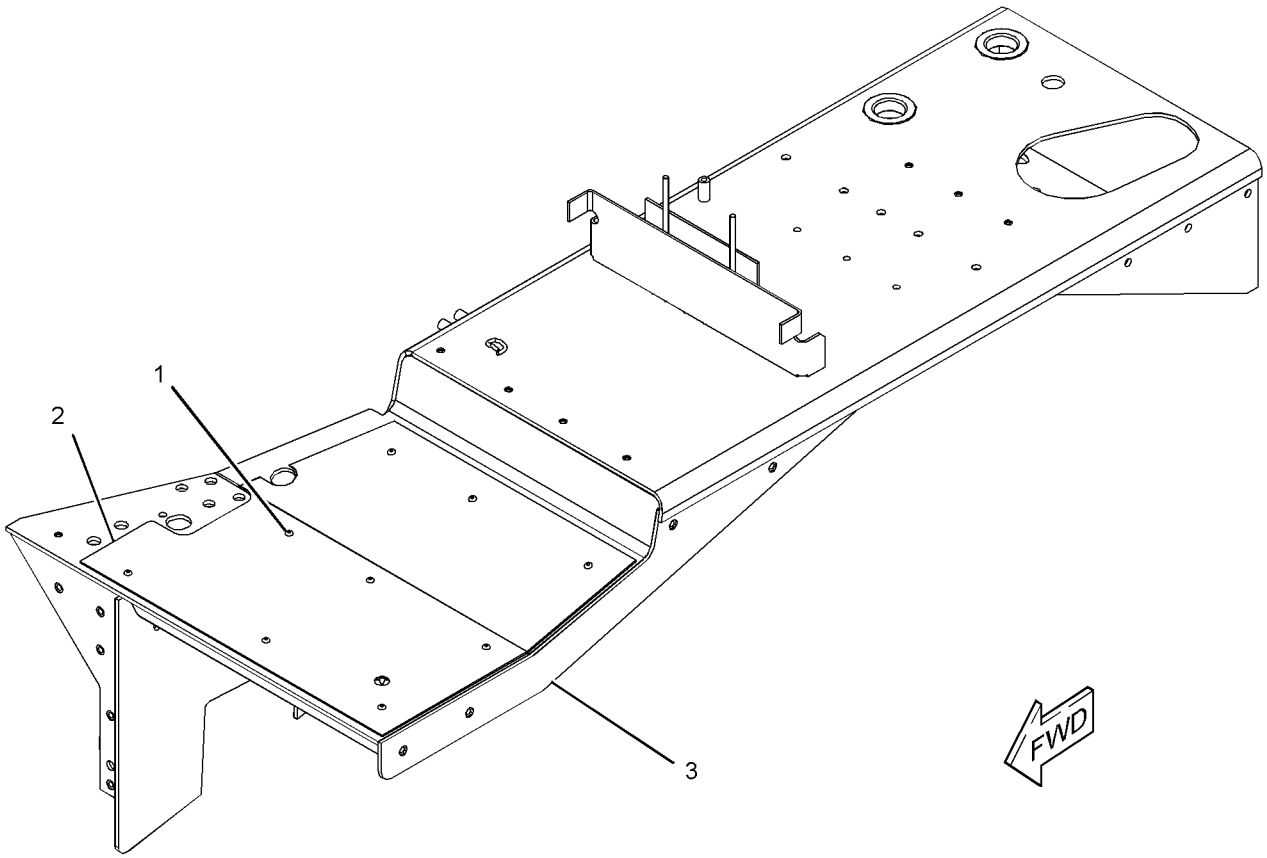

GRAPHIC #1 **<END>** g02836878

FRAME AND BODY

387-2734 FENDER GP–RH

S/N: DSH1-UP; DLN1-UP; DJR1-UP
PART OF 375-6723 FENDER GP

SMCS-7252 **i04726691**

NOTE	REF NO	GRAPHIC REF	PART NUMBER	QTY	PART NAME 1 2 3 4 5 6 (PRODUCT LEVEL)	SEE PAGE
	1	1	**162-2480**	9	RIVET	
	2	1	**387-2736**	1	PLATE (RH)	
	3	1	**387-2738**	1	FENDER AS (RH)	

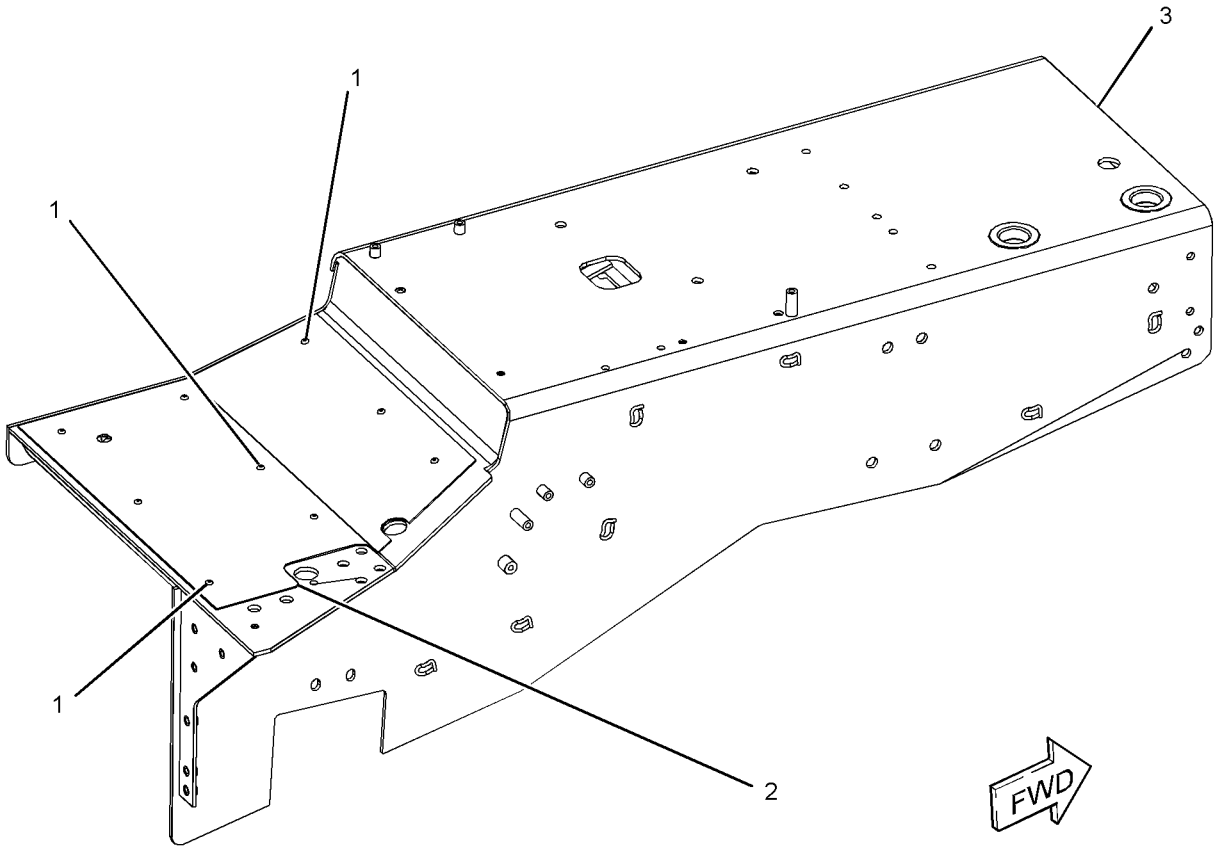

GRAPHIC #1 **<END>** g02841756

FRAME AND BODY

329-2119 GRID GP-SAND BLAST ERODING

S/N: DSH1-UP; DLN1-UP; DJR1-UP

AN ATTACHMENT

SMCS-7179 **i04629250**

NOTE	REF NO	GRAPHIC REF	PART NUMBER	QTY	PART NAME 1 2 3 4 5 6 (PRODUCT LEVEL)	SEE PAGE
	1	1	**113-6362**	1	BRACKET	
	2	1	**143-1265**	2	GRID AS-SAND BLAST	
	3	1	**329-2114**	2	PLATE AS	
	4	1	**329-2115**	2	BRACKET	
	5	1	**4L-6454**	12	BOLT (3/8-16X1-IN)	
	6	1	**5P-1075**	24	WASHER-HARD (10.2X22.5X3-MM THK)	
	7	1	**5S-7379**	4	BOLT (3/8-16X0.875-IN)	
	8	1	**6V-8801**	8	NUT (3/8-16-THD)	
M	9	1	**8T-4136**	4	BOLT (M10X1.5X25-MM)	
	10	1	**8T-4896**	4	WASHER-HARD (10.2X18.5X2.5-MM THK)	

M-METRIC PART

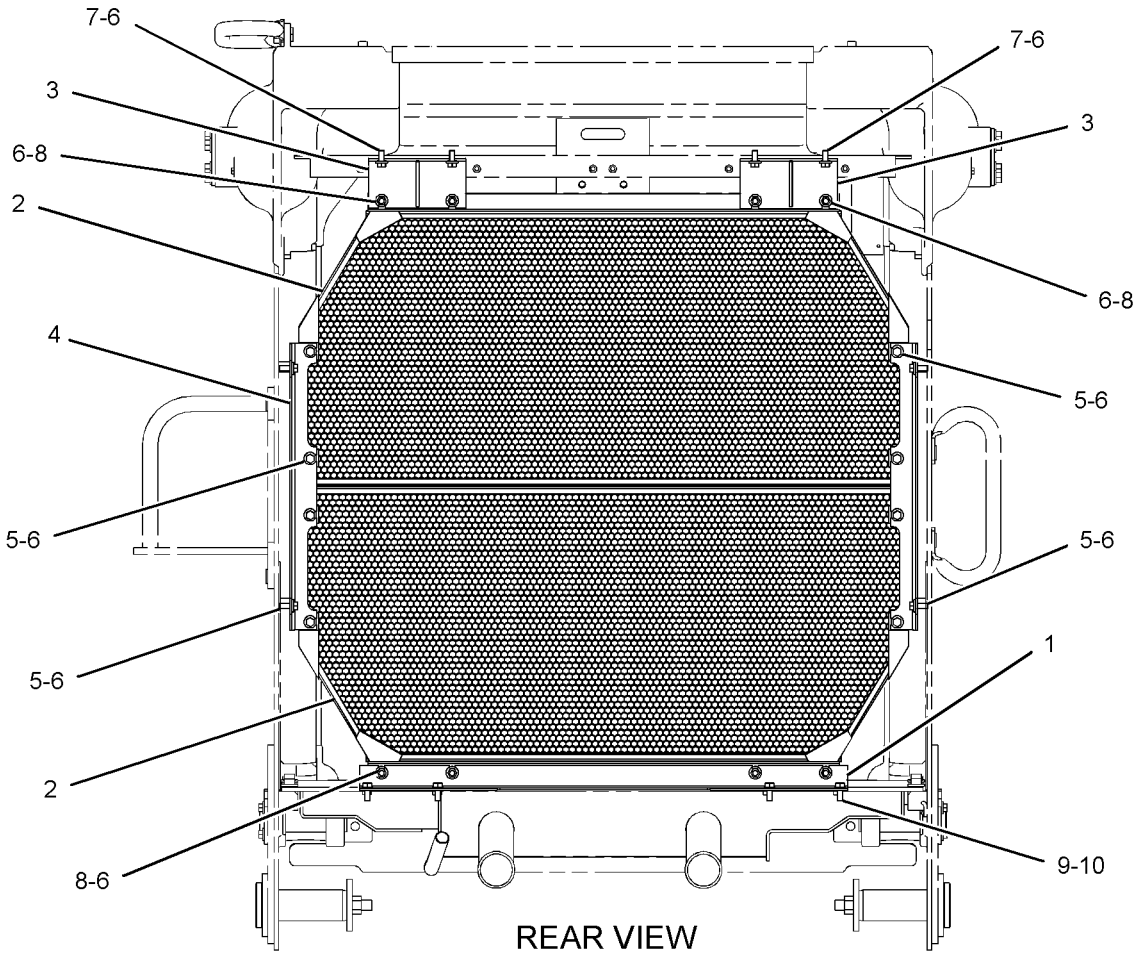

REAR VIEW

GRAPHIC #1 **<END>** g02791338

220-8044 GRILL GP-RADIATOR—HEAVY-DUTY

S/N: DSH1-UP; DLN1-UP; DJR1-UP

AN ATTACHMENT

SMCS-7170 **i04671589**

NOTE	REF NO	GRAPHIC REF	PART NUMBER	QTY	PART NAME 1 2 3 4 5 6 (PRODUCT LEVEL)	SEE PAGE
	1	1	**239-1460**	1	DOOR AS (LH)	
	2	1	**239-1461**	1	DOOR AS (RH)	
	3	1	**5P-1076**	8	WASHER-HARD (13.5X30X4-MM THK)	
	4	1	**5P-2424**	8	BOLT (1/2-13X2.25-IN)	
	5	1	**9W-2822**	1	ROD	
	6	1	**3B-4615**	2	PIN-COTTER	
	7	1	**5P-1075**	2	WASHER-HARD (10.2X22.5X3-MM THK)	

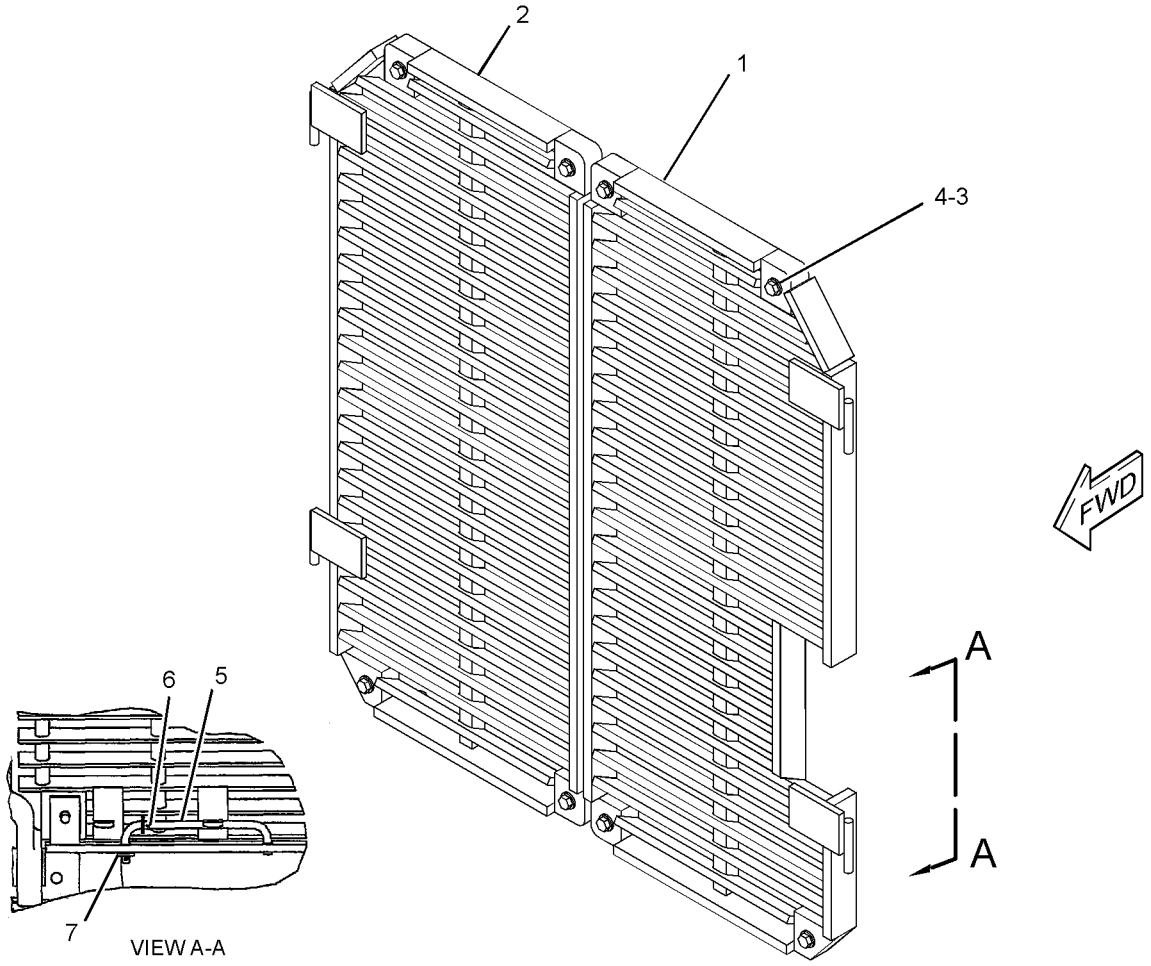

GRAPHIC #1 **<END>** g02819236

331-1334 GUARD GP-BOTTOM

S/N: DSH1-UP; DLN1-UP; DJR1-UP

PART OF 313-3338, 313-3759, 379-6225 CHASSIS AR

SMCS-7153 **i04608973**

NOTE	REF NO	GRAPHIC REF	PART NUMBER	QTY	PART NAME 1 2 3 4 5 6 (PRODUCT LEVEL)	SEE PAGE
	1	1	**3T-2747**	14	RETAINER	
	2	1	**205-5786**	1	GUARD AS (REAR)	
	3	1	**161-4463**	1	GUARD AS (REAR)	
	4	1	**190-8405**	1	GUARD AS (FRONT)	
	5	1	**318-0640**	1	COVER AS	
	6	1	**331-1335**	1	GUARD AS (FRONT)	
	7	1	**191-8283**	3	PIN	
	8	1	**2D-6416**	1	WASHER (0.438X1.25X0.12-IN THK)	
	9	1	**3B-4640**	3	PIN-COTTER	
	10	1	**4L-6454**	1	BOLT (3/8-16X1-IN)	
	11	1	**6V-8182**	14	NUT (3/4-10-THD)	
	12	1	**7X-0365**	6	BOLT (3/4-10X1.5-IN)	
	13	1	**7X-0375**	14	BOLT (3/4-10X5-IN)	
	14	1	**7X-0582**	20	WASHER-HARD (20X44.5X6-MM THK)	
	15	1	**8C-6913**	6	WASHER-HARD (24X41.5X4-MM THK)	

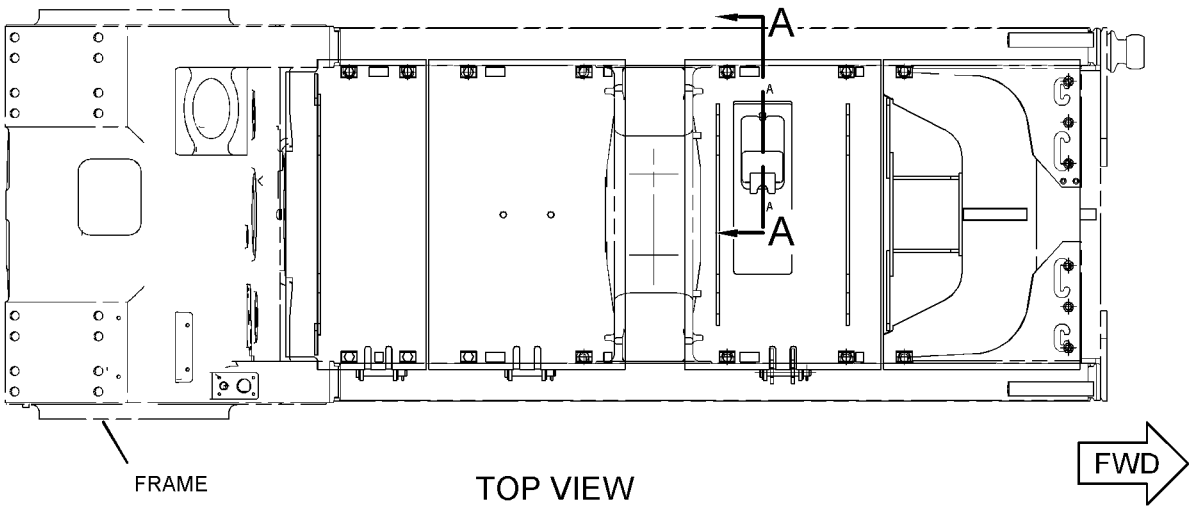

TOP VIEW

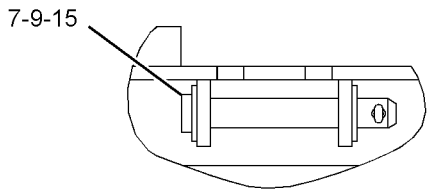

VIEW OF AREA B

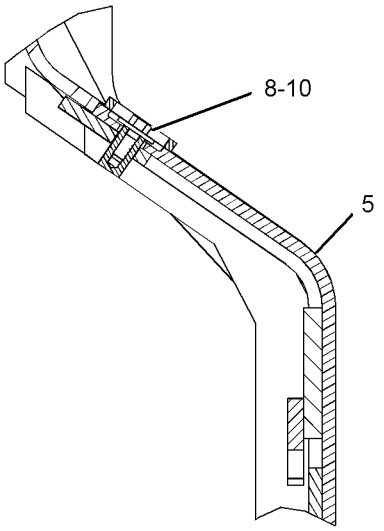

SECTION A-A

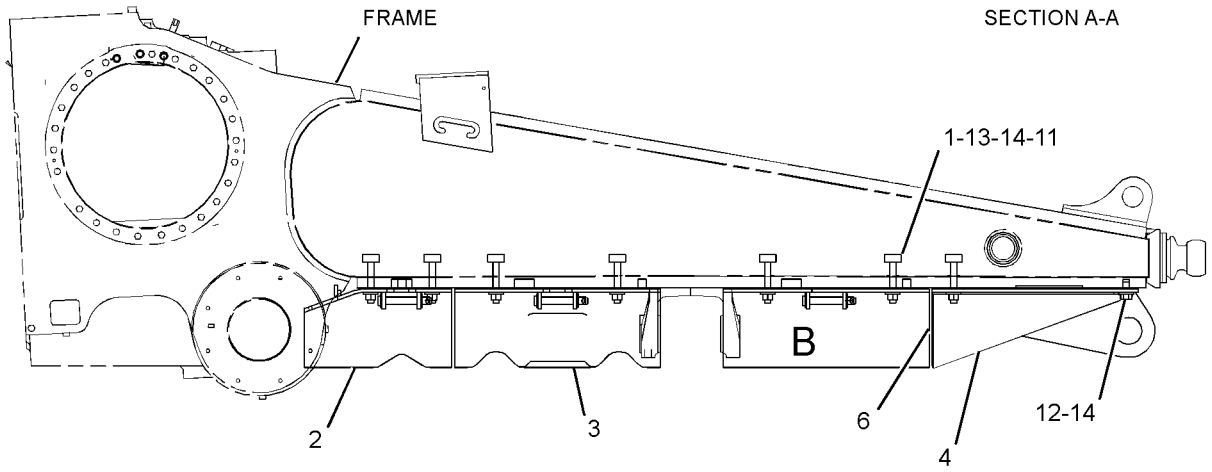

RIGHT SIDE VIEW

GRAPHIC #1 **<END>** g02788527

331-1337 GUARD GP-BOTTOM—HEAVY-DUTY, SEALED

S/N: DSH1-UP; DLN1-UP; DJR1-UP

AN ATTACHMENT

SMCS-7153 **i04608976**

NOTE	REF NO	GRAPHIC REF	PART NUMBER	QTY	PART NAME 1 2 3 4 5 6 (PRODUCT LEVEL)	SEE PAGE
	1	1	**3T-2747**	14	RETAINER	
	2	1	**185-9358**	1	GUARD AS (FRONT)	
	3	1	**318-0640**	1	COVER AS	
	4	1	**331-1338**	1	GUARD AS (FRONT)	
	5	1	**340-1646**	1	GUARD AS (REAR)	
	6	1	**340-1648**	1	GUARD AS (REAR)	
	7	1	**191-8283**	3	PIN	
	8	1	**2D-6416**	1	WASHER (0.438X1.25X0.12-IN THK)	
	9	1	**3B-4640**	3	PIN-COTTER	
	10	1	**4L-6454**	1	BOLT (3/8-16X1-IN)	
	11	1	**6V-8182**	14	NUT (3/4-10-THD)	
	12	1	**7X-0365**	6	BOLT (3/4-10X1.5-IN)	
	13	1	**7X-0375**	14	BOLT (3/4-10X5-IN)	
	14	1	**7X-0582**	20	WASHER-HARD (20X44.5X6-MM THK)	
	15	1	**8C-6913**	6	WASHER-HARD (24X41.5X4-MM THK)	
D	16	1	**5P-5649**		SEAL-BULK (0.9-M)	
D	17	1	**5P-7514**		SEAL (4.6-M)	

D-ORDER BY THE METER

331-1337 **GUARD GP-BOTTOM** *(contd.)* **i04608976**

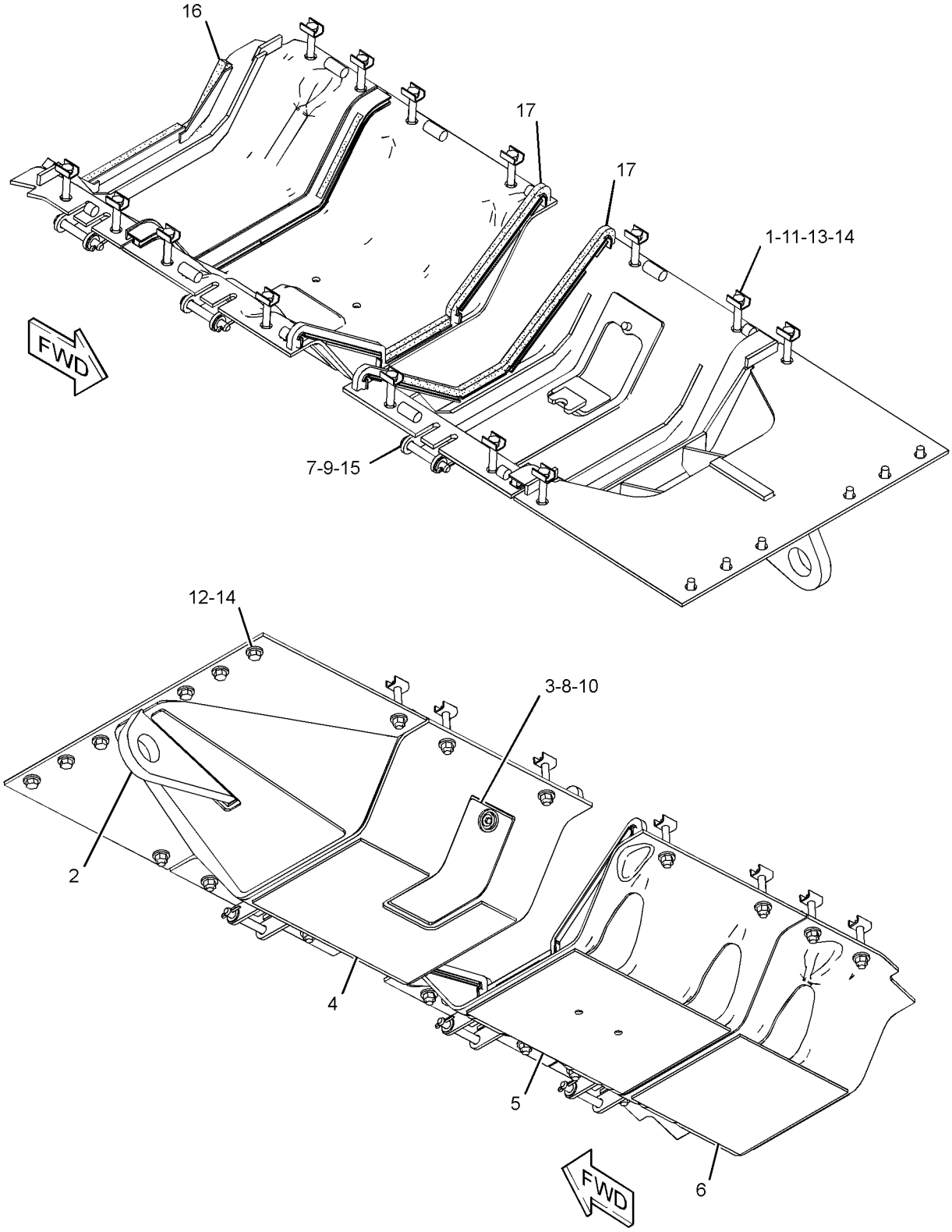

GRAPHIC #1 **<END>** g02791195

380-1642 GUARD GP-ENGINE–LH

S/N: DSH1-UP; DLN1-UP; DJR1-UP

PART OF 380-1630 ENCLOSURE GP-ENGINE

SMCS-7154 **i04734253**

NOTE	REF NO	GRAPHIC REF	PART NUMBER	QTY	PART NAME 1 2 3 4 5 6 (PRODUCT LEVEL)	SEE PAGE
	1	1	**162-2480**	3	RIVET	
	2	1	**380-1644**	1	GUARD AS (LH)	
	3	1	**164-9465**	1	PLATE AS (LH)	
M		1	**8T-3490**	5	NUT-WELD (M10X1.5-THD)	
	4	1	**196-3759**	1	PLATE AS (LH)	
		1	**195-6383**	2	SPACER (8.7X23.5X14.2-MM THK)	
	5	1	**388-1849**	1	TREAD (RH)	
	6	1	**7X-7729**	5	WASHER (11X25X3-MM THK)	
	7	1	**8T-4121**	2	WASHER-HARD (11X21X2.5-MM THK)	
M	8	1	**8T-4136**	5	BOLT (M10X1.5X25-MM)	
M	9	1	**8T-4137**	2	BOLT (M10X1.5X20-MM)	

M-METRIC PART

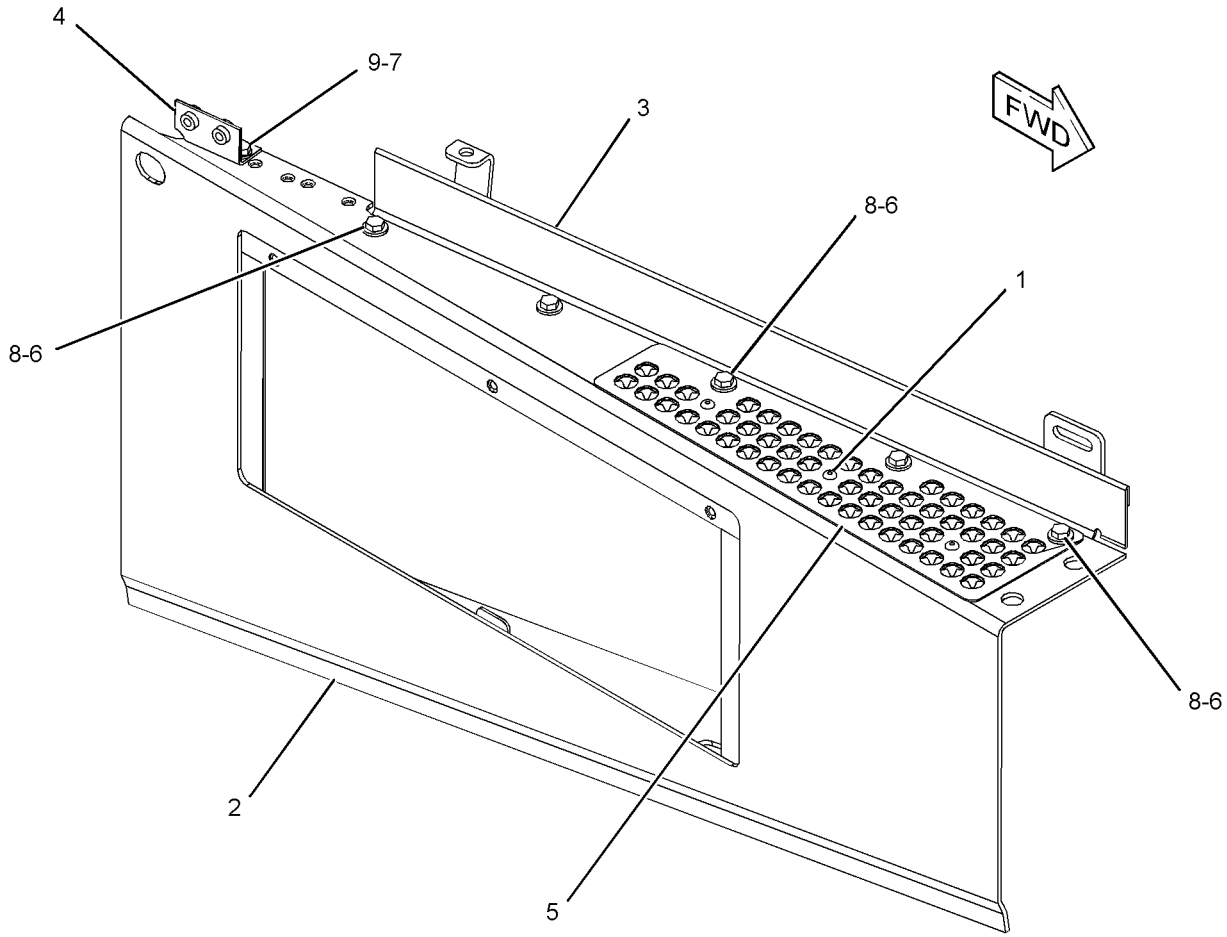

GRAPHIC #1 **<END>** g02846496

FRAME AND BODY

380-1643 GUARD GP-ENGINE–RH

S/N: DSH1-UP; DLN1-UP; DJR1-UP

PART OF 380-1631 ENCLOSURE GP-ENGINE

SMCS-7154 **i04734190**

NOTE	REF NO	GRAPHIC REF	PART NUMBER	QTY	PART NAME 1 2 3 4 5 6 (PRODUCT LEVEL)	SEE PAGE
	1	1	**162-2480**	3	RIVET	
	2	1	**380-1645**	1	GUARD AS (RH)	
	3	1	**164-9463**	1	PLATE AS (RH)	
M		1	**8T-3490**	5	NUT-WELD (M10X1.5-THD)	
	4	1	**196-3760**	1	PLATE AS (RH)	
		1	**195-6383**	2	SPACER (8.7X23.5X14.2-MM THK)	
	5	1	**388-1850**	1	TREAD (RH)	
	6	1	**7X-7729**	5	WASHER (11X25X3-MM THK)	
	7	1	**8T-4121**	2	WASHER-HARD (11X21X2.5-MM THK)	
M	8	1	**8T-4136**	5	BOLT (M10X1.5X25-MM)	
M	9	1	**8T-4137**	2	BOLT (M10X1.5X20-MM)	

M-METRIC PART

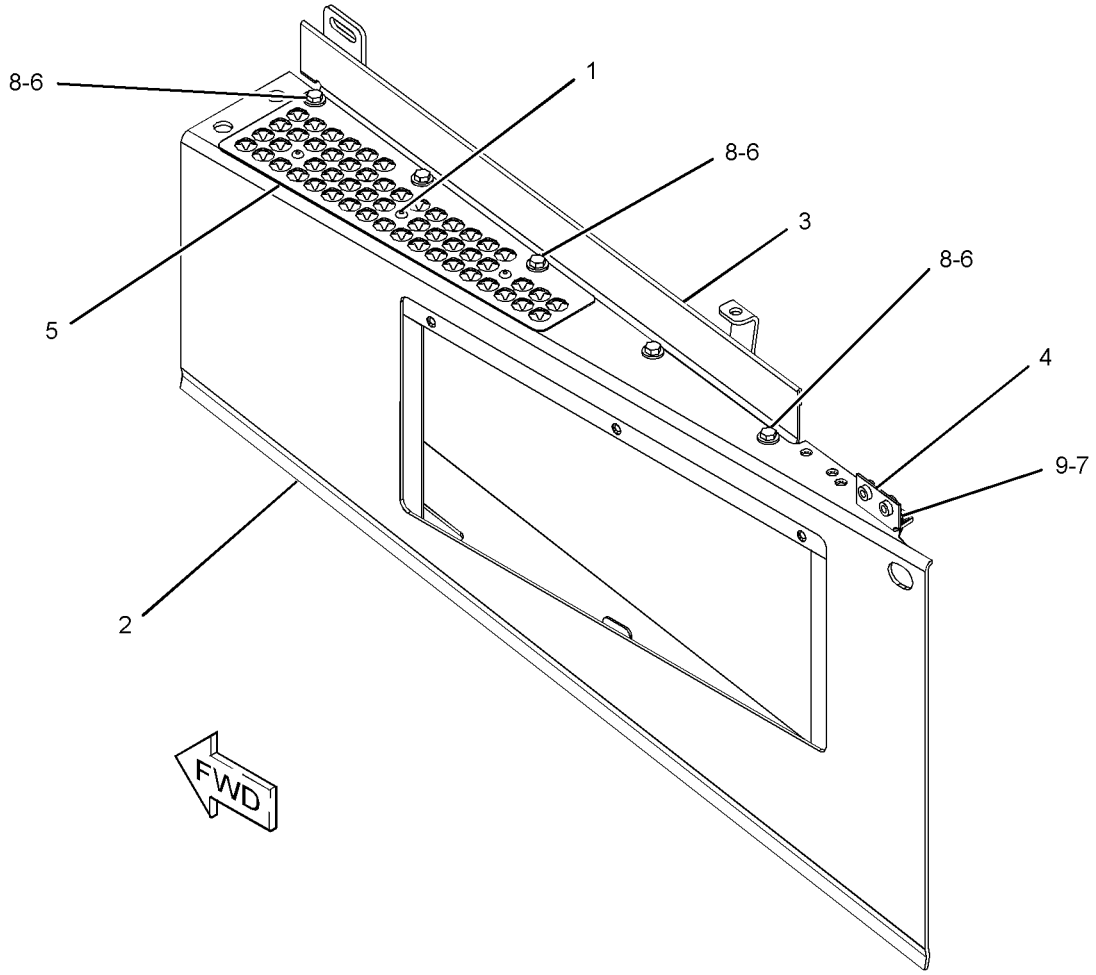

GRAPHIC #1 **<END>** g02846497

272-5492 GUARD GP-FUEL TANK

S/N: DSH1-UP; DLN1-UP; DJR1-UP
PART OF 375-9602 GUARD GP-FUEL TANK
AN ATTACHMENT

SMCS-1273, 7150 **i04629495**

NOTE	REF NO	GRAPHIC REF	PART NUMBER	QTY	PART NAME 1 2 3 4 5 6 (PRODUCT LEVEL)	SEE PAGE
	1	1	**6Y-0560**	2	DOOR	
	2	1	**169-8419**	2	BLOCK	
	3	1	**194-6250**	1	GUARD	
	4	1	**272-5494**	1	GUARD AS	
	5	1	**272-5497**	1	GUARD AS	
	6	1	**272-5498**	1	GUARD AS	
	7	1	**272-5499**	2	PLATE AS	
	8	1	**5C-6565**	5	BOLT (1/2-13X1.125-IN)	
	9	1	**5P-1076**	49	WASHER-HARD (13.5X30X4-MM THK)	
	10	1	**6V-8188**	6	NUT (1/2-13-THD)	
	11	1	**8C-4436**	20	BOLT (1/2-13X1.375-IN)	
	12	1	**8T-4835**	10	BOLT (1/2-13X2-IN)	
	13	1	**8T-8917**	8	BOLT (1/2-13X1.25-IN)	

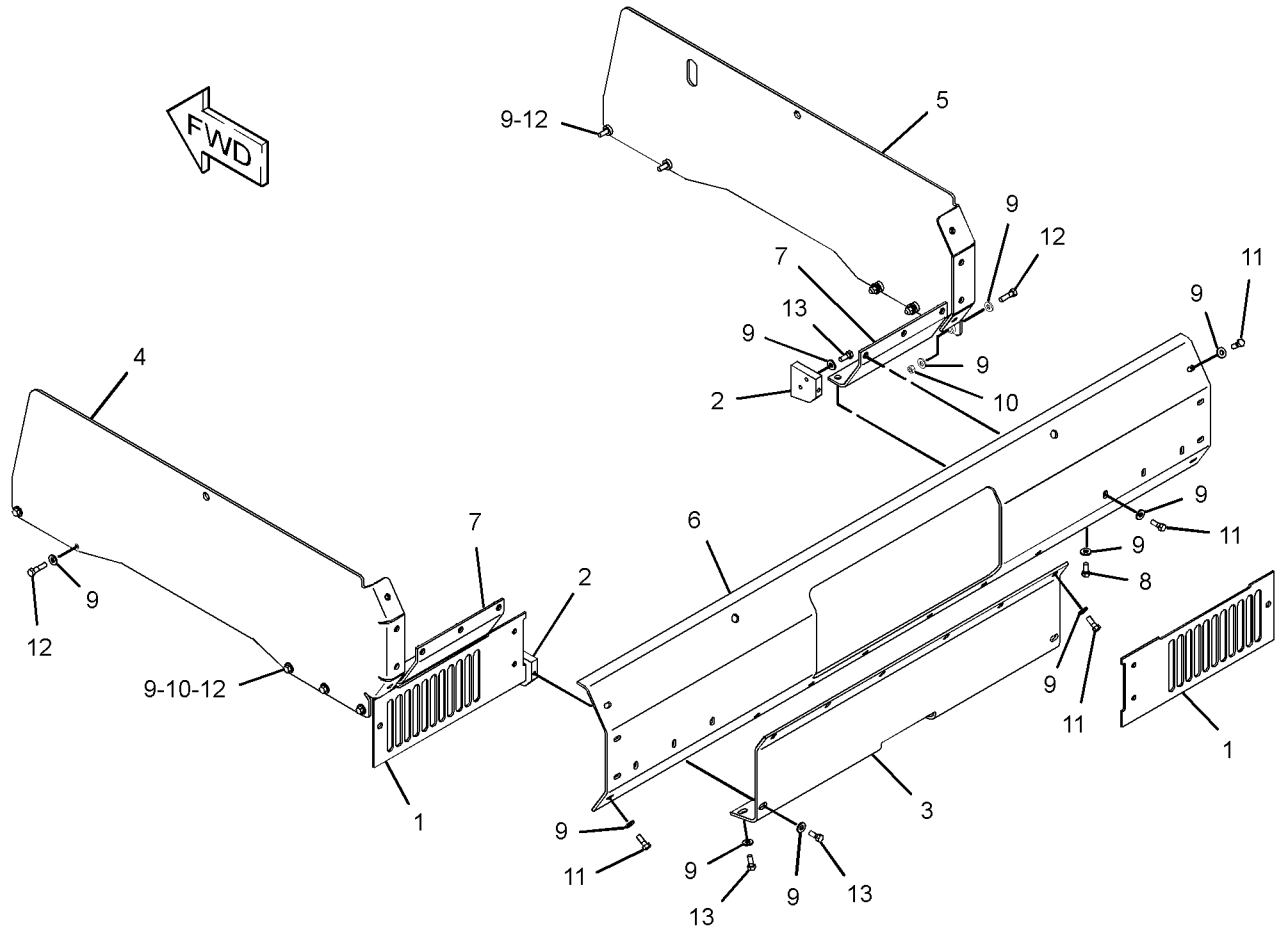

GRAPHIC #1 **<END>** g01260046

375-9602 GUARD GP-FUEL TANK

S/N: DSH1-UP; DLN1-UP; DJR1-UP
AN ATTACHMENT

SMCS-1273, 7150 **i04629425**

NOTE	PART NUMBER	QTY	PART NAME 1 2 3 4 5 6 (PRODUCT LEVEL)	SEE PAGE
Y	*272-5492*	1	GUARD GP-FUEL TANK	325

Y-SEPARATE ILLUSTRATION

<END>

FRAME AND BODY

164-6896 GUARD GP-POWER TRAIN

S/N: LBB1-UP
PART OF 164-4716 MOUNTING GP-RIPPER
AN ATTACHMENT

SMCS-7150 **i04702549**

NOTE	REF NO	GRAPHIC REF	PART NUMBER	QTY	PART NAME 1 2 3 4 5 6 (PRODUCT LEVEL)	SEE PAGE
	1	1	**165-6937**	1	GUARD AS	
M	2	1	**166-0383**	2	BOLT	
	3	1	**209-0547**	1	PLATE AS	
	4	1	**6V-5839**	4	WASHER (11X21X2.5-MM THK)	
M	5	1	**161-7632**	2	BOLT-SELF-LOCKING (M10X1.5X40-MM)	
M	6	1	**8T-4131**	2	NUT (M20X2.5-THD)	
M	7	1	**8T-4187**	2	BOLT (M20X2.5X80-MM)	
	8	1	**8T-5439**	6	WASHER-HARD (21.5X45X6-MM THK)	
M	9	1	**8T-0722**	2	BOLT-LOCKING (M10X1.5X30-MM)	

M-METRIC PART

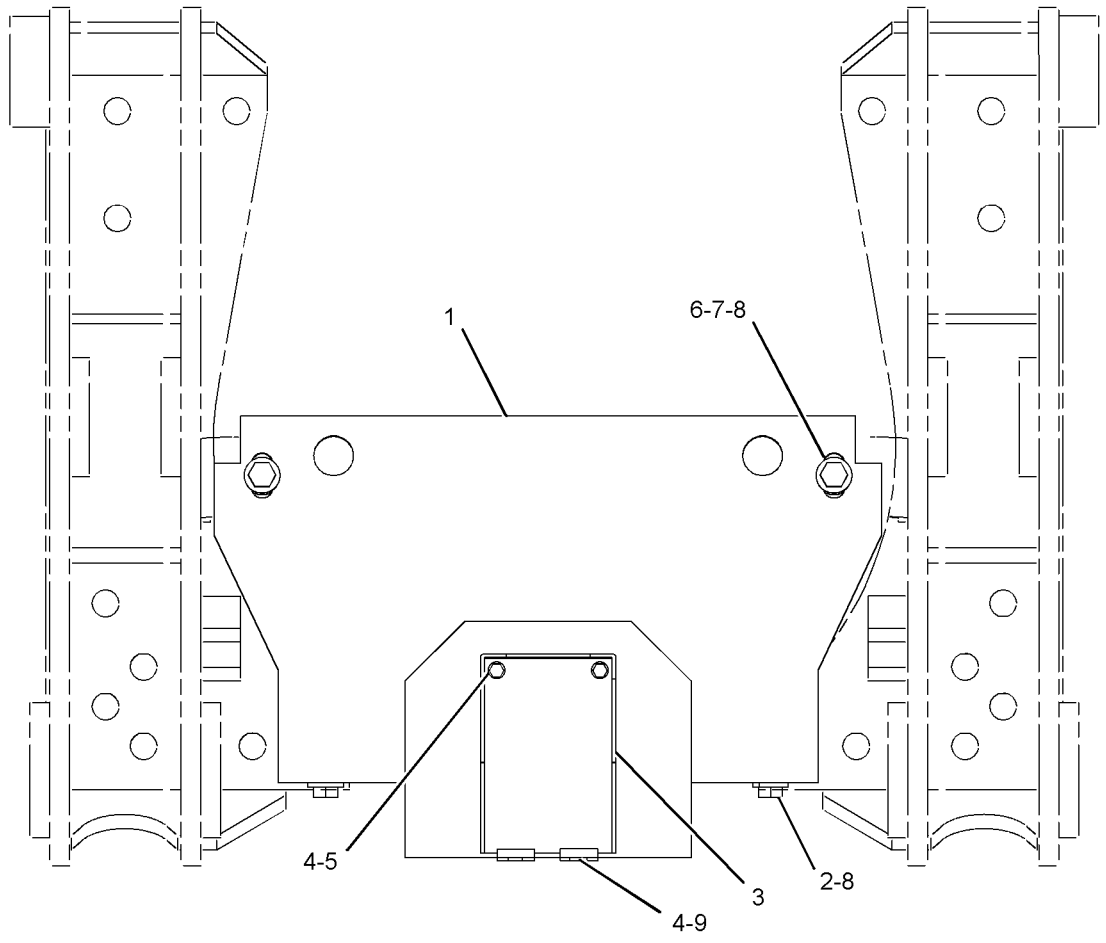

REAR VIEW

GRAPHIC #1 **<END>** g02821642

323-5991 GUARD GP-RADIATOR

S/N: DSH1-UP; DLN1-UP; DJR1-UP

PART OF 313-3338, 313-3759, 379-6225 CHASSIS AR

SMCS-7155 **i04711571**

NOTE	REF NO	GRAPHIC REF	PART NUMBER	QTY	PART NAME 1 2 3 4 5 6 (PRODUCT LEVEL)	SEE PAGE
	1	1	**3W-3742**	2	PLUG	
	2	1	**3W-3896**	2	HANDHOLD	
	3	1	**5D-5652**	2	WASHER (9.53X20.5X10-MM THK)	
	4	1	**5G-9973**	2	COVER	
	5	1	**5G-9974**	2	GASKET	
	6	1	**6T-8250**	2	RETAINER	
	7	1	**6Y-5814**	2	PIN	
	8	1	**7K-1181**	1	STRAP-CABLE	
	9	1	**9U-9229**	2	PIN	
	10	1	**9W-2822**	2	ROD	
Y	11	1	*124-7562*	1	STEP GP	331
	12	1	**158-0518**	2	PLATE	
	13	1	**194-6030**	2	SPACER (17X28.5X12-MM THK)	
	14	1	**194-6036**	1	PLATE AS	
	15	1	**236-6731**	1	DOOR AS (LH)	
	16	1	**236-6732**	1	DOOR AS (RH)	
	17	1	**323-5992**	1	GUARD AS-RADIATOR	
	17A	1	**3J-7189**	2	BUSHING	
	17B	1	**5J-8118**	2	BUSHING	
	17C	1	**258-2305**	4	BUSHING	
	17D	1	**258-2308**	2	BUSHING	
	18	1	**2G-9245**	2	PLATE	
	19	1	**3B-4615**	4	PIN-COTTER	
	20	1	**3V-9244**	2	WASHER (16.5X50X5-MM THK)	
	21	1	**4L-6454**	4	BOLT (3/8-16X1-IN)	
	22	1	**5C-6565**	8	BOLT (1/2-13X1.125-IN)	
	23	1	**5M-6214**	2	PLUG-PIPE	
	24	1	**5P-1075**	8	WASHER-HARD (10.2X22.5X3-MM THK)	
	25	1	**5P-1076**	8	WASHER-HARD (13.5X30X4-MM THK)	
	26	1	**5P-2228**	2	BOLT (1/2-13X1-IN)	
	27	1	**5P-2566**	5	BOLT (1/2-13X1.5-IN)	
	28	1	**7X-0346**	2	BOLT (5/8-11X2-IN)	
	29	1	**8T-4223**	17	WASHER-HARD (13.5X25.5X3-MM THK)	
	30	1	**8T-4994**	6	WASHER-HARD (20X36.5X3.5-MM THK)	
	31	1	**8T-8917**	2	BOLT (1/2-13X1.25-IN)	
	32	1	**8T-9313**	2	BOLT (3/4-10X7-IN)	
	33	1	**8T-9389**	8	BOLT (1/2-13X2.75-IN)	
	34	1	**8T-9398**	4	BOLT (3/4-10X1.75-IN)	

Y-SEPARATE ILLUSTRATION

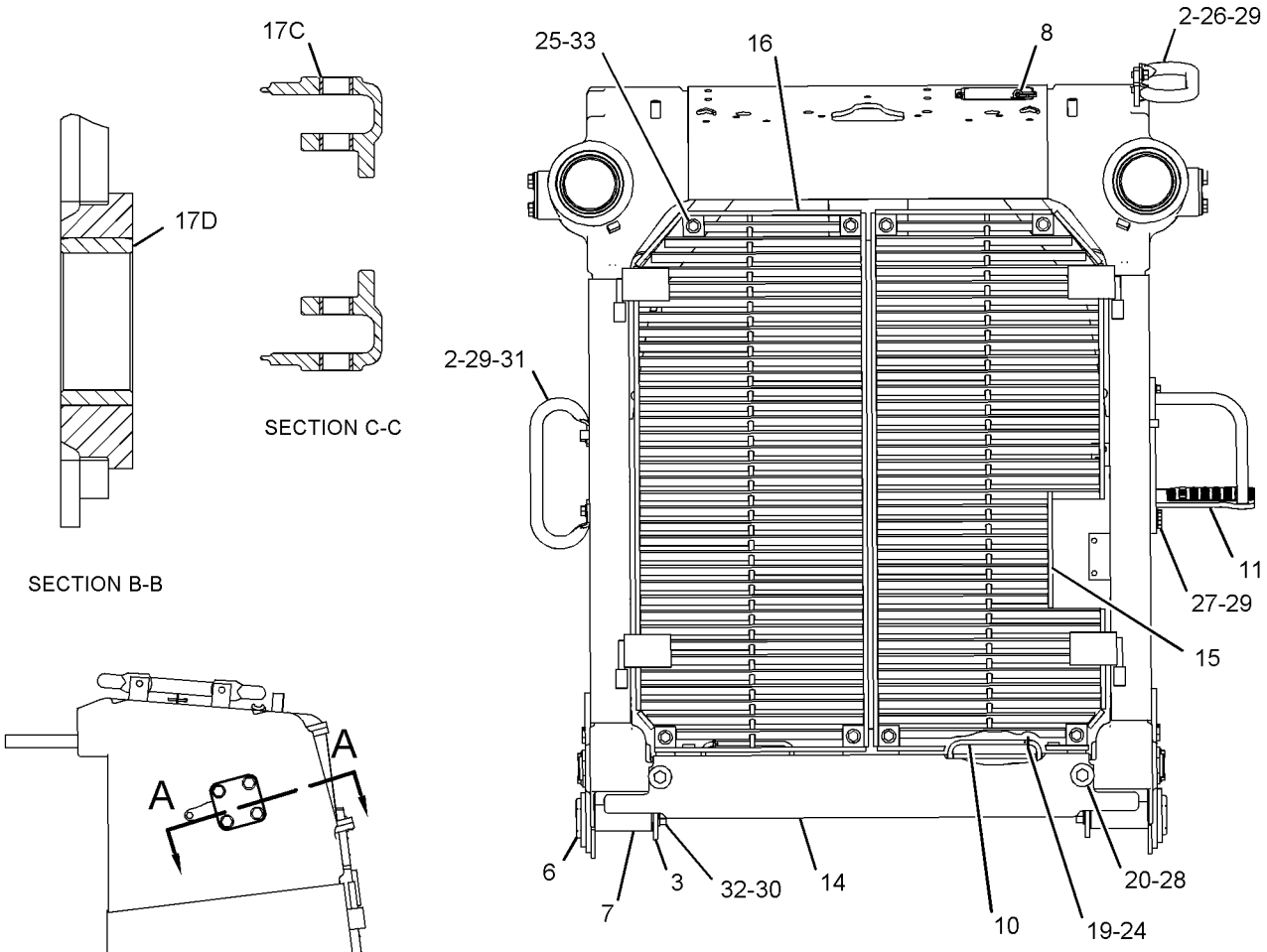

GRAPHIC #1 **<END>** g02833658

377-9734 HOOD GP

S/N: DSH1-UP; DLN1-UP; DJR1-UP
PART OF 378-2269 COLD WEATHER AR, 378-2273 STOCKPILE AR
AN ATTACHMENT

SMCS-7251 **i04629361**

NOTE	REF NO	GRAPHIC REF	PART NUMBER	QTY	PART NAME 1 2 3 4 5 6 (PRODUCT LEVEL)	SEE PAGE
	1	1	**377-9735**	1	HOOD AS	
E	2	1	**132-8502**		SEAL (194-CM)	

E-ORDER BY THE CENTIMETER

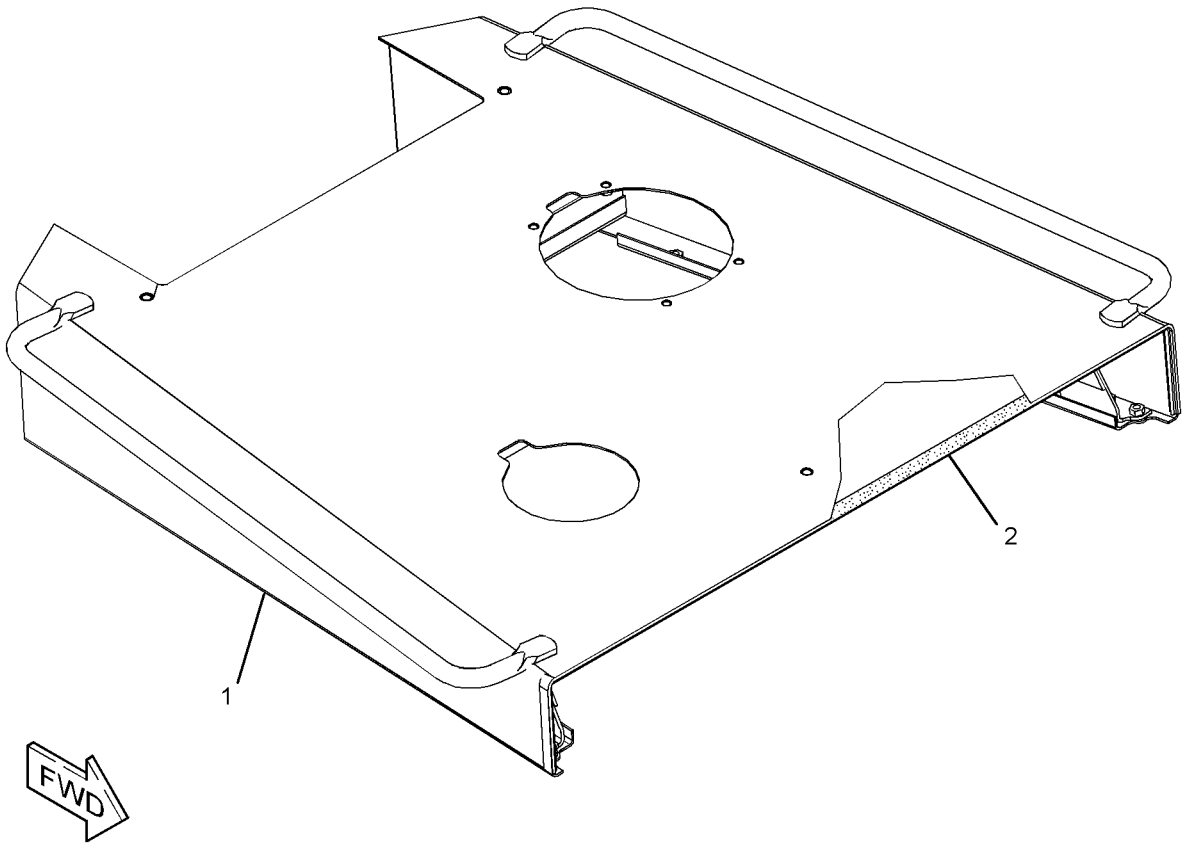

GRAPHIC #1 **<END>** g02790285

FRAME AND BODY

124-7562 STEP GP

S/N: DSH1-UP; DLN1-UP; DJR1-UP
PART OF 323-5991 GUARD GP-RADIATOR

SMCS-7254 **i04714016**

NOTE	REF NO	GRAPHIC REF	PART NUMBER	QTY	PART NAME 1 2 3 4 5 6 (PRODUCT LEVEL)	SEE PAGE
	1	1	**280-3365**	1	STEP AS	
	2	1	**280-3367**	1	PLATE-TREAD	
	3	1	**6V-1193**	4	SCREW-HEX SOCKET (3/8-16X0.625-IN)	

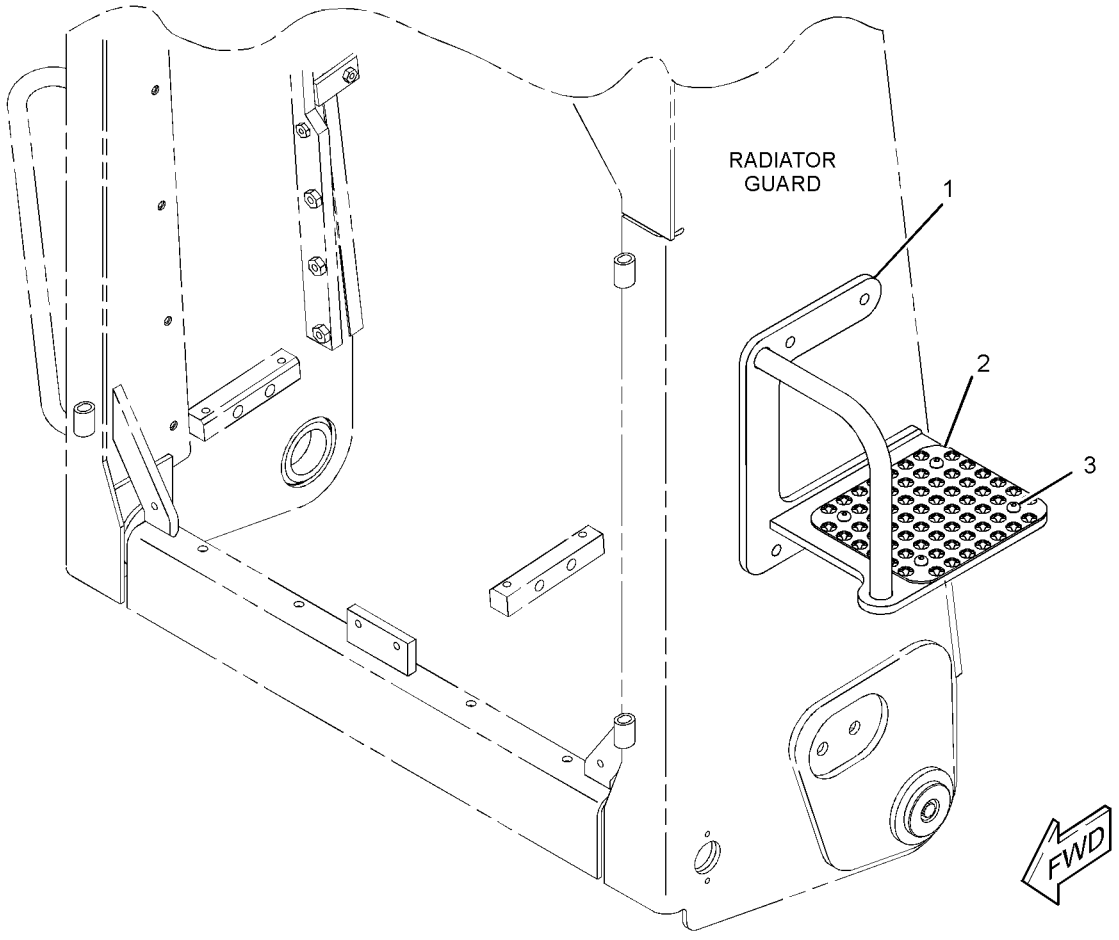

GRAPHIC #1 **<END>** g02834236

378-2602 SWEEP AR

S/N: DSH1-UP; DLN1-UP; DJR1-UP

AN ATTACHMENT

SMCS-7000 **i04675095**

NOTE	REF NO	GRAPHIC REF	PART NUMBER	QTY	PART NAME 1 2 3 4 5 6 (PRODUCT LEVEL)	SEE PAGE
Y	1	1	*327-9903*	2	LIGHTING GP-FLOOD (SWEEPS)	170
Y	2	1	*340-0879*	2	SWEEP GP	333

Y-SEPARATE ILLUSTRATION

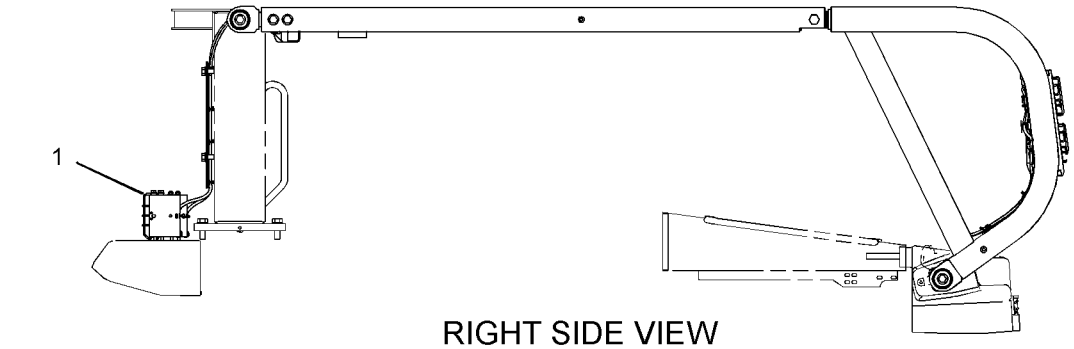

RIGHT SIDE VIEW

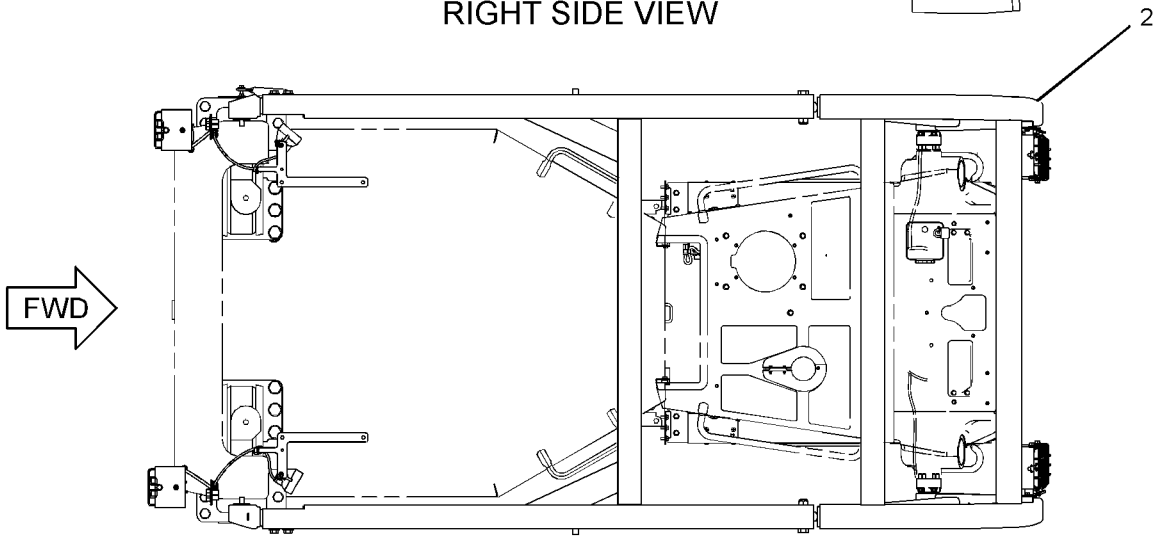

TOP VIEW

GRAPHIC #1 **<END>** g02809098

FRAME AND BODY

340-0879 SWEEP GP

S/N: DSH1-UP; DLN1-UP; DJR1-UP
PART OF 378-2602 SWEEP AR
AN ATTACHMENT

SMCS-7162 **i04675092**

NOTE	REF NO	GRAPHIC REF	PART NUMBER	QTY	PART NAME 1 2 3 4 5 6 (PRODUCT LEVEL)	SEE PAGE
	1	1	**6T-1698**	8	MOUNT	
	2	1	**235-0541**	2	BLOCK AS	
	3	1	**150-1955**	8	PLATE	
	4	1	**8E-9532**	2	SPACER	
	5	1	*280-2045*	1	SWEEP AS	
	5A	1	**1P-2772**	4	SPACER (1.031X1.219X0.75-IN THK)	
	5B	1	**8P-5244**	4	WASHER (33.3X69.8X6.35-MM THK)	
	5D	1	**280-2046**	1	GUARD AS	
	5E	1	**280-2047**	1	GUARD AS	
	5F	1	**6K-3632**	2	LOCKNUT (1-8-THD)	
	5G	1	**8C-8844**	2	BOLT (1-8X5-IN)	
	6	1	**5P-1076**	8	WASHER-HARD (13.5X30X4-MM THK)	
	7	1	**7X-0325**	8	BOLT (1/2-13X2.5-IN)	
M	8	1	**7X-2563**	4	BOLT (M20X2.5X60-MM)	
	9	1	**8C-8842**	4	BOLT (3/4-10X4-IN)	
	10	1	**8T-5439**	4	WASHER-HARD (21.5X45X6-MM THK)	
	11	1	**7X-0582**	4	WASHER-HARD (20X44.5X6-MM THK)	

M-METRIC PART

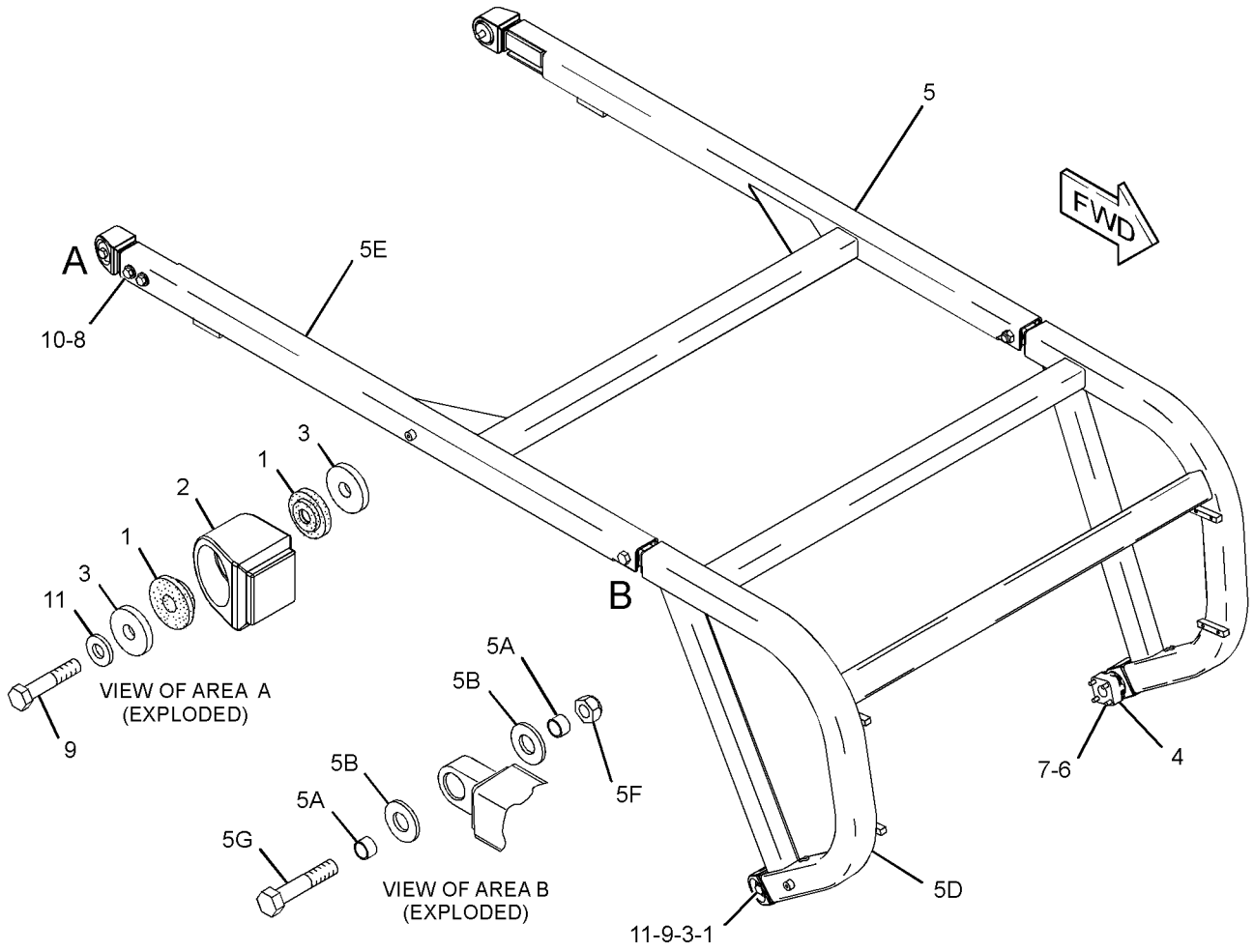

GRAPHIC #1 **<END>** g01390520

UNDERCARRIAGE

7T-6965 BAR GP-EQUALIZER

S/N: DLN1-UP

PART OF 387-3578 UNDERCARRIAGE AR

SMCS-7206 **i04714769**

NOTE	REF NO	GRAPHIC REF	PART NUMBER	QTY	PART NAME 1 2 3 4 5 6 (PRODUCT LEVEL)	SEE PAGE
YR	1	1	**141-4689**	1	BAR GP-EQUALIZER	338
	2	1	**6Y-7795**	2	PAD AS	
	3	1	**6Y-7796**	2	PAD AS	
	4	1	**8F-4028**	4	SPACER (13.5X19X6.35-MM THK)	
	5	1	**5P-1076**	4	WASHER-HARD (13.5X30X4-MM THK)	
	6	1	**8T-4223**	16	WASHER-HARD (13.5X25.5X3-MM THK)	
	7	1	**6V-8188**	8	NUT (1/2-13-THD)	
	8	1	**8T-8917**	4	BOLT (1/2-13X1.25-IN)	
	9	1	**5C-6565**	8	BOLT (1/2-13X1.125-IN)	
	10	1	**6T-3827**	2	FLANGE	
	11	1	**0S-1897**	4	BOLT (3/4-16X2.25-IN)	
	12	1	**7X-0582**	4	WASHER-HARD (20X44.5X6-MM THK)	
	13	1	**7T-6427**	2	PIN	
	14	1	**208-5026**	1	PIN	
	15	1	**3T-5294**	2	SPACER (82.5X150X12-MM THK)	
	16	1	**9P-6911**	1	PLATE	
	17	1	**2H-3745**	4	BOLT (1-14X2.75-IN)	
	18	1	**8T-5361**	4	WASHER-HARD (28X49X5-MM THK)	
	19	1	**7F-6112**	1	BOLT (1-1/4-12X3-IN)	
	20	1	**7X-0533**	1	WASHER-HARD (34X55X6-MM THK)	
	21	1	**3B-8489**	2	FITTING-GREASE	
	22	1	**2F-5326**	2	SETSCREW (3/8-16X0.375-IN)	
	23	1	**143-9523**	2	PLUG	
	24	1	**5F-1678**	2	SEAL-O-RING	
	25	1	**9F-2247**	4	PLUG-PIPE	

R-REMFG PART MAY BE AVAILABLE
Y-SEPARATE ILLUSTRATION

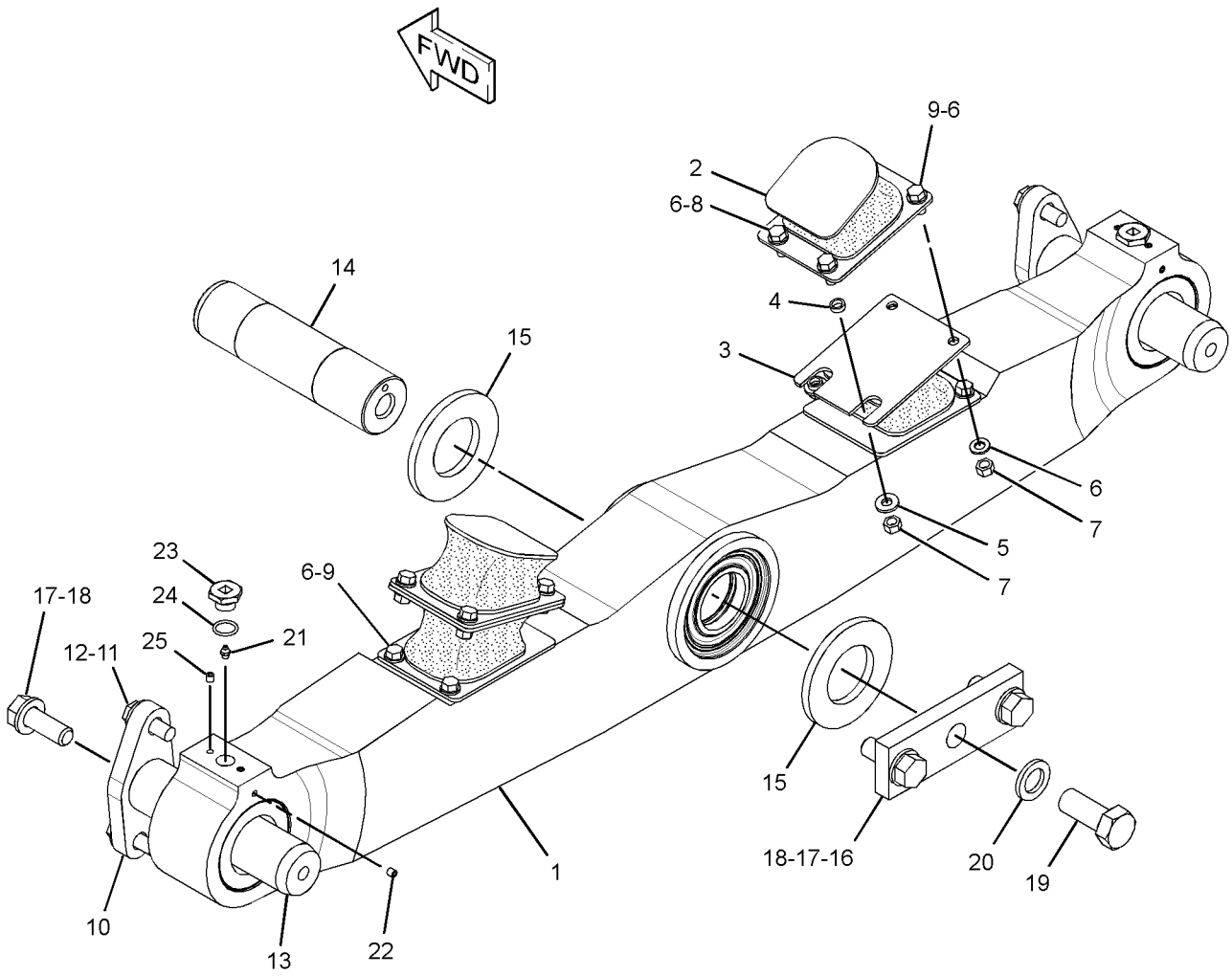

GRAPHIC #1 **<END>** g02829836

UNDERCARRIAGE

7T-6966 BAR GP-EQUALIZER

S/N: DSH1-UP; DJR1-UP

PART OF 379-3578, 379-3579 UNDERCARRIAGE AR

SMCS-7206 **i04659109**

NOTE	REF NO	GRAPHIC REF	PART NUMBER	QTY	PART NAME 1 2 3 4 5 6 (PRODUCT LEVEL)	SEE PAGE
	1	1	**0S-1897**	4	BOLT (3/4-16X2.25-IN)	
	2	1	**2H-3745**	4	BOLT (1-14X2.75-IN)	
	3	1	**3T-5294**	2	SPACER (82.5X150X12-MM THK)	
	4	1	**6T-3827**	2	FLANGE	
	5	1	**6Y-7795**	2	PAD AS	
	6	1	**6Y-7796**	2	PAD AS	
	7	1	**7F-6112**	1	BOLT (1-1/4-12X3-IN)	
	8	1	**7T-6427**	2	PIN	
	9	1	**8F-4028**	4	SPACER (13.5X19X6.35-MM THK)	
	10	1	**9P-6911**	1	PLATE	
Y	11	1	**268-9086**	1	BAR GP-EQUALIZER	339
	12	1	**208-5026**	1	PIN	
	13	1	**5C-6565**	8	BOLT (1/2-13X1.125-IN)	
	14	1	**5P-1076**	4	WASHER-HARD (13.5X30X4-MM THK)	
	15	1	**6V-8188**	8	NUT (1/2-13-THD)	
	16	1	**7X-0533**	1	WASHER-HARD (34X55X6-MM THK)	
	17	1	**7X-0582**	4	WASHER-HARD (20X44.5X6-MM THK)	
	18	1	**8T-4223**	16	WASHER-HARD (13.5X25.5X3-MM THK)	
	19	1	**8T-5361**	4	WASHER-HARD (28X49X5-MM THK)	
	20	1	**8T-8917**	4	BOLT (1/2-13X1.25-IN)	
	21	1	**2F-5326**	4	SETSCREW (3/8-16X0.375-IN)	

Y-SEPARATE ILLUSTRATION

7T-6966 **BAR GP-EQUALIZER** *(contd.)* **i04659109**

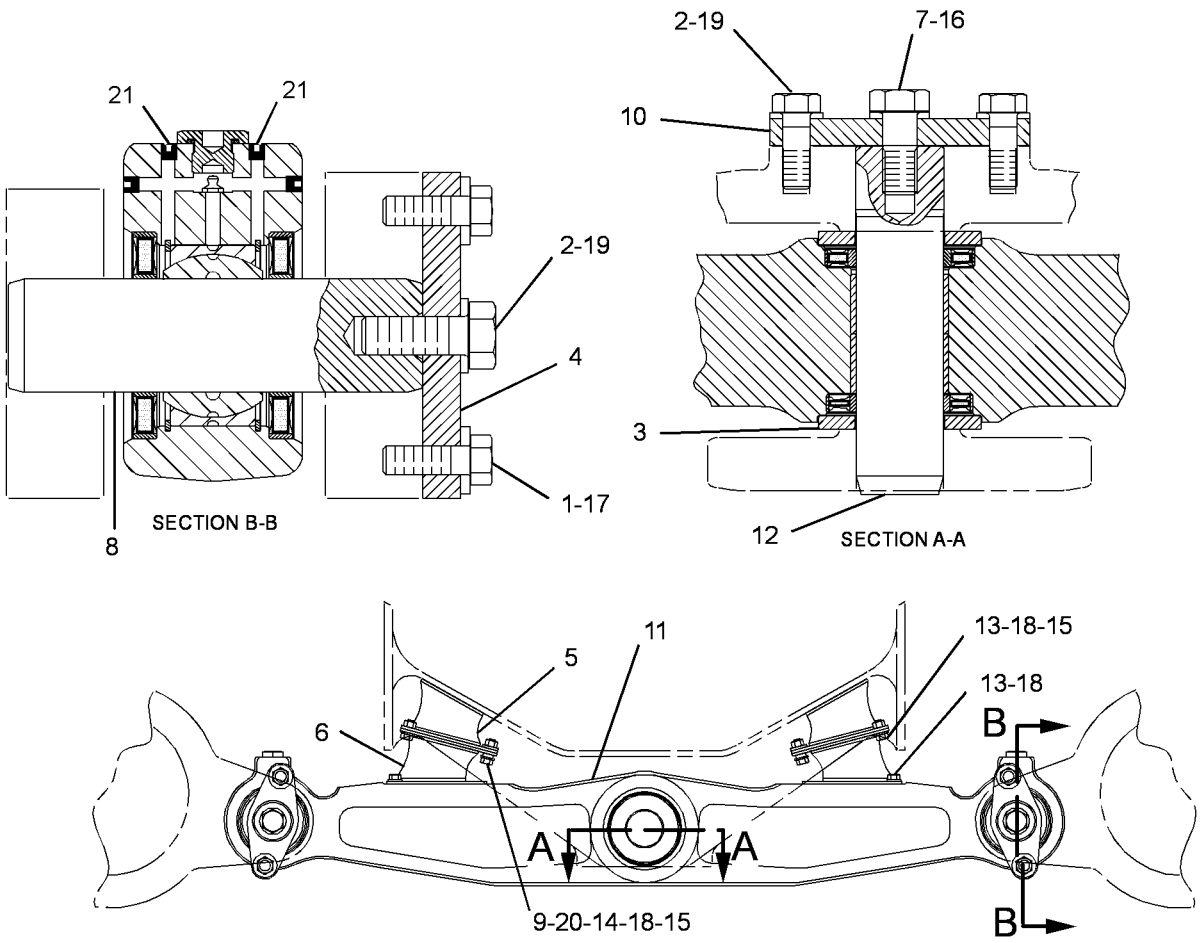

GRAPHIC #1 **<END>** g02795031

141-4689 BAR GP-EQUALIZER*R

S/N: DLN1-UP

PART OF 7T-6965 BAR GP-EQUALIZER

SMCS-7206 **i04728574**

NOTE	REF NO	GRAPHIC REF	PART NUMBER	QTY	PART NAME 1 2 3 4 5 6 (PRODUCT LEVEL)	SEE PAGE
	1	1	**3B-8489**	2	FITTING-GREASE	
	2	1	**2F-5326**	2	SETSCREW (3/8-16X0.375-IN)	
	3	1	**7G-8664**	1	SEAL	
	4	1	**7G-8666**	1	SEAL AS	
	5	1	**7J-3216**	2	BEARING	
	6	1	**9X-7505**	4	SEAL AS	
	7	1	**130-3139**	2	BUSHING	
	8	1	**143-9523**	2	PLUG	
	9	1	**9F-2247**	4	PLUG-PIPE	
	10	1	**5F-1678**	2	SEAL-O-RING	
	11	1	**5L-4751**	4	RING-RETAINING	

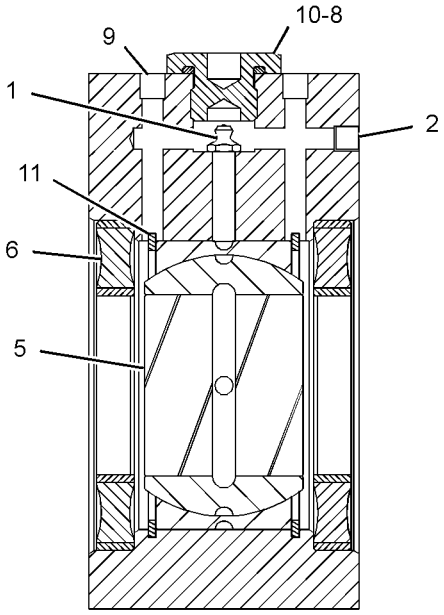

SECTION B-B

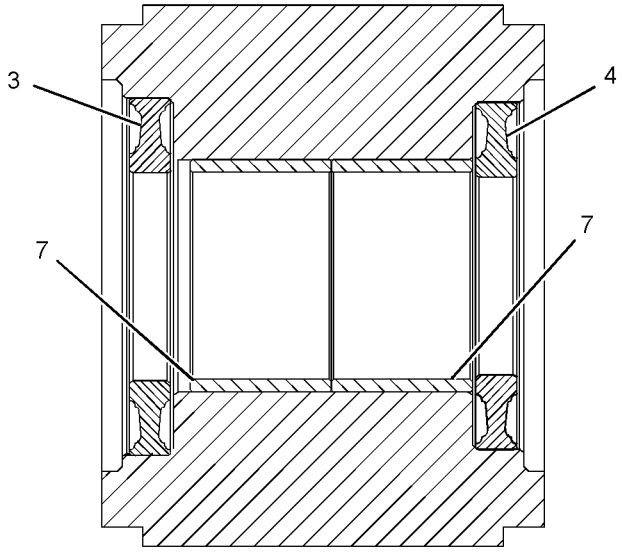

SECTION A-A

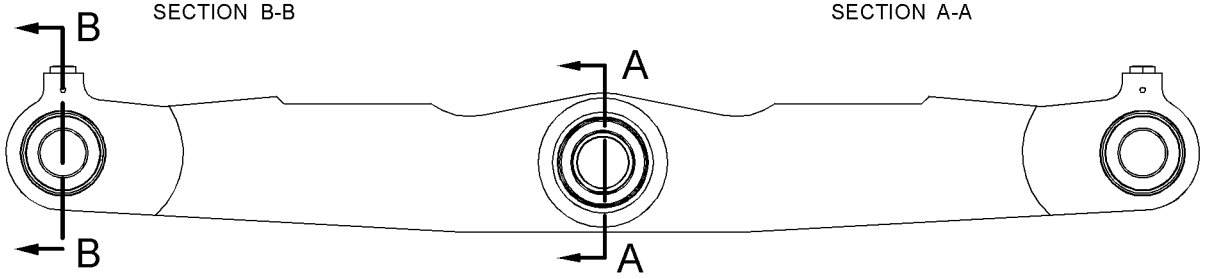

REAR VIEW

GRAPHIC #1 **<END>** g02832558

UNDERCARRIAGE

268-9086 BAR GP-EQUALIZER

S/N: DSH1-UP; DJR1-UP

PART OF 7T-6966 BAR GP-EQUALIZER

SMCS-7206 **i04659129**

NOTE	REF NO	GRAPHIC REF	PART NUMBER	QTY	PART NAME 1 2 3 4 5 6 (PRODUCT LEVEL)	SEE PAGE
	1	1	**3B-8489**	2	FITTING-GREASE	
	2	1	**7G-8664**	1	SEAL	
	3	1	**7G-8666**	1	SEAL AS	
	4	1	**7J-3216**	2	BEARING	
	5	1	**5L-4751**	4	RING-RETAINING	
	6	1	**9X-7505**	4	SEAL AS	
	7	1	**130-3139**	2	BUSHING	
	8	1	**133-5631**	2	PLUG	
	9	1	**2F-5326**	4	SETSCREW (3/8-16X0.375-IN)	
	10	1	**5F-1678**	2	SEAL-O-RING	

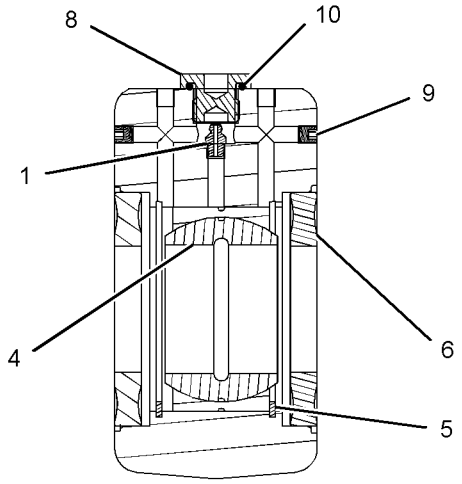

SECTION B-B

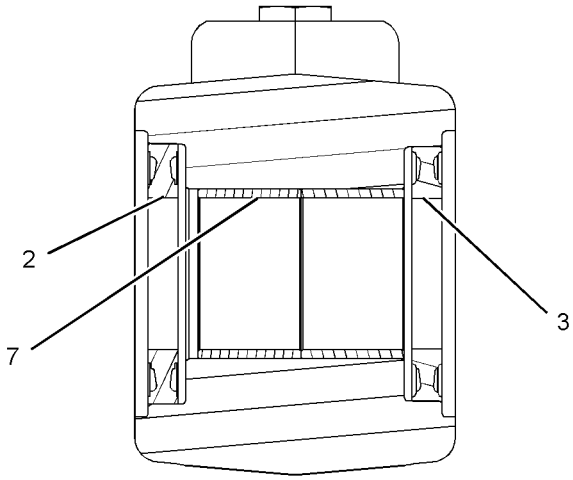

SECTION A-A

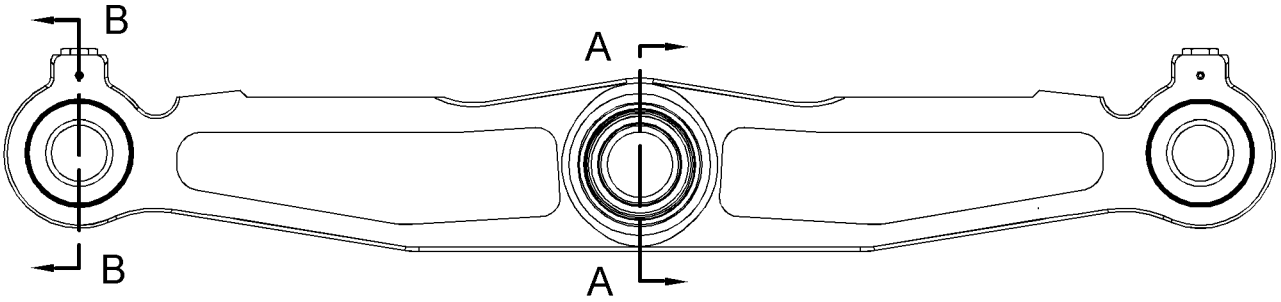

FRONT SIDE VIEW

GRAPHIC #1

<END>

g02820497

7T-7789 CAP GP-TRACK IDLER

S/N: DJR1-UP

PART OF 379-3578 UNDERCARRIAGE AR

SMCS-4159 **i04659674**

NOTE	REF NO	GRAPHIC REF	PART NUMBER	QTY	PART NAME 1 2 3 4 5 6 (PRODUCT LEVEL)	SEE PAGE
	1	1	**131-1647**	1	CAP AS-TRACK IDLER	
	1A	1	**1T-0068**	1	PIN-SPRING	
	2	1	**1D-5976**	2	BOLT (7/8-9X7-IN)	
	3	1	**5P-8249**	2	WASHER-HARD (24X41.5X4-MM THK)	
	4	1	**165-6942**	1	BLOCK-TRACK IDLER	

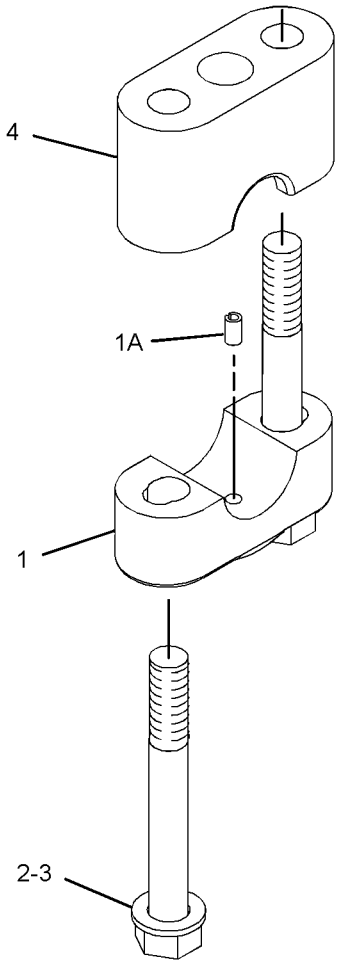

GRAPHIC #1 **<END>** g02163841

142-7092 CAP GP-TRACK IDLER

S/N: DSH1-UP; DLN1-UP

PART OF 379-3579, 387-3578 UNDERCARRIAGE AR

SMCS-4159 **i04659312**

NOTE	REF NO	GRAPHIC REF	PART NUMBER	QTY	PART NAME 1 2 3 4 5 6 (PRODUCT LEVEL)	SEE PAGE
	1	1	**131-1647**	1	CAP AS-TRACK IDLER	
		1	**1T-0068**	1	PIN-SPRING	
	2	1	**9S-1322**	2	BOLT (7/8-9X6-IN)	
	3	1	**5P-8249**	2	WASHER-HARD (24X41.5X4-MM THK)	
	4	1	**8E-8648**	1	BLOCK	

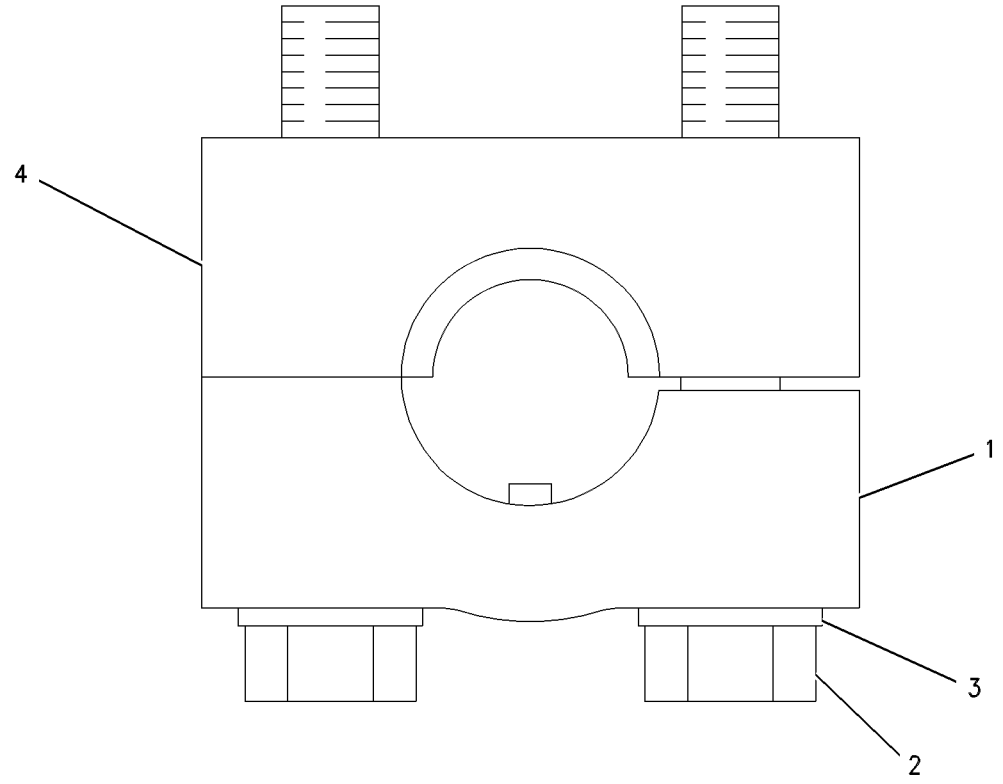

GRAPHIC #1 **<END>** g00559151

UNDERCARRIAGE

379-3575 FRAME GP-TELESCOPING RECOIL

S/N: DJR1-UP

PART OF 379-3578 UNDERCARRIAGE AR

SMCS-4151 **i04774678**

NOTE	REF NO	GRAPHIC REF	PART NUMBER	QTY	PART NAME 1 2 3 4 5 6 (PRODUCT LEVEL)	SEE PAGE
	1	1	**3T-4245**	2	PLATE	
	2	1	**6Y-8037**	4	GUIDE AS	
					(EACH INCLUDES)	
		1	**8T-7532**	1	FILM-WARNING (RECOIL SPRING)	
	3	1	**7T-1149**	2	RETAINER AS	
					(EACH INCLUDES)	
		1	**7T-1150**	1	RETAINER	
		1	**7T-1151**	1	SEAL AS	
		1	**7T-1152**	1	RETAINER	
		1	**7T-1153**	1	PLATE	
	4	1	**7T-6079**	2	SPACER (10X22X15.5-MM THK)	
	5	1	**8E-1212**	2	COVER AS	
					(EACH INCLUDES)	
		1	**5P-9891**	1	PLATE-WARNING (HIGH PRESSURE CYLINDER)	
		1	**7B-3028**	4	SCREW-DRIVE (NO 4X 3/16-IN)	
		1	**8E-1211**	1	COVER	
	6	1	**9X-4584**	2	SEAL AS	
					(EACH INCLUDES)	
		1	**8T-5071**	1	GUARD-SEAL	
R	7	1	**112-3023**	2	FRAME AS-FRONT	
					(EACH INCLUDES)	
		1	**6Y-2835**	1	RESISTOR AS	
		1	**4B-4158**	4	SCREW-DRIVE (NO 4X0.25-IN)	
		1	**6V-2226**	1	PLATE-WARNING (RECOIL SPRING)	
		1	**7T-5886**	2	DOWEL	
		1	**9G-1962**	1	HOOK	
		1	**154-9838**	1	SLEEVE-WEAR	
	8	1	**126-5143**	2	PLATE	
	9	1	**131-8207**	4	SHIM (8-MM THK)	
	10	1	**165-7211**	4	STRIP	
	11	1	**168-5053**	1	FRAME AS (RH)	
		1	**7T-5886**	2	DOWEL	
		1	**9G-1962**	2	HOOK	
		1	**7T-9796**	2	SUPPORT-IDLER	
		1	**165-7574**	2	GUARD AS (RH)	
		1	**165-7576**	2	GUARD AS (LH)	
	12	1	**168-5054**	1	FRAME AS (LH)	
		1	**7T-5886**	2	DOWEL	
		1	**9G-1962**	2	HOOK	
		1	**7T-9796**	2	SUPPORT-IDLER	
		1	**165-7574**	2	GUARD AS (RH)	
		1	**165-7576**	2	GUARD AS (LH)	
	13	1	**203-8040**	4	STRIP	
	14	1	**380-1997**	1	SHAFT-PIVOT	
	15	1	**112-3044**	2	RING	
	16	1	**2D-1690**	2	SEAL-RING	
	17	1	**2H-3932**	2	SEAL-O-RING	
	18	1	**3T-4243**	2	BUSHING	
	19	1	**3T-4244**	2	BUSHING	
	20	1	**3T-5898**	2	RING-RETAINING	
	21	1	**4K-1388**	2	SEAL-O-RING	
	22	1	**4T-2069**	2	PLUG-DRAIN	
	23	1	**5H-6734**	2	SEAL-O-RING	
	24	1	**5P-2424**	16	BOLT (1/2-13X2.25-IN)	
	25	1	**5P-5374**	2	SEAL-O-RING	
	26	1	**6S-3002**	2	SEAL-O-RING	

379-3575 **FRAME GP-TELESCOPING RECOIL** *(contd.)* **i04774678**

NOTE	REF NO	GRAPHIC REF	PART NUMBER	QTY	PART NAME 1 2 3 4 5 6 (PRODUCT LEVEL)	SEE PAGE
	27	1	**6V-3263**	2	SEAL-O-RING	
	28	1	**7G-7379**	2	BEARING	
	29	1	**7X-0343**	24	BOLT (5/8-11X1.25-IN)	
	30	1	**7X-0400**	8	BOLT (1-8X1.5-IN)	
	31	1	**8C-4436**	16	BOLT (1/2-13X1.375-IN)	
	32	1	**8T-2502**	10	BOLT (3/8-16X1.125-IN)	
	33	1	**8T-4122**	24	WASHER-HARD (17X32X3.5-MM THK)	
	34	1	**8T-4223**	56	WASHER-HARD (13.5X25.5X3-MM THK)	
	35	1	**8T-4896**	8	WASHER-HARD (10.2X18.5X2.5-MM THK)	
	36	1	**8T-5361**	8	WASHER-HARD (28X49X5-MM THK)	
	37	1	**8T-8917**	24	BOLT (1/2-13X1.25-IN)	
	38	1	**8T-8919**	24	BOLT (1/2-13X1.75-IN)	
	39	1	**9S-8009**	2	PLUG-O-RING	
	40	1	**9W-3301**	2	RING-RETAINING	

R-REMFG PART MAY BE AVAILABLE

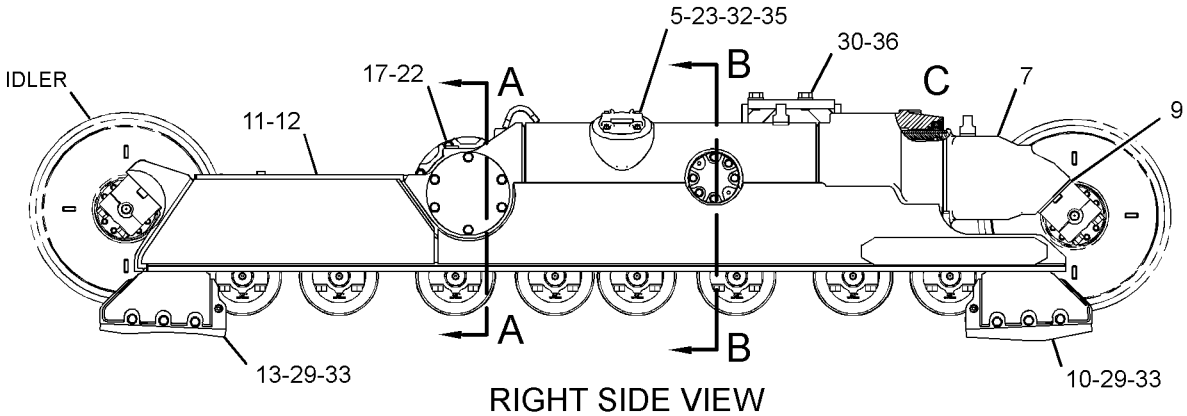

RIGHT SIDE VIEW

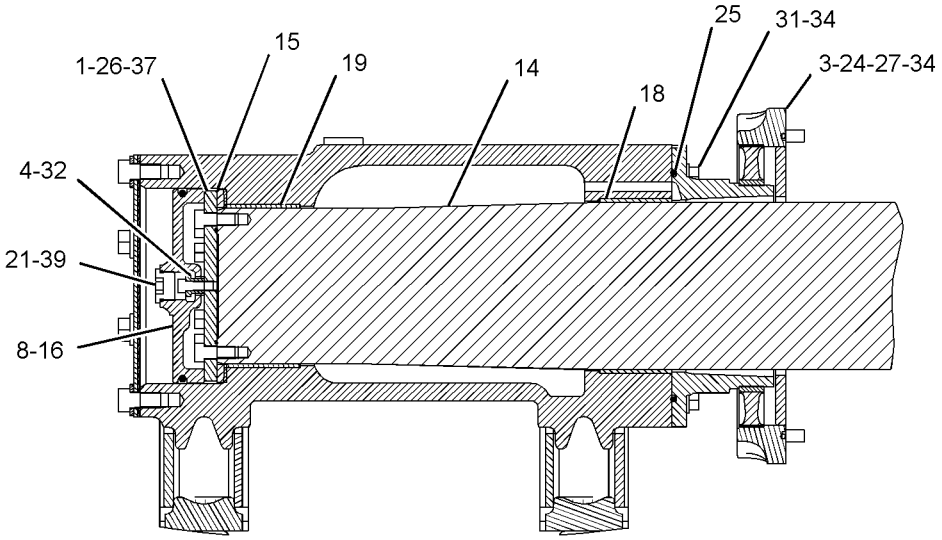

SECTION A-A

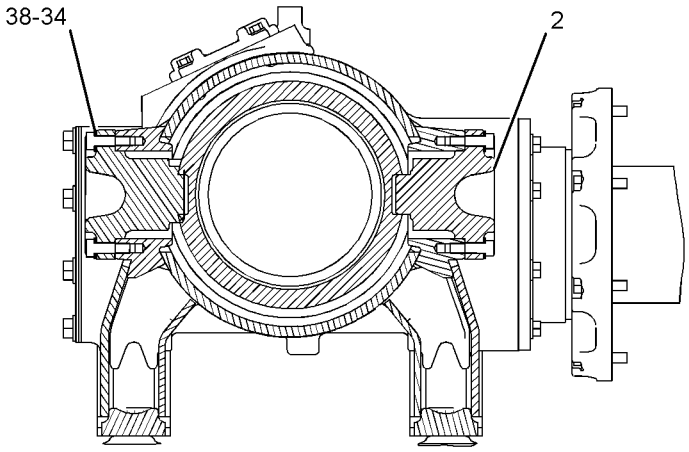

SECTION B-B

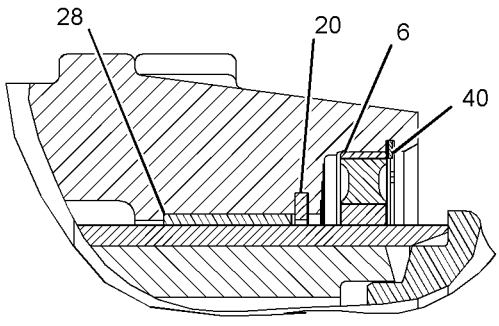

VIEW OF AREA C

GRAPHIC #1 **<END>** g02816419

UNDERCARRIAGE

379-3576 FRAME GP-TELESCOPING RECOIL

S/N: DSH1-UP

PART OF 379-3579 UNDERCARRIAGE AR

SMCS-4151 **i04774686**

NOTE	REF NO	GRAPHIC REF	PART NUMBER	QTY	PART NAME 1 2 3 4 5 6 (PRODUCT LEVEL)	SEE PAGE
	1	1	**3T-4245**	2	PLATE	
	2	1	**6Y-8037**	4	GUIDE AS	
					(EACH INCLUDES)	
		1	**8T-7532**	1	FILM-WARNING (RECOIL SPRING)	
	3	1	**7T-1149**	2	RETAINER AS	
					(EACH INCLUDES)	
		1	**7T-1150**	1	RETAINER	
		1	**7T-1151**	1	SEAL AS	
		1	**7T-1152**	1	RETAINER	
		1	**7T-1153**	1	PLATE	
	4	1	**7T-6079**	2	SPACER (10X22X15.5-MM THK)	
	5	1	**8E-1212**	2	COVER AS	
					(EACH INCLUDES)	
		1	**5P-9891**	1	PLATE-WARNING (HIGH PRESSURE CYLINDER)	
		1	**7B-3028**	4	SCREW-DRIVE (NO 4X 3/16-IN)	
		1	**8E-1211**	1	COVER	
	6	1	**9X-4584**	2	SEAL AS	
					(EACH INCLUDES)	
		1	**8T-5071**	1	GUARD-SEAL	
R	7	1	**112-3023**	2	FRAME AS-FRONT	
					(EACH INCLUDES)	
		1	**6Y-2835**	1	RESISTOR AS	
		1	**4B-4158**	4	SCREW-DRIVE (NO 4X0.25-IN)	
		1	**6V-2226**	1	PLATE-WARNING (RECOIL SPRING)	
		1	**7T-5886**	2	DOWEL	
		1	**9G-1962**	1	HOOK	
		1	**154-9838**	1	SLEEVE-WEAR	
	8	1	**126-5143**	2	PLATE	
	9	1	**131-8207**	4	SHIM (8-MM THK)	
	10	1	**165-7211**	4	STRIP	
	11	1	**168-5051**	1	FRAME AS-REAR (RH)	
		1	**7T-5886**	2	DOWEL	
		1	**7T-9796**	2	SUPPORT-IDLER	
		1	**9G-1962**	2	HOOK	
		1	**165-7574**	2	GUARD AS (RH)	
		1	**165-7576**	2	GUARD AS (LH)	
	12	1	**168-5052**	1	FRAME AS-REAR	
		1	**7T-5886**	2	DOWEL	
		1	**7T-9796**	2	SUPPORT-IDLER	
		1	**9G-1962**	2	HOOK	
		1	**165-7574**	2	GUARD AS (RH)	
		1	**165-7576**	2	GUARD AS (LH)	
	13	1	**203-8040**	4	STRIP	
	14	1	**380-1997**	1	SHAFT-PIVOT	
	15	1	**112-3044**	2	RING	
	16	1	**2D-1690**	2	SEAL-RING	
	17	1	**2H-3932**	2	SEAL-O-RING	
	18	1	**3T-4243**	2	BUSHING	
	19	1	**3T-4244**	2	BUSHING	
	20	1	**3T-5898**	2	RING-RETAINING	
	21	1	**4K-1388**	2	SEAL-O-RING	
	22	1	**4T-2069**	2	PLUG-DRAIN	
	23	1	**5H-6734**	2	SEAL-O-RING	
	24	1	**5P-2424**	16	BOLT (1/2-13X2.25-IN)	
	25	1	**5P-5374**	2	SEAL-O-RING	
	26	1	**6S-3002**	2	SEAL-O-RING	

379-3576 **FRAME GP-TELESCOPING RECOIL** *(contd.)* **i04774686**

NOTE	REF NO	GRAPHIC REF	PART NUMBER	QTY	PART NAME 1 2 3 4 5 6 (PRODUCT LEVEL)	SEE PAGE
	27	1	**6V-3263**	2	SEAL-O-RING	
	28	1	**7G-7379**	2	BEARING	
	29	1	**7X-0343**	24	BOLT (5/8-11X1.25-IN)	
	30	1	**7X-0400**	8	BOLT (1-8X1.5-IN)	
	31	1	**8C-4436**	16	BOLT (1/2-13X1.375-IN)	
	32	1	**8T-2502**	10	BOLT (3/8-16X1.125-IN)	
	33	1	**8T-4122**	24	WASHER-HARD (17X32X3.5-MM THK)	
	34	1	**8T-4223**	56	WASHER-HARD (13.5X25.5X3-MM THK)	
	35	1	**8T-4896**	8	WASHER-HARD (10.2X18.5X2.5-MM THK)	
	36	1	**8T-5361**	8	WASHER-HARD (28X49X5-MM THK)	
	37	1	**8T-8917**	24	BOLT (1/2-13X1.25-IN)	
	38	1	**8T-8919**	24	BOLT (1/2-13X1.75-IN)	
	39	1	**9S-8009**	2	PLUG-O-RING	
	40	1	**9W-3301**	2	RING-RETAINING	

R-REMFG PART MAY BE AVAILABLE

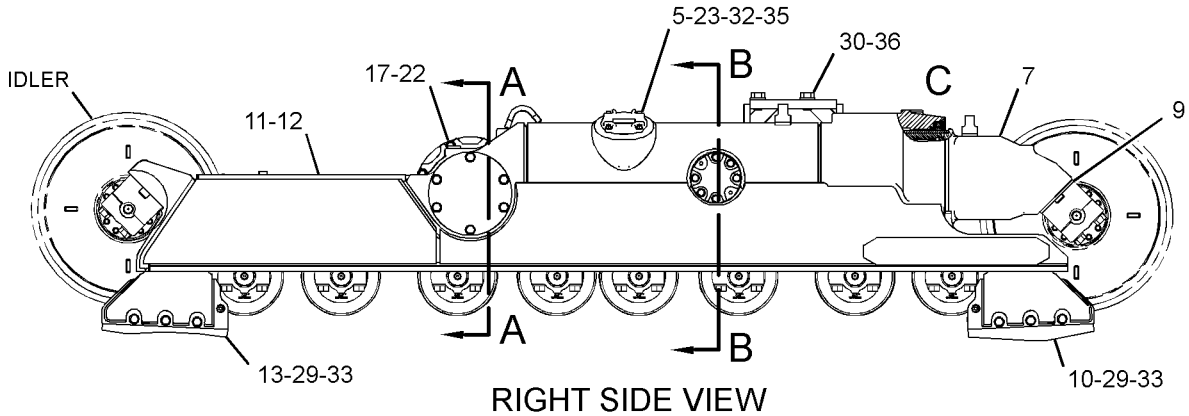

RIGHT SIDE VIEW

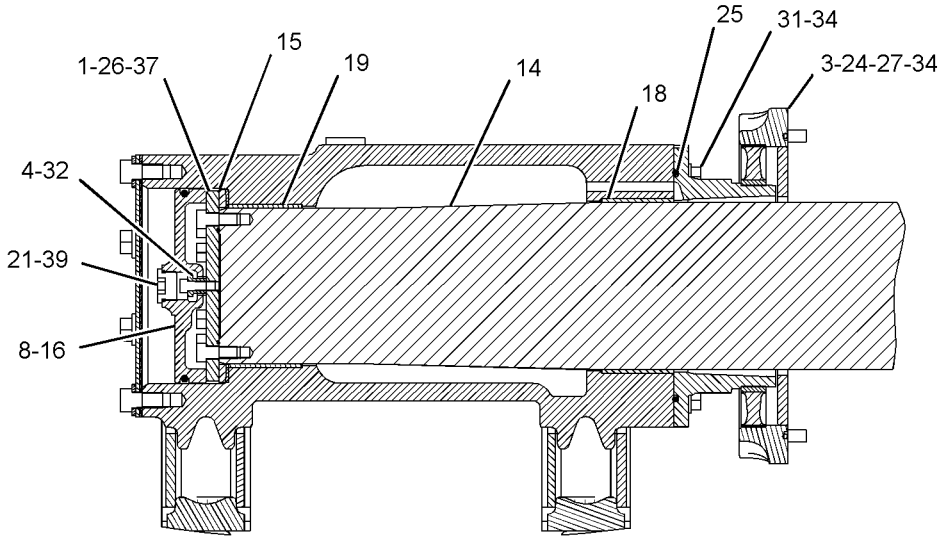

SECTION A-A

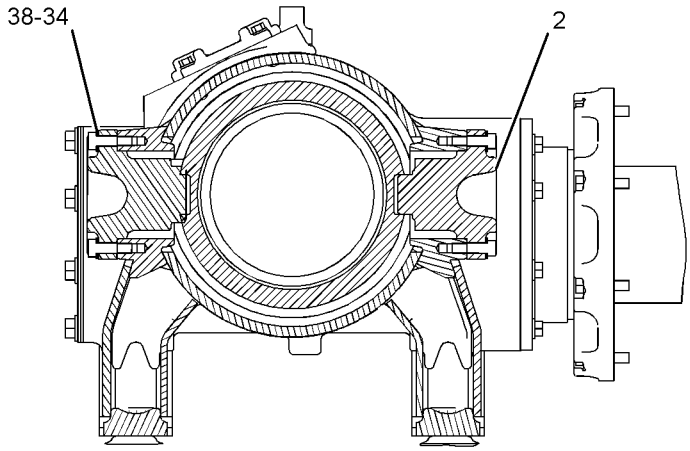

SECTION B-B

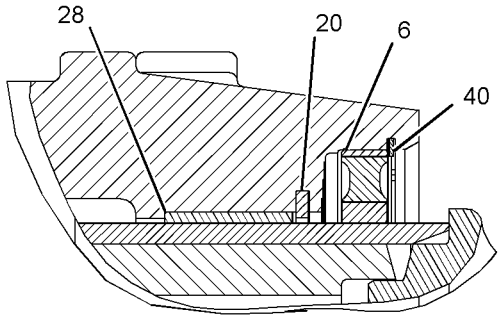

VIEW OF AREA C

GRAPHIC #1 **<END>** g02816516

UNDERCARRIAGE

387-3579 FRAME GP-TELESCOPING RECOIL

S/N: DLN1-UP

PART OF 387-3578 UNDERCARRIAGE AR

SMCS-4151 **i04774692**

NOTE	REF NO	GRAPHIC REF	PART NUMBER	QTY	PART NAME 1 2 3 4 5 6 (PRODUCT LEVEL)	SEE PAGE
	1	1	**3T-4245**	2	PLATE	
	2	1	**126-5143**	2	PLATE	
	3	1	**6Y-8037**	4	GUIDE AS	
					(EACH INCLUDES)	
		1	**8T-7532**	1	FILM-WARNING (RECOIL SPRING)	
	4	1	**7T-1149**	2	RETAINER AS	
					(EACH INCLUDES)	
		1	**7T-1150**	1	RETAINER	
		1	**7T-1151**	1	SEAL AS	
		1	**7T-1152**	1	RETAINER	
		1	**7T-1153**	1	PLATE	
	5	1	**7T-6079**	2	SPACER (10X22X15.5-MM THK)	
	6	1	**8E-1212**	2	COVER AS	
					(EACH INCLUDES)	
		1	**5P-9891**	1	PLATE-WARNING (HIGH PRESSURE CYLINDER)	
		1	**7B-3028**	4	SCREW-DRIVE (NO 4X 3/16-IN)	
		1	**8E-1211**	1	COVER	
	7	1	**9X-4584**	2	SEAL AS	
					(EACH INCLUDES)	
		1	**8T-5071**	1	GUARD-SEAL	
R	8	1	**112-3023**	2	FRAME AS-FRONT	
					(EACH INCLUDES)	
		1	**6Y-2835**	1	RESISTOR AS	
		1	**4B-4158**	4	SCREW-DRIVE (NO 4X0.25-IN)	
		1	**6V-2226**	1	PLATE-WARNING (RECOIL SPRING)	
		1	**7T-5886**	2	DOWEL	
		1	**154-9838**	1	SLEEVE-WEAR	
B	9	1	**131-8207**	4	SHIM (8-MM THK)	
	10	1	**165-7211**	4	STRIP	
	11	1	**190-7560**	1	FRAME AS-REAR (LH)	
		1	**7T-5886**	2	DOWEL	
		1	**7T-9796**	2	SUPPORT-IDLER	
		1	**9G-1962**	2	HOOK	
		1	**165-7574**	2	GUARD AS (RH)	
		1	**165-7576**	2	GUARD AS (LH)	
		1	**190-5524**	1	PLATE	
	12	1	**190-7562**	1	FRAME AS-REAR (RH)	
		1	**7T-5886**	2	DOWEL	
		1	**7T-9796**	2	SUPPORT-IDLER	
		1	**9G-1962**	2	HOOK	
		1	**165-7574**	2	GUARD AS (RH)	
		1	**165-7576**	2	GUARD AS (LH)	
		1	**190-5523**	1	PLATE	
		1	**190-5524**	1	PLATE	
	13	1	**203-8040**	4	STRIP	
	14	1	**386-9826**	1	SHAFT-PIVOT	
	15	1	**112-3044**	2	RING	
	16	1	**2D-1690**	2	SEAL-RING	
	17	1	**2H-3932**	2	SEAL-O-RING	
	18	1	**3T-4243**	2	BUSHING	
	19	1	**3T-4244**	2	BUSHING	
	20	1	**3T-5898**	2	RING-RETAINING	
	21	1	**4K-1388**	2	SEAL-O-RING	
	22	1	**4T-2069**	2	PLUG-DRAIN	
	23	1	**5H-6734**	2	SEAL-O-RING	
	24	1	**5P-2424**	16	BOLT (1/2-13X2.25-IN)	

387-3579 **FRAME GP-TELESCOPING RECOIL** *(contd.)* **i04774692**

NOTE	REF NO	GRAPHIC REF	PART NUMBER	QTY	PART NAME 1 2 3 4 5 6 (PRODUCT LEVEL)	SEE PAGE
	25	1	**5P-5374**	2	SEAL-O-RING	
	26	1	**6S-3002**	2	SEAL-O-RING	
	27	1	**6V-3263**	2	SEAL-O-RING	
	28	1	**7G-7379**	2	BEARING	
	29	1	**7X-0343**	24	BOLT (5/8-11X1.25-IN)	
	30	1	**8C-4436**	16	BOLT (1/2-13X1.375-IN)	
	31	1	**8T-2502**	10	BOLT (3/8-16X1.125-IN)	
	32	1	**8T-4122**	24	WASHER-HARD (17X32X3.5-MM THK)	
	33	1	**8T-4223**	56	WASHER-HARD (13.5X25.5X3-MM THK)	
	34	1	**8T-4896**	8	WASHER-HARD (10.2X18.5X2.5-MM THK)	
	35	1	**8T-8917**	24	BOLT (1/2-13X1.25-IN)	
	36	1	**8T-8919**	24	BOLT (1/2-13X1.75-IN)	
	37	1	**9S-8009**	2	PLUG-O-RING	
	38	1	**9W-3301**	2	RING-RETAINING	

B-USE AS REQUIRED
R-REMFG PART MAY BE AVAILABLE

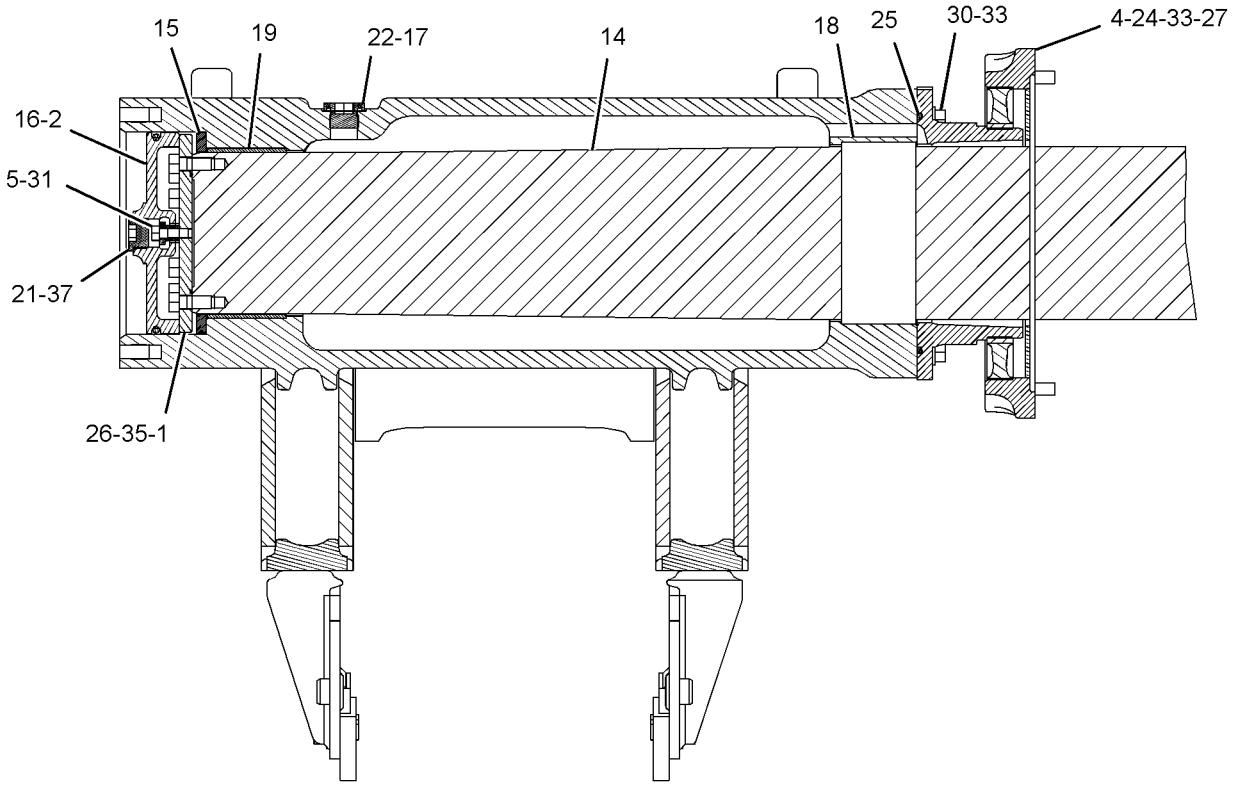

SECTION A-A

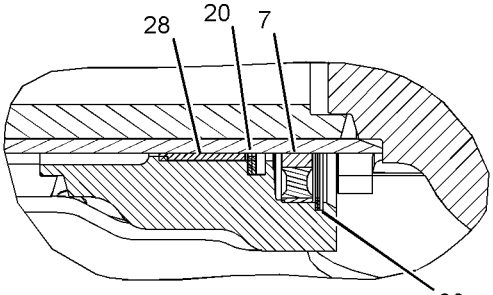

SECTION C-C

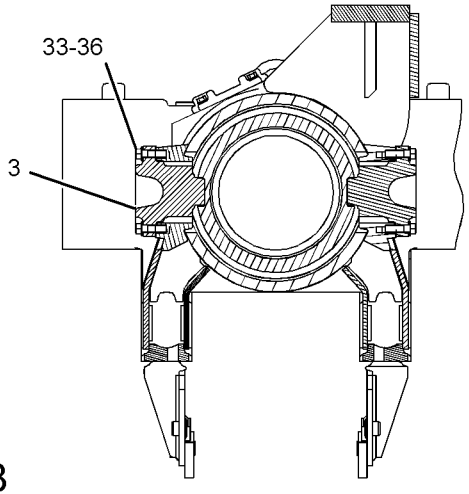

SECTION B-B

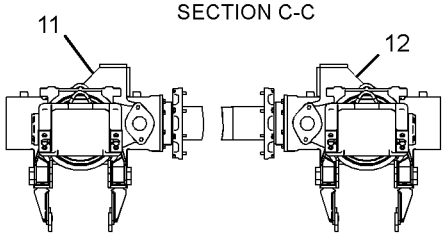

FRONT VIEW

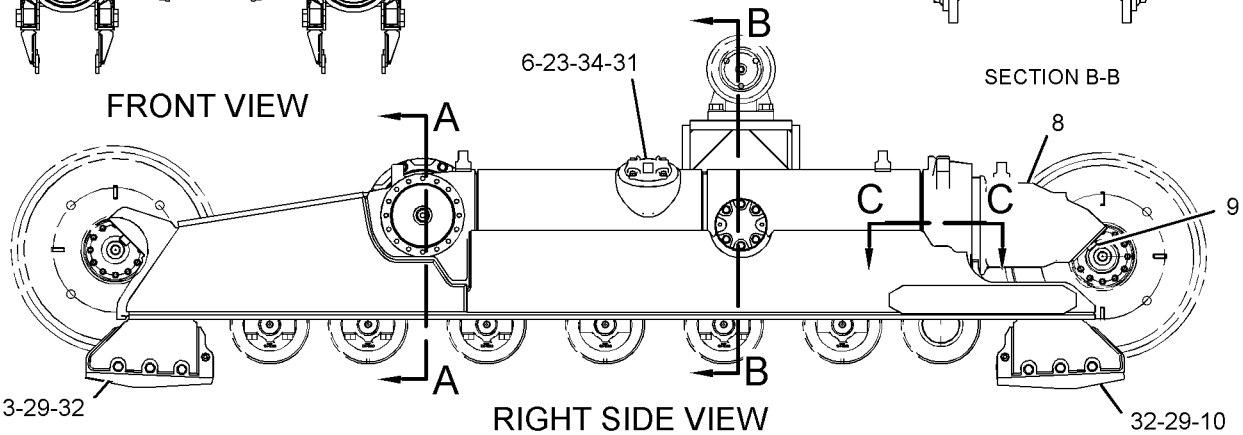

RIGHT SIDE VIEW

GRAPHIC #1

<END>

g02832799

UNDERCARRIAGE

108-1814 GUARD GP-TRACK GUIDE

S/N: DLN1-UP

PART OF 387-3578 UNDERCARRIAGE AR

SMCS-4177 **i04714829**

NOTE	REF NO	GRAPHIC REF	PART NUMBER	QTY	PART NAME 1 2 3 4 5 6 (PRODUCT LEVEL)	SEE PAGE
	1	1	**111-0423**	4	GUARD AS	
	2	1	**3P-8283**	8	SPACER (0.908X1.5X1-IN THK)	
	3	1	**7X-0383**	8	BOLT (7/8-9X2.75-IN)	
	4	1	**111-0428**	4	TUBE	
	5	1	**111-0429**	4	ROD	
	6	1	**8C-6913**	8	WASHER-HARD (24X41.5X4-MM THK)	
	7	1	**7D-8508**	8	NUT-FULL (7/8-14-THD) (7/8-14 THD)	

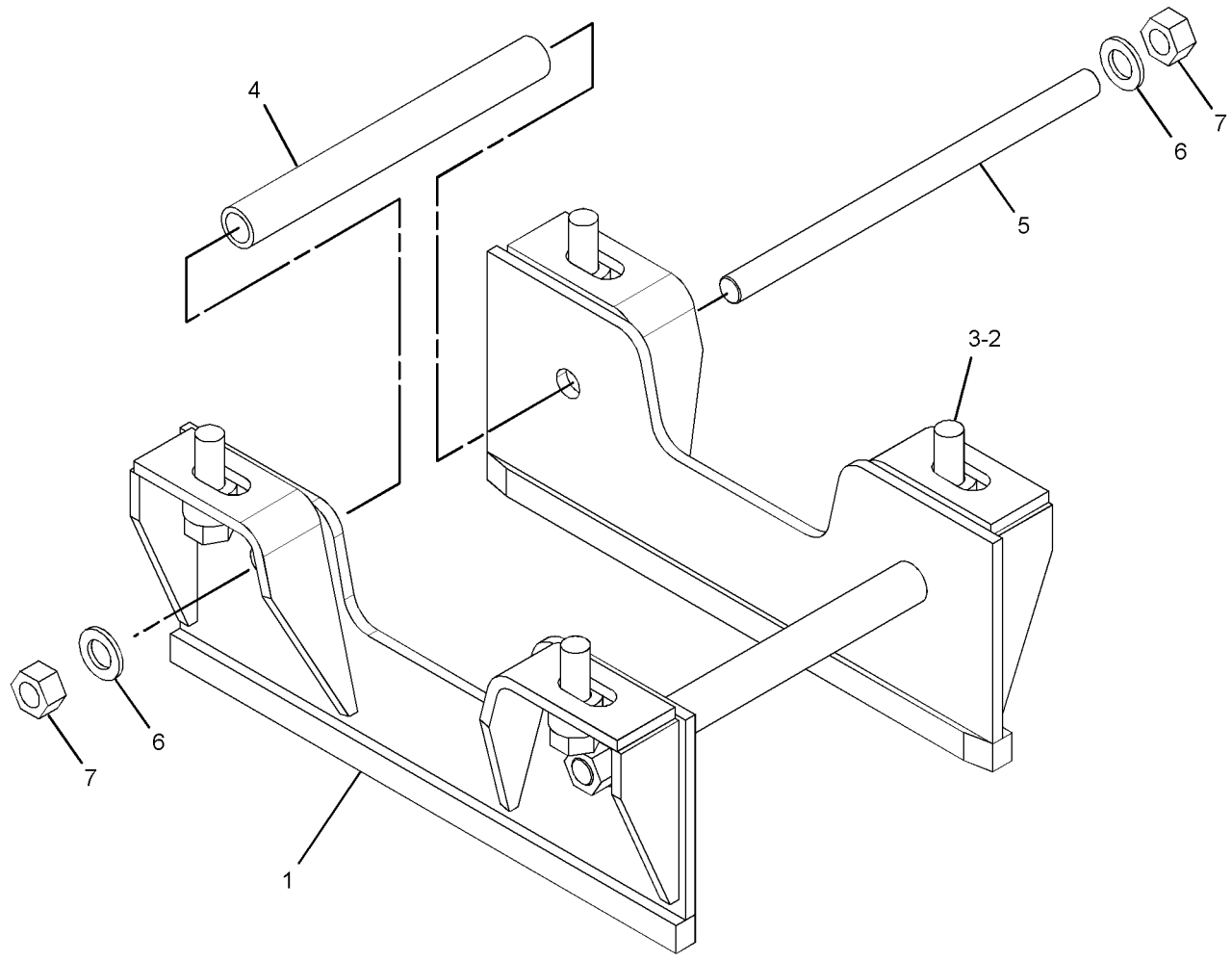

GRAPHIC #1 **<END>** g02830183

163-8687 GUARD GP-TRACK GUIDE

S/N: DSH1-UP; DLN1-UP
MODERATE SERVICE
PART OF 203-6523, 203-6525 GUIDING AR-UNDERCARRIAGE
AN ATTACHMENT

SMCS-4177 **i04662129**

NOTE	REF NO	GRAPHIC REF	PART NUMBER	QTY	PART NAME 1 2 3 4 5 6 (PRODUCT LEVEL)	SEE PAGE
	1	1	**178-7195**	8	SPACER	
	2	1	**7D-8508**	8	NUT-FULL (7/8-14-THD)	
	3	1	**163-8686**	4	GUARD	
	4	1	**165-3663**	4	TUBE	
	5	1	**165-3664**	4	ROD	
	6	1	**7X-0383**	8	BOLT (7/8-9X2.75-IN)	
	7	1	**8C-6913**	8	WASHER-HARD (24X41.5X4-MM THK)	

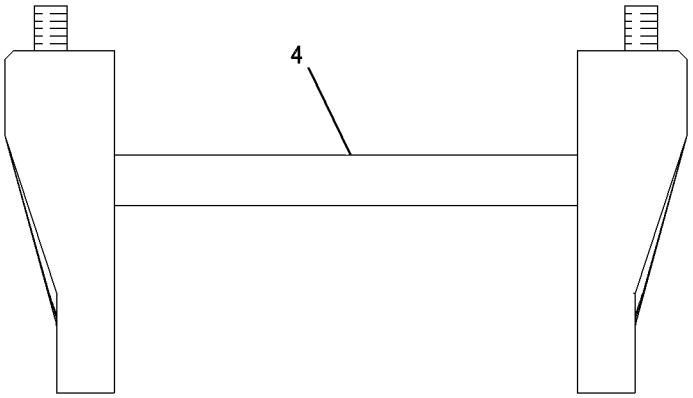

VIEW A-A

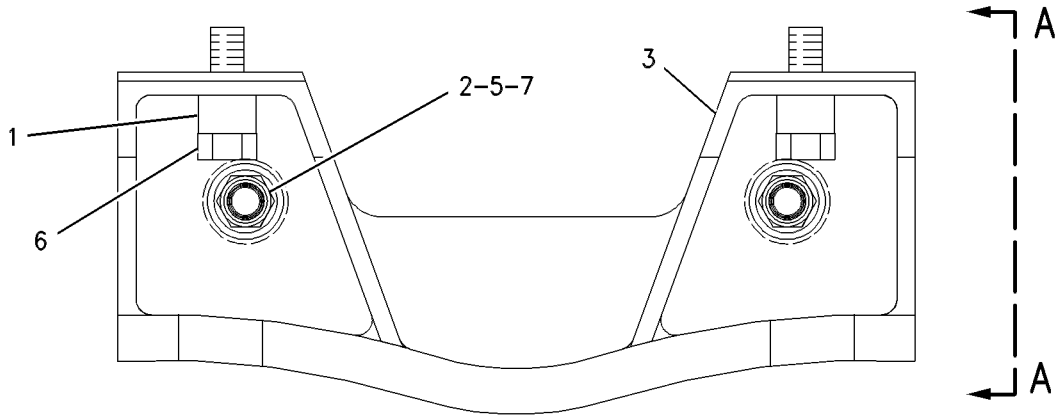

GRAPHIC #1 **<END>** g00644269

163-8692 GUARD GP-TRACK ROLLER

S/N: DSH1-UP
PART OF 203-6527 GUIDING AR-UNDERCARRIAGE
AN ATTACHMENT

SMCS-7152 **i04671110**

NOTE	REF NO	GRAPHIC REF	PART NUMBER	QTY	PART NAME 1 2 3 4 5 6 (PRODUCT LEVEL)	SEE PAGE
	1	1	**7D-8508**	24	NUT-FULL (7/8-14-THD)	
	2	1	**165-3663**	12	TUBE	
	3	1	**165-3664**	12	ROD	
	4	1	**169-0163**	4	GUARD	
	5	1	**169-0164**	4	GUARD	
	6	1	**178-7195**	24	SPACER	
	7	1	**5C-6565**	8	BOLT (1/2-13X1.125-IN)	
	8	1	**7X-0383**	24	BOLT (7/8-9X2.75-IN)	
	9	1	**7X-0590**	8	WASHER-HARD (13.5X44.5X6-MM THK)	
	10	1	**8C-6913**	24	WASHER-HARD (24X41.5X4-MM THK)	

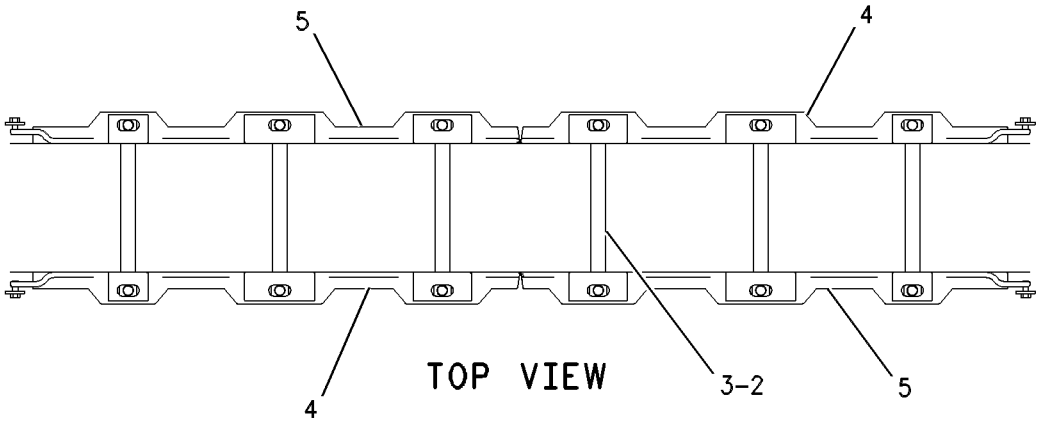

TOP VIEW

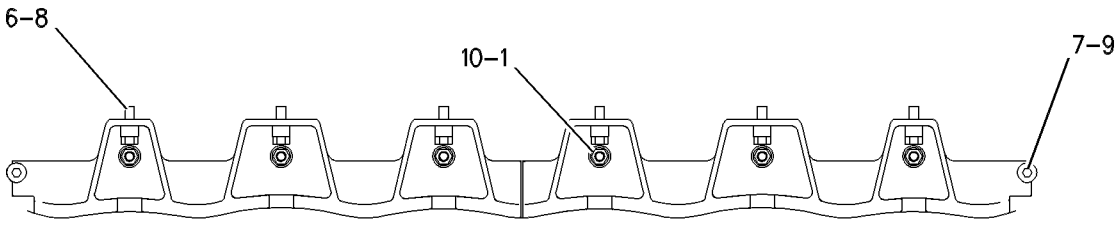

RIGHT SIDE VIEW

GRAPHIC #1 **<END>** g00639474

UNDERCARRIAGE

163-8693 GUARD GP-TRACK ROLLER

S/N: DLN1-UP
PART OF 203-6528 GUIDING AR-UNDERCARRIAGE
AN ATTACHMENT

SMCS-7152 **i04671292**

NOTE	REF NO	GRAPHIC REF	PART NUMBER	QTY	PART NAME 1 2 3 4 5 6 (PRODUCT LEVEL)	SEE PAGE
	1	1	**178-7195**	24	SPACER	
	2	1	**7D-8508**	24	NUT-FULL (7/8-14-THD)	
	3	1	**165-3663**	12	TUBE	
	4	1	**165-3664**	12	ROD	
	5	1	**169-0161**	4	GUARD	
	6	1	**169-0162**	4	GUARD	
	7	1	**5C-6565**	8	BOLT (1/2-13X1.125-IN)	
	8	1	**7X-0383**	24	BOLT (7/8-9X2.75-IN)	
	9	1	**7X-0590**	8	WASHER-HARD (13.5X44.5X6-MM THK)	
	10	1	**8C-6913**	24	WASHER-HARD (24X41.5X4-MM THK)	

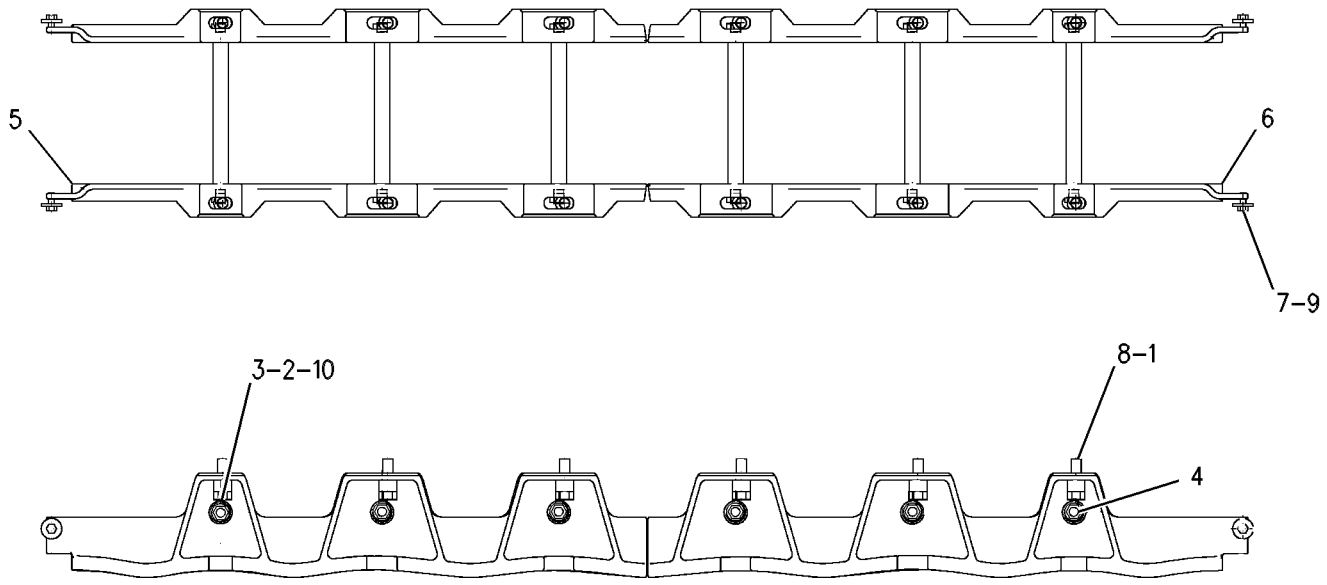

GRAPHIC #1 **<END>** g00606189

203-6523 GUIDING AR-UNDERCARRIAGE—MODERATE SERVICE

S/N: DSH1-UP
AN ATTACHMENT

SMCS-4150 **i04662169**

NOTE	PART NUMBER	QTY	PART NAME 1 2 3 4 5 6 (PRODUCT LEVEL)	SEE PAGE
Y	*163-8687*	2	GUARD GP-TRACK GUIDE	352
Y	*125-4180*	1	ROLLER AR-TRACK	366
Y-SEPARATE ILLUSTRATION				

<END>

203-6525 GUIDING AR-UNDERCARRIAGE—MODERATE SERVICE

S/N: DLN1-UP
AN ATTACHMENT

SMCS-4150 **i04671250**

NOTE	PART NUMBER	QTY	PART NAME 1 2 3 4 5 6 (PRODUCT LEVEL)	SEE PAGE
Y	*163-8687*	2	GUARD GP-TRACK GUIDE	352
Y	*125-4180*	1	ROLLER AR-TRACK	366
Y-SEPARATE ILLUSTRATION				

<END>

203-6527 GUIDING AR-UNDERCARRIAGE—HEAVY-DUTY

S/N: DSH1-UP
AN ATTACHMENT

SMCS-4150 **i04671109**

NOTE	PART NUMBER	QTY	PART NAME 1 2 3 4 5 6 (PRODUCT LEVEL)	SEE PAGE
Y	*163-8692*	1	GUARD GP-TRACK ROLLER	353
Y	*125-4180*	1	ROLLER AR-TRACK	366
Y-SEPARATE ILLUSTRATION				

<END>

203-6528 GUIDING AR-UNDERCARRIAGE—HEAVY-DUTY

S/N: DLN1-UP
AN ATTACHMENT

SMCS-4150 **i04671270**

NOTE	PART NUMBER	QTY	PART NAME 1 2 3 4 5 6 (PRODUCT LEVEL)	SEE PAGE
Y	*163-8693*	1	GUARD GP-TRACK ROLLER	354
Y	*125-4180*	1	ROLLER AR-TRACK	366
Y-SEPARATE ILLUSTRATION				

<END>

248-5316 IDLER GP-FRONT–COLD WEATHER

S/N: DSH1-UP; DLN1-UP
PART OF 375-9603, 384-9811 COLD WEATHER AR
AN ATTACHMENT

SMCS-4159 **i04629643**

NOTE	REF NO	GRAPHIC REF	PART NUMBER	QTY	PART NAME 1 2 3 4 5 6 (PRODUCT LEVEL)	SEE PAGE
	1	1	**2H-9247**	2	SEAL-O-RING	
	2	1	**5P-9681**	24	BOLT-12 POINT HEAD (7/16-14X2-IN)	
	3	1	**7J-2036**	2	SEAL-O-RING	
	4	1	**8E-6619**	2	WASHER-THRUST (12X18.5X3-MM THK)	
	5	1	**8E-2139**	1	STOP AS	
		1	**6Y-0473**	1	PLUG-CLEAR	
		1	**9G-5664**	1	STOPPER-RUBBER	
	6	1	**107-3945**	2	COLLAR-SEAL	
	7	1	**131-3935**	1	SHAFT-TRACK IDLER	
	8	1	**162-7862**	2	SEAL GP-DUO-CONE	
	9	1	**192-0213**	2	RETAINER	
	10	1	**192-0219**	1	IDLER & BEARING AS	
	10A	1	**6Y-1757**	2	BUSHING	
	11	1	**3K-6113**	24	WASHER-HARD (12X18.5X3-MM THK)	

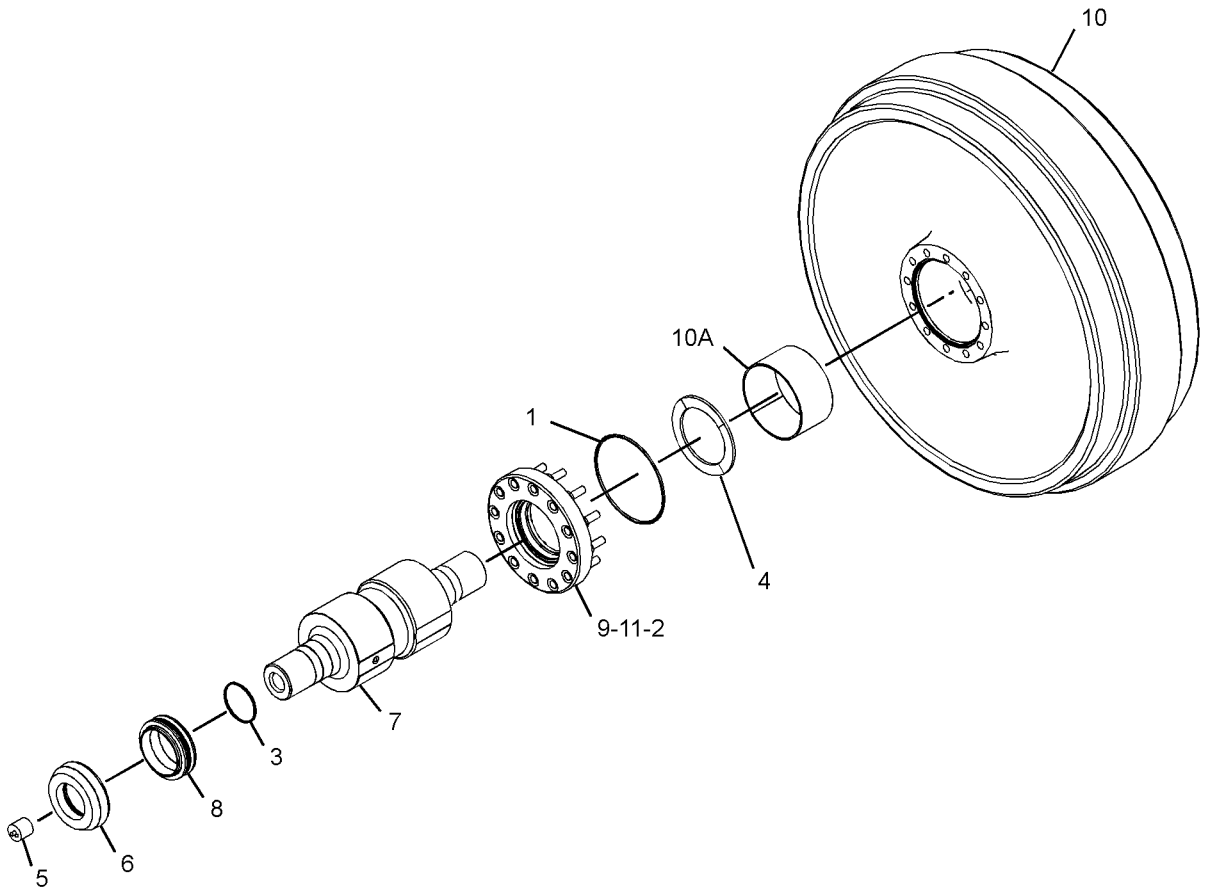

GRAPHIC #1 **<END>** g02784402

192-0220 IDLER GP-TRACK

S/N: DSH1-UP; DLN1-UP

PART OF 379-3579, 387-3578 UNDERCARRIAGE AR

SMCS-4159 **i04659449**

NOTE	REF NO	GRAPHIC REF	PART NUMBER	QTY	PART NAME 1 2 3 4 5 6 (PRODUCT LEVEL)	SEE PAGE
	1	1	**2H-9247**	2	SEAL-O-RING	
	2	1	**7J-2036**	2	SEAL-O-RING	
	3	1	**8E-2139**	1	STOP AS	
		1	**6Y-0473**	1	PLUG-CLEAR	
		1	**9G-5664**	1	STOPPER-RUBBER	
	4	1	**8E-6619**	2	WASHER-THRUST (12X18.5X3-MM THK)	
	5	1	**107-3945**	2	COLLAR-SEAL	
	6	1	**131-3935**	1	SHAFT-TRACK IDLER	
	7	1	**162-7862**	2	SEAL GP-DUO-CONE	
					(EACH INCLUDES)	
		1	**162-2166**	2	RING-TORIC	
	8	1	**192-0213**	2	RETAINER	
	9	1	**192-0219**	1	IDLER & BEARING AS	
	9A	1	**6Y-1757**	2	BUSHING	
	10	1	**3K-6113**	24	WASHER-HARD (12X18.5X3-MM THK)	
	11	1	**5P-9681**	24	BOLT-12 POINT HEAD (7/16-14X2-IN)	

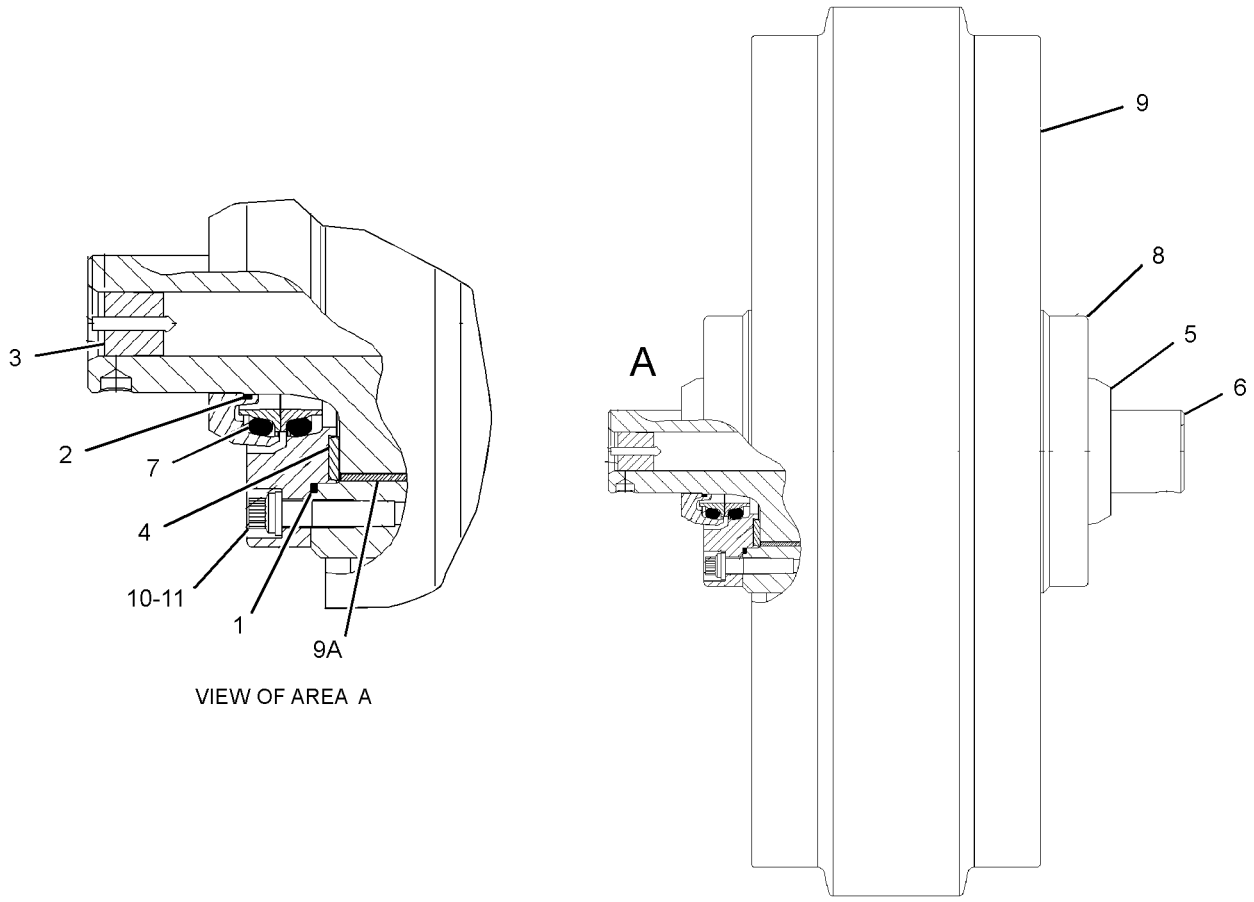

GRAPHIC #1 **<END>** g02799132

UNDERCARRIAGE

192-0224 IDLER GP-TRACK

S/N: DJR1-UP

PART OF 379-3578 UNDERCARRIAGE AR

SMCS-4159 **i04660089**

NOTE	REF NO	GRAPHIC REF	PART NUMBER	QTY	PART NAME 1 2 3 4 5 6 (PRODUCT LEVEL)	SEE PAGE
	1	1	**2H-9247**	2	SEAL-O-RING	
	2	1	**7J-2036**	2	SEAL-O-RING	
	3	1	**8E-2139**	1	STOP AS	
		1	**6Y-0473**	1	PLUG-CLEAR	
		1	**9G-5664**	1	STOPPER-RUBBER	
	4	1	**8E-6619**	2	WASHER-THRUST (12X18.5X3-MM THK)	
	5	1	**107-3945**	2	COLLAR-SEAL	
	6	1	**131-3935**	1	SHAFT-TRACK IDLER	
	7	1	**162-7862**	2	SEAL GP-DUO-CONE	
					(EACH INCLUDES)	
		1	**162-2166**	2	RING-TORIC	
	8	1	**192-0213**	2	RETAINER	
	9	1	**192-0223**	1	IDLER & BEARING AS	
	9A	1	**6Y-1757**	2	BUSHING	
	10	1	**3K-6113**	24	WASHER-HARD (12X18.5X3-MM THK)	
	11	1	**5P-9681**	24	BOLT-12 POINT HEAD (7/16-14X2-IN)	

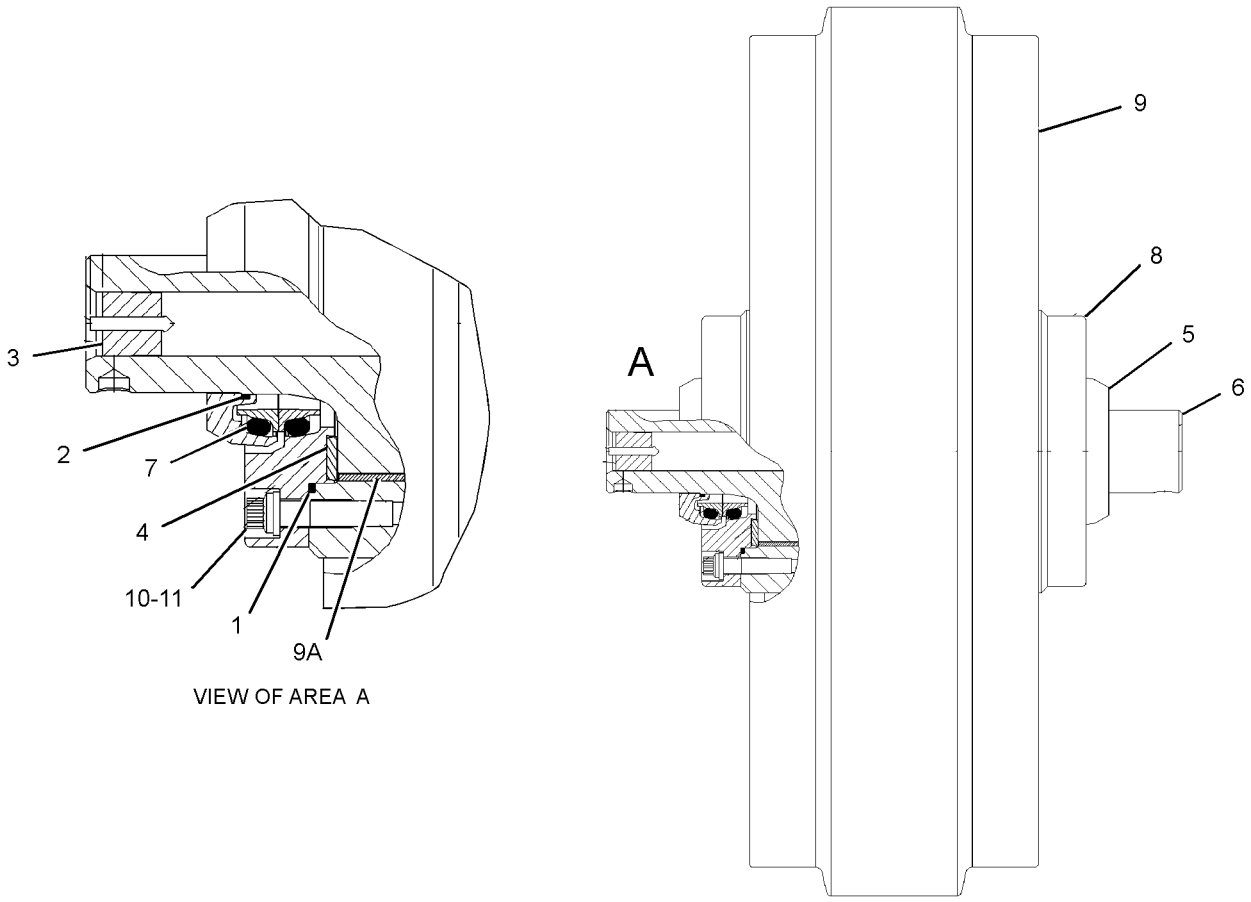

VIEW OF AREA A

GRAPHIC #1 **<END>** g02799118

385-0957 IDLER GP-TRACK–COLD WEATHER

S/N: DJR1-UP
PART OF 384-9812 COLD WEATHER AR
AN ATTACHMENT

SMCS-4159 **i04708892**

NOTE	REF NO	GRAPHIC REF	PART NUMBER	QTY	PART NAME 1 2 3 4 5 6 (PRODUCT LEVEL)	SEE PAGE
	1	1	**192-0223**	1	IDLER & BEARING AS	
	1A	1	**6Y-1757**	2	BUSHING	
	3	1	**192-0213**	2	RETAINER	
	4	1	**107-3945**	2	COLLAR-SEAL	
	5	1	**131-3935**	1	SHAFT-TRACK IDLER	
	6	1	**8E-6619**	2	WASHER-THRUST (12X18.5X3-MM THK)	
	7	1	**3K-6113**	24	WASHER-HARD (12X18.5X3-MM THK)	
	8	1	**5P-9681**	24	BOLT-12 POINT HEAD (7/16-14X2-IN)	
	9	1	**2H-9247**	2	SEAL-O-RING	
	10	1	**9G-5664**	1	STOPPER-RUBBER	
	11	1	**7J-2036**	2	SEAL-O-RING	
	12	1	**162-7862**	2	SEAL GP-DUO-CONE	
					(EACH INCLUDES)	
		1	**162-2166**	2	RING-TORIC	
	13	1	**6Y-0473**	1	PLUG-CLEAR	

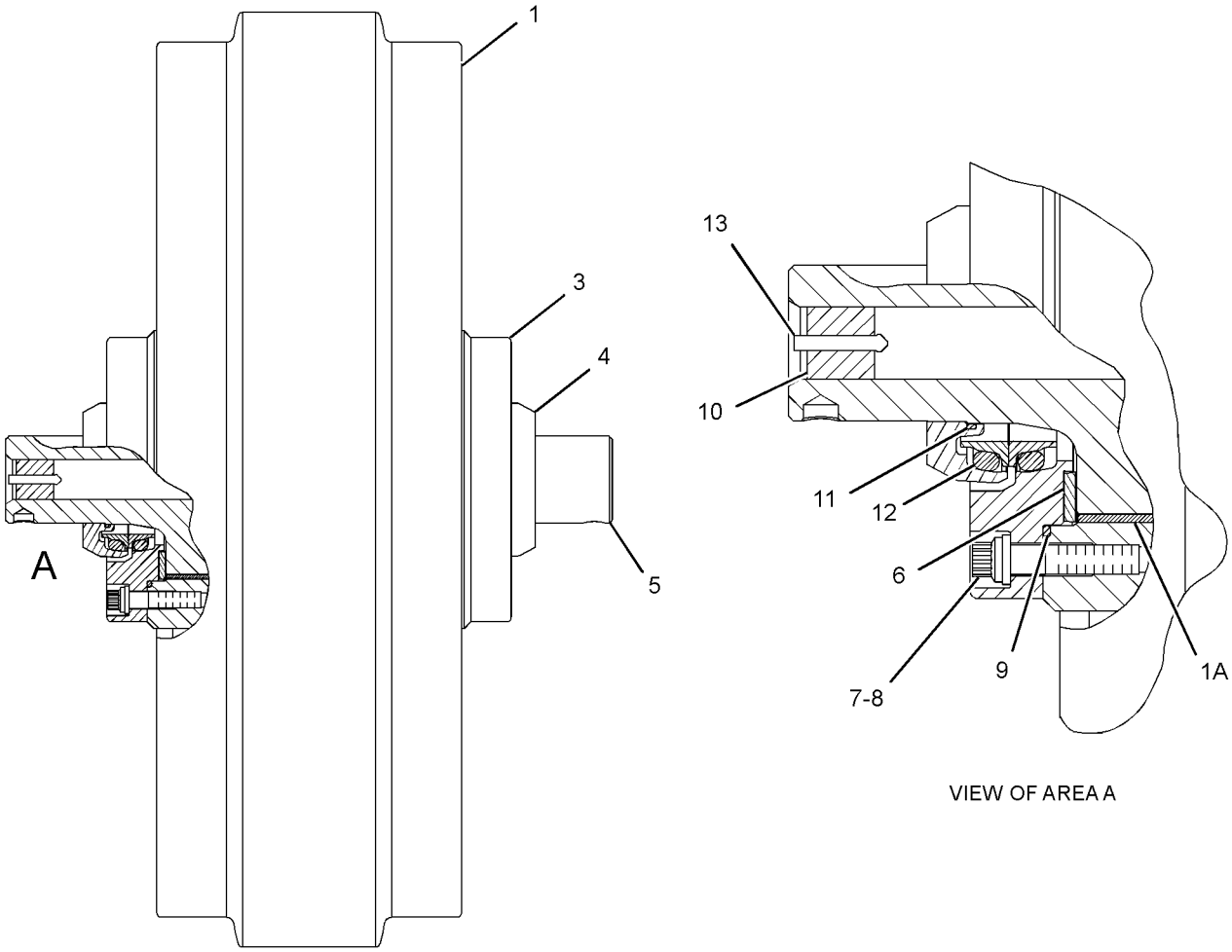

VIEW OF AREA A

GRAPHIC #1 **<END>** g01403672

115-6301 LINK AS-TRACK

S/N: DSH1-UP
SEALED, LUBRICATED, HEAVY DUTY
PART OF 115-6307, 115-6308 TRACK GP
ALSO AN ATTACHMENT

SMCS-4169, 4171 **i04659309**

NOTE	REF NO	GRAPHIC REF	PART NUMBER	QTY	PART NAME 1 2 3 4 5 6 (PRODUCT LEVEL)	SEE PAGE
	1	1	**6Y-0473**	40	PLUG-CLEAR	
	2	1	**7G-4332**	40	STOPPER	
	3	1	**152-8073**	80	RING-THRUST	
	4	1	**239-7943**	80	SEAL AS	
	5	1	**6I-9239**	39	LINK-TRACK (RH)	
	6	1	**6I-9240**	39	LINK-TRACK (LH)	
	7	1	**6I-9243**	1	LINK-TRACK MASTER (BUSHING END, RH)	
	8	1	**6I-9244**	1	LINK-TRACK MASTER (BUSHING END, LH)	
	9	1	**6I-9241**	1	LINK-TRACK MASTER (PIN END, RH)	
	10	1	**6I-9242**	1	LINK-TRACK MASTER (PIN END, LH)	
	11	1	**115-4924**	40	BUSHING-TRACK	
	12	1	**115-4923**	40	PIN-TRACK	

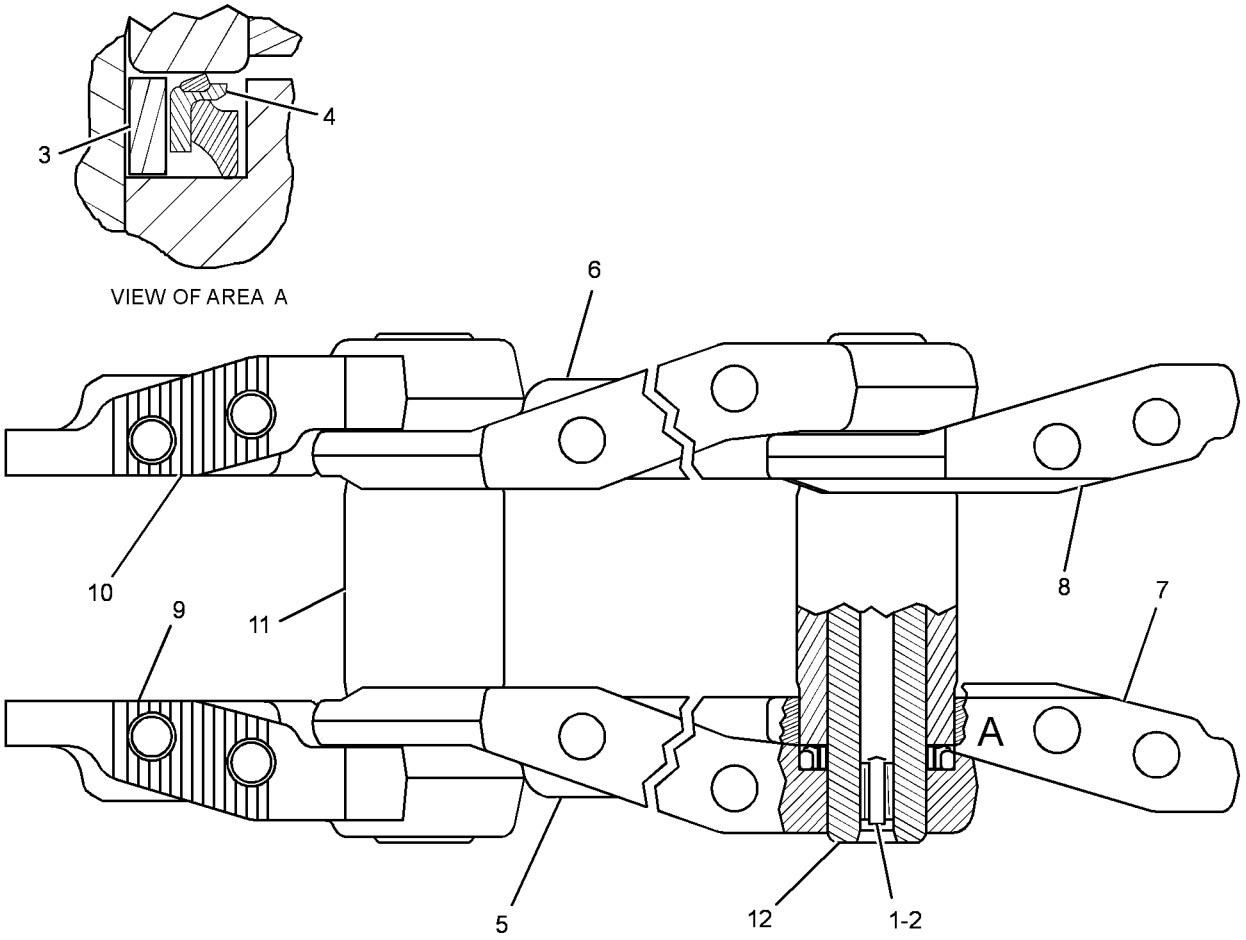

GRAPHIC #1 **<END>** g02795266

115-6302 LINK AS-TRACK

S/N: DLN1-UP
SEALED, LUBRICATED, HEAVY DUTY
PART OF 115-6310, 115-6316 TRACK GP
ALSO AN ATTACHMENT

SMCS-4169, 4171 **i04660770**

NOTE	REF NO	GRAPHIC REF	PART NUMBER	QTY	PART NAME 1 2 3 4 5 6 (PRODUCT LEVEL)	SEE PAGE
	1	1	**7G-4332**	43	STOPPER	
		1	**6Y-0473**	43	PLUG-CLEAR	
	2	1	**152-8073**	86	RING-THRUST	
	3	1	**239-7943**	86	SEAL AS	
	4	1	**6I-9241**	1	LINK-TRACK MASTER (PIN END, RH)	
	5	1	**6I-9242**	1	LINK-TRACK MASTER (PIN END, LH)	
	6	1	**6I-9244**	1	LINK-TRACK MASTER (BUSHING END, LH)	
	7	1	**6I-9243**	1	LINK-TRACK MASTER (BUSHING END, RH)	
	8	1	**115-4923**	43	PIN-TRACK	
	9	1	**115-4924**	43	BUSHING-TRACK	
	10	1	**6I-9240**	42	LINK-TRACK (LH)	
	11	1	**6I-9239**	42	LINK-TRACK (RH)	

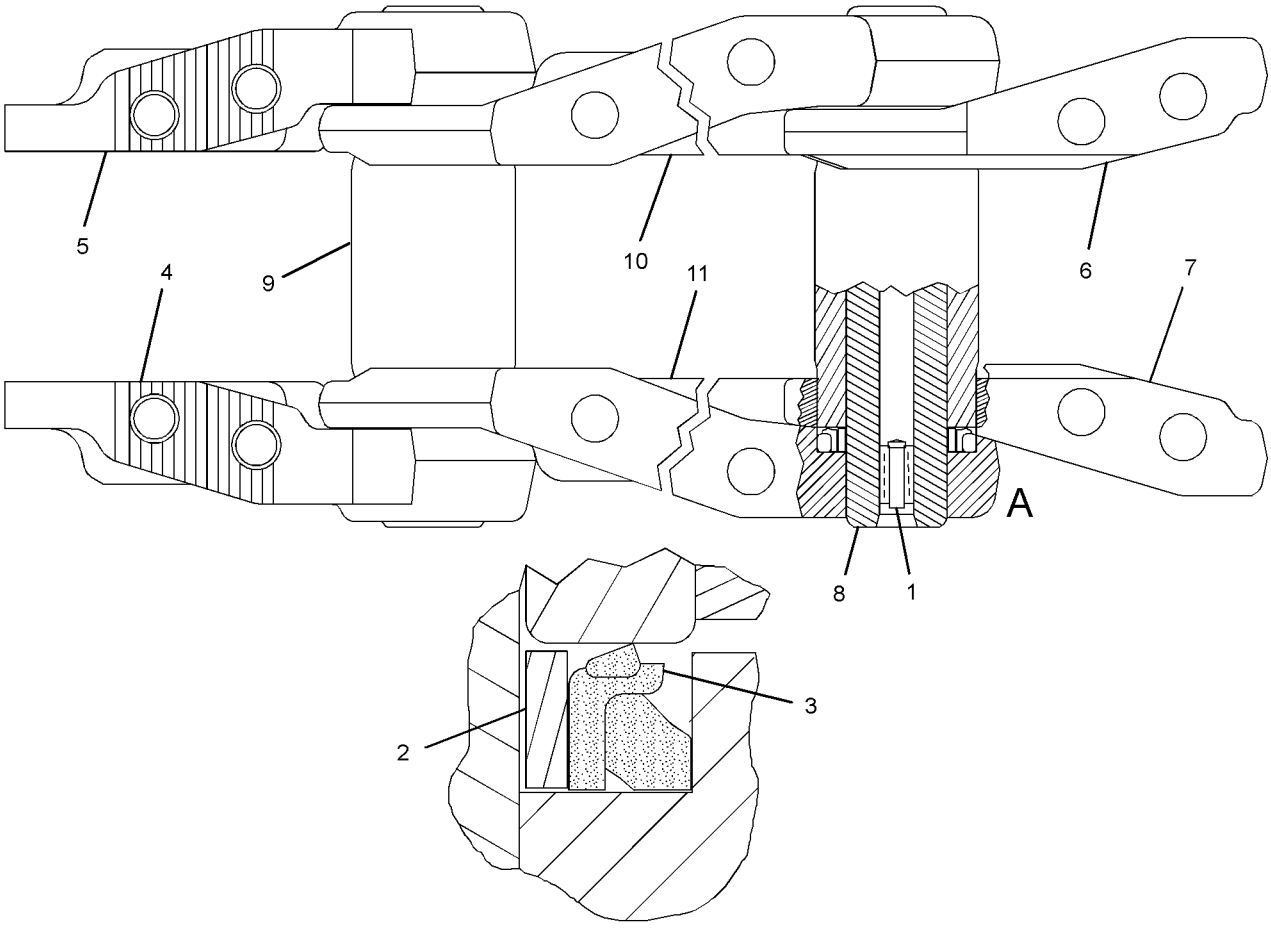

VIEW OF AREA A

GRAPHIC #1 **<END>** g01229652

115-6303 LINK AS-TRACK

S/N: DJR1-UP
SEALED, LUBRICATED, HEAVY DUTY
PART OF 115-6313, 115-6314 TRACK GP
ALSO AN ATTACHMENT

SMCS-4169, 4171 **i04660771**

NOTE	REF NO	GRAPHIC REF	PART NUMBER	QTY	PART NAME 1 2 3 4 5 6 (PRODUCT LEVEL)	SEE PAGE
	1	1	**6Y-0473**	41	PLUG-CLEAR	
	2	1	**7G-4332**	41	STOPPER	
	3	1	**152-8073**	82	RING-THRUST	
	4	1	**239-7943**	82	SEAL AS	
	5	1	**6I-9239**	40	LINK-TRACK (RH)	
	6	1	**6I-9240**	40	LINK-TRACK (LH)	
	7	1	**6I-9243**	1	LINK-TRACK MASTER (BUSHING END, RH)	
	8	1	**6I-9244**	1	LINK-TRACK MASTER (BUSHING END, LH)	
	9	1	**6I-9241**	1	LINK-TRACK MASTER (PIN END, RH)	
	10	1	**6I-9242**	1	LINK-TRACK MASTER (PIN END, LH)	
	11	1	**115-4924**	41	BUSHING-TRACK	
	12	1	**115-4923**	41	PIN-TRACK	

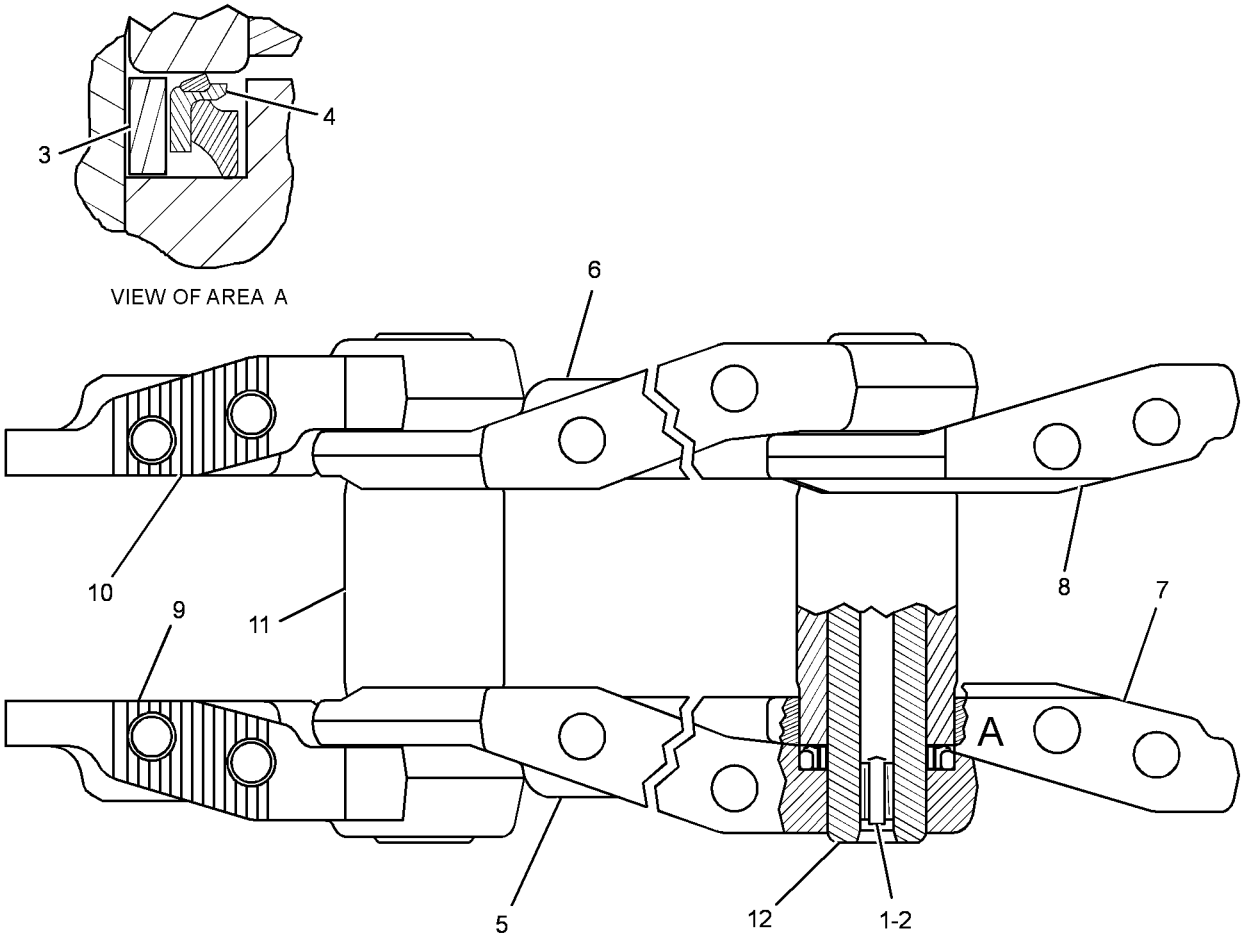

GRAPHIC #1 **<END>** g02796655

164-2879 LUBRICATION GP-PIVOT SHAFT

S/N: DSH1-UP; DLN1-UP; DJR1-UP

PART OF 313-3338, 313-3759, 379-6225 CHASSIS AR

SMCS-3286 **i04711311**

NOTE	REF NO	GRAPHIC REF	PART NUMBER	QTY	PART NAME 1 2 3 4 5 6 (PRODUCT LEVEL)	SEE PAGE
	1	1	**9W-1694**	1	PAD	
	2	1	**9G-5127**	1	BREATHER (PIVOT SHAFT OIL TANK)	
	3	1	**9U-9409**	1	TANK (PIVOT SHAFT OIL)	
	4	1	**9W-1693**	1	SUPPORT AS	
		1	**2R-1694**	2	SPACER	
	5	1	**9W-1695**	1	PAD	
	6	1	**9W-8277**	1	CAP AS-OIL FILLER (PIVOT SHAFT)	
I	7	1	**205-5165**	1	HOSE AS	
	8	1	*148-8324*	1	CONNECTOR AS	
		1	**3K-0360**	1	SEAL-O-RING	
		1	**6V-9746**	1	SEAL-O-RING	
		1	**6V-9874**	1	CONNECTOR	
	9	1	*148-8360*	1	ELBOW AS	
		1	**6V-9182**	1	ELBOW	
		1	**6V-9746**	1	SEAL-O-RING	
		1	**7M-8485**	1	SEAL-O-RING	
	10	1	**1S-0994**	4	CLIP	
	11	1	**5P-8167**	2	BOLT (3/8-16X0.625-IN)	
	12	1	**5S-7349**	1	BOLT (1/4-20X0.5-IN)	
	13	1	**5S-7379**	4	BOLT (3/8-16X0.875-IN)	
	14	1	**8T-4205**	1	WASHER-HARD (7.2X14.5X2-MM THK)	
	15	1	**8T-4896**	6	WASHER-HARD (10.2X18.5X2.5-MM THK)	
	16	1	**200-6345**	1	MOUNT (DUAL SWIVEL)	
	17	1	**204-2281**	2	STRAP-CABLE	

I-REFER TO HYDRAULIC INFORMATION SYSTEM

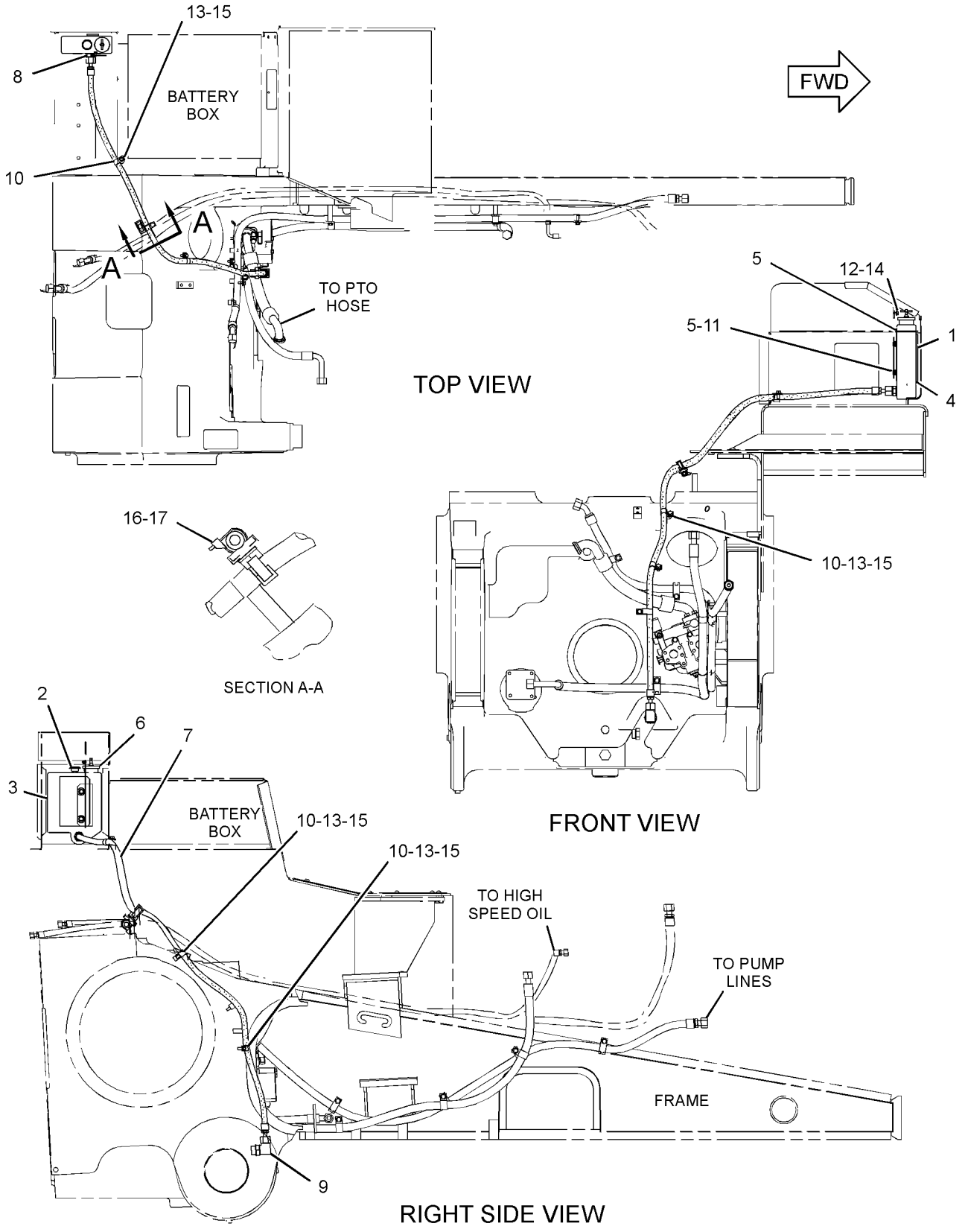

GRAPHIC #1 **<END>** g02825847

163-8691 MOUNTING GP-CARRIER ROLLER

S/N: DSH1-UP; DLN1-UP; DJR1-UP
PART OF 379-3574 ROLLER AR-TRACK CARRIER, 387-3578 UNDERCARRIAGE AR
ALSO AN ATTACHMENT

SMCS-4154 **i04631412**

NOTE	REF NO	GRAPHIC REF	PART NUMBER	QTY	PART NAME 1 2 3 4 5 6 (PRODUCT LEVEL)	SEE PAGE
	1	1	**163-2160**	1	BRACKET	
	2	1	**7X-0370**	2	BOLT (3/4-10X3.5-IN)	
	3	1	**7X-0404**	4	BOLT (1-8X2.5-IN)	
	4	1	**8T-4994**	2	WASHER-HARD (20X36.5X3.5-MM THK)	
	5	1	**8T-5361**	4	WASHER-HARD (28X49X5-MM THK)	

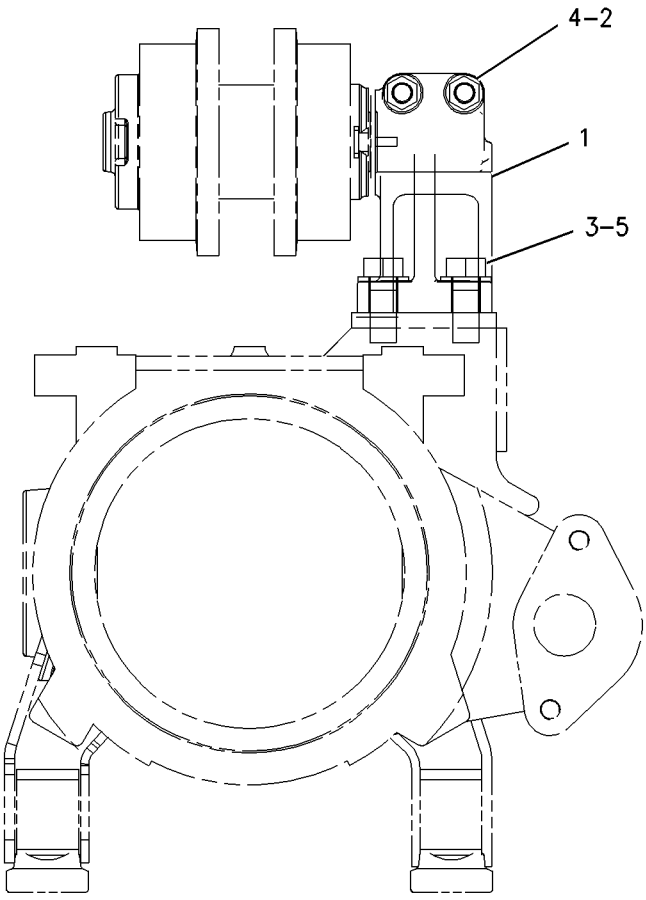

GRAPHIC #1 **<END>** g00725781

UNDERCARRIAGE

125-4180 ROLLER AR-TRACK

S/N: DSH1-UP; DLN1-UP

PART OF 203-6523, 203-6525, 203-6527, 203-6528 GUIDING AR-UNDERCARRIAGE AN ATTACHMENT

SMCS-4180 **i04662064**

NOTE	PART NUMBER	QTY	PART NAME 1 2 3 4 5 6 (PRODUCT LEVEL)	SEE PAGE
Y	**323-5931**	10	ROLLER GP-TRACK-DOUBLE FLANGE	375
	1D-4630	40	BOLT (7/8-9X4-IN)	
	273-3996	20	CAP-TRACK ROLLER	
	9H-1031	40	WASHER-HARD (24X41.5X6-MM THK)	

Y-SEPARATE ILLUSTRATION

<END>

379-3574 ROLLER AR-TRACK CARRIER

S/N: DSH1-UP; DJR1-UP

AN ATTACHMENT

SMCS-4154 **i04631415**

NOTE	REF NO	GRAPHIC REF	PART NUMBER	QTY	PART NAME 1 2 3 4 5 6 (PRODUCT LEVEL)	SEE PAGE
Y	1	1	**1P-8717**	2	ROLLER GP-TRACK CARRIER	368
Y	2	1	*163-8691*	2	MOUNTING GP-CARRIER ROLLER	365

Y-SEPARATE ILLUSTRATION

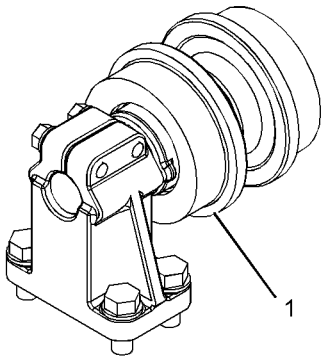

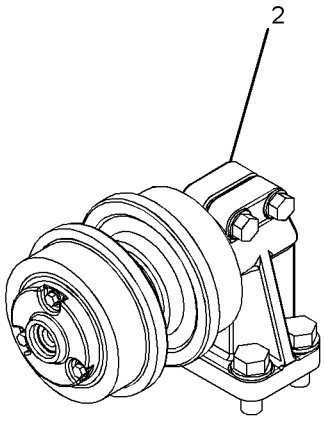



GRAPHIC #1 **<END>** g02791475

UNDERCARRIAGE

1P-8717 ROLLER GP-TRACK CARRIER

S/N: DSH1-UP; DJR1-UP
PART OF 379-3574 ROLLER AR-TRACK CARRIER
AN ATTACHMENT

SMCS-4154 **i04631392**

NOTE	REF NO	GRAPHIC REF	PART NUMBER	QTY	PART NAME 1 2 3 4 5 6 (PRODUCT LEVEL)	SEE PAGE
	1	1	**7H-4574**	1	RING	
	2	1	**1P-8715**	1	SHAFT	
	3	1	**1H-8720**	1	SEAL-O-RING	
	4	1	**7H-4571**	1	COLLAR AS	
	4A	1	**1M-4291**	2	DOWEL	
	5	1	**1M-8747**	1	SEAL GP-DUO-CONE	
	5A	1	**8H-2262**	2	RING-TORIC	
	6	1	**9S-3581**	2	CUP-BEARING	
	7	1	**1P-8716**	1	ROLLER AS	
	8	1	**9S-3582**	2	CONE-BEARING	
	9	1	**8P-6188**	1	PLATE-RETAINER	
	10	1	**2H-6338**	1	SEAL-O-RING	
	11	1	**0S-1594**	3	BOLT (3/8-16X1-IN)	
	12	1	**5M-2894**	3	WASHER-HARD (10.2X18.5X2.5-MM THK)	
	13	1	**6V-4791**	2	BOLT (3/8-24X0.75-IN)	
	15	1	**2P-0347**	1	PLUG	
	16	1	**5M-2043**	1	COVER-ROLLER	
	17	1	**1S-8947**	1	SEAL-O-RING	
					PARTS SHOWN IN GRAPHIC(S) WITHOUT A REFERENCE NUMBER ARE NOT SERVICED SEPARATELY	

1P-8717 **ROLLER GP-TRACK CARRIER** *(contd.)* **i04631392**

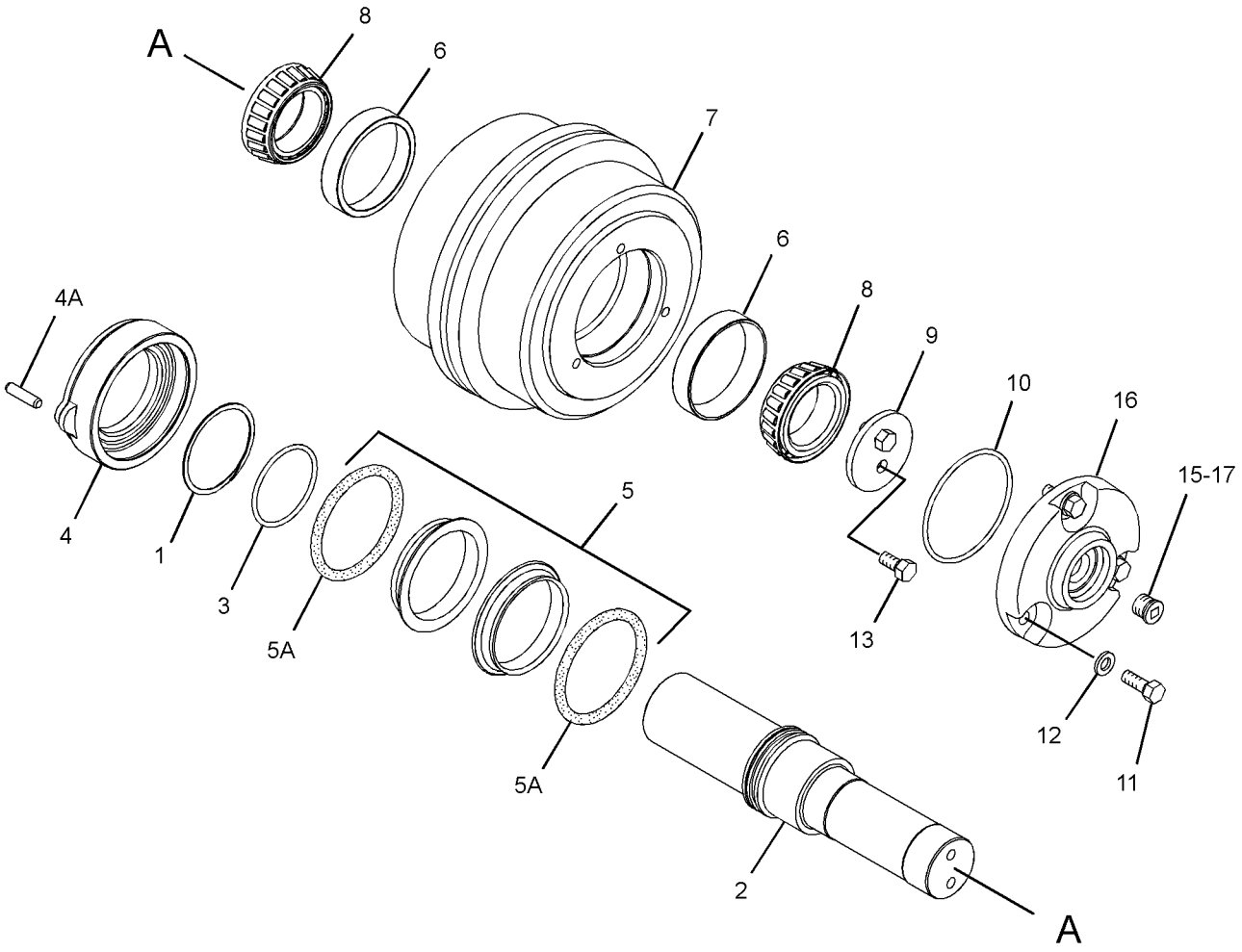

GRAPHIC #1 **<END>** g02838922

UNDERCARRIAGE

360-2560 ROLLER GP-TRACK CARRIER

S/N: DLN1-UP

PART OF 387-3578 UNDERCARRIAGE AR

SMCS-4154 **i04714870**

NOTE	REF NO	GRAPHIC REF	PART NUMBER	QTY	PART NAME 1 2 3 4 5 6 (PRODUCT LEVEL)	SEE PAGE
	1	1	**6Y-0925**	1	SEAL GP-DUO-CONE	
	1A	1	**8H-2262**	2	RING-TORIC	
	2	1	**8P-6188**	1	PLATE-RETAINER	
	3	1	**9S-3581**	2	CUP-BEARING	
	4	1	**9S-3582**	2	CONE-BEARING	
M	5	1	**192-4744**	2	BOLT (M10X1.5X20-MM)	
	6	1	**7H-3171**	1	PLUG-PIPE	
					PARTS SHOWN IN GRAPHIC(S) WITHOUT A REFERENCE NUMBER ARE NOT SERVICED SEPARATELY	

M-METRIC PART

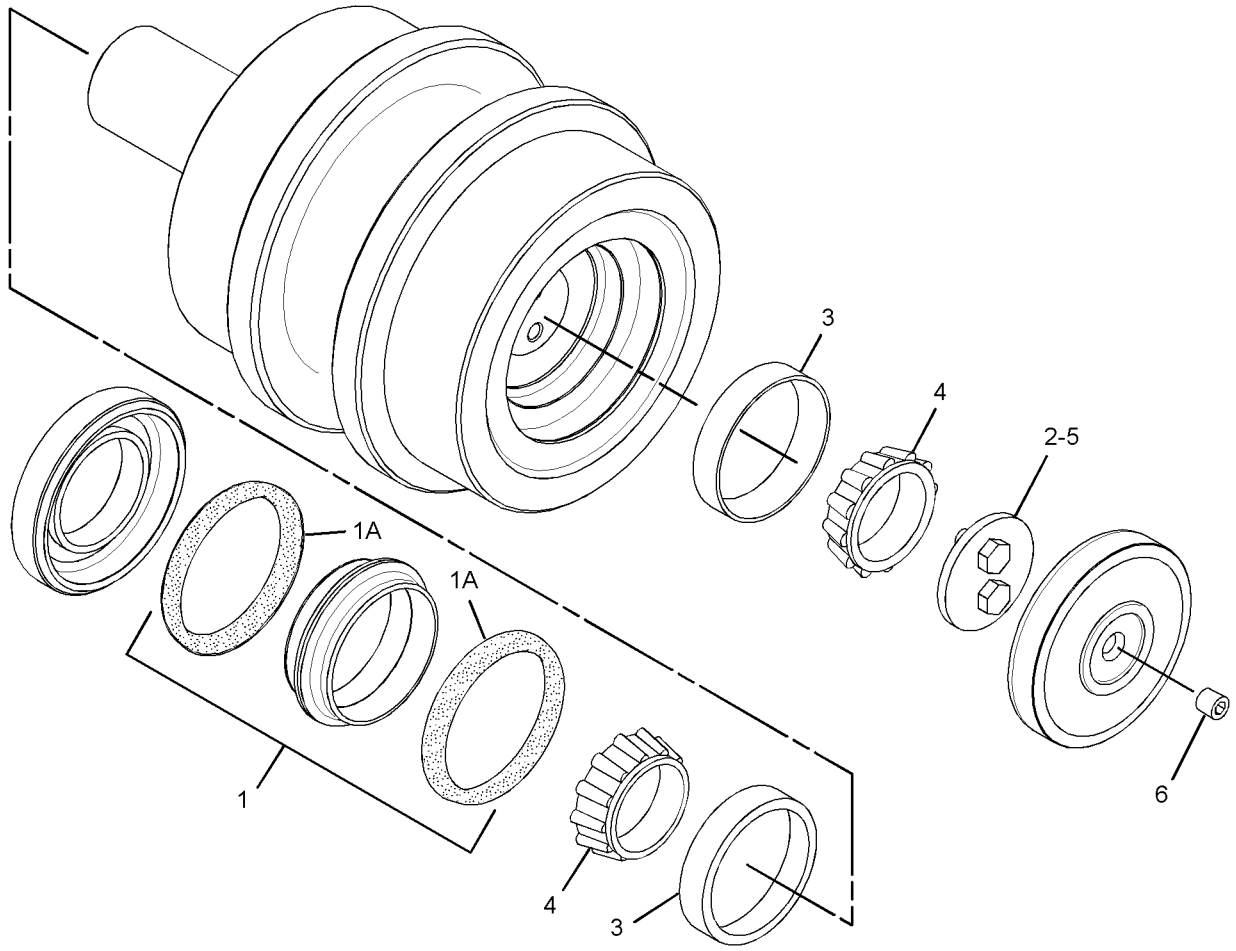

GRAPHIC #1 **<END>** g02372716

125-4179 ROLLER GP-TRACK-DOUBLE FLANGE

S/N: DSH1-UP; DLN1-UP; DJR1-UP

PART OF 379-3578, 379-3579, 387-3578 UNDERCARRIAGE AR

SMCS-4180 **i04728852**

NOTE	PART NUMBER	QTY	PART NAME 1 2 3 4 5 6 (PRODUCT LEVEL)	SEE PAGE
YR	**231-3091**	1	ROLLER GP-TRACK-DOUBLE FLANGE	372
	1D-4629	4	BOLT (7/8-9X3.5-IN)	
	5P-8249	4	WASHER-HARD (24X41.5X4-MM THK)	

R-REMFG PART MAY BE AVAILABLE
Y-SEPARATE ILLUSTRATION

<END>

231-3091 ROLLER GP-TRACK-DOUBLE FLANGE*R

S/N: DSH1-UP; DLN1-UP; DJR1-UP

PART OF 125-4179 ROLLER GP-TRACK-DOUBLE FLANGE

SMCS-4180 **i04728929**

NOTE	REF NO	GRAPHIC REF	PART NUMBER	QTY	PART NAME 1 2 3 4 5 6 (PRODUCT LEVEL)	SEE PAGE
	1	1	**4H-9105**	2	SEAL-O-RING	
	2	1	**118-1628**	1	SHAFT-ROLLER	
	3	1	**6Y-0454**	1	STOPPER AS	
	3A	1	**6Y-0473**	1	PLUG-CLEAR	
	3B	1	**7G-4332**	1	STOPPER	
	4	1	**121-1258**	2	RING-RETAINING	
	5	1	**8F-6711**	2	SEAL-O-RING	
	6	1	**124-8255**	1	RIM AS-DOUBLE FLANGE	
	7	1	**124-8267**	2	BUSHING AS	
					(EACH INCLUDES)	
	7A	1	**8P-6651**	1	BEARING AS	
	7B	1	**9B-2289**	2	PIN	
	8	1	**124-8262**	2	COLLAR-ROLLER END	
	9	1	**171-5882**	2	SEAL GP-DUO-CONE	
					(EACH INCLUDES)	
	9A	1	**162-2166**	2	RING-TORIC	
	10	1	**6H-2953**	2	RING-LOCK	

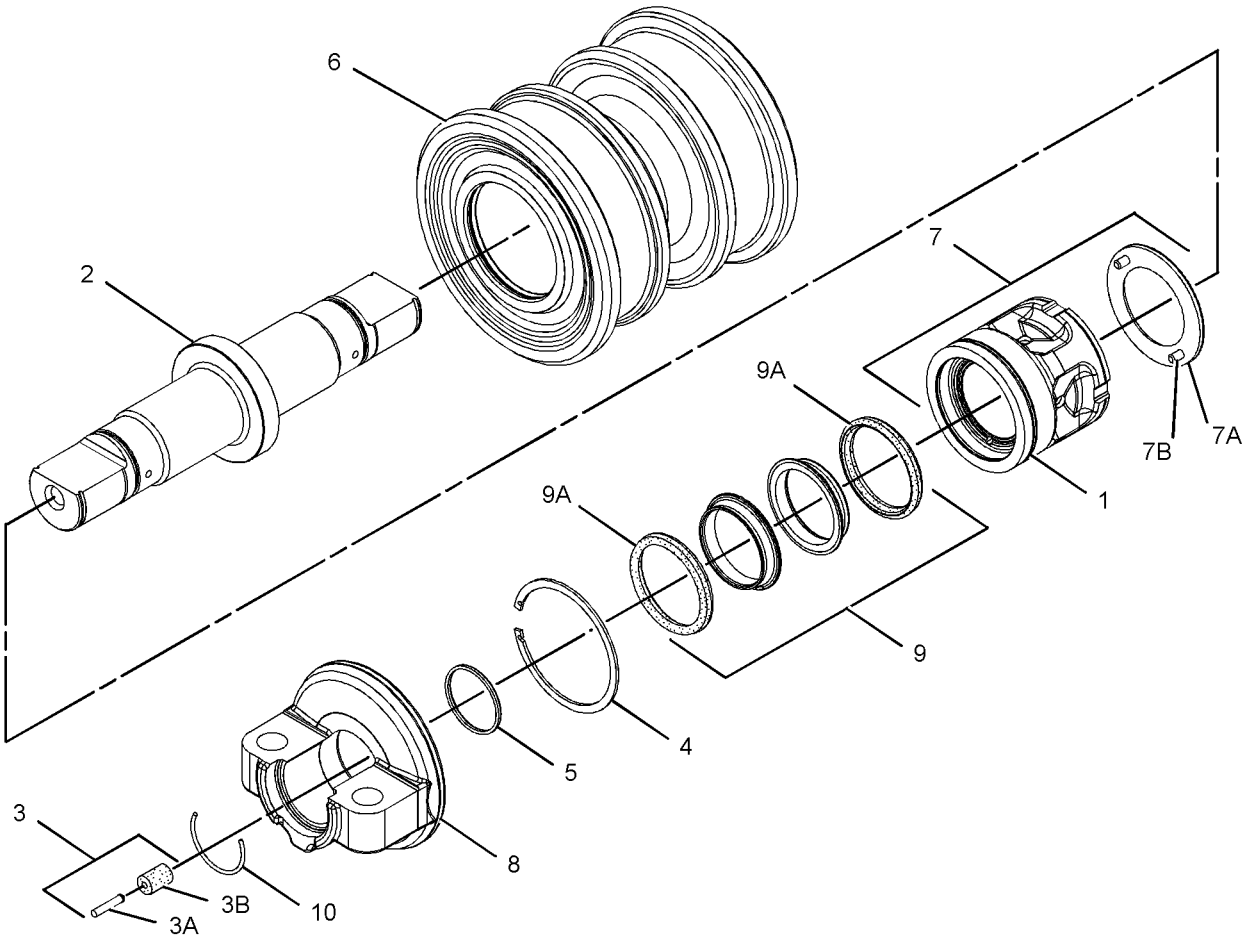

GRAPHIC #1 **<END>** g02839777

248-5317 ROLLER GP-TRACK-DOUBLE FLANGE—COLD WEATHER

S/N: DSH1-UP; DLN1-UP; DJR1-UP
PART OF 248-5318 ROLLER GP-TRACK-DOUBLE FLANGE
FIELD REPLACEMENT FOR 248-5318—PAGE 374
AN ATTACHMENT

SMCS-4180 **i04734390**

NOTE	REF NO	GRAPHIC REF	PART NUMBER	QTY	PART NAME 1 2 3 4 5 6 (PRODUCT LEVEL)	SEE PAGE
	1	1	**6H-2953**	2	RING-LOCK	
	2	1	**118-1628**	1	SHAFT-ROLLER	
	3	1	**124-8262**	2	COLLAR-ROLLER END	
	4	1	**121-1258**	2	RING-RETAINING	
	5	1	**4H-9105**	2	SEAL-O-RING	
	6	1	**124-8255**	1	RIM AS-DOUBLE FLANGE	
	7	1	**124-8267**	2	BUSHING AS	
					(EACH INCLUDES)	
		1	**8P-6651**	1	BEARING AS	
		1	**9B-2289**	2	PIN	
	8	1	**171-5882**	2	SEAL GP-DUO-CONE	
					(EACH INCLUDES)	
		1	**162-2166**	2	RING-TORIC	
	9	1	**8F-6711**	2	SEAL-O-RING	
	10	1	*6Y-0454*	1	STOPPER AS	
		1	**6Y-0473**	1	PLUG-CLEAR	
		1	**7G-4332**	1	STOPPER	

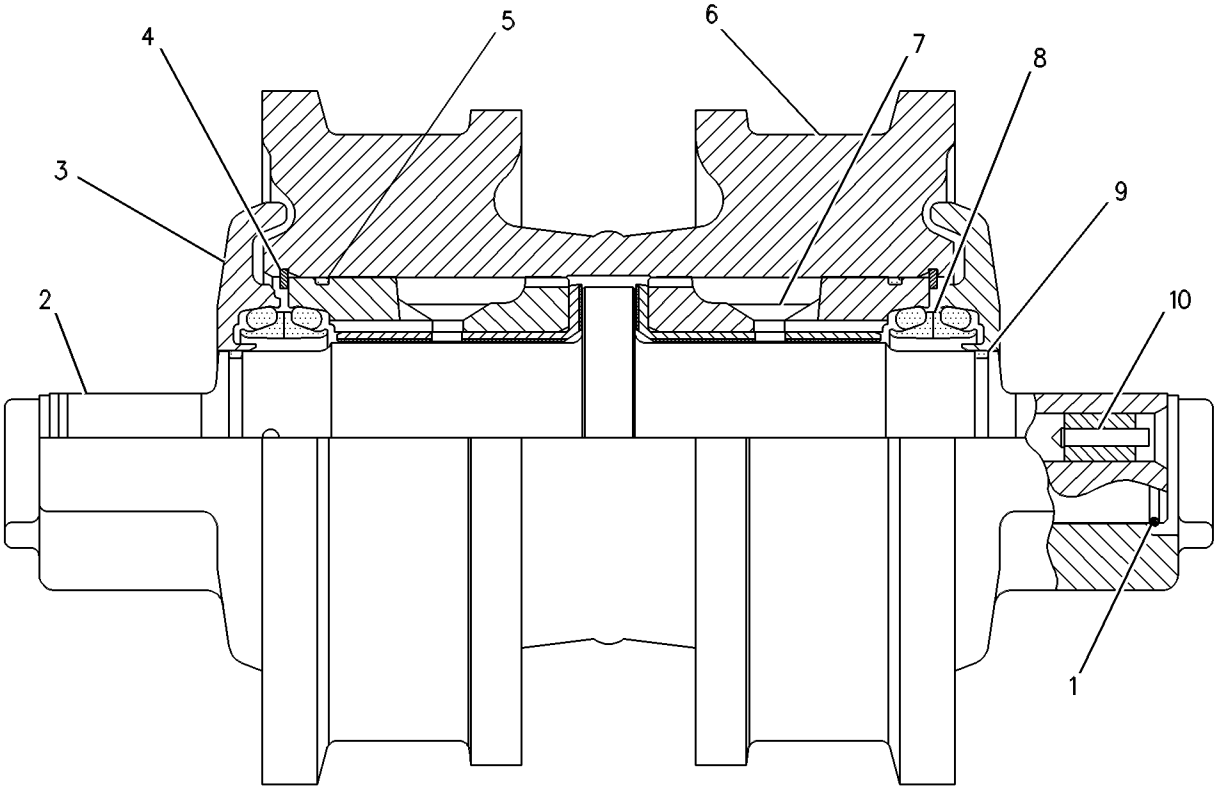

GRAPHIC #1 **<END>** g00255304

248-5318 ROLLER GP-TRACK-DOUBLE FLANGE—COLD WEATHER

S/N: DSH1-UP; DLN1-UP; DJR1-UP
PART OF 375-9603, 384-9811, 384-9812 COLD WEATHER AR
FIELD REPLACEMENT ORDER 248-5317—PAGE 373
AN ATTACHMENT

SMCS-4180 **i04629645**

NOTE	PART NUMBER	QTY	PART NAME 1 2 3 4 5 6 (PRODUCT LEVEL)	SEE PAGE
Y	**248-5317**	1	ROLLER GP-TRACK-DOUBLE FLANGE	373
	1D-4629	4	BOLT (7/8-9X3.5-IN)	
	5P-8249	4	WASHER-HARD (24X41.5X4-MM THK)	

Y-SEPARATE ILLUSTRATION

<END>

UNDERCARRIAGE

323-5931 ROLLER GP-TRACK-DOUBLE FLANGE

S/N: DSH1-UP; DLN1-UP
PART OF 125-4180 ROLLER AR-TRACK
AN ATTACHMENT

SMCS-4180 **i04662050**

NOTE	REF NO	GRAPHIC REF	PART NUMBER	QTY	PART NAME 1 2 3 4 5 6 (PRODUCT LEVEL)	SEE PAGE
					INDIVIDUAL PARTS NOT SERVICED SEPARATELY	

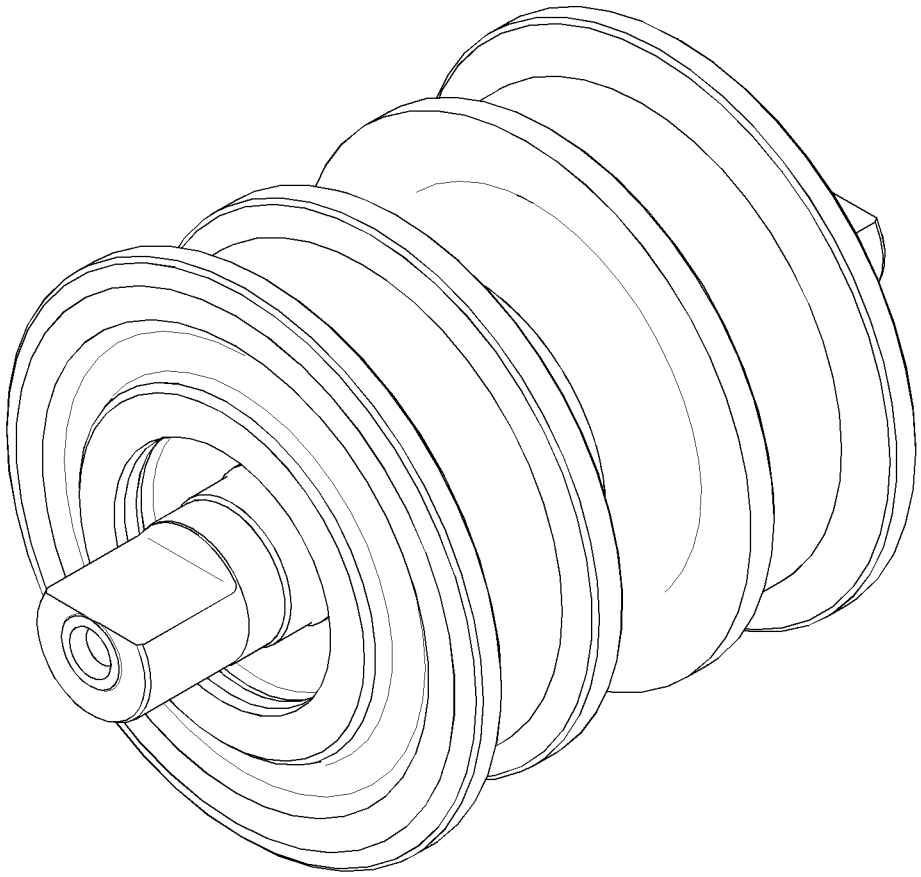

GRAPHIC #1 **<END>** g01972217

125-4178 ROLLER GP-TRACK-SINGLE FLANGE

S/N: DSH1-UP; DLN1-UP; DJR1-UP

PART OF 379-3578, 379-3579, 387-3578 UNDERCARRIAGE AR

SMCS-4180 **i04728855**

NOTE	PART NUMBER	QTY	PART NAME 1 2 3 4 5 6 (PRODUCT LEVEL)	SEE PAGE
YR	**231-3090**	1	ROLLER GP-TRACK-SINGLE FLANGE	377
	1D-4629	4	BOLT (7/8-9X3.5-IN)	
	5P-8249	4	WASHER-HARD (24X41.5X4-MM THK)	

R-REMFG PART MAY BE AVAILABLE
Y-SEPARATE ILLUSTRATION

<END>

231-3090 ROLLER GP-TRACK-SINGLE FLANGE*R

S/N: DSH1-UP; DLN1-UP; DJR1-UP

PART OF 125-4178 ROLLER GP-TRACK-SINGLE FLANGE

SMCS-4180 **i04728930**

NOTE	REF NO	GRAPHIC REF	PART NUMBER	QTY	PART NAME 1 2 3 4 5 6 (PRODUCT LEVEL)	SEE PAGE
	1	1	**4H-9105**	2	SEAL-O-RING	
	2	1	**118-1628**	1	SHAFT-ROLLER	
	3	1	**6Y-0454**	1	STOPPER AS	
	3A	1	**6Y-0473**	1	PLUG-CLEAR	
	3B	1	**7G-4332**	1	STOPPER	
	4	1	**121-1258**	2	RING-RETAINING	
	5	1	**8F-6711**	2	SEAL-O-RING	
	6	1	**124-8251**	1	RIM AS-SINGLE FLANGE	
	7	1	**124-8267**	2	BUSHING AS	
					(EACH INCLUDES)	
	7A	1	**8P-6651**	1	BEARING AS	
	7B	1	**9B-2289**	2	PIN	
	8	1	**124-8262**	2	COLLAR-ROLLER END	
	9	1	**171-5882**	2	SEAL GP-DUO-CONE	
					(EACH INCLUDES)	
	9A	1	**162-2166**	2	RING-TORIC	
	10	1	**6H-2953**	2	RING-LOCK	

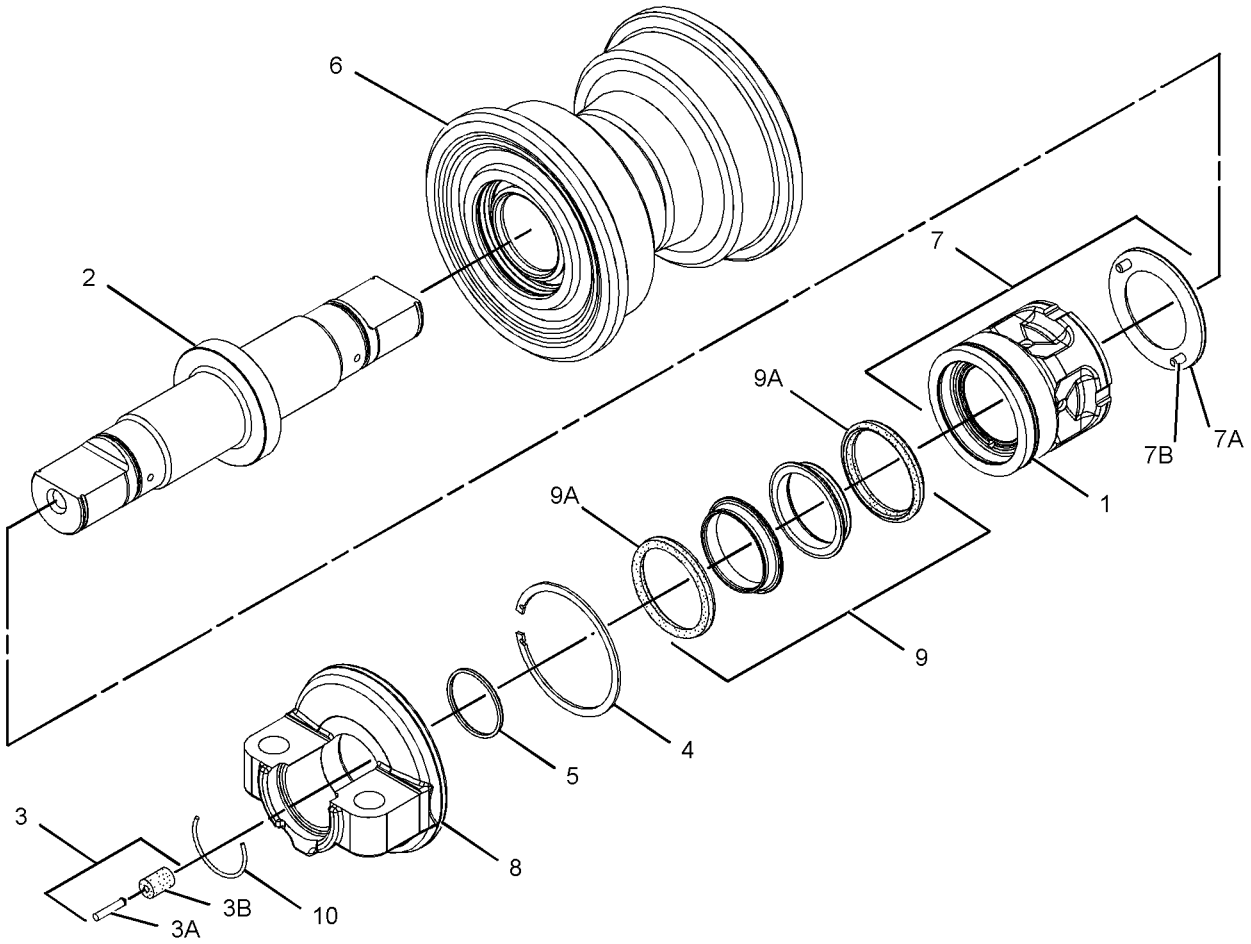

GRAPHIC #1 **<END>** g02838837

248-5319 ROLLER GP-TRACK-SINGLE FLANGE—COLD WEATHER

S/N: DSH1-UP; DLN1-UP; DJR1-UP
PART OF 248-5320 ROLLER GP-TRACK-SINGLE FLANGE
AN ATTACHMENT

SMCS-4180 **i04739633**

NOTE	REF NO	GRAPHIC REF	PART NUMBER	QTY	PART NAME 1 2 3 4 5 6 (PRODUCT LEVEL)	SEE PAGE
	1	1	**124-8262**	2	COLLAR-ROLLER END	
	2	1	**118-1628**	1	SHAFT-ROLLER	
	3	1	**171-5882**	2	SEAL GP-DUO-CONE	
					(EACH INCLUDES)	
	3A	1	**162-2166**	2	RING-TORIC	
	4	1	**121-1258**	2	RING-RETAINING	
	5	1	**4H-9105**	2	SEAL-O-RING	
	6	1	**124-8251**	1	RIM AS-SINGLE FLANGE	
	7	1	**124-8267**	2	BUSHING AS	
					(EACH INCLUDES)	
	7A	1	**8P-6651**	1	BEARING AS	
		1	**9B-2289**	2	PIN	
	8	1	**8F-6711**	2	SEAL-O-RING	
	9	1	*6Y-0454*	1	STOPPER AS	
		1	**6Y-0473**	1	PLUG-CLEAR	
		1	**7G-4332**	1	STOPPER	
	10	1	**6H-2953**	2	RING-LOCK	

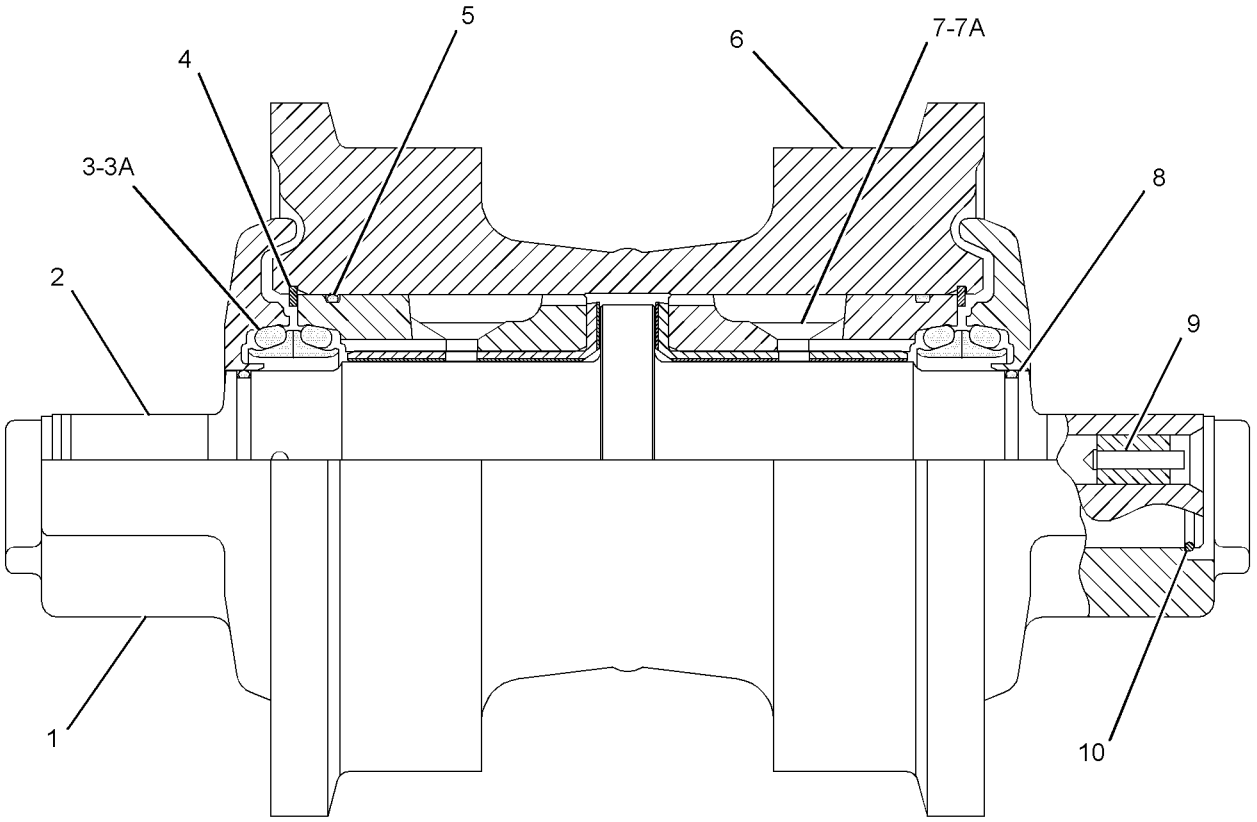

GRAPHIC #1 **<END>** g02844836

248-5320 ROLLER GP-TRACK-SINGLE FLANGE—COLD WEATHER

S/N: DSH1-UP; DLN1-UP; DJR1-UP
PART OF 375-9603, 384-9811, 384-9812 COLD WEATHER AR
FIELD REPLACEMENT ORDER 248-5319—PAGE 378
AN ATTACHMENT

SMCS-4180 **i04629657**

NOTE	PART NUMBER	QTY	PART NAME 1 2 3 4 5 6 (PRODUCT LEVEL)	SEE PAGE
Y	**248-5319**	1	ROLLER GP-TRACK-SINGLE FLANGE	378
	1D-4629	4	BOLT (7/8-9X3.5-IN)	
	5P-8249	4	WASHER-HARD (24X41.5X4-MM THK)	

Y-SEPARATE ILLUSTRATION

<END>

UNDERCARRIAGE

108-1812 TRACK ADJUSTER & RECOIL GP

S/N: DSH1-UP; DLN1-UP; DJR1-UP

PART OF 379-3578, 379-3579, 387-3578 UNDERCARRIAGE AR

SMCS-4157, 4158 **i04659170**

NOTE	REF NO	GRAPHIC REF	PART NUMBER	QTY	PART NAME 1 2 3 4 5 6 (PRODUCT LEVEL)	SEE PAGE
	1	1	**112-3041**	1	CYLINDER	
	2	1	**112-3042**	1	RETAINER	
	3	1	**112-4919**	1	PLATE AS	
	4	1	**8E-2112**	1	SPRING	
	5	1	**9S-8009**	1	PLUG-O-RING	
	6	1	**4K-1388**	1	SEAL-O-RING	
	7	1	**2J-6274**	1	SEAL-O-RING	
	8	1	**0S-1571**	2	BOLT (3/8-16X1.75-IN)	
	9	1	**5M-2894**	2	WASHER-HARD (10.2X18.5X2.5-MM THK)	
	10	1	**3W-2369**	1	PLATE AS	
	11	1	**167-2323**	1	SEAL-U-CUP	
	12	1	**8T-9393**	4	BOLT (5/8-11X1.5-IN)	
	13	1	**9X-8257**	4	WASHER (17.5X30X3.5-MM THK)	
	14	1	**112-3043**	2	LOCK	
	15	1	**2S-5926**	1	VALVE-RELIEF	
	16	1	**190-8609**	1	VALVE-FILL	
	17	1	**3W-0640**	1	PISTON	

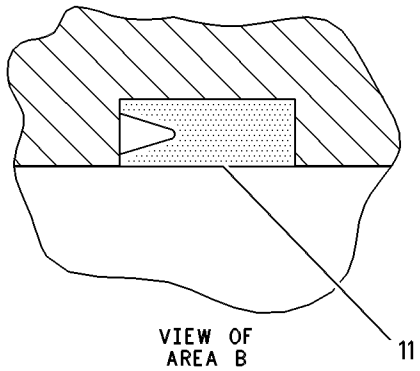

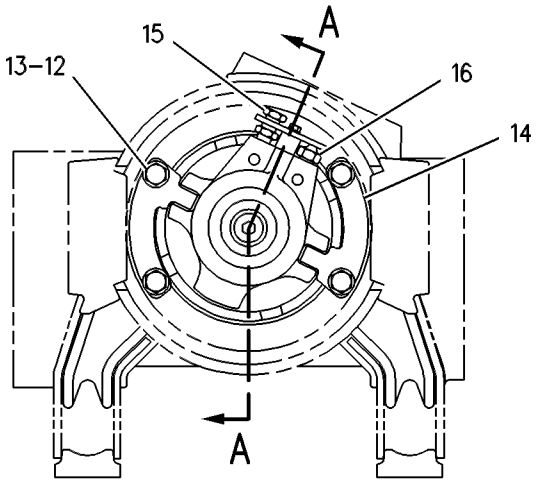

REAR VIEW

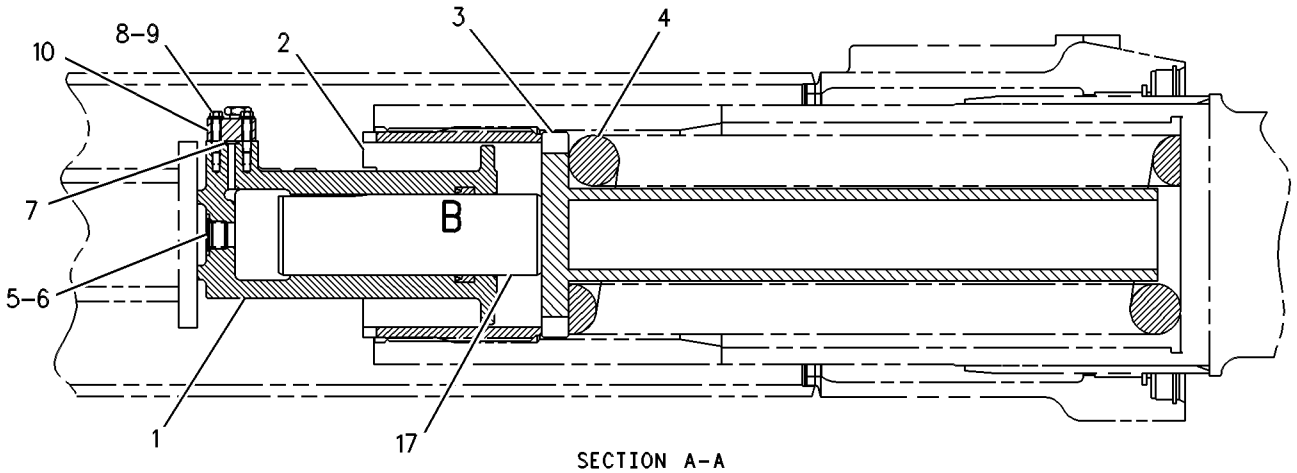

SECTION A-A

GRAPHIC #1 **<END>** g00255336

115-6307 TRACK GP–2-REQUIRED

S/N: DSH1-UP

560-MM (22-IN) GROUSER SHOE. SEALED, LUBRICATED, EXTREME SERVICE, HEAVY-DUTY

PART OF 379-3579 UNDERCARRIAGE AR

FOR USE WITH HEAVY DUTY ROLLERS, GUARDS, GUIDESTRIPS, CONVENTIONAL IDLERS

SMCS-4170 **i04659193**

NOTE	REF NO	GRAPHIC REF	PART NUMBER	QTY	PART NAME 1 2 3 4 5 6 (PRODUCT LEVEL)	SEE PAGE
Y	1	1	**115-6301**	1	LINK AS-TRACK	360
	2	1	**326-1136**	40	SHOE-TRACK	
	3	1	**2S-2140**	156	NUT-TRACK (7/8-14-THD)	
	4	1	**6V-1723**	2	BOLT-TRACK (7/8-14X3.42-IN)	
	5	1	**7H-3599**	156	BOLT-TRACK (7/8-14X2.65-IN)	
	6	1	**9W-9058**	2	BOLT (7/8-14X4.57-IN)	

Y-SEPARATE ILLUSTRATION

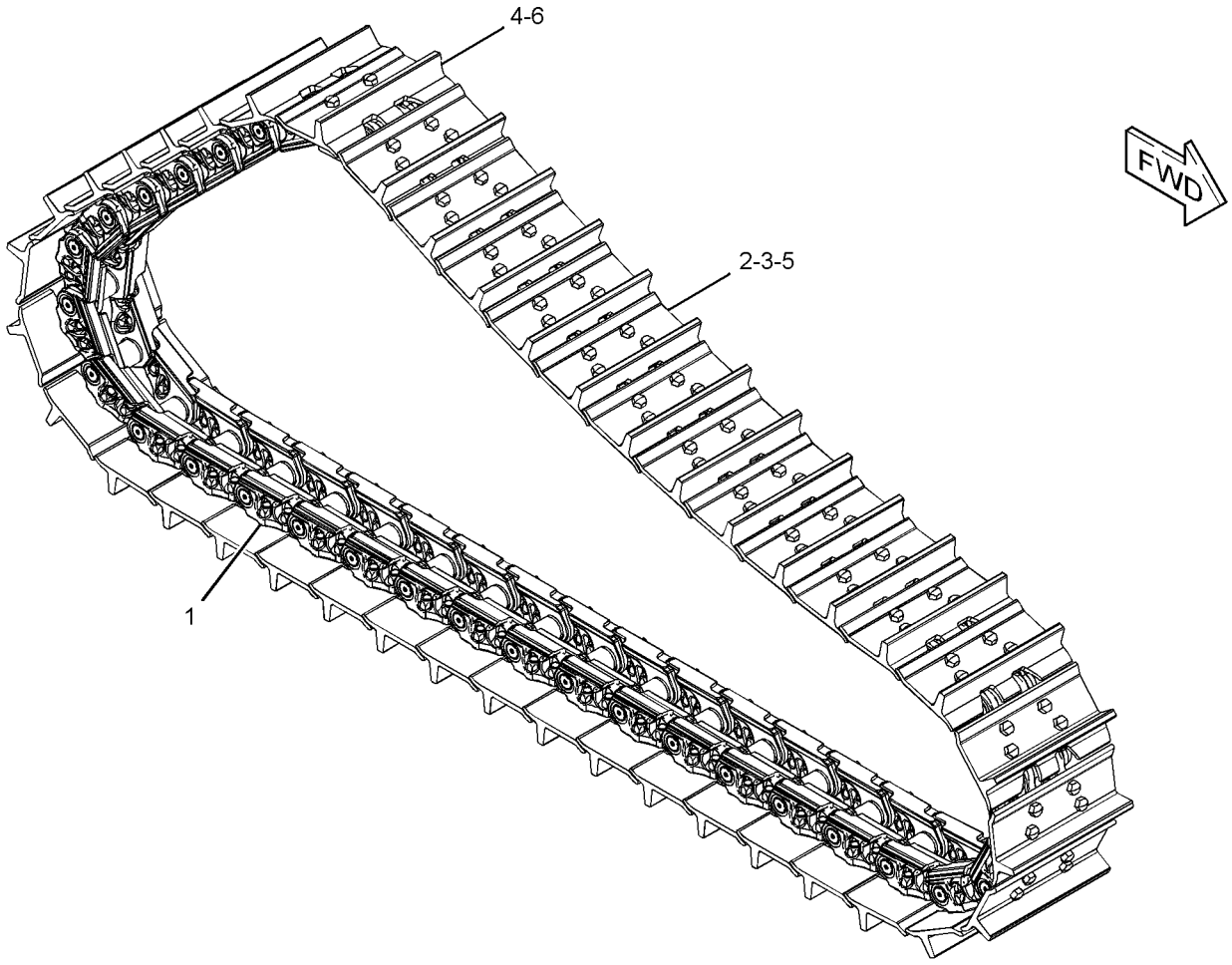

GRAPHIC #1 **<END>** g02798363

115-6308 TRACK GP—2-REQUIRED

S/N: DSH1-UP

610-MM (24-IN) GROUSER SHOE. SEALED, LUBRICATED, EXTREME SERVICE, HEAVY DUTY
FOR USE WITH HEAVY DUTY ROLLERS, GUARDS, GUIDESTRIPS, CONVENTIONAL IDLERS
AN ATTACHMENT

SMCS-4170 **i04660592**

NOTE	PART NUMBER	QTY	PART NAME 1 2 3 4 5 6 (PRODUCT LEVEL)	SEE PAGE
Y	**115-6301**	1	LINK AS-TRACK	360
	9W-9058	2	BOLT (7/8-14X4.57-IN)	
	7H-3599	156	BOLT-TRACK (7/8-14X2.65-IN)	
	6V-1723	2	BOLT-TRACK (7/8-14X3.42-IN)	
	2S-2140	156	NUT-TRACK (7/8-14-THD)	
	7T-5969	40	SHOE-TRACK	
Y-SEPARATE ILLUSTRATION				

<END>

115-6310 TRACK GP—2-REQUIRED, HEAVY-DUTY

S/N: DLN1-UP

915-MM (36-INCH) GROUSER SHOE. SEALED, LUBRICATED, MODERATE SERVICE
PART OF 387-3578 UNDERCARRIAGE AR
FOR USE WITH HEAVY-DUTY ROLLERS, GUARDS, GUIDESTRIPS, & CONVENTIONAL IDLERS

SMCS-4170 **i04714792**

NOTE	PART NUMBER	QTY	PART NAME 1 2 3 4 5 6 (PRODUCT LEVEL)	SEE PAGE
Y	**115-6302**	1	LINK AS-TRACK	361
	9W-9058	2	BOLT (7/8-14X4.57-IN)	
	6V-1723	2	BOLT-TRACK (7/8-14X3.42-IN)	
	7H-3599	168	BOLT-TRACK (7/8-14X2.65-IN)	
	2S-2140	168	NUT-TRACK (7/8-14-THD)	
	6I-9912	43	SHOE-TRACK	
Y-SEPARATE ILLUSTRATION				

<END>

115-6313 TRACK GP—2-REQUIRED

S/N: DJR1-UP

560-MM (22-IN) GROUSER SHOE. SEALED, LUBRICATED, EXTREME SERVICE, HEAVY DUTY
PART OF 379-3578 UNDERCARRIAGE AR
FOR USE WITH HEAVY DUTY ROLLERS, GUARDS, GUIDESTRIPS, CONVENTIONAL IDLERS

SMCS-4170 **i04659729**

NOTE	PART NUMBER	QTY	PART NAME 1 2 3 4 5 6 (PRODUCT LEVEL)	SEE PAGE
Y	**115-6303**	1	LINK AS-TRACK	362
	9W-9058	2	BOLT (7/8-14X4.57-IN)	
	7H-3599	160	BOLT-TRACK (7/8-14X2.65-IN)	
	6V-1723	2	BOLT-TRACK (7/8-14X3.42-IN)	
	2S-2140	160	NUT-TRACK (7/8-14-THD)	
	7T-2750	41	SHOE-TRACK	
Y-SEPARATE ILLUSTRATION				

<END>

UNDERCARRIAGE

115-6314 TRACK GP–2-REQUIRED

S/N: DJR1-UP

610-MM (24-IN) GROUSER SHOE. SEALED, LUBRICATED, EXTREME SERVICE, HEAVY DUTY
FOR USE WITH HEAVY DUTY ROLLERS, GUARDS, GUIDESTRIPS, CONVENTIONAL IDLERS
AN ATTACHMENT

SMCS-4170 **i04660810**

NOTE	PART NUMBER	QTY	PART NAME 1 2 3 4 5 6 (PRODUCT LEVEL)	SEE PAGE
Y	**115-6303**	1	LINK AS-TRACK	362
	9W-9058	2	BOLT (7/8-14X4.57-IN)	
	6V-1723	2	BOLT-TRACK (7/8-14X3.42-IN)	
	7H-3599	160	BOLT-TRACK (7/8-14X2.65-IN)	
	2S-2140	160	NUT-TRACK (7/8-14-THD)	
	7T-5969	41	SHOE-TRACK	
Y-SEPARATE ILLUSTRATION				

<END>

115-6316 TRACK GP–2-REQUIRED

S/N: DLN1-UP

915-MM (36-IN) SELF CLEANING SHOE. SEALED, LUBRICATED, HEAVY DUTY
AN ATTACHMENT

SMCS-4170 **i04660811**

NOTE	PART NUMBER	QTY	PART NAME 1 2 3 4 5 6 (PRODUCT LEVEL)	SEE PAGE
Y	**115-6302**	1	LINK AS-TRACK	361
	9W-9058	2	BOLT (7/8-14X4.57-IN)	
	7H-3599	84	BOLT-TRACK (7/8-14X2.65-IN)	
	116-8145	84	BOLT-TRACK (7/8-14X4.33-IN)	
	6V-1725	2	BOLT-TRACK MASTER (7/8-14X5.08-IN)	
	2S-2140	168	NUT-TRACK (7/8-14-THD)	
	115-6315	43	SHOE-TRACK	
Y-SEPARATE ILLUSTRATION				

<END>

379-3578 UNDERCARRIAGE AR

S/N: DJR1-UP

PART OF 379-6224 GENERAL AR

SMCS-4150 **i04730250**

NOTE	PART NUMBER	QTY	PART NAME 1 2 3 4 5 6 (PRODUCT LEVEL)	SEE PAGE
Y	*7T-6966*	1	BAR GP-EQUALIZER	336
Y	*7T-7789*	8	CAP GP-TRACK IDLER	340
Y	*379-3575*	1	FRAME GP-TELESCOPING RECOIL	342
Y	**192-0224**	4	IDLER GP-TRACK	358
Y	*125-4179*	8	ROLLER GP-TRACK-DOUBLE FLANGE	371
Y	*125-4178*	8	ROLLER GP-TRACK-SINGLE FLANGE	376
Y	*156-5341*	2	SEGMENT GP-SPROCKET	284
Y	*108-1812*	2	TRACK ADJUSTER & RECOIL GP	380
Y	*115-6313*	2	TRACK GP	382
Y-SEPARATE ILLUSTRATION				

<END>

UNDERCARRIAGE

379-3579 UNDERCARRIAGE AR

S/N: DSH1-UP

PART OF 313-3337 GENERAL AR

SMCS-4150 **i04728849**

NOTE	PART NUMBER	QTY	PART NAME 1 2 3 4 5 6 (PRODUCT LEVEL)	SEE PAGE
Y	*7T-6966*	1	BAR GP-EQUALIZER	336
Y	*142-7092*	8	CAP GP-TRACK IDLER	341
Y	*379-3576*	1	FRAME GP-TELESCOPING RECOIL	345
Y	*192-0220*	4	IDLER GP-TRACK	357
Y	*125-4179*	6	ROLLER GP-TRACK-DOUBLE FLANGE	371
Y	*125-4178*	8	ROLLER GP-TRACK-SINGLE FLANGE	376
Y	*156-5341*	2	SEGMENT GP-SPROCKET	284
Y	*108-1812*	2	TRACK ADJUSTER & RECOIL GP	380
Y	**115-6307**	2	TRACK GP	381

Y-SEPARATE ILLUSTRATION

<END>

387-3578 UNDERCARRIAGE AR

S/N: DLN1-UP

PART OF 313-3758 GENERAL AR

SMCS-4150 **i04730426**

NOTE	PART NUMBER	QTY	PART NAME 1 2 3 4 5 6 (PRODUCT LEVEL)	SEE PAGE
Y	*7T-6965*	1	BAR GP-EQUALIZER	334
Y	*142-7092*	8	CAP GP-TRACK IDLER	341
Y	*387-3579*	1	FRAME GP-TELESCOPING RECOIL	348
Y	*108-1814*	1	GUARD GP-TRACK GUIDE	351
Y	*192-0220*	4	IDLER GP-TRACK	357
Y	*163-8691*	2	MOUNTING GP-CARRIER ROLLER	365
Y	**360-2560**	2	ROLLER GP-TRACK CARRIER	370
Y	*125-4179*	6	ROLLER GP-TRACK-DOUBLE FLANGE	371
Y	*125-4178*	8	ROLLER GP-TRACK-SINGLE FLANGE	376
Y	*156-5341*	2	SEGMENT GP-SPROCKET	284
Y	*108-1812*	2	TRACK ADJUSTER & RECOIL GP	380
Y	**115-6310**	2	TRACK GP (HEAVY-DUTY)	382

Y-SEPARATE ILLUSTRATION

<END>

STEERING AND BRAKING SYSTEM

371-1767 CONTROL GP-STEERING & XMSN

S/N: DSH1-UP; DLN1-UP; DJR1-UP
PART OF 380-7870 CONTROL GP-STEERING & XMSN
ALSO AN ATTACHMENT

SMCS-3033 **i04609009**

NOTE	REF NO	GRAPHIC REF	PART NUMBER	QTY	PART NAME 1 2 3 4 5 6 (PRODUCT LEVEL)	SEE PAGE
	1	1	**6Y-2782**	1	SHAFT	
	2	1	**6Y-2780**	1	LEVER	
	3	1	**6V-8801**	2	NUT (3/8-16-THD)	
	4	1	**3H-3433**	1	PIN-SPRING	
	5	1	**6Y-2766**	2	WASHER-THRUST	
	6	2	**8S-2195**	3	BEARING-ROLLER	
	7	1	**6Y-2778**	1	SHAFT	
	8	1	**6Y-6850**	1	HANDLE	
	9	1	**6Y-7579**	1	HANDLE AS	
	10	2	**8F-7702**	1	SEAL-LIP TYPE	
	11	1	**5S-7343**	2	WASHER	
	12	1	**4B-1270**	1	SCREW-MACHINE (8-32X0.75-IN)	
	13	1	**8E-9483**	1	COLLAR (6-32-THD)	
	14	1	**8T-2540**	1	BOLT-SOCKET HEAD (6-32-THD)	
	15	1	**6Y-3140**	2	BALL JOINT AS	
	16	1,2	**6V-8187**	3	NUT (1/4-28-THD)	
	17	1	**365-3650**	2	CABLE AS	
	18	1	**8T-4896**	4	WASHER-HARD (10.2X18.5X2.5-MM THK)	
	19	1	**6Y-3141**	1	ROD AS	
	20	1	**6V-8183**	1	NUT-FULL (3/8-24-THD)	
	21	1	**9S-1354**	4	NUT (5/8-18-THD)	
	22	1	**6Y-2841**	2	BALL BEARING	
	23	1,2	**8T-5410**	2	SEAL-LIP TYPE	
	24	1	**2N-3680**	7	SCREW-HEAD (1/4-20X0.75-IN)	
	25	1	**6Y-2773**	1	COVER AS	
	26	1	**6Y-7573**	1	RING	
	27	1	**6B-4541**	2	SCREW-MACHINE	
	28	2	**5L-5711**	1	PIN-SPRING	
	29	2	**8E-0853**	1	BALL JOINT AS	
	30	2	**8E-0852**	1	PIN	
	31	1	**7K-1181**	2	STRAP-CABLE	
	32	1	**6Y-2850**	1	ROD	
	33	1	**7X-0301**	2	BOLT (3/8-16X7-IN)	
	34	1	**6Y-2784**	1	TUBE AS	
	35	1	**6Y-2767**	1	HOUSING	
	36	1	**6Y-2765**	1	HOUSING-LOWER	
	37	1	**5L-2029**	1	BALL BEARING	
	38	1	**6Y-2763**	1	HOUSING-MAIN	
	39	1	**7X-3317**	1	SCREW-HEX SOCKET (5/16-18X0.87-IN)	
	40	1	**101-2868**	1	DOWEL	
	41	1	**6V-3545**	1	BEARING-ROLLER	
	42	1	**6Y-2854**	1	WASHER-THRUST	
	43	1	**6Y-2783**	1	LEVER-BRAKE	
	44	1	**037-7388**	1	KNOB	
	45	1	**6Y-2855**	1	PLATE	
	46	2	**8E-1358**	2	PLATE	
	47	2	**9X-6281**	4	SCREW-MACHINE (4-40X1-IN)	
	48	2	**6Y-2777**	1	GASKET	
	49	2	**6Y-2847**	1	MOUNT	
	50	2	**5F-9144**	2	SEAL-O-RING	
	51	2	**6Y-2846**	1	SPRING	
	52	2	**6Y-2779**	1	LEVER	
	54	2	**287-3838**	1	SWITCH AS (NEUTRAL START)	
	54A	2	**287-3838**	1	SWITCH AS (BACKUP ALARM)	
					(EACH INCLUDES)	

371-1767 CONTROL GP-STEERING & XMSN *(contd.)* i04609009

NOTE	REF NO	GRAPHIC REF	PART NUMBER	QTY	PART NAME 1 2 3 4 5 6 (PRODUCT LEVEL)	SEE PAGE
		2	**102-8803**	1	KIT-RECEPTACLE (3-PIN)	
					(INCLUDES RECEPTACLE AS AND WEDGE)	
		2	**8T-8729**	3	PIN-CONNECTOR (16-GA TO 18-GA)	
E		2	**114-8843**		SLEEVE-PLASTIC (20-CM)	
	55	2	**108-8174**	2	INSULATION-SWITCH	
	56	2	**8E-1203**	1	LEVER	
	57	1	**4H-1641**	1	PIN-SPRING	
	58	2	**9X-6016**	3	SCREW-HEX SOCKET (8-32X0.875-IN)	
	59	1	**009-3138**	1	NUT-KNURL	
	60	2	**6Y-2848**	1	MOUNT	
	61	2	**4B-9782**	1	BALL	
	62	2	**6V-3832**	1	SEAL-O-RING	
	63	2	**7X-1552**	1	SEAL-V-RING	
	64	2	**6Y-2764**	1	RING	
	65	2	**6Y-7576**	1	PLATE	
	66	2	**6Y-2770**	1	PLATE	
	67	2	**6Y-2781**	1	WASHER-THRUST	
	68	1	**6Y-7577**	1	GASKET	
	69	2	**8S-7048**	1	ROD END	
	70	2	**8T-4205**	1	WASHER-HARD (7.2X14.5X2-MM THK)	
	71	2	**5N-6096**	1	SPRING	
B	72	1	**1P-0810**		TAPE-ELECTRICAL	

B-USE AS REQUIRED
E-ORDER BY THE CENTIMETER

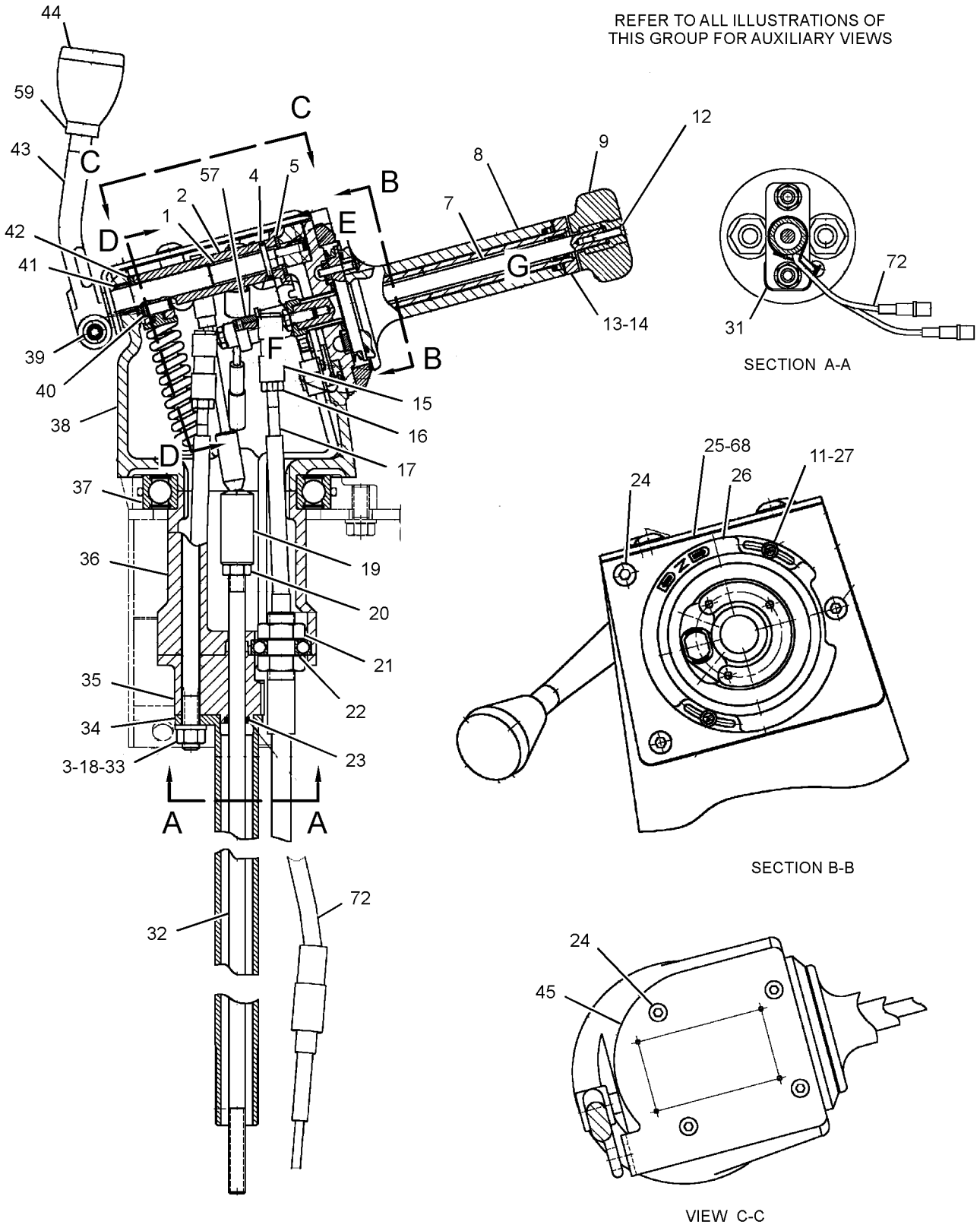

GRAPHIC #1

g02794971

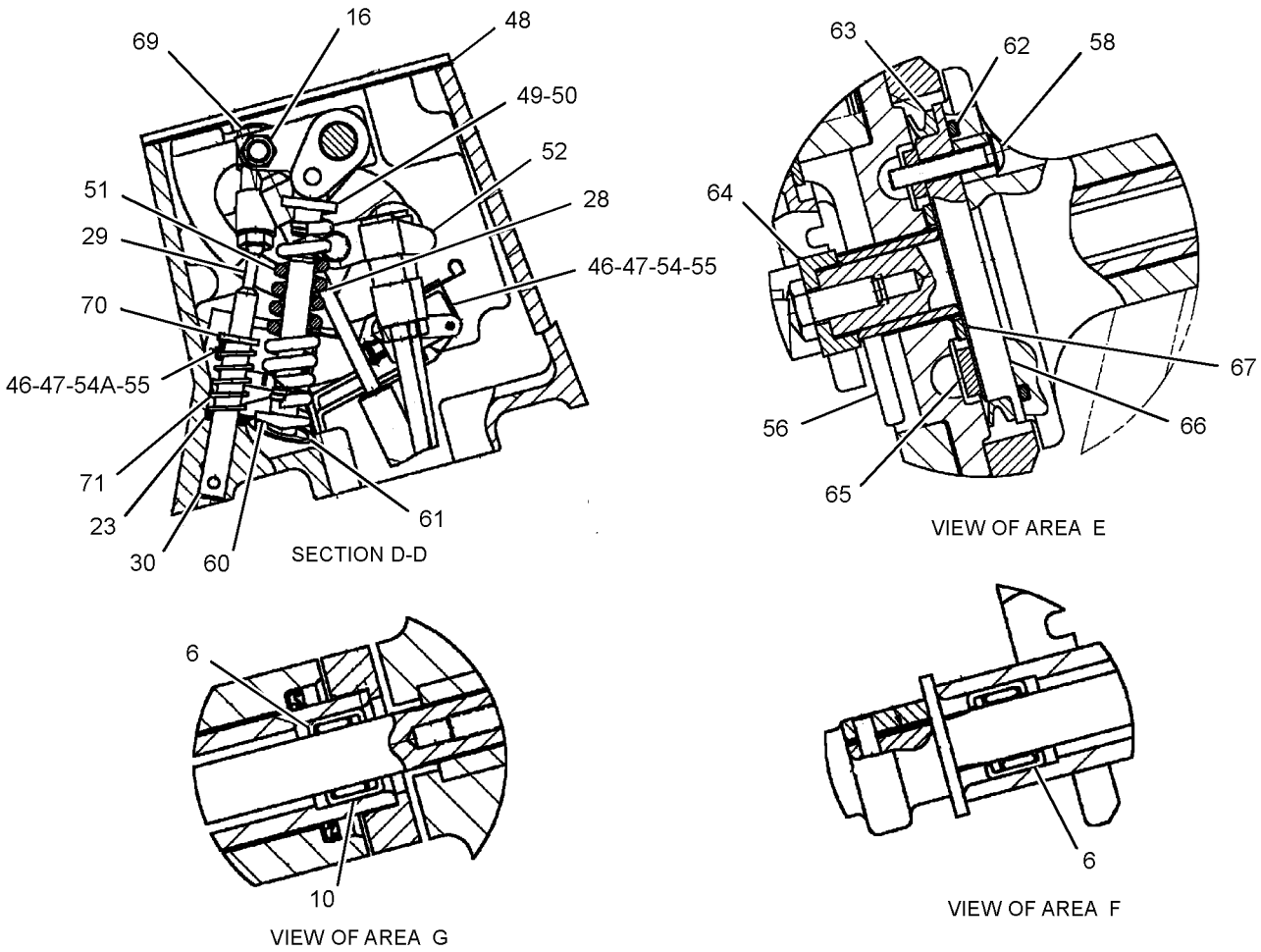

GRAPHIC #2 **<END>** g02794973

380-7870 CONTROL GP-STEERING & XMSN

S/N: DSH1-UP; DLN1-UP; DJR1-UP
PART OF 387-0554 COLD WEATHER AR, 380-7900 OPERATOR AR
ALSO AN ATTACHMENT

SMCS-3033 **i04713999**

NOTE	REF NO	GRAPHIC REF	PART NUMBER	QTY	PART NAME 1 2 3 4 5 6 (PRODUCT LEVEL)	SEE PAGE
	1	1	**5D-3546**	1	COLLAR	
	2	1	**246-2641**	1	PADLOCK GP	
		1	**5P-8500**	1	KEY	
	3	1	**6T-8387**	1	BEARING	
	4	1	**6T-8388**	2	FLANGE	
	5	1	**7K-1181**	1	STRAP-CABLE	
	6	1	**8E-2935**	1	HOUSING-BEARING	
	7	1	**9G-0742**	2	BOOT	
	8	1	**136-6093**	1	SEAL	
	9	1	**143-6871**	1	SPACER (26.93X31.75X58-MM THK)	
	10	1	**161-3964**	1	COVER AS	
	11	1	**166-9212**	1	LEVER	
	12	1	**317-4616**	1	CONSOLE AS	
M		1	**6V-9632**	3	NUT-WELD (M6X1-THD)	
M		1	**8T-3490**	7	NUT-WELD (M10X1.5-THD)	
	13	1	**370-7716**	1	BRACKET AS	
Y	14	1	*371-1767*	1	CONTROL GP-STEERING & XMSN	385
	15	1	**030-8537**	1	BOLT-LOCKING (3/8-16X1.5-IN)	
	16	1	**131-5879**	2	WASHER (11X32X3-MM THK)	
	17	1	**1M-1341**	1	END-YOKE ROD	
	18	1	**4L-6454**	1	BOLT (3/8-16X1-IN)	
	19	1	**5P-1075**	2	WASHER-HARD (10.2X22.5X3-MM THK)	
	20	1	**5S-7379**	4	BOLT (3/8-16X0.875-IN)	
	21	1	**6V-8801**	1	NUT (3/8-16-THD)	
	22	1	**7X-0575**	1	WASHER-HARD (10.2X22.5X5-MM THK)	
	23	1	**7X-0608**	1	WASHER-HARD (10.2X16X2-MM THK)	
	24	1	**7X-7729**	15	WASHER (11X25X3-MM THK)	
M	25	1	**8T-4137**	15	BOLT (M10X1.5X20-MM)	
M	26	1	**8T-4195**	2	BOLT (M10X1.5X30-MM)	
	27	1	**8T-4896**	2	WASHER-HARD (10.2X18.5X2.5-MM THK)	
	28	1	**9L-7712**	1	NUT (3/8-24-THD)	

M-METRIC PART
Y-SEPARATE ILLUSTRATION

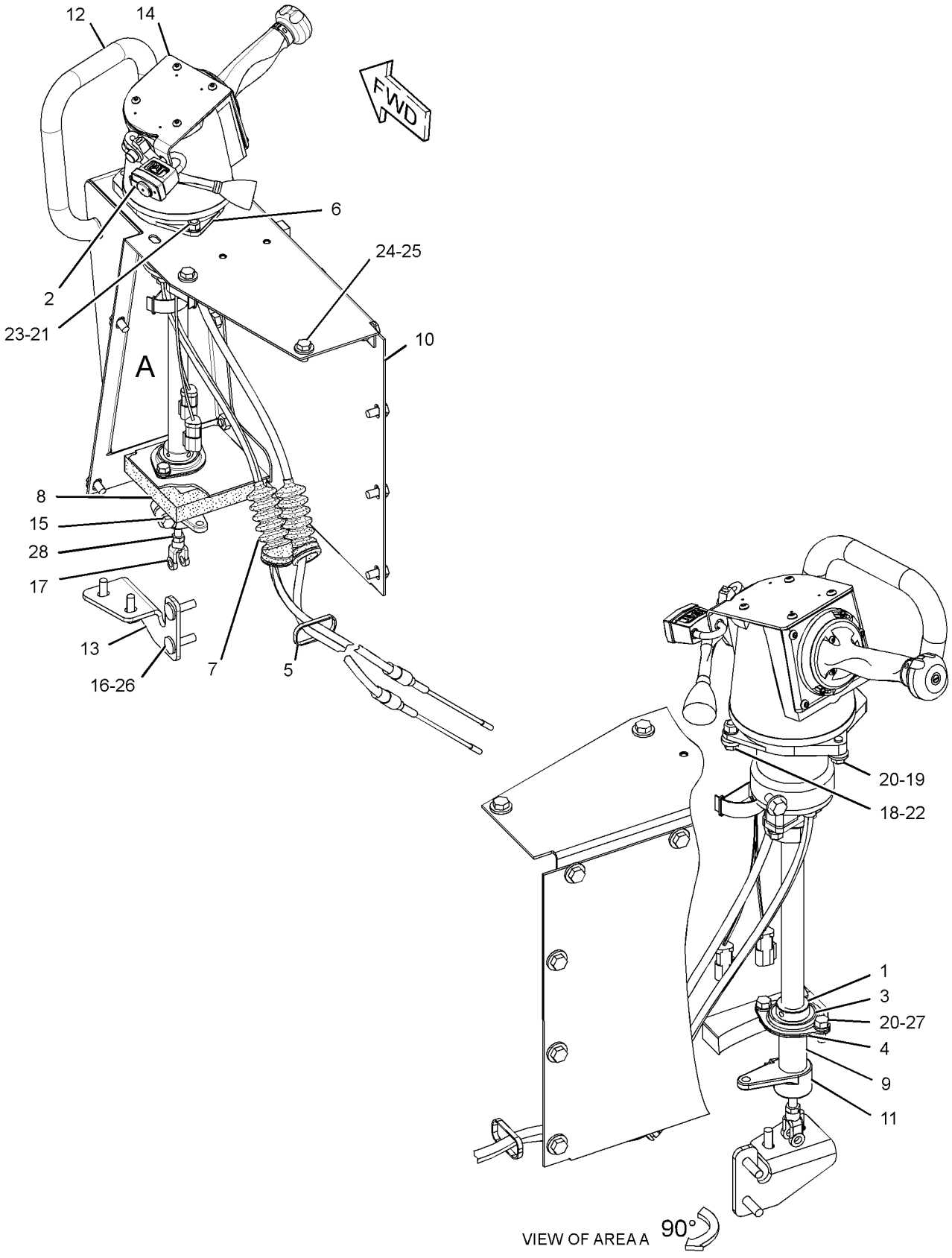

GRAPHIC #1 **<END>** g02834557

159-7156 MOTOR GP-PISTON–STEERING*R

S/N: DSH1-UP; DLN1-UP; DJR1-UP
PART OF 313-3756 HYDRAULIC AR

SMCS-5058 **i03982707**

NOTE	REF NO	GRAPHIC REF	PART NUMBER	QTY	PART NAME 1 2 3 4 5 6 (PRODUCT LEVEL)	SEE PAGE
Y	1	1	**171-6001**	1	ROTATING GP-MOTOR	392
	2	1	**106-1227**	1	HOUSING	
	3	1	**2H-3934**	1	SEAL-O-RING	
	4	1	**9T-4849**	1	HEAD	
	5	1	**8T-4231**	1	DOWEL	
M	6	1	**8T-3957**	6	BOLT-SOCKET HEAD (M12X1.75X30-MM)	

M-METRIC PART
Y-SEPARATE ILLUSTRATION

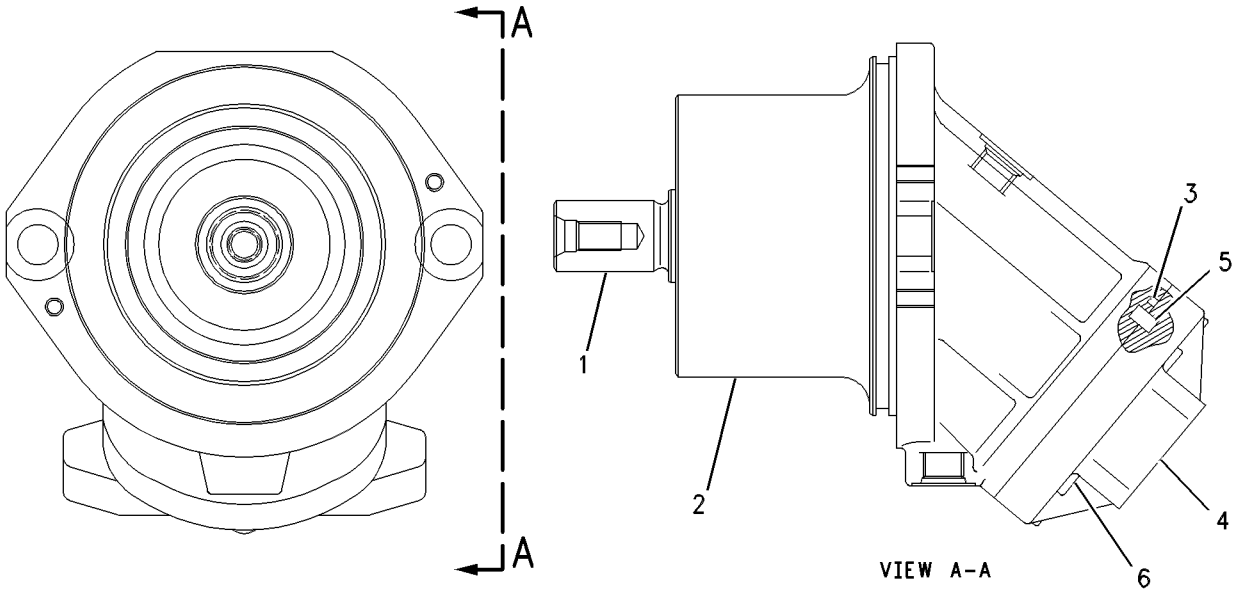

GRAPHIC #1 **<END>** g00592780

171-6001 ROTATING GP-MOTOR–STEERING

S/N: DSH1-UP; DLN1-UP; DJR1-UP

PART OF 159-7156 MOTOR GP-PISTON

SMCS-5058 **i03982875**

NOTE	REF NO	GRAPHIC REF	PART NUMBER	QTY	PART NAME 1 2 3 4 5 6 (PRODUCT LEVEL)	SEE PAGE
	1	1	**171-3068**	1	SHAFT-MOTOR	
	2	1	**123-5748**	1	SEAL-SHAFT	
	3	1	**9T-1637**	1	COVER-FRONT	
	4	1	**6V-3326**	1	RING-RETAINING	
	5	1	**2J-8163**	1	SEAL-O-RING	
	6	1	**9T-1576**	2	SHIM (0.1-MM THK)	
	7	1	**9T-1579**	2	SHIM (0.3-MM THK)	
	8	1	**216-0029**	7	SCREW (M6X20-MM)	
	9	1	**9T-1687**	1	BARREL-CYLINDER	
	10	1	**171-3054**	1	PIN-CENTER	
	11	1	**171-3061**	1	SPRING	
B	12	1	**171-3055**	1	SHIM (4-MM THK)	
B	13	1	**171-3057**	1	SHIM (3.9-MM THK)	
B	14	1	**171-3058**	1	SHIM (3.8-MM THK)	
B	15	1	**171-3059**	1	SHIM (3.7-MM THK)	
B	16	1	**171-3060**	1	SHIM (3.6-MM THK)	
	17	1	**171-5999**	1	PLATE-PORT	
	18	1	**165-6969**	1	PISTON AS	
	19	1	**9T-1642**	7	PLATE-RETAINING	
	20	1	**171-5989**	1	KIT-BEARING (ROTATING PISTON MOTOR)	

B-USE AS REQUIRED

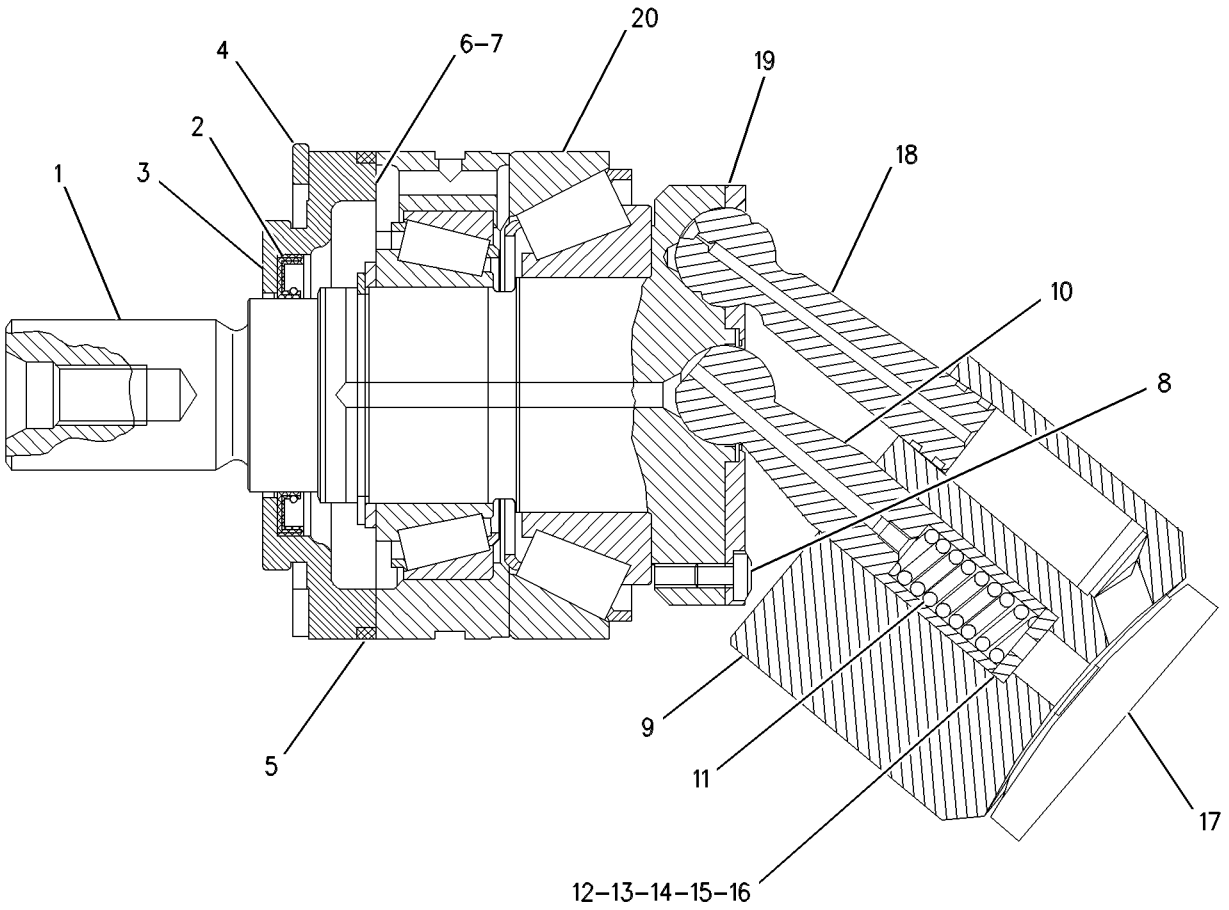

GRAPHIC #1 **<END>** g00592930

STEERING AND BRAKING SYSTEM

380-7880 VALVE & LINES GP-BRAKE

S/N: DSH1-UP; DLN1-UP; DJR1-UP

PART OF 313-3755, 314-8870 POWER TRAIN AR

SMCS-4265, 4282 **i04774708**

NOTE	REF NO	GRAPHIC REF	PART NUMBER	QTY	PART NAME 1 2 3 4 5 6 (PRODUCT LEVEL)	SEE PAGE
	1	1	**3E-4374**	2	STUD (3/8-24X3.15-IN)	
	2	1	**3T-1078**	1	VALVE GP-BRAKE (PARKING)	
		1	**3T-5224**	2	SEAL-SPOOL	
		1	**3T-5225**	2	RING	
	3	1	**6G-6396**	1	WASHER	
	4	1	**6V-5791**	1	END AS-ROD	
	5	1	**7P-4190**	2	BEARING-ROLLER	
	6	1	**8E-4525**	1	BOOT	
	7	1	**8T-8932**	4	PIN AS-SPRING	
	8	1	**9G-0715**	2	COVER	
	9	1	**9S-8748**	2	NUT-FULL (1/4-28-THD)	
	10	1	**132-4354**	1	SPACER (10.5X19X26.5-MM THK)	
	11	1	**166-9204**	1	SHAFT	
	12	1	**166-9209**	1	BRACKET	
	13	1	**166-9213**	1	ROD	
	14	1	**203-2288**	1	GASKET-COVER	
	15	1	**298-7340**	1	LEVER	
	16	1	**313-9374**	1	LINK AS	
	17	1	**319-1676**	1	LEVER	
	18	1	**9S-1354**	2	NUT (5/8-18-THD)	
I	19	1	**325-8735**	1	HOSE AS	
I	20	1	**325-8736**	1	HOSE AS	
I	21	1	**325-8737**	1	HOSE AS	
	22	1	**367-3281**	1	LEVER	
	23	1	**370-7715**	1	BRACKET AS	
	24	1	**033-8248**	2	CLIP	
M	25	1	**116-3715**	1	STUD-TAPERLOCK (M10X1.5X85-MM)	
	26	1	**144-8344**	1	SPACER (11X19X20-MM THK)	
	27	1	*148-8365*	1	ELBOW AS	
		1	**3J-1907**	1	SEAL-O-RING	
		1	**6V-8398**	1	SEAL-O-RING	
		1	**8T-6876**	1	ELBOW	
	28	1	**150-4043**	4	CONNECTOR AS	
		1	**3J-1907**	1	SEAL-O-RING	
		1	**6V-8398**	1	SEAL-O-RING	
		1	**6V-9873**	1	CONNECTOR	
	29	1	**154-2302**	1	SPACER (11X20X15-MM THK)	
	30	1	**1B-0676**	3	PIN	
	31	1	**1B-2578**	2	NUT (3/8-16-THD)	
	32	1	**1B-8706**	2	KEY-WOODRUFF	
	33	1	**1M-1341**	2	END-YOKE ROD	
	34	1	**1S-0994**	2	CLIP	
	35	1	**2J-4672**	1	GASKET	
	36	1	**3B-4615**	5	PIN-COTTER	
	37	1	**5P-6438**	1	END-YOKE ROD	
	38	1	**6V-8183**	2	NUT-FULL (3/8-24-THD)	
	39	1	**7X-7729**	3	WASHER (11X25X3-MM THK)	
	40	1	**8D-9671**	1	CLIP	
	41	1	**8G-0891**	2	ROD	
	42	1	**8M-5661**	2	SEAL-O-RING	
M	43	1	**8T-0722**	5	BOLT-LOCKING (M10X1.5X30-MM)	
	44	1	**8T-4121**	16	WASHER-HARD (11X21X2.5-MM THK)	
M	45	1	**8T-4133**	3	NUT (M10X1.5-THD)	
M	46	1	**8T-4136**	1	BOLT (M10X1.5X25-MM)	
M	47	1	**8T-4186**	1	BOLT (M10X1.5X40-MM)	
M	48	1	**8T-4195**	8	BOLT (M10X1.5X30-MM)	

380-7880 VALVE & LINES GP-BRAKE *(contd.)* i04774708

NOTE	REF NO	GRAPHIC REF	PART NUMBER	QTY	PART NAME 1 2 3 4 5 6 (PRODUCT LEVEL)	SEE PAGE
M	49	1	**8T-4196**	2	BOLT (M10X1.5X35-MM)	
	50	1	**8T-4224**	2	WASHER-HARD (8.8X16X2-MM THK)	
	51	1	**8T-4896**	2	WASHER-HARD (10.2X18.5X2.5-MM THK)	
	52	1	**8T-4994**	2	WASHER-HARD (20X36.5X3.5-MM THK)	
M	53	1	**8T-6912**	2	BOLT (M8X1.25X50-MM)	

I-REFER TO HYDRAULIC INFORMATION SYSTEM
M-METRIC PART

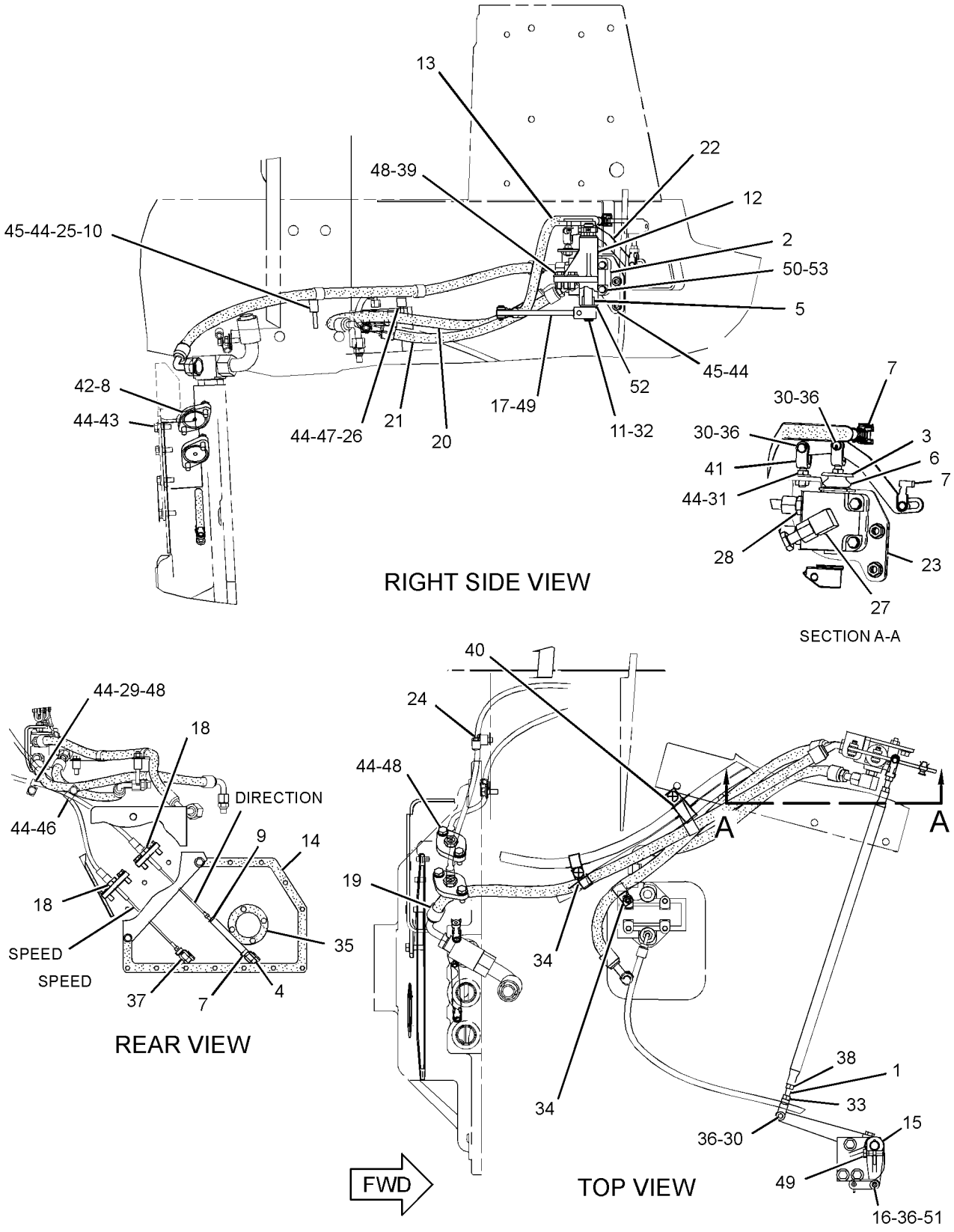

GRAPHIC #1 **<END>** g02849098

375-4880 VALVE & MTG GP-CONTROL–BRAKE

S/N: DSH1-UP; DLN1-UP; DJR1-UP

PART OF 313-3755, 314-8870 POWER TRAIN AR

SMCS-5051 **i04718485**

NOTE	REF NO	GRAPHIC REF	PART NUMBER	QTY	PART NAME 1 2 3 4 5 6 (PRODUCT LEVEL)	SEE PAGE
	1	1	**4S-5719**	3	SPACER (10.31X25X12.7-MM THK)	
	2	1	**8T-8932**	1	PIN AS-SPRING	
Y	3	1	**9W-1617**	1	VALVE GP-BRAKE CONTROL	399
	4	1	**148-9920**	2	SEAL-UMBRELLA	
	5	1	**320-2842**	1	BRACKET AS	
	6	1	**325-6934**	1	CABLE AS	
		1	**6F-0253**	4	LOCKWASHER	
		1	**9X-8257**	4	WASHER (17.5X30X3.5-MM THK)	
M		1	**098-5747**	4	NUT (M16X2-THD)	
	7	1	**364-5127**	2	CLEVIS	
	8	1	**1B-0676**	1	PIN	
	9	1	**1H-7459**	1	GROMMET	
	10	1	**3B-4615**	1	PIN-COTTER	
M	11	1	**5C-2890**	2	NUT (M6X1-THD)	
	12	1	**7K-1181**	1	STRAP-CABLE	
	13	1	**7X-0575**	1	WASHER-HARD (10.2X22.5X5-MM THK)	
M	14	1	**7X-2543**	3	BOLT (M10X1.5X120-MM)	
	15	1	**8M-5254**	3	SEAL-O-RING	
	16	1	**8T-4121**	4	WASHER-HARD (11X21X2.5-MM THK)	
M	17	1	**8T-6685**	1	BOLT (M10X1.5X110-MM)	

M-METRIC PART
Y-SEPARATE ILLUSTRATION

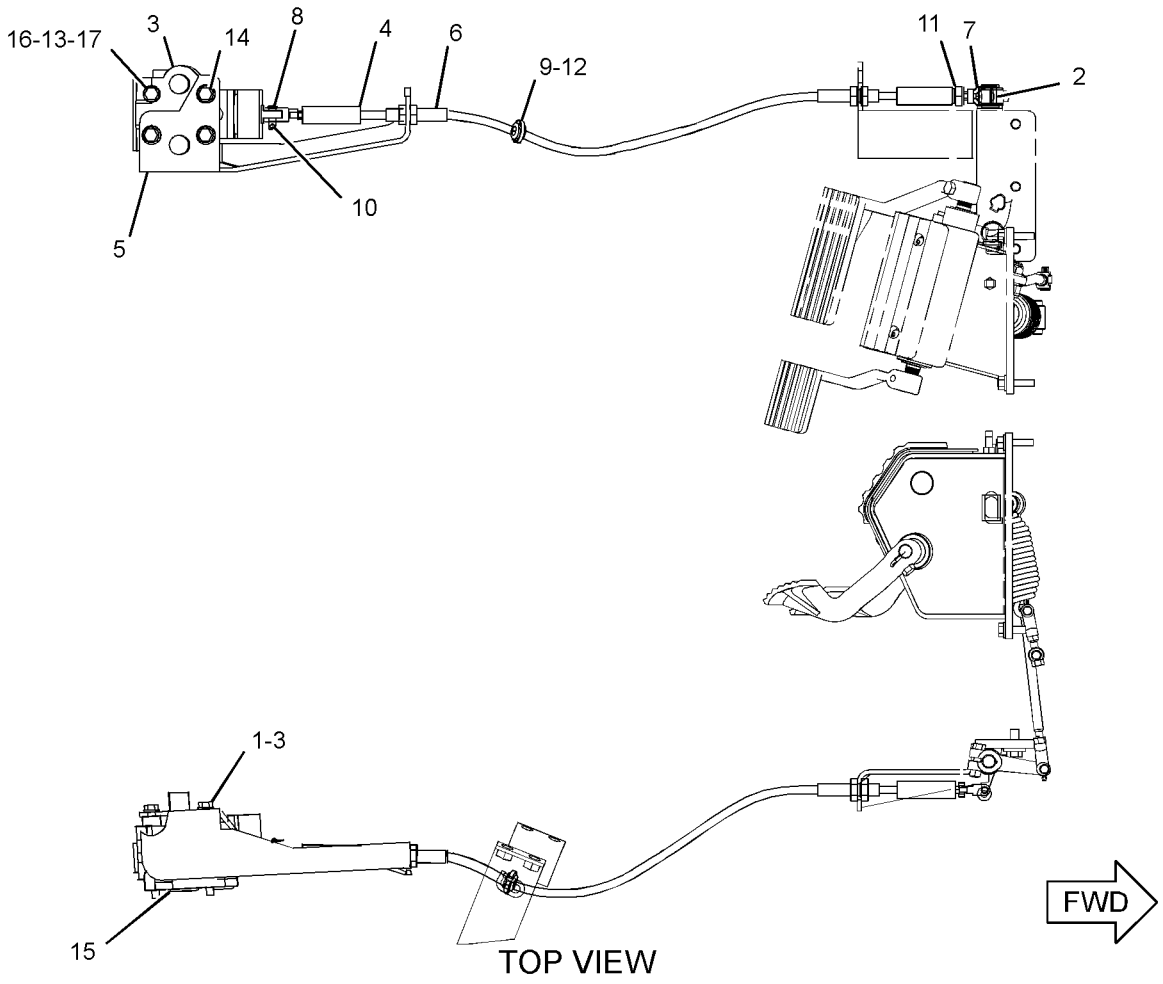

GRAPHIC #1

<END>

g02833678

9W-1617 VALVE GP-BRAKE CONTROL

S/N: DSH1-UP; DLN1-UP; DJR1-UP

PART OF 375-4880 VALVE & MTG GP-CONTROL

SMCS-4265, 4282 **i03998012**

NOTE	REF NO	GRAPHIC REF	PART NUMBER	QTY	PART NAME 1 2 3 4 5 6 (PRODUCT LEVEL)	SEE PAGE
	1	1	**9W-1615**	1	COVER	
	2	1	**0S-1571**	2	BOLT (3/8-16X1.75-IN)	
	3	1	**6V-1604**	1	SEAL-LIP TYPE	
	4	1	**8F-3469**	1	SEAL-O-RING	
	5	1	**8M-4988**	1	SEAL-O-RING	
	6	1	**9W-1467**	1	SPRING	
	7	1	**3J-1907**	1	SEAL-O-RING	
	8	1	**8M-5249**	1	SEAL-O-RING	
	9	1	**2M-1168**	1	SLUG-VALVE	
B	10	1	**5S-7018**	1	SPACER (7.54X14.15X0.25-MM THK)	
B	11	1	**5S-7001**	2	SPACER (7.54X14.15X0.9-MM THK)	
	12	1	**3K-0360**	2	SEAL-O-RING	
	13	1	**8M-4435**	1	SEAL-O-RING	
	14	1	**9W-3302**	1	PLUNGER	
	15	1	**0L-1351**	2	BOLT (3/8-16X0.875-IN)	
	16	1	**7G-1577**	1	COVER-FLANGE	
	18	1	**5P-6944**	1	ADAPTER	
	19	1	**6V-0852**	1	CAP-DUST	
	20	1	**6V-3965**	1	FITTING (QUICK DISCONNECT)	
	21	1	**9W-1614**	1	SPOOL AS	
	21A	1	**7M-8592**	1	RING-RETAINING	
	21B	1	**9W-1468**	1	SLEEVE	
	21C	1	**8M-4409**	1	RETAINER	
	21D	1	**5M-9548**	1	SPRING	
	21E	1	**8M-2538**	1	POPPET	
	24	1	**9S-4185**	1	PLUG-O-RING	

B-USE AS REQUIRED

9W-1617 **VALVE GP-BRAKE CONTROL** *(contd.)* **i03998012**

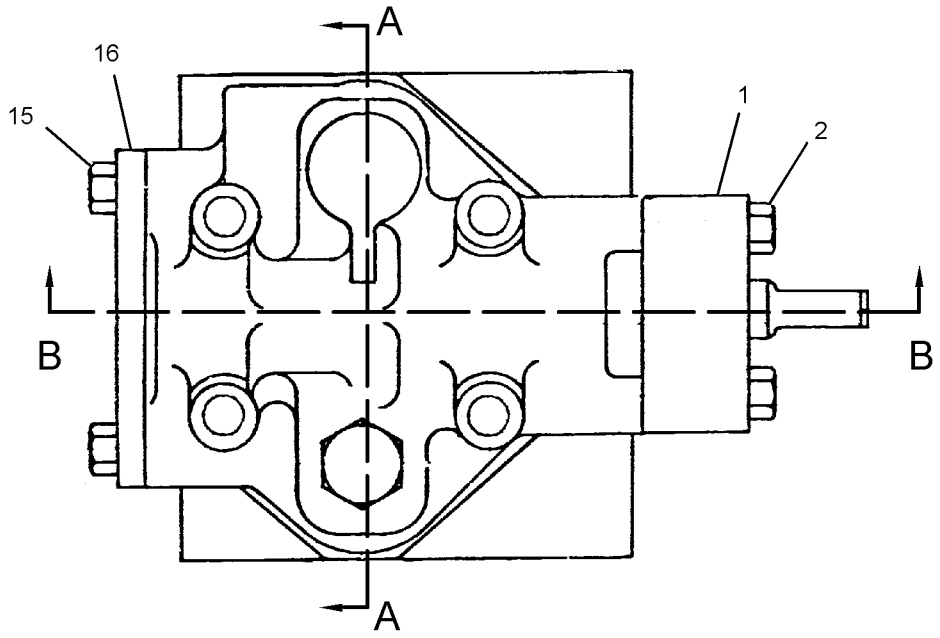

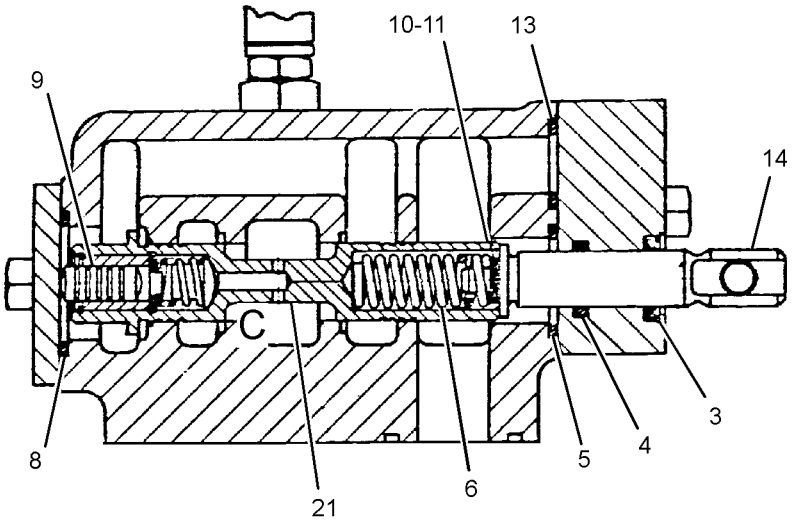

SECTION B-B

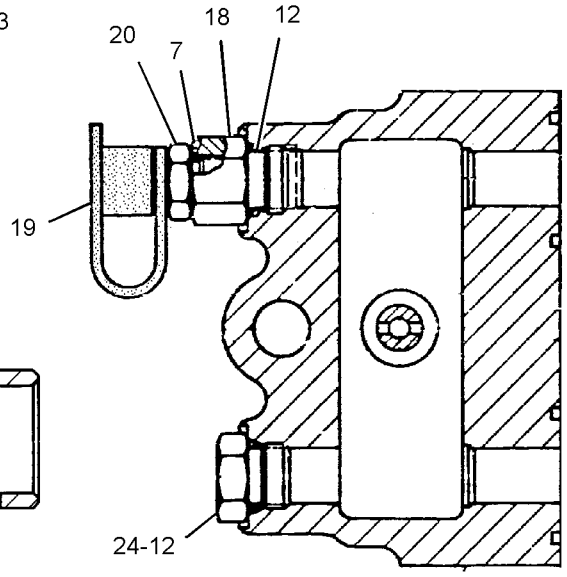

SECTION A-A

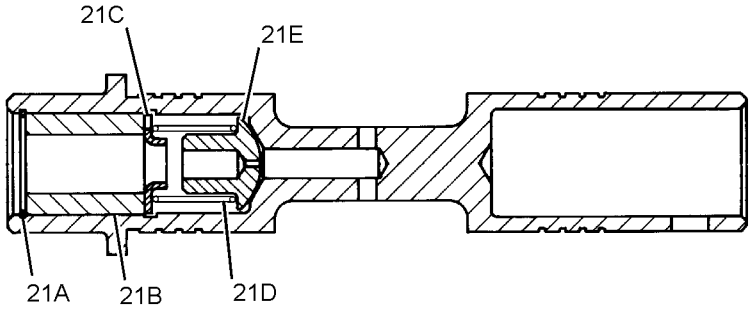

VIEW OF AREA C

GRAPHIC #1 **<END>** g02177949

271-4967 VALVE GP-CONTROL—STEERING

S/N: DSH1-UP; DLN1-UP; DJR1-UP
PART OF 224-4940 VALVE GP-BANK 3, 224-4941 VALVE GP-BANK 5
ALSO AN ATTACHMENT

SMCS-4307 **i04717131**

NOTE	REF NO	GRAPHIC REF	PART NUMBER	QTY	PART NAME 1 2 3 4 5 6 (PRODUCT LEVEL)	SEE PAGE
	1	1	**2S-2596**	3	SPRING	
B	3	1	**4J-6806**	1	SHIM (1.2-MM THK)	
	4	1	**4T-0993**	2	RETAINER	
	5	1	**4T-1021**	2	RETAINER	
	6	1	**4T-1649**	1	HOUSING	
	7	1	**4T-1701**	1	SPRING	
	8	1	**4T-1850**	1	HOUSING	
Y	9	1	**4T-1860**	1	VALVE GP-SHUTTLE	499
	10	1	**4T-4511**	1	SLEEVE	
	11	1	**4T-5074**	1	RING-BACKUP	
	12	1	**6E-0486**	1	VALVE GP-FLOW CONTROL	
		1	**4J-5351**	1	SEAL-O-RING	
		1	**4T-5072**	1	RING-BACKUP	
		1	**8C-3325**	1	BOLT-12 POINT HEAD (5/16-18X2.75-IN)	
	13	1	**9T-6316**	1	SPRING	
	14	1	**100-8010**	3	VALVE-CHECK	
	15	1	**100-8012**	2	BODY	
	16	1	**107-1177**	1	HOUSING	
	17	1	**107-1179**	1	PLATE-SEAL	
	19	1	**208-5498**	1	SEAL AS	
B	21	1	**256-9637**	2	SHIM (0.61-MM THK)	
M	23	1	**099-3649**	2	BOLT (M8X1.25X40-MM)	
	24	1	**100-8011**	1	PLUG	
	25	1	*162-6448*	1	PLUG AS	
		1	**1N-5999**	1	PLUG-O-RING	
		1	**7J-0204**	1	SEAL-O-RING	
	26	1	*173-3993*	2	PLUG AS	
					(EACH INCLUDES)	
		1	**9S-8001**	1	PLUG-O-RING	
		1	**4J-7533**	1	SEAL-O-RING	
	27	1	*183-7263*	1	PLUG AS	
		1	**9S-8002**	1	PLUG-O-RING	
		1	**3J-7354**	1	SEAL-O-RING	
	28	1	**243-7112**	2	BOLT (M8X1.25X85-MM)	
	29	1	**2D-0598**	1	SEAL-O-RING	
	30	1	**4K-1388**	2	SEAL-O-RING	
	31	1	**4T-4207**	1	PLUG-ORIFICE	
	32	1	**4T-5073**	2	RING-BACKUP	
	33	1	**5M-2057**	1	SEAL-O-RING	
	34	1	**6V-5556**	1	SEAL-O-RING	
	35	1	**7D-9749**	1	SEAL-O-RING	
	36	1	**7J-9933**	2	SEAL-O-RING	
	37	1	**7M-8485**	1	SEAL-O-RING	
M	38	1	**8T-4185**	2	BOLT (M10X1.5X50-MM)	
	39	1	**8T-4224**	4	WASHER-HARD (8.8X16X2-MM THK)	

B-USE AS REQUIRED
M-METRIC PART
Y-SEPARATE ILLUSTRATION

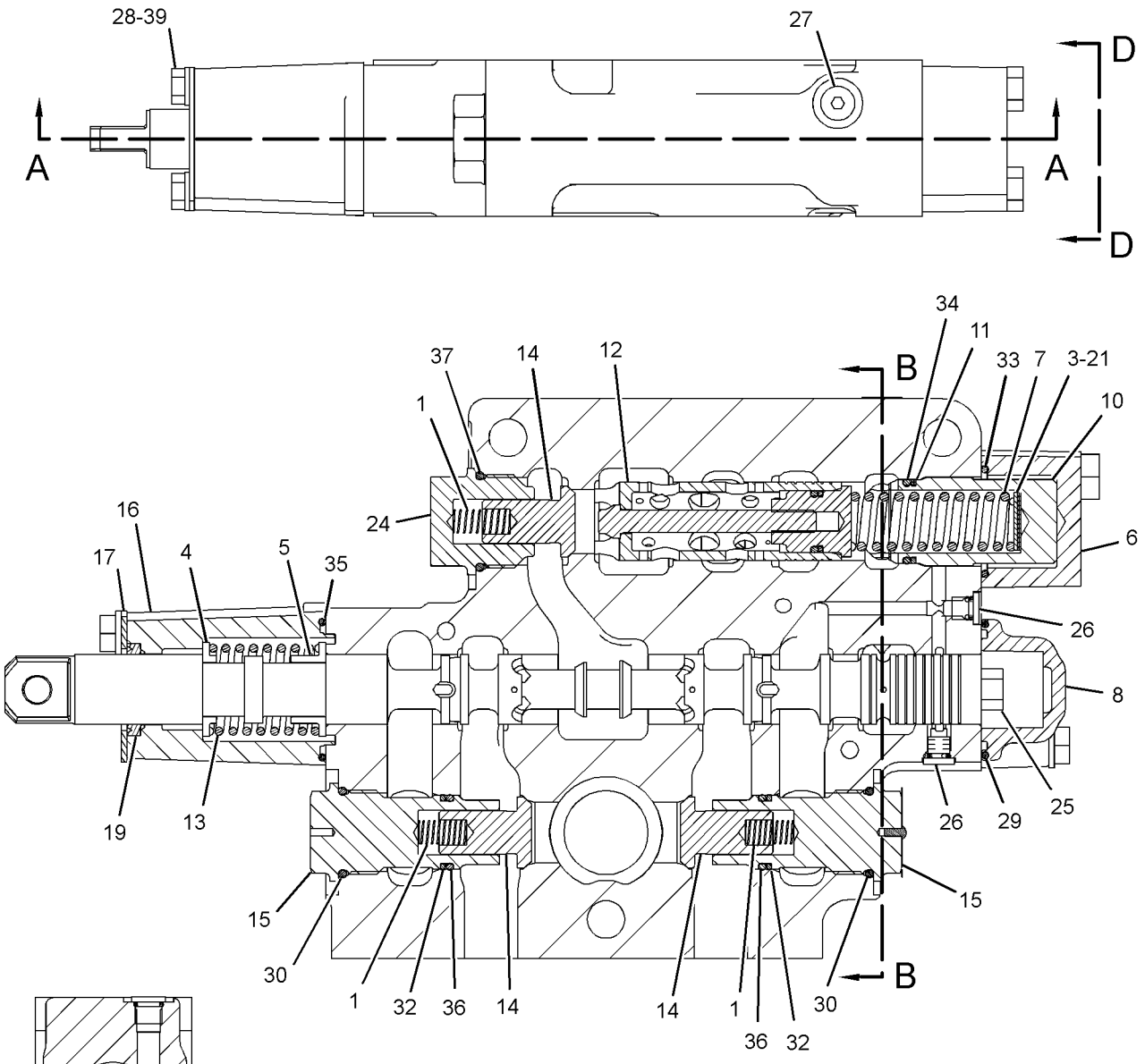

SECTION A-A

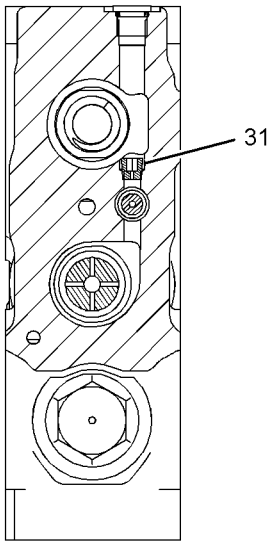

SECTION B-B

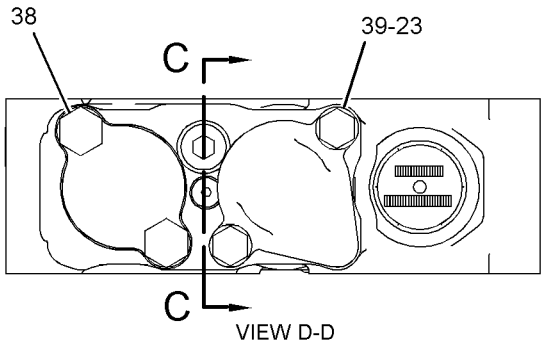

VIEW D-D

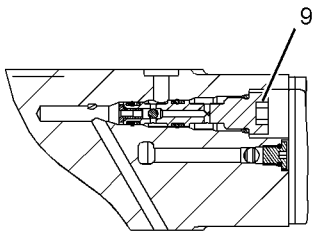

SECTION C-C

GRAPHIC #1

<END>

g01288311

179-9387 ACCUMULATOR GP-PILOT OIL–UNCHARGED

S/N: DSH1-UP; DLN1-UP; DJR1-UP

PART OF 379-1942 LINES GP-PILOT

SMCS-5077 **i04727249**

NOTE	REF NO	GRAPHIC REF	PART NUMBER	QTY	PART NAME 1 2 3 4 5 6 (PRODUCT LEVEL)	SEE PAGE
	1	1	**204-8758**	2	FILM-WARNING (HIGH PRESSURE CYLINDER)	

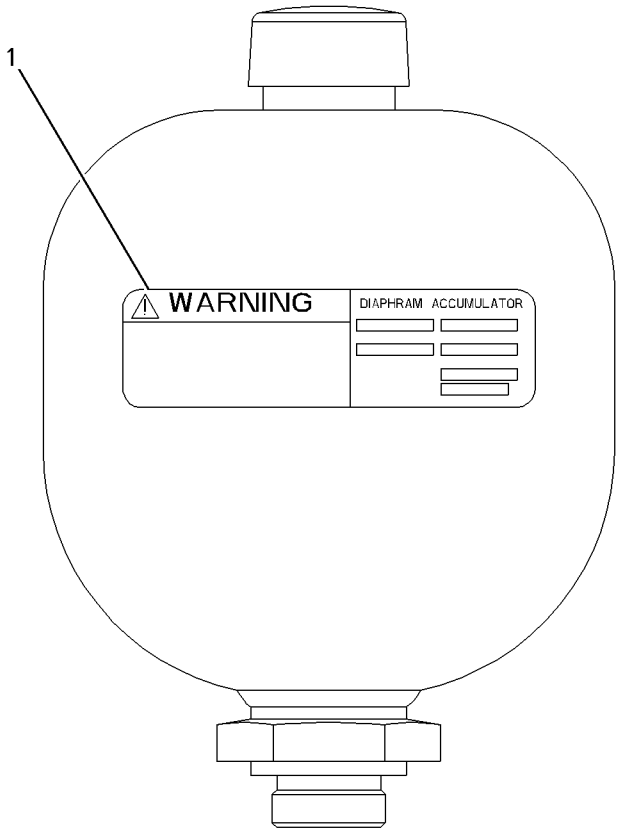

GRAPHIC #1 **<END>** g01004085

229-5422 ADAPTER GP-MOTOR

S/N: DSH1-UP; DLN1-UP; DJR1-UP
PART OF 313-3756 HYDRAULIC AR

SMCS-5058 **i04717437**

NOTE	REF NO	GRAPHIC REF	PART NUMBER	QTY	PART NAME 1 2 3 4 5 6 (PRODUCT LEVEL)	SEE PAGE
	1	1	**216-8584**	1	ADAPTER (MOTOR)	
	2	1	**3N-0759**	1	RING-SEALING	
	3	1	**5J-5793**	6	BOLT-12 POINT HEAD (1/2-13X1.75-IN)	
	4	1	**8C-6857**	2	BOLT (3/4-10X2.75-IN)	
	5	1	**8T-4994**	2	WASHER-HARD (20X36.5X3.5-MM THK)	
	6	1	**8T-7568**	1	SEAL-O-RING	

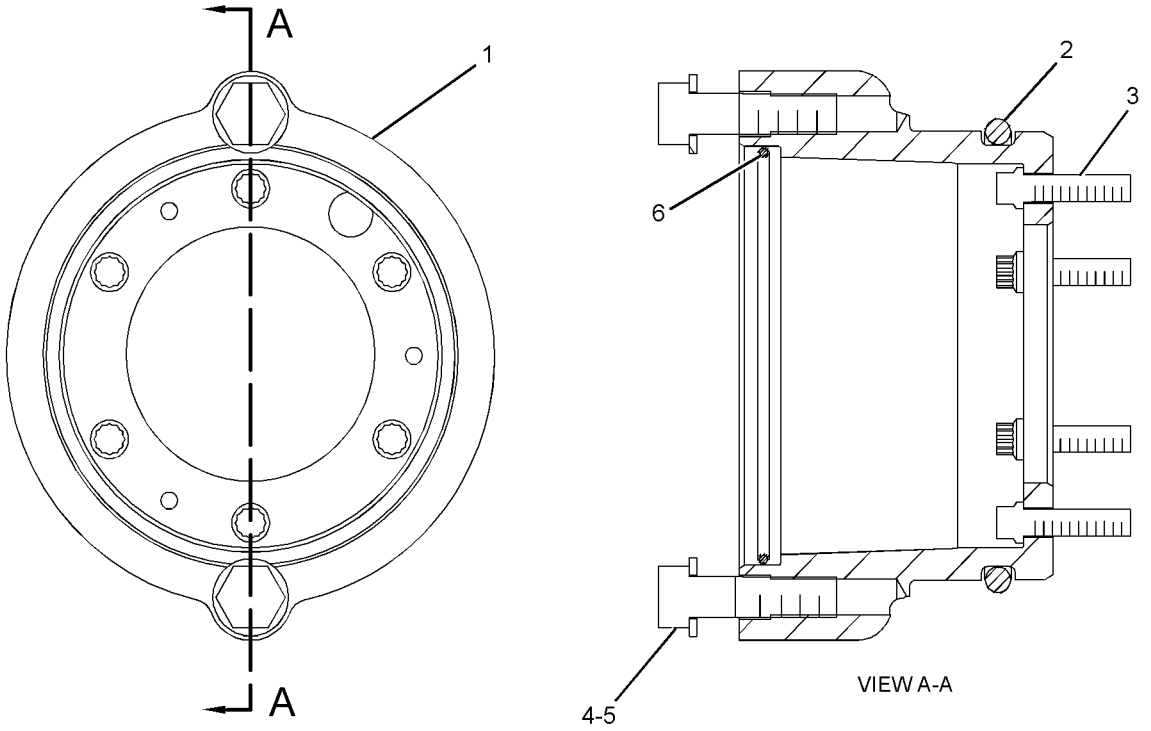

GRAPHIC #1 **<END>** g01165305

HYDRAULIC SYSTEM

323-9711 CONTROL AR-HYDRAULIC–ACCUGRADE

S/N: DSH1-UP; DLN1-UP; DJR1-UP
WITH REAR HYDRAULICS
AN ATTACHMENT

SMCS-5057, 5170, 5357 **i04629243**

NOTE	PART NUMBER	QTY	PART NAME 1 2 3 4 5 6 (PRODUCT LEVEL)	SEE PAGE
Y	*323-9716*	1	LINES GP-PILOT	433
Y	**322-8631**	1	VALVE GP-PILOT (BULLDOZER)	484
M	**8T-4136**	2	BOLT (M10X1.5X25-MM)	
M	**8T-4192**	2	BOLT (M12X1.75X25-MM)	
	235-0523	1	BRACKET	
	8T-4121	2	WASHER-HARD (11X21X2.5-MM THK)	
	8T-4223	2	WASHER-HARD (13.5X25.5X3-MM THK)	

M-METRIC PART
Y-SEPARATE ILLUSTRATION

<END>

323-9717 CONTROL AR-HYDRAULIC–
BULLDOZER, RIPPER, STEERING
S/N: DSH1-UP; DLN1-UP; DJR1-UP
PART OF 379-7862 CONTROL AR-HYDRAULIC
AN ATTACHMENT

SMCS-5057, 5170, 5357 **i04732569**

NOTE	PART NUMBER	QTY	PART NAME 1 2 3 4 5 6 (PRODUCT LEVEL)	SEE PAGE
Y	*161-3616*	1	KNOB GP (RIPPER)	566
Y	*222-1179*	1	LINES GP-PILOT (RIPPER)	431
Y	*228-7368*	1	LINES GP-RIPPER	444
Y	**224-4941**	1	VALVE GP-BANK 5 (BULLDOZER, RIPPER, STEERING)	469
Y	**184-5321**	1	VALVE GP-PILOT (RIPPER)	480
	197-5108	1	FILM-INSTRUCTION (RIPPER CONTROL)	
			ON THE RAISED SURFACE TO THE RIGHT OF THE RIPPER CONTROL HANDLE	

Y-SEPARATE ILLUSTRATION

<END>

379-7862 CONTROL AR-HYDRAULIC–
BULLDOZER, RIPPER, STEERING
S/N: DSH1-UP; DLN1-UP; DJR1-UP
AN ATTACHMENT

SMCS-5057, 5170, 5357 **i04732832**

NOTE	PART NUMBER	QTY	PART NAME 1 2 3 4 5 6 (PRODUCT LEVEL)	SEE PAGE
Y	*323-9717*	1	CONTROL AR-HYDRAULIC (BULLDOZER, RIPPER, STEERING)	405
Y	*380-2511*	1	LIGHTING GP-RIPPER	178

Y-SEPARATE ILLUSTRATION

<END>

HYDRAULIC SYSTEM

357-7845 COOLER GP-HYDRAULIC OIL

S/N: DSH1-UP; DLN1-UP; DJR1-UP
PART OF 313-3757 INSTALLATION AR

SMCS-1374 **i04658869**

NOTE	REF NO	GRAPHIC REF	PART NUMBER	QTY	PART NAME 1 2 3 4 5 6 (PRODUCT LEVEL)	SEE PAGE
	1	1	**357-7846**	1	BRACKET AS	
	2	1	**358-1301**	1	CORE AS-OIL COOLER (HYDRAULIC)	
		1	**3J-1907**	2	SEAL-O-RING	
		1	**9S-4191**	2	PLUG-O-RING	
	3	1	**5J-4715**	4	WASHER (10.3X20.6X4.2-MM THK)	
	4	1	**5P-1076**	2	WASHER-HARD (13.5X30X4-MM THK)	
	5	1	**5S-7382**	1	BOLT (3/8-16X1.375-IN)	
M	6	1	**8T-4133**	4	NUT (M10X1.5-THD)	
	7	1	**8T-4835**	2	BOLT (1/2-13X2-IN)	
	8	1	**8T-4896**	1	WASHER-HARD (10.2X18.5X2.5-MM THK)	

M-METRIC PART

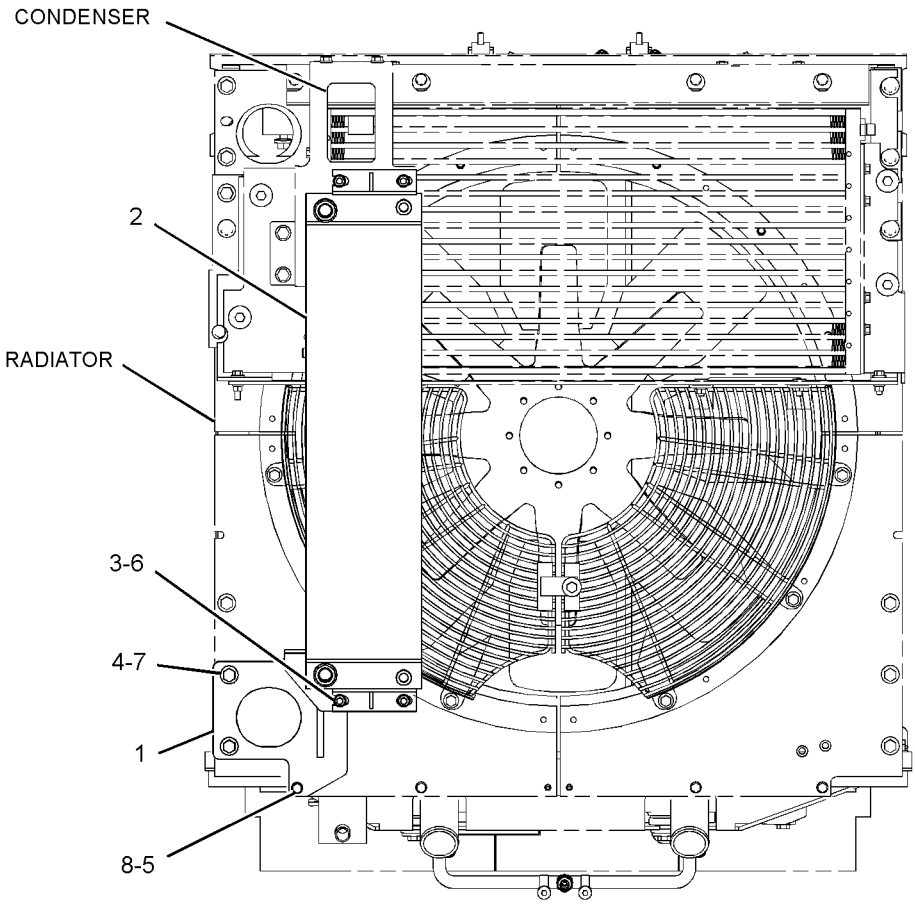

REAR VIEW

GRAPHIC #1 **<END>** g02819659

HYDRAULIC SYSTEM

379-4779 COOLER GP-HYDRAULIC OIL

S/N: DSH1-UP; DLN1-UP; DJR1-UP
PART OF 380-9961 AIR CONDITIONER AR
AN ATTACHMENT

SMCS-1374 **i04631341**

NOTE	REF NO	GRAPHIC REF	PART NUMBER	QTY	PART NAME 1 2 3 4 5 6 (PRODUCT LEVEL)	SEE PAGE
	1	1	**357-7846**	1	BRACKET AS	
	2	1	**358-1301**	1	CORE AS-OIL COOLER (HYDRAULIC)	
		1	**3J-1907**	2	SEAL-O-RING	
		1	**9S-4191**	2	PLUG-O-RING	
	3	1	**379-4775**	1	BRACKET AS	
	4	1	**5J-4715**	4	WASHER (10.3X20.6X4.2-MM THK)	
	5	1	**5P-1076**	2	WASHER-HARD (13.5X30X4-MM THK)	
	6	1	**5S-7382**	1	BOLT (3/8-16X1.375-IN)	
	7	1	**6V-8801**	4	NUT (3/8-16-THD)	
	8	1	**8T-4835**	2	BOLT (1/2-13X2-IN)	
	9	1	**8T-4896**	2	WASHER-HARD (10.2X18.5X2.5-MM THK)	
	10	1	**9B-7237**	2	BOLT (3/8-16X1.25-IN)	

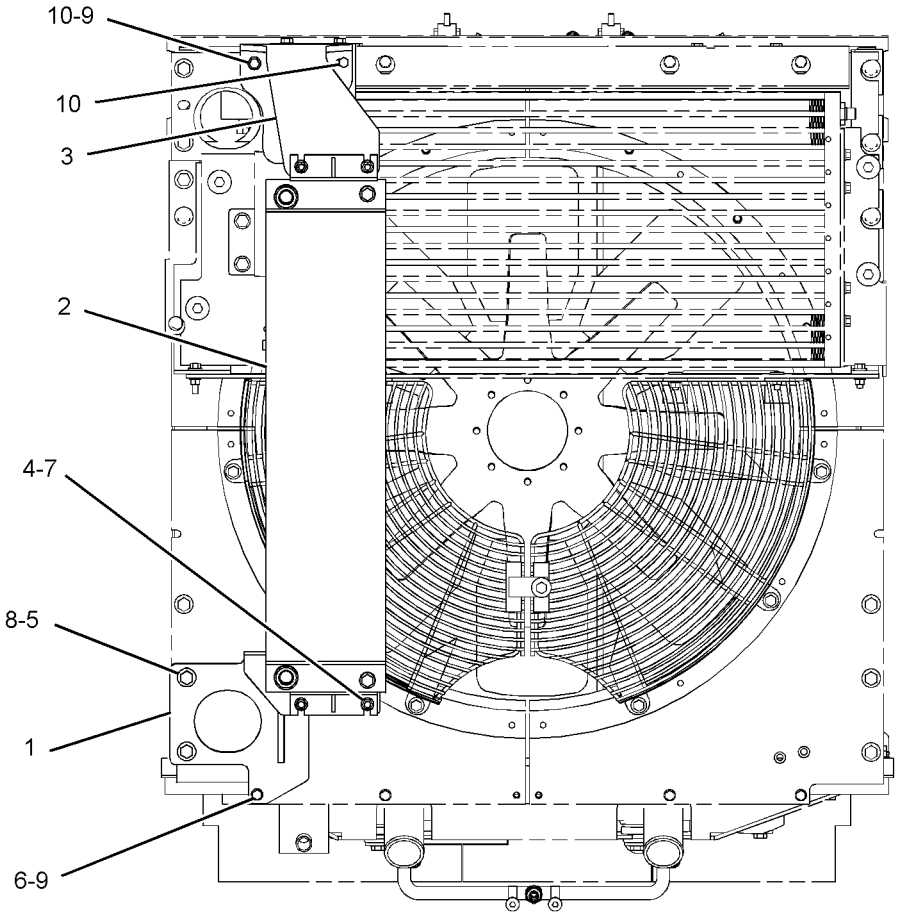

REAR VIEW

GRAPHIC #1 **<END>** g02791883

HYDRAULIC SYSTEM

373-9494 CYLINDER & LINES GP–RH

S/N: DSH1-UP; DJR1-UP

PART OF 313-3338, 379-6225 CHASSIS AR

SMCS-5110 **i04609213**

NOTE	REF NO	GRAPHIC REF	PART NUMBER	QTY	PART NAME 1 2 3 4 5 6 (PRODUCT LEVEL)	SEE PAGE
	1	1	**8E-6269**	1	BRACKET AS	
		1	**1F-0750**	2	NUT-WELD (3/8-16-THD)	
I	2	1	**153-6787**	1	HOSE AS	
I	3	1	**108-6982**	1	HOSE AS	
	4	1	*153-6251*	1	CONNECTOR AS	
		1	**4K-1388**	1	SEAL-O-RING	
		1	**6V-8400**	1	SEAL-O-RING	
		1	**9X-8260**	1	CONNECTOR	
Y	5	1	**373-9496**	1	CYLINDER GP-BULLDOZER LIFT	420
	6	1	**373-9500**	1	PLATE AS	
	7	1	**373-9501**	1	TUBE AS	
	8	1	*148-8391*	1	ELBOW AS	
		1	**2S-4078**	1	SEAL-O-RING	
		1	**5K-9090**	1	SEAL-O-RING	
		1	**8T-8987**	1	ELBOW	
	9	1	**1P-4577**	2	FLANGE-HALF	
	10	1	**4J-0520**	3	SEAL-O-RING	
	11	1	**4L-9337**	2	BOLT (3/8-16X1.5-IN)	
	12	1	**5P-1075**	6	WASHER-HARD (10.2X22.5X3-MM THK)	
	13	1	**5S-7379**	6	BOLT (3/8-16X0.875-IN)	
	14	1	**5S-7382**	2	BOLT (3/8-16X1.375-IN)	
	15	1	**8T-4896**	4	WASHER-HARD (10.2X18.5X2.5-MM THK)	

I-REFER TO HYDRAULIC INFORMATION SYSTEM
Y-SEPARATE ILLUSTRATION

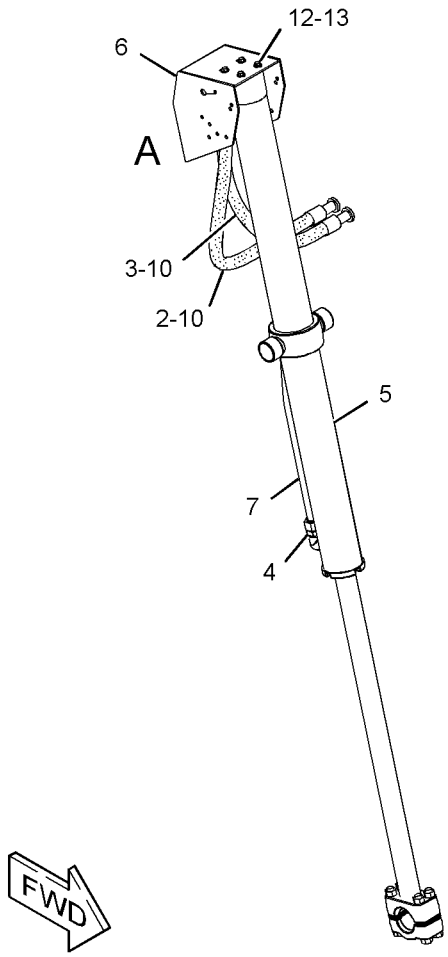

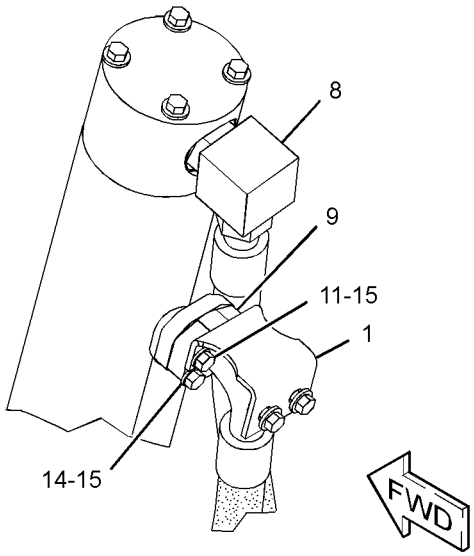

VIEW OF AREA A
(PARTS REMOVED FOR CLARITY)

GRAPHIC #1 **<END>** g02791341

HYDRAULIC SYSTEM

373-9495 CYLINDER & LINES GP–LH

S/N: DSH1-UP; DJR1-UP

PART OF 313-3338, 379-6225 CHASSIS AR

SMCS-5110 **i04609535**

NOTE	REF NO	GRAPHIC REF	PART NUMBER	QTY	PART NAME 1 2 3 4 5 6 (PRODUCT LEVEL)	SEE PAGE
	1	1	**8E-6269**	1	BRACKET AS	
		1	**1F-0750**	2	NUT-WELD (3/8-16-THD)	
I	2	1	**153-6787**	1	HOSE AS	
I	3	1	**108-6982**	1	HOSE AS	
	4	1	*153-6251*	1	CONNECTOR AS	
		1	**4K-1388**	1	SEAL-O-RING	
		1	**6V-8400**	1	SEAL-O-RING	
		1	**9X-8260**	1	CONNECTOR	
Y	5	1	**373-9496**	1	CYLINDER GP-BULLDOZER LIFT	420
	6	1	**373-9500**	1	PLATE AS	
	7	1	**373-9502**	1	TUBE AS	
	8	1	*148-8391*	1	ELBOW AS	
		1	**2S-4078**	1	SEAL-O-RING	
		1	**5K-9090**	1	SEAL-O-RING	
		1	**8T-8987**	1	ELBOW	
	9	1	**1P-4577**	2	FLANGE-HALF	
	10	1	**4J-0520**	3	SEAL-O-RING	
	11	1	**4L-9337**	2	BOLT (3/8-16X1.5-IN)	
	12	1	**5P-1075**	6	WASHER-HARD (10.2X22.5X3-MM THK)	
	13	1	**5S-7379**	6	BOLT (3/8-16X0.875-IN)	
	14	1	**5S-7382**	2	BOLT (3/8-16X1.375-IN)	
	15	1	**8T-4896**	4	WASHER-HARD (10.2X18.5X2.5-MM THK)	

I-REFER TO HYDRAULIC INFORMATION SYSTEM
Y-SEPARATE ILLUSTRATION

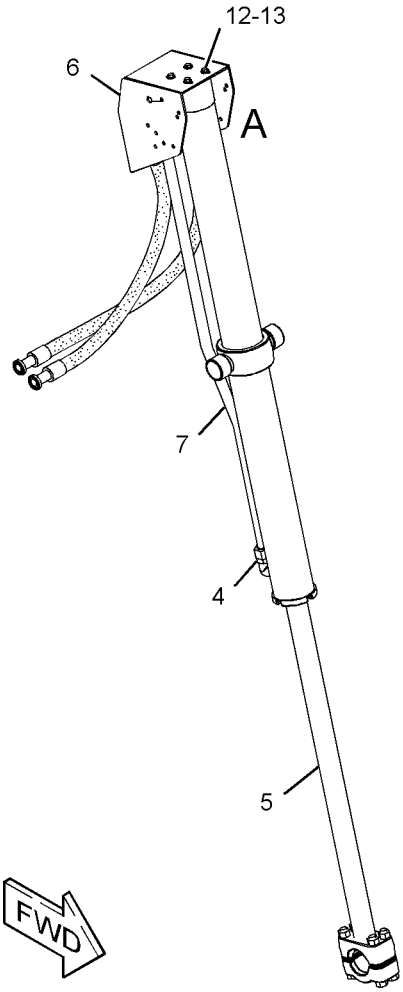

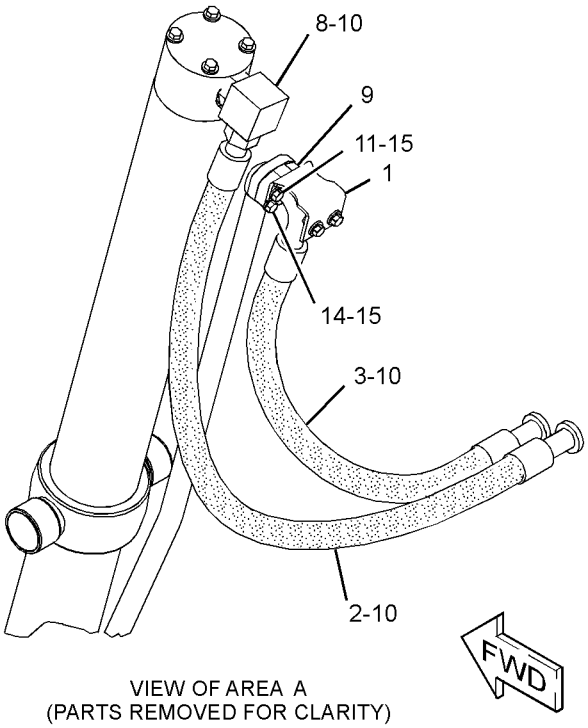

VIEW OF AREA A
(PARTS REMOVED FOR CLARITY)

GRAPHIC #1 **<END>** g02791368

HYDRAULIC SYSTEM

373-9497 CYLINDER & LINES GP-LIFT–RH

S/N: DLN1-UP

PART OF 313-3759 CHASSIS AR

SMCS-5102 **i04714410**

NOTE	REF NO	GRAPHIC REF	PART NUMBER	QTY	PART NAME 1 2 3 4 5 6 (PRODUCT LEVEL)	SEE PAGE
	1	1	**8E-6269**	1	BRACKET AS	
		1	**1F-0750**	2	NUT-WELD (3/8-16-THD)	
	2	1	*153-6251*	1	CONNECTOR AS	
		1	**9X-8260**	1	CONNECTOR	
		1	**4K-1388**	1	SEAL-O-RING	
		1	**6V-8400**	1	SEAL-O-RING	
Y	3	1	**373-9499**	1	CYLINDER GP-BULLDOZER LIFT	421
	4	1	**373-9500**	1	PLATE AS	
	5	1	**373-9504**	1	TUBE AS	
I	6	1	**139-5172**	1	HOSE AS	
I	7	1	**169-6890**	1	HOSE AS	
	8	1	*148-8391*	1	ELBOW AS	
		1	**8T-8987**	1	ELBOW	
		1	**2S-4078**	1	SEAL-O-RING	
		1	**5K-9090**	1	SEAL-O-RING	
	9	1	**1P-4577**	2	FLANGE-HALF	
	10	1	**4J-0520**	3	SEAL-O-RING	
	11	1	**4L-9337**	2	BOLT (3/8-16X1.5-IN)	
	12	1	**5P-1075**	6	WASHER-HARD (10.2X22.5X3-MM THK)	
	13	1	**5S-7379**	6	BOLT (3/8-16X0.875-IN)	
	14	1	**5S-7382**	2	BOLT (3/8-16X1.375-IN)	
	15	1	**8T-4896**	4	WASHER-HARD (10.2X18.5X2.5-MM THK)	

I-REFER TO HYDRAULIC INFORMATION SYSTEM
Y-SEPARATE ILLUSTRATION

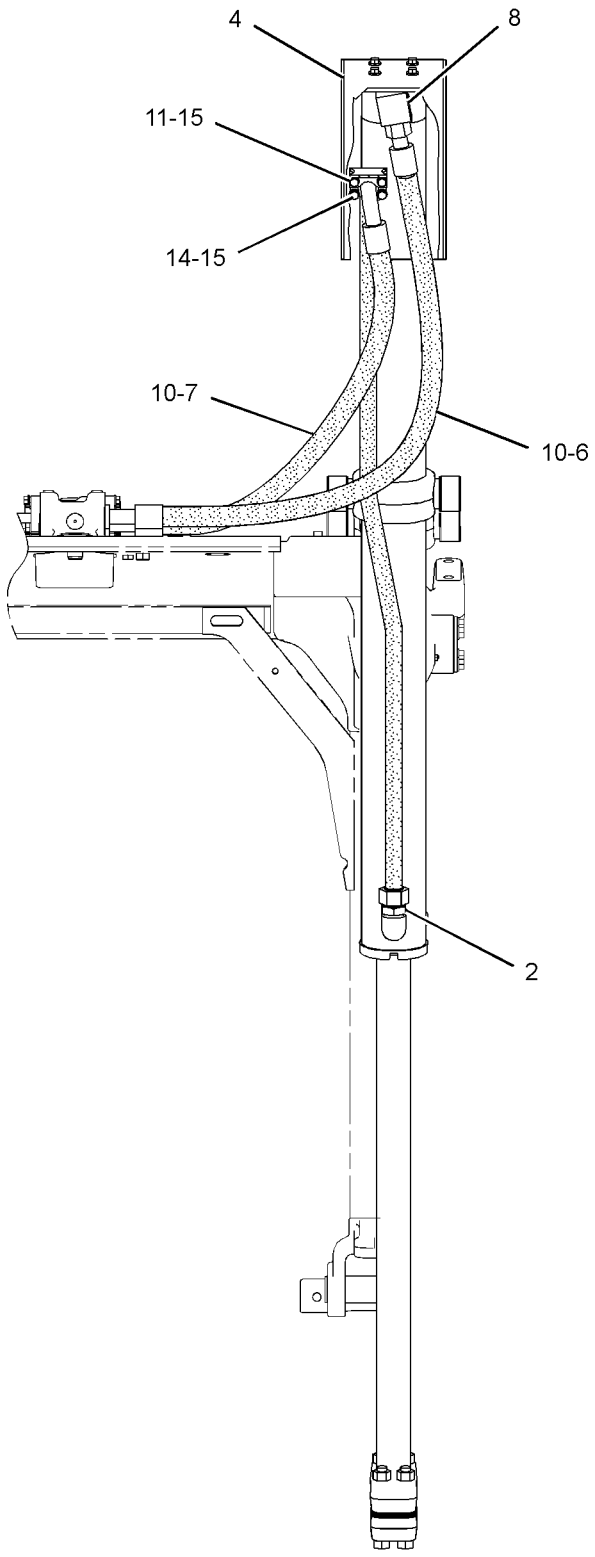

REAR VIEW

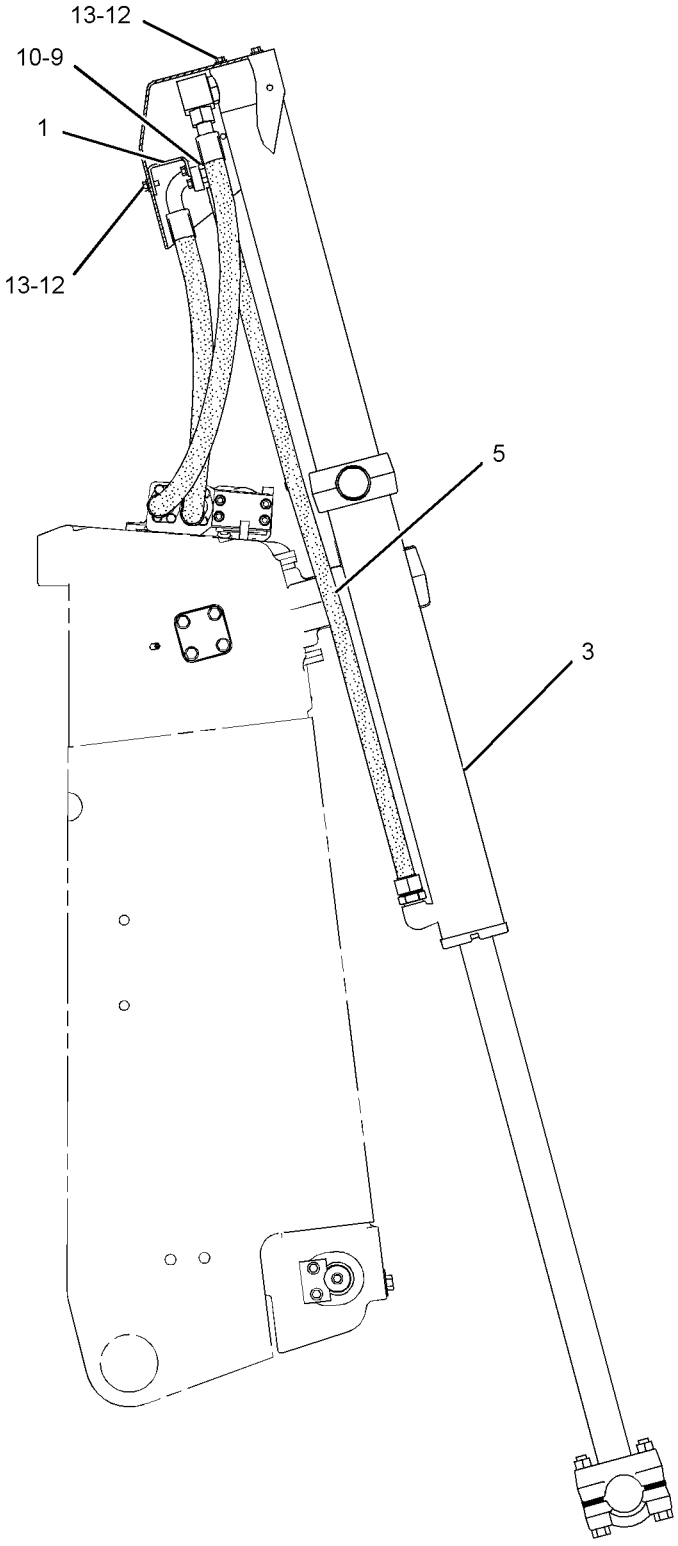

RIGHT SIDE VIEW

GRAPHIC #1 **<END>** g02836538

HYDRAULIC SYSTEM

373-9498 CYLINDER & LINES GP-LIFT–LH

S/N: DLN1-UP

PART OF 313-3759 CHASSIS AR

SMCS-5102 **i04714411**

NOTE	REF NO	GRAPHIC REF	PART NUMBER	QTY	PART NAME 1 2 3 4 5 6 (PRODUCT LEVEL)	SEE PAGE
	1	1	**8E-6269**	1	BRACKET AS	
		1	**1F-0750**	2	NUT-WELD (3/8-16-THD)	
	2	1	*153-6251*	1	CONNECTOR AS	
		1	**9X-8260**	1	CONNECTOR	
		1	**4K-1388**	1	SEAL-O-RING	
		1	**6V-8400**	1	SEAL-O-RING	
Y	3	1	**373-9499**	1	CYLINDER GP-BULLDOZER LIFT	421
	4	1	**373-9500**	1	PLATE AS	
	5	1	**373-9503**	1	TUBE AS	
I	6	1	**139-5172**	1	HOSE AS	
I	7	1	**169-6890**	1	HOSE AS	
	8	1	*148-8391*	1	ELBOW AS	
		1	**8T-8987**	1	ELBOW	
		1	**2S-4078**	1	SEAL-O-RING	
		1	**5K-9090**	1	SEAL-O-RING	
	9	1	**1P-4577**	2	FLANGE-HALF	
	10	1	**4J-0520**	3	SEAL-O-RING	
	11	1	**4L-9337**	2	BOLT (3/8-16X1.5-IN)	
	12	1	**5P-1075**	6	WASHER-HARD (10.2X22.5X3-MM THK)	
	13	1	**5S-7379**	6	BOLT (3/8-16X0.875-IN)	
	14	1	**5S-7382**	2	BOLT (3/8-16X1.375-IN)	
	15	1	**8T-4896**	4	WASHER-HARD (10.2X18.5X2.5-MM THK)	

I-REFER TO HYDRAULIC INFORMATION SYSTEM
Y-SEPARATE ILLUSTRATION

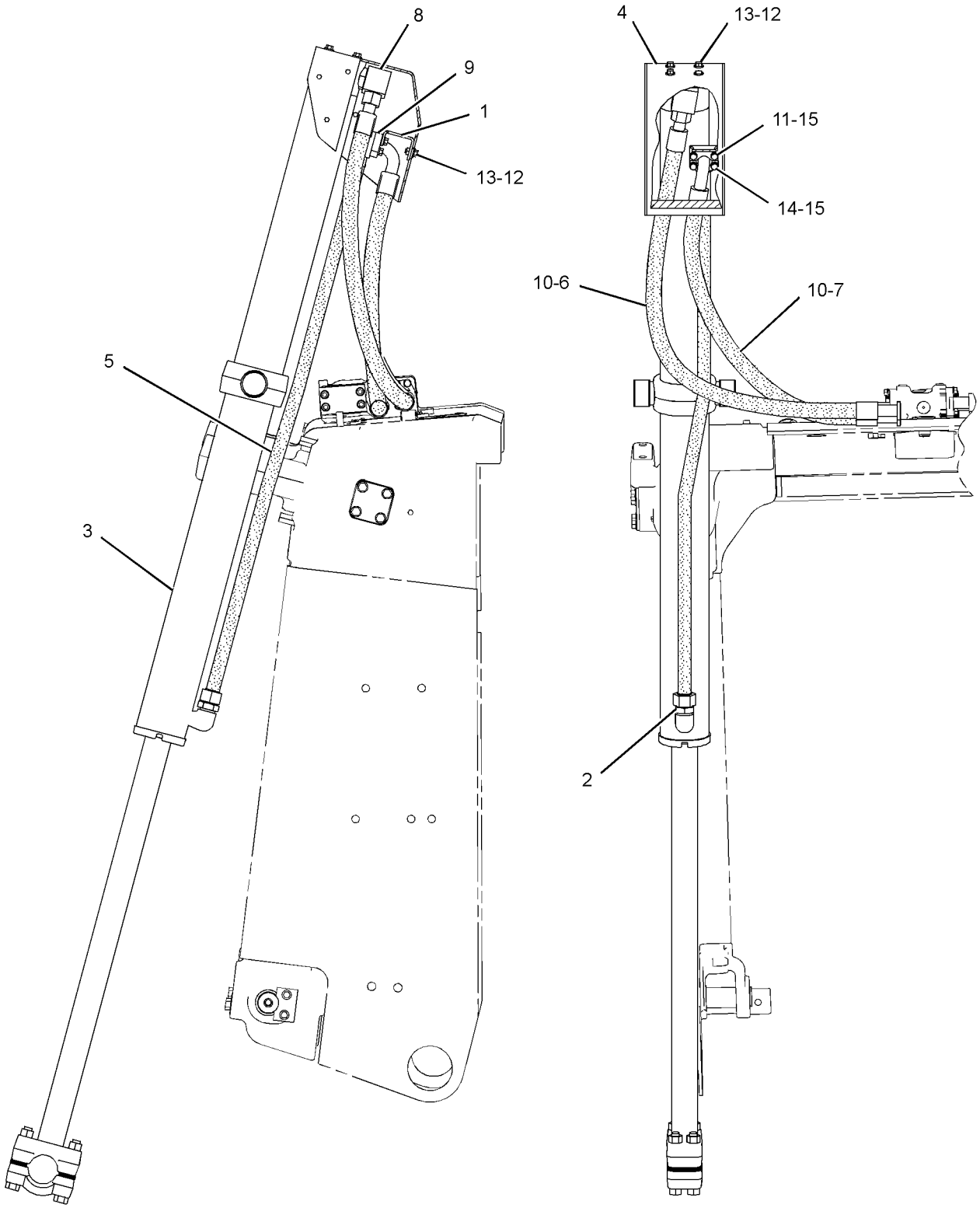

LEFT SIDE VIEW

REAR VIEW

GRAPHIC #1 **<END>** g02833297

HYDRAULIC SYSTEM

129-1908 CYLINDER GP-BULLDOZER LIFT

S/N: DSH1-UP; DJR1-UP
101.6-MM (4-IN) BORE X 1385-MM (54.5-IN) STROKE
PART OF 373-9496 CYLINDER GP-BULLDOZER LIFT

SMCS-5102 **i04609510**

NOTE	REF NO	GRAPHIC REF	PART NUMBER	QTY	PART NAME 1 2 3 4 5 6 (PRODUCT LEVEL)	SEE PAGE
R	1	1	**129-1910**	1	CYLINDER AS	
	1A	1	**6E-1108**	2	BUSHING	
	2	1	**1F-6762**	1	BOLT (1-1/2-12X4.5-IN)	
	3	1	**3G-8742**	1	WASHER (39.3X63.5X6-MM THK)	
	4	1	**1M-1571**	1	RING-WEAR	
	5	1	**9T-3885**	1	PISTON AS	
		1	**8C-9160**	1	SEAL AS	
	6	1	**172-9981**	1	HEAD	
	7	1	**225-3281**	1	SEAL-WIPER	
R	8	1	**6E-1847**	1	ROD AS	
	9	1	**8E-5703**	22	SHIM (0.8-MM THK)	
	10	1	**8J-2880**	1	CAP-BEARING	
B		1	**8E-5703**	14	SHIM (0.8-MM THK)	
	11	1	**289-2948**	1	SEAL-U-CUP	
	12	1	**2K-6830**	1	RING-BACKUP	
	13	1	**289-2937**	1	SEAL AS-BUFFER	
	14	1	**8T-0785**	1	RING-WEAR	
	15	1	**175-7900**	1	SEAL-O-RING	
	16	1	**2J-3506**	4	NUT-FULL (3/4-10-THD)	
	17	1	**1D-4615**	4	BOLT (3/4-10X5.5-IN)	

B-USE AS REQUIRED
R-REMFG PART MAY BE AVAILABLE

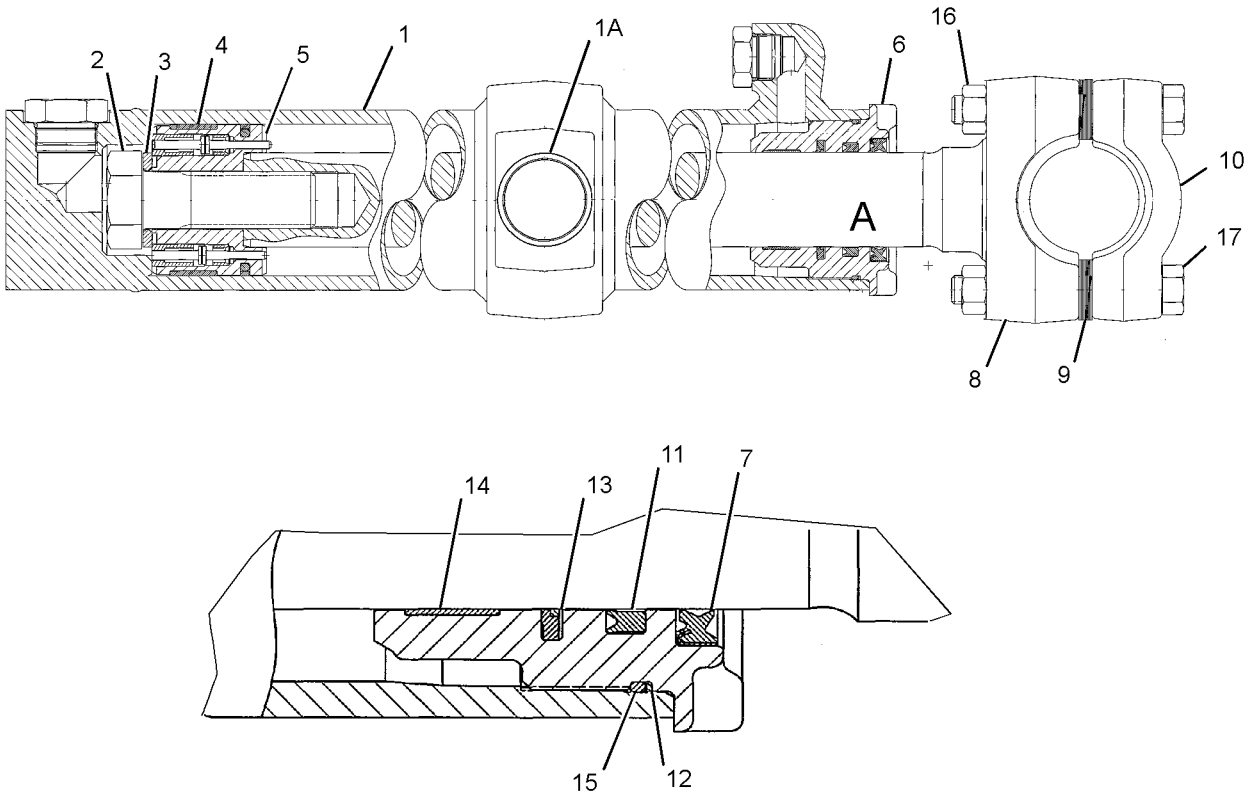

VIEW OF AREA A

GRAPHIC #1 **<END>** g02798855

HYDRAULIC SYSTEM

129-4259 CYLINDER GP-BULLDOZER LIFT

S/N: DLN1-UP
101.6-MM (4-IN) BORE X 1437-MM (56.6-IN) STROKE
PART OF 373-9499 CYLINDER GP-BULLDOZER LIFT

SMCS-5102 **i04714490**

NOTE	REF NO	GRAPHIC REF	PART NUMBER	QTY	PART NAME 1 2 3 4 5 6 (PRODUCT LEVEL)	SEE PAGE
	1	1	**129-4303**	1	CYLINDER AS	
	1A	1	**6E-1108**	2	BUSHING	
	2	1	**1F-6762**	1	BOLT (1-1/2-12X4.5-IN)	
	3	1	**3G-8742**	1	WASHER (39.3X63.5X6-MM THK)	
	4	1	**1M-1571**	1	RING-WEAR	
	5	1	**9T-3885**	1	PISTON AS	
	5A	1	**8C-9160**	1	SEAL AS	
	6	1	**172-9981**	1	HEAD	
	7	1	**2J-3506**	4	NUT-FULL (3/4-10-THD)	
R	8	1	**6E-1839**	1	ROD AS	
B	9	1	**8E-5703**	22	SHIM (0.8-MM THK)	
	10	1	**8J-2880**	1	CAP-BEARING	
	11	1	**1D-4615**	4	BOLT (3/4-10X5.5-IN)	
	12	1	**2K-6830**	1	RING-BACKUP	
	13	1	**175-7900**	1	SEAL-O-RING	
	14	1	**8T-0785**	1	RING-WEAR	
	15	1	**167-2201**	1	SEAL AS-BUFFER	
	16	1	**167-2312**	1	SEAL-U-CUP	
	17	1	**225-3281**	1	SEAL-WIPER	

B-USE AS REQUIRED
R-REMFG PART MAY BE AVAILABLE

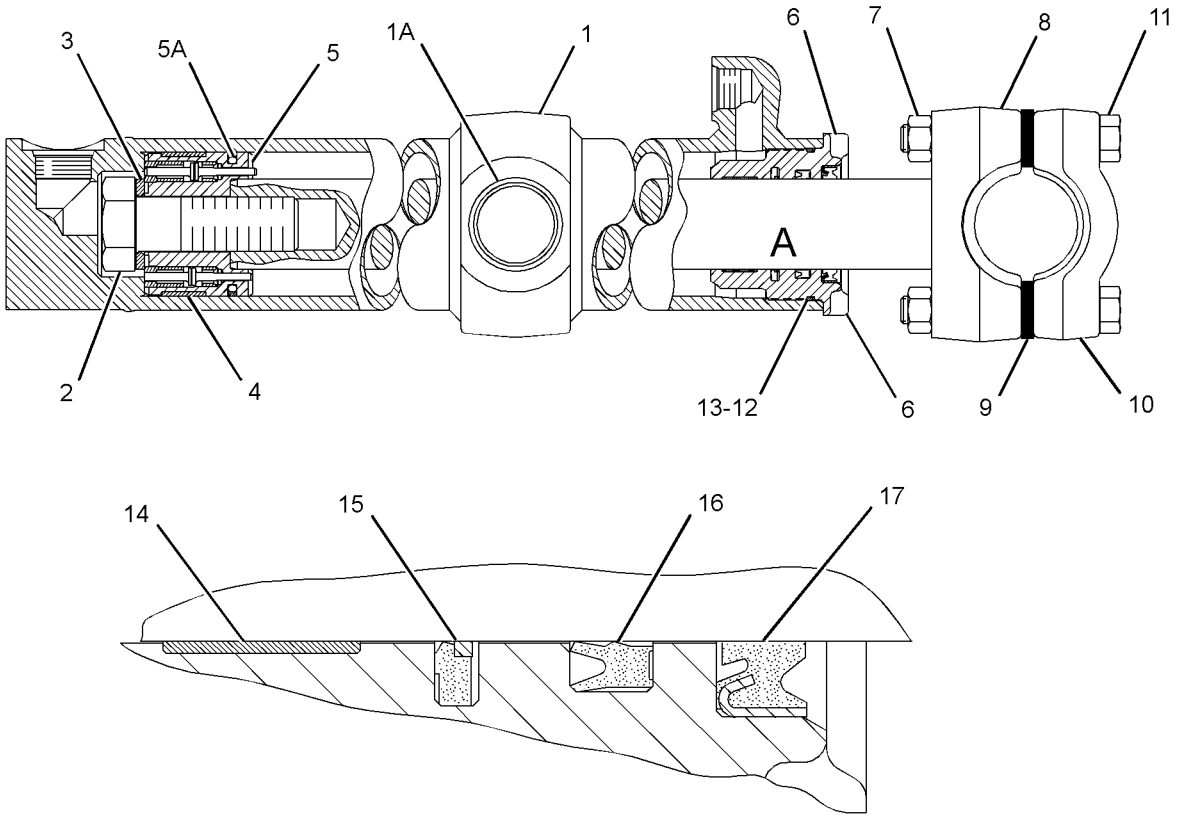

VIEW OF AREA A

GRAPHIC #1 **<END>** g02843256

HYDRAULIC SYSTEM

373-9496 CYLINDER GP-BULLDOZER LIFT

S/N: DSH1-UP; DJR1-UP

PART OF 373-9494, 373-9495 CYLINDER & LINES GP

SMCS-5102 **i04609515**

NOTE	REF NO	GRAPHIC REF	PART NUMBER	QTY	PART NAME 1 2 3 4 5 6 (PRODUCT LEVEL)	SEE PAGE
Y	1	1	**129-1908**	1	CYLINDER GP-BULLDOZER LIFT	416

Y-SEPARATE ILLUSTRATION

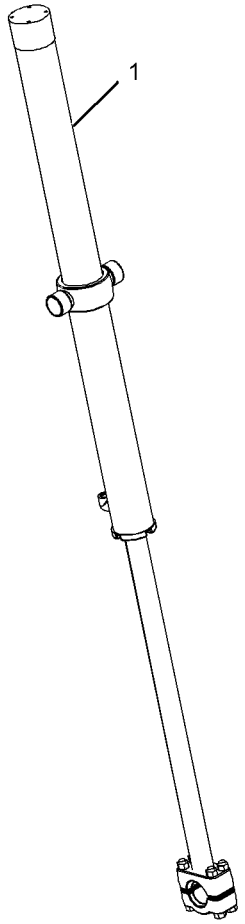

GRAPHIC #1 **<END>** g02791225

373-9499 CYLINDER GP-BULLDOZER LIFT

S/N: DLN1-UP

PART OF 373-9497, 373-9498 CYLINDER & LINES GP-LIFT

SMCS-5102 **i04714530**

NOTE	REF NO	GRAPHIC REF	PART NUMBER	QTY	PART NAME 1 2 3 4 5 6 (PRODUCT LEVEL)	SEE PAGE
Y	1	1	**129-4259**	1	CYLINDER GP-BULLDOZER LIFT	418

Y-SEPARATE ILLUSTRATION

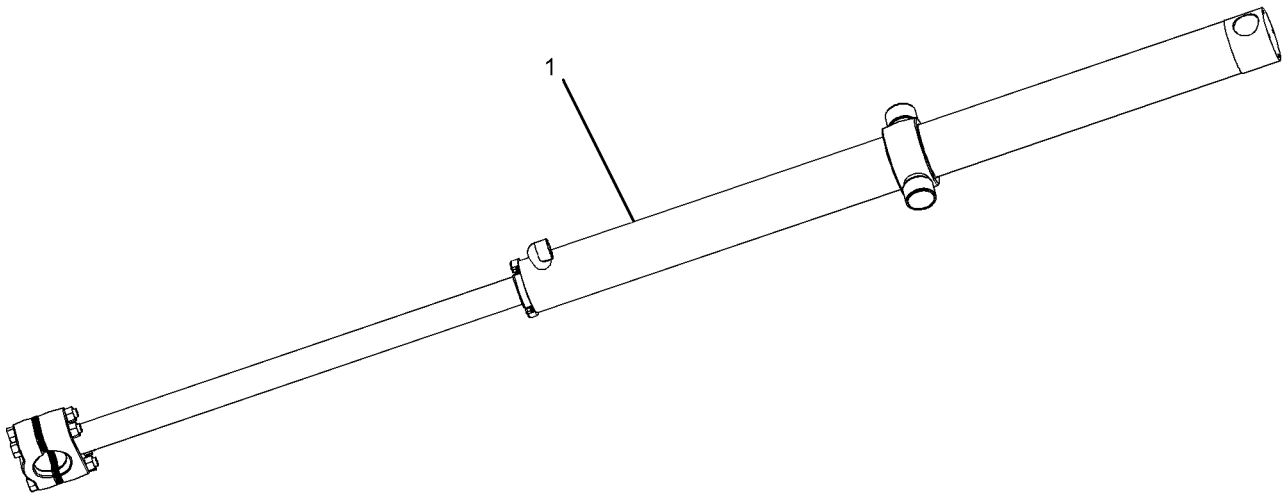

GRAPHIC #1 **<END>** g02833256

HYDRAULIC SYSTEM

164-7320 CYLINDER GP-RIPPER–LIFT

S/N: LBB1-UP
152.4-MM (6-IN) BORE X 311-MM (12.2-IN) STROKE
PART OF 379-3538 RIPPER AR
AN ATTACHMENT

SMCS-5352, 5356 **i04702633**

NOTE	REF NO	GRAPHIC REF	PART NUMBER	QTY	PART NAME 1 2 3 4 5 6 (PRODUCT LEVEL)	SEE PAGE
	1	1	**166-7213**	1	CYLINDER AS	
	1A	1	**3G-5999**	1	BUSHING	
	2	1	**3J-9545**	1	LOCKNUT (2-12-THD)	
	3	1	**1J-0708**	1	RING-WEAR	
	4	1	**8C-9173**	1	SEAL AS	
	5	1	**8J-1818**	1	PISTON	
	6	1	**6D-9157**	1	SEAL-O-RING	
	7	1	**158-3025**	1	RING-BACKUP	
M	8	1	**173-9779**	4	BOLT (M24X3X80-MM)	
	9	1	**6V-8237**	4	WASHER (26X44X4-MM THK)	
R	10	1	**112-4818**	1	ROD AS	
	10A	1	**3G-5999**	1	BUSHING	
	11	1	**167-2207**	1	SEAL AS-BUFFER	
	12	1	**167-2317**	1	SEAL-U-CUP	
	13	1	**167-2467**	1	SEAL-WIPER	
	14	1	**8C-9200**	1	RING-WEAR	
	15	1	**166-7212**	1	HEAD	
	16	1	**3B-8489**	2	FITTING-GREASE	

M-METRIC PART
R-REMFG PART MAY BE AVAILABLE

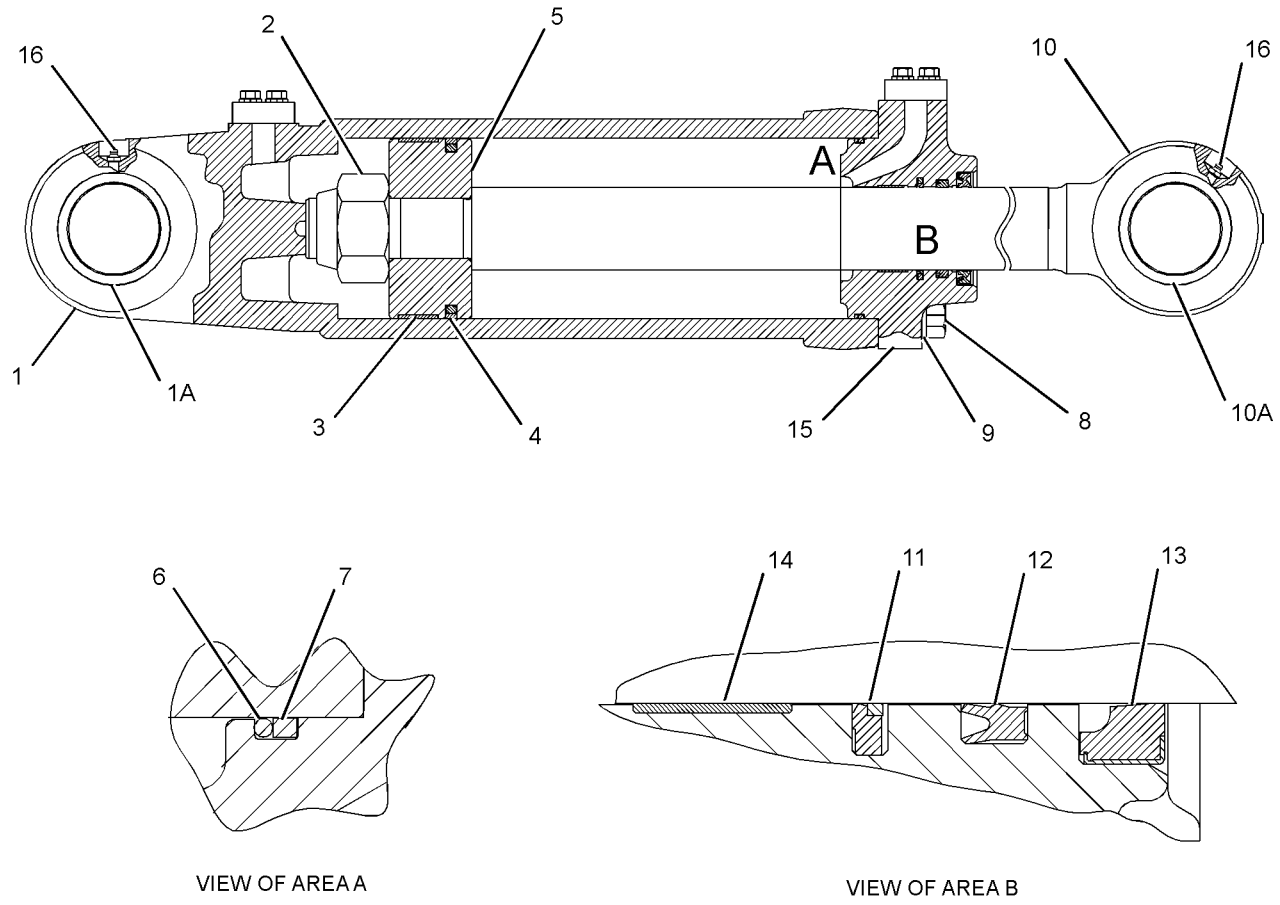

GRAPHIC #1 **<END>** g02822717

HYDRAULIC SYSTEM

189-4645 CYLINDER GP-RIPPER–TILT

S/N: LBB1-UP
133.35-MM (5.25-IN) BORE X 438-MM (17.24-IN) STROKE
PART OF 379-3538 RIPPER AR
AN ATTACHMENT

SMCS-5352, 5356 **i04702673**

NOTE	REF NO	GRAPHIC REF	PART NUMBER	QTY	PART NAME 1 2 3 4 5 6 (PRODUCT LEVEL)	SEE PAGE
	1	1	**189-4647**	1	CYLINDER AS	
	1A	1	**3G-5999**	1	BUSHING	
	2	1	**5P-9402**	1	BOLT (1-1/2-12X5-IN)	
	3	1	**3S-6162**	1	WASHER-HARD (40.5X67X6-MM THK)	
	4	1	**9J-7978**	1	RING-WEAR	
	5	1	**5J-7234**	1	SEAL AS	
	6	1	**4T-8710**	1	PISTON	
	7	1	**189-4646**	1	HEAD	
	8	1	**2J-7767**	1	RING-BACKUP	
	9	1	**5F-3106**	1	SEAL-O-RING	
M	10	1	**6V-3669**	4	BOLT (M20X2.5X80-MM)	
	11	1	**166-9139**	1	ROD AS	
	11A	1	**3G-5999**	1	BUSHING	
	12	1	**3B-8489**	2	FITTING-GREASE	
	13	1	**8T-7849**	1	RING-WEAR	
	14	1	**167-2207**	1	SEAL AS-BUFFER	
	15	1	**167-2317**	1	SEAL-U-CUP	
	16	1	**167-2467**	1	SEAL-WIPER	
	17	1	**8T-3282**	4	WASHER-HARD (22X35X3.5-MM THK)	

M-METRIC PART

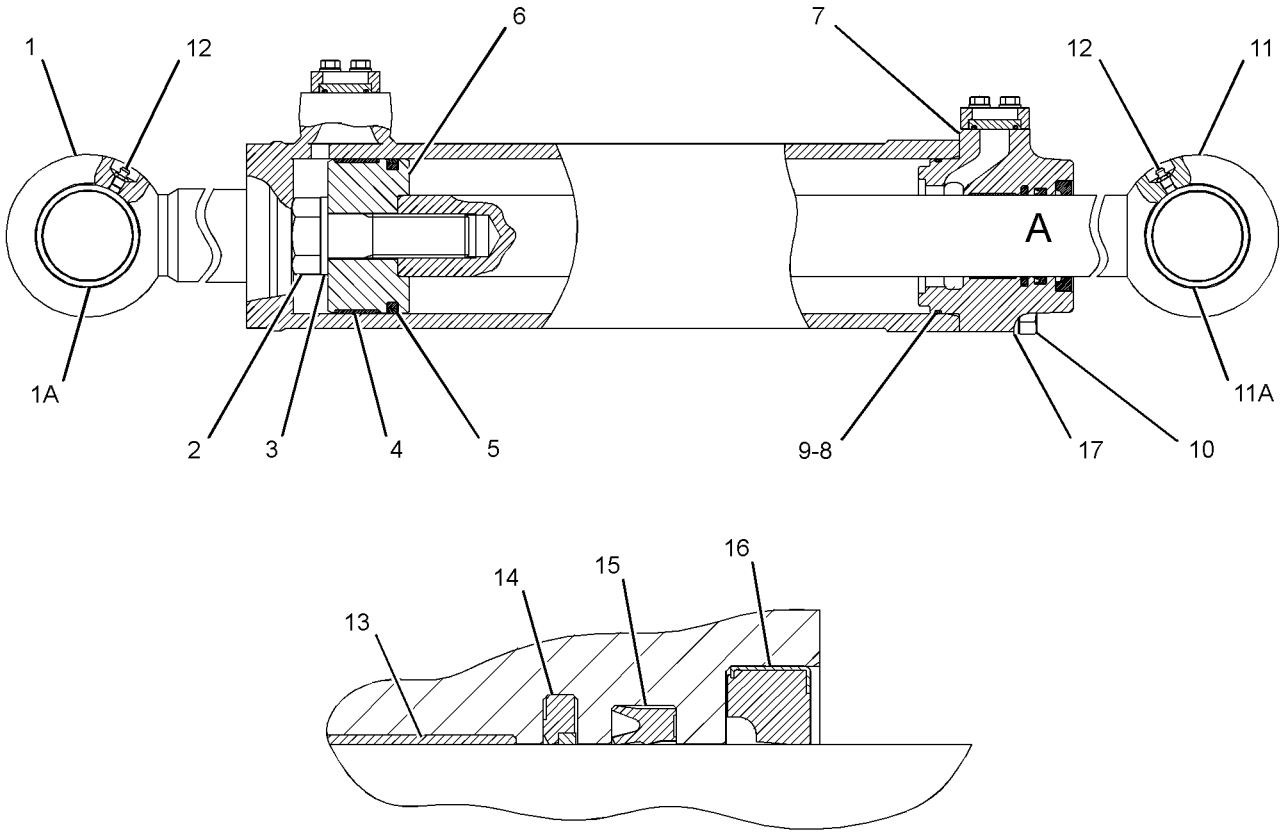

VIEW OF AREA A

GRAPHIC #1 **<END>** g02821278

HYDRAULIC SYSTEM

3G-4533 CYLINDER GP-TILT

S/N: DSH1-UP; DLN1-UP; DJR1-UP
165.1-MM (6.5-IN) BORE X 162-MM (6.4-IN) STROKE
PART OF 386-0187, 386-0221 PUSH ARM GP-STABILIZER
AN ATTACHMENT

SMCS-5104 **i04729249**

NOTE	REF NO	GRAPHIC REF	PART NUMBER	QTY	PART NAME 1 2 3 4 5 6 (PRODUCT LEVEL)	SEE PAGE
R	1	1	**3G-4532**	1	CYLINDER AS	
		1	**1U-1115**	1	YOKE AS	
	1A	1	**4J-6374**	2	BUSHING	
	2	1	**3D-6338**	1	GASKET	
	3	1	**9T-0094**	1	RING-WEAR	
	4	1	**1C-0569**	2	BOLT (5/16-18X0.5-IN)	
	5	1	**2J-0564**	1	LOCKNUT (2-12-THD)	
	6	1	**6J-9748**	1	PISTON	
	7	1	**3J-9703**	1	RING-WEAR	
	8	1	**5J-4991**	1	SEAL AS	
	9	1	**6J-9747**	1	WASHER (53X105X12.7-MM THK)	
	10	1	**365-1757**	1	ROD AS	
B		1	**3G-0911**	14	SHIM (0.8-MM THK)	
	11	1	**2K-4472**	1	SEAL-O-RING	
	12	1	**2K-4473**	1	RING-BACKUP	
	13	1	**2D-0092**	1	GASKET	
	14	1	**2K-1845**	1	COVER	
	15	1	**0T-0102**	2	BOLT (3/8-16X0.625-IN)	
	16	1	**6E-5527**	1	HEAD	
	17	1	**5P-8250**	4	WASHER (28X49X5-MM THK)	
	18	1	**7X-0406**	4	BOLT (1-8X3-IN)	
	19	1	**8C-9126**	1	SEAL AS	
	20	1	**7X-0449**	4	NUT-FULL (7/8-9-THD)	
	21	1	**7X-0392**	4	BOLT (7/8-9X6-IN)	
	22	1	**225-3284**	1	SEAL-WIPER	
	23	1	**312-4245**	1	SEAL-U-CUP	
	24	1	**3G-0910**	1	CAP-BEARING	
B	25	1	**3G-0911**	12	SHIM (0.8-MM THK)	

B-USE AS REQUIRED
R-REMFG PART MAY BE AVAILABLE

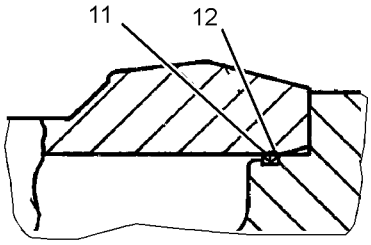

VIEW OF AREA A

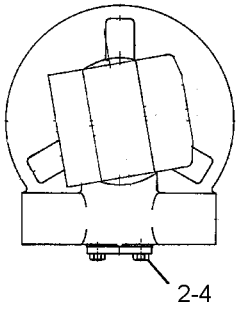

VIEW B-B

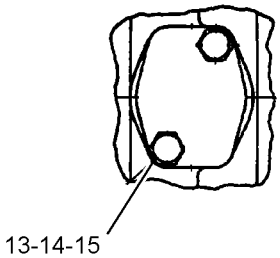

VIEW C-C

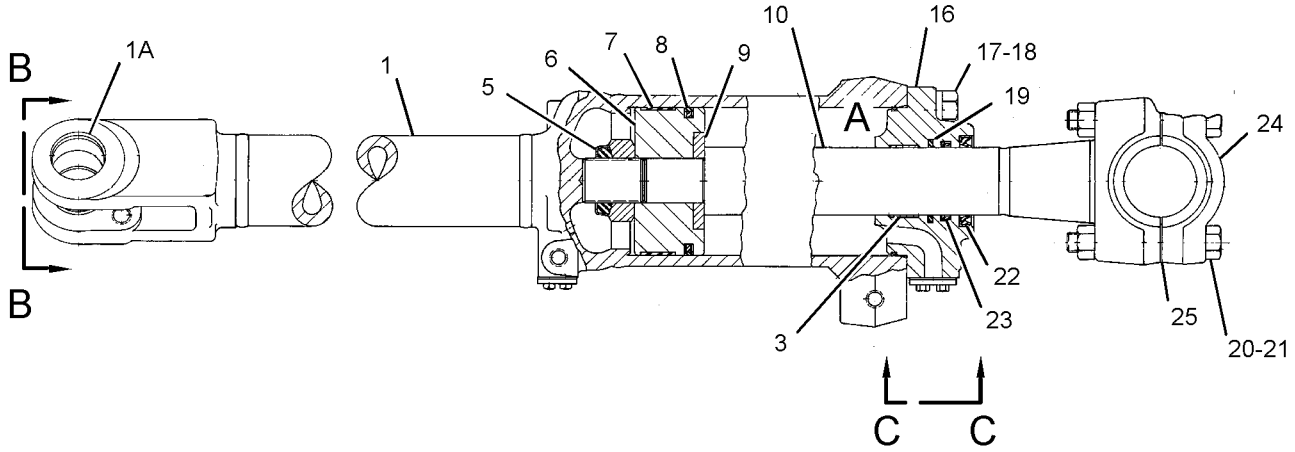

GRAPHIC #1 **<END>** g02849219

HYDRAULIC SYSTEM

313-3756 HYDRAULIC AR

S/N: DSH1-UP; DLN1-UP; DJR1-UP

PART OF 313-3337, 313-3758, 379-6224 GENERAL AR

SMCS-5050 **i04774729**

NOTE	PART NUMBER	QTY	PART NAME 1 2 3 4 5 6 (PRODUCT LEVEL)	SEE PAGE
Y	*229-5422*	1	ADAPTER GP-MOTOR	404
Y	*222-1150*	1	CONTROL GP-PILOT OPERATED HYD (BULLDOZER)	548
Y	*325-4861*	1	LINES GP-LIFT CYLINDER	429
Y	*379-1942*	1	LINES GP-PILOT	435
Y	*327-7190*	1	LINES GP-PUMP	438
Y	*378-6119*	1	LINES GP-TILT CYLINDER	446
YR	**159-7156**	1	MOTOR GP-PISTON (STEERING)	391
Y	*222-1153*	1	PUMP & MOUNTING GP (IMPLEMENT, STEERING)	455
Y	*386-1149*	1	TANK & MTG GP-HYDRAULIC	463
Y	*222-1191*	1	VALVE & MTG GP-COUNTERBALANCE	465
Y	*222-1152*	1	VALVE & MTG GP-IMPLEMENT CONT	466
Y	*222-1151*	1	VALVE GP-QUICK-DROP	491

R-REMFG PART MAY BE AVAILABLE
Y-SEPARATE ILLUSTRATION

<END>

325-4861 LINES GP-LIFT CYLINDER

S/N: DSH1-UP; DLN1-UP; DJR1-UP
PART OF 313-3756 HYDRAULIC AR

SMCS-5057, 5102 **i04607618**

NOTE	REF NO	GRAPHIC REF	PART NUMBER	QTY	PART NAME 1 2 3 4 5 6 (PRODUCT LEVEL)	SEE PAGE
	1	1	**325-4863**	1	TUBE AS	
	2	1	**325-4864**	1	TUBE AS	
	3	1	**378-6129**	1	PLATE AS	
	4	1	**378-6130**	1	BRACKET AS	
I	5	1	*378-6132*	1	HOSE AS	
I	6	1	*381-3883*	1	HOSE AS	
	7	1	**1P-3704**	2	SEAL-RECTANGULAR	
	8	1	**4J-0520**	4	SEAL-O-RING	
	9	1	**5P-2228**	2	BOLT (1/2-13X1-IN)	
	10	1	**7G-5984**	4	CLIP (TAB)	
	11	1	**7G-5985**	4	CLIP (SLOT)	
	12	1	**7G-5986**	4	GROMMET	
	13	1	**8C-3206**	4	FLANGE-HALF	
	14	1	**8S-0023**	2	CLIP (SLOT)	
	15	1	**8S-0024**	2	CLIP (TAB)	
	16	1	**8T-2602**	2	CLIP (TAB)	
	17	1	**8T-2603**	2	CLIP (SLOT)	
	18	1	**8T-4121**	19	WASHER-HARD (11X21X2.5-MM THK)	
M	19	1	**8T-4139**	2	BOLT (M12X1.75X30-MM)	
M	20	1	**8T-4182**	8	BOLT (M10X1.5X45-MM)	
M	21	1	**8T-4183**	2	BOLT (M12X1.75X40-MM)	
M	22	1	**8T-4195**	2	BOLT (M10X1.5X30-MM)	
M	23	1	**8T-4196**	9	BOLT (M10X1.5X35-MM)	
	24	1	**8T-4223**	10	WASHER-HARD (13.5X25.5X3-MM THK)	
M	25	1	**8T-4956**	4	BOLT (M12X1.75X35-MM)	

I-REFER TO HYDRAULIC INFORMATION SYSTEM
M-METRIC PART

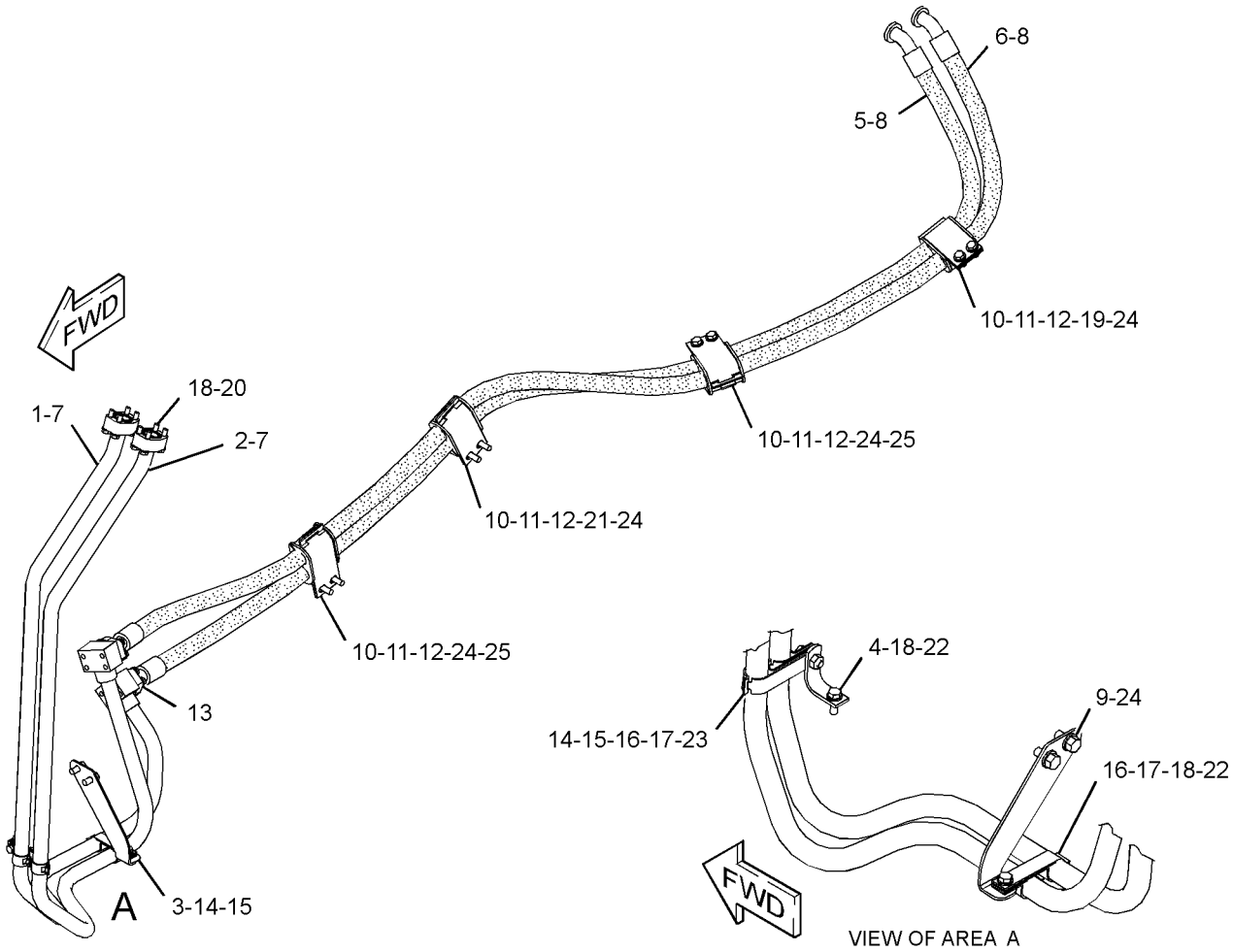

GRAPHIC #1 **<END>** g02792529

HYDRAULIC SYSTEM

222-1179 LINES GP-PILOT–RIPPER

S/N: DSH1-UP; DLN1-UP; DJR1-UP
PART OF 323-9717 CONTROL AR-HYDRAULIC
AN ATTACHMENT

SMCS-5057 **i04631337**

NOTE	REF NO	GRAPHIC REF	PART NUMBER	QTY	PART NAME 1 2 3 4 5 6 (PRODUCT LEVEL)	SEE PAGE
I	1	1	**226-3506**	1	HOSE AS	
I	2	1	**226-3511**	1	HOSE AS	
I	3	1	**227-3179**	1	HOSE AS	
	4	1	**228-7853**	1	HOSE AS	
	5	1	**346-5052**	1	HOSE AS	
	6	1	**346-5053**	1	HOSE AS	
	7	1	**346-5054**	1	HOSE AS	
	8	1	**347-6950**	1	HOSE AS	
	9	1	*148-8325*	1	CONNECTOR AS	
		1	**3J-1907**	1	SEAL-O-RING	
		1	**4J-5477**	1	SEAL-O-RING	
		1	**6V-8641**	1	CONNECTOR	
	10	1	*148-8326*	1	CONNECTOR AS	
		1	**3J-7354**	1	SEAL-O-RING	
		1	**6V-8397**	1	SEAL-O-RING	
		1	**6V-9872**	1	CONNECTOR	
	11	1	*148-8368*	4	ELBOW AS	
					(EACH INCLUDES)	
		1	**3J-1907**	1	SEAL-O-RING	
		1	**4J-5477**	1	SEAL-O-RING	
		1	**6V-8627**	1	ELBOW	
	12	1	*148-8369*	3	ELBOW AS	
					(EACH INCLUDES)	
		1	**3J-7354**	1	SEAL-O-RING	
		1	**4J-5477**	1	SEAL-O-RING	
		1	**6V-8628**	1	ELBOW	
	13	1	*148-8378*	1	ELBOW AS	
		1	**3J-1907**	1	SEAL-O-RING	
		1	**6V-8397**	1	SEAL-O-RING	
		1	**6V-8724**	1	ELBOW	

I-REFER TO HYDRAULIC INFORMATION SYSTEM

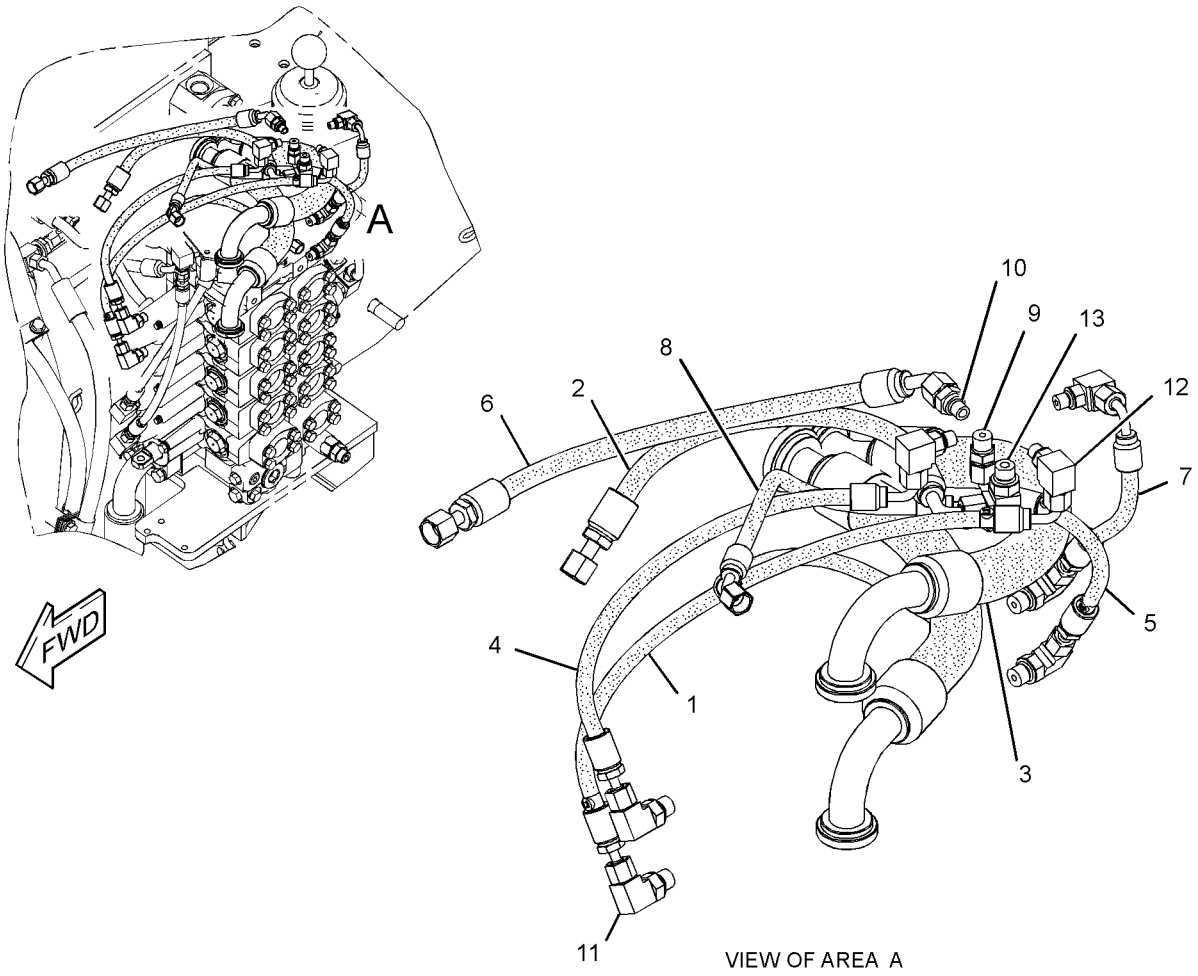

VIEW OF AREA A

GRAPHIC #1 **<END>** g02792678

HYDRAULIC SYSTEM

323-9716 LINES GP-PILOT

S/N: DSH1-UP; DLN1-UP; DJR1-UP
PART OF 323-9711 CONTROL AR-HYDRAULIC
AN ATTACHMENT

SMCS-5057 **i04629249**

NOTE	REF NO	GRAPHIC REF	PART NUMBER	QTY	PART NAME 1 2 3 4 5 6 (PRODUCT LEVEL)	SEE PAGE
Y	1	1	**234-5126**	1	VALVE & MTG GP-BULLDOZER (GRADE CONTROL)	464
	2	1	**238-4986**	4	VALVE GP-SHUTTLE	
	3	1	**238-4993**	1	HOSE AS	
	4	1	**263-3912**	1	VALVE	
	5	1	**322-3702**	1	TUBE AS	
	6	1	**322-3703**	1	TUBE AS	
	7	1	**322-3706**	1	HOSE AS	
I	8	1	**322-3707**	1	HOSE AS	
I	9	1	**322-3708**	1	HOSE AS	
	10	1	**322-3709**	1	HOSE AS	
	11	1	**322-4852**	1	HOSE AS	
	12	1	**371-9244**	1	TUBE AS	
	13	1	**371-9245**	1	TUBE AS	
	14	1	*148-8361*	4	ELBOW AS	
					(EACH INCLUDES)	
		1	**3J-7354**	1	SEAL-O-RING	
		1	**6V-8397**	1	SEAL-O-RING	
		1	**6V-9200**	1	ELBOW	
	15	1	**148-8367**	1	ELBOW AS	
		1	**6V-8397**	1	SEAL-O-RING	
		1	**6V-9850**	1	ELBOW	
	16	1	*148-8435*	1	TEE AS	
		1	**3J-1907**	1	SEAL-O-RING	
		1	**6V-8397**	2	SEAL-O-RING	
		1	**6V-8781**	1	TEE	
	17	1	*148-8439*	1	TEE AS	
		1	**3J-1907**	1	SEAL-O-RING	
		1	**6V-8397**	2	SEAL-O-RING	
		1	**6V-8774**	1	TEE	
	18	1	*150-4047*	1	ADAPTER AS	
		1	**3J-7354**	1	SEAL-O-RING	
		1	**8T-2353**	1	ADAPTER	
	19	1	**3J-1907**	5	SEAL-O-RING	
	20	1	**4J-5477**	4	SEAL-O-RING	
	21	1	**6V-8397**	10	SEAL-O-RING	
	22	1	**6V-8934**	4	REDUCER AS	

I-REFER TO HYDRAULIC INFORMATION SYSTEM
Y-SEPARATE ILLUSTRATION

323-9716 **LINES GP-PILOT** *(contd.)* **i04629249**

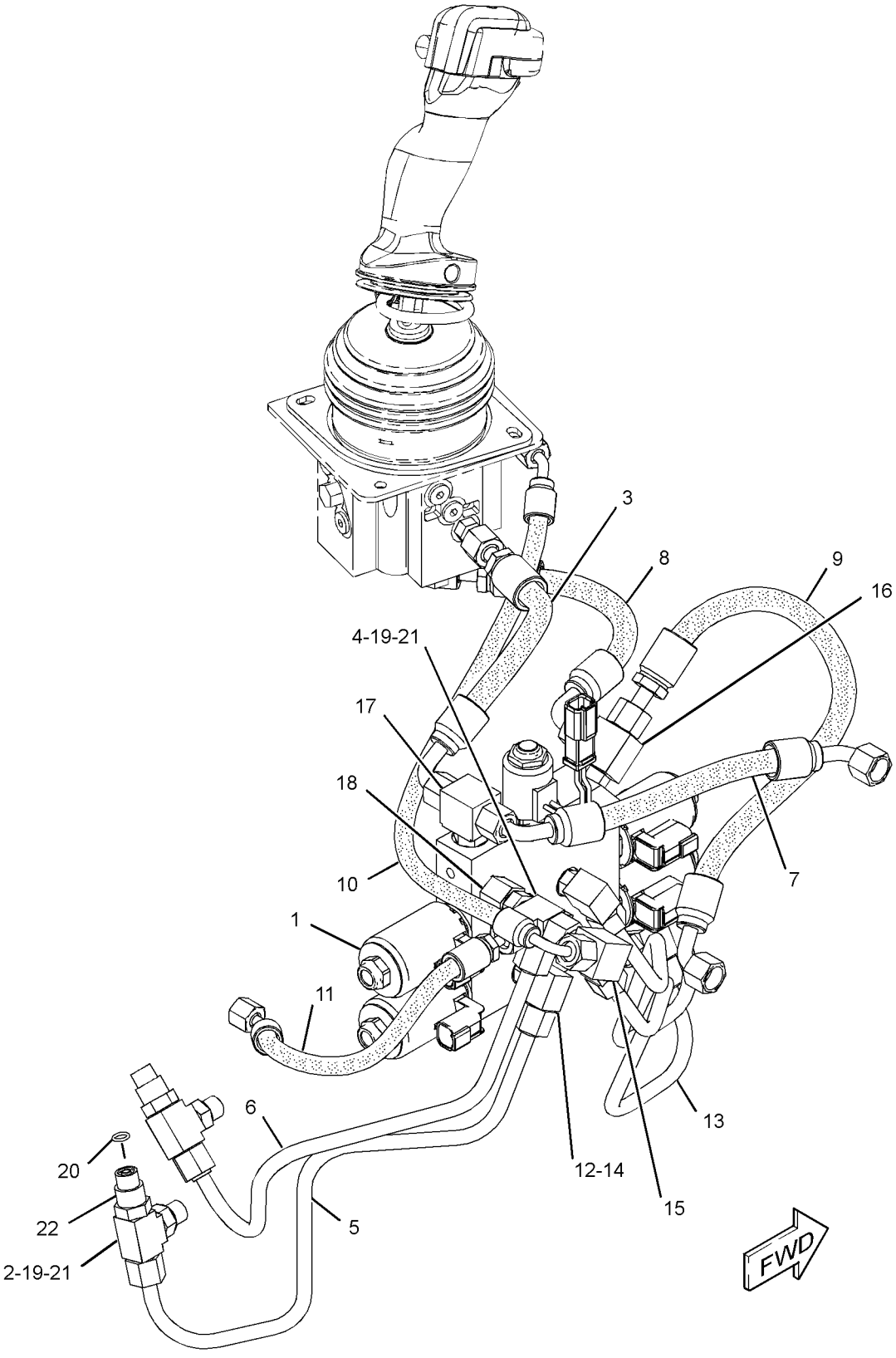

GRAPHIC #1 **<END>** g02789078

HYDRAULIC SYSTEM

379-1942 LINES GP-PILOT

S/N: DSH1-UP; DLN1-UP; DJR1-UP
PART OF 313-3756 HYDRAULIC AR

SMCS-5057 **i04727130**

NOTE	REF NO	GRAPHIC REF	PART NUMBER	QTY	PART NAME 1 2 3 4 5 6 (PRODUCT LEVEL)	SEE PAGE
	1	1	**5I-4376**	2	FITTING	
	2	1	**6V-0852**	2	CAP-DUST	
	3	1	**8C-3451**	1	CAP-DUST	
	4	1	**8Y-7452**	1	TEE-O-RING	
	5	1	**126-0814**	1	FITTING AS (SWIVEL)	
		1	**6V-0852**	1	CAP-DUST	
Y	6	1	**179-9387**	1	ACCUMULATOR GP-PILOT OIL (UNCHARGED)	403
	7	1	**226-3493**	1	TUBE AS	
I	8	1	**226-3496**	1	HOSE AS	
I	9	1	**226-3497**	1	HOSE AS	
I	10	1	**226-3498**	1	HOSE AS	
	11	1	**226-3500**	1	HOSE AS	
	12	1	**226-3502**	1	HOSE AS	
	13	1	**226-3503**	1	HOSE AS	
	14	1	**226-3505**	1	HOSE AS	
Y	15	1	**226-4751**	1	MANIFOLD GP-CONTROL	452
I	16	1	**227-9544**	1	HOSE AS	
I	17	1	**295-0645**	1	HOSE AS	
I	18	1	**380-2466**	1	HOSE AS	
	19	1	*148-8305*	1	ADAPTER AS	
		1	**5P-9617**	1	ADAPTER	
		1	**3J-1907**	1	SEAL-O-RING	
	20	1	*148-8316*	1	CONNECTOR AS	
		1	**6V-8647**	1	CONNECTOR	
		1	**3J-7354**	1	SEAL-O-RING	
		1	**4J-5477**	1	SEAL-O-RING	
	21	1	*148-8318*	3	CONNECTOR AS	
					(EACH INCLUDES)	
		1	**6V-8634**	1	CONNECTOR	
		1	**3K-0360**	1	SEAL-O-RING	
		1	**6V-8397**	1	SEAL-O-RING	
	22	1	*148-8325*	3	CONNECTOR AS	
					(EACH INCLUDES)	
		1	**6V-8641**	1	CONNECTOR	
		1	**3J-1907**	1	SEAL-O-RING	
		1	**4J-5477**	1	SEAL-O-RING	
	23	1	*148-8326*	2	CONNECTOR AS	
					(EACH INCLUDES)	
		1	**6V-9872**	1	CONNECTOR	
		1	**3J-7354**	1	SEAL-O-RING	
		1	**6V-8397**	1	SEAL-O-RING	
	24	1	*148-8336*	3	CONNECTOR AS	
					(EACH INCLUDES)	
		1	**6V-8636**	1	CONNECTOR	
		1	**3J-1907**	1	SEAL-O-RING	
		1	**6V-8397**	1	SEAL-O-RING	
	25	1	*148-8351*	1	ELBOW AS	
		1	**6V-9849**	1	ELBOW	
		1	**4J-5477**	1	SEAL-O-RING	
	26	1	**148-8367**	2	ELBOW AS	
					(EACH INCLUDES)	
		1	**6V-9850**	1	ELBOW	
		1	**6V-8397**	1	SEAL-O-RING	
	27	1	*148-8368*	4	ELBOW AS	
					(EACH INCLUDES)	
		1	**6V-8627**	1	ELBOW	

379-1942 **LINES GP-PILOT** *(contd.)* **i04727130**

NOTE	REF NO	GRAPHIC REF	PART NUMBER	QTY	PART NAME 1 2 3 4 5 6 (PRODUCT LEVEL)	SEE PAGE
		1	**3J-1907**	1	SEAL-O-RING	
		1	**4J-5477**	1	SEAL-O-RING	
	28	1	*148-8369*	1	ELBOW AS	
		1	**6V-8628**	1	ELBOW	
		1	**3J-7354**	1	SEAL-O-RING	
		1	**4J-5477**	1	SEAL-O-RING	
	29	1	*148-8374*	1	ELBOW AS	
		1	**6V-8723**	1	ELBOW	
		1	**3K-0360**	1	SEAL-O-RING	
		1	**6V-8397**	1	SEAL-O-RING	
	30	1	*148-8378*	2	ELBOW AS	
					(EACH INCLUDES)	
		1	**6V-8724**	1	ELBOW	
		1	**3J-1907**	1	SEAL-O-RING	
		1	**6V-8397**	1	SEAL-O-RING	
	31	1	*148-8434*	1	TEE AS	
		1	**6V-9843**	1	TEE	
		1	**6V-8397**	2	SEAL-O-RING	
	32	1	*148-8435*	1	TEE AS	
		1	**6V-8781**	1	TEE	
		1	**3J-1907**	1	SEAL-O-RING	
		1	**6V-8397**	2	SEAL-O-RING	
	33	1	*153-6246*	1	TEE AS	
		1	**7X-0820**	1	TEE	
		1	**6V-8397**	3	SEAL-O-RING	
	34	1	*164-5567*	2	COUPLER AS-QUICK DISCONNECT (MALE)	
					(EACH INCLUDES)	
		1	**6V-3965**	1	FITTING (QUICK DISCONNECT)	
		1	**214-7568**	1	SEAL-O-RING	
	35	1	*164-5590*	1	VALVE AS-FLUID SAMPLING	
		1	**8C-3446**	1	VALVE-FLUID SAMPLING	
		1	**3J-7354**	1	SEAL-O-RING	
	36	1	**226-3514**	1	HOSE AS	
	37	1	**3D-2824**	1	SEAL-O-RING	
	38	1	**3J-1907**	1	SEAL-O-RING	
	39	1	**3J-7354**	1	SEAL-O-RING	
	40	1	**4J-0522**	2	SEAL-O-RING	
	41	1	**5P-1075**	2	WASHER-HARD (10.2X22.5X3-MM THK)	
	42	1	**5R-0939**	1	CLIP (TAB)	
	43	1	**5R-0940**	1	CLIP (SLOT)	
	44	1	**6V-8076**	1	ELBOW	
	45	1	**6V-8397**	1	SEAL-O-RING	
	46	1	**6V-9168**	1	NUT (11/16-16-THD)	
	47	1	**6V-9829**	2	CAP AS	
M	48	1	**7X-2535**	2	BOLT (M6X1X60-MM)	
	49	1	**8T-1887**	2	CLIP (SLOT)	
	50	1	**8T-1888**	2	CLIP (TAB)	
M	51	1	**8T-4136**	1	BOLT (M10X1.5X25-MM)	
M	52	1	**8T-4196**	1	BOLT (M10X1.5X35-MM)	
	53	1	**9X-8256**	2	WASHER (6.6X12X2-MM THK)	
	54	1	**9X-8257**	2	WASHER (17.5X30X3.5-MM THK)	

I-REFER TO HYDRAULIC INFORMATION SYSTEM
M-METRIC PART
Y-SEPARATE ILLUSTRATION

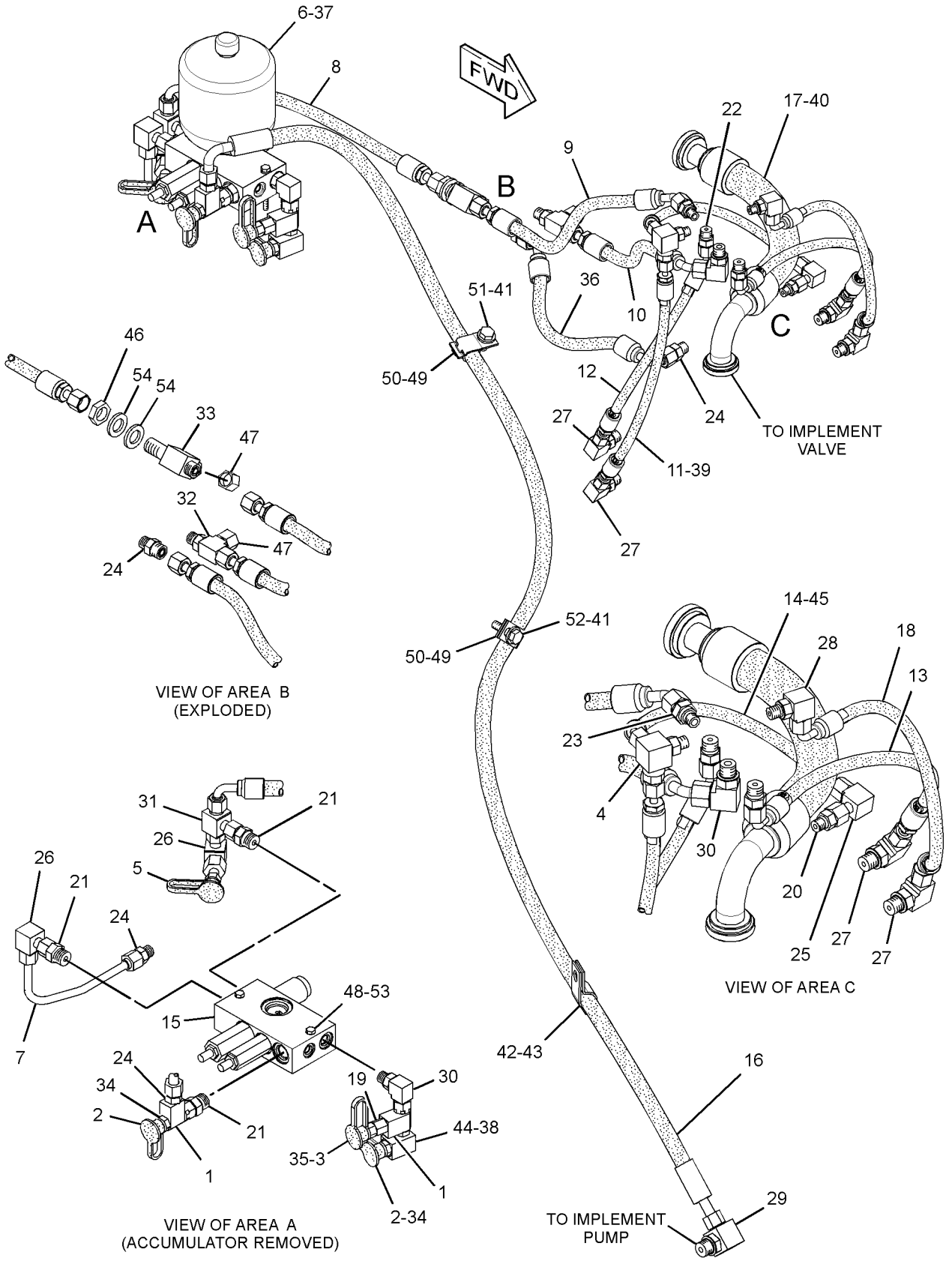

GRAPHIC #1 **<END>** g02843117

HYDRAULIC SYSTEM

327-7190 LINES GP-PUMP

S/N: DSH1-UP; DLN1-UP; DJR1-UP
PART OF 313-3756 HYDRAULIC AR

SMCS-5057 **i04727110**

NOTE	REF NO	GRAPHIC REF	PART NUMBER	QTY	PART NAME 1 2 3 4 5 6 (PRODUCT LEVEL)	SEE PAGE
	1	1	**5G-7191**	1	SPRING	
	2	2	**6V-0852**	1	CAP-DUST	
	3	2	**8J-9990**	1	PLUG-ORIFICE	
	4	1,2	**8T-4984**	4	CLAMP-HOSE	
	5	1	**126-0814**	1	FITTING AS (SWIVEL)	
		1	**6V-0852**	1	CAP-DUST	
	6	2	*153-6261*	1	TEE AS	
		2	**8T-0083**	1	TEE-UNION	
		2	**6V-9746**	2	SEAL-O-RING	
	7	2	**173-7132**	1	TUBE AS	
	8	2	**180-9616**	1	SPACER	
I	9	1	**226-6588**	1	HOSE AS	
E	10	1	**5P-1294**		HOSE (73-CM)	
	11	2	**227-9511**	1	BRACKET AS	
	12	1	**288-4994**	1	BRACKET AS	
I	13	1	**325-4862**	1	HOSE AS	
I	14	1	**325-4865**	1	HOSE AS	
I	15	1	**325-4866**	1	HOSE AS	
I	16	2	**327-7377**	1	HOSE AS	
I	17	1	**327-8236**	1	HOSE AS	
	18	1	**332-2536**	1	BRACKET AS	
	19	1	**332-4125**	1	TUBE AS	
I	20	1	**332-4432**	1	HOSE AS	
I	21	1	**380-9309**	1	HOSE AS	
I	22	1	**380-9310**	1	HOSE AS	
I	23	2	**380-9311**	1	HOSE AS	
	24	1	**380-9312**	1	TUBE AS	
	25	1	**392-9340**	1	BRACKET AS	
	26	2	*148-8347*	1	ELBOW AS	
		2	**6V-9007**	1	ELBOW	
		2	**3D-2824**	1	SEAL-O-RING	
		2	**6V-9746**	1	SEAL-O-RING	
	27	1	*148-8372*	1	ELBOW AS	
		1	**6V-8721**	1	ELBOW	
		1	**2M-9780**	1	SEAL-O-RING	
		1	**6V-8398**	1	SEAL-O-RING	
	28	2	*148-8378*	1	ELBOW AS	
		2	**6V-8724**	1	ELBOW	
		2	**3J-1907**	1	SEAL-O-RING	
		2	**6V-8397**	1	SEAL-O-RING	
	29	2	*148-8381*	1	ELBOW AS	
		2	**8T-5429**	1	ELBOW	
		2	**3D-2824**	1	SEAL-O-RING	
		2	**6V-8398**	1	SEAL-O-RING	
	30	1	*148-8388*	2	ELBOW AS	
					(EACH INCLUDES)	
		1	**6V-8629**	1	ELBOW	
		1	**2M-9780**	1	SEAL-O-RING	
		1	**6V-9746**	1	SEAL-O-RING	
	31	1,2	*148-8449*	2	TEE AS-SWIVEL	
					(EACH INCLUDES)	
		1,2	**6V-9839**	1	TEE-SWIVEL	
		1,2	**6V-9746**	2	SEAL-O-RING	
	32	2	*150-4050*	1	ELBOW AS	
		2	**8T-0788**	1	ELBOW	
		2	**3J-1907**	1	SEAL-O-RING	

327-7190 **LINES GP-PUMP** ***(contd.)*** **i04727110**

NOTE	REF NO	GRAPHIC REF	PART NUMBER	QTY	PART NAME 1 2 3 4 5 6 (PRODUCT LEVEL)	SEE PAGE
	33	1	*153-6246*	1	TEE AS	
		1	**7X-0820**	1	TEE	
		1	**6V-8397**	3	SEAL-O-RING	
	34	2	*155-3624*	1	PLUG AS	
		2	**9S-4182**	1	PLUG-O-RING	
		2	**3J-7354**	1	SEAL-O-RING	
	35	2	*164-5567*	1	COUPLER AS-QUICK DISCONNECT (MALE)	
		2	**6V-3965**	1	FITTING (QUICK DISCONNECT)	
		2	**214-7568**	1	SEAL-O-RING	
	36	2	*164-5570*	1	UNION AS	
		2	**6V-8730**	1	UNION (FACE SEAL)	
		2	**6V-8397**	2	SEAL-O-RING	
	37	2	**1P-3702**	2	SEAL-RECTANGULAR	
	38	2	**1P-3703**	3	SEAL-RECTANGULAR	
	39	2	**1P-3704**	1	SEAL-RECTANGULAR	
	40	2	**1P-3705**	1	SEAL-RECTANGULAR	
	41	2	**1P-5767**	2	FLANGE-HALF	
	42	2	**3J-1907**	1	SEAL-O-RING	
	43	1	**4J-0520**	1	SEAL-O-RING	
	44	1	**4J-0527**	2	SEAL-O-RING	
	45	1,2	**5P-1075**	3	WASHER-HARD (10.2X22.5X3-MM THK)	
	46	1	**5P-7466**	2	CLIP (SLOT)	
	47	1	**5P-7467**	2	CLIP (TAB)	
	48	1	**5P-7468**	1	CLIP (SLOT)	
	49	1	**5P-7469**	1	CLIP (TAB)	
	50	1	**5P-8112**	2	GROMMET	
	51	1	**5P-8444**	1	GROMMET	
	52	1,2	**5R-0939**	2	CLIP (TAB)	
	53	1,2	**5R-0940**	2	CLIP (SLOT)	
	54	1	**6V-0267**	1	CLIP (TAB)	
	55	1	**6V-0268**	1	CLIP (SLOT)	
	56	1	**6V-1889**	1	CLIP	
	57	1	**6V-8397**	1	SEAL-O-RING	
	58	1	**6V-8640**	1	CONNECTOR	
	59	1	**6V-9168**	1	NUT (11/16-16-THD)	
	60	1	**6V-9746**	1	SEAL-O-RING	
	61	1	**6V-9850**	1	ELBOW	
	62	1	**7X-0293**	2	BOLT (3/8-16X4.75-IN)	
	63	1	**8T-1887**	1	CLIP (SLOT)	
	64	1	**8T-1888**	1	CLIP (TAB)	
	65	1	**8T-1891**	1	CLIP (SLOT)	
	66	1	**8T-1892**	1	CLIP (TAB)	
	67	1	**8T-1895**	12	CLIP (SLOT)	
	68	1	**8T-1896**	12	CLIP (TAB)	
	69	1	**8T-4121**	13	WASHER-HARD (11X21X2.5-MM THK)	
M	70	1	**8T-4133**	1	NUT (M10X1.5-THD)	
M	71	1	**8T-4136**	7	BOLT (M10X1.5X25-MM)	
M	72	1	**8T-4137**	1	BOLT (M10X1.5X20-MM)	
M	73	1	**8T-4176**	2	BOLT (M12X1.75X90-MM)	
M	74	2	**8T-4183**	2	BOLT (M12X1.75X40-MM)	
M	75	1	**8T-4184**	2	BOLT (M12X1.75X45-MM)	
M	76	1	**8T-4192**	3	BOLT (M12X1.75X25-MM)	
M	77	1,2	**8T-4195**	3	BOLT (M10X1.5X30-MM)	
M	78	1	**8T-4196**	2	BOLT (M10X1.5X35-MM)	
	79	1,2	**8T-4223**	8	WASHER-HARD (13.5X25.5X3-MM THK)	
M	80	1	**8T-4244**	2	NUT (M12X1.75-THD)	
M	81	1	**8T-4956**	1	BOLT (M12X1.75X35-MM)	
	82	1,2	**8T-5360**	8	WASHER (12X22.5X2.5-MM THK)	
M	83	2	**8T-6868**	6	BOLT (M12X1.75X80-MM)	
	84	1	**9X-8257**	1	WASHER (17.5X30X3.5-MM THK)	

E-ORDER BY THE CENTIMETER
I-REFER TO HYDRAULIC INFORMATION SYSTEM
M-METRIC PART

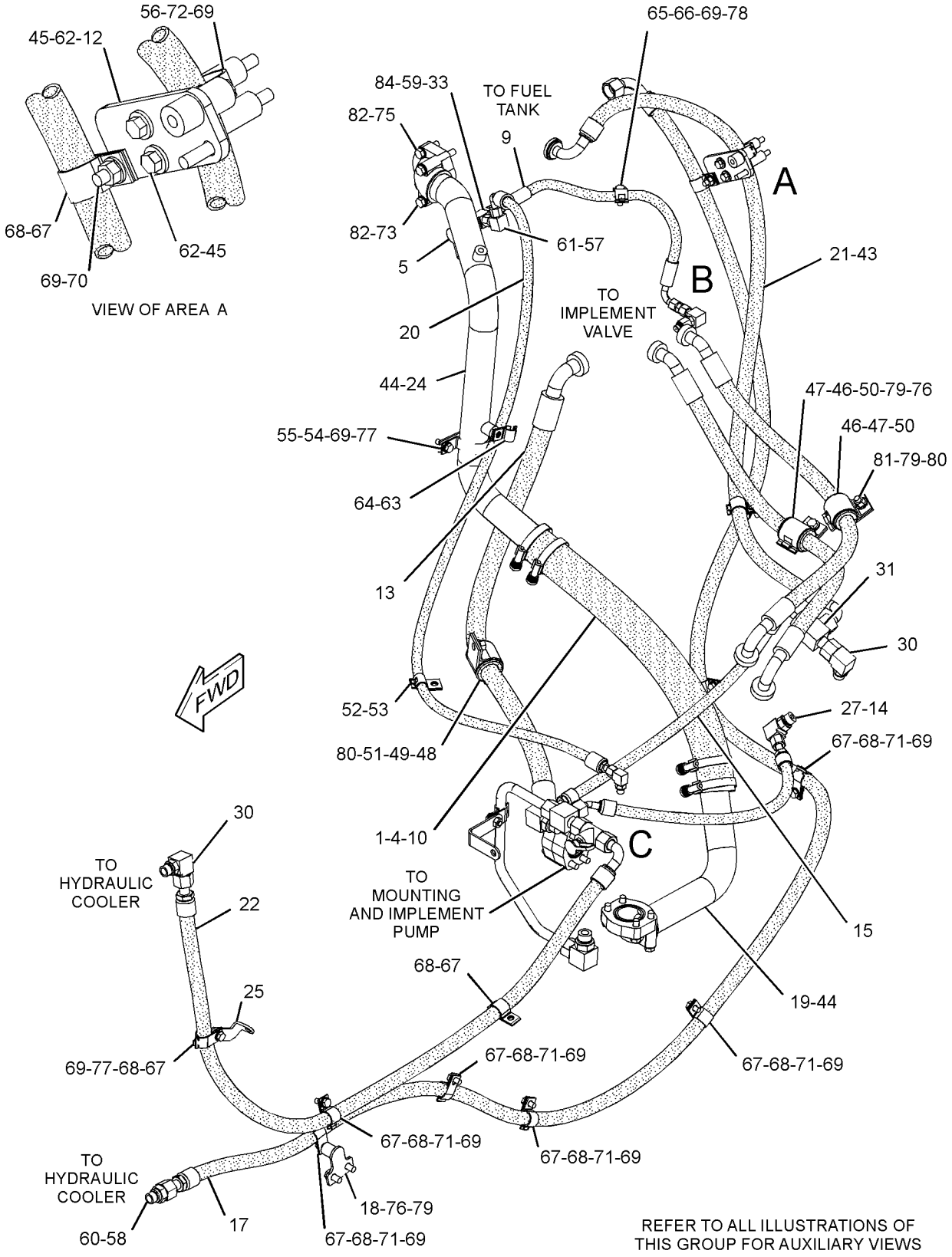

GRAPHIC #1

g02835744

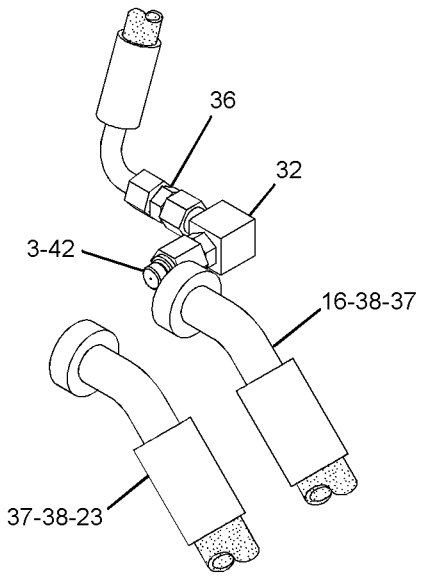

VIEW OF AREA B

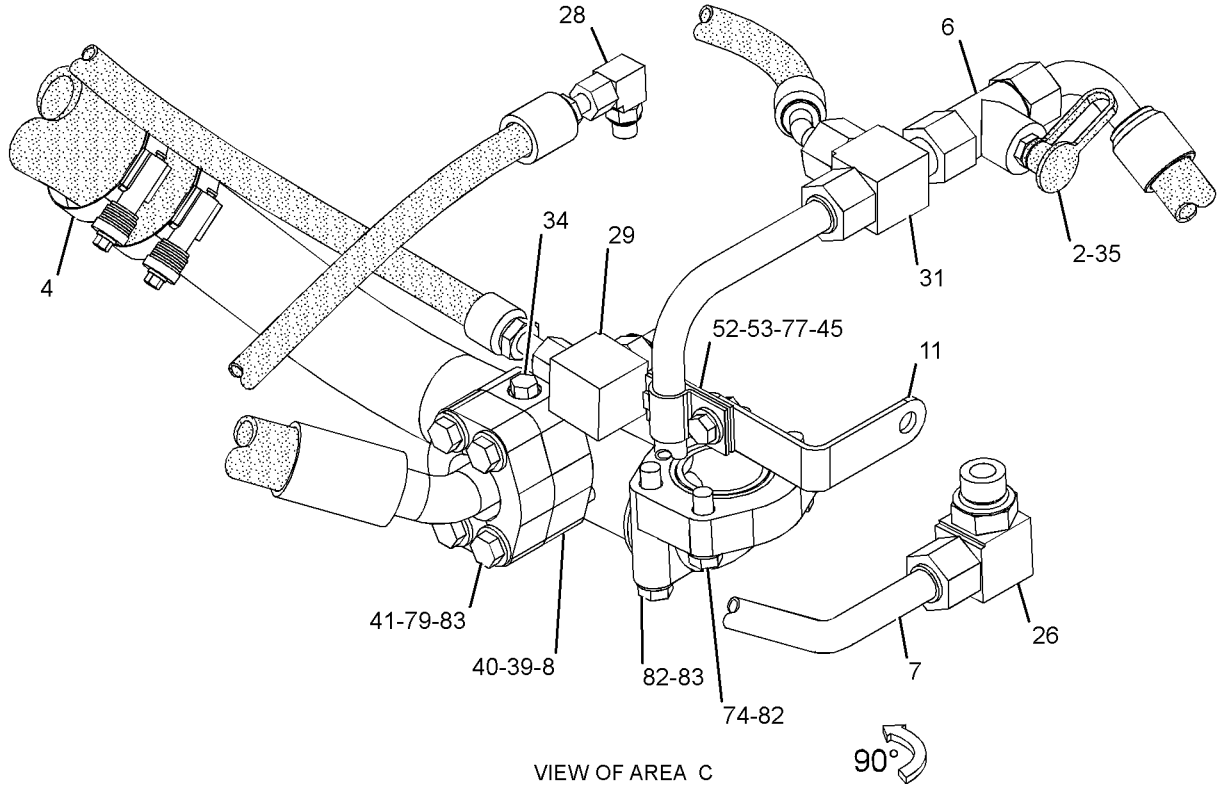

VIEW OF AREA C

GRAPHIC #2 **<END>** g02835746

HYDRAULIC SYSTEM

164-4990 LINES GP-RIPPER

S/N: LBB1-UP
PART OF 379-3538 RIPPER AR
AN ATTACHMENT

SMCS-5057, 5352, 5356 **i04702592**

NOTE	REF NO	GRAPHIC REF	PART NUMBER	QTY	PART NAME 1 2 3 4 5 6 (PRODUCT LEVEL)	SEE PAGE
I	1	1	**119-6024**	1	HOSE AS	
	2	1	**9M-2904**	12	CLAMP-HOSE	
I	3	1	**9U-9540**	1	HOSE AS	
	4	1	**130-1977**	12	SHIELD	
	5	1	**130-9191**	6	GROMMET	
	6	1	**139-2455**	3	SHIELD	
	7	1	**139-2456**	3	SHIELD	
I	8	1	**167-7640**	2	HOSE AS	
I	9	1	**167-7641**	1	HOSE AS	
I	10	1	**167-7642**	1	HOSE AS	
I	11	1	**167-7643**	2	HOSE AS	
	12	1	**4J-0520**	12	SEAL-O-RING	
	13	1	**4J-5267**	4	SEAL-O-RING	
	14	1	**8C-3206**	8	FLANGE-HALF	
	15	1	**8T-4121**	32	WASHER-HARD (11X21X2.5-MM THK)	
M	16	1	**8T-4196**	32	BOLT (M10X1.5X35-MM)	
	17	1	**8C-3205**	8	FLANGE-HALF	

I-REFER TO HYDRAULIC INFORMATION SYSTEM
M-METRIC PART

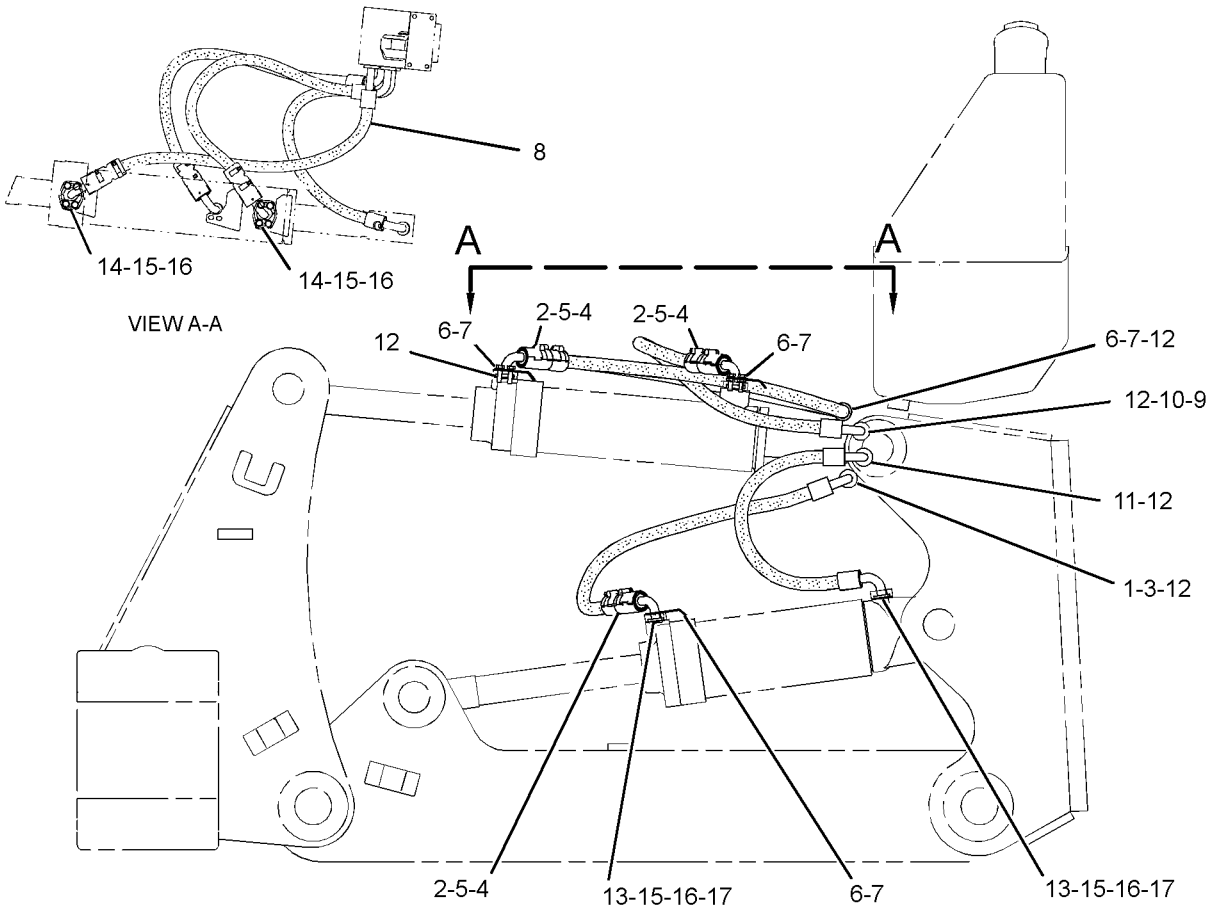

RIGHT SIDE VIEW

GRAPHIC #1 **<END>** g02814120

HYDRAULIC SYSTEM

228-7368 LINES GP-RIPPER

S/N: DSH1-UP; DLN1-UP; DJR1-UP
PART OF 323-9717 CONTROL AR-HYDRAULIC
AN ATTACHMENT

SMCS-5057, 5352, 5356 **i04732810**

NOTE	REF NO	GRAPHIC REF	PART NUMBER	QTY	PART NAME 1 2 3 4 5 6 (PRODUCT LEVEL)	SEE PAGE
M	1	1	**8T-4196**	52	BOLT (M10X1.5X35-MM)	
	2	1	**211-9491**	1	MANIFOLD	
	3	1	**357-6430**	1	HOSE AS	
I	4	1	**357-6431**	1	HOSE AS	
	5	1	**357-6432**	1	HOSE AS	
I	6	1	**357-6433**	1	HOSE AS	
	7	1	**353-7706**	1	BRACKET AS	
	8	1	**4J-0520**	8	SEAL-O-RING	
	9	1	**5P-1075**	56	WASHER-HARD (10.2X22.5X3-MM THK)	
	10	1	**7G-5984**	2	CLIP (TAB)	
	11	1	**7G-5985**	2	CLIP (SLOT)	
	12	1	**7G-5986**	2	GROMMET	
	13	1	**8C-3206**	24	FLANGE-HALF	
M	14	1	**8T-4133**	4	NUT (M10X1.5-THD)	
M	15	1	**8T-4194**	2	BOLT (M12X1.75X50-MM)	
	16	1	**8T-4223**	2	WASHER-HARD (13.5X25.5X3-MM THK)	

I-REFER TO HYDRAULIC INFORMATION SYSTEM
M-METRIC PART

228-7368 **LINES GP-RIPPER** *(contd.)* **i04732810**

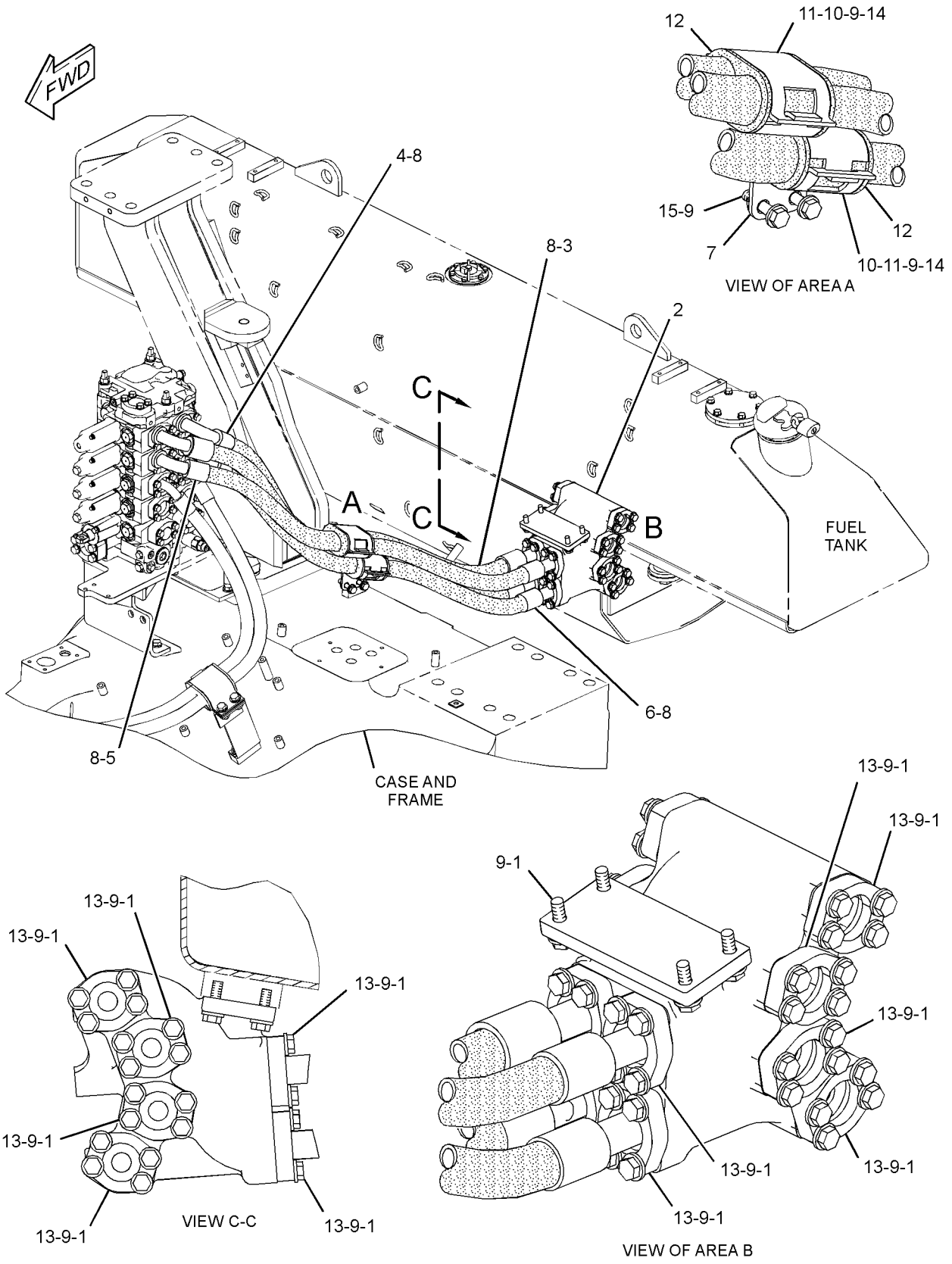

GRAPHIC #1 **<END>** g01611194

HYDRAULIC SYSTEM

378-6119 LINES GP-TILT CYLINDER

S/N: DSH1-UP; DLN1-UP; DJR1-UP
PART OF 313-3756 HYDRAULIC AR

SMCS-5057, 5104 **i04609629**

NOTE	REF NO	GRAPHIC REF	PART NUMBER	QTY	PART NAME 1 2 3 4 5 6 (PRODUCT LEVEL)	SEE PAGE
	1	1	**226-7906**	1	MANIFOLD	
	2	1	**378-6120**	1	BRACKET AS	
I	3	1	**378-6121**	1	HOSE AS	
I	4	1	**378-6122**	1	HOSE AS	
	5	1	**378-6123**	1	BRACKET AS	
	6	1	**378-6124**	1	BRACKET AS	
	7	1	**378-6125**	1	BRACKET AS	
	8	1	**1L-4684**	1	CLAMP-HOSE	
	9	1	**2D-8426**	2	STUD-TAPERLOCK (1/2-13X3.19-IN)	
	10	1	**4J-0520**	2	SEAL-O-RING	
	11	1	**4J-5267**	4	SEAL-O-RING	
	12	1	**5H-4018**	2	COVER	
	13	1	**5P-1075**	22	WASHER-HARD (10.2X22.5X3-MM THK)	
	14	1	**5P-2228**	1	BOLT (1/2-13X1-IN)	
	15	1	**5S-7379**	2	BOLT (3/8-16X0.875-IN)	
	16	1	**6V-0299**	2	NUT-FULL (1/2-13-THD)	
	17	1	**7G-3832**	5	GROMMET	
	18	1	**7G-3833**	5	CLIP (TAB)	
	19	1	**7G-3834**	5	CLIP (SLOT)	
	20	1	**8C-3205**	8	FLANGE-HALF	
M	21	1	**8T-4136**	1	BOLT (M10X1.5X25-MM)	
M	22	1	**8T-4139**	2	BOLT (M12X1.75X30-MM)	
M	23	1	**8T-4183**	4	BOLT (M12X1.75X40-MM)	
M	24	1	**8T-4192**	2	BOLT (M12X1.75X25-MM)	
M	25	1	**8T-4196**	18	BOLT (M10X1.5X35-MM)	
	26	1	**8T-4223**	14	WASHER-HARD (13.5X25.5X3-MM THK)	
	27	1	**8T-4896**	1	WASHER-HARD (10.2X18.5X2.5-MM THK)	
	28	1	**8T-8917**	3	BOLT (1/2-13X1.25-IN)	
	29	1	**9B-7237**	2	BOLT (3/8-16X1.25-IN)	

I-REFER TO HYDRAULIC INFORMATION SYSTEM
M-METRIC PART

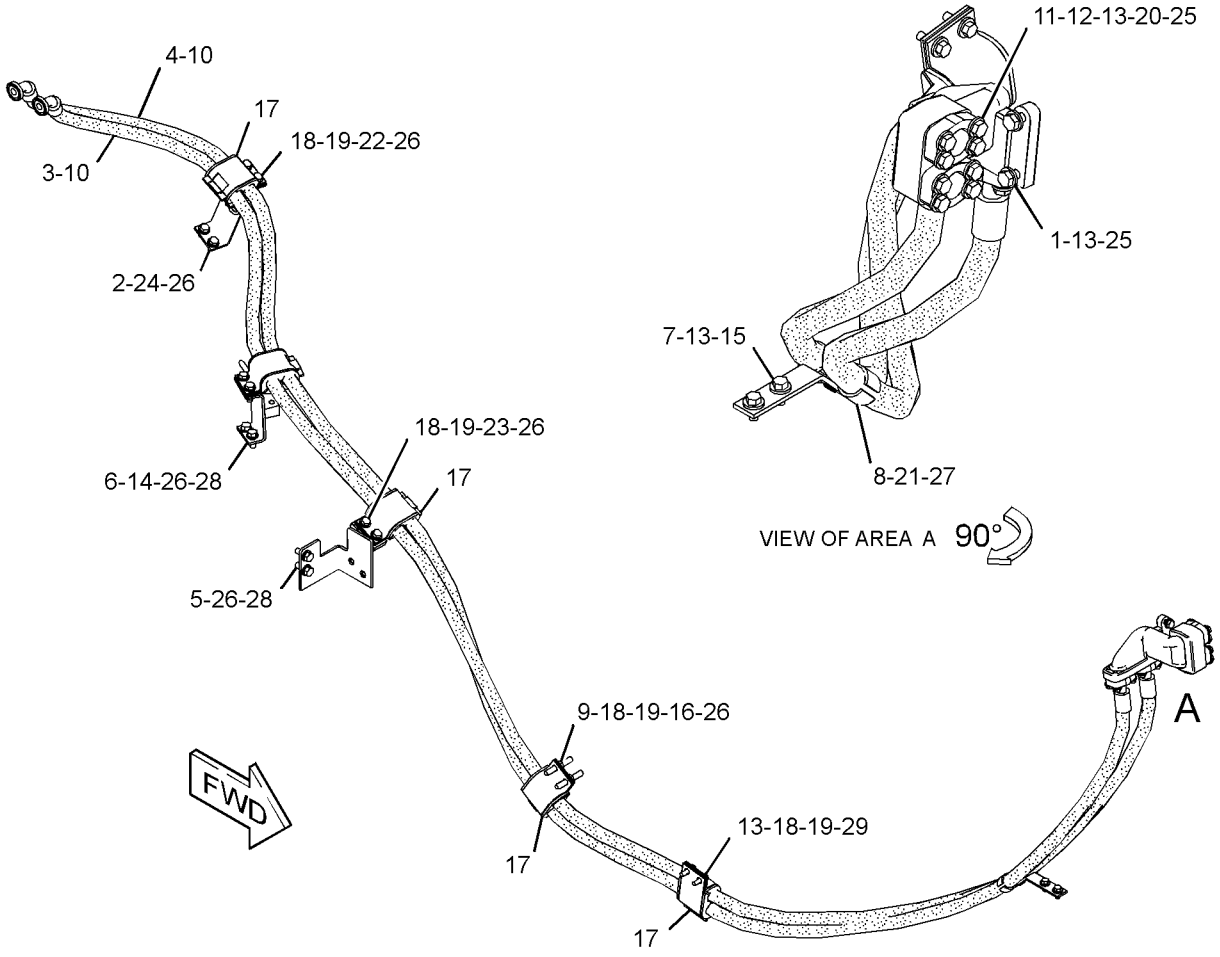

GRAPHIC #1 **<END>** g02792560

HYDRAULIC SYSTEM

386-6977 LINES GP-TILT CYLINDER—DUAL

S/N: DSH1-UP; DJR1-UP
PART OF 365-5514 BULLDOZER AR-SEMI-UNIVERSAL
AN ATTACHMENT

SMCS-5057, 5104 **i04729149**

NOTE	REF NO	GRAPHIC REF	PART NUMBER	QTY	PART NAME 1 2 3 4 5 6 (PRODUCT LEVEL)	SEE PAGE
	1	1	**1U-1325**	1	BLOCK	
	2	1	**4T-6443**	1	PLATE	
	3	1	**4T-6484**	1	GUARD	
	4	1	**5S-8712**	3	BLOCK	
I	5	1	**386-6979**	1	HOSE AS	
I	6	1	**386-6981**	1	HOSE AS	
	7	1	**388-3222**	2	TUBE AS	
	8	1	**388-3223**	1	GUARD	
	9	1	**1P-4576**	4	FLANGE-HALF	
	10	1	**386-6983**	2	HOSE AS	
E		1	**5P-0180**		HOSE (129-CM)	
E		1	**6V-0745**		GUARD-HOSE (120-CM)	
		1	**8T-3719**	1	COUPLING AS-PERMANENT	
		1	**8T-3721**	1	COUPLING AS-PERMANENT	
	11	1	**4J-5140**	1	SEAL-O-RING	
	12	1	**4J-5267**	6	SEAL-O-RING	
	13	1	**5C-6565**	2	BOLT (1/2-13X1.125-IN)	
	14	1	**7X-0274**	4	BOLT (5/16-18X2.75-IN)	
	15	1	**8C-3205**	8	FLANGE-HALF	
	16	1	**8T-4121**	11	WASHER-HARD (11X21X2.5-MM THK)	
M	17	1	**8T-4196**	11	BOLT (M10X1.5X35-MM)	
	18	1	**8T-4223**	3	WASHER-HARD (13.5X25.5X3-MM THK)	
	19	1	**8T-4224**	4	WASHER-HARD (8.8X16X2-MM THK)	
	20	1	**8T-4896**	16	WASHER-HARD (10.2X18.5X2.5-MM THK)	
M	21	1	**8T-4910**	3	BOLT (M12X1.75X60-MM)	
	22	1	**8T-4994**	4	WASHER-HARD (20X36.5X3.5-MM THK)	
	23	1	**8T-9398**	4	BOLT (3/4-10X1.75-IN)	
	24	1	**9B-7237**	16	BOLT (3/8-16X1.25-IN)	

E-ORDER BY THE CENTIMETER
I-REFER TO HYDRAULIC INFORMATION SYSTEM
M-METRIC PART

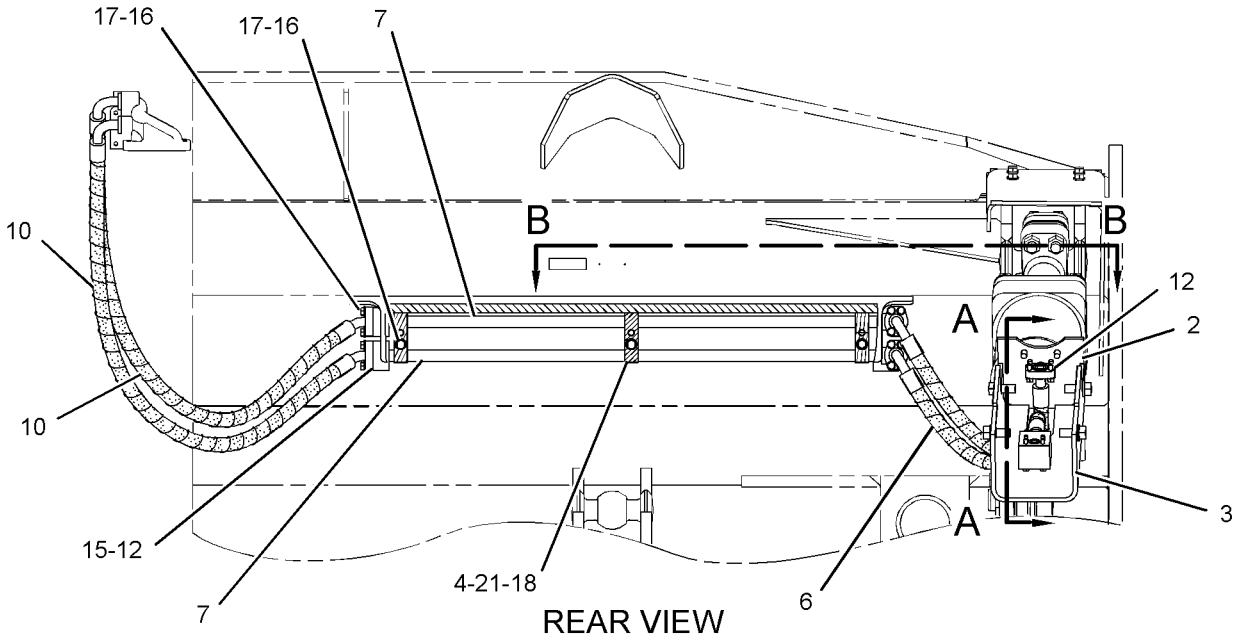

REAR VIEW

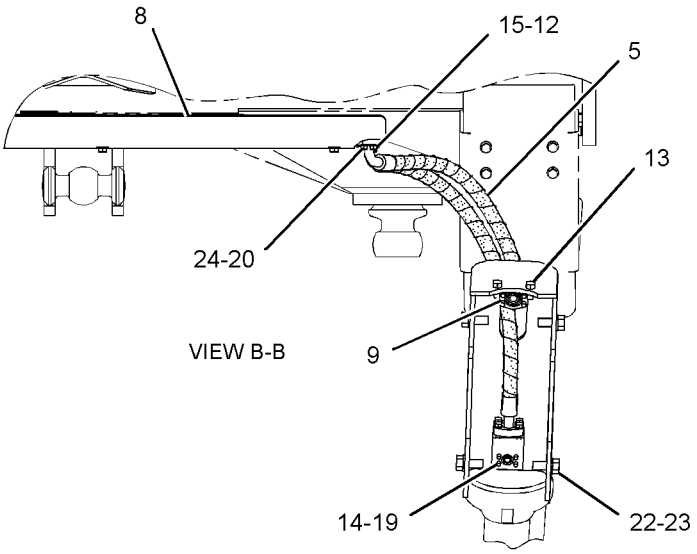

VIEW B-B

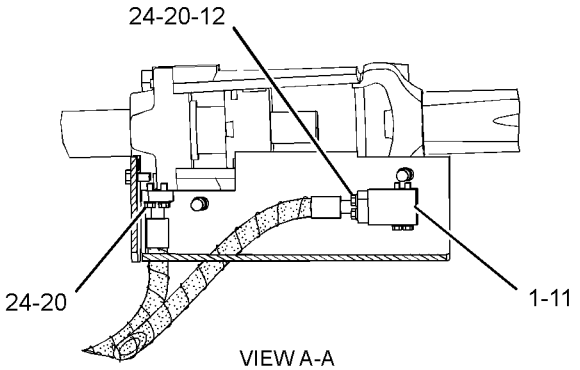

VIEW A-A

GRAPHIC #1 **<END>** g02848216

HYDRAULIC SYSTEM

387-8195 LINES GP-TILT CYLINDER—DUAL

S/N: DLN1-UP
PART OF 365-5517 BULLDOZER AR-STRAIGHT
AN ATTACHMENT

SMCS-5057, 5104 **i04739389**

NOTE	REF NO	GRAPHIC REF	PART NUMBER	QTY	PART NAME 1 2 3 4 5 6 (PRODUCT LEVEL)	SEE PAGE
	1	1	**1U-1325**	1	BLOCK	
	2	1	**4T-6443**	1	PLATE	
	3	1	**4T-6484**	1	GUARD	
	4	1	**5S-8712**	3	BLOCK	
I	5	1	**386-6979**	1	HOSE AS	
I	6	1	**386-6981**	1	HOSE AS	
	7	1	**387-8194**	2	HOSE AS	
	8	1	**388-3222**	2	TUBE AS	
	9	1	**388-3223**	1	GUARD	
	10	1	**1P-4576**	4	FLANGE-HALF	
	11	1	**4J-5140**	1	SEAL-O-RING	
	12	1	**4J-5267**	6	SEAL-O-RING	
	13	1	**5C-6565**	2	BOLT (1/2-13X1.125-IN)	
	14	1	**7X-0274**	4	BOLT (5/16-18X2.75-IN)	
	15	1	**8C-3205**	8	FLANGE-HALF	
	16	1	**8T-4121**	11	WASHER-HARD (11X21X2.5-MM THK)	
M	17	1	**8T-4196**	11	BOLT (M10X1.5X35-MM)	
	18	1	**8T-4223**	3	WASHER-HARD (13.5X25.5X3-MM THK)	
	19	1	**8T-4224**	4	WASHER-HARD (8.8X16X2-MM THK)	
	20	1	**8T-4896**	16	WASHER-HARD (10.2X18.5X2.5-MM THK)	
M	21	1	**8T-4910**	3	BOLT (M12X1.75X60-MM)	
	22	1	**8T-4994**	4	WASHER-HARD (20X36.5X3.5-MM THK)	
	23	1	**8T-9398**	4	BOLT (3/4-10X1.75-IN)	
	24	1	**9B-7237**	16	BOLT (3/8-16X1.25-IN)	

I-REFER TO HYDRAULIC INFORMATION SYSTEM
M-METRIC PART

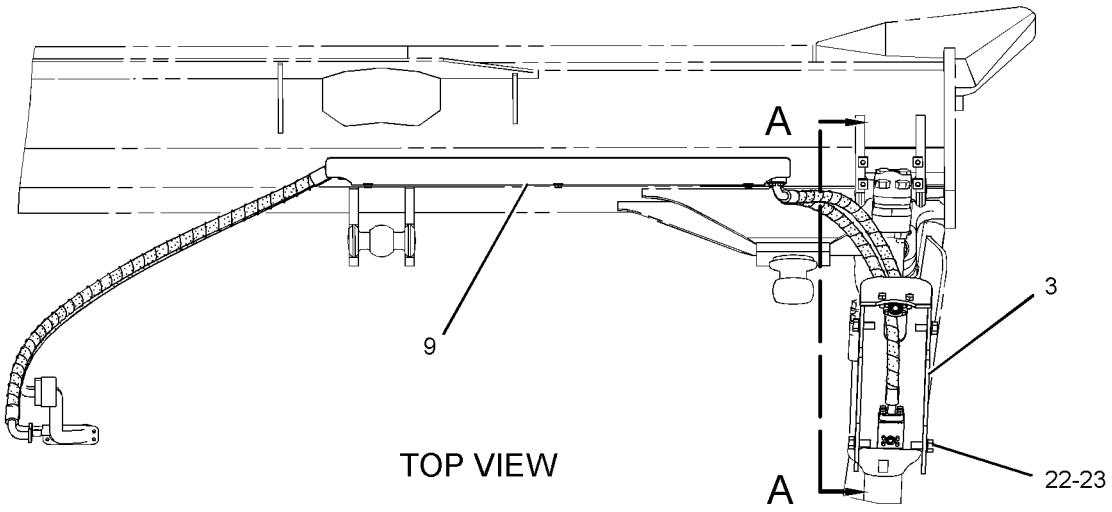

TOP VIEW

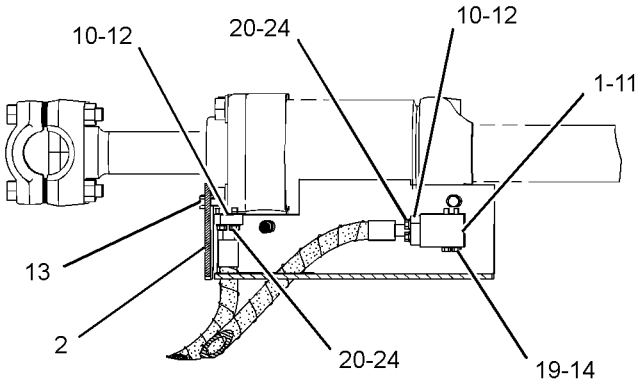

VIEW A-A

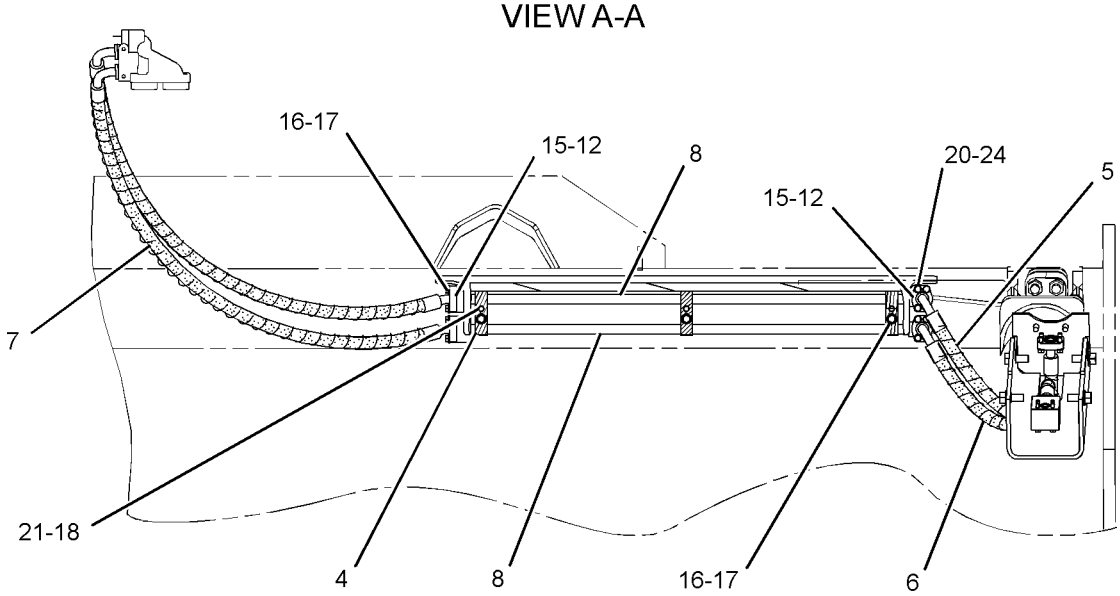

REAR VIEW

GRAPHIC #1 **<END>** g02856016

HYDRAULIC SYSTEM

226-4751 MANIFOLD GP-CONTROL

S/N: DSH1-UP; DLN1-UP; DJR1-UP
PART OF 379-1942 LINES GP-PILOT

SMCS-5264 **i04017210**

NOTE	REF NO	GRAPHIC REF	PART NUMBER	QTY	PART NAME 1 2 3 4 5 6 (PRODUCT LEVEL)	SEE PAGE
Y	1	1	**158-9956**	1	VALVE GP-CHECK (PILOT PRESSURE SUPPLY)	471
Y	2	1	**170-3357**	1	VALVE GP-PRESSURE REDUCING (IMPLEMENT PILOT OIL)	488
Y	3	1	**225-8026**	1	VALVE GP-RELIEF (IMPLEMENT PILOT OIL)	498
Y	4	1	**201-0950**	1	VALVE GP-SOLENOID (HYDRAULIC LOCKOUT)	500
	5	1	**6E-5066**	1	SCREEN (IMPLEMENT PILOT OIL)	
	6	1	**9S-8002**	1	PLUG-O-RING	
	7	1	**9S-8004**	1	PLUG-O-RING	
	8	1	**3J-7354**	1	SEAL-O-RING	
	9	1	**3J-1907**	1	SEAL-O-RING	

Y-SEPARATE ILLUSTRATION

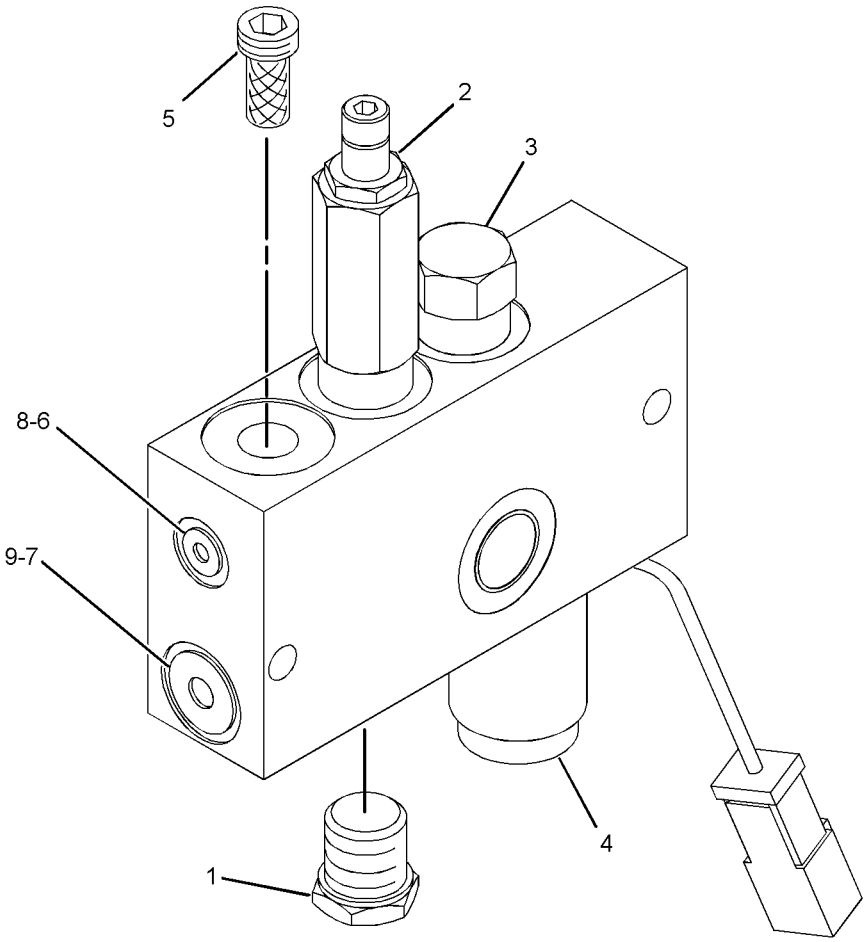

GRAPHIC #1 **<END>** g01205803

235-0401 MANIFOLD GP-VALVE

S/N: DSH1-UP; DLN1-UP; DJR1-UP
PART OF 224-4940 VALVE GP-BANK 3, 224-4941 VALVE GP-BANK 5
ALSO AN ATTACHMENT

SMCS-5264 **i03983084**

NOTE	REF NO	GRAPHIC REF	PART NUMBER	QTY	PART NAME 1 2 3 4 5 6 (PRODUCT LEVEL)	SEE PAGE
	1	1	**6V-0400**	2	FLANGE-HALF	
M	2	1	**8T-4184**	4	BOLT (M12X1.75X45-MM)	
	3	1	**8T-4223**	4	WASHER-HARD (13.5X25.5X3-MM THK)	
Y	4	1	**9T-3541**	1	VALVE GP-RELIEF (MAIN)	494

M-METRIC PART
Y-SEPARATE ILLUSTRATION

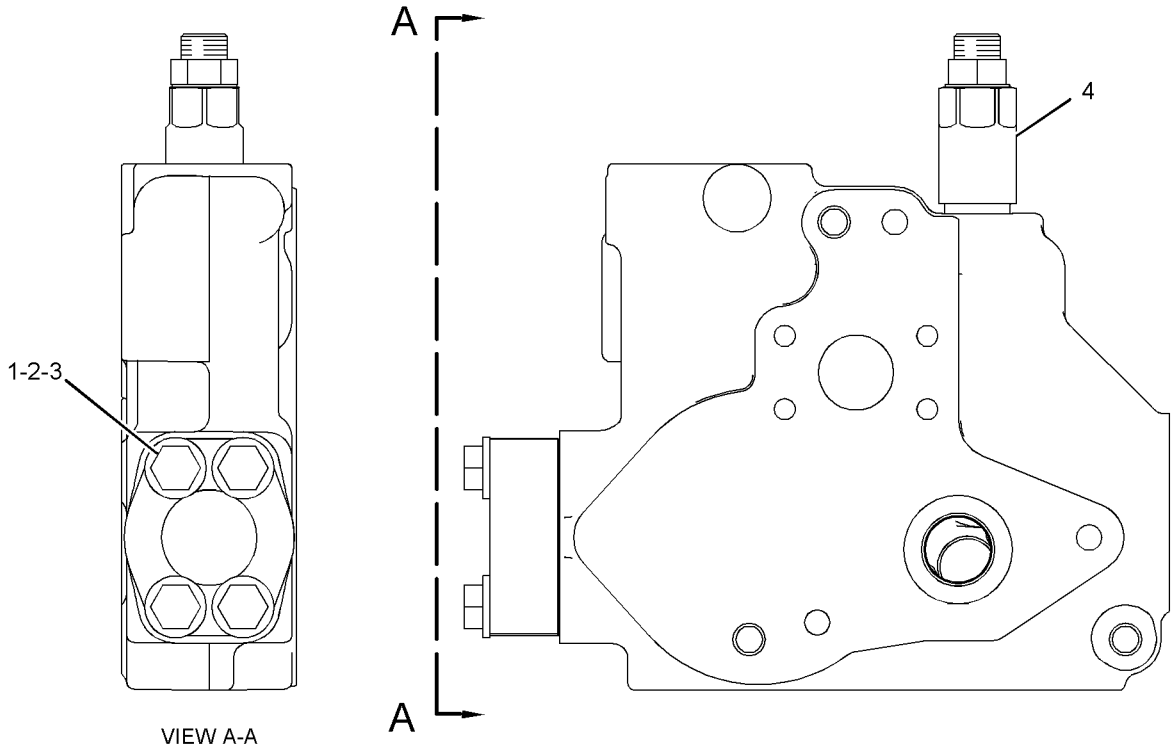

VIEW A-A

GRAPHIC #1 **<END>** g01218600

HYDRAULIC SYSTEM

373-9491 MOUNTING GP-CYLINDER

S/N: DSH1-UP; DLN1-UP; DJR1-UP

PART OF 313-3338, 313-3759, 379-6225 CHASSIS AR

SMCS-7562 **i04722030**

NOTE	REF NO	GRAPHIC REF	PART NUMBER	QTY	PART NAME 1 2 3 4 5 6 (PRODUCT LEVEL)	SEE PAGE
	1	1	**3B-8489**	2	FITTING-GREASE	
	2	1	**4T-4875**	2	PIN	
	3	1	**362-4551**	2	CLIP-2 PIECE	
	4	1	**362-4552**	2	CLIP	
	5	1	**9N-4233**	2	STRAP	
	6	1	**373-9492**	2	YOKE	
	7	1	**373-9493**	4	CAP AS	
					(EACH INCLUDES)	
		1	**230-2636**	1	CAP AS	
	7A	1	**104-1844**	1	BUSHING	
	8	1	**5M-3062**	2	BOLT (3/8-16X0.75-IN)	
	9	1	**7X-0521**	2	WASHER-HARD (20X36.5X5-MM THK)	
	10	1	**6V-0273**	2	SEAL-LIP TYPE	
	11	1	**6V-8188**	2	NUT (1/2-13-THD)	
M	12	1	**7X-2568**	8	BOLT (M20X2.5X180-MM)	
	13	1	**8T-2561**	2	WASHER-HARD (10.5X28.5X5-MM THK)	
	14	1	**8T-4223**	4	WASHER-HARD (13.5X25.5X3-MM THK)	
	15	1	**8T-8919**	2	BOLT (1/2-13X1.75-IN)	
D	16	1	**9X-2532**		SEAL (0.2-M EACH)	

D-ORDER BY THE METER
M-METRIC PART

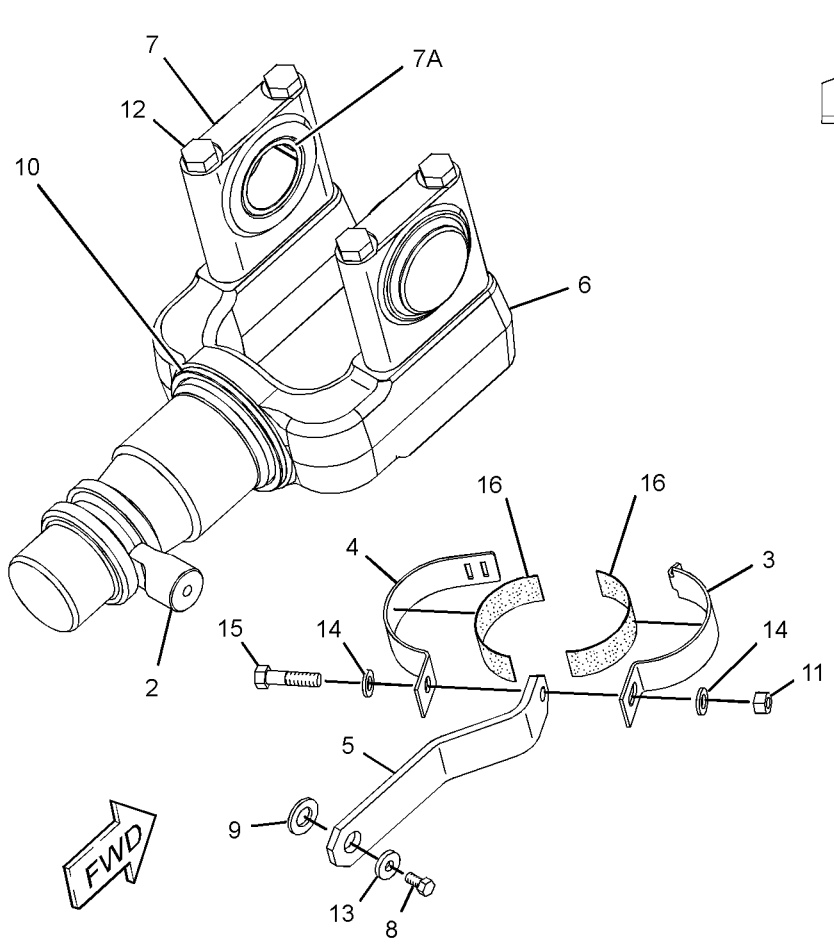

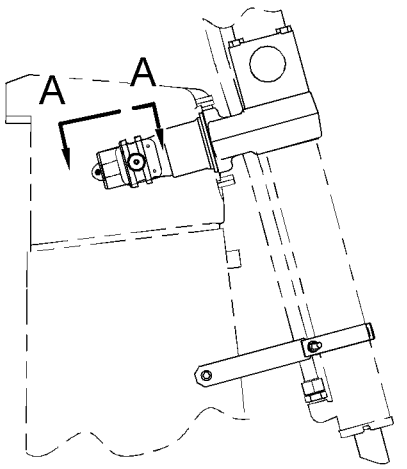

RIGHT SIDE VIEW

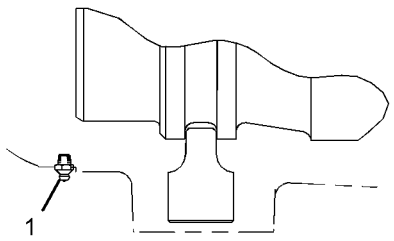

VIEW A-A

GRAPHIC #1 **<END>** g02792016

HYDRAULIC SYSTEM

222-1153 PUMP & MOUNTING GP–IMPLEMENT, STEERING

S/N: DSH1-UP; DLN1-UP; DJR1-UP
PART OF 313-3756 HYDRAULIC AR

SMCS-5084 **i04717311**

NOTE	REF NO	GRAPHIC REF	PART NUMBER	QTY	PART NAME 1 2 3 4 5 6 (PRODUCT LEVEL)	SEE PAGE
Y	1	1	**299-5790**	1	PUMP GP-PISTON (IMPLEMENT, STEERING)	456
	2	1	**2S-0115**	2	WASHER-HARD (20X36.5X5-MM THK)	
	3	1	**5H-3252**	1	SEAL-O-RING	
	4	1	**6M-8796**	2	BOLT-12 POINT HEAD (3/4-10X1.75-IN)	

Y-SEPARATE ILLUSTRATION

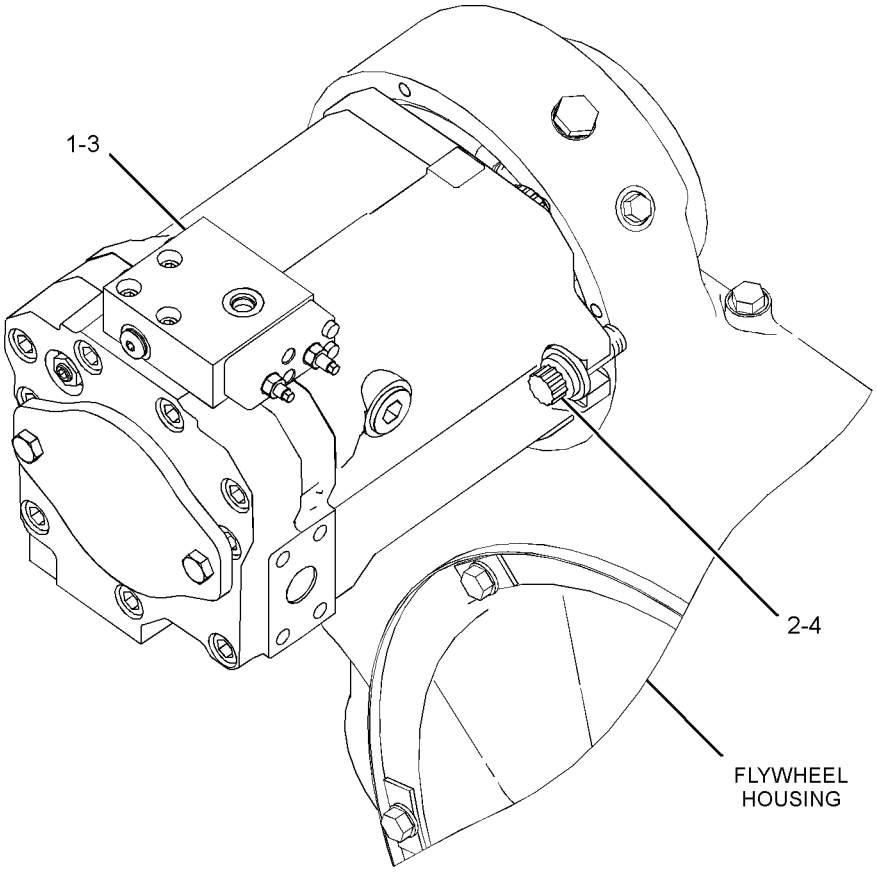

GRAPHIC #1 **<END>** g01417529

HYDRAULIC SYSTEM

299-5790 PUMP GP-PISTON—IMPLEMENT, STEERING

S/N: DSH1-UP; DLN1-UP; DJR1-UP

PART OF 222-1153 PUMP & MOUNTING GP

SMCS-5070 **i04717351**

NOTE	REF NO	GRAPHIC REF	PART NUMBER	QTY	PART NAME 1 2 3 4 5 6 (PRODUCT LEVEL)	SEE PAGE
	1	1	**302-5738**	1	RING-RETAINING	
	2	1	**302-5729**	1	SEAL-LIP TYPE	
	3	1	**302-5737**	1	SHIM (1.5-MM THK)	
	4	1	**9S-8008**	1	PLUG-O-RING	
	5	1	**3D-2824**	1	SEAL-O-RING	
	6	1	**121-9910**	1	RING	
	7	1	**8Q-6071**	1	SPACER (45.5X55X3-MM THK)	
	8	1	**4K-5843**	1	CUP-BEARING (TAPERED ROLLER)	
	9	1	**192-8866**	1	SHAFT	
	10	1	**8U-9480**	2	PIN	
	11	1	**121-9913**	2	BEARING	
	12	1	**190-7684**	1	SWASHPLATE	
	13	1	**121-9915**	3	SLEEVE	
J	14	1	**191-2156**	9	PISTON AS	
	15	1	**121-9917**	1	WASHER (66.5X133X5.5-MM THK)	
B	16	1	**121-9918**	1	PLATE	
B	17	1	**121-9919**	1	PLATE	
B	18	1	**121-9920**	1	PLATE	
	19	1	**121-9921**	1	PLATE	
B	20	1	**121-9922**	1	PLATE	
B	21	1	**121-9924**	1	PLATE	
B	22	1	**121-9923**	1	PLATE	
	23	1	**121-9925**	1	PLATE	
M	24	1	**8U-3297**	4	BOLT (M10X1.5X25-MM)	
	25	1	**190-8368**	1	BARREL AS	
	26	1	**121-9927**	1	WASHER (44.4X57.6X5-MM THK)	
	27	1	**190-8830**	1	SPRING	
	28	1	**191-2127**	1	WASHER (44X57.9X4-MM THK)	
	29	1	**193-2219**	1	SPACER (46X50.5X23.2-MM THK)	
	30	1	**193-2239**	1	SEAL	
	31	1	**195-6882**	1	RING	
	32	1	**195-6890**	1	SPACER (51.5X58X23-MM THK)	
	33	1	**195-6899**	1	RING	
	34	1	**195-6901**	1	BEARING	
B	35	1	**8U-5009**	1	SHIM (0.1-MM THK)	
B	36	1	**8U-5010**	1	SHIM (0.3-MM THK)	
B	37	1	**195-6902**	1	SHIM (1-MM THK)	
	38	1	**195-6903**	1	PLATE	
	39	1	**101-2862**	2	DOWEL	
	40	1	**285-9070**	1	HOUSING AS	
	41	1	**8U-3875**	1	PLUG	
	42	1	**284-3782**	1	PISTON	
Y	43	1	**227-3021**	1	VALVE GP-PUMP CONTROL (PRESSURE, FLOW COMPENSATOR)	489
	44	1	**131-4675**	1	RING	
	45	1	**8C-3131**	2	SEAL-O-RING	
	46	1	**121-9941**	2	RING	
	47	1	**121-9942**	2	PIPE	
	48	1	**195-6913**	1	PISTON-ACTUATOR	
	49	1	**285-9162**	1	PISTON-ACTUATOR	
	50	1	**195-6928**	1	RETAINER	
	51	1	**288-1200**	1	RETAINER	
	52	1	**195-6930**	1	SPRING	
	53	1	**121-9946**	2	PIN	
M	54	1	**9T-4901**	2	NUT (M12X1-THD)	
M	55	1	**111-5154**	9	BOLT (M14X2X70-MM)	

299-5790 **PUMP GP-PISTON** *(contd.)* **i04717351**

NOTE	REF NO	GRAPHIC REF	PART NUMBER	QTY	PART NAME 1 2 3 4 5 6 (PRODUCT LEVEL)	SEE PAGE
	56	1	**117-8765**	1	SEAL-O-RING	
	57	1	**195-6932**	1	COVER	
M	58	1	**8T-4192**	2	BOLT (M12X1.75X25-MM)	
M	59	1	**6V-5192**	3	BOLT-SOCKET HEAD (M8X1.25X30-MM)	
	60	1	**285-5644**	1	RING-RETAINING	
	61	1	**7T-6654**	1	CONE-BEARING (TAPERED ROLLER)	
					PARTS SHOWN IN GRAPHIC(S) WITHOUT A REFERENCE NUMBER ARE NOT SERVICED SEPARATELY	
					AVAILABLE REPAIR KIT(S):	
B			**199-4193**	1	KIT-SHIM (INCLUDES 21-SHIMS) (PISTON PUMP)	

B-USE AS REQUIRED
J-SERVICE AS A SET OF 9 ONLY
M-METRIC PART
Y-SEPARATE ILLUSTRATION

299-5790 **PUMP GP-PISTON** *(contd.)* **i04717351**

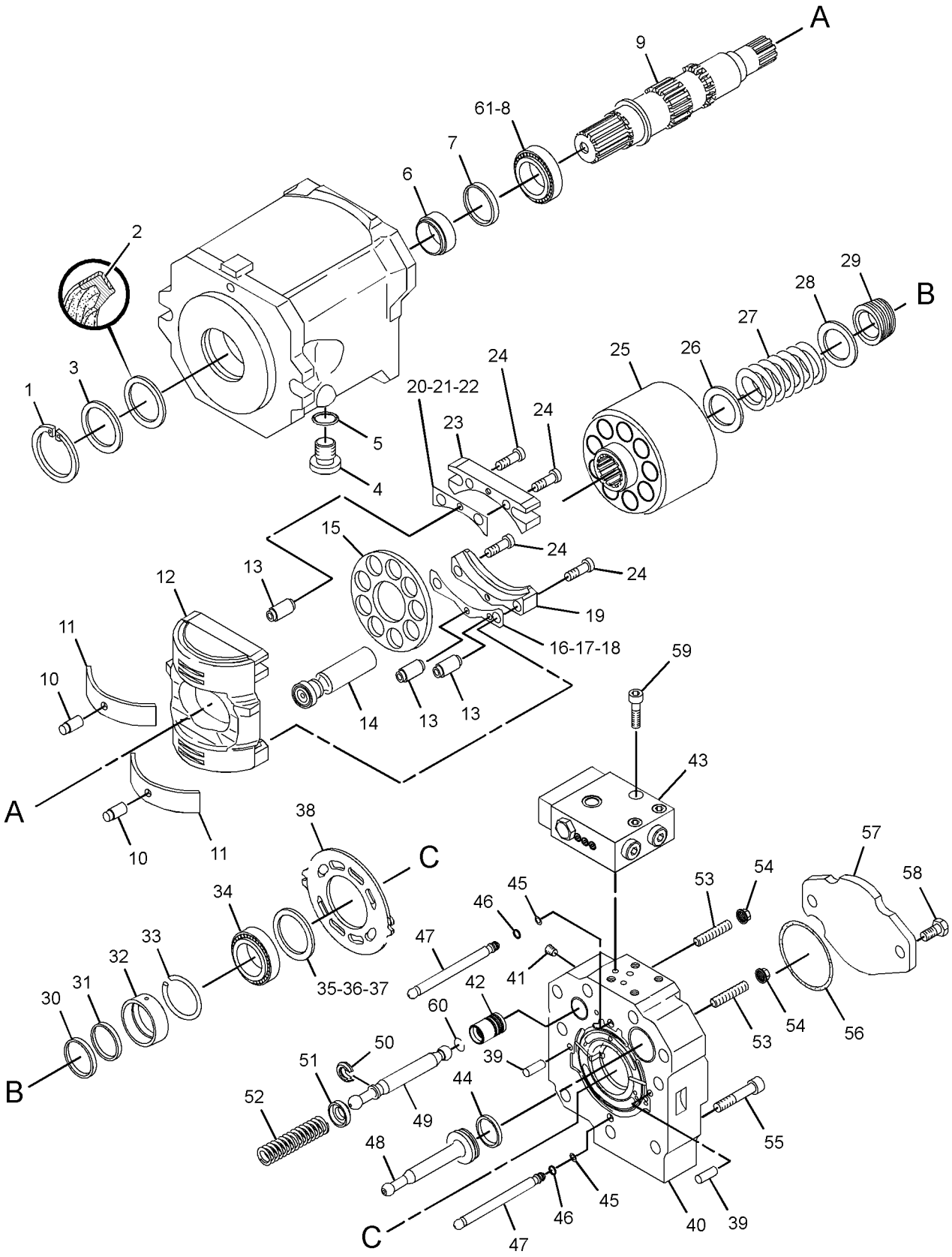

GRAPHIC #1 **<END>** g01445369

HYDRAULIC SYSTEM

224-4948 TANK & FILTER GP-HYDRAULIC

S/N: DSH1-UP; DLN1-UP; DJR1-UP

PART OF 386-1149 TANK & MTG GP-HYDRAULIC

SMCS-5056, 5068 **i04717591**

NOTE	REF NO	GRAPHIC REF	PART NUMBER	QTY	PART NAME 1 2 3 4 5 6 (PRODUCT LEVEL)	SEE PAGE
	1	1	**1U-2827**	1	GUIDE-VALVE	
	2	1	**2D-4202**	1	PLATE	
	3	2	**4J-8251**	1	GROMMET	
	4	2	**8Y-4842**	1	GAUGE-SIGHT (HYDRAULIC TANK OIL)	
	5	1	**4T-0521**	2	BOLT (5/8-11X17.1-IN)	
	6	1	**5D-1911**	1	COVER-HYDRAULIC CAP	
	7	1	**5D-7927**	1	STRAINER AS-OIL (HYDRAULIC TANK)	
		1	**5F-3488**	1	END-STRAINER	
	8	1	**7B-3039**	1	SPRING	
	9	1	**7H-1447**	1	CAP-FILLER (HYDRAULIC TANK)	
	10	2	**8J-6913**	1	RETAINER-SIGHT GLASS	
	11	1	**8J-8443**	2	SPRING	
	12	1	**8J-8468**	2	VALVE	
	13	1	**8J-8782**	1	BODY-DRAIN VALVE	
	14	1	**8J-8783**	1	VALVE	
	15	1	**8T-3298**	1	SEAL-RECTANGULAR	
	16	1	**9J-2914**	2	SPACER	
	17	1	**9J-7031**	1	PLUG-DRAIN (HYDRAULIC TANK OIL)	
	18	1	**9M-7394**	1	LEVER	
	19	2	**9T-3004**	1	VALVE	
	20	2	**9T-3005**	1	SPRING	
	21	1	**9T-3264**	2	COVER	
	22	2	**9T-7677**	1	RETAINER	
	23	2	**187-9194**	1	PLATE (SIGHT GLASS)	
	24	2	**235-0907**	2	BASE-FILTER	
	25	1,2	**257-9788**	1	GASKET	
	26	2	**268-0066**	1	SPACER	
	27	1	**268-2760**	1	TANK AS-HYDRAULIC	
	28	2	**268-2762**	1	TUBE AS	
	29	2	**268-2763**	1	TUBE AS	
	31	2	**268-2769**	2	BLOCK	
	32	1	**269-4870**	1	COVER AS-TANK	
	33	1	**279-9826**	1	TUBE AS	
	34	2	*148-8347*	1	ELBOW AS	
		2	**6V-9007**	1	ELBOW	
		2	**3D-2824**	1	SEAL-O-RING	
		2	**6V-9746**	1	SEAL-O-RING	
	35	2	**154-1580**	1	WASHER-HARD (22X38X6-MM THK)	
	36	1	**1L-5072**	1	DOWEL	
	37	2	**1P-4578**	2	FLANGE-HALF	
	38	1	**1P-4582**	2	FLANGE-HALF	
	39	1	**1R-0777**	2	FILTER ELEMENT AS-OIL (ADVANCED EFFICIENCY) (HYDRAULIC)	
M	40	2	**270-9433**	2	BOLT-SOCKET HEAD (M6X1X45-MM)	
	41	1	**2J-7761**	1	RING-RETAINING	
	42	1	**3G-3267**	2	SCREEN AS (HYDRAULIC TANK)	
	43	2	**4F-7389**	2	SEAL-O-RING	
	44	1	**4K-0367**	2	NUT-FULL (5/8-11-THD)	
	45	1	**4P-7581**	1	CLIP	
	46	1	**4P-8134**	2	CLIP	
	47	2	**5F-1678**	8	SEAL-O-RING	
	48	1	**5M-2057**	1	SEAL-O-RING	
	49	1	**6H-9361**	1	RING-RETAINING	
	50	1	**6J-2680**	1	SEAL-O-RING	
	51	1,2	**6V-5839**	10	WASHER (11X21X2.5-MM THK)	
M	52	2	**6V-7732**	4	BOLT (M10X1.5X25-MM)	

224-4948 **TANK & FILTER GP-HYDRAULIC** *(contd.)* **i04717591**

NOTE	REF NO	GRAPHIC REF	PART NUMBER	QTY	PART NAME 1 2 3 4 5 6 (PRODUCT LEVEL)	SEE PAGE
M	53	1,2	**6V-7744**	6	LOCKNUT (M10X1.5-THD)	
	54	1	**6V-9633**	2	GASKET	
	55	2	**7D-9749**	1	SEAL-O-RING	
	56	2	**7F-8267**	2	SEAL-O-RING	
	57	2	**7X-7729**	4	WASHER (11X25X3-MM THK)	
	58	2	**8C-3206**	2	FLANGE-HALF	
	59	1	**8F-9206**	2	SEAL-O-RING	
	60	1	**8J-8322**	2	RING-RETAINING	
	61	1	**8J-8436**	2	TUBE AS	
M	62	1	**8T-0722**	2	BOLT-LOCKING (M10X1.5X30-MM)	
	63	1	**8T-2275**	1	BALL	
	64	1,2	**8T-4121**	30	WASHER-HARD (11X21X2.5-MM THK)	
M	65	1,2	**8T-4136**	20	BOLT (M10X1.5X25-MM)	
M	66	2	**8T-4172**	4	BOLT (M10X1.5X80-MM)	
M	67	2	**8T-4178**	4	BOLT (M10X1.5X90-MM)	
M	68	2	**8T-4196**	4	BOLT (M10X1.5X35-MM)	
	69	1	**8T-4223**	4	WASHER-HARD (13.5X25.5X3-MM THK)	
M	70	1	**8T-4956**	4	BOLT (M12X1.75X35-MM)	
	71	1	**9H-6454**	1	GASKET	

M-METRIC PART

224-4948 **TANK & FILTER GP-HYDRAULIC** *(contd.)* **i04717591**

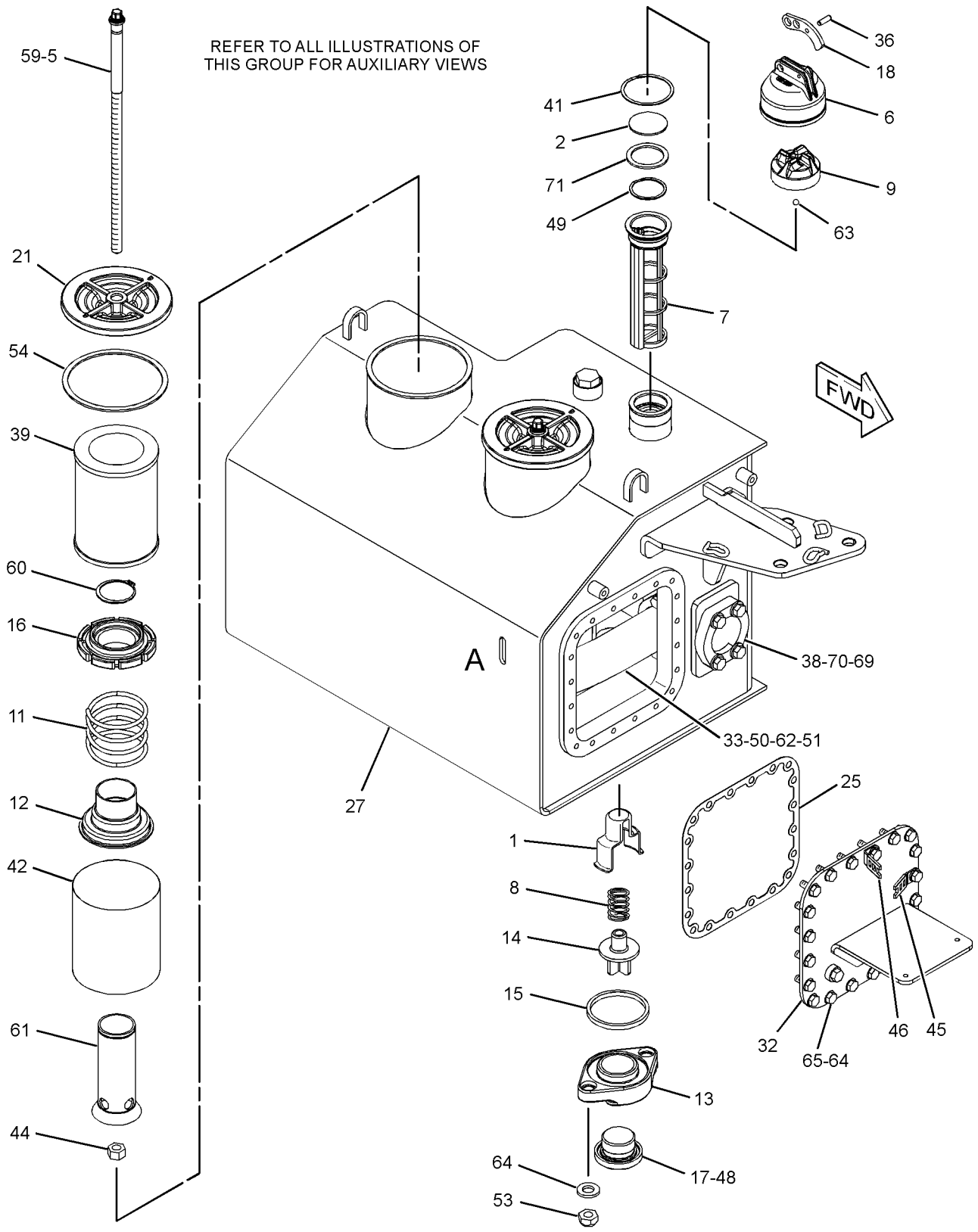

GRAPHIC #1

g01278459

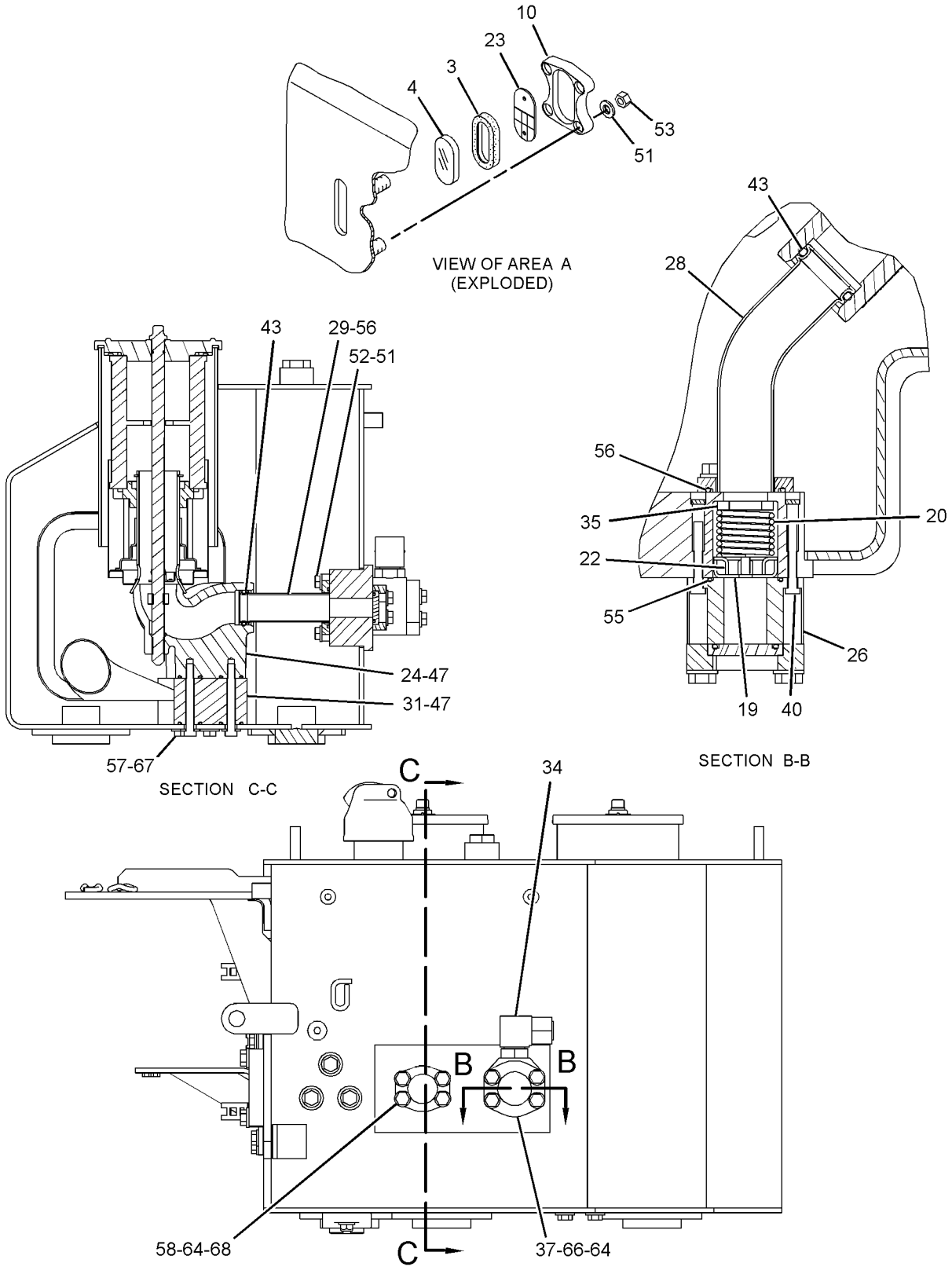

GRAPHIC #2

<END>

g02828877

HYDRAULIC SYSTEM

386-1149 TANK & MTG GP-HYDRAULIC

S/N: DSH1-UP; DLN1-UP; DJR1-UP
PART OF 313-3756 HYDRAULIC AR

SMCS-5056 **i04717589**

NOTE	REF NO	GRAPHIC REF	PART NUMBER	QTY	PART NAME 1 2 3 4 5 6 (PRODUCT LEVEL)	SEE PAGE
	1	1	**7K-1181**	1	STRAP-CABLE	
	2	1	**164-3651**	1	ADAPTER	
Y	3	1	*224-4948*	1	TANK & FILTER GP-HYDRAULIC	459
	4	1	**191-5439**	1	VALVE-BREAKER RELIEF (HYDRAULIC TANK)	
	5	1	**3D-2824**	1	SEAL-O-RING	
	6	1	**3J-1907**	1	SEAL-O-RING	
M	7	1	**8T-4779**	3	BOLT (M16X2X35-MM)	
	8	1	**9X-8257**	3	WASHER (17.5X30X3.5-MM THK)	

M-METRIC PART
Y-SEPARATE ILLUSTRATION

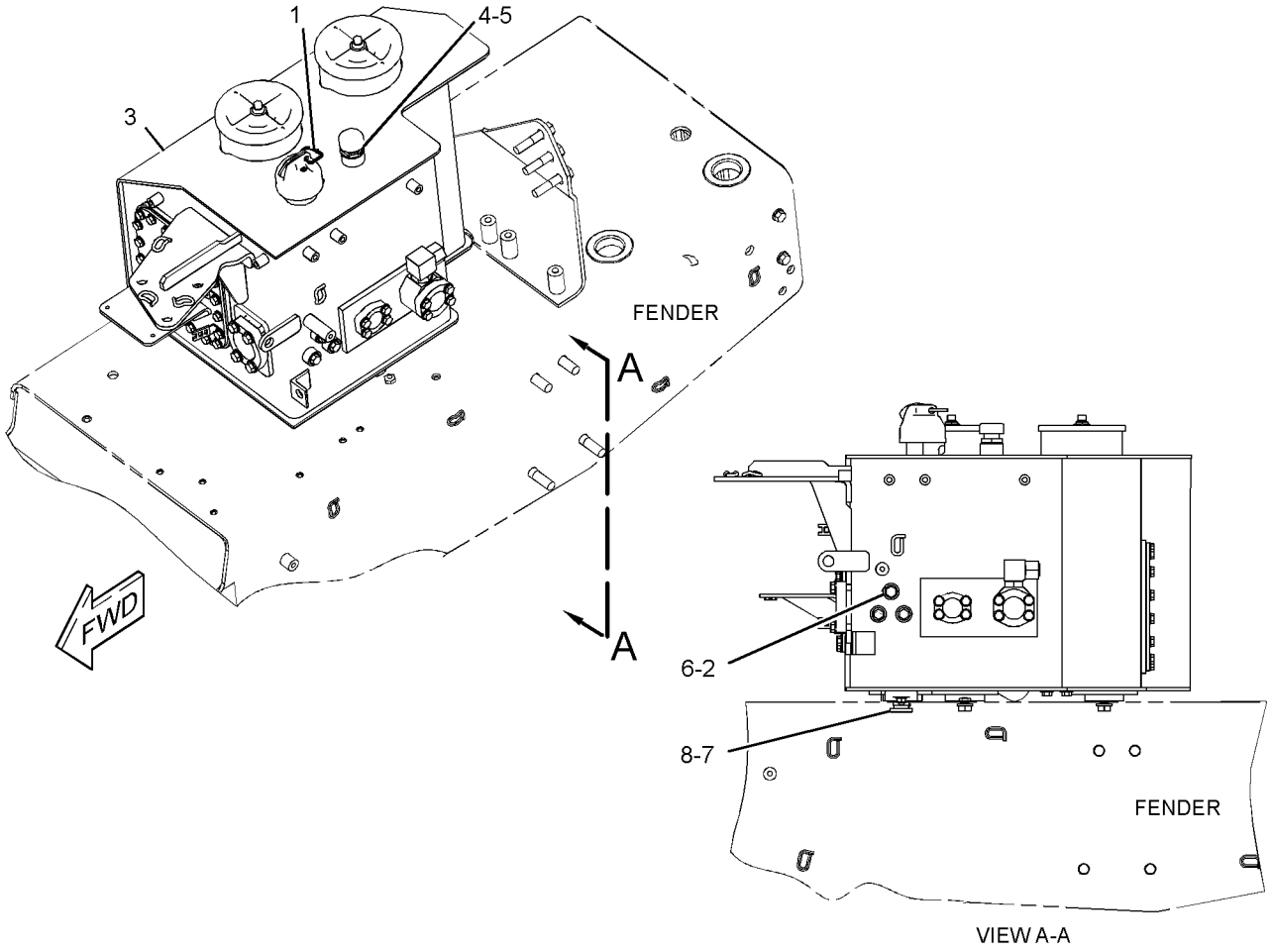

GRAPHIC #1 **<END>** g02843896

HYDRAULIC SYSTEM

234-5126 VALVE & MTG GP-BULLDOZER—GRADE CONTROL

S/N: DSH1-UP; DLN1-UP; DJR1-UP
PART OF 323-9716 LINES GP-PILOT
AN ATTACHMENT

SMCS-5051 **i04033025**

NOTE	REF NO	GRAPHIC REF	PART NUMBER	QTY	PART NAME 1 2 3 4 5 6 (PRODUCT LEVEL)	SEE PAGE
Y	1	1	**201-0950**	1	VALVE GP-SOLENOID (BOOST)	500
	2	1	**234-5124**	1	MANIFOLD AS	
		1	**148-9359**	9	PLUG	
Y	3	1	**235-4605**	4	VALVE GP-SOLENOID (BLADE CONTROL)	501

Y-SEPARATE ILLUSTRATION

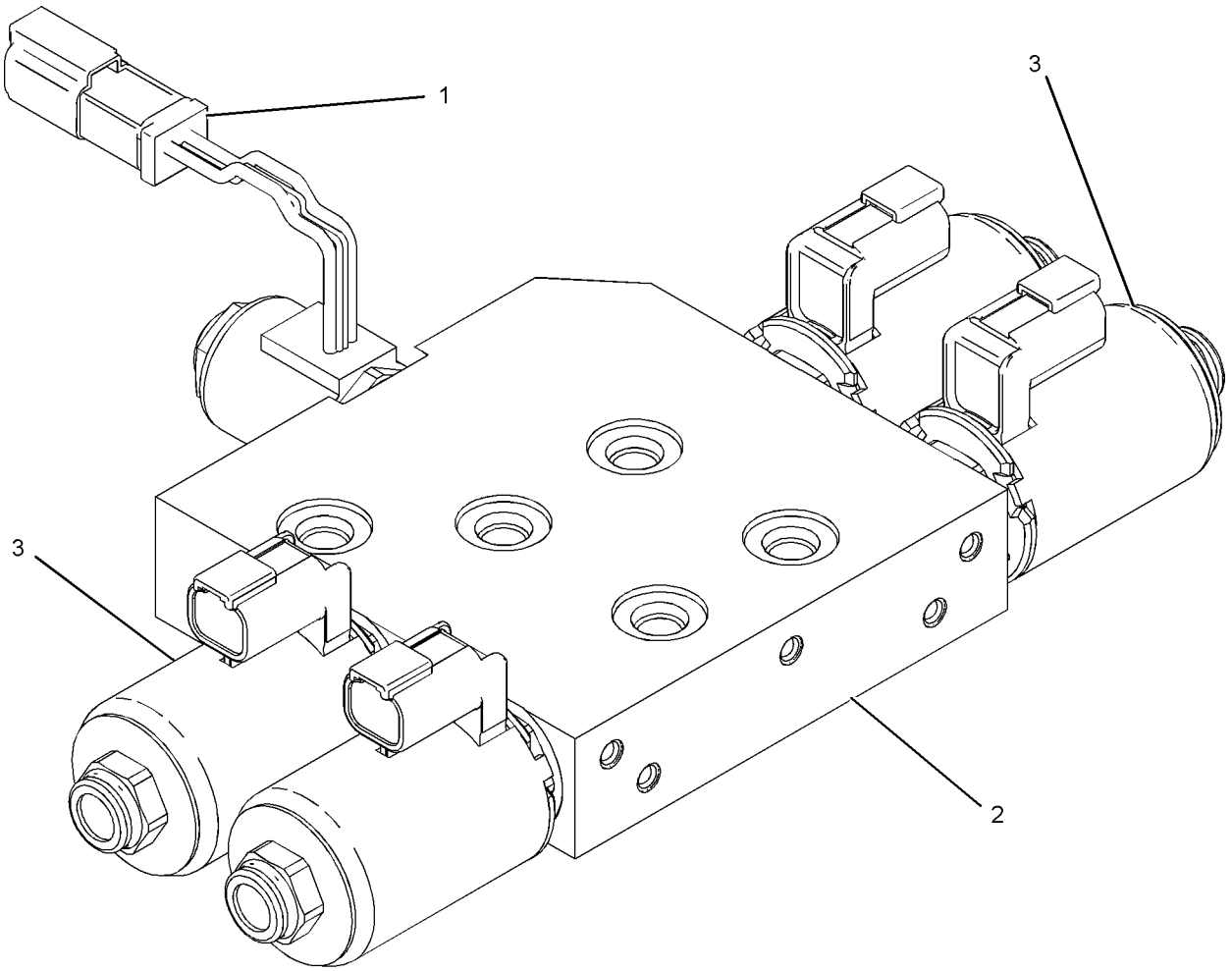

GRAPHIC #1 **<END>** g01072312

222-1191 VALVE & MTG GP-COUNTERBALANCE

S/N: DSH1-UP; DLN1-UP; DJR1-UP
PART OF 313-3756 HYDRAULIC AR

SMCS-5420 **i04013956**

NOTE	REF NO	GRAPHIC REF	PART NUMBER	QTY	PART NAME 1 2 3 4 5 6 (PRODUCT LEVEL)	SEE PAGE
Y	1	1	**227-0832**	1	VALVE GP-COUNTERBALANCE	479
M	2	1	**8C-4365**	6	BOLT (M14X2X80-MM)	
	3	1	**4J-0520**	2	SEAL-O-RING	
	4	1	**6V-0400**	4	FLANGE-HALF	
M	5	1	**8T-4184**	8	BOLT (M12X1.75X45-MM)	
	6	1	**8T-4223**	8	WASHER-HARD (13.5X25.5X3-MM THK)	

M-METRIC PART
Y-SEPARATE ILLUSTRATION

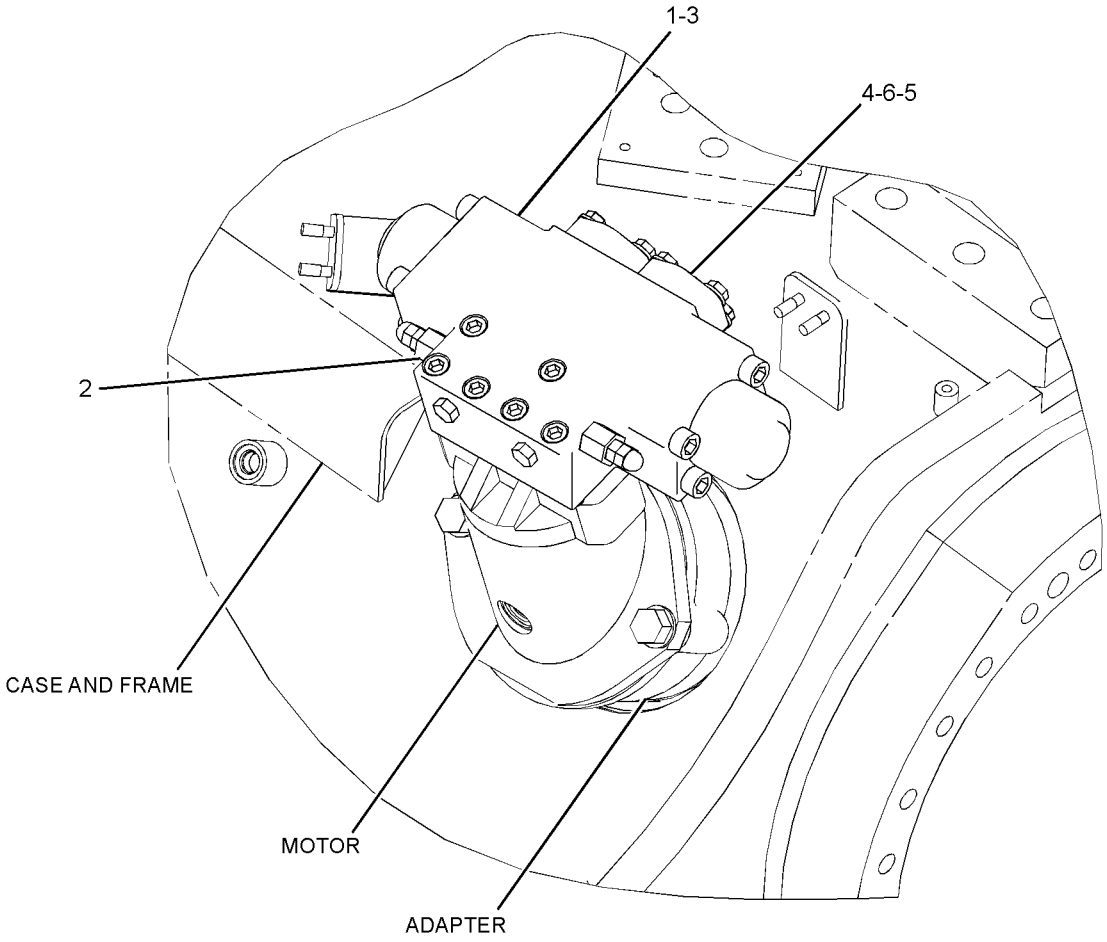

GRAPHIC #1 **<END>** g01206728

HYDRAULIC SYSTEM

222-1152 VALVE & MTG GP-IMPLEMENT CONT

S/N: DSH1-UP; DLN1-UP; DJR1-UP
PART OF 313-3756 HYDRAULIC AR

SMCS-5051 **i04717051**

NOTE	REF NO	GRAPHIC REF	PART NUMBER	QTY	PART NAME 1 2 3 4 5 6 (PRODUCT LEVEL)	SEE PAGE
	1	1	**165-6577**	1	PLATE AS	
Y	2	1	**224-4940**	1	VALVE GP-BANK 3 (BULLDOZER, STEERING)	467
M	3	1	**172-9966**	3	BOLT (M12X1.75X65-MM)	
	4	1	**198-4778**	7	WASHER-HARD (13.5X30X12-MM THK)	
	5	1	**7X-3325**	4	BOLT-LOCKING (1/2-13-THD)	

M-METRIC PART
Y-SEPARATE ILLUSTRATION

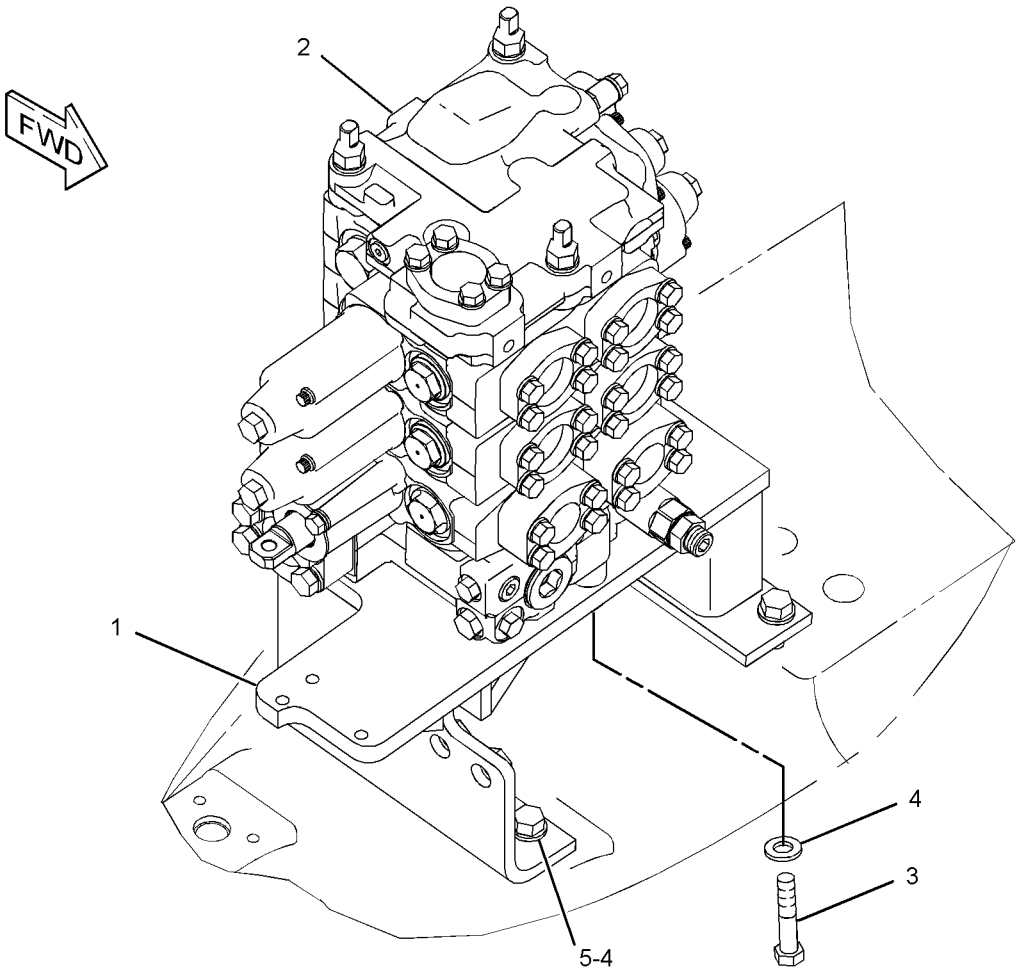

GRAPHIC #1 **<END>** g01450488

224-4940 VALVE GP-BANK 3—BULLDOZER, STEERING

S/N: DSH1-UP; DLN1-UP; DJR1-UP

PART OF 222-1152 VALVE & MTG GP-IMPLEMENT CONT

SMCS-5051 **i04717069**

NOTE	REF NO	GRAPHIC REF	PART NUMBER	QTY	PART NAME 1 2 3 4 5 6 (PRODUCT LEVEL)	SEE PAGE
	1	1	**8T-9403**	4	FLANGE-HALF	
	2	1	**164-7677**	3	ROD	
	3	1	**235-0399**	1	COVER	
Y	4	1	**235-0401**	1	MANIFOLD GP-VALVE (INLET)	453
Y	5	1	**271-4967**	1	VALVE GP-CONTROL (STEERING)	401
Y	6	1	**271-4968**	1	VALVE GP-CONTROL (BULLDOZER LIFT)	472
Y	7	1	**271-4969**	1	VALVE GP-CONTROL (BULLDOZER TILT)	475
	9	1	*155-3624*	2	PLUG AS	
					(EACH INCLUDES)	
		1	**9S-4182**	1	PLUG-O-RING	
		1	**3J-7354**	1	SEAL-O-RING	
	10	1	**1P-3702**	1	SEAL-RECTANGULAR	
	11	1	**1P-4578**	2	FLANGE-HALF	
	12	1	*207-7899*	1	PLUG AS	
		1	**9S-4188**	1	PLUG	
		1	**4K-1388**	1	SEAL-O-RING	
	13	1	**4J-0522**	12	SEAL-O-RING	
	14	1	**4J-8997**	3	SEAL-O-RING	
	15	1	**6V-5555**	12	SEAL-O-RING	
	16	1	**6V-8188**	3	NUT (1/2-13-THD)	
	17	1	**7X-3392**	3	WASHER-HARD (13.5X22.5X3-MM THK)	
	18	1	**8C-3206**	10	FLANGE-HALF	
	19	1	**8T-4121**	32	WASHER-HARD (11X21X2.5-MM THK)	
M	20	1	**8T-4182**	8	BOLT (M10X1.5X45-MM)	
M	21	1	**8T-4196**	24	BOLT (M10X1.5X35-MM)	

M-METRIC PART
Y-SEPARATE ILLUSTRATION

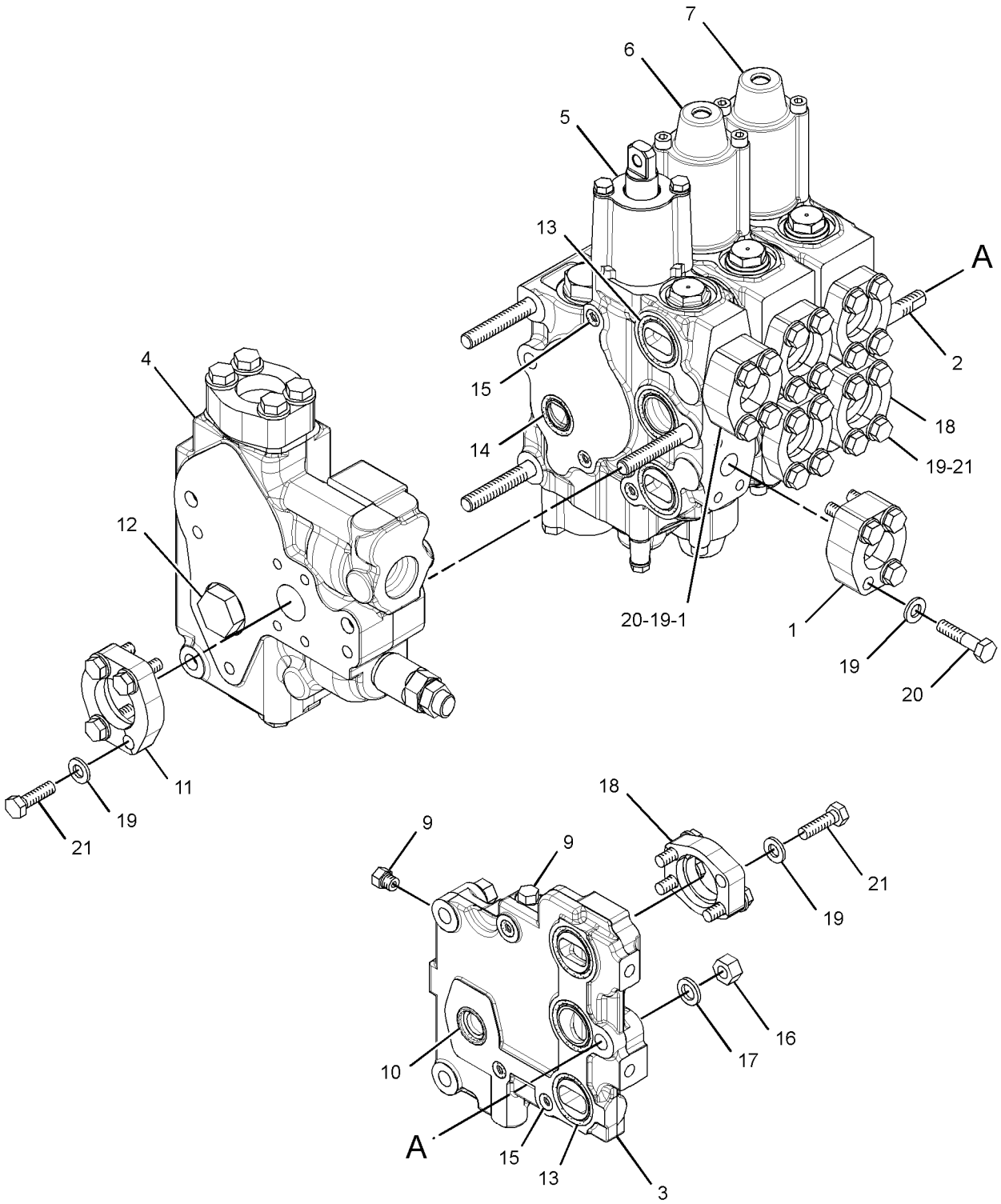

GRAPHIC #1 **<END>** g01426575

224-4941 VALVE GP-BANK 5—BULLDOZER, RIPPER, STEERING

S/N: DSH1-UP; DLN1-UP; DJR1-UP
PART OF 323-9717 CONTROL AR-HYDRAULIC
AN ATTACHMENT

SMCS-5051 **i04732609**

NOTE	REF NO	GRAPHIC REF	PART NUMBER	QTY	PART NAME 1 2 3 4 5 6 (PRODUCT LEVEL)	SEE PAGE
	1	1	**8T-9403**	4	FLANGE-HALF	
	2	1	**166-7220**	3	ROD	
	3	1	**235-0399**	1	COVER	
Y	4	1	**235-0401**	1	MANIFOLD GP-VALVE (INLET)	453
Y	5	1	**271-4967**	1	VALVE GP-CONTROL (STEERING)	401
Y	6	1	**271-4968**	1	VALVE GP-CONTROL (BULLDOZER LIFT)	472
Y	7	1	**271-4969**	1	VALVE GP-CONTROL (BULLDOZER TILT)	475
Y	8	1	**308-6726**	1	VALVE GP-CONTROL (RIPPER LIFT)	477
Y	8A	1	**308-6726**	1	VALVE GP-CONTROL (RIPPER TILT)	477
	10	1	*155-3624*	2	PLUG AS	
					(EACH INCLUDES)	
		1	**9S-4182**	1	PLUG-O-RING	
		1	**3J-7354**	1	SEAL-O-RING	
	11	1	**1P-3702**	1	SEAL-RECTANGULAR	
	12	1	**1P-4578**	2	FLANGE-HALF	
	13	1	*207-7899*	1	PLUG AS	
		1	**9S-4188**	1	PLUG	
		1	**4K-1388**	1	SEAL-O-RING	
	14	1	**4J-0522**	18	SEAL-O-RING	
	15	1	**4J-8997**	5	SEAL-O-RING	
	16	1	**6V-5555**	18	SEAL-O-RING	
	17	1	**6V-8188**	3	NUT (1/2-13-THD)	
	18	1	**7X-3392**	3	WASHER-HARD (13.5X22.5X3-MM THK)	
	19	1	**8C-3206**	18	FLANGE-HALF	
	20	1	**8T-4121**	48	WASHER-HARD (11X21X2.5-MM THK)	
M	21	1	**8T-4182**	8	BOLT (M10X1.5X45-MM)	
M	22	1	**8T-4196**	40	BOLT (M10X1.5X35-MM)	

M-METRIC PART
Y-SEPARATE ILLUSTRATION

224-4941 VALVE GP-BANK 5 *(contd.)* **i04732609**

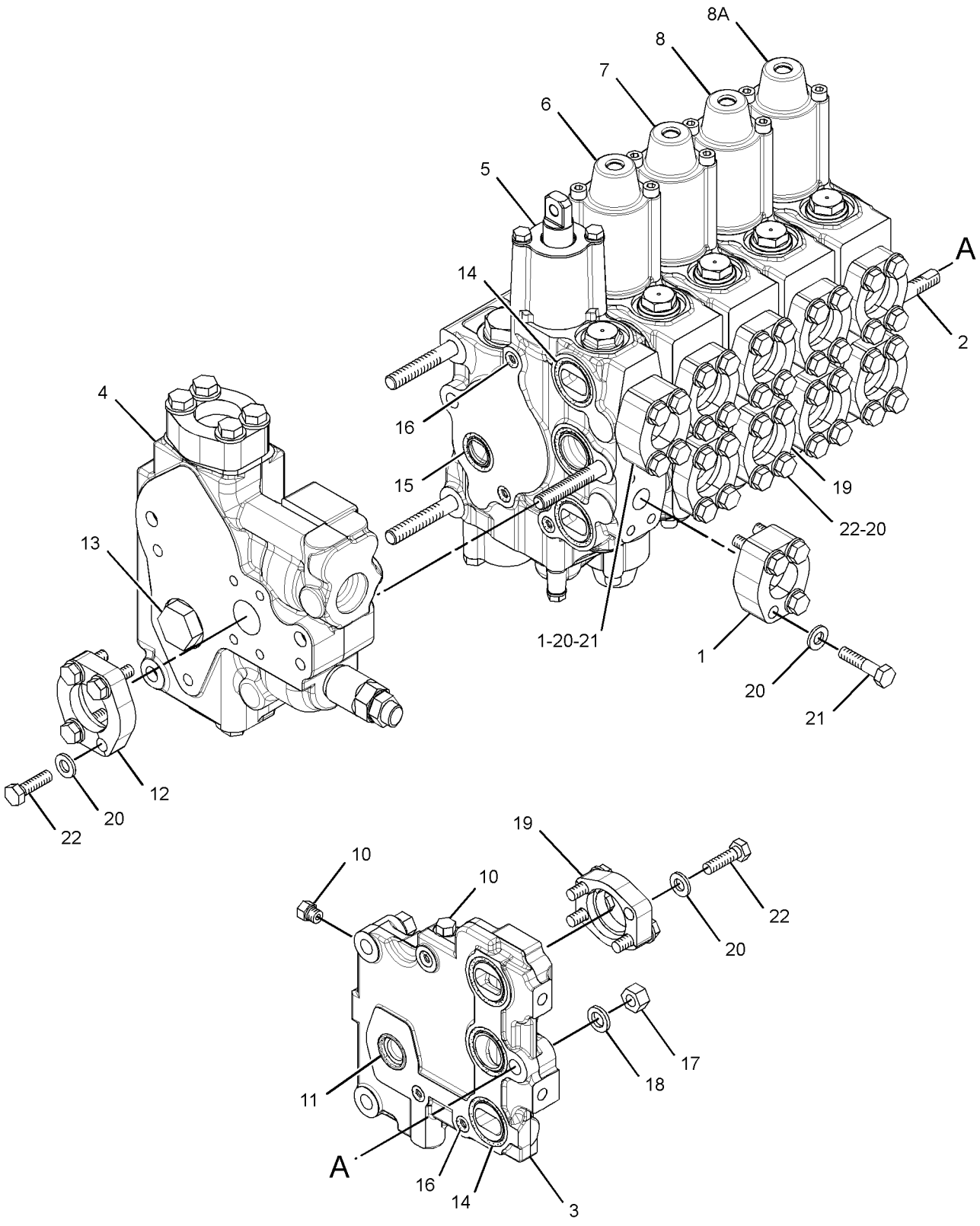

GRAPHIC #1 **<END>** g01426929

158-9956 VALVE GP-CHECK

S/N: DSH1-UP; DLN1-UP; DJR1-UP
PART OF 226-4751 MANIFOLD GP-CONTROL

SMCS-5067 **i04017236**

NOTE	REF NO	GRAPHIC REF	PART NUMBER	QTY	PART NAME 1 2 3 4 5 6 (PRODUCT LEVEL)	SEE PAGE
	1	1	**3K-0360**	1	SEAL-O-RING	
	2	1	**161-6154**	1	SEAL-O-RING	
	3	1	**6E-0381**	1	RING-BACKUP	

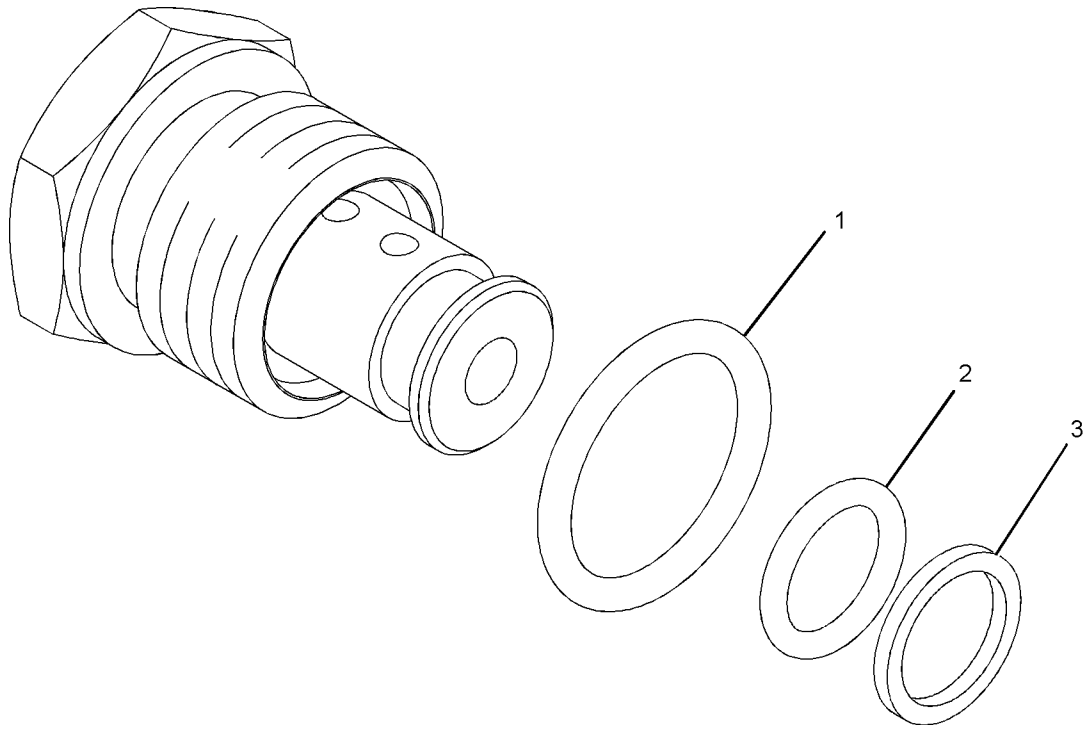

GRAPHIC #1 **<END>** g01016882

HYDRAULIC SYSTEM

271-4968 VALVE GP-CONTROL—BULLDOZER LIFT

S/N: DSH1-UP; DLN1-UP; DJR1-UP
PART OF 224-4940 VALVE GP-BANK 3, 224-4941 VALVE GP-BANK 5
ALSO AN ATTACHMENT

SMCS-5051 **i04717133**

NOTE	REF NO	GRAPHIC REF	PART NUMBER	QTY	PART NAME 1 2 3 4 5 6 (PRODUCT LEVEL)	SEE PAGE
	1	1	**2S-2596**	2	SPRING	
	2	1	**121-6653**	1	VALVE	
	3	1	**4T-1108**	1	PLUG	
Y	4	2	**4T-1860**	1	VALVE GP-SHUTTLE	499
B	5	2	**4T-4628**	5	SHIM (0.5-MM THK)	
	6	1	**4T-5072**	1	RING-BACKUP	
	7	1	**100-8012**	1	BODY	
Y	8	1	**121-6647**	1	VALVE GP-RELIEF (PILOT OIL PRESSURE)	496
	10	1	**123-9624**	1	SPRING	
	11	2	**153-7067**	1	RETAINER	
	12	1	**153-7549**	1	RETAINER	
	13	2	**153-7550**	1	RETAINER	
	14	1	**153-7553**	1	SPRING	
	15	2	**161-2685**	1	SCREW (3/8-24-THD)	
	16	1	**163-5671**	1	WASHER (17X39X2-MM THK)	
	17	2	**164-0938**	1	SPRING	
	19	2	**170-4001**	1	SPRING	
	20	1	**173-0511**	1	HOUSING	
	21	1	**173-0512**	1	HOUSING	
	22	1	**173-0515**	1	SPACER	
M	25	2	**085-8091**	2	BOLT (M10X1.5X55-MM)	
	26	1	**100-8010**	2	VALVE-CHECK	
	27	1	**100-8011**	1	PLUG	
M	28	1	**102-7365**	2	BOLT-SOCKET HEAD (M8X1.25X100-MM)	
	29	1	*173-3993*	2	PLUG AS	
					(EACH INCLUDES)	
		1	**9S-8001**	1	PLUG-O-RING	
		1	**4J-7533**	1	SEAL-O-RING	
	30	2	*183-7263*	1	PLUG AS	
		2	**9S-8002**	1	PLUG-O-RING	
		2	**3J-7354**	1	SEAL-O-RING	
B	31	2	**2J-2866**	3	SHIM (0.12-MM THK)	
	32	1	**4J-5351**	1	SEAL-O-RING	
	33	1	**4K-1388**	2	SEAL-O-RING	
	34	1	**4T-5073**	2	RING-BACKUP	
	35	1,2	**5K-0227**	2	SEAL-O-RING	
	36	1	**5M-2057**	2	SEAL-O-RING	
B	37	1	**6E-1637**	3	SHIM (1-MM THK)	
	38	2	**7J-0204**	1	SEAL-O-RING	
	39	1	**7J-9933**	2	SEAL-O-RING	
	40	1	**7M-8485**	1	SEAL-O-RING	
B	41	1	**8J-8462**	2	SHIM (0.254-MM THK)	
	42	2	**9J-8126**	1	PLUG-ORIFICE	
	43	2	**9X-2027**	2	WASHER (11X18X2-MM THK)	
M	44	1	**9X-6154**	2	BOLT-SOCKET HEAD (M8X1.25-THD)	

B-USE AS REQUIRED
M-METRIC PART
Y-SEPARATE ILLUSTRATION

REFER TO ALL ILLUSTRATIONS OF THIS GROUP FOR AUXILIARY VIEWS

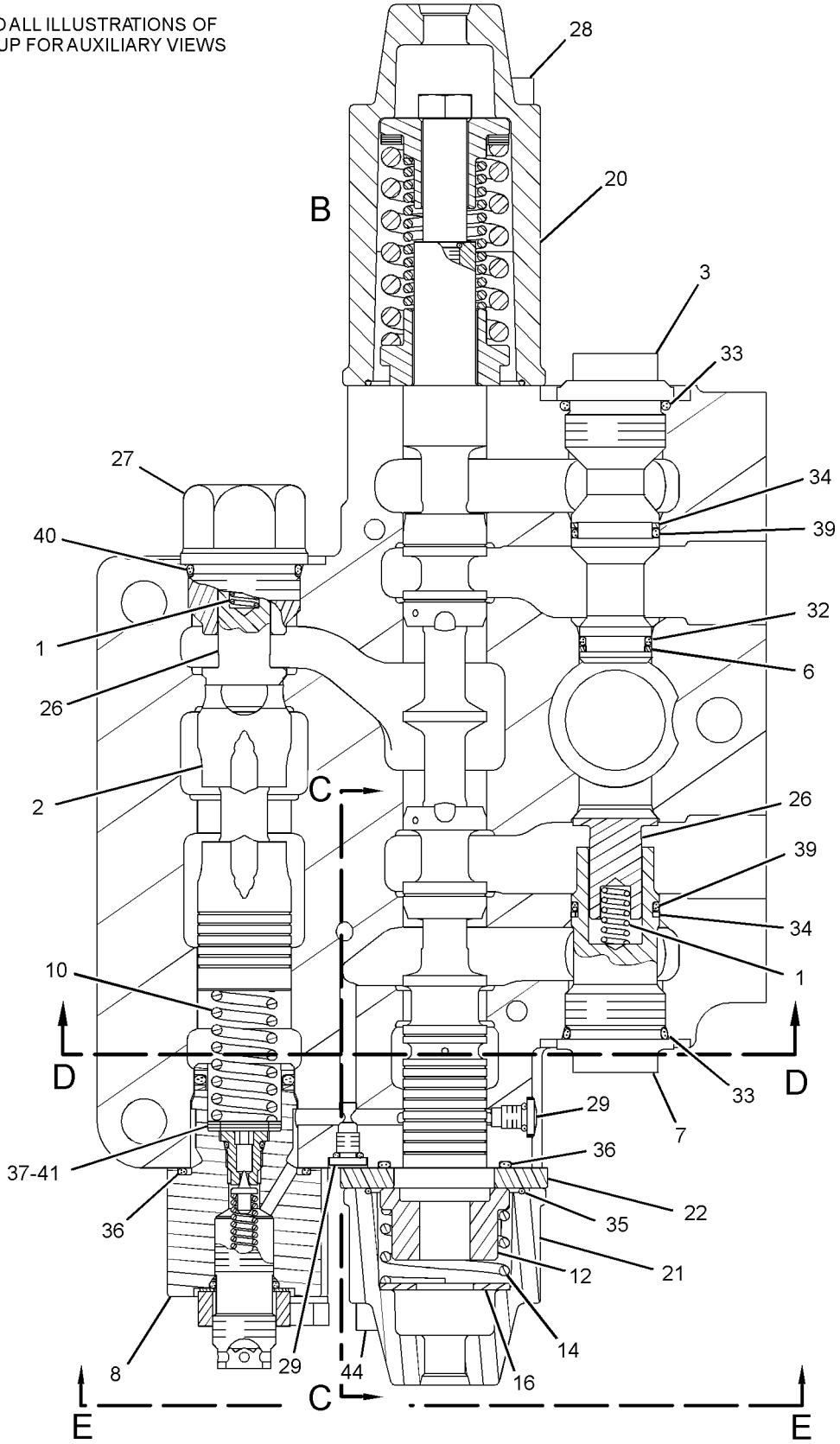

GRAPHIC #1

g02829437

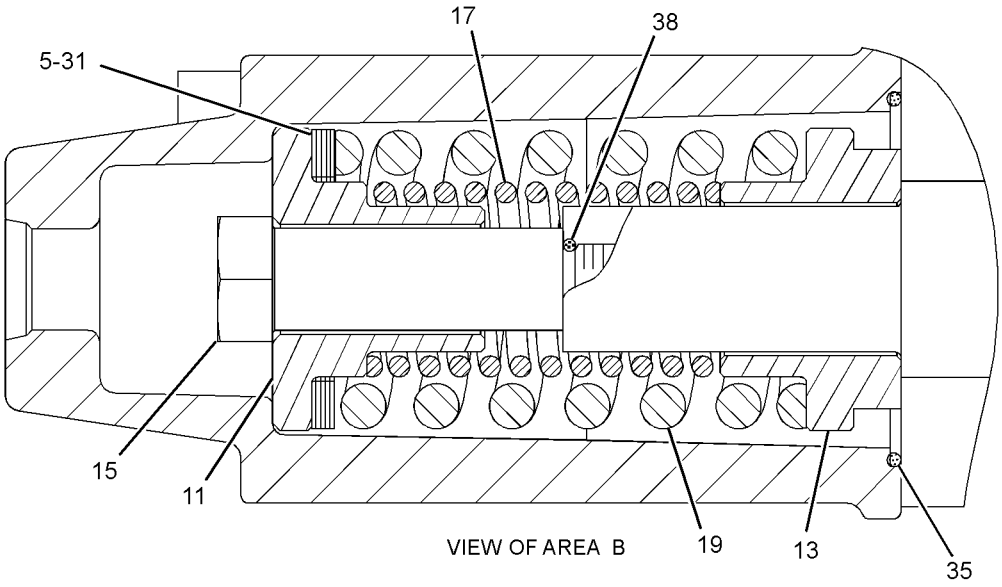

VIEW OF AREA B

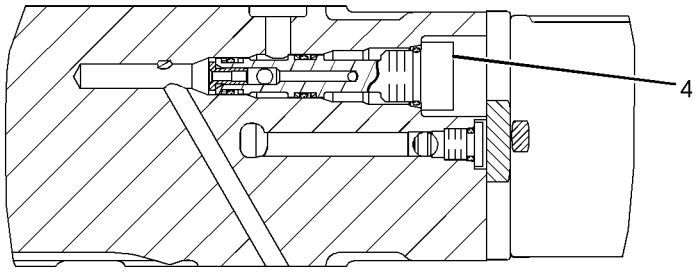

SECTION C-C

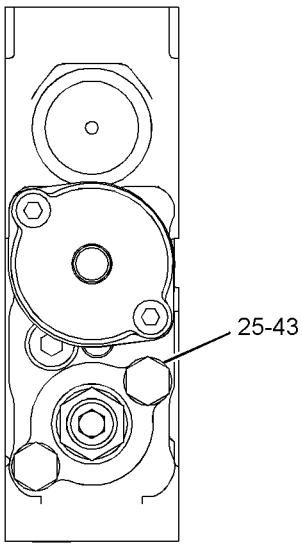

SECTION E-E

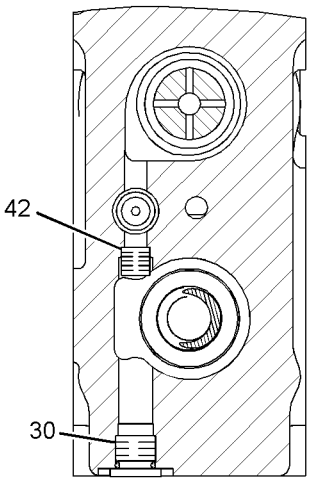

SECTION D-D

GRAPHIC #2 **<END>** g01287750

271-4969 VALVE GP-CONTROL—BULLDOZER TILT

S/N: DSH1-UP; DLN1-UP; DJR1-UP
PART OF 224-4940 VALVE GP-BANK 3, 224-4941 VALVE GP-BANK 5
ALSO AN ATTACHMENT

SMCS-5051 **i04717149**

NOTE	REF NO	GRAPHIC REF	PART NUMBER	QTY	PART NAME 1 2 3 4 5 6 (PRODUCT LEVEL)	SEE PAGE
	1	1	**2S-2596**	1	SPRING	
	2	1	**121-6653**	1	VALVE	
	3	1	**4T-1108**	2	PLUG	
Y	4	1	**4T-1860**	1	VALVE GP-SHUTTLE	499
B	5	1	**4T-4628**	6	SHIM (0.5-MM THK)	
	6	1	**4T-4631**	1	SPRING	
Y	7	1	**121-6650**	1	VALVE GP-RELIEF (PILOT OIL PRESSURE)	497
	9	1	**153-6976**	1	SPRING	
	10	1	**153-7067**	1	RETAINER	
	11	1	**153-7551**	1	RETAINER	
	12	1	**161-2684**	1	SCREW (3/8-24X2.48-IN)	
	14	1	**173-0511**	1	HOUSING	
	15	1	**173-0514**	1	COVER	
M	18	1	**085-8091**	2	BOLT (M10X1.5X55-MM)	
	19	1	**100-8010**	1	VALVE-CHECK	
	20	1	**100-8011**	1	PLUG	
M	21	1	**102-7365**	2	BOLT-SOCKET HEAD (M8X1.25X100-MM)	
	22	1	**123-9624**	1	SPRING	
	23	1	*173-3993*	2	PLUG AS	
					(EACH INCLUDES)	
		1	**9S-8001**	1	PLUG-O-RING	
		1	**4J-7533**	1	SEAL-O-RING	
	24	1	*183-7263*	1	PLUG AS	
		1	**9S-8002**	1	PLUG-O-RING	
		1	**3J-7354**	1	SEAL-O-RING	
B	25	1	**2J-2866**	2	SHIM (0.12-MM THK)	
	26	1	**4J-5351**	2	SEAL-O-RING	
	27	1	**4K-1388**	2	SEAL-O-RING	
	28	1	**4T-5072**	2	RING-BACKUP	
	29	1	**4T-5073**	2	RING-BACKUP	
	30	1	**5K-0227**	1	SEAL-O-RING	
	31	1	**5M-2057**	2	SEAL-O-RING	
M	32	1	**6V-5192**	2	BOLT-SOCKET HEAD (M8X1.25X30-MM)	
	33	1	**7J-0204**	1	SEAL-O-RING	
	34	1	**7J-9933**	2	SEAL-O-RING	
	35	1	**7M-8485**	1	SEAL-O-RING	
	36	1	**9J-8126**	1	PLUG-ORIFICE	
	37	1	**9X-2027**	2	WASHER (11X18X2-MM THK)	

B-USE AS REQUIRED
M-METRIC PART
Y-SEPARATE ILLUSTRATION

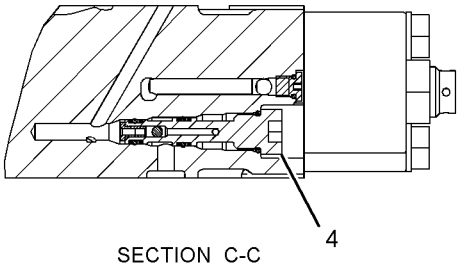

SECTION C-C

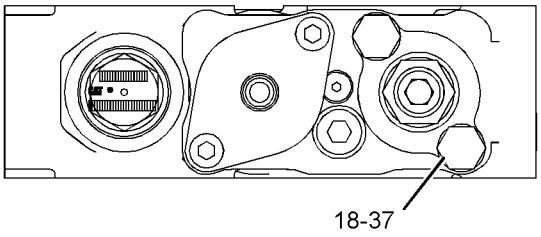

VIEW E-E

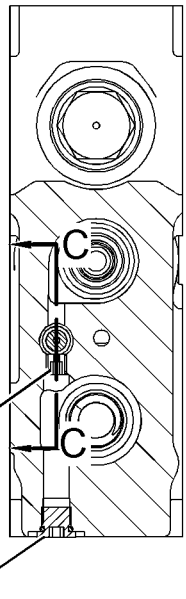

SECTION B-B

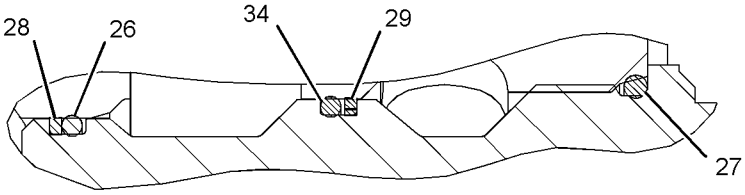

VIEW OF AREA D

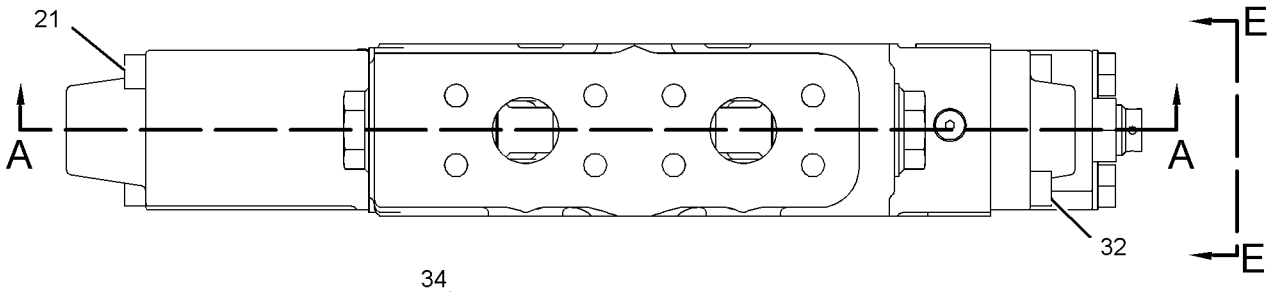

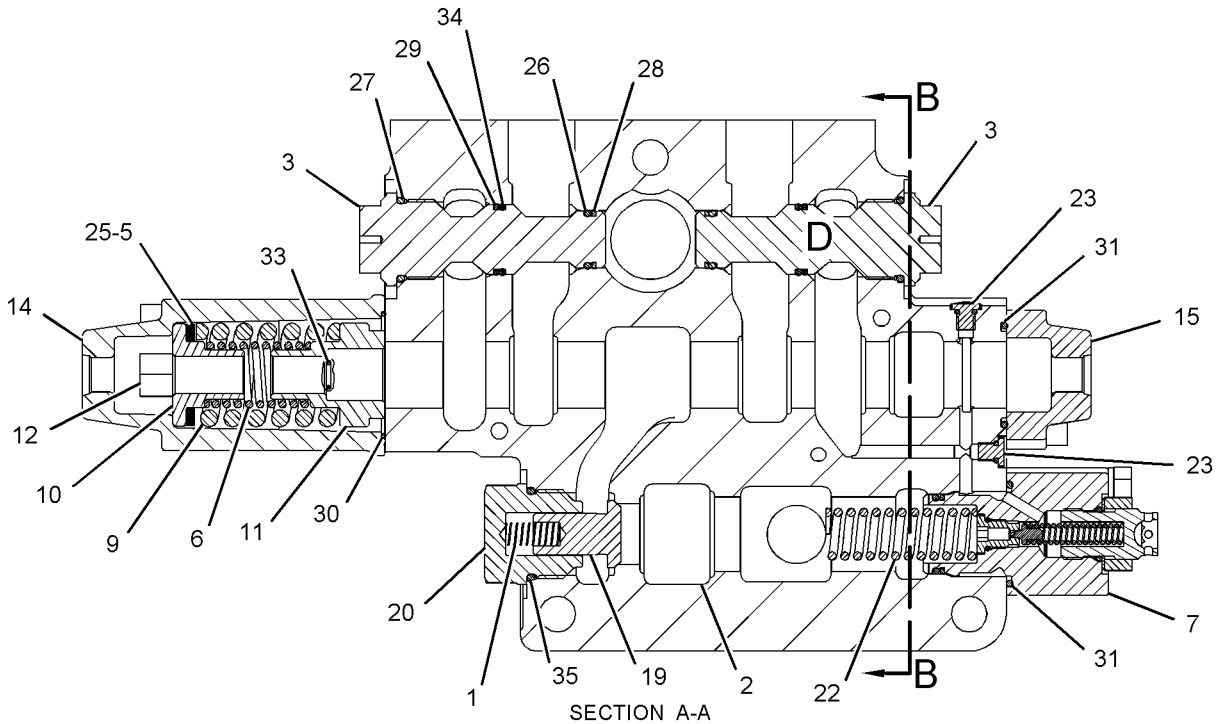

SECTION A-A

GRAPHIC #1 **<END>** g02827477

HYDRAULIC SYSTEM

308-6726 VALVE GP-CONTROL—RIPPER LIFT, TILT

S/N: DSH1-UP; DLN1-UP; DJR1-UP
PART OF 224-4941 VALVE GP-BANK 5
AN ATTACHMENT

SMCS-5051 **i04732689**

NOTE	REF NO	GRAPHIC REF	PART NUMBER	QTY	PART NAME 1 2 3 4 5 6 (PRODUCT LEVEL)	SEE PAGE
	1	1	**2S-2596**	2	SPRING	
	3	1	**4T-1108**	1	PLUG	
Y	4	1	**4T-1860**	1	VALVE GP-SHUTTLE	499
B	5	1	**4T-4628**	6	SHIM (0.5-MM THK)	
	6	1	**4T-4631**	1	SPRING	
	7	1	**9J-8126**	1	PLUG-ORIFICE	
	8	1	**100-8010**	2	VALVE-CHECK	
	9	1	**100-8011**	1	PLUG	
	10	1	**100-8012**	1	BODY	
Y	11	1	**121-6647**	1	VALVE GP-RELIEF (PILOT OIL PRESSURE)	496
	13	1	**153-6976**	1	SPRING	
	14	1	**153-7067**	1	RETAINER	
	15	1	**153-7551**	1	RETAINER	
	16	1	**161-2684**	1	SCREW (3/8-24X2.48-IN)	
	18	1	**173-0511**	1	HOUSING	
	19	1	**173-0514**	1	COVER	
M	22	1	**085-8091**	2	BOLT (M10X1.5X55-MM)	
M	23	1	**102-7365**	2	BOLT-SOCKET HEAD (M8X1.25X100-MM)	
	24	1	**123-9624**	1	SPRING	
	25	1	*173-3993*	2	PLUG AS	
					(EACH INCLUDES)	
		1	**4J-7533**	1	SEAL-O-RING	
		1	**9S-8001**	1	PLUG-O-RING	
	26	1	*183-7263*	1	PLUG AS	
		1	**3J-7354**	1	SEAL-O-RING	
		1	**9S-8002**	1	PLUG-O-RING	
B	27	1	**2J-2866**	2	SHIM (0.12-MM THK)	
	28	1	**4J-5351**	1	SEAL-O-RING	
	29	1	**4K-1388**	2	SEAL-O-RING	
	30	1	**4T-5072**	1	RING-BACKUP	
	31	1	**4T-5073**	2	RING-BACKUP	
	32	1	**5K-0227**	1	SEAL-O-RING	
	33	1	**5M-2057**	2	SEAL-O-RING	
B	34	1	**6E-1637**	2	SHIM (1-MM THK)	
M	35	1	**6V-5192**	2	BOLT-SOCKET HEAD (M8X1.25X30-MM)	
	36	1	**7J-0204**	1	SEAL-O-RING	
	37	1	**7J-9933**	2	SEAL-O-RING	
	38	1	**7M-8485**	1	SEAL-O-RING	
	39	1	**9X-2027**	2	WASHER (11X18X2-MM THK)	

B-USE AS REQUIRED
M-METRIC PART
Y-SEPARATE ILLUSTRATION

308-6726 **VALVE GP-CONTROL** *(contd.)* **i04732689**

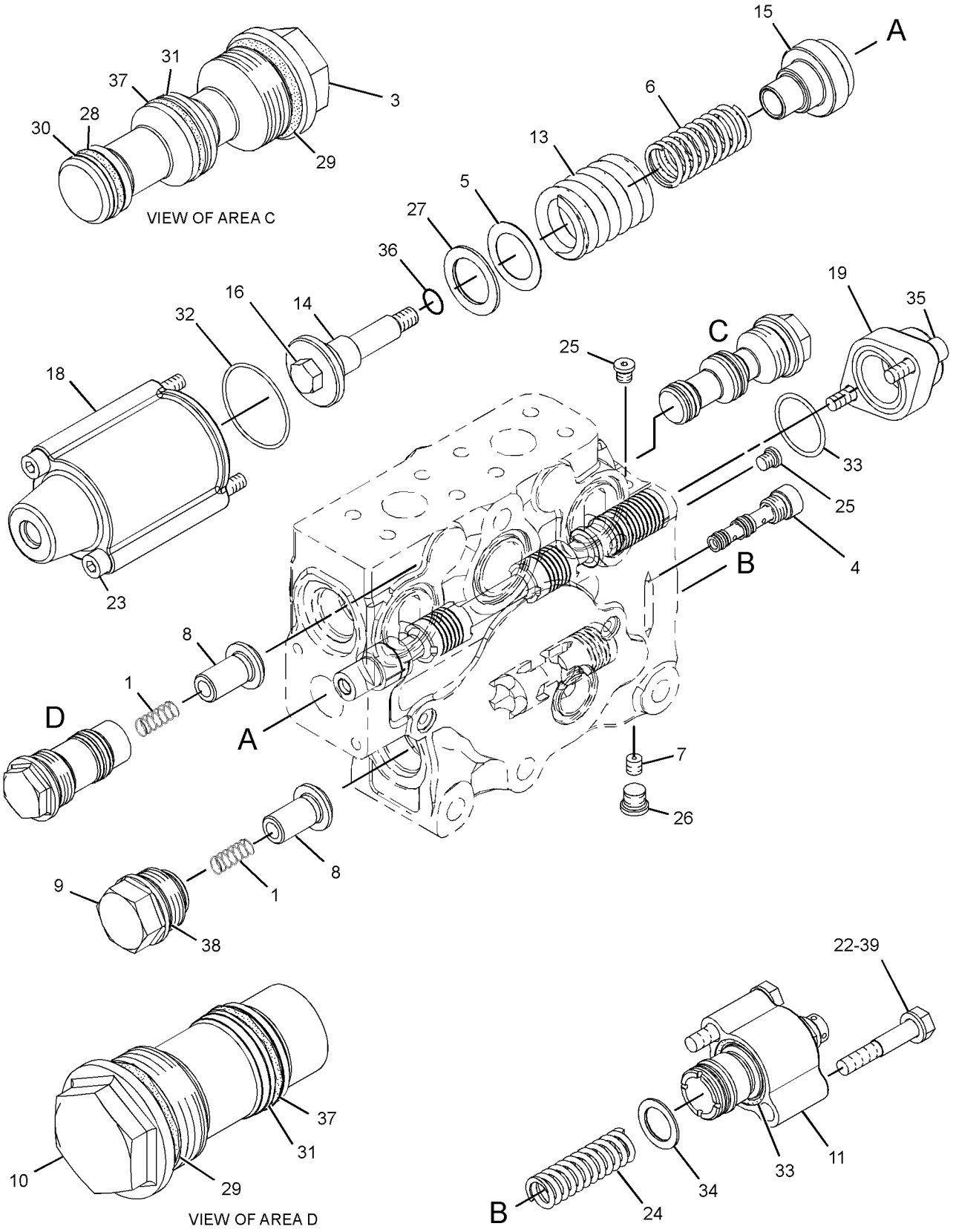

GRAPHIC #1 **<END>** g02150175

227-0832 VALVE GP-COUNTERBALANCE

S/N: DSH1-UP; DLN1-UP; DJR1-UP

PART OF 222-1191 VALVE & MTG GP-COUNTERBALANCE

SMCS-4340 **i04008355**

NOTE	REF NO	GRAPHIC REF	PART NUMBER	QTY	PART NAME 1 2 3 4 5 6 (PRODUCT LEVEL)	SEE PAGE
	1	1	**9T-8571**	2	COVER	
	2	1	**4J-0528**	2	SEAL-O-RING	
	3	1	**9T-5948**	2	RING	
	4	1	**9T-5949**	2	SPRING	
	5	1	**9T-5950**	4	RETAINER	
M	6	1	**8T-1447**	8	BOLT-SOCKET HEAD (M16X2X70-MM)	
	7	1	**9T-8980**	2	RING	
Y	8	1	**9T-5364**	2	VALVE GP-RELIEF (CROSSOVER)	495
	9	1	**5P-6719**	2	PLUG	
	10	1	**3J-1907**	2	SEAL-O-RING	
	11	1	**4J-0522**	2	SEAL-O-RING	

M-METRIC PART
Y-SEPARATE ILLUSTRATION

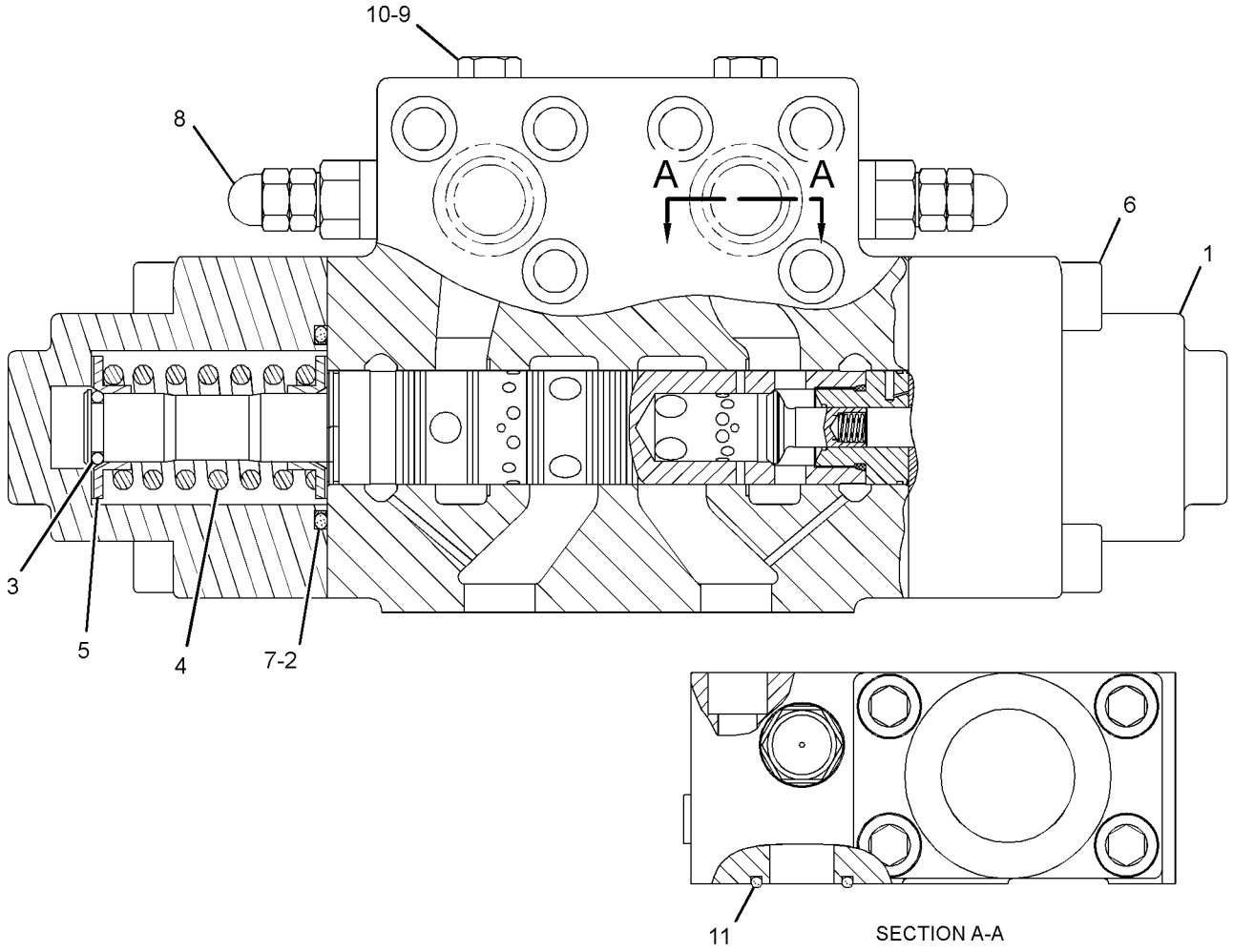

GRAPHIC #1 **<END>** g01208374

HYDRAULIC SYSTEM

184-5321 VALVE GP-PILOT–RIPPER

S/N: DSH1-UP; DLN1-UP; DJR1-UP
PART OF 323-9717 CONTROL AR-HYDRAULIC
AN ATTACHMENT

SMCS-5059 **i04732549**

NOTE	REF NO	GRAPHIC REF	PART NUMBER	QTY	PART NAME 1 2 3 4 5 6 (PRODUCT LEVEL)	SEE PAGE
	1	1	**141-4852**	1	BOOT	
	2	1	**145-2334**	1	ADAPTER	
	3	1	**163-5512**	2	GROMMET	
	4	1	**180-6152**	1	RETAINER	
	5	1	**188-2893**	1	LEVER AS-GATE	
M		1	**5C-2890**	4	NUT (M6X1-THD)	
		1	**146-6315**	4	PIN-ADJUSTMENT	
		1	**159-8112**	1	LEVER	
Y	6	1	**194-5033**	1	VALVE GP-PILOT CARTRIDGE (RIPPER TILT IN)	487
Y	6A	1	**194-5033**	1	VALVE GP-PILOT CARTRIDGE (RIPPER TILT OUT)	487
Y	6B	1	**194-5033**	1	VALVE GP-PILOT CARTRIDGE (RIPPER LOWER)	487
Y	6C	1	**194-5033**	1	VALVE GP-PILOT CARTRIDGE (RIPPER LIFT)	487
	7	1	**9S-8004**	4	PLUG-O-RING	
	8	1	**213-6658**	1	PLATE AS	
	9	1	**136-9291**	1	BODY	
	10	1	**136-9297**	1	PLATE	
	11	1	**136-9298**	1	RETAINER	
	12	1	**149-5470**	1	PLATE	
M	13	1	**191-8921**	4	BOLT-SOCKET HEAD (M6X1X25-MM)	
	14	1	**3J-1907**	4	SEAL-O-RING	
	15	1	**3J-7354**	4	SEAL-O-RING	
	16	1	**8L-2786**	1	SEAL-O-RING	
	17	1	**9S-8002**	4	PLUG-O-RING	

M-METRIC PART
Y-SEPARATE ILLUSTRATION

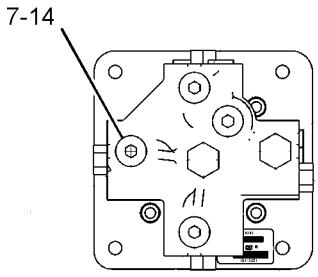

VIEW C-C

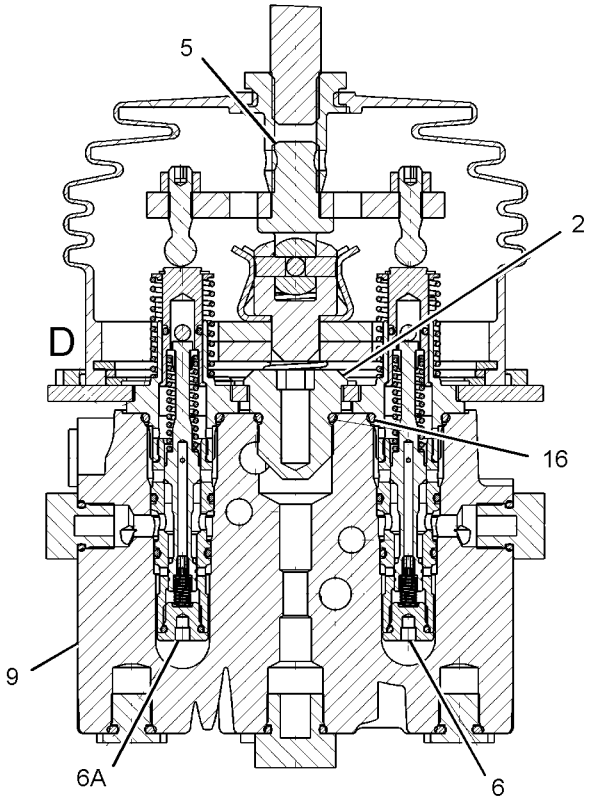

SECTION A-A

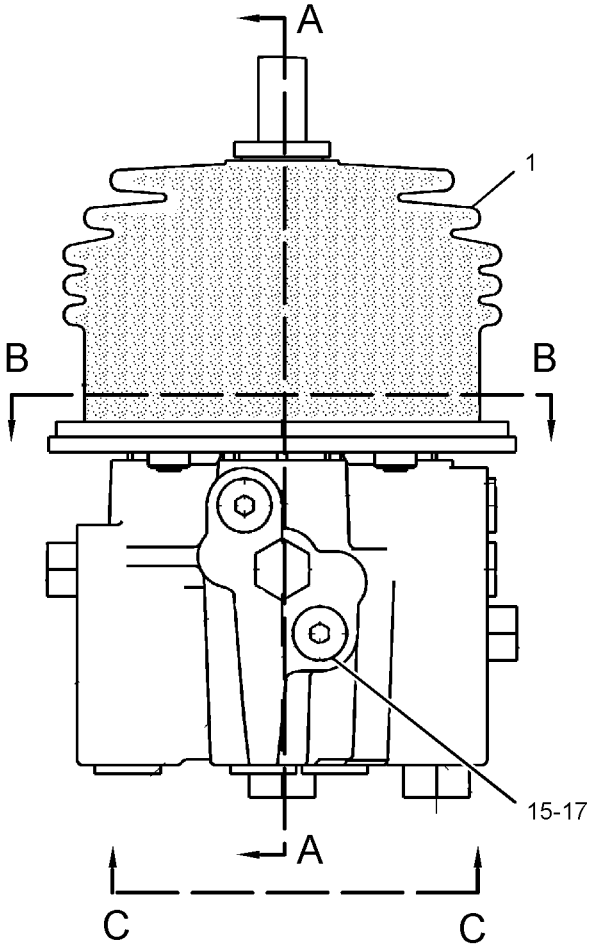

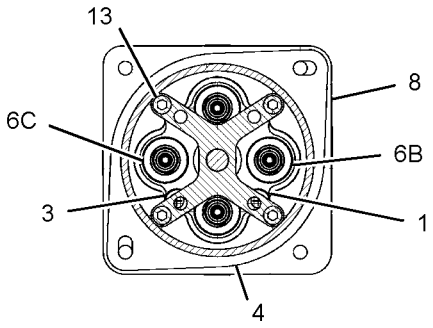

SECTION B-B

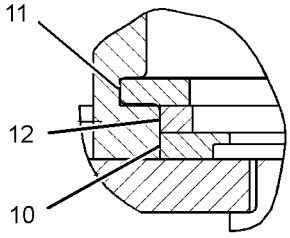

VIEW OF AREA D

GRAPHIC #1 **<END>** g02849113

200-0189 VALVE GP-PILOT—BULLDOZER LIFT, TILT

S/N: DSH1-UP; DLN1-UP; DJR1-UP

PART OF 222-1150 CONTROL GP-PILOT OPERATED HYD

SMCS-5059 **i04011422**

NOTE	REF NO	GRAPHIC REF	PART NUMBER	QTY	PART NAME 1 2 3 4 5 6 (PRODUCT LEVEL)	SEE PAGE
Y	1	1	**194-5033**	2	VALVE GP-PILOT CARTRIDGE (BLADE TILT RIGHT, LEFT)	487
	2	1	**141-4852**	1	BOOT	
	3	1	**145-2334**	1	ADAPTER	
	4	1	**163-5512**	2	GROMMET	
	5	1	**213-6657**	1	PLATE AS	
	6	1	**180-6152**	1	RETAINER	
Y	7	1	**194-5032**	2	VALVE GP-PILOT CARTRIDGE (BULLDOZER LIFT, LOWER)	486
	9	1	**196-5515**	1	LEVER AS	
	9A	1	**146-6315**	3	PIN-ADJUSTMENT	
	9B	1	**199-7834**	1	DETENT AS	
		1	**8S-7499**	2	PIN-SPRING	
	9C	1	**146-6317**	1	RETAINER	
	9D	1	**159-3781**	1	SPRING	
M	9E	1	**5C-2890**	3	NUT (M6X1-THD)	
M	9F	1	**191-8920**	2	BOLT-SOCKET HEAD (M6X1X12-MM)	
	10	1	**206-2800**	1	PLATE-DETENT	
	11	1	**9S-8004**	3	PLUG-O-RING	
B	12	1	**200-5003**	8	SHIM (0.25-MM THK)	
	13	1	**136-9297**	1	PLATE	
	14	1	**136-9298**	1	RETAINER	
	15	1	**137-9755**	1	COIL AS-DETENT (24-VOLT)	
D		1	**6V-2689**		TUBE-HEAT SHRINK (6.35-MM DIA) (0.2-M)	
		1	**186-3735**	2	PIN-CONNECTOR (16-GA TO 18-GA)	
	16	1	**149-5470**	1	PLATE	
M	17	1	**191-8921**	4	BOLT-SOCKET HEAD (M6X1X25-MM)	
	18	1	**102-8802**	1	KIT-RECEPTACLE (2-PIN)	
					(INCLUDES RECEPTACLE AS & WEDGE)	
	22	1	**8L-2786**	1	SEAL-O-RING	
	23	1	**9S-8002**	5	PLUG-O-RING	
	25	1	**3J-1907**	3	SEAL-O-RING	
	26	1	**3J-7354**	5	SEAL-O-RING	

B-USE AS REQUIRED
D-ORDER BY THE METER
M-METRIC PART
Y-SEPARATE ILLUSTRATION

200-0189 VALVE GP-PILOT *(contd.)* **i04011422**

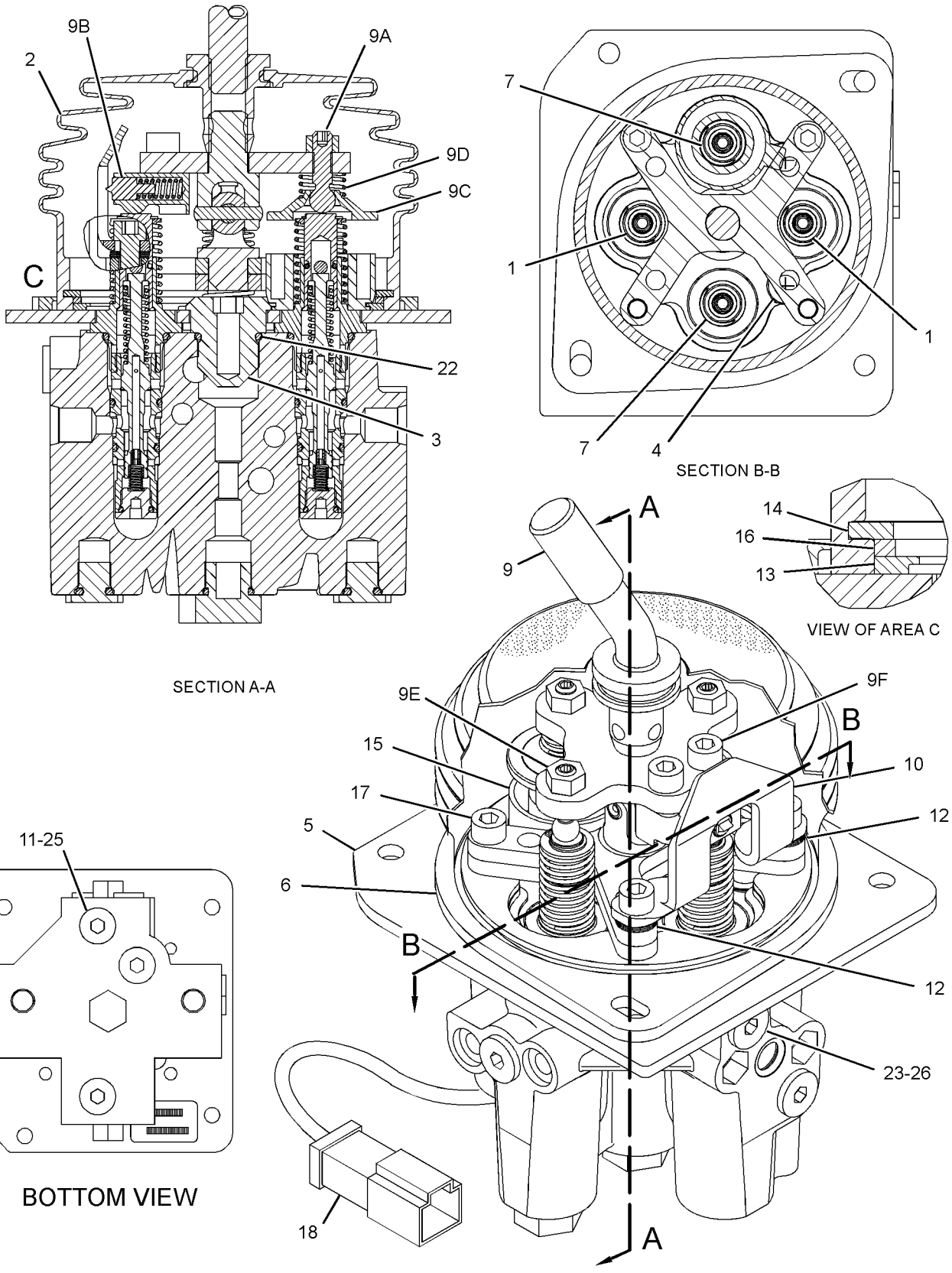

GRAPHIC #1 **<END>** g02199534

HYDRAULIC SYSTEM

322-8631 VALVE GP-PILOT—BULLDOZER

S/N: DSH1-UP; DLN1-UP; DJR1-UP
PART OF 323-9711 CONTROL AR-HYDRAULIC
AN ATTACHMENT

SMCS-5059 **i04021655**

NOTE	REF NO	GRAPHIC REF	PART NUMBER	QTY	PART NAME 1 2 3 4 5 6 (PRODUCT LEVEL)	SEE PAGE
	1	1	**102-8802**	1	KIT-RECEPTACLE (2-PIN)	
	2	1	**102-8801**	1	KIT-RECEPTACLE (12-PIN)	
					(EACH KIT INCLUDES RECEPTACLE AS & WEDGE)	
	3	1	**8T-8737**	5	PLUG-SEAL	
	4	1	**136-9297**	1	PLATE	
	5	1	**136-9298**	1	RETAINER	
	6	1	**137-9755**	1	COIL AS-DETENT (24-VOLT)	
D		1	**6V-2689**		TUBE-HEAT SHRINK (6.35-MM DIA) (0.2-M)	
		1	**8T-8729**	2	PIN-CONNECTOR (16-GA TO 18-GA)	
	7	1	**141-4852**	1	BOOT	
	8	1	**145-2334**	1	ADAPTER	
	9	1	**149-5470**	1	PLATE	
	10	1	**163-5512**	3	GROMMET	
	11	1	**180-6152**	1	RETAINER	
Y	12	1	**194-5032**	2	VALVE GP-PILOT CARTRIDGE (BULLDOZER LIFT, LOWER)	486
Y	13	1	**194-5033**	2	VALVE GP-PILOT CARTRIDGE (BLADE TILT RIGHT, LEFT)	487
B	14	1	**200-5003**	8	SHIM (0.25-MM THK)	
	15	1	**206-2800**	1	PLATE-DETENT	
	16	1	**213-6657**	1	PLATE AS	
	17	1	**227-8348**	1	LEVER AS	
Y	20	1	**322-9655**	1	CONTROL GP-HANDLE (BULLDOZER CONTROL)	547
	21	1	*162-0177*	3	PLUG AS	
					(EACH INCLUDES)	
		1	**9S-8004**	1	PLUG-O-RING	
		1	**3J-1907**	1	SEAL-O-RING	
	22	1	*183-7263*	5	PLUG AS	
					(EACH INCLUDES)	
		1	**9S-8002**	1	PLUG-O-RING	
		1	**3J-7354**	1	SEAL-O-RING	
M	23	1	**191-8921**	4	BOLT-SOCKET HEAD (M6X1X25-MM)	
	26	1	**4B-9808**	2	SETSCREW (1/4-20X0.5-IN)	
	27	1	**8L-2786**	1	SEAL-O-RING	

B-USE AS REQUIRED
D-ORDER BY THE METER
M-METRIC PART
Y-SEPARATE ILLUSTRATION

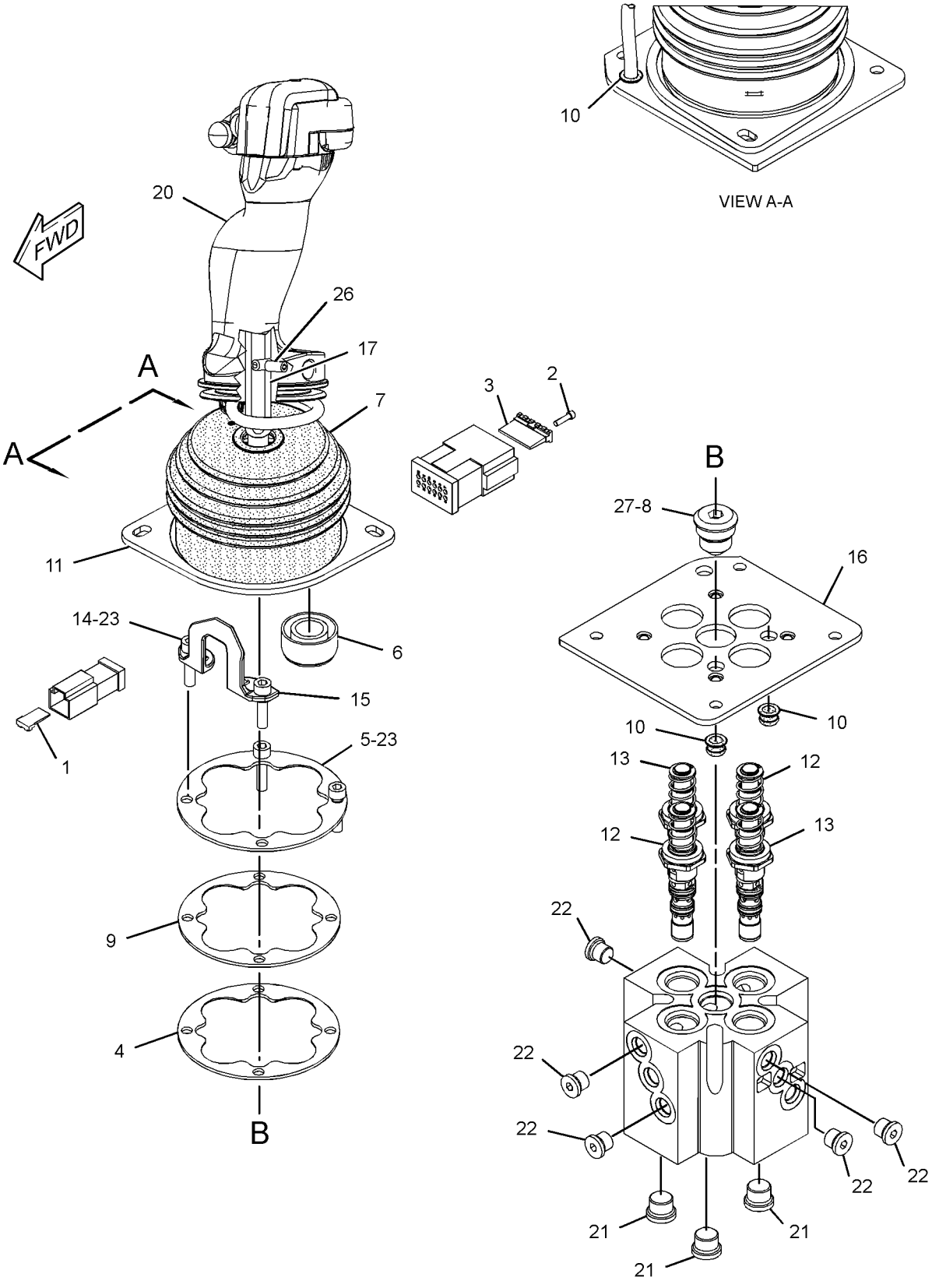

GRAPHIC #1 **<END>** g02203774

194-5032 VALVE GP-PILOT CARTRIDGE–

BULLDOZER LIFT, LOWER

S/N: DSH1-UP; DLN1-UP; DJR1-UP

PART OF 200-0189, 322-8631 VALVE GP-PILOT

ALSO AN ATTACHMENT

SMCS-5059 **i04025962**

NOTE	REF NO	GRAPHIC REF	PART NUMBER	QTY	PART NAME 1 2 3 4 5 6 (PRODUCT LEVEL)	SEE PAGE
	1	1	**3K-0360**	1	SEAL-O-RING	
	2	1	**4K-2039**	1	SEAL-O-RING	
	3	1	**6M-5062**	1	SEAL-O-RING	

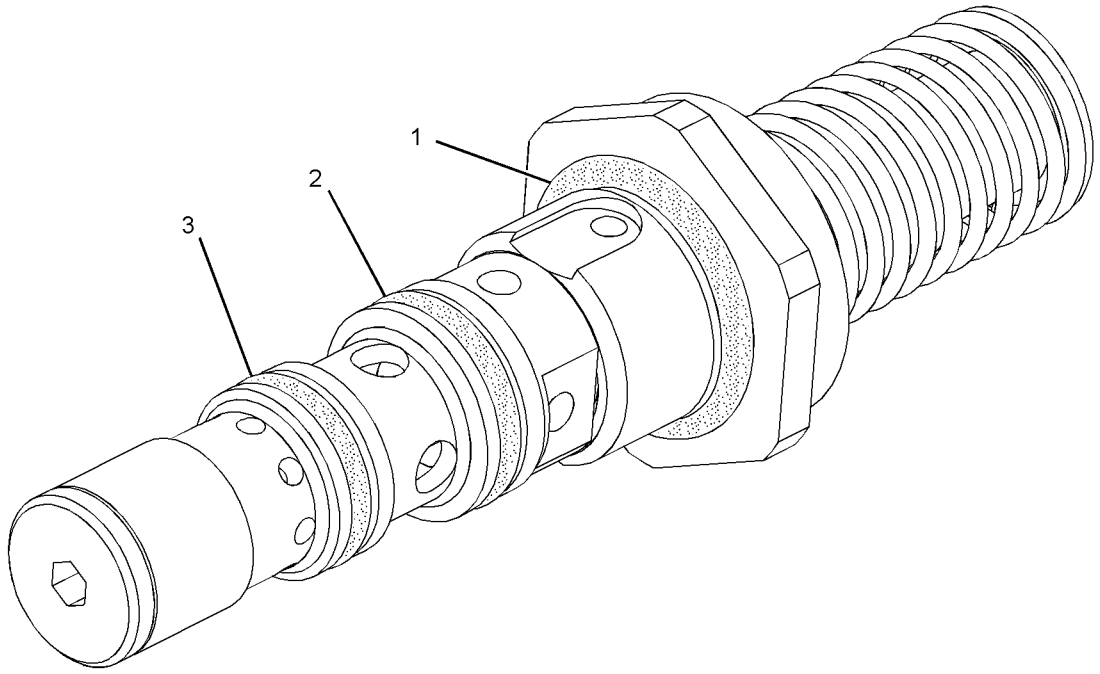

GRAPHIC #1 **<END>** g01218398

194-5033 VALVE GP-PILOT CARTRIDGE–RIPPER–
BLADE TILT RIGHT, LEFT
S/N: DSH1-UP; DLN1-UP; DJR1-UP
PART OF 184-5321, 200-0189, 322-8631 VALVE GP-PILOT
ALSO AN ATTACHMENT

SMCS-5059 **i04025964**

NOTE	REF NO	GRAPHIC REF	PART NUMBER	QTY	PART NAME 1 2 3 4 5 6 (PRODUCT LEVEL)	SEE PAGE
	1	1	**3K-0360**	1	SEAL-O-RING	
	2	1	**4K-2039**	1	SEAL-O-RING	
	3	1	**6M-5062**	1	SEAL-O-RING	

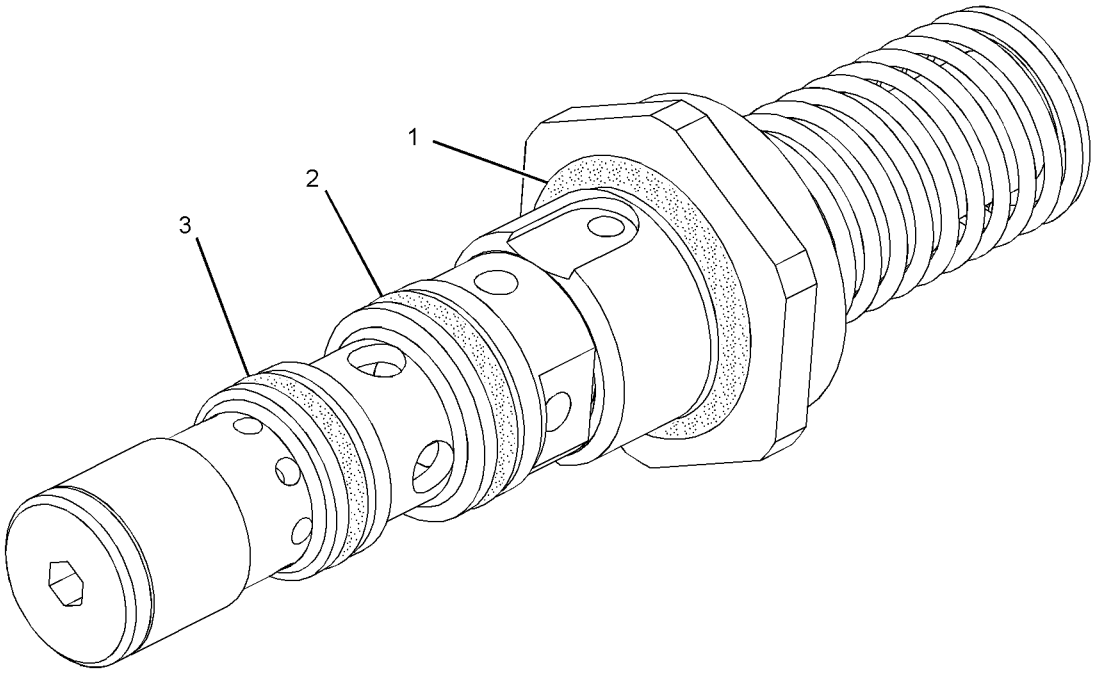

GRAPHIC #1 **<END>** g01218398

170-3357 VALVE GP-PRESSURE REDUCING–
IMPLEMENT PILOT OIL
S/N: DSH1-UP; DLN1-UP; DJR1-UP
PART OF 226-4751 MANIFOLD GP-CONTROL

SMCS-5117 **i04017253**

NOTE	REF NO	GRAPHIC REF	PART NUMBER	QTY	PART NAME 1 2 3 4 5 6 (PRODUCT LEVEL)	SEE PAGE
	1	1	**3K-0360**	1	SEAL-O-RING	
	2	1	**161-6149**	1	SEAL-O-RING	
	3	1	**095-1750**	1	SEAL-O-RING	
	4	1	**161-6161**	2	RING-BACKUP	
	5	1	**187-0541**	2	RING-BACKUP	

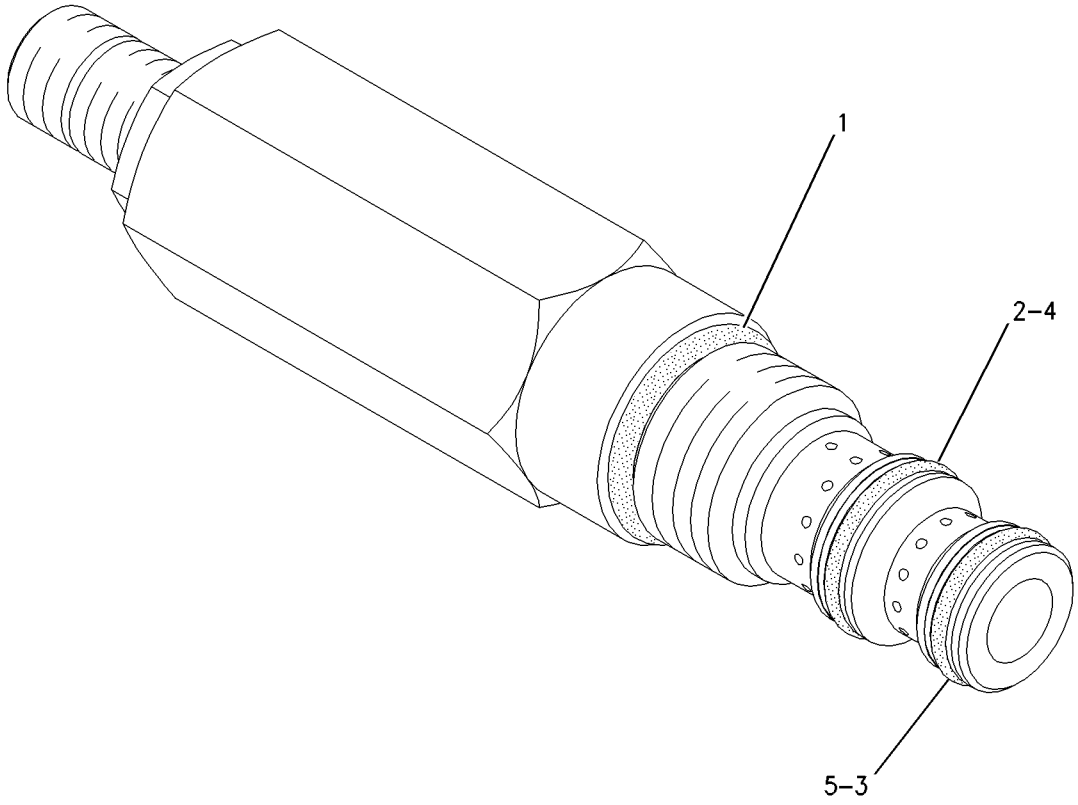

GRAPHIC #1 **<END>** g00777733

227-3021 VALVE GP-PUMP CONTROL–
PRESSURE, FLOW COMPENSATOR–IMPLEMENT, STEERING
S/N: DSH1-UP; DLN1-UP; DJR1-UP
PART OF 299-5790 PUMP GP-PISTON

SMCS-5455 **i03997942**

NOTE	REF NO	GRAPHIC REF	PART NUMBER	QTY	PART NAME 1 2 3 4 5 6 (PRODUCT LEVEL)	SEE PAGE
J	1	1	**227-3023**	1	HOUSING AS	
M	2	1	**096-3218**	1	SETSCREW-SOCKET (M4X0.7X6-MM)	
	3	1	**195-6944**	2	RETAINER	
	4	1	**9T-4186**	1	SPRING-CONTROL	
	5	1	**195-6947**	1	SPRING	
	6	1	**195-6945**	1	RETAINER	
	7	1	**095-1574**	2	SEAL-O-RING	
	8	1	**195-6948**	2	WASHER (10X13X1-MM THK)	
	9	1	**195-6949**	2	ADJUSTER	
	10	1	**6V-6580**	1	SEAL-O-RING	
	11	1	**8T-9529**	1	SEAL-O-RING	
	12	1	**099-8111**	2	PIN-SPRING	
	13	1	**195-6950**	1	COVER	
IM	14	1	**6C-9048**	2	NUT (M8X1-THD)	
M	15	1	**3T-0849**	4	BOLT-SOCKET HEAD (M6X1X25-MM)	
	16	1	**9T-4143**	1	PISTON-PRESS REGULATOR	
	17	1	**9T-6322**	2	PLUG AS	
					(EACH INCLUDES)	
		1	**8C-3082**	1	SEAL-O-RING	
	18	1	**9S-4191**	2	PLUG-O-RING	
	19	1	**3J-1907**	2	SEAL-O-RING	
	20	1	**8U-3875**	3	PLUG	
	21	1	**3E-4297**	3	SEAL-O-RING	
	22	1	**9T-5039**	1	PLUG	

I-REFER TO HYDRAULIC INFORMATION SYSTEM
J-PARTS MARKED J IN GRAPHIC INCLUDED IN HOUSING AS
M-METRIC PART

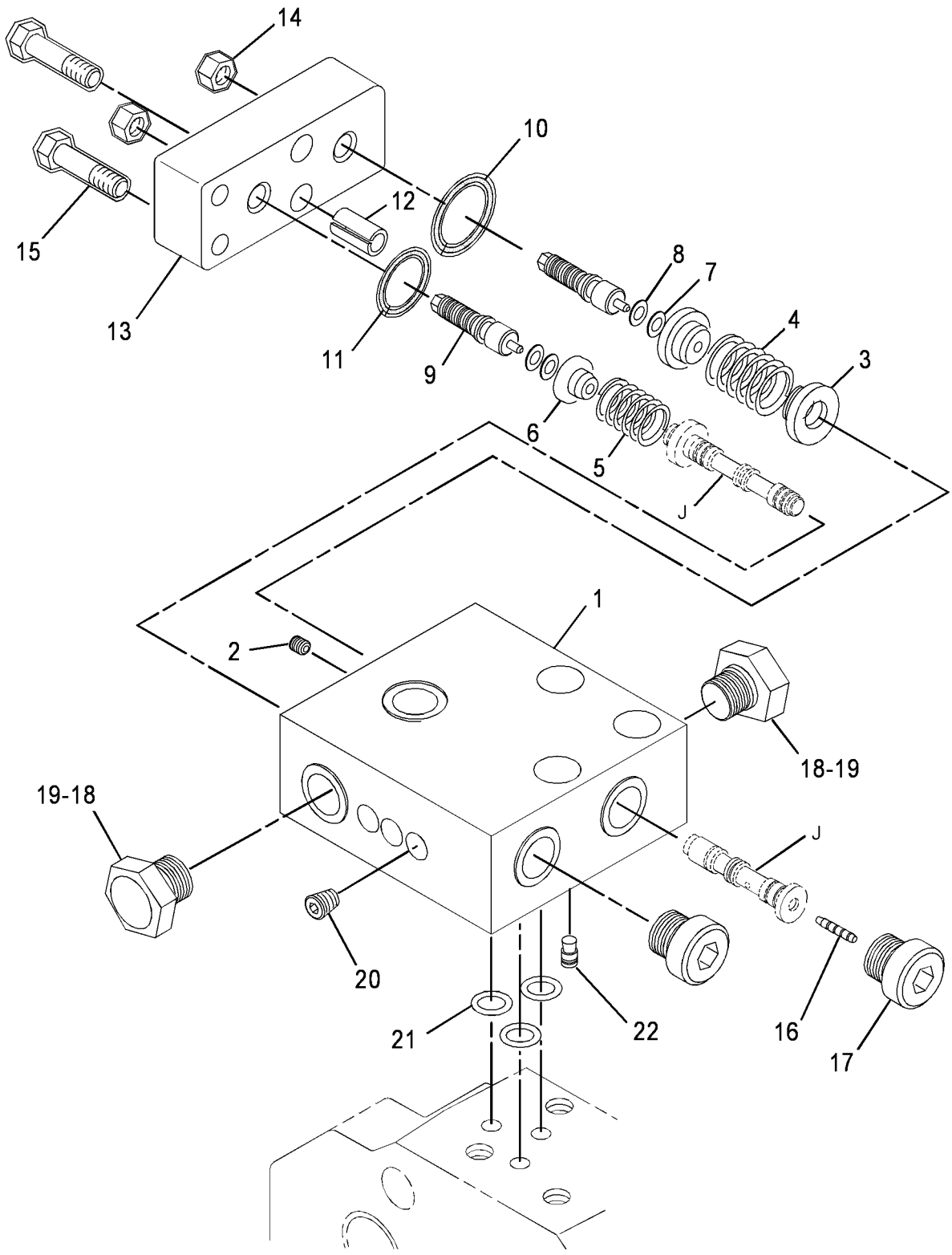

GRAPHIC #1 **<END>** g02088502

222-1151 VALVE GP-QUICK-DROP

S/N: DSH1-UP; DLN1-UP; DJR1-UP
PART OF 313-3756 HYDRAULIC AR

SMCS-5110 **i04715389**

NOTE	REF NO	GRAPHIC REF	PART NUMBER	QTY	PART NAME 1 2 3 4 5 6 (PRODUCT LEVEL)	SEE PAGE
	1	1	**8E-8434**	1	GUARD	
Y	2	1	**228-2576**	1	VALVE GP-QUICK-DROP	492
	3	1	**4L-9337**	3	BOLT (3/8-16X1.5-IN)	
	4	1	**5P-1075**	6	WASHER-HARD (10.2X22.5X3-MM THK)	
M	5	1	**8T-4191**	3	BOLT (M10X1.5X16-MM)	

M-METRIC PART
Y-SEPARATE ILLUSTRATION

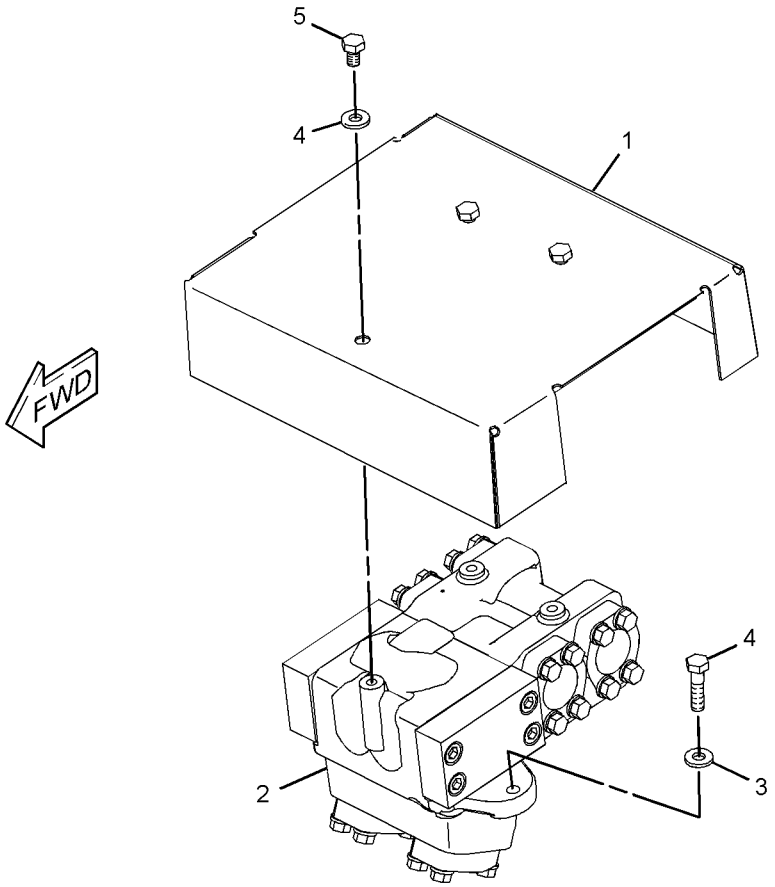

(MOUNTS TO TOP OF RADIATOR GUARD)

GRAPHIC #1 **<END>** g01289545

HYDRAULIC SYSTEM

228-2576 VALVE GP-QUICK-DROP

S/N: DSH1-UP; DLN1-UP; DJR1-UP
PART OF 222-1151 VALVE GP-QUICK-DROP

SMCS-5110 **i04715089**

NOTE	REF NO	GRAPHIC REF	PART NUMBER	QTY	PART NAME 1 2 3 4 5 6 (PRODUCT LEVEL)	SEE PAGE
	1	1	*3J-3679*	2	PLUG AS	
					(EACH INCLUDES)	
		1	**9S-8003**	1	PLUG	
		1	**1J-9671**	1	SEAL-O-RING	
B	3	1	**4T-4659**	2	SHIM (0.8-MM THK)	
	4	1	**6E-4907**	1	STOP	
	5	1	**9T-9836**	1	SLEEVE-ORIFICE	
	6	1	**4S-1962**	1	CLIP	
	7	1	**100-6211**	1	PISTON	
	8	1	**108-1847**	1	SPRING	
M	9	1	**8T-4196**	24	BOLT (M10X1.5X35-MM)	
	10	1	**234-3043**	1	COVER	
	11	1	**8T-4121**	24	WASHER-HARD (11X21X2.5-MM THK)	
	12	1	**234-3451**	1	COVER	
	13	1	**8C-3206**	12	FLANGE-HALF	
	14	1	*164-5619*	1	PLUG AS	
		1	**9S-8006**	1	PLUG-O-RING	
		1	**2M-9780**	1	SEAL-O-RING	
	15	1	**1P-3706**	2	SEAL-RECTANGULAR	
	16	1	**3L-3813**	1	PIN	
B	17	1	**4M-6980**	4	SHIM (0.25-MM THK)	
	18	1	**6K-8162**	1	RING-RETAINING	
M	19	1	**6V-8200**	8	BOLT-SOCKET HEAD (M12X1.75X35-MM)	

B-USE AS REQUIRED
M-METRIC PART

228-2576 **VALVE GP-QUICK-DROP** *(contd.)* **i04715089**

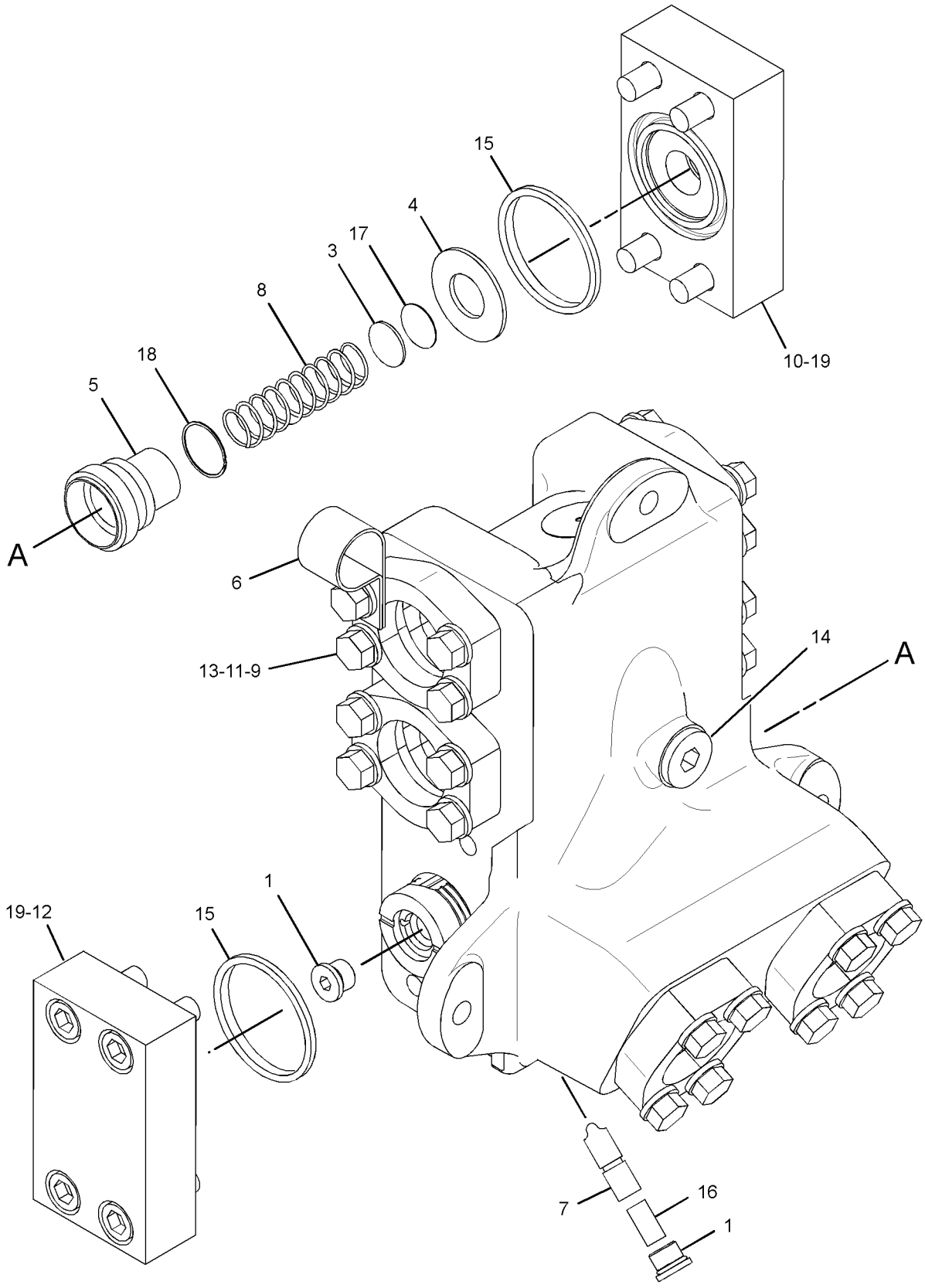

GRAPHIC #1 **<END>** g02842816

HYDRAULIC SYSTEM

9T-3541 VALVE GP-RELIEF–MAIN

S/N: DSH1-UP; DLN1-UP; DJR1-UP
PART OF 235-0401 MANIFOLD GP-VALVE
ALSO AN ATTACHMENT

SMCS-5069, 5117 **i03984230**

NOTE	REF NO	GRAPHIC REF	PART NUMBER	QTY	PART NAME 1 2 3 4 5 6 (PRODUCT LEVEL)	SEE PAGE
	1	1	**3K-0360**	2	SEAL-O-RING	
	2	1	**4T-4942**	1	SPRING	
	3	1	**7J-9933**	1	SEAL-O-RING	
	4	1	**4T-7571**	1	PLATE	
	5	1	**6J-6439**	1	VALVE-POPPET	
	6	1	**6E-1835**	1	RETAINER AS	
	7	1	**9X-6395**	1	NUT (3/4-16-THD)	

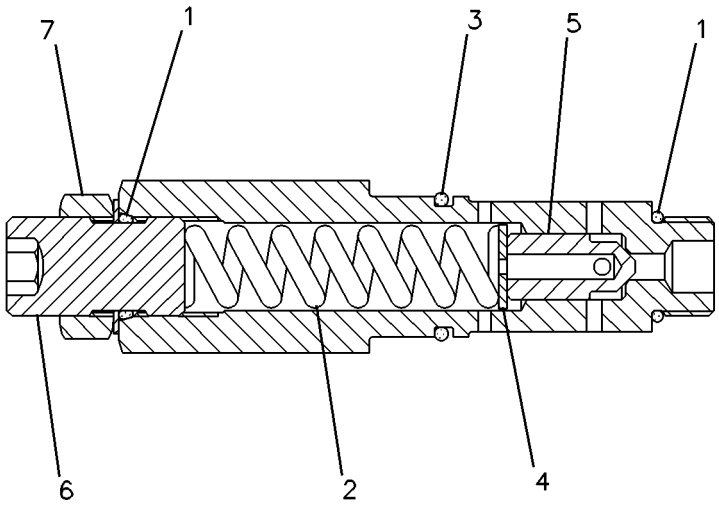

GRAPHIC #1 **<END>** g00082770

9T-5364 VALVE GP-RELIEF–CROSSOVER

S/N: DSH1-UP; DLN1-UP; DJR1-UP

PART OF 227-0832 VALVE GP-COUNTERBALANCE

SMCS-5069, 5117 **i04022092**

NOTE	REF NO	GRAPHIC REF	PART NUMBER	QTY	PART NAME 1 2 3 4 5 6 (PRODUCT LEVEL)	SEE PAGE
	1	1	**4J-5351**	1	SEAL-O-RING	
	2	1	**6V-5326**	1	SEAL-O-RING	
M	3	1	**9T-6521**	1	NUT	
	4	1	**9T-6522**	1	CAP	
M	5	1	**9T-6523**	1	SCREW	
	6	1	**9T-6827**	1	RING	
	7	1	**9T-6828**	1	RING	
	8	1	**6V-3922**	1	SEAL-O-RING	
	9	1	**6V-5758**	2	SEAL-O-RING	

M-METRIC PART

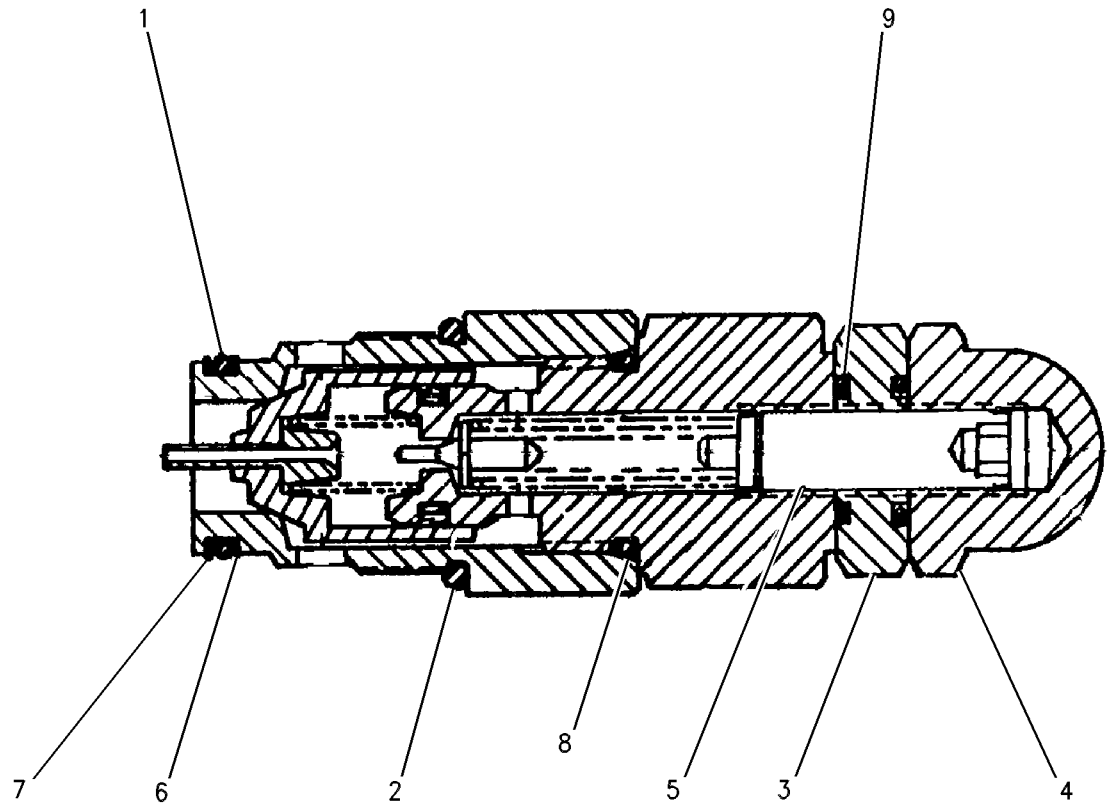

GRAPHIC #1 **<END>** g00595662

121-6647 VALVE GP-RELIEF–PILOT OIL PRESSURE

S/N: DSH1-UP; DLN1-UP; DJR1-UP
PART OF 271-4968, 308-6726 VALVE GP-CONTROL
ALSO AN ATTACHMENT

SMCS-5069, 5117 **i04717189**

NOTE	REF NO	GRAPHIC REF	PART NUMBER	QTY	PART NAME 1 2 3 4 5 6 (PRODUCT LEVEL)	SEE PAGE
B	1	1	**096-6166**	3	WASHER-HARD (4.5X9X1-MM THK)	
	2	1	**4T-5074**	1	RING-BACKUP	
	3	1	**6V-5556**	1	SEAL-O-RING	
	4	1	**4T-4509**	1	SEAT	
	5	1	**108-5157**	1	VALVE	
	6	1	**125-1393**	1	SPRING	
	7	1	**3K-0360**	1	SEAL-O-RING	
	8	1	**9X-6395**	1	NUT (3/4-16-THD)	
	9	1	**6E-5200**	1	RETAINER AS	
	10	1	**3J-7354**	1	SEAL-O-RING	

B-USE AS REQUIRED

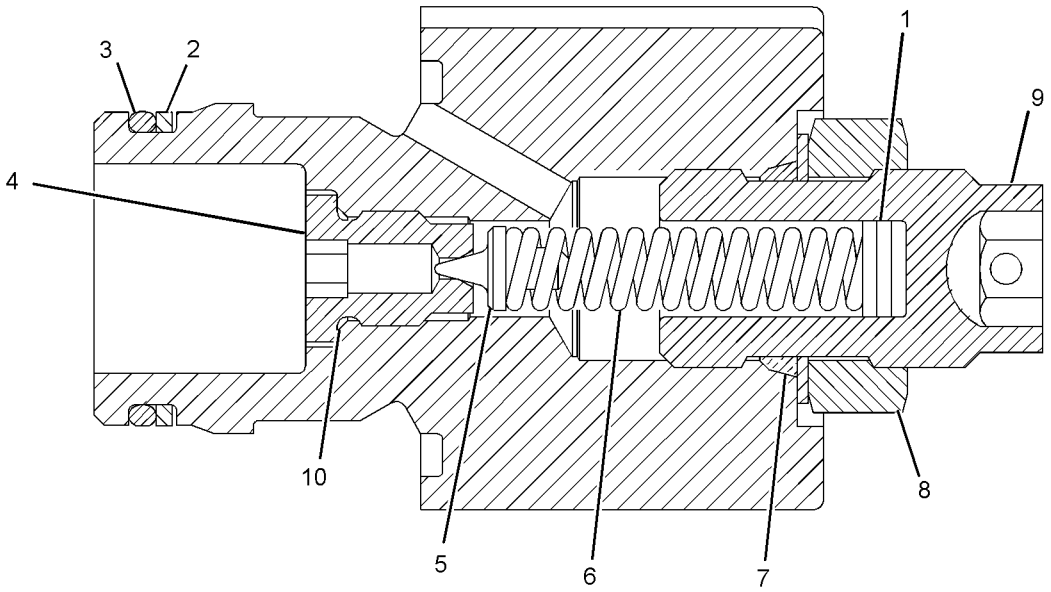

GRAPHIC #1 **<END>** g02832619

121-6650 VALVE GP-RELIEF–PILOT OIL PRESSURE

S/N: DSH1-UP; DLN1-UP; DJR1-UP
PART OF 271-4969 VALVE GP-CONTROL
ALSO AN ATTACHMENT

SMCS-5069, 5117 **i04717229**

NOTE	REF NO	GRAPHIC REF	PART NUMBER	QTY	PART NAME 1 2 3 4 5 6 (PRODUCT LEVEL)	SEE PAGE
	1	1	**3J-7354**	1	SEAL-O-RING	
	2	1	**4T-5074**	1	RING-BACKUP	
	3	1	**6V-5556**	1	SEAL-O-RING	
	4	1	**4T-4509**	1	SEAT	
	5	1	**108-5157**	1	VALVE	
	6	1	**4T-1700**	1	SPRING	
	7	1	**3K-0360**	1	SEAL-O-RING	
	8	1	**9X-6395**	1	NUT (3/4-16-THD)	
	9	1	**6E-5200**	1	RETAINER AS	

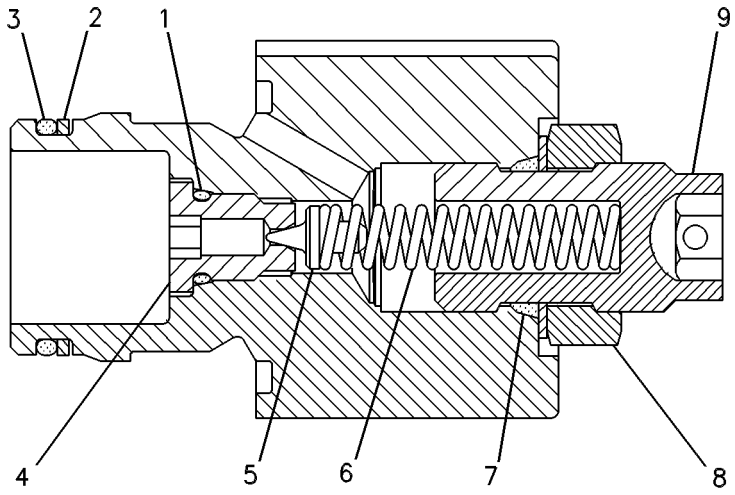

GRAPHIC #1 **<END>** g00255316

225-8026 VALVE GP-RELIEF–IMPLEMENT PILOT OIL

S/N: DSH1-UP; DLN1-UP; DJR1-UP

PART OF 226-4751 MANIFOLD GP-CONTROL

SMCS-5069, 5117 **i04017273**

NOTE	REF NO	GRAPHIC REF	PART NUMBER	QTY	PART NAME 1 2 3 4 5 6 (PRODUCT LEVEL)	SEE PAGE
J	1	1	**161-6149**	1	SEAL-O-RING	
J	2	1	**161-6161**	2	RING-BACKUP	
J	3	1	**2M-9780**	1	SEAL-O-RING	
					AVAILABLE REPAIR KIT(S):	
J			**133-5545**	1	KIT-SEAL (RELIEF VALVE)	
J-KIT MARKED J SERVICES PART(S) MARKED J						

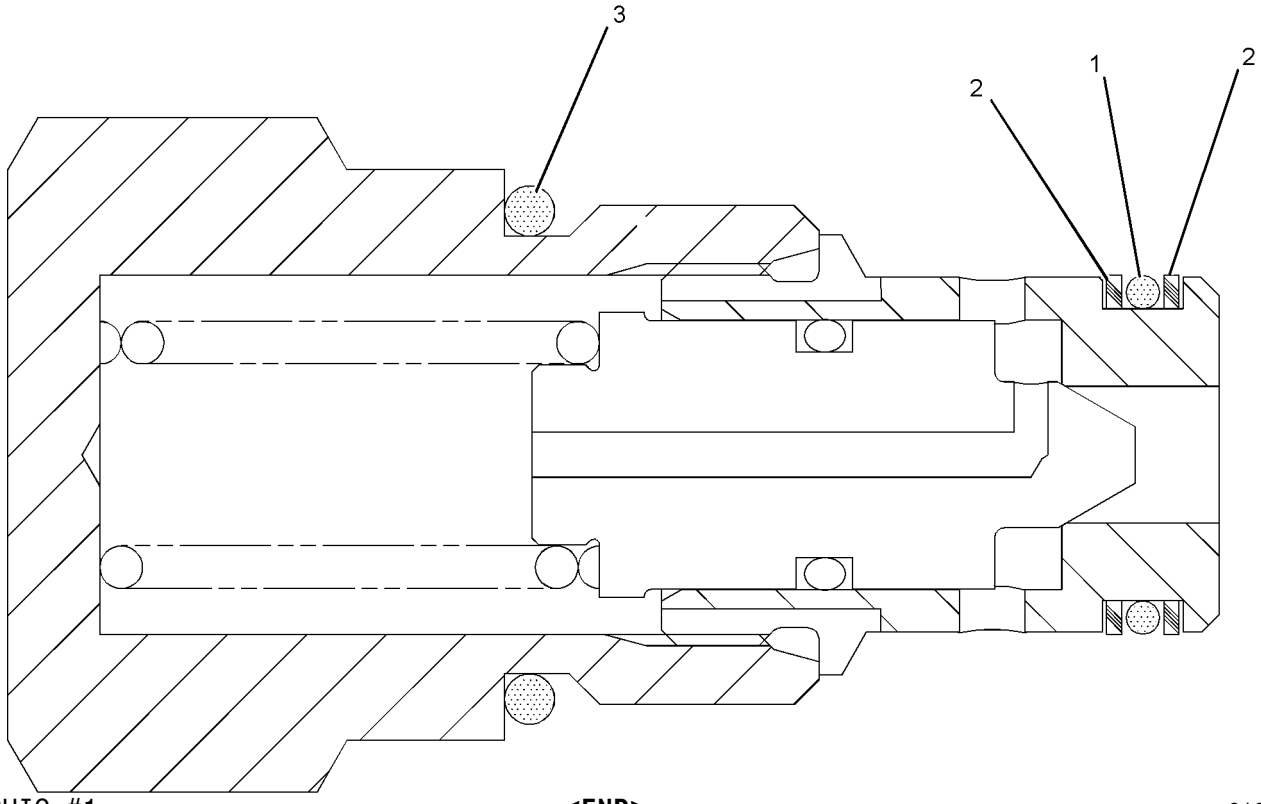

GRAPHIC #1 **<END>** g01019745

4T-1860 VALVE GP-SHUTTLE

S/N: DSH1-UP; DLN1-UP; DJR1-UP
PART OF 271-4967, 271-4968, 271-4969, 308-6726 VALVE GP-CONTROL
ALSO AN ATTACHMENT

SMCS-5079 **i03983115**

NOTE	REF NO	GRAPHIC REF	PART NUMBER	QTY	PART NAME 1 2 3 4 5 6 (PRODUCT LEVEL)	SEE PAGE
	1	1	**4T-0925**	1	SEAT	
	2	1	**1M-6718**	1	BALL	
	3	1	**4T-0928**	1	VALVE	
	4	1	**6V-5324**	1	SEAL-O-RING	
	5	1	**147-6603**	1	SEAL-O-RING	
	6	1	**3J-1907**	1	SEAL-O-RING	
	7	1	**147-6604**	2	RING-BACKUP	
	8	1	**147-6605**	2	RING-BACKUP	

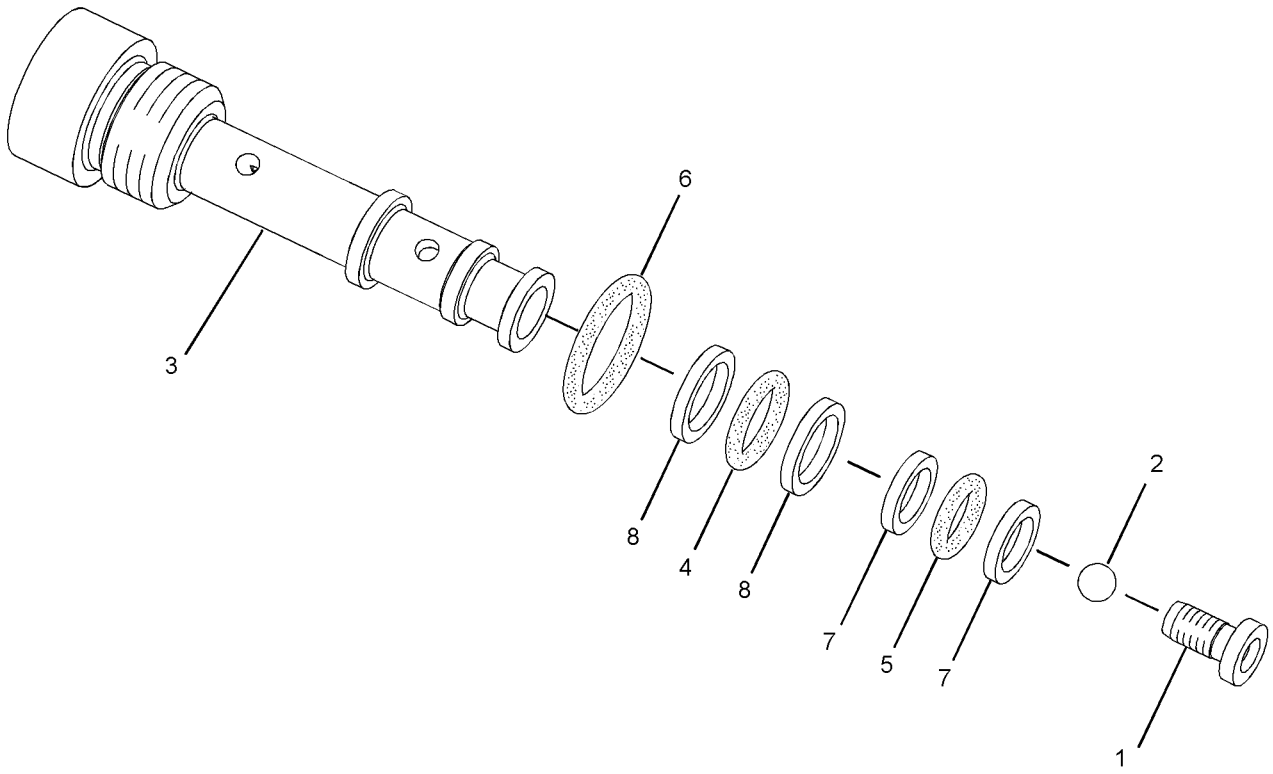

GRAPHIC #1 **<END>** g01941793

HYDRAULIC SYSTEM

201-0950 VALVE GP-SOLENOID

S/N: DSH1-UP; DLN1-UP; DJR1-UP
24-VOLT
PART OF 226-4751 MANIFOLD GP-CONTROL, 234-5126 VALVE & MTG GP-BULLDOZER
ALSO AN ATTACHMENT

SMCS-5479 **i03997205**

NOTE	REF NO	GRAPHIC REF	PART NUMBER	QTY	PART NAME 1 2 3 4 5 6 (PRODUCT LEVEL)	SEE PAGE
	1	1	**122-1133**	1	COIL AS (24-VOLT)	
		1	**1S-9593**	2	STRAP-CABLE	
		1	**186-3735**	2	PIN-CONNECTOR (16-GA TO 18-GA)	
		1	**102-8802**	1	KIT-RECEPTACLE (2-PIN)	
					(INCLUDES RECEPTACLE AS & WEDGE)	
	2	1	**156-5970**	1	NUT (1/2-20-THD)	
	3	1	**171-8772**	1	VALVE AS-SOLENOID	
		1	**156-5970**	1	NUT (1/2-20-THD)	
					AVAILABLE REPAIR KIT(S):	
			195-7430		KIT-SEAL (SOLENOID VALVE)	
					(INCLUDES O-RING SEALS & BACKUP RINGS)	

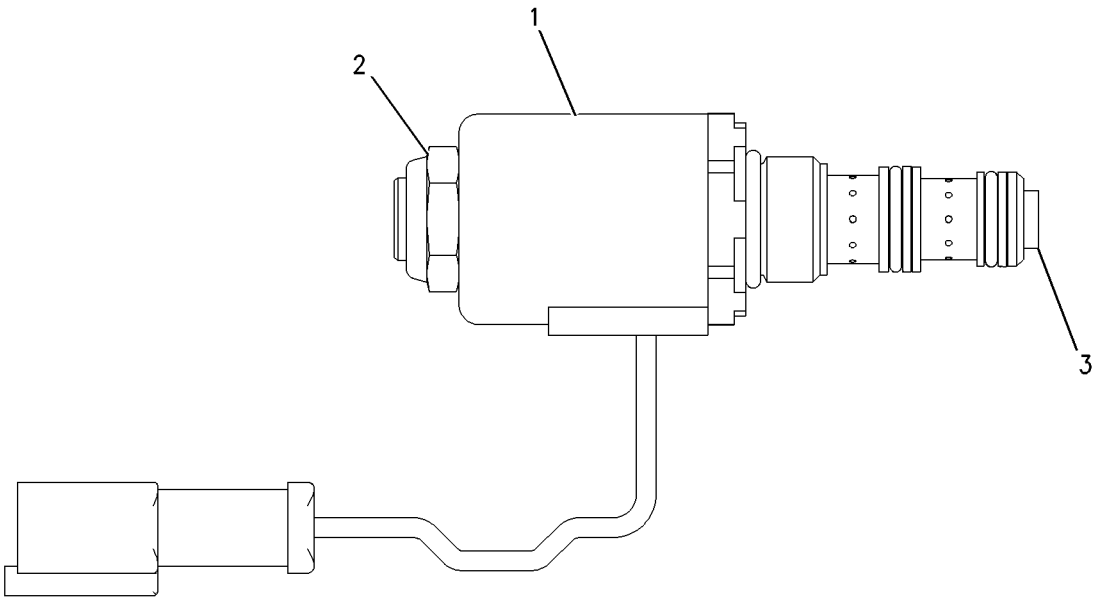

GRAPHIC #1 **<END>** g00888488

235-4605 VALVE GP-SOLENOID

S/N: DSH1-UP; DLN1-UP; DJR1-UP
24-VOLT
PART OF 234-5126 VALVE & MTG GP-BULLDOZER
FIELD REPLACEMENT ORDER 341-9214—PAGE 502
AN ATTACHMENT

SMCS-5479 **i04021639**

NOTE	REF NO	GRAPHIC REF	PART NUMBER	QTY	PART NAME 1 2 3 4 5 6 (PRODUCT LEVEL)	SEE PAGE
	1	1	**312-8629**	1	COIL AS	
	2	1	**033-6043**	1	SEAL-O-RING	
	3	1	**6V-4589**	1	SEAL-O-RING	
	4	1	**8L-2746**	1	SEAL-O-RING	
	5	1	**146-3728**	1	WASHER-SPRING	

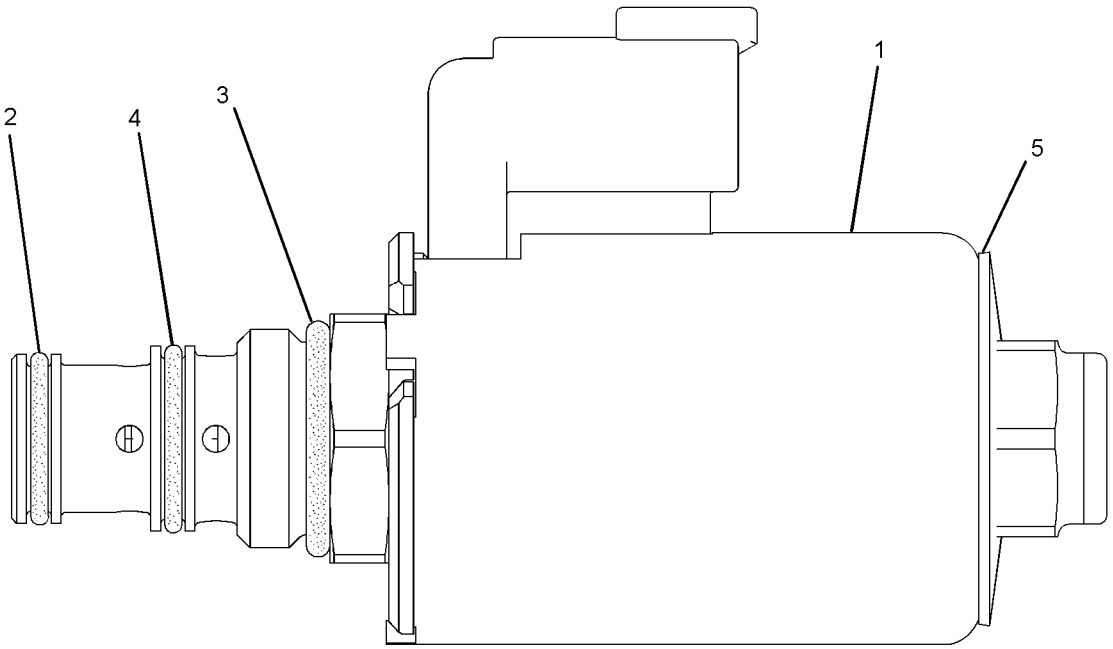

GRAPHIC #1 **<END>** g01819235

341-9214 VALVE GP-SOLENOID

S/N: DSH1-UP; DLN1-UP; DJR1-UP
24-VOLT
FIELD REPLACEMENT FOR 235-4605—PAGE 501

SMCS-5479 **i04021646**

NOTE	REF NO	GRAPHIC REF	PART NUMBER	QTY	PART NAME 1 2 3 4 5 6 (PRODUCT LEVEL)	SEE PAGE
	1	1	**312-8629**	1	COIL AS	
	2	1	**033-6043**	1	SEAL-O-RING	
	3	1	**6V-4589**	1	SEAL-O-RING	
	4	1	**8L-2746**	1	SEAL-O-RING	
	5	1	**191-9247**	1	WASHER (19.15X31.65X2.36-MM THK)	
	6	1	**198-2914**	1	NUT (3/4-32-THD)	

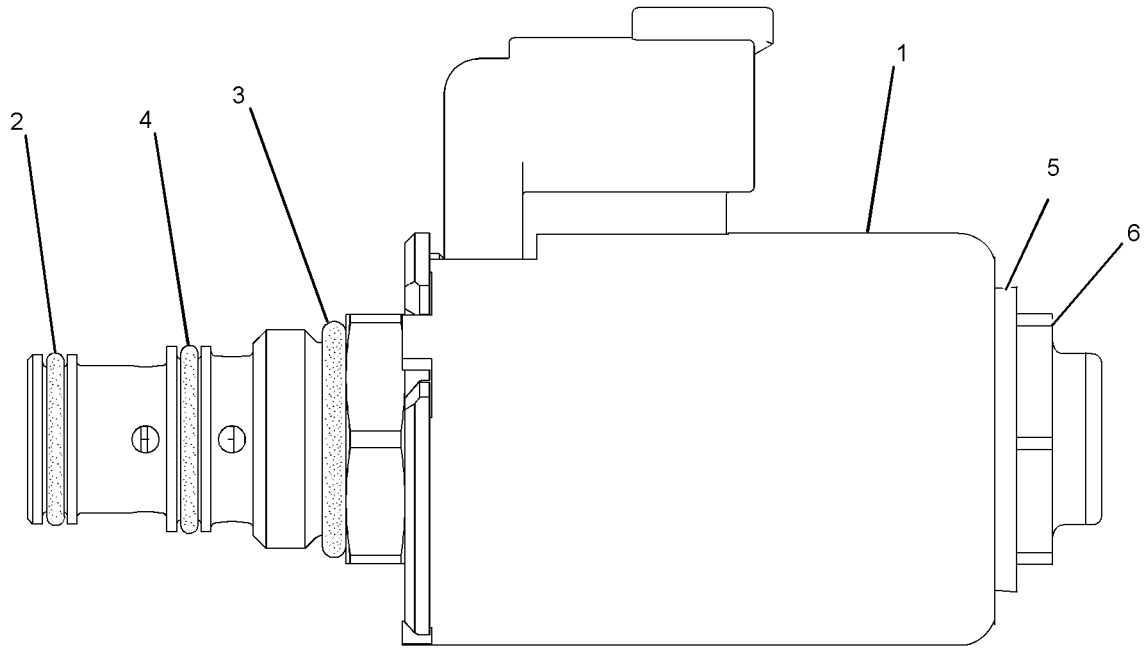

GRAPHIC #1 **<END>** g02198993

IMPLEMENTS

365-5514 BULLDOZER AR-SEMI-UNIVERSAL

S/N: DSH1-UP; DJR1-UP

AN ATTACHMENT

SMCS-6050, 6078 **i04774745**

NOTE	REF NO	GRAPHIC REF	PART NUMBER	QTY	PART NAME 1 2 3 4 5 6 (PRODUCT LEVEL)	SEE PAGE
	1	1	**1U-0872**	2	PIN	
	2	1	*4Y-8450*	1	GUARD GP-CYLINDER	
		1	**4Y-8435**	1	GUARD	
		1	**5P-2228**	4	BOLT (1/2-13X1-IN)	
		1	**8T-4223**	4	WASHER-HARD (13.5X25.5X3-MM THK)	
	3	1	**6J-5342**	2	RETAINER	
	4	1	**8E-6754**	2	CONNECTOR AS	
					(EACH INCLUDES)	
	4A	1	**8E-6755**	2	BUSHING	
	4B	1	**8E-6756**	2	BUSHING	
	5	1	*251-9346*	1	TRUNNION GP-BULLDOZER	
		1	**7X-0349**	32	BOLT (5/8-11X3-IN)	
		1	**8T-4122**	32	WASHER-HARD (17X32X3.5-MM THK)	
	5A	1	**250-1984**	2	TRUNNION	
Y	6	1	*386-0187*	1	PUSH ARM GP-STABILIZER	511
Y	7	1	*386-6977*	1	LINES GP-TILT CYLINDER	448
	8	1	**7X-0365**	4	BOLT (3/4-10X1.5-IN)	
F			**8T-7371**	1	PLATE-SERIAL NUMBER (BLADE)	
					(ON BACK OF MOLDBOARD AT RIGHT END NEAR TOP)	
F			**4B-4158**	2	SCREW-DRIVE (NO 4X0.25-IN)	

F-NOT SHOWN
Y-SEPARATE ILLUSTRATION

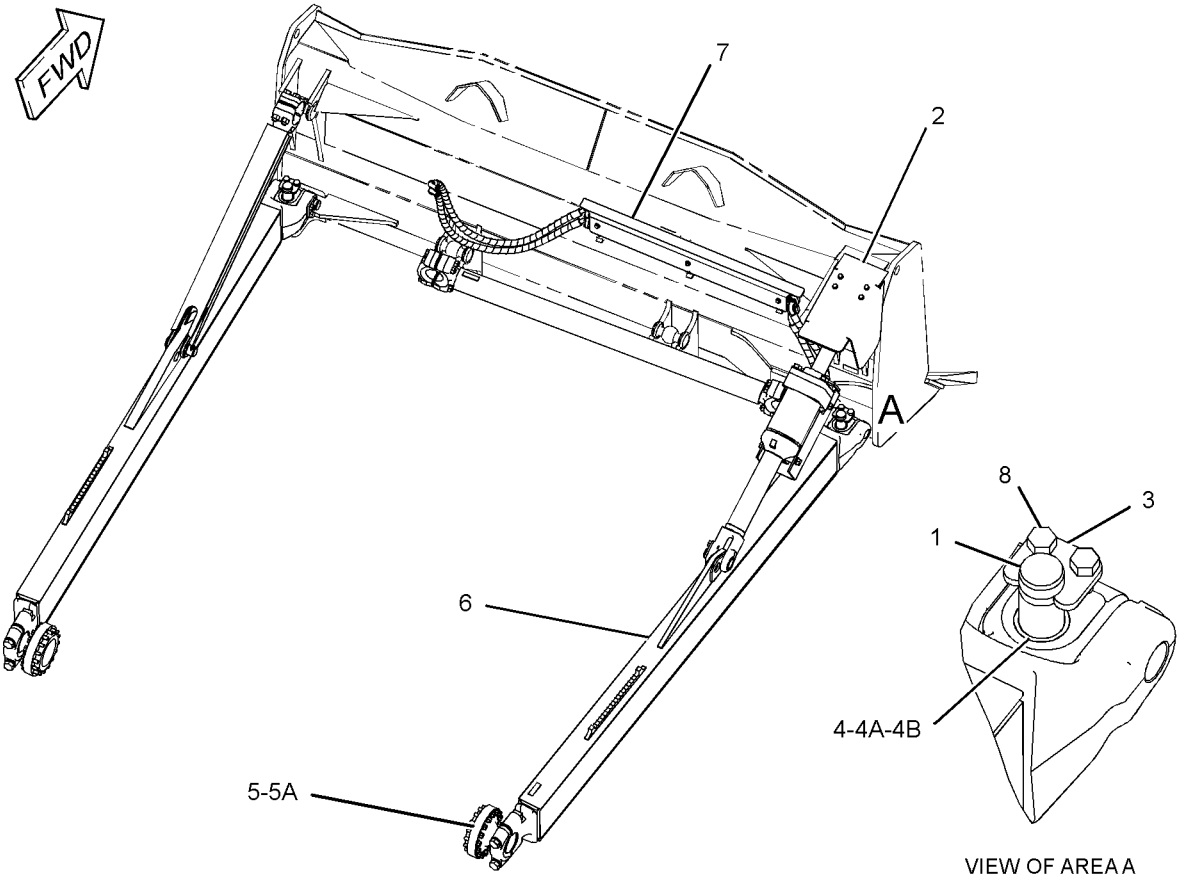

GRAPHIC #1 **<END>** g02839998

IMPLEMENTS

365-5517 BULLDOZER AR-STRAIGHT

S/N: DLN1-UP

AN ATTACHMENT

SMCS-6050, 6051 **i04774748**

NOTE	REF NO	GRAPHIC REF	PART NUMBER	QTY	PART NAME 1 2 3 4 5 6 (PRODUCT LEVEL)	SEE PAGE
	1	1	**1U-0872**	2	PIN	
	2	1	*4Y-8450*	1	GUARD GP-CYLINDER	
		1	**4Y-8435**	1	GUARD	
		1	**5P-2228**	4	BOLT (1/2-13X1-IN)	
		1	**8T-4223**	4	WASHER-HARD (13.5X25.5X3-MM THK)	
	3	1	**6J-5342**	2	RETAINER	
	4	1	**8E-6754**	2	CONNECTOR AS	
					(EACH INCLUDES)	
	4A	1	**8E-6755**	2	BUSHING	
	4B	1	**8E-6756**	2	BUSHING	
	5	1	*251-9346*	1	TRUNNION GP-BULLDOZER	
		1	**7X-0349**	32	BOLT (5/8-11X3-IN)	
		1	**8T-4122**	32	WASHER-HARD (17X32X3.5-MM THK)	
	5A	1	**250-1984**	2	TRUNNION	
Y	6	1	*386-0221*	1	PUSH ARM GP-STABILIZER	512
Y	7	1	*387-8195*	1	LINES GP-TILT CYLINDER	450
	8	1	**7X-0365**	4	BOLT (3/4-10X1.5-IN)	
F			**8T-7371**	1	PLATE-SERIAL NUMBER (BLADE)	
					(ON BACK OF MOLDBOARD - NEAR TOP AT RIGHT END)	
F			**4B-4158**	2	SCREW-DRIVE (NO 4X0.25-IN)	

F-NOT SHOWN
Y-SEPARATE ILLUSTRATION

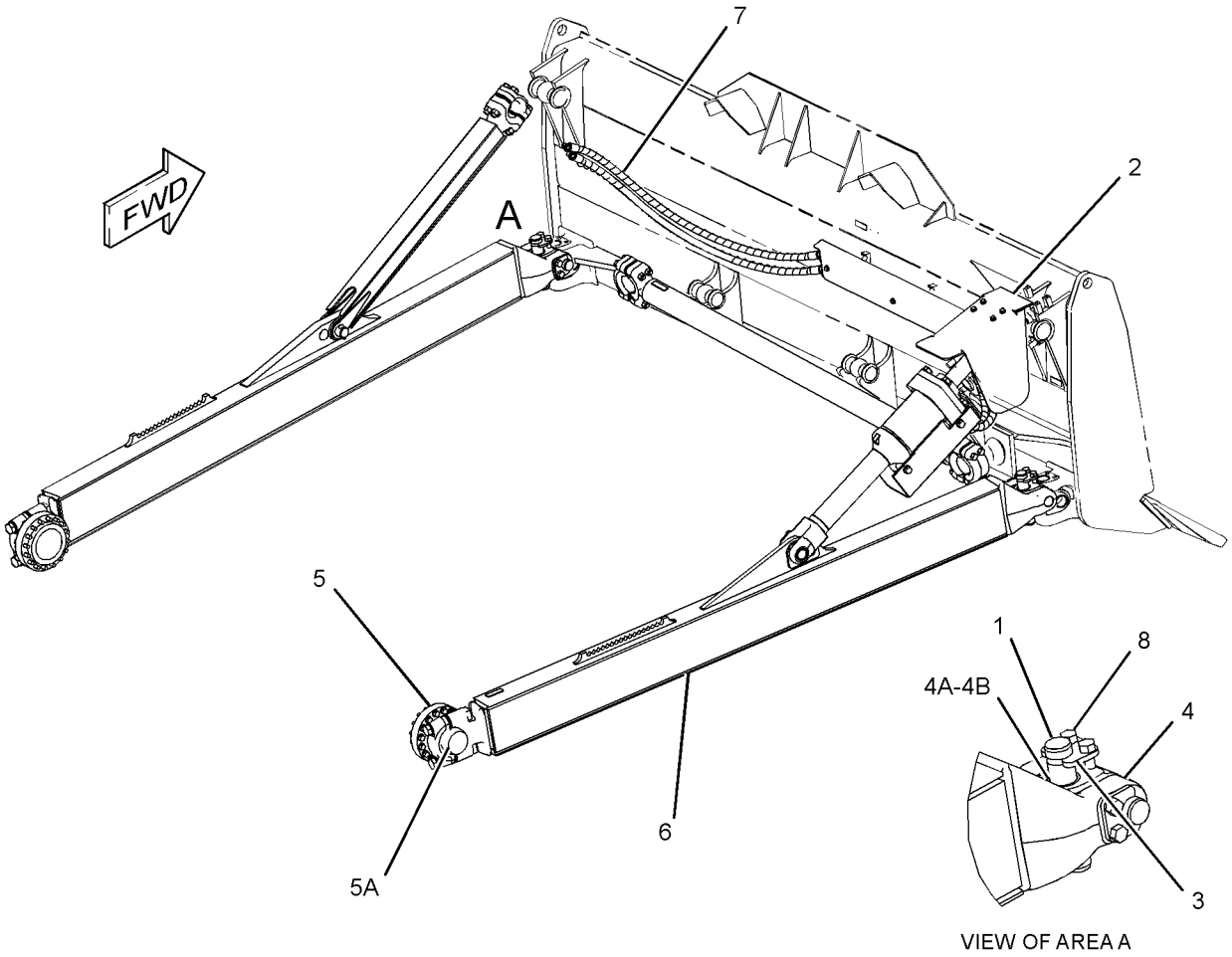

VIEW OF AREA A

GRAPHIC #1 **<END>** g02846218

386-0210 LINK GP-STABILIZER

S/N: DSH1-UP; DJR1-UP
PART OF 386-0187 PUSH ARM GP-STABILIZER
AN ATTACHMENT

SMCS-6071, 7203 **i04729222**

NOTE	REF NO	GRAPHIC REF	PART NUMBER	QTY	PART NAME 1 2 3 4 5 6 (PRODUCT LEVEL)	SEE PAGE
B	1	1	**9T-0065**	52	SHIM (0.8-MM THK)	
	2	1	**160-6304**	2	CAP-BEARING	
	3	1	**386-0211**	1	LINK AS	
		1	**5P-8112**	2	GROMMET	
		1	**8P-9770**	1	PLATE	
	3A	1	**9T-0064**	2	BEARING	
B		1	**9T-0065**	28	SHIM (0.8-MM THK)	
	4	1	**6V-8182**	8	NUT (3/4-10-THD)	
	5	1	**7X-0377**	8	BOLT (3/4-10X6.5-IN)	

B-USE AS REQUIRED

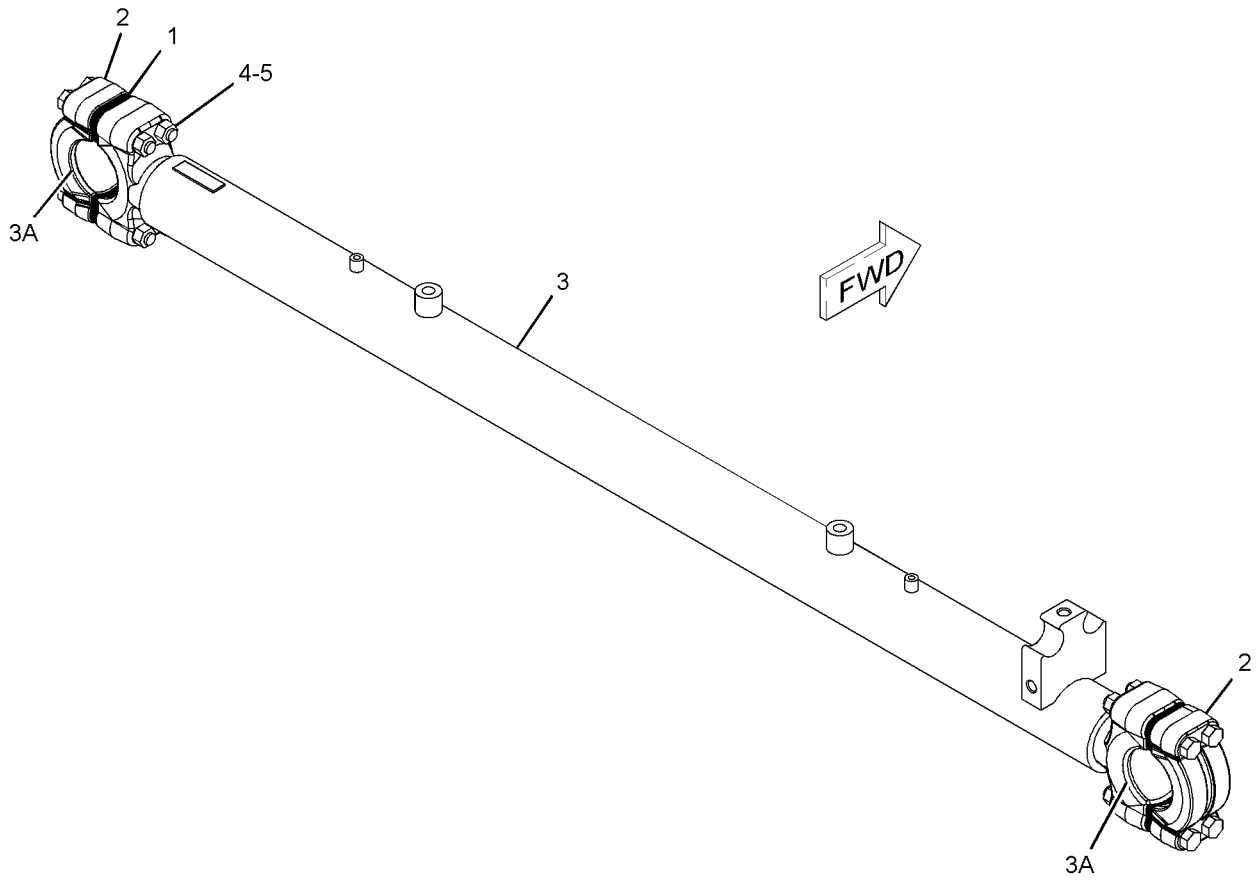

GRAPHIC #1 **<END>** g02838538

386-0222 LINK GP-STABILIZER

S/N: DLN1-UP
PART OF 386-0221 PUSH ARM GP-STABILIZER
AN ATTACHMENT

SMCS-6071, 7203 **i04739370**

NOTE	REF NO	GRAPHIC REF	PART NUMBER	QTY	PART NAME 1 2 3 4 5 6 (PRODUCT LEVEL)	SEE PAGE
B	1	1	**9T-0065**	52	SHIM (0.8-MM THK)	
	2	1	**160-6304**	2	CAP-BEARING	
					(EACH INCLUDES)	
B		1	**9T-0065**	14	SHIM (0.8-MM THK)	
	3	1	**386-0223**	1	LINK AS	
		1	**5P-8112**	2	GROMMET	
		1	**8P-9770**	1	PLATE	
	3A	1	**9T-0064**	2	BEARING	
B		1	**9T-0065**	28	SHIM (0.8-MM THK)	
	4	1	**6V-8182**	8	NUT (3/4-10-THD)	
	5	1	**7X-0377**	8	BOLT (3/4-10X6.5-IN)	

B-USE AS REQUIRED

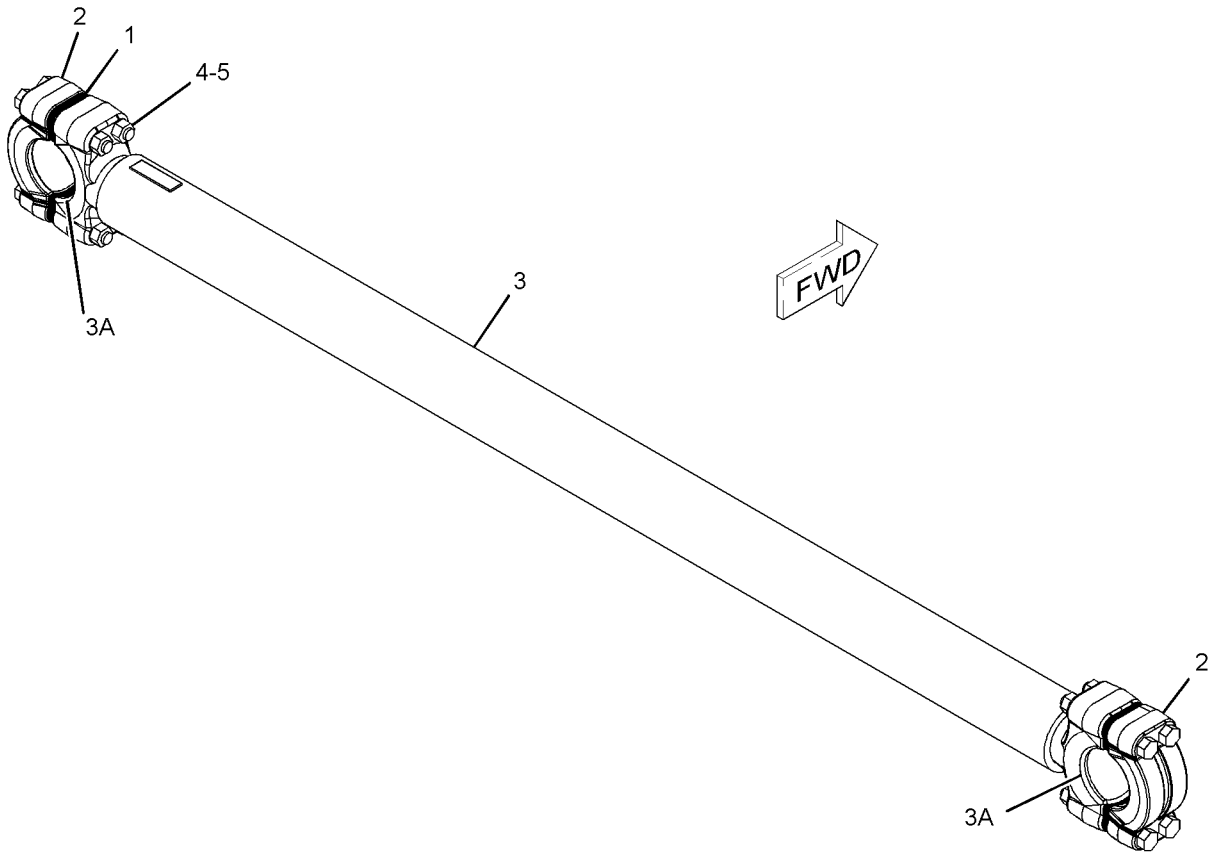

GRAPHIC #1 **<END>** g02842018

3G-5724 PUSH ARM GP–LH

S/N: DSH1-UP; DLN1-UP; DJR1-UP
PART OF 386-0187, 386-0221 PUSH ARM GP-STABILIZER
AN ATTACHMENT

SMCS-6061 **i04729227**

NOTE	REF NO	GRAPHIC REF	PART NUMBER	QTY	PART NAME 1 2 3 4 5 6 (PRODUCT LEVEL)	SEE PAGE
	1	1	**9X-8258**	2	WASHER (33X56X6-MM THK)	
B	2	1	**9W-7602**	26	SHIM (0.8-MM THK)	
	3	1	**193-3063**	1	CAP-BEARING	
	4	1	**195-6283**	2	NUT-SQUARE (M30X3.5-THD)	
M	5	1	**3E-9850**	2	BOLT (M30X3.5X220-MM)	
	6	1	**1U-0980**	1	PUSH ARM AS (LH)	
	7	1	**1J-6740**	1	BEARING	
	8	1	**124-6273**	1	BRACKET	
	9	1	**4T-5250**	1	BRACKET	
	10	1	**1U-2533**	1	BAR	

B-USE AS REQUIRED
M-METRIC PART

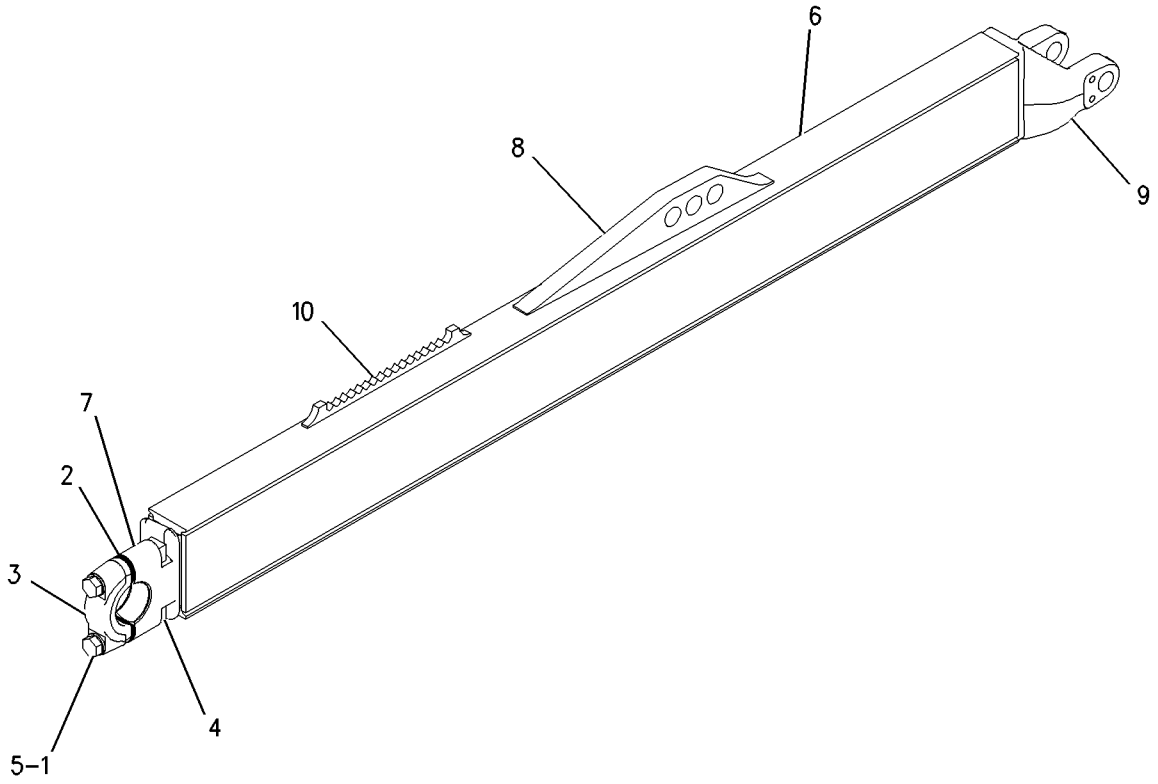

GRAPHIC #1 **<END>** g00792245

386-0214 PUSH ARM GP–RH

S/N: DSH1-UP; DLN1-UP; DJR1-UP
PART OF 386-0187, 386-0221 PUSH ARM GP-STABILIZER
AN ATTACHMENT

SMCS-6061 **i04729216**

NOTE	REF NO	GRAPHIC REF	PART NUMBER	QTY	PART NAME 1 2 3 4 5 6 (PRODUCT LEVEL)	SEE PAGE
B	1	1	**9W-7602**	26	SHIM (0.8-MM THK)	
	2	1	**193-3063**	1	CAP-BEARING	
	3	1	**195-6283**	2	NUT-SQUARE (M30X3.5-THD)	
	4	1	**386-0216**	1	PUSH ARM AS	
	4A	1	**1J-6740**	1	BEARING	
		1	**1U-0904**	1	BRACKET AS	
		1	**1U-2533**	1	BAR	
		1	**4T-5249**	1	BRACKET	
		1	**8P-9770**	1	PLATE	
B		1	**9W-7602**	14	SHIM (0.8-MM THK)	
M	5	1	**3E-9850**	2	BOLT (M30X3.5X220-MM)	
	6	1	**9X-8258**	2	WASHER (33X56X6-MM THK)	

B-USE AS REQUIRED
M-METRIC PART

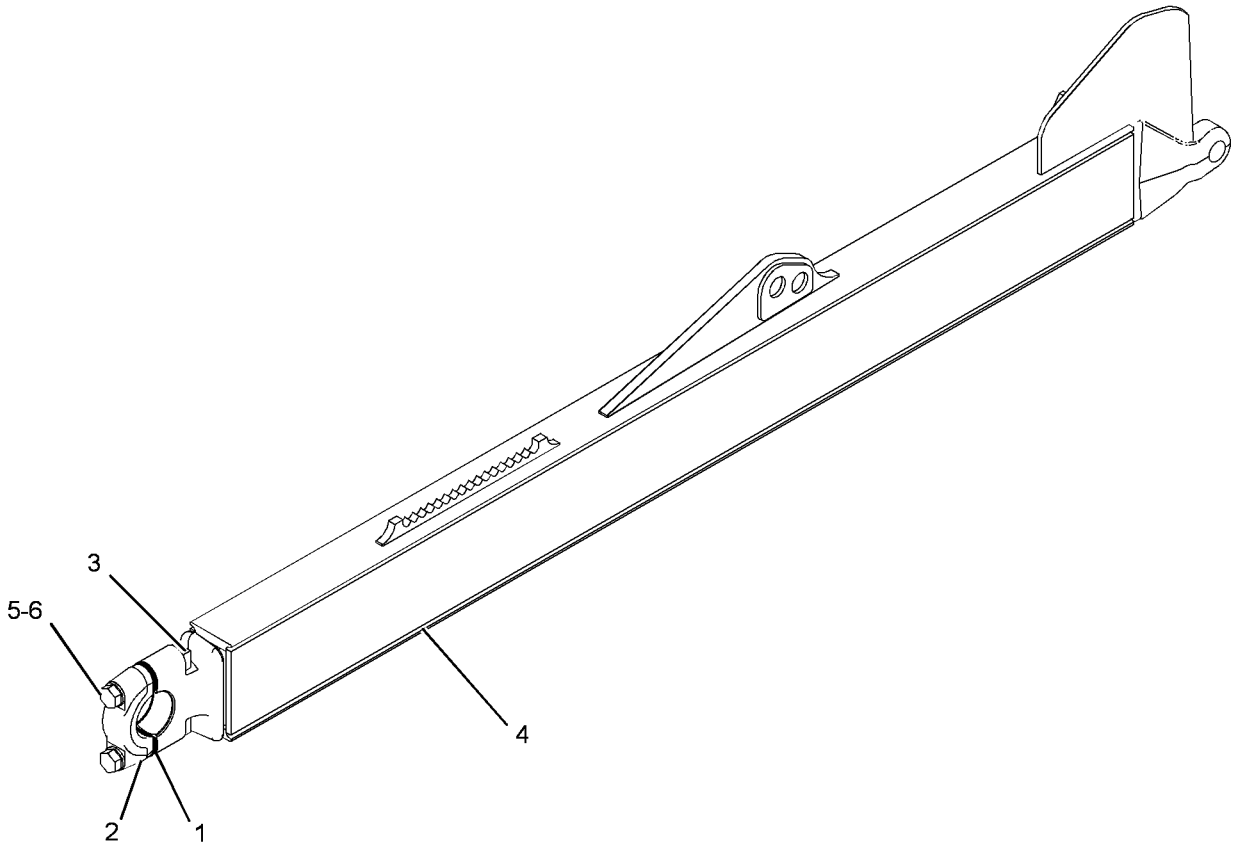

GRAPHIC #1 **<END>** g02838577

386-0187 PUSH ARM GP-STABILIZER

S/N: DSH1-UP; DJR1-UP
PART OF 365-5514 BULLDOZER AR-SEMI-UNIVERSAL
AN ATTACHMENT

SMCS-6061 **i04729169**

NOTE	REF NO	GRAPHIC REF	PART NUMBER	QTY	PART NAME 1 2 3 4 5 6 (PRODUCT LEVEL)	SEE PAGE
	1	1	**1U-0872**	2	PIN	
	2	1	**1U-0873**	1	PIN	
	3	1	**3G-0910**	1	CAP-BEARING	
B	4	1	**3G-0911**	26	SHIM (0.8-MM THK)	
Y	5	1	**3G-4533**	1	CYLINDER GP-TILT	426
Y	6	1	*3G-5724*	1	PUSH ARM GP (LH)	509
	7	1	**4F-0255**	1	PIN	
	8	1	**6J-5342**	3	RETAINER	
	9	1	**124-6274**	1	BRACE AS-TILT	
Y	10	1	*386-0210*	1	LINK GP-STABILIZER	507
Y	11	1	*386-0214*	1	PUSH ARM GP (RH)	510
	12	1	**3B-4627**	1	PIN-COTTER	
	13	1	**3F-4971**	1	PIN	
	14	1	**7X-0365**	6	BOLT (3/4-10X1.5-IN)	
	15	1	**7X-0392**	4	BOLT (7/8-9X6-IN)	
	16	1	**7X-0449**	4	NUT-FULL (7/8-9-THD)	

B-USE AS REQUIRED
Y-SEPARATE ILLUSTRATION

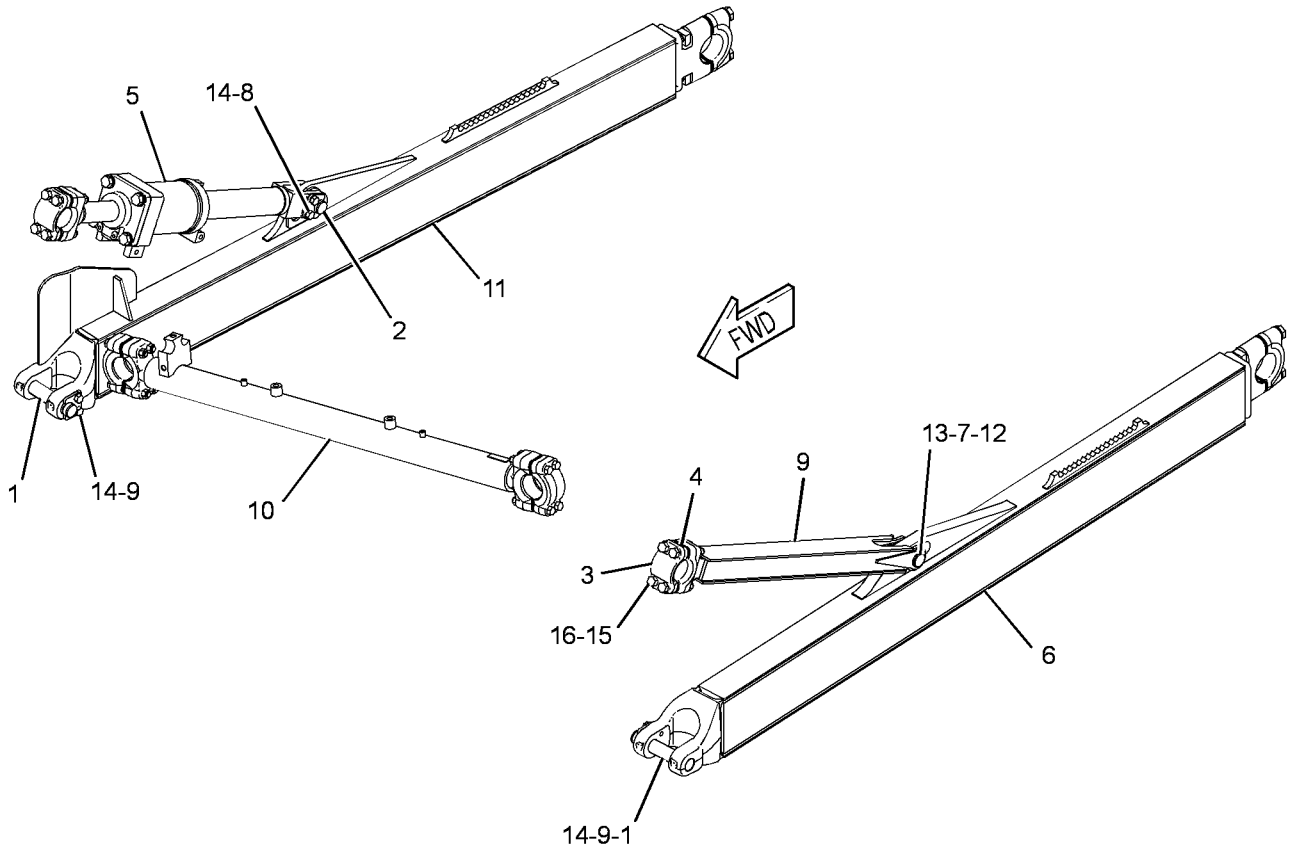

GRAPHIC #1 **<END>** g02838556

IMPLEMENTS

386-0221 PUSH ARM GP-STABILIZER

S/N: DLN1-UP
PART OF 365-5517 BULLDOZER AR-STRAIGHT
AN ATTACHMENT

SMCS-6061 **i04739371**

NOTE	REF NO	GRAPHIC REF	PART NUMBER	QTY	PART NAME 1 2 3 4 5 6 (PRODUCT LEVEL)	SEE PAGE
	1	1	**1U-0872**	2	PIN	
	2	1	**1U-0873**	1	PIN	
	3	1	**3G-0910**	1	CAP-BEARING	
B		1	**3G-0911**	14	SHIM (0.8-MM THK)	
B	4	1	**3G-0911**	26	SHIM (0.8-MM THK)	
Y	5	1	**3G-4533**	1	CYLINDER GP-TILT	426
Y	6	1	*3G-5724*	1	PUSH ARM GP (LH)	509
	7	1	**4F-0255**	1	PIN	
	8	1	**6J-5342**	3	RETAINER	
	9	1	**124-6274**	1	BRACE AS-TILT	
B		1	**3G-0911**	14	SHIM (0.8-MM THK)	
Y	10	1	*386-0214*	1	PUSH ARM GP (RH)	510
Y	11	1	*386-0222*	1	LINK GP-STABILIZER	508
	12	1	**3B-4627**	1	PIN-COTTER	
	13	1	**3F-4971**	1	PIN	
	14	1	**7X-0365**	6	BOLT (3/4-10X1.5-IN)	
	15	1	**7X-0392**	4	BOLT (7/8-9X6-IN)	
	16	1	**7X-0449**	4	NUT-FULL (7/8-9-THD)	

B-USE AS REQUIRED
Y-SEPARATE ILLUSTRATION

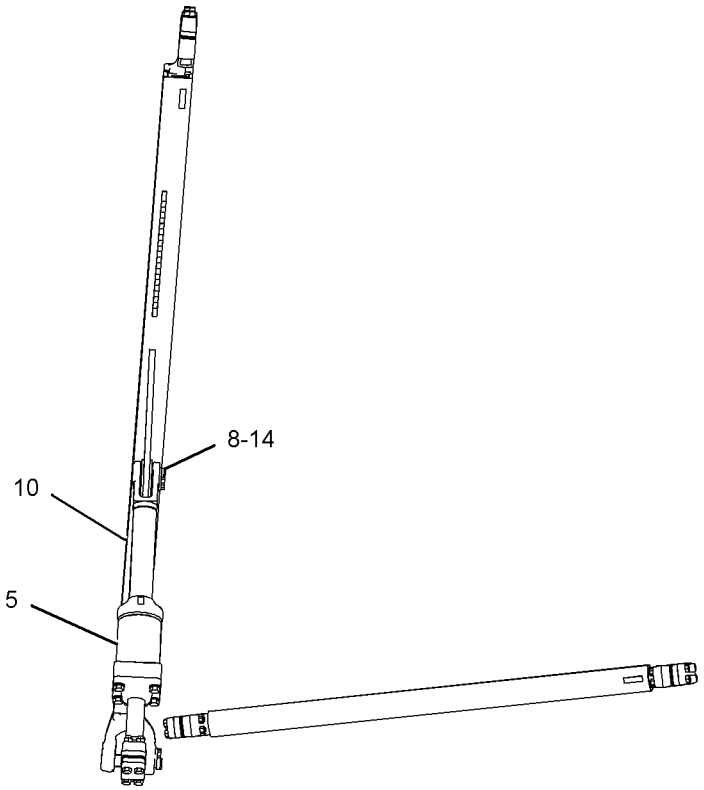

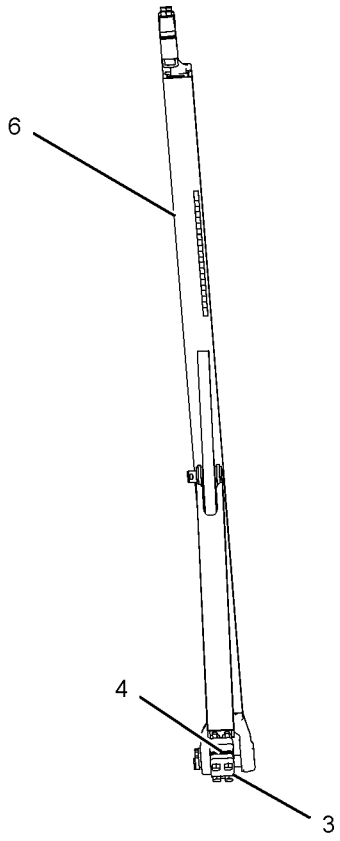

TOP VIEW

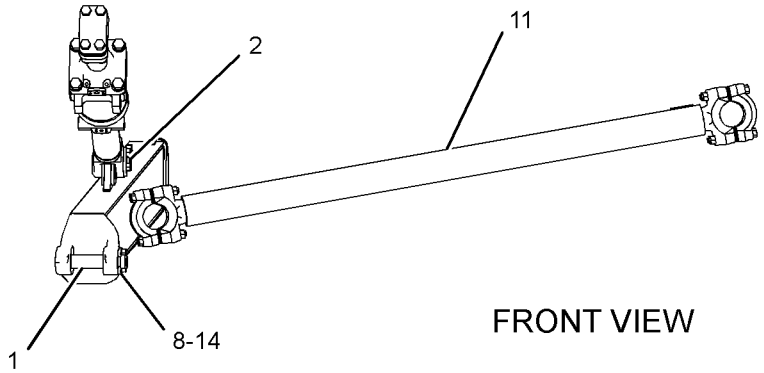

FRONT VIEW

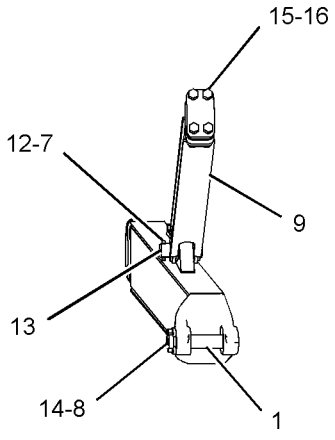

GRAPHIC #1 **<END>** g02847781

173-1028 ADJUSTER GP-SEAT

S/N: DSH1-UP; DLN1-UP; DJR1-UP
PART OF 178-0603, 180-7304 SEAT GP
ALSO AN ATTACHMENT

SMCS-7321 **i01598643**

NOTE	REF NO	GRAPHIC REF	PART NUMBER	QTY	PART NAME 1 2 3 4 5 6 (PRODUCT LEVEL)	SEE PAGE
	1	1	**4V-8256**	4	SPRING	
	2	1	**117-4492**	1	ROD	
	3	1	**136-1544**	1	LATCH AS (LH)	
	4	1	**156-5545**	1	LATCH AS (RH)	
	5	1	**164-4531**	1	ROD	
	6	1	**170-1112**	1	PLATE AS	
	7	1	**170-1114**	1	HANDLE (SLIDE ADJUSTMENT)	
	8	1	**170-1115**	1	HANDLE (TILT ADJUSTMENT)	
	9	1	**132-0338**	2	WASHER-PLASTIC (13X31.7X0.8-MM THK)	
	10	1	**2K-4973**	2	LOCKNUT (3/8-16-THD)	
	11	1	**7X-0608**	2	WASHER-HARD (10.2X16X2-MM THK)	

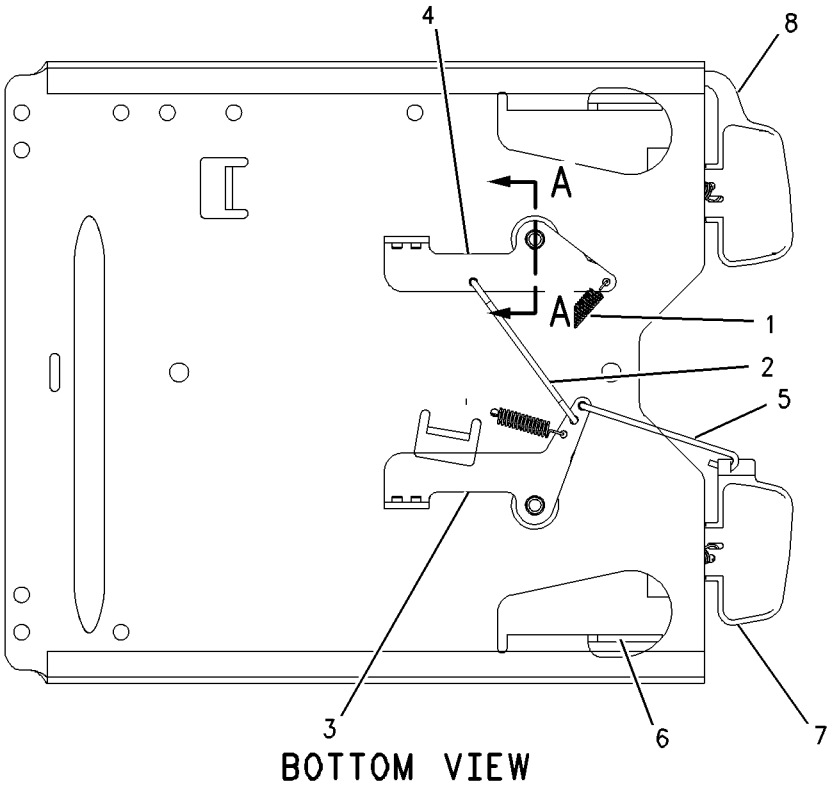

BOTTOM VIEW

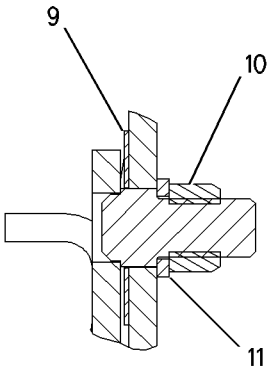

SECTION A-A

GRAPHIC #1 **<END>** g00828822

OPERATOR STATION

380-9961 AIR CONDITIONER AR—ROPS MOUNTED CONDENSER

S/N: DSH1-UP; DLN1-UP; DJR1-UP
PART OF 378-2273 STOCKPILE AR
AN ATTACHMENT

SMCS-7320 **i04774752**

NOTE	PART NUMBER	QTY	PART NAME 1 2 3 4 5 6 (PRODUCT LEVEL)	SEE PAGE
Y	*165-8322*	1	CONDENSER & MTG GP-REFRIGERANT	537
Y	*379-4779*	1	COOLER GP-HYDRAULIC OIL	407
Y	*377-4974*	1	GUARD GP-FAN	82
Y	*324-8984*	1	LINES GP-AIR CONDITIONER	571
	191-8697	1	ROPS AS	
	119-6623	1	PLATE-ROPS	
	8T-9530	4	TACK-FASTENER	

Y-SEPARATE ILLUSTRATION

<END>

OPERATOR STATION

279-2591 AIR CONDITIONER GP

S/N: DSH1-UP; DLN1-UP; DJR1-UP
PART OF 317-4153, 387-0547 CAB AR
ALSO AN ATTACHMENT

SMCS-7320 **i03994775**

NOTE	REF NO	GRAPHIC REF	PART NUMBER	QTY	PART NAME 1 2 3 4 5 6 (PRODUCT LEVEL)	SEE PAGE
	1	1	**3E-5464**	1	THERMOSTAT (HVAC) (REFRIGERANT)	
	2	1	**109-6406**	1	COIL AS (EVAPORATOR)	
	3	1	**2V-1937**	2	GROMMET	
	4	1	**5P-1075**	2	WASHER-HARD (10.2X22.5X3-MM THK)	
	5	1	**178-3338**	2	SCREW (8-32X0.313-IN)	
	6	1	**8T-4121**	2	WASHER-HARD (11X21X2.5-MM THK)	
M	7	1	**8T-4137**	2	BOLT (M10X1.5X20-MM)	
M	8	1	**8T-4191**	2	BOLT (M10X1.5X16-MM)	
E	9	1	**144-0195**		HOSE (12-CM)	
D	10	1	**5P-5643**		SEAL (0.4-M EACH)	

D-ORDER BY THE METER
E-ORDER BY THE CENTIMETER
M-METRIC PART

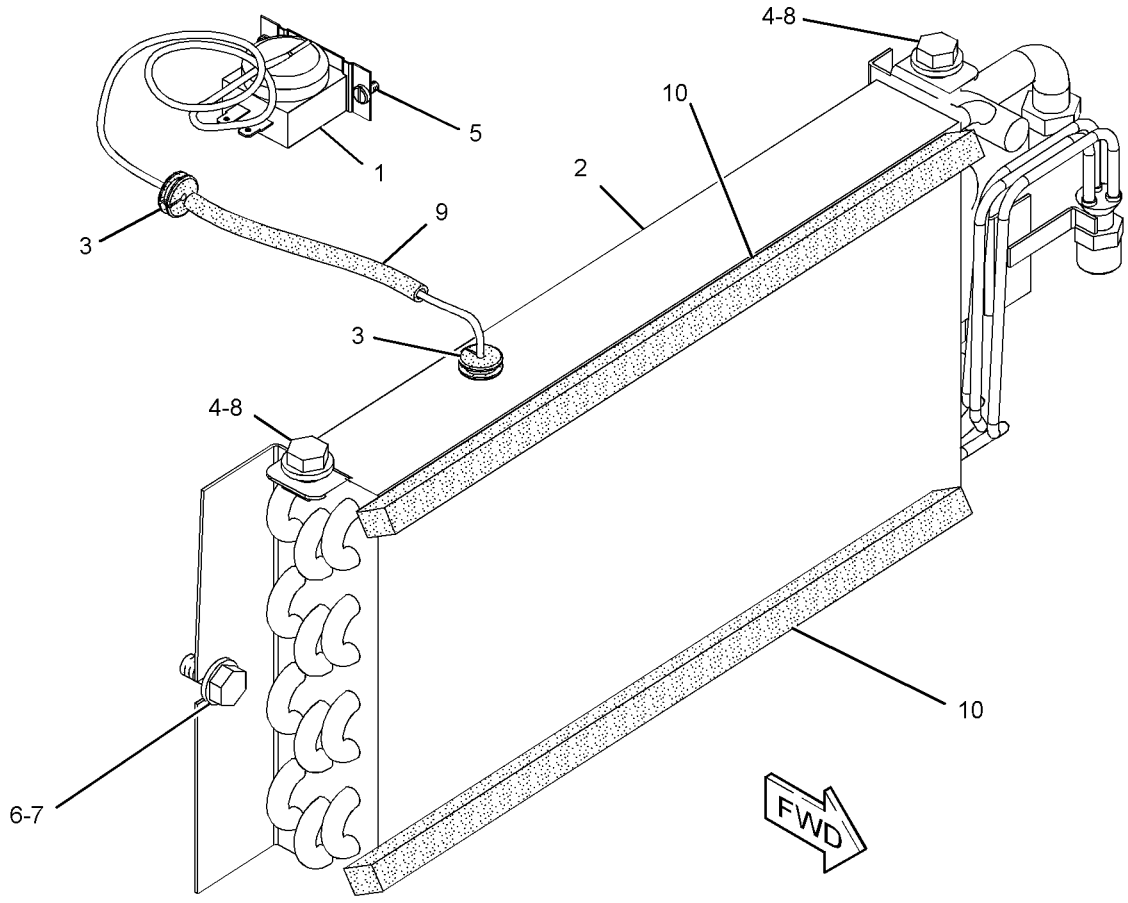

GRAPHIC #1 **<END>** g01232330

OPERATOR STATION

230-5388 BLOWER GP-CAB

S/N: DSH1-UP; DLN1-UP; DJR1-UP
PART OF 230-4700 PRESSURIZER GP-CAB
ALSO AN ATTACHMENT

SMCS-7316 **i04010716**

NOTE	REF NO	GRAPHIC REF	PART NUMBER	QTY	PART NAME 1 2 3 4 5 6 (PRODUCT LEVEL)	SEE PAGE
	1	1	**3S-2093**	1	STRAP-CABLE	
	2	1	**229-6635**	1	GASKET	
	3	1	**230-5385**	2	PLATE AS	
	4	1	**237-0934**	1	PLATE AS	
	5	1	**237-0956**	1	PLATE AS	
	6	1	**257-5029**	1	RESISTOR AS	
	7	1	**260-1914**	1	HARNESS AS-MOTOR	
		1	**102-8805**	1	KIT-RECEPTACLE (6-PIN)	
					(INCLUDES RECEPTACLE AS & WEDGE)	
		1	**6T-6505**	2	HOUSING-RECEPTACLE (BLADE, POSITIVE LOCK)	
		1	**6T-6506**	2	TERMINAL-BLADE (14-GA TO 18-GA)	
		1	**9W-0844**	2	SOCKET-CONNECTOR (14-GA TO 16-GA)	
		1	**9W-0852**	6	PIN-CONNECTOR (14-GA TO 16-GA)	
E		1	**125-7875**		TUBE-HEAT SHRINK (7.44-MM DIA) (10-CM)	
E		1	**1P-0810**		TAPE-ELECTRICAL (30-CM)	
		1	**155-2270**	1	KIT-CONNECTING PLUG (2-PIN)	
					(INCLUDES PLUG AS, WEDGE & INTERFACE SEAL)	
		1	**192-2112**	4	SOCKET-TERMINAL	
	8	1	**275-6706**	1	MOTOR AS-BLOWER (24-VOLT)	
		1	**102-8802**	1	KIT-RECEPTACLE (2-PIN)	
					(INCLUDES RECEPTACLE AS & WEDGE)	
		1	**9W-0852**	2	PIN-CONNECTOR (14-GA TO 16-GA)	
	9	1	**282-1951**	1	PLATE AS	
	10	1	**282-1952**	1	COVER AS-ACCESS	
	11	1	**282-1953**	1	GUARD (RESISTOR)	
	12	1	**2M-1444**	2	SCREW-TAPPING (8-18X0.3-IN)	
M	13	1	**5C-9553**	2	BOLT (M6X1X16-MM)	
	14	1	**6H-4005**	1	GROMMET	
M	15	1	**8T-0337**	8	SCREW-MACHINE (M4X0.7X12-MM)	

E-ORDER BY THE CENTIMETER
M-METRIC PART

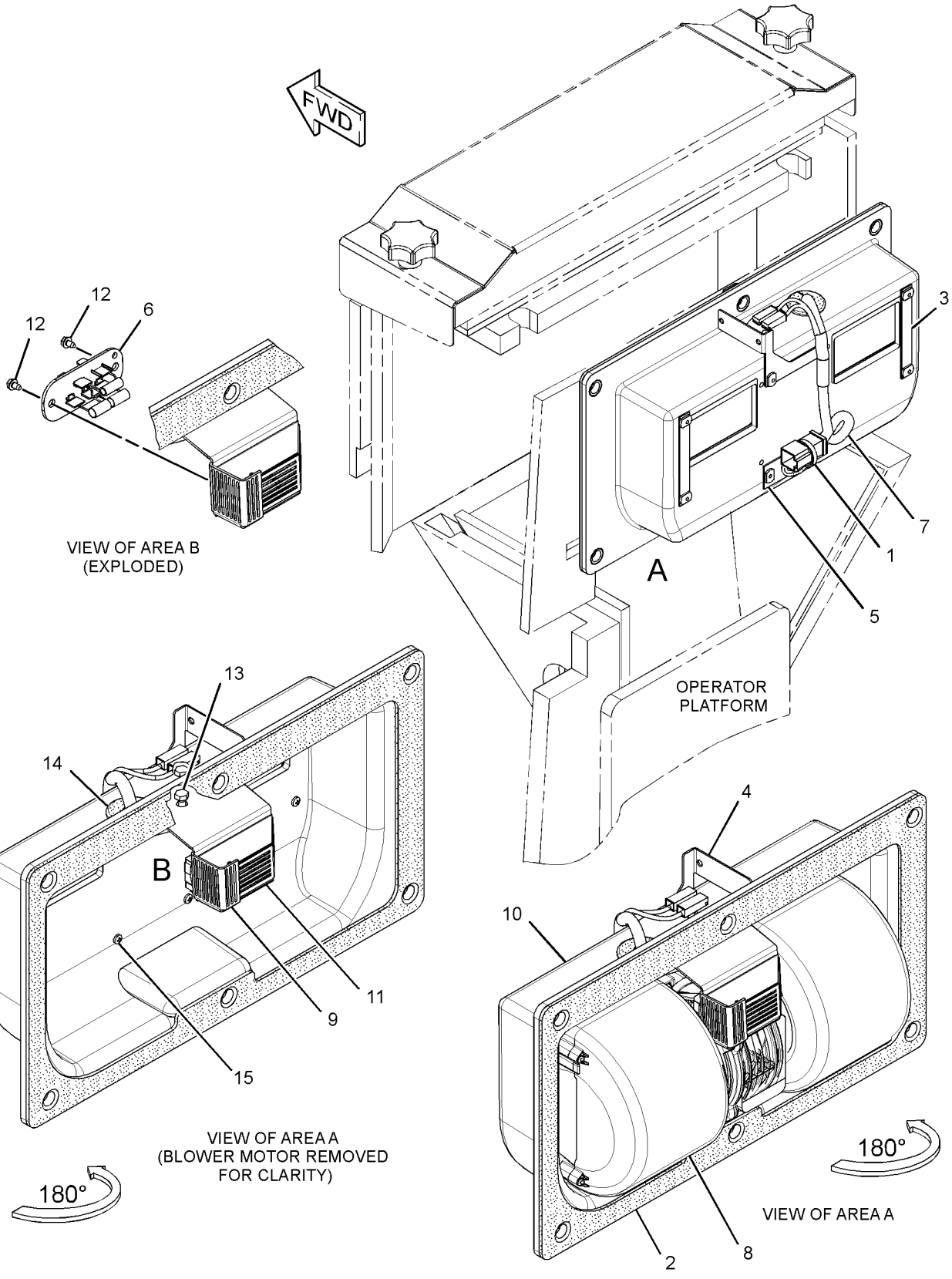

GRAPHIC #1 **<END>** g02183534

OPERATOR STATION

317-4153 CAB AR

S/N: DSH1-UP; DLN1-UP; DJR1-UP
PART OF 380-7900 OPERATOR AR

SMCS-7301 **i04774863**

NOTE	PART NUMBER	QTY	PART NAME 1 2 3 4 5 6 (PRODUCT LEVEL)	SEE PAGE
Y	*279-2591*	1	AIR CONDITIONER GP	516
Y	*323-5696*	1	CAB AR	519
Y	*317-4154*	1	COVER GP-CONSOLE	550
Y	*279-2590*	1	HEATER GP-CAB	556
Y	*387-0546*	1	LINES GP-AIR CONDITIONER	578
Y	*223-1680*	1	LINES GP-HEATER	
Y	*169-9637*	1	MOUNTING GP-CAB	588
Y	*230-4700*	1	PRESSURIZER GP-CAB	607
Y	*262-5079*	1	TANK GP-WINDOW WASHER	
Y-SEPARATE ILLUSTRATION				

<END>

323-5696 CAB AR

S/N: DSH1-UP; DLN1-UP; DJR1-UP
PART OF 317-4153 CAB AR

SMCS-7301 **i04011010**

NOTE	PART NUMBER	QTY	PART NAME 1 2 3 4 5 6 (PRODUCT LEVEL)	SEE PAGE
Y	*179-7094*	1	CAB GP	522
Y	*108-1335*	1	HANDHOLD GP	555
Y	*105-9657*	1	INSTALLATION GP-RADIO	559
Y	*323-5697*	1	LINER GP-CAB	569
Y	*105-9659*	1	MIRROR GP-REAR VIEW (INTERIOR)	582
Y	*322-1394*	1	WASHER GP-WINDOW	637
Y	*354-6924*	1	WIPER GP-WINDOW	649
Y-SEPARATE ILLUSTRATION				

<END>

327-9363 CAB AR—DUAL PANE GLASS

S/N: DSH1-UP; DLN1-UP; DJR1-UP
PART OF 387-0547 CAB AR, 385-6480, 385-6481 COLD WEATHER AR
AN ATTACHMENT

SMCS-7301 **i04629280**

NOTE	PART NUMBER	QTY	PART NAME 1 2 3 4 5 6 (PRODUCT LEVEL)	SEE PAGE
Y	*211-9049*	1	CAB GP	525
Y	*108-1335*	1	HANDHOLD GP	555
Y	*105-9657*	1	INSTALLATION GP-RADIO	559
Y	*323-5697*	1	LINER GP-CAB	569
Y	*105-9659*	1	MIRROR GP-REAR VIEW (INTERIOR)	582
Y	*322-1394*	1	WASHER GP-WINDOW	637
Y	*354-6924*	1	WIPER GP-WINDOW	649
Y-SEPARATE ILLUSTRATION				

<END>

OPERATOR STATION

358-4684 CAB AR

S/N: DSH1-UP; DLN1-UP; DJR1-UP

AN ATTACHMENT

SMCS-7301 **i04740711**

NOTE	REF NO	GRAPHIC REF	PART NUMBER	QTY	PART NAME 1 2 3 4 5 6 (PRODUCT LEVEL)	SEE PAGE
Y	1	1	*387-2153*	1	GUARD GP-WINDOW	553
Y	2	1	*359-0661*	1	CAB GP	530

Y-SEPARATE ILLUSTRATION

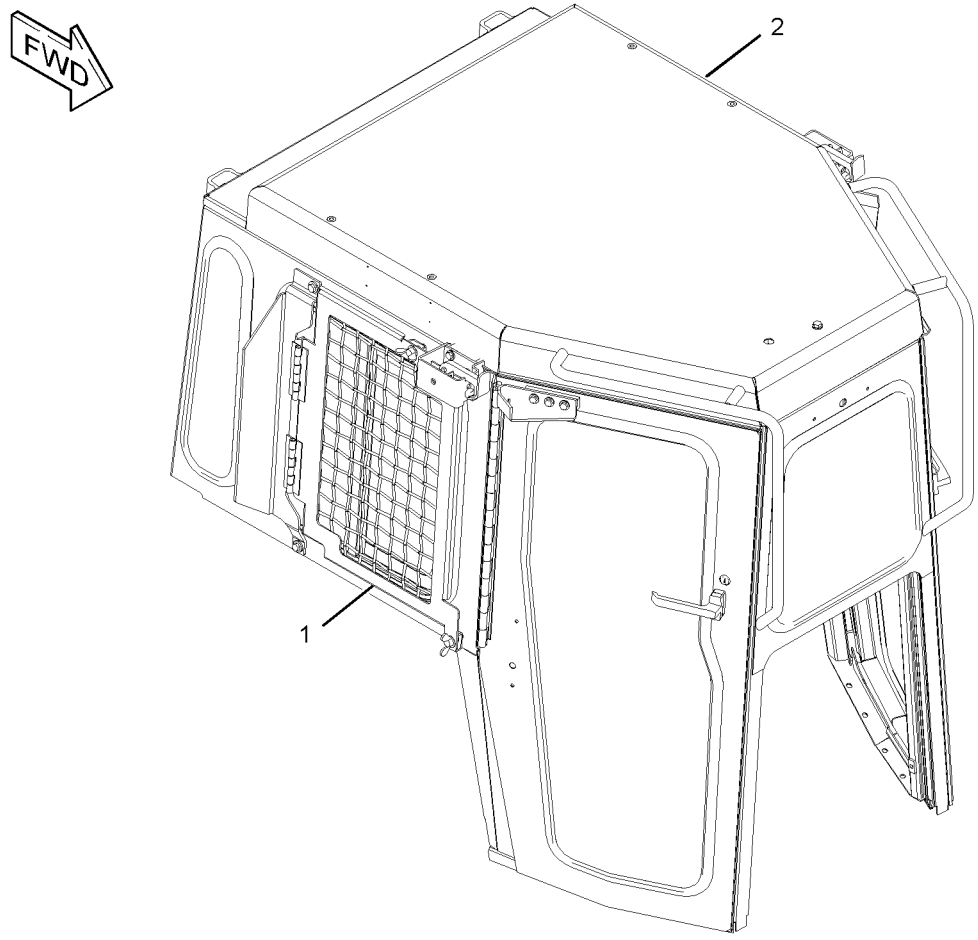

GRAPHIC #1 **<END>** g02186015

387-0547 CAB AR—COLD WEATHER

S/N: DSH1-UP

PART OF 387-0554 COLD WEATHER AR

AN ATTACHMENT

SMCS-7301 **i04772033**

NOTE	PART NUMBER	QTY	PART NAME 1 2 3 4 5 6 (PRODUCT LEVEL)	SEE PAGE
Y	*279-2591*	1	AIR CONDITIONER GP	516
Y	*327-9363*	1	CAB AR	519
Y	*317-4154*	1	COVER GP-CONSOLE	550
Y	*279-2590*	1	HEATER GP-CAB	556
Y	*387-0546*	1	LINES GP-AIR CONDITIONER	578
Y	*169-9637*	1	MOUNTING GP-CAB	588
Y	*230-4700*	1	PRESSURIZER GP-CAB	607

Y-SEPARATE ILLUSTRATION

<END>

OPERATOR STATION

179-7094 CAB GP

S/N: DSH1-UP; DLN1-UP; DJR1-UP

PART OF 323-5696 CAB AR

SMCS-7301 **i04011073**

NOTE	REF NO	GRAPHIC REF	PART NUMBER	QTY	PART NAME 1 2 3 4 5 6 (PRODUCT LEVEL)	SEE PAGE
	1	1	**1B-8735**	2	KEY-WOODRUFF	
	2	1	**4K-3533**	4	WASHER (9.7X17.5X1.6-MM THK)	
	3	1	**4Y-9344**	1	GLASS (REAR)	
	4	1	**5G-8655**	2	LEVER	
	5	1	**5M-8500**	2	KNOB (DOOR RELEASE)	
	6	1	**6I-9386**	2	BRACKET AS	
Y	7	1	*6T-8402*	1	WINDOW GP-CAB (RH)	639
Y	8	1	*6T-8403*	1	WINDOW GP-CAB (LH)	640
	9	1	**6V-2331**	2	HANDLE AS-OUTSIDE	
	10	1	**6V-2375**	2	HANDLE AS-INSIDE	
	11	1	**6V-3260**	8	BOLT-SOCKET HEAD (1/4-20X0.75-IN)	
	12	1	**6V-7190**	2	LEVER AS	
					(EACH INCLUDES)	
		1	**6V-8129**	2	SETSCREW-SOCKET	
	13	1	**6V-7636**	4	PIN AS-SPRING	
	14	1	**6V-8073**	2	LINK-CONNECTING	
	15	1	**7G-2454**	1	GLASS (TINTED) (FRONT)	
	16	1	**7X-0623**	12	WASHER (10.5X21X2-MM THK)	
	17	1	**8C-3442**	2	SPRING-COIL	
B	18	1	**8T-0318**	8	SHIM (0.8-MM THK)	
	19	1	**8T-1979**	1	LINKAGE AS (LH)	
	20	1	**8T-1980**	1	LINKAGE AS (RH)	
					(EACH LINKAGE AS INCLUDES)	
J		1	**5P-8503**	1	LOCK AS-CYLINDER	
	21	1	**8Y-8304**	2	STRIKER AS-LATCH	
					(EACH INCLUDES)	
		1	**8T-4158**	1	WASHER-SPECIAL	
	22	1	**9D-9736**	2	BUMPER	
	23	1	**9G-1127**	2	GLASS (SIDE, RH, LH)	
	24	1	**109-9828**	1	LATCH AS-ROTARY (RH)	
	25	1	**109-9829**	1	LATCH AS-ROTARY (LH)	
	26	1	**125-8254**	2	GLASS (TINTED) (DOOR, RH, LH)	
	27	1	**158-7697**	1	CAB AS	
	28	1	**170-5854**	1	BRACKET (RH)	
	29	1	**170-5855**	1	BRACKET (LH)	
	30	1	**224-4998**	1	DOOR AS (RH)	
	31	1	**224-5000**	1	DOOR AS (LH)	
	32	1	**298-4055**	2	ROD AS	
					(EACH INCLUDES)	
		1	**7X-0608**	1	WASHER-HARD (10.2X16X2-MM THK)	
		1	**118-0693**	1	ROD	
	33	1	**3E-6180**	4	NUT-CLINCH (M10X1.5-THD)	
	34	1	**4M-6425**	2	BOLT (5/16-18X1-IN)	
	35	1	**6V-8189**	2	NUT (5/16-18-THD)	
	36	1	**7X-7729**	12	WASHER (11X25X3-MM THK)	
	37	1	**8T-4121**	4	WASHER-HARD (11X21X2.5-MM THK)	
M	38	1	**8T-4136**	24	BOLT (M10X1.5X25-MM)	
M	39	1	**8T-4179**	1	BOLT (M12X1.75X20-MM)	
M	40	1	**8T-4181**	8	BOLT (M6X1X20-MM)	
M	41	1	**8T-4195**	4	BOLT (M10X1.5X30-MM)	
	42	1	**8T-4223**	1	WASHER-HARD (13.5X25.5X3-MM THK)	
	43	1	**8T-9043**	2	BOLT (5/16-18X0.875-IN)	
D	44	1	**5P-6605**		SEAL (2-M)	
D	44A	1	**5P-6605**		SEAL (3.5-M EACH)	
D	44B	1	**5P-6605**		SEAL (1.7-M EACH)	
D	44C	1	**5P-6605**		SEAL (2.5-M EACH)	

179-7094 **CAB GP** ***(contd.)*** **i04011073**

NOTE	REF NO	GRAPHIC REF	PART NUMBER	QTY	PART NAME 1 2 3 4 5 6 (PRODUCT LEVEL)	SEE PAGE
D	45	1	**5P-5930**		SEAL (0.08-M EACH)	
D	45A	1	**5P-5930**		SEAL (0.8-M EACH)	
D	46	1	**6V-3671**		SEAL (0.6-M EACH)	
D	46A	1	**6V-3671**		SEAL (0.7-M EACH)	
D	46B	1	**6V-3671**		SEAL (1.5-M EACH)	
D	47	1	**5P-7483**		SEAL (1.6-M EACH)	
D	48	1	**5P-5643**		SEAL (0.12-M EACH)	
D	49	1	**5P-5926**		SEAL (0.05-M EACH)	
D	50	1	**5P-5931**		SEAL (0.05-M EACH)	
D	51	1	**5P-5755**		SEAL (0.05-M EACH)	

B-USE AS REQUIRED
D-ORDER BY THE METER
J-REQUIRES CORPORATE KEY
M-METRIC PART
Y-SEPARATE ILLUSTRATION

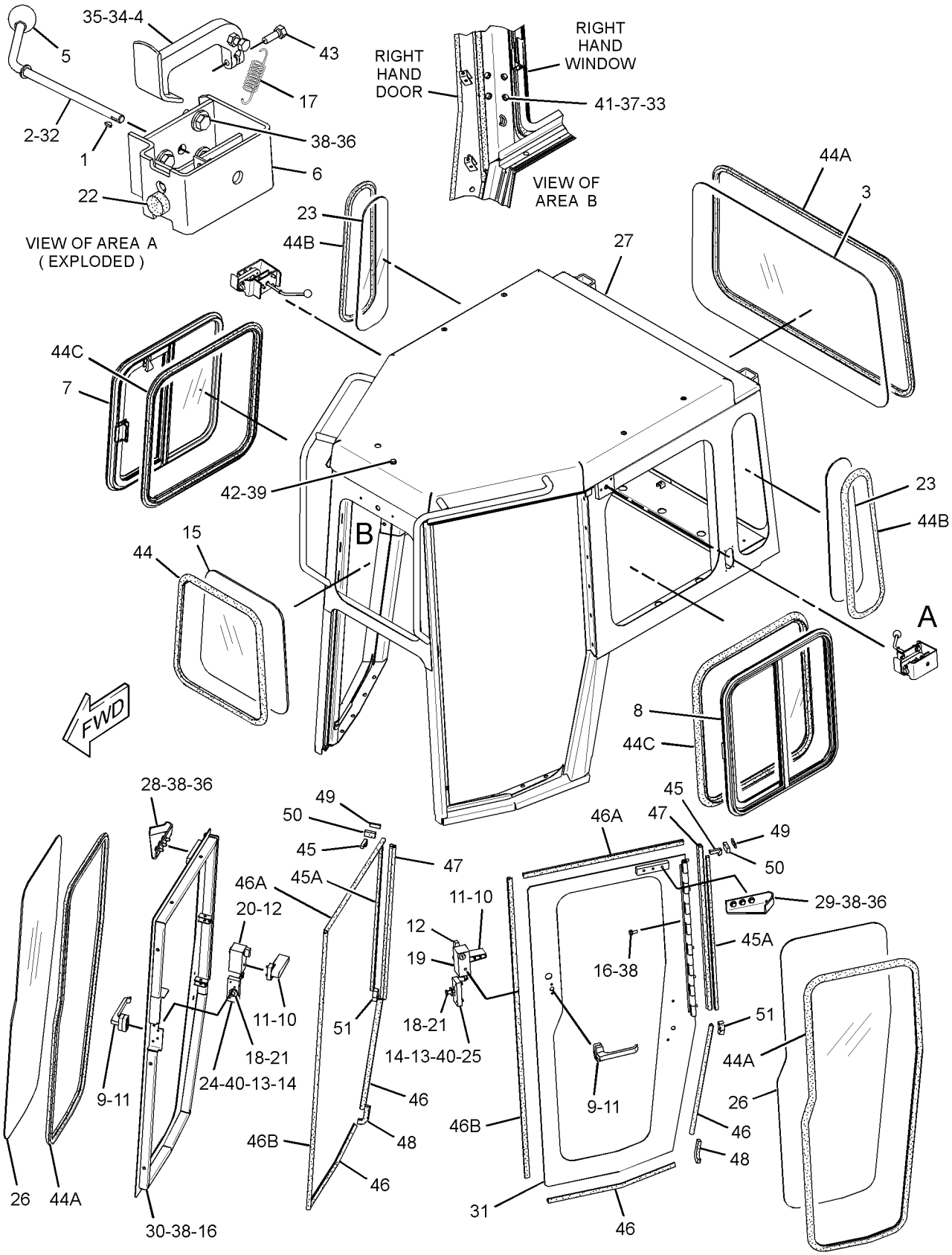

GRAPHIC #1 **<END>** g02190415

OPERATOR STATION

211-9049 CAB GP

S/N: DSH1-UP; DLN1-UP; DJR1-UP
PART OF 327-9363 CAB AR
AN ATTACHMENT

SMCS-7301 **i04629630**

NOTE	REF NO	GRAPHIC REF	PART NUMBER	QTY	PART NAME 1 2 3 4 5 6 (PRODUCT LEVEL)	SEE PAGE
	1	1	**1Q-2606**	1	WINDOW AS-FRONT	
	2	1	**1Q-2645**	2	WINDOW AS-SIDE	
	3	1	**1Q-2648**	1	WINDOW AS-REAR	
	4	1	**1Q-2976**	6	PLATE	
	5	2	**5G-8655**	2	LEVER	
	6	2	**5M-8500**	2	KNOB	
	7	1	**6I-9386**	2	BRACKET AS	
	8	2	**6V-2331**	2	HANDLE AS-OUTSIDE	
	9	2	**6V-2375**	2	HANDLE AS-INSIDE	
	10	2	**6V-3260**	8	BOLT-SOCKET HEAD (1/4-20X0.75-IN)	
	11	2	**6V-7190**	2	LEVER AS	
					(EACH INCLUDES)	
		2	**6V-8129**	2	SETSCREW-SOCKET	
	12	2	**6V-7636**	4	PIN AS-SPRING	
	13	2	**6V-8073**	2	LINK-CONNECTING	
	14	2	**8C-3442**	2	SPRING-COIL	
B	15	2	**8T-0318**	8	SHIM (0.8-MM THK)	
	16	2	**8T-1979**	1	LINKAGE AS (LH)	
	17	2	**8T-1980**	1	LINKAGE AS (RH)	
					(EACH LINKAGE AS INCLUDES)	
		2	**5P-8503**	1	LOCK AS-CYLINDER	
		2	**8T-8914**	1	SEAL-LINKAGE	
	18	2	**109-9828**	1	LATCH AS-ROTARY	
	19	2	**109-9829**	1	LATCH AS-ROTARY	
	20	1	**136-2227**	1	WINDOW AS-SIDE (LH)	
	21	1	**136-2228**	1	WINDOW AS-SIDE (RH)	
	22	1	**158-7697**	1	CAB AS	
M		1	**6V-9632**	8	NUT-WELD (M6X1-THD)	
		1	*117-1415*	1	PANEL AS (LH)	
M		1	**6V-9632**	1	NUT-WELD (M6X1-THD)	
		1	*158-7698*	1	ROOF AS	
M		1	**6V-9632**	4	NUT-WELD (M6X1-THD)	
M		1	**8T-3597**	3	NUT-WELD (M12X1.75-THD)	
M		1	**9T-6001**	2	BOSS (M10X1.5-THD)	
		1	*170-5859*	1	FRONT AS	
		1	**1K-5888**	2	SPACER (0.42X0.67X0.63-IN THK)	
	23	2	**170-5854**	1	BRACKET (RH)	
	24	2	**170-5855**	1	BRACKET (LH)	
	25	2	**187-0413**	2	STRIKER	
	26	1	**211-9050**	1	WINDOW AS-DOOR (RH)	
		1	**125-8254**	1	GLASS (TINTED)	
	27	1	**211-9051**	1	WINDOW AS-DOOR (LH)	
		1	**125-8254**	1	GLASS (TINTED)	
	28	1	**224-4998**	1	DOOR AS (RH)	
M		1	**6V-9632**	2	NUT-WELD (M6X1-THD)	
	29	1	**224-5000**	1	DOOR AS (LH)	
M		1	**6V-9632**	2	NUT-WELD (M6X1-THD)	
	30	1	**282-4390**	14	BRACKET	
	31	2	**1B-8735**	2	KEY-WOODRUFF	
	32	1	**1Q-2977**	6	PLATE	
	33	2	**298-4055**	2	ROD AS	
		2	**7X-0608**	1	WASHER-HARD (10.2X16X2-MM THK)	
		2	**118-0693**	1	ROD	
	34	1	**3E-6180**	4	NUT-CLINCH (M10X1.5-THD)	
	35	2	**4K-3533**	4	WASHER (9.7X17.5X1.6-MM THK)	

OPERATOR STATION

211-9049 **CAB GP** *(contd.)* **i04629630**

NOTE	REF NO	GRAPHIC REF	PART NUMBER	QTY	PART NAME 1 2 3 4 5 6 (PRODUCT LEVEL)	SEE PAGE
	36	2	**4M-6425**	2	BOLT (5/16-18X1-IN)	
	37	1	**5P-1076**	4	WASHER-HARD (13.5X30X4-MM THK)	
	38	2	**6V-8189**	2	NUT (5/16-18-THD)	
	39	1	**7X-0623**	12	WASHER (10.5X21X2-MM THK)	
	40	2	**7X-7729**	12	WASHER (11X25X3-MM THK)	
	41	1	**8T-4121**	4	WASHER-HARD (11X21X2.5-MM THK)	
M	42	1,2	**8T-4136**	24	BOLT (M10X1.5X25-MM)	
M	43	1	**8T-4179**	1	BOLT (M12X1.75X20-MM)	
M	44	2	**8T-4181**	8	BOLT (M6X1X20-MM)	
M	45	1	**8T-4183**	4	BOLT (M12X1.75X40-MM)	
M	46	1	**8T-4195**	4	BOLT (M10X1.5X30-MM)	
	47	1	**8T-4223**	1	WASHER-HARD (13.5X25.5X3-MM THK)	
	48	1	**8T-9043**	2	BOLT (5/16-18X0.875-IN)	
	49	1	**9D-9736**	2	BUMPER	
D	50	2	**5P-5926**		SEAL (0.1-M EACH)	
D	51	1	**5P-5931**		SEAL (0.1-M EACH)	
D	52	1	**5P-5755**		SEAL (0.1-M EACH)	
D	53	3	**5P-5643**		SEAL (0.3-M EACH)	
D	54	1,3	**5P-5930**		SEAL (1.7-M EACH)	
D	55	1	**5P-7483**		SEAL (3.2-M EACH)	
D	56	1	**6V-3671**		SEAL (6.6-M EACH)	
D	57	1	**5P-6605**		SEAL (20.8-M)	

B-USE AS REQUIRED
D-ORDER BY THE METER
M-METRIC PART

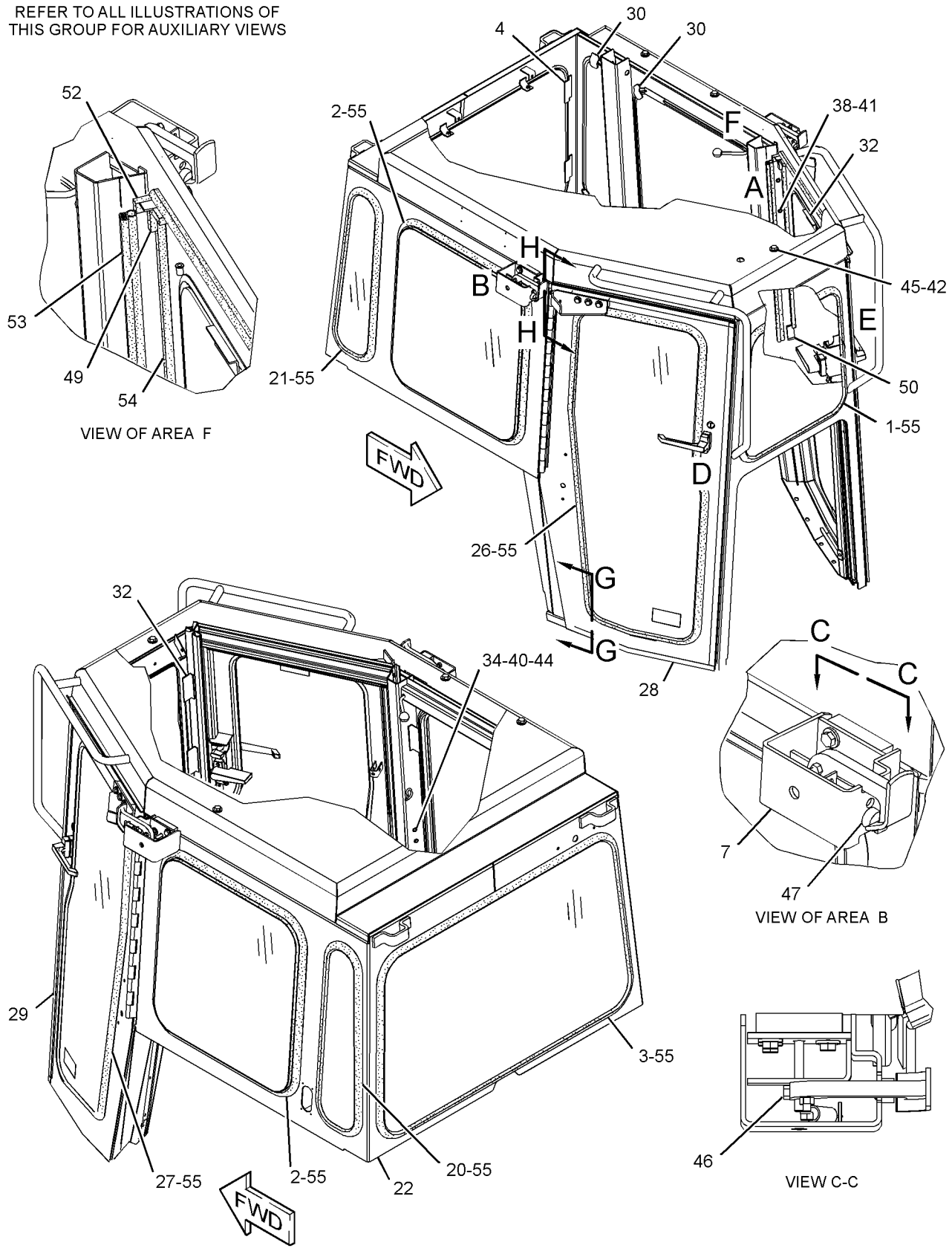

GRAPHIC #1 g02792021

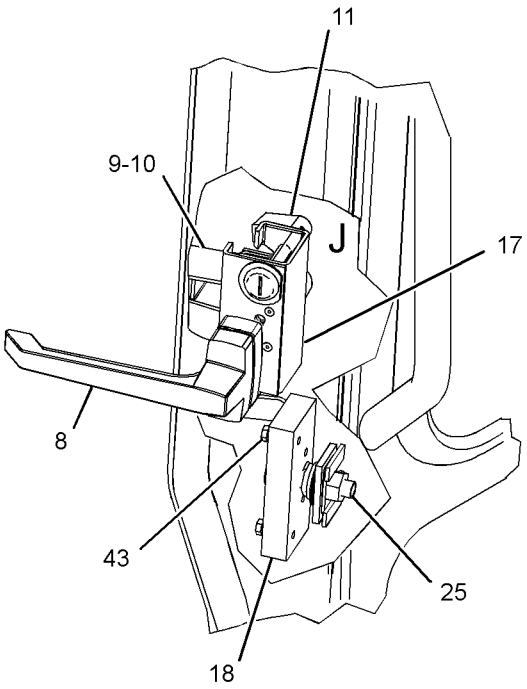

VIEW OF AREA D

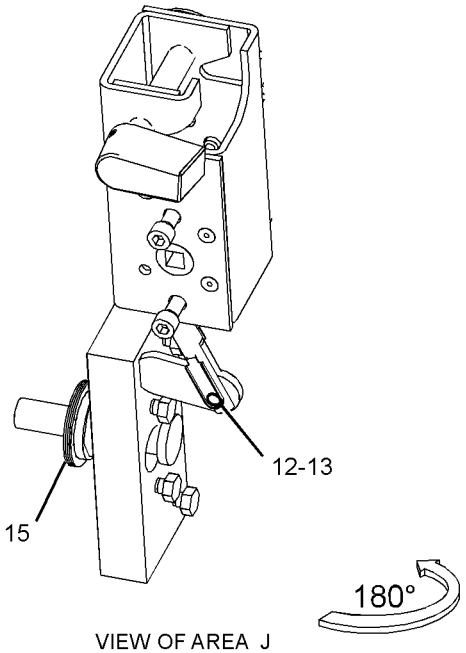

VIEW OF AREA J
(PARTS REMOVED FOR CLARITY)

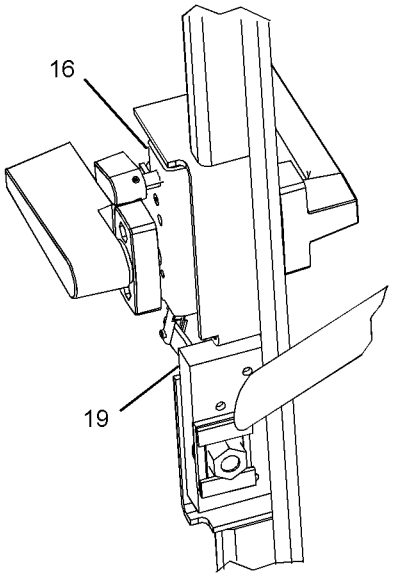

VIEW OF AREA E

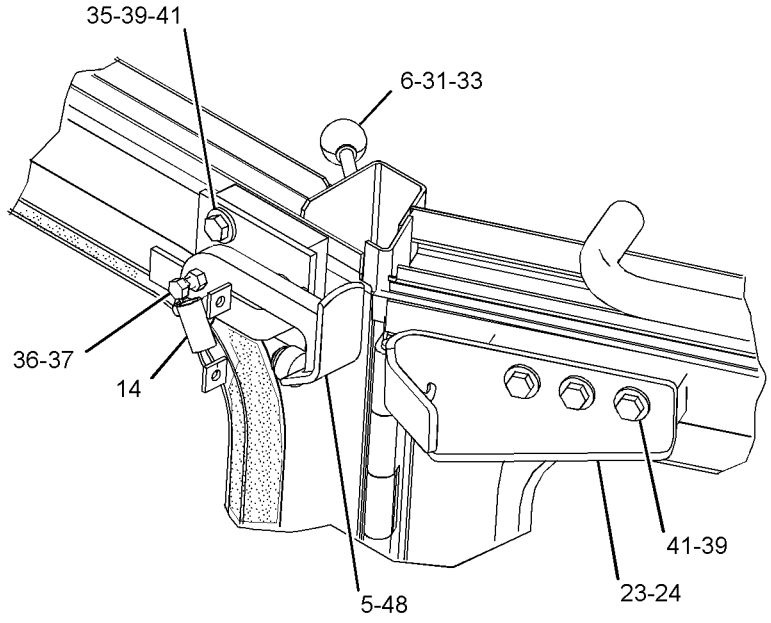

VIEW OF AREA F
(PARTS REMOVED FOR CLARITY)

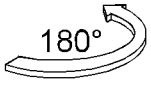

GRAPHIC #2

g02792025

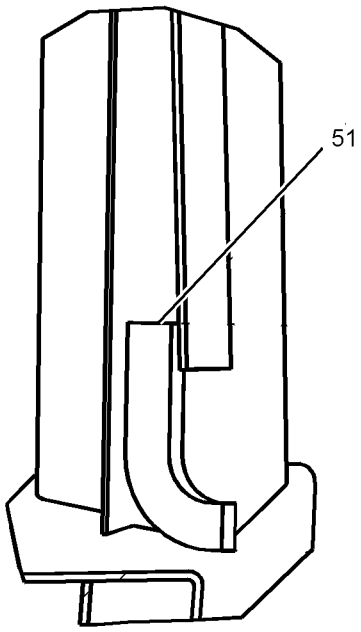

SECTION G-G

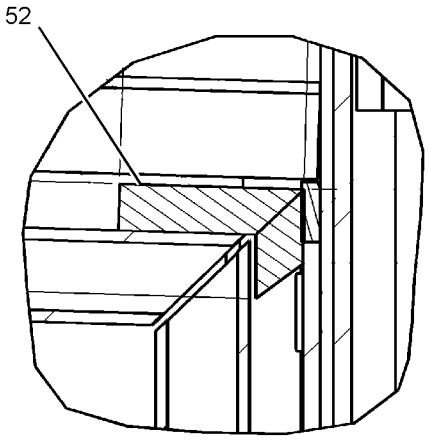

SECTION H-H

GRAPHIC #3 **<END>** g02861336

OPERATOR STATION

359-0661 CAB GP

S/N: DSH1-UP; DLN1-UP; DJR1-UP
PART OF 358-4684 CAB AR
FOR USE WITH SCREENS
AN ATTACHMENT

SMCS-7301 **i04003675**

NOTE	REF NO	GRAPHIC REF	PART NUMBER	QTY	PART NAME 1 2 3 4 5 6 (PRODUCT LEVEL)	SEE PAGE
	1	1	**1B-8735**	2	KEY-WOODRUFF	
	2	1	**4K-3533**	4	WASHER (9.7X17.5X1.6-MM THK)	
	3	1	**4Y-9344**	1	GLASS (REAR)	
	4	1	**5G-8655**	2	LEVER	
	5	1	**5M-8500**	2	KNOB (DOOR RELEASE)	
	6	1	**6I-9386**	2	BRACKET AS	
Y	7	1	*6T-8402*	1	WINDOW GP-CAB (RH)	639
Y	8	1	*6T-8403*	1	WINDOW GP-CAB (LH)	640
	9	1	**6V-2331**	2	HANDLE AS-OUTSIDE	
	10	1	**6V-2375**	2	HANDLE AS-INSIDE	
	11	1	**6V-3260**	8	BOLT-SOCKET HEAD (1/4-20X0.75-IN)	
	12	1	**6V-7190**	2	LEVER AS	
					(EACH INCLUDES)	
		1	**6V-8129**	2	SETSCREW-SOCKET	
	13	1	**6V-7636**	4	PIN AS-SPRING	
	14	1	**6V-8073**	2	LINK-CONNECTING	
	15	1	**7G-2454**	1	GLASS (TINTED) (FRONT)	
	16	1	**7X-0623**	12	WASHER (10.5X21X2-MM THK)	
	17	1	**8C-3442**	2	SPRING-COIL	
B	18	1	**8T-0318**	8	SHIM (0.8-MM THK)	
	19	1	**8T-1979**	1	LINKAGE AS (LH)	
	20	1	**8T-1980**	1	LINKAGE AS (RH)	
					(EACH LINKAGE AS INCLUDES)	
J		1	**5P-8503**	1	LOCK AS-CYLINDER	
	21	1	**8Y-8304**	2	STRIKER AS-LATCH	
					(EACH INCLUDES)	
		1	**8T-4158**	1	WASHER-SPECIAL	
	22	1	**9D-9736**	2	BUMPER	
	23	1	**9G-1127**	2	GLASS (SIDE, RH, LH)	
	24	1	**109-9828**	1	LATCH AS-ROTARY (RH)	
	25	1	**109-9829**	1	LATCH AS-ROTARY (LH)	
	26	1	**125-8254**	2	GLASS (TINTED) (DOOR, RH, LH)	
	27	1	**359-0662**	2	CAB AS	
	28	1	**170-5854**	1	BRACKET (RH)	
	29	1	**170-5855**	1	BRACKET (LH)	
	30	1	**224-4998**	1	DOOR AS (RH)	
	31	1	**224-5000**	1	DOOR AS (LH)	
	32	1	**298-4055**	2	ROD AS	
					(EACH INCLUDES)	
		1	**7X-0608**	1	WASHER-HARD (10.2X16X2-MM THK)	
		1	**118-0693**	1	ROD	
	33	1	**3E-6180**	4	NUT-CLINCH (M10X1.5-THD)	
	34	1	**4M-6425**	2	BOLT (5/16-18X1-IN)	
	35	1	**6V-8189**	2	NUT (5/16-18-THD)	
	36	1	**7X-7729**	12	WASHER (11X25X3-MM THK)	
	37	1	**8T-4121**	4	WASHER-HARD (11X21X2.5-MM THK)	
M	38	1	**8T-4136**	24	BOLT (M10X1.5X25-MM)	
M	39	1	**8T-4179**	1	BOLT (M12X1.75X20-MM)	
M	40	1	**8T-4181**	8	BOLT (M6X1X20-MM)	
M	41	1	**8T-4195**	4	BOLT (M10X1.5X30-MM)	
	42	1	**8T-4223**	1	WASHER-HARD (13.5X25.5X3-MM THK)	
	43	1	**8T-9043**	2	BOLT (5/16-18X0.875-IN)	
D	44	1	**5P-6605**		SEAL (2-M)	
D	44A	1	**5P-6605**		SEAL (3.5-M EACH)	

359-0661 **CAB GP** ***(contd.)*** **i04003675**

NOTE	REF NO	GRAPHIC REF	PART NUMBER	QTY	PART NAME 1 2 3 4 5 6 (PRODUCT LEVEL)	SEE PAGE
D	44B	1	**5P-6605**		SEAL (1.7-M EACH)	
D	44C	1	**5P-6605**		SEAL (2.5-M EACH)	
D	45	1	**5P-5930**		SEAL (0.08-M EACH)	
D	45A	1	**5P-5930**		SEAL (0.8-M EACH)	
D	46	1	**6V-3671**		SEAL (0.6-M EACH)	
D	46A	1	**6V-3671**		SEAL (0.7-M EACH)	
D	46B	1	**6V-3671**		SEAL (1.5-M EACH)	
D	47	1	**5P-7483**		SEAL (1.6-M EACH)	
D	48	1	**5P-5643**		SEAL (0.12-M EACH)	
D	49	1	**5P-5926**		SEAL (0.05-M EACH)	
D	50	1	**5P-5931**		SEAL (0.05-M EACH)	
D	51	1	**5P-5755**		SEAL (0.05-M EACH)	

B-USE AS REQUIRED
D-ORDER BY THE METER
J-REQUIRES CORPORATE KEY
M-METRIC PART
Y-SEPARATE ILLUSTRATION

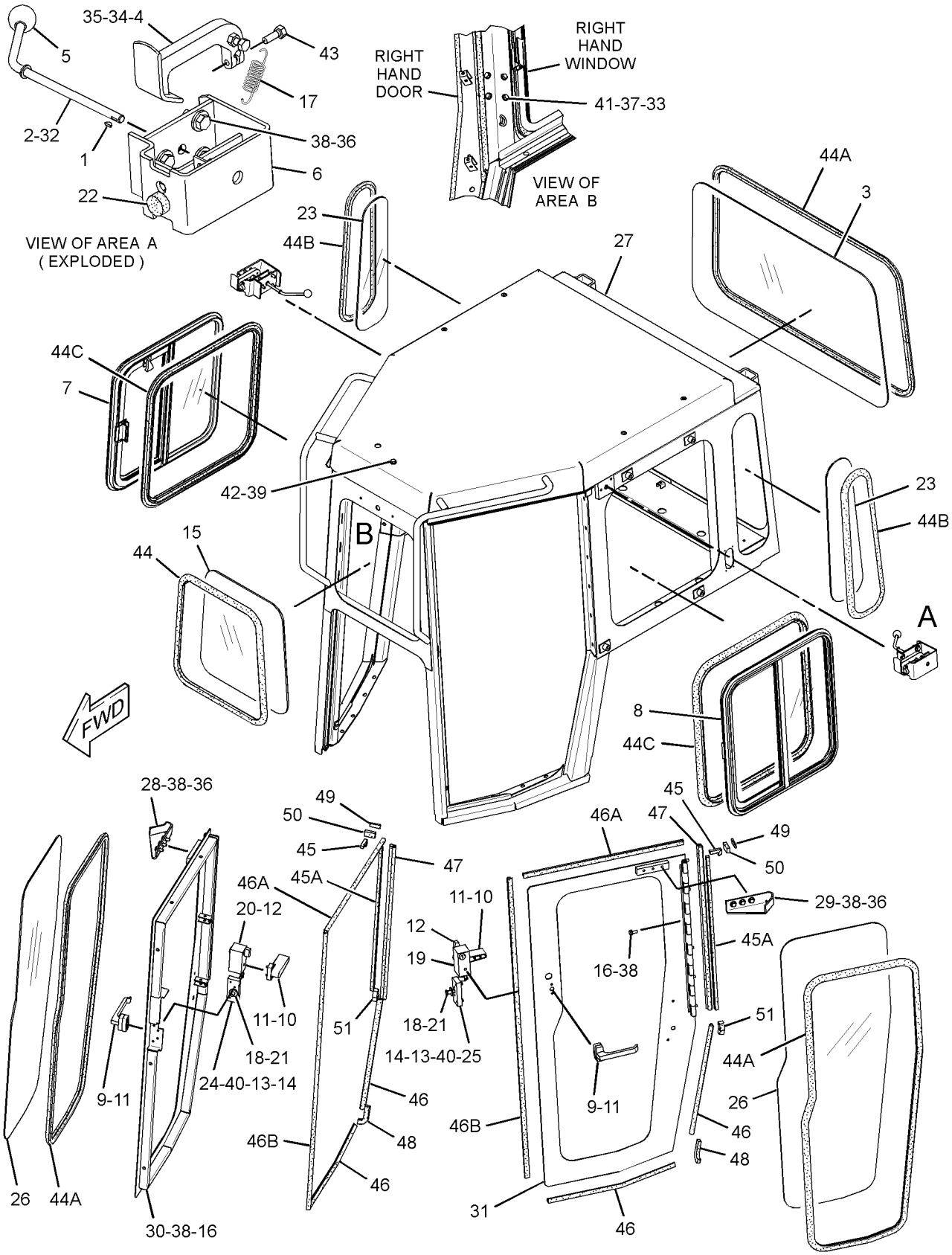

GRAPHIC #1 **<END>** g02190794

OPERATOR STATION

334-8477 CANOPY AR

S/N: DSH1-UP; DLN1-UP; DJR1-UP

AN ATTACHMENT

SMCS-7302 **i04629253**

NOTE	PART NUMBER	QTY	PART NAME 1 2 3 4 5 6 (PRODUCT LEVEL)	SEE PAGE
Y	*323-9636*	1	PANEL GP-INSTRUMENT	597
Y	*317-1767*	1	PLATFORM GP-OPERATOR	601
Y	*167-2088*	1	ROPS GP	613
Y	*214-1197*	1	SEAT GP-SUSPENSION (VINYL)	629
	6V-1971	1	LITERATURE GP	
	246-2641	1	PADLOCK GP	
	5P-8500	1	KEY	
	148-8411	1	PLUG AS	
	3K-0360	1	SEAL-O-RING	
	9S-4185	1	PLUG-O-RING	
	219-0305	1	FILM-WARNING (NO WELD, NO DRILL, READ OMM)	
			(ON LH ROPS VIEWABLE FROM THE GROUND)	
	288-6949	1	PLATE-WARNING (ROPS, FOPS, READ OMM)	
			(ON LH ROPS POST VIEWABLE FROM GROUND)	

Y-SEPARATE ILLUSTRATION

<END>

OPERATOR STATION

106-5122 COMPRESSOR GP-REFRIGERANT

S/N: DSH1-UP; DLN1-UP; DJR1-UP

PART OF 324-2433 COMPRESSOR GP-REFRIGERANT

SMCS-1802 **i03985637**

NOTE	REF NO	GRAPHIC REF	PART NUMBER	QTY	PART NAME 1 2 3 4 5 6 (PRODUCT LEVEL)	SEE PAGE
	1	1	**180-9339**	2	PIN-CONNECTOR (14-GA TO 18-GA)	
	2	1	**314-4018**	1	VALVE AS-PRESSURE RELIEF (REFRIGERANT COMPRESSOR)	
	3	1	**7T-4532**	1	PLUG AS	
	4	1	**9X-7385**	2	SEAL-O-RING	
	5	1	**102-8802**	1	KIT-RECEPTACLE (2-PIN)	
					(INCLUDES RECEPTACLE AS & WEDGE)	
Y	6	1	**258-8473**	1	CLUTCH GP-ELECTRIC (KIT)	148

Y-SEPARATE ILLUSTRATION

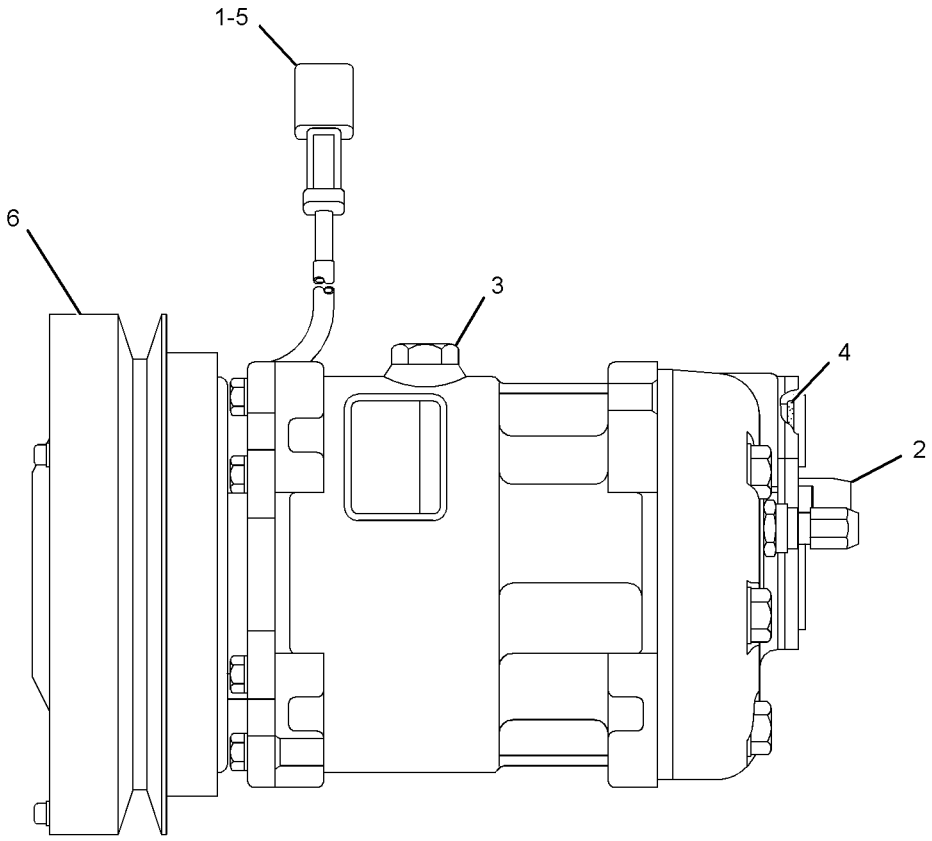

GRAPHIC #1 **<END>** g02168554

OPERATOR STATION

324-2433 COMPRESSOR GP-REFRIGERANT

S/N: DSH1-UP; DLN1-UP; DJR1-UP
PART OF 313-3757 INSTALLATION AR

SMCS-1802 **i04607570**

NOTE	REF NO	GRAPHIC REF	PART NUMBER	QTY	PART NAME 1 2 3 4 5 6 (PRODUCT LEVEL)	SEE PAGE
	1	1	**1N-4556**	1	V-BELT (REFRIGERANT COMPRESSOR)	
	2	1	**8S-5383**	1	BLOCK	
Y	3	1	**106-5122**	1	COMPRESSOR GP-REFRIGERANT	534
	4	1	**188-1012**	1	BRACKET	
	5	1	**188-1013**	1	PLATE	
	6	1	**214-9492**	1	ROD-ADJUSTING	
	7	1	**238-7051**	1	GUARD AS	
	8	1	**8T-4121**	10	WASHER-HARD (11X21X2.5-MM THK)	
M	9	1	**8T-4132**	2	NUT (M16X2-THD)	
M	10	1	**8T-4133**	2	NUT (M10X1.5-THD)	
M	11	1	**8T-4182**	1	BOLT (M10X1.5X45-MM)	
M	12	1	**8T-4185**	3	BOLT (M10X1.5X50-MM)	
M	13	1	**8T-4186**	2	BOLT (M10X1.5X40-MM)	
M	14	1	**8T-4193**	1	BOLT (M16X2X50-MM)	
M	15	1	**8T-4195**	1	BOLT (M10X1.5X30-MM)	
	16	1	**8T-4223**	2	WASHER-HARD (13.5X25.5X3-MM THK)	
M	17	1	**8T-4244**	1	NUT (M12X1.75-THD)	
M	18	1	**8T-4910**	1	BOLT (M12X1.75X60-MM)	
M	19	1	**8T-5436**	1	BOLT (M10X1.5X130-MM)	
	20	1	**9X-8257**	3	WASHER (17.5X30X3.5-MM THK)	

M-METRIC PART
Y-SEPARATE ILLUSTRATION

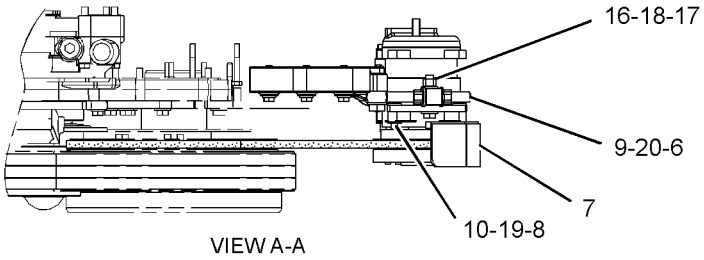

VIEW A-A

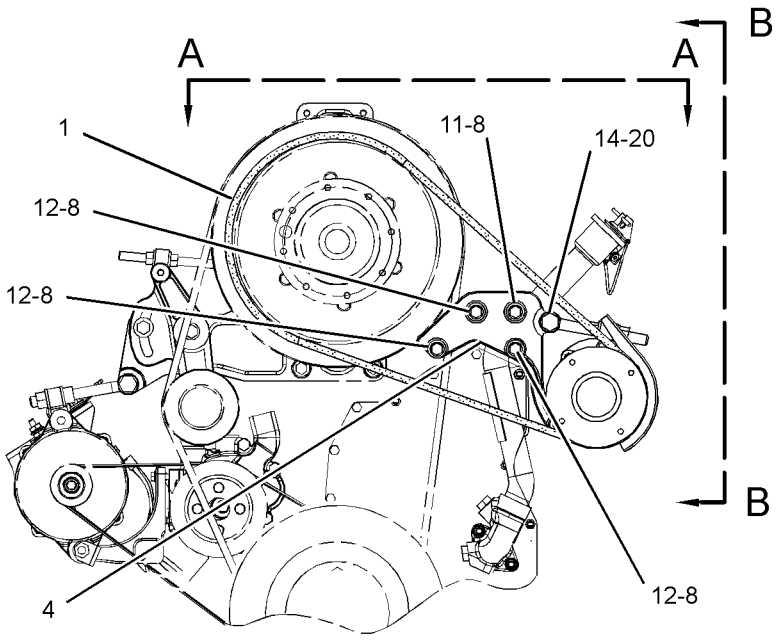

FRONT VIEW OF ENGINE

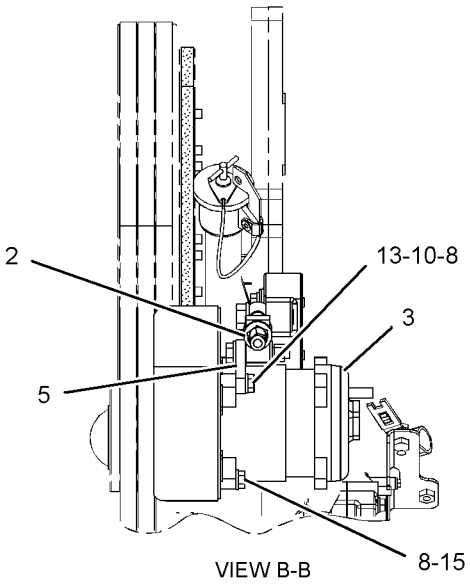

VIEW B-B

GRAPHIC #1 **<END>** g02791429

OPERATOR STATION

165-8322 CONDENSER & MTG GP-REFRIGERANT–

ROPS MOUNTED

S/N: DSH1-UP; DLN1-UP; DJR1-UP

PART OF 380-9961 AIR CONDITIONER AR

AN ATTACHMENT

SMCS-1805 **i04674449**

NOTE	REF NO	GRAPHIC REF	PART NUMBER	QTY	PART NAME 1 2 3 4 5 6 (PRODUCT LEVEL)	SEE PAGE
	1	1	**8D-0983**	6	MOUNTING AS-VIBRATION ISOLATOR	
	2	1	**8D-7185**	6	WASHER (11.9X38.1X3-MM THK)	
Y	3	1	**103-9527**	1	CONDENSER GP-REFRIGERANT (WITH FANS)	541
	4	1	**109-5498**	1	SCREEN AS	
	5	1	**169-5459**	1	SUPPORT AS	
		1	**1F-0750**	4	NUT-WELD (3/8-16-THD)	
		1	**6J-1323**	2	LUG (1/2-13-THD)	
		1	**9F-6445**	6	NUT-WELD (1/4-20-THD)	
	6	1	**170-3399**	2	BRACKET	
	7	1	**172-5989**	2	BRACKET	
	8	1	**193-3306**	2	BOSS	
	9	1	**193-3307**	1	PLATE AS	
	10	1	**193-3308**	1	PLATE AS	
		1	**7T-1099**	4	LINK	
		1	**8J-7236**	1	NUT-WELD (3/4-10-THD)	
	11	1	**4L-6454**	2	BOLT (3/8-16X1-IN)	
	12	1	**5P-1075**	2	WASHER-HARD (10.2X22.5X3-MM THK)	
	13	1	**5P-2566**	3	BOLT (1/2-13X1.5-IN)	
	14	1	**7X-0311**	6	BOLT (7/16-14X2.25-IN)	
	15	1	**8T-9399**	2	BOLT (3/4-10X2.25-IN)	
	16	1	**7X-0371**	2	BOLT (3/4-10X3.75-IN)	
	17	1	**7X-0447**	6	NUT (7/16-14-THD)	
	18	1	**9L-8339**	2	WASHER	
	19	1	**1M-4543**	2	GROMMET	
M	20	1	**8T-4139**	4	BOLT (M12X1.75X30-MM)	
	21	1	**8T-4205**	6	WASHER-HARD (7.2X14.5X2-MM THK)	
	22	1	**8T-4223**	3	WASHER-HARD (13.5X25.5X3-MM THK)	
	23	1	**8T-9364**	6	BOLT (1/4-20X0.625-IN)	
	24	1	**8T-5360**	12	WASHER (12X22.5X2.5-MM THK)	
	25	1	**7X-0582**	4	WASHER-HARD (20X44.5X6-MM THK)	
	26	1	**7X-0365**	2	BOLT (3/4-10X1.5-IN)	
	27	1	**7X-7729**	2	WASHER (11X25X3-MM THK)	
M	28	1	**8T-4136**	2	BOLT (M10X1.5X25-MM)	
	29	1	**5D-7635**	1	GROMMET	

M-METRIC PART
Y-SEPARATE ILLUSTRATION

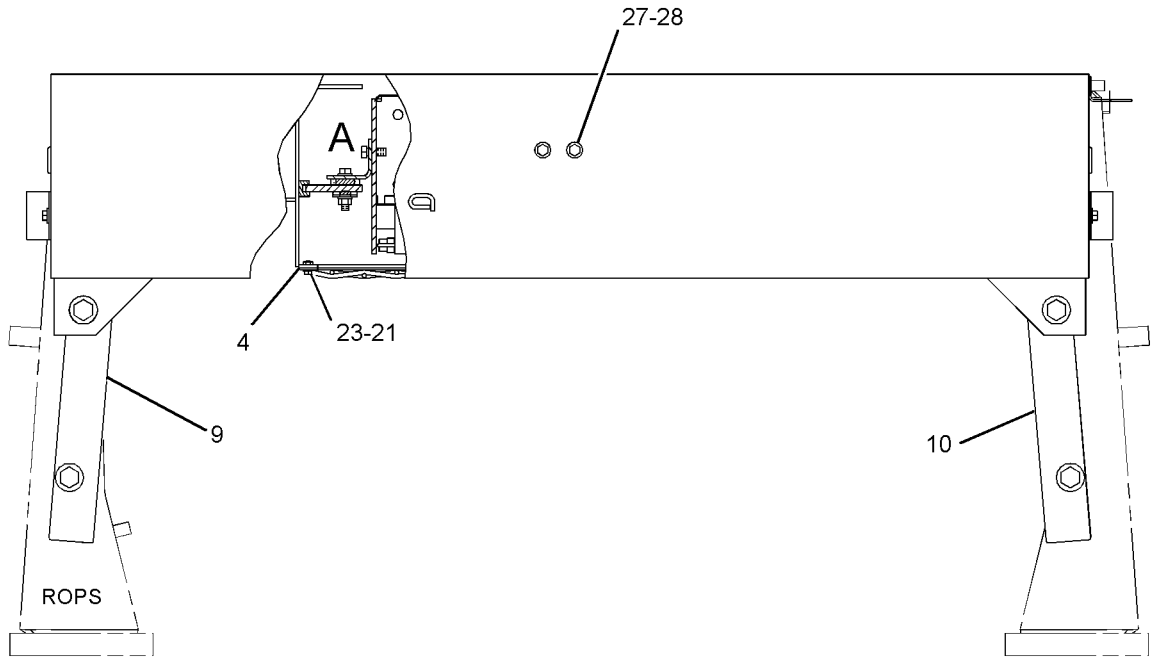

REAR VIEW

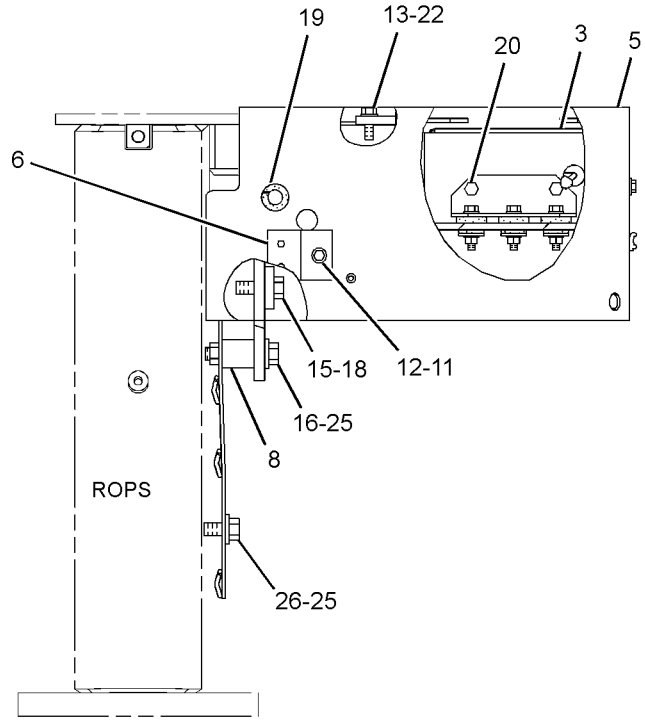

LEFT SIDE VIEW

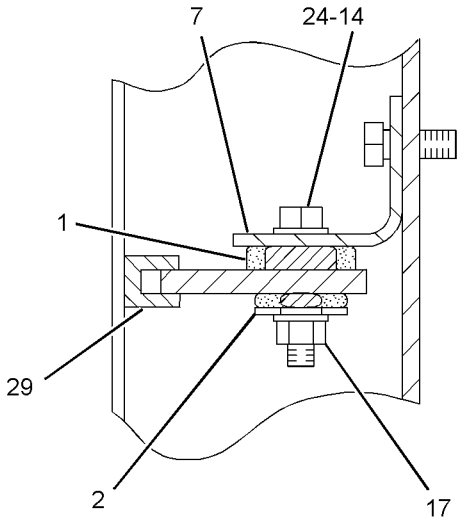

VIEW OF AREA A

GRAPHIC #1 **<END>** g02828257

OPERATOR STATION

357-7835 CONDENSER & MTG GP-REFRIGERANT

S/N: DSH1-UP; DLN1-UP; DJR1-UP
PART OF 313-3757 INSTALLATION AR

SMCS-1805 **i04608990**

NOTE	REF NO	GRAPHIC REF	PART NUMBER	QTY	PART NAME 1 2 3 4 5 6 (PRODUCT LEVEL)	SEE PAGE
	1	1	**6N-8744**	4	MOUNT	
	2	1	**9L-8781**	4	WASHER (0.406X1.5X0.188-IN THK)	
	3	1	**206-5889**	1	CONDENSER GP-REFRIGERANT	
	4	1	**357-7836**	1	BRACKET AS	
	5	1	**357-7837**	1	BRACKET AS	
	6	1	**357-7838**	1	BRACKET	
	7	1	**357-7839**	1	BRACKET AS	
	8	1	**357-7840**	1	BRACKET AS	
	9	1	**357-7842**	1	BRACKET AS	
	10	1	**357-7843**	1	BRACKET AS	
	11	1	**357-7844**	1	SUPPORT AS	
	12	1	**4L-6454**	8	BOLT (3/8-16X1-IN)	
	13	1	**5D-0353**	4	BOLT-LOCKING (3/8-16X1-IN)	
	14	1	**5P-1075**	3	WASHER-HARD (10.2X22.5X3-MM THK)	
	15	1	**5P-1076**	5	WASHER-HARD (13.5X30X4-MM THK)	
	16	1	**6V-8801**	8	NUT (3/8-16-THD)	
	17	1	**7X-0288**	1	BOLT (3/8-16X1.625-IN)	
	18	1	**8T-2501**	1	BOLT (3/8-16X2-IN)	
	19	1	**8T-2561**	2	WASHER-HARD (10.5X28.5X5-MM THK)	
	20	1	**8T-4121**	3	WASHER-HARD (11X21X2.5-MM THK)	
M	21	1	**8T-4136**	2	BOLT (M10X1.5X25-MM)	
M	22	1	**8T-4139**	2	BOLT (M12X1.75X30-MM)	
M	23	1	**8T-4195**	1	BOLT (M10X1.5X30-MM)	
	24	1	**8T-4223**	2	WASHER-HARD (13.5X25.5X3-MM THK)	
	25	1	**8T-4835**	5	BOLT (1/2-13X2-IN)	
	26	1	**8T-4896**	18	WASHER-HARD (10.2X18.5X2.5-MM THK)	
	27	1	**9B-7237**	5	BOLT (3/8-16X1.25-IN)	

M-METRIC PART

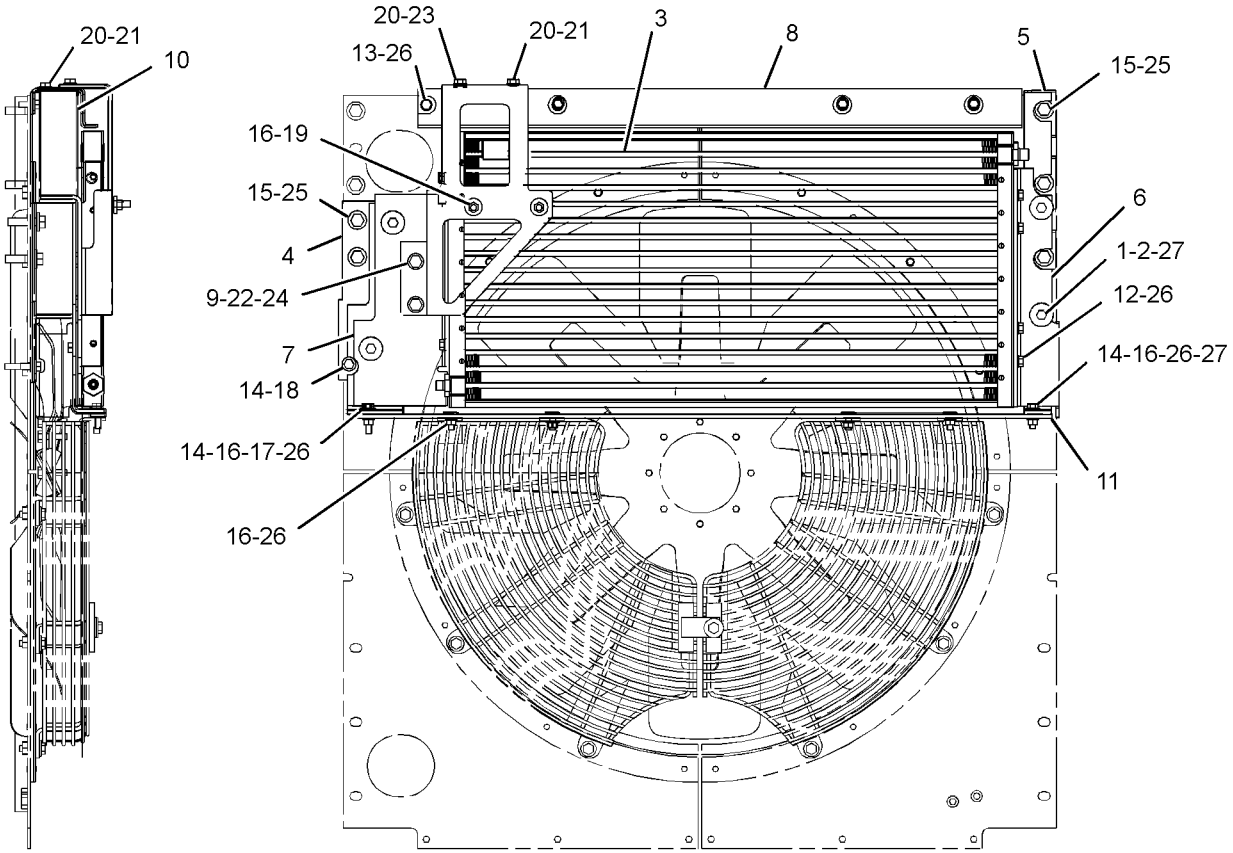

LEFT SIDE VIEW

REAR VIEW

GRAPHIC #1 **<END>** g02788909

OPERATOR STATION

103-9527 CONDENSER GP-REFRIGERANT

S/N: DSH1-UP; DLN1-UP; DJR1-UP
WITH FANS
PART OF 165-8322 CONDENSER & MTG GP-REFRIGERANT
AN ATTACHMENT

SMCS-1805 **i03995825**

NOTE	REF NO	GRAPHIC REF	PART NUMBER	QTY	PART NAME 1 2 3 4 5 6 (PRODUCT LEVEL)	SEE PAGE
	1	1	**3E-5239**	1	RELAY AS (24-VOLT) (CONDENSER FAN MOTOR)	
	2	1	**3S-2093**	7	STRAP-CABLE	
	3	1	**7K-1181**	2	STRAP-CABLE	
	4	1	**7T-5856**	4	CLAMP	
	5	1	**8C-3756**	1	FILM-IDENTIFICATION (GROUP NO., SEQUENCE NO.)	
	6	1	**8P-6363**	1	PLUG	
	7	1	**9X-3452**	2	GUARD AS-FAN	
	8	1	**124-8490**	1	HARNESS AS-HEATER & AIR COND	
		1	**9X-1054**	1	PLUG AS-CONNECTOR (4-PIN)	
		1	**102-8803**	1	KIT-RECEPTACLE (3-PIN)	
					(INCLUDES RECEPTACLE AS & WEDGE)	
		1	**155-2270**	2	KIT-CONNECTING PLUG (2-PIN)	
					(EACH INCLUDES PLUG AS, WEDGE, & INTERFACE SEAL)	
	9	1	**142-8620**	2	FAN AS-CONDENSER (4-BLADE)	
					(EACH INCLUDES)	
		1	**3H-7180**	1	SETSCREW (1/4-28X0.25-IN)	
	10	1	**308-6335**	2	MOTOR GP-ELECTRIC (CONDENSER BLOWER MOTOR)	
					(EACH INCLUDES)	
		1	**9W-0852**	2	PIN-CONNECTOR (14-GA TO 16-GA)	
		1	**102-8802**	1	KIT-RECEPTACLE (2-PIN)	
					(INCLUDES RECEPTACLE AS & WEDGE)	
J	11	1	**203-2070**	8	MOUNT	
J	12	1	**204-9530**	4	TUBE	
J	13	1	**204-9531**	1	COIL-CONDENSER	
	14	1	**204-9532**	1	CASE AS	
	15	1	**4P-8134**	2	CLIP	
M	16	1	**5C-2890**	1	NUT (M6X1-THD)	
	17	1	**5P-1075**	8	WASHER-HARD (10.2X22.5X3-MM THK)	
	18	1	**5P-8441**	1	GROMMET	
J	19	1	**7X-0578**	4	WASHER-HARD (10.2X32X2.5-MM THK)	
	20	1	**8T-4121**	4	WASHER-HARD (11X21X2.5-MM THK)	
M	21	1	**8T-4133**	4	NUT (M10X1.5-THD)	
M	22	1	**8T-4137**	8	BOLT (M10X1.5X20-MM)	
M	23	1	**8T-4192**	12	BOLT (M12X1.75X25-MM)	
	24	1	**8T-4205**	1	WASHER-HARD (7.2X14.5X2-MM THK)	
	25	1	**8T-4223**	12	WASHER-HARD (13.5X25.5X3-MM THK)	
JM	26	1	**8T-6685**	4	BOLT (M10X1.5X110-MM)	
	27	1	**9X-7373**	1	GROMMET	
D	28	1	**5P-5924**		SEAL (0.2-M)	
D	29	1	**5P-5672**		SEAL (1.2-M)	
D	30	1	**5P-5908**		SEAL (1-M)	
					AVAILABLE REPAIR KIT(S):	
J			**216-0805**	1	KIT-COIL (AIR CONDITIONER)	

D-ORDER BY THE METER
J-KIT MARKED J SERVICES PARTS MARKED J
M-METRIC PART

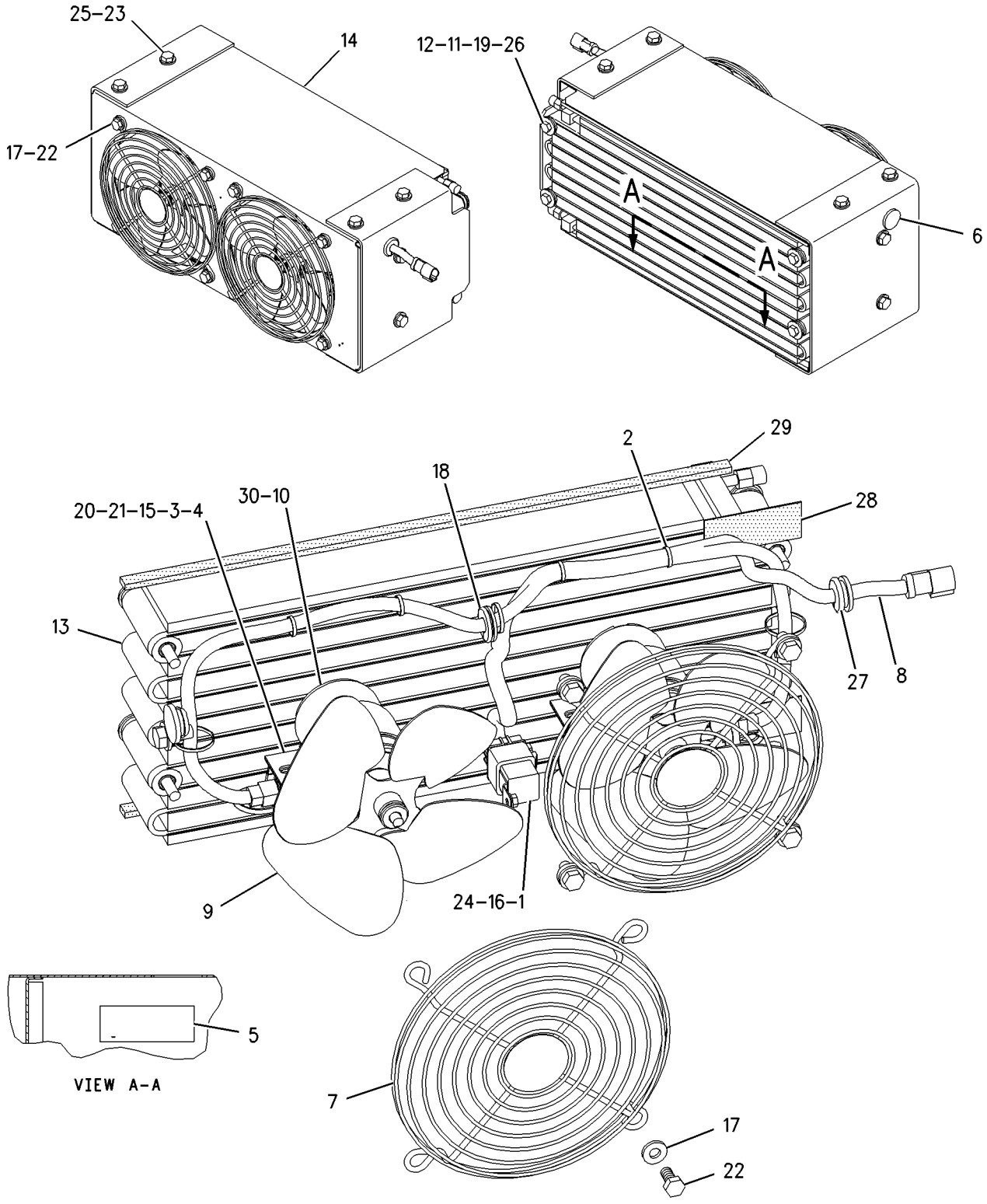

(COVER AND MTG HARDWARE REMOVED)

GRAPHIC #1 **<END>** g00938782

OPERATOR STATION

375-4845 CONTROL GP-GOVERNOR & BRAKE

S/N: DSH1-UP; DLN1-UP; DJR1-UP
PART OF 387-0554 COLD WEATHER AR, 380-7900 OPERATOR AR
ALSO AN ATTACHMENT

SMCS-4122 **i04713974**

NOTE	REF NO	GRAPHIC REF	PART NUMBER	QTY	PART NAME 1 2 3 4 5 6 (PRODUCT LEVEL)	SEE PAGE
	1	1	**1B-8706**	3	KEY-WOODRUFF	
	2	1	**1B-8714**	1	KEY-WOODRUFF	
	3	1	**1M-4533**	1	LEVER	
	4	1	**3S-8313**	1	PLUG-CUP	
	5	1	**3W-0556**	1	SHAFT	
	6	1	**7K-1181**	1	STRAP-CABLE	
	7	1	**7P-4190**	4	BEARING-ROLLER	
	8	1	**8T-1177**	2	BEARING-ROLLER	
	9	1	**9G-5211**	1	SPACER (12.95X19.05X9-MM THK)	
	10	1	**9W-2545**	1	BOLT-ANCHOR	
M	11	1	**9X-6615**	2	BOLT (M5X0.8X30-MM)	
	12	1	**110-8379**	1	PEDAL (BRAKE)	
	13	1	**115-8057**	1	SPRING	
	14	1	**160-1431**	1	SHAFT	
	15	1	**160-1434**	1	LEVER	
	16	1	**165-9104**	1	SPACER (6.5X9.5X10-MM THK)	
	17	1	**171-7077**	2	ROD-THREADED	
	18	1	**184-8060**	1	PEDAL (DECELERATOR)	
	19	1	**194-7034**	1	SPRING	
Y	20	1	**266-1467**	1	SENSOR GP-POSITION (ROTARY) (DECELERATOR PEDAL)	184
	21	1	**317-3919**	1	HOUSING AS	
	22	1	**317-3930**	1	BRACKET AS	
	23	1	**317-3931**	1	BRACKET-SUPPORT	
	24	1	**317-3933**	1	LEVER	
	25	1	**317-3934**	1	SHAFT	
Y	26	1	*317-3939*	1	ROD GP	611
	27	1	**318-0157**	1	SHAFT	
	28	1	**318-2717**	1	PAD AS	
M	29	1	**095-1276**	1	SETSCREW-SOCKET	
	30	1	**111-9251**	4	WASHER-HARD (20X35X1.6-MM THK)	
	31	1	**1B-0676**	2	PIN	
	32	1	**1K-6872**	1	LOCKNUT (1/2-13-THD)	
	33	1	**1M-1341**	1	END-YOKE ROD	
	34	1	**2J-6356**	4	RING-RETAINING	
	35	1	**3B-4615**	2	PIN-COTTER	
	36	1	**4B-3611**	1	SETSCREW-SQUARE HEAD (3/8-16X2-IN)	
	37	1	**4L-6496**	1	BOLT (3/8-24X2-IN)	
	38	1	**4L-9337**	1	BOLT (3/8-16X1.5-IN)	
	39	1	**5H-6799**	1	LEVER-GOVERNOR CONTROL	
	40	1	**5P-1076**	3	WASHER-HARD (13.5X30X4-MM THK)	
	41	1	**6V-0894**	1	SEAL-O-RING	
M	42	1	**6V-7357**	1	BOLT (M6X1X25-MM)	
	43	1	**6V-8801**	2	NUT (3/8-16-THD)	
	44	1	**7X-0519**	3	WASHER-HARD (20X33.5X5-MM THK)	
M	45	1	**7Y-7394**	4	SCREW-BUTTON HEAD (M8X1.25X25-MM)	
	46	1	**8F-7702**	4	SEAL-LIP TYPE	
	47	1	**8T-4121**	6	WASHER-HARD (11X21X2.5-MM THK)	
M	48	1	**8T-4133**	4	NUT (M10X1.5-THD)	
M	49	1	**8T-4139**	3	BOLT (M12X1.75X30-MM)	
M	50	1	**8T-4182**	1	BOLT (M10X1.5X45-MM)	
M	51	1	**8T-4186**	1	BOLT (M10X1.5X40-MM)	
M	52	1	**8T-4195**	6	BOLT (M10X1.5X30-MM)	
	53	1	**8T-4205**	2	WASHER-HARD (7.2X14.5X2-MM THK)	
	54	1	**8T-4223**	2	WASHER-HARD (13.5X25.5X3-MM THK)	

375-4845 **CONTROL GP-GOVERNOR & BRAKE** *(contd.)* **i04713974**

NOTE	REF NO	GRAPHIC REF	PART NUMBER	QTY	PART NAME 1 2 3 4 5 6 (PRODUCT LEVEL)	SEE PAGE
	55	1	**8T-4224**	4	WASHER-HARD (8.8X16X2-MM THK)	
	56	1	**9B-7237**	1	BOLT (3/8-16X1.25-IN)	
	57	1	**9L-7712**	1	NUT (3/8-24-THD)	

M-METRIC PART
Y-SEPARATE ILLUSTRATION

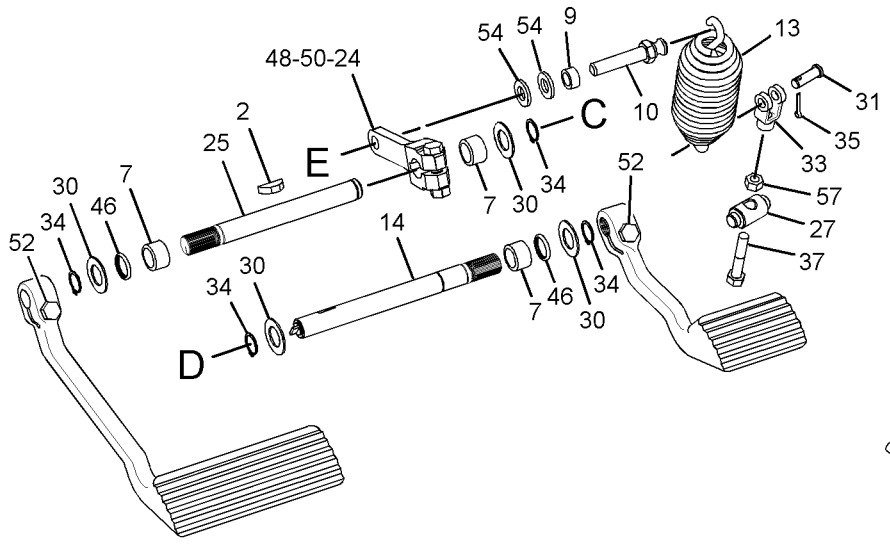

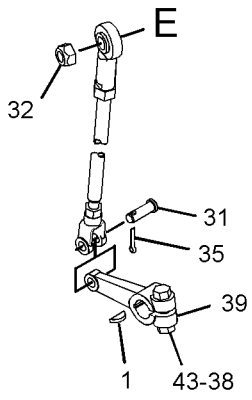

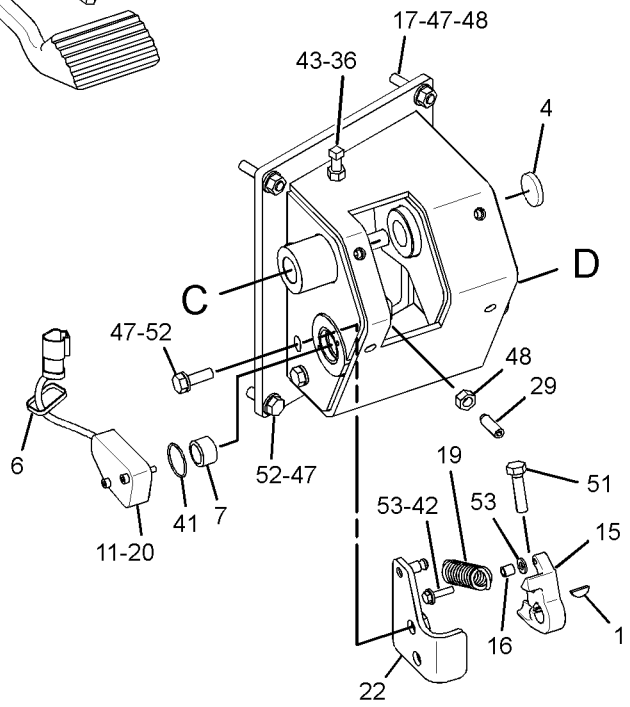

VIEW OF AREA A
(EXPLODED)

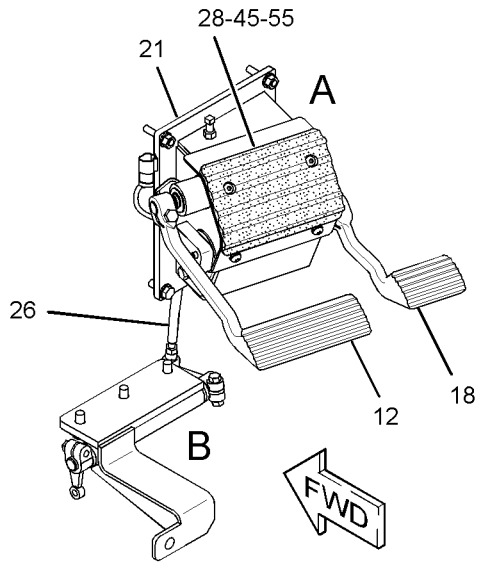

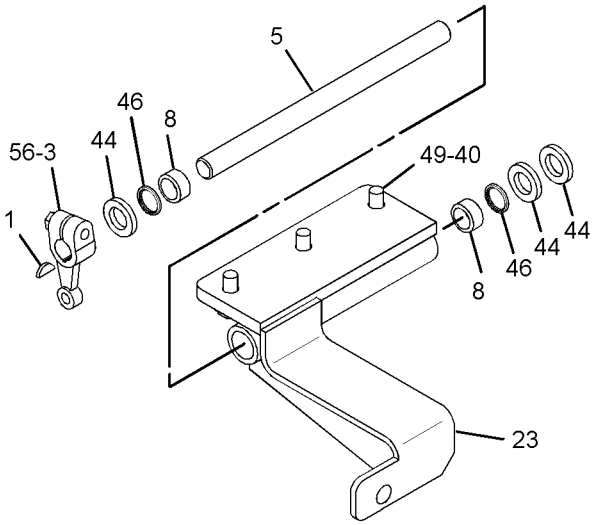

VIEW OF AREA B
(EXPLODED)

GRAPHIC #1 **<END>** g02848689

OPERATOR STATION

161-3615 CONTROL GP-HANDLE–BULLDOZER

S/N: DSH1-UP; DLN1-UP; DJR1-UP

PART OF 222-1150 CONTROL GP-PILOT OPERATED HYD

SMCS-5063, 5705 **i04009478**

NOTE	REF NO	GRAPHIC REF	PART NUMBER	QTY	PART NAME 1 2 3 4 5 6 (PRODUCT LEVEL)	SEE PAGE
	1	1	**188-1079**	1	CONTROL GP-HANDLE (BULLDOZER)	
	2	1	**4B-9808**	2	SETSCREW (1/4-20X0.5-IN)	

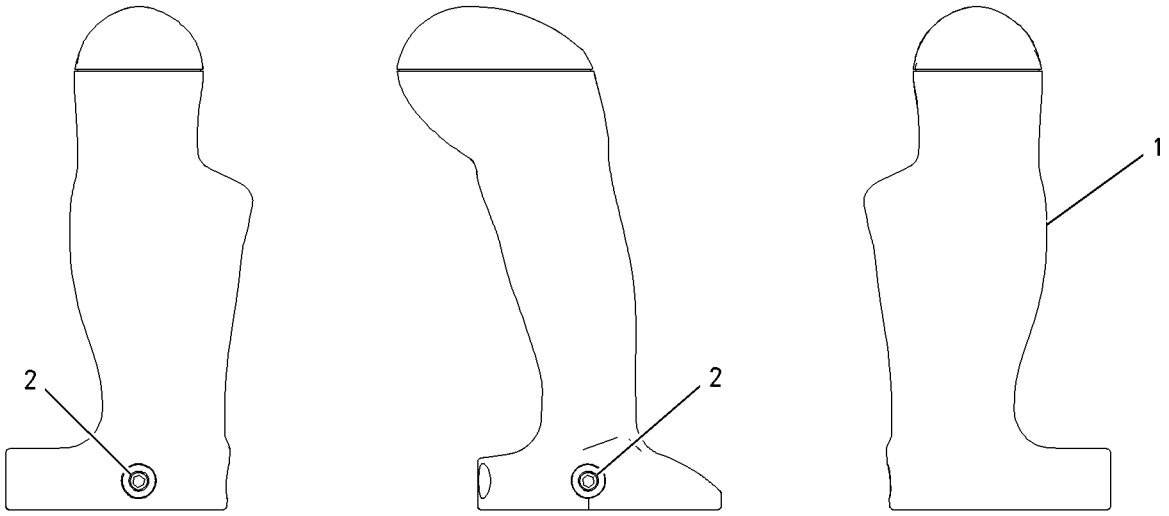

GRAPHIC #1 **<END>** g00763645

OPERATOR STATION

322-9655 CONTROL GP-HANDLE–BULLDOZER

S/N: DSH1-UP; DLN1-UP; DJR1-UP
WITH TRIGGER
PART OF 322-8631 VALVE GP-PILOT
AN ATTACHMENT

SMCS-5063, 5705 **i04021667**

NOTE	REF NO	GRAPHIC REF	PART NUMBER	QTY	PART NAME 1 2 3 4 5 6 (PRODUCT LEVEL)	SEE PAGE
	1	1	**162-8387**	1	LEVER-TRIGGER	
	2	1	**162-8389**	1	PLATE (SWITCH)	
	3	1	**175-4165**	2	SCREW-PAN HEAD (4-20X0.5-IN)	
	4	1	**179-7376**	3	SWITCH AS-PUSH BUTTON (IMPLEMENT)	
					(EACH INCLUDES)	
		1	**162-8378**	1	SWITCH AS-PUSH BUTTON (IMPLEMENT)	
		1	**144-0331**	1	CAP-PUSH BUTTON (YELLOW)	
E		1	**5P-8435**		WIRE (22-GA) (14-CM)	
	5	1	**175-4170**	2	SCREW-PAN HEAD (6-19X1.625-IN)	
	6	1	**9B-1117**	2	LOCKWASHER	
	7	1	**1S-9593**	1	STRAP-CABLE	
	8	1	**8T-8729**	11	PIN-CONNECTOR (16-GA TO 18-GA)	
E	9	1	**218-7136**		SLEEVE (63-CM)	

E-ORDER BY THE CENTIMETER

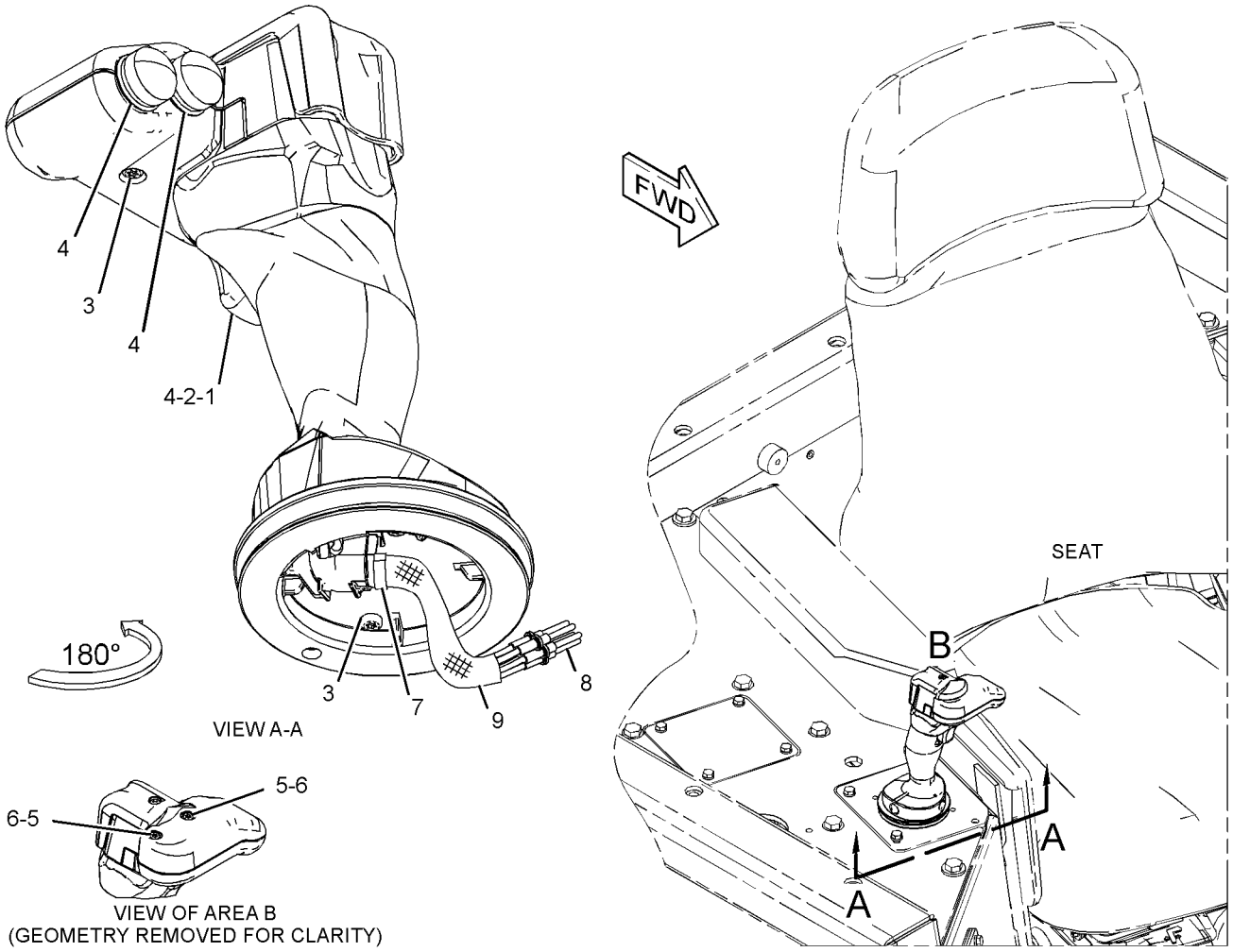

GRAPHIC #1 **<END>** g02201655

OPERATOR STATION

222-1150 CONTROL GP-PILOT OPERATED HYD—BULLDOZER

S/N: DSH1-UP; DLN1-UP; DJR1-UP
PART OF 313-3756 HYDRAULIC AR

SMCS-5059, 5063, 5705 **i04033057**

NOTE	REF NO	GRAPHIC REF	PART NUMBER	QTY	PART NAME 1 2 3 4 5 6 (PRODUCT LEVEL)	SEE PAGE
	1	1	**160-4702**	1	PLATE	
Y	2	1	*161-3615*	1	CONTROL GP-HANDLE (BULLDOZER)	546
Y	3	1	**200-0189**	1	VALVE GP-PILOT (BULLDOZER LIFT, TILT)	482
	4	1	**223-3313**	1	PLATE AS	
	5	1	**225-4134**	1	GASKET	
	6	1	**225-4135**	1	GASKET	
	7	1	**5P-1075**	4	WASHER-HARD (10.2X22.5X3-MM THK)	
M	8	1	**6V-7357**	6	BOLT (M6X1X25-MM)	
M	9	1	**8T-4195**	4	BOLT (M10X1.5X30-MM)	
	10	1	**9X-8256**	6	WASHER (6.6X12X2-MM THK)	

M-METRIC PART
Y-SEPARATE ILLUSTRATION

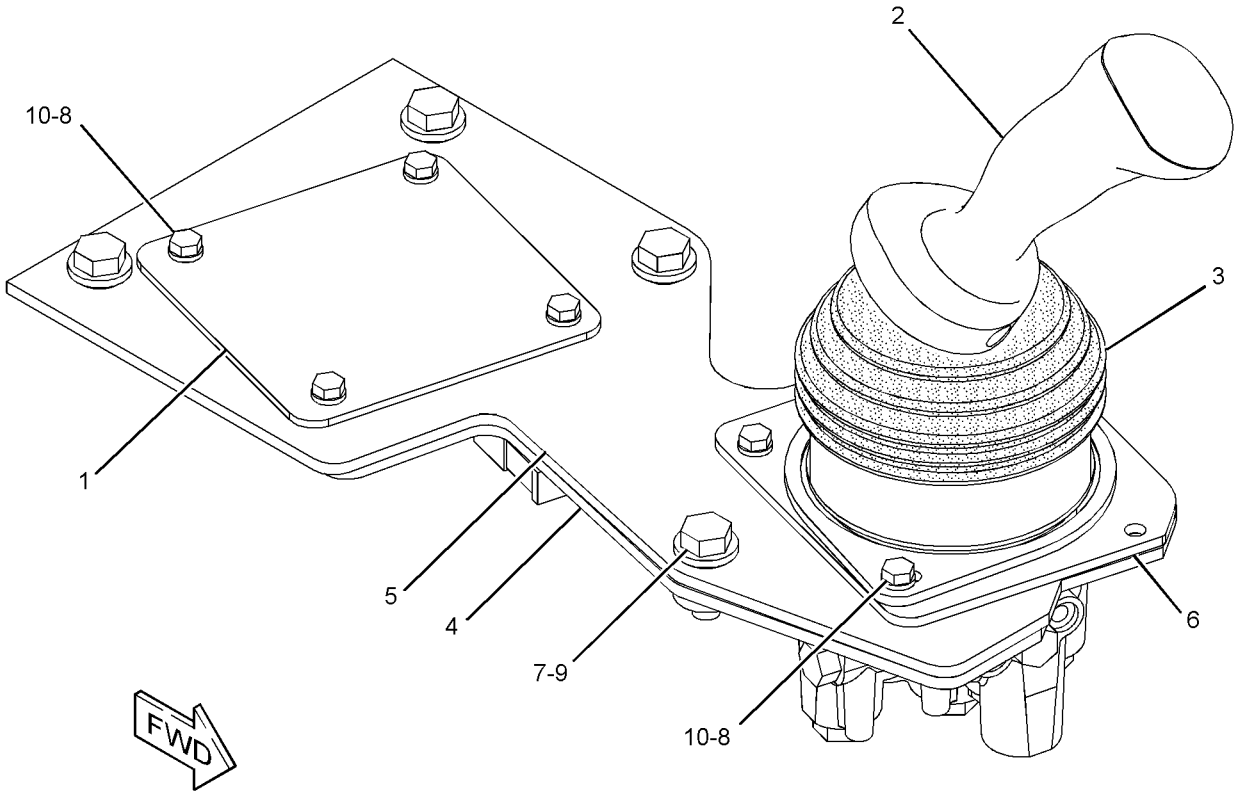

GRAPHIC #1 **<END>** g01298553

OPERATOR STATION

374-4179 COVER GP-CAB

S/N: DSH1-UP; DLN1-UP; DJR1-UP

PART OF 313-3338, 313-3759, 379-6225 CHASSIS AR

SMCS-7301 **i04712396**

NOTE	REF NO	GRAPHIC REF	PART NUMBER	QTY	PART NAME 1 2 3 4 5 6 (PRODUCT LEVEL)	SEE PAGE
	1	1	**159-7949**	1	FLOOR MAT	
	2	1	*375-4879*	1	FLOORPLATE AS	
		1	**237-0205**	1	FLOORPLATE AS	
M		1	**8T-3597**	4	NUT-WELD (M12X1.75-THD)	
		1	**241-4342**	1	GASKET	
	3	1	**387-0543**	2	SUPPORT AS	
	4	1	**387-0545**	1	FLOORPLATE AS	
		1	**237-0204**	1	FLOORPLATE AS	
M		1	**8T-3490**	2	NUT-WELD (M10X1.5-THD)	
		1	**241-4344**	1	GASKET	
	5	1	**5P-1076**	4	WASHER-HARD (13.5X30X4-MM THK)	
	6	1	**7X-7729**	13	WASHER (11X25X3-MM THK)	
M	7	1	**8T-4139**	4	BOLT (M12X1.75X30-MM)	
M	8	1	**8T-4195**	11	BOLT (M10X1.5X30-MM)	
M	9	1	**8T-4196**	2	BOLT (M10X1.5X35-MM)	

M-METRIC PART

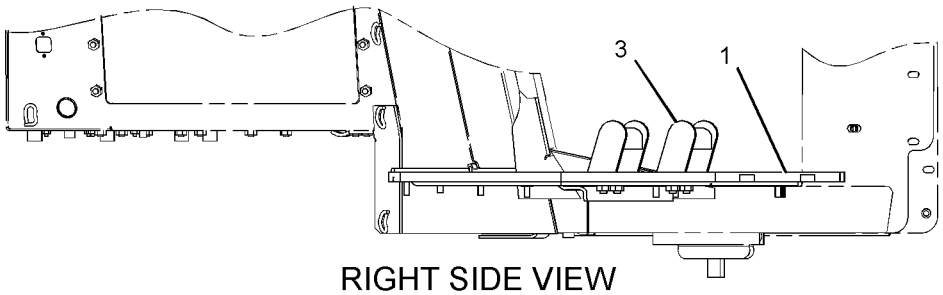

RIGHT SIDE VIEW

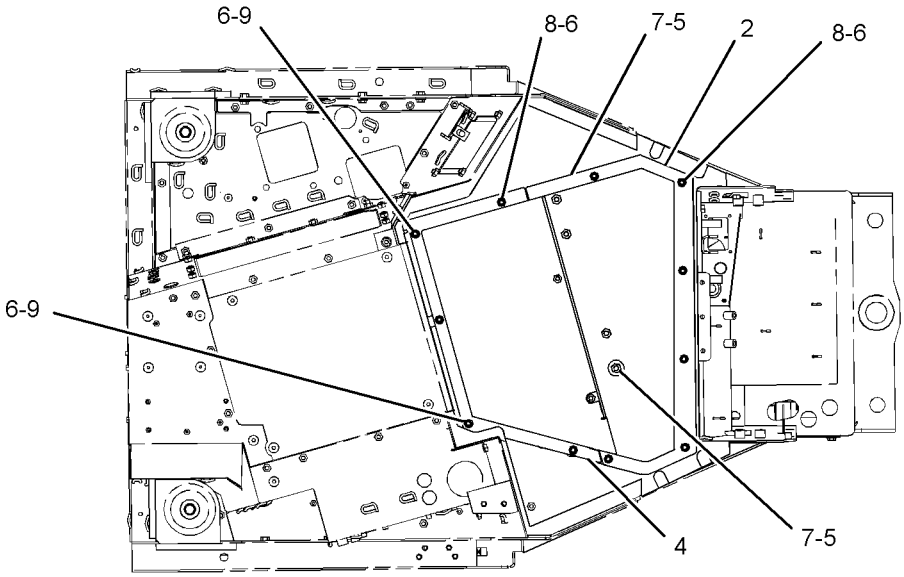

BOTTOM VIEW

GRAPHIC #1 **<END>** g02832440

OPERATOR STATION

317-4154 COVER GP-CONSOLE

S/N: DSH1-UP; DLN1-UP; DJR1-UP
PART OF 317-4153, 387-0547 CAB AR
ALSO AN ATTACHMENT

SMCS-5258 **i03994805**

NOTE	REF NO	GRAPHIC REF	PART NUMBER	QTY	PART NAME 1 2 3 4 5 6 (PRODUCT LEVEL)	SEE PAGE
	1	1	**6Y-0206**	4	RETAINER	
	2	1	**7G-4824**	2	STRAP	
	3	1	**8E-7791**	2	STRAP	
	4	1	**8Y-6388**	3	LOUVER AS-VENT	
	5	1	**154-5629**	1	ASHTRAY AS	
	6	1	**156-7410**	1	COVER AS	
	7	1	**159-7943**	1	PANEL-ACOUSTICAL	
	8	1	**159-7946**	1	PANEL-ACOUSTICAL	
	9	1	**159-7948**	1	FLOOR MAT (REAR)	
	10	1	**159-7949**	1	FLOOR MAT (FRONT)	
	11	1	**161-4024**	2	BOOT	
	12	1	**170-5849**	1	SHROUD AS	
		1	**170-5851**	1	LINER-FOAM	
		1	**170-5852**	1	LINER-FOAM	
		1	**170-5853**	1	LINER-FOAM	
	13	1	**211-0220**	1	COVER AS	
	14	1	**241-7913**	1	COVER AS-ACCESS	
	15	1	**242-8403**	1	PANEL AS-CONSOLE	
	16	1	**242-8404**	1	PANEL	
	17	1	**243-1171**	1	PANEL-ACOUSTICAL	
	18	1	**317-4156**	1	COVER	
	19	1	**317-4157**	1	COVER	
	20	1	**317-4171**	1	PLATE	
	21	1	**111-5147**	6	SCREW-MACHINE (6-32X0.625-IN)	
	22	1	**198-9706**	4	SCREW-TRUSS HEAD (M5X0.8X16-MM)	
	23	1	**5P-4116**	4	WASHER-HARD (8.8X20.5X2-MM THK)	
	24	1	**7D-6922**	6	LOCKNUT (6-32-THD)	
M	25	1	**8T-4189**	4	BOLT (M8X1.25X20-MM)	
	26	1	**9N-0869**	3	WASHER-HARD (8.8X25.5X2-MM THK)	
	27	1	**9X-2038**	5	WASHER (7X19X2-MM THK)	
M	28	1	**9X-2043**	9	SCREW-TRUSS HEAD (M6X1X14-MM)	
M	29	1	**9X-2045**	8	SCREW-TRUSS HEAD (M6X1X20-MM)	
E	30	1	**124-3243**		SEAL (56-CM)	

E-ORDER BY THE CENTIMETER
M-METRIC PART

317-4154 **COVER GP-CONSOLE** *(contd.)* **i03994805**

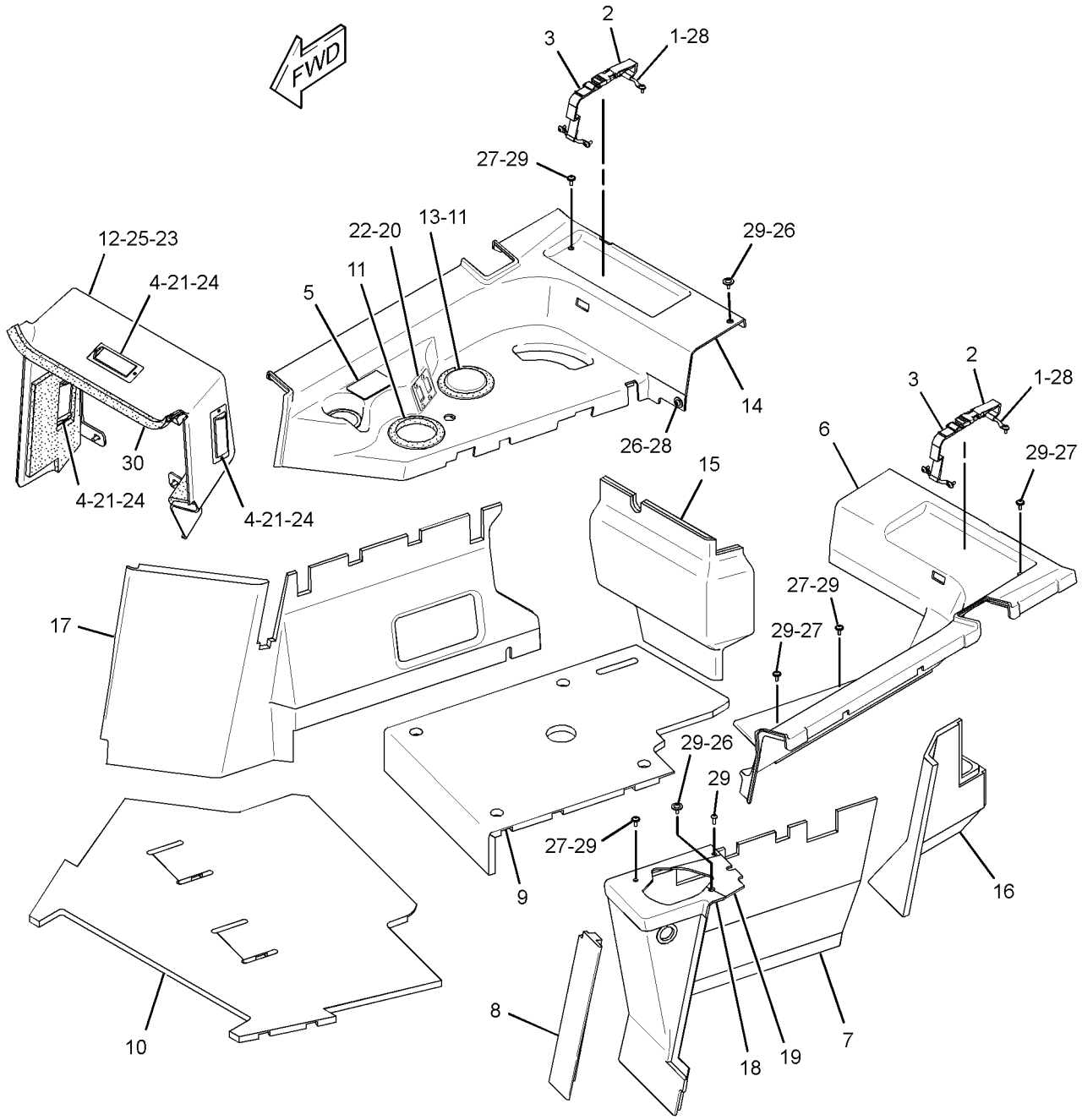

GRAPHIC #1 **<END>** g02185954

OPERATOR STATION

336-1846 COVER GP-CONSOLE

S/N: DSH1-UP; DLN1-UP; DJR1-UP
PART OF 317-1767 PLATFORM GP-OPERATOR
AN ATTACHMENT

SMCS-5258 **i03994970**

NOTE	REF NO	GRAPHIC REF	PART NUMBER	QTY	PART NAME 1 2 3 4 5 6 (PRODUCT LEVEL)	SEE PAGE
	1	1	**193-7377**	2	PANEL	
	2	1	**336-1847**	1	COVER AS	
		1	**5P-8244**	2	WASHER-HARD (12X22.5X2.5-MM THK)	
	3	1	**336-3968**	1	SEAL	
D	4	1	**6V-2803**		SEAL (0.21-M)	

D-ORDER BY THE METER

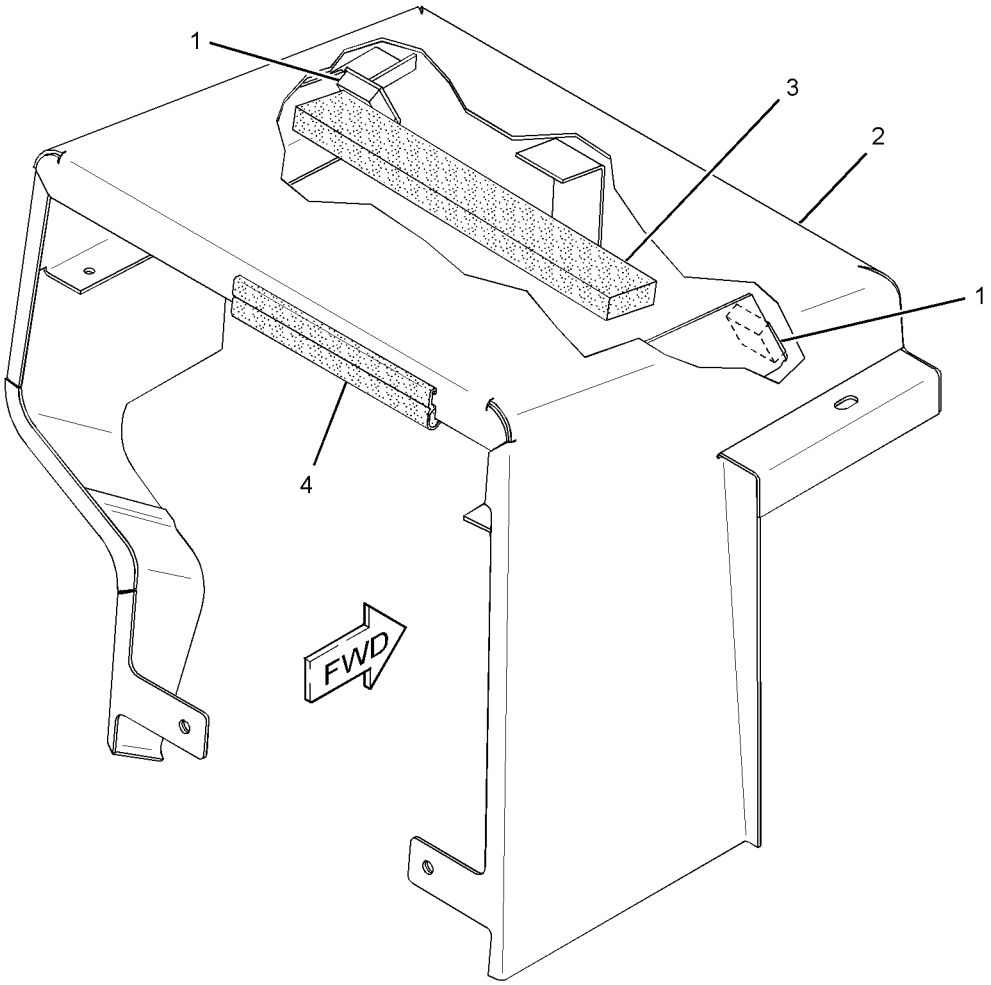

GRAPHIC #1 **<END>** g02177867

OPERATOR STATION

387-2153 GUARD GP-WINDOW

S/N: DSH1-UP; DLN1-UP; DJR1-UP
PART OF 358-4684 CAB AR
AN ATTACHMENT

SMCS-7165 **i04672090**

NOTE	REF NO	GRAPHIC REF	PART NUMBER	QTY	PART NAME 1 2 3 4 5 6 (PRODUCT LEVEL)	SEE PAGE
	1	1	**275-4236**	4	SCREW-WING (M12X1.75X40-MM)	
	2	1	**387-2149**	1	GUARD AS (RH)	
		1	**155-6479**	2	HINGE AS	
	3	1	**387-2150**	1	GUARD AS (LH)	
		1	**155-6479**	2	HINGE AS	
	4	1	**249-2844**	8	WASHER (12.7X31.7X1-MM THK)	
	5	1	**3B-4610**	4	PIN-COTTER	
	6	1	**5P-1076**	4	WASHER-HARD (13.5X30X4-MM THK)	
M	7	1	**8T-4192**	4	BOLT (M12X1.75X25-MM)	

M-METRIC PART

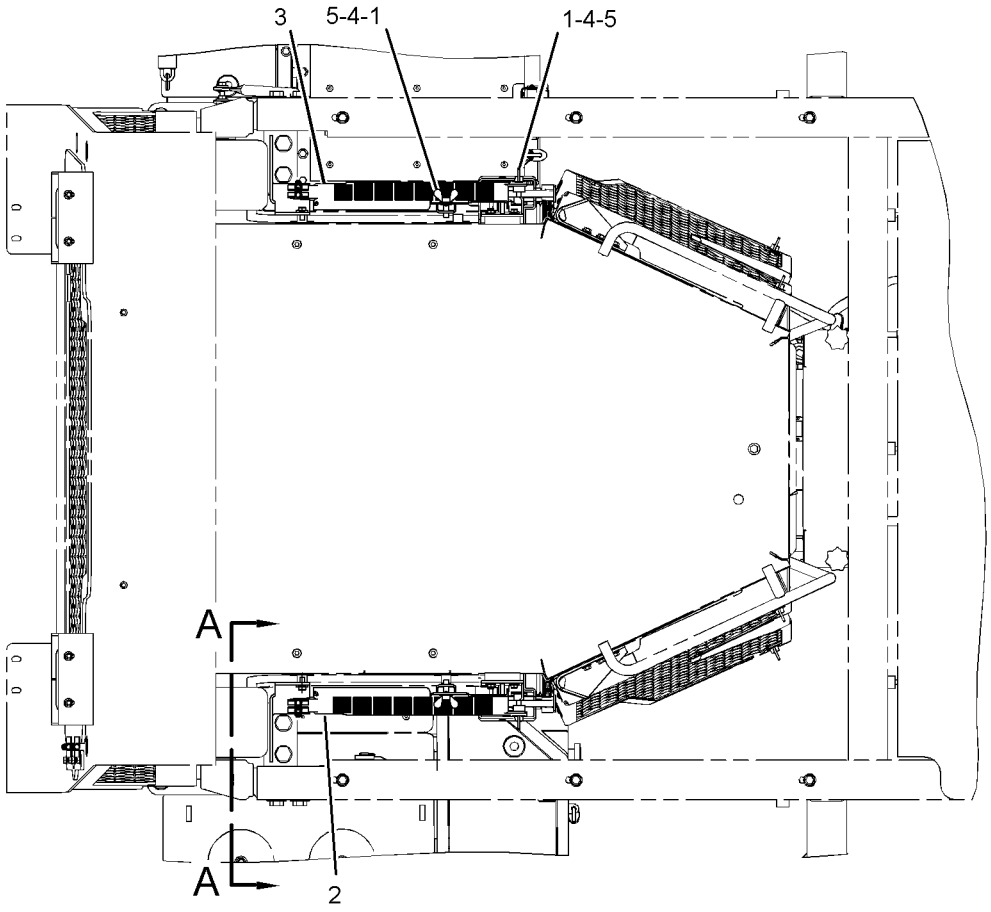

TOP VIEW

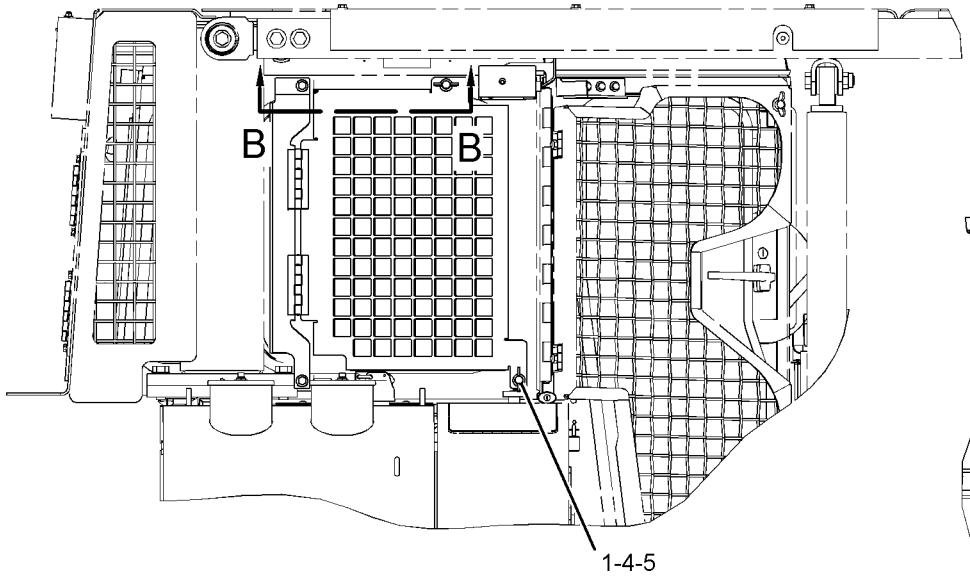

RIGHT SIDE VIEW

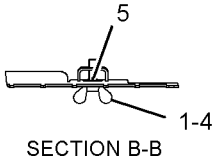

SECTION B-B

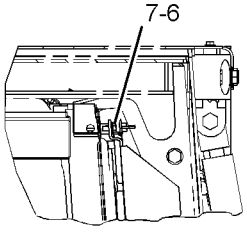

VIEW A-A

GRAPHIC #1 **<END>** g02821857

OPERATOR STATION

108-1335 HANDHOLD GP

S/N: DSH1-UP; DLN1-UP; DJR1-UP
PART OF 323-5696, 327-9363 CAB AR
ALSO AN ATTACHMENT

SMCS-7256 **i04010892**

NOTE	REF NO	GRAPHIC REF	PART NUMBER	QTY	PART NAME 1 2 3 4 5 6 (PRODUCT LEVEL)	SEE PAGE
	1	1	**9W-5343**	2	HANDHOLD	
	2	1	**5P-1076**	4	WASHER-HARD (13.5X30X4-MM THK)	
M	3	1	**8T-4183**	4	BOLT (M12X1.75X40-MM)	

M-METRIC PART

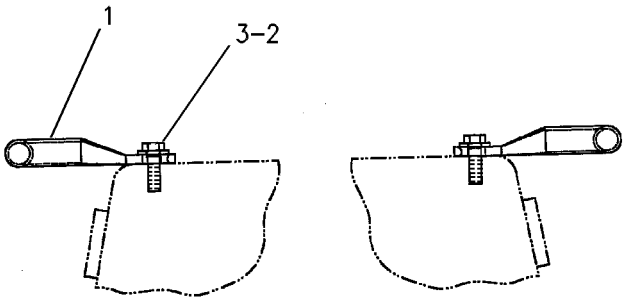

REAR VIEW

GRAPHIC #1 **<END>** g00254256

OPERATOR STATION

279-2590 HEATER GP-CAB

S/N: DSH1-UP; DLN1-UP; DJR1-UP
PART OF 317-4153, 387-0547 CAB AR
ALSO AN ATTACHMENT

SMCS-7304 **i03994764**

NOTE	REF NO	GRAPHIC REF	PART NUMBER	QTY	PART NAME 1 2 3 4 5 6 (PRODUCT LEVEL)	SEE PAGE
	1	1	**5D-1026**	2	CLAMP-BAND	
	2	1	**6T-5617**	1	PLATE	
	3	1	**7T-6299**	1	GROMMET	
	4	1	**9X-2185**	4	SCREW (8-15X0.44-IN)	
	5	1	**109-5761**	1	COIL AS-HEATER	
	6	1	**134-9602**	1	VALVE AS-WATER	
	6A	1	**3E-1841**	1	LEVER	
	6B	1	**6V-6717**	1	SCREW-WASHER HEAD (8-32X9.52-MM)	
	6C	1	**8Y-5737**	1	CLAMP	
	6D	1	**037-4426**	1	RETAINER	
	6E	1	**102-0341**	1	CLIP	
	7	1	**141-4123**	1	PLATE	
	8	1	**8T-4121**	2	WASHER-HARD (11X21X2.5-MM THK)	
M	9	1	**8T-4137**	2	BOLT (M10X1.5X20-MM)	
E	10	1	**5P-0767**		HOSE (12-CM)	
D	11	1	**5P-5639**		SEAL (0.3-M EACH)	
D	12	1	**5P-5643**		SEAL (0.4-M EACH)	

D-ORDER BY THE METER
E-ORDER BY THE CENTIMETER
M-METRIC PART

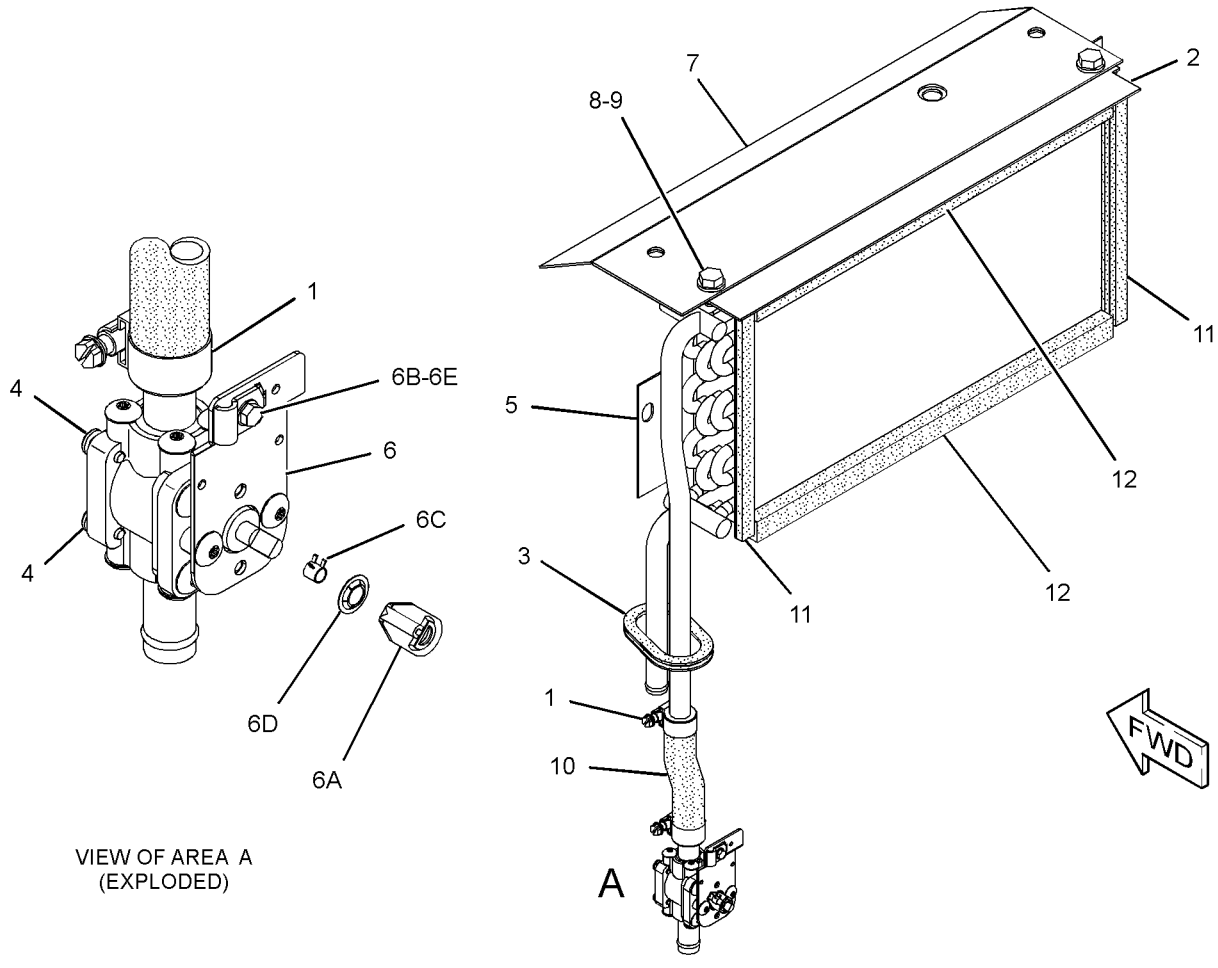

GRAPHIC #1 **<END>** g02174239

OPERATOR STATION

174-2231 HOUSING GP-SEAT SUSPENSION

S/N: DSH1-UP; DLN1-UP; DJR1-UP
PART OF 160-7165 SUSPENSION GP-SEAT
ALSO AN ATTACHMENT

SMCS-7321 **i03557482**

NOTE	REF NO	GRAPHIC REF	PART NUMBER	QTY	PART NAME 1 2 3 4 5 6 (PRODUCT LEVEL)	SEE PAGE
	1	1	**1Y-7927**	1	PIN	
	2	1	**2D-6235**	2	LOCKNUT (1/4-20-THD)	
	3	1	**2M-7819**	4	RING-RETAINING	
L	4	1	**3D-2975**	2	RING-RETAINING	
	5	1	**4B-5059**	6	WASHER (15X29.5X2.5-MM THK)	
	6	1	**4N-2927**	2	RACE-THRUST BEARING	
	7	1	**5D-4822**	2	RING-RETAINING	
	8	1	**5P-8445**	4	RING-RETAINING	
	9	1	**5V-0770**	2	BOLT-CARRIAGE (1/4-20X0.74-IN)	
	10	1	**7M-7219**	1	BEARING-THRUST	
	11	1	**7V-5191**	2	SPACER (28X10X7.1-MM THK)	
P	12	1	**8L-8413**	2	STRAP-CABLE	
	13	1	**8S-7803**	4	RING-RETAINING	
	14	1	**8Y-6041**	1	ARM AS	
	15	1	**8Y-6045**	1	CAM	
	16	1	**8Y-6046**	1	PIN	
	17	1	**8Y-6047**	2	PIN	
	18	1	**8Y-6060**	2	ROLLER	
	19	1	**8Y-6062**	1	LINK-ACTUATOR	
	20	1	**8Y-6063**	1	LINK-ACTUATOR	
	21	1	**8Y-6064**	2	ROLLER-SLIDER	
	22	1	**8Y-6066**	1	SPRING	
	23	1	**8Y-6067**	1	SPACER (10.54-MM THK)	
	24	1	**8Y-6068**	1	NUT (3/8X16-THD)	
	25	1	**8Y-6069**	1	ADJUSTER AS	
	26	1	**9X-8918**	3	SCREW-FLAT HEAD (8-32X0.5-IN)	
	27	1	**095-0878**	1	PIN-SPRING	
	28	1	**131-4242**	1	BOLT (3/8-16X5.18-IN)	
	29	1	**131-5167**	1	KNOB AS-ADJUSTMENT	
	30	1	**161-5967**	1	SHAFT	
	31	1	**174-2237**	1	FRAME AS-SUSPENSION	
					AVAILABLE REPAIR KIT(S):	
			8Y-5945	1	KIT-SUSPENSION KNOB (HEIGHT ADJUSTMENT)	
					(INCLUDES KNOBS)	
L			**8Y-6859**	1	KIT-SPRING	
					(INCLUDES RINGS, SPRING & BUSHING)	
			8Y-6860	1	KIT-SPRING (HEIGHT ADJUSTMENT)	
					(INCLUDES SPRING, BUSHING & ROD)	
P			**100-3224**	1	KIT-INDICATOR (WEIGHT ADJUSTMENT)	
					(INCLUDES GUIDE, TAPE & STRAP)	
			100-5179	1	KIT-BUMPER (WEIGHT ADJUSTMENT)	
					(INCLUDES BUMPER)	
			108-4086	1	KIT-FOLLOWER	
					(INCLUDES PIN & CAM FOLLOWER)	
			108-4087	1	KIT-FOLLOWER	
					(INCLUDES PIN & CAM FOLLOWER)	
			108-4103	1	KIT-BEARING	
					(INCLUDES ROLLER ASSEMBLIES)	

L-KIT MARKED L SERVICES PARTS MARKED L
P-KIT MARKED P SERVICES PARTS MARKED P

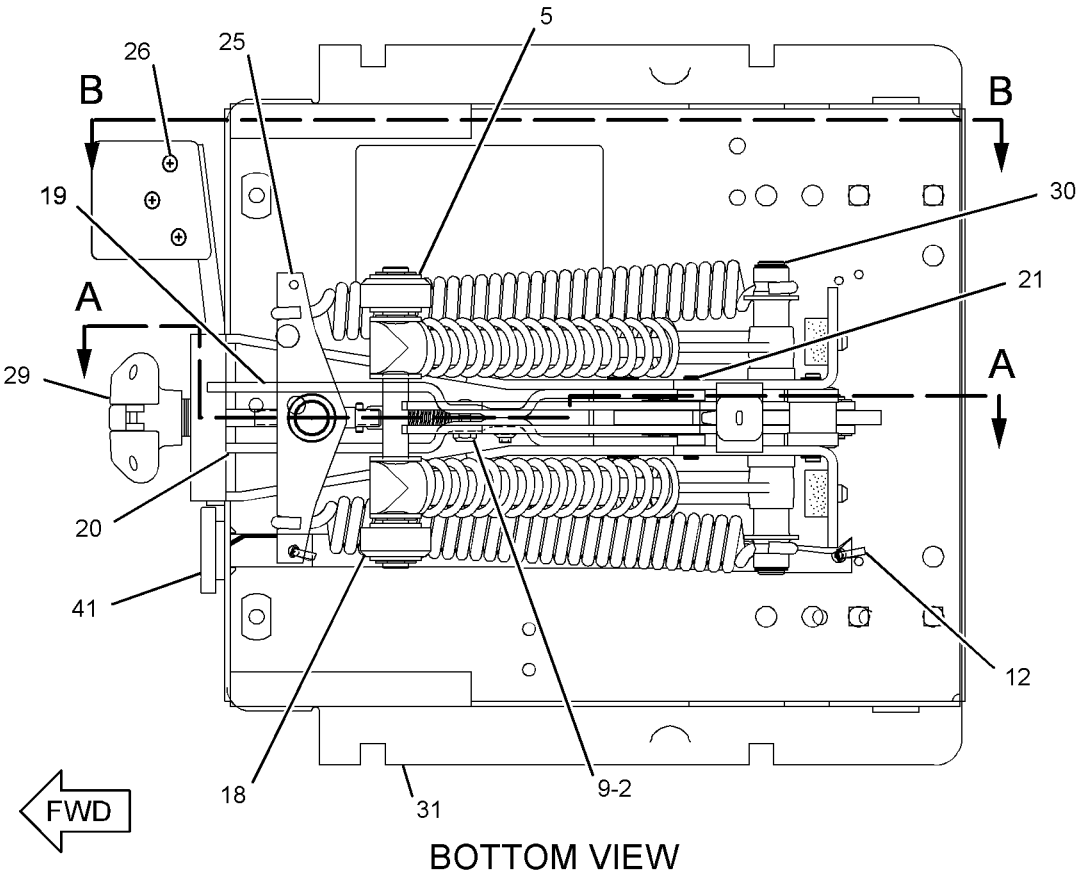

BOTTOM VIEW

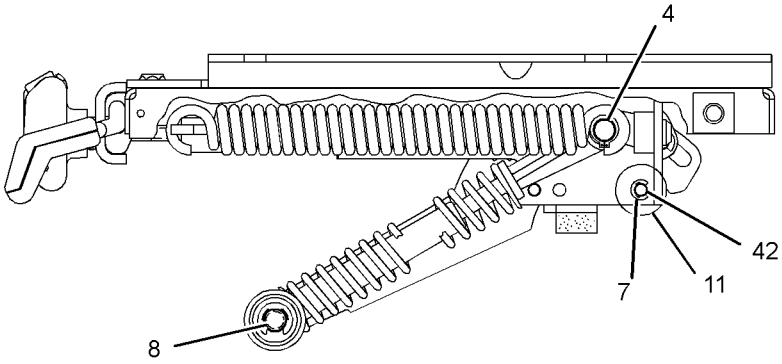

SECTION B-B

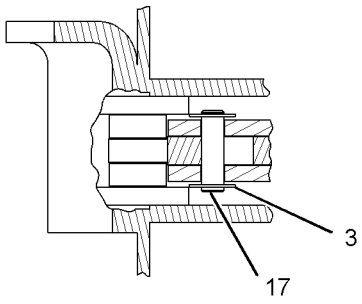

SECTION C-C

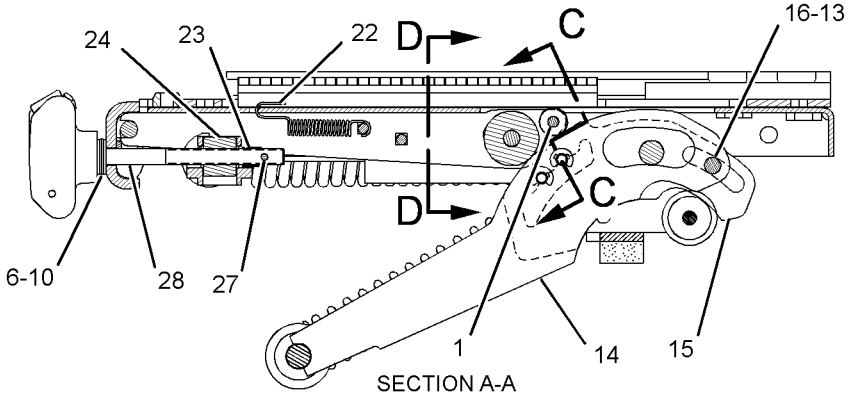

SECTION A-A

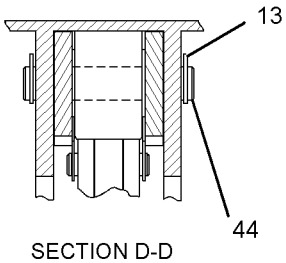

SECTION D-D

GRAPHIC #1 **<END>** g01883073

OPERATOR STATION

105-9657 INSTALLATION GP-RADIO

S/N: DSH1-UP; DLN1-UP; DJR1-UP
PART OF 323-5696, 327-9363 CAB AR
ALSO AN ATTACHMENT

SMCS-7338 **i04010749**

NOTE	REF NO	GRAPHIC REF	PART NUMBER	QTY	PART NAME 1 2 3 4 5 6 (PRODUCT LEVEL)	SEE PAGE
	1	1	**108-3138**	1	BRACKET AS	
	2	1	**6Y-7385**	1	BRACKET	
M	3	1	**8T-4171**	1	BOLT (M6X1X12-MM)	
	4	1	**9X-8256**	1	WASHER (6.6X12X2-MM THK)	
	5	1	**8E-1118**	1	ANTENNA AS	
	6	1	**9U-8263**	1	COVER	
	7	1	**9U-8746**	1	CABLE AS-COAXIAL	
	8	1	**6V-7646**	4	WASHER-HARD (7.2X25X2-MM THK)	
M	9	1	**5C-2890**	4	NUT (M6X1-THD)	
	10	1	**217-8433**	1	FILM-NOTICE (RADIO)	
	11	1	**8K-1433**	1	GROMMET	
	12	1	**4N-9915**	4	GROMMET AS	
	13	1	**3E-4356**	4	WASHER-HARD (17.5X30X6-MM THK)	
	14	1	**8T-4223**	4	WASHER-HARD (13.5X25.5X3-MM THK)	

M-METRIC PART

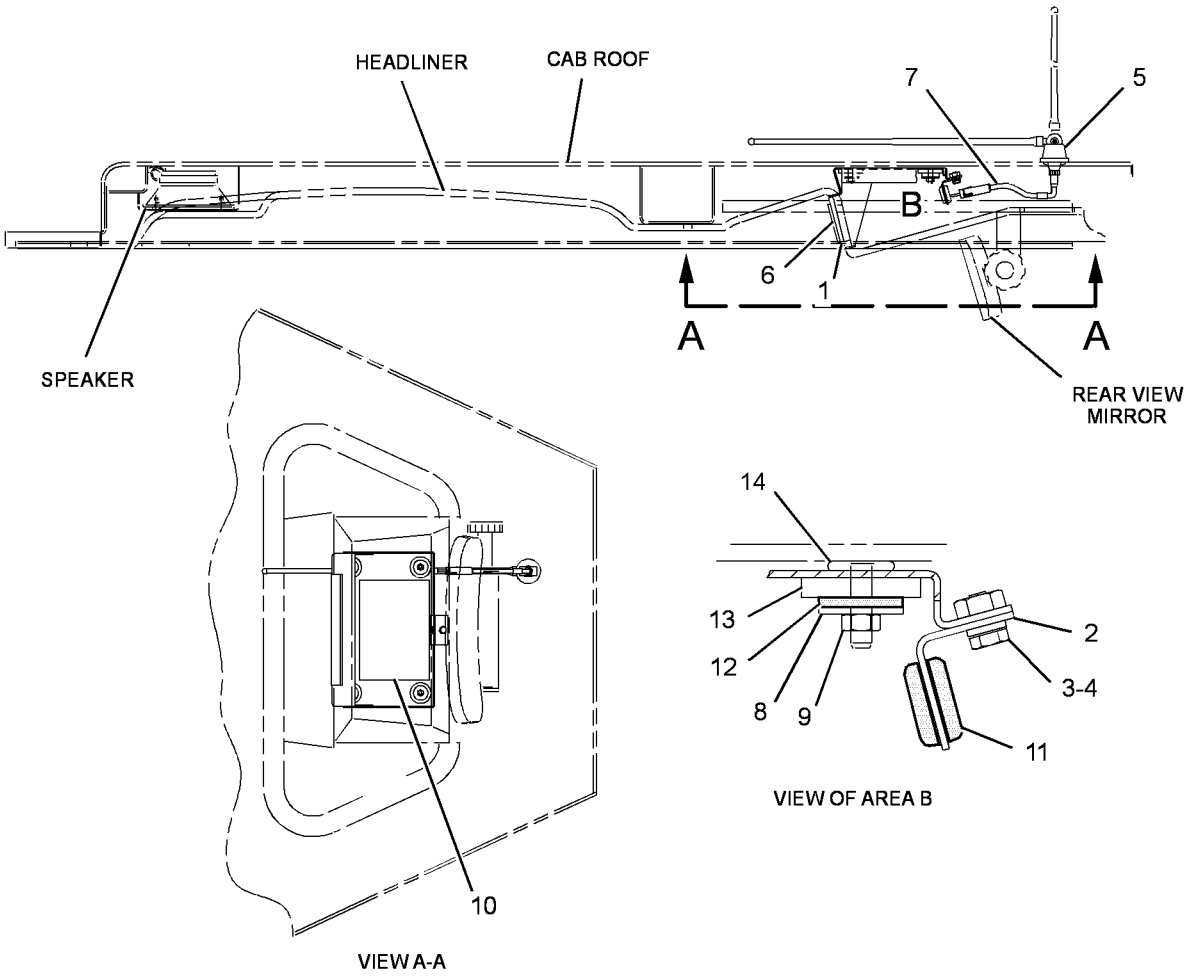

GRAPHIC #1 **<END>** g02183621

OPERATOR STATION

317-9070 INSTRUMENT GP

S/N: DSH1-UP
ENCLOSED ROPS
PART OF 387-0554 COLD WEATHER AR
AN ATTACHMENT

SMCS-7450, 7451 **i04011864**

NOTE	REF NO	GRAPHIC REF	PART NUMBER	QTY	PART NAME 1 2 3 4 5 6 (PRODUCT LEVEL)	SEE PAGE
	1	1	**2P-4339**	1	NUT-JAM (7/16-28-THD)	
	2	1	**3E-5239**	2	RELAY AS (24-VOLT)	
	3	1	**3S-2093**	9	STRAP-CABLE	
	4	1	**7F-6998**	1	LOCKWASHER	
	5	1	**8Y-6388**	2	LOUVER AS-VENT	
	6	1	**083-9527**	2	SPACER (13X20X1.5-MM THK)	
	7	1	**110-6109**	1	KNOB-CONTROL (FAN SPEED)	
	7A	1	**110-6109**	1	KNOB-CONTROL (TEMPERATURE CONTROL)	
	7B	1	**110-6109**	1	KNOB-CONTROL (LIGHT SWITCH)	
	8	1	**110-7887**	1	SWITCH AS-START (KEY)	
		1	**7T-6799**	1	NUT-MOUNTING (1-32-THD)	
		1	**102-8804**	1	KIT-RECEPTACLE (4-PIN)	
					(INCLUDES RECEPTACLE AS & WEDGE)	
		1	**8T-8729**	4	PIN-CONNECTOR (16-GA TO 18-GA)	
	9	1	**122-7127**	18	NUT-SPECIAL (NYLON)	
	10	1	**123-9294**	2	LAMP (24-VOLT) (PANEL)	
	11	1	**157-1361**	1	SWITCH AS-ROTARY (BLOWER FAN SPEED)	
		1	**9W-0852**	6	PIN-CONNECTOR (14-GA TO 16-GA)	
		1	**102-8805**	1	KIT-RECEPTACLE (6-PIN)	
					(INCLUDES RECEPTACLE AS & WEDGE)	
	12	1	**159-9257**	1	PANEL-DASH (LIGHT)	
	13	1	**164-0847**	1	CABLE	
	14	1	**164-8473**	2	LOUVER AS	
	15	1	**170-0260**	1	PLATE	
	16	1	**171-4046**	1	LOUVER AS	
	17	1	**175-1349**	1	PLATE	
	18	1	**175-3950**	1	SWITCH AS-ROTARY (LIGHTS)	
		1	**9W-0852**	7	PIN-CONNECTOR (14-GA TO 16-GA)	
		1	**102-8806**	1	KIT-RECEPTACLE (8-PIN)	
					(INCLUDES RECEPTACLE AS & WEDGE)	
	19	1	**175-4393**	1	SPACER (11.4X17.5X2-MM THK)	
	20	1	**193-3356**	1	CABLE AS	
	21	1	**193-3359**	1	CONTROL AS (TEMPERATURE)	
		1	**129-1831**	1	CLAMP	
M	22	1	**213-7315**	6	SCREW-TRUSS HEAD (M4X0.7X25-MM)	
	23	1	**218-0651**	1	FILM-INSTRUCTION (KEY START SWITCH)	
	24	1	**293-9123**	1	SWITCH AS-ROCKER (FLOODLIGHTS, REAR)	
	25	1	**318-2389**	1	MODULE GP-DISPLAY (INSTRUMENT CLUSTER)	
	26	1	**320-5887**	1	HARNESS AS-DASH	
		1	**102-8803**	1	KIT-RECEPTACLE (3-PIN)	
		1	**102-8804**	1	KIT-RECEPTACLE (4-PIN)	
		1	**102-8805**	3	KIT-RECEPTACLE (6-PIN)	
					(EACH KIT INCLUDES RECEPTACLE AS & WEDGE)	
		1	**3T-3157**	2	TERMINAL-BLADE (16-GA TO 20-GA)	
		1	**3T-3158**	2	SOCKET-LAMP	
		1	**3T-3159**	4	SPRING	
		1	**3T-3278**	2	BOOT	
		1	**6D-4161**	2	CONTACT	
		1	**7X-6222**	1	PLUG AS-CONNECTOR (24-PIN)	
		1	**3E-4367**	1	RING-RETAINING	
M		1	**3E-8558**	1	BOLT (M5X0.8X39.37-MM)	
		1	**9X-3265**	2	SEAL-CONNECTOR (24-PIN)	
		1	**8T-8737**	85	PLUG-SEAL	
		1	**9X-1054**	2	PLUG AS-CONNECTOR (4-PIN)	

317-9070 **INSTRUMENT GP** *(contd.)* **i04011864**

NOTE	REF NO	GRAPHIC REF	PART NUMBER	QTY	PART NAME 1 2 3 4 5 6 (PRODUCT LEVEL)	SEE PAGE
		1	**9X-1056**	2	TERMINAL-RECEPTACLE (14-GA TO 16-GA)	
		1	**100-5041**	6	TERMINAL-RECEPTACLE (18-GA TO 20-GA)	
		1	**114-8843**	20	SLEEVE-PLASTIC	
		1	**125-7874**	30	TUBE-HEAT SHRINK (5.72-MM DIA)	
		1	**125-7875**	15	TUBE-HEAT SHRINK (7.44-MM DIA)	
		1	**9X-3402**	39	SOCKET-CONNECTOR (16-GA TO 18-GA)	
					—OR—	
		1	**126-1768**	39	SOCKET-CONNECTOR (14-GA TO 16-GA)	
		1	**9X-3401**	36	PIN-CONNECTOR (16-GA TO 18-GA)	
					—OR—	
		1	**126-1767**	36	PIN-CONNECTOR (14-GA TO 16-GA)	
		1	**155-2270**	1	KIT-CONNECTING PLUG (2-PIN)	
		1	**155-2271**	1	KIT-CONNECTING PLUG (4-PIN)	
		1	**155-2274**	1	KIT-CONNECTING PLUG (6-PIN)	
		1	**155-2265**	1	KIT-CONNECTING PLUG (8-PIN)	
		1	**155-2260**	1	KIT-CONNECTING PLUG (3-PIN)	
		1	**155-2270**	1	KIT-CONNECTING PLUG (2-PIN)	
		1	**155-2271**	2	KIT-CONNECTING PLUG (4-PIN)	
		1	**155-2274**	3	KIT-CONNECTING PLUG (6-PIN)	
		1	**245-7434**	2	KIT-CONNECTING PLUG (10-PIN)	
					(EACH KIT INCLUDES PLUG AS, WEDGE & INTERFACE SEAL)	
		1	**185-1861**	12	SEAL-WIRE	
		1	**202-5397**	10	PLUG	
		1	**214-4208**	1	RECEPTACLE AS-CONNECTOR (70-PIN)	
	27	1	**323-5774**	1	PANEL AS-INSTRUMENT	
		1	**311-3737**	2	GUIDE	
	28	1	**334-7389**	1	FILM-IDENTIFICATION (INSTRUMENT PANEL)	
	29	1	**104-2091**	12	SCREW-FLAT HEAD (6-20X0.5-IN)	
	30	1	**204-6102**	18	WASHER-HARD (4.45X9.52X1-MM THK)	
	31	1	**216-7352**	2	SCREW-TRUSS HEAD (M8X1.25X30-MM)	
	32	1	**251-1198**	1	SWITCH AS-ROCKER (24-VOLT) (AIR CONDITIONER)	
	33	1	**3E-4352**	2	WASHER-HARD (8.8X20.5X2.5-MM THK)	
	34	1	**3E-6922**	4	SCREW-RECESS FLAT HEAD (6-19X0.5-IN)	
	35	1	**4P-8134**	2	CLIP	
	36	1	**5P-4115**	2	WASHER-HARD (7.2X19X2-MM THK)	
	37	1	**6P-6591**	1	GROMMET	
M	38	1	**6V-8214**	2	BOLT (M6X1X20-MM)	
M	39	1	**7Y-7256**	12	SCREW-TRUSS HEAD (M4X0.7X35-MM)	
M	40	1	**8T-4138**	3	BOLT (M6X1X20-MM)	
M	41	1	**8T-4171**	2	BOLT (M6X1X12-MM)	
	42	1	**8T-4205**	5	WASHER-HARD (7.2X14.5X2-MM THK)	
	43	1	**9D-3769**	2	GROMMET	
M	44	1	**9X-2044**	2	SCREW-TRUSS HEAD (M6X1X16-MM)	
	45	1	**9X-8267**	2	WASHER (6.6X12X2-MM THK)	

M-METRIC PART

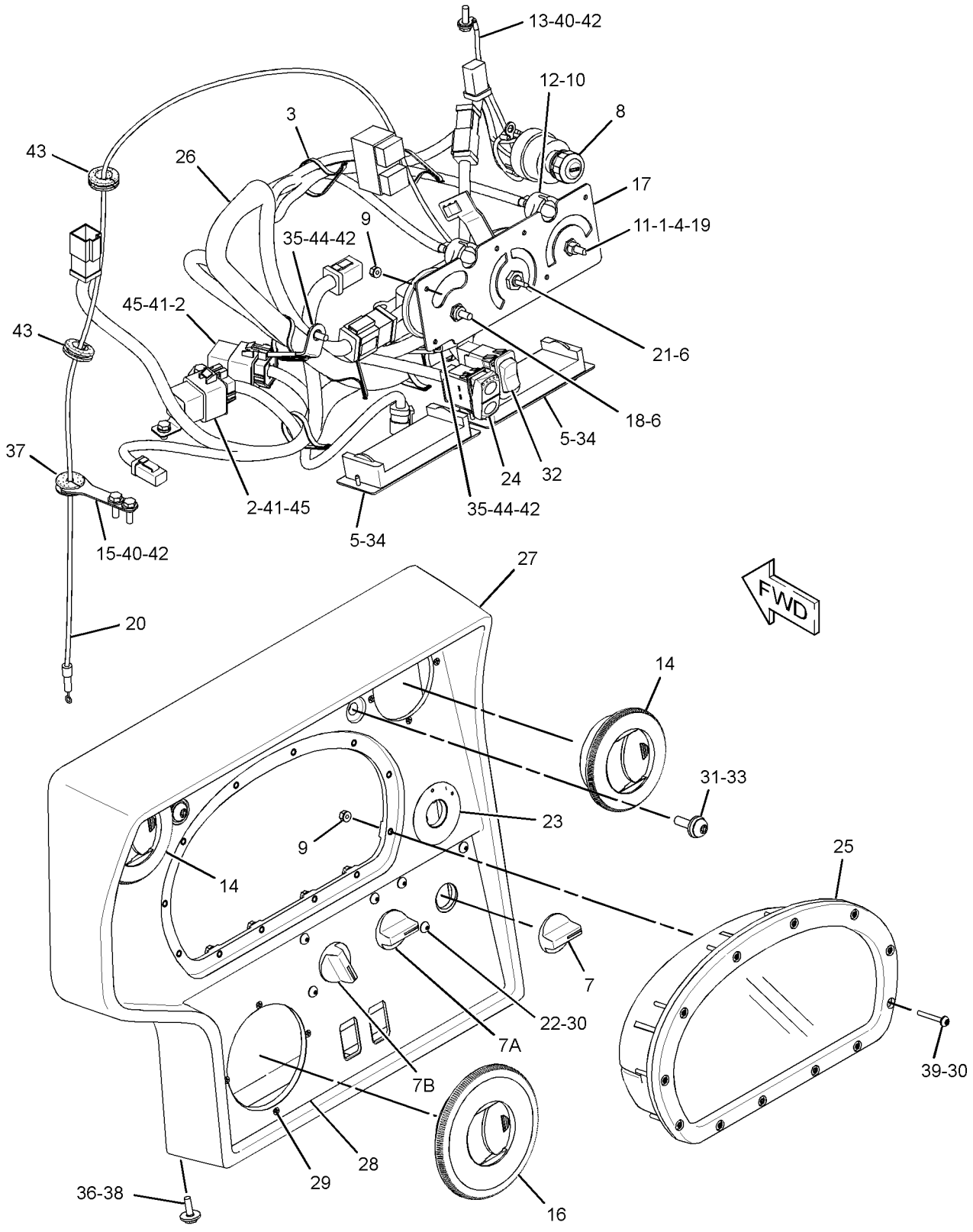

GRAPHIC #1 **<END>** g02201734

OPERATOR STATION

380-2488 INSTRUMENT GP

S/N: DSH1-UP; DLN1-UP; DJR1-UP
PART OF 380-7900 OPERATOR AR

SMCS-7450, 7451 **i04610209**

NOTE	REF NO	GRAPHIC REF	PART NUMBER	QTY	PART NAME 1 2 3 4 5 6 (PRODUCT LEVEL)	SEE PAGE
	1	1	**318-2389**	1	MODULE GP-DISPLAY (INSTRUMENT CLUSTER)	
	2	1	**2P-4339**	1	NUT-JAM (7/16-28-THD)	
	3	1	**3E-5239**	2	RELAY AS (24-VOLT) (ALARM)	
	4	1	**7F-6998**	1	LOCKWASHER	
	5	1	**8Y-6388**	2	LOUVER AS-VENT	
	6	1	**083-9527**	2	SPACER (13X20X1.5-MM THK)	
	7	1	**110-6109**	1	KNOB-CONTROL (FAN SPEED)	
	7A	1	**110-6109**	1	KNOB-CONTROL (TEMPERATURE CONTROL)	
	7B	1	**110-6109**	1	KNOB-CONTROL (LIGHTS)	
	8	1	**110-7887**	1	SWITCH AS-START (KEY)	
		1	**7T-6799**	1	NUT-MOUNTING (1-32-THD)	
		1	**8T-8729**	4	PIN-CONNECTOR (16-GA TO 18-GA)	
		1	**102-8804**	1	KIT-RECEPTACLE (4-PIN)	
					(INCLUDES RECEPTACLE AS & WEDGE)	
	9	1	**122-7127**	18	NUT-SPECIAL (NYLON)	
	10	1	**123-9294**	2	LAMP (24-VOLT)	
	11	1	**157-1361**	1	SWITCH AS-ROTARY (FAN SPEED)	
		1	**9W-0852**	6	PIN-CONNECTOR (14-GA TO 16-GA)	
		1	**102-8805**	1	KIT-RECEPTACLE (6-PIN)	
					(INCLUDES RECEPTACLE AS & WEDGE)	
	12	1	**159-9257**	1	PANEL-DASH (LIGHT)	
	13	1	**164-0847**	1	CABLE	
	14	1	**164-8473**	2	LOUVER AS	
	15	1	**170-0260**	1	PLATE	
	16	1	**171-4046**	1	LOUVER AS	
	17	1	**175-1349**	1	PLATE	
	18	1	**175-3950**	1	SWITCH AS-ROTARY (LIGHTS)	
		1	**9W-0852**	7	PIN-CONNECTOR (14-GA TO 16-GA)	
		1	**102-8806**	1	KIT-RECEPTACLE (8-PIN)	
					(INCLUDES RECEPTACLE AS & WEDGE)	
	19	1	**175-4393**	1	SPACER (11.4X17.5X2-MM THK)	
	20	1	**193-3356**	1	CABLE AS	
	21	1	**193-3359**	1	CONTROL AS	
		1	**129-1831**	1	CLAMP	
M	22	1	**213-7315**	6	SCREW-TRUSS HEAD (M4X0.7X25-MM)	
	23	1	**218-0651**	1	FILM-INSTRUCTION (KEY START SWITCH)	
	24	1	**293-9123**	1	SWITCH AS-ROCKER (24-VOLT) (FLOODLIGHTS, REAR)	
	25	1	**323-5774**	1	PANEL AS-INSTRUMENT	
		1	**311-3737**	2	GUIDE	
	26	1	**334-7389**	1	FILM-IDENTIFICATION (INSTRUMENT PANEL)	
	27	1	**377-8030**	1	HARNESS AS-PANEL	
		1	**102-8803**	1	KIT-RECEPTACLE (3-PIN)	
		1	**102-8804**	1	KIT-RECEPTACLE (4-PIN)	
		1	**102-8805**	1	KIT-RECEPTACLE (6-PIN)	
					(EACH RECEPTACLE KIT INCLUDES RECEPTACLE AS & WEDGE)	
		1	**3T-3157**	2	TERMINAL-BLADE (16-GA TO 20-GA)	
		1	**3T-3158**	2	SOCKET-LAMP	
		1	**3T-3159**	2	SPRING	
		1	**3T-3278**	2	BOOT	
		1	**6D-4161**	2	CONTACT	
		1	**7X-6222**	1	PLUG AS-CONNECTOR (24-PIN)	
		1	**3E-4367**	1	RING-RETAINING	
M		1	**3E-8558**	1	BOLT (M5X0.8X39.37-MM)	
		1	**9X-3265**	2	SEAL-CONNECTOR (24-PIN)	

380-2488 **INSTRUMENT GP** *(contd.)* **i04610209**

NOTE	REF NO	GRAPHIC REF	PART NUMBER	QTY	PART NAME 1 2 3 4 5 6 (PRODUCT LEVEL)	SEE PAGE
		1	**8T-8737**	82	PLUG-SEAL	
		1	**9X-1054**	2	PLUG AS-CONNECTOR (4-PIN)	
		1	**9X-1056**	2	TERMINAL-RECEPTACLE (14-GA TO 16-GA)	
		1	**100-5041**	6	TERMINAL-RECEPTACLE (18-GA TO 20-GA)	
E		1	**114-8843**		SLEEVE-PLASTIC (20-CM)	
E		1	**125-7874**		TUBE-HEAT SHRINK (5.72-MM DIA) (35-CM)	
E		1	**125-7875**		TUBE-HEAT SHRINK (7.44-MM DIA) (15-CM)	
		1	**9X-3402**	39	SOCKET-CONNECTOR (16-GA TO 18-GA)	
					—OR—	
		1	**126-1768**	39	SOCKET-CONNECTOR (14-GA TO 16-GA)	
		1	**9X-3401**	37	PIN-CONNECTOR (16-GA TO 18-GA)	
					—OR—	
		1	**126-1767**	37	PIN-CONNECTOR (14-GA TO 16-GA)	
		1	**155-2265**	1	KIT-CONNECTING PLUG (8-PIN)	
		1	**155-2260**	1	KIT-CONNECTING PLUG (3-PIN)	
		1	**155-2270**	1	KIT-CONNECTING PLUG (2-PIN)	
		1	**155-2271**	2	KIT-CONNECTING PLUG (4-PIN)	
		1	**155-2274**	3	KIT-CONNECTING PLUG (6-PIN)	
					(EACH PLUG KIT INCLUDES PLUG AS, WEDGE & INTERFACE SEAL)	
		1	**202-5397**	8	PLUG	
		1	**204-1297**	10	TERMINAL AS-BLADE (18-GA TO 20-GA)	
		1	**214-4208**	1	RECEPTACLE AS-CONNECTOR (70-PIN)	
		1	**245-7434**	2	KIT-CONNECTING PLUG (10-PIN)	
					(EACH INCLUDES PLUGS & WIRE AS)	
	28	1	**104-2091**	12	SCREW-FLAT HEAD (6-20X0.5-IN)	
	29	1	**204-6102**	18	WASHER-HARD (4.45X9.52X1-MM THK)	
	30	1	**216-7352**	2	SCREW-TRUSS HEAD (M8X1.25X30-MM)	
	31	1	**251-1198**	1	SWITCH AS-ROCKER (24-VOLT) (AIR CONDITIONER CONTROL)	
	32	1	**3E-4352**	2	WASHER-HARD (8.8X20.5X2.5-MM THK)	
	33	1	**3E-6922**	4	SCREW-RECESS FLAT HEAD (6-19X0.5-IN)	
	34	1	**3S-2093**	9	STRAP-CABLE	
	35	1	**4P-8134**	2	CLIP	
	36	1	**5P-4115**	2	WASHER-HARD (7.2X19X2-MM THK)	
	37	1	**6P-6591**	1	GROMMET	
M	38	1	**6V-8214**	2	BOLT (M6X1X20-MM)	
M	39	1	**7Y-7256**	12	SCREW-TRUSS HEAD (M4X0.7X35-MM)	
M	40	1	**8T-4138**	3	BOLT (M6X1X20-MM)	
M	41	1	**8T-4171**	2	BOLT (M6X1X12-MM)	
	42	1	**8T-4205**	5	WASHER-HARD (7.2X14.5X2-MM THK)	
	43	1	**9D-3769**	2	GROMMET	
M	44	1	**9X-2044**	2	SCREW-TRUSS HEAD (M6X1X16-MM)	
	45	1	**9X-8267**	2	WASHER (6.6X12X2-MM THK)	

E-ORDER BY THE CENTIMETER
M-METRIC PART

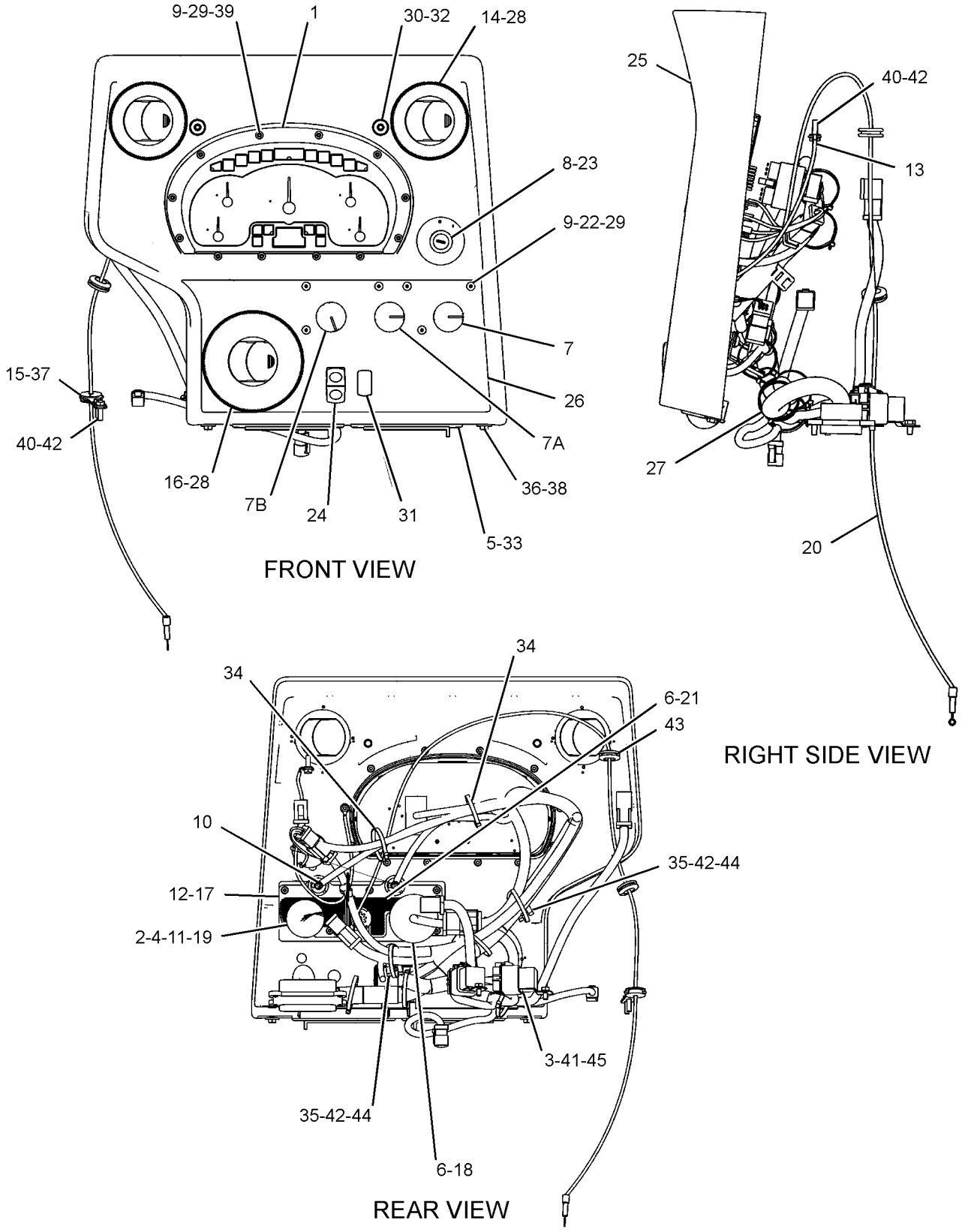

GRAPHIC #1 **<END>** g02794024

OPERATOR STATION

161-3616 KNOB GP

S/N: DSH1-UP; DLN1-UP; DJR1-UP
PART OF 323-9717 CONTROL AR-HYDRAULIC
AN ATTACHMENT

SMCS-5800 **i03995849**

NOTE	REF NO	GRAPHIC REF	PART NUMBER	QTY	PART NAME 1 2 3 4 5 6 (PRODUCT LEVEL)	SEE PAGE
	1	1	**2A-1736**	1	HANDLE	
	2	1	**7X-3374**	1	NUT-FULL (1/2-20-THD)	

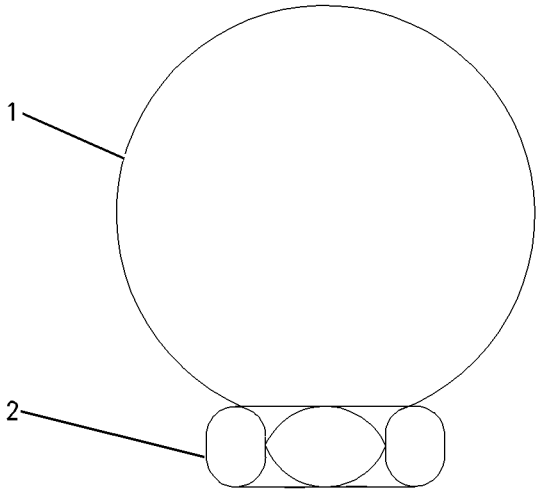

GRAPHIC #1 **<END>** g00763264

OPERATOR STATION

317-6561 LINER GP-CAB

S/N: DSH1-UP; DLN1-UP; DJR1-UP
PART OF 323-5697 LINER GP-CAB
ALSO AN ATTACHMENT

SMCS-7329 **i03995425**

NOTE	REF NO	GRAPHIC REF	PART NUMBER	QTY	PART NAME 1 2 3 4 5 6 (PRODUCT LEVEL)	SEE PAGE
Y	1	1	**3E-6389**	1	LAMP GP-DOME (24-VOLT)	168
	2	1	**3S-2093**	11	STRAP-CABLE	
	3	1	**6T-7695**	2	SPEAKER AS-RADIO	
	4	1	**7T-9303**	1	SWITCH AS-ROTARY (REAR)	
	4A	1	**7T-9303**	1	SWITCH AS-ROTARY (DOOR, RH)	
	4B	1	**7T-9303**	1	SWITCH AS-ROTARY (DOOR, LH)	
	4C	1	**7T-9303**	1	SWITCH AS-ROTARY (FRONT)	
		1	**2H-3920**	1	LOCKWASHER	
		1	**6V-8369**	1	NUT (7/16-28-THD)	
	5	1	**8T-4752**	4	NUT (M5X0.8-THD)	
	6	1	**101-3055**	2	COVER-SPEAKER	
	7	1	**110-6109**	1	KNOB-CONTROL (REAR WIPER)	
	7A	1	**110-6109**	1	KNOB-CONTROL (WIPER, RH DOOR)	
	7B	1	**110-6109**	1	KNOB-CONTROL (WIPER, LH DOOR)	
	7C	1	**110-6109**	1	KNOB-CONTROL (FRONT WIPER)	
	8	1	**131-5137**	1	PLUG	
	9	1	**161-1097**	1	LINER-CAB	
	10	1	**161-1099**	1	PLATE	
	11	1	**166-3733**	11	NUT-SPEED (8-32-THD)	
	12	1	**267-8685**	1	FILM-IDENTIFICATION (WINDOW WIPER CONTROLS)	
	13	1	**320-5885**	1	HARNESS AS-CAB	
		1	**102-8801**	1	KIT-RECEPTACLE (12-PIN)	
					(INCLUDES RECEPTACLE AS AND WEDGE)	
		1	**6T-8048**	2	TERMINAL-RECEPTACLE	
		1	**5P-4571**	2	TERMINAL-BLADE (14-GA TO 16-GA)	
		1	**8T-8737**	6	PLUG-SEAL	
		1	**9G-9314**	17	TERMINAL-BLADE (14-GA TO 16-GA)	
E		1	**114-8843**		SLEEVE-PLASTIC (20-CM)	
E		1	**125-7875**		TUBE-HEAT SHRINK (7.44-MM DIA) (5-CM)	
		1	**9X-3402**	16	SOCKET-CONNECTOR (16-GA TO 18-GA)	
		1	**9X-3401**	11	PIN-CONNECTOR (16-GA TO 18-GA)	
		1	**155-2255**	1	KIT-CONNECTING PLUG (12-PIN)	
		1	**155-2260**	1	KIT-CONNECTING PLUG (3-PIN)	
		1	**155-2274**	1	KIT-CONNECTING PLUG (6-PIN)	
					(EACH PLUG KIT INCLUDES PLUG ASSEMBLY, WEDGE & INTERFACE SEAL)	
	14	1	**103-9425**	11	SCREW-MACHINE (8-32X1-IN)	
M	15	1	**7Y-7388**	4	SCREW-BUTTON HEAD (M5X0.8X12-MM)	

E-ORDER BY THE CENTIMETER
M-METRIC PART
Y-SEPARATE ILLUSTRATION

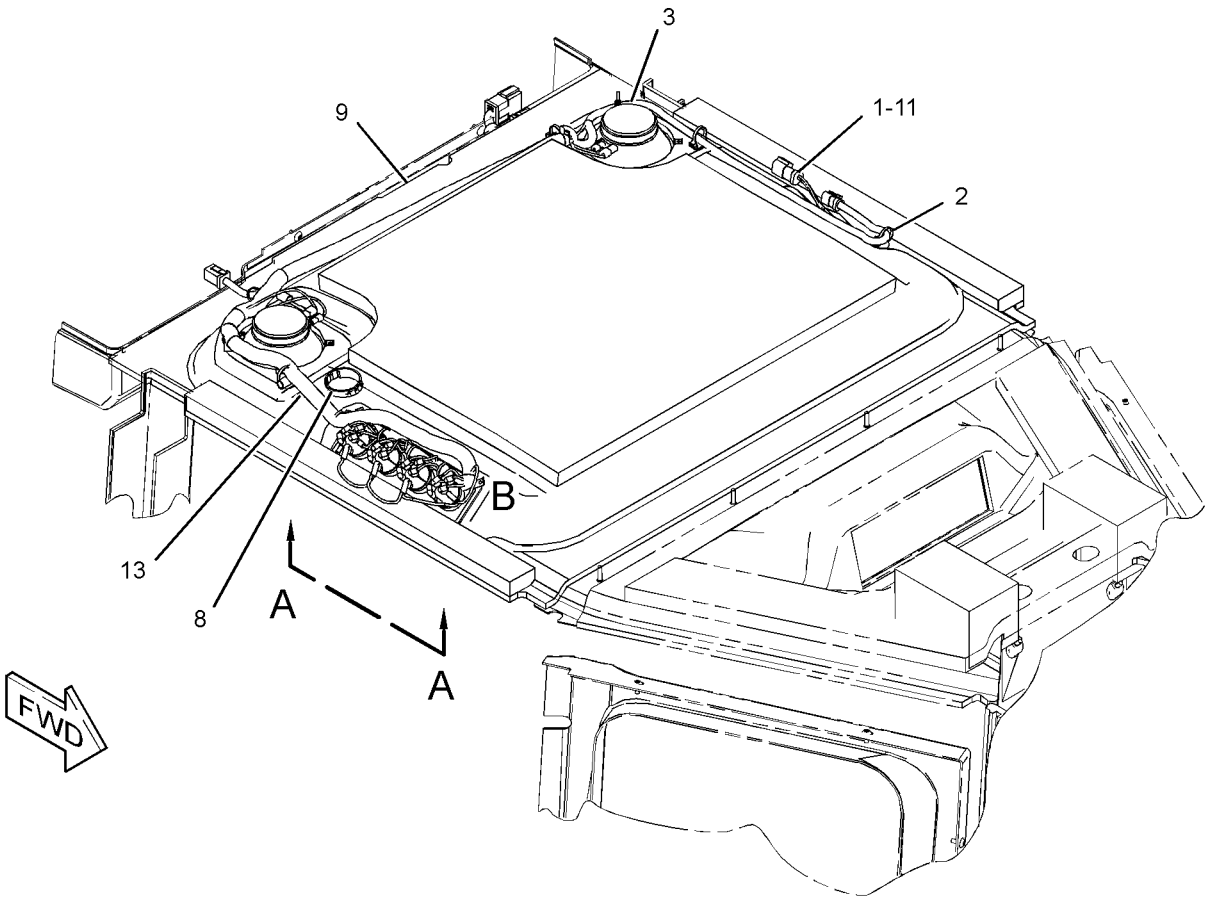

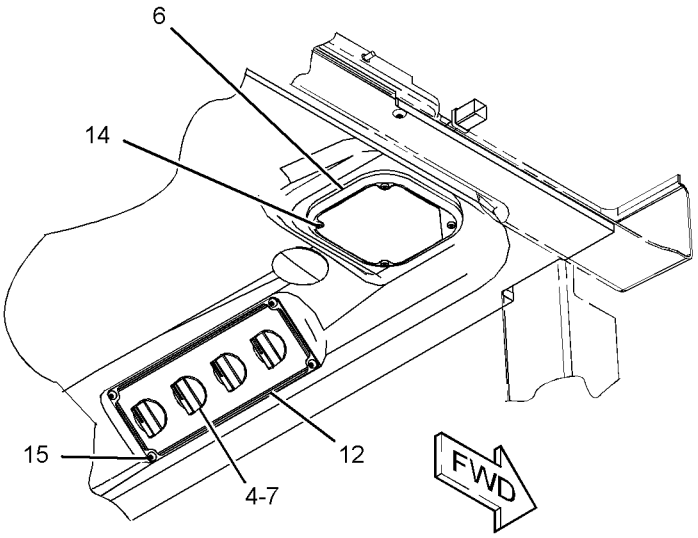

VIEW A-A

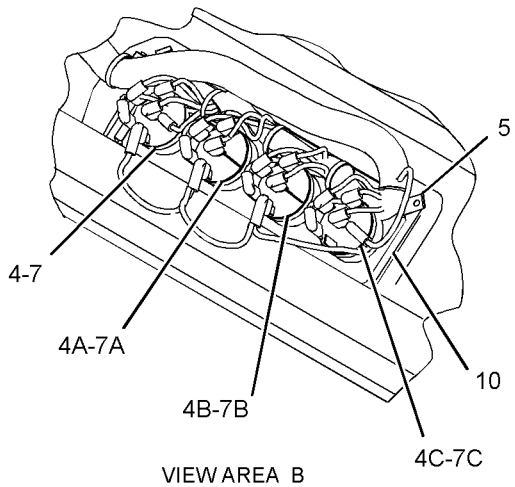

VIEW AREA B

GRAPHIC #1 **<END>** g02182874

OPERATOR STATION

323-5697 LINER GP-CAB

S/N: DSH1-UP; DLN1-UP; DJR1-UP
PART OF 323-5696, 327-9363 CAB AR
ALSO AN ATTACHMENT

SMCS-7329 **i03994910**

NOTE	REF NO	GRAPHIC REF	PART NUMBER	QTY	PART NAME 1 2 3 4 5 6 (PRODUCT LEVEL)	SEE PAGE
	1	1	**6V-8928**	1	HOOK-COAT	
	2	1	**110-8152**	2	HANDLE AS-PULL	
	3	1	**158-8906**	2	BLOCK-FOAM	
	4	1	**161-1083**	1	COVER-DOOR (RH)	
	5	1	**161-1084**	1	COVER-DOOR (LH)	
	6	1	**161-1085**	1	COVER-FRONT	
	7	1	**161-1091**	1	COVER-POST (RH)	
	8	1	**161-1092**	1	COVER-POST (LH)	
	9	1	**161-1093**	2	TRIM-POST	
	10	1	**161-1094**	1	LINER-CAB	
	11	1	**161-1098**	1	RETAINER	
	12	1	**228-6787**	1	COVER	
Y	13	1	*317-6561*	1	LINER GP-CAB	567
M	14	1	**3E-8020**	4	SCREW-TRUSS HEAD (M6X1X25-MM)	
M	15	1	**6V-5683**	4	BOLT (M6X1X16-MM)	
M	16	1	**9X-2043**	18	SCREW-TRUSS HEAD (M6X1X14-MM)	
M	17	1	**9X-2045**	1	SCREW-TRUSS HEAD (M6X1X20-MM)	

M-METRIC PART
Y-SEPARATE ILLUSTRATION

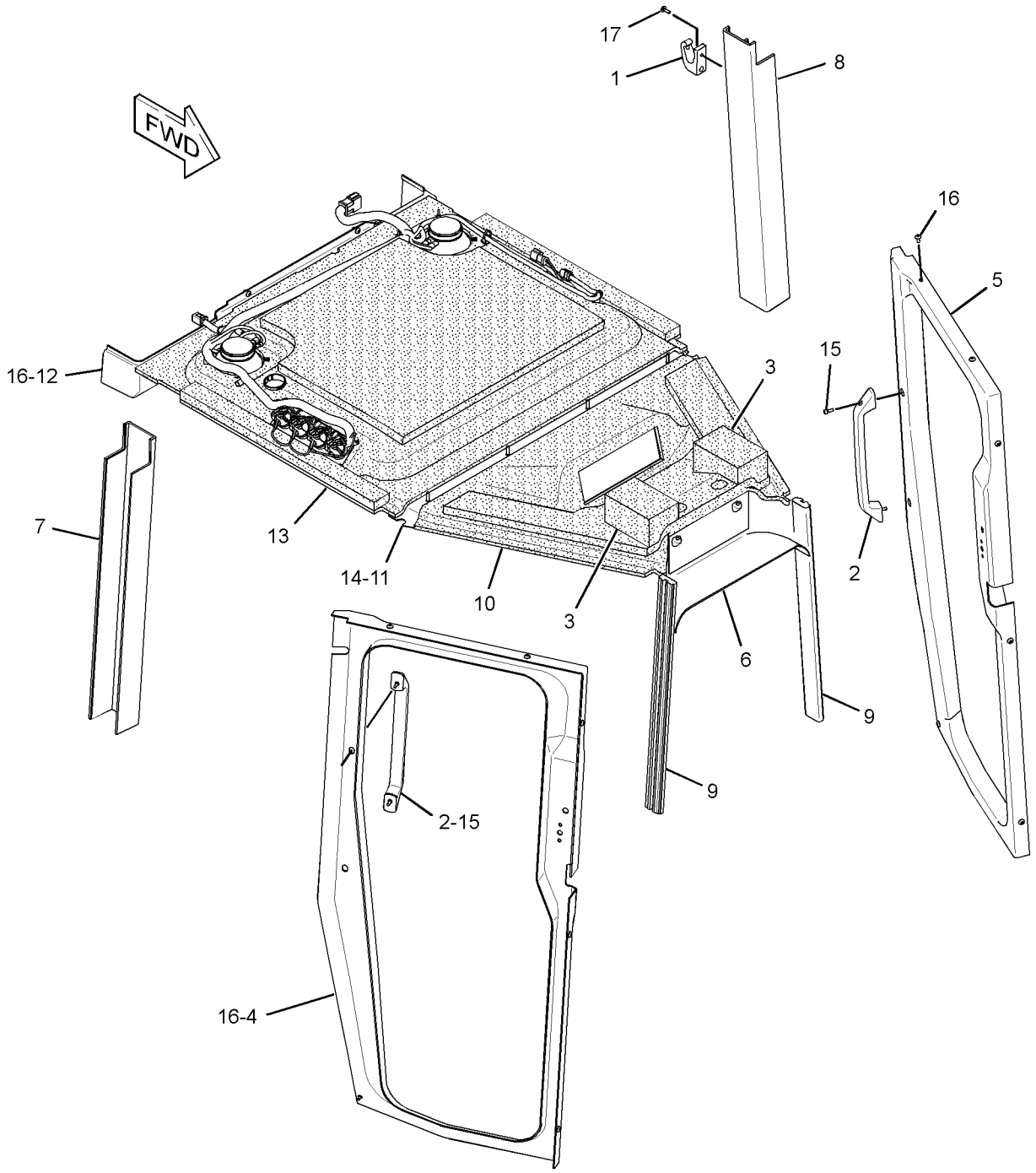

GRAPHIC #1 **<END>** g02177941

OPERATOR STATION

324-8984 LINES GP-AIR CONDITIONER—ROPS MOUNTED

S/N: DSH1-UP; DLN1-UP; DJR1-UP
PART OF 380-9961 AIR CONDITIONER AR
AN ATTACHMENT

SMCS-1808 **i04674552**

NOTE	REF NO	GRAPHIC REF	PART NUMBER	QTY	PART NAME 1 2 3 4 5 6 (PRODUCT LEVEL)	SEE PAGE
	1	1	**1P-6356**	1	PLATE	
	2	1	**1S-4836**	1	SPACER (0.438X0.75X2.12-IN THK)	
	3	1	**3S-2093**	7	STRAP-CABLE	
	4	1	**5P-3948**	2	COUPLING AS-REFRIGERANT (SELF-SEALING)	
					(EACH INCLUDES)	
		1	**7F-8607**	1	SEAL-O-RING	
		1	**107-4399**	1	VALVE AS	
	5	1	**7D-1089**	1	CLIP	
	6	1	**7K-1181**	11	STRAP-CABLE	
	7	1	**7K-3176**	2	COUPLING AS-REFRIGERANT (SELF-SEALING)	
	8	1	**7T-8894**	1	GROMMET	
	9	1	**7T-8895**	1	GROMMET	
	10	1	**7T-9426**	1	GROMMET	
	11	1	**8C-5682**	1	TEE	
	12	1	**8R-3393**	1	STRAP	
	13	1	**081-6344**	2	SPACER (13.3X21.3X25-MM THK)	
	14	1	**114-5333**	1	SWITCH AS-PRESSURE (AIR CONDITIONER)	
		1	**102-8802**	1	KIT-RECEPTACLE (2-PIN)	
					(INCLUDES RECEPTACLE AS & WEDGE)	
		1	**8T-8729**	2	PIN-CONNECTOR (16-GA TO 18-GA)	
	15	1	**128-5924**	1	CLAMP	
	16	1	**130-1433**	2	SPACER (11X25X17-MM THK)	
	17	1	**154-6626**	2	BRACKET AS	
I	18	1	**170-3443**	1	HOSE AS	
I	19	1	**109-4044**	1	HOSE AS	
	20	1	**183-4273**	1	HARNESS AS-WIRING (AIR CONDITIONER COMPRESSOR)	
E		1	**114-8843**		SLEEVE-PLASTIC (20-CM)	
E		1	**114-8845**		SLEEVE-PLASTIC (60-CM)	
E		1	**119-3662**		TUBE-HEAT SHRINK (10.85-MM DIA) (13-CM)	
		1	**126-1768**	8	SOCKET-CONNECTOR (14-GA TO 16-GA)	
		1	**155-2270**	4	KIT-CONNECTING PLUG (2-PIN)	
					(EACH INCLUDES PLUG AS, WEDGE & INTERFACE SEAL)	
	21	1	**186-6189**	1	ACCUMULATOR-REFRIGERANT	
	22	1	**189-3158**	1	SUPPRESSOR-ARC	
	23	1	**239-5106**	1	PLATE AS	
	24	1	**257-3227**	1	DRYER AS-REFRIGERANT	
		1	**189-1707**	1	ORIFICE AS-AIR CONDITIONER	
	25	1	**287-0338**	1	BRACKET AS	
M		1	**8T-3490**	3	NUT-WELD (M10X1.5-THD)	
	26	1	**294-5076**	2	PLATE AS	
					(EACH INCLUDES)	
		1	**8E-3431**	1	PLATE	
M		1	**8T-3490**	1	NUT-WELD (M10X1.5-THD)	
	27	1	**321-5804**	1	HARNESS AS-SWITCH	
		1	**102-8803**	1	KIT-RECEPTACLE (3-PIN)	
					(INCLUDES RECEPTACLE AS & WEDGE)	
E		1	**114-8843**		SLEEVE-PLASTIC (20-CM)	
		1	**9X-3402**	1	SOCKET-CONNECTOR (16-GA TO 18-GA)	
					—OR—	
		1	**126-1768**	1	SOCKET-CONNECTOR (14-GA TO 16-GA)	
		1	**126-1767**	2	PIN-CONNECTOR (14-GA TO 16-GA)	
		1	**126-1768**	2	SOCKET-CONNECTOR (14-GA TO 16-GA)	

OPERATOR STATION

324-8984 **LINES GP-AIR CONDITIONER** *(contd.)* **i04674552**

NOTE	REF NO	GRAPHIC REF	PART NUMBER	QTY	PART NAME 1 2 3 4 5 6 (PRODUCT LEVEL)	SEE PAGE
		1	**9X-3401**	1	PIN-CONNECTOR (16-GA TO 18-GA)	
					—OR—	
		1	**126-1767**	1	PIN-CONNECTOR (14-GA TO 16-GA)	
		1	**155-2260**	1	KIT-CONNECTING PLUG (3-PIN)	
					(INCLUDES PLUG AS, WEDGE & INTERFACE SEAL)	
	28	1	**325-3469**	1	HOSE AS	
G		1	**9X-2390**		HOSE (24.5-IN)	
		1	**320-1725**	1	COUPLING AS-AIR CONDITIONER	
		1	**320-1730**	1	COUPLING-AIR CONDITIONER	
I	29	1	**325-3470**	1	HOSE AS	
I	30	1	**325-3471**	1	HOSE AS	
	31	1	**325-3472**	1	HOSE AS	
G		1	**9X-2390**		HOSE (53.2-IN)	
		1	**320-1720**	1	COUPLING-AIR CONDITIONER (STRAIGHT)	
		1	**320-1749**	1	COUPLING AS-AIR CONDITIONER	
	32	1	**376-6731**	1	HOSE AS	
G		1	**9X-2390**		HOSE	
		1	**320-1721**	1	COUPLING-AIR CONDITIONER (STRAIGHT) (65-IN)	
		1	**320-1786**	1	COUPLING AS-AIR CONDITIONER	
	33	1	**380-6683**	1	STRIP AS	
M		1	**8T-3490**	1	NUT-WELD (M10X1.5-THD)	
	34	1	**190-5583**	1	CLIP (SLOT)	
	35	1	**190-5584**	1	CLIP (TAB)	
	36	1	**1S-6420**	3	CLIP	
	37	1	**2D-2751**	1	GROMMET	
	38	1	**3E-4078**	1	FITTING AS-AIR CONDITIONER	
		1	**3E-4051**	1	CAP-SEAL (LOW SIDE CHARGE PORT)	
		1	**3E-4057**	1	VALVE AS (REFRIGERANT, LOW SIDE)	
	39	1	**3E-6811**	1	FITTING AS-AIR CONDITIONER	
		1	**3E-4052**	1	CAP-SEAL (HIGH SIDE CHARGE PORT)	
		1	**3E-4058**	1	VALVE AS (REFRIGERANT, HIGH SIDE)	
	40	1	**4D-7733**	6	CLIP	
	41	1	**4K-8302**	3	CLIP	
	42	1	**4L-6454**	2	BOLT (3/8-16X1-IN)	
	43	1	**4P-7428**	1	CLIP	
	44	1	**4P-7429**	2	CLIP	
	45	1	**4P-8134**	4	CLIP	
	46	1	**5K-4778**	1	CLIP	
	47	1	**5M-3062**	1	BOLT (3/8-16X0.75-IN)	
	48	1	**5P-2228**	2	BOLT (1/2-13X1-IN)	
	49	1	**6D-3479**	1	CLIP	
	50	1	**6V-2372**	1	ELBOW	
	51	1	**7T-9793**	1	VALVE-CHECK	
	52	1	**7X-7729**	3	WASHER (11X25X3-MM THK)	
	53	1	**8M-2773**	1	CLIP	
	54	1	**8T-4121**	16	WASHER-HARD (11X21X2.5-MM THK)	
M	55	1	**8T-4133**	2	NUT (M10X1.5-THD)	
M	56	1	**8T-4136**	4	BOLT (M10X1.5X25-MM)	
M	57	1	**8T-4137**	3	BOLT (M10X1.5X20-MM)	
M	58	1	**8T-4172**	1	BOLT (M10X1.5X80-MM)	
M	59	1	**8T-4185**	1	BOLT (M10X1.5X50-MM)	
M	60	1	**8T-4195**	2	BOLT (M10X1.5X30-MM)	
M	61	1	**8T-4196**	2	BOLT (M10X1.5X35-MM)	
	62	1	**8T-4223**	2	WASHER-HARD (13.5X25.5X3-MM THK)	
	63	1	**8T-4896**	3	WASHER-HARD (10.2X18.5X2.5-MM THK)	
M	64	1	**8T-6466**	5	BOLT (M10X1.5X60-MM)	
	65	1	**9X-7378**	1	SEAL-O-RING	
	66	1	**9X-7380**	2	SEAL-O-RING	
	67	1	**9X-7381**	4	SEAL-O-RING	

324-8984 LINES GP-AIR CONDITIONER *(contd.)* i04674552

NOTE	REF NO	GRAPHIC REF	PART NUMBER	QTY	PART NAME 1 2 3 4 5 6 (PRODUCT LEVEL)	SEE PAGE
	68	1	**9X-7382**	2	SEAL-O-RING	
	69	1	**9X-7383**	6	SEAL-O-RING	
	70	1	**9X-7385**	2	SEAL-O-RING	
	71	1	**9X-8250**	3	CLIP	
D	72	1	**5P-6129**	1	TUBE (1.2-M)	
D	72A	1	**5P-6129**		TUBE (0.14-M)	
D	72B	1	**5P-6129**		TUBE (0.2-M)	
D	72C	1	**5P-6129**		TUBE (0.4-M)	
D	73	1	**6V-2495**		SEAL (0.1-M EACH)	

D-ORDER BY THE METER
E-ORDER BY THE CENTIMETER
G-ORDER BY THE INCH
I-REFER TO HYDRAULIC INFORMATION SYSTEM
M-METRIC PART

324-8984 **LINES GP-AIR CONDITIONER** *(contd.)* **i04674552**

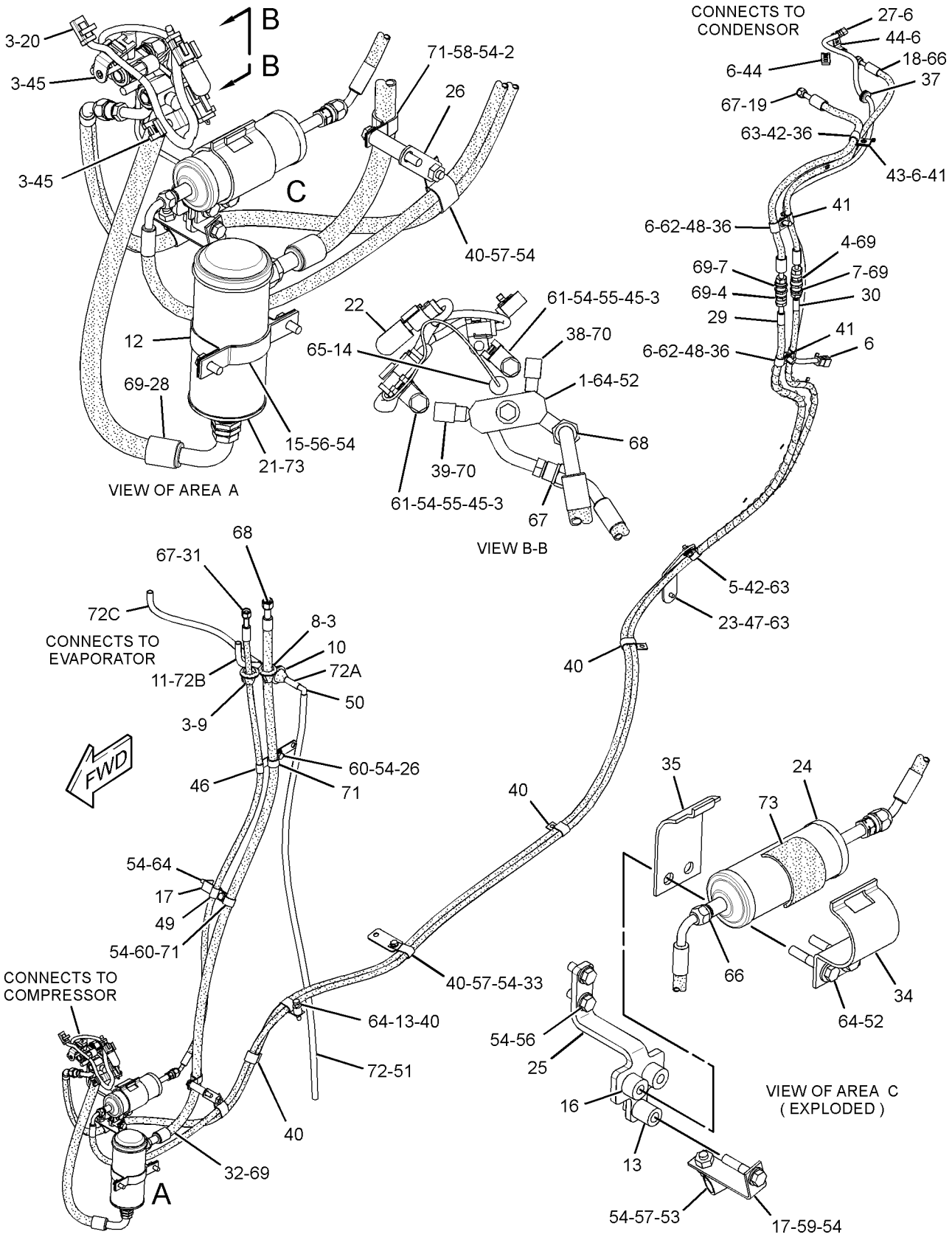

GRAPHIC #1 **<END>** g02830576

OPERATOR STATION

358-8129 LINES GP-AIR CONDITIONER—UNDERHOOD

S/N: DSH1-UP; DLN1-UP; DJR1-UP

PART OF 313-3338, 313-3759, 379-6225 CHASSIS AR

SMCS-1808 **i04726551**

NOTE	REF NO	GRAPHIC REF	PART NUMBER	QTY	PART NAME 1 2 3 4 5 6 (PRODUCT LEVEL)	SEE PAGE
	1	1	**1P-6356**	1	PLATE	
	2	1	**3S-2093**	7	STRAP-CABLE	
	3	1	**7T-8894**	1	GROMMET	
	4	1	**7T-8895**	1	GROMMET	
	5	1	**7T-9426**	1	GROMMET	
	6	1	**8C-5682**	1	TEE	
	7	1	**8R-3393**	1	STRAP	
	8	1	**114-5333**	1	SWITCH AS-PRESSURE (REFRIGERANT)	
		1	**102-8802**	1	KIT-RECEPTACLE (2-PIN)	
					(INCLUDES RECEPTACLE AS & WEDGE)	
		1	**8T-8729**	2	PIN-CONNECTOR (16-GA TO 18-GA)	
	9	1	**128-5924**	1	CLAMP	
	10	1	**130-1433**	2	SPACER (11X25X17-MM THK)	
	11	1	**154-6626**	1	BRACKET AS	
	12	1	**183-4273**	1	HARNESS AS-WIRING (AIR CONDITIONER COMPRESSOR)	
E		1	**114-8843**		SLEEVE-PLASTIC (20-CM)	
E		1	**114-8845**		SLEEVE-PLASTIC (60-CM)	
E		1	**119-3662**		TUBE-HEAT SHRINK (10.85-MM DIA) (13-CM)	
		1	**126-1768**	8	SOCKET-CONNECTOR (14-GA TO 16-GA)	
		1	**155-2270**	4	KIT-CONNECTING PLUG (2-PIN)	
					(EACH INCLUDES PLUG AS, WEDGE, & INTERFACE SEAL)	
	13	1	**186-6189**	1	ACCUMULATOR-REFRIGERANT	
	14	1	**189-3158**	1	SUPPRESSOR-ARC	
	15	1	**257-3226**	1	DRYER-REFRIGERANT (IN-LINE)	
	16	1	**287-0338**	1	BRACKET AS	
	17	1	**294-5076**	1	PLATE AS	
	18	1	**325-3469**	1	HOSE AS	
	19	1	**325-3472**	1	HOSE AS	
	20	1	**335-5568**	1	BRACKET AS.	
	21	1	**360-1529**	1	HOSE AS	
	22	1	**360-1530**	1	HOSE AS	
	23	1	**360-6564**	1	TUBE AS	
	24	1	**376-6731**	1	HOSE AS	
	25	1	**391-0590**	1	BRACKET AS	
	26	1	**391-0591**	1	BRACKET AS	
	27	1	**067-2551**	3	CLIP	
	28	1	**190-4885**	1	SPACER (11X22X50-MM THK)	
	29	1	**190-5583**	1	CLIP (SLOT)	
	30	1	**190-5584**	1	CLIP (TAB)	
	31	1	**1P-7009**	1	CLIP	
	32	1	**2P-0449**	1	CLIP	
	33	1	**3E-4078**	1	FITTING AS-AIR CONDITIONER	
		1	**3E-4051**	1	CAP-SEAL (LOW SIDE CHARGE PORT)	
		1	**3E-4057**	1	VALVE AS (REFRIGERANT, LOW SIDE)	
	34	1	**3E-6811**	1	FITTING AS-AIR CONDITIONER	
		1	**3E-4052**	1	CAP-SEAL (HIGH SIDE CHARGE PORT)	
		1	**3E-4058**	1	VALVE AS (REFRIGERANT, HIGH SIDE)	
	35	1	**4K-8864**	1	CLIP	
	36	1	**4P-8134**	3	CLIP	
	37	1	**4S-4456**	1	CLIP	
	38	1	**5K-4778**	1	CLIP	
	39	1	**6V-2372**	1	ELBOW	
	40	1	**7T-9793**	1	VALVE-CHECK	
	41	1	**7X-7729**	3	WASHER (11X25X3-MM THK)	

358-8129 LINES GP-AIR CONDITIONER *(contd.)* i04726551

NOTE	REF NO	GRAPHIC REF	PART NUMBER	QTY	PART NAME 1 2 3 4 5 6 (PRODUCT LEVEL)	SEE PAGE
	42	1	**8T-4121**	16	WASHER-HARD (11X21X2.5-MM THK)	
M	43	1	**8T-4133**	2	NUT (M10X1.5-THD)	
M	44	1	**8T-4136**	7	BOLT (M10X1.5X25-MM)	
M	45	1	**8T-4137**	1	BOLT (M10X1.5X20-MM)	
M	46	1	**8T-4172**	1	BOLT (M10X1.5X80-MM)	
M	47	1	**8T-4191**	1	BOLT (M10X1.5X16-MM)	
M	48	1	**8T-4195**	2	BOLT (M10X1.5X30-MM)	
M	49	1	**8T-4196**	2	BOLT (M10X1.5X35-MM)	
M	50	1	**8T-6466**	4	BOLT (M10X1.5X60-MM)	
	51	1	**9X-7378**	1	SEAL-O-RING	
	52	1	**9X-7380**	3	SEAL-O-RING	
	53	1	**9X-7381**	4	SEAL-O-RING	
	54	1	**9X-7382**	2	SEAL-O-RING	
	55	1	**9X-7383**	2	SEAL-O-RING	
	56	1	**9X-7385**	2	SEAL-O-RING	
	57	1	**9X-8250**	3	CLIP	
D	58	1	**6V-2495**		SEAL (0.2-M)	
D	59	1	**5P-6129**		TUBE (1.9-M)	

D-ORDER BY THE METER
E-ORDER BY THE CENTIMETER
M-METRIC PART

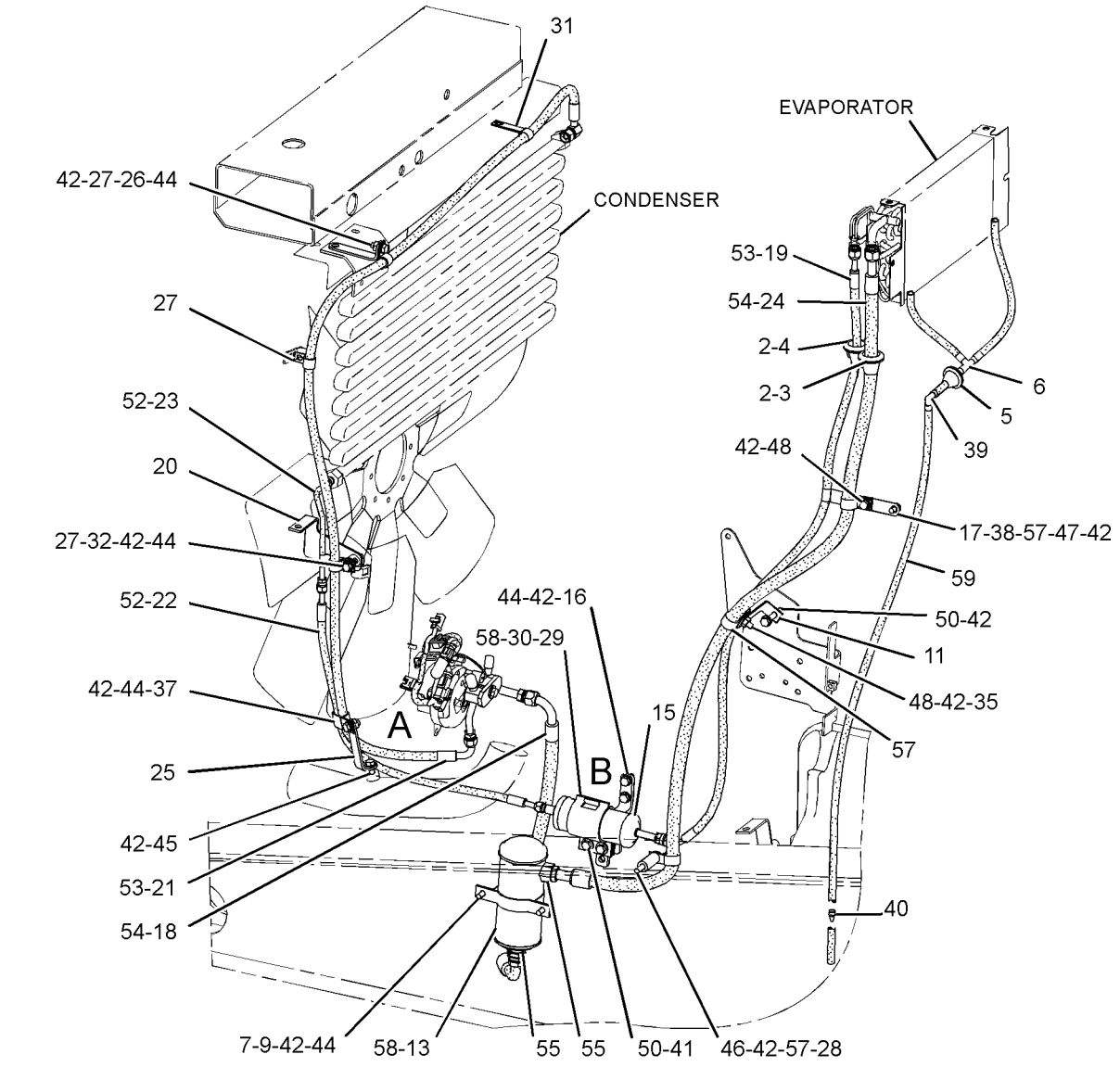

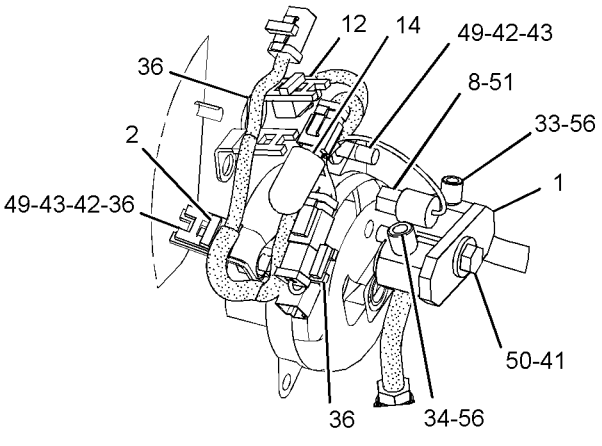

VIEW OF AREA A

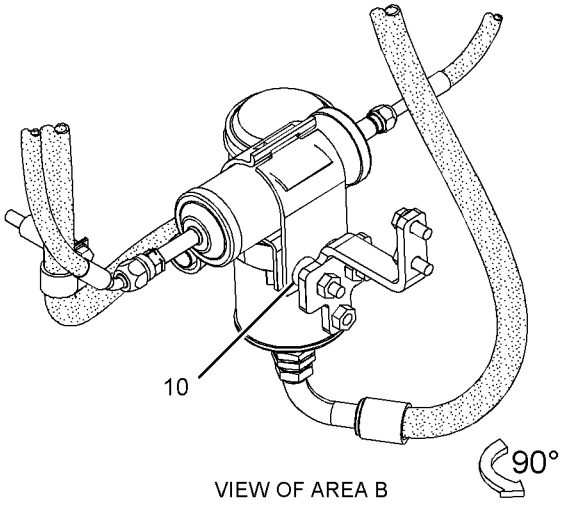

VIEW OF AREA B

GRAPHIC #1 **<END>** g02849877

OPERATOR STATION

387-0546 LINES GP-AIR CONDITIONER

S/N: DSH1-UP; DLN1-UP; DJR1-UP
PART OF 317-4153, 387-0547 CAB AR
ALSO AN ATTACHMENT

SMCS-1808 **i04772034**

NOTE	PART NUMBER	QTY	PART NAME 1 2 3 4 5 6 (PRODUCT LEVEL)	SEE PAGE
	6V-2372	1	ELBOW	
	7T-9426	1	GROMMET	
	8C-5682	1	TEE	
D	**5P-6129**		TUBE (1.9-M)	
	7T-9793	1	VALVE-CHECK	

D-ORDER BY THE METER

<END>

OPERATOR STATION

324-8985 LINES GP-HEATER

S/N: DSH1-UP; DLN1-UP; DJR1-UP

PART OF 313-3338, 313-3759, 379-6225 CHASSIS AR

SMCS-7304 **i04726530**

NOTE	REF NO	GRAPHIC REF	PART NUMBER	QTY	PART NAME 1 2 3 4 5 6 (PRODUCT LEVEL)	SEE PAGE
	1	1	**1W-2860**	1	BRACKET	
	2	1	**165-2273**	2	VALVE GP-SHUTOFF (COOLANT)	
					(EACH INCLUDES)	
		1	**6V-7238**	1	VALVE-SHUTOFF	
		1	**3K-0360**	1	SEAL-O-RING	
	3	1	*194-2903*	1	ELBOW AS	
		1	**8T-0119**	1	ELBOW	
		1	**3K-0360**	1	SEAL-O-RING	
	4	1	**294-5076**	1	PLATE AS	
	5	1	**296-6980**	1	SPACER (11X25X30-MM THK)	
	6	1	**137-6722**	1	CLIP	
	7	1	**159-1503**	4	CLAMP-HOSE	
	8	1	**198-4767**	1	WASHER-HARD (13.5X30X12-MM THK)	
	9	1	**6D-1641**	5	CLIP	
	10	1	**6D-4636**	1	CLIP	
M	11	1	**6V-5684**	1	BOLT (M12X1.75X45-MM)	
	12	1	**8J-8197**	1	CLIP	
	13	1	**8T-4121**	8	WASHER-HARD (11X21X2.5-MM THK)	
M	14	1	**8T-4133**	1	NUT (M10X1.5-THD)	
M	15	1	**8T-4136**	5	BOLT (M10X1.5X25-MM)	
M	16	1	**8T-4137**	1	BOLT (M10X1.5X20-MM)	
M	17	1	**8T-4195**	1	BOLT (M10X1.5X30-MM)	
	18	1	**8T-4223**	1	WASHER-HARD (13.5X25.5X3-MM THK)	
M	19	1	**8T-4779**	1	BOLT (M16X2X35-MM)	
	20	1	**9X-8257**	1	WASHER (17.5X30X3.5-MM THK)	
E	21	1	**7I-1024**		GUARD-HOSE (60-CM)	
E	22	1	**5P-0767**		HOSE (259-CM)	
E	22A	1	**5P-0767**		HOSE (309-CM)	

E-ORDER BY THE CENTIMETER
M-METRIC PART

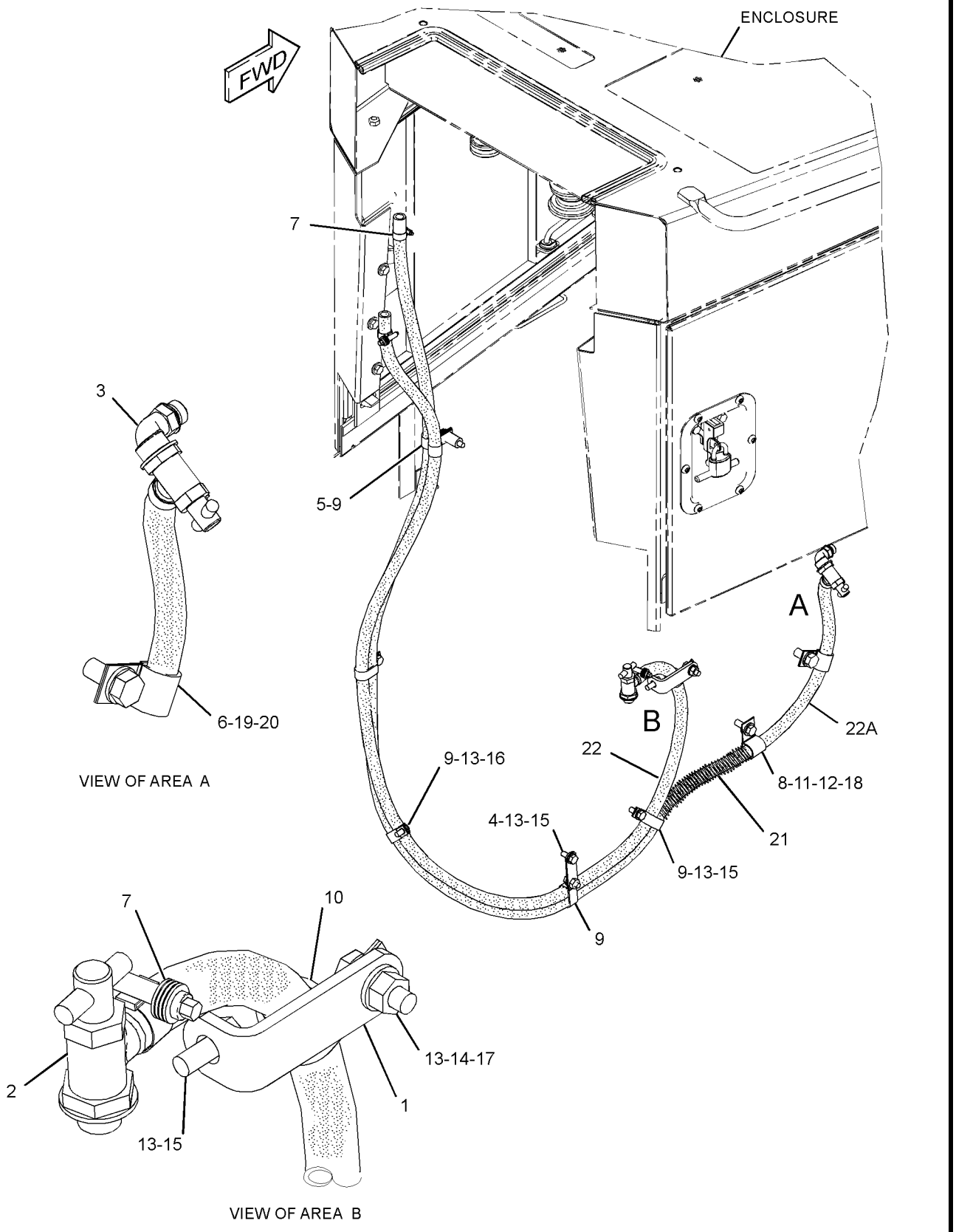

GRAPHIC #1 **<END>** g02793919

OPERATOR STATION

9P-9392 MIRROR GP-REAR VIEW

S/N: DSH1-UP; DLN1-UP; DJR1-UP
PART OF 167-2088 ROPS GP
AN ATTACHMENT

SMCS-7319 **i03991770**

NOTE	REF NO	GRAPHIC REF	PART NUMBER	QTY	PART NAME 1 2 3 4 5 6 (PRODUCT LEVEL)	SEE PAGE
	1	1	**5S-7379**	2	BOLT (3/8-16X0.875-IN)	
		1	**5P-1075**	2	WASHER-HARD (10.2X22.5X3-MM THK)	
	2	1	**9P-9390**	1	BRACKET	
	3	1	**9P-9388**	1	KNOB (MIRROR ADJUSTMENT)	
	4	1	**5P-6874**	1	MIRROR (REAR VIEW)	
	5	1	**5K-9179**	1	BOLT-ROUND HEAD (3/8-16X11-IN)	

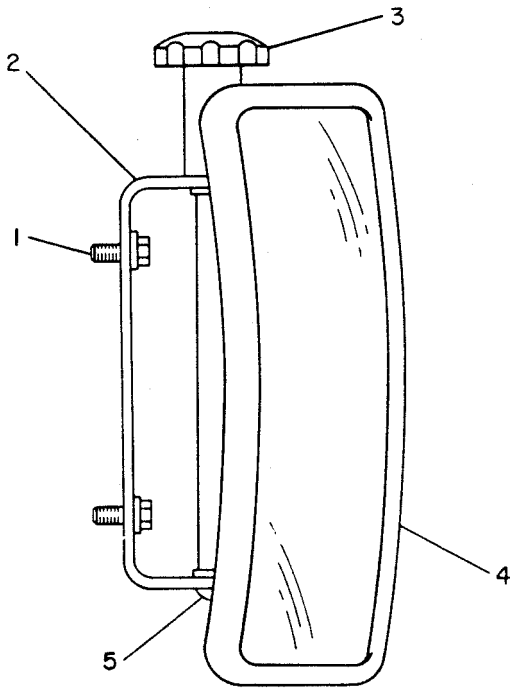

GRAPHIC #1 **<END>** g00143265

OPERATOR STATION

105-9659 MIRROR GP-REAR VIEW

S/N: DSH1-UP; DLN1-UP; DJR1-UP
PART OF 323-5696, 327-9363 CAB AR
ALSO AN ATTACHMENT

SMCS-7319 **i03994848**

NOTE	REF NO	GRAPHIC REF	PART NUMBER	QTY	PART NAME 1 2 3 4 5 6 (PRODUCT LEVEL)	SEE PAGE
	1	1	**9P-9388**	1	KNOB (REAR VIEW MIRROR)	
	2	1	**5P-6874**	1	MIRROR (REAR VIEW)	
	3	1	**5K-9179**	1	BOLT-ROUND HEAD (3/8-16X11-IN)	
	4	1	**6Y-5113**	1	BRACKET	
	5	1	**8T-4121**	2	WASHER-HARD (11X21X2.5-MM THK)	
M	6	1	**8T-4137**	2	BOLT (M10X1.5X20-MM)	

M-METRIC PART

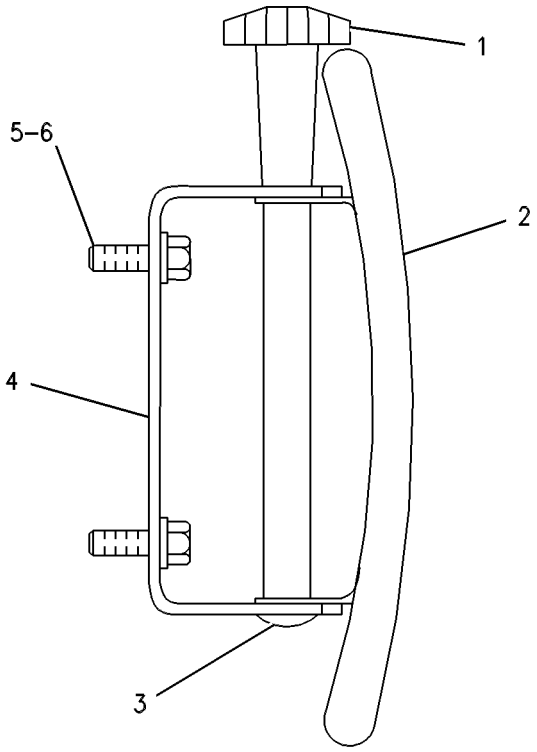

GRAPHIC #1 **<END>** g00254288

147-7976 MOTOR GP-WINDOW WIPER–FRONT

S/N: DSH1-UP; DLN1-UP; DJR1-UP
24-VOLT
PART OF 354-6924 WIPER GP-WINDOW
ALSO AN ATTACHMENT

SMCS-7305 **i03995944**

NOTE	REF NO	GRAPHIC REF	PART NUMBER	QTY	PART NAME 1 2 3 4 5 6 (PRODUCT LEVEL)	SEE PAGE
M	1	1	**5C-7261**	1	NUT (M8X1.25-THD)	
	2	1	**3F-9556**	1	LOCKWASHER	
	3	1	**102-8805**	1	KIT-RECEPTACLE (6-PIN)	
					(INCLUDES RECEPTACLE AND WEDGE)	
	4	1	**9G-3695**	1	PLUG-SEAL	
	5	1	**8T-8729**	5	PIN-CONNECTOR (16-GA TO 18-GA)	

M-METRIC PART

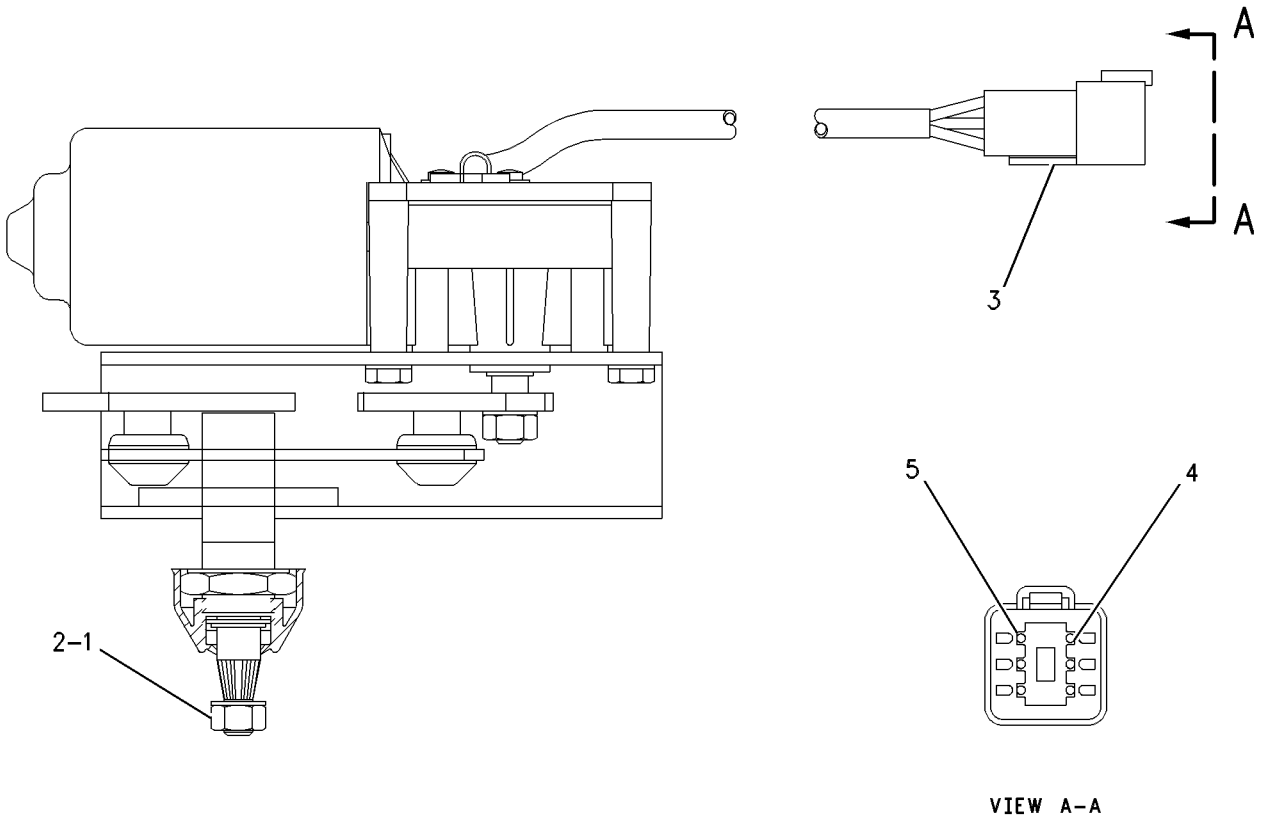

GRAPHIC #1 **<END>** g00464037

147-7979 MOTOR GP-WINDOW WIPER–REAR

S/N: DSH1-UP; DLN1-UP; DJR1-UP
24-VOLT
PART OF 354-6924 WIPER GP-WINDOW
ALSO AN ATTACHMENT

SMCS-7305 **i03995945**

NOTE	REF NO	GRAPHIC REF	PART NUMBER	QTY	PART NAME 1 2 3 4 5 6 (PRODUCT LEVEL)	SEE PAGE
M	1	1	**5C-7261**	1	NUT (M8X1.25-THD)	
	2	1	**3F-9556**	1	LOCKWASHER	
	3	1	**102-8805**	1	KIT-RECEPTACLE (6-PIN)	
					(INCLUDES RECEPTACLE AS & WEDGE)	
	4	1	**9G-3695**	1	PLUG-SEAL	
	5	1	**8T-8729**	5	PIN-CONNECTOR (16-GA TO 18-GA)	

M-METRIC PART

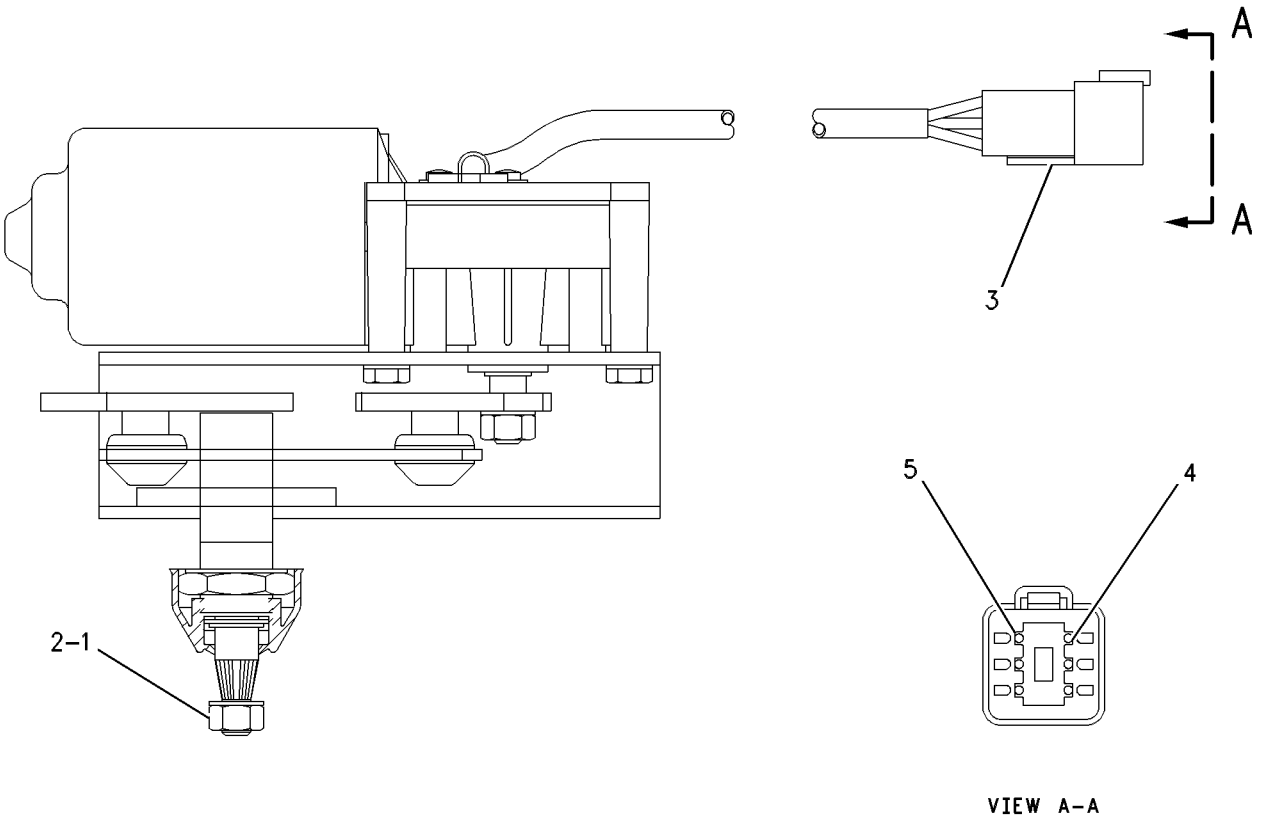

VIEW A–A

GRAPHIC #1 **<END>** g00464037

330-5013 MOTOR GP-WINDOW WIPER—DOOR, LH

S/N: DSH1-UP; DLN1-UP; DJR1-UP
24-VOLT
PART OF 354-6924 WIPER GP-WINDOW
ALSO AN ATTACHMENT

SMCS-7305 **i03995189**

NOTE	REF NO	GRAPHIC REF	PART NUMBER	QTY	PART NAME 1 2 3 4 5 6 (PRODUCT LEVEL)	SEE PAGE
	1	1	**102-8805**	1	KIT-RECEPTACLE (6-PIN)	
					(INCLUDES RECEPTACLE AS & WEDGE)	
	2	1	**186-3735**	5	PIN-CONNECTOR (16-GA TO 18-GA)	
	3	1	**8T-8737**	1	PLUG-SEAL	
M	4	1	**5C-7261**	1	NUT (M8X1.25-THD)	
	5	1	**3F-9556**	1	LOCKWASHER	
	6	1	**263-3823**	1	CAP-WIPER	

M-METRIC PART

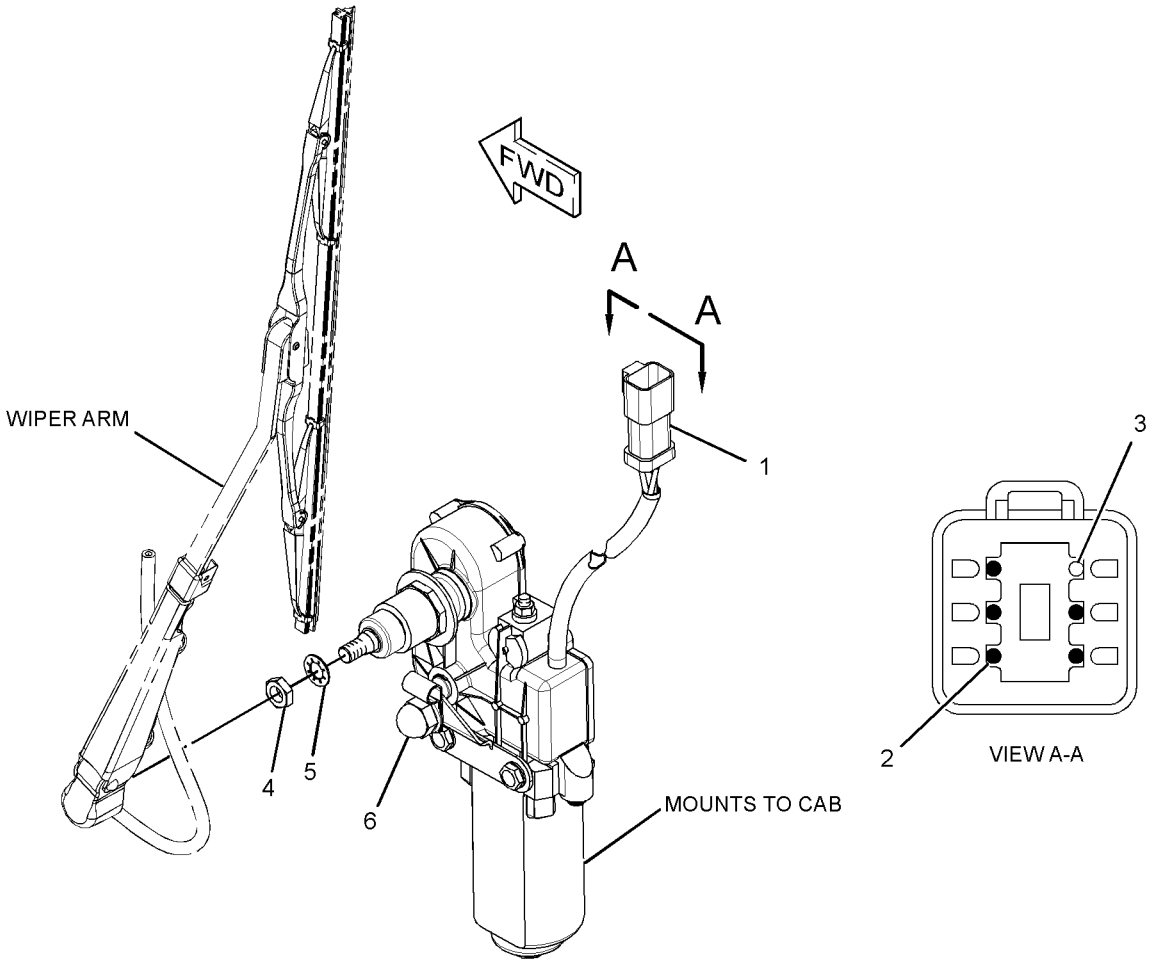

GRAPHIC #1 **<END>** g02052753

330-5014 MOTOR GP-WINDOW WIPER–DOOR, RH

S/N: DSH1-UP; DLN1-UP; DJR1-UP
24-VOLT
PART OF 354-6924 WIPER GP-WINDOW
ALSO AN ATTACHMENT

SMCS-7305 **i03995187**

NOTE	REF NO	GRAPHIC REF	PART NUMBER	QTY	PART NAME 1 2 3 4 5 6 (PRODUCT LEVEL)	SEE PAGE
	1	1	**8T-8737**	1	PLUG-SEAL	
	2	1	**102-8805**	1	KIT-RECEPTACLE (6-PIN)	
					(INCLUDES RECEPTACLE AS & WEDGE)	
	3	1	**186-3735**	5	PIN-CONNECTOR (16-GA TO 18-GA)	
	4	1	**263-3823**	1	CAP-WIPER	
	5	1	**3F-9556**	1	LOCKWASHER	
M	6	1	**5C-7261**	1	NUT (M8X1.25-THD)	

M-METRIC PART

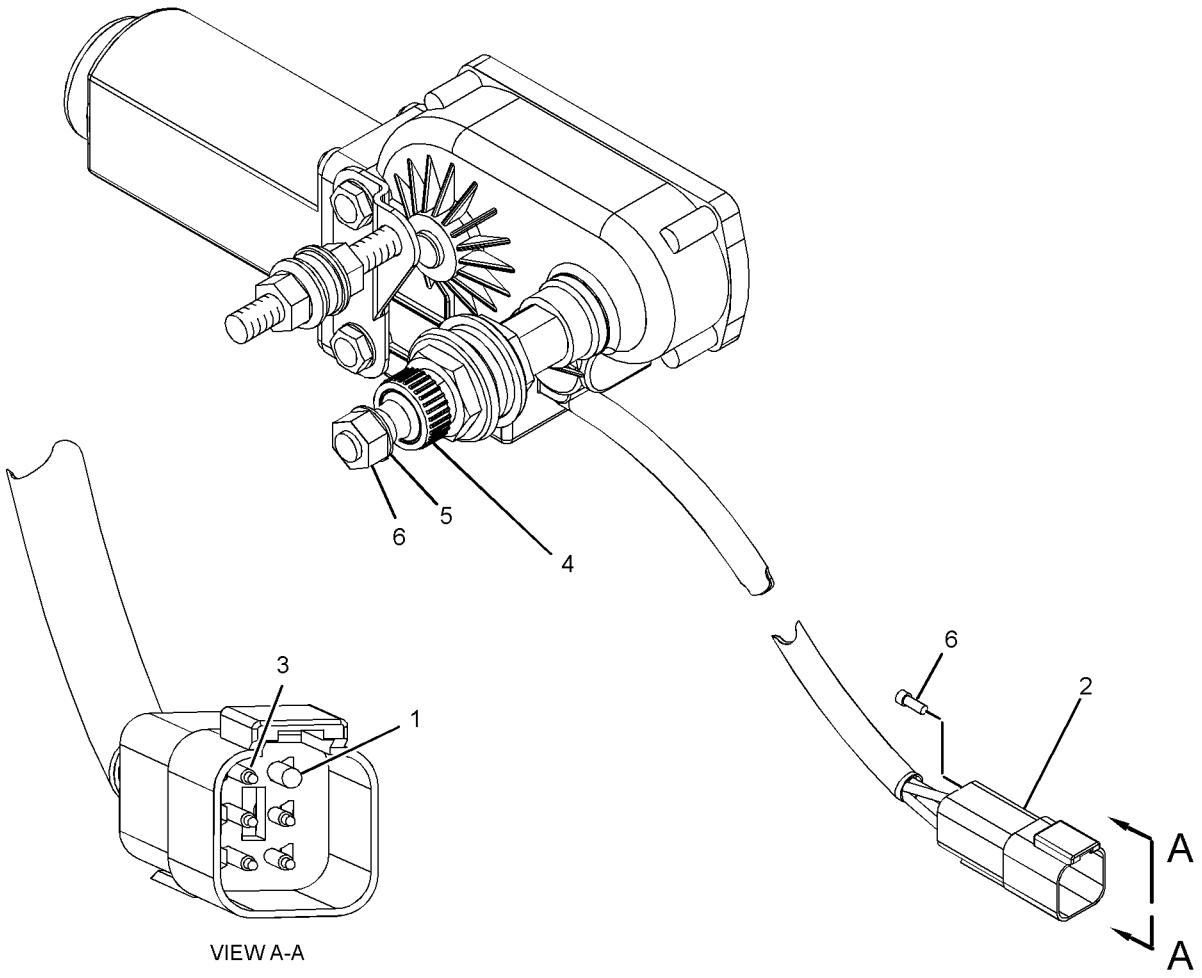

GRAPHIC #1 **<END>** g02029793

OPERATOR STATION

237-9140 MOUNTING GP-ANTENNA–GRADE CONTROL

S/N: DSH1-UP; DLN1-UP; DJR1-UP
PART OF 317-6580 GRADE CONTROL GP
AN ATTACHMENT

SMCS-7606 **i04000858**

NOTE	REF NO	GRAPHIC REF	PART NUMBER	QTY	PART NAME 1 2 3 4 5 6 (PRODUCT LEVEL)	SEE PAGE
	1	1	**317-2656**	1	HANDHOLD AS	
	2	1	**5P-1076**	2	WASHER-HARD (13.5X30X4-MM THK)	
M	3	1	**8T-4139**	2	BOLT (M12X1.75X30-MM)	

M-METRIC PART

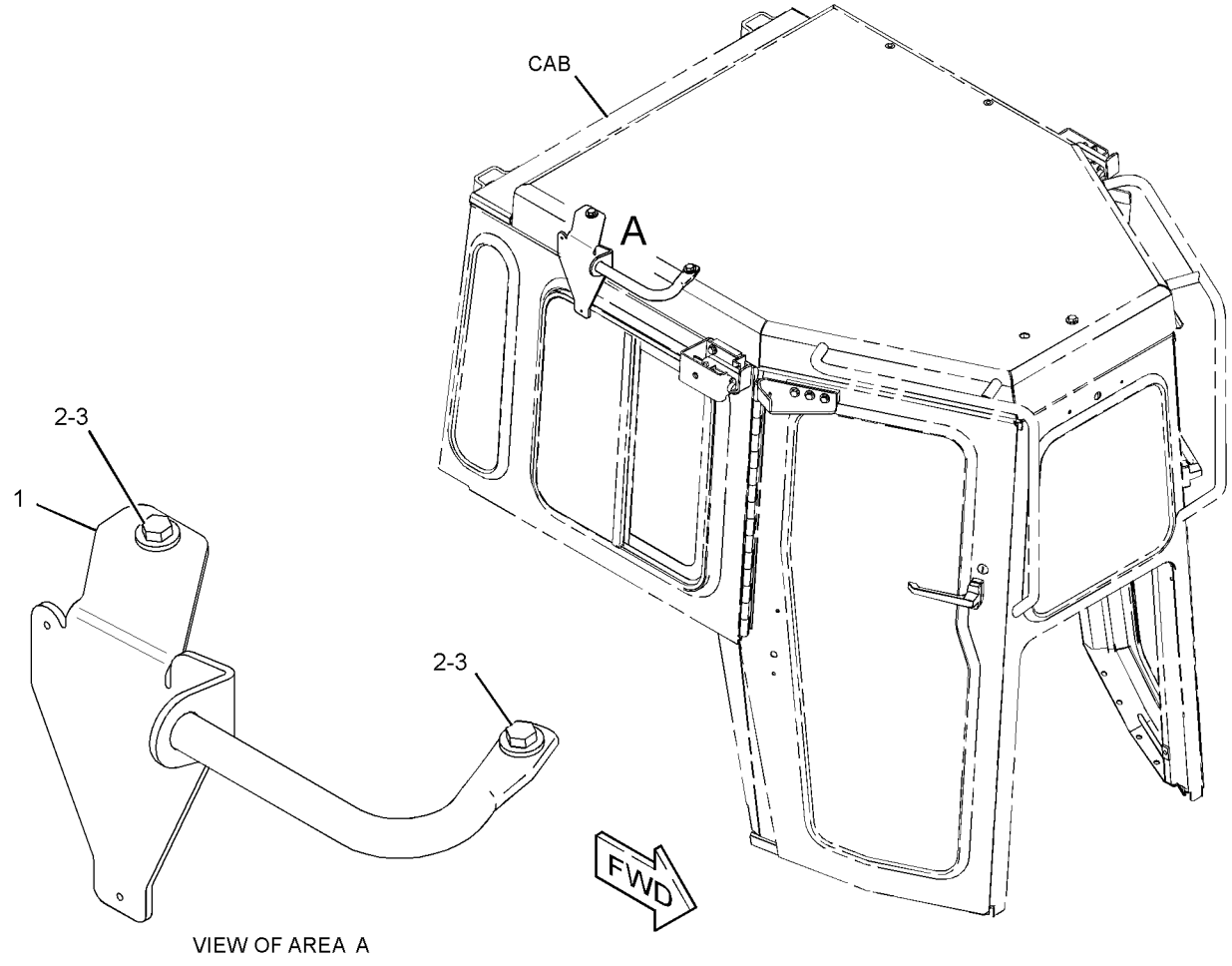

VIEW OF AREA A

GRAPHIC #1 **<END>** g01571261

OPERATOR STATION

169-9637 MOUNTING GP-CAB

S/N: DSH1-UP; DLN1-UP; DJR1-UP
PART OF 317-4153, 387-0547 CAB AR
ALSO AN ATTACHMENT

SMCS-7266, 7301 **i04010529**

NOTE	REF NO	GRAPHIC REF	PART NUMBER	QTY	PART NAME 1 2 3 4 5 6 (PRODUCT LEVEL)	SEE PAGE
	1	1	**9G-0986**	1	SEAL	
	2	1	**9G-0983**	2	SEAL	
D	3	1	**5P-7514**		SEAL (2.1-M)	
	4	1	**9G-0990**	1	SEAL	
	5	1	**113-6033**	1	ANGLE	
M	6	1	**189-5358**	2	BOLT (M10X1.5X60-MM)	
	7	1	**7X-3392**	31	WASHER-HARD (13.5X22.5X3-MM THK)	
	8	1	**171-2438**	7	BOLT-12 POINT HEAD (M12X1.75X30-MM)	
M	9	1	**8T-4136**	8	BOLT (M10X1.5X25-MM)	
	10	1	**7X-7729**	8	WASHER (11X25X3-MM THK)	
D	11	1	**5P-7513**		SEAL (4.2-M)	
	12	1	**189-5359**	2	WASHER-HARD (10.5X28.5X5-MM THK)	
M	13	1	**189-6123**	12	BOLT-12 POINT HEAD (M12X1.75X60-MM)	

D-ORDER BY THE METER
M-METRIC PART

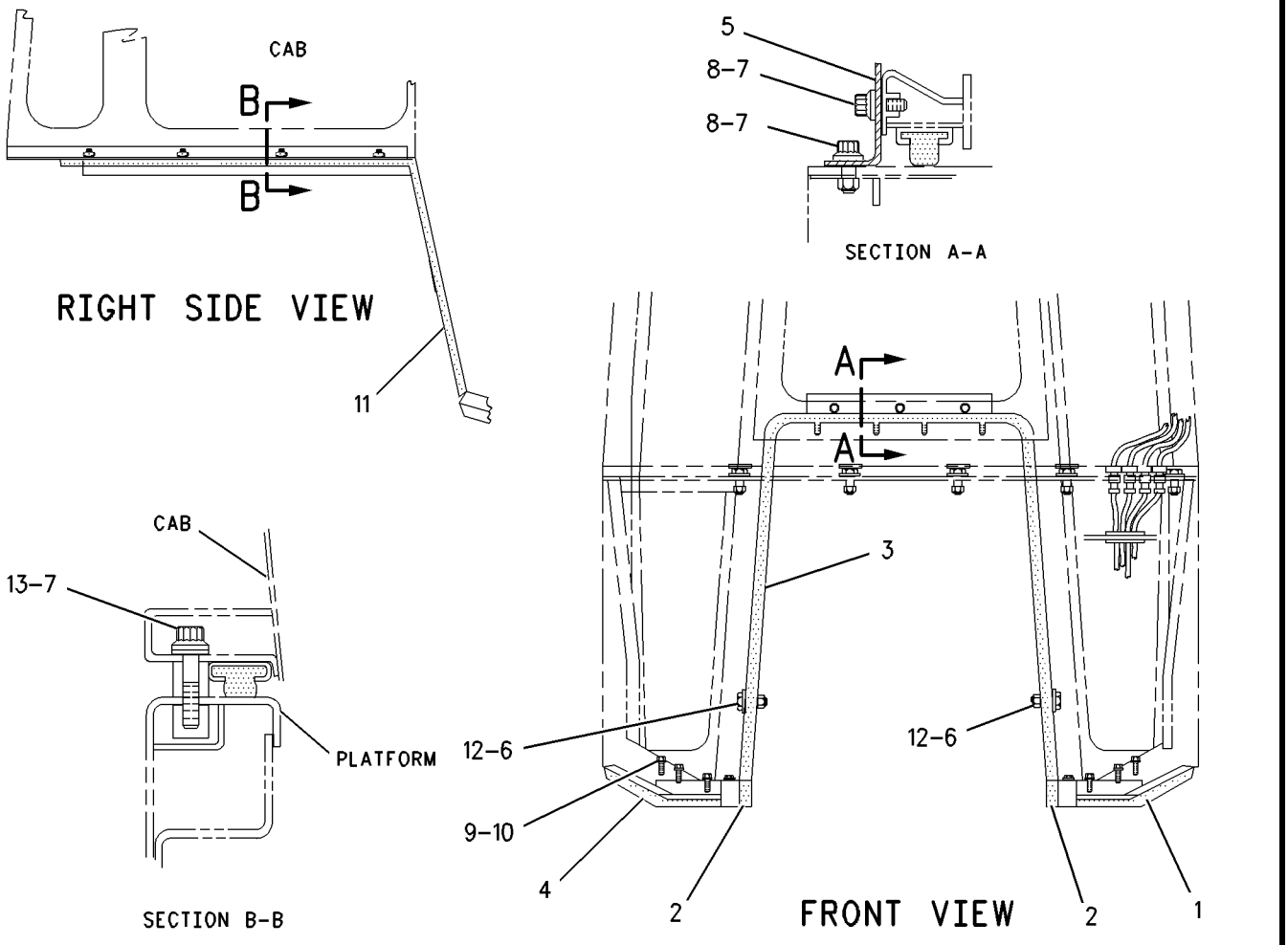

GRAPHIC #1 **<END>** g00722402

296-0612 MOUNTING GP-MONITOR—GRADE CONTROL

S/N: DSH1-UP; DLN1-UP; DJR1-UP
PART OF 317-6566 MOUNTING GP-MONITOR
AN ATTACHMENT

SMCS-7490 **i04000833**

NOTE	REF NO	GRAPHIC REF	PART NUMBER	QTY	PART NAME 1 2 3 4 5 6 (PRODUCT LEVEL)	SEE PAGE
	1	1	**222-9151**	2	WASHER-HARD (11X32X5-MM THK)	
	2	1	**245-8334**	2	KNOB	
	3	1	**296-0614**	1	BRACKET AS	
	4	1	**296-2861**	1	BRACKET AS	
	5	1	**299-5417**	1	SWIVEL AS	
		1	**6V-8236**	2	PIN-SPRING	
	6	1	**299-5418**	1	PIVOT AS-LOWER	
M	7	1	**5C-2890**	1	NUT (M6X1-THD)	
M	8	1	**7X-7888**	1	BOLT (M6X1X90-MM)	
M	9	1	**8T-0389**	1	LOCKNUT (M10X1.5-THD)	
M	10	1	**8T-0639**	4	BOLT (M6X1X12-MM)	
	11	1	**8T-4121**	6	WASHER-HARD (11X21X2.5-MM THK)	
M	12	1	**8T-4195**	5	BOLT (M10X1.5X30-MM)	
M	13	1	**8T-7852**	6	BOLT (M4X0.7X10-MM)	
	14	1	**9X-8256**	10	WASHER (6.6X12X2-MM THK)	

M-METRIC PART

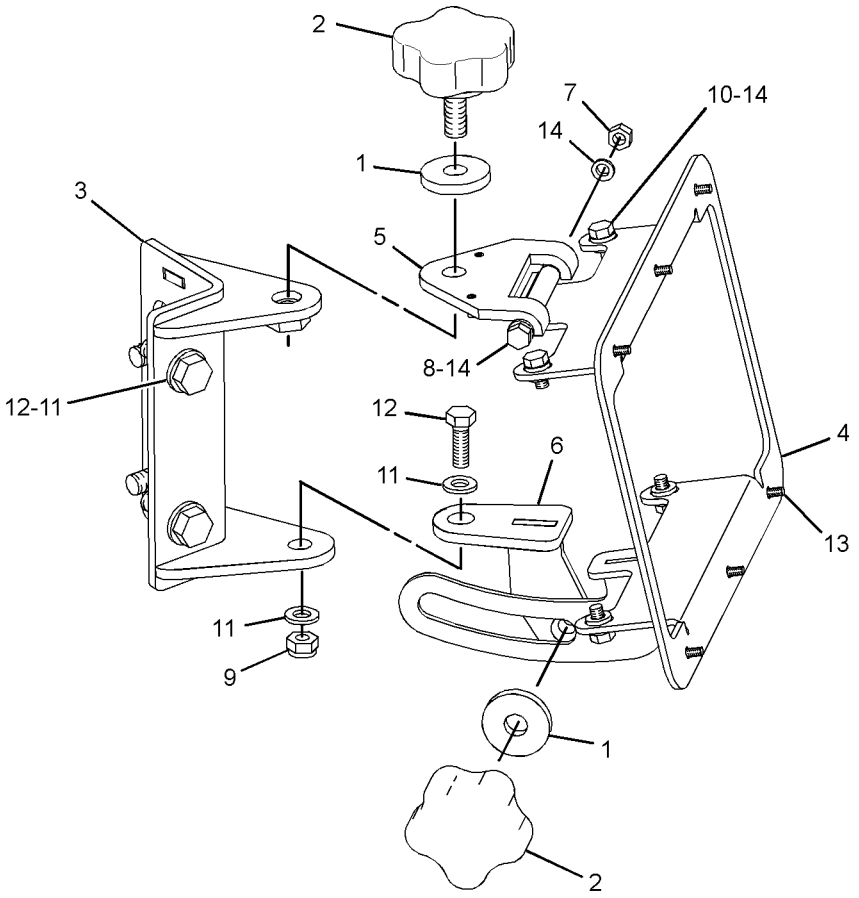

GRAPHIC #1 **<END>** g01362299

OPERATOR STATION

317-6566 MOUNTING GP-MONITOR—GRADE CONTROL

S/N: DSH1-UP; DLN1-UP; DJR1-UP
PART OF 379-5228 GRADE CONTROL AR
AN ATTACHMENT

SMCS-7490 **i04000823**

NOTE	PART NUMBER	QTY	PART NAME 1 2 3 4 5 6 (PRODUCT LEVEL)	SEE PAGE
Y	*296-0612*	1	MOUNTING GP-MONITOR (GRADE CONTROL)	589
	320-5905	1	HARNESS AS-MONITOR (ADVISOR)	
	8T-8737	115	PLUG-SEAL	
	9X-6772	2	STRAP-CABLE	
E	**125-7874**		TUBE-HEAT SHRINK (5.72-MM DIA) (5-CM)	
E	**125-7875**		TUBE-HEAT SHRINK (7.44-MM DIA) (5-CM)	
	9X-3402	18	SOCKET-CONNECTOR (16-GA TO 18-GA)	
	126-1768	7	SOCKET-CONNECTOR (14-GA TO 16-GA)	
	126-1774	1	COVER-CONNECTOR	
	5P-2766	2	TERMINAL-RING (18-GA TO 22-GA, NO. 6 SCREW)	
	147-1444	1	PLUG AS-CONNECTOR (70-PIN)	
	159-9322	1	SEAL-O-RING	
	160-7689	1	PLUG AS-CONNECTOR (70-PIN)	
	159-9322	1	SEAL-O-RING	
	320-5906	1	HARNESS AS-MONITOR (GPS)	
	8T-8737	57	PLUG-SEAL	
	9X-6772	2	STRAP-CABLE	
E	**119-3662**		TUBE-HEAT SHRINK (10.85-MM DIA) (7-CM)	
E	**125-7875**		TUBE-HEAT SHRINK (7.44-MM DIA) (5-CM)	
	9X-3402	11	SOCKET-CONNECTOR (16-GA TO 18-GA)	
	126-1768	2	SOCKET-CONNECTOR (14-GA TO 16-GA)	
	126-1774	1	COVER-CONNECTOR	
	160-7689	1	PLUG AS-CONNECTOR (70-PIN)	
	159-9322	1	SEAL-O-RING	
	248-5358	1	PLUG AS-CONNECTOR (39-PIN)	
	7K-1181	1	STRAP-CABLE	

E-ORDER BY THE CENTIMETER
Y-SEPARATE ILLUSTRATION

<END>

OPERATOR STATION

374-4178 MOUNTING GP-PLATFORM

S/N: DSH1-UP; DLN1-UP; DJR1-UP

PART OF 313-3338, 313-3759, 379-6225 CHASSIS AR

SMCS-7253 **i04712387**

NOTE	REF NO	GRAPHIC REF	PART NUMBER	QTY	PART NAME 1 2 3 4 5 6 (PRODUCT LEVEL)	SEE PAGE
	1	1	**117-8131**	8	MOUNT AS	
	2	1	**117-9966**	1	PLUG	
	3	1	**185-3666**	4	SLEEVE	
	4	1	**237-4270**	1	PLATE AS	
	5	1	**241-4348**	1	GASKET	
	6	1	**6T-8714**	4	WASHER-HARD (28X125X12-MM THK)	
	7	1	**7X-7729**	3	WASHER (11X25X3-MM THK)	
M	8	1	**8T-4136**	3	BOLT (M10X1.5X25-MM)	
	9	1	**8T-4167**	4	WASHER-HARD (26X44X4-MM THK)	
M	10	1	**8T-4649**	4	BOLT (M24X3X140-MM)	

M-METRIC PART

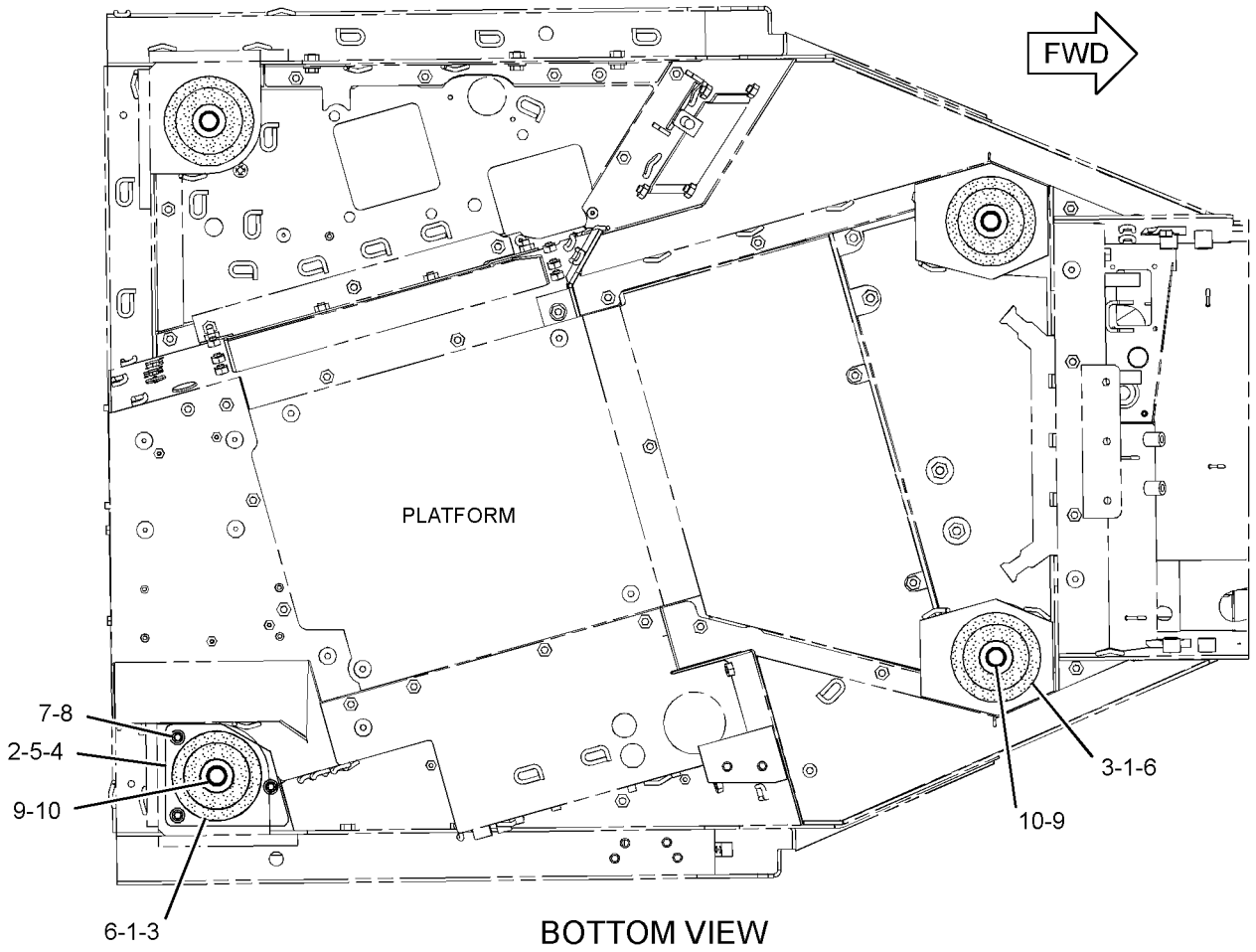

BOTTOM VIEW

GRAPHIC #1

<END>

g02847060

OPERATOR STATION

163-8744 MOUNTING GP-ROPS

S/N: DSH1-UP; DLN1-UP; DJR1-UP

PART OF 313-3338, 313-3759, 379-6225 CHASSIS AR

SMCS-7266 **i04711189**

NOTE	REF NO	GRAPHIC REF	PART NUMBER	QTY	PART NAME 1 2 3 4 5 6 (PRODUCT LEVEL)	SEE PAGE
	1	1	**163-8742**	1	SUPPORT GP-ROPS (LH)	
	1A	1	**3Y-7829**	1	BOSS (3/8-16-THD)	
	1B	1	**189-9240**	2	LINK	
	2	1	**163-8743**	1	SUPPORT GP-ROPS (RH)	
	2A	1	**189-9240**	2	LINK	
	3	1	**7X-0428**	16	BOLT (1-1/4-7X4-IN)	
	4	1	**7X-0533**	16	WASHER-HARD (34X55X6-MM THK)	

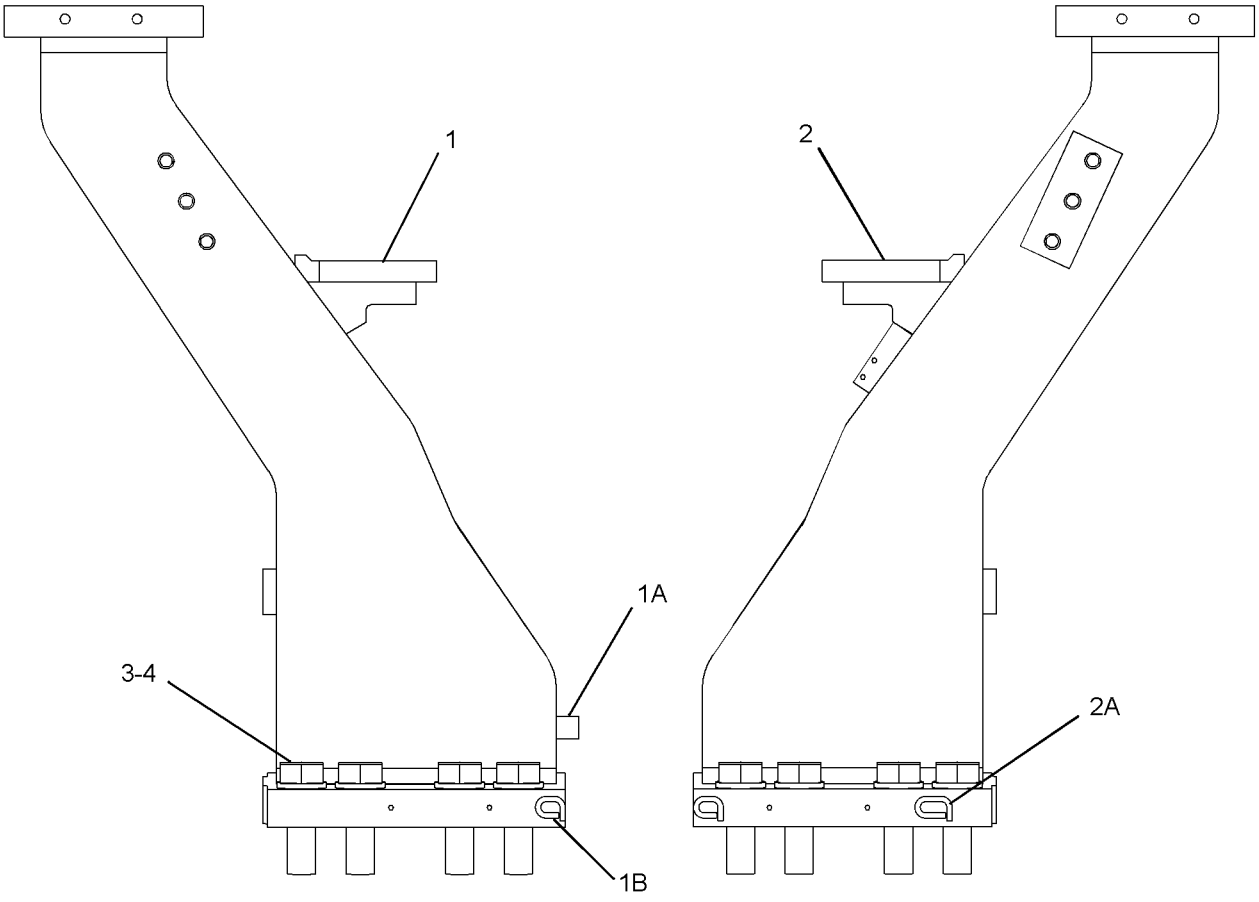

GRAPHIC #1 **<END>** g01227622

OPERATOR STATION

380-7900 OPERATOR AR

S/N: DSH1-UP; DLN1-UP; DJR1-UP

PART OF 313-3338, 313-3759, 379-6225 CHASSIS AR

SMCS-7301 **i04753369**

NOTE	PART NUMBER	QTY	PART NAME 1 2 3 4 5 6 (PRODUCT LEVEL)	SEE PAGE
Y	*387-0549*	1	BOX GP-BATTERY	300
Y	*317-4153*	1	CAB AR	519
Y	*375-4845*	1	CONTROL GP-GOVERNOR & BRAKE	543
Y	*380-7870*	1	CONTROL GP-STEERING & XMSN	389
Y	*387-0548*	1	FILM GP	677
Y	*380-2488*	1	INSTRUMENT GP	563
Y	*317-4155*	1	PLATFORM GP-OPERATOR	603
Y	*327-9902*	1	WIRING GP-PLATFORM	219
Y-SEPARATE ILLUSTRATION				

<END>

OPERATOR STATION

178-0604 PAN GP-BACKREST–CLOTH

S/N: DSH1-UP; DLN1-UP; DJR1-UP
PART OF 178-0603 SEAT GP
ALSO AN ATTACHMENT

SMCS-7312 **i02605954**

NOTE	REF NO	GRAPHIC REF	PART NUMBER	QTY	PART NAME 1 2 3 4 5 6 (PRODUCT LEVEL)	SEE PAGE
	1	1	**164-4883**	1	KNOB-LUMBAR	
Y	2	1	*178-0605*	1	PAN GP-BACKREST (LUMBAR)	595
	3	1	**233-6745**	1	CUSHION AS (CLOTH)	
	4	1	**250-4628**	3	PLUG	
	5	1	**8T-7566**	1	PIN-SPRING	

Y-SEPARATE ILLUSTRATION

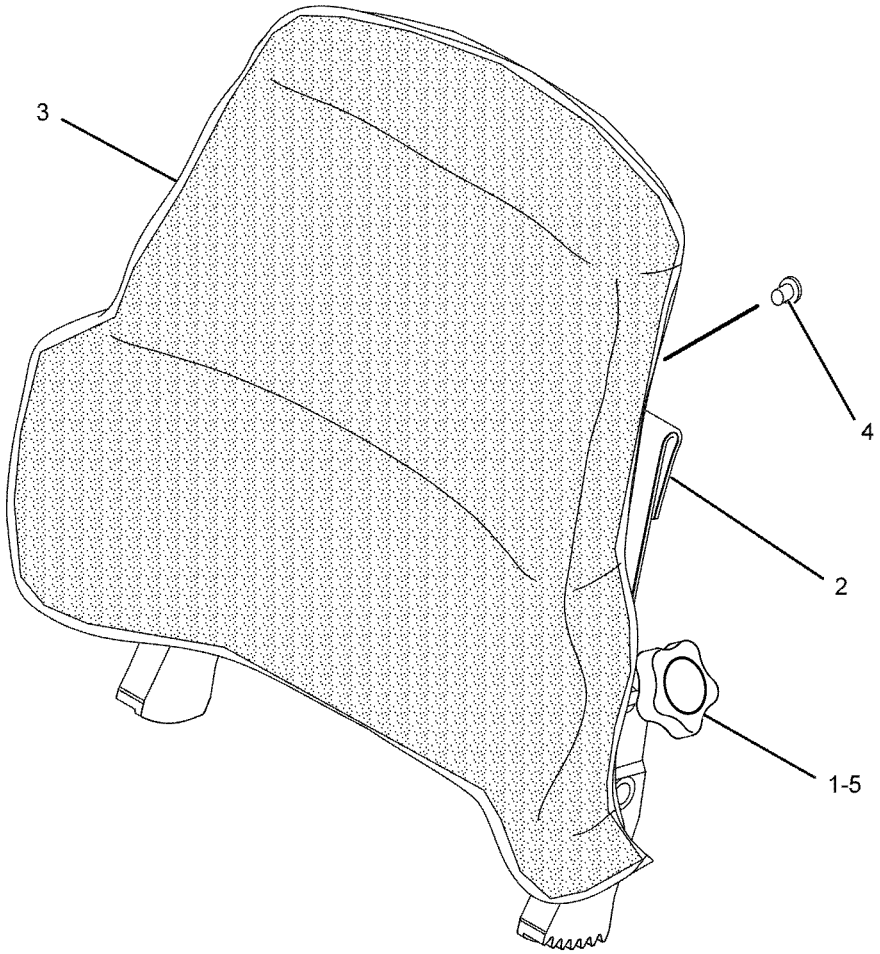

GRAPHIC #1 **<END>** g01092296

178-0605 PAN GP-BACKREST–LUMBAR

S/N: DSH1-UP; DLN1-UP; DJR1-UP
PART OF 178-0604, 180-7305 PAN GP-BACKREST
ALSO AN ATTACHMENT

SMCS-7312 **i03437182**

NOTE	REF NO	GRAPHIC REF	PART NUMBER	QTY	PART NAME 1 2 3 4 5 6 (PRODUCT LEVEL)	SEE PAGE
	1	1	**4K-9429**	8	RIVET-POP	
	2	1	**5P-7957**	1	LANYARD	
	3	1	**136-1543**	1	PLATE AS-LUMBAR	
	4	1	**173-2052**	1	RETAINER	
	5	1	**178-7907**	1	HOLDER	
	6	1	**261-5694**	1	PAN AS-BACKREST	

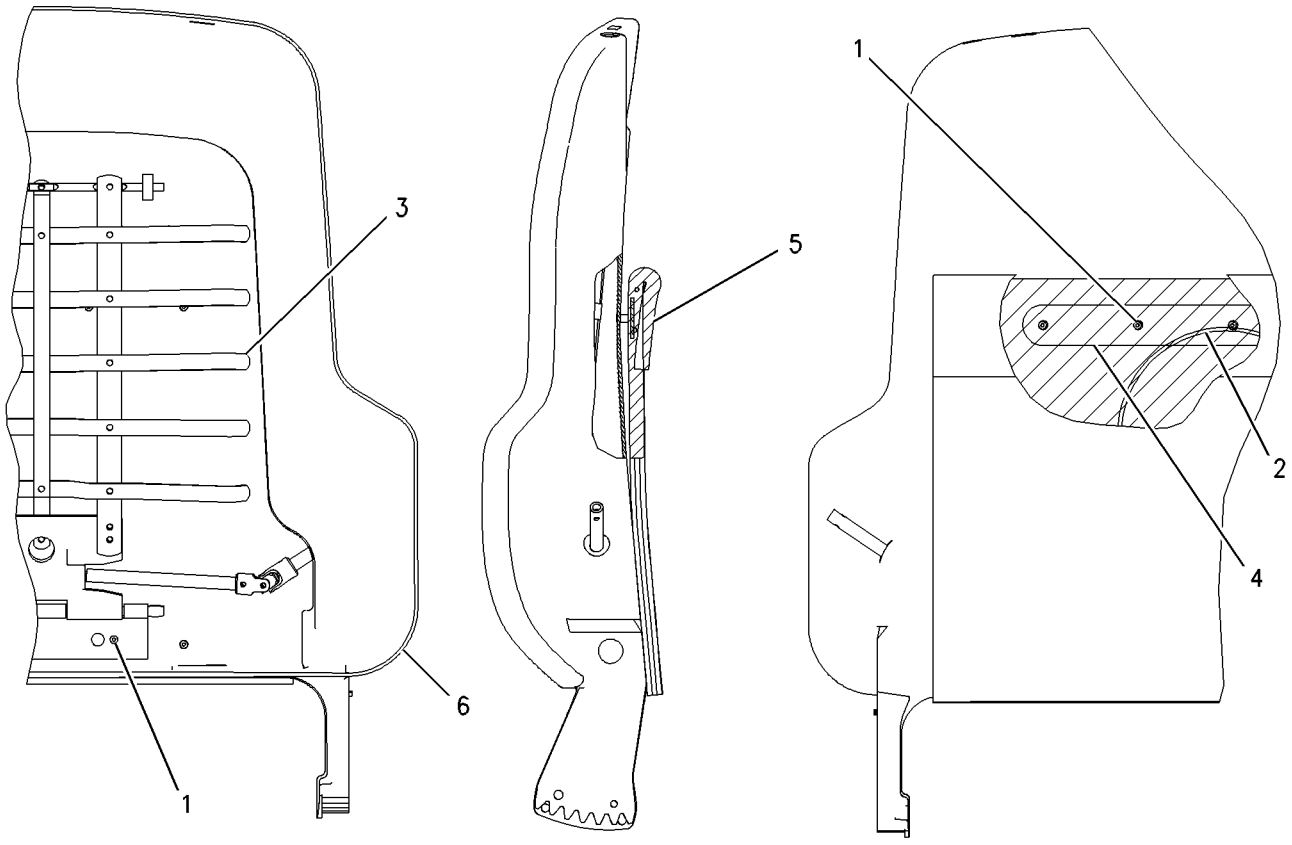

GRAPHIC #1 **<END>** g00716497

OPERATOR STATION

180-7305 PAN GP-BACKREST–VINYL

S/N: DSH1-UP; DLN1-UP; DJR1-UP
PART OF 180-7304 SEAT GP
AN ATTACHMENT

SMCS-7312 **i02122316**

NOTE	REF NO	GRAPHIC REF	PART NUMBER	QTY	PART NAME 1 2 3 4 5 6 (PRODUCT LEVEL)	SEE PAGE
	1	1	**164-4883**	1	KNOB-LUMBAR	
	2	1	**169-0697**	1	CUSHION AS	
Y	3	1	*178-0605*	1	PAN GP-BACKREST (LUMBAR)	595
	4	1	**250-4628**	3	PLUG	
	5	1	**8T-7566**	1	PIN-SPRING	

Y-SEPARATE ILLUSTRATION

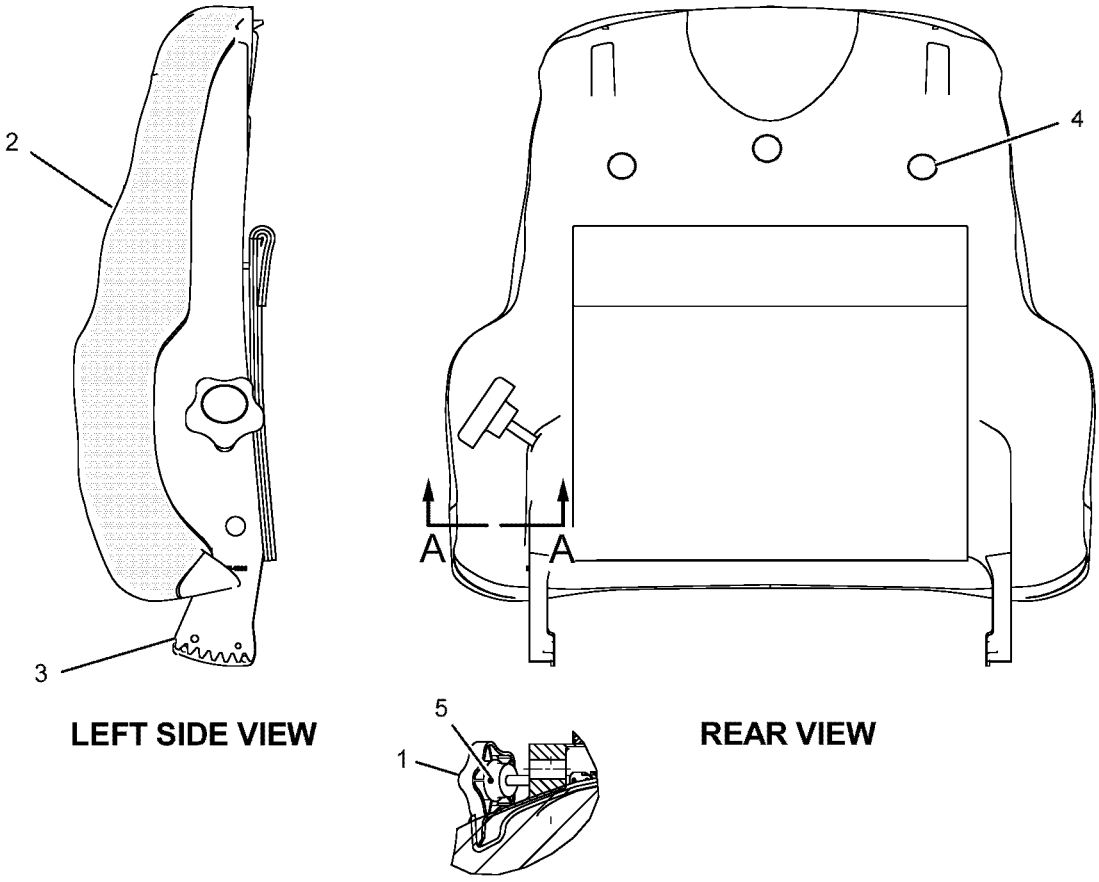

LEFT SIDE VIEW

REAR VIEW

SECTION A-A

GRAPHIC #1

<END>

g01082619

OPERATOR STATION

323-9636 PANEL GP-INSTRUMENT—OPEN ROPS

S/N: DSH1-UP; DLN1-UP; DJR1-UP
PART OF 334-8477 CANOPY AR
AN ATTACHMENT

SMCS-7450, 7451 **i04033074**

NOTE	REF NO	GRAPHIC REF	PART NUMBER	QTY	PART NAME 1 2 3 4 5 6 (PRODUCT LEVEL)	SEE PAGE
	1	1	**3E-5239**	2	RELAY AS (24-VOLT)	
	2	1	**3S-2093**	9	STRAP-CABLE	
	3	1	**083-9527**	1	SPACER (13X20X1.5-MM THK)	
	4	1	**110-6109**	1	KNOB-CONTROL (LAMP)	
	5	1	**110-7887**	1	SWITCH AS-START (KEY)	
		1	**7T-6799**	1	NUT-MOUNTING (1-32-THD)	
		1	**102-8804**	1	KIT-RECEPTACLE (4-PIN)	
					(INCLUDES RECEPTACLE AS & WEDGE)	
		1	**8T-8729**	4	PIN-CONNECTOR (16-GA TO 18-GA)	
	6	1	**122-7127**	18	NUT-SPECIAL (NYLON)	
	7	1	**123-9294**	2	LAMP (24-VOLT)	
	8	1	**159-9257**	1	PANEL-DASH (LIGHT)	
	9	1	**164-0847**	1	CABLE	
	10	1	**175-1349**	1	PLATE	
	11	1	**175-3950**	1	SWITCH AS-ROTARY (LIGHT SWITCH)	
		1	**9W-0852**	7	PIN-CONNECTOR (14-GA TO 16-GA)	
		1	**102-8806**	1	KIT-RECEPTACLE (8-PIN)	
					(INCLUDES RECEPTACLE AS & WEDGE)	
	12	1	**178-3003**	1	COVER	
M	13	1	**187-7719**	4	SCREW-HEX FLANGE (M5X2.24X14-MM)	
	14	1	**194-1466**	1	CLIP	
	15	1	**293-9123**	1	SWITCH AS-ROCKER (FLOODLIGHTS)	
	16	1	**311-3741**	1	GUARD-VANDALISM	
	17	1	**311-3742**	1	PANEL AS	
		1	**311-3737**	2	GUIDE	
	18	1	**311-3744**	1	ROD	
	19	1	*314-3124*	1	LOCK GP	
		1	**226-0293**	1	LOCK AS	
		1	**300-1643**	1	CAM	
	20	1	**318-2389**	1	MODULE GP-DISPLAY (INSTRUMENT CLUSTER)	
	21	1	**320-5887**	1	HARNESS AS-DASH	
		1	**102-8803**	1	KIT-RECEPTACLE (3-PIN)	
		1	**102-8804**	1	KIT-RECEPTACLE (4-PIN)	
		1	**102-8805**	1	KIT-RECEPTACLE (6-PIN)	
					(EACH RECEPTACLE KIT INCLUDES RECEPTACLE AS & WEDGE)	
		1	**3T-3158**	2	SOCKET-LAMP	
		1	**3T-3159**	4	SPRING	
		1	**3T-3278**	2	BOOT	
		1	**6D-4161**	2	CONTACT	
		1	**7X-6222**	1	PLUG AS-CONNECTOR (24-PIN)	
		1	**3E-4367**	1	RING-RETAINING	
M		1	**3E-8558**	1	BOLT (M5X0.8X39.37-MM)	
		1	**9X-3265**	2	SEAL-CONNECTOR (24-PIN)	
		1	**8T-8737**	85	PLUG-SEAL	
		1	**9X-1054**	2	PLUG AS-CONNECTOR (4-PIN)	
E		1	**114-8843**	1	SLEEVE-PLASTIC (20-CM)	
		1	**125-7874**	30	TUBE-HEAT SHRINK (5.72-MM DIA)	
		1	**125-7875**	15	TUBE-HEAT SHRINK (7.44-MM DIA)	
		1	**9X-3402**	1	SOCKET-CONNECTOR (16-GA TO 18-GA)	
		1	**9X-3401**	1	PIN-CONNECTOR (16-GA TO 18-GA)	
					—OR—	
		1	**126-1767**	1	PIN-CONNECTOR (14-GA TO 16-GA)	
		1	**155-2270**	1	KIT-CONNECTING PLUG (2-PIN)	
		1	**155-2271**	1	KIT-CONNECTING PLUG (4-PIN)	

323-9636 **PANEL GP-INSTRUMENT** *(contd.)* **i04033074**

NOTE	REF NO	GRAPHIC REF	PART NUMBER	QTY	PART NAME 1 2 3 4 5 6 (PRODUCT LEVEL)	SEE PAGE
		1	**155-2274**	1	KIT-CONNECTING PLUG (6-PIN)	
		1	**155-2260**	1	KIT-CONNECTING PLUG (3-PIN)	
		1	**174-0503**	1	KIT-CONNECTING PLUG (3-PIN)	
					(EACH PLUG KIT INCLUDES PLUG AS, WEDGE & INTERFACE SEAL)	
		1	**245-7434**	1	KIT-CONNECTING PLUG (10-PIN)	
		1	**288-7146**	10	WIRE AS	
		1	**185-1861**	12	SEAL-WIRE	
		1	**214-4208**	1	RECEPTACLE AS-CONNECTOR (70-PIN)	
	22	1	**334-7392**	1	FILM-CERTIFICATION (OPS, READ OMM)	
	23	1	**204-6102**	18	WASHER-HARD (4.45X9.52X1-MM THK)	
M	24	1	**213-7315**	6	SCREW-TRUSS HEAD (M4X0.7X25-MM)	
	25	1	**216-7352**	2	SCREW-TRUSS HEAD (M8X1.25X30-MM)	
	26	1	**4M-5281**	2	BOLT (1/4-20X0.75-IN)	
	27	1	**4P-8134**	2	CLIP	
	28	1	**5P-4115**	2	WASHER-HARD (7.2X19X2-MM THK)	
	29	1	**5P-4116**	2	WASHER-HARD (8.8X20.5X2-MM THK)	
M	30	1	**7Y-7256**	12	SCREW-TRUSS HEAD (M4X0.7X35-MM)	
M	31	1	**8T-0337**	1	SCREW-MACHINE (M4X0.7X12-MM)	
M	32	1	**8T-2659**	1	LOCKNUT (M4X0.7-THD)	
M	33	1	**8T-4138**	1	BOLT (M6X1X20-MM)	
M	34	1	**8T-4171**	2	BOLT (M6X1X12-MM)	
	35	1	**8T-4205**	3	WASHER-HARD (7.2X14.5X2-MM THK)	
M	36	1	**9X-2044**	2	SCREW-TRUSS HEAD (M6X1X16-MM)	
	37	1	**9X-8267**	2	WASHER (6.6X12X2-MM THK)	

E-ORDER BY THE CENTIMETER
M-METRIC PART

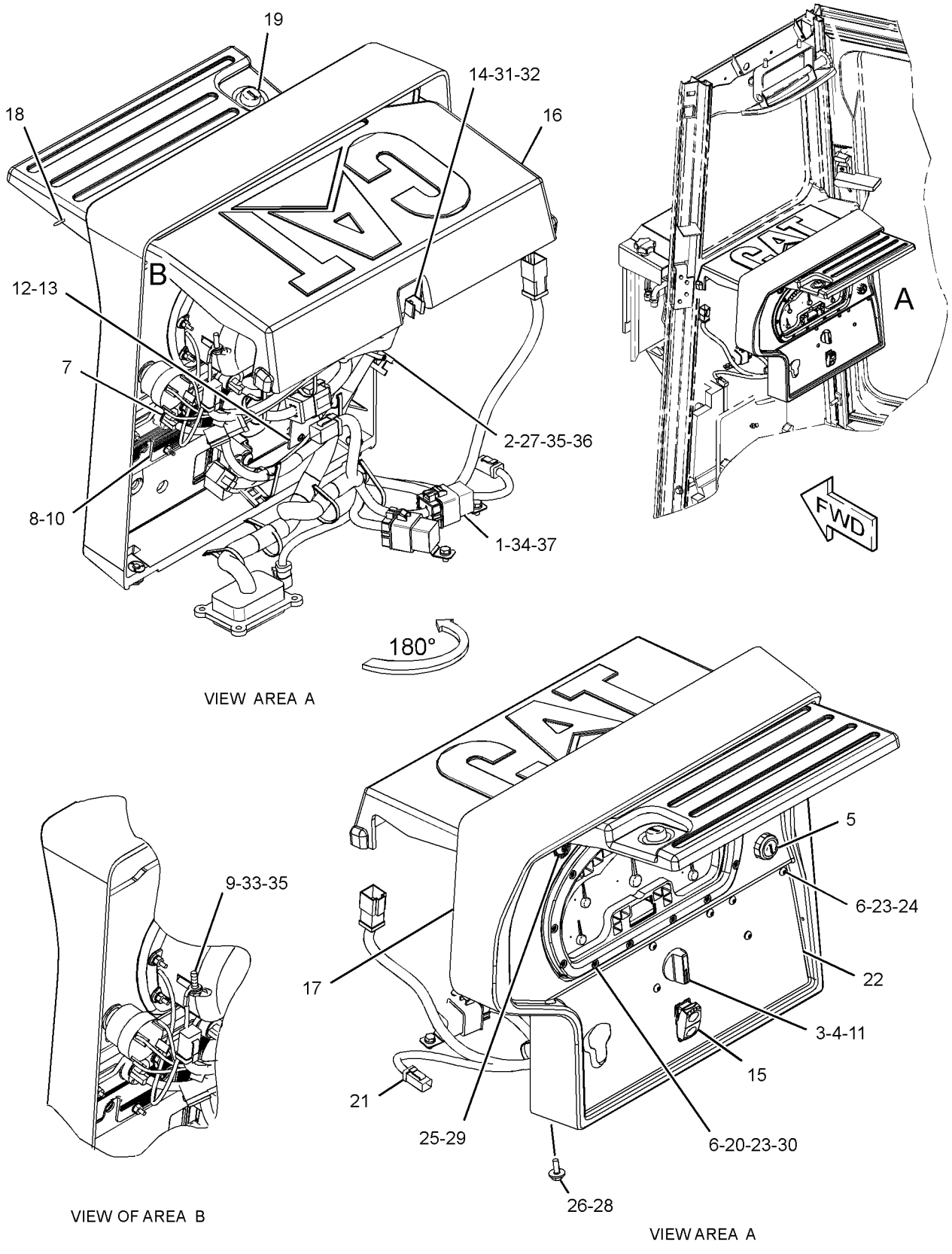

GRAPHIC #1 **<END>** g02178454

OPERATOR STATION

317-4158 PLATFORM GP

S/N: DSH1-UP; DLN1-UP; DJR1-UP
PART OF 317-4155 PLATFORM GP-OPERATOR
ALSO AN ATTACHMENT

SMCS-7253, 7254 **i03995336**

NOTE	REF NO	GRAPHIC REF	PART NUMBER	QTY	PART NAME 1 2 3 4 5 6 (PRODUCT LEVEL)	SEE PAGE
	1	1	**169-6902**	1	BRACKET AS	
M		1	**8T-3490**	9	NUT-WELD (M10X1.5-THD)	
	2	1	**317-4159**	1	PLATFORM AS	
	3	1	**7X-7729**	2	WASHER (11X25X3-MM THK)	
M	4	1	**8T-4136**	2	BOLT (M10X1.5X25-MM)	

M-METRIC PART

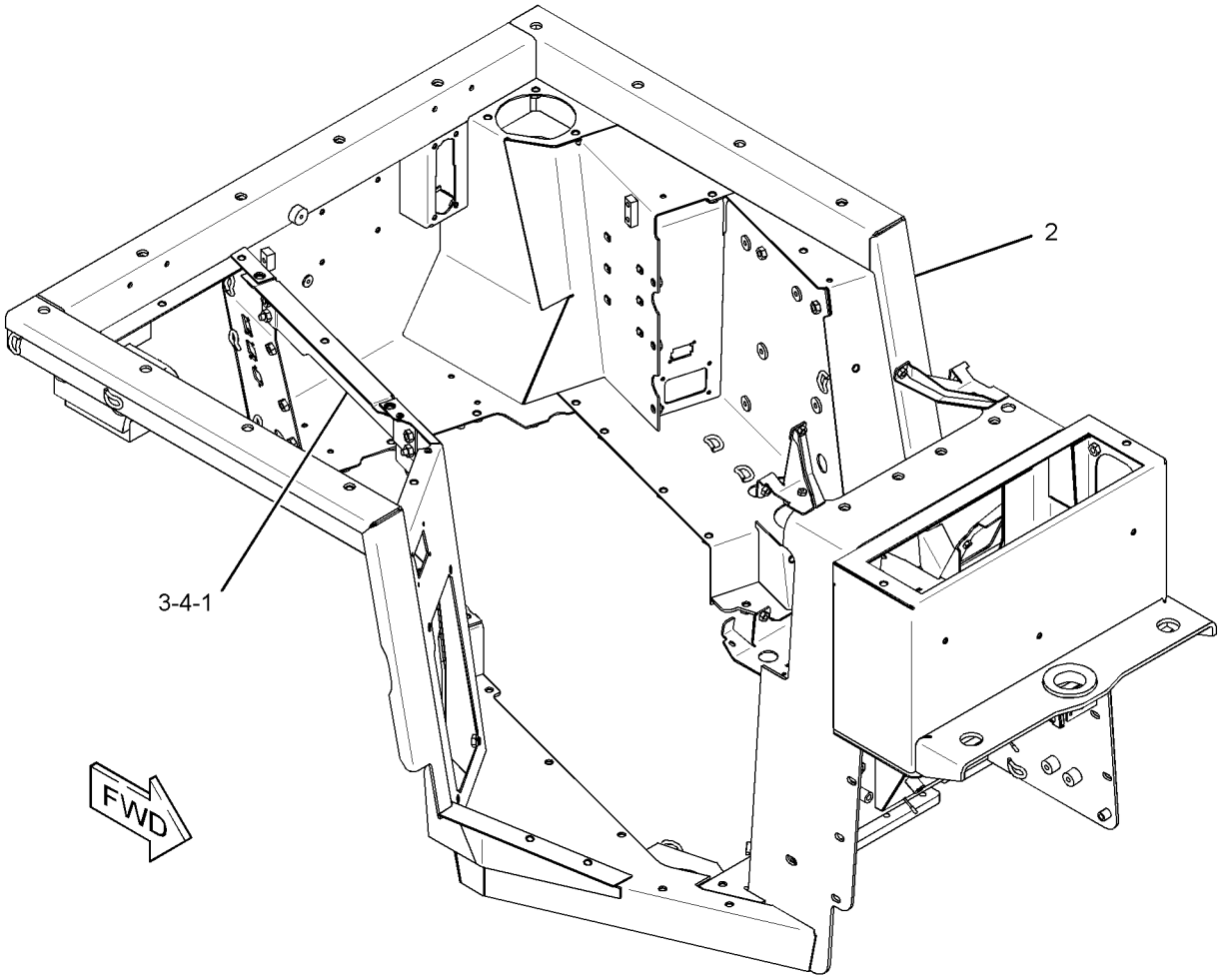

GRAPHIC #1 **<END>** g02194083

OPERATOR STATION

317-1767 PLATFORM GP-OPERATOR–OPEN ROPS

S/N: DSH1-UP; DLN1-UP; DJR1-UP
PART OF 334-8477 CANOPY AR
AN ATTACHMENT

SMCS-7253 **i03994945**

NOTE	REF NO	GRAPHIC REF	PART NUMBER	QTY	PART NAME 1 2 3 4 5 6 (PRODUCT LEVEL)	SEE PAGE
	1	1	**3T-3634**	1	HANDRAIL	
	2	1	**5P-0998**	3	PLUG-SEAL	
	3	1	**6I-9706**	1	RETAINER AS	
M		1	**6V-9632**	4	NUT-WELD (M6X1-THD)	
	4	1	**6V-1790**	3	PLUG-BUTTON	
	5	1	**6Y-0206**	2	RETAINER	
	6	1	**6Y-8114**	2	SPACER (13.8X23.75X12.7-MM THK)	
	7	1	**7G-4824**	1	STRAP	
	8	1	**7T-6299**	1	GROMMET	
	9	1	**8E-7791**	1	STRAP	
	10	1	**127-3018**	1	HANDHOLD	
	11	1	**141-2240**	1	PLATE	
M	12	1	**184-0982**	4	SCREW-PAN HEAD (M6X1X16-MM)	
	13	1	**237-0204**	1	FLOORPLATE AS	
M		1	**8T-3490**	2	NUT-WELD (M10X1.5-THD)	
	14	1	**237-0205**	1	FLOORPLATE AS	
M		1	**8T-3597**	4	NUT-WELD (M12X1.75-THD)	
	15	1	**241-4342**	1	GASKET	
	16	1	**241-4344**	1	GASKET	
	17	1	**241-7917**	1	HOUSING	
	18	1	**261-8619**	1	FLOOR MAT	
	19	1	**317-4171**	1	PLATE	
Y	20	1	*336-1846*	1	COVER GP-CONSOLE	552
	21	1	**198-9706**	4	SCREW-TRUSS HEAD (M5X0.8X16-MM)	
	22	1	**5P-1076**	10	WASHER-HARD (13.5X30X4-MM THK)	
	23	1	**5P-4115**	2	WASHER-HARD (7.2X19X2-MM THK)	
	24	1	**5P-4116**	2	WASHER-HARD (8.8X20.5X2-MM THK)	
	25	1	**7X-7729**	10	WASHER (11X25X3-MM THK)	
M	26	1	**8T-4136**	8	BOLT (M10X1.5X25-MM)	
M	27	1	**8T-4137**	2	BOLT (M10X1.5X20-MM)	
M	28	1	**8T-4138**	2	BOLT (M6X1X20-MM)	
M	29	1	**8T-4139**	10	BOLT (M12X1.75X30-MM)	
M	30	1	**8T-4189**	2	BOLT (M8X1.25X20-MM)	
M	31	1	**8T-4194**	2	BOLT (M12X1.75X50-MM)	
	32	1	**8T-4223**	2	WASHER-HARD (13.5X25.5X3-MM THK)	
	33	1	**8T-8908**	2	BOLT (1/4-20X1-IN)	
	34	1	**9X-8256**	2	WASHER (6.6X12X2-MM THK)	

M-METRIC PART
Y-SEPARATE ILLUSTRATION

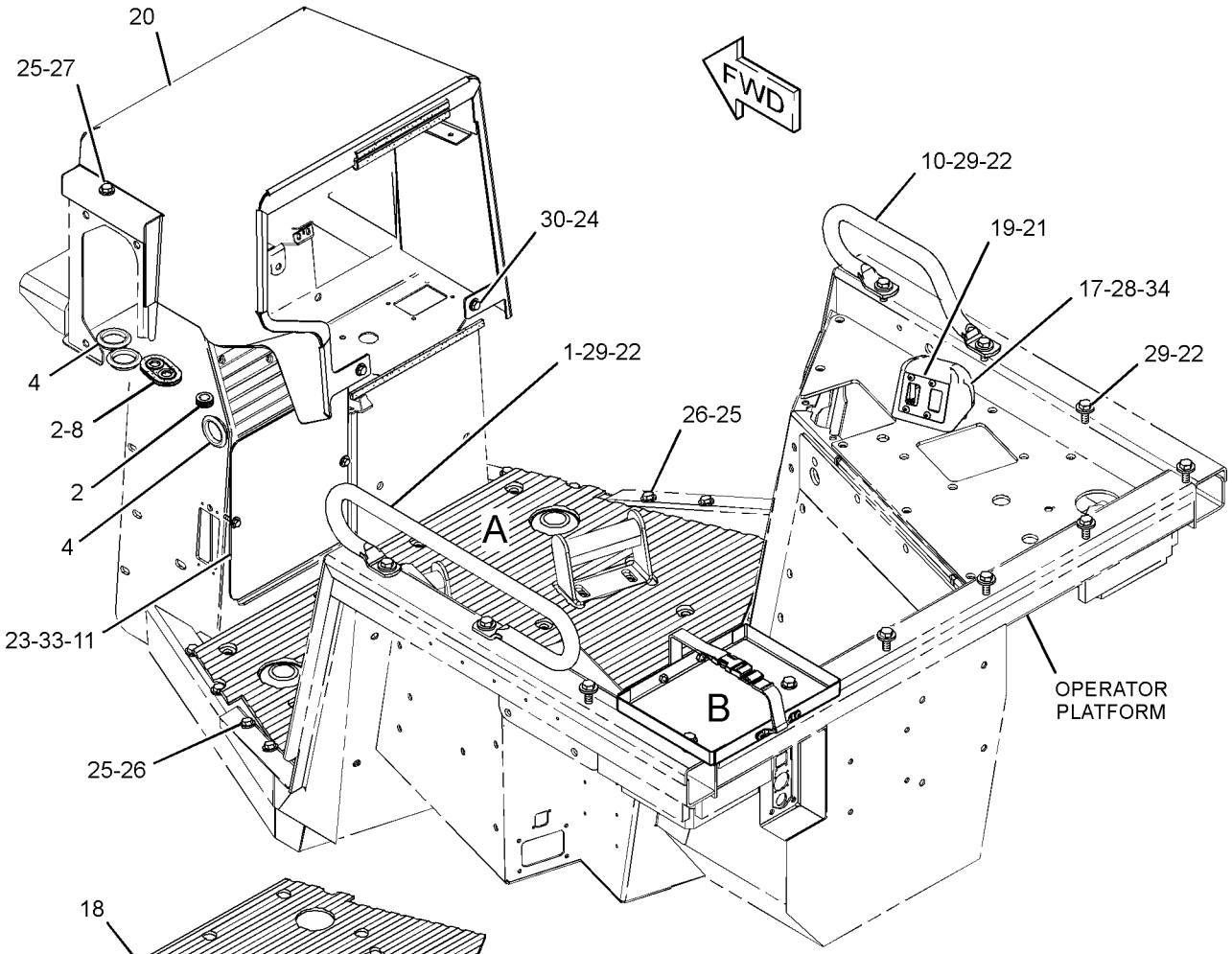

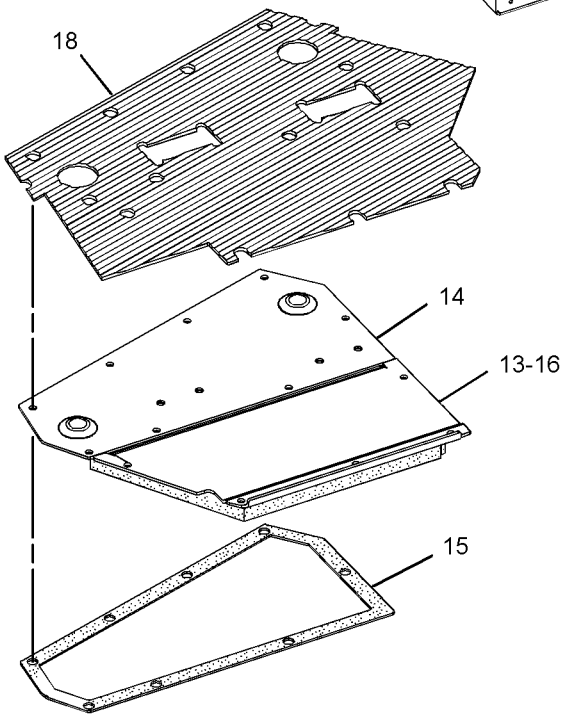

VIEW OF AREA A
(EXPLODED)

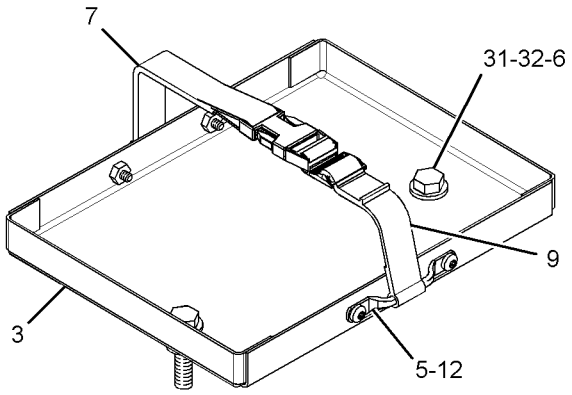

VIEW OF AREA B

GRAPHIC #1 **<END>** g02177907

OPERATOR STATION

317-4155 PLATFORM GP-OPERATOR

S/N: DSH1-UP; DLN1-UP; DJR1-UP
ENCLOSED ROPS
PART OF 387-0554 COLD WEATHER AR, 380-7900 OPERATOR AR
ALSO AN ATTACHMENT

SMCS-7253 **i04612477**

NOTE	REF NO	GRAPHIC REF	PART NUMBER	QTY	PART NAME 1 2 3 4 5 6 (PRODUCT LEVEL)	SEE PAGE
	1	1,2	**4H-0407**	10	PLUG-PROTECTION	
	2	1	**5P-7509**	1	PLUG-BUTTON	
	3	1	**6T-4556**	1	COVER	
	4	1	**6T-4557**	1	GASKET	
	5	1	**6V-8547**	1	PLUG-BUTTON	
	9	1	**9P-6571**	1	PLUG	
	10	2	**117-8131**	8	MOUNT AS	
	11	1	**117-9966**	1	PLUG	
	12	1	**161-3958**	1	GASKET	
	13	2	**164-0758**	1	BOLT (9/16-18X2-IN)	
	14	1	**165-6857**	1	PAD AS-RUBBER	
	15	1	**170-0251**	2	STRIP	
M	16	1	**184-0982**	8	SCREW-PAN HEAD (M6X1X16-MM)	
	17	1	**185-2076**	2	SUPPORT AS (FOOT)	
	18	2	**185-3666**	4	SLEEVE	
	19	1	**198-9707**	2	SCREW-TRUSS HEAD (M6X1X35-MM)	
	20	1	**375-4867**	1	COVER AS	
	21	1	**237-4269**	1	PLATE AS	
	22	1	**375-4877**	1	PLATE AS	
	23	2	**239-5113**	1	COVER AS	
		2	**2G-0391**	2	SCREW	
		2	**131-5492**	2	RETAINER-CAPTIVE	
	24	1	**375-4879**	1	FLOORPLATE AS	
		1	**237-0205**	1	FLOORPLATE AS	
		1	**241-4342**	1	GASKET	
	25	1	**375-4878**	1	FLOORPLATE AS	
		1	**237-0204**	1	FLOORPLATE AS	
		1	**241-4344**	1	GASKET	
	26	1	**241-4346**	1	PLATE AS	
	27	1	**241-4348**	1	GASKET	
	28	1	**241-4349**	1	GASKET	
	29	1	**242-8405**	1	BRACKET AS	
	30	1	**242-8407**	1	GASKET	
	31	1	**243-5168**	1	GASKET	
	32	1	**375-4875**	1	COVER AS	
		1	**9X-8256**	4	WASHER (6.6X12X2-MM THK)	
	33	2	**248-8866**	4	CAP	
	34	1	**307-8686**	1	PLUG-BUTTON	
Y	35	1	*317-4158*	1	PLATFORM GP	600
	36	1	**320-8283**	1	PLATE AS	
	37	1	**341-7036**	1	PLATE	
	38	1	**5P-1076**	4	WASHER-HARD (13.5X30X4-MM THK)	
	39	2	**6T-8714**	4	WASHER-HARD (28X125X12-MM THK)	
	40	1	**7X-7729**	58	WASHER (11X25X3-MM THK)	
M	41	1	**8T-4136**	38	BOLT (M10X1.5X25-MM)	
M	42	1	**8T-4137**	3	BOLT (M10X1.5X20-MM)	
M	43	1	**8T-4139**	4	BOLT (M12X1.75X30-MM)	
	44	2	**8T-4167**	4	WASHER-HARD (26X44X4-MM THK)	
M	45	1	**8T-4195**	11	BOLT (M10X1.5X30-MM)	
M	46	1	**8T-4196**	6	BOLT (M10X1.5X35-MM)	
M	47	2	**8T-4649**	4	BOLT (M24X3X140-MM)	
M	48	1	**8T-4971**	4	BOLT (M6X1X30-MM)	
	49	1	**9X-8256**	6	WASHER (6.6X12X2-MM THK)	
D	52	2	**5P-9909**		SEAL (0.1-M)	

OPERATOR STATION

317-4155 **PLATFORM GP-OPERATOR** *(contd.)* **i04612477**

NOTE	REF NO	GRAPHIC REF	PART NUMBER	QTY	PART NAME 1 2 3 4 5 6 (PRODUCT LEVEL)	SEE PAGE
E	53	1	**3E-3892**		SEAL (31-CM)	

D-ORDER BY THE METER
E-ORDER BY THE CENTIMETER
M-METRIC PART
Y-SEPARATE ILLUSTRATION

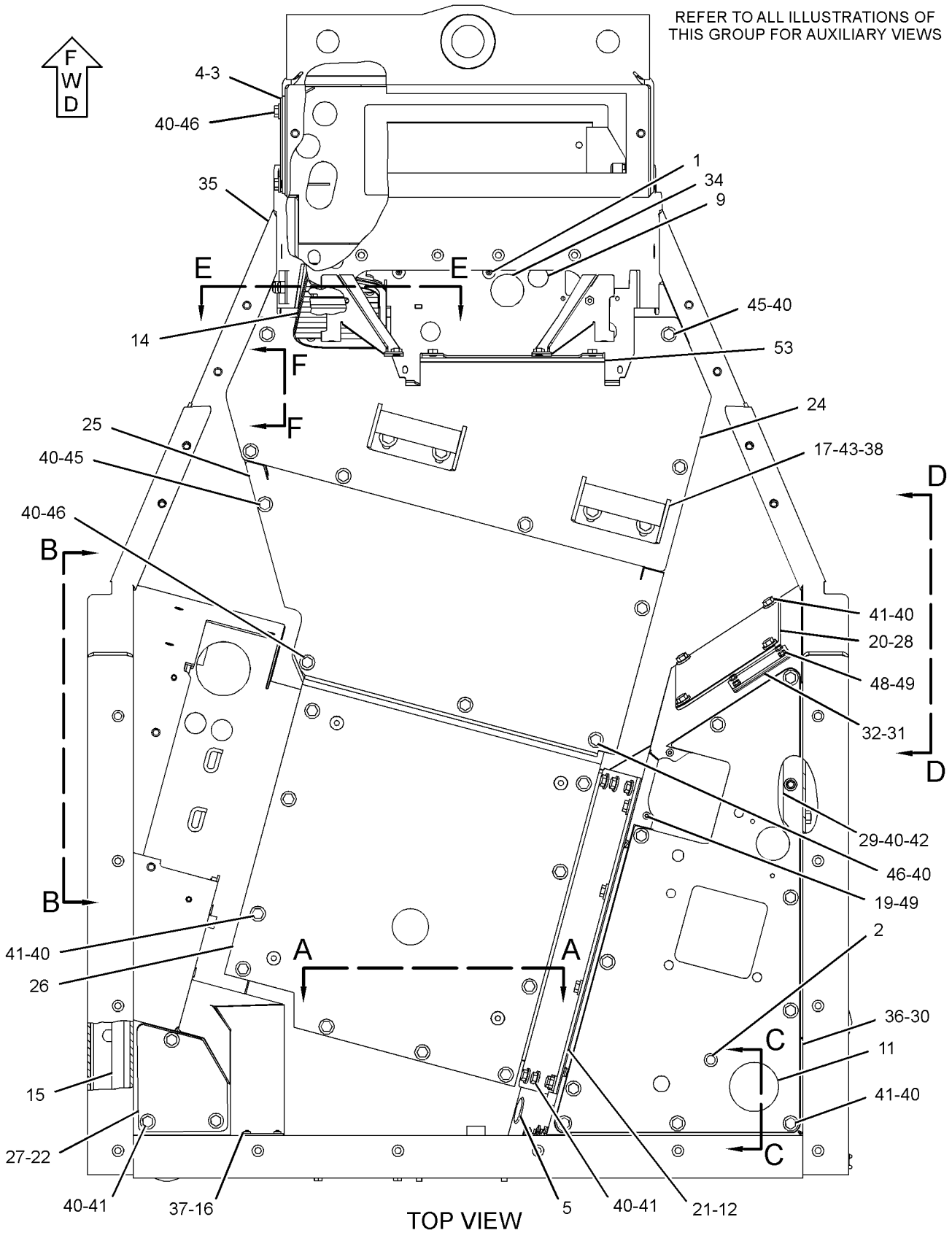

GRAPHIC #1

g02858485

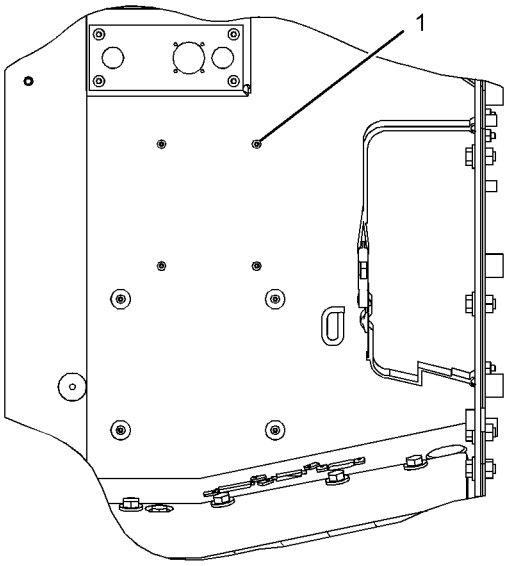

SECTION A-A

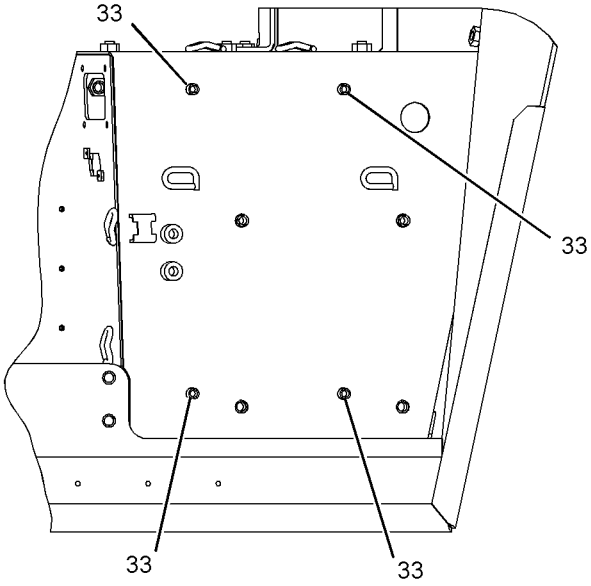

VIEW B-B

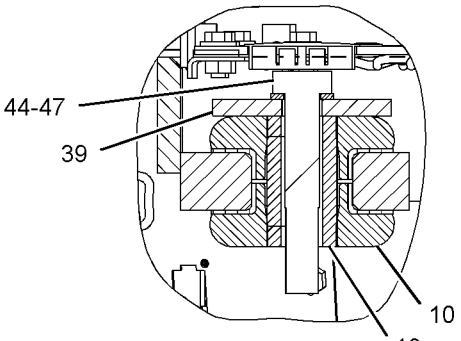

SECTION C-C

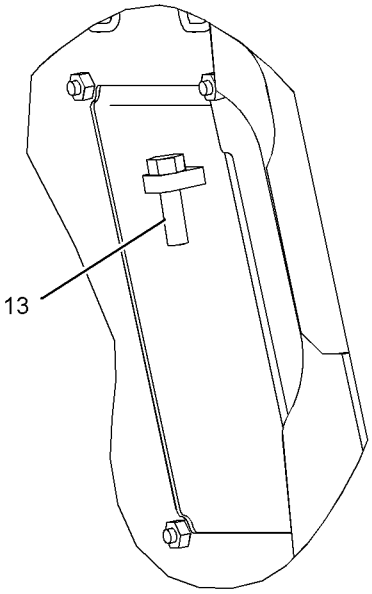

VIEW D-D

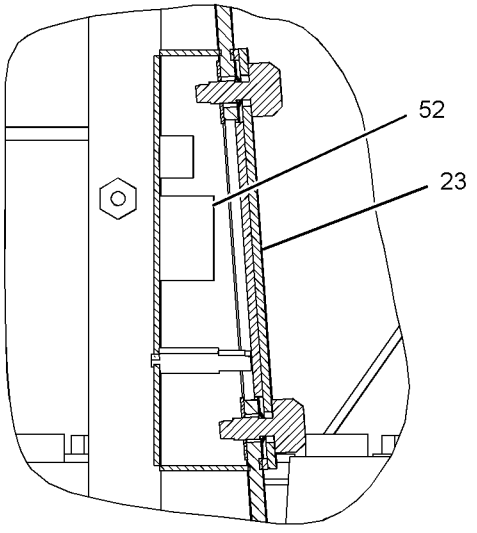

SECTION E-E

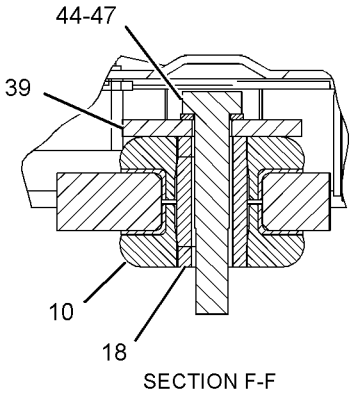

SECTION F-F

GRAPHIC #2 **<END>** g02858486

OPERATOR STATION

230-4700 PRESSURIZER GP-CAB

S/N: DSH1-UP; DLN1-UP; DJR1-UP
PART OF 317-4153, 387-0547 CAB AR
ALSO AN ATTACHMENT

SMCS-7311 **i04774917**

NOTE	REF NO	GRAPHIC REF	PART NUMBER	QTY	PART NAME 1 2 3 4 5 6 (PRODUCT LEVEL)	SEE PAGE
	1	1	**3L-0594**	3	SPACER (8.7X15.9X15.9-MM THK)	
	2	1	**3W-6756**	2	KNOB (AIR FILTER COVER)	
	3	1	**6P-2216**	7	CAP	
	4	1	**6T-0988**	1	FILTER ELEMENT-CAB AIR (STANDARD EFFICIENCY)	
					—OR—	
A		1	**175-2831**	1	FILTER ELEMENT-CAB AIR (ULTRA HIGH EFFICIENCY)	
	5	1	**6T-5067**	1	LINER	
	6	1	**6T-5068**	1	FILTER ELEMENT-CAB AIR (AIR RECIRCULATION)	
	7	1	**7D-8431**	2	RING-RETAINING	
	8	1	**111-4482**	1	COVER AS	
	9	1	**117-8863**	1	LINER	
	10	1	**127-1043**	1	LINER	
	11	1	**127-1044**	1	LINER	
	12	1	**127-1045**	1	LINER	
	13	1	**127-1046**	1	LINER	
	14	1	**127-1048**	1	LINER	
	15	1	**141-4044**	1	PANEL	
	16	1	**224-9072**	2	KNOB (AIR FILTER COVER)	
Y	17	1	**230-5388**	1	BLOWER GP-CAB	517
	18	1	**7X-0603**	3	WASHER-HARD (9.9X35X2.5-MM THK)	
	19	1	**8T-4121**	6	WASHER-HARD (11X21X2.5-MM THK)	
M	20	1	**8T-4136**	6	BOLT (M10X1.5X25-MM)	
M	21	1	**8T-4971**	3	BOLT (M6X1X30-MM)	
	22	1	**5P-4115**	3	WASHER-HARD (7.2X19X2-MM THK)	
E	23	1	**7X-7877**		STRIP-EDGING (47-CM)	

A-NOT PART OF THIS GROUP
E-ORDER BY THE CENTIMETER
M-METRIC PART
Y-SEPARATE ILLUSTRATION

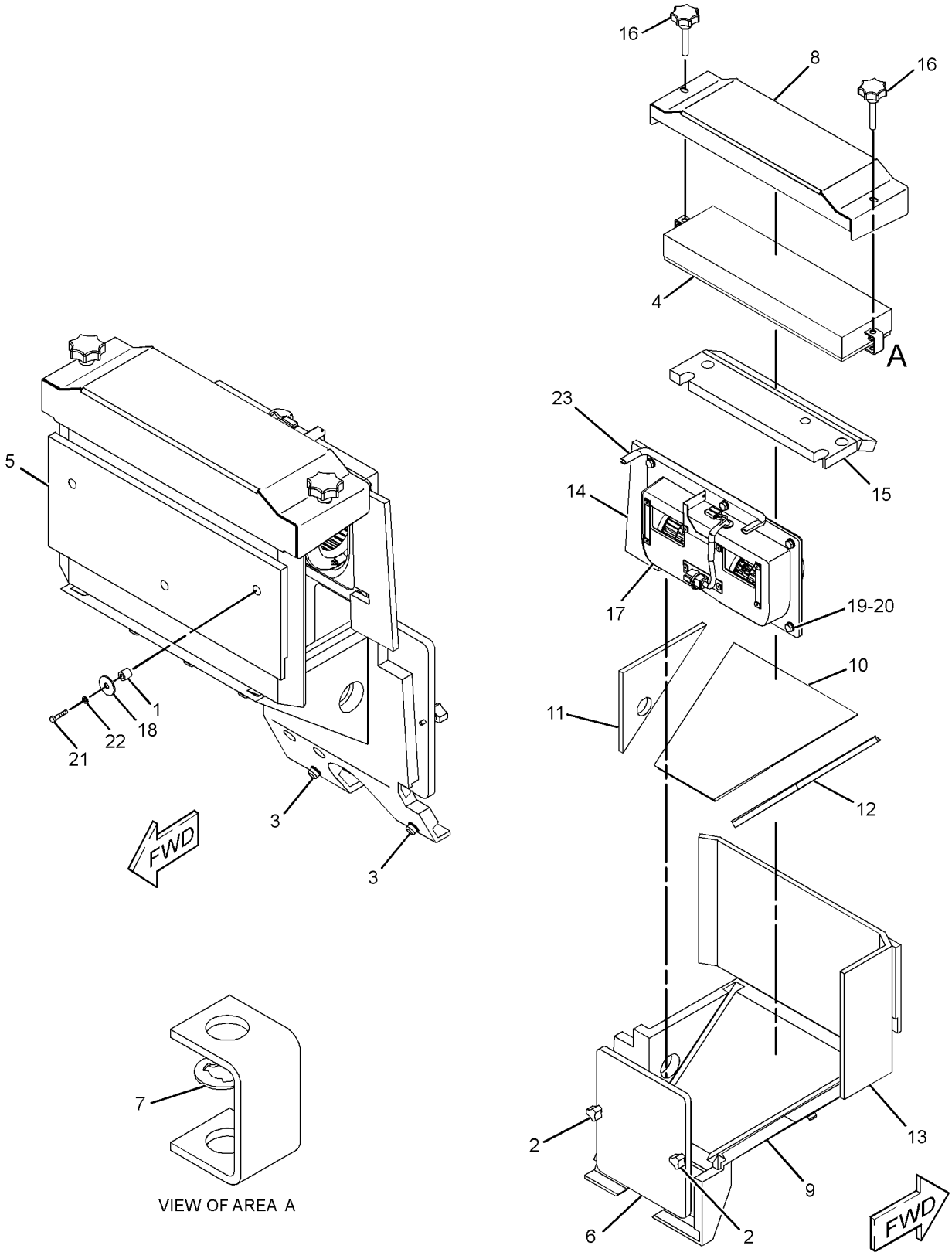

GRAPHIC #1 **<END>** g01209668

177-4935 RECLINER GP-SEAT

S/N: DSH1-UP; DLN1-UP; DJR1-UP
PART OF 180-7304 SEAT GP
AN ATTACHMENT

SMCS-7312 **i03367841**

NOTE	REF NO	GRAPHIC REF	PART NUMBER	QTY	PART NAME 1 2 3 4 5 6 (PRODUCT LEVEL)	SEE PAGE
	1	1	**164-4146**	1	SPRING	
	2	1	**177-1860**	1	GEAR (14-TEETH)	
	3	1	**177-1862**	1	BRACKET	
	4	1	**178-0607**	1	SHAFT AS	
	4A	1	**2L-5893**	2	PIN-SPRING	
	4B	1	**192-5627**	2	PIN	
	4C	1	**170-8590**	1	SPRING	
	5	1	**178-0608**	1	BRACKET AS	
	6	1	**178-0609**	1	BRACKET AS	
	7	1	**217-7933**	1	LATCH	
	8	1	**031-0214**	1	BOLT-LOCKING (1/4-20X0.5-IN)	
	9	1	**101-2867**	1	WASHER-HARD (7.2X25X2-MM THK)	
	10	1	**4M-6425**	1	BOLT (5/16-18X1-IN)	
	11	1	**5S-7383**	1	BOLT (3/8-16X1.75-IN)	
	12	1	**8T-4224**	1	WASHER-HARD (8.8X16X2-MM THK)	

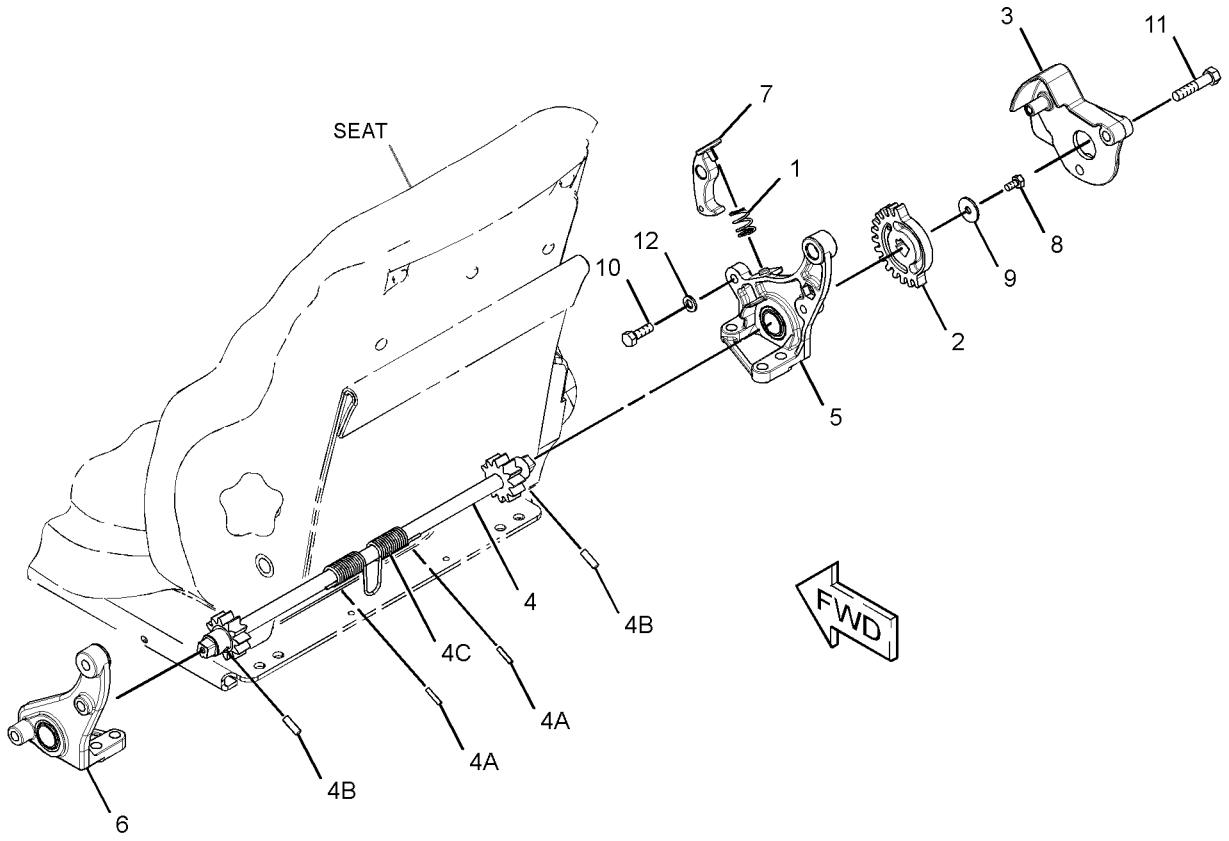

GRAPHIC #1 **<END>** g01741297

OPERATOR STATION

210-2270 RECLINER GP-SEAT

S/N: DSH1-UP; DLN1-UP; DJR1-UP
PART OF 178-0603 SEAT GP
ALSO AN ATTACHMENT

SMCS-7312 **i02794046**

NOTE	REF NO	GRAPHIC REF	PART NUMBER	QTY	PART NAME 1 2 3 4 5 6 (PRODUCT LEVEL)	SEE PAGE
	1	1	**177-1862**	1	BRACKET (SEAT BELT)	
	2	1	**210-2262**	1	BRACKET AS (LH)	
	3	1	**210-2263**	1	BRACKET AS (RH)	
	4	1	**210-2266**	1	GEAR-LOCK (14-TEETH)	
	5	1	**293-2911**	1	SHAFT AS	
		1	**2L-5893**	2	PIN-SPRING	
		1	**170-8590**	1	SPRING	
	6	1	**217-7933**	1	LATCH	
	7	1	**236-5197**	1	SPRING	
	8	1	**031-0214**	1	BOLT-LOCKING (1/4-20X0.5-IN)	
	9	1	**101-2867**	1	WASHER-HARD (7.2X25X2-MM THK)	
	10	1	**4M-6425**	1	BOLT (5/16-18X1-IN)	
	11	1	**5M-2894**	1	WASHER-HARD (10.2X18.5X2.5-MM THK)	
	12	1	**5S-7383**	1	BOLT (3/8-16X1.75-IN)	
	13	1	**8T-4224**	1	WASHER-HARD (8.8X16X2-MM THK)	

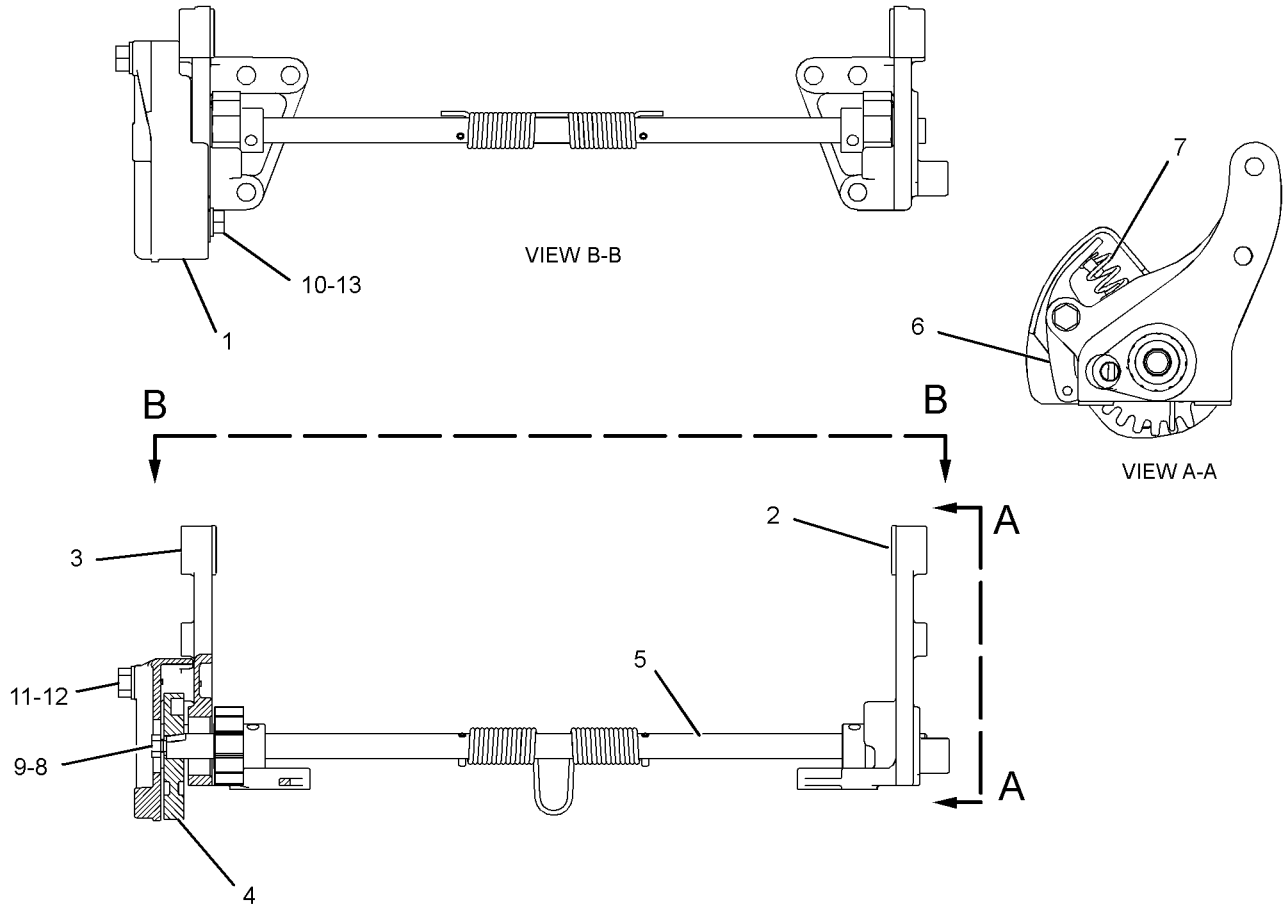

GRAPHIC #1 **<END>** g01296294

OPERATOR STATION

317-3939 ROD GP

S/N: DSH1-UP; DLN1-UP; DJR1-UP
PART OF 375-4845 CONTROL GP-GOVERNOR & BRAKE
ALSO AN ATTACHMENT

SMCS-4122 **i04713973**

NOTE	REF NO	GRAPHIC REF	PART NUMBER	QTY	PART NAME 1 2 3 4 5 6 (PRODUCT LEVEL)	SEE PAGE
	1	1	**4D-4065**	1	ROD END	
	2	1	**317-3940**	1	ROD	
	3	1	**1M-1341**	1	END-YOKE ROD	
	4	1	**6B-6684**	1	NUT-FULL (1/2-20-THD)	
	5	1	**6V-8183**	1	NUT-FULL (3/8-24-THD)	

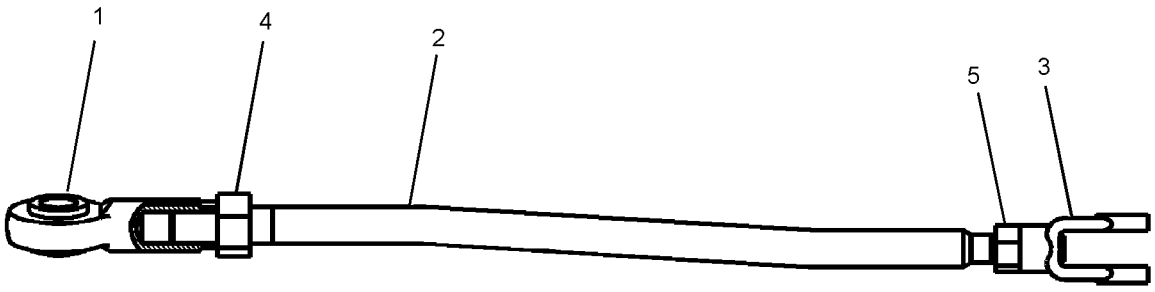

GRAPHIC #1 **<END>** g02830384

OPERATOR STATION

163-8746 ROPS GP

S/N: DSH1-UP; DLN1-UP; DJR1-UP

PART OF 313-3338, 313-3759, 379-6225 CHASSIS AR

SMCS-7177, 7301 **i04711270**

NOTE	REF NO	GRAPHIC REF	PART NUMBER	QTY	PART NAME 1 2 3 4 5 6 (PRODUCT LEVEL)	SEE PAGE
	1	1	**163-8745**	1	ROPS AS	
	2	1	**7X-0531**	12	WASHER-HARD (31X52.5X6-MM THK)	
	3	1	**7X-0421**	12	BOLT (1-1/8-7X3-IN)	
	4	1	**180-6600**	1	HANDRAIL	
	5	1	**8C-4436**	2	BOLT (1/2-13X1.375-IN)	
	6	1	**5P-1076**	3	WASHER-HARD (13.5X30X4-MM THK)	

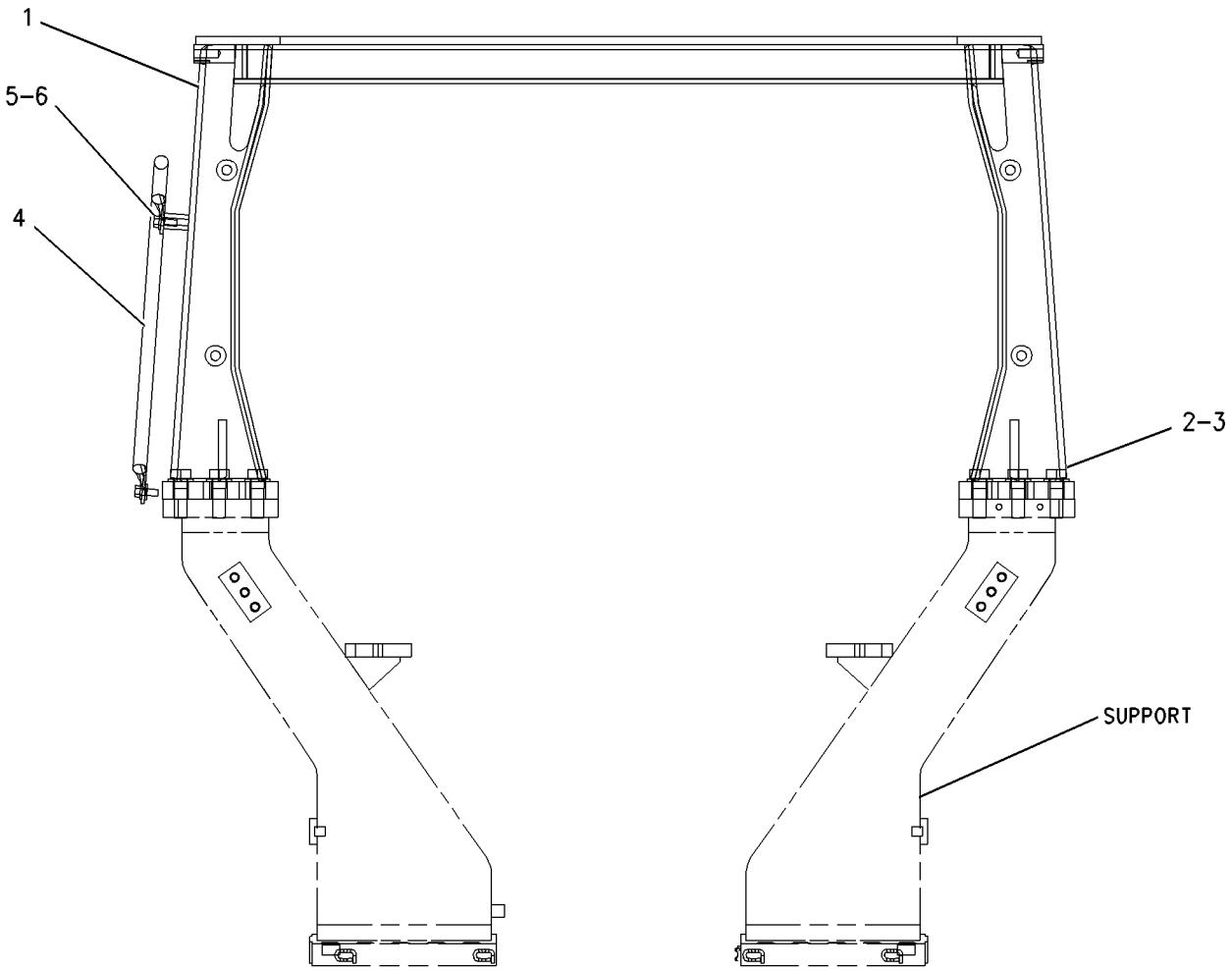

GRAPHIC #1 **<END>** g00815256

OPERATOR STATION

167-2088 ROPS GP

S/N: DSH1-UP; DLN1-UP; DJR1-UP
PART OF 334-8477 CANOPY AR
AN ATTACHMENT

SMCS-7177, 7301 **i04629619**

NOTE	REF NO	GRAPHIC REF	PART NUMBER	QTY	PART NAME 1 2 3 4 5 6 (PRODUCT LEVEL)	SEE PAGE
	1	1	**167-2087**	1	ROPS AS	
	2	1	**8P-9747**	2	HANDRAIL (TOP)	
	3	1	**5P-1076**	12	WASHER-HARD (13.5X30X4-MM THK)	
	4	1	**5C-6565**	12	BOLT (1/2-13X1.125-IN)	
Y	5	1	*9P-9392*	1	MIRROR GP-REAR VIEW	581
	6	1	**170-7259**	1	TUBE AS	
	7	1	**170-7260**	1	TUBE AS	
	8	1	**8T-4994**	4	WASHER-HARD (20X36.5X3.5-MM THK)	
	9	1	**8T-8924**	4	BOLT (3/4-10X2.5-IN)	
	10	1	**9G-0992**	2	HANDRAIL (FRONT, RH, LH)	
	11	1	**180-6600**	2	HANDRAIL (SIDE, RH, LH)	
	12	1	**8C-8843**	2	BOLT (1-8X4.5-IN)	
	13	1	**8P-5244**	4	WASHER (33.3X69.8X6.35-MM THK)	
	14	1	**1P-2772**	4	SPACER (1.031X1.219X0.75-IN THK)	
	15	1	**6K-3632**	2	LOCKNUT (1-8-THD)	
	16	1	**9S-5187**	2	MOUNTING	
	17	1	**196-9846**	1	LINER-CAB	
	18	1	**7X-0531**	12	WASHER-HARD (31X52.5X6-MM THK)	
	19	1	**7X-0421**	12	BOLT (1-1/8-7X3-IN)	
	20	1	**198-6574**	12	WASHER (16X75X3.5-MM THK)	
	21	1	**198-6575**	12	BUTTON	
	22	1	**8T-4223**	2	WASHER-HARD (13.5X25.5X3-MM THK)	

Y-SEPARATE ILLUSTRATION

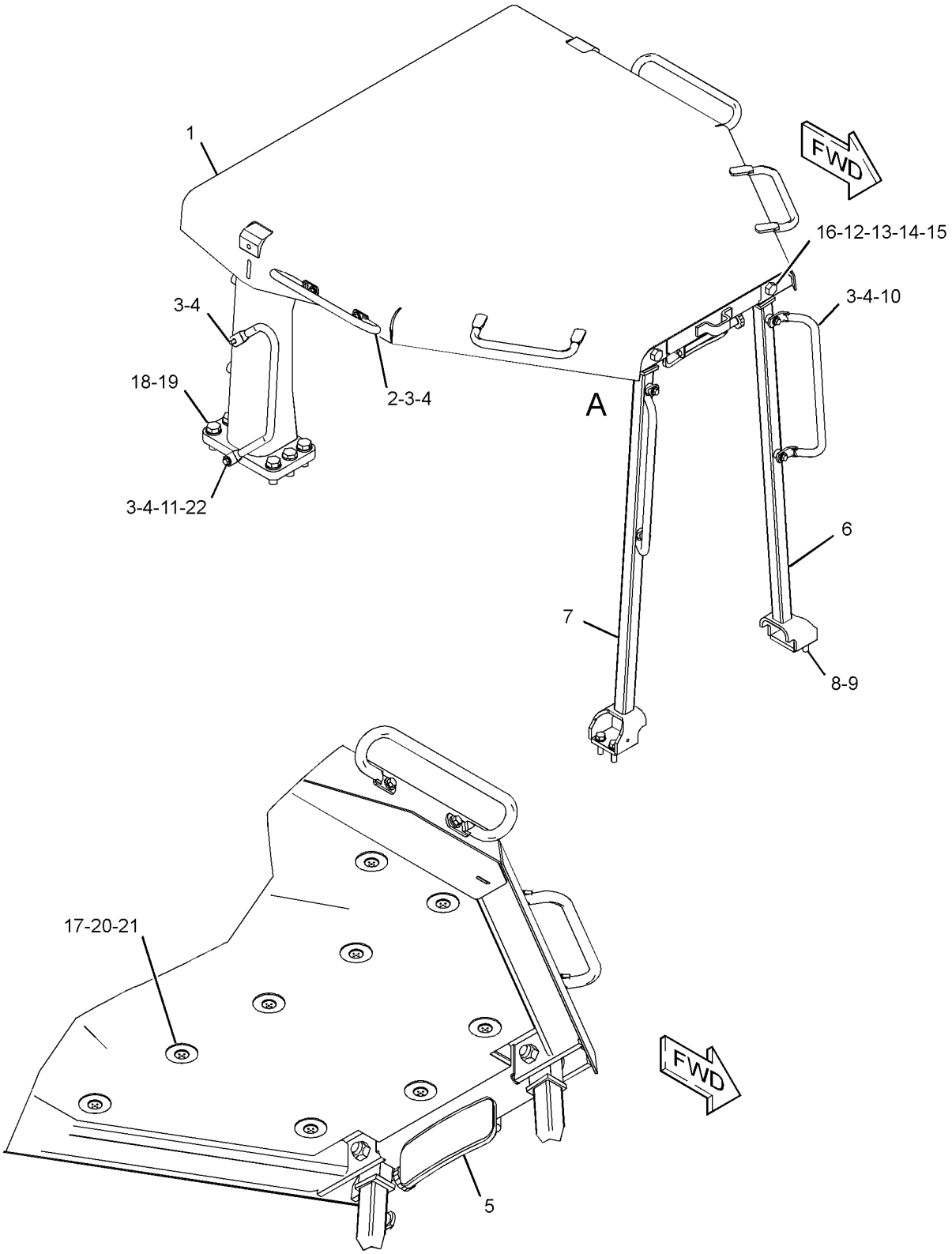

VIEW OF AREA A

GRAPHIC #1 **<END>** g02784017

OPERATOR STATION

340-3959 SCREEN GP-PROTECTION–REAR

S/N: DSH1-UP; DLN1-UP; DJR1-UP
AN ATTACHMENT

SMCS-7165 **i04722149**

NOTE	REF NO	GRAPHIC REF	PART NUMBER	QTY	PART NAME 1 2 3 4 5 6 (PRODUCT LEVEL)	SEE PAGE
	1	1	**387-3580**	1	SCREEN AS	
	2	1	**8T-8924**	2	BOLT (3/4-10X2.5-IN)	
	3	1	**6V-8182**	2	NUT (3/4-10-THD)	
	4	1	**7X-0372**	2	BOLT (3/4-10X4.25-IN)	
	5	1	**8T-5439**	6	WASHER-HARD (21.5X45X6-MM THK)	

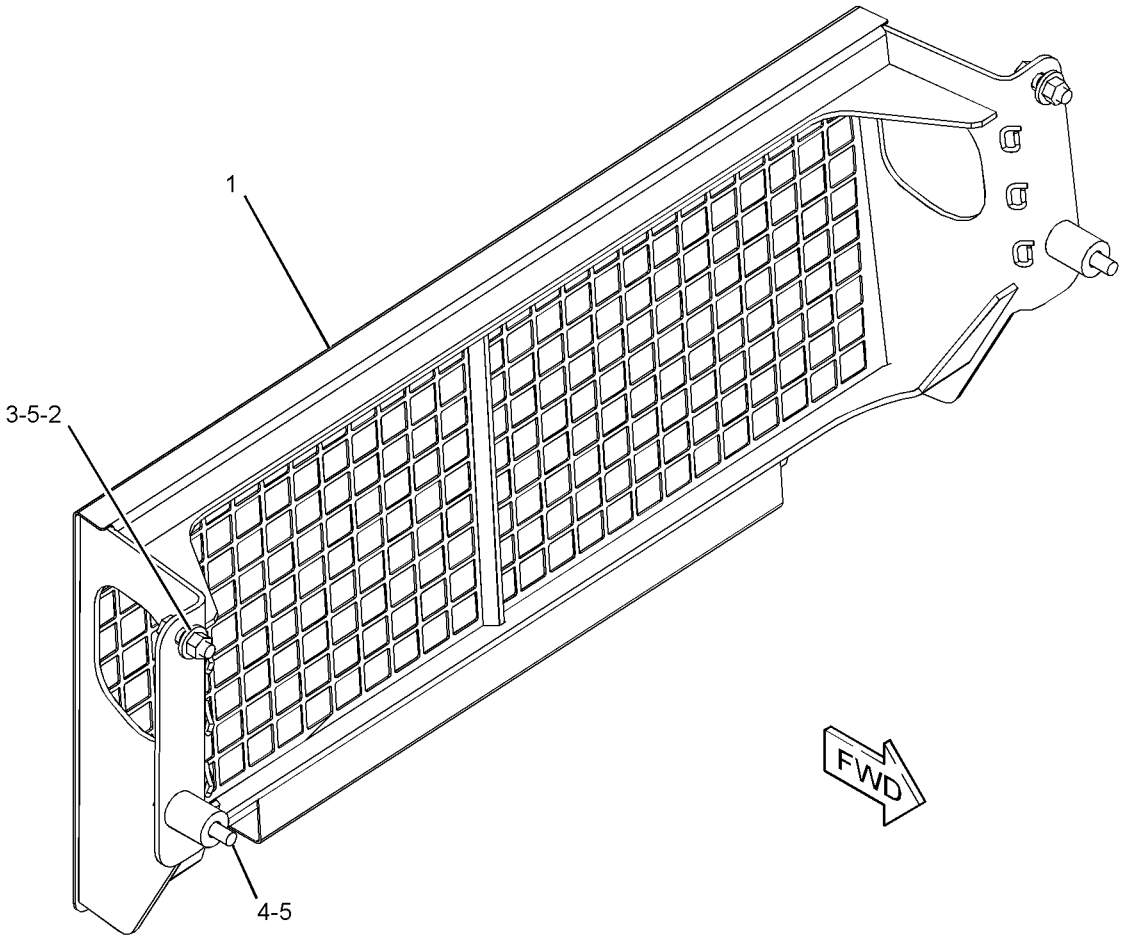

GRAPHIC #1 **<END>** g02833627

OPERATOR STATION

378-3468 SCREEN GP-PROTECTION–REAR

S/N: DSH1-UP

AN ATTACHMENT

SMCS-7165 **i04675310**

NOTE	REF NO	GRAPHIC REF	PART NUMBER	QTY	PART NAME 1 2 3 4 5 6 (PRODUCT LEVEL)	SEE PAGE
	1	1	**322-7221**	1	SCREEN AS-PROTECTION (REAR)	
	2	1	**6C-9149**	4	WASHER (22X50X10-MM THK)	
	3	1	**7X-0366**	4	BOLT (3/4-10X2-IN)	

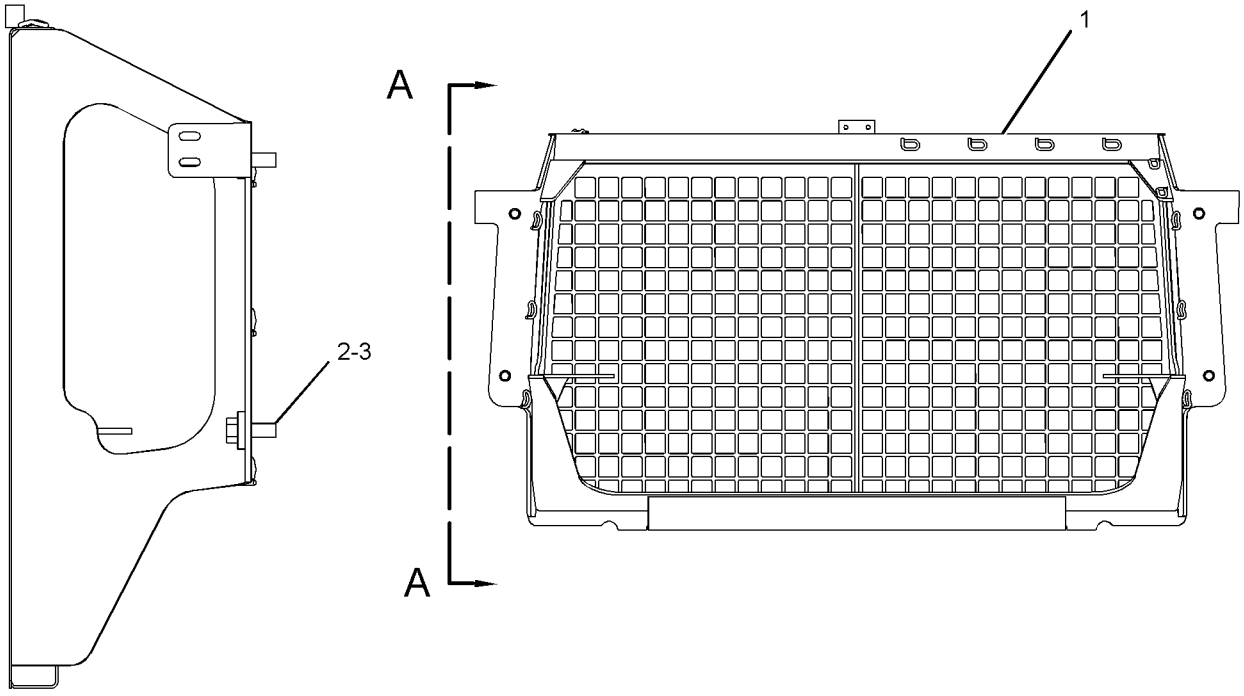

VIEW A-A

GRAPHIC #1 **<END>** g02809836

OPERATOR STATION

178-0603 SEAT GP—CLOTH

S/N: DSH1-UP; DLN1-UP; DJR1-UP
PART OF 178-0606 SEAT GP
ALSO AN ATTACHMENT

SMCS-7312 **i04033097**

NOTE	REF NO	GRAPHIC REF	PART NUMBER	QTY	PART NAME 1 2 3 4 5 6 (PRODUCT LEVEL)	SEE PAGE
	1	1	**143-1288**	8	LOCKNUT-FLANGE (3/8-16-THD)	
	2	1	**171-1230**	6	SCREW-BUTTON HEAD (3/8-16X1-IN)	
	3	1	**171-6682**	1	BAR	
	4	1	**172-2416**	2	PIN	
Y	5	1	*173-1028*	1	ADJUSTER GP-SEAT	514
	6	1	**177-1863**	2	BOLT-PIVOT (3/8-16X2.89-IN)	
Y	7	1	*178-0604*	1	PAN GP-BACKREST (CLOTH)	594
	8	1	**184-2298**	1	ROD	
	9	1	**184-2299**	4	WASHER (7X25.4X2.54-MM THK)	
CY	10	1	*210-2270*	1	RECLINER GP-SEAT (CLOTH)	610
	11	1	**218-0861**	1	PAN AS	
		1	**8T-9082**	5	RIVET-POP	
		1	**217-9049**	1	CUSHION AS	
	12	1	**095-0843**	2	PIN-COTTER	
	13	1	**5V-1496**	2	RETAINER	
	14	1	**6V-7646**	2	WASHER-HARD (7.2X25X2-MM THK)	
	15	1	**8T-0328**	1	WASHER-HARD (5.5X10X1-MM THK)	
	16	1	**8T-4205**	1	WASHER-HARD (7.2X14.5X2-MM THK)	
	17	1	**8Y-6277**	2	SPACER (10.5X28.6X10-MM THK)	

C-CHANGE FROM PREVIOUS TYPE
Y-SEPARATE ILLUSTRATION

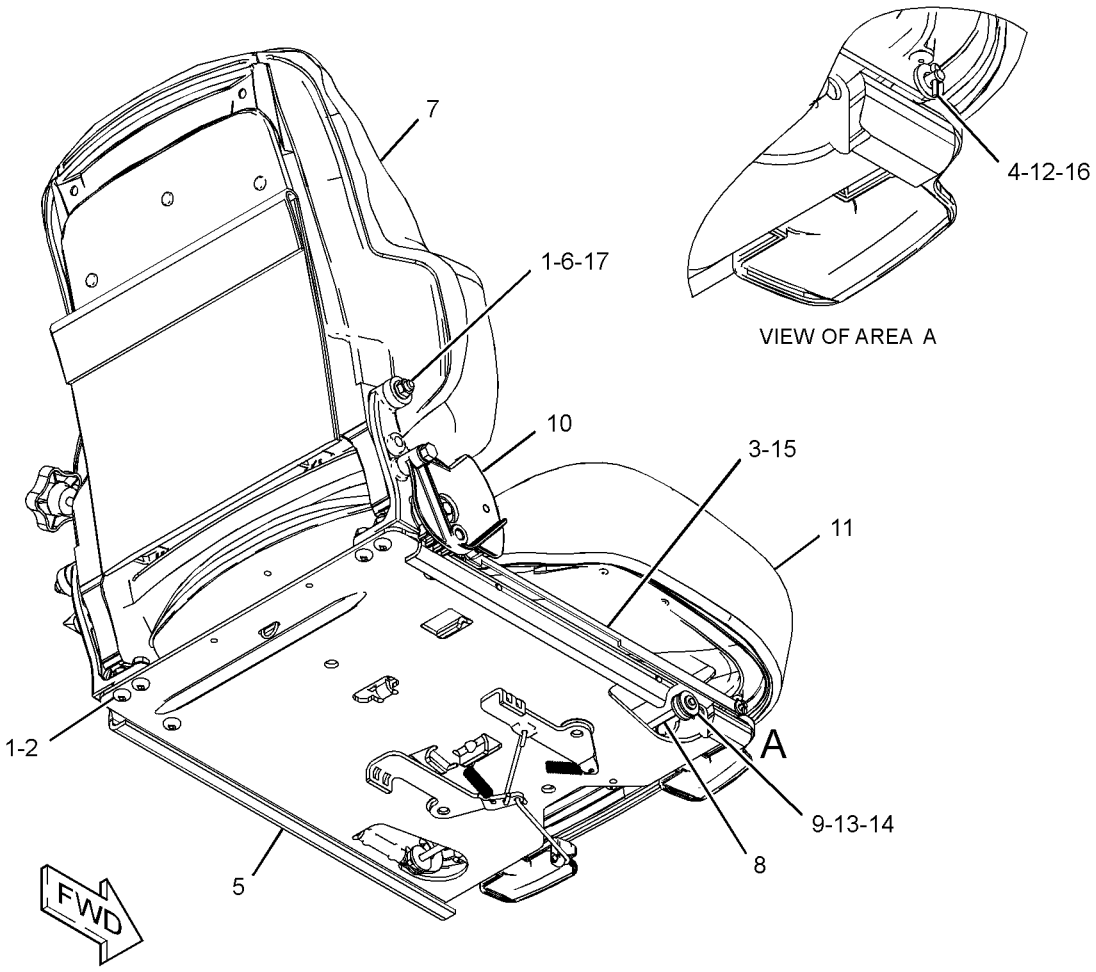

GRAPHIC #1 **<END>** g01395947

OPERATOR STATION

178-0606 SEAT GP–CLOTH

S/N: DSH1-UP; DLN1-UP; DJR1-UP
PART OF 160-7186, 200-3174 SEAT GP-SUSPENSION
ALSO AN ATTACHMENT

SMCS-7312 **i02123114**

NOTE	REF NO	GRAPHIC REF	PART NUMBER	QTY	PART NAME 1 2 3 4 5 6 (PRODUCT LEVEL)	SEE PAGE
	1	1	**177-4937**	1	SPACER (11.7X19.8X20.3-MM THK)	
Y	2	1	**178-0603**	1	SEAT GP (CLOTH)	617
	3	1	**222-0345**	1	SEAT BELT GP (RETRACTABLE, 3-IN)	
C	4	1	**229-1494**	1	EXTENSION GP-BACKREST (CLOTH)	
	5	1	**0T-0244**	1	BOLT (7/16-20X1.25-IN)	
	6	1	**205-6388**	1	BOLT (7/16-20X1.75-IN)	

C-CHANGE FROM PREVIOUS TYPE
Y-SEPARATE ILLUSTRATION

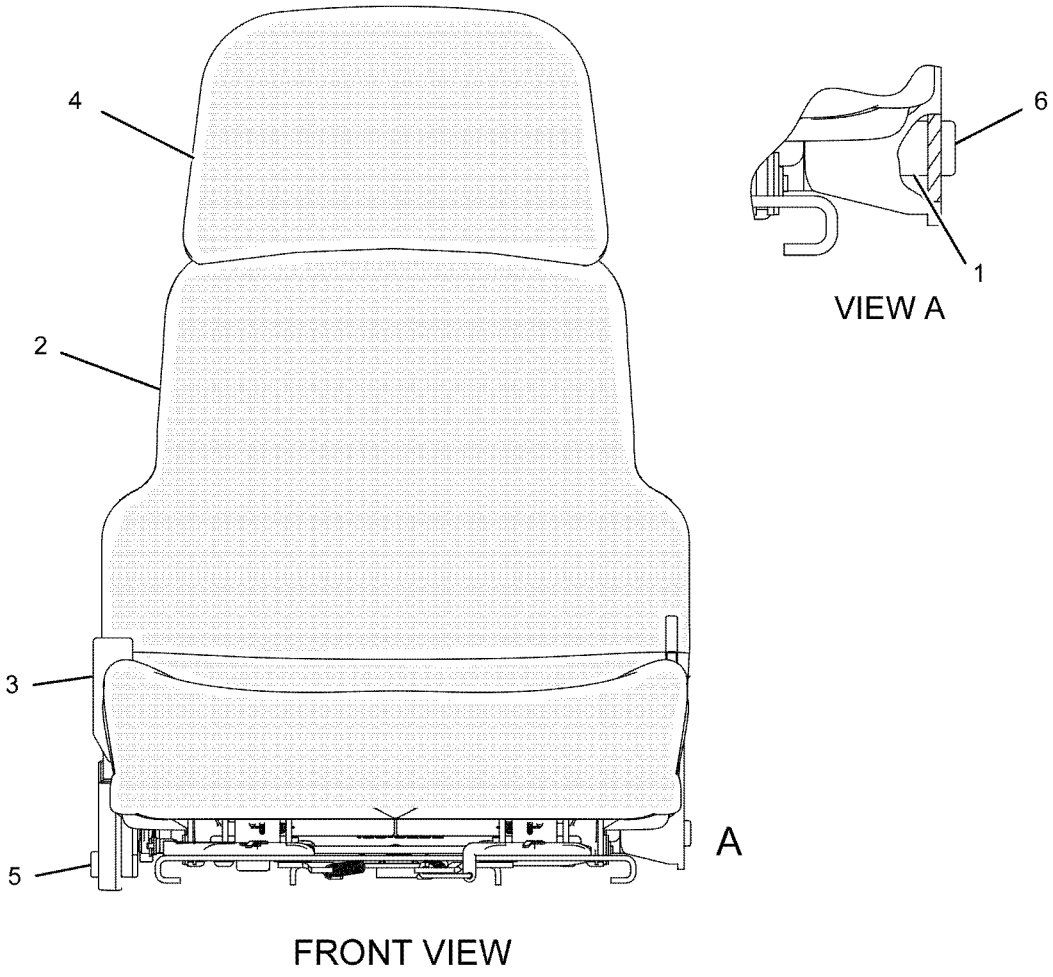

GRAPHIC #1 **<END>** g01084230

OPERATOR STATION

180-7304 SEAT GP–VINYL

S/N: DSH1-UP; DLN1-UP; DJR1-UP
PART OF 184-6011 SEAT GP
AN ATTACHMENT

SMCS-7312 **i03550904**

NOTE	REF NO	GRAPHIC REF	PART NUMBER	QTY	PART NAME 1 2 3 4 5 6 (PRODUCT LEVEL)	SEE PAGE
	1	1	**143-1288**	8	LOCKNUT-FLANGE (3/8-16-THD)	
	2	1	**171-1230**	6	SCREW-BUTTON HEAD (3/8-16X1-IN)	
	3	1	**171-6682**	1	BAR	
	4	1	**172-2416**	2	PIN	
Y	5	1	*173-1028*	1	ADJUSTER GP-SEAT	514
	6	1	**173-3283**	1	PAN AS (VINYL)	
		1	**6K-3273**	5	RIVET-POP	
		1	**169-1026**	1	CUSHION AS	
	7	1	**177-1863**	2	BOLT-PIVOT (3/8-16X2.89-IN)	
Y	8	1	*177-4935*	1	RECLINER GP-SEAT	609
Y	9	1	*180-7305*	1	PAN GP-BACKREST (VINYL)	596
	10	1	**184-2298**	1	ROD	
	11	1	**184-2299**	4	WASHER (7X25.4X2.54-MM THK)	
	12	1	**095-0843**	2	PIN-COTTER	
	13	1	**5V-1496**	2	RETAINER	
	14	1	**6V-7646**	2	WASHER-HARD (7.2X25X2-MM THK)	
	15	1	**8T-0328**	1	WASHER-HARD (5.5X10X1-MM THK)	
	16	1	**8T-4205**	1	WASHER-HARD (7.2X14.5X2-MM THK)	
	17	1	**8Y-6277**	2	SPACER (10.5X28.6X10-MM THK)	

Y-SEPARATE ILLUSTRATION

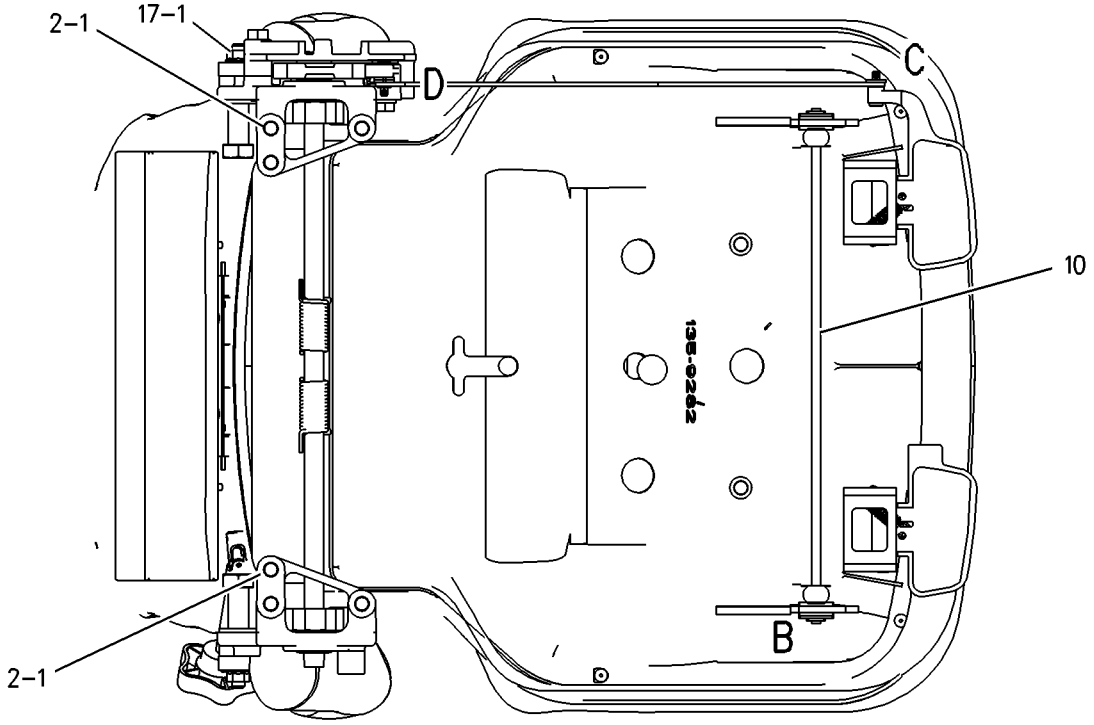

SECTION A–A

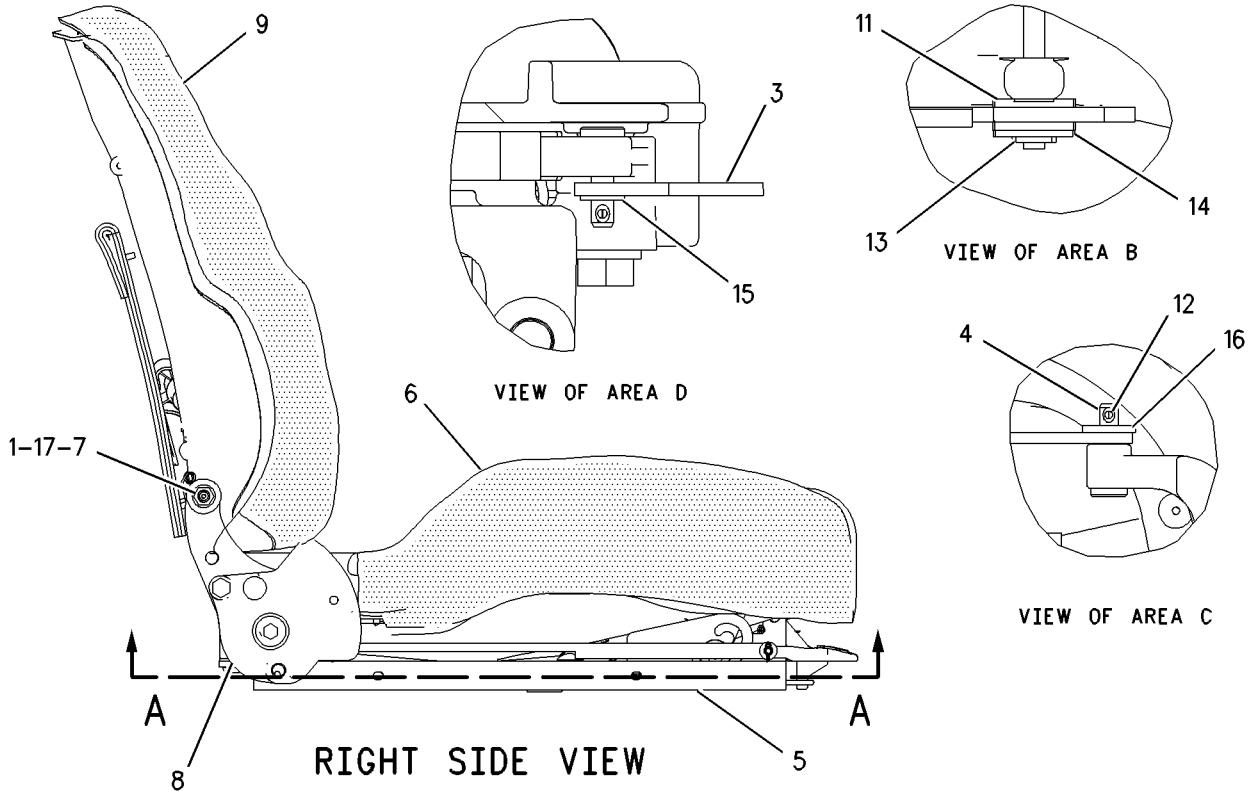

VIEW OF AREA D

VIEW OF AREA B

VIEW OF AREA C

RIGHT SIDE VIEW

GRAPHIC #1 **<END>** g00828649

184-6011 SEAT GP–VINYL

S/N: DSH1-UP; DLN1-UP; DJR1-UP
PART OF 159-2950 SEAT GP-SUSPENSION
AN ATTACHMENT

SMCS-7312 **i03422460**

NOTE	REF NO	GRAPHIC REF	PART NUMBER	QTY	PART NAME 1 2 3 4 5 6 (PRODUCT LEVEL)	SEE PAGE
	1	1	**173-3083**	1	EXTENSION GP-BACKREST (VINYL)	
		1	**117-4491**	1	ROD	
	2	1	**177-4937**	1	SPACER (11.7X19.8X20.3-MM THK)	
	3	1	**205-6388**	1	BOLT (7/16-20X1.75-IN)	
	4	1	**0T-0244**	1	BOLT (7/16-20X1.25-IN)	
Y	5	1	**180-7304**	1	SEAT GP (VINYL)	621
	6	1	**222-0345**	1	SEAT BELT GP (RETRACTABLE, 3-IN)	

Y-SEPARATE ILLUSTRATION

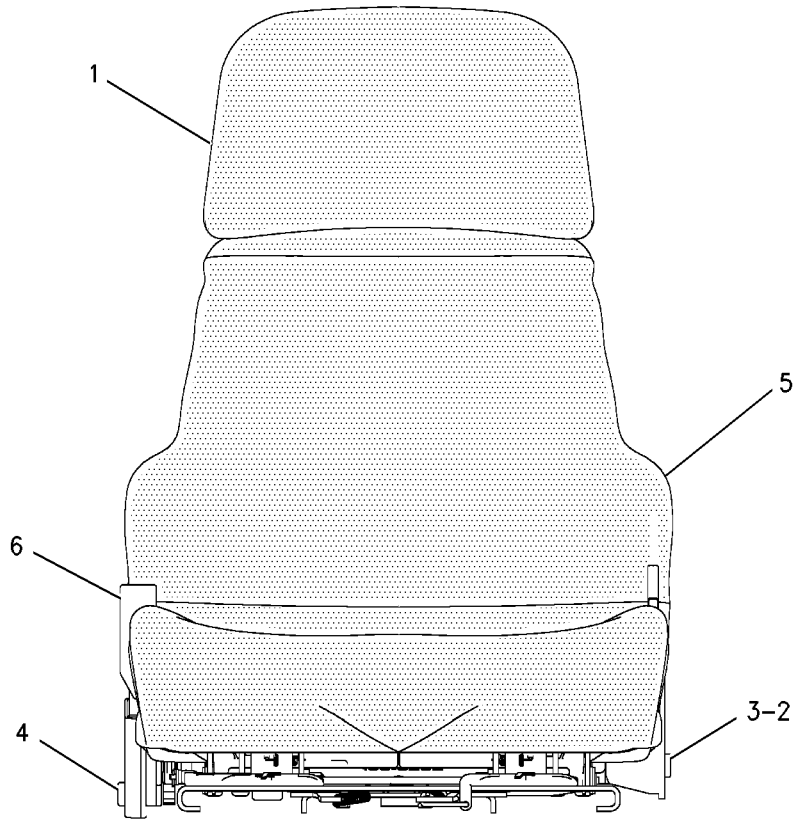

FRONT VIEW

GRAPHIC #1 **<END>** g00683843

OPERATOR STATION

214-1196 SEAT GP–CLOTH, AIR

S/N: DSH1-UP; DLN1-UP; DJR1-UP

AN ATTACHMENT

SMCS-7312 **i04033103**

NOTE	REF NO	GRAPHIC REF	PART NUMBER	QTY	PART NAME 1 2 3 4 5 6 (PRODUCT LEVEL)	SEE PAGE
Y	1	1	**200-3174**	1	SEAT GP-SUSPENSION (CLOTH, AIR)	628
	2	1	**9V-2818**	1	GROMMET	

Y-SEPARATE ILLUSTRATION

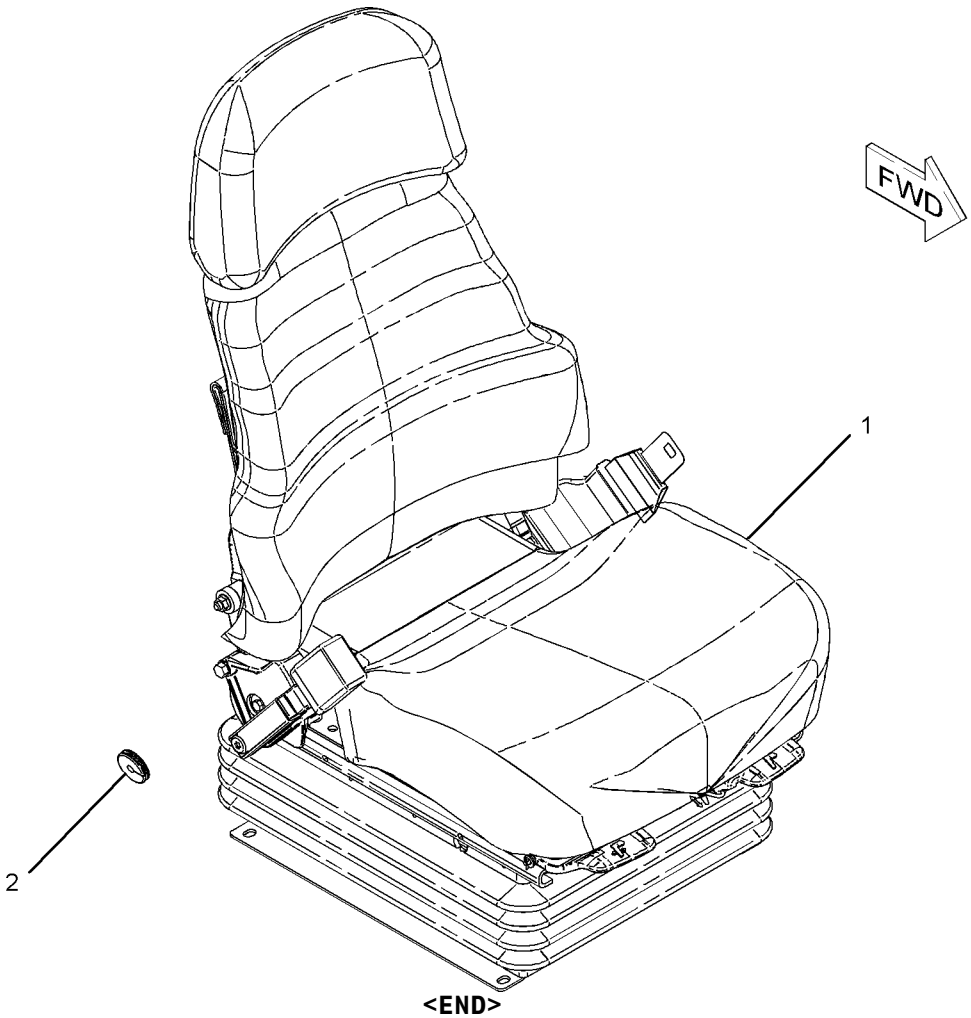

GRAPHIC #1 **<END>** g01021550

OPERATOR STATION

223-2205 SEAT GP–CLOTH

S/N: DSH1-UP; DLN1-UP; DJR1-UP

PART OF 313-3338, 313-3759, 379-6225 CHASSIS AR

SMCS-7312 **i04011429**

NOTE	REF NO	GRAPHIC REF	PART NUMBER	QTY	PART NAME 1 2 3 4 5 6 (PRODUCT LEVEL)	SEE PAGE
	1	1	**126-3700**	1	ARMREST AS (RH)	
	2	1	**126-3701**	1	ARMREST AS (LH)	
Y	3	1	**160-7186**	1	SEAT GP-SUSPENSION (CLOTH)	627
	4	1	**184-1503**	2	KNOB	
	5	1	**184-3269**	1	PLATE AS	
		1	**1F-0750**	1	NUT-WELD (3/8-16-THD)	
	6	1	**184-3270**	1	PLATE AS	
M		1	**8T-3490**	2	NUT-WELD (M10X1.5-THD)	
	7	1	**5P-1075**	2	WASHER-HARD (10.2X22.5X3-MM THK)	
	8	1	**7X-7729**	10	WASHER (11X25X3-MM THK)	
	9	1	**8T-4121**	2	WASHER-HARD (11X21X2.5-MM THK)	
M	10	1	**8T-4137**	4	BOLT (M10X1.5X20-MM)	
M	11	1	**8T-4196**	2	BOLT (M10X1.5X35-MM)	
M	12	1	**9X-2125**	4	BOLT-LOCKING (M10X1.5X25-MM)	

M-METRIC PART
Y-SEPARATE ILLUSTRATION

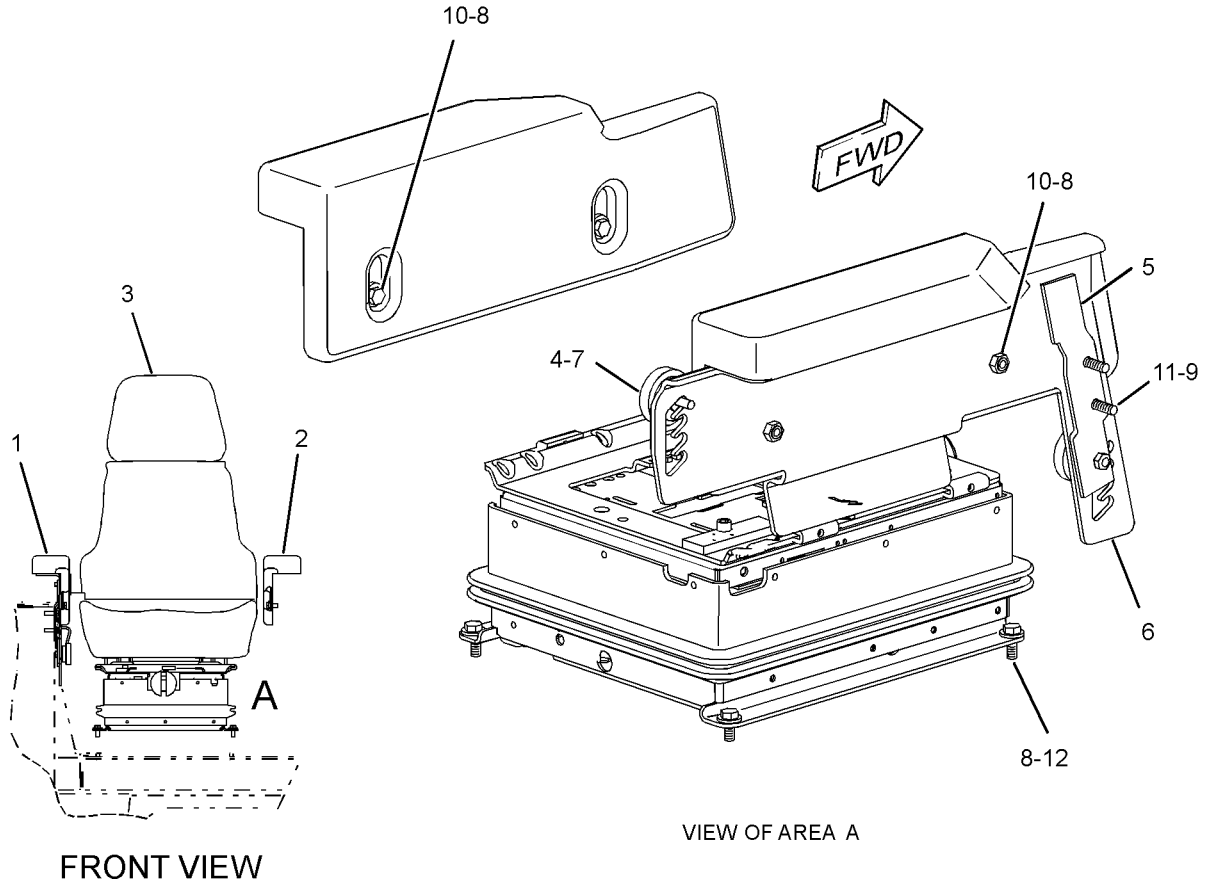

GRAPHIC #1 **<END>** g02190973

OPERATOR STATION

159-2950 SEAT GP-SUSPENSION—VINYL

S/N: DSH1-UP; DLN1-UP; DJR1-UP
PART OF 214-1197 SEAT GP-SUSPENSION
AN ATTACHMENT

SMCS-7321, 7324, 7336 **i03422480**

NOTE	REF NO	GRAPHIC REF	PART NUMBER	QTY	PART NAME 1 2 3 4 5 6 (PRODUCT LEVEL)	SEE PAGE
Y	1	1	**160-7165**	1	SUSPENSION GP-SEAT	630
Y	2	1	*184-6011*	1	SEAT GP (VINYL)	623
J	3	1	**161-9289**	4	BLOCK-SLIDER	
J	4	1	**4F-4879**	1	BOLT (3/8-16X0.5-IN)	
J	5	1	**203-7703**	2	WASHER-HARD (10.2X22.22X2.38-MM THK)	
J	6	1	**173-5787**	4	SETSCREW (1/4-20-THD)	
					AVAILABLE REPAIR KIT(S):	
J			**173-7035**	1	KIT-SLIDER BLOCK (SUSPENSION SEAT)	
					(INCLUDES BLOCK, WASHERS & SETSCREWS)	

J-KIT MARKED J SERVICES PART(S) MARKED J
Y-SEPARATE ILLUSTRATION

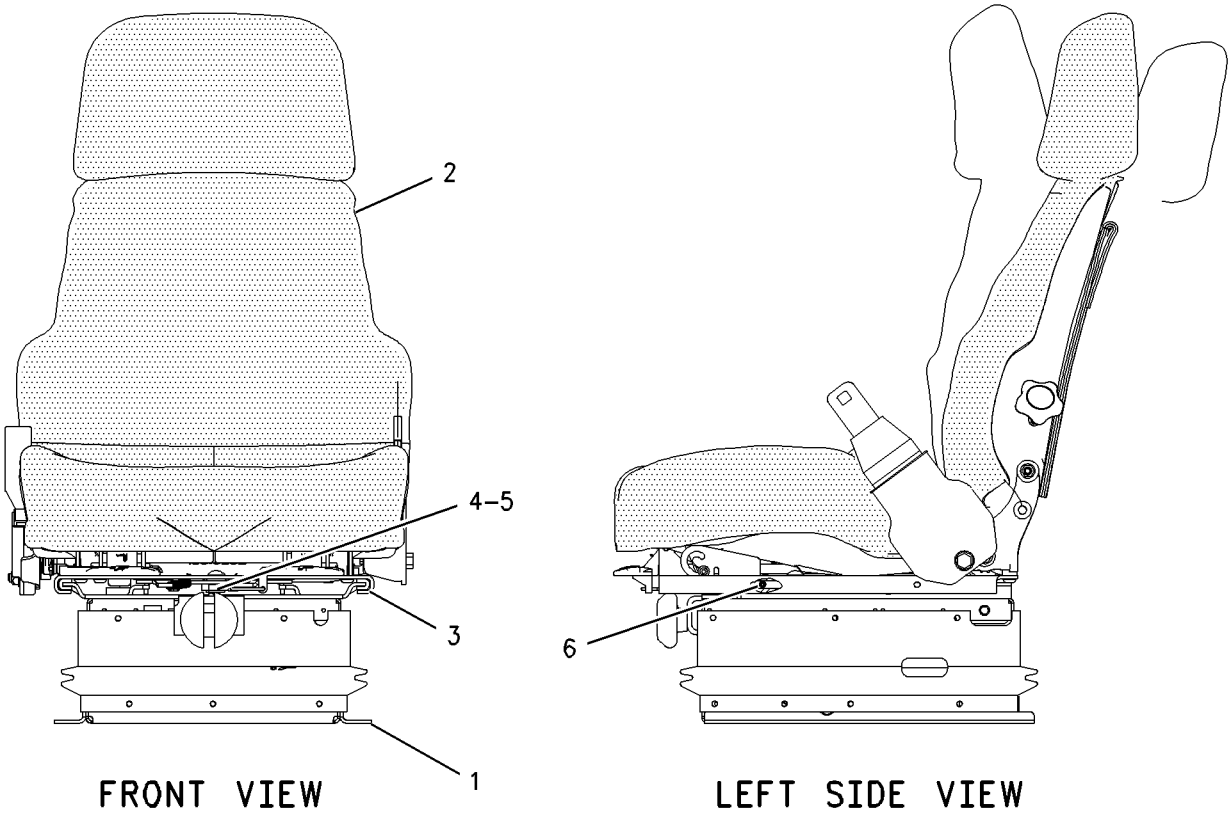

GRAPHIC #1 **<END>** g00819547

160-7186 SEAT GP-SUSPENSION–CLOTH

S/N: DSH1-UP; DLN1-UP; DJR1-UP
PART OF 223-2205 SEAT GP

SMCS-7321, 7324, 7336 **i04038392**

NOTE	REF NO	GRAPHIC REF	PART NUMBER	QTY	PART NAME 1 2 3 4 5 6 (PRODUCT LEVEL)	SEE PAGE
Y	1	1	**160-7165**	1	SUSPENSION GP-SEAT	630
Y	2	1	**178-0606**	1	SEAT GP (CLOTH)	619
J	3	1	**173-5787**	4	SETSCREW (1/4-20-THD)	
J	4	1	**4F-4879**	1	BOLT (3/8-16X0.5-IN)	
J	5	1	**203-7703**	2	WASHER-HARD (10.2X22.22X2.38-MM THK)	
J	6	1	**161-9289**	4	BLOCK-SLIDER	
					AVAILABLE REPAIR KIT(S):	
J			**173-7035**	1	KIT-SLIDER BLOCK (SUSPENSION SEAT)	
					(INCLUDES BLOCKS, BOLT, WASHERS & SETSCREWS)	

J-(KIT MARKED J SERVICES PART(S) MARKED J)
Y-SEPARATE ILLUSTRATION

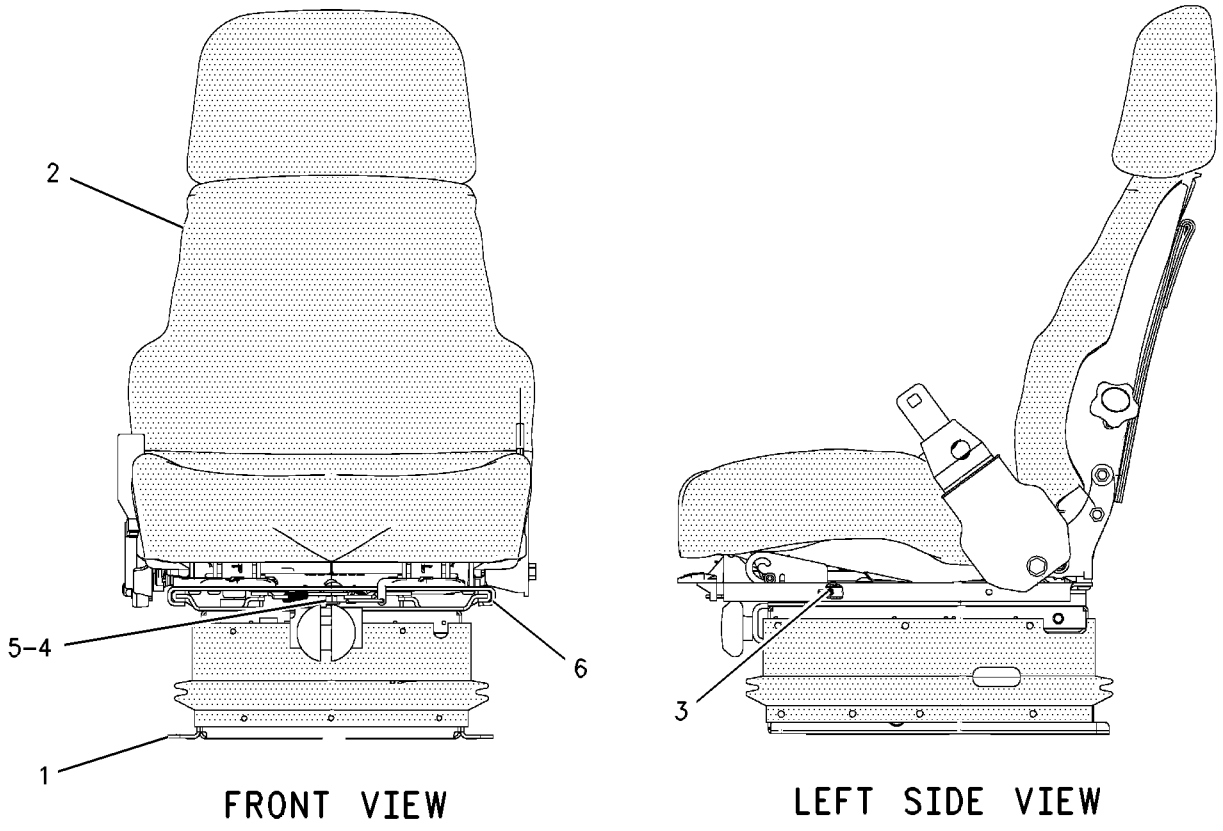

FRONT VIEW LEFT SIDE VIEW

GRAPHIC #1 **<END>** g00835586

OPERATOR STATION

200-3174 SEAT GP-SUSPENSION—CLOTH, AIR

S/N: DSH1-UP; DLN1-UP; DJR1-UP
PART OF 214-1196 SEAT GP
AN ATTACHMENT

SMCS-7321, 7324, 7336 **i04038391**

NOTE	REF NO	GRAPHIC REF	PART NUMBER	QTY	PART NAME 1 2 3 4 5 6 (PRODUCT LEVEL)	SEE PAGE
J	1	1	**161-9289**	4	BLOCK-SLIDER	
J	2	1	**173-5787**	4	SETSCREW (1/4-20-THD)	
Y	3	1	**178-0606**	1	SEAT GP (CLOTH)	619
Y	4	1	**191-2933**	1	SUSPENSION GP-SEAT (AIR)	632
J	5	1	**203-7703**	2	WASHER-HARD (10.2X22.22X2.38-MM THK)	
J	6	1	**4F-4879**	1	BOLT (3/8-16X0.5-IN)	
					AVAILABLE REPAIR KIT(S):	
J			**173-7035**	1	KIT-SLIDER BLOCK (SUSPENSION SEAT)	
					(INCLUDES BLOCKS, BOLT, WASHERS & SETSCREWS)	

J-(KIT MARKED J INCLUDES PARTS MARKED J)
Y-SEPARATE ILLUSTRATION

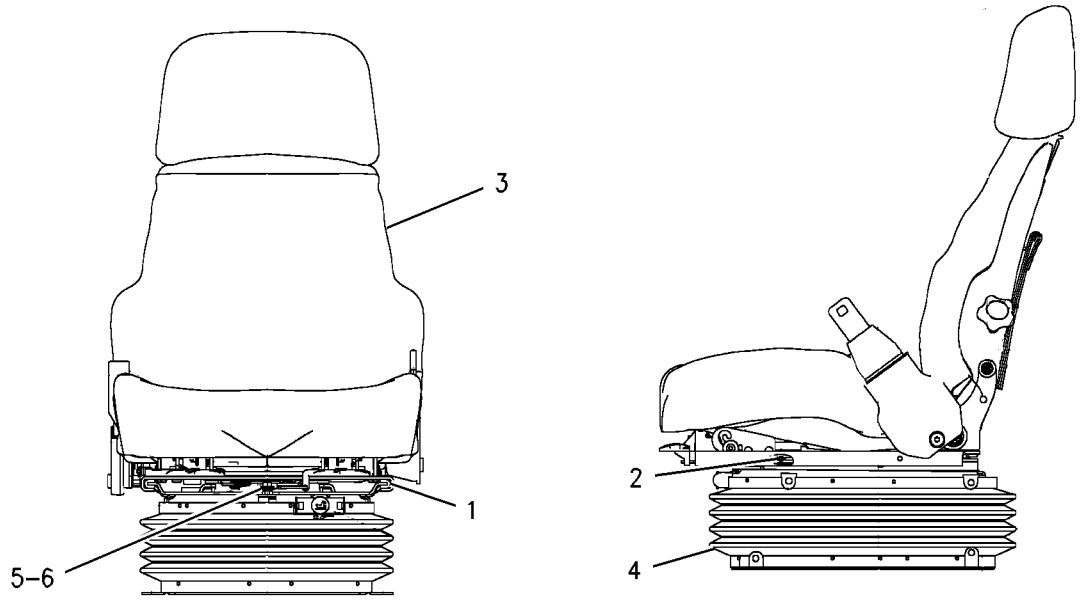

GRAPHIC #1 **<END>** g00909437

OPERATOR STATION

214-1197 SEAT GP-SUSPENSION—VINYL

S/N: DSH1-UP; DLN1-UP; DJR1-UP
PART OF 334-8477 CANOPY AR
AN ATTACHMENT

SMCS-7321, 7324, 7336 **i03991780**

NOTE	REF NO	GRAPHIC REF	PART NUMBER	QTY	PART NAME 1 2 3 4 5 6 (PRODUCT LEVEL)	SEE PAGE
Y	1	1	**159-2950**	1	SEAT GP-SUSPENSION (VINYL)	626

Y-SEPARATE ILLUSTRATION

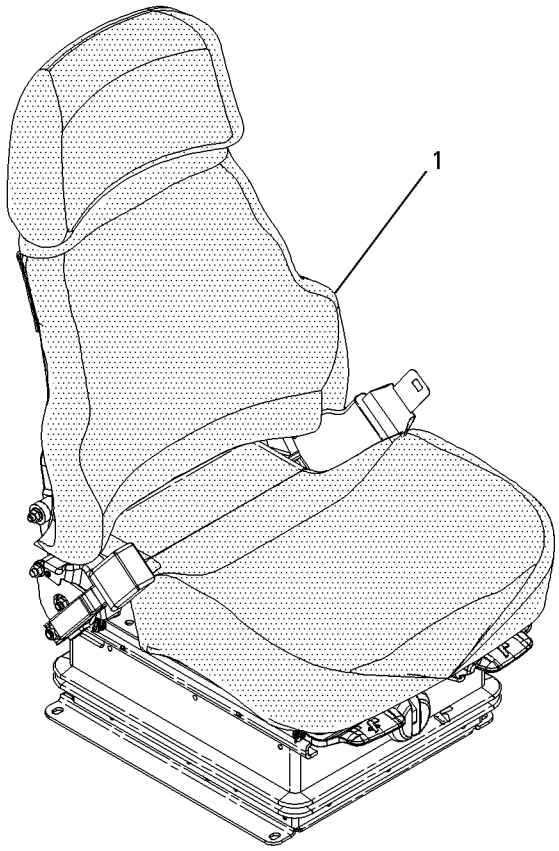

GRAPHIC #1 **<END>** g00695004

OPERATOR STATION

160-7165 SUSPENSION GP-SEAT

S/N: DSH1-UP; DLN1-UP; DJR1-UP
PART OF 159-2950, 160-7186 SEAT GP-SUSPENSION
ALSO AN ATTACHMENT

SMCS-7324 **i02605884**

NOTE	REF NO	GRAPHIC REF	PART NUMBER	QTY	PART NAME 1 2 3 4 5 6 (PRODUCT LEVEL)	SEE PAGE
	1	1	**2K-4973**	2	LOCKNUT (3/8-16-THD)	
	2	1	**4V-7884**	2	BEARING	
	3	1	**4V-8577**	4	BEARING	
	4	1	**5V-1497**	1	RETAINER	
	5	1	**8Y-5965**	1	ABSORBER AS-SHOCK	
	6	1	**8Y-6012**	1	ARM AS-SUSPENSION	
	7	1	**8Y-6014**	1	HOUSING AS (LOWER)	
	8	1	**8Y-6024**	2	SHAFT AS	
J	9	1	**101-0003**	20	FASTENER	
J	10	1	**166-6781**	6	FASTENER	
J	11	1	**163-1146**	3	FASTENER	
	12	1	**145-0326**	1	FILM-INSTRUCTION (SEAT ADJUSTMENT)	
	13	1	**169-7380**	1	BOLT-SOCKET HEAD (3/8-16X0.375-IN)	
Y	14	1	**174-2231**	1	HOUSING GP-SEAT SUSPENSION	557
J	15	1	**197-7689**	3	FASTENER	
					AVAILABLE REPAIR KIT(S):	
J			**8Y-5944**	1	KIT-SUSPENSION BOOT (SEAT)	
					(INCLUDES FASTENERS, BOOT & RETAINERS)	
			101-4194	1	KIT-TETHER BELT (SUSPENSION SEAT)	
					(INCLUDES BELTS)	
			101-4195	1	KIT-SUSPENSION ROLLER (SUSPENSION SEAT)	
					(INCLUDES ROLLERS)	

J-KIT MARKED J SERVICES PARTS MARKED J
Y-SEPARATE ILLUSTRATION

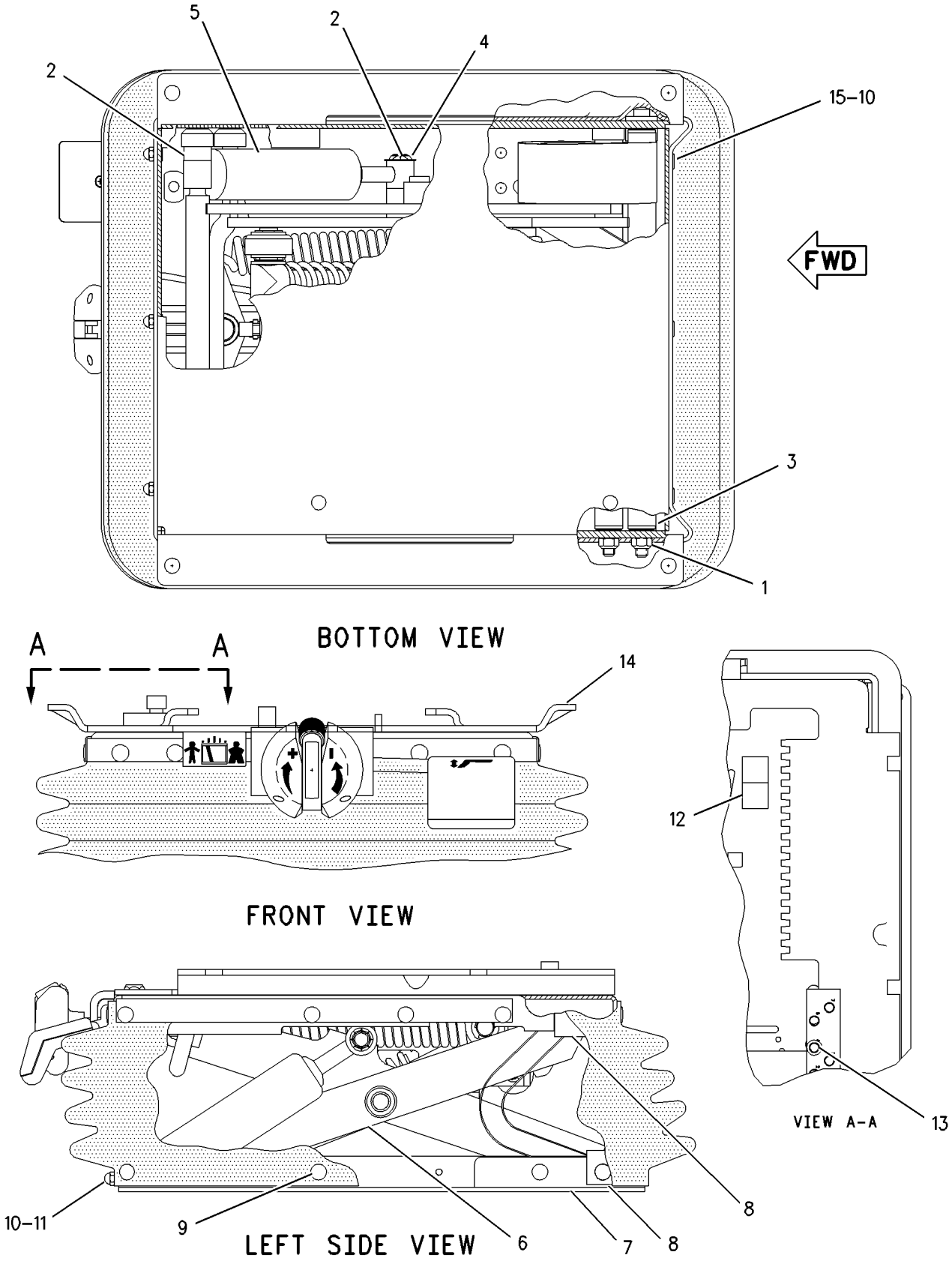

GRAPHIC #1 **<END>** g00828820

OPERATOR STATION

191-2933 SUSPENSION GP-SEAT—AIR

S/N: DSH1-UP; DLN1-UP; DJR1-UP
PART OF 200-3174 SEAT GP-SUSPENSION
AN ATTACHMENT

SMCS-7324 **i04033117**

NOTE	REF NO	GRAPHIC REF	PART NUMBER	QTY	PART NAME 1 2 3 4 5 6 (PRODUCT LEVEL)	SEE PAGE
	1	1	**3P-9900**	5	WASHER (10.5X30X3-MM THK)	
	2	1	**4B-4278**	2	WASHER (10.2X20.5X1.6-MM THK)	
	3	1	**4V-8577**	12	BEARING	
	4	1	**8L-8413**	1	STRAP-CABLE	
	5	1	**145-0326**	1	FILM-INSTRUCTION (SEAT ADJUSTMENT)	
	6	1	**164-1234**	1	PLATE	
	7	1	**101-0003**	33	FASTENER	
	8	1	**169-7380**	1	BOLT-SOCKET HEAD (3/8-16X0.375-IN)	
	9	1	**186-5107**	2	SCREW-DRIVE (NO 8-16X1.25-IN)	
	10	1	**192-7752**	4	SHAFT AS	
	11	1	**192-7755**	1	HOUSING AS (LOWER)	
	12	1	**192-7760**	1	SHAFT	
	13	1	**192-7767**	1	SCISSORS AS	
	14	1	**192-7783**	1	TOGGLE AS (WIDE)	
	15	1	**192-7787**	1	TOGGLE AS (NARROW)	
	16	1	**192-7790**	1	HOUSING AS (UPPER)	
	17	1	**192-7795**	1	BOOT	
	18	1	**192-7805**	1	HARNESS AS-VALVE (SEAT AIR COMPRESSOR)	
		1	**102-8802**	1	KIT-RECEPTACLE (2-PIN)	
					(INCLUDES RECEPTACLE AS & WEDGE)	
	19	1	**192-7810**	1	SPRING AS-AIR	
		1	**5P-4423**	1	ELBOW	
		1	**163-1135**	1	SPRING	
	20	1	**192-7812**	1	BOLT-SPECIAL	
	21	1	**192-7820**	3	BUMPER	
	22	1	**192-7822**	1	SHAFT	
	23	1	**237-3943**	1	BRACKET	
	24	1	**237-3970**	1	AIR COMPRESSOR GP-SEAT	
	25	1	**1H-8296**	1	SCREW-MACHINE (3/8-16X0.52-IN)	
	26	1	**2K-4973**	8	LOCKNUT (3/8-16-THD)	
	27	1	**3J-4818**	1	LOCKWASHER	
M	28	1	**5C-2890**	3	NUT (M6X1-THD)	
	29	1	**8T-9371**	1	BOLT (3/8-16X0.5-IN)	
E	30	1	**211-5358**		CONDUIT-FLEXIBLE (100CM)	
D	31	1	**5P-6010**		TUBE (1M)	
					AVAILABLE REPAIR KIT(S):	
			192-7799	1	KIT-AIR VALVE (SUSPENSION SEAT)	
					(INCLUDES KNOB AS)	
			192-7848	1	KIT-SHOCK ABSORBER (SUSPENSION SEAT)	
					(INCLUDES LOCKNUT, LOCKWASHER, SHOCK ABSORBER, BEARING, WASHER, AND BOLTS)	
			211-9294	1	KIT-TETHER (SUSPENSION SEAT)	

D-ORDER BY THE METER
E-ORDER BY THE CENTIMETER
M-METRIC PART

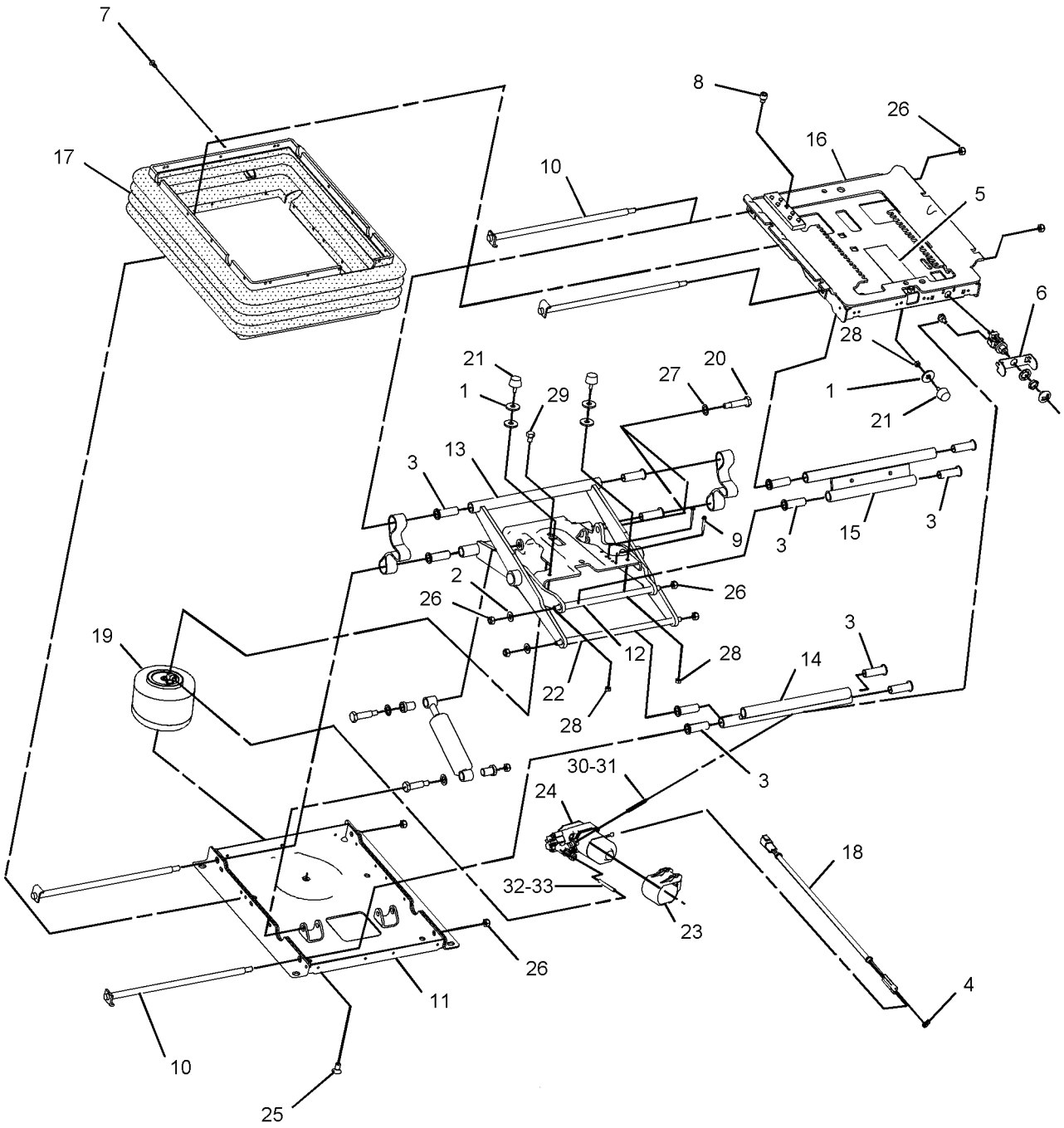

GRAPHIC #1 **<END>** g01011847

OPERATOR STATION

169-9649 TANK GP-WINDOW WASHER

S/N: DSH1-UP; DLN1-UP; DJR1-UP

PART OF 387-0556 TANK GP-WINDOW WASHER

SMCS-7306 **i04017072**

NOTE	REF NO	GRAPHIC REF	PART NUMBER	QTY	PART NAME 1 2 3 4 5 6 (PRODUCT LEVEL)	SEE PAGE
	1	1	**169-9650**	1	TANK-WASHER	
	2	1	**8E-8292**	1	CAP-VENTED (WINDOW WASHER RESERVOIR)	
D	3	1	**6V-5817**		CONDUIT-FLEXIBLE (26.1-MM ID, SPLIT) (0.4-M)	
	4	1	**186-4857**	1	HARNESS AS-WIRING (WINDOW WASHER)	
		1	**102-8805**	1	KIT-RECEPTACLE (6-PIN)	
					(INCLUDES RECEPTACLE AS & WEDGE)	
		1	**9X-0194**	4	TERMINAL AS	
		1	**3T-8371**	4	TERMINAL-SOLDER	
		1	**9G-3695**	1	PLUG-SEAL	
E		1	**114-8843**		SLEEVE-PLASTIC (100-CM)	
E		1	**119-3662**		TUBE-HEAT SHRINK (10.85-MM DIA) (7-CM)	
		1	**144-1636**	5	PIN-CONNECTOR (14-GA TO 18-GA)	
E	5	1	**144-0195**		HOSE (60.5-CM EACH)	
E	5A	1	**144-0195**		HOSE (57-CM EACH)	
E	5B	1	**144-0195**		HOSE (15.3-CM EACH)	
	6	1	**7T-8891**	4	PUMP AS-WASHER	
B	7	1	**3S-2093**	12	STRAP-CABLE	
E	8	1	**7X-7927**		TAPE-IDENTIFICATION (LETTER A) (6-CM EACH)	
E	9	1	**7X-7928**		TAPE-IDENTIFICATION (LETTER B) (6-CM EACH)	
E	10	1	**7X-7929**		TAPE-IDENTIFICATION (LETTER C) (6-CM EACH)	
E	11	1	**7X-7930**		TAPE-IDENTIFICATION (LETTER D) (6-CM EACH)	
E	12	1	**7I-7439**		GUARD (20-CM EACH)	
E	12A	1	**7I-7439**		GUARD (15-CM)	

B-USE AS REQUIRED
D-ORDER BY THE METER
E-ORDER BY THE CENTIMETER

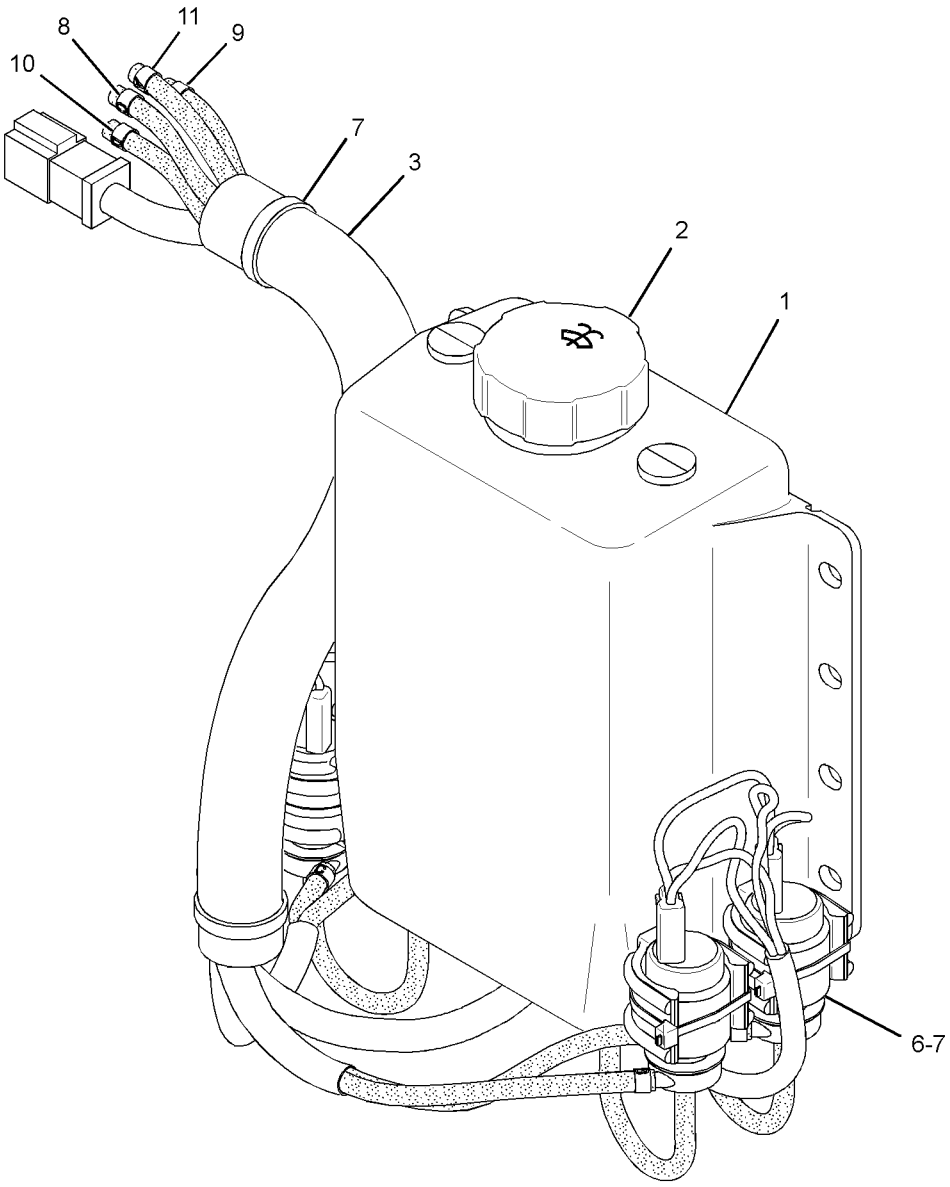

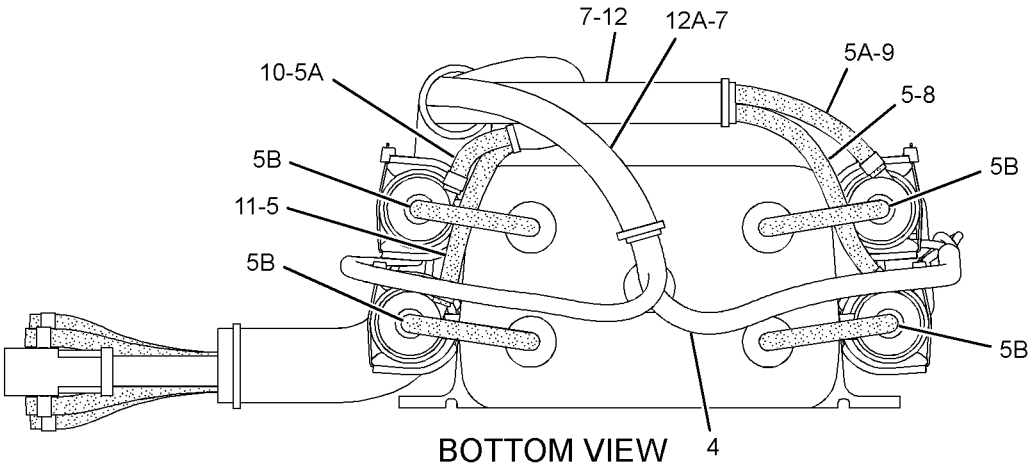

GRAPHIC #1

<END>

g02192058

OPERATOR STATION

387-0556 TANK GP-WINDOW WASHER

S/N: DSH1-UP; DLN1-UP; DJR1-UP

PART OF 313-3338, 313-3759, 379-6225 CHASSIS AR

SMCS-7306 **i04757790**

NOTE	REF NO	GRAPHIC REF	PART NUMBER	QTY	PART NAME 1 2 3 4 5 6 (PRODUCT LEVEL)	SEE PAGE
	1	1	**8T-4205**	6	WASHER-HARD (7.2X14.5X2-MM THK)	
	2	1	**3S-2093**	1	STRAP-CABLE	
	3	1	**9W-6323**	1	BRACKET AS	
		1	**9F-6445**	4	NUT-WELD (1/4-20-THD)	
Y	4	1	**169-9649**	1	TANK GP-WINDOW WASHER	634
	5	1	**3E-9865**	2	LOCKNUT (1/4-20-THD)	
	6	1	**4M-5281**	6	BOLT (1/4-20X0.75-IN)	
	7	1	**5P-4115**	2	WASHER-HARD (7.2X19X2-MM THK)	

Y-SEPARATE ILLUSTRATION

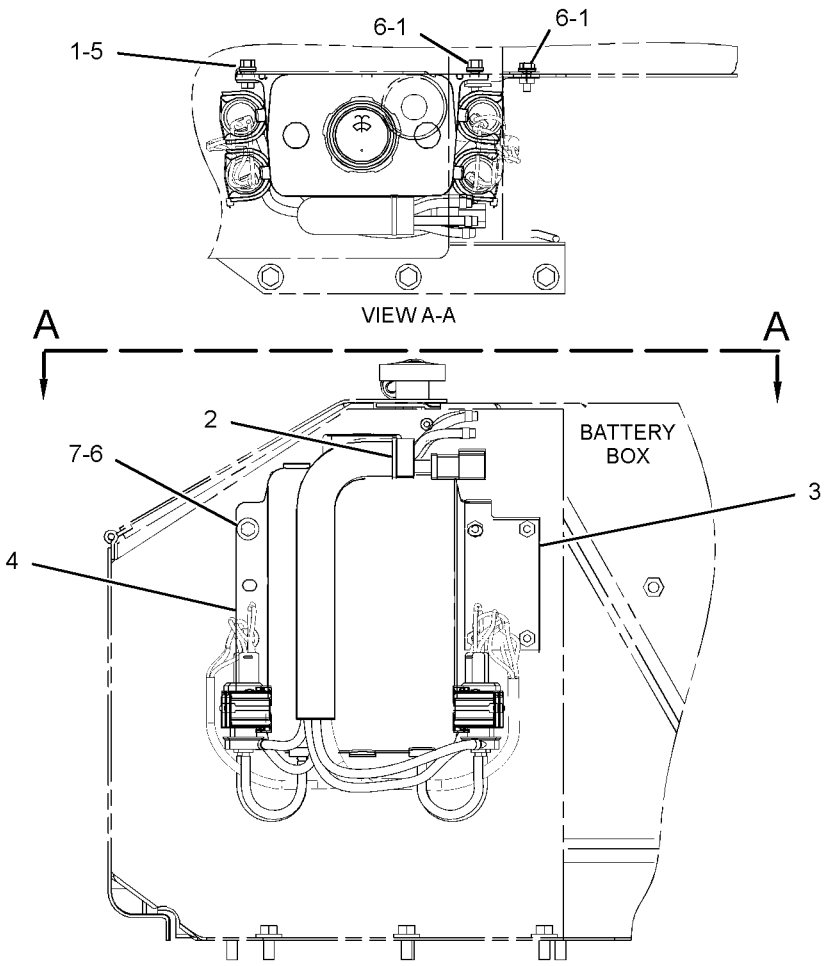

GRAPHIC #1 **<END>** g02852811

OPERATOR STATION

322-1394 WASHER GP-WINDOW

S/N: DSH1-UP; DLN1-UP; DJR1-UP
PART OF 323-5696, 327-9363 CAB AR
ALSO AN ATTACHMENT

SMCS-7306 **i04400204**

NOTE	REF NO	GRAPHIC REF	PART NUMBER	QTY	PART NAME 1 2 3 4 5 6 (PRODUCT LEVEL)	SEE PAGE
	1	1	**3S-2093**	19	STRAP-CABLE	
	2	1	**8T-5400**	4	CONNECTOR AS	
	3	1	**145-7328**	2	ELBOW-HOSE	
	4	1	**320-5904**	1	HARNESS AS-WINDOW WIPER	
		1	**102-8801**	1	KIT-RECEPTACLE (12-PIN)	
					(INCLUDES RECEPTACLE AS AND WEDGE)	
		1	**8T-8737**	10	PLUG-SEAL	
E		1	**114-8844**		SLEEVE-PLASTIC (20-CM)	
E		1	**119-3662**		TUBE-HEAT SHRINK (10.85-MM DIA) (13-CM)	
		1	**9X-3402**	42	SOCKET-CONNECTOR (16-GA TO 18-GA)	
		1	**126-1768**	1	SOCKET-CONNECTOR (14-GA TO 16-GA)	
		1	**9X-3401**	9	PIN-CONNECTOR (16-GA TO 18-GA)	
					—OR—	
		1	**126-1767**	1	PIN-CONNECTOR (14-GA TO 16-GA)	
		1	**155-2255**	1	KIT-CONNECTING PLUG (12-PIN)	
		1	**155-2265**	1	KIT-CONNECTING PLUG (8-PIN)	
		1	**155-2274**	5	KIT-CONNECTING PLUG (6-PIN)	
					(EACH KIT INCLUDES PLUG AS, WEDGE & INTERFACE SEAL)	
	5	1	**4H-2558**	1	GROMMET	
	6	1	**8E-6856**	1	COVER	
M	7	1	**8T-4133**	1	NUT (M10X1.5-THD)	
	8	1	**8T-4896**	1	WASHER-HARD (10.2X18.5X2.5-MM THK)	
	9	1	**9N-1995**	4	RIVET-POP	
E	10	1	**6V-5818**		CONDUIT-FLEXIBLE (18.62-MM ID, SPLIT) (375-CM EACH)	
E	11	1	**7X-7702**		CONDUIT-FLEXIBLE (23.35-MM ID, SPLIT) (83-CM)	
E	12	1	**144-0195**		HOSE (288-CM)	
E	12A	1	**144-0195**		HOSE (364-CM EACH)	
E	12B	1	**144-0195**		HOSE (440-CM)	
E	12C	1	**144-0195**		HOSE (3-CM EACH)	
E	13	1	**7X-7877**		STRIP-EDGING (5-CM)	
E	13A	1	**7X-7877**		STRIP-EDGING (10-CM EACH)	
E	14	1	**7X-7927**		TAPE-IDENTIFICATION (LETTER A) (6-CM)	
E	15	1	**7X-7928**		TAPE-IDENTIFICATION (LETTER B) (6-CM)	
E	16	1	**7X-7929**		TAPE-IDENTIFICATION (LETTER C) (6-CM)	
E	17	1	**7X-7930**		TAPE-IDENTIFICATION (LETTER D) (6-CM)	

E-ORDER BY THE CENTIMETER
M-METRIC PART

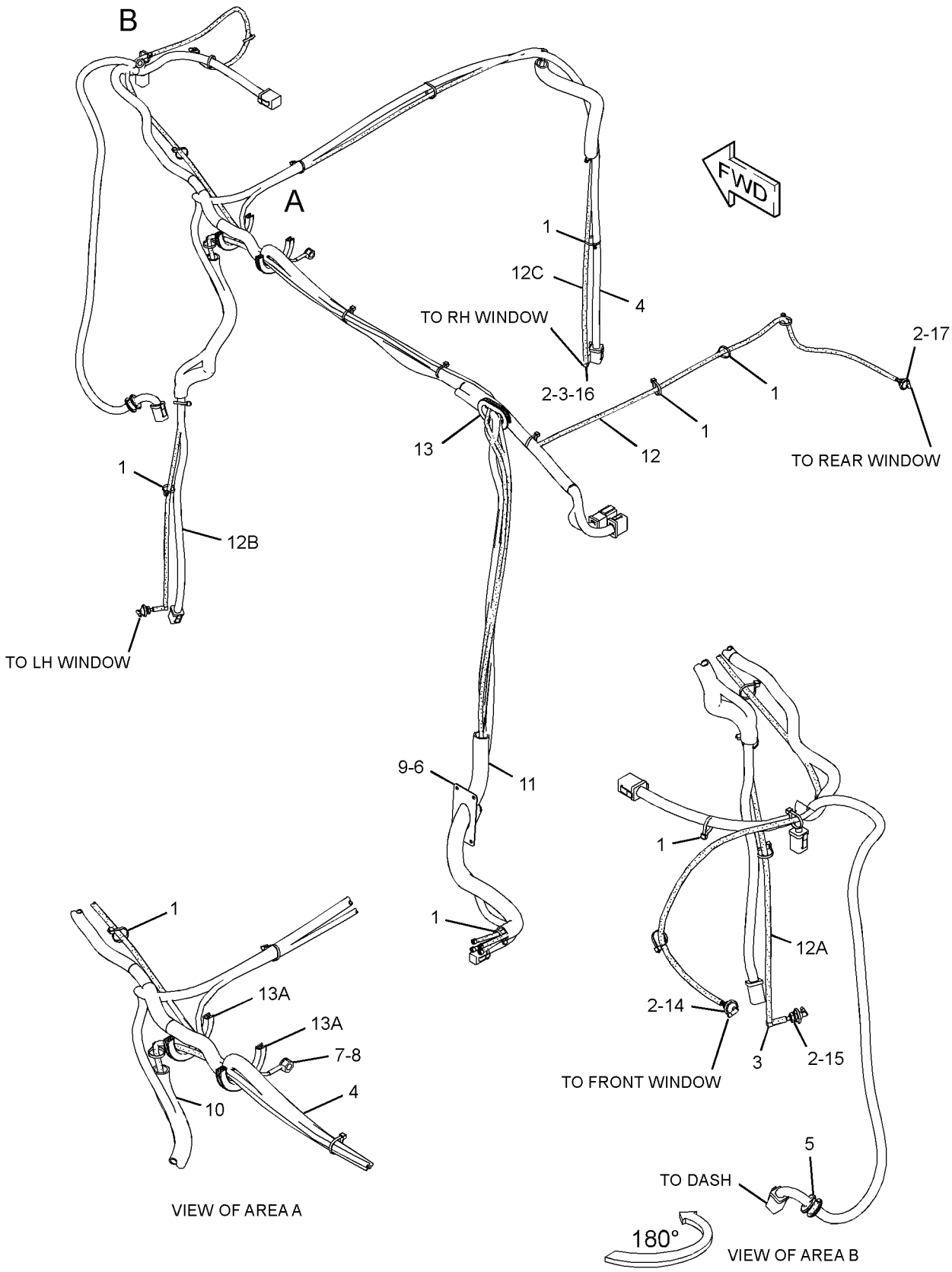

GRAPHIC #1 **<END>** g02198193

6T-8402 WINDOW GP-CAB—SLIDING, RH

S/N: DSH1-UP; DLN1-UP; DJR1-UP
PART OF 179-7094, 359-0661 CAB GP, 8E-5113 WINDOW GP-SLIDING
FIELD REPLACEMENT ORDER 8E-5113—PAGE 648
ALSO AN ATTACHMENT

SMCS-7310 **i04003585**

NOTE	REF NO	GRAPHIC REF	PART NUMBER	QTY	PART NAME 1 2 3 4 5 6 (PRODUCT LEVEL)	SEE PAGE
Y	1	1	**7T-1068**	1	WINDOW GP-CAB (RH)	641
	2	1	**7T-1330**	1	GLASS (TINTED) (RH)	
D	3	1	**5P-5680**		SEAL (1.2-M)	
D	3A	1	**5P-5680**		SEAL (0.7-M)	
D	4	1	**8T-0687**		FILLER (1.2-M)	
E	5	1	**8Y-6839**		SEAL (64-CM)	
D	6	1	**6V-5833**		SEAL (0.7-M)	

D-ORDER BY THE METER
E-ORDER BY THE CENTIMETER
Y-SEPARATE ILLUSTRATION

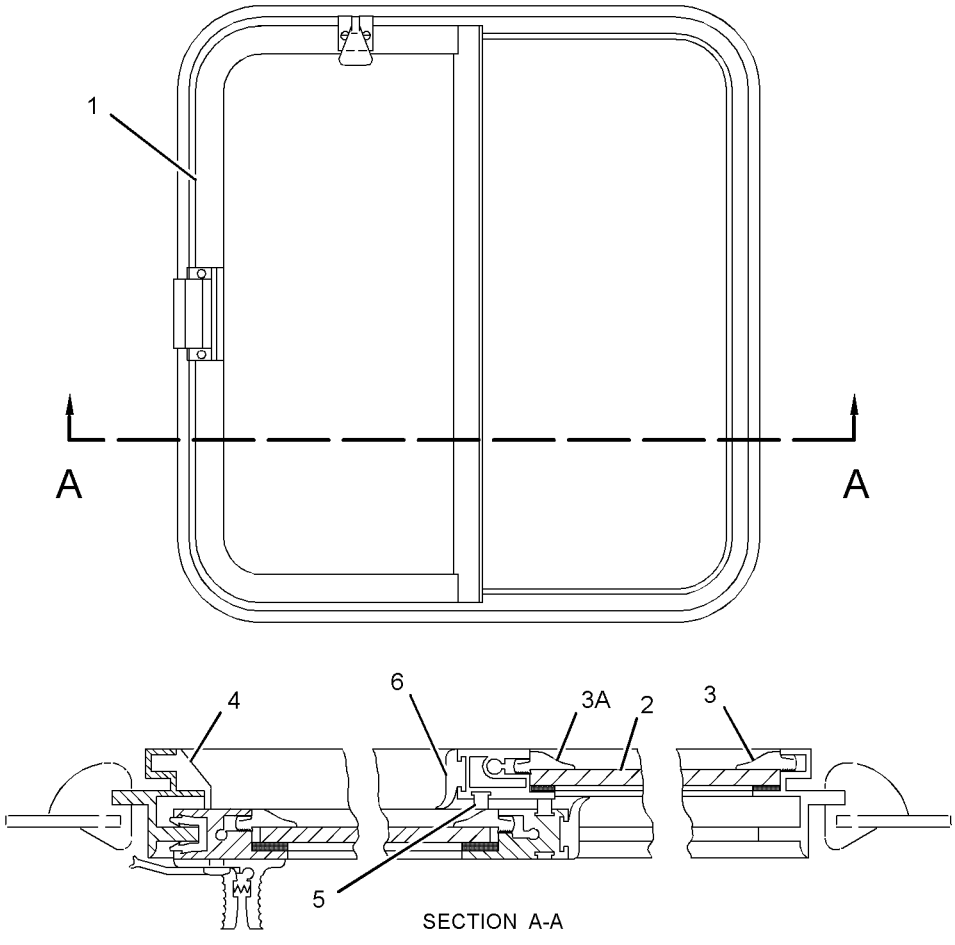

SECTION A-A

GRAPHIC #1 **<END>** g02181002

6T-8403 WINDOW GP-CAB—SLIDING, LH

S/N: DSH1-UP; DLN1-UP; DJR1-UP
PART OF 179-7094, 359-0661 CAB GP, 8E-5114 WINDOW GP-SLIDING
FIELD REPLACEMENT ORDER 8E-5114—PAGE 648
ALSO AN ATTACHMENT

SMCS-7310 **i04003587**

NOTE	REF NO	GRAPHIC REF	PART NUMBER	QTY	PART NAME 1 2 3 4 5 6 (PRODUCT LEVEL)	SEE PAGE
D	1	1	**5P-5680**		SEAL (1.2-M)	
D	1A	1	**5P-5680**		SEAL (0.7-M)	
D	2	1	**8T-0687**		FILLER (1.2-M)	
D	3	1	**6V-5833**		SEAL (0.7-M)	
Y	4	1	**7T-1069**	1	WINDOW GP-CAB (LH)	642
E	5	1	**8Y-6839**		SEAL (64-CM)	
	6	1	**7T-1330**	1	GLASS (TINTED) (LH)	

D-ORDER BY THE METER
E-ORDER BY THE CENTIMETER
Y-SEPARATE ILLUSTRATION

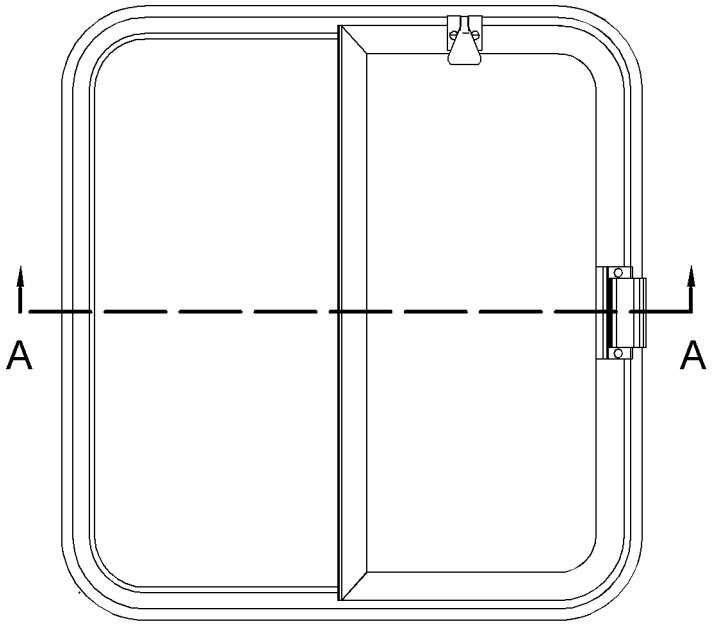

SECTION A-A

GRAPHIC #1 **<END>** g02181214

OPERATOR STATION

7T-1068 WINDOW GP-CAB–RH

S/N: DSH1-UP; DLN1-UP; DJR1-UP
PART OF 6T-8402 WINDOW GP-CAB
ALSO AN ATTACHMENT

SMCS-7310 **i04003580**

NOTE	REF NO	GRAPHIC REF	PART NUMBER	QTY	PART NAME 1 2 3 4 5 6 (PRODUCT LEVEL)	SEE PAGE
	1	1	**3T-1121**	1	LOCK AS	
	2	1	**2H-6622**	2	SCREW-SELF-TAPPING (10-16X0.77-IN)	
	3	1	**9P-7860**	1	LOCK AS	
	4	1	**9P-7859**	2	SCREW-SELF-TAPPING (10-16X0.5-IN)	
D	5	1	**5P-5680**		SEAL (0.7-M)	
D	5A	1	**5P-5680**		SEAL (1.1-M)	
D	6	1	**6V-5833**		SEAL (0.7-M)	
D	7	1	**5P-8918**		SEAL (1.2-M)	
	8	1	**8Y-6448**	1	GLASS	
E	9	1	**8Y-6839**		SEAL (64-CM)	

D-ORDER BY THE METER
E-ORDER BY THE CENTIMETER

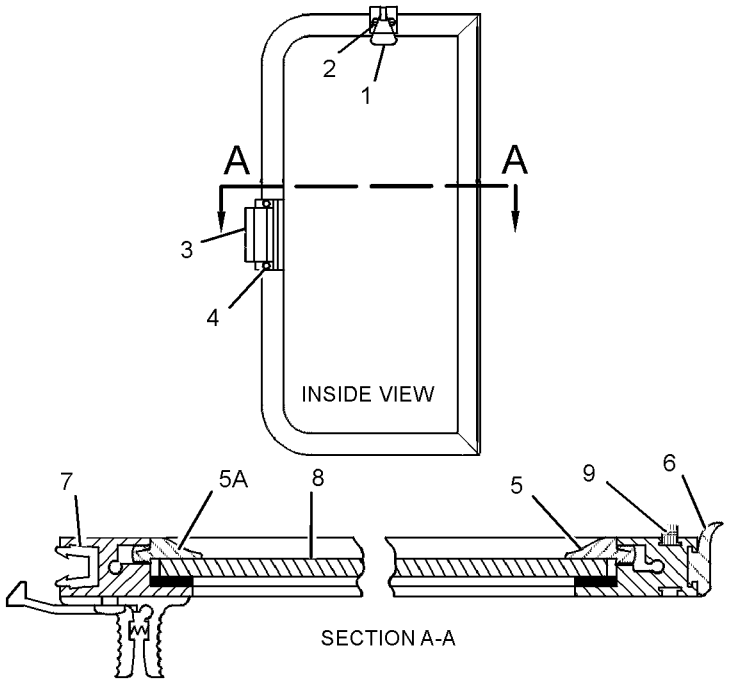

GRAPHIC #1 **<END>** g01211059

OPERATOR STATION

7T-1069 WINDOW GP-CAB–LH

S/N: DSH1-UP; DLN1-UP; DJR1-UP
PART OF 6T-8403 WINDOW GP-CAB
ALSO AN ATTACHMENT

SMCS-7310 **i04003589**

NOTE	REF NO	GRAPHIC REF	PART NUMBER	QTY	PART NAME 1 2 3 4 5 6 (PRODUCT LEVEL)	SEE PAGE
	1	1	**3T-1121**	1	LOCK AS	
	2	1	**2H-6622**	2	SCREW-SELF-TAPPING (10-16X0.77-IN)	
	3	1	**9P-7860**	1	LOCK AS	
	4	1	**9P-7859**	2	SCREW-SELF-TAPPING (10-16X0.5-IN)	
D	5	1	**5P-5680**		SEAL (0.7-M)	
D	5A	1	**5P-5680**		SEAL (1.1-M)	
D	6	1	**6V-5833**		SEAL (0.7-M)	
D	7	1	**5P-8918**		SEAL (1.2-M)	
	8	1	**8Y-6448**	1	GLASS	
E	9	1	**8Y-6839**		SEAL (64-CM)	

D-ORDER BY THE METER
E-ORDER BY THE CENTIMETER

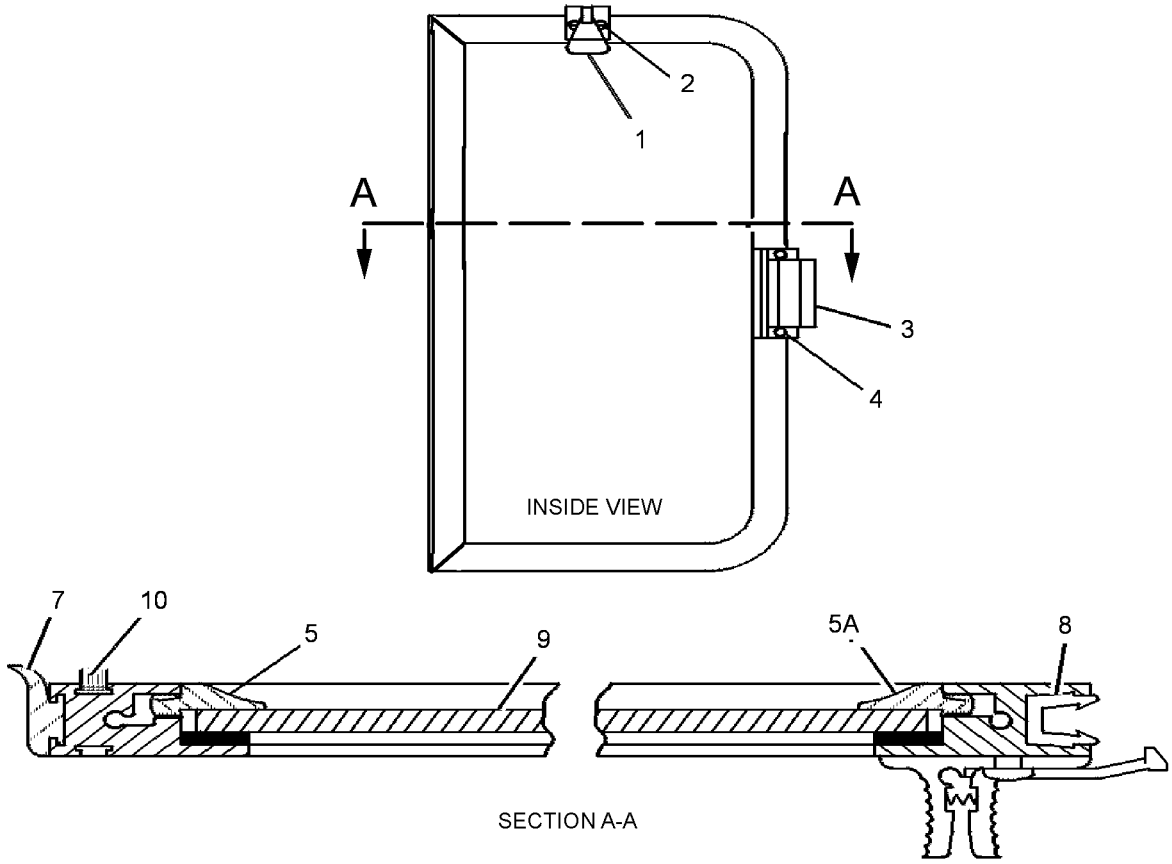

GRAPHIC #1 **<END>** g01435540

OPERATOR STATION

8E-3446 WINDOW GP-CAB—SLIDING, RH

S/N: DSH1-UP; DLN1-UP; DJR1-UP
PART OF 8E-5113 WINDOW GP-SLIDING
FIELD REPLACEMENT ORDER 8E-5113—PAGE 648

SMCS-7310 **i04003645**

NOTE	REF NO	GRAPHIC REF	PART NUMBER	QTY	PART NAME 1 2 3 4 5 6 (PRODUCT LEVEL)	SEE PAGE
E	1	1	**8Y-6423**		SEAL (130-CM)	
E	1A	1	**8Y-6423**		SEAL (65-CM)	
B	2	1	**8Y-6459**		TAPE-BUTYL	
	3	1	**8Y-6430**	1	SEAL-WINDOW	
Y	4	1	**8Y-6433**	1	WINDOW GP-CAB (RH)	647
	5	1	**8Y-6462**	1	KIT-LEAF SPRING	
					(INCLUDES SPRING AS & RIVET)	
	6	1	**8Y-6432**	1	GLASS-CAB (FIXED)	
E	7	1	**8Y-6424**		SEAL (122-CM)	
E	8	1	**8Y-6910**		WEATHERSTRIP (68-CM)	

B-USE AS REQUIRED
E-ORDER BY THE CENTIMETER
Y-SEPARATE ILLUSTRATION

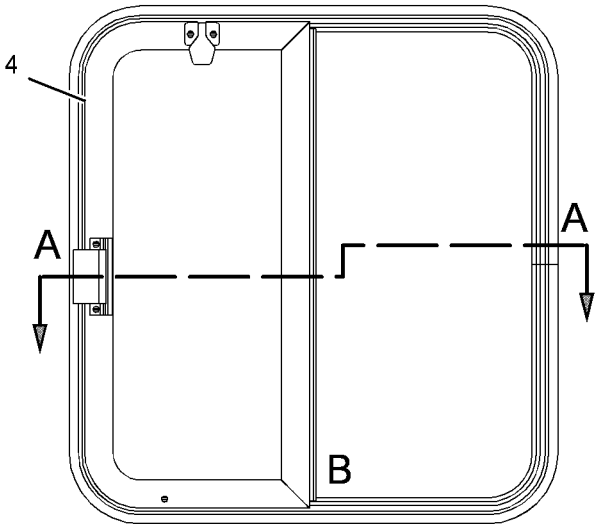

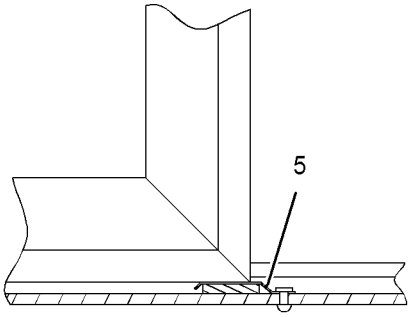

VIEW OF AREA B

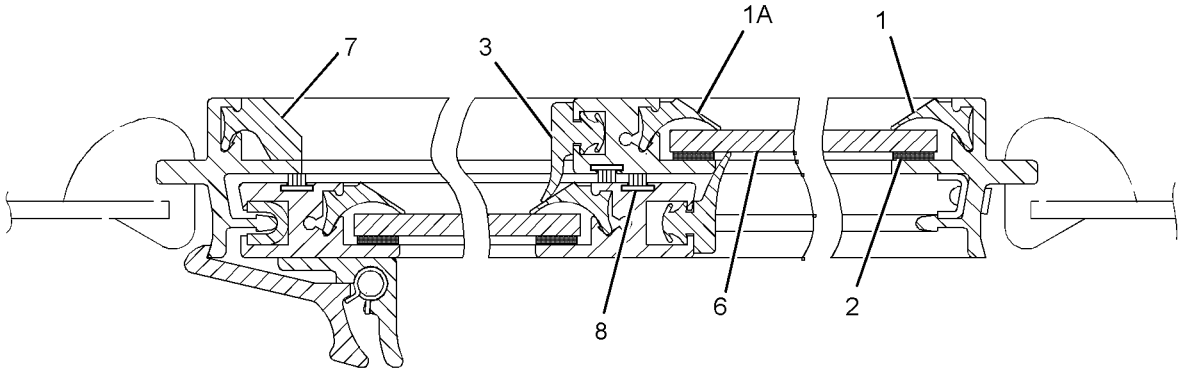

SECTION A-A

GRAPHIC #1 **<END>** g02197993

8E-3447 WINDOW GP-CAB—SLIDING, LH

S/N: DSH1-UP; DLN1-UP; DJR1-UP
PART OF 8E-5114 WINDOW GP-SLIDING
FIELD REPLACEMENT ORDER 8E-5114—PAGE 648

SMCS-7310 **i04003655**

NOTE	REF NO	GRAPHIC REF	PART NUMBER	QTY	PART NAME 1 2 3 4 5 6 (PRODUCT LEVEL)	SEE PAGE
E	1	1	**8Y-6423**		SEAL (65-CM)	
E	1A	1	**8Y-6423**		SEAL (130-CM)	
B	2	1	**8Y-6459**		TAPE-BUTYL	
	3	1	**8Y-6430**	1	SEAL-WINDOW	
Y	4	1	**8Y-6420**	1	WINDOW GP-CAB (LH)	645
	5	1	**8Y-6462**	1	KIT-LEAF SPRING (CAB WINDOW)	
					(INCLUDES SPRING AS & RIVET)	
	6	1	**8Y-6419**	1	GLASS-CAB (FIXED) (TINTED)	
E	7	1	**8Y-6424**		SEAL (122-CM)	
E	8	1	**8Y-6910**		WEATHERSTRIP (68-CM)	

B-USE AS REQUIRED
E-ORDER BY THE CENTIMETER
Y-SEPARATE ILLUSTRATION

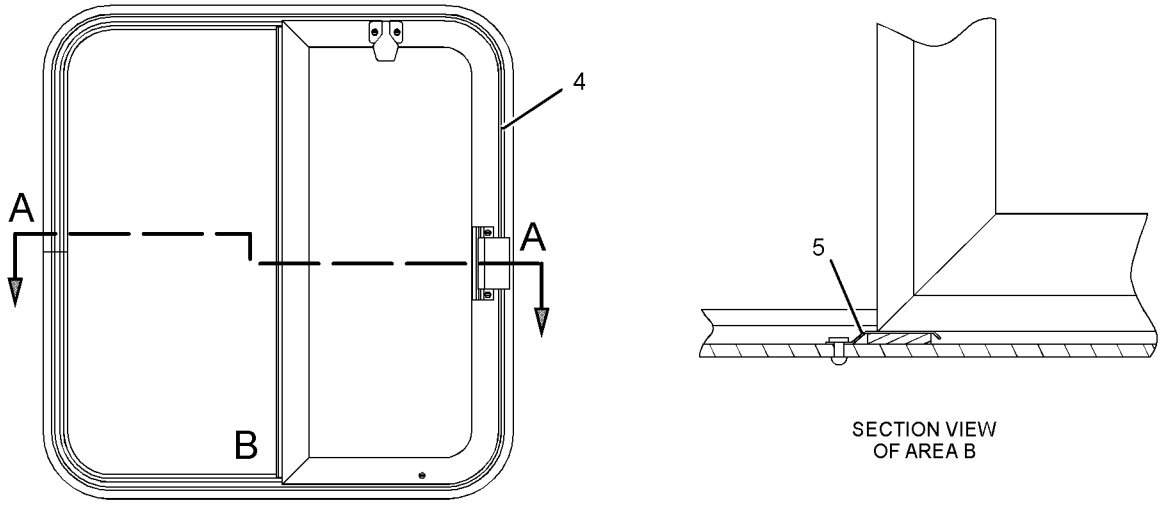

SECTION VIEW
OF AREA B

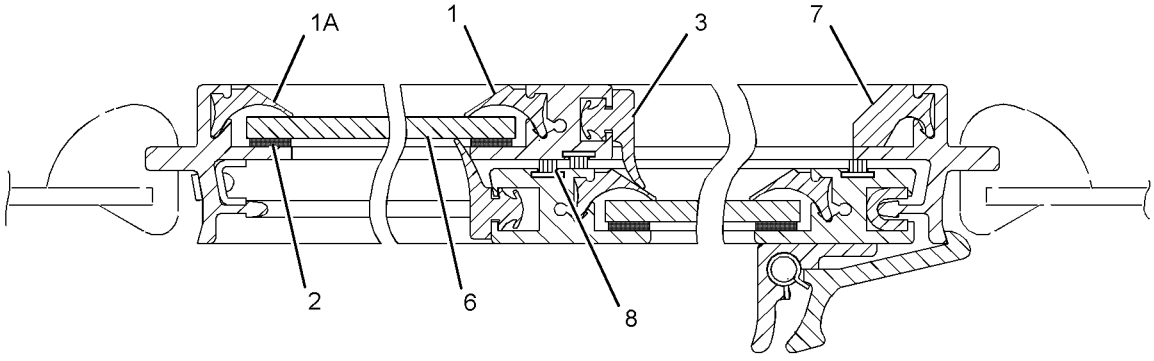

SECTION A-A

GRAPHIC #1 **<END>** g01232324

OPERATOR STATION

8Y-6420 WINDOW GP-CAB—LH

S/N: DSH1-UP; DLN1-UP; DJR1-UP
PART OF 8E-3447 WINDOW GP-CAB

SMCS-7310 **i04003657**

NOTE	REF NO	GRAPHIC REF	PART NUMBER	QTY	PART NAME 1 2 3 4 5 6 (PRODUCT LEVEL)	SEE PAGE
	1	1	**8Y-6454**	1	KIT-CATCH (CAB WINDOW)	
					(INCLUDES CATCH AS & AMP; 2 SCREWS)	
M	2	1	**084-4111**	2	SCREW-PAN HEAD (M5X0.8X16-MM)	
	3	1	**8Y-6455**	1	KIT-CATCH (CAB WINDOW)	
					(INCLUDES CATCH AS & 2 SCREWS)	
M	4	1	**8T-4777**	2	SCREW-MACHINE (M5X0.8X12-MM)	
	5	1	**8Y-6460**	1	KIT-RUNNER GUIDE (CAB WINDOW)	
					(INCLUDES GUIDE & SCREW)	
	6	1	**3S-9557**	2	SCREW-PAN HEAD (4-40X0.5-IN)	
	7	1	**8Y-6461**	1	KIT-RUNNER GUIDE (CAB WINDOW)	
					(INCLUDES GUIDE & SCREW)	
M	8	1	**6V-2312**	2	SCREW-MACHINE (M6X1X25-MM)	
BE	9	1	**8Y-6423**		SEAL	
	10	1	**8Y-6430**	1	SEAL-WINDOW	
BE	11	1	**8Y-6459**		TAPE-BUTYL	
	12	1	**8Y-6422**	1	GLASS-CAB (SLIDING, TINTED)	
BE	13	1	**8Y-6910**		WEATHERSTRIP	

B-USE AS REQUIRED
E-ORDER BY THE CENTIMETER
M-METRIC PART

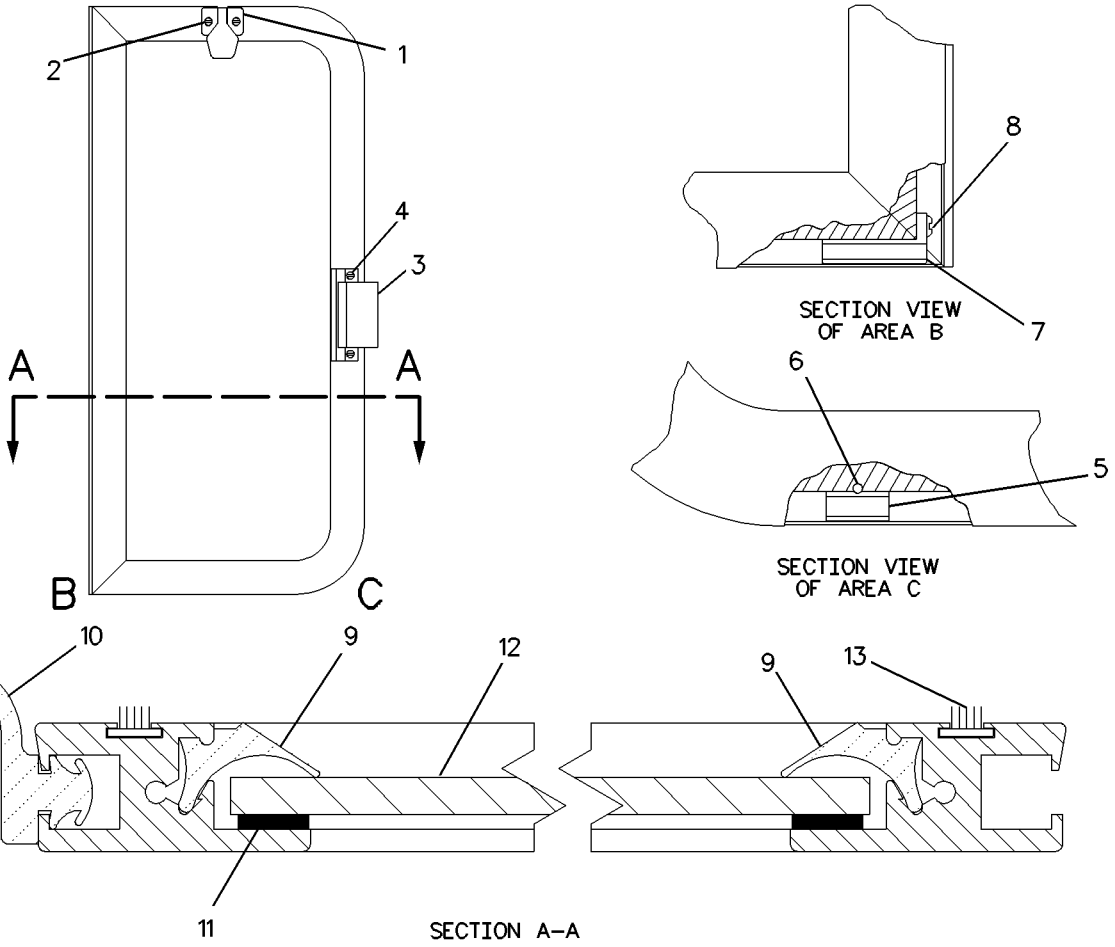

GRAPHIC #1 **<END>** g00864814

OPERATOR STATION

8Y-6433 WINDOW GP-CAB–RH

S/N: DSH1-UP; DLN1-UP; DJR1-UP
PART OF 8E-3446 WINDOW GP-CAB

SMCS-7310 **i04003640**

NOTE	REF NO	GRAPHIC REF	PART NUMBER	QTY	PART NAME 1 2 3 4 5 6 (PRODUCT LEVEL)	SEE PAGE
	1	1	**8Y-6454**	1	KIT-CATCH (CAB WINDOW)	
					(INCLUDES CATCH AS & 2 SCREWS)	
M	2	1	**084-4111**	2	SCREW-PAN HEAD (M5X0.8X16-MM)	
	3	1	**8Y-6455**	1	KIT-CATCH (CAB WINDOW)	
					(INCLUDES CATCH AS & 2 SCREWS)	
M	4	1	**8T-4777**	2	SCREW-MACHINE (M5X0.8X12-MM)	
	5	1	**8Y-6460**	1	KIT-RUNNER GUIDE (CAB WINDOW)	
					(INCLUDES GUIDE & SCREW)	
M	6	1	**6V-2312**	2	SCREW-MACHINE (M6X1X25-MM)	
	7	1	**8Y-6461**	1	KIT-RUNNER GUIDE (CAB WINDOW)	
					(INCLUDES GUIDE & SCREW)	
BE	8	1	**8Y-6423**		SEAL	
	9	1	**8Y-6430**	1	SEAL-WINDOW	
BE	10	1	**8Y-6459**		TAPE-BUTYL	
BE	11	1	**8Y-6423**		SEAL	
	12	1	**8Y-6431**	1	GLASS-CAB (SLIDING, TINTED)	
BE	13	1	**8Y-6910**		WEATHERSTRIP	

B-USE AS REQUIRED
E-ORDER BY THE CENTIMETER
M-METRIC PART

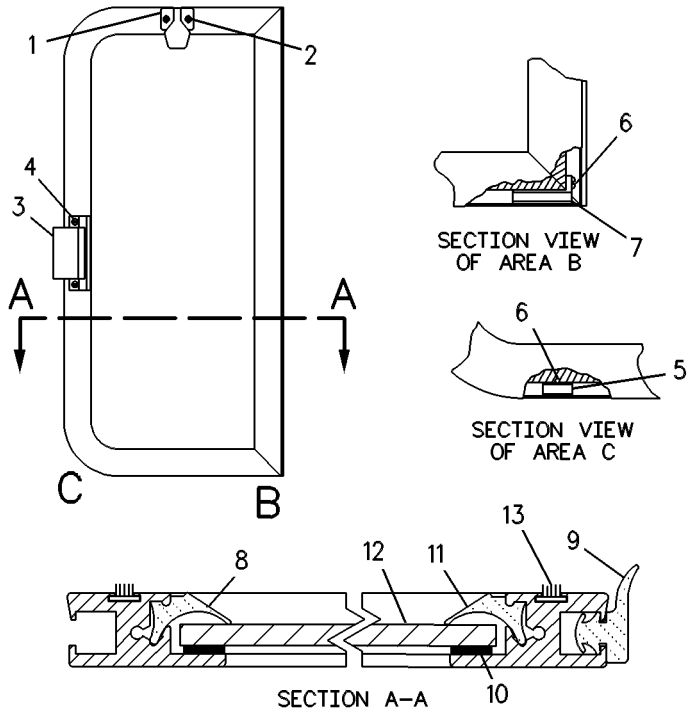

GRAPHIC #1 **<END>** g00326281

8E-5113 WINDOW GP-SLIDING—RH

S/N: DSH1-UP; DLN1-UP; DJR1-UP

FIELD REPLACEMENT FOR 6T-8402—PAGE 639, 8E-3446—PAGE 643

SMCS-7310 **i04003664**

NOTE	PART NUMBER	QTY	PART NAME 1 2 3 4 5 6 (PRODUCT LEVEL)	SEE PAGE
Y	*6T-8402*	1	WINDOW GP-CAB (RH)	639
			—OR—	
Y	*8E-3446*	1	WINDOW GP-CAB (RH)	643

Y-SEPARATE ILLUSTRATION

<END>

8E-5114 WINDOW GP-SLIDING—LH

S/N: DSH1-UP; DLN1-UP; DJR1-UP

FIELD REPLACEMENT FOR 6T-8403—PAGE 640, 8E-3447—PAGE 644

SMCS-7310 **i04003622**

NOTE	PART NUMBER	QTY	PART NAME 1 2 3 4 5 6 (PRODUCT LEVEL)	SEE PAGE
Y	*6T-8403*	1	WINDOW GP-CAB (LH)	640
			—OR—	
Y	*8E-3447*	1	WINDOW GP-CAB (LH)	644

Y-SEPARATE ILLUSTRATION

<END>

354-6924 WIPER GP-WINDOW

S/N: DSH1-UP; DLN1-UP; DJR1-UP
PART OF 323-5696, 327-9363 CAB AR
ALSO AN ATTACHMENT

SMCS-7305 **i03995949**

NOTE	REF NO	GRAPHIC REF	PART NUMBER	QTY	PART NAME 1 2 3 4 5 6 (PRODUCT LEVEL)	SEE PAGE
	1	1	**6V-5849**	2	BLADE AS-WIPER (350-MM) (DOOR, RH, LH)	
					(EACH INCLUDES)	
		1	**8C-5060**	1	KIT-WIPER BLADE (INCLUDES 2-BLADES)	
	2	1	**6V-5851**	1	BLADE AS-WIPER (400-MM) (FRONT WINDOW)	
	3	1	**8Y-8309**	1	ARM AS-WIPER	
E		1	**194-5171**		HOSE (55-CM)	
		1	**305-9190**	1	NOZZLE AS-WASHER	
Y	4	1	**101-0742**	1	WIPER PIVOT GP (FRONT WINDOW)	651
	5	1	**145-8741**	1	ARM AS-WINDOW WIPER (FRONT)	
		1	**136-3188**	1	CLIP	
		1	**136-3191**	1	NOZZLE AS-WASHER	
E		1	**194-5171**		HOSE (53-CM)	
	6	1	**146-6433**	1	BLADE AS-WIPER (500-MM) (REAR)	
Y	7	1	**147-7976**	1	MOTOR GP-WINDOW WIPER (FRONT)	583
	8	1	**151-0254**	1	ARM AS-WINDOW WIPER (DOOR, RH)	
		1	**305-9192**	1	NOZZLE AS-WASHER	
	9	1	**151-0255**	1	ARM AS-WINDOW WIPER (DOOR, LH)	
		1	**305-9192**	1	NOZZLE AS-WASHER	
Y	10	1	**147-7979**	1	MOTOR GP-WINDOW WIPER (REAR)	584
	11	1	**224-6829**	2	SPACER (17X24.5X17-MM THK)	
Y	12	1	**330-5013**	1	MOTOR GP-WINDOW WIPER (DOOR, LH)	585
Y	13	1	**330-5014**	1	MOTOR GP-WINDOW WIPER (DOOR, RH)	586
	14	1	**6N-7523**	2	WASHER (6.48X11.9X1.57-MM THK)	
M	15	1	**8T-4138**	2	BOLT (M6X1X20-MM)	
	16	1	**8V-5455**	1	BOSS	

E-ORDER BY THE CENTIMETER
M-METRIC PART
Y-SEPARATE ILLUSTRATION

354-6924 **WIPER GP-WINDOW** *(contd.)* **i03995949**

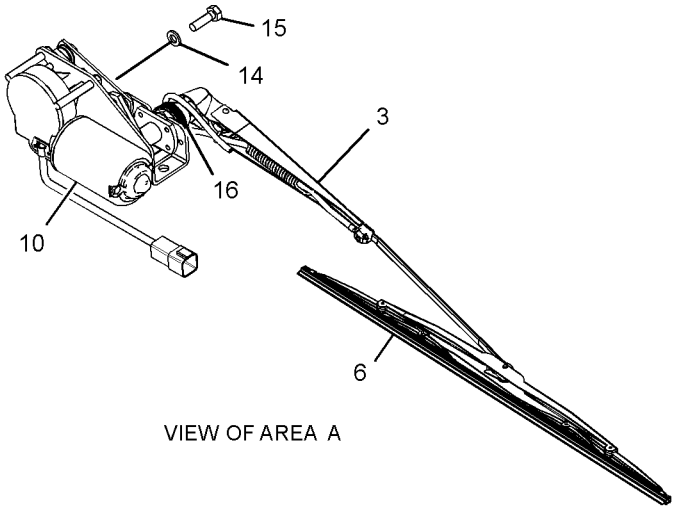

VIEW OF AREA A

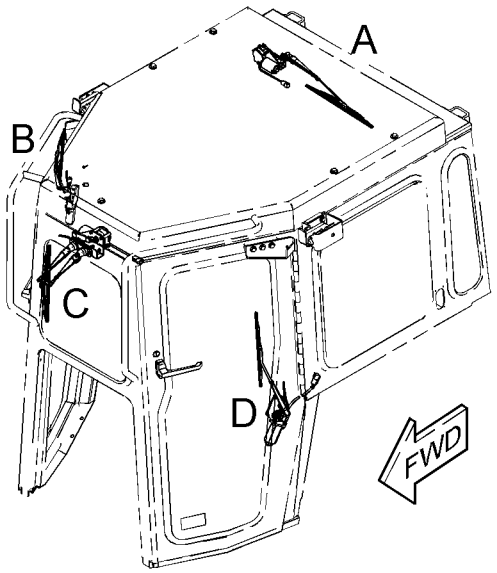

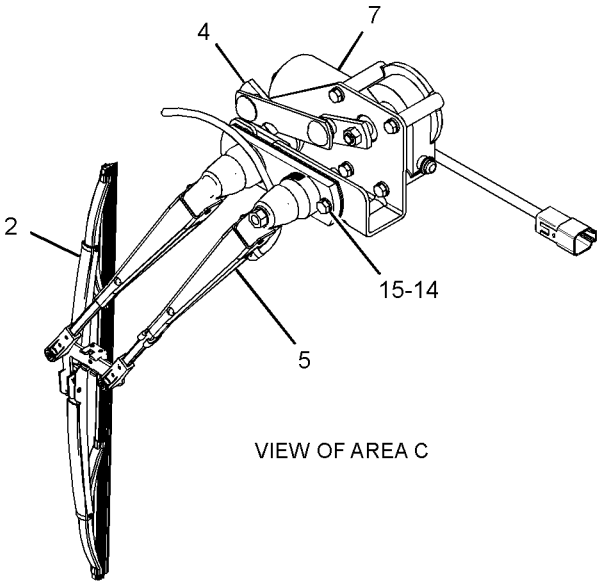

VIEW OF AREA C

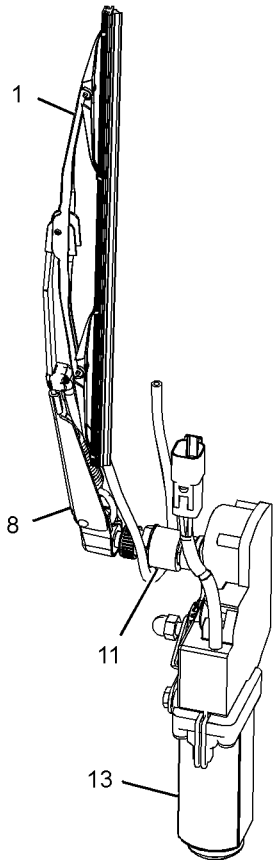

VIEW OF AREA B

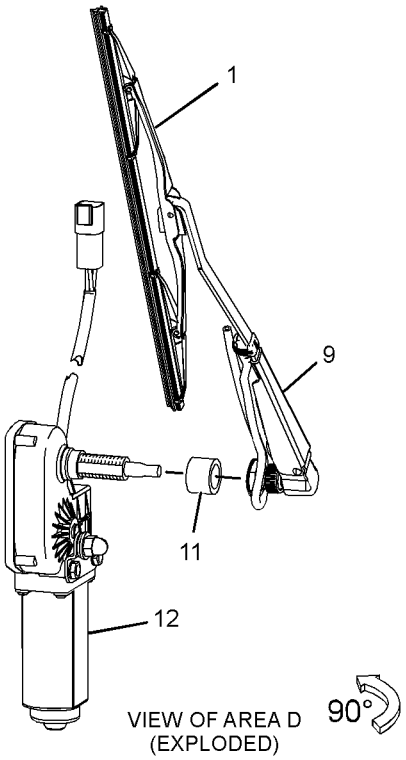

VIEW OF AREA D
(EXPLODED)

90°

GRAPHIC #1 **<END>** g02185335

101-0742 WIPER PIVOT GP

S/N: DSH1-UP; DLN1-UP; DJR1-UP
PART OF 354-6924 WIPER GP-WINDOW
ALSO AN ATTACHMENT

SMCS-7305 **i04017689**

NOTE	REF NO	GRAPHIC REF	PART NUMBER	QTY	PART NAME 1 2 3 4 5 6 (PRODUCT LEVEL)	SEE PAGE
M	1	1	**6V-6889**	1	NUT (M8X1.25-THD)	
	2	1	**6A-9718**	1	WASHER (8.1X12.5X1-MM THK)	
	3	1	**6V-6209**	1	CAP-WIPER	

M-METRIC PART

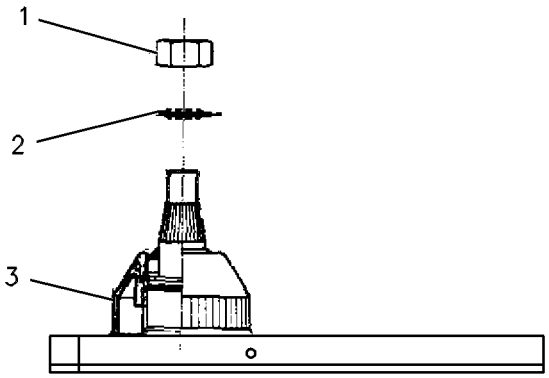

GRAPHIC #1 **<END>** g00084472

WORK TOOLS

365-5542 BLADE & EDGE GP-SEMI-UNIVERSAL

S/N: RAG1-UP

AN ATTACHMENT

SMCS-6060 **i04708776**

NOTE	REF NO	GRAPHIC REF	PART NUMBER	QTY	PART NAME 1 2 3 4 5 6 (PRODUCT LEVEL)	SEE PAGE
Y	1	1	*7T-6935*	1	EDGE GP-BIT & CUTTING	666
Y	2	1	**365-5546**	1	BLADE GP-SEMI-UNIVERSAL	661

Y-SEPARATE ILLUSTRATION

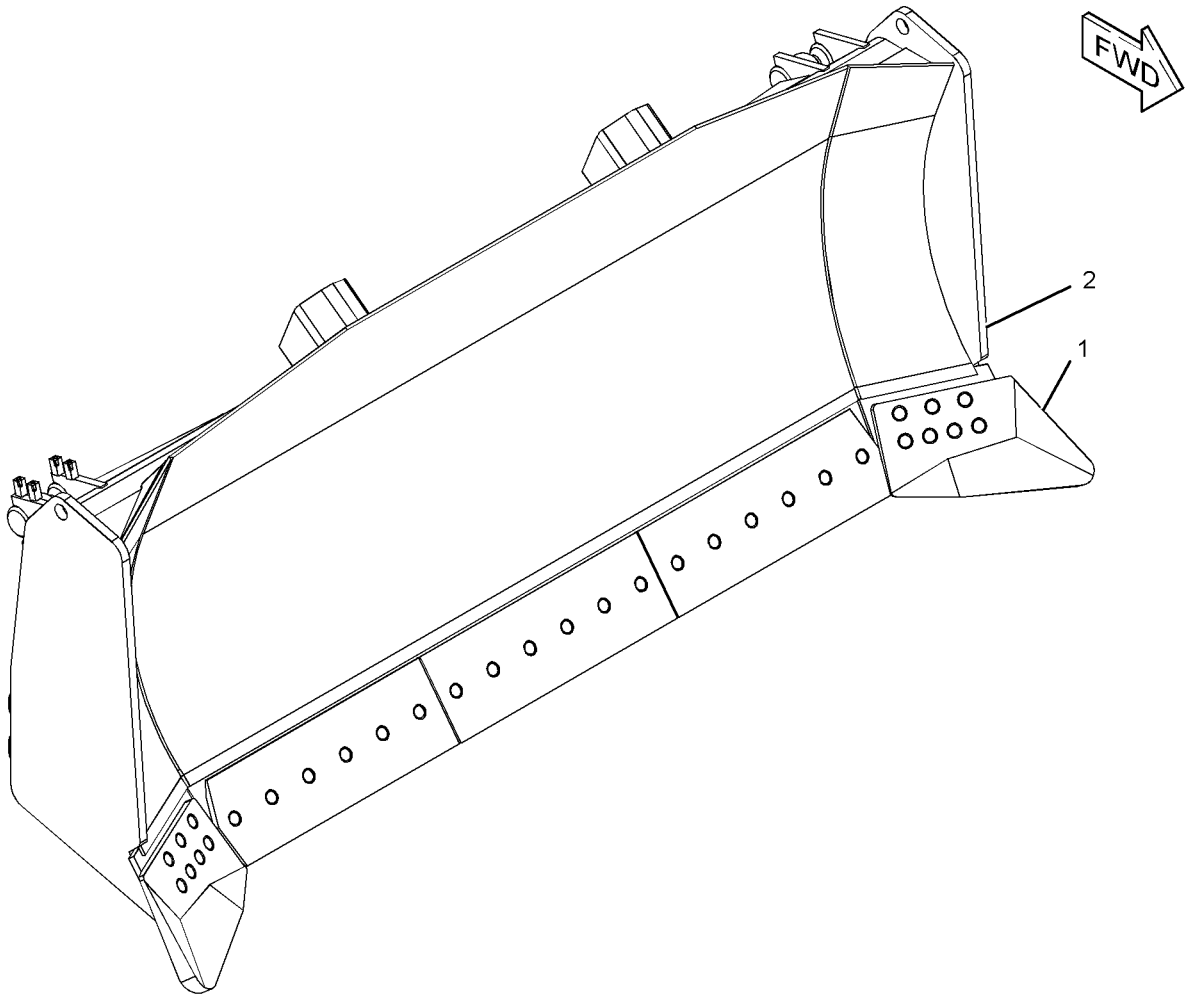

GRAPHIC #1 **<END>** g02836479

WORK TOOLS

379-3534 BLADE & EDGE GP-SEMI-UNIVERSAL

S/N: RAG1-UP
AN ATTACHMENT

SMCS-6060 **i04708777**

NOTE	REF NO	GRAPHIC REF	PART NUMBER	QTY	PART NAME 1 2 3 4 5 6 (PRODUCT LEVEL)	SEE PAGE
Y	1	1	*7T-6935*	1	EDGE GP-BIT & CUTTING	666
Y	2	1	**379-3535**	1	BLADE GP-SEMI-UNIVERSAL	662

Y-SEPARATE ILLUSTRATION

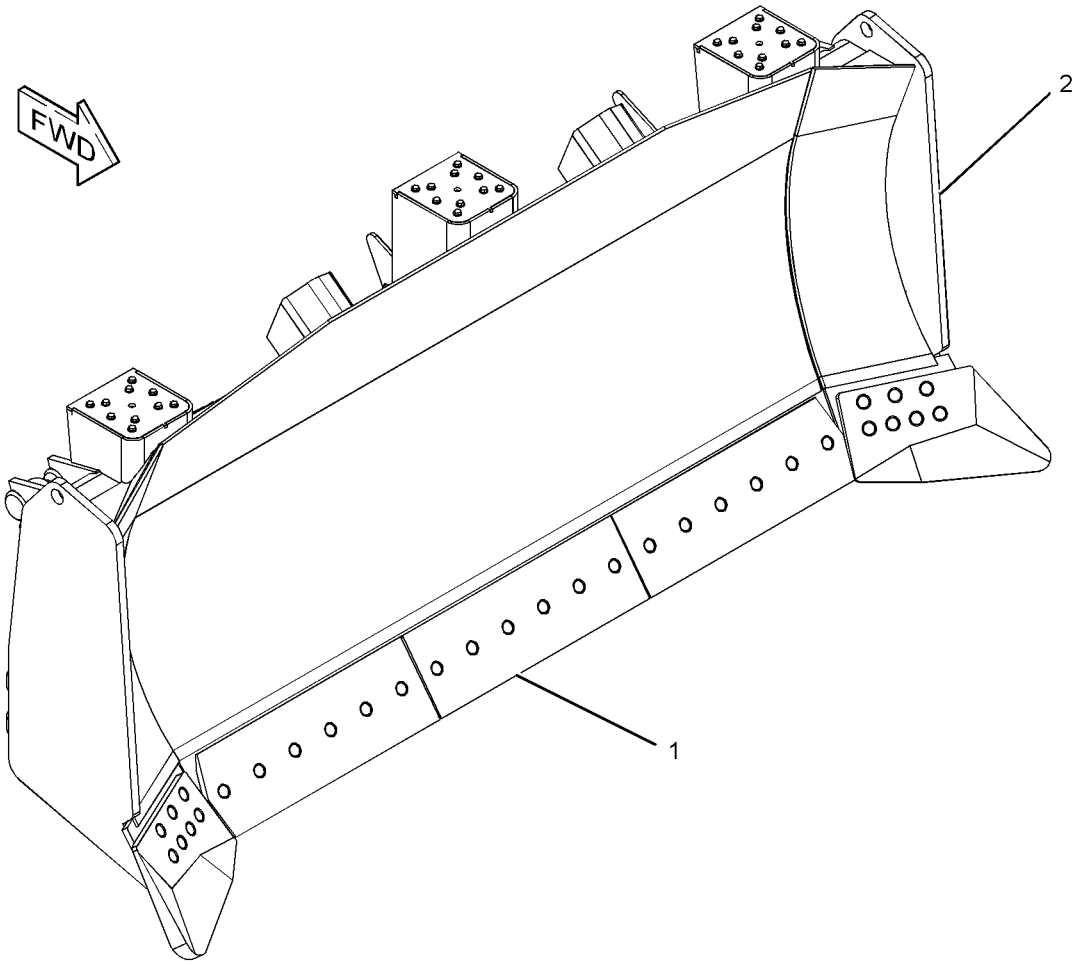

GRAPHIC #1 **<END>** g02828225

WORK TOOLS

380-0970 BLADE & EDGE GP-SEMI-UNIVERSAL

S/N: RAG1-UP
AN ATTACHMENT

SMCS-6060 **i04733235**

NOTE	REF NO	GRAPHIC REF	PART NUMBER	QTY	PART NAME 1 2 3 4 5 6 (PRODUCT LEVEL)	SEE PAGE
Y	1	1	*7T-6935*	1	EDGE GP-BIT & CUTTING	666
Y	2	1	**386-0218**	1	BLADE GP-SEMI-UNIVERSAL	663

Y-SEPARATE ILLUSTRATION

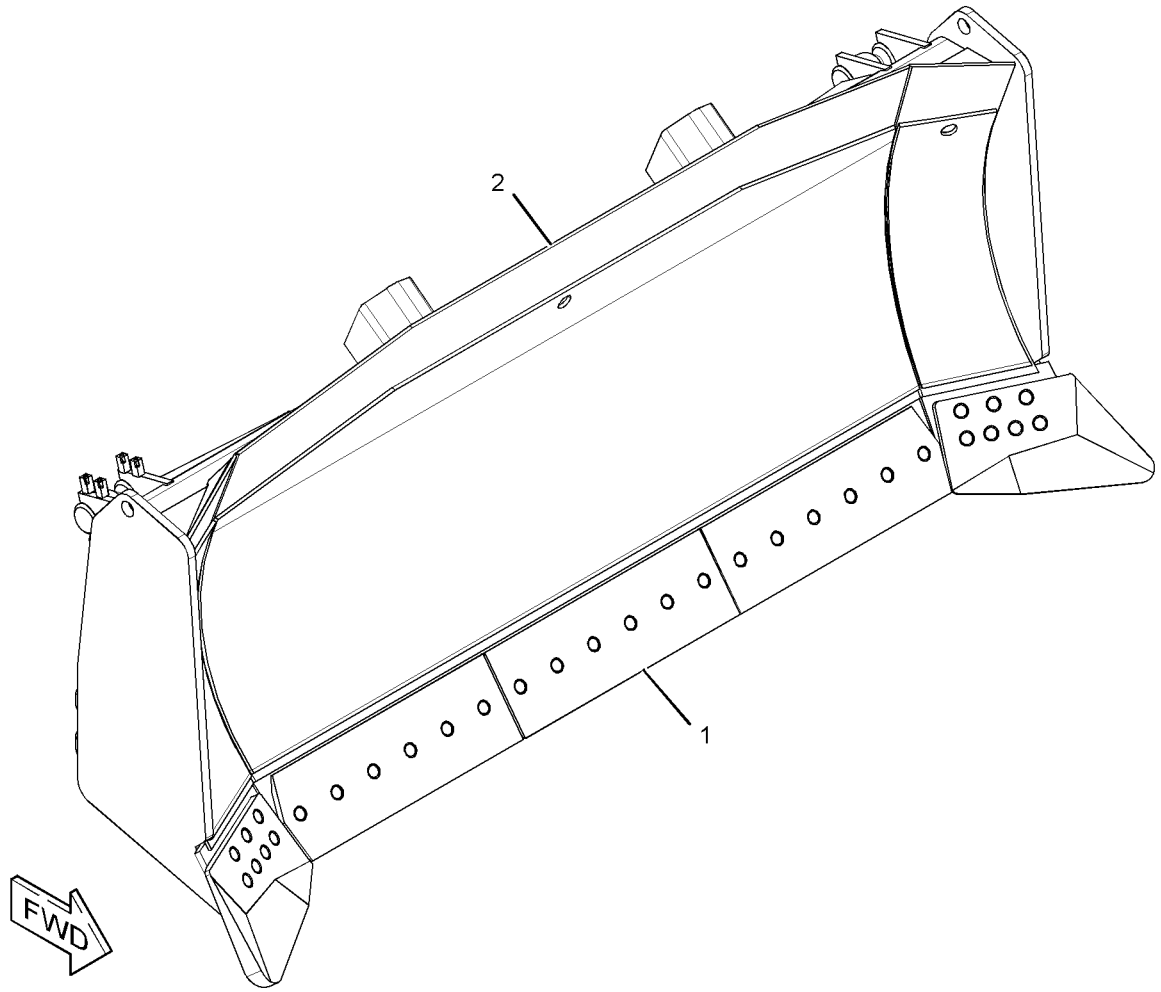

GRAPHIC #1 **<END>** g02836832

WORK TOOLS

365-5544 BLADE & EDGE GP-STRAIGHT

S/N: HAJ1-UP
AN ATTACHMENT

SMCS-6051 **i04709271**

NOTE	REF NO	GRAPHIC REF	PART NUMBER	QTY	PART NAME 1 2 3 4 5 6 (PRODUCT LEVEL)	SEE PAGE
Y	1		*135-6538*	1	EDGE GP-BIT & CUTTING	667
Y	2		**365-5548**	1	BLADE GP-STRAIGHT	664

Y-SEPARATE ILLUSTRATION

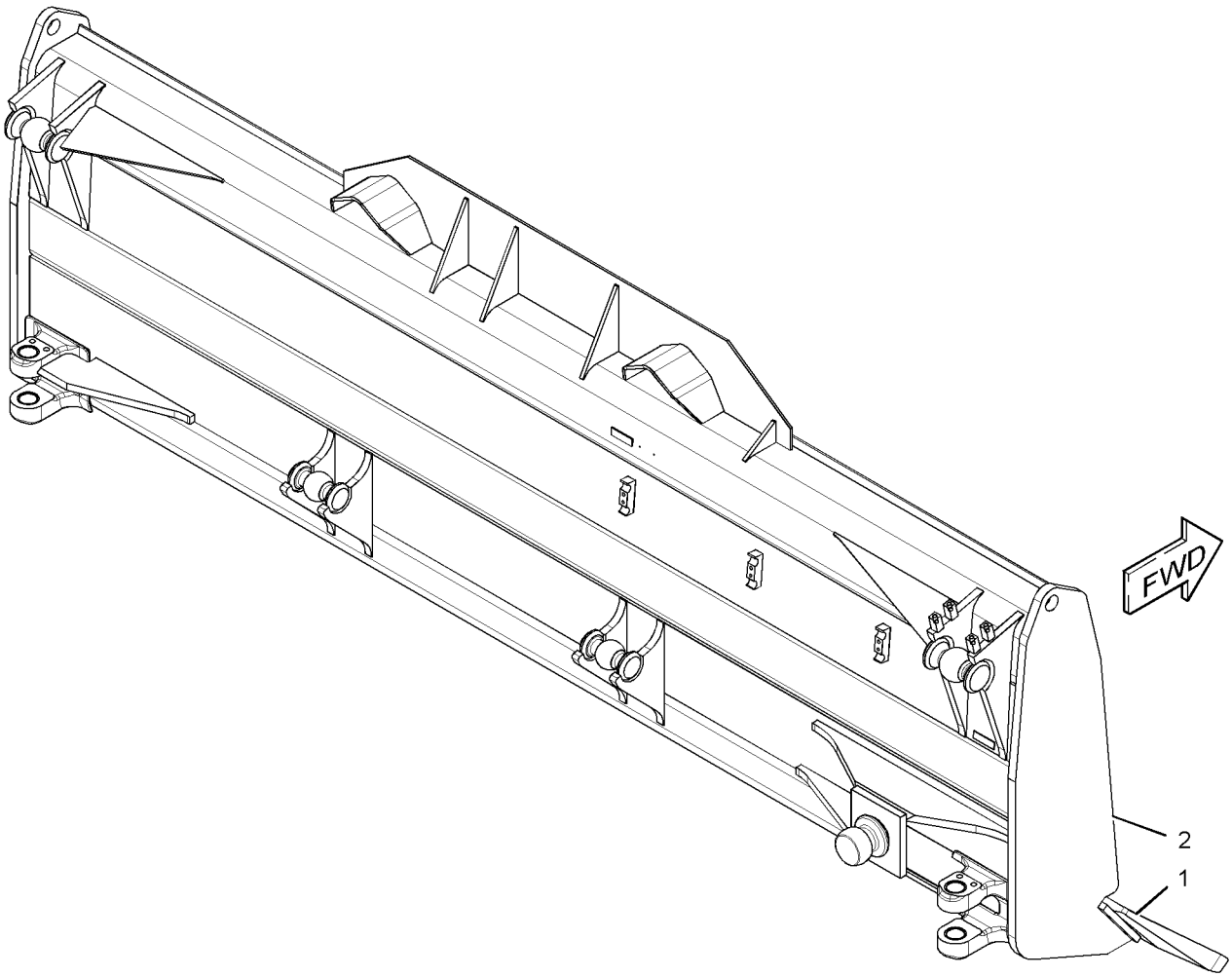

GRAPHIC #1 **<END>** g02849862

WORK TOOLS

379-3536 BLADE & EDGE GP-STRAIGHT

S/N: HAJ1-UP
AN ATTACHMENT

SMCS-6051 **i04709449**

NOTE	REF NO	GRAPHIC REF	PART NUMBER	QTY	PART NAME 1 2 3 4 5 6 (PRODUCT LEVEL)	SEE PAGE
Y	1	1	*135-6538*	1	EDGE GP-BIT & CUTTING	667
Y	2	1	**379-3537**	1	BLADE GP-STRAIGHT	665

Y-SEPARATE ILLUSTRATION

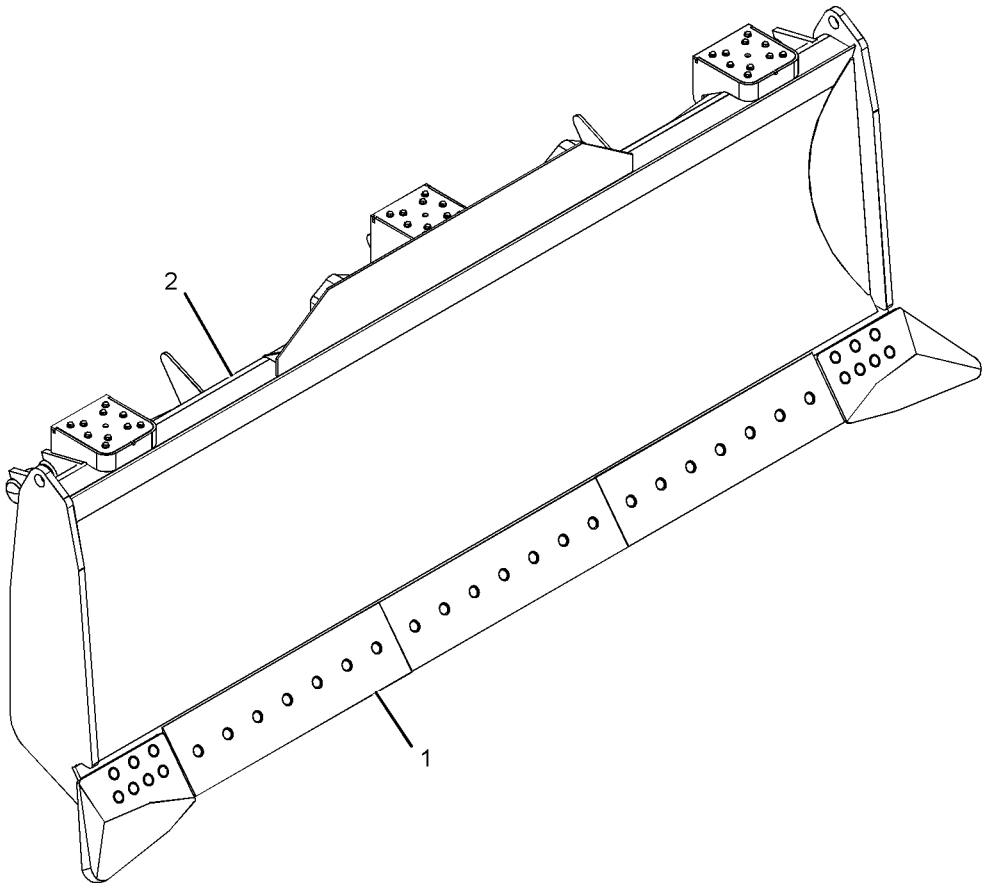

GRAPHIC #1 **<END>** g02822756

WORK TOOLS

380-0968 BLADE AS-SEMI-UNIVERSAL

S/N: RAG1-UP

PART OF 379-3535 BLADE GP-SEMI-UNIVERSAL

AN ATTACHMENT

SMCS-6060 **i04708780**

NOTE	REF NO	GRAPHIC REF	PART NUMBER	QTY	PART NAME 1 2 3 4 5 6 (PRODUCT LEVEL)	SEE PAGE
	1	1	**3G-5352**	1	REINFORCEMENT	
	2	1	**3G-5375**	2	BRACKET AS	
					(EACH INCLUDES)	
	2A	1	**7J-5131**	1	TRUNNION	
	3	1	**6I-8371**	2	PLATE	
	4	1	**6I-8372**	2	BRACKET AS	
					(EACH INCLUDES)	
	4A	1	**9J-0123**	1	TRUNNION	
	5	1	**6I-8375**	2	BRACKET AS	
					(EACH INCLUDES)	
	5A	1	**1U-0738**	2	BUSHING	
	6	1	**6I-8380**	2	SUPPORT	
	7	1	*6I-8382*	1	TRUNNION AS	
	7A	1	**9T-0066**	1	TRUNNION	
	8	1	**9J-6058**	2	DEFLECTOR	

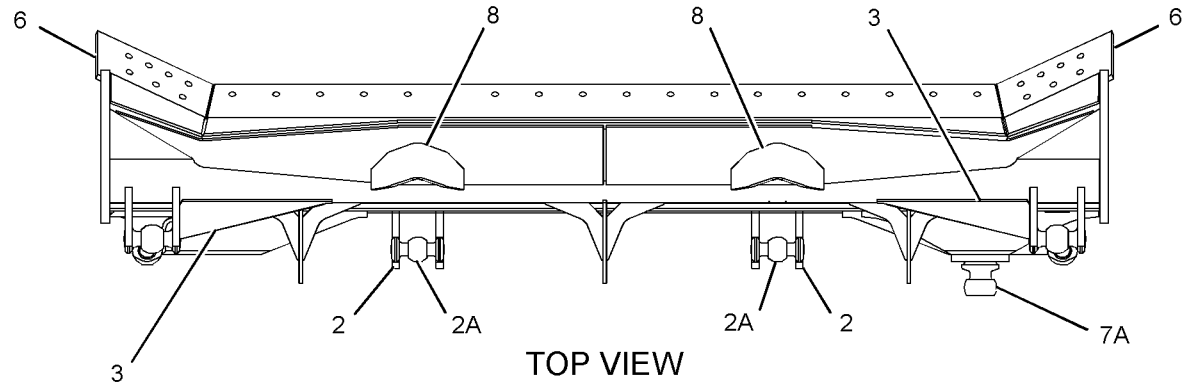

TOP VIEW

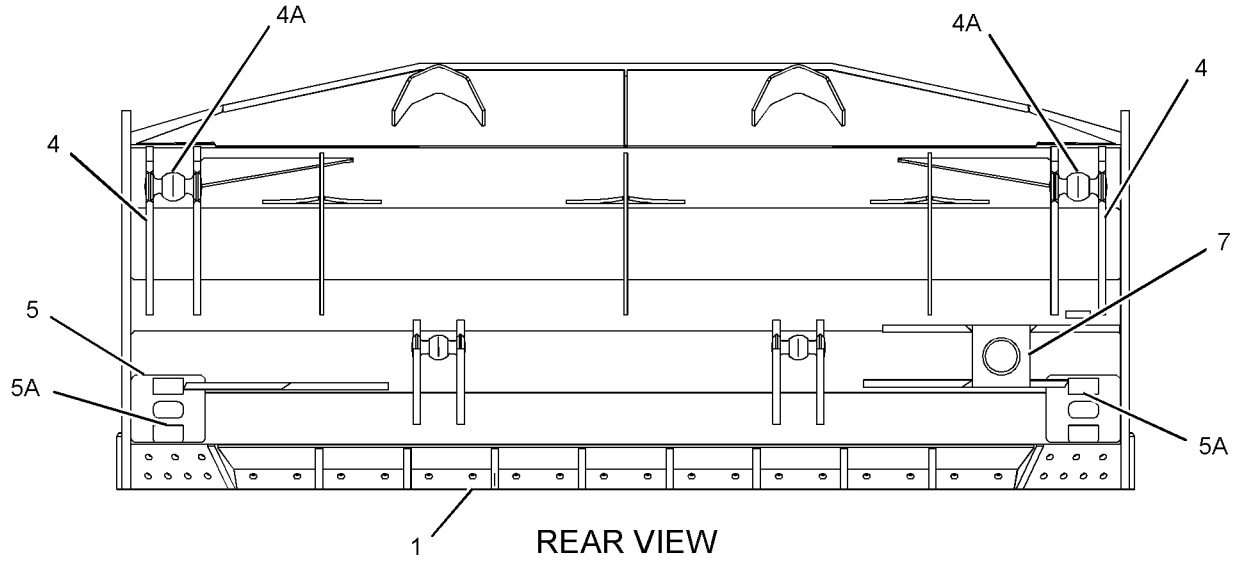

REAR VIEW

GRAPHIC #1 **<END>** g02828397

WORK TOOLS

386-0217 BLADE AS-SEMI-UNIVERSAL

S/N: RAG1-UP
PART OF 365-5546, 386-0218 BLADE GP-SEMI-UNIVERSAL
AN ATTACHMENT

SMCS-6060 **i04729311**

NOTE	REF NO	GRAPHIC REF	PART NUMBER	QTY	PART NAME 1 2 3 4 5 6 (PRODUCT LEVEL)	SEE PAGE
	1	1	**3G-5352**	1	REINFORCEMENT	
	2	1	**3G-5375**	2	BRACKET AS	
	2A	1	**7J-5131**	1	TRUNNION	
	3	1	**6D-5767**	4	BLOCK	
	4	1	**6I-8371**	2	PLATE	
	5	1	**6I-8372**	2	BRACKET AS	
	5A	1	**9J-0123**	1	TRUNNION	
	6	1	**6I-8375**	2	BRACKET AS	
	6A	1	**1U-0738**	2	BUSHING	
	7	1	**6I-8380**	2	SUPPORT	
	8	1	*6I-8382*	1	TRUNNION AS	
	8A	1	**9T-0066**	1	TRUNNION	
	9	1	**8P-9770**	1	PLATE	
	10	1	**9J-6058**	2	DEFLECTOR	

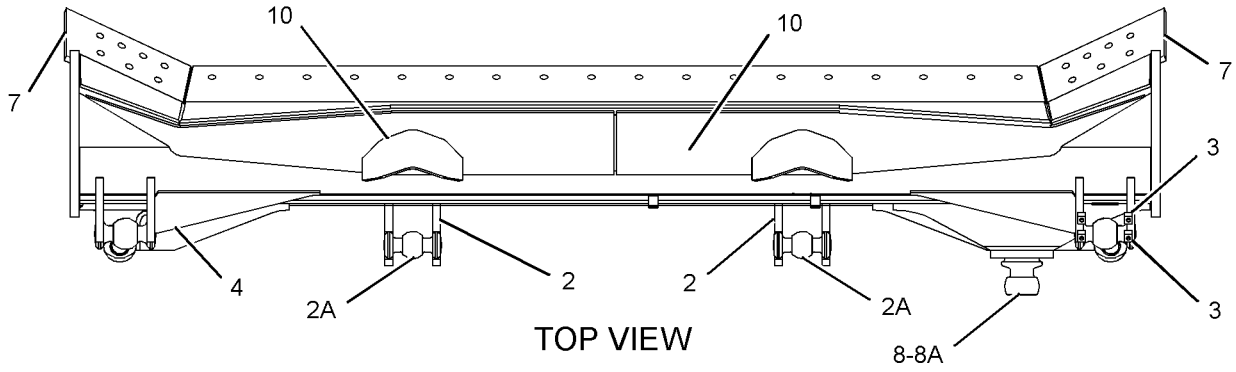

TOP VIEW

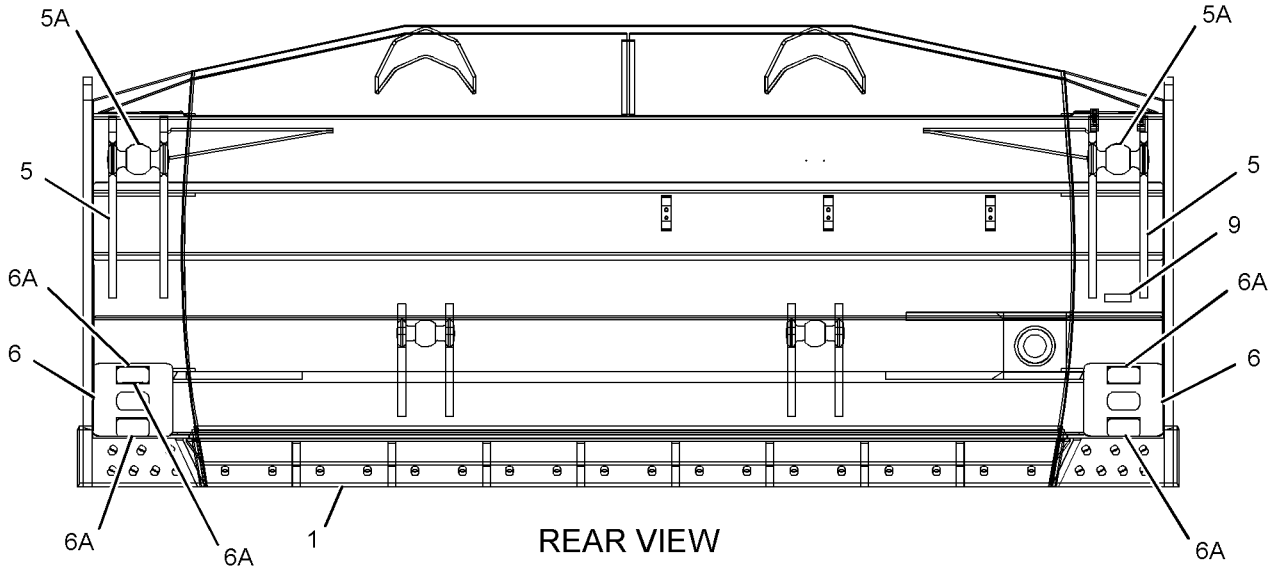

REAR VIEW

GRAPHIC #1 **<END>** g02840460

380-0969 BLADE AS-STRAIGHT

S/N: HAJ1-UP
PART OF 379-3537 BLADE GP-STRAIGHT
AN ATTACHMENT

SMCS-6051, 6060 **i04709451**

NOTE	REF NO	GRAPHIC REF	PART NUMBER	QTY	PART NAME 1 2 3 4 5 6 (PRODUCT LEVEL)	SEE PAGE
	1	1	**3G-5375**	2	BRACKET AS	
					(EACH INCLUDES)	
	1A	1	**7J-5131**	1	TRUNNION	
	2	1	**6I-8371**	2	PLATE	
	3	1	**6I-8375**	2	BRACKET AS	
					(EACH INCLUDES)	
	3A	1	**1U-0738**	2	BUSHING	
	4	1	*6I-8382*	1	TRUNNION AS	
		1	**9T-0066**	1	TRUNNION	
	5	1	*6Y-5708*	2	BRACKET AS	
					(EACH INCLUDES)	
	5A	1	**9J-0123**	1	TRUNNION	
	6	1	**8P-9770**	1	PLATE	
	7	1	**9J-6058**	2	DEFLECTOR	
	8	1	**135-6536**	1	SUPPORT	

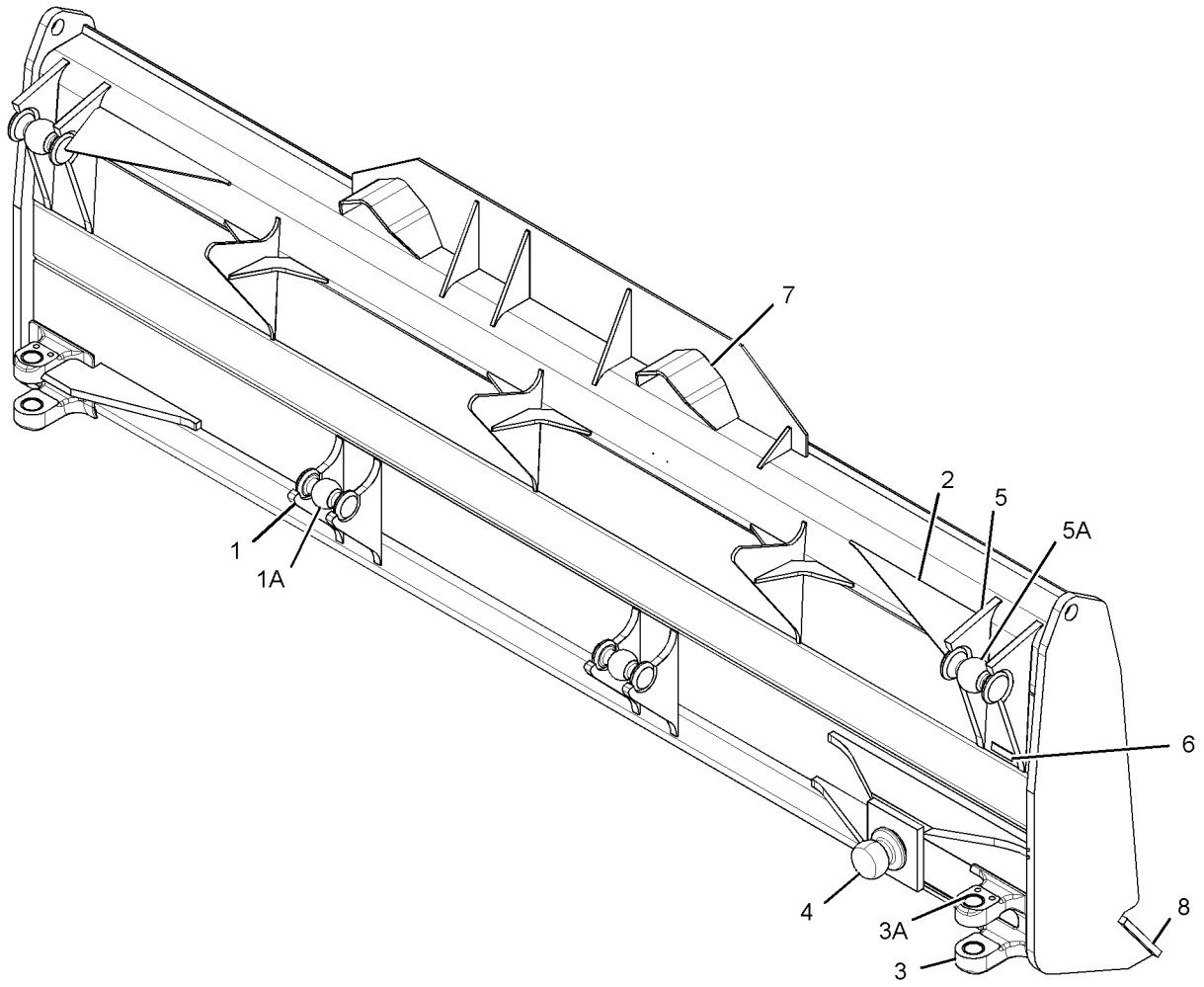

GRAPHIC #1 **<END>** g02825536

WORK TOOLS

386-0224 BLADE AS-STRAIGHT

S/N: HAJ1-UP
PART OF 365-5548 BLADE GP-STRAIGHT
AN ATTACHMENT

SMCS-6051, 6060 **i04739471**

NOTE	REF NO	GRAPHIC REF	PART NUMBER	QTY	PART NAME 1 2 3 4 5 6 (PRODUCT LEVEL)	SEE PAGE
	1	1	**3G-5375**	2	BRACKET AS	
					(EACH INCLUDES)	
	1A	1	**7J-5131**	1	TRUNNION	
	2	1	**6D-5767**	4	BLOCK	
	3	1	**6I-8371**	2	PLATE	
	4	1	**6I-8375**	2	BRACKET AS	
					(EACH INCLUDES)	
	4A	1	**1U-0738**	2	BUSHING	
	5	1	*6I-8382*	1	TRUNNION AS	
	5A	1	**9T-0066**	1	TRUNNION	
	6	1	*6Y-5708*	2	BRACKET AS	
					(EACH INCLUDES)	
	6A	1	**9J-0123**	1	TRUNNION	
	7	1	**8P-9770**	1	PLATE	
	8	1	**9J-6058**	2	DEFLECTOR	
	9	1	**135-6536**	1	SUPPORT	

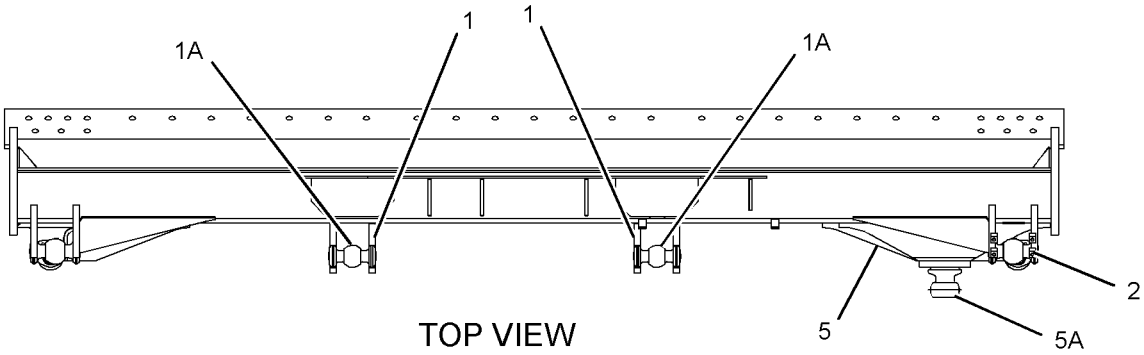

TOP VIEW

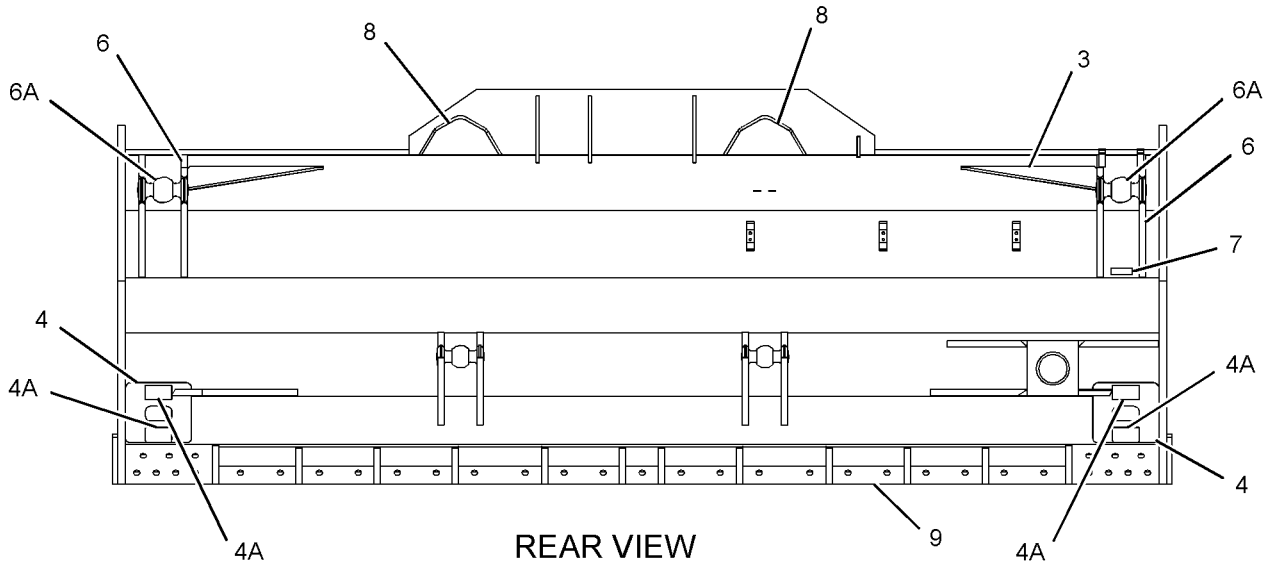

REAR VIEW

GRAPHIC #1 **<END>** g02855899

WORK TOOLS

365-5546 BLADE GP-SEMI-UNIVERSAL

S/N: RAG1-UP

PART OF 365-5542 BLADE & EDGE GP-SEMI-UNIVERSAL

AN ATTACHMENT

SMCS-6060, 6078 **i04729312**

NOTE	REF NO	GRAPHIC REF	PART NUMBER	QTY	PART NAME 1 2 3 4 5 6 (PRODUCT LEVEL)	SEE PAGE
	1	1	**8P-9770**	1	PLATE	
Y	2	1	**386-0217**	1	BLADE AS-SEMI-UNIVERSAL	658

Y-SEPARATE ILLUSTRATION

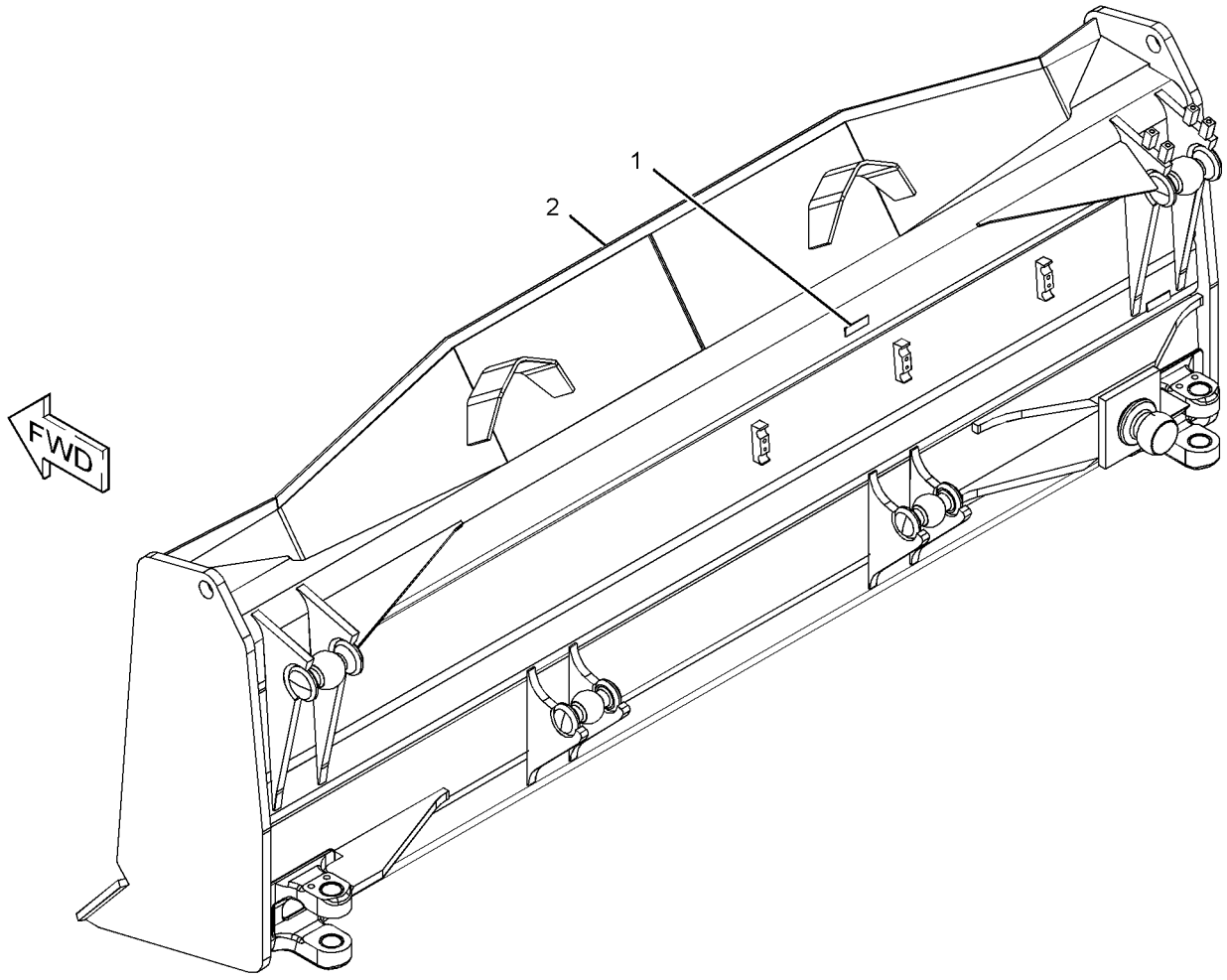

GRAPHIC #1 **<END>** g02836616

WORK TOOLS

379-3535 BLADE GP-SEMI-UNIVERSAL

S/N: RAG1-UP
PART OF 379-3534 BLADE & EDGE GP-SEMI-UNIVERSAL
AN ATTACHMENT

SMCS-6060, 6078 **i04708779**

NOTE	REF NO	GRAPHIC REF	PART NUMBER	QTY	PART NAME 1 2 3 4 5 6 (PRODUCT LEVEL)	SEE PAGE
	1	1	**245-4202**	1	BRACKET AS	
	2	1	**245-4256**	1	BRACKET AS	
	3	1	**248-2349**	2	GUSSET	
	4	1	**249-7871**	1	BRACKET AS	
	5	1	**249-7872**	1	BRACKET AS	
Y	6	1	**380-0968**	1	BLADE AS-SEMI-UNIVERSAL	657

Y-SEPARATE ILLUSTRATION

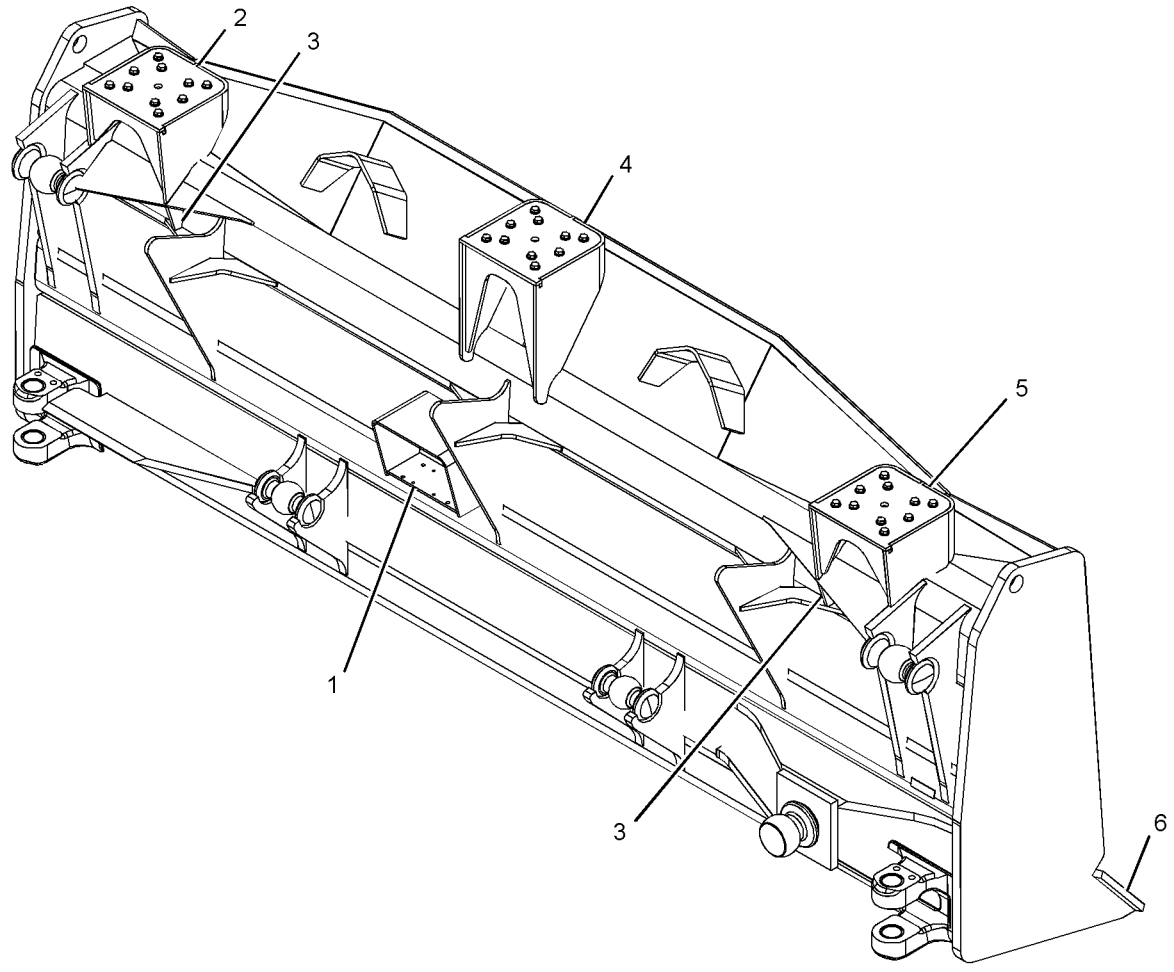

GRAPHIC #1 **<END>** g02822539

386-0218 BLADE GP-SEMI-UNIVERSAL

S/N: RAG1-UP

PART OF 380-0970 BLADE & EDGE GP-SEMI-UNIVERSAL

AN ATTACHMENT

SMCS-6060, 6078 **i04733232**

NOTE	REF NO	GRAPHIC REF	PART NUMBER	QTY	PART NAME 1 2 3 4 5 6 (PRODUCT LEVEL)	SEE PAGE
	1	1	**4Z-9148**	1	PLATE-WEAR-RH	
	2	1	**4Z-9150**	1	PLATE-WEAR-LH	
	3	1	**4Z-9151**	1	PLATE-WEAR-CENTER	
Y	4	1	**386-0217**	1	BLADE AS-SEMI-UNIVERSAL	658

Y-SEPARATE ILLUSTRATION

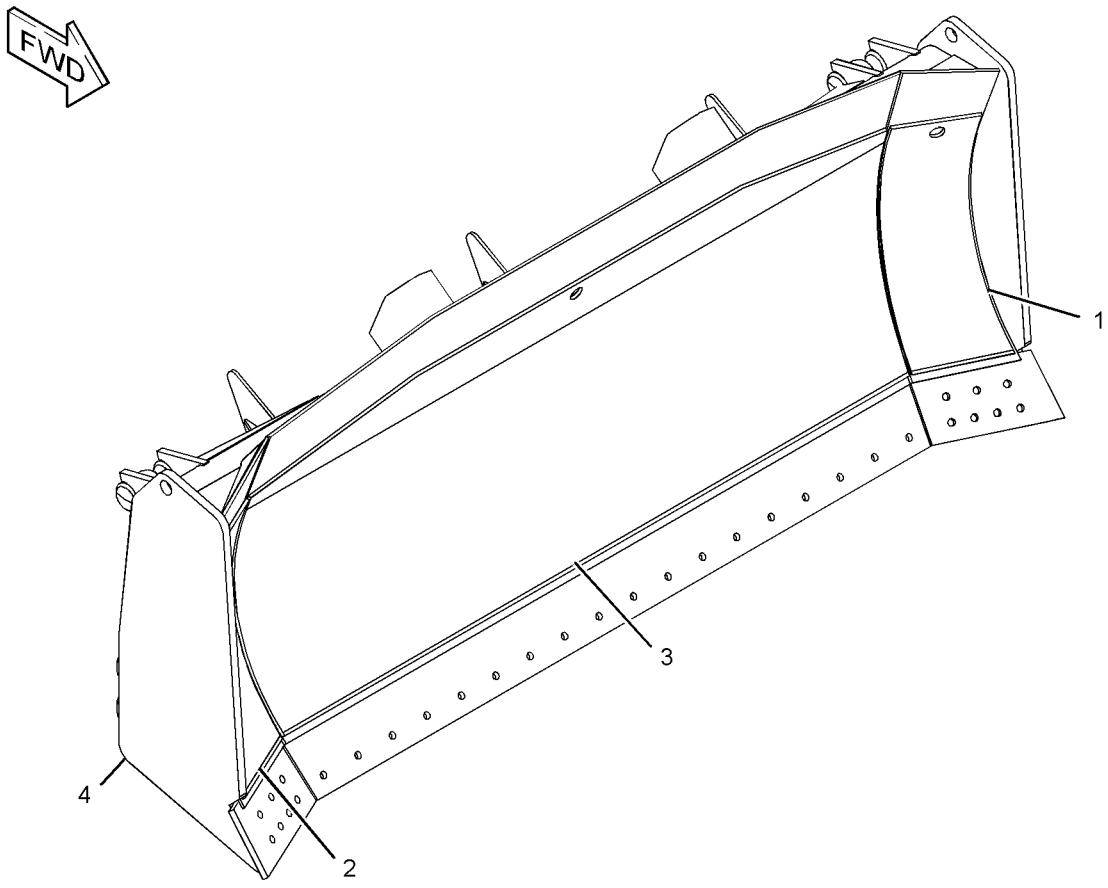

GRAPHIC #1 **<END>** g02502258

WORK TOOLS

365-5548 BLADE GP-STRAIGHT

S/N: HAJ1-UP

PART OF 365-5544 BLADE & EDGE GP-STRAIGHT

AN ATTACHMENT

SMCS-6051, 6060 **i04739469**

NOTE	REF NO	GRAPHIC REF	PART NUMBER	QTY	PART NAME 1 2 3 4 5 6 (PRODUCT LEVEL)	SEE PAGE
	1	1	**8P-9770**	1	PLATE	
Y	2	1	**386-0224**	1	BLADE AS-STRAIGHT	660

Y-SEPARATE ILLUSTRATION

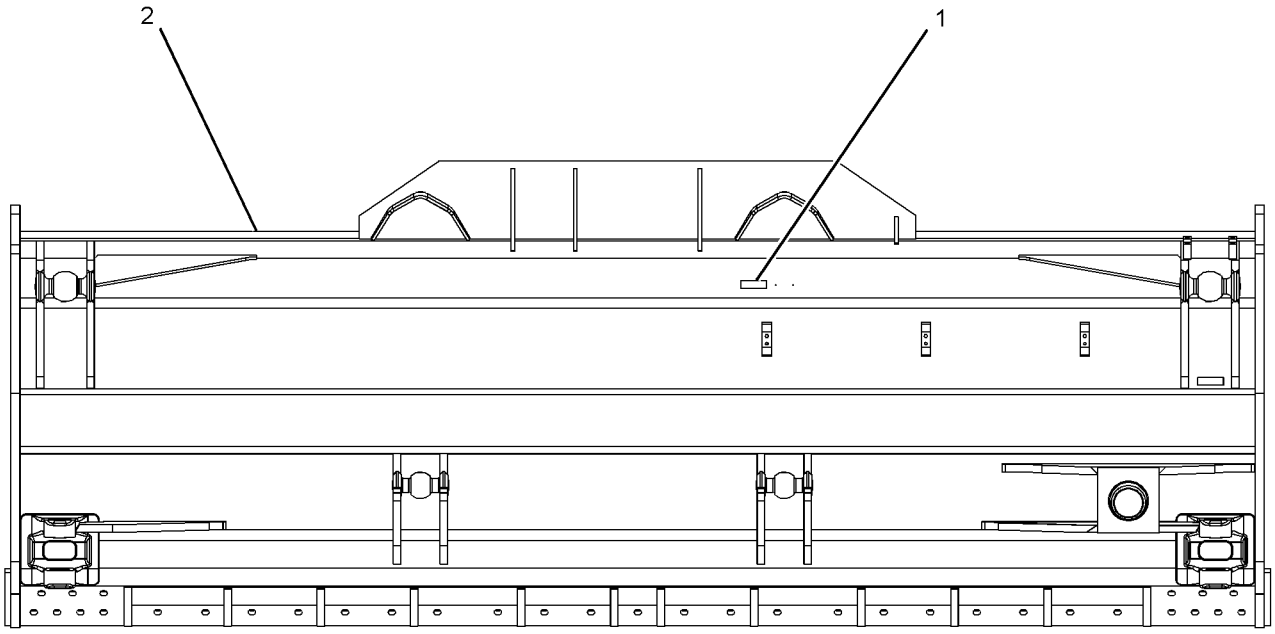

REAR VIEW

GRAPHIC #1 **<END>** g02848913

WORK TOOLS

379-3537 BLADE GP-STRAIGHT

S/N: HAJ1-UP

PART OF 379-3536 BLADE & EDGE GP-STRAIGHT

AN ATTACHMENT

SMCS-6051, 6060 **i04709450**

NOTE	REF NO	GRAPHIC REF	PART NUMBER	QTY	PART NAME 1 2 3 4 5 6 (PRODUCT LEVEL)	SEE PAGE
	1	1	**245-4202**	1	BRACKET AS	
	2	1	**245-4266**	1	BRACKET AS	
	3	1	**249-7875**	1	BRACKET AS	
	4	1	**249-7876**	1	BRACKET AS	
Y	5	1	**380-0969**	1	BLADE AS-STRAIGHT	659

Y-SEPARATE ILLUSTRATION

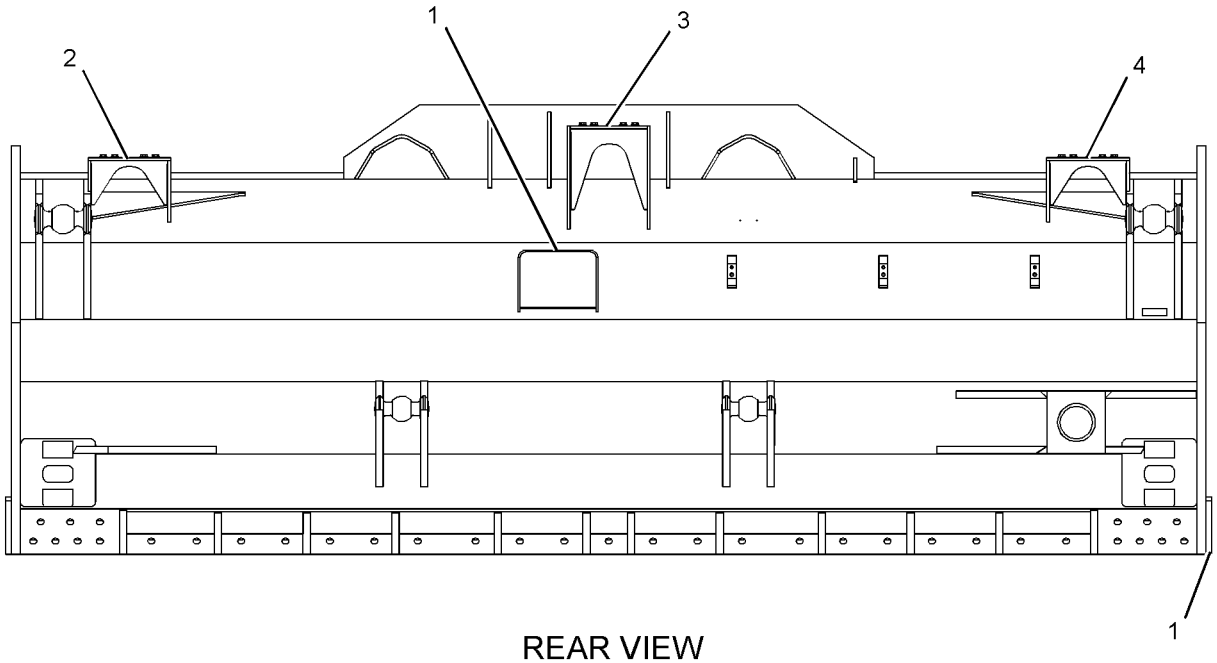

REAR VIEW

GRAPHIC #1 **<END>** g02828336

WORK TOOLS

7T-6935 EDGE GP-BIT & CUTTING

S/N: RAG1-UP

PART OF 365-5542, 379-3534, 380-0970 BLADE & EDGE GP-SEMI-UNIVERSAL AN ATTACHMENT

SMCS-6801, 6804 **i04672290**

NOTE	REF NO	GRAPHIC REF	PART NUMBER	QTY	PART NAME 1 2 3 4 5 6 (PRODUCT LEVEL)	SEE PAGE
	1	1	**9W-6199**	1	BIT-END (RH)	
	2	1	**9W-6198**	1	BIT-END (LH)	
	3	1	**6F-0196**	32	BOLT-PLOW (7/8-9X2.75-IN)	
	4	1	**5P-8249**	32	WASHER-HARD (24X41.5X4-MM THK)	
	5	1	**2J-3505**	32	NUT-FULL (7/8-9-THD)	
	6	1	**7T-6936**	2	EDGE-CUTTING	
	7	1	**7T-6678**	1	EDGE-CUTTING	

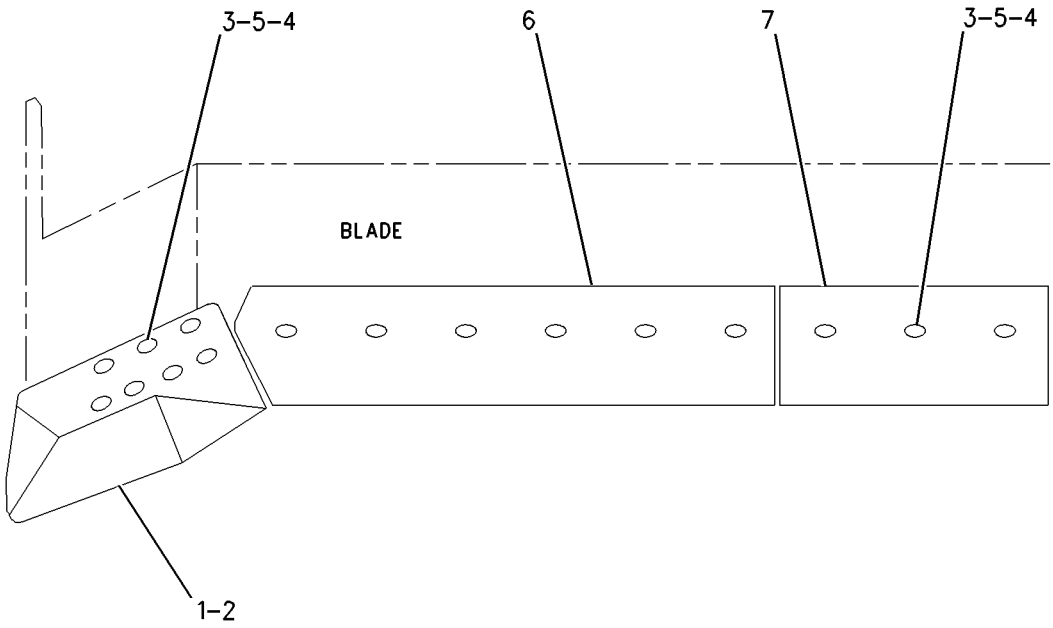

GRAPHIC #1 **<END>** g00695008

WORK TOOLS

135-6538 EDGE GP-BIT & CUTTING

S/N: HAJ1-UP

PART OF 365-5544, 379-3536 BLADE & EDGE GP-STRAIGHT

AN ATTACHMENT

SMCS-6801, 6804 **i04709269**

NOTE	REF NO	GRAPHIC REF	PART NUMBER	QTY	PART NAME 1 2 3 4 5 6 (PRODUCT LEVEL)	SEE PAGE
	1	1	**9W-6199**	1	BIT-END (RH)	
	2	1	**9W-6198**	1	BIT-END (LH)	
	3	1	**6F-0196**	35	BOLT-PLOW (7/8-9X2.75-IN)	
	4	1	**5P-8249**	35	WASHER-HARD (24X41.5X4-MM THK)	
	5	1	**2J-3505**	35	NUT-FULL (7/8-9-THD)	
	6	1	**135-6537**	3	EDGE-CUTTING	

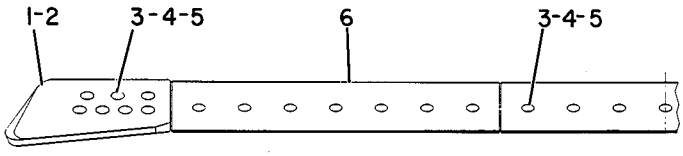

GRAPHIC #1 **<END>** g00187559

WORK TOOLS

164-4720 FRAME GP-RIPPER

S/N: LBB1-UP
PART OF 379-3538 RIPPER AR
AN ATTACHMENT

SMCS-6314, 7067 **i04702576**

NOTE	REF NO	GRAPHIC REF	PART NUMBER	QTY	PART NAME 1 2 3 4 5 6 (PRODUCT LEVEL)	SEE PAGE
	1	1	**1U-0990**	2	PIN	
	2	1	**4T-0202**	4	PIN AS	
	3	1	**4T-0203**	2	PIN AS	
	4	1	**4T-1389**	4	PIN AS	
	5	1	**4T-3522**	12	WASHER (95X170X3-MM THK)	
	6	1	**6V-9313**	2	PLUG	
	7	1	**7T-7305**	10	PLATE	
	8	1	**155-7861**	1	FRAME AS-RIPPER	
	8A	1	**7T-3746**	8	BUSHING	
	9	1	**3E-6756**	16	SEAL-LIP TYPE	
	10	1	**3E-6757**	8	SEAL-LIP TYPE	
M	11	1	**6V-7688**	2	LOCKNUT (M20X2.5-THD)	
M	12	1	**7X-2568**	2	BOLT (M20X2.5X180-MM)	
M	13	1	**8T-5460**	20	BOLT (M20X2.5X40-MM)	

M-METRIC PART

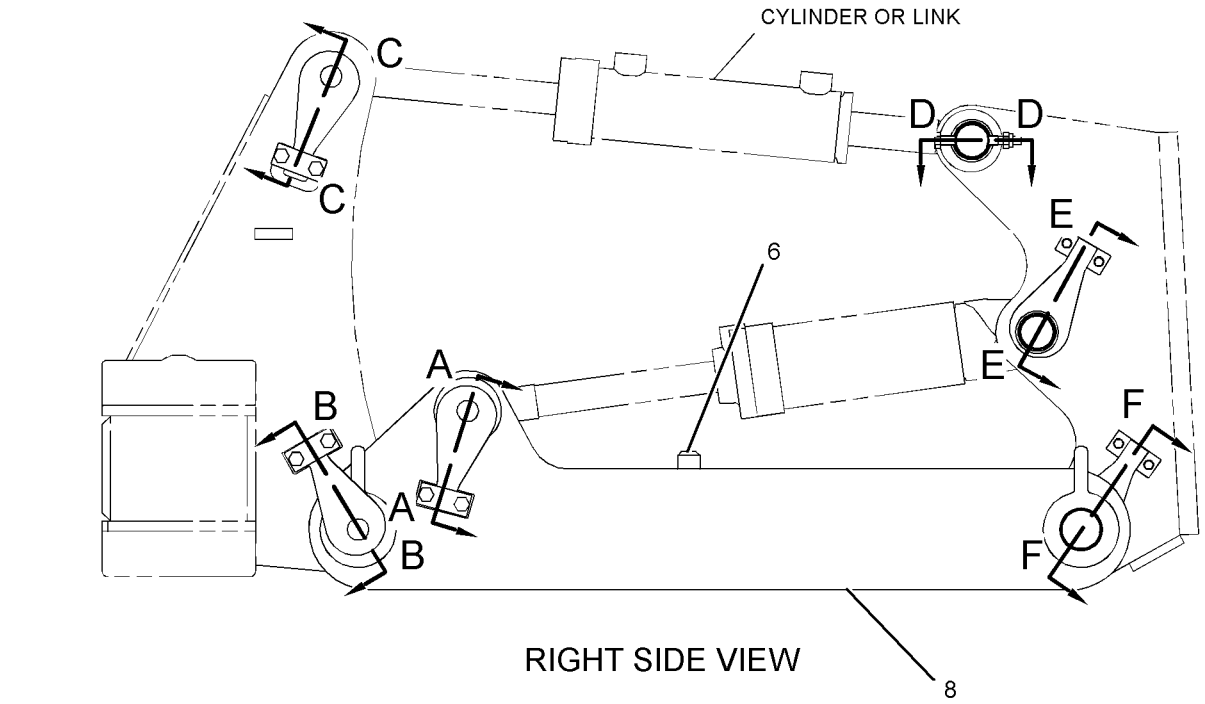

RIGHT SIDE VIEW

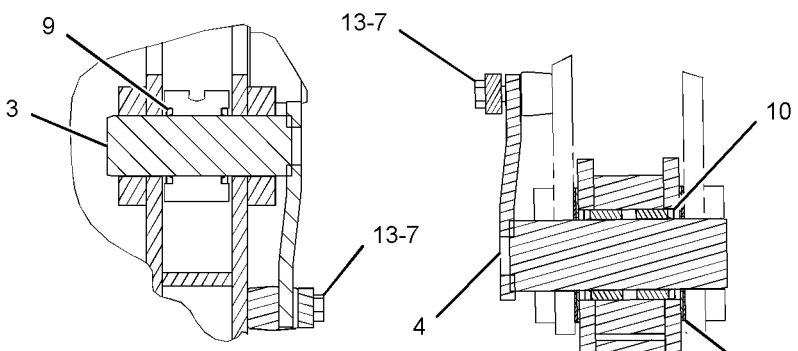

SECTION A-A

SECTION B-B

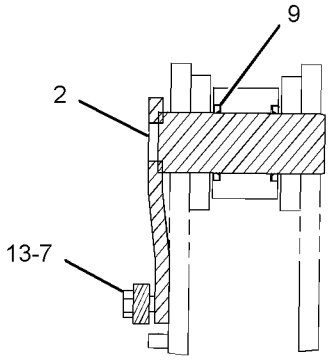

SECTION C-C

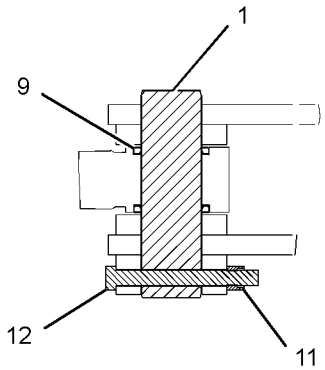

SECTION D-D

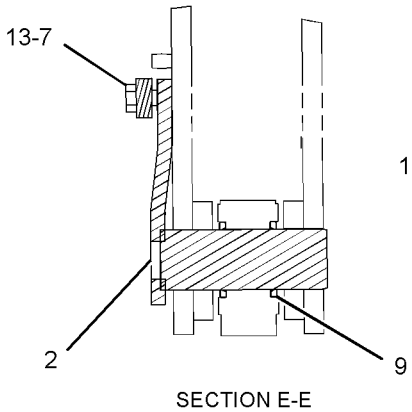

SECTION E-E

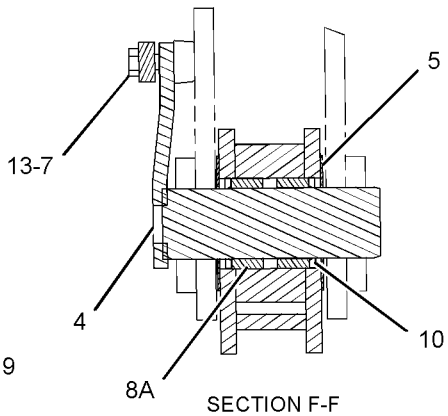

SECTION F-F

GRAPHIC #1 **<END>** g02819939

WORK TOOLS

164-4716 MOUNTING GP-RIPPER

S/N: LBB1-UP
PART OF 379-3538 RIPPER AR
AN ATTACHMENT

SMCS-6165, 6310, 6324 **i04702470**

NOTE	REF NO	GRAPHIC REF	PART NUMBER	QTY	PART NAME 1 2 3 4 5 6 (PRODUCT LEVEL)	SEE PAGE
	1	1	**119-4153**	2	BRACKET AS	
N	2	1	**164-4718**	1	BRACKET AS	
N	3	1	**164-4719**	1	BRACKET AS	
Y	4	1	*164-6896*	1	GUARD GP-POWER TRAIN	327
	5	1	**7X-0533**	16	WASHER-HARD (34X55X6-MM THK)	
	6	1	**7X-0428**	16	BOLT (1-1/4-7X4-IN)	
M	7	1	**7X-2562**	4	BOLT (M20X2.5X45-MM)	
	8	1	**8T-4123**	4	WASHER (22X35X3.5-MM THK)	

M-METRIC PART
N-NEW PART
Y-SEPARATE ILLUSTRATION

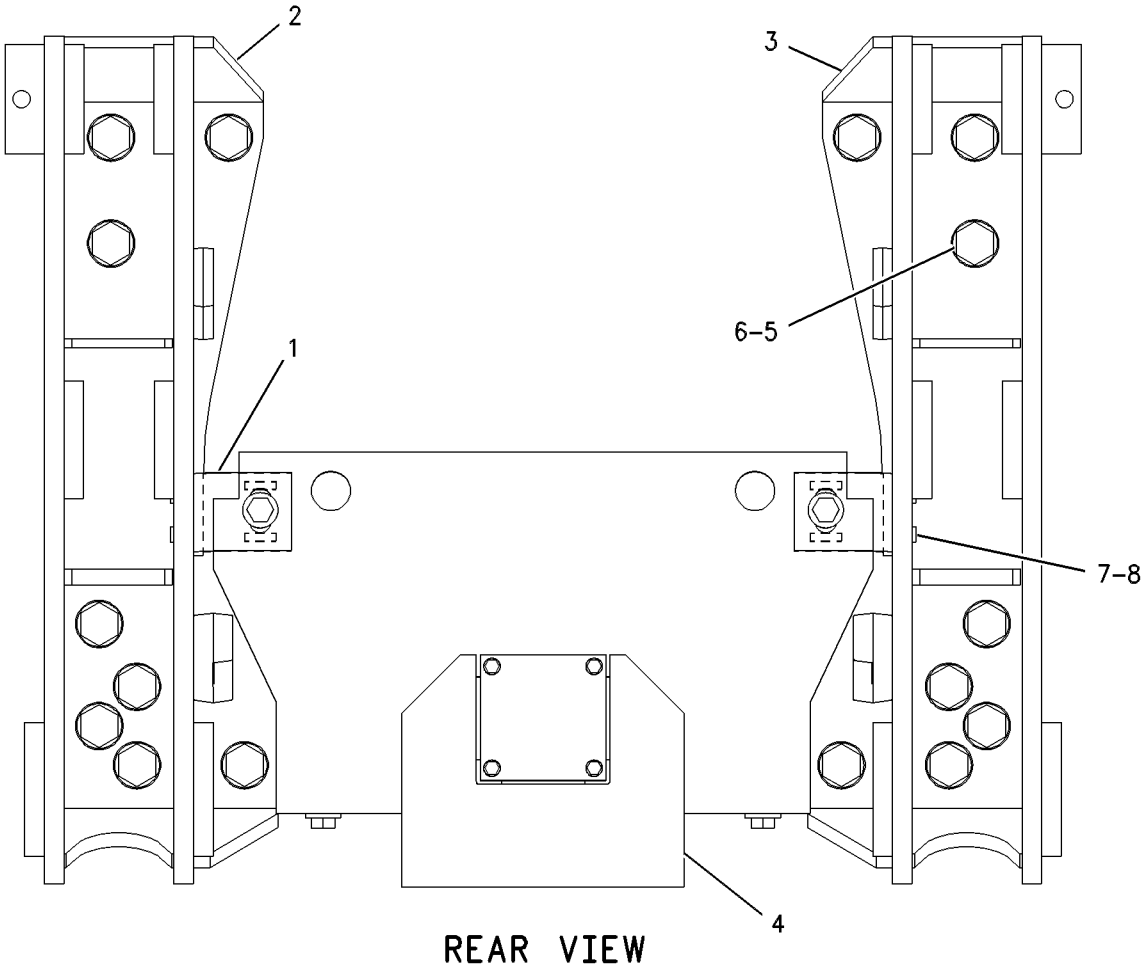

REAR VIEW

GRAPHIC #1 **<END>** g00570082

WORK TOOLS

379-3538 RIPPER AR

S/N: LBB1-UP
ADJUSTABLE MULTI SHANK
AN ATTACHMENT

SMCS-6310 **i04702718**

NOTE	REF NO	GRAPHIC REF	PART NUMBER	QTY	PART NAME 1 2 3 4 5 6 (PRODUCT LEVEL)	SEE PAGE
Y	1	1	*164-4716*	1	MOUNTING GP-RIPPER	670
Y	2	1	*164-4720*	1	FRAME GP-RIPPER	668
Y	3	1	*164-4990*	1	LINES GP-RIPPER	443
Y	4	1	**164-7320**	2	CYLINDER GP-RIPPER	422
Y	5	1	**189-4645**	2	CYLINDER GP-RIPPER	424
Y	6	1	*378-7501*	1	RIPPER GP	672
F			**5P-1327**	1	PLATE-SERIAL NUMBER (RIPPER)	
					(ON CYLINDER TOWER)	
F			**4B-4158**	2	SCREW-DRIVE (NO 4X0.25-IN)	

F-NOT SHOWN
Y-SEPARATE ILLUSTRATION

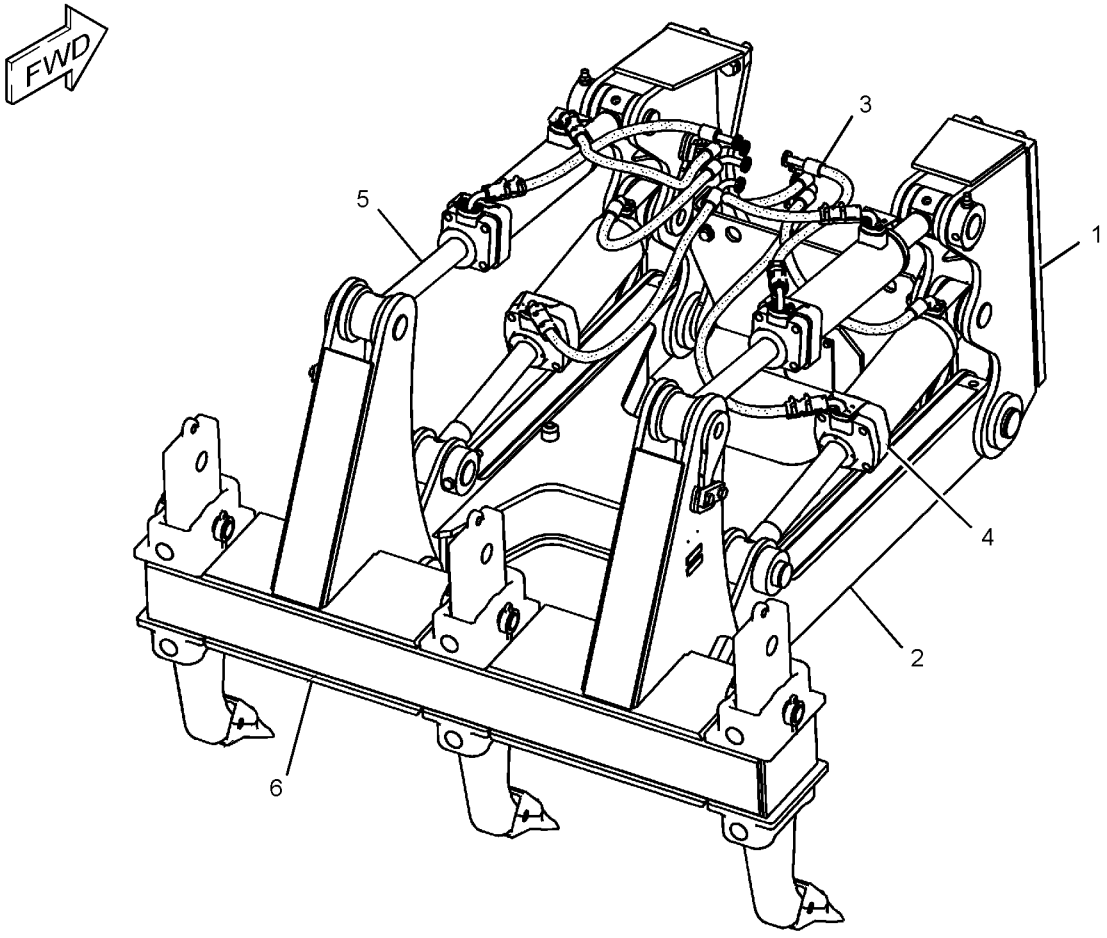

GRAPHIC #1 **<END>** g02815119

WORK TOOLS

378-7501 RIPPER GP

S/N: LBB1-UP
PART OF 379-3538 RIPPER AR
AN ATTACHMENT

SMCS-6310, 6325 **i04702696**

NOTE	REF NO	GRAPHIC REF	PART NUMBER	QTY	PART NAME 1 2 3 4 5 6 (PRODUCT LEVEL)	SEE PAGE
Y	1	1	*9J-1641*	3	TOOTH GP-RIPPER	673
	2	1	**378-7500**	1	BEAM AS	

Y-SEPARATE ILLUSTRATION

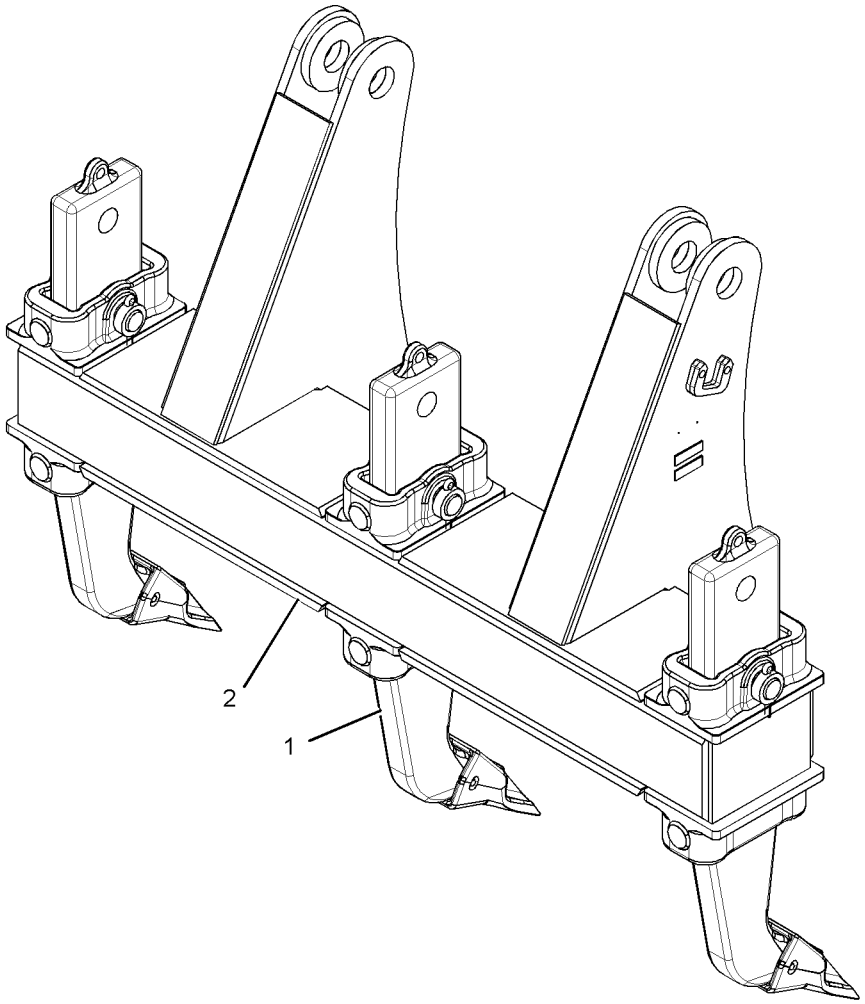

GRAPHIC #1 **<END>** g02834441

WORK TOOLS

9J-1641 TOOTH GP-RIPPER

S/N: LBB1-UP
PART OF 378-7501 RIPPER GP
AN ATTACHMENT

SMCS-6808, 6810 **i04722092**

NOTE	REF NO	GRAPHIC REF	PART NUMBER	QTY	PART NAME 1 2 3 4 5 6 (PRODUCT LEVEL)	SEE PAGE
	1	1	**9W-7382**	1	SHANK	
	2	1	**6Y-0359**	1	TIP-RIPPER	
	3	1	**4J-5241**	2	RETAINER	
	4	1	**1J-2919**	2	PIN-COTTER	
	5	1	**4J-5240**	1	PIN	
	6	1	**114-0358**	1	PIN	
	7	1	**114-0359**	1	RETAINER AS	
	8	1	**9W-9224**	2	RETAINER	
	9	1	**0L-1329**	2	BOLT (1/2-13X3-IN)	
	10	1	**1K-6872**	2	LOCKNUT (1/2-13-THD)	

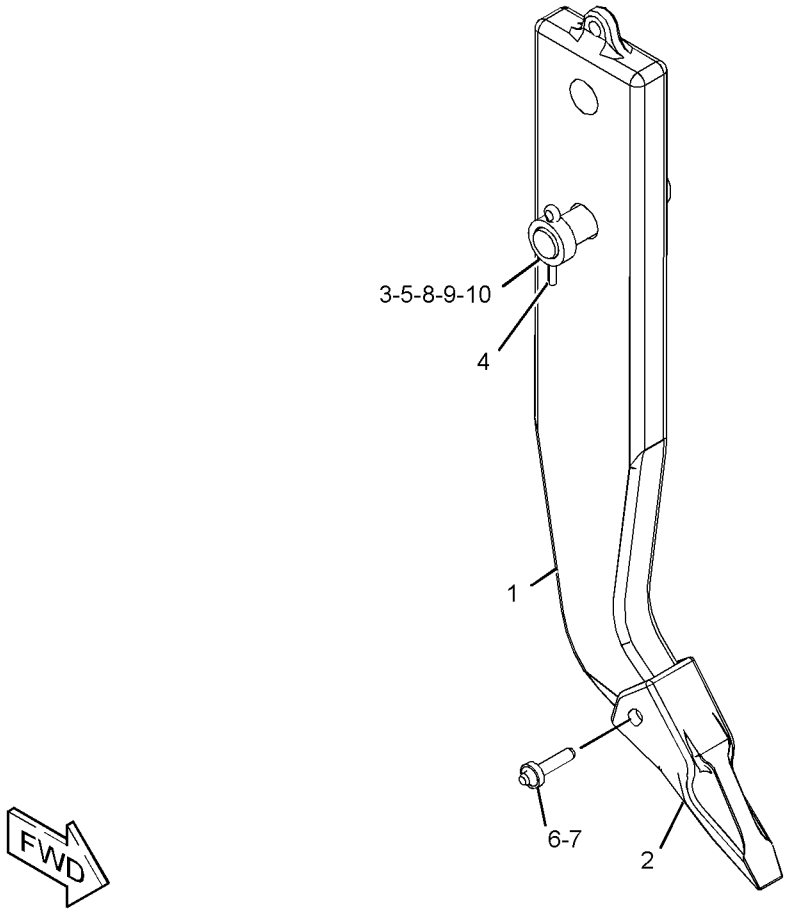

GRAPHIC #1 **<END>** g02838679

SERVICE EQUIPMENT AND SUPPLIES

329-2704 FILM GP

S/N: DSH1-UP

PART OF 329-2694 PLATE & FILM GP

SMCS-7000 **i04711933**

NOTE	REF NO	GRAPHIC REF	PART NUMBER	QTY	PART NAME 1 2 3 4 5 6 (PRODUCT LEVEL)	SEE PAGE
	1	1	**341-8313**	1	FILM-IDENTIFICATION (D7R, LH)	
	2	1	**341-8314**	1	FILM-IDENTIFICATION (D7R, RH)	
	3	1	**308-4558**	1	FILM-IDENTIFICATION (CAT, LH)	
	4	1	**308-4559**	1	FILM-IDENTIFICATION (CAT, RH)	
	5	1	**380-1381**	1	FILM-IDENTIFICATION (CAT) (FRONT)	
	6	1	**292-4396**	1	FILM-IDENTIFICATION (CAT, REAR)	

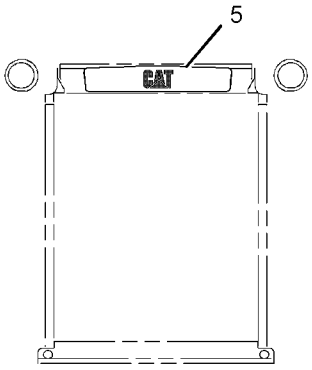

FRONT VIEW

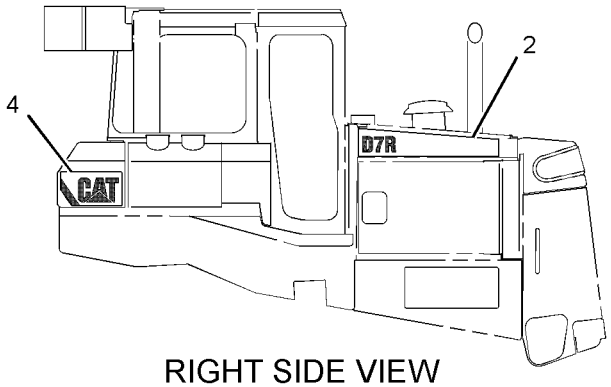

RIGHT SIDE VIEW

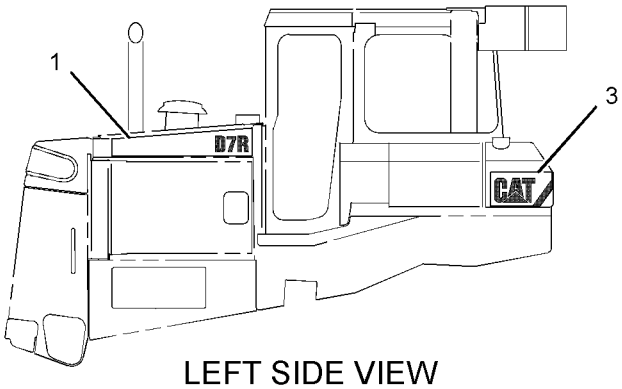

LEFT SIDE VIEW

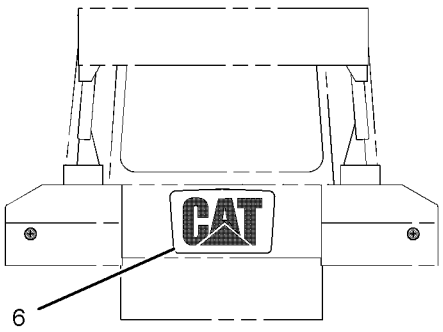

REAR VIEW

GRAPHIC #1 **<END>** g02836824

SERVICE EQUIPMENT AND SUPPLIES

329-2705 FILM GP

S/N: DLN1-UP

PART OF 329-2697 PLATE & FILM GP

SMCS-7000 **i04714315**

NOTE	REF NO	GRAPHIC REF	PART NUMBER	QTY	PART NAME 1 2 3 4 5 6 (PRODUCT LEVEL)	SEE PAGE
	1	1	**341-8315**	1	FILM-IDENTIFICATION (D7R LGP, LH)	
	2	1	**341-8316**	1	FILM-IDENTIFICATION (D7R LGP, RH)	
	3	1	**308-4558**	1	FILM-IDENTIFICATION (CAT, LH)	
	4	1	**308-4559**	1	FILM-IDENTIFICATION (CAT, RH)	
	5	1	**380-1381**	1	FILM-IDENTIFICATION (CAT)	
	6	1	**292-4396**	1	FILM-IDENTIFICATION (CAT, REAR)	

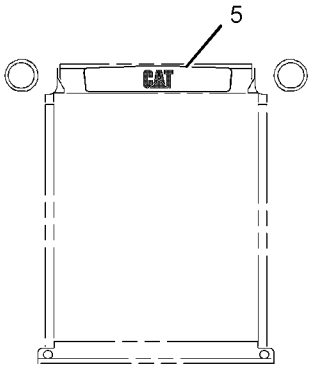

FRONT VIEW

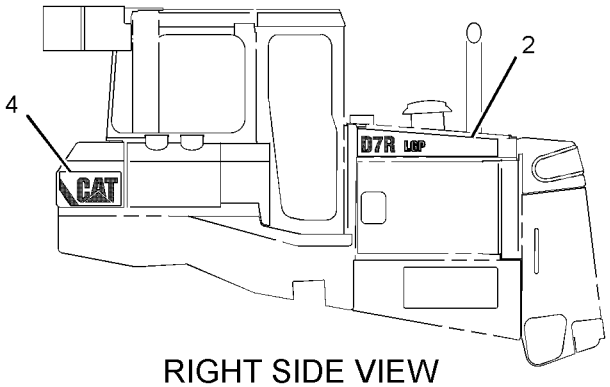

RIGHT SIDE VIEW

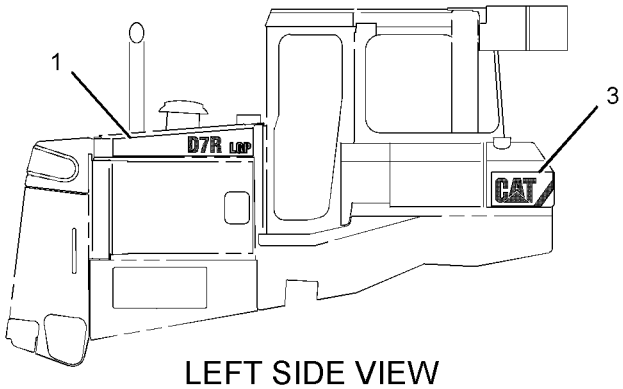

LEFT SIDE VIEW

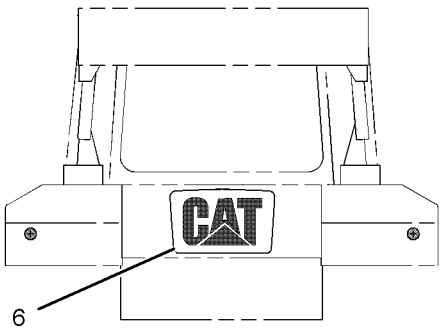

REAR VIEW

GRAPHIC #1 **<END>** g02838338

SERVICE EQUIPMENT AND SUPPLIES

378-2492 FILM GP

S/N: DJR1-UP

PART OF 377-5058 PLATE & FILM GP

SMCS-7000 **i04714189**

NOTE	REF NO	GRAPHIC REF	PART NUMBER	QTY	PART NAME 1 2 3 4 5 6 (PRODUCT LEVEL)	SEE PAGE
	1	1	**378-2284**	1	FILM-IDENTIFICATION (D7R XR)	
	2	1	**378-2285**	1	FILM-IDENTIFICATION (D7R XR)	
	3	1	**308-4558**	1	FILM-IDENTIFICATION (CAT, LH)	
	4	1	**308-4559**	1	FILM-IDENTIFICATION (CAT, RH)	
	5	1	**380-1381**	1	FILM-IDENTIFICATION (CAT)	
	6	1	**292-4396**	1	FILM-IDENTIFICATION (CAT, REAR)	

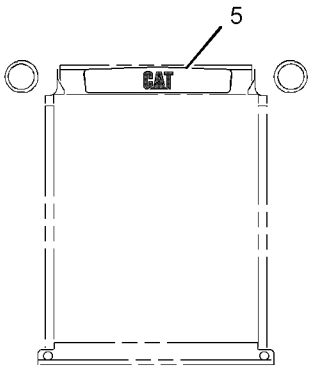

FRONT VIEW

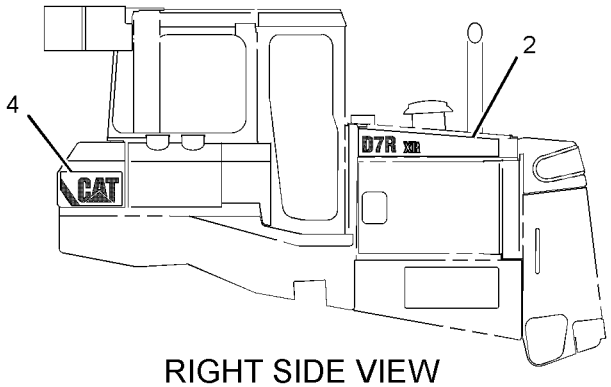

RIGHT SIDE VIEW

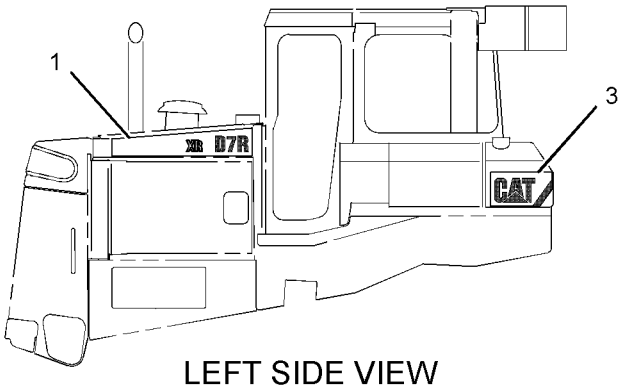

LEFT SIDE VIEW

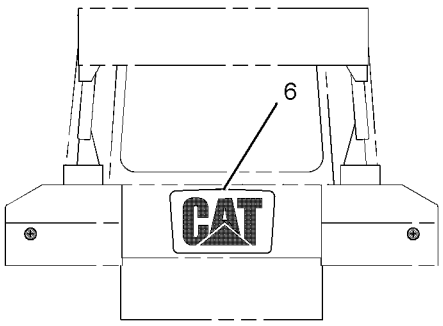

REAR VIEW

GRAPHIC #1 **<END>** g02838858

387-0548 FILM GP

S/N: DSH1-UP; DLN1-UP; DJR1-UP
PART OF 387-0554 COLD WEATHER AR, 380-7900 OPERATOR AR
ALSO AN ATTACHMENT

SMCS-7000 **i04748209**

NOTE	PART NUMBER	QTY	PART NAME 1 2 3 4 5 6 (PRODUCT LEVEL)	SEE PAGE
	169-2876	2	FILM-IDENTIFICATION (POWER RECEPTACLE, 12-VOLT)	
			(REAR CONSOLE BEHIND OPERATOR'S SEAT)	
	102-2913	1	FILM-INSTRUCTION (BULLDOZER CONTROL)	
			(ON RAISED SURFACE TO RIGHT OF CONTROL)	
	241-4167	1	FILM-INSTRUCTION (READ OMM, STEERING)	
			(ON TOP OF DIFFERENTIAL STEERING CONTROL)	
	325-5460	1	FILM-INSTRUCTION (PARKING BRAKE LOCK)	
			(ON THE TOP OF THE STEERING CONTROL LENGTHWAYS)	
	219-0305	1	FILM-WARNING (NO WELD, NO DRILL, READ OMM)	
			(PLACE ON CAB FOPS CERTIFICATION PLATE)	
	224-0672	1	FILM-WARNING (HIGH PRESSURE, READ OMM, INTL)	
			(TO PLATFORM PRIOR TO INSTALLING PLASTIC LINES)	
	247-6876	1	FILM-WARNING (DO NOT OPERATE, READ OMM)	
			(ON UPPER LEDGE OF LH CONSOLE OF OPERATOR'S STATION, READABLE FROM RH SIDE OF TRACTOR)	
	247-6878	1	FILM-WARNING (SEAT BELT)	
			(ON RH CONSOLE ON HORIZONTAL SURFACE TO THE RIGHT OF THE DOZER CONTROL)	
	269-0174	1	FILM-WARNING (NO WELD, NO DRILL, READ OMM)	
			(ON CAB FOPS)	
			<END>	

329-2694 PLATE & FILM GP

S/N: DSH1-UP
PART OF 313-3338 CHASSIS AR

SMCS-7557, 7563 **i04775806**

NOTE	PART NUMBER	QTY	PART NAME 1 2 3 4 5 6 (PRODUCT LEVEL)	SEE PAGE
Y	*329-2704*	1	FILM GP	674
	330-6873	1	PLATE (SERVICE INFORMATION NUMBERS)	
	8T-9905	1	PLATE-IDENTIFICATION (TRANSMISSION OIL FILL TUBE)	
			(ON PTO FILL CAP VERTICAL SHAFT ON T HANDLE)	
	214-8976	1	PLATE-IDENTIFICATION (FUEL DRAIN VALVE)	
			(ON FUEL TANK DRAIN VALVE)	
	110-6393	1	PLATE-INSTRUCTION (AIR CONDITIONER)	
			(ON LH SIDE OF DASH VISIBLE THROUGH CAB DOOR)	
	239-6987	1	PLATE-SERIAL NUMBER (MACHINE)	
			(ON TOP LH CORNER OF REAR FACE ON CASE & FRAME)	
A	**4W-1413**	1	PLATE-SERIAL NUMBER (ENGINE)	
			(ON RH SIDE OF CYLINDER BLOCK)	
	9F-6656	1	RING-RETAINING	
			(ON PTO FILL CAP VERTICAL SHAFT ON T HANDLE)	
	8T-9530	4	TACK-FASTENER	
			(USE FASTENERS WHEN MOUNTING PLATES)	

329-2694 **PLATE & FILM GP** *(contd.)* **i04775806**

NOTE	PART NUMBER	QTY	PART NAME 1 2 3 4 5 6 (PRODUCT LEVEL)	SEE PAGE
	288-6950	1	FILM-CERTIFICATION (ROPS, READ OMM)	
			(ON LH ROPS POST)	
	127-8830	2	FILM-IDENTIFICATION (EQUALIZER BAR LUBRICATION)	
			(ON EQUALIZER BAR END PINS)	
	169-2876	2	FILM-IDENTIFICATION (POWER RECEPTACLE, 12-VOLT)	
			(REAR CONSOLE BEHIND OPERATOR'S SEAT)	
	245-8456	1	FILM-IDENTIFICATION (FUEL PUMP)	
			(NEXT TO FUEL PRIMING PUMP SWITCH)	
	258-2355	1	FILM-IDENTIFICATION (FUSE)	
			(ON STEEL AREA ON LH DASH UPRIGHT)	
	321-6073	1	FILM-IDENTIFICATION (FUSE PANEL)	
			(ON BOTTOM OF BATTERY BOX LID)	
	7X-7644	3	FILM-INFORMATION (TIE-DOWN)	
			(1-ON FRONT TOWING EYE)	
			(2-ON SIDE OF TRACK ROLLER FRAME CENTERED BETWEEN FRONT & REAR IDLERS(1 EACH SIDE))	
	134-7258	1	FILM-INFORMATION (EXTENDED LIFE COOLANT)	
			(ON RIGHT OF RADIATOR FILL COVER)	
	146-6747	1	FILM-INFORMATION (24-VOLT)	
			(ON BOTTOM OF BATTERY BOX COVER)	
	229-0887	1	FILM-INFORMATION (AIR CLEANER)	
			(CENTER ON EXTERIOR OF AIR CLEANER COVER)	
	235-8026	1	FILM-INFORMATION (TRANSMISSION OIL LEVEL)	
			(ON SHEET METAL SURFACE RIGHT OF PTO DIPSTICK TUBE)	
	334-4603	1	FILM-INFORMATION (HYDO ADVANCED 10)	
			(ON TOP OF HYD TANK ADJACENT TO HYD TANK FILLER SPOUT)	
	3E-2378	1	FILM-INSTRUCTION (PIVOT SHAFT LUBRICATION)	
			(ON TOP OF PIVOT SHAFT BOTTLE)	
	7X-3229	4	FILM-INSTRUCTION (LIFT EYE, TIE-DOWN LOCATION)	
			(WITHOUT RIPPER)	
			(4-ON SIDE OF TRACK ROLLER FRAME BETWEEN FRONT ROLLER & IDLER & BETWEEN REAR ROLLER & IDLER(2 EACH SIDE))	
			(WITH RIPPER)	
			(4-ON SIDE OF TRACK ROLLER FRAME BETWEEN FRONT & IDLER & ON SIDE OF LOWER RIPPER FRAME BY REAR PIN(2 EACH SIDE))	
	8T-4999	1	FILM-INSTRUCTION (BATTERY DISCONNECT)	
			(ON FACE OF DISCONNECT SWITCH)	
	9X-6340	1	FILM-INSTRUCTION (ENGINE OIL)	
			(ON ENGINE OIL FILL TUBE)	
	102-2913	1	FILM-INSTRUCTION (BULLDOZER CONTROL)	
			(ON RAISED SURFACE TO RIGHT OF CONTROL)	
	241-4167	1	FILM-INSTRUCTION (READ OMM, STEERING)	
			(ON TOP OF DIFFERENTIAL STEERING CONTROL)	
	325-5460	1	FILM-INSTRUCTION (PARKING BRAKE LOCK)	
			(ON TOP OF STEERING CONTROL LENGTHWAYS)	
	190-5386	2	FILM-STRIPE (ROUND RED REFLECTIVE)	
			(ON REAR RH & LH SIDE OF MACHINE ON FILM STRIPE)	
	219-0305	2	FILM-WARNING (NO WELD, NO DRILL, READ OMM)	
			(1-ON CAB FOPS BESIDE FOPS CERTIFICATION PLATE)	
			(1-ON LH ROPS POST)	
	224-0672	1	FILM-WARNING (HIGH PRESSURE, READ OMM, INTL)	
			(ON PLATFORM)	

329-2694 **PLATE & FILM GP** ***(contd.)*** **i04775806**

NOTE	PART NUMBER	QTY	PART NAME 1 2 3 4 5 6 (PRODUCT LEVEL)	SEE PAGE
	225-0312	1	FILM-WARNING (JUMP START, READ OMM, INTL)	
			(ON BOTTOM OF BATTERY BOX COVER)	
	225-4257	1	FILM-WARNING (HOT FLUID UNDER PRESS, INTL)	
			(ON RIGHT OF RADIATOR FILL COVER)	
	247-6876	1	FILM-WARNING (DO NOT OPERATE, READ OMM)	
			(ON UPPER LEDGE OF LH CONSOLE OF OPERATORS STATION)	
	247-6878	1	FILM-WARNING (SEAT BELT)	
			(ON RH CONSOLE ON HORIZONTAL SURFACE TO THE RIGHT OF THE DOZER CONTROL)	
	269-0174	1	FILM-WARNING (NO WELD, NO DRILL, READ OMM)	
			(ON CAB)	
A-NOT PART OF THIS GROUP Y-SEPARATE ILLUSTRATION				

<END>

329-2697 PLATE & FILM GP

S/N: DLN1-UP

PART OF 313-3759 CHASSIS AR

SMCS-7557, 7563 **i04774799**

NOTE	PART NUMBER	QTY	PART NAME 1 2 3 4 5 6 (PRODUCT LEVEL)	SEE PAGE
Y	*329-2705*	1	FILM GP	675
			(REAR LH & RH SIDE OF MACHINE)	
	8T-9905	1	PLATE-IDENTIFICATION (TRANSMISSION OIL FILL TUBE)	
			(ON PTO FILL CAP)	
	214-8976	1	PLATE-IDENTIFICATION (FUEL DRAIN VALVE)	
			(ON FUEL TANK DRAIN VALVE)	
	110-6393	1	PLATE-INSTRUCTION (AIR CONDITIONER)	
			(ON LH SIDE OF DASH APPROXIMATELY 250-MM ABOVE FLOOR AND 10-MM IN FRONT OF DASH REAR EDGE)	
	239-6987	1	PLATE-SERIAL NUMBER (MACHINE)	
			(AT TOP LH CORNER OF REAR FACE ON CASE & FRAME)	
A	**4W-1413**	1	PLATE-SERIAL NUMBER (ENGINE)	
			(ON RH SIDE OF CYLINDER BLOCK)	
	9F-6656	1	RING-RETAINING	
			(ON PTO FILL CAP)	
	8T-9530	4	TACK-FASTENER	
			(ON PTO FILL CAP)	
	169-2876	2	FILM-IDENTIFICATION (POWER RECEPTACLE, 12-VOLT)	
			(2-REAR CONSOLE BEHIND OPERATOR'S SEAT)	
	258-2355	1	FILM-IDENTIFICATION (FUSE)	
			(ON STEEL AREA ON LH DASH UPRIGHT)	
	321-6073	1	FILM-IDENTIFICATION (FUSE PANEL)	
			(BOTTOM OF BATTERY BOX LID)	
	245-8456	1	FILM-IDENTIFICATION (FUEL PUMP)	
			(NEXT TO FUEL PRIMING PUMP SWITCH)	
	7X-7644	3	FILM-INFORMATION (TIE-DOWN)	
			(1 - ON FRONT TOWING EYE)	
			(2 - ON RH & LH SIDE OF TRACK ROLLER FRAME CENTERED BETWEEN FRONT & REAR IDLERS	
	134-7258	1	FILM-INFORMATION (EXTENDED LIFE COOLANT)	

329-2697 **PLATE & FILM GP** *(contd.)* **i04774799**

NOTE	PART NUMBER	QTY	PART NAME 1 2 3 4 5 6 (PRODUCT LEVEL)	SEE PAGE
			(TO RIGHT OF RADIATOR FILL COVER)	
	146-6747	1	FILM-INFORMATION (24-VOLT)	
			(ON BOTTOM OF BATTERY BOX COVER)	
	229-0887	1	FILM-INFORMATION (AIR CLEANER)	
			(CENTER ON EXTERIOR OF AIR CLEANER COVER)	
	235-8026	1	FILM-INFORMATION (TRANSMISSION OIL LEVEL)	
			(ON SHEET METAL SURFACE TO RIGHT OF PTO DIPSTICK TUBE)	
	334-4603	1	FILM-INFORMATION (HYDO ADVANCED 10)	
			(ON TOP OF HYD TANK - ADJACENT TO HYD TANK FILLER SPOUT)	
	3E-2378	1	FILM-INSTRUCTION (PIVOT SHAFT LUBRICATION)	
			(ON TOP OF PIVOT SHAFT BOTTLE)	
	7X-3229	4	FILM-INSTRUCTION (LIFT EYE, TIE-DOWN LOCATION)	
			(WITHOUT RIPPER)	
			(4-ON RH & LH SIDE OF TRACK ROLLER FRAME BETWEEN FRONT ROLLER & IDLER & BETWEEN REAR ROLLER & IDLER)	
			(WITH RIPPER)	
			(4-ON RH & LH SIDE OF TRACK ROLLER FRAME BETWEEN FRONT ROLLER & IDLER & ON SIDE OF LOWER RIPPER FRAME BY REAR PIN)	
	8T-4999	1	FILM-INSTRUCTION (BATTERY DISCONNECT)	
			(ON FACE OF DISCONNECT SWITCH)	
	9X-6340	1	FILM-INSTRUCTION (ENGINE OIL)	
			(ON ENGINE OIL FILL TUBE)	
	102-2913	1	FILM-INSTRUCTION (BULLDOZER CONTROL)	
			(ON RAISED SURFACE TO RIGHT OF CONTROL)	
	241-4167	1	FILM-INSTRUCTION (READ OMM, STEERING)	
			(ON TOP OF DIFFERENTIAL STEERING CONTROL)	
	325-5460	1	FILM-INSTRUCTION (PARKING BRAKE LOCK)	
			(ON THE TOP OF THE STEERING CONTROL LENGTHWAYS)	
	288-6950	1	FILM-CERTIFICATION (ROPS, READ OMM)	
			(ON LH ROPS POST)	
	190-5386	2	FILM-STRIPE (ROUND RED REFLECTIVE)	
			(TO REAR LH & RH SIDE OF MACHINE)	
	219-0305	2	FILM-WARNING (NO WELD, NO DRILL, READ OMM)	
			(1-ON CAB FOPS BEHIND CERTIFICATION PLATE)	
			(1-ON LH ROPS POST)	
	224-0672	1	FILM-WARNING (HIGH PRESSURE, READ OMM, INTL)	
			(ON PLATFORM)	
	225-0312	1	FILM-WARNING (JUMP START, READ OMM, INTL)	
			(ON BOTTOM OF BATTERY BOX COVER)	
	225-4257	1	FILM-WARNING (HOT FLUID UNDER PRESS, INTL)	
			(TO RIGHT OF RADIATOR FILL COVER)	
	247-6876	1	FILM-WARNING (DO NOT OPERATE, READ OMM)	
			(ON UPPER LEDGE OF LH CONSOLE OF OPERATOR'S STATION READABLE FROM RH SIDE OF TRACTOR)	
	247-6878	1	FILM-WARNING (SEAT BELT)	
			(ON RH CONSOLE ON HORIZONTAL SURFACE TO THE RIGHT OF THE BULLDOZER CONTROL)	
	269-0174	1	FILM-WARNING (NO WELD, NO DRILL, READ OMM)	
			(ON CAB)	

A-NOT PART OF THIS GROUP
Y-SEPARATE ILLUSTRATION

<END>

SERVICE EQUIPMENT AND SUPPLIES

376-1052 PLATE & FILM GP–CHINESE

S/N: DSH1-UP; DLN1-UP; DJR1-UP

AN ATTACHMENT

SMCS-7557, 7563 **i04672708**

NOTE	REF NO	GRAPHIC REF	PART NUMBER	QTY	PART NAME 1 2 3 4 5 6 (PRODUCT LEVEL)	SEE PAGE
	1	1	**373-7196**	1	PLATE-IDENTIFICATION	

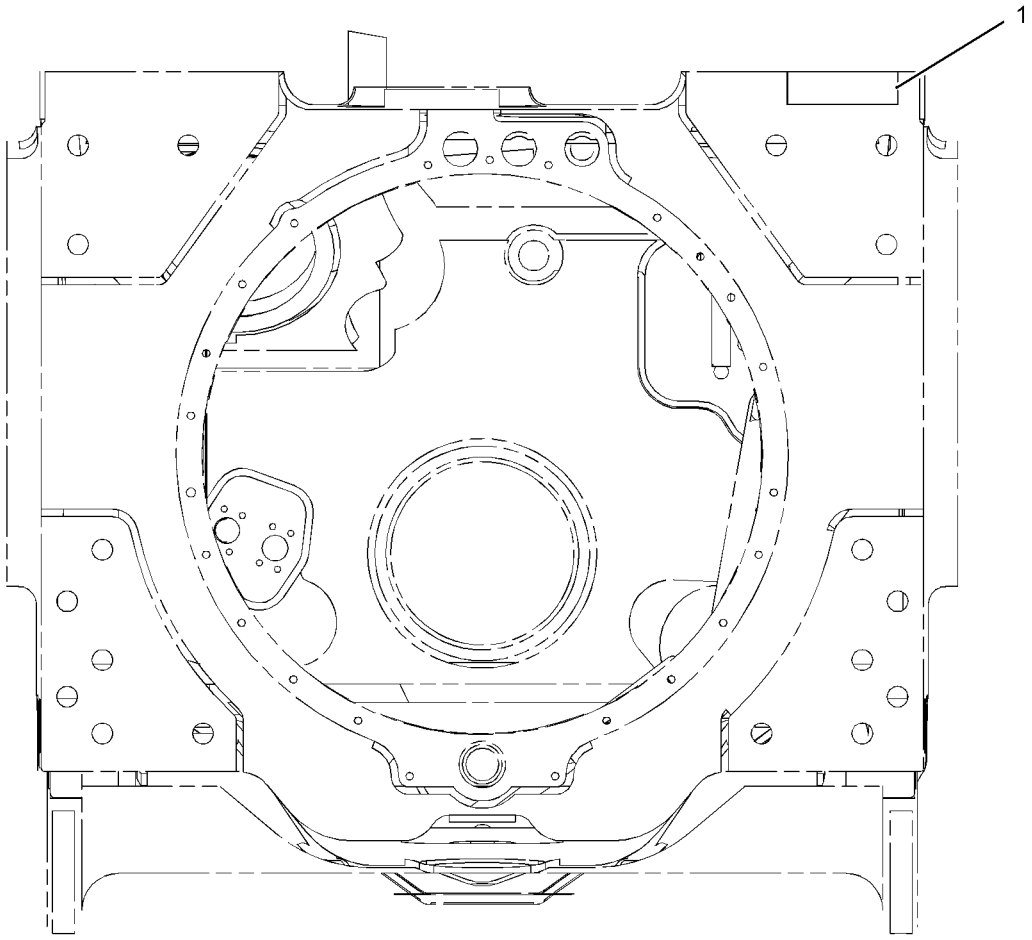

GRAPHIC #1 **<END>** g02827976

SERVICE EQUIPMENT AND SUPPLIES

377-5058 PLATE & FILM GP

S/N: DJR1-UP

PART OF 379-6225 CHASSIS AR

SMCS-7557, 7563 **i04774844**

NOTE	PART NUMBER	QTY	PART NAME 1 2 3 4 5 6 (PRODUCT LEVEL)	SEE PAGE
Y	*378-2492*	1	FILM GP	676
			(REAR LH & RH SIDE OF MACHINE)	
	8T-9905	1	PLATE-IDENTIFICATION (TRANSMISSION OIL FILL TUBE)	
			(ON PTO FILL CAP)	
	214-8976	1	PLATE-IDENTIFICATION (FUEL DRAIN VALVE)	
			(ON FUEL TANK DRAIN VALVE)	
	110-6393	1	PLATE-INSTRUCTION (AIR CONDITIONER)	
			(ON LH SIDE OF DASH APPROXIMATELY 250-MM ABOVE FLOOR AND 10-MM IN FRONT OF DASH REAR EDGE)	
	239-6987	1	PLATE-SERIAL NUMBER (MACHINE)	
			(ON TOP LH CORNER OF REAR FACE ON CASE & FRAME)	
A	**4W-1413**	1	PLATE-SERIAL NUMBER (ENGINE)	
			(ON RH SIDE OF CYLINDER BLOCK)	
	9F-6656	1	RING-RETAINING	
			(ON PTO FILL CAP)	
	8T-9530	4	TACK-FASTENER	
			(ON PTO FILL CAP)	
	169-2876	2	FILM-IDENTIFICATION (POWER RECEPTACLE, 12-VOLT)	
			(2-REAR CONSOLE BEHIND OPERATOR'S SEAT)	
	258-2355	1	FILM-IDENTIFICATION (FUSE)	
			(ON STEEL AREA ON LH DASH UPRIGHT)	
	321-6073	1	FILM-IDENTIFICATION (FUSE PANEL)	
			(BOTTOM OF BATTERY BOX LID)	
	245-8456	1	FILM-IDENTIFICATION (FUEL PUMP)	
			(NEXT TO FUEL PRIMING PUMP SWITCH)	
	7X-7644	3	FILM-INFORMATION (TIE-DOWN)	
			(1 - ON FRONT TOWING EYE)	
			(2 - ON RH & LH SIDE OF TRACK ROLLER FRAME CENTERED BETWEEN FRONT & REAR IDLERS)	
	134-7258	1	FILM-INFORMATION (EXTENDED LIFE COOLANT)	
			(TO RIGHT OF RADIATOR FILL COVER)	
	146-6747	1	FILM-INFORMATION (24-VOLT)	
			(ON BOTTOM OF BATTERY BOX COVER)	
	229-0887	1	FILM-INFORMATION (AIR CLEANER)	
			(CENTER ON EXTERIOR OF AIR CLEANER COVER)	
	235-8026	1	FILM-INFORMATION (TRANSMISSION OIL LEVEL)	
			(ON SHEET METAL SURFACE TO RIGHT OF PTO DIPSTICK TUBE)	
	334-4603	1	FILM-INFORMATION (HYDO ADVANCED 10)	
			(ON TOP OF HYD TANK - ADJACENT TO HYD TANK FILLER SPOUT)	
	3E-2378	1	FILM-INSTRUCTION (PIVOT SHAFT LUBRICATION)	
			(ON TOP OF PIVOT SHAFT BOTTLE)	
	7X-3229	4	FILM-INSTRUCTION (LIFT EYE, TIE-DOWN LOCATION)	
			(WITHOUT RIPPER)	
			(4-ON RH & LH SIDE OF TRACK ROLLER FRAME BETWEEN FRONT ROLLER & IDLER & BETWEEN REAR ROLLER & IDLER)	
			(WITH RIPPER)	

377-5058 **PLATE & FILM GP** ***(contd.)*** **i04774844**

NOTE	PART NUMBER	QTY	PART NAME 1 2 3 4 5 6 (PRODUCT LEVEL)	SEE PAGE
			(4-ON RH & LH SIDE OF TRACK ROLLER FRAME BETWEEN FRONT ROLLER & IDLER & ON SIDE OF LOWER RIPPER FRAME BY REAR PIN)	
	8T-4999	1	FILM-INSTRUCTION (BATTERY DISCONNECT)	
			(ON FACE OF DISCONNECT SWITCH)	
	9X-6340	1	FILM-INSTRUCTION (ENGINE OIL)	
			(ON ENGINE OIL FILL TUBE)	
	102-2913	1	FILM-INSTRUCTION (BULLDOZER CONTROL)	
			(ON RAISED SURFACE TO RIGHT OF CONTROL)	
	241-4167	1	FILM-INSTRUCTION (READ OMM, STEERING)	
			(ON TOP OF DIFFERENTIAL STEERING CONTROL)	
	325-5460	1	FILM-INSTRUCTION (PARKING BRAKE LOCK)	
			(ON THE TOP OF THE STEERING CONTTROL LENGTHWAYS)	
	288-6950	1	FILM-CERTIFICATION (ROPS, READ OMM)	
			(ON LH ROPS POST)	
	190-5386	2	FILM-STRIPE (ROUND RED REFLECTIVE)	
			(TO REAR LH & RH SIDE OF MACHINE)	
	219-0305	2	FILM-WARNING (NO WELD, NO DRILL, READ OMM)	
			(1-ON CAB FOPS BEHIND CERTIFICATION PLATE)	
			(1-ON LH ROPS POST)	
	224-0672	1	FILM-WARNING (HIGH PRESSURE, READ OMM, INTL)	
			(ON PLATFORM)	
	225-0312	1	FILM-WARNING (JUMP START, READ OMM, INTL)	
			(ON BOTTOM OF BATTERY BOX COVER)	
	225-4257	1	FILM-WARNING (HOT FLUID UNDER PRESS, INTL)	
			(TO RIGHT OF RADIATOR FILL COVER)	
	247-6876	1	FILM-WARNING (DO NOT OPERATE, READ OMM)	
			(ON UPPER LEDGE OF LH CONSOLE OF OPERATOR"S STATION)	
	247-6878	1	FILM-WARNING (SEAT BELT)	
			(ON RH CONSOLE ON HORIZONTAL SURFACE TO THE RIGHT OF THE BULLDOZER CONTROL)	
	269-0174	1	FILM-WARNING (NO WELD, NO DRILL, READ OMM)	
			(ON CAB)	

A-NOT PART OF THIS GROUP
Y-SEPARATE ILLUSTRATION

<END>

SERVICE EQUIPMENT AND SUPPLIES

388-9547 PLATE & FILM GP

S/N: THX28268-UP

PART OF 387-8953 ENGINE AR

SMCS-7557, 7563 **i04766614**

NOTE	REF NO	GRAPHIC REF	PART NUMBER	QTY	PART NAME 1 2 3 4 5 6 (PRODUCT LEVEL)	SEE PAGE
	1	1	**293-9659**	2	FILM-WARNING (UNIVERSAL, READ OMM)	
	2	1	**136-9066**	1	FILM-INFORMATION (ENGINE OIL)	
	3	1	**297-8989**	1	PLATE-IDENTIFICATION (C9 CAT)	
AF			*4W-1413*	1	PLATE-SERIAL NUMBER (ENGINE)	

A-NOT PART OF THIS GROUP
F-NOT SHOWN

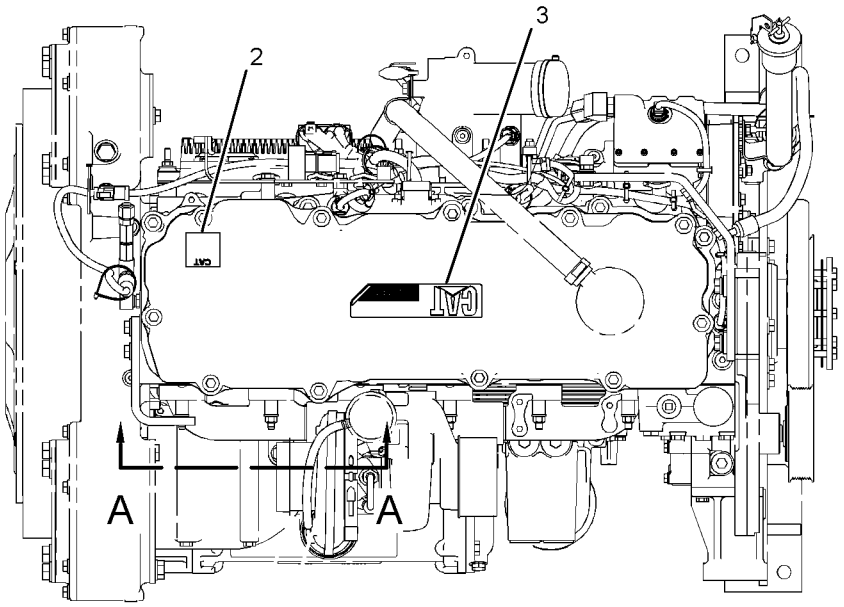

TOP VIEW OF ENGINE

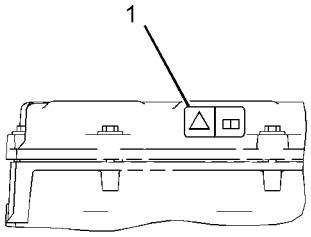

VIEW A-A

GRAPHIC #1 **<END>** g02864492

SERVICE EQUIPMENT AND SUPPLIES

377-0337 SERVICE CENTER GP

S/N: DSH1-UP; DLN1-UP; DJR1-UP

AN ATTACHMENT

SMCS-7513 **i04673513**

NOTE	PART NUMBER	QTY	PART NAME 1 2 3 4 5 6 (PRODUCT LEVEL)	SEE PAGE
Y	*273-9183*	1	ADAPTER GP-FAST FILL FUEL	113
Y	*377-4467*	1	OIL CHANGE GP-HIGH SPEED	74

Y-SEPARATE ILLUSTRATION

<END>

MEMORANDA

PART NUMBER INDEX

Part	Page
0	
0L-1026	18
0L-1143	227
0L-1169	256
0L-1329	673
0L-1351	237
	293
	399
0S-0484	285
0S-0519	20
0S-1569	256
0S-1571	380
	399
0S-1585	232
	234
	270
0S-1591	98
	256
0S-1594	236
	368
0S-1597	197
0S-1614	227
0S-1620	236
0S-1897	256
	334
	336
0T-0102	234
	426
0T-0244	619
	623
0T-0883	113
1	
1A-1460	227
	232
1A-2029	227
	232
	288
1A-2209	288
1A-2223	227
	270
1A-2610	236
1A-5183	270
1A-5822	256
1B-0676	394
	397
	543
1B-2578	394
1B-8705	12
	17
	281
1B-8706	394
	543
1B-8714	543
1B-8735	522
	525
	530
1C-0569	232
	426
1D-4539	237
1D-4601	256
1D-4615	416
1D-4629	371
	374
	376
	379
1D-4630	366
1D-5976	340
1F-0748	137
	139
	298
	300
	312
1F-0750	92
	210
	298
	300
	306
	408
	410
	412
	414
	537
	625
1F-6762	416
	418
1F-7960	129
1H-1023	197
1H-1200	267
1H-2629	197
1H-3244	135
	206
1H-3338	202
1H-5728	261
	281
1H-7459	143
	397
1H-8128	133
1H-8296	632
1H-8720	368
1J-0708	422
1J-2919	673
1J-5353	295
1J-6740	509
	510
1J-8668	143
	211
1J-9671	113
	492
1K-5888	525
1K-6872	543
	673
1L-4684	446
1L-4775	64
1L-5072	459
1L-6957	256
1L-7388	270
1L-8545	52
	54
1M-1341	389
	394
1M-1571	416
	418
1M-4291	368
1M-4533	543
1M-4543	537
1M-4986	142
	196
1M-6119	142
	143
1M-6120	142
	143
1M-6718	499
1M-8657	270
1M-8747	368
1M-9011	247
	249
	267
1M-9968	198
1M-9971	197
1N-4556	535
1N-5999	401
1P-0810	142
	211
	216
	220
	386
	517
1P-2772	333
	613
1P-3702	439
	467
	469
1P-3703	439
1P-3704	429
	439
1P-3705	439
1P-3706	492
1P-3934	256
1P-3935	256
1P-4278	94
	115
1P-4576	448
	450
1P-4577	280
	408
	410
	412
	414
1P-4578	261
	280
	459
	467
	469
1P-4582	459
1P-5767	439
1P-6356	571
	575
1P-7009	575
1P-8116	295
1P-8715	368
1P-8716	368
1P-8717	367
	▶368
1Q-2606	525
1Q-2645	525
1Q-2648	525
1Q-2976	525
1Q-2977	525
1R-0762	115
1R-0777	459
1R-1808	66
1S-0724	73
1S-0994	115
	120
	122
	143
	158
	211
	363
	394
1S-1015	115
	122
	143
	158
1S-1860	256
1S-2563	71
1S-4836	571
1S-4915	142
	143
	211
1S-6385	298
1S-6420	217
	572
1S-7251	143
1S-7252	143
1S-7446	197
1S-8947	368
1S-9130	143
1S-9593	500
	547
1S-9799	286
1T-0068	340
	341
1T-0069	288
1T-0097	288
1T-0414	288
1T-0438	288
1T-0441	288
1T-0446	288
1T-0447	288
1T-0599	288
1T-0902	288
1T-1993	288
1T-2052	288
1T-2069	288
1T-2070	288
1T-2079	288
1T-2080	288
1T-2086	288
1U-0738	657
	658
	659
	660
1U-0872	503
	505
	511
	512
1U-0873	511
	512
1U-0904	510
1U-0980	509
1U-0990	668
1U-1115	426

▶ **PRIMARY REFERENCE**

PART NUMBER INDEX

Part	Page
1U-1325	448
	450
1U-2533	509
	510
1U-2827	459
1U-8846	42
	44
	100
	228
	232
1W-2431	104
1W-2715	25
1W-2860	579
1W-4738	40
1W-4741	40
1W-4746	40
1W-4877	107
1W-8407	20
1W-8620	107
1Y-7927	557
2	
2A-1162	41
2A-1736	566
2A-3746	27
	290
2A-4429	25
2B-0858	245
2B-2695	295
2B-9373	281
2D-0092	426
2D-0598	401
2D-1523	286
2D-1690	342
	345
	348
2D-2751	572
2D-4202	459
2D-5658	290
2D-6235	557
2D-6392	197
2D-6416	319
	321
2D-6506	267
2D-6642	256
2D-8426	446
2F-5326	334
	336
	338
	339
2F-6678	198
2G-0391	603
2G-9245	328
2H-2995	295
2H-3429	197
	237
2H-3745	334
	336
2H-3920	567
2H-3922	201
	204
2H-3931	245
2H-3932	342
	345
	348
2H-3934	391
2H-6338	368
2H-6622	641
	642
2H-9247	356
	357
	358
	359
2J-0564	426
2J-2866	472
	475
	477
2J-3505	666
	667
2J-3506	416
	418
2J-4672	237
	394
2J-6274	380
2J-6356	543
2J-7761	459
2J-7767	424
2J-8163	197
	392
2K-1845	426
2K-4472	426
2K-4473	426
2K-4821	135
2K-4973	514
	630
	632
2K-5069	227
2K-5986	290
2K-6830	416
	418
2K-8257	261
2K-9295	227
2L-5893	609
	610
2L-6679	197
2L-8049	210
2L-8057	210
2L-8069	220
2L-8071	210
2L-8075	206
2L-8077	220
2M-1168	399
2M-1444	517
2M-3974	280
2M-4453	86
2M-5795	298
2M-7041	293
2M-7819	557
2M-9780	115
	122
	158
	194
	438
	492
	498
2N-3680	385
2P-0347	368
2P-0449	575
2P-1279	261
2P-1286	74
2P-1370	247
	249
	251
	253
2P-2717	65
2P-4304	66
2P-4339	560
	563
2R-0098	266
2R-0179	305
2R-1694	363
2S-0115	455
2S-0696	295
2S-0795	239
2S-2140	381
	382
	383
2S-2251	286
2S-2596	401
	472
	475
	477
2S-3029	64
2S-3440	70
2S-4078	247
	249
	251
	253
	261
	408
	410
	412
	414
2S-4872	295
2S-5926	380
2V-1937	516
2V-2043	74
2V-4868	94
2W-5825	81
2W-7381	28
2W-7940	306
2W-8147	17
2Y-5829	56
	57
3	
3B-0623	18
3B-4124	227
3B-4501	204
3B-4605	303
	304
3B-4609	298
3B-4610	113
	298
	300
	553
3B-4615	318
	328
	394
	397
	543
3B-4627	511
	512
3B-4640	319
	321
3B-8489	334
	338
	339
	422
	424
	454
3D-0490	143
3D-2824	74
	88
	94
	200
	436
	438
	456
	459
	463
3D-2975	557
3D-6338	426
3D-8317	293
	295
3E-1841	556
3E-2378	678
	680
	682
3E-3365	134
3E-3892	604
3E-4051	572
	575
3E-4052	572
	575
3E-4057	572
	575
3E-4058	572
	575
3E-4078	572
	575
3E-4297	489
3E-4352	183
	217
	561
	564
3E-4353	45
	48
3E-4354	232
3E-4356	559
3E-4367	560
	563
	597
3E-4374	394
3E-4999	52
	54
3E-5239	219
	541
	560
	563
	597
3E-5464	516
3E-6180	522
	525
	530
3E-6328	►134

► **PRIMARY REFERENCE**

PART NUMBER INDEX

Part	Page	Part	Page	Part	Page	Part	Page
	219	3J-1907	84		260	3T-0852	178
3E-6389	▶168		115		261	3T-1078	394
	567		118		286	3T-1121	641
3E-6756	668		122		363		642
3E-6757	668		158		399	3T-2747	319
3E-6773	113		239		435		321
3E-6811	572		255		436	3T-3157	560
	575		260		471		563
3E-6922	561		261		486	3T-3158	560
	564		394		487		563
3E-7410	120		399		488		597
3E-7771	198		406		494	3T-3159	560
3E-8005	13		407		496		563
3E-8017	105		431		497		597
	112		433		533	3T-3278	560
3E-8020	569		435		579		563
3E-8558	560		436	3K-2511	270		597
	563		438	3K-2889	305	3T-3418	197
	597		439	3K-6060	143	3T-3422	197
3E-9412	125		452		211	3T-3423	197
3E-9850	509		463	3K-6113	356		198
	510		479		357	3T-3424	197
3E-9865	636		480		358		198
3E-9867	84		482		359	3T-3434	197
3E-9868	84		484	3L-0594	607	3T-3494	295
3F-3442	236		489	3L-3380	197	3T-3634	601
3F-3727	288		499	3L-3813	492	3T-4007	290
3F-4971	511	3J-3679	492	3N-0759	404	3T-4008	290
	512	3J-4818	632	3N-3763	198	3T-4009	290
3F-5022	269	3J-7189	328	3P-0647	190	3T-4011	290
3F-5792	42	3J-7354	84	3P-1932	255	3T-4013	290
3F-9556	135		94	3P-8283	351	3T-4215	295
	583		143	3P-8485	295	3T-4238	301
	584		401	3P-9900	632	3T-4243	342
	585		431	3R-8797	197		345
	586		433	3R-8801	198		348
3G-0910	426		435	3S-2093	94	3T-4244	342
	511		436		120		345
	512		439		208		348
3G-0911	426		452		517	3T-4245	342
	511		467		541		345
	512		469		560		348
3G-3267	459		472		564	3T-4377	269
3G-4214	261		475		567	3T-4403	237
3G-4218	261		477		571	3T-4516	301
3G-4532	426		480		575	3T-4568	227
3G-4533	▶426		482		597	3T-4709	197
	511		484		634	3T-4710	197
	512		496		636	3T-4824	227
3G-5352	657		497		637	3T-5021	227
	658	3J-9545	422	3S-2708	227	3T-5200	227
3G-5375	657	3J-9703	426		232	3T-5224	394
	658	3K-0360	74		269	3T-5225	394
	659		88		270	3T-5294	334
	660		92		290		336
3G-5724	▶509		122	3S-3439	283	3T-5301	260
	511		158	3S-3440	283	3T-5302	260
	512		228	3S-6049	142	3T-5356	280
3G-5999	422		232	3S-6162	424	3T-5807	232
	424		239	3S-7781	234	3T-5851	224
3G-8742	416		247	3S-8313	543		225
	418		249	3S-9557	645	3T-5898	342
3H-3243	297		251	3S-9643	83		345
3H-3433	385		253	3T-0395	301		348
3H-7180	541		259	3T-0849	489	3T-5923	247

▶ **PRIMARY REFERENCE**

PART NUMBER INDEX

Part	Page
	249
	251
	253
3T-5926	247
	249
	251
	253
3T-5928	247
	249
	251
	253
3T-5929	247
	249
	251
	253
3T-6239	305
3T-6469	260
3T-6471	260
3T-6742	256
3T-6963	227
3T-8371	634
3T-8729	270
3T-9272	227
3T-9494	197
	198
3T-9524	198
3T-9525	197
3T-9549	226
3T-9921	234
3T-9986	▶224
	279
3V-9244	328
3V-9399	303
	304
3W-0556	543
3W-0640	380
3W-2369	380
3W-2568	89
3W-3742	328
3W-3896	312
	328
3W-6756	607
3W-9139	208
3Y-7829	592

4

Part	Page
4B-0831	297
4B-1270	385
4B-2049	198
4B-3611	543
4B-3693	247
	249
	251
	253
4B-4098	31
4B-4158	342
	345
	348
	503
	505
	671
4B-4278	303
	304
4B-4863	220
4B-5059	557
4B-7739	245
4B-9782	236
	386
4B-9785	236
4B-9808	484
	546
4B-9880	256
	293
	295
4C-9612	49
4D-1248	143
4D-4065	611
4D-7388	69
4D-7733	572
4D-7794	170
	174
4F-0255	511
	512
4F-2294	203
4F-4879	626
	627
	628
4F-5695	18
4F-6024	40
4F-7389	459
4G-4972	20
4H-0019	256
4H-0407	603
4H-1225	194
4H-1394	237
4H-1440	288
4H-1641	298
	306
	386
4H-2558	161
	163
	165
	303
	304
	637
4H-4737	293
4H-5440	234
4H-9105	372
	373
	377
	378
4J-0520	408
	410
	412
	414
	429
	439
	443
	444
	446
	465
4J-0522	261
	436
	467
	469
	479
4J-0525	86
4J-0527	113
	439
4J-0528	479
4J-5140	448
	450
4J-5240	673
4J-5241	673
4J-5267	443
	446
	448
	450
4J-5351	401
	472
	475
	477
	495
4J-5477	260
	261
	431
	433
	435
	436
4J-6374	426
4J-6806	401
4J-7533	401
	472
	475
	477
4J-8251	459
4J-8997	467
	469
4K-0367	459
4K-1388	342
	345
	348
	380
	401
	408
	410
	412
	414
	467
	469
	472
	475
	477
4K-2039	486
	487
4K-3533	522
	525
	530
4K-5843	456
4K-6177	261
4K-8302	572
4K-8864	575
4K-9429	595
4L-1250	128
4L-2729	198
4L-6454	92
	94
	137
	221
	298
	306
	317
4L-6496	543
4L-9337	408
	410
	412
	414
	491
	543
4M-0189	42
4M-1827	197
4M-1828	197
4M-1831	197
4M-1853	197
4M-1854	197
4M-1896	198
4M-2381	293
	295
4M-2442	270
4M-5281	598
	636
4M-6425	522
	526
	530
	609
	610
4M-6980	492
4M-7470	303
	304
4M-8239	294
4M-9592	269
4N-0205	74
4N-1059	196
4N-1230	40
4N-2514	37
4N-2927	557
4N-3808	243
4N-3861	107
4N-6045	65
4N-9915	559
4P-0489	115
4P-4369	105
4P-5524	97
4P-7428	45
	572
4P-7429	94
	211
	572
4P-7581	137
	139
	143
	160
	163
	170
	174
	208
	211
	217
	459
4P-7582	211

▶ **PRIMARY REFERENCE**

PART NUMBER INDEX

Part	Page
4P-8134	158
	160
	178
	194
	208
	211
	459
	541
	561
	564
	572
	575
	598
4R-9999	58
4S-1962	143
	492
4S-4456	575
4S-5719	397
4S-8537	288
4S-8598	283
4S-9191	83
4T-0202	668
4T-0203	668
4T-0521	459
4T-0925	499
4T-0928	499
4T-0993	401
4T-1021	401
4T-1108	472
	475
	477
4T-1389	668
4T-1649	401
4T-1700	497
4T-1701	401
4T-1850	401
4T-1860	401
	472
	475
	477
	▶499
4T-2069	342
	345
	348
4T-3522	668
4T-4207	401
4T-4509	496
	497
4T-4511	401
4T-4628	472
	475
	477
4T-4631	475
	477
4T-4659	492
4T-4875	454
4T-4942	494
4T-5072	401
	472
	475
	477
4T-5073	401
	472
	475
	477
4T-5074	401
	496
	497
4T-5249	510
4T-5250	509
4T-6443	448
	450
4T-6484	448
	450
4T-7571	494
4T-8710	424
4V-7884	630
4V-8256	514
4V-8577	630
	632
4W-1203	31
4W-1204	31
4W-1413	677
	679
	682
	684
4W-2026	14
4Y-8435	503
	505
4Y-8450	503
	505
4Y-9344	522
	530
4Z-9148	663
4Z-9150	663
4Z-9151	663
5B-0582	288
5C-2890	181
	202
	397
	480
	482
	541
	559
	589
	632
5C-6565	312
	325
	328
	334
	336
	353
	354
	448
	450
	613
5C-7261	169
	170
	211
	583
	584
	585
	586
5C-7883	181
5C-8312	221
5C-9553	132
	180
	517
5D-0353	539
5D-1026	556
5D-1911	459
5D-3546	389
5D-4822	557
5D-5652	328
5D-7635	537
5D-7927	459
5F-0304	41
5F-1678	334
	338
	339
	459
5F-2465	247
	249
	251
	253
5F-3106	424
5F-3488	459
5F-4899	237
5F-7054	247
	249
	251
	253
5F-9144	118
	385
5F-9657	297
5F-9757	221
5G-7191	438
5G-8655	522
	525
	530
5G-9973	328
5G-9974	328
5H-3193	247
	249
	251
	253
5H-3252	455
5H-4018	446
5H-4279	280
5H-6734	133
	342
	345
	348
5H-6799	543
5H-8853	261
5H-8985	295
5I-4376	435
5J-3964	290
5J-4715	406
	407
5J-4991	426
5J-5314	197
5J-5793	404
5J-7234	424
5J-7386	290
5J-8118	328
5K-0227	472
	475
	477
5K-4778	572
	575
5K-8454	247
	249
	251
	253
5K-9090	260
	261
	408
	410
	412
	414
5K-9107	228
5K-9179	581
	582
5K-9246	234
5K-9988	234
5L-2029	385
5L-4751	338
	339
5L-5711	385
5L-7200	204
5M-0578	227
	232
5M-2043	368
5M-2057	401
	459
	472
	475
5M-2894	228
	232
	234
	237
	256
	280
	281
	288
	368
	380
	610
5M-3034	197
5M-3038	270
5M-3062	143
	211
	221
	261
	298
	454
	572
5M-4987	281
5M-6126	269
5M-6214	297
	328
5M-7878	290
5M-7925	227
5M-8500	522
	525
	530
5M-9548	399
5M-9622	293
	295
5M-9623	294
	295
5M-9624	293
	295
5M-9735	52

5

▶ **PRIMARY REFERENCE**

PART NUMBER INDEX

Part	Page	Part	Page	Part	Page	Part	Page
	54		407	5P-5623	141	5P-7592	256
5N-4185	13		526	5P-5639	556	5P-7665	284
5N-6096	386		539	5P-5643	516	5P-7679	290
5P-0180	448		543		523	5P-7814	129
5P-0492	160		549		526	5P-7815	226
5P-0597	107		553		531	5P-7854	74
5P-0599	107		555		556	5P-7957	595
5P-0695	142		587	5P-5649	321	5P-7958	1
	143		601	5P-5672	541		2
	211		603	5P-5677	220		3
5P-0746	196		612	5P-5680	639	5P-7970	65
5P-0767	259		613		640		71
	556	5P-1251	94		641		208
	579	5P-1294	438		642	5P-8068	72
5P-0998	601	5P-1327	671	5P-5755	523	5P-8112	439
5P-1046	122	5P-1442	122		526		507
	158		159		531		508
5P-1075	89	5P-1465	94	5P-5846	234	5P-8167	363
	92	5P-1606	251	5P-5908	541	5P-8194	269
	94		253	5P-5924	541	5P-8215	261
	137	5P-2228	328	5P-5926	523	5P-8244	552
	143		429		526	5P-8245	14
	170		446		531		42
	172		503	5P-5930	523		45
	174		505		526		60
	176		572		531		61
	211	5P-2424	318	5P-5931	523		62
	217		342		526		227
	221		345		531		228
	298		348	5P-5991	116		232
	300	5P-2566	89	5P-6010	632		234
	312		261	5P-6129	573		236
	317		328		576		256
	318		537		578		270
	328	5P-2618	113	5P-6298	197		280
	389	5P-2766	590	5P-6438	394	5P-8247	135
	408	5P-2817	99	5P-6605	522		256
	410	5P-3264	125		526	5P-8249	340
	412	5P-3860	107		530		341
	414	5P-3930	269		531		371
	436		290	5P-6719	479		374
	439	5P-3948	571	5P-6874	581		376
	444	5P-4057	234		582		379
	446	5P-4115	561	5P-6944	122		666
	491		564		158		667
	516		598		399	5P-8250	426
	537		601	5P-7211	308	5P-8435	547
	539		607	5P-7464	211	5P-8441	541
	541		636	5P-7465	211	5P-8444	439
	548	5P-4116	194	5P-7466	439	5P-8445	557
	581		550	5P-7467	439	5P-8472	247
	625		598	5P-7468	261		249
5P-1076	52		601		439		251
	54	5P-4423	632	5P-7469	261		253
	89	5P-4571	219		439	5P-8500	1
	92		567	5P-7483	308		2
	261	5P-4906	259		523		3
	312	5P-4961	122		526		122
	318		158		531		158
	325	5P-5045	270	5P-7509	603		298
	328	5P-5296	270	5P-7513	588		389
	333	5P-5297	270	5P-7514	321		533
	334	5P-5374	342		588	5P-8503	522
	336		345	5P-7530	72		525
	406		349		73		530

PART NUMBER INDEX

Part	Page
5P-8522	172
	174
5P-8918	641
	642
5P-8998	234
5P-9085	172
5P-9402	424
5P-9439	280
5P-9617	66
	84
	435
5P-9658	243
5P-9681	356
	357
	358
	359
5P-9891	342
	345
	348
5P-9909	603
5R-0939	436
	439
5R-0940	436
	439
5S-4437	293
5S-7001	399
5S-7008	267
5S-7018	399
5S-7343	385
5S-7349	135
	363
5S-7379	174
	176
	298
	300
	306
	312
	317
	363
	389
	408
	410
	412
	414
	446
	581
5S-7382	406
	407
	408
	410
	412
	414
5S-7383	609
	610
5S-8712	448
	450
5S-9062	31
5V-0770	557
5V-1496	298
	617
	621
5V-1497	630

6

Part	Page
6A-5591	42
6A-9718	651
6B-1124	52
	54
6B-4541	385
6B-4594	92
	310
6B-6684	611
6B-6863	269
6C-3060	132
6C-9048	489
6C-9149	616
6D-1641	579
6D-1746	113
	298
	300
6D-3033	215
6D-3479	572
6D-4161	560
	563
	597
6D-4244	221
6D-4636	579
6D-5767	658
	660
6D-5801	128
6D-9157	422
6E-0381	471
6E-0486	401
6E-1108	416
	418
6E-1637	472
	477
6E-1835	494
6E-1839	418
6E-1847	416
6E-4907	492
6E-5066	452
6E-5200	496
	497
6E-5527	426
6F-0196	666
	667
6F-0253	397
6F-0711	301
6F-4718	286
6F-6673	261
	266
	281
	295
6F-7045	201
6F-7062	239
6G-6396	394
6H-2953	372
	373
	377
	378
6H-3977	280
6H-4005	170
	174
	176
	517
6H-9361	459

Part	Page
6I-1418	215
6I-2435	89
6I-2501	97
6I-2502	97
6I-4464	97
6I-8371	657
	658
	659
	660
6I-8372	657
	658
6I-8375	657
	658
	659
	660
6I-8380	657
	658
6I-8382	657
	658
	659
	660
6I-8500	269
6I-8507	256
6I-8511	256
6I-8724	227
6I-9239	360
	361
	362
6I-9240	360
	361
	362
6I-9241	360
	361
	362
6I-9242	360
	361
	362
6I-9243	360
	361
	362
6I-9244	360
	361
	362
6I-9386	522
	525
	530
6I-9706	601
6I-9875	295
6I-9912	382
6J-1323	537
6J-2680	459
6J-3473	256
6J-5342	503
	505
	511
	512
6J-6439	494
6J-9747	426
6J-9748	426
6K-1049	298
6K-3273	621
6K-3630	290
6K-3632	333
	613
6K-4934	172

Part	Page
	174
6K-4935	172
	174
6K-8162	492
6K-8498	234
6L-1649	261
6L-4783	280
6L-5359	261
	283
6M-5062	486
	487
6M-8796	455
6N-1558	104
6N-2985	65
	260
6N-3279	197
6N-3826	197
6N-5337	52
	54
6N-5338	54
6N-7523	132
	649
6N-8744	539
6P-1735	227
6P-1736	227
6P-2216	607
6P-4938	295
6P-4939	295
6P-4940	295
6P-4971	295
6P-5317	228
	232
6P-6591	561
	564
6P-7704	269
6P-8269	308
6P-9783	295
6P-9784	295
6P-9785	295
6P-9786	295
6S-2828	256
6S-2829	256
6S-3002	342
	345
	349
6S-6646	237
6T-0062	227
6T-0064	227
6T-0363	197
6T-0364	256
6T-0371	197
6T-0372	197
6T-0850	227
6T-0988	607
6T-1698	132
	333
6T-1746	247
	249
	251
	253
6T-2173	247
	249
	251
	253
6T-2307	293

► **PRIMARY REFERENCE**

PART NUMBER INDEX

Part	Page
6T-2394	247
	251
6T-2395	249
	253
6T-3643	181
6T-3714	260
6T-3764	160
6T-3827	334
	336
6T-3852	256
6T-3853	256
6T-4556	603
6T-4557	603
6T-5067	607
6T-5068	607
6T-5617	556
6T-6505	517
6T-6506	517
6T-7695	567
6T-8048	567
6T-8250	328
6T-8387	389
6T-8388	389
6T-8402	522
	530
	▶639
	648
6T-8403	522
	530
	▶640
	648
6T-8710	297
6T-8714	591
	603
6T-9509	310
	311
6T-9510	310
	311
6T-9512	310
	311
6T-9807	308
6T-9808	308
6T-9927	308
6T-9928	308
6T-9929	308
6V-0267	439
6V-0268	439
6V-0273	454
6V-0299	446
6V-0400	453
	465
6V-0473	269
6V-0484	261
6V-0661	247
	249
	251
	253
6V-0662	247
	249
	251
	253
6V-0663	247
	249
	251
	253
6V-0664	247
	249
	251
	253
6V-0745	448
6V-0852	77
	115
	234
	255
	260
	399
	435
	438
6V-0855	227
6V-0894	543
6V-1193	331
6V-1322	197
6V-1355	94
6V-1581	84
6V-1582	84
6V-1604	399
6V-1720	234
6V-1723	381
	382
	383
6V-1725	383
6V-1790	601
6V-1819	28
	76
6V-1820	40
	45
6V-1889	70
	439
6V-1970	1
	2
	3
6V-1971	533
6V-2226	342
	345
	348
6V-2312	645
	647
6V-2317	32
	34
	46
6V-2331	522
	525
	530
6V-2372	572
	575
	578
6V-2375	522
	525
	530
6V-2404	256
6V-2478	269
6V-2495	573
	576
6V-2686	194
6V-2689	482
	484
6V-2803	552
6V-3260	522
	525
	530
6V-3263	343
	346
	349
6V-3298	247
	249
	251
	253
6V-3326	392
6V-3538	20
6V-3545	385
6V-3668	239
6V-3669	424
6V-3671	523
	526
	531
6V-3822	211
	280
6V-3823	239
	280
6V-3832	386
6V-3918	13
	44
	49
6V-3922	495
6V-3940	12
	13
	50
	73
	183
6V-3965	77
	115
	234
	255
	261
	399
	436
	439
6V-4248	52
	54
	69
	74
	120
6V-4249	101
	104
6V-4365	237
6V-4369	208
6V-4583	290
6V-4589	501
	502
6V-4791	368
6V-5048	120
	255
6V-5049	77
	120
	131
6V-5050	226
6V-5185	270
6V-5186	270
6V-5188	283
6V-5192	457
	475
	477
6V-5217	44
	72
	170
	208
6V-5218	66
	73
6V-5219	66
6V-5220	66
6V-5324	499
6V-5326	495
6V-5387	260
6V-5555	467
	469
6V-5556	401
	496
	497
6V-5645	181
6V-5683	569
6V-5684	45
	579
6V-5696	14
	61
	239
6V-5758	495
6V-5791	394
6V-5817	634
6V-5818	637
6V-5833	639
	640
	641
	642
6V-5839	40
	69
	76
	101
	104
	105
	120
	125
	208
	259
	327
	459
6V-5841	284
6V-5843	38
	48
6V-5844	42
6V-5849	649
6V-5851	649
6V-6209	651
6V-6317	208
	259
6V-6580	489
6V-6609	83
	193
	259
6V-6717	556
6V-6889	651
6V-7190	522
	525
	530
6V-7238	259
	579
6V-7357	308
	543
	548
6V-7604	23
6V-7636	522

▶ **PRIMARY REFERENCE**

PART NUMBER INDEX

Part	Page	Part	Page	Part	Page	Part	Page
	525		431		539	6Y-0925	370
	530		433		543	6Y-0926	227
6V-7646	227		435	6V-8928	569	6Y-0984	227
	559		436	6V-8934	433	6Y-1757	356
	617		438	6V-9001	120		357
	621		439	6V-9007	74		358
6V-7673	31	6V-8398	122		94		359
	40		158		438	6Y-2130	242
6V-7688	668		394		459	6Y-2704	227
6V-7732	459		438	6V-9168	436		232
6V-7743	308	6V-8400	408		439	6Y-2763	385
6V-7744	267		410	6V-9182	74	6Y-2764	386
	303		412		363	6Y-2765	385
	304		414	6V-9200	433	6Y-2766	385
	460	6V-8547	603	6V-9313	668	6Y-2767	385
6V-7981	125	6V-8624	158	6V-9632	208	6Y-2770	386
6V-8073	522	6V-8625	122		389	6Y-2773	385
	525		158		525	6Y-2777	385
	530	6V-8627	260		601	6Y-2778	385
6V-8076	115		431	6V-9633	460	6Y-2779	385
	436		435	6V-9746	74	6Y-2780	385
6V-8077	66	6V-8628	431		94	6Y-2781	386
6V-8129	522		436		261	6Y-2782	385
	525	6V-8629	438		363	6Y-2783	385
	530	6V-8634	435		438	6Y-2784	385
6V-8149	14	6V-8635	260		439	6Y-2811	269
6V-8182	319	6V-8636	73		459	6Y-2835	342
	321		120	6V-9748	31		345
	507		261	6V-9807	122		348
	508		435		158	6Y-2841	385
	615	6V-8640	439	6V-9829	436	6Y-2846	385
6V-8183	385	6V-8641	431	6V-9839	438	6Y-2847	385
	394		435	6V-9843	436	6Y-2848	386
	611	6V-8647	435	6V-9849	435	6Y-2850	385
6V-8185	206	6V-8675	45	6V-9850	433	6Y-2854	385
6V-8187	385		60		435	6Y-2855	385
6V-8188	170		239		439	6Y-3033	295
	198		280	6V-9872	431	6Y-3140	385
	325	6V-8715	115		435	6Y-3141	385
	334	6V-8721	122	6V-9873	125	6Y-3973	298
	336		158		394	6Y-4082	295
	454		438	6V-9874	363	6Y-4771	269
	467	6V-8723	66	6V-9877	74	6Y-4834	269
	469		122	6Y-0123	308	6Y-4846	269
6V-8189	135		158	6Y-0206	550	6Y-5113	582
	522		260		601	6Y-5500	295
	526		436	6Y-0359	673	6Y-5708	659
	530	6V-8724	115	6Y-0454	372		660
6V-8190	305		120		373	6Y-5814	328
6V-8197	42		431		377	6Y-6277	251
	45		436		378		253
6V-8200	492		438	6Y-0473	356	6Y-6850	385
6V-8214	561	6V-8730	439		357	6Y-7233	312
	564	6V-8774	433		358	6Y-7385	559
6V-8236	589	6V-8781	433		359	6Y-7573	385
6V-8237	422		436		360	6Y-7576	386
6V-8260	64	6V-8801	143		361	6Y-7577	386
6V-8336	42		170		362	6Y-7579	385
6V-8369	567		172		372	6Y-7795	334
6V-8370	204		174		373		336
6V-8376	181		176		377	6Y-7796	334
6V-8397	115		317		378		336
	122		385	6Y-0560	325	6Y-8037	342
	158		389	6Y-0563	312		345
	260		407	6Y-0859	247		348

► **PRIMARY REFERENCE**

PART NUMBER INDEX

Part	Page
6Y-8114	601
6Y-9373	227
	232
7	
7B-0863	305
7B-1597	234
7B-3028	342
	345
	348
7B-3039	459
7B-3235	256
7C-1493	66
7C-2164	52
	54
7C-3567	47
7C-4354	259
7C-7225	281
7C-7431	112
7C-8370	52
	54
7C-8634	31
7D-1089	571
7D-1649	45
	239
	256
7D-1677	285
7D-6922	550
7D-7233	94
7D-8431	607
7D-8508	351
	352
	353
	354
7D-9749	401
	460
7E-4761	29
7F-3488	197
7F-3491	197
7F-3525	197
7F-6112	334
	336
7F-6998	560
	563
7F-8267	460
7F-8607	571
7G-1577	399
7G-1596	227
7G-2343	270
7G-2454	522
	530
7G-2516	269
7G-2830	269
7G-3832	261
	446
7G-3833	261
	446
7G-3834	261
	446
7G-4332	360
	361
	362
	372
	373
	377
	378
7G-4824	550
	601
7G-4842	295
7G-4998	226
7G-5186	92
7G-5684	247
	249
	251
	253
7G-5776	247
	249
	251
	253
7G-5777	247
	249
	251
	253
7G-5780	247
	249
	251
	253
7G-5783	247
	249
	251
	253
7G-5784	247
	249
	251
	253
7G-5831	247
	249
	251
	253
7G-5832	247
	249
	251
	253
7G-5833	247
	249
	251
	253
7G-5837	247
	249
	251
	253
7G-5984	429
	444
7G-5985	429
	444
7G-5986	429
	444
7G-7218	269
7G-7379	343
	346
	349
7G-7724	269
7G-8664	338
	339
7G-8666	338
	339
7G-9476	295
7H-1447	459
7H-3171	370
7H-3599	381
	382
	383
7H-3608	284
7H-4566	227
7H-4571	368
7H-4574	368
7H-7628	256
7H-7658	269
7I-1024	579
7I-2272	208
7I-7439	634
7J-0204	143
	211
	401
	472
	475
	477
7J-2036	356
	357
	358
	359
7J-3216	338
	339
7J-5131	657
	658
	659
	660
7J-8611	234
	261
7J-9933	401
	472
	475
	477
	494
7K-1181	132
	137
	139
	141
	155
	158
	160
	161
	163
	165
	170
	172
	174
	176
	178
	181
	211
	217
	221
	298
	306
	308
	328
	385
	389
	397
	463
	541
	543
	571
	590
7K-3176	571
7L-2894	197
7M-0324	197
7M-0325	198
7M-0326	197
7M-0327	197
7M-1201	236
7M-1296	294
7M-1297	294
7M-1377	294
7M-7219	557
7M-8485	74
	94
	160
	239
	260
	261
	301
	363
	401
	472
	475
	477
7M-8592	399
7M-8651	197
7N-0060	147
7N-0296	194
7N-0718	143
	▶201
7N-2059	194
7N-5683	20
7N-9801	194
	205
7N-9943	168
7P-4190	394
	543
7R-3029	215
7S-2042	298
	306
7S-3912	261
7S-3913	261
7S-5005	129
7S-6369	100
7T-0020	168
7T-0029	298
7T-0030	306
7T-0094	155
7T-1068	639
	▶641
7T-1069	640
	▶642
7T-1099	106
	208
	217
	298
	537
7T-1149	342
	345
	348
7T-1150	342
	345
	348
7T-1151	342

▶ **PRIMARY REFERENCE**

PART NUMBER INDEX

Part	Page
	345
	348
7T-1152	342
	345
	348
7T-1153	342
	345
	348
7T-1330	639
	640
7T-1474	256
7T-1475	256
7T-1885	227
	232
7T-2530	247
	249
	251
	253
7T-2531	247
	249
	251
	253
7T-2750	382
7T-3746	668
7T-3974	197
7T-4532	534
7T-5856	541
7T-5886	342
	345
	348
7T-5969	382
	383
7T-6079	342
	345
	348
7T-6299	556
	601
7T-6427	334
	336
7T-6578	269
7T-6580	269
7T-6581	269
7T-6654	457
7T-6678	666
7T-6799	560
	563
	597
7T-6935	652
	653
	654
	▶666
7T-6936	666
7T-6965	▶334
	384
7T-6966	▶336
	383
	384
7T-6994	227
	232
7T-7305	668
7T-7789	▶340
	383
7T-8130	227
7T-8136	232
7T-8556	293
7T-8816	270
7T-8875	234
7T-8876	234
7T-8891	634
7T-8894	571
	575
7T-8895	571
	575
7T-9031	232
7T-9123	198
7T-9272	269
7T-9280	312
7T-9303	567
7T-9370	269
7T-9426	571
	575
	578
7T-9515	204
7T-9542	269
7T-9788	227
7T-9793	572
	575
	578
7T-9796	342
	345
	348
7T-9832	227
7T-9837	227
	232
7T-9946	256
7U-4892	181
7V-5191	557
7V-8532	260
7W-3872	46
7W-6534	228
7X-0274	448
	450
7X-0288	539
7X-0293	439
7X-0301	385
7X-0311	537
7X-0325	333
7X-0339	137
	139
7X-0343	343
	346
	349
7X-0346	312
	328
7X-0349	312
	503
	505
7X-0365	161
	163
	165
	170
	174
	176
	217
	319
	321
	503
	505
	511
	512
7X-0366	247
	249
	251
	253
	616
7X-0370	365
7X-0371	537
7X-0372	615
7X-0375	319
	321
7X-0377	507
	508
7X-0383	351
	352
	353
	354
7X-0392	426
	511
	512
7X-0400	343
	346
7X-0404	365
7X-0406	426
7X-0418	305
7X-0421	612
	613
7X-0428	305
	592
	670
7X-0447	537
7X-0449	426
	511
	512
7X-0515	47
	211
	312
7X-0519	543
7X-0521	454
7X-0531	612
	613
7X-0533	305
	334
	336
	592
	670
7X-0562	198
7X-0575	389
	397
7X-0578	541
7X-0579	115
7X-0582	312
	319
	321
	333
	334
	336
	537
7X-0590	353
	354
7X-0603	607
7X-0608	389
	514
	522
	525
	530
7X-0618	312
7X-0623	522
	526
	530
7X-0818	217
7X-0820	436
	439
7X-1552	386
7X-2535	436
7X-2536	261
7X-2539	115
7X-2543	397
7X-2547	281
7X-2548	181
7X-2555	308
7X-2562	670
7X-2563	333
7X-2565	132
7X-2568	454
	668
7X-2908	50
7X-3229	678
	680
	682
7X-3317	385
7X-3325	466
7X-3327	312
7X-3373	197
7X-3374	566
7X-3392	467
	469
	588
7X-6222	560
	563
	597
7X-6315	151
	152
	156
7X-7644	678
	679
	682
7X-7700	133
7X-7702	637
7X-7729	79
	81
	82
	84
	92
	98
	101
	106
	107
	110
	115
	161
	163
	165
	306
	308
	323
	324
	389
	394
	460

▶ **PRIMARY REFERENCE**

PART NUMBER INDEX

Part	Page
	522
	526
	530
	537
	549
	572
	575
	588
	591
	600
	601
	603
	625
7X-7877	607
	637
7X-7888	589
7X-7927	634
	637
7X-7928	634
	637
7X-7929	634
	637
7X-7930	634
	637
7X-7945	260
7Y-7256	561
	564
	598
7Y-7388	567
7Y-7394	543
8	
8B-4624	298
8C-3079	129
8C-3082	489
8C-3089	197
8C-3131	456
8C-3205	443
	446
	448
	450
8C-3206	261
	429
	443
	444
	460
	467
	469
	492
8C-3325	401
8C-3334	236
8C-3442	522
	525
	530
8C-3443	260
8C-3445	66
8C-3446	66
	84
	255
	436
8C-3447	255
8C-3451	435
8C-3681	94
8C-3756	541
8C-4365	465
8C-4436	312
	325
	343
	346
	349
	612
8C-4984	33
8C-5060	649
8C-5607	161
	163
	165
8C-5608	161
	163
	165
8C-5682	571
	575
	578
8C-5917	143
8C-6354	219
	220
8C-6857	312
	404
8C-6913	266
	319
	321
	351
	352
	353
	354
8C-8451	161
	163
	165
8C-8583	113
8C-8585	303
	304
8C-8842	333
8C-8843	613
8C-8844	333
8C-9126	426
8C-9160	416
	418
8C-9173	422
8C-9200	422
8C-9660	197
8D-0983	537
8D-1817	256
8D-1819	256
8D-3508	298
8D-4771	266
8D-7185	537
8D-9671	122
	158
	394
8D-9739	270
8E-0618	224
	225
8E-0852	385
8E-0853	385
8E-1118	559
8E-1203	386
8E-1205	298
	306
8E-1211	342
8E-1212	342
	345
	348
8E-1358	385
8E-2112	380
8E-2139	356
	357
	358
8E-2935	389
8E-3430	210
8E-3431	210
	571
8E-3446	▶643
	648
8E-3447	▶644
	648
8E-3507	224
8E-3508	224
8E-3509	225
8E-3520	225
8E-3621	298
	300
8E-3623	298
	300
8E-4525	394
8E-5113	▶648
8E-5114	▶648
8E-5170	242
8E-5703	416
	418
8E-6269	408
	410
	412
	414
8E-6619	356
	357
	358
	359
8E-6754	503
	505
8E-6755	503
	505
8E-6756	503
	505
8E-6856	637
8E-7561	298
	306
8E-7791	550
	601
8E-8292	634
8E-8299	269
8E-8300	290
8E-8303	269
8E-8304	269
8E-8307	227
	232
8E-8310	227
8E-8434	491
8E-8648	341
8E-9483	385
8E-9532	333
8F-1434	198
8F-3469	399
8F-4028	334
	336
8F-6575	62
8F-6711	372
	373
	377
	378
8F-7219	118
8F-7702	385
	543
8F-9206	460
8G-0891	394
8G-4386	301
8H-2262	368
	370
8H-2768	285
8H-5303	201
8H-5306	201
8H-5352	270
8H-8175	237
8H-9818	245
	286
8H-9819	245
8J-1665	247
	249
	251
	253
8J-1818	422
8J-2880	416
	418
8J-6913	459
8J-7236	537
8J-8197	579
8J-8322	460
8J-8436	460
8J-8443	459
8J-8462	472
8J-8468	459
8J-8782	459
8J-8783	459
8J-9990	438
8K-1433	559
8L-2746	501
	502
8L-2779	120
	295
8L-2786	255
	480
	482
	484
8L-5008	94
8L-8413	142
	143
	557
	632
8M-1013	293
	295
8M-2530	234
8M-2538	399
8M-2773	115
	122
	158
	572
8M-4390	267
8M-4409	399

▶ **PRIMARY REFERENCE**

PART NUMBER INDEX

Part	Page	Part	Page	Part	Page	Part	Page
8M-4432	237	8S-0527	232	8T-1980	522		84
	270	8S-0948	211		525		89
8M-4435	399	8S-2195	385		530		94
8M-4438	228	8S-4304	239	8T-2225	142		96
	232	8S-5383	535		143		98
8M-4986	237	8S-7048	386		211		101
	261	8S-7499	482	8T-2275	460		113
	294	8S-7803	557	8T-2353	433		115
8M-4987	261	8S-9008	286	8T-2501	217		122
8M-4988	399	8S-9130	234		539		133
8M-5010	270	8T-0083	438	8T-2502	89		137
8M-5249	399	8T-0100	34		94		139
8M-5254	397		36		221		143
8M-5255	270		100		308		158
8M-5266	270	8T-0119	122		343		170
8M-5661	394		158		346		172
8M-5860	23		579		349		174
8M-7160	283	8T-0232	301	8T-2540	385		178
8M-8157	261	8T-0267	155	8T-2561	308		181
8M-8489	281	8T-0276	72		454		211
8M-9307	239	8T-0292	72		539		221
8M-9315	41	8T-0318	522	8T-2602	429		241
8N-0869	211		525	8T-2603	429		242
8N-1544	210		530	8T-2659	221		261
8N-1545	220	8T-0328	198		598		267
8N-1725	142		208	8T-2920	211		286
8N-4617	97		221	8T-3282	424		294
8P-0058	234		617	8T-3298	459		298
8P-0311	293		621	8T-3490	60		300
8P-0612	298	8T-0337	517		71		303
8P-1892	269		598		84		304
8P-1916	269	8T-0372	280		106		308
8P-1964	269	8T-0389	221		115		323
8P-2019	270		589		122		324
8P-2022	270	8T-0638	137		139		394
8P-2023	270		139		208		397
8P-2051	269	8T-0639	589		210		405
8P-2053	269	8T-0644	83		260		429
8P-5244	333		86		306		439
	613	8T-0646	62		310		443
8P-6188	368	8T-0687	639		311		448
	370		640		323		450
8P-6321	295	8T-0722	327		324		460
8P-6363	541		394		389		467
8P-6651	372		460		549		469
	373	8T-0785	416		571		492
	377		418		572		516
	378	8T-0788	438		600		522
8P-8357	228	8T-1120	261		601		526
	232	8T-1177	543		625		530
8P-9507	269	8T-1445	269	8T-3597	525		535
8P-9747	613	8T-1447	479		549		539
8P-9770	507	8T-1887	436		601		541
	508		439	8T-3612	194		543
	510	8T-1888	436	8T-3666	28		556
	658		439	8T-3719	448		572
	659	8T-1891	439	8T-3721	448		576
	660	8T-1892	439	8T-3957	391		579
	661	8T-1895	439	8T-3992	181		582
	664	8T-1896	439	8T-4121	30		589
8Q-6071	456	8T-1899	261		52		607
8R-3393	571	8T-1900	261		54		625
	575	8T-1979	522		70	8T-4122	308
8S-0023	429		525		73		312
8S-0024	429		530		74		343

► **PRIMARY REFERENCE**

PART NUMBER INDEX

Part	Page
	346
	349
	503
	505
8T-4123	47
	308
	670
8T-4131	327
8T-4132	137
	139
	535
8T-4133	73
	74
	96
	98
	172
	174
	261
	283
	308
	394
	406
	439
	444
	535
	541
	543
	572
	576
	579
	637
8T-4136	74
	84
	89
	92
	94
	98
	101
	107
	110
	113
	115
	122
	133
	139
	158
	161
	163
	165
	170
	172
	174
	211
	241
	245
	261
	286
	294
	298
	300
	303
	304
	306
	308
	317
	323
	324
	394
	405
	436
	439
	446
	460
	522
	526
	530
	537
	539
	572
	576
	579
	588
	591
	600
	601
	603
	607
8T-4137	70
	79
	81
	84
	94
	98
	122
	137
	139
	143
	158
	170
	178
	208
	211
	221
	261
	286
	308
	323
	324
	389
	439
	516
	541
	556
	572
	576
	579
	582
	601
	603
	625
8T-4138	221
	561
	564
	598
	601
	649
8T-4139	217
	286
	429
	446
	537
	539
	543
	549
	587
	601
	603
8T-4154	169
8T-4158	522
	530
8T-4167	591
	603
8T-4170	47
8T-4171	221
	559
	561
	564
	598
8T-4172	261
	294
	460
	572
	576
8T-4176	286
	308
	439
8T-4178	460
8T-4179	522
	526
	530
8T-4181	163
	522
	526
	530
8T-4182	30
	96
	101
	242
	261
	266
	429
	467
	469
	535
	543
8T-4183	262
	429
	439
	446
	526
	555
8T-4184	439
	453
	465
8T-4185	73
	81
	96
	211
	242
	245
	262
	401
	535
	572
8T-4186	52
	54
	74
	79
	143
	262
	394
	535
	543
8T-4187	327
8T-4189	194
	217
	550
	601
8T-4190	211
8T-4191	181
	221
	298
	300
	491
	516
	576
8T-4192	74
	89
	101
	211
	405
	439
	446
	457
	541
	553
8T-4193	47
	137
	139
	535
8T-4194	262
	444
	601
8T-4195	74
	84
	89
	101
	115
	122
	158
	262
	286
	389
	394
	429
	439
	522
	526
	530
	535
	539
	543
	548
	549
	572
	576
	579
	589
	603
8T-4196	52

PART NUMBER INDEX

Part	Page	Part	Page	Part	Page	Part	Page
	54		247		535	8T-4986	104
	79		249	8T-4648	113	8T-4994	161
	81		251		267		163
	82		253	8T-4649	591		165
	92		262		603		170
	101		266	8T-4752	567		174
	106		267	8T-4777	645		176
	115		286		647		217
	170		298	8T-4779	64		247
	172		300		463		249
	174		306		579		251
	262		308	8T-4835	325		253
	267		312		406		328
	308		328		407		365
	395		334		539		395
	429		336	8T-4896	79		404
	436		343		92		448
	439		346		94		450
	443		349		143		613
	444		405		159	8T-4999	678
	446		429		174		680
	448		439		211		683
	450		444		221	8T-5005	262
	460		446		247	8T-5030	239
	467		448		249	8T-5041	267
	469		450		251	8T-5071	342
	492		453		253		345
	549		454		262		348
	572		460		312	8T-5360	267
	576		465		317		439
	603		503		343		537
	625		505		346	8T-5361	305
8T-4199	181		522		349		334
	221		526		363		336
8T-4200	181		530		385		343
8T-4205	135		535		389		346
	158		537		395		365
	197		539		406	8T-5400	637
	206		541		407	8T-5410	385
	208		543		408	8T-5429	438
	363		559		410	8T-5436	159
	386		572		412		535
	537		579		414	8T-5439	132
	541		601		446		327
	543		613		448		333
	561	8T-4224	35		450		615
	564		135		539	8T-5451	208
	598		169		572	8T-5460	668
	617		170		637	8T-6430	47
	621		181	8T-4897	308	8T-6466	115
	636		211	8T-4908	217		194
8T-4222	79		221	8T-4910	52		262
	298		262		54		308
8T-4223	52		395		89		572
	54		401		448		576
	74		448		450	8T-6685	397
	101		450		535		541
	113		544	8T-4956	429	8T-6703	84
	137		609		439	8T-6723	122
	139		610		460		158
	143	8T-4226	262	8T-4971	603	8T-6724	122
	170	8T-4231	391		607		158
	181	8T-4244	52	8T-4984	84	8T-6757	25
	211		54		89	8T-6761	239
	217		439		438	8T-6762	83

► **PRIMARY REFERENCE**

PART NUMBER INDEX

Part	Page
8T-6764	239
8T-6854	239
8T-6868	52
	54
	439
8T-6869	116
8T-6871	305
	312
8T-6876	394
8T-6912	35
	178
	395
8T-7044	105
8T-7371	503
	505
8T-7532	342
	345
	348
8T-7566	298
	306
	594
	596
8T-7568	404
8T-7849	424
8T-7852	589
8T-7934	221
8T-8729	132
	141
	194
	210
	211
	386
	484
	547
	560
	563
	571
	575
	583
	584
	597
8T-8736	220
8T-8737	141
	142
	155
	161
	163
	165
	172
	208
	210
	215
	216
	219
	220
	484
	560
	564
	567
	585
	586
	590
	597
	637
8T-8902	66
8T-8908	601
8T-8914	525
8T-8917	170
	247
	249
	251
	253
	312
	325
	328
	334
	336
	343
	346
	349
	446
8T-8919	89
	92
	137
	139
	266
	343
	346
	349
	454
8T-8924	613
	615
8T-8932	394
	397
8T-8987	408
	410
	412
	414
8T-9043	522
	526
	530
8T-9082	617
8T-9085	281
8T-9313	328
8T-9364	537
8T-9371	632
8T-9389	312
	328
8T-9393	312
	380
8T-9398	328
	448
	450
8T-9399	174
	176
	537
8T-9403	467
	469
8T-9405	221
8T-9496	303
	304
8T-9529	489
8T-9530	515
	677
	679
	682
8T-9655	115
	149
	215
8T-9757	143
8T-9905	677
	679
	682
8U-3297	456
8U-3875	456
	489
8U-5009	456
8U-5010	456
8U-9480	456
8V-0622	143
8V-5455	649
8W-2521	115
8W-6153	122
	158
8Y-4000	303
	304
8Y-4489	115
8Y-4842	459
8Y-5737	556
8Y-5944	630
8Y-5945	557
8Y-5965	630
8Y-6012	630
8Y-6014	630
8Y-6024	630
8Y-6041	557
8Y-6045	557
8Y-6046	557
8Y-6047	557
8Y-6060	557
8Y-6062	557
8Y-6063	557
8Y-6064	557
8Y-6066	557
8Y-6067	557
8Y-6068	557
8Y-6069	557
8Y-6277	617
	621
8Y-6388	550
	560
	563
8Y-6419	644
8Y-6420	644
	▶645
8Y-6422	645
8Y-6423	643
	644
	645
8Y-6424	643
	644
8Y-6430	643
	644
	645
	647
8Y-6431	647
8Y-6432	643
8Y-6433	643
	▶647
8Y-6448	641
	642
8Y-6454	645
	647
8Y-6455	645
	647
8Y-6459	643
	644
	645
	647
8Y-6460	645
	647
8Y-6461	645
	647
8Y-6462	643
	644
8Y-6839	639
	640
	641
	642
8Y-6859	557
8Y-6860	557
8Y-6910	643
	644
	645
	647
8Y-7452	435
8Y-8304	522
	530
8Y-8309	649
9	
9B-0576	227
9B-1117	547
9B-2289	372
	373
	377
	378
9B-7233	181
9B-7237	89
	92
	143
	262
	312
	407
	446
	448
	450
	539
	544
9D-0630	113
9D-3769	161
	165
	561
	564
9D-7924	260
9D-9736	522
	526
	530
9F-2247	334
	338
9F-3691	308
9F-4446	13
9F-5599	197
9F-5644	201
9F-6445	298
	537
	636

▶ **PRIMARY REFERENCE**

PART NUMBER INDEX

Part	Page	Part	Page	Part	Page	Part	Page
9F-6656	677		658	9P-7390	269		477
	679		659	9P-7757	269		480
	682		660	9P-7859	641		482
9G-0003	143	9J-7031	459		642		484
9G-0004	143	9J-7978	424	9P-7860	641	9S-8003	41
9G-0280	269	9J-8126	472		642		492
9G-0281	270		475	9P-8614	269	9S-8004	41
9G-0284	269		477	9P-8626	269		51
9G-0285	269	9L-6770	135	9P-9388	581		118
9G-0286	270	9L-7712	389		582		125
9G-0289	269		544	9P-9390	581		255
9G-0290	269	9L-8339	537	9P-9392	▶581		452
9G-0715	394	9L-8781	539		613		480
9G-0742	389	9L-9132	228	9R-2613	110		482
9G-0832	256	9M-0164	70	9S-1240	137		484
9G-0983	588	9M-1974	13		139	9S-8005	25
9G-0986	588		32	9S-1322	341		41
9G-0990	588		33	9S-1354	385		51
9G-0992	613		44		394		66
9G-1127	522		46	9S-2544	197		88
	530		49	9S-2792	293		100
9G-1930	285		65	9S-3581	368		228
9G-1962	342		66		370		232
	345		71	9S-3582	368	9S-8006	66
	348		72		370		100
9G-2375	297		73	9S-4167	115		492
9G-2459	237		149	9S-4181	239	9S-8008	51
9G-2460	237		208		301		88
9G-2461	237		237	9S-4182	94		226
9G-3695	141		297		439		456
	206	9M-1976	286		467	9S-8009	343
	220	9M-2008	290		469		346
	583	9M-2904	99	9S-4185	83		349
	584		443		239		380
	634	9M-3835	298		247	9S-8230	298
9G-4101	197	9M-4355	269		249		306
	198	9M-4370	281		251	9S-8748	394
9G-5127	363	9M-7002	267		253	9S-8752	98
9G-5211	543	9M-7394	459		286	9S-9334	49
9G-5664	356	9M-7609	197		399	9T-0064	507
	357	9M-7958	69		533		508
	358	9N-0869	36	9S-4188	467	9T-0065	507
	359		149		469		508
9G-6744	270		217	9S-4190	115	9T-0066	301
9G-8020	269		550	9S-4191	115		657
9G-8551	297	9N-1995	637		237		658
9G-8615	234	9N-4233	454		239		659
9G-9314	567	9N-4685	73		406		660
9H-0846	247	9P-0356	285		407	9T-0094	426
	249	9P-1478	256		489	9T-1576	392
	251	9P-1480	237	9S-5187	613	9T-1579	392
	253	9P-1921	256	9S-6130	234	9T-1637	392
	286	9P-1922	256	9S-6758	98	9T-1642	392
9H-1031	366	9P-1925	256	9S-7710	234	9T-1687	392
9H-3757	197	9P-3041	295	9S-8001	401	9T-3004	459
9H-6454	460	9P-3066	308		472	9T-3005	459
9H-8712	286	9P-3709	286		475	9T-3264	459
9J-0123	657	9P-5928	297		477	9T-3541	453
	658	9P-5977	237	9S-8002	20		▶494
	659	9P-6217	237		41	9T-3885	416
	660	9P-6571	603		128		418
9J-1641	672	9P-6911	334		401	9T-4143	489
	▶673		336		452	9T-4186	489
9J-2914	459	9P-7072	256		472	9T-4849	391
9J-6058	657	9P-7121	133		475	9T-4901	456

▶ **PRIMARY REFERENCE**

PART NUMBER INDEX

Part	Page
9T-5039	489
9T-5364	479
	▶495
9T-5948	479
9T-5949	479
9T-5950	479
9T-6001	525
9T-6316	401
9T-6322	489
9T-6521	495
9T-6522	495
9T-6523	495
9T-6827	495
9T-6828	495
9T-7677	459
9T-8571	479
9T-8980	479
9T-9836	492
9U-8263	559
9U-8388	295
9U-8746	559
9U-9229	328
9U-9409	363
9U-9540	443
9V-2818	624
9W-0593	▶247
	279
9W-0594	▶249
	279
9W-0844	517
9W-0852	517
	541
	560
	563
	597
9W-1441	181
9W-1442	181
9W-1446	181
9W-1467	399
9W-1468	399
9W-1569	256
9W-1570	256
9W-1571	227
9W-1614	399
9W-1615	399
9W-1617	397
	▶399
9W-1693	363
9W-1694	363
9W-1695	363
9W-1951	220
9W-2032	206
9W-2033	206
9W-2545	543
9W-2822	318
	328
9W-2853	227
9W-2992	256
9W-3232	247
	249
	251
	253
9W-3301	343
	346
	349
9W-3302	399
9W-3330	297
9W-3365	241
9W-3423	305
9W-3425	305
9W-3660	256
9W-4159	234
9W-4361	170
	172
	174
	176
9W-4709	▶225
	279
9W-5150	256
9W-5290	310
	311
9W-5334	234
9W-5343	555
9W-5567	295
9W-5568	295
9W-5595	294
9W-6102	227
9W-6103	227
9W-6198	666
	667
9W-6199	666
	667
9W-6323	636
9W-6359	267
9W-7382	673
9W-7543	298
9W-7602	509
	510
9W-7925	232
9W-7926	232
9W-8084	303
	304
9W-8270	269
9W-8277	363
9W-8612	256
9W-8940	303
	304
9W-9044	310
	311
9W-9058	381
	382
	383
9W-9224	673
9W-9890	281
9X-0194	634
9X-0196	219
9X-0199	204
9X-0261	120
	183
9X-0262	183
9X-0941	143
9X-1054	219
	541
	560
	564
	597
9X-1056	561
	564
9X-1813	141
	185
	186
	188
	200
	202
9X-2027	266
	472
	475
	477
9X-2038	550
9X-2042	221
9X-2043	550
	569
9X-2044	561
	564
	598
9X-2045	550
	569
9X-2053	37
9X-2099	34
9X-2125	234
	625
9X-2185	556
9X-2205	133
9X-2390	572
9X-2532	454
9X-2646	101
9X-2647	101
9X-3265	560
	563
	597
9X-3401	141
	142
	178
	184
	204
	206
	210
	215
	216
	219
	220
	561
	564
	567
	572
	597
	637
9X-3402	141
	142
	161
	163
	165
	178
	206
	210
	215
	216
	219
	220
	561
	564
	567
	571
	590
	597
	637
9X-3452	541
9X-4244	169
9X-4584	342
	345
	348
9X-6016	386
9X-6154	472
9X-6165	161
	163
	165
9X-6281	385
9X-6340	678
	680
	683
9X-6395	494
	496
	497
9X-6458	236
9X-6615	543
9X-6772	161
	163
	165
	590
9X-7287	113
9X-7363	251
	253
9X-7373	541
9X-7378	572
	576
9X-7380	572
	576
9X-7381	572
	576
9X-7382	573
	576
9X-7383	573
	576
9X-7385	534
	573
	576
9X-7449	215
9X-7505	338
	339
9X-8250	137
	139
	573
	576
9X-8256	137
	139
	155
	163
	180
	181
	219
	308
	436
	548
	559
	589
	601
	603
9X-8257	64
	137
	139

▶ **PRIMARY REFERENCE**

PART NUMBER INDEX

Part	Page
	262
	380
	397
	436
	439
	463
	535
	579
9X-8258	509
	510
9X-8260	408
	410
	412
	414
9X-8266	308
9X-8267	561
	564
	598
9X-8268	18
	33
	37
	42
9X-8600	133
9X-8918	557
9X-9731	147
9Y-0810	17
9Y-9236	94
0	
005-4834	227
009-3138	386
012-0380	202
030-1707	196
	211
030-2135	227
030-7950	125
030-8537	389
031-0214	609
	610
031-1119	94
033-6034	72
033-6043	501
	502
033-8248	260
	394
034-3557	247
	249
	251
	253
036-9821	197
037-4426	556
037-5197	143
037-7388	385
045-4065	198
061-6711	270
061-9455	65
	234
067-2551	575
068-8093	270
069-4269	69
	94
077-3241	301
081-6344	571
083-9527	560
	563
	597
084-4111	645
	647
085-8091	472
	475
	477
090-3093	247
	249
	251
	253
091-9035	142
092-7385	74
095-0843	617
	621
095-0878	557
095-1276	543
095-1574	489
095-1750	488
096-3218	489
096-6166	496
098-5747	397
099-3649	401
099-8111	489
1	
100-3224	557
100-3320	208
100-4336	122
	158
100-5041	219
	561
	564
100-5179	557
100-6211	492
100-8010	401
	472
	475
	477
100-8011	401
	472
	475
	477
100-8012	401
	472
	477
101-0003	630
	632
101-0742	649
	▶651
101-2862	456
101-2867	609
	610
101-2868	385
101-3055	567
101-3128	149
101-3934	42
101-4194	630
101-4195	630
102-0341	556
102-2913	677
	678
102-7365	472
	475
	477
102-8801	142
	215
	216
	219
	484
	567
	637
102-8802	132
	134
	141
	142
	170
	172
	174
	178
	191
	194
	200
	202
	204
	205
	206
	208
	210
	211
	219
	482
	484
	500
	517
	534
	541
	571
	575
	632
102-8803	120
	141
	142
	168
	184
	208
	210
	386
	541
	560
	563
	571
	597
102-8804	142
	170
	172
	174
	176
	215
	219
	560
	563
	597
102-8805	219
	517
	680
	683
	472
	475
	477
	142
	215
	216
	219
	484
	567
	637
	132
	134
	141
	142
	170
	172
	174
	178
	191
	194
	200
	202
	204
	205
	206
	208
	210
	211
	219
	482
	484
	500
	517
	534
	541
	571
	575
	632
	120
	141
	142
	168
	184
	208
	210
	386
	541
	560
	563
	571
	597
	142
	170
	172
	174
	176
	215
	219
	560
	563
	597
	219
	517
102-8806	120
	141
	216
	560
	563
	583
	584
	585
	586
	597
	634
	120
	141
	216
	560
	563
	597
103-9425	567
103-9527	537
	▶541
104-1844	454
104-2091	561
	564
104-6202	211
105-1797	208
105-3484	113
105-8183	269
105-9657	519
	▶559
105-9659	519
	▶582
106-1227	391
106-4150	▶243
	245
106-5122	▶534
	535
106-8186	301
106-8187	301
107-1177	401
107-1179	401
107-3786	220
107-3945	356
	357
	358
	359
107-4399	571
107-7694	12
108-1335	519
	▶555
108-1812	▶380
	383
	384
108-1814	▶351
	384
108-1847	492
108-3138	559
108-4086	557
108-4087	557
108-4103	557
108-5157	496
	497
108-6953	286
108-6982	408
	410
108-8089	74
108-8174	386
109-3196	269
109-3207	119

▶ **PRIMARY REFERENCE**

PART NUMBER INDEX

Part	Page
109-4044	571
109-5498	537
109-5761	556
109-6406	516
109-9828	522
	525
	530
109-9829	522
	525
	530
110-0510	286
110-2445	94
110-6109	560
	563
	567
	597
110-6393	677
	679
	682
110-7887	560
	563
	597
110-8152	569
110-8319	74
110-8379	543
110-8827	74
111-0423	351
111-0428	351
111-0429	351
111-2416	208
111-4482	607
111-4919	280
111-5147	550
111-5154	456
111-9251	543
112-3023	342
	345
	348
112-3041	380
112-3042	380
112-3043	380
112-3044	342
	345
	348
112-3462	92
112-4511	269
112-4818	422
112-4919	380
112-5585	269
112-8042	269
112-9051	4
	▶147
112-9783	260
113-6033	588
113-6069	38
113-6362	317
113-6363	94
113-6364	94
114-0358	673
114-0359	673
114-5333	571
	575
114-8843	141
	142
	155
	170
	172
	174
	178
	210
	216
	219
	220
	386
	561
	564
	567
	571
	575
	597
	634
114-8844	161
	163
	637
114-8845	142
	571
	575
115-3519	220
115-4072	38
115-4219	38
115-4337	260
115-4923	360
	361
	362
115-4924	360
	361
	362
115-6301	▶360
	381
	382
115-6302	▶361
	382
	383
115-6303	▶362
	382
	383
115-6307	▶381
	384
115-6308	▶382
115-6310	▶382
	384
115-6313	▶382
	383
115-6314	▶383
115-6315	383
115-6316	▶383
115-8057	543
116-3715	105
	394
116-8145	383
117-1415	525
117-2311	219
117-4491	623
117-4492	514
117-7826	269
117-8131	591
	603
117-8765	457
117-8863	607
117-9966	591
	603
118-0693	522
	525
	530
118-1628	372
	373
	377
	378
118-1727	10
	▶14
118-3619	29
119-3662	141
	142
	155
	170
	174
	206
	208
	210
	215
	216
	219
	220
	571
	575
	590
	634
	637
119-4153	670
119-6024	443
119-6623	515
121-1258	372
	373
	377
	378
121-2844	210
121-6647	472
	477
	▶496
121-6650	475
	▶497
121-6653	472
	475
121-9910	456
121-9913	456
121-9915	456
121-9917	456
121-9918	456
121-9919	456
121-9920	456
121-9921	456
121-9922	456
121-9923	456
121-9924	456
121-9925	456
121-9927	456
121-9941	456
121-9942	456
121-9946	456
122-1133	500
122-2358	89
	96
122-4026	142
122-7127	560
	563
	597
123-0790	52
	54
123-5748	392
123-9294	560
	563
	597
123-9624	472
	475
	477
124-0174	73
124-2463	113
124-3243	550
124-6273	509
124-6274	511
	512
124-6998	74
	210
124-7562	328
	▶331
124-8251	377
	378
124-8255	372
	373
124-8262	372
	373
	377
	378
124-8267	372
	373
	377
	378
124-8490	541
124-9401	236
124-9633	71
125-1302	181
	▶202
125-1372	128
125-1393	496
125-4178	▶376
	383
	384
125-4179	▶371
	383
	384
125-4180	355
	▶366
125-6535	198
125-6536	198
125-6537	198
125-7874	142
	208
	210
	215
	216
	219
	220
	561
	564
	590
	597
125-7875	142
	208
	210
	215

▶ **PRIMARY REFERENCE**

PART NUMBER INDEX

Part	Page	Part	Page	Part	Page	Part	Page
	219	126-5011	208		348		484
	220	126-5143	342	132-0338	514	141-4942	3
	517		345	132-4354	394		5
	561		348	132-5789	142		▶251
	564	126-7574	156		172	141-4976	220
	567	127-1043	607		211	142-3331	306
	590	127-1044	607		220	142-7092	▶341
	597	127-1045	607	132-8487	215		384
125-8254	522	127-1046	607	132-8502	330	142-8620	541
	525	127-1048	607	133-5545	498	143-1265	317
	530	127-3018	601	133-5631	339	143-1288	617
126-0814	435	127-5485	220	134-2540	210		621
	438	127-5486	210		215	143-6871	389
126-1757	15	127-7443	194		220	143-9392	149
126-1767	141	127-8830	678	134-4126	151	143-9523	334
	142	128-3341	64		152		338
	170	128-3813	64		156	144-0195	516
	172	128-5924	571	134-7258	678		634
	174		575		679		637
	176	129-1831	560		682	144-0331	547
	178		563	134-9602	556	144-1636	634
	184	129-1908	▶416	135-6536	659	144-4284	270
	206		420		660	144-7878	270
	210	129-1910	416	135-6537	667	144-8344	394
	215	129-4259	▶418	135-6538	655	145-0326	630
	216		421		656		632
	219	129-4303	418		▶667	145-2334	480
	220	129-8331	161	135-9819	14		482
	561		163	136-0822	15		484
	564		165	136-1543	595	145-6669	108
	571		170	136-1544	514	145-7028	141
	572		174	136-1595	227		▶191
	597		176	136-2216	286		210
	637		217	136-2227	525	145-7328	637
126-1768	141	130-0229	255	136-2228	525	145-8741	649
	142	130-1433	571	136-3188	649	146-0414	89
	155		575	136-3191	649	146-3728	501
	161	130-1977	443	136-4183	38	146-6315	480
	163	130-3139	338	136-6093	389		482
	165		339	136-9066	684	146-6317	482
	170	130-3280	108	136-9291	480	146-6433	649
	172	130-5300	142	136-9297	480	146-6669	236
	174		217		482	146-6670	236
	176		220		484	146-6747	678
	178	130-9191	443	136-9298	480		680
	206	130-9811	192		482		682
	210		193		484	147-1444	590
	215	131-0353	100	137-1602	111	147-1445	216
	216	131-1488	206	137-6645	192	147-1446	216
	219	131-1647	340		193	147-3150	210
	220		341	137-6722	579	147-6603	499
	561	131-3539	217	137-9755	482	147-6604	499
	564	131-3935	356		484	147-6605	499
	571		357	139-2455	443	147-7976	▶583
	575		358	139-2456	443		649
	590		359	139-5172	412	147-7979	▶584
	637	131-4091	270		414		649
126-1773	220	131-4242	557	140-0860	141	148-2903	119
126-1774	161	131-4675	456	141-2240	601	148-8305	435
	163	131-5137	567	141-4044	607	148-8313	122
	165	131-5167	557	141-4123	556		158
	210	131-5492	603	141-4689	334	148-8316	435
	590	131-5879	389		▶338	148-8318	435
126-3700	625	131-8207	342	141-4852	480	148-8319	115
126-3701	625		345		482	148-8324	363

▶ **PRIMARY REFERENCE**

PART NUMBER INDEX

Part	Page
148-8325	431
	435
148-8326	431
	435
148-8335	260
148-8336	435
148-8347	74
	94
	438
	459
148-8351	435
148-8358	158
148-8359	74
148-8360	74
	363
148-8361	433
148-8364	122
	158
148-8365	394
148-8367	433
	435
148-8368	260
	431
	435
148-8369	431
	436
148-8372	122
	158
	438
148-8374	122
	158
	260
	436
148-8378	115
	431
	436
	438
148-8381	438
148-8388	438
148-8391	408
	410
	412
	414
148-8407	239
148-8411	239
	533
148-8434	436
148-8435	433
	436
148-8439	433
148-8449	438
148-8458	122
	158
148-9359	464
148-9920	397
149-5240	119
149-5470	480
	482
	484
149-9818	219
150-1955	333
150-3065	261
150-4043	394
150-4047	433
150-4050	438
150-4086	220
151-0254	649
151-0255	649
151-1398	206
151-2939	17
151-6282	158
152-8073	360
	361
	362
153-1277	108
153-5043	191
153-5700	141
153-6243	261
153-6246	436
	439
153-6251	408
	410
	412
	414
153-6261	438
153-6281	141
153-6787	408
	410
153-6976	475
	477
153-7067	472
	475
	477
153-7549	472
153-7550	472
153-7551	475
	477
153-7553	472
153-8001	220
154-1580	459
154-2302	394
154-3358	40
154-5629	550
154-6626	571
	575
154-9838	342
	345
	348
155-2255	142
	161
	163
	165
	215
	219
	220
	567
	637
155-2257	215
	220
155-2260	142
	185
	186
	188
	208
	210
	220
	561
	564
	567
	572
	598
155-2265	161
	163
	165
	208
	210
	215
	561
	564
	637
155-2270	141
	142
	170
	172
	174
	176
	178
	203
	206
	208
	210
	216
	219
	220
	517
	541
	561
	564
	571
	575
	597
155-2271	142
	220
	561
	564
	597
155-2274	155
	219
	220
	561
	564
	567
	598
	637
155-3624	439
	467
	469
155-5161	286
155-6479	553
155-7327	261
155-7861	668
156-4406	270
156-5341	▶284
	383
	384
156-5545	514
156-5970	500
156-7410	550
157-0670	84
157-1361	560
	563
158-0518	328
158-3025	422
158-6072	111
158-6632	141
	▶204
	219
158-7697	522
	525
158-7698	525
158-7864	3
	4
	5
158-8906	569
158-9956	452
	▶471
159-1503	92
	259
	579
159-2950	▶626
	629
159-3042	45
159-3781	482
159-7156	▶391
	428
159-7943	550
159-7946	550
159-7948	550
159-7949	549
	550
159-8047	211
159-8049	142
	143
159-8050	143
159-8112	480
159-9257	560
	563
	597
159-9322	161
	163
	165
	210
	216
	220
	590
160-0526	16
160-1431	543
160-1434	543
160-1823	132
160-3585	256
160-3588	256
160-4702	548
160-6304	507
	508
160-7165	626
	627
	▶630
160-7186	625
	▶627
160-7689	210
	216
	220
	590
160-7690	161
	163
	165
160-8124	208
	210
160-8184	40
160-8194	50

▶ **PRIMARY REFERENCE**

PART NUMBER INDEX

Part	Page	Part	Page	Part	Page	Part	Page
160-8197	50	162-7862	356	164-5567	115	166-5229	220
160-8199	50		357		234	166-6781	630
160-8497	137		358		261	166-7212	422
161-1083	569		359		436	166-7213	422
161-1084	569	162-8378	547		439	166-7220	469
161-1085	569	162-8387	547	164-5570	439	166-9139	424
161-1091	569	162-8389	547	164-5590	436	166-9204	394
161-1092	569	163-1135	632	164-5619	492	166-9209	394
161-1093	569	163-1146	630	164-5669	62	166-9212	389
161-1094	569	163-1201	141	164-5675	▶305	166-9213	394
161-1097	567	163-2160	365	164-6148	11	167-0024	22
161-1098	569	163-2445	62		▶17	167-0168	73
161-1099	567	163-2447	56	164-6896	▶327	167-0172	105
161-1703	187	163-2459	62		670	167-1138	312
161-1704	183	163-2478	25	164-7320	▶422	167-1140	312
161-1705	183	163-5512	480		671	167-2087	613
161-2684	475		482	164-7556	169	167-2088	533
	477		484	164-7577	▶200		▶613
161-2685	472	163-5671	472		226	167-2201	418
161-3398	105	163-8686	352	164-7677	467	167-2207	422
161-3406	11	163-8687	▶352	164-8473	560		424
	▶20		355		563	167-2312	418
161-3411	105	163-8691	▶365	164-9456	311	167-2317	422
161-3424	50		367	164-9461	310		424
161-3615	▶546		384	164-9463	324	167-2323	380
	548	163-8692	▶353	164-9465	323	167-2467	422
161-3616	405		355	165-2273	579		424
	▶566	163-8693	▶354	165-3663	352	167-7640	443
161-3958	603		355		353	167-7641	443
161-3964	389	163-8742	592		354	167-7642	443
161-4024	550	163-8743	592	165-3664	352	167-7643	443
161-4463	319	163-8744	1		353	167-8987	215
161-5967	557		2		354	168-5051	345
161-6149	488		3	165-4445	10	168-5052	345
	498		▶592		▶105	168-5053	342
161-6154	471	163-8745	612	165-4461	10	168-5054	342
161-6161	488	163-8746	1		▶83	168-7211	50
	498		2	165-4854	286	168-8655	170
161-6963	111		3	165-6577	466	168-8806	92
161-7632	327		▶612	165-6857	603	169-0161	354
161-8068	281	164-0758	603	165-6879	10	169-0162	354
161-9289	626	164-0847	560		▶40	169-0163	353
	627		563	165-6937	327	169-0164	353
	628		597	165-6940	94	169-0697	596
161-9926	141	164-0938	472	165-6942	340	169-1026	621
	▶185	164-1234	632	165-6969	392	169-2692	312
162-0177	484	164-2879	1	165-7211	342	169-2693	312
162-2166	357		2		345	169-2876	677
	358		3		348		678
	359		▶363	165-7574	342		679
	372	164-3417	133		345		682
	373	164-3651	463		348	169-3883	104
	377	164-4146	609	165-7576	342	169-3895	61
	378	164-4180	239		345	169-3899	60
162-2220	128	164-4531	514		348	169-5459	537
162-2222	128	164-4716	▶670	165-8322	515	169-5863	260
162-2480	298		671		▶537	169-6890	412
	315	164-4718	670	165-9104	543		414
	316	164-4719	670	166-0383	327	169-6902	600
	323	164-4720	▶668	166-1790	10	169-7380	630
	324		671		▶60		632
162-2792	281	164-4883	594	166-1792	10	169-8419	325
162-6448	401		596		▶61	169-9637	519
162-6874	▶256	164-4990	▶443	166-3648	50		521
	292		671	166-3733	567		▶588

▶ **PRIMARY REFERENCE**

PART NUMBER INDEX

Part	Page
169-9649	▶634
	636
169-9650	634
170-0251	603
170-0260	560
	563
170-0967	259
170-1112	514
170-1114	514
170-1115	514
170-3357	452
	▶488
170-3399	537
170-3443	571
170-4001	472
170-4068	142
170-4859	143
170-5849	550
170-5851	550
170-5852	550
170-5853	550
170-5854	522
	525
	530
170-5855	522
	525
	530
170-5859	525
170-7259	613
170-7260	613
170-8590	609
	610
171-1230	617
	621
171-2438	588
171-3054	392
171-3055	392
171-3057	392
171-3058	392
171-3059	392
171-3060	392
171-3061	392
171-3068	392
171-4046	560
	563
171-5882	372
	373
	377
	378
171-5989	392
171-5999	392
171-6001	391
	▶392
171-6682	617
	621
171-7077	543
171-8772	500
172-2416	617
	621
172-4860	219
172-4863	181
172-5989	537
172-6062	208
172-9966	466
172-9981	416
173-0511	472
	475
	477
173-0512	472
173-0514	475
	477
173-0515	472
173-1016	128
173-1028	▶514
	617
	621
173-2052	595
173-3083	623
173-3283	621
173-3993	401
	472
	475
	477
173-5787	626
	627
173-7035	626
	627
	628
173-7132	438
173-9779	422
174-0503	210
	215
	220
	598
174-2231	▶557
	630
174-2237	557
174-5415	108
174-7599	115
174-7875	141
174-9169	194
174-9570	115
	▶118
175-0451	174
175-0454	18
175-1349	560
	563
	597
175-2831	607
175-3721	42
175-3950	560
	563
	597
175-4165	547
175-4170	547
175-4291	169
175-4292	169
175-4393	560
	563
175-7900	416
	418
176-5913	62
176-5914	62
177-1044	88
177-1050	87
177-1056	87
177-1058	87
177-1860	609
177-1862	609
	610
177-1863	617
	621
177-4935	▶609
	621
177-4937	619
	623
177-9653	155
177-9656	155
178-0603	▶617
	619
178-0604	▶594
	617
178-0605	594
	▶595
	596
178-0606	▶619
	627
	628
178-0607	609
178-0608	609
178-0609	609
178-3003	597
178-3338	516
178-7195	352
	353
	354
178-7907	595
179-7094	519
	▶522
179-7376	547
179-7400	128
179-8128	129
179-9387	▶403
	435
180-3907	239
180-4362	261
180-5737	206
180-6152	480
	482
	484
180-6600	612
	613
180-7304	▶621
	623
180-7305	▶596
	621
180-9339	534
180-9340	185
	186
180-9616	438
183-2097	10
	▶66
183-2931	88
183-3399	73
183-3401	120
183-3407	41
	51
	125
183-3873	260
183-4273	571
	575
183-4274	210
183-7263	401
183-9374	47
184-0982	601
	603
184-1503	625
184-2298	617
	621
184-2299	617
	619
	621
184-3269	625
184-3270	625
184-5321	405
	▶480
184-6011	▶623
	626
184-8060	543
185-0838	52
	54
185-0845	84
185-1047	92
185-1861	561
	598
185-2076	603
185-2638	135
185-2639	135
185-2644	135
185-2645	135
185-2647	135
185-2648	135
185-2650	135
185-2651	135
185-2653	135
185-2654	135
185-2655	135
185-2656	135
185-2657	135
185-2658	135
185-3159	16
185-3666	591
185-6393	196
185-7157	141
185-9358	321
185-9607	176
186-0636	170
186-3735	134
	168
	191
	200
	202
	205
	482
	500
	585
	586
186-3736	203
186-4857	634
186-5107	632
186-6189	571
	575
187-0413	525
187-0541	488

▶ **PRIMARY REFERENCE**

PART NUMBER INDEX

Part	Page
187-1315	27
187-1679	133
187-3523	239
187-3961	84
187-7719	597
187-8194	40
187-8195	40
187-8222	40
187-8223	40
187-9194	459
188-1012	535
188-1013	535
188-1017	45
188-1079	546
188-2893	480
188-3034	94
188-3826	11
	▶78
188-7536	128
188-7541	128
189-1707	571
189-3158	571
	575
189-4645	▶424
	671
189-4646	424
189-4647	424
189-5358	588
189-5359	588
189-5368	174
189-6123	588
189-9240	592
189-9306	10
	▶58
190-2277	256
190-2278	234
	▶236
190-3562	22
190-4885	575
190-5386	678
	680
	683
190-5523	348
190-5524	348
190-5583	572
	575
190-5584	572
	575
190-6114	49
190-6115	25
190-6117	25
190-7560	348
190-7562	348
190-7615	142
	215
	216
	220
190-7684	456
190-8368	456
190-8405	319
190-8609	380
190-8830	456
190-8970	115
	▶128
191-1782	115
191-1783	115
191-2127	456
191-2156	456
191-2933	628
	▶632
191-4457	83
191-5439	463
191-7823	208
191-8283	319
	321
191-8697	515
191-8920	482
191-8921	158
	480
	482
	484
191-9247	502
192-0213	356
	357
	358
	359
192-0219	356
	357
192-0220	▶357
	384
192-0223	358
	359
192-0224	▶358
	383
192-2112	517
192-4744	370
192-5627	609
192-7752	632
192-7755	632
192-7760	632
192-7767	632
192-7783	632
192-7787	632
192-7790	632
192-7795	632
192-7799	632
192-7805	632
192-7810	632
192-7812	632
192-7820	632
192-7822	632
192-7848	632
192-8866	456
193-1598	113
193-2219	456
193-2239	456
193-3063	509
	510
193-3306	537
193-3307	537
193-3308	537
193-3356	560
	563
193-3359	560
	563
193-7377	552
194-1466	597
194-1738	298
194-2903	579
194-4227	298
	300
194-4231	298
	300
194-4254	220
194-5032	482
	484
	▶486
194-5033	480
	482
	484
	▶487
194-5171	649
194-5226	188
194-5227	188
194-6030	328
194-6036	328
194-6250	325
194-6725	120
	▶186
194-7034	543
195-0452	72
195-4989	172
195-6283	509
	510
195-6383	323
	324
195-6882	456
195-6890	456
195-6899	456
195-6901	456
195-6902	456
195-6903	456
195-6913	456
195-6928	456
195-6930	456
195-6932	457
195-6944	489
195-6945	489
195-6947	489
195-6948	489
195-6949	489
195-6950	489
195-7430	500
195-8098	11
	▶76
196-3759	323
196-3760	324
196-3763	310
196-3764	311
196-5515	482
196-6838	120
196-8884	236
196-9654	208
196-9846	613
196-9858	94
197-5108	405
197-7689	630
197-8393	183
	▶187
197-8419	73
197-8820	▶135
	139
197-9367	50
197-9392	50
198-0921	10
	▶77
198-2914	502
198-3462	239
198-4767	579
198-4778	466
198-6574	613
198-6575	613
198-9706	550
	601
198-9707	603
199-4193	457
199-4317	220
199-7232	310
	311
199-7834	482
200-0189	▶482
	548
200-3174	624
	▶628
200-4495	38
200-5003	482
	484
200-6345	217
	363
201-0950	452
	464
	▶500
201-1260	101
202-2605	107
202-4327	219
202-5397	219
	561
	564
202-6614	169
203-2070	541
203-2288	234
	394
203-2789	210
203-3237	25
203-3238	25
203-5805	18
203-6090	18
203-6523	▶355
203-6525	▶355
203-6527	▶355
203-6528	▶355
203-7703	626
	627
	628
203-7775	105
203-8040	342
	345
	348
204-1297	219
	564
204-2281	210
	220
	363
204-4444	16
204-6102	561
	564

2

▶ **PRIMARY REFERENCE**

PART NUMBER INDEX

Part	Page	Part	Page	Part	Page	Part	Page
	598	211-9050	525	215-3296	52	222-1179	405
204-7563	141	211-9051	525		54		▶431
204-8000	219	211-9085	242	215-4441	13	222-1191	428
204-8758	403	211-9087	242	216-0029	392		▶465
204-9530	541	211-9294	632	216-0273	256	222-1783	10
204-9531	541	211-9491	444	216-0805	541		▶16
204-9532	541	212-2301	280	216-4591	232	222-3901	88
205-0626	135	212-5839	31	216-5586	18	222-9151	52
205-1320	38	212-5844	31	216-7352	561		54
205-1321	11	212-7002	18		564		589
	▶38	212-8917	23		598	223-0556	7
205-5165	363	212-8926	▶62	216-7431	227		▶47
205-5285	13		63	216-8584	404	223-1680	519
205-5314	232	213-3190	50	217-0609	25	223-2205	1
205-5786	319	213-4363	27	217-2293	227		2
205-6388	619		▶33	217-4616	310		3
	623	213-6657	482	217-5199	83		▶625
205-8674	▶97		484	217-5200	83	223-3313	548
	98	213-6658	480	217-5912	160	223-3400	286
205-8681	98	213-7315	560	217-7933	609	223-4869	113
205-9169	128		563		610	223-8173	181
206-2800	482		598	217-8433	559	223-9848	129
	484	213-9100	141	217-8669	10	224-0672	677
206-3719	58	213-9320	▶56		▶15		678
206-5887	65		62	217-9049	617		680
206-5889	539	214-1196	▶624	218-0114	▶266		683
206-9000	7	214-1197	533		279	224-2228	120
	▶98		▶629	218-0651	560	224-2694	64
207-7899	467	214-1645	104		563	224-2695	47
	469	214-3573	227	218-0861	617	224-3247	12
208-4622	137		232	218-7136	547	224-4536	▶188
	139	214-4208	206	219-0305	533		189
208-5026	334		220		677	224-4940	466
	336		561		678		▶467
208-5498	401		564		680	224-4941	405
208-6055	101		598		683		▶469
208-9282	72	214-7566	20	219-0669	92	224-4948	▶459
208-9619	28		66	219-3305	84		463
209-0547	327		183	219-4481	266	224-4998	522
209-0760	15	214-7567	41	219-8666	10		525
209-0762	15		189		▶42		530
209-3172	125	214-7568	25	219-8681	10	224-5000	522
209-4581	101		41		▶34		525
209-6692	87		51	220-0771	196		530
209-7193	232		66	220-1418	260	224-6829	649
209-7290	66		73		▶294	224-9072	607
209-7293	78		115	220-1952	20	224-9222	219
209-8423	7		125		▶22	224-9772	158
	▶196		183	220-8044	▶318	225-0312	679
210-2262	610		187	220-8233	11		680
210-2263	610		217		▶125		683
210-2266	610		234	220-8678	118	225-3281	416
210-2270	▶610		237	221-0144	76		418
	617		255	221-5461	▶41	225-3284	426
210-4458	286		261		42	225-4134	548
211-0220	550		436	222-0345	619	225-4135	548
211-1044	137		439		623	225-4257	679
	139	214-8976	677	222-1150	428		680
211-1812	11		679		▶548		683
	▶86		682	222-1151	428	225-6363	294
211-2134	25	214-9389	160		▶491	225-8026	452
211-5358	632	214-9492	137	222-1152	428		▶498
211-6807	208		139		▶466	225-8553	206
211-9049	519		535	222-1153	428	226-0293	597
	▶525	215-3249	208		▶455	226-3493	435

▶ **PRIMARY REFERENCE**

PART NUMBER INDEX

Part	Page	Part	Page	Part	Page	Part	Page
226-3496	435		220	236-6221	183	238-5085	66
226-3497	435	230-4700	519		▶190	238-5508	295
226-3498	435		521	236-6731	328	238-7051	535
226-3500	435		▶607	236-6732	328	239-1134	194
226-3502	435	230-4962	89	236-7315	10		▶205
226-3503	435	230-5008	215		▶35	239-1460	318
226-3505	435	230-5040	66	236-8191	47	239-1461	318
226-3506	431	230-5385	517	236-8239	28	239-2402	129
226-3511	431	230-5388	▶517	236-8240	32	239-3354	181
226-3514	436		607	236-8826	215	239-3355	219
226-4751	435	230-8792	206	237-0048	181	239-3686	7
	▶452	230-9796	70	237-0050	181		▶106
226-6588	438	231-1978	11	237-0051	181	239-3902	155
226-7473	149		▶183	237-0052	181	239-5106	571
	▶154	231-3090	376	237-0053	181	239-5113	603
226-7906	446		▶377	237-0204	549	239-6987	677
226-9169	180	231-3091	371		601		679
227-0832	465		▶372		603		682
	▶479	231-4166	260	237-0205	549	239-7392	219
227-0912	206		▶283		601	239-7854	139
227-1200	23	231-4167	283		603	239-7943	360
227-2451	227	231-5968	▶227	237-0225	181		361
227-3021	456		279	237-0227	216		362
	▶489	231-5990	▶232	237-0229	37	239-8107	181
227-3023	489		279	237-0934	517		219
227-3179	431	231-8855	270	237-0956	517	240-0041	13
227-4002	208	232-0343	120	237-1962	196	240-8259	283
227-4246	227		▶131		▶197	240-8917	181
227-4247	227	232-1693	149	237-2737	7	241-2501	132
227-5904	125	232-3402	181		▶110	241-3718	10
227-8348	484	232-6411	286	237-2738	110		▶37
227-9511	122	233-0423	10	237-3943	632	241-3719	10
	158		▶36	237-3970	632		▶69
	438	233-0668	290	237-4269	603	241-4167	677
227-9544	435	233-0891	149	237-4270	591		678
228-2576	491	233-6745	594	237-9140	157		680
	▶492	234-0203	72		▶587		683
228-3323	216	234-3043	492	237-9251	107	241-4194	194
228-3621	28	234-3451	492		▶108	241-4342	549
228-5897	129	234-5124	464	237-9252	108		601
228-6787	569	234-5126	433	237-9254	108		603
228-7089	66		▶464	237-9255	108	241-4344	549
	73	234-9994	270	238-0303	143		601
228-7090	125	235-0399	467	238-1116	10		603
228-7096	25		469		▶239	241-4346	603
	234	235-0401	▶453	238-1117	239	241-4348	591
228-7368	405		467	238-2014	181		603
	▶444		469	238-4986	433	241-4349	603
228-7853	431	235-0523	405	238-4993	433	241-4354	99
229-0887	678	235-0541	333	238-5079	89	241-4695	49
	680	235-0907	459	238-5080	25	241-4981	52
	682	235-4514	260		29		54
229-1494	619	235-4605	464		41	241-6215	115
229-5422	▶404		▶501		51	241-6498	306
	428	235-8026	678		66	241-7913	180
229-6635	517		680		100		550
229-9281	41		682		192	241-7917	601
229-9601	106	235-8202	208	238-5081	66	241-8368	181
230-1340	161	235-8203	10		100		▶203
	163		▶208		115	241-8383	25
	165	235-9651	127		125	241-8384	25
230-2636	454	236-4545	194	238-5082	51	241-8385	25
230-4009	216	236-5197	610		69	241-8386	25
	220	236-6220	183		125	241-8387	25
230-4010	216		▶189	238-5084	49	241-8388	23

▶ **PRIMARY REFERENCE**

PART NUMBER INDEX

Part	Page
241-8390	25
241-8475	46
242-0328	57
242-0329	▶57
	62
242-0447	11
	▶63
242-0673	12
242-0674	11
	▶12
242-3360	111
242-3864	66
242-8399	180
242-8403	550
242-8404	550
242-8405	603
242-8407	603
243-1171	550
243-1588	104
243-2076	89
243-5168	603
243-6716	17
243-7112	401
244-2310	232
244-3712	115
	237
244-4500	36
244-5891	63
245-3261	44
245-3262	10
	▶44
245-3786	10
	▶49
245-4202	662
	665
245-4256	662
245-4266	665
245-4630	190
245-7339	58
245-7434	219
	561
	564
	598
245-8334	589
245-8456	678
	679
	682
245-9941	89
246-0599	10
	▶32
246-0600	10
	▶46
246-2641	122
	158
	298
	389
	533
246-3150	17
246-6036	73
246-9365	10
	▶149
247-6876	677
	679
	680
	683
247-6878	677
	679
	680
	683
247-7133	5
248-2349	662
248-5316	3
	4
	▶356
248-5317	▶373
	374
248-5318	3
	4
	5
	▶374
248-5319	▶378
	379
248-5320	3
	4
	5
	▶379
248-5358	590
248-5513	83
248-8646	4
	▶253
248-8866	603
249-0313	137
249-2844	553
249-5481	219
249-7871	662
249-7872	662
249-7875	665
249-7876	665
250-1984	503
	505
250-4628	594
	596
250-9286	106
250-9290	98
251-1198	561
	564
251-9346	503
	505
252-1567	10
	▶51
252-5165	▶111
	112
252-5805	113
252-5806	113
252-7803	25
254-3941	25
254-3942	25
254-3946	23
254-3947	23
254-5524	84
254-8155	▶169
	170
	172
	174
	176
	178
255-8674	63
256-9637	401
256-9988	▶245
257-3226	575
257-3227	571
257-5029	517
257-5858	73
257-8299	100
257-9788	459
258-0769	301
258-2303	301
258-2305	328
258-2308	328
258-2355	678
	679
	682
258-8473	▶148
	534
258-8477	148
258-8478	148
258-8479	148
258-8480	148
258-8481	148
258-8482	148
258-8483	148
259-5829	25
260-1914	517
260-3799	194
260-4856	25
260-7524	56
	57
260-9197	194
260-9198	194
261-1544	17
261-5694	595
261-7990	219
261-8619	601
262-1421	150
	▶156
262-2031	28
262-2870	111
262-5079	519
263-2915	33
263-3464	73
263-3823	585
	586
263-3912	433
263-7731	120
263-9959	107
264-0168	301
264-2014	10
	▶120
264-5732	208
264-6156	63
264-7030	217
264-7031	215
264-7034	216
	220
265-1400	11
	▶50
265-1401	50
265-2106	220
266-1467	▶184
	543
266-2404	210
266-9810	10
	▶73
267-7509	52
	54
267-8685	567
267-9715	11
	▶127
268-0066	459
268-2760	459
268-2762	459
268-2763	459
268-2769	459
268-3371	215
268-3490	16
268-9086	336
	▶339
269-0174	677
	679
	680
	683
269-4739	247
	249
269-4870	459
270-5291	260
270-5292	260
270-5293	260
270-9433	459
271-1482	7
	▶64
271-2322	210
271-4967	▶401
	467
	469
271-4968	467
	469
	▶472
271-4969	467
	469
	▶475
271-7442	25
272-5492	▶325
	326
272-5494	325
272-5497	325
272-5498	325
272-5499	325
272-6541	260
272-6552	260
273-3834	306
273-3843	306
273-3996	366
273-8981	260
273-9183	▶113
	685
274-7395	183
	▶192
274-7396	183
	▶193
275-4236	553
275-6706	517
279-2590	519
	521
	▶556
279-2591	▶516
	519
	521
279-9826	459
280-2045	333
280-2046	333

▶ **PRIMARY REFERENCE**

PART NUMBER INDEX

Part	Page
280-2047	333
280-3365	331
280-3367	331
280-6794	83
281-3179	219
282-1771	17
282-1772	17
282-1951	517
282-1952	517
282-1953	517
282-4390	525
284-3502	73
284-3623	219
284-3782	456
284-8532	163
285-4074	58
	▶59
285-4106	16
285-5644	457
285-9070	456
285-9162	456
287-0338	571
	575
287-3838	385
288-1200	456
288-4994	438
288-6949	533
288-6950	678
	680
	683
288-7146	598
289-2937	416
289-2948	416
290-2612	178
290-3970	84
290-6884	33
290-6891	261
290-6892	261
292-2016	227
292-4396	674
	675
	676
292-4906	137
293-0730	119
293-2911	610
293-5033	298
	300
293-9123	560
	563
	597
293-9367	78
293-9659	684
294-5076	571
	575
	579
294-8620	131
295-0645	435
295-1771	69
295-1803	120
296-0612	▶589
	590
296-0614	589
296-2861	589
296-6980	579
297-0693	156
297-8989	684
298-4055	522
	525
	530
298-7340	394
299-5417	589
299-5418	589
299-5790	455
	▶456

3

Part	Page
300-1643	597
301-0589	163
302-3908	211
	217
302-5729	456
302-5737	456
302-5738	456
304-5687	215
304-9651	288
305-9190	649
305-9192	649
306-0177	161
	163
	165
306-3998	197
306-8040	137
307-0047	161
	163
	165
307-2671	20
	41
307-2673	25
	41
	51
	66
	100
307-8686	603
308-4558	674
	675
	676
308-4559	674
	675
	676
308-5435	1
	2
	3
	▶301
308-5436	301
308-6335	541
308-6726	469
	▶477
308-7112	99
	106
309-5131	66
	100
309-5140	92
310-7255	23
310-7257	23
311-3737	561
	563
	597
311-3741	597
311-3742	597
311-3744	597
312-4245	426
312-8629	501
	502
313-3337	▶6
313-3338	▶1
	6
313-3492	115
313-3755	6
	7
	▶279
313-3756	6
	7
	▶428
313-3757	6
	▶7
313-3758	▶6
313-3759	▶2
	6
313-3766	96
313-3769	96
313-9374	394
314-3124	597
314-4018	534
314-5462	284
314-6506	96
314-6509	96
314-8870	6
	▶279
315-9840	66
315-9859	51
315-9961	▶234
	292
315-9962	234
315-9963	279
	▶292
315-9964	▶237
	292
315-9965	237
	▶293
315-9966	237
	▶297
316-8663	41
317-1767	533
	▶601
317-2656	587
317-3919	543
317-3930	543
317-3931	543
317-3933	543
317-3934	543
317-3939	543
	▶611
317-3940	611
317-4153	▶519
	593
317-4154	519
	521
	▶550
317-4155	6
	593
	▶603
317-4156	550
317-4157	550
317-4158	▶600
	603
317-4159	600
317-4171	550
	601
317-4616	389
317-6561	▶567
	569
317-6566	156
	▶590
317-6571	▶155
317-6574	219
317-6579	157
	▶180
317-6580	156
	▶157
317-7210	23
317-7211	23
317-7212	23
317-7213	23
317-9070	6
	▶560
318-0157	543
318-0640	319
	321
318-0692	281
318-1906	6
	7
	▶10
318-2082	198
318-2389	560
	563
	597
318-2717	543
318-6191	▶269
	292
318-6357	129
318-8531	▶295
	297
319-0678	125
	▶129
319-1676	394
319-3753	215
319-3758	215
319-6208	66
319-6234	49
319-6237	25
319-6240	125
320-1720	572
320-1721	572
320-1725	572
320-1730	572
320-1749	572
320-1786	572
320-2842	397
320-3065	215
320-5885	567
320-5887	560
	597
320-5889	219
320-5892	215
320-5893	215
320-5895	141
320-5896	141
320-5898	161

▶ **PRIMARY REFERENCE**

PART NUMBER INDEX

Part	Page	Part	Page	Part	Page	Part	Page
	163		279	325-7496	260		649
	165	323-5695	260	325-7497	260	330-6873	677
320-5902	216	323-5696	519	325-7498	260	330-7934	241
320-5903	206	323-5697	519	325-7499	260	331-1334	1
320-5904	637		▶569	325-8061	241		2
320-5905	590	323-5774	561	325-8735	394		3
320-5906	590		563	325-8736	394		▶319
320-8283	603	323-5931	366	325-8737	394	331-1335	319
321-5802	155		▶375	326-0316	234	331-1337	▶321
321-5804	571	323-5991	1	326-1136	381	331-1338	321
321-5815	142		2	326-1644	118	331-4709	279
321-5816	1		3	326-3852	242		▶285
	2		▶328	326-3853	241	331-4710	285
	3	323-5992	328		▶242	331-4865	260
	▶141	323-6360	281	326-3854	▶241	331-4866	260
321-5967	255	323-6361	281		279	331-6078	72
321-6073	678	323-6362	281	326-9200	249	331-8059	72
	679	323-6366	281	327-7190	428	331-8540	74
	682	323-6367	281		▶438	331-8905	76
321-8635	25	323-7443	180	327-7377	438	331-8906	76
321-8638	25	323-7444	8	327-8236	438	331-9273	1
321-8642	41		▶137	327-9363	5		2
321-8649	66	323-7992	7		▶519		3
322-1359	181		▶139		521		▶308
	▶206	323-9636	533	327-9900	4	331-9274	308
322-1360	▶181		▶597		▶194	331-9867	96
	219	323-9637	142	327-9901	7	332-2536	438
322-1394	519	323-9711	▶405		▶210	332-2967	7
	▶637	323-9716	405	327-9902	6		▶84
322-2095	219		▶433		▶219	332-2968	84
322-2943	143	323-9717	405		593	332-2969	84
322-3702	433	324-0244	7	327-9903	▶170	332-3619	▶23
322-3703	433		▶70		332		25
322-3706	433	324-2433	7	328-1861	210	332-4125	438
322-3707	433		▶535	328-1862	211	332-4155	7
322-3708	433	324-6202	48	328-2573	▶119		▶96
322-3709	433	324-6217	45		127	332-4156	96
322-4852	433	324-7380	50	328-3655	255	332-4432	438
322-7221	616	324-8984	515	328-4374	270	333-6437	▶255
322-8631	405		▶571	328-4375	270		260
	▶484	324-8985	1	329-2114	317	333-9308	▶226
322-8959	279		2	329-2115	317		255
	▶286		3	329-2119	▶317	334-2679	226
322-9655	484		▶579	329-2579	10	334-2680	226
	▶547	325-3469	572		▶72	334-4603	678
323-0927	1		575	329-2694	1		680
	2	325-3470	572		▶677		682
	3	325-3471	572	329-2697	2	334-6370	219
	▶122	325-3472	572		▶679	334-7389	561
323-0928	122		575	329-2704	▶674		563
323-0932	7	325-3915	▶18		677	334-7392	598
	▶99		22	329-2705	▶675	334-8477	▶533
323-0933	7	325-4861	428		679	334-8514	104
	▶101		▶429	329-4441	7	334-8520	101
323-0934	7	325-4862	438		▶30	334-8527	104
	▶104	325-4863	429	329-4474	30	334-9544	216
323-0935	7	325-4864	429		▶31	334-9545	216
	▶115	325-4865	438	329-4475	31	335-5568	575
323-0936	122	325-4866	438	329-4498	52	335-8389	10
	158	325-5460	677	329-5070	139		▶48
323-3269	7		678	329-5451	183	336-1846	▶552
	▶52		680	329-5511	66		601
323-3772	7		683	330-5013	▶585	336-1847	552
	▶94	325-6934	397		649	336-2433	288
323-5693	▶260	325-7402	281	330-5014	▶586	336-3545	150

▶ **PRIMARY REFERENCE**

PART NUMBER INDEX

Part	Page
	▶156
336-3968	552
336-8613	115
337-6811	170
337-8766	89
337-8767	89
338-0942	▶288
	290
338-0944	286
	▶290
338-2145	10
	▶28
338-2147	10
	▶45
338-2149	10
	▶100
338-5335	10
	▶71
338-5362	10
	▶29
339-9514	220
340-0691	71
340-0879	332
	▶333
340-1646	321
340-1648	321
340-3959	▶615
340-4612	260
340-5624	71
340-7161	220
340-7313	74
341-0087	83
341-0979	16
341-7036	603
341-8313	674
341-8314	674
341-8315	675
341-8316	675
341-9214	▶502
342-9022	151
	152
342-9290	151
	152
343-5527	118
344-0875	232
344-2149	▶25
	27
344-3393	▶150
	163
346-2033	270
346-2134	270
346-5052	431
346-5053	431
346-5054	431
346-7763	151
	152
346-9376	161
	165
347-3110	87
347-3148	83
347-4428	66
347-5684	100
347-6950	431
348-5792	239
348-8603	269
349-5766	216
349-6123	▶87
	88
350-2536	86
	▶88
350-5417	87
351-8488	151
351-8490	▶151
	153
351-9918	169
352-3969	94
352-6498	66
352-8839	66
353-5112	183
353-6988	16
353-7706	444
354-0703	161
	165
354-1681	216
354-1683	216
354-6924	519
	▶649
355-0598	163
355-1213	161
	165
355-5105	156
355-9764	156
357-4619	125
357-6430	444
357-6431	444
357-6432	444
357-6433	444
357-7835	7
	▶539
357-7836	539
357-7837	539
357-7838	539
357-7839	539
357-7840	539
357-7842	539
357-7843	539
357-7844	539
357-7845	7
	▶406
357-7846	406
	407
357-7848	52
	54
357-7849	92
357-7850	92
358-1297	79
358-1298	79
358-1299	82
358-1301	406
	407
358-4684	▶520
358-4889	194
358-7872	16
358-7876	16
358-8129	1
	2
	3
	▶575
358-9211	79
358-9212	80
358-9213	81
358-9214	89
358-9215	7
	▶79
359-0661	520
	▶530
359-0662	530
359-1008	10
	▶112
359-3732	71
360-1529	575
360-1530	575
360-2560	▶370
	384
360-6564	575
361-1045	161
	165
361-2441	9
361-6052	211
362-4551	454
362-4552	454
363-2581	92
363-2582	92
363-4122	132
364-5127	397
365-0582	259
365-1757	426
365-3650	385
365-5514	▶503
365-5517	▶505
365-5542	▶652
365-5544	▶655
365-5546	652
	▶661
365-5548	655
	▶664
367-3281	394
370-7715	394
370-7716	389
371-1767	▶385
	389
371-2459	▶89
	92
371-2460	89
371-2461	89
371-2462	89
371-2463	92
371-2464	89
371-2465	89
371-2466	89
371-7190	125
371-7191	125
371-9244	433
371-9245	433
372-0294	216
372-1457	94
372-2905	154
372-4531	▶152
	153
372-4532	152
372-6387	89
373-7196	681
373-9491	1
	2
	3
	▶454
373-9492	454
373-9493	454
373-9494	1
	3
	▶408
373-9495	1
	3
	▶410
373-9496	408
	410
	▶420
373-9497	2
	▶412
373-9498	2
	▶414
373-9499	412
	414
	▶421
373-9500	408
	410
	412
	414
373-9501	408
373-9502	410
373-9503	414
373-9504	412
374-0187	▶267
	279
374-0773	4
	▶54
374-0785	1
	2
	3
	▶172
374-4178	1
	2
	3
	▶591
374-4179	1
	2
	3
	▶549
374-4269	156
	▶215
375-2980	8
	▶174
375-3127	8
	▶91
375-4845	6
	▶543
	593
375-4867	603
375-4875	603
375-4877	603
375-4878	603
375-4879	549
	603
375-4880	279
	▶397
375-6723	1
	2
	3
	▶312
375-6724	312

▶ **PRIMARY REFERENCE**

PART NUMBER INDEX

Part	Page
375-7128	153
375-8135	▶176
375-8775	115
375-8776	115
375-9270	174
	176
375-9271	174
	176
375-9602	▶326
375-9603	▶3
	4
376-1052	▶681
376-1549	132
376-4616	▶153
	165
376-6478	▶153
	161
376-6731	572
	575
376-7248	152
376-7673	125
376-9482	308
377-0337	▶685
377-4467	▶74
	685
377-4844	156
377-4972	91
377-4973	91
377-4974	▶82
	515
377-4977	92
377-4978	92
377-4979	81
377-4980	4
	▶81
377-4981	7
	▶92
377-4984	92
377-4985	89
377-4986	92
377-4987	92
377-4991	8
	▶80
377-5058	3
	▶682
377-5482	260
	▶280
377-5483	280
	▶281
377-5880	▶161
377-5881	▶163
377-5963	122
	158
377-6171	281
377-6173	281
377-6175	281
377-8030	563
377-9734	4
	8
	▶330
377-9735	330
378-2269	▶4
378-2270	▶4
378-2273	▶8
378-2284	676
378-2285	676
378-2492	▶676
	682
378-2602	▶332
378-3468	▶616
378-6119	428
	▶446
378-6120	446
378-6121	446
378-6122	446
378-6123	446
378-6124	446
378-6125	446
378-6126	260
378-6129	429
378-6130	429
378-6132	429
378-6135	260
378-6136	260
378-6138	158
378-7488	8
	▶107
378-7500	672
378-7501	671
	▶672
379-1942	428
	▶435
379-3534	▶653
379-3535	653
	▶662
379-3536	▶656
379-3537	656
	▶665
379-3538	▶671
379-3574	▶367
379-3575	▶342
	383
379-3576	▶345
	384
379-3578	7
	▶383
379-3579	6
	▶384
379-4774	84
379-4775	407
379-4779	▶407
	515
379-5228	▶156
379-6224	▶7
379-6225	▶3
	7
379-7862	▶405
379-8787	259
379-8788	259
380-0968	▶657
	662
380-0969	▶659
	665
380-0970	▶654
380-1022	7
	▶259
380-1381	674
	675
	676
380-1630	308
	▶310
380-1631	308
	▶311
380-1632	▶303
	310
380-1633	▶304
	311
380-1634	304
380-1638	310
380-1639	311
380-1642	310
	▶323
380-1643	311
	▶324
380-1644	323
380-1645	324
380-1997	342
	345
380-2009	54
380-2466	435
380-2488	▶563
	593
380-2511	▶178
	405
380-3504	4
	▶160
380-5775	107
380-6683	572
380-7185	4
	▶158
380-7186	158
380-7187	158
380-7870	6
	▶389
	593
380-7880	279
	▶394
380-7900	1
	2
	3
	▶593
380-9309	438
380-9310	438
380-9311	438
380-9312	438
380-9732	153
380-9961	8
	▶515
381-3299	216
381-3883	429
382-5982	151
383-1730	170
	176
383-1731	170
384-0071	170
	172
	174
384-0072	174
	176
384-0073	174
	176
384-4171	63
384-4172	63
384-5590	11
	▶27
384-9220	69
384-9811	▶4
	5
384-9812	5
385-0957	5
	▶359
385-2783	9
	▶11
385-3186	115
385-3187	115
385-3188	115
385-6480	▶5
385-6481	▶5
385-6489	74
385-6490	74
385-6491	74
385-7302	172
385-7303	170
386-0187	503
	▶511
386-0210	▶507
	511
386-0211	507
386-0214	▶510
	511
	512
386-0216	510
386-0217	▶658
	661
	663
386-0218	654
	▶663
386-0221	505
	▶512
386-0222	▶508
	512
386-0223	508
386-0224	▶660
	664
386-1149	428
	▶463
386-1150	1
	2
	3
	▶132
386-1151	1
	2
	3
	▶298
386-1976	101
386-1977	101
386-1978	101
386-2758	101
386-2766	101
386-2767	101
386-6977	▶448
	503
386-6979	448
	450
386-6981	448
	450
386-6983	448
386-9826	348
386-9830	178
387-0543	549

▶ **PRIMARY REFERENCE**

PART NUMBER INDEX

Part	Page
387-0545	549
387-0546	519
	521
	▶578
387-0547	6
	▶521
387-0548	6
	593
	▶677
387-0549	6
	▶300
	593
387-0554	4
	▶6
387-0556	1
	2
	3
	▶636
387-2081	101
387-2149	553
387-2150	553
387-2153	520
	▶553
387-2578	1
	2
	3
	▶306
387-2733	312
	▶315
387-2734	312
	▶316
387-2735	315
387-2736	316
387-2737	315
387-2738	316
387-3559	298
387-3561	298
387-3578	6
	▶384
387-3579	▶348
	384
387-3580	615
387-4661	174
387-4671	133
387-4677	132
	▶133
387-8194	450
387-8195	▶450
	505
387-8953	▶9
	10
388-1849	323
388-1850	324
388-3222	448
	450
388-3223	448
	450
388-4887	10
	▶13
388-9547	9
	▶684
389-3202	298
389-8270	10
	▶65
390-7292	▶165
391-0590	575
391-0591	575
391-4758	122
	158
391-4763	101
392-9340	438
393-0832	311

▶ **PRIMARY REFERENCE**

MEMORANDA



© 2012 CATERPILLAR
ALL RIGHTS
RESERVED

CAT, CATERPILLAR, THEIR RESPECTIVE LOGOS, “CATERPILLAR YELLOW” AND THE POWER EDGE TRADE DRESS, AS WELL AS CORPORATE AND PRODUCT IDENTITY USED HEREIN, ARE TRADEMARKS OF CATERPILLAR AND MAY NOT BE USED WITHOUT PERMISSION.

Printed in
Japan

SEBP5818

D7R TRACK-TYPE TRACTOR

DJR1-Up
DLN1-Up
DSH1-Up