CATERPILLAR®

XEBP9546-01
September 2009

RUTHZIL TRATOR COMERCIAL DE PEÇAS LTDA 11 97083-6812 ROLANDO CITRANGULO

Parts Manual

D7R2 Track-Type Tractor

STD, Differential Steering

BRM00801-Up(Machine)
7ZR24799-Up(Engine)
JRM00202-Up(Transmission)

Powered By 3176C Engine

Product and Dealer Information

Note: For product identification plate locations, see the section “Product Identification Information” in the Operation and Maintenance Manual.

Delivery Date: _____

Product Information

Model: _____

Product Identification Number: _____

Engine Serial Number: _____

Transmission Serial Number: _____

Generator Serial Number: _____

Attachment Serial Numbers: _____

Attachment Information: _____

Customer Equipment Number: _____

Dealer Equipment Number: _____

Dealer Information

Name: _____ Branch: _____

Address: _____

_____

_____

	Dealer Contact	Phone Number	Hours
Sales:	_____	_____	_____
Parts:	_____	_____	_____
Service:	_____	_____	_____

GENERAL INFORMATION

1. MACHINE IDENTIFICATION

Caterpillar machines are identified by Product Identification Numbers (PIN). Some components included in a machine may be identified by Serial Numbers (S/N). Typical components that will be serialized include engines, transmissions, bulldozers, and rippers. The machine and engine are further identified by arrangement numbers and in some cases modification numbers. These numbers are shown on the product identification plate(s) and on the master plate in the operator's compartment.

Caterpillar dealers need all of these numbers to determine accurate parts identification.

Effective First Quarter 2001 the Caterpillar Product Identification Number (PIN) changed from 8 to 17 characters. In an effort to provide uniform equipment identification, Caterpillar and other construction equipment manufacturers are moving to comply with the latest version of the product identification numbering standard. Non-road machine PINs are defined by ISO 10261. The new PIN format will apply to all Caterpillar machines and generator sets. The PIN plates and frame marking will display the 17 character PIN. The new format will look like the following:

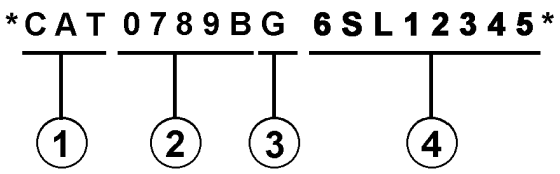

Where:

1. Caterpillar's World Manufacturing Code (characters 1-3)

2. Machine Descriptor (characters 4-8)

3. Check Character (character 9)

4. Machine Indicator Section (MIS) or Product Sequence Number (characters 10-17). These were previously referred to as the Serial Number.

Machines and generator sets produced before First Quarter 2001 will maintain their 8 character PIN format.

Components such as engines, transmissions, axles, etc. and work tools will continue to use an 8 character Serial Number (S/N).

2. ORDERING PARTS

⚠ WARNING

When replacement parts are required for this product Caterpillar recommends using Caterpillar replacement parts or parts with equivalent specifications including, but not limited to, physical dimensions, type, strength and material.

Failure to heed this warning can lead to premature failures, product damage, personal injury or death.

Quality Caterpillar replacement parts are available from Caterpillar dealers throughout the world. Their parts inventories are up to date and include all parts normally required to protect your investment in Caterpillar machines. Dealers may offer repair kits or remanufactured parts to allow selection of the most effective repair alternative for a particular situation. When ordering parts, your order should specify the quantity, part number, part name, and the serial number/product identification number of the machine for which the parts are needed.

3. PARTS MANUAL ORGANIZATION

Product information in this manual is presented as "information elements" that represent all of the components for the specific model. Engine Arrangement and Seat Group are examples of information elements. The information elements are organized alphabetically by part name and secondarily by part number within each major section of the manual.

4. MAINTENANCE PARTS INDEX

The Maintenance Parts Index, located near the beginning of the manual, references most frequently used maintenance part numbers, providing description, quantity, usage and page number. This information is organized alphabetically by part description.

GENERAL INFORMATION

5. INDEX

The index located near the front of the manual is an alphabetical listing of all information elements included in the manual. Page numbers are provided for quick reference to detailed parts identification illustrations and serviceable consist lists.

6. PART NUMBER INDEX

A numerical index listing all part numbers and the corresponding page number(s) appears at the back of the manual.

7. CAPTIONS

Captions located at the beginning of each information element identify the part number and part name along with additional descriptive information. PIN and S/N information found in each caption should be used to select correct information for a specific machine. Field replacement options, identification of optional attachment components, and where used ("part of") information is also provided.

8. NON-SERVICED PARTS

In some instances it is necessary to display non-serviced parts that are a link to a lower level serviceable consist lists. These non-serviced parts are indicated with mark "Z".

9. PARTS LIST REFERENCE NUMBERS

Numbers shown in the Ref No column correspond to numbers used in the associated graphic(s).

10. INDENTED PART NAMES

When a part name is indented in a parts list, it is part of (included in) the group or assembly under which it is indented.

11. ILLUSTRATION REFERENCE LETTERS

When necessary, illustrations contain reference letters (A, B, C etc.) that are intended to track lines and harnesses from one point to another. They are also used to show where to reconnect illustrations that have been separated.

12. ABBREVIATIONS AND SYMBOLS

O.D. – Outside Diameter
I.D. – Inside Diameter
A – Not A Part Of This Group
B – Use As Required
C – Change From Previous Type
D – Order By The m
E – Order By The cm
F – Not Shown
G – Order By The Inch
I – Refer To Hydraulic Information System
R – Remfg Part May Be Available
Y – Separate Illustration
Z – Not Serviced Separately
AS – Assembly
N/S – Not Serviced

ABBREVIATIONS OF COLORS

RD	Red
WH	White
OR	Orange
YL	Yellow
PK	Pink
BK	Black
GY	Gray
PU	Purple
BR	Brown
GN	Green
BU	Blue
T	Tan
DK/BU	Dark Blue
DK/GN	Dark Green
LT/BU	Light Blue
LT/GN	Light Green

13. NOTE:

Continuing improvement and advancement of product design may cause changes to your machine which may not be included in this publication. Whenever a question arises regarding your Caterpillar product or this publication, please consult your Caterpillar dealer for the latest available information.

INDEX

A

NAME PAGE

ACCUGRADE MOUNTING GROUP ····· 393
ACCUMULATOR GROUP ····· 200,349
AFTERCOOLER WATER LINES GROUP ····· 62
AIR CLEANER GROUP ····· 67,69
AIR CONDITIONER ARRANGEMENT ····· 476
AIR CONDITIONER GROUP ····· 486～487
AIR CONDITIONER LINES GROUP ····· 477～483
AIR LINES GROUP ····· 69,74
ALARM GROUP ····· 125
ALTERNATOR MOUNTING GROUP ····· 98
ANGLING BLADE GROUP ····· 402
ARCTIC ARRANGEMENT ····· 283
ASSIST HANDLE GROUP ····· 425

B

BATTERY AND WIRING GROUP ····· 108～111
BATTERY BOX GROUP ····· 270～271
BATTERY GROUP ····· 95
BEVEL AND TRANSFER GEAR GROUP ····· 212～213
BLOWER FAN GROUP ····· 46～47
BLOWER GROUP ····· 424
BOTTOM GUARD GROUP ····· 241～243
BRAKE CONTROL GROUP ····· 232
BRUSH PLATE ASSEMBLY ····· 107
BULLDOZER ARRANGEMENT ····· 382～386
BULLDOZER BRACE GROUP ····· 388,391
BULLDOZER TRUNNION GROUP ····· 391

C

C-FRAME GROUP ····· 390
CAB ARRANGEMENT ····· 403～405
CAB GROUP ····· 409～417
CAB HEATER GROUP ····· 488
CAB MOUNTING GROUP ····· 474
CAB PRESSURIZER GROUP ····· 422～423
CAB WINDOW GROUP ····· 418
CAMSHAFT GROUP ····· 17
CANOPY ARRANGEMENT ····· 406
CARRIER ROLLER ARRANGEMENT ····· 282
CARRIER ROLLER MOUNTING GROUP ····· 306
CARTRIDGE ASSEMBLY ····· 367
CHARGING ALTERNATOR ARRANGEMENT ····· 100～101
CHARGING ALTERNATOR GROUP ····· 99,102
CHASSIS ARRANGEMENT ····· 236
CHECK VALVE GROUP ····· 370
CLUTCH AND REFRIGERANT COMPRESSOR GROUP ····· 493
CLUTCH KIT GROUP ····· 494
COLD WEATHER ARRANGEMENT ····· 280
COMPACT DRIVE MOTOR GROUP ····· 454～455
CONDENSER AND MOUNTING GROUP ····· 50,489
CONDENSER GROUP ····· 490～491

NAME PAGE

CONNECTORS MOUNTING GROUP ····· 149
CONSOLE COVER GROUP ····· 428～429
CONTROL AND MOUNTING GROUP ····· 93,225,310
CONTROL GROUP ····· 136,436～437
CONTROL MOUNTING GROUP ····· 438～439
CONTROL VALVE GROUP ····· 356～363
COUNTER BALANCE VALVE GROUP ····· 351
CRANKSHAFT GROUP ····· 15
CYLINDER BLOCK ASSEMBLY ····· 6～7
CYLINDER BLOCK COVER GROUP ····· 26
CYLINDER BLOCK GROUP ····· 5
CYLINDER GROUP ····· 377～380
CYLINDER HEAD ASSEMBLY ····· 10
CYLINDER HEAD GROUP ····· 8～9
CYLINDER LINES GROUP ····· 339
CYLINDER MOUNTING GROUP ····· 381

D

DAMPER AND PULLEY GROUP ····· 16
DASH ASSEMBLY ····· 256
DIFFERENTIAL DRIVE AND BRAKE GROUP ····· 216～217
DISCONNECT SWITCH ASSEMBLY ····· 127
DISPLAY MOUNTING KIT ····· 392
DOME LAMP GROUP ····· 452
DOOR GROUP ····· 264～265
DRAIN LINES GROUP ····· 66
DRAWBAR GROUP ····· 276
DUST EJECTOR GROUP ····· 72

E

ECOLOGY DRAIN GROUP ····· 206
ELECTRIC STARTING MOTOR GROUP ····· 103～106
ELECTRICAL CONNECTION GROUP ····· 27
ELECTRICAL CONVERTER GROUP ····· 96
ELECTRONIC CONTROL GROUP ····· 92,94,136,452
ELECTRONIC CONTROL WIRING GROUP ····· 130～132
ELECTRONICS ARRANGEMENT ····· 90
ELECTRONICS GROUP ····· 90～91
ENCLOSURE GROUP ····· 261,263
ENGINE ARRANGEMENT ····· 2～3
ENGINE ENCLOSURE GROUP ····· 257～259
ENGINE GUARD GROUP ····· 262
ENGINE LIFTING GROUP ····· 31
ENGINE MOUNTING GROUP ····· 268
ENGINE OIL COOLER GROUP ····· 63
ENGINE OIL FILLER GROUP ····· 41
ENGINE OIL FILTER GROUP ····· 38～39
ENGINE OIL PUMP GROUP ····· 36～37
ENGINE SUPPORT GROUP ····· 28
ENGINE TRUNNION GROUP ····· 20
ENGINE WIRING GROUP ····· 152～155
EQUALIZER BAR GROUP ····· 289～290

INDEX

NAME	PAGE
EQUALIZER BAR REMOTE LUBRICATION GROUP	288
ETHER STARTING AID GROUP	171
EXHAUST MANIFOLD GROUP	73
EXHAUST SHIELD GROUP	72
F	
FAN DRIVE GROUP	30
FAN GROUP	48,475
FAN PULLEY GROUP	29
FAST FILL FUEL ADAPTER GROUP	84
FENDER ASSEMBLY	249～250
FENDER GROUP	244～248
FILM GROUP	496～501
FILTER BASE ASSEMBLY	205
FILTER BYPASS SWITCH GROUP	205
FINAL DRIVE GROUP	208～211
FINAL DRIVE MOUNTING GROUP	207
FLOOD LAMP GROUP	166～168
FLYWHEEL GROUP	25
FLYWHEEL HOUSING ASSEMBLY	23
FLYWHEEL HOUSING GROUP	22
FRAME AND CASE ASSEMBLY	238～240
FRAME AND CASE GROUP	237
FRONT GEAR GROUP	21
FRONT HOUSING GROUP	19
FRONT HOUSING MOUNTING GROUP	20
FUEL FILTER GROUP	85～86
FUEL HEATER GROUP	89
FUEL INJECTION LINES GROUP	82～83
FUEL INJECTION PUMP GROUP	88
FUEL INJECTOR GROUP	88
FUEL LINES GROUP	80～81
FUEL TANK ASSEMBLY	79
FUEL TANK GROUP	77～78
FUEL TANK GUARD GROUP	268～269
FUEL TRANSFER PUMP AND MOUNTING GROUP	87
FUMES DISPOSAL GROUP	42
G	
GEAR PUMP GROUP	202～203
GENERAL ARRANGEMENT	1
GOVERNOR AND BRAKE PEDAL GROUP	226～227
GUARD AND COUPLING GROUP	214
H	
HANDLE CONTROL GROUP	233,312
HANDLE GROUP	315
HEATER GROUP	172～173
HEATER LINES GROUP	484～485
HIGH SPEED OIL CHANGE GROUP	192～193
HOOD AND GUARD GROUP	260
HOOD ASSEMBLY	267
HOOD GROUP	266
HOUSING AND REGULATOR GROUP	61
HYDRAULIC ARRANGEMENT	307
HYDRAULIC CONTROL ARRANGEMENT	308
HYDRAULIC OIL COOLER GROUP	49
HYDRAULIC TANK AND FILTER GROUP	317～319
HYDRAULIC TANK AND MOUNTING GROUP	316
I	
INLET MANIFOLD GROUP	364
INSTALLATION ARRANGEMENT	4,137
INSTALLATION GROUP	134～135
INSTRUMENT GROUP	432～435
J	
JOYSTICK CONTROL GROUP	311
L	
LIFT CYLINDER AND LINES GROUP	344～345
LIFT CYLINDER ARRANGEMENT	315
LIFT LINES GROUP	332～333
LIGHTING GROUP	158～166
LINK ASSEMBLY	292
LITERATURE GROUP	494～495
LUBRICATION GROUP	279
M	
MAIN DRIVE SHAFT GROUP	215
MANIFOLD ASSEMBLY	201
MANIFOLD GROUP	223
MIRROR GROUP	445
MODIFICATION ARRANGEMENT	349
MODULAR HANDLE GROUP	308
MODULATING VALVE GROUP	187
MOTOR ADAPTER GROUP	375
MOUNTING GROUP	399
MUFFLER GROUP	75
O	
OIL COOLER FASTENER GROUP	65
OIL FILTER BASE GROUP	40
OIL LEVEL GAUGE GROUP	33
OIL PAN GROUP	34
OIL PORT FITTING GROUP	37
OPERATOR COMPARTMENT LINER GROUP	420～421
P	
PAN ASSEMBLY	472
PAN GROUP	471
PANEL GROUP	112～113
PARTS AND CASE GROUP	180～182
PILOT LINES GROUP	324～331

INDEX

NAME	PAGE
PILOT VALVE GROUP	313～314
PISTON MOTOR GROUP	375
PISTON PUMP GROUP	372～373
PLANETARY AND BRAKE GROUP	218
PLANETARY GROUP	176～179
PLATE GROUP	470
PLATFORM ASSEMBLY	255
PLATFORM GROUP	251～254,430～431
PLATFORM WIRING GROUP	116～120
PLUG GROUP	25～26,28
POSITION SENSOR GROUP	234
POWER TRAIN ARRANGEMENT	174
POWER TRAIN AXLE GROUP	215
POWER TRAIN OIL FILTER GROUP	204
POWER TRAIN OIL LINES GROUP	194～198
PRECLEANER ARRANGEMENT	68
PRECLEANER ASSEMBLY	71
PRESSURE REDUCING VALVE GROUP	369
PROTECTIVE SCREEN GROUP	444
PUMP AND MOUNTING GROUP	348
PUMP COUPLING GROUP	214
PUMP LINES GROUP	320～323
PUSH ARM GROUP	389

Q

QUICK DROP VALVE GROUP	350

R

RADIATOR GRILL GROUP	275
RADIATOR GROUP	43～45
RADIATOR GUARD GROUP	272～273
RADIO INSTALLATION GROUP	441
RADIO MOUNTING GROUP	440
REAR FRAME ASSEMBLY	305
REAR GEAR GROUP	24
REFRIGERANT COMPRESSOR GROUP	492
RELIEF VALVE GROUP	186,199,366,368～369,371
RIPPER ARRANGEMENT	395
RIPPER FRAME GROUP	396
RIPPER GROUP	398
RIPPER LINES GROUP	334～338
RIPPER MOUNTING GROUP	397
RIPPER TOOTH GROUP	398
ROCKER ARM GROUP	12
ROD AND PISTON GROUP	18
ROLLOVER ASSEMBLY	406
ROLLOVER PROTECTIVE STRUCTURE GROUP	407～408
ROPS MOUNTING GROUP	275
ROTATING MOTOR GROUP	376

S

NAME	PAGE
SAND BLAST GRID GROUP	274
SCREEN GROUP	200
SEAT AND MOUNTING GROUP	456
SEAT GROUP	457,459～463
SEAT RECLINER GROUP	473
SEAT SUSPENSION GROUP	464～467
SERVICE GROUP	91～92
SHUTTLE VALVE GROUP	365
SOLENOID VALVE GROUP	224,370
STABILIZER LINK GROUP	392
STEERING AND TRANSMISSION CONTROL GROUP	228～231
STRAIGHT BLADE GROUP	400～401
SUSPENSION HOUSING GROUP	468～469
SUSPENSION SEAT GROUP	458～459
SWEEP ASSEMBLY	278
SWEEP GROUP	277
SWITCH ASSEMBLY	125

T

TILT CYLINDER GUARD GROUP	387
TILT CYLINDER LINES GROUP	340～343
TOGGLE SWITCH ASSEMBLY	168
TORQUE CONVERTER GROUP	189～191
TRACK ADJUSTER AND RECOIL GROUP	285
TRACK CARRIER ROLLER GROUP	303
TRACK GROUP	291～292
TRACK GUIDE GUARD GROUP	284
TRACK GUIDING ARRANGEMENT	281～282
TRACK IDLER CAP GROUP	293
TRACK IDLER GROUP	301～302
TRACK ROLLER ARRANGEMENT	283
TRACK ROLLER FRAME GROUP	286～287
TRACK ROLLER GROUP	294～300
TRACK ROLLER GUARD GROUP	304
TRANSMISSION ARRANGEMENT	175
TRANSMISSION HYDRAULIC CONTROL GROUP	184～185
TRANSMISSION MOUNTING GROUP	183
TRANSMISSION OIL COOLER GROUP	64
TURBOCHARGER GROUP	70
TURBOCHARGER OIL LINES GROUP	35

U

UNDERCARRIAGE ARRANGEMENT	281
UNIT INJECTOR WIRING GROUP	150

V

VALVE AND MOUNTING GROUP	219,309,346～348,365
VALVE GROUP	220～222,352～355,374
VALVE LIFTER GROUP	13
VALVE MECHANISM GROUP	11
VALVE MECHANISM MOUNTING GROUP	14

INDEX

W

NAME	PAGE
WATER AFTERCOOLER GROUP	76
WATER LINES GROUP	58～60
WATER PUMP GROUP	54～57
WATER SEPARATOR AND FUEL FILTER GROUP	86
WATER TANK GROUP	51～53
WINDOW GROUP	419
WINDSHIELD WASHER BOTTLE GROUP	448～449
WINDSHIELD WASHER GROUP	446～447
WIPER ARM PIVOT GROUP	454
WIPER GROUP	453
WIRING GROUP	138～141

Y

YOKE GROUP	32

MAINTENANCE PARTS INDEX

DESCRIPTION	PART NO.	PAGE NO.
V-BELT	2P-7333	492
V-BELT SET	7M-4720	29
ELEMENT ASSEMBLY	104-6931	318
	139-1537	318
	1R-0777	318
	328-3655	204
	6I-0274	69
	6I-0273	69
STRAINER	9P-7121	78
FILTER	6T-0988	422
FILTER ASSEMBLY	1R-0716	39
	1R-0749	86
	326-1642	86
	6T-5068	422

MACHINE ARRANGEMENT

CONSISTS OF :

			PAGE
1	127-8424	UNDERCARRIAGE ARRANGEMENT	281
1	256-6771	ENGINE ARRANGEMENT	2
1	270-0515	HYDRAULIC ARRANGEMENT	307
1	270-7621	ELECTRONICS ARRANGEMENT	90
1	271-6466	INSTALLATION ARRANGEMENT	4
1	322-6115	CHASSIS ARRANGEMENT	236
1	279-3351	POWER TRAIN ARRANGEMENT	174

J154648 X00

GENERAL ARRANGEMENT (322-6112 N/S)

ENGINE ARRANGEMENT

CONSISTS OF :

PAGE

CENTRAL STRUCTURE

1 115-2982 CYLINDER BLOCK GROUP ····· 5
1 117-0165 PLUG GROUP(CYLINDER BLOCK) ····· 25
1 117-0185 PLUG GROUP(CYLINDER BLOCK) ····· 26
1 117-2743 CRANKSHAFT GROUP ····· 15
6 132-3203 ROD AND PISTON GROUP ····· 18
1 159-8588 FRONT HOUSING MOUNTING GROUP ····· 20
1 171-3062 CAMSHAFT GROUP(SINGLE) ····· 17

UPPER STRUCTURE

1 116-1085 CYLINDER HEAD GROUP ····· 8
1 116-5408 VALVE MECHANISM MOUNTING GROUP ····· 14
1 117-2749 VALVE MECHANISM GROUP ····· 11

FRONT STRUCTURE

1 117-2750 FRONT GEAR GROUP ····· 21
1 158-8692 ENGINE TRUNNION GROUP ····· 20
1 160-6314 DAMPER AND PULLEY GROUP ····· 16
1 171-5823 ENGINE SUPPORT GROUP(FRONT) ····· 28
1 133-7075 FRONT HOUSING GROUP ····· 19

REAR STRUCTURE

1 125-4590 FLYWHEEL HOUSING GROUP ····· 22
1 241-3718 FLYWHEEL GROUP ····· 25
1 165-6879 REAR GEAR GROUP ····· 24

LOWER STRUCTURE

1 176-3908 OIL LEVEL GAUGE GROUP ····· 33
1 207-9830 OIL PAN GROUP ····· 34

LUBRICATION SYSTEM

1 117-2746 ENGINE OIL PUMP GROUP ····· 36
1 160-8581 ENGINE OIL FILTER GROUP(REMOTE) ····· 38
1 169-8947 ENGINE OIL FILLER GROUP ····· 41
1 188-8590 OIL PORT FITTING GROUP ····· 37

J154651 -06

256-6771 ENGINE ARRANGEMENT -PART 1 OF 2
PART OF 322-6112-Page 1

ENGINE ARRANGEMENT

CONSISTS OF :

PAGE

COOLING SYSTEM

1 116-5460 WATER LINES GROUP ····· 58
1 117-2674 WATER PUMP GROUP ····· 54
1 161-4347 TRANSMISSION OIL COOLER GROUP ····· 64
1 161-8089 ENGINE OIL COOLER GROUP ····· 63
1 164-5822 AFTERCOOLER WATER LINES GROUP ····· 62
1 268-0051 WATER PUMP GROUP(AFTERCOOLER) ····· 56
1 165-4274 WATER LINES GROUP ····· 60
1 212-0819 WATER LINES GROUP ····· 58

INTAKE AND EXHAUST SYSTEM

1 161-2717 EXHAUST MANIFOLD GROUP ····· 73
1 161-3597 AIR LINES GROUP ····· 69
1 161-3619 WATER AFTERCOOLER GROUP ····· 76
1 164-3710 TURBOCHARGER GROUP ····· 70
1 161-2130 TURBOCHARGER OIL LINES GROUP ····· 35
1 279-6053 FUMES DISPOSAL GROUP ····· 42

FUEL SYSTEM

1 116-5413 FUEL FILTER GROUP ····· 86
1 145-1695 FUEL TRANSFER PUMP AND MOUNTING GROUP ····· 87
6 190-6017 FUEL INJECTION PUMP GROUP ····· 88
1 251-9363 FUEL INJECTION LINES GROUP ····· 82

ELECTRICAL AND STARTING SYSTEM

1 117-2760 UNIT INJECTOR WIRING GROUP ····· 150
1 246-9360 ELECTRONIC CONTROL WIRING GROUP ····· 130

MISCELLANEOUS

1 115-2985 CYLINDER BLOCK COVER GROUP ····· 26
1 117-2792 OIL COOLER FASTENER GROUP ····· 65
1 124-2674 ELECTRICAL CONNECTION GROUP ····· 27
1 138-2028 PLUG GROUP(CYLINDER BLOCK) ····· 28
1 164-6472 ENGINE LIFTING GROUP ····· 31
1 175-2842 ALTERNATOR MOUNTING GROUP ····· 98

ELECTRONICS SYSTEM

1 248-6387 CONTROL AND MOUNTING GROUP(ELECTRONIC) ····· 93

J154652 -06

256-6771 ENGINE ARRANGEMENT -PART 2 OF 2
PART OF 322-6112-Page 1

ENGINE ARRANGEMENT

CONSISTS OF :

			PAGE
1	4W-5386	ENGINE MOUNTING GROUP	268
1	110-2317	HYDRAULIC OIL COOLER GROUP	49
1	160-8570	MUFFLER GROUP	75
1	160-8571	EXHAUST SHIELD GROUP	72
1	160-8573	AIR CLEANER GROUP	67
1	160-8576	FAN PULLEY GROUP	29
1	162-2786	PRIMARY FUEL FILTER GROUP	85
1	163-4762	WATER LINES GROUP	59
1	164-4444	WATER TANK GROUP	51
1	164-4445	ETHER STARTING AID GROUP	171
1	164-5689	FAN DRIVE GROUP	30
1	165-0088	REFRIGERANT COMPRESSOR GROUP	492
1	171-4357	DUST EJECTOR GROUP	72
1	176-4257	ALTERNATOR GROUP	99
1	186-0067	ELECTRIC STARTING MOTOR GROUP	103
1	193-2413	DRAIN LINES GROUP	66
1	271-1482	YOKE GROUP	32
1	271-6399	AIR LINES GROUP	74
1	271-6423	ENGINE WIRING GROUP	152
1	286-0369	CONDENSER AND MOUNTING GROUP	50
1	286-2633	BLOWER FAN GROUP	46
1	286-2639	RADIATOR GROUP	43

J155587 X05

INSTALLATION ARRANGEMENT (271-6466 N/S)
PART OF 322-6112-Page 1

BASIC ENGINE

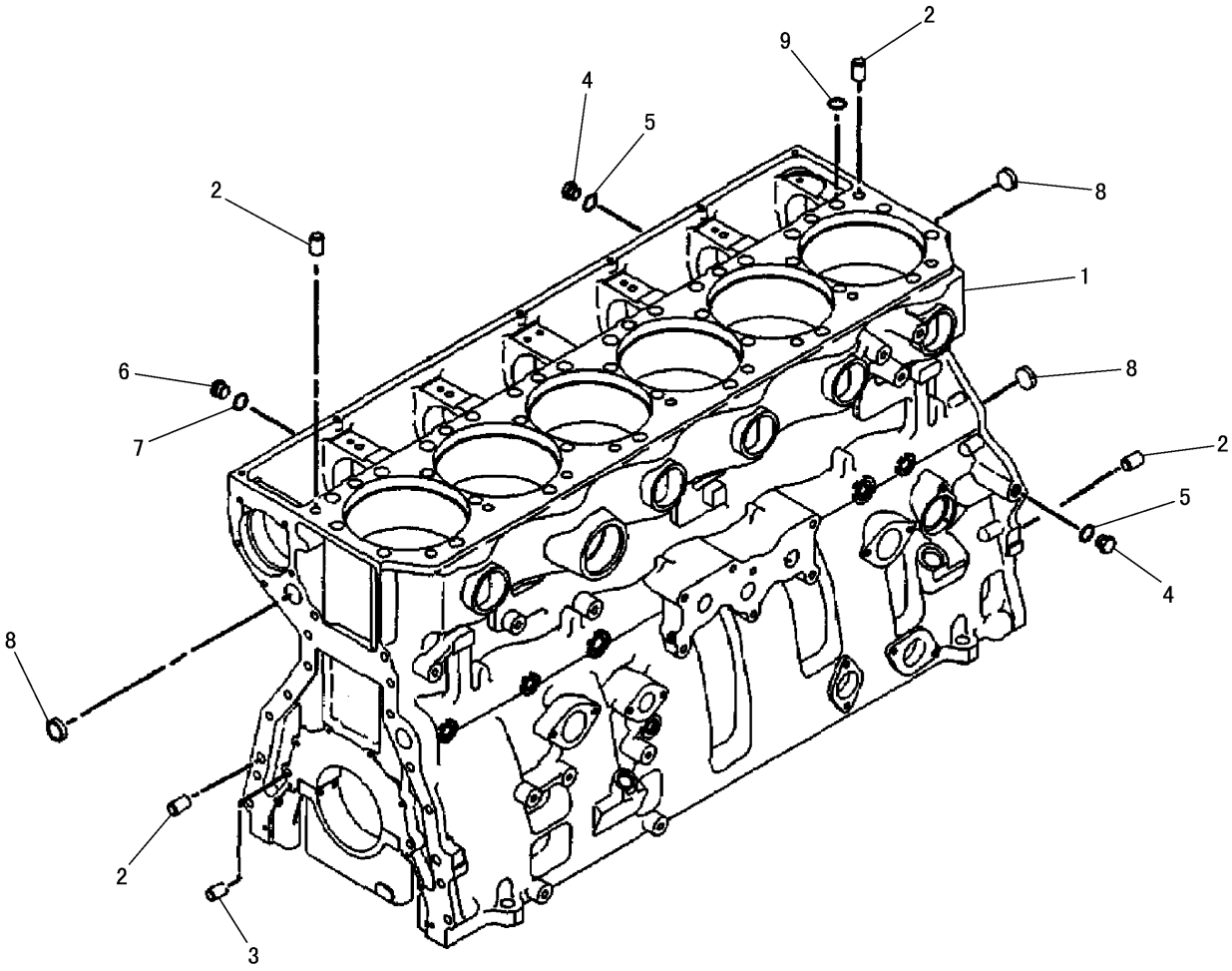

NOTE	№	PART NO.	QTY	PART NAME	NOTE	№	PART NO.	QTY	PART NAME
Y	1	204-3450	1	CYLINDER BLOCK AS					
	2	7N-5683	6	DOWEL					
	3	6V-3538	2	DOWEL					
	4	1N-5999	2	PLUG					
	5	5P-7813	2	SEAL					
	6	9S-8002	1	PLUG					
	7	6V-5048	1	SEAL					
	8	3B-0623	3	PLUG					
	9	4G-4972	6	SEAL					

Y-SEPARATE ILLUSTRATION

J119130 -10

CYLINDER BLOCK GROUP (115-2982 N/S)

PART OF 256-6771-Page 2

REFERENCE:204-3450-Page 6

BASIC ENGINE

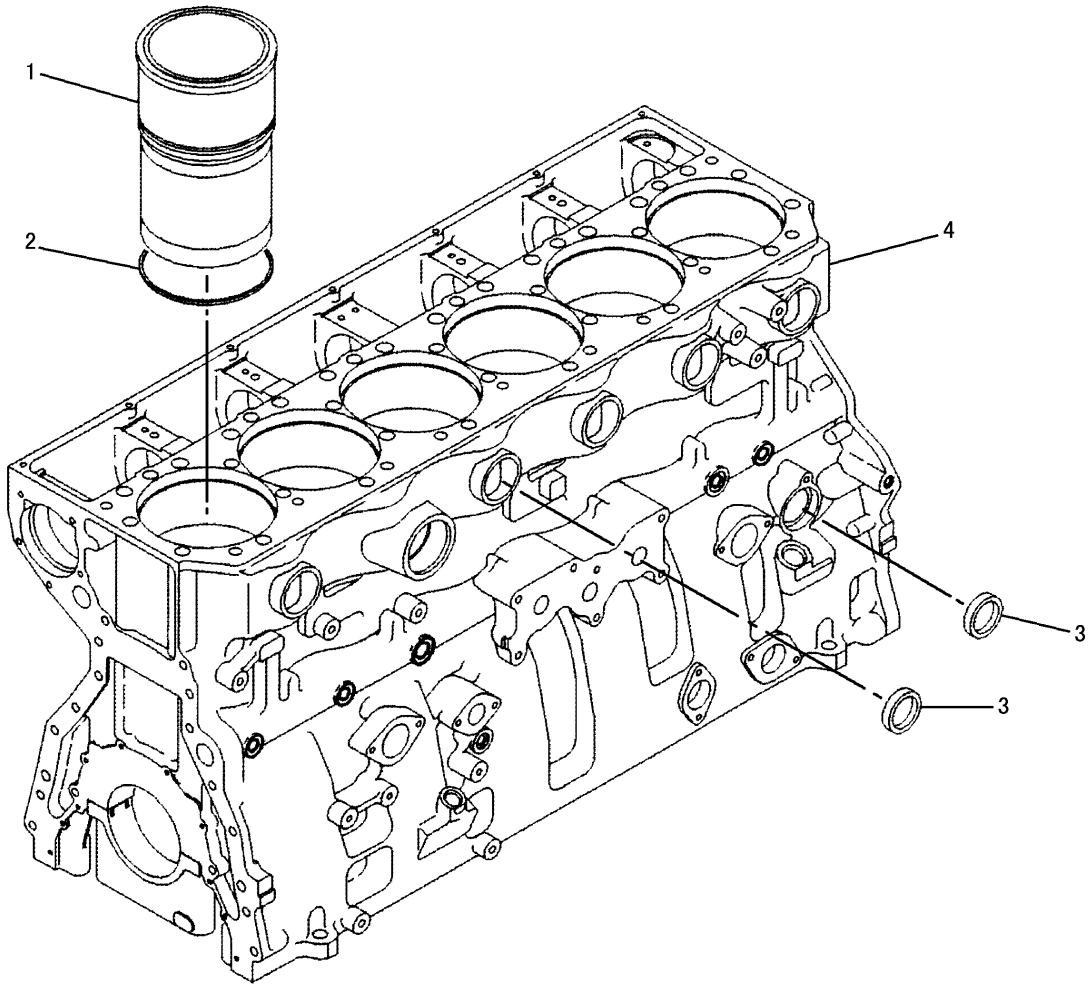

NOTE	№	PART NO.	QTY	PART NAME	NOTE	№	PART NO.	QTY	PART NAME
	1	148-2125	6	LINER					
	2	104-3560	6	SEAL					
	3	4F-5695	6	PLUG					
Y	4	200-2054	1	BLOCK AS					

Y-SEPARATE ILLUSTRATION

J119131 -01

CYLINDER BLOCK ASSEMBLY (204-3450 N/S)

PART OF 115-2982-Page 5
REFERENCE:200-2054-Page 7

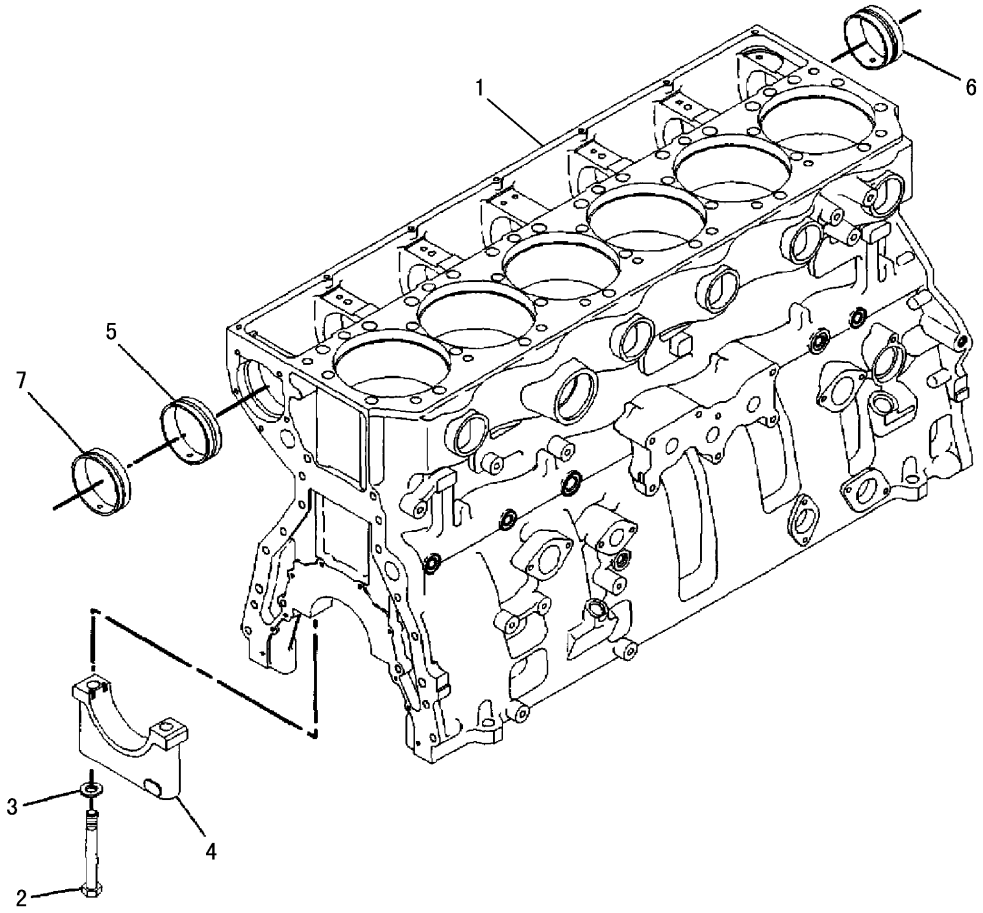

NOTE	№	PART NO.	QTY	PART NAME	NOTE	№	PART NO.	QTY	PART NAME
	1	200-2053	1	CYLINDER BLOCK AS					
	2	175-0454	14	BOLT(MJ16×2)					
	3	5P-8247	14	WASHER					
	4	117-0166	7	CAP					
	5	216-5583	5	BEARING					
	6	216-5584	1	BEARING					
	7	216-5585	1	BEARING					

J119133 -02

200-2054 CYLINDER BLOCK ASSEMBLY
PART OF 204-3450-Page 6

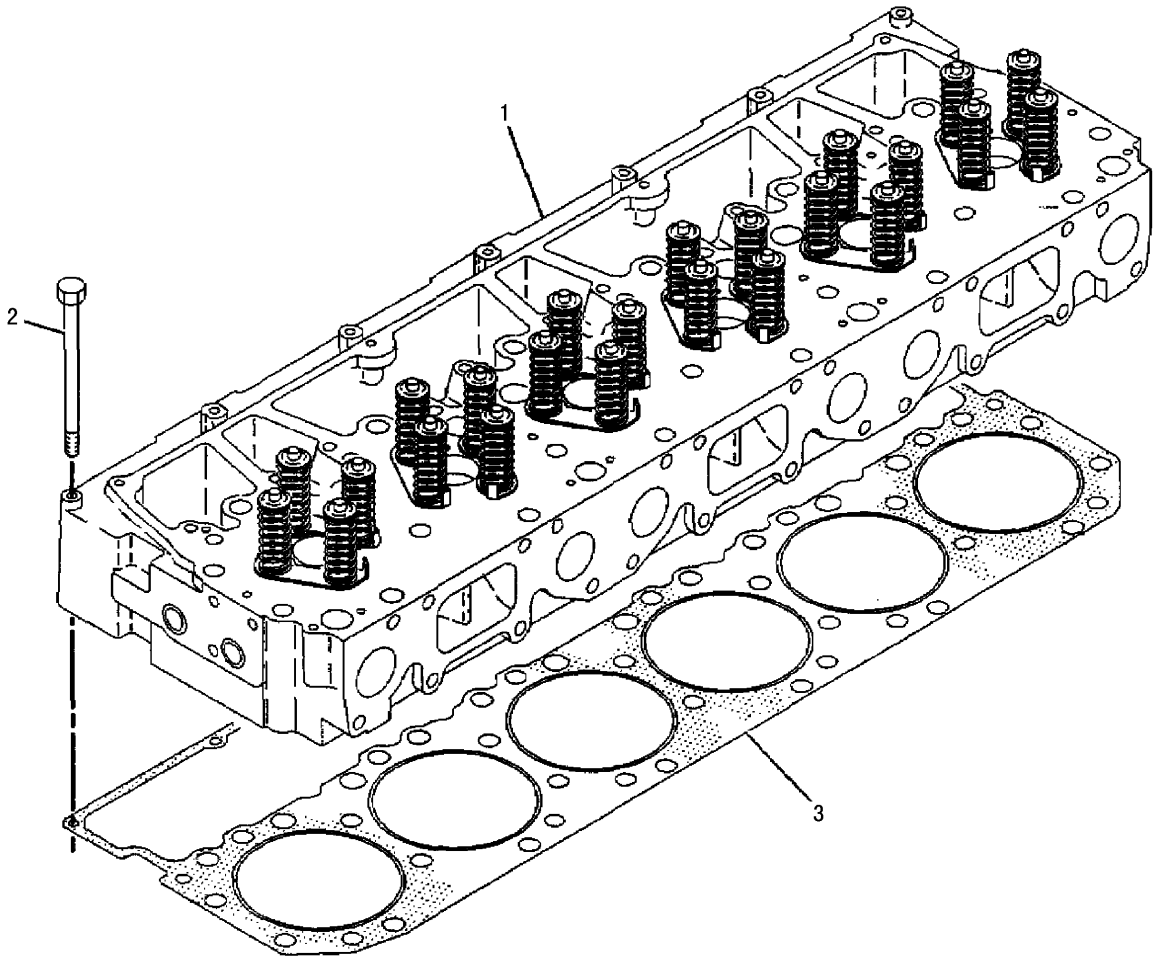

NOTE	№	PART NO.	QTY	PART NAME	NOTE	№	PART NO.	QTY	PART NAME
Y	1	148-2149	1	HEAD GROUP					
	2	6V-9607	7	BOLT(M8×1.25)					
	3	187-3307	1	GASKET AS					

Y-SEPARATE ILLUSTRATION

J119157 -13

CYLINDER HEAD GROUP (116-1085 N/S)

PART OF 256-6771-Page 2
REFERENCE:148-2149-Page 9

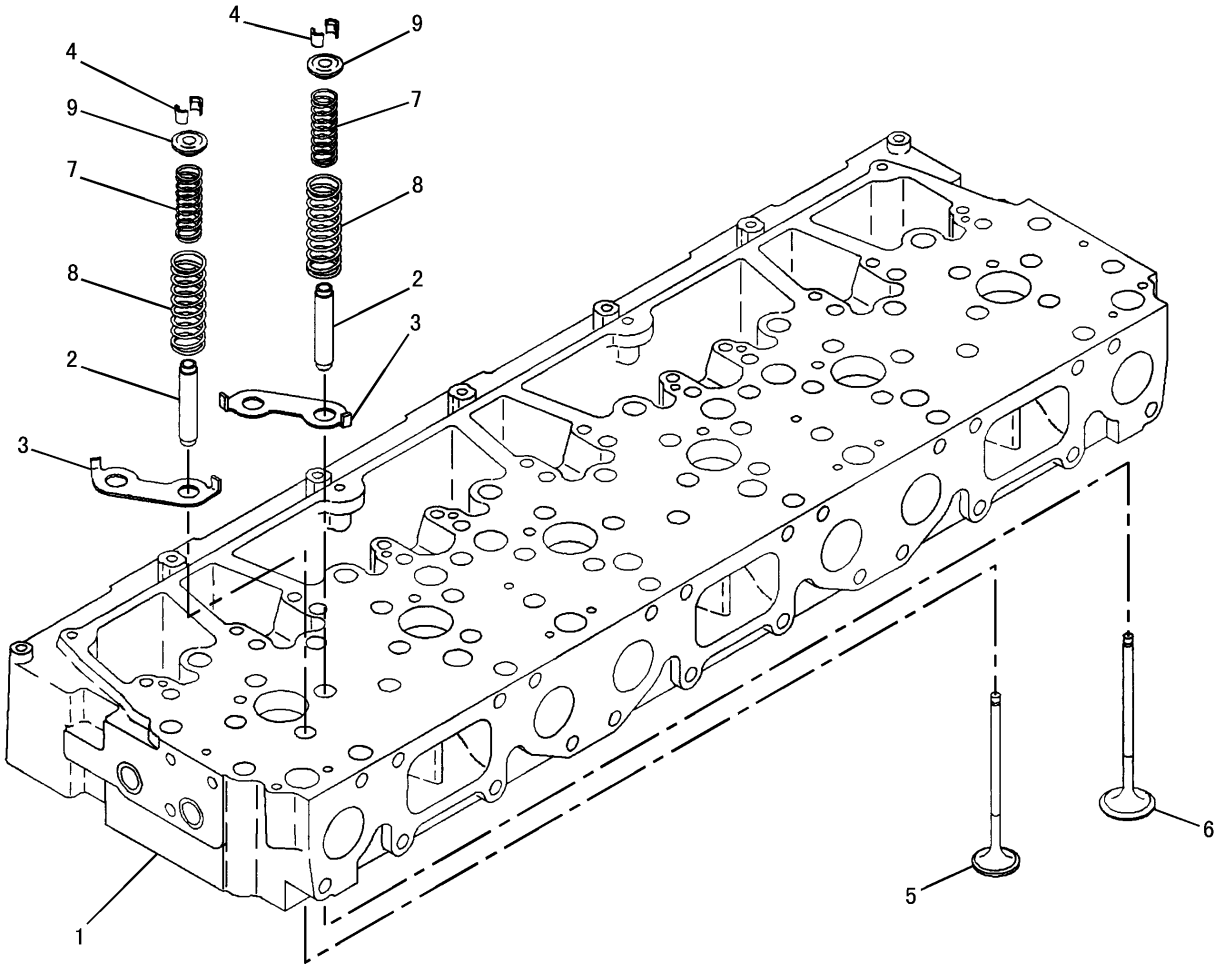

NOTE	№	PART NO.	QTY	PART NAME	NOTE	№	PART NO.	QTY	PART NAME
Y	1	179-9462	1	HEAD AS					
	2	100-8150	24	GUIDE					
	3	6I-1638	12	BASE					
	4	2A-4429	48	LOCK					
	5	133-7029	12	VALVE(EXHAUST)					
	6	7E-9578	12	VALVE(INLET)					
	7	220-4441	24	SPRING					
	8	214-0586	24	SPRING					
	9	6I-2663	24	ROTOCOIL AS					
		6I-2662	1	SHIELD					
		7C-8581	1	ROTOCOIL AS					

Y-SEPARATE ILLUSTRATION

J137485 -03

148-2149 CYLINDER HEAD GROUP
PART OF 116-1085-Page 8
REFERENCE:179-9462-Page 10

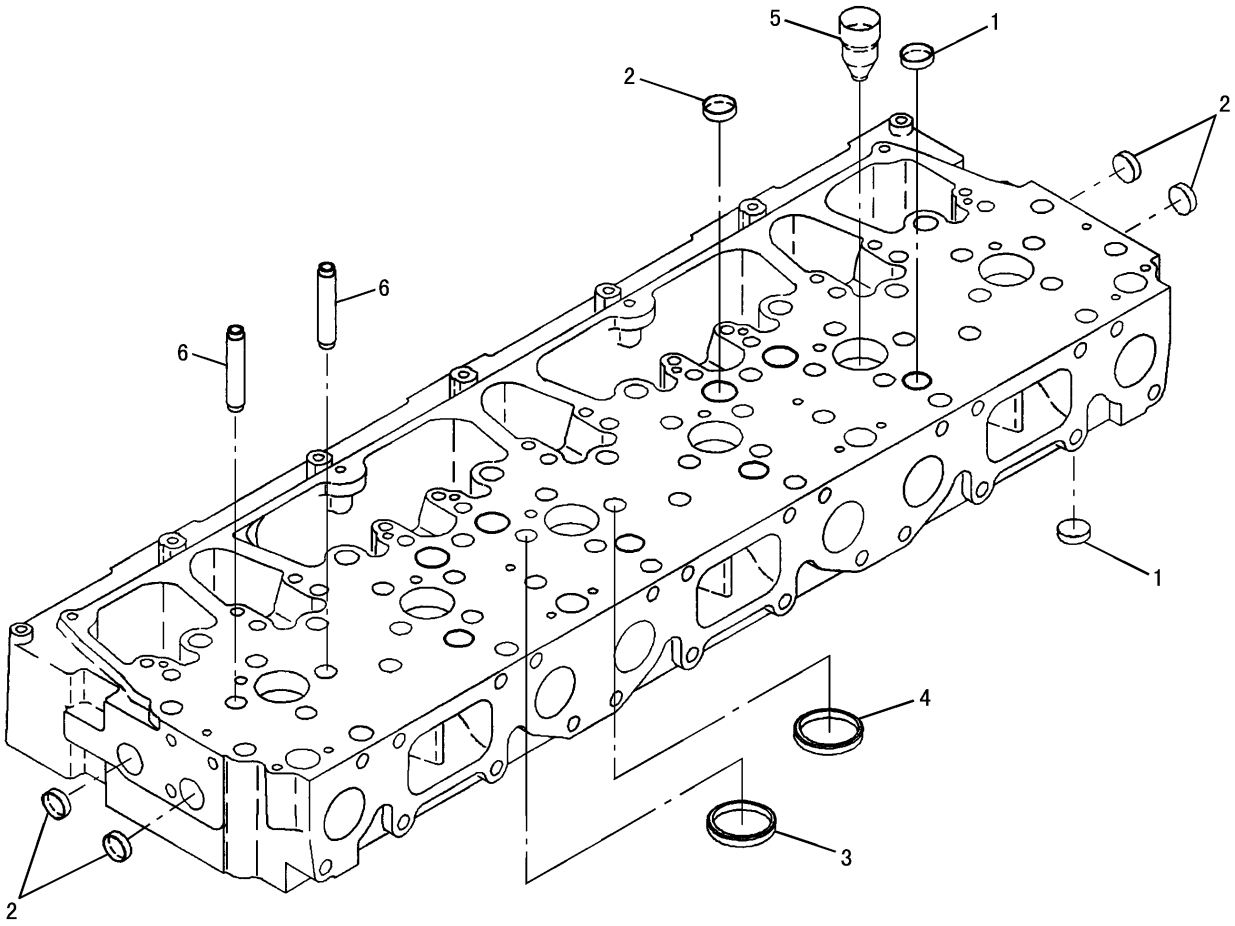

NOTE	№	PART NO.	QTY	PART NAME	NOTE	№	PART NO.	QTY	PART NAME
	1	6V-7604	16	PLUG					
	2	3B-0623	8	PLUG					
	3	179-9453	12	INSERT(EXHAUST)					
	4	138-2006	12	INSERT(INLET)					
	5	116-1102	6	SLEEVE					
	6	100-8150	24	GUIDE					

J137486 -00

179-9462 CYLINDER HEAD ASSEMBLY
PART OF 148-2149-Page 9

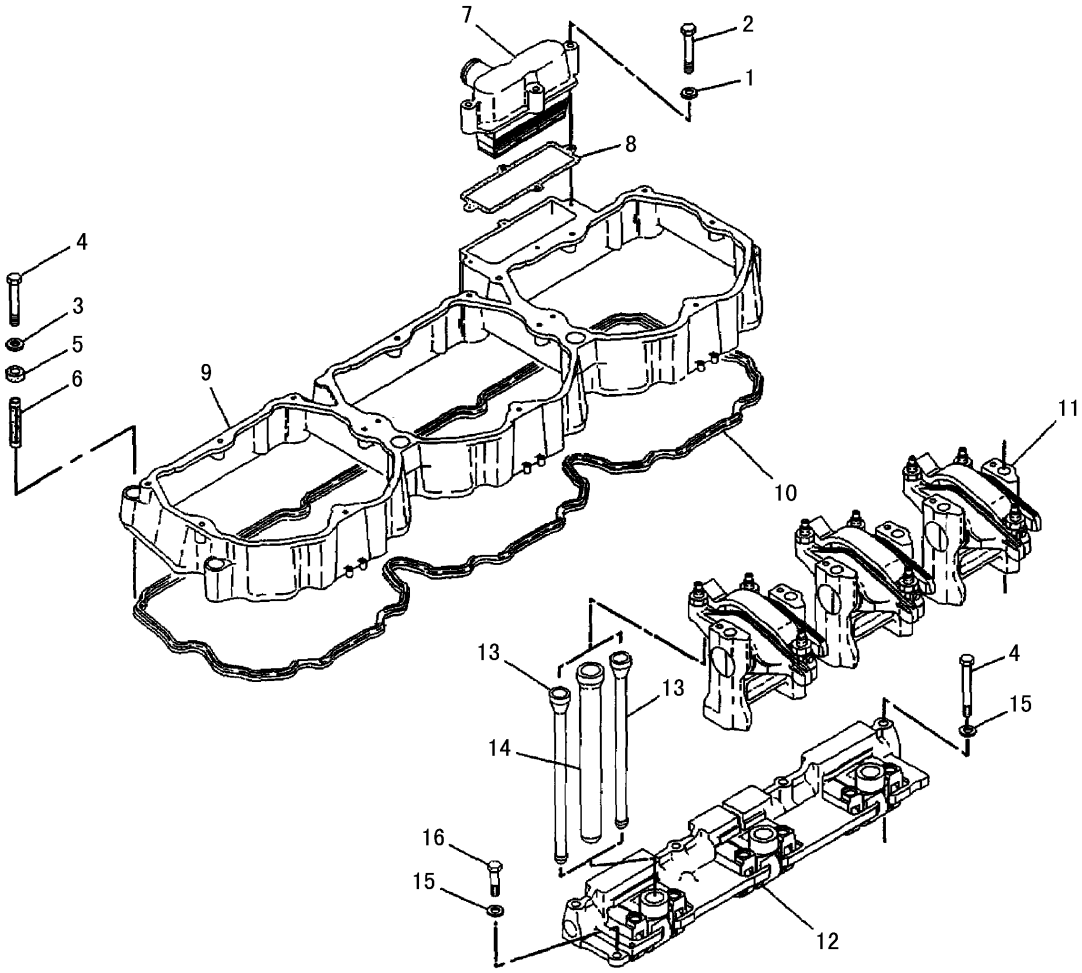

NOTE	№	PART NO.	QTY	PART NAME	NOTE	№	PART NO.	QTY	PART NAME
	1	9X-8267	4	WASHER					
	2	8T-0275	4	BOLT(M6×1)					
	3	3E-4352	8	WASHER					
	4	8T-0100	16	BOLT(M8×1.25)					
	5	7C-8292	8	ISOLATOR					
	6	9Y-7215	8	SLEEVE					
	7	9Y-4357	1	BREATHER AS					
	8	9Y-1758	1	GASKET					
	9	102-5842	1	BASE					
	10	109-5309	1	GASKET					
Y	11	115-9397	3	ROCKER ARM GROUP					
Y	12	148-2063	2	VALVE LIFTER GROUP					
	13	104-3567	12	PUSHROD					
	14	104-3568	6	PUSHROD					
	15	9M-1974	9	WASHER					
	16	6V-5217	1	BOLT(M8×1.25)					

Y-SEPARATE ILLUSTRATION

J119193 -09

VALVE MECHANISM GROUP (117-2749 N/S)
PART OF 256-6771-Page 2
REFERENCE:115-9397-Page 12 148-2063-Page 13

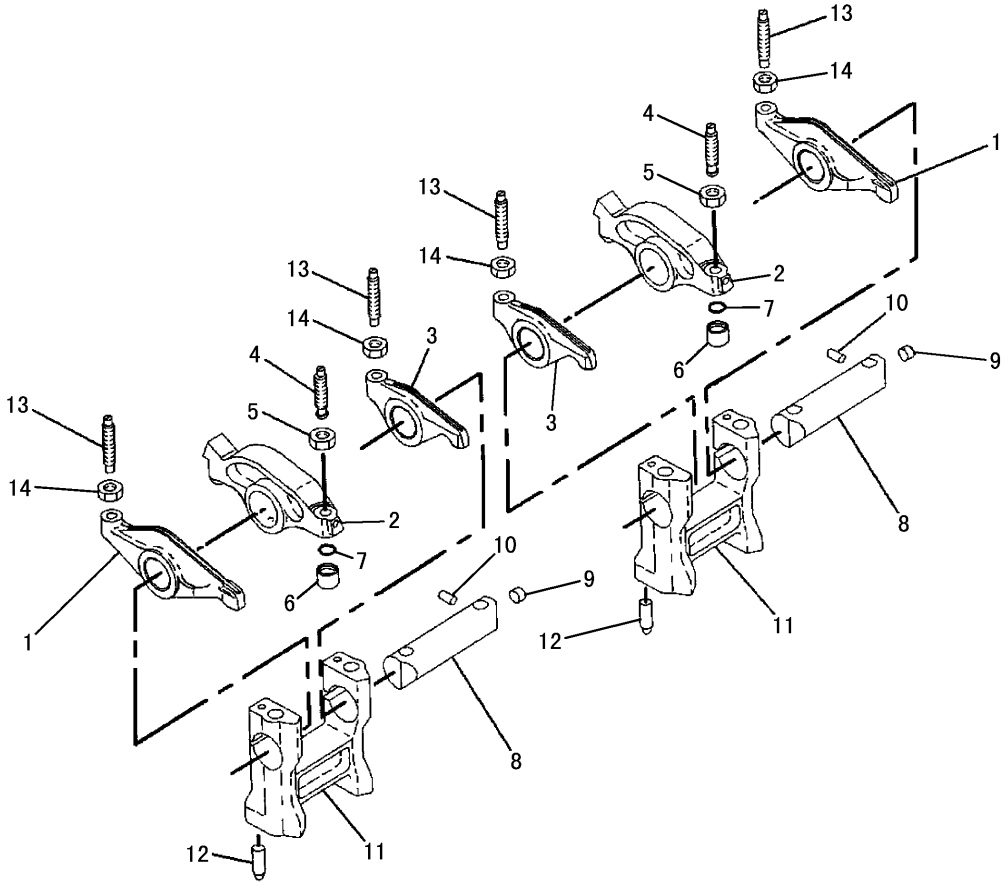

NOTE	№	PART NO.	QTY	PART NAME	NOTE	№	PART NO.	QTY	PART NAME
	1	115-9398	2	ARM					
	2	115-9400	2	ARM AS					
		2D-6642	2	BALL					
		115-9402	1	BEARING					
	3	115-9399	2	ARM					
	4	7C-1798	2	SCREW(M12×1.5)					
	5	245-6095	2	NUT(M12×1.5)					
	6	258-8721	2	BUTTON					
	7	8L-2777	2	SEAL					
	8	115-9403	2	SHAFT AS					
	9	3S-6605	1	PLUG					
	10	096-0014	1	PIN					
	11	185-4461	2	SUPPORT AS					
	12	180-1538	2	DOWEL					
	13	260-7524	4	SCREW(M10×1.5)					
	14	2Y-5829	4	NUT(M10×1.5)					

J155654 -10

ROCKER ARM GROUP (115-9397 N/S)
PART OF 117-2749-Page 11

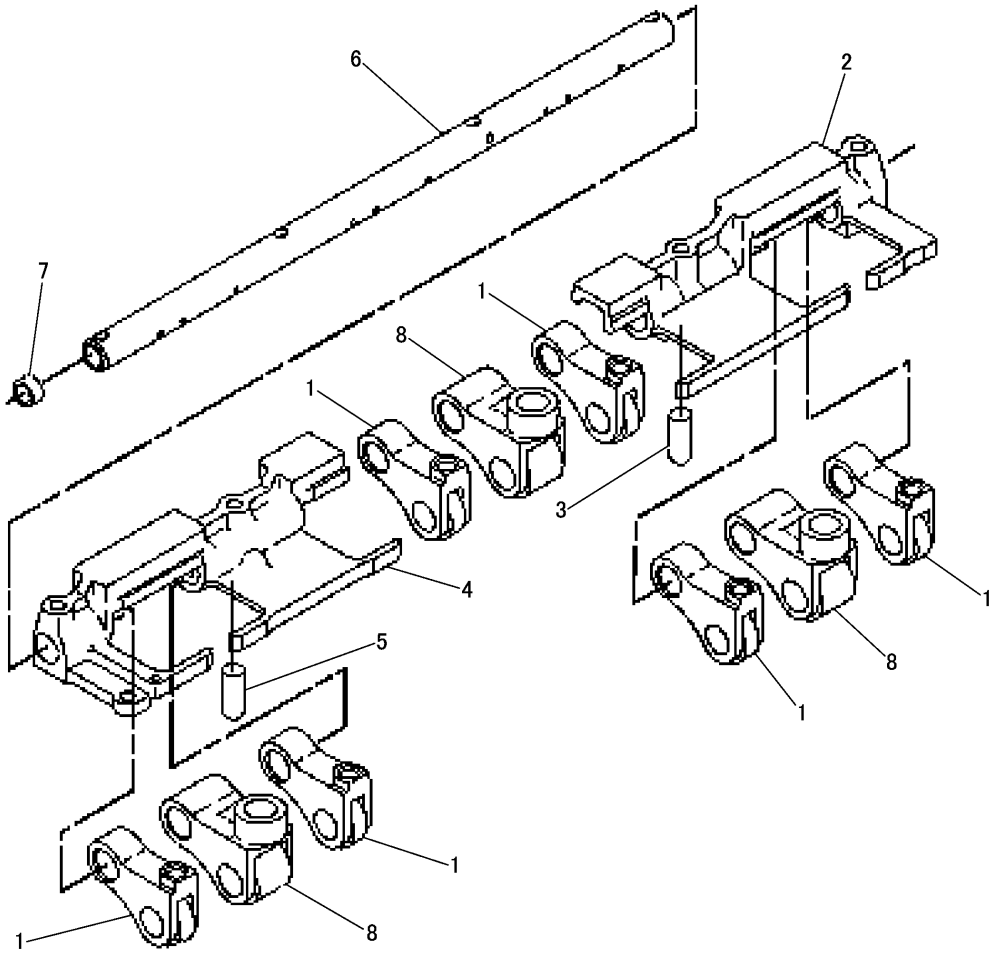

NOTE	№	PART NO.	QTY	PART NAME	NOTE	№	PART NO.	QTY	PART NAME
	1	251-1005	6	LIFTER AS					
	2	148-2064	1	BRACKET AS					
	3	6V-3537	1	DOWEL					
	4	148-2065	1	BRACKET AS					
	5	129-2893	1	DOWEL					
	6	245-9129	1	SHAFT AS					
	7	0L-1026	2	PLUG					
	8	202-7475	3	LIFTER AS					

J155655 -07

VALVE LIFTER GROUP (148-2063 N/S)
PART OF 117-2749-Page 11

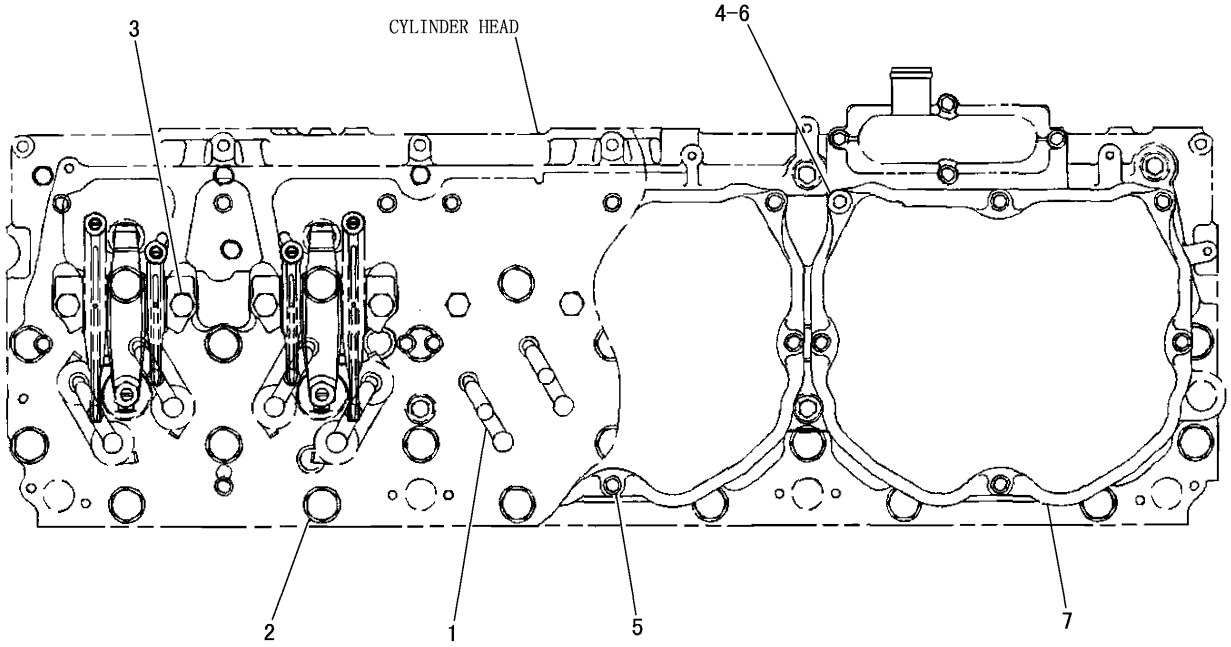

NOTE	№	PART NO.	QTY	PART NAME	NOTE	№	PART NO.	QTY	PART NAME
	1	176-4168	12	BRIDGE AS					
	2	129-3184	26	BOLT(M16×2)					
		2S-5658	26	WASHER					
	3	7X-0909	12	BOLT(M12×1.75)					
	4	6V-2315	1	BOLT(M6×1)					
	5	7X-2533	17	BOLT(M6×1)					
		9X-8256	17	WASHER					
	6	5P-4115	1	WASHER					
	7	9Y-4580	3	COVER AS					
D		5P-5678		SEAL---1m					

D-ORDER BY THE m

J119200 -06

VALVE MECHANISM MOUNTING GROUP (116-5408 N/S)
PART OF 256-6771-Page 2

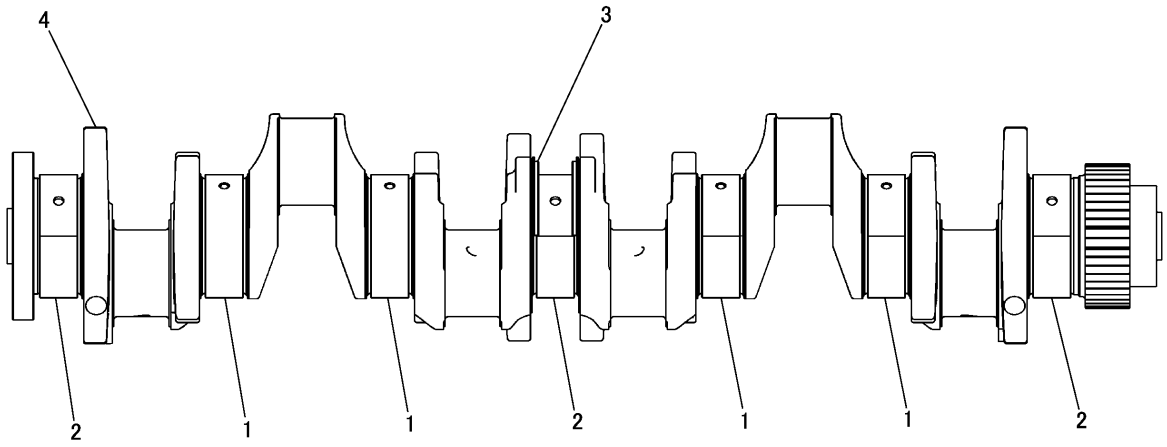

NOTE	№	PART NO.	QTY	PART NAME	NOTE	№	PART NO.	QTY	PART NAME
	1	211-0587	4	BEARING					
AB		128-0400		BEARING(0.51mm UNDERSIZE)					
AB		128-0401		BEARING(0.76mm UNDERSIZE)					
AB		128-0402		BEARING(0.51mm OVERSIZE)					
AB		128-0403		BEARING(0.51mm UNDERSIZE-0.51mm OVERSIZE)					
	2	211-0588	3	BEARING					
AB		128-0382		BEARING(0.51mm UNDERSIZE)					
AB		128-0383		BEARING(0.76mm UNDERSIZE)					
AB		128-0384		BEARING(0.51mm OVERSIZE)					
AB		128-0385		BEARING(0.51mm UNDERSIZE-0.51mm OVERSIZE)					
	3	246-3144	2	PLATE					
	4	326-4278	1	CRANKSHAFT AS					
		6V-3536	1	DOWEL					
		187-8972	1	GEAR					
		9Y-0821	1	SLEEVE(FRONT SEAL)					
		9Y-0810	1	SLEEVE(REAR SEAL)					

A-NOT A PART OF THIS GROUP
B-USE AS REQUIRED

J154653 -12

CRANKSHAFT GROUP (117-2743 N/S)
PART OF 256-6771-Page 2

BASIC ENGINE

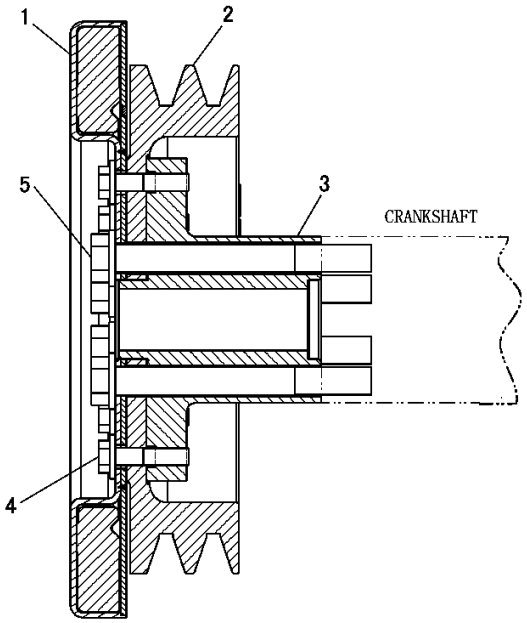

NOTE	№	PART NO.	QTY	PART NAME
	1	167-8125	1	DAMPER AS
	2	233-9163	1	PULLY
	3	185-7450	1	ADAPTER
	4	6V-5843	8	BOLT(M10×1.5)
		3E-4353	8	WASHER
	5	6V-8154	6	BOLT(M16×2)
		5P-8247	6	WASHER

J135889 -02

DAMPER AND PULLEY GROUP (160-6314 N/S)
PART OF 256-6771-Page 2

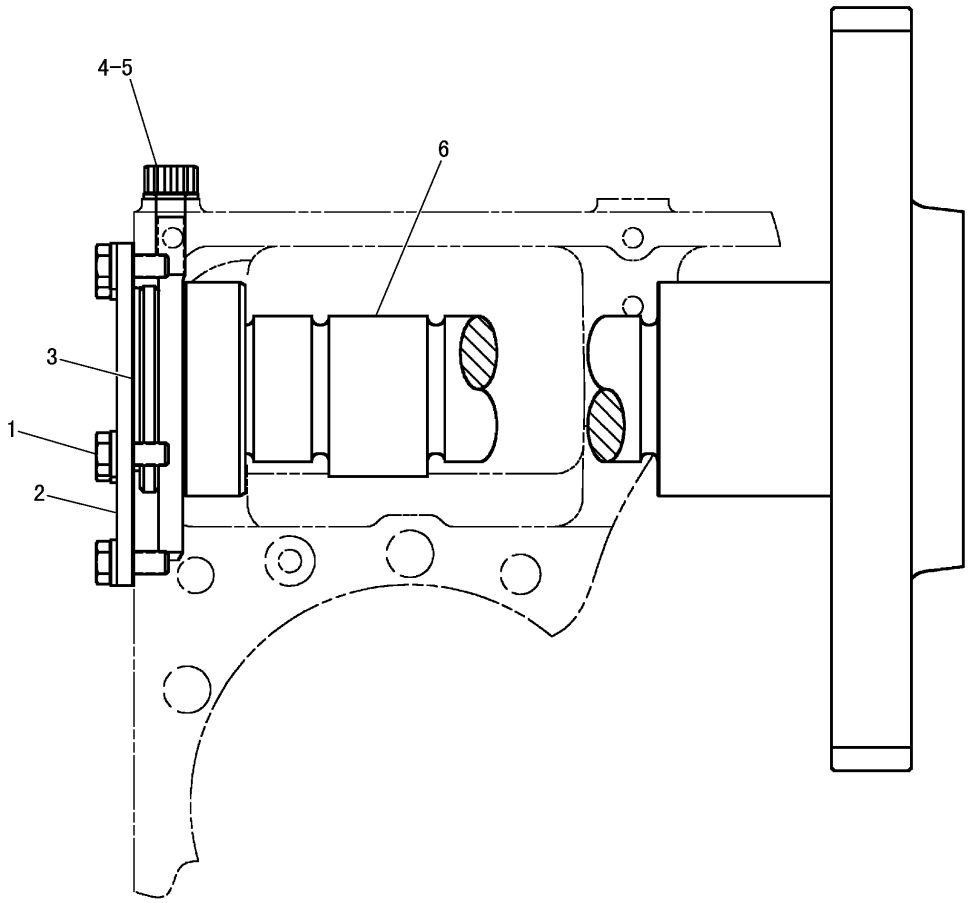

NOTE	№	PART NO.	QTY	PART NAME	NOTE	№	PART NO.	QTY	PART NAME
	1	6V-5217	5	BOLT(M8×1.25)					
		9M-1974	5	WASHER					
	2	118-0459	1	COVER					
	3	133-7068	1	GASKET					
	4	4K-9841	1	WASHER					
	5	178-3643	1	PIN					
	6	171-3063	1	CAMSHAFT AS					
		1B-8705	1	KEY					
		128-0411	1	JOURNAL					
		133-7100	1	GEAR					

J122644 -01

CAMSHAFT GROUP (171-3062 N/S) -SINGLE
PART OF 256-6771-Page 2

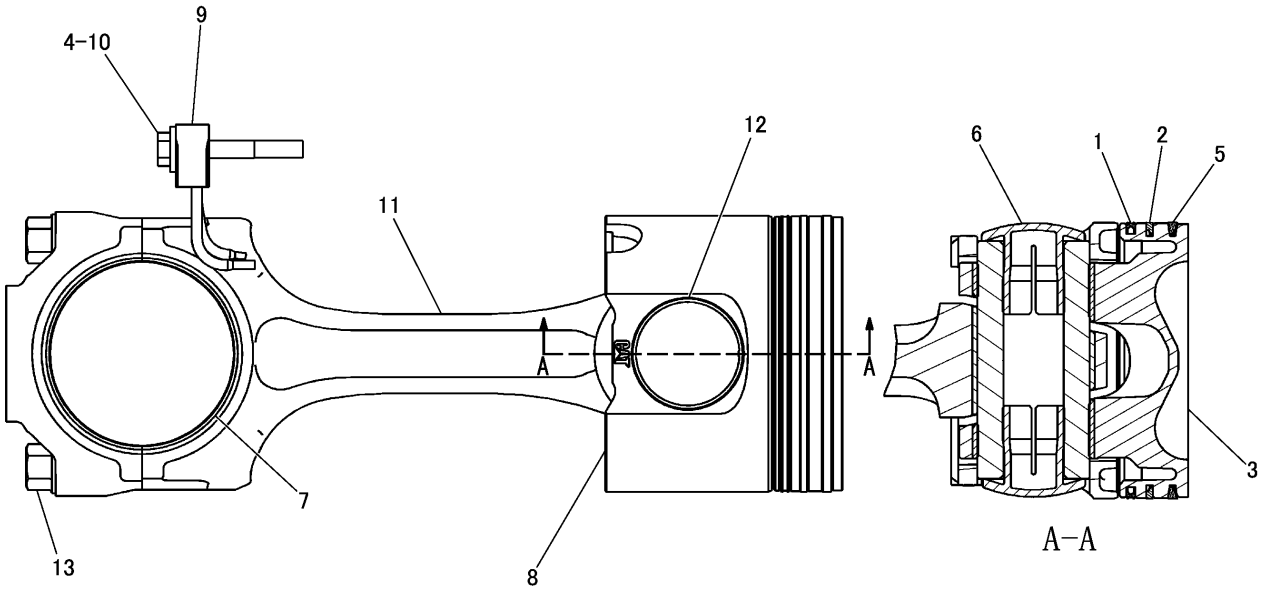

NOTE	№	PART NO.	QTY	PART NAME	NOTE	№	PART NO.	QTY	PART NAME
	1	4P-1659	1	RING(OIL)					
	2	109-5319	1	RING(INTERMEDIATE)					
	3	133-7098	1	CROWN AS					
	4	8T-0100	1	BOLT(M8×1.25)					
	5	168-7212	1	RING(TOP)					
	6	197-9335	1	PIN AS					
		6I-2720	2	PLUG					
		168-7276	1	PIN					
	7	217-0577	1	BEARING					
	8	238-2710	1	SKIRT					
	9	274-1587	1	TUBE AS					
	10	3E-4352	1	WASHER					
	11	155-6629	1	ROD AS					
		219-4458	2	DOWEL PIN					
	12	7W-5844	1	BEARING					
	13	7C-8639	2	BOLT					

J144177 -10

ROD AND PISTON GROUP (132-3203 N/S)
PART OF 256-6771-Page 2

BASIC ENGINE

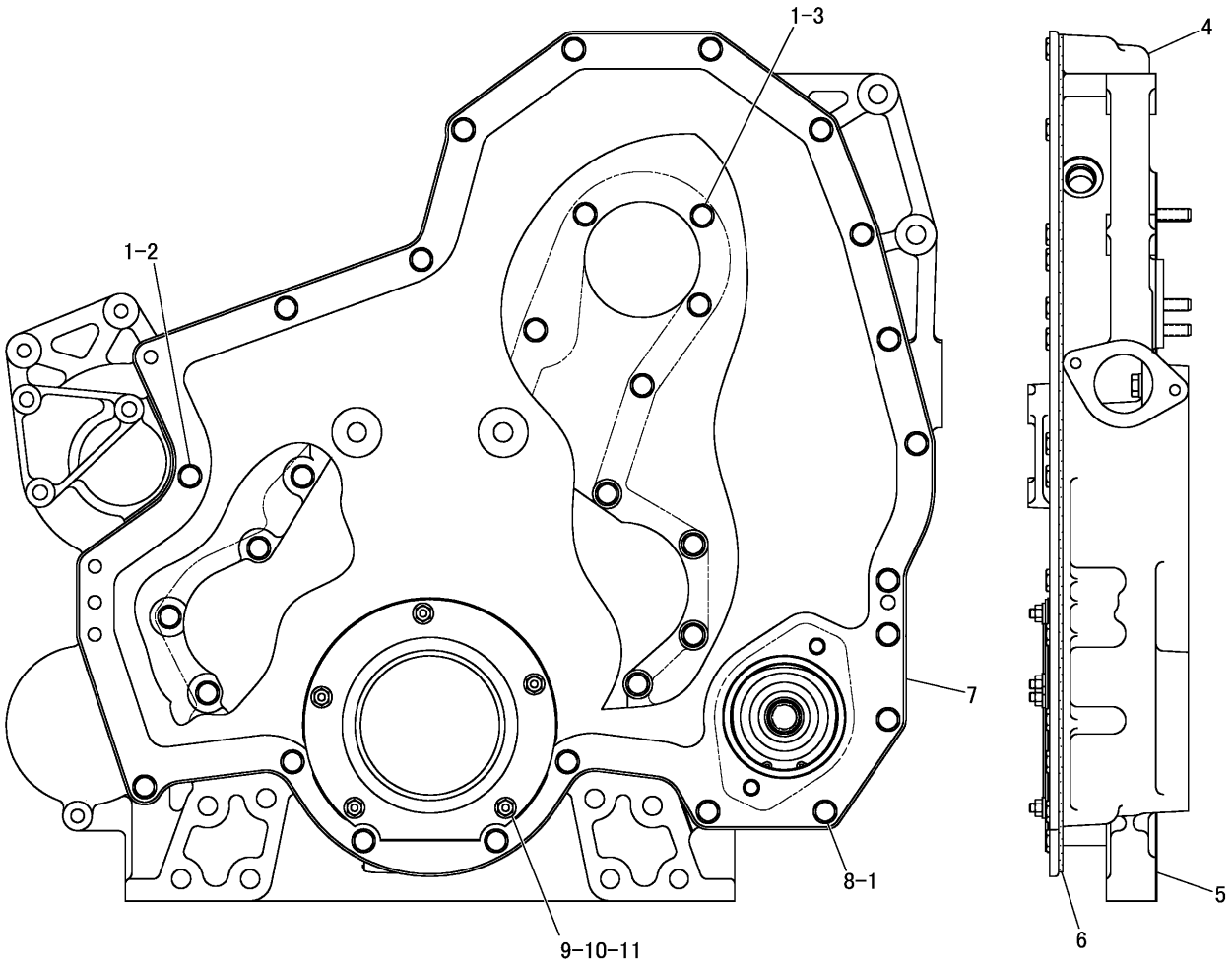

NOTE	№	PART NO.	QTY	PART NAME	NOTE	№	PART NO.	QTY	PART NAME
	1	9M-1974	33	WASHER					
	2	3E-8016	1	BOLT(M8×1.25)					
	3	6V-5219	13	BOLT(M8×1.25)					
	4	169-4170	1	HOUSING AS					
		2H-5549	1	RING					
		2A-3348	2	DOWEL					
		6V-3538	2	DOWEL					
		115-9424	1	GEAR					
		8H-9789	2	BEARING					
	5	262-8382	1	GASKET					
	6	174-2475	1	SEAL					
	7	262-7131	1	COVER AS					
	8	6V-3940	19	BOLT(M8×1.25)					
	9	5P-0537	5	WASHER					
	10	6V-8225	5	NUT(M6×1)					
	11	226-4755	1	SEAL GROUP					

J149434 -09

FRONT HOUSING GROUP (133-7075 N/S)
PART OF 256-6771-Page 2

BASIC ENGINE

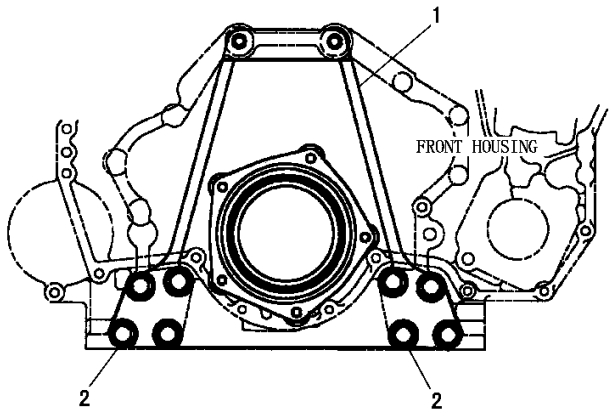

NOTE	№	PART NO.	QTY	PART NAME
	1	158-8693	1	TRUNNION AS
		158-8696	1	RING
	2	8T-0646	8	BOLT(M12×1.75)
		5P-8245	8	WASHER

J119229 -03

ENGINE TRUNNION GROUP (158-8692 N/S)
PART OF 256-6771-Page 2

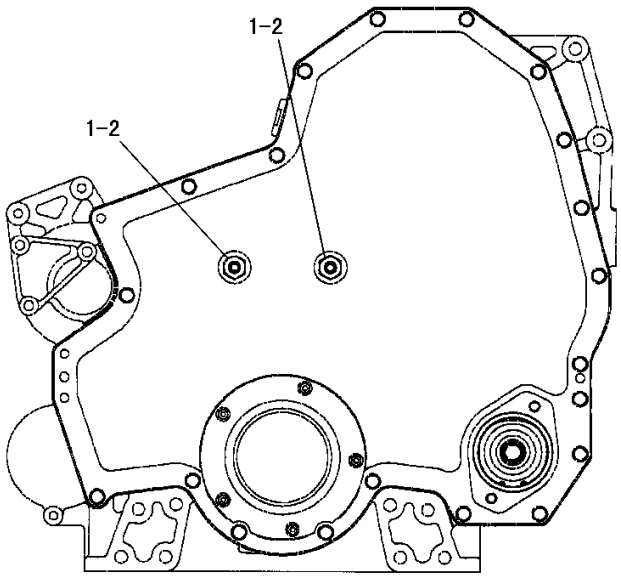

FRONT VIEW

NOTE	№	PART NO.	QTY	PART NAME
	1	5R-7137	2	WASHER
	2	159-8587	2	STUD(M12×1.75)

J119198 -01

FRONT HOUSING MOUNTING GROUP (159-8588 N/S)
PART OF 256-6771-Page 2

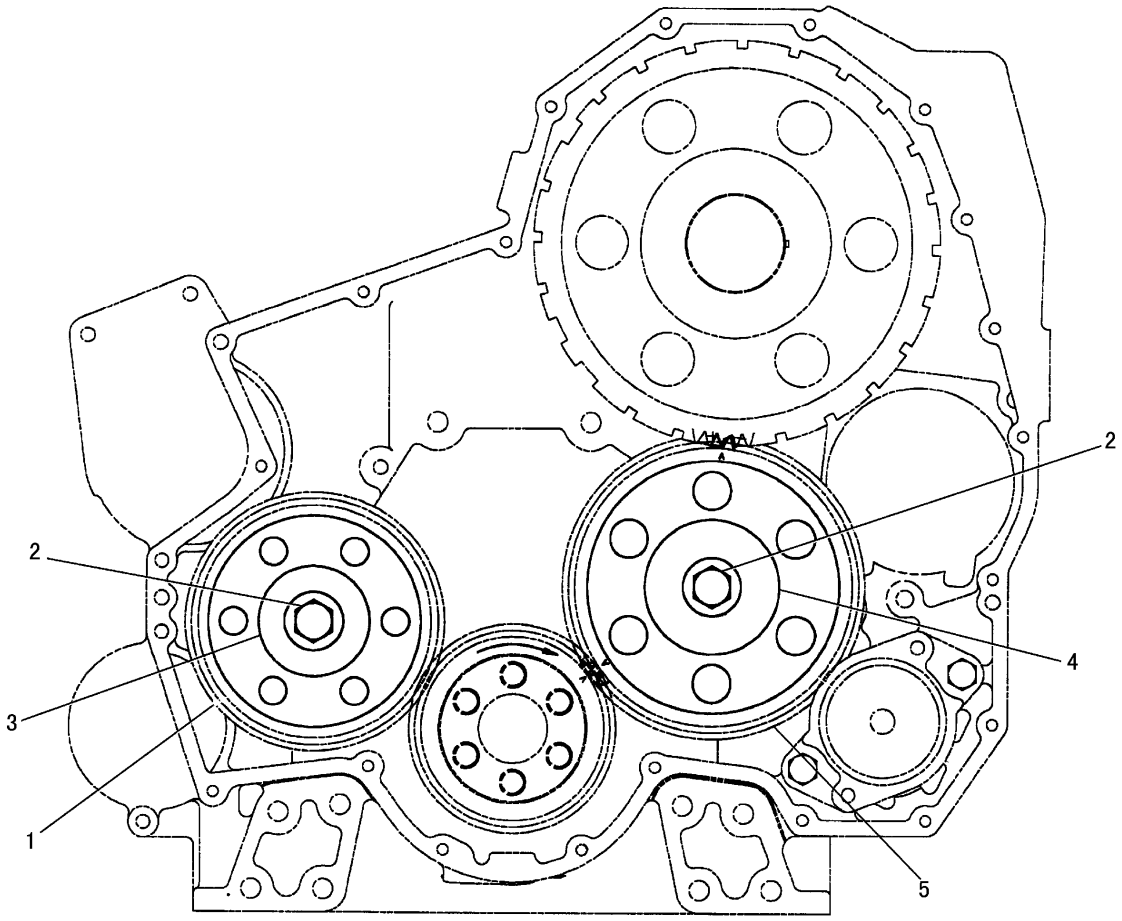

NOTE	№	PART NO.	QTY	PART NAME	NOTE	№	PART NO.	QTY	PART NAME
	1	9Y−3520	1	GEAR AS					
		7C−7852	1	BEARING					
	2	8T−0281	2	BOLT(M16×2)					
	3	7C−7851	1	SHAFT					
	4	133−7083	1	SHAFT					
	5	133−7086	1	GEAR AS					

J149436 -07

FRONT GEAR GROUP (117-2750 N/S)
PART OF 256-6771-Page 2

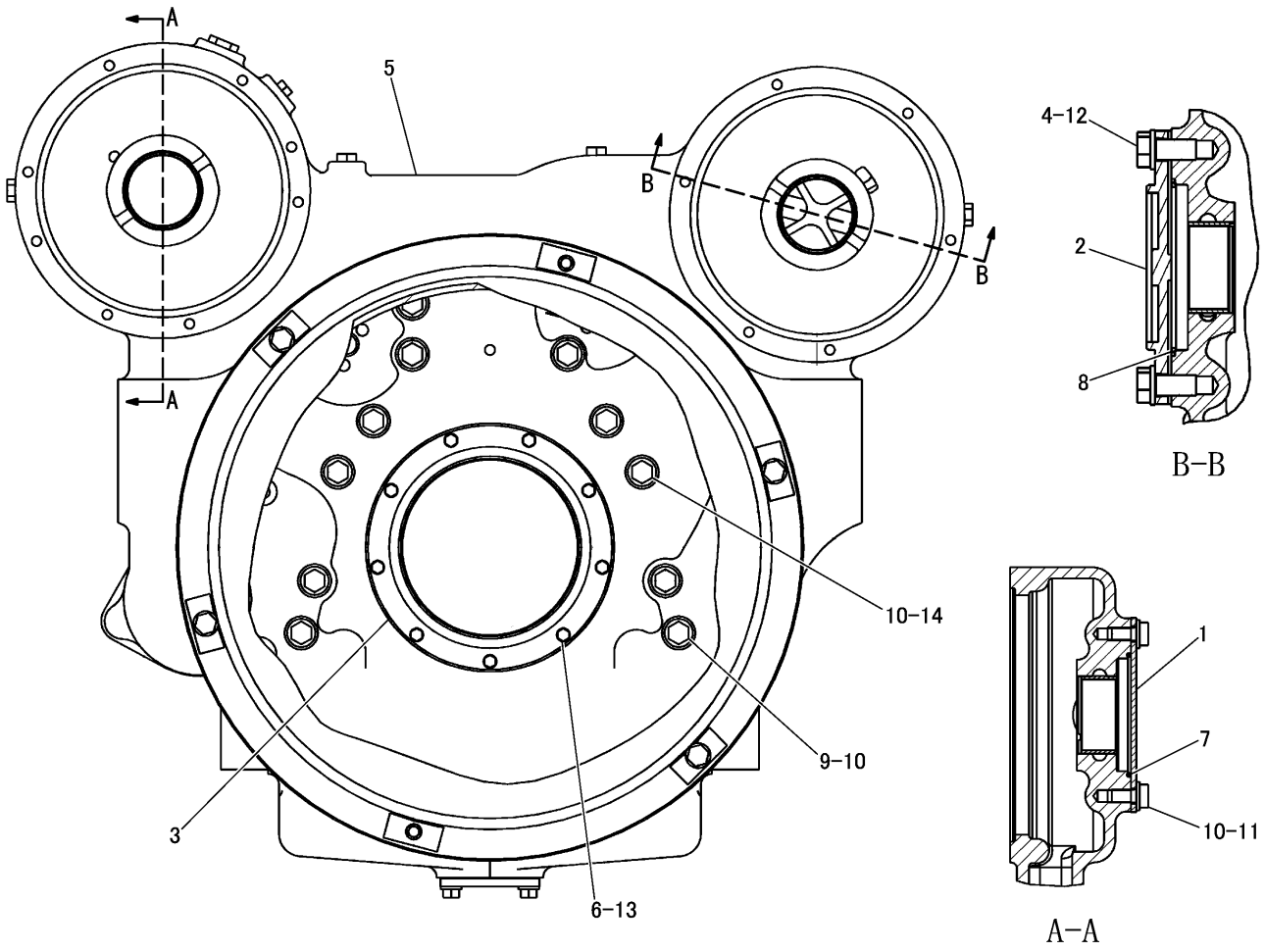

NOTE	№	PART NO.	QTY	PART NAME	NOTE	№	PART NO.	QTY	PART NAME
	1	175-3721	1	COVER					
	2	195-5837	1	COVER					
Z	3	227-0838	1	SEAL GROUP					
		107-6280	1	SEAL					
		100-5421	1	SEAL GROUP					
	4	9X-8268	2	WASHER					
Y	5	234-3442	1	FLYWHEEL HOUSING AS					
	6	9X-8267	9	WASHER					
	7	4M-0189	1	SEAL					
	8	5F-3999	1	SEAL					
	9	6V-8336	4	BOLT(M12×1.75)					
	10	5P-8245	15	WASHER					
	11	6A-5591	2	BOLT(M12×1.75)					
	12	6V-5844	2	BOLT(M16×2)					
	13	6V-7727	9	BOLT(M6×1)					
	14	6V-8197	9	BOLT(M12×1.75)					
BF	15	1U-8846		GASKET MAKER					

B-USE AS REQUIRED
F-NOT SHOWN
Y-SEPARATE ILLUSTRATION
Z-NOT SERVICED SEPARATELY

J154654 -10

FLYWHEEL HOUSING GROUP (125-4590 N/S)
PART OF 256-6771-Page 2
REFERENCE:234-3442-Page 23

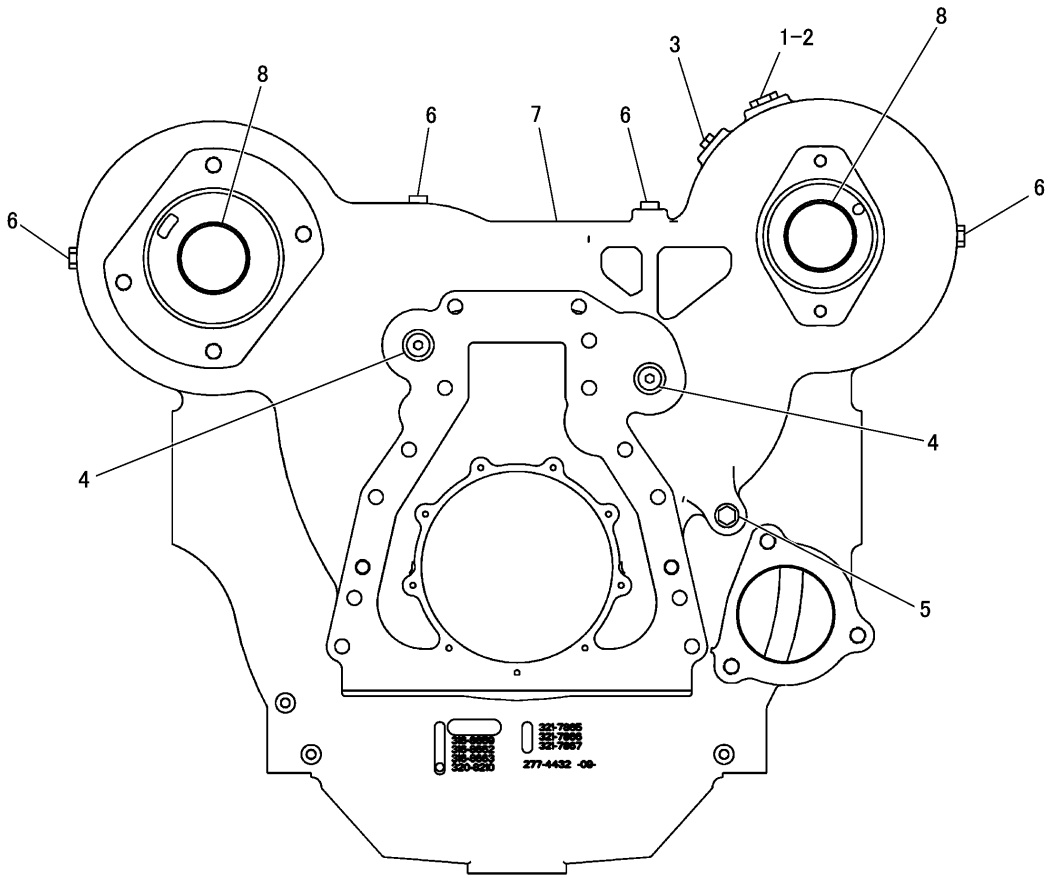

NOTE	№	PART NO.	QTY	PART NAME	NOTE	№	PART NO.	QTY	PART NAME
	1	2A−1162	1	GASKET					
	2	5F−0304	1	PLUG					
	3	9S−4182	1	PLUG					
		3J−7354	1	SEAL					
	4	9S−8005	2	PLUG					
		3K−0360	2	SEAL					
	5	3K−8460	1	PLUG					
		1J−9671	1	SEAL					
	6	9S−4191	4	PLUG					
		3J−1907	4	SEAL					
	7	320−8210	1	HOUSING AS					
	8	8M−9315	2	BEARING					

J156219 -01

234-3442 FLYWHEEL HOUSING ASSEMBLY
PART OF 125-4590-Page 22

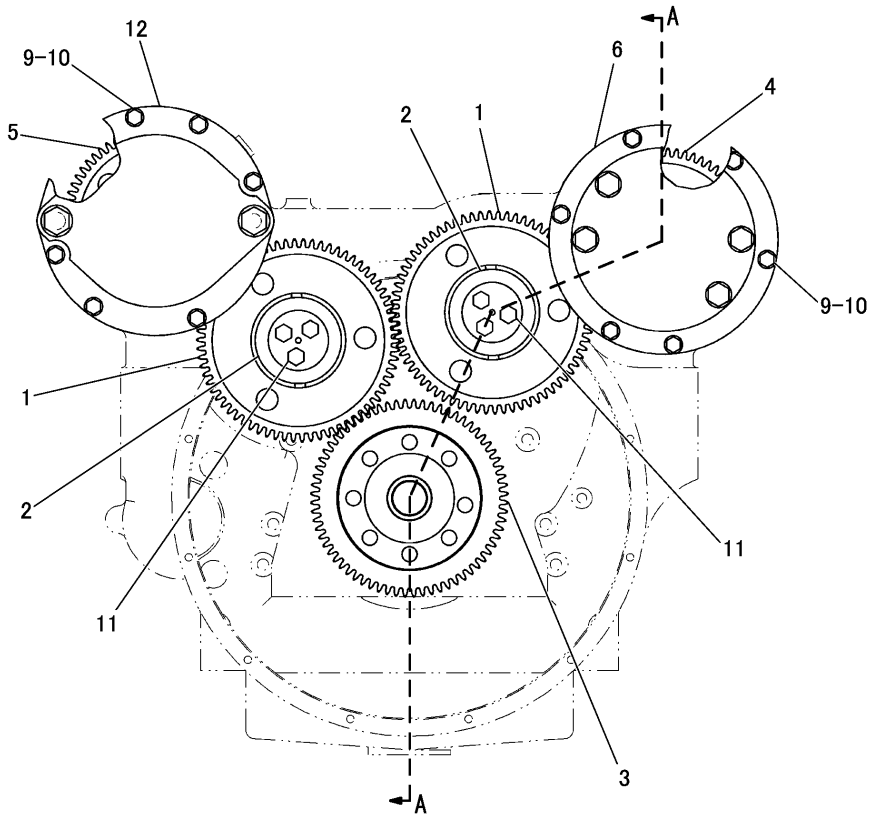

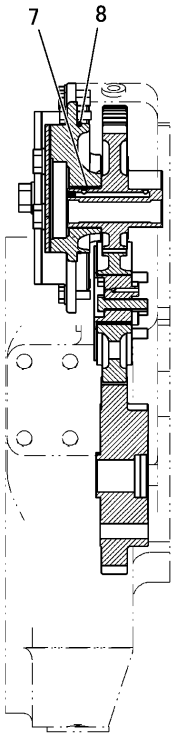

A-A

NOTE	№	PART NO.	QTY	PART NAME	NOTE	№	PART NO.	QTY	PART NAME
	1	1W-4741	2	GEAR AS					
		1W-4738	1	BEARING					
	2	1W-4746	2	RETAINER					
	3	154-3358	1	GEAR					
	4	187-8194	1	GEAR AS					
	5	187-8195	1	GEAR AS					
	6	187-8222	1	ADAPTER AS					
	7	160-8184	1	BEARING					
	8	4N-1230	2	SEAL					
	9	6V-1820	12	BOLT(M10×1.5)					
	10	6V-5839	12	WASHER					
	11	6V-7673	6	BOLT(M12×1.75)					
	12	187-8223	1	ADAPTER AS					
		160-8184	1	BEARING					

J155647 -06

REAR GEAR GROUP (165-6879 N/S)
PART OF 256-6771-Page 2

BASIC ENGINE

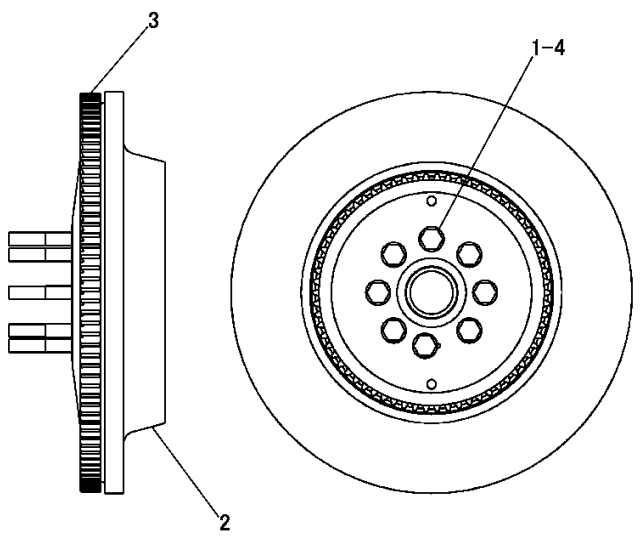

NOTE	№	PART NO.	QTY	PART NAME
	1	9X-2053	8	BOLT(M16×2)
	2	237-0229	1	FLYWHEEL AS
	3	4N-2514	1	GEAR
	4	9X-8268	8	WASHER

J137398 -01

FLYWHEEL GROUP (241-3718 N/S)
PART OF 256-6771-Page 2

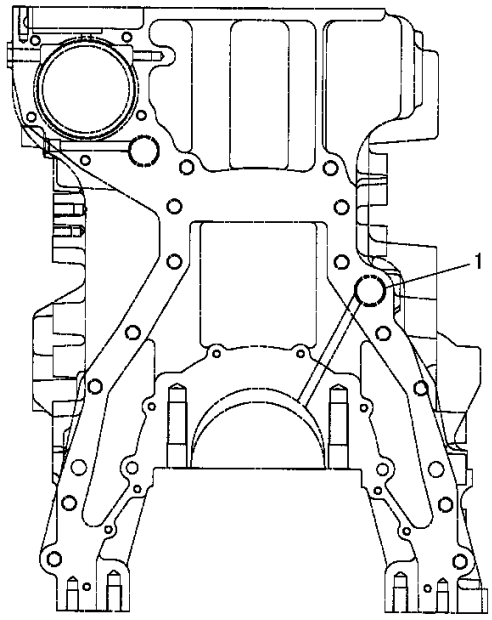

NOTE	№	PART NO.	QTY	PART NAME
	1	3B-0623	1	PLUG

J119204 -01

PLUG GROUP (117-0165 N/S) -CYLINDER BLOCK
PART OF 256-6771-Page 2

BASIC ENGINE

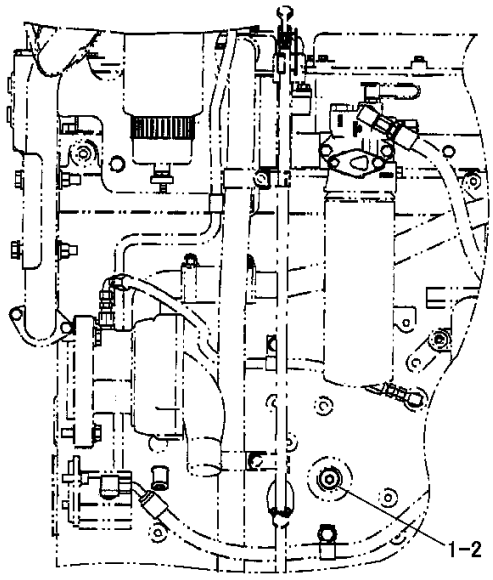

LEFT SIDE OF ENGINE

NOTE	№	PART NO.	QTY	PART NAME
	1	9S-8006	1	PLUG
	2	6V-4589	1	SEAL

J123902 -00

PLUG GROUP (117-0185 N/S) -CYLINDER BLOCK
PART OF 256-6771-Page 2

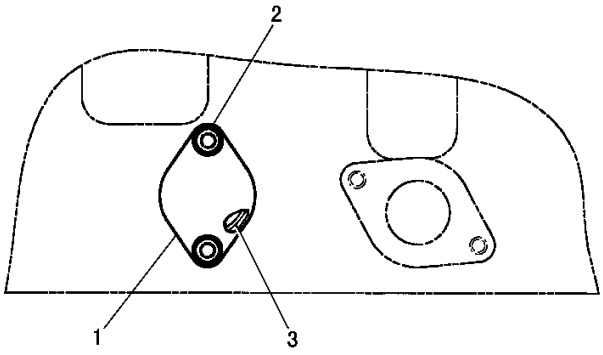

RIGHT SIDE OF ENGINE

NOTE	№	PART NO.	QTY	PART NAME
	1	4P-6587	1	COVER
	2	6V-5217	2	BOLT(M8×1.25)
		9M-1974	2	WASHER
	3	6V-1250	1	SEAL

J156220 -01

CYLINDER BLOCK COVER GROUP (115-2985 N/S)
PART OF 256-6771-Page 3

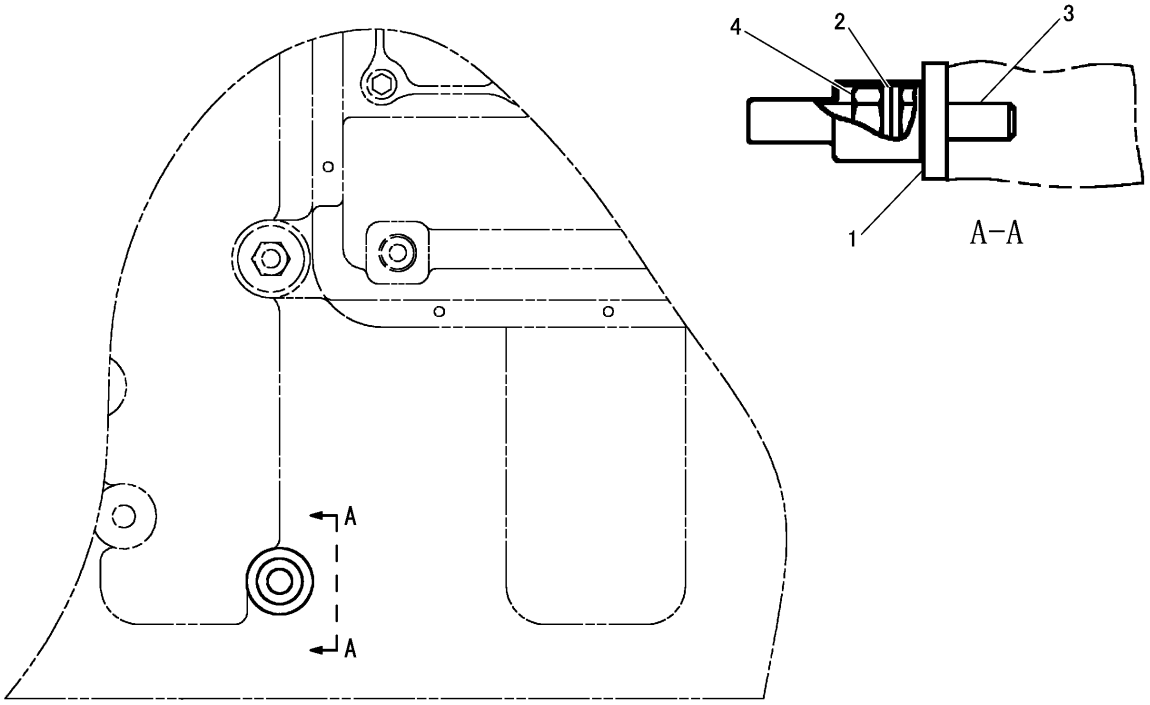

LEFT SIDE OF ENGINE

NOTE	№	PART NO.	QTY	PART NAME	NOTE	№	PART NO.	QTY	PART NAME
	1	6V-3964	1	WASHER					
	2	8T-4224	2	WASHER					
	3	9X-2097	1	STUD(M8×1.25)					
	4	5C-7261	1	NUT(M8×1.25)					

J156222 -02

ELECTRICAL CONNECTION GROUP (124-2674 N/S)
PART OF 256-6771-Page 3

BASIC ENGINE

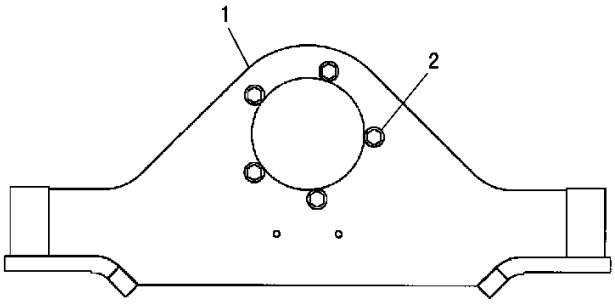

FRONT OF ENGINE

NOTE	Nº	PART NO.	QTY	PART NAME
	1	171-5817	1	SUPPORT AS
	2	6V-8675	5	BOLT(M12×1.75)
		5P-8245	5	WASHER

J119227 -01

ENGINE SUPPORT GROUP (171-5823 N/S) -FRONT
PART OF 256-6771-Page 2

CONSISTS OF :

1	8T-6762	PLUG(1/2-14 NPTF)
1	6V-5048	SEAL(8.9mm ID)
1	9S-4182	PLUG(7/16-20)
1	3J-1907	SEAL(11.9mm ID)
1	9S-4191	PLUG(9/16-18)

J119203 -00

PLUG GROUP (138-2028 N/S) -CYLINDER BLOCK
PART OF 256-6771-Page 3

BASIC ENGINE

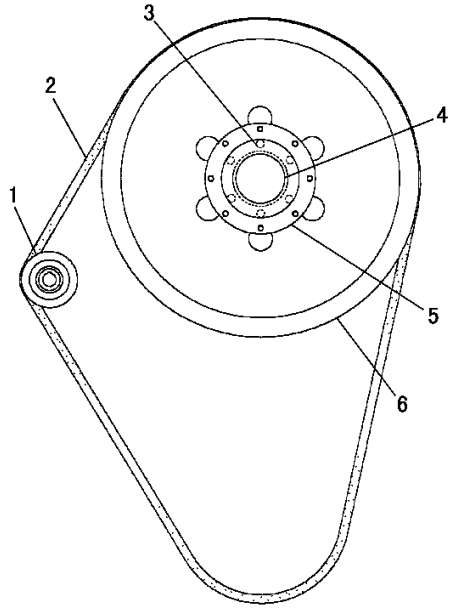

NOTE	№	PART NO.	QTY	PART NAME
	1	235-6388	1	PULLEY
	2	7M-4720	1	V-BELT SET
	3	0L-1143	6	BOLT(3/8-16)
	4	9F-4446	1	SEAL
	5	4N-1744	1	ADAPTER
	6	164-5692	1	PULLEY

J123638 X03

FAN PULLEY GROUP (160-8576 N/S)
PART OF 271-6466-Page 4

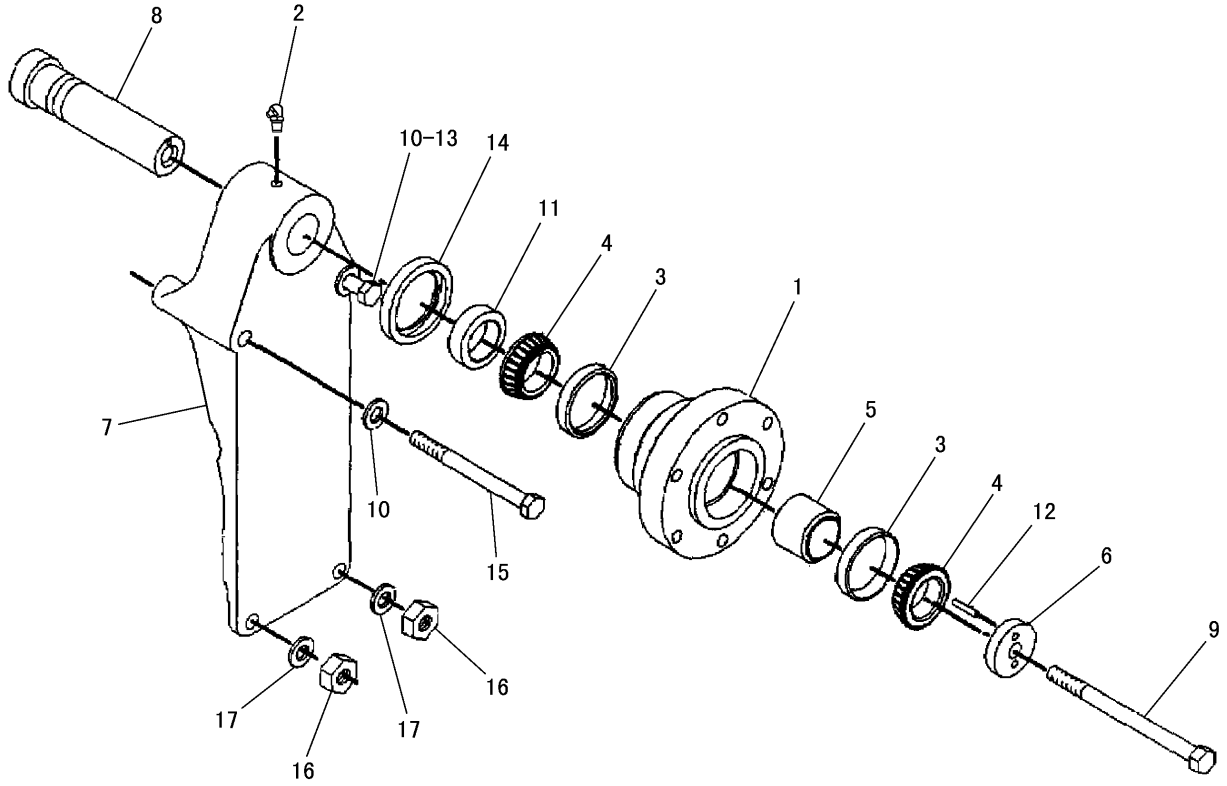

NOTE	№	PART NO.	QTY	PART NAME	NOTE	№	PART NO.	QTY	PART NAME
	1	1W-5039	1	HUB					
	2	3B-8488	1	FITTING					
	3	4W-1203	2	CUP					
	4	4W-1204	2	CONE					
	5	4W-2042	1	SPACER					
	6	7E-4808	1	PLATE					
	7	164-7888	1	BRACKET AS					
	8	7E-5816	1	SHAFT					
	9	2A-1531	1	BOLT(1/2-13)					
	10	5P-8245	2	WASHER					
	11	5S-9062	1	SPACER					
	12	6H-3956	1	PIN					
	13	8T-5041	1	BOLT(M12×1.75)					
	14	6V-9748	1	SEAL					
	15	8T-5001	1	BOLT(M12×1.75)					
	16	129-3180	2	LOCKNUT(M12×1.75)					
	17	8T-4223	2	WASHER					

J118266 X02

FAN DRIVE GROUP (164-5689 N/S)
PART OF 271-6466-Page 4

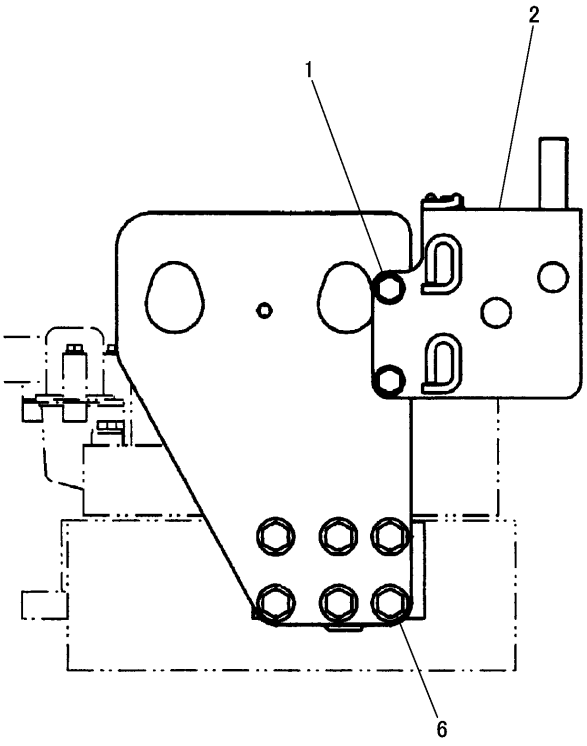

REAR VIEW

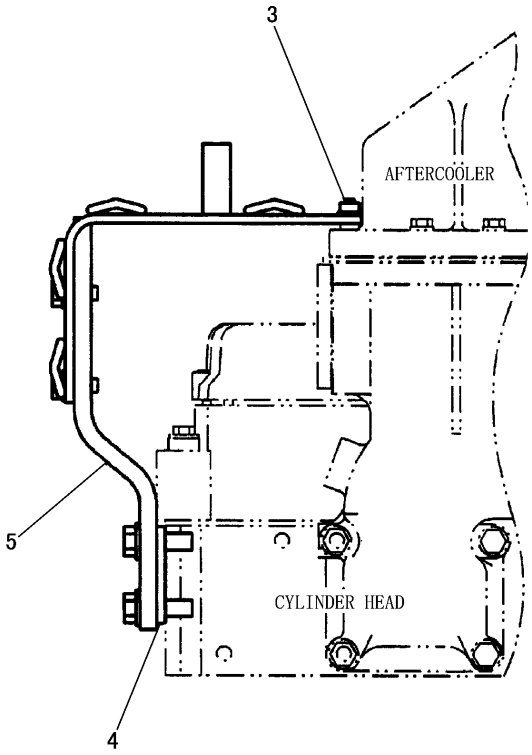

RIGHT SIDE OF ENGINE

NOTE	№	PART NO.	QTY	PART NAME	NOTE	№	PART NO.	QTY	PART NAME
	1	6V-4248	2	BOLT(M10×1.5)					
		6V-5839	2	WASHER					
	2	172-4233	1	BRACKET AS					
		7T-1099	4	LINK					
		8J-1196	1	LUG(3/8-16)					
	3	5P-7970	2	NUT(M8×1.25)					
		9M-1974	2	WASHER					
	4	101-1651	1	PLATE					
	5	173-8912	1	EYE					
	6	6V-8197	6	BOLT(M12×1.75)					
		5P-8245	6	WASHER					

J119166 -05

ENGINE LIFTING GROUP (164-6472 N/S)
PART OF 256-6771-Page 3

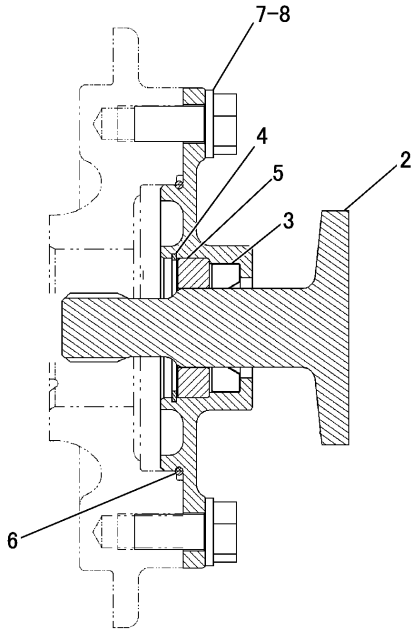

A-A

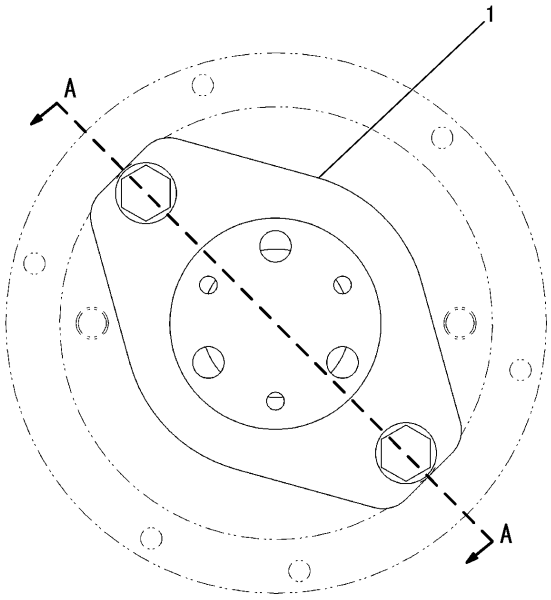

NOTE	№	PART NO.	QTY	PART NAME	NOTE	№	PART NO.	QTY	PART NAME
	1	128-3341	1	COVER					
	2	224-2694	1	FLANGE					
	3	128-3813	1	SEAL					
	4	1L-4775	1	RING					
	5	2S-3029	1	BEARING					
	6	6V-8260	1	SEAL					
	7	8T-4779	2	BOLT(M16×2)					
	8	9X-8257	2	WASHER					

J155724 -00

YOKE GROUP (271-1482 N/S)
PART OF 271-6466-Page 4

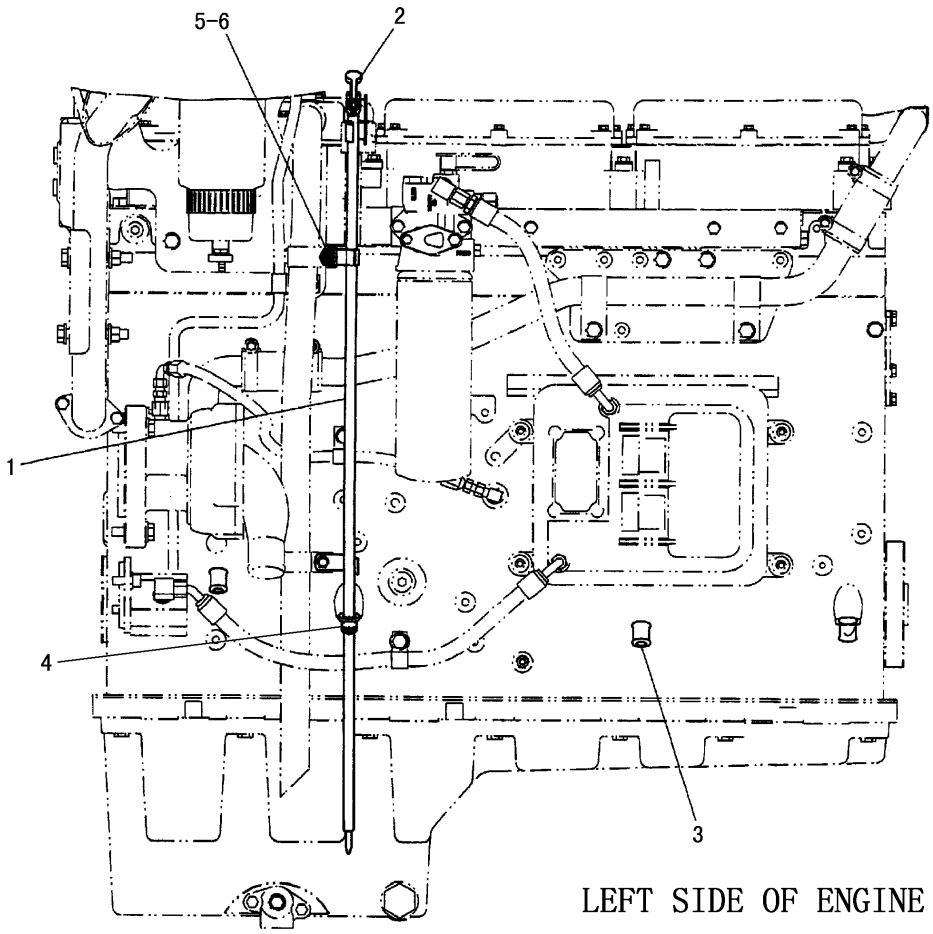

LEFT SIDE OF ENGINE

NOTE	№	PART NO.	QTY	PART NAME	NOTE	№	PART NO.	QTY	PART NAME
	1	176-3903	1	TUBE AS					
	2	208-5436	1	GAUGE AS					
	3	209-7309	3	PLUG					
	4	3P-0647	1	SEAL					
	5	6V-5839	1	WASHER					
	6	6V-6317	1	BOLT(M10×1.5)					

J119153 -04

OIL LEVEL GAUGE GROUP (176-3908 N/S)
PART OF 256-6771-Page 2

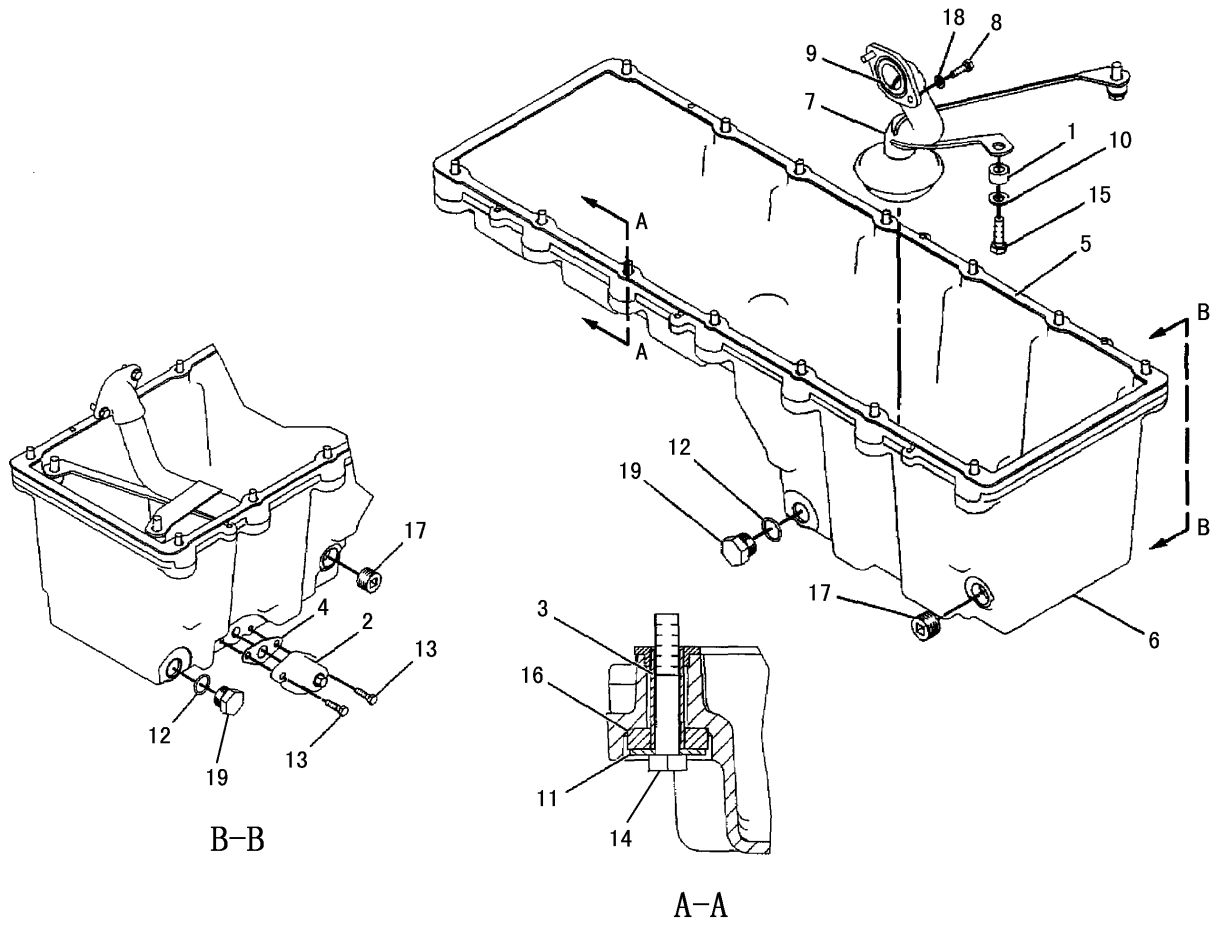

NOTE	№	PART NO.	QTY	PART NAME	NOTE	№	PART NO.	QTY	PART NAME
	1	1V-8230	2	SPACER					
	2	8N-6849	1	ADAPTER					
		4B-7739	1	PLUG					
	3	7E-3369	14	SLEEVE					
	4	8N-6854	1	GASKET					
	5	109-5308	1	GASKET					
	6	207-2510	1	OIL PAN					
	7	207-4771	1	BELL AS					
	8	3E-8016	2	BOLT(M8×1.25)					
	9	5P-8211	1	SEAL					
	10	5P-8245	2	WASHER					
	11	6N-8863	14	WASHER					
	12	6V-1903	2	SEAL					
	13	6V-2317	2	BOLT(M8×1.25)					
	14	6V-5230	14	BOLT(M10×1.5)					
	15	6V-8197	2	BOLT(M12×1.75)					
	16	7C-8296	14	ISOLATOR					
	17	8T-6761	2	PLUG					
	18	9M-1974	2	WASHER					
	19	9S-4188	2	PLUG					

J119201 -01

OIL PAN GROUP (207-9830 N/S)
PART OF 256-6771-Page 2

LUBRICATION SYSTEM

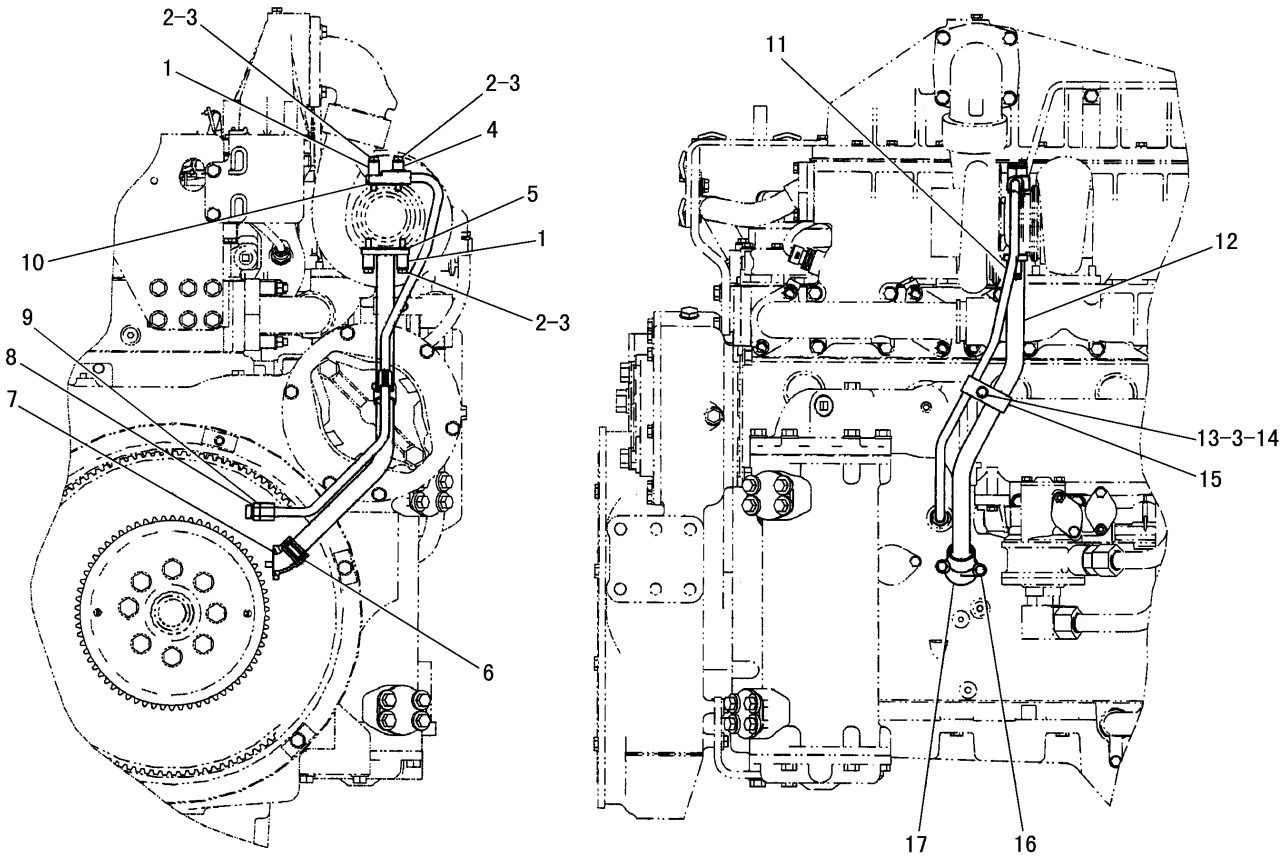

NOTE	№	PART NO.	QTY	PART NAME	NOTE	№	PART NO.	QTY	PART NAME
	1	9G-8661	3	SPACER					
	2	8T-0276	4	BOLT(M8×1.25)					
	3	9M-1974	6	WASHER					
	4	4K-5824	1	BOSS					
	5	188-6126	1	GASKET					
	6	114-2687	1	SEAL					
	7	5P-8066	1	SEAL					
	8	8L-2786	1	SEAL					
	9	8M-0505	1	CONNECTOR					
	10	8H-9788	1	GASKET					
	11	161-2128	1	TUBE AS					
	12	161-2129	1	TUBE AS					
	13	6V-3940	1	BOLT(M8×1.25)					
	14	5P-7970	1	NUT(M8×1.25)					
	15	6N-6033	2	CLIP					
	16	6V-5218	2	BOLT(M8×1.25)					
	17	119-2942	1	ADAPTER					

J119171 -02

TURBOCHARGER OIL LINES GROUP (161-2130 N/S)
PART OF 256-6771-Page 3

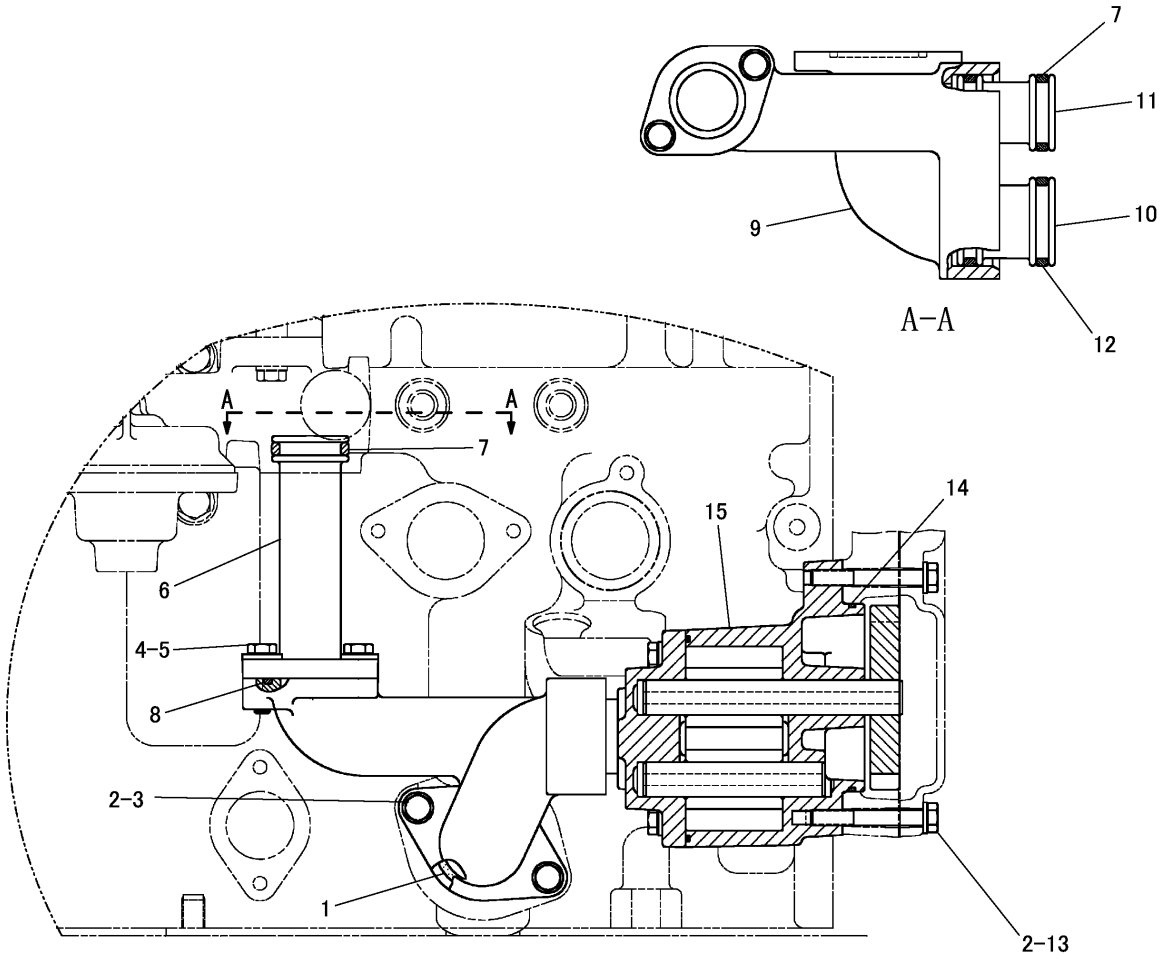

NOTE	№	PART NO.	QTY	PART NAME	NOTE	№	PART NO.	QTY	PART NAME
	1	8J−4351	1	SEAL					
	2	9M−1974	4	WASHER					
	3	3E−8016	2	BOLT(M8×1.25)					
	4	6V−2317	2	BOLT(M8×1.25)					
	5	3E−4352	2	WASHER					
	6	115−3003	1	TUBE AS					
	7	6V−5134	3	SEAL					
	8	061−8561	1	SEAL					
	9	122−0760	1	ELBOW					
	10	7C−1821	1	COUPLING					
	11	7C−1822	1	COUPLING					
	12	5P−8068	2	SEAL					
	13	6V−5221	2	BOLT(M8×1.25)					
	14	6V−3834	1	SEAL					
Y	15	233−5220	1	PUMP GROUP					

Y-SEPARATE ILLUSTRATION

J132355 -04

ENGINE OIL PUMP GROUP (117-2746 N/S)
PART OF 256-6771-Page 2
REFERENCE:233-5220-Page 37

LUBRICATION SYSTEM

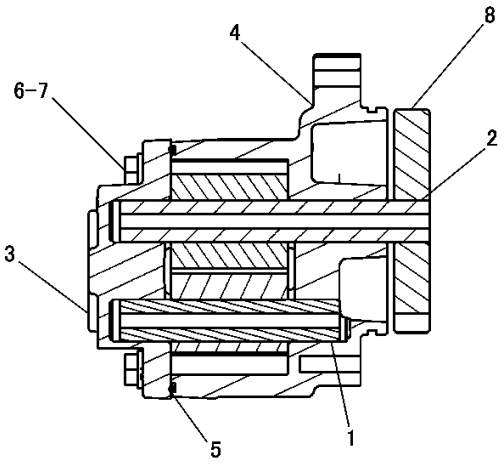

NOTE	№	PART NO.	QTY	PART NAME
	1	9Y-8075	1	SHAFT AS
	2	9Y-8076	1	SHAFT AS
	3	223-1612	1	COVER
	4	233-5219	1	BODY
	5	6D-7146	1	SEAL
	6	6V-2317	4	BOLT(M8×1.25)
	7	9M-1974	4	WASHER
	8	9Y-3805	1	GEAR

J138529 -00

233-5220 ENGINE OIL PUMP GROUP
PART OF 117-2746-Page 36

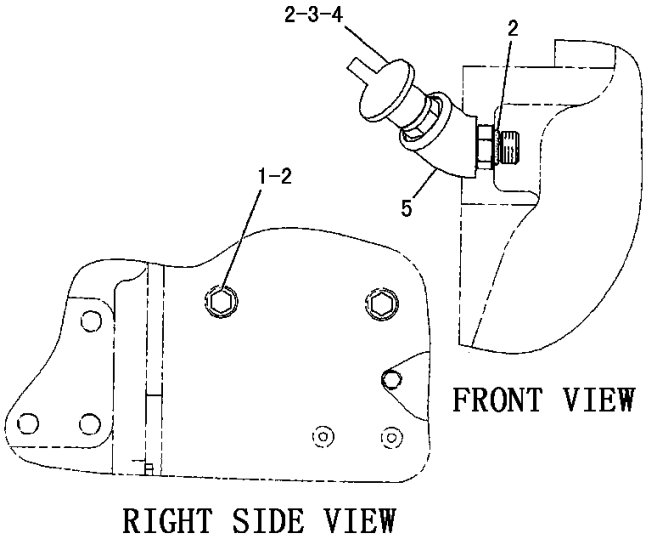

NOTE	№	PART NO.	QTY	PART NAME
	1	9S-4191	2	PLUG
	2	6V-5049	4	SEAL
	3	6V-3965	1	NIPPLE AS
	4	6V-0852	1	CAP
	5	6V-8077	1	ELBOW

J119152 -00

OIL PORT FITTING GROUP (188-8590 N/S)
PART OF 256-6771-Page 2

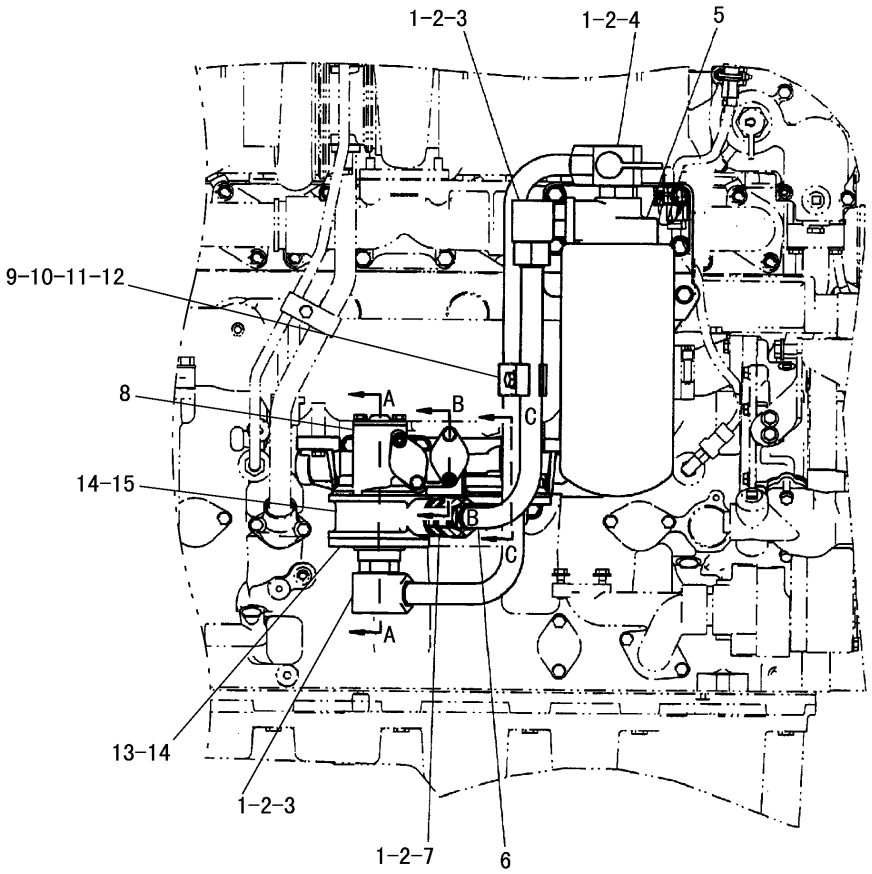

RIGHT SIDE OF ENGINE

NOTE	№	PART NO.	QTY	PART NAME	NOTE	№	PART NO.	QTY	PART NAME
	1	8C-3093	4	SEAL					
	2	5P-7701	4	SEAL					
	3	6V-9008	2	ELBOW					
	4	186-3705	1	ELBOW					
	5	104-7995	1	BASE AS					
		2P-4304	1	STUD(1 1/2-16)					
	6	188-6229	1	TUBE AS					
	7	6V-8635	1	CONNECTOR					
Y	8	166-1329	1	OIL FILTER BASE GROUP					
	9	2Y-5829	1	NUT(M10×1.5)					
	10	6V-5839	2	WASHER					
	11	6V-3822	1	BOLT(M10×1.5)					
	12	5M-7087	2	CLIP					
	13	102-5828	1	COVER					
	14	6V-3908	2	SEAL					
	15	102-5829	1	ADAPTER					

Y-SEPARATE ILLUSTRATION

J119146 -06

ENGINE OIL FILTER GROUP (160-8581 N/S) -REMOTE-PART 1 OF 2

PART OF 256-6771-Page 2
REFERENCE:166-1329-Page 40

LUBRICATION SYSTEM

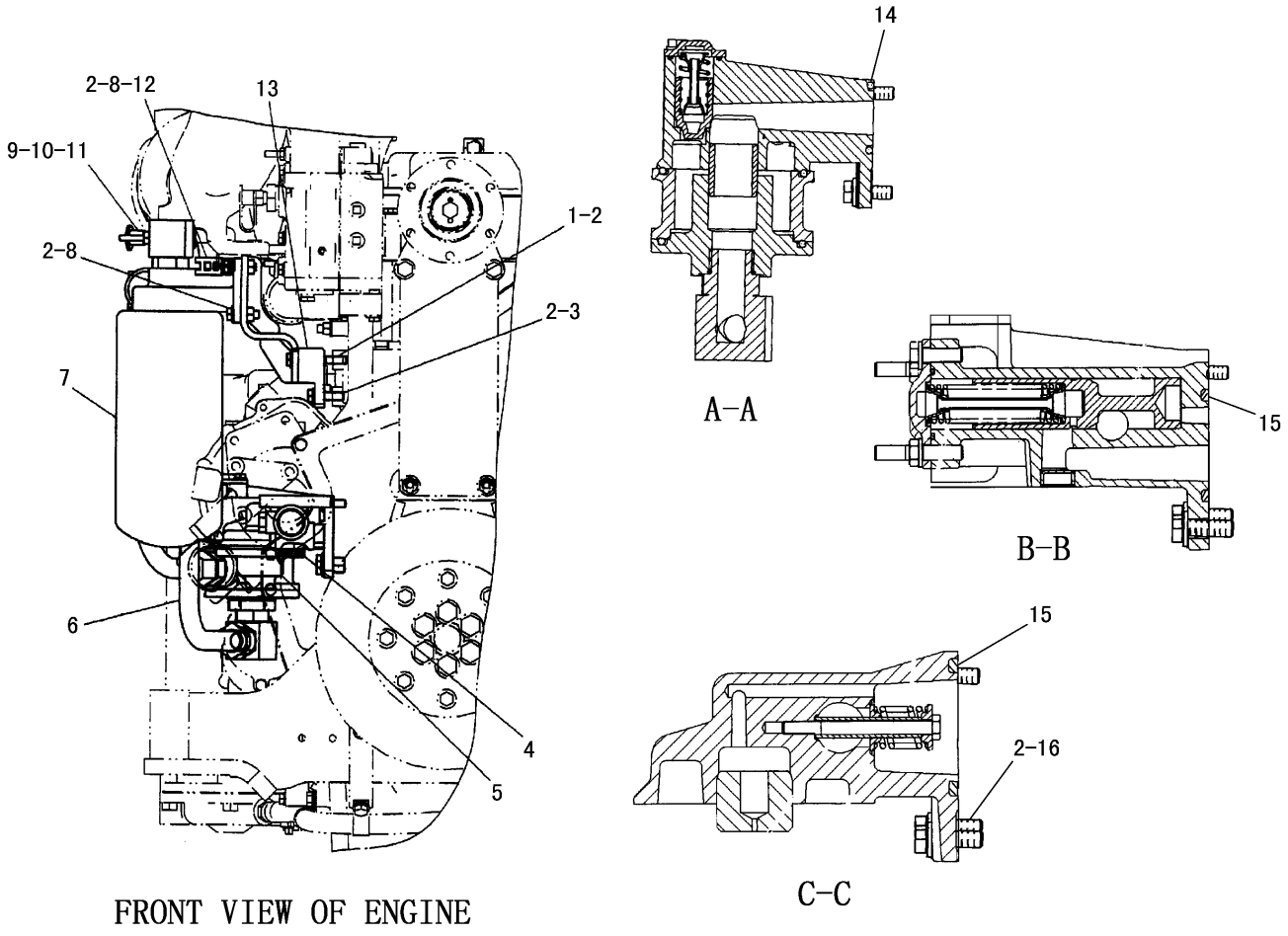

FRONT VIEW OF ENGINE

NOTE	№	PART NO.	QTY	PART NAME	NOTE	№	PART NO.	QTY	PART NAME
	1	6V-7981	2	BOLT(M10×1.5)					
	2	6V-5839	14	WASHER					
	3	6V-5842	1	BOLT(M10×1.5)					
	4	5S-9134	1	SEAL					
	5	7C-9542	1	COVER					
	6	188-6232	1	TUBE AS					
	7	1R-0716	1	FILTER AS					
	8	6V-3822	4	BOLT(M10×1.5)					
	9	8C-3446	1	VALVE					
	10	3J-7354	1	SEAL					
	11	8C-3445	1	CAP					
	12	4P-7429	1	CLIP					
	13	217-3075	1	BRACKET AS					
		8T-3490	4	NUT(M10×1.5)(WELD)					
	14	8C-5230	1	SEAL					
	15	6V-3831	2	SEAL					
	16	134-5245	6	BOLT(M10×1.5)					

J119147 -06

ENGINE OIL FILTER GROUP (160-8581 N/S) -REMOTE-PART 2 OF 2
PART OF 256-6771-Page 2

LUBRICATION SYSTEM

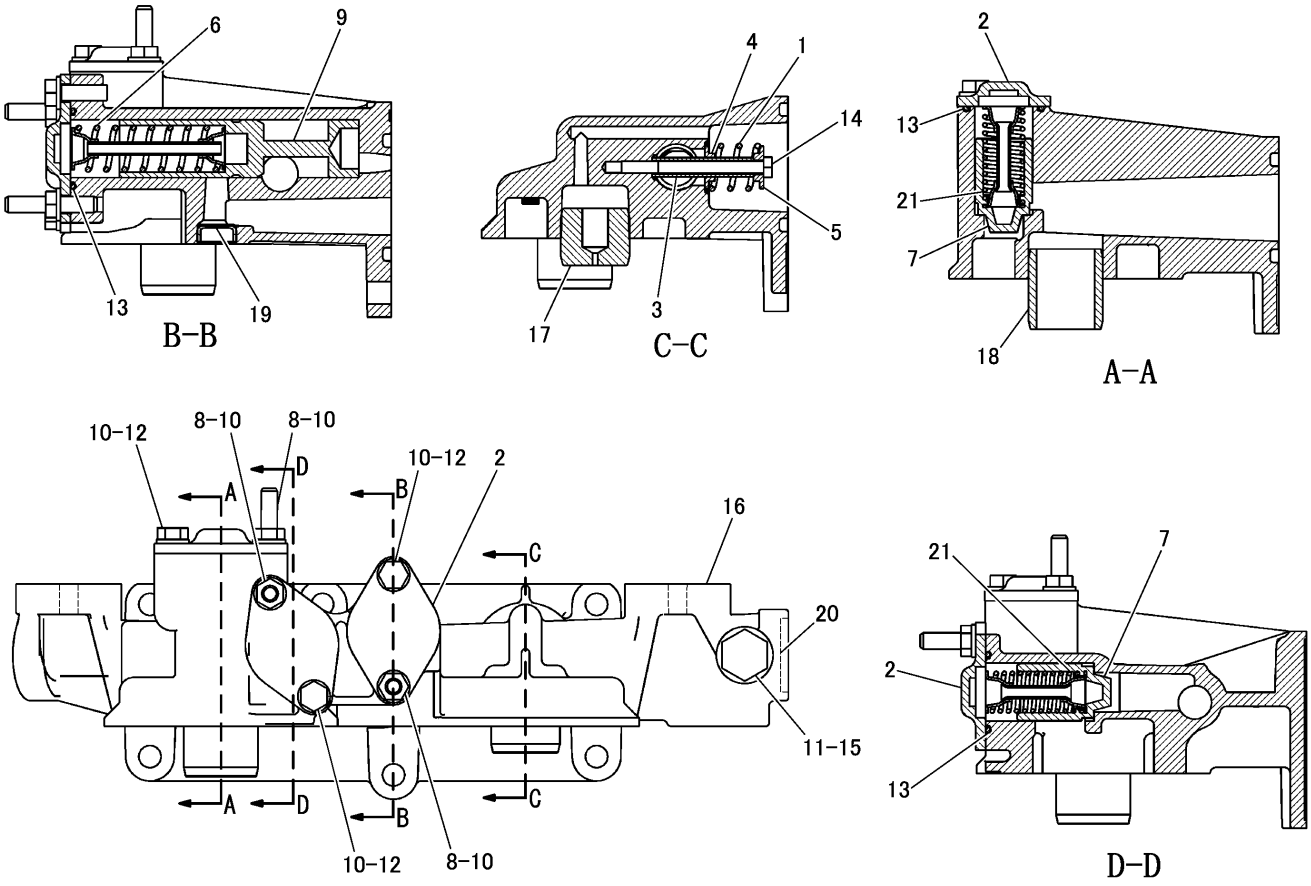

NOTE	№	PART NO.	QTY	PART NAME	NOTE	№	PART NO.	QTY	PART NAME
	1	1A-2170	1	SPRING		16	166-1328	1	BASE AS
	2	7C-2891	3	COVER		17	7W-6390	1	STUD
	3	7C-3081	1	SPACER		18	2P-4304	1	STUD
	4	7C-3082	1	RETAINER		19	3B-0623	1	PLUG
	5	7C-3083	1	SEAT		20	3P-1896	2	PLUG
	6	7C-3954	1	SPRING AS		21	288-3803	2	SPRING AS
		2N-6005	1	SPRING			4N-8150	1	SPRING
	7	9M-0853	2	PLUNGER					
	8	9X-2097	3	STUD(M8×1.25)					
	9	111-2645	1	VALVE					
	10	9M-1974	6	WASHER					
	11	9S-4185	1	PLUG					
	12	6V-3940	3	BOLT(M8×1.25)					
	13	6V-4367	3	SEAL					
	14	6V-8359	1	BOLT(M6×1)					
	15	8L-2786	1	SEAL					

J154659 -02

166-1329 OIL FILTER BASE GROUP
PART OF 160-8581-Page 38

LUBRICATION SYSTEM

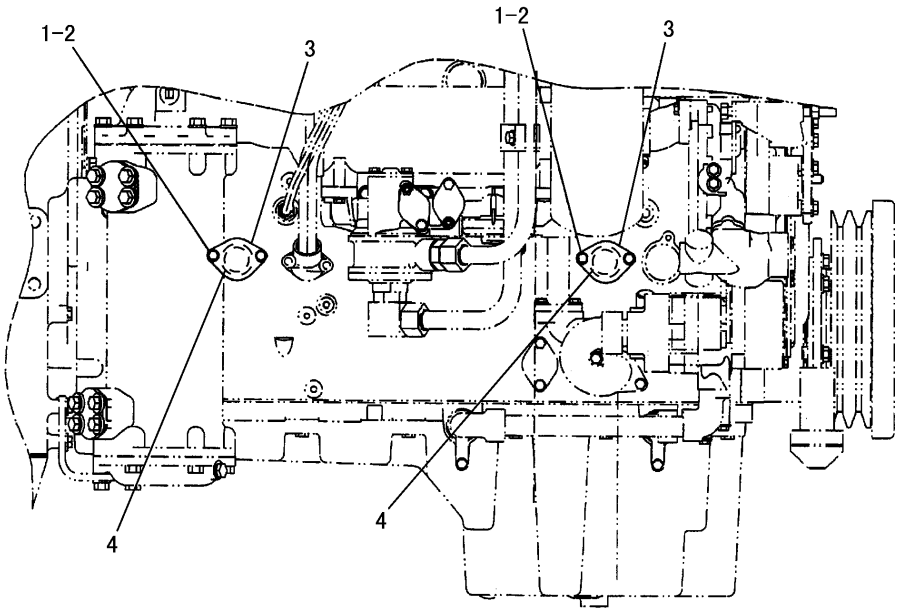

RIGHT SIDE OF ENGINE

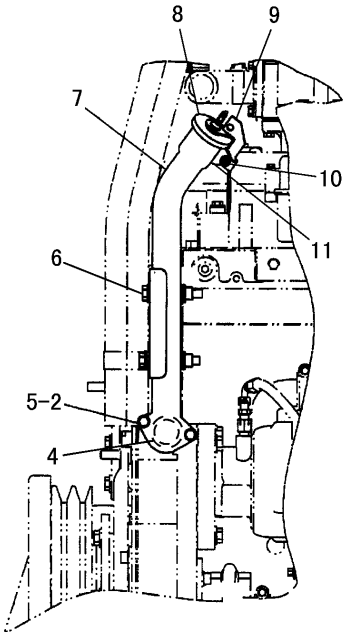

LEFT SIDE OF ENGINE

NOTE	№	PART NO.	QTY	PART NAME	NOTE	№	PART NO.	QTY	PART NAME
	1	6V-5217	4	BOLT(M8×1.25)					
	2	9M-1974	6	WASHER					
	3	7C-1445	2	COVER					
	4	061-9455	3	SEAL					
	5	6V-3940	2	BOLT(M8×1.25)					
	6	6V-5696	2	BOLT(M12×1.75)					
		5P-8245	4	WASHER					
		6V-8149	2	NUT(M12×1.75)					
	7	169-8946	1	TUBE AS					
		4B-4314	1	RIVET					
	8	6N-2985	1	CAP AS					
	9	2P-2717	1	HASP					
	10	2A-3211	1	WASHER					
	11	4N-6045	1	LUG					

J123925 -04

ENGINE OIL FILLER GROUP (169-8947 N/S)
PART OF 256-6771-Page 2

LUBRICATION SYSTEM

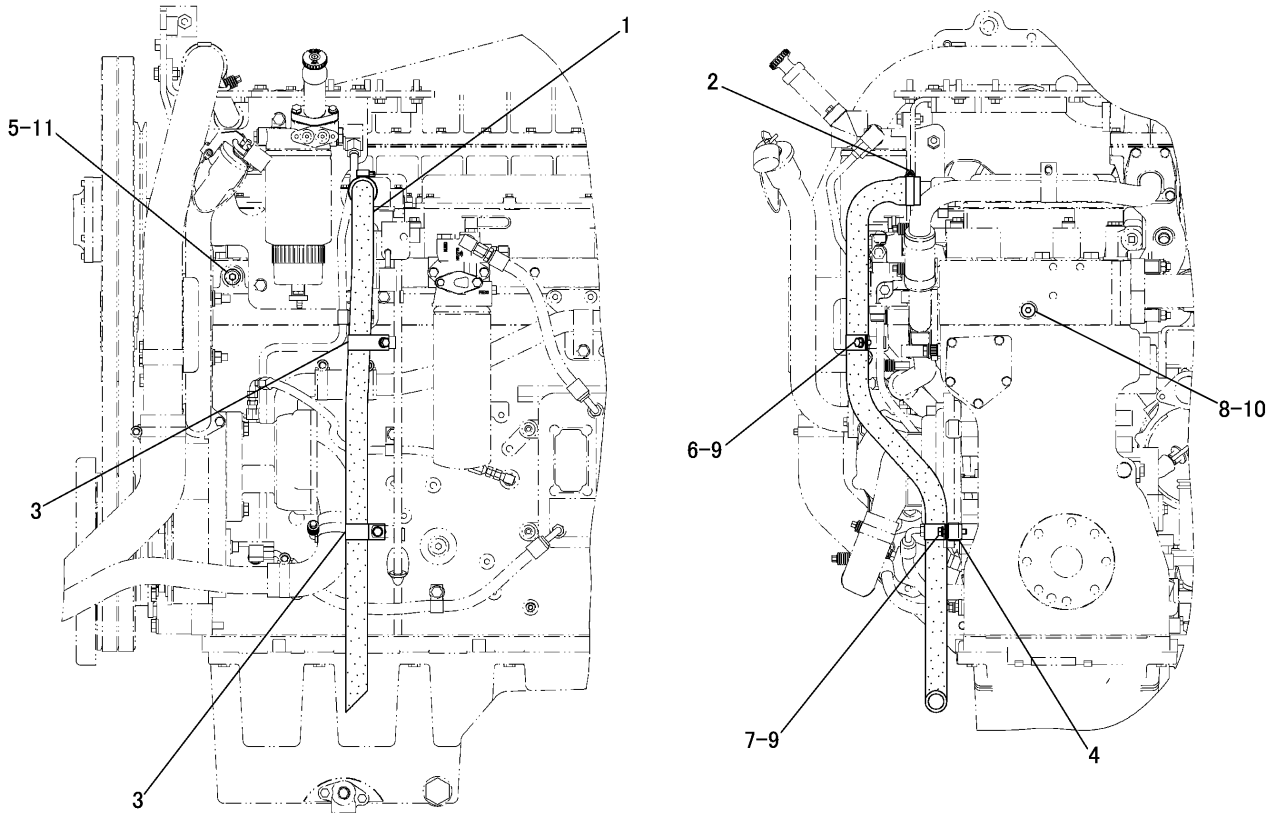

NOTE	№	PART NO.	QTY	PART NAME	NOTE	№	PART NO.	QTY	PART NAME
	1	4P-1555	1	HOSE					
	2	9M-2904	1	CLAMP					
	3	2S-2053	2	CLIP					
	4	2V-4387	1	SPACER					
	5	6V-3251	1	SEAL					
	6	6V-5217	1	BOLT(M8×1.25)					
	7	6V-5219	1	BOLT(M8×1.25)					
	8	6V-6609	1	SEAL					
	9	9M-1974	2	WASHER					
	10	9S-8005	1	PLUG					
	11	9S-8006	1	PLUG					

J144158 -00

FUMES DISPOSAL GROUP (279-6053 N/S)
PART OF 256-6771-Page 3

COOLING SYSTEM

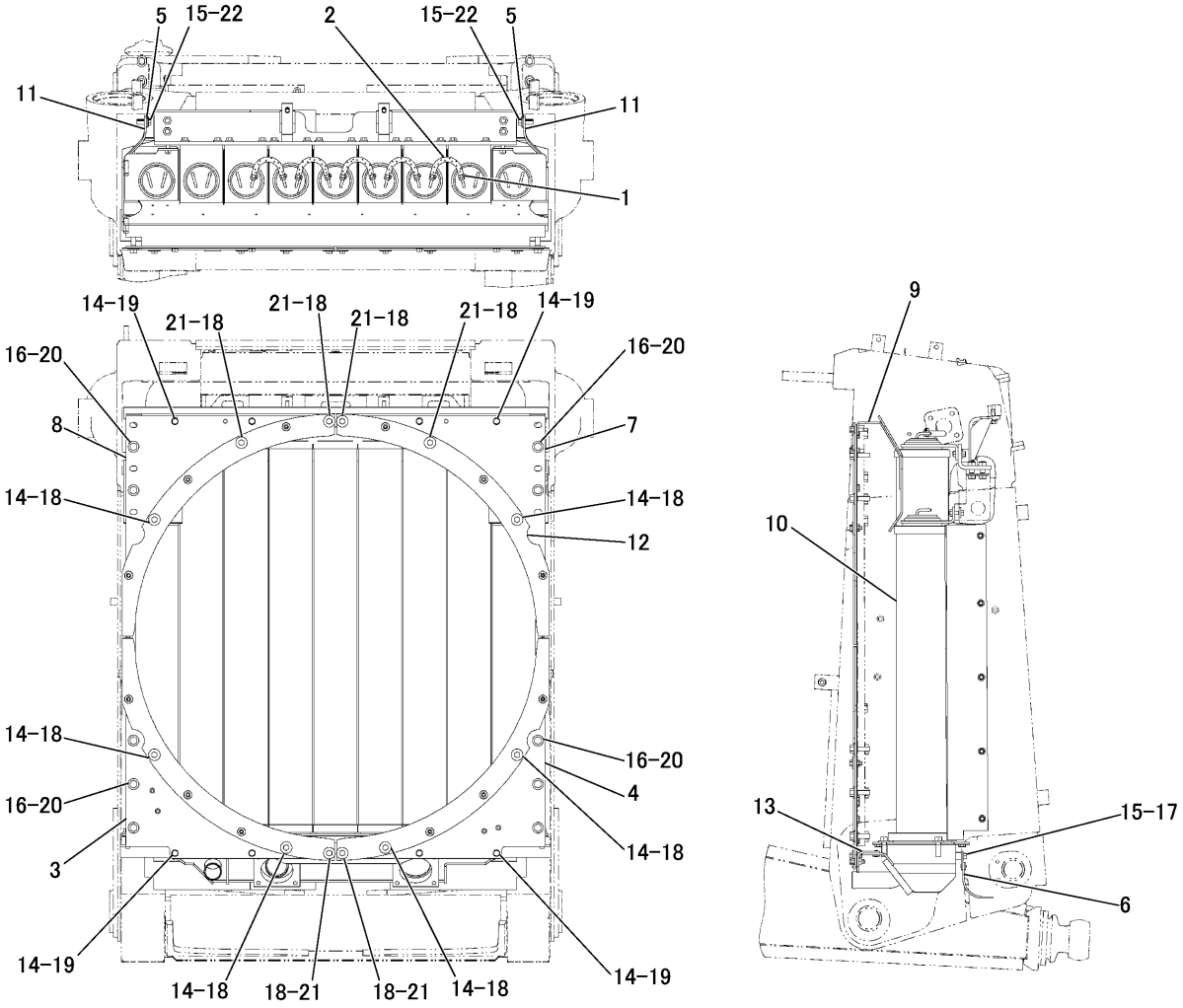

NOTE	№	PART NO.	QTY	PART NAME	NOTE	№	PART NO.	QTY	PART NAME
	1	1P-4278	10	CLAMP		12	227-5141	4	BAFFLE AS
	2	106-4572	5	HOSE			7X-0507	6	WASHER
	3	108-1798	1	SHIELD AS		13	312-4668	1	BAFFLE AS
		9F-2978	6	NUT(3/8-16)(WELD)			7B-5074	6	RIVRT
	4	108-1799	1	SHIELD AS			9F-2978	6	NUT(3/8-16)(WELD)
		1F-0748	2	NUT(1/2-13)(WELD)		14	5D-0353	14	BOLT(3/8-16)
		9F-2978	4	NUT(3/8-16)(WELD)		15	5P-1075	16	WASHER
	5	112-3462	2	STRIP		16	5P-1076	10	WASHER
	6	113-2688	1	BAFFLE AS		17	5S-7379	6	BOLT(3/8-16)
		6B-4594	7	RIVET		18	7X-0578	12	WASHER
	7	113-7335	1	SHIELD AS(TOP,RH)		19	8T-4896	8	WASHER
		9F-2978	4	NUT(3/8-16)(WELD)		20	8T-8919	10	BOLT(1/2-13)
	8	113-7336	1	SHIELD AS(TOP,LH)		21	8T-9056	6	BOLT(3/8-16)
		9F-2978	4	NUT(3/8-16)(WELD)		22	9B-7237	10	BOLT(3/8-16)
	9	115-9360	1	BAFFLE AS					
		9F-2978	8	NUT(3/8-16)(WELD)					
		6B-4594	16	RIVET					
Y	10	165-0081	1	RADIATOR GROUP					
	11	166-3773	2	BAFFLE AS					
		7G-5186	5	SPACER					

Y-SEPARATE ILLUSTRATION

J155715 -02

RADIATOR GROUP (286-2639 N/S)
PART OF 271-6466-Page 4
REFERENCE:165-0081-Page 45

COOLING SYSTEM

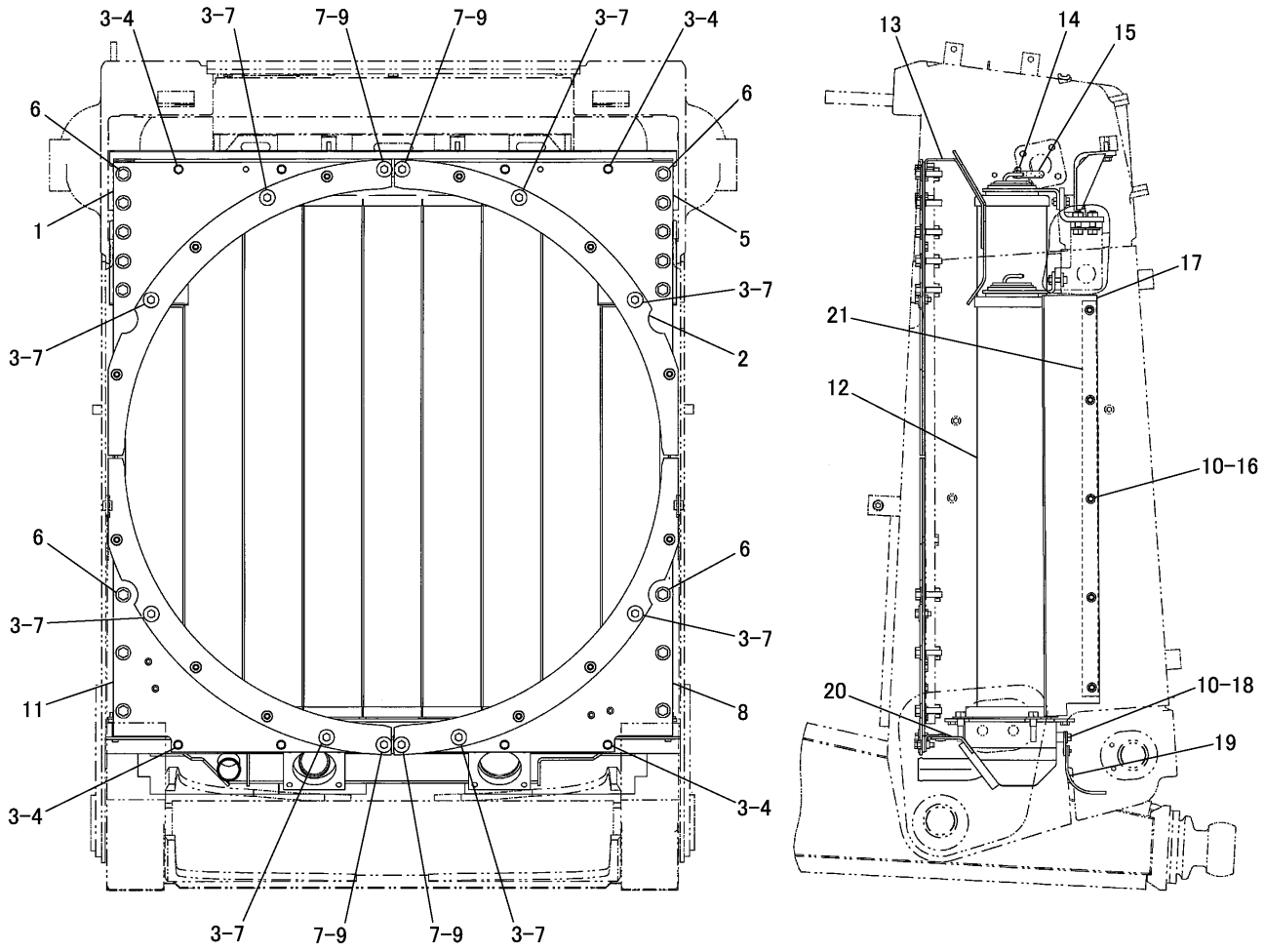

NOTE	№	PART NO.	QTY	PART NAME
	1	113-7336	1	SHIELD AS(TOP,LH)
		9F-2978	4	NUT(3/8-16)(WELD)
	2	227-5141	4	BAFFLE AS
	3	5D-0353	16	BOLT(3/8-16)
	4	8T-4896	8	WASHER
	5	113-7335	1	SHIELD AS(TOP,RH)
		9F-2978	4	NUT(3/8-16)(WELD)
	6	8T-8919	16	BOLT(1/2-13)
		5P-1076	16	WASHER
	7	7X-0578	12	WASHER
	8	108-1799	1	SHIELD AS
		9F-2978	4	NUT(3/8-16)(WELD)
		1F-0748	2	NUT(1/2-13)(WELD)
	9	8T-9056	4	BOLT(3/8-16)
	10	5P-1075	16	WASHER
	11	108-1798	1	SHIELD AS
		9F-2978	6	NUT(3/8-16)(WELD)
Y	12	165-0081	1	RADIATOR GROUP

NOTE	№	PART NO.	QTY	PART NAME
	13	115-9360	1	BAFFLE AS
		9F-2978	8	NUT(3/8-16)(WELD)
		6B-4594	16	RIVET
	14	1P-4278	10	CLAMP
	15	106-4572	5	HOSE
	16	9B-7237	10	BOLT(3/8-16)
	17	166-3773	2	BAFFLE AS
		7G-5186	5	SPACER
	18	5S-7379	6	BOLT(3/8-16)
	19	113-2688	1	BAFFLE AS
		6B-4594	7	RIVET
	20	109-3615	1	BAFFLE AS
		9F-2978	6	NUT(3/8-16)(WELD)
		6B-4594	6	RIVET
	21	112-3462	2	STRIP

Y-SEPARATE ILLUSTRATION

J135886 X05

RADIATOR GROUP (165-0080 N/S)
PART OF 284-4645-Page 406
REFERENCE:165-0081-Page 45
AN ATTACHMENT

COOLING SYSTEM

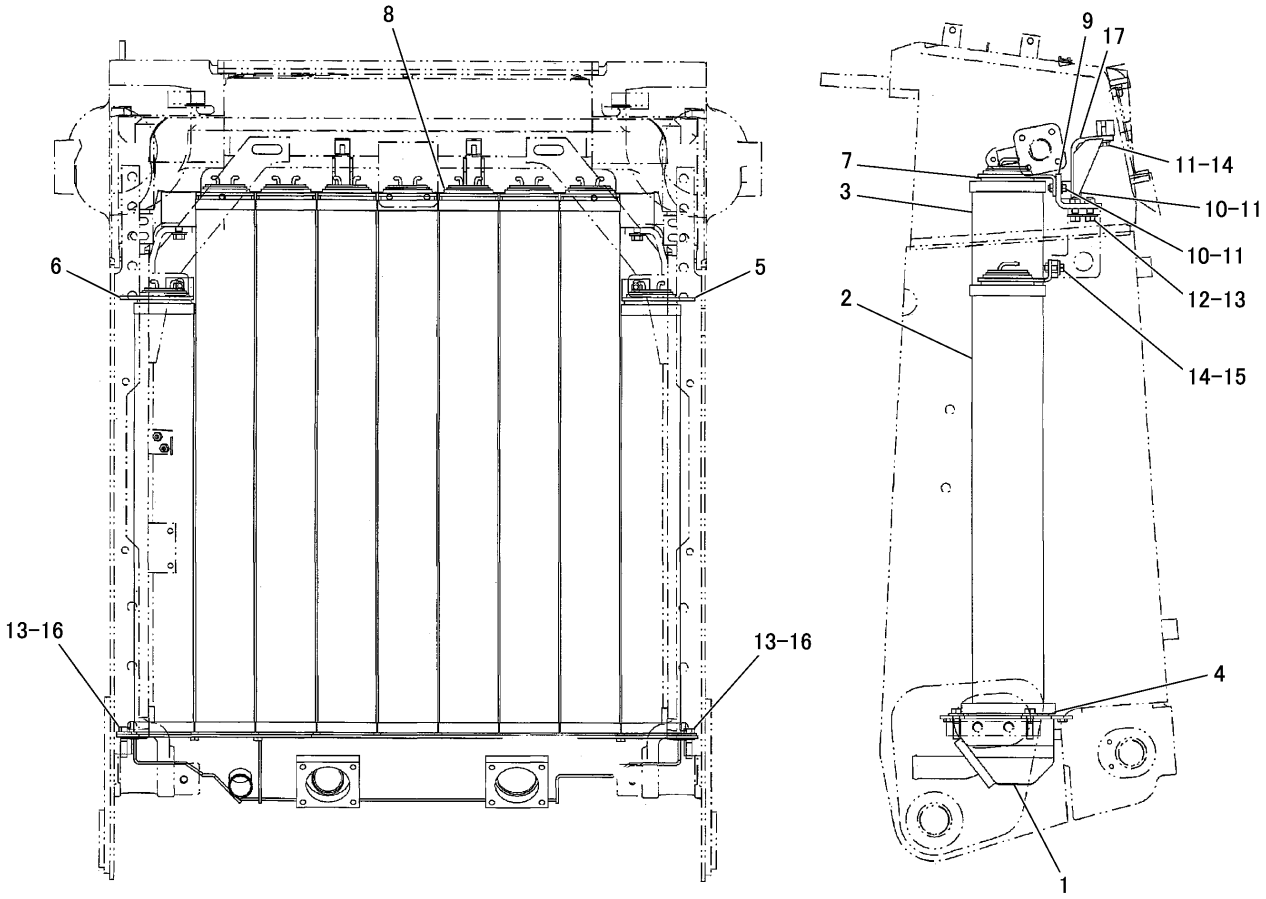

NOTE	№	PART NO.	QTY	PART NAME	NOTE	№	PART NO.	QTY	PART NAME
	1	166-5336	1	TANK AS		13	5P-1076	8	WASHER
		7J-5544	1	FITTING		14	9B-7237	4	BOLT(3/8-16)
		9F-2978	5	NUT(3/8-16)(WELD)		15	7X-0503	2	WASHER
		9S-4185	1	PLUG		16	8T-4835	4	BOLT(1/2-13)
		3K-0360	1	SEAL		17	230-4962	2	BRACKET AS
	2	113-9539	2	CORE AS					
	3	109-3622	7	CORE AS					
	4	6I-2431	9	SEAL					
	5	109-3609	1	RETAINER AS					
		9F-2978	1	NUT(3/8-16)(WELD)					
	6	109-3610	1	RETAINER AS					
		9F-2978	1	NUT(3/8-16)(WELD)					
	7	6I-2435	9	SPACER					
	8	108-0697	7	RETAINER AS					
		9F-2978	2	NUT(3/8-16)(WELD)					
	9	230-4960	1	BRACKET AS					
		1F-0748	4	NUT(1/2-13)(WELD)					
	10	8T-2502	16	BOLT(3/8-16)					
	11	5P-1075	18	WASHER					
	12	5P-2566	4	BOLT(1/2-13)					

J130504 X01

RADIATOR GROUP (165-0081 N/S)
PART OF 165-0080-Page 44,286-2639-Page 43

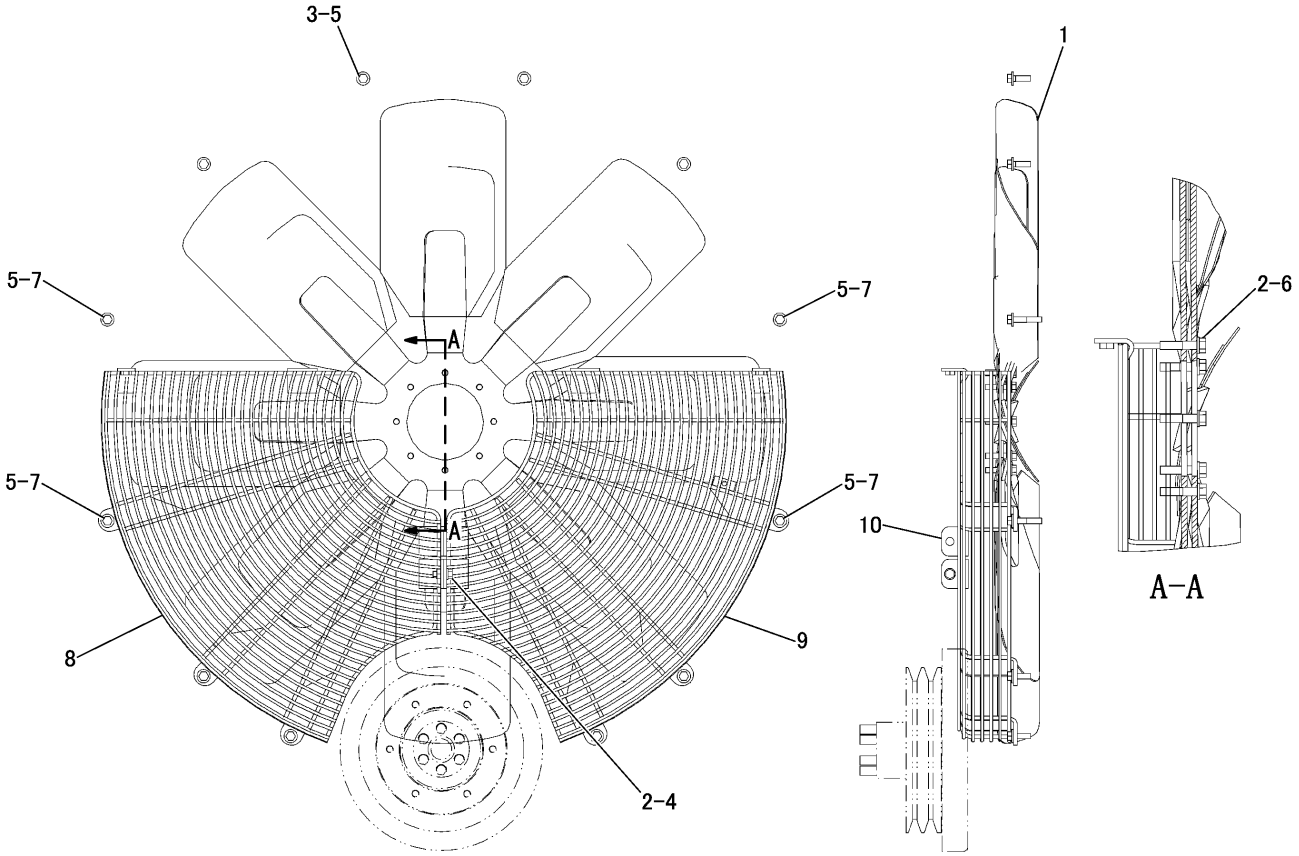

NOTE	№	PART NO.	QTY	PART NAME	NOTE	№	PART NO.	QTY	PART NAME
	1	118-8458	1	SPIDER AS					
	2	8T-4896	9	WASHER					
	3	9B-7237	8	BOLT(3/8-16)					
	4	4L-6454	1	BOLT(3/8-16)					
	5	5P-1075	12	WASHER					
	6	5S-7383	8	BOLT(3/8-16)					
	7	8T-2501	4	BOLT(3/8-16)					
	8	191-0068	1	GUARD AS					
		9F-2978	2	NUT(3/8-16)(WELD)					
		9Y-5379	2	CLIP					
	9	191-0069	1	GUARD AS					
		9F-2978	1	NUT(3/8-16)(WELD)					
	10	9Y-5379	1	CLIP					

J155713 -00

BLOWER FAN GROUP (286-2633 N/S)
PART OF 271-6466-Page 4

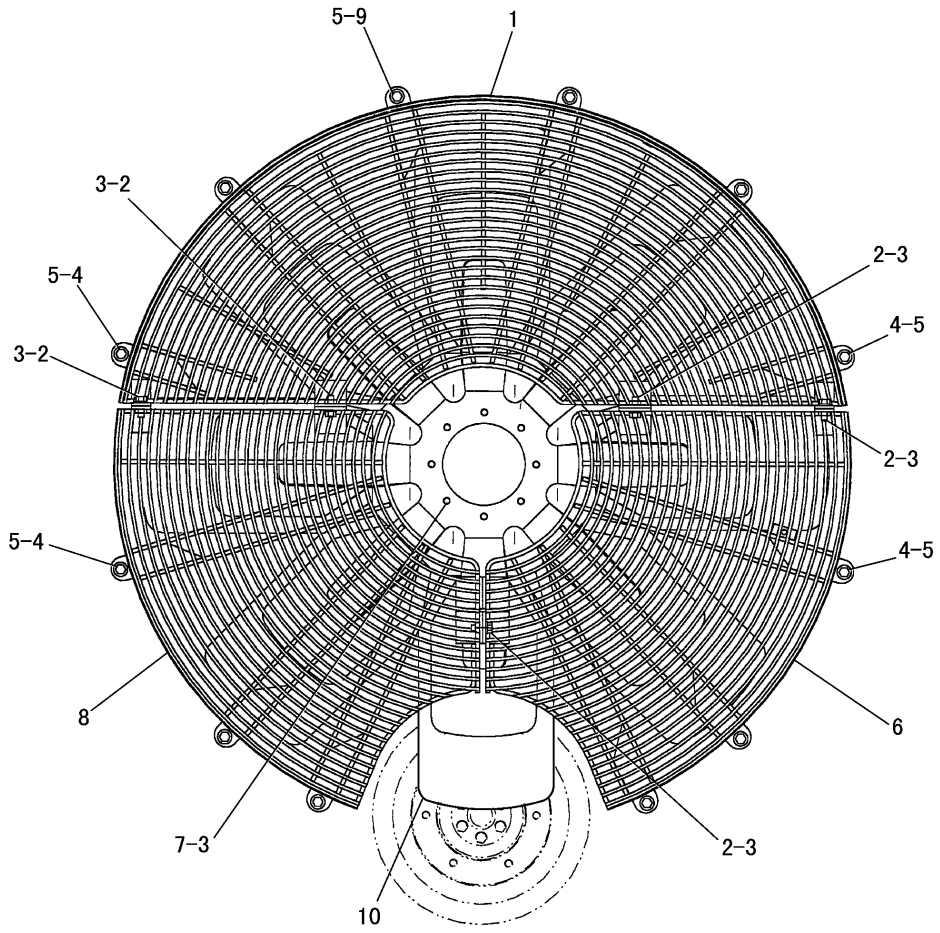

NOTE	№	PART NO.	QTY	PART NAME	NOTE	№	PART NO.	QTY	PART NAME
	1	191-2394	1	GUARD AS					
		9F-2978	2	NUT(3/8-16)(WELD)					
	2	4L-6454	5	BOLT(3/8-16)					
	3	8T-4896	13	WASHER					
	4	8T-2501	4	BOLT(3/8-16)					
	5	5P-1075	12	WASHER					
	6	191-0069	1	GUARD AS					
		9F-2978	1	NUT(3/8-16)(WELD)					
	7	5S-7383	8	BOLT(3/8-16)					
	8	191-0068	1	GUARD AS					
		9F-2978	2	NUT(3/8-16)(WELD)					
	9	9B-7237	8	BOLT(3/8-16)					
	10	118-8458	1	SPIDER AS					

J118281 X01

BLOWER FAN GROUP (173-1302 N/S)

PART OF 284-4645-Page 406
AN ATTACHMENT

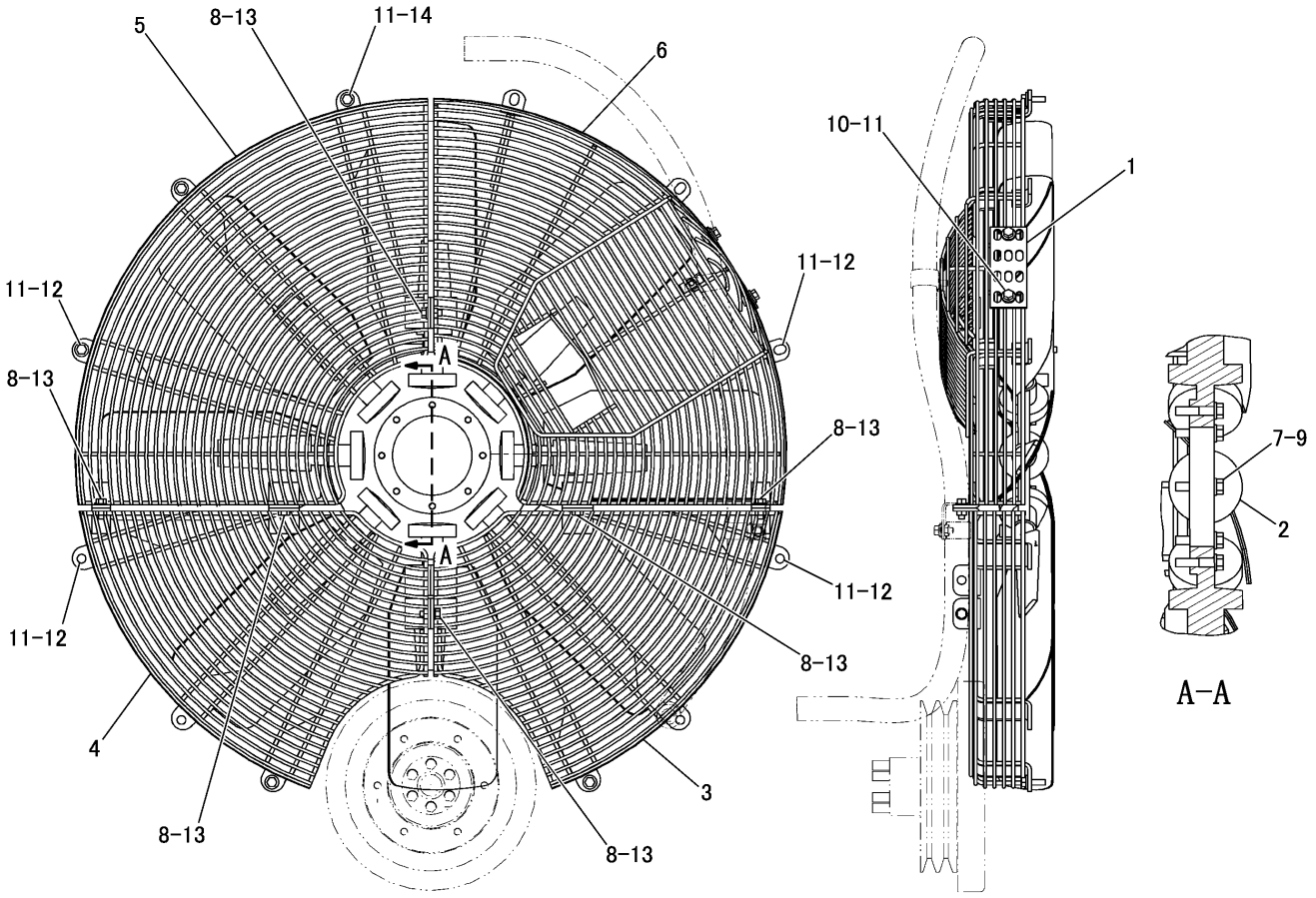

NOTE	№	PART NO.	QTY	PART NAME	NOTE	№	PART NO.	QTY	PART NAME
	1	2W-5825	1	PLATE					
	2	147-9672	1	FAN AS					
	3	194-0614	1	GUARD AS					
		9Y-5379	2	CLIP					
		9F-2978	2	NUT(3/8-16)(WELD)					
	4	194-0615	1	GUARD AS					
		9Y-5379	3	CLIP					
		9F-2978	3	NUT(3/8-16)(WELD)					
	5	194-0616	1	GUARD AS					
	6	194-0617	1	GUARD AS					
		9Y-5379	1	CLIP					
		9F-2978	1	NUT(3/8-16)(WELD)					
	7	0S-1571	8	BOLT(3/8-16)					
	8	4L-6454	6	BOLT(3/8-16)					
	9	5M-2894	8	WASHER					
	10	5M-3062	2	BOLT(3/8-16)					
	11	5P-1075	14	WASHER					
	12	8T-2501	4	BOLT(3/8-16)					
	13	8T-4896	6	WASHER					
	14	9B-7237	8	BOLT(3/8-16)					

J155902 -04

FAN GROUP (173-1303 N/S) -REVERSIBLE
AN ATTACHMENT

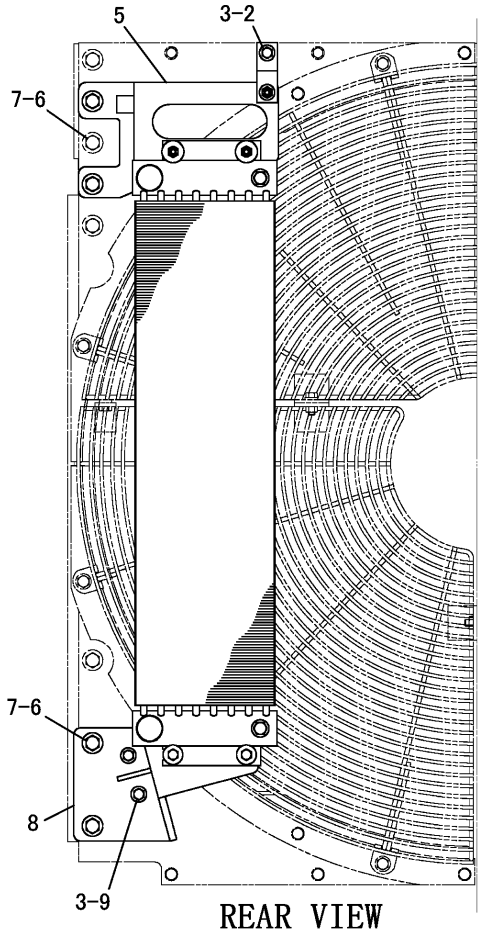

REAR VIEW

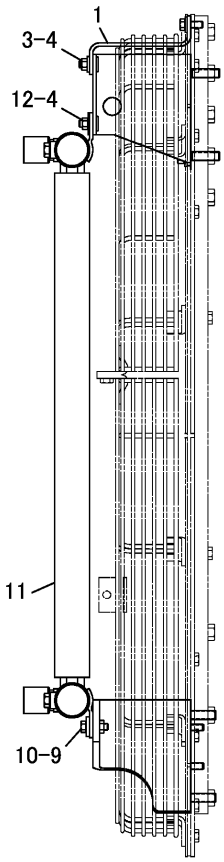

NOTE	№	PART NO.	QTY	PART NAME	NOTE	№	PART NO.	QTY	PART NAME
	1	114-8735	1	SUPPORT					
	2	4L-6454	1	BOLT(3/8-16)					
	3	5P-1075	4	WASHER					
	4	6V-8801	3	NUT(3/8-16)					
	5	114-4396	1	BRACKET AS					
		7M-7794	3	STUD(3/8-16)					
		3Y-7829	1	BOSS(3/8-16)					
	6	8T-4835	4	BOLT(1/2-13)					
	7	5P-1076	4	WASHER					
	8	113-4230	1	BRACKET AS					
		9F-2978	2	NUT(3/8-16)(WELD)					
	9	8T-9056	4	BOLT(3/8-16)					
	10	8M-7145	2	WASHER					
	11	143-7397	1	CORE AS					
	12	7X-0578	2	WASHER					

J107412 X01

HYDRAULIC OIL COOLER GROUP (110-2317 N/S)
PART OF 271-6466-Page 4

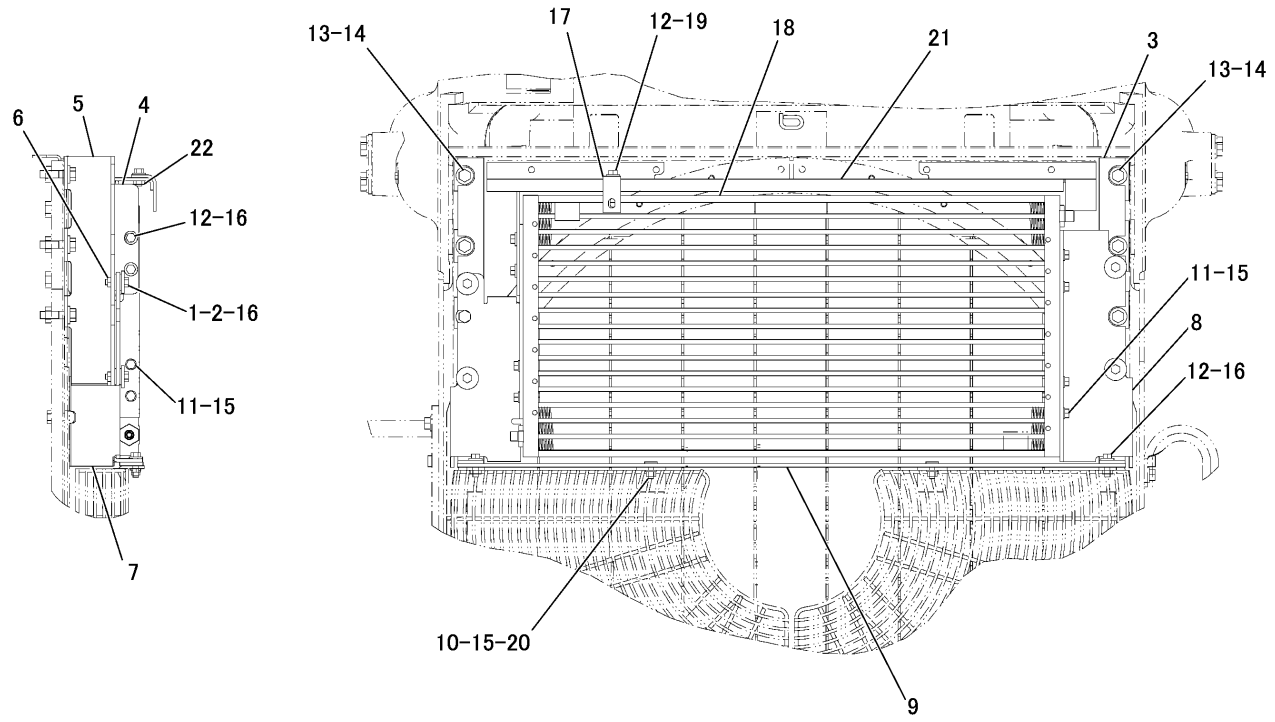

NOTE	№	PART NO.	QTY	PART NAME	NOTE	№	PART NO.	QTY	PART NAME
	1	6N-8744	4	MOUNT		20	6V-8801	2	NUT(3/8-16)
	2	9L-8781	4	WASHER		21	114-4400	1	BAFFLE AS
	3	110-6891	1	BRACKET AS(RH)		22	9F-2978	3	NUT(3/8-16)(WELD)
		9F-2978	2	NUT(3/8-16)(WELD)					
	4	114-4397	1	PLATE					
	5	114-4399	1	BRACKET AS(LH)					
	6	8T-5912	2	NUT(3/8-16)(WELD)					
	7	194-5042	1	BRACKET					
	8	194-5043	1	BRACKET					
	9	194-5044	1	SUPPORT AS					
	10	7M-7794	2	STUD(3/8-16)(WELD)					
	11	4L-6454	6	BOLT(3/8-16)					
	12	5P-1075	5	WASHER					
	13	5P-1076	6	WASHER					
	14	8T-4835	6	BOLT(1/2-13)					
	15	8T-4896	8	WASHER					
	16	9B-7237	8	BOLT(3/8-16)					
	17	122-3324	1	BRACKET					
	18	206-5889	1	A/C CONDENSER					
	19	5S-7379	1	BOLT(3/8-16)					

J155712 -00

CONDENSER AND MOUNTING GROUP (286-0369 N/S)
PART OF 271-6466-Page 4

COOLING SYSTEM

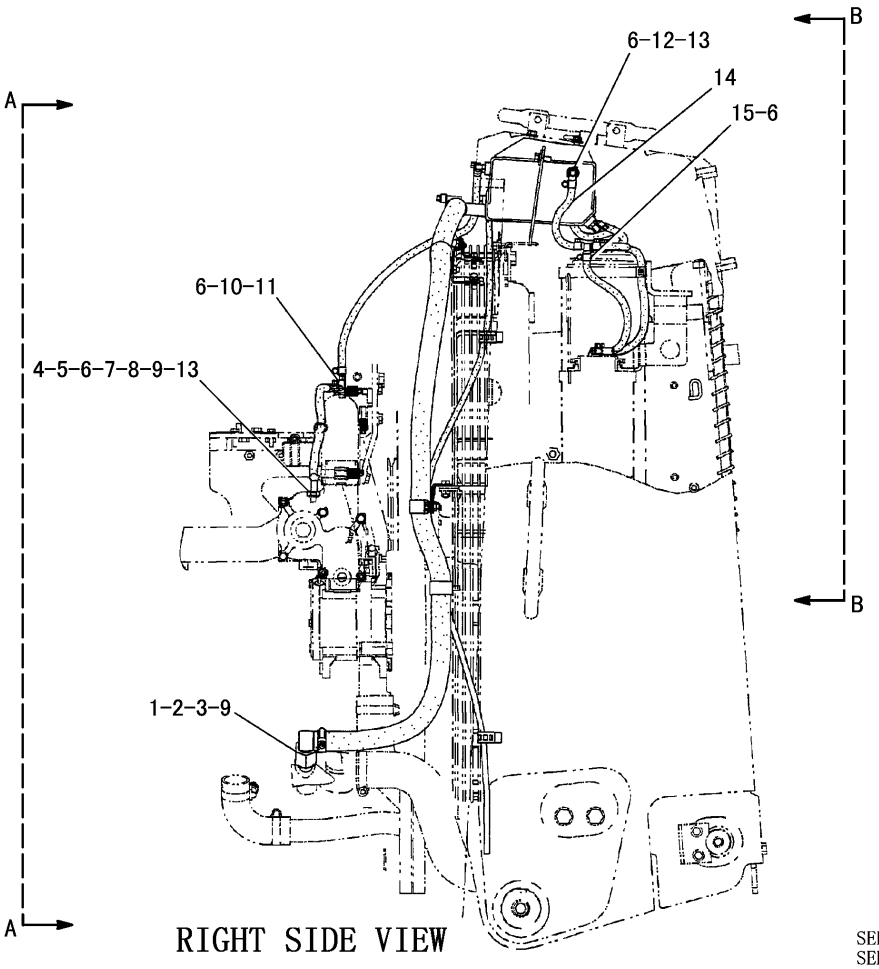

RIGHT SIDE VIEW

SEE PART 2 OF 3 FOR A-A
SEE PART 3 OF 3 FOR B-B

NOTE	Nº	PART NO.	QTY	PART NAME	NOTE	Nº	PART NO.	QTY	PART NAME
	1	9X-3966	1	ELBOW					
	2	7X-7958	2	CLAMP					
	3	159-5255	1	ADAPTER					
E	4	7I-7439		GUARD---40cm					
E	5	5P-1465		HOSE---43cm					
	6	1P-4278	8	CLAMP					
	7	3P-1932	1	ADAPTER					
	8	6V-8245	1	ELBOW					
	9	3K-0360	3	SEAL					
	10	2V-4868	2	FITTING					
	11	5P-3422	1	TEE					
	12	6V-1355	1	ELBOW					
	13	3J-7354	2	SEAL					
	14	164-3759	1	HOSE					
E	15	5P-1465		HOSE---28cm					

E-ORDER BY THE cm

J155716 X07

WATER TANK GROUP (164-4444 N/S) -PART 1 OF 3
PART OF 271-6466-Page 4

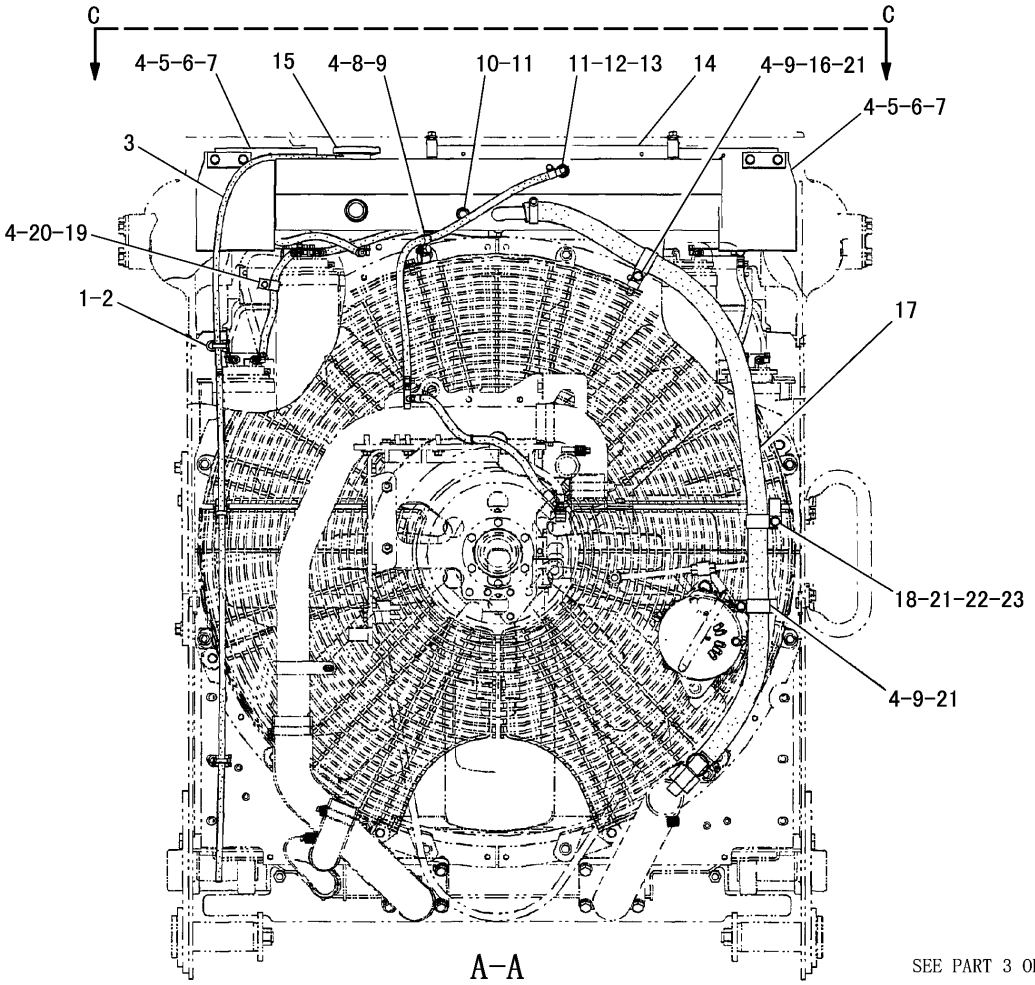

SEE PART 3 OF 3 FOR C-C

NOTE	№	PART NO.	QTY	PART NAME
	1	9X-6772	3	STRAP
	2	4P-7429	3	CLIP
E	3	8C-3681		HOSE---180cm
	4	8T-4896	10	WASHER
	5	4L-6454	4	BOLT(3/8-16)
	6	113-6363	2	STRIP
	7	113-6364	2	BAFFLE AS
		7G-5186	2	SPACER
	8	8M-2770	1	CLIP
	9	5S-7379	5	BOLT(3/8-16)
	10	9S-4182	1	PLUG
	11	3J-7354	2	SEAL
E	12	5P-1465		HOSE---73cm
	13	6V-1355	1	ELBOW
	14	165-6940	1	TANK GROUP
		3L-5893	1	TUBE
		8N-8846	1	NECK
		7T-1099	2	LINK
	15	031-1119	1	CAP AS
	16	7N-1277	1	BRACKET AS
		9F-2978	1	NUT(3/8-16)(WELD)
E	17	5P-1251		HOSE---150cm
	18	124-3019	1	BRACKET AS
		8T-3490	1	NUT(M10×1.5)(WELD)
	19	033-8248	1	CLIP
	20	5M-3062	1	BOLT(3/8-16)
	21	7D-7233	3	CLIP
	22	8T-4121	1	WASHER
	23	8T-4137	1	BOLT(M10×1.5)

E-ORDER BY THE cm

J155717 X07

WATER TANK GROUP (164-4444 N/S) -PART 2 OF 3
PART OF 271-6466-Page 4

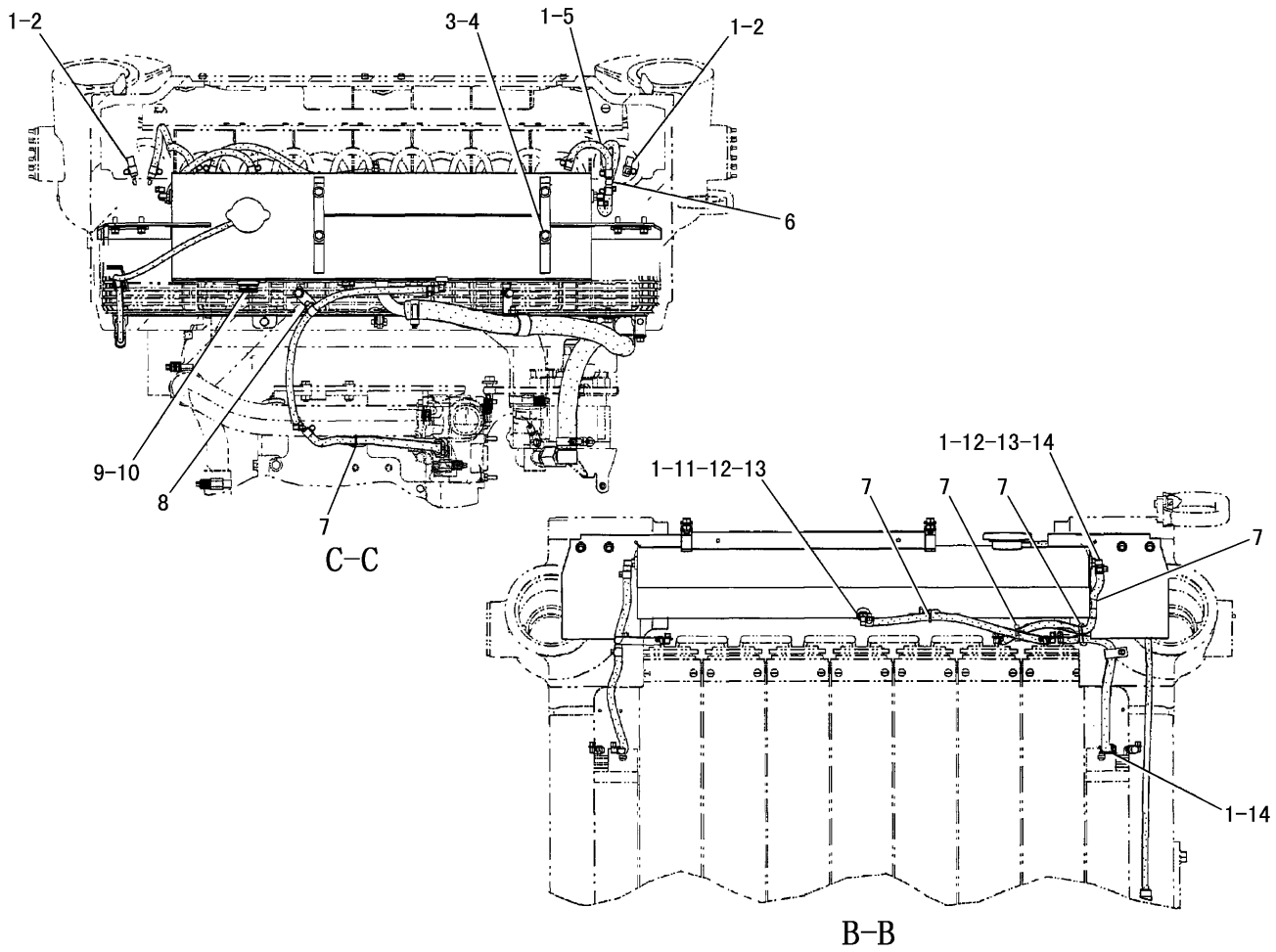

NOTE	№	PART NO.	QTY	PART NAME	NOTE	№	PART NO.	QTY	PART NAME
	1	1P-4278	10	CLAMP					
	2	111-7421	2	CAP					
	3	7X-0503	4	WASHER					
	4	8T-2502	4	BOLT(3/8-16)					
	5	106-4572	1	HOSE					
	6	192-5425	1	TEE					
	7	3S-2093	5	STRAP					
	8	7N-1277	1	BRACKET AS					
		9F-2978	1	NUT(3/8-16)(WELD)					
	9	7M-8485	1	SEAL					
	10	9Y-9236	1	BODY AS					
E	11	5P-1465		HOSE---40cm					
	12	3J-7354	2	SEAL					
	13	6V-1355	2	ELBOW					
E	14	5P-1465		HOSE---38cm(×2)					

E-ORDER BY THE cm

J155718 X07

WATER TANK GROUP (164-4444 N/S) -PART 3 OF 3
PART OF 271-6466-Page 4

COOLING SYSTEM

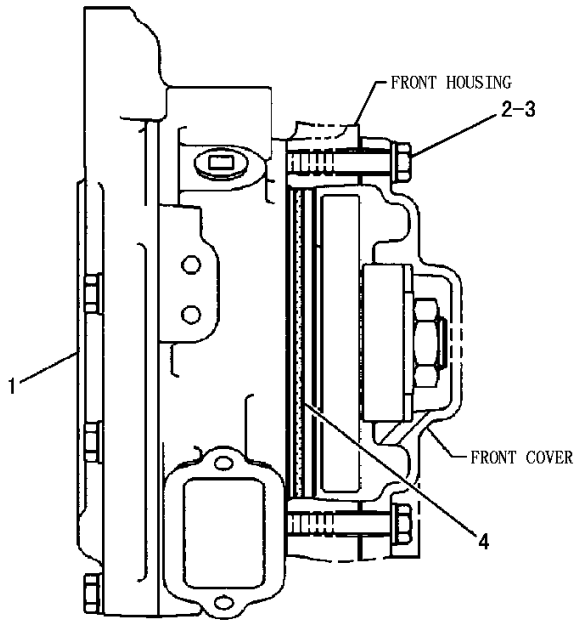

NOTE	№	PART NO.	QTY	PART NAME
Y	1	176-7000	1	WATER PUMP GROUP
	2	6V-5221	2	BOLT(M8×1.25)
	3	9M-1974	2	WASHER
	4	6V-7350	1	SEAL

Y-SEPARATE ILLUSTRATION

J125962 -03

WATER PUMP GROUP (117-2674 N/S)

PART OF 256-6771-Page 3
REFERENCE:176-7000-Page 55

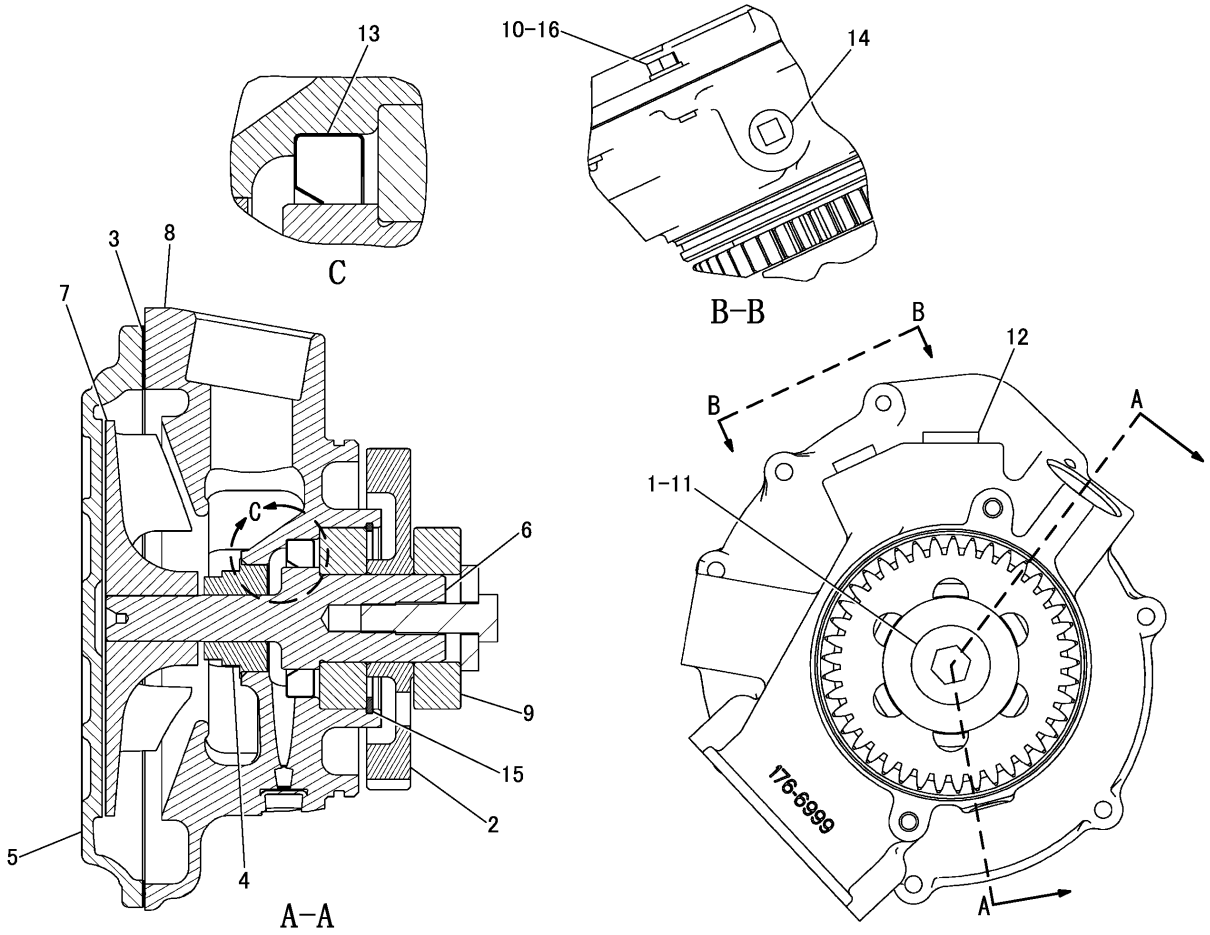

NOTE	№	PART NO.	QTY	PART NAME	NOTE	№	PART NO.	QTY	PART NAME
	1	6V-9666	1	WASHER					
	2	9Y-3513	1	GEAR					
	3	105-4210	1	GASKET					
	4	147-5088	1	SEAL AS					
	5	176-6995	1	COVER					
	6	176-6997	1	SHAFT					
	7	176-6998	1	IMPELLER					
	8	176-6999	1	HOUSING AS					
	9	1B-3867	2	BEARING					
	10	6V-3940	6	BOLT(M8×1.25)					
	11	6V-5842	1	BOLT(M10×1.5)					
	12	7X-7731	1	PLUG					
	13	8C-3100	1	SEAL					
	14	8T-6762	1	PLUG					
	15	8T-9598	1	RING					
	16	9M-1974	6	WASHER					

J155656 -01

176-7000 WATER PUMP GROUP
PART OF 117-2674-Page 54

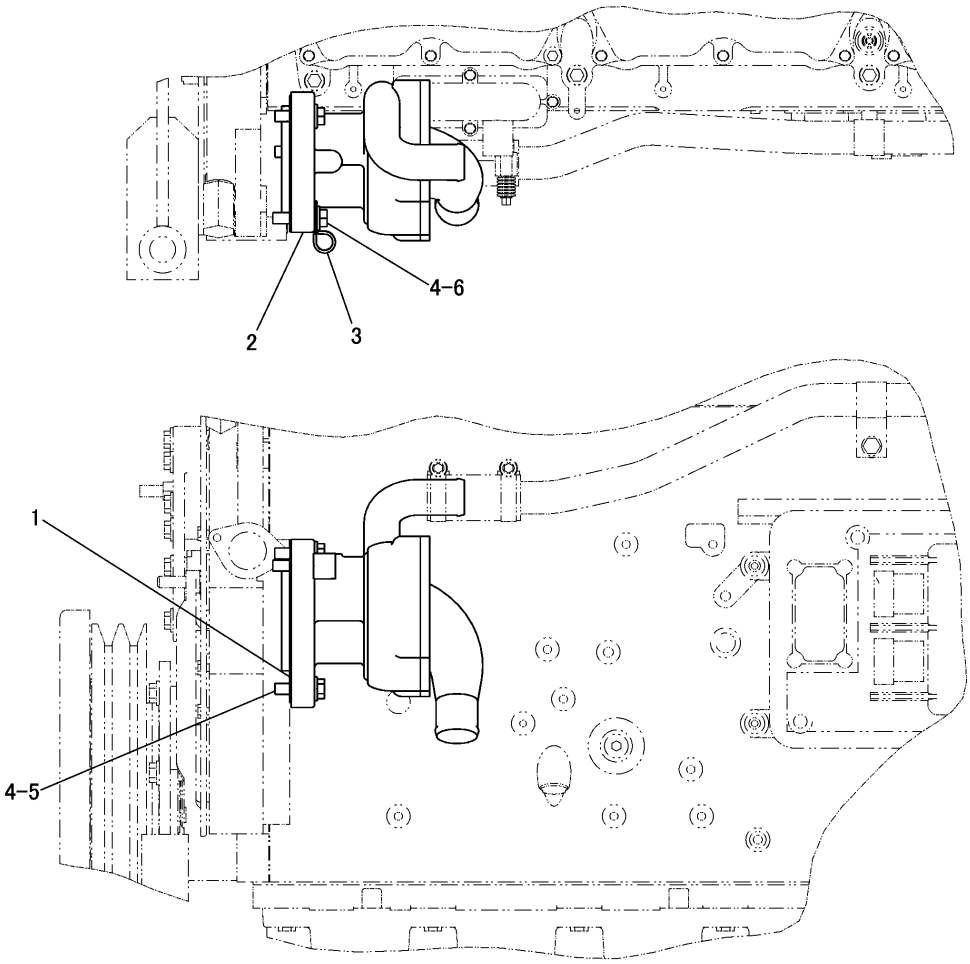

NOTE	№	PART NO.	QTY	PART NAME	NOTE	№	PART NO.	QTY	PART NAME
	1	129-2181	1	SEAL					
Y	2	311-8409	1	PUMP GROUP					
	3	1S-6420	1	CLIP					
	4	5P-8245	3	WASHER					
	5	6V-5684	2	BOLT(M12×1.75)					
	6	6V-7673	1	BOLT(M12×1.75)					

Y-SEPARATE ILLUSTRATION

J154667 -02

WATER PUMP GROUP (268-0051 N/S) -AFTERCOOLER
PART OF 256-6771-Page 3
REFERENCE:311-8409-Page 57

COOLING SYSTEM

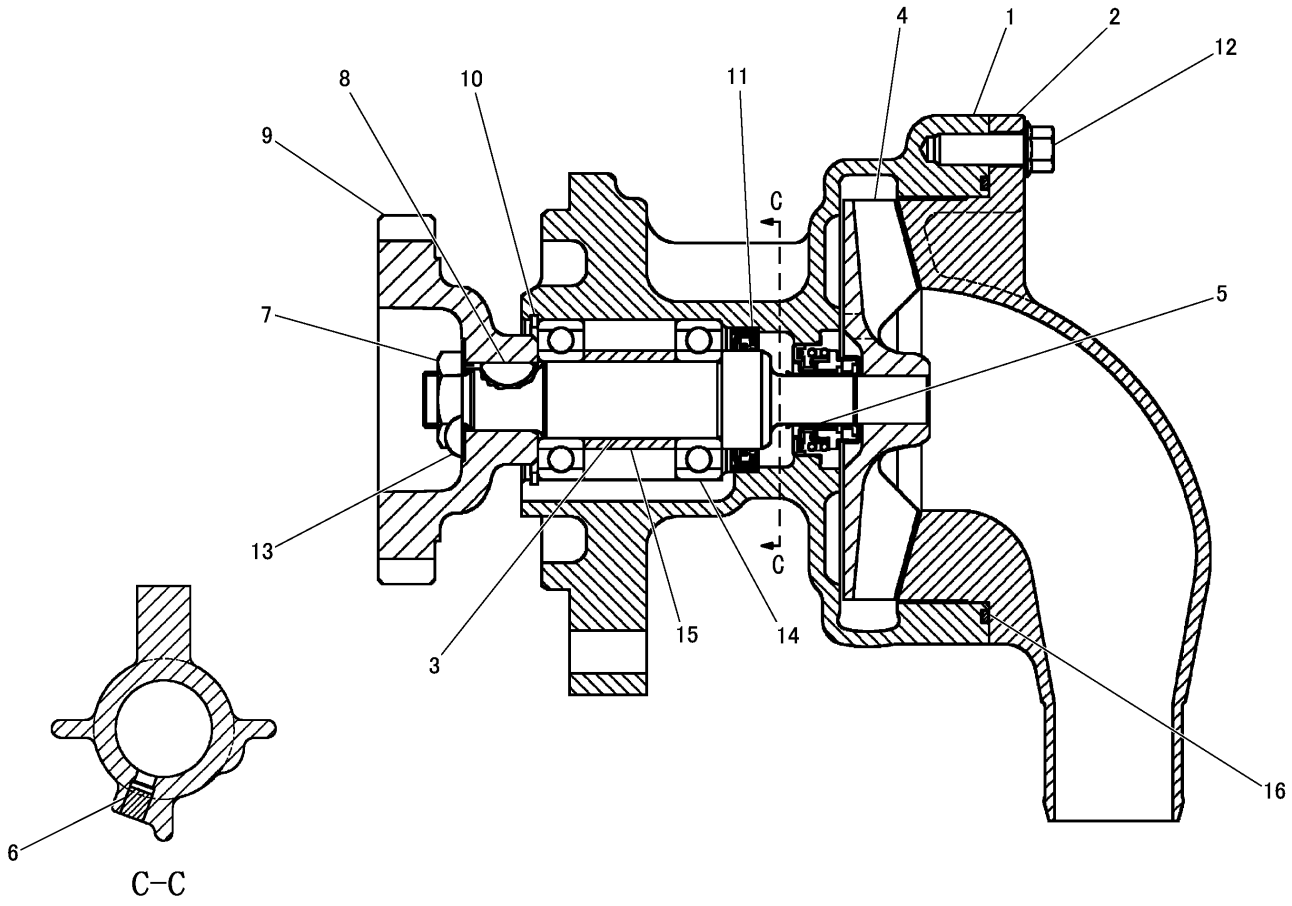

NOTE	№	PART NO.	QTY	PART NAME	NOTE	№	PART NO.	QTY	PART NAME
	1	160-8202	1	HOUSING					
	2	161-3006	1	COVER					
	3	161-3007	1	SHAFT					
	4	160-8203	1	IMPELLER					
	5	311-8411	1	SEAL AS					
	6	119-3025	1	FILTER					
	7	161-3015	1	NUT					
	8	161-3018	1	KEY					
	9	241-2656	1	GEAR					
	10	161-3014	1	RING					
	11	249-3367	1	SEAL					
	12	161-3016	4	BOLT					
	13	161-3017	1	WASHER					
	14	6B-1124	2	BEARING					
	15	161-3011	1	SPACER					
	16	161-3020	1	SEAL					

J154668 -00

311-8409 WATER PUMP GROUP
PART OF 268-0051-Page 56

COOLING SYSTEM

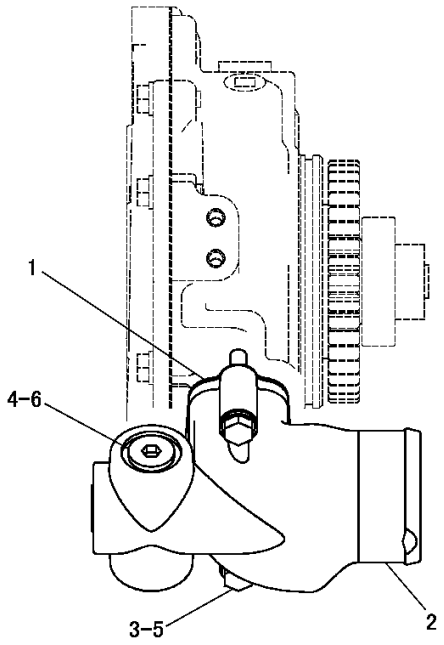

NOTE	№	PART NO.	QTY	PART NAME
	1	101-1635	1	GASKET
	2	272-0263	1	ELBOW
	3	6V-3918	2	BOLT(M8×1.25)
	4	6V-6609	3	SEAL
	5	9M-1974	2	WASHER
	6	9S-8005	3	PLUG

J135954 -02

WATER LINES GROUP (212-0819 N/S)

PART OF 256-6771-Page 3

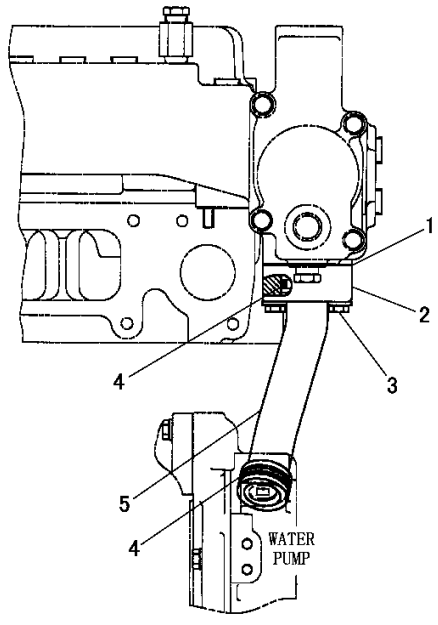

NOTE	№	PART NO.	QTY	PART NAME
	1	7E-5555	1	GASKET
	2	105-4208	1	FLANGE
	3	6V-3918	2	BOLT(M8×1.25)
		3E-4352	2	WASHER
	4	7L-6580	2	SEAL
	5	107-5795	1	TUBE

J119188 -01

WATER LINES GROUP (116-5460 N/S)

PART OF 256-6771-Page 3

COOLING SYSTEM

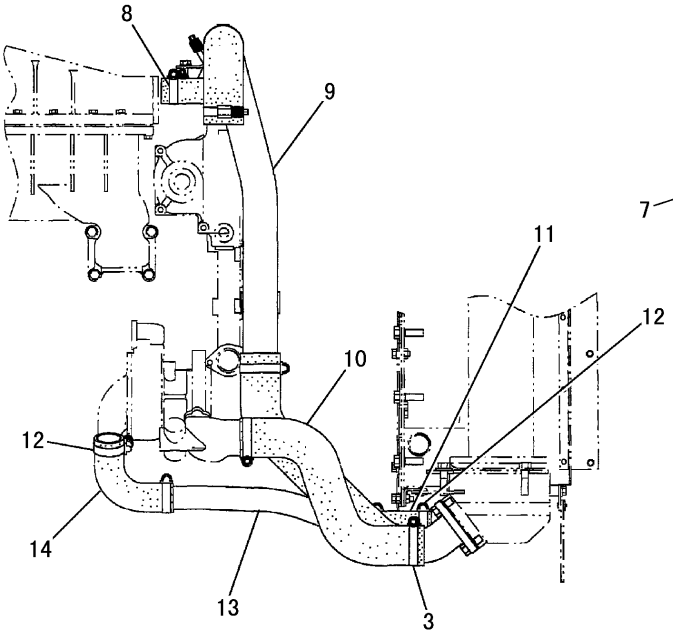

RIGHT SIDE VIEW

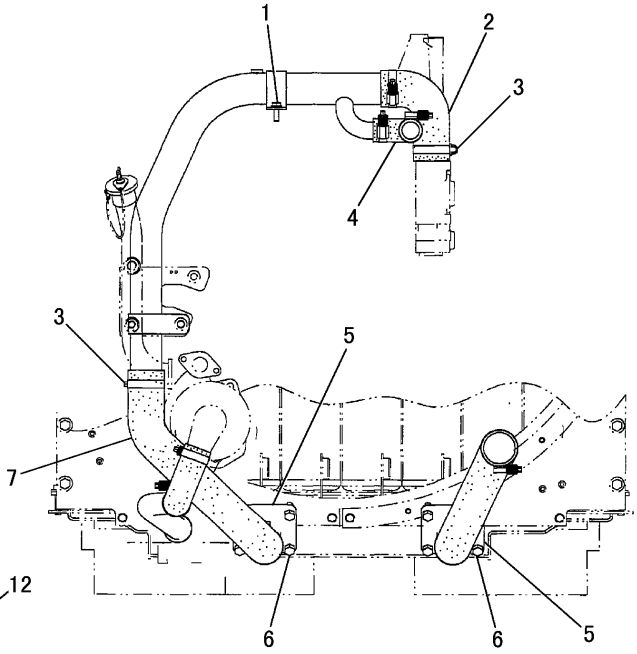

REAR VIEW

NOTE	№	PART NO.	QTY	PART NAME	NOTE	№	PART NO.	QTY	PART NAME
	1	6V-1820	1	BOLT(M10×1.5)					
		6V-5839	1	WASHER					
	2	209-3722	1	HOSE					
	3	8T-4984	6	CLAMP					
	4	209-3721	1	HOSE					
	5	113-8125	2	ELBOW					
		4N-1419	2	GASKET					
	6	8T-8917	8	BOLT(1/2-13)					
	7	188-5071	1	HOSE					
	8	8T-4983	2	CLAMP					
	9	163-7454	1	TUBE AS					
	10	175-6593	1	HOSE					
	11	3S-5842	1	HOSE					
	12	8T-6703	4	CLAMP					
	13	235-2652	1	TUBE					
	14	199-8288	1	HOSE					

J120996 X03

WATER LINES GROUP (163-4762 N/S)
PART OF 271-6466-Page 4

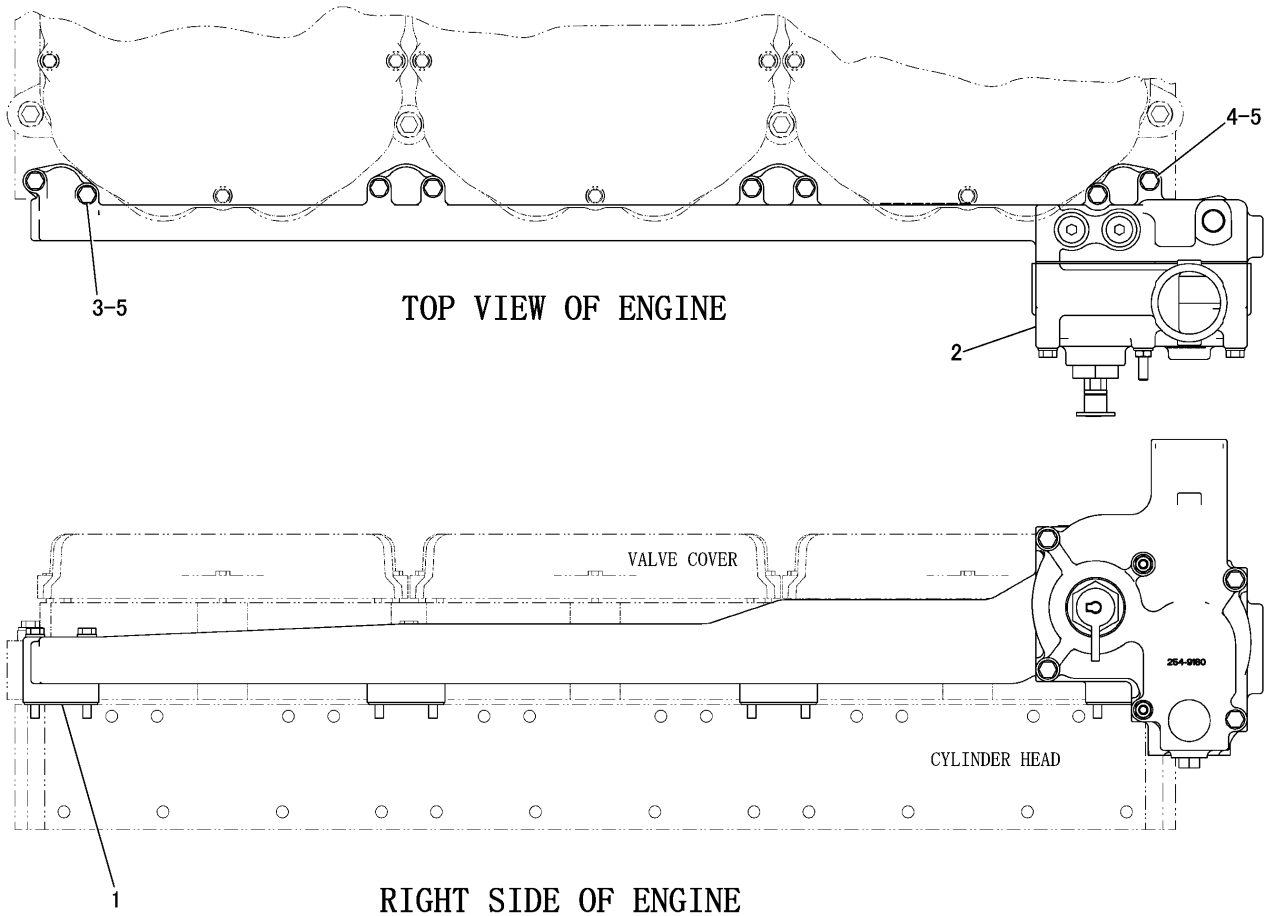

NOTE	№	PART NO.	QTY	PART NAME	NOTE	№	PART NO.	QTY	PART NAME
	1	118-2797	4	GASKET					
Y	2	262-0564	1	REGULATOR GROUP					
	3	5P-8347	6	BOLT(M8×1.25)					
	4	8T-0292	2	BOLT(M8×1.25)					
	5	9M-1974	8	WASHER					

Y-SEPARATE ILLUSTRATION

J155652 -04

WATER LINES GROUP (165-4274 N/S)

PART OF 256-6771-Page 3
REFERENCE:262-0564-Page 61

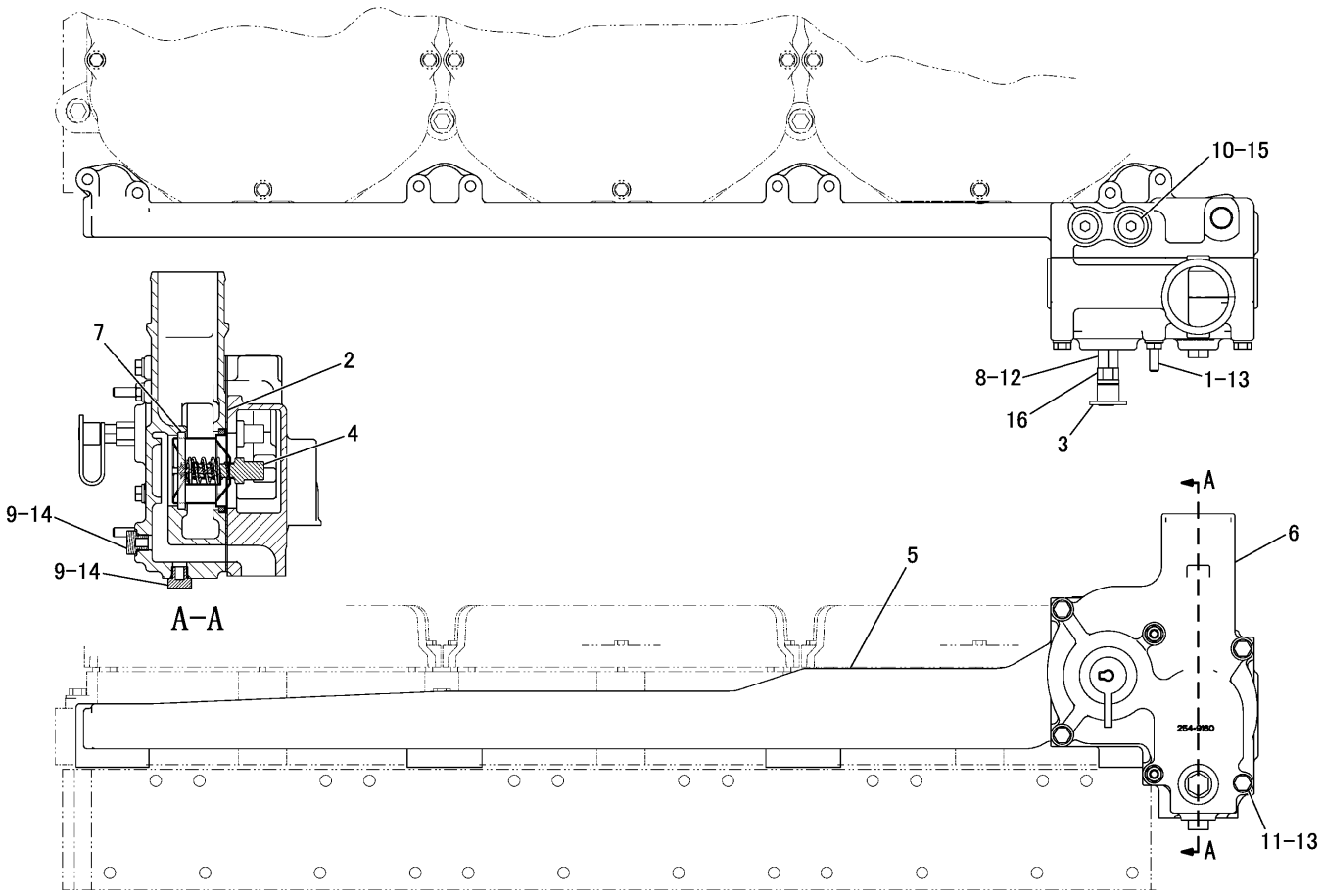

NOTE	№	PART NO.	QTY	PART NAME	NOTE	№	PART NO.	QTY	PART NAME
	1	123-4511	2	STUD(M8×1.25)					
	2	131-4164	1	GASKET					
	3	157-0670	1	CAP					
	4	248-5513	2	REGULATOR					
	5	254-9165	1	MANIFOLD					
	6	257-9164	1	HOUSING AS					
	7	3S-9643	2	SEAL					
	8	1J-9671	1	SEAL					
	9	6V-3250	2	SEAL					
	10	6V-6609	2	SEAL					
	11	8T-0292	4	BOLT(M8×1.25)					
	12	8T-9357	1	ADAPTER					
	13	9M-1974	6	WASHER					
	14	9S-4191	2	PLUG					
	15	9S-8005	2	PLUG					
	16	8C-3446	1	VALVE					
		3J-7354	1	SEAL					

J155653 -01

HOUSING AND REGULATOR GROUP (262-0564 N/S)
PART OF 165-4274-Page 60

COOLING SYSTEM

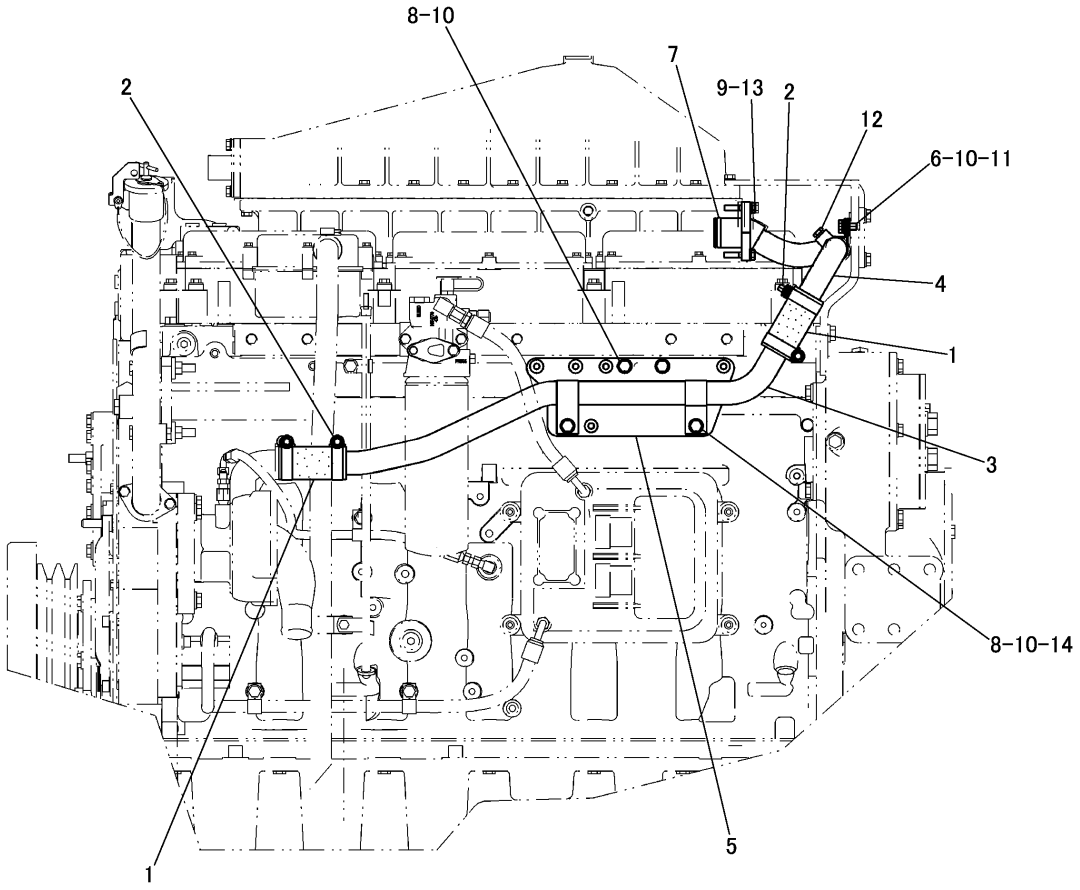

NOTE	№	PART NO.	QTY	PART NAME	NOTE	№	PART NO.	QTY	PART NAME
E	1	5P-1255		HOSE---10cm(×2)					
	2	8T-4983	4	CLAMP					
	3	185-1645	1	TUBE					
	4	185-5893	1	TUBE AS					
	5	194-6739	1	BRACKET AS					
	6	2S-2053	1	CLIP					
	7	5M-5860	1	SEAL					
	8	6V-1820	4	BOLT(M10×1.5)					
	9	6V-5219	4	BOLT(M8×1.25)					
	10	6V-5839	5	WASHER					
	11	6V-6317	1	BOLT(M10×1.5)					
	12	8T-6765	1	PLUG					
	13	9M-1974	4	WASHER					
	14	9X-2503	2	CLIP					

E-ORDER BY THE cm

J144182 -06

AFTERCOOLER WATER LINES GROUP (164-5822 N/S)
PART OF 256-6771-Page 3

COOLING SYSTEM

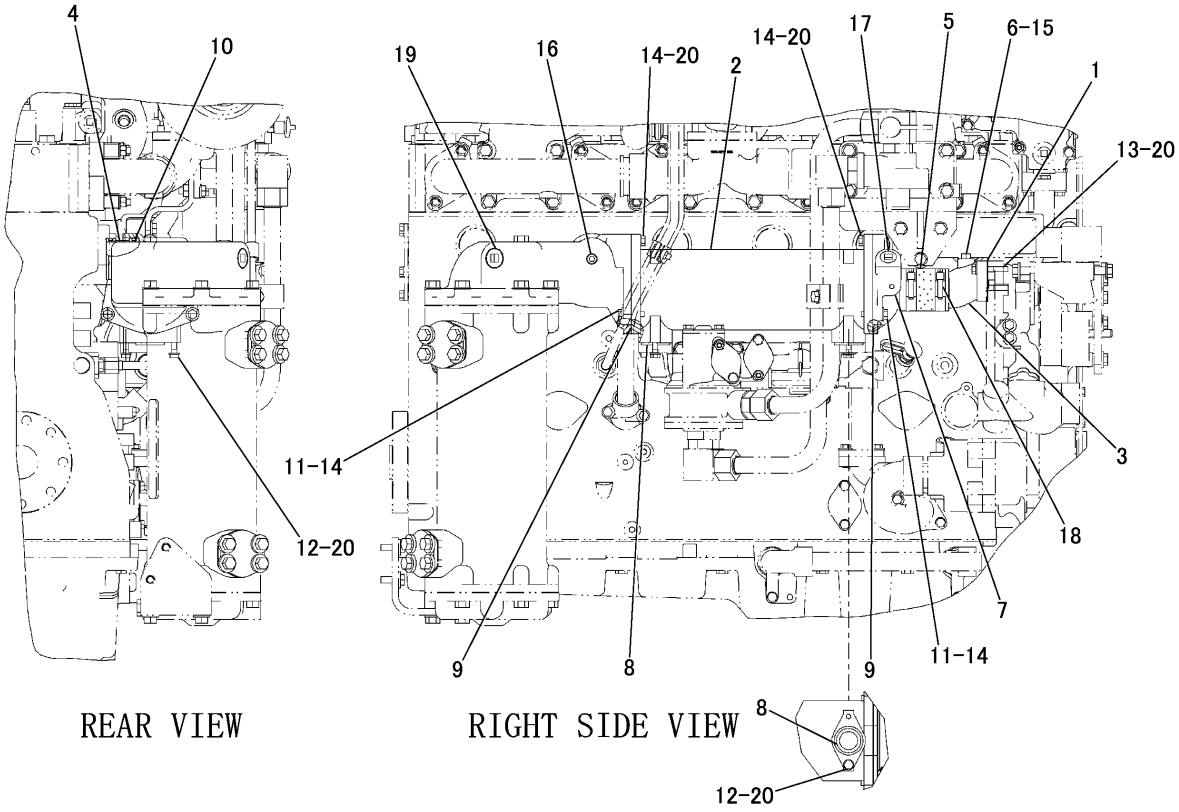

NOTE	№	PART NO.	QTY	PART NAME	NOTE	№	PART NO.	QTY	PART NAME
	1	100-8525	1	GASKET					
	2	115-4517	1	CORE AS					
	3	122-0763	1	ELBOW					
	4	124-5043	1	COUPLING					
	5	131-6645	1	HOSE					
	6	9S-4182	1	PLUG					
	7	155-7970	1	BONNET					
	8	061-7540	2	SEAL					
	9	117-3036	2	SEAL					
	10	2N-5243	2	SEAL					
	11	3E-4352	5	WASHER					
	12	6V-2317	3	BOLT(M8×1.25)					
	13	6V-3918	2	BOLT(M8×1.25)					
	14	6V-5218	7	BOLT(M8×1.25)					
	15	6V-9027	1	SEAL					
	16	7M-7410	1	PLUG					
	17	7X-7731	1	PLUG					
	18	8T-4984	2	CLAMP					
	19	8T-6761	1	PLUG					
	20	9M-1974	7	WASHER					

J144180 -09

ENGINE OIL COOLER GROUP (161-8089 N/S)
PART OF 256-6771-Page 3

COOLING SYSTEM

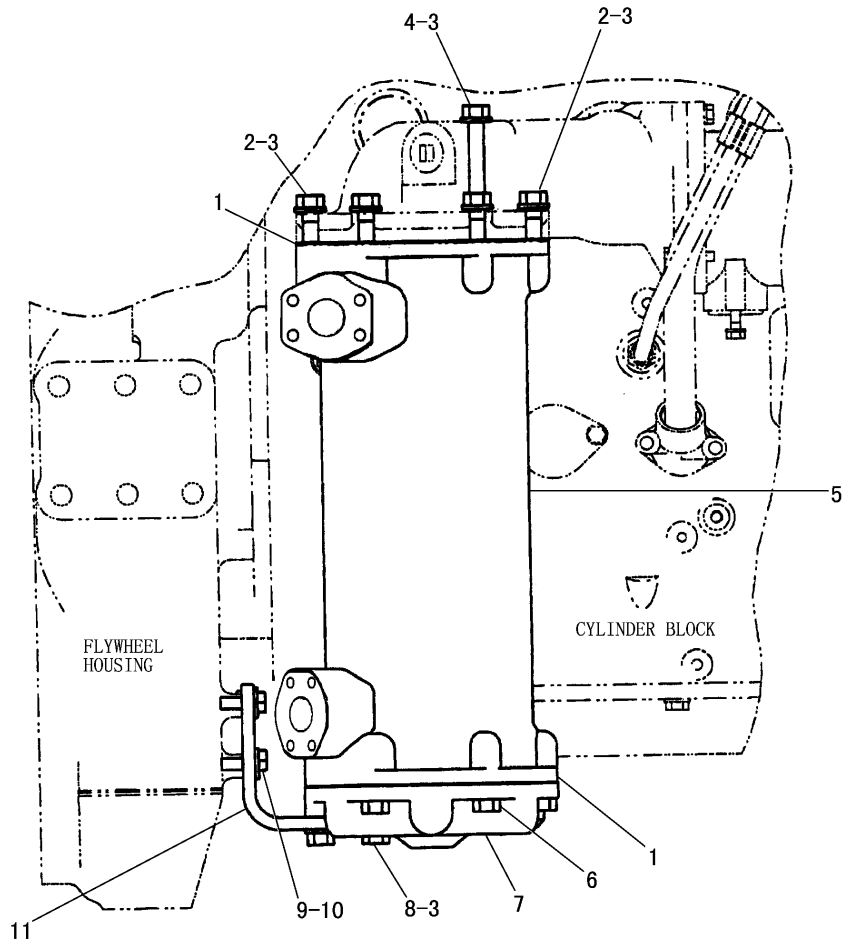

NOTE	№	PART NO.	QTY	PART NAME	NOTE	№	PART NO.	QTY	PART NAME
	1	2S-0795	2	GASKET					
	2	0S-1587	5	BOLT(1/2-13)					
	3	5P-8245	8	WASHER					
	4	8S-9089	1	BOLT(1/2-13)					
	5	166-8598	1	CORE AS					
	6	0S-1595	4	BOLT(1/2-13)					
	7	193-2454	1	BONNET					
	8	9X-8873	2	BOLT(1/2-13)					
	9	6V-1820	2	BOLT(M10×1.5)					
	10	3E-4353	2	WASHER					
	11	183-4693	1	BRACKET					

J119138 -03

TRANSMISSION OIL COOLER GROUP (161-4347 N/S)
PART OF 256-6771-Page 3

COOLING SYSTEM

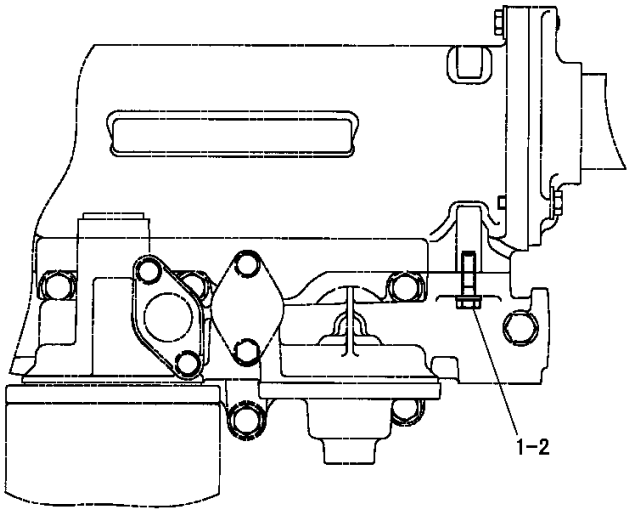

RIGHT SIDE VIEW

NOTE	№	PART NO.	QTY	PART NAME
	1	6V-2317	1	BOLT(M8×1.25)
	2	9M-1974	1	WASHER

J119143 -01

OIL COOLER FASTENER GROUP (117-2792 N/S)
PART OF 256-6771-Page 3

COOLING SYSTEM

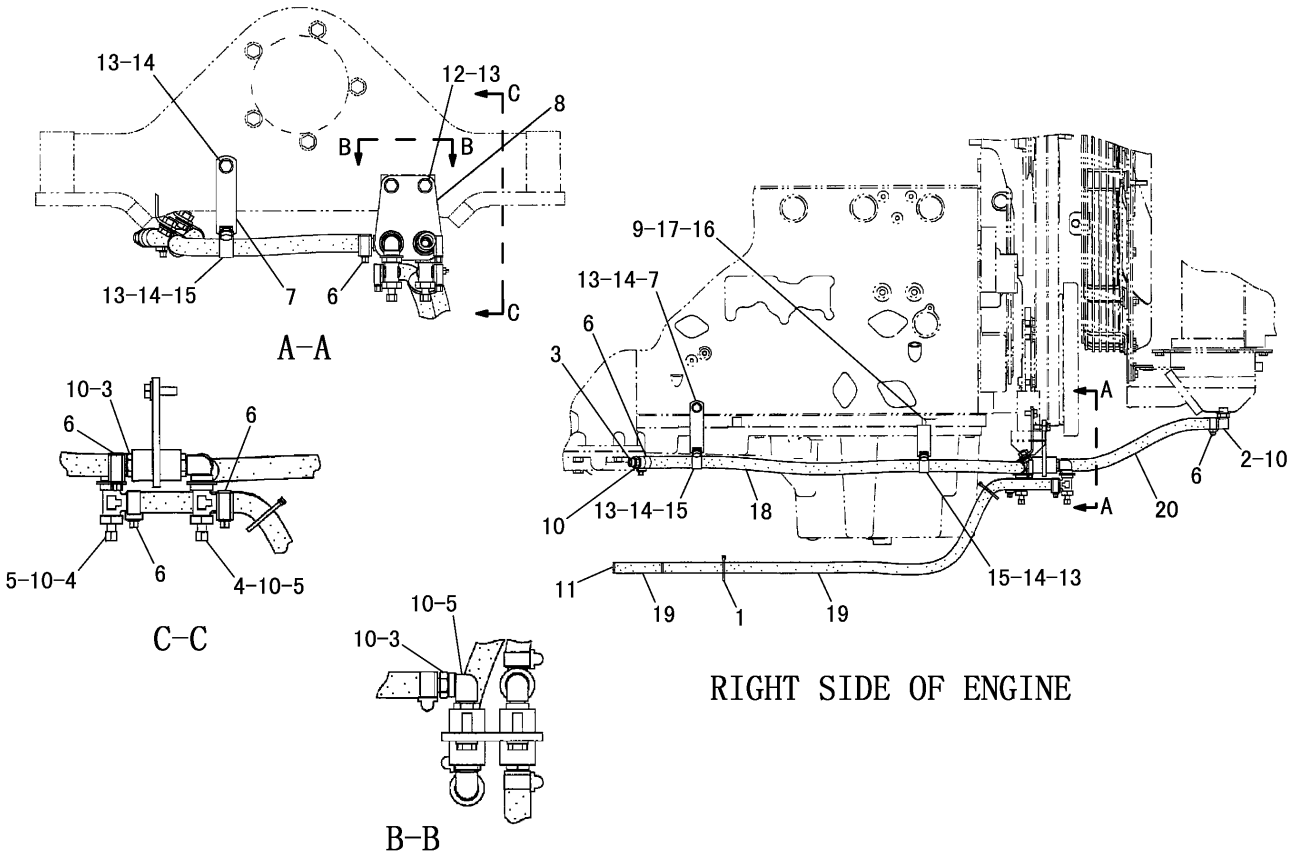

NOTE	№	PART NO.	QTY	PART NAME	NOTE	№	PART NO.	QTY	PART NAME
	1	3S-2093	2	STRAP	E	19	5P-0767		HOSE---99cm(×2)
	2	5P-4906	1	ELBOW	E	20	5P-0767		HOSE---38.3cm
	3	6V-1438	3	CONNECTOR					
	4	7E-4761	2	VALVE					
	5	8T-0119	3	ELBOW					
	6	159-1503	7	CLAMP					
	7	193-2414	2	BRACKET AS					
		8T-3490	1	NUT(M10×1.5)(WELD)					
	8	196-1903	1	BRACKET AS					
	9	208-7490	1	BRACKET AS					
		8T-3490	1	NUT(M10×1.5)(WELD)					
	10	3K-0360	9	SEAL					
	11	6N-2944	2	PLUG					
	12	6V-1820	2	BOLT(M10×1.5)					
	13	6V-5839	7	WASHER					
	14	6V-6317	5	BOLT(M10×1.5)					
	15	7C-4354	3	CLIP					
	16	8T-4189	1	BOLT(M8×1.25)					
	17	8T-4224	1	WASHER					
E	18	5P-0767		HOSE---113cm					

E-ORDER BY THE cm

J139116 X02

DRAIN LINES GROUP (193-2413 N/S)
PART OF 271-6466-Page 4

AIR INLET AND EXHAUST SYSTEM

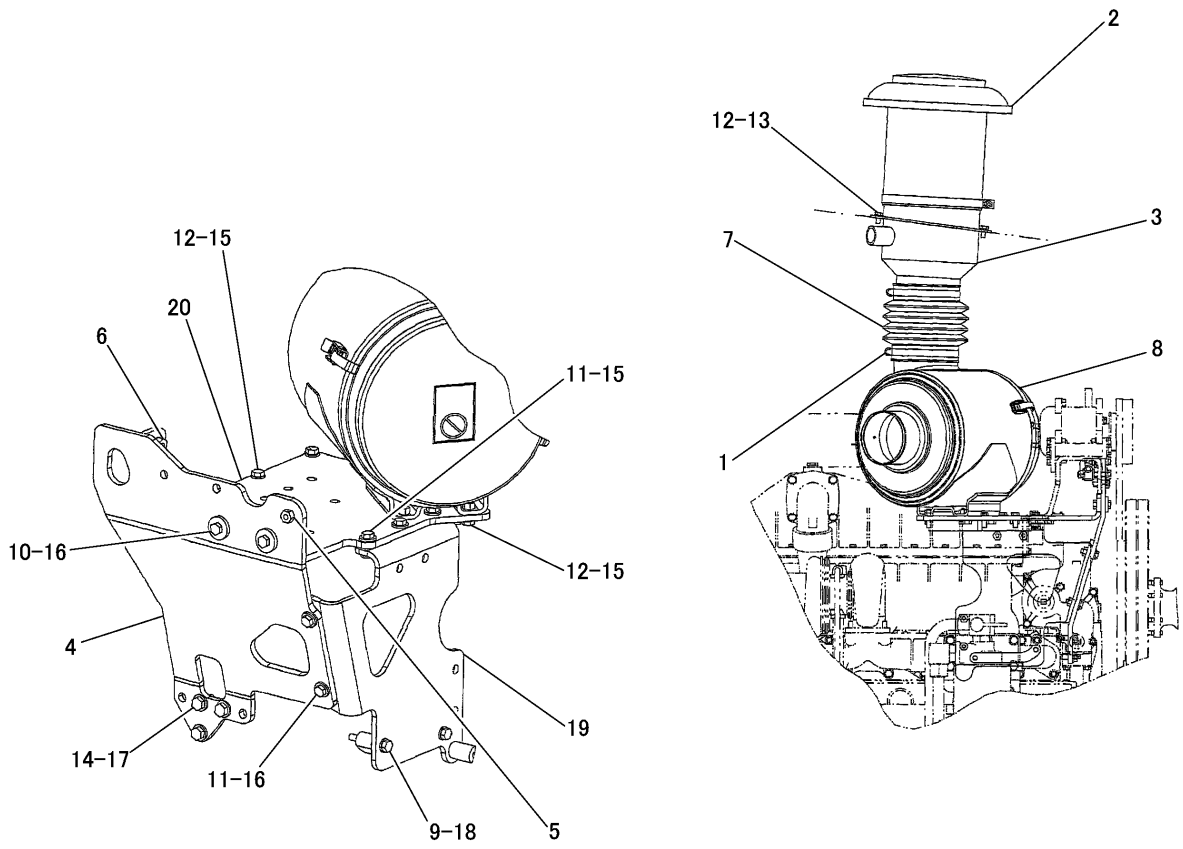

NOTE	№	PART NO.	QTY	PART NAME	NOTE	№	PART NO.	QTY	PART NAME
	1	3E-7424	2	CLAMP		19	164-9884	1	BRACKET AS
	2	7S-9396	1	PRESCREENER AS			8T-3490	9	NUT(M10×1.5)(WELD)
		0S-1591	1	BOLT(3/8-16)		20	164-9885	1	BRACKET AS
		1D-4717	1	NUT(3/8-16)			7T-1099	1	LINK
	3	100-7913	1	BODY AS			8T-3490	9	NUT(M10×1.5)(WELD)
	4	164-9882	1	BRACKET AS					
	5	8T-3490	1	NUT(M10×1.5)(WELD)					
	6	8T-3597	1	NUT(M12×1.75)(WELD)					
	7	210-2130	1	HOSE					
Y	8	210-8400	1	CLEANER GROUP					
	9	6V-5839	2	WASHER					
	10	7X-0632	2	WASHER					
	11	7X-7729	5	WASHER					
	12	8T-4121	11	WASHER					
	13	8T-4137	4	BOLT(M10×1.5)					
	14	8T-4139	3	BOLT(M12×1.75)					
	15	8T-4195	10	BOLT(M10×1.5)					
	16	8T-4196	4	BOLT(M10×1.5)					
	17	8T-4223	3	WASHER					
	18	8T-5035	2	BOLT(M10×1.5)					

Y-SEPARATE ILLUSTRATION

J144194 X03

AIR CLEANER GROUP (160-8573 N/S)

PART OF 271-6466-Page 4
REFERENCE:210-8400-Page 69

AIR INLET AND EXHAUST SYSTEM

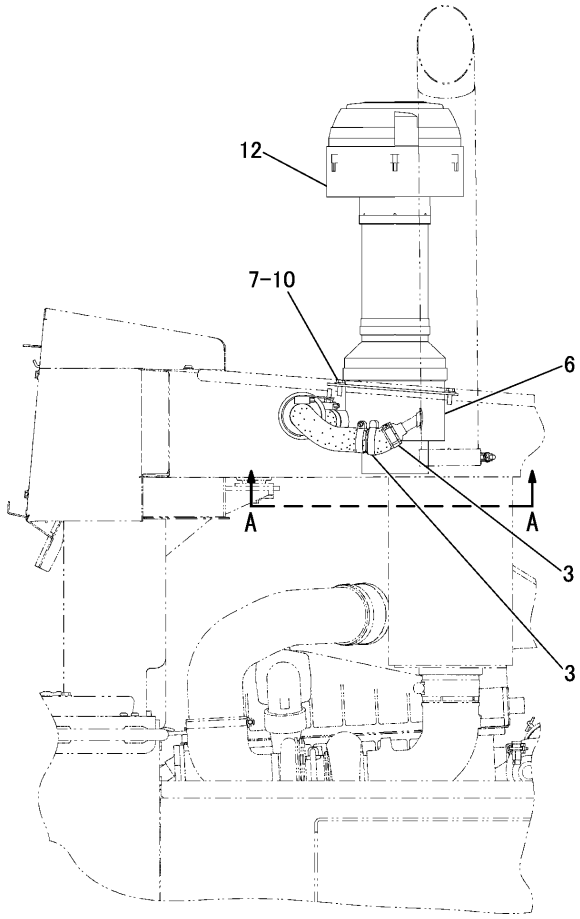

RIGHT SIDE VIEW

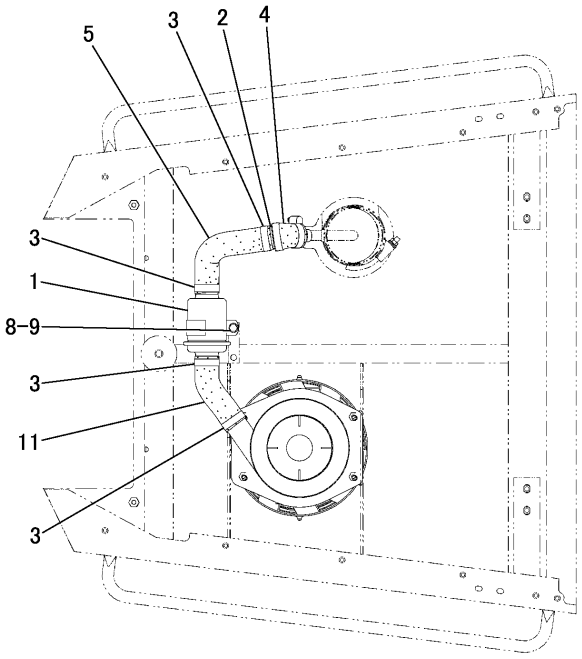

A-A

NOTE	№	PART NO.	QTY	PART NAME	NOTE	№	PART NO.	QTY	PART NAME
	1	1W-8620	1	VALVE AS					
	2	4N-3861	1	TUBE					
	3	5P-0597	6	CLAMP					
	4	202-2605	1	HOSE					
E	5	263-9959		HOSE---39.5cm					
	6	254-1789	1	PIPE AS					
	7	7X-7729	4	WASHER					
	8	8T-4121	1	WASHER					
	9	8T-4136	1	BOLT(M10×1.5)					
	10	8T-4195	4	BOLT(M10×1.5)					
E	11	263-9959		HOSE---18cm					
Y	12	237-9250	1	PRECLEANER AS					

E-ORDER BY THE cm
Y-SEPARATE ILLUSTRATION

J157031 -06

PRECLEANER ARRANGEMENT (254-1790 N/S)
REFERENCE:237-9250-Page 71
AN ATTACHMENT

AIR INLET AND EXHAUST SYSTEM

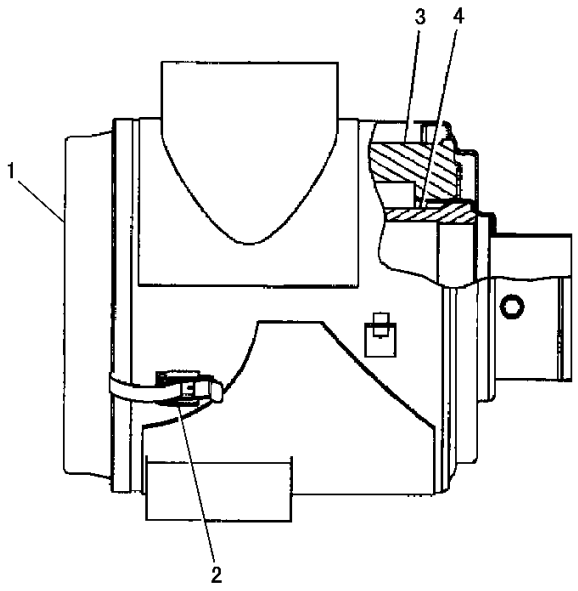

NOTE	№	PART NO.	QTY	PART NAME
	1	6I-0275	1	COVER AS
		4P-5524	1	SEAL
		101-2850	1	FILM
	2	8N-4617	2	CLAMP KIT
		9B-2596	1	RIVET
		1N-4403	1	CLIP AS
	3	6I-0273	1	ELEMENT AS(PRIMARY)
	4	6I-0274	1	ELEMENT AS(SECONDARY)

J119882 -00

210-8400 AIR CLEANER GROUP
PART OF 160-8573-Page 67

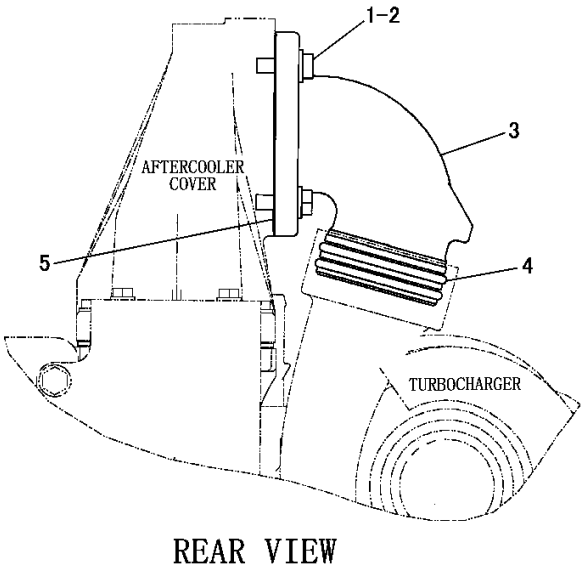

REAR VIEW

NOTE	№	PART NO.	QTY	PART NAME
	1	6V-1820	4	BOLT(M10×1.5)
	2	6V-5839	4	WASHER
	3	184-2465	1	ELBOW
	4	8H-1607	2	SEAL
	5	1N-9372	1	GASKET

J119168 -01

AIR LINES GROUP (161-3597 N/S)
PART OF 256-6771-Page 3

AIR INLET AND EXHAUST SYSTEM

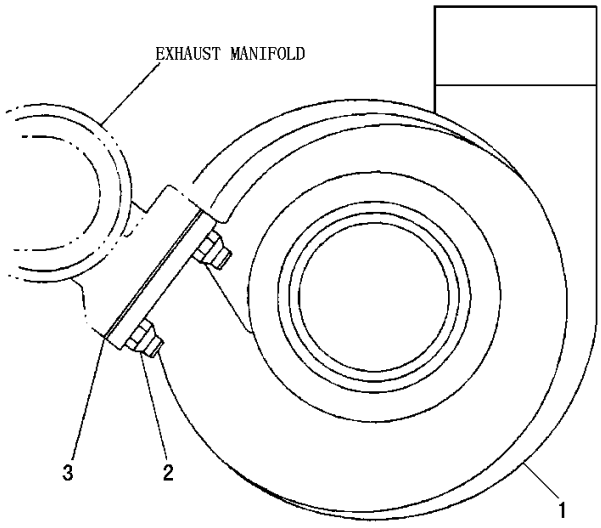

NOTE	№	PART NO.	QTY	PART NAME
Y	1	167-9666	1	TURBOCHARGER GROUP
	2	3E-8017	4	LOCKNUT(M10×1.5)
	3	1P-0451	1	GASKET

Y-SEPARATE ILLUSTRATION

J119230 -01

TURBOCHARGER GROUP (164-3710 N/S)

PART OF 256-6771-Page 3
REFERENCE:167-9666-Page 70

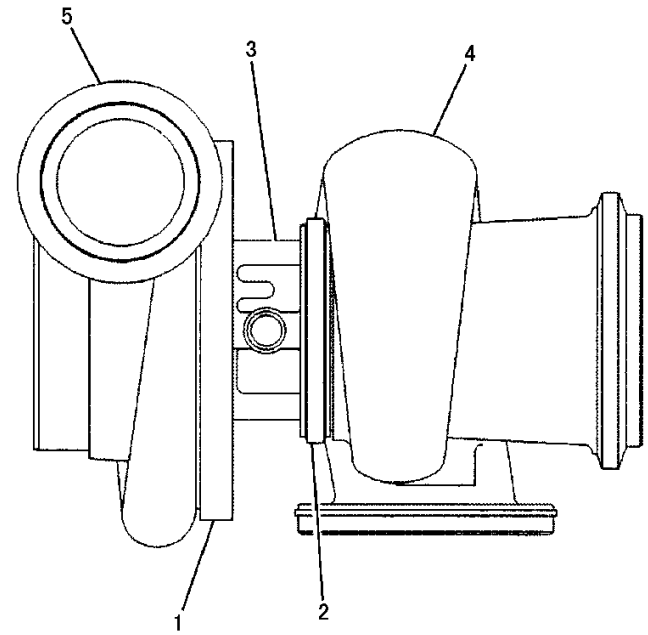

NOTE	№	PART NO.	QTY	PART NAME
	1	4P-3629	1	CLAMP AS
		7M-9918	1	NUT(1/4-28)
	2	137-1602	1	CLAMP AS
		7M-9918	1	NUT(1/4-28)
	3	167-9671	1	CARTRIDGE GROUP
	4	169-4097	1	HOUSING
	5	167-9670	1	COVER
F	6	6C-3677	1	RIVET

F-NOT SHOWN

J119231 -02

167-9666 TURBOCHARGER GROUP

PART OF 164-3710-Page 70

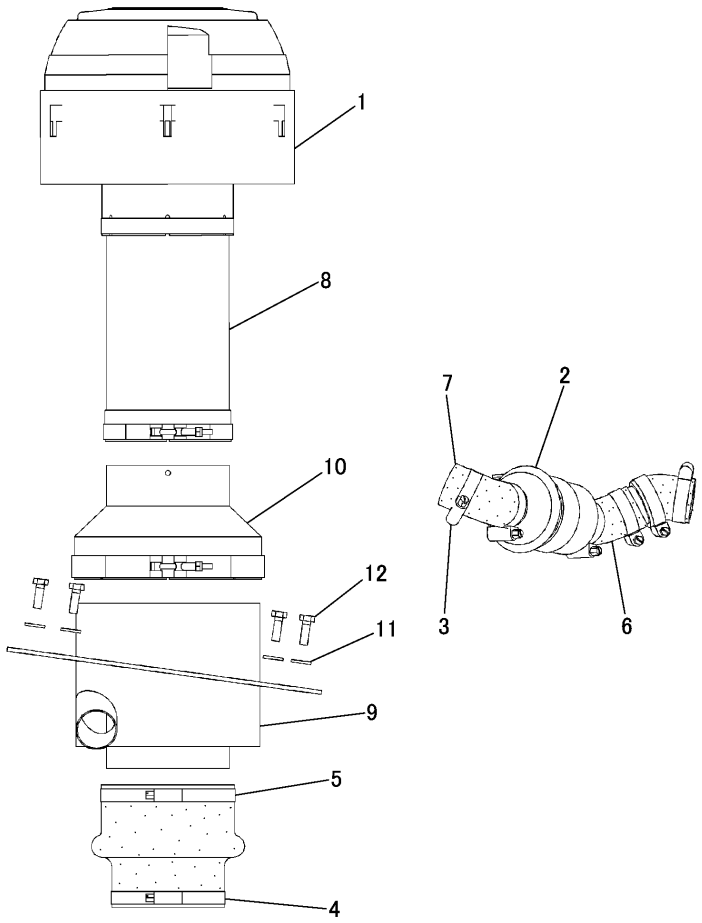

NOTE	№	PART NO.	QTY	PART NAME	NOTE	№	PART NO.	QTY	PART NAME
	1	130-3280	1	PRECLEANER AS					
		237-9254	1	INSTALLATION KIT(TURBINE)					
	2	1W-8620	1	VALVE AS					
	3	5P-0597	6	CLAMP					
	4	5P-0599	1	CLAMP					
	5	5P-3860	1	CLAMP					
E	6	5P-1471		HOSE---10cm					
E	7	5P-1471		HOSE---17.5cm					
	8	237-9252	1	PIPE AS					
	9	237-9253	1	PIPE AS					
	10	237-9255	1	PIPE AS					
	11	7X-7729	8	WASHER					
	12	8T-4195	8	BOLT(M10×1.5)					

E-ORDER BY THE cm

J157823 -00

237-9250 PRECLEANER ASSEMBLY
PART OF 254-1790-Page 68
AN ATTACHMENT

AIR INLET AND EXHAUST SYSTEM

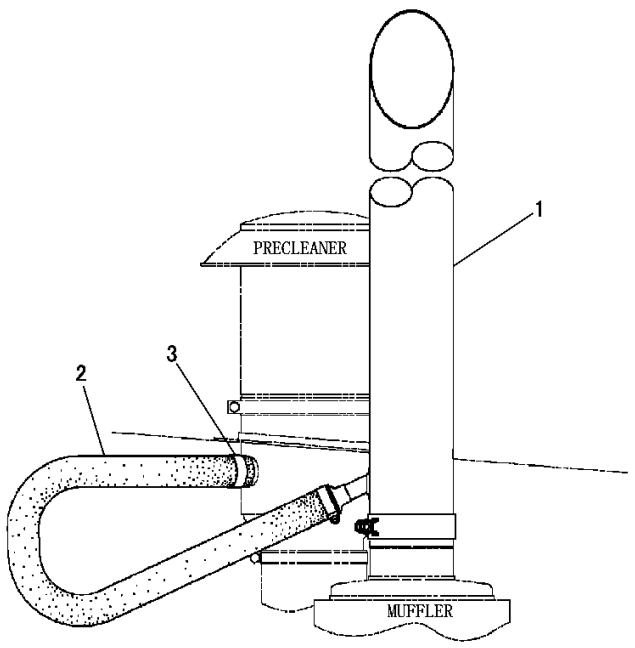

NOTE	№	PART NO.	QTY	PART NAME
	1	155-2819	1	EJECTOR AS
		141-1480	1	CLAMP AS
E	2	5P-2817		HOSE---65cm
	3	5P-0597	2	CLAMP

E-ORDER BY THE cm

J119925 X01

DUST EJECTOR GROUP (171-4357 N/S)

PART OF 271-6466-Page 4

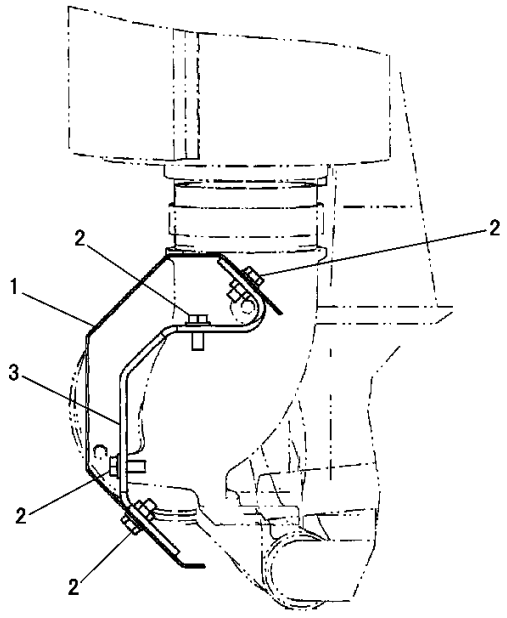

NOTE	№	PART NO.	QTY	PART NAME
	1	184-1679	1	SHIELD
	2	6V-4248	6	BOLT(M10×1.5)
		6V-5839	6	WASHER
	3	226-7511	1	BRACKET AS
		6V-8224	3	NUT(M10×1.5)(WELD)

J118255 X01

EXHAUST SHIELD GROUP (160-8571 N/S)

PART OF 271-6466-Page 4

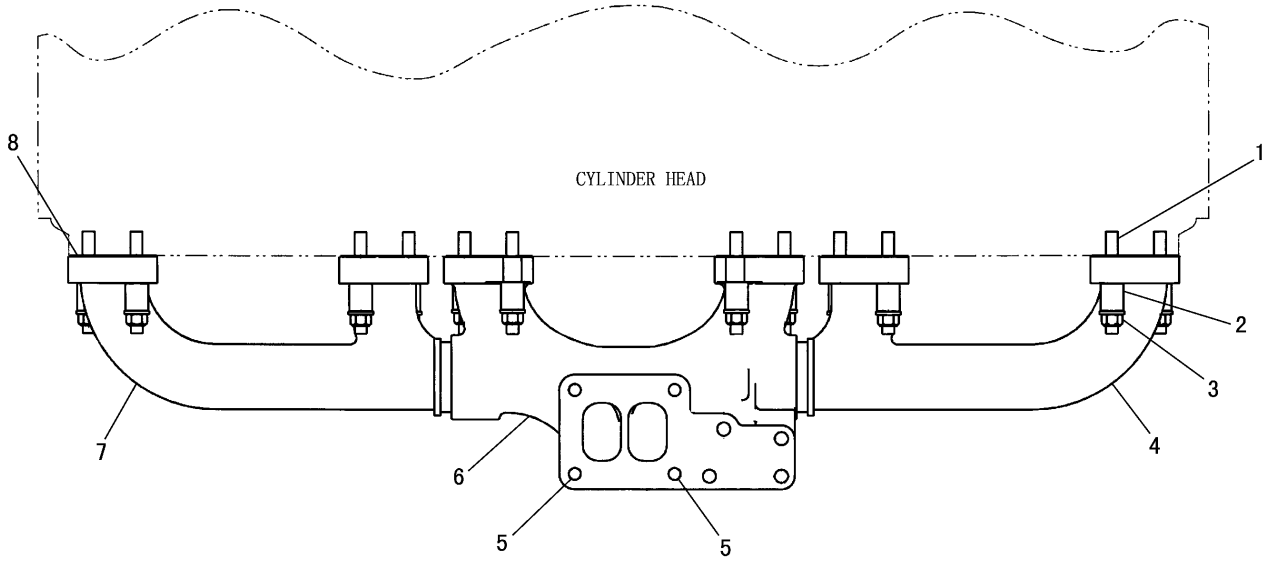

TOP VIEW

NOTE	№	PART NO.	QTY	PART NAME	NOTE	№	PART NO.	QTY	PART NAME
	1	116-3715	12	STUD(M10×1.5)					
	2	4P-4369	12	SPACER					
	3	3E-8017	12	LOCKNUT(M10×1.5)					
		6V-5839	12	WASHER					
	4	4P-8280	1	MANIFOLD					
	5	8T-7044	4	STUD(M10×1.5)					
	6	161-2726	1	MANIFOLD					
	7	4P-8279	1	MANIFOLD					
	8	109-5313	6	GASKET					

J119192 -02

EXHAUST MANIFOLD GROUP (161-2717 N/S)
PART OF 256-6771-Page 3

AIR INLET AND EXHAUST SYSTEM

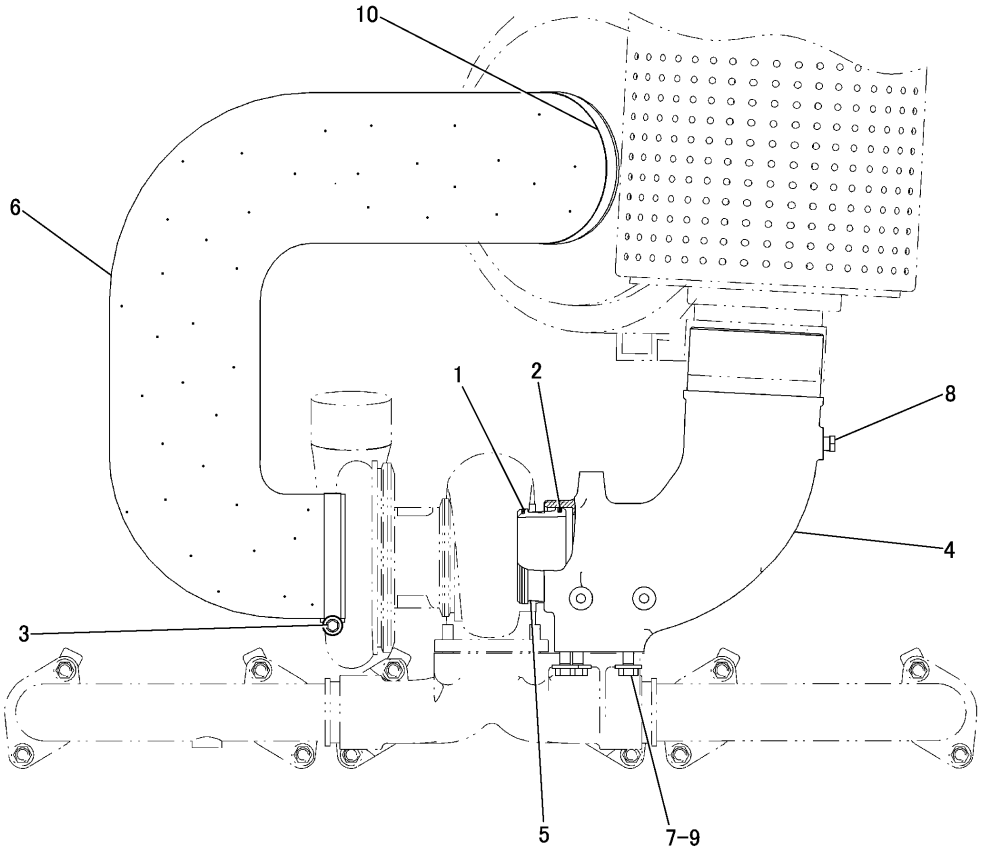

RIGHT SIDE OF ENGINE

NOTE	№	PART NO.	QTY	PART NAME	NOTE	№	PART NO.	QTY	PART NAME
	1	6N-0009	1	SEAL					
	2	6N-0992	1	SEAL					
	3	8T-4986	1	CLAMP					
	4	184-1680	1	ELBOW					
	5	231-4174	1	COUPLING					
	6	262-8042	1	HOSE					
	7	3E-4353	4	WASHER					
	8	5B-7890	1	PLUG					
	9	6V-1820	4	BOLT(M10×1.5)					
	10	8T-4987	1	CLAMP					

J155714 -00

AIR LINES GROUP (271-6399 N/S)
PART OF 271-6466-Page 4

AIR INLET AND EXHAUST SYSTEM

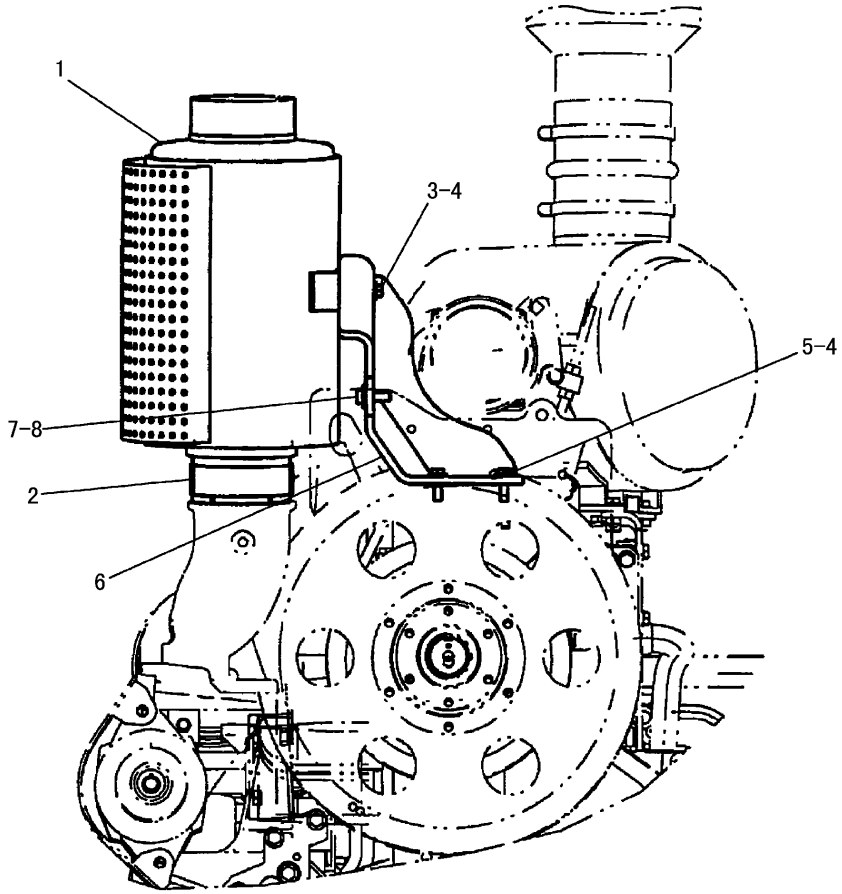

FRONT VIEW

NOTE	№	PART NO.	QTY	PART NAME	NOTE	№	PART NO.	QTY	PART NAME
	1	1W-9229	1	MUFFLER AS					
	2	141-1480	1	CLAMP AS					
	3	9B-7237	2	BOLT(3/8-16)					
	4	7X-7729	6	WASHER					
	5	8T-4196	4	BOLT(M10×1.5)					
	6	160-2317	1	BRACKET AS					
	7	8T-4956	1	BOLT(M10×1.5)					
	8	5P-1076	1	WASHER					

J118254 X01

MUFFLER GROUP (160-8570 N/S)
PART OF 271-6466-Page 4

AIR INLET AND EXHAUST SYSTEM

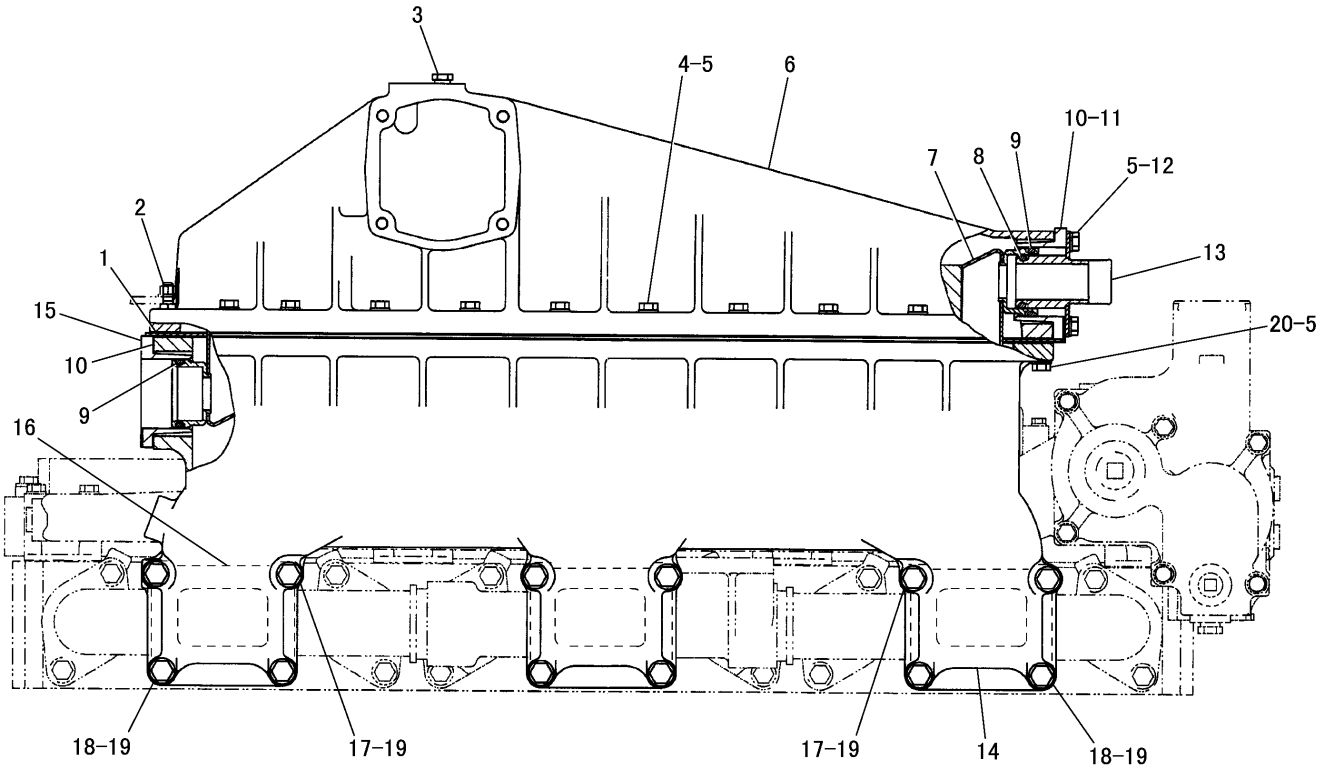

RIGHT SIDE OF ENGINE

NOTE	№	PART NO.	QTY	PART NAME	NOTE	№	PART NO.	QTY	PART NAME
	1	9L-5908	2	GASKET					
	2	9X-2068	2	BOLT(3/8-16)					
	3	5M-6213	1	PLUG					
	4	6V-5219	20	BOLT(M8×1.25)					
	5	9M-1974	26	WASHER					
	6	161-2867	1	COVER					
	7	164-4712	1	CORE AS					
	8	5M-5860	1	SEAL					
	9	6L-1648	2	SEAL					
	10	2W-3679	2	GASKET					
	11	211-8231	1	ADAPTER					
	12	6V-2317	4	BOLT(M8×1.25)					
	13	166-0364	1	TUBE AS					
	14	161-0120	1	HOUSING					
	15	214-2469	1	ADAPTER					
	16	7W-5164	3	GASKET					
	17	6V-7981	6	BOLT(M10×1.5)					
	18	6V-5842	6	BOLT(M10×1.5)					
	19	6V-5839	12	WASHER					
	20	6V-5218	2	BOLT(M8×1.25)					

J155642 -07

WATER AFTERCOOLER GROUP (161-3619 N/S)
PART OF 256-6771-Page 3

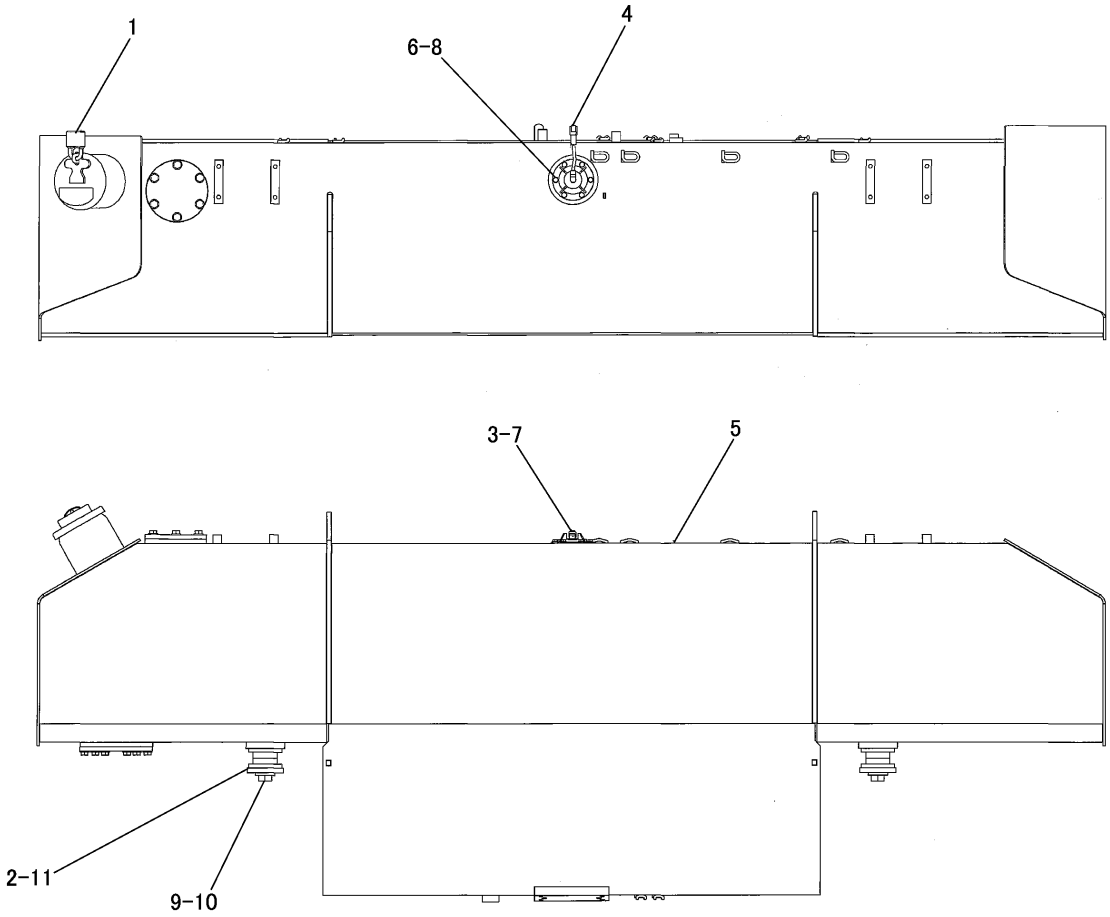

NOTE	№	PART NO.	QTY	PART NAME	NOTE	№	PART NO.	QTY	PART NAME
	1	246-2641	1	PADLOCK GROUP					
		5P-8500	2	KEY					
	2	6T-1698	8	MOUNT					
	3	160-1823	1	SENDER AS					
		6C-3060	1	GASKET					
		317-9186	1	SENSOR KIT					
	4	102-8802	1	RECEPTACLE KIT(2P)					
		186-3735	2	PIN					
Y	5	270-9022	1	FUEL TANK GROUP					
	6	5C-9553	6	BOLT(M6×1)					
	7	6C-3060	1	GASKET					
	8	6N-7523	6	WASHER					
	9	7X-2565	4	BOLT(M20×2.5)					
	10	8T-5439	4	WASHER					
	11	241-2501	4	WASHER					

Y-SEPARATE ILLUSTRATION

J155620 X00

FUEL TANK GROUP (270-3260 N/S) -481 LITERS

PART OF 322-6115-Page 236
REFERENCE:270-9022-Page 78

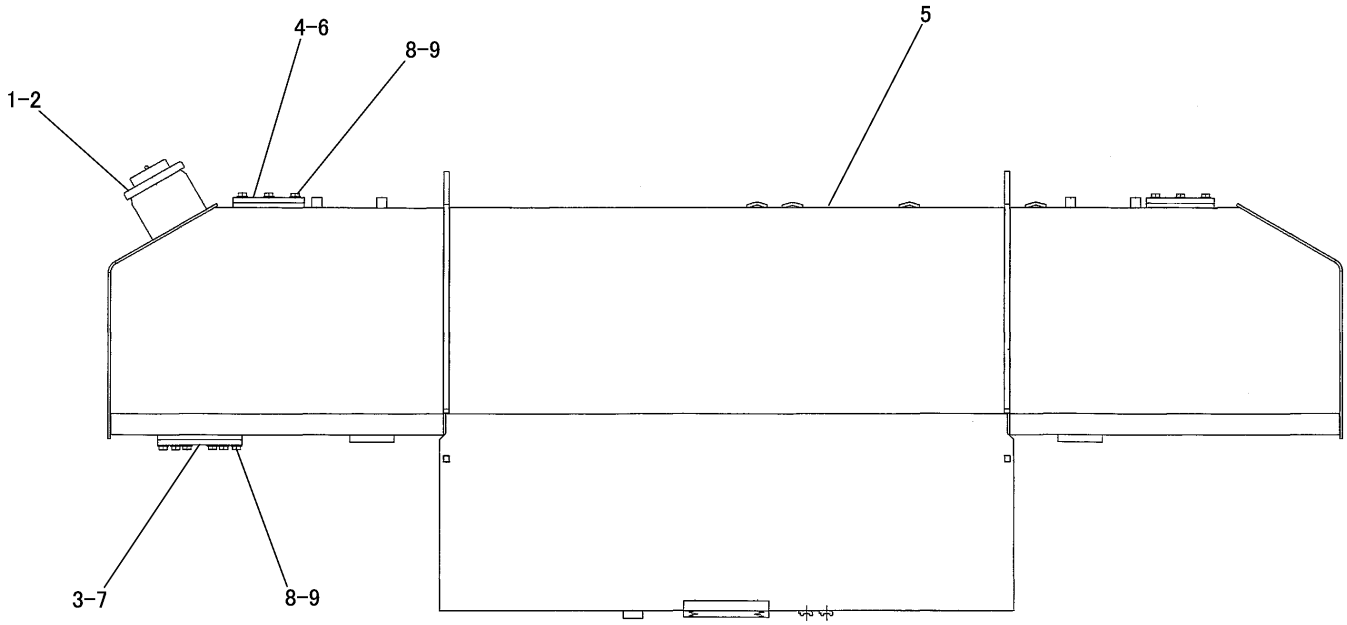

NOTE	№	PART NO.	QTY	PART NAME	NOTE	№	PART NO.	QTY	PART NAME
	1	7X-7700	1	CAP AS					
		9X-8600	1	SEAL					
		9X-2205	1	FILTER KIT					
	2	9P-7121	1	STRAINER					
	3	164-3417	1	COVER					
	4	187-1679	2	COVER					
Y	5	270-9023	1	TANK AS					
	6	1H-8128	2	SEAL					
	7	5H-6734	1	SEAL					
	8	8T-4121	18	WASHER					
	9	8T-4136	18	BOLT(M10×1.5)					

Y-SEPARATE ILLUSTRATION

J155621 X01

FUEL TANK GROUP (270-9022 N/S) -481 LITERS

PART OF 270-3260-Page 77
REFERENCE:270-9023-Page 79

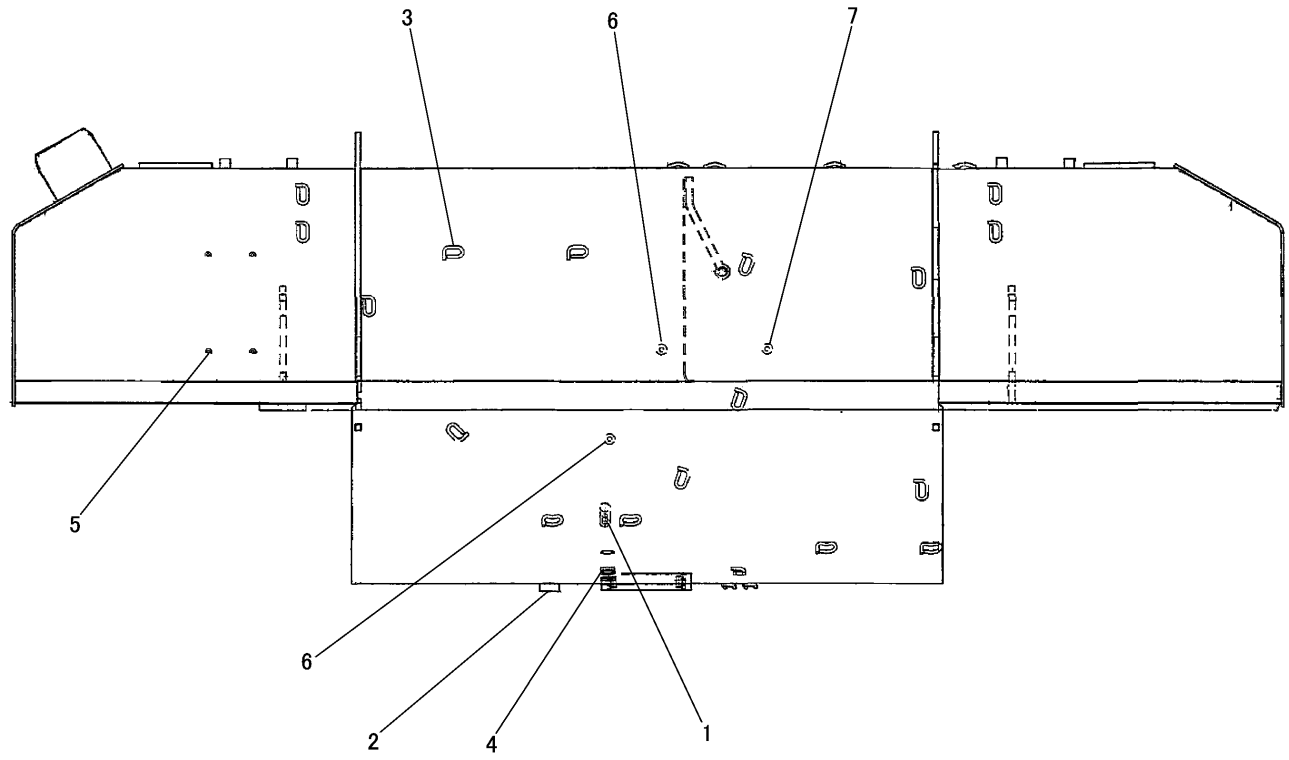

NOTE	№	PART NO.	QTY	PART NAME	NOTE	№	PART NO.	QTY	PART NAME
	1	9R-3761	1	BOSS(M10×1.5)					
	2	3T-3096	1	BOSS(3/4-16)					
	3	7T-1099	24	LINK					
	4	7T-2853	1	FITTING					
	5	8X-4245	4	BOSS(M6×1)					
	6	9R-2613	2	BOSS(M10×1.5)					
	7	9R-2672	1	BOSS(M10×1.5)					

J155622 X01

270-9023 FUEL TANK ASSEMBLY
PART OF 270-9022-Page 78

FUEL SYSTEM

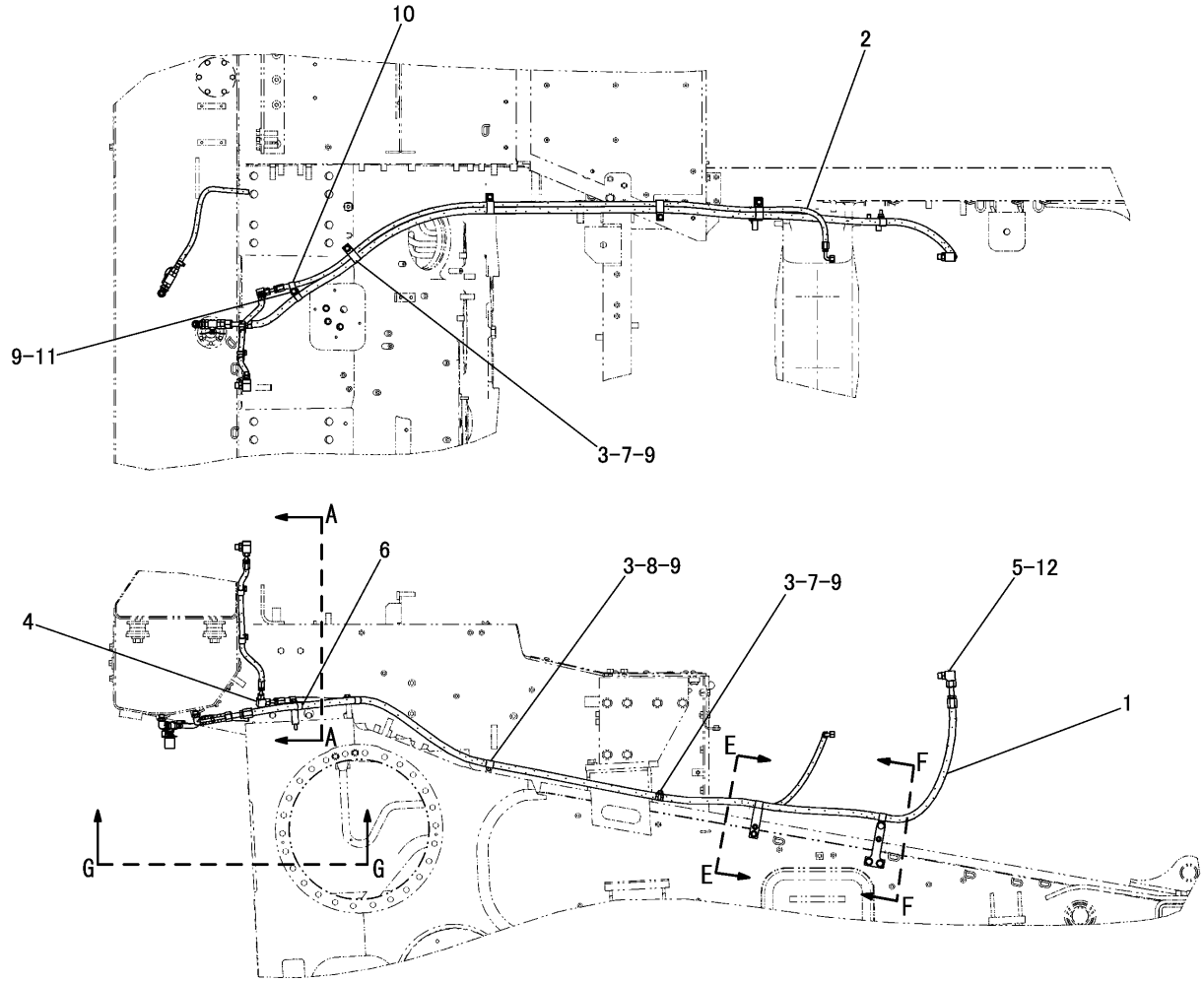

NOTE	№	PART NO.	QTY	PART NAME	NOTE	№	PART NO.	QTY	PART NAME
	1	170-3343	1	HOSE AS					
	2	272-9879	1	HOSE AS					
	3	100-4336	3	CLIP					
	4	6V-9807	1	UNION					
		6V-8397	2	SEAL					
	5	6V-8722	1	ELBOW					
		7J-9108	1	SEAL					
	6	1S-0994	1	CLIP					
	7	4L-6454	2	BOLT(3/8-16)					
	8	5M-3062	1	BOLT(3/8-16)					
	9	5P-1075	4	WASHER					
	10	8M-2773	1	CLIP					
	11	8T-9378	1	BOLT(3/8-16)					
	12	3K-0360	1	SEAL					

J155614 X00

FUEL LINES GROUP (223-4929 N/S) -PART 1 OF 2

PART OF 322-6115-Page 236

FUEL SYSTEM

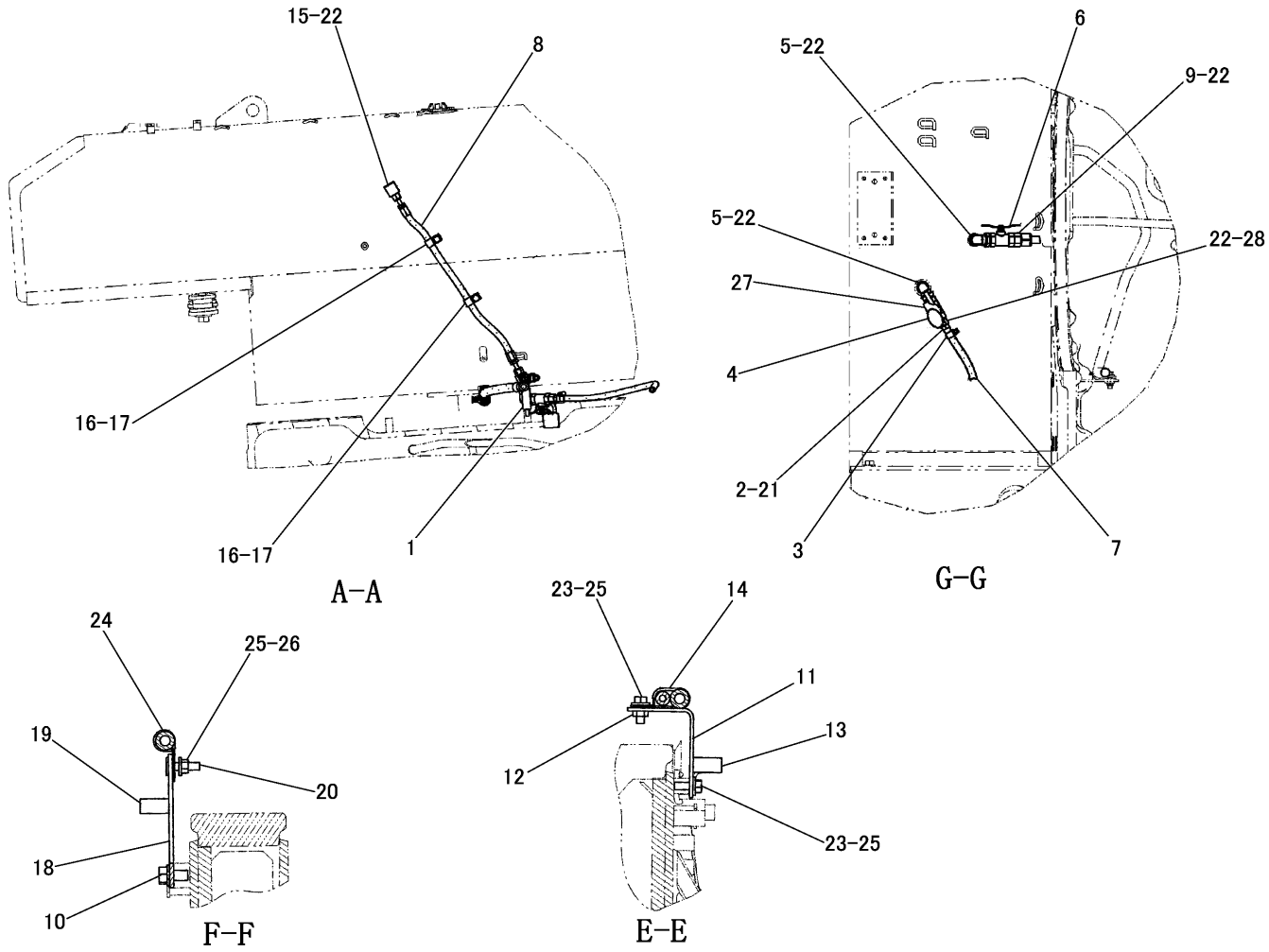

NOTE	№	PART NO.	QTY	PART NAME	NOTE	№	PART NO.	QTY	PART NAME
	1	1W-3011	1	SPACER		16	8T-4136	2	BOLT(M10×1.5)
	2	5P-1046	1	CONNECTOR			8T-4121	2	WASHER
	3	5P-4961	1	CLAMP		17	8M-2773	2	CLIP
	4	246-2641	1	PADLOCK GROUP		18	170-3341	1	BRACKET AS
		5P-8500	2	KEY		19	3G-2415	1	BOSS(3/8-16)
	5	8T-0119	2	ELBOW		20	4M-0200	1	STUD(3/8-16)(WELD)
	6	8T-6723	1	VALVE		21	3J-1907	1	SEAL
E	7	5P-1442		HOSE---45cm		22	3K-0360	7	SEAL
	8	8W-6153	1	HOSE AS		23	4L-6454	2	BOLT(3/8-16)
	9	6V-8632	1	CONNECTOR		24	1S-1015	1	CLIP
		7J-9108	1	SEAL		25	5P-1075	3	WASHER
	10	5P-2228	2	BOLT(1/2-13)		26	6V-8801	1	NUT(3/8-16)
		8T-4223	2	WASHER		27	8T-6724	1	VALVE
	11	231-1422	1	BRACKET AS		28	5P-6944	1	ADAPTER
	12	9F-2978	1	NUT(3/8-16)(WELD)					
	13	3G-2415	1	BOSS(3/8-16)					
	14	100-4336	1	CLIP					
	15	6V-8723	1	ELBOW					
		6V-8397	1	SEAL					

E-ORDER BY THE cm

J155615 X00

FUEL LINES GROUP (223-4929 N/S) -PART 2 OF 2

PART OF 322-6115-Page 236

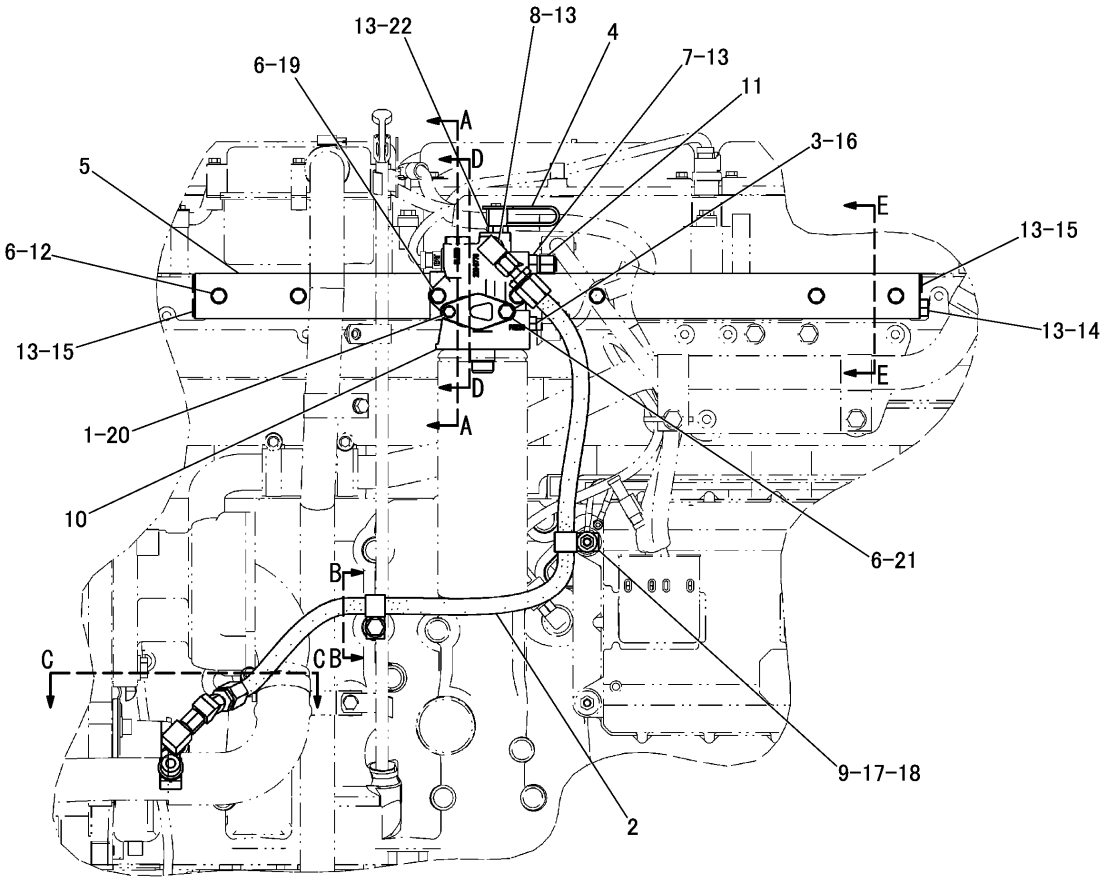

NOTE	№	PART NO.	QTY	PART NAME	NOTE	№	PART NO.	QTY	PART NAME
	1	9X-8267	1	WASHER		19	5P-8347	2	BOLT(M8×1.25)
	2	6N-3246	1	HOSE AS		20	6V-2315	1	BOLT(M6×1)
	3	9S-4182	1	PLUG		21	6V-2317	1	BOLT(M8×1.25)
	4	6V-0852	1	CAP		22	6V-3965	1	NIPPLE AS
	5	126-0179	1	MANIFOLD					
	6	9M-1974	8	WASHER					
	7	6V-8636	1	CONNECTOR					
		8L-2779	1	SEAL					
	8	030-7947	1	ELBOW					
	9	8T-4121	1	WASHER					
	10	238-6770	1	BASE AS					
		9S-4167	1	STUD(1-14)					
	11	6V-9828	1	CAP AS					
	12	6V-5218	5	BOLT(M8×1.25)					
	13	6V-5049	7	SEAL					
	14	9S-4191	1	PLUG					
	15	9S-8004	3	PLUG					
	16	6V-5048	1	SEAL					
	17	5C-7261	1	NUT(M8×1.25)					
	18	8M-2773	1	CLIP					

J144160 -02

FUEL INJECTION LINES GROUP (251-9363 N/S) -PART 1 OF 2
PART OF 256-6771-Page 3

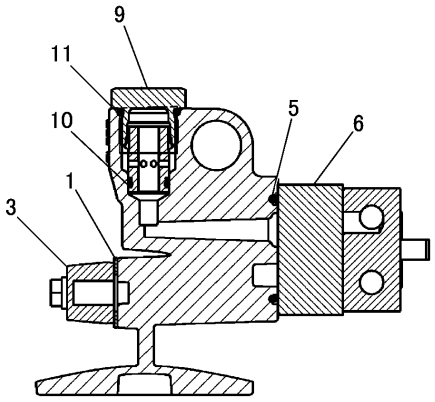

A–A

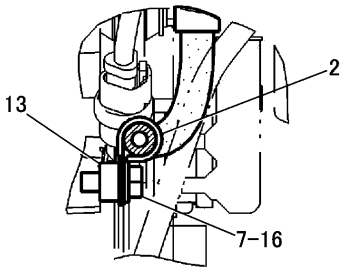

B–B

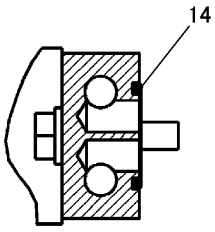

E–E

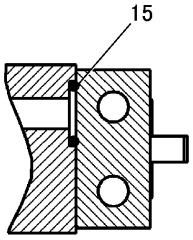

D–D

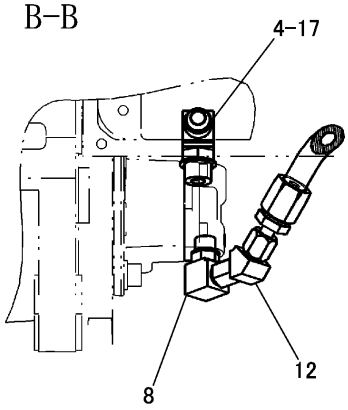

C–C

NOTE	№	PART NO.	QTY	PART NAME	NOTE	№	PART NO.	QTY	PART NAME
	1	1P−0436	1	GASKET		17	118−4728	1	ELBOW
	2	8M−2773	1	CLIP					
	3	6N−4414	1	COVER					
	4	8L−2786	1	SEAL					
	5	6V−8676	1	SEAL					
	6	163−7972	1	SPACER AS					
		7M−5130	1	PIN					
	7	6V−5839	1	WASHER					
	8	030−7947	1	ELBOW					
		6V−5049	1	SEAL					
	9	233−6742	1	VALVE GROUP					
		281−2725	1	VALVE GROUP					
	10	033−6033	1	SEAL					
		6V−6923	1	RING					
	11	6V−4589	1	SEAL					
	12	030−7962	1	ELBOW					
	13	091−0081	1	SPACER					
	14	5P−3456	6	SEAL					
	15	3P−0647	2	SEAL					
	16	6V−4248	1	BOLT(M10×1.5)					

J144161 -02

FUEL INJECTION LINES GROUP (251-9363 N/S) -PART 2 OF 2
PART OF 256-6771-Page 3

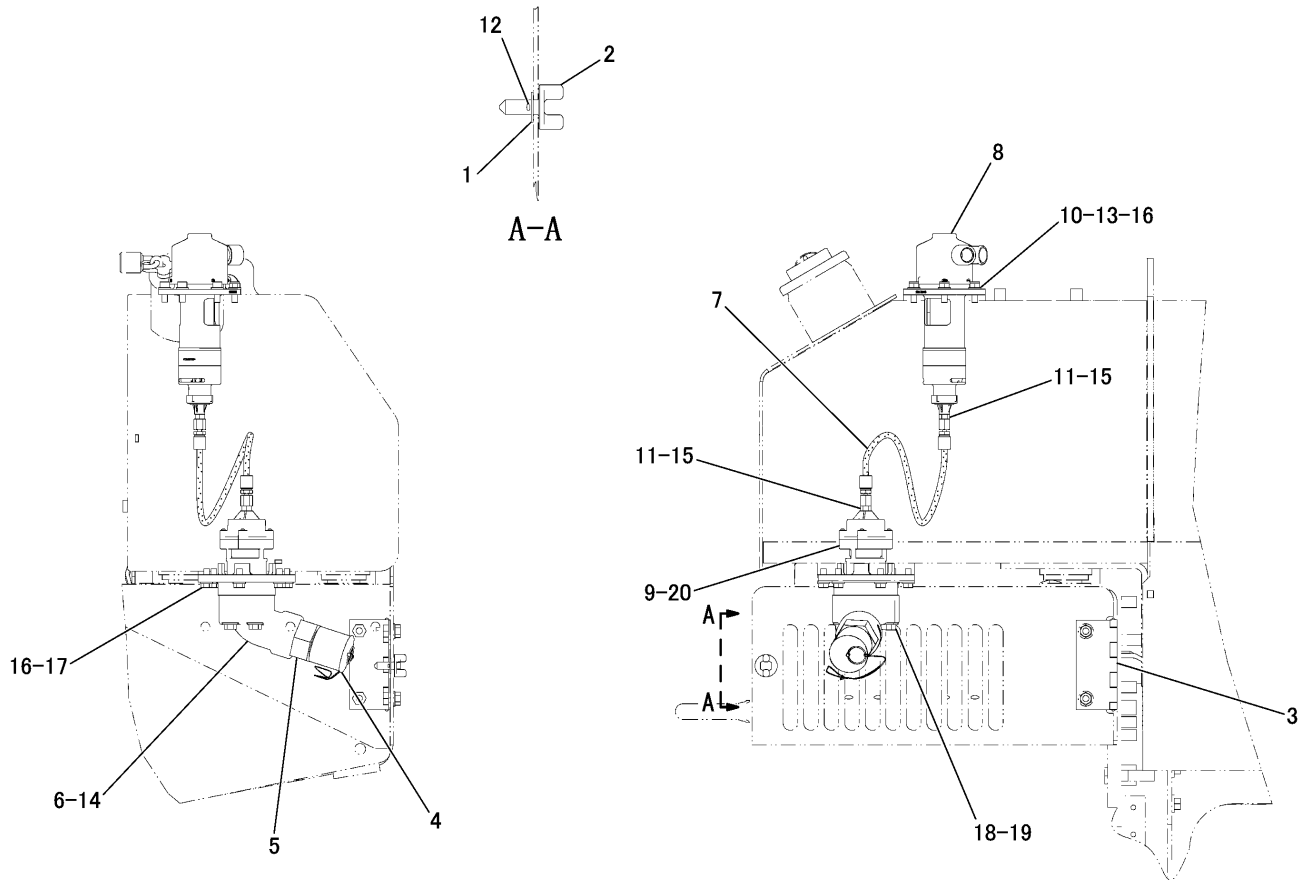

NOTE	№	PART NO.	QTY	PART NAME	NOTE	№	PART NO.	QTY	PART NAME
	1	0T−0883	1	WASHER		17	8T−4136	6	BOLT(M10×1.5)
	2	6D−1746	1	BOLT(1/2-13)		18	8T−4223	4	WASHER
	3	8C−8583	1	HINGE AS		19	8T−4648	4	BOLT(M12×1.75)
	4	9D−0630	1	COVER GROUP		20	9X−7287	1	SEAL
		9D−0625	1	SEAL					
		9D−0644	1	RING					
		9D−0624	1	COVER					
		9D−0643	1	RING					
	5	124−2463	1	RECEIVER					
	6	193−1598	1	ELBOW					
	7	223−4869	1	HOSE AS					
	8	252−5805	1	VENT AS					
	9	252−5806	1	VALVE AS					
	10	105−3484	6	BOLT(M10×1.5)					
	11	1J−9671	2	SEAL					
	12	3B−4610	1	COTTER PIN					
	13	3E−6773	1	SEAL					
	14	4J−0527	1	SEAL					
	15	5P−2618	2	CONNECTOR					
	16	8T−4121	12	WASHER					

J155813 -02

FAST FILL FUEL ADAPTER GROUP (273-9183 N/S)
AN ATTACHMENT

FUEL SYSTEM

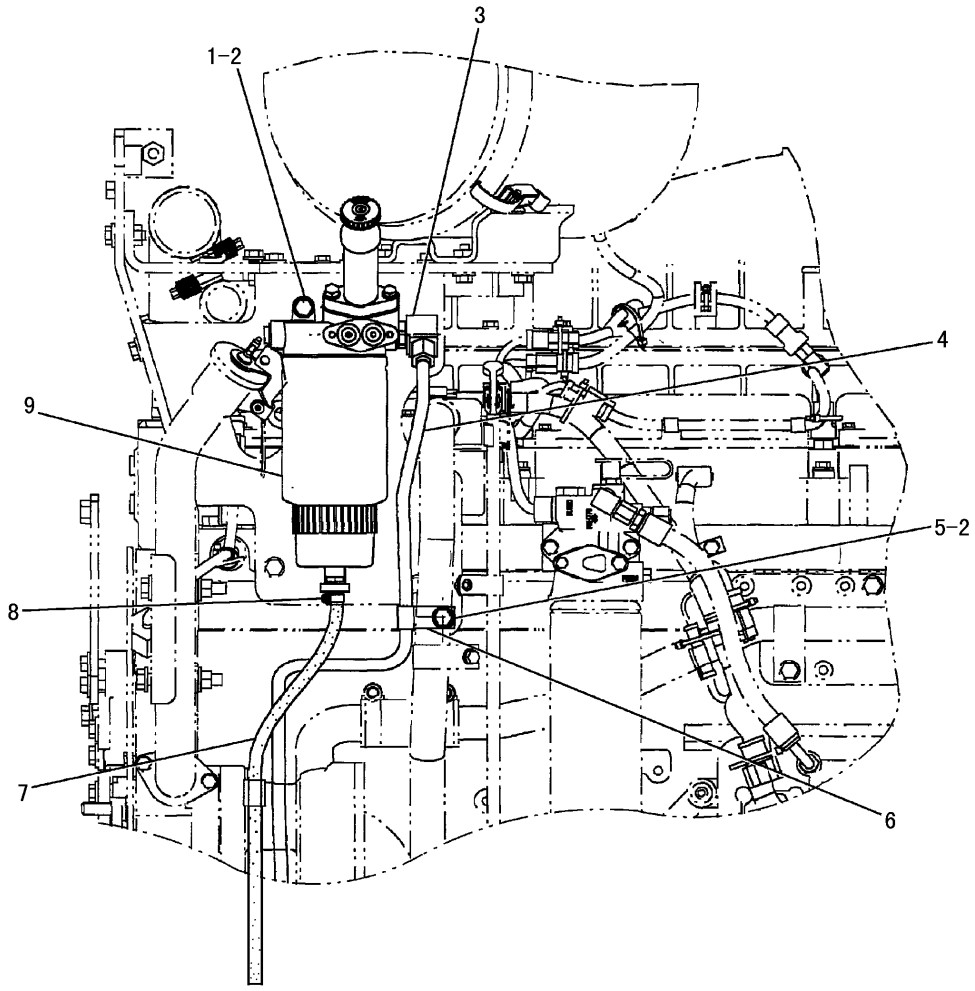

NOTE	№	PART NO.	QTY	PART NAME	NOTE	№	PART NO.	QTY	PART NAME
	1	8T-4196	2	BOLT(M10×1.5)					
	2	8T-4121	3	WASHER					
	3	005-4173	1	ELBOW					
		2M-9780	1	SEAL					
	4	193-0747	1	TUBE AS					
	5	8T-4137	1	BOLT(M10×1.5)					
	6	4D-9517	1	CLIP					
D	7	5P-5991		HOSE---0.6m					
	8	1P-4278	1	CLAMP					
Y	9	188-4517	1	FILTER GROUP					

D-ORDER BY THE m
Y-SEPARATE ILLUSTRATION

J118259 X01

FUEL FILTER GROUP (162-2786 N/S) -PRIMARY

PART OF 271-6466-Page 4
REFERENCE:188-4517-Page 86

FUEL SYSTEM

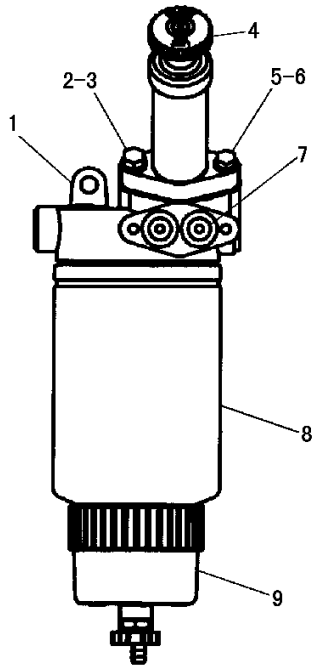

NOTE	№	PART NO.	QTY	PART NAME
	1	128-8557	1	BASE AS
	2	1B-7182	1	BOLT(5/16-18)
	3	9M-1974	1	WASHER
	4	137-5541	1	PUMP AS
		1H-8171	1	SEAL
		7E-2985	2	VALVE AS
		6V-1903	1	SEAL
		1P-0436	1	GASKET
	5	7B-2742	1	BOLT(1/4-20)
	6	5P-0537	1	WASHER
	7	9S-8002	4	PLUG
		6V-5048	4	SEAL
	8	176-5618	1	FILTER GROUP
		326-1642	1	FILTER AS
	9	173-7126	1	BOWL AS

J118260 X01

WATER SEPARATOR AND FUEL FILTER GROUP (188-4517 N/S)
PART OF 162-2786-Page 85

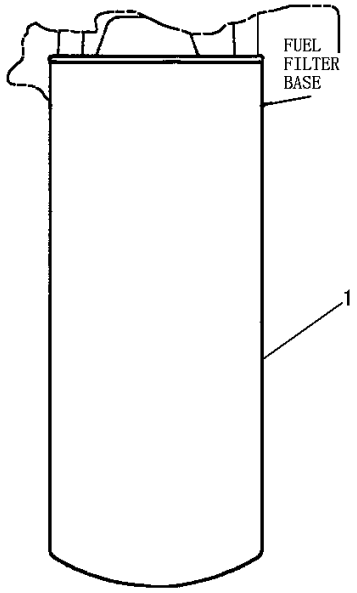

NOTE	№	PART NO.	QTY	PART NAME
	1	1R-0749	1	FILTER AS

J119150 -01

FUEL FILTER GROUP (116-5413 N/S)
PART OF 256-6771-Page 3

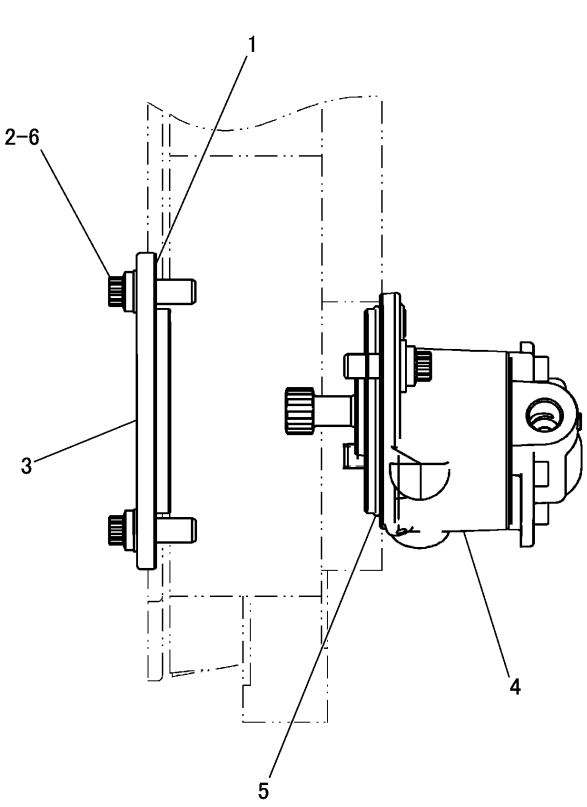

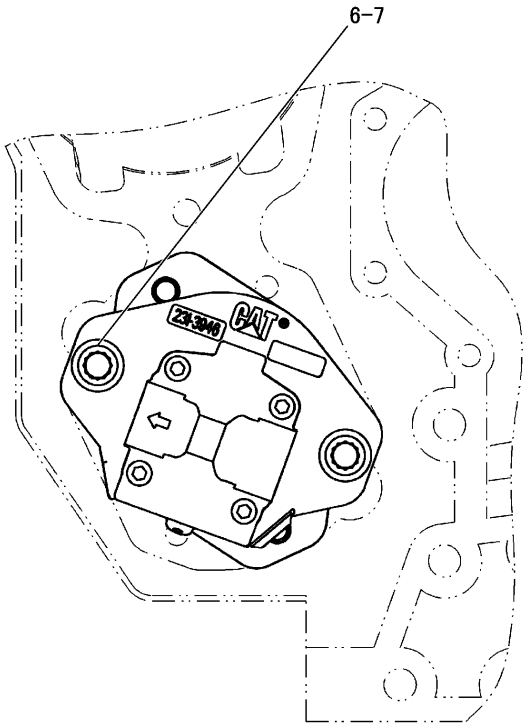

NOTE	№	PART NO.	QTY	PART NAME	NOTE	№	PART NO.	QTY	PART NAME
	1	9L-1633	1	GASKET					
	2	092-2570	2	WASHER					
	3	296-3447	1	COVER					
	4	316-6863	1	PUMP GROUP					
	5	107-5769	1	SEAL					
	6	115-6929	4	BOLT(M10×1.5)					
	7	6V-5839	2	WASHER					

J154670 -08

FUEL TRANSFER PUMP AND MOUNTING GROUP (145-1695 N/S)
PART OF 256-6771-Page 3

FUEL SYSTEM

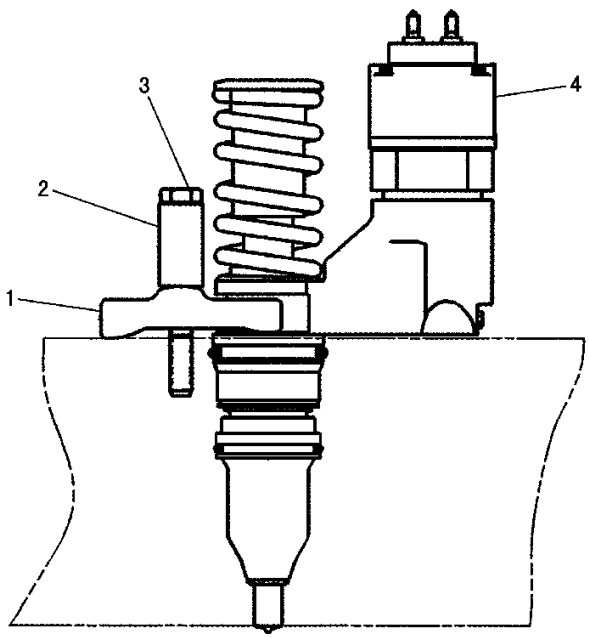

NOTE	№	PART NO.	QTY	PART NAME
	1	7C-8851	1	CLAMP
	2	4P-8525	1	SPACER
	3	152-3001	1	BOLT(MJ8×1.25)
Y	4	208-9160	1	INJECTOR GROUP

Y-SEPARATE ILLUSTRATION

J119210 -01

FUEL INJECTION PUMP GROUP (190-6017 N/S)

PART OF 256-6771-Page 3
REFERENCE:208-9160-Page 88

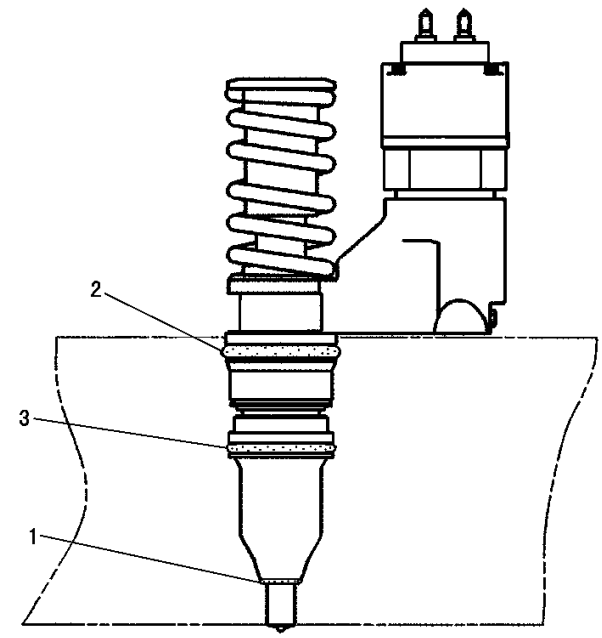

NOTE	№	PART NO.	QTY	PART NAME
	1	9X-7317	1	SEAL
	2	215-3198	1	SEAL
	3	119-8784	1	SEAL

J125720 -00

208-9160 FUEL INJECTOR GROUP

PART OF 190-6017-Page 88

FUEL SYSTEM

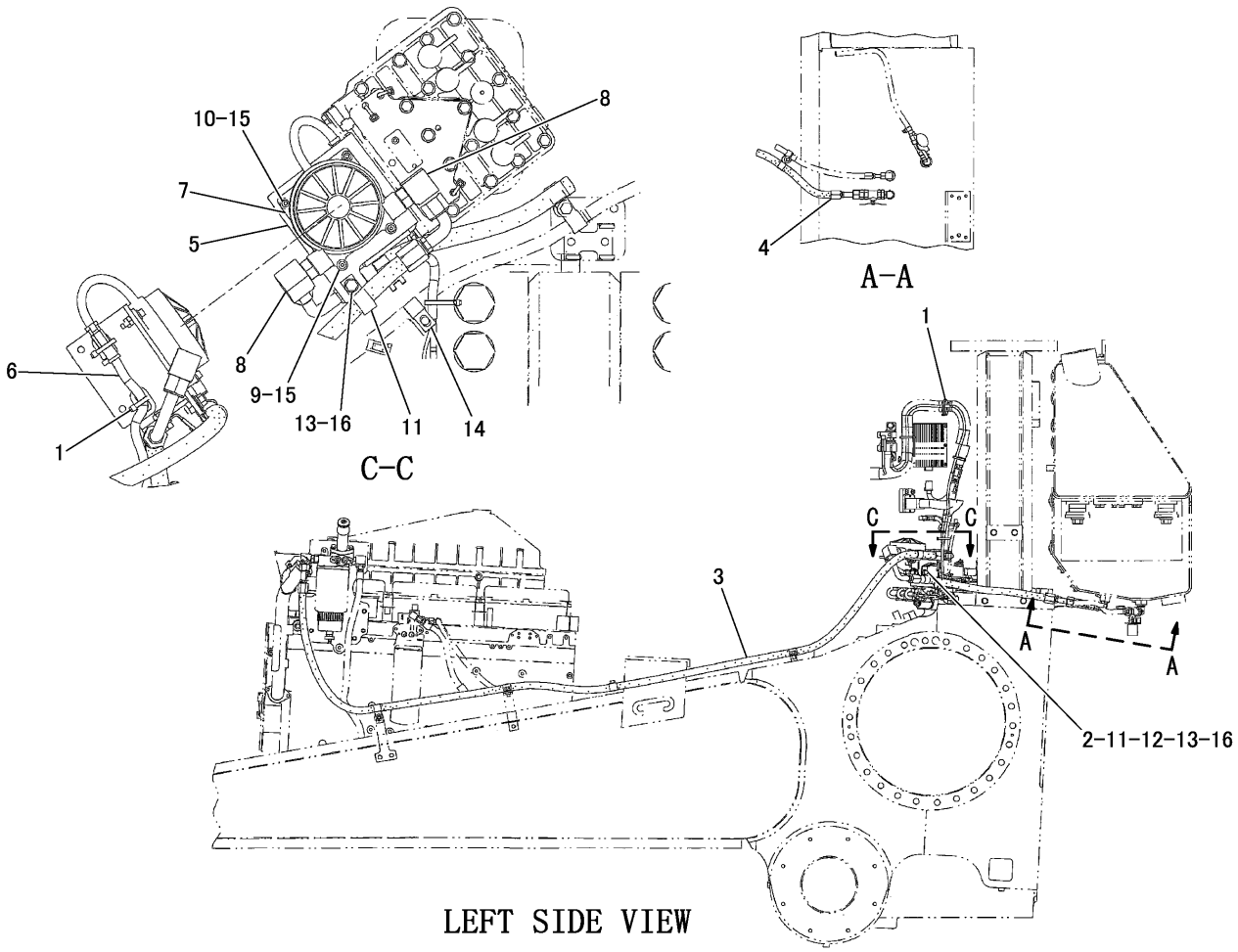

NOTE	№	PART NO.	QTY	PART NAME	NOTE	№	PART NO.	QTY	PART NAME
	1	3S-2093	7	STRAP		13	5S-7379	2	BOLT(3/8-16)
	2	7K-1181	1	STRAP		14	8M-2773	1	CLIP
	3	224-9766	1	HOSE AS		15	8T-4205	4	WASHER
	4	224-9767	1	HOSE AS		16	8T-4896	2	WASHER
	5	224-9769	1	BRACKET AS					
		9F-2978	2	NUT(3/8-16)(WELD)					
		7T-1099	2	LINK					
	6	224-9771	1	HARNESS AS					
		9W-0852	2	PIN					
		126-1768	2	SOCKET					
		155-2270	1	PLUG KIT(2P)					
		102-8802	1	RECEPTACLE KIT(2P)					
	7	224-9772	1	HEATER AS					
	8	2M-9780	2	SEAL(24.1mm OD)					
		6V-8626	2	ELBOW					
		7J-9108	2	SEAL(19.3mm OD)					
	9	138-8886	2	BOLT(1/4-20)					
	10	192-0089	2	BOLT(1/4-20)					
	11	6D-4244	2	CLIP					
	12	4P-8134	1	LADDER CLIP					

J157048 X00

FUEL HEATER GROUP (224-9768 N/S)
AN ATTACHMENT

ELECTRICAL AND STARTING SYSTEM

CONSISTS OF :

			PAGE
1	242-7099	ELECTRONICS GROUP(EMS)	90
1	242-7100	ELECTRONICS GROUP(POWER TRAIN)	91

J137918 X00

ELECTRONICS ARRANGEMENT (270-7621 N/S)
PART OF 322-6112-Page 1

CONSISTS OF :

			PAGE
1	323-1272	SERVICE GROUP	91

J153912 X05

ELECTRONICS GROUP (242-7099 N/S) -EMS
PART OF 270-7621-Page 90

ELECTRICAL AND STARTING SYSTEM

CONSISTS OF :

			PAGE
1	333-9327	SERVICE GROUP	92

J155532 -09

ELECTRONICS GROUP (242-7100 N/S) -POWER TRAIN
PART OF 270-7621-Page 90

CONSISTS OF :

			PAGE
1	252-4501	ELECTRONIC CONTROL GROUP	92

J153913 -00

SERVICE GROUP (323-1272 N/S)
PART OF 242-7099-Page 90

ELECTRICAL AND STARTING SYSTEM

CONSISTS OF :

PAGE

1 304-5687 ELECTRONIC CONTROL GROUP 94

J155533 -00

SERVICE GROUP (333-9327 N/S)
PART OF 242-7100-Page 91

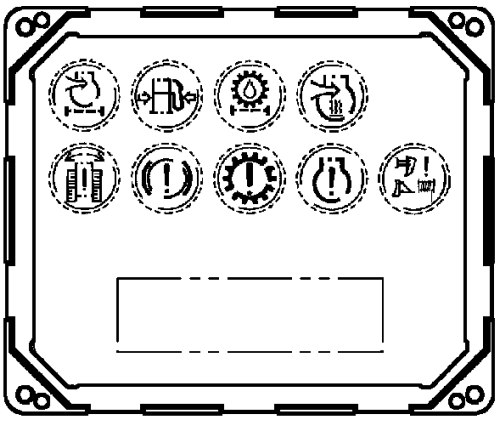

NOTE	Nº	PART NO.	QTY	PART NAME
				(NO SERVICED PARTS)

J139177 -00

252-4501 ELECTRONIC CONTROL GROUP
PART OF 279-5009-Page 433,285-3629-Page 435,323-1272-Page 91

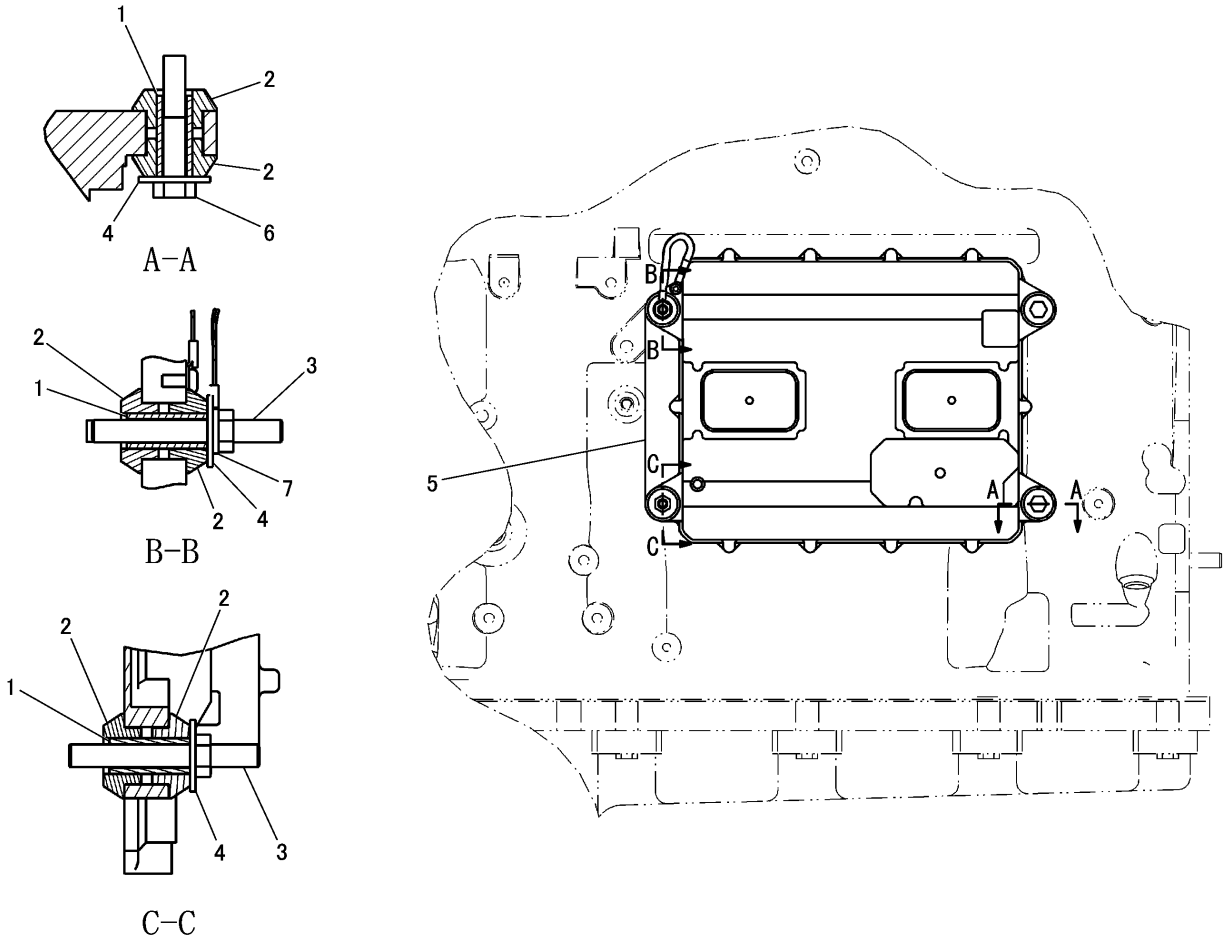

NOTE	№	PART NO.	QTY	PART NAME	NOTE	№	PART NO.	QTY	PART NAME
	1	6I-1418	4	SPACER					
	2	8T-9655	8	MOUNT					
	3	9X-2098	2	STUD(M8×1.25)					
	4	9N-0869	4	WASHER					
Y	5	209-9588	1	CONTROL GROUP					
	6	8T-0276	2	BOLT(M8×1.25)					
	7	8T-4224	1	WASHER					

Y-SEPARATE ILLUSTRATION

J155643 -01

CONTROL AND MOUNTING GROUP (248-6387 N/S) -ELECTRONIC

PART OF 256-6771-Page 3
REFERENCE:209-9588-Page 94

ELECTRICAL AND STARTING SYSTEM

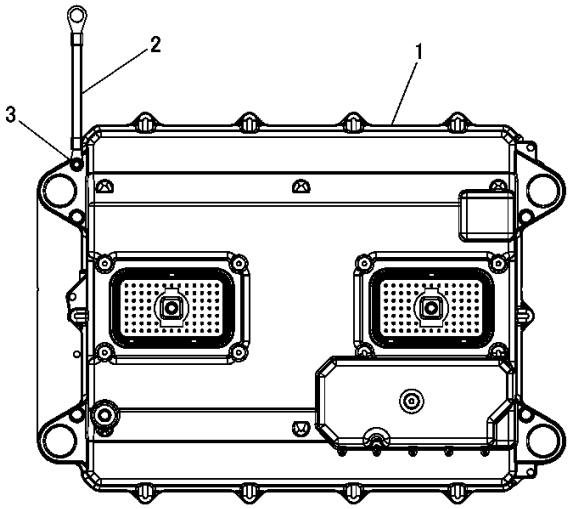

NOTE	№	PART NO.	QTY	PART NAME
	1	240-5307	1	CONTROL GROUP
	2	7X-6315	1	STRAP
	3	184-2472	1	SCREW(No.8-32)

J133486 -03

ELECTRONIC CONTROL GROUP (209-9588 N/S)
PART OF 248-6387-Page 93

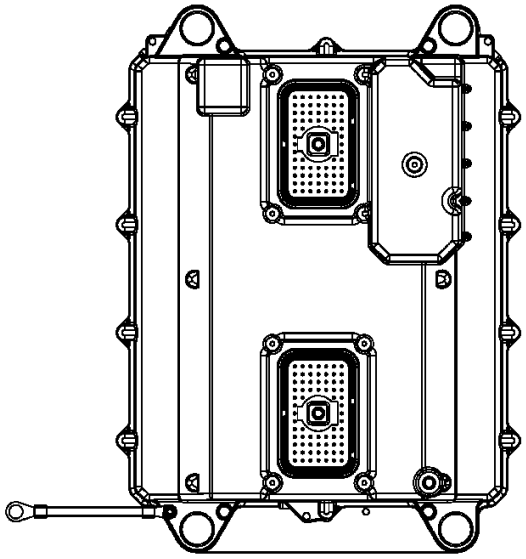

NOTE	№	PART NO.	QTY	PART NAME
				(NO SERVICED PARTS)

J151491 -01

304-5687 ELECTRONIC CONTROL GROUP
PART OF 271-6422-Page 117,333-9327-Page 92

ELECTRICAL AND STARTING SYSTEM

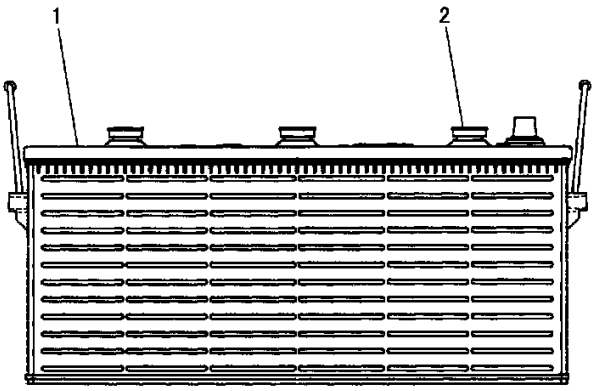

NOTE	№	PART NO.	QTY	PART NAME
	1	9X−9730	2	BATTERY(1300A)
	2	7N−0060	6	VENT AS

J119302 X01

BATTERY GROUP (112-9051 N/S) -HEAVY DUTY
AN ATTACHMENT

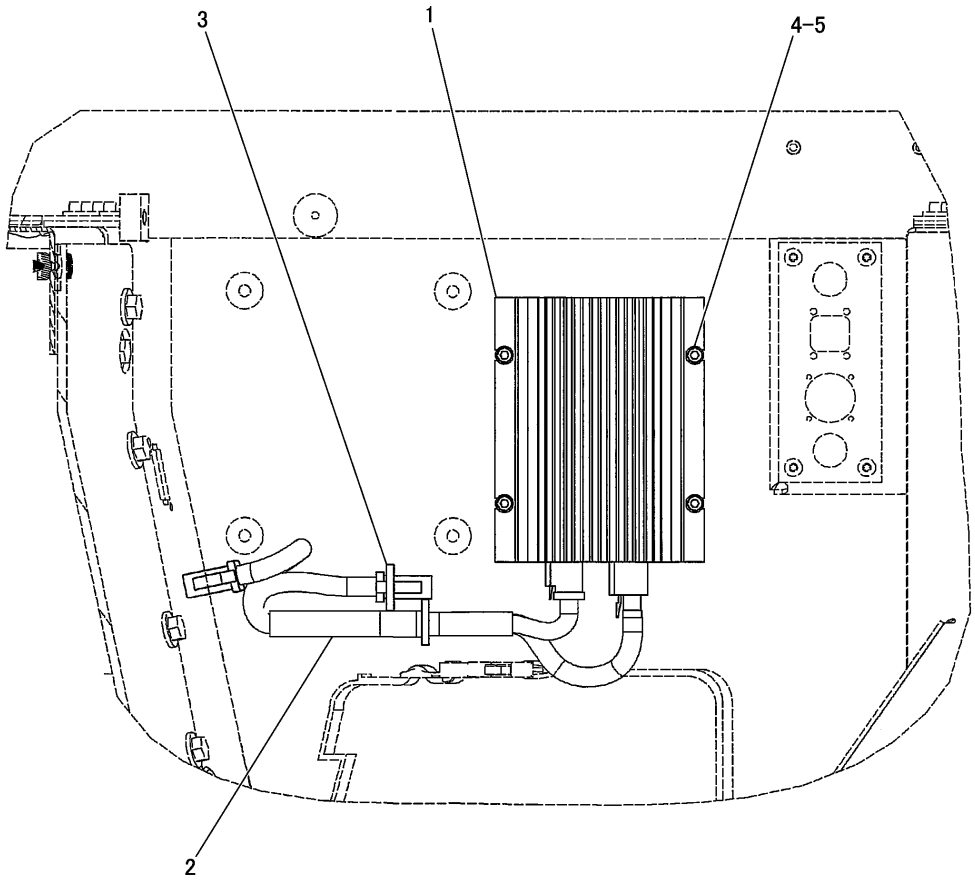

NOTE	№	PART NO.	QTY	PART NAME	NOTE	№	PART NO.	QTY	PART NAME
	1	239-3902	1	CONVERTER(24V TO 12V)					
Y	2	242-1585	1	HARNESS AS					
	3	7K-1181	2	STRAP					
	4	8T-0267	4	BOLT(M6×1)					
	5	9X-8256	4	WASHER					

Y-SEPARATE ILLUSTRATION

J148837 X01

ELECTRICAL CONVERTER GROUP (227-1226 N/S)
REFERENCE:242-1585-Page 97
AN ATTACHMENT

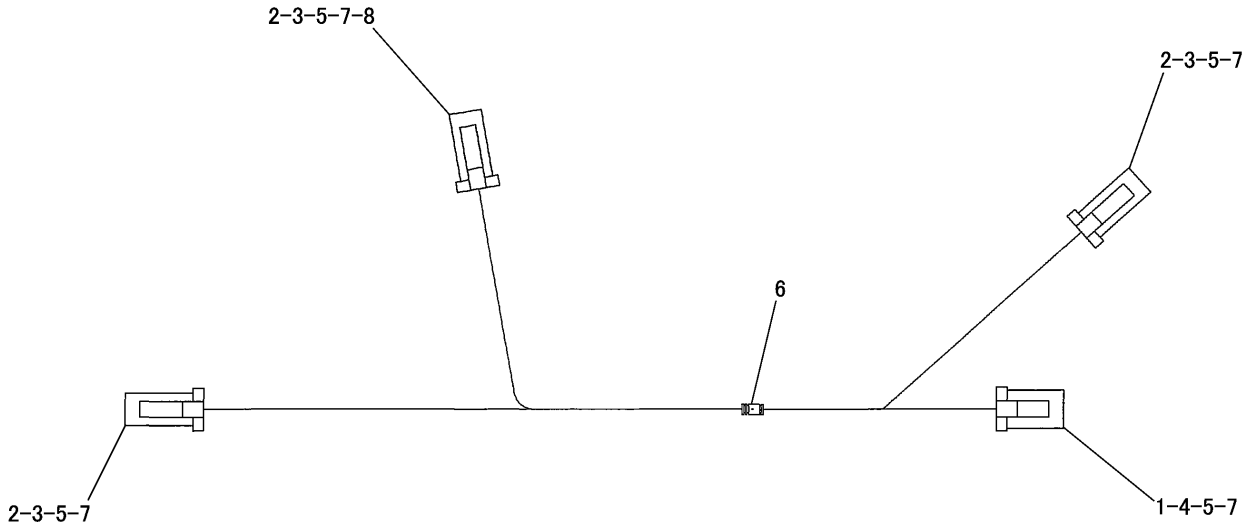

NOTE	№	PART NO.	QTY	PART NAME	NOTE	№	PART NO.	QTY	PART NAME
	1	155-2274	1	PLUG KIT(6P)					
	2	177-9656	3	PLUG KIT(4P)					
	3	7T-0094	9	SOCKET					
	4	126-1768	2	SOCKET					
E	5	114-8843		SLEEVE---2cm(×4)					
E	6	119-3662		TUBE---6.5cm					
	7	9G-3695	11	PLUG					
	8	177-9653	1	RECEPTACLE KIT(4P)					

E-ORDER BY THE cm

J148838 X01

242-1585 HARNESS ASSEMBLY
PART OF 227-1226-Page 96
AN ATTACHMENT

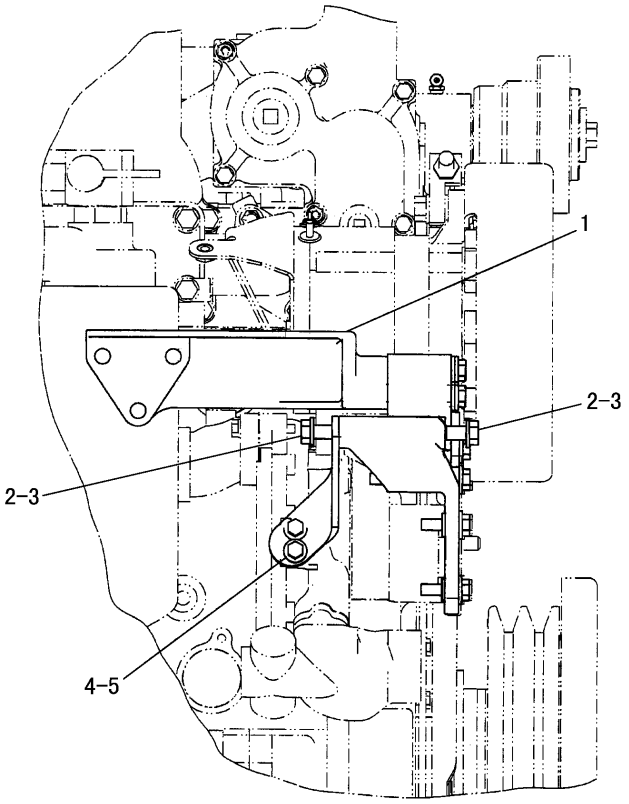

RIGHT SIDE OF ENGINE

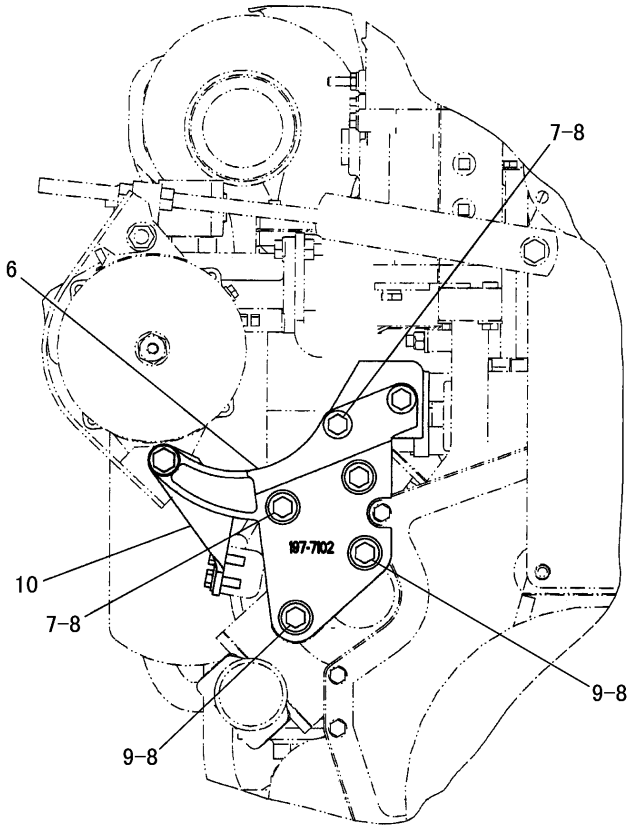

FRONT VIEW OF ENGINE

NOTE	№	PART NO.	QTY	PART NAME	NOTE	№	PART NO.	QTY	PART NAME
	1	133-7042	1	BRACKET					
	2	8T-4194	2	BOLT(M12×1.75)					
	3	8T-4223	2	WASHER					
	4	6V-3940	2	BOLT(M8×1.25)					
	5	3E-4352	2	WASHER					
	6	197-7102	1	BRACKET					
	7	8T-0643	4	BOLT(M10×1.5)					
	8	3E-4353	6	WASHER					
	9	6V-3822	2	BOLT(M10×1.5)					
	10	112-1719	1	BRACKET					

J156224 -04

ALTERNATOR MOUNTING GROUP (175-2842 N/S)
PART OF 256-6771-Page 3

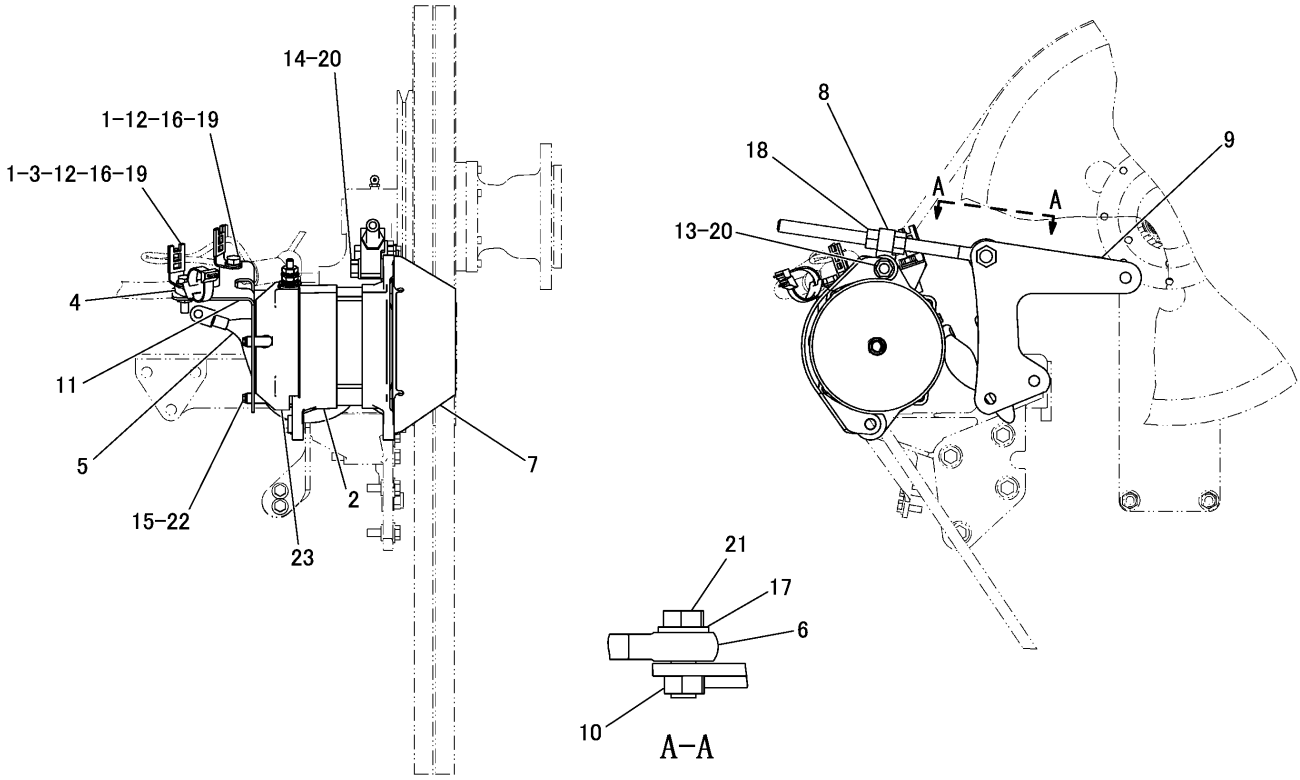

NOTE	№	PART NO.	QTY	PART NAME	NOTE	№	PART NO.	QTY	PART NAME
	1	7K-1181	2	STRAP		20	8T-4223	3	WASHER
Y	2	197-8820	1	ALTERNATOR GROUP		21	8T-7338	1	BOLT(M16×2)
	3	204-2281	1	TIE		22	9X-8256	3	WASHER
	4	204-8000	1	MOUNT		23	239-7854	1	GUARD
	5	208-4622	1	STRAP AS					
	6	209-0531	1	ROD					
	7	209-7705	1	GUARD					
	8	211-1044	1	BLOCK					
	9	212-6254	1	BRACKET AS					
	10	9X-6269	1	NUT(M16×2)(WELD)					
	11	329-5070	1	BRACKET AS					
		8T-3490	2	NUT(M10×1.5)(WELD)					
	12	132-5789	2	CLIP					
	13	6V-8188	1	NUT(1/2-13)					
	14	7X-0325	1	BOLT(1/2-13)					
	15	8T-0638	3	BOLT(M5×0.8)					
	16	8T-4121	2	WASHER					
	17	8T-4122	1	WASHER					
	18	8T-4132	2	NUT(M16×2)					
	19	8T-4186	2	BOLT(M10×1.5)					

Y-SEPARATE ILLUSTRATION

J155709 X10

CHARGING ALTERNATOR GROUP (176-4257 N/S) -95A

PART OF 271-6466-Page 4
REFERENCE:197-8820-Page 102

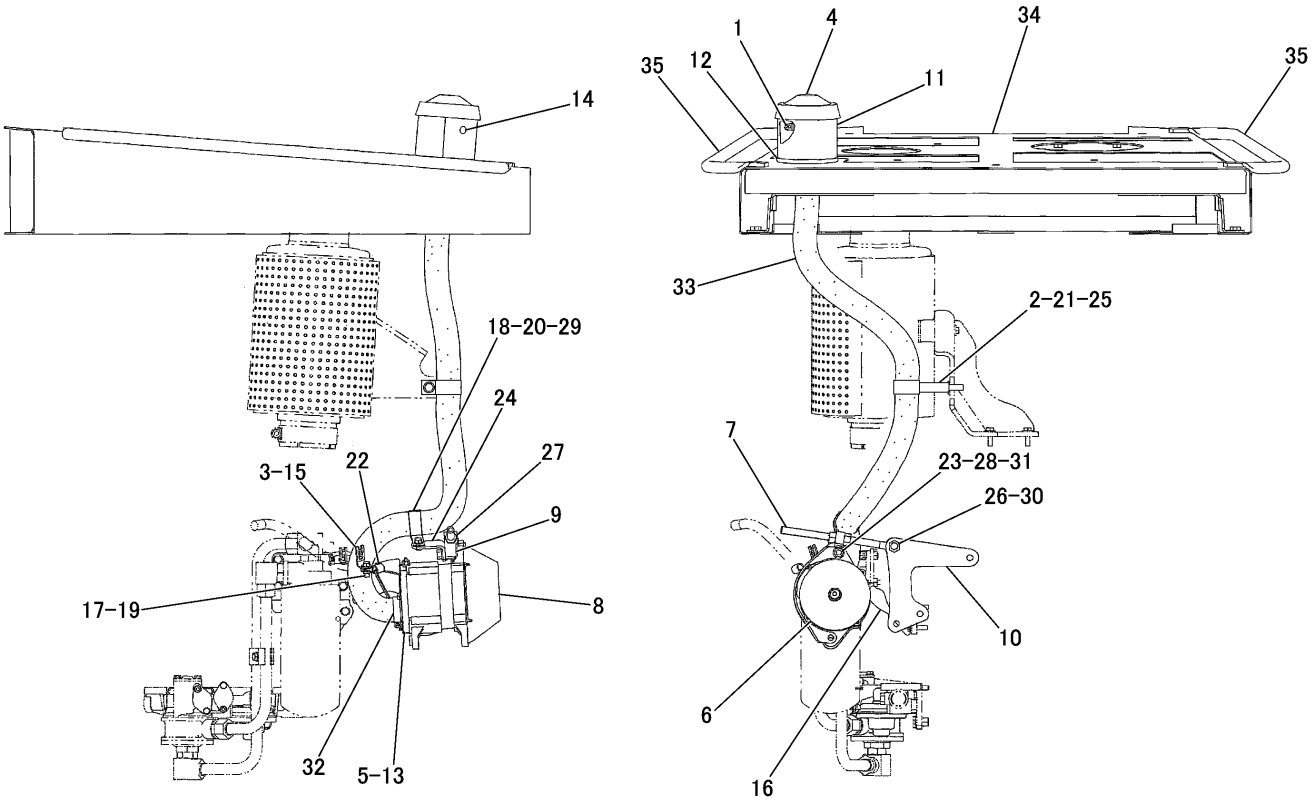

FRONT VIEW

NOTE	№	PART NO.	QTY	PART NAME
	1	5P-0597	1	CLAMP
	2	5V-6103	1	SPACER
	3	7K-1181	1	STRAP
	4	164-5798	1	CAP
	5	187-6222	1	BRACKET AS
		9F-2978	1	NUT(3/8-16)(WELD)
Y	6	197-8820	1	ALTERNATOR GROUP
	7	209-0531	1	ROD
	8	209-7705	1	GUARD
	9	211-1044	1	BLOCK
	10	212-6254	1	BRACKET AS
		9X-6269	1	NUT(M16×2)(WELD)
	11	226-4909	1	SCREEN
E	12	231-0858		SEAL---43.4cm
	13	258-5035	1	COVER AS
D		8T-6936		SEAL---0.45m
	14	272-8384	1	PLUG BUTTON
	15	132-5789	1	LADDER CLIP
	16	208-4622	1	STRAP AS
	17	4L-6454	1	BOLT(3/8-16)
	18	5M-3062	1	BOLT(3/8-16)

NOTE	№	PART NO.	QTY	PART NAME
	19	5P-1075	1	WASHER
	20	5P-4325	1	CLIP
	21	6D-6099	1	CLIP
	22	6K-8178	1	CLIP
	23	6V-8188	1	NUT(1/2-13)
	24	7W-5157	1	BRACKET AS
		9F-2978	1	NUT(3/8-16)(WELD)
	25	7X-2550	1	BOLT(M12×1.75)
	26	8T-4122	1	WASHER
	27	8T-4132	2	NUT(M16×2)
	28	8T-4223	4	WASHER
	29	8T-4896	1	WASHER
	30	8T-7338	1	BOLT(M16×2)
	31	8T-9389	1	BOLT(1/2-13)
	32	9M-0164	2	CLAMP
E	33	263-9959		HOSE---140.4cm
	34	239-1363	1	HOOD AS
		2T-1523	1	BAR
		8T-3490	17	NUT(M10×1.5)(WELD)
		8T-3597	7	NUT(M12×1.75)(WELD)
		9X-6269	1	NUT(M16×2)(WELD)
	35	126-1074	2	HANDLE

D-ORDER BY THE m
E-ORDER BY THE cm
Y-SEPARATE ILLUSTRATION

J157020 X09

CHARGING ALTERNATOR ARRANGEMENT (240-2500 N/S) -95A
REFERENCE:197-8820-Page 102
AN ATTACHMENT

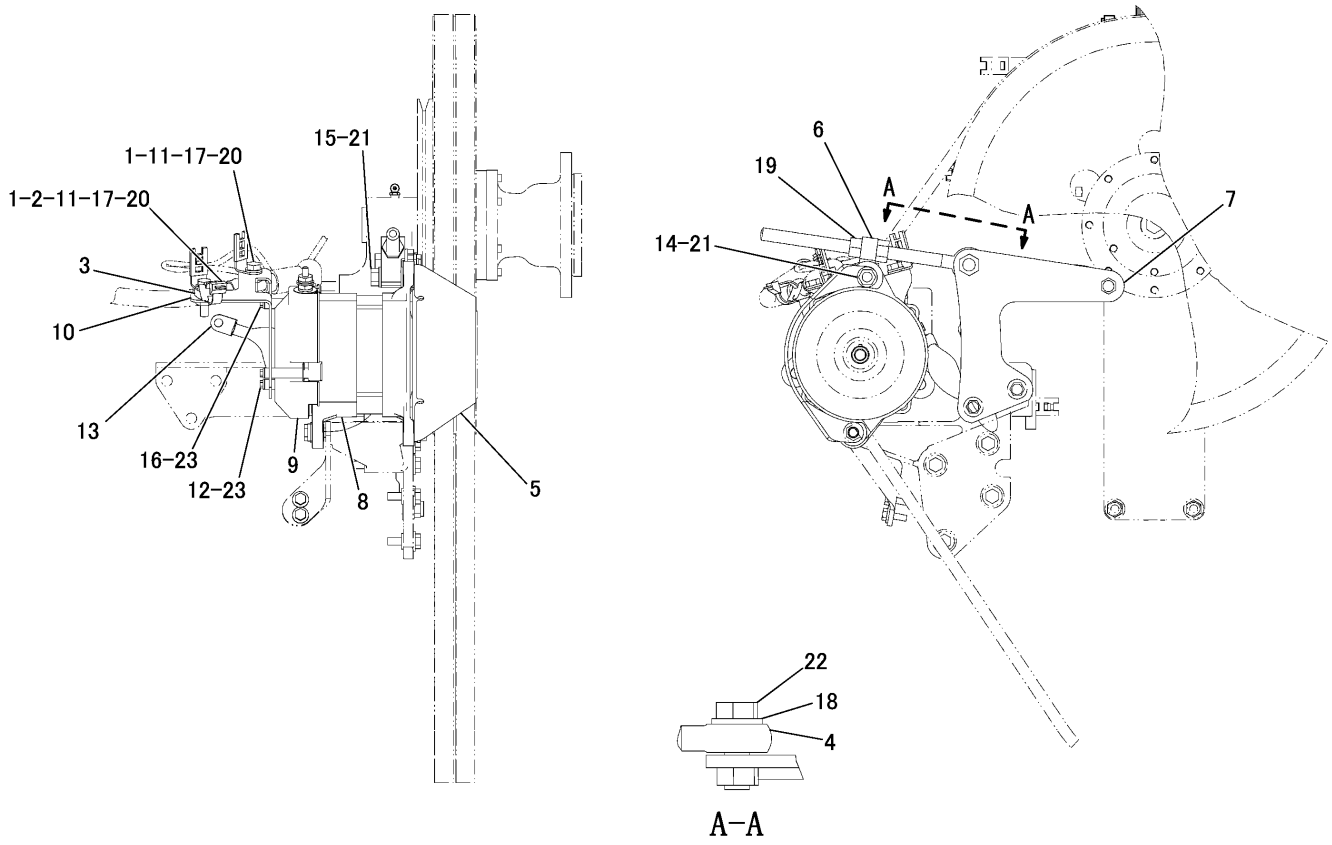

NOTE	№	PART NO.	QTY	PART NAME	NOTE	№	PART NO.	QTY	PART NAME
	1	7K-1181	2	STRAP		19	8T-4132	2	NUT(M16×2)
	2	204-2281	1	TIE		20	8T-4186	2	BOLT(M10×1.5)
	3	204-8000	1	MOUNT		21	8T-4223	3	WASHER
	4	209-0531	1	ROD		22	8T-7338	1	BOLT(M16×2)
	5	209-7705	1	GUARD		23	9X-8256	3	WASHER
	6	211-1044	1	BLOCK					
	7	212-6254	1	BRACKET AS					
		9X-6269	1	NUT(M16×2)(WELD)					
	8	249-0313	1	ALTERNATOR GROUP					
	9	292-4906	1	GUARD AS					
	10	329-5071	1	BRACKET AS					
		8T-3490	2	NUT(M10×1.5)(WELD)					
	11	132-5789	2	CLIP					
	12	160-8497	2	BOLT(M5×0.8)					
	13	208-4622	1	STRAP AS					
	14	6V-8188	1	NUT(1/2-13)					
	15	7X-0325	1	BOLT(1/2-13)					
	16	8T-0638	1	BOLT(M5×0.8)					
	17	8T-4121	2	WASHER					
	18	8T-4122	1	WASHER					

J155814 -01

CHARGING ALTERNATOR ARRANGEMENT (319-7443 N/S) -24V,150A
AN ATTACHMENT

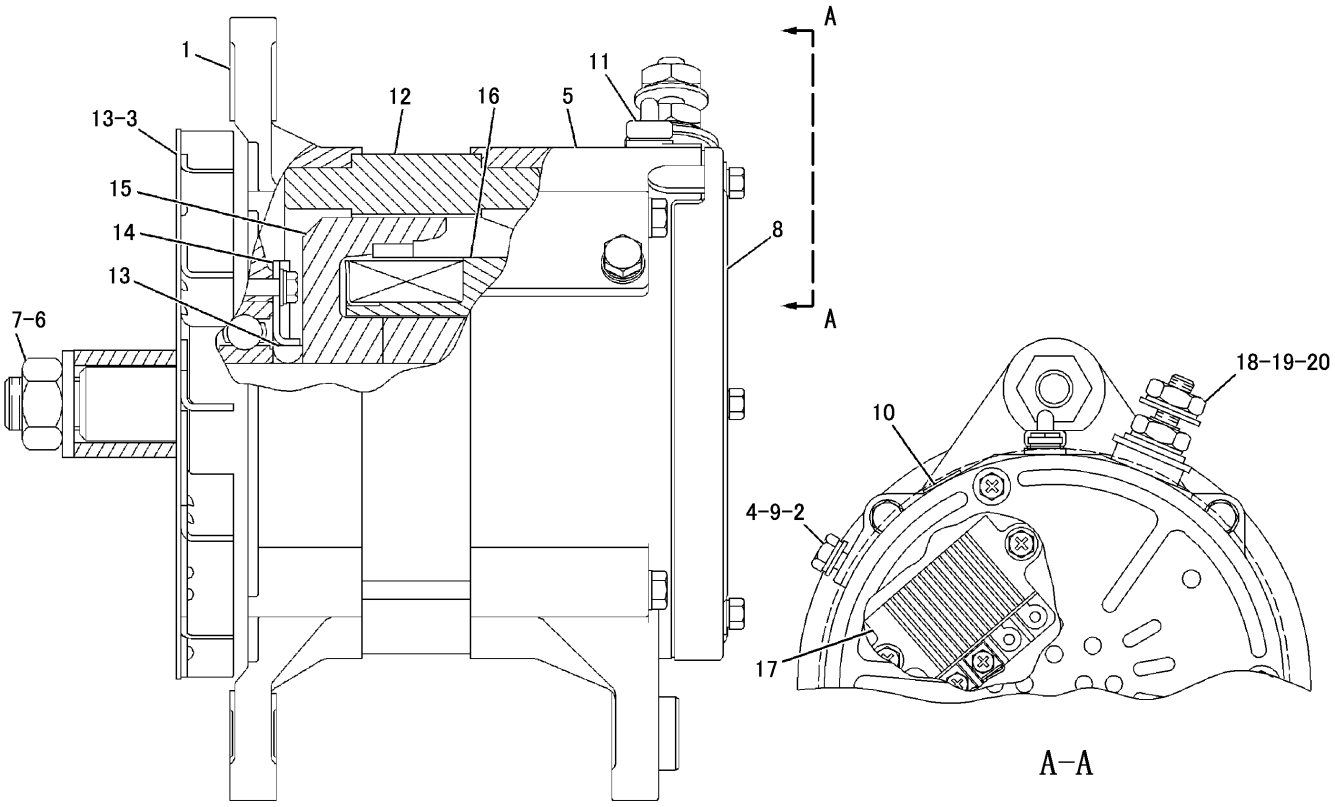

NOTE	№	PART NO.	QTY	PART NAME	NOTE	№	PART NO.	QTY	PART NAME
	1	185-2653	1	FRAME					AVAILABLE REPAIR KIT(S):
	2	5S-7349	1	BOLT(1/4-20)			185-2655	1	BEARING KIT
	3	185-2639	1	FAN AS					(INCLUDES BEARINGS)
	4	1H-3244	1	LOCKWASHER			185-2656	1	TERMINAL KIT
	5	185-2645	1	FRAME					(INCLUDES HOLDER AS,
	6	2K-4821	1	LOCKNUT(5/8-18)					PLATE,INSULATOR,PIN,NUT,
	7	5P-8247	1	WASHER					BOLT KIT AND GROMMET)
	8	185-2651	1	COVER			185-2657	1	TERMINAL KIT
	9	8T-4205	1	WASHER					(INCLUDES INSULATOR,
	10	185-2647	1	GROMMET					WASHER AND NUT)
	11	9L-6770	1	CAP			185-2658	1	HARDWARE KIT
	12	205-0626	1	STATOR AS					(INCLUDES BOLT KIT AND BOLT)
	13	185-2638	2	COLLAR					
	14	185-2654	1	PLATE					
	15	185-2650	1	ROTOR AS					
	16	185-2644	1	COIL AS					
	17	185-2648	1	REGULATOR AS					
	18	6V-8189	1	NUT(5/16-18)					
	19	8T-4224	1	WASHER					
	20	3F-9556	1	LOCKWASHER					

J124138 -00

197-8820 CHARGING ALTERNATOR GROUP -DENSO-24V,95A
PART OF 176-4257-Page 99,240-2500-Page 100

ELECTRICAL AND STARTING SYSTEM

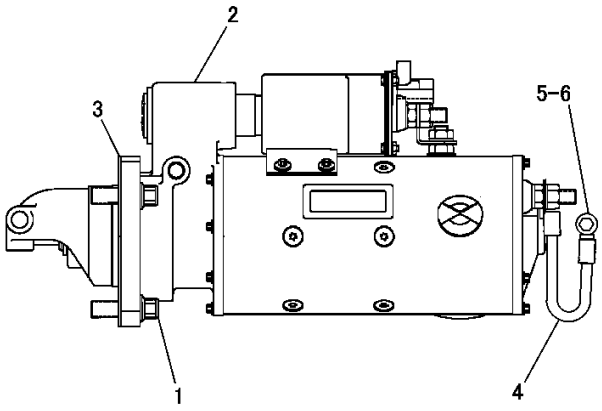

NOTE	№	PART NO.	QTY	PART NAME
	1	8S-2332	3	BOLT(5/8-11)
Y	2	237-1962	1	MOTOR GROUP
	3	4N-1059	1	GASKET
	4	185-6393	1	WIRE AS
		1M-4986	1	TERMINAL
		030-1707	1	TERMINAL
	5	8T-4137	1	BOLT(M10×1.5)
	6	8T-4121	1	WASHER

Y-SEPARATE ILLUSTRATION

J130723 X02

ELECTRIC STARTING MOTOR GROUP (186-0067 N/S) -24V

PART OF 271-6466-Page 4

REFERENCE:237-1962-Page 104～106

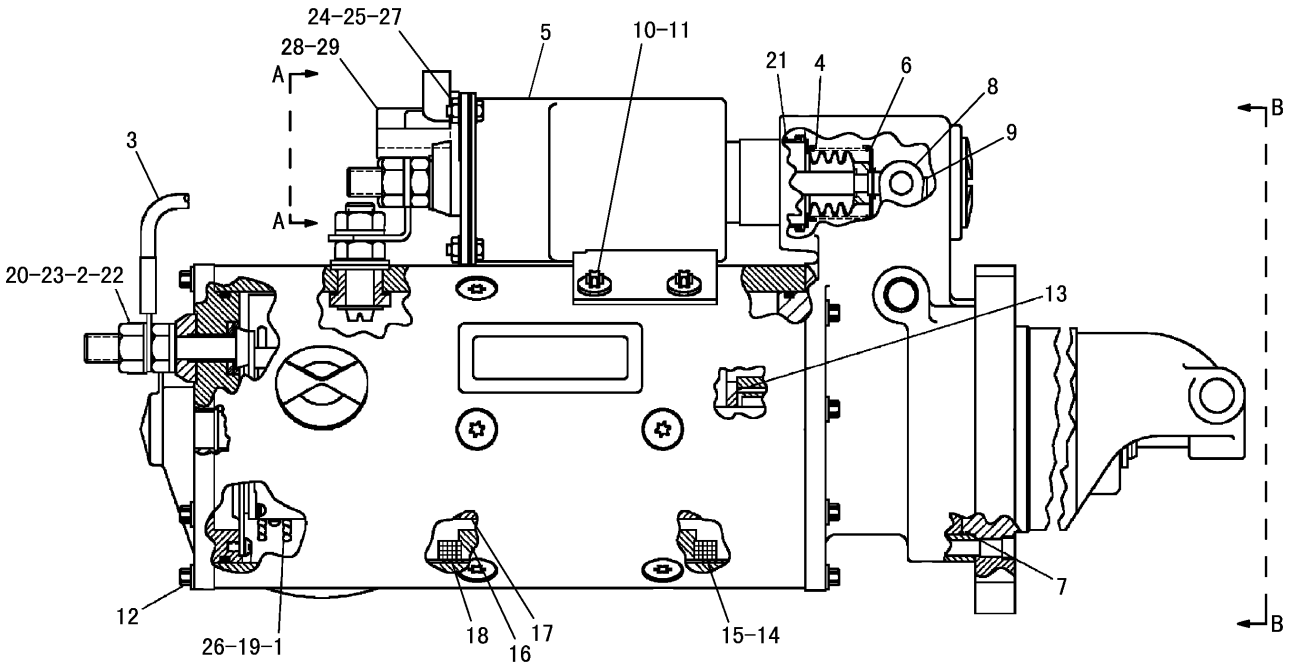

SEE PART 3 OF 3 FOR A-A AND B-B

NOTE	№	PART NO.	QTY	PART NAME
	1	9S-2544	9	SCREW(No.8-32)
	2	7F-3491	2	WASHER
	3	3T-3422	1	WIRE AS
		2L-8066	1	TERMINAL
		2L-8071	1	TERMINAL
	4	4M-1828	1	RETAINER
	5	238-1851	1	SOLENOID AS
		3R-8801	1	CLAMP
	6	4M-1827	1	RETAINER
	7	8C-3089	1	SEAL
	8	4M-1853	1	LEVER AS
	9	5M-3034	1	LOCKNUT(5/16-24)
	10	6V-1322	4	BOLT(1/4-20)
	11	8T-4205	4	WASHER
	12	036-9823	6	BOLT(1/4-28)
	13	1M-9971	1	SPACER
	14	1H-2629	3	STRIP
	15	7M-0324	1	COIL AS
	16	7F-3488	6	SHOE
	17	7M-8651	1	ARMATURE AS
	18	7M-0325	1	INSULATOR
	19	3T-9524	6	BRUSH AS
	20	3N-3763	1	TERMINAL KIT (INCLUDES BUSHINGS,WASHER)
	21	3R-8801	1	CLAMP
	22	6V-8188	2	NUT(1/2-13)
	23	7X-0562	2	WASHER
	24	4B-2049	4	NUT(No.10-32)
	25	8T-0328	8	WASHER
	26	3T-9494	6	SPRING
	27	045-4065	4	SCREW(No.10-32)
	28	7T-9123	1	GASKET
	29	125-6536	1	TERMINAL AS

J130720 -00

237-1962 ELECTRIC STARTING MOTOR GROUP -24V-DELCO REMY-PART 1 OF 3
PART OF 186-0067-Page 103

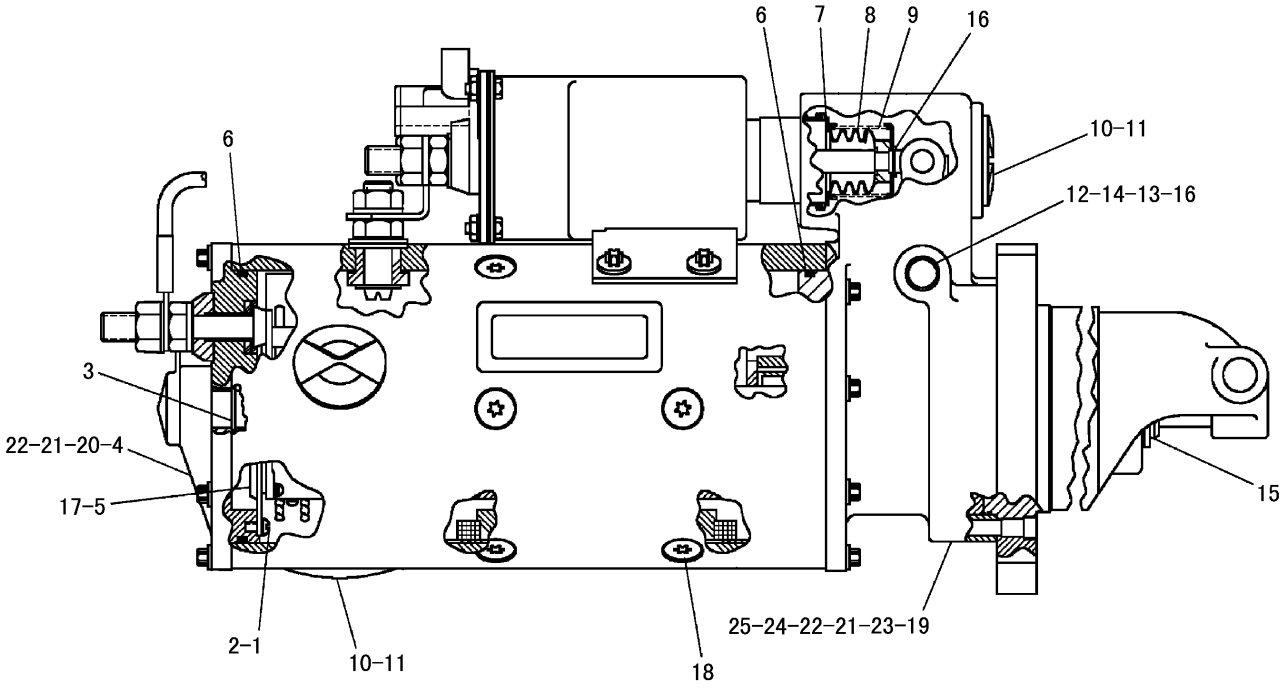

NOTE	№	PART NO.	QTY	PART NAME	NOTE	№	PART NO.	QTY	PART NAME
	1	1S-7446	3	SCREW(No.8-32)		18	3R-8797	12	SCREW AS(3/8-24)
	2	8C-9660	3	WASHER		19	3E-7771	1	HOUSING AS
	3	7M-0327	1	WASHER		20	9G-4101	1	BUSHING
	4	3T-3418	1	FRAME AS		21	3T-3424	2	PLUG
		3T-3423	1	CUP		22	3T-3423	2	CUP
		3T-3424	1	PLUG		23	1M-9968	1	BUSHING
		9G-4101	1	BUSHING		24	2F-6678	1	SEAL
Y	5	3T-9525	1	BRUSH PLATE AS		25	4L-2729	1	WASHER
	6	2J-8163	2	SEAL					
	7	036-9821	1	WASHER					
	8	4M-1829	1	BOOT					
	9	9M-7609	1	SPRING					
	10	7L-2894	4	GASKET					
	11	4M-1831	4	PLUG					
	12	4M-1854	1	SHAFT					
	13	1H-1023	1	SEAL					
	14	2D-6392	1	SEAL					
	15	6N-3826	1	DRIVE AS					
	16	2H-3429	2	RING					
	17	6N-3279	1	INSULATOR					

Y-SEPARATE ILLUSTRATION

J130721 -00

237-1962 ELECTRIC STARTING MOTOR GROUP -24V-DELCO REMY-PART 2 OF 3

PART OF 186-0067-Page 103
REFERENCE:3T-9525-Page 107

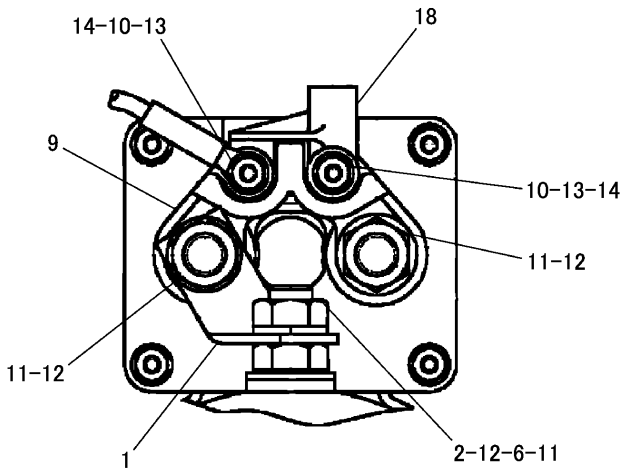

A-A

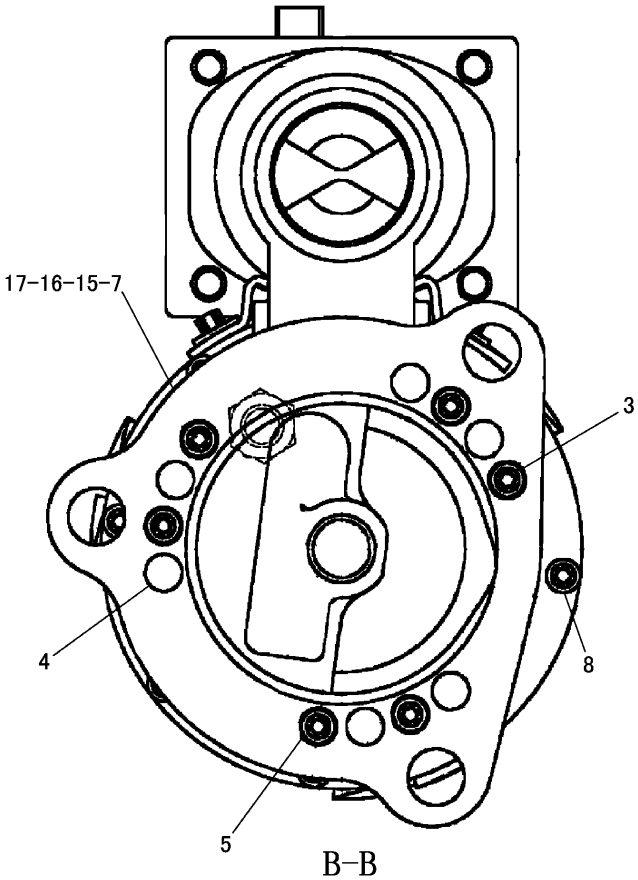

B-B

NOTE	№	PART NO.	QTY	PART NAME	NOTE	№	PART NO.	QTY	PART NAME
	1	7M-0326	1	CONNECTOR					
	2	9H-3757	2	WASHER					
	3	7X-3373	1	BOLT(5/16-18)					
	4	3T-3434	6	PLUG					
	5	5J-5314	5	BOLT(5/16-18)					
	6	3L-3380	1	BUSHING					
	7	7T-3974	1	HOUSING AS					
	8	036-9823	7	BOLT(1/4-28)					
	9	125-6537	1	INSULATOR					
	10	8F-1434	2	LOCKWASHER					
	11	6V-8188	4	NUT(1/2-13)					
	12	7X-0562	4	WASHER					
	13	4B-2049	2	NUT(No.10-32)					
	14	8T-0328	2	WASHER					
	15	3T-3424	1	PLUG					
	16	3T-3423	1	CUP					
	17	4M-1896	1	BUSHING					
	18	125-6535	1	COVER					

J130722 -00

237-1962 ELECTRIC STARTING MOTOR GROUP -24V-DELCO REMY-PART 3 OF 3
PART OF 186-0067-Page 103

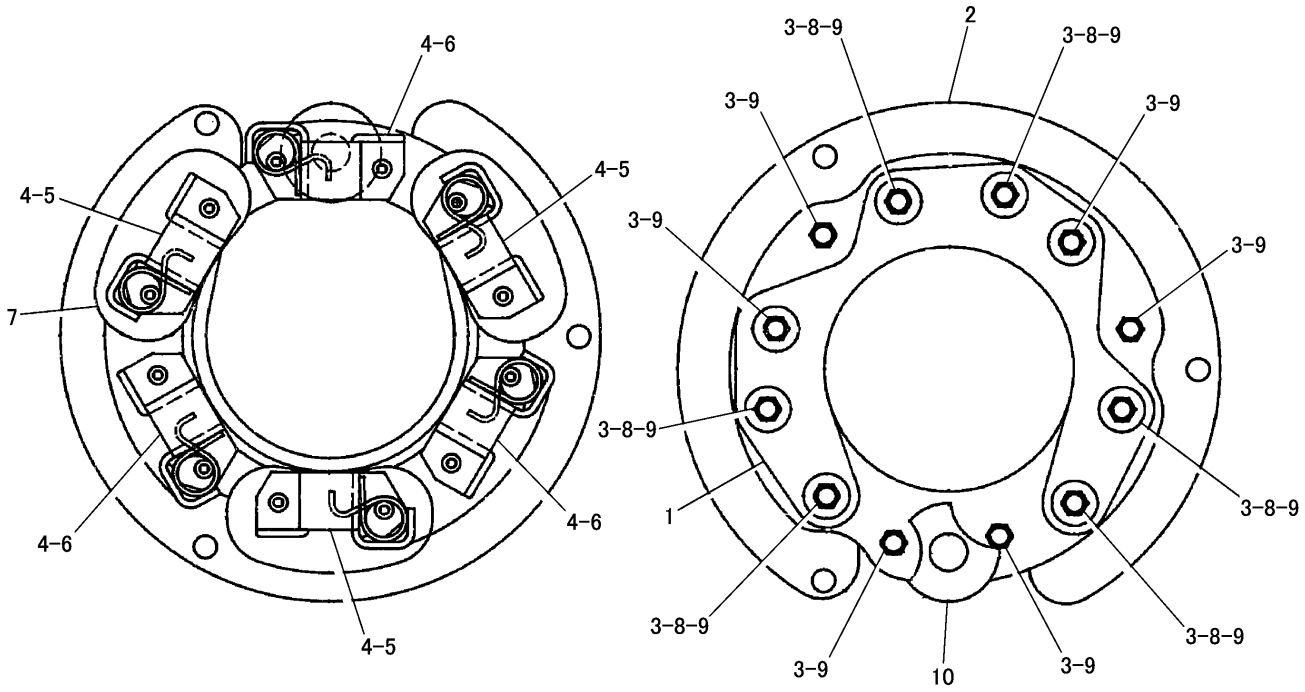

NOTE	№	PART NO.	QTY	PART NAME	NOTE	№	PART NO.	QTY	PART NAME
	1	6T-0372	1	PLATE					
	2	6T-0371	1	INSULATOR					
	3	9F-5599	12	LOCKWASHER					
	4	6T-0363	6	HOLDER AS					
		3T-9494	1	SPRING					
	5	3T-4709	3	PLATE					
	6	3T-4710	3	PLATE					
	7	2L-6679	3	PLATE					
	8	7F-3525	6	WASHER					
	9	5P-6298	12	SCREW(No.10-32)					
	10	6T-0373	1	PLATE AS					

J130497 -00

3T-9525 BRUSH PLATE ASSEMBLY
PART OF 237-1962-Page 105

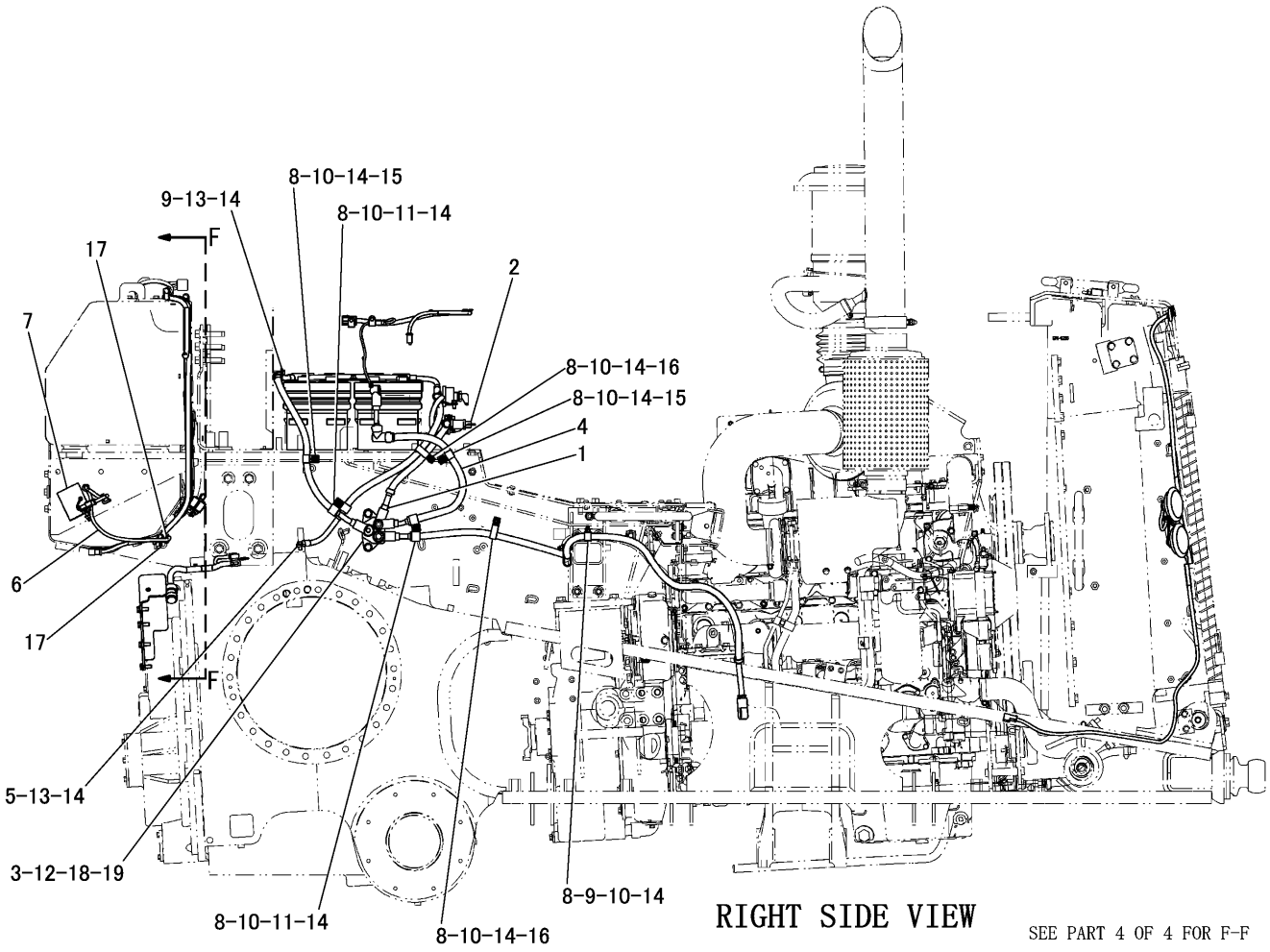

RIGHT SIDE VIEW

SEE PART 4 OF 4 FOR F-F

NOTE	№	PART NO.	QTY	PART NAME
	1	8N-0869	1	COVER(RD)
	2	8S-2634	1	COVER AS
		2P-2975	2	SEAL
	3	9W-0742	1	BLOCK GROUP
		8C-6358	1	BLOCK AS
		8T-3519	3	BOLT(1/2-13)
		1D-5117	3	NUT(1/2-13)
		7F-0560	6	WASHER
		8T-3518	6	NUT(1/2-13)
	4	167-1882	1	CABLE AS
		1S-4915	2	LINER
		8N-0869	2	COVER(RD)
		170-3795	2	TERMINAL
	5	170-4859	1	CABLE AS
		1S-4915	2	LINER
		1S-7251	1	TERMINAL(1/2 IN BOLT)
		4D-1248	1	TERMINAL(13/32 IN BOLT)

NOTE	№	PART NO.	QTY	PART NAME
	6	204-7563	1	HARNESS AS
		155-2270	1	PLUG KIT(2P)
		102-8802	1	RECEPTACLE KIT(2P)
		126-1767	2	PIN
		126-1768	2	SOCKET
	7	213-9100	1	ALARM AS
		186-3735	2	PIN
		102-8802	1	RECEPTACLE KIT(2P)
	8	1J-8668	7	STUD(3/8-16)
	9	1S-0994	2	CLIP
	10	3K-6060	7	LOCKNUT(3/8-16)
	11	4S-1962	4	CLIP
	12	5G-6505	3	WASHER
	13	5M-3062	2	BOLT(3/8-16)
	14	5P-1075	9	WASHER
	15	5P-4295	2	CLIP
	16	6D-4247	2	CLIP
	17	7K-1181	2	STRAP
	18	8C-4436	2	BOLT(1/2-13)
	19	8T-4223	2	WASHER

J155623 X01

BATTERY AND WIRING GROUP (271-6421 N/S) -PART 1 OF 4

PART OF 322-6115-Page 236

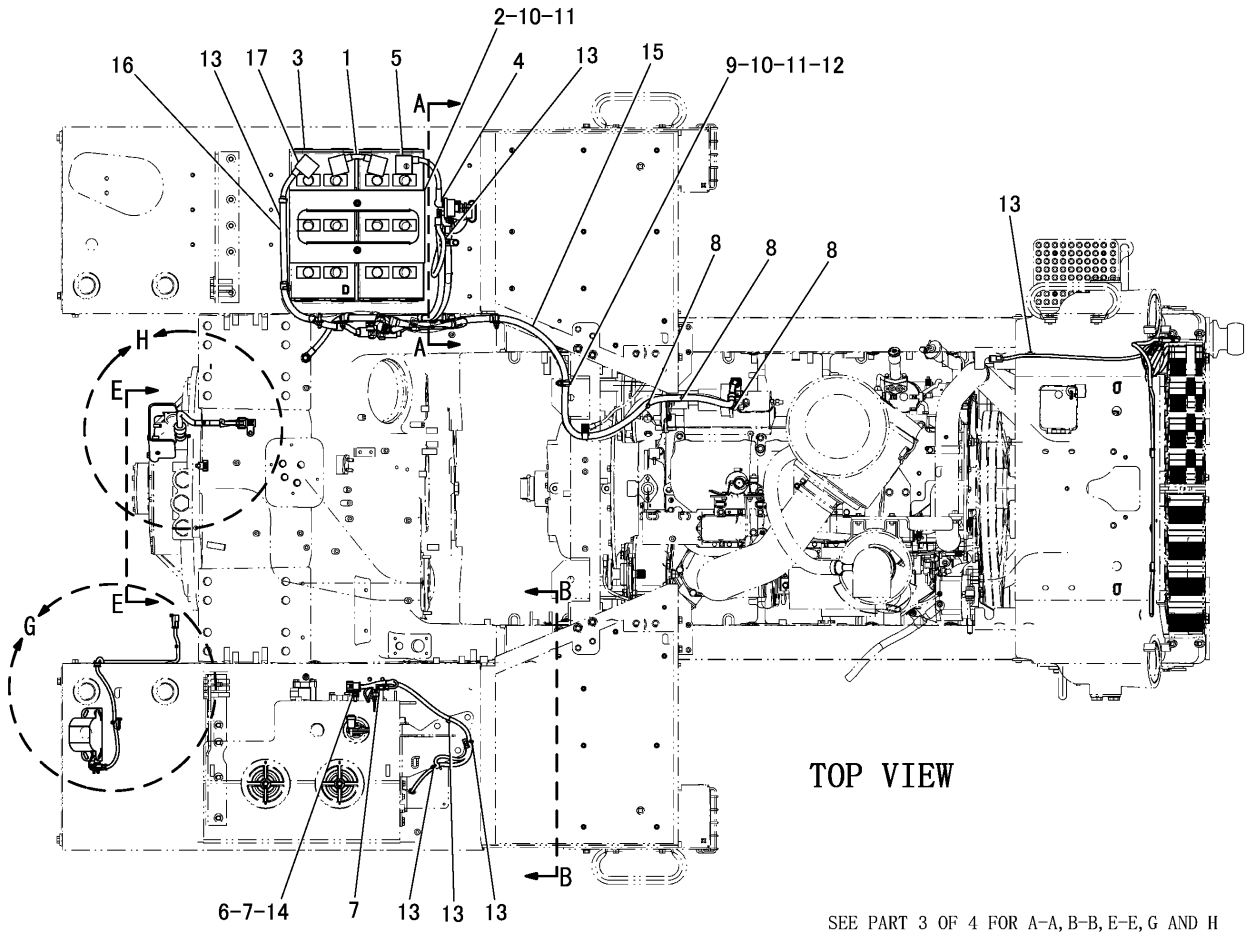

TOP VIEW

SEE PART 3 OF 4 FOR A-A, B-B, E-E, G AND H

NOTE	№	PART NO.	QTY	PART NAME
	1	8V-0622	1	CABLE AS
		5M-9205	1	TERMINAL AS(-)
		1M-6119	1	BOLT(5/16-18)
		1M-6120	1	NUT(5/16-18)
		5M-9204	1	TERMINAL AS(+)
		1M-6119	1	BOLT(5/16-18)
		1M-6120	1	NUT(5/16-18)
		9G-0003	1	COVER(BK)
		9G-0004	1	COVER(RD)
	2	153-6281	1	HOLD DOWN
	3	155-0812	2	BATTERY(1000A)
		7N-0060	6	VENT AS
				-OR-
J		9X-9720	2	BATTERY(1000A)
		7N-0060	6	VENT AS
	4	170-4068	1	CABLE AS
		1S-7252	1	TERMINAL(RING)
		037-5197	1	BOOT
	5	8T-9757	1	TERMINAL AS(-)
		9G-0003	1	COVER(BK)
	6	8T-4137	1	BOLT(M10×1.5)
	7	132-5789	2	CLIP
	8	204-2281	3	TIE
	9	1J-8668	1	STUD(3/8-16)
	10	3K-6060	3	LOCKNUT(3/8-16)
	11	5P-1075	3	WASHER
	12	6D-4247	1	CLIP
	13	7K-1181	6	STRAP
	14	8T-4121	1	WASHER
	15	229-1509	1	CABLE AS
		1S-4915	2	LINER
		1S-7251	1	TERMINAL
		8N-0869	1	COVER(RD)
	16	189-1715	1	CABLE AS
		1S-4915	2	LINER
		1S-7251	1	TERMINAL(RING)
		8N-0869	1	COVER(RD)
	17	5M-9204	1	TERMINAL AS(+)
		1M-6119	1	BOLT(5/16-18)
		1M-6120	1	NUT(5/16-18)
		9G-0004	1	COVER(RD)

J-OPT SERVICE REPLACEMENT(FOR OUTSIDE JAPAN)

J155624 X01

BATTERY AND WIRING GROUP (271-6421 N/S) -PART 2 OF 4
PART OF 322-6115-Page 236

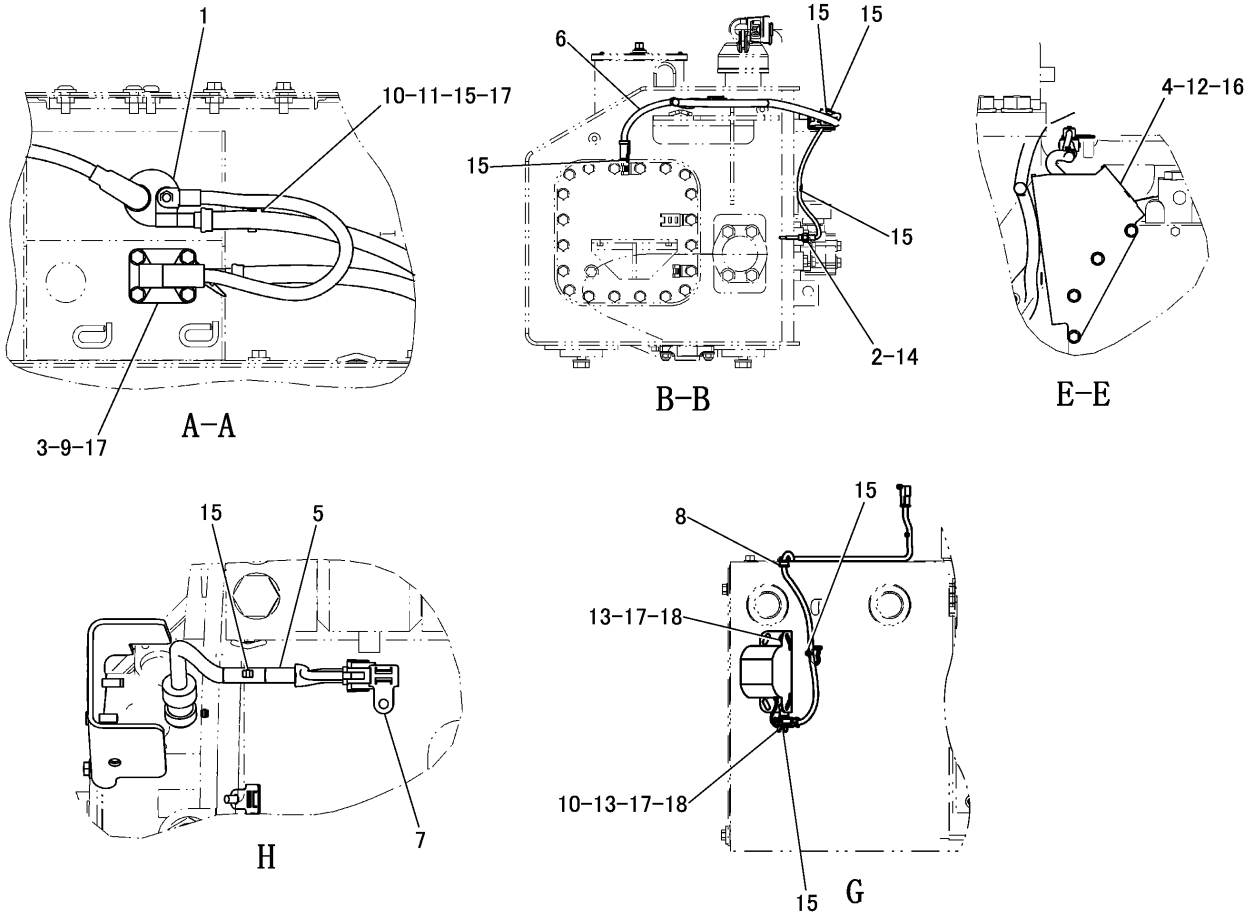

NOTE	№	PART NO.	QTY	PART NAME	NOTE	№	PART NO.	QTY	PART NAME
Y	1	7N-0718	1	SWITCH AS		17	8T-4896	9	WASHER
	2	145-7028	1	SENSOR GROUP		18	9B-7237	2	BOLT(3/8-16)
		102-8802	1	RECEPTACLE KIT(2P)					
		186-3735	2	PIN					
	3	170-4857	1	RECEPTACLE AS					
		1S-4915	2	LINER					
		1S-7251	2	TERMINAL					
	4	172-4864	1	GUARD					
Y	5	239-8155	1	HARNESS AS					
Y	6	276-5713	1	HARNESS AS					
	7	130-5300	2	CLIP					
	8	1H-7459	1	GROMMET					
	9	4L-6454	4	BOLT(3/8-16)					
	10	4P-7581	2	CLIP					
	11	5M-3062	1	BOLT(3/8-16)					
	12	5P-1075	4	WASHER					
	13	6V-8801	2	NUT(3/8-16)					
	14	7J-0204	1	SEAL					
	15	7K-1181	8	STRAP					
	16	8T-0722	4	BOLT(M10×1.5)					

Y-SEPARATE ILLUSTRATION

J155625 X01

BATTERY AND WIRING GROUP (271-6421 N/S) -PART 3 OF 4

PART OF 322-6115-Page 236

REFERENCE:7N-0718-Page 127 239-8155-Page 127 276-5713-Page 129

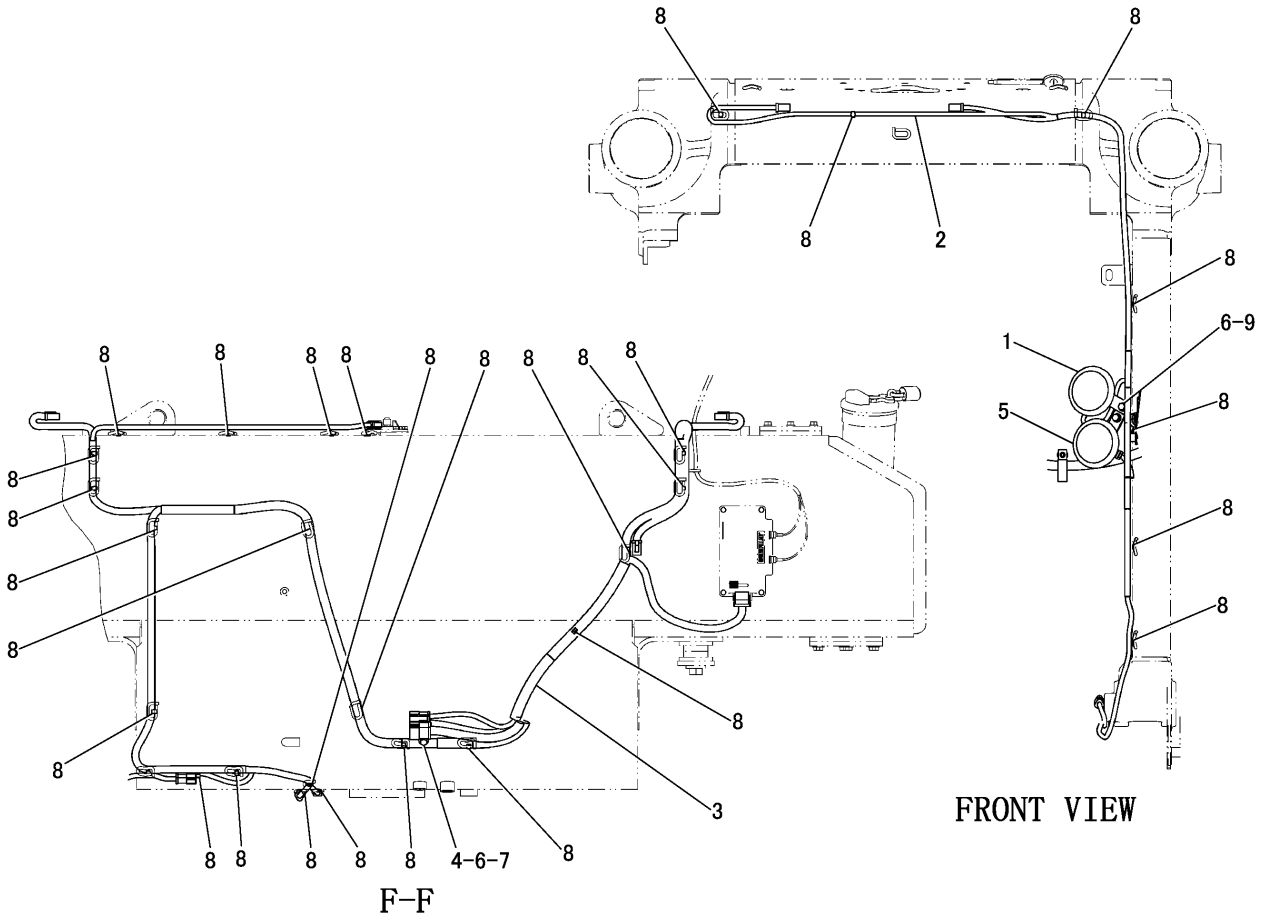
8
8
8
2
8
6-9
1
5
8
8
8

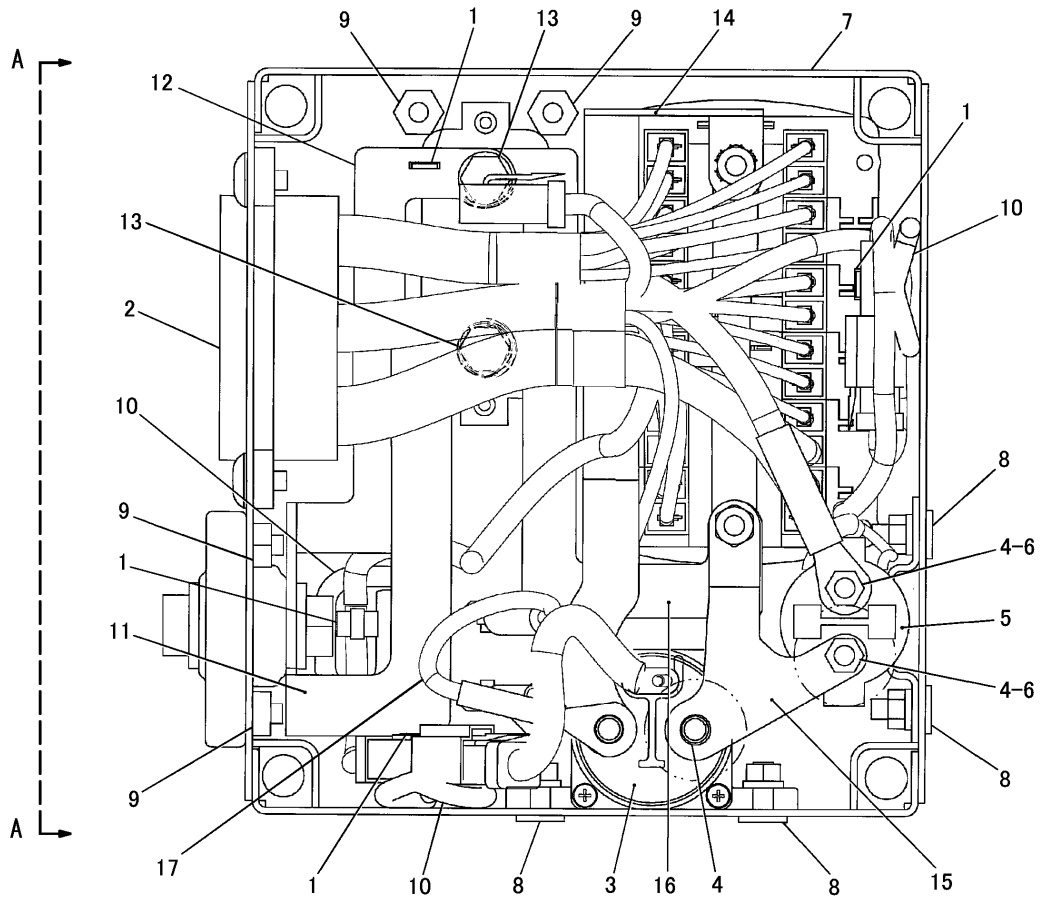

NOTE	№	PART NO.	QTY	PART NAME
	1	7K-1181	4	STRAP
Y	2	226-9675	1	HARNESS AS
	3	241-8368	1	SWITCH AS
		155-2270	1	PLUG KIT(2P)
		4F-2294	2	NUT(5/16-24)
		186-3736	2	SOCKET
	4	5C-2890	4	NUT(M6×1)
		9X-8256	4	WASHER
	5	125-1302	1	SWITCH AS(START RELAY)
		102-8802	1	RECEPTACLE KIT(2P)
		186-3735	2	PIN
E		9X-1813		SLEEVE---16cm
	6	1H-3338	2	LOCKWASHER
		012-0380	2	LOCKWASHER
		5C-2890	2	NUT(M6×1)
	7	237-0048	1	PANEL AS
	8	140-3943	4	STUD(M6×1)
	9	6V-9632	7	NUT(M6×1)(WELD)
	10	7T-1099	3	LINK
	11	237-0051	1	STRAP
	12	237-0052	1	STRAP
	13	8T-4199	2	BOLT(M8×1.25)
		8T-4224	2	WASHER
	14	237-0053	1	STRAP
	15	237-0050	1	STRAP
	16	237-0225	1	STRAP
	17	238-2014	1	WIRE AS
E		119-3662		TUBE---3.8cm
		2L-8057	1	TERMINAL
D		5P-6006		TUBE---0.03m
		2L-8068	1	TERMINAL

D-ORDER BY THE m
E-ORDER BY THE cm
Y-SEPARATE ILLUSTRATION

J156226 X02

PANEL GROUP (226-9674 N/S) -PART 1 OF 2
PART OF 271-6422-Page 116
REFERENCE:226-9675-Page 114

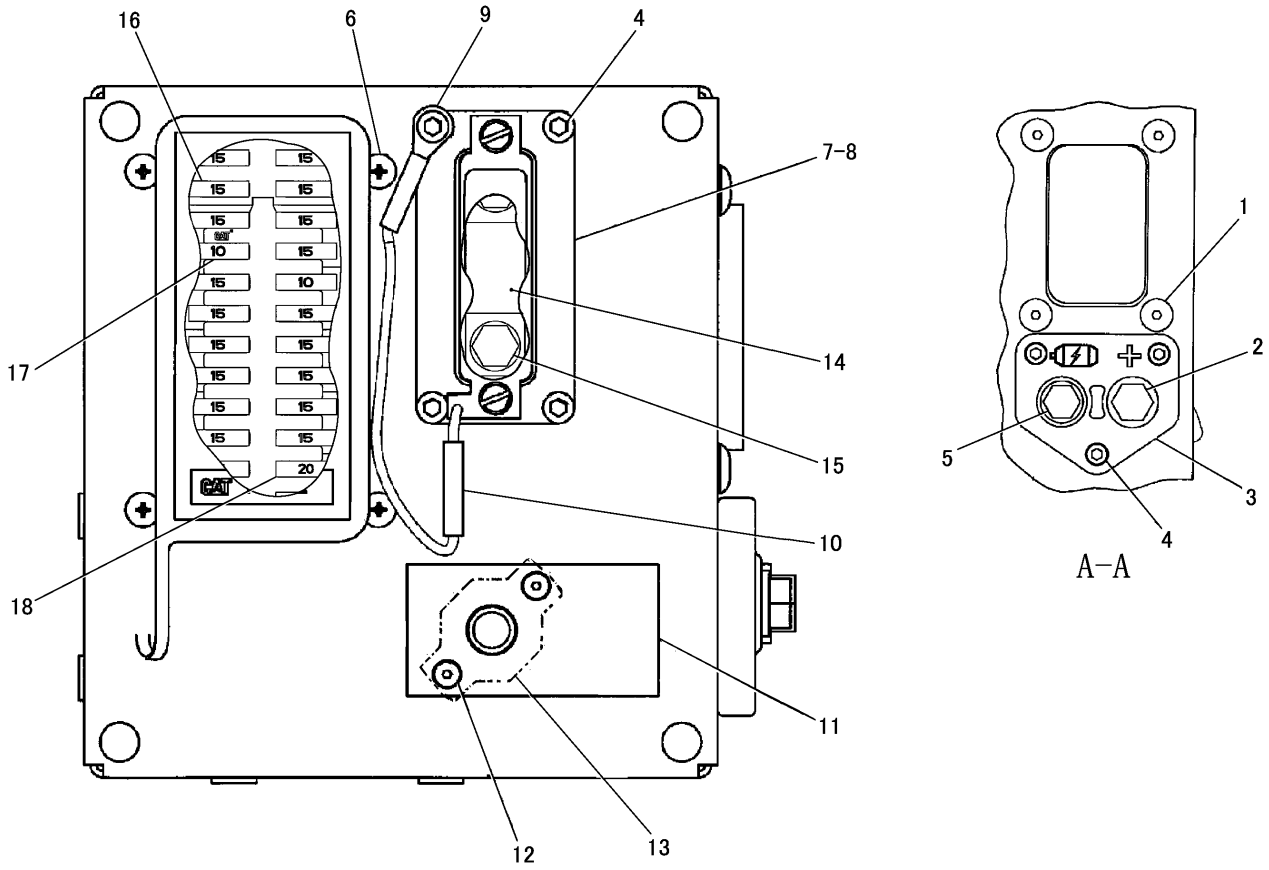

NOTE	№	PART NO.	QTY	PART NAME	NOTE	№	PART NO.	QTY	PART NAME
	1	8T-3992	4	SCREW(M6×1)		16	9W-1441	21	FUSE(15A)
	2	7X-2548	2	BOLT(M12×1.75)		17	9W-1442	2	FUSE(10A)
		8T-4223	2	WASHER		18	9W-1446	1	FUSE(20A)
	3	172-4863	1	JUNCTION BLOCK					
	4	5C-7883	7	BOLT(M6×1)					
	5	8T-4121	2	WASHER					
		8T-4191	2	BOLT(M10×1.5)					
	6	6V-5645	4	SCREW(No.10-32)					
	7	223-8173	1	FUSE HOLDER					
	8	239-3354	1	CAP AS					
	9	2L-8077	1	TERMINAL					
E	10	125-7875		TUBE---3cm					
	11	240-8917	1	FILM(BREAKER)					
	12	7U-4892	2	SCREW(No.8-32)					
	13	6T-3643	1	BREAKER AS(15A)					
		6V-8376	2	SCREW(No.8-32)					
		9B-7233	2	LOCKWASHER					
	14	239-8107	1	FUSE(175A)					
	15	8T-4199	2	BOLT(M8×1.25)					
		8T-4224	2	WASHER					

E-ORDER BY THE cm

J156227 X02

PANEL GROUP (226-9674 N/S) -PART 2 OF 2

PART OF 271-6422-Page 116

ELECTRICAL AND STARTING SYSTEM

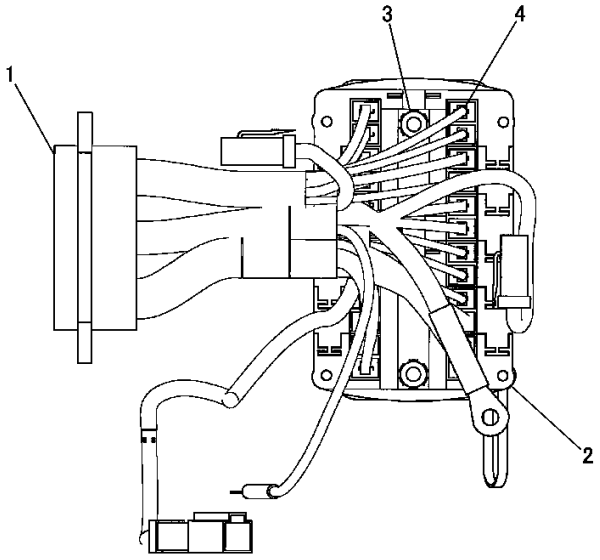

NOTE	№	PART NO.	QTY	PART NAME
Y	1	237-0049	1	HARNESS AS
	2	225-8553	1	BLOCK AS
	3	1H-3244	2	LOCKWASHER
		6V-8185	2	NUT(1/4-20)
		8T-4205	2	WASHER
	4	151-1398	2	LOCK KIT

Y-SEPARATE ILLUSTRATION

J137637 X00

226-9675 HARNESS ASSEMBLY -FUSE BLOCK
PART OF 226-9674-Page 112
REFERENCE:237-0049-Page 115

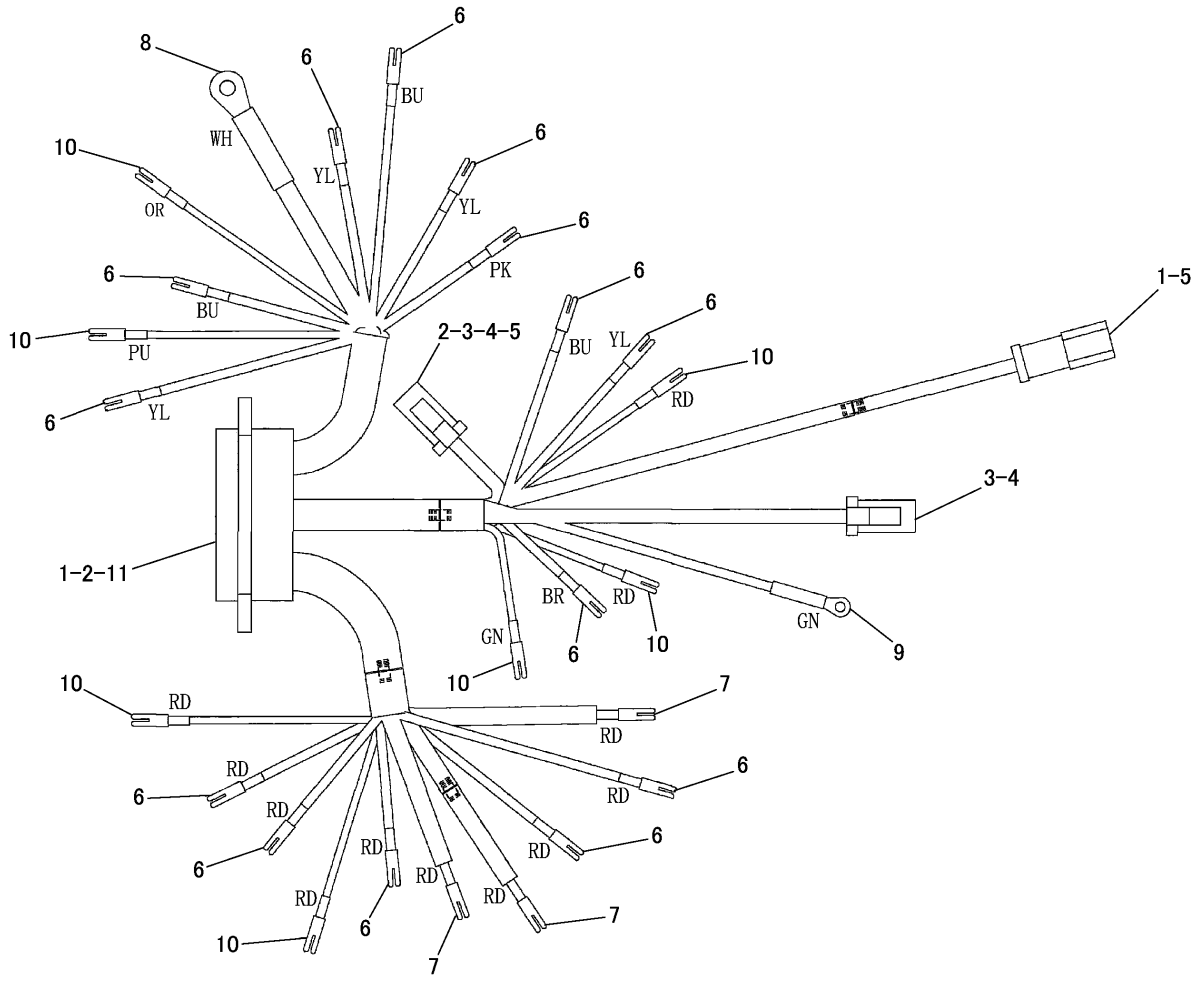

NOTE	№	PART NO.	QTY	PART NAME	NOTE	№	PART NO.	QTY	PART NAME
	1	126-1767	37	PIN					
	2	9G-3695	37	PLUG					
	3	126-1768	4	SOCKET					
	4	155-2270	2	PLUG KIT(2P)					
	5	102-8802	2	RECEPTACLE KIT(2P)					
	6	9W-2033	14	TERMINAL					
	7	9W-2032	3	TERMINAL					
	8	2L-8058	1	TERMINAL					
	9	2L-8075	1	TERMINAL					
	10	230-8792	7	SOCKET					
	11	214-4208	1	RECEPTACLE AS(70P)					

J137638 X01

HARNESS ASSEMBLY (237-0049 N/S) -FUSE PANEL

PART OF 226-9675-Page 114

ELECTRICAL AND STARTING SYSTEM

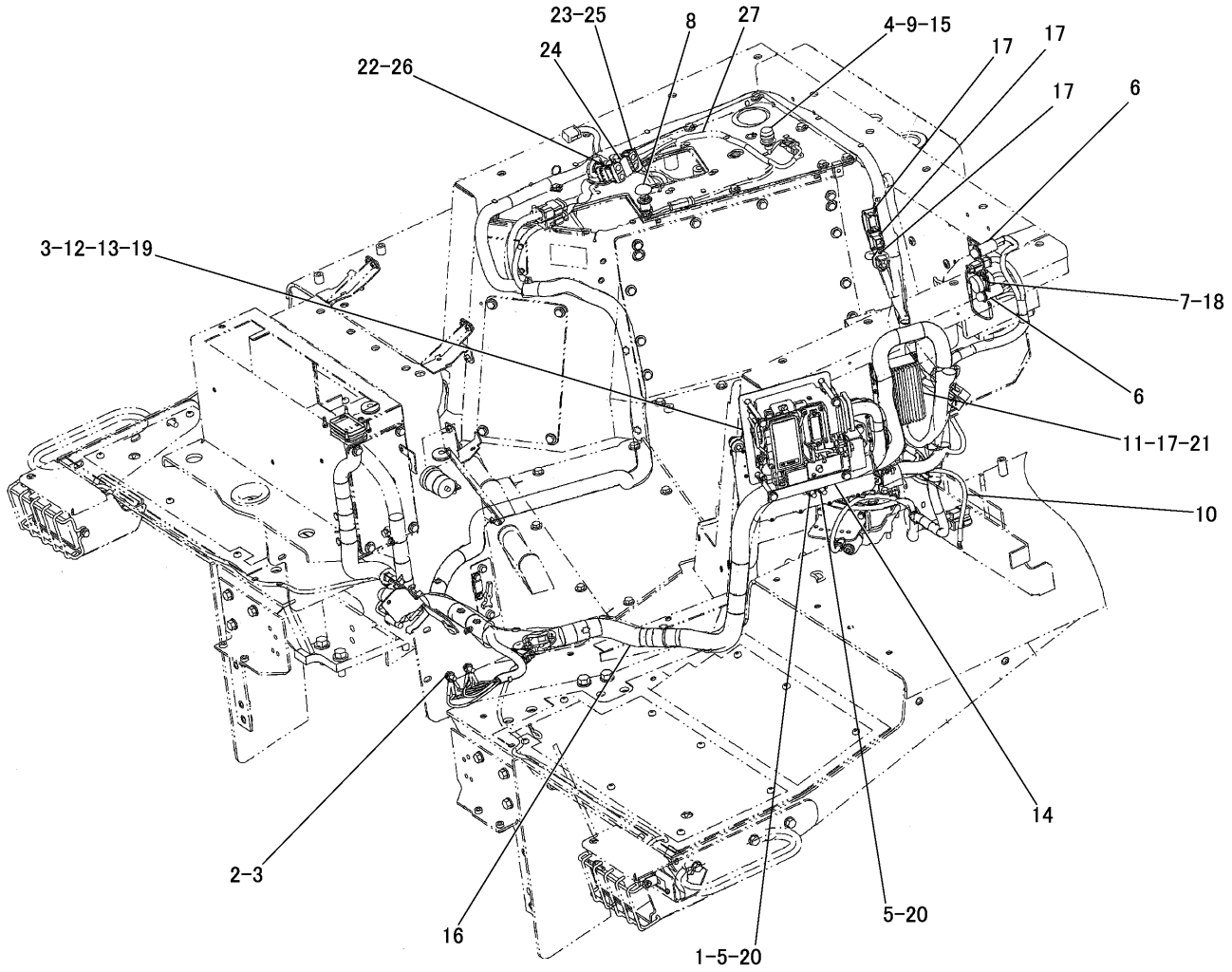

NOTE	№	PART NO.	QTY	PART NAME	NOTE	№	PART NO.	QTY	PART NAME
	1	8T-7934	1	WASHER	Y	16	275-0074	1	HARNESS AS
	2	8T-4137	2	BOLT(M10×1.5)		17	107-3786	12	BOLT(M4×0.7)
	3	8T-4121	6	WASHER		18	141-4976	4	SCREW(No.4-40)
	4	7N-1996	1	LAMP		19	199-4317	4	BOLT(M10×1.5)
	5	8T-0389	2	LOCKNUT(M10×1.5)		20	5P-1075	2	WASHER
	6	117-2311	2	HOUSING AS		21	8T-0328	6	WASHER
	7	149-9818	1	PLATE		22	222-7877	1	SWITCH AS
Y	8	158-6632	1	SWITCH AS		23	222-7883	1	SWITCH AS
	9	170-3461	1	BASE AS		24	228-6089	1	PLUG
		3T-0304	1	BASE		25	246-4311	1	GUARD
		186-3735	1	PIN		26	261-7990	1	GROMMET
		102-8802	1	RECEPTACLE KIT(2P)	Y	27	226-9665	1	HARNESS AS
	10	172-4860	1	WIRE AS					
		2L-8067	2	TERMINAL					
	11	209-0381	1	CONVERTER					
Y	12	226-9674	1	PANEL GROUP					
	13	239-3355	1	GASKET					
	14	239-7392	1	PLATE AS					
		170-7491	2	STUD(M10×1.5)(WELD)					
	15	259-2093	1	LENS					

Y-SEPARATE ILLUSTRATION

J155629 X00

PLATFORM WIRING GROUP (271-6422 N/S) -PART 1 OF 5

PART OF 322-6115-Page 236

REFERENCE:158-6632-Page 125 226-9674-Page 112, 113 275-0074-Page 121～123 226-9665-Page 124

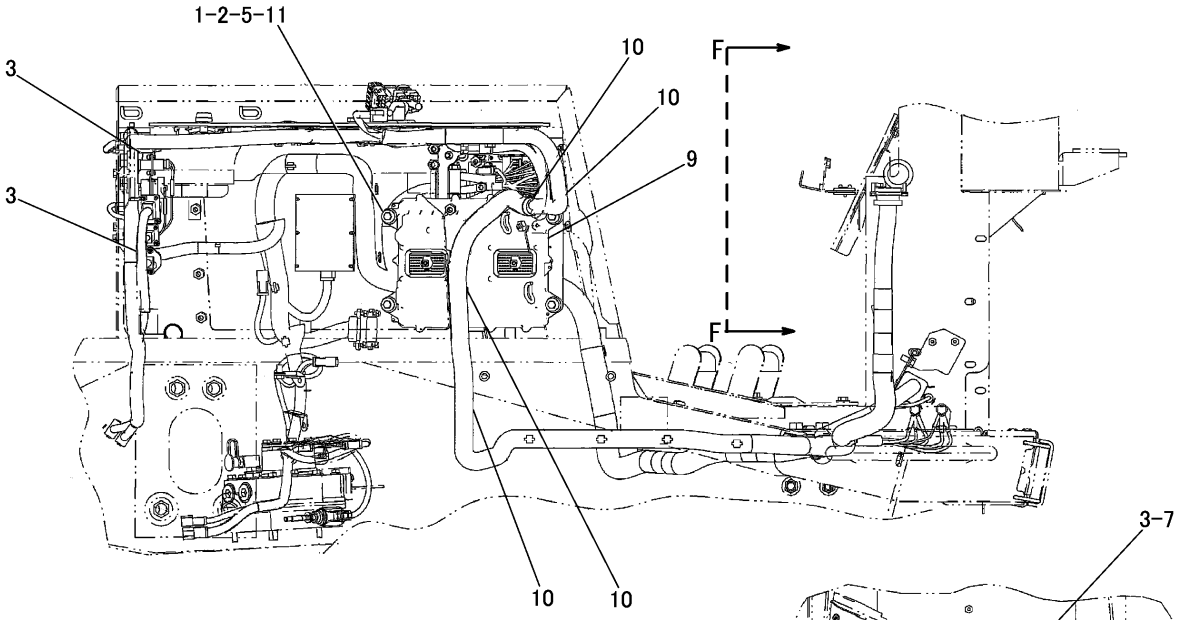

RIGHT SIDE VIEW

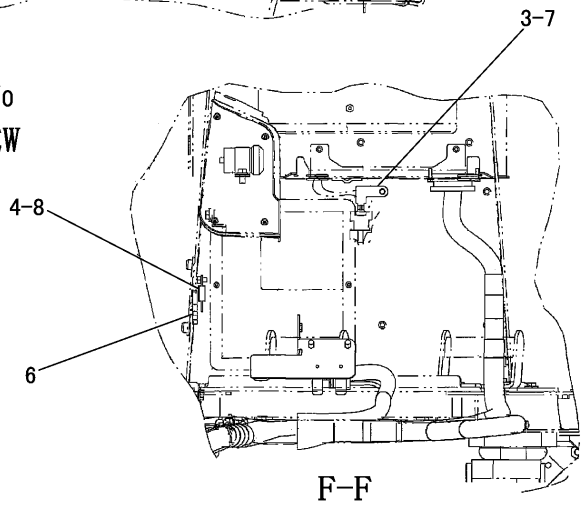

F-F

NOTE	№	PART NO.	QTY	PART NAME	NOTE	№	PART NO.	QTY	PART NAME
	1	9N-0869	4	WASHER					
	2	6I-1418	4	SPACER					
	3	7K-1181	4	STRAP					
	4	8T-4199	1	BOLT(M8×1.25)					
	5	8T-9655	8	MOUNT					
	6	202-4327	1	PULLER					
	7	224-9222	1	BRACKET					
	8	239-8107	1	FUSE(175A)					
Y	9	304-5687	1	ELECTRONIC CONTROL GROUP					
	10	204-2281	4	TIE					
	11	7X-0818	4	BOLT(M8×1.25)					

Y-SEPARATE ILLUSTRATION

J155630 X00

PLATFORM WIRING GROUP (271-6422 N/S) -PART 2 OF 5

PART OF 322-6115-Page 236
REFERENCE:304-5687-Page 94

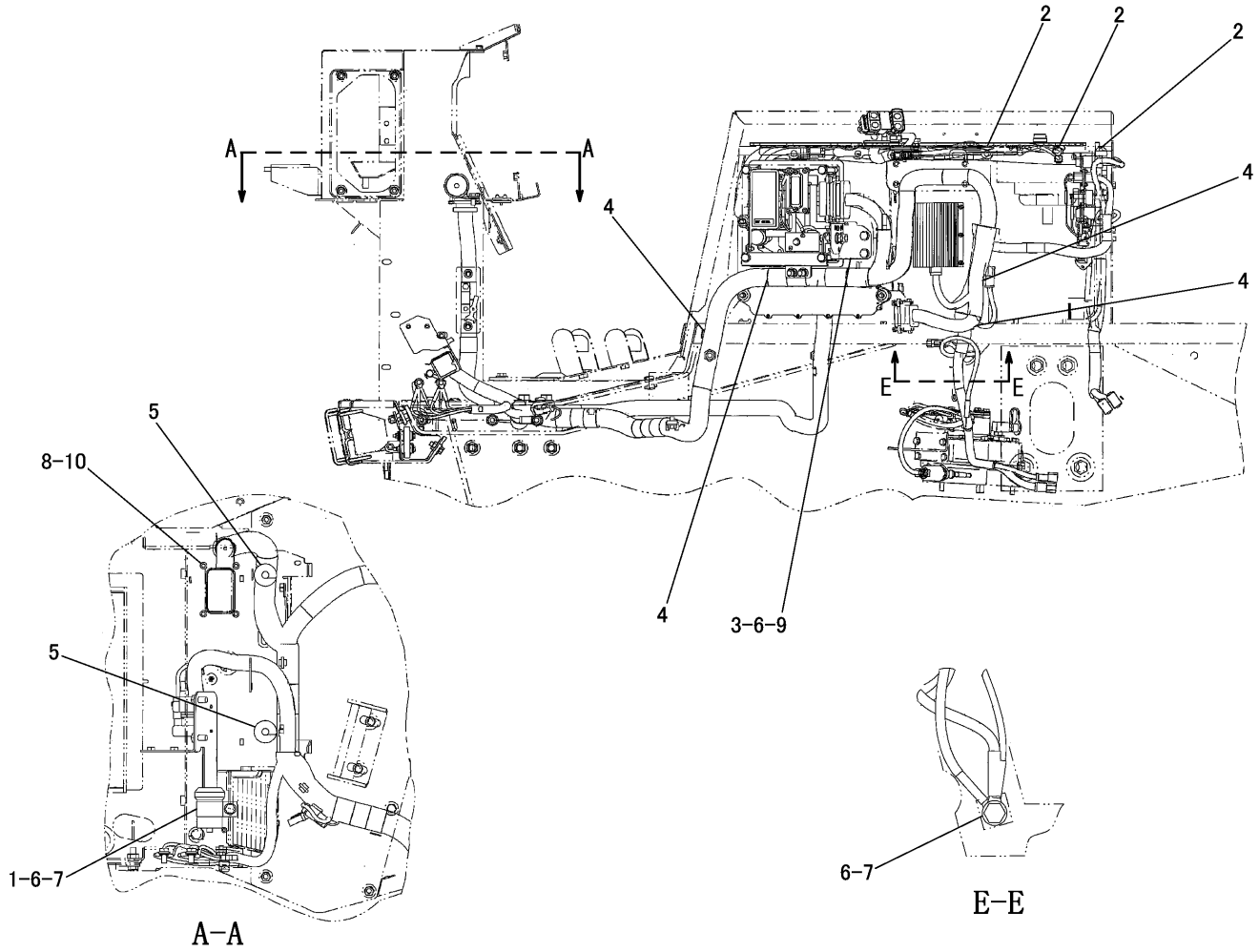

NOTE	№	PART NO.	QTY	PART NAME	NOTE	№	PART NO.	QTY	PART NAME
Y	1	3E-6328	1	ALARM GROUP					
	2	7K-1181	11	STRAP					
	3	281-3179	1	BRACKET					
	4	204-2281	7	TIE					
	5	5F-9757	2	GROMMET					
	6	8T-4121	4	WASHER					
	7	8T-4137	2	BOLT(M10×1.5)					
	8	8T-4138	4	BOLT(M6×1)					
	9	8T-4191	2	BOLT(M10×1.5)					
	10	9X-8256	4	WASHER					

Y-SEPARATE ILLUSTRATION

J155631 X00

PLATFORM WIRING GROUP (271-6422 N/S) -PART 3 OF 5

PART OF 322-6115-Page 236

REFERENCE:3E-6328-Page 125

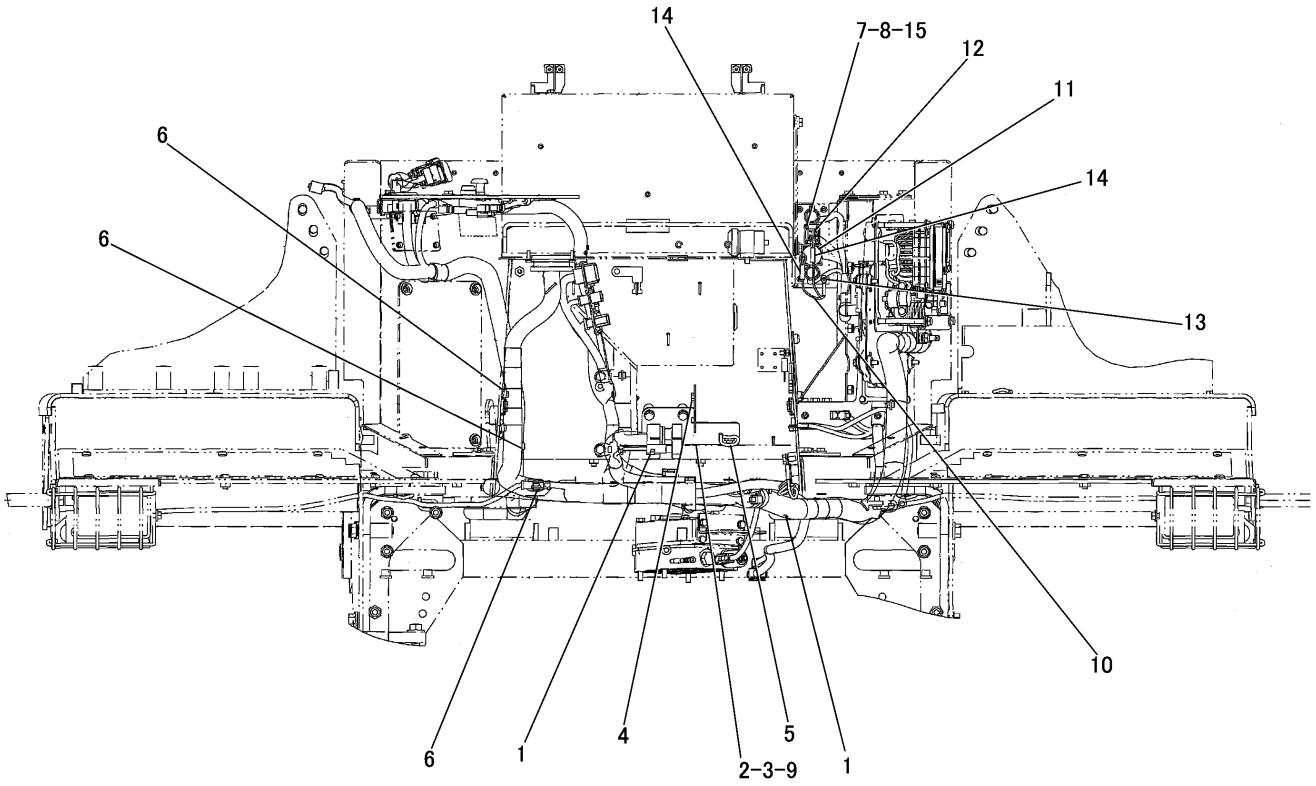

FRONT VIEW

NOTE	№	PART NO.	QTY	PART NAME	NOTE	№	PART NO.	QTY	PART NAME
	1	7K-1181	2	STRAP					
	2	8T-4137	2	BOLT(M10×1.5)					
	3	196-9852	1	PLATE AS					
		109-1645	1	CLIP					
		6V-6716	2	RIVET					
	4	6V-9632	2	NUT(M6×1)(WELD)					
	5	7T-1099	1	LINK					
	6	204-2281	6	TIE					
	7	4B-4863	2	WASHER					
	8	8T-2659	2	NUT(M4×0.7)					
	9	8T-4121	2	WASHER					
	10	173-1566	1	CAP AS					
	11	8C-6354	1	CAP					
	12	155-2271	1	PLUG KIT(4P)					
	13	2L-8077	1	TERMINAL					
E	14	125-7875		TUBE---3cm(×2)					
	15	150-4086	2	SCREW(M4×0.7)					

E-ORDER BY THE cm

J155632 X00

PLATFORM WIRING GROUP (271-6422 N/S) -PART 4 OF 5

PART OF 322-6115-Page 236

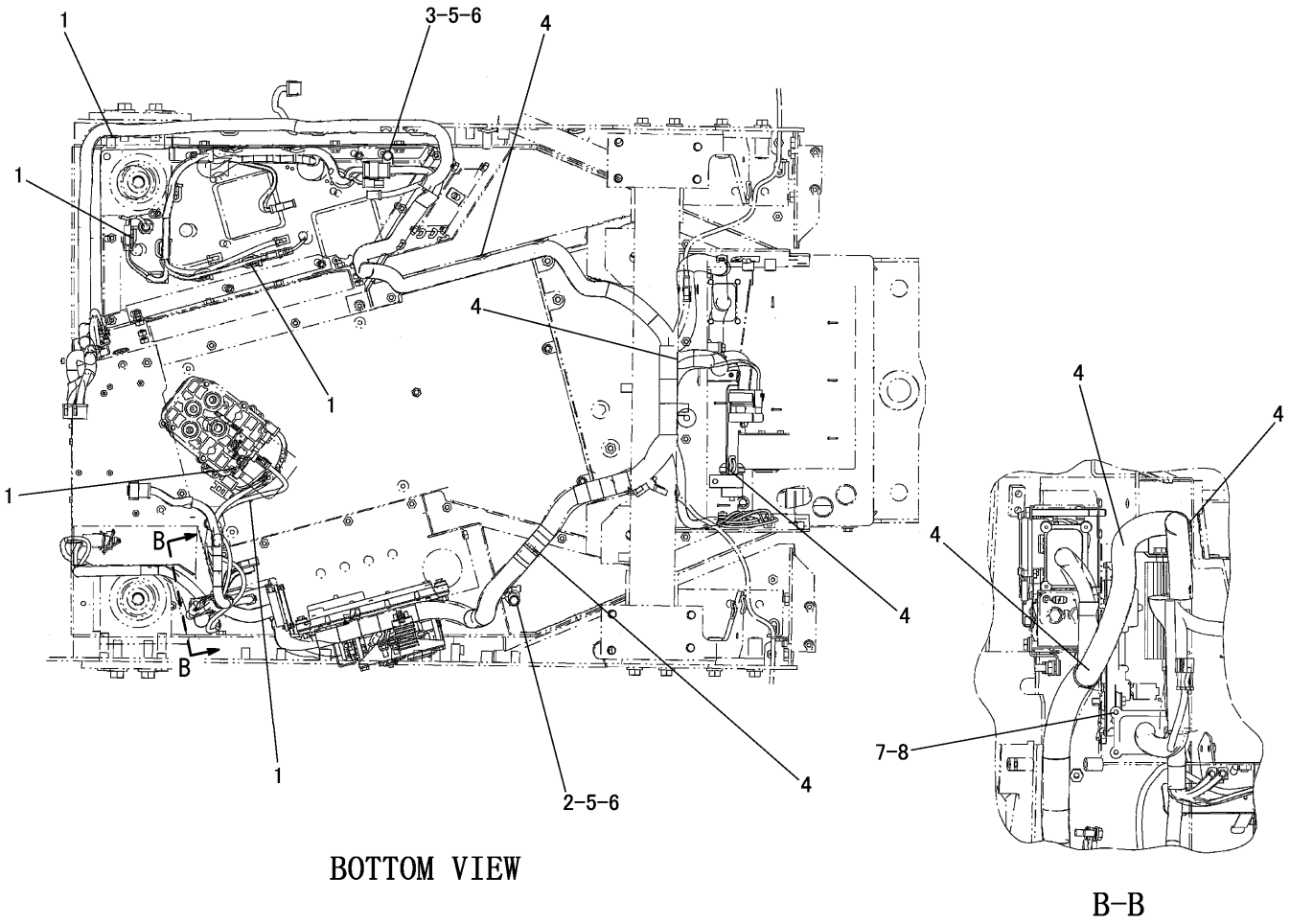

BOTTOM VIEW

B-B

NOTE	№	PART NO.	QTY	PART NAME	NOTE	№	PART NO.	QTY	PART NAME
	1	7K-1181	15	STRAP					
	2	204-8000	1	MOUNT					
	3	130-5300	2	CLIP					
	4	204-2281	12	TIE					
	5	8T-4121	2	WASHER					
	6	8T-4137	2	BOLT(M10×1.5)					
	7	8T-4138	4	BOLT(M6×1)					
	8	9X-8256	4	WASHER					

J155633 X00

PLATFORM WIRING GROUP (271-6422 N/S) -PART 5 OF 5

PART OF 322-6115-Page 236

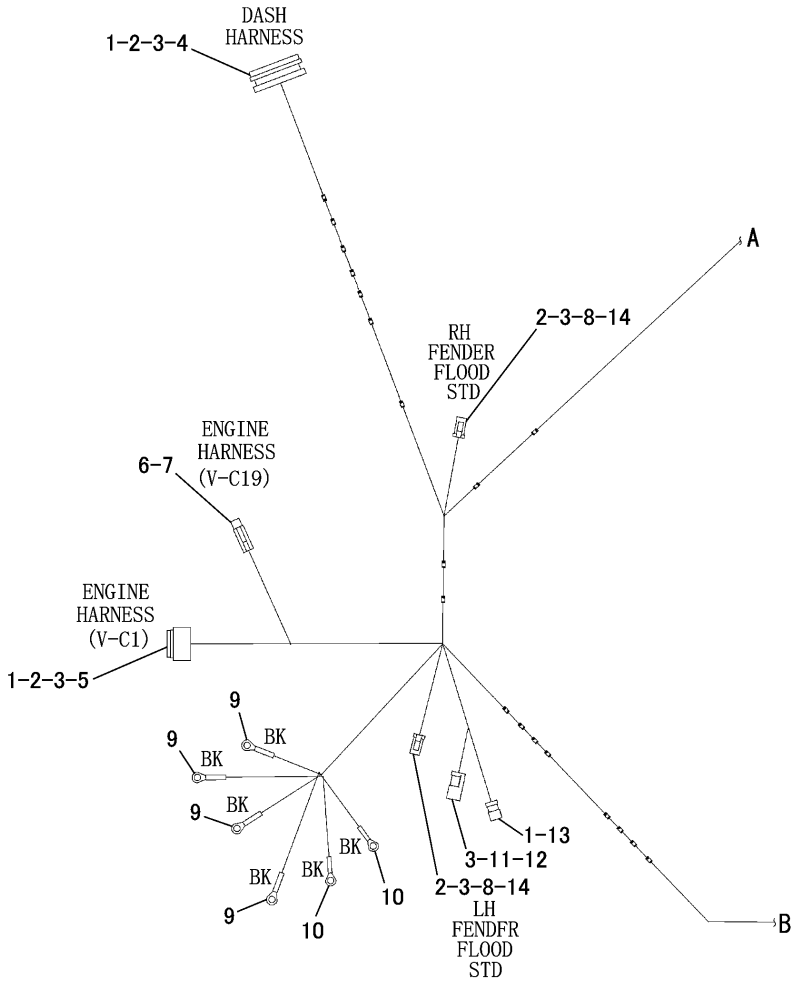

NOTE	№	PART NO.	QTY	PART NAME	NOTE	№	PART NO.	QTY	PART NAME
	1	9X-3402	114	SOCKET					
	2	126-1768	57	SOCKET					
	3	8T-8737	139	PLUG					
	4	160-7689	2	PLUG AS(70P)					
		159-9322	1	SEAL					
	5	110-6845	1	PLUG AS(40P)					
		110-6844	1	SEAL					
		1U-9053	1	CAPSULE					
	6	8N-1545	1	SOCKET					
	7	127-5485	1	PLUG AS(1P)					
	8	102-8802	5	RECEPTACLE KIT(2P)					
	9	2L-8069	6	TERMINAL					
	10	2L-8079	2	TERMINAL					
	11	9X-3401	116	PIN					
	12	102-8803	1	RECEPTACLE KIT(3P)					
	13	155-2260	1	PLUG KIT(3P)					
	14	155-2270	2	PLUG KIT(2P)					
				(QUANTITIES SHOWN ARE AMOUNT ON ASSEMBLY)					

J155635 -04

275-0074 HARNESS ASSEMBLY -PLATFORM-PART 1 OF 3
PART OF 271-6422-Page 116

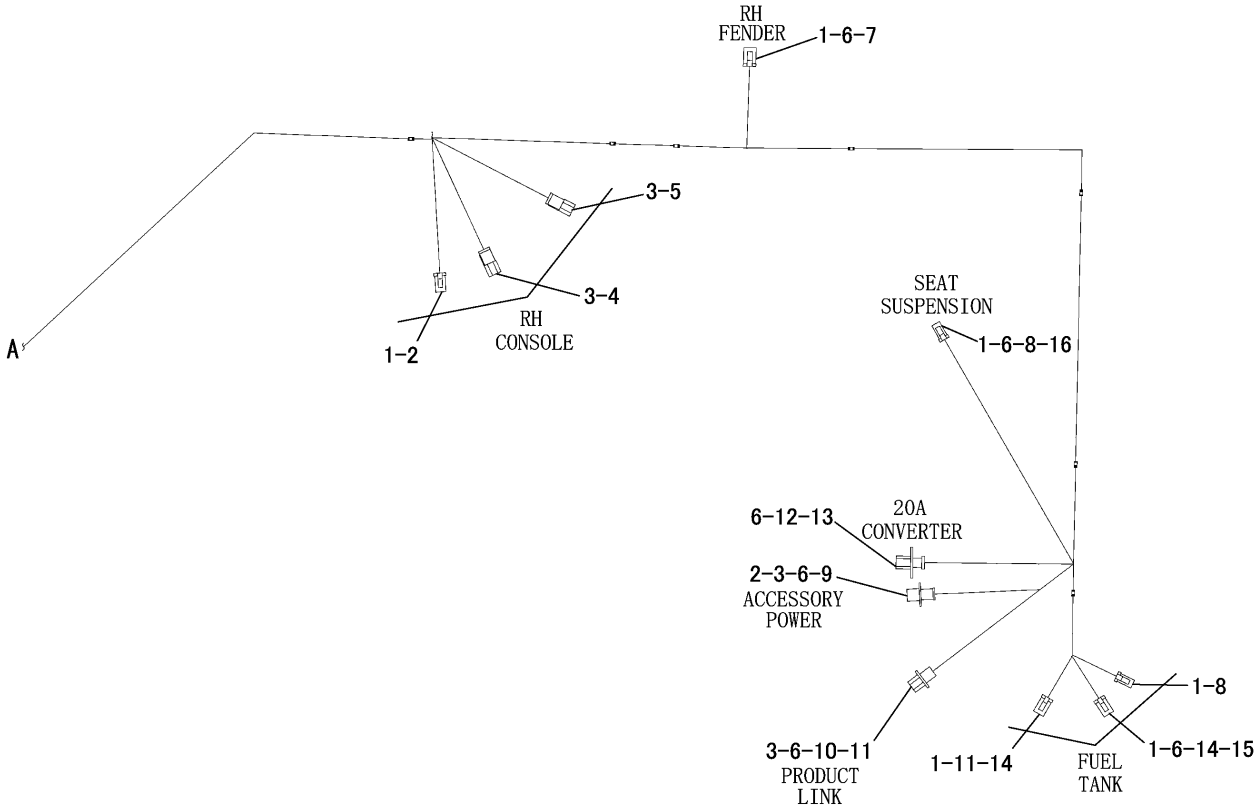

NOTE	№	PART NO.	QTY	PART NAME	NOTE	№	PART NO.	QTY	PART NAME
	1	9X-3402	114	SOCKET					
	2	155-2271	4	PLUG KIT(4P)					
	3	9X-3401	116	PIN					
	4	190-7615	1	RECEPTACLE KIT(12P)					
	5	102-8801	2	RECEPTACLE KIT(12P)					
	6	8T-8737	139	PLUG					
	7	155-2265	1	PLUG KIT(8P)					
	8	155-2270	7	PLUG KIT(2P)					
	9	197-7565	2	RECEPTACLE KIT(4P)					
	10	166-5229	1	RECEPTACLE KIT(12P)					
	11	155-2255	2	PLUG KIT(12P)					
	12	265-2106	1	RECEPTACLE KIT(4P)					
	13	177-9656	1	PLUG KIT(4P)					
	14	126-1768	57	SOCKET					
	15	155-2257	1	PLUG KIT(12P)					
	16	102-8802	5	RECEPTACLE KIT(2P)					
				(QUANTITIES SHOWN ARE AMOUNT ON ASSEMBLY)					

J155636 -04

275-0074 HARNESS ASSEMBLY -PLATFORM-PART 2 OF 3
PART OF 271-6422-Page 116

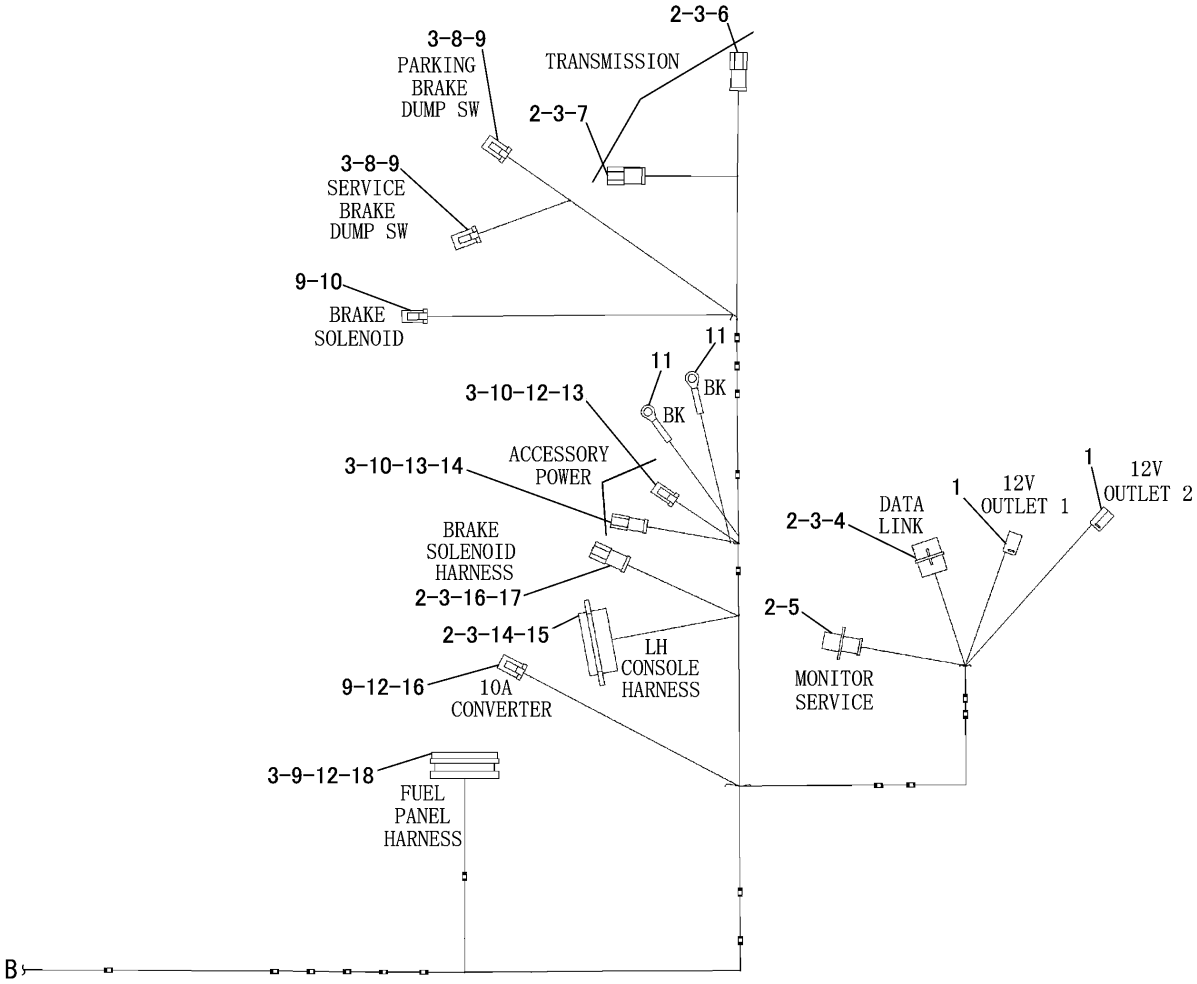

NOTE	№	PART NO.	QTY	PART NAME	NOTE	№	PART NO.	QTY	PART NAME
	1	9X-0196	2	TERMINAL AS					(QUANTITIES SHOWN ARE AMOUNT ON ASSEMBLY)
	2	9X-3401	116	PIN					
	3	8T-8737	139	PLUG					
	4	9W-1951	1	RECEPTACLE					
	5	197-7565	2	RECEPTACLE KIT(4P)					
	6	102-8804	1	RECEPTACLE KIT(4P)					
	7	102-8801	2	RECEPTACLE KIT(12P)					
	8	155-2271	4	PLUG KIT(4P)					
	9	9X-3402	114	SOCKET					
	10	155-2270	7	PLUG KIT(2P)					
	11	2L-8069	6	TERMINAL					
	12	126-1768	57	SOCKET					
	13	102-8802	5	RECEPTACLE KIT(2P)					
	14	126-1767	6	PIN					
	15	214-4208	1	RECEPTACLE AS(70P)					
	16	155-2274	2	PLUG KIT(6P)					
	17	102-8805	1	RECEPTACLE KIT(6P)					
	18	160-7689	2	PLUG AS(70P)					
		159-9322	1	SEAL					

J155637 -04

275-0074 HARNESS ASSEMBLY -PLATFORM-PART 3 OF 3
PART OF 271-6422-Page 116

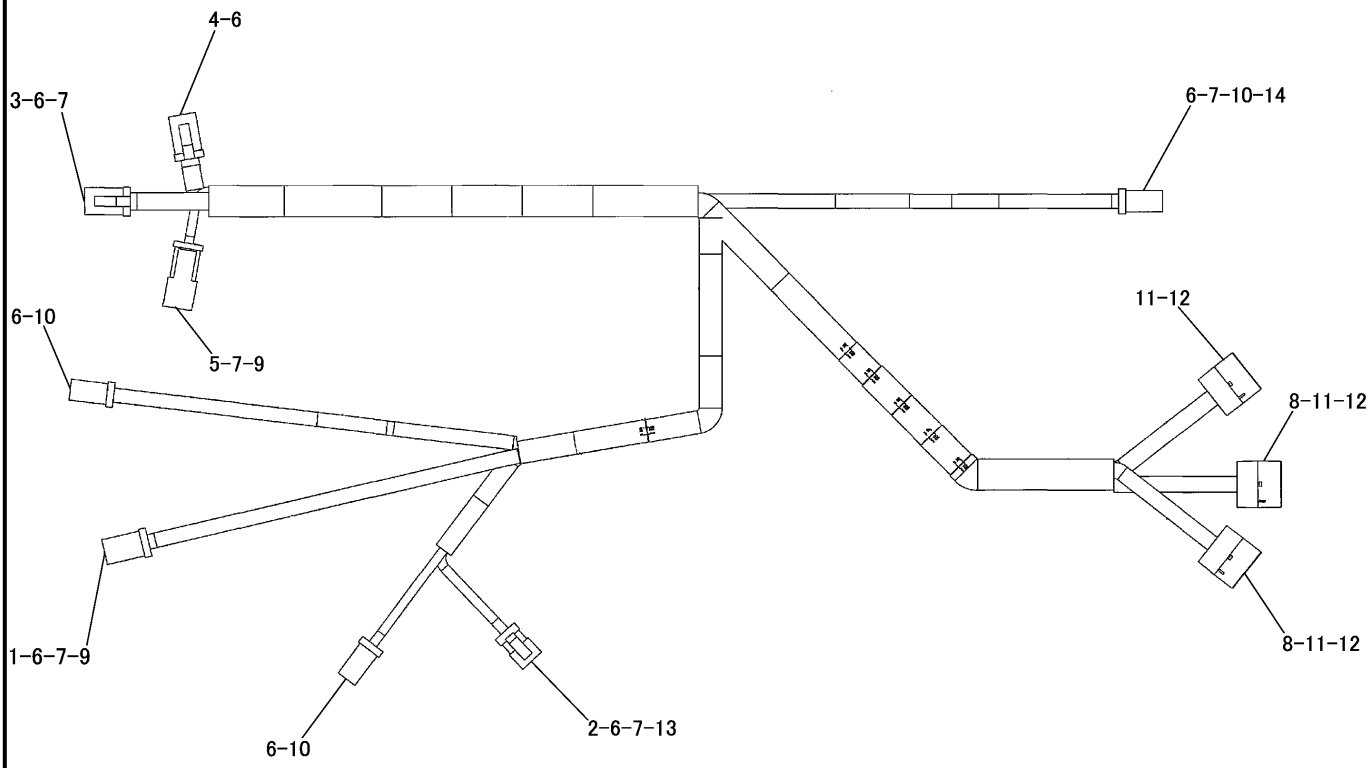

NOTE	№	PART NO.	QTY	PART NAME	NOTE	№	PART NO.	QTY	PART NAME
	1	155-2271	1	PLUG KIT(4P)					
	2	155-2260	1	PLUG KIT(3P)					
	3	155-2257	1	PLUG KIT(12P)					
	4	155-2255	1	PLUG KIT(12P)					
	5	126-1767	2	PIN					
	6	126-1768	35	SOCKET					
	7	9G-3695	13	PLUG					
	8	202-5397	6	PLUG					
	9	102-8804	2	RECEPTACLE KIT(4P)					
	10	155-2270	3	PLUG KIT(2P)					
	11	245-7434	3	PLUG KIT(10P)					
	12	204-1297	24	TERMINAL					
	13	102-8803	1	RECEPTACLE KIT(3P)					
	14	102-8802	1	RECEPTACLE KIT(2P)					

J137636 X02

226-9665 HARNESS ASSEMBLY -RH CONSOLE
PART OF 271-6422-Page 116

ELECTRICAL AND STARTING SYSTEM

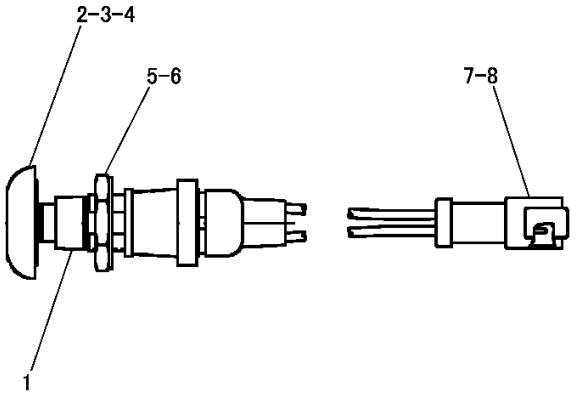

NOTE	№	PART NO.	QTY	PART NAME
	1	9X-0199	1	BOOT
	2	7T-9515	1	KNOB
	3	5L-7200	1	SCREW(No.8-32)
	4	3B-4501	1	LOCKWASHER
	5	6V-8370	1	NUT(3/4-32)
	6	2H-3922	1	LOCKWASHER
	7	102-8802	1	RECEPTACLE KIT(2P)
	8	9X-3401	2	PIN

J147346 -00

158-6632 SWITCH ASSEMBLY -HORN
PART OF 271-6422-Page 116

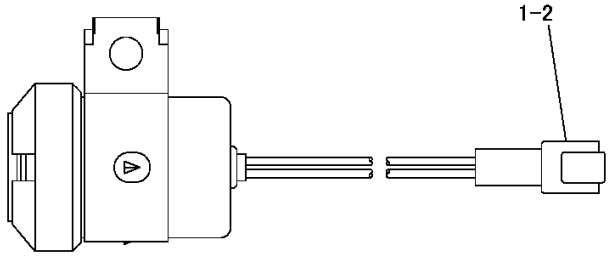

NOTE	№	PART NO.	QTY	PART NAME
	1	102-8802	1	RECEPTACLE KIT(2P)
	2	186-3735	2	PIN

J137560 -02

3E-6328 ALARM GROUP -24V
PART OF 271-6422-Page 118

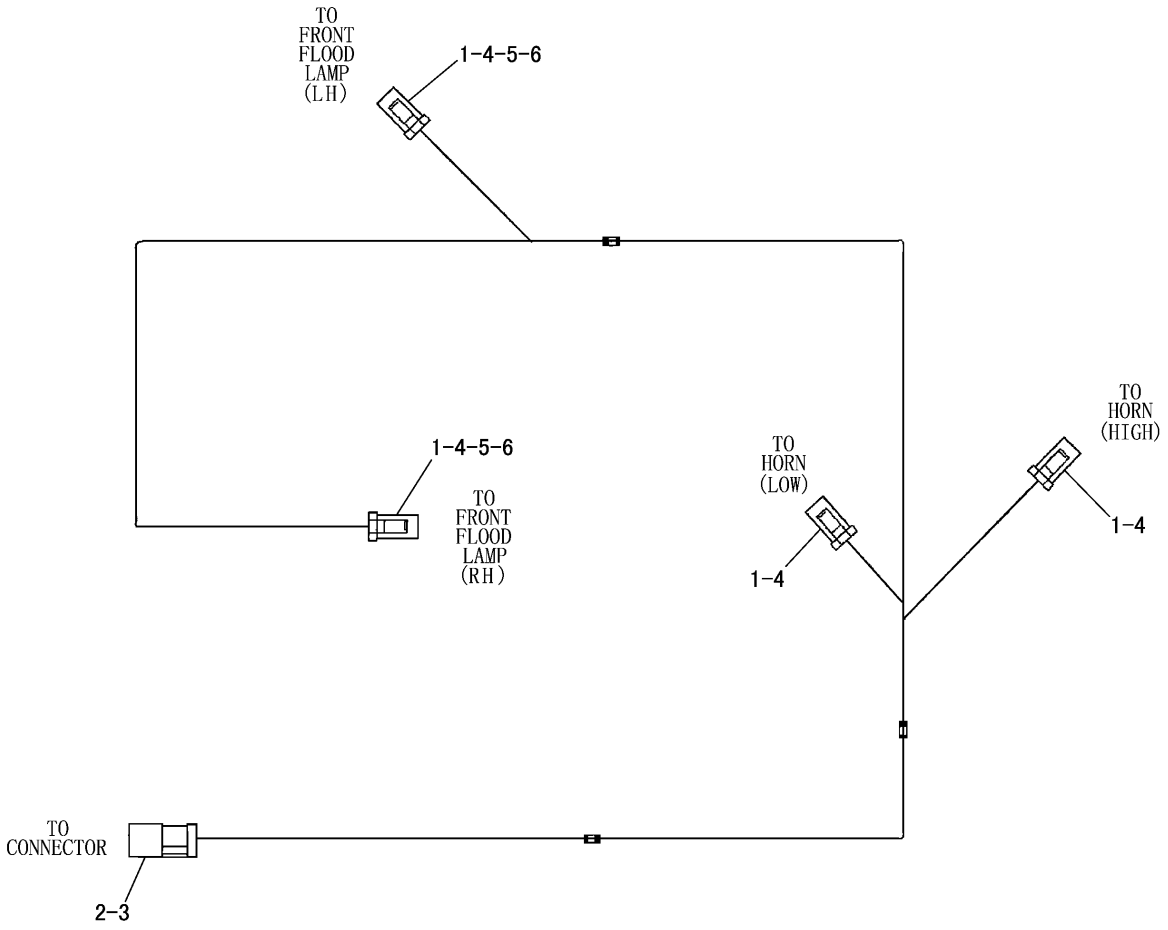

NOTE	№	PART NO.	QTY	PART NAME	NOTE	№	PART NO.	QTY	PART NAME
	1	155-2270	4	PLUG KIT(2P)					
	2	102-8803	1	RECEPTACLE KIT(3P)					
	3	126-1767	3	PIN					
	4	126-1768	8	SOCKET					
	5	9G-3695	4	PLUG					
	6	102-8802	2	RECEPTACLE KIT(2P)					

J146228 X01

185-7157 HARNESS ASSEMBLY -RADIATOR GUARD
PART OF 271-6421-Page 111

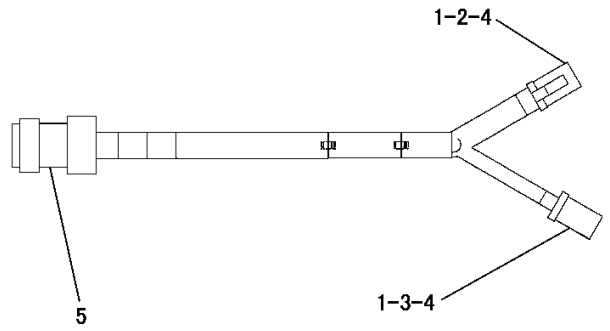

NOTE	№	PART NO.	QTY	PART NAME
	1	8T-8737	3	PLUG
	2	155-2255	1	PLUG AS(12P)
	3	155-2271	1	PLUG KIT(4P)
	4	9X-3402	13	SOCKET
	5	154-3172	1	PULG AS(14P)

J147350 X00

239-8155 HARNESS ASSEMBLY -TRANSMISSION JUMPER
PART OF 271-6421-Page 110

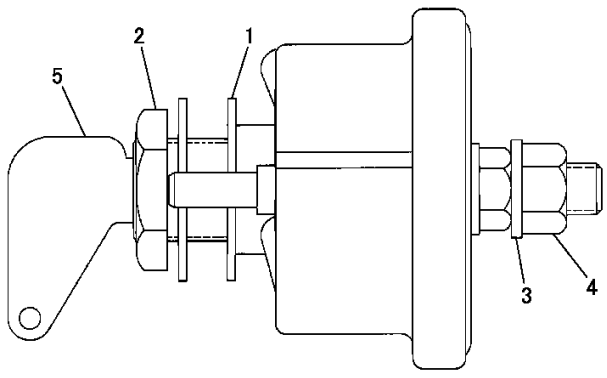

NOTE	№	PART NO.	QTY	PART NAME
	1	2H-3922	2	LOCKWASHER
	2	8H-5303	1	NUT(3/4-16)
	3	9F-5644	2	LOCKWASHER
	4	6F-7045	2	NUT(3/8-24)
	5	8H-5306	1	KEY

J106722 -13

7N-0718 DISCONNECT SWITCH ASSEMBLY
PART OF 271-6421-Page 110

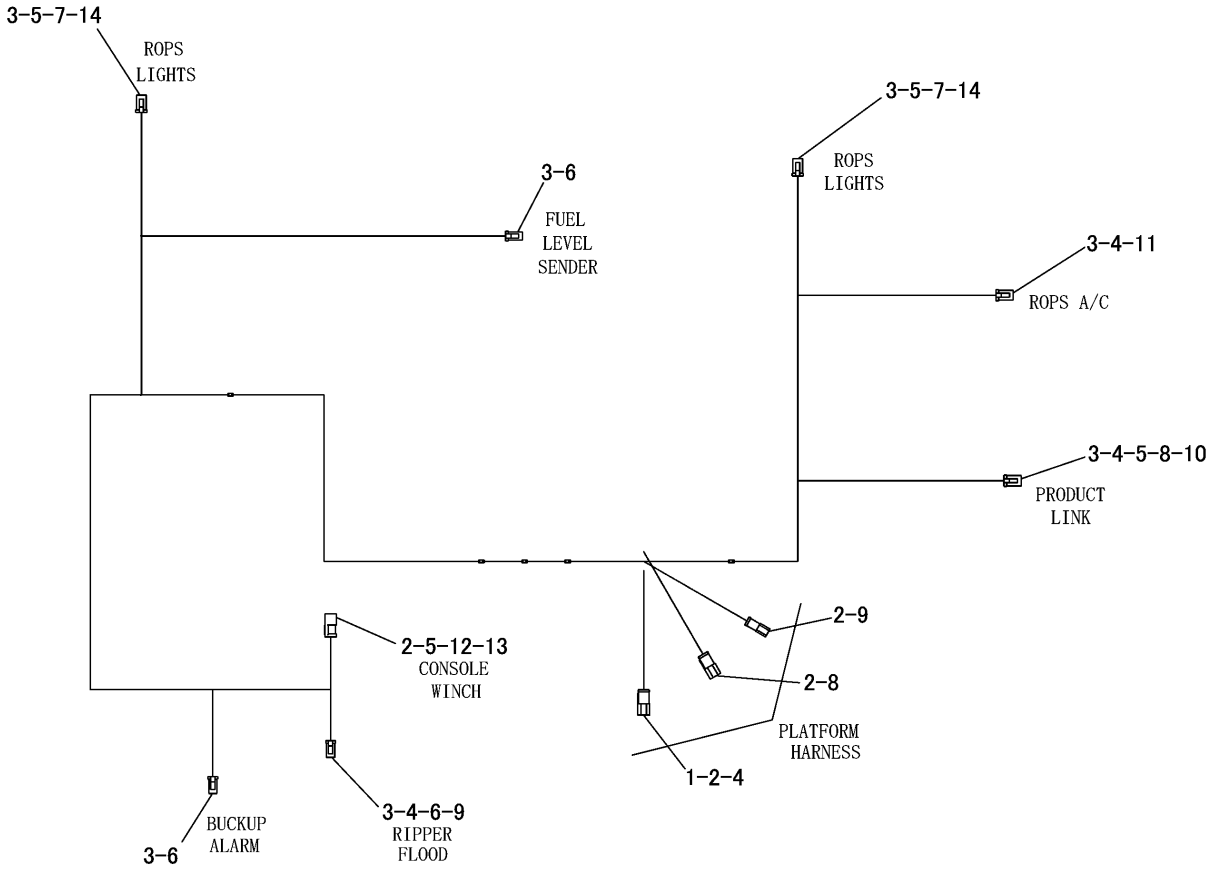

NOTE	№	PART NO.	QTY	PART NAME	NOTE	№	PART NO.	QTY	PART NAME
	1	190-7615	1	RECEPTACLE KIT(12P)					
	2	126-1767	28	PIN					
	3	126-1768	28	SOCKET					
	4	8T-8737	7	PLUG					
	5	9G-3695	23	PLUG					
	6	155-2270	3	PLUG KIT(2P)					
	7	155-2271	2	PLUG KIT(4P)					
	8	102-8801	2	RECEPTACLE KIT(12P)					
	9	102-8802	2	RECEPTACLE KIT(2P)					
	10	155-2255	1	PLUG KIT(12P)					
	11	155-2274	1	PLUG KIT(6P)					
	12	102-8803	1	RECEPTACLE KIT(3P)					
	13	155-2260	1	PLUG KIT(3P)					
	14	102-8804	2	RECEPTACLE KIT(4P)					

J155627 X01

276-4833 HARNESS ASSEMBLY -FUEL TANK
PART OF 271-6421-Page 111

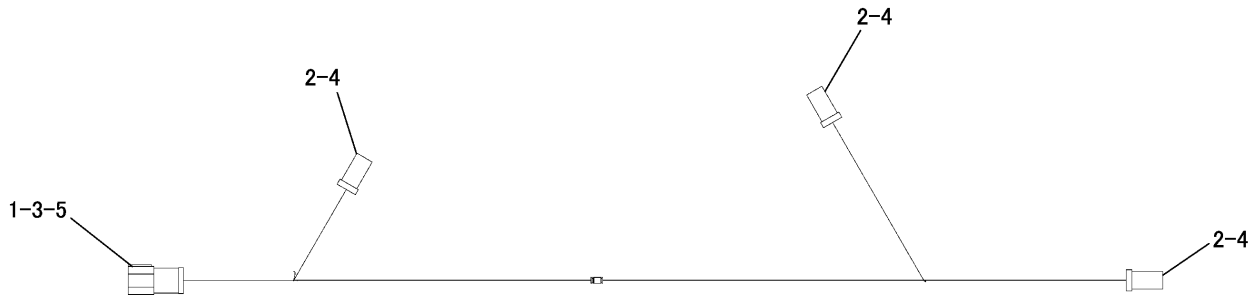

NOTE	№	PART NO.	QTY	PART NAME	NOTE	№	PART NO.	QTY	PART NAME
	1	126-1767	5	PIN					
	2	126-1768	6	SOCKET					
	3	8T-8737	3	PLUG					
	4	155-2270	3	PLUG KIT(2P)					
	5	102-8806	1	RECEPTACLE KIT(8P)					

J155628 -01

276-5713 HARNESS ASSEMBLY -RH FENDER
PART OF 271-6421-Page 110

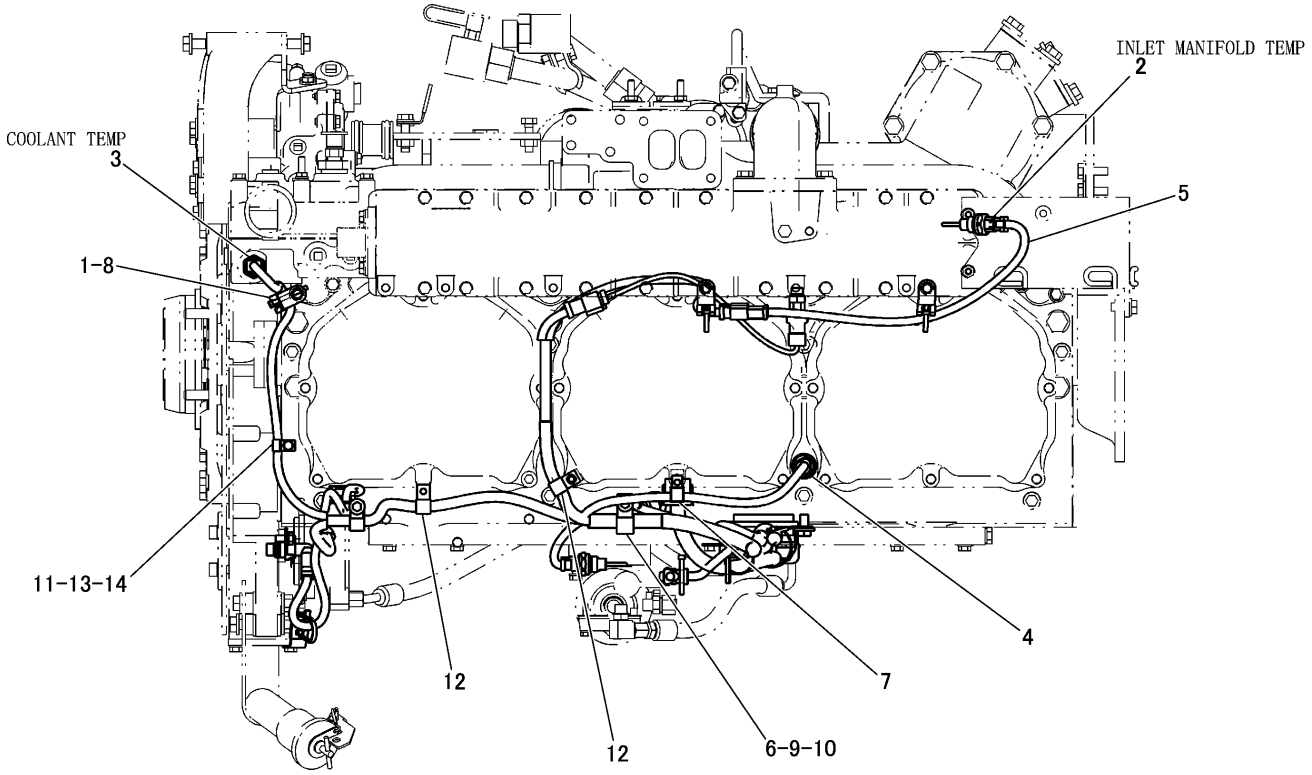

TOP VIEW OF ENGINE

NOTE	№	PART NO.	QTY	PART NAME	NOTE	№	PART NO.	QTY	PART NAME
	1	3S-2093	1	STRAP		11	8T-4138	1	BOLT(M6×1)
Z	2	197-8391	1	SENSOR GROUP		12	8J-1256	2	CLIP
		264-4297	1	SENSOR GROUP		13	8M-2771	1	CLIP
		137-6645	1	PAD		14	9X-8267	1	WASHER
		8L-2786	1	SEAL					
	3	130-9811	1	SENSOR GROUP					
		6V-6609	1	SEAL					
Z	4	197-8393	1	SENSOR GROUP					
		161-1703	1	SENSOR GROUP					
		214-7568	1	SEAL					
	5	269-8372	1	HARNESS AS					
		102-8802	1	RECEPTACLE KIT(2P)					
		126-1767	2	PIN					
		155-2270	1	PLUG KIT(2P)					
		194-5226	2	HARNESS AS					
	6	067-2551	1	CLIP					
	7	2V-3216	1	CLIP					
	8	4P-8134	1	CLIP					
	9	5P-4115	1	WASHER					
	10	6V-8214	1	BOLT(M6×1)					

Z-NOT SERVICED SEPARATELY

J155657 -07

ELECTRONIC CONTROL WIRING GROUP (246-9360 N/S) -PART 1 OF 3
PART OF 256-6771-Page 3

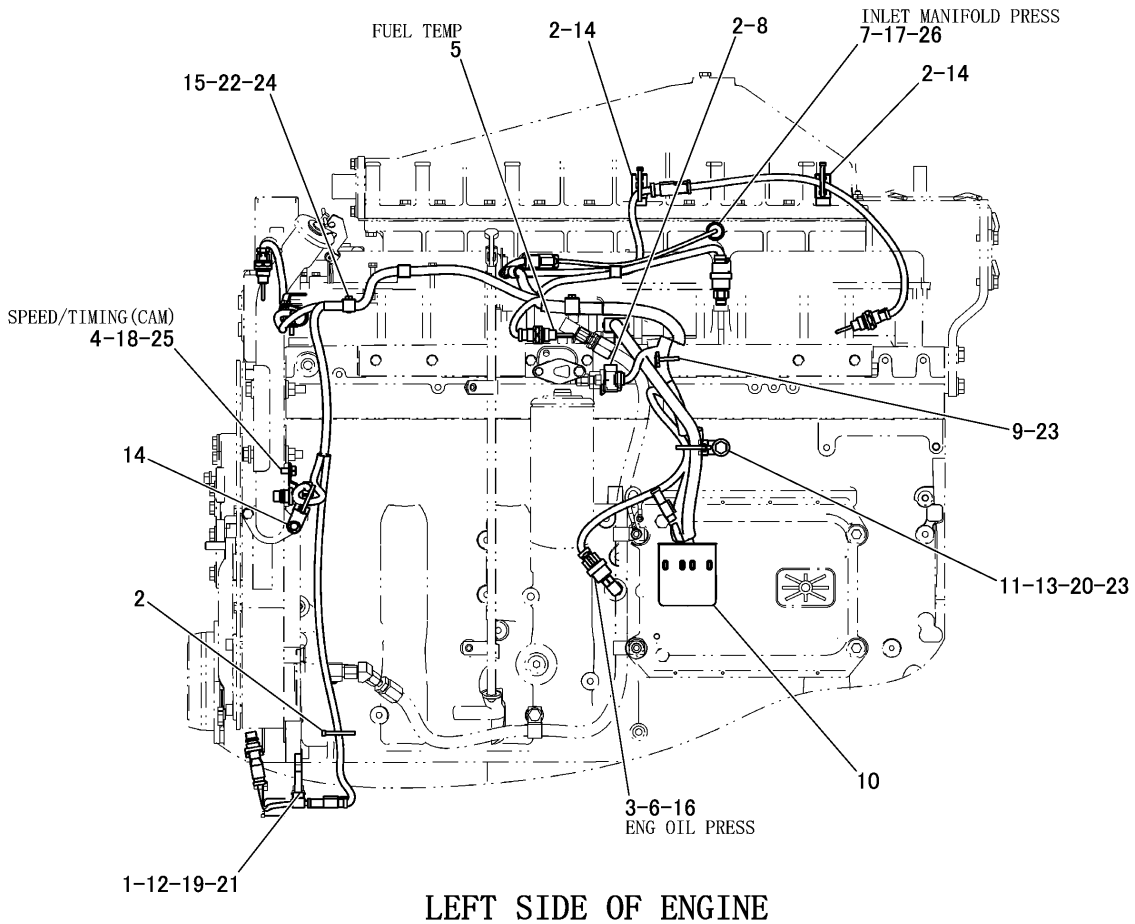

LEFT SIDE OF ENGINE

NOTE	№	PART NO.	QTY	PART NAME
	1	2M-7077	1	SPACER
	2	3S-2093	4	STRAP
	3	117-0067	1	ELBOW
Z	4	197-8397	1	SENSOR GROUP
		194-5340	1	SENSOR GROUP
		155-2270	1	PLUG KIT(2P)
		194-5226	2	HARNESS AS
		136-4878	2	SPLICE
		203-3940	1	SEAL
Z	5	197-8391	1	SENSOR GROUP
		264-4297	1	SENSOR GROUP
		137-6645	1	PAD
		8L-2786	1	SEAL
Z	6	197-8394	1	SENSOR GROUP
		161-1705	1	SENSOR GROUP
		6V-5048	1	SEAL
Z	7	197-8395	1	PRESSURE SENSOR GROUP
		194-6724	1	PRESSURE SENSOR GROUP
		155-2260	1	PLUG KIT(3P)
		194-5226	3	HARNESS AS
		6V-5048	1	SEAL

NOTE	№	PART NO.	QTY	PART NAME
	8	102-8803	1	RECEPTACLE KIT(3P)
		8T-8737	3	PLUG
	9	132-5789	1	CLIP
Y	10	222-4086	1	HARNESS AS
	11	3E-4353	1	WASHER
	12	4D-7794	1	CLIP
	13	4P-7581	1	CLIP
	14	4P-8134	3	CLIP
	15	5P-4115	1	WASHER
	16	6V-5048	1	SEAL
	17	214-7568	1	SEAL
	18	6V-5215	1	BOLT(M8×1.25)
	19	6V-5839	1	WASHER
	20	6V-6317	1	BOLT(M10×1.5)
	21	6V-7981	1	BOLT(M10×1.5)
	22	6V-8214	1	BOLT(M6×1)
	23	7K-1181	2	STRAP
	24	8J-1256	1	CLIP
	25	9M-1974	1	WASHER
	26	9X-0261	1	ADAPTER

Y-SEPARATE ILLUSTRATION
Z-NOT SERVICED SEPARATELY

J155658 -07

ELECTRONIC CONTROL WIRING GROUP (246-9360 N/S) -PART 2 OF 3
PART OF 256-6771-Page 3
REFERENCE:222-4086-Page 133

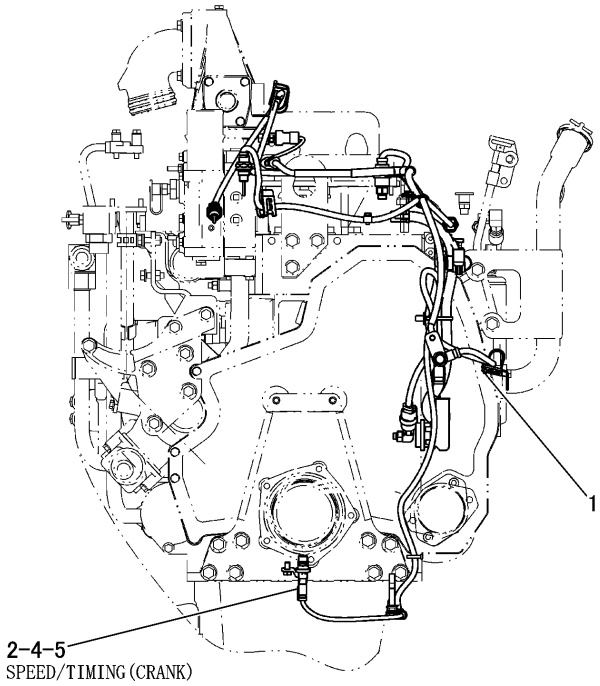

FRONT VIEW OF ENGINE

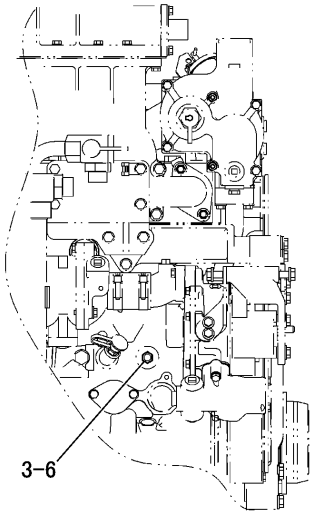

RIGHT SIDE OF ENGINE

NOTE	№	PART NO.	QTY	PART NAME	NOTE	№	PART NO.	QTY	PART NAME
	1	3S-2093	1	STRAP					
Z	2	197-8396	1	SPEED SENSOR GROUP					
		203-3940	1	SEAL					
		188-7511	1	SPEED SENSOR GROUP					
		137-6645	1	PAD					
		133-0260	1	BRACKET					
		188-9429	1	HARNESS AS					
	3	214-7568	1	SEAL					
	4	6V-5215	1	BOLT(M8×1.25)					
	5	9M-1974	1	WASHER					
	6	9S-4191	1	PLUG					

Z-NOT SERVICED SEPARATELY

J155659 -07

ELECTRONIC CONTROL WIRING GROUP (246-9360 N/S) -PART 3 OF 3
PART OF 256-6771-Page 3

ELECTRICAL AND STARTING SYSTEM

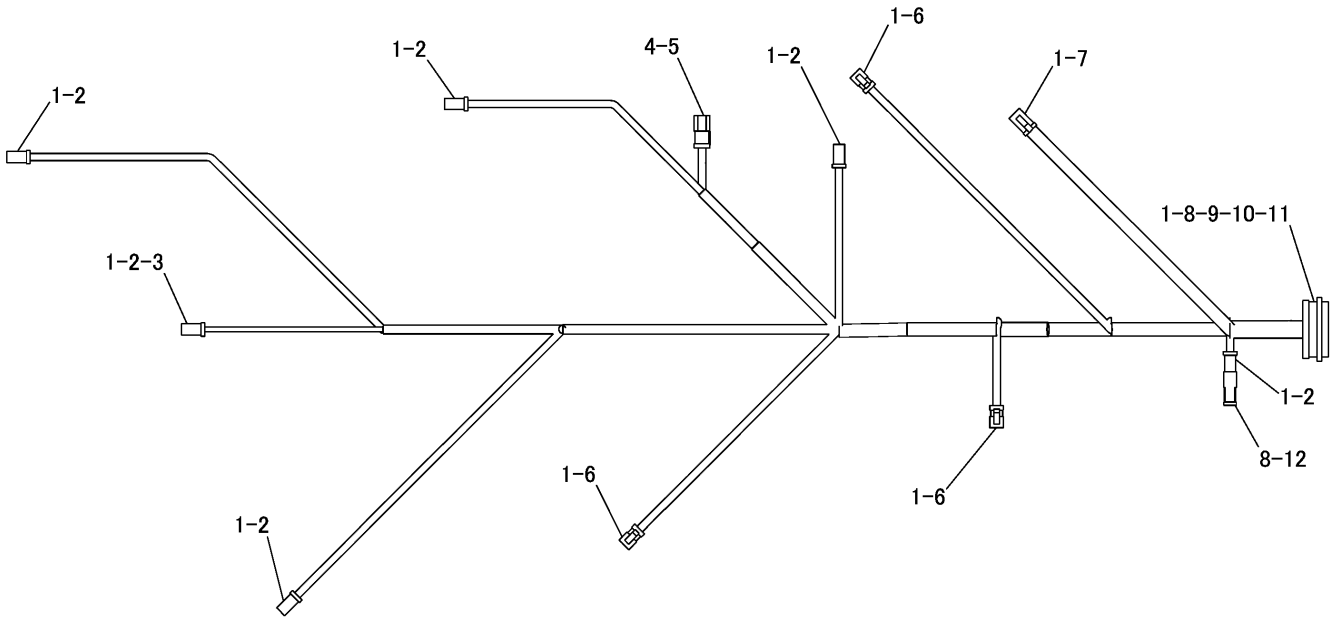

NOTE	№	PART NO.	QTY	PART NAME	NOTE	№	PART NO.	QTY	PART NAME
	1	180-9340	61	SOCKET					
	2	155-2270	6	PLUG KIT(2P)					
E	3	9X-1386		SLEEVE---25cm					
	4	9X-3401	3	PIN					
	5	102-8803	1	RECEPTACLE KIT(3P)					
	6	155-2260	3	PLUG KIT(3P)					
	7	155-2255	1	PLUG KIT(12P)					
	8	8T-8737	44	PLUG					
	9	160-7690	1	PLUG AS(70P)					
		159-9322	1	SEAL					
	10	3S-2093	2	STRAP					
	11	126-1774	1	ENDBELL					
	12	102-8802	1	RECEPTACLE KIT(2P)					

E-ORDER BY THE cm

J144165 -02

222-4086 HARNESS ASSEMBLY -ELECTRONIC CONTROL
PART OF 246-9360-Page 131

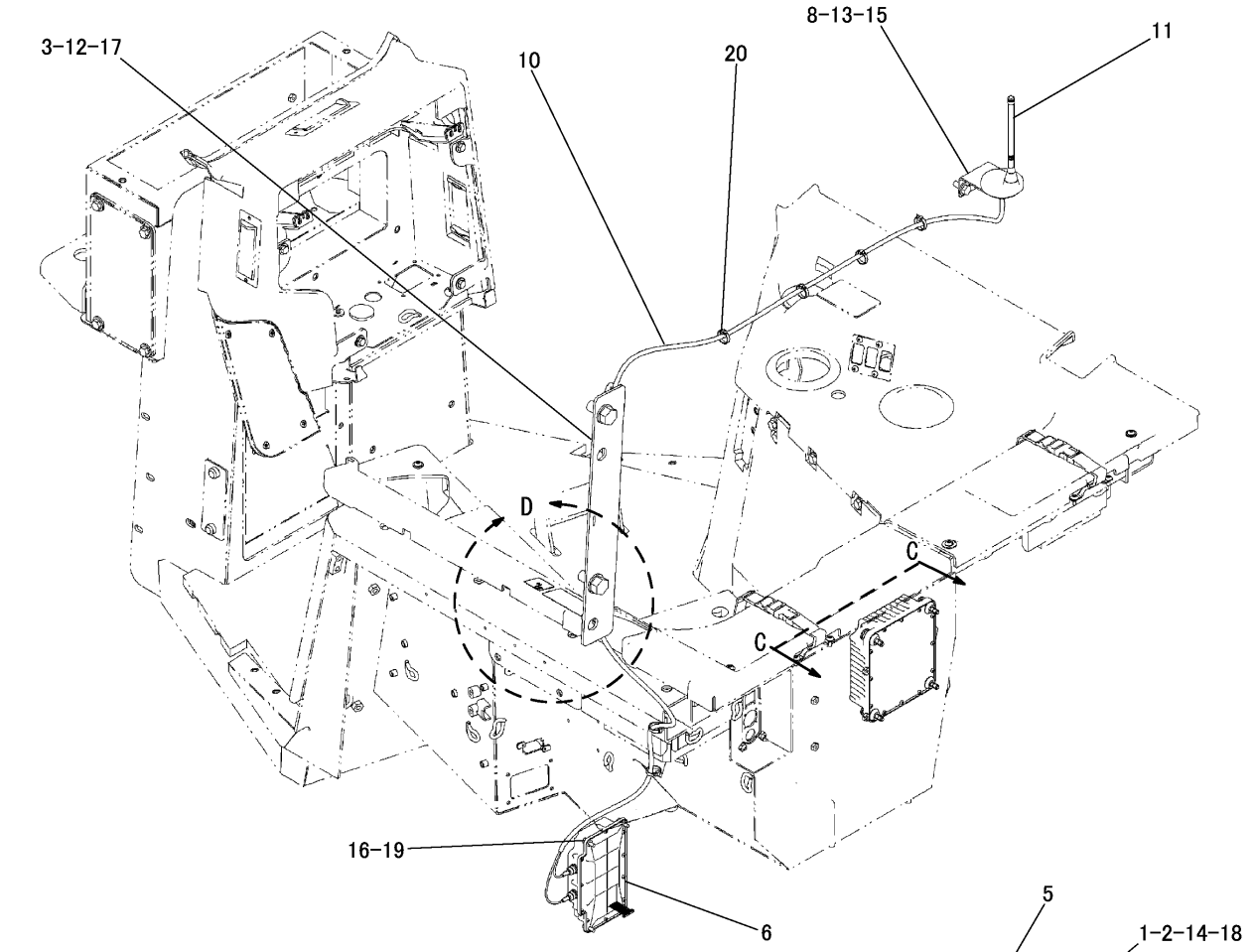

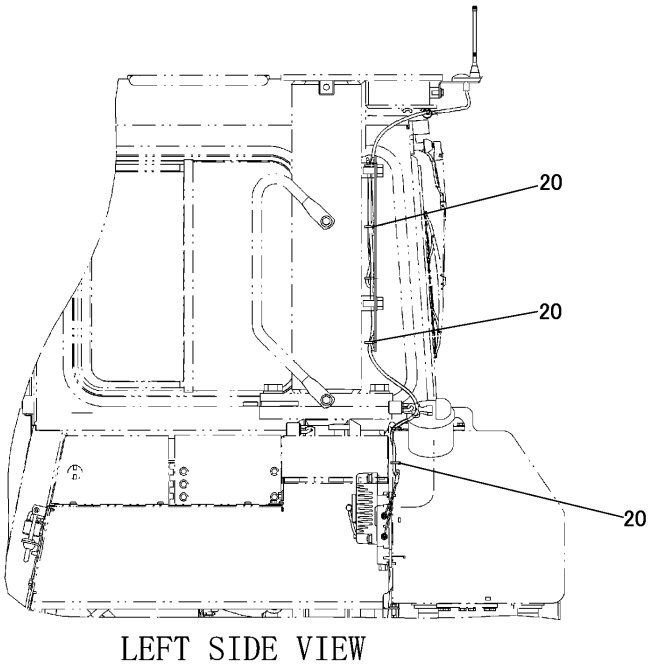

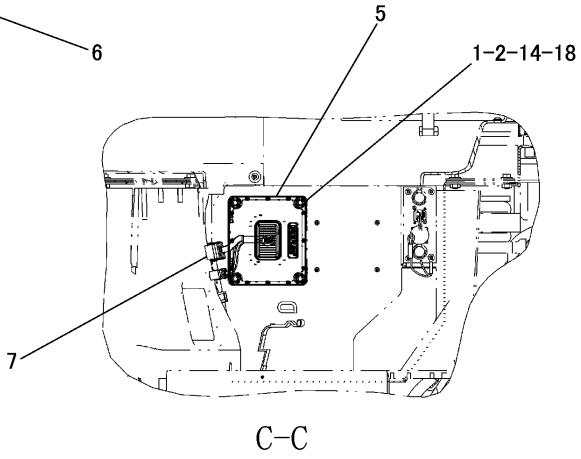

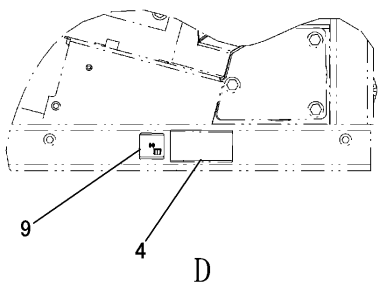

J155863 -07

INSTALLATION GROUP (286-1197 N/S) -PRODUCT LINK
AN ATTACHMENT

ELECTRICAL AND STARTING SYSTEM

NOTE	№	PART NO.	QTY	PART NAME	NOTE	№	PART NO.	QTY	PART NAME
	1	8C-5607	8	MOUNT					
	2	8C-5608	4	SPACER					
	3	129-8331	1	PLATE AS					
		7T-1099	4	LINK					
	4	230-1340	1	FILM(WARNING)(PRODUCT LINK,ANSI)					
Y	5	262-1421	1	CONTROL GROUP					
	6	263-9088	1	CONTROL GROUP					
Y	7	268-5986	1	HARNESS AS					
	8	306-0177	1	BRACKET					
	9	307-0047	1	FILM(WARNING)(PRODUCT LINK)					
	10	284-8532	1	ANTENNA AS					
	11	301-0589	1	ANTENNA					
	12	7X-0365	2	BOLT(3/4-10)					
	13	7X-7729	2	WASHER					
	14	8T-2192	4	BOLT(M6×1)					
	15	8T-4136	2	BOLT(M10×1.5)					
	16	8T-4181	4	BOLT(M6×1)					
	17	8T-4994	2	WASHER					
	18	9X-6165	4	WASHER					
	19	9X-8256	4	WASHER					
	20	7K-1181	10	STRAP					

Y-SEPARATE ILLUSTRATION

J155863 -07

INSTALLATION GROUP (286-1197 N/S) -PRODUCT LINK
REFERENCE:262-1421-Page 136 268-5986-Page 137
AN ATTACHMENT

ELECTRICAL AND STARTING SYSTEM

CONSISTS OF :

PAGE

1 239-9954 ELECTRONIC CONTROL GROUP 136

J153142 -09

CONTROL GROUP (262-1421 N/S) -PRODUCT LINK
PART OF 286-1197-Page 135
AN ATTACHMENT

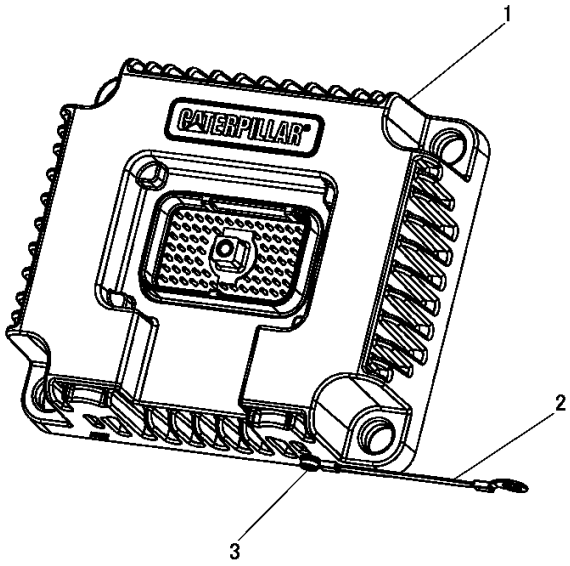

NOTE	№	PART NO.	QTY	PART NAME
	1	285-1133	1	CONTROL GROUP
	2	7X-6315	1	STRAP
	3	126-7574	1	SCREW(No.8-32)
		134-4126	1	WASHER

J147857 -05

239-9954 ELECTRONIC CONTROL GROUP -PRODUCT LINK
PART OF 262-1421-Page 136
AN ATTACHMENT

ELECTRICAL AND STARTING SYSTEM

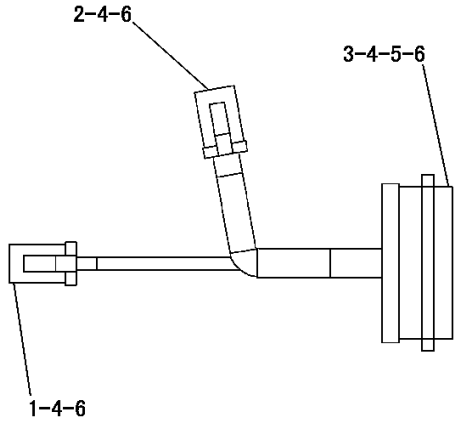

NOTE	№	PART NO.	QTY	PART NAME
	1	155-2271	1	PLUG KIT(4P)
	2	155-2255	1	PLUG KIT(12P)
	3	160-7690	1	PLUG AS(70P)
		159-9322	1	SEAL
	4	126-1768	26	SOCKET
	5	126-1774	1	ENDBELL
	6	8T-8737	60	PLUG

J155867 X00

HARNESS ASSEMBLY (268-5986 N/S) -PRODUCT LINK
PART OF 286-1197-Page 135
AN ATTACHMENT

CONSISTS OF :

			PAGE
1	239-2385	CONTROL AND MOUNTING GROUP ·····	310
1	239-5120	CONTROL MOUNTING GROUP(VALVE) ·····	438
1	246-5959	CONNECTORS MOUNTING GROUP ·····	149
1	252-6945	DISPLAY MOUNTING KIT ·····	392
1	271-5642	PILOT LINES GROUP ·····	328
1	275-0043	WIRING GROUP ·····	138
1	235-0523	BRACKET	
1	245-7725	FILM(INSTRUCTION)(JOYSTICK) (BELOW DOZER CONTROL FILM)	
2	8T-4136	BOLT(M10×1.5)	
1	285-2213	PLUG ASSEMBLY	
5	126-1767	PIN	
1	8T-8737	PLUG	
1	102-8805	RECEPTACLE KIT(6P)	

J155846 X00

INSTALLATION ARRANGEMENT (273-1826 N/S) -ACCUGRADE
AN ATTACHMENT

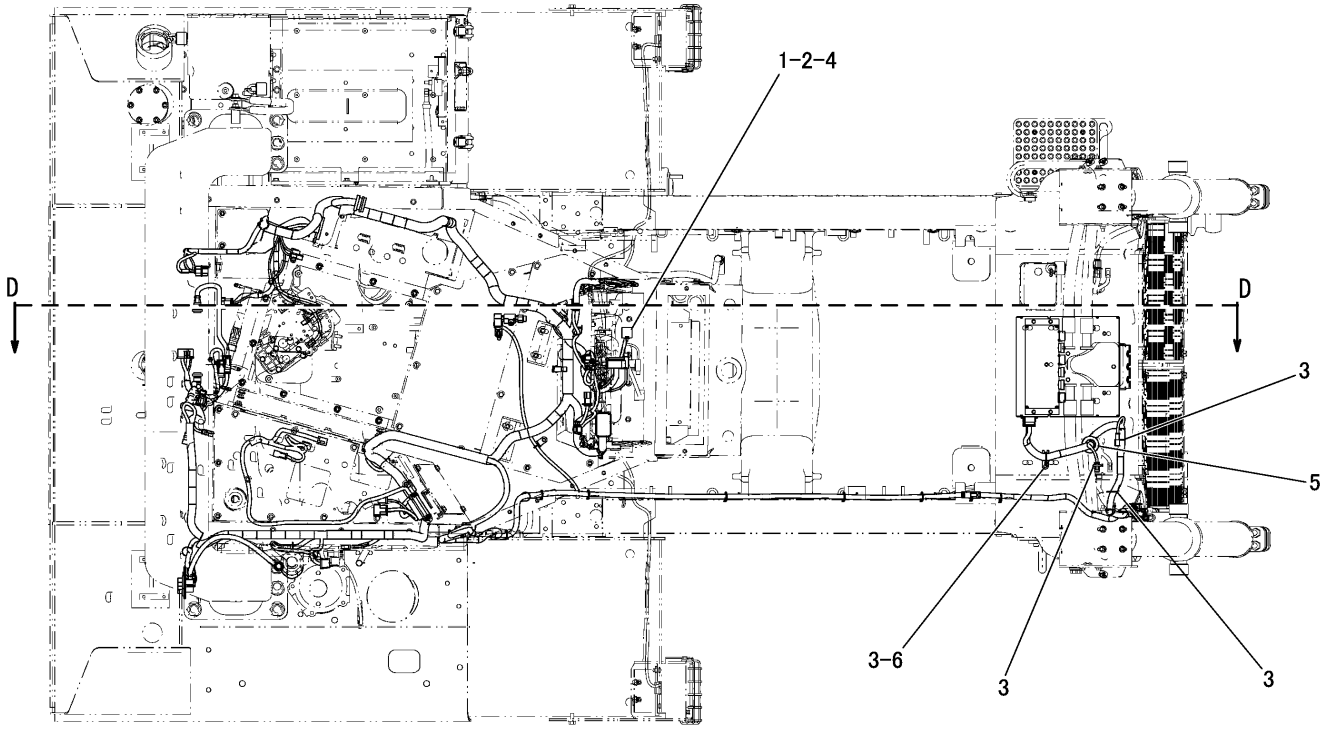

TOP VIEW

SEE PART 2 OF 4 FOR D-D

NOTE	№	PART NO.	QTY	PART NAME	NOTE	№	PART NO.	QTY	PART NAME
	1	3E-5239	1	RELAY AS					
	2	9X-8267	1	WASHER					
	3	7K-1181	4	STRAP					
	4	8T-4171	1	BOLT(M6×1)					
	5	9X-7449	1	GROMMET					
	6	4P-7581	1	CLIP					

J155853 -06

WIRING GROUP (275-0043 N/S) -ACCUGRADE-PART 1 OF 4
PART OF 273-1826-Page 137
AN ATTACHMENT

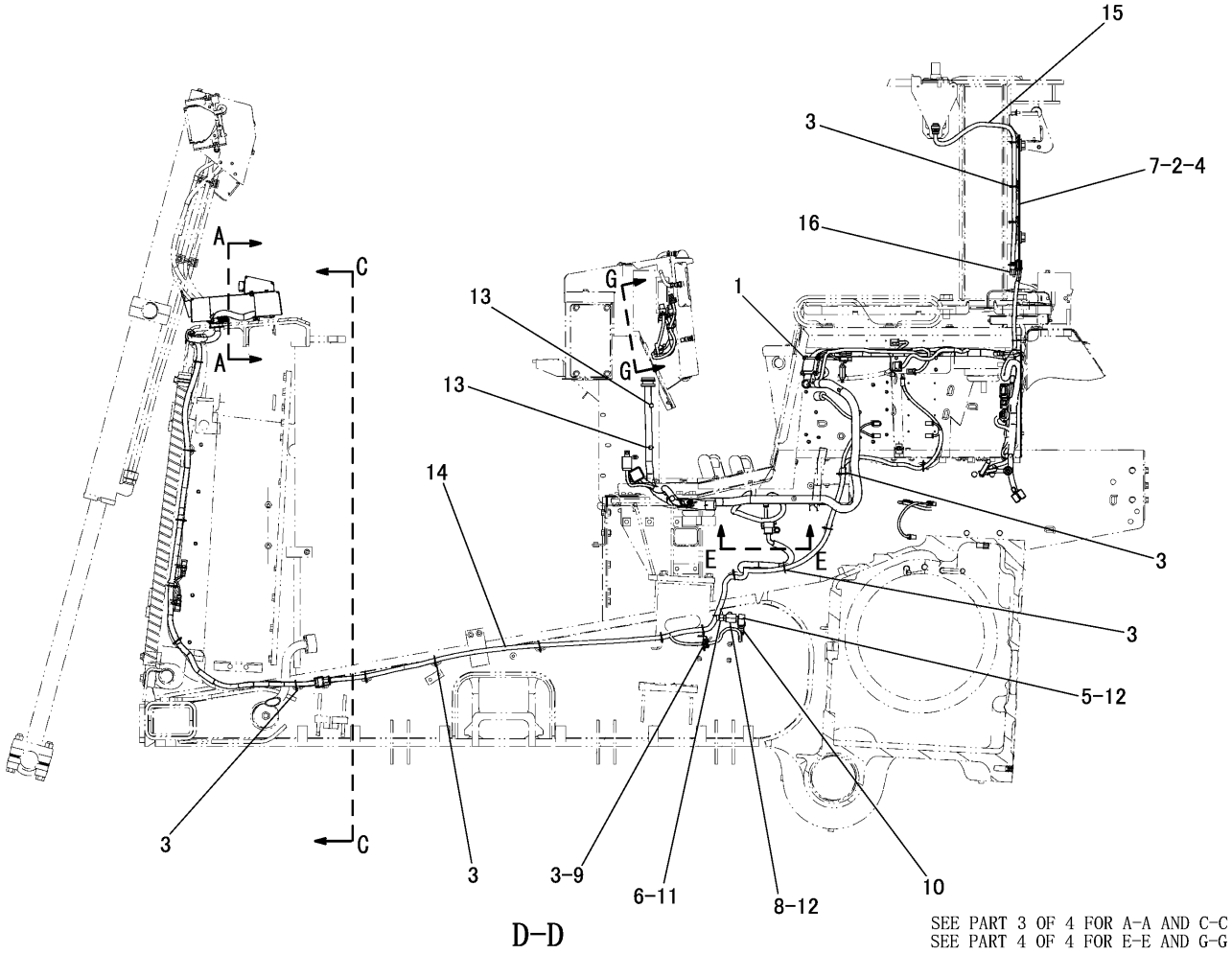

NOTE	№	PART NO.	QTY	PART NAME	NOTE	№	PART NO.	QTY	PART NAME
	1	9X-2044	4	SCREW(M6×1)		15	275-0068	1	HARNESS AS
	2	7X-0582	2	WASHER		16	102-8801	1	RECEPTACLE KIT(12P)
	3	7K-1181	19	STRAP			126-1767	2	PIN
	4	7X-0365	2	BOLT(3/4-10)			9X-3401	6	PIN
	5	6V-8076	1	ELBOW			8T-8737	4	PLUG
	6	5P-6944	1	ADAPTER					
	7	129-8331	1	PLATE AS					
		7T-1099	4	LINK					
	8	126-6872	1	TEE					
		6V-8397	1	SEAL					
	9	4P-8134	1	CLIP					
	10	261-0420	1	SENSOR GROUP					
	11	3K-0360	1	SEAL					
	12	3J-1907	3	SEAL					
	13	204-2281	3	TIE					
Y	14	275-0045	1	HARNESS AS					

Y-SEPARATE ILLUSTRATION

J155854 -06

WIRING GROUP (275-0043 N/S) -ACCUGRADE-PART 2 OF 4
PART OF 273-1826-Page 137
REFERENCE:275-0045-Page 145
AN ATTACHMENT

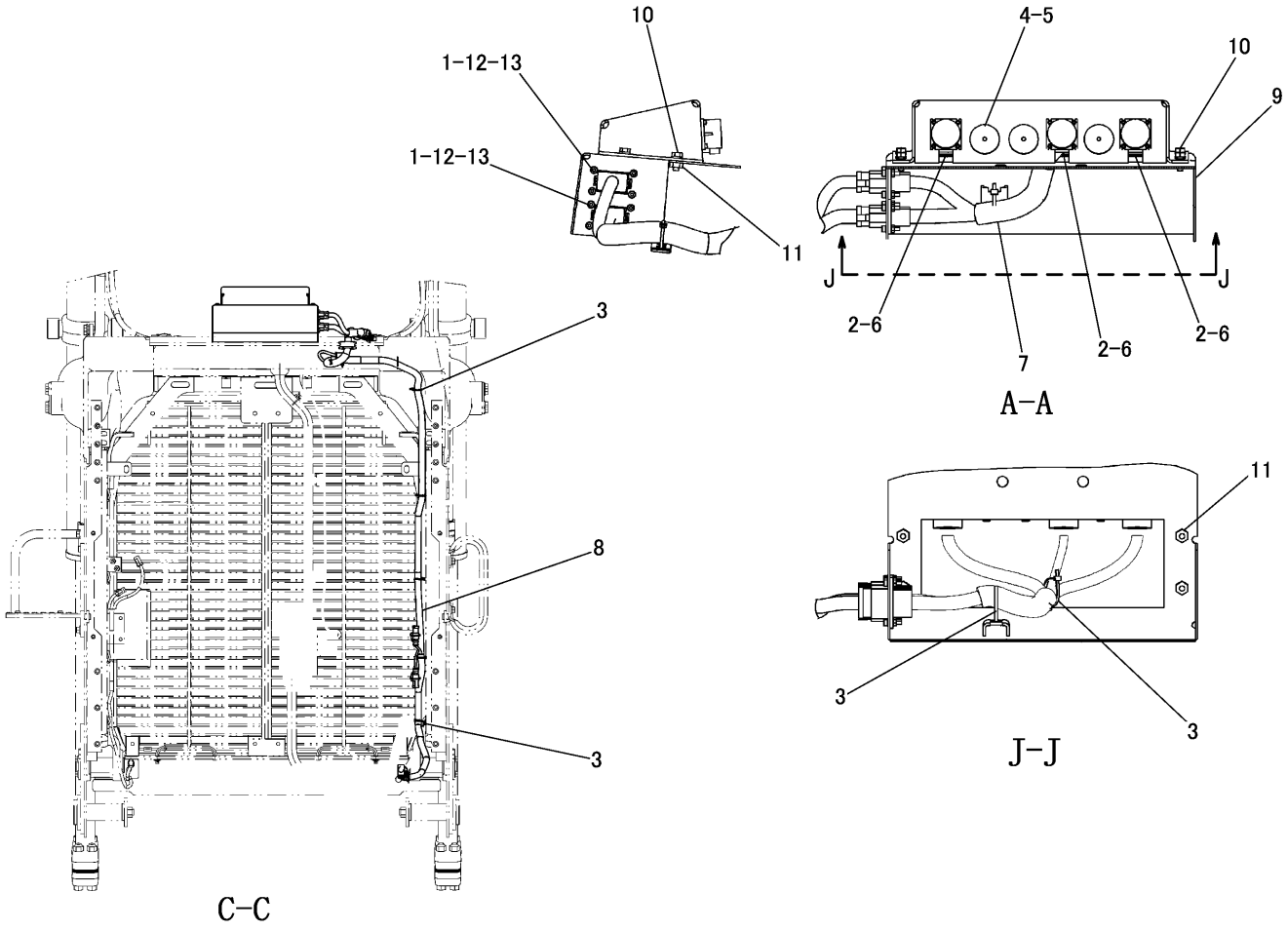

NOTE	№	PART NO.	QTY	PART NAME	NOTE	№	PART NO.	QTY	PART NAME
	1	8T-9405	8	BOLT(M4×0.7)					
	2	6D-3033	12	SCREW(No.4-40)					
	3	7K-1181	9	STRAP					
	4	7R-3029	3	CAP					
	5	236-8826	3	BOSS(1 1/8-18)					
	6	308-1395	3	PLATE					
Y	7	321-1451	1	HARNESS AS					
Y	8	321-8331	1	HARNESS AS					
	9	322-1969	1	BRACKET AS					
	10	8T-4138	4	BOLT(M6×1)					
		9X-8267	4	WASHER					
	11	6V-9632	4	NUT(M6×1)(WELD)					
	12	8C-9660	16	WASHER					
	13	5C-8312	8	NUT(M4×0.7)					

Y-SEPARATE ILLUSTRATION

J155855 -06

WIRING GROUP (275-0043 N/S) -ACCUGRADE-PART 3 OF 4

PART OF 273-1826-Page 137
REFERENCE:321-1451-Page 148 321-8331-Page 146
AN ATTACHMENT

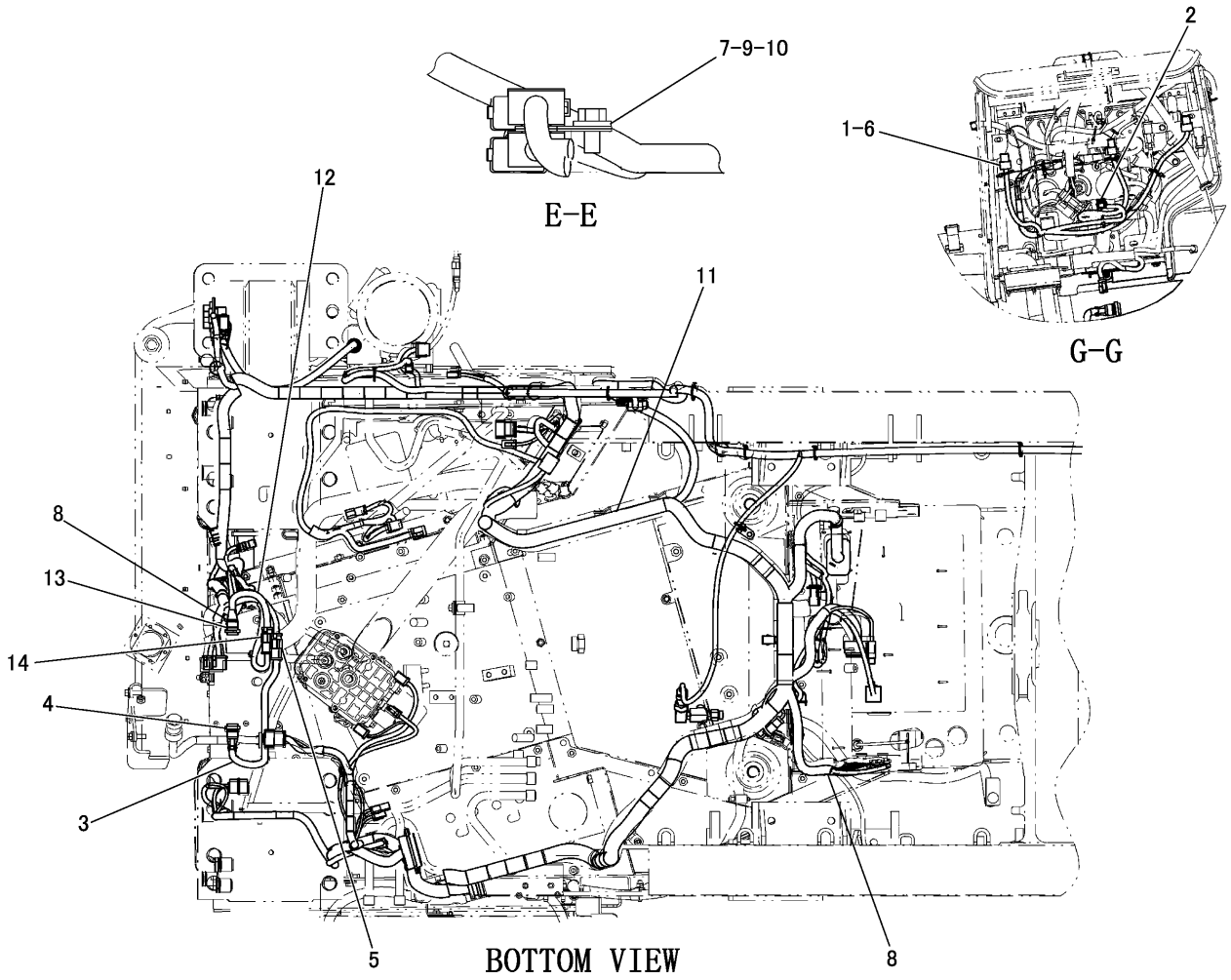

NOTE	№	PART NO.	QTY	PART NAME	NOTE	№	PART NO.	QTY	PART NAME
	1	7K-1181	5	STRAP					
	2	123-0304	1	INDICATOR AS					
		123-0306	1	SOCKET AS					
		115-1748	1	LAMP(24V)					
	3	265-9040	1	HARNESS AS					
	4	6D-5257	1	PLUG AS(8P)					
	5	102-8805	1	RECEPTACLE KIT(6P)					
		186-3735	2	PIN					
		9W-0852	4	PIN					
Y	6	301-0076	1	HARNESS AS					
	7	130-5300	2	CLIP					
	8	204-2281	3	TIE					
	9	5M-3062	1	BOLT(3/8-16)					
	10	5P-1075	1	WASHER					
Y	11	275-0044	1	HARNESS AS					
	12	265-9042	1	HARNESS AS					
	13	3R-9965	1	PLUG AS(8P)					
	14	155-2274	1	PLUG KIT(6P)					
		9W-0844	4	SOCKET					
		8T-8737	2	PLUG					

Y-SEPARATE ILLUSTRATION

J155856 -06

WIRING GROUP (275-0043 N/S) -ACCUGRADE-PART 4 OF 4

PART OF 273-1826-Page 137

REFERENCE:301-0076-Page 147 275-0044-Page 142～144

AN ATTACHMENT

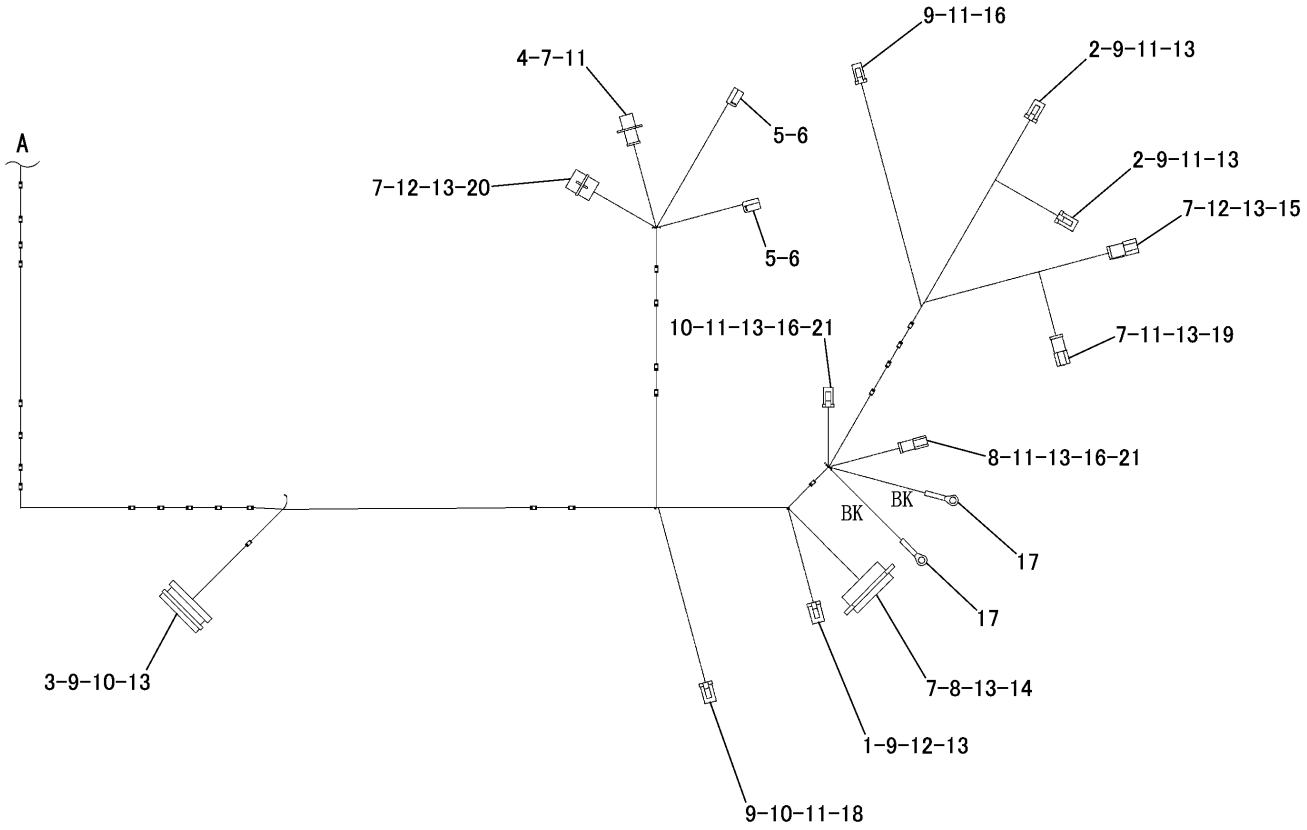

NOTE	№	PART NO.	QTY	PART NAME	NOTE	№	PART NO.	QTY	PART NAME
	1	155-2255	6	PLUG KIT(12P)		20	9W-1951	1	RECEPTACLE
	2	155-2271	5	PLUG KIT(4P)		21	102-8802	5	RECEPTACLE KIT(2P)
	3	160-7689	2	PLUG AS(70P)					
		159-9322	1	SEAL					(QUANTITIES SHOWN ARE AMOUNT
	4	197-7565	2	RECEPTACLE KIT(4P)					ON ASSEMBLY)
	5	5P-4571	4	TERMINAL					
	6	9X-0196	2	TERMINAL AS					
	7	9X-3401	139	PIN					
	8	126-1767	16	PIN					
	9	9X-3402	168	SOCKET					
	10	126-1768	71	SOCKET					
E	11	114-8843		SLEEVE---20cm(×24)					
E	12	114-8844		SLEEVE---20cm(×12)					
	13	8T-8737	198	PLUG					
	14	214-4208	2	RECEPTACLE AS(70P)					
	15	102-8801	2	RECEPTACLE KIT(12P)					
	16	155-2270	7	PLUG KIT(2P)					
	17	2L-8069	7	TERMINAL					
	18	155-2274	3	PLUG KIT(6P)					
	19	102-8804	2	RECEPTACLE KIT(4P)					

E-ORDER BY THE cm

J155857 -03

275-0044 HARNESS ASSEMBLY -PLATFORM-PART 1 OF 3
PART OF 275-0043-Page 141
AN ATTACHMENT

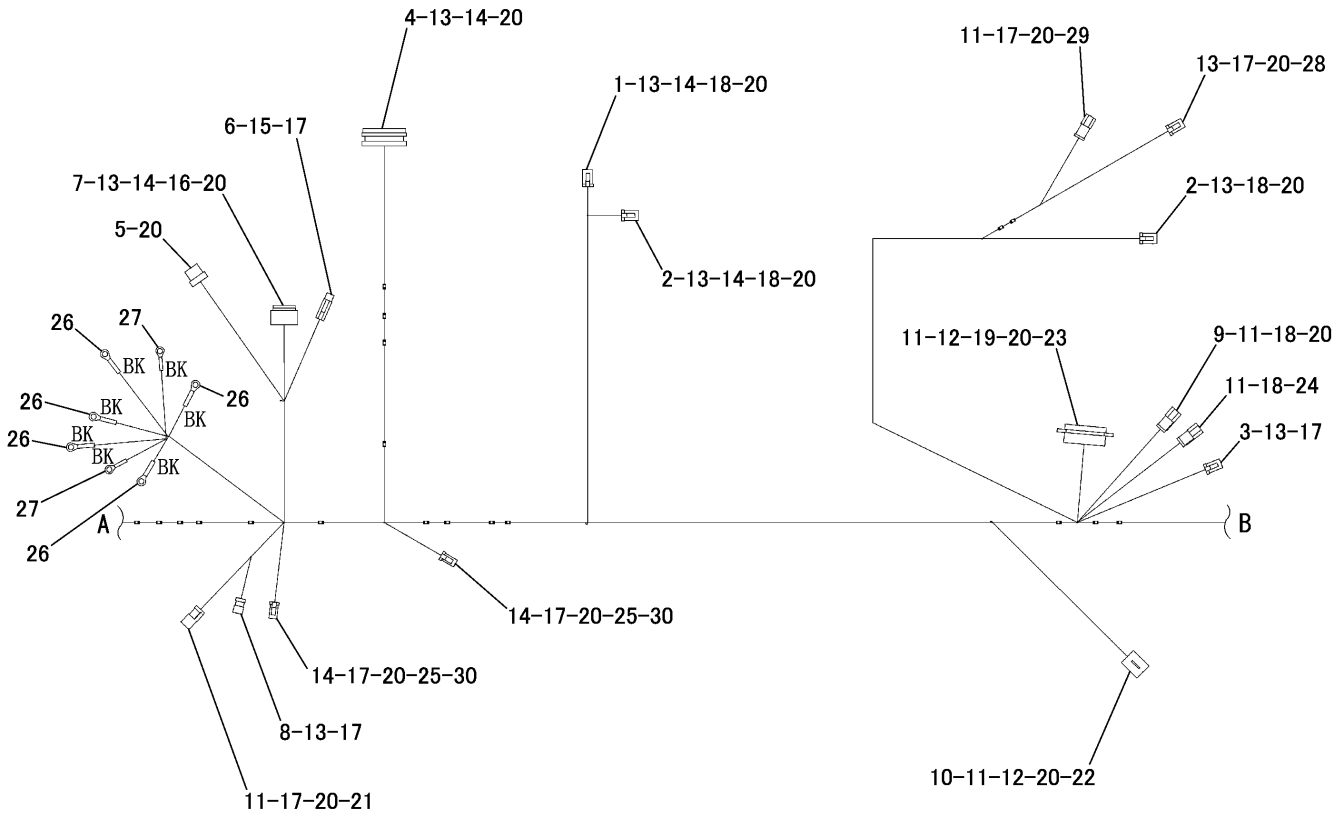

NOTE	№	PART NO.	QTY	PART NAME
	1	155-2257	2	PLUG KIT(12P)
	2	155-2255	6	PLUG KIT(12P)
	3	155-2271	5	PLUG KIT(4P)
	4	160-7689	2	PLUG AS(70P)
		159-9322	1	SEAL
	5	119-5094	1	PLUG AS(4P)
		100-5041	4	TERMINAL
	6	127-5485	1	PLUG AS(1P)
	7	110-6845	1	PLUG AS(40P)
		110-6844	1	SEAL
	8	155-2260	1	PLUG KIT(3P)
	9	190-7615	1	RECEPTACLE KIT(12P)
	10	8C-6354	1	CAP
	11	9X-3401	139	PIN
	12	126-1767	16	PIN
	13	9X-3402	168	SOCKET
	14	126-1768	71	SOCKET
	15	8N-1545	1	SOCKET
E	16	114-8845		SLEEVE---20cm(×3)
E	17	114-8843		SLEEVE---20cm(×24)
E	18	114-8844		SLEEVE---20cm(×12)
	19	126-1774	1	ENDBELL
	20	8T-8737	198	PLUG
	21	102-8803	1	RECEPTACLE KIT(3P)
	22	8T-8736	1	RECEPTACLE
	23	214-4208	2	RECEPTACLE AS(70P)
	24	102-8801	2	RECEPTACLE KIT(12P)
	25	155-2270	7	PLUG KIT(2P)
	26	2L-8069	7	TERMINAL
	27	2L-8079	2	TERMINAL
	28	155-2274	3	PLUG KIT(6P)
	29	102-8804	2	RECEPTACLE KIT(4P)
	30	102-8802	5	RECEPTACLE KIT(2P)
				(QUANTITIES SHOWN ARE AMOUNT ON ASSEMBLY)

E-ORDER BY THE cm

J155858 -03

275-0044 HARNESS ASSEMBLY -PLATFORM-PART 2 OF 3

PART OF 275-0043-Page 141
AN ATTACHMENT

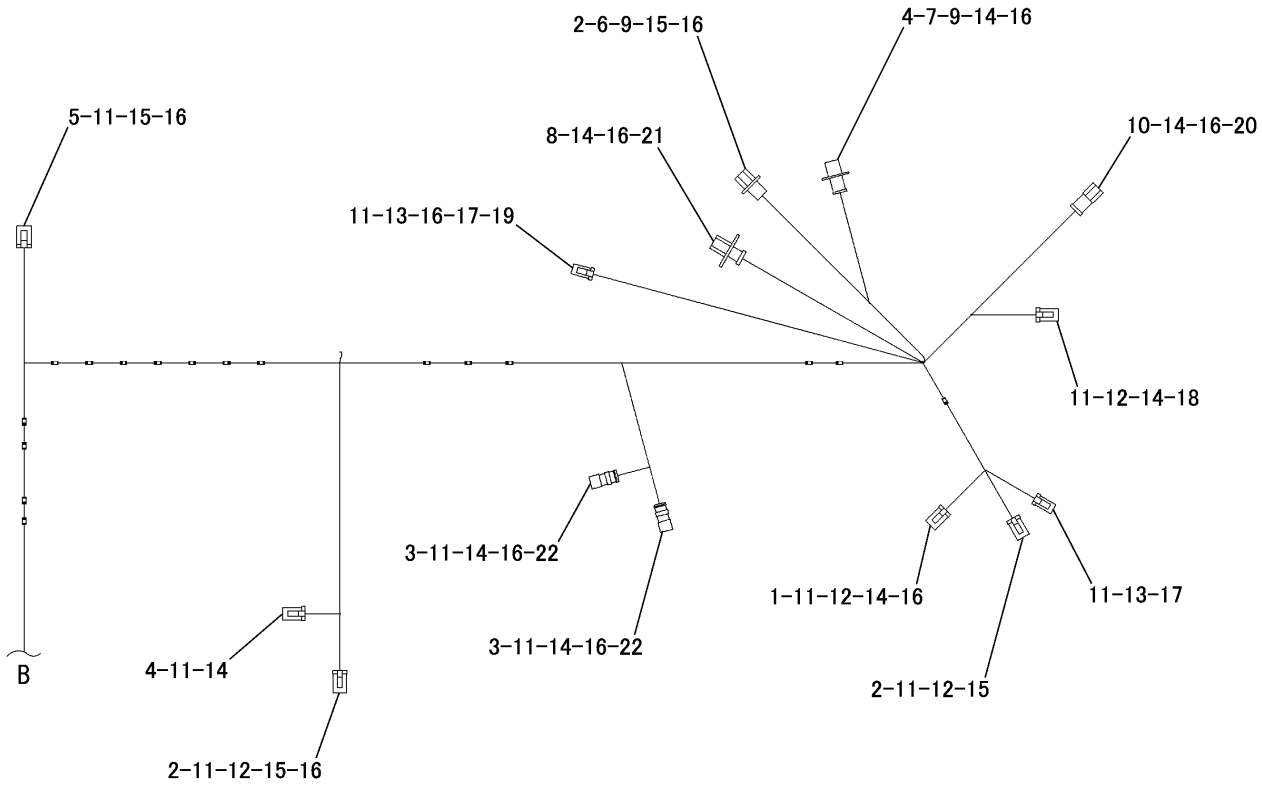

NOTE	№	PART NO.	QTY	PART NAME	NOTE	№	PART NO.	QTY	PART NAME
	1	155-2257	2	PLUG KIT(12P)		21	177-9656	1	PLUG KIT(4P)
	2	155-2255	6	PLUG KIT(12P)		22	134-2540	2	RECEPTACLE AS
	3	174-0503	2	PLUG KIT(3P)					
	4	155-2271	5	PLUG KIT(4P)					(QUANTITIES SHOWN ARE AMOUNT
	5	155-2265	1	PLUG KIT(8P)					ON ASSEMBLY)
	6	166-5229	1	RECEPTACLE KIT(12P)					
	7	197-7565	2	RECEPTACLE KIT(4P)					
	8	265-2106	1	RECEPTACLE KIT(4P)					
	9	9X-3401	139	PIN					
	10	126-1767	16	PIN					
	11	9X-3402	168	SOCKET					
	12	126-1768	71	SOCKET					
E	13	114-8845		SLEEVE---20cm(×3)					
E	14	114-8843		SLEEVE---20cm(×24)					
E	15	114-8844		SLEEVE---20cm(×12)					
	16	8T-8737	198	PLUG					
	17	155-2270	7	PLUG KIT(2P)					
	18	155-2274	3	PLUG KIT(6P)					
	19	102-8802	5	RECEPTACLE KIT(2P)					
	20	102-8805	1	RECEPTACLE KIT(6P)					

E-ORDER BY THE cm

J155859 -03

275-0044 HARNESS ASSEMBLY -PLATFORM-PART 3 OF 3
PART OF 275-0043-Page 141
AN ATTACHMENT

ELECTRICAL AND STARTING SYSTEM

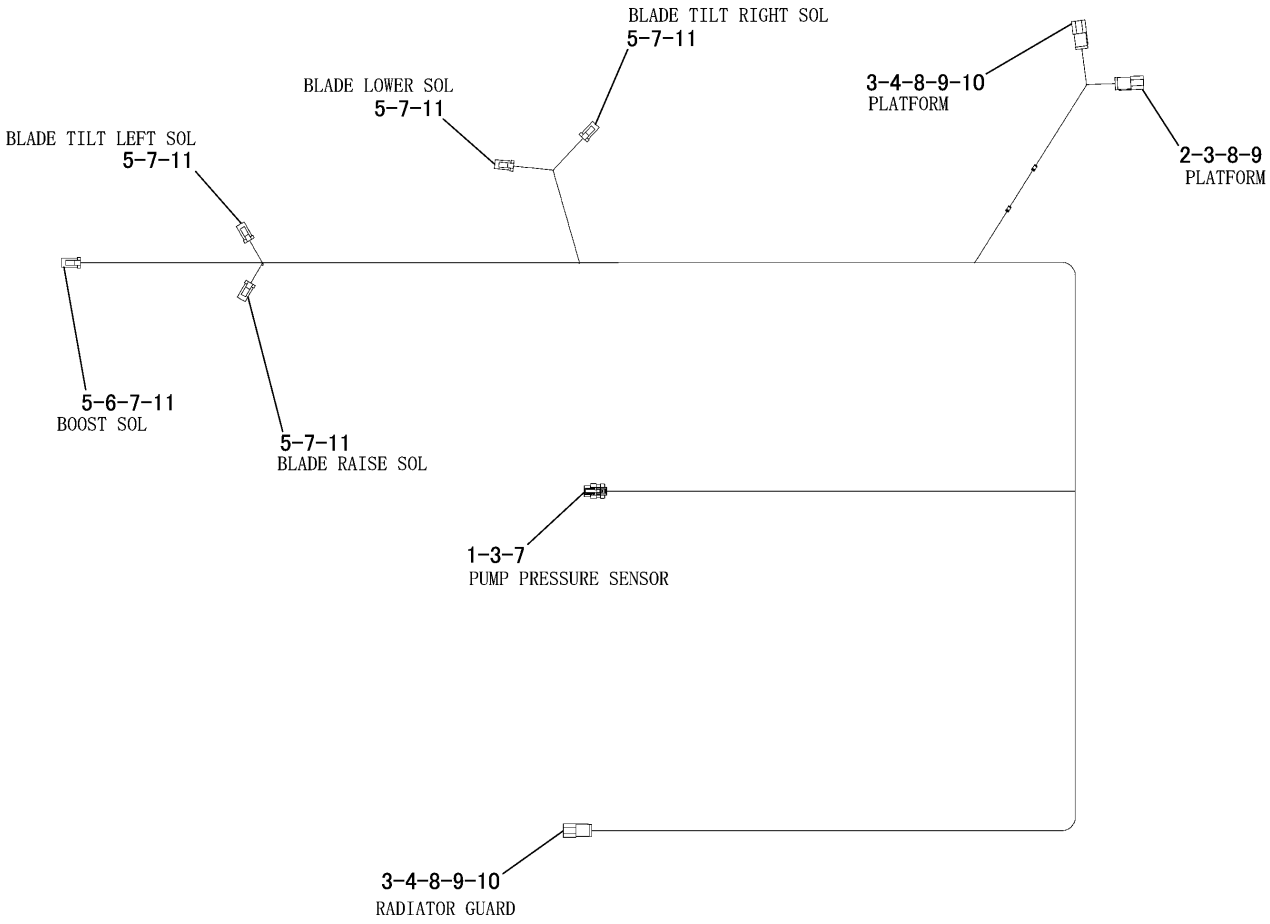

NOTE	№	PART NO.	QTY	PART NAME	NOTE	№	PART NO.	QTY	PART NAME
	1	237-0227	1	PLUG AS(3P)					
	2	190-7615	1	RECEPTACLE KIT(12P)					
	3	126-1767	24	PIN					
	4	9W-0852	6	PIN					
	5	126-1768	9	SOCKET					
	6	9W-0844	1	SOCKET					
E	7	114-8843		SLEEVE---20cm(×6)					
E	8	114-8844		SLEEVE---20cm(×3)					
	9	8T-8737	9	PLUG					
	10	102-8801	2	RECEPTACLE KIT(12P)					
	11	155-2270	5	PLUG KIT(2P)					

E-ORDER BY THE cm

J155860 -01

275-0045 HARNESS ASSEMBLY -ACCUGRADE CHASSIS

PART OF 275-0043-Page 139
AN ATTACHMENT

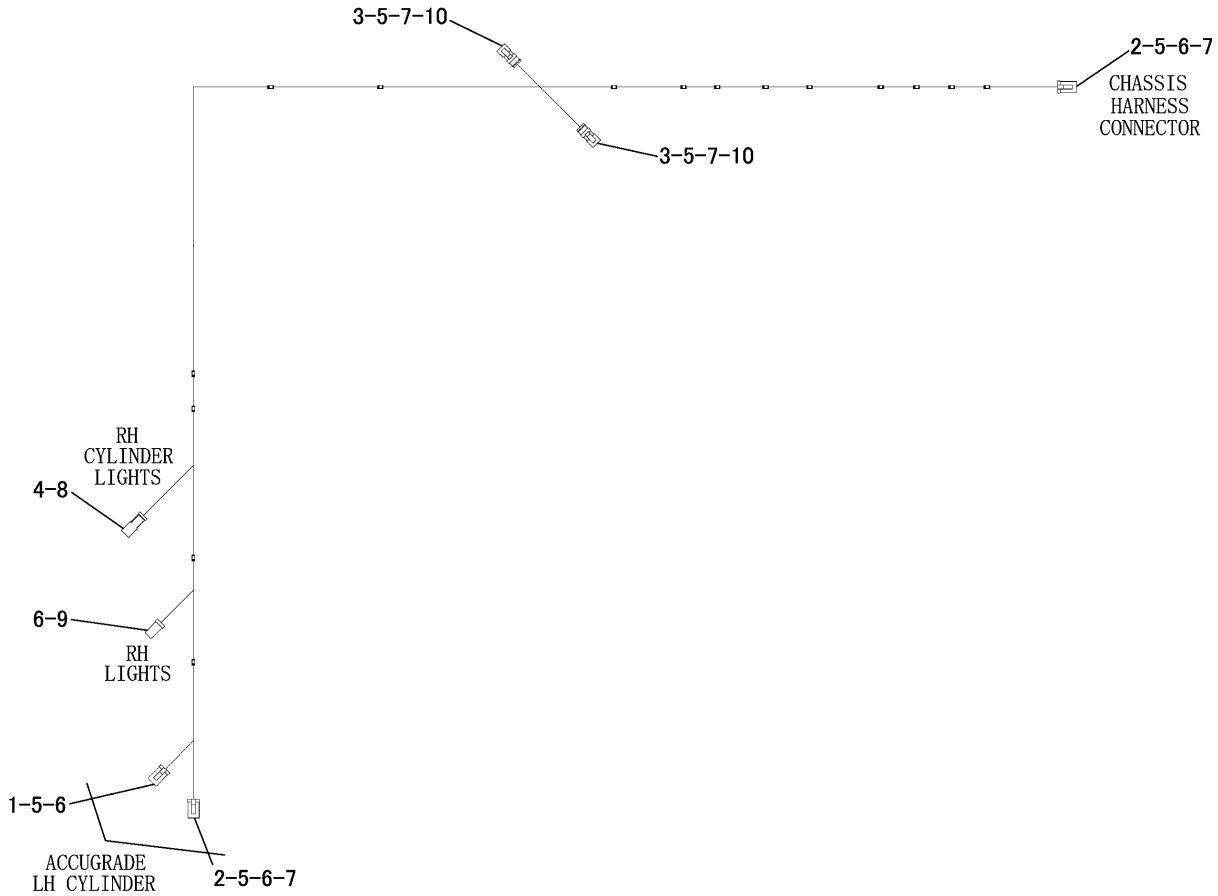

NOTE	№	PART NO.	QTY	PART NAME	NOTE	№	PART NO.	QTY	PART NAME
	1	155-2257	1	PLUG KIT(12P)					
	2	155-2255	2	PLUG KIT(12P)					
	3	174-0503	2	PLUG KIT(3P)					
	4	126-1767	2	PIN					
	5	9X-3402	18	SOCKET					
	6	126-1768	17	SOCKET					
	7	8T-8737	9	PLUG					
	8	102-8802	1	RECEPTACLE KIT(2P)					
	9	155-2270	1	PLUG KIT(2P)					
	10	134-2540	2	RECEPTACLE AS					

J155861 -00

321-8331 HARNESS ASSEMBLY -ACCUGRADE RADIATOR GUARD
PART OF 275-0043-Page 140
AN ATTACHMENT

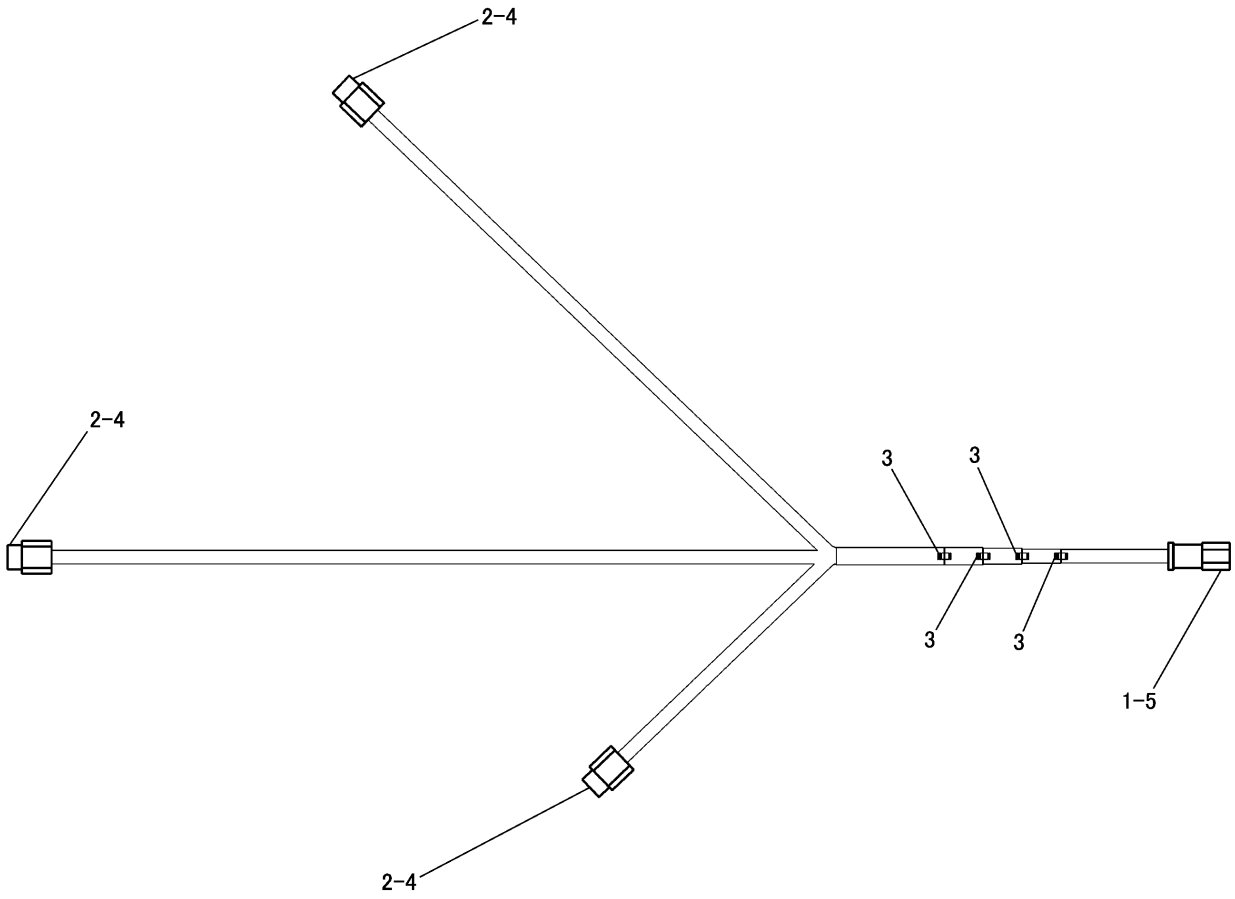

NOTE	№	PART NO.	QTY	PART NAME	NOTE	№	PART NO.	QTY	PART NAME
	1	9X-3401	4	PIN					
	2	9X-3402	12	SOCKET					
E	3	125-7874		TUBE---5cm(×4)					
	4	230-5008	3	PLUG AS(4P)					
	5	102-8804	1	RECEPTACLE KIT(4P)					

E-ORDER BY THE cm

J148858 X00

301-0076 HARNESS ASSEMBLY
PART OF 275-0043-Page 141
AN ATTACHMENT

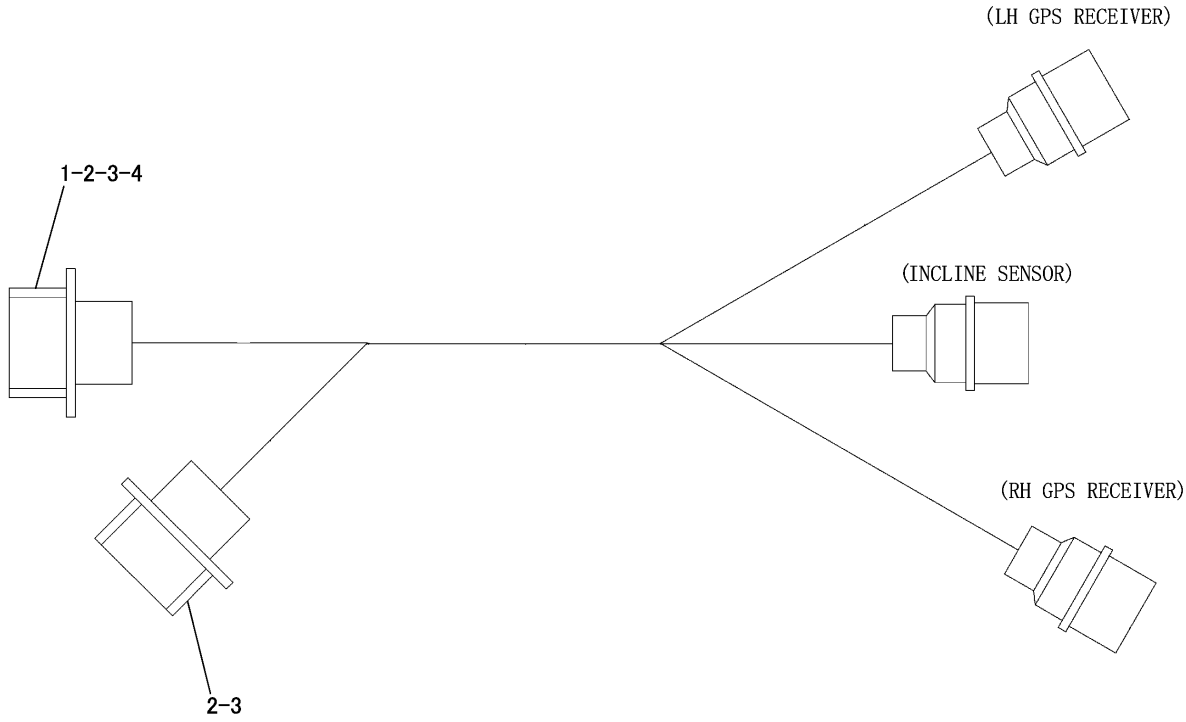

NOTE	№	PART NO.	QTY	PART NAME	NOTE	№	PART NO.	QTY	PART NAME
	1	166-5229	1	RECEPTACLE KIT(12P)					
	2	186-3735	10	PIN					
	3	9W-0852	11	PIN					
	4	8T-8737	3	PLUG					

J148860 -00

321-1451 HARNESS ASSEMBLY
PART OF 275-0043-Page 140
AN ATTACHMENT

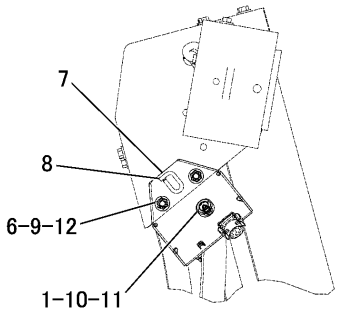

A–A

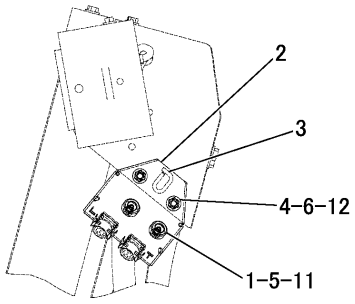

B–B

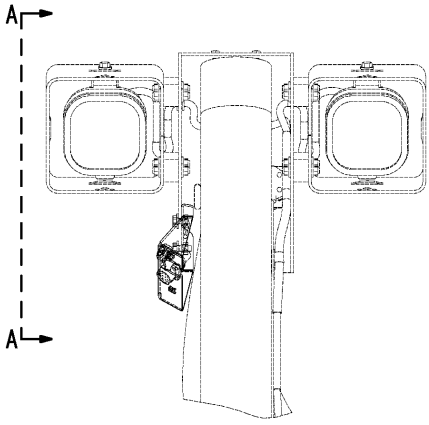

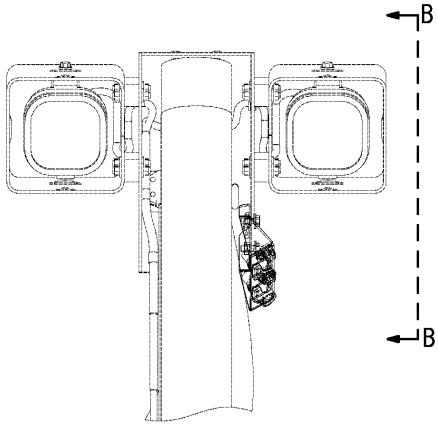

NOTE	№	PART NO.	QTY	PART NAME	NOTE	№	PART NO.	QTY	PART NAME
	1	236-8826	3	BOSS(1 1/8-18)					
	2	246-5960	1	BOX AS(LH)					
	3	7T-1099	1	LINK					
	4	8T-3490	2	NUT(M10×1.5)(WELD)					
	5	8T-3612	2	NUT(M8×1.25)(WELD)					
	6	8T-4136	4	BOLT(M10×1.5)					
	7	246-5961	1	BOX AS(RH)					
	8	7T-1099	1	LINK					
	9	8T-3490	2	NUT(M10×1.5)(WELD)					
	10	8T-3612	1	NUT(M8×1.25)(WELD)					
	11	188-9644	3	SCREW(M8×1.25)					
	12	7X-7729	4	WASHER					

J155847 -00

CONNECTORS MOUNTING GROUP (246-5959 N/S) -GRADE CONTROL
PART OF 273-1826-Page 137
AN ATTACHMENT

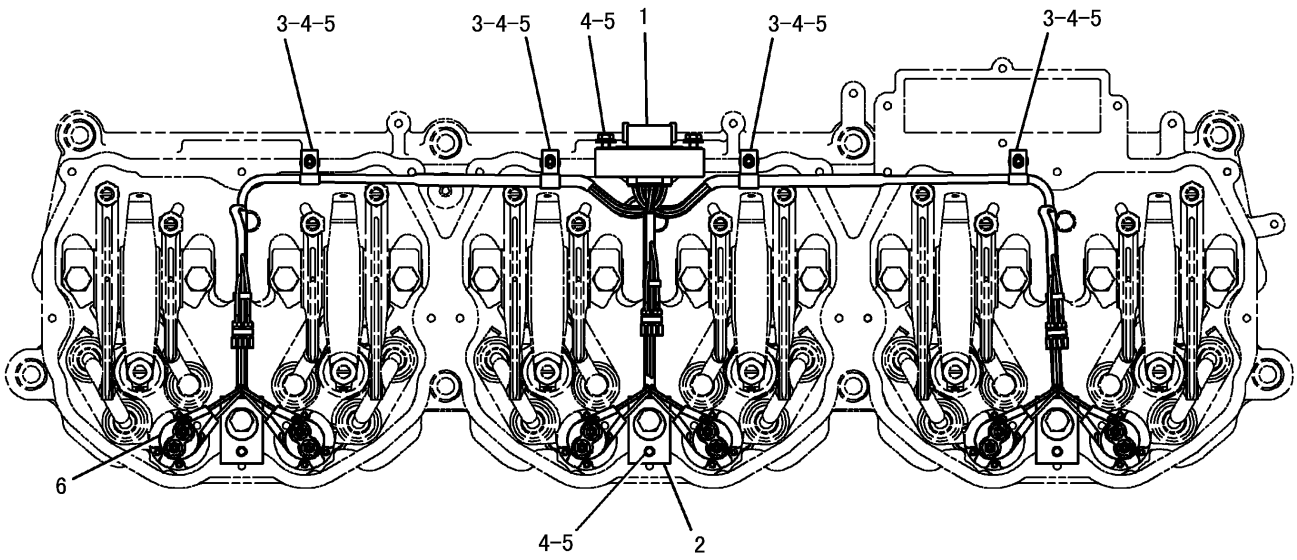

NOTE	№	PART NO.	QTY	PART NAME	NOTE	№	PART NO.	QTY	PART NAME
Y	1	4P-9537	1	HARNESS AS					
	2	7X-2468	3	CLIP					
	3	2V-3216	4	CLIP					
	4	6V-8214	9	BOLT(M6×1)					
	5	5P-0537	9	WASHER					
	6	7E-6508	6	CAP AS					

Y-SEPARATE ILLUSTRATION

J119235 -03

UNIT INJECTOR WIRING GROUP (117-2760 N/S)
PART OF 256-6771-Page 3
REFERENCE:4P-9537-Page 151

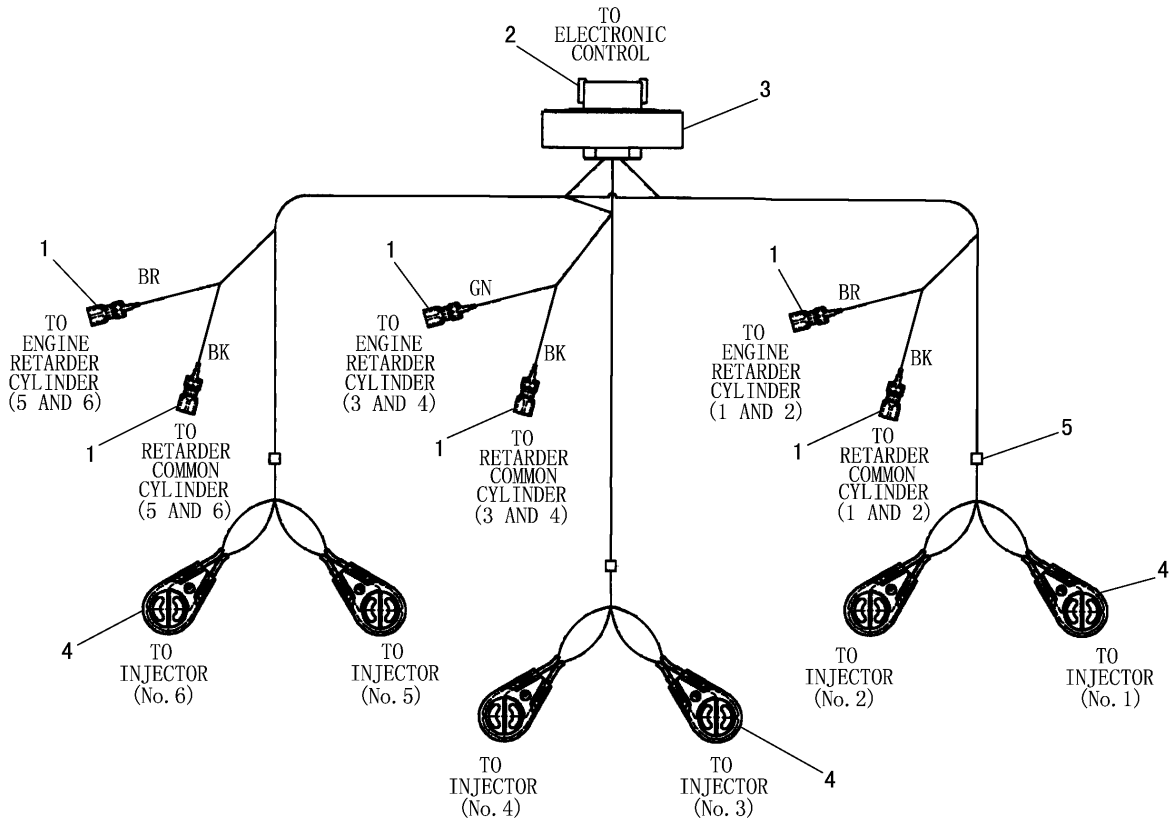

NOTE	№	PART NO.	QTY	PART NAME	NOTE	№	PART NO.	QTY	PART NAME
	1	065-7187	6	TERMINAL					
	2	186-3735	12	PIN					
	3	103-8133	1	RECEPTACLE KIT(12P)					
	4	7E-6513	6	CONNECTOR AS					
	5	3S-2093	3	STRAP					

J123927 -07

4P-9537 HARNESS ASSEMBLY -WIRING
PART OF 117-2760-Page 150

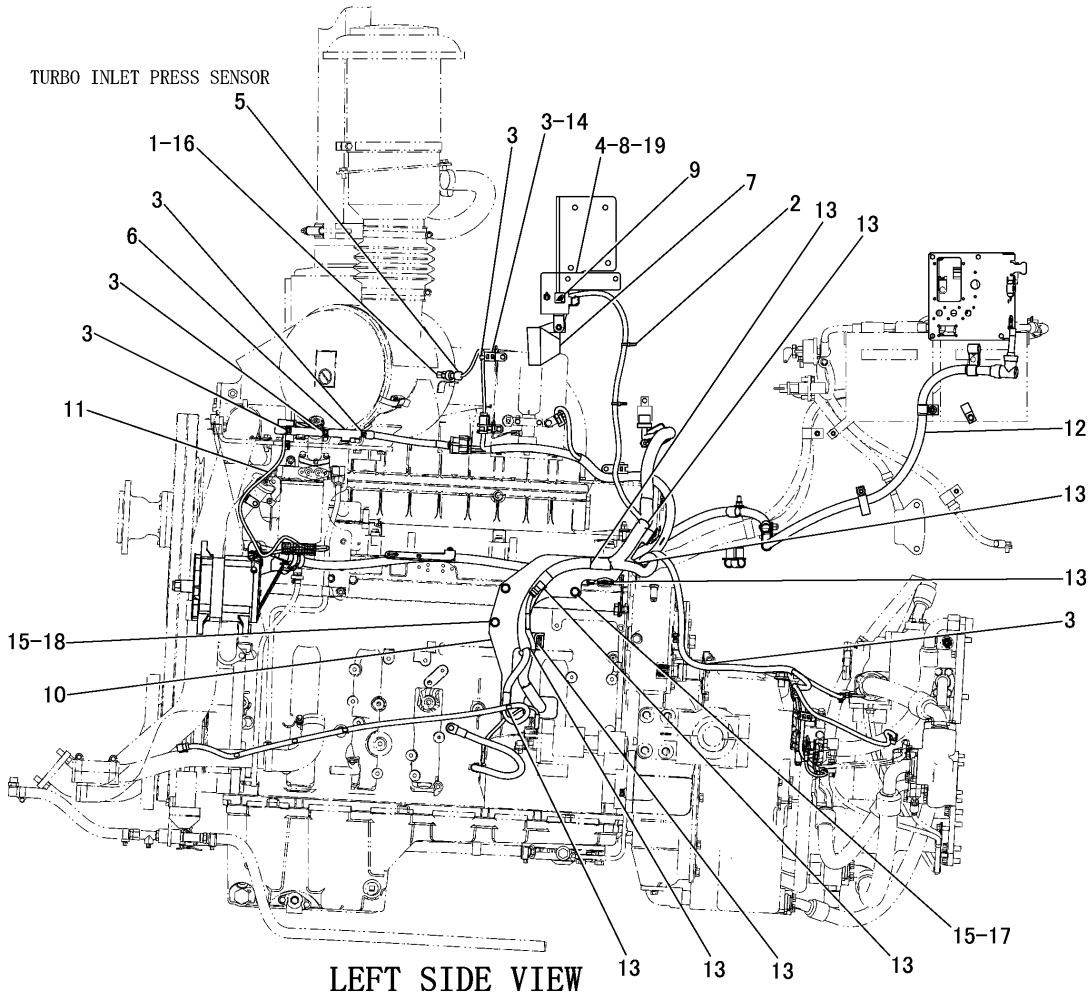

LEFT SIDE VIEW

NOTE	№	PART NO.	QTY	PART NAME	NOTE	№	PART NO.	QTY	PART NAME
	1	5P-5528	1	ADAPTER		15	5P-1075	3	WASHER
	2	7I-2673	2	STRAP		16	6V-5048	1	SEAL
	3	7K-1181	7	STRAP		17	8T-4136	2	BOLT(M10×1.5)
Y	4	139-2116	1	SWITCH AS		18	8T-4172	1	BOLT(M10×1.5)
	5	161-9926	1	SENSOR GROUP		19	8T-7934	2	WASHER
		155-2260	1	PLUG KIT(3P)					
		194-5227	3	HARNESS AS					
	6	164-3743	1	PLATE					
Y	7	219-6487	1	LAMP GROUP					
	8	237-7308	1	BRACKET					
	9	248-6862	1	FILM(WORK LIGHT)					
	10	250-2330	1	PLATE AS					
		7T-1099	9	LINK					
Y	11	275-0073	1	HARNESS AS					
	12	314-4218	1	CABLE AS					
		170-3793	2	TERMINAL					
		1S-4915	2	LINER					
		8N-0869	1	COVER(RD)					
	13	204-2281	8	TIE					
	14	4P-7581	2	CLIP					

Y-SEPARATE ILLUSTRATION

J155719 X01

ENGINE WIRING GROUP (271-6423 N/S) -PART 1 OF 4

PART OF 271-6466-Page 4
REFERENCE:139-2116-Page 168 219-6487-Page 166 275-0073-Page 156

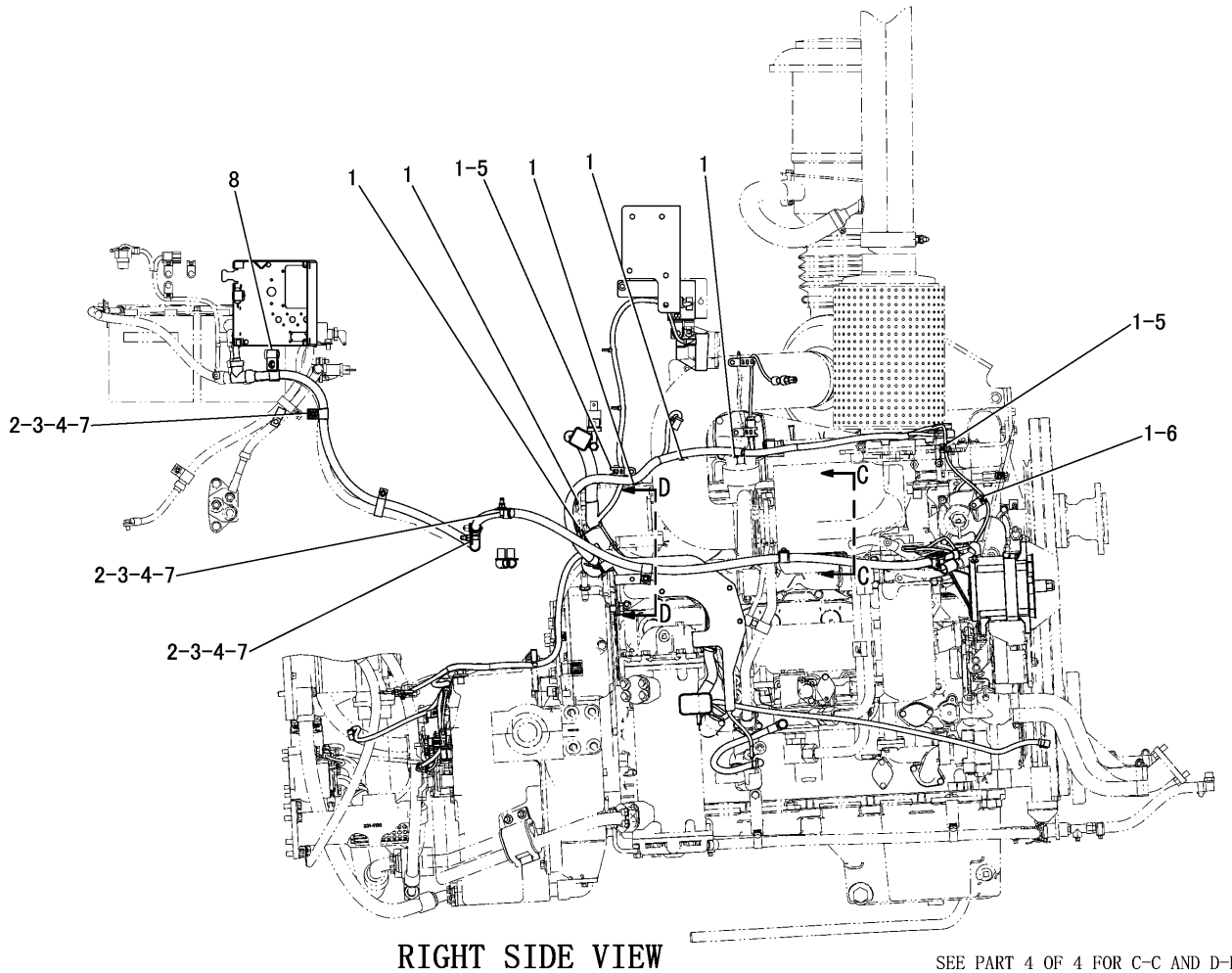

RIGHT SIDE VIEW

SEE PART 4 OF 4 FOR C-C AND D-D

NOTE	№	PART NO.	QTY	PART NAME	NOTE	№	PART NO.	QTY	PART NAME
	1	7K-1181	8	STRAP					
	2	1J-8668	3	STUD(3/8-16)					
	3	1S-0994	3	CLIP					
	4	3K-6060	3	LOCKNUT(3/8-16)					
	5	4P-7581	2	CLIP					
	6	4P-8134	1	CLIP					
	7	5P-1075	3	WASHER					
	8	8S-0948	1	CLIP					

J155720 X01

ENGINE WIRING GROUP (271-6423 N/S) -PART 2 OF 4
PART OF 271-6466-Page 4

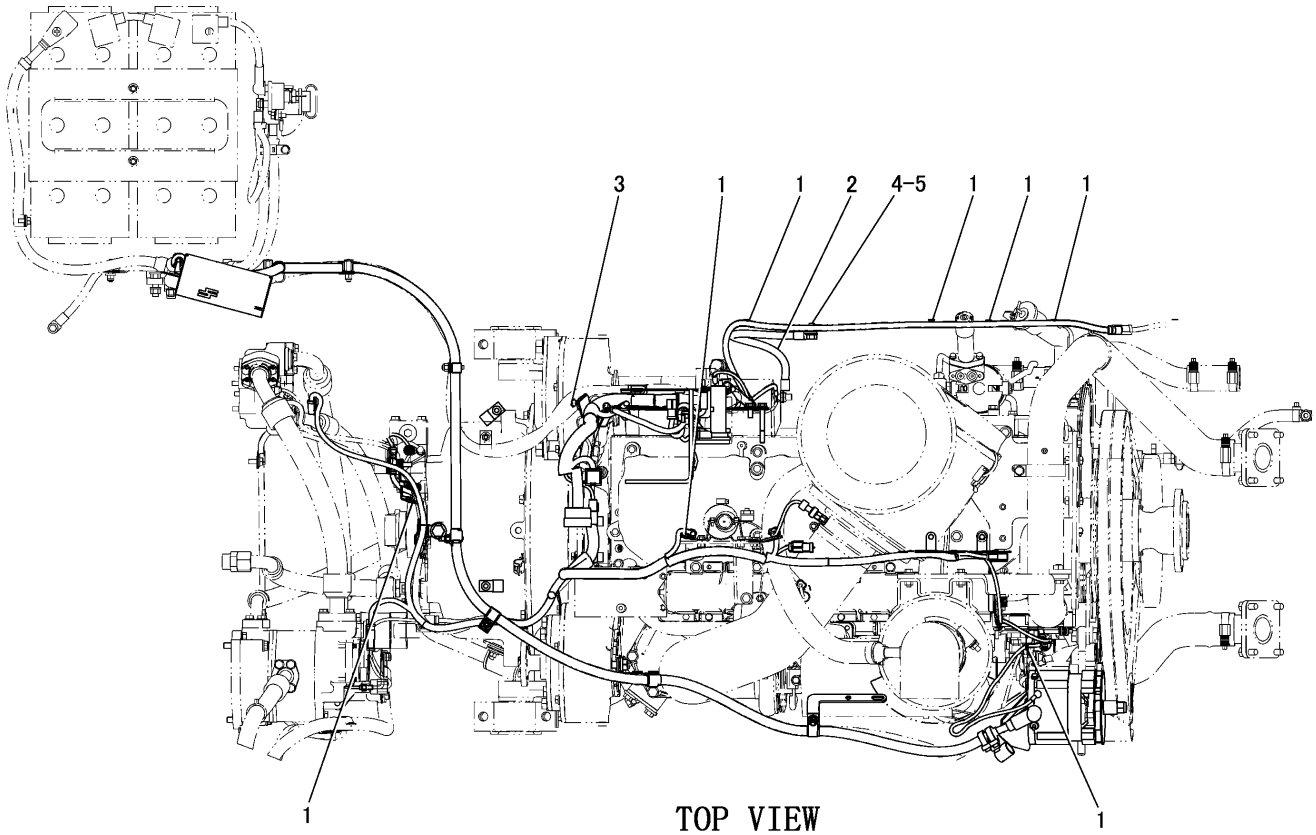

TOP VIEW

NOTE	№	PART NO.	QTY	PART NAME	NOTE	№	PART NO.	QTY	PART NAME
	1	7K-1181	7	STRAP					
	2	140-0860	1	STRAP AS					
	3	204-2281	1	TIE					
	4	5P-2228	1	BOLT(1/2-13)					
	5	8T-4223	1	WASHER					

J155721 X01

ENGINE WIRING GROUP (271-6423 N/S) -PART 3 OF 4
PART OF 271-6466-Page 4

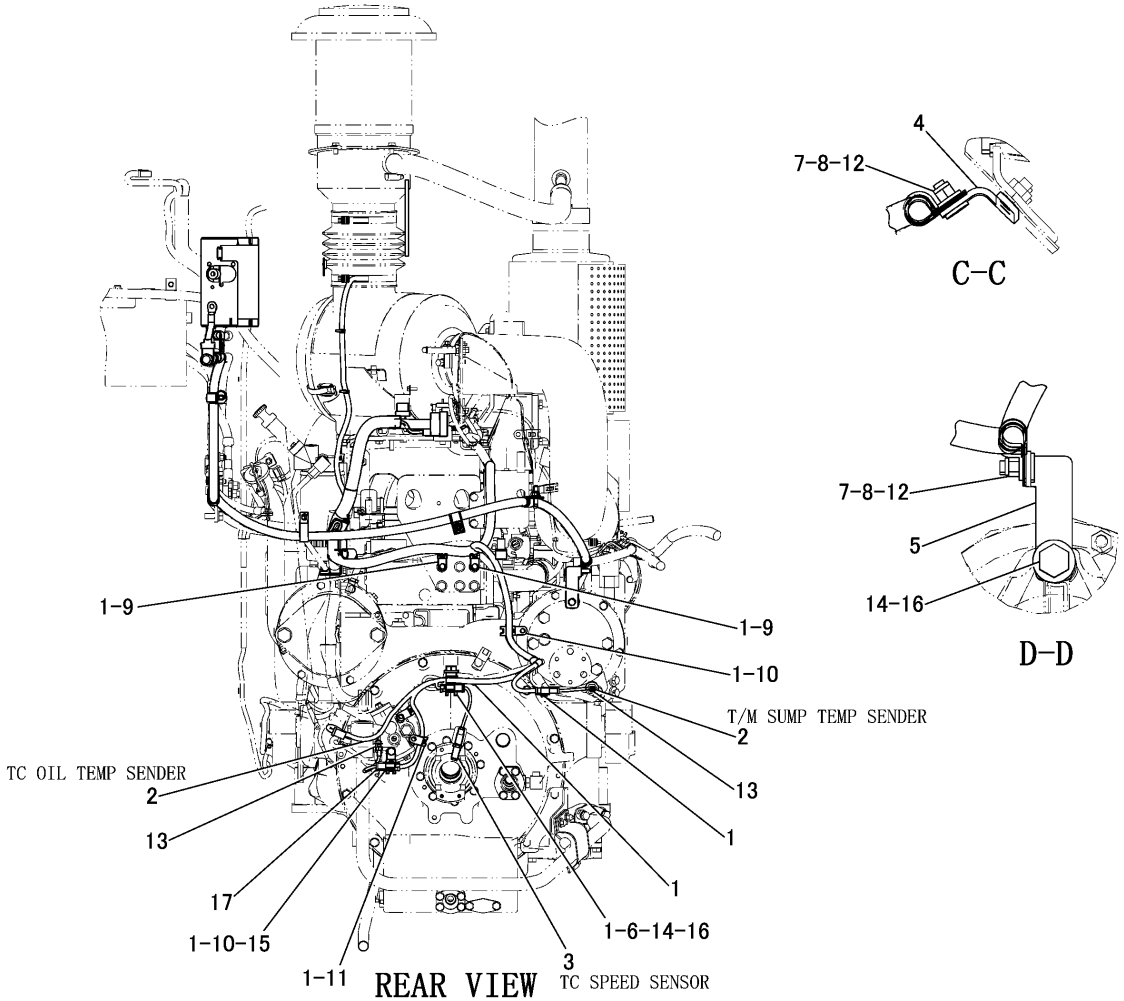

NOTE	№	PART NO.	QTY	PART NAME	NOTE	№	PART NO.	QTY	PART NAME
	1	7K-1181	9	STRAP		14	7X-0515	2	WASHER
	2	145-7028	2	SENSOR GROUP		15	8T-4136	1	BOLT(M10×1.5)
		102-8802	1	RECEPTACLE KIT(2P)		16	8T-4190	2	BOLT(M16×2)
		186-3735	2	PIN		17	8T-4896	1	WASHER
	3	189-5746	1	SENSOR GROUP					
		171-5349	1	STRAP					
		102-8802	1	RECEPTACLE KIT(2P)					
		186-3735	2	PIN					
	4	190-1027	1	BRACKET AS					
		5L-8957	1	STUD(3/8-16)(WELD)					
	5	193-0403	1	BRACKET AS					
		5L-8957	2	STUD(3/8-16)(WELD)					
	6	104-6202	1	CLIP					
	7	1S-0994	2	CLIP					
	8	3K-6060	2	LOCKNUT(3/8-16)					
	9	4P-7429	2	CLIP					
	10	4P-7581	2	CLIP					
	11	4P-8134	2	CLIP					
	12	5P-1075	2	WASHER					
	13	7J-0204	2	SEAL					

J155722 X01

ENGINE WIRING GROUP (271-6423 N/S) -PART 4 OF 4
PART OF 271-6466-Page 4

ELECTRICAL AND STARTING SYSTEM

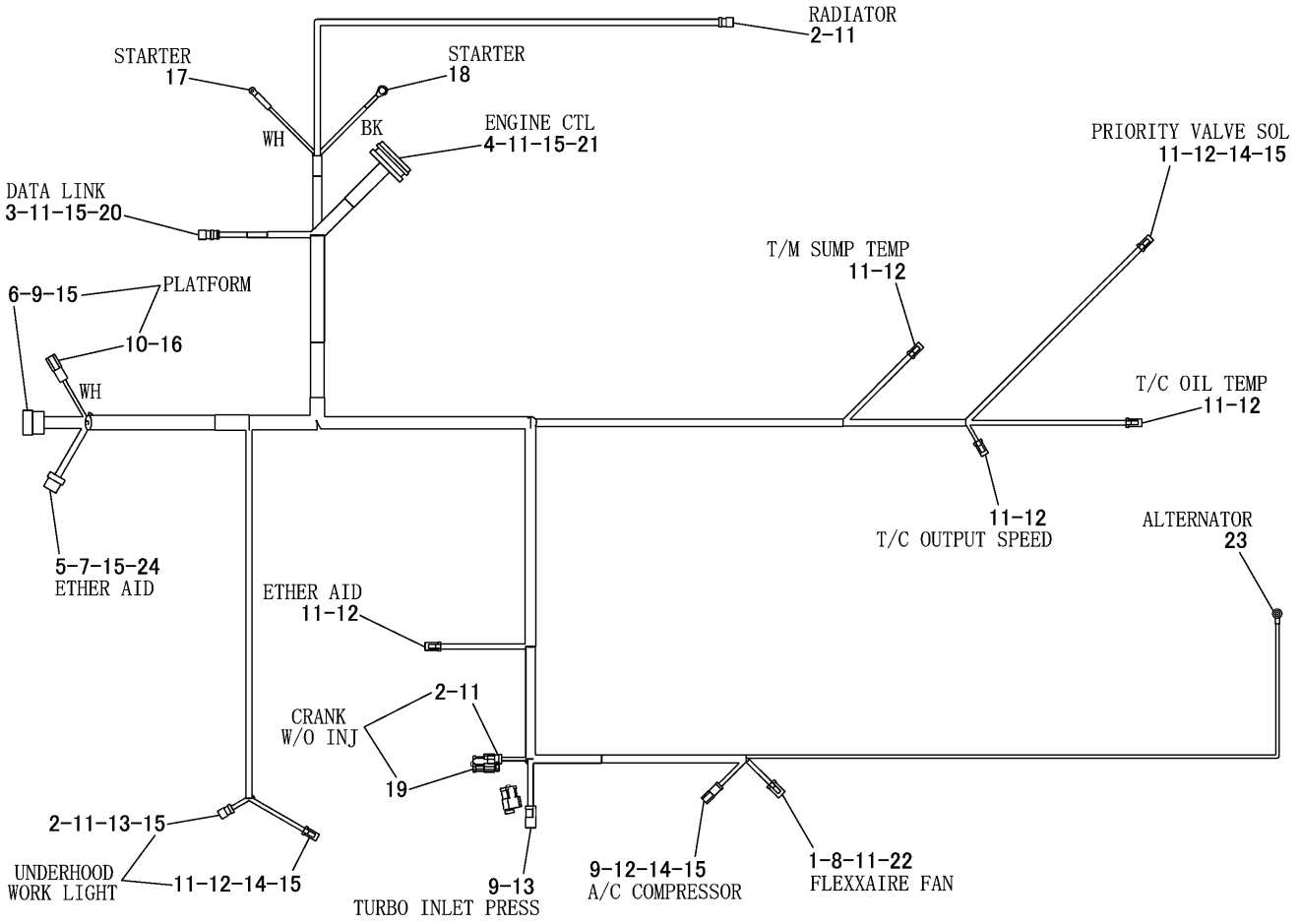

NOTE	№	PART NO.	QTY	PART NAME	NOTE	№	PART NO.	QTY	PART NAME
	1	155-2271	1	PLUG KIT(4P)	Y	19	121-2844	1	HARNESS AS
	2	155-2260	3	PLUG KIT(3P)		20	134-2540	1	RECEPTACLE AS
	3	174-0503	1	PLUG KIT(3P)		21	126-1774	1	ENDBELL
	4	160-7689	1	PLUG AS(70P)		22	102-8804	1	RECEPTACLE KIT(4P)
		159-9322	1	SEAL		23	110-8769	1	WIRE AS
	5	9X-1056	1	TERMINAL		24	119-5094	1	PLUG AS(4P)
	6	113-0580	1	RECEPTACLE AS(40P)					
		106-4155	1	BOLT KIT(M5×0.8)					
	7	100-5041	3	TERMINAL					
	8	8T-8737	3	PLUG					
	9	126-1767	37	PIN					
	10	8N-1544	1	PIN					
	11	126-1768	54	SOCKET					
	12	155-2270	7	PLUG KIT(2P)					
	13	102-8803	2	RECEPTACLE KIT(3P)					
	14	102-8802	3	RECEPTACLE KIT(2P)					
	15	9G-3695	62	PLUG					
	16	127-5486	1	RECEPTACLE AS(1P)					
	17	2L-8057	1	TERMINAL					
	18	2L-8071	1	TERMINAL					

Y-SEPARATE ILLUSTRATION

J155723 X04

275-0073 HARNESS ASSEMBLY -ENGINE

PART OF 271-6423-Page 152
REFERENCE:121-2844-Page 157

ELECTRICAL AND STARTING SYSTEM

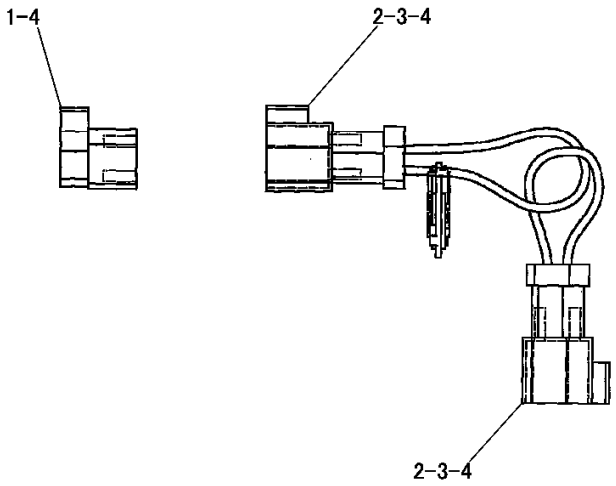

NOTE	№	PART NO.	QTY	PART NAME
	1	155-2260	1	PLUG KIT(3P)
	2	102-8803	2	RECEPTACLE KIT(3P)
	3	186-3735	4	PIN
	4	8T-8737	5	PLUG

J147482 X02

121-2844 HARNESS ASSEMBLY -CRANK
PART OF 275-0073-Page 156

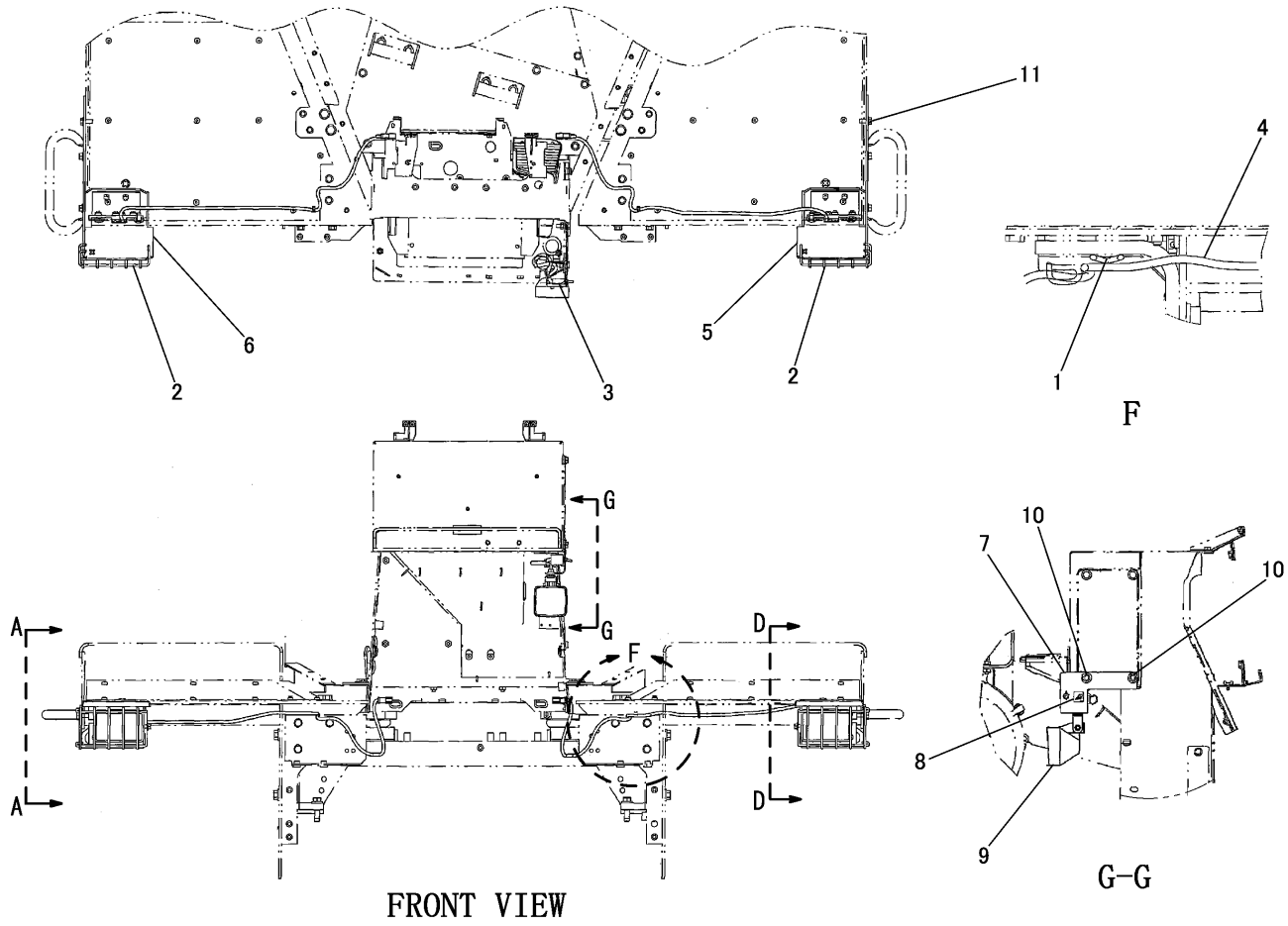

NOTE	№	PART NO.	QTY	PART NAME	NOTE	№	PART NO.	QTY	PART NAME
	1	7K-1181	4	STRAP					
	2	131-3981	2	GUARD					
Y	3	139-2116	1	SWITCH AS					
	4	184-4761	2	HARNESS AS					
		155-2270	1	PLUG KIT(2P)					
		9W-0844	2	SOCKET					
		102-8802	1	RECEPTACLE KIT(2P)					
		9W-0852	2	PIN					
	5	194-2608	1	BRACKET AS					
		9F-2978	1	NUT(3/8-16)(WELD)					
		6V-2360	2	WASHER					
	6	194-2610	1	BRACKET AS					
		9F-2978	1	NUT(3/8-16)(WELD)					
		6V-2360	2	WASHER					
	7	237-7308	1	BRACKET					
	8	248-6862	1	FILM(WORK LIGHT)					
Y	9	219-6487	1	LAMP GROUP					
	10	8T-7934	2	WASHER					
	11	8T-4139	1	BOLT(M12×1.75)					
		8T-4223	1	WASHER					

Y-SEPARATE ILLUSTRATION

J155868 X00

LIGHTING GROUP (280-1505 N/S) -PART 1 OF 2

REFERENCE:139-2116-Page 168 219-6487-Page 166
AN ATTACHMENT

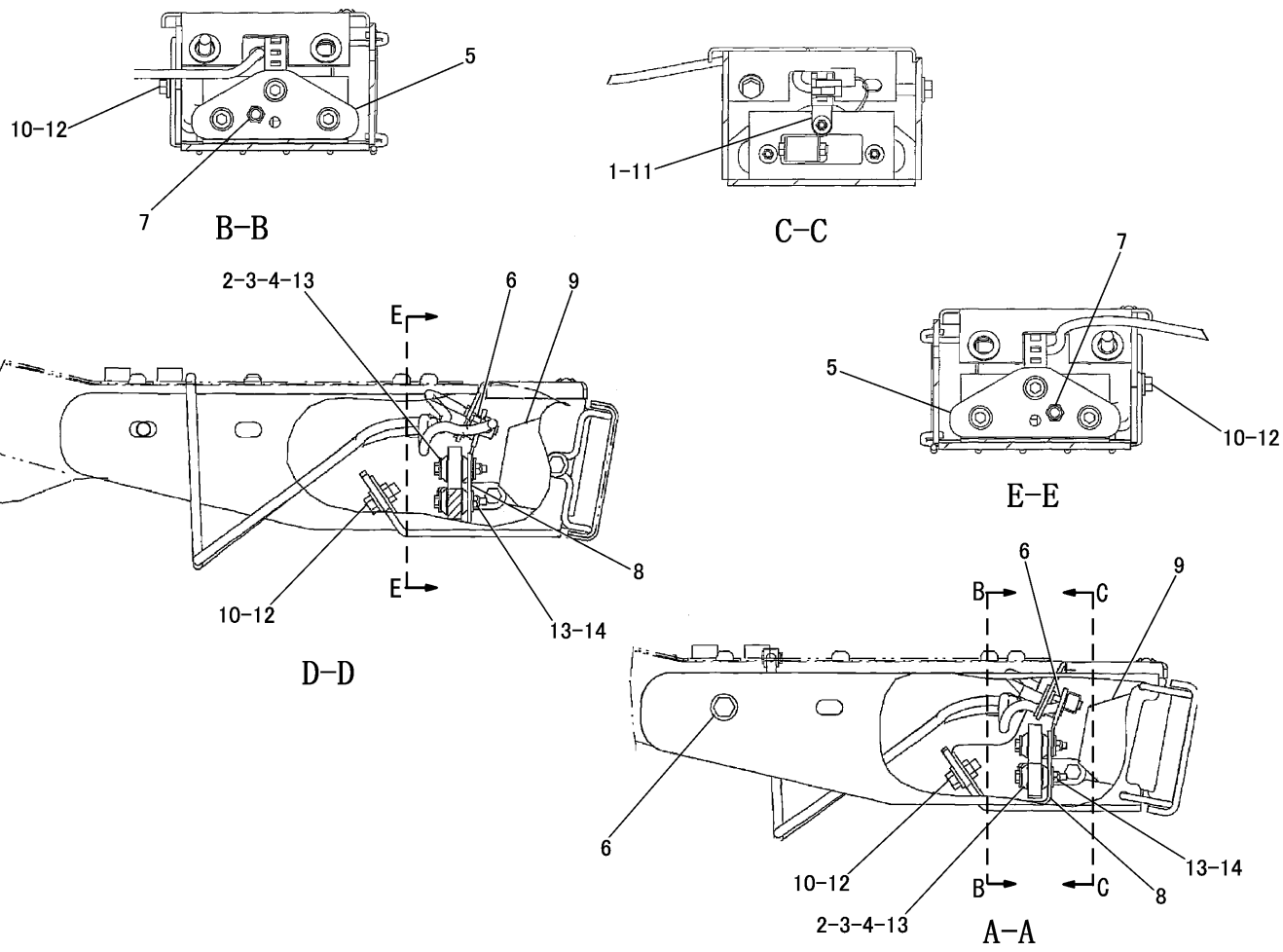

NOTE	№	PART NO.	QTY	PART NAME	NOTE	№	PART NO.	QTY	PART NAME
	1	7K-1181	2	STRAP					
	2	8C-5607	12	MOUNT					
	3	9X-2480	6	BOLT(M6×1)					
	4	8C-5608	6	SPACER					
	5	134-4492	2	PLATE					
	6	8T-4139	3	BOLT(M12×1.75)					
		8T-4223	3	WASHER					
	7	6V-7744	2	LOCKNUT(M10×1.5)					
	8	194-2606	2	BRACKET AS					
		9F-2978	2	NUT(3/8-16)(WELD)					
Y	9	242-3514	2	FLOOD LAMP GROUP					
	10	4L-6454	6	BOLT(3/8-16)					
	11	4P-7581	2	CLIP					
	12	5P-1075	6	WASHER					
	13	5P-4115	12	WASHER					
	14	6V-7743	6	LOCKNUT(M6×1)					

Y-SEPARATE ILLUSTRATION

J155869 X00

LIGHTING GROUP (280-1505 N/S) -PART 2 OF 2
REFERENCE:242-3514-Page 167
AN ATTACHMENT

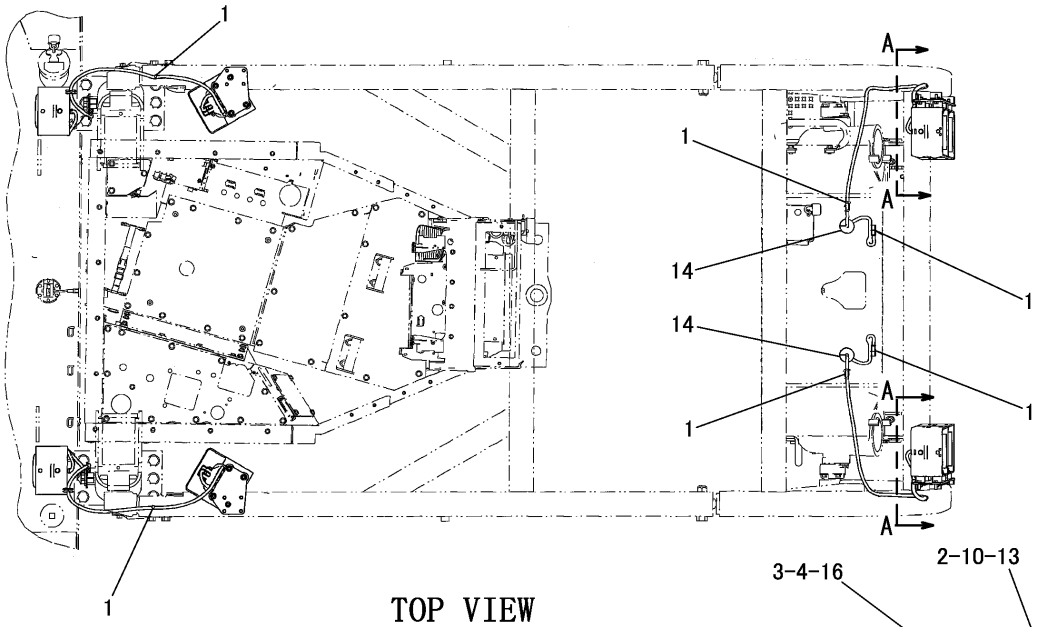

TOP VIEW

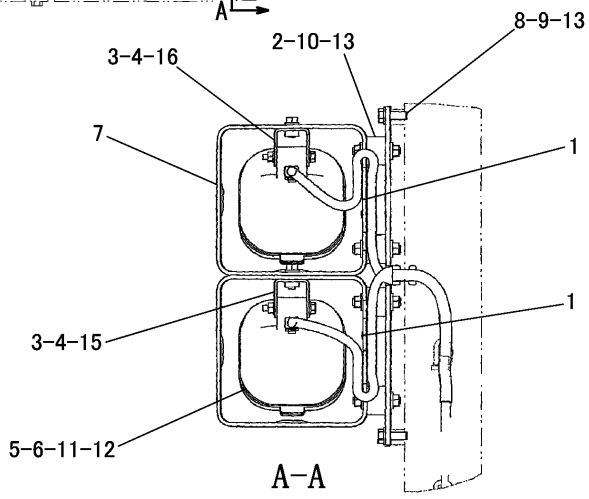

A-A

NOTE	№	PART NO.	QTY	PART NAME	NOTE	№	PART NO.	QTY	PART NAME
	1	7K-1181	14	STRAP					
	2	9W-4361	16	MOUNT					
	3	111-8314	4	BRACKET AS					
		9F-2978	1	NUT(3/8-16)(WELD)					
	4	8T-4896	4	WASHER					
Y	5	147-0319	4	FLOOD LAMP GROUP					
	6	8T-4224	8	WASHER					
	7	167-1884	4	GUARD					
	8	8T-4195	8	BOLT(M10×1.5)					
	9	168-8656	2	PLATE					
	10	6V-8801	32	NUT(3/8-16)					
	11	6V-8189	4	NUT(5/16-18)					
	12	5P-2955	4	BOLT(5/16-18)					
	13	5P-1075	40	WASHER					
	14	322-2943	2	GROMMET					
	15	4L-6454	2	BOLT(3/8-16)					
	16	5M-3062	2	BOLT(3/8-16)					

Y-SEPARATE ILLUSTRATION

J155876 X00

LIGHTING GROUP (280-1506 N/S) -SWEEPS-PART 1 OF 2

REFERENCE:147-0319-Page 167

AN ATTACHMENT

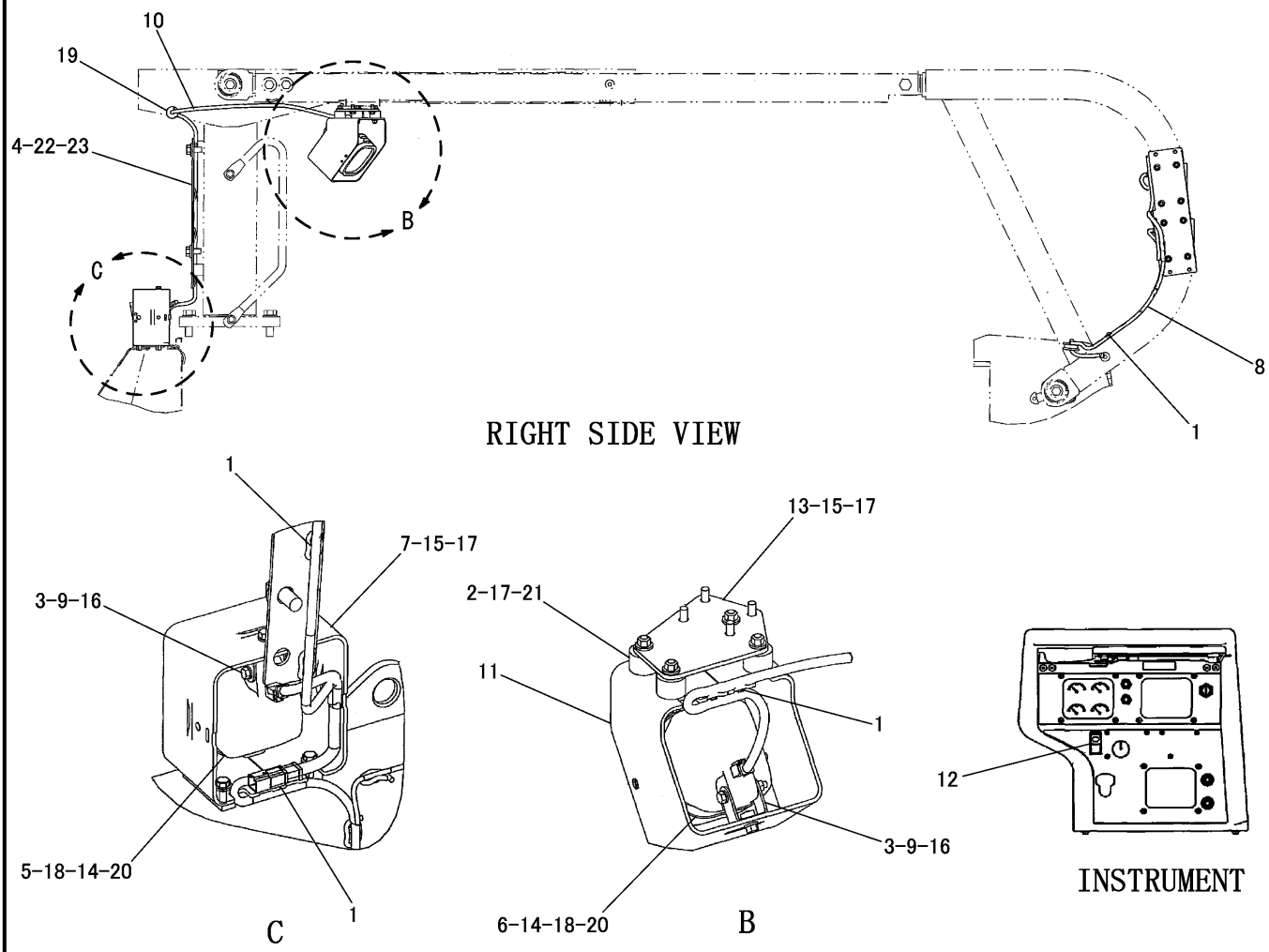

NOTE	№	PART NO.	QTY	PART NAME	NOTE	№	PART NO.	QTY	PART NAME
	1	7K−1181	24	STRAP		18	5P−2955	4	BOLT(5/16-18)
	2	9W−4361	8	MOUNT		19	6H−4005	2	GROMMET
	3	111−8314	4	BRACKET AS		20	6V−8189	4	NUT(5/16-18)
		9F−2978	1	NUT(3/8-16)(WELD)		21	6V−8801	16	NUT(3/8-16)
	4	129−8331	2	PLATE AS		22	7X−0365	4	BOLT(3/4-10)
		7T−1099	4	LINK		23	7X−0582	4	WASHER
Y	5	147−0319	2	FLOOD LAMP GROUP					
Y	6	153−2073	2	FLOOD LAMP GROUP					
	7	167−1884	2	GUARD					
Y	8	168−8655	2	HARNESS AS					
	9	8T−4896	4	WASHER					
Y	10	186−0636	2	HARNESS AS					
	11	213−4504	2	GUARD AS					
		9F−2978	1	NUT(3/8-16)(WELD)					
	12	222−7885	1	SWITCH AS					
	13	234−5846	2	PLATE					
	14	8T−4224	8	WASHER					
	15	8T−4136	16	BOLT(M10×1.5)					
	16	5M−3062	4	BOLT(3/8-16)					
	17	5P−1075	32	WASHER					

Y-SEPARATE ILLUSTRATION

J155877 X00

LIGHTING GROUP (280-1506 N/S) -SWEEPS-PART 2 OF 2

REFERENCE:147-0319-Page 167 153-2073-Page 168 168-8655-Page 170 186-0636-Page 169
AN ATTACHMENT

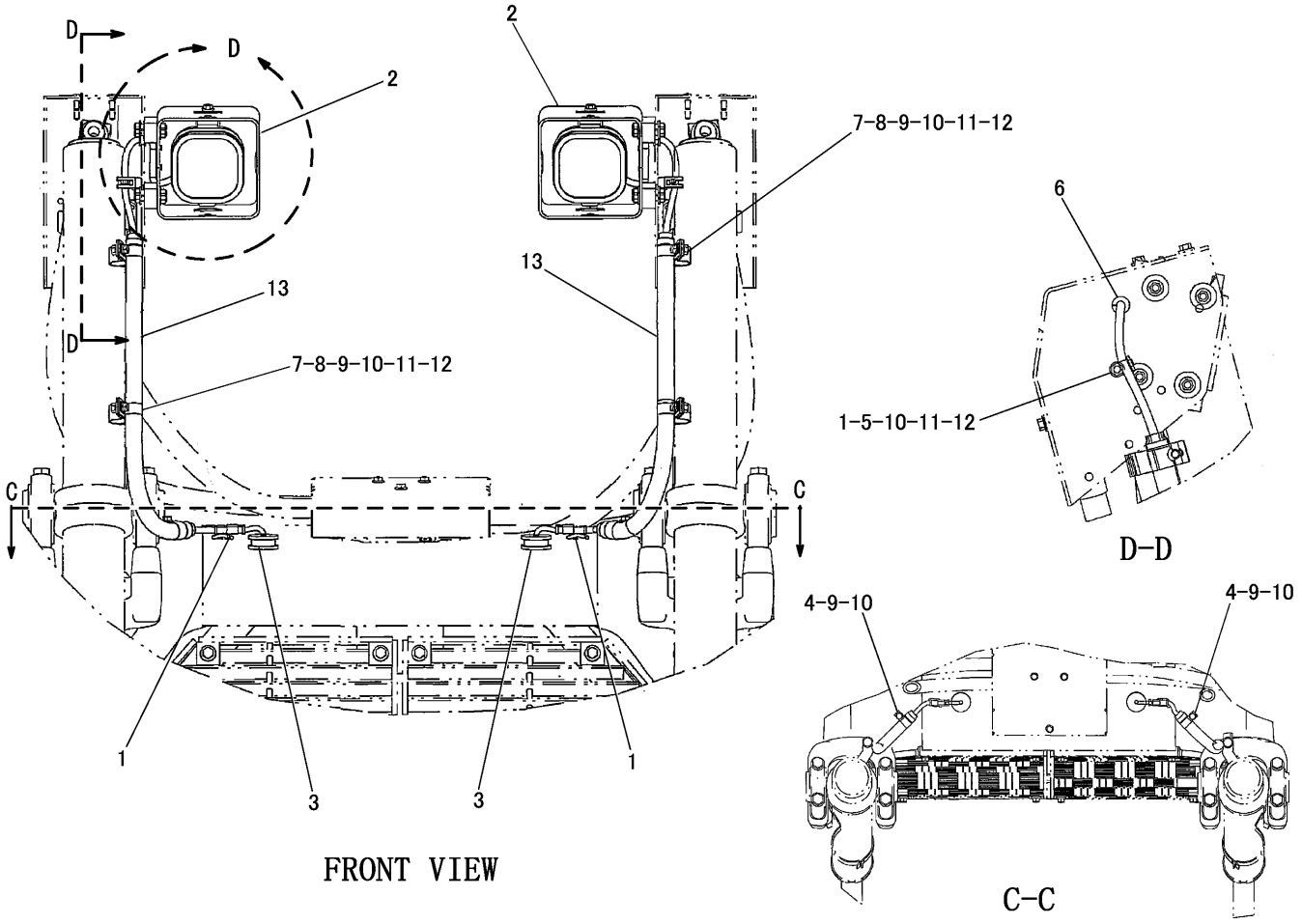

SEE PART 3 OF 3 FOR D

NOTE	№	PART NO.	QTY	PART NAME	NOTE	№	PART NO.	QTY	PART NAME
	1	7K-1181	4	STRAP					
Y	2	125-2001	2	LIGHTING GROUP					
	3	322-2943	2	GROMMET					
	4	8T-4137	2	BOLT(M10×1.5)					
	5	132-5789	2	CLIP					
	6	5P-8522	2	GROMMET					
	7	6K-4934	4	CLIP					
	8	6K-4935	4	BRACKET					
	9	6V-1889	6	CLIP					
	10	8T-4121	14	WASHER					
	11	8T-4133	6	NUT(M10×1.5)					
	12	8T-4136	6	BOLT(M10×1.5)					
	13	324-3306	2	HARNESS AS					
		155-2270	1	PLUG KIT(2P)					
		102-8802	1	RECEPTACLE KIT(2P)					
		126-1767	2	PIN					
		126-1768	2	SOCKET					

Y-SEPARATE ILLUSTRATION

J155871 X00

LIGHTING GROUP (280-1512 N/S) -PART 1 OF 3

REFERENCE:125-2001-Page 166

AN ATTACHMENT

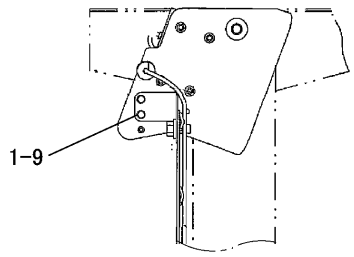

A-A

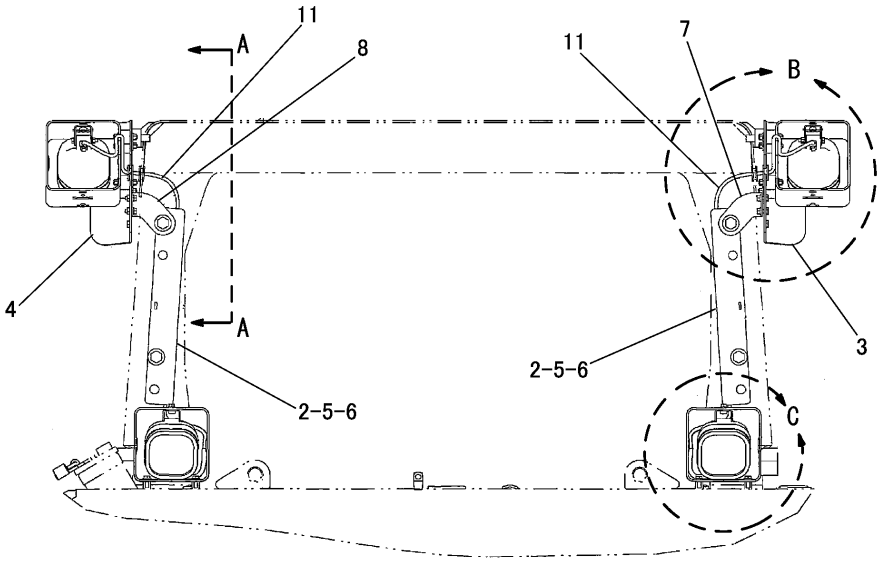

REAR VIEW

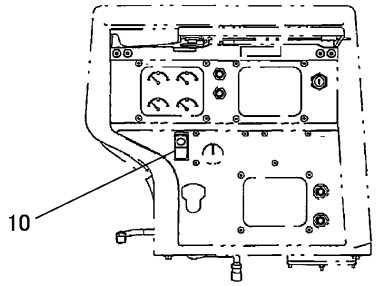

INSTRUMENT

SEE PART 3 OF 3 FOR B AND C

NOTE	№	PART NO.	QTY	PART NAME	NOTE	№	PART NO.	QTY	PART NAME
	1	8T-4896	4	WASHER					
	2	7X-0582	4	WASHER					
	3	115-1024	1	BRACKET AS(RH)					
		9F-2978	3	NUT(3/8-16)(WELD)					
	4	115-1025	1	BRACKET AS(LH)					
		9F-2978	3	NUT(3/8-16)(WELD)					
	5	7X-0365	4	BOLT(3/4-10)					
	6	129-8331	2	PLATE AS					
		7T-1099	4	LINK					
	7	130-3232	1	PLATE(RH)					
	8	130-3233	1	PLATE(LH)					
	9	5S-7379	4	BOLT(3/8-16)					
	10	222-7885	1	SWITCH AS					
	11	185-9607	2	HARNESS AS					
		155-2270	2	PLUG KIT(2P)					
		102-8804	1	RECEPTACLE KIT(4P)					
		126-1767	4	PIN					
		126-1768	4	SOCKET					

J155872 X00

LIGHTING GROUP (280-1512 N/S) -PART 2 OF 3
AN ATTACHMENT

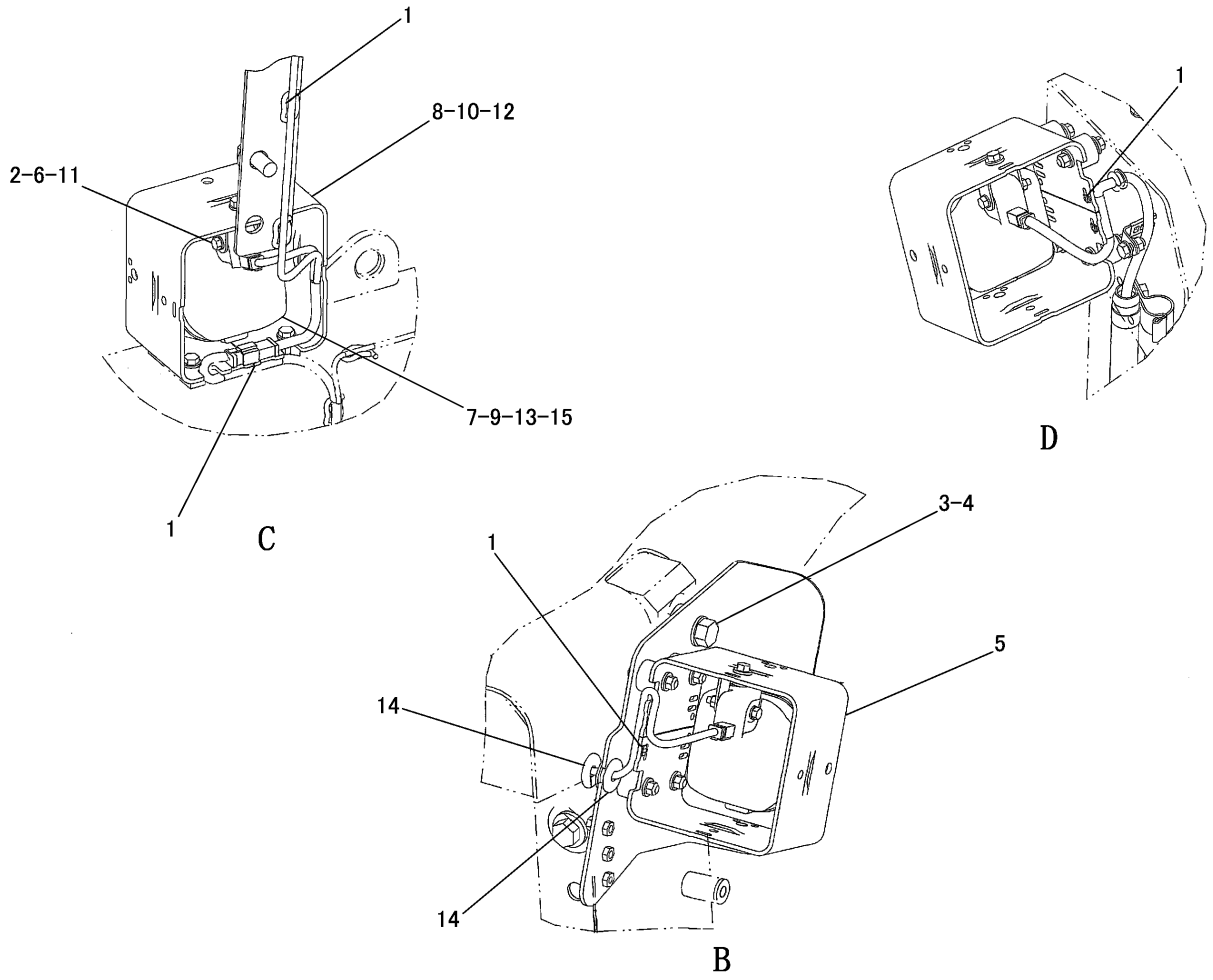

NOTE	№	PART NO.	QTY	PART NAME	NOTE	№	PART NO.	QTY	PART NAME
	1	7K-1181	22	STRAP					
	2	111-8314	2	BRACKET AS					
		9F-2978	1	NUT(3/8-16)(WELD)					
	3	8T-9399	2	BOLT(3/4-10)					
	4	8T-4994	2	WASHER					
Y	5	125-2001	2	LIGHTING GROUP					
	6	8T-4896	2	WASHER					
	7	8T-4224	4	WASHER					
	8	8T-4136	8	BOLT(M10×1.5)					
Y	9	147-0319	2	FLOOD LAMP GROUP					
	10	167-1884	2	GUARD					
	11	5M-3062	2	BOLT(3/8-16)					
	12	5P-1075	8	WASHER					
	13	5P-2955	2	BOLT(5/16-18)					
	14	6H-4005	4	GROMMET					
	15	6V-8189	2	NUT(5/16-18)					

Y-SEPARATE ILLUSTRATION

J155873 X00

LIGHTING GROUP (280-1512 N/S) -PART 3 OF 3
REFERENCE:125-2001-Page 166 147-0319-Page 167
AN ATTACHMENT

ELECTRICAL AND STARTING SYSTEM

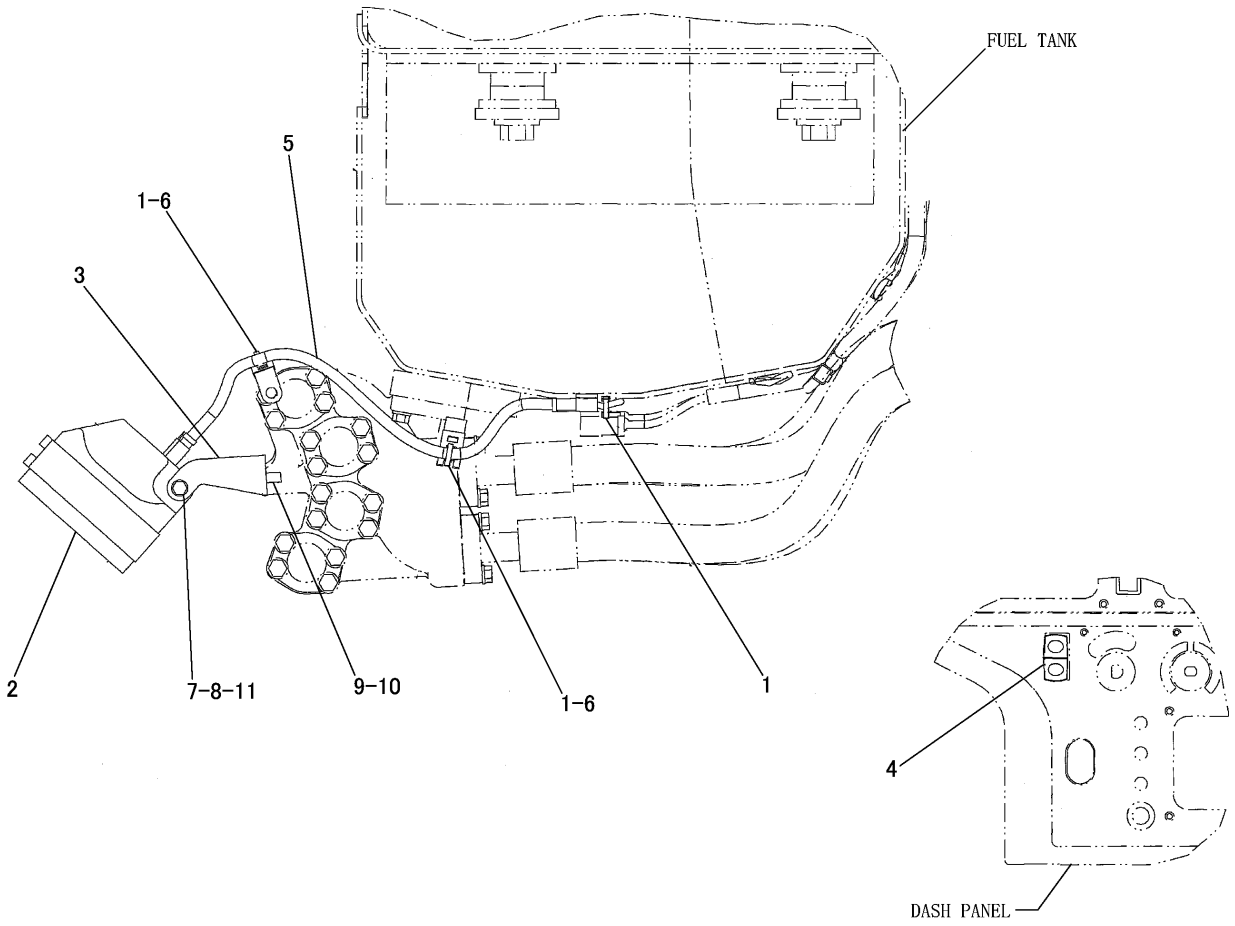

NOTE	№	PART NO.	QTY	PART NAME	NOTE	№	PART NO.	QTY	PART NAME
	1	9X-6772	3	STRAP					
Y	2	153-2073	1	FLOOD LAMP GROUP					
	3	164-8101	1	BRACKET					
	4	222-7884	1	SWITCH AS					
	5	290-2612	1	HARNESS AS					
		155-2270	1	PLUG KIT(2P)					
		102-8802	1	RECEPTACLE KIT(2P)					
		9X-3402	2	SOCKET					
		9X-3401	2	PIN					
	6	4P-8134	2	CLIP					
	7	5P-2955	1	BOLT(5/16-18)					
	8	6V-8189	1	NUT(5/16-18)					
	9	8T-4121	1	WASHER					
	10	8T-4137	1	BOLT(M10×1.5)					
	11	8T-4224	2	WASHER					

Y-SEPARATE ILLUSTRATION

J155875 X00

LIGHTING GROUP (280-1504 N/S) -RIPPER

REFERENCE:153-2073-Page 168
AN ATTACHMENT

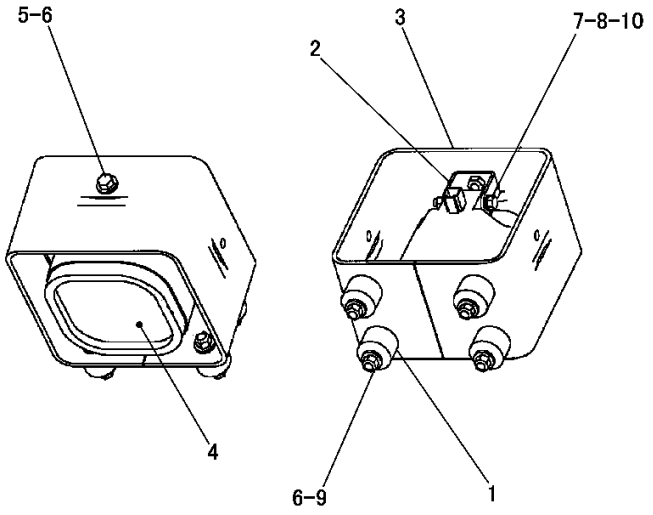

NOTE	№	PART NO.	QTY	PART NAME
	1	9W-4361	4	MOUNT
	2	111-8314	1	BRACKET AS
		9F-2978	1	NUT(3/8-16)(WELD)
	3	114-2368	1	GUARD AS
		7T-1099	1	LINK
Y	4	147-0319	1	FLOOD LAMP GROUP
	5	5M-3062	1	BOLT(3/8-16)
	6	5P-1075	9	WASHER
	7	5P-2955	1	BOLT(5/16-18)
	8	6V-8189	1	NUT(5/16-18)
	9	6V-8801	8	NUT(3/8-16)
	10	8T-4224	2	WASHER

Y-SEPARATE ILLUSTRATION

J155874 X00

LIGHTING GROUP (125-2001 N/S)

PART OF 280-1512-Page 162,164
REFERENCE:147-0319-Page 167
AN ATTACHMENT

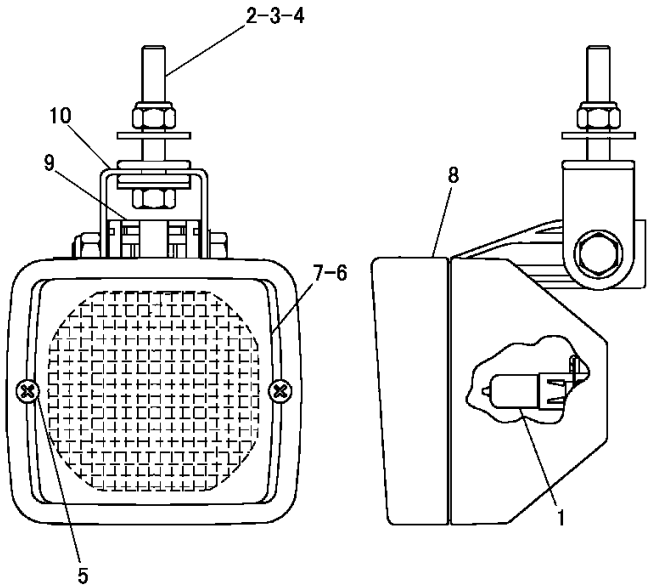

NOTE	№	PART NO.	QTY	PART NAME
	1	9X-3463	1	LAMP(24V,65W)
	2	8T-6912	1	BOLT(M8×1.25)
	3	6V-9189	1	LOCKNUT(M8×1.25)
	4	8T-4224	2	WASHER
	5	9X-4244	2	SCREW
	6	202-6612	1	SEAL
	7	202-6614	1	LENS AS
	8	175-4292	1	BODY AS
	9	164-7556	1	CLIP
	10	175-4291	1	BRACKET AS

J147262 -03

219-6487 FLOOD LAMP GROUP -SUSPENDED-24V

PART OF 271-6423-Page 152,280-1505-Page 158

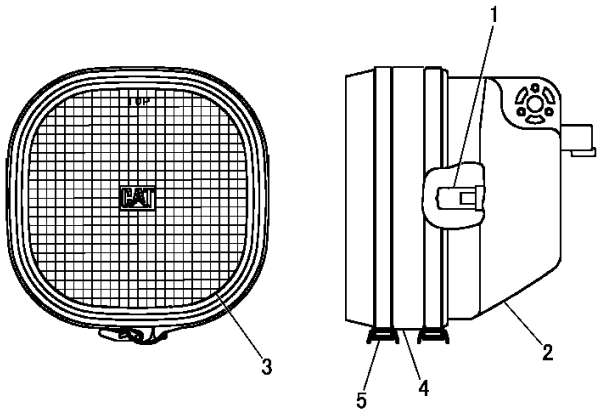

NOTE	№	PART NO.	QTY	PART NAME
	1	9X-3463	1	BULB(24V,65W)
	2	158-0250	1	BODY AS
	3	158-0248	1	LENS AS
	4	158-0252	1	BEZEL
	5	188-8849	2	CLAMP

J144523 -02

147-0319 FLOOD LAMP GROUP -SUSPENDED-24V
PART OF 125-2001-Page 166,280-1506-Page 160,161,280-1512-Page 164
AN ATTACHMENT

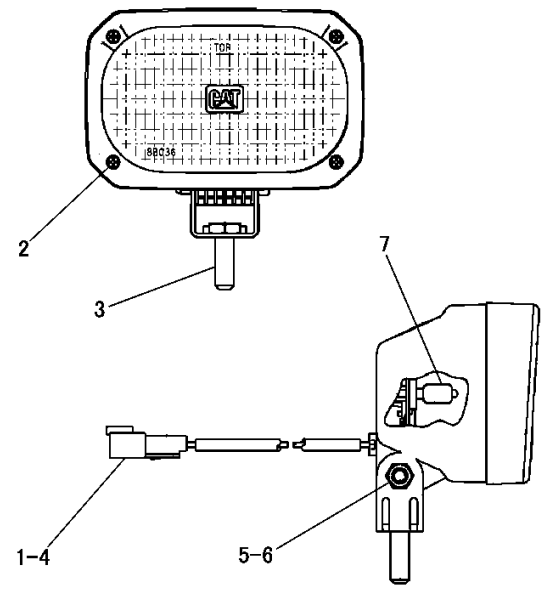

NOTE	№	PART NO.	QTY	PART NAME
	1	102-8802	1	RECEPTACLE KIT(2P)
	2	142-5789	4	SCREW
	3	8T-4195	1	BOLT(M10×1.5)
	4	186-3735	2	PIN
	5	6V-9189	1	LOCKNUT(M8×1.25)
	6	8T-7329	1	BOLT(M8×1.25)
	7	9X-3463	1	LAMP(24V,65W)

J155870 -03

242-3514 FLOOD LAMP GROUP -VERTICAL-24V
PART OF 280-1505-Page 159
AN ATTACHMENT

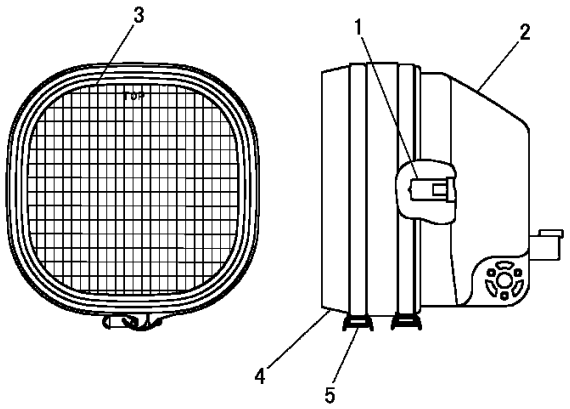

NOTE	№	PART NO.	QTY	PART NAME
	1	9X-3463	1	BULB(24V,65W)
	2	158-0250	1	BODY AS
	3	158-0248	1	LENS AS
	4	158-0252	1	BEZEL
	5	188-8849	2	CLAMP

J100406 -00

153-2073 FLOOD LAMP GROUP -VERTICAL-24V

PART OF 280-1504-Page 165,280-1506-Page 161
AN ATTACHMENT

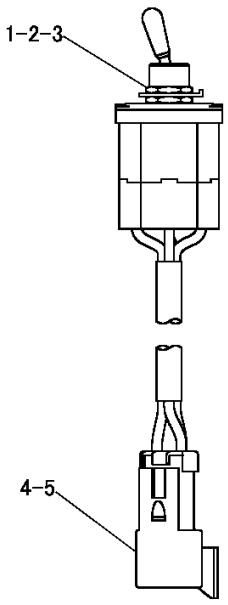

NOTE	№	PART NO.	QTY	PART NAME
	1	6T-3631	2	NUT(15/32-32)
	2	6T-3632	1	LOCKWASHER
	3	6T-3633	1	RING
	4	102-8803	1	RECEPTACLE KIT(3P)
	5	186-3735	3	PIN

J134720 -00

139-2116 TOGGLE SWITCH ASSEMBLY

PART OF 271-6423-Page 152,280-1505-Page 158

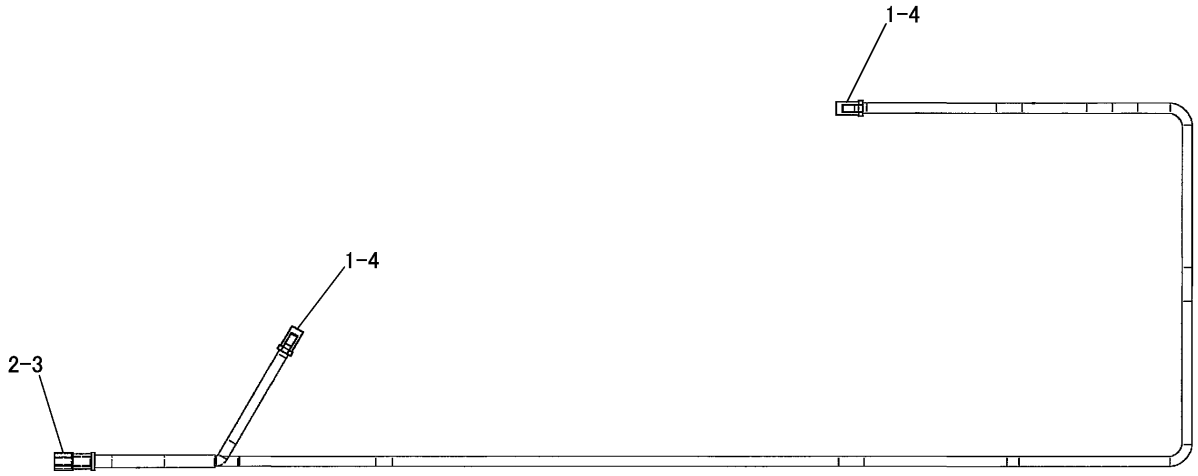

NOTE	№	PART NO.	QTY	PART NAME	NOTE	№	PART NO.	QTY	PART NAME
	1	155-2270	2	PLUG KIT(2P)					
	2	102-8804	1	RECEPTACLE KIT(4P)					
	3	126-1767	4	PIN					
	4	126-1768	4	SOCKET					

J148868 X01

186-0636 HARNESS ASSEMBLY
PART OF 280-1506-Page 161
AN ATTACHMENT

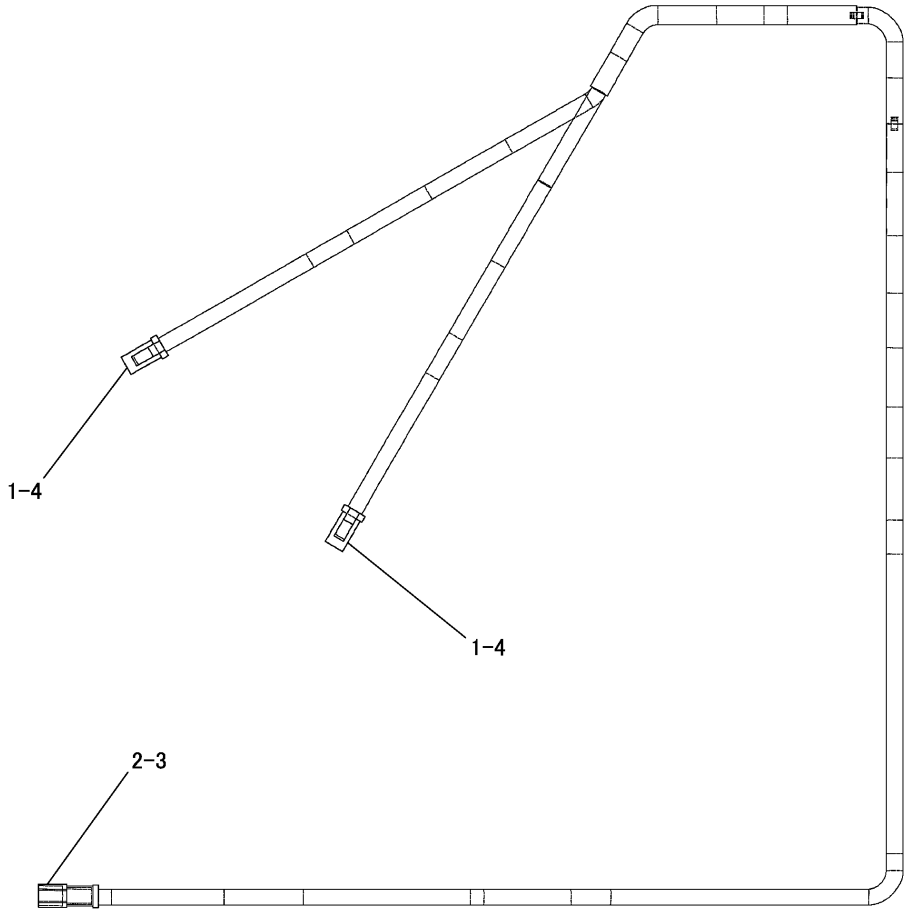

NOTE	№	PART NO.	QTY	PART NAME	NOTE	№	PART NO.	QTY	PART NAME
	1	155-2270	2	PLUG KIT(2P)					
	2	102-8802	1	RECEPTACLE KIT(2P)					
	3	126-1767	2	PIN					
	4	126-1768	4	SOCKET					

J155878 X00

168-8655 HARNESS ASSEMBLY -SWEEPS LIGHT
PART OF 280-1506-Page 161
AN ATTACHMENT

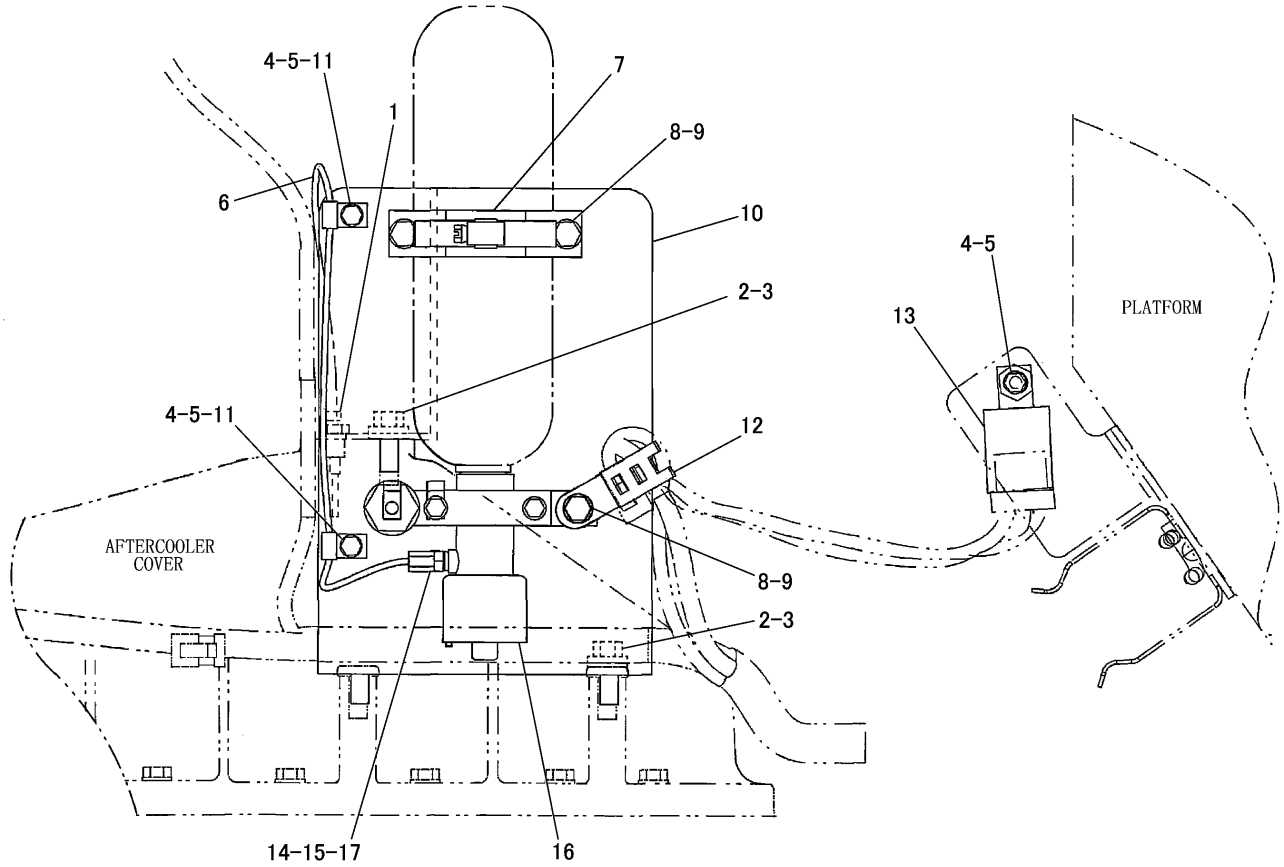

LEFT SIDE VIEW

NOTE	№	PART NO.	QTY	PART NAME	NOTE	№	PART NO.	QTY	PART NAME
	1	7J-5606	1	ATOMIZER AS		16	239-1134	1	VALVE AS
	2	6V-4248	3	BOLT(M10×1.5)			7N-9801	1	GASKET
	3	3E-4353	3	WASHER			102-8802	1	RECEPTACLE KIT(2P)
	4	8T-4138	3	BOLT(M6×1)			186-3735	2	PIN
	5	9X-8256	3	WASHER		17	230-0917	1	FITTING
D	6	174-9169		TUBE---0.515m					
	7	7N-2059	1	CLAMP AS					
	8	6V-3940	4	BOLT(M8×1.25)					
	9	8T-4224	4	WASHER					
	10	252-9466	1	BRACKET AS					
		6V-9632	2	NUT(M6×1)(WELD)					
		8T-3612	4	NUT(M8×1.25)(WELD)					
		7T-1099	2	LINK					
		5D-9629	1	ROD					
	11	1V-3113	2	CLIP					
	12	4P-7581	1	CLIP					
	13	3E-5239	1	RELAY AS					
	14	5P-6313	1	NUT(5/16-24)					
	15	5P-6314	1	SLEEVE					

D-ORDER BY THE m

J158483 X04

ETHER STARTING AID GROUP (164-4445 N/S)
PART OF 271-6466-Page 4

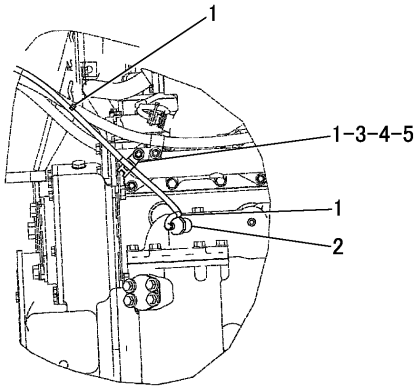

A-A

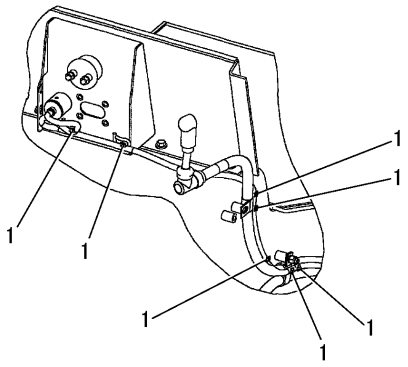

PLUG AND CABLE ROUTING

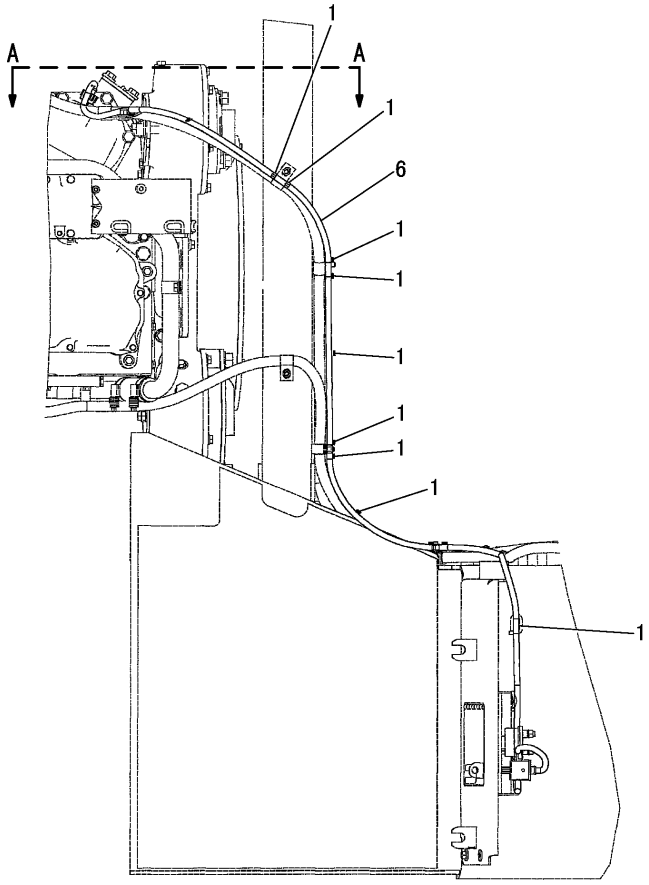

TOP VIEW

NOTE	№	PART NO.	QTY	PART NAME	NOTE	№	PART NO.	QTY	PART NAME
	1	9X-6772	19	STRAP					
	2	131-8627	1	ELEMENT AS					
		133-6517	1	CAP AS					
	3	5P-1075	1	WASHER					
	4	3K-6060	1	LOCKNUT(3/8-16)					
	5	4P-7581	1	CLIP					
	6	189-0753	1	HARNESS AS					

J155835 X00

HEATER GROUP (189-0751 N/S) -JACKET WATER
120V
AN ATTACHMENT

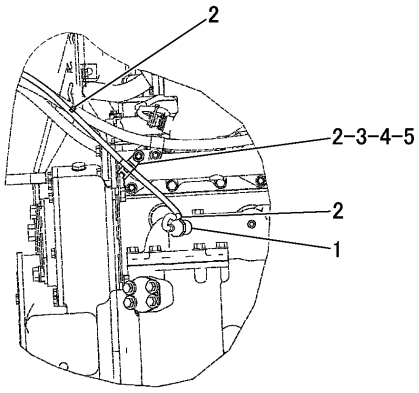

A–A

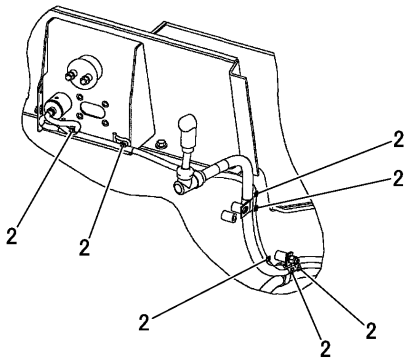

B–B

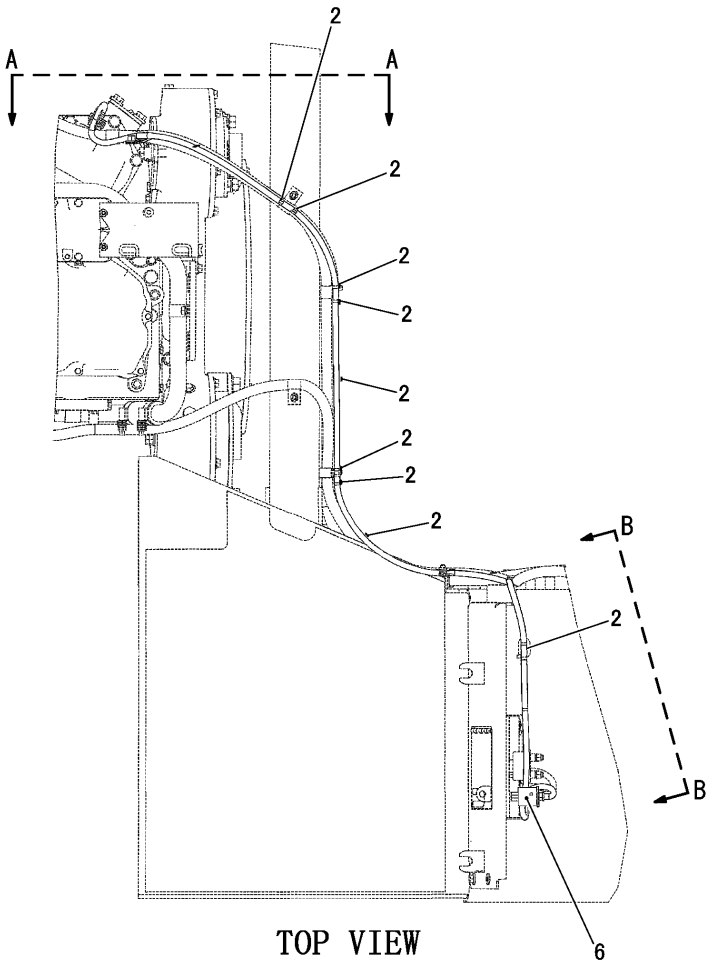

TOP VIEW

NOTE	№	PART NO.	QTY	PART NAME	NOTE	№	PART NO.	QTY	PART NAME
	1	154-2881	1	ELEMENT AS					
		133-6517	1	CAP AS					
	2	9X-6772	19	STRAP					
	3	3K-6060	1	LOCKNUT(3/8-16)					
	4	4P-7581	1	CLIP					
	5	5P-1075	1	WASHER					
	6	217-2998	1	HARNESS AS					

J157047 X00

HEATER GROUP (224-9908 N/S) -JACKET WATER
240V
AN ATTACHMENT

CONSISTS OF :

			PAGE
2	3T-4449	FINAL DRIVE GROUP	208
1	3T-9986	POWER TRAIN AXLE GROUP	215
1	108-1744	MAIN DRIVE SHAFT GROUP	215
1	158-8076	VALVE AND MOUNTING GROUP	219
1	218-0114	FINAL DRIVE MOUNTING GROUP	207
1	223-1074	POWER TRAIN OIL LINES GROUP	194
1	223-2451	TRANSMISSION ARRANGEMENT	175
1	224-2793	CONTROL AND MOUNTING GROUP	225
1	231-5968	DIFFERENTIAL DRIVE AND BRAKE GROUP	216
1	231-5990	PLANETARY AND BRAKE GROUP	218
1	272-2928	GUARD AND COUPLING GROUP	214
1	276-4798	TRANSMISSION MOUNTING GROUP	183
1	279-6627	STEERING AND TRANSMISSION CONTROL GROUP	228
1	317-2293	TORQUE CONVERTER GROUP	189

J155588 -02

POWER TRAIN ARRANGEMENT (279-3351 N/S)
PART OF 322-6112-Page 1

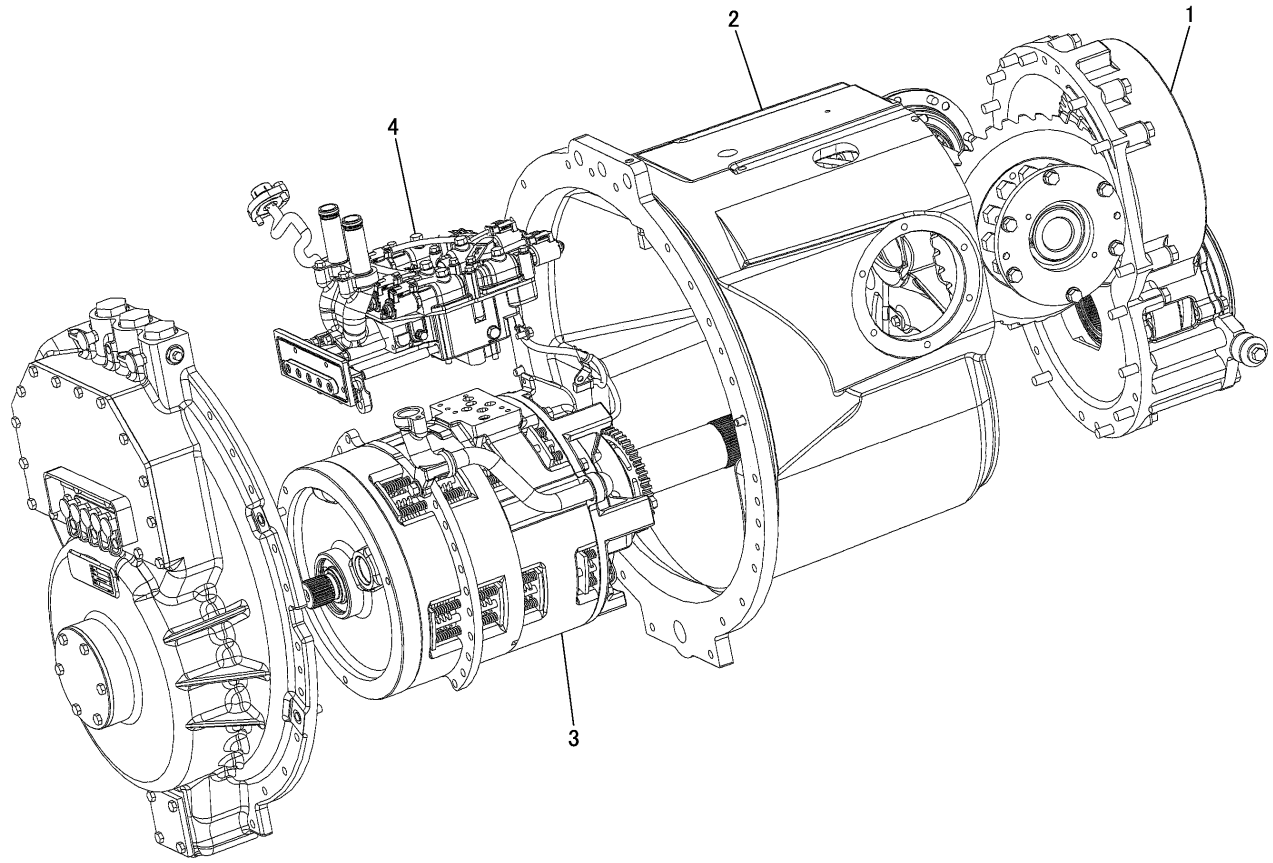

NOTE	№	PART NO.	QTY	PART NAME	NOTE	№	PART NO.	QTY	PART NAME
Y	1	162-6874	1	GEAR GROUP					
Y	2	221-3342	1	CASE GROUP					
Y	3	223-5981	1	PLANETARY GROUP					
Y	4	265-5278	1	T/M HYD CONTROL GROUP					

Y-SEPARATE ILLUSTRATION

J155793 X00

223-2451 TRANSMISSION ARRANGEMENT

PART OF 279-3351-Page 174

REFERENCE:162-6874-Page 212, 213 221-3342-Page 180～182 223-5981-Page 176～179
265-5278-Page 184, 185

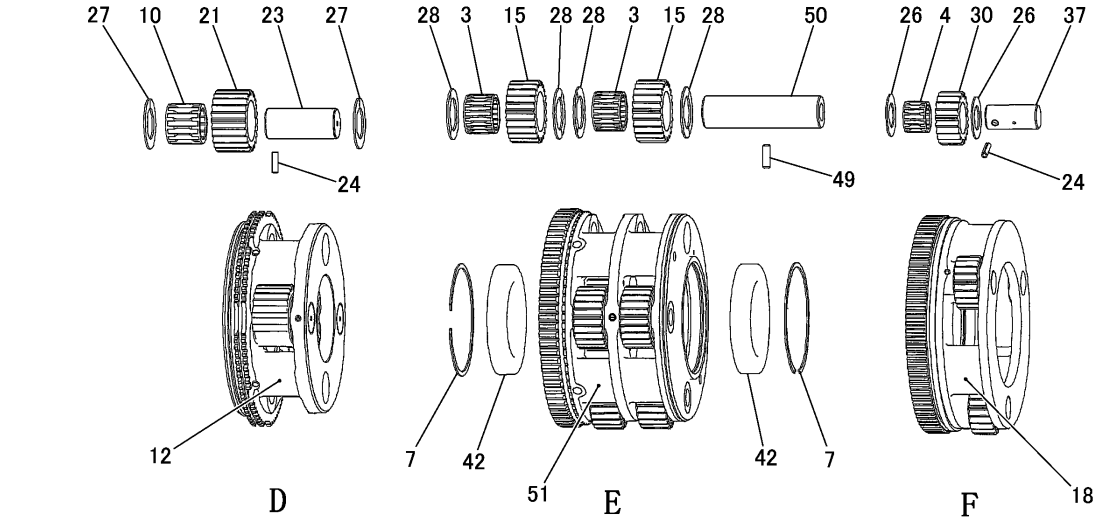

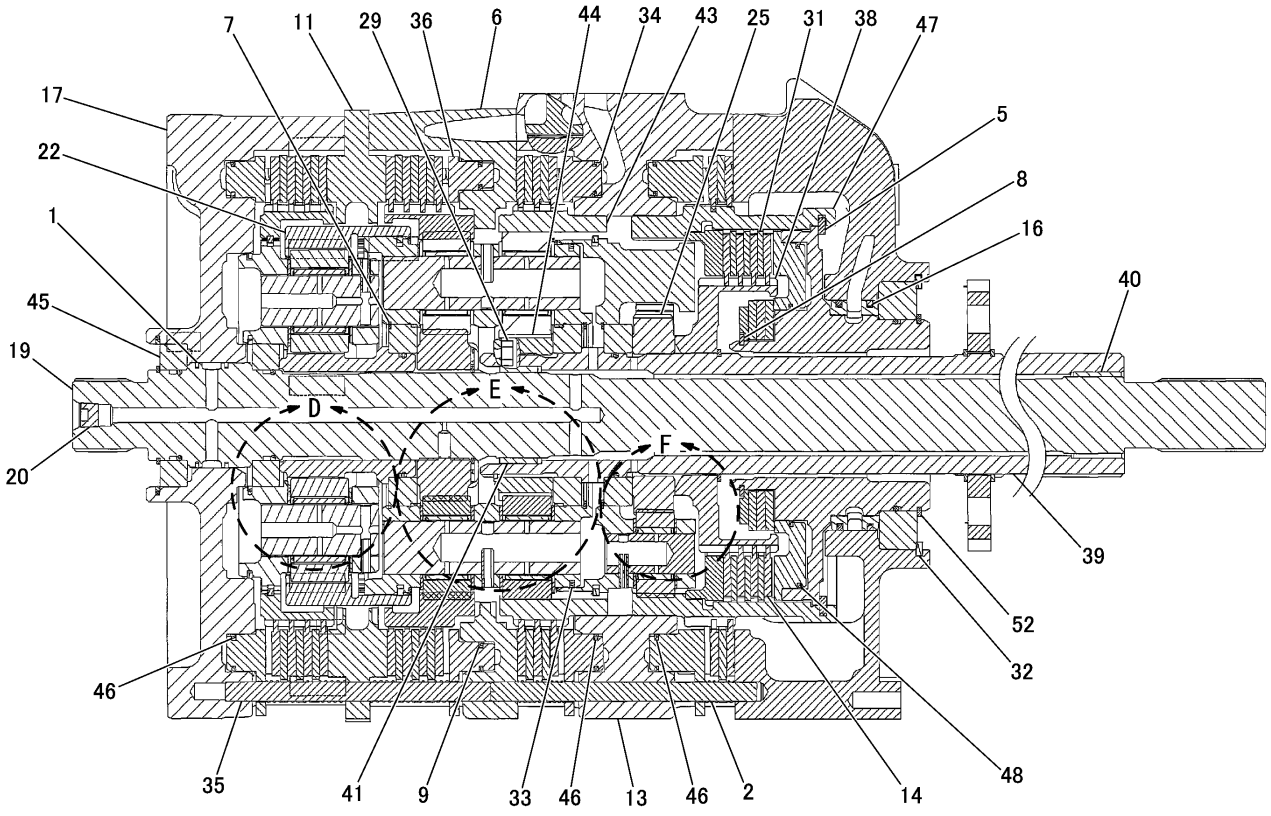

J155811 X00

PLANETARY GROUP (223-5981 N/S) -PART 1 OF 2
PART OF 223-2451-Page 175

NOTE	№	PART NO.	QTY	PART NAME	NOTE	№	PART NO.	QTY	PART NAME
	1	3T-4377	2	SEAL					
	2	4M-9592	20	SPRING					
	3	5M-6126	8	BEARING					
	4	5P-3930	3	BEARING AS					
	5	5P-8194	1	RING					
	6	9G-0284	1	HOUSING					
	7	6V-0473	3	RING					
	8	6V-2478	1	RING					
	9	9G-0286	1	RING					
	10	6Y-2811	4	BEARING					
	11	6Y-4831	1	PLATE AS					
		5H-6202	2	PIN					
		7M-5130	1	PIN					
	12	6Y-4846	1	CARRIER					
	13	117-7826	1	HOUSING AS					
	14	6Y-5912	4	DISC					
	15	7G-2516	8	GEAR					
	16	7G-2830	2	RING					
	17	220-1411	1	HOUSING AS					
		3F-5022	1	PLUG					
	18	7G-7218	1	CARRIER					
	19	231-8855	1	SHAFT AS					
	20	156-4406	1	PLUG					
	21	7T-6578	4	GEAR					
	22	7T-6580	1	GEAR					
	23	7T-6581	4	SHAFT					
	24	3S-2708	7	PIN					
	25	7T-9370	1	GEAR					
	26	8E-8299	6	DISC					
	27	8E-8303	8	DISC					
	28	8E-8304	16	DISC					
	29	1A-5183	2	BOLT(3/8-16)					
	30	8P-1916	3	GEAR					
	31	8P-1964	3	PLATE					
	32	1L-7388	1	RING					
	33	8P-2053	1	SEAL					
	34	8P-9507	1	PISTON					
	35	3K-2511	10	DOWEL					
	36	9G-0285	1	PISTON					
	37	9G-0289	3	SHAFT					
	38	9G-0290	1	HUB					
	39	234-9994	1	SHAFT AS					
	40	3T-8729	1	BEARING					
	41	9G-6744	1	BEARING					
	42	7T-8816	2	BEARING					
	43	9P-8614	1	GEAR					
	44	9P-8626	1	GEAR					
	45	8H-5352	2	BEARING					
	46	8P-2019	3	RING					
	47	9W-8270	1	GEAR					
	48	8P-2023	1	RING					
	49	112-4511	4	PIN					
	50	112-5585	4	SHAFT					
	51	112-8042	1	CARRIER					
	52	5P-5297	1	RING					

J155811 X00

PLANETARY GROUP (223-5981 N/S) -PART 1 OF 2

PART OF 223-2451-Page 175

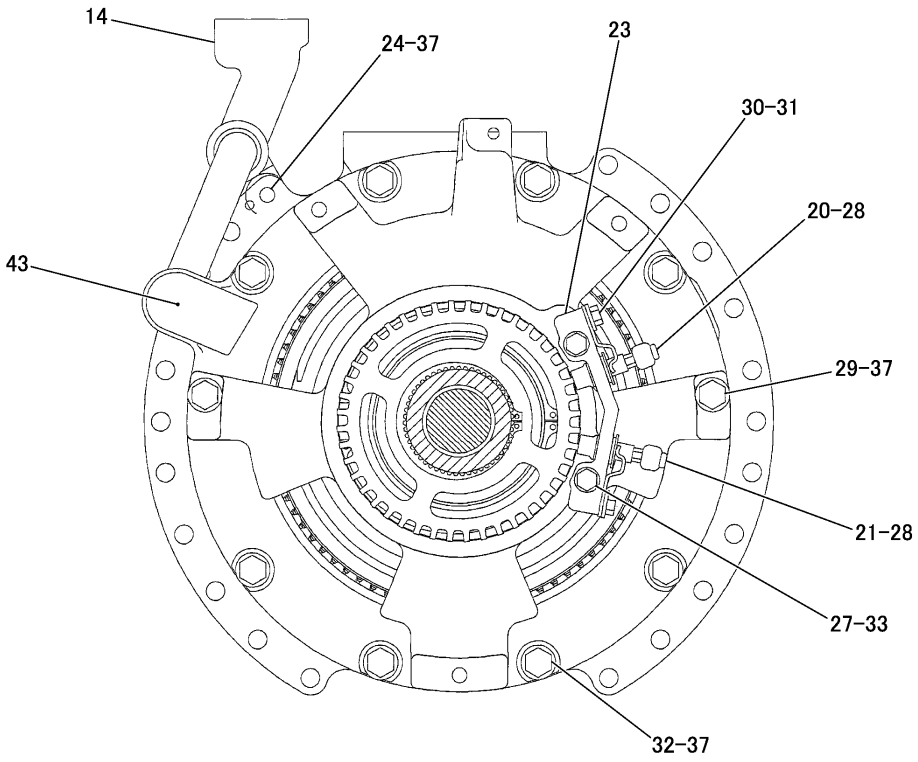

C-C

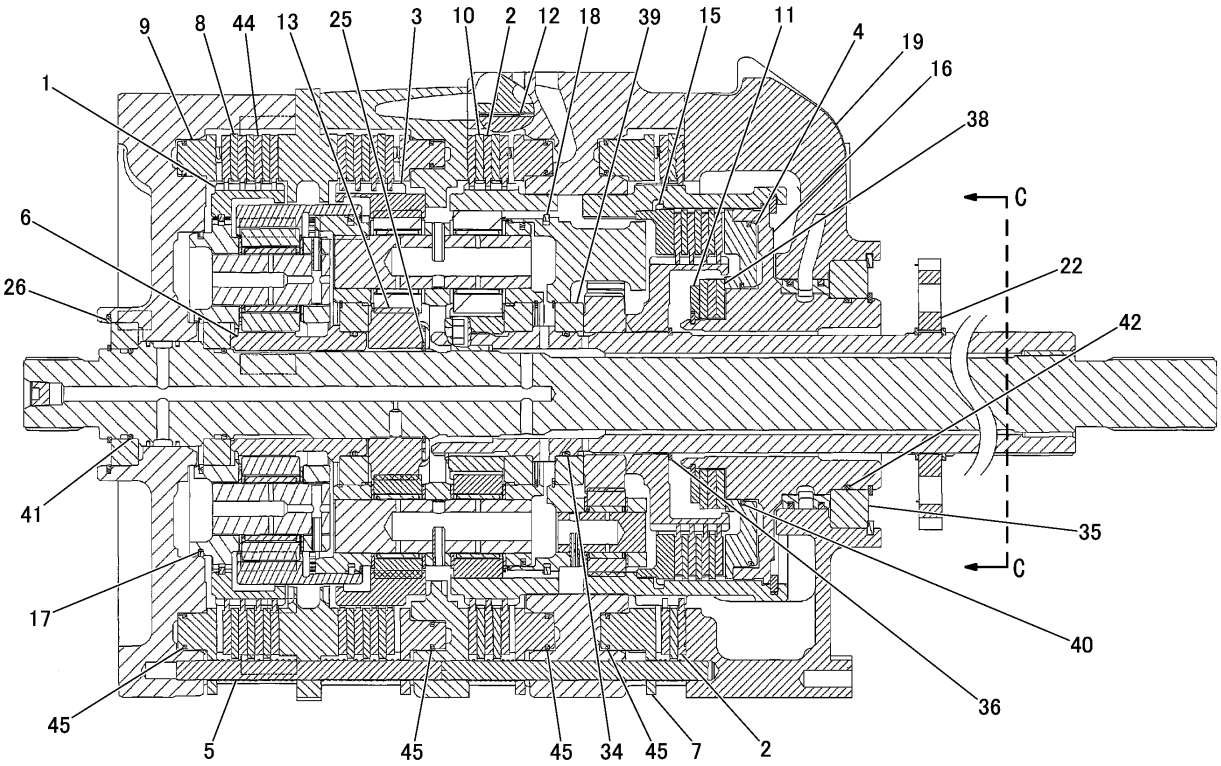

J155812 X00

PLANETARY GROUP (223-5981 N/S) -PART 2 OF 2
PART OF 223-2451-Page 175

POWER TRAIN

NOTE	№	PART NO.	QTY	PART NAME	NOTE	№	PART NO.	QTY	PART NAME
	1	6Y-1602	1	COUPLING					
	2	6Y-5911	5	DISC					
	3	7G-6355	1	GEAR					
	4	7G-7724	1	PISTON					
	5	7H-7658	10	SPRING					
	6	7T-9272	1	GEAR					
	7	8P-1892	1	PISTON					
	8	8P-2051	6	PLATE					
	9	8P-9507	1	PISTON					
	10	6I-8500	3	PLATE					
	11	9G-8020	1	PLATE					
	12	9M-4355	10	DAMPER					
	13	9P-7757	1	GEAR					
	14	9W-0645	1	TUBE AS					
	15	9W-8269	1	PLATE					
	16	105-8183	1	HOUSING AS					
		6P-7704	1	CARRIER					
		6B-6863	1	PIN					
	17	131-4091	1	SEAL					
	18	144-4284	3	RING					
	19	144-7878	1	MANIFOLD					
	20	191-8304	1	SENSOR GROUP					
		137-6645	1	PAD					
	21	191-8305	1	SENSOR GROUP					
		137-6645	1	PAD					
	22	237-2209	1	ROTOR					
	23	237-9601	1	BRACKET AS					
		8M-8489	2	DOWEL					
	24	030-8538	1	BOLT(1/2-13)					
	25	061-6711	2	RING					
	26	068-8093	2	RING					
	27	0S-1619	2	BOLT(3/8-16)					
	28	117-1385	2	SEAL					
	29	1M-8657	2	BOLT(1/2-13)					
	30	2H-3755	2	BOLT(5/16-18)					
	31	3E-4352	2	WASHER					
	32	4M-2442	8	BOLT(1/2-13)					
	33	5M-2894	2	WASHER					
	34	5M-3038	2	SEAL					
	35	4F-2129	1	BEARING					
	36	5P-5296	4	RING					
	37	5P-8245	11	WASHER					
	38	7G-2343	3	SPRING					
	39	7T-8816	1	BEARING					
	40	8D-9739	1	SEAL					
	41	8M-5010	2	SEAL					
	42	8M-5255	1	SEAL					
	43	8M-5266	1	SEAL					
	44	9P-7390	8	DISC AS					
	45	8P-2022	4	RING					

J155812 X00

PLANETARY GROUP (223-5981 N/S) -PART 2 OF 2

PART OF 223-2451-Page 175

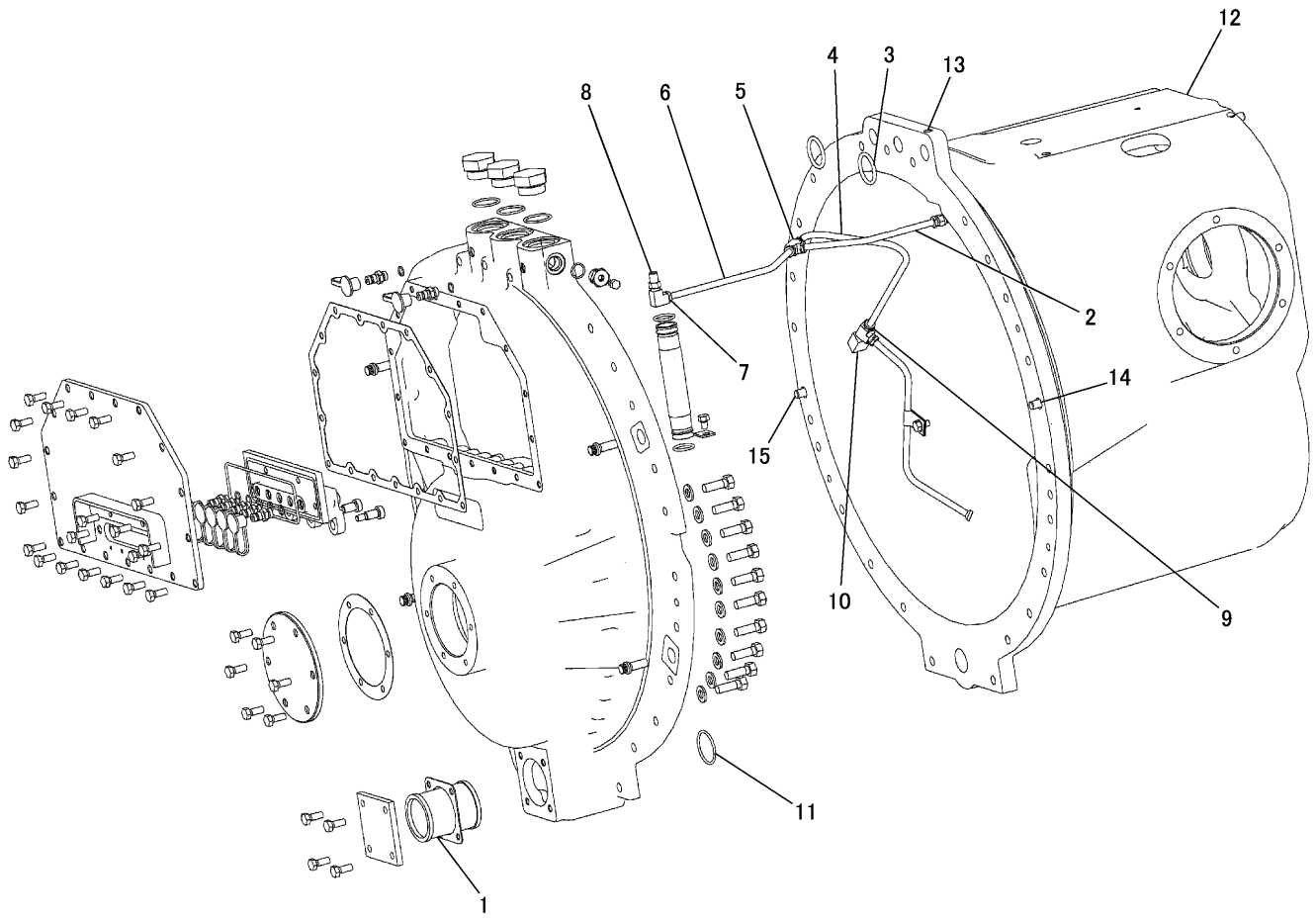

NOTE	№	PART NO.	QTY	PART NAME	NOTE	№	PART NO.	QTY	PART NAME
	1	8S-9130	1	SCREEN		12	190-2278	1	CASE AS
	2	7T-8876	1	TUBE AS			3F-3442	2	DOWEL
	3	9M-9647	2	SEAL			4B-9782	1	BALL
	4	9W-5334	1	TUBE AS			146-6669	1	GASKET
	5	5K-9988	1	TEE			146-6670	1	COVER
	6	7T-8875	1	TUBE AS			9X-6458	6	WASHER
	7	9S-7710	1	ELBOW			0S-1594	6	BOLT(3/8-16)
	8	5P-8998	1	NIPPLE		13	4B-9785	1	BALL
	9	6K-8498	1	TEE		14	1A-2610	1	PIN
	10	7J-8611	1	ELBOW		15	7M-1201	1	DOWEL
	11	8M-5661	1	SEAL					

J137927 X00

PARTS AND CASE GROUP (221-3342 N/S) -PART 1 OF 3

PART OF 223-2451-Page 175

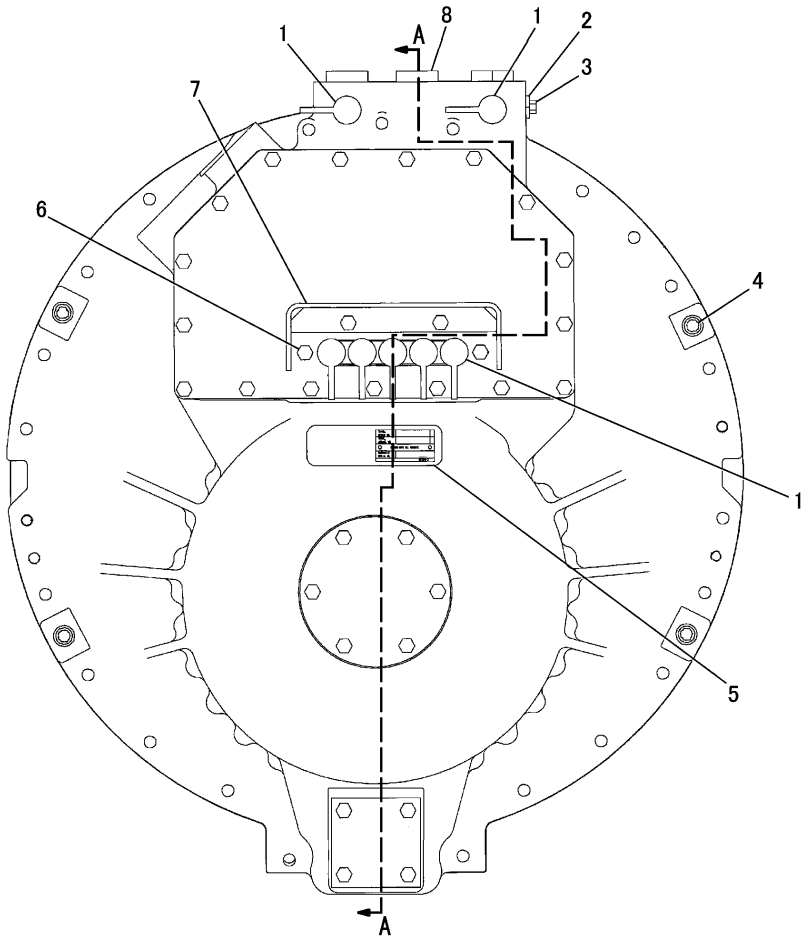

NOTE	№	PART NO.	QTY	PART NAME	NOTE	№	PART NO.	QTY	PART NAME
	1	6V-0852	7	CAP					
		6V-3965	7	NIPPLE AS					
		3J-1907	7	SEAL					
	2	216-6202	1	ADAPTER					
		2M-9780	1	SEAL					
	3	1N-5999	1	PLUG					
		7J-0204	1	SEAL					
	4	8M-2530	4	BOLT(1/2-13)					
	5	6V-1720	1	PLATE(T/M SERIAL NUMBER)					
	6	9X-2125	4	BOLT(M10×1.5)					
	7	221-0877	1	GUARD AS					
	8	2S-4078	3	SEAL					
		9S-6130	3	PLUG					

J137928 X00

PARTS AND CASE GROUP (221-3342 N/S) -PART 2 OF 3

PART OF 223-2451-Page 175

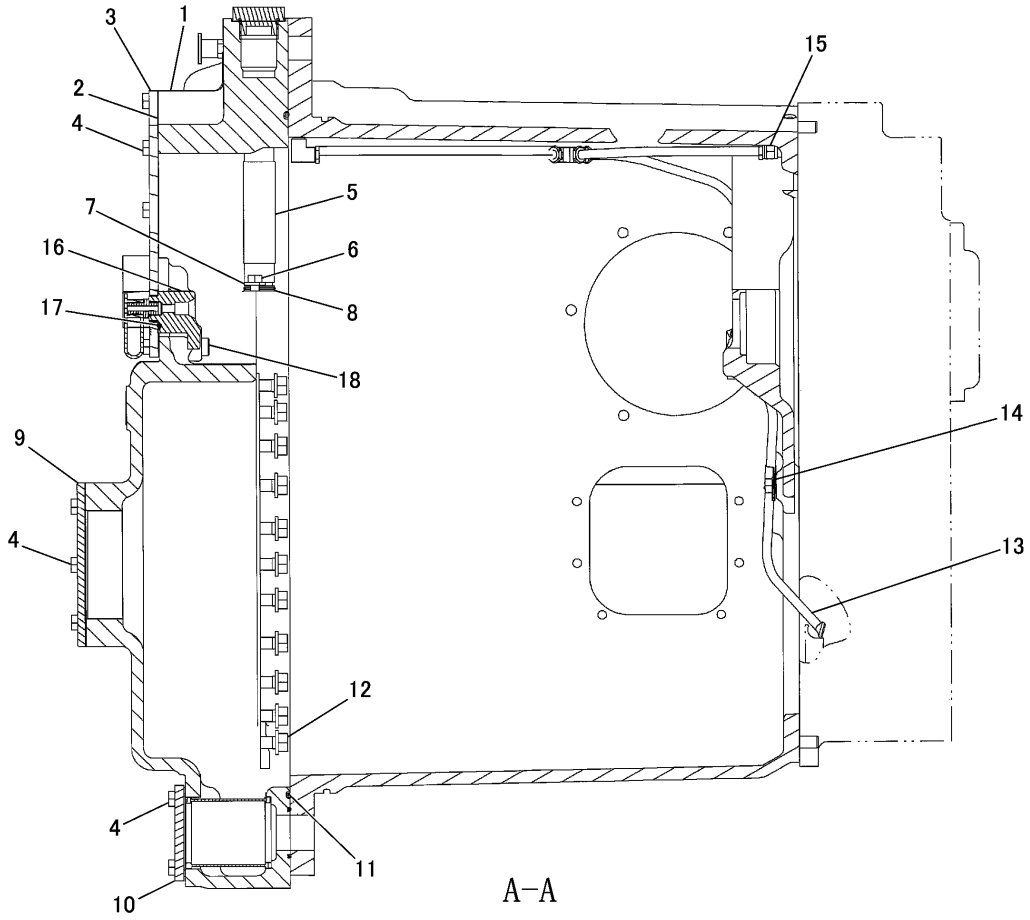

NOTE	№	PART NO.	QTY	PART NAME	NOTE	№	PART NO.	QTY	PART NAME
	1	210-0091	1	COVER		16	214-9408	1	MANIFOLD
	2	203-2288	1	GASKET		17	2S-4071	1	SEAL
	3	204-6499	1	COVER		18	081-8353	3	BOLT(3/8-16)
	4	9X-2125	23	BOLT(M10×1.5)					
	5	9P-1475	1	SLEEVE					
	6	031-0218	1	BOLT(3/8-16)					
	7	5K-5120	1	STRIP					
	8	8M-4432	2	SEAL					
	9	9G-8615	1	COVER					
		8P-0058	1	GASKET					
	10	3S-7781	1	GASKET					
		4H-5440	1	COVER					
	11	5P-4057	1	SEAL					
	12	0S-1585	21	BOLT(1/2-13)					
		5P-8245	21	WASHER					
	13	9W-4159	1	TUBE AS					
	14	0T-0102	1	BOLT(3/8-16)					
		5M-2894	1	WASHER					
		8H-1603	1	CLIP					
	15	5K-9246	1	CONNECTOR					

J137929 X00

PARTS AND CASE GROUP (221-3342 N/S) -PART 3 OF 3
PART OF 223-2451-Page 175

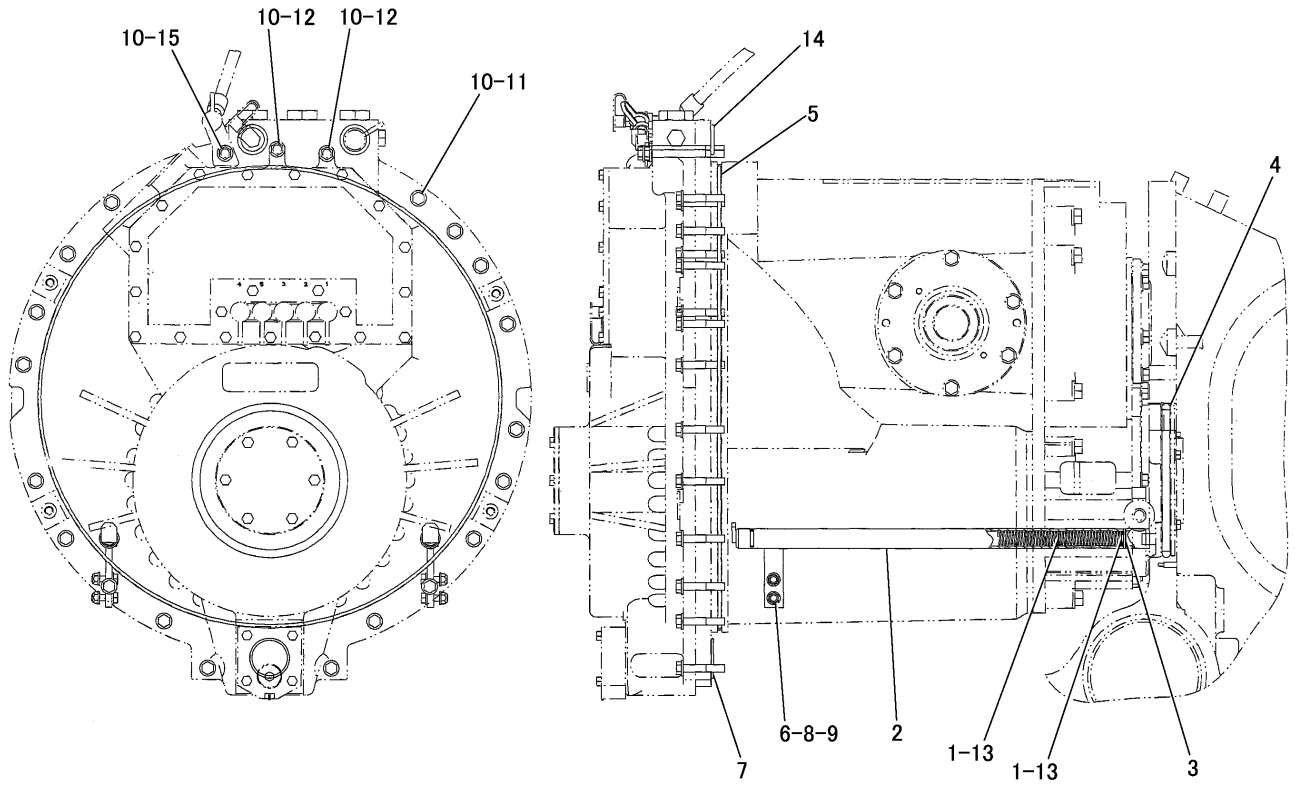

NOTE	№	PART NO.	QTY	PART NAME	NOTE	№	PART NO.	QTY	PART NAME
	1	5S-7008	4	SPRING					
	2	9W-6359	2	TUBE AS					
	3	1H-1200	2	PIN					
	4	1M-9011	1	RING					
	5	2D-6506	1	SEAL					
	6	6V-7744	4	LOCKNUT(M10×1.5)					
	7	8M-4390	1	SEAL					
	8	8T-4121	8	WASHER					
	9	8T-4196	4	BOLT(M10×1.5)					
	10	8T-4223	22	WASHER					
	11	8T-4648	19	BOLT(M12×1.75)					
	12	8T-5041	2	BOLT(M12×1.75)					
	13	8T-5360	4	WASHER					
	14	9M-7002	2	SEAL					
	15	8T-5001	1	BOLT(M12×1.75)					

J155754 X01

TRANSMISSION MOUNTING GROUP (276-4798 N/S)
PART OF 279-3351-Page 174

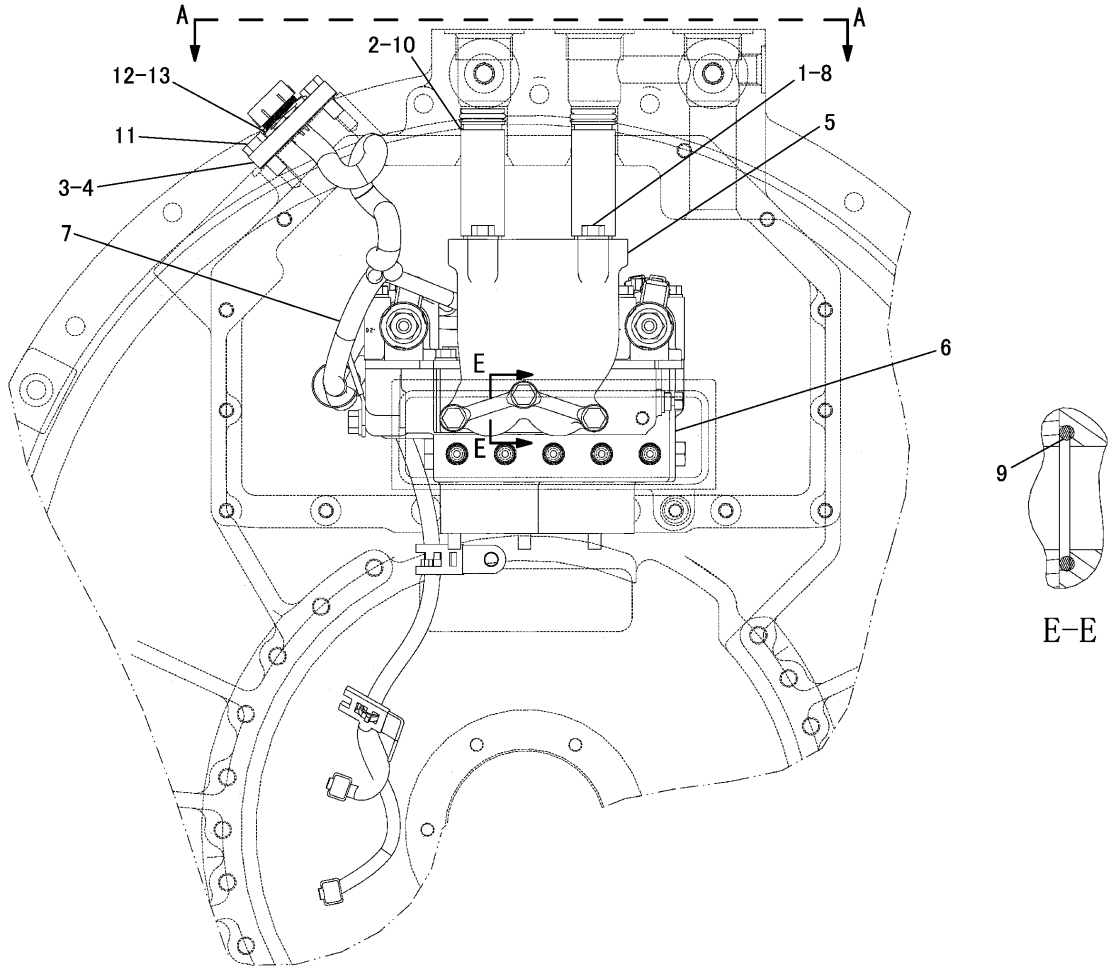

NOTE	№	PART NO.	QTY	PART NAME	NOTE	№	PART NO.	QTY	PART NAME
	1	5K-5120	2	STRIP					
	2	6P-4977	2	SLEEVE					
	3	104-6729	1	RETAINER					
	4	104-6730	1	GASKET					
	5	204-6501	1	ELBOW					
Y	6	213-4540	1	RELIEF VALVE GROUP					
Y	7	263-4081	1	HARNESS AS					
	8	031-0218	2	BOLT(3/8-16)					
	9	2H-3932	2	SEAL					
	10	8M-4432	4	SEAL					
	11	9X-2125	2	BOLT(M10×1.5)					
J	12	125-5341	1	NUT(1 1/4-18)					
J	13	6J-2419	1	SEAL					

J-PARTS SERVICE ONLY/INCLUDED IN HARNESS AS
Y-SEPARATE ILLUSTRATION

J137932 X00

TRANSMISSION HYDRAULIC CONTROL GROUP (265-5278 N/S) -PART 1 OF 2

PART OF 223-2451-Page 175
REFERENCE:213-4540-Page 186 263-4081-Page 188

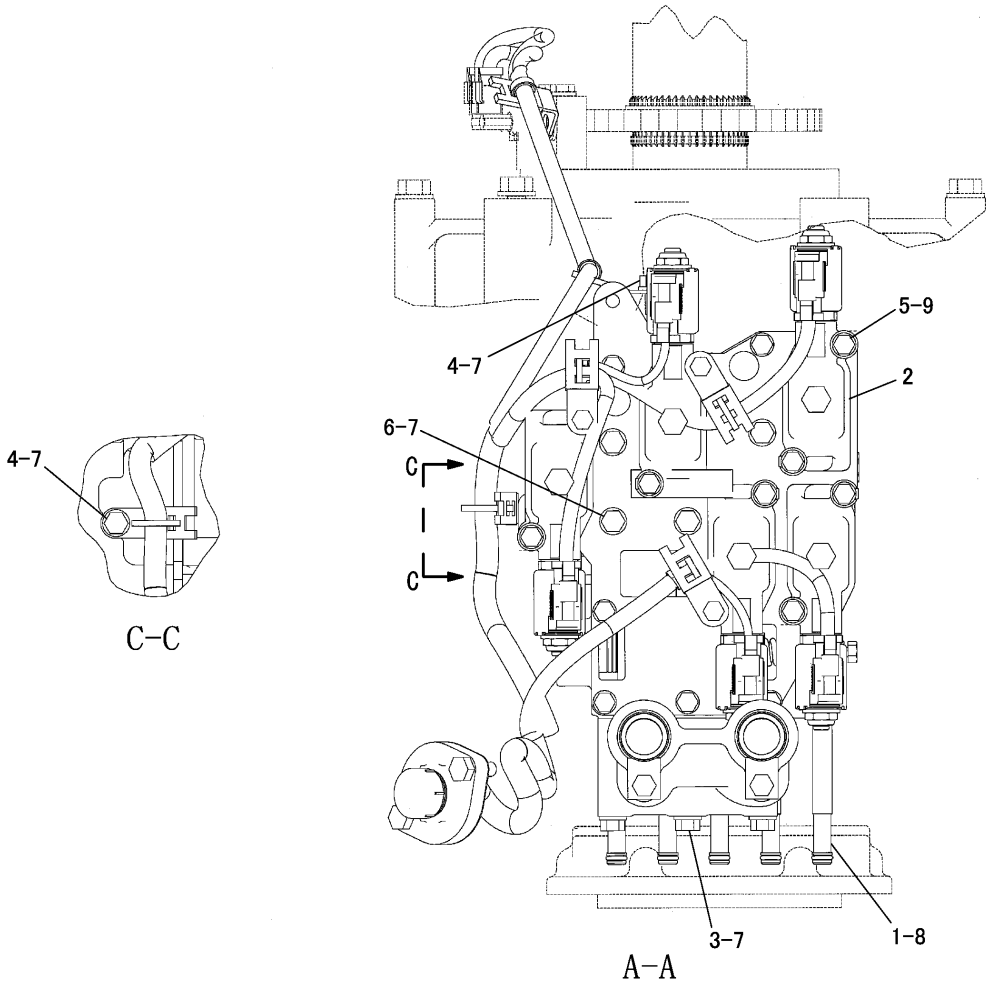

NOTE	№	PART NO.	QTY	PART NAME	NOTE	№	PART NO.	QTY	PART NAME
	1	205-7205	5	SLEEVE					
Y	2	220-4324	5	MODULATING VALVE GROUP					
	3	0L-1352	3	BOLT(3/8-16)					
	4	0S-0509	2	BOLT(3/8-16)					
	5	1D-4540	10	BOLT(5/16-18)					
	6	5F-4899	4	BOLT(3/8-16)					
	7	5M-2894	9	WASHER					
	8	8M-8157	10	SEAL					
	9	9M-1974	10	WASHER					

Y-SEPARATE ILLUSTRATION

J137933 X00

TRANSMISSION HYDRAULIC CONTROL GROUP (265-5278 N/S) -PART 2 OF 2

PART OF 223-2451-Page 175
REFERENCE:220-4324-Page 187

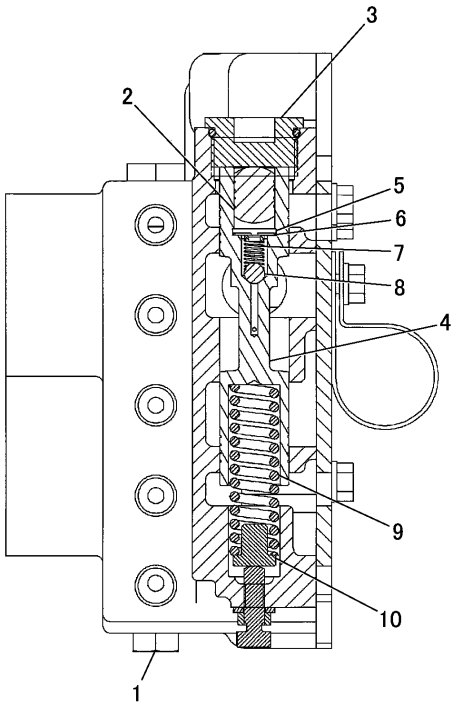

A–A

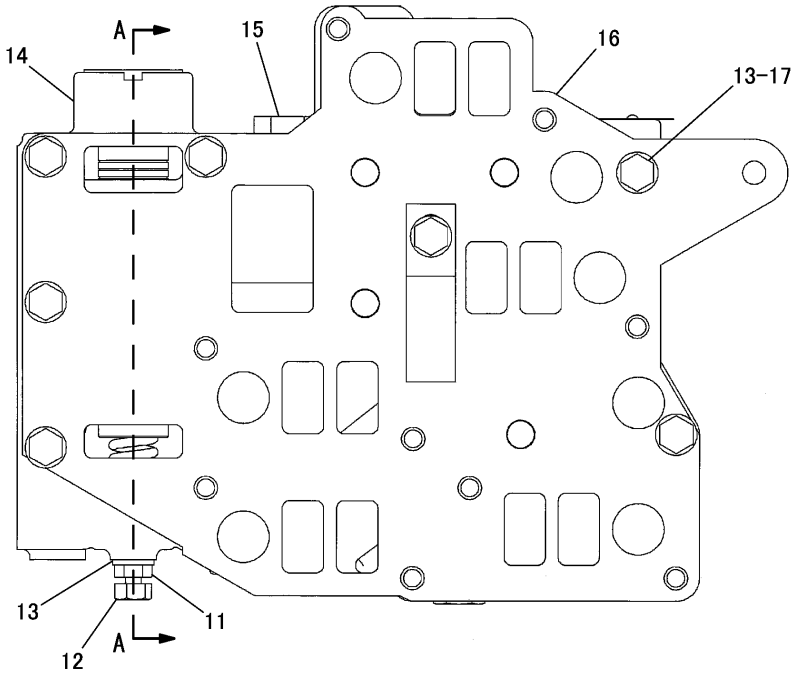

NOTE	№	PART NO.	QTY	PART NAME	NOTE	№	PART NO.	QTY	PART NAME
	1	9S-4191	1	PLUG					
		3J-1907	1	SEAL					
	2	2M-7041	1	SLUG					
	3	6Y-4638	1	PLUG					
		7M-8485	1	SEAL					
	4	109-3968	1	SPOOL AS					
	5	3D-8317	1	RING					
	6	8M-1013	1	RETAINER					
	7	4M-2381	1	SPRING					
	8	4B-9880	1	BALL					
	9	106-9212	1	SPRING					
	10	153-4247	1	STOP					
	11	5B-3180	1	NUT(5/16-18)					
	12	4M-5905	1	SCREW(5/16-18)					
	13	9M-1974	7	WASHER					
	14	204-6502	1	MANIFOLD					
	15	9S-4185	1	PLUG					
		3K-0360	1	SEAL					
	16	106-9214	1	PLATE					
	17	0S-1617	6	BOLT(5/16-18)					

J137968 X00

213-4540 RELIEF VALVE GROUP
PART OF 265-5278-Page 184

POWER TRAIN

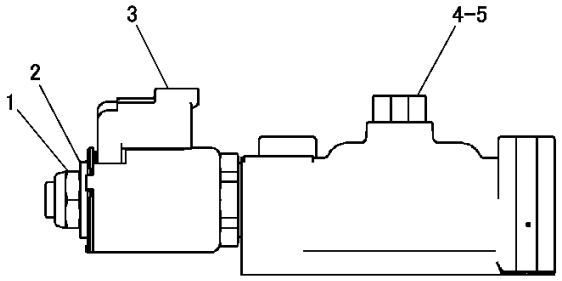

NOTE	№	PART NO.	QTY	PART NAME
	1	167−9524	1	NUT(1/2-28)
	2	164−2108	1	WASHER
	3	226−9622	1	COIL AS
	4	9S−4191	1	PLUG
	5	3J−1907	1	SEAL

J139117 -03

220-4324 MODULATING VALVE GROUP
PART OF 265-5278-Page 185

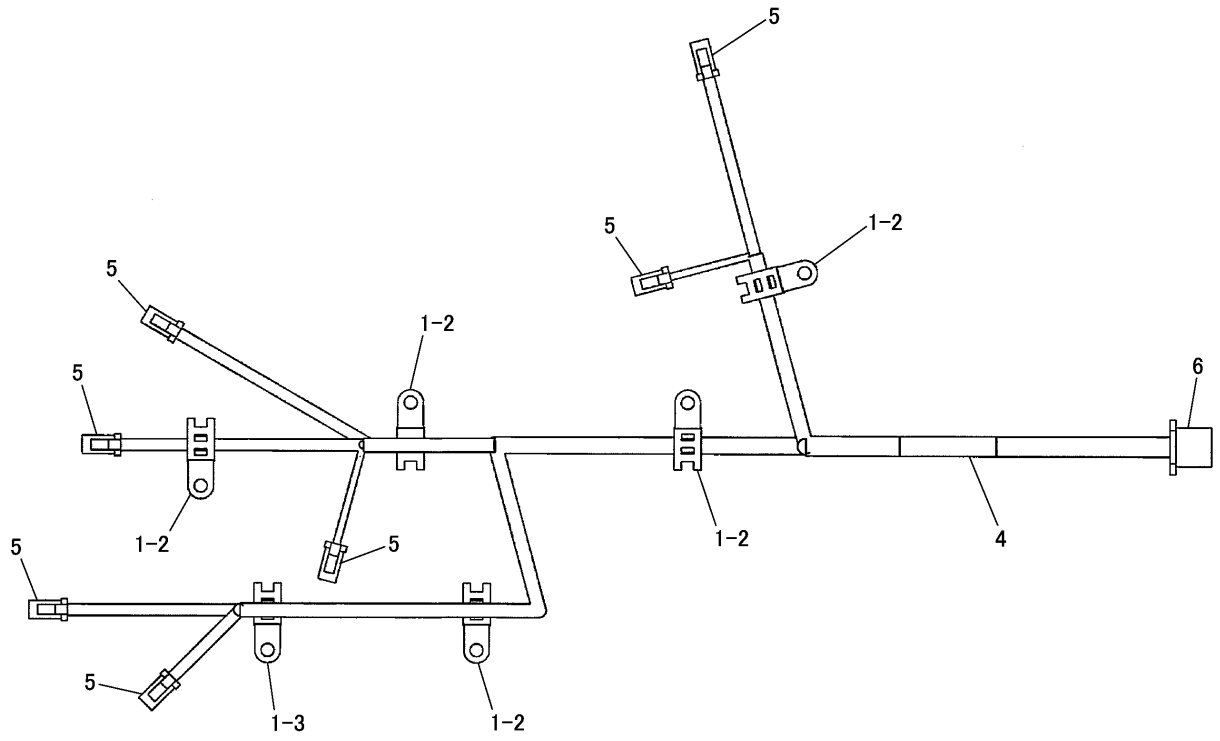

NOTE	№	PART NO.	QTY	PART NAME	NOTE	№	PART NO.	QTY	PART NAME
	1	3S-2093	6	STRAP					
	2	4P-7581	5	CLIP					
	3	4P-8134	1	CLIP					
	4	263-4080	1	HARNESS AS					
	5	186-3736	14	SOCKET					
		155-2270	7	PLUG KIT(2P)					
	6	250-3508	1	RECEPTACLE KIT(14P)					
		125-5341	1	NUT(1 1/4-18)					
		6J-2419	1	SEAL					

J137954 X01

263-4081 HARNESS ASSEMBLY
PART OF 265-5278-Page 184

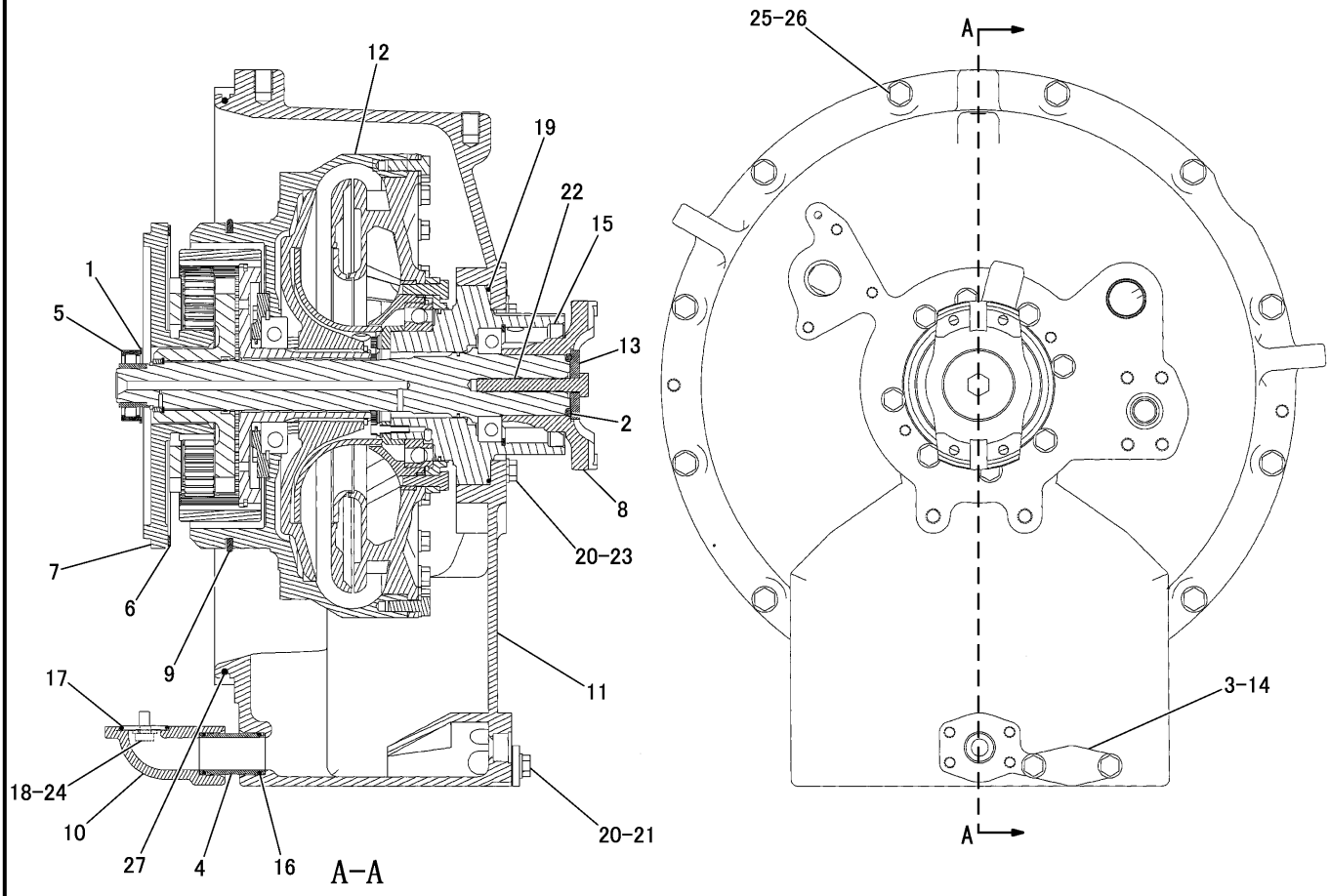

NOTE	№	PART NO.	QTY	PART NAME	NOTE	№	PART NO.	QTY	PART NAME
	1	2D-1523	1	RING		21	8T-4137	2	BOLT(M10×1.5)
	2	2S-2251	1	SEAL		22	8T-4176	1	BOLT(M12×1.75)
	3	8H-9818	1	GASKET		23	8T-4195	8	BOLT(M10×1.5)
	4	8S-9008	1	SLEEVE		24	8T-4896	2	WASHER
	5	9H-8712	1	BEARING		25	8T-5360	12	WASHER
	6	9M-1976	1	RING		26	8T-9382	12	BOLT(7/16-14)
	7	9P-3709	1	GEAR		27	9H-0846	1	SEAL
	8	108-6953	1	YOKE					
	9	155-5161	1	SEAL					
	10	210-4458	1	ELBOW					
	11	223-3400	1	HOUSING					
Y	12	232-6208	1	TORQUE CONVERTER GROUP					
	13	232-6411	1	RETAINER					
	14	110-0510	1	COVER					
	15	136-2216	1	SEAL					
	16	165-4854	2	SEAL					
	17	1S-9799	1	SEAL					
	18	4L-6454	2	BOLT(3/8-16)					
	19	6F-4718	1	SEAL					
	20	8T-4121	10	WASHER					

Y-SEPARATE ILLUSTRATION

J155734 X00

TORQUE CONVERTER GROUP (317-2293 N/S)

PART OF 279-3351-Page 174
REFERENCE:232-6208-Page 190

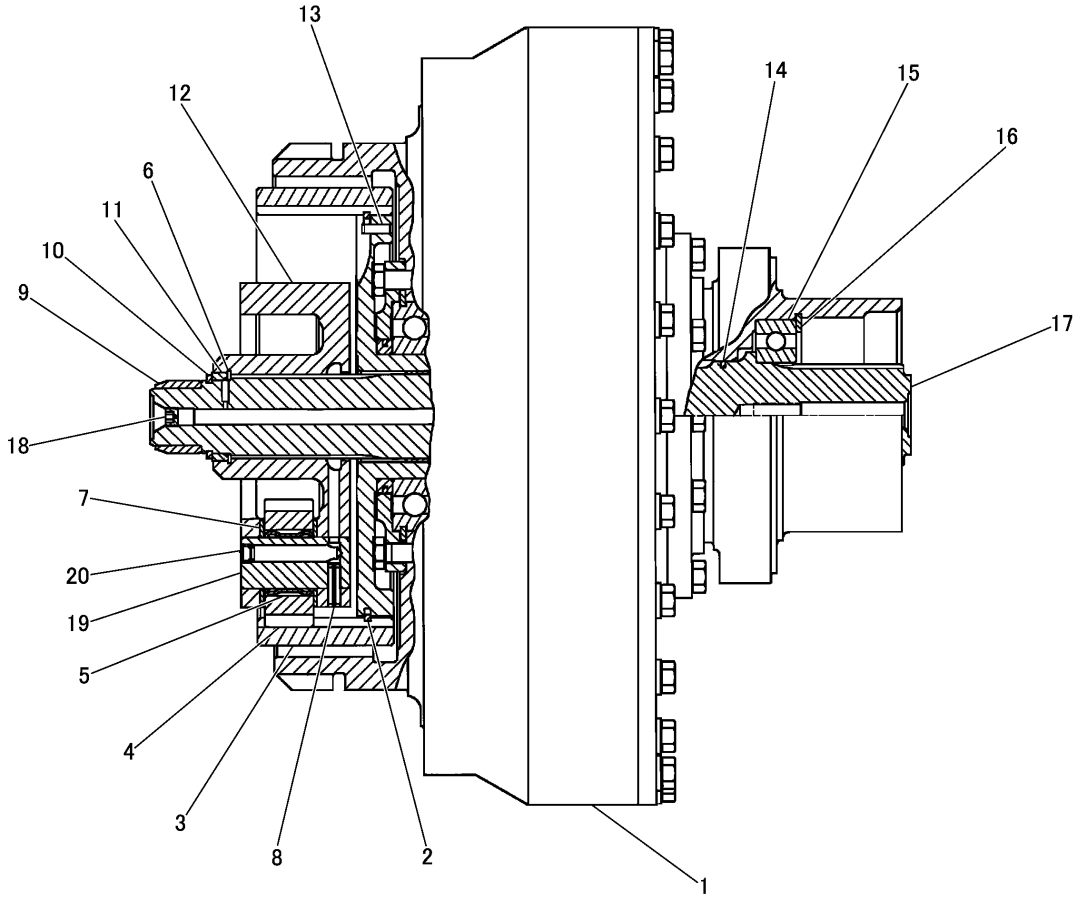

NOTE	№	PART NO.	QTY	PART NAME	NOTE	№	PART NO.	QTY	PART NAME
Y	1	1T-2083	1	TORQUE CONVERTER GROUP					
	2	5M-7878	1	RING					
	3	3T-4009	1	GEAR					
	4	3T-4008	3	GEAR					
	5	5P-3930	3	BEARING AS					
	6	6V-4583	1	RING					
	7	8E-8300	6	DISC					
	8	3S-2708	3	PIN					
	9	5P-7679	1	RACE					
	10	6K-3630	1	RING					
	11	3T-4013	1	RETAINER					
	12	3T-4007	1	CARRIER					
	13	2K-5986	2	PIN					
	14	9M-2008	1	RING					
	15	2D-5658	1	BEARING					
	16	5J-3964	1	RING					
	17	233-0668	1	SHAFT AS					
	18	5J-7386	1	PLUG					
	19	3T-4011	1	SHAFT AS					
	20	2A-3746	1	PLUG					

Y-SEPARATE ILLUSTRATION

J137964 X00

TORQUE CONVERTER GROUP (232-6208 N/S)

PART OF 317-2293-Page 189
REFERENCE:1T-2083-Page 191

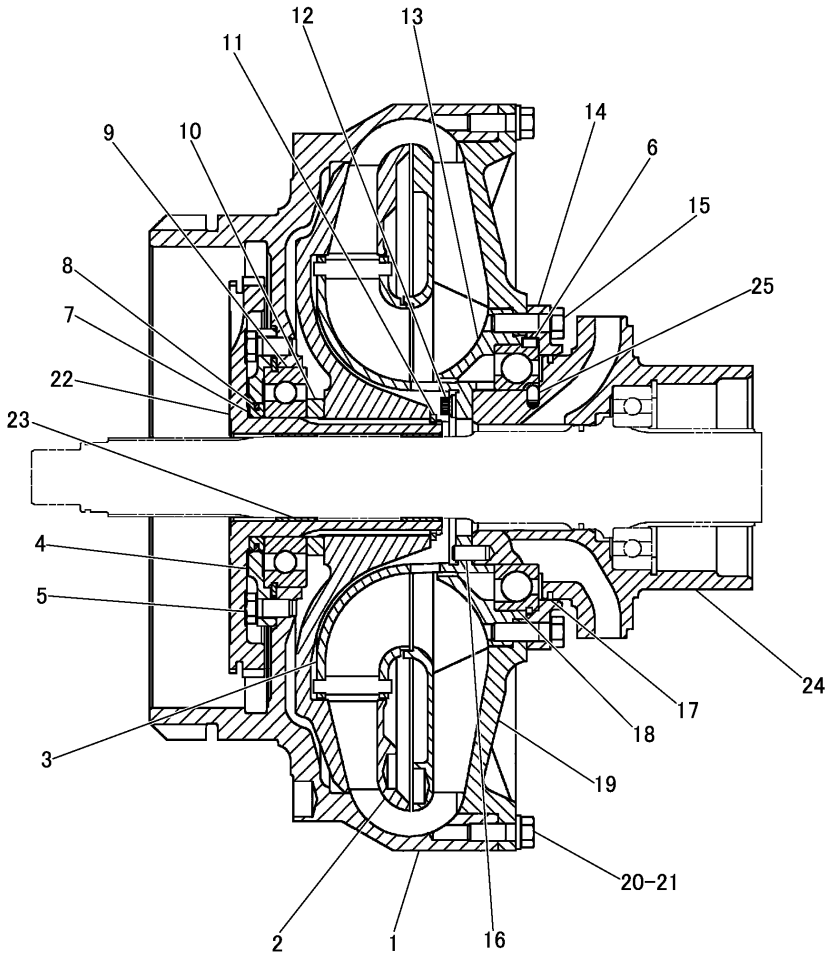

NOTE	№	PART NO.	QTY	PART NAME	NOTE	№	PART NO.	QTY	PART NAME
	1	1T-2080	1	HOUSING		21	5M-2894	24	WASHER
	2	1T-1994	1	WHEEL		22	1T-2086	1	FLANGE AS
	3	1T-2052	1	STATOR AS		23	1T-0902	2	BEARING
	4	1T-0438	1	RETAINER		24	1T-2081	1	CARRIER AS
	5	1T-0446	6	BOLT(3/8-16)		25	4S-8537	1	DOWEL
	6	5B-0582	1	DOWEL					
	7	1T-0447	1	CARRIER					
	8	1T-0097	1	RING					
	9	1T-0441	1	BEARING					
	10	1T-0599	1	SPACER					
	11	3F-3727	1	RING					
	12	1T-0414	8	BOLT(5/16-18)					
	13	1T-2069	1	CARRIER					
	14	1T-2077	1	RETAINER					
	15	1A-2209	8	BOLT(3/8-24)					
	16	4H-1440	6	PIN					
	17	142-8540	1	RING					
	18	304-9651	1	BEARING					
	19	1T-2079	1	IMPELLER					
	20	1A-2029	24	BOLT(3/8-16)					

J146965 X01

1T-2083 TORQUE CONVERTER GROUP
PART OF 232-6208-Page 190

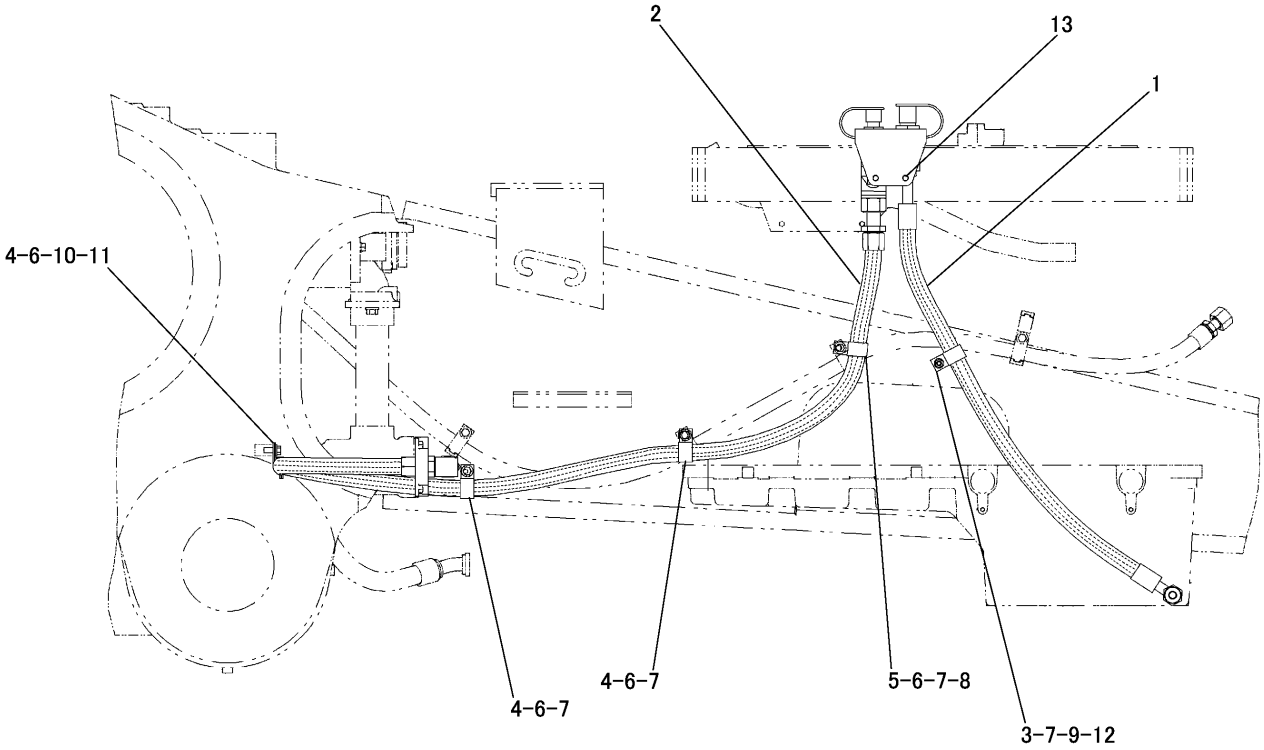

NOTE	№	PART NO.	QTY	PART NAME	NOTE	№	PART NO.	QTY	PART NAME
	1	190-4239	1	HOSE AS					
	2	190-4240	1	HOSE AS					
	3	106-1792	1	STUD(3/8-16)					
	4	4L-6454	3	BOLT(3/8-16)					
	5	4L-6459	1	BOLT(3/8-16)					
	6	5P-1075	4	WASHER					
	7	5P-7854	4	CLIP					
	8	6B-6205	1	SPACER					
	9	6V-8801	1	NUT(3/8-16)					
	10	8T-1897	1	CLIP(SLOT)					
	11	8T-1898	1	CLIP(TAB)					
	12	8T-4896	1	WASHER					
	13	8T-4121	2	WASHER					
		8T-4195	2	BOLT(M10×1.5)					

J155819 -10

HIGH SPEED OIL CHANGE GROUP (166-2185 N/S) -PART 1 OF 2
AN ATTACHMENT

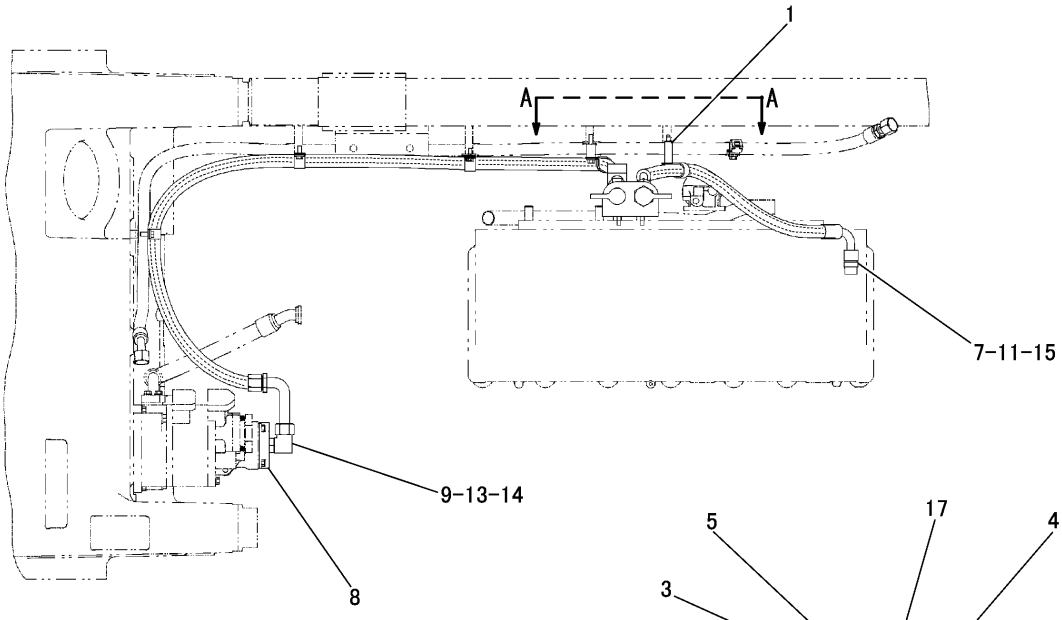

TOP VIEW

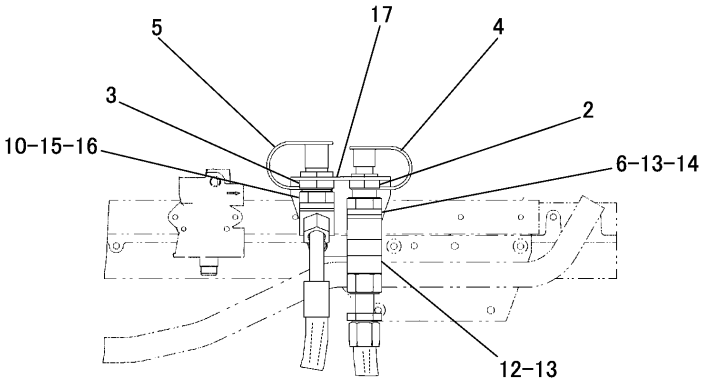

A-A

NOTE	№	PART NO.	QTY	PART NAME	NOTE	№	PART NO.	QTY	PART NAME
	1	1S-4836	1	SPACER					
	2	2P-1286	1	LOCKNUT(1 5/16-12)					
	3	2V-2043	1	LOCKNUT(1 5/8-12)					
	4	110-8319	1	RECEIVER AS					
	5	110-8827	1	RECEIVER AS					
	6	8T-7970	1	ELBOW					
	7	4K-1388	1	SEAL					
	8	108-8089	1	COVER					
	9	8T-6684	1	ELBOW					
	10	8T-4149	1	ELBOW					
	11	2T-2991	1	CONNECTOR					
	12	142-0038	1	ELBOW					
	13	5K-9090	3	SEAL					
	14	3D-2824	2	SEAL					
	15	6V-9746	2	SEAL					
	16	7M-8485	1	SEAL					
	17	190-4808	1	BRACKET					

J155820 -10

HIGH SPEED OIL CHANGE GROUP (166-2185 N/S) -PART 2 OF 2
AN ATTACHMENT

POWER TRAIN

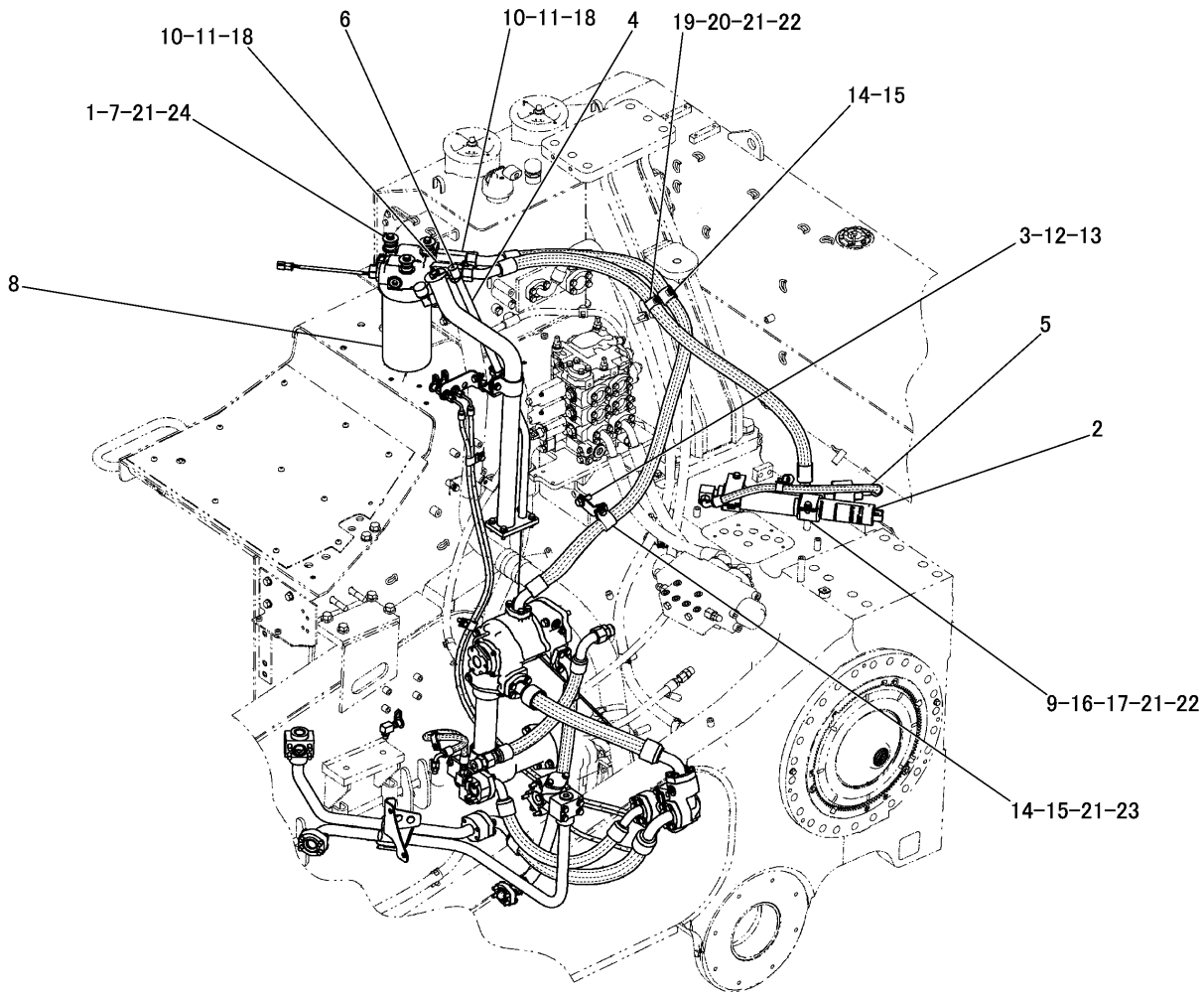

NOTE	№	PART NO.	QTY	PART NAME	NOTE	№	PART NO.	QTY	PART NAME
	1	9D−7924	3	MOUNTING		20	8T−1900	1	CLIT(TAB)
Y	2	255−6936	1	ACCUMULATOR GROUP		21	8T−4121	7	WASHER
	3	270−5292	1	BRACKET AS		22	8T−4136	3	BOLT(M10×1.5)
		8T−3490	1	NUT(M10×1.5)(WELD)		23	8T−4195	1	BOLT(M10×1.5)
	4	272−6541	1	TUBE AS		24	8T−4226	6	WASHER(45mm OD)
	5	272−6551	1	HOSE AS					
	6	273−8981	1	GAGE AS					
	7	8T−6466	3	BOLT(M10×1.5)					
Y	8	333−6437	1	FILTER GROUP					
	9	162−9523	2	GROMMET					
	10	168−9441	2	CONNECTOR					
	11	5K−9090	2	SEAL(27.2mm OD)					
	12	5P−1076	1	WASHER					
	13	5P−2566	1	BOLT(1/2-13)					
	14	5P−7464	2	CLIP(SLOT)					
	15	5P−7465	2	CLIP(TAB)					
	16	6V−1572	2	CLIP(SLOT)					
	17	6V−1573	2	CLIP(TAB)					
	18	7M−8485	2	SEAL(35.6mm OD)					
	19	8T−1899	1	CLIT(SLOT)					

Y-SEPARATE ILLUSTRATION

J155747 X02

POWER TRAIN OIL LINES GROUP (223-1074 N/S) -PART 1 OF 5

PART OF 279-3351-Page 174
REFERENCE:255-6936-Page 200 333-6437-Page 204

POWER TRAIN

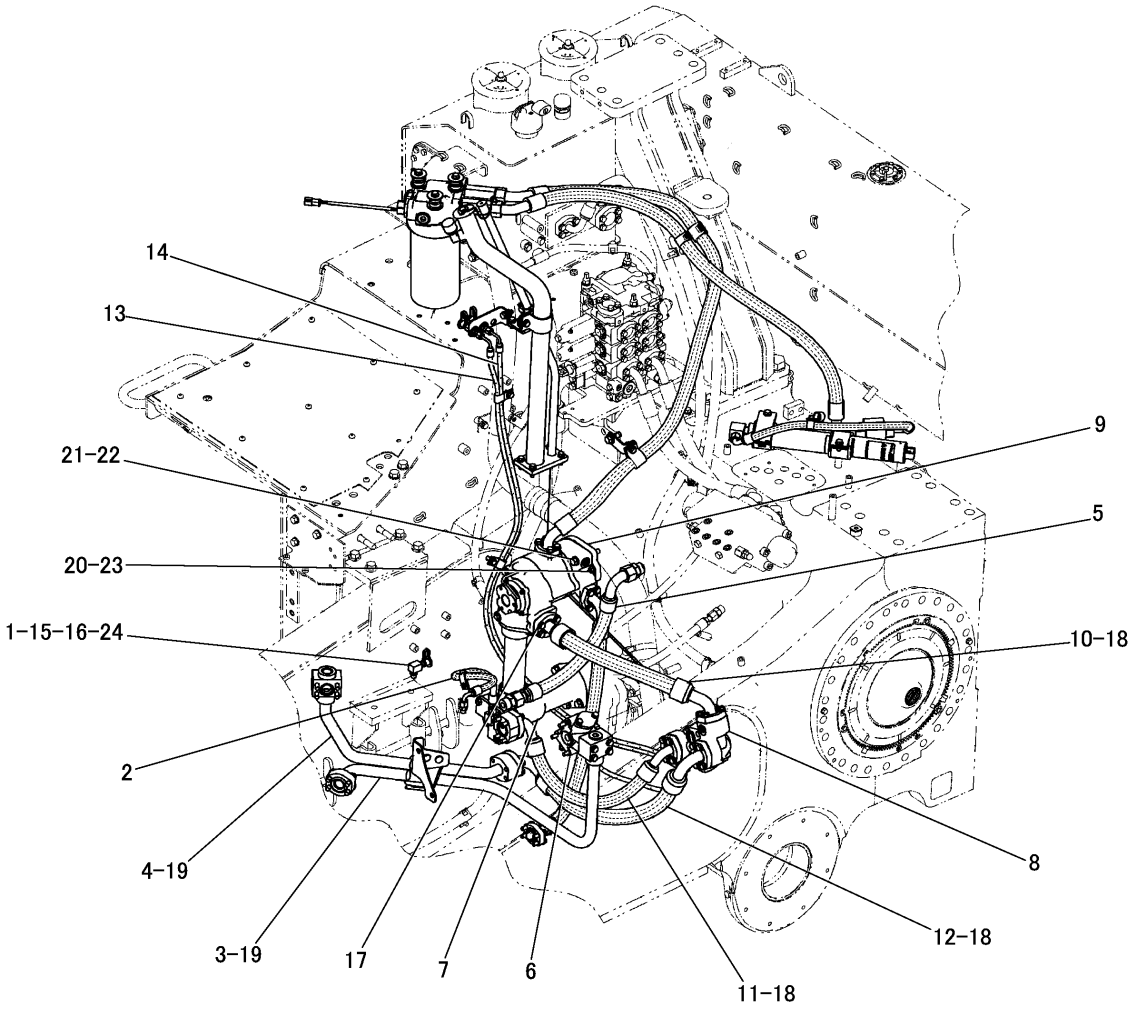

NOTE	№	PART NO.	QTY	PART NAME	NOTE	№	PART NO.	QTY	PART NAME
	1	6V-0852	1	CAP		20	6V-8801	2	NUT(3/8-16)
	2	115-4337	1	HOSE AS		21	7X-0328	2	BOLT(1/2-13)
	3	166-8768	1	TUBE AS		22	8T-4223	2	WASHER
	4	166-8769	1	TUBE AS		23	8T-4896	2	WASHER
	5	203-4708	1	HOSE AS		24	3J-1907	1	SEAL
Y	6	220-1418	1	RELIEF VALVE GROUP					
Y	7	231-4166	1	SCREEN GROUP					
Y	8	263-9949	1	MANIFOLD AS					
Y	9	270-1762	1	GEAR PUMP GROUP					
	10	272-6546	1	HOSE AS					
	11	272-6547	1	HOSE AS					
	12	272-6548	1	HOSE AS					
	13	272-6549	1	HOSE AS					
	14	281-7796	1	HOSE AS					
	15	6V-0484	1	ADAPTER					
	16	6V-3965	1	NIPPLE AS					
		214-7568	1	SEAL					
	17	4J-0520	1	SEAL					
	18	4J-0522	6	SEAL					
	19	5P-7085	3	SEAL					

Y-SEPARATE ILLUSTRATION

J155748 X02

POWER TRAIN OIL LINES GROUP (223-1074 N/S) -PART 2 OF 5

PART OF 279-3351-Page 174

REFERENCE:220-1418-Page 199 231-4166-Page 200 263-9949-Page 201 270-1762-Page 202

POWER TRAIN

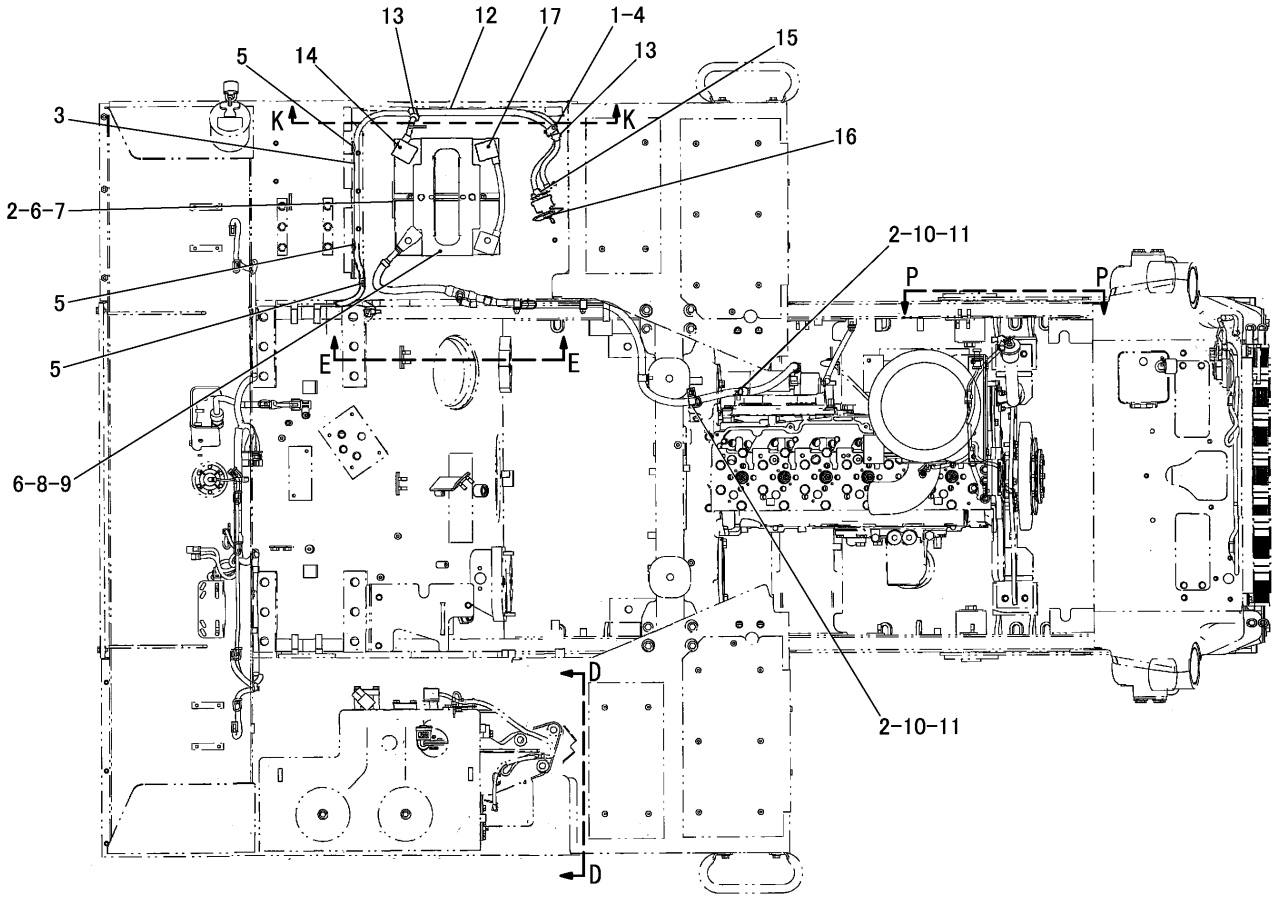

TOP VIEW

SEE PART 4 OF 5 FOR P-P
SEE PART 5 OF 5 FOR D-D, E-E AND K-K

NOTE	№	PART NO.	QTY	PART NAME	NOTE	№	PART NO.	QTY	PART NAME
	1	9X-8257	4	WASHER		18	5P-1075	1	WASHER
	2	6T-3714	1	GASKET		19	5P-7468	1	CLIP(SLOT)
	3	6V-0852	2	CAP		20	5P-7469	1	CLIP(TAB)
	4	7X-7945	2	ADAPTER		21	8T-5360	4	WASHER
	5	174-2930	1	HOSE AS		22	7S-3912	1	CLIP(TAB)
	6	9B-7237	4	BOLT(3/8-16)		23	7S-3913	1	CLIP(SLOT)
	7	235-4514	1	BRACKET		24	8T-4896	4	WASHER
	8	270-5291	1	BRACKET AS		25	8C-3206	2	FLANGE
		8T-3490	1	NUT(M10×1.5)(WELD)		26	8C-6877	4	BOLT(7/16-14)
	9	270-5293	1	BRACKET AS		27	8T-1893	1	CLIP(SLOT)
		8T-3490	2	NUT(M10×1.5)(WELD)		28	8T-1894	1	CLIP(TAB)
	10	6V-8627	2	ELBOW		29	8T-4121	12	WASHER
	11	6V-8636	1	CONNECTOR		30	8T-4136	3	BOLT(M10×1.5)
	12	6V-3965	2	NIPPLE AS		31	8T-4195	3	BOLT(M10×1.5)
		214-7568	2	SEAL		32	8T-4196	4	BOLT(M10×1.5)
	13	1P-5761	2	FLANGE		33	3J-1907	3	SEAL
	14	2P-1279	2	LOCKNUT(9/16-18)		34	4J-5477	4	SEAL
	15	4J-0520	2	SEAL		35	5H-8853	1	SEAL
	16	4K-6177	2	CLIP					
	17	5M-3062	1	BOLT(3/8-16)					

J155749 X02

POWER TRAIN OIL LINES GROUP (223-1074 N/S) -PART 3 OF 5
PART OF 279-3351-Page 174

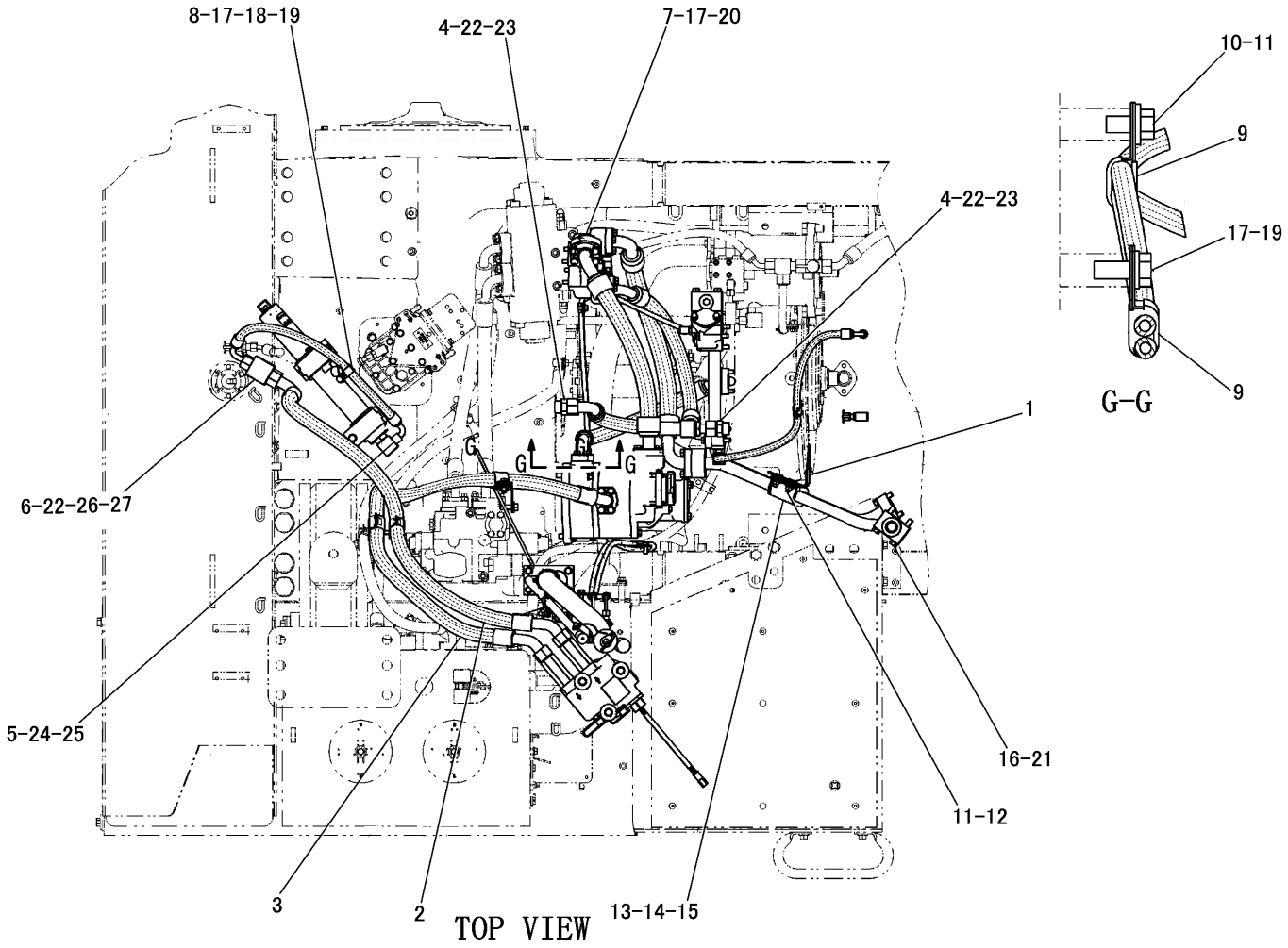

NOTE	№	PART NO.	QTY	PART NAME	NOTE	№	PART NO.	QTY	PART NAME
	1	166-8777	1	BRACKET AS		20	8T-4196	4	BOLT(M10×1.5)
		4M-0200	2	STUD(3/8-16)(WELD)		21	8T-5360	4	WASHER
	2	272-6552	1	HOSE AS		22	5K-9090	3	SEAL
	3	272-6553	1	HOSE AS		23	7M-8485	2	SEAL
	4	6V-8635	2	CONNECTOR		24	3D-2824	1	SEAL
	5	8T-5429	1	ELBOW		25	6V-8398	1	SEAL
	6	8T-1120	1	TEE		26	2S-4078	1	SEAL
	7	1P-4578	2	FLANGE		27	6V-9746	1	SEAL
	8	1S-0994	2	CLIP					
	9	4K-6177	2	CLIP					
	10	5M-3062	1	BOLT(3/8-16)					
	11	5P-1075	3	WASHER					
	12	6V-8801	2	NUT(3/8-16)					
	13	7G-3832	1	GROMMET					
	14	7G-3833	1	CLIP(TAB)					
	15	7G-3834	1	CLIP(SLOT)					
	16	7X-0314	4	BOLT(7/16-14)					
	17	8T-4121	7	WASHER					
	18	8T-4133	1	NUT(M10×1.5)					
	19	8T-4136	2	BOLT(M10×1.5)					

J155750 X02

POWER TRAIN OIL LINES GROUP (223-1074 N/S) -PART 4 OF 5

PART OF 279-3351-Page 174

POWER TRAIN

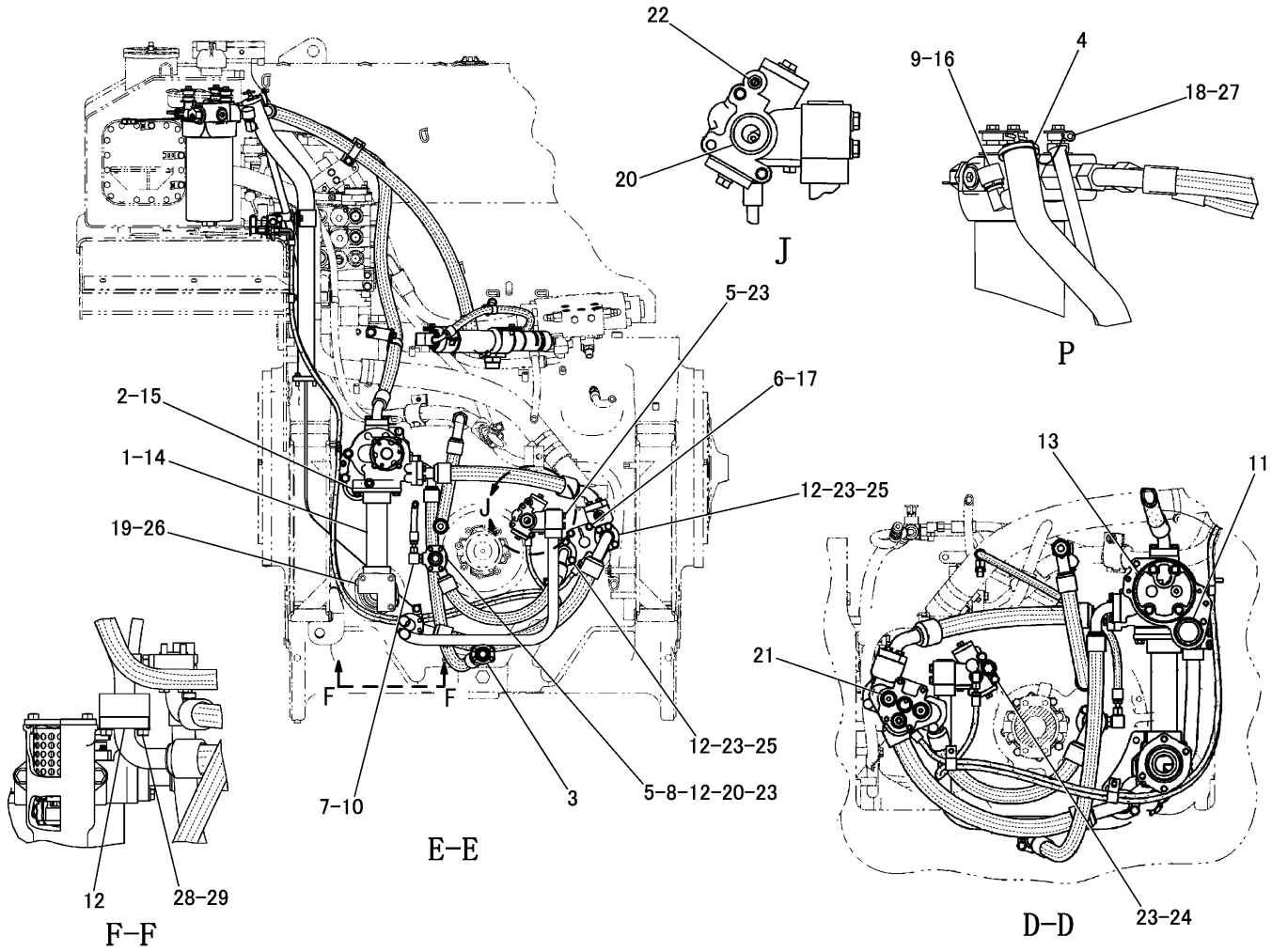

NOTE	№	PART NO.	QTY	PART NAME	NOTE	№	PART NO.	QTY	PART NAME
	1	3T-5301	1	TUBE		18	7X-2536	1	BOLT(M8×1.25)
	2	3T-5302	1	FLANGE		19	8C-4436	4	BOLT(1/2-13)
	3	3T-6471	1	SCREEN AS		20	8M-4986	2	SEAL
		3T-6469	1	WASHER		21	8M-5254	4	SEAL
	4	6N-2985	1	CAP AS		22	8M-8157	1	SEAL
	5	8T-5005	8	BOLT(M10×1.5)		23	8T-4121	17	WASHER
	6	8T-4896	4	WASHER		24	8T-4172	3	BOLT(M10×1.5)
	7	6V-5387	1	PLATE		25	8T-4196	8	BOLT(M10×1.5)
	8	7V-8532	1	SPACER		26	8T-4223	4	WASHER
	9	183-3873	1	BREATHER AS		27	8T-4224	1	WASHER
	10	6V-8723	1	ELBOW		28	8T-5360	4	WASHER
		6V-8397	1	SEAL		29	8T-8916	4	BOLT(7/16-14)
		3K-0360	1	SEAL					
	11	1H-5728	1	SEAL					
	12	1P-4578	8	FLANGE					
	13	2K-8257	1	SEAL					
	14	6L-1649	2	SEAL					
	15	6L-5359	1	SEAL					
	16	7J-8611	1	ELBOW					
	17	7X-0290	4	BOLT(3/8-16)					

J155751 X02

POWER TRAIN OIL LINES GROUP (223-1074 N/S) -PART 5 OF 5
PART OF 279-3351-Page 174

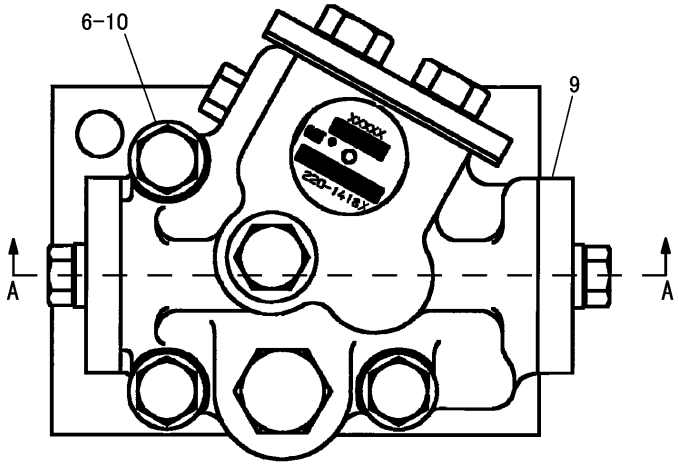

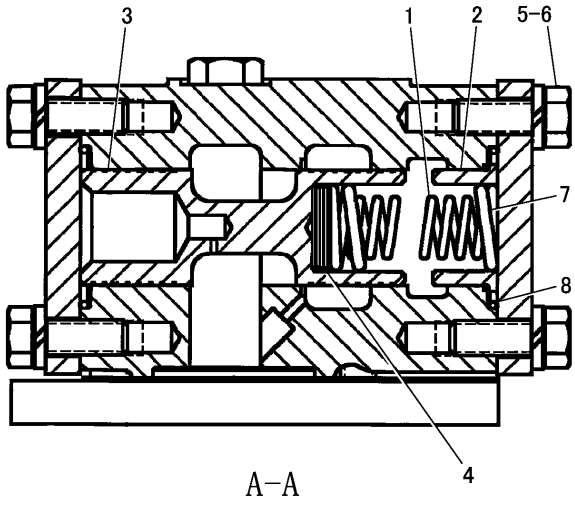

A-A

NOTE	№	PART NO.	QTY	PART NAME	NOTE	№	PART NO.	QTY	PART NAME
	1	9W-5595	1	SPRING					
	2	7M-1377	1	STOP					
	3	7M-1296	1	VALVE					
B	4	5M-9623	5	SPACER(0.9mm THICK)					
	5	8T-4136	4	BOLT(M10×1.5)					
	6	8T-4121	7	WASHER					
	7	7M-1297	1	SPRING					
	8	8M-4986	2	SEAL					
	9	4M-8239	2	COVER					
	10	8T-4172	3	BOLT(M10×1.5)					

B-USE AS REQUIRED

J137939 X00

220-1418 RELIEF VALVE GROUP
PART OF 223-1074-Page 195

POWER TRAIN

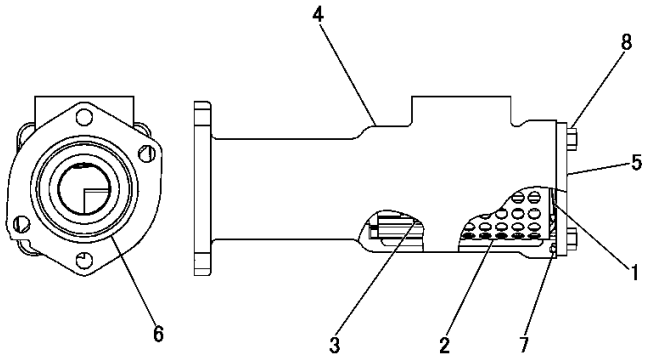

NOTE	№	PART NO.	QTY	PART NAME
	1	3S-3440	1	WASHER
	2	4S-8598	1	SCREEN
	3	4S-8603	1	TUBE AS
	4	231-4167	1	HOUSING AS
		8T-7044	2	STUD(M10×1.5)
	5	3S-3439	1	COVER
	6	6L-5359	1	SEAL
	7	6V-5188	1	SEAL
	8	8T-4133	4	NUT(M10×1.5)

J137940 X00

SCREEN GROUP (231-4166 N/S)

PART OF 223-1074-Page 195

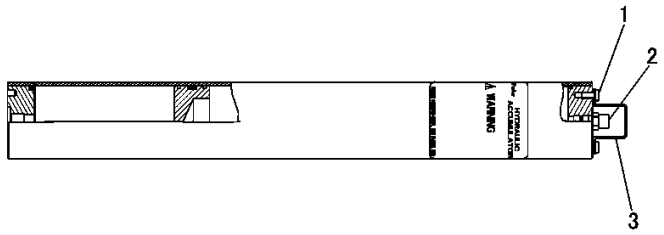

NOTE	№	PART NO.	QTY	PART NAME
	1	030-9613	2	SCREW(No.10-24)
	2	158-2336	1	VALVE
	3	069-2536	1	PROTECTOR
F	4	160-0496	1	SERVICE KIT
				(INCLUDES SEALS)
F	5	241-0037	1	FILM(ACCUMULATOR)
F	6	5P-3779	1	TAG

F-NOT SHOWN

J137942 -01

255-6936 ACCUMULATOR GROUP

PART OF 223-1074-Page 194

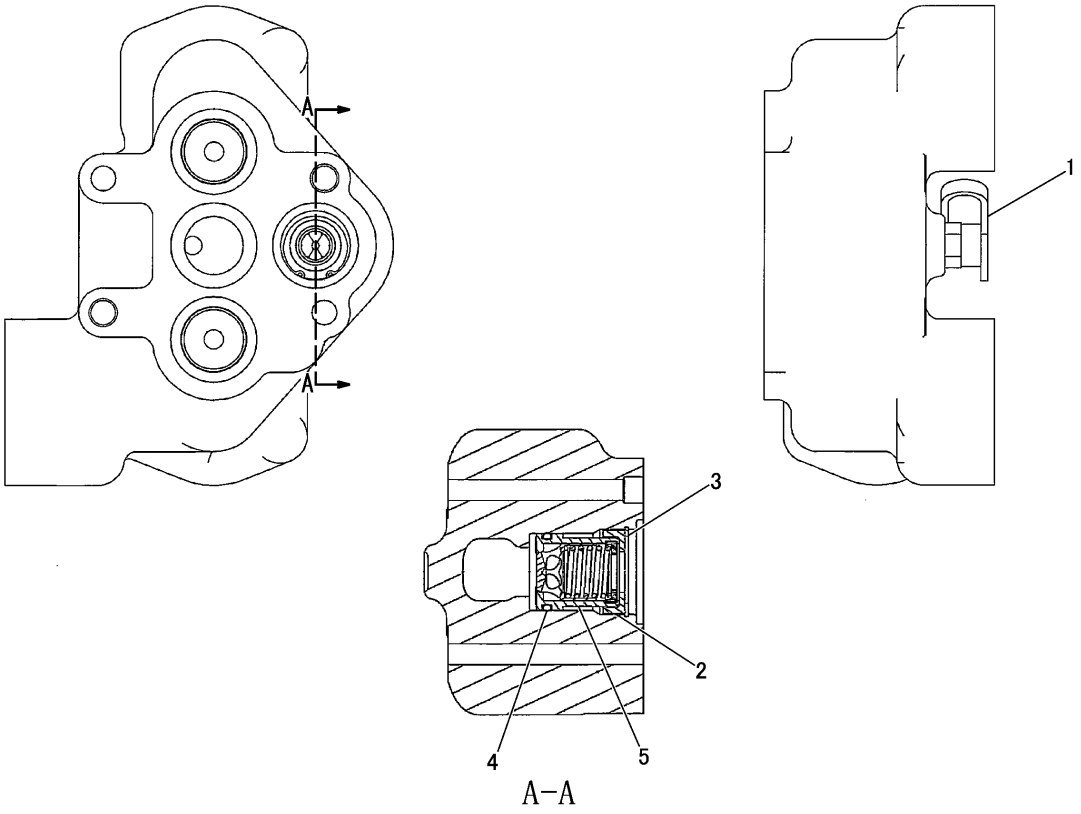

NOTE	№	PART NO.	QTY	PART NAME	NOTE	№	PART NO.	QTY	PART NAME
	1	6V-0852	1	CAP					
		3J-1907	1	SEAL					
		6V-3965	1	NIPPLE AS					
	2	263-9950	1	RETAINER					
	3	8C-3428	1	RING					
	4	9X-4609	1	SEAL					
	5	148-1928	1	VALVE					

J148813 X01

263-9949 MANIFOLD ASSEMBLY
PART OF 223-1074-Page 195

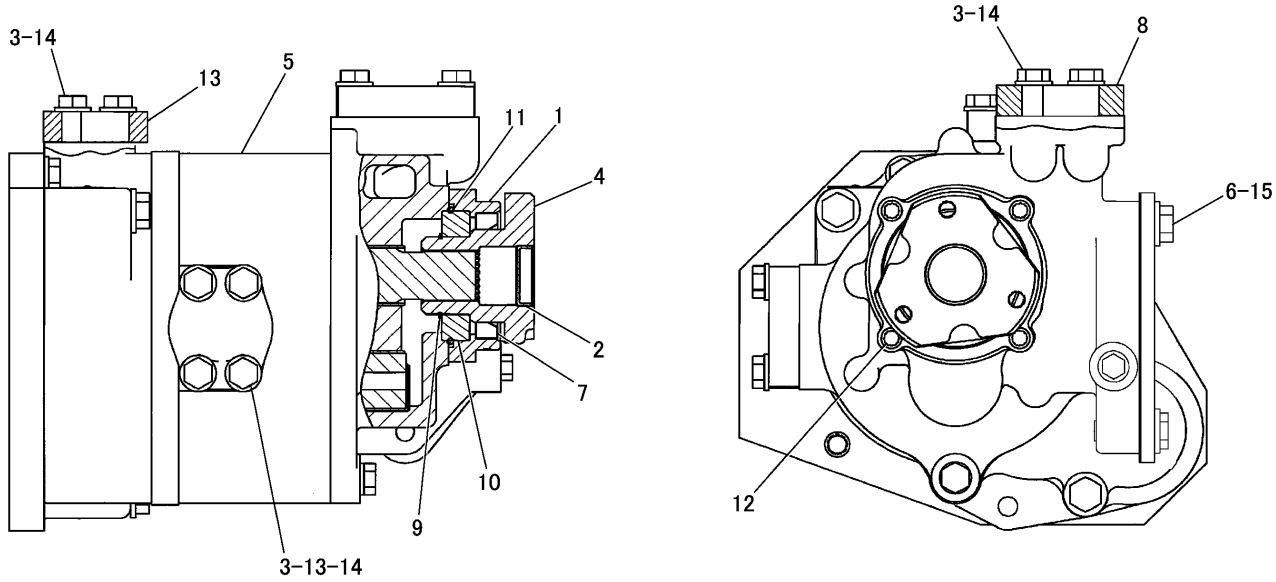

NOTE	№	PART NO.	QTY	PART NAME	NOTE	№	PART NO.	QTY	PART NAME
	1	3T-5356	1	CAGE					
	2	5H-4279	1	PLUG					
	3	8T-4196	12	BOLT(M10×1.5)					
	4	212-2301	1	FLANGE					
Y	5	270-1763	1	GEAR PUMP GROUP					
	6	8T-4223	2	WASHER					
	7	111-4919	1	SEAL					
	8	1P-4578	2	FLANGE					
	9	2M-3974	1	RING					
	10	5P-9439	1	BEARING					
	11	6H-3977	1	SEAL					
	12	6L-4783	4	BOLT(5/16-18)					
	13	8C-3206	4	FLANGE					
	14	8T-4121	12	WASHER					
	15	8T-4956	2	BOLT(M12×1.75)					

Y-SEPARATE ILLUSTRATION

J139537 X01

GEAR PUMP GROUP (270-1762 N/S)

PART OF 223-1074-Page 195
REFERENCE:270-1763-Page 203

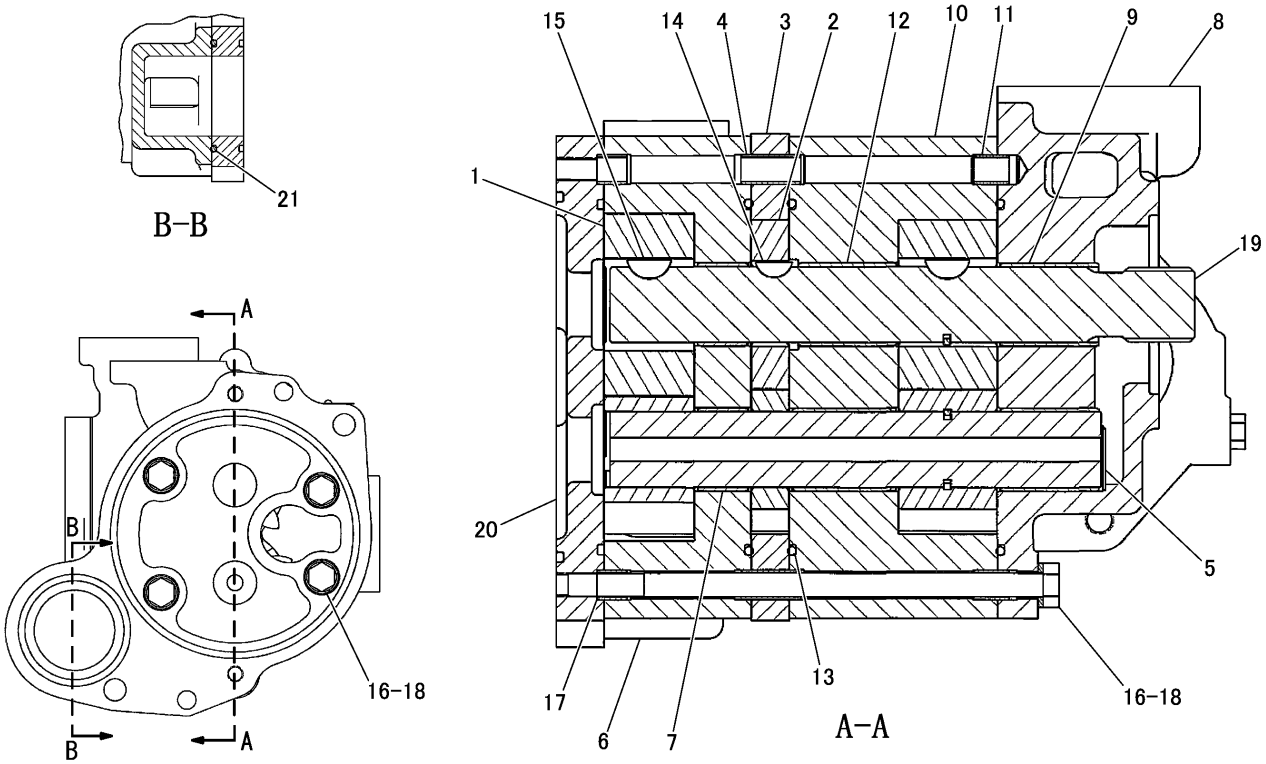

NOTE	№	PART NO.	QTY	PART NAME	NOTE	№	PART NO.	QTY	PART NAME
	1	3T−1447	2	GEAR		21	061−9457	1	SEAL
	2	304−5280	2	GEAR					
	3	131−3278	1	BODY AS					
	4	5M−3605	2	DOWEL					
	5	133−1401	1	GEAR AS					
	6	226−3908	1	BODY AS					
	7	131−0825	2	BEARING					
	8	270−1764	1	COVER AS					
	9	1M−3909	2	BEARING					
	10	270−1766	1	BODY AS					
	11	8M−8489	2	DOWEL					
	12	1M−3909	2	BEARING					
	13	161−8068	4	SEAL					
	14	1B−8705	1	KEY					
	15	2B−9373	1	KEY					
	16	3S−0004	5	WASHER					
	17	5M−4987	2	DOWEL					
	18	7X−2547	5	BOLT(M10×1.5)					
	19	133−1400	1	GEAR AS					
	20	226−3910	1	COVER					

J153933 X03

270-1763 GEAR PUMP GROUP
PART OF 270-1762-Page 202

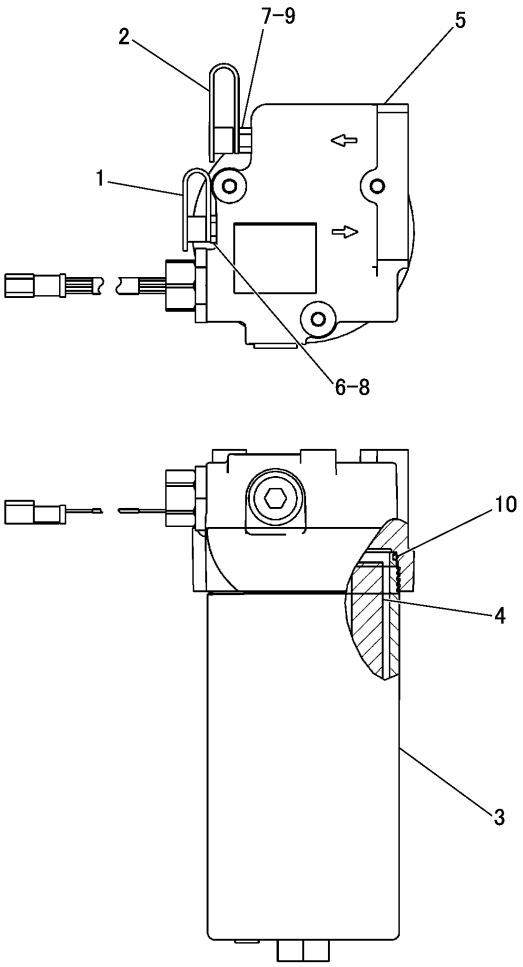

NOTE	№	PART NO.	QTY	PART NAME	NOTE	№	PART NO.	QTY	PART NAME
	1	6V-0852	1	CAP					
	2	8C-3447	1	CAP					
	3	321-5967	1	HOUSING GROUP					
		214-7568	1	SEAL					
		9S-8004	1	PLUG					
	4	328-3655	1	ELEMENT AS					
Y	5	333-9308	1	BASE AS					
	6	3J-1907	1	SEAL					
	7	3J-7354	1	SEAL					
	8	6V-3965	1	NIPPLE AS					
	9	8C-3446	1	VALVE					
	10	130-0229	1	SEAL					

Y-SEPARATE ILLUSTRATION

J155752 -00

333-6437 POWER TRAIN OIL FILTER GROUP -INTERNAL BYPASS

PART OF 223-1074-Page 194
REFERENCE:333-9308-Page 205

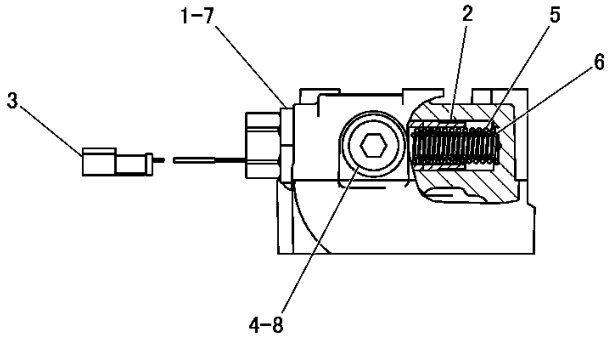

NOTE	№	PART NO.	QTY	PART NAME
	1	3T-9549	1	ADAPTER
	2	7G-4998	1	SPOOL
Y	3	164-7577	1	SWITCH GROUP
	4	3D-2824	1	SEAL
	5	334-2679	1	SPRING
	6	334-2680	1	SPRING
	7	2S-4078	1	SEAL
	8	9S-8008	1	PLUG

Y-SEPARATE ILLUSTRATION

J155753 -00

333-9308 FILTER BASE ASSEMBLY -INTERNAL BYPASS

PART OF 333-6437-Page 204
REFERENCE:164-7577-Page 205

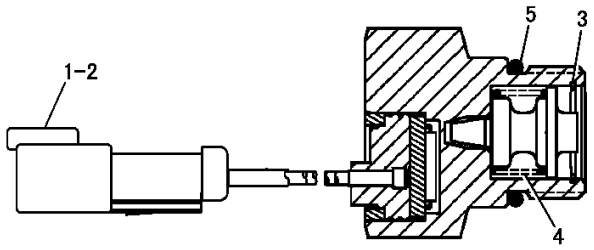

NOTE	№	PART NO.	QTY	PART NAME
	1	102-8802	1	RECEPTACLE KIT(2P)
	2	186-3735	2	PIN
	3	2M-8191	1	RING
	4	9X-8071	1	SPRING
	5	3D-2824	1	SEAL

J137559 -01

164-7577 FILTER BYPASS SWITCH GROUP

PART OF 333-9308-Page 205

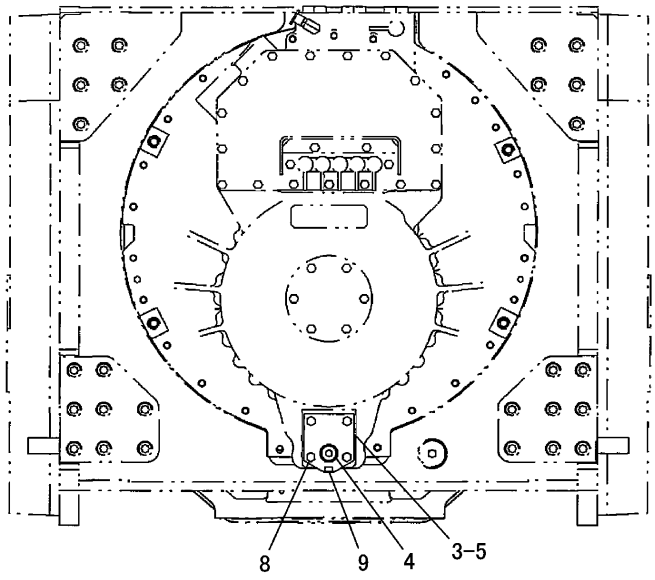

REAR VIEW OF TM

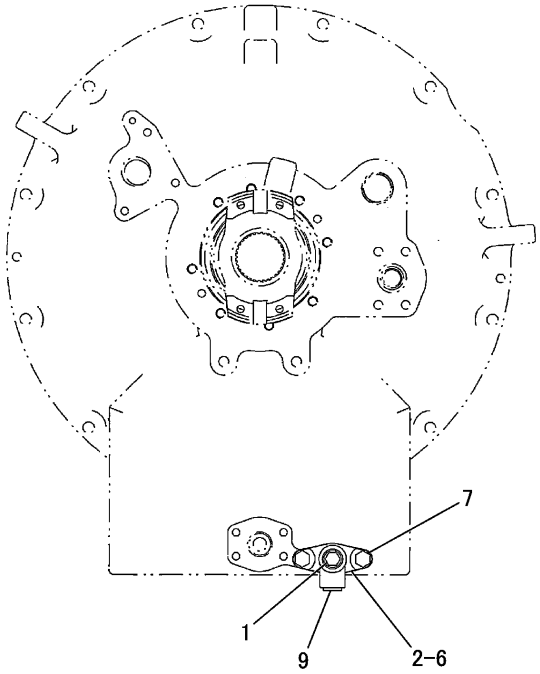

FRONT VIEW OF TC

NOTE	№	PART NO.	QTY	PART NAME	NOTE	№	PART NO.	QTY	PART NAME
	1	4B-7739	1	PLUG					
	2	8H-9819	1	ADAPTER					
	3	106-4150	1	DRAIN GROUP					
	4	4N-3808	1	PIN					
		5P-9658	1	SEAL					
	5	2H-3931	1	SEAL					
	6	8H-9818	1	GASKET					
	7	8T-4136	2	BOLT(M10×1.5)					
	8	8T-4185	4	BOLT(M10×1.5)					
	9	2B-0858	2	PLUG					

J156639 X00

ECOLOGY DRAIN GROUP (256-9988 N/S)
AN ATTACHMENT

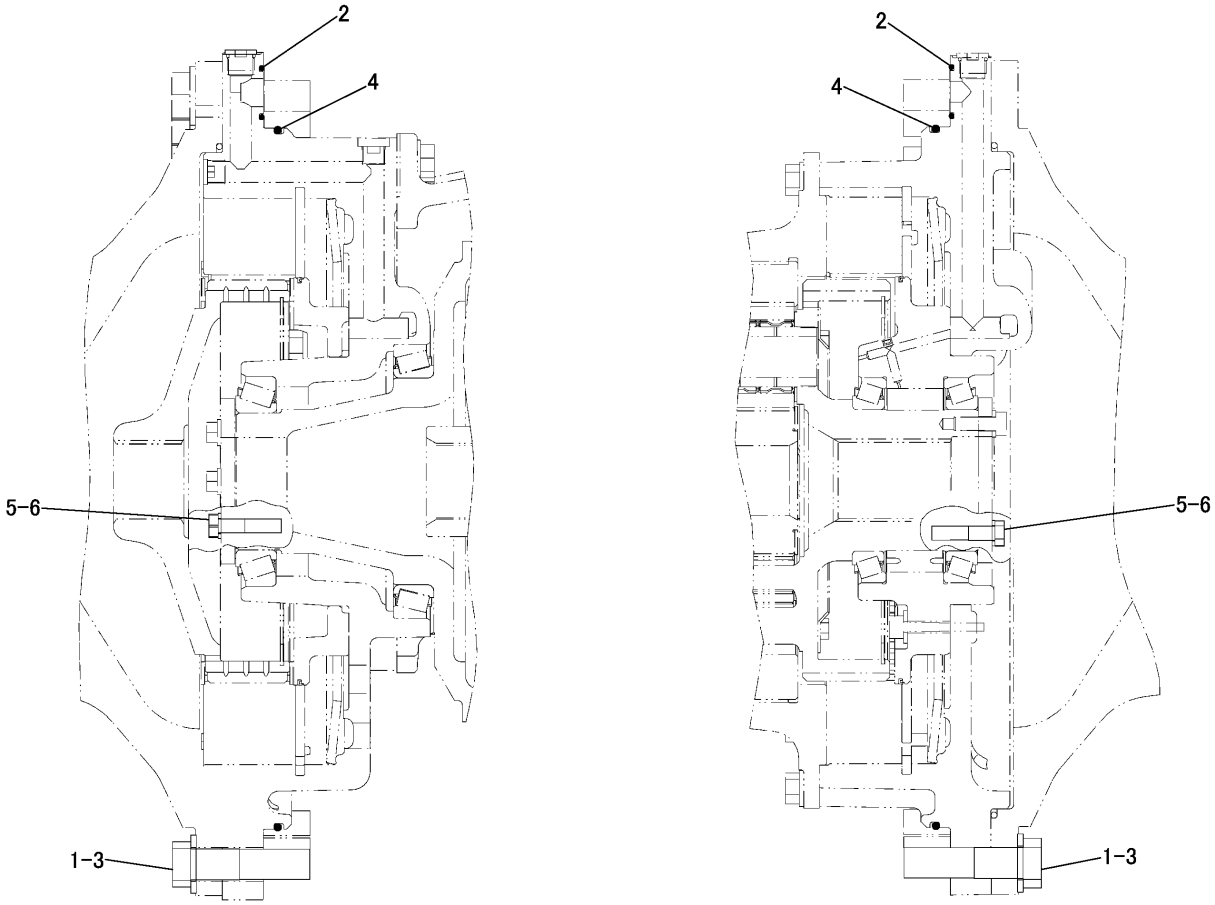

NOTE	№	PART NO.	QTY	PART NAME	NOTE	№	PART NO.	QTY	PART NAME
	1	219-4481	52	BOLT(M22×2.5)					
	2	6F-6673	4	SEAL					
	3	8C-6913	52	WASHER					
	4	8D-4771	2	SEAL					
	5	8T-4182	4	BOLT(M10×1.5)					
	6	9X-2027	4	WASHER					

J155792 -02

FINAL DRIVE MOUNTING GROUP (218-0114 N/S)
PART OF 279-3351-Page 174

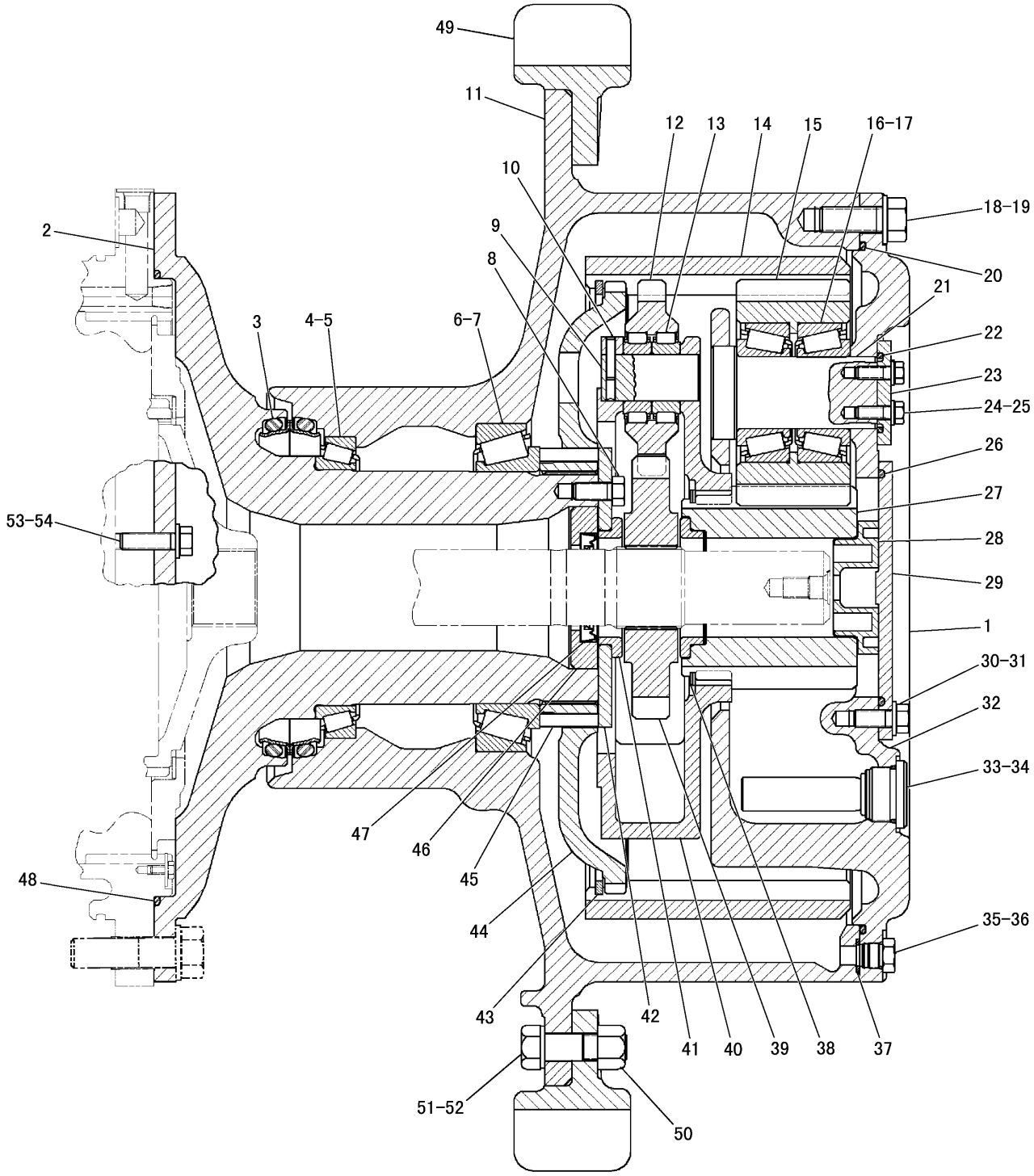

J155744 X20

FINAL DRIVE GROUP (3T-4449 N/S)
PART OF 279-3351-Page 174

NOTE	№	PART NO.	QTY	PART NAME	NOTE	№	PART NO.	QTY	PART NAME
	1	9W-0593	1	DRIVE GROUP					
	2	6T-2394	1	HUB					
	3	6Y-0859	1	SEAL GROUP					
		1M-9011	2	TORIC RING					
	4	6V-0663	1	CONE					
	5	6V-0662	1	CUP					
	6	6V-0664	1	CONE					
	7	5F-2465	1	CUP					
	8	5K-8454	15	BOLT(1/2-13)					
	9	7G-5776	3	SHAFT					
	10	5H-3193	3	PIN					
	11	7G-5837	1	HUB					
	12	7G-5783	3	GEAR					
	13	4B-3693	6	BEARING					
	14	7G-5833	1	GEAR					
	15	7G-5784	3	GEAR					
	16	6V-0661	6	CONE					
	17	2P-1370	6	CUP					
	18	7X-0366	29	BOLT(3/4-10)					
	19	8T-4994	29	WASHER					
	20	9H-0846	1	SEAL					
	21	7G-5780	3	SHAFT					
	22	090-3093	3	SEAL					
	23	7G-5777	3	COVER					
	24	034-3557	6	BOLT(3/8-16)					
	25	8T-4896	6	WASHER					
	26	8J-1665	1	SEAL					
	27	3T-5929	1	GEAR					
	28	9W-3232	1	RETAINER					
	29	3T-5926	1	COVER					
	30	8T-8917	3	BOLT(1/2-13)					
	31	8T-4223	3	WASHER					
	32	7T-2531	1	CARRIER					
	33	6V-3298	1	PLUG					
	34	2S-4078	1	SEAL					
	35	9S-4185	1	PLUG					
	36	3K-0360	1	SEAL					
	37	5F-7054	1	SEAL					
	38	5P-8472	1	RING					
	39	3T-5928	1	GEAR					
	40	7G-5684	1	CARRIER					
	41	7T-2530	2	RING					
	42	7G-5832	1	RETAINER					
	43	7G-5831	1	RING					
	44	6T-1746	1	HUB					
	45	6T-2173	15	PIN					
	46	3T-5923	1	RETAINER					
	47	7X-4777	1	SEAL					
	48	2R-0098	1	SEAL					
Z	49	156-5341	1	SEGMENT GROUP					
		314-5462	5	SEGMENT					
	50	7H-3608	25	NUT(3/4-16)					
	51	5P-7665	25	BOLT(3/4-16)					
	52	6V-5841	25	WASHER					
	53	8T-4223	2	WASHER					
	54	8T-8919	2	BOLT(1/2-13)					

Z-NOT SERVICED SEPARATELY

J155744 X20

FINAL DRIVE GROUP (3T-4449 N/S)
PART OF 279-3351-Page 174

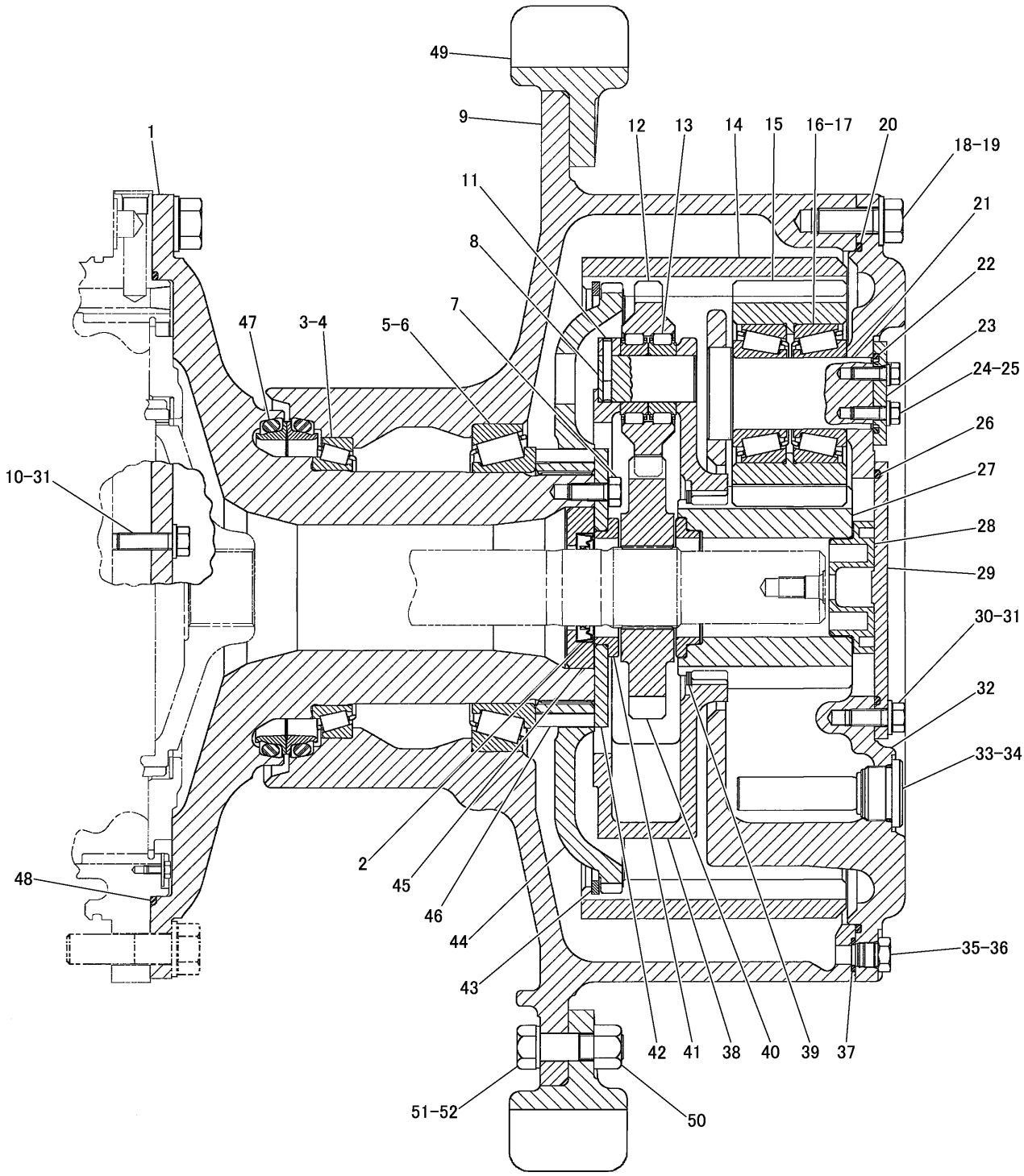

J157034 X00

FINAL DRIVE GROUP (141-4942 N/S) -ARCTIC
PART OF 252-1041-Page 283
AN ATTACHMENT

POWER TRAIN

NOTE	№	PART NO.	QTY	PART NAME	NOTE	№	PART NO.	QTY	PART NAME
	1	6T-2394	1	HUB					
	2	9X-7363	1	SEAL					
	3	6V-0663	1	CONE					
	4	6V-0662	1	CUP					
	5	6V-0664	1	CONE					
	6	5F-2465	1	CUP					
	7	5K-8454	15	BOLT(1/2-13)					
	8	7G-5776	3	SHAFT					
	9	7G-5837	1	HUB					
	10	8T-8919	2	BOLT(1/2-13)					
	11	5H-3193	3	PIN					
	12	7G-5783	3	GEAR					
	13	4B-3693	6	BEARING					
	14	7G-5833	1	GEAR					
	15	7G-5784	3	GEAR					
	16	6V-0661	6	CONE					
	17	2P-1370	6	CUP					
	18	7X-0366	29	BOLT(3/4-10)					
	19	8T-4994	29	WASHER					
	20	9H-0846	1	SEAL(505.3mm OD)					
	21	7G-5780	3	SHAFT					
	22	090-3093	3	SEAL(60.8mm OD)					
	23	7G-5777	3	COVER					
	24	034-3557	6	BOLT(3/8-16)					
	25	8T-4896	6	WASHER					
	26	8J-1665	1	SEAL(175.1mm OD)					
	27	3T-5929	1	GEAR					
	28	9W-3232	1	RETAINER					
	29	3T-5926	1	COVER					
	30	8T-8917	3	BOLT(1/2-13)					
	31	8T-4223	5	WASHER					
	32	7T-2531	1	CARRIER					
	33	6V-3298	1	PLUG					
	34	2S-4078	1	SEAL(43.5mm OD)					
	35	9S-4185	1	PLUG					
	36	3K-0360	1	SEAL(20.8mm OD)					
	37	5F-7054	1	SEAL(25.7mm OD)					
	38	7G-5684	1	CARRIER					
	39	5P-8472	1	RING					
	40	3T-5928	1	GEAR					
	41	7T-2530	2	RING					
	42	7G-5832	1	RETAINER					
	43	7G-5831	1	RING					
	44	6T-1746	1	HUB					
	45	3T-5923	1	RETAINER					
	46	6T-2173	15	PIN					
	47	6Y-6277	1	SEAL GROUP					
		5P-1606	2	TORIC RING					
	48	2R-0098	1	SEAL(466.7mm OD)					
Z	49	156-5341	1	SEGMENT GROUP					
		314-5462	5	SEGMENT					
	50	7H-3608	25	NUT(3/4-16)					
	51	6V-5841	25	WASHER					
	52	5P-7665	25	BOLT(3/4-16)					

Z-NOT SERVICED SEPARATELY

J157034 X00

FINAL DRIVE GROUP (141-4942 N/S) -ARCTIC
PART OF 252-1041-Page 283
AN ATTACHMENT

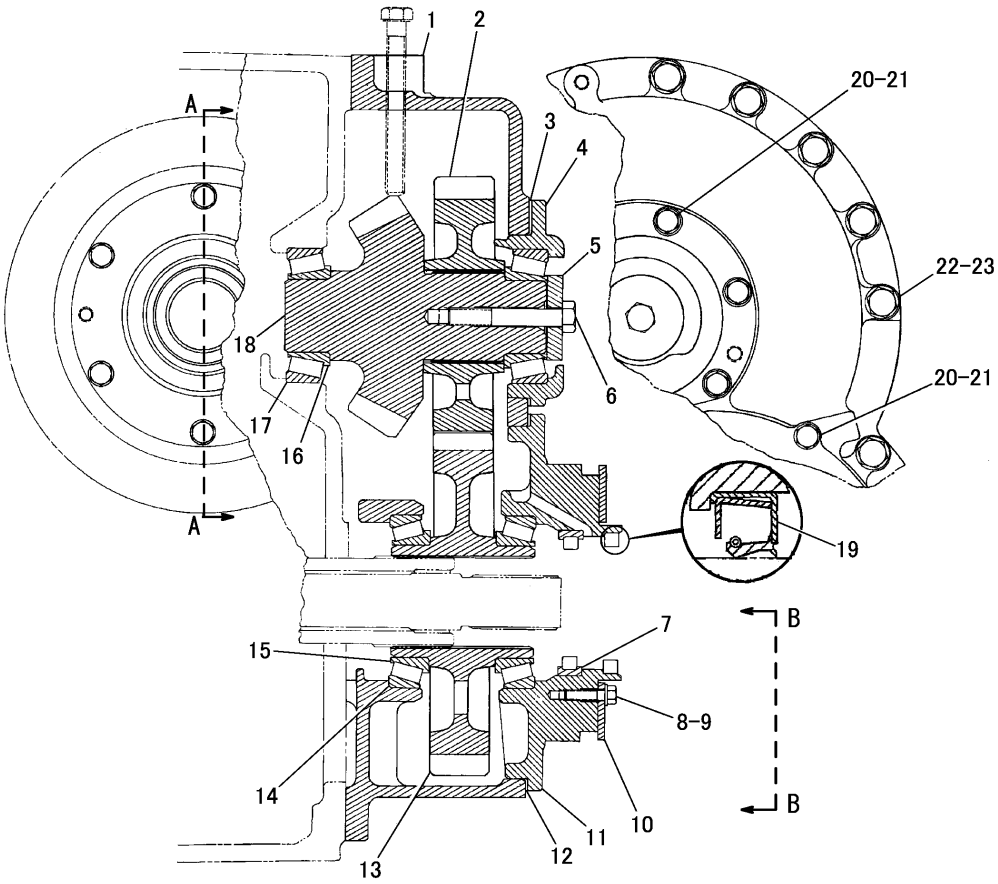

NOTE	№	PART NO.	QTY	PART NAME	NOTE	№	PART NO.	QTY	PART NAME
	1	190-2277	1	CASE AS		20	7B-3235	12	BOLT(1/2-13)
		2D-6642	1	BALL		21	5P-8245	12	WASHER
	2	160-3588	1	GEAR		22	7X-0351	12	BOLT(5/8-11)
B	3	9P-1922	1	SHIM PACK		23	5P-8247	12	WASHER
	4	9W-2992	1	CAGE					
	5	3T-6742	1	RETAINER					
	6	7X-0352	1	BOLT(5/8-11)					
	7	7H-7628	1	BEARING					
	8	0S-1591	4	BOLT(3/8-16)					
	9	5M-2894	4	WASHER					
	10	6I-8507	1	PLATE					
	11	6I-8511	1	CAGE					
B	12	9P-1921	1	SHIM PACK					
	13	160-3585	1	GEAR					
	14	8D-1817	2	CUP					
	15	8D-1819	2	CONE					
	16	6S-2829	2	CONE					
	17	6S-2828	2	CUP					
	18	9W-3660	1	PINION					
	19	216-0273	1	SEAL					

B-USE AS REQUIRED

J144235 X01

BEVEL AND TRANSFER GEAR GROUP (162-6874 N/S) -PART 1 OF 2

PART OF 223-2451-Page 175

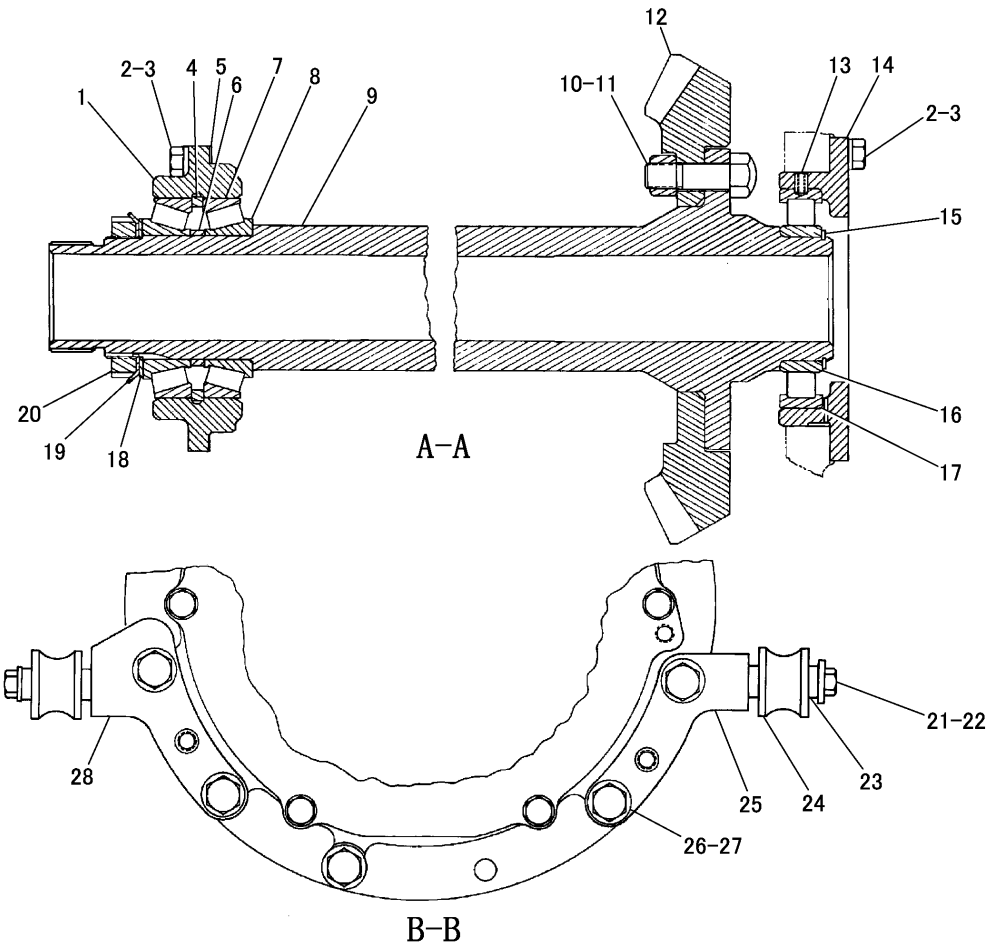

NOTE	№	PART NO.	QTY	PART NAME	NOTE	№	PART NO.	QTY	PART NAME
	1	9W-1570	1	CAGE AS		19	6V-2404	1	WASHER
		9W-1569	1	PLUG		20	1L-6957	1	LOCKNUT
		4B-9880	1	BALL		21	7D-1649	2	WASHER
	2	7B-3235	12	BOLT(1/2-13)		22	1A-5822	2	BOLT(1/2-13)
	3	5P-8245	12	WASHER		23	6T-3853	2	SLEEVE
	4	6T-0364	1	RING		24	6T-3852	2	ROLLER
B	5	9P-1478	2	SHIM PACK		25	7T-1474	1	BRACKET(RH)
	6	9W-8612	1	SPACER		26	5P-8247	4	WASHER
	7	1P-3934	2	CUP		27	1D-4601	4	BOLT(5/8-11)
	8	1P-3935	2	CONE		28	7T-1475	1	BRACKET(LH)
	9	9W-5150	1	SHAFT					
	10	0S-1897	12	BOLT(3/4-16)					
	11	1S-1860	12	NUT(3/4-16)					
	12	9P-1925	1	GEAR					
	13	9G-0832	1	DOWEL					
	14	7T-9946	1	CAGE					
	15	6J-3473	1	RING					
	16	5P-7592	1	RACE(INNER)					
	17	4H-0019	1	RACE AND ROLLER AS					
	18	9P-7072	1	WASHER					

B-USE AS REQUIRED

J144236 X01

BEVEL AND TRANSFER GEAR GROUP (162-6874 N/S) -PART 2 OF 2

PART OF 223-2451-Page 175

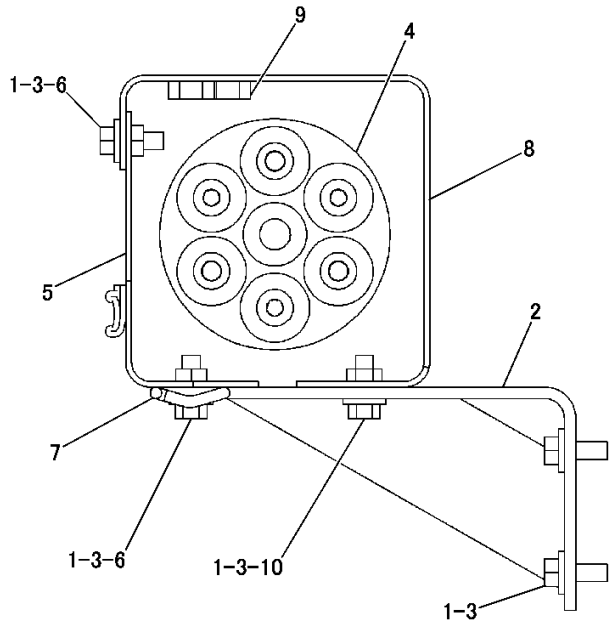

NOTE	№	PART NO.	QTY	PART NAME
	1	4L-6454	10	BOLT(3/8-16)
	2	9W-3365	1	BRACKET AS
	3	5P-1075	10	WASHER
Y	4	227-0925	1	PUMP COUPLING GROUP
	5	9W-3364	1	GUARD AS
	6	9F-2978	4	NUT(3/8-16)(WELD)
	7	7T-1099	3	LINK
	8	9W-3366	1	GUARD AS
	9	1F-0748	2	NUT(1/2-13)(WELD)
	10	9F-2978	2	NUT(3/8-16)(WELD)

Y-SEPARATE ILLUSTRATION

J155735 -01

GUARD AND COUPLING GROUP (272-2928 N/S)

PART OF 279-3351-Page 174
REFERENCE:227-0925-Page 214

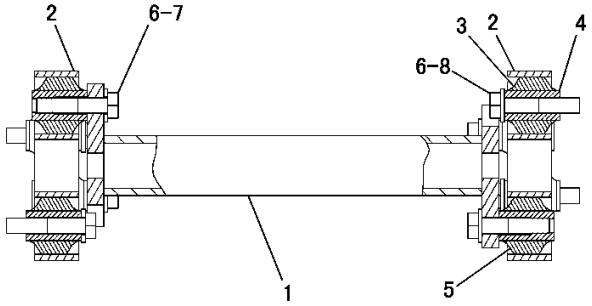

NOTE	№	PART NO.	QTY	PART NAME
	1	196-2126	1	TUBE AS
	2	211-9087	2	COUPLING AS
	3	6Y-2130	3	BUSHING AS
	4	8E-5170	1	SLEEVE
	5	211-9085	3	BUSHING AS
	6	8T-4121	12	WASHER
	7	8T-4182	6	BOLT(M10×1.5)
	8	8T-4185	6	BOLT(M10×1.5)

J155736 -00

PUMP COUPLING GROUP (227-0925 N/S)

PART OF 272-2928-Page 214

POWER TRAIN

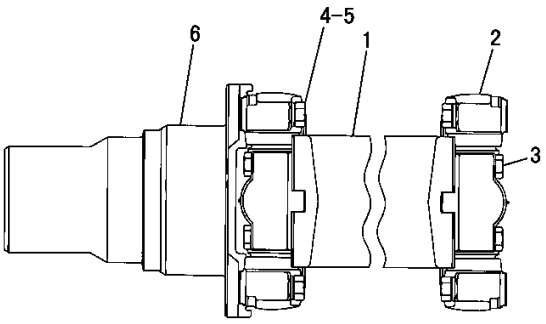

NOTE	№	PART NO.	QTY	PART NAME
	1	108-2109	1	JOINT GROUP
	2	9P-0356	2	SPIDER AND BEARING
	3	0S-0484	8	BOLT(1/2-20)
		7X-0584	8	WASHER
	4	0S-0484	8	BOLT(1/2-20)
	5	7X-0584	8	WASHER
	6	9G-1930	1	YOKE AS
		8H-2768	1	PLUG
		7D-1677	1	RACE

J061071 X00

MAIN DRIVE SHAFT GROUP (108-1744 N/S)

PART OF 279-3351-Page 174

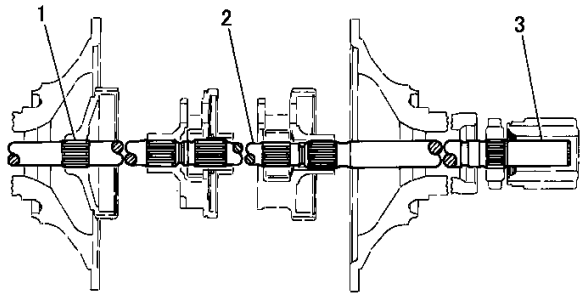

NOTE	№	PART NO.	QTY	PART NAME
	1	8E-3507	1	SHAFT AS(LH)
		8E-0618	1	BEARING
	2	3T-5851	1	SHAFT
	3	8E-3508	1	SHAFT AS(RH)
		8E-0618	1	BEARING

J061462 X02

POWER TRAIN AXLE GROUP (3T-9986 N/S)

PART OF 279-3351-Page 174

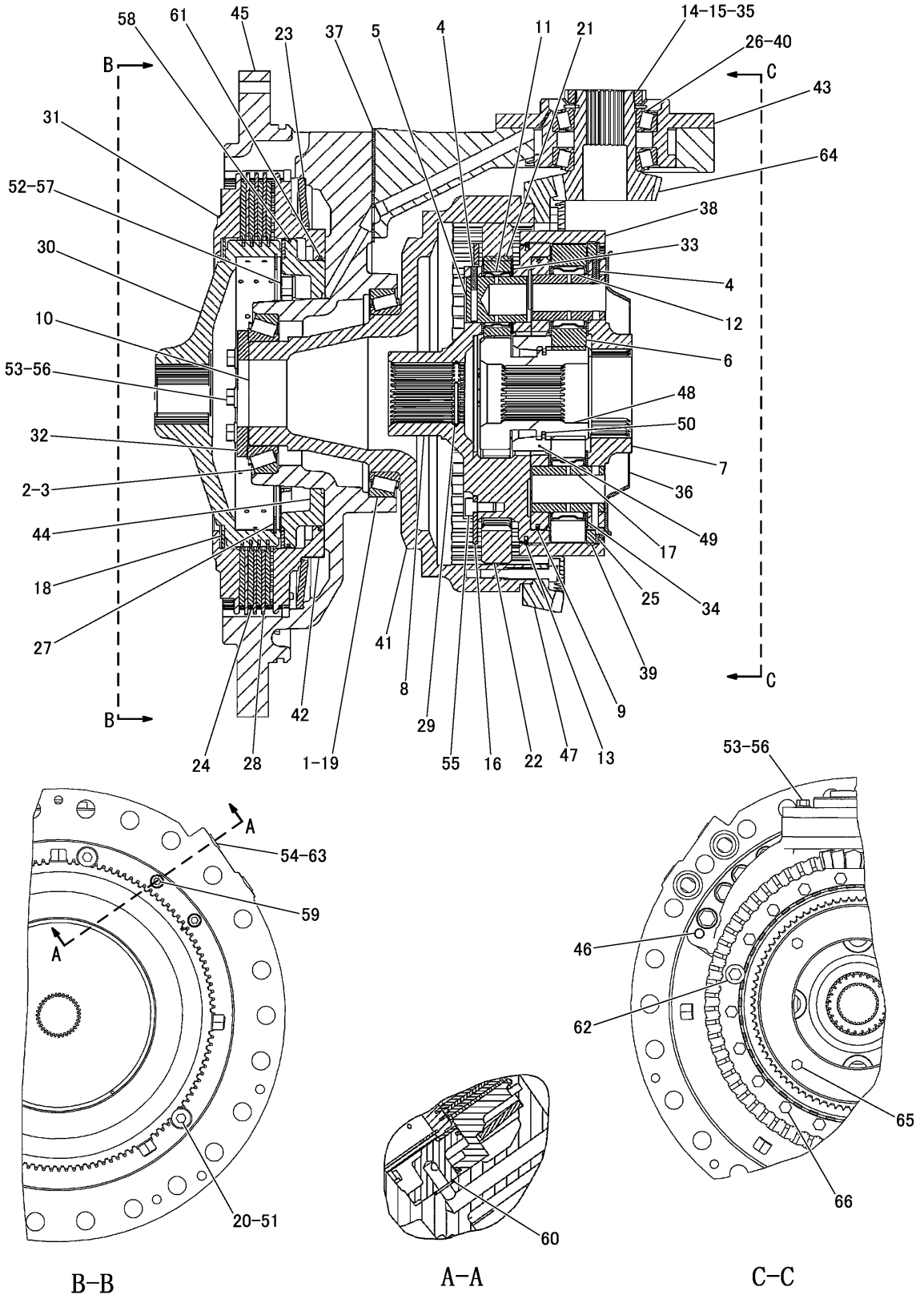

J155731 X00

DIFFERENTIAL DRIVE AND BRAKE GROUP (231-5968 N/S)
PART OF 279-3351-Page 174

POWER TRAIN

NOTE	№	PART NO.	QTY	PART NAME
	1	2K-5069	1	CUP
	2	2K-9295	1	CONE
	3	3B-4124	1	CUP
	4	3S-2708	7	PIN
	5	3T-4568	3	SHAFT
	6	3T-4824	4	GEAR
	7	3T-5021	1	CARRIER
	8	3T-5200	1	CARRIER
	9	3T-6963	1	SEAL
	10	3T-9272	1	SHIM PACK
	11	5M-0578	3	BEARING
	12	5M-7925	4	BEARING
	13	6I-8724	1	RING
	14	6P-1735	1	LOCKWASHER
	15	6P-1736	1	WASHER
	16	6T-0062	1	PLATE
	17	6T-0064	4	SHAFT
	18	6T-0850	2	WASHER
	19	6V-0855	1	CONE
	20	6V-7646	3	WASHER
	21	6Y-0926	3	GEAR
	22	6Y-0984	1	GEAR
	23	6Y-2704	1	SPRING
	24	6Y-9373	4	DISC
	25	7G-1596	1	RING
	26	7H-4566	2	CUP
	27	7T-1885	1	RING
	28	7T-6994	3	PLATE
	29	7T-8130	1	RING
	30	7T-9788	1	HUB
	31	7T-9832	1	RETAINER
	32	7T-9837	1	PLATE
	33	8E-8307	6	DISC
	34	8E-8310	8	DISC
	35	9B-0576	1	NUT
	36	9W-1571	1	SLINGER
B		1U-8846		GASKET MAKER
	37	9W-2853	1	SHIM PACK
	38	9W-6102	1	GEAR
	39	9W-6103	1	RING
	40	005-4834	2	CONE
	41	136-1595	1	HOUSING
	42	214-3573	1	PISTON
	43	216-7431	1	CARRIER
	44	217-2293	1	RETAINER
	45	227-2451	1	HOUSING AS
		1A-1460	12	BOLT(1/2-13)
		5P-8245	12	WASHER
		9W-2853	1	SHIM PACK
	46	1A-2223	2	DOWEL
	47	227-4247	1	GEAR
	48	292-2016	1	GEAR AS
	49	9W-3937	1	SPACER
	50	290-9849	1	RING
	51	0S-1614	3	BOLT(1/4-20)
	52	1A-1460	6	BOLT(1/2-13)
	53	1A-2029	7	BOLT(3/8-16)
	54	3K-0360	2	SEAL
	55	5K-9107	3	BOLT(3/8-16)
	56	5M-2894	7	WASHER
	57	5P-8245	6	WASHER
	58	6P-5317	1	RING
	59	7W-6534	4	PLUG
	60	8M-4438	1	SEAL
	61	8P-8357	1	RING
	62	9L-9132	3	WASHER
	63	9S-8005	2	PLUG
	64	227-4246	1	PINION
	65	030-2135	4	BOLT(5/16-18)
	66	0L-1143	21	BOLT(3/8-16)

B-USE AS REQUIRED

J155731 X00

DIFFERENTIAL DRIVE AND BRAKE GROUP (231-5968 N/S)
PART OF 279-3351-Page 174

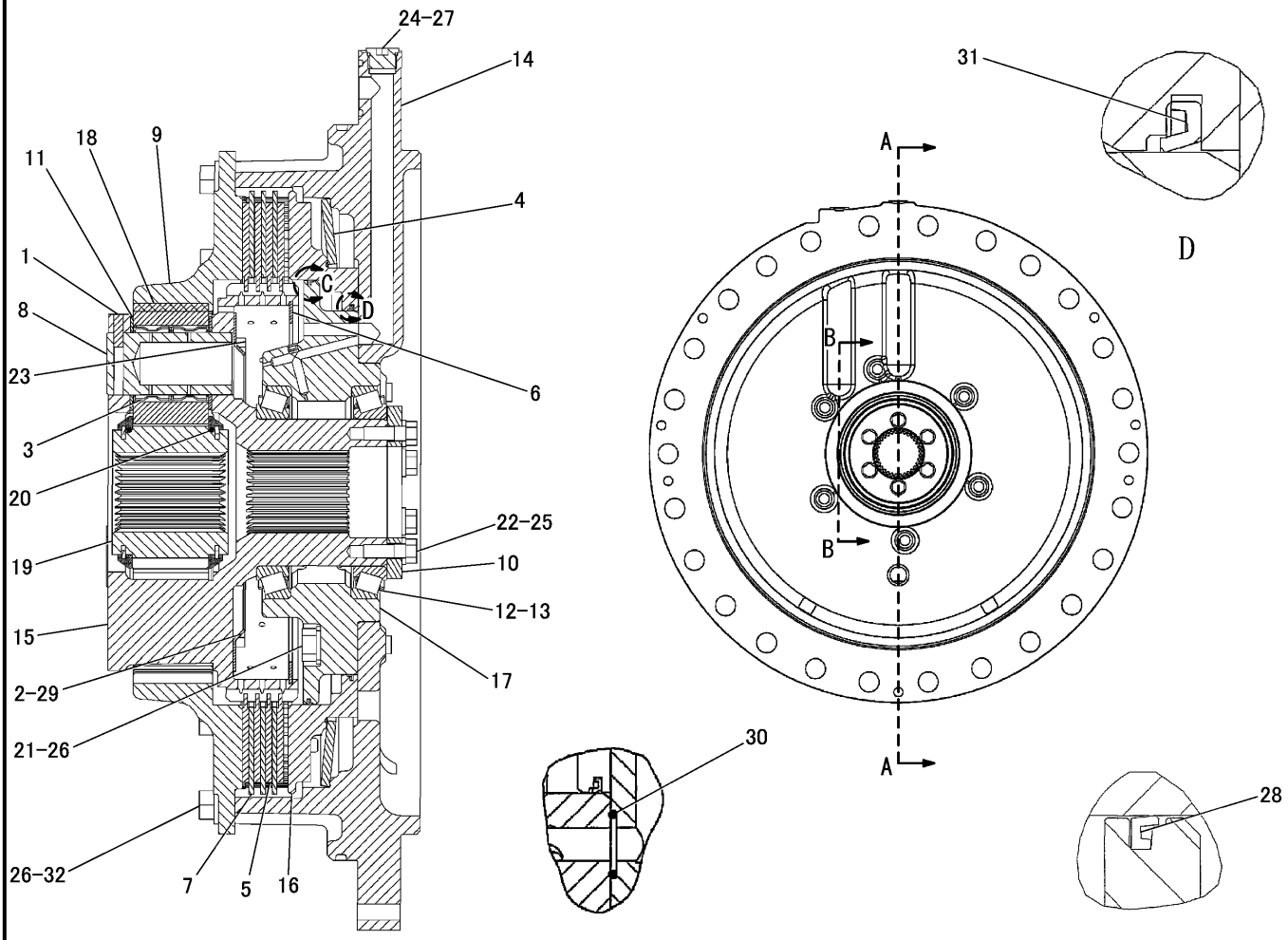

NOTE	№	PART NO.	QTY	PART NAME	NOTE	№	PART NO.	QTY	PART NAME
	1	3S-2708	3	PIN		19	306-0278	1	GEAR AS
	2	3T-5807	1	SLINGER		20	3E-4354	2	BALL
	3	5M-0578	6	BEARING		21	1A-1460	6	BOLT(1/2-13)
	4	6Y-2704	1	SPRING		22	1A-2029	6	BOLT(3/8-16)
	5	6Y-9373	4	DISC		23	1C-0569	6	BOLT(5/16-18)
	6	7T-1885	1	RING		24	3K-0360	2	SEAL
	7	7T-6994	3	PLATE		25	5M-2894	6	WASHER
	8	7T-8136	3	SHAFT		26	5P-8245	18	WASHER
	9	7T-9031	1	GEAR		27	9S-8005	2	PLUG
	10	7T-9837	1	PLATE		28	6P-5317	1	RING
	11	8E-8307	6	DISC	B	29	1U-8846		GASKET MAKER
	12	9W-7925	2	CONE		30	8M-4438	1	SEAL
	13	9W-7926	2	CUP		31	8P-8357	1	RING
	14	205-5314	1	HOUSING		32	0S-1585	12	BOLT(1/2-13)
	15	209-7193	1	CARRIER					
	16	214-3573	1	PISTON					
	17	216-4591	1	RETAINER AS					
		8S-0527	1	PLUG					
	18	244-2310	3	GEAR					

B-USE AS REQUIRED

J148705 X02

PLANETARY AND BRAKE GROUP (231-5990 N/S)

PART OF 279-3351-Page 174

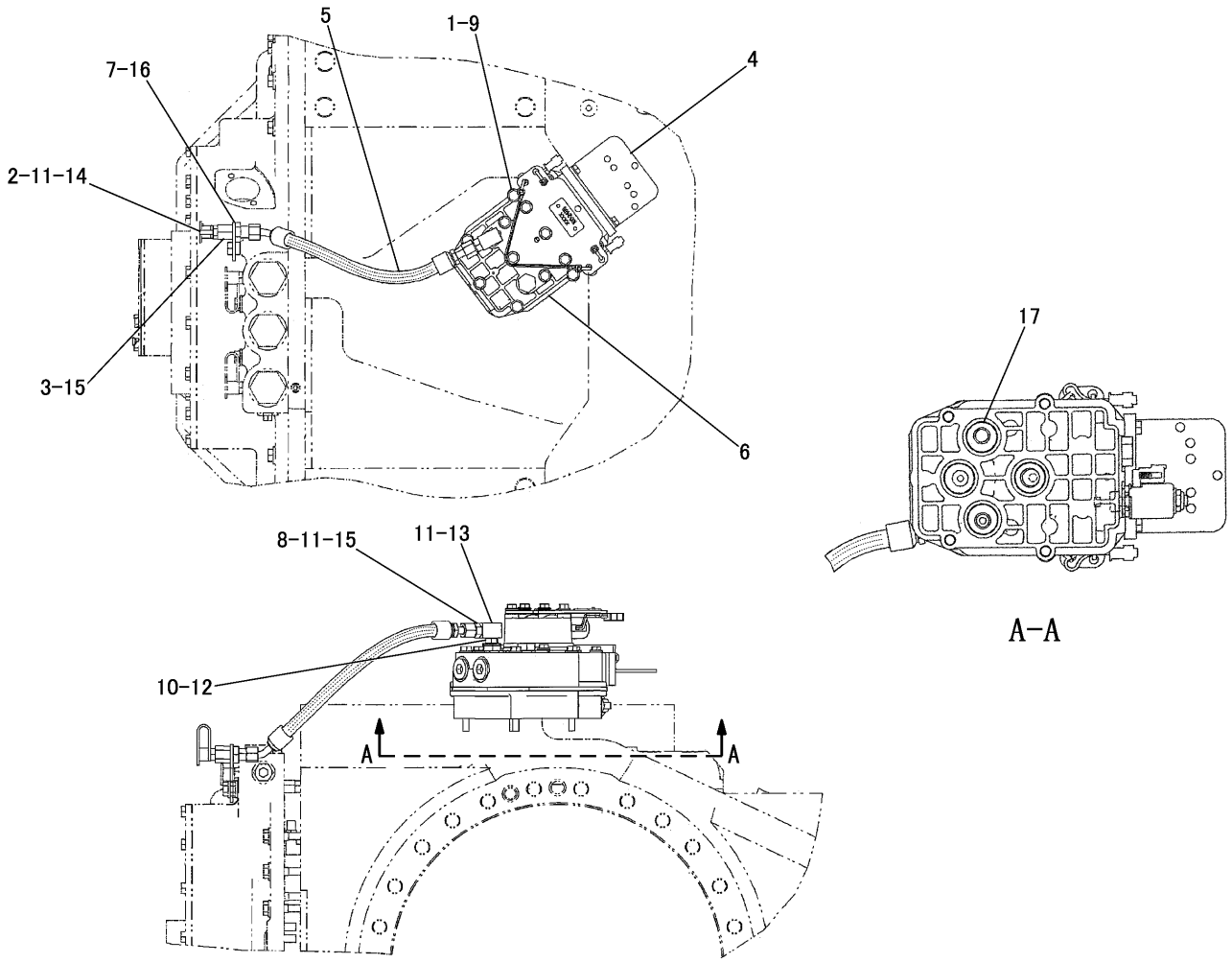

NOTE	№	PART NO.	QTY	PART NAME	NOTE	№	PART NO.	QTY	PART NAME
	1	3S-0004	4	WASHER					
	2	6V-0852	1	CAP					
	3	8T-9358	1	CONNECTOR					
	4	115-4371	1	PLATE					
	5	169-7451	1	HOSE AS					
Y	6	201-7274	1	VALVE GROUP					
	7	260-2017	1	BRACKET AS					
	8	6V-8636	1	CONNECTOR					
	9	1A-5183	4	BOLT(3/8-16)					
	10	2M-9780	1	SEAL					
	11	3J-1907	3	SEAL					
	12	5P-1404	1	ADAPTER					
	13	6V-0484	1	ADAPTER					
	14	6V-3965	1	NIPPLE AS					
	15	6V-8397	2	SEAL					
	16	6V-9168	1	NUT(11/16-16)					
	17	8M-5254	4	SEAL					

Y-SEPARATE ILLUSTRATION

J149466 X04

VALVE AND MOUNTING GROUP (158-8076 N/S)

PART OF 279-3351-Page 174
REFERENCE:201-7274-Page 220, 221

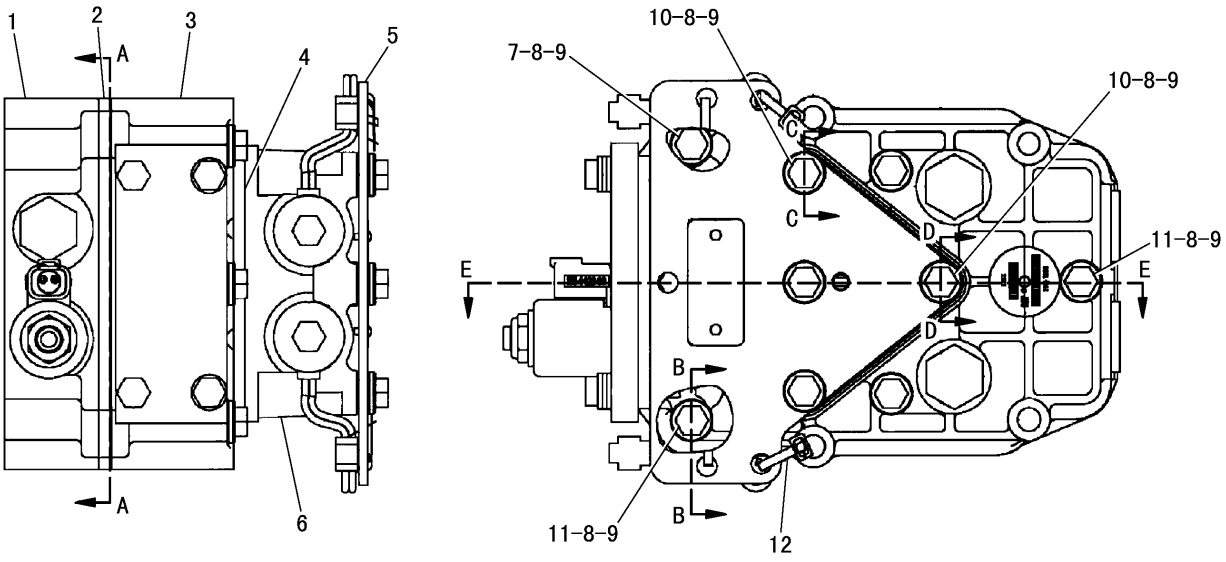

NOTE	№	PART NO.	QTY	PART NAME	NOTE	№	PART NO.	QTY	PART NAME
Y	1	162-5357	1	MANIFOLD GROUP					
	2	134-1251	1	PLATE					
Y	3	201-7269	1	VALVE GROUP					
	4	132-9899	1	PLATE					
	5	132-9900	1	PLATE					
Y	6	175-4972	1	MANIFOLD GROUP					
	7	8T-3647	4	BOLT(M8×1.25)					
	8	9P-9150	24	WASHER(18mm OD)					
	9	1T-0738	10	WASHER(19mm OD)					
	10	7X-2541	4	BOLT(M8×1.25)					
	11	8T-4177	2	BOLT(M8×1.25)					
	12	3S-2093	4	STRAP					

Y-SEPARATE ILLUSTRATION

J119542 X00

201-7274 VALVE GROUP -UNIT TEST-3-PART 1 OF 2

PART OF 158-8076-Page 219

REFERENCE:162-5357-Page 223 201-7269-Page 222 175-4972-Page 223

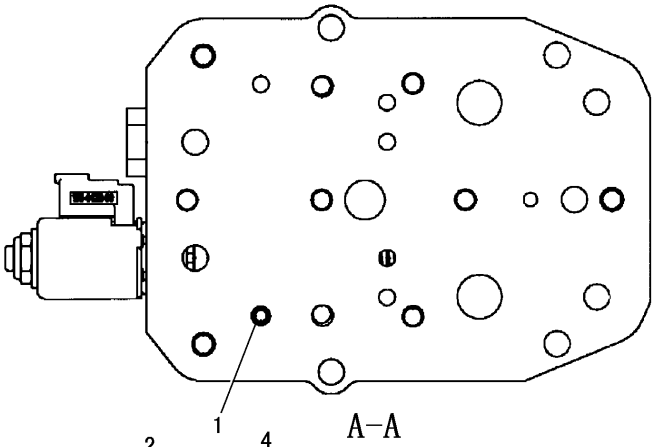

A–A

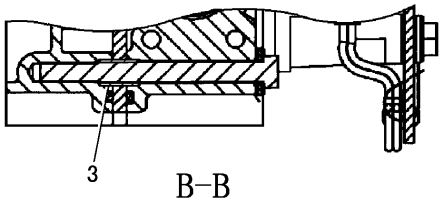

B–B

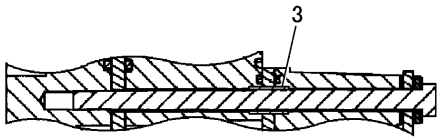

C–C

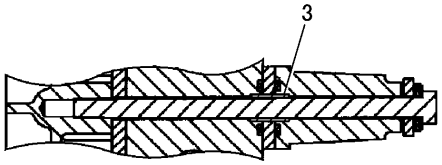

D–D

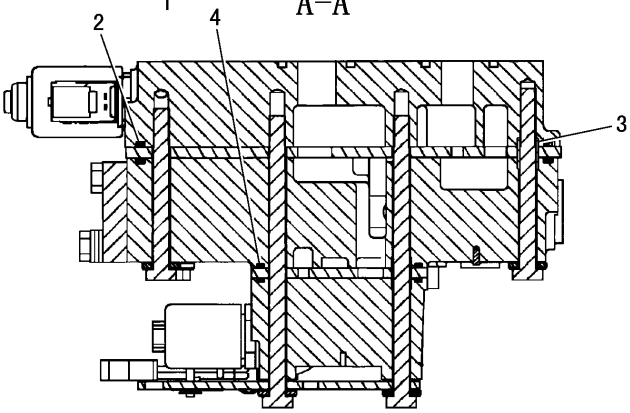

E–E

NOTE	№	PART NO.	QTY	PART NAME	NOTE	№	PART NO.	QTY	PART NAME
	1	176-0259	1	PLUG					
		4J-7533	1	SEAL					
	2	122-3771	2	SEAL					
	3	9L-9068	4	DOWEL					
	4	185-3503	2	SEAL					

J119902 X00

201-7274 VALVE GROUP -UNIT TEST-3-PART 2 OF 2
PART OF 158-8076-Page 219

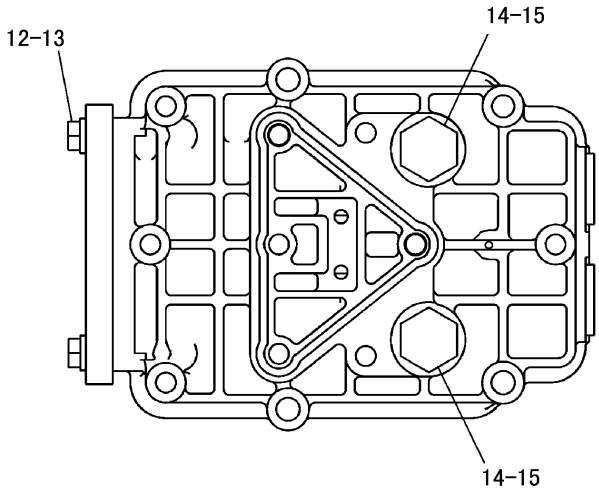

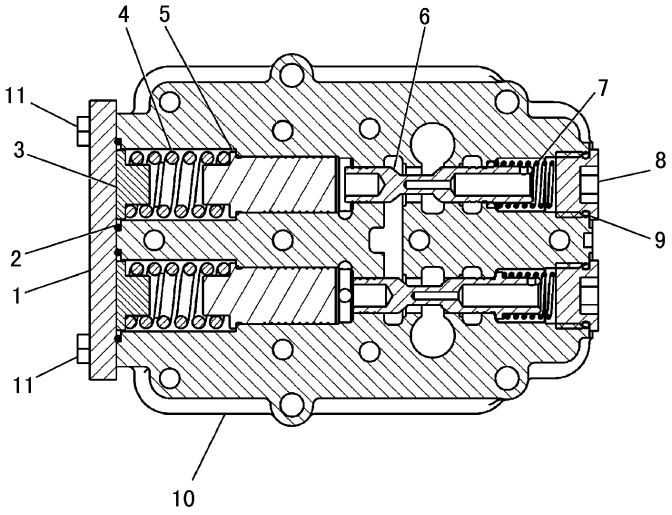

NOTE	№	PART NO.	QTY	PART NAME	NOTE	№	PART NO.	QTY	PART NAME
	1	110-2842	1	PLATE					
	2	6J-2419	2	SEAL					
	3	188-7068	2	RETAINER					
	4	188-7067	2	SPRING					
	5	188-7069	2	PISTON					
	6	137-6603	2	SPOOL					
	7	108-4430	2	SPRING					
	8	9S-8008	2	PLUG					
	9	3D-2824	2	SEAL					
	10	162-5359	1	BODY					
	11	8T-7547	2	BOLT(M8×1.25)					
	12	7X-2537	2	BOLT(M8×1.25)					
	13	8T-4224	2	WASHER					
	14	9S-4190	2	PLUG					
	15	2M-9780	2	SEAL					

J119544 -01

201-7269 VALVE GROUP
PART OF 201-7274-Page 220

POWER TRAIN

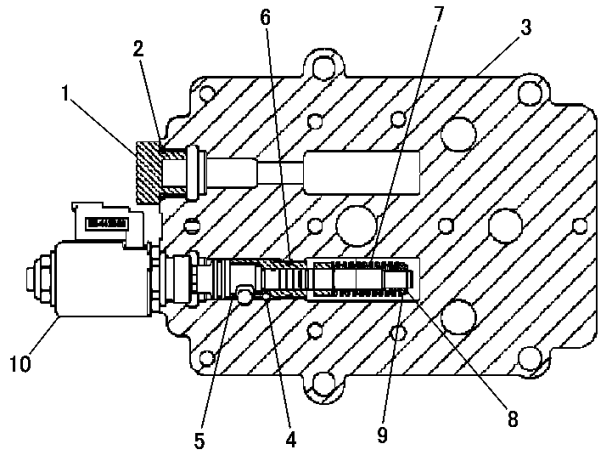

NOTE	№	PART NO.	QTY	PART NAME
	1	9S-4190	1	PLUG
	2	2M-9780	1	SEAL
	3	162-5358	1	MANIFOLD
	4	1P-1744	1	DOWEL
	5	137-8794	1	SPOOL AS
	6	5L-4758	1	SEAL
	7	137-8793	1	SPRING
	8	3D-7943	1	RING
	9	111-3201	1	RETAINER
Y	10	174-4909	1	SOLENOID VALVE GROUP

Y-SEPARATE ILLUSTRATION

J119543 -06

MANIFOLD GROUP (162-5357 N/S)
PART OF 201-7274-Page 220
REFERENCE:174-4909-Page 224

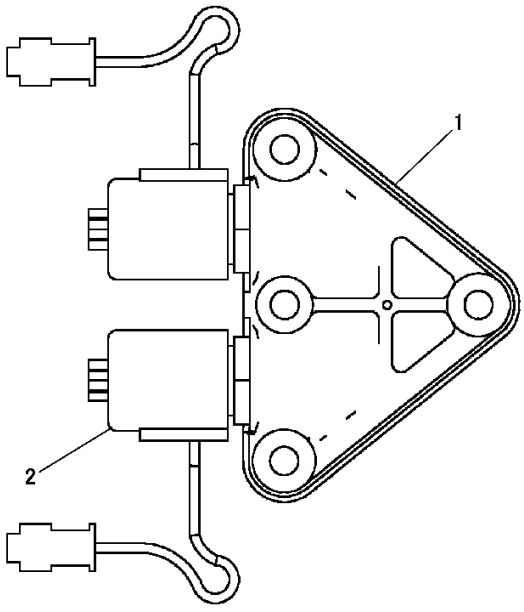

NOTE	№	PART NO.	QTY	PART NAME
	1	132-9455	1	MANIFOLD
Y	2	172-2392	2	SOLENOID VALVE GROUP

Y-SEPARATE ILLUSTRATION

J110483 -00

MANIFOLD GROUP (175-4972 N/S)
PART OF 201-7274-Page 220
REFERENCE:172-2392-Page 224

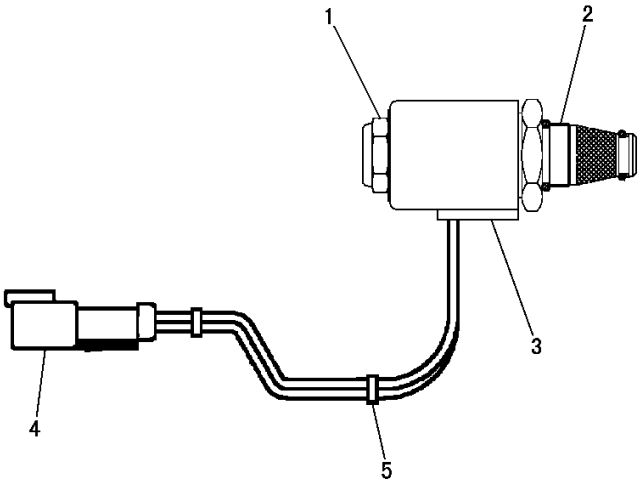

NOTE	№	PART NO.	QTY	PART NAME
	1	156-5970	1	NUT(1/2-20)
	2	172-2391	1	CARTRIDGE AS
	3	133-2249	1	COIL AS
	4	102-8804	1	RECEPTACLE KIT(4P)
		186-3735	2	PIN
		8T-8737	2	PLUG
	5	1S-9593	2	STRAP
				AVAILABLE REPAIR KIT(S):
		189-1839	1	SEAL KIT
				(INCLUDES SEALS AND RING)

J127741 -01

172-2392 SOLENOID VALVE GROUP
PART OF 175-4972-Page 223

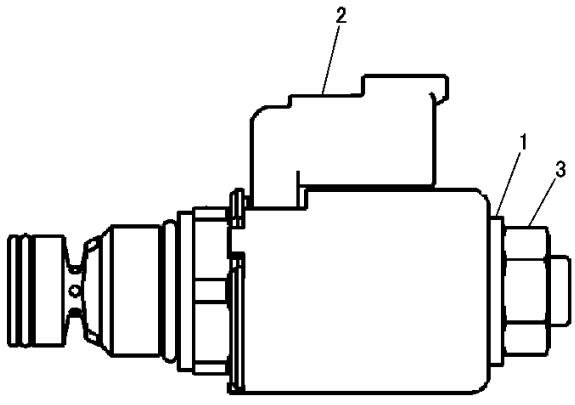

NOTE	№	PART NO.	QTY	PART NAME
	1	164-2108	1	WASHER
	2	226-9622	1	COIL AS
	3	218-2373	1	NUT(1/2-28)
F	4	6V-4589	1	SEAL(19.2mm ID)
F	5	8L-2746	1	SEAL(15.6mm ID)

F-NOT SHOWN

J145193 -06

174-4909 SOLENOID VALVE GROUP
PART OF 162-5357-Page 223

STEERING AND BRAKING SYSTEM

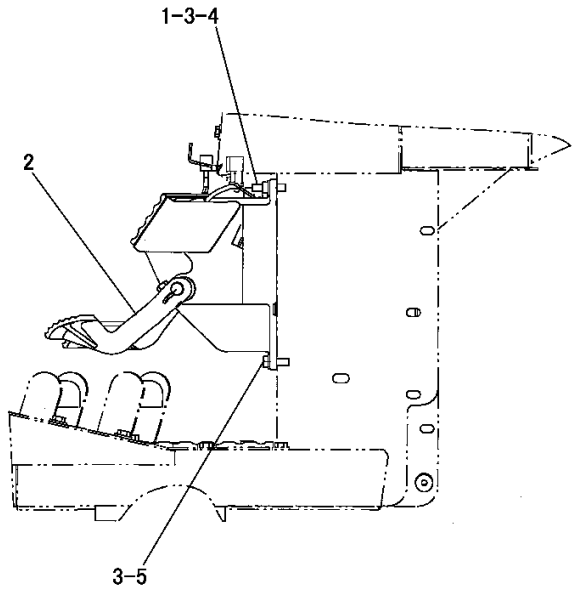

NOTE	№	PART NO.	QTY	PART NAME
	1	171-7077	2	ROD
Y	2	224-2791	1	PEDAL GROUP
	3	8T-4121	4	WASHER
	4	8T-4133	2	NUT(M10×1.5)
	5	8T-4195	2	BOLT(M10×1.5)

Y-SEPARATE ILLUSTRATION

J147393 X01

CONTROL AND MOUNTING GROUP (224-2793 N/S)

PART OF 279-3351-Page 174
REFERENCE:224-2791-Page 226, 227

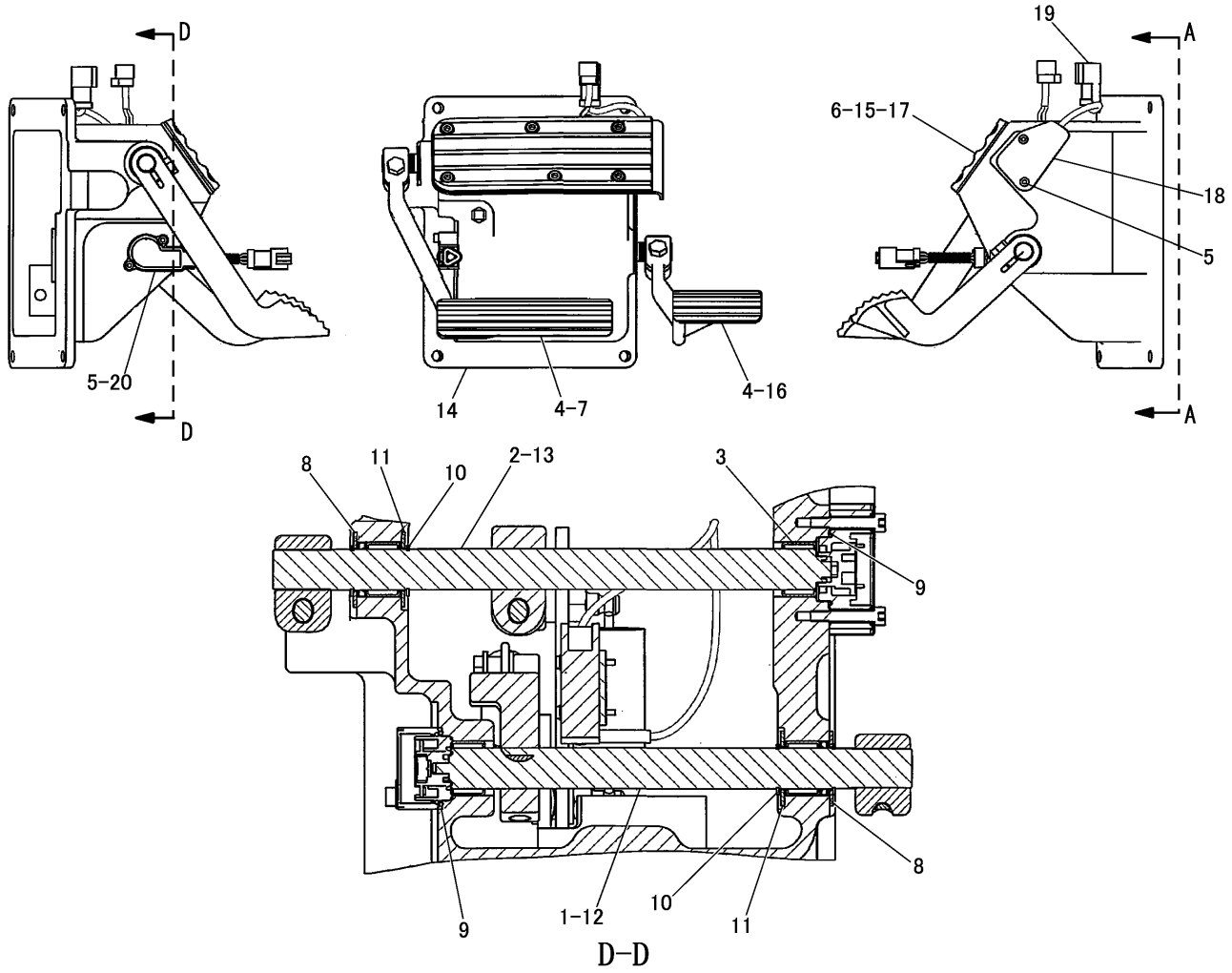

D–D

NOTE	№	PART NO.	QTY	PART NAME	NOTE	№	PART NO.	QTY	PART NAME
	1	1B-8706	1	KEY		18	224-5530	1	POSITION SENSOR GROUP
	2	1B-8714	1	KEY	E		9X-1813		SLEEVE---13cm
	3	7P-4190	4	BEARING		19	102-8803	1	RECEPTACLE KIT(3P)
	4	8T-4195	2	BOLT(M10×1.5)			186-3735	3	PIN
	5	9X-6615	4	BOLT(M5×0.8)	Y	20	266-1467	1	POSITION SENSOR GROUP
	6	105-3482	6	BOLT(M8×1.25)					
	7	110-8379	1	PEDAL					
	8	8F-7702	2	SEAL					
	9	6V-0894	2	SEAL					
	10	2J-6356	4	RING					
	11	111-9251	4	WASHER					
	12	160-1431	1	SHAFT					
	13	160-1432	1	SHAFT					
	14	160-1435	1	HOUSING					
	15	165-6779	1	GASKET					
	16	184-8060	1	PEDAL					
	17	186-4998	1	PAD AS					

E-ORDER BY THE cm
Y-SEPARATE ILLUSTRATION

J149606 X03

GOVERNOR AND BRAKE PEDAL GROUP (224-2791 N/S) -PART 1 OF 2

PART OF 224-2793-Page 225
REFERENCE:266-1467-Page 234

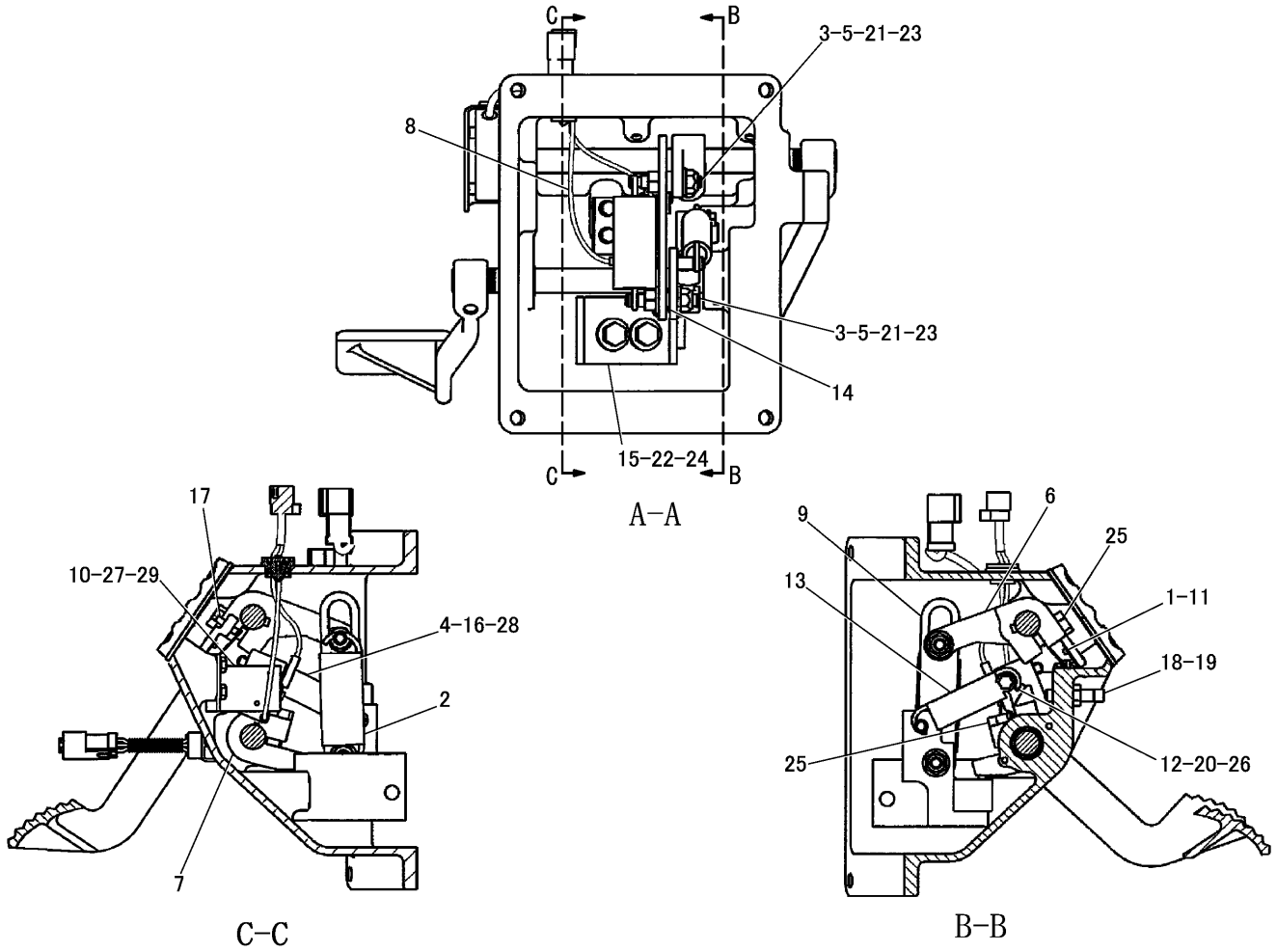

NOTE	№	PART NO.	QTY	PART NAME	NOTE	№	PART NO.	QTY	PART NAME
	1	9M-5731	2	RIVET		16	096-5962	2	WASHER
	2	111-3780	1	SPRING		17	106-5472	1	SETSCREW(M5×0.8)
	3	111-3781	2	BOLT(M10×1.5)		18	1B-2578	1	NUT(3/8-16)
	4	132-7077	1	SWITCH AS		19	4B-3609	1	SETSCREW(3/8-16)
		6V-8376	3	SCREW(No.8-32)		20	6V-7357	1	BOLT(M6×1)
		9B-7233	3	LOCKWASHER		21	6V-7744	2	LOCKNUT(M10×1.5)
	5	145-3405	2	SPACER		22	7X-7729	2	WASHER
	6	160-1433	1	LEVER		23	8T-4121	4	WASHER
	7	160-1434	1	LEVER		24	8T-4136	2	BOLT(M10×1.5)
	8	164-9541	1	HARNESS AS		25	8T-4186	2	BOLT(M10×1.5)
		2L-8075	2	TERMINAL		26	8T-4205	2	WASHER
		102-8804	1	RECEPTACLE KIT(4P)		27	8T-4970	2	BOLT(M6×1)
		186-3735	2	PIN		28	9X-6281	2	SCREW(No.4-40)
	9	165-9100	1	LINK		29	9X-8256	2	WASHER
	10	165-9102	1	PLATE					
	11	165-9103	1	SPRING					
	12	165-9104	1	SPACER					
	13	194-7034	1	SPRING					
	14	205-7331	1	SPACER					
	15	215-9801	1	BRACKET AS					

J149607 X03

GOVERNOR AND BRAKE PEDAL GROUP (224-2791 N/S) -PART 2 OF 2

PART OF 224-2793-Page 225

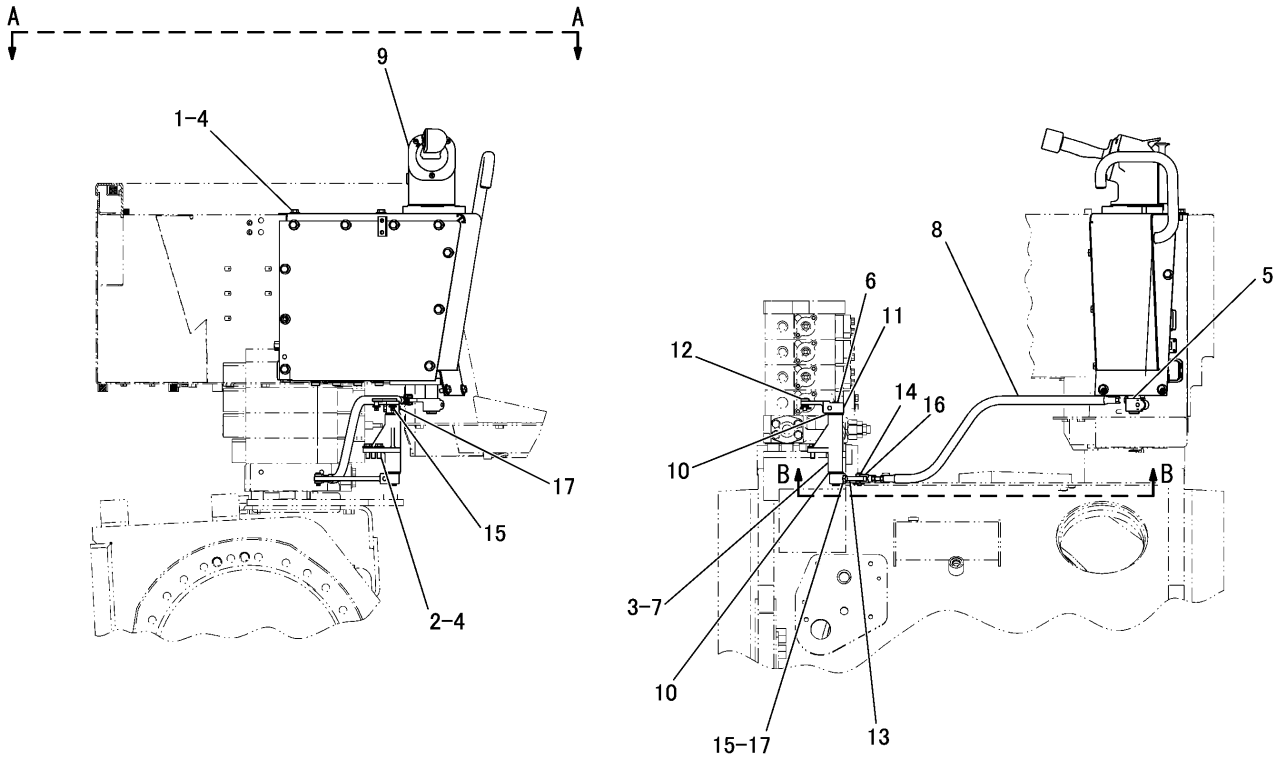

NOTE	№	PART NO.	QTY	PART NAME	NOTE	№	PART NO.	QTY	PART NAME
	1	8T-4137	8	BOLT(M10×1.5)					
	2	8T-4195	3	BOLT(M10×1.5)					
	3	7P-4190	2	BEARING					
	4	7X-7729	11	WASHER					
	5	8T-8932	1	PIN AS					
	6	166-9204	1	SHAFT					
	7	166-9209	1	BRACKET					
	8	166-9213	1	ROD					
Y	9	226-9713	1	CONTROL GROUP					
	10	8T-4994	2	WASHER					
	11	298-7340	1	LEVER					
	12	313-9374	1	LINK AS					
	13	319-1676	1	LEVER					
	14	1B-0676	1	PIN					
	15	1B-8706	2	KEY					
	16	1M-1341	2	ROD END					
	17	8T-4196	2	BOLT(M10×1.5)					

Y-SEPARATE ILLUSTRATION

J156228 X01

STEERING AND TRANSMISSION CONTROL GROUP (279-6627 N/S) -PART 1 OF 2

PART OF 279-3351-Page 174
REFERENCE:226-9713-Page 230, 231

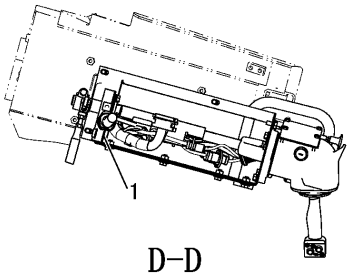

D–D

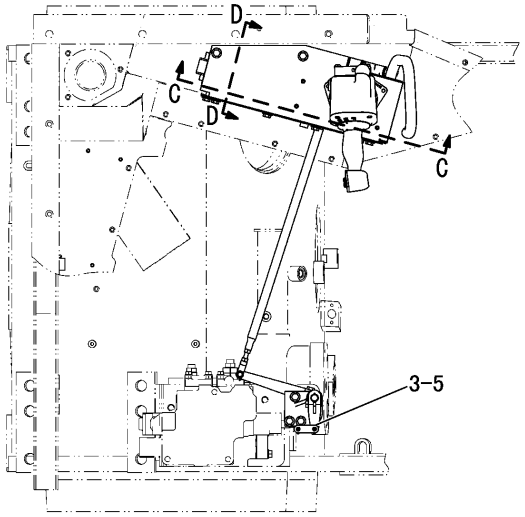

A–A

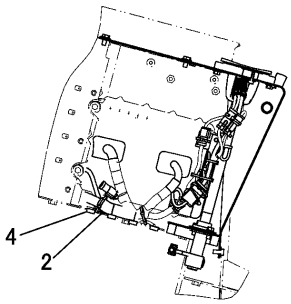

C–C

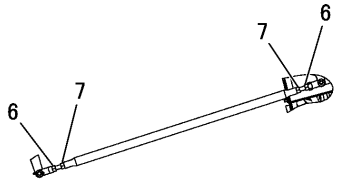

B–B

NOTE	№	PART NO.	QTY	PART NAME	NOTE	№	PART NO.	QTY	PART NAME
	1	136-6093	1	SEAL					
	2	292-0486	1	PLUG AS					
		126-1767	5	PIN					
		9G-3695	1	PLUG					
		102-8805	1	RECEPTACLE KIT(6P)					
	3	3B-4615	3	COTTER PIN					
	4	4Y-4281	4	PLUG					
	5	8T-4896	2	WASHER					
	6	3E-4374	2	STUD(3/8-24)					
	7	6V-8183	2	NUT(3/8-24)					

J156229 X01

STEERING AND TRANSMISSION CONTROL GROUP (279-6627 N/S) -PART 2 OF 2
PART OF 279-3351-Page 174

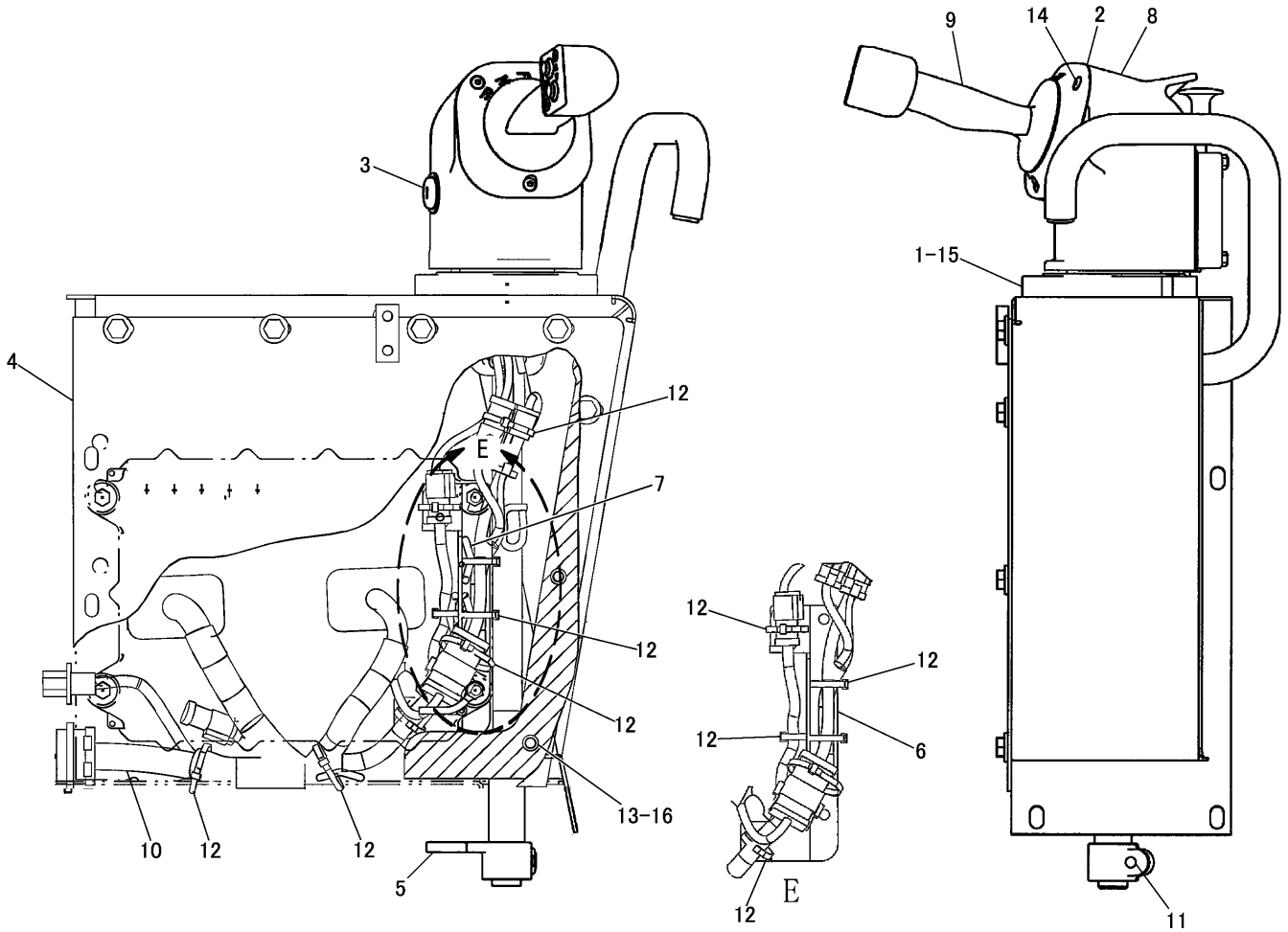

NOTE	№	PART NO.	QTY	PART NAME	NOTE	№	PART NO.	QTY	PART NAME
	1	112-4440	1	HOUSING					
	2	127-1598	1	GASKET					
	3	149-3137	1	LOCK AS					
	4	161-3964	1	COVER AS					
	5	166-9212	1	LEVER					
	6	200-4574	1	PLATE AS					
	7	7T-1099	5	LINK					
	8	201-9624	1	HOUSING					
Y	9	224-9450	1	HANDLE CONTROL GROUP					
Y	10	226-9673	1	HARNESS AS					
	11	030-8537	1	BOLT(3/8-16)					
	12	7K-1181	9	STRAP					
	13	7X-7729	7	WASHER					
	14	2N-3680	3	SCREW(1/4-20)					
	15	4H-9105	1	SEAL					
	16	8T-4137	7	BOLT(M10×1.5)					

Y-SEPARATE ILLUSTRATION

J138727 X01

STEERING AND TRANSMISSION CONTROL GROUP (226-9713 N/S) -PART 1 OF 2

PART OF 279-6627-Page 228
REFERENCE:224-9450-Page 233 226-9673-Page 235

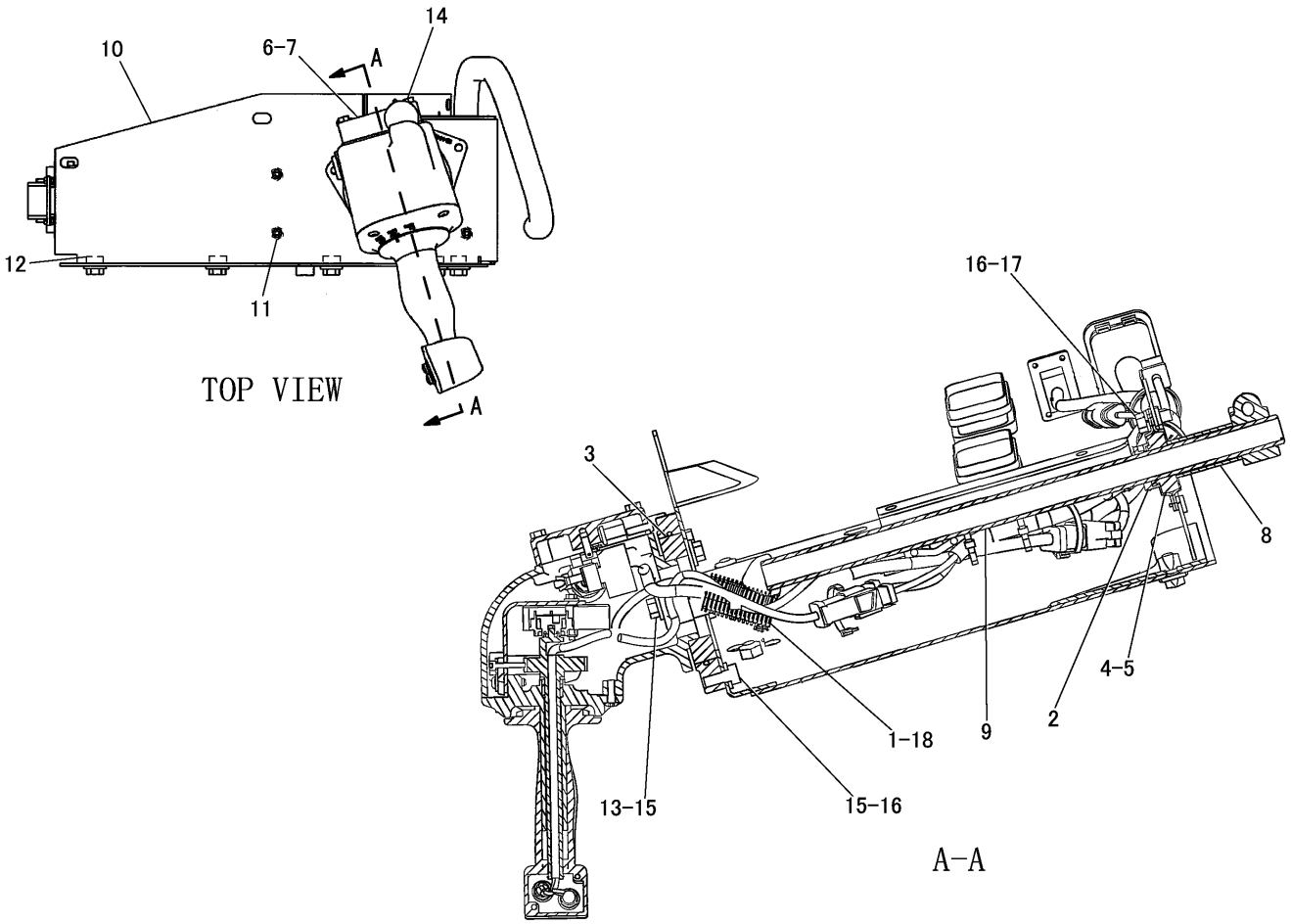

NOTE	№	PART NO.	QTY	PART NAME	NOTE	№	PART NO.	QTY	PART NAME
D	1	6V-5817		CONDUIT---0.06m					
	2	3D-2546	1	COLLAR					
	3	5L-2029	1	BEARING					
	4	6T-8387	1	BEARING					
	5	6T-8388	2	FLANGE					
Y	6	107-3881	1	BRAKE CONTROL GROUP					
	7	127-1599	1	GASKET					
	8	143-6871	1	SPACER					
	9	158-6161	1	SHAFT AS					
		7T-1099	1	LINK					
	10	161-3963	1	CONSOLE AS					
		1V-8638	2	NUT(3/8-16)(WELD)					
	11	6V-9632	3	NUT(M6×1)(WELD)					
	12	8T-3490	12	NUT(M10×1.5)(WELD)					
	13	4L-9337	2	BOLT(3/8-16)					
	14	4M-5282	4	BOLT(1/4-20)					
	15	5P-1075	5	WASHER					
	16	5S-7379	5	BOLT(3/8-16)					
	17	8T-4896	2	WASHER					
	18	7K-1181	1	STRAP					

D-ORDER BY THE m
Y-SEPARATE ILLUSTRATION

J138728 X01

STEERING AND TRANSMISSION CONTROL GROUP (226-9713 N/S) -PART 2 OF 2

PART OF 279-6627-Page 228
REFERENCE:107-3881-Page 232

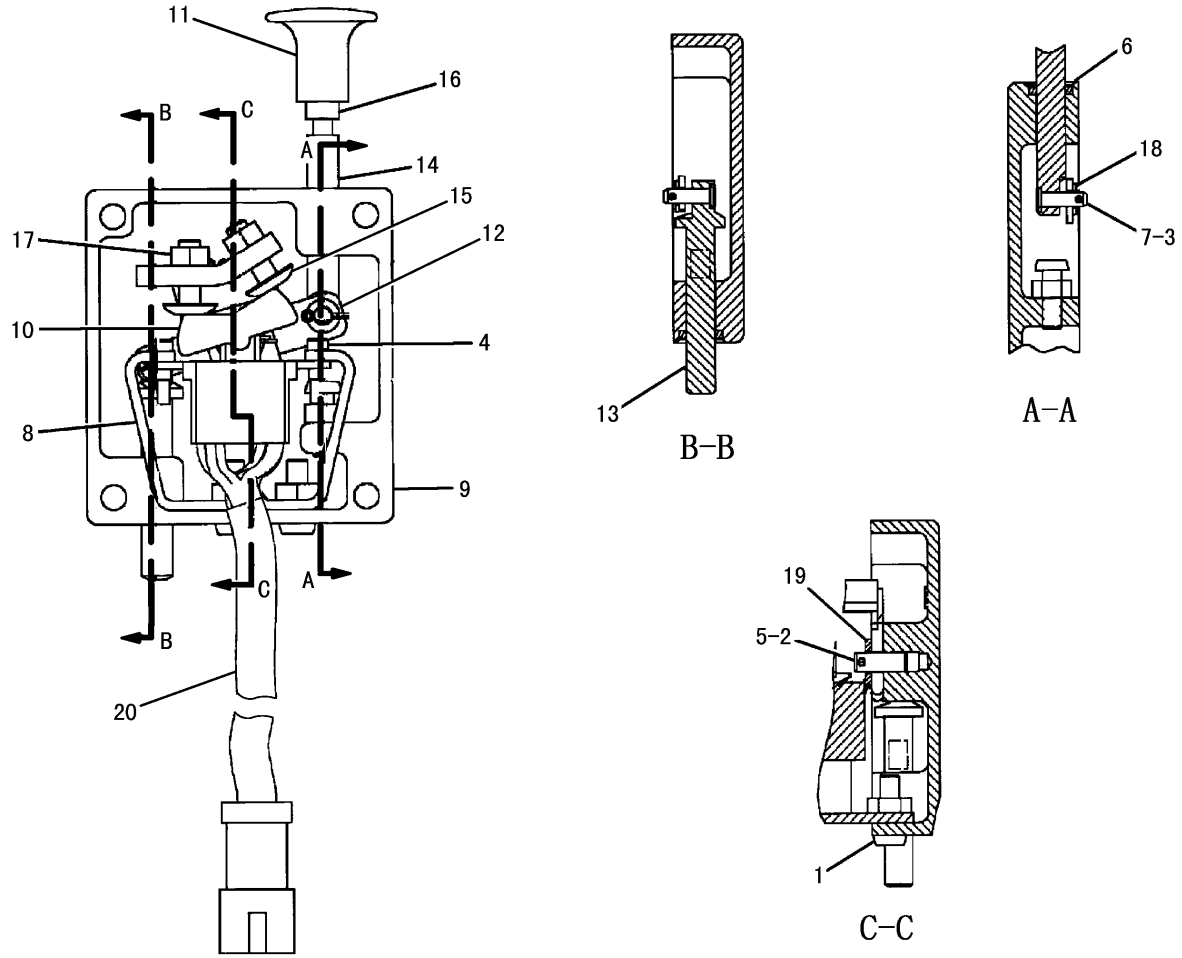

NOTE	№	PART NO.	QTY	PART NAME	NOTE	№	PART NO.	QTY	PART NAME
	1	2N-3680	3	SCREW(1/4-20)		18	8T-0328	2	WASHER
	2	2R-5001	1	DOWEL		19	8T-4205	1	WASHER
	3	3B-4605	2	COTTER PIN	E	20	8C-5063		CONDUIT---30cm
	4	6V-8118	2	SCREW(No.6-32)					
	5	7H-9737	1	COTTER PIN					
	6	8T-5410	2	SEAL					
	7	9S-1305	2	PIN					
	8	107-3888	1	BRACKET AS					
		9F-6445	2	NUT(1/4-20)(WELD)					
	9	112-2660	1	COVER					
	10	118-0639	1	SWITCH AS					
		102-8801	1	RECEPTACLE KIT(12P)					
		186-3735	12	PIN					
	11	208-9647	1	KNOB					
	12	167-7751	1	PLATE AS					
	13	127-1596	1	SHAFT					
	14	127-1597	1	SHAFT					
	15	4V-6981	2	SCREW(1/4-20)					
	16	5C-2890	1	NUT(M6×1)					
	17	6V-8185	3	NUT(1/4-20)					

E-ORDER BY THE cm

J125603 X06

BRAKE CONTROL GROUP (107-3881 N/S)
PART OF 226-9713-Page 231

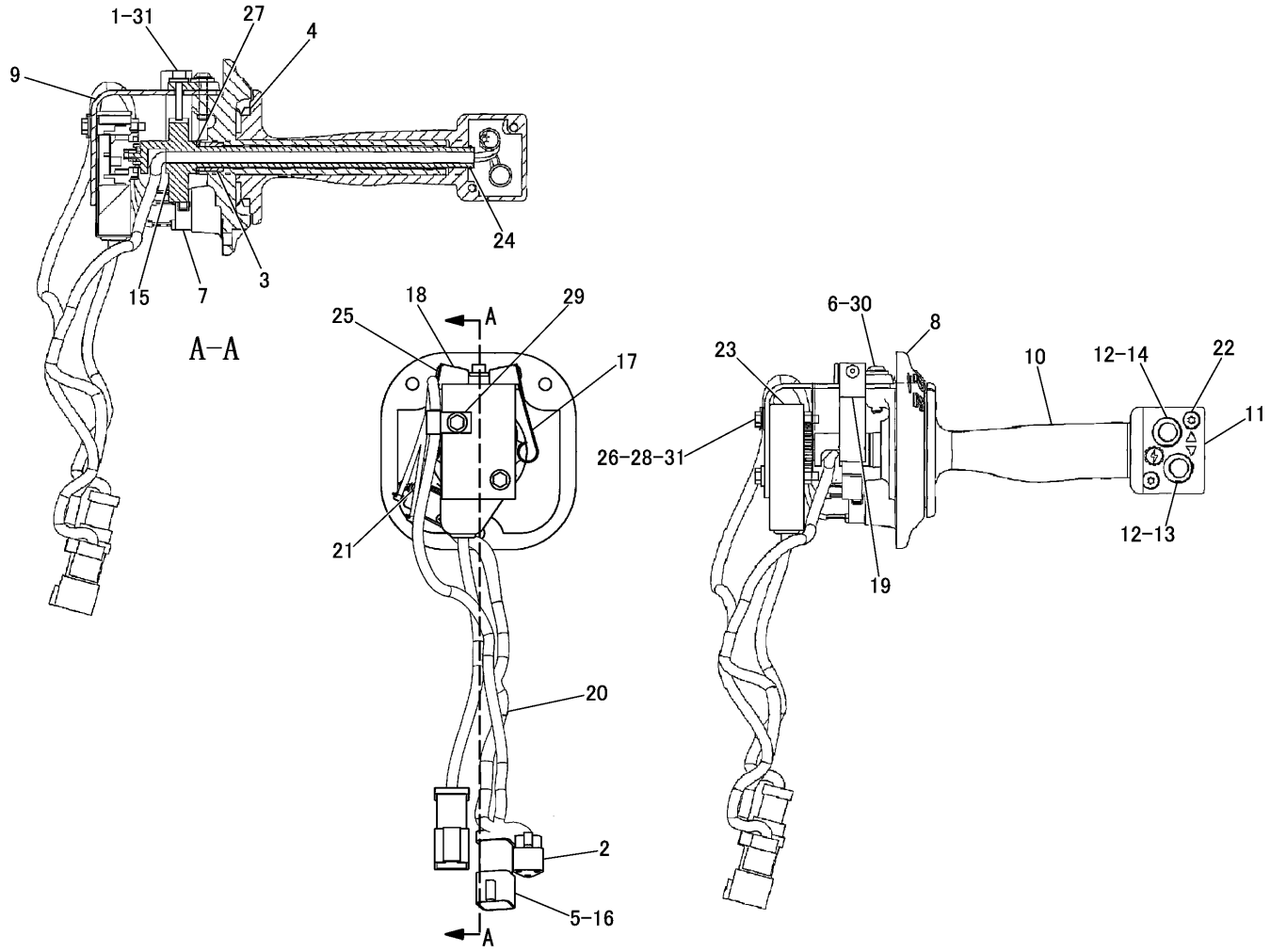

NOTE	№	PART NO.	QTY	PART NAME
	1	1H-3340	1	BOLT(No.10-24)
	2	229-5354	1	WIRE AS
		155-2260	1	PLUG KIT(3P)
		2L-8074	3	TERMINAL
		9X-3402	3	SOCKET
	3	6V-3545	1	BEARING
	4	7X-4771	1	SEAL
	5	186-3735	6	PIN
	6	9W-1464	2	SCREW(1/4-20)
	7	110-7882	1	SWITCH AS
		6V-8818	3	SCREW(No.4-40)
		5S-4246	3	LOCKWASHER
	8	111-8642	1	COVER
	9	111-8950	1	ANGLE
	10	112-4740	1	HANDLE
	11	112-4757	1	COVER
	12	131-0447	2	NUT(15/32-32)
	13	132-7419	1	SWITCH AS
		144-0331	1	CAP
	14	132-7450	1	SWITCH AS
		144-0331	1	CAP
	15	151-5803	1	SHAFT AS
	16	151-9275	1	RECEPTACLE KIT(6P)
	17	158-2734	2	SPRING
	18	158-2735	1	BASE
	19	226-9423	2	SPRING
D	20	6V-2689		TUBE---0.25m
	21	103-6262	2	SCREW(No.4-40)
	22	110-2028	2	SCREW(No.10-14)
Y	23	219-2391	1	SENSOR GROUP
	24	5H-9899	1	RING
	25	6V-1232	2	SCREW(No.8-32)
	26	6V-2314	2	BOLT(M5×0.8)
	27	7X-0584	1	WASHER
	28	7Y-5226	2	NUT(M5×0.8)
	29	8M-2771	1	CLIP
	30	8T-4205	2	WASHER
	31	9X-8256	3	WASHER

D-ORDER BY THE m
Y-SEPARATE ILLUSTRATION

J137953 X00

224-9450 HANDLE CONTROL GROUP

PART OF 226-9713-Page 230
REFERENCE:219-2391-Page 234

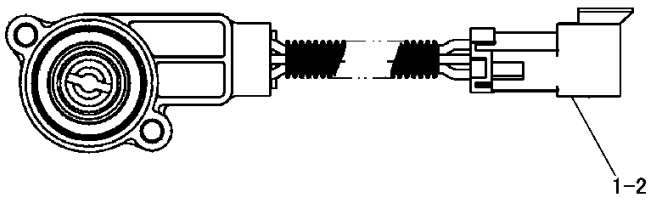

NOTE	№	PART NO.	QTY	PART NAME
	1	180−9339	3	PIN
	2	102−8803	1	RECEPTACLE KIT(3P)

J149469 -03

266-1467 POSITION SENSOR GROUP
PART OF 224-2791-Page 226

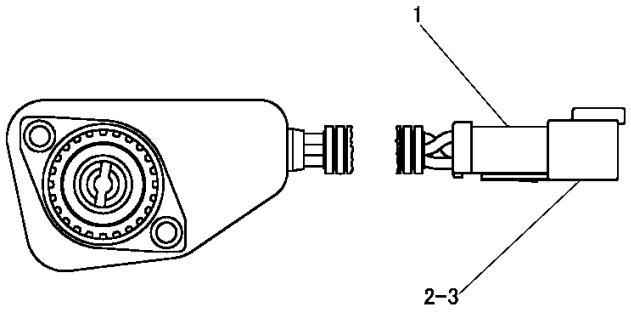

NOTE	№	PART NO.	QTY	PART NAME
	1	102−8804	1	RECEPTACLE KIT(4P)
	2	186−3735	3	PIN
	3	9G−3695	1	PLUG

J137955 -00

219-2391 POSITION SENSOR GROUP
PART OF 224-9450-Page 233

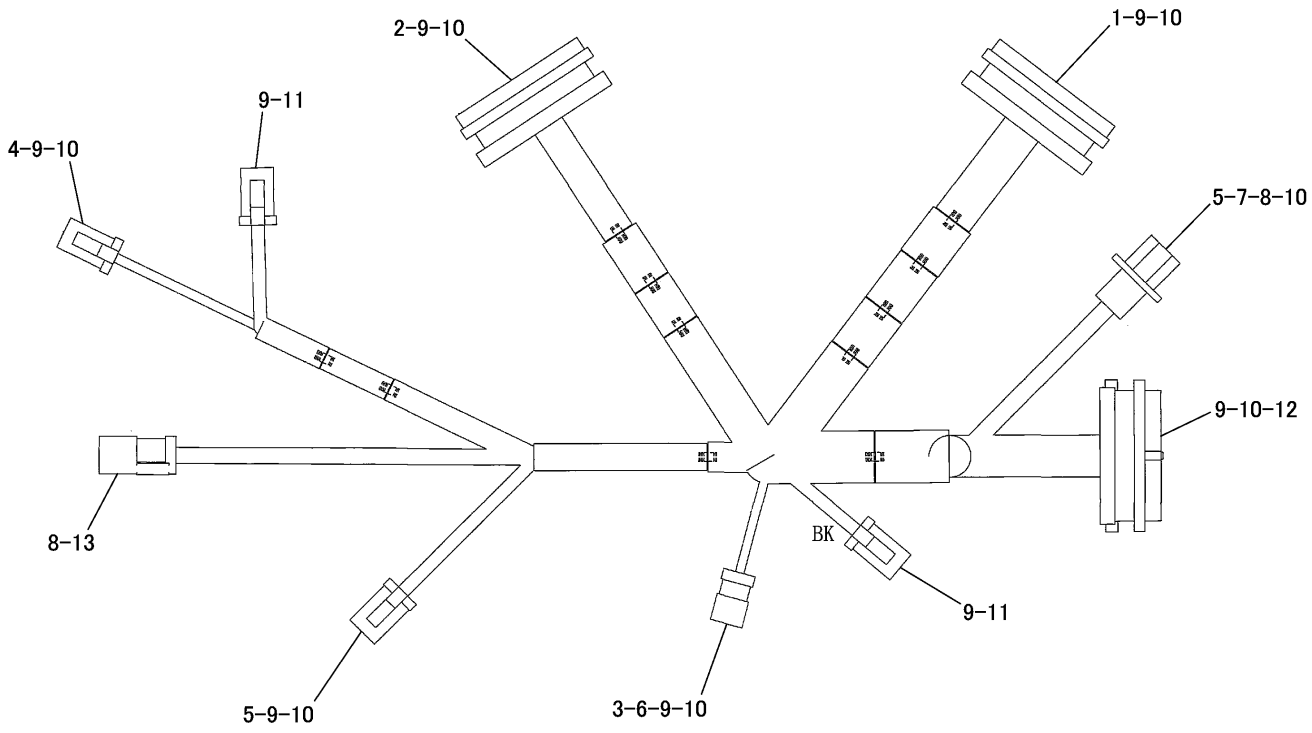

NOTE	№	PART NO.	QTY	PART NAME	NOTE	№	PART NO.	QTY	PART NAME
	1	147-1445	1	PLUG AS(70P)					
		159-9322	1	SEAL					
	2	147-1446	1	PLUG AS(70P)					
		159-9322	1	SEAL					
	3	174-0503	1	PLUG KIT(3P)					
	4	155-2271	1	PLUG KIT(4P)					
	5	155-2255	2	PLUG KIT(12P)					
	6	134-2540	1	RECEPTACLE AS(3P)					
	7	166-5229	1	RECEPTACLE KIT(12P)					
	8	126-1767	14	PIN					
	9	126-1768	179	SOCKET					
	10	9G-3695	75	PLUG					
	11	155-2274	2	PLUG KIT(6P)					
	12	160-7689	1	PLUG AS(70P)					
		159-9322	1	SEAL					
	13	102-8803	1	RECEPTACLE KIT(3P)					

J139624 X02

226-9673 HARNESS ASSEMBLY
PART OF 226-9713-Page 230

CONSISTS OF :

			PAGE
1	6V-1971	LITERATURE GROUP	494
1	161-4465	BOTTOM GUARD GROUP	241
1	163-8744	ROPS MOUNTING GROUP	275
1	163-8746	ROLLOVER PROTECTIVE STRUCTURE GROUP	407
1	163-8818	BATTERY BOX GROUP	270
1	164-2879	LUBRICATION GROUP(PIVOT SHAFT)	279
1	215-5581	ENGINE ENCLOSURE GROUP	257
1	220-2800	PLATFORM GROUP(EROPS)	251
1	222-8719	FENDER GROUP	244
1	223-2205	SEAT AND MOUNTING GROUP	456
1	223-4929	FUEL LINES GROUP	80
1	249-7666	RADIATOR GUARD GROUP	272
1	270-3260	FUEL TANK GROUP	77
1	270-3261	ENCLOSURE GROUP(HYDRAULIC TANK)	263
1	322-6118	CAB ARRANGEMENT	403
1	271-6421	BATTERY AND WIRING GROUP	108
1	271-6422	PLATFORM WIRING GROUP	116
1	273-3962	FRAME AND CASE GROUP	237
1	279-5009	INSTRUMENT GROUP(EROPS)	432
1	283-7325	FILM GROUP	496

J155583 X00

CHASSIS ARRANGEMENT (322-6115 N/S)
PART OF 322-6112-Page 1

FRAME AND BODY

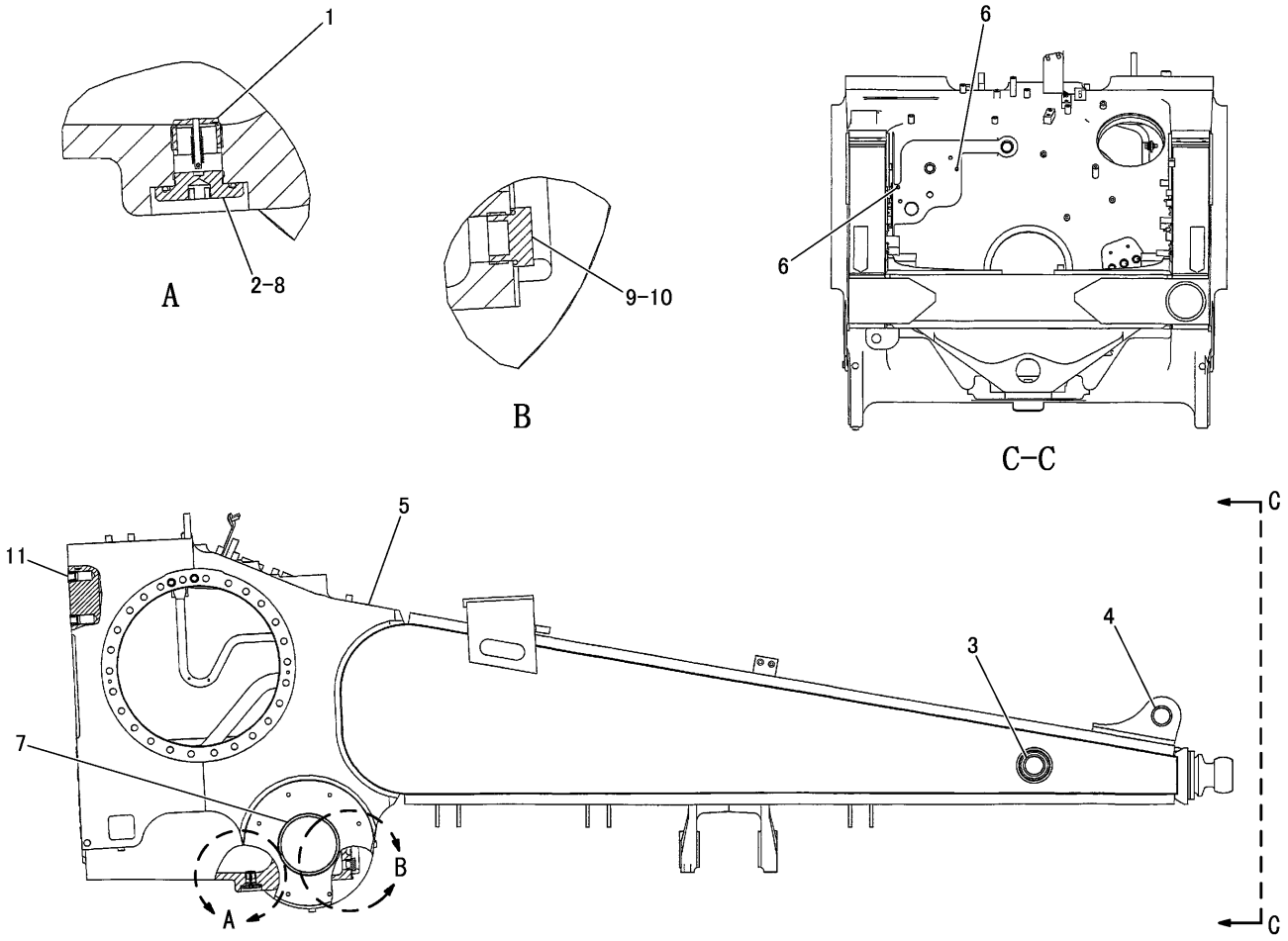

NOTE	№	PART NO.	QTY	PART NAME	NOTE	№	PART NO.	QTY	PART NAME
	1	106-8186	1	VALVE					
	2	106-8187	1	PLUG					
	3	258-0769	2	BEARING					
	4	258-2303	2	BEARING					
Y	5	273-3961	1	FRAME AND CASE AS					
	6	1J-8668	2	STUD(3/8-16)					
	7	3T-4238	2	BEARING					
	8	6F-0711	1	SEAL					
	9	7M-8485	1	SEAL					
	10	9S-4181	1	PLUG					
	11	8T-0232	18	PLUG					

Y-SEPARATE ILLUSTRATION

J155597 X00

FRAME AND CASE GROUP (273-3962 N/S)

PART OF 322-6115-Page 236
REFERENCE:273-3961-Page 238, 239

FRAME AND BODY

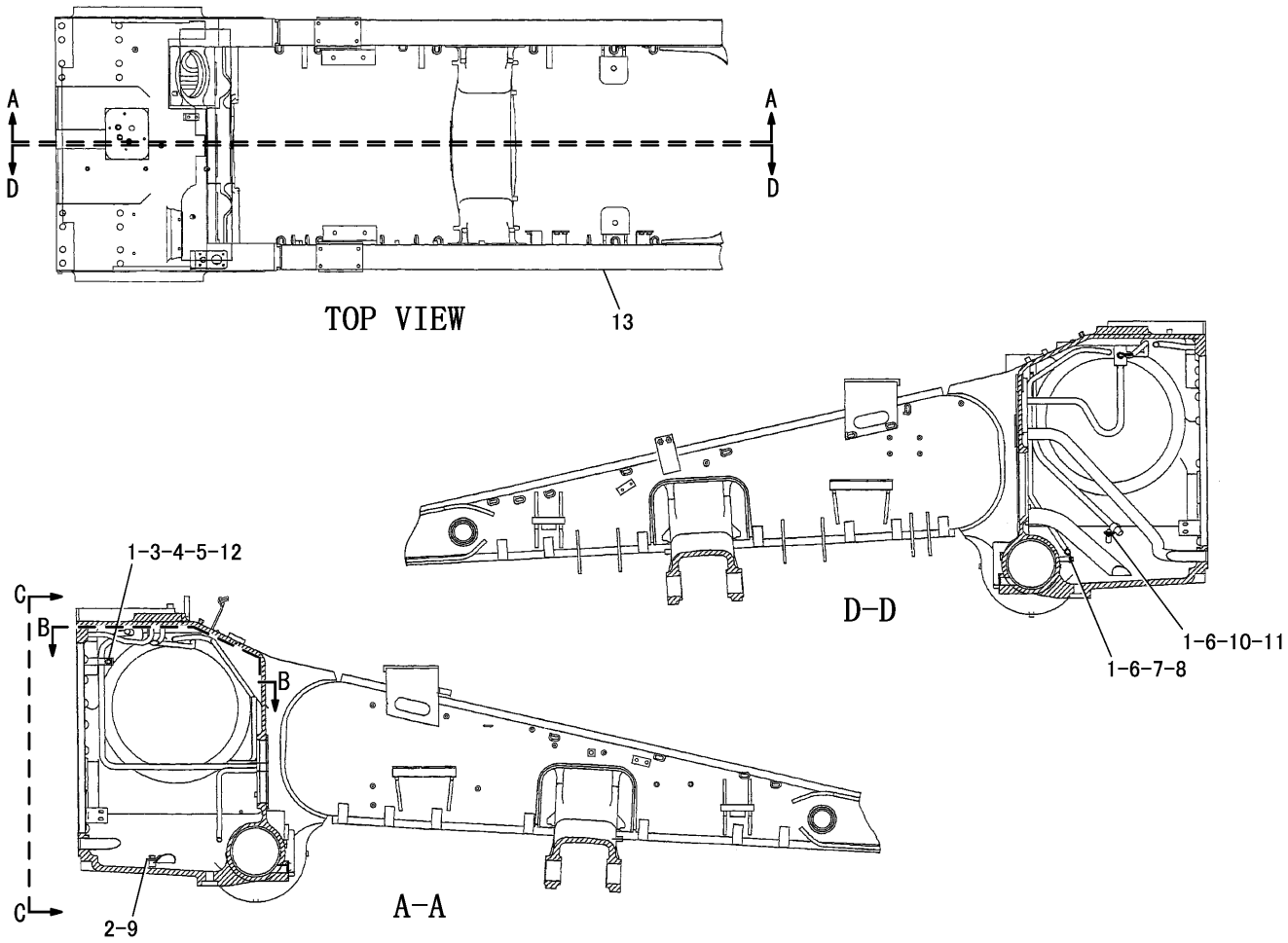

NOTE	№	PART NO.	QTY	PART NAME	NOTE	№	PART NO.	QTY	PART NAME
	1	5P-1075	4	WASHER					
	2	8T-4223	1	WASHER					
	3	0S-1588	1	BOLT(3/8-16)					
	4	7S-3912	1	CLIP(TAB)					
	5	7S-3913	1	CLIP(SLOT)					
	6	5D-0353	2	BOLT(3/8-16)					
	7	5R-0939	1	CLIP(TAB)					
	8	5R-0940	1	CLIP(SLOT)					
	9	7X-3328	1	BOLT(1/2-13)					
	10	7S-3916	1	CLIP(TAB)					
	11	7S-3919	1	CLIP(SLOT)					
	12	2K-4973	1	LOCKNUT(3/8-16)					
Y	13	273-3960	1	CASE AS					

Y-SEPARATE ILLUSTRATION

J155598 X00

273-3961 FRAME AND CASE ASSEMBLY -PART 1 OF 2

PART OF 273-3962-Page 237
REFERENCE:273-3960-Page 240

FRAME AND BODY

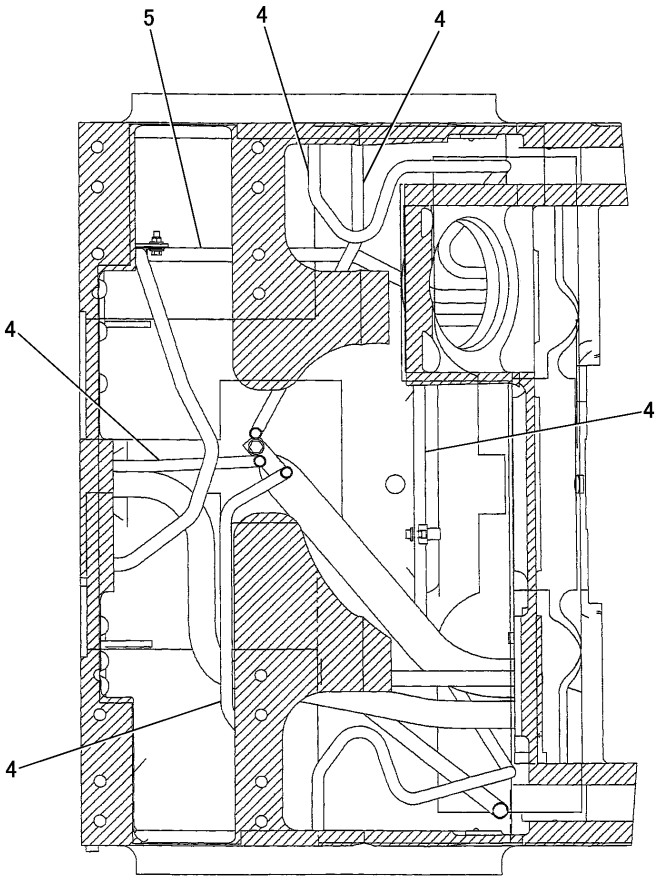

NOTE	№	PART NO.	QTY	PART NAME	NOTE	№	PART NO.	QTY	PART NAME
	1	8T–4223	2	WASHER					
	2	1K–6872	1	LOCKNUT(1/2-13)					
	3	8C–4436	1	BOLT(1/2-13)					
	4	8G–4386	10	SLEEVE					
	5	8G–5247	2	SLEEVE					

J155599 X00

273-3961 FRAME AND CASE ASSEMBLY -PART 2 OF 2

PART OF 273-3962-Page 237

FRAME AND BODY

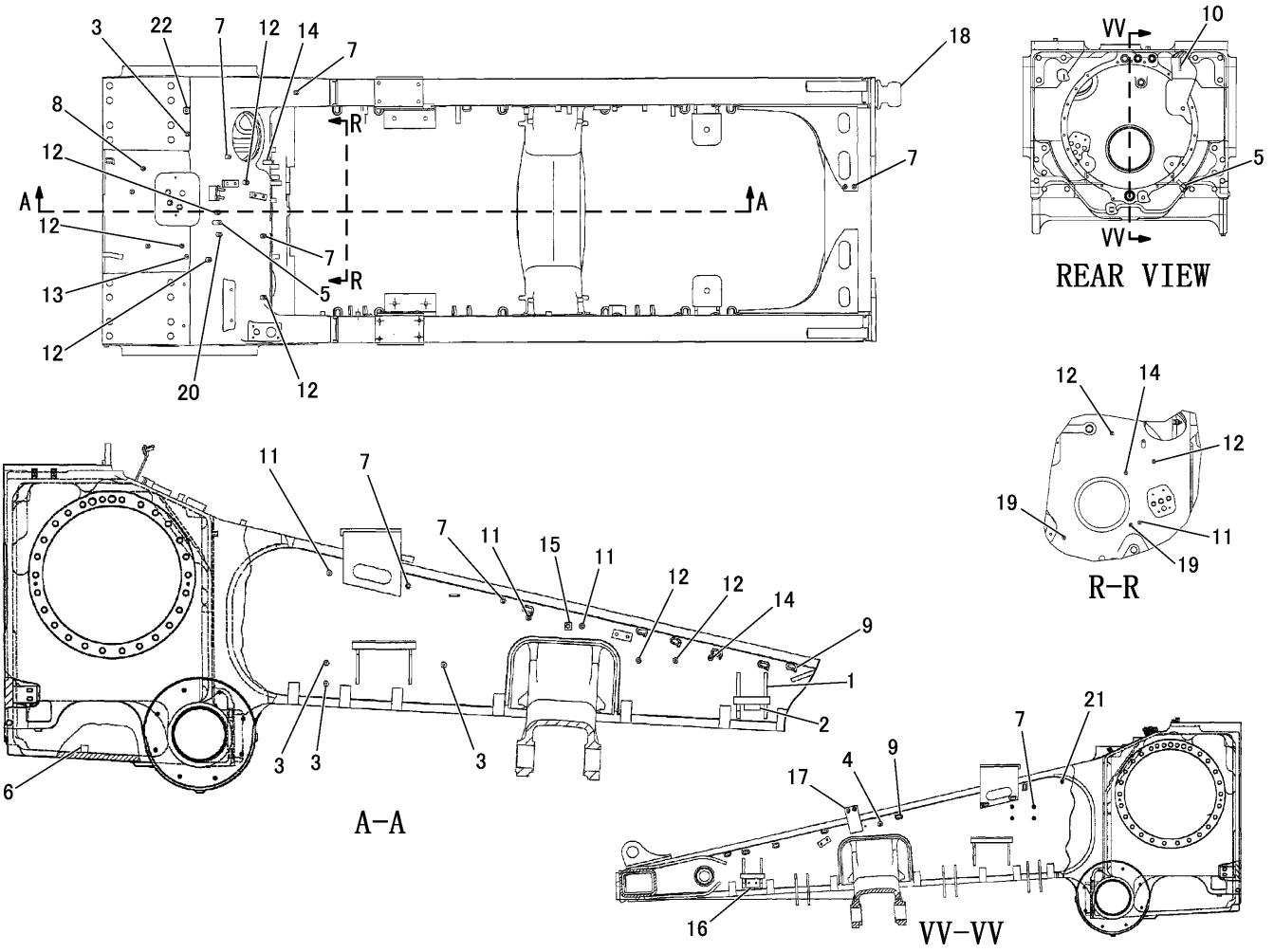

NOTE	№	PART NO.	QTY	PART NAME	NOTE	№	PART NO.	QTY	PART NAME
Z	1	171-4123	2	SUPPORT AS		18	3T-4516	1	TRUNNION AS
	2	3F-5234	1	PLATE			9T-0066	1	TRUNNION
	3	2R-1694	4	SPACER		19	8Y-3795	2	BOSS(M10×1.5)
	4	3W-2764	1	BOSS(3/8-16)		20	9R-2613	1	BOSS(M10×1.5)
	5	8J-4916	2	BOSS(3/8-16)		21	9R-2672	1	BOSS(M10×1.5)
	6	5H-9394	1	BOSS(1/2-13)		22	9G-0028	1	BOSS AS(3/8-16)
	7	8F-9836	11	LUG			4K-2543	1	BOSS(3/8-16)
	8	3G-2415	1	BOSS(3/8-16)			8S-1783	1	PLATE
	9	7T-1099	15	LINK					
	10	4V-7231	1	PLATE					
	11	4D-7529	5	BOSS(3/8-16)					
	12	8D-3508	9	BOSS(3/8-16)					
	13	4D-9376	1	BOSS(3/8-16)					
	14	8J-1196	3	LUG					
Z	15	180-5045	1	BOSS AS					
		8S-1783	1	PLATE					
	16	8V-9468	1	BLOCK					
	17	204-0301	1	PLATE AS					
		1F-0748	2	NUT(1/2-13)(WELD)					

Z-NOT SERVICED SEPARATELY

J155600 X02

FRAME AND CASE ASSEMBLY (273-3960 N/S)
PART OF 273-3961-Page 238

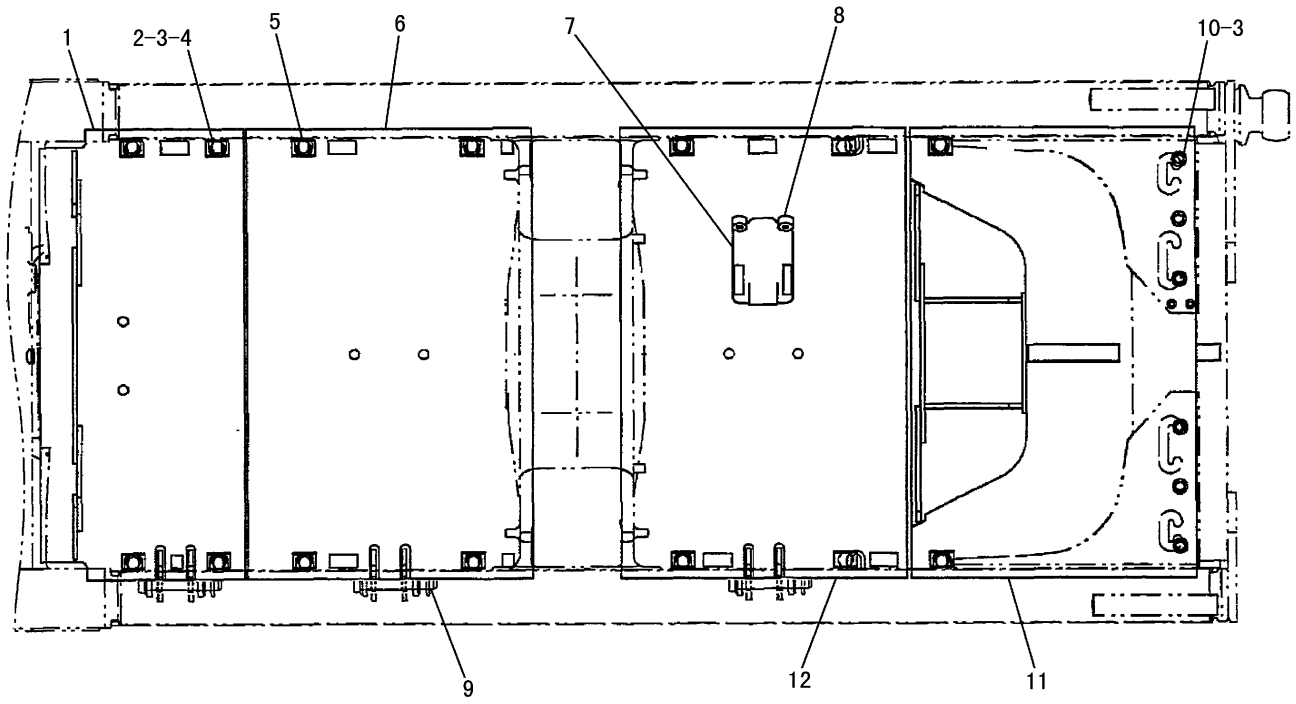

BOTTOM VIEW

NOTE	№	PART NO.	QTY	PART NAME	NOTE	№	PART NO.	QTY	PART NAME
	1	6T-4219	1	GUARD AS					
	2	8T-8925	14	BOLT(3/4-10)					
	3	7X-0582	20	WASHER					
	4	6V-8182	14	LOCKNUT(3/4-10)					
	5	3T-2747	14	RETAINER					
	6	161-4463	1	GUARD AS					
	7	6Y-7236	1	COVER AS					
	8	7X-3325	2	BOLT(1/2-13)					
		5P-1076	2	WASHER					
	9	191-8283	3	PIN					
		3B-4640	3	COTTER PIN					
		8C-6913	6	WASHER					
	10	7X-0365	6	BOLT(3/4-10)					
	11	190-8405	1	GUARD AS					
	12	161-4464	1	GUARD AS					

J118291 X02

BOTTOM GUARD GROUP (161-4465 N/S)
PART OF 322-6115-Page 236

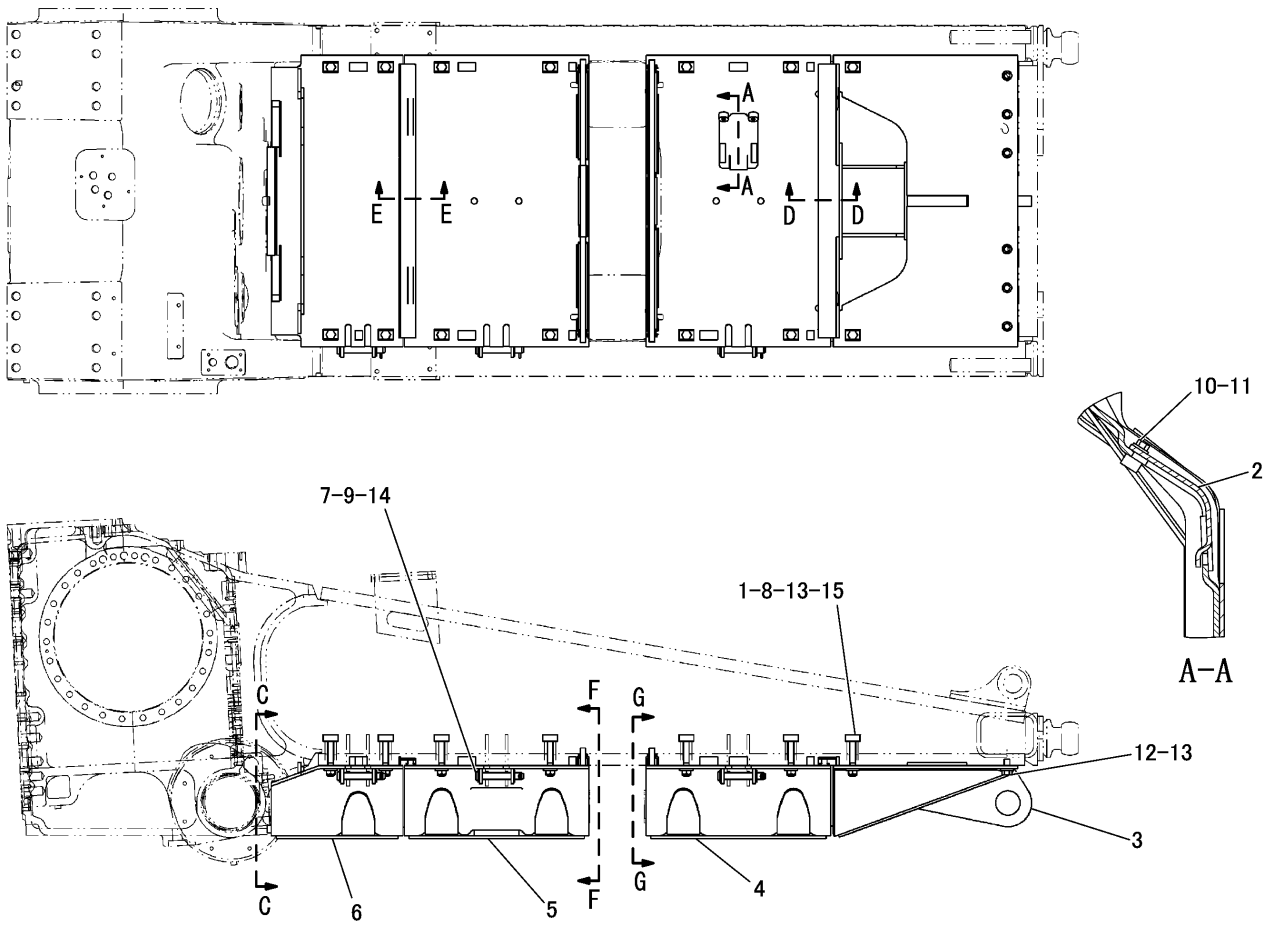

NOTE	№	PART NO.	QTY	PART NAME	NOTE	№	PART NO.	QTY	PART NAME
	1	3T-2747	14	RETAINER					
	2	6Y-7236	1	COVER AS					
	3	185-9358	1	GUARD AS					
	4	340-1645	1	GUARD AS					
		7K-3673	2	BOSS(1/2-13)					
	5	340-1646	1	GUARD AS					
	6	340-1648	1	GUARD AS					
	7	191-8283	3	PIN					
	8	1K-6870	14	LOCKNUT(3/4-10)					
	9	3B-4640	3	COTTER PIN					
	10	5K-7143	2	BOLT(1/2-13)					
	11	5P-1076	2	WASHER					
	12	7X-0365	6	BOLT(3/4-10)					
	13	7X-0582	20	WASHER					
	14	8C-6913	6	WASHER					
	15	8T-8925	14	BOLT(3/4-10)					

J155900 X00

BOTTOM GUARD GROUP (240-9565 N/S) -HEAVY DUTY-PART 1 OF 2
AN ATTACHMENT

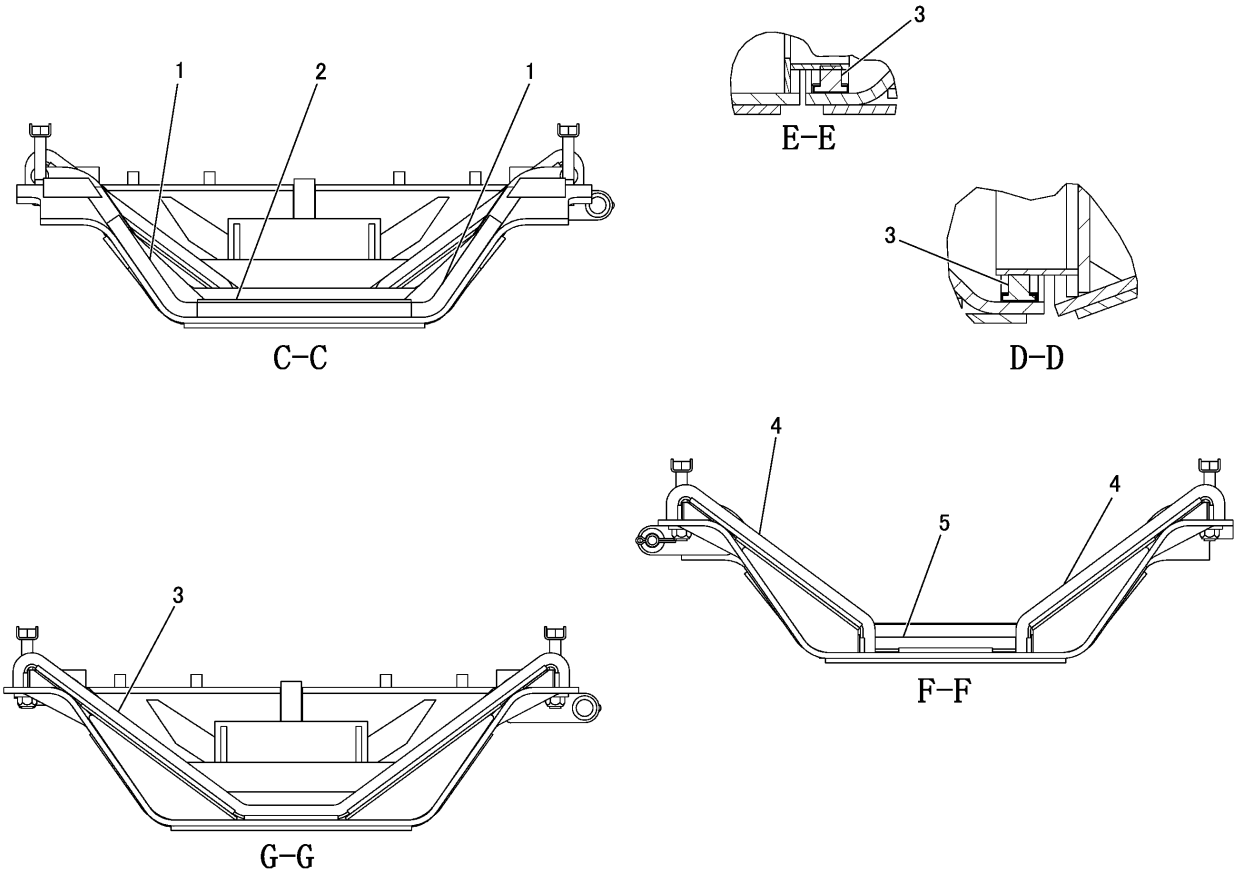

NOTE	№	PART NO.	QTY	PART NAME	NOTE	№	PART NO.	QTY	PART NAME
D	1	5P−5649		SEAL---0.235m(×2)					
D	2	5P−5649		SEAL---0.365m					
D	3	5P−7514		SEAL---1.14m(×3)					
D	4	5P−7514		SEAL---0.455m(×2)					
D	5	5P−7514		SEAL---0.24m					

D-ORDER BY THE m

J155901 X00

BOTTOM GUARD GROUP (240-9565 N/S) -HEAVY DUTY-PART 2 OF 2
AN ATTACHMENT

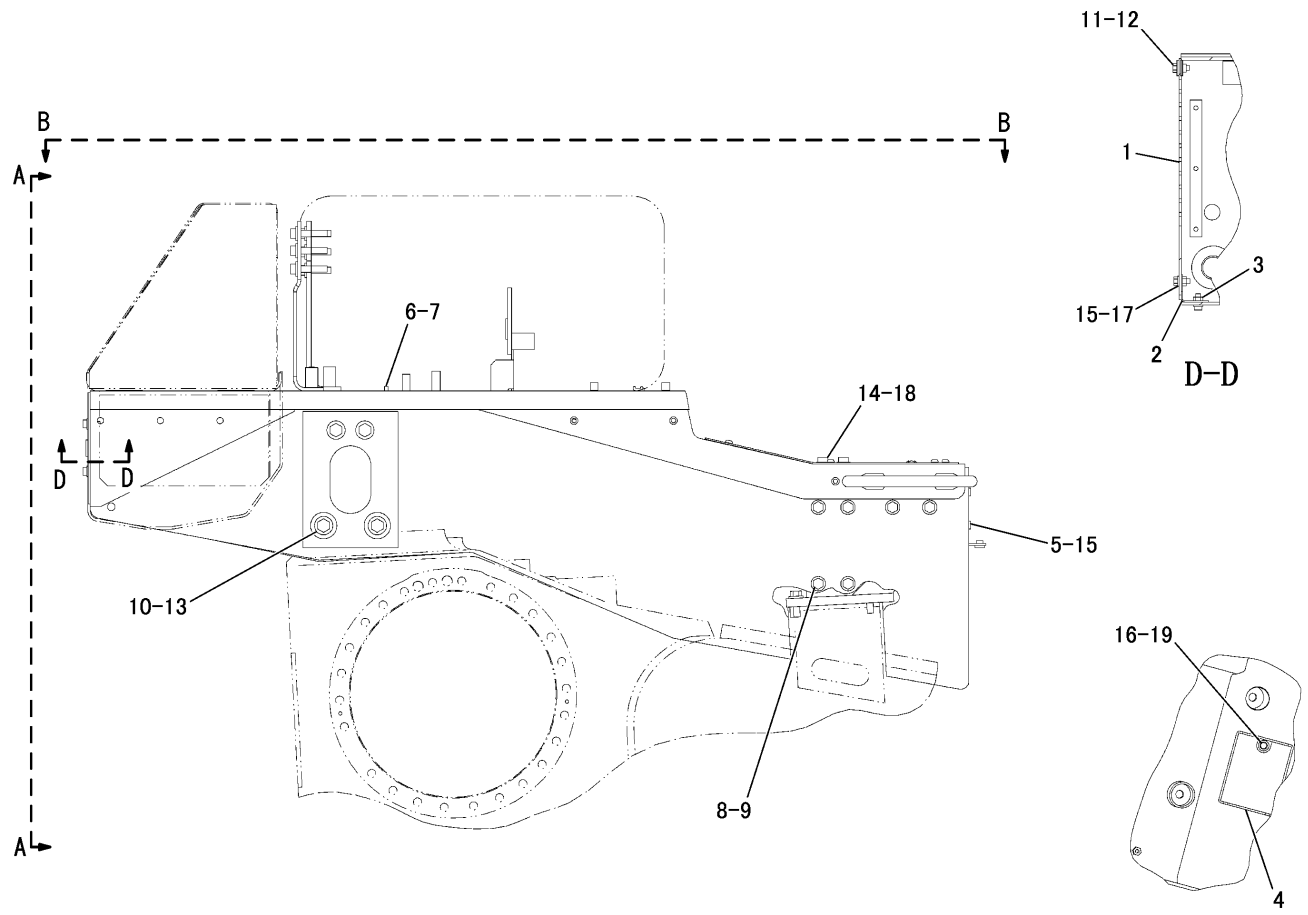

SEE PART 2 OF 3 FOR A-A
SEE PART 3 OF 3 FOR B-B

NOTE	№	PART NO.	QTY	PART NAME	NOTE	№	PART NO.	QTY	PART NAME
	1	6Y-0563	2	DOOR					
	2	6Y-7233	2	BRACKET AS					
	3	1F-0748	4	NUT(1/2-13)(WELD)					
	4	7T-9280	1	PLATE AS					
	5	5C-6565	6	BOLT(1/2-13)					
	6	5P-1075	3	WASHER					
	7	5S-7379	3	BOLT(3/8-16)					
	8	7X-0349	12	BOLT(5/8-11)					
	9	7X-0515	12	WASHER					
	10	7X-0582	8	WASHER					
	11	7X-0618	2	WASHER					
	12	7X-3327	2	BOLT(1/2-13)					
	13	8C-6857	8	BOLT(3/4-10)					
	14	8T-4122	4	WASHER					
	15	8T-4223	14	WASHER					
	16	8T-4896	1	WASHER					
	17	8T-8917	8	BOLT(1/2-13)					
	18	8T-9393	4	BOLT(5/8-11)					
	19	9B-7237	1	BOLT(3/8-16)					

J155602 -02

FENDER GROUP (222-8719 N/S) -PART 1 OF 3
PART OF 322-6115-Page 236

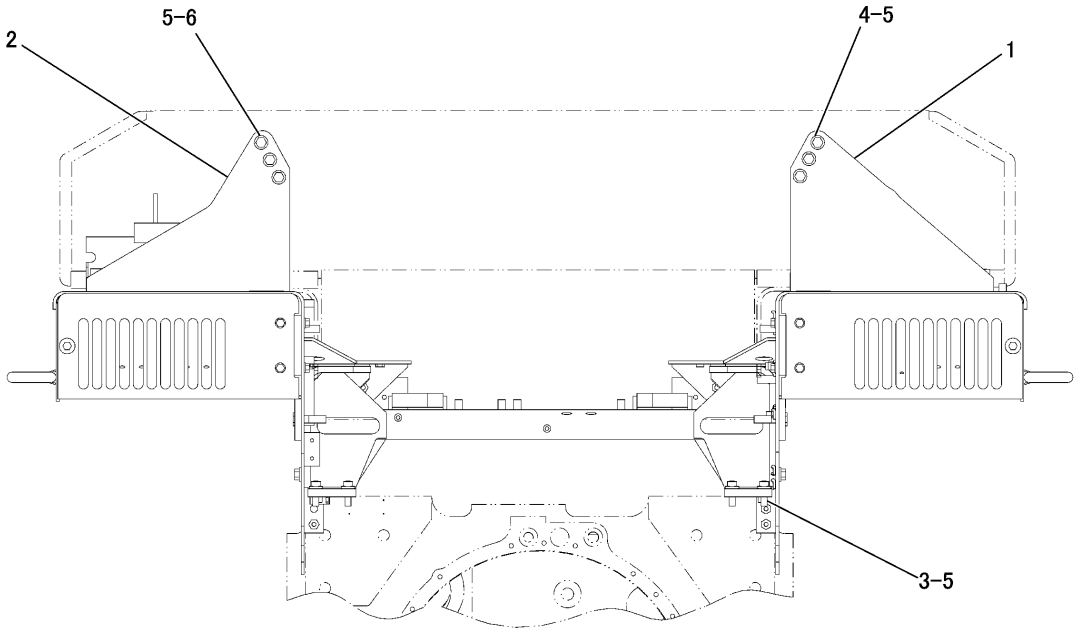

A-A

NOTE	№	PART NO.	QTY	PART NAME	NOTE	№	PART NO.	QTY	PART NAME
	1	169-2692	1	PLATE AS					
		7T-8777	1	PLATE(RH)					
	2	169-2693	1	PLATE AS					
		6T-6581	1	PLATE(LH)					
	3	7X-0346	8	BOLT(5/8-11)					
	4	7X-0349	3	BOLT(5/8-11)					
	5	7X-0515	14	WASHER					
	6	8T-6871	3	BOLT(5/8-11)					

J155603 -02

FENDER GROUP (222-8719 N/S) -PART 2 OF 3
PART OF 322-6115-Page 236

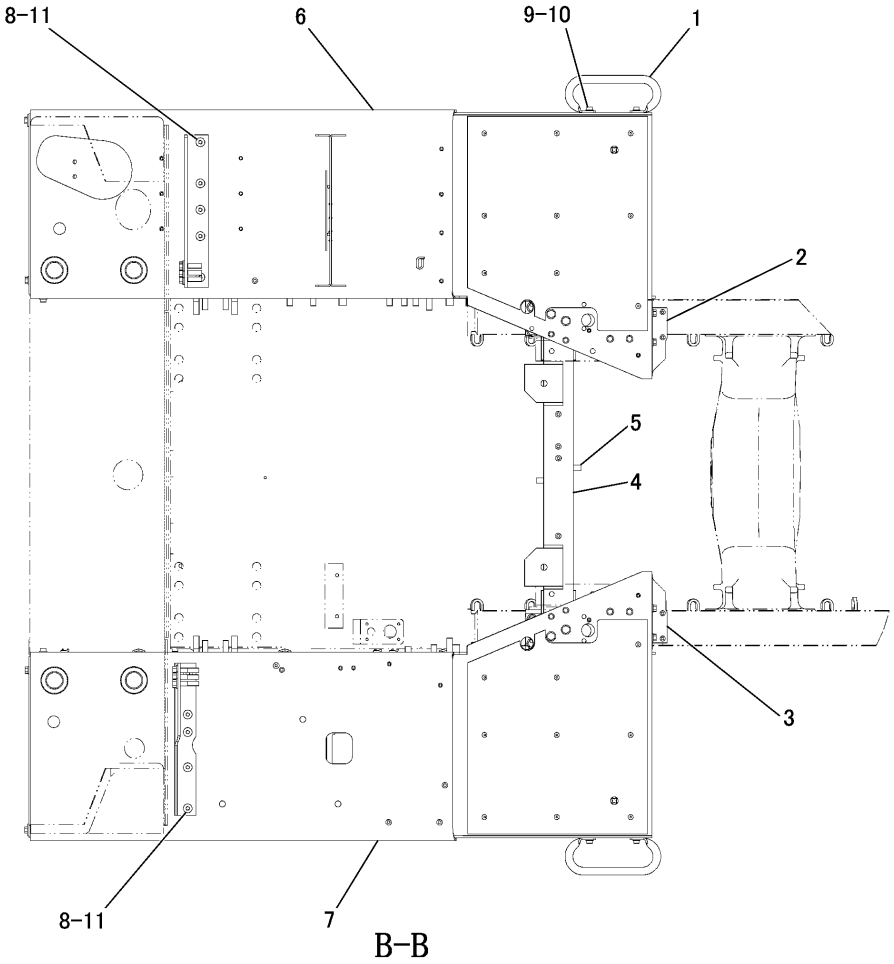

NOTE	№	PART NO.	QTY	PART NAME	NOTE	№	PART NO.	QTY	PART NAME
	1	3W-3896	2	HANDLE					
	2	167-1138	1	PLATE AS(LH)					
	3	167-1140	1	PLATE AS(RH)					
	4	168-8588	1	SUPPORT AS					
		7T-1099	4	LINK					
	5	8D-3508	7	BOSS(3/8-16)					
Y	6	230-5845	1	FENDER GROUP(LH)					
Y	7	230-5846	1	FENDER GROUP(RH)					
	8	5P-1076	10	WASHER					
	9	8C-4436	4	BOLT(1/2-13)					
	10	8T-4223	4	WASHER					
	11	8T-9389	10	BOLT(1/2-13)					

Y-SEPARATE ILLUSTRATION

J155604 -02

FENDER GROUP (222-8719 N/S) -PART 3 OF 3

PART OF 322-6115-Page 236

REFERENCE:230-5845-Page 247 230-5846-Page 248

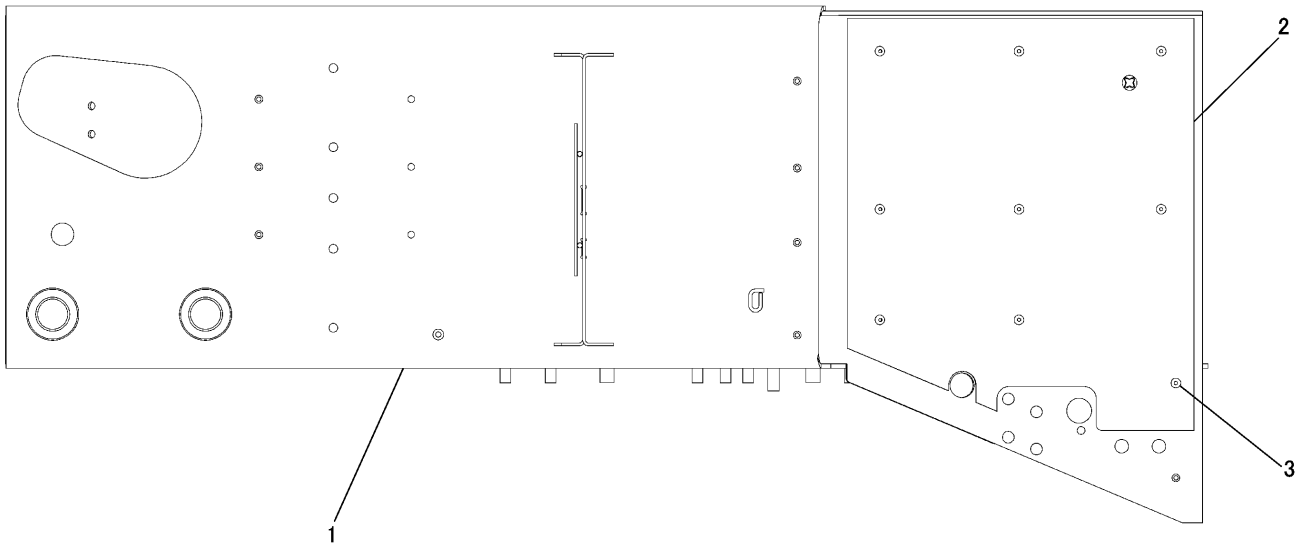

NOTE	№	PART NO.	QTY	PART NAME	NOTE	№	PART NO.	QTY	PART NAME
Y	1	230-1502	1	FENDER AS(LH)					
	2	231-2913	1	PLATE(LH)					
	3	6J-0488	9	SCREW(3/8-16)					

Y-SEPARATE ILLUSTRATION

J155605 -05

FENDER GROUP (230-5845 N/S) -LH

PART OF 222-8719-Page 246
REFERENCE:230-1502-Page 249

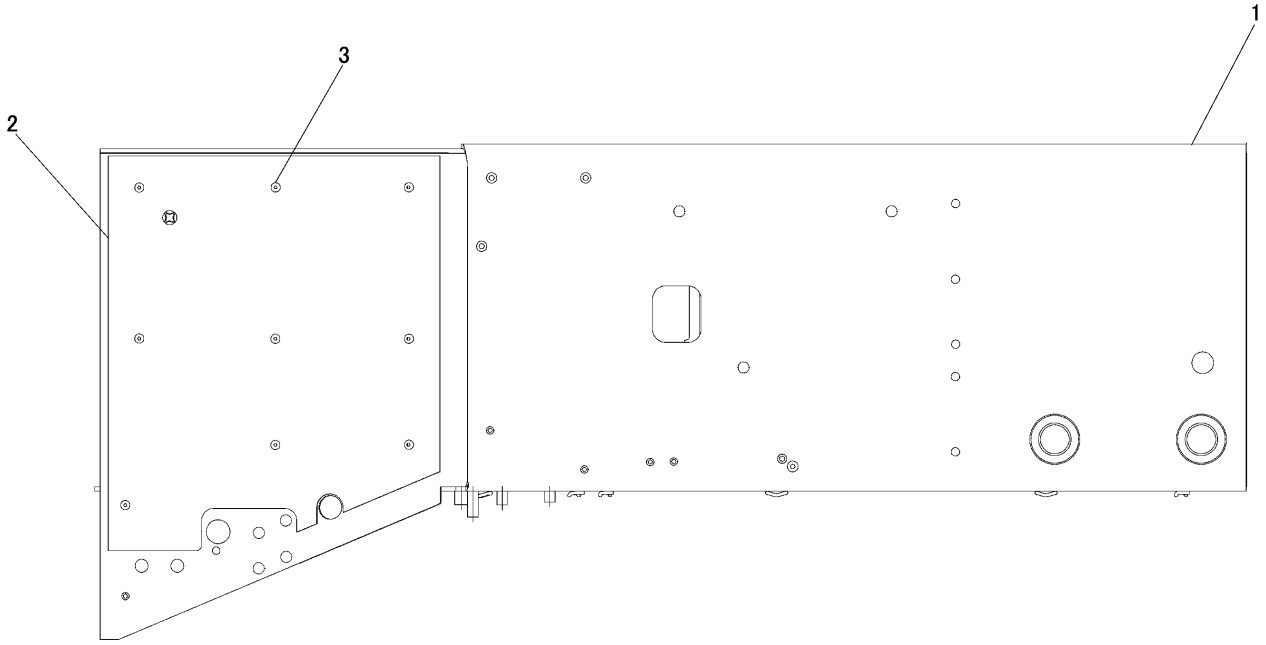

NOTE	№	PART NO.	QTY	PART NAME	NOTE	№	PART NO.	QTY	PART NAME
Y	1	230-1503	1	FENDER AS(RH)					
	2	231-2914	1	PLATE(RH)					
	3	6J-0488	9	SCREW(3/8-16)					

Y-SEPARATE ILLUSTRATION

J155607 -07

FENDER GROUP (230-5846 N/S) -RH

PART OF 222-8719-Page 246
REFERENCE:230-1503-Page 250

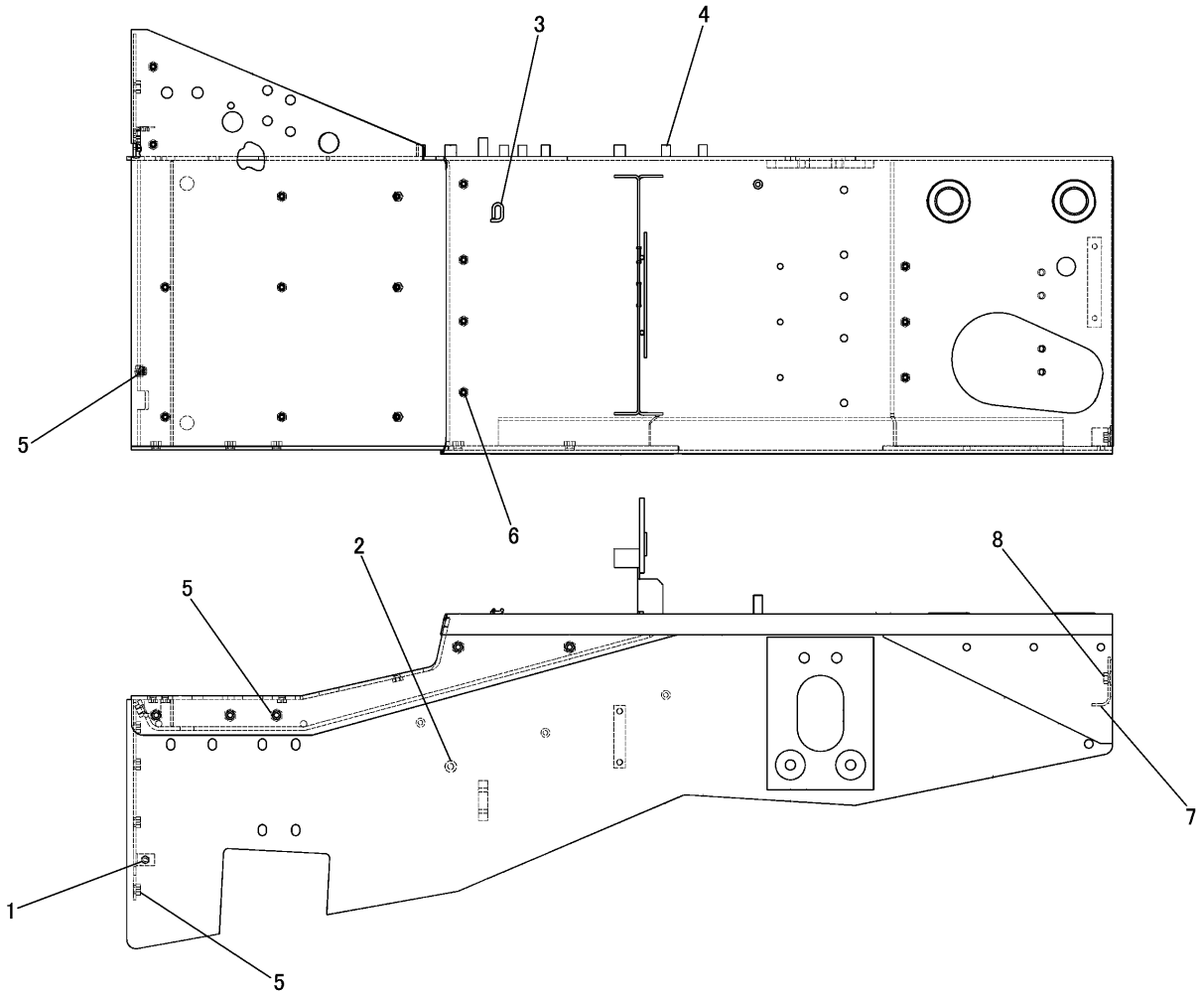

NOTE	Nº	PART NO.	QTY	PART NAME	NOTE	Nº	PART NO.	QTY	PART NAME
	1	9F-2978	1	NUT(3/8-16)(WELD)					
	2	5H-9394	1	BOSS(1/2-13)					
	3	7T-1099	1	LINK					
	4	8D-3508	6	BOSS(3/8-16)					
	5	8T-5911	11	NUT(1/2-13)(WELD)					
	6	8T-5912	17	NUT(3/8-16)(WELD)					
Z	7	8E-4265	1	PLATE AS					
	8	1F-0748	1	NUT(1/2-13)(WELD)					

Z-NOT SERVICED SEPARATELY

J155606 X00

230-1502 FENDER ASSEMBLY -LH
PART OF 230-5845-Page 247

FRAME AND BODY

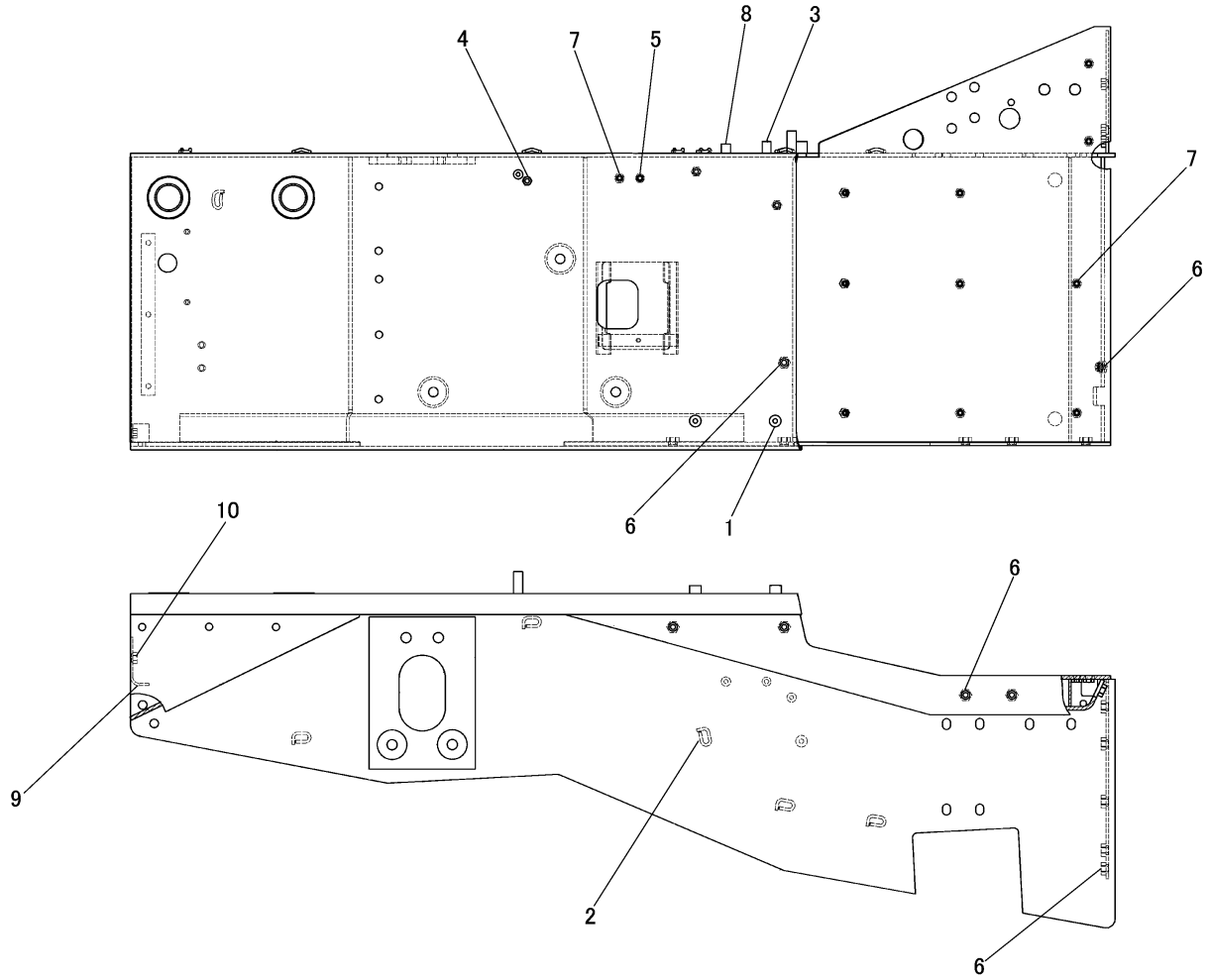

NOTE	№	PART NO.	QTY	PART NAME	NOTE	№	PART NO.	QTY	PART NAME
	1	6K-2198	2	BOSS					
	2	7T-1099	8	LINK					
	3	8D-3508	1	BOSS(3/8-16)					
	4	8K-7186	1	NUT(7/16-14)					
	5	8T-3490	2	NUT(M10×1.5)(WELD)					
	6	8T-5911	13	NUT(1/2-13)(WELD)					
	7	8T-5912	12	NUT(3/8-16)(WELD)					
	8	9R-2672	1	BOSS(M10×1.5)					
Z	9	6Y-0562	1	PLATE AS					
	10	1F-0748	1	NUT(1/2-13)(WELD)					

Z-NOT SERVICED SEPARATELY

J155608 X01

230-1503 FENDER ASSEMBLY -RH

PART OF 230-5846-Page 248

FRAME AND BODY

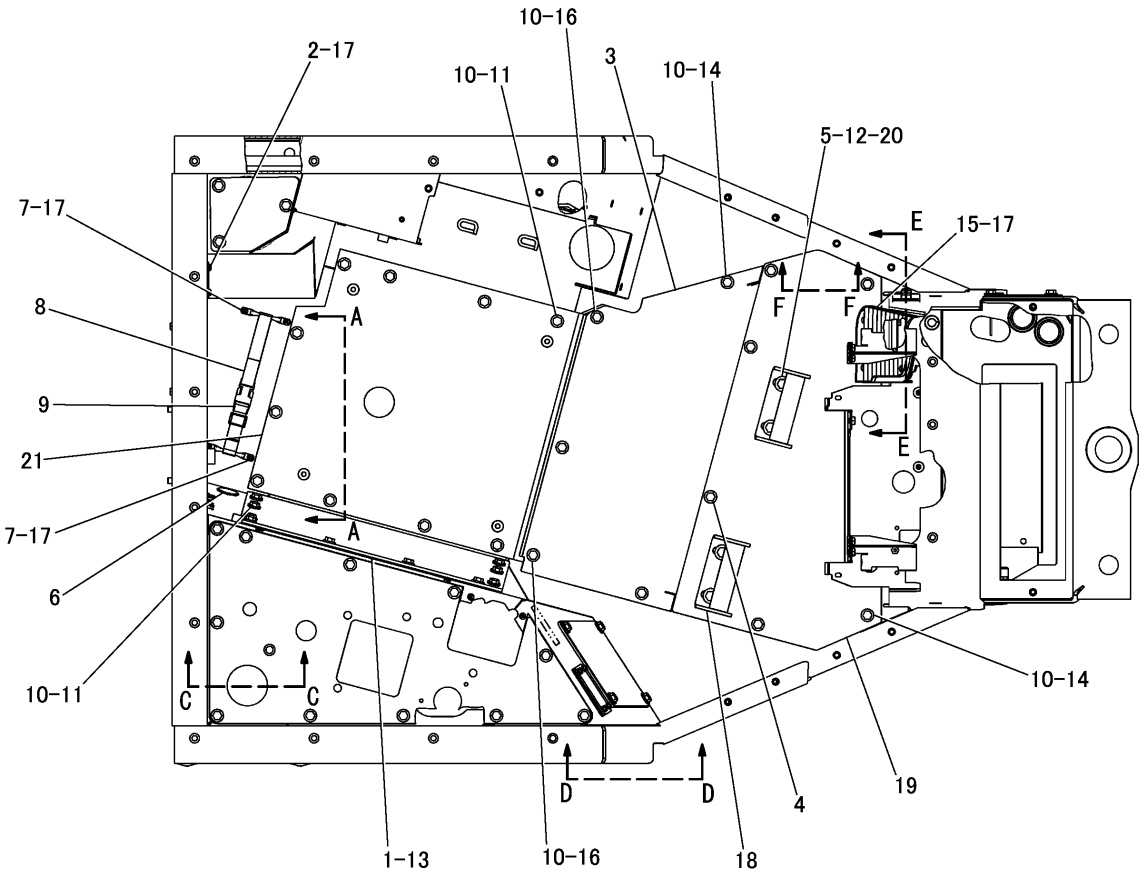

SEE PART 3 OF 3 FOR A-A, C-C, D-D, E-E AND F-F

NOTE	№	PART NO.	QTY	PART NAME	NOTE	№	PART NO.	QTY	PART NAME
	1	237-4269	1	PLATE AS		19	241-4343	1	FLOOR PLATE AS
	2	205-2203	1	PLATE			184-3289	1	PANEL
	3	241-4345	1	FLOORPLATE AS			237-0205	1	FLOOR PLATE AS
		237-0204	1	FLOORPLATE AS		20	8T-3597	4	NUT(M12×1.75)(WELD)
	4	8T-3490	2	NUT(M10×1.5)(WELD)		21	241-4346	1	PLATE AS
	5	5P-1076	4	WASHER					
	6	3E-4044	1	PLUG					
	7	6Y-0206	2	RETAINER					
	8	7G-4824	1	STRAP					
	9	8E-7791	1	STRAP					
	10	7X-7729	33	WASHER					
	11	8T-4136	20	BOLT(M10×1.5)					
	12	8T-4139	4	BOLT(M12×1.75)					
	13	161-3958	1	GASKET					
	14	8T-4195	11	BOLT(M10×1.5)					
	15	165-6857	1	PAD AS					
	16	8T-4196	2	BOLT(M10×1.5)					
	17	184-0982	12	SCREW(M6×1)					
	18	185-2076	2	SUPPORT AS					

J146775 X03

PLATFORM GROUP (220-2800 N/S) -EROPS-PART 1 OF 3
PART OF 322-6115-Page 236

FRAME AND BODY

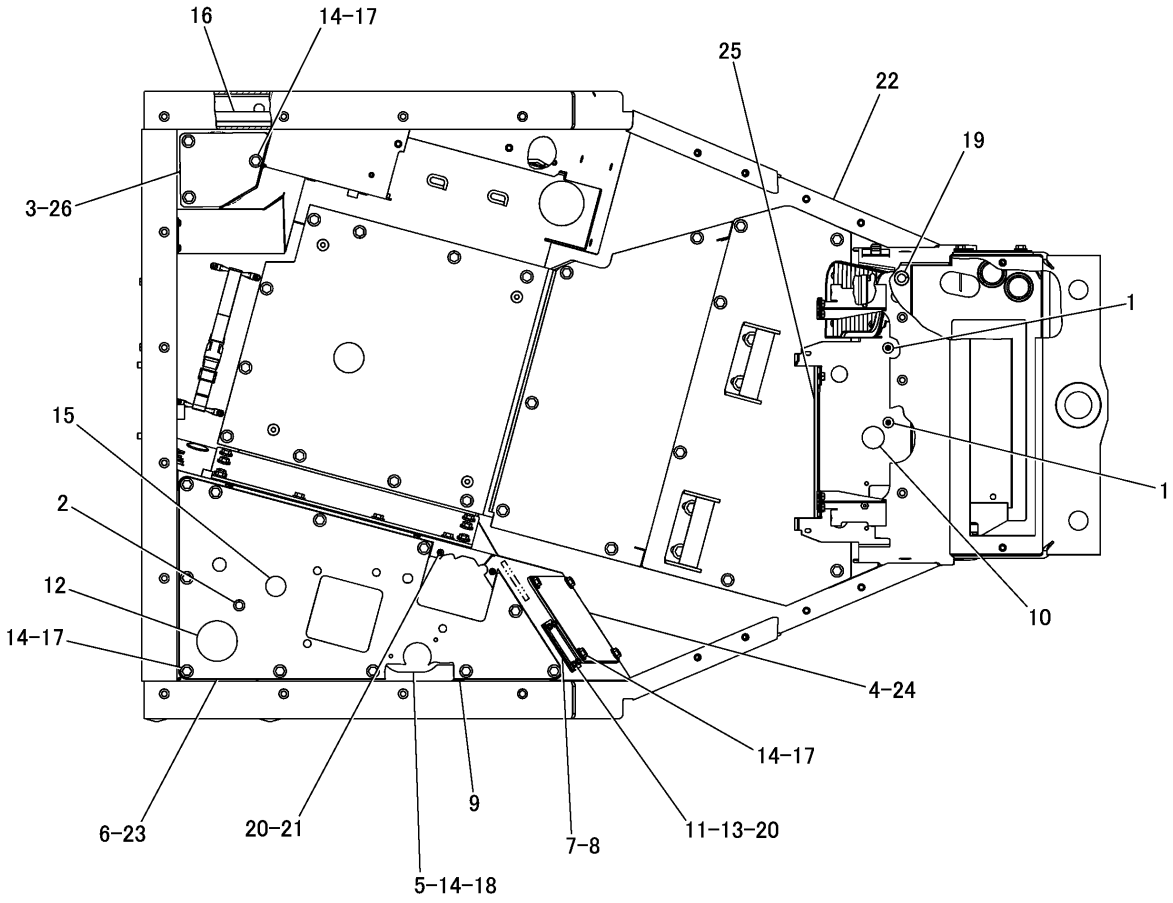

NOTE	№	PART NO.	QTY	PART NAME	NOTE	№	PART NO.	QTY	PART NAME
	1	4H-0407	2	PLUG		17	8T-4136	18	BOLT(M10×1.5)
	2	5P-7509	1	PLUG		18	8T-4137	3	BOLT(M10×1.5)
	3	241-4348	1	GASKET		19	9D-3769	1	GROMMET
	4	241-4349	1	GASKET		20	9X-8256	10	WASHER
	5	242-8405	1	BRACKET AS		21	208-0375	2	SCREW(M6×1)
		7T-1099	2	LINK	Y	22	225-9480	1	PLATFORM GROUP
		8T-3490	3	NUT(M10×1.5)(WELD)		23	237-4266	1	PLATE AS
		9R-2613	1	BOSS(M10×1.5)			7T-1099	7	LINK
	6	242-8407	1	GASKET		24	237-4268	1	COVER AS
	7	243-5168	1	GASKET	E	25	3E-3892		SEAL---30.3cm
	8	243-5170	1	COVER AS		26	237-4270	1	PLATE AS
		9X-8256	4	WASHER					
	9	8C-5226	1	PLUG					
	10	8T-4943	1	PLUG					
	11	5C-2890	4	NUT(M6×1)					
	12	117-9966	1	PLUG					
	13	6V-7357	4	BOLT(M6×1)					
	14	7X-7729	21	WASHER					
	15	8P-6364	1	PLUG					
	16	170-0251	2	STRIP					

E-ORDER BY THE cm
Y-SEPARATE ILLUSTRATION

J146776 X03

PLATFORM GROUP (220-2800 N/S) -EROPS-PART 2 OF 3
PART OF 322-6115-Page 236
REFERENCE:225-9480-Page 254

FRAME AND BODY

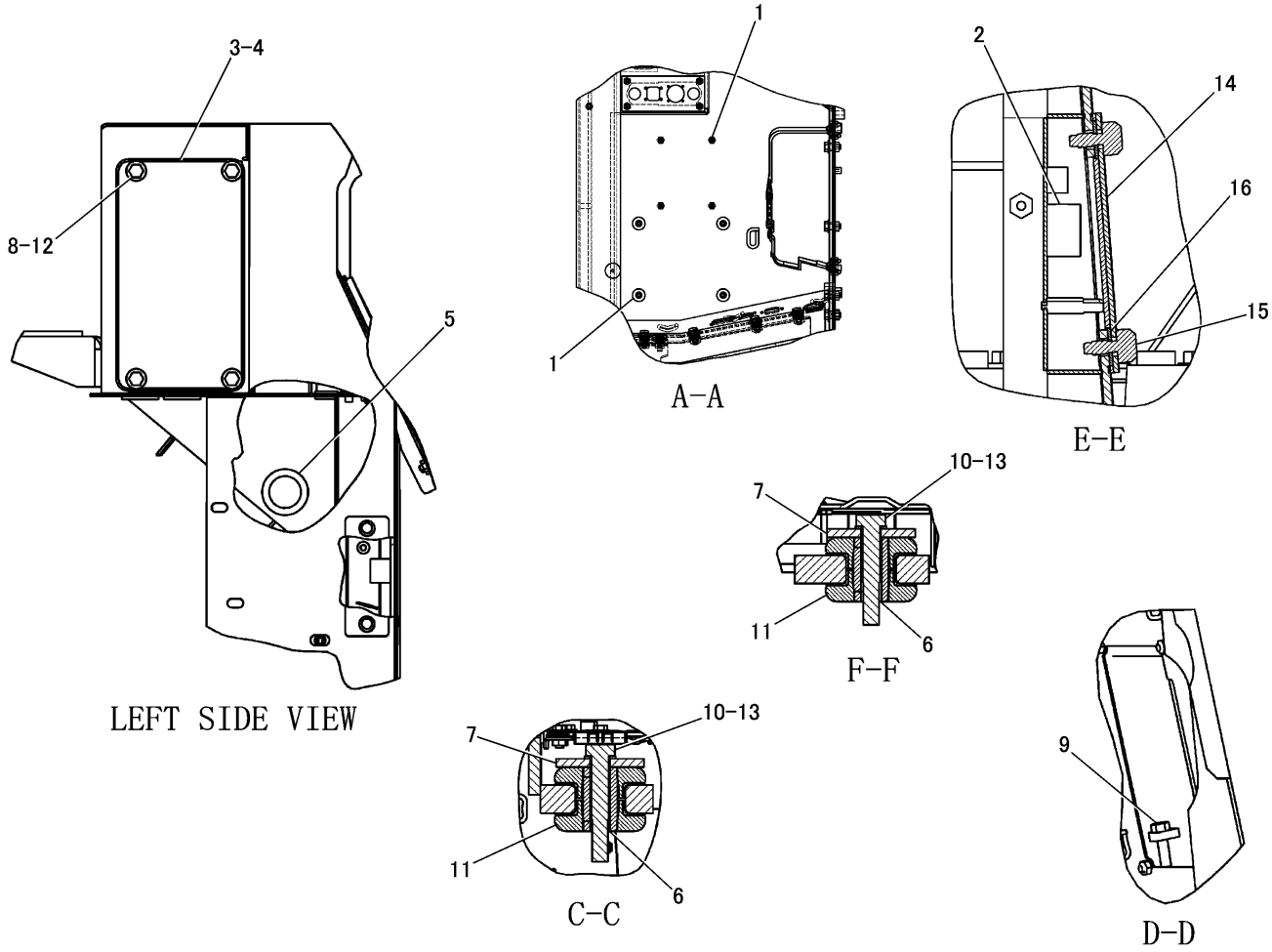

NOTE	№	PART NO.	QTY	PART NAME	NOTE	№	PART NO.	QTY	PART NAME
	1	4H-0407	8	PLUG					
D	2	5P-9909		SEAL---0.03m					
	3	6T-4556	1	COVER					
	4	6T-4557	1	GASKET					
	5	6V-1790	3	PLUG					
	6	185-3666	4	SLEEVE					
	7	6T-8714	4	WASHER					
	8	7X-7729	4	WASHER					
	9	164-0758	1	BOLT(9/16-18)					
	10	8T-4167	4	WASHER					
	11	117-8131	8	MOUNT AS					
	12	8T-4196	4	BOLT(M10×1.5)					
	13	8T-4649	4	BOLT(M24×3)					
	14	239-5113	1	COVER AS					
	15	2G-0391	2	SCREW					
	16	131-5492	2	RETAINER					

D-ORDER BY THE m

J146777 X03

FRAME AND BODY

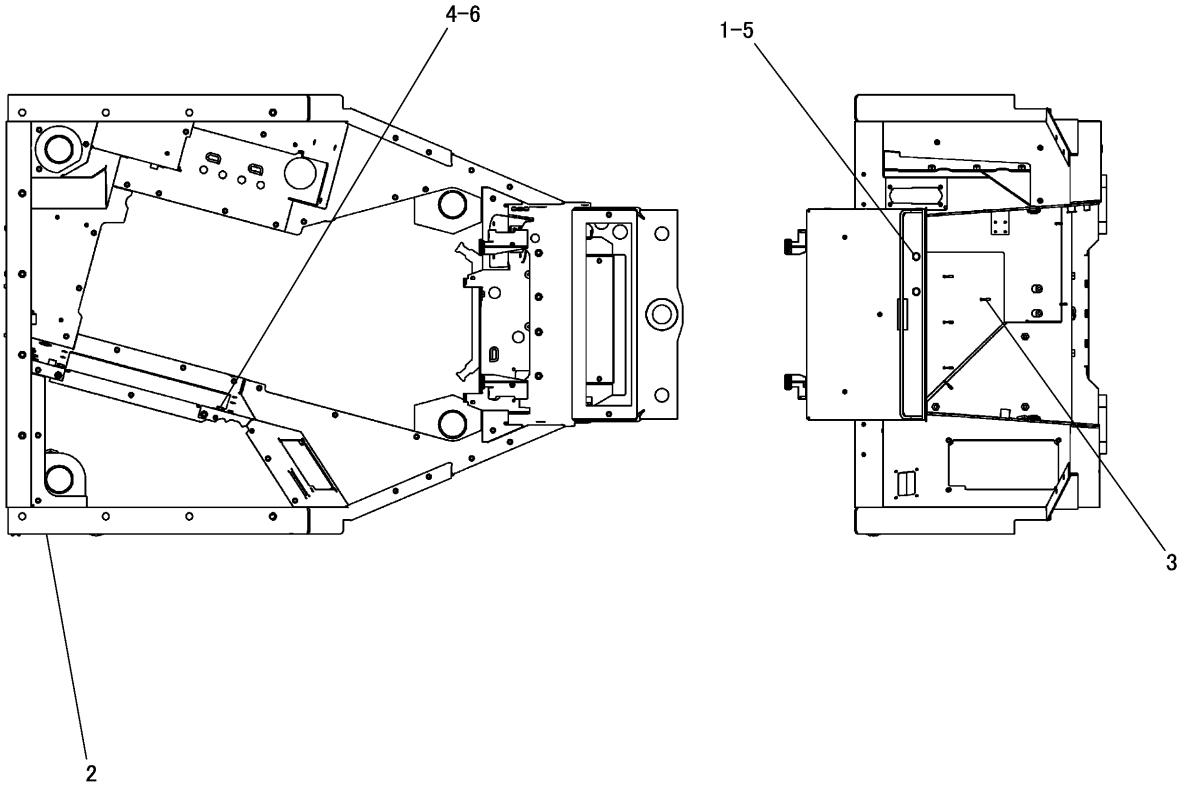

NOTE	№	PART NO.	QTY	PART NAME	NOTE	№	PART NO.	QTY	PART NAME
	1	8T-4137	2	BOLT(M10×1.5)					
Y	2	229-6640	1	PLATFORM AS					
J	3	172-8600	7	CAP					
	4	7X-7729	2	WASHER					
	5	8T-4121	2	WASHER					
	6	8T-4136	2	BOLT(M10×1.5)					

J-REMOVE CAPS WHEN INSTALLING LINER
Y-SEPARATE ILLUSTRATION

J147366 X02

PLATFORM GROUP (225-9480 N/S)
PART OF 220-2800-Page 252
REFERENCE:229-6640-Page 255

FRAME AND BODY

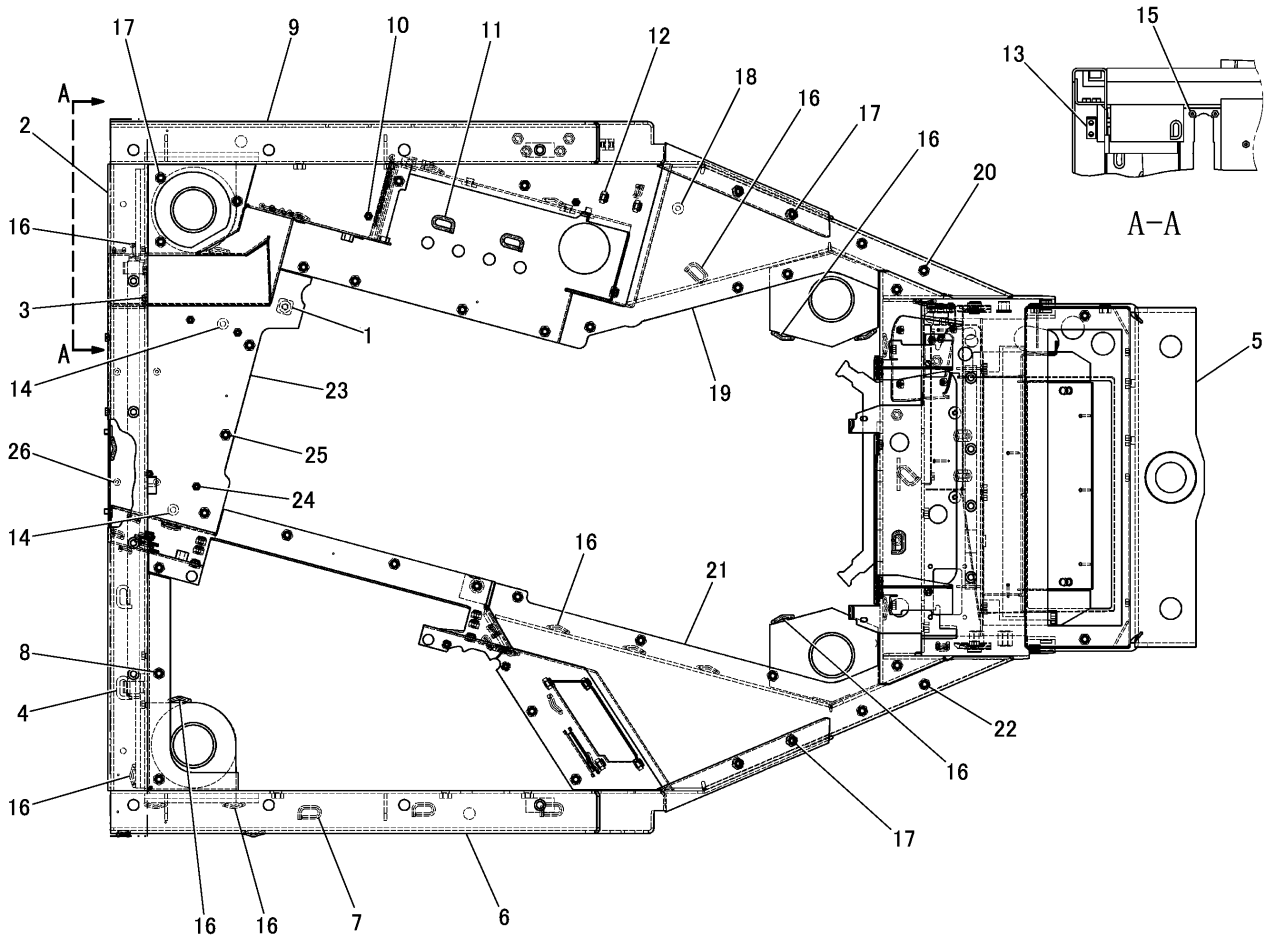

NOTE	№	PART NO.	QTY	PART NAME
Z	1	8Y-4083	1	BOSS AS
		8S-1783	1	PLATE
Z	2	159-3838	1	PLATE AS
	3	6V-9632	4	NUT(M6×1)(WELD)
	4	7T-1099	2	LINK
Y	5	224-2740	1	DASH AS
Z	6	241-4340	1	CONSOLE AS(RH)
	7	7T-1099	14	LINK
	8	8T-3490	23	NUT(M10×1.5)(WELD)
Z	9	241-4350	1	CONSOLE AS(LH)
	10	6V-9632	2	NUT(M6×1)(WELD)
	11	7T-1099	12	LINK
	12	8T-3490	20	NUT(M10×1.5)(WELD)
	13	6C-6761	1	PLATE
	14	4D-9376	2	BOSS(3/8-16)
	15	6V-9632	4	NUT(M6×1)(WELD)
	16	7T-1099	15	LINK
	17	8T-3490	7	NUT(M10×1.5)(WELD)
	18	9R-2821	1	BOSS(M10×1.5)
Z	19	237-0208	1	PLATE AS
	20	8T-3490	5	NUT(M10×1.5)(WELD)
Z	21	237-0209	1	PLATE AS
	22	8T-3490	5	NUT(M10×1.5)(WELD)
Z	23	241-4337	1	PLATE AS
	24	6V-9632	8	NUT(M6×1)(WELD)
	25	8T-3490	3	NUT(M10×1.5)(WELD)
	26	091-4537	4	SPACER

Y-SEPARATE ILLUSTRATION
Z-NOT SERVICED SEPARATELY

J147367 X06

229-6640 PLATFORM ASSEMBLY
PART OF 225-9480-Page 254
REFERENCE:224-2740-Page 256

FRAME AND BODY

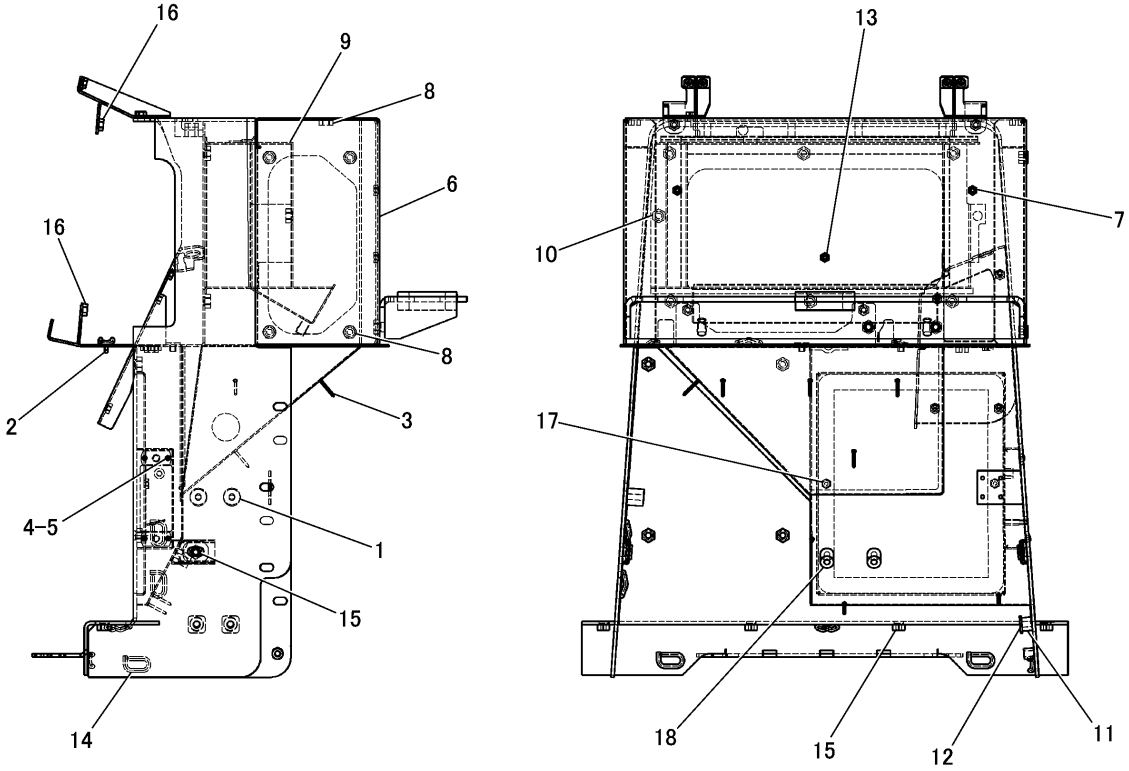

NOTE	№	PART NO.	QTY	PART NAME	NOTE	№	PART NO.	QTY	PART NAME
	1	3Y-7829	2	BOSS(3/8-16)					
	2	5D-9629	1	ROD					
	3	6P-2215	7	PIN					
	4	7K-4201	2	NUT					
	5	7K-6536	4	RIVET					
Z	6	172-8601	1	BOX AS					
	7	6V-9632	3	NUT(M6×1)(WELD)					
	8	8T-3490	6	NUT(M10×1.5)(WELD)					
Z	9	111-4663	1	SUPPORT AS					
	10	8T-3490	1	NUT(M10×1.5)(WELD)					
Z	11	237-2097	2	BOSS AS					
		9R-2821	1	BOSS(M10×1.5)					
	12	8S-1783	1	PLATE					
	13	6V-9632	11	NUT(M6×1)(WELD)					
	14	7T-1099	7	LINK					
	15	8T-3490	19	NUT(M10×1.5)(WELD)					
	16	8T-3612	4	NUT(M8×1.25)(WELD)					
	17	9F-6445	2	NUT(1/4-20)(WELD)					
	18	9R-2613	2	BOSS(M10×1.5)					

Z-NOT SERVICED SEPARATELY

J147420 X02

DASH ASSEMBLY (224-2740 N/S)
PART OF 229-6640-Page 255

FRAME AND BODY

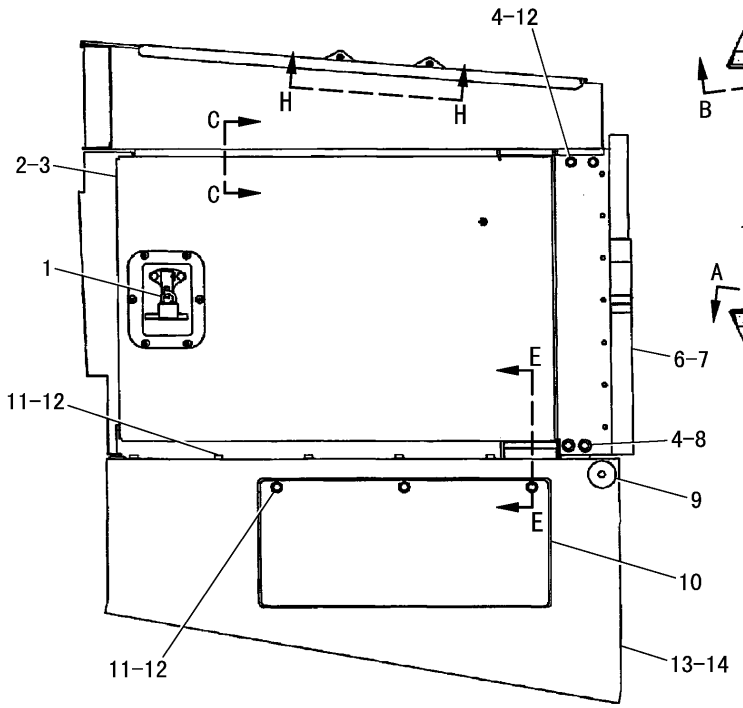

RIGHT SIDE VIEW

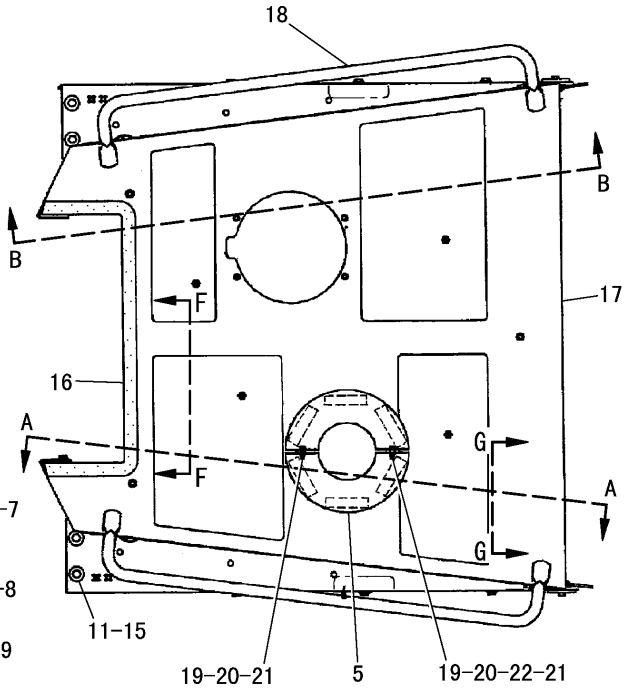

TOP VIEW

SEE PART 2 OF 3 FOR A-A, C-C, F-F AND G-G
SEE PART 3 OF 3 FOR B-B, E-E AND H-H

NOTE	№	PART NO.	QTY	PART NAME
	1	246-2641	2	PADLOCK GROUP
		5P-8500	2	KEY
Y	2	169-9081	1	DOOR GROUP(RH)
Y	3	169-9085	1	DOOR GROUP(LH)
	4	8T-4137	8	BOLT(M10×1.5)
	5	6T-8089	2	PLATE
	6	217-0153	1	PLATE AS(RH)
		6B-4594	7	RIVET
		6I-9583	1	BAFFLE
		6T-7686	1	STRIP
	7	217-0155	1	PLATE AS(LH)
		6B-4594	7	RIVET
		6I-9583	1	BAFFLE
		6T-7686	1	STRIP
	8	8T-2561	4	WASHER
	9	8T-2502	2	BOLT(3/8-16)
		9X-8266	2	WASHER
	10	6Y-0123	2	PLATE AS
	11	8T-4136	20	BOLT(M10×1.5)
	12	7X-7729	20	WASHER
	13	227-5992	1	GUARD AS(RH)
		8T-3490	12	NUT(M10×1.5)(WELD)
		8T-5413	4	STUD(M10×1.5)(WELD)
	14	227-5993	1	GUARD AS(LH)
		8T-3490	12	NUT(M10×1.5)(WELD)
		8T-5413	4	STUD(M10×1.5)(WELD)
	15	8T-4897	4	WASHER
D	16	5P-7211		SEAL---1.11m
	17	164-9454	1	HOOD AS
		8T-3490	17	NUT(M10×1.5)(WELD)
		8T-3597	7	NUT(M12×1.75)(WELD)
		9X-6269	1	NUT(M16×2)(WELD)
		2T-1523	1	BAR
	18	126-1074	2	HANDLE
	19	6V-7357	2	BOLT(M6×1)
	20	9X-8256	4	WASHER
	21	6V-7743	2	LOCKNUT(M6×1)
	22	9F-3691	1	SPACER

D-ORDER BY THE m
Y-SEPARATE ILLUSTRATION

J156231 X02

ENGINE ENCLOSURE GROUP (215-5581 N/S) -PART 1 OF 3

PART OF 322-6115-Page 236
REFERENCE:169-9081-Page 264 169-9085-Page 265

FRAME AND BODY

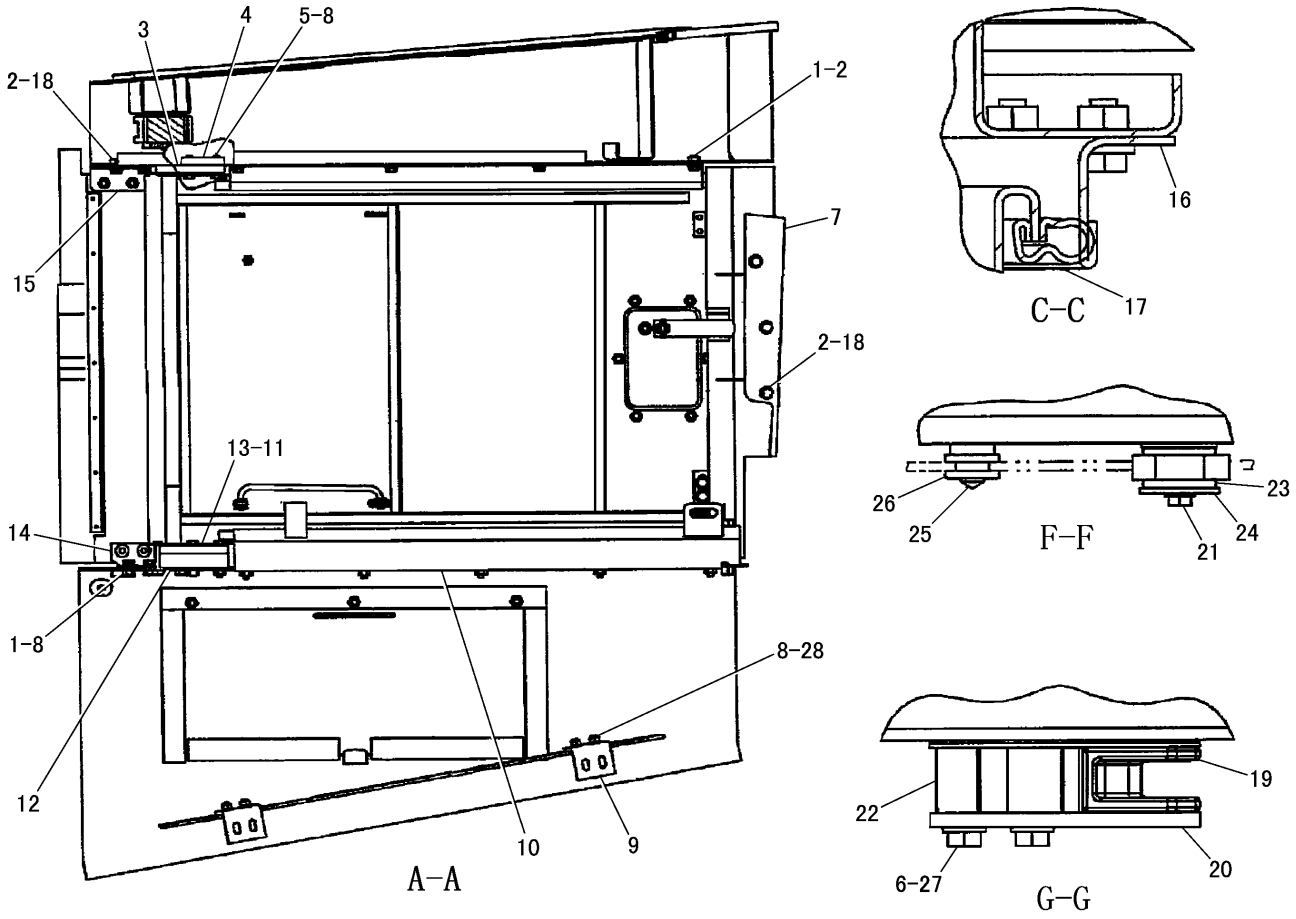

NOTE	№	PART NO.	QTY	PART NAME	NOTE	№	PART NO.	QTY	PART NAME
	1	8T-4137	6	BOLT(M10×1.5)	BD	17	5P-7483		SEAL---2.5m(×2)
	2	7X-7729	9	WASHER		18	8T-4136	5	BOLT(M10×1.5)
	3	6T-9510	1	HINGE AS(LH)		19	6T-9927	2	SLIDE
	4	199-7232	1	BLOCK		20	6T-9929	2	PLATE
	5	8T-4196	2	BOLT(M10×1.5)		21	7X-2555	1	BOLT(M16×2)
	6	8T-4223	4	WASHER			8T-4122	1	WASHER
	7	164-9456	1	PLATE AS(RH)		22	6T-9928	2	PLATE
		8T-3490	3	NUT(M10×1.5)(WELD)		23	9P-3066	2	MOUNT
	8	8T-4121	8	WASHER		24	6P-8269	1	WASHER
	9	217-4616	2	BRACKET		25	6T-9808	2	SUPPORT
	10	164-9465	1	PLATE AS(LH)		26	6T-9807	2	GROMMET
		8T-3490	5	NUT(M10×1.5)(WELD)		27	8T-4176	4	BOLT(M12×1.75)
	11	6T-9509	1	HINGE AS(RH)		28	8T-4133	4	NUT(M10×1.5)
	12	9W-9044	1	PLATE					
B	13	8T-4123	1	WASHER(3.5mm THICK)					
	14	196-3760	1	PLATE AS(RH)					
		195-6383	2	SPACER					
	15	196-3764	1	ANGLE AS(RH)					
		8T-3490	2	NUT(M10×1.5)(WELD)					
	16	6T-9512	2	PLATE					

B-USE AS REQUIRED
D-ORDER BY THE m

J156232 X02

ENGINE ENCLOSURE GROUP (215-5581 N/S) -PART 2 OF 3
PART OF 322-6115-Page 236

FRAME AND BODY

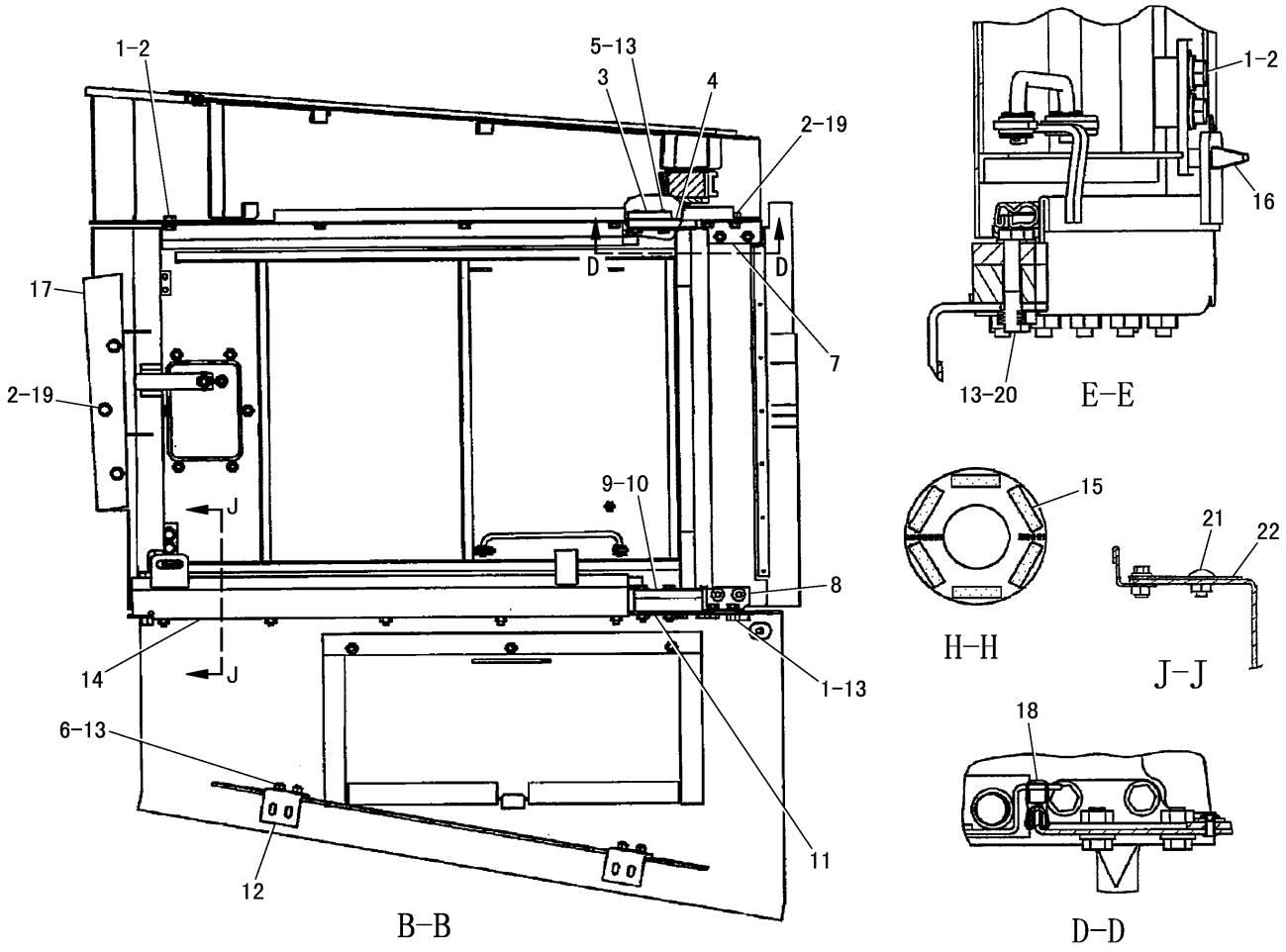

NOTE	№	PART NO.	QTY	PART NAME
	1	8T-4137	10	BOLT(M10×1.5)
	2	7X-7729	13	WASHER
	3	199-7232	1	BLOCK
	4	6T-9509	1	HINGE AS(RH)
	5	8T-4196	2	BOLT(M10×1.5)
	6	8T-4133	4	NUT(M10×1.5)
	7	196-3763	1	ANGLE AS(LH)
		8T-3490	2	NUT(M10×1.5)(WELD)
	8	196-3759	1	PLATE AS(LH)
		195-6383	2	SPACER
B	9	8T-4123	1	WASHER(3.5mm THICK)
	10	6T-9510	1	HINGE AS(LH)
	11	9W-9044	1	PLATE
	12	217-4616	2	BRACKET
	13	8T-4121	12	WASHER
	14	164-9463	1	PLATE AS(RH)
		8T-3490	5	NUT(M10×1.5)(WELD)
D	15	5P-5923		SEAL---0.1m(×6)
	16	9W-5290	2	PLATE AS
	17	164-9461	1	PLATE AS(LH)
		8T-3490	3	NUT(M10×1.5)(WELD)
D	18	5P-7211		SEAL---0.674m(×2)
	19	8T-4136	5	BOLT(M10×1.5)
	20	8T-6466	4	BOLT(M10×1.5)
	21	8C-8585	6	SCREW(M10×1.5)
	22	227-5996	1	TREAD(RH)
		227-5997	1	TREAD(LH)

B-USE AS REQUIRED
D-ORDER BY THE m

J156233 X02

ENGINE ENCLOSURE GROUP (215-5581 N/S) -PART 3 OF 3
PART OF 322-6115-Page 236

FRAME AND BODY

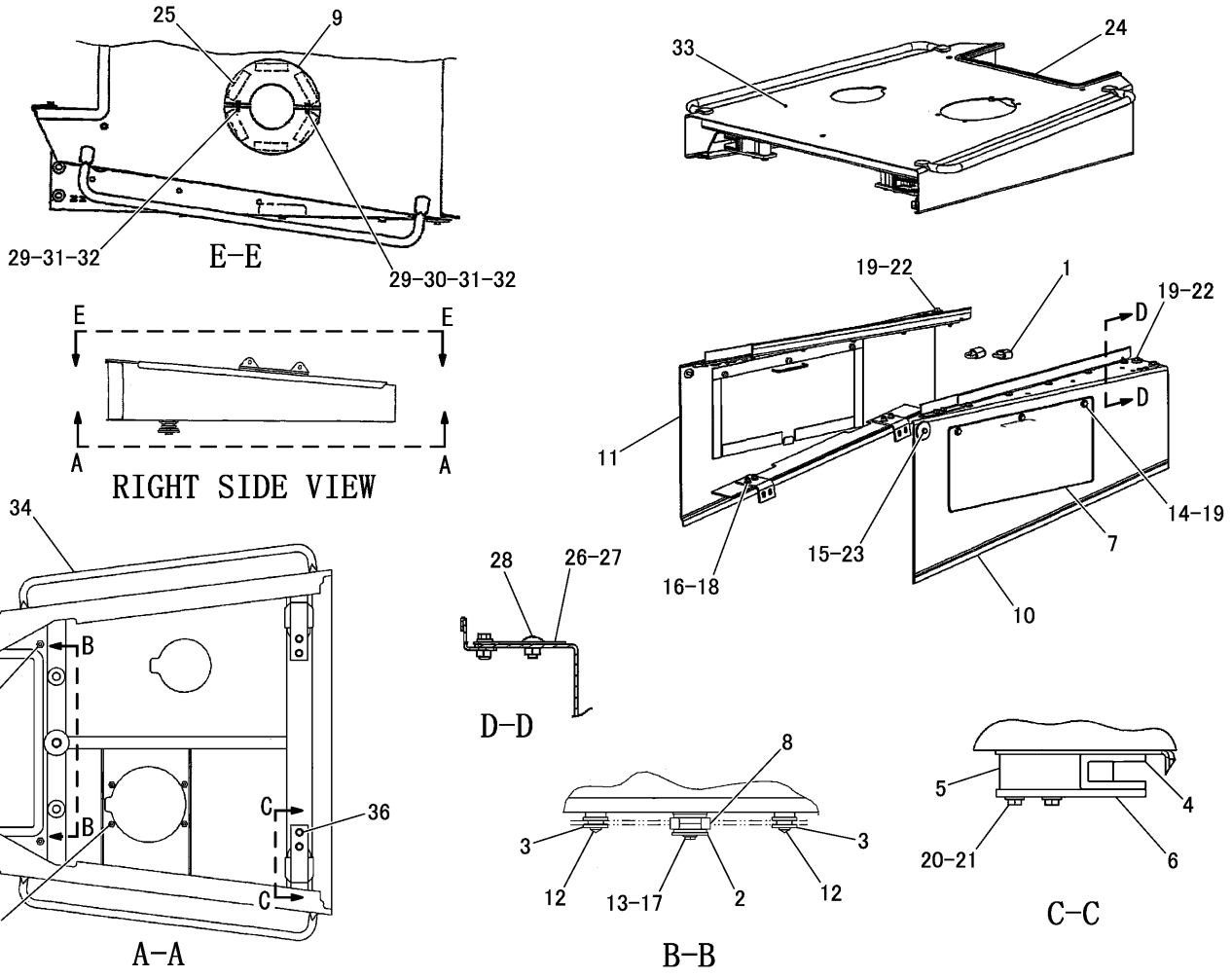

NOTE	№	PART NO.	QTY	PART NAME	NOTE	№	PART NO.	QTY	PART NAME
	1	246-2641	2	PADLOCK GROUP		20	8T-4176	4	BOLT(M12×1.75)
		5P-8500	2	KEY		21	8T-4223	4	WASHER
	2	6P-8269	1	WASHER		22	8T-4897	4	WASHER
	3	6T-9807	2	GROMMET		23	9X-8266	2	WASHER
	4	6T-9927	2	SLIDE	D	24	5P-7211		SEAL---1.11m
	5	6T-9928	2	PLATE	D	25	5P-5923		SEAL---0.1m(×6)
	6	6T-9929	2	PLATE		26	227-5996	1	TREAD(RH)
	7	6Y-0123	2	PLATE AS		27	227-5997	1	TREAD(LH)
	8	9P-3066	2	MOUNT		28	8C-8585	6	SCREW(M10×1.5)
	9	6T-8089	2	PLATE		29	6V-7743	2	LOCKNUT(M6×1)
Y	10	246-2921	1	ENCLOSURE GROUP(LH)		30	9F-3691	1	SPACER
Y	11	246-2922	1	ENCLOSURE GROUP(RH)		31	9X-8256	4	WASHER
	12	6T-9808	2	SUPPORT		32	6V-7357	2	BOLT(M6×1)
	13	7X-2555	1	BOLT(M16×2)		33	164-9348	1	HOOD AS
	14	7X-7729	6	WASHER			2T-1523	1	BAR
	15	8T-2502	2	BOLT(3/8-16)			9X-6269	1	NUT(M16×2)(WELD)
	16	8T-4121	8	WASHER		34	126-1074	2	HANDLE
	17	8T-4122	1	WASHER		35	8T-3490	5	NUT(M10×1.5)(WELD)
	18	8T-4133	8	NUT(M10×1.5)		36	8T-3597	7	NUT(M12×1.75)(WELD)
	19	8T-4136	10	BOLT(M10×1.5)					

D-ORDER BY THE m
Y-SEPARATE ILLUSTRATION

J155840 X03

HOOD AND GUARD GROUP (215-5588 N/S)

REFERENCE:246-2921-Page 261 246-2922-Page 261
AN ATTACHMENT

FRAME AND BODY

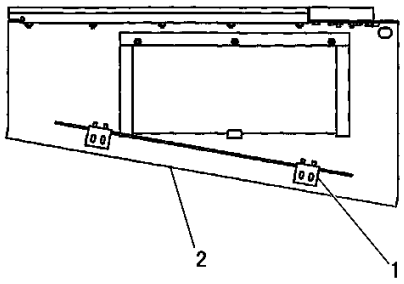

NOTE	№	PART NO.	QTY	PART NAME
	1	217-4616	2	BRACKET
Y	2	246-2909	1	ENGINE GUARD GROUP(LH)

Y-SEPARATE ILLUSTRATION

J155842 X01

ENCLOSURE GROUP (246-2921 N/S) -LH

PART OF 215-5588-Page 260
REFERENCE:246-2909-Page 262
AN ATTACHMENT

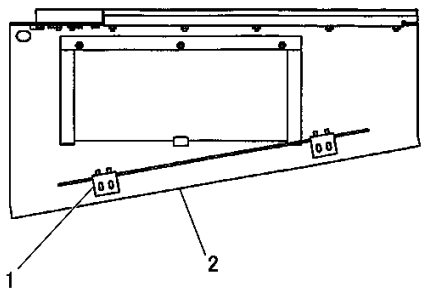

NOTE	№	PART NO.	QTY	PART NAME
	1	217-4616	2	BRACKET
Y	2	246-2910	1	ENGINE GUARD GROUP(RH)

Y-SEPARATE ILLUSTRATION

J155844 X01

ENCLOSURE GROUP (246-2922 N/S) -RH

PART OF 215-5588-Page 260
REFERENCE:246-2910-Page 262
AN ATTACHMENT

FRAME AND BODY

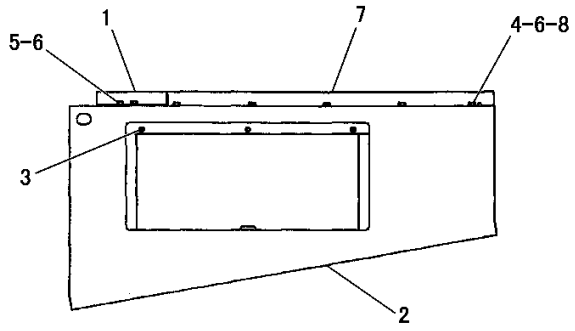

NOTE	№	PART NO.	QTY	PART NAME
	1	114-2538	1	PLATE(LH)
	2	227-5993	1	GUARD AS(LH)
		8T-5413	4	STUD(M10×1.5)(WELD)
	3	8T-3490	12	NUT(M10×1.5)(WELD)
	4	7X-7729	5	WASHER
	5	8T-4121	2	WASHER
	6	8T-4136	7	BOLT(M10×1.5)
	7	164-9358	1	PLATE AS(LH)
	8	8T-3490	5	NUT(M10×1.5)(WELD)

J155843 X01

ENGINE GUARD GROUP (246-2909 N/S) -LH

PART OF 246-2921-Page 261
AN ATTACHMENT

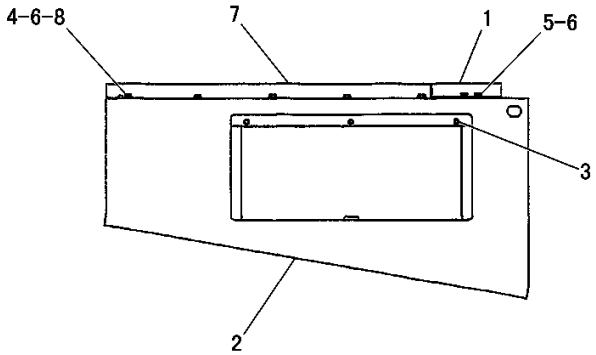

NOTE	№	PART NO.	QTY	PART NAME
	1	114-0408	1	PLATE(RH)
	2	227-5992	1	GUARD AS(RH)
		8T-5413	4	STUD(M10×1.5)(WELD)
	3	8T-3490	12	NUT(M10×1.5)(WELD)
	4	7X-7729	5	WASHER
	5	8T-4121	2	WASHER
	6	8T-4136	7	BOLT(M10×1.5)
	7	164-9360	1	PLATE AS(RH)
	8	8T-3490	5	NUT(M10×1.5)(WELD)

J155845 X01

ENGINE GUARD GROUP (246-2910 N/S) -RH

PART OF 246-2922-Page 261
AN ATTACHMENT

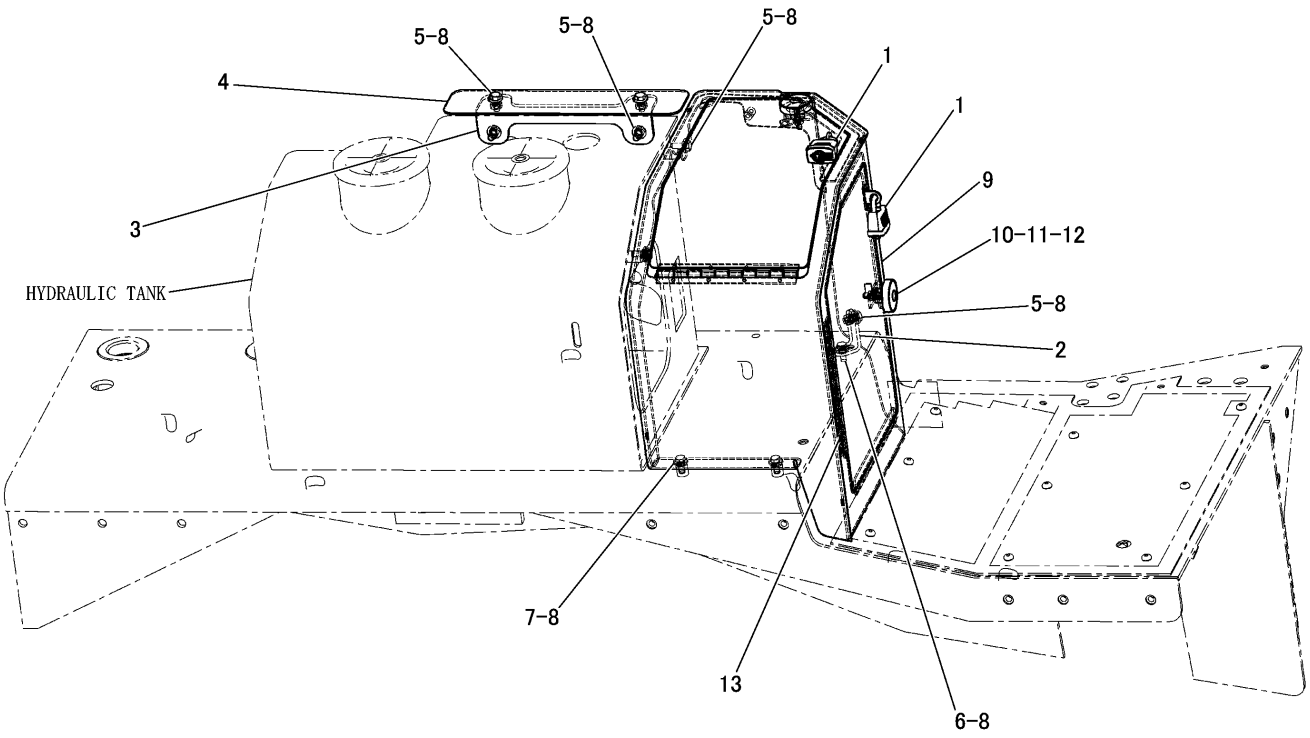

NOTE	№	PART NO.	QTY	PART NAME	NOTE	№	PART NO.	QTY	PART NAME
	1	246-2641	2	PADLOCK GROUP		9	273-3843	1	COVER AS
		5P-8500	2	KEY			8T-4223	2	WASHER
	2	101-9083	1	BRACKET AS		10	8E-7561	2	KNOB AS
		2W-7940	1	BRACKET			7S-2042	1	STUD(3/8-16)
		8T-3490	1	NUT(M10×1.5)(WELD)			8E-1205	1	KNOB
	3	241-6498	1	BRACKET AS			8T-7566	1	PIN
		8T-3490	2	NUT(M10×1.5)(WELD)		11	9S-8230	2	PLATE AS
	4	273-3834	1	PLATE			9F-2978	1	NUT(3/8-16)(WELD)
	5	8T-4136	7	BOLT(M10×1.5)		12	4H-1641	2	PIN
	6	4L-6454	1	BOLT(3/8-16)		13	7T-0030	2	HINGE
	7	5S-7379	2	BOLT(3/8-16)					
	8	7X-7729	10	WASHER					

J155601 X04

ENCLOSURE GROUP (270-3261 N/S) -HYDRAULIC TANK
PART OF 322-6115-Page 236

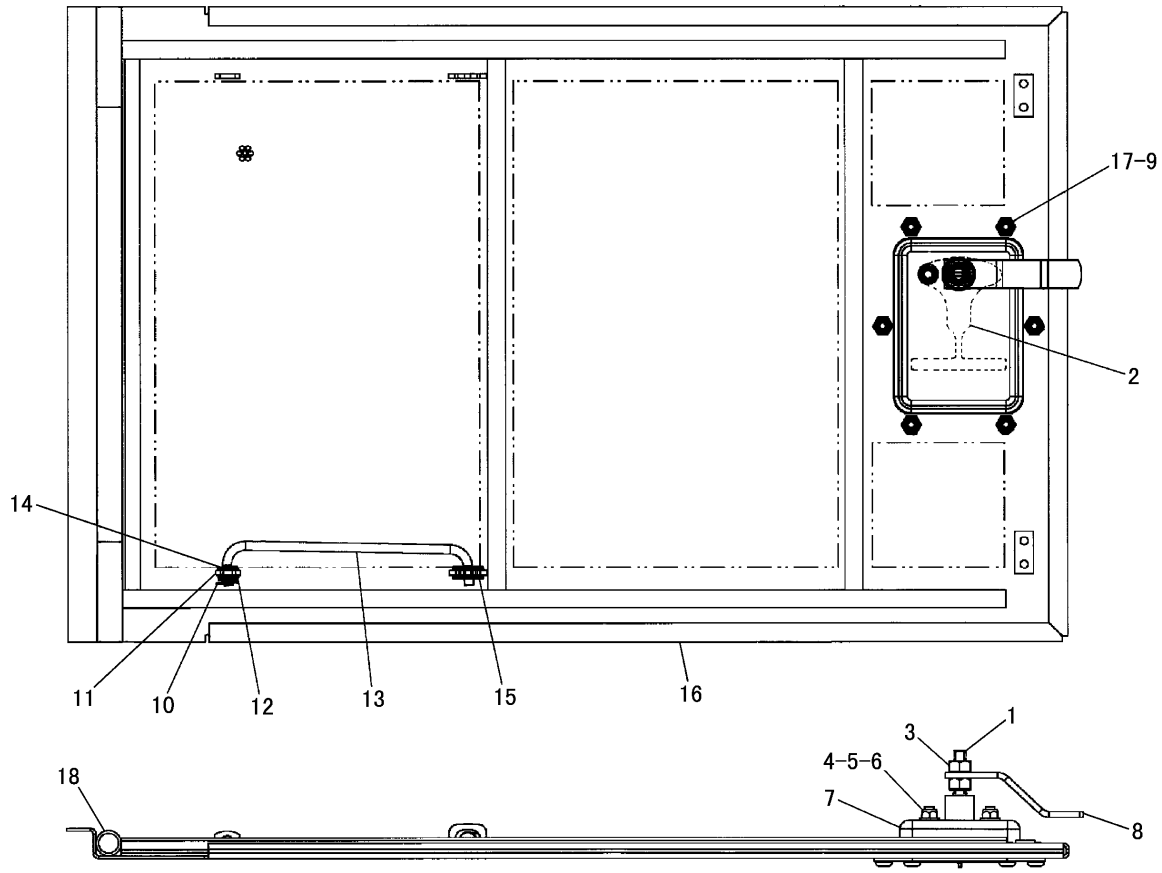

NOTE	№	PART NO.	QTY	PART NAME	NOTE	№	PART NO.	QTY	PART NAME
	1	8Y-4000	1	LATCH AS		16	196-3762	1	DOOR AS
		7X-0766	1	SPRING		17	8T-3490	6	NUT(M10×1.5)(WELD)
		8Y-3998	1	HANDLE		18	6P-9116	2	SPACER
		8Y-3966	1	WASHER					
		8Y-8306	1	SHAFT					
	2	8Y-3999	1	BRACKET					
	3	8T-9496	2	LOCKNUT(9/16-18)					
	4	6V-7744	2	LOCKNUT(M10×1.5)					
	5	8T-4121	2	WASHER					
	6	8T-4136	2	BOLT(M10×1.5)					
	7	9W-8940	1	PLATE					
	8	9W-8084	1	PLATE					
	9	8C-8585	6	SCREW(M10×1.5)					
	10	4B-4278	1	WASHER					
	11	4M-7470	1	GROMMET					
	12	3B-4605	1	COTTER PIN					
	13	3V-9399	1	ROD AS					
	14	4B-4278	2	WASHER					
	15	4H-2558	1	GROMMET					

J137444 X00

DOOR GROUP (169-9081 N/S) -RH
PART OF 215-5581-Page 257

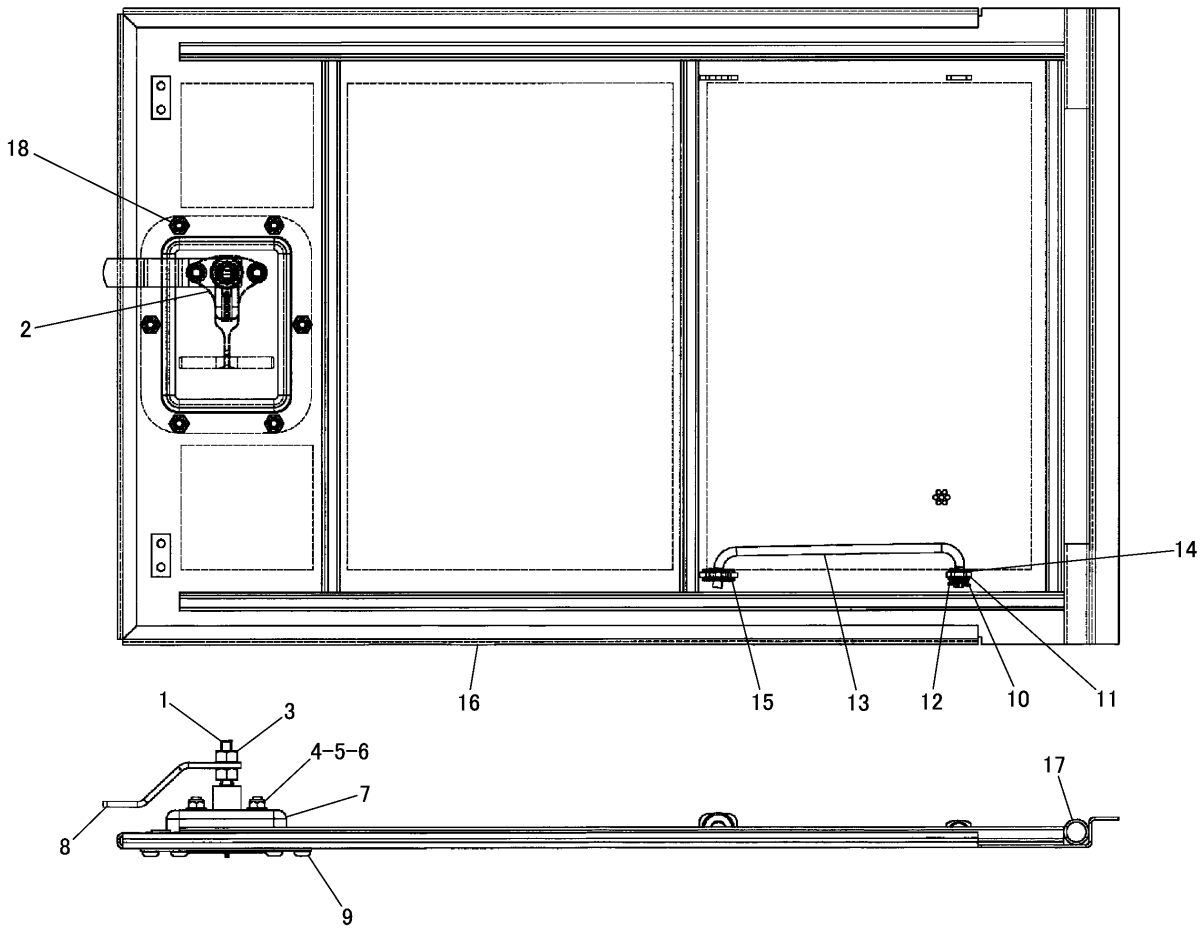

NOTE	№	PART NO.	QTY	PART NAME	NOTE	№	PART NO.	QTY	PART NAME
	1	8Y-4000	1	LATCH AS		16	196-3762	1	DOOR AS
		7X-0766	1	SPRING		17	6P-9116	2	SPACER
		8Y-3998	1	HANDLE		18	8T-3490	6	NUT(M10×1.5)(WELD)
		8Y-3966	1	WASHER					
		8Y-8306	1	SHAFT					
	2	8Y-3999	1	BRACKET					
	3	8T-9496	2	LOCKNUT(9/16-18)					
	4	6V-7744	2	LOCKNUT(M10×1.5)					
	5	8T-4121	2	WASHER					
	6	8T-4136	2	BOLT(M10×1.5)					
	7	9W-8940	1	PLATE					
	8	9W-8084	1	PLATE					
	9	8C-8585	6	SCREW(M10×1.5)					
	10	4B-4278	1	WASHER					
	11	4M-7470	1	GROMMET					
	12	3B-4605	1	COTTER PIN					
	13	3V-9399	1	ROD AS					
	14	4B-4278	2	WASHER					
	15	4H-2558	1	GROMMET					

J119345 X00

DOOR GROUP (169-9085 N/S) -LH
PART OF 215-5581-Page 257

CONSISTS OF :

			PAGE
1	224-6187	HOOD ASSEMBLY	267
	132-8502	SEAL---149cm(ON FRONT EDGE OF HOOD)	

J157040 -02

HOOD GROUP (270-8494 N/S) -SOLID HOOD
AN ATTACHMENT

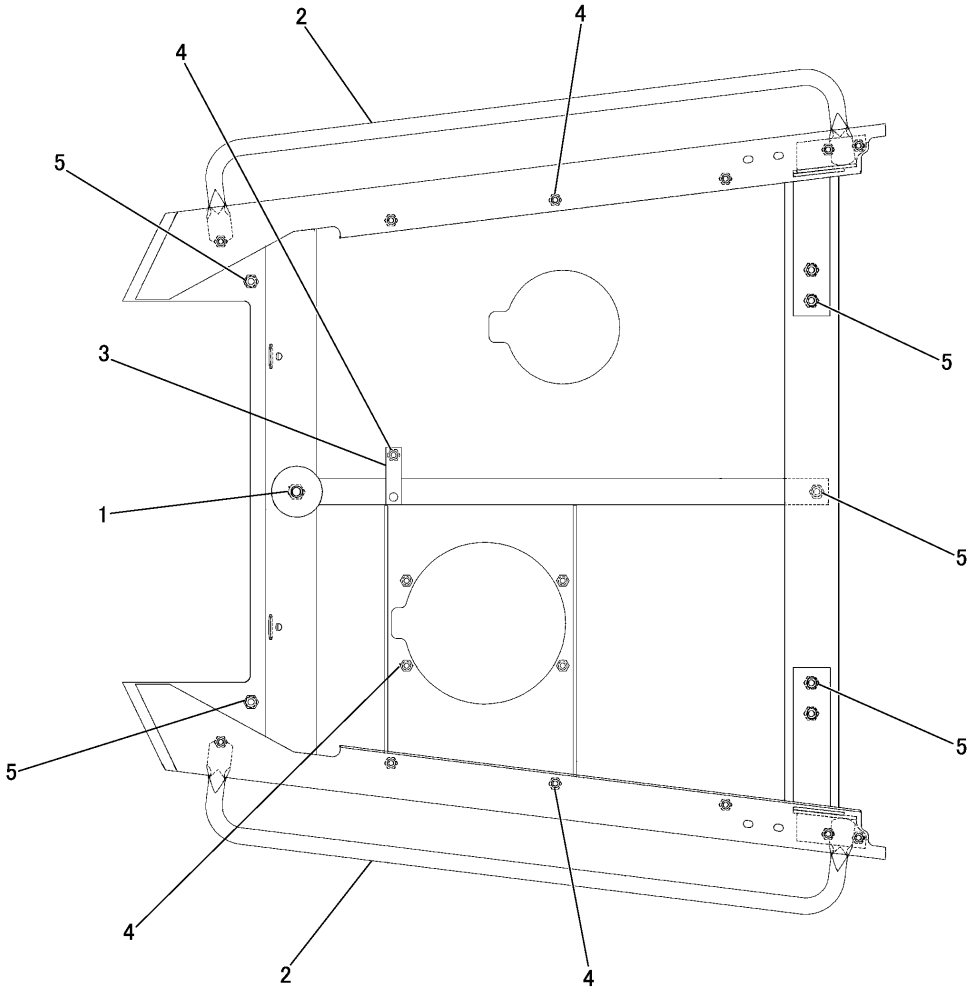

NOTE	№	PART NO.	QTY	PART NAME	NOTE	№	PART NO.	QTY	PART NAME
	1	9X-6269	1	NUT(M16×2)(WELD)					
	2	126-1074	2	HANDLE					
	3	2T-1523	1	BAR					
	4	8T-3490	17	NUT(M10×1.5)(WELD)					
	5	8T-3597	7	NUT(M12×1.75)(WELD)					

J157041 -04

224-6187 HOOD ASSEMBLY
PART OF 270-8494-Page 266
AN ATTACHMENT

FRAME AND BODY

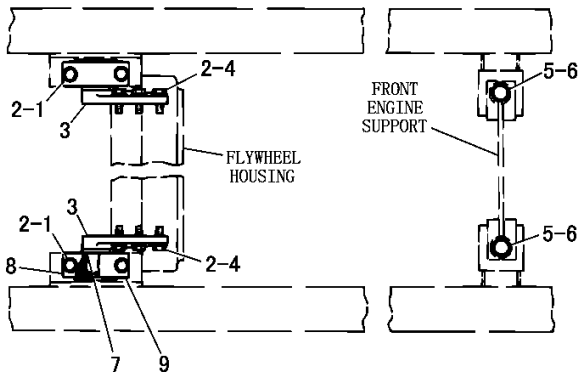

NOTE	№	PART NO.	QTY	PART NAME
	1	7X-0377	4	BOLT(3/4-10)
	2	7X-0521	16	WASHER
	3	9Y-9619	2	SUPPORT
	4	7X-0366	12	BOLT(3/4-10)
	5	1J-5929	2	BOLT(1-8)
	6	5P-8250	2	WASHER
	7	7C-3567	2	MOUNT AS
	8	7N-9696	2	CAP
	9	4W-5385	2	BLOCK

J055525 X04

ENGINE MOUNTING GROUP (4W-5386 N/S) -FLEXIBLE
PART OF 271-6466-Page 4

CONSISTS OF :

PAGE

1 272-5492 FUEL TANK GUARD GROUP 269

J155830 -04

FUEL TANK GUARD GROUP (279-6714 N/S)
AN ATTACHMENT

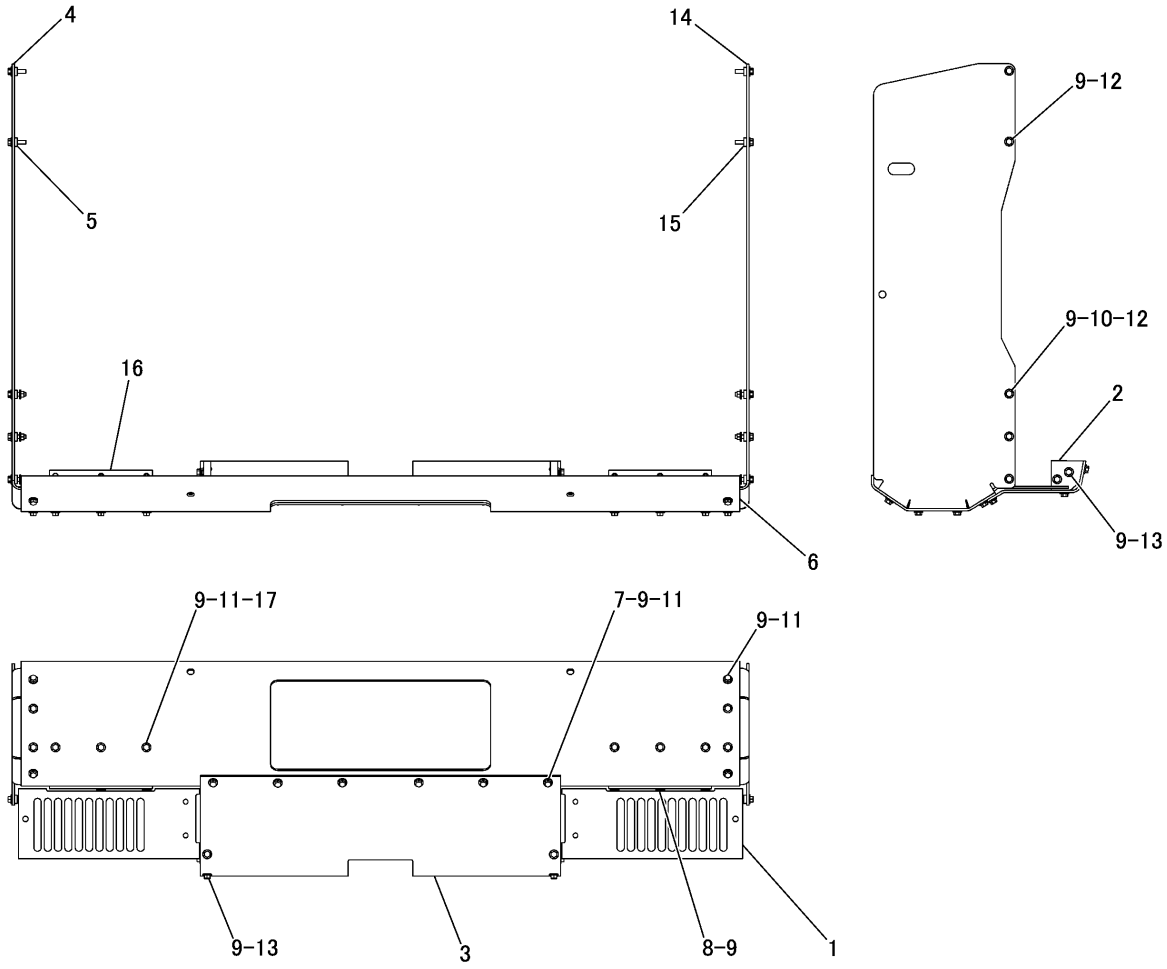

NOTE	№	PART NO.	QTY	PART NAME	NOTE	№	PART NO.	QTY	PART NAME
	1	6Y-0560	2	DOOR					
	2	169-8419	2	BLOCK					
	3	194-6250	1	GUARD					
	4	272-5494	1	GUARD AS					
		1F-0748	4	NUT(1/2-13)(WELD)					
	5	4L-8183	5	SPACER					
	6	272-5498	1	GUARD AS					
	7	1F-0748	6	NUT(1/2-13)(WELD)					
	8	5C-6565	5	BOLT(1/2-13)					
	9	5P-1076	49	WASHER					
	10	6V-8188	6	NUT(1/2-13)					
	11	8C-4436	20	BOLT(1/2-13)					
	12	8T-4835	10	BOLT(1/2-13)					
	13	8T-8917	8	BOLT(1/2-13)					
	14	272-5497	1	GUARD AS					
		1F-0748	4	NUT(1/2-13)(WELD)					
	15	4L-8183	5	SPACER					
	16	272-5499	2	GUARD AS					
	17	1F-0748	3	NUT(1/2-13)(WELD)					

J155831 -02

FUEL TANK GUARD GROUP (272-5492 N/S)
PART OF 279-6714-Page 268
AN ATTACHMENT

FRAME AND BODY

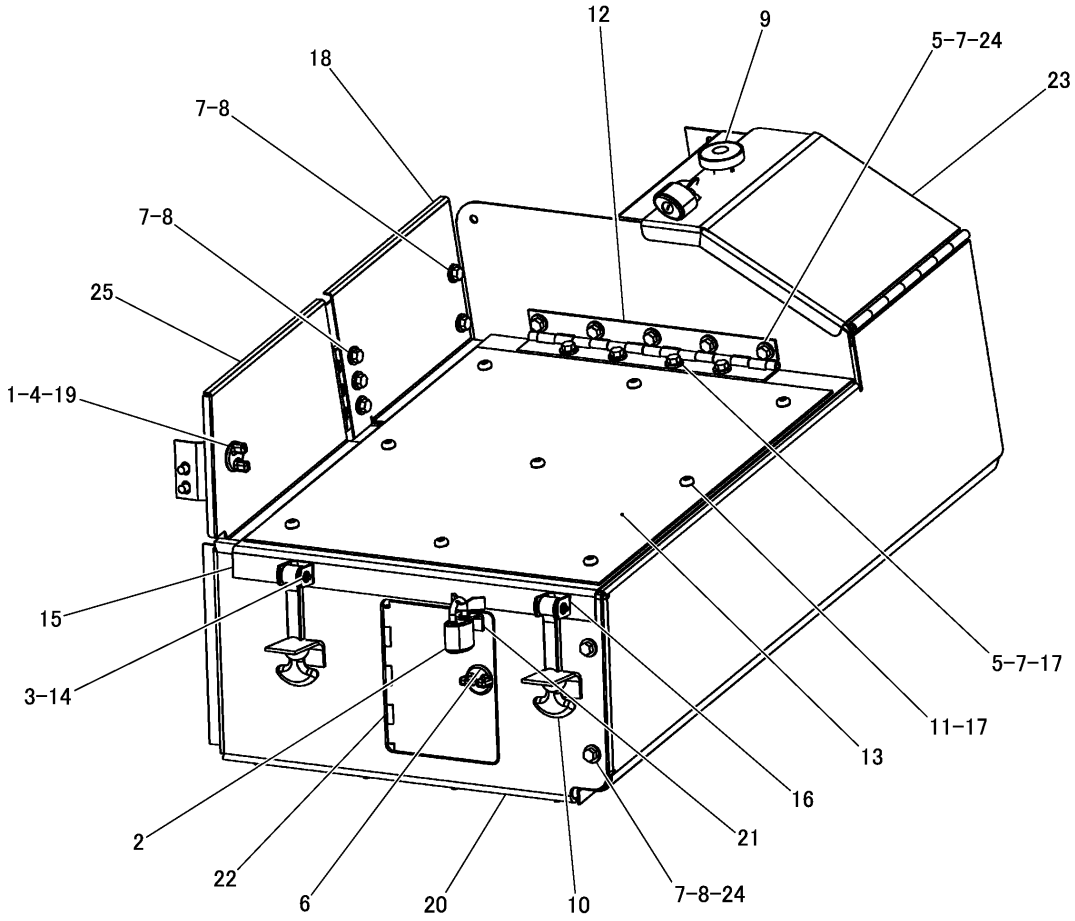

NOTE	№	PART NO.	QTY	PART NAME	NOTE	№	PART NO.	QTY	PART NAME
	1	3B-4610	2	COTTER PIN		14	2M-5795	2	PIN
	2	246-2641	2	PADLOCK GROUP		15	170-7642	1	COVER AS
		5P-8500	2	KEY		16	9M-3838	2	BRACKET
	3	5V-1496	2	RETAINER		17	9F-2978	13	NUT(3/8-16)(WELD)
	4	6D-1746	2	BOLT(1/2-13)		18	194-4231	1	PLATE AS
	5	5M-3062	9	BOLT(3/8-16)		19	8T-4223	1	WASHER
	6	8B-4624	1	SHIM		20	165-0153	1	COVER AS
	7	5P-1075	16	WASHER			1F-0748	1	NUT(1/2-13)(WELD)
	8	5S-7379	7	BOLT(3/8-16)			9F-2978	4	NUT(3/8-16)(WELD)
	9	8E-7561	1	KNOB AS			7T-1099	2	LINK
		7S-2042	1	STUD(3/8-16)		21	1S-6385	1	LUG
		8E-1205	1	KNOB		22	6K-1049	1	HINGE
		8T-7566	1	PIN		23	194-1738	1	SUPPORT AS
	10	9M-3835	2	LATCH AS			8D-3508	1	BOSS(3/8-16)
	11	6J-0488	9	SCREW(3/8-16)			9F-6445	2	NUT(1/4-20)(WELD)
	12	9W-7543	1	HINGE			7T-1099	3	LINK
	13	9W-7547	1	PLATE		24	9F-2978	12	NUT(3/8-16)(WELD)
						25	194-4227	1	DOOR AS
							9W-5545	1	HINGE

J155589 X05

BATTERY BOX GROUP (163-8818 N/S) -PART 1 OF 2

PART OF 322-6115-Page 236

FRAME AND BODY

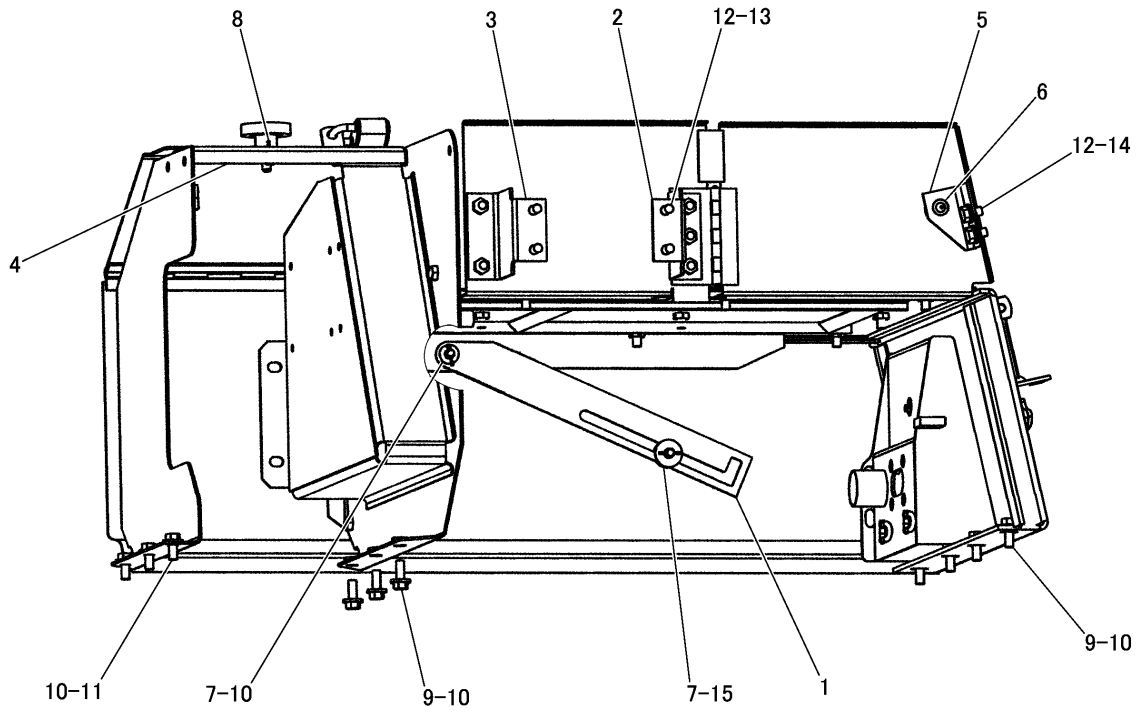

NOTE	№	PART NO.	QTY	PART NAME	NOTE	№	PART NO.	QTY	PART NAME
	1	6Y-3973	1	LINK					
	2	8E-3621	1	BRACKET AS					
		9F-2978	3	NUT(3/8-16)(WELD)					
	3	8E-3623	1	BRACKET AS					
		9F-2978	2	NUT(3/8-16)(WELD)					
	4	9S-8230	1	PLATE AS					
		9F-2978	1	NUT(3/8-16)(WELD)					
	5	293-5033	1	BRACKET AS					
	6	1F-0748	1	NUT(1/2-13)(WELD)					
	7	3B-4609	2	COTTER PIN					
	8	4H-1641	1	PIN					
	9	4L-6454	7	BOLT(3/8-16)					
	10	5P-1075	11	WASHER					
	11	5S-7379	3	BOLT(3/8-16)					
	12	8T-4121	6	WASHER					
	13	8T-4136	4	BOLT(M10×1.5)					
	14	8T-4191	2	BOLT(M10×1.5)					
	15	8T-4222	2	WASHER					

J155590 X05

BATTERY BOX GROUP (163-8818 N/S) -PART 2 OF 2

PART OF 322-6115-Page 236

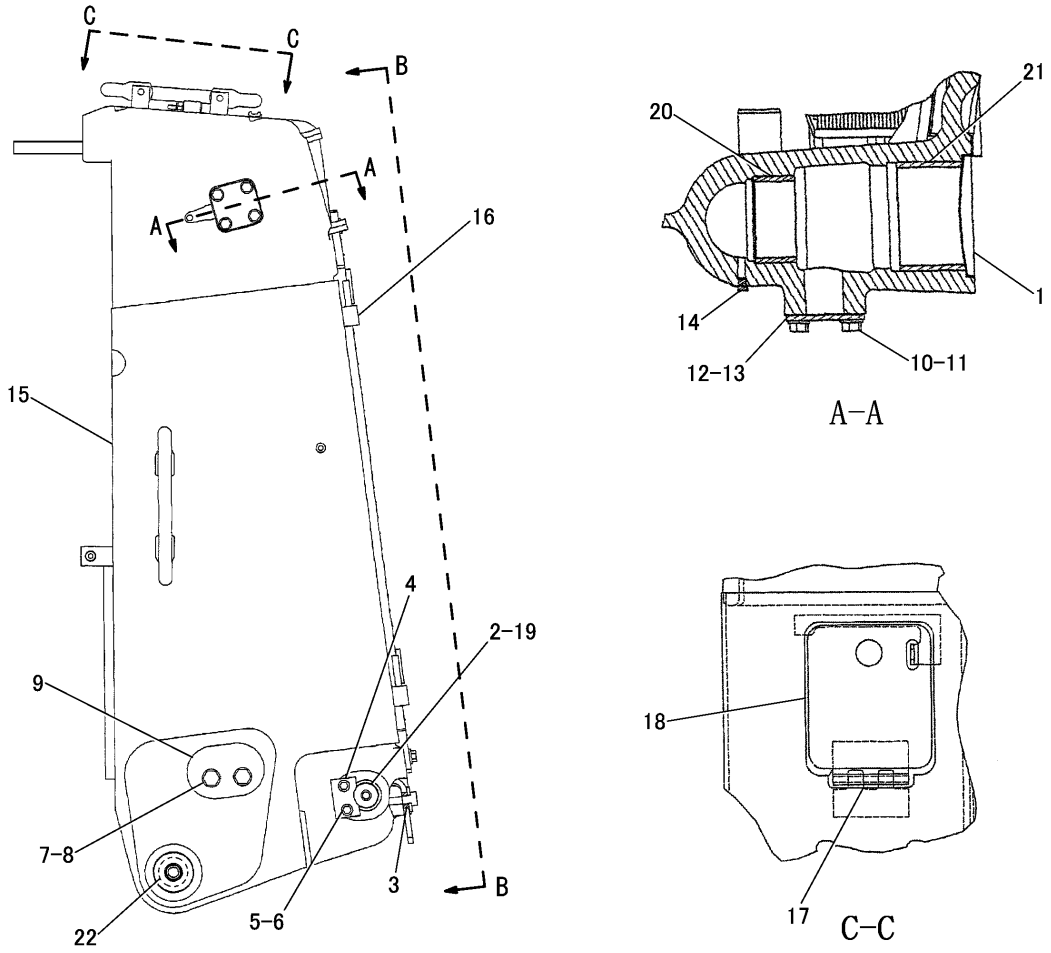

NOTE	№	PART NO.	QTY	PART NAME	NOTE	№	PART NO.	QTY	PART NAME
	1	3W-3742	2	PLUG		15	249-7667	1	GUARD AS
	2	9U-9229	2	PIN	Z		249-7668	1	GUARD AS
	3	194-6030	2	SPACER			9F-2978	6	NUT(3/8-16)(WELD)
	4	2G-9245	2	PLATE			3J-5169	2	NUT(5/8-11)(WELD)
	5	4L-6454	4	BOLT(3/8-16)			7T-1099	5	LINK
	6	5P-1075	4	WASHER			8T-5912	9	NUT(3/8-16)(WELD)
	7	8T-9398	4	BOLT(3/4-10)		16	8E-5124	4	TUBE
	8	8T-4994	4	WASHER		17	9B-2052	1	HINGE
	9	158-0518	2	PLATE		18	9U-9190	1	DOOR
	10	5C-6565	8	BOLT(1/2-13)		19	258-2305	4	BEARING
	11	8T-4223	8	WASHER		20	3J-7189	2	BEARING
	12	5G-9974	2	GASKET		21	5J-8118	2	BEARING
	13	5G-9973	2	COVER		22	258-2308	2	BEARING
	14	5M-6214	2	PLUG					

Z-NOT SERVICED SEPARATELY

J155609 X02

RADIATOR GUARD GROUP (249-7666 N/S) -PART 1 OF 2

PART OF 322-6115-Page 236

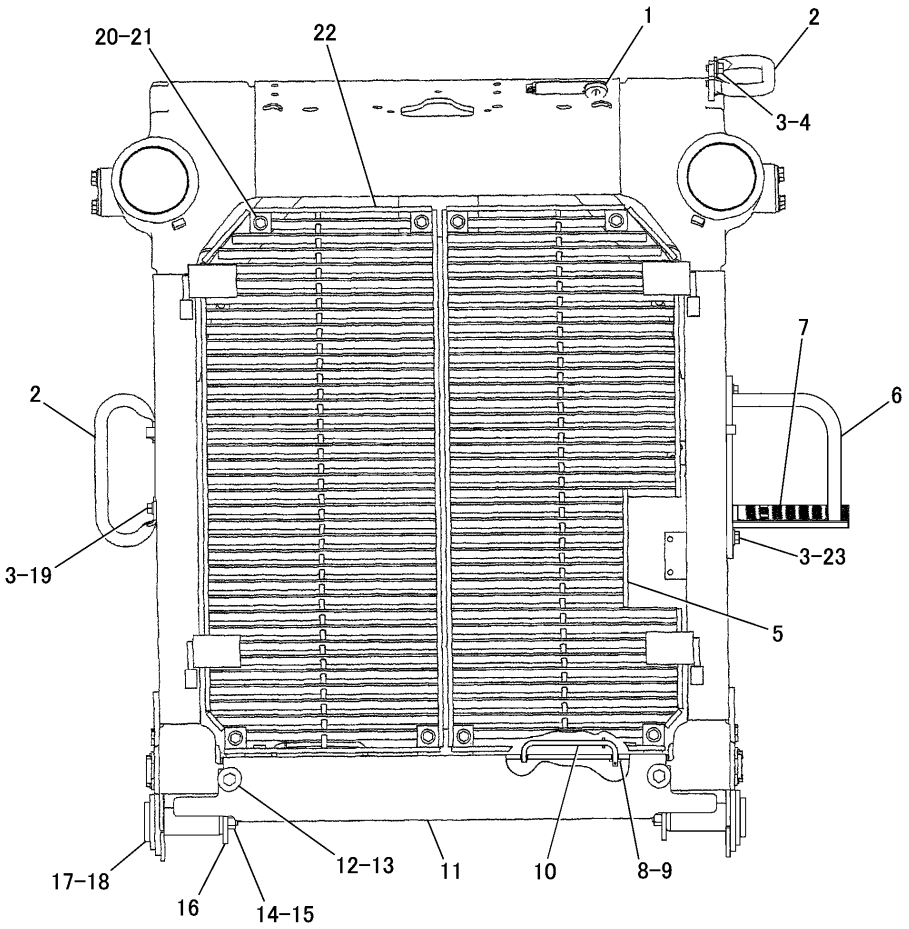

B-B

NOTE	№	PART NO.	QTY	PART NAME	NOTE	№	PART NO.	QTY	PART NAME
	1	246-2641	1	PADLOCK GROUP		18	6Y-5814	2	PIN
		5P-8500	2	KEY		19	8T-8917	2	BOLT(1/2-13)
	2	3W-3896	2	HANDLE		20	8T-9389	8	BOLT(1/2-13)
	3	8T-4223	9	WASHER		21	5P-1076	8	WASHER
	4	5P-2228	2	BOLT(1/2-13)		22	236-6732	1	DOOR AS(RH)
	5	236-6731	1	DOOR AS(LH)		23	5P-2566	5	BOLT(1/2-13)
	6	124-7562	1	STEP GROUP					
		280-3365	1	STEP AS					
	7	280-3367	1	PLATE					
		6V-1193	4	SCREW(3/8-16)					
	8	5P-1075	4	WASHER					
	9	3B-4615	4	COTTER PIN					
	10	9W-2822	2	ROD					
	11	194-6036	1	PLATE AS					
	12	3V-9244	2	WASHER					
	13	7X-0346	2	BOLT(5/8-11)					
	14	8T-4994	2	WASHER					
	15	8T-9313	2	BOLT(3/4-10)					
	16	5D-5652	2	WASHER					
	17	6T-8250	2	RETAINER					

J155610 X02

RADIATOR GUARD GROUP (249-7666 N/S) -PART 2 OF 2
PART OF 322-6115-Page 236

FRAME AND BODY

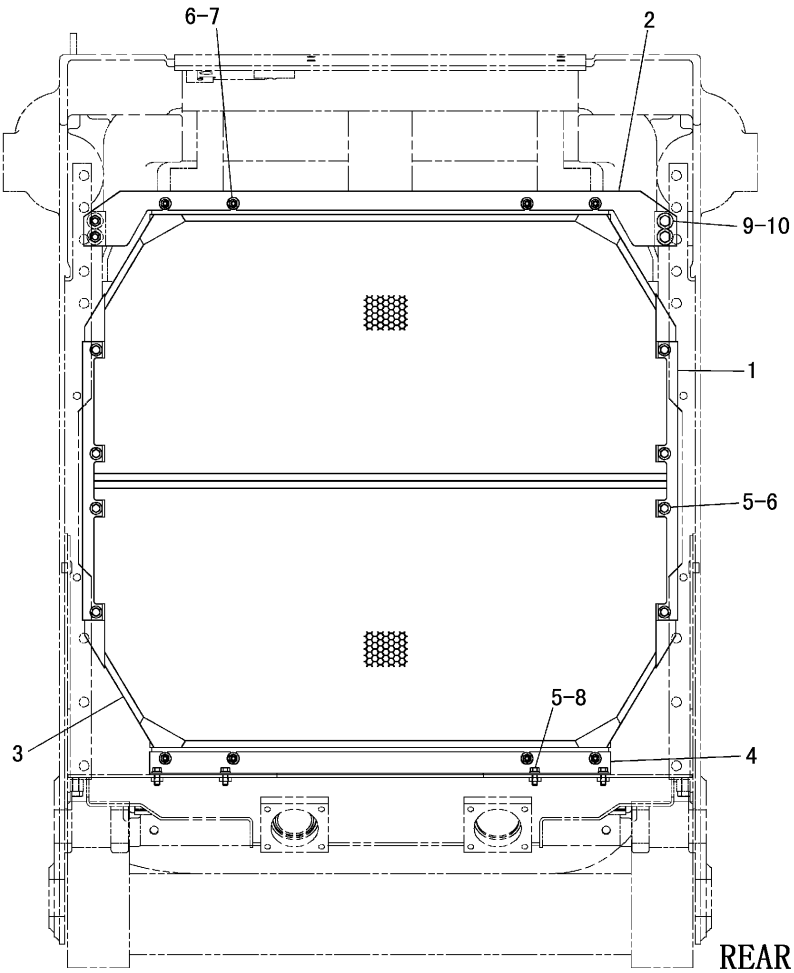

REAR VIEW

NOTE	№	PART NO.	QTY	PART NAME	NOTE	№	PART NO.	QTY	PART NAME
	1	137-4940	2	PLATE					
	2	115-9354	1	BRACKET AS					
		1F-0748	4	NUT(1/2-13)(WELD)					
	3	143-1265	2	GRID AS					
	4	113-6362	1	BRACKET					
	5	4L-6454	12	BOLT(3/8-16)					
	6	5P-1075	16	WASHER					
	7	6V-8801	8	NUT(3/8-16)					
	8	8T-4896	4	WASHER					
	9	5P-2566	4	BOLT(1/2-13)					
	10	5P-1076	4	WASHER					

J119916 X01

SAND BLAST GRID GROUP (115-9589 N/S)
AN ATTACHMENT

FRAME AND BODY

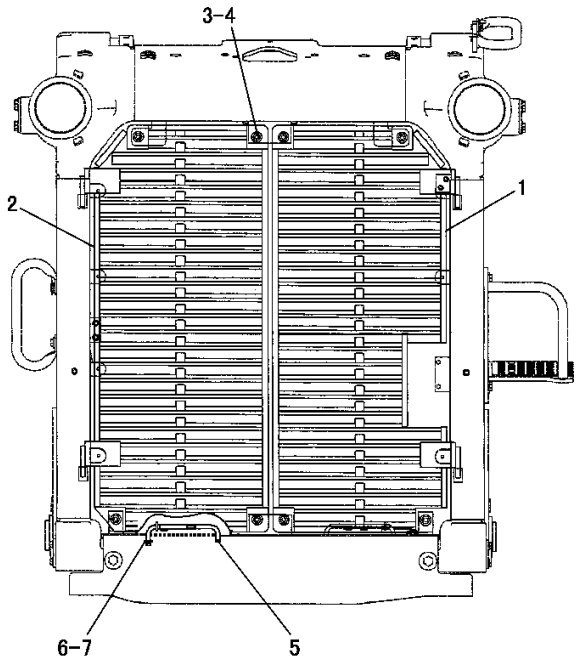

NOTE	Nº	PART NO.	QTY	PART NAME
	1	239-1460	1	DOOR AS(LH)
	2	239-1461	1	DOOR AS(RH)
	3	5P-2424	8	BOLT(1/2-13)
	4	5P-1076	8	WASHER
	5	9W-2822	1	ROD
	6	3B-4615	2	COTTER PIN
	7	5P-1075	2	WASHER

J135943 X01

RADIATOR GRILL GROUP (220-8044 N/S) -HINGED-HEAVY DUTY
AN ATTACHMENT

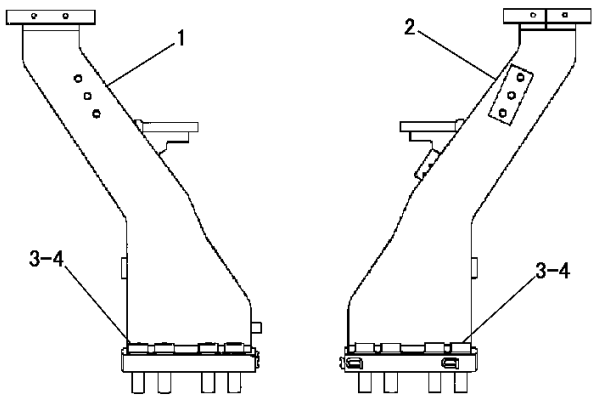

REAR VIEW

NOTE	Nº	PART NO.	QTY	PART NAME
	1	163-8742	1	SUPPORT AS(LH)
		189-9240	2	LINK
	2	163-8743	1	SUPPORT AS(RH)
		189-9240	2	LINK
	3	7X-0428	16	BOLT(1-1/4)
	4	7X-0533	16	WASHER

J119101 X00

ROPS MOUNTING GROUP (163-8744 N/S)
PART OF 322-6115-Page 236

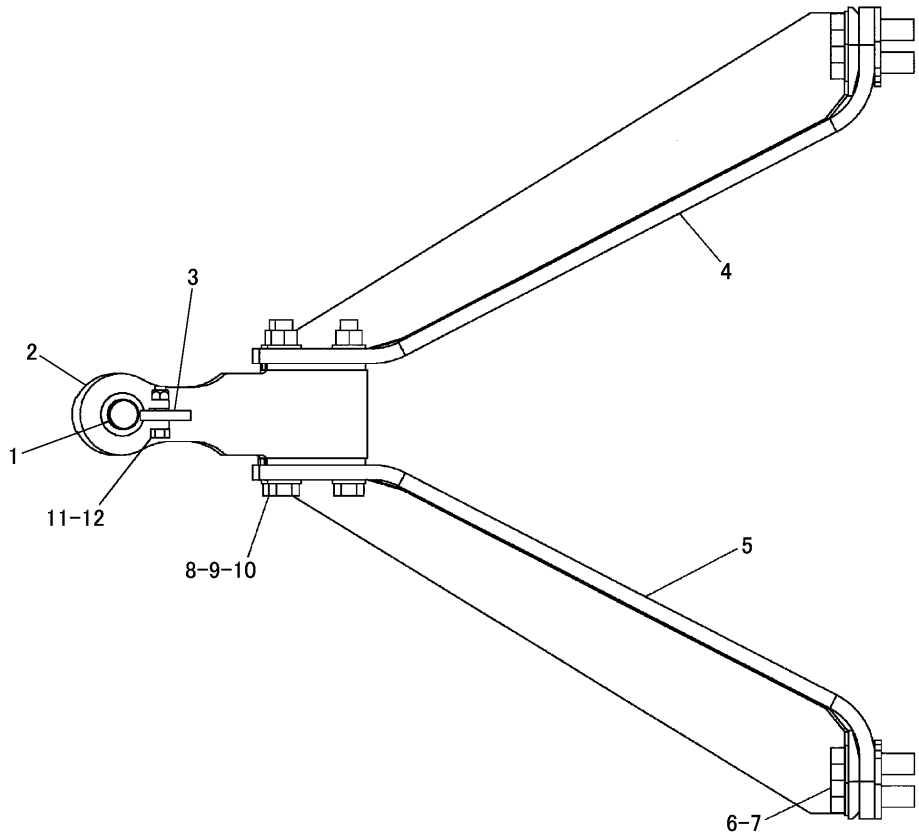

NOTE	№	PART NO.	QTY	PART NAME	NOTE	№	PART NO.	QTY	PART NAME
	1	2R-0179	1	PIN AS					
	2	3T-6239	1	CLEVIS					
	3	7B-0863	1	LATCH					
	4	9W-3425	1	BRACKET AS(LH)					
	5	9W-3423	1	BRACKET AS(RH)					
	6	7X-0428	8	BOLT(1 1/4-7)					
	7	7X-0533	8	WASHER					
	8	6V-8190	4	NUT(1-8)					
	9	7X-0418	4	BOLT(1-8)					
	10	8T-5361	8	WASHER					
	11	3K-2889	1	LOCKNUT(5/8-11)					
	12	8T-6871	1	BOLT(5/8-11)					

J119339 X00

DRAWBAR GROUP (164-5675 N/S)
AN ATTACHMENT

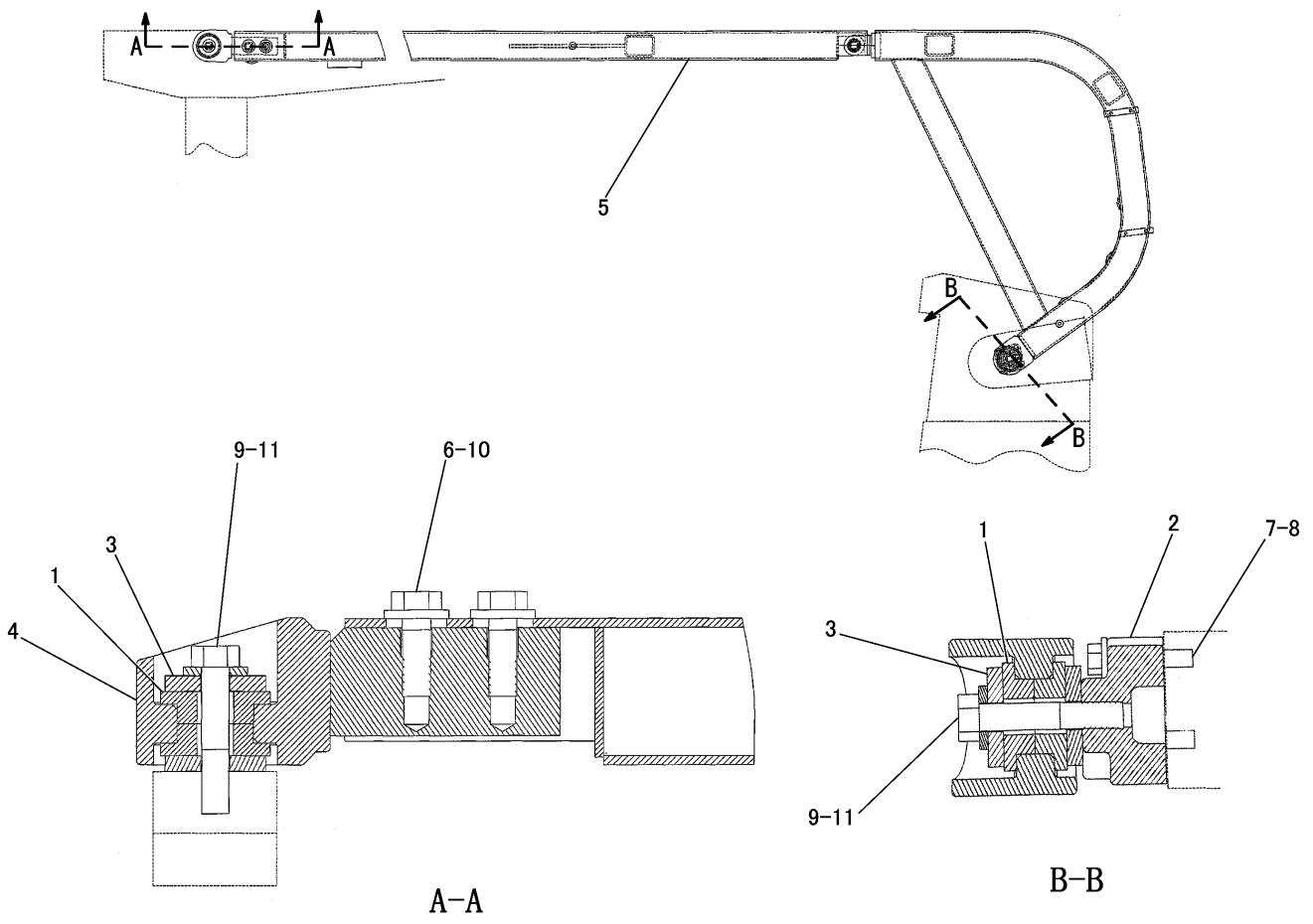

NOTE	№	PART NO.	QTY	PART NAME	NOTE	№	PART NO.	QTY	PART NAME
	1	6T-1698	8	MOUNT					
	2	8E-9532	2	SPACER					
	3	150-1955	8	PLATE					
	4	235-0541	2	BLOCK AS					
Y	5	280-2045	1	SWEEP AS					
	6	8T-5439	4	WASHER					
	7	5P-1076	8	WASHER					
	8	7X-0325	8	BOLT(1/2-13)					
	9	7X-0582	4	WASHER					
	10	7X-2563	4	BOLT(M20×2.5)					
	11	8C-8842	4	BOLT(3/4-10)					
YF	12	330-5270	1	CAB AR					

F-NOT SHOWN
Y-SEPARATE ILLUSTRATION

J155890 X00

SWEEP GROUP (280-2044 N/S)
REFERENCE:280-2045-Page 278 330-5270-Page 404
AN ATTACHMENT

FRAME AND BODY

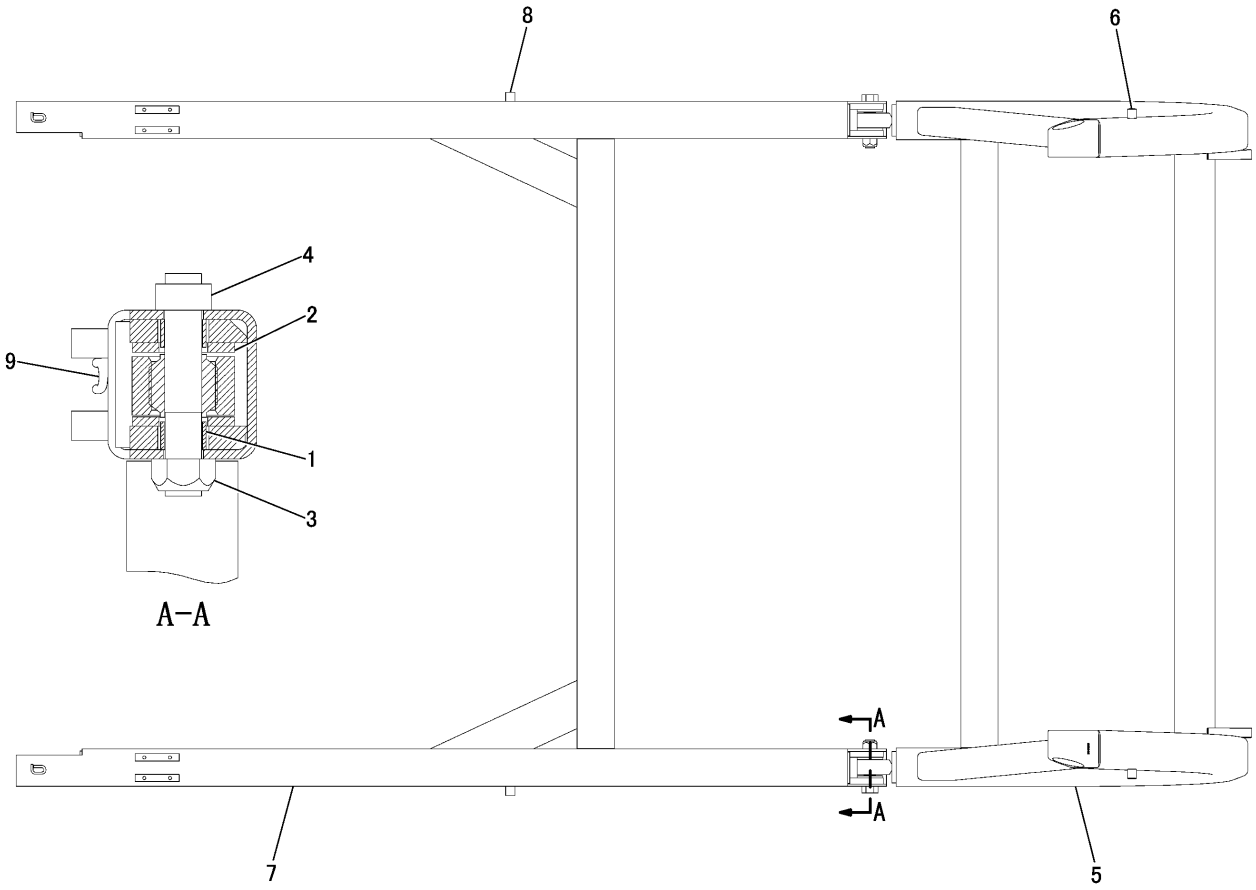

NOTE	№	PART NO.	QTY	PART NAME	NOTE	№	PART NO.	QTY	PART NAME
	1	1P-2772	4	SPACER					
	2	8P-5244	4	WASHER					
	3	6K-3632	2	LOCKNUT(1-8)					
	4	8C-8844	2	BOLT(1-8)					
	5	280-2046	1	GUARD AS					
		7T-1099	6	LINK					
	6	9R-2640	2	BOSS(M12×1.75)					
	7	280-2047	1	GUARD AS					
	8	9R-2640	2	BOSS(M12×1.75)					
	9	7T-1099	2	LINK					

J155891 -01

SWEEP ASSEMBLY (280-2045 N/S)
PART OF 280-2044-Page 277
AN ATTACHMENT

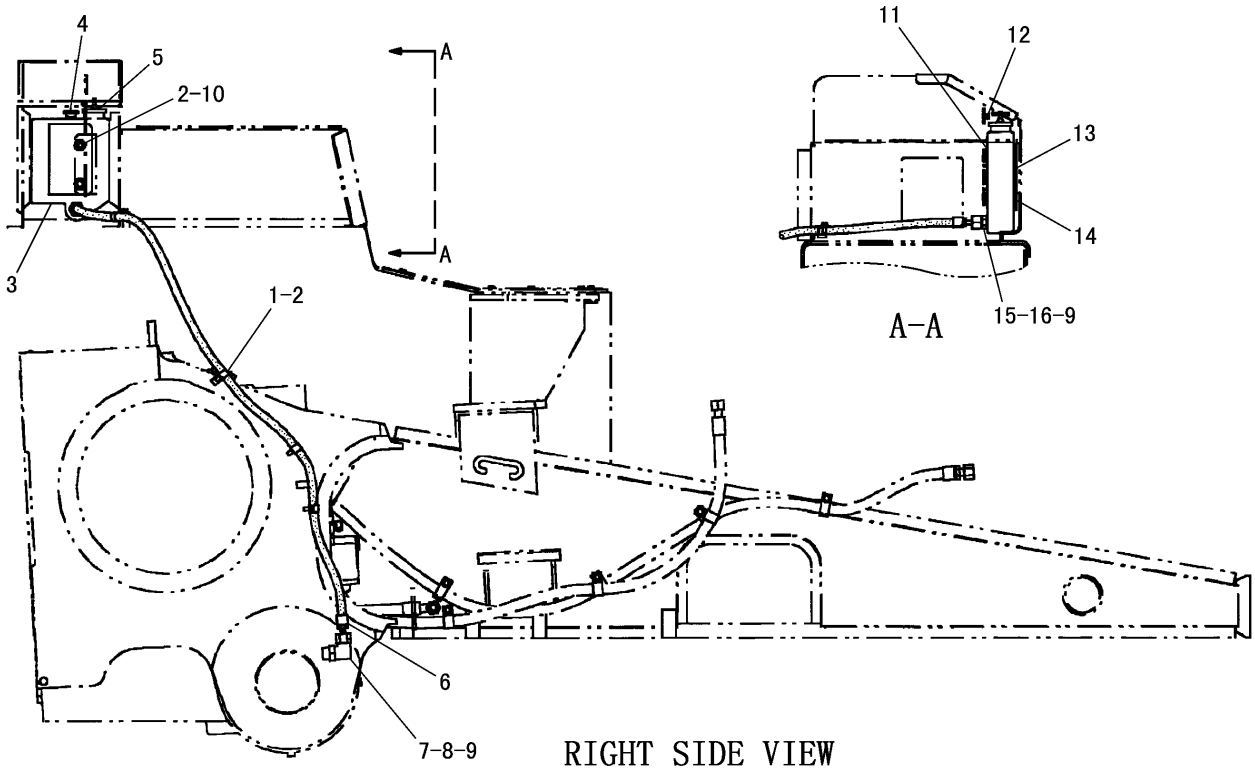

RIGHT SIDE VIEW

NOTE	№	PART NO.	QTY	PART NAME	NOTE	№	PART NO.	QTY	PART NAME
	1	1S-0994	4	CLIP					
		5S-7379	4	BOLT(3/8-16)					
	2	8T-4896	6	WASHER					
	3	9U-9409	1	BOTTLE					
	4	9G-5127	1	BREATHER					
	5	9W-8277	1	CAP AS					
	6	205-5165	1	HOSE AS					
	7	6V-9182	1	ELBOW					
	8	7M-8485	1	SEAL					
	9	6V-9746	2	SEAL					
	10	5P-8167	2	BOLT(3/8-16)					
	11	9W-1695	1	PAD					
	12	5S-7349	1	BOLT(1/4-20)					
		8T-4205	1	WASHER					
	13	9W-1694	1	PAD					
	14	9W-1693	1	SUPPORT AS					
	15	6V-9874	1	CONNECTOR					
	16	3K-0360	1	SEAL					

J119100 X00

LUBRICATION GROUP (164-2879 N/S) -PIVOT SHAFT
PART OF 322-6115-Page 236

FRAME AND BODY

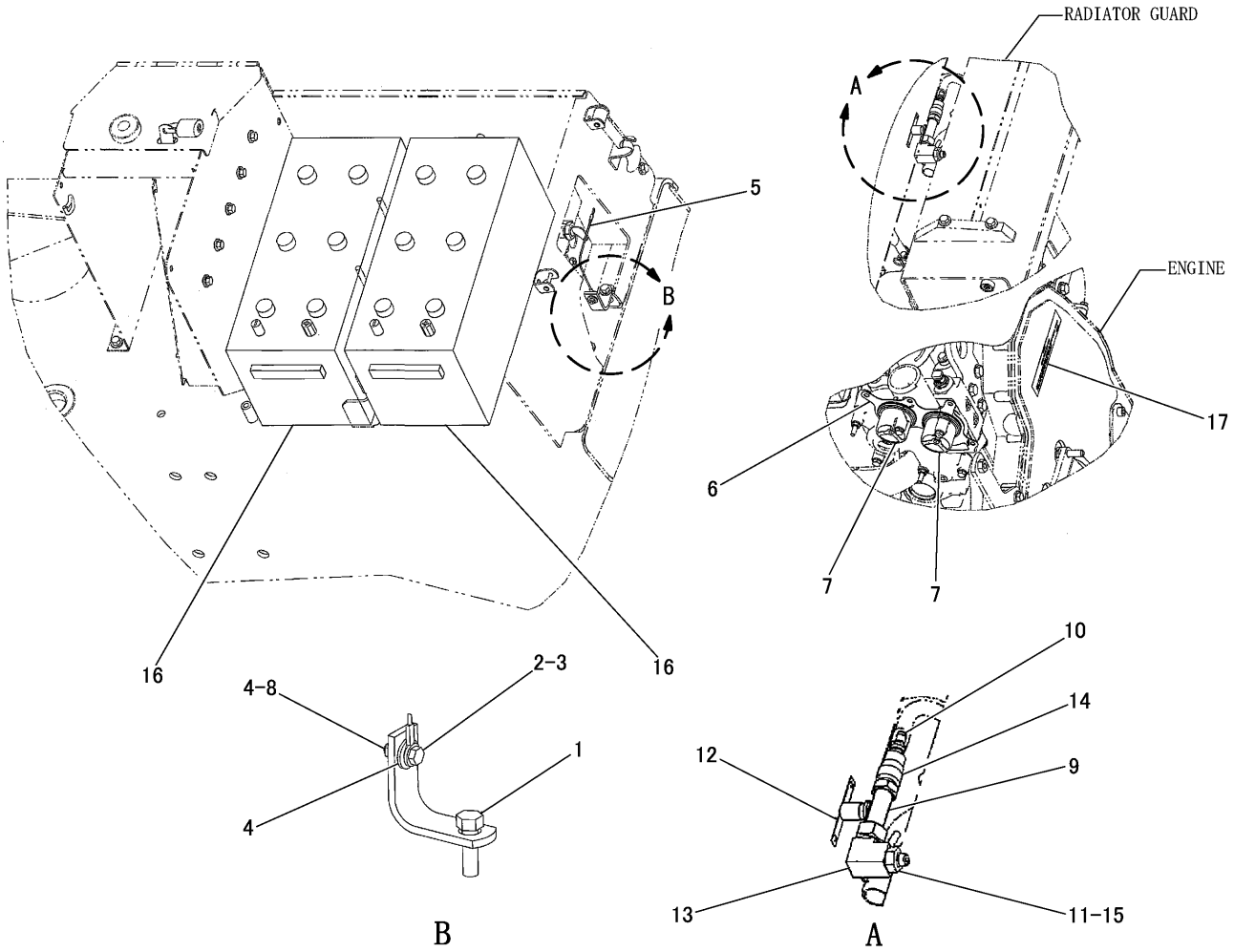

NOTE	№	PART NO.	QTY	PART NAME	NOTE	№	PART NO.	QTY	PART NAME
	1	9B-7237	1	BOLT(3/8-16)	F	18	9X-6076	1	FILM(NOTICE)(VENT VALVE) (ON LH SIDE OF HOOD AT FRONT OF ENGINE)
	2	8T-4205	1	WASHER					
	3	8T-4138	1	BOLT(M6×1)					
	4	5P-4115	2	WASHER					
Z	5	109-2377	1	LANYARD AS					
		5P-7958	1	SLEEVE					
		5P-7957	1	LANYARD					
	6	131-4164	1	GASKET					
	7	247-7133	2	REGULATOR					
	8	5C-2890	1	NUT(M6×1)					
Z	9	270-8496	1	TANK GP					
	10	1P-9328	1	FITTING					
	11	3E-7448	1	CONNECTOR					
	12	5P-7090	1	VALVE					
	13	003-2143	1	ELBOW					
	14	127-5588	1	COUPLING					
	15	3J-7354	1	SEAL					
	16	9X-9730	2	BATTERY(1300A)					
	17	9X-8703	1	FILM(NOTICE)(VENT VALVE)					

F-NOT SHOWN
Z-NOT SERVICED SEPARATELY

J157032 X00

COLD WEATHER ARRANGEMENT (270-3283 N/S)
AN ATTACHMENT

UNDERCARRIAGE

CONSISTS OF :

			PAGE
1	7T-6966	EQUALIZER BAR GROUP	289
1	143-9521	EQUALIZER BAR REMOTE LUBRICATION GROUP	288
2	108-1812	TRACK ADJUSTER AND RECOIL GROUP	285
1	127-8426	TRACK ROLLER FRAME GROUP	286
8	125-4178	TRACK ROLLER GROUP(SINGLE FLANGE)	294
6	125-4179	TRACK ROLLER GROUP(DOUBLE FLANGE)	297
8	142-7092	TRACK IDLER CAP GROUP	293
4	192-0220	TRACK IDLER GROUP	301
2	115-6307	TRACK GROUP	291

J116570 X07

UNDERCARRIAGE ARRANGEMENT (127-8424 N/S)
PART OF 322-6112-Page 1

CONSISTS OF :

			PAGE
1	125-4180	TRACK ROLLER ARRANGEMENT	283
1	163-8692	TRACK ROLLER GUARD GROUP	304

J119384 X00

TRACK GUIDING ARRANGEMENT (203-6527 N/S)
AN ATTACHMENT

CONSISTS OF :

			PAGE
1	125-4180	TRACK ROLLER ARRANGEMENT	283
2	163-8687	TRACK GUIDE GUARD GROUP	284

J155832 X01

TRACK GUIDING ARRANGEMENT (203-6523 N/S)
AN ATTACHMENT

CONSISTS OF :

			PAGE
2	163-8691	CARRIER ROLLER MOUNTING GROUP	306
1	168-5051	REAR FRAME ASSEMBLY(RH)	305
1	168-5052	REAR FRAME ASSEMBLY(LH)	305
2	1P-8717	TRACK CARRIER ROLLER GROUP	303

J155886 X01

CARRIER ROLLER ARRANGEMENT (166-2085 N/S)
AN ATTACHMENT

CONSISTS OF :

			PAGE
2	141-4942	FINAL DRIVE GROUP	210
4	248-5316	TRACK IDLER GROUP	302
6	248-5318	TRACK ROLLER GROUP(DOUBLE FLANGE)	299
8	248-5320	TRACK ROLLER GROUP(SINGLE FLANGE)	295

J157033 X00

ARCTIC ARRANGEMENT (252-1041 N/S)
AN ATTACHMENT

CONSISTS OF :

			PAGE
10	231-3092	TRACK ROLLER GROUP(DOUBLE FRANGE)	298

J135961 X01

TRACK ROLLER ARRANGEMENT (125-4180 N/S)
PART OF 203-6523-Page 282,203-6527-Page 281
AN ATTACHMENT

UNDERCARRIAGE

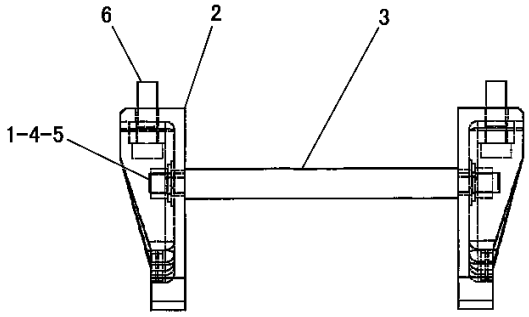

NOTE	№	PART NO.	QTY	PART NAME
	1	7D-8508	8	NUT(7/8-14)
	2	163-8686	4	GUARD
	3	165-3663	4	TUBE
	4	165-3664	4	ROD
	5	8C-6913	8	WASHER
	6	7X-0383	8	BOLT(7/8-9)
		178-7195	8	SPACER

J155834 X01

TRACK GUIDE GUARD GROUP (163-8687 N/S)
PART OF 203-6523-Page 282
AN ATTACHMENT

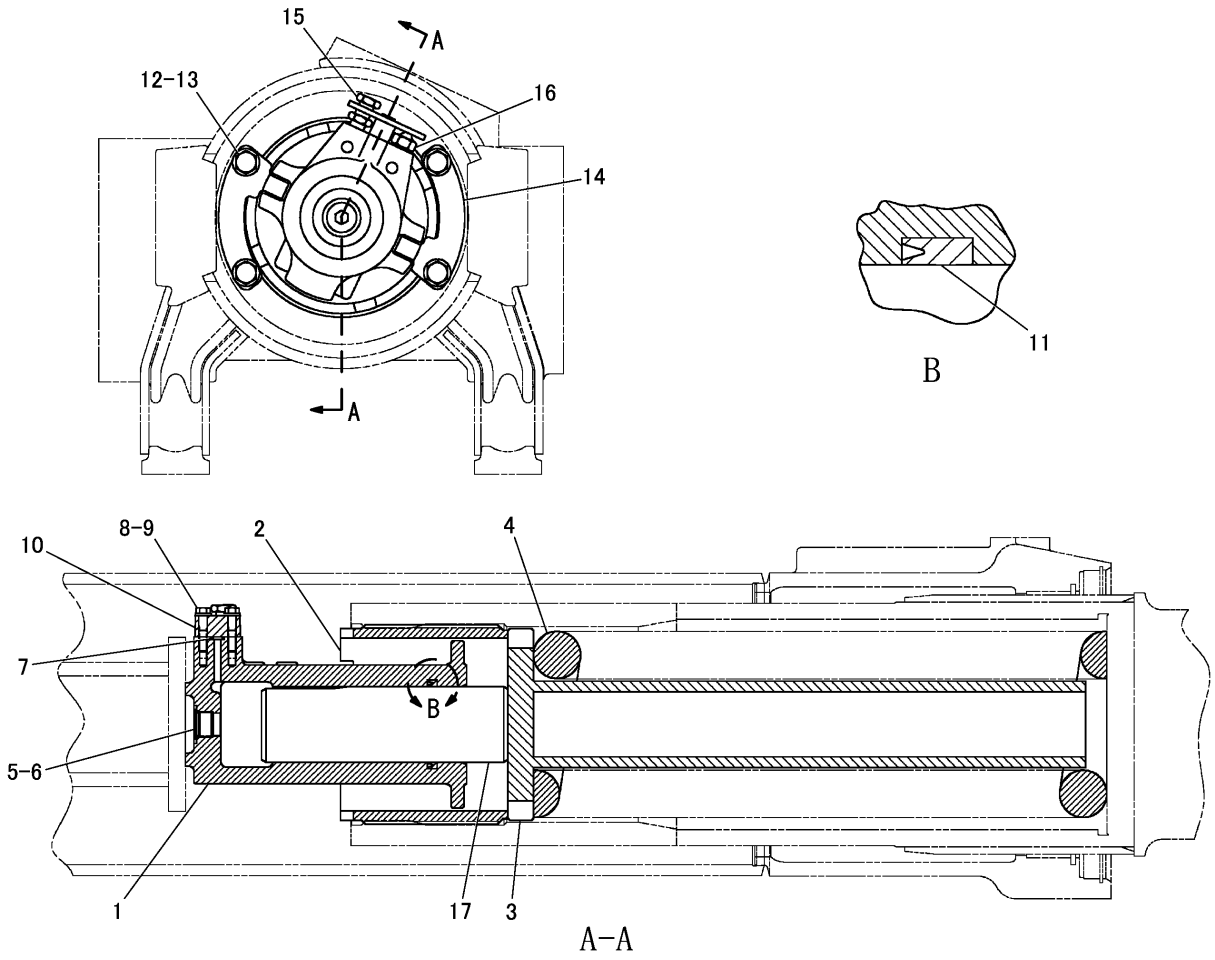

NOTE	№	PART NO.	QTY	PART NAME	NOTE	№	PART NO.	QTY	PART NAME
	1	112-3041	1	CYLINDER					
	2	112-3042	1	RETAINER					
	3	112-4919	1	PLATE AS					
	4	8E-2112	1	SPRING					
	5	9S-8009	1	PLUG					
	6	4K-1388	1	SEAL					
	7	2J-6274	1	SEAL					
	8	0S-1571	2	BOLT(3/8-16)					
	9	5M-2894	2	WASHER					
	10	3W-2369	1	PLATE AS					
	11	167-2323	1	SEAL					
	12	8T-9393	4	BOLT(5/8-11)					
	13	9X-8257	4	WASHER					
	14	112-3043	2	LOCK					
	15	2S-5926	1	VALVE(RELIFE)					
	16	190-8609	1	VALVE(FILL)					
	17	3W-0640	1	PISTON					

J133614 X04

TRACK ADJUSTER AND RECOIL GROUP (108-1812 N/S)
PART OF 127-8424-Page 281

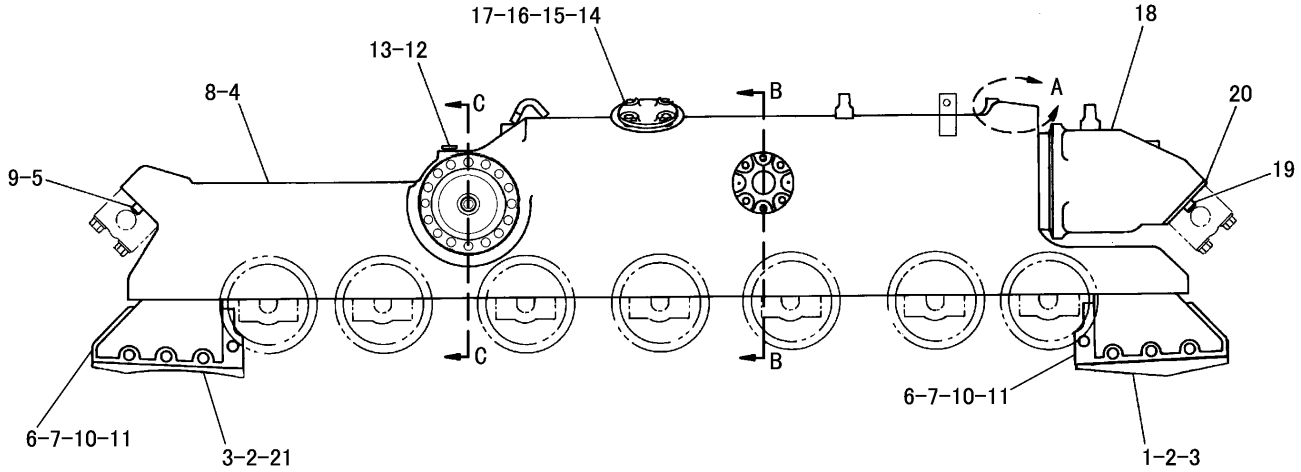

NOTE	№	PART NO.	QTY	PART NAME
	1	165-7211	4	STRIP
	2	7X-0343	24	BOLT(5/8-11)
	3	8T-4122	24	WASHER
	4	128-8128	1	FRAME AS(RH)
	5	7T-5886	2	DOWEL
	6	165-7574	2	GUARD AS
				(FRONT-OUTER,REAR-INNER)
		2M-2933	1	NUT(1/2-13)(WELD)
	7	165-7576	2	GUARD AS
				(FRONT-INNER,REAR-OUTER)
		2M-2933	1	NUT(1/2-13)(WELD)
	8	128-8130	1	FRAME AS(LH)
	9	7T-5886	2	DOWEL
	10	165-7574	2	GUARD AS
				(FRONT-INNER,REAR-OUTER)
		2M-2933	1	NUT(1/2-13)(WELD)
	11	165-7576	2	GUARD AS
				(FRONT-OUTER,REAR-INNER)
		2M-2933	1	NUT(1/2-13)(WELD)
	12	4T-2069	2	PLUG
	13	2H-3932	2	SEAL
	14	8E-1212	2	COVER AS
		5P-9891	1	PLATE
		7B-3028	4	DRIVE SCREW
	15	5H-6734	2	SEAL
	16	8T-2502	8	BOLT(3/8-16)
	17	8T-4896	8	WASHER
	18	112-3023	2	FRAME AS
		9W-0709	1	BEARING
		4B-4158	4	SCREW
		6V-2226	1	PLATE
		6Y-2835	1	RESISTOR AS
	19	7T-5886	1	DOWEL
	20	131-8207	4	SHIM
	21	203-8040	4	STRIP

J137491 X07

TRACK ROLLER FRAME GROUP (127-8426 N/S) -PART 1 OF 2

PART OF 127-8424-Page 281

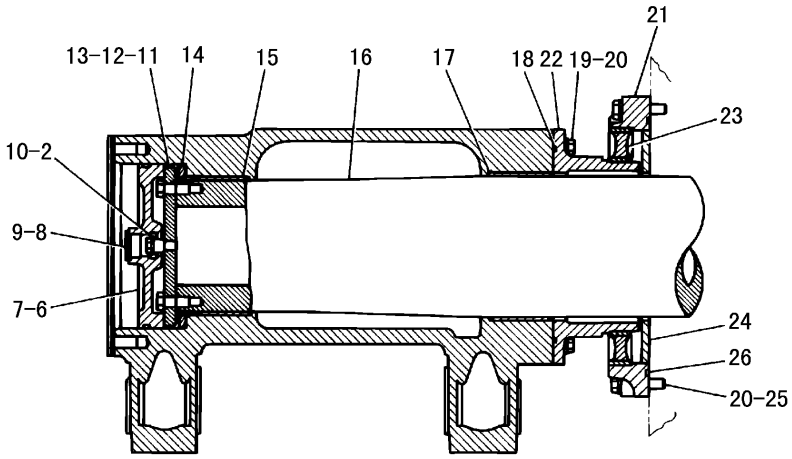

C-C

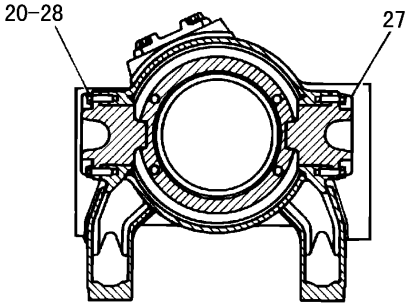

B-B

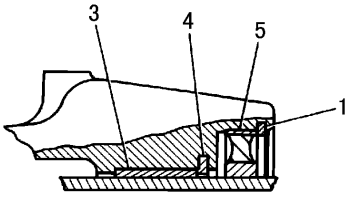

A

NOTE	№	PART NO.	QTY	PART NAME	NOTE	№	PART NO.	QTY	PART NAME
	1	9W-3301	2	RING		20	8T-4223	56	WASHER
	2	8T-2502	2	BOLT(3/8-16)		21	7T-1149	2	RETAINER AS
	3	7G-7379	2	BEARING			7T-1152	1	RETAINER
	4	3T-5898	2	RING		22	7T-1150	1	RETAINER
	5	9X-4584	2	SEAL AS		23	7T-1151	1	SEAL
		8T-5071	1	GUARD		24	7T-1153	1	PLATE
	6	6T-2302	2	PLATE		25	5P-2424	16	BOLT(1/2-13)
	7	2D-1690	2	SEAL		26	6V-3263	2	SEAL
	8	9S-8009	2	PLUG		27	6Y-8037	4	GUIDE AS
	9	4K-1388	2	SEAL		28	8T-8919	24	BOLT(1/2-13)
	10	7T-6079	2	SPACER					
	11	3T-4245	2	PLATE					
	12	8T-8917	24	BOLT(1/2-13)					
	13	6S-3002	2	SEAL					
	14	112-3044	2	RING					
	15	3T-4244	2	BEARING					
	16	6T-9204	1	SHAFT					
	17	3T-4243	2	BEARING					
	18	5P-5374	2	SEAL					
	19	8C-4436	16	BOLT(1/2-13)					

J137492 X07

TRACK ROLLER FRAME GROUP (127-8426 N/S) -PART 2 OF 2

PART OF 127-8424-Page 281

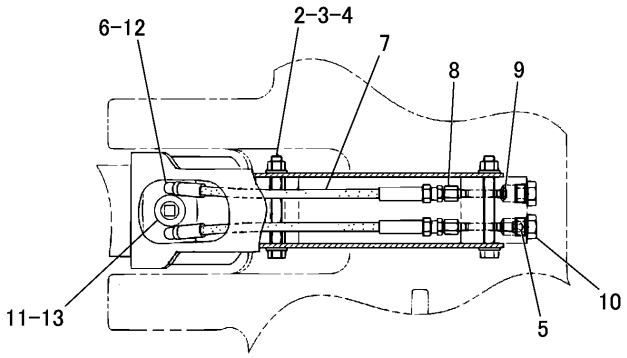

A-A

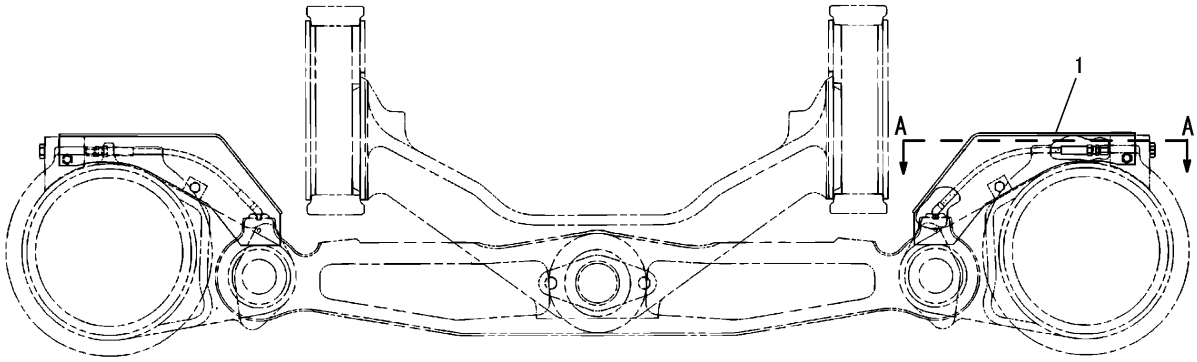

FRONT VIEW

NOTE	№	PART NO.	QTY	PART NAME	NOTE	№	PART NO.	QTY	PART NAME
	1	142-5149	2	GUARD AS					
	2	7X-0332	4	BOLT(1/2-13)					
	3	5P-8245	4	WASHER					
	4	1D-4719	4	NUT(1/2-13)					
	5	2D-4867	2	FITTING					
	6	9L-5125	4	ELBOW					
	7	4Y-7483	4	HOSE AS					
	8	6K-6967	4	ADAPTER					
	9	1K-6853	2	FITTING					
	10	9S-4189	4	PLUG					
	11	260-5152	2	PLUG					
	12	260-5153	4	CONNECTOR					
	13	5F-1678	2	SEAL					

J133758 X02

EQUALIZER BAR REMOTE LUBRICATION GROUP (143-9521 N/S)
PART OF 127-8424-Page 281

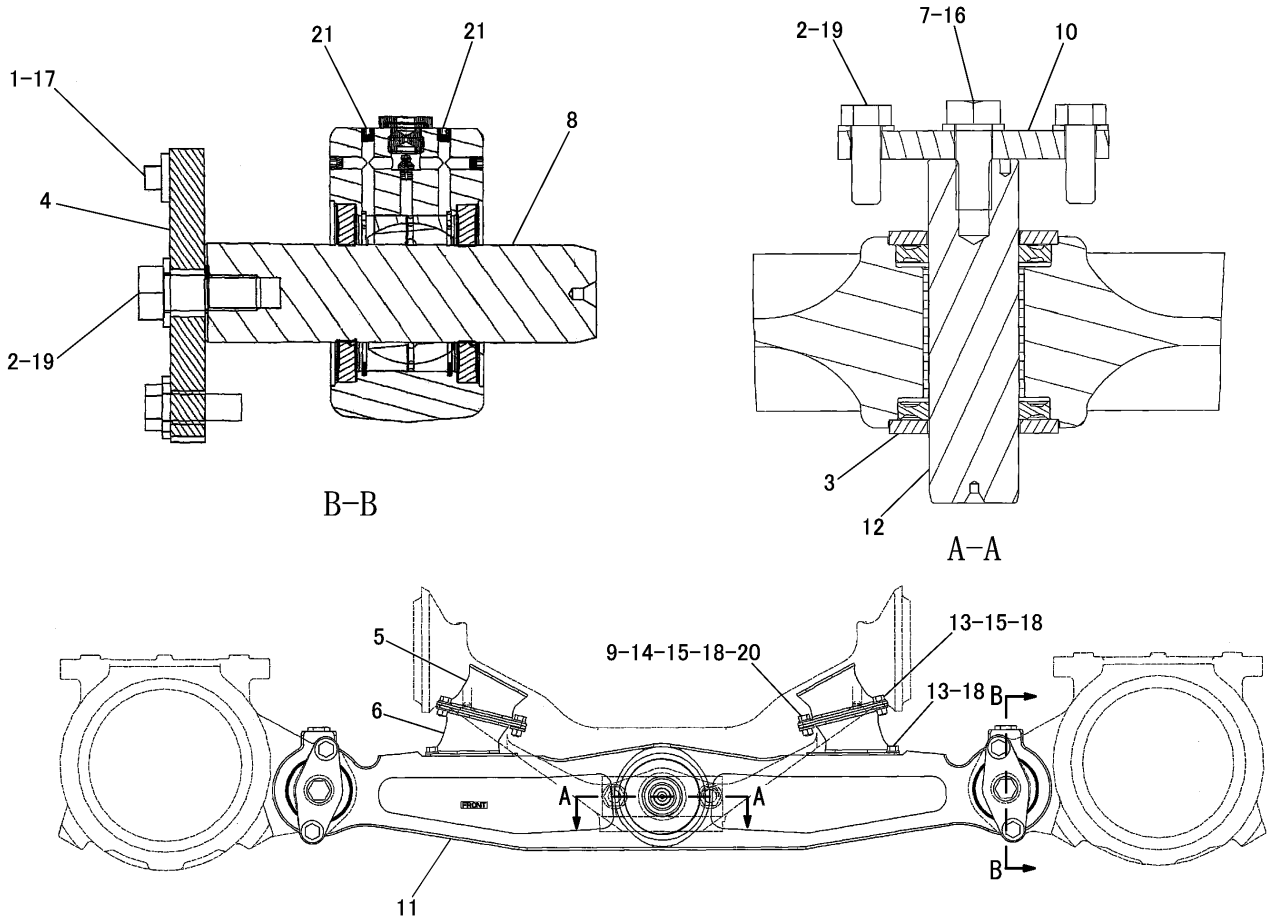

NOTE	№	PART NO.	QTY	PART NAME	NOTE	№	PART NO.	QTY	PART NAME
	1	0S-1897	4	BOLT(3/4-16)		21	2F-5326	4	SETSCREW(3/8-16)
	2	2H-3745	4	BOLT(1-14)					
	3	3T-5294	2	SPACER					
	4	6T-3827	2	FLANGE					
	5	6Y-7795	2	PAD AS					
	6	6Y-7796	2	PAD AS					
	7	7F-6112	1	BOLT(1 1/4-12)					
	8	7T-6427	2	PIN					
	9	8F-4028	4	SPACER					
	10	9P-6911	1	PLATE					
Y	11	268-9086	1	EQUALIZER BAR GROUP					
	12	208-5026	1	PIN					
	13	5C-6565	8	BOLT(1/2-13)					
	14	5P-1076	4	WASHER					
	15	6V-8188	8	NUT(1/2-13)					
	16	7X-0533	1	WASHER					
	17	7X-0582	4	WASHER					
	18	8T-4223	16	WASHER					
	19	8T-5361	4	WASHER					
	20	8T-8917	4	BOLT(1/2-13)					

Y-SEPARATE ILLUSTRATION

J156397 X12

EQUALIZER BAR GROUP (7T-6966 N/S)

PART OF 127-8424-Page 281
REFERENCE:268-9086-Page 290

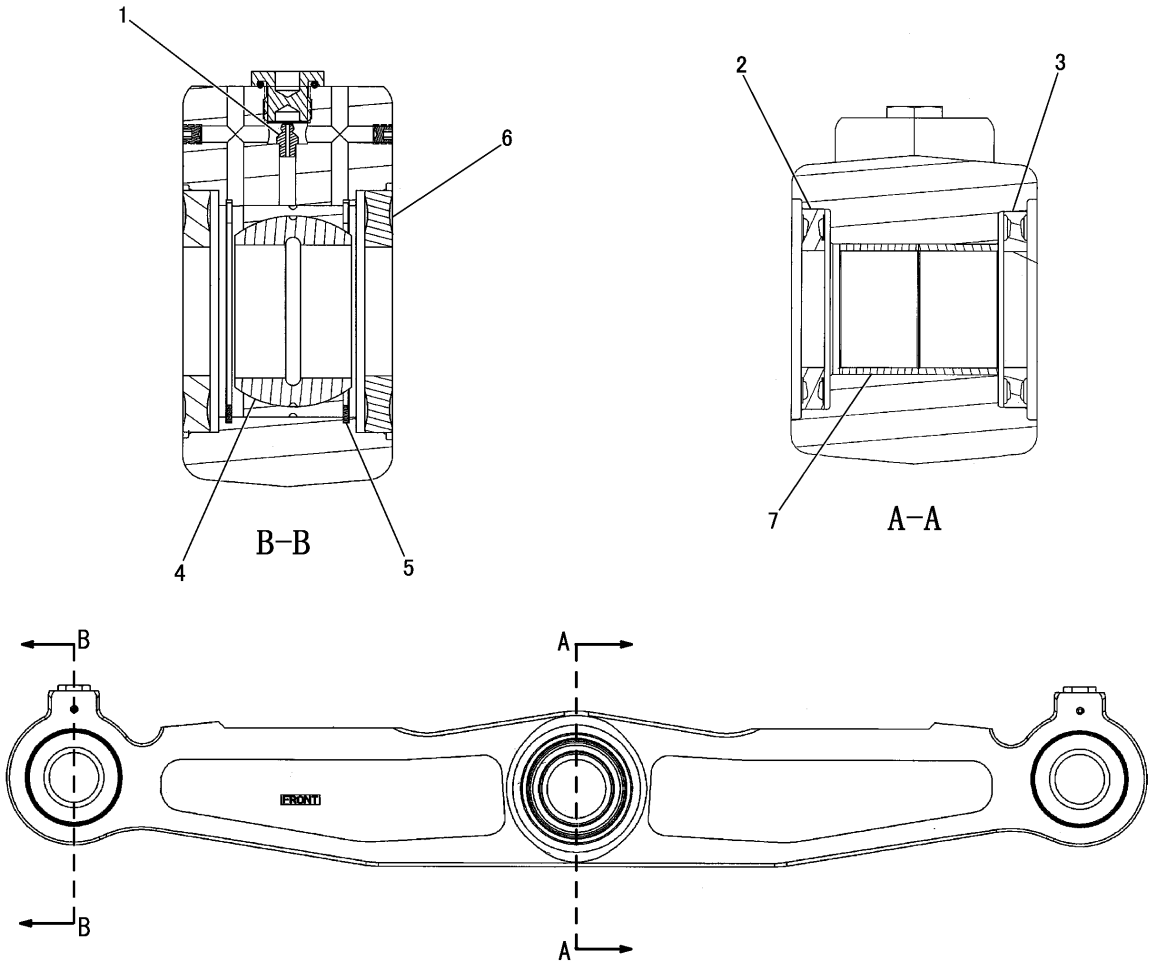

NOTE	№	PART NO.	QTY	PART NAME	NOTE	№	PART NO.	QTY	PART NAME
	1	3B-8489	2	FITTING					
	2	7G-8664	1	SEAL					
	3	7G-8666	1	SEAL					
	4	7J-3216	2	BEARING					
	5	5L-4751	4	RING					
	6	9X-7505	4	SEAL AS					
	7	130-3139	2	BEARING					

J156399 X00

268-9086 EQUALIZER BAR GROUP
PART OF 7T-6966-Page 289

UNDERCARRIAGE

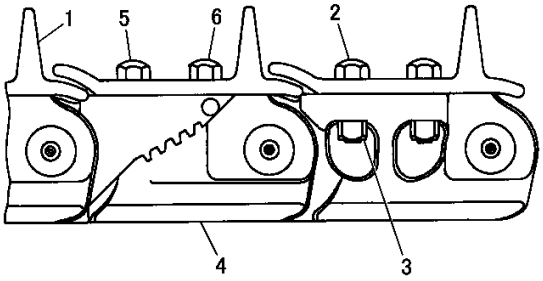

NOTE	№	PART NO.	QTY	PART NAME
	1	7T-2750	40	SHOE
	2	7H-3599	156	BOLT(7/8-14)
	3	2S-2140	156	NUT(7/8-14)
Y	4	115-6301	1	LINK AS
	5	9W-9058	2	BOLT(7/8-14)(MASTER)
	6	6V-1723	2	BOLT(7/8-14)(MASTER)

Y-SEPARATE ILLUSTRATION

J058383 X00

115-6307 TRACK GROUP -560mm GROUSER SHOE-HEAVY DUTY
PART OF 127-8424-Page 281
REFERENCE:115-6301-Page 292

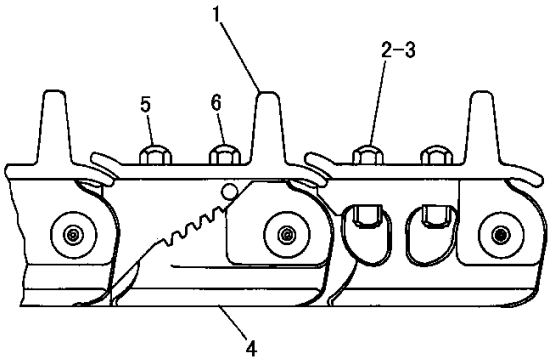

NOTE	№	PART NO.	QTY	PART NAME
	1	7T-5969	40	SHOE
	2	7H-3599	156	BOLT(7/8-14)
	3	2S-2140	156	NUT(7/8-14)
Y	4	115-6301	1	LINK AS
	5	9W-9058	2	BOLT(7/8-14)(MASTER)
	6	6V-1723	2	BOLT(7/8-14)(MASTER)

Y-SEPARATE ILLUSTRATION

J059301 X00

115-6308 TRACK GROUP -610mm GROUSER SHOE-HEAVY DUTY
REFERENCE:115-6301-Page 292
AN ATTACHMENT

UNDERCARRIAGE

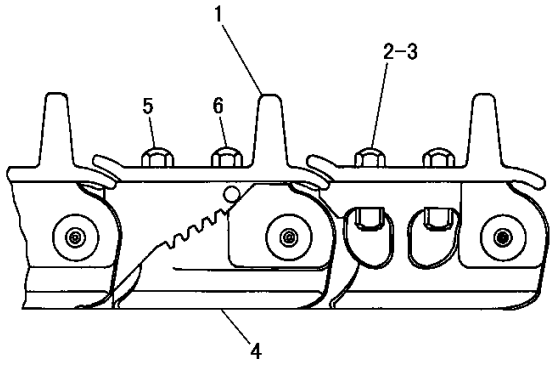

NOTE	№	PART NO.	QTY	PART NAME
	1	7T-5968	40	SHOE
	2	7H-3599	156	BOLT(7/8-14)
	3	2S-2140	156	NUT(7/8-14)
Y	4	115-6301	1	LINK AS
	5	9W-9058	2	BOLT(7/8-14)(MASTER)
	6	6V-1723	2	BOLT(7/8-14)(MASTER)

Y-SEPARATE ILLUSTRATION

J155899 X01

TRACK GROUP (115-6306 N/S) -660mm GROUSER SHOE-HEAVY DUTY
REFERENCE:115-6301-Page 292
AN ATTACHMENT

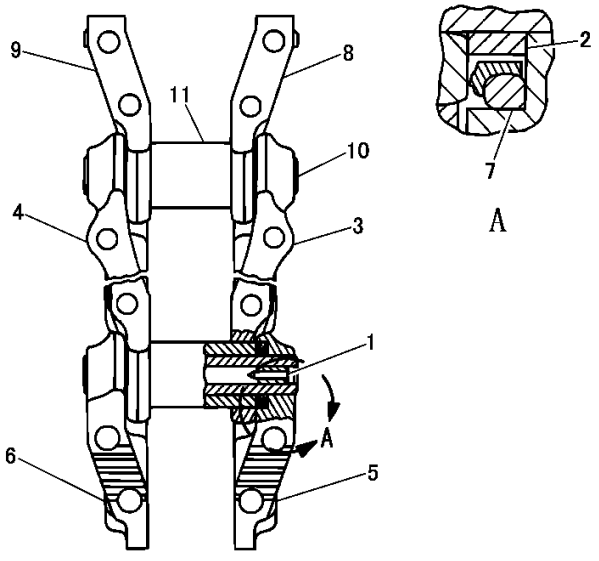

NOTE	№	PART NO.	QTY	PART NAME
	1	6Y-0473	40	PLUG
		7G-4332	40	STOPPER
	2	152-8073	80	RING
	3	6I-9239	39	LINK(RH)
	4	6I-9240	39	LINK(LH)
	5	6I-9241	1	LINK(MASTER)(RH PIN END)
	6	6I-9242	1	LINK(MASTER)(LH PIN END)
	7	239-7943	80	SEAL AS
	8	6I-9243	1	LINK(MASTER)(RH BUSHING END)
	9	6I-9244	1	LINK(MASTER)(LH BUSHING END)
	10	115-4923	40	PIN
	11	115-4924	40	BUSHING

J146332 X03

115-6301 LINK ASSEMBLY
PART OF 115-6306-Page 292,115-6307-Page 291,115-6308-Page 291

UNDERCARRIAGE

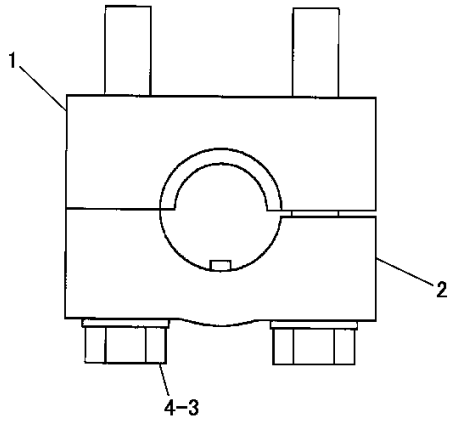

NOTE	№	PART NO.	QTY	PART NAME
	1	8E-8648	1	BLOCK
	2	131-1647	1	CAP AS
		1T-0068	1	PIN
	3	5P-8249	2	WASHER
	4	9S-1322	2	BOLT(7/8-9)

J101549 X01

TRACK IDLER CAP GROUP (142-7092 N/S)
PART OF 127-8424-Page 281

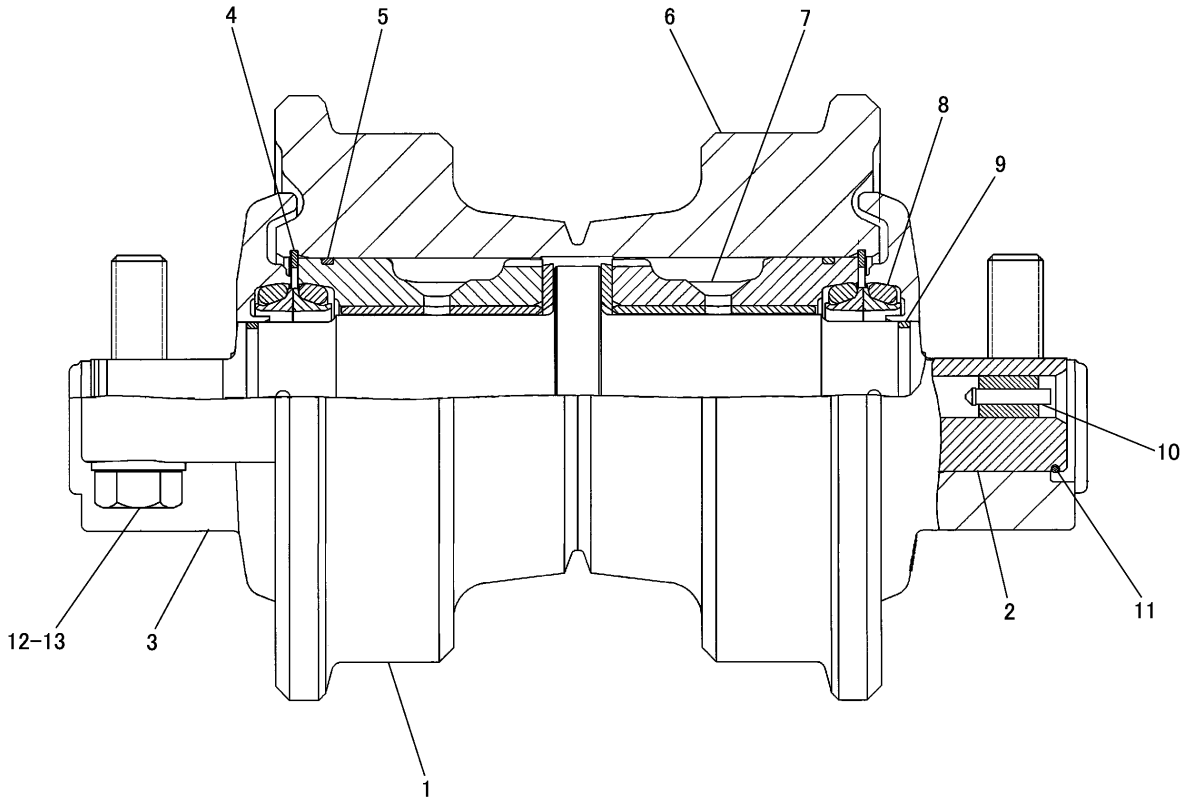

NOTE	№	PART NO.	QTY	PART NAME	NOTE	№	PART NO.	QTY	PART NAME
	1	231-3090	1	ROLLER GROUP					
	2	118-1628	1	SHAFT					
	3	124-8262	2	COLLAR					
	4	121-1258	2	RING					
	5	4H-9105	2	SEAL					
	6	124-8251	1	RIM AS					
	7	124-8267	2	BUSHING AS					
		1P-8786	1	BEARING AS					
		9B-2289	2	PIN					
	8	171-5882	2	SEAL GROUP					
		162-2166	2	TORIC RING					
	9	8F-6711	2	SEAL					
	10	6Y-0473	1	PLUG					
		7G-4332	1	STOPPER					
	11	6H-2953	2	RING					
	12	1D-4629	4	BOLT(7/8-9)					
	13	5P-8249	4	WASHER					

J135917 X02

TRACK ROLLER GROUP (125-4178 N/S) -SINGLE FLANGE
PART OF 127-8424-Page 281

CONSISTS OF :

			PAGE
1	248-5319	TRACK ROLLER GROUP	296
4	1D-4629	BOLT(7/8-9)	
4	5P-8249	WASHER	

J157038 X00

TRACK ROLLER GROUP (248-5320 N/S) -SINGLE FLANGE
PART OF 252-1041-Page 283
AN ATTACHMENT

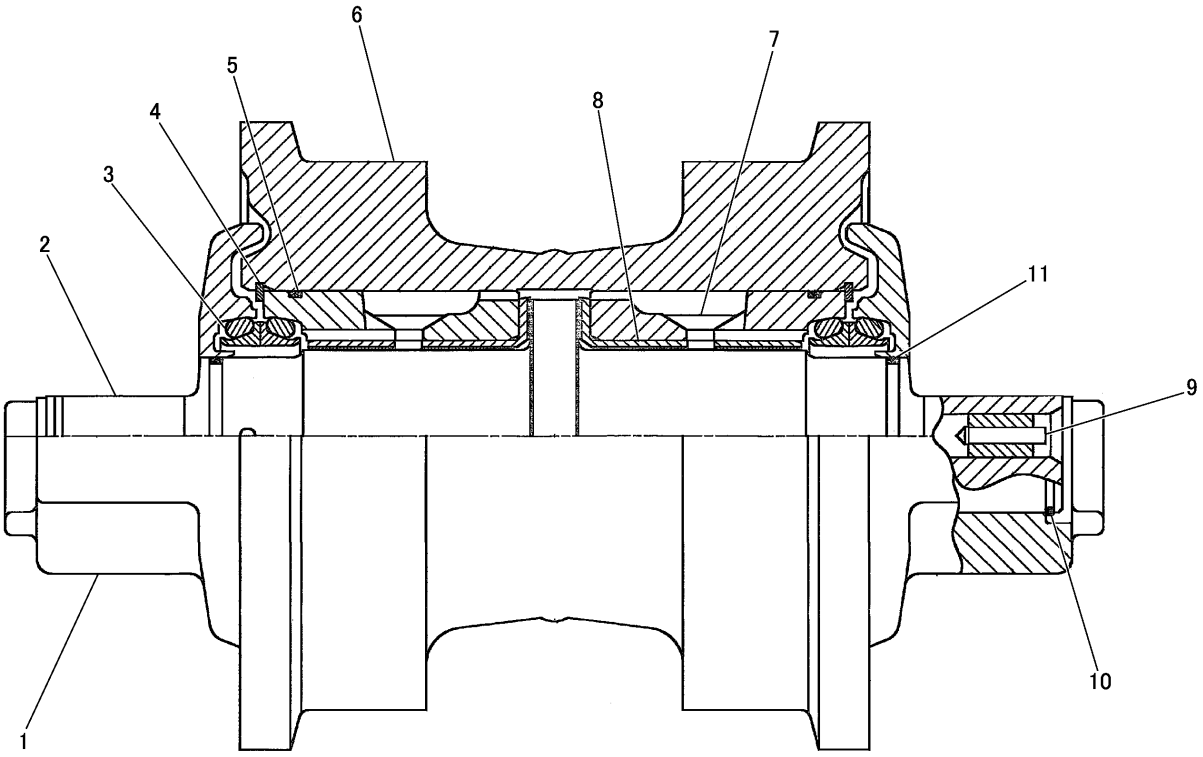

NOTE	№	PART NO.	QTY	PART NAME	NOTE	№	PART NO.	QTY	PART NAME
	1	124-8262	2	COLLAR					
	2	118-1628	1	SHAFT					
	3	171-5882	2	SEAL GROUP					
		162-2166	2	TORIC RING					
	4	121-1258	2	RING					
	5	4H-9105	2	SEAL(117.8mm OD)					
	6	124-8251	1	RIM AS					
	7	124-8267	2	BUSHING AS					
		9B-2289	2	PIN					
	8	8P-6651	1	BEARING AS					
	9	6Y-0473	1	PLUG					
		7G-4332	1	STOPPER					
	10	6H-2953	2	RING					
	11	8F-6711	2	SEAL(63.8mm OD)					

J157039 X00

248-5319 TRACK ROLLER GROUP -SINGLE FLANGE
PART OF 248-5320-Page 295
AN ATTACHMENT

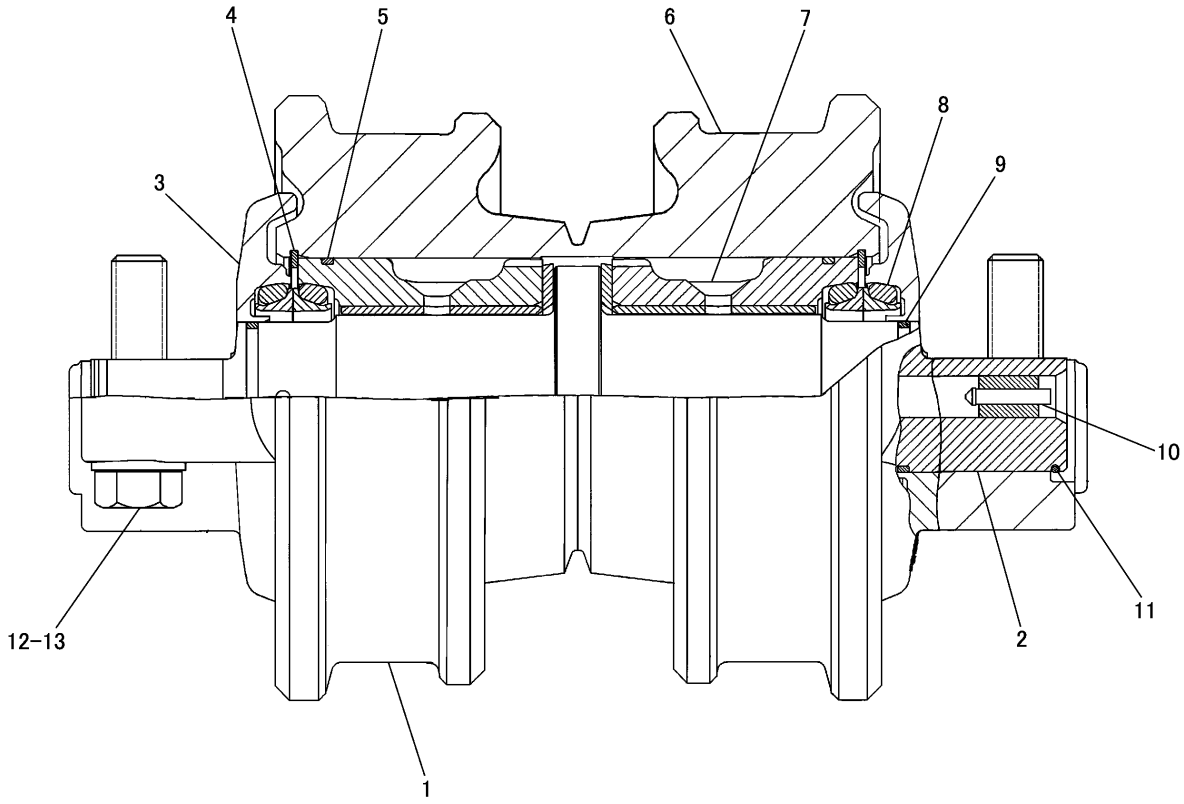

NOTE	№	PART NO.	QTY	PART NAME	NOTE	№	PART NO.	QTY	PART NAME
	1	231-3091	1	ROLLER GROUP					
	2	118-1628	1	SHAFT					
	3	124-8262	2	COLLAR					
	4	121-1258	2	RING					
	5	4H-9105	2	SEAL					
	6	124-8255	1	RIM AS					
	7	124-8267	2	BUSHING AS					
		1P-8786	1	BEARING AS					
		9B-2289	2	PIN					
	8	171-5882	2	SEAL GROUP					
		162-2166	2	TORIC RING					
	9	8F-6711	2	SEAL					
	10	6Y-0473	1	PLUG					
		7G-4332	1	STOPPER					
	11	6H-2953	2	RING					
	12	1D-4629	4	BOLT(7/8-9)					
	13	5P-8249	4	WASHER					

J135916 X02

TRACK ROLLER GROUP (125-4179 N/S) -DOUBLE FLANGE
PART OF 127-8424-Page 281

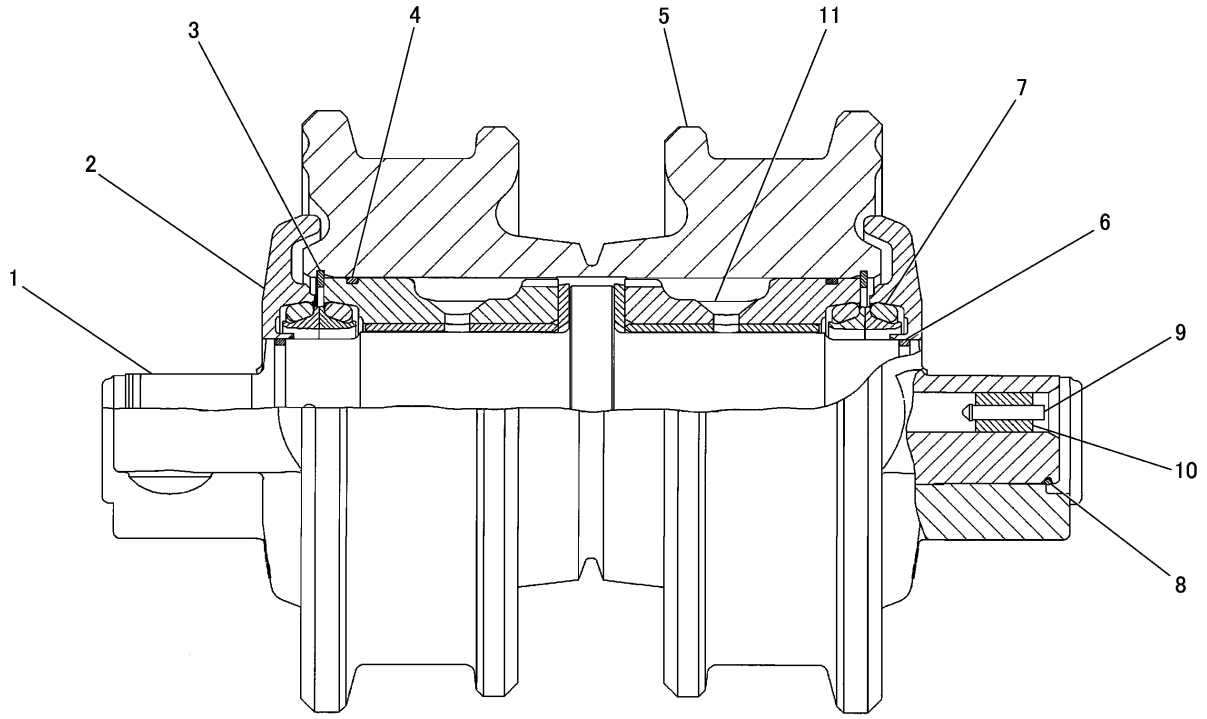

NOTE	№	PART NO.	QTY	PART NAME	NOTE	№	PART NO.	QTY	PART NAME
	1	118-1628	1	SHAFT					
	2	124-8262	2	COLLAR					
	3	121-1258	2	RING					
	4	4H-9105	2	SEAL					
	5	124-8259	1	RIM AS					
	6	8F-6711	2	SEAL					
	7	171-5882	2	SEAL GROUP					
		162-2166	2	TORIC RING					
	8	6H-2953	2	RING					
	9	6Y-0473	1	PLUG					
	10	7G-4332	1	STOPPER					
	11	124-8267	2	BUSHING AS					
		8P-6651	1	BEARING AS					
		9B-2289	2	PIN					

J135960 X00

231-3092 TRACK ROLLER GROUP -DOUBLE FLANGE
PART OF 125-4180-Page 283
AN ATTACHMENT

CONSISTS OF :

			PAGE
1	248-5317	TRACK ROLLER GROUP	300
4	1D-4629	BOLT(7/8-9)	
4	5P-8249	WASHER	

J157036 X00

TRACK ROLLER GROUP (248-5318 N/S) -DOUBLE FLANGE
PART OF 252-1041-Page 283
AN ATTACHMENT

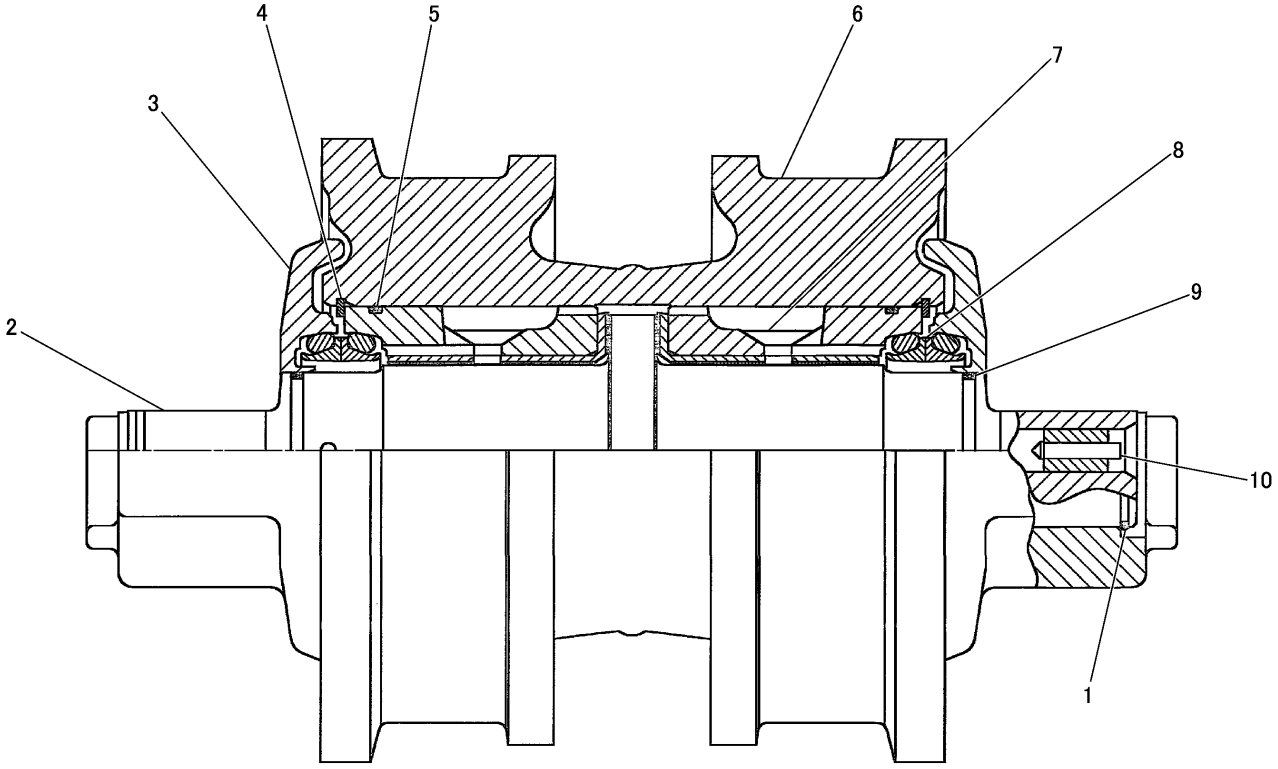

NOTE	№	PART NO.	QTY	PART NAME	NOTE	№	PART NO.	QTY	PART NAME
	1	6H-2953	2	RING					
	2	118-1628	1	SHAFT					
	3	124-8262	2	COLLAR					
	4	121-1258	2	RING					
	5	4H-9105	2	SEAL(117.8mm OD)					
	6	124-8255	1	RIM AS					
	7	124-8267	2	BUSHING AS					
		9B-2289	2	PIN					
		8P-6651	1	BEARING AS					
	8	171-5882	2	SEAL GROUP					
		162-2166	2	TORIC RING					
	9	8F-6711	2	SEAL(63.8mm OD)					
	10	6Y-0473	1	PLUG					
		7G-4332	1	STOPPER					

J157037 X00

248-5317 TRACK ROLLER GROUP -DOUBLE FLANGE
PART OF 248-5318-Page 299
AN ATTACHMENT

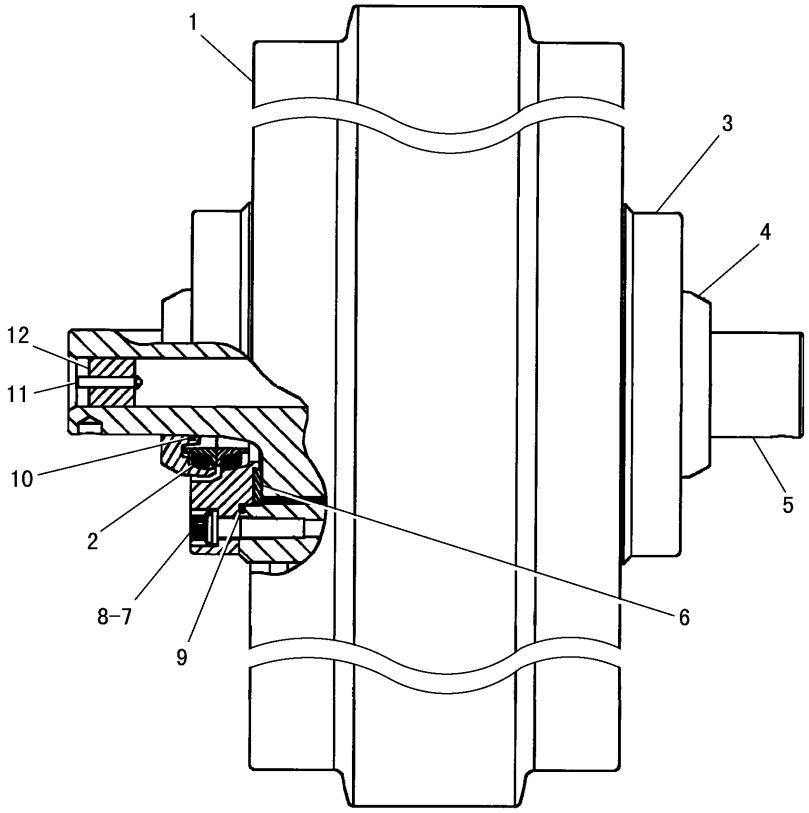

NOTE	№	PART NO.	QTY	PART NAME	NOTE	№	PART NO.	QTY	PART NAME
	1	192-0219	1	IDLER AS					
		6Y-1757	2	BEARING					
	2	162-7862	2	SEAL GROUP					
		162-2166	2	TORIC RING					
	3	192-0213	2	RETAINER					
	4	107-3945	2	COLLAR					
	5	131-3935	1	SHAFT					
	6	8E-6619	2	WASHER					
	7	3K-6113	24	WASHER					
	8	5P-9681	24	BOLT(7/16-14)					
	9	2H-9247	2	SEAL					
	10	7J-2036	2	SEAL					
	11	6Y-0473	1	PLUG					
	12	9G-5664	1	STOPPER					

J116572 X00

192-0220 TRACK IDLER GROUP
PART OF 127-8424-Page 281

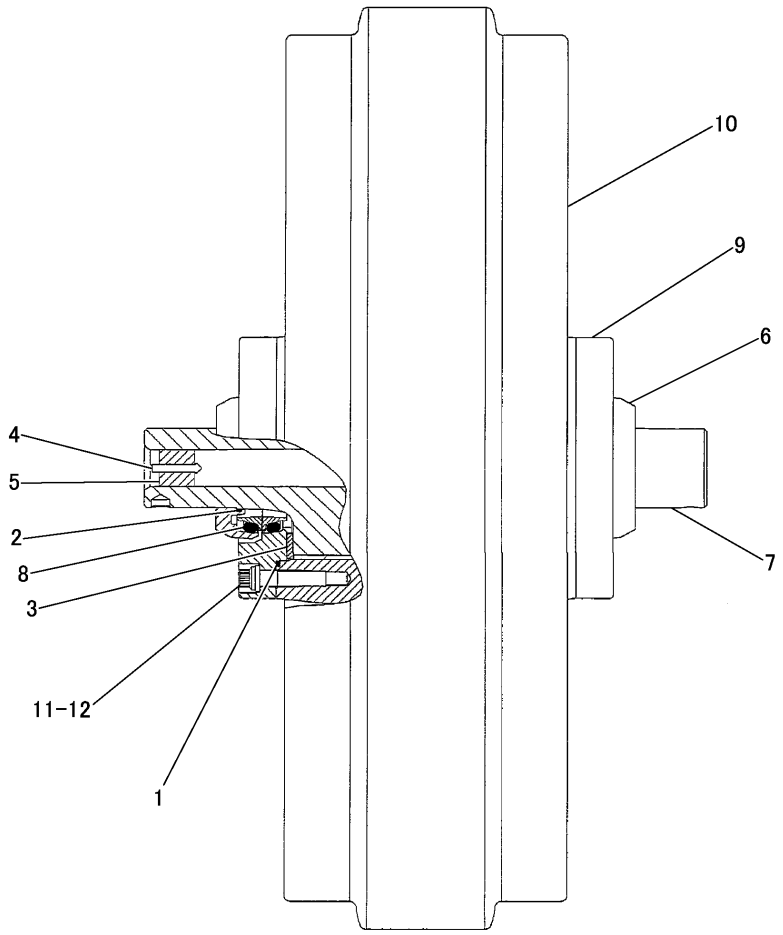

NOTE	№	PART NO.	QTY	PART NAME	NOTE	№	PART NO.	QTY	PART NAME
	1	2H-9247	2	SEAL(140mm OD)					
	2	7J-2036	2	SEAL(63.7mm OD)					
	3	8E-6619	2	WASHER					
	4	6Y-0473	1	PLUG					
	5	9G-5664	1	STOPPER					
	6	107-3945	2	COLLAR					
	7	131-3935	1	SHAFT					
	8	162-7862	2	SEAL GROUP					
		162-2166	2	TORIC RING					
	9	192-0213	2	RETAINER					
	10	192-0219	1	IDLER AS					
		6Y-1757	2	BEARING					
	11	3K-6113	24	WASHER					
	12	5P-9681	24	BOLT(7/16-14)					

J157035 X00

TRACK IDLER GROUP (248-5316 N/S)
PART OF 252-1041-Page 283
AN ATTACHMENT

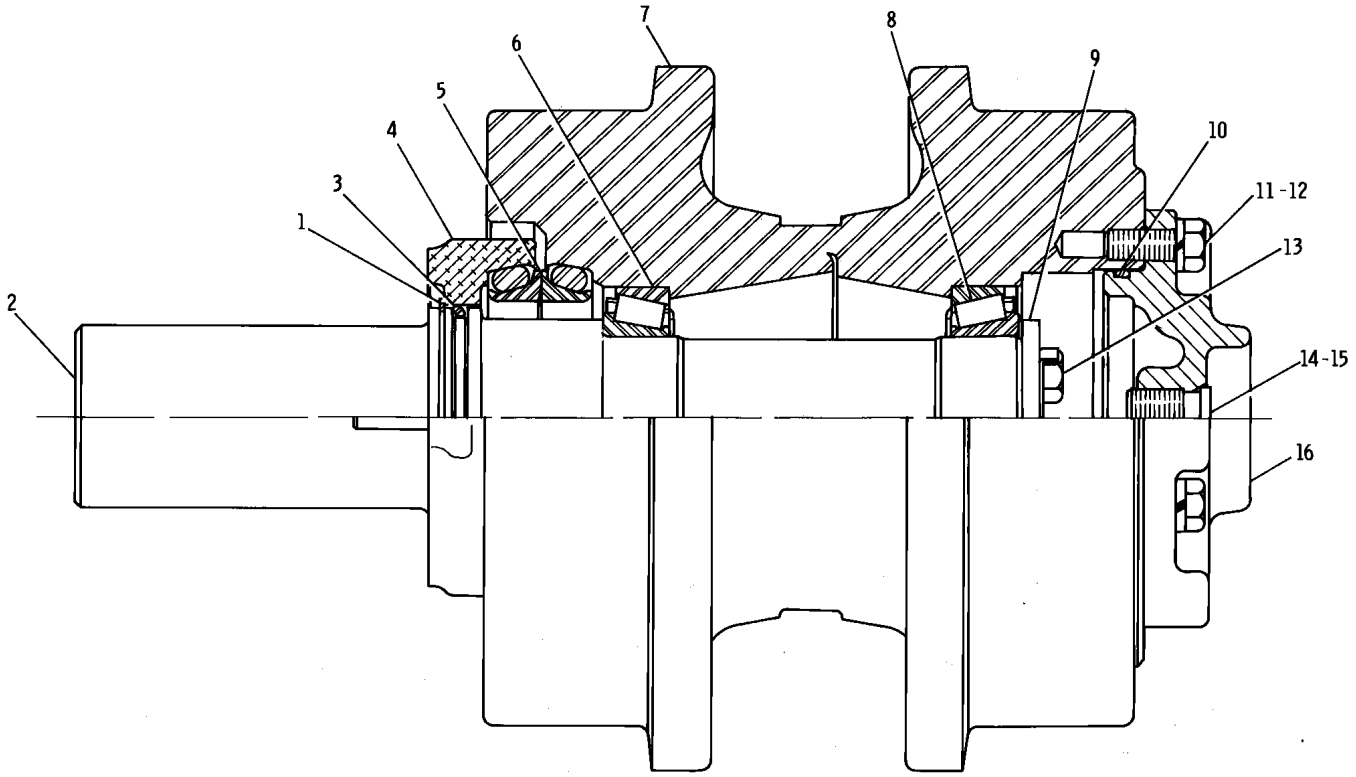

NOTE	№	PART NO.	QTY	PART NAME	NOTE	№	PART NO.	QTY	PART NAME
	1	7H-4574	1	RING					
	2	1P-8715	1	SHAFT					
	3	1H-8720	1	SEAL					
	4	7H-4571	1	COLLAR AS					
		1M-4291	2	DOWEL					
	5	1M-8747	1	SEAL GROUP					
		8H-2262	2	TRIC RING					
	6	9S-3581	2	CUP					
	7	1P-8716	1	ROLLER AS					
	8	9S-3582	2	CONE					
	9	8P-6188	1	PLATE					
	10	2H-6338	1	SEAL					
	11	0S-1594	3	BOLT(3/8-16)					
	12	3B-4506	3	LOCKWASHER					
	13	6V-4791	2	BOLT(3/8-24)					
	14	1S-8947	1	SEAL					
	15	2P-0347	1	PLUG					
	16	5M-2043	1	COVER					

J048320 X06

1P-8717 TRACK CARRIER ROLLER GROUP
PART OF 166-2085-Page 282
AN ATTACHMENT

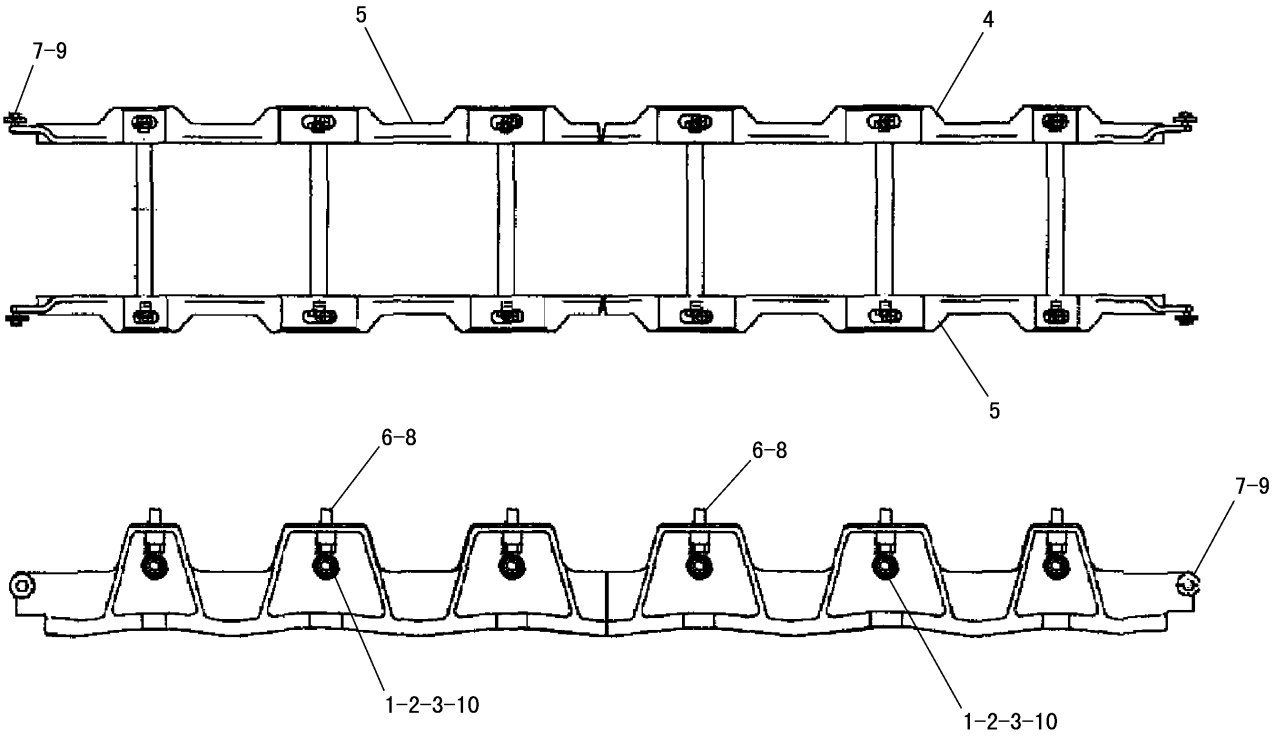

NOTE	№	PART NO.	QTY	PART NAME	NOTE	№	PART NO.	QTY	PART NAME
	1	7D-8508	24	NUT(7/8-14)					
	2	165-3663	12	TUBE					
	3	165-3664	12	ROD					
	4	169-0163	4	GUARD					
	5	169-0164	4	GUARD					
	6	178-7195	24	SPACER					
	7	5C-6565	8	BOLT(1/2-13)					
	8	7X-0383	24	BOLT(7/8-9)					
	9	7X-0590	8	WASHER					
	10	8C-6913	24	WASHER					

J119385 X00

TRACK ROLLER GUARD GROUP (163-8692 N/S)
PART OF 203-6527-Page 281
AN ATTACHMENT

UNDERCARRIAGE

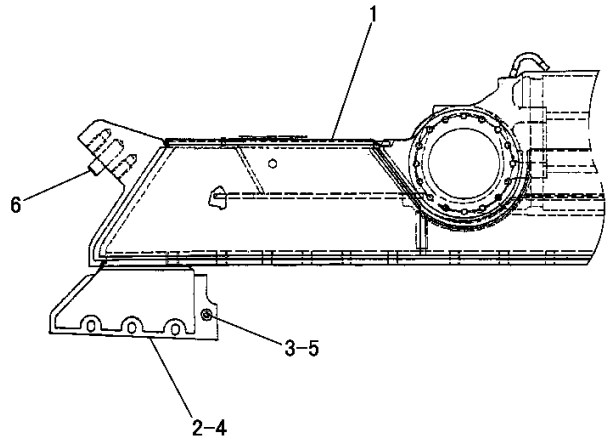

NOTE	№	PART NO.	QTY	PART NAME
Z	1	168−5252	1	FRAME AS
	2	165−7574	2	GUARD AS(RH)
	3	2M−2933	1	NUT(1/2-13)(WELD)
	4	165−7576	2	GUARD AS(LH)
	5	2M−2933	1	NUT(1/2-13)(WELD)
	6	7T−5886	2	DOWEL

Z-NOT SERVICED SEPARATELY

J155887 X01

REAR FRAME ASSEMBLY (168-5051 N/S) -RH
PART OF 166-2085-Page 282
AN ATTACHMENT

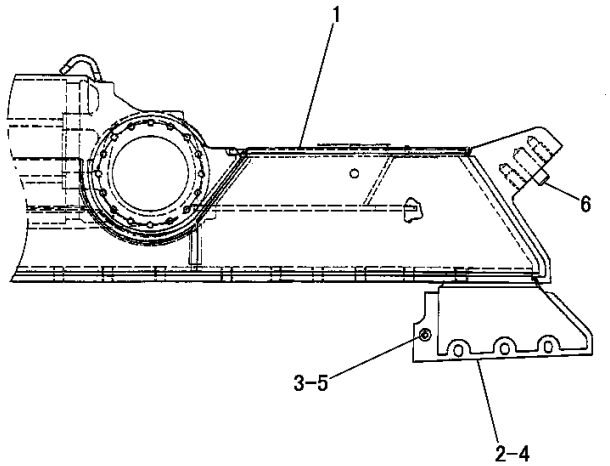

NOTE	№	PART NO.	QTY	PART NAME
Z	1	168−5253	1	FRAME AS
	2	165−7574	2	GUARD AS(RH)
	3	2M−2933	1	NUT(1/2-13)(WELD)
	4	165−7576	2	GUARD AS(LH)
	5	2M−2933	1	NUT(1/2-13)(WELD)
	6	7T−5886	2	DOWEL

Z-NOT SERVICED SEPARATELY

J155888 X01

REAR FRAME ASSEMBLY (168-5052 N/S) -LH
PART OF 166-2085-Page 282
AN ATTACHMENT

UNDERCARRIAGE

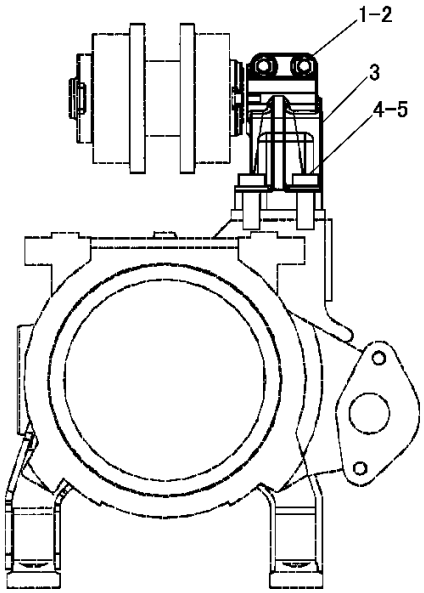

NOTE	№	PART NO.	QTY	PART NAME
	1	7X-0370	2	BOLT(3/4-10)
	2	8T-4994	2	WASHER
	3	163-2160	1	BRACKET
	4	7X-0404	4	BOLT(1-8)
	5	8T-5361	4	WASHER

J107498 X00

CARRIER ROLLER MOUNTING GROUP (163-8691 N/S)

PART OF 166-2085-Page 282
AN ATTACHMENT

CONSISTS OF :

			PAGE
1	159-7156	PISTON MOTOR GROUP	375
1	222-1150	VALVE AND MOUNTING GROUP(PILOT)	309
1	222-1151	VALVE AND MOUNTING GROUP(QUICK DROP)	347
1	222-1152	VALVE AND MOUNTING GROUP(IMPLEMENT)	346
1	222-1153	PUMP AND MOUNTING GROUP	348
1	222-1154	HYDRAULIC TANK AND MOUNTING GROUP	316
1	222-1155	PUMP LINES GROUP	320
1	222-1156	PILOT LINES GROUP	324
1	222-1157	LIFT LINES GROUP	332
1	222-1158	TILT LINES GROUP	340
1	222-1191	VALVE AND MOUNTING GROUP(COUNTER BALANCE)	348
1	229-5422	MOTOR ADAPTER GROUP	375

J155584 -02

HYDRAULIC ARRANGEMENT (270-0515 N/S)
PART OF 322-6112-Page 1

HYDRAULIC SYSTEM

CONSISTS OF :

			PAGE
1	161-3616	MODULAR HANDLE GROUP(RIPPER) ·····	308
1	184-5321	PILOT VALVE GROUP ·····	314
1	222-1179	PILOT LINES GROUP(RIPPER) ·····	330
1	224-4941	VALVE GROUP(UNIT TEST-5) ·····	354
1	228-7368	RIPPER LINES GROUP ·····	336
1	197-5108	FILM(INSTRUCTION)(RIPPER CONTROL)	
		(TO RH SIDE OF CONTROL)	

J155821 X00

HYDRAULIC CONTROL ARRANGEMENT (228-7816 N/S) -DOZER AND ADJ RIPPER
AN ATTACHMENT

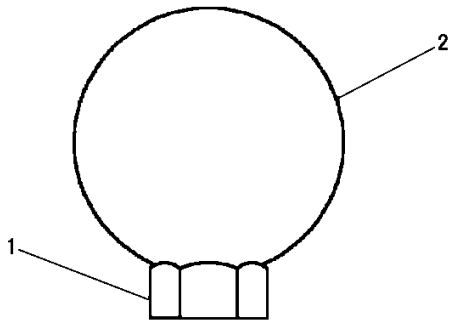

NOTE	Nº	PART NO.	QTY	PART NAME
	1	7X−3374	1	NUT(1/2-20)
	2	2A−1736	1	HANDLE

J138042 X01

MODULAR HANDLE GROUP (161-3616 N/S) -RIPPER
PART OF 228-7816-Page 308
AN ATTACHMENT

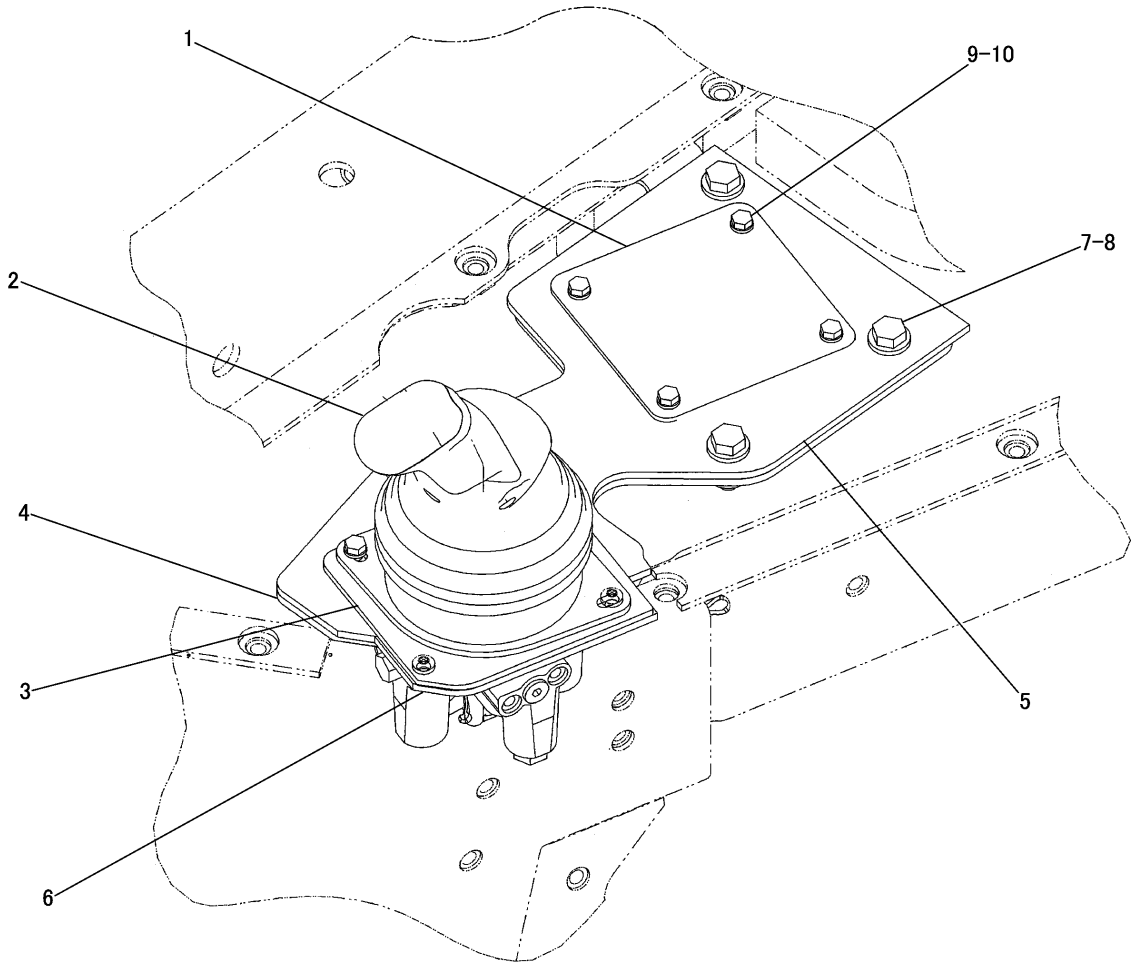

NOTE	№	PART NO.	QTY	PART NAME	NOTE	№	PART NO.	QTY	PART NAME
	1	160-4702	1	PLATE					
Y	2	161-3615	1	HANDLE GROUP					
Y	3	200-0189	1	VALVE GROUP					
	4	223-3313	1	PLATE AS					
	5	225-4134	1	GASKET					
	6	225-4135	1	GASKET					
	7	5P-1075	4	WASHER					
	8	8T-4195	4	BOLT(M10×1.5)					
	9	6V-7357	6	BOLT(M6×1)					
	10	9X-8256	6	WASHER					

Y-SEPARATE ILLUSTRATION

J146814 X01

VALVE AND MOUNTING GROUP (222-1150 N/S) -PILOT

PART OF 270-0515-Page 307
REFERENCE:161-3615-Page 315 200-0189-Page 313

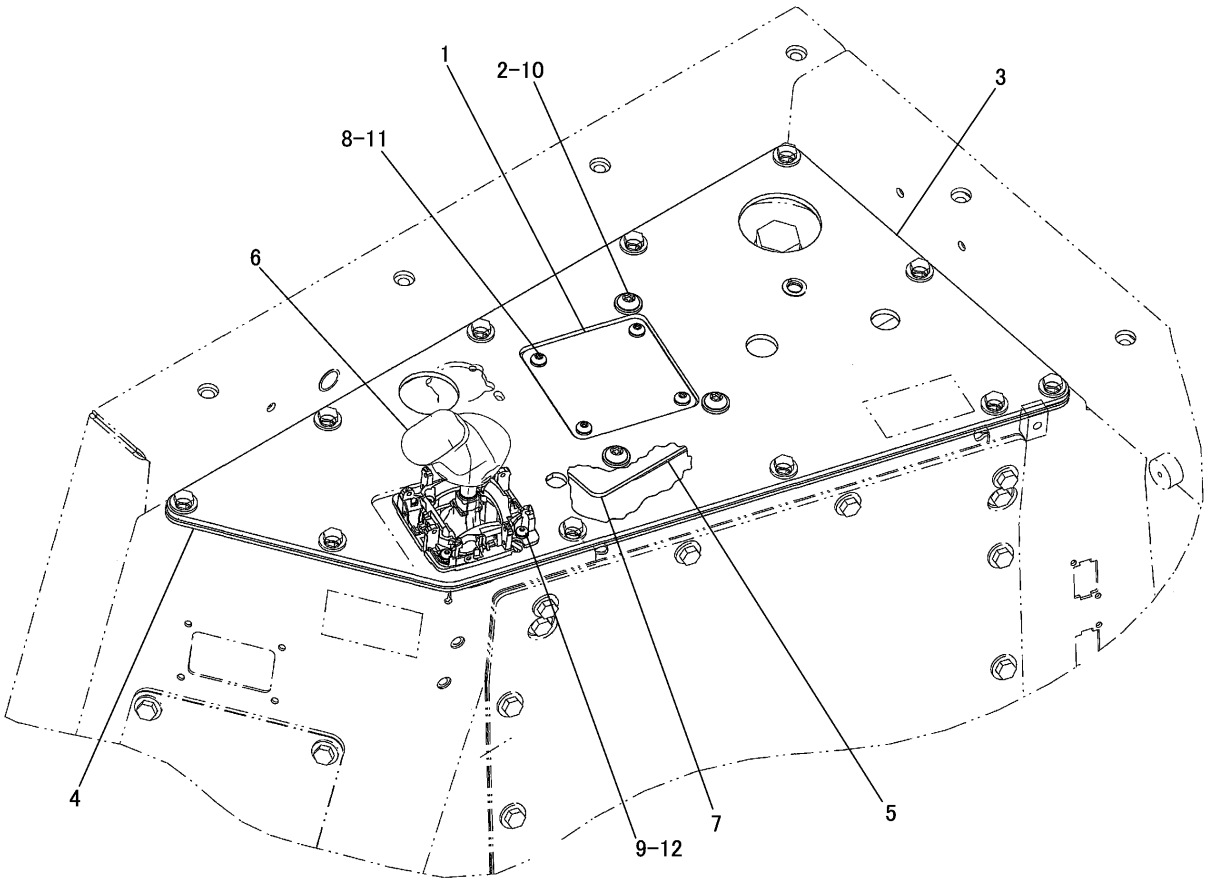

NOTE	№	PART NO.	QTY	PART NAME	NOTE	№	PART NO.	QTY	PART NAME
	1	160-4702	1	PLATE					
	2	172-5291	3	SCREW(M10×1.5)					
	3	238-7793	1	PLATE AS					
		6V-9632	4	NUT(M6×1)(WELD)					
		7T-1099	7	LINK					
		180-3969	11	WASHER					
	4	238-8270	1	GASKET					
	5	239-2247	1	PLATE AS					
Y	6	240-8613	1	CONTROL GROUP					
	7	242-5200	1	GASKET					
	8	111-4627	4	SCREW(M6×1)					
	9	166-3777	4	SCREW(M6×1)					
	10	7X-7729	3	WASHER					
	11	8T-4205	4	WASHER					
	12	9X-6381	4	WASHER					

Y-SEPARATE ILLUSTRATION

J156641 X00

CONTROL AND MOUNTING GROUP (239-2385 N/S) -JOYSTICK

PART OF 273-1826-Page 137
REFERENCE:240-8613-Page 311
AN ATTACHMENT

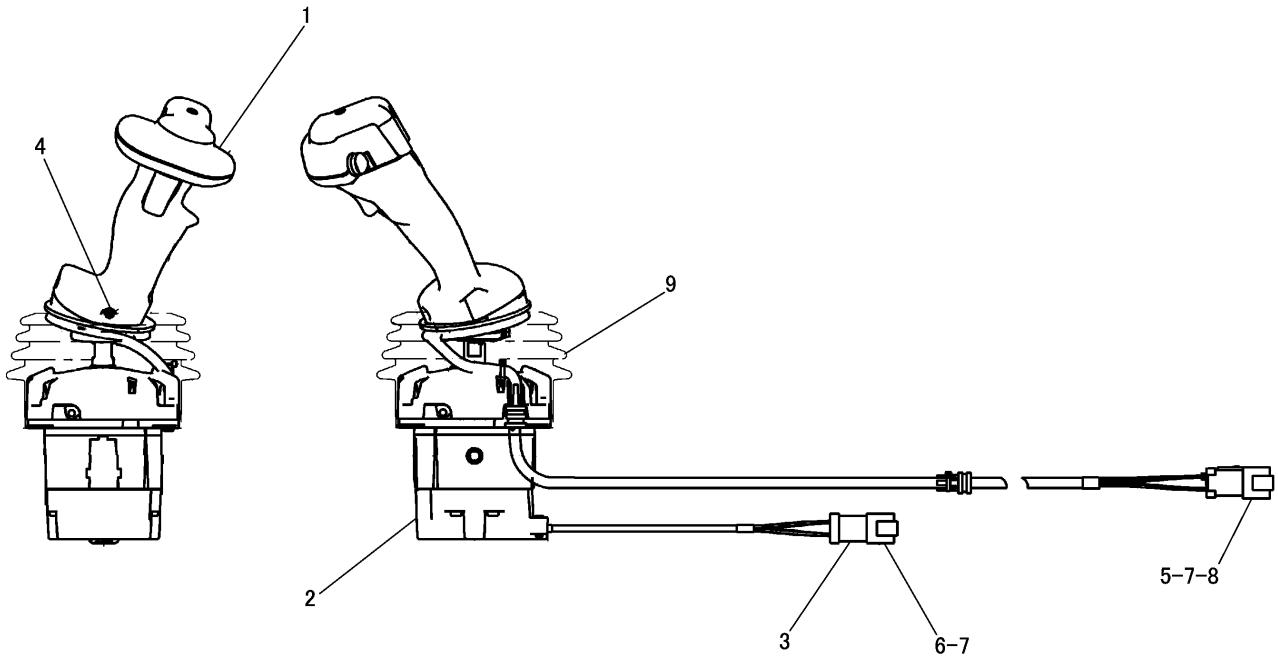

NOTE	№	PART NO.	QTY	PART NAME	NOTE	№	PART NO.	QTY	PART NAME
Y	1	268-3293	1	CONTROL GROUP					
	2	271-0475	1	BASE AS					
	3	102-8805	1	RECEPTACLE KIT(6P)					
		186-3735	6	PIN					
	4	4B-9808	2	SETSCREW(1/4-20)					
	5	174-3091	1	RECEPTACLE KIT(12P)					
	6	102-8805	1	RECEPTACLE KIT(6P)					
	7	186-3735	17	PIN					
	8	8T-8737	1	PLUG					
	9	285-0150	1	BOOT					

Y-SEPARATE ILLUSTRATION

J155626 -04

240-8613 JOYSTICK CONTROL GROUP
PART OF 239-2385-Page 310
REFERENCE:268-3293-Page 312
AN ATTACHMENT

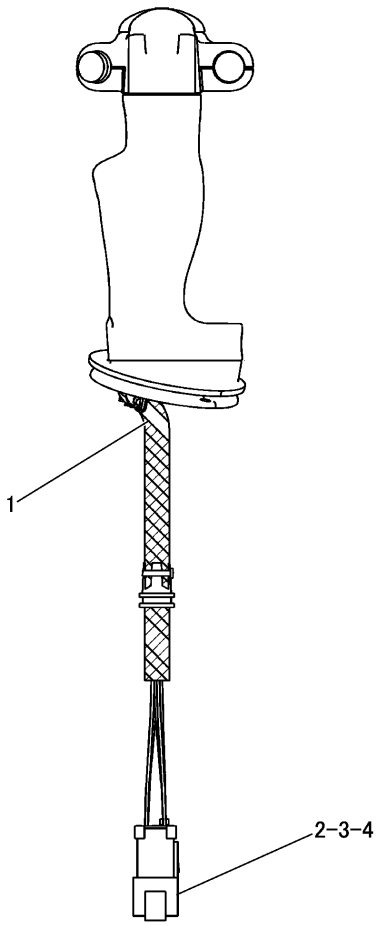

NOTE	№	PART NO.	QTY	PART NAME	NOTE	№	PART NO.	QTY	PART NAME
	1	1S-9593	1	STRAP					
	2	8T-8737	5	PLUG					
	3	186-3735	7	PIN					
	4	174-3091	1	RECEPTACLE KIT(12P)					

J138506 -01

268-3293 HANDLE CONTROL GROUP
PART OF 240-8613-Page 311
AN ATTACHMENT

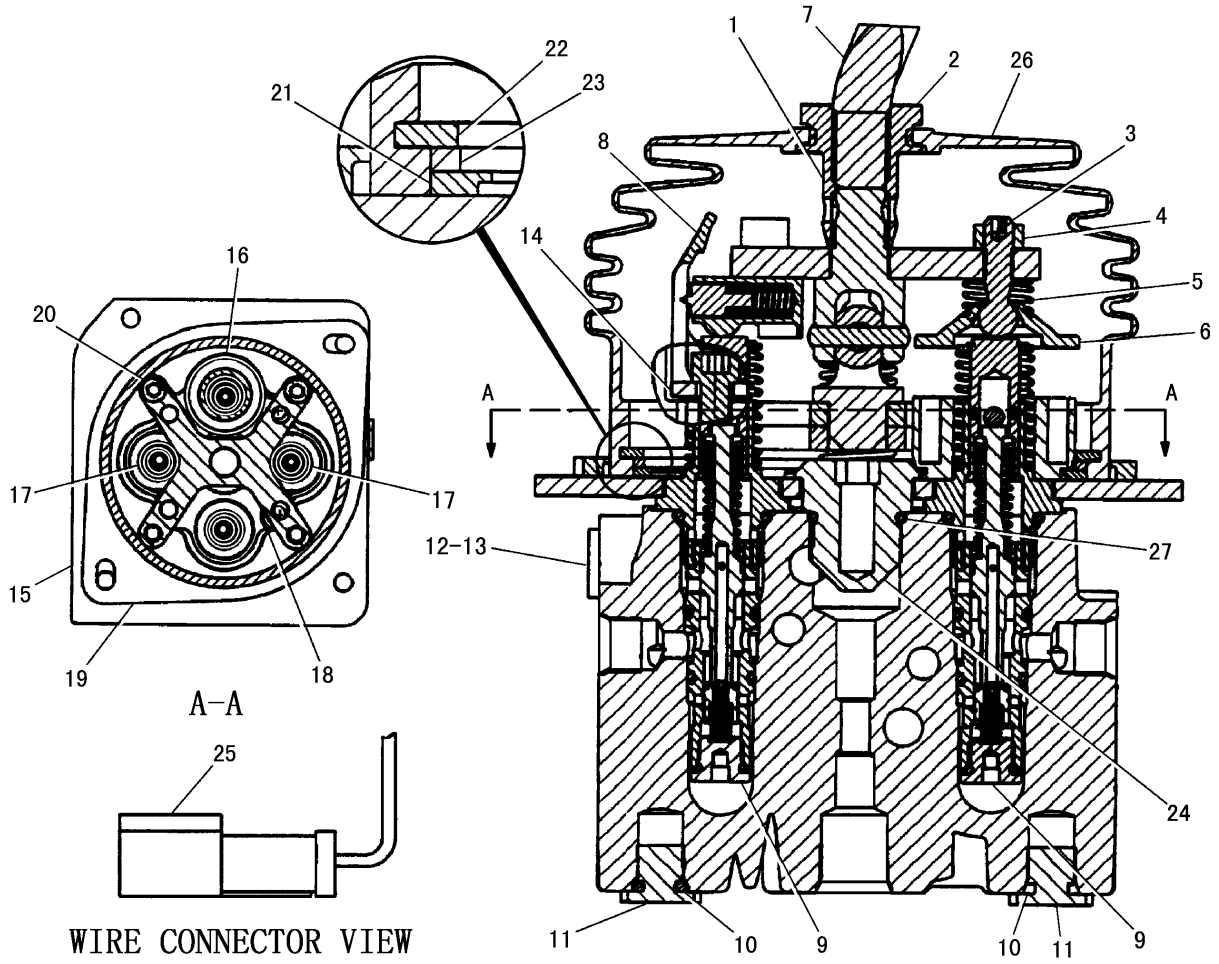

NOTE	№	PART NO.	QTY	PART NAME	NOTE	№	PART NO.	QTY	PART NAME
	1	196-5515	1	LEVER AS	Y	17	194-5033	2	CARTRIDGE AS
		199-7834	1	DETENT AS		18	163-5512	2	GROMMET
		8S-7499	2	PIN		19	180-6152	1	RETAINER
		191-8920	2	BOLT(M6×1)		20	191-8921	4	BOLT(M6×1)
	2	209-9723	1	LEVER AS		21	136-9297	1	PLATE
	3	146-6315	3	PIN		22	136-9298	1	RETAINER
	4	5C-2890	3	NUT(M6×1)		23	149-5470	1	PLATE
	5	159-3781	1	SPRING		24	145-2334	1	ADAPTER
	6	146-6317	1	WASHER		25	102-8802	1	RECEPTACLE KIT(2P)
	7	159-8111	1	LEVER		26	141-4852	1	BOOT
	8	206-2800	1	PLATE		27	8L-2786	1	SEAL
Y	9	194-5032	2	CARTRIDGE AS					
	10	3J-1907	3	SEAL					
	11	9S-8004	3	PLUG					
	12	3J-7354	5	SEAL					
	13	9S-8002	5	PLUG					
	14	200-5003	8	SHIM(0.25mm THICK)					
	15	213-6657	1	PLATE AS					
	16	137-9755	1	COIL AS					
		186-3735	2	PIN					

Y-SEPARATE ILLUSTRATION

J145227 -01

200-0189 PILOT VALVE GROUP
PART OF 222-1150-Page 309
REFERENCE:194-5032-Page 367 194-5033-Page 367

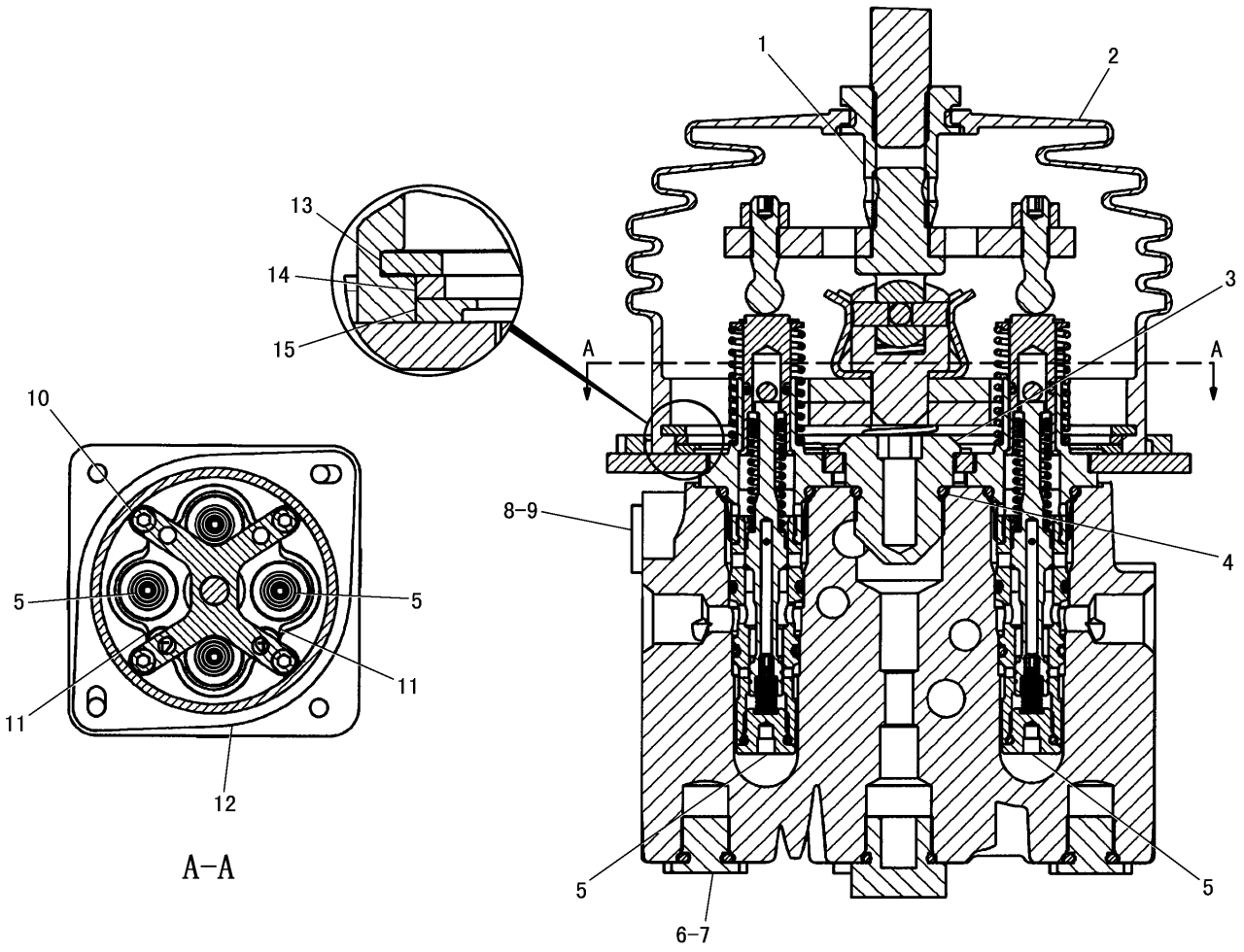

NOTE	№	PART NO.	QTY	PART NAME	NOTE	№	PART NO.	QTY	PART NAME
	1	188-2893	1	LEVER AS					
		146-6315	4	PIN					
		5C-2890	4	NUT(M6×1)					
	2	141-4852	1	BOOT					
	3	145-2334	1	ADAPTER					
	4	8L-2786	1	SEAL					
Y	5	194-5033	4	CARTRIDGE ASSEMBLY					
	6	3J-1907	4	SEAL					
	7	9S-8004	4	PLUG					
	8	3J-7354	4	SEAL					
	9	9S-8002	4	PLUG					
	10	191-8921	4	BOLT(M6×1)					
	11	163-5512	2	GROMMET					
	12	180-6512	1	RETAINER					
	13	136-9298	1	RETAINER					
	14	149-5470	1	PLATE					
	15	136-9297	1	PLATE					

Y-SEPARATE ILLUSTRATION

J119375 -05

184-5321 PILOT VALVE GROUP
PART OF 228-7816-Page 308
REFERENCE:194-5033-Page 367
AN ATTACHMENT

HYDRAULIC SYSTEM

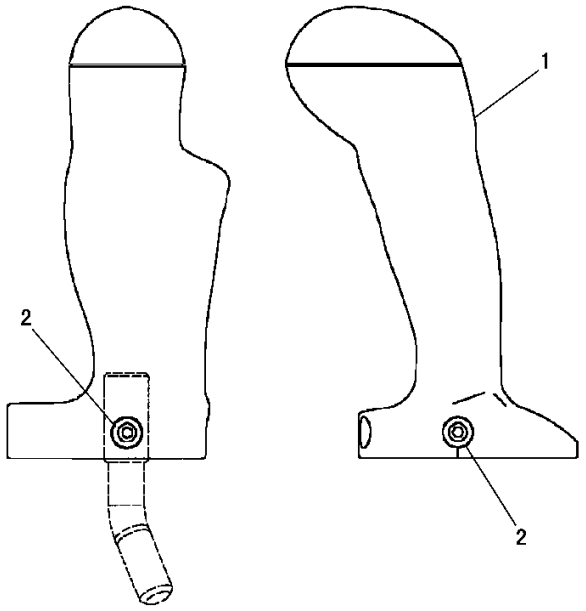

NOTE	№	PART NO.	QTY	PART NAME
	1	188-1079	1	CONTROL GROUP
	2	4B-9808	2	SETSCREW(1/4-20)

J123695 X03

HANDLE GROUP (161-3615 N/S) -DOZER
PART OF 222-1150-Page 309

CONSISTS OF :

			PAGE
1	270-8489	CYLINDER LINES GROUP(RH)	339
1	270-8490	CYLINDER LINES GROUP(LH)	339

J157042 -01

LIFT CYLINDER ARRANGEMENT (270-8493 N/S) -COLD WEATHER
AN ATTACHMENT

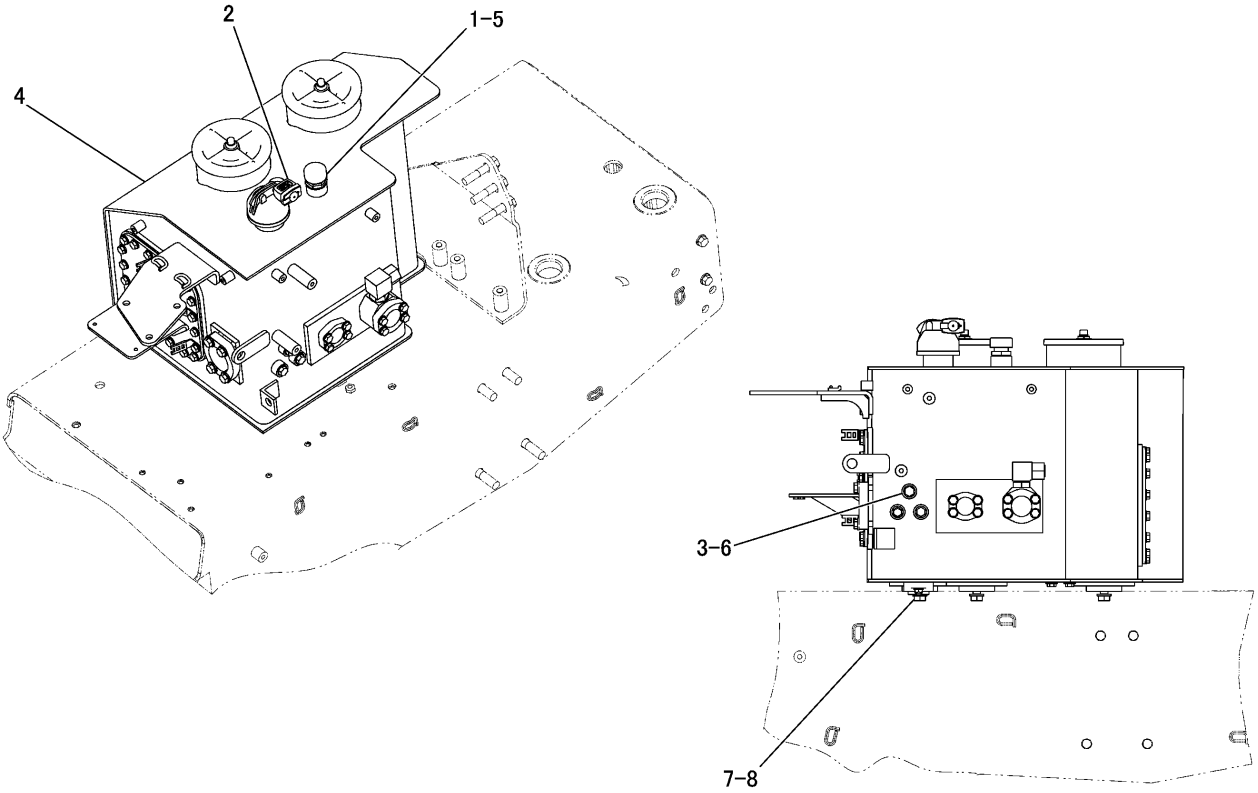

NOTE	№	PART NO.	QTY	PART NAME	NOTE	№	PART NO.	QTY	PART NAME
	1	191-5439	1	VALVE					
	2	246-2641	1	PADLOCK GROUP					
		5P-8500	2	KEY					
	3	164-3651	1	ADAPTER					
Y	4	224-4948	1	TANK GROUP					
	5	3D-2824	1	SEAL					
	6	3J-1907	1	SEAL					
	7	8T-4779	3	BOLT(M16×2)					
	8	9X-8257	3	WASHER					

Y-SEPARATE ILLUSTRATION

J155689 -02

HYDRAULIC TANK AND MOUNTING GROUP (222-1154 N/S)

PART OF 270-0515-Page 307
REFERENCE:224-4948-Page 317～319

HYDRAULIC SYSTEM

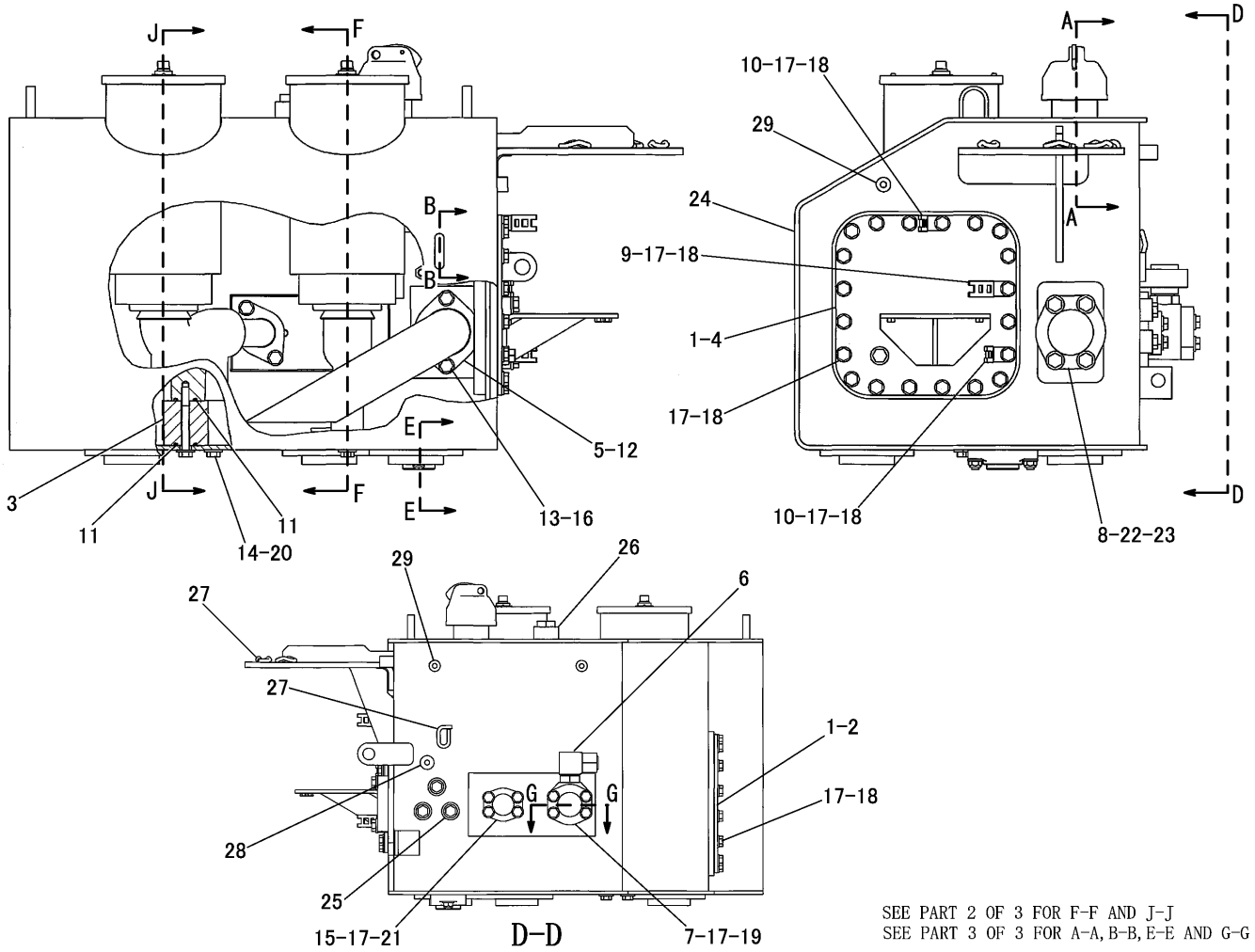

SEE PART 2 OF 3 FOR F-F AND J-J
SEE PART 3 OF 3 FOR A-A, B-B, E-E AND G-G

NOTE	№	PART NO.	QTY	PART NAME	NOTE	№	PART NO.	QTY	PART NAME
	1	257-9788	2	GASKET		19	8T-4172	4	BOLT(M10×1.5)
	2	268-2767	1	PLATE		20	8T-4178	2	BOLT(M10×1.5)
	3	268-2769	1	BLOCK		21	8T-4196	4	BOLT(M10×1.5)
	4	269-4870	1	COVER AS		22	8T-4223	4	WASHER
	5	279-9826	1	TUBE AS		23	8T-4956	4	BOLT(M12×1.75)
	6	6V-9007	1	ELBOW		24	268-2760	1	TANK AS
		3D-2824	1	SEAL		25	5J-3306	3	FITTING
		6V-9746	1	SEAL		26	7J-5225	1	FITTING
	7	1P-4578	2	FLANGE		27	7T-1099	4	LINK
	8	1P-4582	2	FLANGE		28	9R-1733	1	BOSS(M10×1.5)
	9	4P-7581	1	CLIP		29	9R-2613	5	BOSS(M10×1.5)
	10	4P-8134	2	CLIP					
	11	5F-1678	4	SEAL					
	12	6J-2680	1	SEAL					
	13	6V-5839	2	WASHER					
	14	7X-7729	2	WASHER					
	15	8C-3206	2	FLANGE					
	16	8T-0722	2	BOLT(M10×1.5)					
	17	8T-4121	48	WASHER					
	18	8T-4136	40	BOLT(M10×1.5)					

J155690 X00

HYDRAULIC TANK AND FILTER GROUP (224-4948 N/S) -PART 1 OF 3
PART OF 222-1154-Page 316

HYDRAULIC SYSTEM

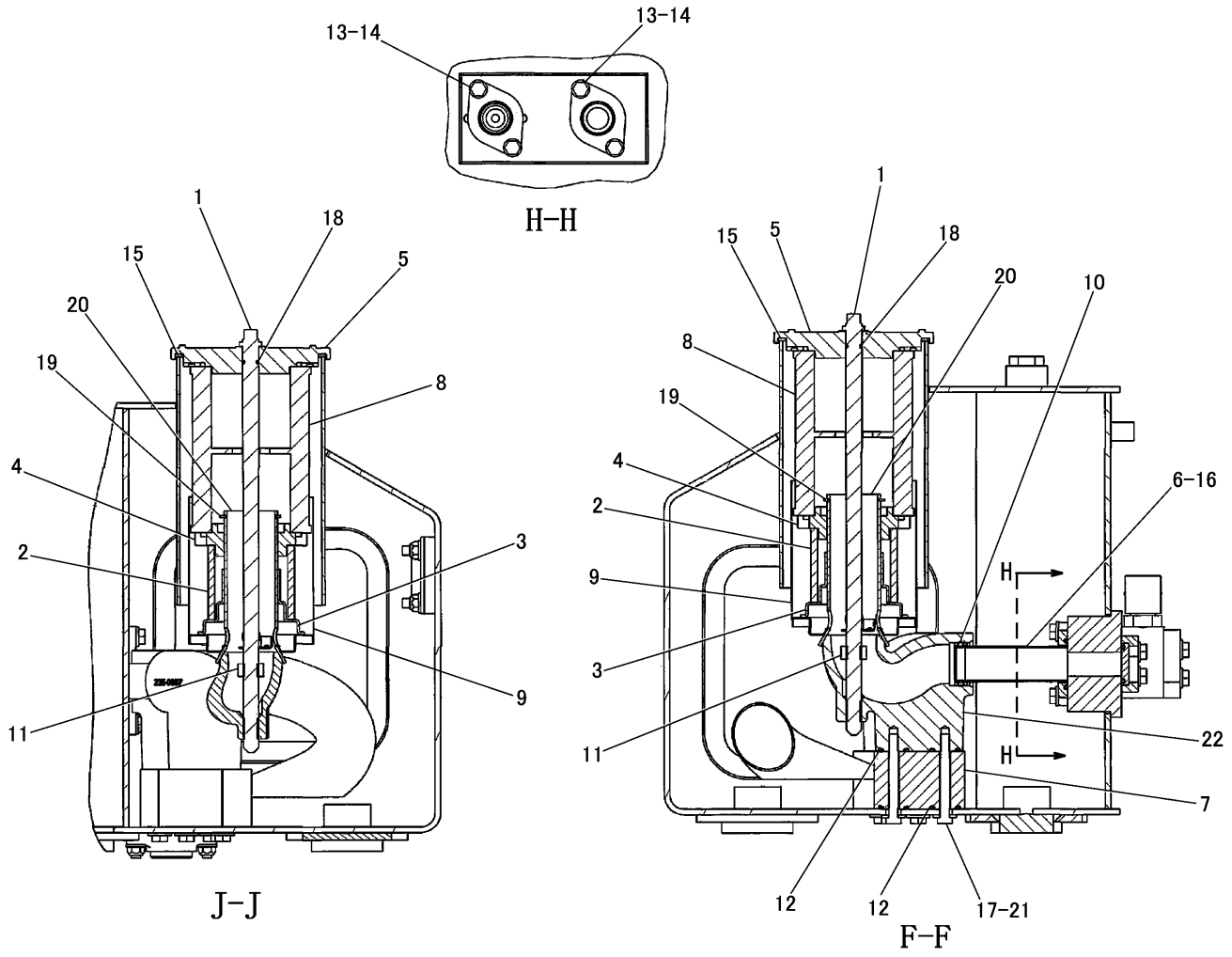

NOTE	№	PART NO.	QTY	PART NAME	NOTE	№	PART NO.	QTY	PART NAME
	1	4T-0521	2	BOLT AS(5/8-11)		17	7X-7729	2	WASHER
	2	8J-8443	2	SPRING		18	8F-9206	2	SEAL
	3	8J-8468	2	VALVE		19	8J-8322	2	RING
	4	9J-2914	2	SPACER		20	8J-8436	2	TUBE AS
	5	9T-3264	2	COVER		21	8T-4178	2	BOLT(M10×1.5)
	6	268-2763	1	TUBE AS		22	235-0907	1	BASE
	7	268-2769	1	BLOCK					
	8	1R-0777	2	ELEMENT AS					
AB		104-6931	2	ELEMENT AS (FIRE RESISTANT FLUIDS)					
AB		139-1537	2	ELEMENT AS (ULTRA HIGH EFFICIENCY)					
	9	3G-3267	2	SCREEN AS					
	10	4F-7389	1	SEAL					
	11	4K-0367	2	NUT(5/8-11)					
	12	5F-1678	4	SEAL					
	13	6V-5839	4	WASHER					
	14	6V-7732	4	BOLT(M10×1.5)					
	15	6V-9633	2	GASKET					
	16	7F-8267	1	SEAL					

A-NOT A PART OF THIS GROUP
B-USE AS REQUIRED

J155691 X00

HYDRAULIC TANK AND FILTER GROUP (224-4948 N/S) -PART 2 OF 3
PART OF 222-1154-Page 316

HYDRAULIC SYSTEM

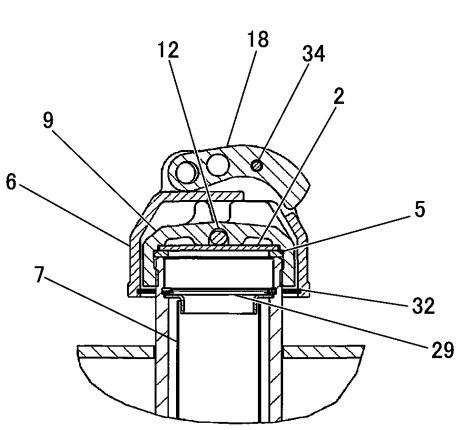

A–A

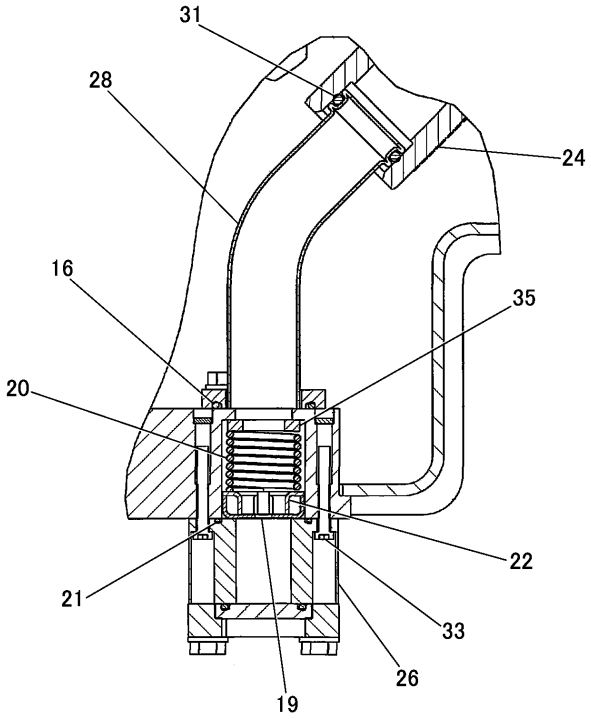

G–G

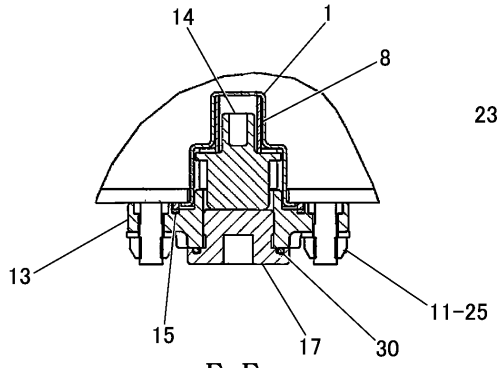

E–E

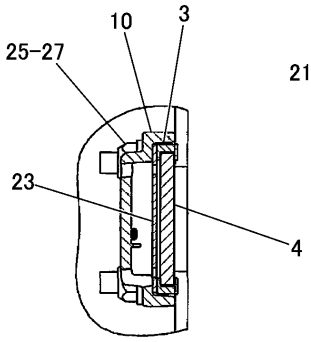

B–B

NOTE	№	PART NO.	QTY	PART NAME	NOTE	№	PART NO.	QTY	PART NAME
	1	1U−2827	1	GUIDE		21	7D−9749	1	SEAL
	2	2D−4202	1	PLATE		22	9T−7677	1	RETAINER
	3	4J−8251	1	GROMMET		23	187−9194	1	PLATE
	4	8Y−4842	1	GLASS		24	235−0907	1	BASE
	5	9H−6454	1	GASKET		25	6V−7744	6	LOCKNUT(M10×1.5)
	6	5D−1911	1	COVER		26	268−0066	1	SPACER
	7	5D−7927	1	STRAINER AS		27	6V−5839	4	WASHER
	8	7B−3039	1	SPRING		28	268−2762	1	TUBE AS
	9	7H−1447	1	CAP		29	6H−9361	1	RING
	10	8J−6913	1	RETAINER		30	5M−2057	1	SEAL
	11	8T−4121	2	WASHER		31	4F−7389	1	SEAL
	12	8T−2275	1	BALL		32	2J−7761	1	RING
	13	8J−8782	1	BODY		33	270−9433	2	BOLT(M6×1)
	14	8J−8783	1	VALVE		34	1L−5072	1	DOWEL
	15	8T−3298	1	SEAL		35	154−1580	1	WASHER
	16	7F−8267	1	SEAL					
	17	9J−7031	1	PLUG					
	18	9M−7394	1	LEVER					
	19	9T−3004	1	VALVE					
	20	9T−3005	1	SPRING					

J155692 X00

HYDRAULIC TANK AND FILTER GROUP (224-4948 N/S) -PART 3 OF 3

PART OF 222-1154-Page 316

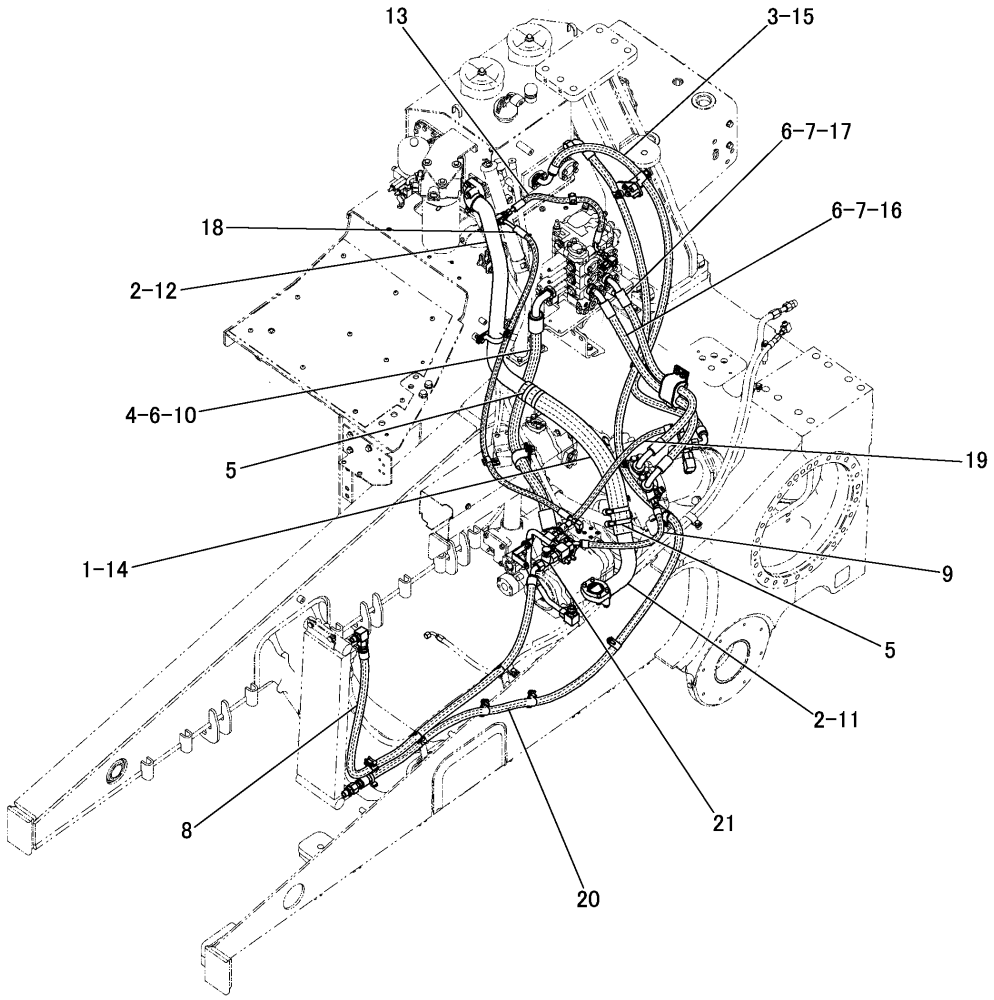

NOTE	№	PART NO.	QTY	PART NAME	NOTE	№	PART NO.	QTY	PART NAME
	1	5G-7191	1	SPRING		21	6V-3965	1	NIPPLE AS
	2	4J-0527	2	SEAL			3J-1907	1	SEAL
	3	4J-0520	1	SEAL					
	4	1P-3705	1	SEAL					
	5	8T-4984	4	CLAMP					
	6	1P-3703	3	SEAL					
	7	1P-3702	2	SEAL					
	8	165-8335	1	HOSE AS					
	9	299-9226	1	HOSE AS					
	10	253-6252	1	HOSE AS					
	11	229-5397	1	TUBE AS					
	12	229-5391	1	TUBE AS					
	13	226-6588	1	HOSE AS					
	14	227-9390	1	HOSE					
	15	227-9391	1	HOSE AS					
	16	227-9392	1	HOSE AS					
	17	227-9393	1	HOSE AS					
	18	227-9394	1	HOSE AS					
	19	227-9395	1	HOSE AS					
	20	227-9396	1	HOSE AS					

J155670 X08

PUMP LINES GROUP (222-1155 N/S) -PART 1 OF 4
PART OF 270-0515-Page 307

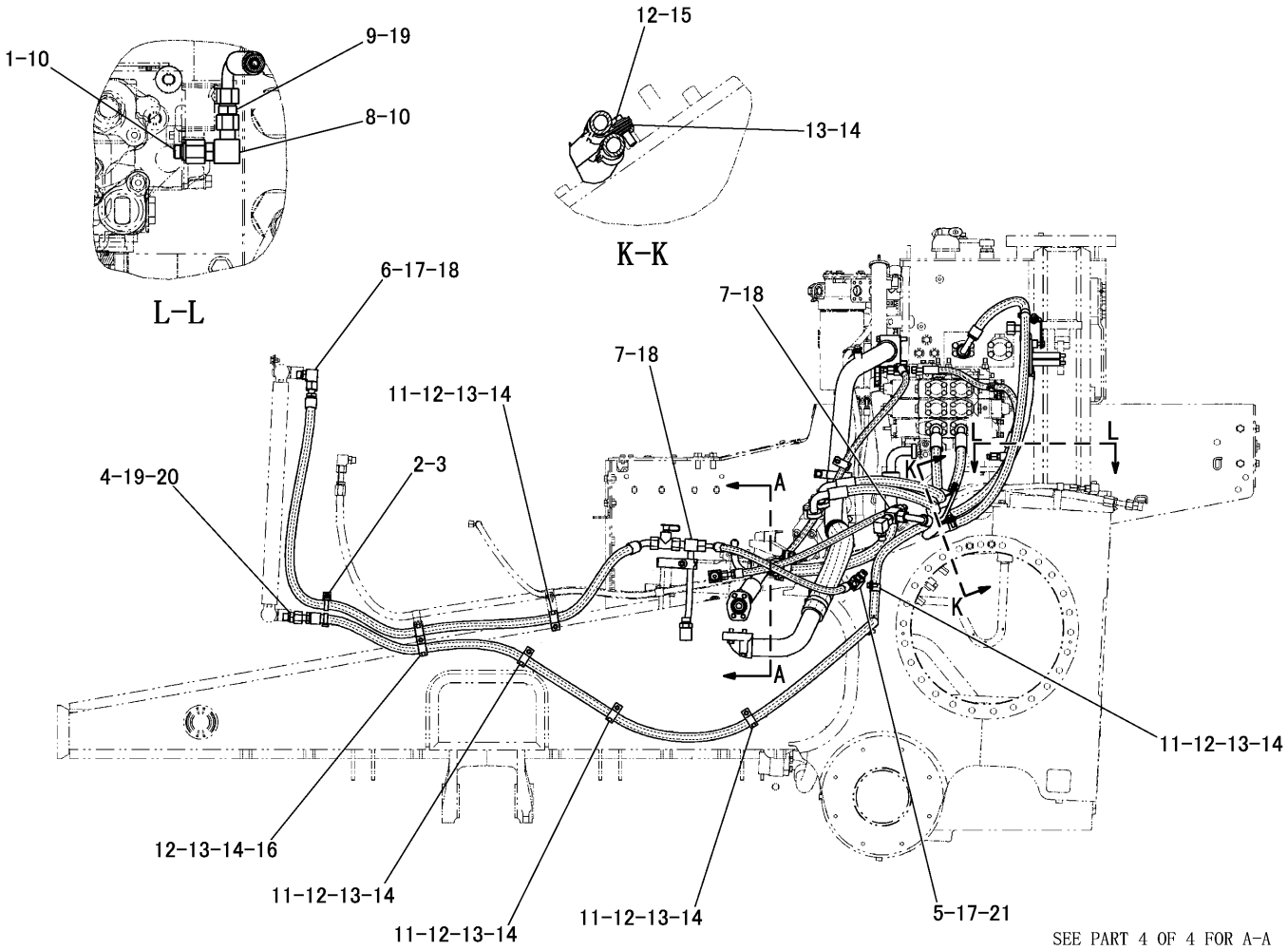

NOTE	№	PART NO.	QTY	PART NAME	NOTE	№	PART NO.	QTY	PART NAME
	1	8J-9990	1	PLUG		21	6V-8398	1	SEAL
	2	193-3973	2	TIE					
	3	200-6345	1	MOUNT					
	4	8T-5043	1	CONNECTOR					
	5	6V-8721	1	ELBOW					
	6	6V-8629	1	ELBOW					
	7	6V-9839	2	TEE					
	8	8T-0788	1	ELBOW					
	9	6V-8730	1	UNION					
	10	3J-1907	2	SEAL					
	11	4L-6454	5	BOLT(3/8-16)					
	12	5P-1075	7	WASHER					
	13	8T-1895	9	CLIP(SLOT)					
	14	8T-1896	9	CLIP(TAB)					
	15	8T-4196	1	BOLT(M10×1.5)					
	16	9B-7237	1	BOLT(3/8-16)					
	17	2M-9780	2	SEAL					
	18	6V-9746	5	SEAL					
	19	6V-8397	3	SEAL					
	20	1J-9671	1	SEAL					

J155671 X08

PUMP LINES GROUP (222-1155 N/S) -PART 2 OF 4
PART OF 270-0515-Page 307

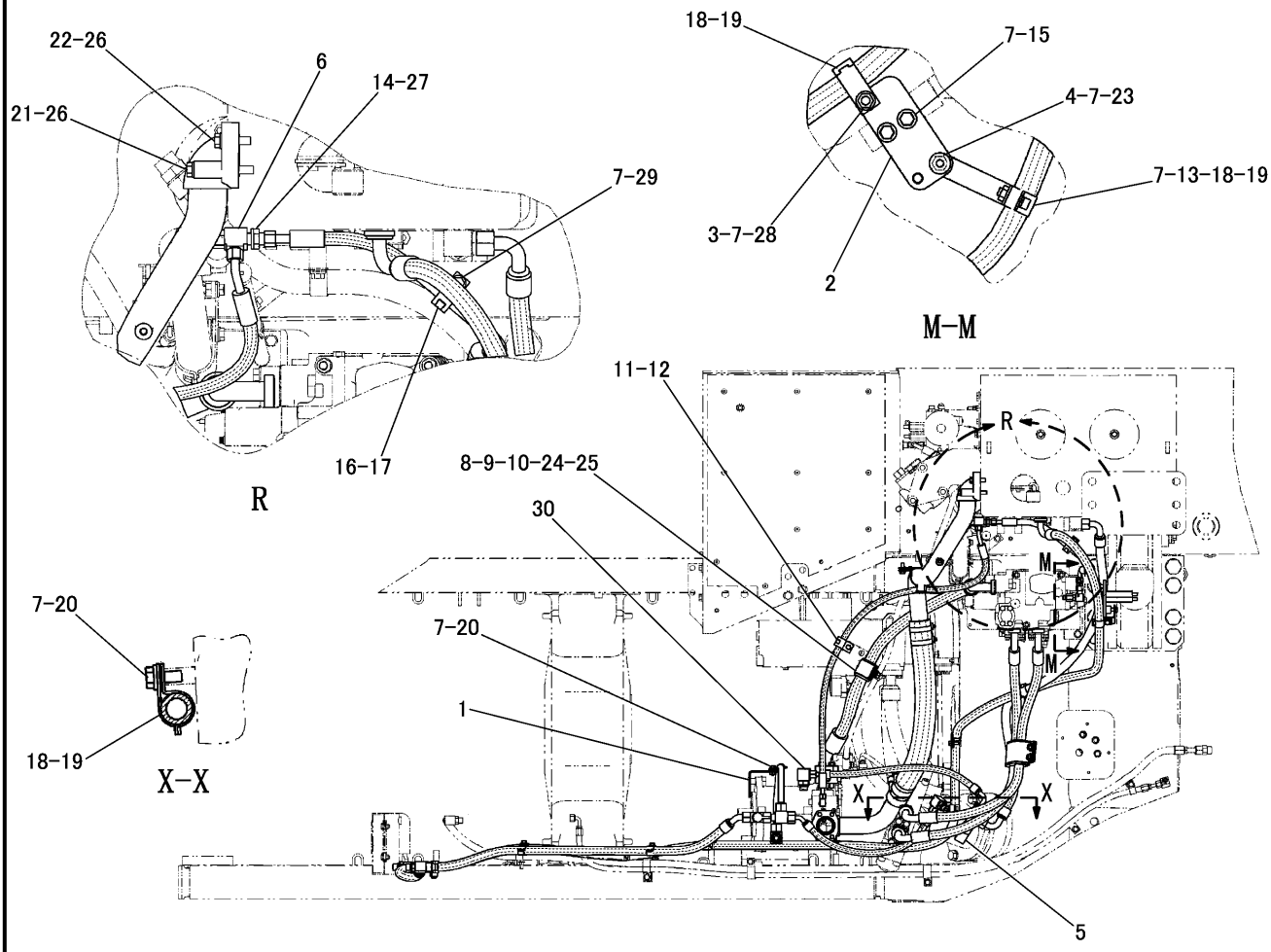

NOTE	№	PART NO.	QTY	PART NAME	NOTE	№	PART NO.	QTY	PART NAME
	1	227-9511	1	BRACKET AS		17	8T-1892	1	CLIP(TAB)
		8T-3490	1	NUT(M10×1.5)(WELD)		18	8T-1895	3	CLIP(SLOT)
	2	288-4994	1	BRACKET AS		19	8T-1896	3	CLIP(TAB)
	3	170-7491	1	STUD(M10×1.5)(WELD)		20	8T-4136	2	BOLT(M10×1.5)
	4	9R-2060	1	BOSS(M10×1.5)		21	8T-4176	2	BOLT(M12×1.75)
	5	6V-8629	1	ELBOW		22	8T-4184	2	BOLT(M12×1.75)
		2M-9780	1	SEAL		23	8T-4195	1	BOLT(M10×1.5)
		6V-9746	1	SEAL		24	8T-4223	1	WASHER
	6	7X-0820	1	TEE		25	8T-4244	1	NUT(M12×1.75)
		6V-8397	3	SEAL		26	8T-5360	4	WASHER
	7	5P-1075	8	WASHER		27	9X-8268	1	WASHER
	8	5P-7468	1	CLIP(SLOT)		28	8T-4133	1	NUT(M10×1.5)
	9	5P-7469	1	CLIP(TAB)		29	8T-4196	1	BOLT(M10×1.5)
	10	5P-8444	1	GROMMET		30	8T-5429	1	ELBOW
	11	5R-0939	1	CLIP(TAB)			3D-2824	1	SEAL
	12	5R-0940	1	CLIP(SLOT)			6V-8398	1	SEAL
	13	5S-7379	1	BOLT(3/8-16)					
	14	6V-9168	1	NUT(11/16-16)					
	15	7X-0293	2	BOLT(3/8-16)					
	16	8T-1891	1	CLIP(SLOT)					

J155672 X08

PUMP LINES GROUP (222-1155 N/S) -PART 3 OF 4

PART OF 270-0515-Page 307

HYDRAULIC SYSTEM

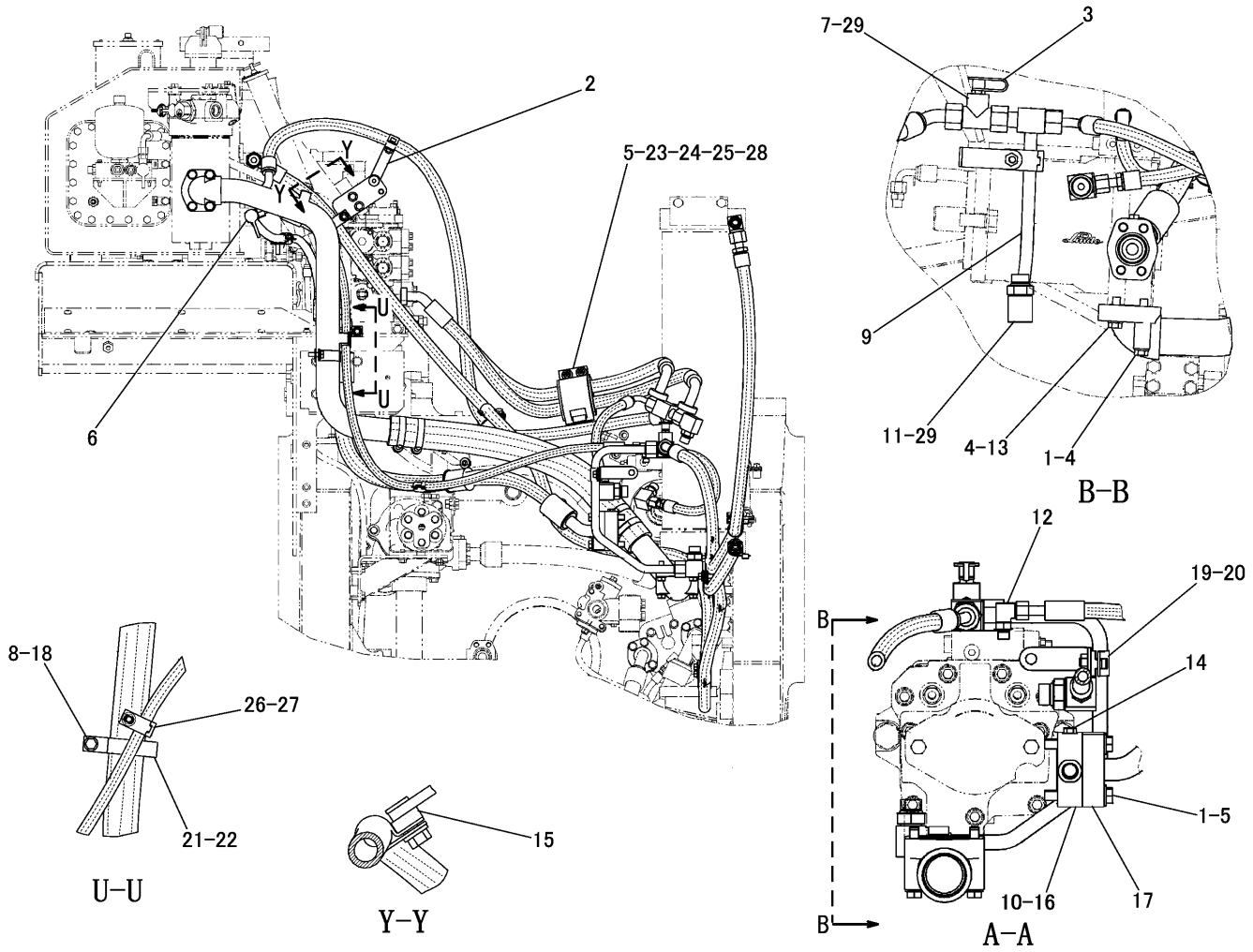

NOTE	№	PART NO.	QTY	PART NAME	NOTE	№	PART NO.	QTY	PART NAME
	1	8T-6868	6	BOLT(M12×1.75)		16	1P-3704	1	SEAL
	2	6T-2724	1	BRACKET AS		17	1P-5767	2	FLANGE
		9F-2978	2	NUT(3/8-16)(WELD)		18	5P-1075	1	WASHER
	3	6V-0852	1	CAP		19	5R-0939	1	CLIP(TAB)
	4	8T-5360	4	WASHER		20	5R-0940	1	CLIP(SLOT)
	5	8T-4223	6	WASHER		21	6V-0267	1	CLIP(SLOT)
	6	126-0814	1	NIPPLE AS		22	6V-0268	1	CLIP(TAB)
	7	8T-0083	1	TEE		23	6V-1876	1	GROMMET
	8	8T-4195	1	BOLT(M10×1.5)		24	7G-5984	1	CLIP(TAB)
	9	173-7132	1	TUBE AS		25	7G-5985	1	CLIP(SLOT)
	10	180-9616	1	SPACER		26	8T-1887	1	CLIP(SLOT)
	11	6V-9007	1	ELBOW		27	8T-1888	1	CLIP(TAB)
		3D-2824	1	SEAL		28	8T-4133	2	NUT(M10×1.5)
	12	6V-8724	1	ELBOW		29	6V-9746	2	SEAL
		6V-8397	1	SEAL					
		3J-1907	1	SEAL					
	13	8T-4183	2	BOLT(M12×1.75)					
	14	9S-4182	1	PLUG					
		3J-7354	1	SEAL					
	15	198-4777	1	WASHER					

J155673 X08

PUMP LINES GROUP (222-1155 N/S) -PART 4 OF 4
PART OF 270-0515-Page 307

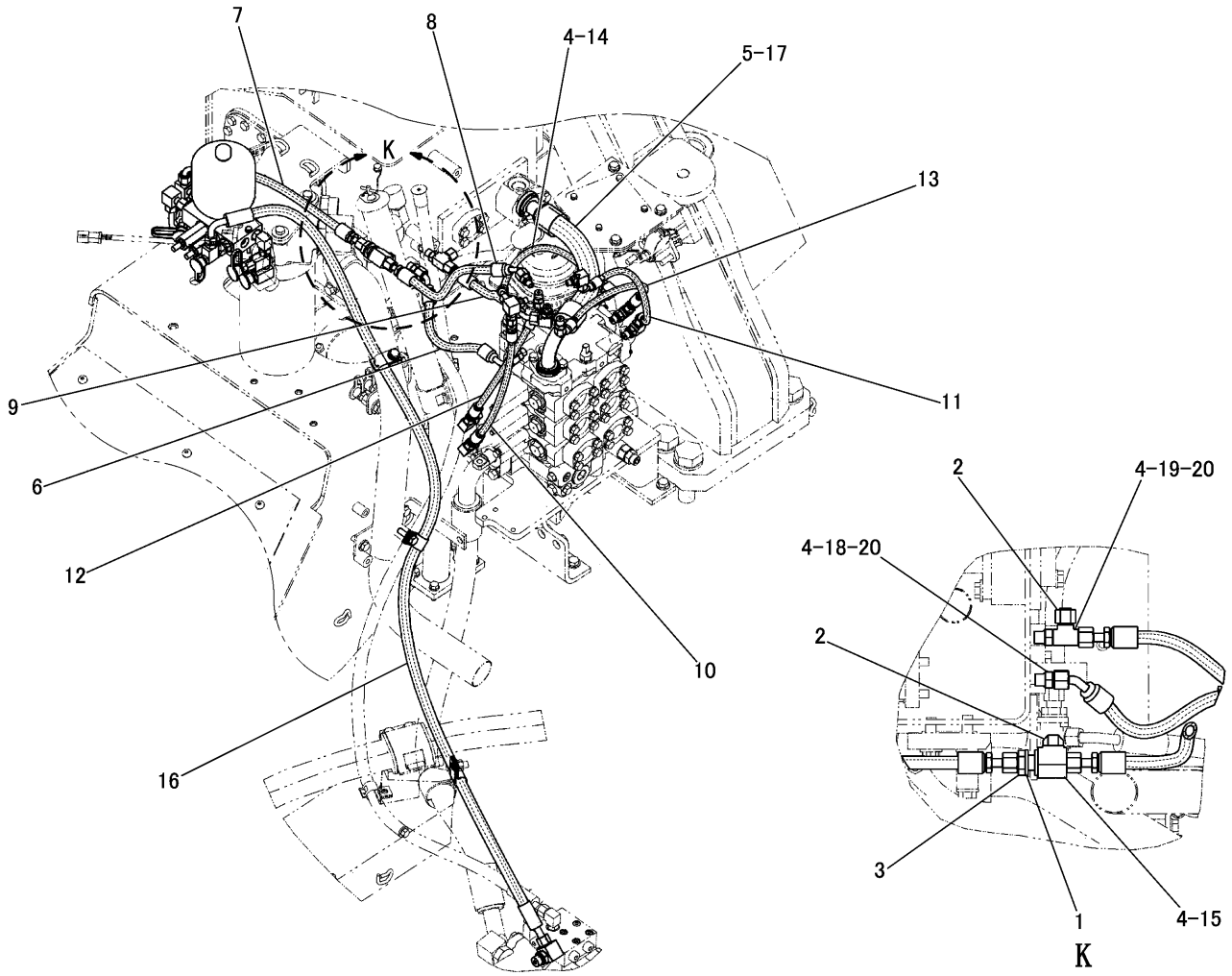

NOTE	№	PART NO.	QTY	PART NAME	NOTE	№	PART NO.	QTY	PART NAME
	1	9X-8268	2	WASHER		20	3J-1907	2	SEAL
	2	6V-9355	2	PLUG					
		6V-8553	2	NUT(11/16-16)					
	3	6V-9168	1	NUT(11/16-16)					
	4	6V-8397	7	SEAL					
	5	4J-0522	2	SEAL					
	6	226-3514	1	HOSE AS					
	7	226-3496	1	HOSE AS					
	8	226-3497	1	HOSE AS					
	9	226-3498	1	HOSE AS					
	10	226-3500	1	HOSE AS					
	11	226-3501	1	HOSE AS					
	12	226-3502	1	HOSE AS					
	13	226-3503	1	HOSE AS					
	14	226-3505	1	HOSE AS					
	15	7X-0820	1	TEE					
	16	227-9544	1	HOSE AS					
	17	295-0645	1	HOSE AS					
	18	6V-8636	1	CONNECTOR					
	19	6V-8781	1	TEE					

J155663 X02

PILOT LINES GROUP (222-1156 N/S) -DOZER-PART 1 OF 4
PART OF 270-0515-Page 307

HYDRAULIC SYSTEM

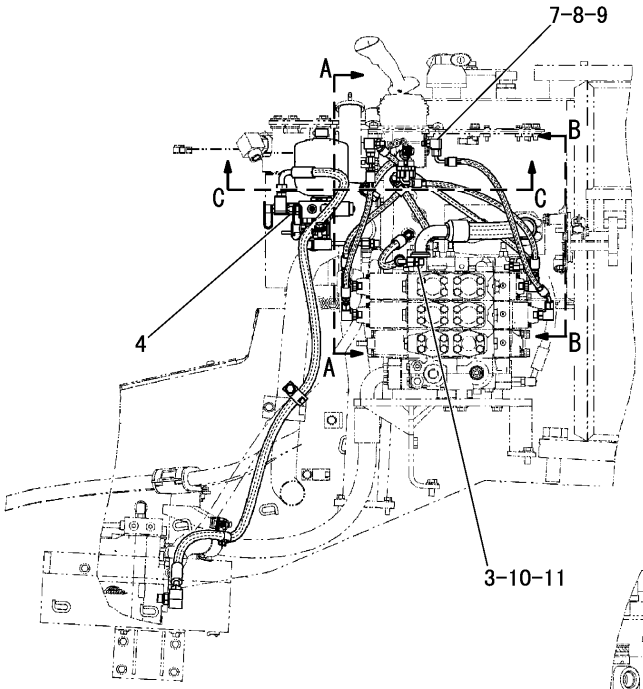

LEFT SIDE VIEW

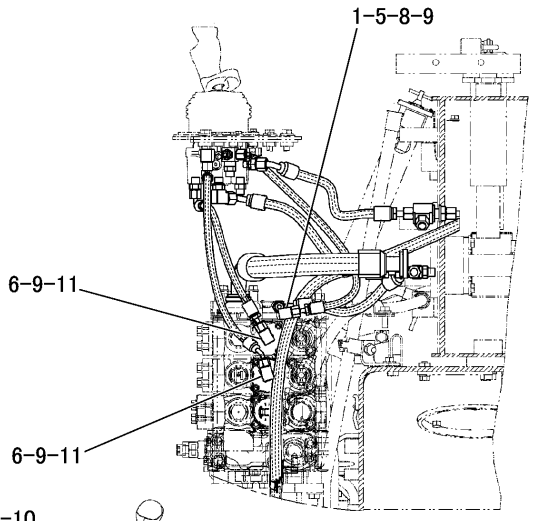

B-B

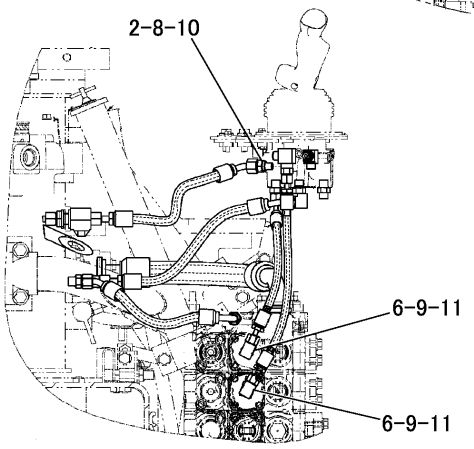

A-A

SEE PART 4 OF 4 FOR C-C

NOTE	№	PART NO.	QTY	PART NAME	NOTE	№	PART NO.	QTY	PART NAME
	1	6V-8647	1	CONNECTOR					
	2	6V-9872	1	CONNECTOR					
	3	6V-8636	1	CONNECTOR					
	4	6V-8639	1	CONNECTOR					
		6V-8398	1	SEAL					
		3K-0360	1	SEAL					
	5	6V-9849	1	ELBOW					
	6	6V-8627	4	ELBOW					
	7	6V-8628	1	ELBOW					
	8	3J-7354	3	SEAL					
	9	4J-5477	7	SEAL					
	10	6V-8397	2	SEAL					
	11	3J-1907	5	SEAL					

J155664 X02

PILOT LINES GROUP (222-1156 N/S) -DOZER-PART 2 OF 4
PART OF 270-0515-Page 307

HYDRAULIC SYSTEM

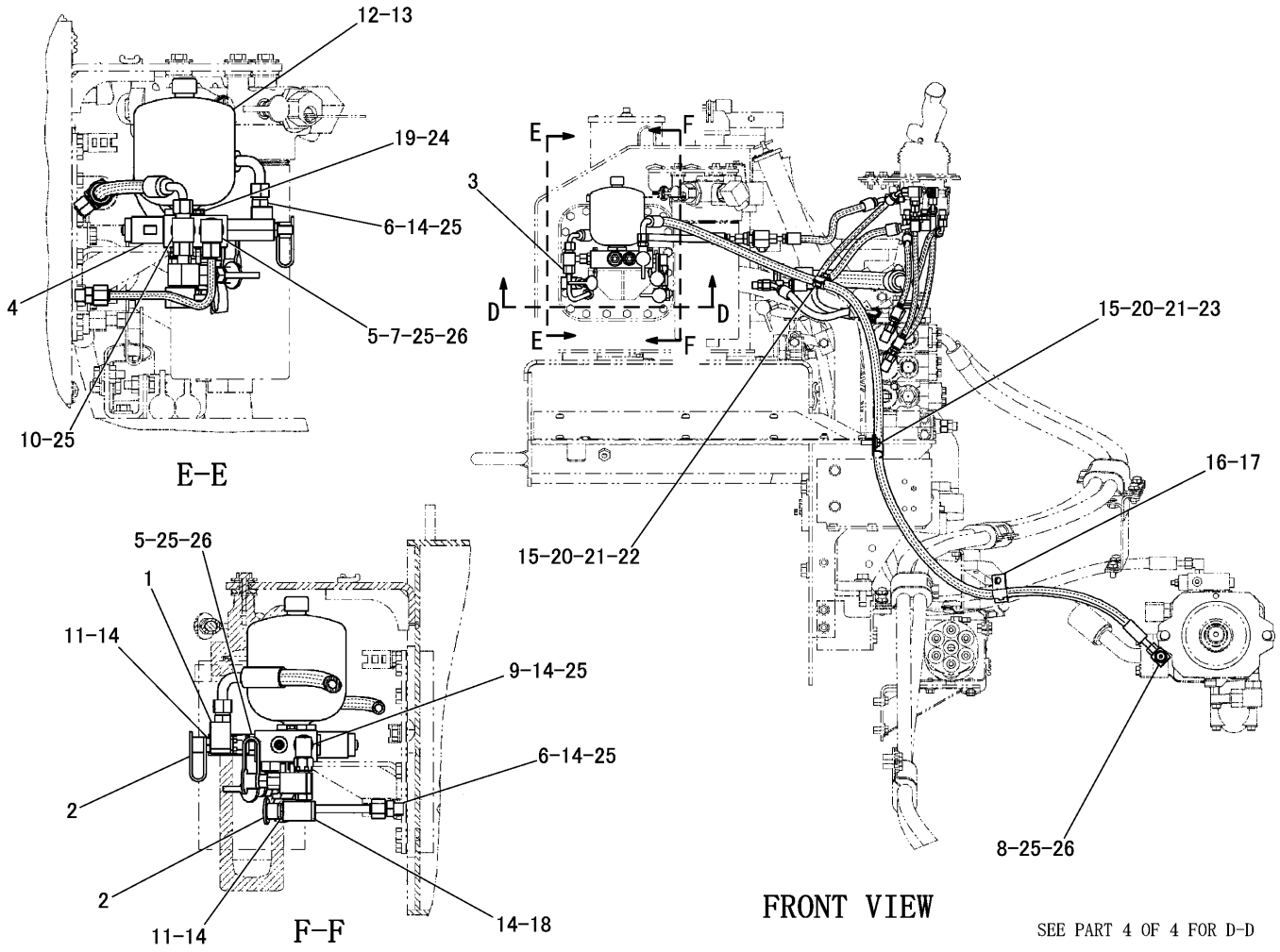

SEE PART 4 OF 4 FOR D-D

NOTE	№	PART NO.	QTY	PART NAME	NOTE	№	PART NO.	QTY	PART NAME
	1	5I-4376	1	FITTING		21	8T-1888	2	CLIP(TAB)
	2	6V-0852	2	CAP		22	8T-4136	1	BOLT(M10×1.5)
	3	226-3493	1	TUBE AS		23	8T-4196	1	BOLT(M10×1.5)
Y	4	226-4751	1	RELIEF VALVE GROUP		24	9X-8256	2	WASHER
	5	6V-8634	2	CONNECTOR		25	6V-8397	8	SEAL
	6	6V-8636	2	CONNECTOR		26	3K-0360	3	SEAL
	7	6V-9850	1	ELBOW					
	8	6V-8723	1	ELBOW					
	9	6V-8724	1	ELBOW					
	10	6V-9843	1	TEE					
	11	6V-3965	2	NIPPLE AS					
Y	12	317-6394	1	ACCUMULATOR GROUP					
	13	3D-2824	1	SEAL					
	14	3J-1907	5	SEAL					
	15	5P-1075	2	WASHER					
	16	5R-0939	1	CLIP(TAB)					
	17	5R-0940	1	CLIP(SLOT)					
	18	6V-8076	1	ELBOW					
	19	7X-2535	2	BOLT(M6×1)					
	20	8T-1887	2	CLIP(SLOT)					

Y-SEPARATE ILLUSTRATION

J155665 X02

PILOT LINES GROUP (222-1156 N/S) -DOZER-PART 3 OF 4

PART OF 270-0515-Page 307
REFERENCE:226-4751-Page 368 317-6394-Page 349

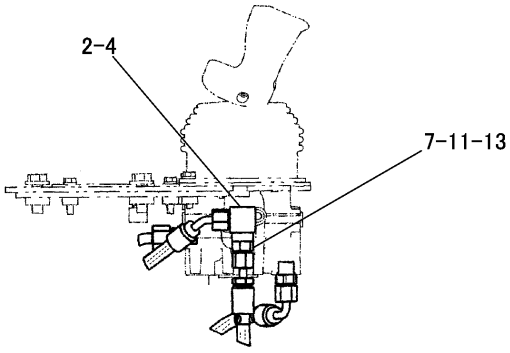

G-G

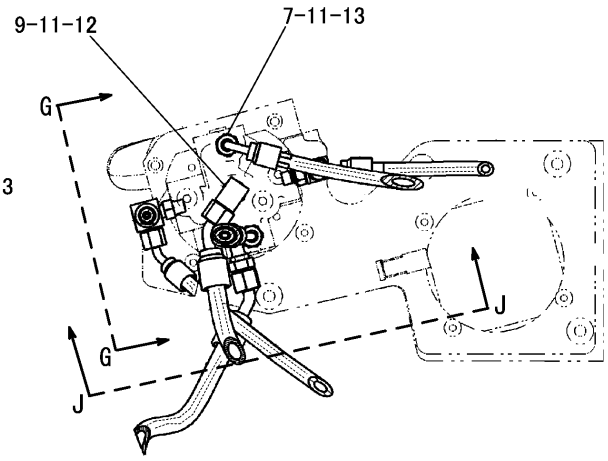

C-C

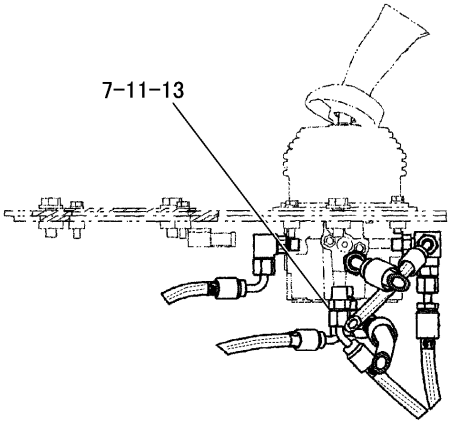

J-J

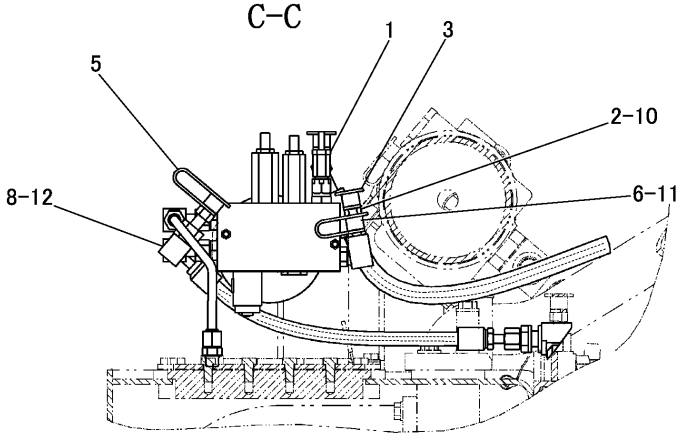

D-D

NOTE	№	PART NO.	QTY	PART NAME	NOTE	№	PART NO.	QTY	PART NAME
	1	5I-4376	1	FITTING					
	2	3J-7354	2	SEAL					
	3	8C-3451	1	CAP					
	4	8Y-7452	1	TEE					
	5	126-0814	1	NIPPLE AS					
	6	5P-9617	1	ADAPTER					
	7	6V-8641	3	CONNECTOR					
	8	6V-9850	1	ELBOW					
	9	6V-8724	1	ELBOW					
	10	8C-3446	1	VALVE					
	11	3J-1907	5	SEAL					
	12	6V-8397	2	SEAL					
	13	4J-5477	3	SEAL					

J155666 X02

PILOT LINES GROUP (222-1156 N/S) -DOZER-PART 4 OF 4
PART OF 270-0515-Page 307

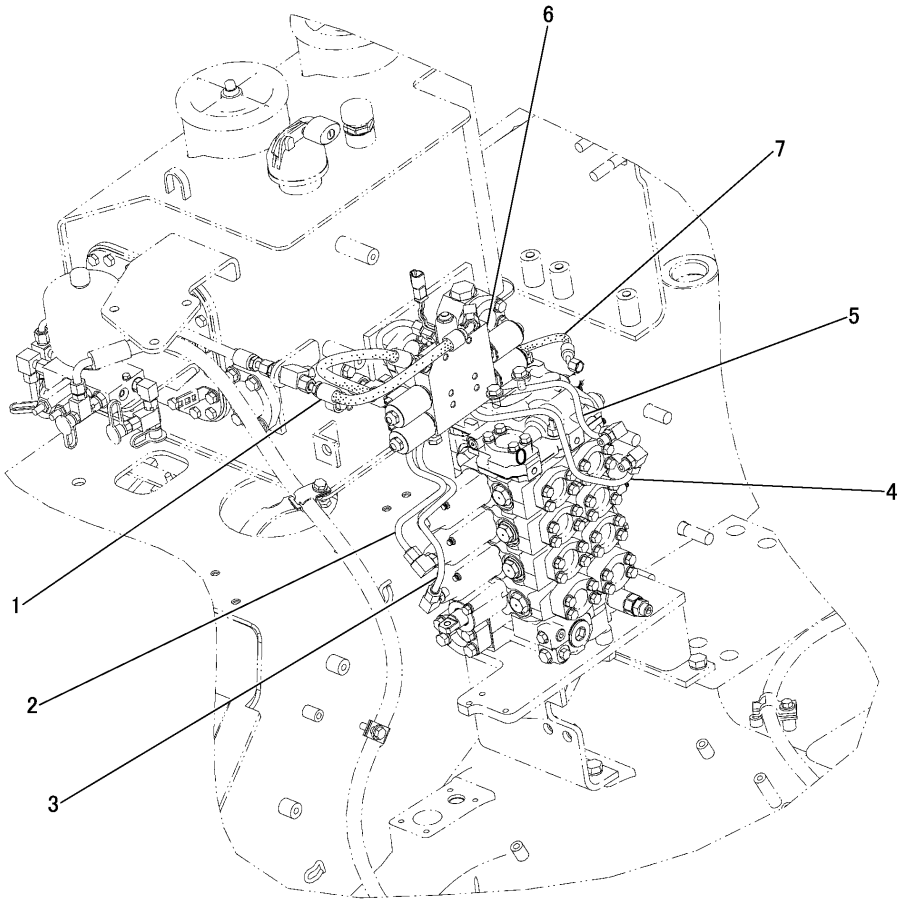

NOTE	№	PART NO.	QTY	PART NAME	NOTE	№	PART NO.	QTY	PART NAME
	1	226-3497	1	HOSE AS					
	2	239-3875	1	TUBE AS					
	3	239-3876	1	TUBE AS					
	4	239-4119	1	TUBE AS					
	5	239-4120	1	TUBE AS					
Y	6	239-5317	1	VALVE GROUP					
	7	264-4006	1	HOSE AS					

Y-SEPARATE ILLUSTRATION

J155850 -02

PILOT LINES GROUP (271-5642 N/S) -ACCUGRADE-PART 1 OF 2
PART OF 273-1826-Page 137
REFERENCE:239-5317-Page 365
AN ATTACHMENT

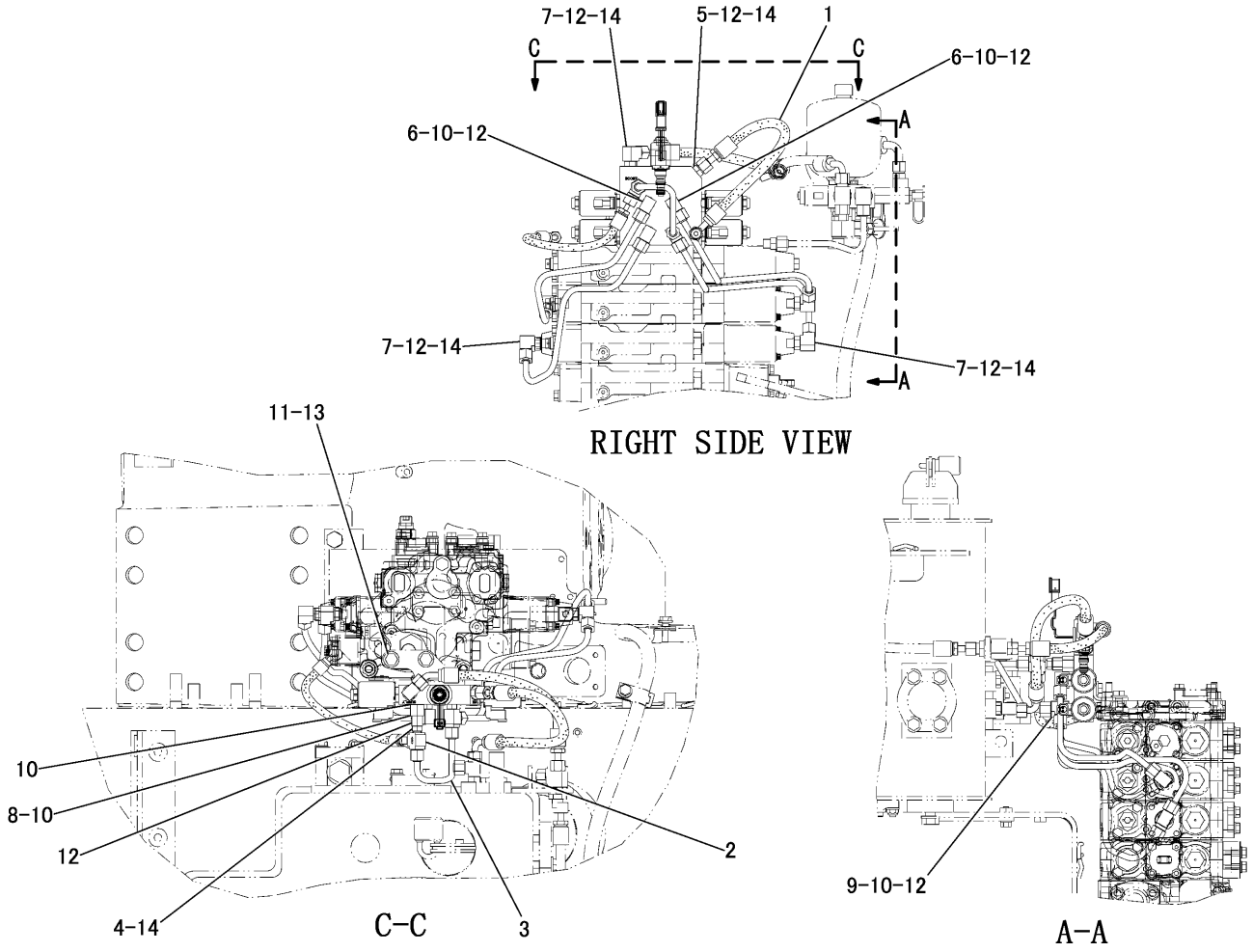

NOTE	№	PART NO.	QTY	PART NAME	NOTE	№	PART NO.	QTY	PART NAME
	1	226-3511	1	HOSE AS					
	2	233-6942	1	VALVE					
	3	264-3883	1	TUBE AS					
	4	5P-9617	1	ADAPTER					
	5	6V-8636	1	CONNECTOR					
	6	6V-9200	3	ELBOW					
	7	6V-8724	5	ELBOW					
	8	8T-2353	1	ADAPTER					
	9	6V-9161	1	TEE					
	10	3J-7354	6	SEAL					
	11	5P-8245	2	WASHER					
	12	6V-8397	13	SEAL					
	13	8T-4192	2	BOLT(M12×1.75)					
	14	3J-1907	7	SEAL					

J155851 -02

PILOT LINES GROUP (271-5642 N/S) -ACCUGRADE-PART 2 OF 2
PART OF 273-1826-Page 137
AN ATTACHMENT

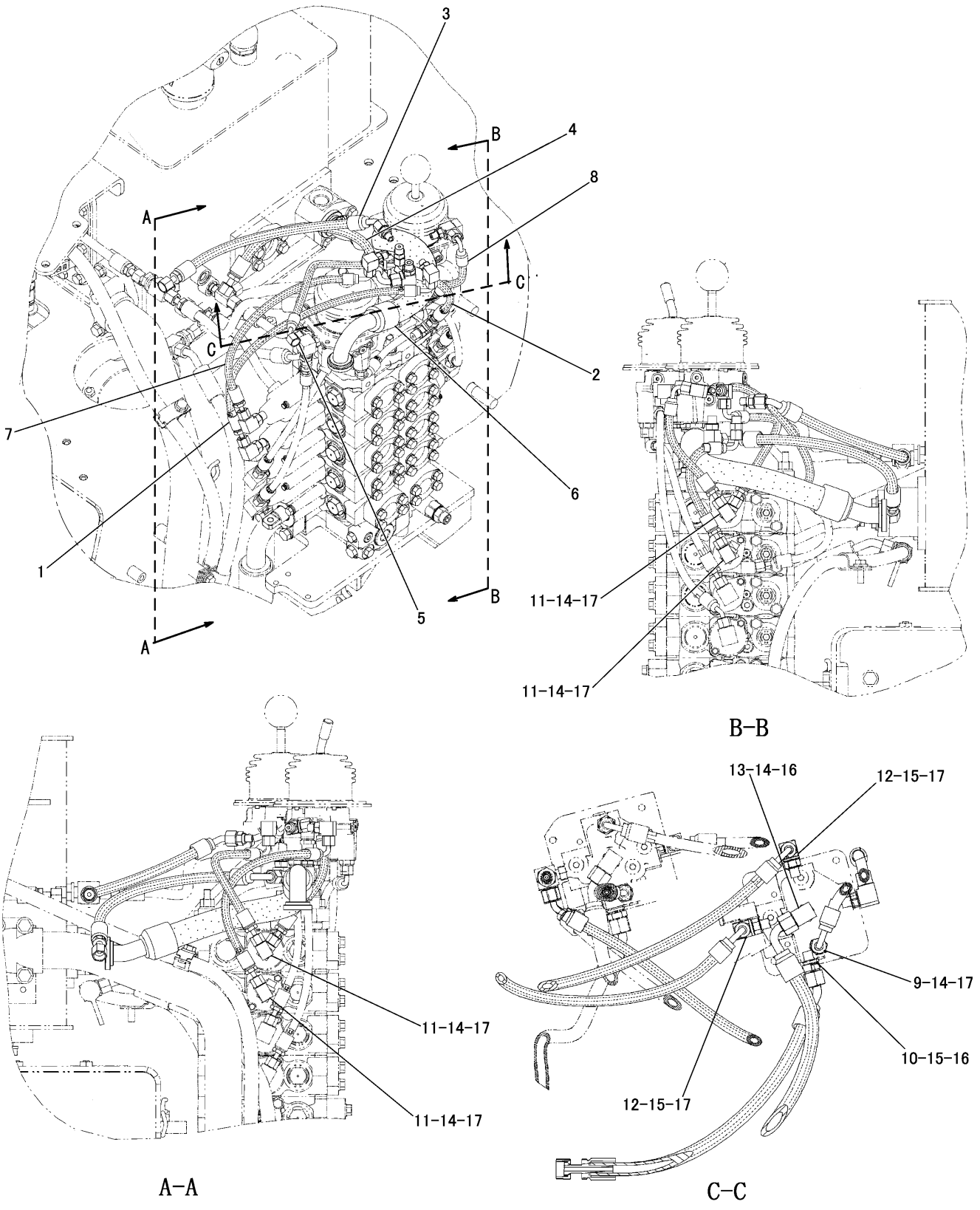

PILOT LINES GROUP (222-1179 N/S) -RIPPER
PART OF 228-7816-Page 308
AN ATTACHMENT

HYDRAULIC SYSTEM

NOTE	№	PART NO.	QTY	PART NAME	NOTE	№	PART NO.	QTY	PART NAME
	1	226-3506	1	HOSE AS					
	2	226-3507	1	HOSE AS					
	3	226-3510	1	HOSE AS					
	4	226-3511	1	HOSE AS					
	5	227-3178	1	HOSE AS					
	6	227-3179	1	HOSE AS					
	7	228-7853	1	HOSE AS					
	8	228-7855	1	HOSE AS					
	9	6V-8641	1	CONNECTOR					
	10	6V-9872	1	CONNECTOR					
	11	6V-8627	4	ELBOW					
	12	6V-8628	3	ELBOW					
	13	6V-8724	1	ELBOW					
	14	3J-1907	6	SEAL					
	15	3J-7354	4	SEAL					
	16	6V-8397	2	SEAL					
	17	4J-5477	8	SEAL					

J155822 -03

PILOT LINES GROUP (222-1179 N/S) -RIPPER
PART OF 228-7816-Page 308
AN ATTACHMENT

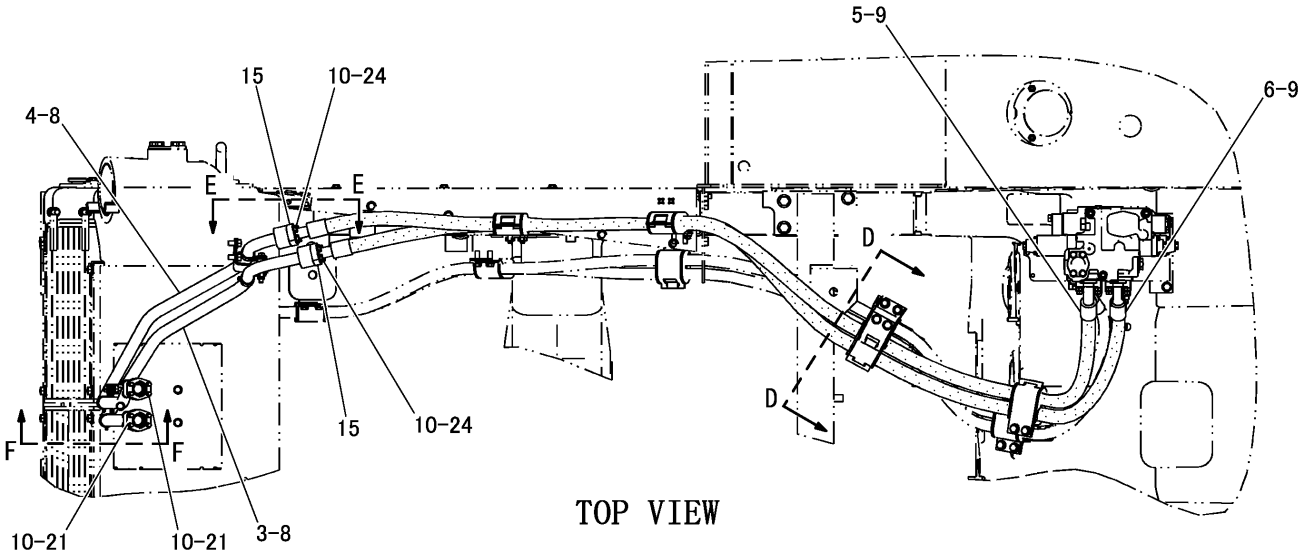

TOP VIEW

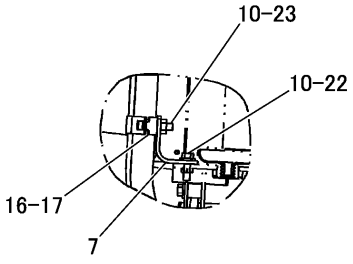

F-F

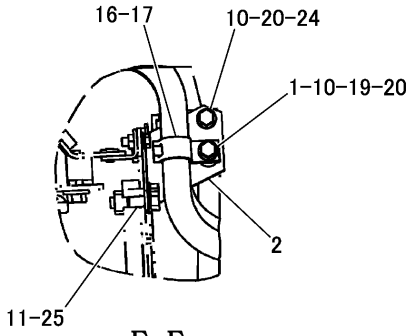

E-E

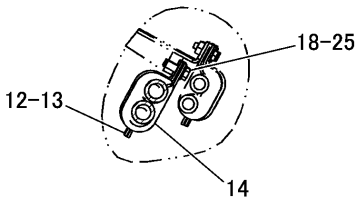

D-D

NOTE	№	PART NO.	QTY	PART NAME	NOTE	№	PART NO.	QTY	PART NAME
	1	091-9035	1	SPACER		20	8T-4133	2	NUT(M10×1.5)
	2	172-3584	1	BRACKET		21	8T-4182	8	BOLT(M10×1.5)
	3	229-5458	1	TUBE AS		22	9B-7237	1	BOLT(3/8-16)
	4	229-5459	1	TUBE AS		23	8T-4186	1	BOLT(M10×1.5)
	5	229-5460	1	HOSE AS		24	8T-4196	9	BOLT(M10×1.5)
	6	229-5461	1	HOSE AS		25	8T-4223	4	WASHER
	7	229-5462	1	BRACKET AS					
		8T-3490	1	NUT(M10×1.5)(WELD)					
	8	1P-3704	2	SEAL					
	9	4J-0520	4	SEAL					
	10	5P-1075	22	WASHER					
	11	5P-2228	2	BOLT(1/2-13)					
	12	7G-5984	1	CLIP(TAB)					
	13	7G-5985	1	CLIP(SLOT)					
	14	7G-5986	1	GROMMET					
	15	8C-3206	4	FLANGE					
	16	8S-0023	2	CLIP(SLOT)					
	17	8S-0024	2	CLIP(TAB)					
	18	8T-4956	2	BOLT(M12×1.75)					
	19	8T-6466	1	BOLT(M10×1.5)					

J155661 X00

LIFT LINES GROUP (222-1157 N/S) -PART 1 OF 2
PART OF 270-0515-Page 307

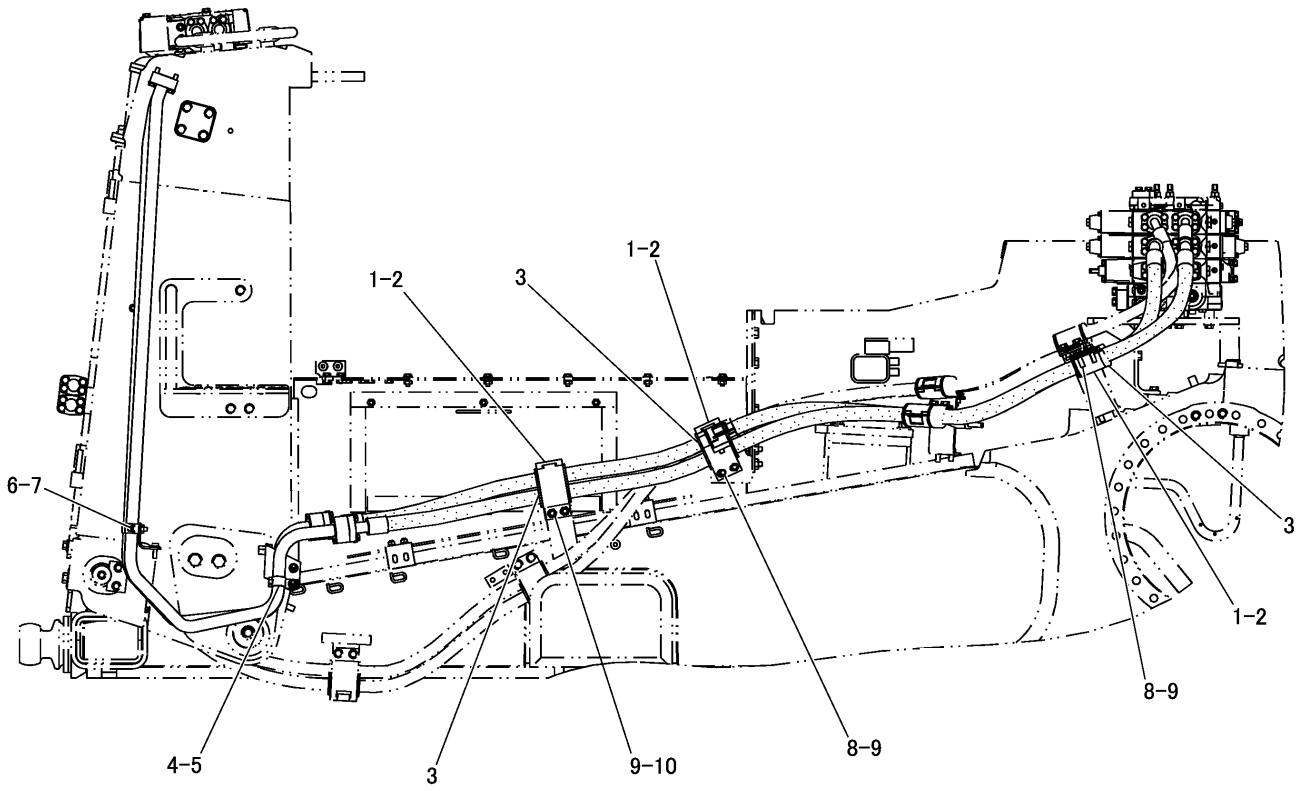

NOTE	№	PART NO.	QTY	PART NAME	NOTE	№	PART NO.	QTY	PART NAME
	1	7G-5984	3	CLIP(TAB)					
	2	7G-5985	3	CLIP(SLOT)					
	3	7G-5986	3	GROMMET					
	4	8S-0023	1	CLIP(SLOT)					
	5	8S-0024	1	CLIP(TAB)					
	6	8T-2602	1	CLIP(TAB)					
	7	8T-2603	1	CLIP(SLOT)					
	8	8T-4183	4	BOLT(M12×1.75)					
	9	8T-4223	6	WASHER					
	10	8T-8917	2	BOLT(1/2-13)					

J155662 X00

LIFT LINES GROUP (222-1157 N/S) -PART 2 OF 2
PART OF 270-0515-Page 307

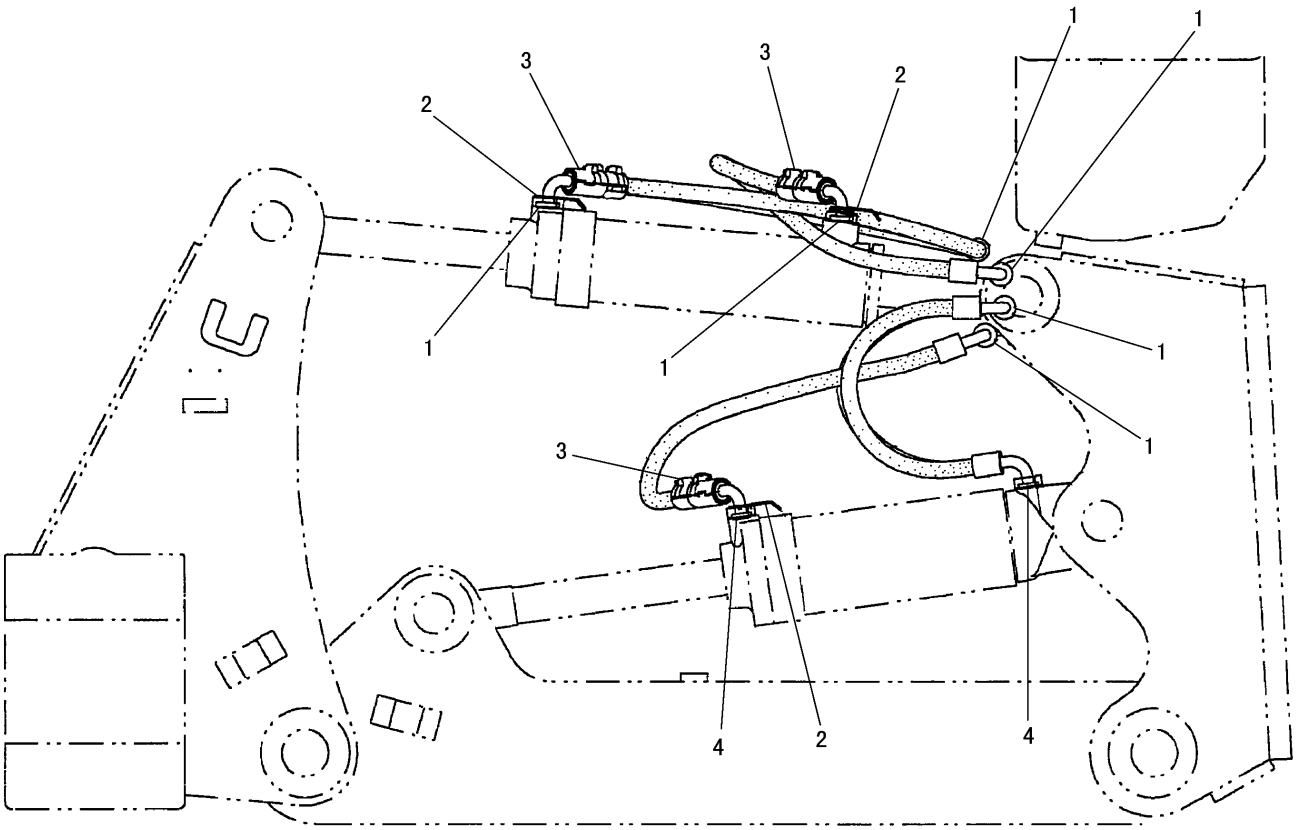

RIGHT SIDE VIEW

NOTE	№	PART NO.	QTY	PART NAME	NOTE	№	PART NO.	QTY	PART NAME
	1	4J-0520	12	SEAL					
	2	139-2456	3	SHIELD(LH)					
		139-2455	3	SHIELD(RH)					
	3	9M-2904	12	CLAMP					
		130-1977	12	SHIELD					
		130-9191	6	GROMMET					
	4	4J-5267	4	SEAL					

J119373 X04

RIPPER LINES GROUP (164-4990 N/S) -PART 1 OF 2
PART OF 164-4717-Page 395
AN ATTACHMENT

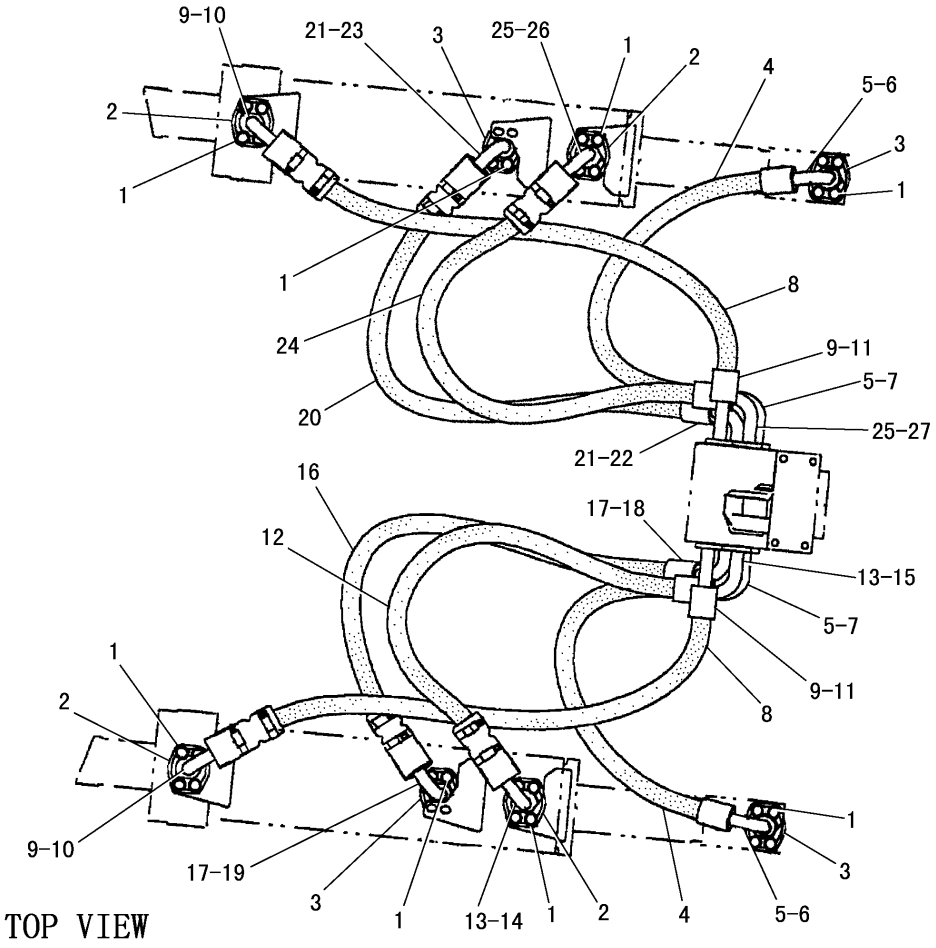

TOP VIEW

NOTE	№	PART NO.	QTY	PART NAME
	1	8T-4196	32	BOLT(M10×1.5)
		8T-4121	32	WASHER
	2	8C-3206	8	FLANGE
	3	8C-3205	8	FLANGE
	4	167-7643	2	HOSE AS
E		5P-0180		HOSE---83cm
	5	3S-7166	2	SLEEVE
	6	6V-4675	1	STEM AS(90°)
	7	6V-4679	1	STEM AS(90°)
	8	167-7640	2	HOSE AS
E		5P-0180		HOSE---97cm
	9	3S-7166	2	SLEEVE
	10	6V-4676	1	STEM AS(90°)
	11	147-7328	1	STEM AS(STRAIGHT)
	12	167-7642	1	HOSE AS(RH)
E		5P-0180		HOSE---98cm
	13	3S-7166	2	SLEEVE
	14	6V-4676	1	STEM AS(90°)
	15	6V-4679	1	STEM AS(90°)
	16	9U-9540	1	HOSE AS(RH)
E		5P-0180		HOSE---107cm
	17	3S-7166	2	SLEEVE
	18	6V-4676	1	STEM AS(90°)
	19	6V-4675	1	STEM AS(90°)
	20	119-6024	1	HOSE AS(LH)
E		5P-0180		HOSE---107cm
	21	3S-7166	2	SLEEVE
	22	6V-4676	1	STEM AS(90°)
	23	6V-4675	1	STEM AS(90°)
	24	167-7641	1	HOSE AS(LH)
E		5P-0180		HOSE---98cm
	25	3S-7166	2	SLEEVE
	26	6V-4676	1	STEM AS(90°)
	27	6V-4679	1	STEM AS(90°)

E-ORDER BY THE cm

J119928 X04

RIPPER LINES GROUP (164-4990 N/S) -PART 2 OF 2

PART OF 164-4717-Page 395
AN ATTACHMENT

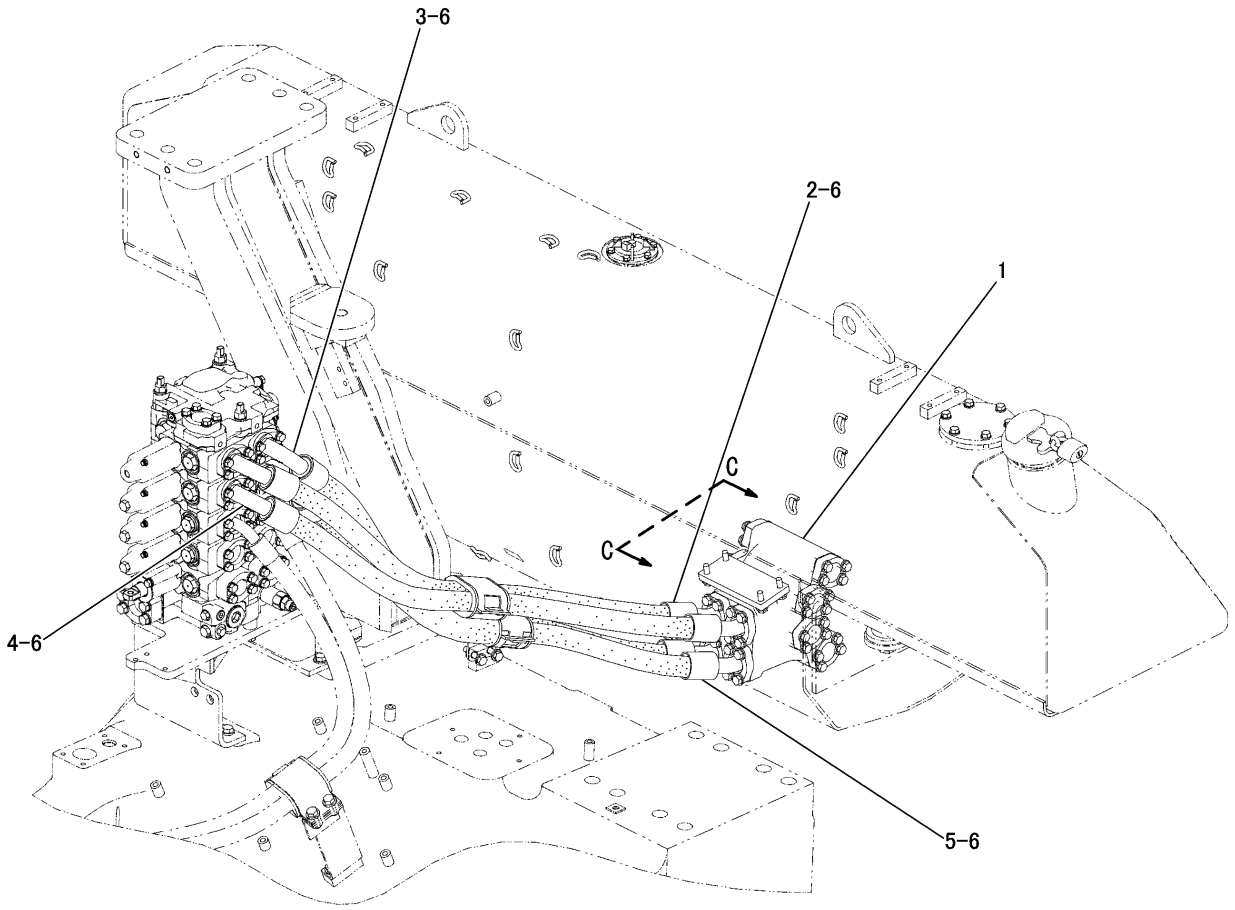

NOTE	№	PART NO.	QTY	PART NAME	NOTE	№	PART NO.	QTY	PART NAME
	1	211-9491	1	MANIFOLD					
	2	229-2353	1	HOSE AS					
	3	229-2355	1	HOSE AS					
	4	229-2356	1	HOSE AS					
	5	229-2357	1	HOSE AS					
	6	4J-0520	8	SEAL					

J155826 -03

RIPPER LINES GROUP (228-7368 N/S) -PART 1 OF 2
PART OF 228-7816-Page 308
AN ATTACHMENT

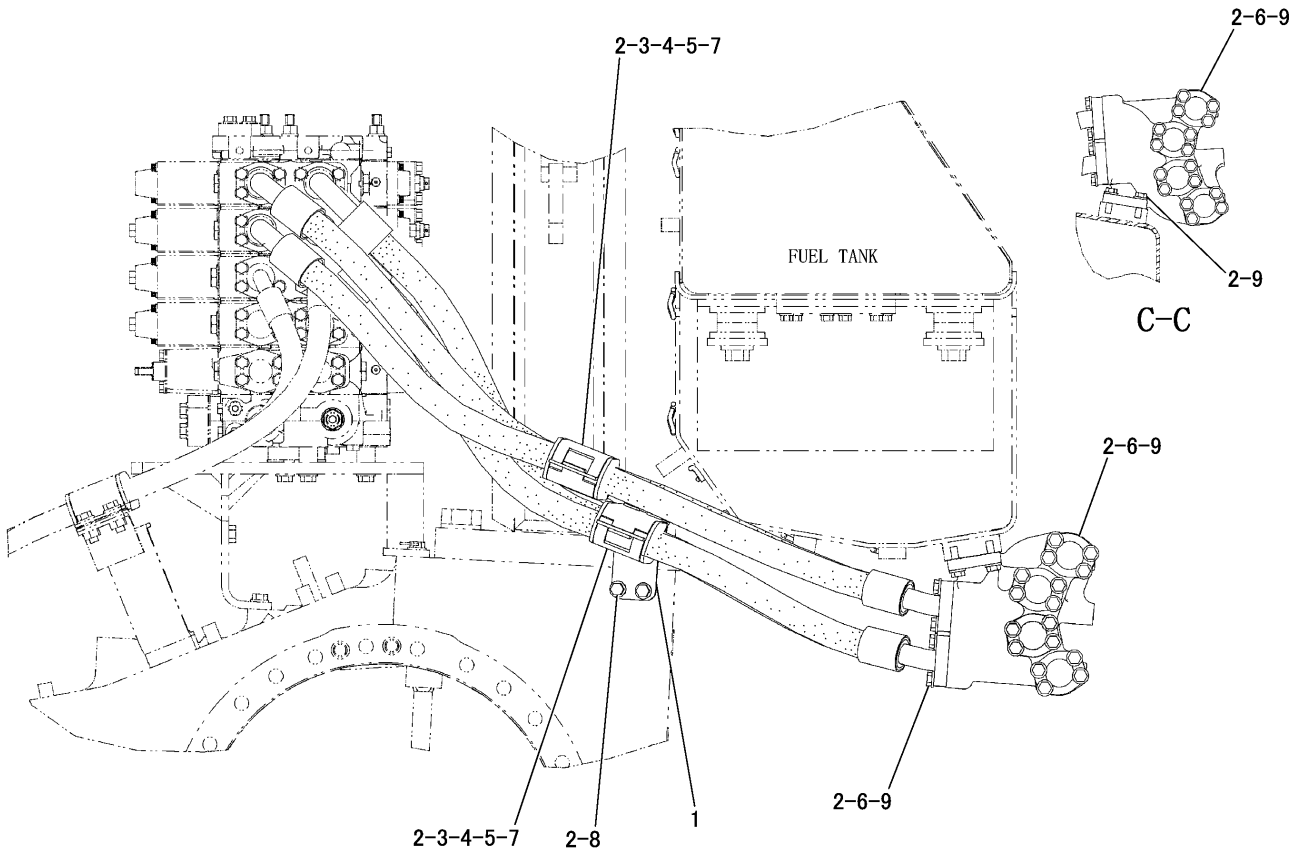

NOTE	№	PART NO.	QTY	PART NAME	NOTE	№	PART NO.	QTY	PART NAME
	1	229-2359	1	BRACKET AS					
		8T-3490	2	NUT(M10×1.5)(WELD)					
		8T-7501	4	STUD(M10×1.5)(WELD)					
	2	5P-1075	58	WASHER					
	3	7G-5984	2	CLIP(TAB)					
	4	7G-5985	2	CLIP(SLOT)					
	5	7G-5986	2	GROMMET					
	6	8C-3206	24	FLANGE					
	7	8T-4133	4	NUT(M10×1.5)					
	8	8T-4185	2	BOLT(M10×1.5)					
	9	8T-4196	52	BOLT(M10×1.5)					

J155827 -03

RIPPER LINES GROUP (228-7368 N/S) -PART 2 OF 2
PART OF 228-7816-Page 308
AN ATTACHMENT

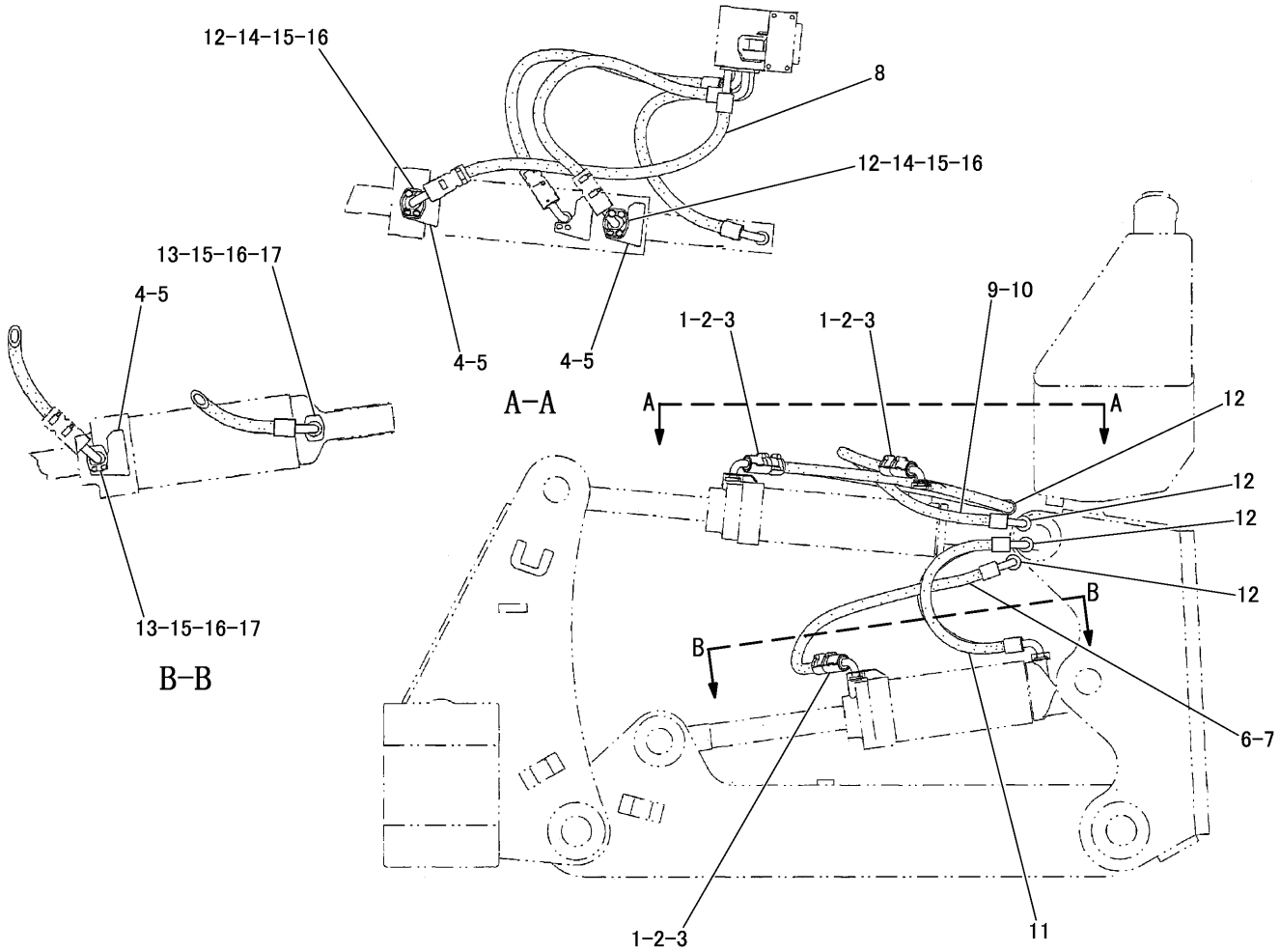

NOTE	№	PART NO.	QTY	PART NAME	NOTE	№	PART NO.	QTY	PART NAME
	1	9M-2904	12	CLAMP					
	2	130-1977	12	SHIELD					
	3	130-9191	6	GROMMET					
	4	139-2455	3	SHIELD(RH)					
	5	139-2456	3	SHIELD(LH)					
K	6	270-8481	1	HOSE AS					
J	7	270-8482	1	HOSE AS					
	8	270-8483	2	HOSE AS					
K	9	270-8484	1	HOSE AS					
J	10	270-8485	1	HOSE AS					
	11	270-8487	2	HOSE AS					
	12	4J-0520	12	SEAL					
	13	4J-5267	4	SEAL					
	14	8C-3206	8	FLANGE					
	15	8T-4121	32	WASHER					
	16	8T-4196	32	BOLT(M10×1.5)					
	17	8C-3205	8	FLANGE					

J-FOR RH
K-FOR LH

J157046 X00

RIPPER LINES GROUP (270-8486 N/S) -COLD WEATHER
AN ATTACHMENT

CONSISTS OF :

1 270-8488 HOSE ASSEMBLY

1 270-8495 HOSE ASSEMBLY

J157759 -01

CYLINDER LINES GROUP (270-8489 N/S) -RH-COLD WEATHER
PART OF 270-8493-Page 315
AN ATTACHMENT

CONSISTS OF :

1 270-8488 HOSE ASSEMBLY

1 270-8495 HOSE ASSEMBLY

J157760 -01

CYLINDER LINES GROUP (270-8490 N/S) -LH-COLD WEATHER
PART OF 270-8493-Page 315
AN ATTACHMENT

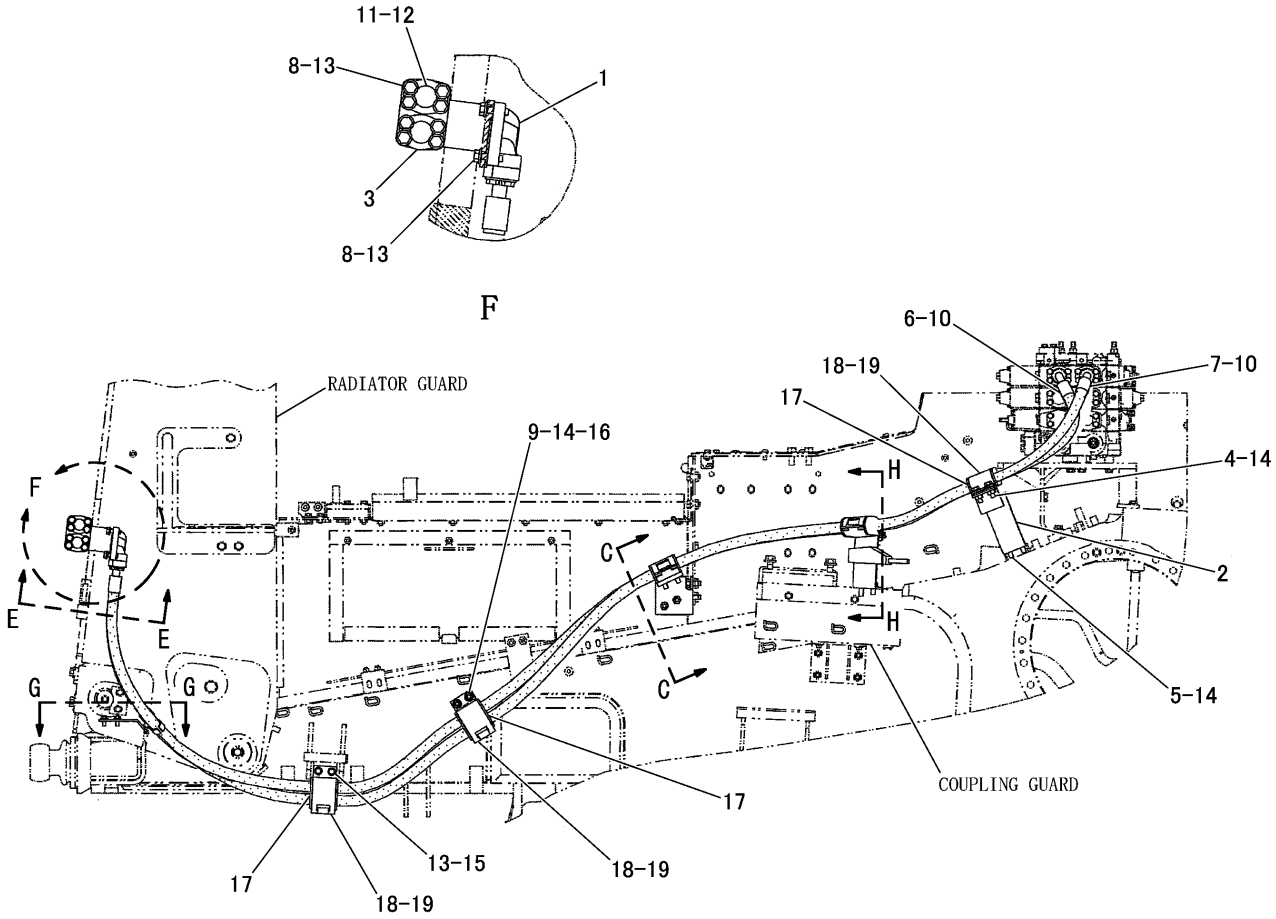

NOTE	№	PART NO.	QTY	PART NAME	NOTE	№	PART NO.	QTY	PART NAME
	1	226-7906	1	MANIFOLD					
	2	228-6679	1	BRACKET AS					
		8T-3597	4	NUT(M12×1.75)(WELD)					
	3	8C-3205	4	FLANGE					
	4	8T-4183	2	BOLT(M12×1.75)					
	5	8T-4192	2	BOLT(M12×1.75)					
	6	228-6683	1	HOSE AS					
	7	228-6684	1	HOSE AS					
	8	8T-4196	10	BOLT(M10×1.5)					
	9	2D-8426	2	STUD(1/2-13)					
	10	4J-0520	2	SEAL					
	11	4J-5267	2	SEAL					
	12	5H-4018	2	COVER					
	13	5P-1075	12	WASHER					
	14	8T-4223	6	WASHER					
	15	9B-7237	2	BOLT(3/8-16)					
	16	6V-0299	2	NUT(1/2-13)					
	17	7G-3832	3	GROMMET					
	18	7G-3833	3	CLIP(TAB)					
	19	7G-3834	3	CLIP(SLOT)					

J155679 X06

TILT CYLINDER LINES GROUP (222-1158 N/S) -PART 1 OF 2
PART OF 270-0515-Page 307

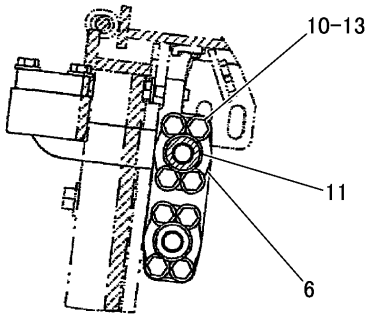

E-E

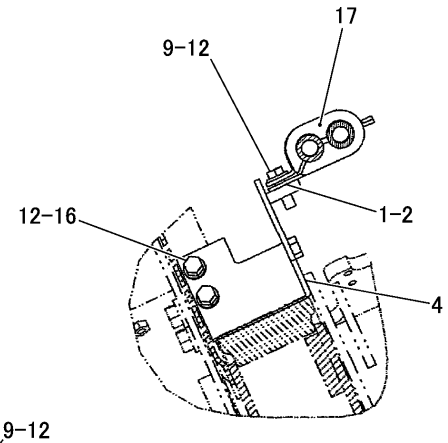

C-C

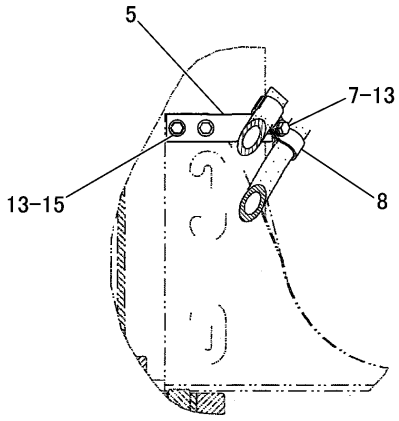

G-G

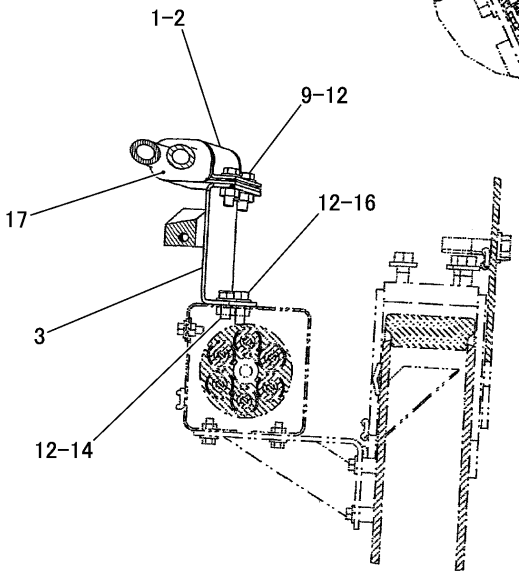

H-H

NOTE	№	PART NO.	QTY	PART NAME	NOTE	№	PART NO.	QTY	PART NAME
	1	7G-3833	2	CLIP(TAB)		17	7G-3832	2	GROMMET
	2	7G-3834	2	CLIP(SLOT)					
	3	228-6680	1	BRACKET AS					
		8T-3597	2	NUT(M12×1.75)(WELD)					
	4	228-6681	1	BRACKET AS					
		8T-3597	2	NUT(M12×1.75)(WELD)					
	5	228-6682	1	BRACKET AS					
		1L-4684	1	CLIP					
		8T-3851	1	BOSS(M10×1.5)(WELD)					
	6	8C-3205	4	FLANGE					
	7	8T-4136	1	BOLT(M10×1.5)					
	8	1L-4684	1	CLIP					
	9	8T-4183	4	BOLT(M12×1.75)					
	10	8T-4196	8	BOLT(M10×1.5)					
	11	4J-5267	2	SEAL					
	12	8T-4223	8	WASHER					
	13	5P-1075	11	WASHER					
	14	5P-2228	1	BOLT(1/2-13)					
	15	5S-7379	2	BOLT(3/8-16)					
	16	8T-8917	3	BOLT(1/2-13)					

J155680 X06

TILT CYLINDER LINES GROUP (222-1158 N/S) -PART 2 OF 2

PART OF 270-0515-Page 307

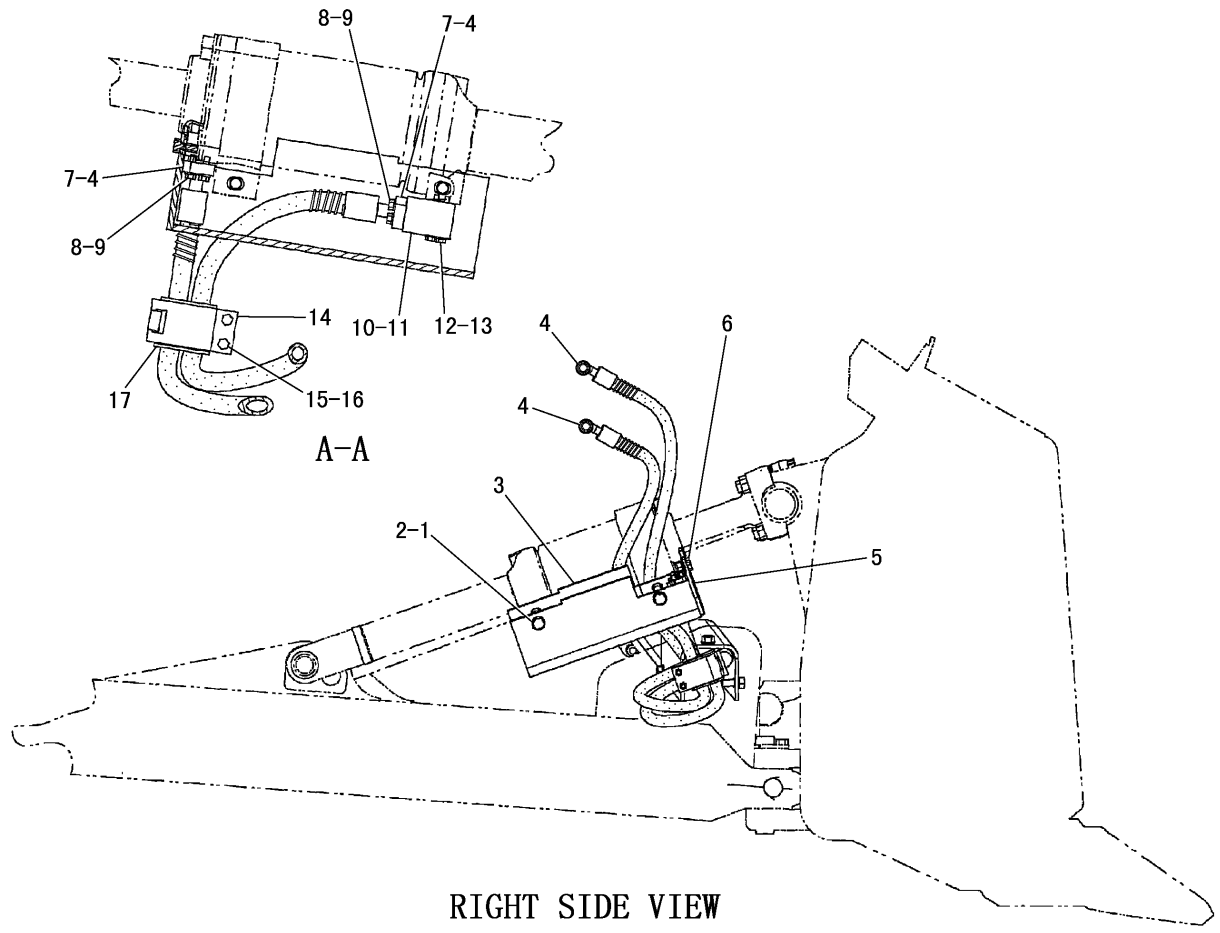

RIGHT SIDE VIEW

NOTE	№	PART NO.	QTY	PART NAME	NOTE	№	PART NO.	QTY	PART NAME
	1	8T-4994	4	WASHER					
	2	8T-9398	4	BOLT(3/4-10)					
	3	4T-6484	1	GUARD					
	4	4J-5267	4	SEAL					
	5	4T-6443	1	PLATE					
	6	5C-6565	2	BOLT(1/2-13)					
	7	1P-4576	4	FLANGE					
	8	9B-7237	8	BOLT(3/8-16)					
	9	8T-4896	8	WASHER					
	10	1U-1325	1	BLOCK					
	11	4J-5140	1	SEAL					
	12	7X-0274	4	BOLT(5/16-18)					
	13	8T-4224	4	WASHER					
	14	7G-3833	1	CLIP(TAB)					
		7G-3834	1	CLIP(SLOT)					
	15	8T-4137	2	BOLT(M10×1.5)					
	16	8T-4133	2	NUT(M10×1.5)					
	17	7G-3832	1	GROMMET					

J119305 X00

TILT CYLINDER LINES GROUP (213-6169 N/S) -PART 1 OF 2
PART OF 212-7421-Page 382,218-7469-Page 384,226-2543-Page 383,226-2544-Page 385
AN ATTACHMENT

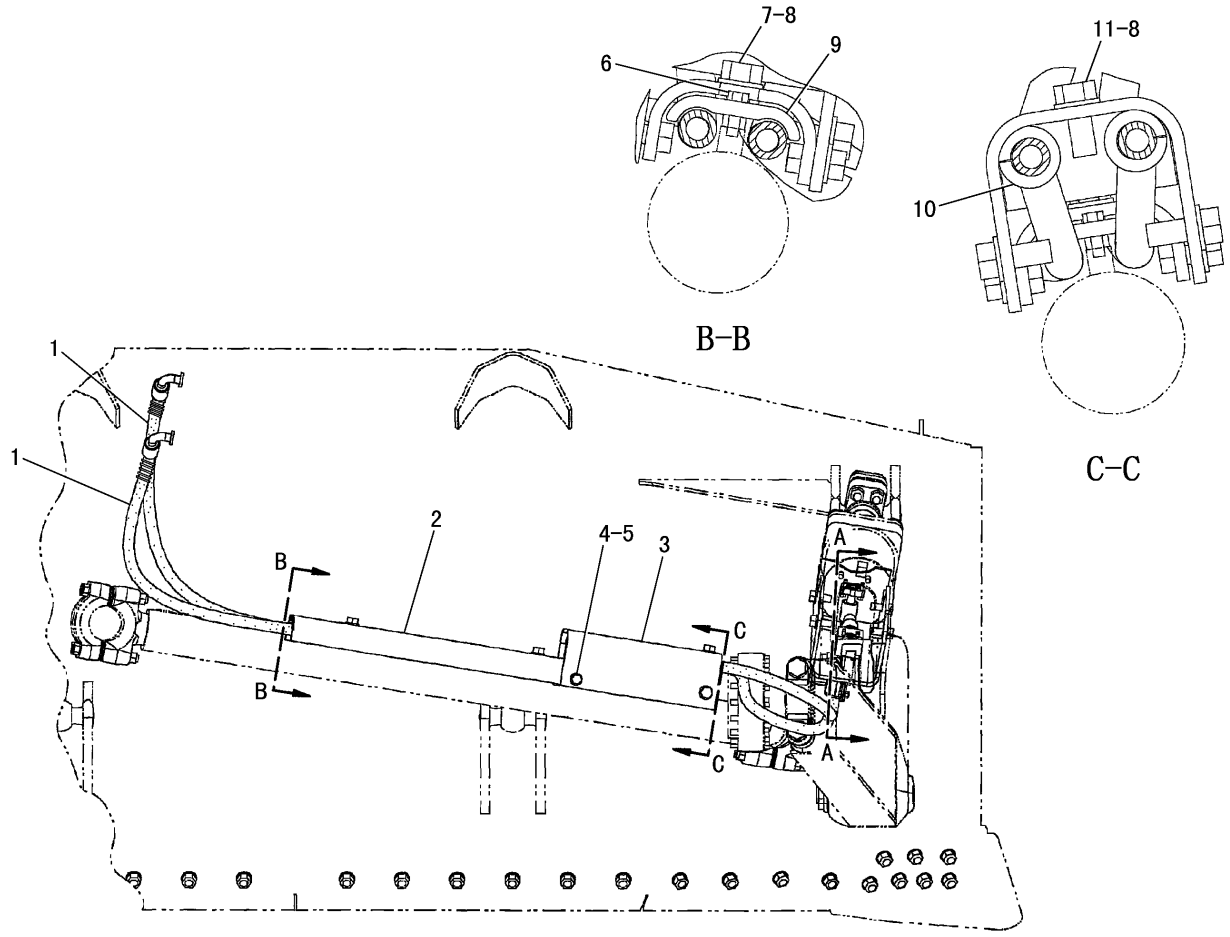

NOTE	№	PART NO.	QTY	PART NAME	NOTE	№	PART NO.	QTY	PART NAME
	1	9U-8544	2	HOSE AS					
E		5P-0180		HOSE---308cm					
E		6V-0745		GUARD---160cm					
		3S-7166	2	SLEEVE					
		6V-4681	1	STEM AS(90°)					
		6V-4651	1	STEM AS(STRAIGHT)					
	2	4T-6440	1	GUARD AS					
		3J-5169	2	NUT(5/8-11)(WELD)					
	3	4T-6483	1	GUARD AS					
	4	7X-0344	2	BOLT(5/8-11)					
	5	8T-4122	2	WASHER					
	6	8T-2502	2	BOLT(3/8-16)					
	7	7X-0365	2	BOLT(3/4-10)					
	8	8T-4994	5	WASHER					
	9	1U-1344	2	CLAMP					
	10	5P-8112	2	GROMMET					
	11	8T-9389	3	BOLT(1/2-13)					

E-ORDER BY THE cm

J119306 X00

TILT CYLINDER LINES GROUP (213-6169 N/S) -PART 2 OF 2
PART OF 212-7421-Page 382,218-7469-Page 384,226-2543-Page 383,226-2544-Page 385
AN ATTACHMENT

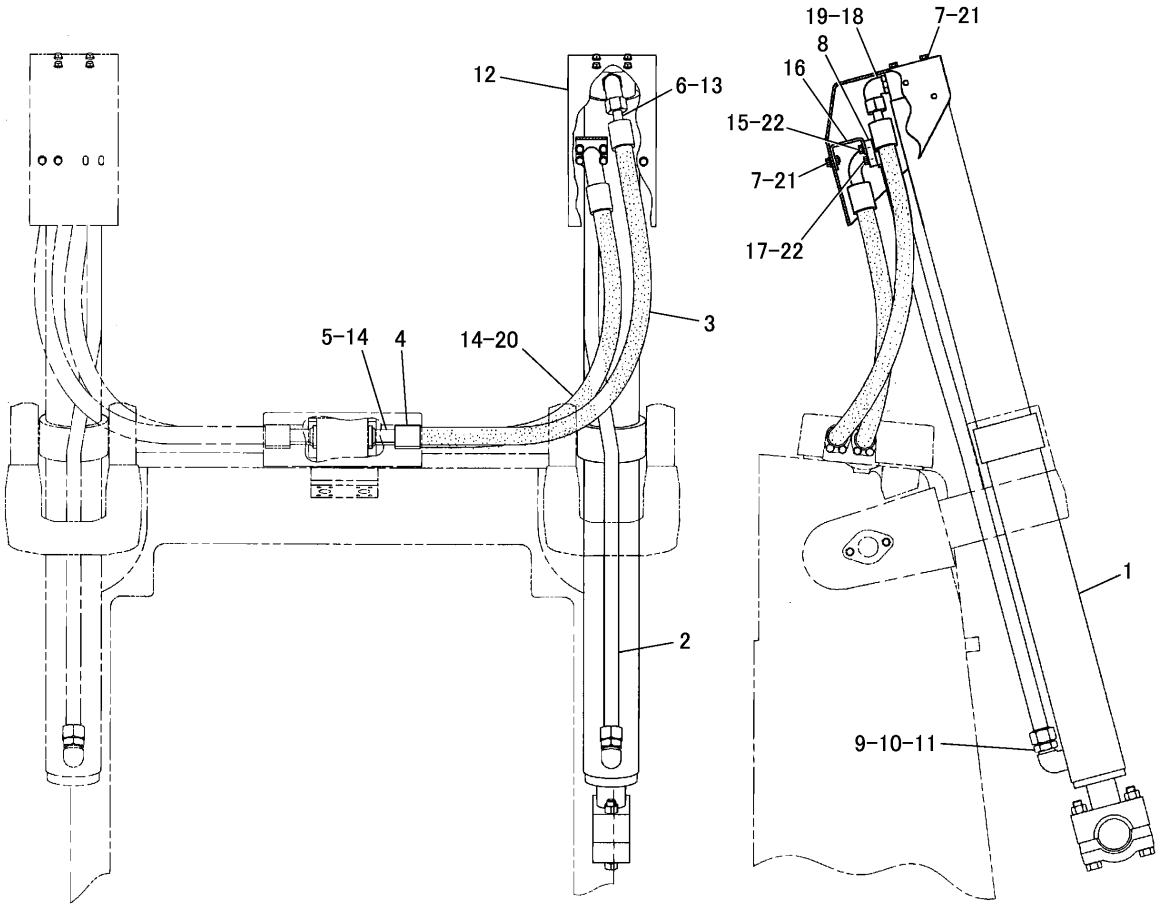

NOTE	№	PART NO.	QTY	PART NAME	NOTE	№	PART NO.	QTY	PART NAME
Y	1	129-1908	1	CYLINDER GROUP		19	8T-8987	1	ELBOW
	2	8E-8432	1	TUBE AS(RH)		20	8E-8431	1	HOSE AS
	3	8E-8430	1	HOSE AS	E		5P-0181		HOSE---83cm
E		5P-0181		HOSE---113cm			3S-7252	2	SLEEVE
	4	3S-7252	2	SLEEVE			2P-1801	1	STEM AS(STRAIGHT)
	5	2P-1801	1	STEM AS(STRAIGHT)			3S-8503	1	STEM AS(90°)
	6	6V-9957	1	COUPLING AS(STRAIGHT)		21	5S-7379	6	BOLT(3/8-16)
	7	5P-1075	6	WASHER		22	8T-4896	4	WASHER
	8	1P-4577	2	FLANGE					
	9	9X-8260	1	CONNECTOR					
	10	4K-1388	1	SEAL					
	11	6V-8400	1	SEAL					
	12	8E-8334	1	PLATE AS					
	13	5K-9090	1	SEAL					
	14	4J-0520	3	SEAL					
	15	4L-9337	2	BOLT(3/8-16)					
	16	8E-6269	1	BRACKET AS					
		9F-2978	2	NUT(3/8-16)(WELD)					
	17	5S-7382	2	BOLT(3/8-16)					
	18	2S-4078	1	SEAL					

E-ORDER BY THE cm
Y-SEPARATE ILLUSTRATION

J133619 X00

LIFT CYLINDER AND LINES GROUP (129-6768 N/S) -RH

PART OF 226-2543-Page 383,226-2544-Page 385
REFERENCE:129-1908-Page 377
AN ATTACHMENT

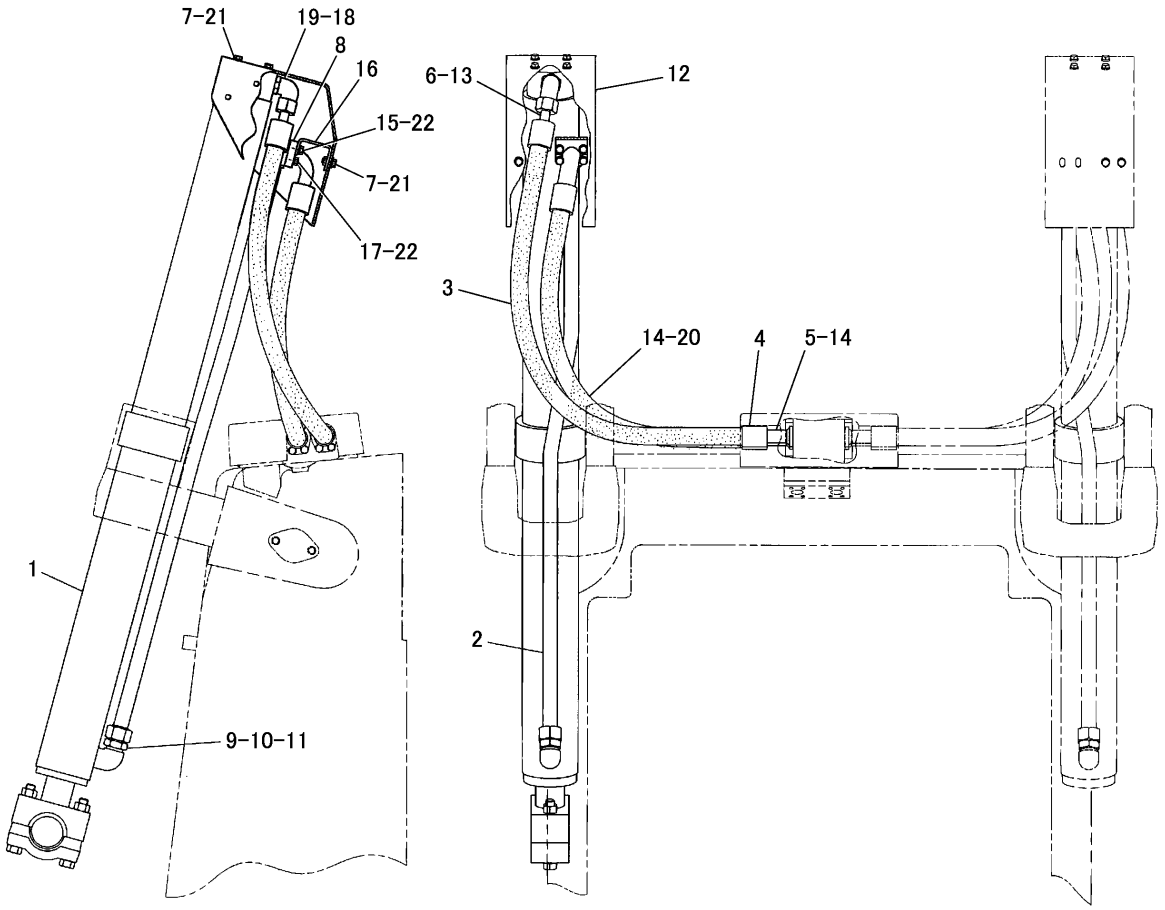

NOTE	№	PART NO.	QTY	PART NAME	NOTE	№	PART NO.	QTY	PART NAME
Y	1	129-1908	1	CYLINDER GROUP		19	8T-8987	1	ELBOW
	2	8E-8433	1	TUBE AS(LH)		20	8E-8431	1	HOSE AS
	3	8E-8430	1	HOSE AS	E		5P-0181		HOSE---83cm
E		5P-0181		HOSE---113cm			3S-7252	2	SLEEVE
	4	3S-7252	2	SLEEVE			2P-1801	1	STEM AS(STRAIGHT)
	5	2P-1801	1	STEM AS(STRAIGHT)			3S-8503	1	STEM AS(90°)
	6	6V-9957	1	COUPLING AS(STRAIGHT)		21	5S-7379	6	BOLT(3/8-16)
	7	5P-1075	6	WASHER		22	8T-4896	4	WASHER
	8	1P-4577	2	FLANGE					
	9	9X-8260	1	CONNECTOR					
	10	4K-1388	1	SEAL					
	11	6V-8400	1	SEAL					
	12	8E-8334	1	PLATE AS					
	13	5K-9090	1	SEAL					
	14	4J-0520	3	SEAL					
	15	4L-9337	2	BOLT(3/8-16)					
	16	8E-6269	1	BRACKET AS					
		9F-2978	2	NUT(3/8-16)(WELD)					
	17	5S-7382	2	BOLT(3/8-16)					
	18	2S-4078	1	SEAL					

E-ORDER BY THE cm
Y-SEPARATE ILLUSTRATION

J133621 X00

LIFT CYLINDER AND LINES GROUP (129-6769 N/S) -LH

PART OF 226-2543-Page 383,226-2544-Page 385
REFERENCE:129-1908-Page 377
AN ATTACHMENT

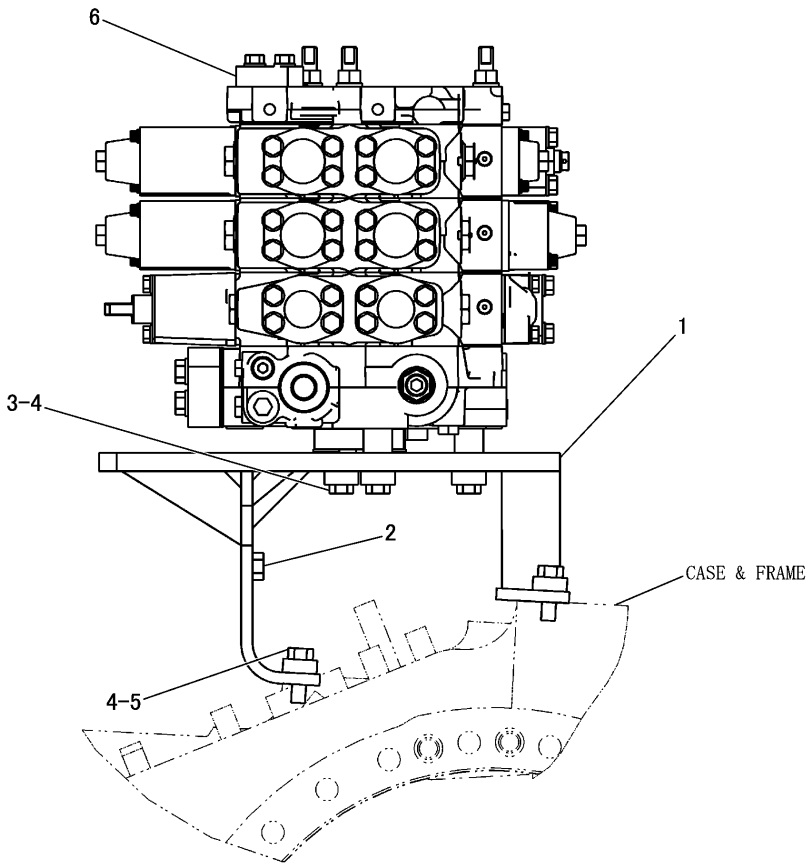

NOTE	№	PART NO.	QTY	PART NAME	NOTE	№	PART NO.	QTY	PART NAME
	1	165-6577	1	PLATE AS					
	2	1F-0748	2	NUT(1/2-13)(WELD)					
	3	172-9966	3	BOLT(M12×1.75)					
	4	198-4778	7	WASHER					
	5	7X-3325	4	BOLT(1/2-13)					
Y	6	224-4940	1	VALVE GROUP					

Y-SEPARATE ILLUSTRATION

J155700 X00

VALVE AND MOUNTING GROUP (222-1152 N/S) -IMPLEMENT

PART OF 270-0515-Page 307
REFERENCE:224-4940-Page 352, 353

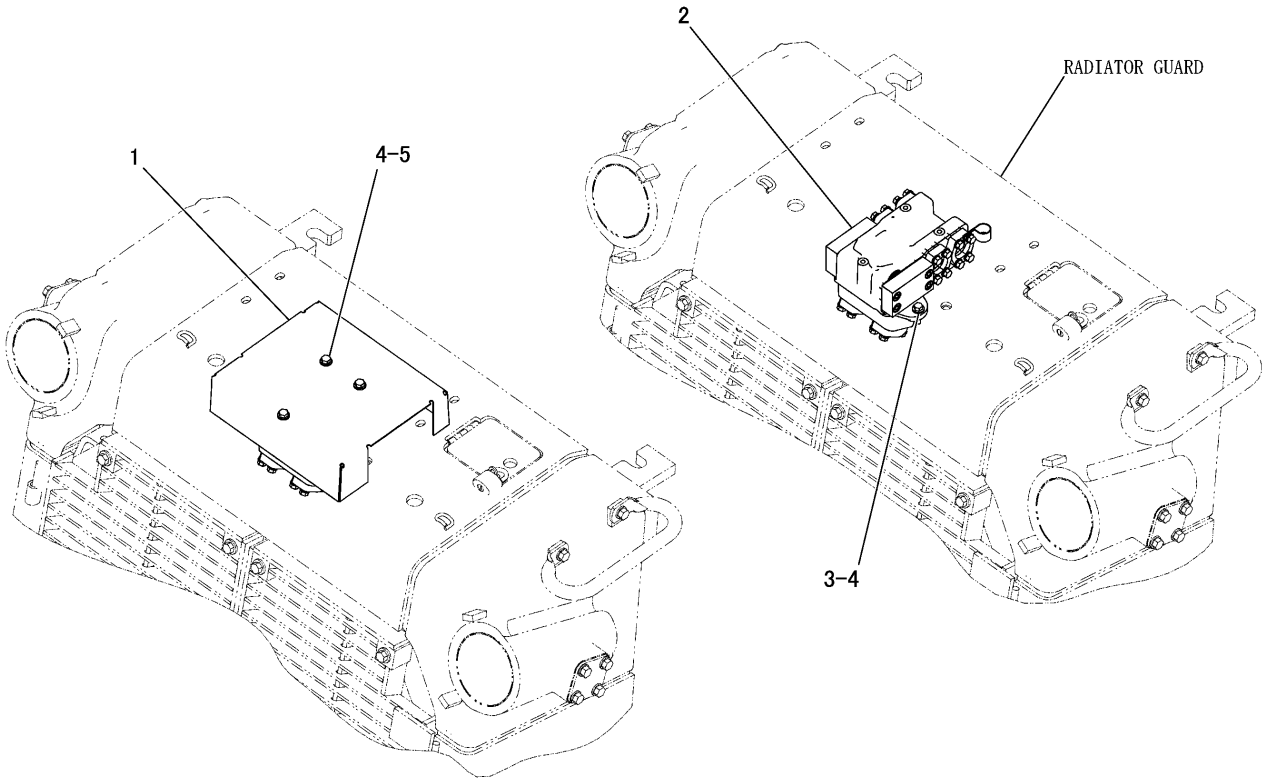

NOTE	№	PART NO.	QTY	PART NAME	NOTE	№	PART NO.	QTY	PART NAME
	1	8E-8434	1	GUARD					
Y	2	228-2576	1	VALVE GROUP					
	3	4L-9337	3	BOLT(3/8-16)					
	4	5P-1075	6	WASHER					
	5	8T-4191	3	BOLT(M10×1.5)					

Y-SEPARATE ILLUSTRATION

J155707 -02

VALVE AND MOUNTING GROUP (222-1151 N/S) -QUICK DROP

PART OF 270-0515-Page 307
REFERENCE:228-2576-Page 350

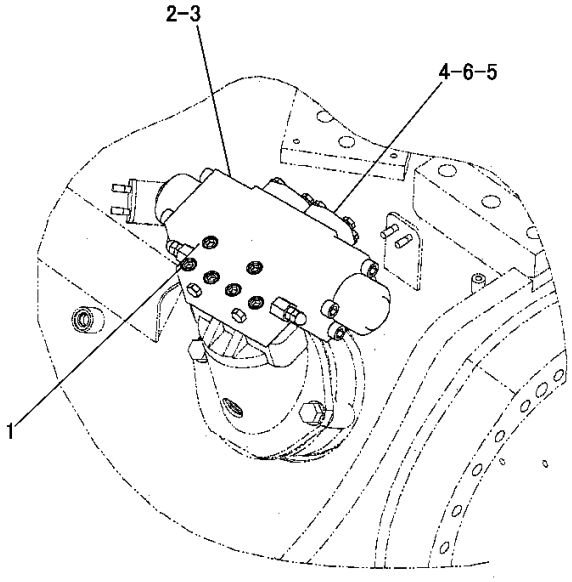

NOTE	№	PART NO.	QTY	PART NAME
	1	8C-4365	6	BOLT(M14×2)
Y	2	227-0832	1	VALVE GROUP
	3	4J-0520	2	SEAL
	4	6V-0400	4	FLANGE
	5	8T-4184	8	BOLT(M12×1.75)
	6	8T-4223	8	WASHER

Y-SEPARATE ILLUSTRATION

J137506 X01

VALVE AND MOUNTING GROUP (222-1191 N/S) -COUNTER BALANCE

PART OF 270-0515-Page 307
REFERENCE:227-0832-Page 351

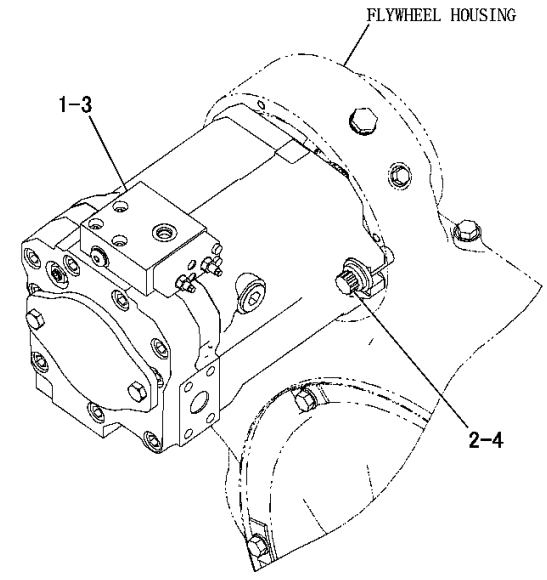

NOTE	№	PART NO.	QTY	PART NAME
Y	1	299-5790	1	PUMP GROUP
	2	2S-0115	2	WASHER
	3	5H-3252	1	SEAL
	4	6M-8796	2	BOLT(3/4-10)

Y-SEPARATE ILLUSTRATION

J155686 -03

PUMP AND MOUNTING GROUP (222-1153 N/S) -IMPLEMENT

PART OF 270-0515-Page 307
REFERENCE:299-5790-Page 372, 373

HYDRAULIC SYSTEM

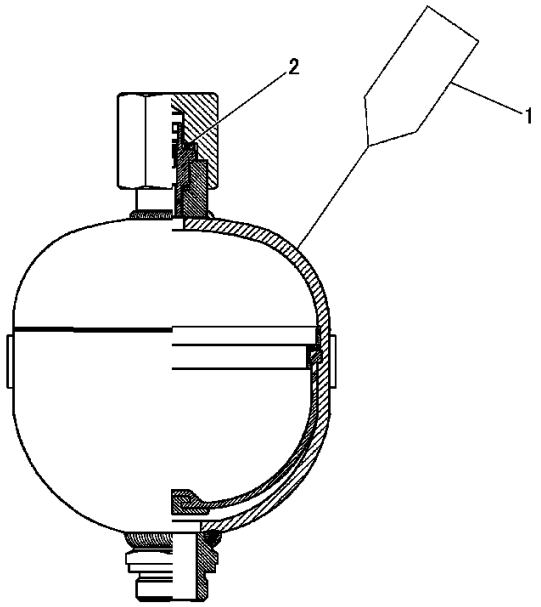

NOTE	№	PART NO.	QTY	PART NAME
	1	5P-3779	1	TAG(CYLINDER)
	2	169-4812	1	SEAL

J154909 X01

317-6394 ACCUMULATOR GROUP
PART OF 222-1156-Page 326

CONSISTS OF :

2 270-8491 HOSE ASSEMBLY

J157043 -02

MODIFICATION ARRANGEMENT (270-8492 N/S) -TILT LINES-COLD WEATHER
AN ATTACHMENT

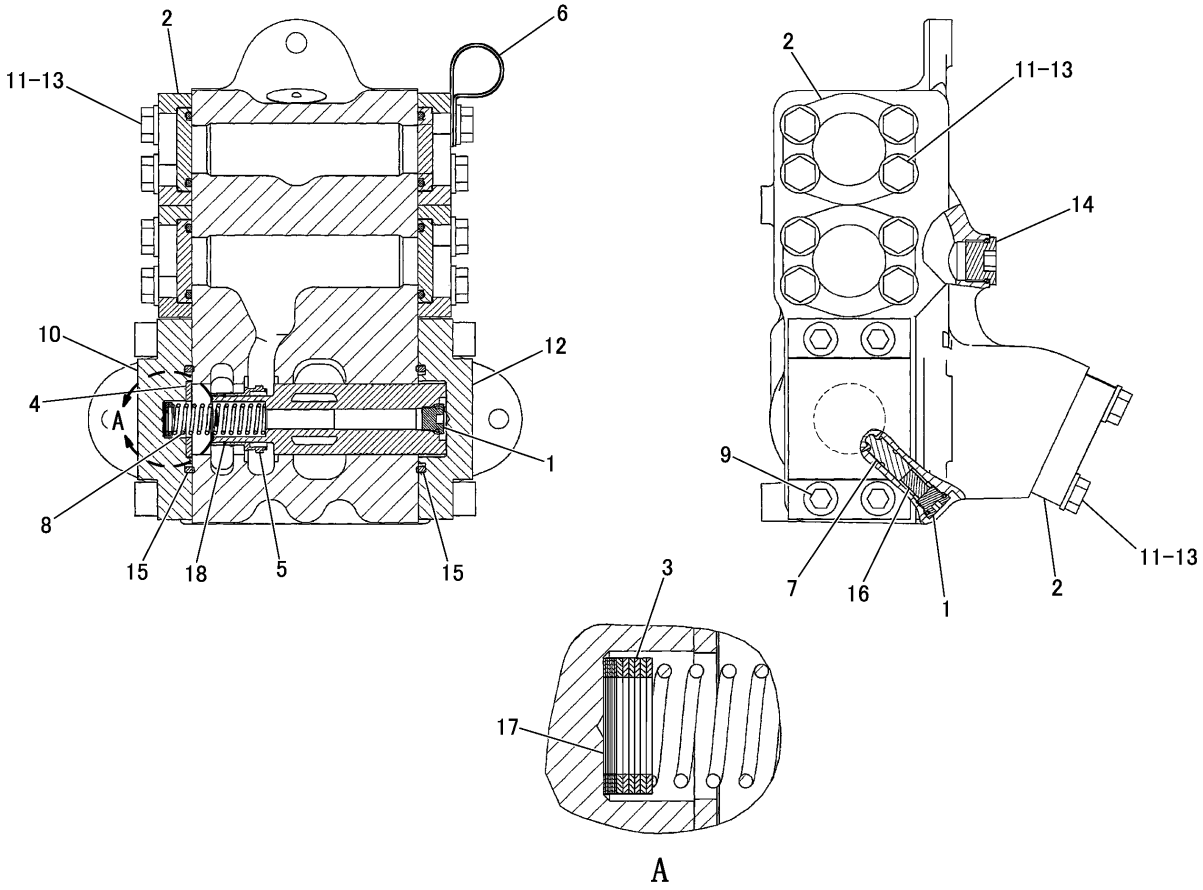

NOTE	№	PART NO.	QTY	PART NAME	NOTE	№	PART NO.	QTY	PART NAME
	1	9S-8003	2	PLUG					
		1J-9671	2	SEAL					
	2	8C-3206	12	FLANGE					
B	3	4T-4659	6	SHIM(0.8mm THICK)					
	4	6E-4907	1	STOP					
	5	9T-9836	1	SLEEVE					
	6	4S-1962	1	CLIP					
	7	100-6211	1	PISTON					
	8	108-1847	1	SPRING					
	9	6V-8200	8	BOLT(M12×1.75)					
	10	234-3043	1	COVER					
	11	8T-4121	24	WASHER					
	12	234-3451	1	COVER					
	13	8T-4196	24	BOLT(M10×1.5)					
	14	9S-8006	1	PLUG					
		2M-9780	1	SEAL					
	15	1P-3706	2	SEAL					
	16	3L-3813	1	PIN					
B	17	4M-6980	6	SHIM(0.3mm THICK)					
	18	6K-8162	1	RING					

B-USE AS REQUIRED

J155708 X00

228-2576 QUICK DROP VALVE GROUP
PART OF 222-1151-Page 347

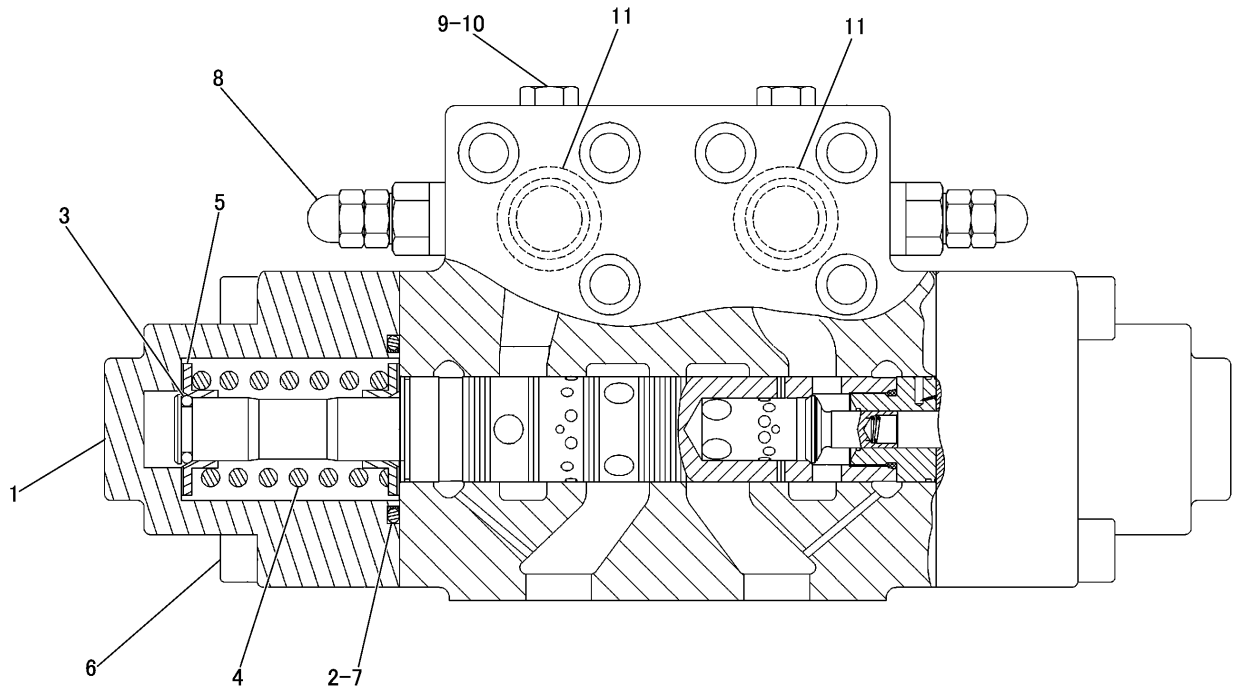

NOTE	№	PART NO.	QTY	PART NAME	NOTE	№	PART NO.	QTY	PART NAME
	1	9T-8571	2	COVER					
	2	4J-0528	2	SEAL					
	3	9T-5948	2	RING					
	4	9T-5949	2	SPRING					
	5	9T-5950	4	RETAINER					
	6	8T-1447	8	BOLT(M16×2)					
	7	9T-8980	2	RING					
Y	8	9T-5364	2	VALVE GROUP					
	9	5P-6719	2	PLUG					
	10	3J-1907	2	SEAL					
	11	4J-0522	2	SEAL					

Y-SEPARATE ILLUSTRATION

J137505 -01

227-0832 COUNTER BALANCE VALVE GROUP

PART OF 222-1191-Page 348
REFERENCE:9T-5364-Page 371

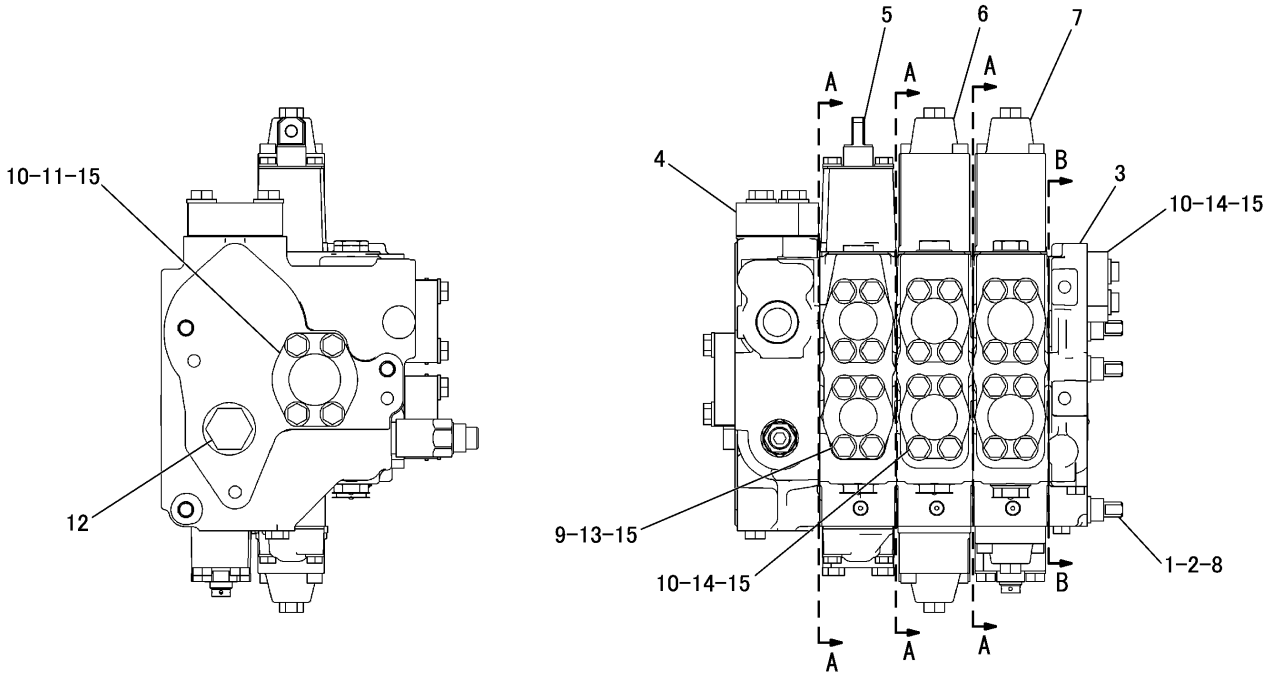

NOTE	№	PART NO.	QTY	PART NAME	NOTE	№	PART NO.	QTY	PART NAME
	1	6V-8188	3	NUT(1/2-13)					
	2	164-7677	3	ROD					
	3	235-0399	1	COVER					
Y	4	235-0401	1	MANIFOLD GROUP					
Y	5	271-4967	1	VALVE GROUP					
Y	6	271-4968	1	VALVE GROUP					
Y	7	271-4969	1	VALVE GROUP					
	8	7X-3392	3	WASHER					
	9	8T-9403	4	FLANGE					
	10	8T-4196	24	BOLT(M10×1.5)					
	11	1P-4578	2	FLANGE					
	12	9S-4188	1	PLUG					
		4K-1388	1	SEAL					
	13	8T-4182	8	BOLT(M10×1.5)					
	14	8C-3206	10	FLANGE					
	15	8T-4121	32	WASHER					

Y-SEPARATE ILLUSTRATION

J155702 -07

224-4940 VALVE GROUP -UNIT TEST-3-PART 1 OF 2

PART OF 222-1152-Page 346

REFERENCE:235-0401-Page 364 271-4967-Page 356, 357 271-4968-Page 358, 359 271-4969-Page 360, 361

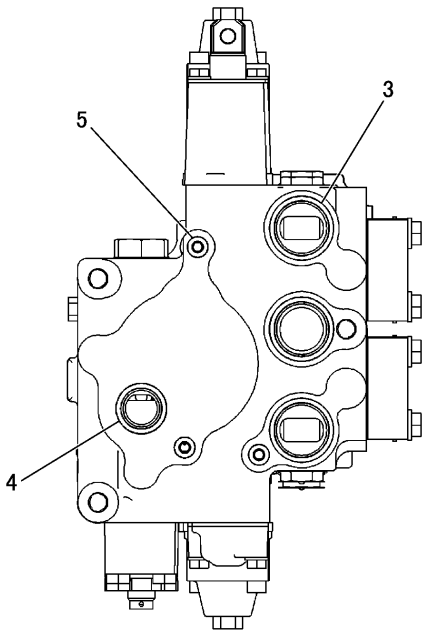

A–A

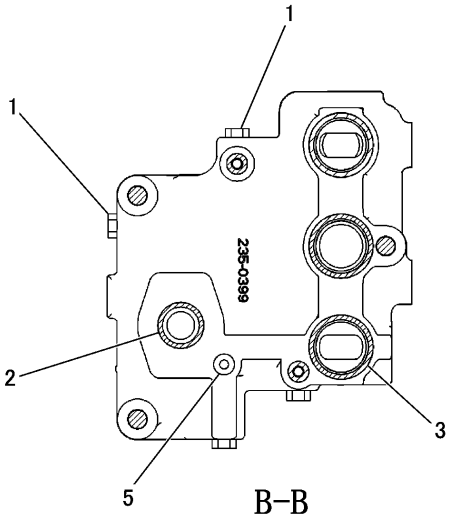

B–B

NOTE	№	PART NO.	QTY	PART NAME	NOTE	№	PART NO.	QTY	PART NAME
	1	9S–4182	2	PLUG					
		3J–7354	2	SEAL					
	2	1P–3702	1	SEAL					
	3	4J–0522	12	SEAL					
	4	4J–8997	3	SEAL					
	5	6V–5555	12	SEAL					

J155703 -07

224-4940 VALVE GROUP -UNIT TEST-3-PART 2 OF 2
PART OF 222-1152-Page 346

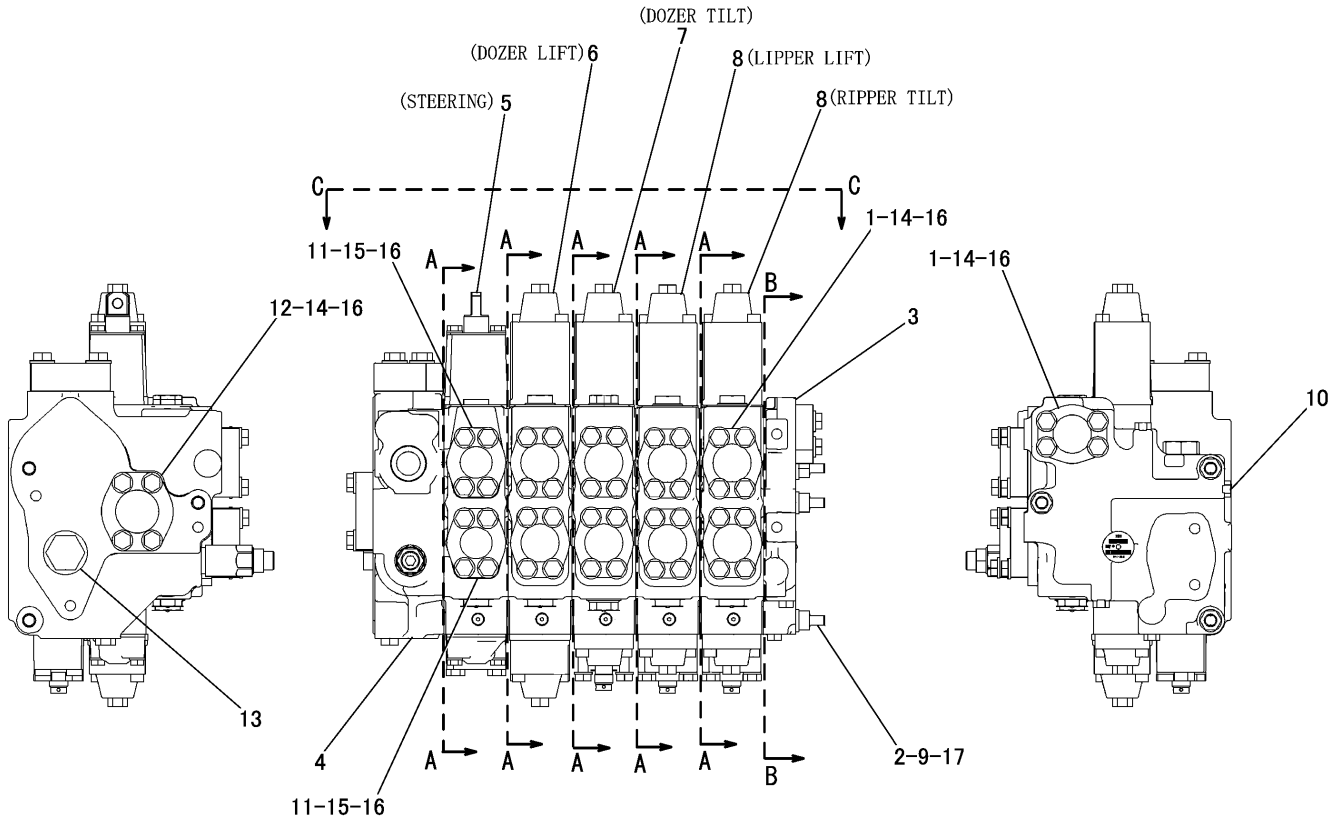

NOTE	№	PART NO.	QTY	PART NAME	NOTE	№	PART NO.	QTY	PART NAME
	1	8C-3206	18	FLANGE					
	2	166-7220	3	ROD					
	3	235-0399	1	COVER					
Y	4	235-0401	1	MANIFOLD GROUP					
Y	5	271-4967	1	VALVE GROUP					
Y	6	271-4968	1	VALVE GROUP					
Y	7	271-4969	1	VALVE GROUP					
Y	8	271-4970	2	VALVE GROUP					
	9	7X-3392	3	WASHER					
	10	9S-4182	1	PLUG					
		3J-7354	1	SEAL					
	11	8T-9403	4	FLANGE					
	12	1P-4578	2	FLANGE					
	13	9S-4188	1	PLUG					
		4K-1388	1	SEAL					
	14	8T-4196	40	BOLT(M10×1.5)					
	15	8T-4182	8	BOLT(M10×1.5)					
	16	8T-4121	48	WASHER					
	17	6V-8188	3	NUT(1/2-13)					

Y-SEPARATE ILLUSTRATION

J155823 -05

224-4941 VALVE GROUP -UNIT TEST-5-PART 1 OF 2

PART OF 228-7816-Page 308

REFERENCE:235-0401-Page 364 271-4967-Page 356, 357 271-4968-Page 358, 359 271-4969-Page 360, 361 271-4970-Page 362, 363

AN ATTACHMENT

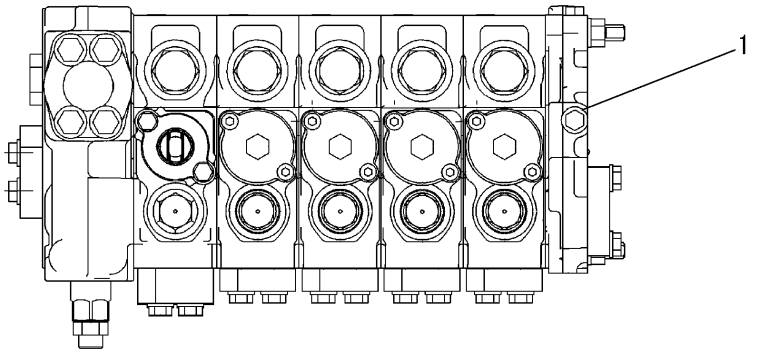

C–C

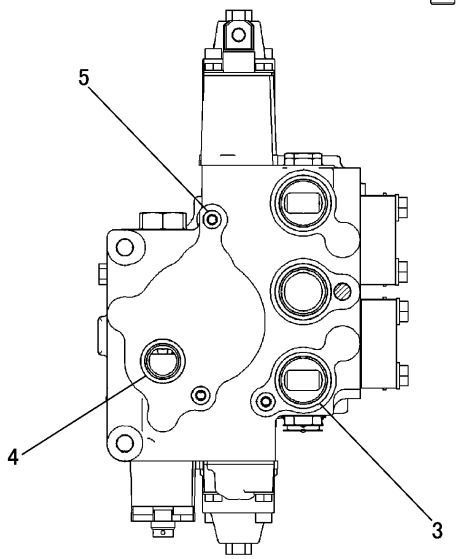

A–A

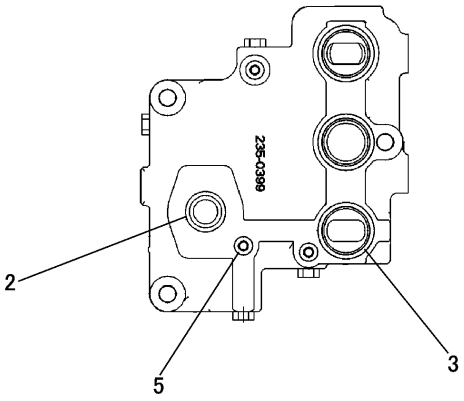

B–B

NOTE	№	PART NO.	QTY	PART NAME	NOTE	№	PART NO.	QTY	PART NAME
	1	9S–4182	1	PLUG					
		3J–7354	1	SEAL					
	2	1P–3702	1	SEAL					
	3	4J–0522	18	SEAL					
	4	4J–8997	5	SEAL					
	5	6V–5555	18	SEAL					

J155824 -05

224-4941 VALVE GROUP -UNIT TEST-5-PART 2 OF 2
PART OF 228-7816-Page 308
AN ATTACHMENT

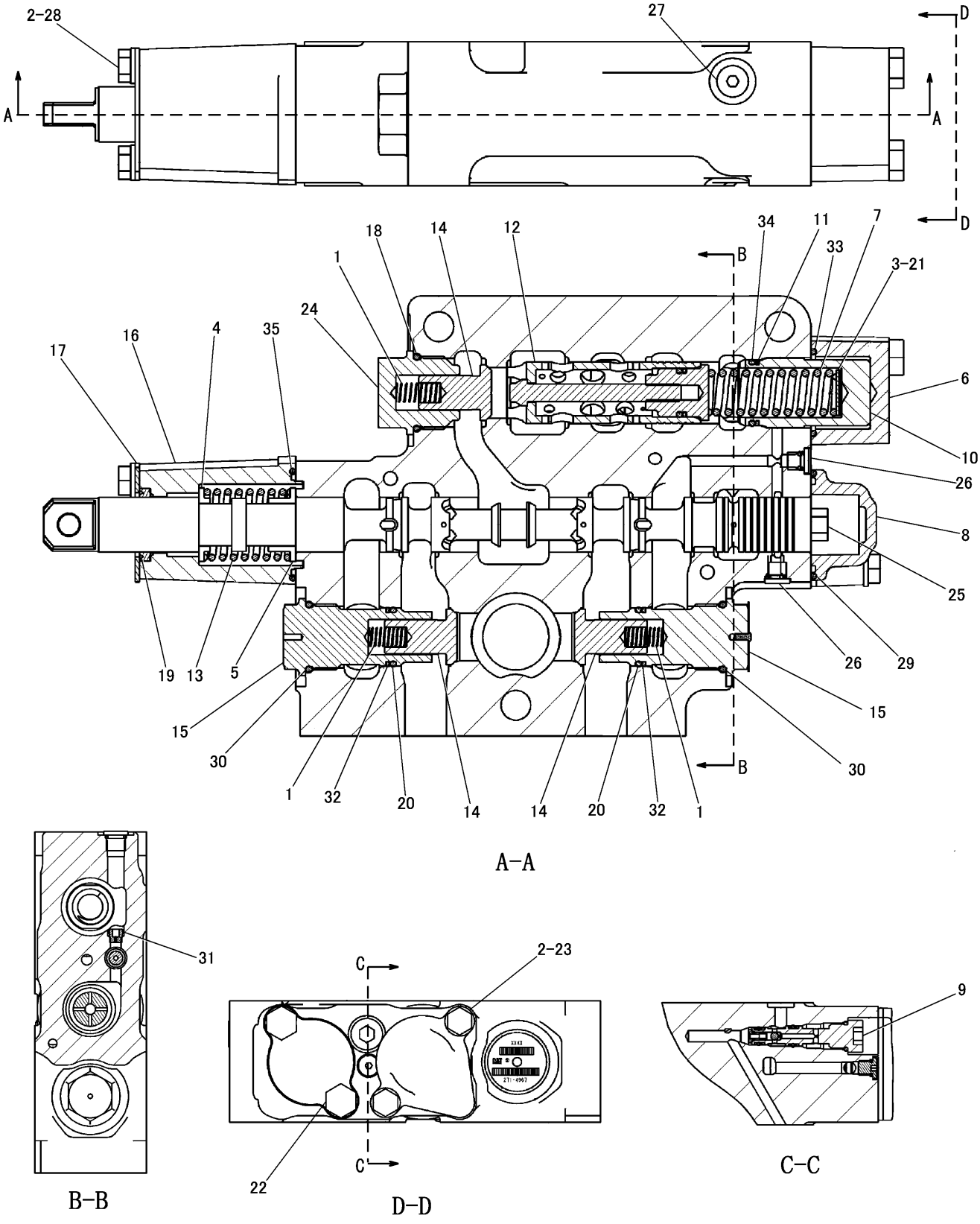

J155704 -06

271-4967 CONTROL VALVE GROUP
PART OF 224-4940-Page 352,224-4941-Page 354

HYDRAULIC SYSTEM

NOTE	№	PART NO.	QTY	PART NAME	NOTE	№	PART NO.	QTY	PART NAME
	1	2S-2596	3	SPRING					
	2	8T-4224	4	WASHER					
B	3	4J-6806	1	SHIM(1.2mm THICK)					
	4	4T-0993	2	RETAINER					
	5	4T-1021	2	RETAINER					
	6	4T-1649	1	HOUSING					
	7	4T-1701	1	SPRING					
	8	4T-1850	1	HOUSING					
Y	9	4T-1860	1	SHUTTLE VALVE GROUP					
	10	4T-4511	1	SLEEVE					
	11	4T-5074	1	RING					
	12	6E-0485	1	VALVE GROUP					
		4J-5351	1	SEAL					
		4T-5072	1	RING					
		8C-3325	1	BOLT(5/16-18)					
	13	9T-6316	1	SPRING					
	14	100-8010	3	VALVE					
	15	100-8012	2	BODY					
	16	107-1177	1	HOUSING					
	17	107-1179	1	SEAL PLATE					
	18	7M-8485	1	SEAL					
	19	208-5498	1	SEAL					
	20	7J-9933	2	SEAL					
B	21	256-9637	2	SHIM(0.61mm THICK)					
	22	8T-4185	2	BOLT(M10×1.5)					
	23	099-3649	2	BOLT(M8×1.25)					
	24	100-8011	1	PLUG					
	25	1N-5999	1	PLUG					
		7J-0204	1	SEAL					
	26	9S-8001	2	PLUG					
		4J-7533	2	SEAL					
	27	9S-8002	1	PLUG					
		3J-7354	1	SEAL					
	28	243-7112	2	BOLT(M8×1.25)					
	29	2D-0598	1	SEAL					
	30	4K-1388	2	SEAL					
	31	4T-4207	1	PLUG					
	32	4T-5073	2	RING					
	33	5M-2057	1	SEAL					
	34	6V-5556	1	SEAL					
	35	7D-9749	1	SEAL					

B-USE AS REQUIRED
Y-SEPARATE ILLUSTRATION

J155704 -06

271-4967 CONTROL VALVE GROUP
PART OF 224-4940-Page 352,224-4941-Page 354
REFERENCE:4T-1860-Page 365

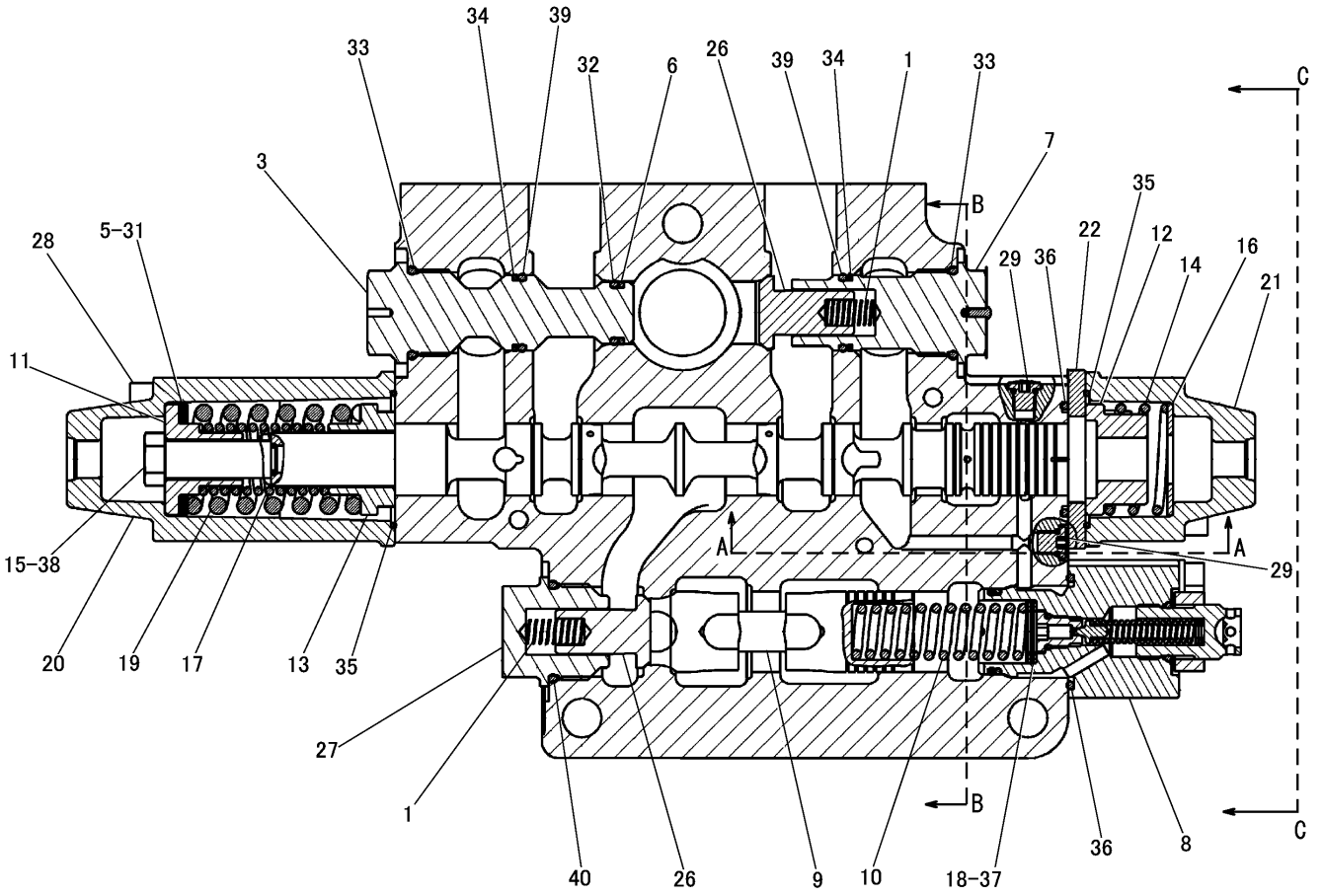

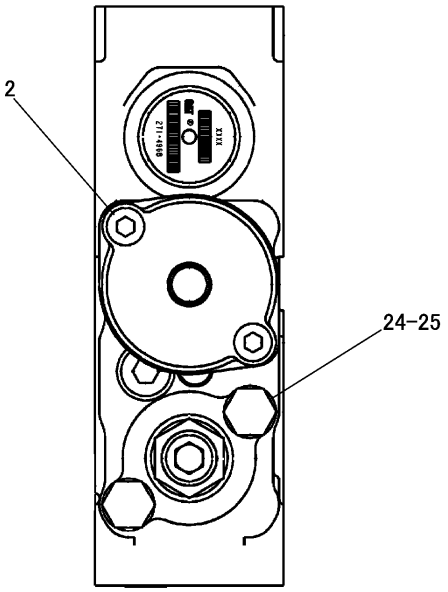

C-C

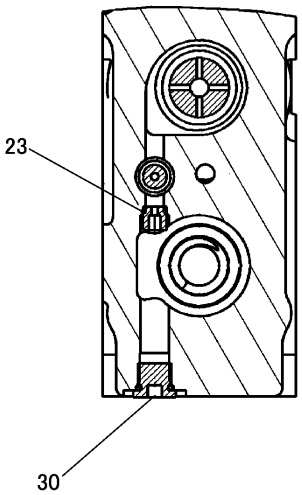

B-B

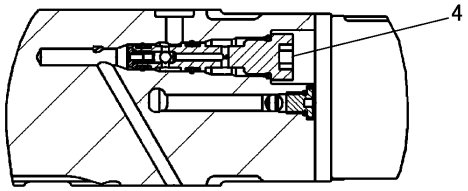

A-A

J155705 -03

271-4968 CONTROL VALVE GROUP
PART OF 224-4940-Page 352,224-4941-Page 354

HYDRAULIC SYSTEM

NOTE	№	PART NO.	QTY	PART NAME	NOTE	№	PART NO.	QTY	PART NAME
	1	2S-2596	2	SPRING					
	2	9X-6154	2	BOLT(M8×1.25)					
	3	4T-1108	1	PLUG					
Y	4	4T-1860	1	SHUTTLE VALVE GROUP					
B	5	4T-4628	5	SHIM(0.5mm THICK)					
	6	4T-5072	1	RING					
	7	100-8012	1	BODY					
Y	8	121-6647	1	RELIEF VALVE GROUP					
	9	121-6653	1	VALVE					
	10	123-9624	1	SPRING					
	11	153-7067	1	RETAINER					
	12	153-7549	1	RETAINER					
	13	153-7550	1	RETAINER					
	14	153-7553	1	SPRING					
	15	161-2685	1	SCREW(3/8-24)					
	16	163-5671	1	WASHER					
	17	164-0938	1	SPRING					
B	18	8J-8462	2	SHIM(0.25mm THICK)					
	19	170-4001	1	SPRING					
	20	173-0511	1	HOUSING					
	21	173-0512	1	HOUSING					
	22	173-0515	1	SPACER					
	23	9J-8126	1	PLUG					
	24	9X-2027	2	WASHER					
	25	085-8091	2	BOLT(M10×1.5)					
	26	100-8010	2	VALVE					
	27	100-8011	1	PLUG					
	28	102-7365	2	BOLT(M8×1.25)					
	29	9S-8001	2	PLUG					
		4J-7533	2	SEAL					
	30	9S-8002	1	PLUG					
		3J-7354	1	SEAL					
B	31	2J-2866	3	SHIM(0.13mm THICK)					
	32	4J-5351	1	SEAL					
	33	4K-1388	2	SEAL					
	34	4T-5073	2	RING					
	35	5K-0227	2	SEAL					
	36	5M-2057	2	SEAL					
B	37	6E-1637	3	SHIM(1mm THICK)					
	38	7J-0204	1	SEAL					
	39	7J-9933	2	SEAL					
	40	7M-8485	1	SEAL					

B-USE AS REQUIRED
Y-SEPARATE ILLUSTRATION

J155705 -03

271-4968 CONTROL VALVE GROUP

PART OF 224-4940-Page 352,224-4941-Page 354
REFERENCE:4T-1860-Page 365 121-6647-Page 366

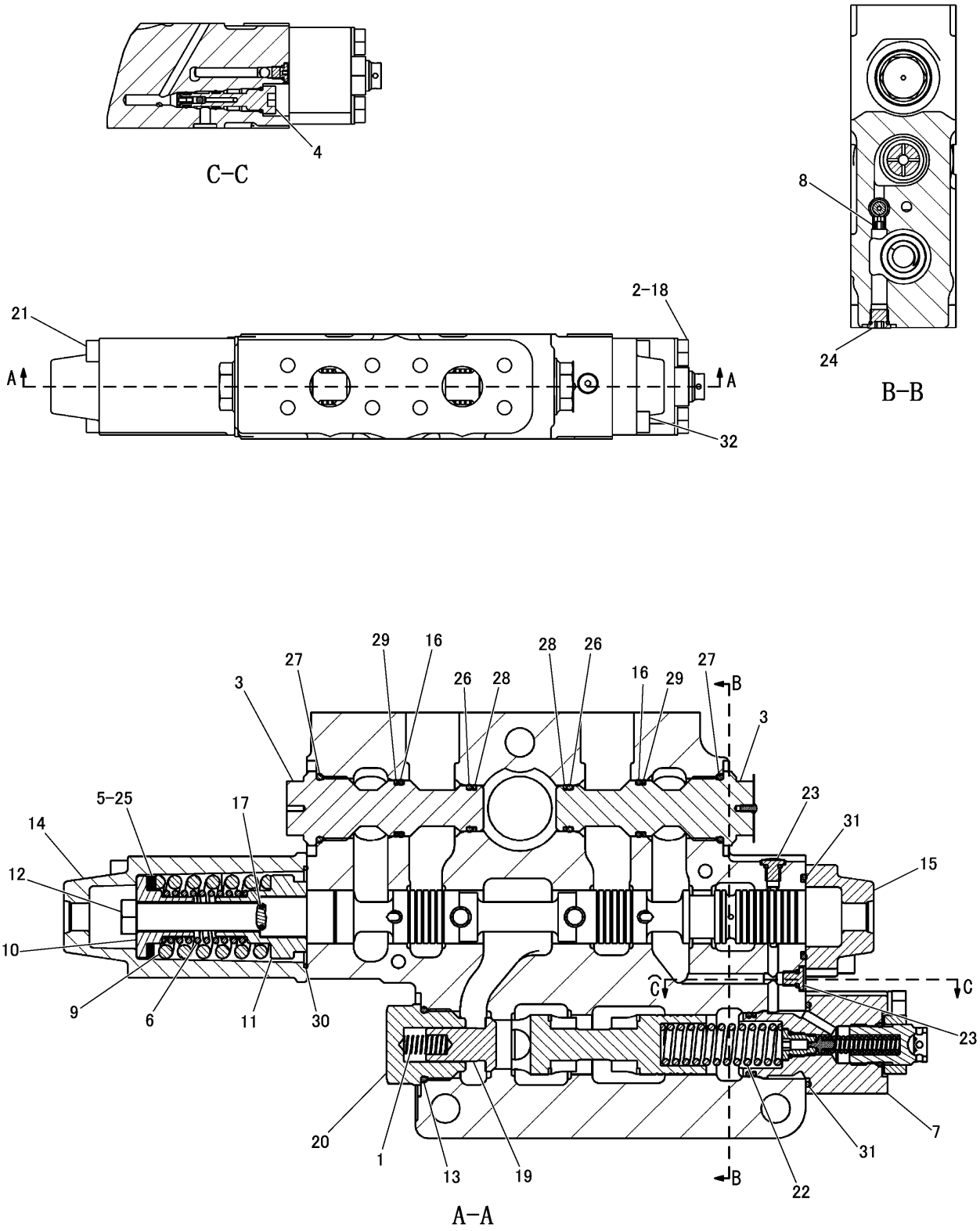

J155706 -03

271-4969 CONTROL VALVE GROUP
PART OF 224-4940-Page 352,224-4941-Page 354

HYDRAULIC SYSTEM

NOTE	№	PART NO.	QTY	PART NAME	NOTE	№	PART NO.	QTY	PART NAME
	1	2S-2596	1	SPRING					
	2	9X-2027	2	WASHER					
	3	4T-1108	2	PLUG					
Y	4	4T-1860	1	SHUTTLE VALVE GROUP					
B	5	4T-4628	6	SHIM(0.5mm THICK)					
	6	4T-4631	1	SPRING					
Y	7	121-6650	1	RELIEF VALVE GROUP					
	8	9J-8126	1	PLUG					
	9	153-6976	1	SPRING					
	10	153-7067	1	RETAINER					
	11	153-7551	1	RETAINER					
	12	161-2684	1	SCREW(3/8-24)					
	13	7M-8485	1	SEAL					
	14	173-0511	1	HOUSING					
	15	173-0514	1	COVER					
	16	7J-9933	2	SEAL					
	17	7J-0204	1	SEAL					
	18	085-8091	2	BOLT(M10×1.5)					
	19	100-8010	1	VALVE					
	20	100-8011	1	PLUG					
	21	102-7365	2	BOLT(M8×1.25)					
	22	123-9624	1	SPRING					
	23	9S-8001	2	PLUG					
		4J-7533	2	SEAL					
	24	9S-8002	1	PLUG					
		3J-7354	1	SEAL					
B	25	2J-2866	2	SHIM(0.13mm THICK)					
	26	4J-5351	2	SEAL					
	27	4K-1388	2	SEAL					
	28	4T-5072	2	RING					
	29	4T-5073	2	RING					
	30	5K-0227	1	SEAL					
	31	5M-2057	2	SEAL					
	32	6V-5192	2	BOLT(M8×1.25)					

B-USE AS REQUIRED
Y-SEPARATE ILLUSTRATION

J155706 -03

271-4969 CONTROL VALVE GROUP
PART OF 224-4940-Page 352,224-4941-Page 354
REFERENCE:4T-1860-Page 365 121-6650-Page 366

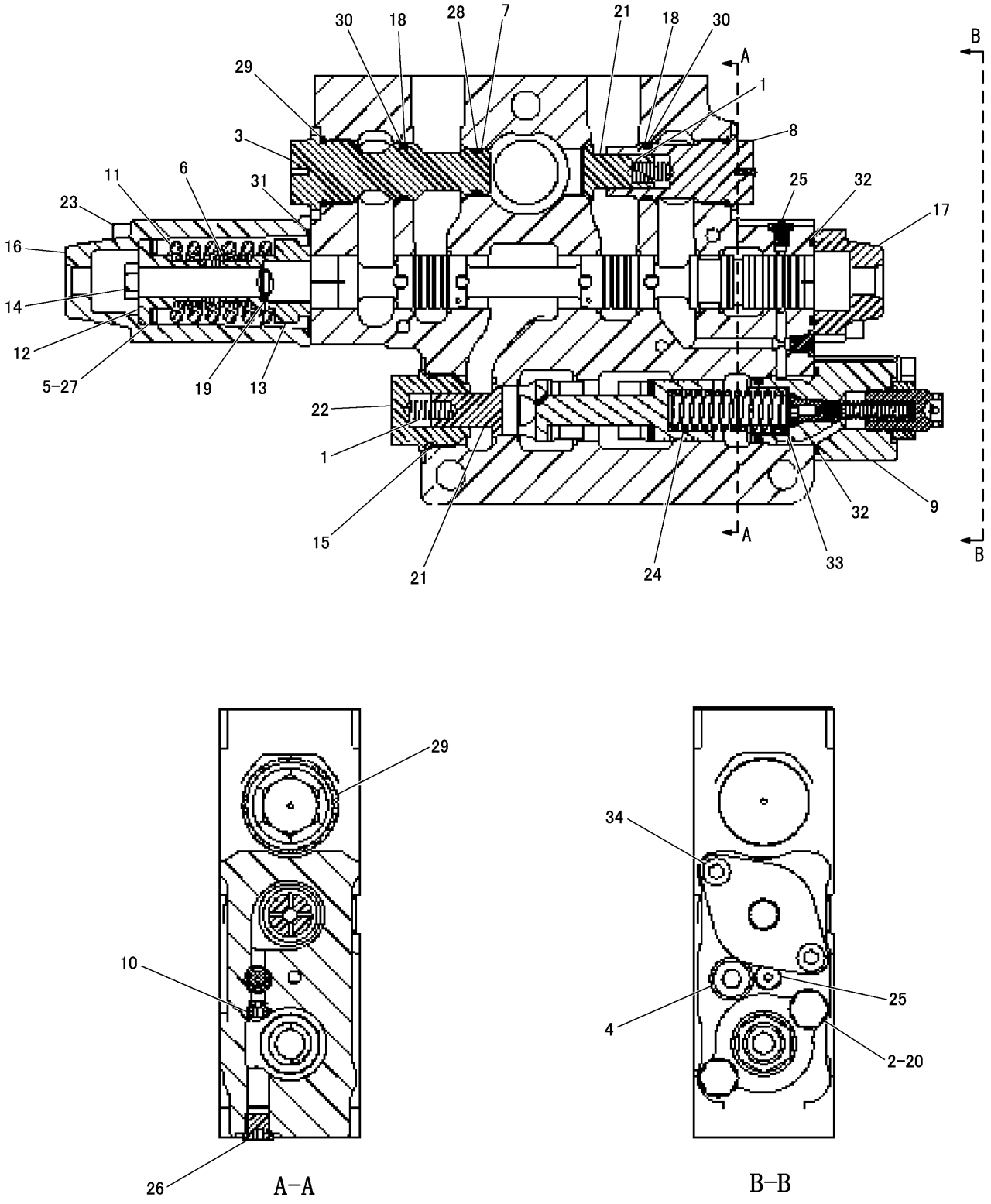

J155825 -03

271-4970 CONTROL VALVE GROUP -RIPPER
PART OF 224-4941-Page 354
AN ATTACHMENT

HYDRAULIC SYSTEM

NOTE	№	PART NO.	QTY	PART NAME	NOTE	№	PART NO.	QTY	PART NAME
	1	2S-2596	2	SPRING					
	2	9X-2027	2	WASHER					
	3	4T-1108	1	PLUG					
Y	4	4T-1860	1	SHUTTLE VALVE GROUP					
B	5	4T-4628	6	SHIM(0.5mm THICK)					
	6	4T-4631	1	SPRING					
	7	4T-5072	1	RING					
	8	100-8012	1	BODY					
Y	9	121-6647	1	RELIEF VALVE GROUP					
	10	9J-8126	1	PLUG					
	11	153-6976	1	SPRING					
	12	153-7067	1	RETAINER					
	13	153-7551	1	RETAINER					
	14	161-2684	1	SCREW(3/8-24)					
	15	7M-8485	1	SEAL					
	16	173-0511	1	HOUSING					
	17	173-0514	1	COVER					
	18	7J-9933	2	SEAL					
	19	7J-0204	1	SEAL					
	20	085-8091	2	BOLT(M10×1.5)					
	21	100-8010	2	VALVE					
	22	100-8011	1	PLUG					
	23	102-7365	2	BOLT(M8×1.25)					
	24	123-9624	1	SPRING					
	25	9S-8001	2	PLUG					
		4J-7533	2	SEAL					
	26	9S-8002	1	PLUG					
		3J-7354	1	SEAL					
B	27	2J-2866	2	SHIM(0.13mm THICK)					
	28	4J-5351	1	SEAL					
	29	4K-1388	2	SEAL					
	30	4T-5073	2	RING					
	31	5K-0227	1	SEAL					
	32	5M-2057	2	SEAL					
B	33	6E-1637	2	SHIM(1mm THICK)					
	34	6V-5192	2	BOLT(M8×1.25)					

B-USE AS REQUIRED
Y-SEPARATE ILLUSTRATION

J155825 -03

271-4970 CONTROL VALVE GROUP -RIPPER

PART OF 224-4941-Page 354
REFERENCE:4T-1860-Page 365 121-6647-Page 366
AN ATTACHMENT

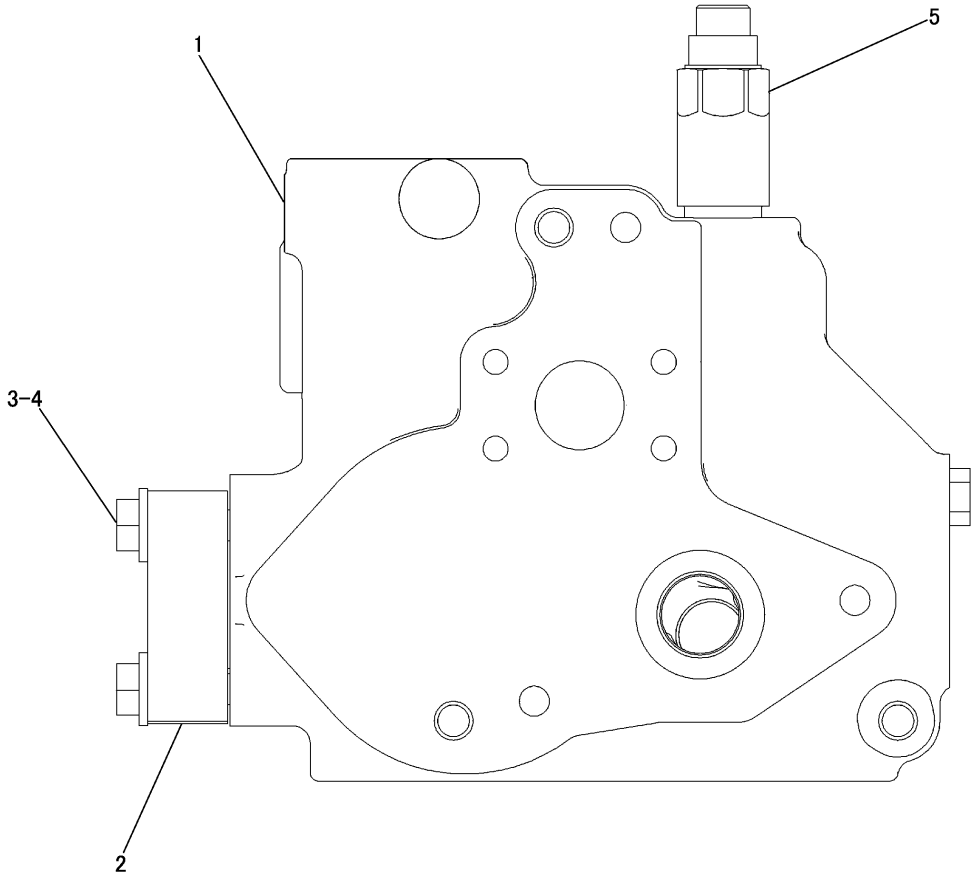

NOTE	№	PART NO.	QTY	PART NAME	NOTE	№	PART NO.	QTY	PART NAME
	1	235-0400	1	MANIFOLD					
	2	6V-0400	2	FLANGE					
	3	8T-4184	4	BOLT(M12×1.75)					
	4	8T-4223	4	WASHER					
Y	5	9T-3541	1	VALVE GROUP					

Y-SEPARATE ILLUSTRATION

J137536 -01

235-0401 INLET MANIFOLD GROUP

PART OF 224-4940-Page 352,224-4941-Page 354
REFERENCE:9T-3541-Page 371

HYDRAULIC SYSTEM

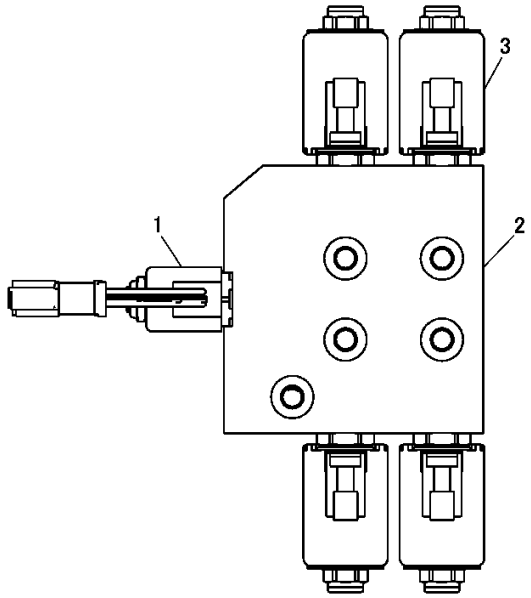

NOTE	№	PART NO.	QTY	PART NAME
Y	1	201-0950	1	VALVE GROUP
	2	239-5318	1	MANIFOLD AS
	3	235-4605	4	VALVE GROUP
		033-6043	1	SEAL
		6V-4589	1	SEAL
		8L-2746	1	SEAL

Y-SEPARATE ILLUSTRATION

J138503 -00

VALVE AND MOUNTING GROUP (239-5317 N/S)

PART OF 271-5642-Page 328
REFERENCE:201-0950-Page 370
AN ATTACHMENT

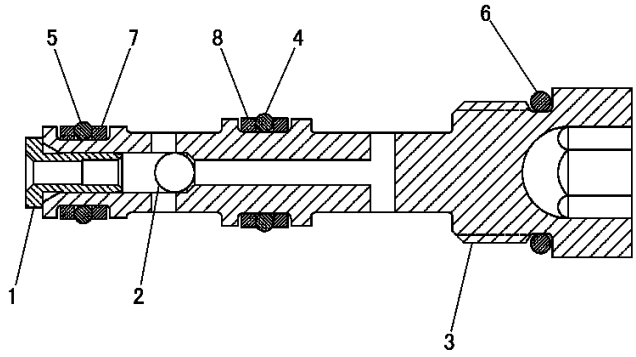

NOTE	№	PART NO.	QTY	PART NAME
	1	4T-0925	1	SEAT
	2	1M-6718	1	BALL
	3	4T-0928	1	VALVE
	4	6V-5324	1	SEAL
	5	147-6603	1	SEAL
	6	3J-1907	1	SEAL
	7	147-6604	2	RING
	8	147-6605	2	RING

J138453 X05

4T-1860 SHUTTLE VALVE GROUP

PART OF 271-4967-Page 357,271-4968-Page 359,271-4969-Page 361,271-4970-Page 363

HYDRAULIC SYSTEM

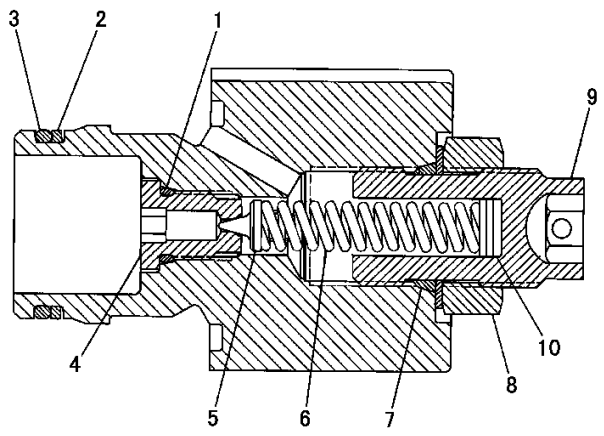

NOTE	№	PART NO.	QTY	PART NAME
	1	3J-7354	1	SEAL
	2	4T-5074	1	RING
	3	6V-5556	1	SEAL
	4	4T-4509	1	SEAT
	5	108-5157	1	VALVE
	6	125-1393	1	SPRING
	7	3K-0360	1	SEAL
	8	9X-6395	1	NUT(3/4-16)
	9	6E-5200	1	RETAINER AS
	10	096-6166	3	WASHER

J119502 X04

121-6647 RELIEF VALVE GROUP
PART OF 271-4968-Page 359,271-4970-Page 363

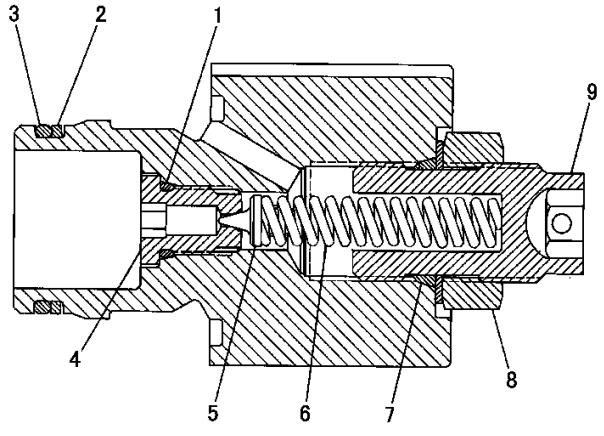

NOTE	№	PART NO.	QTY	PART NAME
	1	3J-7354	1	SEAL
	2	4T-5074	1	RING
	3	6V-5556	1	SEAL
	4	4T-4509	1	SEAT
	5	108-5157	1	VALVE
	6	4T-1700	1	SPRING
	7	3K-0360	1	SEAL
	8	9X-6395	1	NUT(3/4-16)
	9	6E-5200	1	RETAINER AS

J119263 -04

121-6650 RELIEF VALVE GROUP
PART OF 271-4969-Page 361

HYDRAULIC SYSTEM

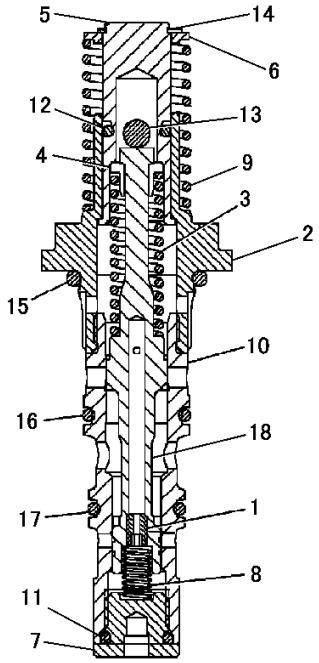

NOTE	№	PART NO.	QTY	PART NAME
	1	116-4527	1	ORIFICE
	2	136-9304	1	ADAPTER
	3	145-8707	1	SPRING
	4	146-6316	2	RETAINER
	5	146-6318	1	PLUNGER
	6	146-6319	1	RETAINER
	7	153-8925	1	STOP
	8	153-8926	1	SPRING
	9	157-2153	1	SPRING
	10	191-3028	1	CAGE
	11	7J-0204	1	SEAL
	12	259-0509	1	SEAL
	13	1M-6718	1	BALL
	14	2H-3429	1	RING
	15	3K-0360	1	SEAL
	16	4K-2039	1	SEAL
	17	6M-5062	1	SEAL
	18	191-3029	1	SPOOL

J136389 -01

194-5032 CARTRIDGE ASSEMBLY
PART OF 200-0189-Page 313

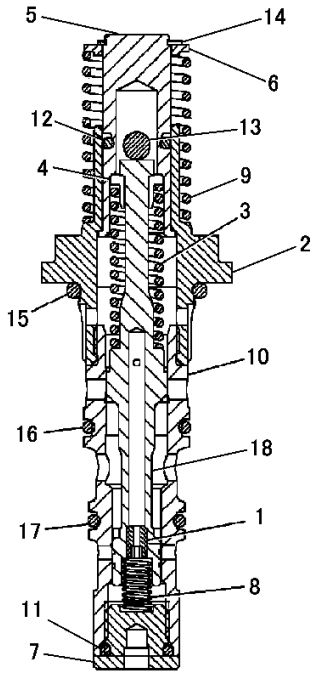

NOTE	№	PART NO.	QTY	PART NAME
	1	116-4527	1	ORIFICE
	2	136-9304	1	ADAPTER
	3	141-5151	1	SPRING
	4	146-6316	2	RETAINER
	5	146-6318	1	PLUNGER
	6	146-6319	1	RETAINER
	7	153-8925	1	STOP
	8	153-8926	1	SPRING
	9	157-2153	1	SPRING
	10	191-3028	1	CAGE
	11	7J-0204	1	SEAL
	12	259-0509	1	SEAL
	13	1M-6718	1	BALL
	14	2H-3429	1	RING
	15	3K-0360	1	SEAL
	16	4K-2039	1	SEAL
	17	6M-5062	1	SEAL
	18	191-3029	1	SPOOL

J136390 -01

194-5033 CARTRIDGE ASSEMBLY
PART OF 184-5321-Page 314,200-0189-Page 313

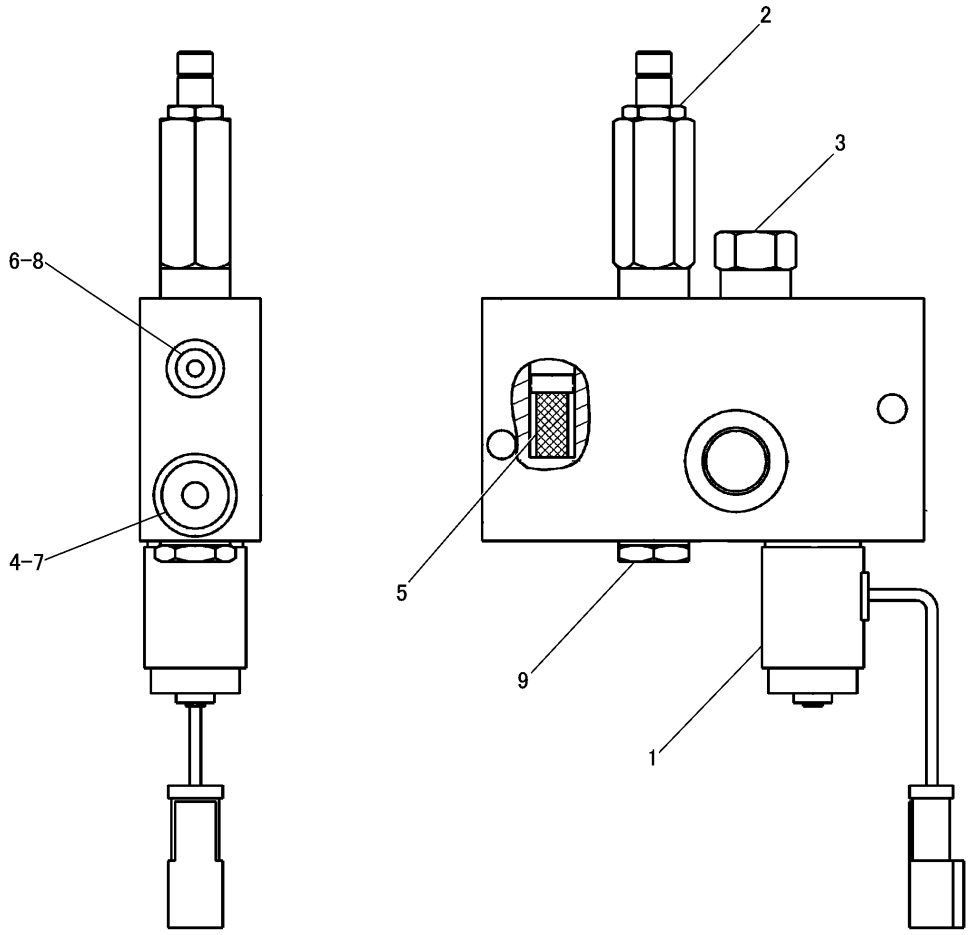

NOTE	№	PART NO.	QTY	PART NAME	NOTE	№	PART NO.	QTY	PART NAME
Y	1	201-0950	1	VALVE GROUP					
Y	2	170-3357	1	VALVE GROUP					
Y	3	225-8026	1	VALVE GROUP					
	4	3J-1907	1	SEAL					
	5	6E-5066	1	SCREEN					
	6	9S-8001	1	PLUG					
	7	9S-8004	1	PLUG					
	8	4J-7533	1	SEAL					
Y	9	158-9956	1	VALVE GROUP					

Y-SEPARATE ILLUSTRATION

J137512 -00

226-4751 RELIEF VALVE GROUP

PART OF 222-1156-Page 326

REFERENCE:201-0950-Page 370 170-3357-Page 369 225-8026-Page 369 158-9956-Page 370

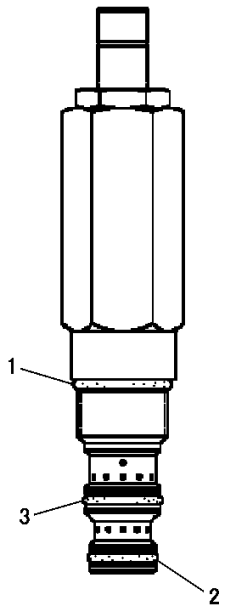

NOTE	№	PART NO.	QTY	PART NAME
	1	3K-0360	1	SEAL
	2	095-1750	1	SEAL
		187-0541	2	RING
	3	161-6149	1	SEAL
		161-6161	2	RING

J118648 -02

170-3357 PRESSURE REDUCING VALVE GROUP

PART OF 226-4751-Page 368

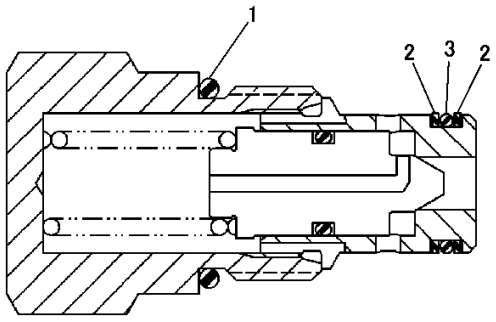

NOTE	№	PART NO.	QTY	PART NAME
J	1	2M-9780	1	SEAL
J	2	161-6161	2	RING
J	3	161-6149	1	SEAL
				AVAILABLE REPAIR KIT(S):
		133-5545	1	SEAL KIT (INCLUDES PARTS MARKED J)

J131799 -02

225-8026 RELIEF VALVE GROUP -DIRECT OPERATED

PART OF 226-4751-Page 368

HYDRAULIC SYSTEM

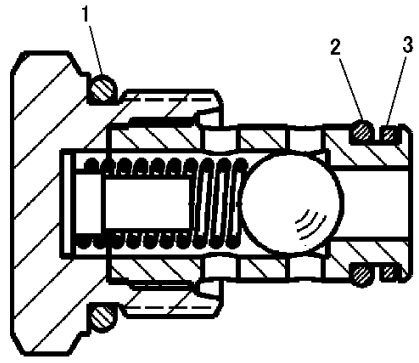

NOTE	№	PART NO.	QTY	PART NAME
	1	3K-0360	1	SEAL
	2	161-6154	1	SEAL
	3	6E-0381	1	RING

J136984 -02

158-9956 CHECK VALVE GROUP

PART OF 226-4751-Page 368

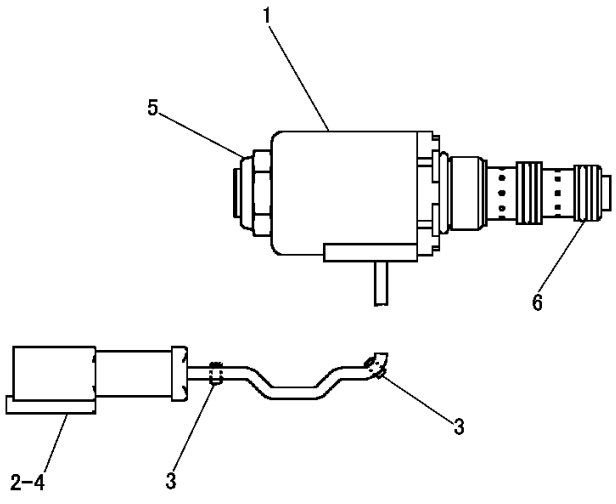

NOTE	№	PART NO.	QTY	PART NAME
	1	122-1133	1	COIL AS
	2	102-8802	1	RECEPTACLE KIT(2P)
	3	1S-9593	2	STRAP
	4	186-3735	2	PIN
	5	156-5970	1	NUT(1/2-20)
	6	171-8772	1	CARTRIDGE AS
		156-5970	1	NUT(1/2-20)
				AVAILABLE REPAIR KIT(S):
		195-7430	1	SEAL KIT (INCLUDES SEALS AND RINGS)

J131781 -01

201-0950 SOLENOID VALVE GROUP -24V

PART OF 226-4751-Page 368,239-5317-Page 365

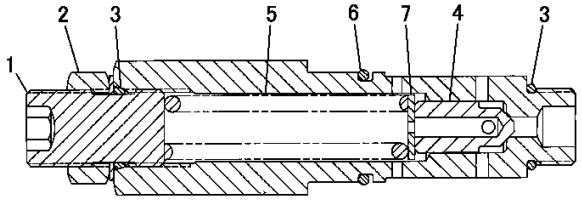

NOTE	№	PART NO.	QTY	PART NAME
	1	6E-1835	1	RETAINER AS
	2	9X-6395	1	NUT(3/4-16)
	3	3K-0360	2	SEAL
	4	6J-6439	1	VALVE
	5	4T-4942	1	SPRING
	6	7J-9933	1	SEAL
	7	4T-7571	1	PLATE

J061064 X03

9T-3541 RELIEF VALVE GROUP

PART OF 235-0401-Page 364

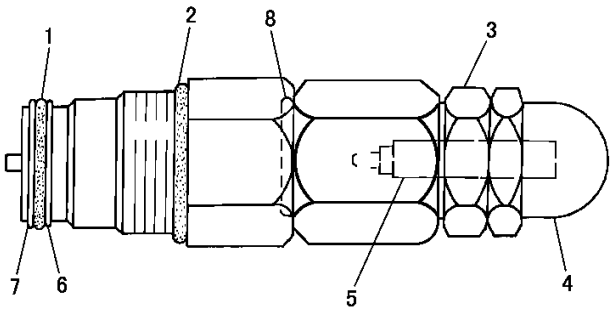

NOTE	№	PART NO.	QTY	PART NAME
	1	4J-5351	1	SEAL
	2	6V-5326	1	SEAL
	3	9T-6521	1	NUT(M10×1)
		6V-5758	2	SEAL
	4	9T-6522	1	CAP
	5	9T-6523	1	SCREW(M10×1)
	6	9T-6827	1	RING
	7	9T-6828	1	RING
	8	6V-3922	1	SEAL

J119504 X03

9T-5364 RELIEF VALVE GROUP

PART OF 227-0832-Page 351

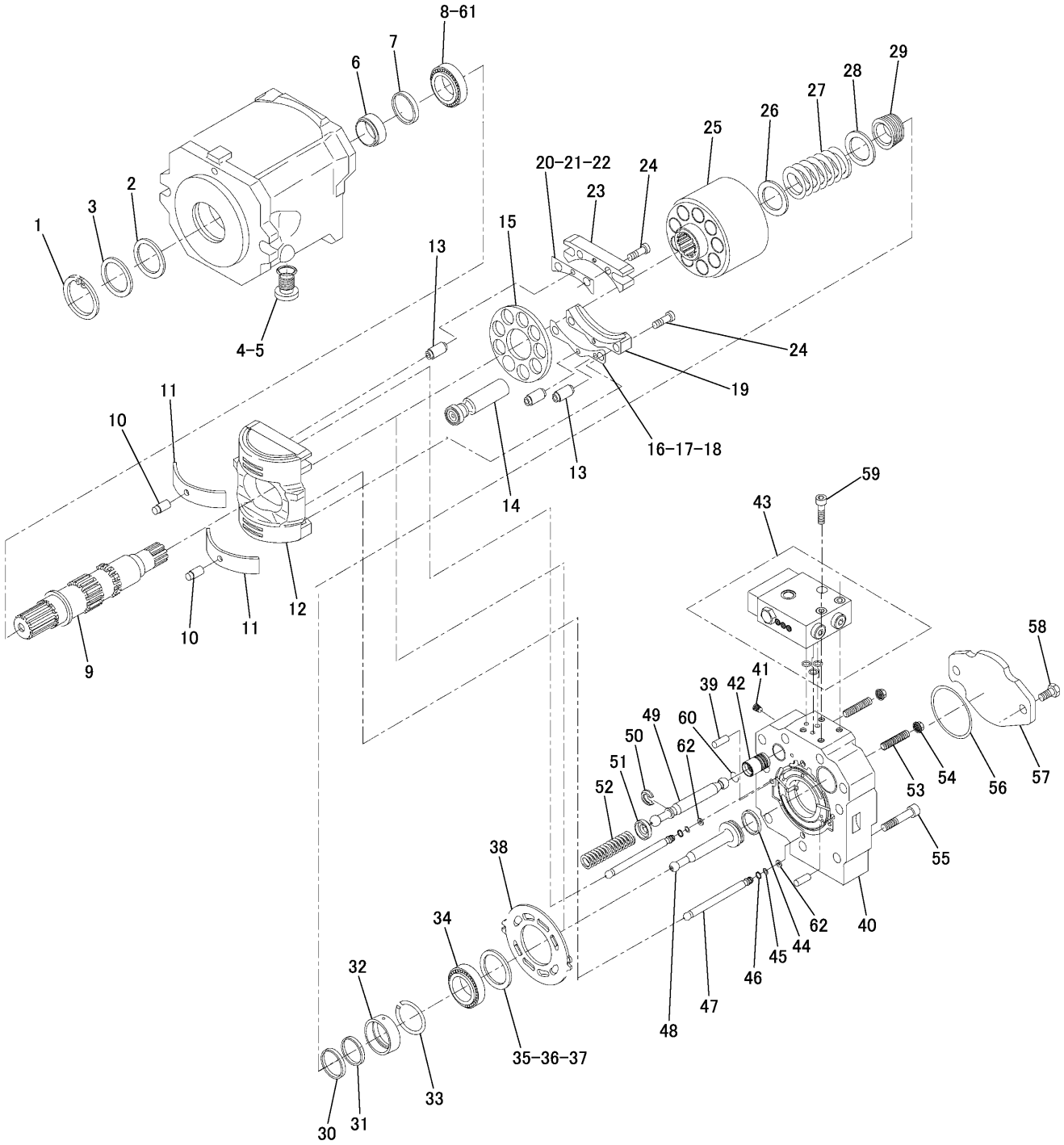

J155687 -01

299-5790 PISTON PUMP GROUP -SLIPPER
PART OF 222-1153-Page 348

HYDRAULIC SYSTEM

NOTE	№	PART NO.	QTY	PART NAME
	1	302-5738	1	RING
	2	302-5729	1	SEAL
	3	302-5737	1	SHIM
	4	9S-8008	1	PLUG
	5	3D-2824	1	SEAL
	6	121-9910	1	RING
	7	8Q-6071	1	SPACER
	8	4K-5843	1	CUP
	9	192-8866	1	SHAFT
	10	8U-9480	2	PIN
	11	121-9913	2	BEARING
	12	190-7684	1	SWASHPLATE
	13	121-9915	3	SLEEVE
	14	191-2156	9	PISTON AS
	15	121-9917	1	WASHER
B	16	121-9918	1	PLATE(0.05mm THICK)
B	17	121-9919	1	PLATE(0.075mm THICK)
B	18	121-9920	1	PLATE(0.1mm THICK)
	19	121-9921	1	PLATE
B	20	121-9922	1	PLATE(0.05mm THICK)
B	21	121-9924	1	PLATE(0.075mm THICK)
B	22	121-9923	1	PLATE(0.1mm THICK)
	23	121-9925	1	PLATE
	24	8U-3297	4	BOLT(M10×1.5)
	25	190-8368	1	BARREL AS
	26	121-9927	1	WASHER
	27	190-8830	1	SPRING
	28	191-2127	1	WASHER
	29	193-2219	1	SPACER
	30	193-2239	1	SEAL
	31	195-6882	1	RING
	32	195-6890	1	SPACER
	33	195-6899	1	RING
	34	195-6901	1	BEARING
B	35	8U-5009	1	SHIM(0.1mm THICK)
B	36	8U-5010	1	SHIM(0.3mm THICK)
B	37	195-6902	1	SHIM(1mm THICK)
	38	195-6903	1	PLATE
	39	101-2862	2	DOWEL
	40	285-9070	1	HOUSING AS
	41	8U-3875	1	PLUG
	42	284-3782	1	PISTON
Y	43	227-3021	1	VALVE GROUP
	44	131-4675	1	RING
	45	8C-3131	2	SEAL
	46	121-9941	2	RING
	47	121-9942	2	PIPE
	48	195-6913	1	PISTON
	49	285-9162	1	PISTON
	50	195-6928	1	RETAINER
	51	288-1200	1	RETAINER
	52	195-6930	1	SPRING
	53	121-9946	2	PIN
	54	9T-4901	2	NUT(M12×1)
	55	195-6931	9	BOLT(M14×2)
	56	117-8765	1	SEAL
	57	195-6932	1	COVER
	58	8T-4192	2	BOLT(M12×1.75)
	59	6V-5192	3	BOLT(M8×1.25)
	60	285-5644	1	RING
	61	7T-6654	1	CONE
B	62	199-4193	1	SHIM KIT

B-USE AS REQUIRED
Y-SEPARATE ILLUSTRATION

J155687 -01

299-5790 PISTON PUMP GROUP -SLIPPER
PART OF 222-1153-Page 348
REFERENCE:227-3021-Page 374

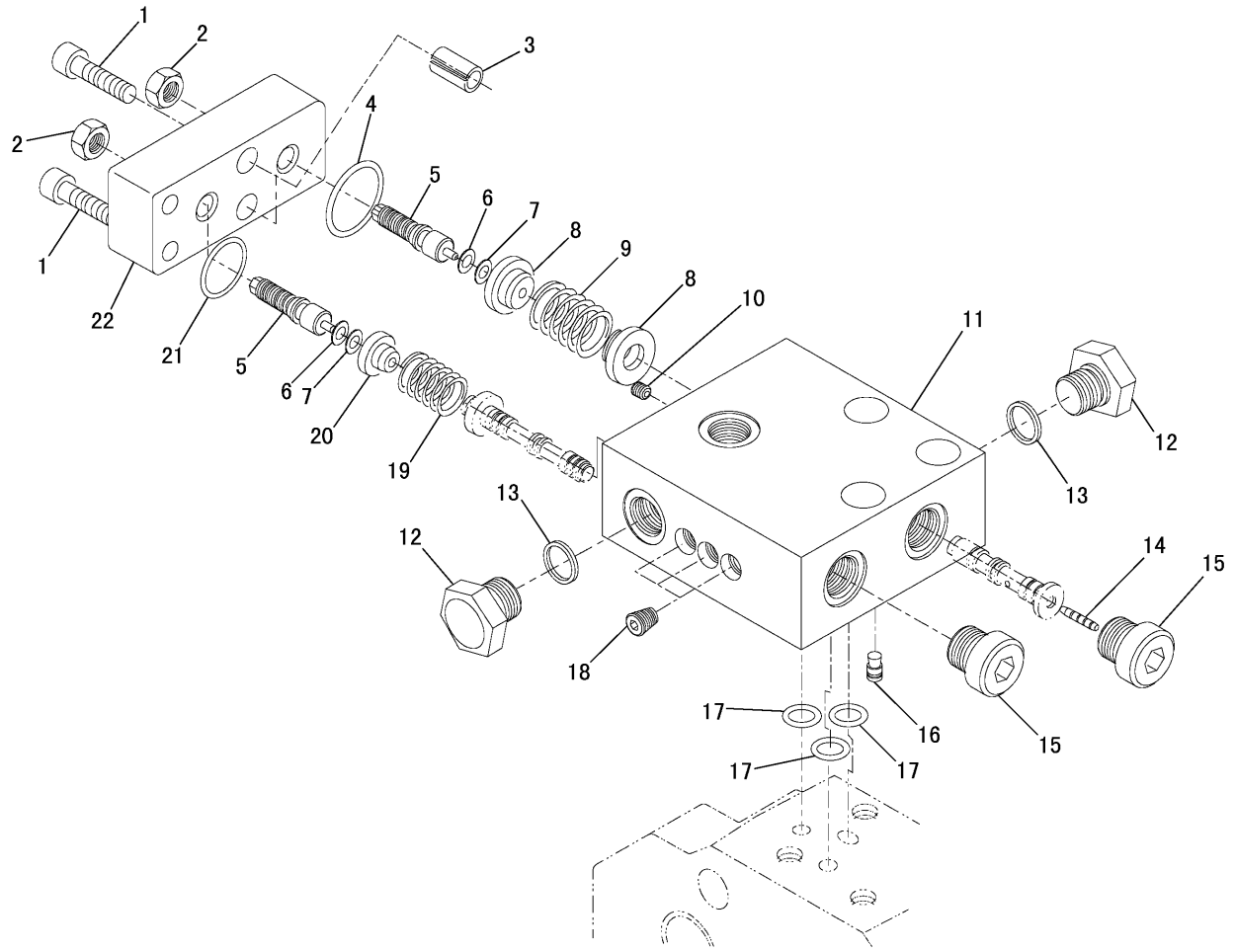

NOTE	№	PART NO.	QTY	PART NAME	NOTE	№	PART NO.	QTY	PART NAME
	1	3T-0849	4	BOLT(M6×1)		20	195-6945	1	RETAINER
	2	6C-9048	2	LOCKNUT(M8×1)		21	6V-6580	1	SEAL
	3	099-8111	2	PIN(SPRING)		22	195-6950	1	COVER
	4	8T-9529	1	SEAL					
	5	195-6949	2	ADJUSTER					
	6	195-6948	2	WASHER					
	7	095-1574	2	SEAL					
	8	195-6944	2	RETAINER					
	9	9T-4186	1	SPRING					
	10	096-3218	1	SETSCREW(M4×0.7)					
	11	227-3023	1	HOUSING AS					
	12	9S-4191	2	PLUG					
	13	3J-1907	2	SEAL					
	14	9T-4143	1	PISTON					
	15	9T-6322	2	PLUG AS					
		8C-3082	1	SEAL					
	16	9T-5039	1	PLUG					
	17	3E-4297	3	SEAL					
	18	8U-3875	3	PLUG					
	19	195-6947	1	SPRING					

J137530 -03

227-3021 VALVE GROUP -PRESSURE AND FLOW COMPENSATOR
PART OF 299-5790-Page 373

HYDRAULIC SYSTEM

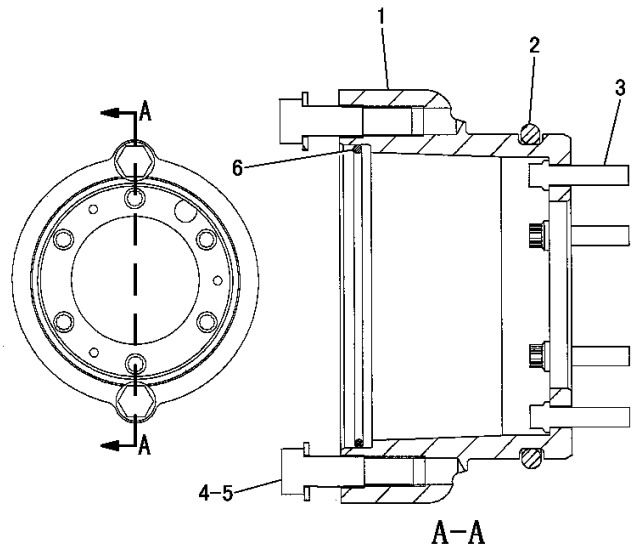

NOTE	№	PART NO.	QTY	PART NAME
	1	216-8584	1	ADAPTER
	2	3N-0759	1	RING
	3	5J-5793	6	BOLT(1/2-13)
	4	8C-6857	2	BOLT(3/4-10)
	5	8T-4994	2	WASHER
	6	8T-7568	1	SEAL

J155660 X00

MOTOR ADAPTER GROUP (229-5422 N/S)

PART OF 270-0515-Page 307

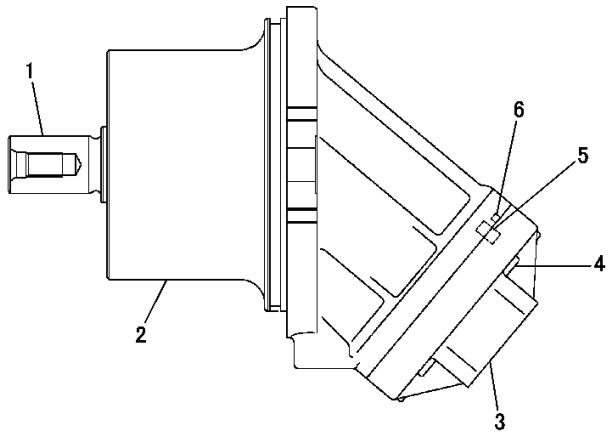

NOTE	№	PART NO.	QTY	PART NAME
Y	1	171-6001	1	ROTATING MOTOR GROUP
	2	106-1227	1	HOUSING
	3	9T-4849	1	HEAD
	4	8T-3957	6	BOLT(M12×1.75)
	5	8T-4231	1	DOWEL
	6	2H-3934	1	SEAL

Y-SEPARATE ILLUSTRATION

J100376 -02

159-7156 PISTON MOTOR GROUP -LINK

PART OF 270-0515-Page 307
REFERENCE:171-6001-Page 376

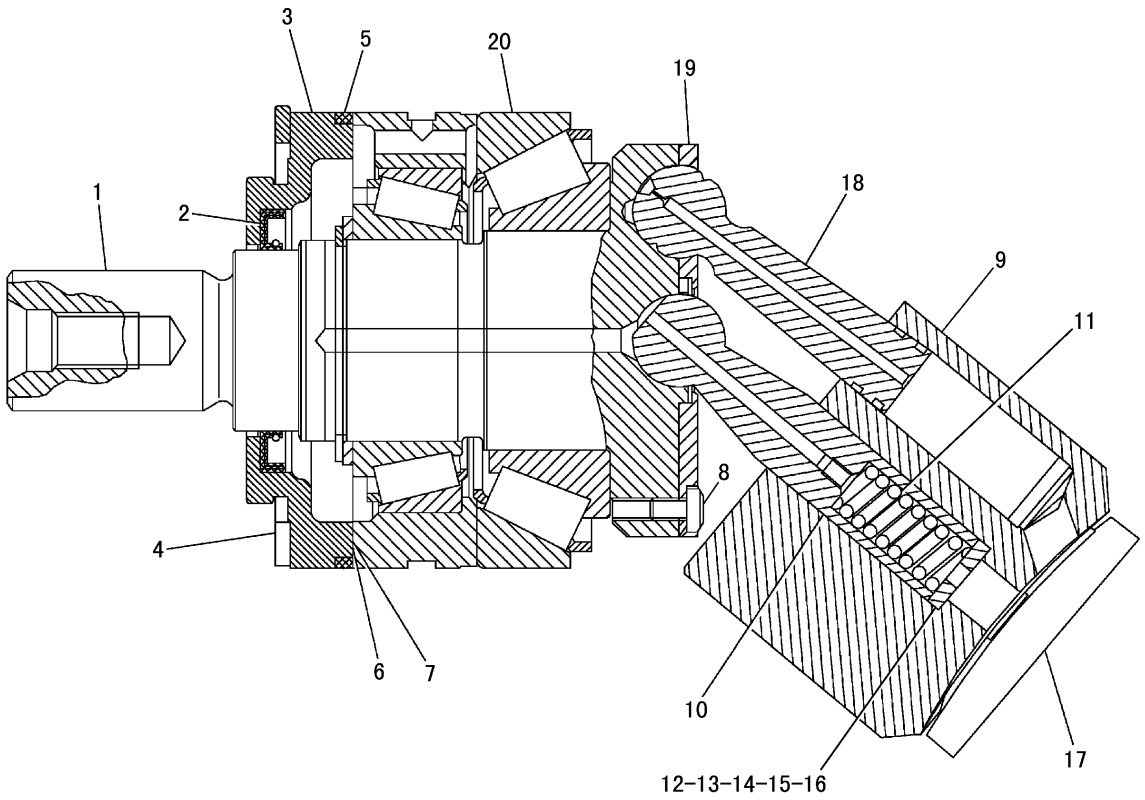

NOTE	№	PART NO.	QTY	PART NAME	NOTE	№	PART NO.	QTY	PART NAME
	1	171-3068	1	SHAFT		20	171-5989	1	BEARING KIT
	2	123-5748	1	SEAL					
	3	9T-1367	1	COVER					
	4	6V-3326	1	RING					
	5	2J-8163	1	SEAL					
B	6	9T-1576	2	SHIM(0.1mm THICK)					
B	7	9T-1579	2	SHIM(0.3mm THICK)					
	8	216-0029	7	SCREW(M6×20)					
	9	9T-1687	1	BARREL					
	10	171-3054	1	PIN					
	11	171-3061	1	SPRING					
B	12	171-3055	1	SHIM(4.0mm THICK)					
B	13	171-3057	1	SHIM(3.9mm THICK)					
B	14	171-3058	1	SHIM(3.8mm THICK)					
B	15	171-5059	1	SHIM(3.7mm THICK)					
B	16	171-3060	1	SHIM(3.6mm THICK)					
	17	171-5999	1	PLATE					
	18	165-6969	7	PISTON AS					
		9T-1582	2	RING					
	19	9T-1642	1	PLATE					

B-USE AS REQUIRED

J119918 X00

171-6001 ROTATING MOTOR GROUP
PART OF 159-7156-Page 375

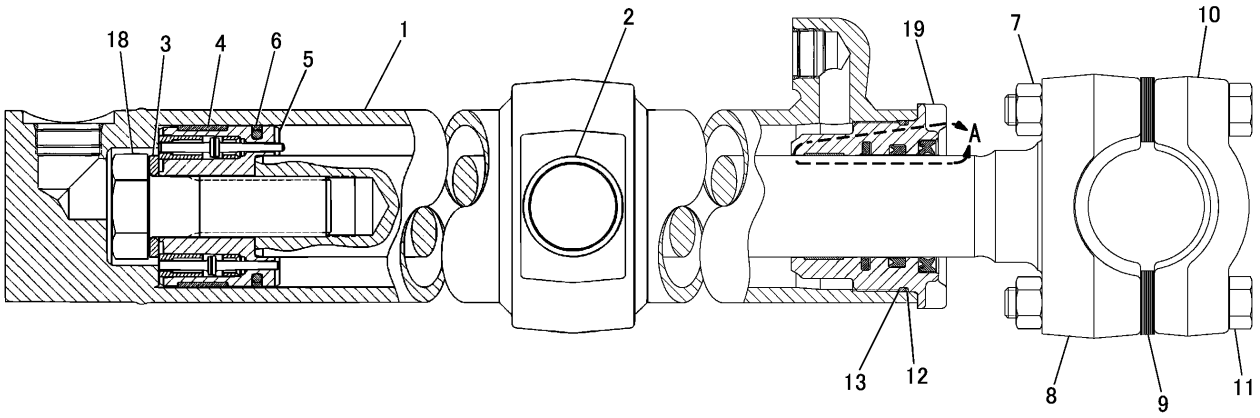

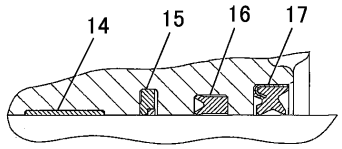

A

NOTE	№	PART NO.	QTY	PART NAME	NOTE	№	PART NO.	QTY	PART NAME
	1	129-1910	1	CYLINDER AS					
	2	6E-1108	2	BEARING					
	3	3G-8742	1	WASHER					
	4	1M-1571	1	WEAR RING					
	5	9T-3885	1	PISTON AS					
	6	8C-9160	1	SEAL AS					
	7	2J-3506	4	NUT(3/4-10)					
	8	6E-1847	1	ROD AS					
B	9	8E-5703	22	SHIM(0.8mm THICK)					
	10	8J-2880	1	CAP					
	11	1D-4615	4	BOLT(3/4-10)					
	12	2K-6830	1	RING					
	13	175-7900	1	SEAL					
	14	8T-0785	1	WEAR RING					
	15	167-2201	1	SEAL					
	16	167-2312	1	SEAL					
	17	225-3281	1	SEAL					
	18	1F-6762	1	BOLT(1 1/2-12)					
	19	172-9981	1	HEAD					

B-USE AS REQUIRED

J133620 X00

129-1908 CYLINDER GROUP -LIFT-102mm BORE × 1385mm STROKE

PART OF 129-6768-Page 344,129-6769-Page 345
AN ATTACHMENT

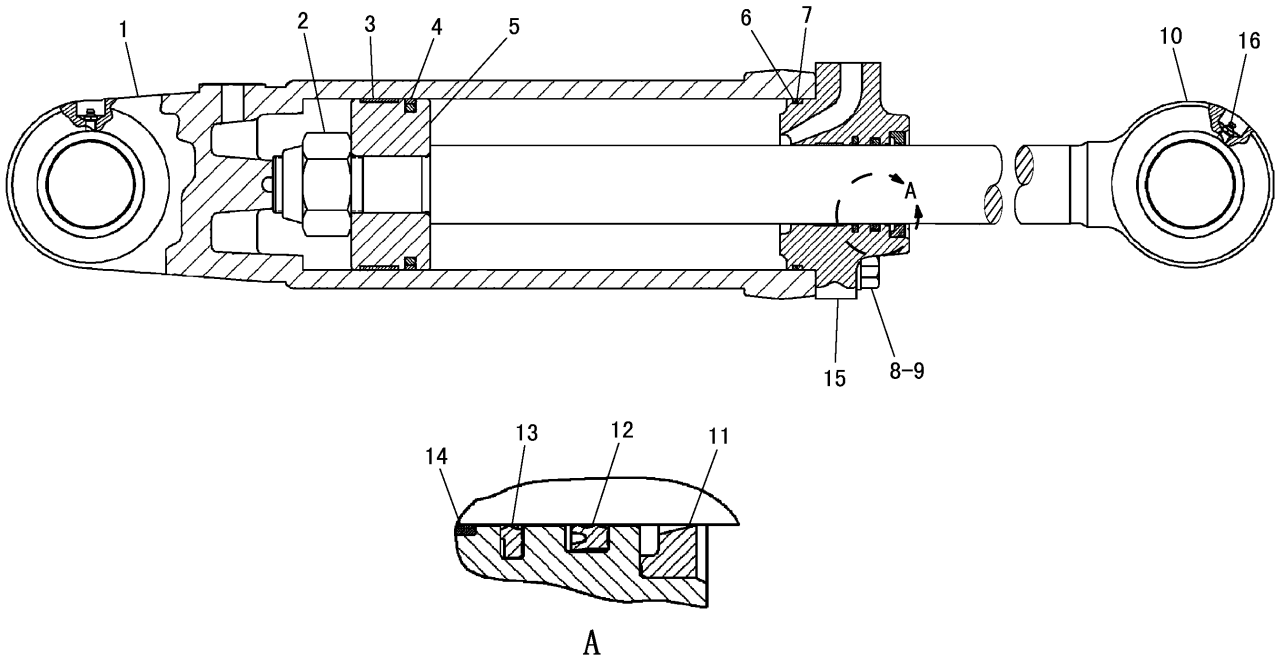

NOTE	№	PART NO.	QTY	PART NAME	NOTE	№	PART NO.	QTY	PART NAME
	1	166-7213	1	CYLINDER AS					
		3G-5999	1	BEARING					
	2	3J-9545	1	NUT(2-12)					
	3	1J-0708	1	WEAR RING					
	4	8C-9173	1	SEAL AS					
	5	8J-1818	1	PISTON					
	6	6D-9157	1	SEAL					
	7	158-3025	1	RING					
	8	173-9779	4	BOLT(M24×3)					
	9	6V-8237	4	WASHER					
	10	112-4818	1	ROD AS					
		3G-5999	1	BEARING					
	11	167-2467	1	SEAL					
	12	167-2317	1	SEAL					
	13	167-2207	1	SEAL AS					
	14	8C-9200	1	WEAR RING					
	15	166-7212	1	HEAD					
	16	3B-8489	2	FITTING					

J119374 X05

164-7320 CYLINDER GROUP -LIFT-152mm BORE × 311mm STROKE
PART OF 164-4717-Page 395
AN ATTACHMENT

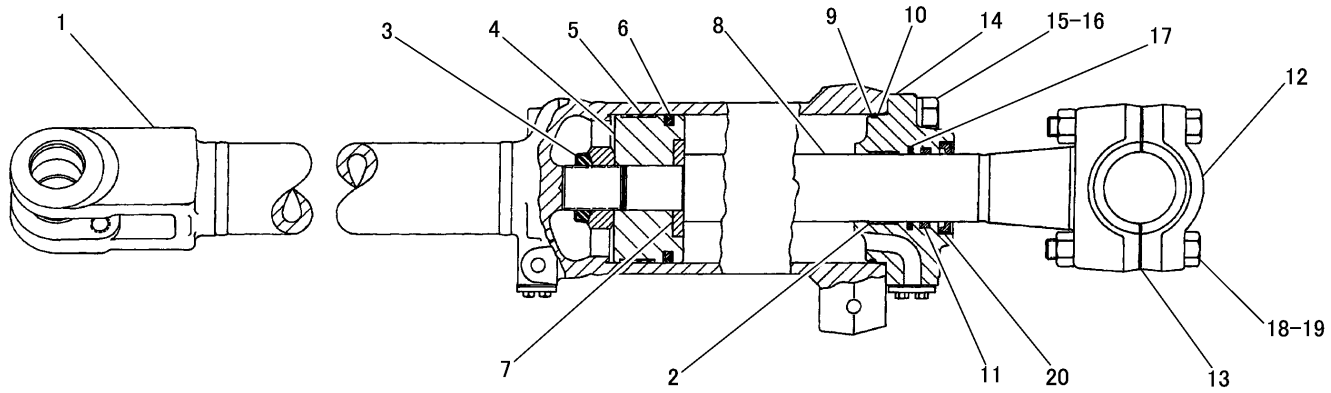

NOTE	№	PART NO.	QTY	PART NAME	NOTE	№	PART NO.	QTY	PART NAME
	1	3G-4532	1	CYLINDER AS					
	2	9T-0094	1	RING					
	3	2J-0564	1	NUT(2-12)					
	4	6J-9748	1	PISTON					
	5	3J-9703	1	RING					
	6	5J-4991	1	SEAL AS					
	7	6J-9747	1	WASHER					
	8	9T-6115	1	ROD AS					
	9	2K-4472	1	SEAL					
	10	2K-4473	1	RING					
	11	5J-8300	1	SEAL					
	12	3G-0910	1	CAP					
	13	3G-0911	12	SHIM					
	14	9T-0095	1	HEAD					
	15	5P-8250	4	WASHER					
	16	7X-0406	4	BOLT(1-8)					
	17	8C-9126	1	SEAL AS					
	18	7X-0449	4	NUT(7/8-9)					
	19	7X-0392	4	BOLT(7/8-9)					
	20	2J-1411	1	SEAL					

J144513 X04

3G-4533 CYLINDER GROUP -TILT-165mm BORE × 162mm STROKE
PART OF 212-7413-Page 389
AN ATTACHMENT

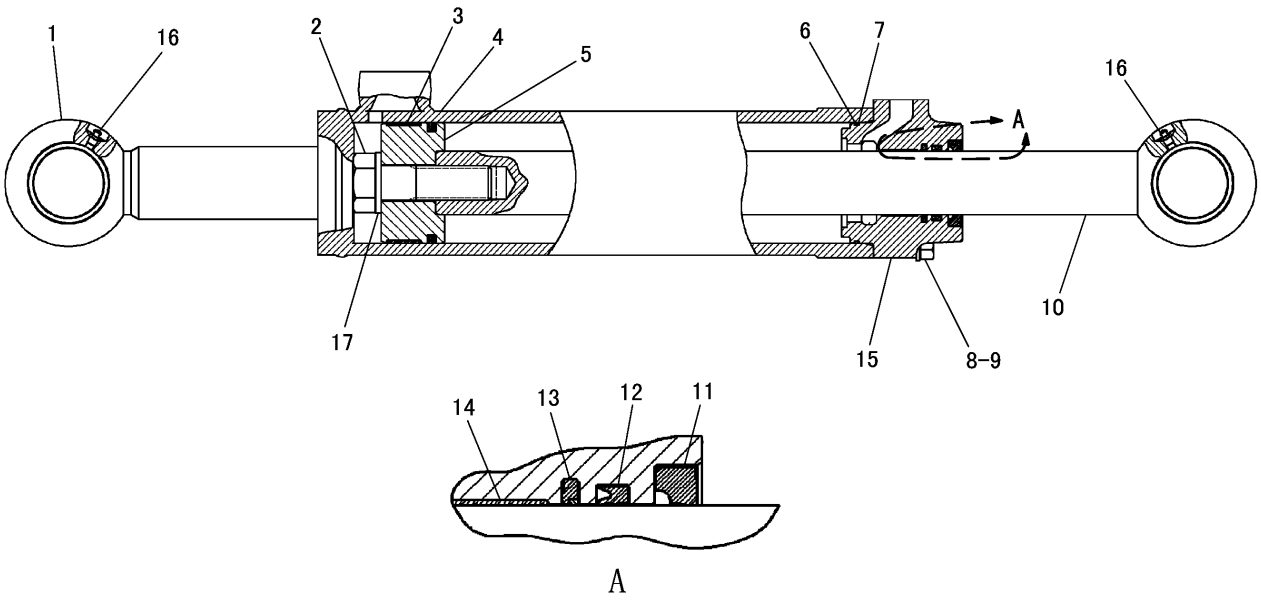

NOTE	№	PART NO.	QTY	PART NAME	NOTE	№	PART NO.	QTY	PART NAME
	1	189-4647	1	CYLINDER AS					
		3G-5999	1	BEARING					
	2	5P-9402	1	BOLT(1 1/2-12)					
	3	9J-7978	1	WEAR RING					
	4	5J-7234	1	SEAL AS					
	5	4T-8710	1	PISTON					
	6	5F-3106	1	SEAL					
	7	2J-7767	1	RING					
	8	6V-3669	4	BOLT(M20×2.5)					
	9	8T-3282	4	WASHER					
	10	166-9139	1	ROD AS					
		3G-5999	1	BEARING					
	11	167-2467	1	SEAL					
	12	167-2317	1	SEAL					
	13	167-2207	1	SEAL AS					
	14	8T-7849	1	WEAR RING					
	15	189-4646	1	HEAD					
	16	3B-8489	2	FITTING					
	17	3S-6162	1	WASHER					

J119376 X07

189-4645 CYLINDER GROUP -RIPPER TILT-133mm BORE × 438mm STROKE
PART OF 164-4717-Page 395
AN ATTACHMENT

HYDRAULIC SYSTEM

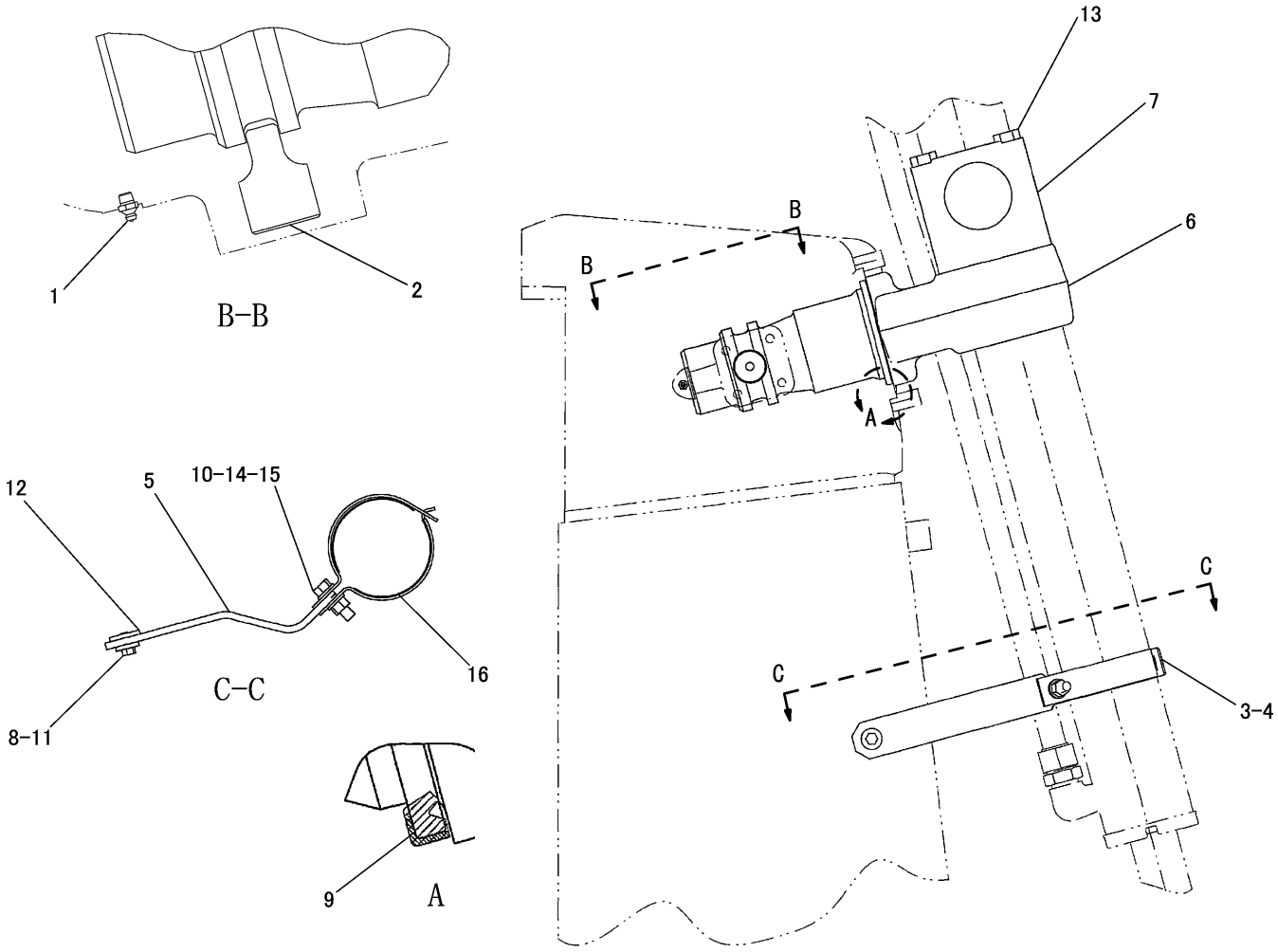

NOTE	№	PART NO.	QTY	PART NAME	NOTE	№	PART NO.	QTY	PART NAME
	1	3B-8489	2	FITTING					
	2	4T-4875	2	PIN					
J	3	6Y-9280	2	CLAMP					
J	4	6Y-9281	2	CLAMP					
J	5	9N-4233	2	STRAP					
	6	229-9744	2	YOKE					
	7	230-2636	4	CAP AS					
		104-1844	4	BEARING					
J	8	5M-3062	2	BOLT(3/8-16)					
	9	6V-0273	2	SEAL					
J	10	6V-8188	2	NUT(1/2-13)					
J	11	7X-0503	2	WASHER					
J	12	7X-0521	2	WASHER					
	13	7X-2568	8	BOLT(M20×2.5)					
J	14	8T-4223	4	WASHER					
J	15	8T-8919	2	BOLT(1/2-13)					
D	16	9X-2532		SEAL---0.165m(×4)					

D-ORDER BY THE m
J-FOR BULLDOZER INSTALLATION

J144512 X02

CYLINDER MOUNTING GROUP (6Y-5694 N/S)

PART OF 226-2543-Page 383,226-2544-Page 385
AN ATTACHMENT

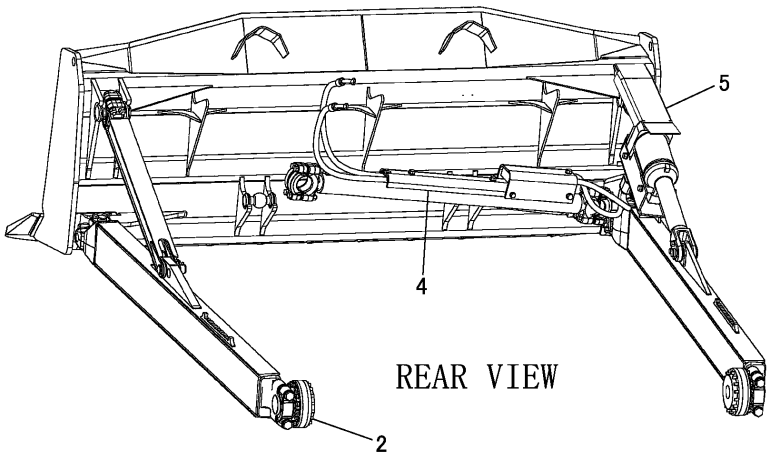

REAR VIEW

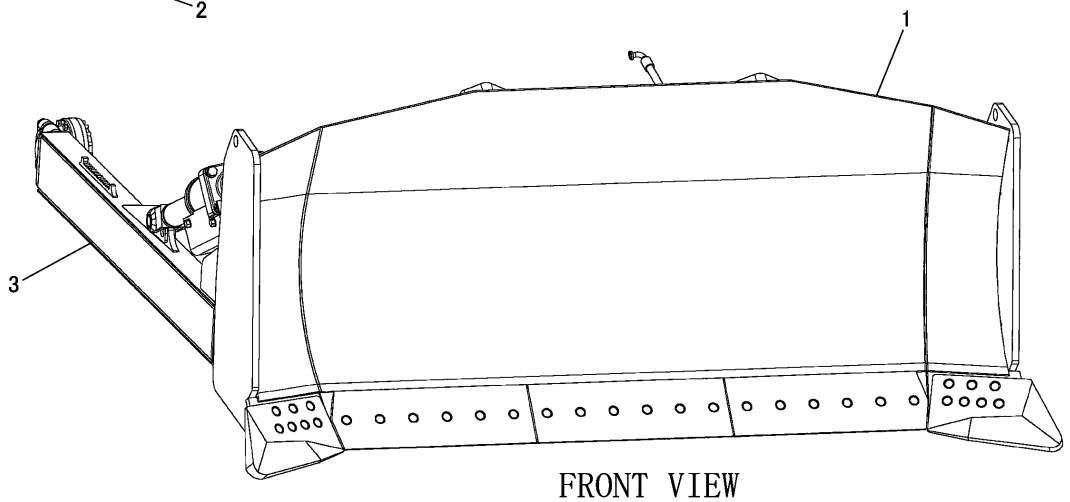

FRONT VIEW

NOTE	№	PART NO.	QTY	PART NAME	NOTE	№	PART NO.	QTY	PART NAME
Y	1	3G-5436	1	BLADE GROUP					
Y	2	4T-5316	1	TRUNNION GROUP					
Y	3	212-7413	1	ARM GROUP					
Y	4	213-6169	1	CYLINDER LINES GROUP					
Y	5	4Y-8450	1	GUARD GROUP					
FY	6	5P-2506	1	LITERATURE GROUP					
F	7	7B-3028	2	SCREW					

F-NOT SHOWN
Y-SEPARATE ILLUSTRATION

J139167 X00

BULLDOZER ARRANGEMENT (212-7421 N/S) -SEMIUNIVERSAL
REFERENCE:3G-5436-Page 400 4T-5316-Page 391 212-7413-Page 389 213-6169-Page 342, 343
4Y-8450-Page 387 5P-2506-Page 495
AN ATTACHMENT

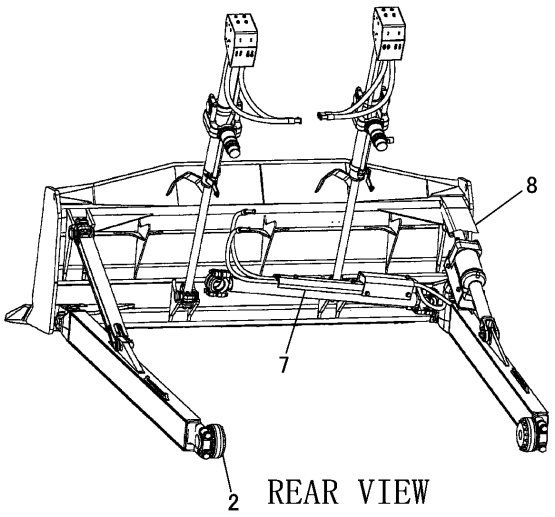

REAR VIEW

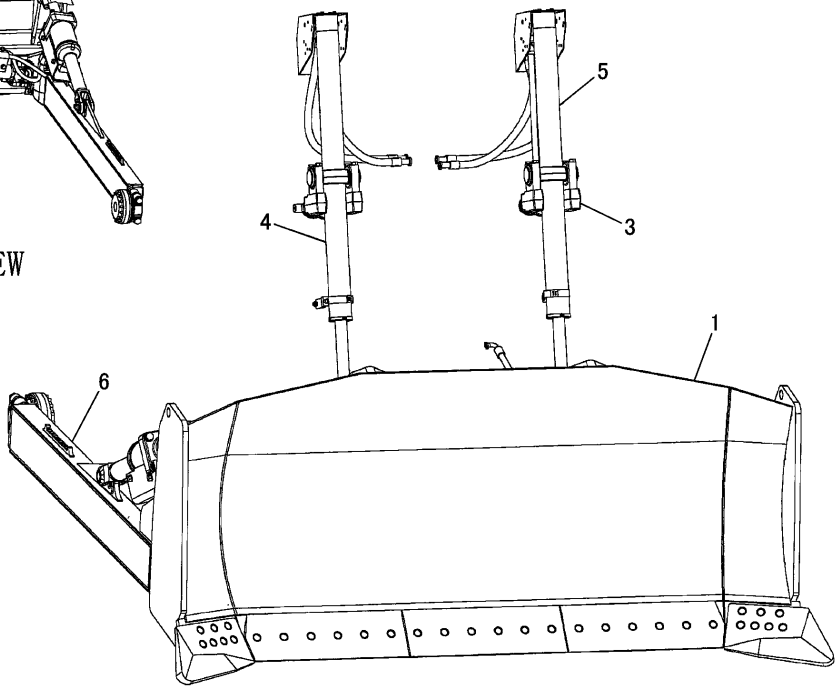

FRONT VIEW

NOTE	№	PART NO.	QTY	PART NAME	NOTE	№	PART NO.	QTY	PART NAME
Y	1	3G-5436	1	BLADE GROUP					
Y	2	4T-5316	1	TRUNNION GROUP					
Y	3	6Y-5694	1	MOUNTING GROUP					
Y	4	129-6768	1	CYLINDE AND LINES GROUP(RH)					
Y	5	129-6769	1	CYLINDE AND LINES GROUP(LH)					
Y	6	212-7413	1	ARM GROUP					
Y	7	213-6169	1	CYLINDER LINES GROUP					
Y	8	4Y-8450	1	GUARD GROUP					
FY	9	5P-2506	1	LITERATURE GROUP					
F	10	7B-3028	2	SCREW					

F-NOT SHOWN
Y-SEPARATE ILLUSTRATION

J139166 X01

BULLDOZER ARRANGEMENT (226-2543 N/S) -SEMIUNIVERSAL
REFERENCE:3G-5436-Page 400 4T-5316-Page 391 6Y-5694-Page 381 129-6768-Page 344 129-6769-Page 345 212-7413-Page 389 213-6169-Page 342, 343 4Y-8450-Page 387 5P-2506-Page 495
AN ATTACHMENT

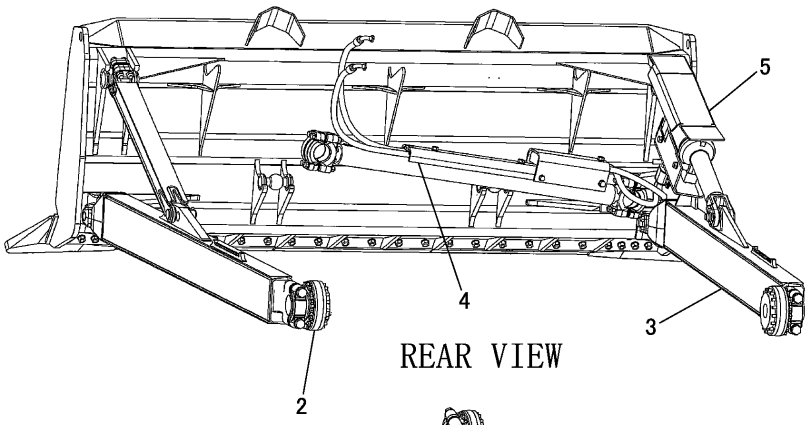

REAR VIEW

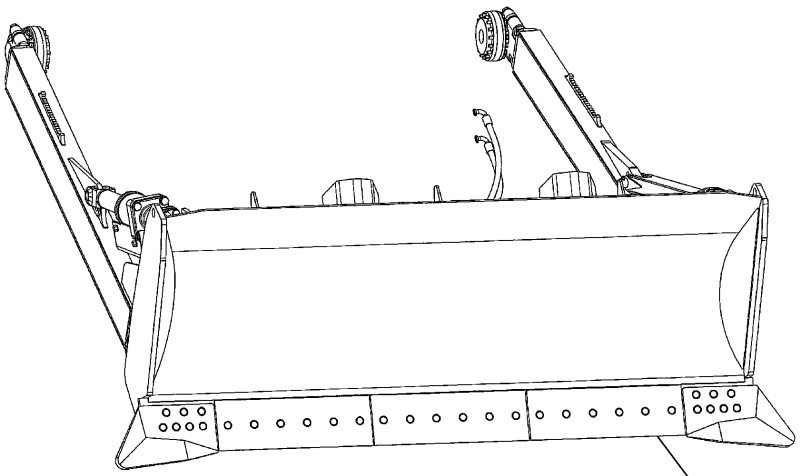

FRONT VIEW

NOTE	№	PART NO.	QTY	PART NAME	NOTE	№	PART NO.	QTY	PART NAME
Y	1	4T-2463	1	BLADE GROUP					
Y	2	4T-5316	1	TRUNNION GROUP					
Y	3	212-7413	1	ARM GROUP					
Y	4	213-6169	1	CYLINDER LINES GROUP					
Y	5	4Y-8450	1	GUARD GROUP					
FY	6	5P-2506	1	LITERATURE GROUP					
F	7	7B-3028	2	SCREW					

F-NOT SHOWN
Y-SEPARATE ILLUSTRATION

J139170 X00

BULLDOZER ARRANGEMENT (218-7469 N/S) -STRAIGHT
REFERENCE:4T-2463-Page 401 4T-5316-Page 391 212-7413-Page 389 213-6169-Page 342, 343 4Y-8450-Page 387 5P-2506-Page 495
AN ATTACHMENT

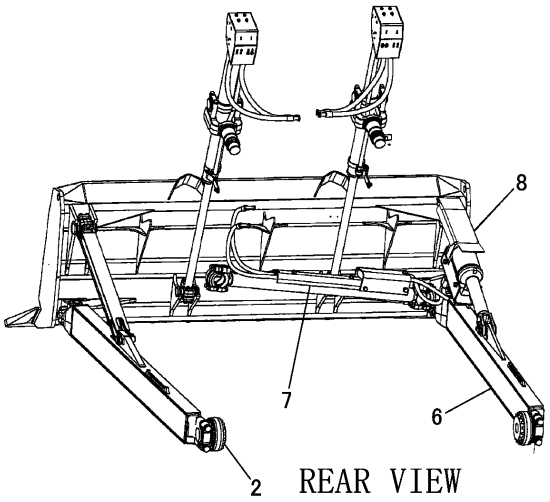

REAR VIEW

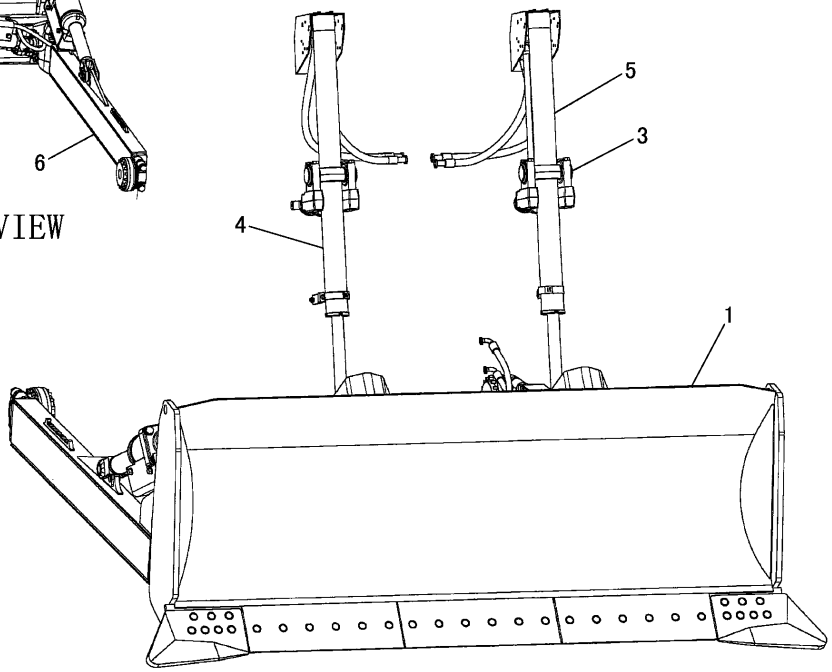

FRONT VIEW

NOTE	№	PART NO.	QTY	PART NAME	NOTE	№	PART NO.	QTY	PART NAME
Y	1	4T-2463	1	BLADE GROUP					
Y	2	4T-5316	1	TRUNNION GROUP					
Y	3	6Y-5694	1	MOUNTING GROUP					
Y	4	129-6768	1	CYLINDER AND LINES GROUP(RH)					
Y	5	129-6769	1	CYLINDER AND LINES GROUP(LH)					
Y	6	212-7413	1	ARM GROUP					
Y	7	213-6169	1	CYLINDER LINES GROUP					
Y	8	4Y-8450	1	GUARD GROUP					
FY	9	5P-2506	1	LITERATURE GROUP					
F	10	7B-3028	2	SCREW					

F-NOT SHOWN
Y-SEPARATE ILLUSTRATION

J139169 X01

BULLDOZER ARRANGEMENT (226-2544 N/S) -STRAIGHT

REFERENCE:4T-2463-Page 401 4T-5316-Page 391 6Y-5694-Page 381 129-6768-Page 344 129-6769-Page 345 212-7413-Page 389 213-6169-Page 342, 343 4Y-8450-Page 387 5P-2506-Page 495

AN ATTACHMENT

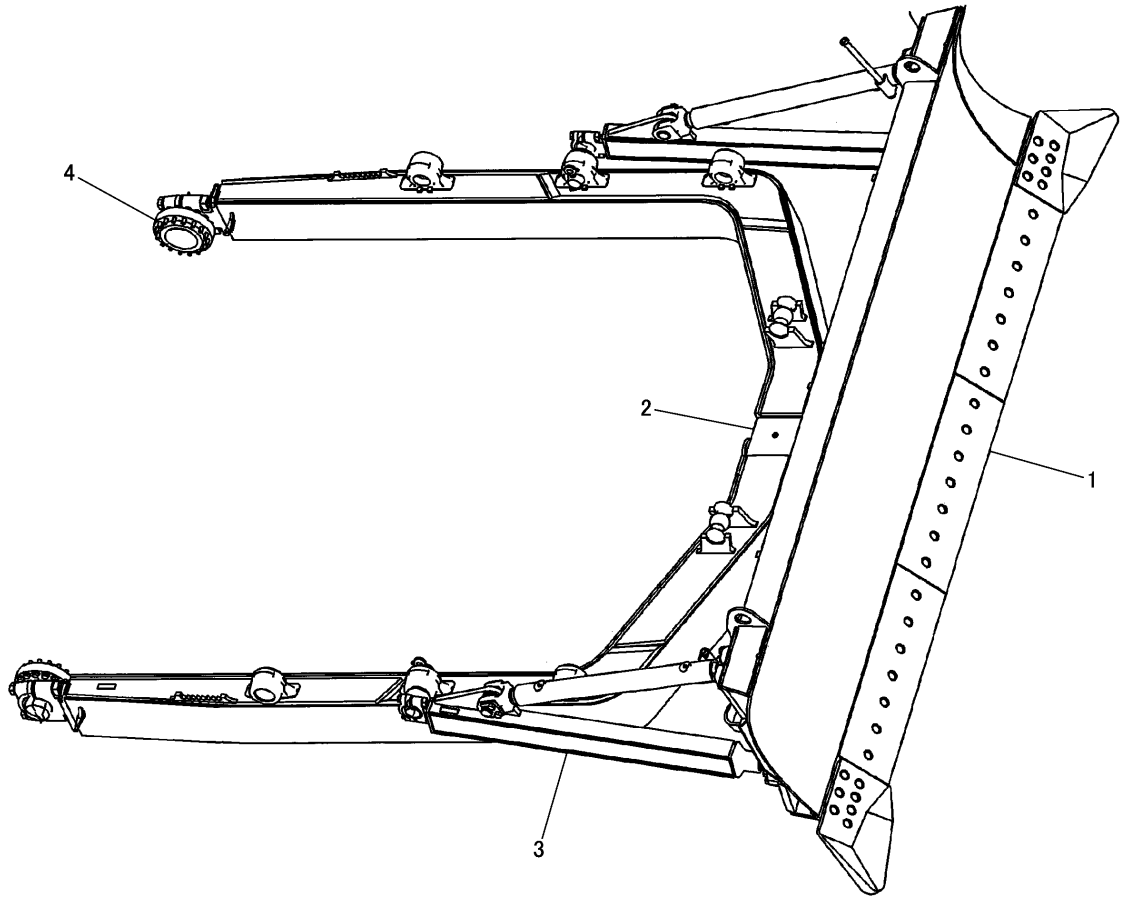

NOTE	№	PART NO.	QTY	PART NAME	NOTE	№	PART NO.	QTY	PART NAME
Y	1	4T-6134	1	BLADE GROUP					
Y	2	4T-6135	1	C-FRAME GROUP					
Y	3	4T-6137	1	BRACE GROUP					
Y	4	4T-5316	1	TRUNNION GROUP					
FY	5	5P-2506	1	LITERATURE GROUP					
F	6	7B-3028	2	SCREW					

F-NOT SHOWN
Y-SEPARATE ILLUSTRATION

J139174 X03

BULLDOZER ARRANGEMENT (1U-0640 N/S) -ANGLING
REFERENCE:4T-6134-Page 402 4T-6135-Page 390 4T-6137-Page 388 4T-5316-Page 391 5P-2506-Page 495
AN ATTACHMENT

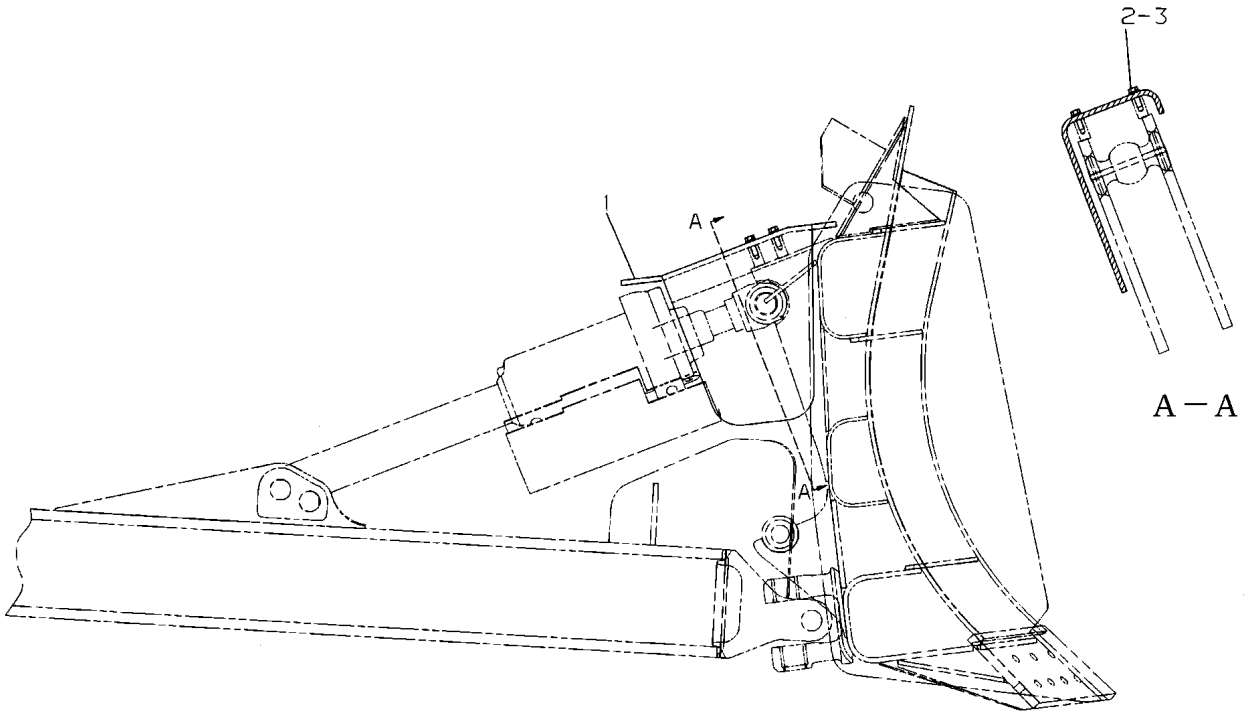

NOTE	№	PART NO.	QTY	PART NAME	NOTE	№	PART NO.	QTY	PART NAME
	1	4Y－8435	1	GUARD					
	2	8T－4223	4	WASHER					
	3	5P－2228	4	BOLT(1/2-13)					

J156234 X02

TILT CYLINDER GUARD GROUP (4Y-8450 N/S)
PART OF 212-7421-Page 382,218-7469-Page 384,226-2543-Page 383,226-2544-Page 385
AN ATTACHMENT

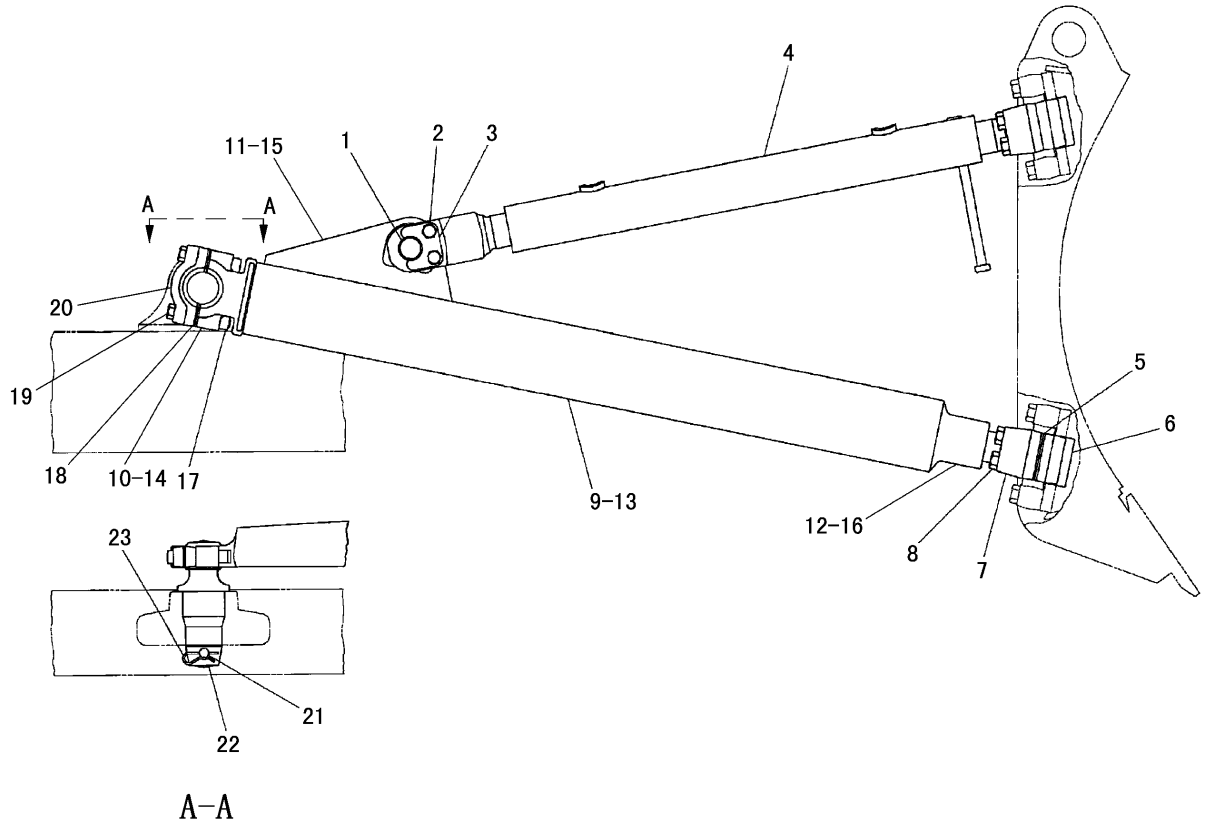

A-A

NOTE	№	PART NO.	QTY	PART NAME	NOTE	№	PART NO.	QTY	PART NAME
	1	1U-0873	2	PIN		19	8T-8925	4	BOLT(3/4-10)
	2	7X-0365	4	BOLT(3/4-10)		20	160-6306	2	CAP
	3	6J-5342	2	RETAINER		21	4F-1252	2	PIN
Y	4	4T-8066	2	BRACE GROUP		22	4T-5495	2	BALLSTUD
B	5	3G-0911	52	SHIM(0.8mm THICK)		23	3J-1770	2	PIN
	6	1U-1212	2	CAP					
	7	4T-8088	2	SCREW					
	8	7X-0388	8	BOLT(7/8-9)					
	9	4T-6212	1	ARM AS(RH)					
		8E-5701	14	SHIM(0.8mm THICK)					
	10	9W-1677	1	BEARING					
	11	1U-1220	1	PLATE AS					
	12	9W-1676	1	NUT(2 3/4-8)					
	13	4T-6211	1	ARM AS(LH)					
		8E-5701	14	SHIM(0.8mm THICK)					
	14	9W-1677	1	BEARING					
	15	1U-1220	1	PLATE AS					
	16	9W-1676	1	NUT(2 3/4-8)					
	17	4F-2710	4	NUT(3/4-10)					
B	18	8E-5701	52	SHIM(0.8mm THICK)					

B-USE AS REQUIRED
Y-SEPARATE ILLUSTRATION

J116409 X06

4T-6137 BULLDOZER BRACE GROUP
PART OF 1U-0640-Page 386
REFERENCE:4T-8066-Page 391
AN ATTACHMENT

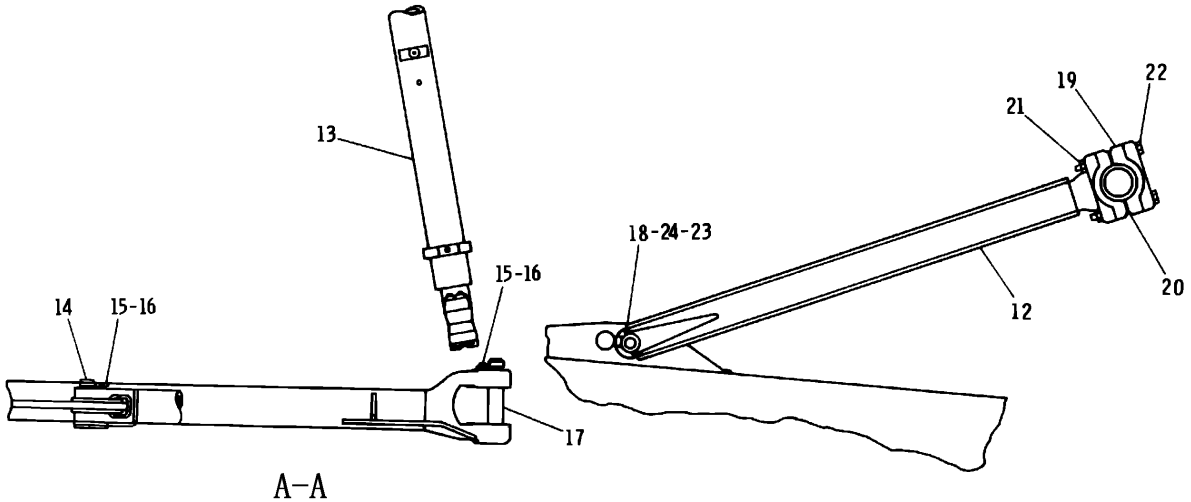

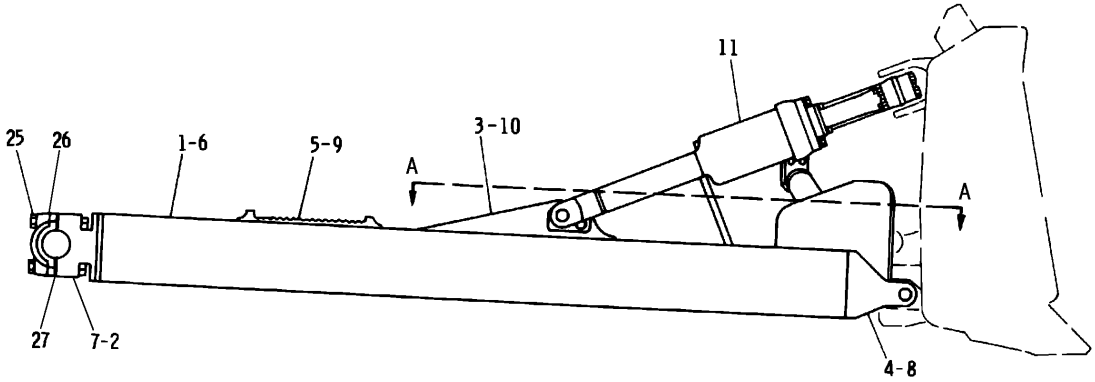

NOTE	№	PART NO.	QTY	PART NAME	NOTE	№	PART NO.	QTY	PART NAME
	1	1U-0979	1	ARM AS(RH)		21	7X-0449	4	NUT(7/8-9)
	2	1J-6740	1	BEARING		22	7X-0392	4	BOLT(7/8-9)
	3	1U-0904	1	BRACKET AS(RH)		23	3B-4627	1	COTTER
	4	4T-5249	1	BRACKET(RH)		24	4F-0255	1	PIN
	5	1U-2533	1	BAR		25	3E-9850	4	BOLT(M30×3.5)
	6	1U-0980	1	ARM AS(LH)			9X-8258	4	WASHER
	7	1J-6740	1	BEARING			195-6283	4	NUT(M30×3.5)
	8	4T-5250	1	BRACKET(LH)		26	193-3063	2	CAP
	9	1U-2533	1	BAR	B	27	9W-7602	52	SHIM(0.8mm THICK)
	10	124-6273	1	BRACKET(LH)					
Y	11	3G-4533	1	CYLINDER GROUP					
	12	124-6274	1	BRACE AS					
Y	13	212-7410	1	LINK GROUP					
	14	1U-0873	1	PIN					
	15	6J-5342	3	RETAINER					
	16	7X-0365	6	BOLT(3/4-10)					
	17	1U-0872	2	PIN					
	18	3F-4971	1	PIN					
	19	3G-0910	1	CAP					
B	20	3G-0911	26	SHIM(0.8mm THICK)					

B-USE AS REQUIRED
Y-SEPARATE ILLUSTRATION

J156235 X00

PUSH ARM GROUP (212-7413 N/S) -STABILIZER

PART OF 212-7421-Page 382,218-7469-Page 384,226-2543-Page 383,226-2544-Page 385
REFERENCE:3G-4533-Page 379 212-7410-Page 392
AN ATTACHMENT

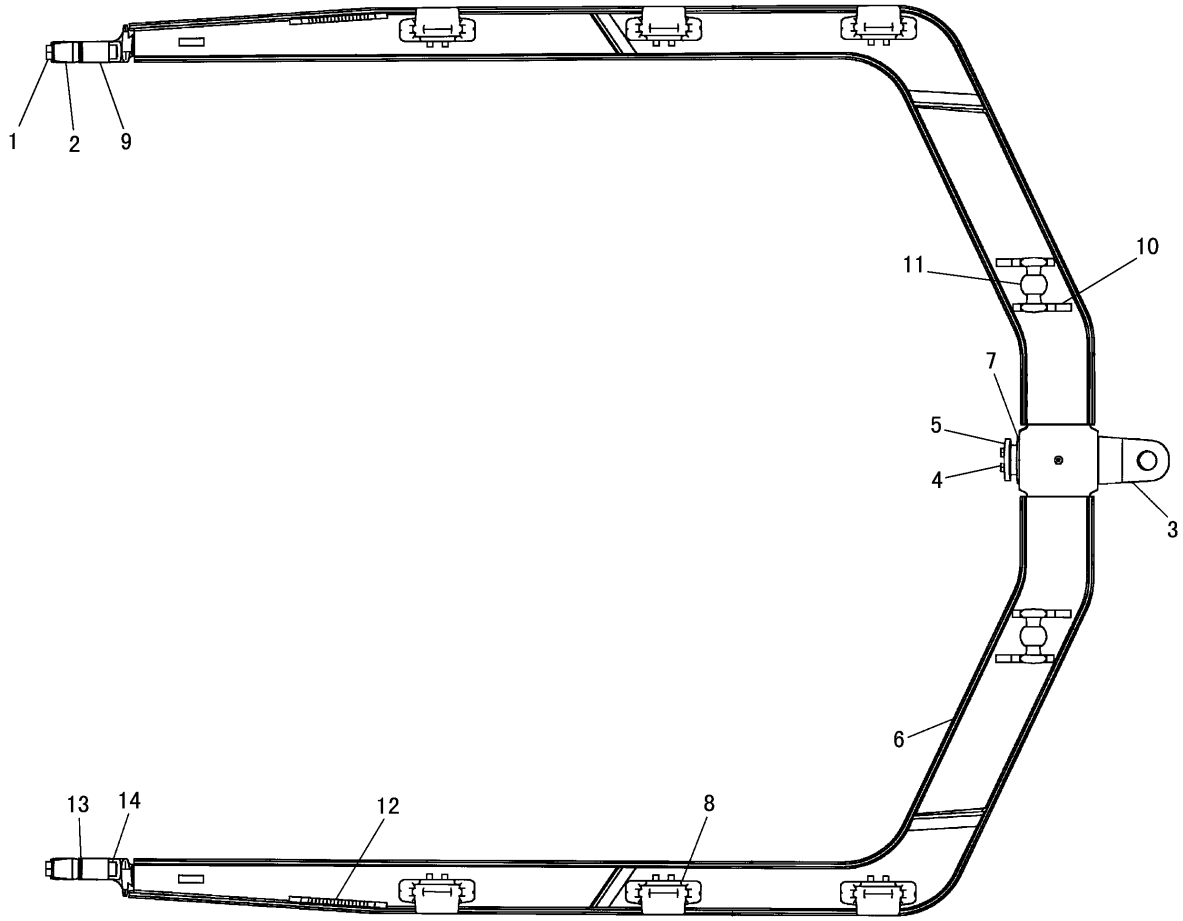

NOTE	№	PART NO.	QTY	PART NAME	NOTE	№	PART NO.	QTY	PART NAME
	1	3E-9850	4	BOLT(1-1/4)					
		9X-8258	4	WASHER					
	2	193-3063	2	CAP					
	3	6Y-7474	1	PIN					
	4	8T-9398	2	BOLT(3/4-10)					
	5	1U-0725	1	RETAINER					
	6	9W-9009	1	FRAME AS					
	7	9W-9001	1	ADAPTER AS					
		8E-5486	2	BEARING					
	8	9W-4897	6	BRACKET AS					
	9	1J-6740	2	BEARING					
	10	7J-5129	2	BRACKET AS					
	11	7J-5131	1	TRUNNION					
	12	9W-5375	2	BAR					
B	13	9W-7602	52	SHIM(0.8mm THICK)					
	14	195-6283	4	NUT(M30×3.5)					

B-USE AS REQUIRED

J112305 X08

C-FRAME GROUP (4T-6135 N/S)
PART OF 1U-0640-Page 386
AN ATTACHMENT

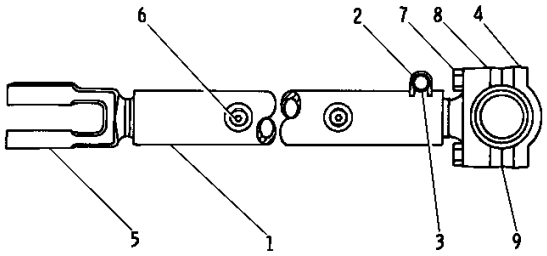

NOTE	Nº	PART NO.	QTY	PART NAME
	1	4T-7782	1	BRACE AS
	2	1U-1320	1	LUG
	3	7T-9153	1	HANDLE
	4	1U-1212	1	CAP
	5	4T-8065	1	SCREW(2 3/4-4)
	6	3B-8489	2	FITTING
	7	7X-0455	4	BOLT(7/8-9)
	8	4T-7784	1	SCREW(2 3/4-4)
B	9	3G-0911	8	SHIM(0.8mm THICK)

B-USE AS REQUIRED

J120010 X05

BULLDOZER BRACE GROUP (4T-8066 N/S) -MANUAL TILT

PART OF 4T-6137-Page 388
AN ATTACHMENT

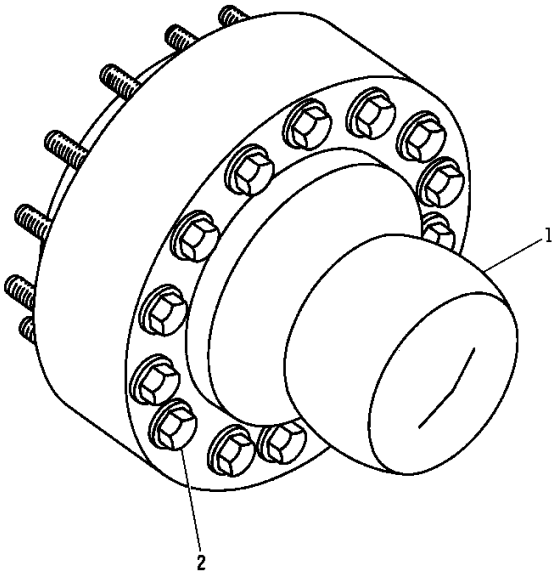

NOTE	Nº	PART NO.	QTY	PART NAME
	1	4T-5405	2	TRUNNION AS
		5J-4321	1	TRUNNION
	2	7X-0351	32	BOLT(5/8-11)
		8T-4122	32	WASHER

J058339 X03

BULLDOZER TRUNNION GROUP (4T-5316 N/S)

PART OF 1U-0640-Page 386,212-7421-Page 382,218-7469-Page 384,226-2543-Page 383,226-2544-Page 385
AN ATTACHMENT

IMPLEMENTS

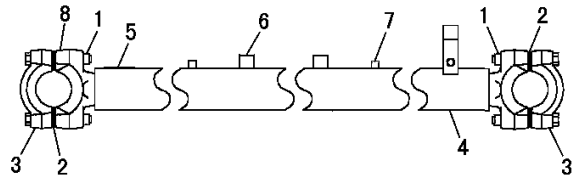

NOTE	№	PART NO.	QTY	PART NAME
	1	7X-0377	8	BOLT(3/4-10)
		6V-8182	8	NUT(3/4-10)
B	2	9T-0065	52	SHIM(0.8mm THICK)
	3	160-6304	2	CAP
	4	212-2072	1	LINK AS
	5	8P-9770	1	PLATE
	6	4V-3638	2	BOSS(3/4-10)
	7	4V-7412	2	BOSS(3/8-16)
	8	9T-0064	2	BEARING

B-USE AS REQUIRED

J119892 X00

STABILIZER LINK GROUP (212-7410 N/S)
PART OF 212-7413-Page 389
AN ATTACHMENT

CONSISTS OF :

			PAGE
1	296-0612	ACCUGRADE MOUNTING GROUP ·····	393
1	298-6397	HARNESS ASSEMBLY(ADVISOR JUMPER) ·····	394
1	300-5501	HARNESS ASSEMBLY(GPS DISPLAY) ·····	394
1	300-6142	BRACKET	
1	7K-1181	STRAP	
1	167-8712	ALARM	
1	4P-7581	CLIP	

J155579 X03

DISPLAY MOUNTING KIT (252-6945 N/S)
PART OF 273-1826-Page 137
AN ATTACHMENT

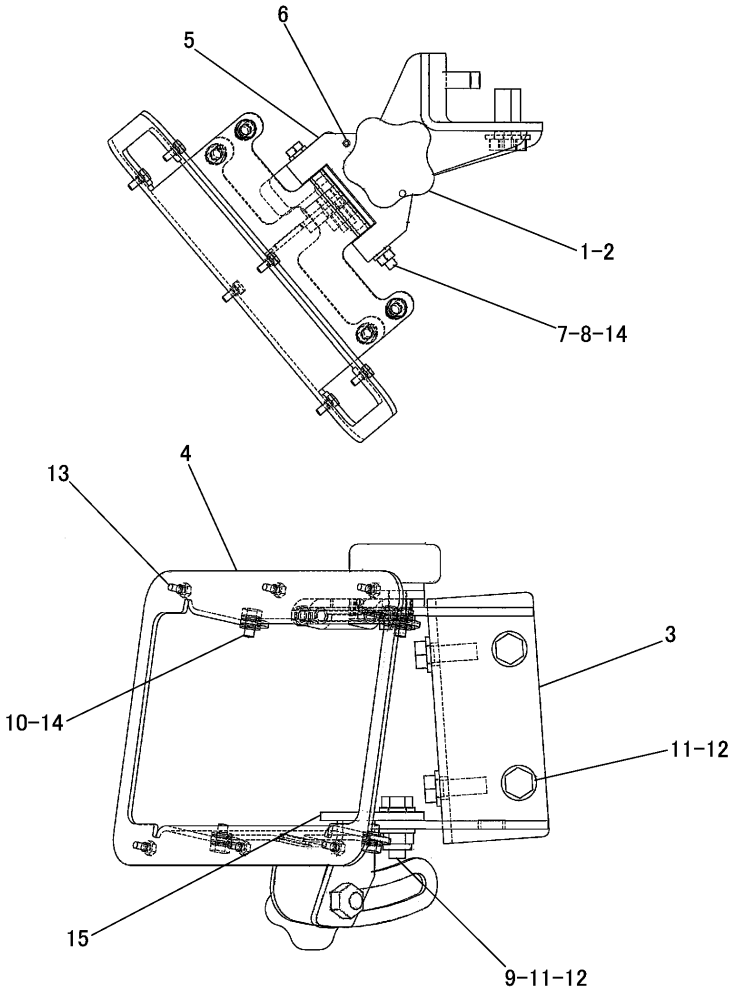

NOTE	№	PART NO.	QTY	PART NAME	NOTE	№	PART NO.	QTY	PART NAME
	1	222-9151	2	WASHER					
	2	245-8334	2	KNOB					
	3	296-0614	1	BRACKET AS					
		8T-3490	1	NUT(M10×1.5)(WELD)					
	4	296-2861	1	BRACKET AS					
	5	299-5417	1	SWIVEL AS					
	6	6V-8236	2	PIN					
	7	5C-2890	1	NUT(M6×1)					
	8	7X-7888	1	BOLT(M6×1)					
	9	8T-0389	1	LOCKNUT(M10×1.5)					
	10	8T-0639	4	BOLT(M6×1)					
	11	8T-4121	6	WASHER					
	12	8T-4195	5	BOLT(M10×1.5)					
	13	8T-7852	6	SCREW(M4×0.7)					
	14	9X-8256	10	WASHER					
	15	299-5418	1	PIVOT AS					
		8T-3490	1	NUT(M10×1.5)(WELD)					

J155580 X00

ACCUGRADE MOUNTING GROUP (296-0612 N/S)

PART OF 252-6945-Page 392
AN ATTACHMENT

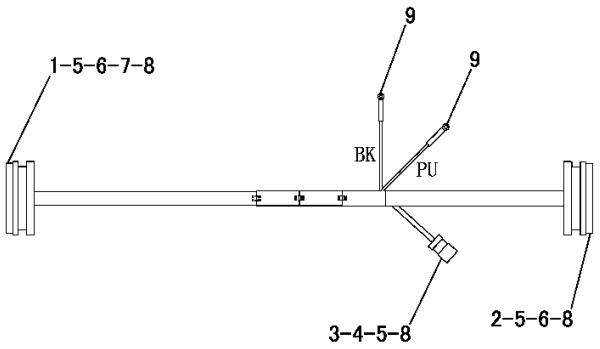

NOTE	№	PART NO.	QTY	PART NAME
	1	160-7689	1	PLUG AS(70P)
		159-9322	1	SEAL
	2	147-1444	1	PLUG AS(70P)
		159-9322	1	SEAL
	3	155-2260	1	PLUG KIT(3P)
	4	102-8803	1	RECEPTACLE KIT(3P)
	5	126-1766	27	SOCKET
	6	126-1768	7	SOCKET
	7	237-0336	1	ENDBELL
	8	8T-8737	112	PLUG
	9	5P-2766	2	TERMINAL

J155581 X00

298-6397 HARNESS ASSEMBLY -ADVISOR JUMPER
PART OF 252-6945-Page 392
AN ATTACHMENT

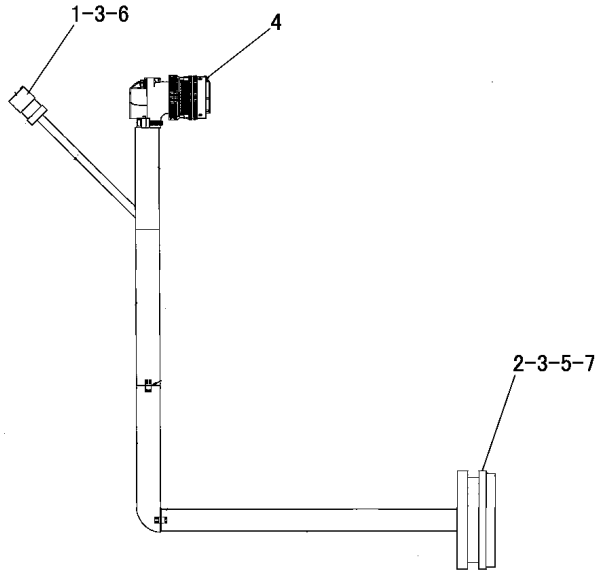

NOTE	№	PART NO.	QTY	PART NAME
	1	155-2260	1	PLUG KIT(3P)
	2	160-7689	1	PLUG AS(70P)
		159-9322	1	SEAL
	3	9X-3402	19	SOCKET
	4	248-5358	1	PLUG AS
	5	9X-6772	2	STRAP
	6	251-7591	1	WIRE AS
		102-8803	1	RECEPTACLE KIT(3P)
		9X-3401	2	PIN
	7	8T-8737	54	PLUG

J155582 X00

300-5501 HARNESS ASSEMBLY -DISPLAY
PART OF 252-6945-Page 392
AN ATTACHMENT

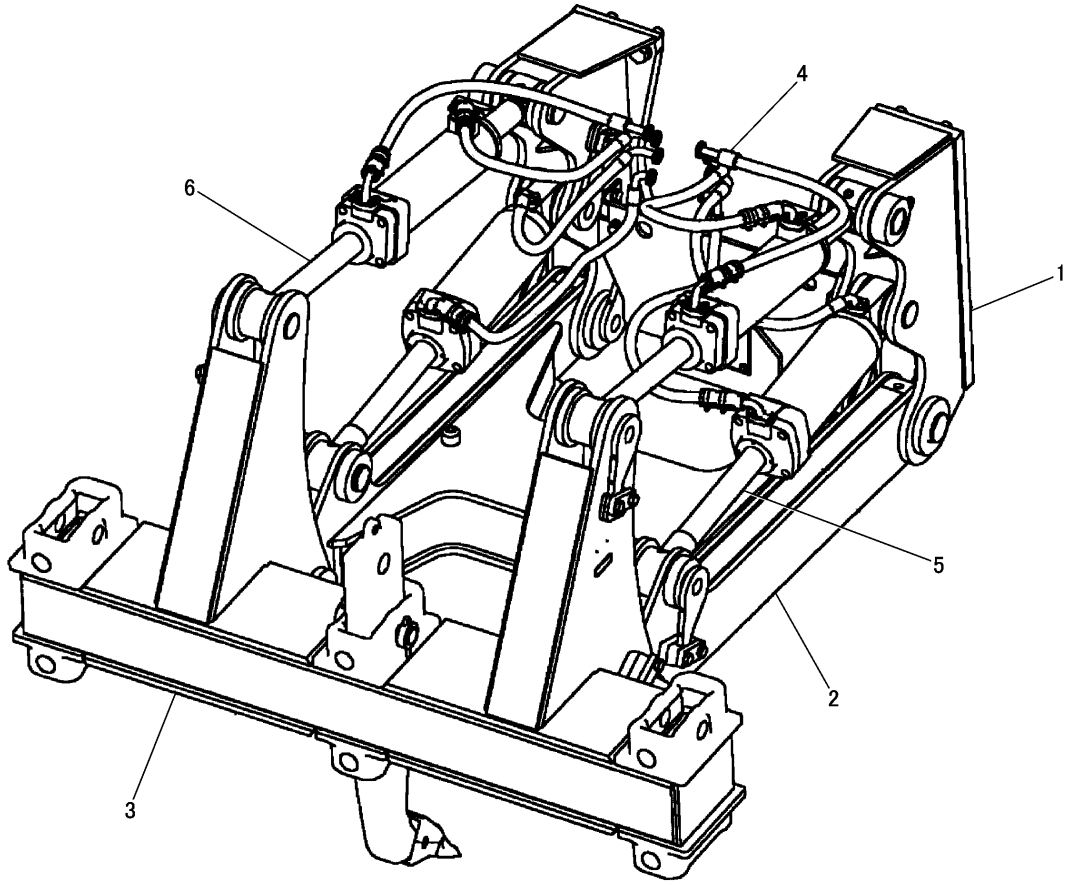

NOTE	№	PART NO.	QTY	PART NAME	NOTE	№	PART NO.	QTY	PART NAME
Y	1	164-4716	1	MOUNTING GROUP					
Y	2	164-4720	1	FRAME GROUP					
Y	3	164-4721	1	RIPPER GROUP					
Y	4	164-4990	1	RIPPER LINES GROUP					
Y	5	164-7320	2	CYLINDER GROUP(RIPPER LIFT)					
Y	6	189-4645	2	CYLINDER GROUP(RIPPER TILT)					
FY	7	5P-2506	1	LITERATURE GROUP					
F	8	7B-3028	2	SCREW(FOR SERIAL PLATE)					

F-NOT SHOWN
Y-SEPARATE ILLUSTRATION

J144531 X00

RIPPER ARRANGEMENT (164-4717 N/S)

REFERENCE:164-4716-Page 397 164-4720-Page 396 164-4721-Page 398 164-4990-Page 334, 335 164-7320-Page 378 189-4645-Page 380 5P-2506-Page 495
AN ATTACHMENT

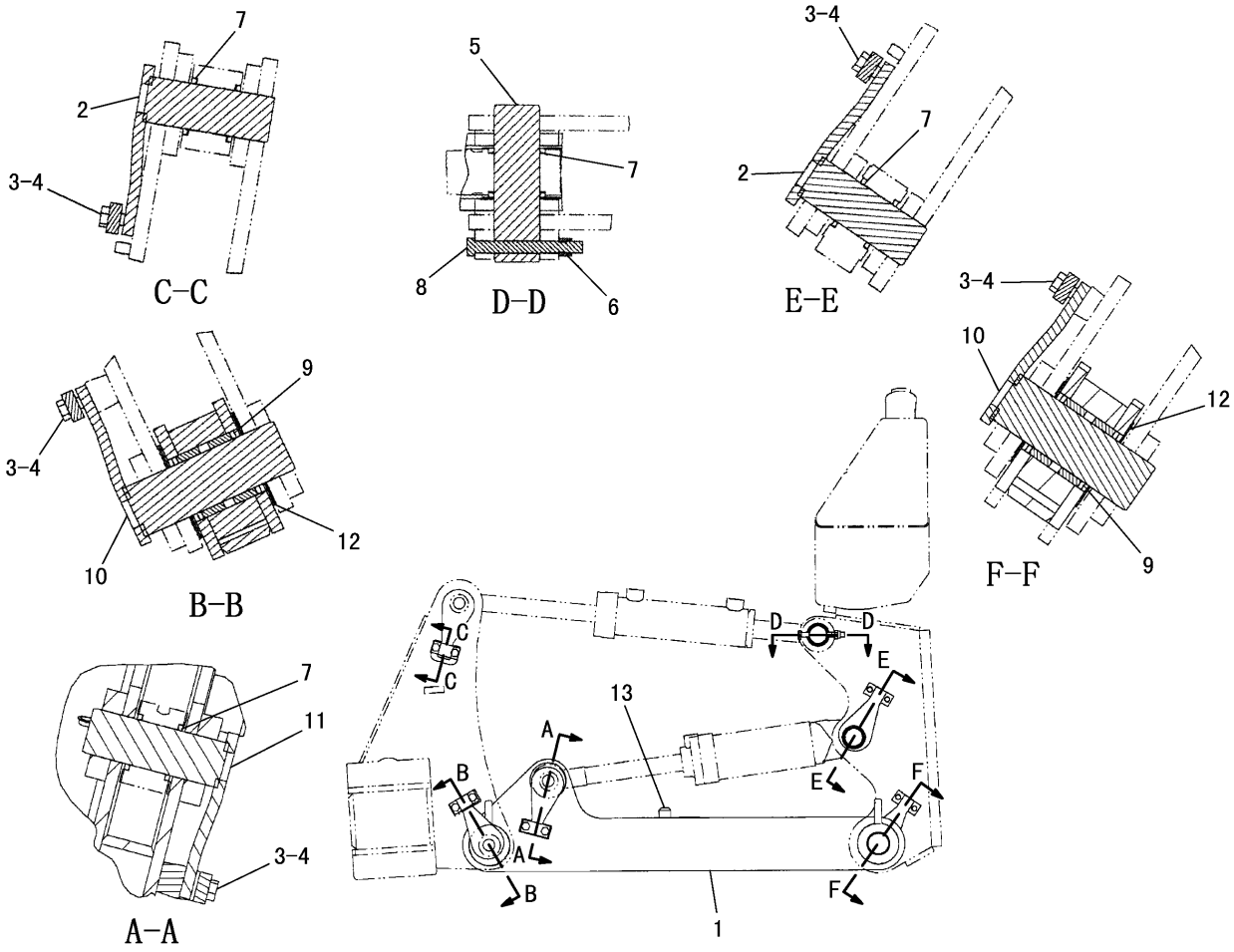

NOTE	№	PART NO.	QTY	PART NAME	NOTE	№	PART NO.	QTY	PART NAME
	1	155-7861	1	FRAME AS					
		7T-3746	8	BEARING					
		3B-8489	4	FITTING					
	2	4T-0202	4	PIN AS					
	3	8T-5460	20	BOLT(M20×2.5)					
	4	7T-7305	10	PLATE					
	5	1U-0990	2	PIN					
	6	6V-7688	2	LOCKNUT(M20×2.5)					
	7	3E-6756	16	SEAL					
	8	7X-2568	2	BOLT(M20×2.5)					
	9	3E-6757	8	SEAL					
	10	4T-1389	4	PIN AS					
	11	4T-0203	2	PIN AS					
B	12	4T-3522	12	WASHER(3.0mm THICK)					
	13	6V-9313	2	PLUG					

B-USE AS REQUIRED

J119371 X01

RIPPER FRAME GROUP (164-4720 N/S)
PART OF 164-4717-Page 395
AN ATTACHMENT

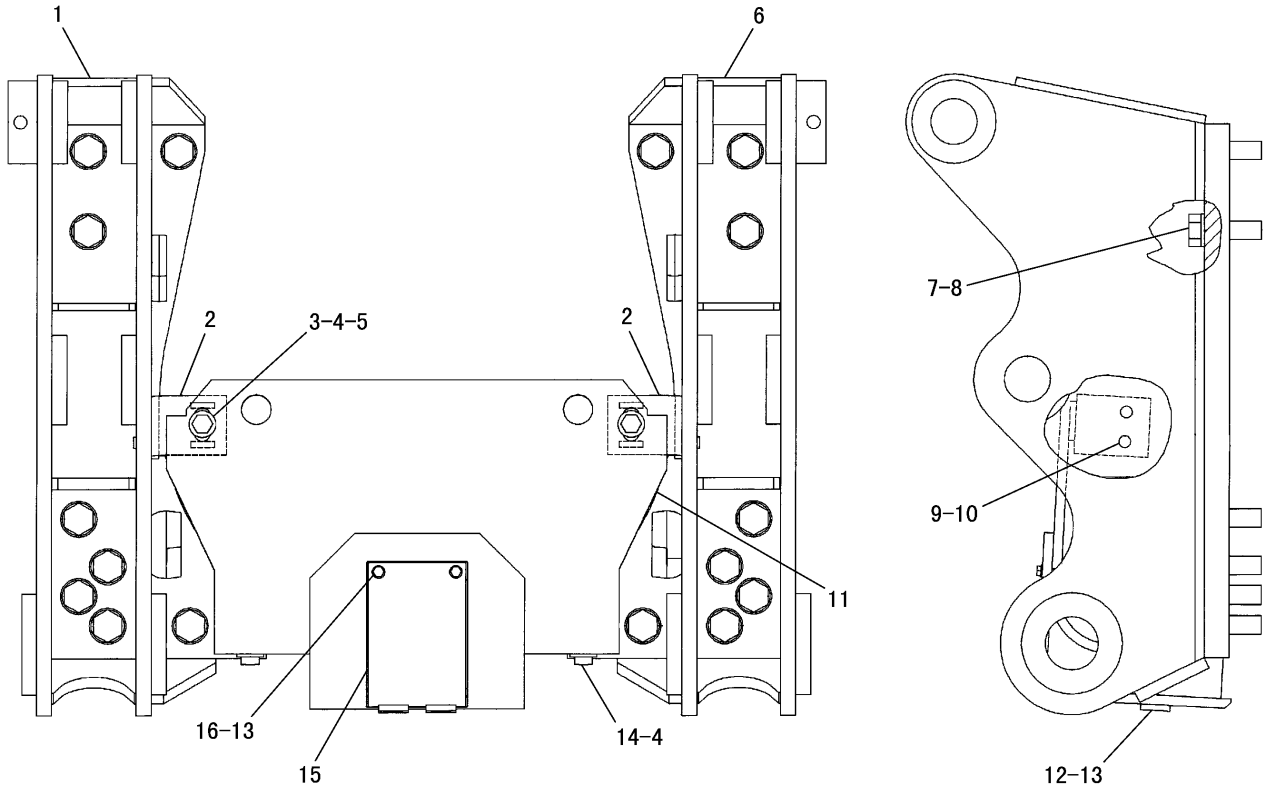

NOTE	№	PART NO.	QTY	PART NAME	NOTE	№	PART NO.	QTY	PART NAME
	1	164-4718	1	BRACKET AS(LH)					
	2	119-4153	2	BRACKET AS					
	3	8T-4187	2	BOLT(M20×2.5)					
	4	8T-5439	6	WASHER					
	5	8T-4131	2	NUT(M20×2.5)					
	6	164-4719	1	BRACKET AS(RH)					
	7	7X-0428	16	BOLT(1 1/4-7)					
	8	7X-0533	16	WASHER					
	9	7X-2562	4	BOLT(M20×2.5)					
	10	8T-4123	4	WASHER					
	11	165-6937	1	GUARD AS					
	12	8T-0722	2	BOLT(M10×1.5)					
	13	6V-5839	4	WASHER					
	14	166-0383	2	BOLT(M20×2.5)					
	15	209-0547	1	PLATE AS					
	16	6V-8335	2	BOLT(M10×1.5)					

J119370 X02

RIPPER MOUNTING GROUP (164-4716 N/S)
PART OF 164-4717-Page 395
AN ATTACHMENT

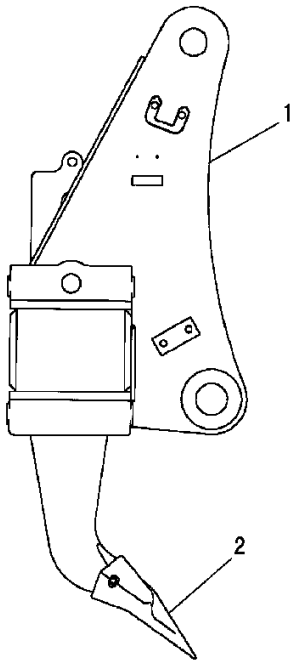

NOTE	№	PART NO.	QTY	PART NAME
	1	164-4722	1	BEAM AS
Y	2	9J-1641	1	TOOTH GROUP

Y-SEPARATE ILLUSTRATION

J119372 X00

RIPPER GROUP (164-4721 N/S)

PART OF 164-4717-Page 395
REFERENCE:9J-1641-Page 398
AN ATTACHMENT

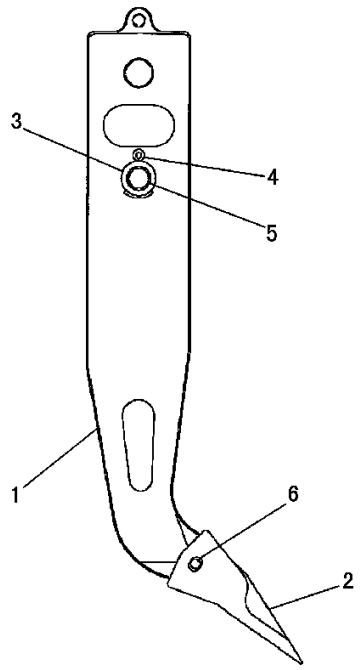

NOTE	№	PART NO.	QTY	PART NAME
	1	9W-7382	1	SHANK
	2	6Y-0359	1	TIP
	3	9W-9224	2	RETAINER
	4	0L-1329	2	BOLT(1/2-13)
		1K-6872	2	LOCKNUT(1/2-13)
	5	4J-5240	1	PIN
	6	114-0358	1	PIN
		114-0359	1	RETAINER AS
		109-9012	1	HOLDER

J119324 X12

RIPPER TOOTH GROUP (9J-1641 N/S)

PART OF 164-4721-Page 398
AN ATTACHMENT

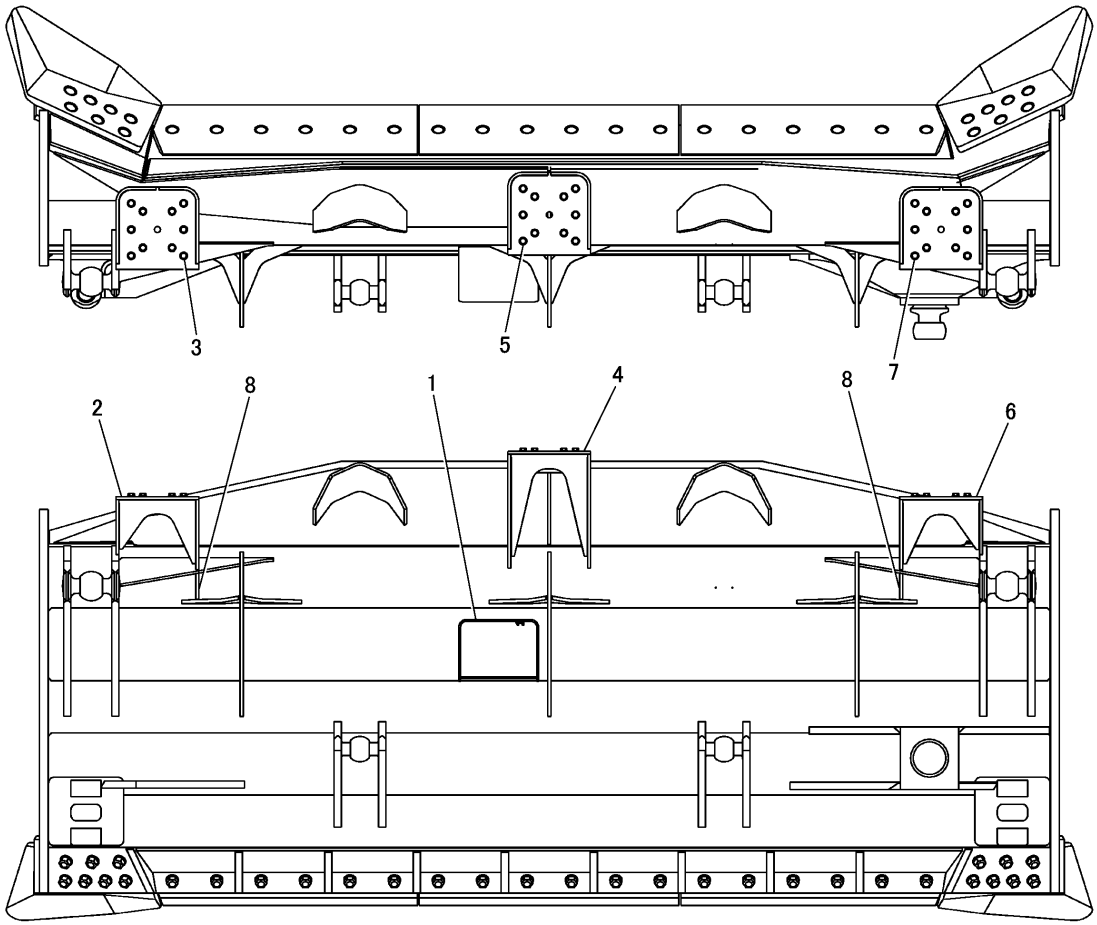

NOTE	№	PART NO.	QTY	PART NAME	NOTE	№	PART NO.	QTY	PART NAME
	1	245-4202	1	BRACKET AS					
		189-9240	1	LINK					
	2	245-4256	1	BRACKET AS					
	3	8T-3597	10	NUT(M12×1.75)(WELD)					
		8T-4183	10	BOLT(M12×1.75)					
		8T-4223	10	WASHER					
	4	249-7871	1	BRACKET AS					
	5	8T-3597	10	NUT(M12×1.75)(WELD)					
		8T-4183	10	BOLT(M12×1.75)					
		8T-4223	10	WASHER					
	6	249-7872	1	BRACKET AS					
	7	8T-3597	10	NUT(M12×1.75)(WELD)					
		8T-4183	10	BOLT(M12×1.75)					
		8T-4223	10	WASHER					
	8	248-2349	2	GUSSET					

J155880 X00

MOUNTING GROUP (245-4125 N/S) -BRADE
AN ATTACHMENT

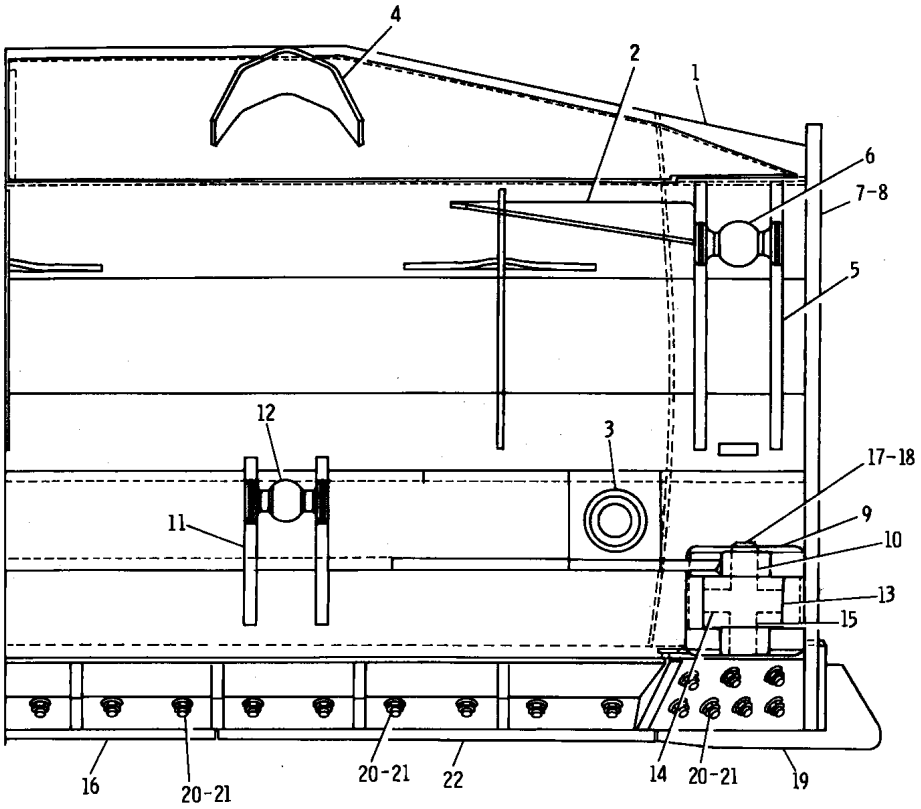

NOTE	№	PART NO.	QTY	PART NAME	NOTE	№	PART NO.	QTY	PART NAME
	1	6I-8381	1	BLADE AS		19	9W-6199	1	END BIT(RH)
	2	6I-8371	2	PLATE			9W-6198	1	END BIT(LH)
	3	6I-8382	1	TRUNNION AS		20	6F-0196	32	PLOW BOLT(7/8-9)
		9T-0066	1	TRUNNION		21	5P-8249	32	WASHER
	4	9J-6058	2	DEFLECTOR			2J-3505	32	NUT(7/8-9)
	5	6I-8372	2	BRACKET AS		22	7T-6936	2	CUTTING EDGE
	6	9J-0123	1	TRUNNION					
	7	6I-8374	1	PLATE(RH)					
	8	6I-8373	1	PLATE(LH)					
	9	6I-8375	2	BRACKET AS					
	10	1U-0738	2	BEARING					
	11	3G-5375	2	BRACKET AS					
	12	7J-5131	1	TRUNNION					
	13	8E-6754	2	CONNECTOR AS					
	14	8E-6755	2	BEARING					
	15	8E-6756	2	BEARING					
	16	7T-6678	1	CUTTING EDGE					
	17	1U-0872	2	PIN					
	18	7X-0365	4	BOLT(3/4-10)					
		6J-5342	2	RETAINER					

J061516 X05

STRAIGHT BLADE GROUP (3G-5436 N/S) -SEMIUNIVERSAL
PART OF 212-7421-Page 382,226-2543-Page 383
AN ATTACHMENT

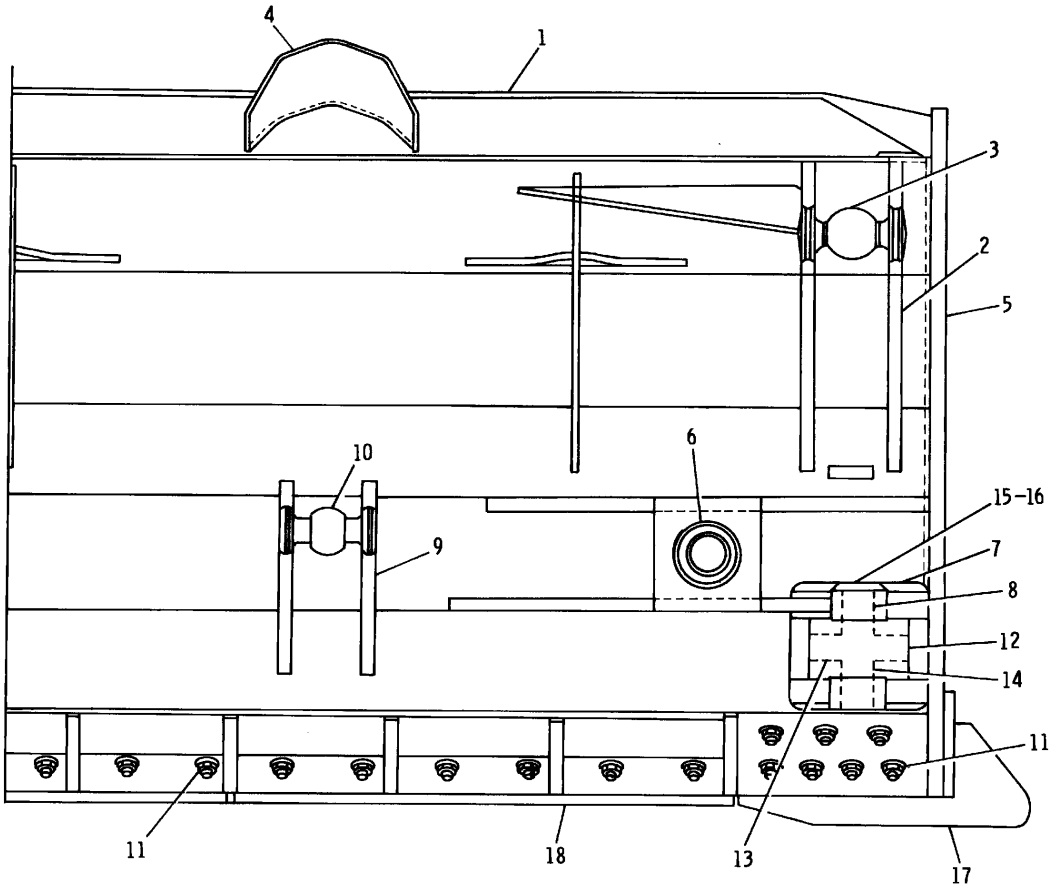

NOTE	№	PART NO.	QTY	PART NAME	NOTE	№	PART NO.	QTY	PART NAME
	1	6Y-5704	1	BLADE AS		17	9W-6199	1	END BIT(RH)
	2	6I-8372	2	BRACKET AS			9W-6198	1	END BIT(LH)
	3	9J-0123	1	TRUNNION		18	7T-6678	3	CUTTING EDGE
	4	9J-6058	2	DEFLECTOR					
	5	6Y-5702	2	PLATE					
	6	6I-8382	1	TRUNNION AS					
		9T-0066	1	TRUNNION					
	7	6I-8375	2	BRACKET AS					
	8	1U-0738	2	BEARING					
	9	3G-5375	2	BRACKET AS					
	10	7J-5131	1	TRUNNION					
	11	6F-0196	32	PLOW BOLT(7/8-9)					
		5P-8249	32	WASHER					
		2J-3505	32	NUT(7/8-9)					
	12	8E-6754	2	CONNECTOR AS					
	13	8E-6755	2	BEARING					
	14	8E-6756	2	BEARING					
	15	1U-0872	2	PIN					
	16	7X-0365	4	BOLT(3/4-10)					
		6J-5342	2	RETAINER					

J116142 X05

STRAIGHT BLADE GROUP (4T-2463 N/S)

PART OF 218-7469-Page 384,226-2544-Page 385
AN ATTACHMENT

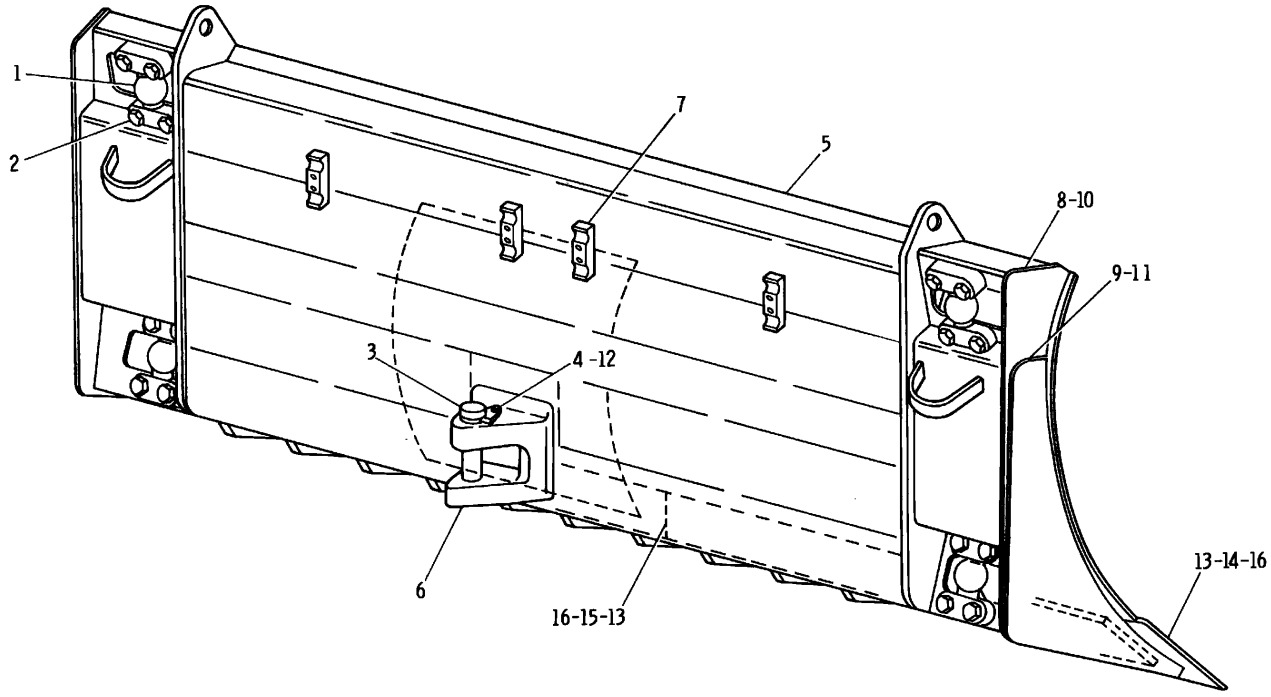

NOTE	№	PART NO.	QTY	PART NAME	NOTE	№	PART NO.	QTY	PART NAME
	1	1U-1204	4	BEARING					
	2	7X-0384	16	BOLT(7/8-9)					
	3	6Y-6752	1	PIN					
	4	7X-0344	1	BOLT(5/8-11)					
	5	6Y-7472	1	BLADE AS					
	6	6Y-7473	1	BRACKET					
	7	5S-8711	4	BLOCK					
	8	4T-6341	1	PLATE AS(RH)					
	9	4T-6345	1	SHOE					
	10	4T-6342	1	PLATE AS(LH)					
	11	4T-6346	1	SHOE					
	12	4J-9118	1	RETAINER					
	13	5P-8249	35	WASHER					
		2J-3505	35	NUT(7/8-9)					
	14	9W-6199	1	END BIT(RH)					
		9W-6198	1	END BIT(LH)					
	15	7T-6589	3	CUTTING EDGE					
	16	6F-0196	35	PLOW BOLT(7/8-9)					

J116408 X07

ANGLING BLADE GROUP (4T-6134 N/S)
PART OF 1U-0640-Page 386
AN ATTACHMENT

OPERATOR STATION

CONSISTS OF :

			PAGE
1	227-9879	CAB ARRANGEMENT	403
1	164-3715	AIR CONDITIONER LINES GROUP	477
1	164-3718	HEATER LINES GROUP	484
1	169-9637	CAB MOUNTING GROUP	474
1	169-9647	WINDSHIELD WASHER BOTTLE GROUP	448
1	230-4700	CAB PRESSURIZER GROUP	422
1	242-8397	CONSOLE COVER GROUP	428
1	279-2590	CAB HEATER GROUP	488
1	279-2591	AIR CONDITIONER GROUP	486

J155593 X00

CAB ARRANGEMENT (322-6118 N/S)
PART OF 322-6115-Page 236

CONSISTS OF :

			PAGE
1	105-9657	RADIO INSTALLATION GROUP	441
1	105-9659	MIRROR GROUP	445
1	108-1335	ASSIST HANDLE GROUP	425
1	158-7690	WINDSHIELD WASHER GROUP	446
1	158-7695	OPERATOR COMPARTMENT LINER GROUP	420
1	179-7094	CAB GROUP	409
1	224-4357	WIPER GROUP	453

J144118 X01

CAB ARRANGEMENT (227-9879 N/S)
PART OF 322-6118-Page 403

OPERATOR STATION

CONSISTS OF :

			PAGE
1	105-9657	RADIO INSTALLATION GROUP	441
1	105-9659	MIRROR GROUP	445
1	158-7690	WINDSHIELD WASHER GROUP	446
1	158-7695	OPERATOR COMPARTMENT LINER GROUP	420
1	179-7094	CAB GROUP	409
1	224-4357	WIPER GROUP	453

J155892 X00

CAB ARRANGEMENT (330-5270 N/S)
PART OF 280-2044-Page 277
AN ATTACHMENT

CONSISTS OF :

			PAGE
1	211-9048	CAB ARRANGEMENT	405

J157021 -02

CAB ARRANGEMENT (252-1047 N/S) -DUAL PANE-DEFROSTER
AN ATTACHMENT

OPERATOR STATION

CONSISTS OF :

			PAGE
1	105-9657	RADIO INSTALLATION GROUP	441
1	105-9659	MIRROR GROUP	445
1	108-1335	ASSIST HANDLE GROUP	425
1	158-7690	WINDSHIELD WASHER GROUP	446
1	158-7695	OPERATOR COMPARTMENT LINER GROUP	420
1	211-9049	CAB GROUP	412
1	224-4357	WIPER GROUP	453
1	3E-7835	FAN GROUP(DEFROSTER)	475
1	201-8902	WIRE ASSEMBLY(FAN SW)	
1	5P-2766	TERMINAL	
1	9G-9314	TERMINAL	
1	201-8903	WIRE ASSEMBLY(FAN GND)	
1	2L-8076	TERMINAL	
1	2L-8077	TERMINAL	
4	1H-3338	LOCKWASHER	
4	3E-4304	INSERT	
4	9X-2045	SCREW(M6×1)	

J157022 -02

OPERATOR STATION

CONSISTS OF :

			PAGE
1	6V-1971	LITERATURE GROUP	494
1	165-0080	RADIATOR GROUP	44
1	167-2088	ROLLOVER PROTECTIVE STRUCTURE GROUP	408
1	173-1302	BLOWER FAN GROUP	47
1	214-1197	SEAT GROUP	457
1	285-3629	INSTRUMENT GROUP	434
1	220-2810	PLATFORM GROUP	430
1	219-0305	FILM(WARNING)(NO WELD/NO DRILL)	
1	288-6949	FILM(INFORMATION)(ROPS/FOPS) (ON LH ROPS POST)	

J155815 X00

CANOPY ARRANGEMENT (284-4645 N/S)
AN ATTACHMENT

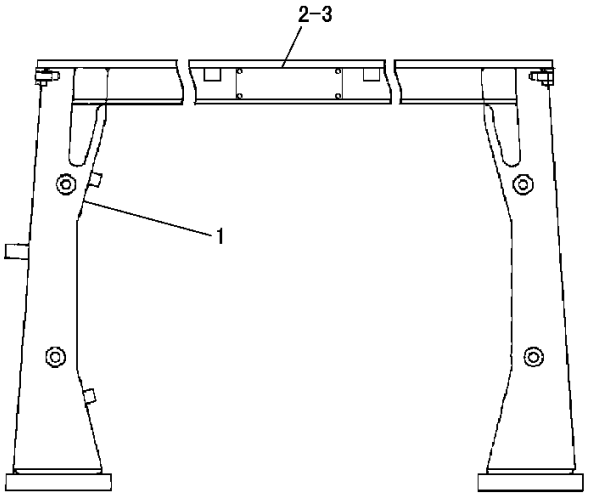

NOTE	№	PART NO.	QTY	PART NAME
	1	191-8697	1	ROLLOVER AS
	2	119-6623	1	PLATE(WARNING)(EROPS)
	3	8T-9530	4	FASTENER

J119325 X00

ROLLOVER ASSEMBLY (165-2580 N/S)
PART OF 164-3713-Page 476
AN ATTACHMENT

OPERATOR STATION

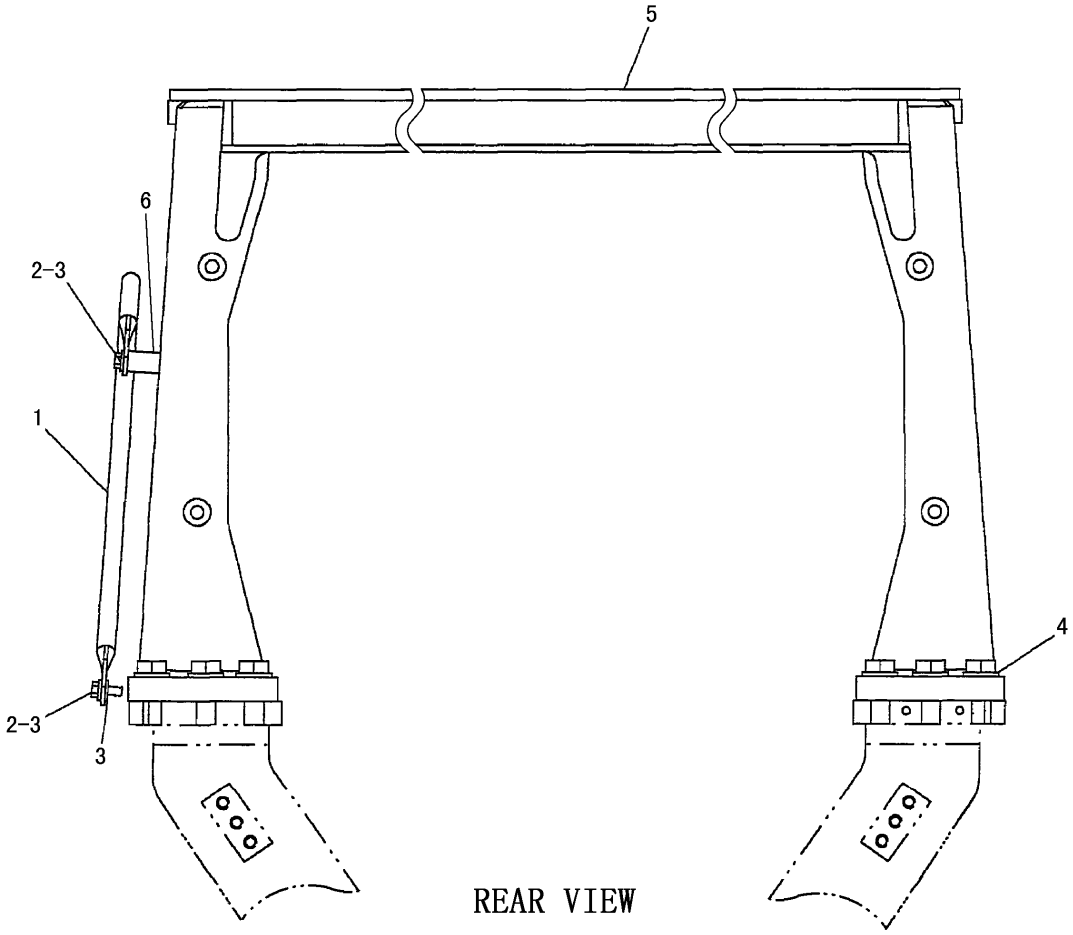

REAR VIEW

NOTE	№	PART NO.	QTY	PART NAME	NOTE	№	PART NO.	QTY	PART NAME
	1	180-6600	1	HANDLE					
	2	8C-4436	2	BOLT(1/2-13)					
	3	5P-1076	3	WASHER					
	4	7X-0531	12	WASHER					
		7X-0421	12	BOLT(1 1/8-7)					
	5	191-8139	1	ROLLOVER AS					
		4V-3638	4	BOSS(3/4-10)					
	6	9G-5926	1	BOSS(1/2-13)(WELD)					

J119311 X02

ROLLOVER PROTECTIVE STRUCTURE GROUP (163-8746 N/S)
PART OF 322-6115-Page 236

OPERATOR STATION

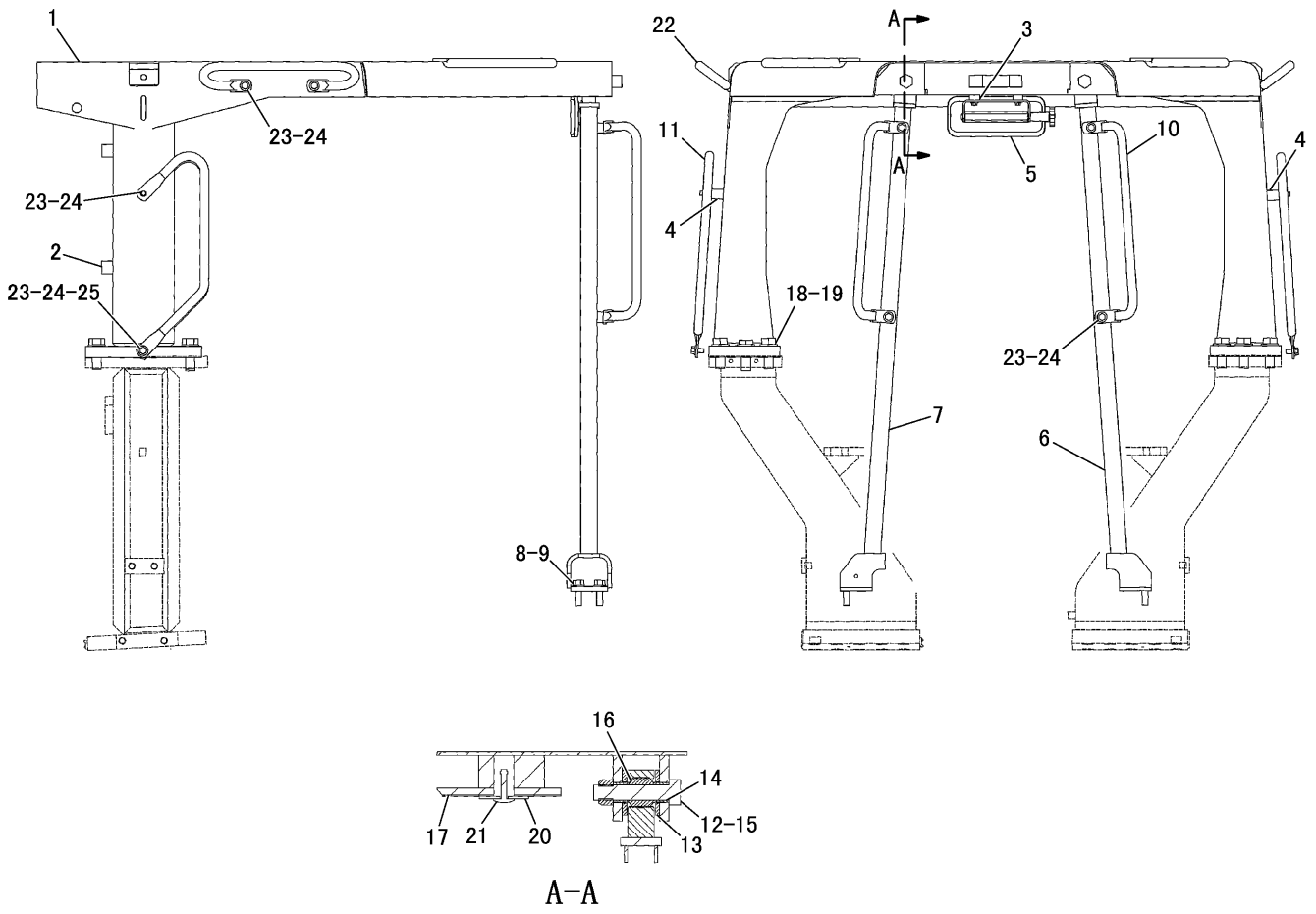

NOTE	№	PART NO.	QTY	PART NAME
Z	1	191-8140	1	ROLLOVER AS
		8T-9530	4	TACK FASTENER
		119-6622	1	PLATE(WARNING)(OROPS/FOPS)
		167-2087	1	ROLLOVER AS
		7T-1099	5	LINK
	2	4V-3638	4	BOSS(3/4-10)
	3	4K-2543	2	BOSS(3/8-16)
	4	9G-5926	2	BOSS(1/2-13)
Y	5	9P-9392	1	MIRROR GROUP
	6	170-7259	1	TUBE AS
	7	170-7260	1	TUBE AS
	8	8T-4994	4	WASHER
	9	8T-8924	4	BOLT(3/4-10)
	10	9G-0992	2	HANDLE
	11	180-6600	2	HANDLE
	12	8C-8843	2	BOLT(1-8)
	13	8P-5244	4	WASHER
	14	1P-2772	4	SPACER
	15	6K-3632	2	LOCKNUT(1-8)
	16	9S-5187	2	MOUNTING
	17	196-9846	1	HEADLINER
	18	7X-0531	12	WASHER
	19	7X-0421	12	BOLT(1 1/8-7)
	20	198-6574	12	WASHER
	21	198-6575	12	BUTTON
	22	8P-9747	2	GRAB IRON
	23	5P-1076	12	WASHER
	24	5C-6565	12	BOLT(1/2-13)
B	25	8T-4223	2	WASHER

B-USE AS REQUIRED
Y-SEPARATE ILLUSTRATION
Z-NOT SERVICED SEPARATELY

J155816 X02

ROLLOVER PROTECTIVE STRUCTURE GROUP (167-2088 N/S)
PART OF 284-4645-Page 406
REFERENCE:9P-9392-Page 445
AN ATTACHMENT

OPERATOR STATION

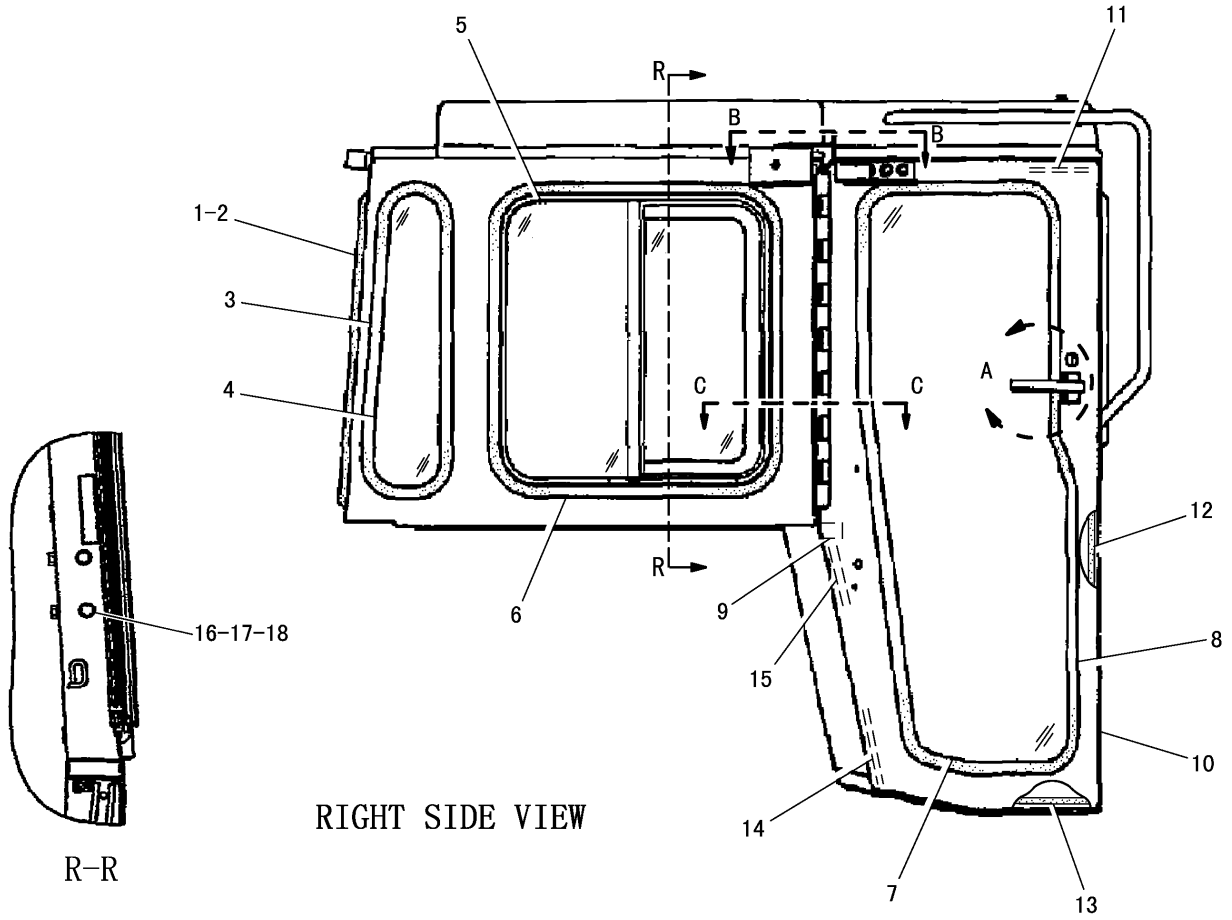

SEE PART 3 OF 3 FOR A, B-B AND C-C

NOTE	№	PART NO.	QTY	PART NAME	NOTE	№	PART NO.	QTY	PART NAME
	1	4Y-9344	1	GLASS		18	8T-4195	4	BOLT(M10×1.5)
D	2	5P-6605		SEAL---3.5m					
D	3	5P-6605		SEAL---1.661m					
	4	9G-1127	1	GLASS					
Y	5	6T-8402	1	WINDOW GROUP(RH)					
D	6	5P-6605		SEAL---2.48m					
	7	125-8254	1	GLASS					
D	8	5P-6605		SEAL---3.446m					
D	9	5P-5755		SEAL---0.05m					
	10	224-4998	1	DOOR AS(RH)					
		120-4921	1	HINGE					
		3E-4304	6	INSERT					
		6V-9632	2	NUT(M6×1)(WELD)					
D	11	6V-3671		SEAL---0.704m					
D	12	6V-3671		SEAL---1.467m					
D	13	6V-3671		SEAL---0.576m					
D	14	5P-5643		SEAL---0.12m					
D	15	6V-3671		SEAL---0.51m					
	16	3E-6180	4	INSERT					
	17	8T-4121	4	WASHER					

D-ORDER BY THE m
Y-SEPARATE ILLUSTRATION

J147020 X07

CAB GROUP (179-7094 N/S) -PART 1 OF 3
PART OF 227-9879-Page 403,330-5270-Page 404
REFERENCE:6T-8402-Page 418

OPERATOR STATION

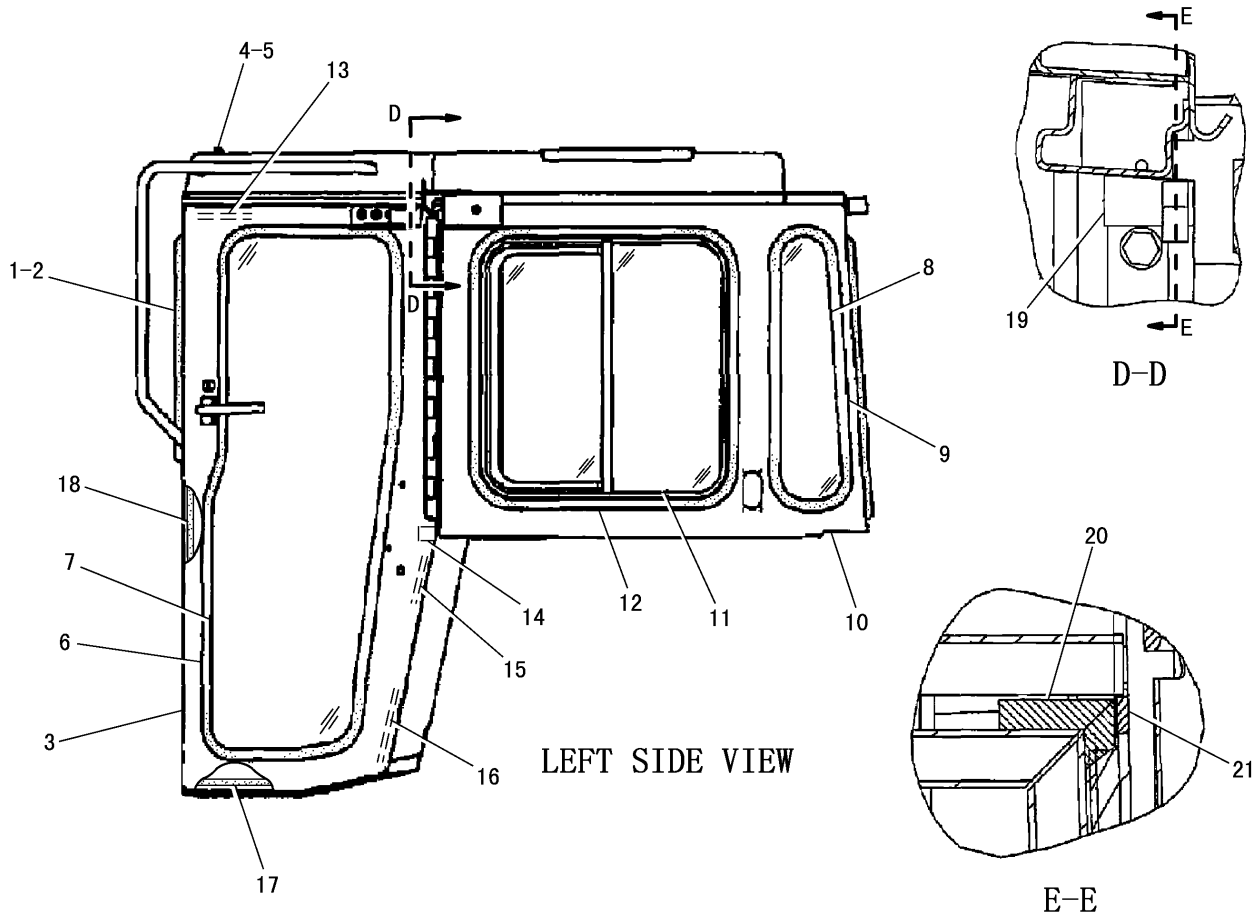

NOTE	№	PART NO.	QTY	PART NAME	NOTE	№	PART NO.	QTY	PART NAME
	1	7G-2454	1	GLASS	D	17	6V-3671		SEAL---0.576m
D	2	5P-6605		SEAL---1.97m	D	18	6V-3671		SEAL---1.467m
	3	224-5000	1	DOOR AS(LH)	D	19	5P-5931		SEAL---0.045m(×2)
		120-4921	1	HINGE	D	20	5P-5930		SEAL---0.08m(×2)
		3E-4304	6	INSERT	D	21	5P-5926		SEAL---0.045m(×2)
		6V-9632	2	NUT(M6×1)(WELD)					
	4	8T-4179	1	BOLT(M12×1.75)					
	5	8T-4223	1	WASHER					
D	6	5P-6605		SEAL---3.446m					
	7	125-8254	1	GLASS					
	8	9G-1127	1	GLASS					
D	9	5P-6605		SEAL---1.661m					
	10	158-7697	1	CAB AS					
		6V-9632	9	NUT(M6×1)(WELD)					
Y	11	6T-8403	1	WINDOW GROUP(LH)					
D	12	5P-6605		SEAL---2.48m					
D	13	6V-3671		SEAL---0.704m					
D	14	5P-5755		SEAL---0.05m					
D	15	6V-3671		SEAL---0.51m					
D	16	5P-5643		SEAL---0.12m					

D-ORDER BY THE m
Y-SEPARATE ILLUSTRATION

J147021 X07

CAB GROUP (179-7094 N/S) -PART 2 OF 3

PART OF 227-9879-Page 403,330-5270-Page 404
REFERENCE:6T-8403-Page 418

OPERATOR STATION

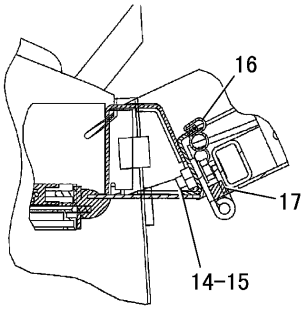

C-C

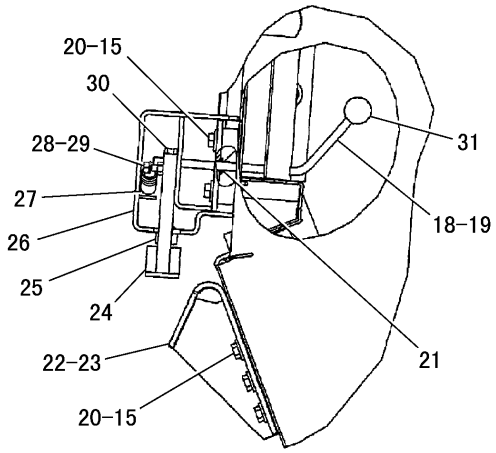

B-B

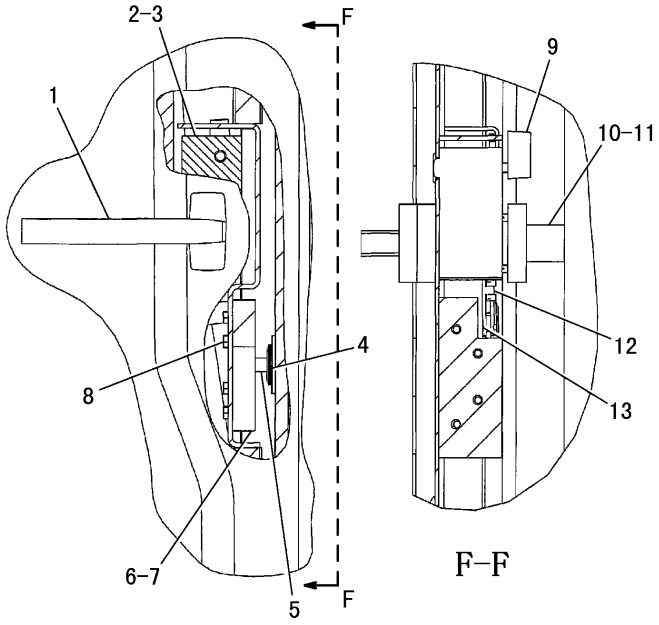

A

NOTE	№	PART NO.	QTY	PART NAME	NOTE	№	PART NO.	QTY	PART NAME
	1	6V-2331	2	HANDLE AS		15	8T-4136	24	BOLT(M10×1.5)
	2	8T-1979	1	LINKAGE AS(LH)	D	16	5P-7483		SEAL---1.6m(×2)
		8T-8914	1	SEAL	D	17	5P-5930		SEAL---0.76m(×2)
		5P-8503	1	LOCK AS		18	1B-8735	2	KEY
	3	8T-1980	1	LINKAGE AS(RH)		19	298-4055	2	ROD AS
		5P-8503	1	LOCK AS			7X-0608	1	WASHER
		8T-8914	1	SEAL			118-0693	1	ROD
B	4	8T-0318	8	SHIM(0.8mm THICK)		20	7X-7729	12	WASHER
	5	8Y-8304	2	STRIKER AS		21	4K-3533	4	WASHER
		8T-4158	1	WASHER		22	170-5855	1	BRACKET(LH)
	6	109-9829	1	LATCH AS(LH)		23	170-5854	1	BRACKET(RH)
	7	109-9828	1	LATCH AS(RH)		24	5G-8655	2	LEVER
	8	8T-4181	8	BOLT(M6×1)		25	9D-9736	2	BUMPER
	9	6V-7190	2	LEVER AS		26	6I-9386	2	BRACKET AS
		6V-8129	2	SETSCREW(No.8-32)			7P-7610	2	PLATE
	10	6V-2375	2	HANDLE AS		27	8C-3442	2	SPRING
	11	6V-3260	8	BOLT(1/4-20)		28	6V-8189	2	NUT(5/16-18)
	12	6V-8073	2	LINK		29	4M-6425	2	BOLT(5/16-18)
	13	6V-7636	4	PIN AS		30	8T-9043	2	BOLT(5/16-18)
	14	8T-4121	12	WASHER		31	5M-8500	2	KNOB

B-USE AS REQUIRED
D-ORDER BY THE m

J147022 X07

CAB GROUP (179-7094 N/S) -PART 3 OF 3

PART OF 227-9879-Page 403,330-5270-Page 404

OPERATOR STATION

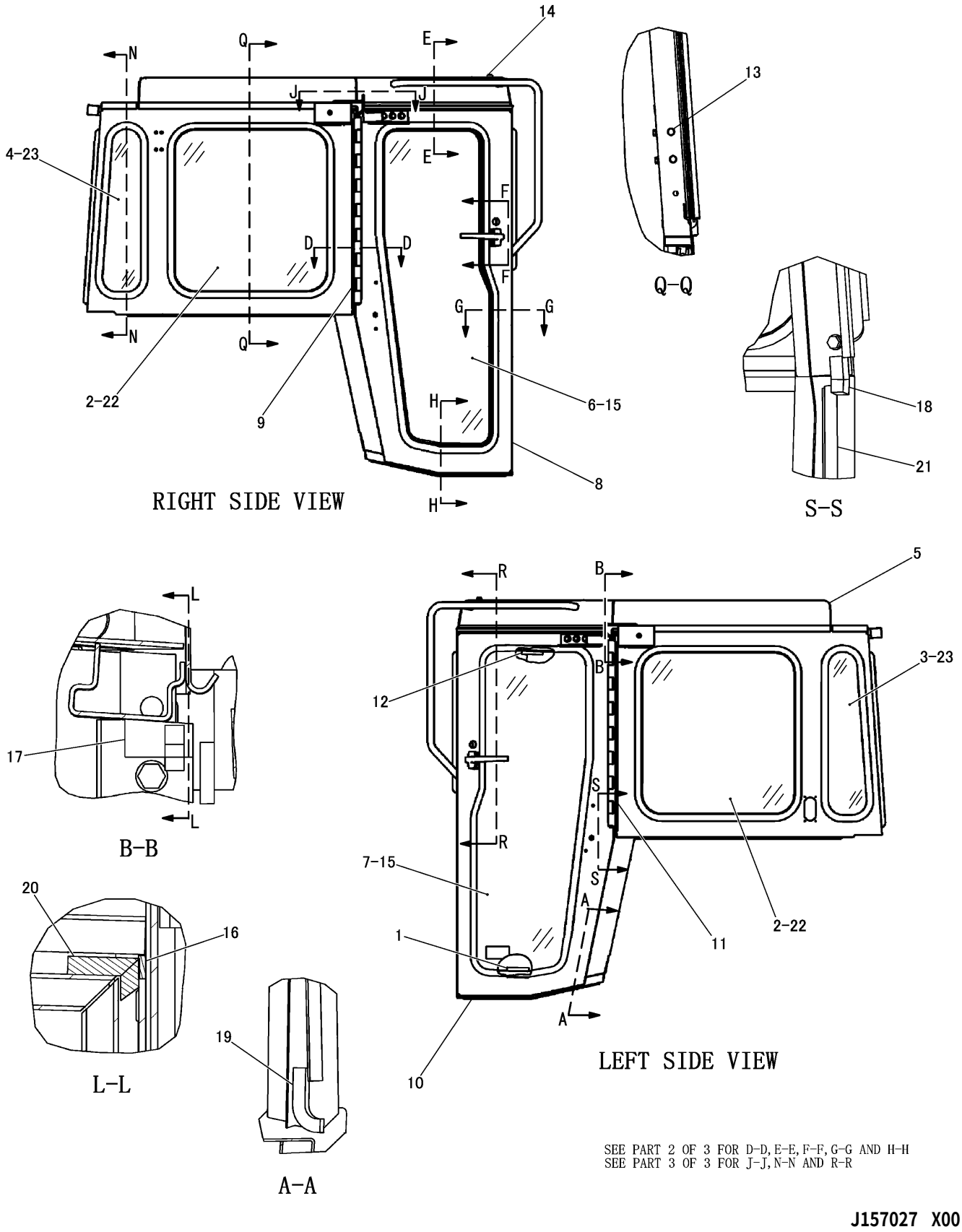

SEE PART 2 OF 3 FOR D-D, E-E, F-F, G-G AND H-H
SEE PART 3 OF 3 FOR J-J, N-N AND R-R

J157027 X00

CAB GROUP (211-9049 N/S) -PART 1 OF 3
PART OF 211-9048-Page 405
AN ATTACHMENT

OPERATOR STATION

NOTE	№	PART NO.	QTY	PART NAME	NOTE	№	PART NO.	QTY	PART NAME
	1	1Q-2976	2	PLATE					
	2	1Q-2645	2	WINDOW AS					
	3	136-2227	1	WINDOW AS					
	4	136-2228	1	WINDOW AS					
	5	158-7697	1	CAB AS					
		6V-9632	8	NUT(M6×1)(WELD)					
	6	211-9050	1	WINDOW AS					
		125-8254	1	GLASS					
	7	211-9051	1	WINDOW AS					
		125-8254	1	GLASS					
	8	224-4998	1	DOOR AS(RH)					
		3E-4304	6	INSERT					
		6V-9632	2	NUT(M6×1)(WELD)					
	9	120-4921	1	HINGE					
	10	224-5000	1	DOOR AS(LH)					
		3E-4304	6	INSERT					
		6V-9632	2	NUT(M6×1)(WELD)					
	11	120-4921	1	HINGE					
	12	1Q-2977	2	PLATE					
	13	3E-6180	4	NUT(M10×1.5)					
		8T-4121	4	WASHER					
		8T-4195	4	BOLT(M10×1.5)					
	14	8T-4179	1	BOLT(M12×1.75)					
		8T-4223	1	WASHER					
D	15	5P-6605		SEAL---3.446m(×2)					
D	16	5P-5926		SEAL---0.045m(×2)					
D	17	5P-5931		SEAL---0.045m(×2)					
D	18	5P-5755		SEAL---0.05m(×2)					
D	19	5P-5643		SEAL---0.12m(×2)					
D	20	5P-5930		SEAL---0.08m(×2)					
D	21	6V-3671		SEAL---0.51m(×2)					
D	22	5P-6605		SEAL---2.56m(×2)					
D	23	5P-6605		SEAL---1.661m(×2)					

D-ORDER BY THE m

J157027 X00

CAB GROUP (211-9049 N/S) -PART 1 OF 3

PART OF 211-9048-Page 405
AN ATTACHMENT

OPERATOR STATION

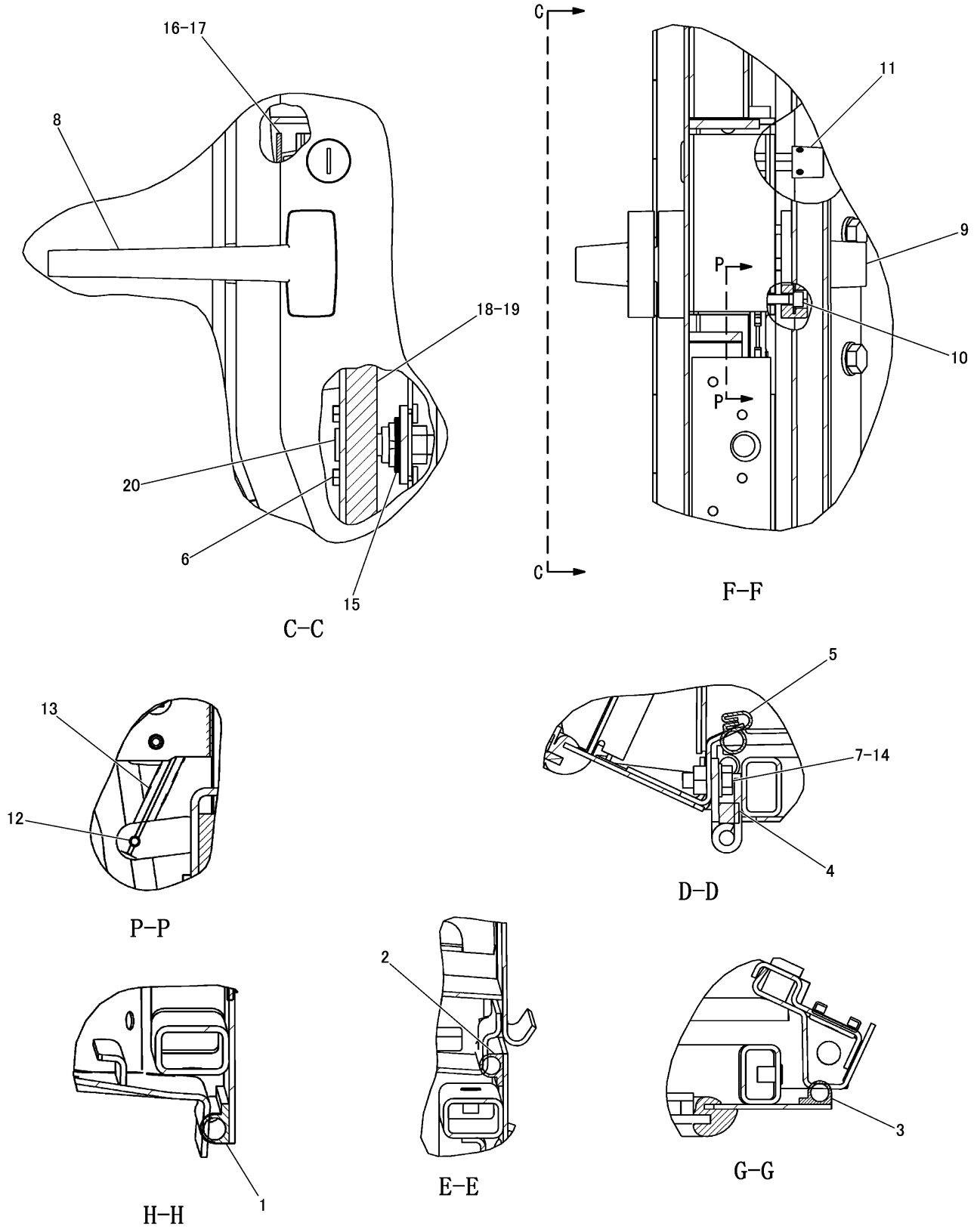

J157028 X00

CAB GROUP (211-9049 N/S) -PART 2 OF 3
PART OF 211-9048-Page 405
AN ATTACHMENT

OPERATOR STATION

NOTE	№	PART NO.	QTY	PART NAME	NOTE	№	PART NO.	QTY	PART NAME
D	1	6V-3671		SEAL---0.576m(×2)					
D	2	6V-3671		SEAL---0.704m(×2)					
D	3	6V-3671		SEAL---1.467m(×2)					
D	4	5P-5930		SEAL---0.76m(×2)					
D	5	5P-7483		SEAL---1.6m(×2)					
	6	8T-4181	8	BOLT(M6×1)					
	7	8T-4136	12	BOLT(M10×1.5)					
	8	6V-2331	2	HANDLE AS					
	9	6V-2375	2	HANDLE AS					
	10	6V-3260	8	BOLT(1/4-20)					
	11	6V-7190	2	LEVER AS					
		6V-8129	2	SETSCREW(No.8-32)					
	12	6V-7636	4	PIN AS					
	13	6V-8073	2	LINK					
	14	7X-0623	12	WASHER					
B	15	8T-0318	8	SHIM(0.8mm THICK)					
	16	8T-1979	1	LINKAGE AS(LH)					
		8T-8914	1	SEAL					
		5P-8503	1	LOCK AS					
	17	8T-1980	1	LINKAGE AS(RH)					
		8T-8914	1	SEAL					
		5P-8503	1	LOCK AS					
	18	109-9828	1	LATCH AS(RH)					
	19	109-9829	1	LATCH AS(LH)					
	20	187-0413	2	STRAIKER BOLT					

B-USE AS REQUIRED
D-ORDER BY THE m

J157028 X00

CAB GROUP (211-9049 N/S) -PART 2 OF 3
PART OF 211-9048-Page 405
AN ATTACHMENT

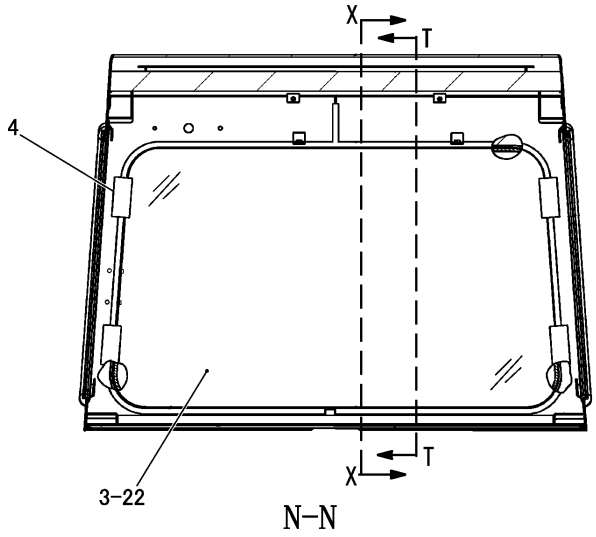

N-N

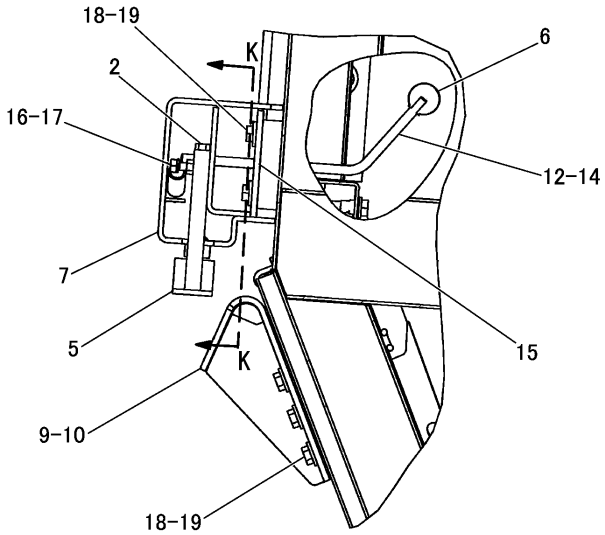

J-J

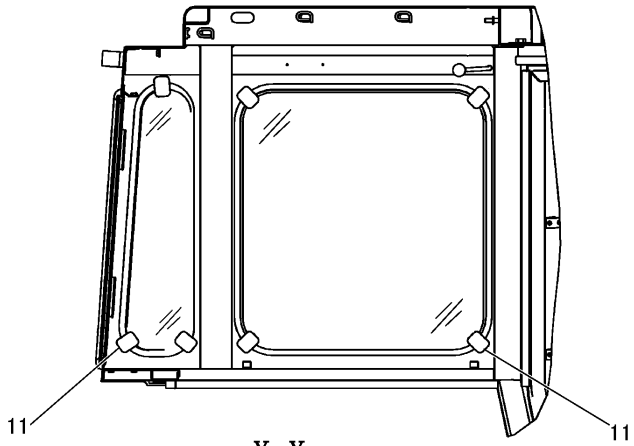

X-X

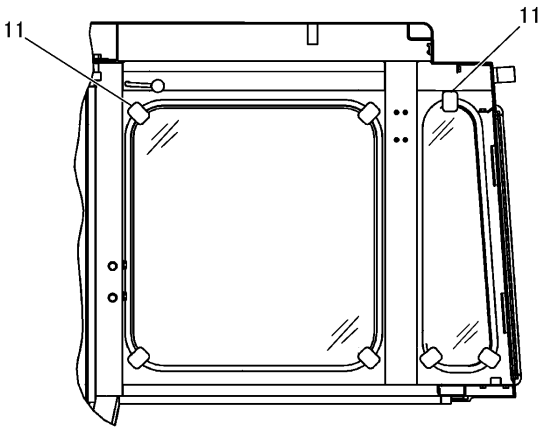

T-T

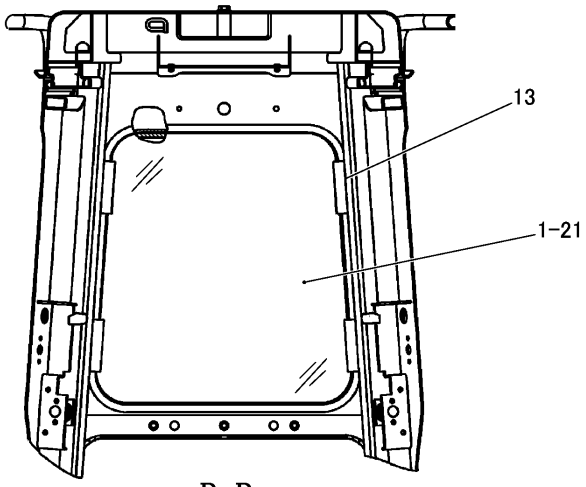

R-R

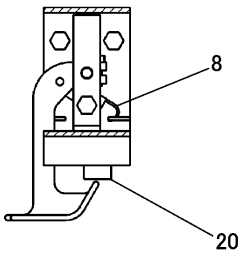

K-K

J157029 X00

CAB GROUP (211-9049 N/S) -PART 3 OF 3
PART OF 211-9048-Page 405
AN ATTACHMENT

OPERATOR STATION

NOTE	№	PART NO.	QTY	PART NAME	NOTE	№	PART NO.	QTY	PART NAME
	1	1Q-2606	1	WINDOW AS					
	2	8T-9043	2	BOLT(5/16-18)					
	3	1Q-2648	1	WINDOW AS					
	4	1Q-2976	4	PLATE					
	5	5G-8655	2	LEVER					
	6	5M-8500	2	KNOB					
	7	6I-9386	2	BRACKET AS					
	8	8C-3442	2	SPRING					
	9	170-5854	1	BRACKET(RH)					
	10	170-5855	1	BRACKET(LH)					
	11	282-4390	14	BRACKET					
	12	1B-8735	2	KEY					
	13	1Q-2977	4	PLATE					
	14	298-4055	2	ROD AS					
		118-0693	1	ROD					
		7X-0608	1	WASHER					
	15	4K-3533	4	WASHER					
	16	4M-6425	2	BOLT(5/16-18)					
	17	6V-8189	2	NUT(5/16-18)					
	18	7X-7729	12	WASHER					
	19	8T-4136	12	BOLT(M10×1.5)					
	20	9D-9736	2	BUMPER					
D	21	5P-6605		SEAL---1.97m					
D	22	5P-6605		SEAL---3.5m					

D-ORDER BY THE m

J157029 X00

CAB GROUP (211-9049 N/S) -PART 3 OF 3

PART OF 211-9048-Page 405
AN ATTACHMENT

OPERATOR STATION

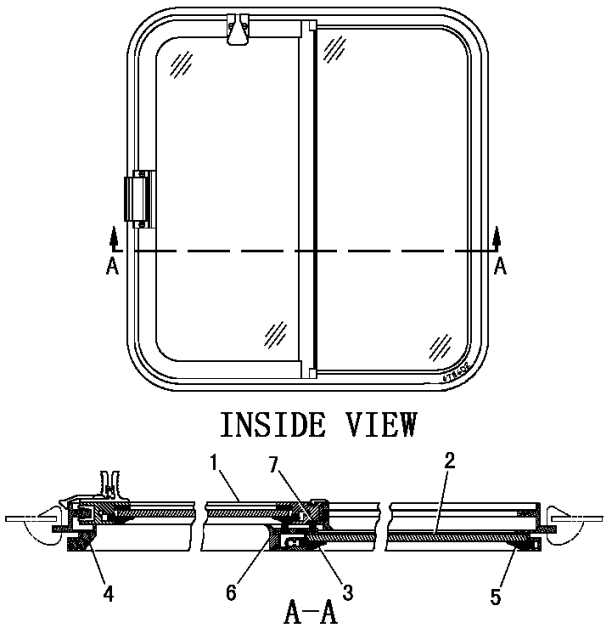

NOTE	№	PART NO.	QTY	PART NAME
Y	1	7T-1068	1	WINDOW GROUP
	2	7T-1330	1	GLASS
D	3	5P-5680		SEAL---0.655m
D	4	8T-0687		FILLER---1.105m
D	5	5P-5680		SEAL---1.135m
D	6	6V-5833		SEAL---0.635m
E	7	8Y-6839		SEAL---63.5cm

D-ORDER BY THE m
E-ORDER BY THE cm
Y-SEPARATE ILLUSTRATION

J139191 X05

6T-8402 CAB WINDOW GROUP -SLIDING-RH

PART OF 179-7094-Page 409
REFERENCE:7T-1068-Page 419

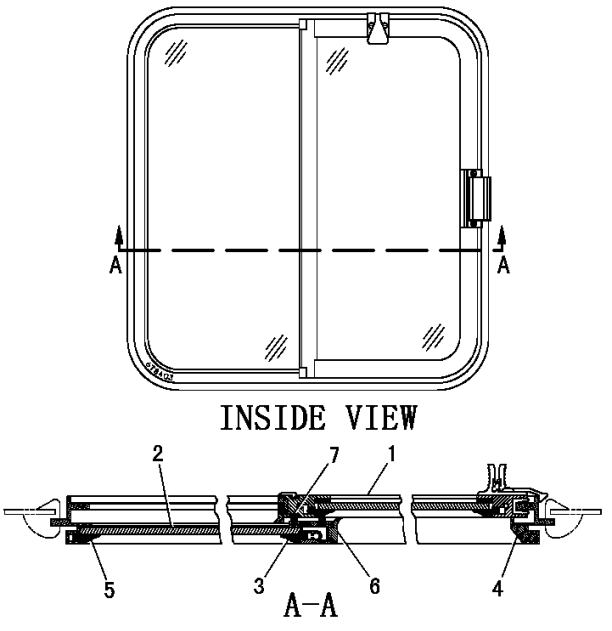

NOTE	№	PART NO.	QTY	PART NAME
Y	1	7T-1069	1	WINDOW GROUP
	2	7T-1330	1	GLASS
D	3	5P-5680		SEAL---0.655m
D	4	8T-0687		FILLER---1.105m
D	5	5P-5680		SEAL---1.135m
D	6	6V-5833		SEAL---0.635m
E	7	8Y-6839		SEAL---63.5cm

D-ORDER BY THE m
E-ORDER BY THE cm
Y-SEPARATE ILLUSTRATION

J139192 X05

6T-8403 CAB WINDOW GROUP -SLIDING-LH

PART OF 179-7094-Page 410
REFERENCE:7T-1069-Page 419

OPERATOR STATION

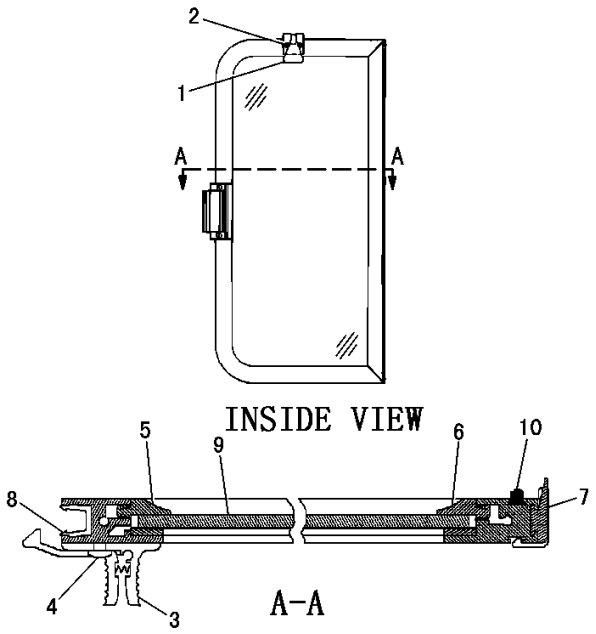

NOTE	№	PART NO.	QTY	PART NAME
	1	3T-1121	1	LOCK AS
	2	2H-6622	2	SCREW(No.10-16)
	3	9P-7860	1	LOCK AS
	4	9P-7859	2	SCREW
D	5	5P-5680		SEAL---1.07m
D	6	5P-5680		SEAL---0.604m
D	7	6V-5833		SEAL---0.635m
D	8	5P-8918		SEAL---1.143m
	9	8Y-6448	1	GLASS
E	10	8Y-6839		SEAL---63.5cm

D-ORDER BY THE m
E-ORDER BY THE cm

J139193 X05

7T-1068 WINDOW GROUP -RH

PART OF 6T-8402-Page 418

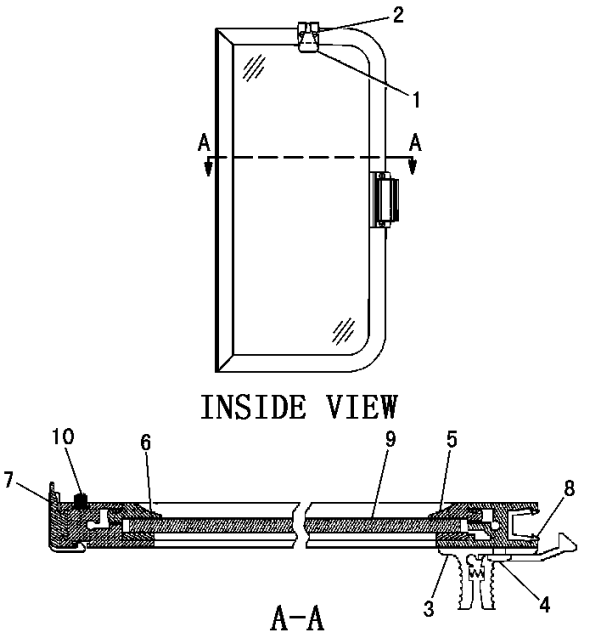

NOTE	№	PART NO.	QTY	PART NAME
	1	3T-1121	1	LOCK AS
	2	2H-6622	2	SCREW(No.10-16)
	3	9P-7860	1	LOCK AS
	4	9P-7859	2	SCREW
D	5	5P-5680		SEAL---1.07m
D	6	5P-5680		SEAL---0.604m
D	7	6V-5833		SEAL---0.635m
D	8	5P-8918		SEAL---1.143m
	9	8Y-6448	1	GLASS
E	10	8Y-6839		SEAL---63.5cm

D-ORDER BY THE m
E-ORDER BY THE cm

J139194 X05

7T-1069 WINDOW GROUP -LH

PART OF 6T-8403-Page 418

OPERATOR STATION

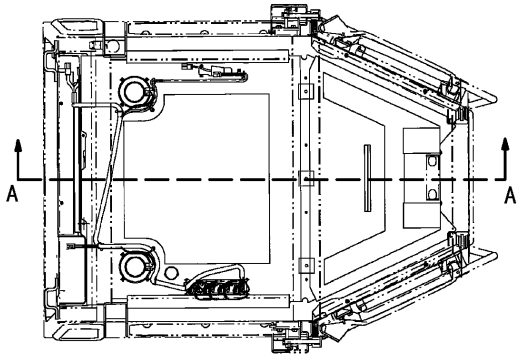

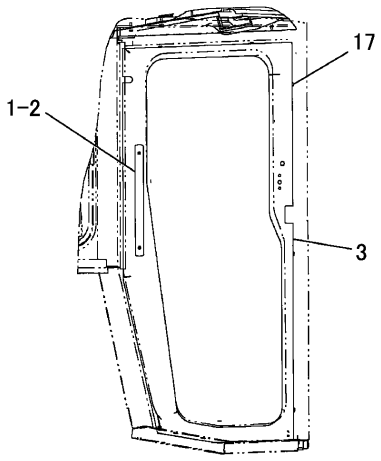

LH DOOR

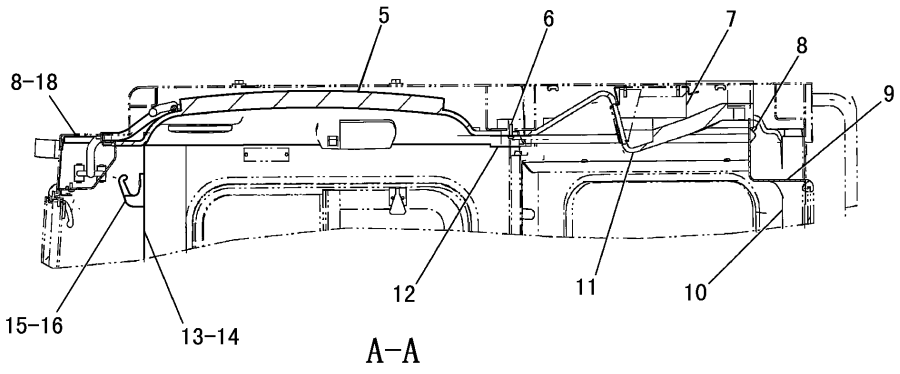

A-A

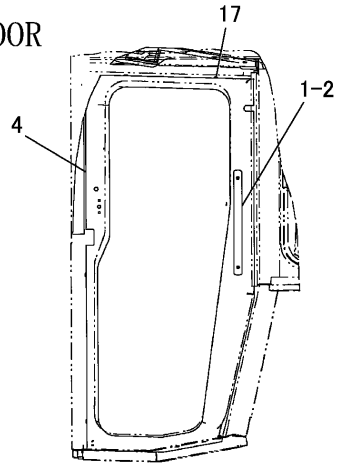

RH DOOR

NOTE	№	PART NO.	QTY	PART NAME	NOTE	№	PART NO.	QTY	PART NAME
	1	6V-5683	4	BOLT(M6×1)					
	2	110-8152	2	HANDLE AS					
	3	161-1084	1	COVER(LH)					
	4	161-1083	1	COVER(RH)					
Y	5	161-1096	1	LINER GROUP					
	6	3E-8020	4	SCREW(M6×1)					
	7	158-8906	2	BLOCK					
	8	9X-2043	6	SCREW(M6×1)					
	9	161-1085	1	COVER(FRONT)					
	10	161-1093	2	TRIM					
	11	161-1094	1	HEADLINER(FRONT)					
	12	161-1098	1	RETAINER					
	13	161-1091	1	COVER(RH)					
	14	161-1092	1	COVER(LH)					
	15	9X-2045	1	SCREW(M6×1)					
	16	6V-8928	1	HOOK					
	17	9X-2044	12	SCREW(M6×1)					
	18	228-6787	1	COVER					

Y-SEPARATE ILLUSTRATION

J139415 X03

OPERATOR COMPARTMENT LINER GROUP (158-7695 N/S)
PART OF 211-9048-Page 405,227-9879-Page 403,330-5270-Page 404
REFERENCE:161-1096-Page 421

OPERATOR STATION

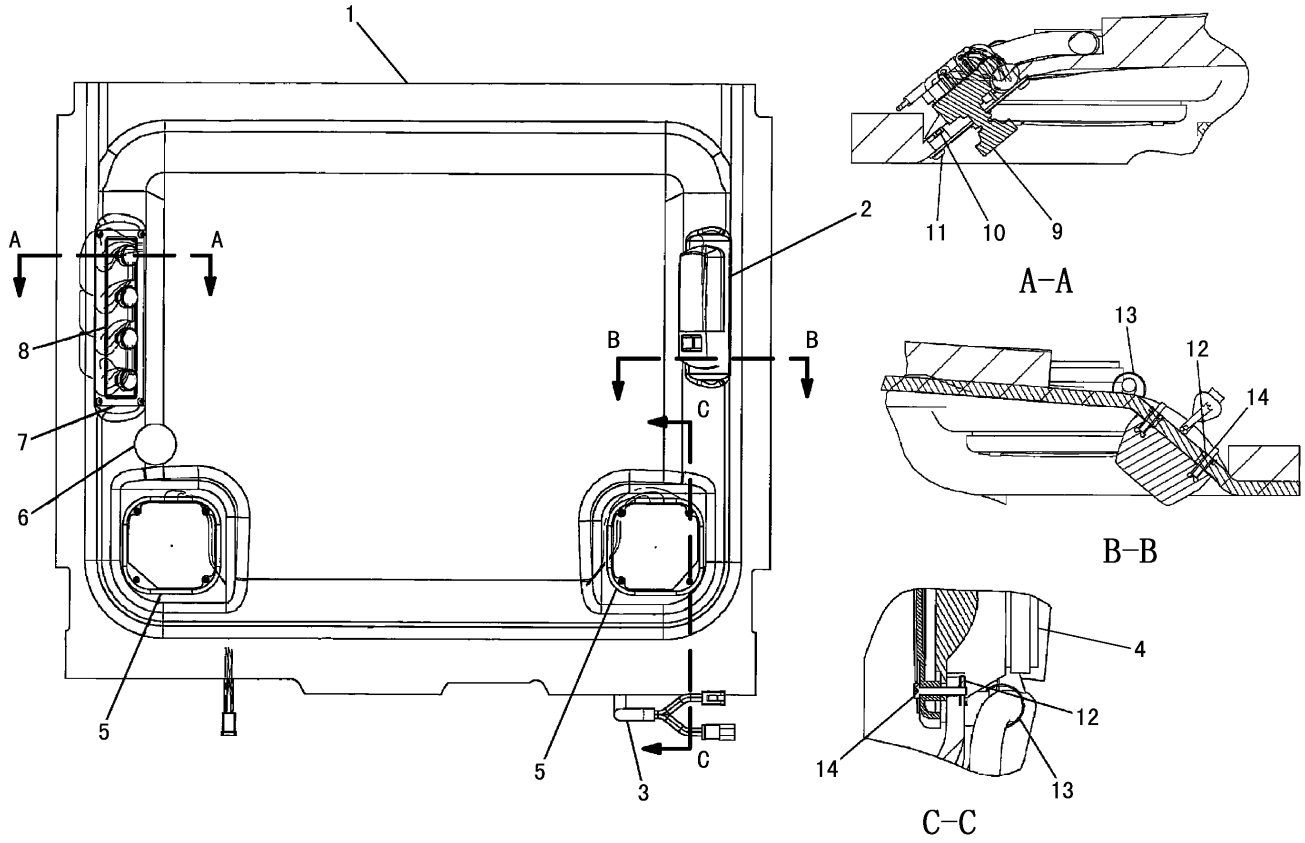

NOTE	№	PART NO.	QTY	PART NAME	NOTE	№	PART NO.	QTY	PART NAME
	1	161-1097	1	HEADLINER					
Y	2	3E-6389	1	DOME LAMP GROUP					
Y	3	169-9636	1	HARNESS AS					
	4	168-8772	2	SPEAKER AS					
	5	101-3055	2	COVER					
	6	131-5137	1	PLUG					
	7	161-1099	1	PLATE					
	8	9U-9942	1	FILM					
	9	3T-6655	4	SWITCH AS					
		7T-9302	1	KNOB					
		7T-9303	1	SWITCH AS					
		6V-8369	1	NUT(7/16-28)					
		2H-3920	1	LOCKWASHER					
	10	8T-4752	4	NUT(SPEED)					
	11	7Y-7388	4	SCREW(M5×0.8)					
	12	166-3733	11	NUT(SPEED)					
	13	3S-2093	11	STRAP					
	14	103-9425	11	SCREW(No.8-32)					

Y-SEPARATE ILLUSTRATION

J139385 X01

OPERATOR COMPARTMENT LINER GROUP (161-1096 N/S)

PART OF 158-7695-Page 420
REFERENCE:3E-6389-Page 452 169-9636-Page 426

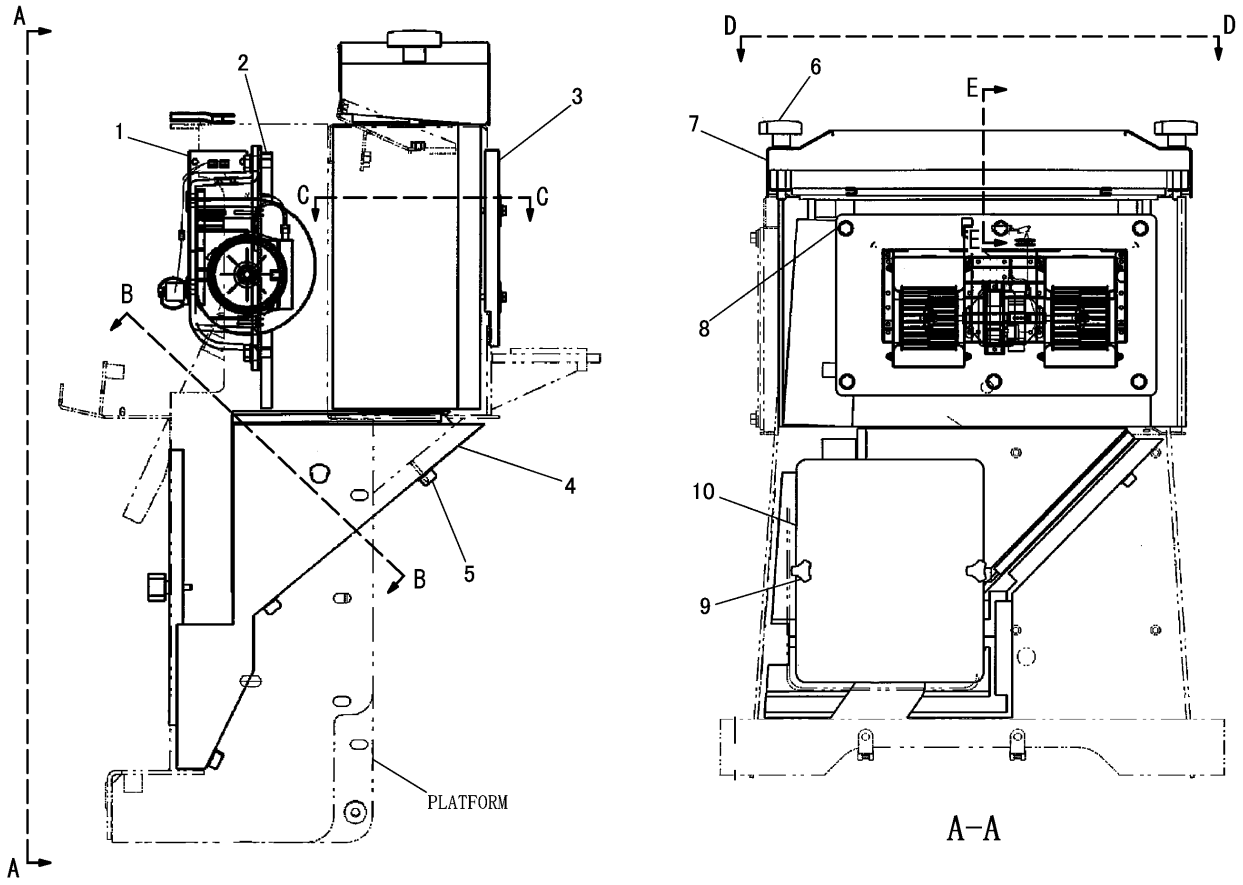

NOTE	№	PART NO.	QTY	PART NAME	NOTE	№	PART NO.	QTY	PART NAME
Y	1	230-5388	1	BLOWER GROUP					
	2	127-1048	1	LINER					
	3	6T-5067	1	LINER					
	4	117-8863	1	LINER					
	5	6P-2216	7	CAP					
	6	7D-8431	2	RING					
		224-9072	2	KNOB					
	7	6T-0988	1	FILTER					
		111-4482	1	COVER AS					
	8	8T-4121	6	WASHER					
		8T-4136	6	BOLT(M10×1.5)					
	9	3W-6756	2	KNOB					
	10	6T-5068	1	FILTER AS					

Y-SEPARATE ILLUSTRATION

J146867 X01

CAB PRESSURIZER GROUP (230-4700 N/S) -PART 1 OF 2

PART OF 322-6118-Page 403
REFERENCE:230-5388-Page 424

OPERATOR STATION

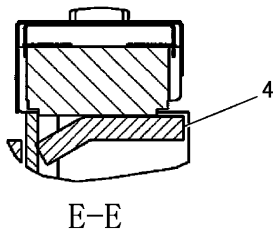

E–E

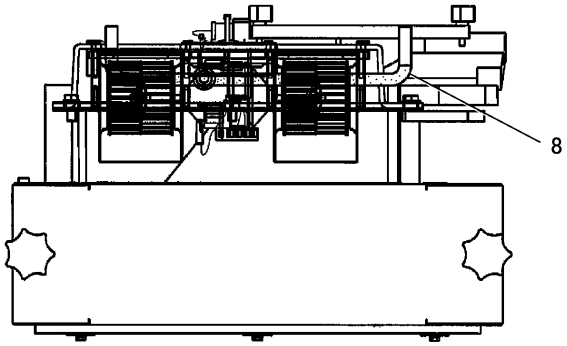

D–D

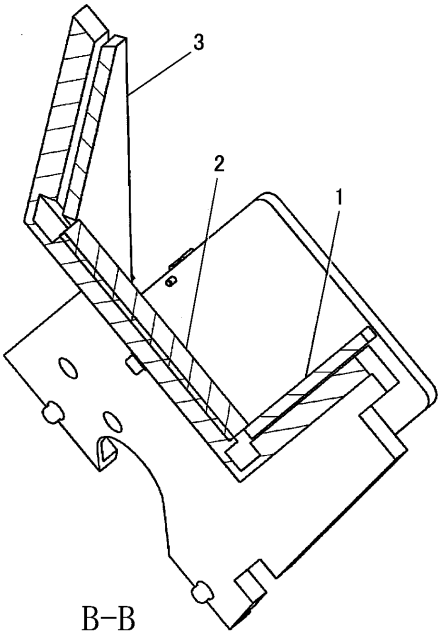

B–B

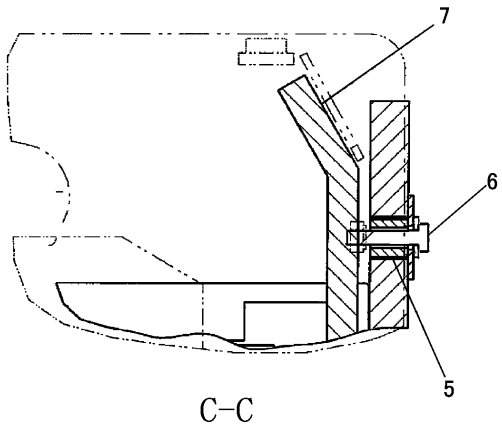

C–C

NOTE	№	PART NO.	QTY	PART NAME	NOTE	№	PART NO.	QTY	PART NAME
	1	127-1044	1	LINER					
	2	127-1043	1	LINER					
	3	127-1045	1	LINER					
	4	141-4044	1	PANEL					
	5	3L-0594	3	SPACER					
	6	7X-0603	3	WASHER(OD 35mm)					
		8T-4971	3	BOLT(M6×1)					
		5P-4115	3	WASHER(OD 19mm)					
	7	127-1046	1	LINER					
E	8	7X-7877		STRIP---47cm					

E-ORDER BY THE cm

J146868 X01

CAB PRESSURIZER GROUP (230-4700 N/S) -PART 2 OF 2

PART OF 322-6118-Page 403

OPERATOR STATION

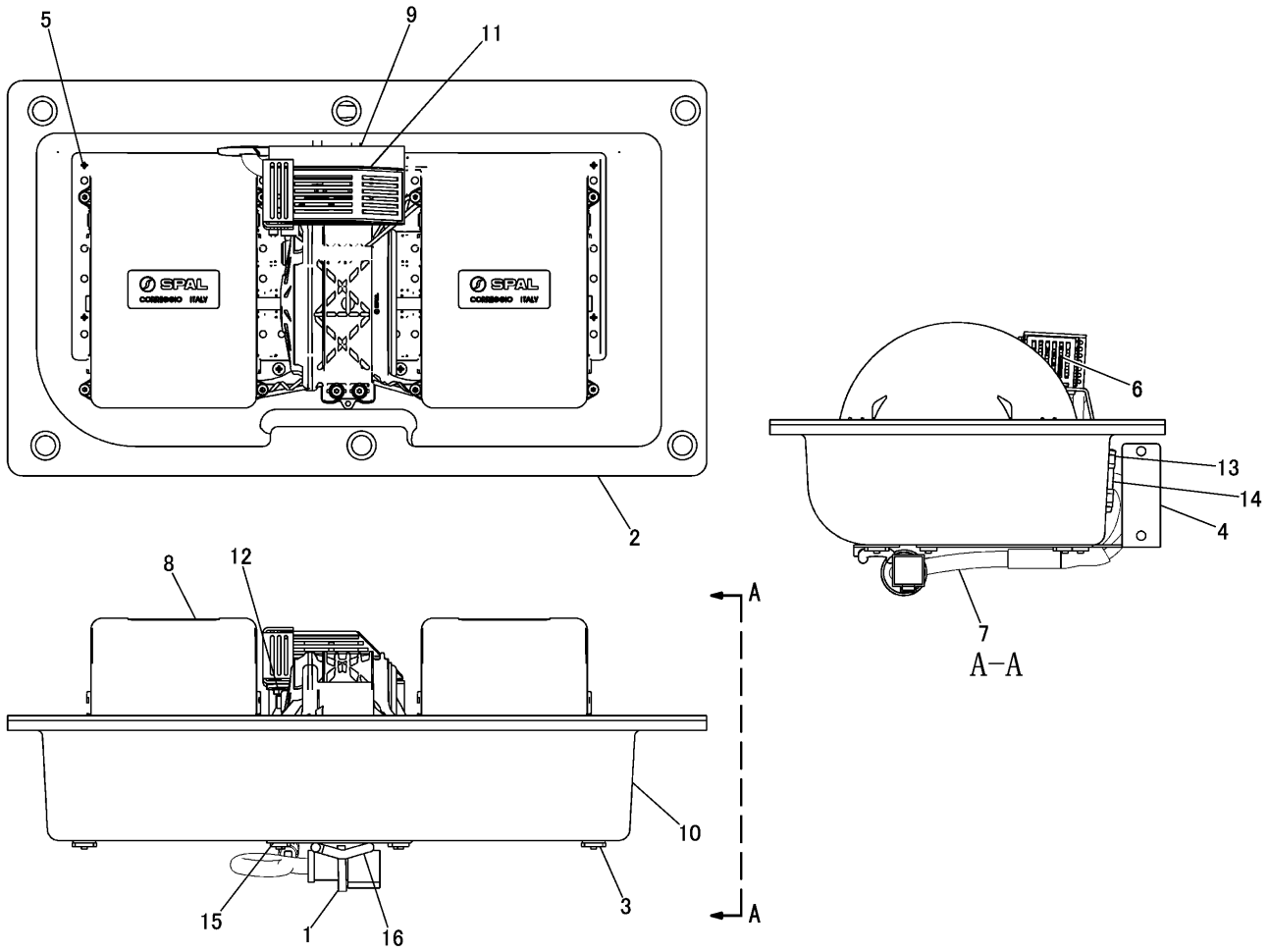

NOTE	№	PART NO.	QTY	PART NAME	NOTE	№	PART NO.	QTY	PART NAME
	1	3S-2093	1	STRAP					
	2	229-6635	1	GASKET					
	3	230-5385	2	PLATE AS					
	4	237-0934	1	PLATE AS					
	5	8T-0337	8	SCREW(M4×0.7)					
	6	257-5029	1	RESISTOR AS					
Y	7	260-1914	1	HARNESS AS					
	8	275-6706	1	BLOWER AS					
	9	282-1951	1	PLATE AS					
		6V-9632	2	NUT(M6×1)(WELD)					
	10	282-1952	1	COVER AS					
	11	282-1953	1	GUARD					
	12	2M-1444	2	SCREW(No.8-18)					
	13	5C-9553	2	BOLT(M6×1)					
	14	6H-4005	1	GROMMET					
	15	237-0956	1	PLATE AS					
	16	7T-1099	1	LINK					

Y-SEPARATE ILLUSTRATION

J137990 -03

230-5388 BLOWER GROUP

PART OF 230-4700-Page 422
REFERENCE:260-1914-Page 427

OPERATOR STATION

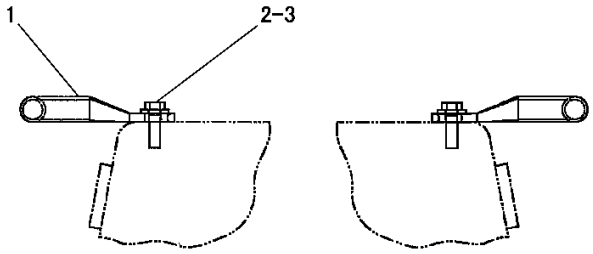

NOTE	№	PART NO.	QTY	PART NAME
	1	9W-5343	2	HANDLE
	2	5P-1076	4	WASHER
	3	8T-4183	4	BOLT(M12×1.75)

J144119 X02

ASSIST HANDLE GROUP (108-1335 N/S)

PART OF 211-9048-Page 405,227-9879-Page 403

OPERATOR STATION

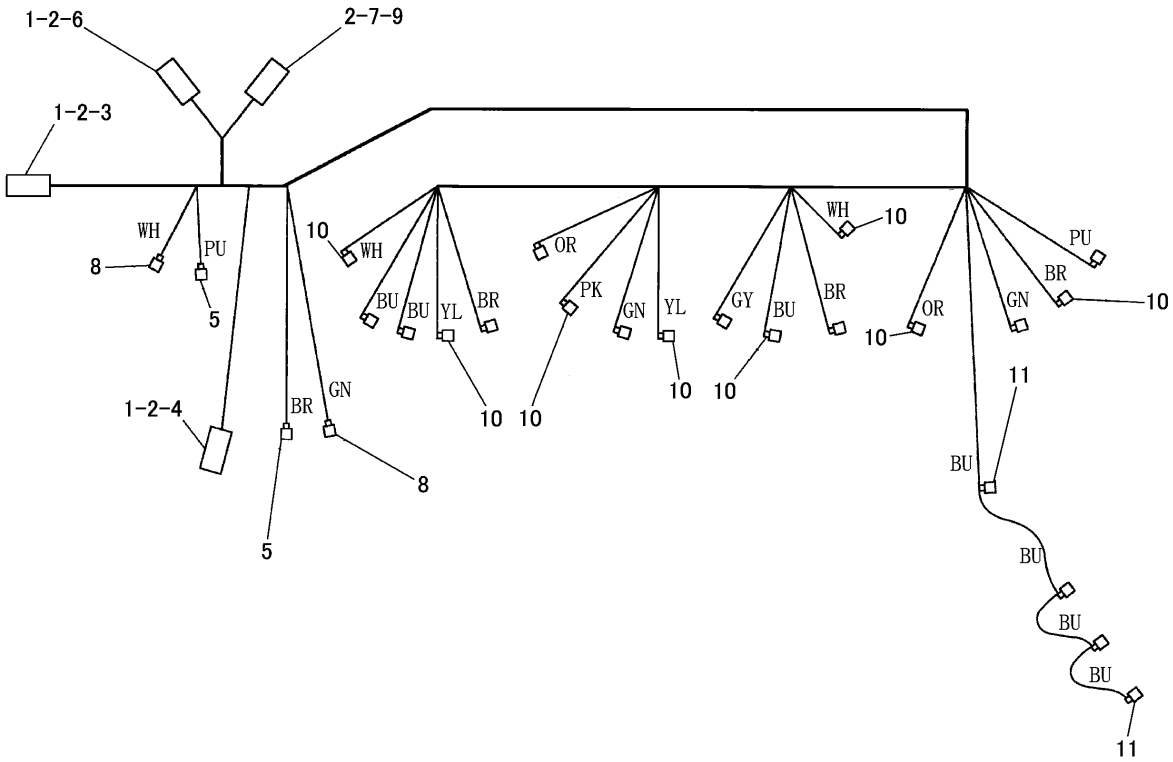

NOTE	№	PART NO.	QTY	PART NAME	NOTE	№	PART NO.	QTY	PART NAME
	1	9X-3402	16	SOCKET					
	2	9G-3695	6	PLUG					
	3	155-2260	1	PLUG KIT(3P)					
	4	155-2274	1	PLUG KIT(6P)					
	5	5P-4571	2	TERMINAL					
	6	155-2255	1	PLUG KIT(12P)					
	7	102-8801	1	RECEPTACLE KIT(12P)					
	8	6T-8048	2	TERMINAL					
	9	126-1767	11	PIN					
	10	9G-9314	17	TERMINAL					
	11	3T-5433	4	WIRE AS					

J138033 X01

169-9636 HARNESS ASSEMBLY
PART OF 161-1096-Page 421

OPERATOR STATION

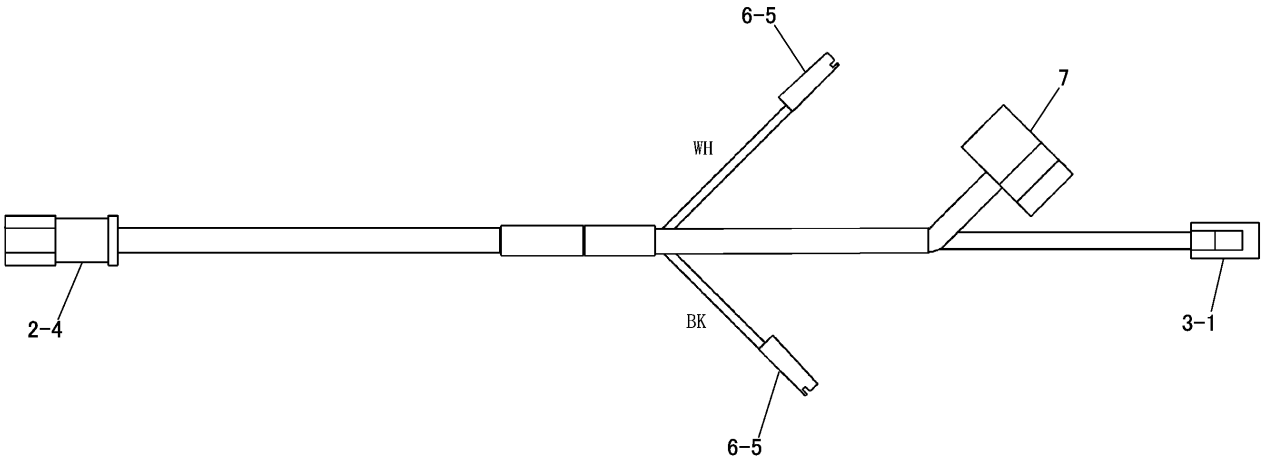

NOTE	№	PART NO.	QTY	PART NAME	NOTE	№	PART NO.	QTY	PART NAME
	1	155-2270	1	PLUG KIT(2P)					
	2	9W-0852	6	PIN					
	3	9W-0844	2	SOCKET					
	4	102-8805	1	RECEPTACLE KIT(6P)					
	5	6T-6505	2	HOUSING					
	6	6T-6506	2	TERMINAL					
	7	192-2112	4	SOCKET					
		260-3157	1	RECEPTACLE AS					

J137992 -01

260-1914 HARNESS ASSEMBLY
PART OF 230-5388-Page 424

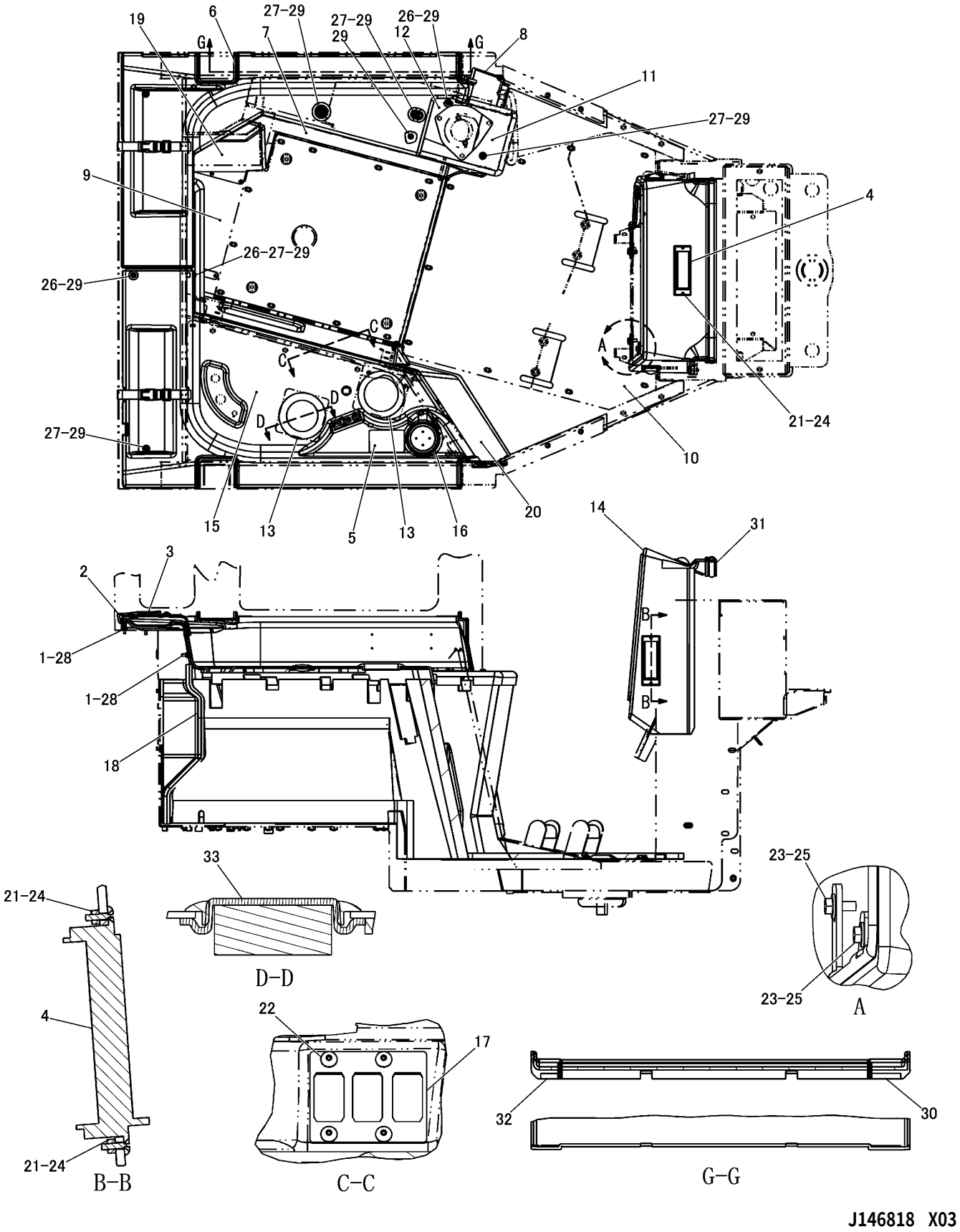

CONSOLE COVER GROUP (242-8397 N/S)
PART OF 322-6118-Page 403

OPERATOR STATION

NOTE	№	PART NO.	QTY	PART NAME	NOTE	№	PART NO.	QTY	PART NAME
	1	6Y-0206	4	RETAINER					
	2	7G-4824	2	STRAP					
	3	8E-7791	2	STRAP					
	4	8Y-6388	3	LOUVER AS					
	5	154-5629	1	TRAY AS					
	6	156-7410	1	COVER AS					
	7	159-7943	1	PANEL					
	8	159-7946	1	PANEL					
	9	159-7948	1	FLOORMAT					
	10	159-7949	1	FLOORMAT					
	11	159-8108	1	COVER					
	12	159-8109	1	COVER					
	13	161-4024	2	BOOT					
	14	170-5849	1	SHROUD AS					
		170-5851	1	LINER					
		170-5852	1	LINER					
	15	241-7913	1	COVER AS					
	16	114-9125	1	HOLDER					
	17	241-7919	1	PLATE					
	18	242-8403	1	PANEL AS					
	19	242-8404	1	PANEL					
	20	243-1171	1	PANEL					
	21	111-5147	6	SCREW(No.6-32)					
	22	198-9706	4	SCREW(M5×0.8)					
	23	5P-4116	4	WASHER					
	24	7D-6922	6	LOCKNUT(No.6-32)					
	25	8T-4189	4	BOLT(M8×1.25)					
	26	9N-0869	3	WASHER					
	27	9X-2038	7	WASHER					
	28	9X-2043	8	SCREW(M6×1)					
	29	9X-2045	9	SCREW(M6×1)					
D	30	8T-5372		SEAL---0.05m					
E	31	124-3243		SEAL---56cm					
D	32	8T-5372		SEAL---0.03m					
	33	211-0220	1	COVER AS					

D-ORDER BY THE m
E-ORDER BY THE cm

J146818 X03

CONSOLE COVER GROUP (242-8397 N/S)

PART OF 322-6118-Page 403

OPERATOR STATION

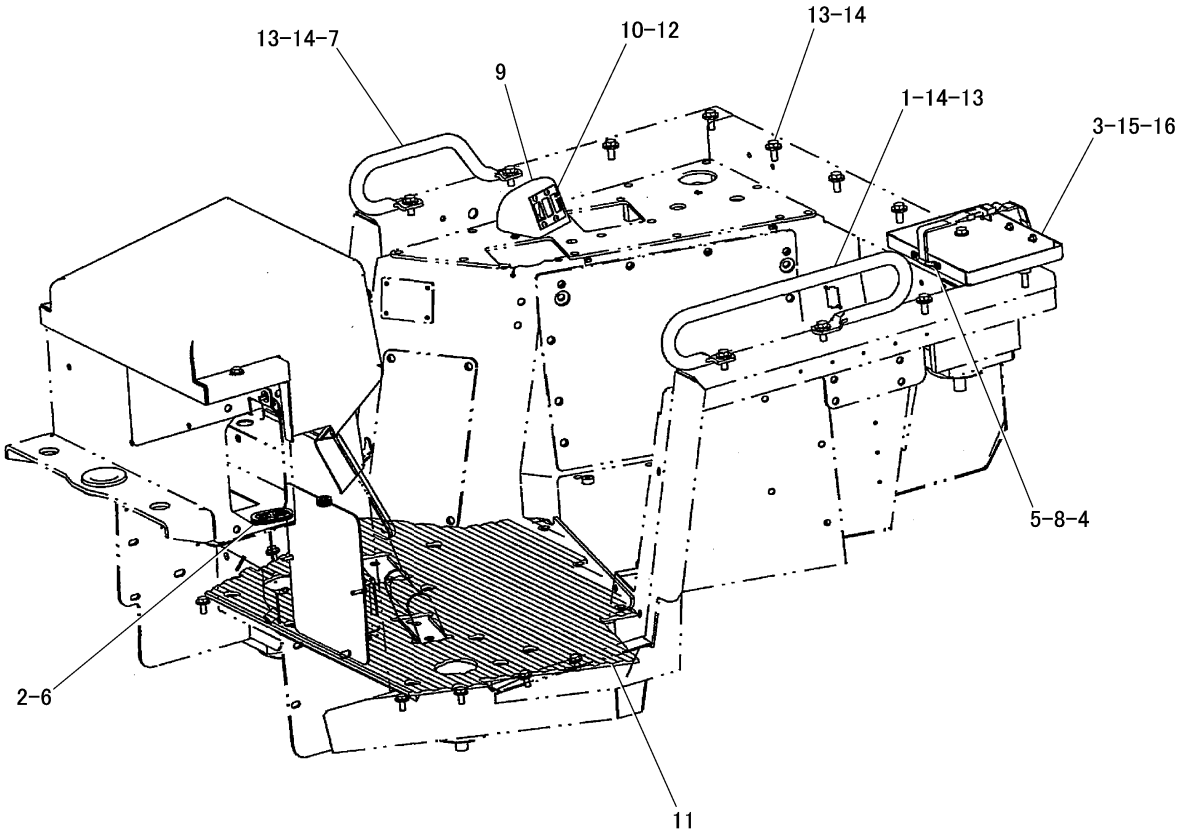

NOTE	№	PART NO.	QTY	PART NAME	NOTE	№	PART NO.	QTY	PART NAME
	1	3T-3634	1	HANDLE					
	2	5P-0998	2	PLUG					
	3	6I-9706	1	RETAINER AS					
	4	6V-9632	4	NUT(M6×1)(WELD)					
	5	6Y-0206	2	RETAINER					
	6	7T-6299	1	GROMMET					
	7	127-3018	1	HANDLE					
	8	184-0982	4	SCREW(M6×1)					
	9	241-7917	1	HOUSING					
	10	241-7919	1	PLATE					
	11	261-8619	1	FLOORMAT					
	12	198-9706	4	SCREW(M5×0.8)					
	13	5P-1076	10	WASHER					
	14	8T-4139	10	BOLT(M12×1.75)					
	15	8T-4194	2	BOLT(M12×1.75)					
	16	8T-4223	2	WASHER					

J138633 X01

PLATFORM GROUP (220-2810 N/S) -OROPS-PART 1 OF 2
PART OF 284-4645-Page 406
AN ATTACHMENT

OPERATOR STATION

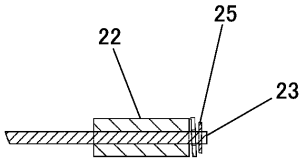

A

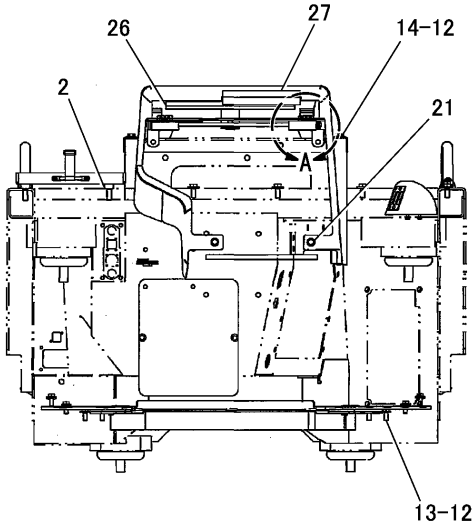

REAR VIEW

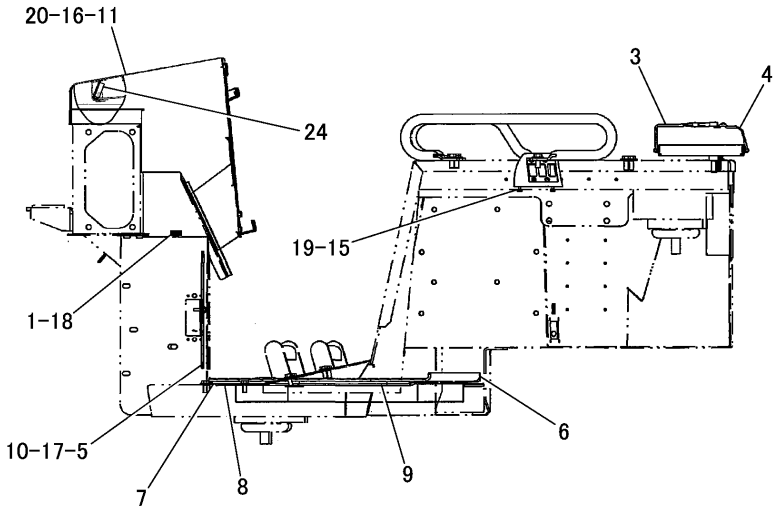

LEFT SIDE VIEW

NOTE	№	PART NO.	QTY	PART NAME	NOTE	№	PART NO.	QTY	PART NAME
	1	5P-0998	1	PLUG		19	9X-8256	2	WASHER
	2	6Y-8114	2	SPACER		20	169-9639	1	COVER AS
	3	7G-4824	1	STRAP		21	5P-8244	2	WASHER
	4	8E-7791	1	STRAP		22	192-3017	2	ROLLER
	5	141-2240	1	PLATE		23	192-3018	1	ROD
	6	237-0204	1	FLOORPLATE AS		24	193-7377	2	PANEL
		8T-3490	2	NUT(M10×1.5)(WELD)		25	5P-7177	2	RETAINER
	7	237-0205	1	FLOORPLATE AS	D	26	6V-1584		SEAL---0.35m
		8T-3597	4	NUT(M12×1.75)(WELD)	D	27	6V-2803		SEAL---0.211m
	8	241-4342	1	GASKET					
	9	241-4344	1	GASKET					
	10	5P-4115	2	WASHER					
	11	5P-4116	2	WASHER					
	12	7X-7729	10	WASHER					
	13	8T-4136	8	BOLT(M10×1.5)					
	14	8T-4137	2	BOLT(M10×1.5)					
	15	8T-4138	2	BOLT(M6×1)					
	16	8T-4189	2	BOLT(M8×1.25)					
	17	8T-8908	2	BOLT(1/4-20)					
	18	9D-3769	1	GROMMET					

D-ORDER BY THE m

J138634 X01

PLATFORM GROUP (220-2810 N/S) -OROPS-PART 2 OF 2
PART OF 284-4645-Page 406
AN ATTACHMENT

OPERATOR STATION

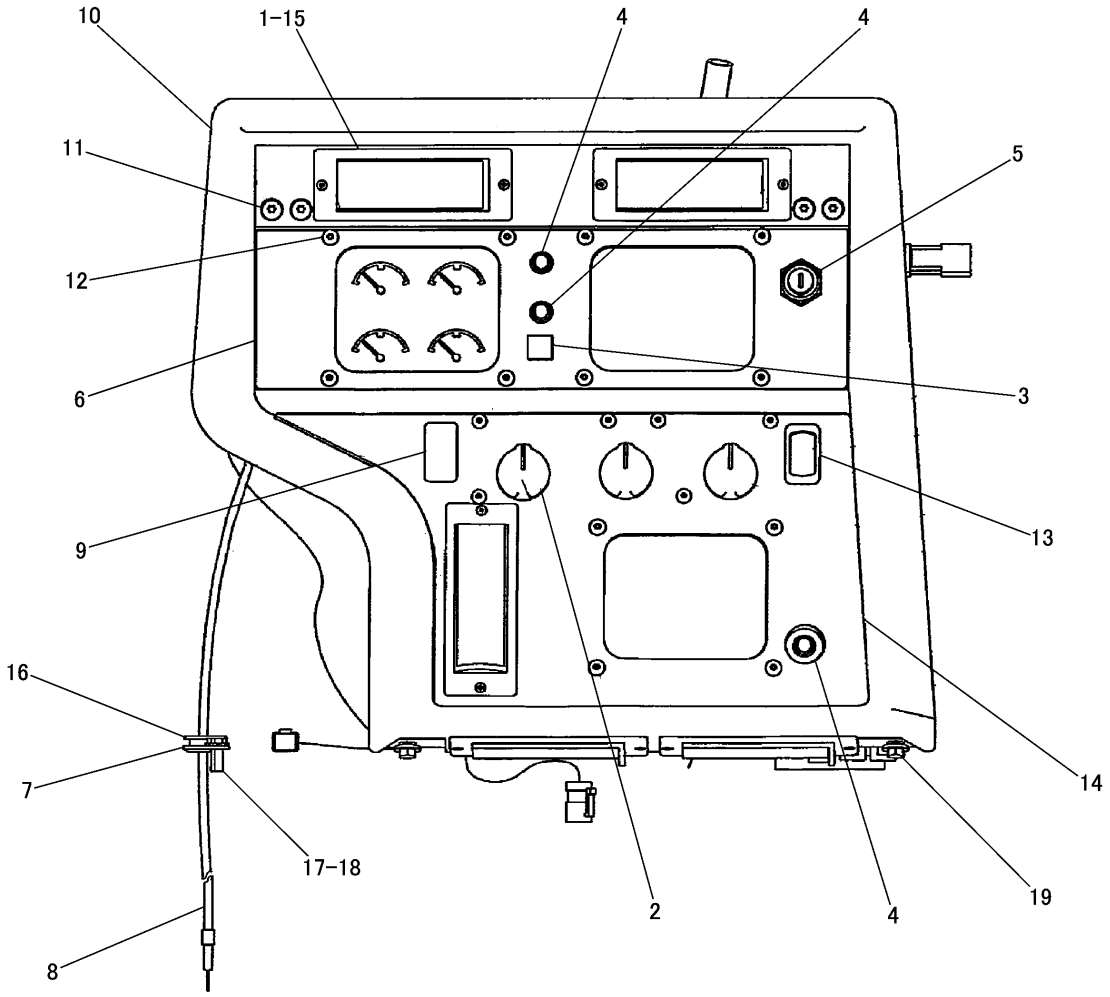

NOTE	№	PART NO.	QTY	PART NAME	NOTE	№	PART NO.	QTY	PART NAME
	1	8Y-6388	5	LOUVER AS			204-6101	12	WASHER
	2	110-6109	3	KNOB		13	251-1198	1	SWITCH AS
	3	123-0304	1	INDICATOR AS		14	266-5851	1	FILM(IDENTIFICATION)
		123-0306	1	SOCKET AS		15	3E-6922	10	SCREW(No.6-19)
		115-1748	1	LAMP(24V)		16	6P-6591	1	GROMMET
	4	133-9405	3	SWITCH AS		17	8T-4138	2	BOLT(M6×1)
		6F-0253	1	LOCKWASHER		18	8T-4205	2	WASHER
		3K-0835	1	NUT(5/8-24)		19	4M-5281	2	BOLT(1/4-20)
		186-3735	3	PIN			5P-4115	2	WASHER
		102-8803	1	RECEPTACLE KIT(3P)					
	5	142-8858	1	SWITCH AS					
		167-1530	1	NUT(1-32)					
	6	159-4712	1	FILM(IDENTIFICATION)					
	7	170-0260	1	PLATE					
	8	193-3356	1	CABLE AS					
	9	228-6089	1	PLUG					
	10	265-7314	1	PANEL AS					
		7T-7388	2	GUIDE					
	11	198-9707	4	SCREW(M6×1)					
	12	198-9706	12	SCREW(M5×0.8)					

J155611 X00

INSTRUMENT GROUP (279-5009 N/S) -EROPS-PART 1 OF 2
PART OF 322-6115-Page 236

OPERATOR STATION

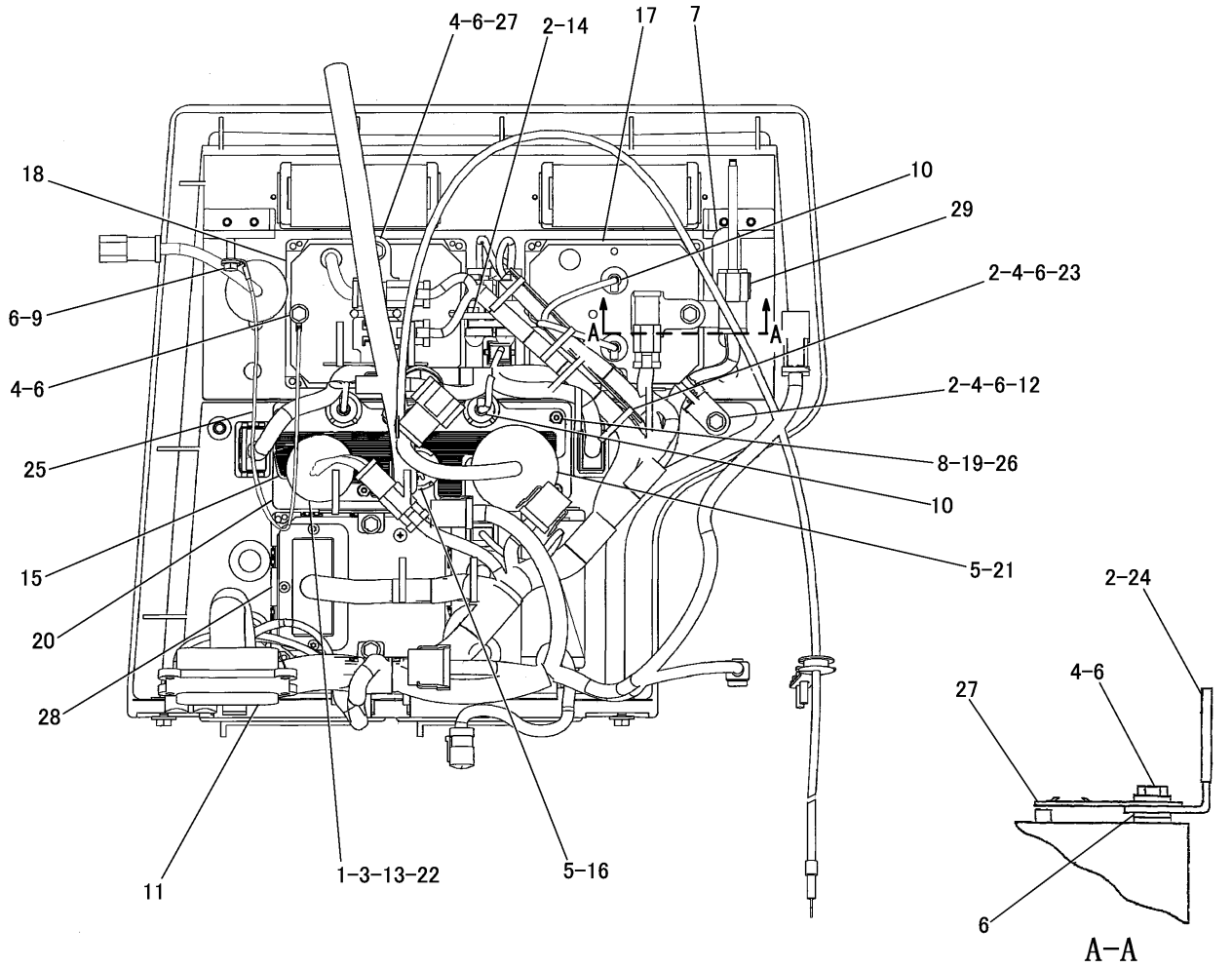

NOTE	№	PART NO.	QTY	PART NAME
	1	2P-4339	1	NUT(7/16-28)
	2	3S-2093	18	STRAP
	3	7F-6998	1	LOCKWASHER
	4	8T-4970	10	BOLT(M6×1)
	5	083-9527	2	SPACER
	6	8T-4205	13	WASHER
	7	116-6203	1	RESISTOR AS
		102-8802	1	RECEPTACLE KIT(2P)
		186-3735	2	PIN
	8	122-7127	6	NUT
	9	8T-4138	1	BOLT(M6×1)
	10	123-9294	4	LAMP(24V)
Y	11	294-4631	1	HARNESS AS
	12	4P-8134	1	CLIP
	13	157-1361	1	SWITCH AS
		102-8805	1	RECEPTACLE KIT(6P)
		9W-0852	6	PIN
	14	4P-7581	1	CLIP
	15	159-9257	1	LIGHT

NOTE	№	PART NO.	QTY	PART NAME
	16	193-3359	1	CONTROL AS
		129-1831	1	CLAMP
Y	17	166-6928	1	CONTROL GROUP
	18	168-0369	1	CONTROL GROUP
		102-8805	1	RECEPTACLE KIT(6P)
		186-3735	6	PIN
	19	204-6102	6	WASHER
	20	175-1349	1	PLATE
	21	175-3950	1	SWITCH AS
		102-8806	1	RECEPTACLE KIT(8P)
		9W-0852	7	PIN
	22	175-4393	1	SPACER
	23	185-3533	7	CLIP
	24	132-5789	1	CLIP
	25	164-0847	1	CABLE
	26	213-7315	6	SCREW(M4×0.7)
	27	130-5300	3	CLIP
Y	28	252-4501	1	CONTROL GROUP
	29	155-2265	1	PLUG KIT(8P)
		126-1768	3	SOCKET
		9G-3695	5	PLUG

Y-SEPARATE ILLUSTRATION

J155612 X00

INSTRUMENT GROUP (279-5009 N/S) -EROPS-PART 2 OF 2

PART OF 322-6115-Page 236

REFERENCE:294-4631-Page 442 166-6928-Page 452 252-4501-Page 92

OPERATOR STATION

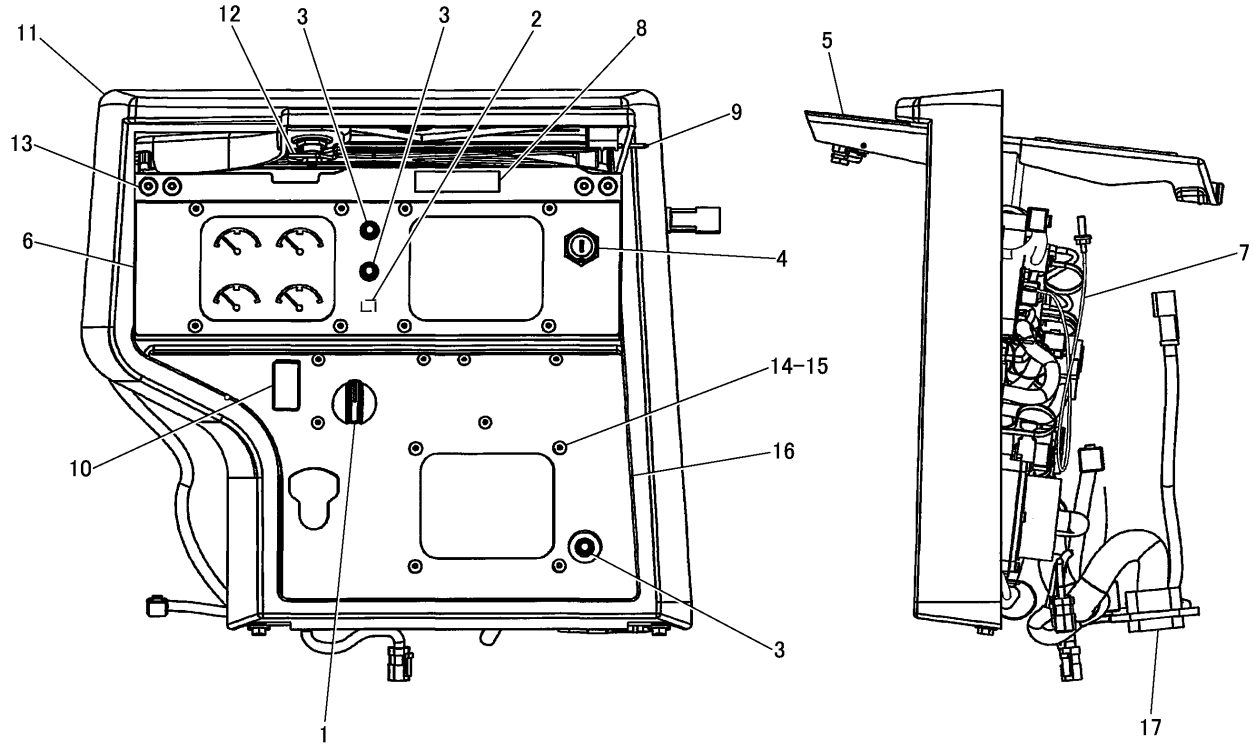

NOTE	№	PART NO.	QTY	PART NAME	NOTE	№	PART NO.	QTY	PART NAME
	1	110-6109	1	KNOB		12	314-3124	1	LOCK GROUP
	2	123-0304	1	INDICATOR AS			226-0293	1	LOCK AS
		123-0306	1	SOCKET AS			300-1643	1	CAM
		115-1748	1	LAMP(24V)		13	198-9707	4	SCREW(M6×1)
	3	133-9405	3	SWITCH AS		14	198-9706	12	SCREW(M5×0.8)
		6F-0253	1	LOCKWASHER		15	204-6101	12	WASHER
		3K-0835	1	NUT(5/8-24)		16	268-1825	1	FILM(IDENTIFICATION)
		186-3735	3	PIN	Y	17	294-4631	1	HARNESS AS
		102-8803	1	RECEPTACLE KIT(3P)					
	4	142-8858	1	SWITCH AS					
		167-1530	1	NUT(1-32)					
	5	157-2741	1	GUARD					
	6	159-4712	1	FILM(IDENTIFICATION)					
	7	164-0847	1	CABLE					
	8	164-9929	1	FILM(IDENTIFICATION)					
	9	186-5097	1	ROD					
	10	228-6089	1	PLUG					
	11	265-7315	1	PANEL AS					
		7T-7388	2	GUIDE					

Y-SEPARATE ILLUSTRATION

J155817 X00

INSTRUMENT GROUP (285-3629 N/S) -OROPS-PART 1 OF 2

PART OF 284-4645-Page 406
REFERENCE:294-4631-Page 442
AN ATTACHMENT

OPERATOR STATION

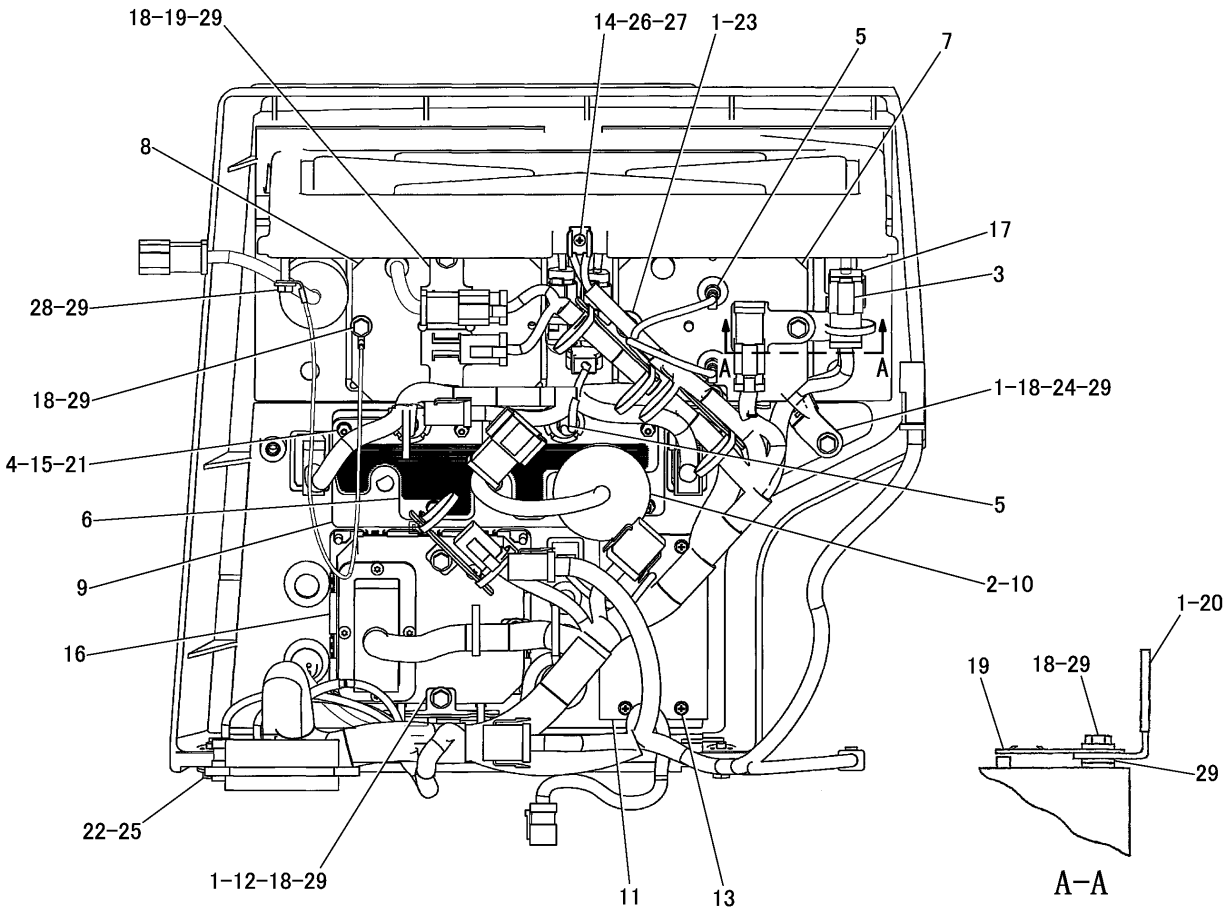

NOTE	№	PART NO.	QTY	PART NAME
	1	3S-2093	17	STRAP
	2	083-9527	1	SPACER
	3	116-6203	1	RESISTOR AS
		102-8802	1	RECEPTACLE KIT(2P)
		186-3735	2	PIN
	4	122-7127	6	NUT
	5	123-9294	4	LAMP(24V)
	6	159-9257	1	LIGHT
Y	7	166-6928	1	CONTROL GROUP
	8	168-0369	1	CONTROL GROUP
		102-8805	1	RECEPTACLE KIT(6P)
		186-3735	6	PIN
	9	175-1349	1	PLATE
	10	175-3950	1	SWITCH AS
		102-8806	1	RECEPTACLE KIT(8P)
		9W-0852	7	PIN
	11	178-3003	1	COVER
	12	185-3533	7	CLIP
	13	187-7719	4	SCREW(M5×2.24)
	14	194-1466	1	CLIP
	15	213-7315	6	SCREW(M4×0.7)
Y	16	252-4501	1	CONTROL GROUP
Z	17	290-8665	1	PLUG AS
		155-2265	1	PLUG KIT(8P)
		126-1768	3	SOCKET
		9G-3695	5	PLUG
	18	8T-4970	10	BOLT(M6×1)
	19	130-5300	3	CLIP
	20	132-5789	1	CLIP
	21	204-6102	6	WASHER
	22	4M-5281	2	BOLT(1/4-20)
	23	4P-7581	1	CLIP
	24	4P-8134	1	CLIP
	25	5P-4115	2	WASHER
	26	8T-0337	1	SCREW(M4×0.7)
	27	8T-2659	1	NUT(M4×0.7)
	28	8T-4138	1	BOLT(M6×1)
	29	8T-4205	13	WASHER

Y-SEPARATE ILLUSTRATION
Z-NOT SERVICED SEPARATELY

J155818 X00

INSTRUMENT GROUP (285-3629 N/S) -OROPS-PART 2 OF 2

PART OF 284-4645-Page 406
REFERENCE:166-6928-Page 452 252-4501-Page 92
AN ATTACHMENT

OPERATOR STATION

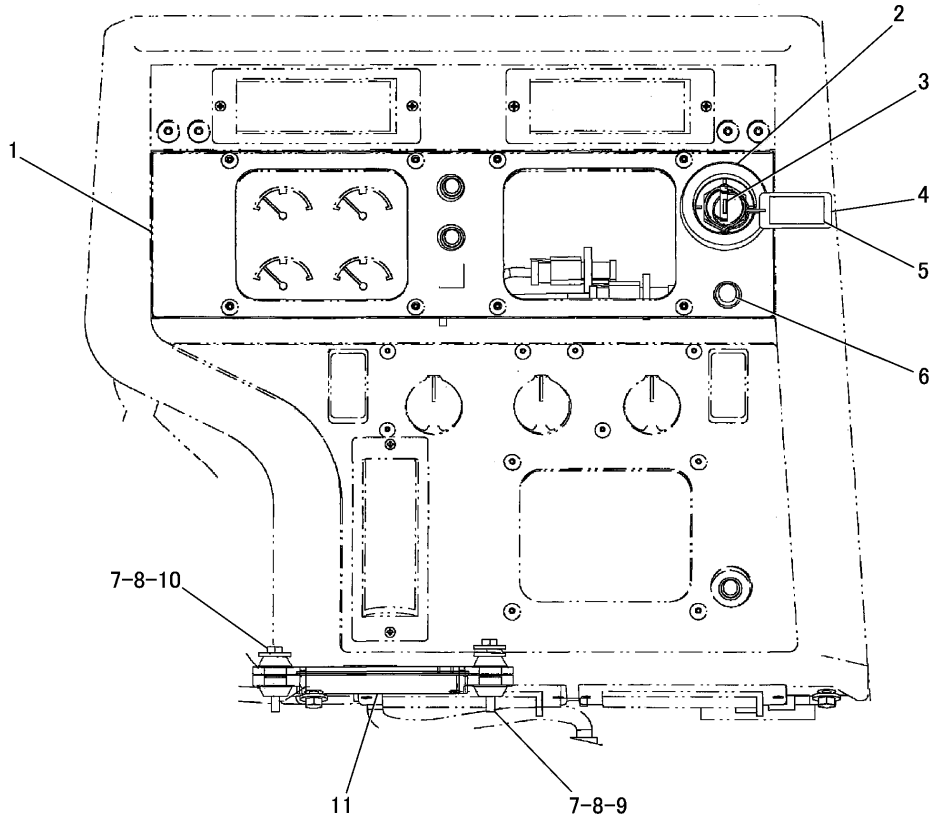

NOTE	№	PART NO.	QTY	PART NAME	NOTE	№	PART NO.	QTY	PART NAME
	1	192-9734	1	FILM					
	2	198-5389	1	FILM					
		205-8257	1	COIL AS					
	3	206-5165	2	KEY AS					
	4	219-6314	2	TAG					
	5	219-6607	2	LABEL					
	6	242-3282	1	LAMP					
		186-3735	2	PIN					
	7	8C-5607	4	MOUNT					
		8C-5608	2	SPACER					
	8	9X-6165	3	WASHER					
	9	9X-2480	1	BOLT(M6×1)					
	10	8C-8451	1	BOLT(M6×1)					
	11	218-0404	1	CONTROL GROUP					
		6V-6715	1	SCREW(No.4-20)					
		8C-3095	1	SEAL					

J138472 X00

CONTROL GROUP (227-1228 N/S) -MACHINE SECURITY SYSTEM-PART 1 OF 2
AN ATTACHMENT

OPERATOR STATION

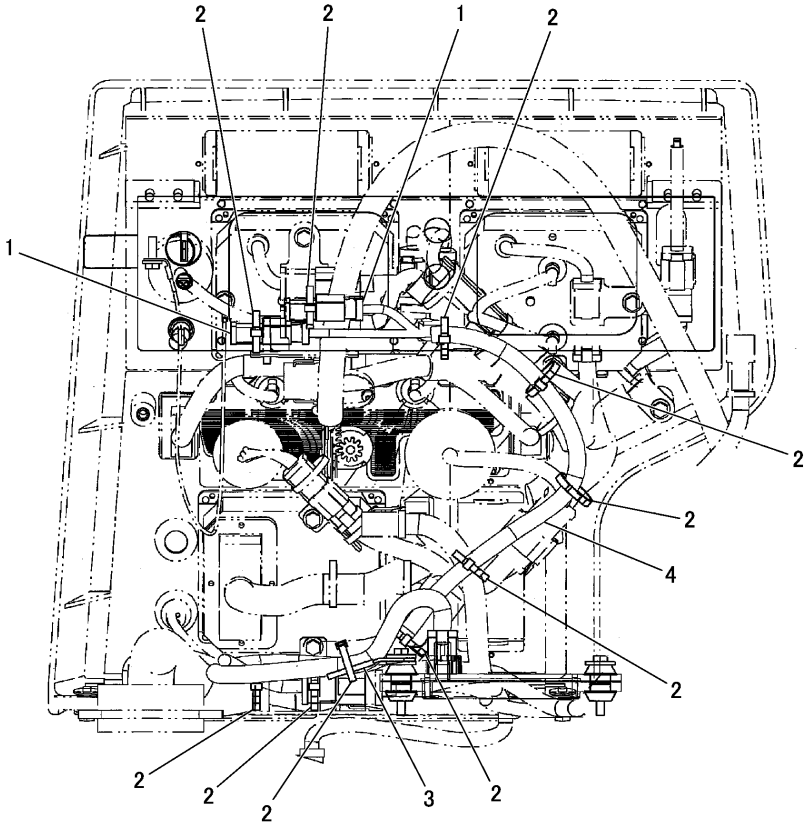

NOTE	№	PART NO.	QTY	PART NAME	NOTE	№	PART NO.	QTY	PART NAME
	1	102-8802	2	RECEPTACLE KIT(2P)					
	2	7K-1181	10	STRAP					
	3	4P-7581	1	CLIP					
Y	4	242-1584	1	HARNESS AS					

Y-SEPARATE ILLUSTRATION

J138473 X00

CONTROL GROUP (227-1228 N/S) -MACHINE SECURITY SYSTEM-PART 2 OF 2

REFERENCE:242-1584-Page 443

AN ATTACHMENT

OPERATOR STATION

CONSISTS OF :

			PAGE
1	237-9140	RADIO MOUNTING GROUP	440
1	242-8409	GRADE CONTROL MOUNTING GROUP	439

J148850 X01

CONTROL MOUNTING GROUP (239-5120 N/S)
PART OF 273-1826-Page 137
AN ATTACHMENT

OPERATOR STATION

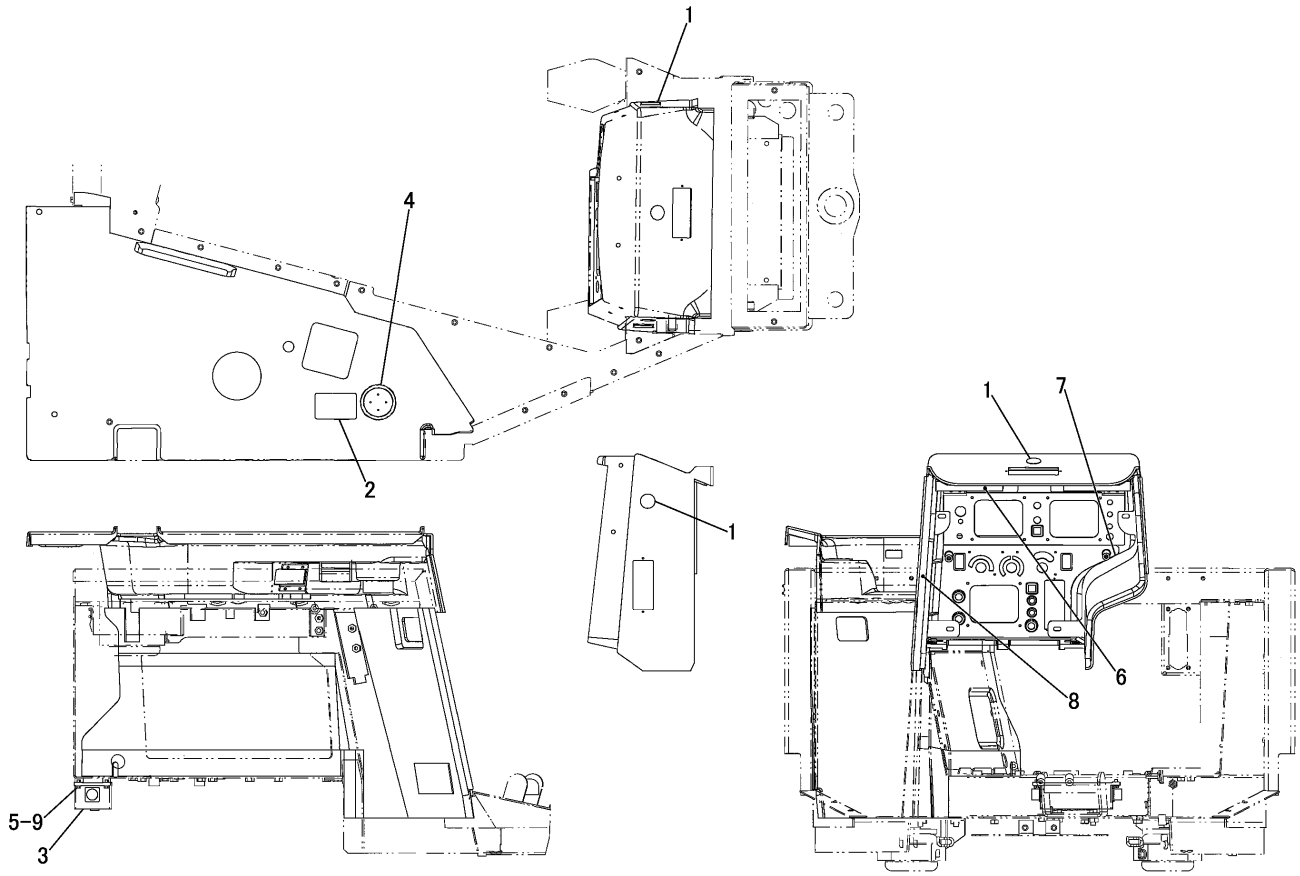

NOTE	№	PART NO.	QTY	PART NAME	NOTE	№	PART NO.	QTY	PART NAME
	1	092-4924	3	PLUG					
	2	154-5629	1	ASHTRAY AS					
	3	226-9169	1	POWER MODULE					
	4	114-9125	1	CUP HOLDER					
	5	9X-8256	4	WASHER					
	6	170-5852	1	LINER					
	7	170-5853	1	LINER					
	8	170-5851	1	LINER					
	9	5C-9553	4	BOLT(M6×1)					

J138692 X00

CONTROL MOUNTING GROUP (242-8409 N/S)
PART OF 239-5120-Page 438
AN ATTACHMENT

OPERATOR STATION

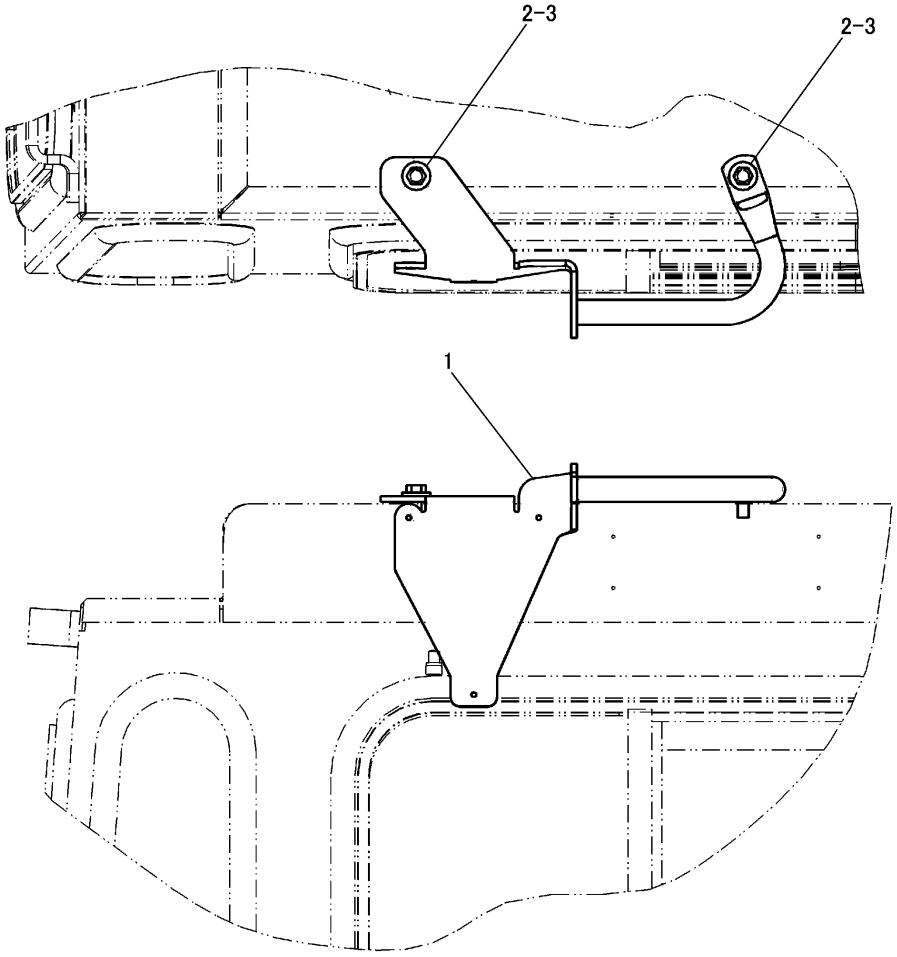

NOTE	№	PART NO.	QTY	PART NAME	NOTE	№	PART NO.	QTY	PART NAME
	1	317-2656	1	HANDLE AS					
	2	5P-1076	2	WASHER					
	3	8T-4139	2	BOLT(M12×1.75)					

J155563 -05

RADIO MOUNTING GROUP (237-9140 N/S)

PART OF 239-5120-Page 438
AN ATTACHMENT

OPERATOR STATION

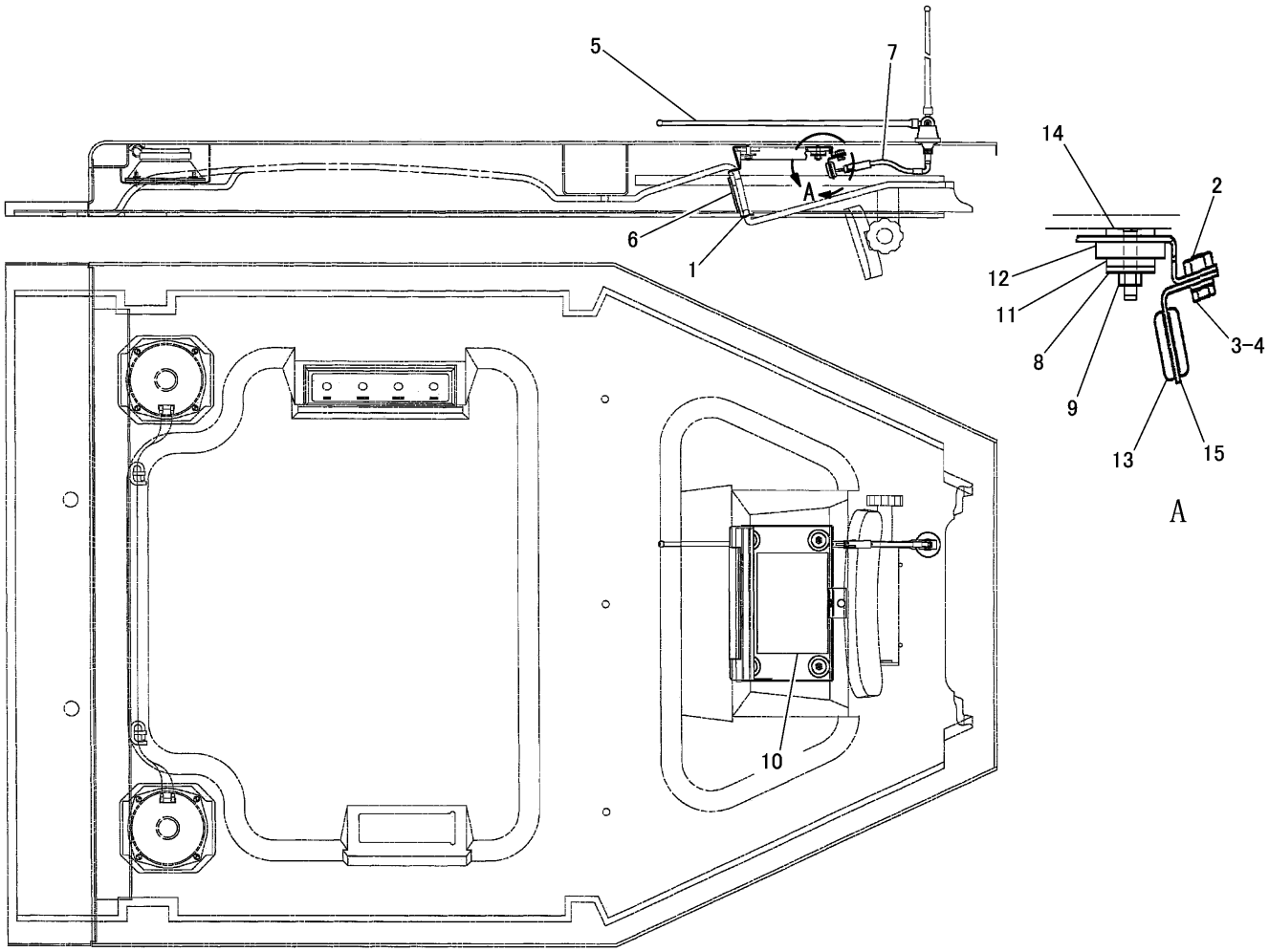

NOTE	№	PART NO.	QTY	PART NAME	NOTE	№	PART NO.	QTY	PART NAME
	1	108-3138	1	BRACKET AS					
	2	6V-9632	1	NUT(M6×1)(WELD)					
	3	8T-4171	1	BOLT(M6×1)					
	4	9X-8256	1	WASHER					
	5	8E-1118	1	ANTENNA AS					
	6	9U-8263	1	COVER					
	7	9U-8746	1	CABLE AS					
	8	6V-7646	4	WASHER					
	9	5C-2890	4	NUT(M6×1)					
	10	217-8433	1	FILM(NOTICE)					
	11	4N-9915	4	GROMMET AS					
	12	3E-4356	4	WASHER					
	13	8K-1433	1	GROMMET					
	14	8T-4223	4	WASHER					
	15	6Y-7385	1	BRACKET					

J140541 X02

RADIO INSTALLATION GROUP (105-9657 N/S)

PART OF 211-9048-Page 405,227-9879-Page 403,330-5270-Page 404

OPERATOR STATION

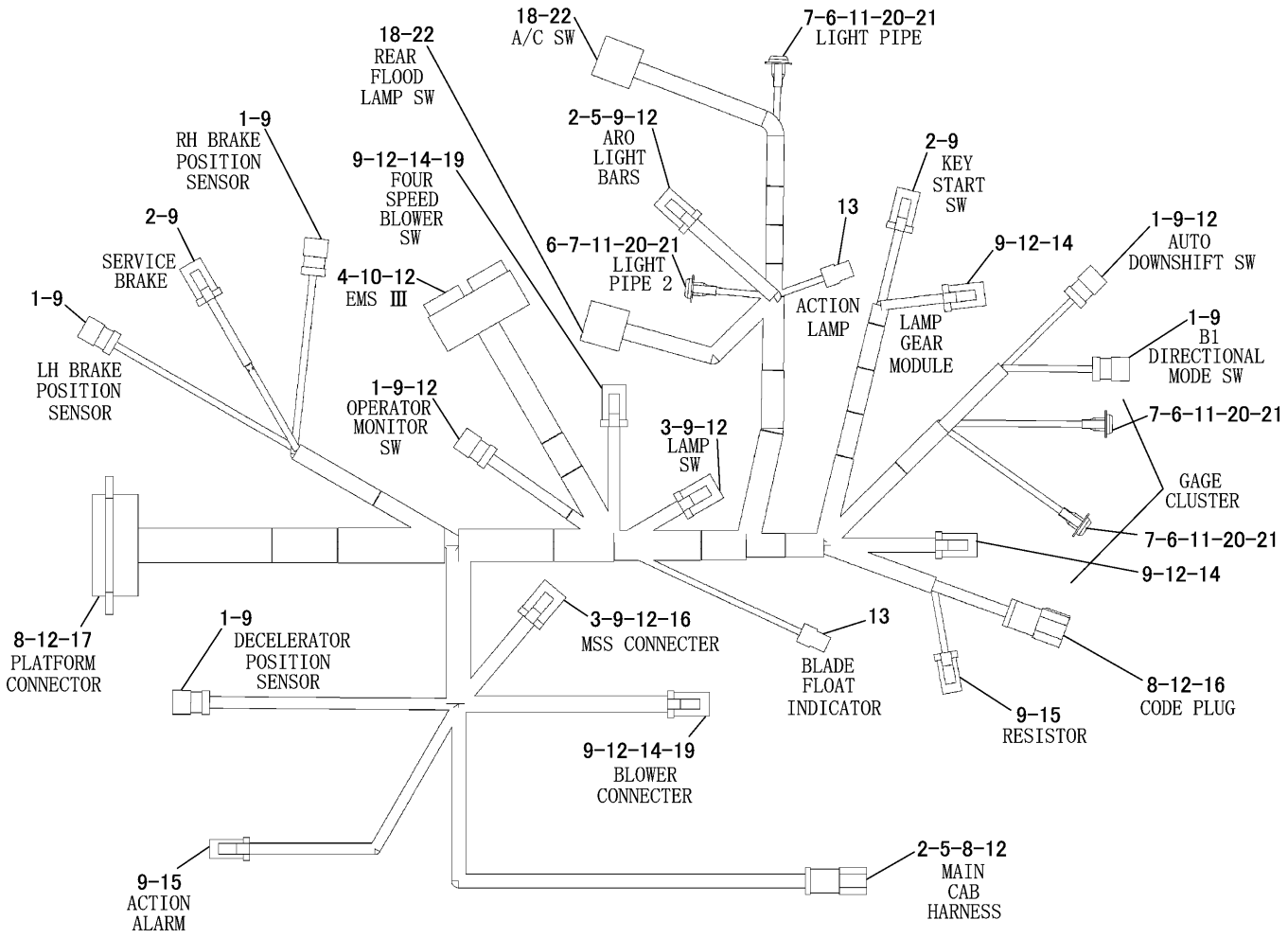

NOTE	№	PART NO.	QTY	PART NAME	NOTE	№	PART NO.	QTY	PART NAME
	1	155-2260	6	PLUG KIT(3P)		20	3T-3278	4	BOOT
	2	155-2271	4	PLUG KIT(4P)		21	3T-3159	4	SPRING
	3	155-2265	2	PLUG KIT(8P)		22	185-1861	6	SEAL
	4	8T-9834	1	PLUG AS(40P)					
		9X-3132	2	SEAL					
	5	102-8804	2	RECEPTACLE KIT(4P)					
	6	3T-3157	4	TERMINAL					
	7	6D-4161	4	CONTACT					
	8	126-1767	65	PIN					
	9	126-1768	67	SOCKET					
	10	186-3736	25	SOCKET					
	11	3T-3158	4	SOCKET					
	12	9G-3695	67	PLUG					
	13	118-2765	2	HOUSING					
	14	155-2274	4	PLUG KIT(6P)					
	15	155-2270	2	PLUG KIT(2P)					
	16	102-8806	2	RECEPTACLE KIT(8P)					
	17	214-4208	1	RECEPTACLE AS(70P)					
	18	245-7434	2	PLUG KIT(10P)					
	19	102-8805	2	RECEPTACLE KIT(6P)					

J155613 -00

294-4631 HARNESS ASSEMBLY -INSTRUMENT
PART OF 279-5009-Page 433,285-3629-Page 434

OPERATOR STATION

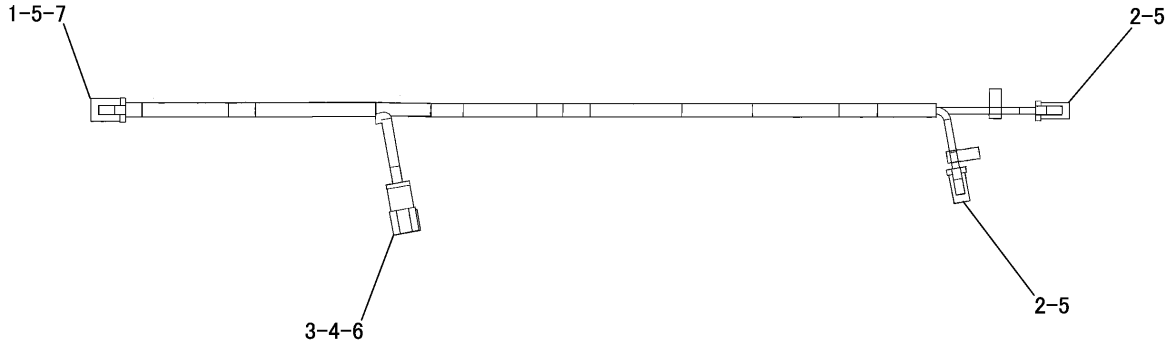

NOTE	№	PART NO.	QTY	PART NAME	NOTE	№	PART NO.	QTY	PART NAME
	1	155-2265	1	PLUG KIT(8P)					
	2	155-2270	2	PLUG KIT(2P)					
	3	102-8806	1	RECEPTACLE KIT(8P)					
	4	126-1767	6	PIN					
	5	126-1768	10	SOCKET					
	6	9G-3695	2	PLUG					
	7	8T-8737	2	PLUG					

J138474 X00

242-1584 HARNESS ASSEMBLY -MACHINE SECURITY SYSTEM
PART OF 227-1228-Page 437
AN ATTACHMENT

OPERATOR STATION

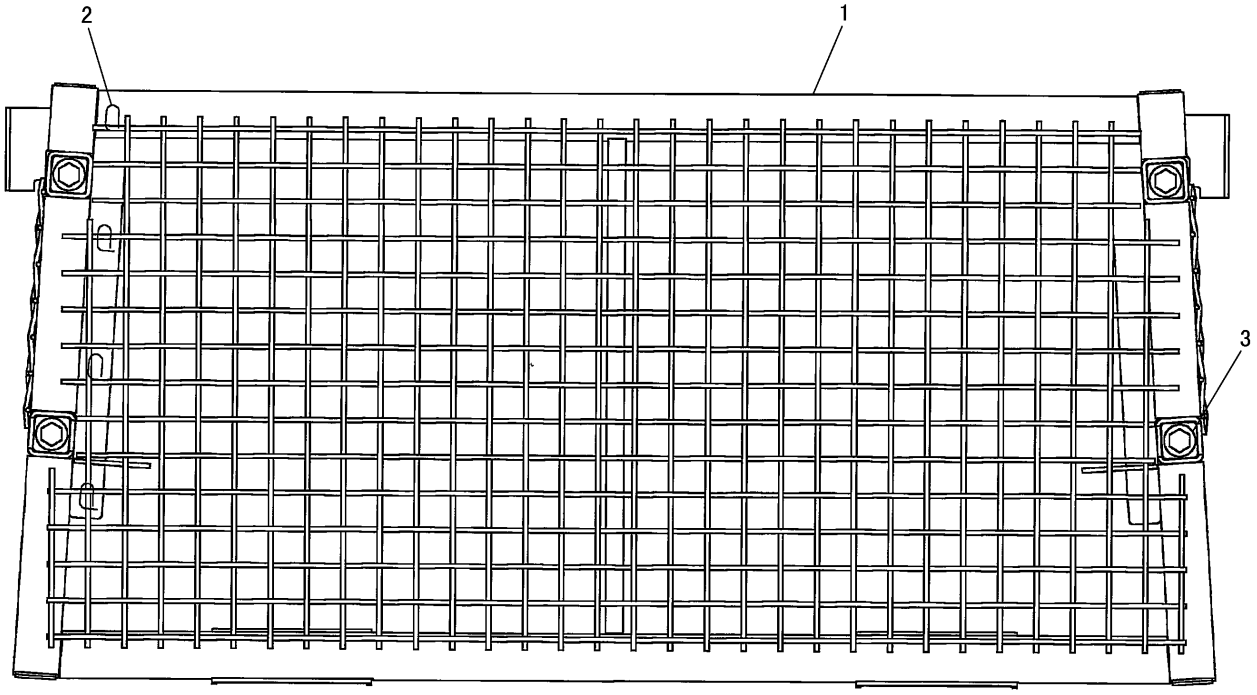

NOTE	№	PART NO.	QTY	PART NAME	NOTE	№	PART NO.	QTY	PART NAME
	1	165-2577	1	SCREEN AS					
	2	7T-1099	8	LINK					
	3	7X-0366	4	BOLT(3/4-10)					
		7X-0582	4	WASHER					

J119335 X00

PROTECTIVE SCREEN GROUP (165-2578 N/S) -REAR

AN ATTACHMENT

OPERATOR STATION

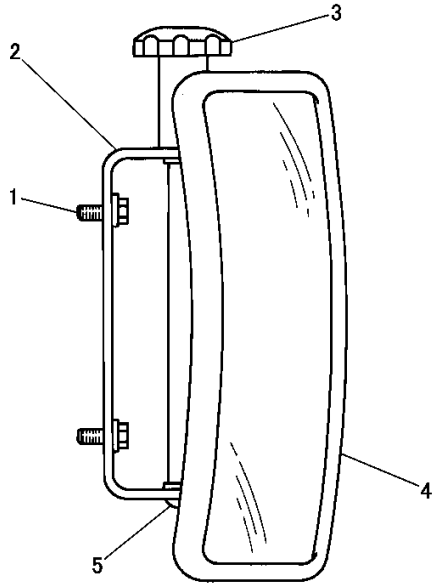

NOTE	№	PART NO.	QTY	PART NAME
	1	5S-7379	2	BOLT(3/8-16)
		5P-1075	2	WASHER
	2	9P-9390	1	BRACKET
	3	9P-9388	1	KNOB
	4	5P-6874	1	MIRROR
	5	5K-9179	1	BOLT(3/8-16)

J045590 X01

MIRROR GROUP (9P-9392 N/S)

PART OF 167-2088-Page 408
AN ATTACHMENT

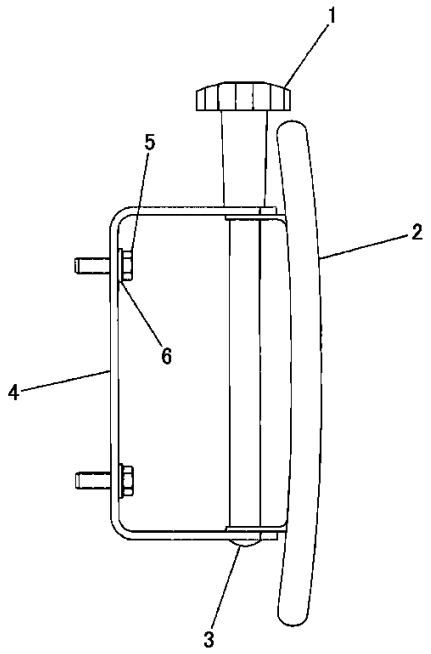

NOTE	№	PART NO.	QTY	PART NAME
	1	9P-9388	1	KNOB
	2	5P-6874	1	MIRROR
	3	5K-9179	1	BOLT(3/8-16)
	4	6Y-5113	1	BRACKET
	5	8T-4137	2	BOLT(M10×1.5)
	6	8T-4121	2	WASHER

J106896 X02

105-9659 MIRROR GROUP

PART OF 211-9048-Page 405,227-9879-Page 403,330-5270-Page 404
AN ATTACHMENT

OPERATOR STATION

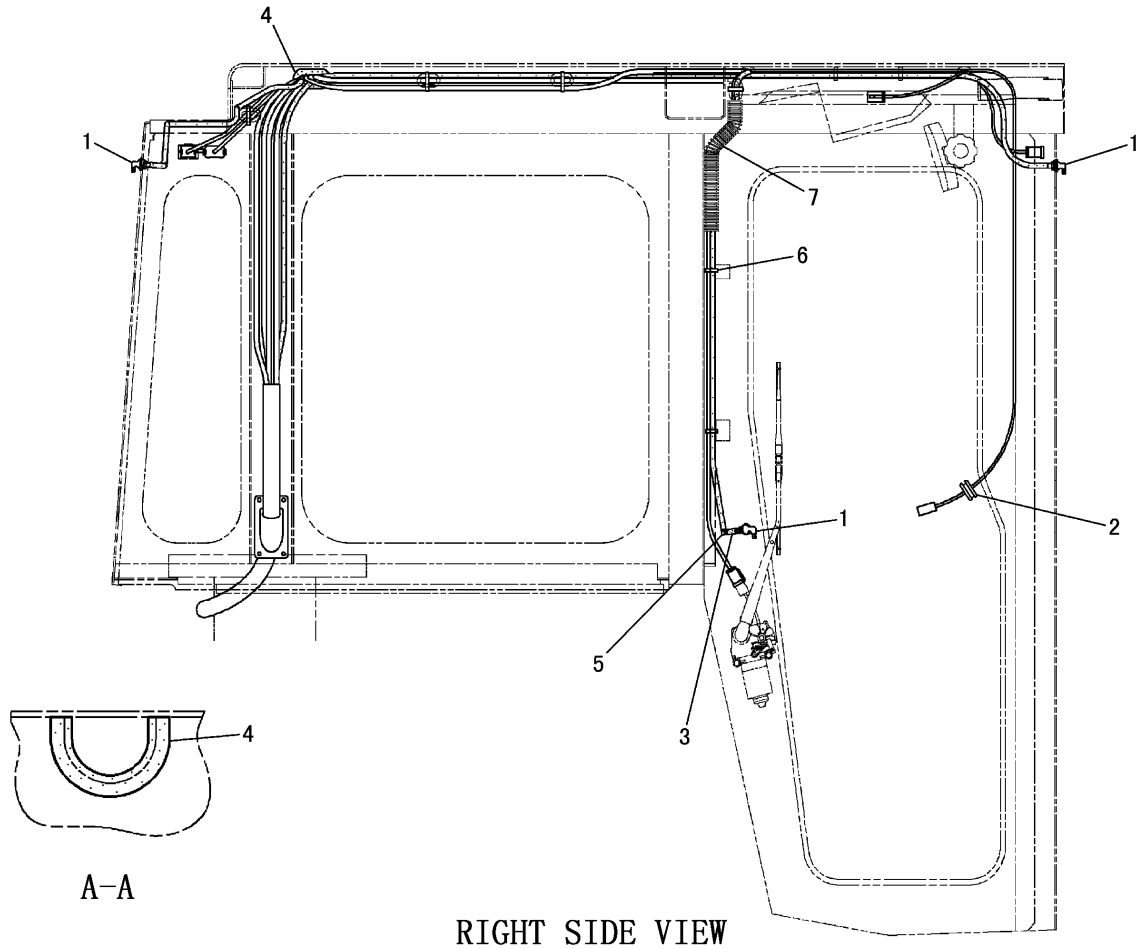

NOTE	№	PART NO.	QTY	PART NAME	NOTE	№	PART NO.	QTY	PART NAME
	1	8T−5400	4	CONNECTOR AS					
	2	2G−8097	1	MOUNTING					
E	3	144−0195		HOSE---2cm(×2)					
	4	7Y−3281	3	GROMMET					
	5	145−7328	2	ELBOW					
	6	3S−2093	6	STRAP					
D	7	6V−5818		CONDUIT---0.375m(×2)					

D-ORDER BY THE m
E-ORDER BY THE cm

J139383 X01

158-7690 WINDSHIELD WASHER GROUP -PART 1 OF 2

PART OF 211-9048-Page 405,227-9879-Page 403,330-5270-Page 404

OPERATOR STATION

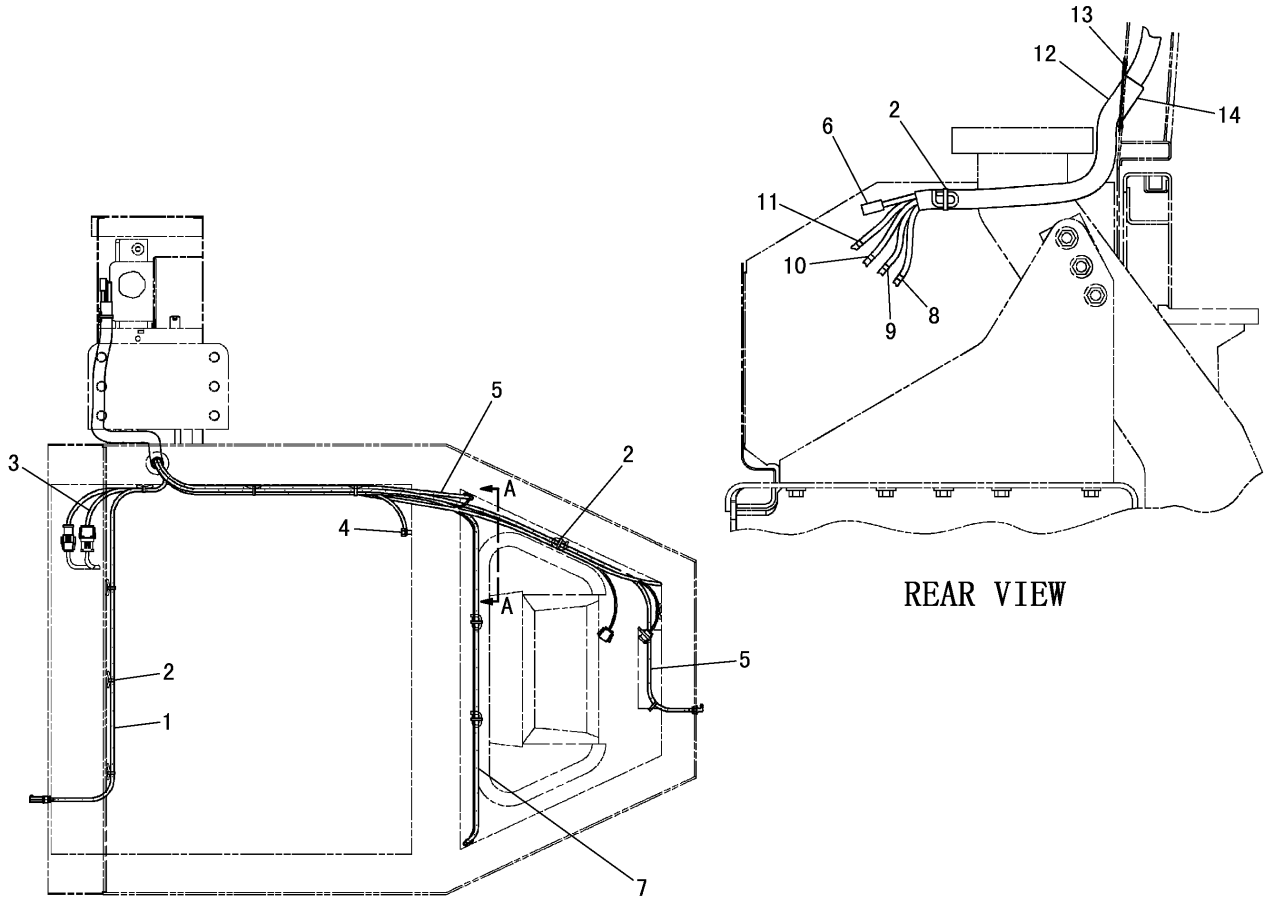

NOTE	№	PART NO.	QTY	PART NAME	NOTE	№	PART NO.	QTY	PART NAME
E	1	144-0195		HOSE---250cm					
	2	3S-2093	13	STRAP					
Y	3	169-9635	1	HARNESS AS					
	4	8T-4896	1	WASHER					
		8T-4133	1	NUT(M10×1.5)					
E	5	144-0195		HOSE---350cm(×2)					
	6	155-2274	1	PLUG KIT(6P)					
		102-8815	1	SEAL					
		8T-8737	1	PLUG					
E	7	144-0195		HOSE---450cm					
E	8	7X-7930		TAPE---6cm					
E	9	7X-7929		TAPE---6cm					
E	10	7X-7928		TAPE---6cm					
E	11	7X-7927		TAPE---6cm					
E	12	7X-7702		CONDUIT---83cm					
	13	9N-1995	4	RIVET					
	14	8E-6856	1	COVER					

E-ORDER BY THE cm
Y-SEPARATE ILLUSTRATION

J139384 X01

158-7690 WINDSHIELD WASHER GROUP -PART 2 OF 2
PART OF 211-9048-Page 405,227-9879-Page 403,330-5270-Page 404
REFERENCE:169-9635-Page 450

OPERATOR STATION

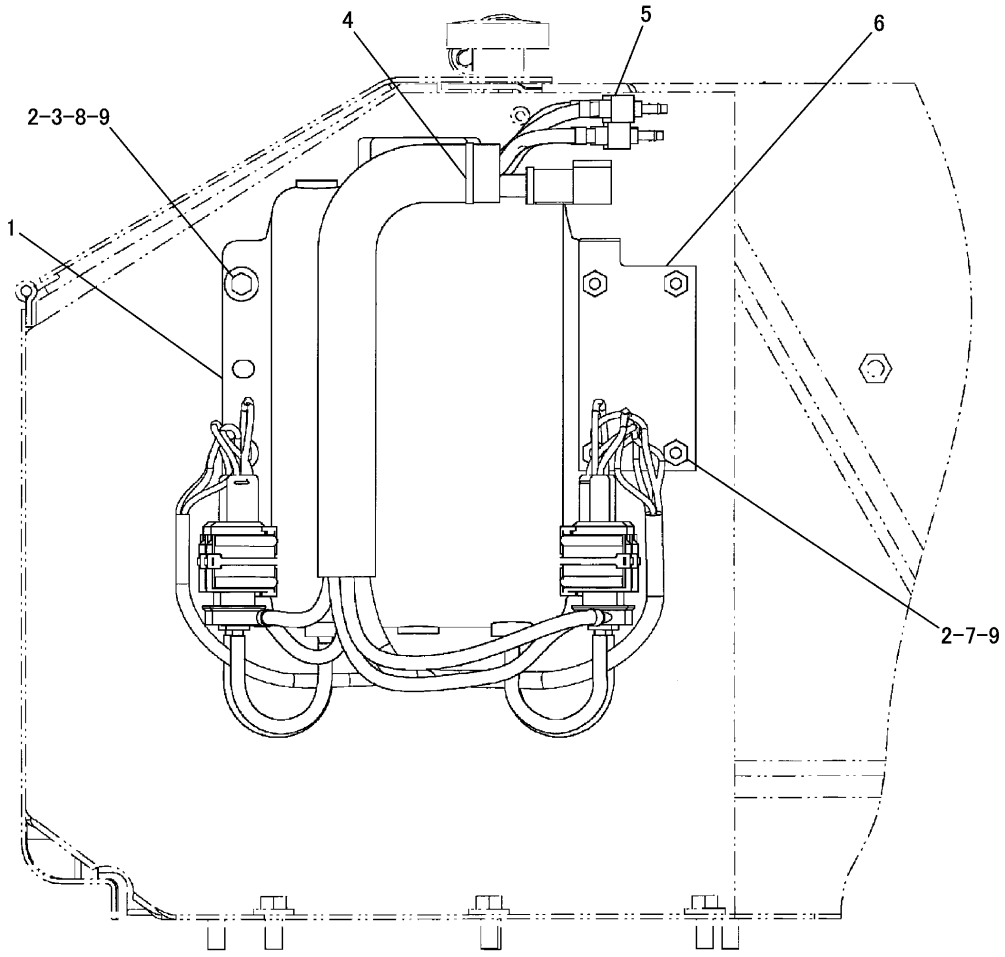

NOTE	№	PART NO.	QTY	PART NAME	NOTE	№	PART NO.	QTY	PART NAME
Y	1	169-9649	1	BOTTLE GROUP					
	2	4M-5281	6	BOLT(1/4-20)					
	3	5P-4115	2	WASHER					
	4	3S-2093	1	STRAP					
	5	8T-5383	4	VALVE AS					
	6	9W-6323	1	BRACKET AS					
	7	9F-6445	4	NUT(1/4-20)(WELD)					
	8	3E-9865	2	LOCKNUT(1/4-20)					
	9	8T-4205	6	WASHER					

Y-SEPARATE ILLUSTRATION

J119314 X01

WINDSHIELD WASHER BOTTLE GROUP (169-9647 N/S)

PART OF 322-6118-Page 403
REFERENCE:169-9649-Page 449

OPERATOR STATION

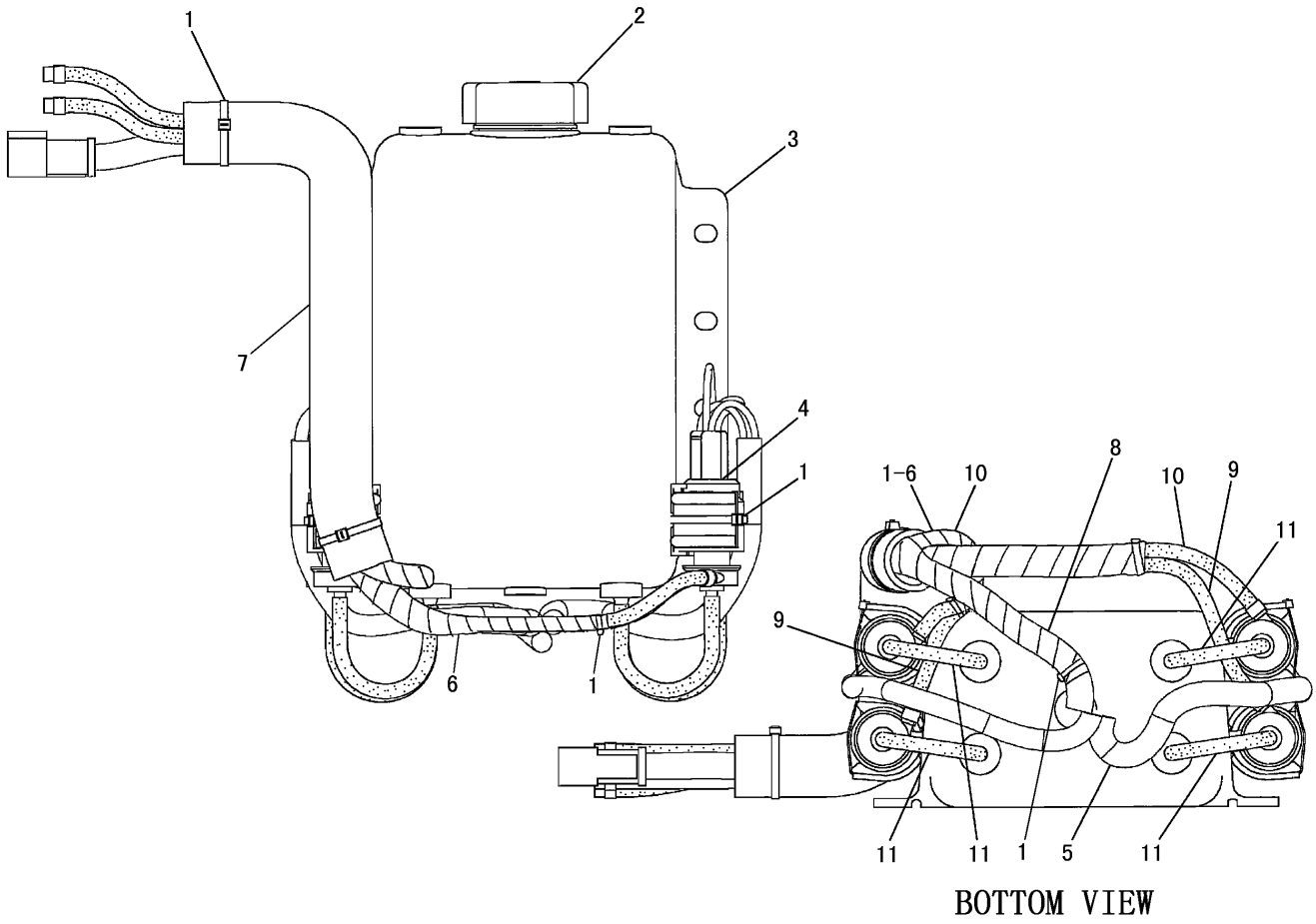

BOTTOM VIEW

NOTE	№	PART NO.	QTY	PART NAME	NOTE	№	PART NO.	QTY	PART NAME
	1	3S-2093	12	STRAP					
	2	8E-8292	1	CAP					
	3	169-9650	1	BOTTLE					
	4	7T-8891	4	PUMP AS					
Y	5	186-4857	1	HARNESS AS					
E	6	7I-7439		GUARD---20cm(×2)					
D	7	6V-5817		CONDUIT---0.356m					
E	8	7I-7439		GUARD---15cm					
E	9	144-0195		HOSE---60.5cm(×2)					
E	10	144-0195		HOSE---57cm(×2)					
E	11	144-0195		HOSE---15.25cm(×4)					

D-ORDER BY THE m
E-ORDER BY THE cm
Y-SEPARATE ILLUSTRATION

J139129 X03

169-9649 WINDSHIELD WASHER BOTTLE GROUP

PART OF 169-9647-Page 448
REFERENCE:186-4857-Page 451

OPERATOR STATION

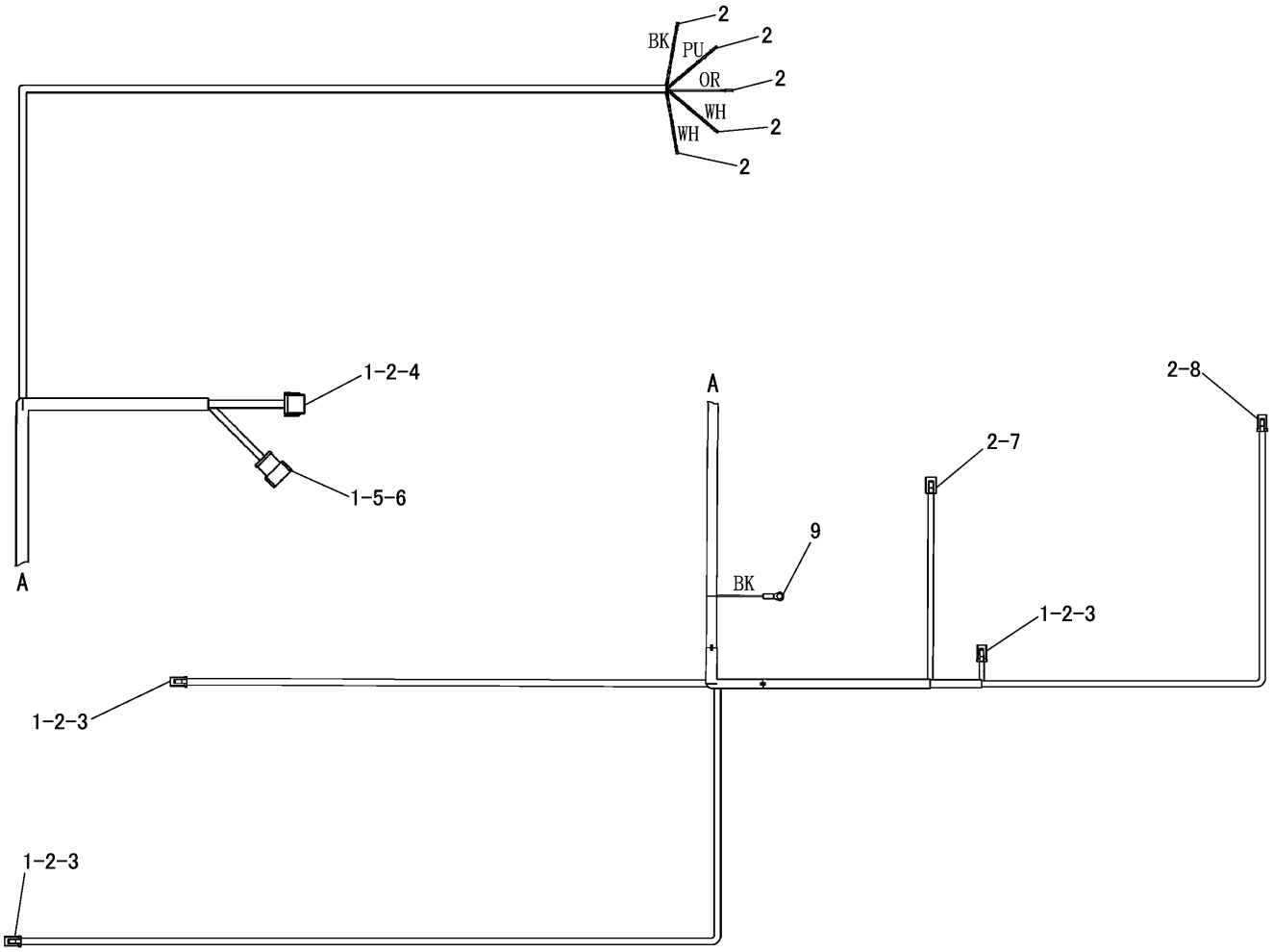

NOTE	№	PART NO.	QTY	PART NAME	NOTE	№	PART NO.	QTY	PART NAME
	1	8T-8737	7	PLUG					
	2	186-3736	43	SOCKET					
	3	155-2274	3	PLUG KIT(6P)					
		102-8815	3	SEAL					
	4	155-2255	1	PLUG KIT(12P)					
	5	186-3735	9	PIN					
	6	102-8801	1	RECEPTACLE KIT(12P)					
	7	155-2265	1	PLUG KIT(8P)					
		102-8816	1	SEAL					
	8	155-2271	1	PLUG KIT(4P)					
		102-8814	1	SEAL					
	9	2L-8079	1	TERMINAL					

J144120 X03

169-9635 HARNESS ASSEMBLY
PART OF 158-7690-Page 447

OPERATOR STATION

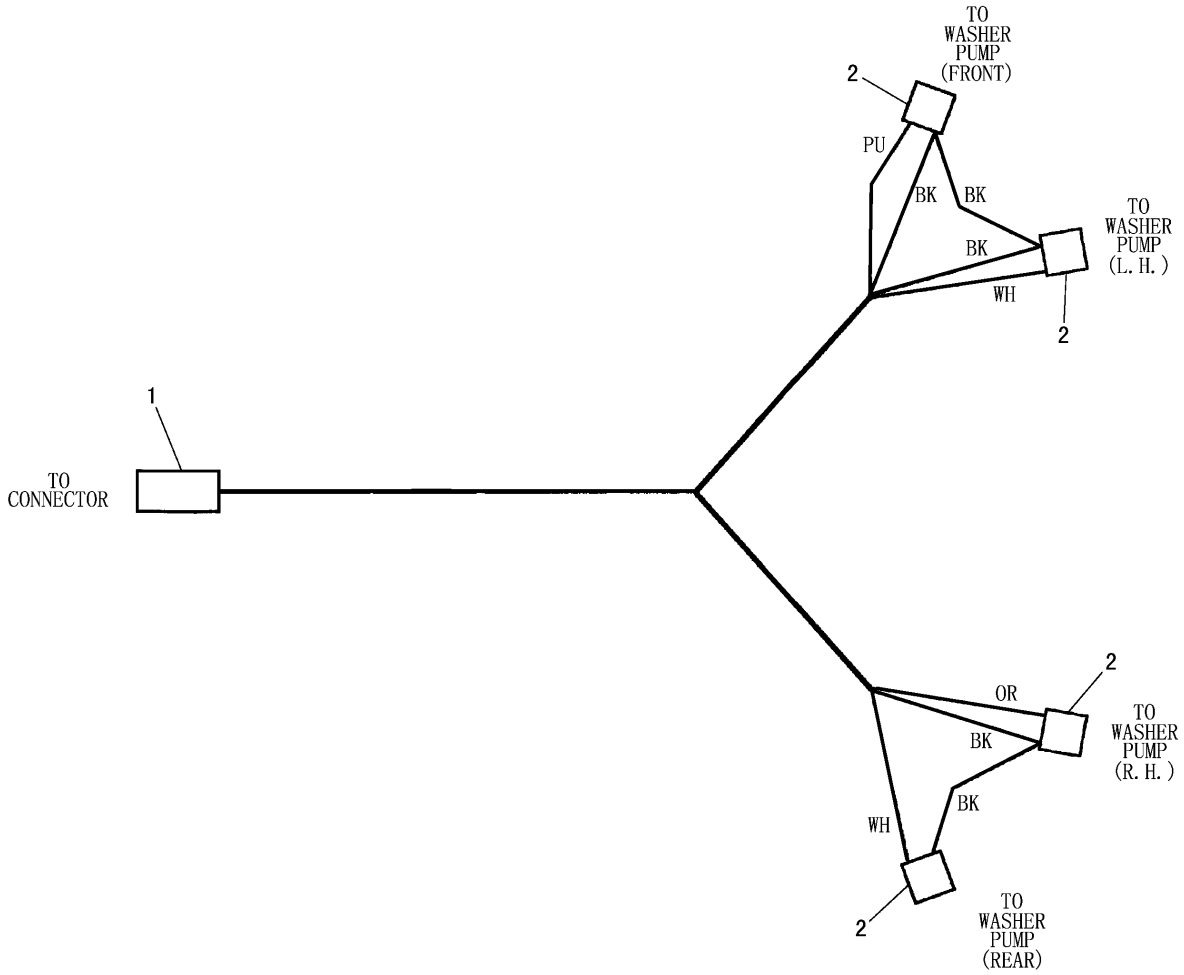

NOTE	№	PART NO.	QTY	PART NAME	NOTE	№	PART NO.	QTY	PART NAME
	1	102-8805	1	RECEPTACLE KIT(6P)					
		186-3735	5	PIN					
		8T-8737	1	PLUG					
	2	9X-0194	4	TERMINAL AS					

J123921 X01

186-4857 HARNESS ASSEMBLY
PART OF 169-9649-Page 449

OPERATOR STATION

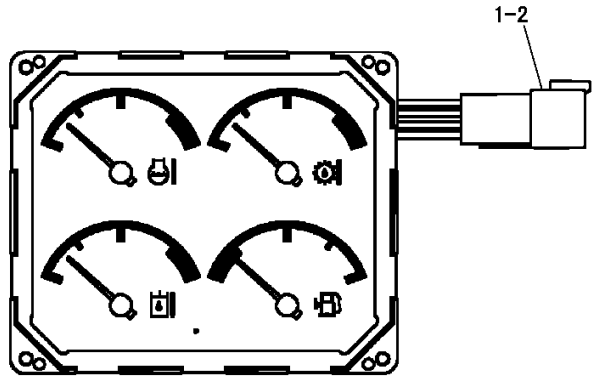

NOTE	№	PART NO.	QTY	PART NAME
	1	102-8805	1	RECEPTACLE KIT(6P)
	2	186-3735	6	PIN

J137674 -01

166-6928 ELECTRONIC CONTROL GROUP -QUAD GAGE MODULE
PART OF 279-5009-Page 433,285-3629-Page 435

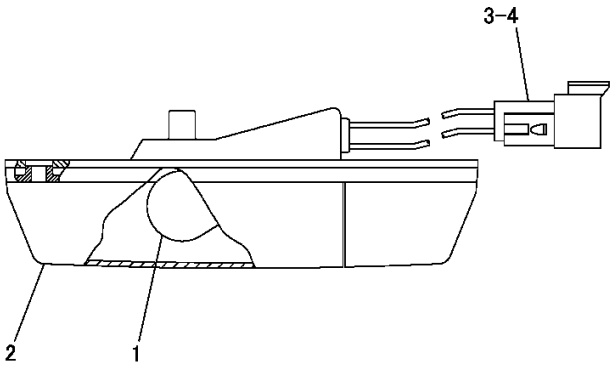

NOTE	№	PART NO.	QTY	PART NAME
	1	7N-9943	1	LAMP(24V,17W)
	2	7T-0020	1	LENS
	3	102-8803	1	RECEPTACLE KIT(3P)
	4	186-3735	3	PIN

J137554 -03

3E-6389 DOME LAMP GROUP
PART OF 161-1096-Page 421

OPERATOR STATION

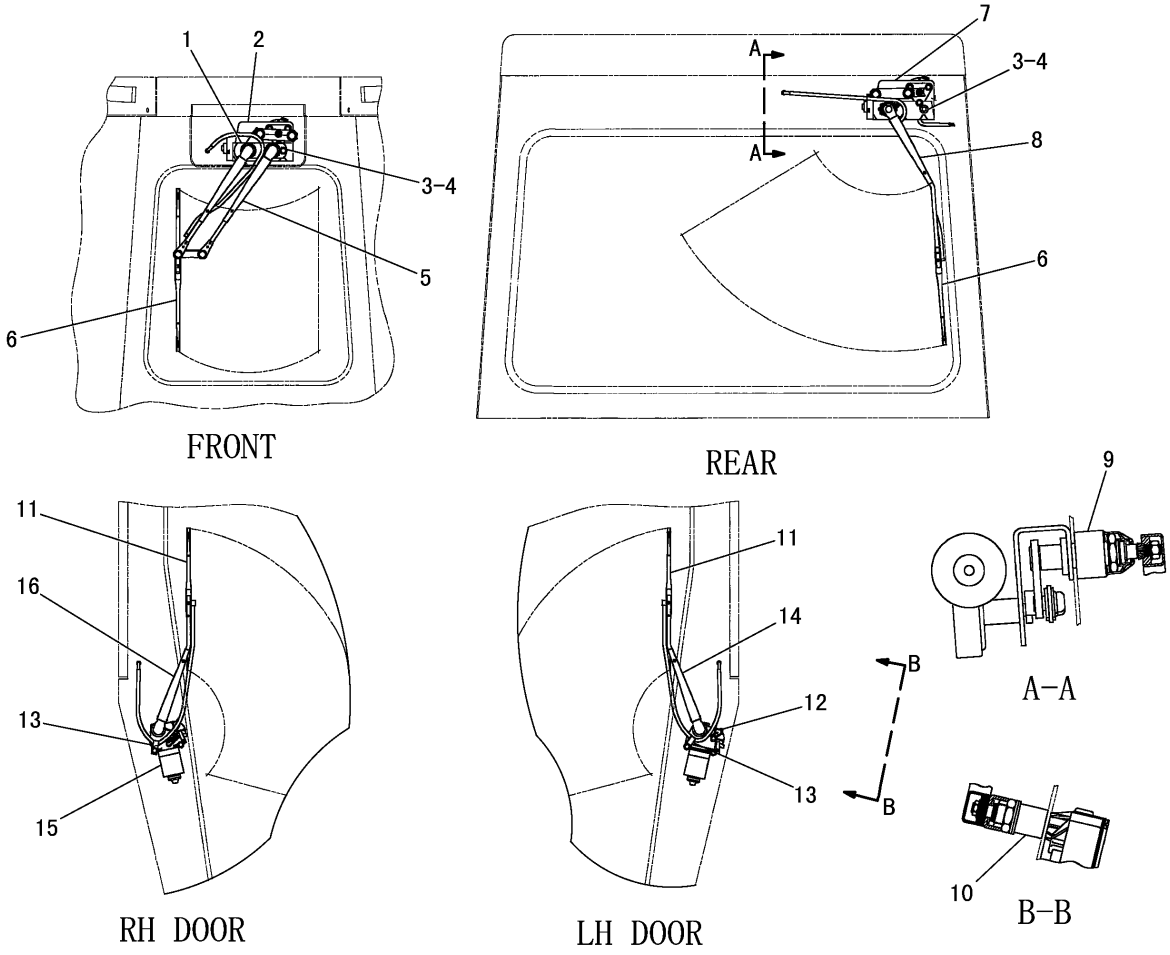

NOTE	№	PART NO.	QTY	PART NAME	NOTE	№	PART NO.	QTY	PART NAME
Y	1	101-0742	1	PIVOT GROUP		15	221-3450	1	MOTOR AS
Y	2	147-7976	1	MOTOR GROUP			102-8805	1	RECEPTACLE KIT(6P)
	3	6V-7357	2	BOLT(M6×1)			186-3735	5	PIN
	4	6N-7523	2	WASHER			8T-8737	1	PLUG
	5	145-8741	1	ARM AS			5C-7261	1	NUT(M8×1.25)
	6	6V-5851	2	BLADE AS			3F-9556	1	LOCKWASHER
Y	7	147-7979	1	MOTOR GROUP		16	151-0254	1	ARM AS
	8	151-0256	1	ARM AS					
	9	8V-5455	1	BOSS					
	10	224-6829	2	SPACER					
	11	6V-5849	2	BLADE AS					
		8C-5060	1	BLADE KIT					
	12	221-3451	1	MOTOR AS					
		102-8805	1	RECEPTACLE KIT(6P)					
		186-3735	5	PIN					
		8T-8737	1	PLUG					
		5C-7261	1	NUT(M8×1.25)					
		3F-9556	1	LOCKWASHER					
	13	222-2209	2	CLIP					
	14	151-0255	1	ARM AS					

Y-SEPARATE ILLUSTRATION

J139416 X01

224-4357 WIPER GROUP

PART OF 211-9048-Page 405,227-9879-Page 403,330-5270-Page 404

REFERENCE:101-0742-Page 454 147-7976-Page 454 147-7979-Page 455

OPERATOR STATION

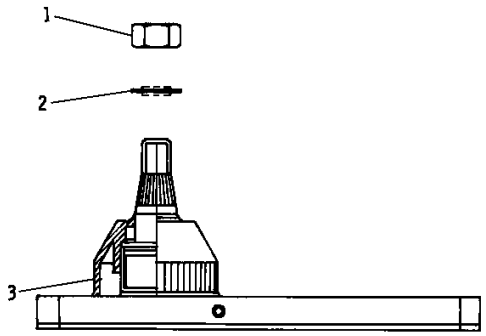

NOTE	№	PART NO.	QTY	PART NAME
	1	6V-6889	1	NUT(M8×1.25)
	2	6A-9718	1	WASHER
	3	6V-6209	1	CAP

J059513 X00

101-0742 WIPER ARM PIVOT GROUP

PART OF 224-4357-Page 453

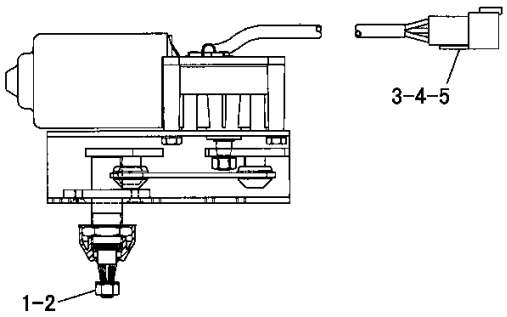

NOTE	№	PART NO.	QTY	PART NAME
	1	5C-7261	1	NUT(M8×1.25)
	2	3F-9556	1	LOCKWASHER
	3	102-8805	1	RECEPTACLE KIT(6P)
	4	9G-3695	1	PLUG
	5	186-3735	5	PIN

J100393 -01

147-7976 COMPACT DRIVE MOTOR GROUP -24V

PART OF 224-4357-Page 453

OPERATOR STATION

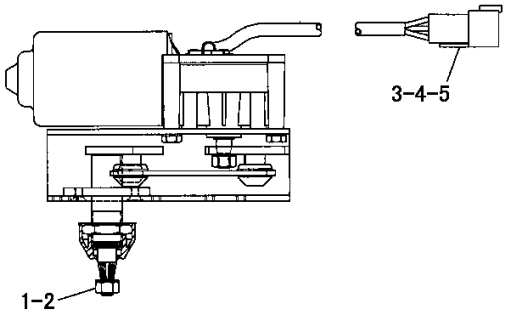

NOTE	№	PART NO.	QTY	PART NAME
	1	5C-7261	1	NUT(M8×1.25)
	2	3F-9556	1	LOCKWASHER
	3	102-8805	1	RECEPTACLE KIT(6P)
	4	9G-3695	1	PLUG
	5	186-3735	5	PIN

J100394 -01

147-7979 COMPACT DRIVE MOTOR GROUP -24V
PART OF 224-4357-Page 453

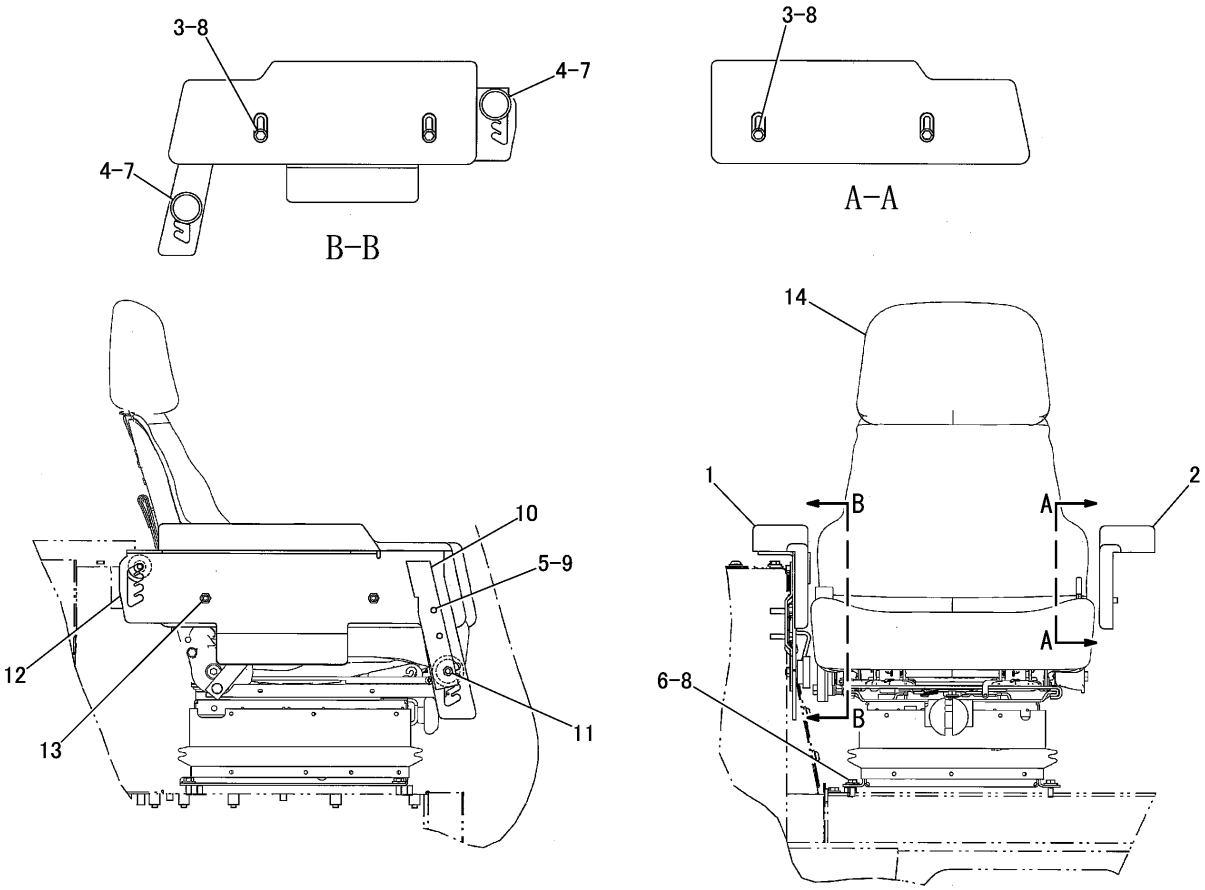

NOTE	№	PART NO.	QTY	PART NAME	NOTE	№	PART NO.	QTY	PART NAME
	1	126-3700	1	ARMREST AS(RH)					
	2	126-3701	1	ARMREST AS(LH)					
	3	8T-4137	4	BOLT(M10×1.5)					
	4	184-1503	2	KNOB					
	5	8T-4196	2	BOLT(M10×1.5)					
	6	9X-2125	4	BOLT(M10×1.5)					
	7	5P-1075	2	WASHER					
	8	7X-7729	10	WASHER					
	9	8T-4121	2	WASHER					
	10	184-3269	1	PLATE AS					
	11	9F-2978	1	NUT(3/8-16)(WELD)					
	12	184-3270	1	PLATE AS					
	13	8T-3490	2	NUT(M10×1.5)(WELD)					
Y	14	160-7186	1	SEAT GROUP					

Y-SEPARATE ILLUSTRATION

J138009 X01

SEAT AND MOUNTING GROUP (223-2205 N/S)

PART OF 322-6115-Page 236
REFERENCE:160-7186-Page 458

OPERATOR STATION

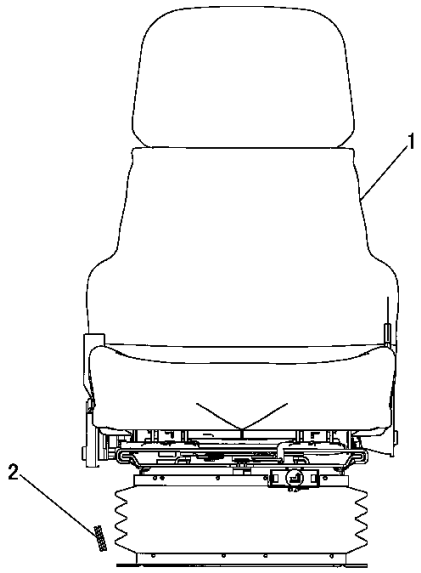

NOTE	№	PART NO.	QTY	PART NAME
Y	1	200-3174	1	SEAT GROUP
	2	9V-2818	1	GROMMET

Y-SEPARATE ILLUSTRATION

J138398 X00

SEAT GROUP (214-1196 N/S)
REFERENCE:200-3174-Page 458
AN ATTACHMENT

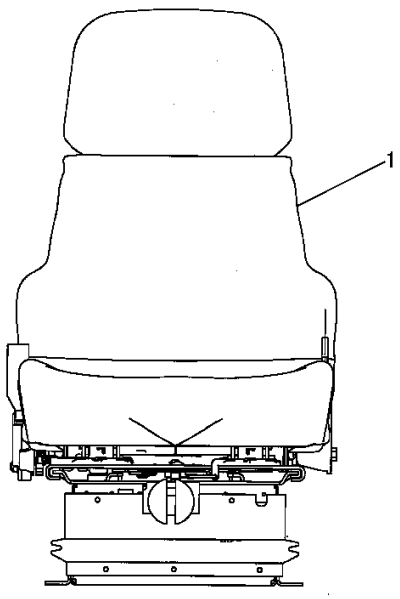

NOTE	№	PART NO.	QTY	PART NAME
Y	1	159-2950	1	SEAT GROUP

Y-SEPARATE ILLUSTRATION

J138071 X00

SEAT GROUP (214-1197 N/S)
PART OF 284-4645-Page 406
REFERENCE:159-2950-Page 459
AN ATTACHMENT

OPERATOR STATION

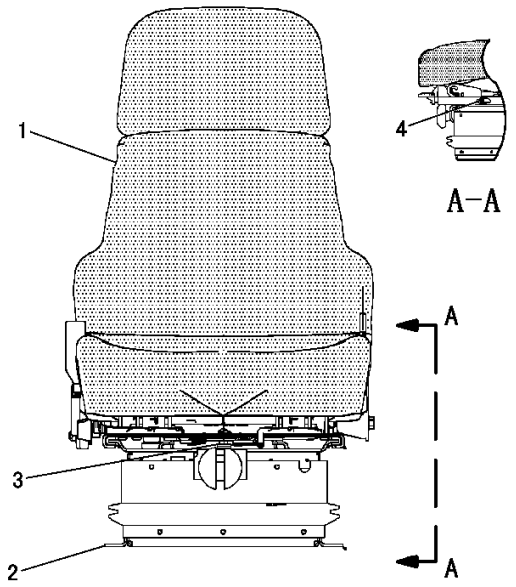

NOTE	№	PART NO.	QTY	PART NAME
Y	1	178–0606	1	SEAT GROUP
Y	2	160–7165	1	SUSPENSION GROUP
	3	4F–4879	1	BOLT(3/8-16)
		203–7703	2	WASHER
	4	173–5787	4	SETSCREW(1/4-20)
				AVAILABLE REPAIR KIT(S):
		173–7035	1	BLOCK KIT (INCLUDES BOLT,WASHERS, BLOCKS AND SETSCREWS)

Y-SEPARATE ILLUSTRATION

J112807 -06

160-7186 SUSPENSION SEAT GROUP

PART OF 223-2205-Page 456
REFERENCE:178-0606-Page 459 160-7165-Page 464, 465

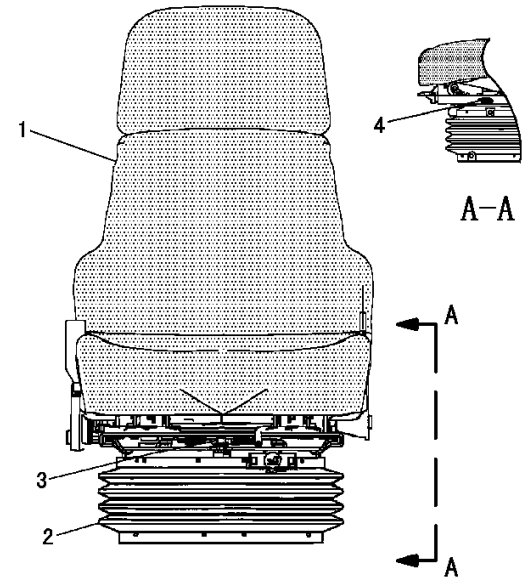

NOTE	№	PART NO.	QTY	PART NAME
Y	1	178–0606	1	SEAT GROUP
Y	2	191–2933	1	SUSPENSION GROUP
	3	4F–4879	1	BOLT(3/8-16)
		203–7703	2	WASHER
	4	173–5787	4	SETSCREW(1/4-20)
				AVAILABLE REPAIR KIT(S):
		173–7035	1	BLOCK KIT (INCLUDES BOLT,WASHERS, BLOCKS AND SETSCREWS)

Y-SEPARATE ILLUSTRATION

J119329 X00

200-3174 SUSPENSION SEAT GROUP

PART OF 214-1196-Page 457
REFERENCE:178-0606-Page 459 191-2933-Page 466, 467
AN ATTACHMENT

OPERATOR STATION

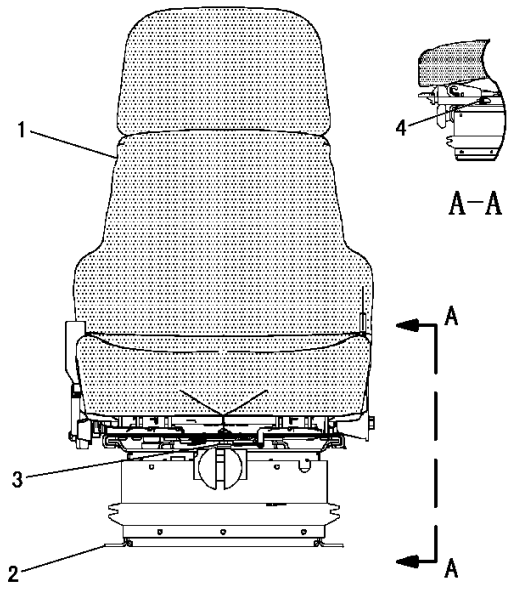

NOTE	№	PART NO.	QTY	PART NAME
Y	1	184-6011	1	SEAT GROUP
Y	2	160-7165	1	SUSPENSION GROUP
	3	4F-4879	1	BOLT(3/8-16)
		203-7703	2	WASHER
	4	173-5787	4	SETSCREW(1/4-20)
				AVAILABLE REPAIR KIT(S):
		173-7035	1	BLOCK KIT (INCLUDES BOLT,WASHERS, BLOCKS AND SETSCREWS)

Y-SEPARATE ILLUSTRATION

J112716 -05

159-2950 SUSPENSION SEAT GROUP

PART OF 214-1197-Page 457
REFERENCE:184-6011-Page 460 160-7165-Page 464, 465
AN ATTACHMENT

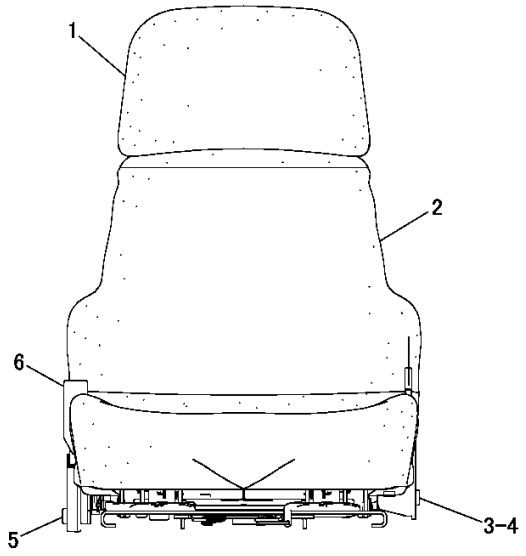

NOTE	№	PART NO.	QTY	PART NAME
	1	229-1494	1	EXTENSION GROUP
		117-4491	1	ROD
Y	2	178-0603	1	SEAT GROUP
	3	205-6388	1	BOLT(7/16-20)
	4	177-4937	1	SPACER
	5	0T-0244	1	BOLT(7/16-20)
	6	222-0345	1	SEAT BELT GROUP
		0T-0244	1	BOLT(7/16-20)
		205-6388	1	BOLT(7/16-20)

Y-SEPARATE ILLUSTRATION

J139417 -02

178-0606 SEAT GROUP -FABRIC

PART OF 160-7186-Page 458,200-3174-Page 458
REFERENCE:178-0603-Page 462, 463

OPERATOR STATION

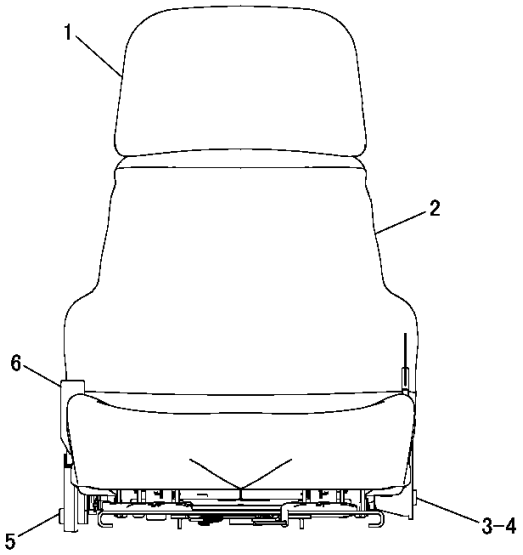

NOTE	№	PART NO.	QTY	PART NAME
	1	173-3083	1	EXTENSION GROUP
		117-4491	1	ROD
Y	2	180-7304	1	SEAT GROUP
	3	205-6388	1	BOLT(7/16-20)
	4	177-4937	1	SPACER
	5	0T-0244	1	BOLT(7/16-20)
	6	222-0345	1	SEAT BELT GROUP
		0T-0244	1	BOLT(7/16-20)
		205-6388	1	BOLT(7/16-20)

Y-SEPARATE ILLUSTRATION

J139418 -02

184-6011 SEAT GROUP -VINYL
PART OF 159-2950-Page 459
REFERENCE:180-7304-Page 461
AN ATTACHMENT

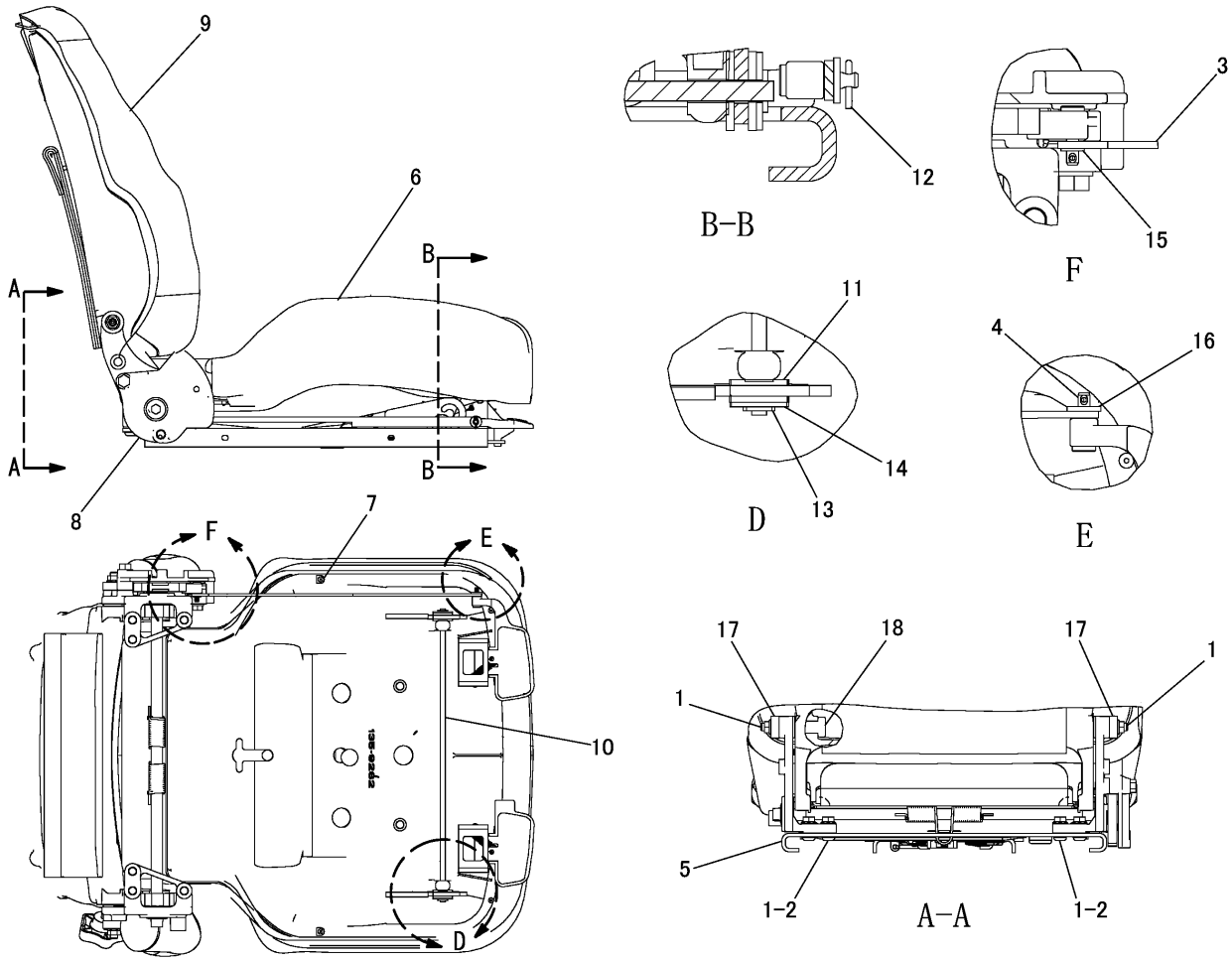

NOTE	№	PART NO.	QTY	PART NAME	NOTE	№	PART NO.	QTY	PART NAME
	1	143-1288	8	LOCKNUT(3/8-16)					
	2	171-1230	6	SCREW(3/8-16)					
	3	171-6682	1	BAR					
	4	172-2416	2	PIN					
Y	5	173-1028	1	PLATE GROUP					
	6	173-3283	1	PAN AS					
		169-1026	1	CUSHION AS					
	7	6K-3273	5	RIVET					
Y	8	177-4935	1	SEAT RECLINER GROUP					
Y	9	180-7305	1	PAN GROUP					
	10	184-2298	1	ROD					
	11	184-2299	4	WASHER					
	12	095-0843	2	COTTER PIN					
	13	5V-1496	2	RETAINER					
	14	6V-7646	2	WASHER					
	15	8T-0328	1	WASHER					
	16	8T-4205	1	WASHER					
	17	8Y-6277	2	SPACER					
	18	177-1863	2	BOLT(3/8-16)					

Y-SEPARATE ILLUSTRATION

J147427 -02

180-7304 SEAT GROUP -VINYL

PART OF 184-6011-Page 460
REFERENCE:173-1028-Page 470 177-4935-Page 473 180-7305-Page 471
AN ATTACHMENT

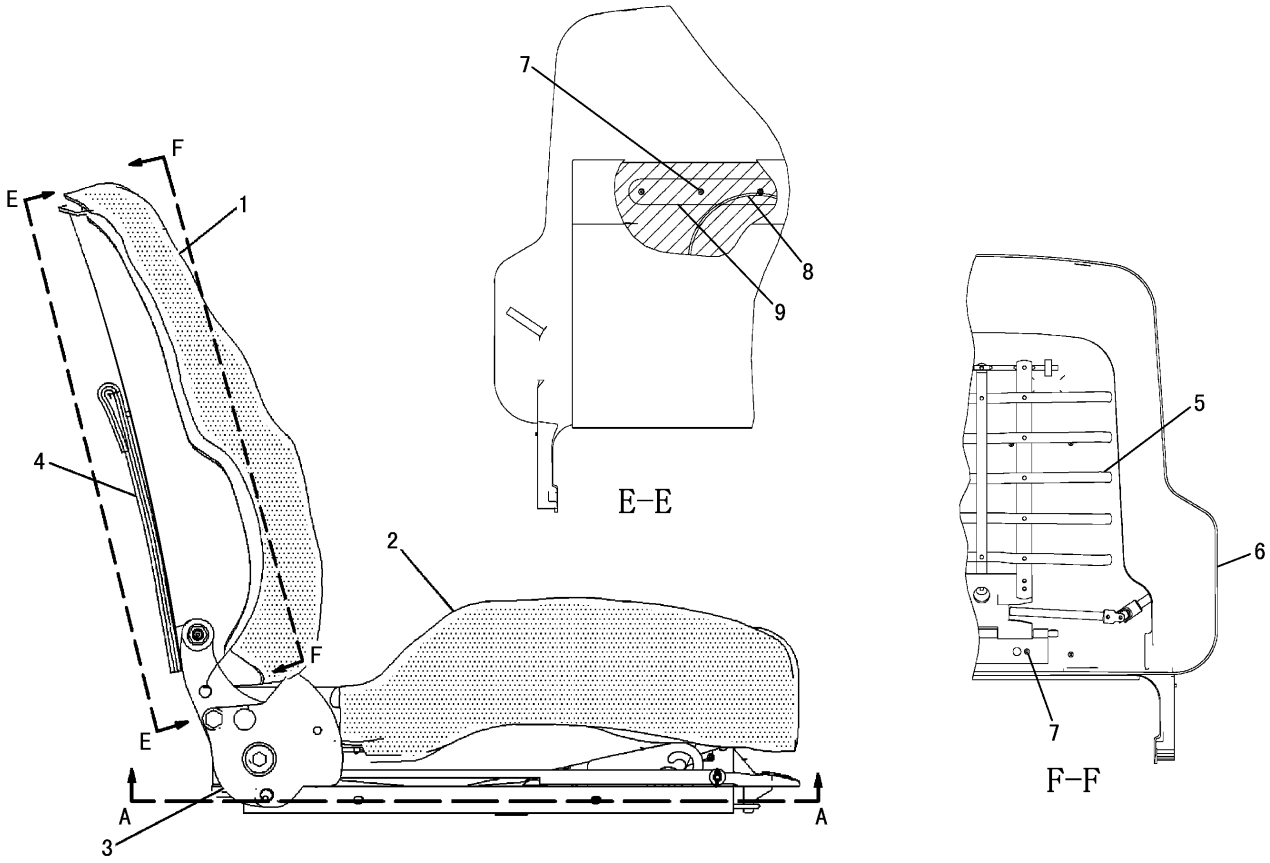

NOTE	№	PART NO.	QTY	PART NAME	NOTE	№	PART NO.	QTY	PART NAME
	1	233-6745	1	CUSHION AS					
		184-2300	1	FILM					
	2	218-0861	1	PAN AS					
		8T-9082	5	RIVET					
		217-9049	1	CUSHION AS					
Y	3	177-4935	1	SEAT RECLINER GROUP					
	4	178-7907	1	HOLDER					
	5	136-1543	1	PLATE AS					
	6	177-4930	1	PAN					
	7	4K-9429	8	RIVET					
	8	5P-7957	1	LANYARD					
	9	173-2052	1	RETAINER					

Y-SEPARATE ILLUSTRATION

J119222 -01

178-0603 SEAT GROUP -FABRIC-PART 1 OF 2

PART OF 178-0606-Page 459
REFERENCE:177-4935-Page 473

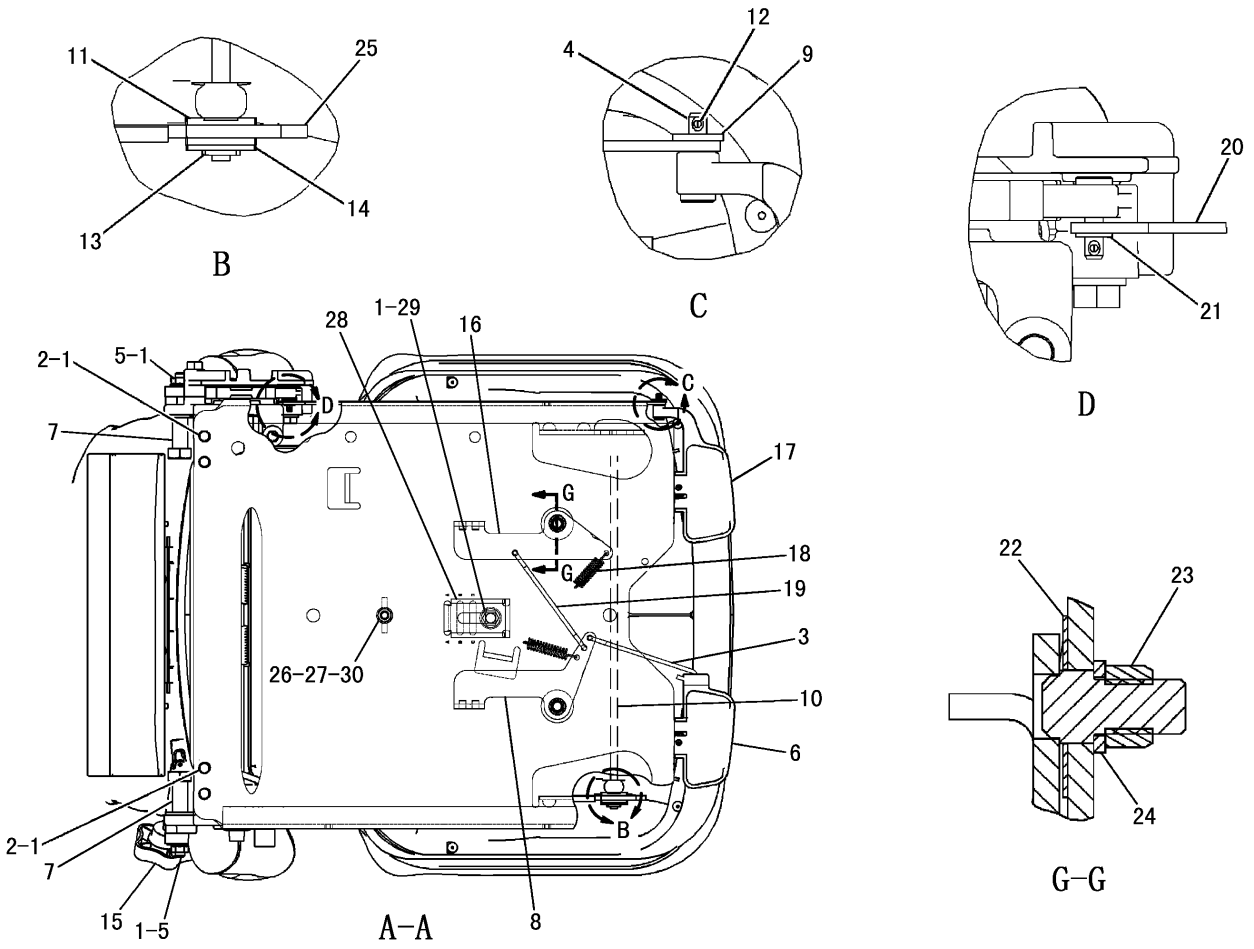

NOTE	№	PART NO.	QTY	PART NAME	NOTE	№	PART NO.	QTY	PART NAME
	1	143-1288	9	LOCKNUT(3/8-16)		20	171-6682	1	BAR
	2	171-1230	6	SCREW(3/8-16)		21	8T-0328	1	WASHER
	3	164-4531	1	ROD		22	132-0338	2	WASHER
	4	172-2416	2	PIN		23	2K-4973	2	LOCKNUT(3/8-16)
	5	8Y-6277	2	SPACER		24	7X-0608	2	WASHER
	6	170-1114	1	HANDLE		25	170-1112	1	PLATE AS
	7	177-1863	2	BOLT(3/8-16)		26	117-4486	1	ANCHOR
	8	136-1544	1	LATCH AS(LH)		27	9M-1974	1	WASHER
	9	8T-4205	1	WASHER		28	172-4001	1	BRACKET
	10	184-2298	1	ROD		29	1D-4675	1	BOLT(3/8-16)
	11	184-2299	4	WASHER		30	7L-8170	1	NUT(5/16-18)
	12	095-0843	2	COTTER PIN					
	13	5V-1496	2	RETAINER					
	14	6V-7646	2	WASHER					
	15	164-4883	1	KNOB					
		8T-7566	1	PIN					
	16	156-5545	1	LATCH AS(RH)					
	17	170-1115	1	HANDLE					
	18	4V-8256	4	SPRING					
	19	117-4492	1	ROD					

J119223 -01

178-0603 SEAT GROUP -FABRIC-PART 2 OF 2

PART OF 178-0606-Page 459

OPERATOR STATION

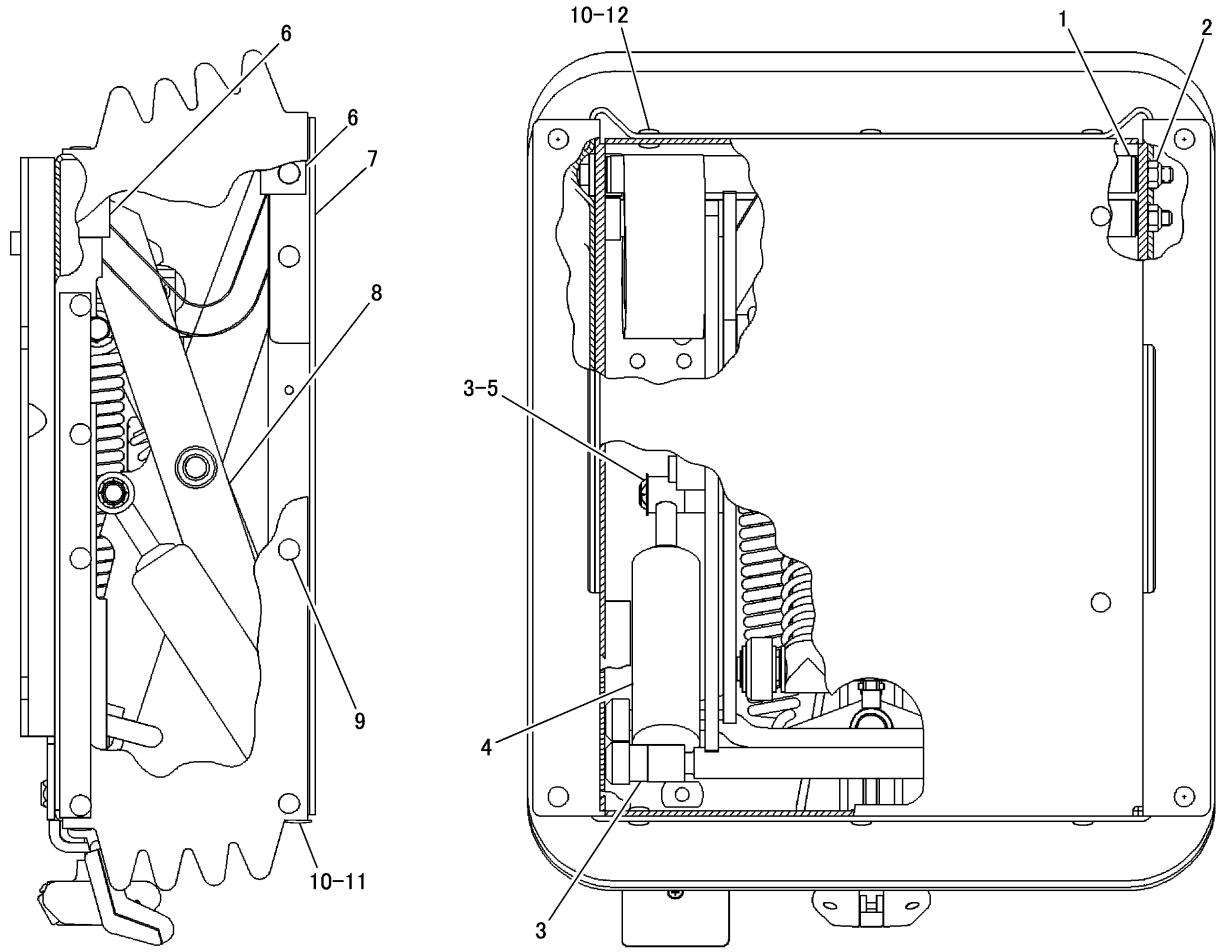

BOTTOM VIEW

NOTE	№	PART NO.	QTY	PART NAME	NOTE	№	PART NO.	QTY	PART NAME
	1	4V-8577	4	BEARING					AVAILABLE REPAIR KIT(S):
	2	2K-4973	2	LOCKNUT(3/8-16)			8Y-5944	1	BOOT KIT
	3	4V-7884	2	BEARING					(INCLUDES BOOT,
	4	8Y-5965	1	SHOCK ABSORBER					RETAINERS,FASTENERS)
	5	5V-1497	1	RETAINER			101-4194	1	BELT KIT
	6	8Y-6024	2	SHAFT AS					(INCLUDES BELTS)
	7	8Y-6014	1	HOUSING AS			101-4195	1	ROLLER KIT
	8	8Y-6012	1	ARM AS					(INCLUDES ROLLERS)
	9	101-0003	20	FASTENER					
	10	166-6781	6	FASTENER					
	11	163-1146	3	FASTENER					
	12	197-7689	3	FASTENER					

J139386 -06

160-7165 SEAT SUSPENSION GROUP -PART 1 OF 2
PART OF 159-2950-Page 459,160-7186-Page 458

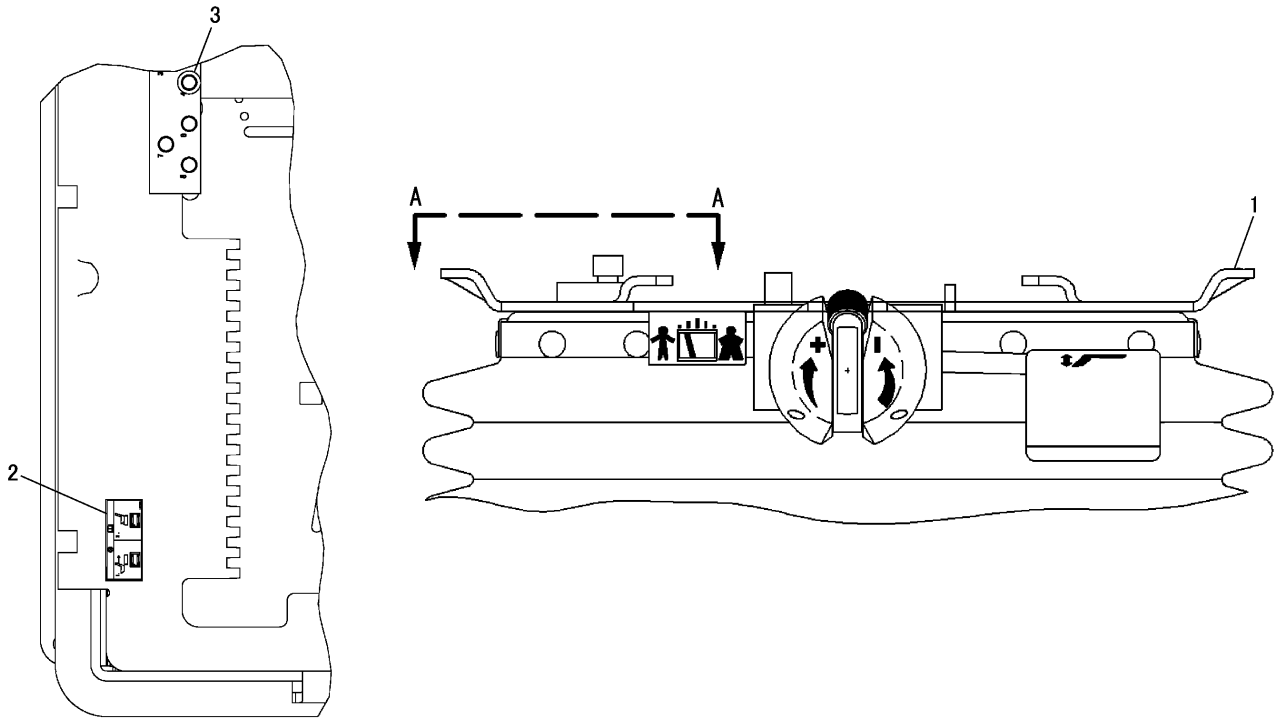

NOTE	№	PART NO.	QTY	PART NAME	NOTE	№	PART NO.	QTY	PART NAME
Y	1	174-2231	1	HOUSING GROUP					
	2	145-0326	1	FILM(SEAT ADJUSTMENT)					
	3	169-7380	1	BOLT(3/8-16)					

Y-SEPARATE ILLUSTRATION

J139387 -06

160-7165 SEAT SUSPENSION GROUP -PART 2 OF 2

PART OF 159-2950-Page 459,160-7186-Page 458
REFERENCE:174-2231-Page 468, 469

OPERATOR STATION

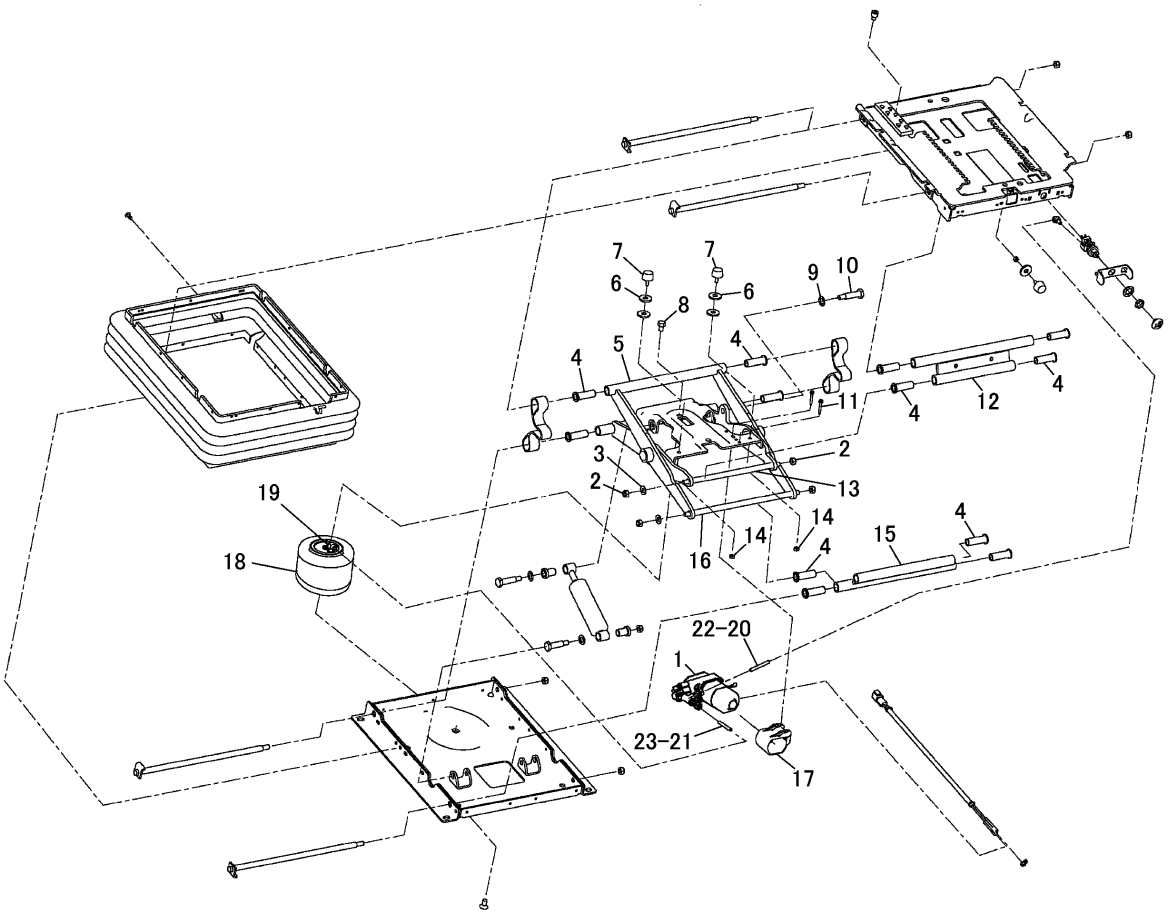

NOTE	№	PART NO.	QTY	PART NAME	NOTE	№	PART NO.	QTY	PART NAME
	1	237-3970	1	COMPRESSOR AS		15	192-7783	1	TOGGLE AS
		214-0783	1	COMPRESSOR KIT		16	192-7822	1	SHAFT
		5P-4423	1	ELBOW		17	237-3943	1	BRACKET
		5P-4432	1	ELBOW		18	192-7810	1	SPRING AS
		186-5107	3	SCREW(No.8-16)		19	5P-4423	1	ELBOW
E		211-5358		CONDUIT---100cm	D	20	5P-6010		TUBE---0.267m
D		5P-6010		TUBE---1m	D	21	5P-6010		TUBE---0.356m
	2	2K-4973	4	LOCKNUT(3/8-16)	E	22	211-5358		CONDUIT---26.7cm
	3	4B-4278	2	WASHER	E	23	211-5358		CONDUIT---35.6cm
	4	4V-8577	12	BEARING					
	5	192-7767	1	SCISSORS AS					
	6	3P-9900	4	WASHER					
	7	192-7820	2	BUMPER					
	8	8T-9371	1	BOLT(3/8-16)					
	9	3J-4818	1	LOCKWASHER					
	10	192-7812	1	BOLT(3/8-16)					
	11	186-5107	2	SCREW(No.8-16)					
	12	192-7787	1	TOGGLE AS					
	13	192-7760	1	SHAFT					
	14	5C-2890	2	NUT(M6×1)					

D-ORDER BY THE m
E-ORDER BY THE cm

J132568 X02

191-2933 SEAT SUSPENSION GROUP -AIR-PART 1 OF 2
PART OF 200-3174-Page 458
AN ATTACHMENT

OPERATOR STATION

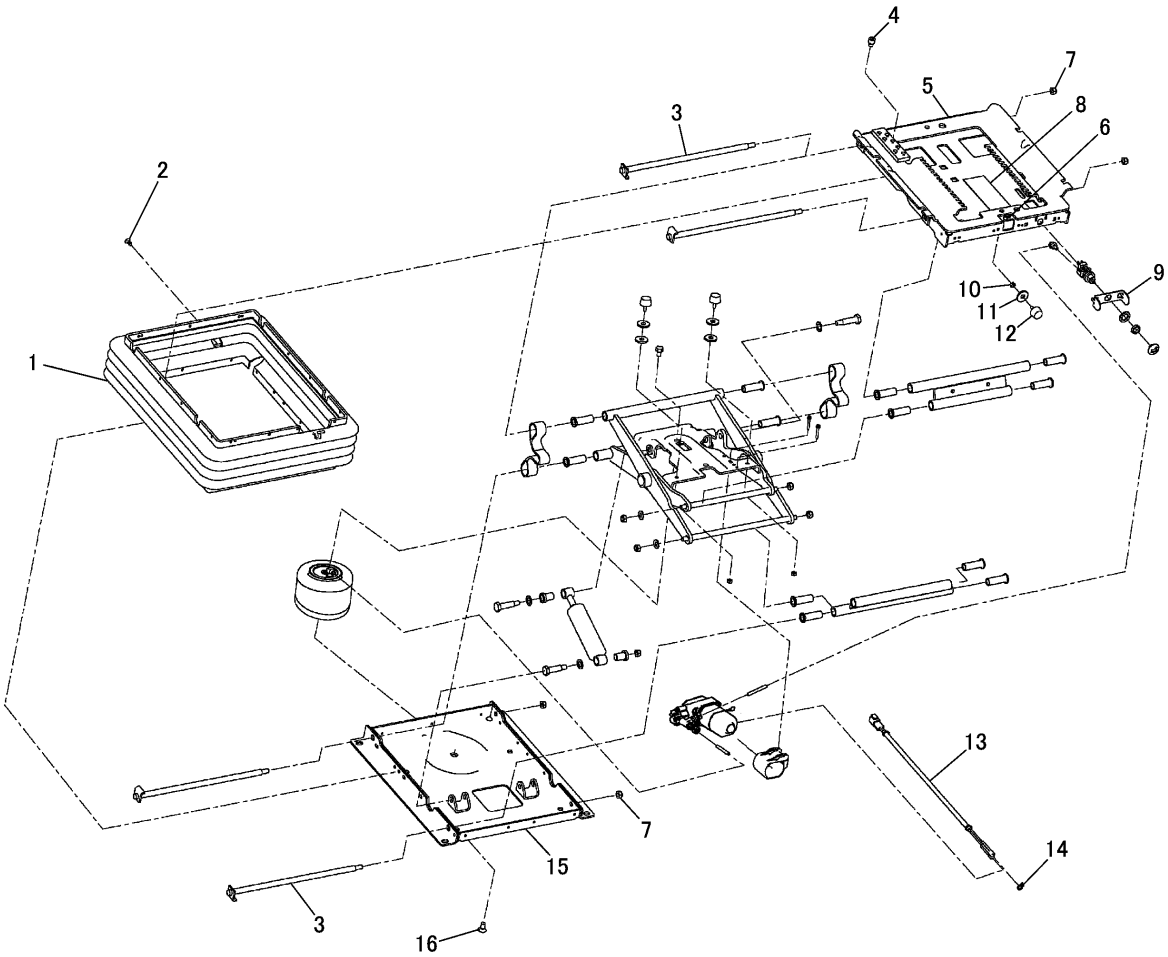

NOTE	№	PART NO.	QTY	PART NAME	NOTE	№	PART NO.	QTY	PART NAME
	1	192-7795	1	BOOT					AVAILABLE REPAIR KIT(S):
	2	101-0003	33	FASTENER			192-7799	1	AIR VALVE KIT
	3	192-7752	4	SHAFT AS					(INCLUDES NUT,FITTING,
	4	169-7380	1	BOLT(3/8-16)					VALVE,LOCKWASHER,
	5	192-7790	1	HOUSING AS					AND KNOB AS)
	6	2K-4973	1	LOCKNUT(3/8-16)			211-9294	1	TETHER KIT
	7	2K-4973	4	LOCKNUT(3/8-16)			192-7848	1	SHOCK ABSORBER KIT
	8	145-0326	1	FILM(SEAT ADJUSTMENT)					(INCLUDES WASHERS,BOLTS,
	9	164-1234	1	PLATE					SHOCK ABSORBER,BEARINGS
	10	5C-2890	1	NUT(M6×1)					AND LOCKWASHERS)
	11	3P-9900	1	WASHER					
	12	192-7820	1	BUMPER					
	13	192-7805	1	HARNESS AS					
		102-8802	1	RECEPTACLE KIT(2P)					
		5P-4571	2	TERMINAL					
		186-3735	2	PIN					
	14	8L-8413	1	STRAP					
	15	192-7755	1	HOUSING AS					
	16	1H-8296	1	SCREW(3/8-16)					

J132569 X02

191-2933 SEAT SUSPENSION GROUP -AIR-PART 2 OF 2
PART OF 200-3174-Page 458
AN ATTACHMENT

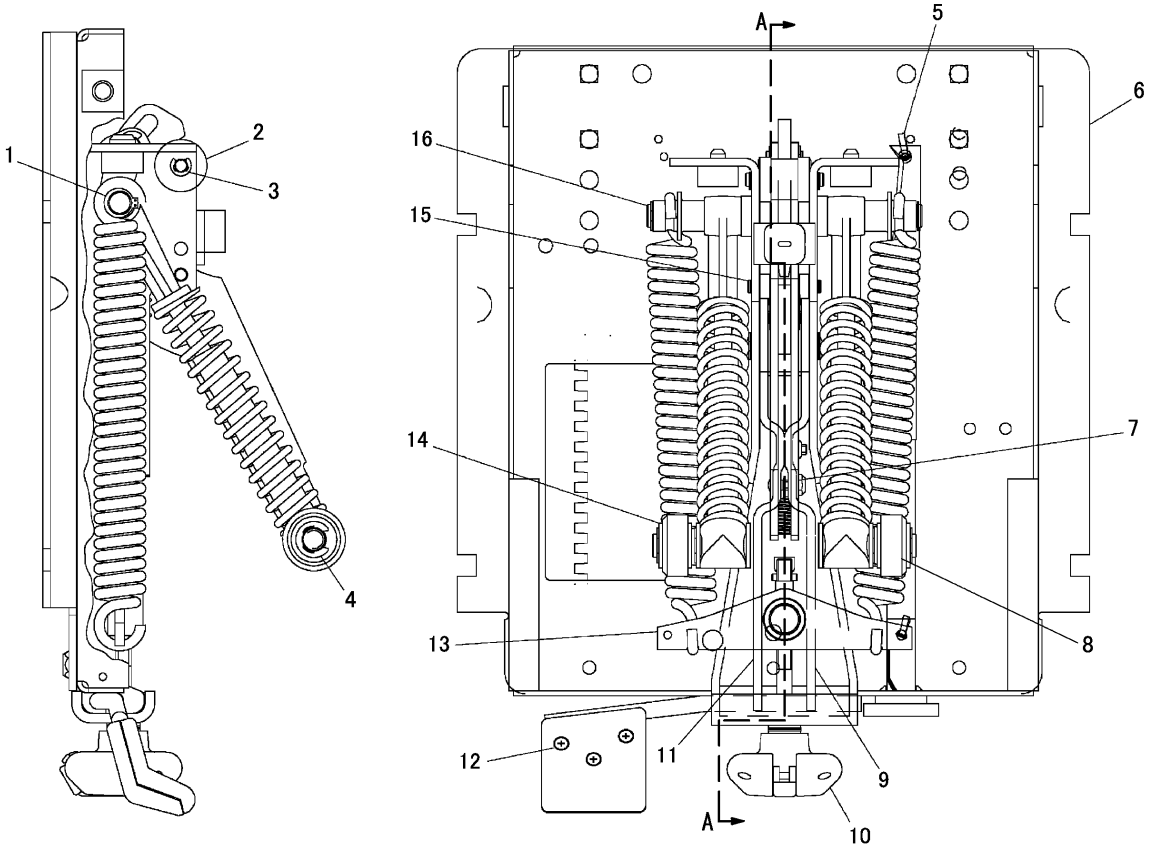

NOTE	№	PART NO.	QTY	PART NAME	NOTE	№	PART NO.	QTY	PART NAME
	1	3D-2975	2	RING					AVAILABLE REPAIR KIT(S):
	2	7V-5191	2	SPACER			8Y-5945	1	SUSPENSION KNOB KIT
	3	5D-4822	2	RING					(INCLUDES KNOBS)
	4	5P-8445	4	RING			8Y-6859	1	SPRING KIT
	5	8L-8413	2	STRAP					(INCLUDES SPRINGS,
	6	174-2237	1	HOUSING AS					BUSHINGS,RINGS)
	7	2D-6235	2	LOCKNUT(1/4-20)			8Y-6860	1	SPRING KIT
		5V-0770	2	BOLT(1/4-20)					(INCLUDES SPRINGS,BUSHINGS,
	8	8Y-6060	2	ROLLER					SPACERS AND RODS)
	9	8Y-6063	1	LINK			100-3224	1	INDICATOR KIT
	10	131-5167	1	KNOB AS					(INCLUDES GUIDE,TAPE,STRAPS)
		4V-7875	1	HANDLE			100-5179	1	BUMPER KIT
		4V-7877	1	SPRING					(INCLUDES BUMPERS)
		6V-3259	1	PIN			108-4086	1	FOLLOWER KIT
	11	8Y-6062	1	LINK					(INCLUDES FOLLOWER,PIN)
	12	9X-8918	3	SCREW(No.8-32)			108-4087	1	FOLLOWER KIT
	13	8Y-6069	1	ADJUSTER AS					(INCLUDES FOLLOWER,PIN)
	14	4B-4059	6	WASHER			108-4103	1	BEARING KIT
	15	8Y-6064	2	ROLLER					(INCLUDES ROLLERS)
	16	161-5967	1	SHAFT					

J118548 -01

174-2231 SUSPENSION HOUSING GROUP -PART 1 OF 2
PART OF 160-7165-Page 465

OPERATOR STATION

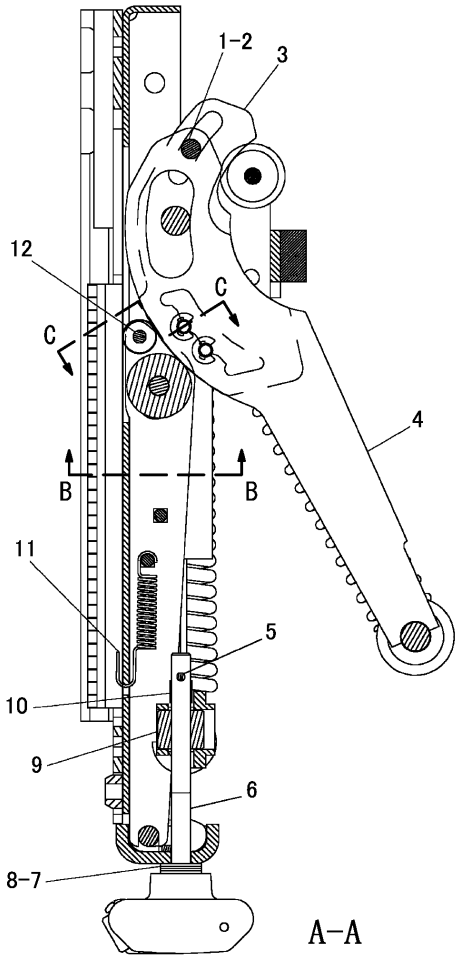

A-A

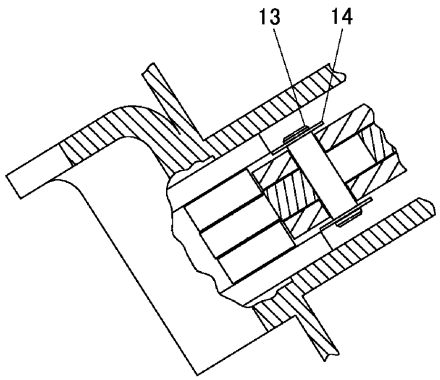

C-C

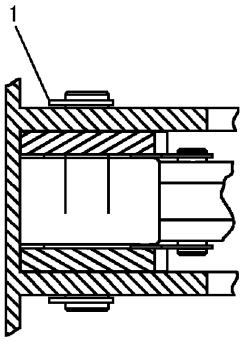

B-B

NOTE	№	PART NO.	QTY	PART NAME	NOTE	№	PART NO.	QTY	PART NAME
	1	8S-7803	4	RING					
	2	8Y-6046	1	PIN					
	3	8Y-6045	1	CAM					
	4	8Y-6041	1	ARM AS					
	5	095-0878	1	PIN					
	6	131-4242	1	BOLT(3/8-16)					
	7	4N-2927	2	RACE					
	8	7M-7219	1	BEARING					
	9	8Y-6068	1	NUT(3/8-16)					
	10	8Y-6067	1	SPACER					
	11	8Y-6066	1	SPRING					
	12	1Y-7927	1	PIN					
	13	8Y-6047	2	PIN					
	14	2M-7819	4	RING					

J118549 -01

174-2231 SUSPENSION HOUSING GROUP -PART 2 OF 2

PART OF 160-7165-Page 465

OPERATOR STATION

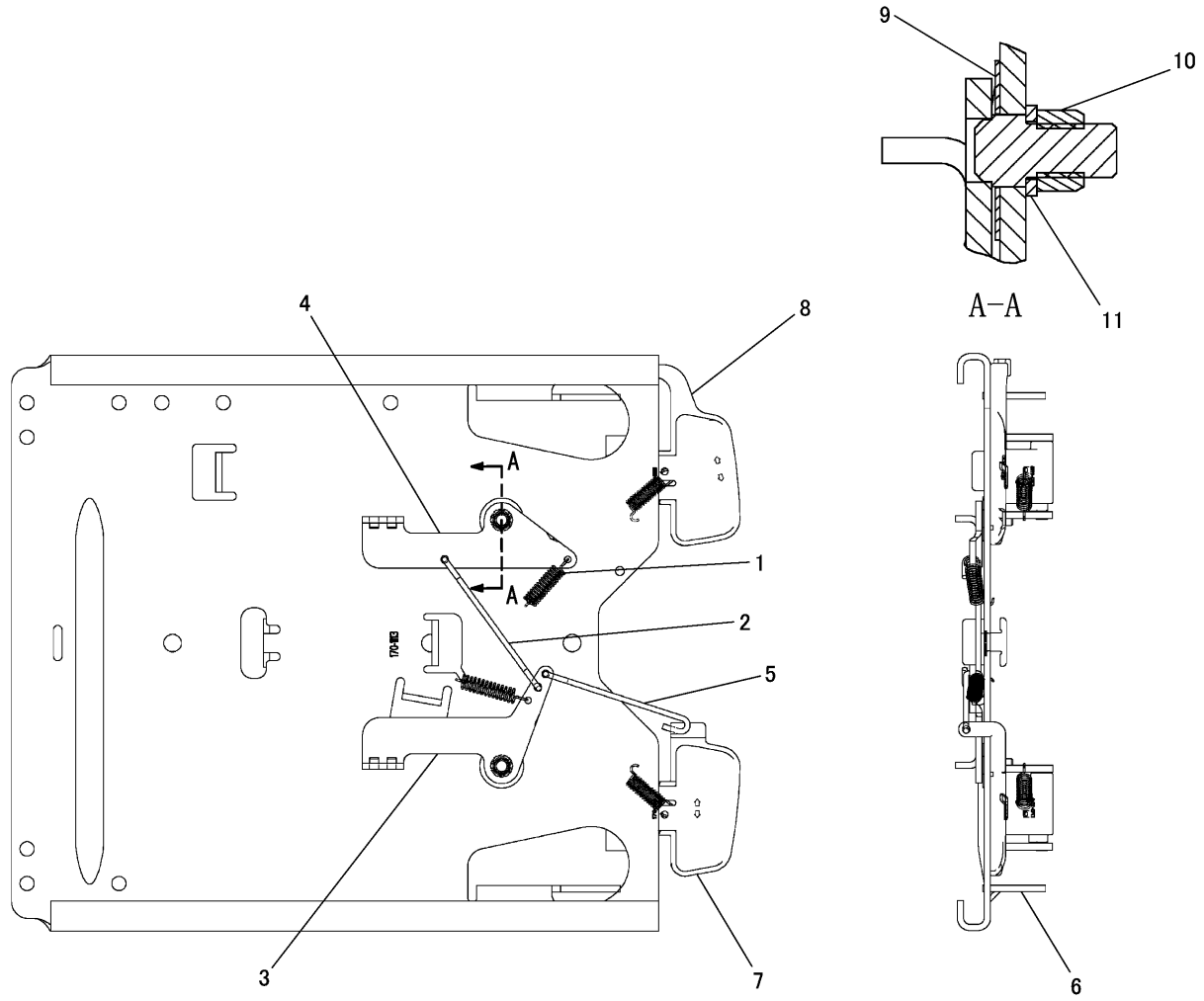

NOTE	№	PART NO.	QTY	PART NAME	NOTE	№	PART NO.	QTY	PART NAME
	1	4V-8256	4	SPRING					
	2	117-4492	1	ROD					
	3	136-1544	1	LATCH AS					
	4	156-5545	1	LATCH AS					
	5	164-4531	1	ROD					
	6	170-1112	1	PLATE AS					
	7	170-1114	1	HANDLE					
	8	170-1115	1	HANDLE					
	9	132-0338	2	WASHER					
	10	2K-4973	2	LOCKNUT(3/8-16)					
	11	7X-0608	2	WASHER					

J147428 -03

PLATE GROUP (173-1028 N/S) -SLIDE
PART OF 180-7304-Page 461
AN ATTACHMENT

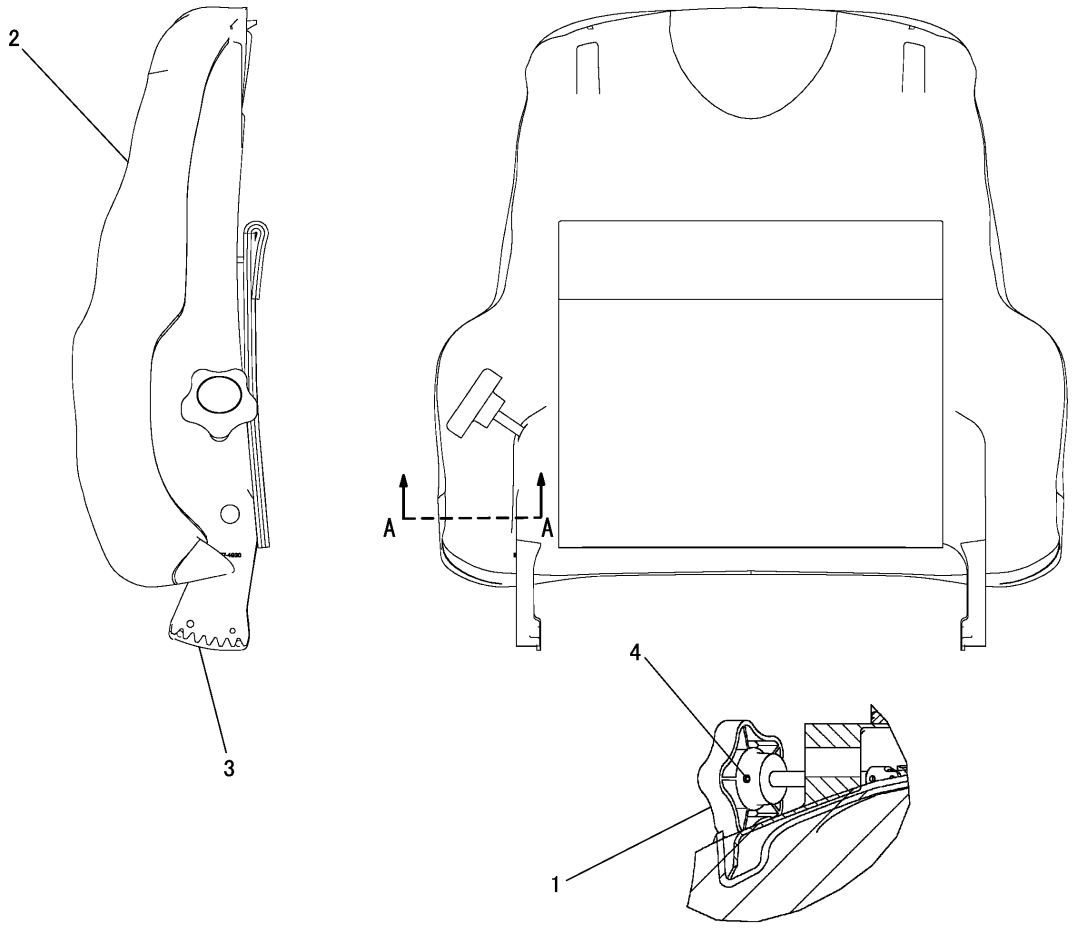

A–A

NOTE	№	PART NO.	QTY	PART NAME	NOTE	№	PART NO.	QTY	PART NAME
	1	164-4883	1	KNOB					
	2	169-0697	1	CUSHION AS					
		184-2300	1	FILM(CUSHION)					
Y	3	178-0605	1	PAN AS					
	4	8T-7566	1	PIN					

Y-SEPARATE ILLUSTRATION

J147429 -00

PAN GROUP (180-7305 N/S) -BACKREST

PART OF 180-7304-Page 461
REFERENCE:178-0605-Page 472
AN ATTACHMENT

OPERATOR STATION

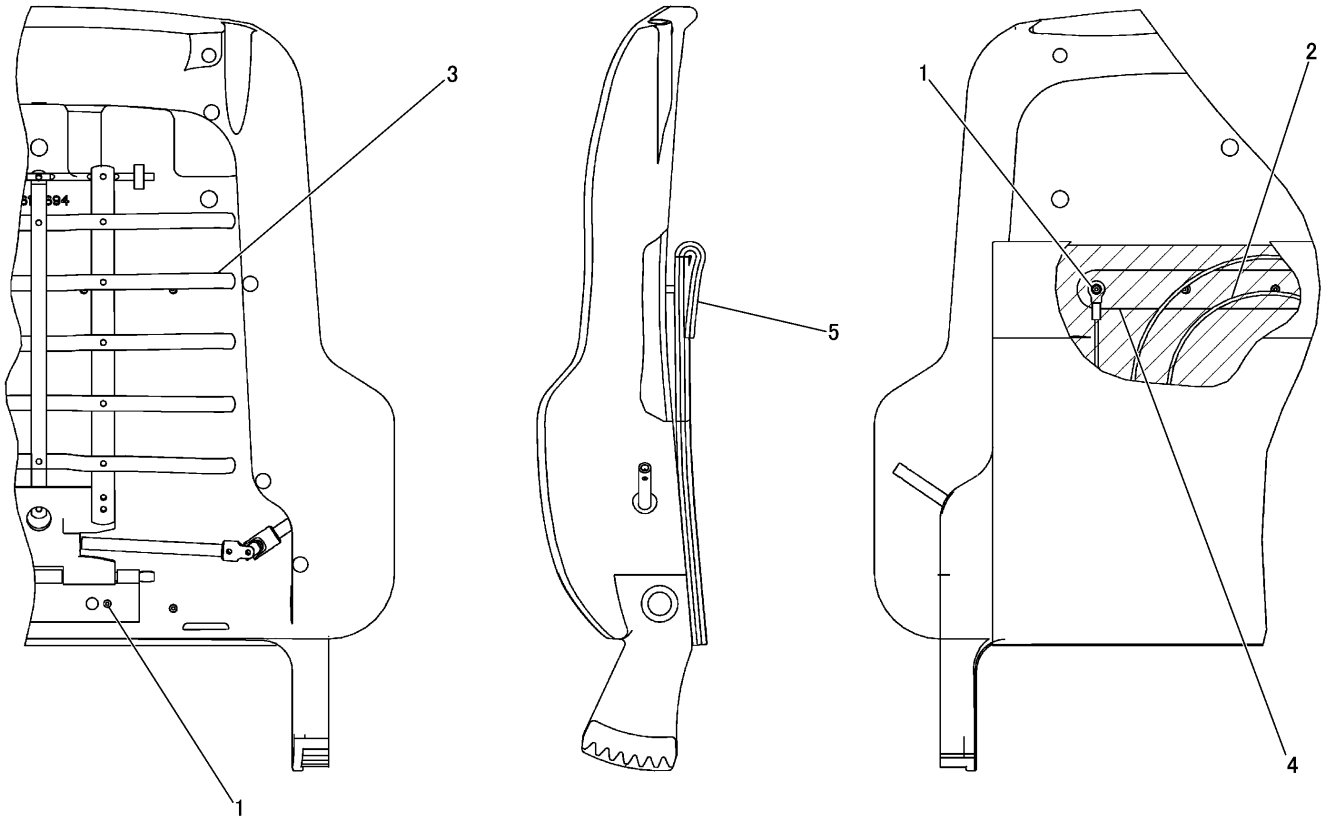

NOTE	№	PART NO.	QTY	PART NAME	NOTE	№	PART NO.	QTY	PART NAME
	1	4K-9429	8	RIVET					
	2	5P-7957	1	LANYARD					
	3	136-1543	1	PLATE AS					
	4	173-2052	1	RETAINER					
	5	178-7907	1	HOLDER					

J147430 -01

178-0605 PAN ASSEMBLY
PART OF 180-7305-Page 471
AN ATTACHMENT

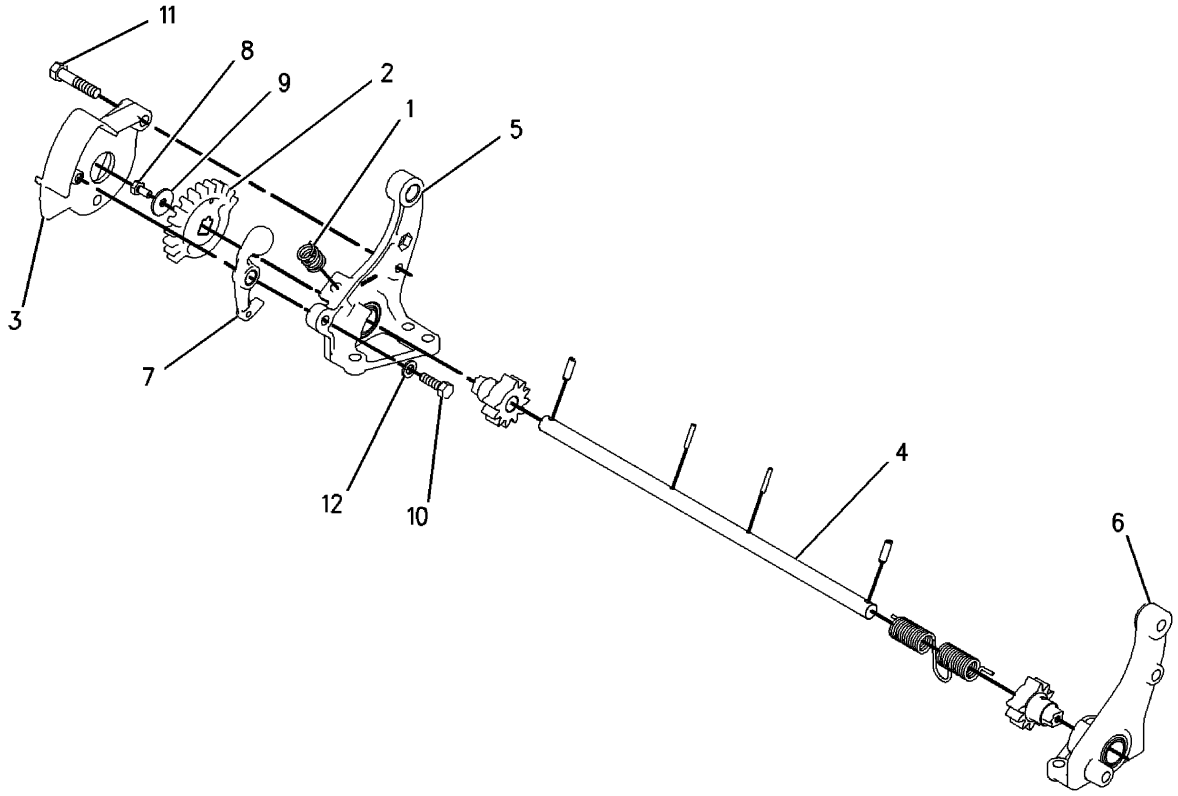

NOTE	№	PART NO.	QTY	PART NAME	NOTE	№	PART NO.	QTY	PART NAME
	1	236-5197	1	SPRING					
	2	177-1860	1	GEAR					
	3	177-1862	1	BRACKET					
	4	178-0607	1	SHAFT AS					
		2L-5893	2	PIN					
		192-5627	2	PIN					
		170-8590	1	SPRING					
	5	178-0608	1	BRACKET AS					
		174-7159	1	BEARING					
	6	178-0609	1	BRACKET AS					
		174-7159	1	BEARING					
	7	217-7933	1	LATCH					
	8	031-0214	1	BOLT(1/4-20)					
	9	101-2867	1	WASHER					
	10	4M-6425	1	BOLT(5/16-18)					
	11	5S-7383	1	BOLT(3/8-16)					
	12	8T-4224	1	WASHER					

J112724 -03

SEAT RECLINER GROUP (177-4935 N/S)

PART OF 178-0603-Page 462,180-7304-Page 461

OPERATOR STATION

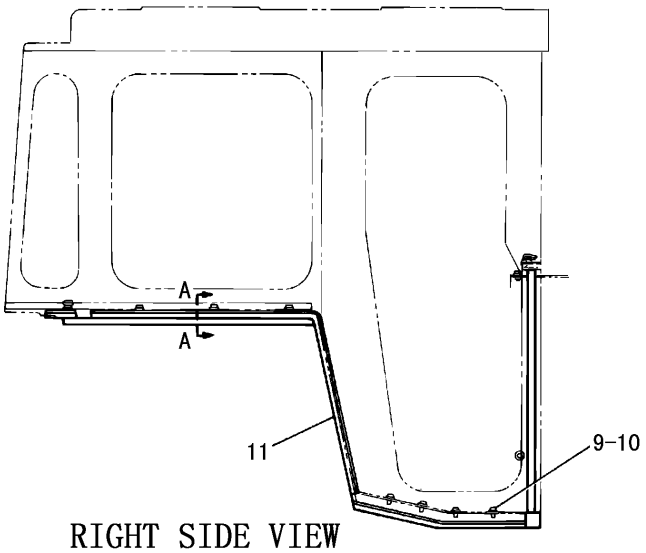

RIGHT SIDE VIEW

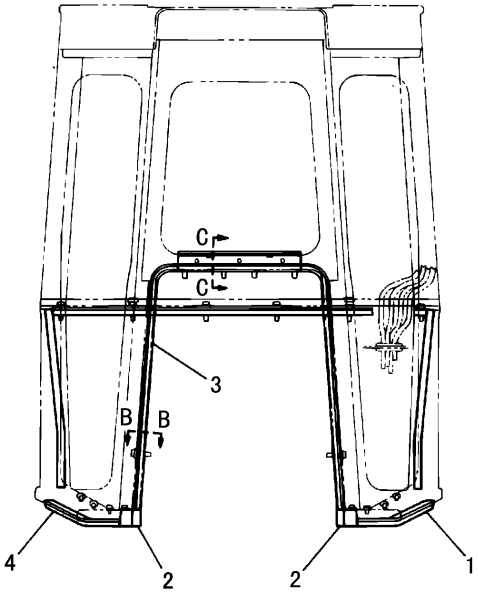

FRONT VIEW

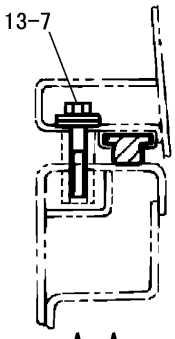

A-A

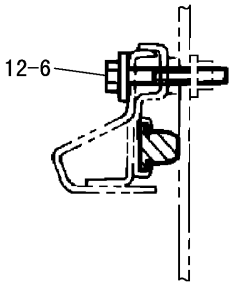

B-B

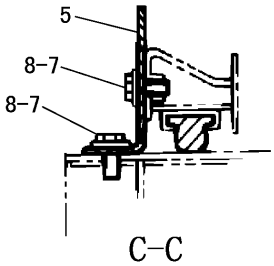

C-C

NOTE	№	PART NO.	QTY	PART NAME	NOTE	№	PART NO.	QTY	PART NAME
	1	9G-0986	1	SEAL					
	2	9G-0983	2	SEAL					
D	3	5P-7514		SEAL---2.1m					
	4	9G-0990	1	SEAL					
	5	113-6033	1	ANGLE					
	6	189-5358	2	BOLT(M10×1.5)					
	7	7X-3392	31	WASHER					
	8	171-2438	7	BOLT(M12×1.75)					
	9	8T-4136	8	BOLT(M10×1.5)					
	10	7X-7729	8	WASHER					
D	11	5P-7513		SEAL---4.2m					
	12	189-5359	2	WASHER					
	13	189-6123	12	BOLT(M12×1.75)					

D-ORDER BY THE m

J118753 X02

CAB MOUNTING GROUP (169-9637 N/S)
PART OF 322-6118-Page 403

OPERATOR STATION

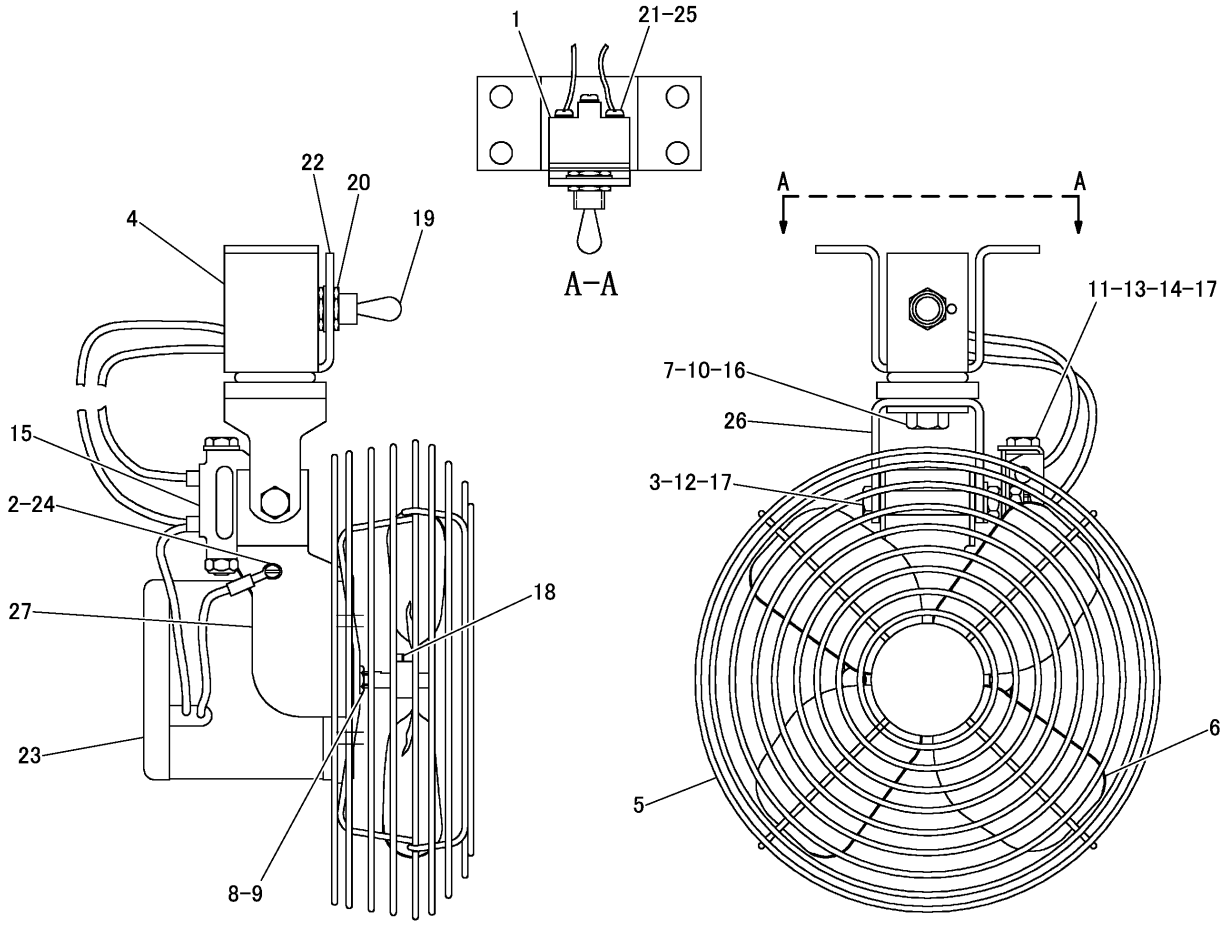

NOTE	№	PART NO.	QTY	PART NAME
	1	2L-8075	2	TERMINAL
	2	7H-4543	1	SCREW(No.10-16)
	3	7X-0264	1	BOLT(1/4-20)
	4	3E-7837	1	BASE AS
		9F-2978	1	NUT(3/8-16)(WELD)
	5	3D-8749	1	GUARD
	6	3D-8748	1	FAN AS
	7	6N-6984	1	GROMMET AS
	8	1M-1230	2	NUT AND LOCK AS(No.10-32)
	9	4B-4274	2	WASHER
	10	9B-7237	1	BOLT(3/8-16)
	11	8T-9368	1	BOLT(1/4-20)
	12	4B-4276	1	WASHER
	13	6T-9255	1	PLATE
	14	6T-9256	2	WASHER
	15	6T-8943	1	PLATE
	16	8T-4222	1	WASHER
	17	2D-6235	3	LOCKNUT(1/4-20)
	18	7L-8316	1	SETSCREW(No.10-32)
	19	1V-6652	1	SWITCH AS
	20	6T-3631	2	NUT(15/32-32)
	21	6V-8374	3	SCREW(No.6-32)
		3L-8187	3	LOCKWASHER
	22	6T-3632	1	LOCKWASHER
		6T-3633	1	RING
	23	174-1503	1	MOTOR AS
	24	2L-8076	1	TERMINAL
	25	2L-8075	2	TERMINAL
	26	3E-7838	1	BRACKET AS
	27	3E-7839	1	BRACKET AS

J157030 -03

FAN GROUP (3E-7835 N/S)
PART OF 211-9048-Page 405
AN ATTACHMENT

OPERATOR STATION

CONSISTS OF :

			PAGE
1	108-0720	AIR CONDITIONER GROUP	487
1	164-3716	AIR CONDITIONER LINES GROUP	480
1	165-8322	CONDENSER AND MOUNTING GROUP	489
1	165-0088	REFRIGERANT COMPRESSOR GROUP	492
1	165-2580	ROLLOVER ASSEMBLY	406
1	125-9257	SWITCH ASSEMBLY	
1	3E-8857	SWITCH ASSEMBLY	
1	126-1699	ACTUATOR	
1	110-6393	PLATE(INSTRUCTION)(A/C) (ON LEFT SIDE OF DASH)	

J119317 X00

AIR CONDITIONER ARRANGEMENT (164-3713 N/S)
AN ATTACHMENT

OPERATOR STATION

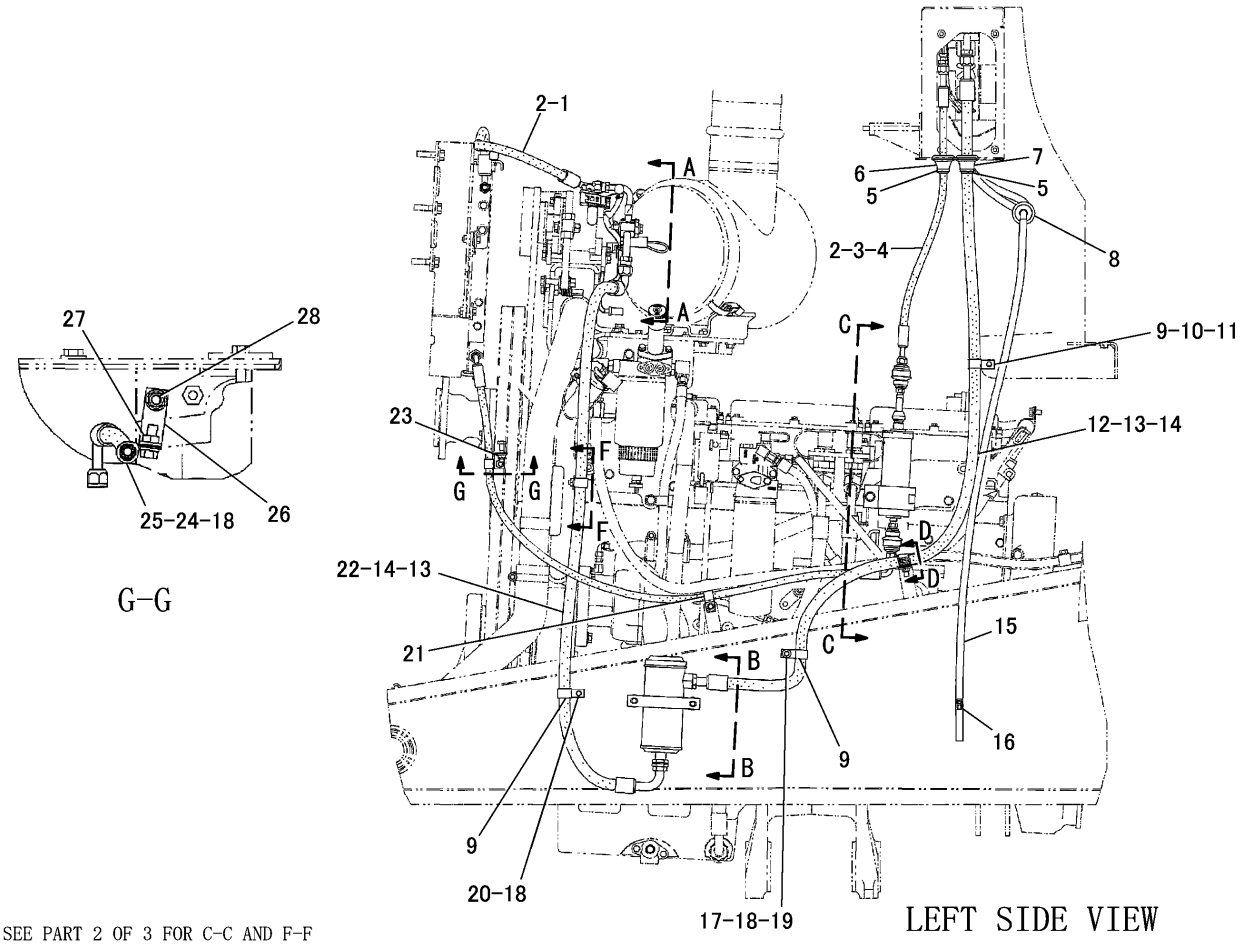

SEE PART 2 OF 3 FOR C-C AND F-F
SEE PART 3 OF 3 FOR A-A, B-B AND D-D

NOTE	№	PART NO.	QTY	PART NAME	NOTE	№	PART NO.	QTY	PART NAME
	1	170-0809	1	HOSE AS		21	6D-4246	1	CLIP
	2	9X-7381	3	SEAL		22	170-0812	1	HOSE AS
	3	9X-7380	1	SEAL		23	6V-7744	1	LOCKNUT(M10×1.5)
	4	170-0805	1	HOSE AS		24	4L-6454	1	BOLT(3/8-16)
	5	3S-2093	2	STRAP		25	9M-8406	1	CLIP
	6	7T-8895	1	GROMMET		26	7N-1277	1	BRACKET AS
	7	7T-8894	1	GROMMET		27	9F-2978	1	NUT(3/8-16)(WELD)
	8	7T-9426	1	GROMMET		28	8T-4186	1	BOLT(M10×1.5)
	9	9X-8250	3	CLIP					
	10	8T-4137	1	BOLT(M10×1.5)					
	11	8T-4121	1	WASHER					
	12	170-0811	1	HOSE AS					
	13	9X-7383	2	SEAL					
	14	9X-7382	2	SEAL					
D	15	5P-6129		TUBE---1.16m					
	16	7T-9793	1	VALVE					
	17	1S-4836	1	SPACER					
	18	8T-4896	3	WASHER					
	19	8T-8915	1	BOLT(3/8-16)					
	20	5M-3062	1	BOLT(3/8-16)					

D-ORDER BY THE m

J155594 X06

AIR CONDITIONER LINES GROUP (164-3715 N/S) -PART 1 OF 3

PART OF 322-6118-Page 403

OPERATOR STATION

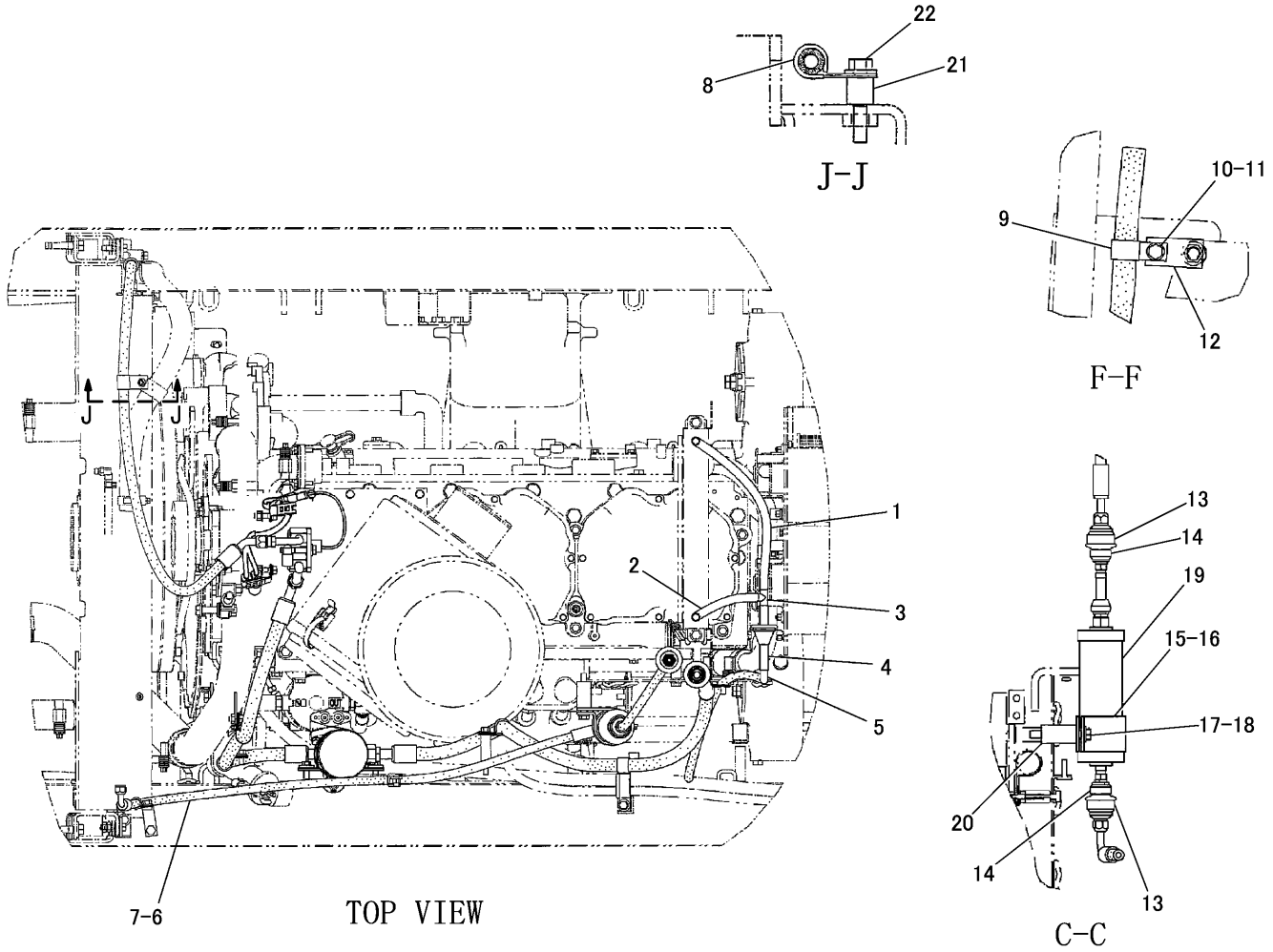

NOTE	№	PART NO.	QTY	PART NAME	NOTE	№	PART NO.	QTY	PART NAME
D	1	5P-6129		TUBE---0.36m		20	5G-9603	1	SPACER
D	2	5P-6129		TUBE---0.2m		21	114-9223	1	SPACER
	3	8C-5682	1	TEE		22	8T-2501	1	BOLT(3/8-16)
D	4	5P-6129		TUBE---0.135m					
	5	6V-2372	1	ELBOW					
	6	170-0808	1	HOSE AS					
	7	9X-7380	2	SEAL					
	8	4D-7735	1	CLIP					
	9	9X-8250	1	CLIP					
	10	5M-3062	1	BOLT(3/8-16)					
	11	8T-4896	1	WASHER					
	12	194-1435	1	PLATE AS					
		9F-2978	1	NUT(3/8-16)(WELD)					
	13	116-6202	2	BOOT					
	14	103-6100	2	DISCONNECT					
	15	109-1633	1	CLIP(SLOT)					
	16	109-1634	1	CLIP(TAB)					
	17	8T-4121	2	WASHER					
	18	8T-4172	1	BOLT(M10×1.5)					
	19	175-7162	1	DRYER					

D-ORDER BY THE m

J155595 X06

AIR CONDITIONER LINES GROUP (164-3715 N/S) -PART 2 OF 3
PART OF 322-6118-Page 403

OPERATOR STATION

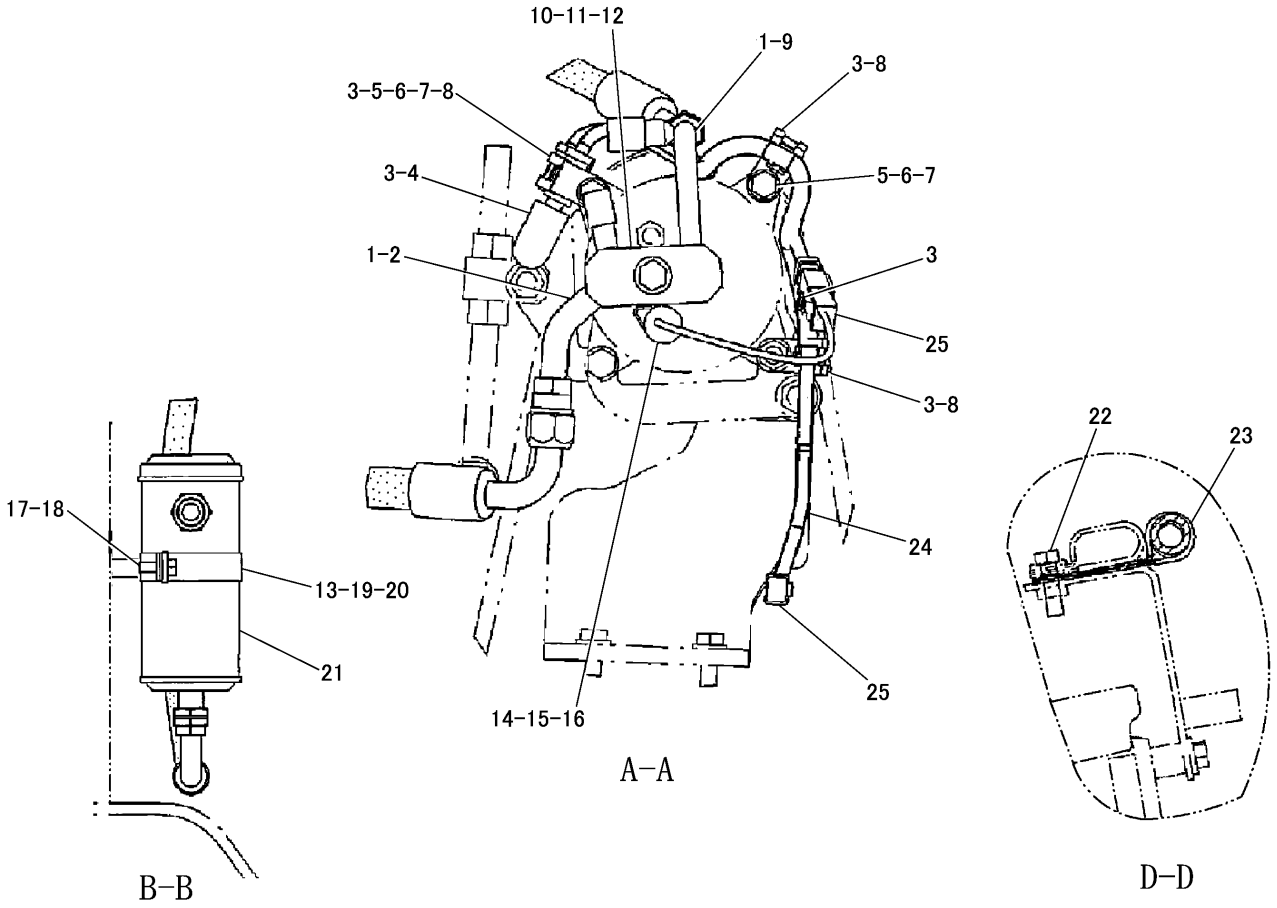

NOTE	№	PART NO.	QTY	PART NAME	NOTE	№	PART NO.	QTY	PART NAME
	1	9X-7385	2	SEAL		15	9X-7378	1	SEAL
	2	3E-6812	1	FITTING AS		16	3S-2093	1	STRAP
		3E-4051	1	CAP		17	7X-0503	2	WASHER
		3E-4057	1	VALVE AS		18	4L-6454	2	BOLT(3/8-16)
	3	7K-1181	5	STRAP		19	8R-3393	1	STRAP
	4	106-8704	1	SUPPRESSOR		20	128-5924	1	CLAMP
	5	5S-7382	2	BOLT(3/8-16)		21	186-6189	1	ACCUMULATOR
	6	6V-8801	2	NUT(3/8-16)		22	9B-7237	1	BOLT(3/8-16)
	7	8T-4896	4	WASHER		23	6V-1228	1	CLIP
	8	4P-8134	3	CLIP		24	183-4273	1	HARNESS AS
	9	3E-4090	1	FITTING AS		25	155-2270	4	PLUG KIT(2P)
		3E-4052	1	CAP			126-1768	8	SOCKET
		3E-4058	1	VALVE AS					
	10	1P-6356	1	PLATE					
	11	5P-1075	1	WASHER					
	12	8T-6466	1	BOLT(M10×1.5)					
BD	13	6V-2495		SEAL---0.3m					
	14	114-5333	1	SWITCH AS					
		102-8802	1	RECEPTACLE KIT(2P)					
		186-3735	2	PIN					

B-USE AS REQUIRED
D-ORDER BY THE m

J155596 X06

AIR CONDITIONER LINES GROUP (164-3715 N/S) -PART 3 OF 3
PART OF 322-6118-Page 403

OPERATOR STATION

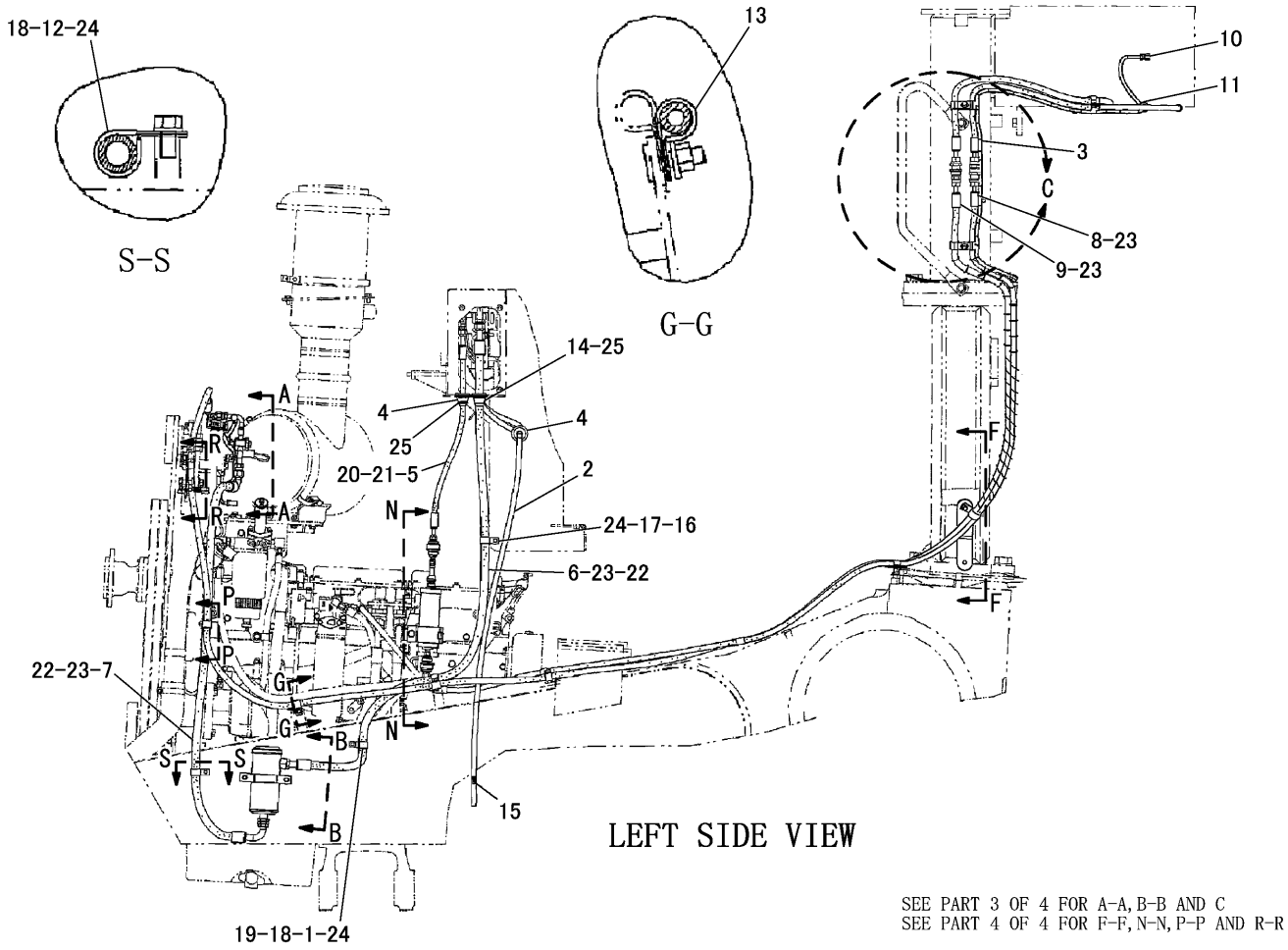

SEE PART 3 OF 4 FOR A-A, B-B AND C
SEE PART 4 OF 4 FOR F-F, N-N, P-P AND R-R

NOTE	№	PART NO.	QTY	PART NAME	NOTE	№	PART NO.	QTY	PART NAME
	1	1S-4836	1	SPACER		19	8T-7008	1	BOLT(3/8-16)
D	2	5P-6129		TUBE---1.16m		20	9X-7380	1	SEAL
	3	7K-1181	8	STRAP		21	9X-7381	1	SEAL
	4	7T-9426	2	GROMMET		22	9X-7382	2	SEAL
	5	170-0805	1	HOSE AS		23	9X-7383	4	SEAL
	6	170-0811	1	HOSE AS		24	9X-8250	3	CLIP
	7	170-0812	1	HOSE AS		25	3S-2093	2	STRAP
	8	170-3441	1	HOSE AS					
	9	170-3442	1	HOSE AS					
	10	199-7065	1	HARNESS AS					
		9W-0844	6	SOCKET					
		155-2260	2	PLUG KIT(3P)					
	11	2D-2751	1	GROMMET					
	12	5M-3062	1	BOLT(3/8-16)					
	13	6D-4246	1	CLIP					
	14	7T-8894	1	GROMMET					
	15	7T-9793	1	VALVE					
	16	8T-4121	1	WASHER					
	17	8T-4137	1	BOLT(M10×1.5)					
	18	8T-4896	2	WASHER					

D-ORDER BY THE m

J144515 X05

AIR CONDITIONER LINES GROUP (164-3716 N/S) -PART 1 OF 4

PART OF 164-3713-Page 476
AN ATTACHMENT

OPERATOR STATION

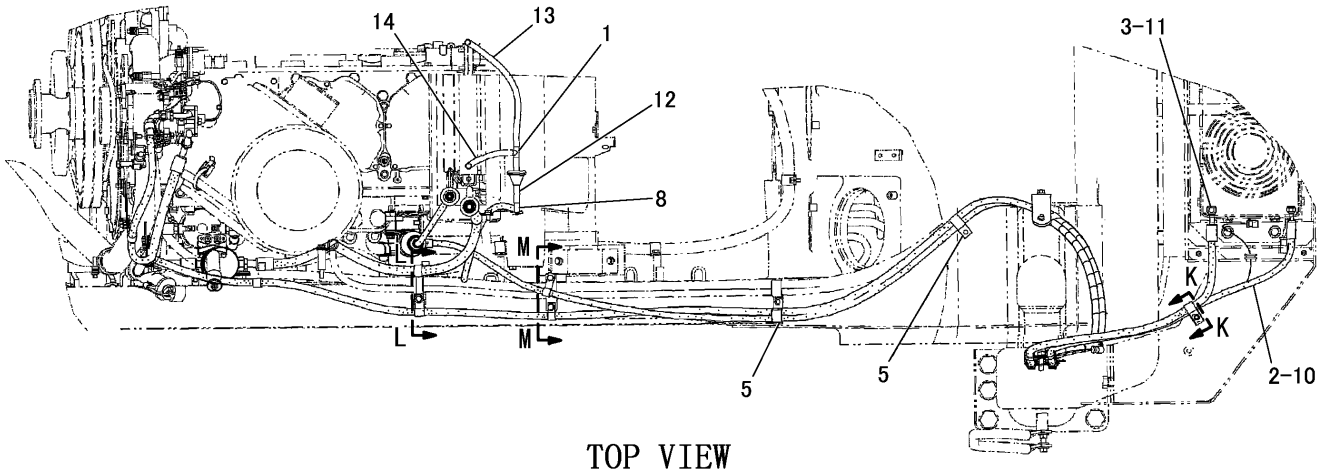

TOP VIEW

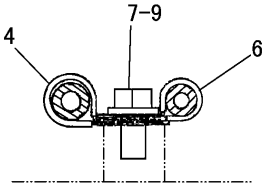

D-D

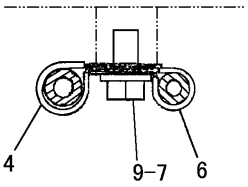

E-E

SEE PART 4 OF 4 FOR K-K, L-L AND M-M

NOTE	№	PART NO.	QTY	PART NAME	NOTE	№	PART NO.	QTY	PART NAME
	1	8C-5682	1	TEE					
	2	170-3443	1	HOSE AS					
	3	170-3444	1	HOSE AS					
	4	1S-1015	2	CLIP					
	5	4D-7733	2	CLIP					
	6	4K-8302	2	CLIP					
	7	5P-2228	2	BOLT(1/2-13)					
	8	6V-2372	1	ELBOW					
	9	8T-4223	2	WASHER					
	10	9X-7380	1	SEAL					
	11	9X-7381	1	SEAL					
D	12	5P-6129		TUBE---0.135m					
D	13	5P-6129		TUBE---0.36m					
D	14	5P-6129		TUBE---0.2m					

D-ORDER BY THE m

J144516 X05

AIR CONDITIONER LINES GROUP (164-3716 N/S) -PART 2 OF 4

PART OF 164-3713-Page 476
AN ATTACHMENT

OPERATOR STATION

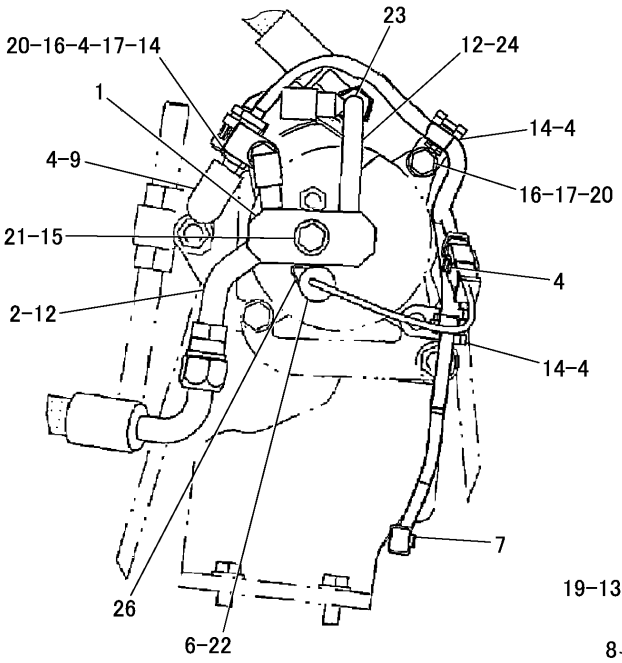

A-A

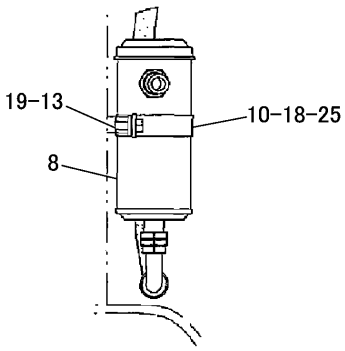

B-B

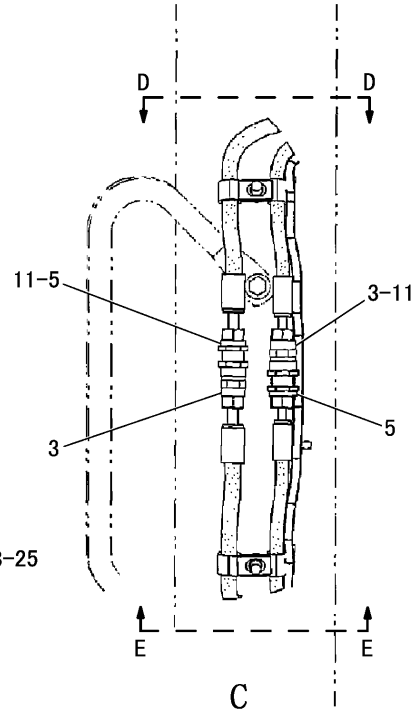

C

SEE PART 2 OF 4 FOR D-D AND E-E

NOTE	№	PART NO.	QTY	PART NAME
	1	1P-6356	1	PLATE
	2	3E-6812	1	FITTING AS
		3E-4051	1	CAP
		3E-4057	1	VALVE AS
	3	5P-3948	2	COUPLING
		107-4399	1	VALVE AS
		7F-8607	1	SEAL
	4	7K-1181	5	STRAP
	5	7K-3176	2	COUPLING
		107-4393	1	VALVE AS
		107-4394	1	GASKET
	6	114-5333	1	SWITCH AS
		102-8802	1	RECEPTACLE KIT(2P)
		186-3735	2	PIN
	7	183-4273	1	HARNESS AS
		9W-0844	8	SOCKET
		155-2270	4	PLUG KIT(2P)
	8	186-6189	1	ACCUMULATOR

NOTE	№	PART NO.	QTY	PART NAME
	9	106-8704	1	SUPPRESSOR
		102-8802	1	RECEPTACLE KIT(2P)
		186-3735	2	PIN
	10	128-5924	1	CLAMP
	11	9X-7383	2	SEAL
	12	9X-7385	2	SEAL
	13	4L-6454	2	BOLT(3/8-16)
	14	4P-8134	3	CLIP
	15	5P-1075	1	WASHER
	16	5S-7382	2	BOLT(3/8-16)
	17	6V-8801	2	NUT(3/8-16)
	18	8R-3393	1	STRAP
	19	7X-0503	2	WASHER
	20	8T-4896	4	WASHER
	21	8T-6466	1	BOLT(M10×1.5)
	22	9X-7378	1	SEAL
	23	9X-7381	1	SEAL
	24	3E-4090	1	FITTING AS
		3E-4052	1	CAP
		3E-4058	1	VALVE AS
D	25	6V-2495		SEAL---0.1m
	26	3S-2093	1	STRAP

D-ORDER BY THE m

J144517 X05

AIR CONDITIONER LINES GROUP (164-3716 N/S) -PART 3 OF 4

PART OF 164-3713-Page 476
AN ATTACHMENT

OPERATOR STATION

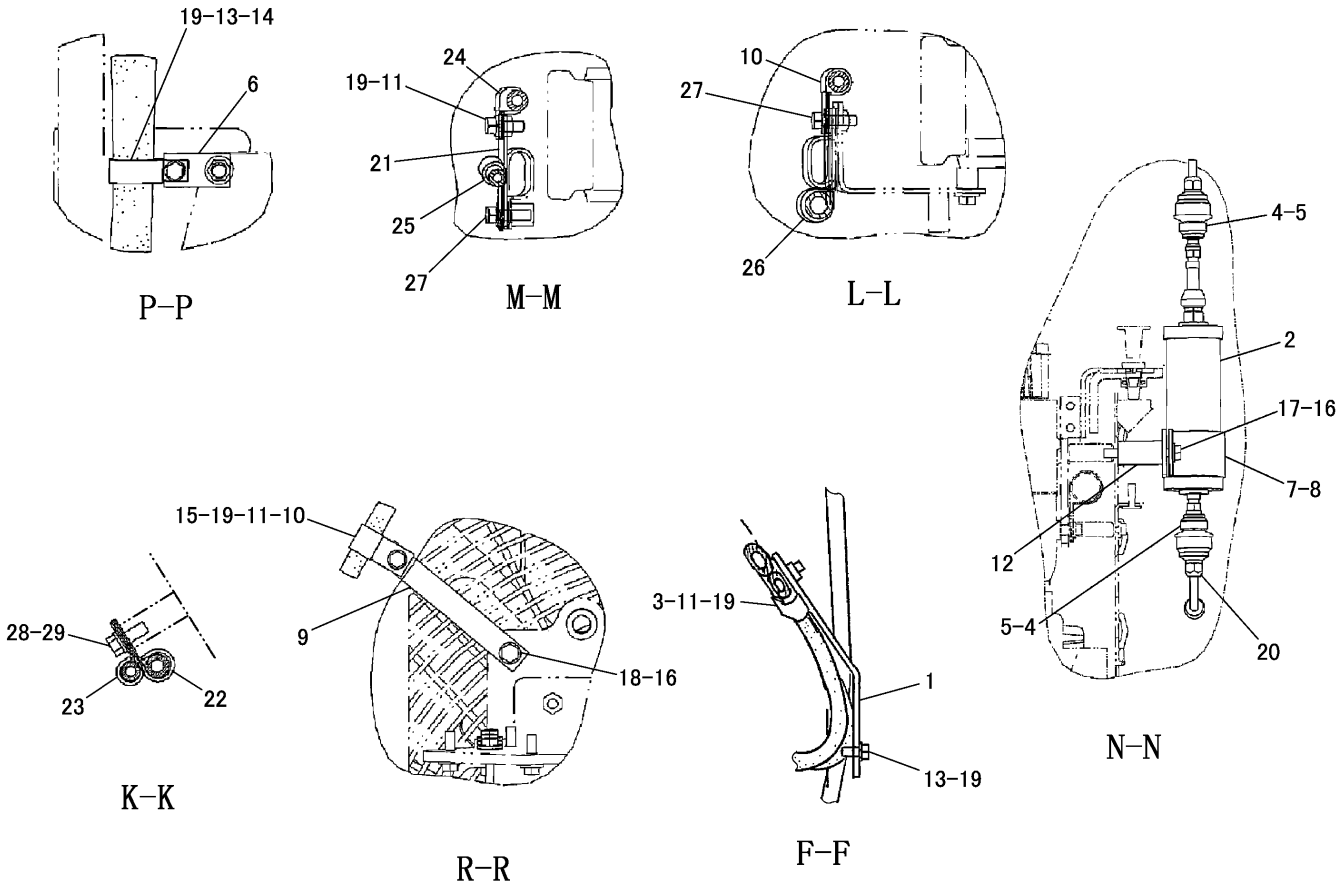

NOTE	№	PART NO.	QTY	PART NAME
	1	239-5106	1	PLATE AS
		9F-2978	1	NUT(3/8-16)(WELD)
	2	175-7162	1	DRYER
		7X-2049	1	ORIFICE AS
	3	7D-1089	1	CLIP
	4	103-6100	2	DISCONNECT
		9X-7382	2	SEAL
	5	116-6202	2	BOOT
	6	194-1435	1	PLATE AS
		9F-2978	1	NUT(3/8-16)(WELD)
	7	109-1633	1	CLIP(SLOT)
	8	109-1634	1	CLIP(TAB)
	9	117-0128	1	STRIP
	10	4D-7735	2	CLIP
	11	4L-6454	3	BOLT(3/8-16)
	12	5G-9603	1	SPACER
	13	5M-3062	2	BOLT(3/8-16)
	14	6D-4247	1	CLIP
	15	6V-8801	1	NUT(3/8-16)
	16	8T-4121	2	WASHER
	17	8T-4172	1	BOLT(M10×1.5)
	18	8T-4195	1	BOLT(M10×1.5)
	19	8T-4896	6	WASHER
	20	9X-7380	1	SEAL
	21	194-1434	1	PLATE AS
		9F-2978	1	NUT(3/8-16)(WELD)
	22	1S-1015	1	CLIP
	23	4K-8302	1	CLIP
	24	6D-4246	1	CLIP
	25	6K-8178	1	CLIP
	26	6V-1228	1	CLIP
	27	9B-7237	2	BOLT(3/8-16)
	28	5P-2228	1	BOLT(1/2-13)
	29	8T-4223	1	WASHER

J144518 X05

AIR CONDITIONER LINES GROUP (164-3716 N/S) -PART 4 OF 4
PART OF 164-3713-Page 476
AN ATTACHMENT

OPERATOR STATION

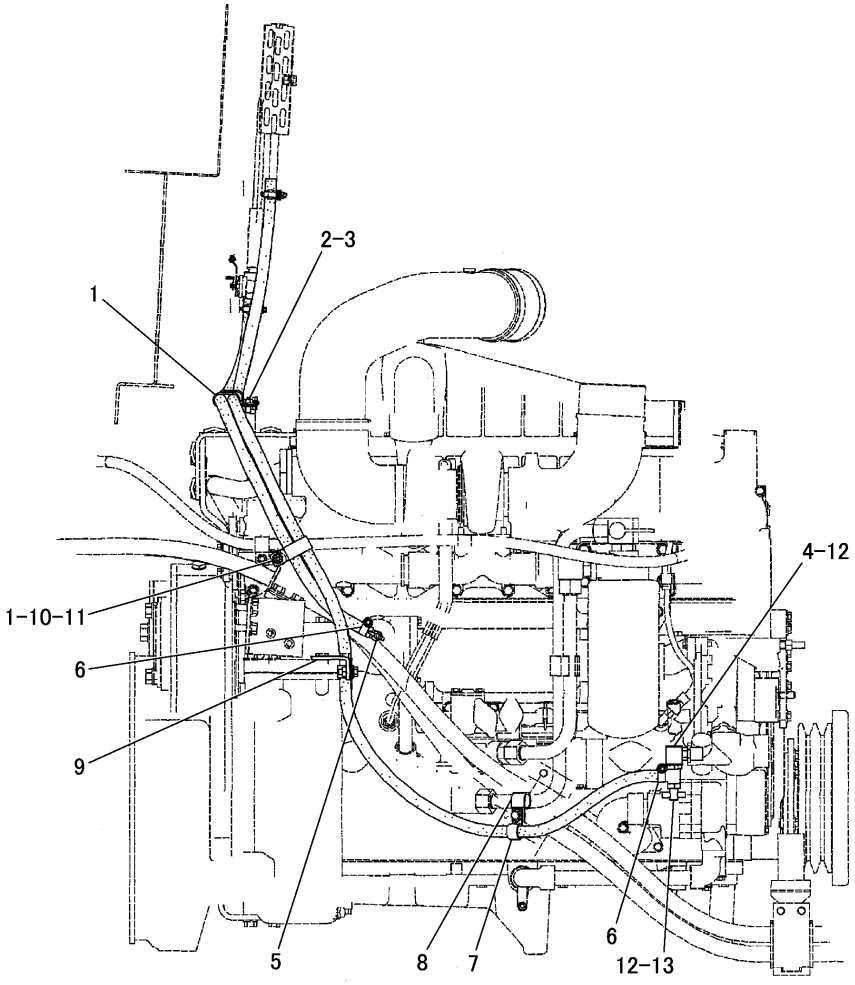

NOTE	№	PART NO.	QTY	PART NAME	NOTE	№	PART NO.	QTY	PART NAME
	1	6D-1641	2	CLIP					
	2	5M-3062	1	BOLT(3/8-16)					
	3	5P-1075	1	WASHER					
	4	8T-0119	1	ELBOW					
	5	8F-8151	1	COCK					
	6	159-1503	2	CLAMP					
	7	9X-8250	1	CLIP					
	8	4S-1962	1	CLIP					
	9	201-8318	1	BRACKET AS					
		8T-3490	1	NUT(M10×1.5)(WELD)					
	10	6V-8801	1	NUT(3/8-16)					
	11	8T-4896	1	WASHER					
	12	3K-0360	2	SEAL					
	13	6V-7238	1	VALVE					

J135952 X03

HEATER LINES GROUP (164-3718 N/S) -PART 1 OF 2

PART OF 322-6118-Page 403

OPERATOR STATION

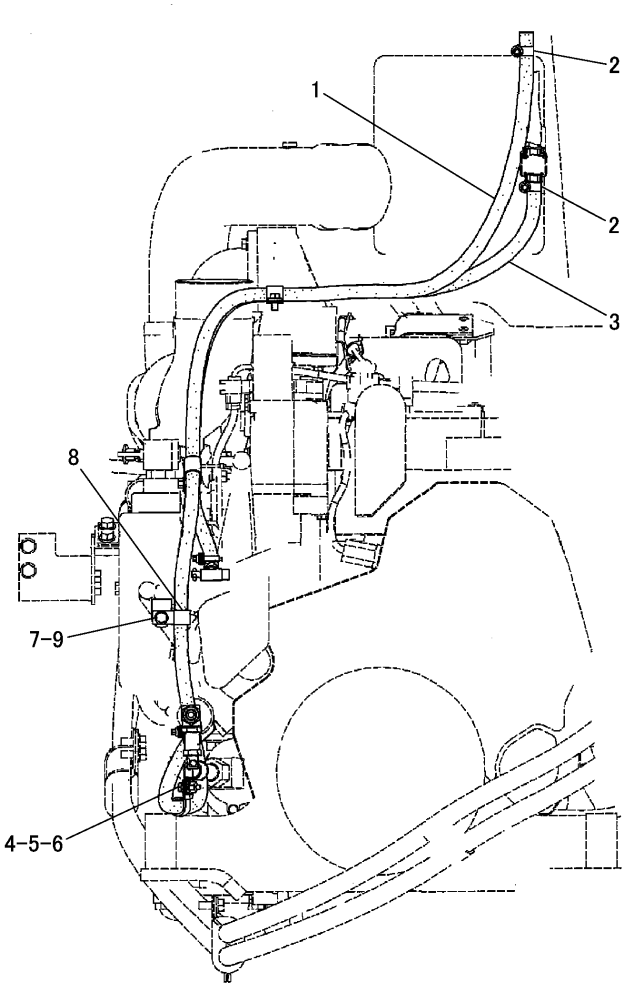

NOTE	№	PART NO.	QTY	PART NAME	NOTE	№	PART NO.	QTY	PART NAME
E	1	5P-0767		HOSE---210cm					
	2	159-1503	2	CLAMP					
E	3	5P-0767		HOSE---120cm					
	4	6V-8801	1	NUT(3/8-16)					
	5	9B-7237	1	BOLT(3/8-16)					
	6	5P-1075	2	WASHER					
	7	8T-4195	1	BOLT(M10×1.5)					
	8	6D-4636	1	CLIP					
	9	8T-4121	2	WASHER					

E-ORDER BY THE cm

J135953 X03

HEATER LINES GROUP (164-3718 N/S) -PART 2 OF 2

PART OF 322-6118-Page 403

OPERATOR STATION

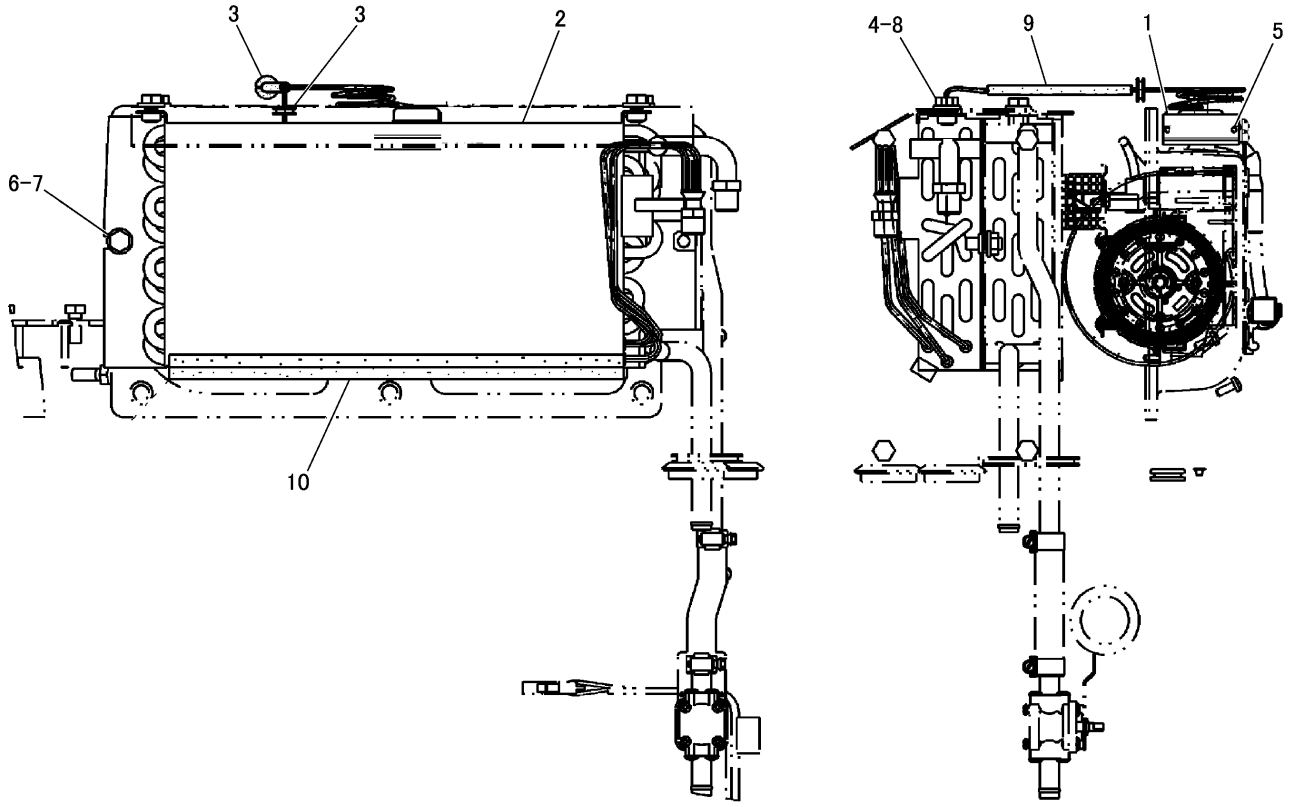

NOTE	№	PART NO.	QTY	PART NAME	NOTE	№	PART NO.	QTY	PART NAME
	1	3E-5464	1	SWITCH AS					
	2	109-6406	1	COIL AS					
	3	2V-1937	2	GROMMET					
	4	5P-1075	2	WASHER					
	5	6L-7159	2	SCREW(No.8-32)					
	6	8T-4121	2	WASHER					
	7	8T-4137	2	BOLT(M10×1.5)					
	8	8T-4191	2	BOLT(M10×1.5)					
E	9	144-0195		HOSE---12cm					
D	10	5P-5643		SEAL---0.38m					

D-ORDER BY THE m
E-ORDER BY THE cm

J137998 -00

AIR CONDITIONER GROUP (279-2591 N/S)
PART OF 322-6118-Page 403

OPERATOR STATION

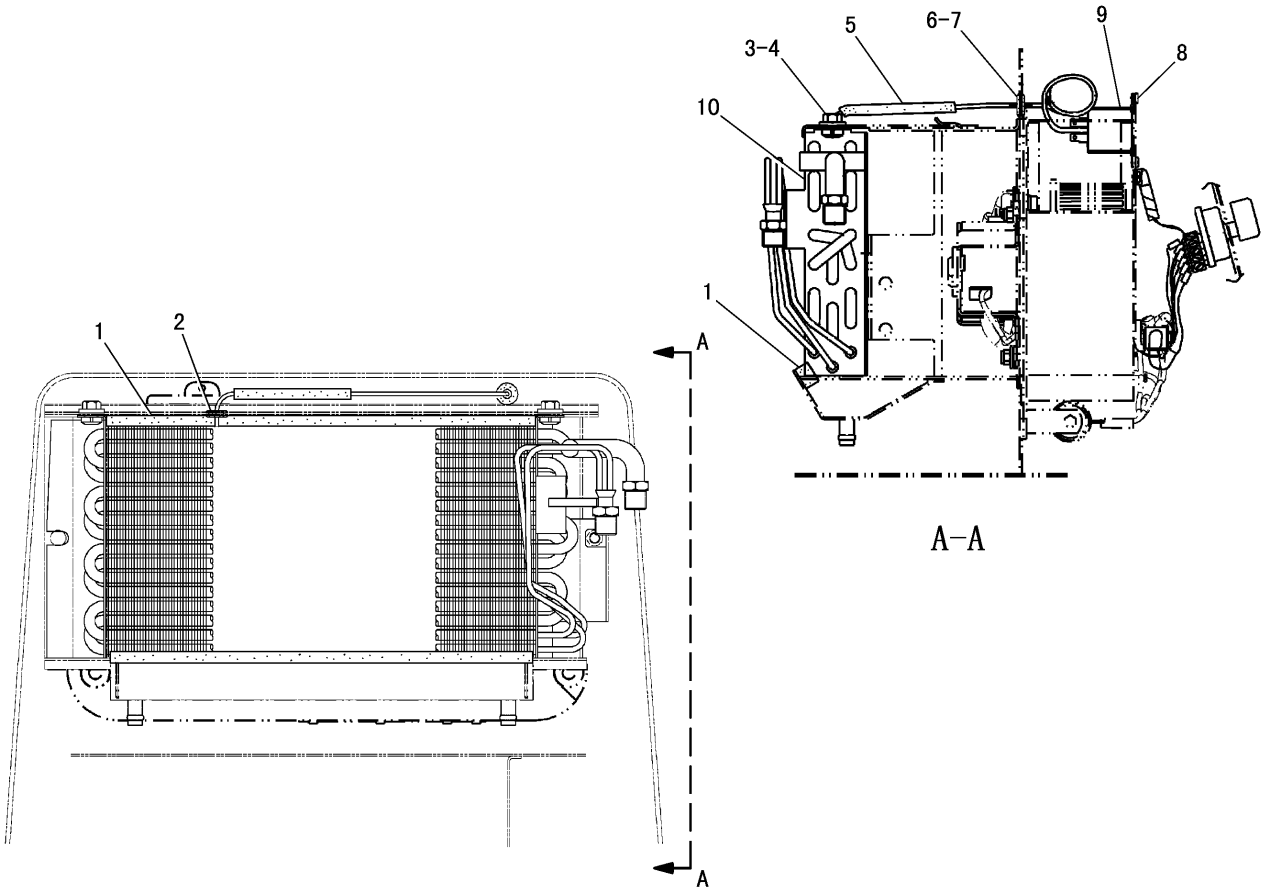

NOTE	№	PART NO.	QTY	PART NAME	NOTE	№	PART NO.	QTY	PART NAME
D	1	5P-5643		SEAL---0.38m(×2)					
	2	2V-1937	1	GROMMET					
	3	8T-4191	2	BOLT(M10×1.5)					
	4	5P-1075	2	WASHER					
D	5	144-0195		HOSE---0.1m					
J	6	6K-9555	1	GROMMET					
K	7	2V-1937	1	GROMMET					
	8	6L-7159	2	SCREW(No.8-32)					
	9	3E-5464	1	SWITCH AS					
	10	109-6406	1	COIL AS					

D-ORDER BY THE m
J-FOR MODEL D5M,D6M
K-FOR MODEL D5N,D6N,D6R,D7R

J139131 -08

AIR CONDITIONER GROUP (108-0720 N/S)

PART OF 164-3713-Page 476
AN ATTACHMENT

OPERATOR STATION

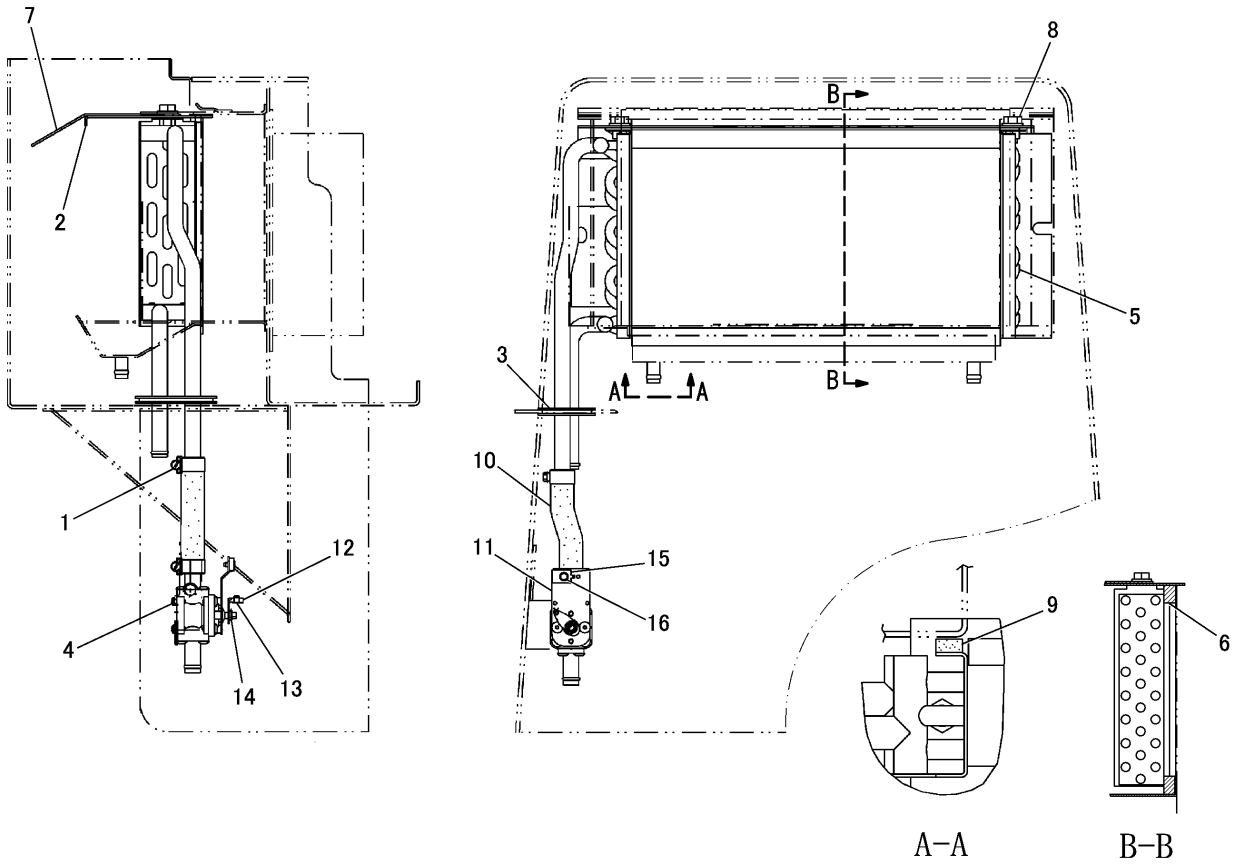

NOTE	№	PART NO.	QTY	PART NAME	NOTE	№	PART NO.	QTY	PART NAME
	1	5D−1026	2	CLAMP					
	2	6T−5617	1	PLATE					
	3	7T−6299	1	GROMMET					
	4	9X−2185	4	SCREW(No.8-15)					
	5	109−5761	1	COIL AS					
D	6	5P−5643		SEAL---0.38m(×2)					
	7	141−4123	1	PLATE					
	8	8T−4121	2	WASHER					
		8T−4137	2	BOLT(M10×1.5)					
D	9	5P−5639		SEAL---0.21m(×2)					
E	10	5P−0767		HOSE---12cm					
	11	134−9602	1	WATER VALVE AS					
	12	3E−1841	1	LEVER					
	13	8Y−5737	1	CLIP					
	14	037−4426	1	RETAINER					
	15	102−0341	1	CLIP					
	16	6V−6717	1	SCREW(No.8-32)					

D-ORDER BY THE m
E-ORDER BY THE cm

J137997 -00

CAB HEATER GROUP (279-2590 N/S)

PART OF 322-6118-Page 403

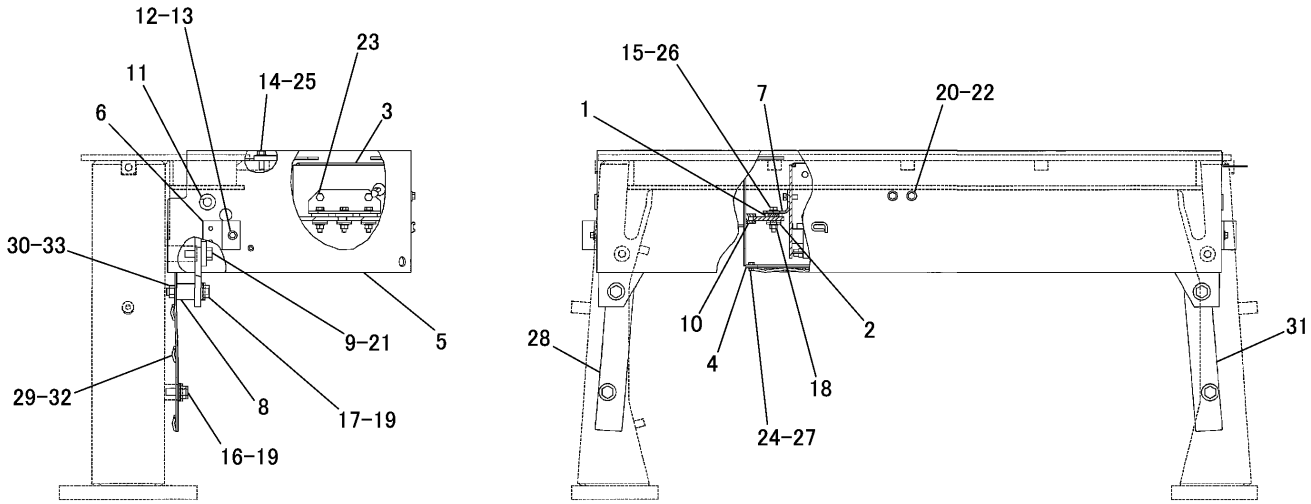

NOTE	№	PART NO.	QTY	PART NAME	NOTE	№	PART NO.	QTY	PART NAME
	1	8D-0983	6	MOUNTING		16	7X-0365	2	BOLT(3/4-10)
	2	8D-7185	6	WASHER		17	7X-0371	2	BOLT(3/4-10)
Y	3	103-9527	1	CONDENSER GROUP		18	7X-0447	6	NUT(7/16-14)
	4	109-5498	1	SCREEN AS		19	7X-0582	4	WASHER
	5	169-5459	1	SUPPORT AS		20	7X-7729	2	WASHER
		9F-2978	4	NUT(3/8-16)(WELD)		21	9L-8339	2	WASHER
		6J-1323	2	LUG		22	8T-4136	2	BOLT(M10×1.5)
		9F-6445	6	NUT(1/4-20)(WELD)	K	23	8T-4139	4	BOLT(M12×1.75)
		7T-1099	1	LINK		24	8T-4205	6	WASHER
		8T-3490	2	NUT(M10×1.5)(WELD)		25	8T-4223	3	WASHER
J	6	170-3399	2	BRACKET		26	8T-5360	12	WASHER
	7	172-5989	2	BRACKET		27	8T-9364	6	BOLT(1/4-20)
	8	193-3306	2	BOSS		28	193-3307	1	PLATE AS
	9	8T-9399	2	BOLT(3/4-10)		29	7T-1099	4	LINK
	10	5D-7635	1	GROMMET		30	8J-7236	1	NUT(3/4-10)(WELD)
	11	1M-4543	2	GROMMET		31	193-3308	1	PLATE AS
	12	4L-6454	2	BOLT(3/8-16)		32	7T-1099	4	LINK
	13	5P-1075	2	WASHER		33	8J-7236	1	NUT(3/4-10)(WELD)
	14	5P-2566	3	BOLT(1/2-13)					
	15	7X-0311	6	BOLT(7/16-14)					

J-FOR ROPS MOUNTED LIGHTING
K-USE EXISTING WASHERS
Y-SEPARATE ILLUSTRATION

J144519 X02

CONDENSER AND MOUNTING GROUP (165-8322 N/S)

PART OF 164-3713-Page 476
REFERENCE:103-9527-Page 490, 491
AN ATTACHMENT

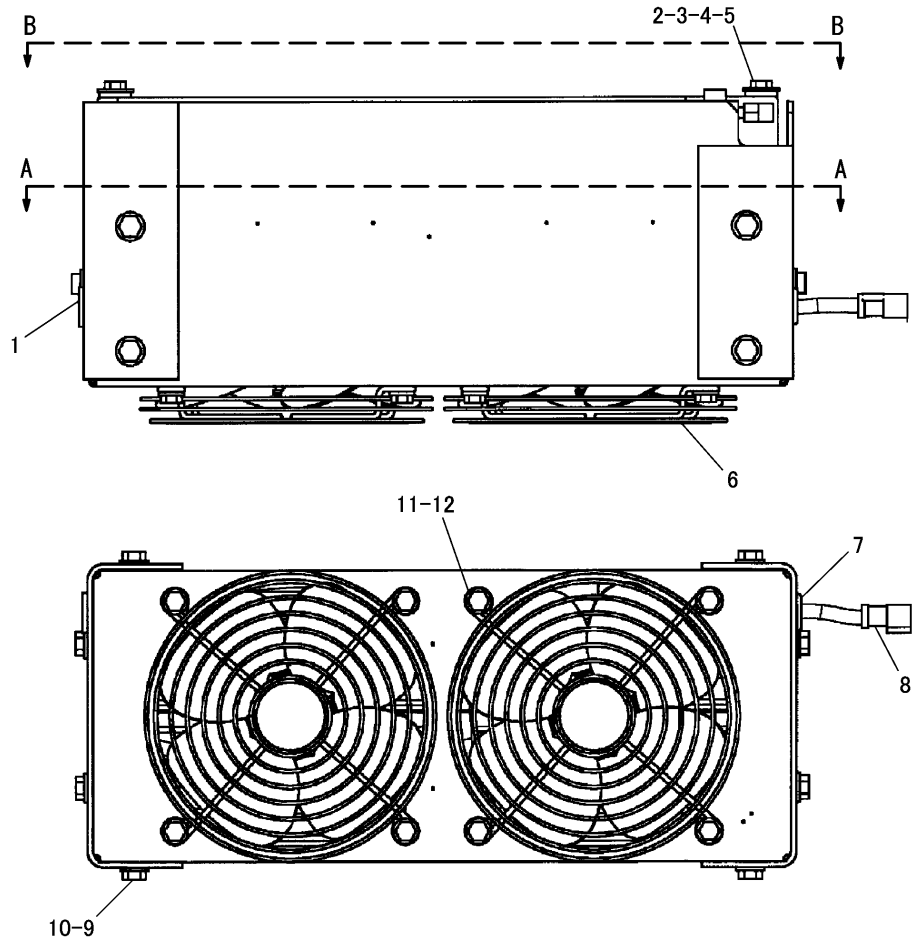

NOTE	№	PART NO.	QTY	PART NAME	NOTE	№	PART NO.	QTY	PART NAME
	1	8P-6363	1	PLUG					
	2	203-2070	8	MOUNT					
	3	204-9530	4	TUBE					
	4	7X-0578	4	WASHER					
	5	8T-6685	4	BOLT(M10×1.5)					
	6	9X-3452	2	GUARD AS					
	7	9X-7373	1	GROMMET					
	8	124-8490	1	HARNESS AS					
		9X-1054	1	PLUG AS					
		155-2270	2	PLUG KIT(2P)					
		102-8803	1	RECEPTACLE KIT(3P)					
		9X-1056	4	TERMINAL					
		9W-0852	3	PIN					
		9W-0844	4	SOCKET					
	9	8T-4192	12	BOLT(M12×1.75)					
	10	8T-4223	12	WASHER					
	11	5P-1075	8	WASHER					
	12	8T-4137	8	BOLT(M10×1.5)					

J147513 X08

103-9527 CONDENSER GROUP -PART 1 OF 2
PART OF 165-8322-Page 489
AN ATTACHMENT

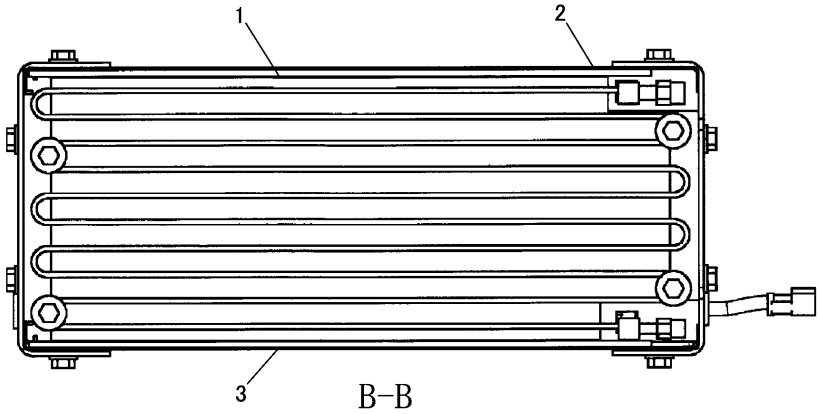

B-B

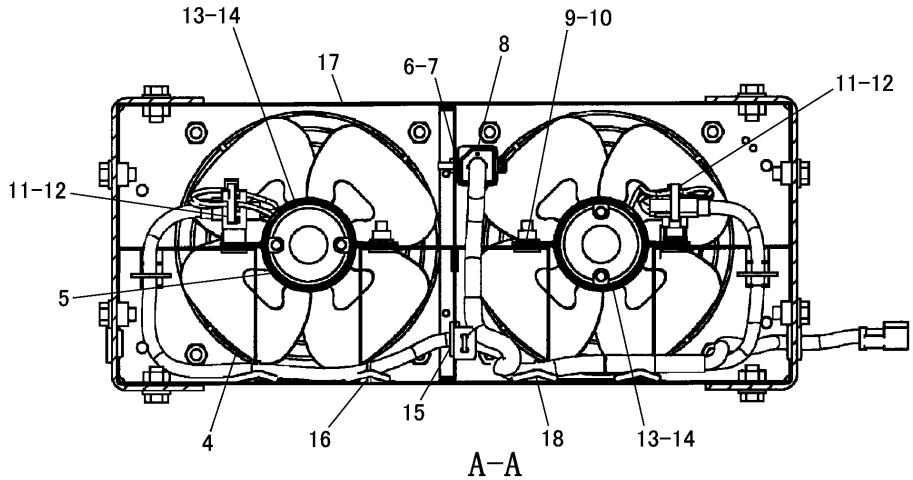

A-A

NOTE	№	PART NO.	QTY	PART NAME	NOTE	№	PART NO.	QTY	PART NAME
	1	216-0805	1	COIL KIT		17	204-9532	1	CASE AS
D	2	5P-5924		SEAL---0.09m(×2)			8T-3490	12	NUT(M10×1.5)(WELD)
D	3	5P-5672		SEAL---0.564m(×2)			9G-9151	2	CLIP
	4	142-8620	2	FAN AS			8T-3597	12	NUT(M12×1.75)(WELD)
		3H-7180	1	SETSCREW(1/4-28)		18	7T-1099	4	LINK
	5	7T-5856	4	CLAMP					
	6	5C-2890	1	NUT(M6×1)					
	7	8T-4205	1	WASHER					
	8	3E-5239	1	RELAY AS					
	9	8T-4121	4	WASHER					
	10	8T-4133	4	NUT(M10×1.5)					
	11	7K-1181	2	STRAP					
	12	4P-8134	2	CLIP					
	13	308-6335	2	MOTOR AS					
		102-8802	1	RECEPTACLE KIT(2P)					
		9W-0852	2	PIN					
D	14	5P-5908		SEAL---0.11m(×4)					
	15	5P-8441	1	GROMMET					
	16	3S-2093	7	STRAP					

D-ORDER BY THE m

J147514 X08

103-9527 CONDENSER GROUP -PART 2 OF 2
PART OF 165-8322-Page 489
AN ATTACHMENT

OPERATOR STATION

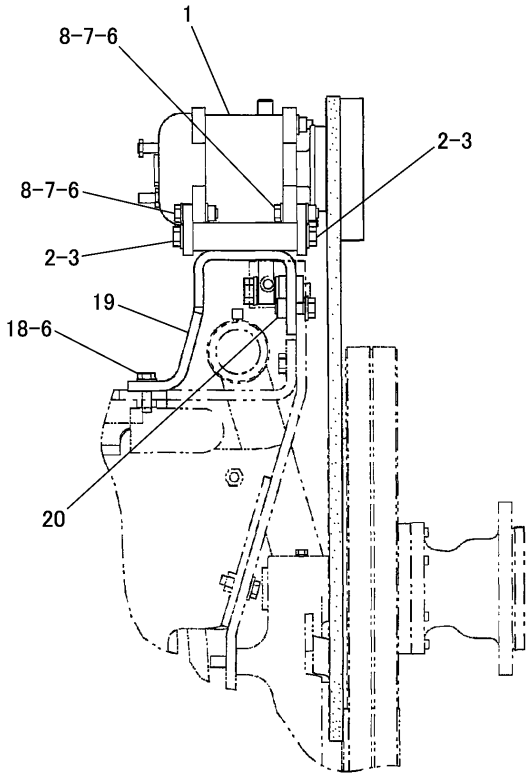

RIGHT SIDE VIEW

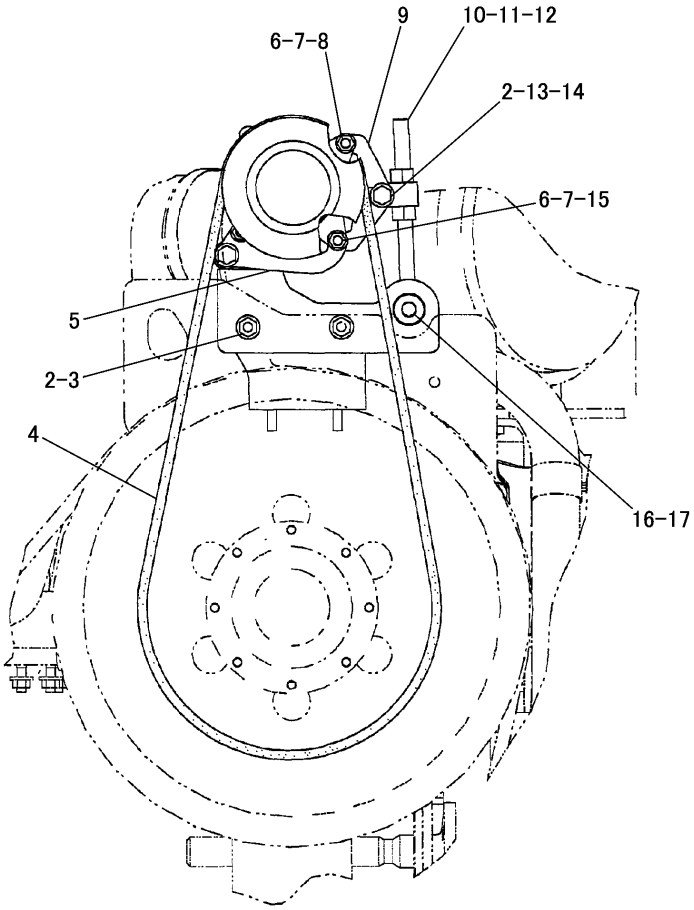

FRONT VIEW

NOTE	№	PART NO.	QTY	PART NAME	NOTE	№	PART NO.	QTY	PART NAME
Y	1	106-5122	1	COMPRESSOR GROUP					
	2	8T-4223	6	WASHER					
	3	8T-4956	4	BOLT(M12×1.75)					
	4	2P-7333	1	V-BELT					
	5	4P-7363	2	BRACKET					
	6	8T-4121	12	WASHER					
	7	8T-4133	5	NUT(M10×1.5)					
	8	8T-4186	4	BOLT(M10×1.5)					
	9	9Y-4815	1	BRACKET					
	10	101-2657	1	ROD					
	11	8S-5383	1	BLOCK					
	12	8T-4132	2	NUT(M16×2)					
	13	8T-4194	1	BOLT(M12×1.75)					
	14	8T-4244	1	NUT(M12×1.75)					
	15	8T-4182	1	BOLT(M10×1.5)					
	16	8T-4140	1	BOLT(M16×2)					
	17	9X-8257	2	WASHER					
	18	8T-4196	2	BOLT(M10×1.5)					
	19	185-1433	1	BRACKET AS					
	20	8T-3597	2	NUT(M12×1.75)(WELD)					

Y-SEPARATE ILLUSTRATION

J131559 X02

REFRIGERANT COMPRESSOR GROUP (165-0088 N/S)

PART OF 164-3713-Page 476,271-6466-Page 4
REFERENCE:106-5122-Page 493

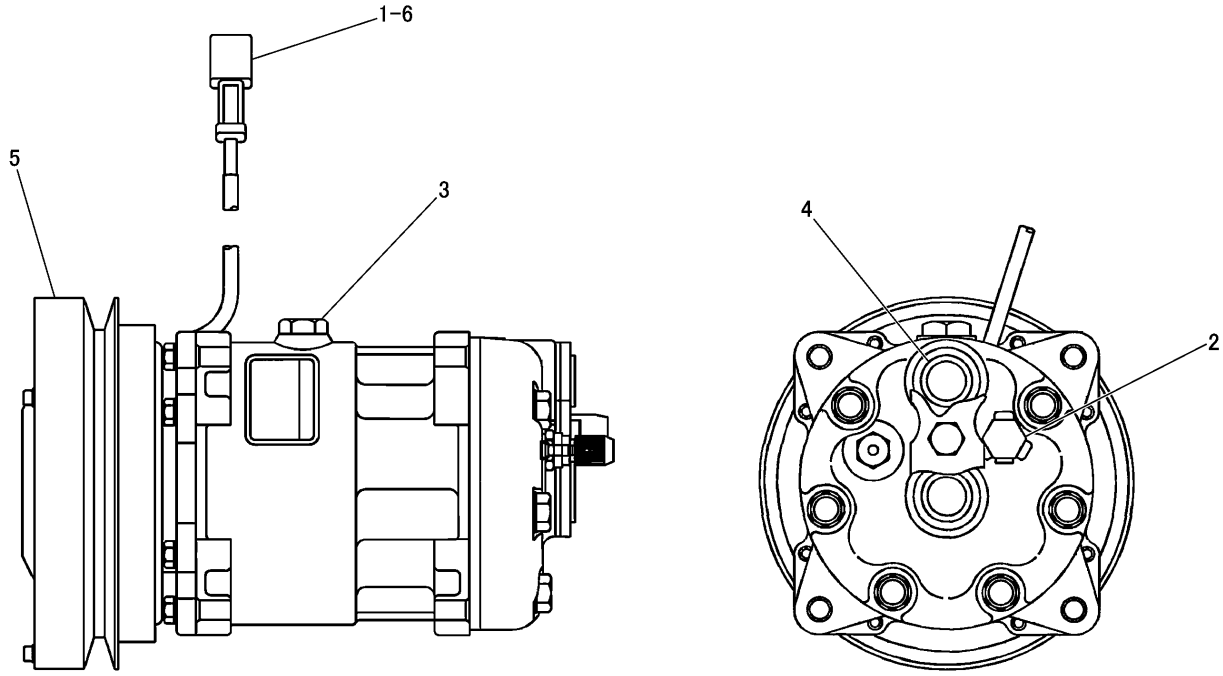

NOTE	№	PART NO.	QTY	PART NAME	NOTE	№	PART NO.	QTY	PART NAME
	1	126-1767	2	PIN					
	2	314-4018	1	VALVE AS					
	3	7T-4532	1	PLUG AS					
	4	9X-7385	2	SEAL					
Y	5	258-8473	1	CLUTCH KIT GROUP					
	6	102-8802	1	RECEPTACLE KIT(2P)					

Y-SEPARATE ILLUSTRATION

J148759 X10

106-5122 CLUTCH AND REFRIGERANT COMPRESSOR GROUP

PART OF 165-0088-Page 492
REFERENCE:258-8473-Page 494

OPERATOR STATION

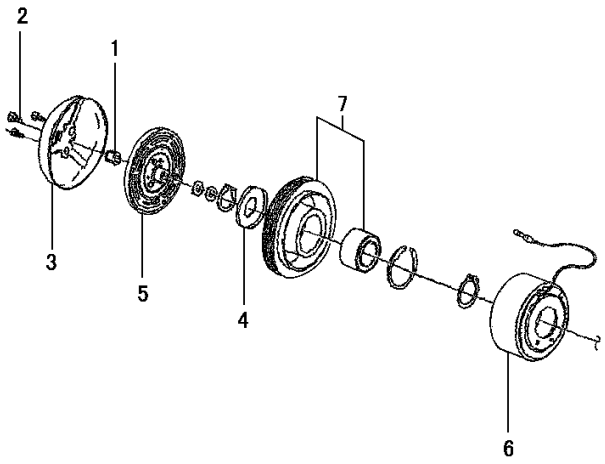

NOTE	№	PART NO.	QTY	PART NAME
	1	258-8477	1	NUT
	2	258-8478	3	BOLT
	3	258-8479	1	COVER
	4	258-8480	1	COVER
	5	258-8481	1	ARMATURE AS
	6	258-8482	1	CORE AS
	7	258-8483	1	ROTOR AS

J131557 X00

258-8473 CLUTCH KIT GROUP
PART OF 106-5122-Page 493

CONSISTS OF :

1	246-2641	PADLOCK GROUP
2	5P-8500	KEY
1	6V-2405	ENVELOPE(FOR KEYS)
1	7F-3400	BAG(CONTAINING LITERATURE AS SPECIFED ON F.N.L.)
1	5P-7958	SLEEVE(TO FASTEN MANUALS TO CABLE)

J138168 X05

LITERATURE GROUP (6V-1971 N/S)
PART OF 284-4645-Page 406,322-6115-Page 236

OPERATOR STATION

CONSISTS OF :

1	7F-3400	BAG(CONTAINING LITERATURE AS SPECIFED ON F.N.L.)

J139175 X00

LITERATURE GROUP (5P-2506 N/S)
PART OF 164-4717-Page 395,1U-0640-Page 386,212-7421-Page 382,218-7469-Page 384,226-2543-Page 383
226-2544-Page 385
AN ATTACHMENT

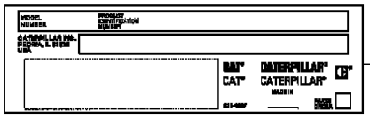
1

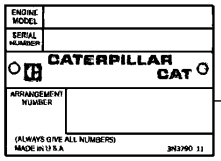

2

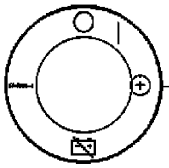
12

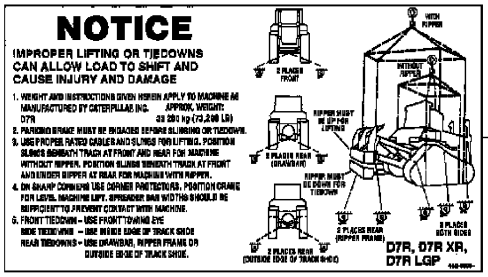

6

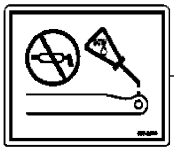
5

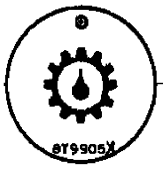

13



3

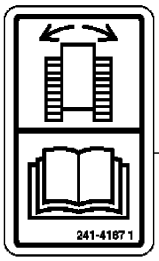

7

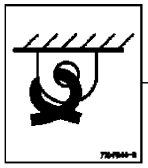
9



4

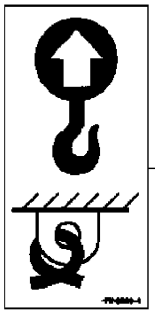
8


14



10



15

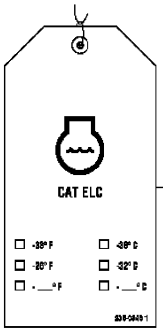

16

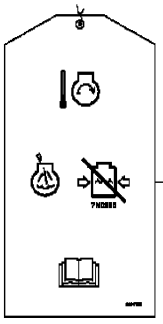
17



11

J155616 X02

FILM GROUP (283-7325 N/S) -PART 1 OF 2
PART OF 322-6115-Page 236

SERVICE EQUIPMENT AND SUPPLIES

NOTE	№	PART NO.	QTY	PART NAME
Z	1		1	PLATE(PIN)
Z	2		1	PLATE(ENGINE SERIAL NUMBER)
	3	225-4256	1	FILM(WARNING)(HOT FLUID) (RADIATOR FILLER DOOR)
	4	247-6877	1	FILM(WARNING)(SEA BELT) (CONSOLE)
	5	127-8830	2	FILM(LUBE POINTS) (EQUALIZER BAR END PINS)
	6	130-3698	1	FILM(SHIPPING) (ENGINE SIDE GUARD)
	7	241-4167	1	FILM(STEERING) (DIFFERENTIAL STEERING CONTROL)
	8	7X-3229	4	FILM(LIFT/TIE DOWN) (W/ RIPPER:TRF,RIPPER FRAME) (W/O RIPPER:TRF)
	9	7X-7644	4	FILM(TIE DOWN) (FRONT TOWING EYE) (W/ RIPPER:TRF) (W/O RIPPER:TRF) (W/ DRAWBAR:DRAWBAR CLEVIS)
	10	225-0313	1	FILM(WARNING)(JUMP START) (BATTERY BOX COVER)
	11	247-6875	1	FILM(WARNING)(UNIVERSAL) (CONSOLE)
	12	8T-4999	1	FILM(DISCONNECT) (DISCONNECT SWITCH)
	13	8T-9905	1	PLATE(T/M OIL) (PTO FILL CAP)
	14	3E-2378	1	FILM(LUBE POINTS) (PIVOT SHAFT BOTTLE)
	15	134-7258	1	FILM(EXTENDED LIFE COOLANT) (RADIATOR FILLER DOOR)
	16	235-0346	1	TAG(EXTENDED LIFE COOLANT)
	17	236-7228	1	TAG(STARTING AID)
F	18	190-5386	2	FILM(RED REFLECTIVE) (REAR OF MACHINE)
F	19	8T-9530	6	TACK FASTENER
F	20	9F-6656	1	RING
F	21	9N-1995	8	RIVET

F-NOT SHOWN
Z-NOT SERVICED SEPARATELY

J155616 X02

FILM GROUP (283-7325 N/S) -PART 1 OF 2
PART OF 322-6115-Page 236

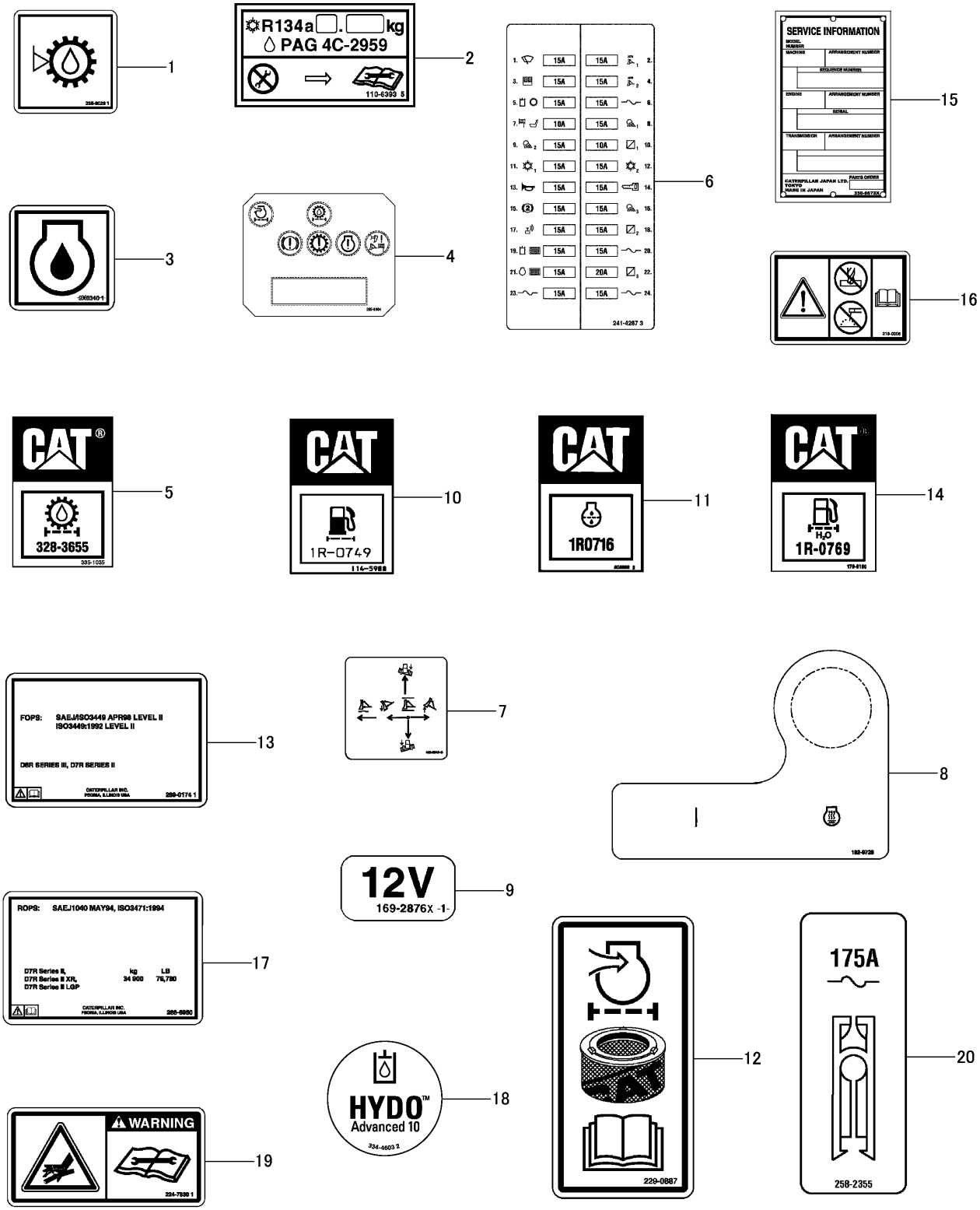

J155617 X02

FILM GROUP (283-7325 N/S) -PART 2 OF 2
PART OF 322-6115-Page 236

SERVICE EQUIPMENT AND SUPPLIES

NOTE	№	PART NO.	QTY	PART NAME	NOTE	№	PART NO.	QTY	PART NAME
	1	235-8026	1	FILM(T/M OIL LEVEL) (DIPSTICK TUBE)					
	2	110-6393	1	PLATE(A/C) (DASH)					
	3	9X-6340	1	FILM(ENGINE OIL) (ENGINE OIL FILLER TUBE)					
	4	289-9984	1	FILM(MONITOR) (INSTRUMENT PANEL)					
	5	335-1035	1	FILM(T/M OIL FILTER)					
	6	241-4287	1	FILM(FUSE PANEL) (BATTERY BOX)					
	7	102-2913	1	FILM(DOZER CONTROL)					
	8	192-9728	1	FILM(AUX START) (BATTERY BOX)					
	9	169-2876	2	FILM(12V) (REAR CONSOLE)					
	10	114-5988	1	FILM(FUEL FILTER)					
	11	8C-8902	1	FILM(ENGINE OIL FILTER)					
	12	229-0887	1	FILM(AIR CLEANER)					
	13	269-0174	1	FILM(FOPS) (CAB)					
	14	179-0160	1	FILM(FUEL FILTER/WATER SEPARATOR)					
Z	15		1	PLATE(SIN)					
	16	219-0305	1	FILM(WARNING)(NO WELD/NO DRILL) (ROPS POST)					
	17	288-6950	1	FILM(ROPS) (ROPS POST)					
	18	334-4603	1	FILM(HYDO ADVANCED 10) (HYD OIL FILLER)					
	19	224-7830	1	FILM(WARNING)(HIGH PRESSURE CYL) (PLATFORM)					
	20	258-2355	1	FILM(SPARE FUSE) (DASH)					

Z-NOT SERVICED SEPARATELY

J155617 X02

FILM GROUP (283-7325 N/S) -PART 2 OF 2

SERVICE EQUIPMENT AND SUPPLIES

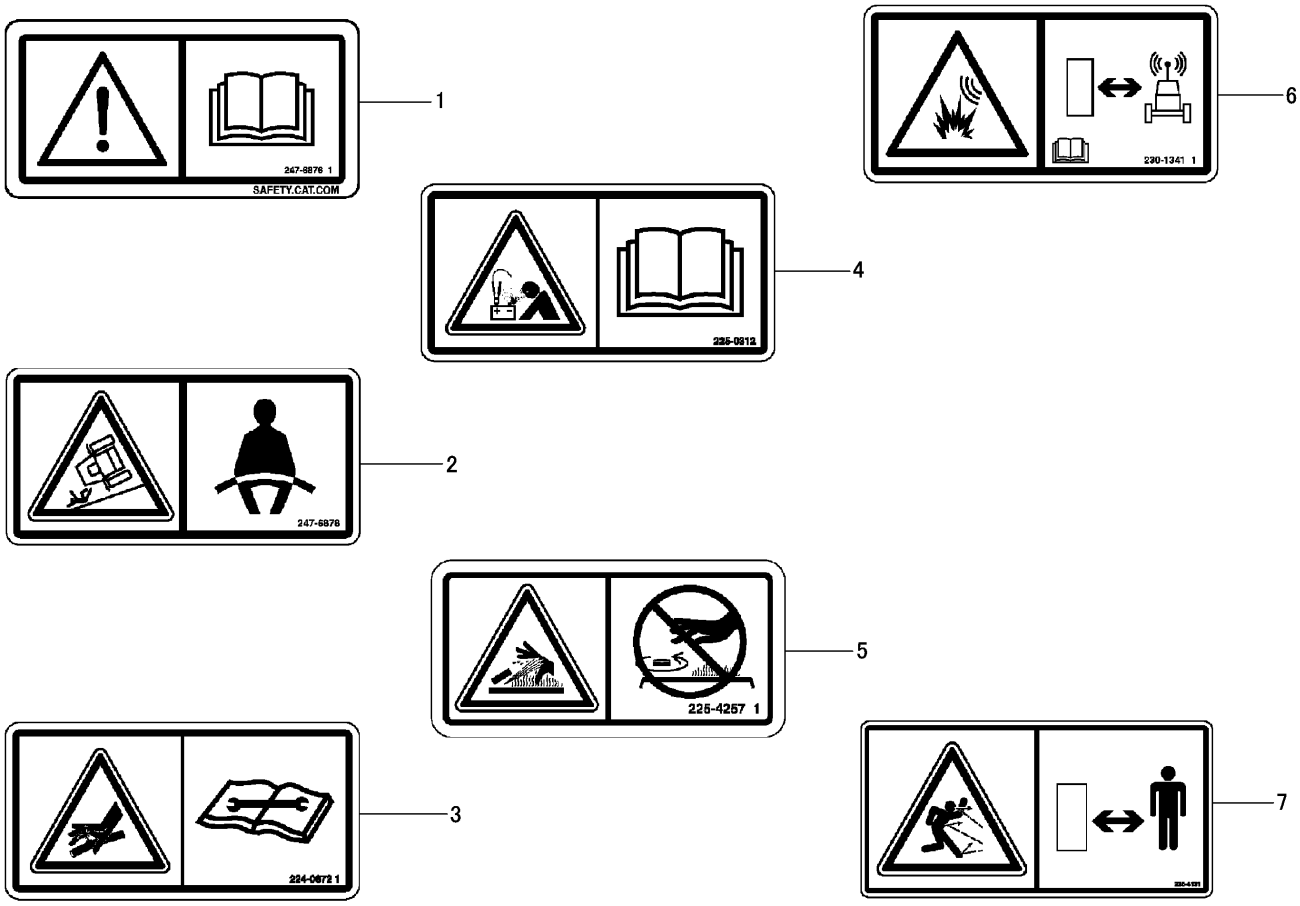

NOTE	№	PART NO.	QTY	PART NAME	NOTE	№	PART NO.	QTY	PART NAME
	1	247-6876	1	FILM(WARNING)(UNIVERSAL)					
	2	247-6878	1	FILM(WARNING)(SEATBELT)					
	3	224-0672	1	FILM(WARNING)(HIGH PRESSURE CYL)					
	4	225-0312	1	FILM(WARNING)(JUMP START)					
	5	225-4257	1	FILM(WARNING)(HOT FLUID)					
	6	230-1341	1	FILM(WARNING)(PRODUCT LINK,ISO)					
	7	225-4131	2	FILM(WARNING)(FLYING DEBRIS)					

J155879 -02

FILM GROUP (283-7716 N/S)
AN ATTACHMENT

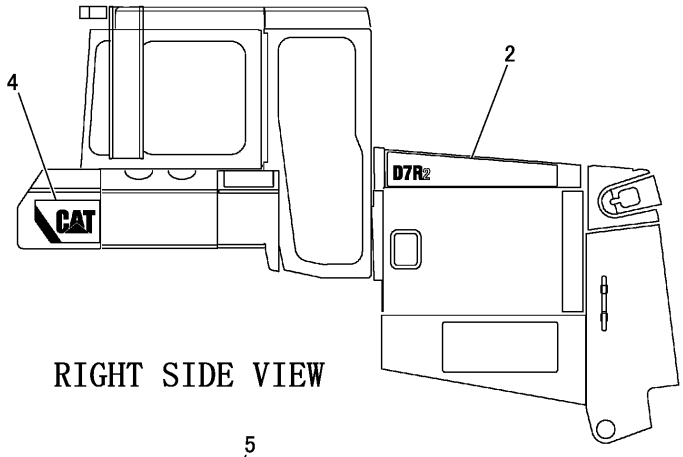

RIGHT SIDE VIEW

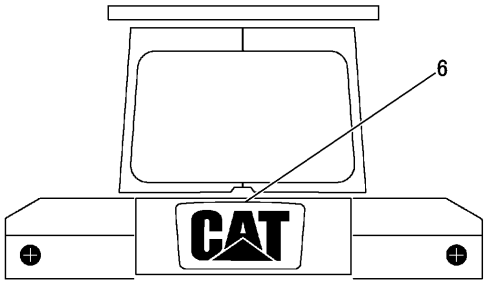

REAR VIEW

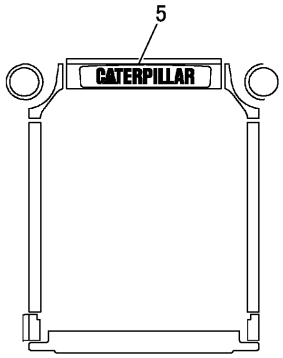

FRONT VIEW

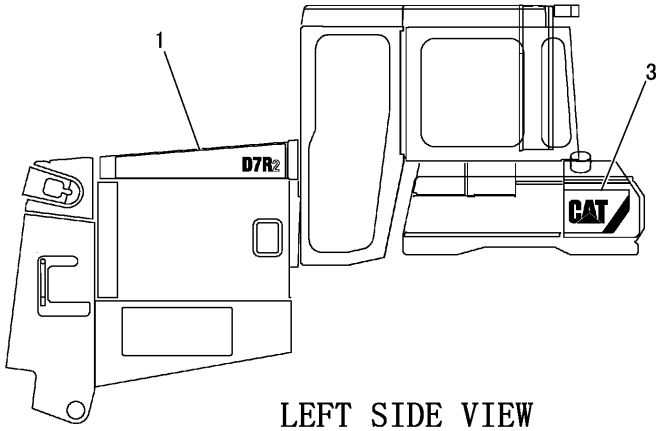

LEFT SIDE VIEW

NOTE	№	PART NO.	QTY	PART NAME	NOTE	№	PART NO.	QTY	PART NAME
	1	286-7163	1	FILM(D7R2)(LH)					
	2	274-6977	1	FILM(D7R2)(RH)					
	3	304-6766	1	FILM(CAT)(LH)					
	4	304-6767	1	FILM(CAT)(RH)					
	5	274-6978	1	FILM(CATERPILLAR)					
	6	274-6979	1	FILM(CAT)					

J155618 -02

FILM GROUP (286-8064 N/S)

PART NUMBER INDEX

Part No.	Page
0	
0L-1026	13
0L-1143	29
	216
	217
0L-1329	398
0L-1352	185
0S-0484	215
0S-0509	185
0S-1571	48
	285
0S-1585	182
	218
0S-1587	64
0S-1588	238
0S-1591	67
	212
0S-1594	180
	303
0S-1595	64
0S-1614	216
	217
0S-1617	186
0S-1619	178
	179
0S-1897	213
	289
0T-0102	182
0T-0244	459
	460
0T-0883	84
1	
1A-1460	216
	217
	218
1A-2029	191
	216
	217
	218
1A-2170	40
1A-2209	191
1A-2223	216
	217
1A-2610	180
1A-5183	176
	177
	219
1A-5822	213
1B-0676	228
1B-2578	227
1B-3867	55
1B-7182	86
1B-8705	17
	203
1B-8706	226
	228
1B-8714	226
1B-8735	411
	416
	417
1C-0569	218
1D-4540	185
1D-4601	213
1D-4615	377
1D-4629	294
	295
	297
	299
1D-4675	463
1D-4717	67
1D-4719	288
1D-5117	108
1F-0748	43
	44
	45
	214
	240
	244
	249
	250
	269
	270
	271
	274
	346
1F-6762	377
1H-1023	105
1H-1200	183
1H-2629	104
1H-3244	102
	114
1H-3338	112
	405
1H-3340	233
1H-5728	198
1H-7459	110
1H-8128	78
1H-8171	86
1H-8296	467
1H-8720	303
1J-0708	378
1J-5929	268
1J-6740	389
	390
1J-8668	108
	109
	153
	237
1J-9671	23
	61
	84
	321
	350
1K-6853	288
1K-6870	242
1K-6872	239
	398
1L-4684	341
1L-4775	32
1L-5072	319
1L-6957	213
1L-7388	176
	177
1M-1230	475
1M-1341	228
1M-1571	377
1M-3909	203
1M-4291	303
1M-4543	489
1M-4986	103
1M-6119	109
1M-6120	109
1M-6718	365
	367
1M-8657	178
	179
1M-8747	303
1M-9011	183
	208
	209
1M-9968	105
1M-9971	104
1N-4403	69
1N-5999	5
	181
	356
	357
1N-9372	69
1P-0436	83
	86
1P-0451	70
1P-1744	223
1P-2772	278
	408
1P-3702	320
	353
	355
1P-3703	320
1P-3704	323
	332
1P-3705	320
1P-3706	350
1P-3934	213
1P-3935	213
1P-4278	43
	44
	51
	53
	85
1P-4576	342
1P-4577	344
	345
1P-4578	197
	198
	202
	317
	352
	354
1P-4582	317
1P-5761	196
1P-5767	323
1P-6356	479
	482
1P-8715	303
1P-8716	303
1P-8717	282

▲ PRIMARY REFERENCE

PART NUMBER INDEX

Part No.	Page
1P-8717	▲303
1P-8786	294
	297
1P-9328	280
1Q-2606	416
	417
1Q-2645	412
	413
1Q-2648	416
	417
1Q-2976	412
	413
	416
	417
1Q-2977	412
	413
	416
	417
1R-0716	39
1R-0749	86
1R-0777	318
1S-0994	80
	108
	153
	155
	197
	279
1S-1015	81
	481
	483
1S-1860	213
1S-4836	193
	477
	480
1S-4915	108
	109
	110
	152
1S-6385	270
1S-6420	56
1S-7251	108
	109
	110
1S-7252	109
1S-7446	105
1S-8947	303
1S-9593	224
	312
	370
1S-9799	189
1T-0068	293
1T-0097	191
1T-0414	191
1T-0438	191
1T-0441	191
1T-0446	191
1T-0447	191
1T-0599	191
1T-0738	220
1T-0902	191
1T-1994	191
1T-2052	191
1T-2069	191
1T-2077	191
1T-2079	191
1T-2080	191
1T-2081	191
1T-2083	190
	▲191
1T-2086	191
1U-0640	▲386
1U-0725	390
1U-0738	400
	401
1U-0872	389
	400
	401
1U-0873	388
	389
1U-0904	389
1U-0979	389
1U-0980	389
1U-0990	396
1U-1204	402
1U-1212	388
	391
1U-1220	388
1U-1320	391
1U-1325	342
1U-1344	343
1U-2533	389
1U-2827	319
1U-8846	22
	216
	217
	218
1U-9053	121
1V-3113	171
1V-6652	475
1V-8230	34
1V-8638	231
1W-3011	81
1W-4738	24
1W-4741	24
1W-4746	24
1W-5039	30
1W-8620	68
	71
1W-9229	75
1Y-7927	469

2

Part No.	Page
2A-1162	23
2A-1531	30
2A-1736	308
2A-3211	41
2A-3348	19
2A-3746	190
2A-4429	9
2B-0858	206
2B-9373	203
2D-0598	356
	357
2D-1523	189
2D-1690	287
2D-2751	480
2D-4202	319
2D-4867	288
2D-5658	190
2D-6235	468
	475
2D-6392	105
2D-6506	183
2D-6642	12
	212
2D-8426	340
2F-5326	289
2F-6678	105
2G-0391	253
2G-8097	446
2G-9245	272
2H-3429	105
	367
2H-3745	289
2H-3755	178
	179
2H-3920	421
2H-3922	125
	127
2H-3931	206
2H-3932	184
	286
2H-3934	375
2H-5549	19
2H-6338	303
2H-6622	419
2H-9247	301
	302
2J-0564	379
2J-1411	379
2J-2866	358
	359
	360
	361
	362
	363
2J-3505	400
	401
	402
2J-3506	377
2J-6274	285
2J-6356	226
2J-7761	319
2J-7767	380
2J-8163	105
	376
2K-4472	379
2K-4473	379
2K-4821	102
2K-4973	238
	463
	464
	466
	467
	470
2K-5069	216
	217
2K-5986	190

▲ PRIMARY REFERENCE

PART NUMBER INDEX

Part No.	Page
2K-6830	377
2K-8257	198
2K-9295	216
	217
2L-5893	473
2L-6679	107
2L-8057	112
	156
2L-8058	115
2L-8066	104
2L-8067	116
2L-8068	112
2L-8069	121
	123
	142
	143
2L-8071	104
	156
2L-8074	233
2L-8075	115
	227
	475
2L-8076	405
	475
2L-8077	113
	119
	405
2L-8079	121
	143
	450
2M-1444	424
2M-2933	286
	305
2M-3974	202
2M-5795	270
2M-7041	186
2M-7077	131
2M-7819	469
2M-8191	205
2M-9780	85
	89
	181
	219
	222
	223
	321
	322
	350
	369
2N-3680	230
	232
2N-5243	63
2N-6005	40
2P-0347	303
2P-1279	196
2P-1286	193
2P-1370	208
	209
	210
	211
2P-1801	344
	345
2P-2717	41
2P-2975	108
2P-4304	38
	40
2P-4339	433
2P-7333	492
2R-0098	208
	209
	210
	211
2R-0179	276
2R-1694	240
2R-5001	232
2S-0115	348
2S-0795	64
2S-2053	42
	62
2S-2140	291
	292
2S-2251	189
2S-2596	356
	357
	358
	359
	360
	361
	362
	363
2S-3029	32
2S-4071	182
2S-4078	181
	197
	205
	208
	209
	210
	211
	344
	345
2S-5658	14
2S-5926	285
2T-1523	100
	257
	260
	267
2T-2991	193
2V-1937	486
	487
2V-2043	193
2V-3216	130
	150
2V-4387	42
2V-4868	51
2W-3679	76
2W-5825	48
2W-7940	263
2Y-5829	12
	38

3

Part No.	Page
3B-0623	5
	10
	25
3B-0623	40
3B-4124	216
	217
3B-4501	125
3B-4506	303
3B-4605	232
	264
	265
3B-4609	271
3B-4610	84
	270
3B-4615	229
	273
	275
3B-4627	389
3B-4640	241
	242
3B-8488	30
3B-8489	290
	378
	380
	381
	391
	396
3D-2546	231
3D-2824	193
	197
	205
	222
	316
	317
	322
	323
	326
	372
	373
3D-2975	468
3D-7943	223
3D-8317	186
3D-8748	475
3D-8749	475
3E-1841	488
3E-2378	496
	497
3E-3892	252
3E-4044	251
3E-4051	479
	482
3E-4052	479
	482
3E-4057	479
	482
3E-4058	479
	482
3E-4090	479
	482
3E-4297	374
3E-4304	405
	409
	410
	412
	413
3E-4352	11

▲ PRIMARY REFERENCE

PART NUMBER INDEX

Part No.	Page
3E-4352	18
	36
	58
	63
	98
	178
	179
3E-4353	16
	64
	74
	98
	131
	171
3E-4354	218
3E-4356	441
3E-4374	229
3E-5239	138
	171
	491
3E-5464	486
	487
3E-6180	409
	412
	413
3E-6328	118
	▲125
3E-6389	421
	▲452
3E-6756	396
3E-6757	396
3E-6773	84
3E-6812	479
	482
3E-6922	432
3E-7424	67
3E-7448	280
3E-7771	105
3E-7835	405
	▲475
3E-7837	475
3E-7838	475
3E-7839	475
3E-8016	19
	34
	36
3E-8017	70
	73
3E-8020	420
3E-8857	476
3E-9850	389
	390
3E-9865	448
3F-3442	180
3F-3727	191
3F-4971	389
3F-5022	176
	177
3F-5234	240
3F-9556	102
	453
	454
	455
3G-0910	379
3G-0910	389
3G-0911	379
	388
	389
	391
3G-2415	81
	240
3G-3267	318
3G-4532	379
3G-4533	389
	▲379
3G-5375	400
	401
3G-5436	382
	383
	▲400
3G-5999	378
	380
3G-8742	377
3H-7180	491
3J-1770	388
3J-1907	23
	28
	81
	139
	181
	186
	187
	195
	196
	201
	204
	219
	313
	314
	316
	320
	321
	323
	324
	325
	326
	327
	329
	330
	331
	351
	365
	368
	374
3J-4818	466
3J-5169	272
	343
3J-7189	272
3J-7354	23
	39
	51
	52
	53
	61
	204
	280
	313
3J-7354	314
	323
	325
	327
	329
	330
	331
	353
	354
	355
	356
	357
	358
	359
	360
	361
	362
	363
	366
3J-9545	378
3J-9703	379
3K-0360	23
	45
	51
	66
	80
	81
	139
	186
	198
	208
	209
	210
	211
	216
	217
	218
	279
	325
	326
	366
	367
	369
	370
	371
	484
3K-0835	432
	434
3K-2511	176
	177
3K-2889	276
3K-6060	108
	109
	153
	155
	172
	173
3K-6113	301
	302
3K-8460	23
3L-0594	423
3L-3380	106
3L-3813	350

▲ PRIMARY REFERENCE

PART NUMBER INDEX

Part No.	Page
3L-5893	52
3L-8187	475
3N-0759	375
3N-3763	104
3P-0647	33
	83
3P-1896	40
3P-1932	51
3P-9900	466
	467
3R-8797	105
3R-8801	104
3R-9965	141
3S-0004	203
	219
3S-2093	53
	66
	89
	130
	131
	132
	133
	151
	188
	220
	421
	424
	433
	435
	446
	447
	448
	449
	477
	479
	480
	482
	491
3S-2708	176
	177
	190
	216
	217
	218
3S-3439	200
3S-3440	200
3S-5842	59
3S-6162	380
3S-6605	12
3S-7166	335
	343
3S-7252	344
	345
3S-7781	182
3S-8503	344
	345
3S-9643	61
3T-0304	116
3T-0849	374
3T-1121	419
3T-1447	203
3T-2747	241
	242
3T-3096	79
3T-3157	442
3T-3158	442
3T-3159	442
3T-3278	442
3T-3418	105
3T-3422	104
3T-3423	105
	106
3T-3424	105
	106
3T-3434	106
3T-3634	430
3T-4007	190
3T-4008	190
3T-4009	190
3T-4011	190
3T-4013	190
3T-4238	237
3T-4243	287
3T-4244	287
3T-4245	287
3T-4377	176
	177
3T-4449	174
	▲208
	▲209
3T-4516	240
3T-4568	216
	217
3T-4709	107
3T-4710	107
3T-4824	216
	217
3T-5021	216
	217
3T-5200	216
	217
3T-5294	289
3T-5301	198
3T-5302	198
3T-5356	202
3T-5433	426
3T-5807	218
3T-5851	215
3T-5898	287
3T-5923	208
	209
	210
	211
3T-5926	208
	209
	210
	211
3T-5928	208
	209
	210
	211
3T-5929	208
	209
	210
	211
3T-6239	276
3T-6469	198
3T-6471	198
3T-6655	421
3T-6742	212
3T-6963	216
	217
3T-8729	176
	177
3T-9272	216
	217
3T-9494	104
	107
3T-9524	104
3T-9525	105
	▲107
3T-9549	205
3T-9986	174
	▲215
3V-9244	273
3V-9399	264
	265
3W-0640	285
3W-2369	285
3W-2764	240
3W-3742	272
3W-3896	246
	273
3W-6756	422
3Y-7829	49
	256
4	
4B-2049	104
	106
4B-3609	227
4B-3693	208
	209
	210
	211
4B-4059	468
4B-4158	286
4B-4274	475
4B-4276	475
4B-4278	264
	265
	466
4B-4314	41
4B-4863	119
4B-7739	34
	206
4B-9782	180
4B-9785	180
4B-9808	311
	315
4B-9880	186
	213
4D-1248	108
4D-7529	240
4D-7733	481
4D-7735	478
	483
4D-7794	131

▲ PRIMARY REFERENCE

PART NUMBER INDEX

Part No.	Page
4D-9376	240
	255
4D-9517	85
4F-0255	389
4F-1252	388
4F-2129	178
	179
4F-2294	112
4F-2710	388
4F-4879	458
	459
4F-5695	6
4F-7389	318
	319
4G-4972	5
4H-0019	213
4H-0407	252
	253
4H-1440	191
4H-1641	263
	271
4H-2558	264
	265
4H-5440	182
4H-9105	230
	294
	296
	297
	298
	300
4J-0520	195
	196
	320
	332
	334
	336
	338
	340
	344
	345
	348
4J-0522	195
	324
	351
	353
	355
4J-0527	84
	320
4J-0528	351
4J-5140	342
4J-5240	398
4J-5267	334
	338
	340
	341
	342
4J-5351	356
	357
	358
	359
	360
	361
	362
4J-5351	363
	371
4J-5477	196
	325
	327
	330
	331
4J-6806	356
	357
4J-7533	221
	356
	357
	358
	359
	360
	361
	362
	363
	368
4J-8251	319
4J-8997	353
	355
4J-9118	402
4K-0367	318
4K-1388	193
	285
	287
	344
	345
	352
	354
	356
	357
	358
	359
	360
	361
	362
	363
4K-2039	367
4K-2543	240
	408
4K-3533	411
	416
	417
4K-5824	35
4K-5843	372
	373
4K-6177	196
	197
4K-8302	481
	483
4K-9429	462
	472
4K-9841	17
4L-2729	105
4L-6454	46
	47
	48
	49
	50
	52
	80
4L-6454	81
	100
	110
	159
	160
	189
	192
	214
	263
	271
	272
	274
	321
	477
	479
	482
	483
	489
4L-6459	192
4L-8183	269
4L-9337	231
	344
	345
	347
4M-0189	22
4M-0200	81
	197
4M-1827	104
4M-1828	104
4M-1829	105
4M-1831	105
4M-1853	104
4M-1854	105
4M-1896	106
4M-2381	186
4M-2442	178
	179
4M-5281	432
	435
	448
4M-5282	231
4M-5905	186
4M-6425	411
	416
	417
	473
4M-6980	350
4M-7470	264
	265
4M-8239	199
4M-9592	176
	177
4N-1059	103
4N-1230	24
4N-1419	59
4N-1744	29
4N-2514	25
4N-2927	469
4N-3808	206
4N-3861	68
4N-6045	41
4N-8150	40
4N-9915	441

▲ PRIMARY REFERENCE

PART NUMBER INDEX

Part No.	Page
4P-1555	42
4P-1659	18
4P-3629	70
4P-4369	73
4P-5524	69
4P-6587	26
4P-7363	492
4P-7429	39
	52
	155
4P-7581	110
	131
	138
	152
	153
	155
	159
	171
	172
	173
	188
	317
	392
	433
	435
	437
4P-8134	89
	130
	131
	139
	153
	155
	165
	188
	317
	433
	435
	479
	482
	491
4P-8279	73
4P-8280	73
4P-8525	88
4P-9537	150
	▲151
4S-1962	108
	350
	484
4S-8537	191
4S-8598	200
4S-8603	200
4T-0202	396
4T-0203	396
4T-0521	318
4T-0925	365
4T-0928	365
4T-0993	356
	357
4T-1021	356
	357
4T-1108	358
	359
	360
4T-1108	361
	362
	363
4T-1389	396
4T-1649	356
	357
4T-1700	366
4T-1701	356
	357
4T-1850	356
	357
4T-1860	356
	357
	358
	359
	360
	361
	362
	363
	▲365
4T-2069	286
4T-2463	384
	385
	▲401
4T-3522	396
4T-4207	356
	357
4T-4509	366
4T-4511	356
	357
4T-4628	358
	359
	360
	361
	362
	363
4T-4631	360
	361
	362
	363
4T-4659	350
4T-4875	381
4T-4942	371
4T-5072	356
	357
	358
	359
	360
	361
	362
	363
4T-5073	356
	357
	358
	359
	360
	361
	362
	363
4T-5074	356
	357
	366
4T-5249	389
4T-5250	389
4T-5316	382
	383
	384
	385
	386
	▲391
4T-5405	391
4T-5495	388
4T-6134	386
	▲402
4T-6135	386
	▲390
4T-6137	386
	▲388
4T-6211	388
4T-6212	388
4T-6341	402
4T-6342	402
4T-6345	402
4T-6346	402
4T-6440	343
4T-6443	342
4T-6483	343
4T-6484	342
4T-7571	371
4T-7782	391
4T-7784	391
4T-8065	391
4T-8066	388
	▲391
4T-8088	388
4T-8710	380
4V-3638	392
	407
	408
4V-6981	232
4V-7231	240
4V-7412	392
4V-7875	468
4V-7877	468
4V-7884	464
4V-8256	463
	470
4V-8577	464
	466
4W-1203	30
4W-1204	30
4W-2042	30
4W-5385	268
4W-5386	4
	▲268
4Y-4281	229
4Y-7483	288
4Y-8435	387
4Y-8450	382
	383
	384
	385
	▲387
4Y-9344	409

▲ PRIMARY REFERENCE

PART NUMBER INDEX

Part No.	Page
5	
5B-0582	191
5B-3180	186
5B-7890	74
5C-2890	112
	232
	252
	280
	313
	314
	393
	441
	466
	467
	491
5C-6565	244
	269
	272
	289
	304
	342
	408
5C-7261	27
	82
	453
	454
	455
5C-7883	113
5C-8312	140
5C-9553	77
	424
	439
5D-0353	43
	44
	238
5D-1026	488
5D-1911	319
5D-4822	468
5D-5652	273
5D-7635	489
5D-7927	319
5D-9629	171
	256
5F-0304	23
5F-1678	288
	317
	318
5F-2465	208
	209
	210
	211
5F-3106	380
5F-3999	22
5F-4899	185
5F-7054	208
	209
	210
	211
5F-9757	118
5G-6505	108
5G-7191	320
5G-8655	411
5G-8655	416
	417
5G-9603	478
	483
5G-9973	272
5G-9974	272
5H-3193	208
	209
	210
	211
5H-3252	348
5H-4018	340
5H-4279	202
5H-6202	176
	177
5H-6734	78
	286
5H-8853	196
5H-9394	240
	249
5H-9899	233
5I-4376	326
	327
5J-3306	317
5J-3964	190
5J-4321	391
5J-4991	379
5J-5314	106
5J-5793	375
5J-7234	380
5J-7386	190
5J-8118	272
5J-8300	379
5K-0227	358
	359
	360
	361
	362
	363
5K-5120	182
	184
5K-7143	242
5K-8454	208
	209
	210
	211
5K-9090	193
	194
	197
	344
	345
5K-9107	216
	217
5K-9179	445
5K-9246	182
5K-9988	180
5L-2029	231
5L-4751	290
5L-4758	223
5L-7200	125
5L-8957	155
5M-0578	216
	217
5M-0578	218
5M-2043	303
5M-2057	319
	356
	357
	358
	359
	360
	361
	362
	363
5M-2894	48
	178
	179
	182
	185
	191
	212
	216
	217
	218
	285
5M-3034	104
5M-3038	178
	179
5M-3062	48
	52
	80
	100
	108
	110
	111
	141
	160
	161
	164
	166
	196
	197
	270
	381
	477
	478
	480
	483
	484
5M-3605	203
5M-4987	203
5M-5860	62
	76
5M-6126	176
	177
5M-6213	76
5M-6214	272
5M-7087	38
5M-7878	190
5M-7925	216
	217
5M-8500	411
	416
	417
5M-9204	109
5M-9205	109

▲ PRIMARY REFERENCE

PART NUMBER INDEX

Part No.	Page
5M-9623	199
5P-0180	335
	343
5P-0181	344
	345
5P-0537	19
	86
	150
5P-0597	68
	71
	72
	100
5P-0599	71
5P-0767	66
	485
	488
5P-0998	430
	431
5P-1046	81
5P-1075	43
	44
	45
	46
	47
	48
	49
	50
	80
	81
	100
	108
	109
	110
	111
	116
	141
	152
	153
	155
	159
	160
	161
	164
	166
	172
	173
	192
	196
	197
	214
	231
	238
	244
	270
	271
	272
	273
	274
	275
	309
	321
	322
	323
5P-1075	326
	332
	337
	340
	341
	344
	345
	347
	445
	456
	479
	482
	484
	485
	486
	487
	489
	490
5P-1076	43
	44
	45
	49
	50
	75
	194
	241
	242
	246
	251
	269
	273
	274
	275
	277
	289
	407
	408
	425
	430
	440
5P-1251	52
5P-1255	62
5P-1404	219
5P-1442	81
5P-1465	51
	52
	53
5P-1471	71
5P-1606	210
	211
5P-2228	81
	154
	273
	332
	341
	387
	481
	483
5P-2424	275
	287
5P-2506	382
	383
	384
5P-2506	385
	386
	395
	▲495
5P-2566	45
	194
	273
	274
	489
5P-2618	84
5P-2766	394
	405
5P-2817	72
5P-2955	160
	161
	164
	165
	166
5P-3422	51
5P-3456	83
5P-3779	200
	349
5P-3860	71
5P-3930	176
	177
	190
5P-3948	482
5P-4057	182
5P-4115	14
	130
	131
	159
	280
	423
	431
	432
	435
	448
5P-4116	428
	429
	431
5P-4295	108
5P-4325	100
5P-4423	466
5P-4432	466
5P-4571	142
	426
	467
5P-4906	66
5P-4961	81
5P-5296	178
	179
5P-5297	176
	177
5P-5374	287
5P-5528	152
5P-5639	488
5P-5643	409
	410
	412
	413
	486
	487

▲ PRIMARY REFERENCE

PART NUMBER INDEX

Part No.	Page
5P-5643	488
5P-5649	243
5P-5672	491
5P-5678	14
5P-5680	418
	419
5P-5755	409
	410
	412
	413
5P-5908	491
5P-5923	259
	260
5P-5924	491
5P-5926	410
	412
	413
5P-5930	410
	411
	412
	413
	414
	415
5P-5931	410
	412
	413
5P-5991	85
5P-6006	112
5P-6010	466
5P-6129	477
	478
	480
	481
5P-6298	107
5P-6313	171
5P-6314	171
5P-6605	409
	410
	412
	413
	416
	417
5P-6719	351
5P-6874	445
5P-6944	81
	139
5P-7085	195
5P-7090	280
5P-7177	431
5P-7211	257
	259
	260
5P-7464	194
5P-7465	194
5P-7468	196
	322
5P-7469	196
	322
5P-7483	258
	411
	414
	415
5P-7509	252
5P-7513	474
5P-7514	243
	474
5P-7592	213
5P-7665	208
	209
	210
	211
5P-7679	190
5P-7701	38
5P-7813	5
5P-7854	192
5P-7957	280
	462
	472
5P-7958	280
	494
5P-7970	31
	35
5P-8066	35
5P-8068	36
5P-8112	343
5P-8167	279
5P-8194	176
	177
5P-8211	34
5P-8244	431
5P-8245	20
	22
	28
	30
	31
	34
	41
	56
	64
	178
	179
	182
	212
	213
	216
	217
	218
	288
	329
5P-8247	7
	16
	102
	212
	213
5P-8249	293
	294
	295
	297
	299
	400
	401
	402
5P-8250	268
	379
5P-8347	60
	82
5P-8441	491
5P-8444	322
5P-8445	468
5P-8472	208
	209
	210
	211
5P-8500	77
	81
	257
	260
	263
	270
	273
	316
	494
5P-8503	411
	414
	415
5P-8522	162
5P-8918	419
5P-8998	180
5P-9402	380
5P-9439	202
5P-9617	327
	329
5P-9658	206
5P-9681	301
	302
5P-9891	286
5P-9909	253
5R-0939	238
	322
	323
	326
5R-0940	238
	322
	323
	326
5R-7137	20
5S-4246	233
5S-7008	183
5S-7349	102
	279
5S-7379	43
	44
	50
	52
	89
	163
	231
	244
	263
	270
	271
	279
	322
	341
	344
	345
	445
5S-7382	344
	345

▲ PRIMARY REFERENCE

PART NUMBER INDEX

Part No.	Page
5S-7382	479
	482
5S-7383	46
	47
	473
5S-8711	402
5S-9062	30
5S-9134	39
5V-0770	468
5V-1496	270
	461
	463
5V-1497	464
5V-6103	100
6	
6A-5591	22
6A-9718	454
6B-1124	57
6B-4594	43
	44
	257
6B-6205	192
6B-6863	178
	179
6C-3060	77
6C-3677	70
6C-6761	255
6C-9048	374
6D-1641	484
6D-1746	84
	270
6D-3033	140
6D-4161	442
6D-4244	89
6D-4246	477
	480
	483
6D-4247	108
	109
	483
6D-4636	485
6D-5257	141
6D-6099	100
6D-7146	37
6D-9157	378
6E-0381	370
6E-0485	356
	357
6E-1108	377
6E-1637	358
	359
	362
	363
6E-1835	371
6E-1847	377
6E-4907	350
6E-5066	368
6E-5200	366
6F-0196	400
	401
	402
6F-0253	432
	434
6F-0711	237
6F-4718	189
6F-6673	207
6F-7045	127
6H-2953	294
	296
	297
	298
	300
6H-3956	30
6H-3977	202
6H-4005	161
	164
	424
6H-9361	319
6I-0273	69
6I-0274	69
6I-0275	69
6I-1418	93
	117
6I-1638	9
6I-2431	45
6I-2435	45
6I-2662	9
6I-2663	9
6I-2720	18
6I-8371	400
6I-8372	400
	401
6I-8373	400
6I-8374	400
6I-8375	400
	401
6I-8381	400
6I-8382	400
	401
6I-8500	178
	179
6I-8507	212
6I-8511	212
6I-8724	216
	217
6I-9239	292
6I-9240	292
6I-9241	292
6I-9242	292
6I-9243	292
6I-9244	292
6I-9386	411
	416
	417
6I-9583	257
6I-9706	430
6J-0488	247
	248
	270
6J-1323	489
6J-2419	184
	188
	222
6J-2680	317
6J-3473	213
6J-5342	388
	389
	400
	401
6J-6439	371
6J-9747	379
6J-9748	379
6K-1049	270
6K-2198	250
6K-3273	461
6K-3630	190
6K-3632	278
	408
6K-4934	162
6K-4935	162
6K-6967	288
6K-8162	350
6K-8178	100
	483
6K-8498	180
6K-9555	487
6L-1648	76
6L-1649	198
6L-4783	202
6L-5359	198
	200
6L-7159	486
	487
6M-5062	367
6M-8796	348
6N-0009	74
6N-0992	74
6N-2944	66
6N-2985	41
	198
6N-3246	82
6N-3279	105
6N-3826	105
6N-4414	83
6N-6033	35
6N-6984	475
6N-7523	77
	453
6N-8744	50
6N-8863	34
6P-1735	216
	217
6P-1736	216
	217
6P-2215	256
6P-2216	422
6P-4977	184
6P-5317	216
	217
	218
6P-6591	432
6P-7704	178
	179
6P-8269	258
	260
6P-9116	264
	265

▲ PRIMARY REFERENCE

PART NUMBER INDEX

Part No.	Page
6S-2828	212
6S-2829	212
6S-3002	287
6T-0062	216
	217
6T-0064	216
	217
6T-0363	107
6T-0364	213
6T-0371	107
6T-0372	107
6T-0373	107
6T-0850	216
	217
6T-0988	422
6T-1698	77
	277
6T-1746	208
	209
	210
	211
6T-2173	208
	209
	210
	211
6T-2302	287
6T-2394	208
	209
	210
	211
6T-2724	323
6T-3631	168
	475
6T-3632	168
	475
6T-3633	168
	475
6T-3643	113
6T-3714	196
6T-3827	289
6T-3852	213
6T-3853	213
6T-4219	241
6T-4556	253
6T-4557	253
6T-5067	422
6T-5068	422
6T-5617	488
6T-6505	427
6T-6506	427
6T-6581	245
6T-7686	257
6T-8048	426
6T-8089	257
	260
6T-8250	273
6T-8387	231
6T-8388	231
6T-8402	409
	▲418
6T-8403	410
	▲418
6T-8714	253
6T-8943	475
6T-9204	287
6T-9255	475
6T-9256	475
6T-9509	258
	259
6T-9510	258
	259
6T-9512	258
6T-9807	258
	260
6T-9808	258
	260
6T-9927	258
	260
6T-9928	258
	260
6T-9929	258
	260
6V-0267	323
6V-0268	323
6V-0273	381
6V-0299	340
6V-0400	348
	364
6V-0473	176
	177
6V-0484	195
	219
6V-0661	208
	209
	210
	211
6V-0662	208
	209
	210
	211
6V-0663	208
	209
	210
	211
6V-0664	208
	209
	210
	211
6V-0745	343
6V-0852	37
	82
	181
	195
	196
	201
	204
	219
	323
	326
6V-0855	216
	217
6V-0894	226
6V-1193	273
6V-1228	479
	483
6V-1232	233
6V-1250	26
6V-1322	104
6V-1355	51
	52
	53
6V-1438	66
6V-1572	194
6V-1573	194
6V-1584	431
6V-1720	181
6V-1723	291
	292
6V-1790	253
6V-1820	24
	59
	62
	64
	66
	69
	74
6V-1876	323
6V-1889	162
6V-1903	34
	86
6V-1971	236
	406
	▲494
6V-2226	286
6V-2314	233
6V-2315	14
	82
6V-2317	34
	36
	37
	63
	65
	76
	82
6V-2331	411
	414
	415
6V-2360	158
6V-2372	478
	481
6V-2375	411
	414
	415
6V-2404	213
6V-2405	494
6V-2478	176
	177
6V-2495	479
	482
6V-2689	233
6V-2803	431
6V-3250	61
6V-3251	42
6V-3259	468
6V-3260	411
	414
	415
6V-3263	287
6V-3298	208

▲ PRIMARY REFERENCE

PART NUMBER INDEX

Part No.	Page
6V-3298	209
	210
	211
6V-3326	376
6V-3536	15
6V-3537	13
6V-3538	5
	19
6V-3545	233
6V-3669	380
6V-3671	409
	410
	412
	413
	414
	415
6V-3822	38
	39
	98
6V-3831	39
6V-3834	36
6V-3908	38
6V-3918	58
	63
6V-3922	371
6V-3940	19
	35
	40
	41
	55
	98
	171
6V-3964	27
6V-3965	37
	82
	181
	195
	196
	201
	204
	219
	320
	326
6V-4248	31
	72
	83
	171
6V-4367	40
6V-4583	190
6V-4589	26
	83
	224
	365
6V-4651	343
6V-4675	335
6V-4676	335
6V-4679	335
6V-4681	343
6V-4791	303
6V-5048	5
	28
	82
	86
6V-5048	131
	152
6V-5049	37
	82
	83
6V-5134	36
6V-5188	200
6V-5192	360
	361
	362
	363
	372
	373
6V-5215	131
	132
6V-5217	11
	17
	26
	41
	42
6V-5218	35
	63
	76
	82
6V-5219	19
	42
	62
	76
6V-5221	36
	54
6V-5230	34
6V-5324	365
6V-5326	371
6V-5387	198
6V-5555	353
	355
6V-5556	356
	357
	366
6V-5645	113
6V-5683	420
6V-5684	56
6V-5696	41
6V-5758	371
6V-5817	231
	449
6V-5818	446
6V-5833	418
	419
6V-5839	24
	31
	33
	38
	39
	59
	62
	66
	67
	69
	72
	73
	76
	83
6V-5839	87
	131
	317
	318
	319
	397
6V-5841	208
	209
	210
	211
6V-5842	39
	55
	76
6V-5843	16
6V-5844	22
6V-5849	453
6V-5851	453
6V-6209	454
6V-6317	33
	62
	66
	131
6V-6580	374
6V-6609	42
	58
	61
	130
6V-6715	436
6V-6716	119
6V-6717	488
6V-6889	454
6V-6923	83
6V-7190	411
	414
	415
6V-7238	484
6V-7350	54
6V-7357	227
	252
	257
	260
	309
	453
6V-7604	10
6V-7636	411
	414
	415
6V-7646	216
	217
	441
	461
	463
6V-7673	24
	56
6V-7688	396
6V-7727	22
6V-7732	318
6V-7743	159
	257
	260
6V-7744	159
	183
	227

▲ PRIMARY REFERENCE

PART NUMBER INDEX

Part No.	Page
6V-7744	264
	265
	319
	477
6V-7981	39
	76
	131
6V-8073	411
	414
	415
6V-8076	139
	326
6V-8077	37
6V-8118	232
6V-8129	411
	414
	415
6V-8149	41
6V-8154	16
6V-8182	241
	392
6V-8183	229
6V-8185	114
	232
6V-8188	99
	100
	101
	104
	106
	269
	289
	352
	354
	381
6V-8189	102
	160
	161
	164
	165
	166
	411
	416
	417
6V-8190	276
6V-8197	22
	31
	34
6V-8200	350
6V-8214	130
	131
	150
6V-8224	72
6V-8225	19
6V-8236	393
6V-8237	378
6V-8245	51
6V-8260	32
6V-8335	397
6V-8336	22
6V-8359	40
6V-8369	421
6V-8370	125
6V-8374	475
6V-8376	113
	227
6V-8397	80
	81
	139
	198
	219
	321
	322
	323
	324
	325
	326
	327
	329
	330
	331
6V-8398	197
	321
	322
	325
6V-8400	344
	345
6V-8553	324
6V-8626	89
6V-8627	196
	325
	330
	331
6V-8628	325
	330
	331
6V-8629	321
	322
6V-8632	81
6V-8634	326
6V-8635	38
	197
6V-8636	82
	196
	219
	324
	325
	326
	329
6V-8639	325
6V-8641	327
	330
	331
6V-8647	325
6V-8675	28
6V-8676	83
6V-8721	321
6V-8722	80
6V-8723	81
	198
	326
6V-8724	323
	326
	327
	329
	330
	331
6V-8730	321
6V-8781	324
6V-8801	49
	50
	81
	110
	160
	161
	166
	192
	195
	197
	274
	479
	482
	483
	484
	485
6V-8818	233
6V-8928	420
6V-9007	317
	323
6V-9008	38
6V-9027	63
6V-9161	329
6V-9168	219
	322
	324
6V-9182	279
6V-9189	166
	167
6V-9200	329
6V-9313	396
6V-9355	324
6V-9607	8
6V-9632	112
	119
	140
	171
	231
	255
	256
	310
	409
	410
	412
	413
	424
	430
	441
6V-9633	318
6V-9666	55
6V-9746	193
	197
	279
	317
	321
	322
	323
6V-9748	30
6V-9807	80
6V-9828	82
6V-9839	321

▲ PRIMARY REFERENCE

PART NUMBER INDEX

Part No.	Page
6V-9843	326
6V-9849	325
6V-9850	326
	327
6V-9872	325
	330
	331
6V-9874	279
6V-9957	344
	345
6Y-0123	257
	260
6Y-0206	251
	428
	429
	430
6Y-0359	398
6Y-0473	292
	294
	296
	297
	298
	300
	301
	302
6Y-0560	269
6Y-0562	250
6Y-0563	244
6Y-0859	208
	209
6Y-0926	216
	217
6Y-0984	216
	217
6Y-1602	178
	179
6Y-1757	301
	302
6Y-2130	214
6Y-2704	216
	217
	218
6Y-2811	176
	177
6Y-2835	286
6Y-3973	271
6Y-4638	186
6Y-4831	176
	177
6Y-4846	176
	177
6Y-5113	445
6Y-5694	383
	385
	▲381
6Y-5702	401
6Y-5704	401
6Y-5814	273
6Y-5911	178
	179
6Y-5912	176
	177
6Y-6277	210
6Y-6277	211
6Y-6752	402
6Y-7233	244
6Y-7236	241
	242
6Y-7385	441
6Y-7472	402
6Y-7473	402
6Y-7474	390
6Y-7795	289
6Y-7796	289
6Y-8037	287
6Y-8114	431
6Y-9280	381
6Y-9281	381
6Y-9373	216
	217
	218
7	
7B-0863	276
7B-2742	86
7B-3028	286
	382
	383
	384
	385
	386
	395
7B-3039	319
7B-3235	212
	213
7B-5074	43
7C-1445	41
7C-1798	12
7C-1821	36
7C-1822	36
7C-2891	40
7C-3081	40
7C-3082	40
7C-3083	40
7C-3567	268
7C-3954	40
7C-4354	66
7C-7851	21
7C-7852	21
7C-8292	11
7C-8296	34
7C-8581	9
7C-8639	18
7C-8851	88
7C-9542	39
7D-1089	483
7D-1649	213
7D-1677	215
7D-6922	428
	429
7D-7233	52
7D-8431	422
7D-8508	284
	304
7D-9749	319
7D-9749	356
	357
7E-2985	86
7E-3369	34
7E-4761	66
7E-4808	30
7E-5555	58
7E-5816	30
7E-6508	150
7E-6513	151
7E-9578	9
7F-0560	108
7F-3400	494
	495
7F-3488	104
7F-3491	104
7F-3525	107
7F-6112	289
7F-6998	433
7F-8267	318
	319
7F-8607	482
7G-1596	216
	217
7G-2343	178
	179
7G-2454	410
7G-2516	176
	177
7G-2830	176
	177
7G-3832	197
	340
	341
	342
7G-3833	197
	340
	341
	342
7G-3834	197
	340
	341
	342
7G-4332	292
	294
	296
	297
	298
	300
7G-4824	251
	428
	429
	431
7G-4998	205
7G-5186	43
	44
	52
7G-5684	208
	209
	210
	211
7G-5776	208
	209

▲ PRIMARY REFERENCE

PART NUMBER INDEX

Part No.	Page
7G-5776	210
	211
7G-5777	208
	209
	210
	211
7G-5780	208
	209
	210
	211
7G-5783	208
	209
	210
	211
7G-5784	208
	209
	210
	211
7G-5831	208
	209
	210
	211
7G-5832	208
	209
	210
	211
7G-5833	208
	209
	210
	211
7G-5837	208
	209
	210
	211
7G-5984	323
	332
	333
	337
7G-5985	323
	332
	333
	337
7G-5986	332
	333
	337
7G-6355	178
	179
7G-7218	176
	177
7G-7379	287
7G-7724	178
	179
7G-8664	290
7G-8666	290
7H-1447	319
7H-3599	291
	292
7H-3608	208
	209
	210
	211
7H-4543	475
7H-4566	216
7H-4566	217
7H-4571	303
7H-4574	303
7H-7628	212
7H-7658	178
	179
7H-9737	232
7I-2673	152
7I-7439	51
	449
7J-0204	110
	155
	181
	356
	357
	358
	359
	360
	361
	362
	363
	367
7J-2036	301
	302
7J-3216	290
7J-5129	390
7J-5131	390
	400
	401
7J-5225	317
7J-5544	45
7J-5606	171
7J-8611	180
	198
7J-9108	80
	81
	89
7J-9933	356
	357
	358
	359
	360
	361
	362
	363
	371
7K-1181	89
	96
	99
	100
	101
	108
	109
	110
	111
	112
	117
	118
	119
	120
	131
	134
	135
7K-1181	138
	139
	140
	141
	152
	153
	154
	155
	158
	159
	160
	161
	162
	164
	230
	231
	392
	437
	479
	480
	482
	491
7K-3176	482
7K-3673	242
7K-4201	256
7K-6536	256
7L-2894	105
7L-6580	58
7L-8170	463
7L-8316	475
7M-0324	104
7M-0325	104
7M-0326	106
7M-0327	105
7M-1201	180
7M-1296	199
7M-1297	199
7M-1377	199
7M-4720	29
7M-5130	83
	176
	177
7M-7219	469
7M-7410	63
7M-7794	49
	50
7M-8485	53
	186
	193
	194
	197
	237
	279
	356
	357
	358
	359
	360
	361
	362
	363
7M-8651	104
7M-9918	70

▲ PRIMARY REFERENCE

PART NUMBER INDEX

Part No.	Page
7N-0060	95
	109
7N-0718	110
	▲127
7N-1277	52
	53
	477
7N-1996	116
7N-2059	171
7N-5683	5
7N-9696	268
7N-9801	171
7N-9943	452
7P-4190	226
	228
7P-7610	411
7R-3029	140
7S-2042	263
	270
7S-3912	196
	238
7S-3913	196
	238
7S-3916	238
7S-3919	238
7S-9396	67
7T-0020	452
7T-0030	263
7T-0094	97
7T-1068	418
	▲419
7T-1069	418
	▲419
7T-1099	31
	52
	67
	79
	89
	112
	119
	134
	135
	139
	149
	152
	161
	163
	166
	171
	214
	230
	231
	240
	246
	249
	250
	252
	255
	256
	270
	272
	278
	310
7T-1099	317
	408
	424
	444
	489
	491
7T-1149	287
7T-1150	287
7T-1151	287
7T-1152	287
7T-1153	287
7T-1330	418
7T-1474	213
7T-1475	213
7T-1885	216
	217
	218
7T-2530	208
	209
	210
	211
7T-2531	208
	209
	210
	211
7T-2750	291
7T-2853	79
7T-3746	396
7T-3974	106
7T-4532	493
7T-5856	491
7T-5886	286
	305
7T-5968	292
7T-5969	291
7T-6079	287
7T-6299	430
	488
7T-6427	289
7T-6578	176
	177
7T-6580	176
	177
7T-6581	176
	177
7T-6589	402
7T-6654	372
	373
7T-6678	400
	401
7T-6936	400
7T-6966	281
	▲289
7T-6994	216
	217
	218
7T-7305	396
7T-7388	432
	434
7T-8130	216
	217
7T-8136	218
7T-8777	245
7T-8816	176
	177
	178
	179
7T-8875	180
7T-8876	180
7T-8891	449
7T-8894	477
	480
7T-8895	477
7T-9031	218
7T-9123	104
7T-9153	391
7T-9272	178
	179
7T-9280	244
7T-9302	421
7T-9303	421
7T-9370	176
	177
7T-9426	477
	480
7T-9515	125
7T-9788	216
	217
7T-9793	477
	480
7T-9832	216
	217
7T-9837	216
	217
	218
7T-9946	213
7U-4892	113
7V-5191	468
7V-8532	198
7W-5157	100
7W-5164	76
7W-5844	18
7W-6390	40
7W-6534	216
	217
7X-0264	475
7X-0274	342
7X-0290	198
7X-0293	322
7X-0311	489
7X-0314	197
7X-0325	99
	101
	277
7X-0328	195
7X-0332	288
7X-0343	286
7X-0344	343
	402
7X-0346	245
	273
7X-0349	244
	245
7X-0351	212
	391
7X-0352	212

▲ PRIMARY REFERENCE

PART NUMBER INDEX

Part No.	Page
7X-0365	134
	135
	139
	161
	163
	241
	242
	343
	388
	389
	400
	401
	489
7X-0366	208
	209
	210
	211
	268
	444
7X-0370	306
7X-0371	489
7X-0377	268
	392
7X-0383	284
	304
7X-0384	402
7X-0388	388
7X-0392	379
	389
7X-0404	306
7X-0406	379
7X-0418	276
7X-0421	407
	408
7X-0428	275
	276
	397
7X-0447	489
7X-0449	379
	389
7X-0455	391
7X-0503	45
	53
	381
	479
	482
7X-0507	43
7X-0515	155
	244
	245
7X-0521	268
	381
7X-0531	407
	408
7X-0533	275
	276
	289
	397
7X-0562	104
	106
7X-0578	43
	44
	49
7X-0578	490
7X-0582	139
	161
	163
	241
	242
	244
	277
	289
	444
	489
7X-0584	215
	233
7X-0590	304
7X-0603	423
7X-0608	411
	416
	417
	463
	470
7X-0618	244
7X-0623	414
	415
7X-0632	67
7X-0766	264
	265
7X-0818	117
7X-0820	322
	324
7X-0909	14
7X-2049	483
7X-2468	150
7X-2533	14
7X-2535	326
7X-2536	198
7X-2537	222
7X-2541	220
7X-2547	203
7X-2548	113
7X-2550	100
7X-2555	258
	260
7X-2562	397
7X-2563	277
7X-2565	77
7X-2568	381
	396
7X-3229	496
	497
7X-3325	241
	346
7X-3327	244
7X-3328	238
7X-3373	106
7X-3374	308
7X-3392	352
	354
	474
7X-4771	233
7X-4777	208
	209
7X-6315	94
	136
7X-7644	496
	497
7X-7700	78
7X-7702	447
7X-7729	67
	68
	71
	75
	134
	135
	149
	227
	228
	230
	251
	252
	253
	254
	257
	258
	259
	260
	262
	263
	310
	317
	318
	411
	416
	417
	431
	456
	474
	489
7X-7731	55
	63
7X-7877	423
7X-7888	393
7X-7927	447
7X-7928	447
7X-7929	447
7X-7930	447
7X-7945	196
7X-7958	51
7Y-3281	446
7Y-5226	233
7Y-7388	421
8	
8B-4624	270
8C-3082	374
8C-3089	104
8C-3093	38
8C-3095	436
8C-3100	55
8C-3131	372
	373
8C-3205	335
	338
	340
	341
8C-3206	196

▲ PRIMARY REFERENCE

PART NUMBER INDEX

Part No.	Page
8C-3206	202
	317
	332
	335
	337
	338
	350
	352
	354
8C-3325	356
	357
8C-3428	201
8C-3442	411
	416
	417
8C-3445	39
8C-3446	39
	61
	204
	327
8C-3447	204
8C-3451	327
8C-3681	52
8C-4365	348
8C-4436	108
	198
	239
	246
	269
	287
	407
8C-5060	453
8C-5063	232
8C-5226	252
8C-5230	39
8C-5607	134
	135
	159
	436
8C-5608	134
	135
	159
	436
8C-5682	478
	481
8C-6354	119
	143
8C-6358	108
8C-6857	244
	375
8C-6877	196
8C-6913	207
	241
	242
	284
	304
8C-8451	436
8C-8583	84
8C-8585	259
	260
	264
	265
8C-8842	277
8C-8843	408
8C-8844	278
8C-8902	498
	499
8C-9126	379
8C-9160	377
8C-9173	378
8C-9200	378
8C-9660	105
	140
8D-0983	489
8D-1817	212
8D-1819	212
8D-3508	240
	246
	249
	250
	270
8D-4771	207
8D-7185	489
8D-9739	178
	179
8E-0618	215
8E-1118	441
8E-1205	263
	270
8E-1212	286
8E-2112	285
8E-3507	215
8E-3508	215
8E-3621	271
8E-3623	271
8E-4265	249
8E-5124	272
8E-5170	214
8E-5486	390
8E-5701	388
8E-5703	377
8E-6269	344
	345
8E-6619	301
	302
8E-6754	400
	401
8E-6755	400
	401
8E-6756	400
	401
8E-6856	447
8E-7561	263
	270
8E-7791	251
	428
	429
	431
8E-8292	449
8E-8299	176
	177
8E-8300	190
8E-8303	176
	177
8E-8304	176
	177
8E-8307	216
	217
	218
8E-8310	216
	217
8E-8334	344
	345
8E-8430	344
	345
8E-8431	344
	345
8E-8432	344
8E-8433	345
8E-8434	347
8E-8648	293
8E-9532	277
8F-1434	106
8F-4028	289
8F-6711	294
	296
	297
	298
	300
8F-7702	226
8F-8151	484
8F-9206	318
8F-9836	240
8G-4386	239
8G-5247	239
8H-1603	182
8H-1607	69
8H-2262	303
8H-2768	215
8H-5303	127
8H-5306	127
8H-5352	176
	177
8H-9788	35
8H-9789	19
8H-9818	189
	206
8H-9819	206
8J-1196	31
	240
8J-1256	130
	131
8J-1665	208
	209
	210
	211
8J-1818	378
8J-2880	377
8J-4351	36
8J-4916	240
8J-6913	319
8J-7236	489
8J-8322	318
8J-8436	318
8J-8443	318
8J-8462	358
	359
8J-8468	318
8J-8782	319

▲ PRIMARY REFERENCE

PART NUMBER INDEX

Part No.	Page
8J-8783	319
8J-9990	321
8K-1433	441
8K-7186	250
8L-2746	224
	365
8L-2777	12
8L-2779	82
8L-2786	35
	40
	83
	130
	131
	313
	314
8L-8413	467
	468
8M-0505	35
8M-1013	186
8M-2530	181
8M-2770	52
8M-2771	130
	233
8M-2773	80
	81
	82
	83
	89
8M-4390	183
8M-4432	182
	184
8M-4438	216
	217
	218
8M-4986	198
	199
8M-5010	178
	179
8M-5254	198
	219
8M-5255	178
	179
8M-5266	178
	179
8M-5661	180
8M-7145	49
8M-8157	185
	198
8M-8489	178
	179
	203
8M-9315	23
8N-0869	108
	109
	152
8N-1544	156
8N-1545	121
	143
8N-4617	69
8N-6849	34
8N-6854	34
8N-8846	52
8P-0058	182
8P-1892	178
	179
8P-1916	176
	177
8P-1964	176
	177
8P-2019	176
	177
8P-2022	178
	179
8P-2023	176
	177
8P-2051	178
	179
8P-2053	176
	177
8P-5244	278
	408
8P-6188	303
8P-6363	490
8P-6364	252
8P-6651	296
	298
	300
8P-8357	216
	217
	218
8P-9507	176
	177
	178
	179
8P-9747	408
8P-9770	392
8Q-6071	372
	373
8R-3393	479
	482
8S-0023	332
	333
8S-0024	332
	333
8S-0527	218
8S-0948	153
8S-1783	240
	255
	256
8S-2332	103
8S-2634	108
8S-5383	492
8S-7499	313
8S-7803	469
8S-9008	189
8S-9089	64
8S-9130	180
8T-0083	323
8T-0100	11
	18
8T-0119	66
	81
	484
8T-0232	237
8T-0267	96
8T-0275	11
8T-0276	35
	93
8T-0281	21
8T-0292	60
	61
8T-0318	411
	414
	415
8T-0328	104
	106
	116
	232
	461
	463
8T-0337	424
	435
8T-0389	116
	393
8T-0638	99
	101
8T-0639	393
8T-0643	98
8T-0646	20
8T-0687	418
8T-0722	110
	317
	397
8T-0785	377
8T-0788	321
8T-1120	197
8T-1447	351
8T-1887	323
	326
8T-1888	323
	326
8T-1891	322
8T-1892	322
8T-1893	196
8T-1894	196
8T-1895	321
	322
8T-1896	321
	322
8T-1897	192
8T-1898	192
8T-1899	194
8T-1900	194
8T-1979	411
	414
	415
8T-1980	411
	414
	415
8T-2192	134
	135
8T-2275	319
8T-2353	329
8T-2501	46
	47
	48
	478
8T-2502	45
	53

▲ PRIMARY REFERENCE

PART NUMBER INDEX

Part No.	Page
8T-2502	257
	260
	286
	287
	343
8T-2561	257
8T-2602	333
8T-2603	333
8T-2659	119
	435
8T-3282	380
8T-3298	319
8T-3490	39
	52
	66
	67
	99
	100
	101
	149
	194
	196
	231
	250
	251
	252
	255
	256
	257
	258
	259
	260
	262
	263
	264
	265
	267
	322
	332
	337
	393
	431
	456
	484
	489
	491
8T-3518	108
8T-3519	108
8T-3597	67
	100
	251
	257
	260
	267
	340
	341
	399
	431
	491
	492
8T-3612	149
	171
	256
8T-3647	220
8T-3851	341
8T-3957	375
8T-3992	113
8T-4121	52
	67
	68
	78
	81
	82
	84
	85
	99
	101
	103
	109
	113
	116
	118
	119
	120
	162
	165
	183
	189
	192
	194
	196
	197
	198
	199
	202
	214
	225
	227
	254
	258
	259
	260
	262
	264
	265
	271
	317
	319
	335
	338
	350
	352
	354
	393
	409
	411
	412
	413
	422
	445
	456
	477
	478
	480
	483
	485
8T-4121	486
	488
	491
	492
8T-4122	99
	100
	101
	244
	258
	260
	286
	343
	391
8T-4123	258
	259
	397
8T-4131	397
8T-4132	99
	100
	101
	492
8T-4133	162
	197
	200
	225
	258
	259
	260
	322
	323
	332
	337
	342
	447
	491
	492
8T-4136	68
	78
	81
	84
	134
	135
	137
	149
	152
	155
	161
	162
	164
	194
	196
	197
	199
	206
	227
	251
	252
	254
	257
	258
	259
	260
	262

▲ PRIMARY REFERENCE

PART NUMBER INDEX

Part No.	Page
8T-4136	263
	264
	265
	271
	317
	322
	326
	341
	411
	414
	415
	416
	417
	422
	431
	474
	489
8T-4137	52
	67
	85
	103
	109
	116
	118
	119
	120
	162
	165
	189
	228
	230
	252
	254
	257
	258
	259
	342
	431
	445
	456
	477
	480
	486
	488
	490
8T-4138	118
	120
	130
	140
	171
	280
	431
	432
	433
	435
8T-4139	67
	158
	159
	251
	430
	440
	489
8T-4140	492
8T-4149	193
8T-4158	411
8T-4167	253
8T-4171	138
	441
8T-4172	152
	198
	199
	317
	478
	483
8T-4176	189
	258
	260
	322
8T-4177	220
8T-4178	317
	318
8T-4179	410
	412
	413
8T-4181	134
	135
	411
	414
	415
8T-4182	207
	214
	332
	352
	354
	492
8T-4183	323
	333
	340
	341
	399
	425
8T-4184	322
	348
	364
8T-4185	206
	214
	337
	356
	357
8T-4186	99
	101
	227
	332
	477
	492
8T-4187	397
8T-4189	66
	428
	429
	431
8T-4190	155
8T-4191	113
	118
	271
	347
	486
8T-4191	487
8T-4192	329
	340
	372
	373
	490
8T-4194	98
	430
	492
8T-4195	67
	68
	71
	160
	167
	189
	192
	194
	196
	225
	226
	228
	251
	309
	322
	323
	393
	409
	412
	413
	483
	485
8T-4196	67
	75
	85
	183
	196
	197
	198
	202
	228
	251
	253
	258
	259
	317
	321
	322
	326
	332
	335
	337
	338
	340
	341
	350
	352
	354
	456
	492
8T-4199	112
	113
	117
8T-4205	89

▲ PRIMARY REFERENCE

PART NUMBER INDEX

Part No.	Page
8T-4205	102
	104
	114
	227
	232
	233
	279
	280
	310
	432
	433
	435
	448
	461
	463
	489
	491
8T-4222	271
	475
8T-4223	30
	67
	81
	84
	98
	99
	100
	101
	108
	113
	154
	158
	159
	183
	195
	198
	202
	208
	209
	210
	211
	238
	239
	244
	246
	258
	260
	263
	270
	272
	273
	287
	289
	317
	322
	323
	332
	333
	340
	341
	348
	364
	381
	387
8T-4223	399
	408
	410
	412
	413
	430
	441
	481
	483
	489
	490
	492
8T-4224	27
	66
	93
	102
	112
	113
	160
	161
	164
	165
	166
	171
	198
	222
	342
	356
	357
	473
8T-4226	194
8T-4231	375
8T-4244	322
	492
8T-4648	84
	183
8T-4649	253
8T-4752	421
8T-4779	32
	316
8T-4835	45
	49
	50
	269
8T-4896	43
	44
	46
	47
	48
	50
	52
	89
	100
	110
	111
	155
	160
	161
	163
	164
	189
	192
	195
8T-4896	196
	198
	208
	209
	210
	211
	229
	231
	244
	274
	279
	286
	342
	344
	345
	447
	477
	478
	479
	480
	482
	483
	484
8T-4897	257
	260
8T-4943	252
8T-4956	75
	202
	317
	332
	492
8T-4970	227
	433
	435
8T-4971	423
8T-4983	59
	62
8T-4984	59
	63
	320
8T-4986	74
8T-4987	74
8T-4994	134
	135
	164
	208
	209
	210
	211
	228
	272
	273
	306
	342
	343
	375
	408
8T-4999	496
	497
8T-5001	30
	183
8T-5005	198
8T-5035	67

▲ PRIMARY REFERENCE

PART NUMBER INDEX

Part No.	Page
8T-5041	30
	183
8T-5043	321
8T-5071	287
8T-5360	183
	189
	196
	197
	198
	322
	323
	489
8T-5361	276
	289
	306
8T-5372	428
	429
8T-5383	448
8T-5400	446
8T-5410	232
8T-5413	257
	262
8T-5429	197
	322
8T-5439	77
	277
	397
8T-5460	396
8T-5911	249
	250
8T-5912	50
	249
	250
	272
8T-6466	194
	259
	332
	479
	482
8T-6684	193
8T-6685	490
8T-6703	59
8T-6723	81
8T-6724	81
8T-6761	34
	63
8T-6762	28
	55
8T-6765	62
8T-6868	323
8T-6871	245
	276
8T-6912	166
8T-6936	100
8T-7008	480
8T-7044	73
	200
8T-7329	167
8T-7338	99
	100
	101
8T-7501	337
8T-7547	222
8T-7566	263
	270
	463
	471
8T-7568	375
8T-7849	380
8T-7852	393
8T-7934	116
	152
	158
8T-7970	193
8T-8736	143
8T-8737	121
	122
	123
	127
	128
	129
	131
	133
	137
	139
	141
	142
	143
	144
	145
	146
	148
	156
	157
	224
	311
	312
	394
	443
	447
	450
	451
	453
8T-8908	431
8T-8914	411
	414
	415
8T-8915	477
8T-8916	198
8T-8917	59
	208
	209
	210
	211
	244
	269
	273
	287
	289
	333
	341
8T-8919	43
	44
	208
	209
	210
8T-8919	211
	287
	381
8T-8924	408
8T-8925	241
	242
	388
8T-8932	228
8T-8987	344
	345
8T-9043	411
	416
	417
8T-9056	43
	44
	49
8T-9082	462
8T-9313	273
8T-9357	61
8T-9358	219
8T-9364	489
8T-9368	475
8T-9371	466
8T-9378	80
8T-9382	189
8T-9389	100
	246
	273
	343
8T-9393	244
	285
8T-9398	272
	342
	390
8T-9399	164
	489
8T-9403	352
	354
8T-9405	140
8T-9496	264
	265
8T-9529	374
8T-9530	406
	408
	496
	497
8T-9598	55
8T-9655	93
	117
8T-9757	109
8T-9834	442
8T-9905	496
	497
8U-3297	372
	373
8U-3875	372
	373
	374
8U-5009	372
	373
8U-5010	372
	373
8U-9480	372

▲ PRIMARY REFERENCE

PART NUMBER INDEX

Part No.	Page
8U-9480	373
8V-0622	109
8V-5455	453
8V-9468	240
8W-6153	81
8X-4245	79
8Y-3795	240
8Y-3966	264
	265
8Y-3998	264
	265
8Y-3999	264
	265
8Y-4000	264
	265
8Y-4083	255
8Y-4842	319
8Y-5737	488
8Y-5944	464
8Y-5945	468
8Y-5965	464
8Y-6012	464
8Y-6014	464
8Y-6024	464
8Y-6041	469
8Y-6045	469
8Y-6046	469
8Y-6047	469
8Y-6060	468
8Y-6062	468
8Y-6063	468
8Y-6064	468
8Y-6066	469
8Y-6067	469
8Y-6068	469
8Y-6069	468
8Y-6277	461
	463
8Y-6388	428
	429
	432
8Y-6448	419
8Y-6839	418
	419
8Y-6859	468
8Y-6860	468
8Y-7452	327
8Y-8304	411
8Y-8306	264
	265

9

Part No.	Page
9B-0576	216
	217
9B-2052	272
9B-2289	294
	296
	297
	298
	300
9B-2596	69
9B-7233	113
9B-7233	227
9B-7237	43
	44
	45
	46
	47
	48
	50
	75
	110
	196
	244
	280
	321
	332
	340
	342
	475
	479
	483
	485
9D-0624	84
9D-0625	84
9D-0630	84
9D-0643	84
9D-0644	84
9D-3769	252
	431
9D-7924	194
9D-9736	411
	416
	417
9F-2978	43
	44
	45
	46
	47
	48
	49
	50
	52
	53
	81
	89
	100
	158
	159
	160
	161
	163
	164
	166
	214
	249
	263
	270
	271
	272
	323
	344
	345
	456
	475
9F-2978	477
	478
	483
	489
9F-3691	257
	260
9F-4446	29
9F-5599	107
9F-5644	127
9F-6445	232
	256
	270
	448
	489
9F-6656	496
	497
9G-0003	109
9G-0004	109
9G-0028	240
9G-0284	176
	177
9G-0285	176
	177
9G-0286	176
	177
9G-0289	176
	177
9G-0290	176
	177
9G-0832	213
9G-0983	474
9G-0986	474
9G-0990	474
9G-0992	408
9G-1127	409
	410
9G-1930	215
9G-3695	97
	115
	124
	126
	128
	156
	229
	234
	235
	426
	433
	435
	442
	443
	454
	455
9G-4101	105
9G-5127	279
9G-5664	301
	302
9G-5926	407
	408
9G-6744	176
	177
9G-8020	178
	179

▲ PRIMARY REFERENCE

PART NUMBER INDEX

Part No.	Page
9G-8615	182
9G-8661	35
9G-9151	491
9G-9314	405
	426
9H-0846	189
	208
	209
	210
	211
9H-3757	106
9H-6454	319
9H-8712	189
9J-0123	400
	401
9J-1641	398
	▲398
9J-2914	318
9J-6058	400
	401
9J-7031	319
9J-7978	380
9J-8126	358
	359
	360
	361
	362
	363
9L-1633	87
9L-5125	288
9L-5908	76
9L-6770	102
9L-8339	489
9L-8781	50
9L-9068	221
9L-9132	216
	217
9M-0164	100
9M-0853	40
9M-1974	11
	17
	19
	26
	31
	34
	35
	36
	37
	40
	41
	42
	54
	55
	58
	60
	61
	62
	63
	65
	76
	82
	86
	131
9M-1974	132
	185
	186
	463
9M-1976	189
9M-2008	190
9M-2904	42
	334
	338
9M-3835	270
9M-3838	270
9M-4355	178
	179
9M-5731	227
9M-7002	183
9M-7394	319
9M-7609	105
9M-8406	477
9M-9647	180
9N-0869	93
	117
	428
	429
9N-1995	447
	496
	497
9N-4233	381
9P-0356	215
9P-1475	182
9P-1478	213
9P-1921	212
9P-1922	212
9P-1925	213
9P-3066	258
	260
9P-3709	189
9P-6911	289
9P-7072	213
9P-7121	78
9P-7390	178
	179
9P-7757	178
	179
9P-7859	419
9P-7860	419
9P-8614	176
	177
9P-8626	176
	177
9P-9150	220
9P-9388	445
9P-9390	445
9P-9392	408
	▲445
9R-1733	317
9R-2060	322
9R-2613	79
	240
	252
	256
	317
9R-2640	278
9R-2672	79
9R-2672	240
	250
9R-2821	255
	256
9R-3761	79
9S-1305	232
9S-1322	293
9S-2544	104
9S-3581	303
9S-3582	303
9S-4167	82
9S-4181	237
9S-4182	23
	28
	52
	63
	82
	323
	353
	354
	355
9S-4185	40
	45
	186
	208
	209
	210
	211
9S-4188	34
	352
	354
9S-4189	288
9S-4190	222
	223
9S-4191	23
	28
	37
	61
	82
	132
	186
	187
	374
9S-5187	408
9S-6130	181
9S-7710	180
9S-8001	356
	357
	358
	359
	360
	361
	362
	363
	368
9S-8002	5
	86
	313
	314
	356
	357
	358
	359

▲ PRIMARY REFERENCE

PART NUMBER INDEX

Part No.	Page
9S-8002	360
	361
	362
	363
9S-8003	350
9S-8004	82
	204
	313
	314
	368
9S-8005	23
	42
	58
	61
	216
	217
	218
9S-8006	26
	42
	350
9S-8008	205
	222
	372
	373
9S-8009	285
	287
9S-8230	263
	271
9T-0064	392
9T-0065	392
9T-0066	240
	400
	401
9T-0094	379
9T-0095	379
9T-1367	376
9T-1576	376
9T-1579	376
9T-1582	376
9T-1642	376
9T-1687	376
9T-3004	319
9T-3005	319
9T-3264	318
9T-3541	364
	▲371
9T-3885	377
9T-4143	374
9T-4186	374
9T-4849	375
9T-4901	372
	373
9T-5039	374
9T-5364	351
	▲371
9T-5948	351
9T-5949	351
9T-5950	351
9T-6115	379
9T-6316	356
	357
9T-6322	374
9T-6521	371
9T-6522	371
9T-6523	371
9T-6827	371
9T-6828	371
9T-7677	319
9T-8571	351
9T-8980	351
9T-9836	350
9U-8263	441
9U-8544	343
9U-8746	441
9U-9190	272
9U-9229	272
9U-9409	279
9U-9540	335
9U-9942	421
9V-2818	457
9W-0593	208
	209
9W-0645	178
	179
9W-0709	286
9W-0742	108
9W-0844	141
	145
	158
	427
	480
	482
	490
9W-0852	89
	141
	145
	148
	158
	427
	433
	435
	490
	491
9W-1441	113
9W-1442	113
9W-1446	113
9W-1464	233
9W-1569	213
9W-1570	213
9W-1571	216
	217
9W-1676	388
9W-1677	388
9W-1693	279
9W-1694	279
9W-1695	279
9W-1951	123
	142
9W-2032	115
9W-2033	115
9W-2822	273
	275
9W-2853	216
	217
9W-2992	212
9W-3232	208
9W-3232	209
	210
	211
9W-3301	287
9W-3364	214
9W-3365	214
9W-3366	214
9W-3423	276
9W-3425	276
9W-3660	212
9W-3937	216
	217
9W-4159	182
9W-4361	160
	161
	166
9W-4897	390
9W-5150	213
9W-5290	259
9W-5334	180
9W-5343	425
9W-5375	390
9W-5545	270
9W-5595	199
9W-6102	216
	217
9W-6103	216
	217
9W-6198	400
	401
	402
9W-6199	400
	401
	402
9W-6323	448
9W-6359	183
9W-7382	398
9W-7543	270
9W-7547	270
9W-7602	389
	390
9W-7925	218
9W-7926	218
9W-8084	264
	265
9W-8269	178
	179
9W-8270	176
	177
9W-8277	279
9W-8612	213
9W-8940	264
	265
9W-9001	390
9W-9009	390
9W-9044	258
	259
9W-9058	291
	292
9W-9224	398
9X-0194	451
9X-0196	123
	142

▲ PRIMARY REFERENCE

PART NUMBER INDEX

Part No.	Page
9X-0199	125
9X-0261	131
9X-1054	490
9X-1056	156
	490
9X-1386	133
9X-1813	112
	226
9X-2027	207
	358
	359
	360
	361
	362
	363
9X-2038	428
	429
9X-2043	420
	428
	429
9X-2044	139
	420
9X-2045	405
	420
	428
	429
9X-2053	25
9X-2068	76
9X-2097	27
	40
9X-2098	93
9X-2125	181
	182
	184
	456
9X-2185	488
9X-2205	78
9X-2480	159
	436
9X-2503	62
9X-2532	381
9X-3132	442
9X-3401	121
	122
	123
	125
	133
	139
	142
	143
	144
	147
	165
	394
9X-3402	121
	122
	123
	127
	142
	143
	144
	146
	147
9X-3402	165
	233
	394
	426
9X-3452	490
9X-3463	166
	167
	168
9X-3966	51
9X-4244	166
9X-4584	287
9X-4609	201
9X-6076	280
9X-6154	358
	359
9X-6165	134
	135
	436
9X-6269	99
	100
	101
	257
	260
	267
9X-6281	227
9X-6340	498
	499
9X-6381	310
9X-6395	366
	371
9X-6458	180
9X-6615	226
9X-6772	52
	165
	172
	173
	394
9X-7287	84
9X-7317	88
9X-7363	210
	211
9X-7373	490
9X-7378	479
	482
9X-7380	477
	478
	480
	481
	483
9X-7381	477
	480
	481
	482
9X-7382	477
	480
	483
9X-7383	477
	480
	482
9X-7385	479
	482
	493
9X-7449	138
9X-7505	290
9X-8071	205
9X-8250	477
	478
	480
	484
9X-8256	14
	96
	99
	101
	112
	118
	120
	134
	135
	171
	227
	233
	252
	257
	260
	309
	326
	393
	431
	439
	441
9X-8257	32
	196
	285
	316
	492
9X-8258	389
	390
9X-8260	344
	345
9X-8266	257
	260
9X-8267	11
	22
	82
	130
	138
	140
9X-8268	22
	25
	322
	324
9X-8600	78
9X-8703	280
9X-8873	64
9X-8918	468
9X-9720	109
9X-9730	95
	280
9Y-0810	15
9Y-0821	15
9Y-1758	11
9Y-3513	55
9Y-3520	21
9Y-3805	37
9Y-4357	11
9Y-4580	14

▲ PRIMARY REFERENCE

PART NUMBER INDEX

Part No.	Page
9Y-4815	492
9Y-5379	46
	48
9Y-7215	11
9Y-8075	37
9Y-8076	37
9Y-9236	53
9Y-9619	268
0	
003-2143	280
005-4173	85
005-4834	216
	217
012-0380	112
030-1707	103
030-2135	216
	217
030-7947	82
	83
030-7962	83
030-8537	230
030-8538	178
	179
030-9613	200
031-0214	473
031-0218	182
	184
031-1119	52
033-6033	83
033-6043	365
033-8248	52
034-3557	208
	209
	210
	211
036-9821	105
036-9823	104
	106
037-4426	488
037-5197	109
045-4065	104
061-6711	178
	179
061-7540	63
061-8561	36
061-9455	41
061-9457	203
065-7187	151
067-2551	130
068-8093	178
	179
069-2536	200
081-8353	182
083-9527	433
	435
085-8091	358
	359
	360
	361
	362
	363
090-3093	208
	209
	210
	211
091-0081	83
091-4537	255
091-9035	332
092-2570	87
092-4924	439
095-0843	461
	463
095-0878	469
095-1574	374
095-1750	369
096-0014	12
096-3218	374
096-5962	227
096-6166	366
099-3649	356
	357
099-8111	374
1	
100-3224	468
100-4336	80
	81
100-5041	143
	156
100-5179	468
100-5421	22
100-6211	350
100-7913	67
100-8010	356
	357
	358
	359
	360
	361
	362
	363
100-8011	356
	357
	358
	359
	360
	361
	362
	363
100-8012	356
	357
	358
	359
	362
	363
100-8150	9
	10
100-8525	63
101-0003	464
	467
101-0742	453
	▲454
101-1635	58
101-1651	31
101-2657	492
101-2850	69
101-2862	372
	373
101-2867	473
101-3055	421
101-4194	464
101-4195	464
101-9083	263
102-0341	488
102-2913	498
	499
102-5828	38
102-5829	38
102-5842	11
102-7365	358
	359
	360
	361
	362
	363
102-8801	122
	123
	128
	139
	142
	143
	145
	232
	426
	450
102-8802	77
	89
	108
	110
	112
	115
	116
	121
	122
	123
	124
	125
	126
	128
	130
	133
	142
	143
	144
	146
	155
	156
	158
	162
	165
	167
	170
	171
	205
	313
	370

▲ PRIMARY REFERENCE

PART NUMBER INDEX

Part No.	Page
102-8802	433
	435
	437
	467
	479
	482
	491
	493
102-8803	121
	124
	126
	128
	131
	133
	143
	156
	157
	168
	226
	234
	235
	394
	432
	434
	452
	490
102-8804	123
	124
	128
	142
	143
	147
	156
	163
	169
	224
	227
	234
	442
102-8805	123
	137
	141
	144
	229
	311
	427
	433
	435
	442
	443
102-8814	450
102-8815	447
	450
102-8816	450
103-6100	478
	483
103-6262	233
103-8133	151
103-9425	421
103-9527	489
	▲490
	▲491
104-1844	381
104-3560	6
104-3567	11
104-3568	11
104-6202	155
104-6729	184
104-6730	184
104-6931	318
104-7995	38
105-3482	226
105-3484	84
105-4208	58
105-4210	55
105-8183	178
	179
105-9657	403
	404
	405
	▲441
105-9659	403
	404
	405
	▲445
106-1227	375
106-1792	192
106-4150	206
106-4155	156
106-4572	43
	44
	53
106-5122	492
	▲493
106-5472	227
106-8186	237
106-8187	237
106-8704	479
	482
106-9212	186
106-9214	186
107-1177	356
	357
107-1179	356
	357
107-3786	116
107-3881	231
	▲232
107-3888	232
107-3945	301
	302
107-4393	482
107-4394	482
107-4399	482
107-5769	87
107-5795	58
107-6280	22
108-0697	45
108-0720	476
	▲487
108-1335	403
	405
	▲425
108-1744	174
	▲215
108-1798	43
	44
108-1799	43
	44
108-1812	281
	▲285
108-1847	350
108-2109	215
108-3138	441
108-4086	468
108-4087	468
108-4103	468
108-4430	222
108-5157	366
108-6953	189
108-8089	193
109-1633	478
	483
109-1634	478
	483
109-1645	119
109-2377	280
109-3609	45
109-3610	45
109-3615	44
109-3622	45
109-3968	186
109-5308	34
109-5309	11
109-5313	73
109-5319	18
109-5498	489
109-5761	488
109-6406	486
	487
109-9012	398
109-9828	411
	414
	415
109-9829	411
	414
	415
110-0510	189
110-2028	233
110-2317	4
	▲49
110-2842	222
110-6109	432
	434
110-6393	476
	498
	499
110-6844	121
	143
110-6845	121

▲ PRIMARY REFERENCE

PART NUMBER INDEX

Part No.	Page
110-6845	143
110-6891	50
110-7882	233
110-8152	420
110-8319	193
110-8379	226
110-8769	156
110-8827	193
111-2645	40
111-3201	223
111-3780	227
111-3781	227
111-4482	422
111-4627	310
111-4663	256
111-4919	202
111-5147	428
	429
111-7421	53
111-8314	160
	161
	164
	166
111-8642	233
111-8950	233
111-9251	226
112-1719	98
112-2660	232
112-3023	286
112-3041	285
112-3042	285
112-3043	285
112-3044	287
112-3462	43
	44
112-4440	230
112-4511	176
	177
112-4740	233
112-4757	233
112-4818	378
112-4919	285
112-5585	176
	177
112-8042	176
	177
112-9051	▲95
113-0580	156
113-2688	43
	44
113-4230	49
113-6033	474
113-6362	274
113-6363	52
113-6364	52
113-7335	43
	44
113-7336	43
	44
113-8125	59
113-9539	45
114-0358	398
114-0359	398
114-0408	262
114-2368	166
114-2538	262
114-2687	35
114-4396	49
114-4397	50
114-4399	50
114-4400	50
114-5333	479
	482
114-5988	498
	499
114-8735	49
114-8843	97
	142
	143
	144
	145
114-8844	142
	143
	144
	145
114-8845	143
	144
114-9125	428
	429
	439
114-9223	478
115-1024	163
115-1025	163
115-1748	141
	432
	434
115-2982	2
	▲5
115-2985	3
	▲26
115-3003	36
115-4337	195
115-4371	219
115-4517	63
115-4923	292
115-4924	292
115-6301	291
	292
	▲292
115-6306	▲292
115-6307	281
	▲291
115-6308	▲291
115-6929	87
115-9354	274
115-9360	43
	44
115-9397	11
	▲12
115-9398	12
115-9399	12
115-9400	12
115-9402	12
115-9403	12
115-9424	19
115-9589	▲274
116-1085	2
	▲8
116-1102	10
116-3715	73
116-4527	367
116-5408	2
	▲14
116-5413	3
	▲86
116-5460	3
	▲58
116-6202	478
	483
116-6203	433
	435
117-0067	131
117-0128	483
117-0165	2
	▲25
117-0166	7
117-0185	2
	▲26
117-1385	178
	179
117-2311	116
117-2674	3
	▲54
117-2743	2
	▲15
117-2746	2
	▲36
117-2749	2
	▲11
117-2750	2
	▲21
117-2760	3
	▲150
117-2792	3
	▲65
117-3036	63
117-4486	463
117-4491	459
	460
117-4492	463
	470
117-7826	176
	177
117-8131	253
117-8765	372
	373
117-8863	422
117-9966	252
118-0459	17
118-0639	232
118-0693	411
	416
	417
118-1628	294
	296
	297
	298
	300
118-2765	442

▲ PRIMARY REFERENCE

PART NUMBER INDEX

Part No.	Page
118-2797	60
118-4728	83
118-8458	46
	47
119-2942	35
119-3025	57
119-3662	97
	112
119-4153	397
119-5094	143
	156
119-6024	335
119-6622	408
119-6623	406
119-8784	88
120-4921	409
	410
	412
	413
121-1258	294
	296
	297
	298
	300
121-2844	156
	▲157
121-6647	358
	359
	362
	363
	▲366
121-6650	360
	361
	▲366
121-6653	358
	359
121-9910	372
	373
121-9913	372
	373
121-9915	372
	373
121-9917	372
	373
121-9918	372
	373
121-9919	372
	373
121-9920	372
	373
121-9921	372
	373
121-9922	372
	373
121-9923	372
	373
121-9924	372
	373
121-9925	372
	373
121-9927	372
	373
121-9941	372
121-9941	373
121-9942	372
	373
121-9946	372
	373
122-0760	36
122-0763	63
122-1133	370
122-3324	50
122-3771	221
122-7127	433
	435
123-0304	141
	432
	434
123-0306	141
	432
	434
123-4511	61
123-5748	376
123-9294	433
	435
123-9624	358
	359
	360
	361
	362
	363
124-2463	84
124-2674	3
	▲27
124-3019	52
124-3243	428
	429
124-5043	63
124-6273	389
124-6274	389
124-7562	273
124-8251	294
	296
124-8255	297
	300
124-8259	298
124-8262	294
	296
	297
	298
	300
124-8267	294
	296
	297
	298
	300
124-8490	490
125-1302	112
125-1393	366
125-2001	162
	164
	▲166
125-4178	281
	▲294
125-4179	281
	▲297
125-4180	281
	282
	▲283
125-4590	2
	▲22
125-5341	184
	188
125-6535	106
125-6536	104
125-6537	106
125-7874	147
125-7875	113
	119
125-8254	409
	410
	412
	413
125-9257	476
126-0179	82
126-0814	323
	327
126-1074	100
	257
	260
	267
126-1699	476
126-1766	394
126-1767	108
	115
	123
	124
	126
	128
	129
	130
	137
	139
	142
	143
	144
	145
	146
	156
	162
	163
	169
	170
	229
	235
	426
	442
	443
	493
126-1768	89
	97
	108
	115
	121
	122
	123
	124
	126
	128

▲ PRIMARY REFERENCE

PART NUMBER INDEX

Part No.	Page
126-1768	129
	137
	142
	143
	144
	145
	146
	156
	162
	163
	169
	170
	235
	394
	433
	435
	442
	443
	479
126-1774	133
	137
	143
	156
126-3700	456
126-3701	456
126-6872	139
126-7574	136
127-1043	423
127-1044	423
127-1045	423
127-1046	423
127-1048	422
127-1596	232
127-1597	232
127-1598	230
127-1599	231
127-3018	430
127-5485	121
	143
127-5486	156
127-5588	280
127-8424	1
	▲281
127-8426	281
	▲286
	▲287
127-8830	496
	497
128-0382	15
128-0383	15
128-0384	15
128-0385	15
128-0400	15
128-0401	15
128-0402	15
128-0403	15
128-0411	17
128-3341	32
128-3813	32
128-5924	479
	482
128-8128	286
128-8130	286
128-8557	86
129-1831	433
129-1908	344
	345
	▲377
129-1910	377
129-2181	56
129-2893	13
129-3180	30
129-3184	14
129-6768	383
	385
	▲344
129-6769	383
	385
	▲345
129-8331	134
	135
	139
	161
	163
130-0229	204
130-1977	334
	338
130-3139	290
130-3232	163
130-3233	163
130-3280	71
130-3698	496
	497
130-5300	110
	111
	120
	141
	433
	435
130-9191	334
	338
130-9811	130
131-0447	233
131-0825	203
131-1647	293
131-3278	203
131-3935	301
	302
131-3981	158
131-4091	178
	179
131-4164	61
	280
131-4242	469
131-4675	372
	373
131-5137	421
131-5167	468
131-5492	253
131-6645	63
131-8207	286
131-8627	172
132-0338	463
	470
132-3203	2
	▲18
132-5789	99
	100
	101
	109
	131
	162
	433
	435
132-7077	227
132-7419	233
132-7450	233
132-8502	266
132-9455	223
132-9899	220
132-9900	220
133-0260	132
133-1400	203
133-1401	203
133-2249	224
133-5545	369
133-6517	172
	173
133-7029	9
133-7042	98
133-7068	17
133-7075	2
	▲19
133-7083	21
133-7086	21
133-7098	18
133-7100	17
133-9405	432
	434
134-1251	220
134-2540	144
	146
	156
	235
134-4126	136
134-4492	159
134-5245	39
134-7258	496
	497
134-9602	488
136-1543	462
	472
136-1544	463
	470
136-1595	216
	217
136-2216	189
136-2227	412
	413
136-2228	412
	413
136-4878	131
136-6093	229
136-9297	313
	314
136-9298	313
	314
136-9304	367
137-1602	70

▲ PRIMARY REFERENCE

PART NUMBER INDEX

Part No.	Page
137-4940	274
137-5541	86
137-6603	222
137-6645	130
	131
	132
	178
	179
137-8793	223
137-8794	223
137-9755	313
138-2006	10
138-2028	3
	▲28
138-8886	89
139-1537	318
139-2116	152
	158
	▲168
139-2455	334
	338
139-2456	334
	338
140-0860	154
140-3943	112
141-1480	72
	75
141-2240	431
141-4044	423
141-4123	488
141-4852	313
	314
141-4942	283
	▲210
	▲211
141-4976	116
141-5151	367
142-0038	193
142-5149	288
142-5789	167
142-7092	281
	▲293
142-8540	191
142-8620	491
142-8858	432
	434
143-1265	274
143-1288	461
	463
143-6871	231
143-7397	49
143-9521	281
	▲288
144-0195	446
	447
	449
	486
	487
144-0331	233
144-4284	178
	179
144-7878	178
	179
145-0326	465
	467
145-1695	3
	▲87
145-2334	313
	314
145-3405	227
145-7028	110
	155
145-7328	446
145-8707	367
145-8741	453
146-6315	313
	314
146-6316	367
146-6317	313
146-6318	367
146-6319	367
146-6669	180
146-6670	180
147-0319	160
	161
	164
	166
	▲167
147-1444	394
147-1445	235
147-1446	235
147-5088	55
147-6603	365
147-6604	365
147-6605	365
147-7328	335
147-7976	453
	▲454
147-7979	453
	▲455
147-9672	48
148-1928	201
148-2063	11
	▲13
148-2064	13
148-2065	13
148-2125	6
148-2149	8
	▲9
149-3137	230
149-5470	313
	314
149-9818	116
150-1955	277
150-4086	119
151-0254	453
151-0255	453
151-0256	453
151-1398	114
151-5803	233
151-9275	233
152-3001	88
152-8073	292
153-2073	161
	165
	▲168
153-4247	186
153-6281	109
153-6976	360
	361
	362
	363
153-7067	358
	359
	360
	361
	362
	363
153-7549	358
	359
153-7550	358
	359
153-7551	360
	361
	362
	363
153-7553	358
	359
153-8925	367
153-8926	367
154-1580	319
154-2881	173
154-3172	127
154-3358	24
154-5629	428
	429
	439
155-0812	109
155-2255	122
	124
	127
	128
	133
	137
	142
	143
	144
	146
	235
	426
	450
155-2257	122
	124
	143
	144
	146
155-2260	121
	124
	128
	131
	133
	143
	152
	156
	157
	233
	394
	426
	442

▲ PRIMARY REFERENCE

PART NUMBER INDEX

Part No.	Page
155-2260	480
155-2265	122
	144
	433
	435
	442
	443
	450
155-2270	89
	108
	112
	115
	121
	122
	123
	124
	126
	128
	129
	130
	131
	133
	142
	143
	144
	145
	146
	156
	158
	162
	163
	165
	169
	170
	188
	427
	442
	443
	479
	482
	490
155-2271	119
	122
	123
	124
	127
	128
	137
	142
	143
	144
	156
	235
	442
	450
155-2274	97
	123
	128
	141
	142
	143
	144
	235
155-2274	426
	442
	447
	450
155-2819	72
155-5161	189
155-6629	18
155-7861	396
155-7970	63
156-4406	176
	177
156-5341	208
	209
	210
	211
156-5545	463
	470
156-5970	224
	370
156-7410	428
	429
157-0670	61
157-1361	433
157-2153	367
157-2741	434
158-0248	167
	168
158-0250	167
	168
158-0252	167
	168
158-0518	272
158-2336	200
158-2734	233
158-2735	233
158-3025	378
158-6161	231
158-6632	116
	▲125
158-7690	403
	404
	405
	▲446
	▲447
158-7695	403
	404
	405
	▲420
158-7697	410
	412
	413
158-8076	174
	▲219
158-8692	2
	▲20
158-8693	20
158-8696	20
158-8906	420
158-9956	368
	▲370
159-1503	66
	484
	485
159-2950	457
	▲459
159-3781	313
159-3838	255
159-4712	432
	434
159-5255	51
159-7156	307
	▲375
159-7943	428
	429
159-7946	428
	429
159-7948	428
	429
159-7949	428
	429
159-8108	428
	429
159-8109	428
	429
159-8111	313
159-8587	20
159-8588	2
	▲20
159-9257	433
	435
159-9322	121
	123
	133
	137
	142
	143
	156
	235
	394
160-0496	200
160-1431	226
160-1432	226
160-1433	227
160-1434	227
160-1435	226
160-1823	77
160-2317	75
160-3585	212
160-3588	212
160-4702	309
	310
160-6304	392
160-6306	388
160-6314	2
	▲16
160-7165	458
	459
	▲464
	▲465
160-7186	456
	▲458
160-7689	121
	123
	142
	143
	156

▲ PRIMARY REFERENCE

PART NUMBER INDEX

Part No.	Page
160-7689	235
	394
160-7690	133
	137
160-8184	24
160-8202	57
160-8203	57
160-8497	101
160-8570	4
	▲75
160-8571	4
	▲72
160-8573	4
	▲67
160-8576	4
	▲29
160-8581	2
	▲38
	▲39
161-0120	76
161-1083	420
161-1084	420
161-1085	420
161-1091	420
161-1092	420
161-1093	420
161-1094	420
161-1096	420
	▲421
161-1097	421
161-1098	420
161-1099	421
161-1703	130
161-1705	131
161-2128	35
161-2129	35
161-2130	3
	▲35
161-2684	360
	361
	362
	363
161-2685	358
	359
161-2717	3
	▲73
161-2726	73
161-2867	76
161-3006	57
161-3007	57
161-3011	57
161-3014	57
161-3015	57
161-3016	57
161-3017	57
161-3018	57
161-3020	57
161-3597	3
	▲69
161-3615	309
	▲315
161-3616	308
	▲308
161-3619	3
	▲76
161-3958	251
161-3963	231
161-3964	230
161-4024	428
	429
161-4347	3
	▲64
161-4463	241
161-4464	241
161-4465	236
	▲241
161-5967	468
161-6149	369
161-6154	370
161-6161	369
161-8068	203
161-8089	3
	▲63
161-9926	152
162-2166	294
	296
	297
	298
	300
	301
	302
162-2786	4
	▲85
162-5357	220
	▲223
162-5358	223
162-5359	222
162-6874	175
	▲212
	▲213
162-7862	301
	302
162-9523	194
163-1146	464
163-2160	306
163-4762	4
	▲59
163-5512	313
	314
163-5671	358
	359
163-7454	59
163-7972	83
163-8686	284
163-8687	282
	▲284
163-8691	282
	▲306
163-8692	281
	▲304
163-8742	275
163-8743	275
163-8744	236
	▲275
163-8746	236
	▲407
163-8818	236
	▲270
	▲271
164-0758	253
164-0847	433
	434
164-0938	358
	359
164-1234	467
164-2108	187
	224
164-2879	236
	▲279
164-3417	78
164-3651	316
164-3710	3
	▲70
164-3713	▲476
164-3715	403
	▲477
	▲478
	▲479
164-3716	476
	▲480
	▲481
	▲482
	▲483
164-3718	403
	▲484
	▲485
164-3743	152
164-3759	51
164-4444	4
	▲51
	▲52
	▲53
164-4445	4
	▲171
164-4531	463
	470
164-4712	76
164-4716	395
	▲397
164-4717	▲395
164-4718	397
164-4719	397
164-4720	395
	▲396
164-4721	395
	▲398
164-4722	398
164-4883	463
	471
164-4990	395
	▲334
	▲335
164-5675	▲276
164-5689	4
	▲30
164-5692	29
164-5798	100
164-5822	3
	▲62

▲ PRIMARY REFERENCE

PART NUMBER INDEX

Part No.	Page
164-6472	3
	▲31
164-7320	395
	▲378
164-7556	166
164-7577	205
	▲205
164-7677	352
164-7888	30
164-8101	165
164-9348	260
164-9358	262
164-9360	262
164-9454	257
164-9456	258
164-9461	259
164-9463	259
164-9465	258
164-9541	227
164-9882	67
164-9884	67
164-9885	67
164-9929	434
165-0080	406
	▲44
165-0081	43
	44
	▲45
165-0088	4
	476
	▲492
165-0153	270
165-2577	444
165-2578	▲444
165-2580	476
	▲406
165-3663	284
	304
165-3664	284
	304
165-4274	3
	▲60
165-4854	189
165-6577	346
165-6779	226
165-6857	251
165-6879	2
	▲24
165-6937	397
165-6940	52
165-6969	376
165-7211	286
165-7574	286
	305
165-7576	286
	305
165-8322	476
	▲489
165-8335	320
165-9100	227
165-9102	227
165-9103	227
165-9104	227
166-0364	76
166-0383	397
166-1328	40
166-1329	38
	▲40
166-2085	▲282
166-2185	▲192
	▲193
166-3733	421
166-3773	43
	44
166-3777	310
166-5229	122
	144
	148
	235
166-5336	45
166-6781	464
166-6928	433
	435
	▲452
166-7212	378
166-7213	378
166-7220	354
166-8598	64
166-8768	195
166-8769	195
166-8777	197
166-9139	380
166-9204	228
166-9209	228
166-9212	230
166-9213	228
167-1138	246
167-1140	246
167-1530	432
	434
167-1882	108
167-1884	160
	161
	164
167-2087	408
167-2088	406
	▲408
167-2201	377
167-2207	378
	380
167-2312	377
167-2317	378
	380
167-2323	285
167-2467	378
	380
167-7640	335
167-7641	335
167-7642	335
167-7643	335
167-7751	232
167-8125	16
167-8712	392
167-9524	187
167-9666	70
	▲70
167-9670	70
167-9671	70
168-0369	433
	435
168-5051	282
	▲305
168-5052	282
	▲305
168-5252	305
168-5253	305
168-7212	18
168-7276	18
168-8588	246
168-8655	161
	▲170
168-8656	160
168-8772	421
168-9441	194
169-0163	304
169-0164	304
169-0697	471
169-1026	461
169-2692	245
169-2693	245
169-2876	498
	499
169-4097	70
169-4170	19
169-4812	349
169-5459	489
169-7380	465
	467
169-7451	219
169-8419	269
169-8946	41
169-8947	2
	▲41
169-9081	257
	▲264
169-9085	257
	▲265
169-9635	447
	▲450
169-9636	421
	▲426
169-9637	403
	▲474
169-9639	431
169-9647	403
	▲448
169-9649	448
	▲449
169-9650	449
170-0251	252
170-0260	432
170-0805	477
	480
170-0808	478
170-0809	477
170-0811	477
	480
170-0812	477
	480

▲ PRIMARY REFERENCE

PART NUMBER INDEX

Part No.	Page
170-1112	463
	470
170-1114	463
	470
170-1115	463
	470
170-3341	81
170-3343	80
170-3357	368
	▲369
170-3399	489
170-3441	480
170-3442	480
170-3443	481
170-3444	481
170-3461	116
170-3793	152
170-3795	108
170-4001	358
	359
170-4068	109
170-4857	110
170-4859	108
170-5849	428
	429
170-5851	428
	429
	439
170-5852	428
	429
	439
170-5853	439
170-5854	411
	416
	417
170-5855	411
	416
	417
170-7259	408
170-7260	408
170-7491	116
	322
170-7642	270
170-8590	473
171-1230	461
	463
171-2438	474
171-3054	376
171-3055	376
171-3057	376
171-3058	376
171-3060	376
171-3061	376
171-3062	2
	▲17
171-3063	17
171-3068	376
171-4123	240
171-4357	4
	▲72
171-5059	376
171-5349	155
171-5817	28
171-5823	2
	▲28
171-5882	294
	296
	297
	298
	300
171-5989	376
171-5999	376
171-6001	375
	▲376
171-6682	461
	463
171-7077	225
171-8772	370
172-2391	224
172-2392	223
	▲224
172-2416	461
	463
172-3584	332
172-4001	463
172-4233	31
172-4860	116
172-4863	113
172-4864	110
172-5291	310
172-5989	489
172-8600	254
172-8601	256
172-9966	346
172-9981	377
173-0511	358
	359
	360
	361
	362
	363
173-0512	358
	359
173-0514	360
	361
	362
	363
173-0515	358
	359
173-1028	461
	▲470
173-1302	406
	▲47
173-1303	▲48
173-1566	119
173-2052	462
	472
173-3083	460
173-3283	461
173-5787	458
	459
173-7035	458
	459
173-7126	86
173-7132	323
173-8912	31
173-9779	378
174-0503	144
	146
	156
	235
174-1503	475
174-2231	465
	▲468
	▲469
174-2237	468
174-2475	19
174-2930	196
174-3091	311
	312
174-4909	223
	▲224
174-7159	473
174-7875	111
174-7876	111
174-9169	171
175-0454	7
175-1349	433
	435
175-2842	3
	▲98
175-3721	22
175-3950	433
	435
175-4291	166
175-4292	166
175-4393	433
175-4972	220
	▲223
175-6593	59
175-7162	478
	483
175-7900	377
176-0259	221
176-3903	33
176-3908	2
	▲33
176-4168	14
176-4257	4
	▲99
176-5618	86
176-6995	55
176-6997	55
176-6998	55
176-6999	55
176-7000	54
	▲55
177-1860	473
177-1862	473
177-1863	461
	463
177-4930	462
177-4935	461
	462
	▲473
177-4937	459
	460
177-9653	97
177-9656	97

▲ PRIMARY REFERENCE

PART NUMBER INDEX

Part No.	Page
177-9656	122
	144
177-9853	111
178-0603	459
	▲462
	▲463
178-0605	471
	▲472
178-0606	458
	▲459
178-0607	473
178-0608	473
178-0609	473
178-3003	435
178-3586	111
178-3643	17
178-7195	284
	304
178-7907	462
	472
179-0160	498
	499
179-7094	403
	404
	▲409
	▲410
	▲411
179-9453	10
179-9462	9
	▲10
180-1538	12
180-3969	310
180-5045	240
180-6152	313
180-6512	314
180-6600	407
	408
180-7304	460
	▲461
180-7305	461
	▲471
180-9339	234
180-9340	133
180-9616	323
183-3873	198
183-4273	479
	482
183-4693	64
184-0982	251
	430
184-1503	456
184-1679	72
184-1680	74
184-2298	461
	463
184-2299	461
	463
184-2300	462
	471
184-2465	69
184-2472	94
184-3269	456
184-3270	456
184-3289	251
184-4761	158
184-5321	308
	▲314
184-6011	459
	▲460
184-8060	226
185-1433	492
185-1645	62
185-1861	442
185-2076	251
185-2638	102
185-2639	102
185-2644	102
185-2645	102
185-2647	102
185-2648	102
185-2650	102
185-2651	102
185-2653	102
185-2654	102
185-2655	102
185-2656	102
185-2657	102
185-2658	102
185-3503	221
185-3533	433
	435
185-3666	253
185-4461	12
185-5893	62
185-6393	103
185-7157	111
	▲126
185-7450	16
185-9358	242
185-9607	163
186-0067	4
	▲103
186-0636	161
	▲169
186-3705	38
186-3735	77
	108
	110
	112
	116
	125
	141
	148
	151
	155
	157
	167
	168
	171
	205
	224
	226
	227
	232
	233
	234
186-3735	311
	312
	313
	370
	432
	433
	434
	435
	436
	450
	451
	452
	453
	454
	455
	467
	479
	482
186-3736	112
	188
	442
	450
186-4857	449
	▲451
186-4998	226
186-5097	434
186-5107	466
186-6189	479
	482
187-0413	414
	415
187-0541	369
187-1679	78
187-3307	8
187-6222	100
187-7719	435
187-8194	24
187-8195	24
187-8222	24
187-8223	24
187-8972	15
187-9194	319
188-1079	315
188-2893	314
188-4517	85
	▲86
188-5071	59
188-6126	35
188-6229	38
188-6232	39
188-7067	222
188-7068	222
188-7069	222
188-7511	132
188-8590	2
	▲37
188-8849	167
	168
188-9429	132
188-9644	149
189-0751	▲172
189-0753	172
189-1715	109

▲ PRIMARY REFERENCE

PART NUMBER INDEX

Part No.	Page
189-1839	224
189-4645	395
	▲380
189-4646	380
189-4647	380
189-5358	474
189-5359	474
189-5746	155
189-6123	474
189-9240	275
	399
190-1027	155
190-2277	212
190-2278	180
190-4239	192
190-4240	192
190-4808	193
190-5386	496
	497
190-6017	3
	▲88
190-7615	122
	128
	143
	145
190-7684	372
	373
190-8368	372
	373
190-8405	241
190-8609	285
190-8830	372
	373
191-0068	46
	47
191-0069	46
	47
191-2127	372
	373
191-2156	372
	373
191-2394	47
191-2933	458
	▲466
	▲467
191-3028	367
191-3029	367
191-5439	316
191-8139	407
191-8140	408
191-8283	241
	242
191-8304	178
	179
191-8305	178
	179
191-8697	406
191-8920	313
191-8921	313
	314
192-0089	89
192-0213	301
	302
192-0219	301
	302
192-0220	281
	▲301
192-2112	427
192-3017	431
192-3018	431
192-5425	53
192-5627	473
192-7752	467
192-7755	467
192-7760	466
192-7767	466
192-7783	466
192-7787	466
192-7790	467
192-7795	467
192-7799	467
192-7805	467
192-7810	466
192-7812	466
192-7820	466
	467
192-7822	466
192-7848	467
192-8866	372
	373
192-9728	498
	499
192-9734	436
193-0403	155
193-0747	85
193-1598	84
193-2219	372
	373
193-2239	372
	373
193-2413	4
	▲66
193-2414	66
193-2454	64
193-3063	389
	390
193-3306	489
193-3307	489
193-3308	489
193-3356	432
193-3359	433
193-3973	321
193-7377	431
194-0614	48
194-0615	48
194-0616	48
194-0617	48
194-1434	483
194-1435	478
	483
194-1466	435
194-1738	270
194-2606	159
194-2608	158
194-2610	158
194-4227	270
194-4231	270
194-5032	313
	▲367
194-5033	313
	314
	▲367
194-5042	50
194-5043	50
194-5044	50
194-5226	130
	131
194-5227	152
194-5340	131
194-6030	272
194-6036	273
194-6250	269
194-6724	131
194-6739	62
194-7034	227
195-5837	22
195-6283	389
	390
195-6383	258
	259
195-6882	372
	373
195-6890	372
	373
195-6899	372
	373
195-6901	372
	373
195-6902	372
	373
195-6903	372
	373
195-6913	372
	373
195-6928	372
	373
195-6930	372
	373
195-6931	372
	373
195-6932	372
	373
195-6944	374
195-6945	374
195-6947	374
195-6948	374
195-6949	374
195-6950	374
195-7430	370
196-1903	66
196-2126	214
196-3759	259
196-3760	258
196-3762	264
	265
196-3763	259
196-3764	258
196-5515	313
196-9846	408

▲ PRIMARY REFERENCE

PART NUMBER INDEX

Part No.	Page
196-9852	119
197-5108	308
197-7102	98
197-7565	122
	123
	142
	144
197-7689	464
197-8391	130
	131
197-8393	130
197-8394	131
197-8395	131
197-8396	132
197-8397	131
197-8820	99
	100
	▲102
197-9335	18
198-4777	323
198-4778	346
198-5389	436
198-6574	408
198-6575	408
198-9706	428
	429
	430
	432
	434
198-9707	432
	434
199-4193	372
	373
199-4317	116
199-7065	480
199-7232	258
	259
199-7834	313
199-8288	59

2

200-0189	309
	▲313
200-2053	7
200-2054	6
	▲7
200-3174	457
	▲458
200-4574	230
200-5003	313
200-6345	321
201-0950	365
	368
	▲370
201-7269	220
	▲222
201-7274	219
	▲220
	▲221
201-8318	484
201-8902	405
201-8903	405
201-9624	230
202-2605	68
202-4327	117
202-5397	124
202-6612	166
202-6614	166
202-7475	13
203-2070	490
203-2288	182
203-3940	131
	132
203-4708	195
203-6523	▲282
203-6527	▲281
203-7703	458
	459
203-8040	286
204-0301	240
204-1297	124
204-2281	99
	101
	109
	117
	118
	119
	120
	139
	141
	152
	154
204-3450	5
	▲6
204-6101	432
	434
204-6102	433
	435
204-6499	182
204-6501	184
204-6502	186
204-7563	108
204-8000	99
	101
	120
204-9530	490
204-9532	491
205-0626	102
205-2203	251
205-5165	279
205-5314	218
205-6388	459
	460
205-7205	185
205-7331	227
205-8257	436
206-2800	313
206-5165	436
206-5889	50
207-2510	34
207-4771	34
207-9830	2
	▲34
208-0375	252
208-4622	99
208-4622	100
	101
208-5026	289
208-5436	33
208-5498	356
	357
208-7490	66
208-9160	88
	▲88
208-9647	232
209-0381	116
209-0531	99
	100
	101
209-0547	397
209-3721	59
209-3722	59
209-7193	218
209-7309	33
209-7705	99
	100
	101
209-9588	93
	▲94
209-9723	313
210-0091	182
210-2130	67
210-4458	189
210-8400	67
	▲69
211-0220	428
	429
211-0587	15
211-0588	15
211-1044	99
	100
	101
211-5358	466
211-8231	76
211-9048	404
	▲405
211-9049	405
	▲412
	▲413
	▲414
	▲415
	▲416
	▲417
211-9050	412
	413
211-9051	412
	413
211-9085	214
211-9087	214
211-9294	467
211-9491	336
212-0819	3
	▲58
212-2072	392
212-2301	202
212-6254	99
	100
	101

▲ PRIMARY REFERENCE

PART NUMBER INDEX

Part No.	Page
212-7410	389
	▲392
212-7413	382
	383
	384
	385
	▲389
212-7421	▲382
213-4504	161
213-4540	184
	▲186
213-6169	382
	383
	384
	385
	▲342
	▲343
213-6657	313
213-7315	433
	435
213-9100	108
214-0586	9
214-0783	466
214-1196	▲457
214-1197	406
	▲457
214-2469	76
214-3573	216
	217
	218
214-4208	115
	123
	142
	143
	442
214-7568	130
	131
	132
	195
	196
	204
214-9408	182
215-3198	88
215-5581	236
	▲257
	▲258
	▲259
215-5588	▲260
215-9801	227
216-0029	376
216-0273	212
216-0805	491
216-4591	218
216-5583	7
216-5584	7
216-5585	7
216-6202	181
216-7431	216
	217
216-8584	375
217-0153	257
217-0155	257
217-0577	18
217-2293	216
	217
217-2998	173
217-3075	39
217-4616	258
	259
	261
217-7933	473
217-8433	441
217-9049	462
218-0114	174
	▲207
218-0404	436
218-0861	462
218-2373	224
218-7469	▲384
219-0305	406
	498
	499
219-2391	233
	▲234
219-4458	18
219-4481	207
219-6314	436
219-6487	152
	158
	▲166
219-6607	436
220-1411	176
	177
220-1418	195
	▲199
220-2800	236
	▲251
	▲252
	▲253
220-2810	406
	▲430
	▲431
220-4324	185
	▲187
220-4441	9
220-8044	▲275
221-0877	181
221-3342	175
	▲180
	▲181
	▲182
221-3450	453
221-3451	453
222-0345	459
	460
222-1150	307
	▲309
222-1151	307
	▲347
222-1152	307
	▲346
222-1153	307
	▲348
222-1154	307
	▲316
222-1155	307
222-1155	▲320
	▲321
	▲322
	▲323
222-1156	307
	▲324
	▲325
	▲326
	▲327
222-1157	307
	▲332
	▲333
222-1158	307
	▲340
	▲341
222-1179	308
	▲330
	▲331
222-1191	307
	▲348
222-2209	453
222-4086	131
	▲133
222-7877	116
222-7883	116
222-7884	165
222-7885	161
	163
222-8719	236
	▲244
	▲245
	▲246
222-9151	393
223-1074	174
	▲194
	▲195
	▲196
	▲197
	▲198
223-1612	37
223-2205	236
	▲456
223-2451	174
	▲175
223-3313	309
223-3400	189
223-4869	84
223-4929	236
	▲80
	▲81
223-5981	175
	▲176
	▲177
	▲178
	▲179
223-8173	113
224-0672	500
224-2694	32
224-2740	255
	▲256
224-2791	225
	▲226
	▲227

▲ PRIMARY REFERENCE

PART NUMBER INDEX

Part No.	Page
224-2793	174
	▲225
224-4357	403
	404
	405
	▲453
224-4940	346
	▲352
	▲353
224-4941	308
	▲354
	▲355
224-4948	316
	▲317
	▲318
	▲319
224-4998	409
	412
	413
224-5000	410
	412
	413
224-5530	226
224-6187	266
	▲267
224-6829	453
224-7830	498
	499
224-9072	422
224-9222	117
224-9450	230
	▲233
224-9766	89
224-9767	89
224-9768	▲89
224-9769	89
224-9771	89
224-9772	89
224-9908	▲173
225-0312	500
225-0313	496
	497
225-3281	377
225-4131	500
225-4134	309
225-4135	309
225-4256	496
	497
225-4257	500
225-8026	368
	▲369
225-8553	114
225-9480	252
	▲254
226-0293	434
226-2543	▲383
226-2544	▲385
226-3493	326
226-3496	324
226-3497	324
	328
226-3498	324
226-3500	324
226-3501	324
226-3502	324
226-3503	324
226-3505	324
226-3506	330
	331
226-3507	330
	331
226-3510	330
	331
226-3511	329
	330
	331
226-3514	324
226-3908	203
226-3910	203
226-4751	326
	▲368
226-4755	19
226-4909	100
226-6588	320
226-7511	72
226-7906	340
226-9169	439
226-9423	233
226-9622	187
	224
226-9665	116
	▲124
226-9673	230
	▲235
226-9674	116
	▲112
	▲113
226-9675	112
	▲114
226-9713	228
	▲230
	▲231
227-0832	348
	▲351
227-0838	22
227-0925	214
	▲214
227-1226	▲96
227-1228	▲436
	▲437
227-2451	216
	217
227-3021	372
	373
	▲374
227-3023	374
227-3178	330
	331
227-3179	330
	331
227-4246	216
	217
227-4247	216
	217
227-5141	43
	44
227-5992	257
	262
227-5993	257
	262
227-5996	259
	260
227-5997	259
	260
227-9390	320
227-9391	320
227-9392	320
227-9393	320
227-9394	320
227-9395	320
227-9396	320
227-9511	322
227-9544	324
227-9879	403
	▲403
228-2576	347
	▲350
228-6089	116
	432
	434
228-6679	340
228-6680	341
228-6681	341
228-6682	341
228-6683	340
228-6684	340
228-6787	420
228-7368	308
	▲336
	▲337
228-7816	▲308
228-7853	330
	331
228-7855	330
	331
229-0887	498
	499
229-1494	459
229-1509	109
229-2353	336
229-2355	336
229-2356	336
229-2357	336
229-2359	337
229-5354	233
229-5391	320
229-5397	320
229-5422	307
	▲375
229-5458	332
229-5459	332
229-5460	332
229-5461	332
229-5462	332
229-6635	424
229-6640	254
	▲255
229-9744	381
230-0917	171

▲ PRIMARY REFERENCE

PART NUMBER INDEX

Part No.	Page
230-1340	134
	135
230-1341	500
230-1502	247
	▲249
230-1503	248
	▲250
230-2636	381
230-4700	403
	▲422
	▲423
230-4960	45
230-4962	45
230-5008	147
230-5385	424
230-5388	422
	▲424
230-5845	246
	▲247
230-5846	246
	▲248
230-8792	115
231-0858	100
231-1422	81
231-2913	247
231-2914	248
231-3090	294
231-3091	297
231-3092	283
	▲298
231-4166	195
	▲200
231-4167	200
231-4174	74
231-5968	174
	▲216
	▲217
231-5990	174
	▲218
231-8855	176
	177
232-6208	189
	▲190
232-6411	189
233-0668	190
233-5219	37
233-5220	36
	▲37
233-6742	83
233-6745	462
233-6942	329
233-9163	16
234-3043	350
234-3442	22
	▲23
234-3451	350
234-5846	161
234-9994	176
	177
235-0346	496
	497
235-0399	352
	354
235-0400	364
235-0401	352
	354
	▲364
235-0523	137
235-0541	277
235-0907	318
	319
235-2652	59
235-4514	196
235-4605	365
235-6388	29
235-8026	498
	499
236-5197	473
236-6731	273
236-6732	273
236-7228	496
	497
236-8826	140
	149
237-0048	112
237-0049	114
	▲115
237-0050	112
237-0051	112
237-0052	112
237-0053	112
237-0204	251
	431
237-0205	251
	431
237-0208	255
237-0209	255
237-0225	112
237-0227	145
237-0229	25
237-0336	394
237-0934	424
237-0956	424
237-1962	103
	▲104
	▲105
	▲106
237-2097	256
237-2209	178
	179
237-3943	466
237-3970	466
237-4266	252
237-4268	252
237-4269	251
237-4270	252
237-7308	152
	158
237-9140	438
	▲440
237-9250	68
	▲71
237-9252	71
237-9253	71
237-9254	71
237-9255	71
237-9601	178
	179
238-1851	104
238-2014	112
238-2710	18
238-6770	82
238-7793	310
238-8270	310
239-1134	171
239-1363	100
239-1460	275
239-1461	275
239-2247	310
239-2385	137
	▲310
239-3354	113
239-3355	116
239-3875	328
239-3876	328
239-3902	96
239-4119	328
239-4120	328
239-5106	483
239-5113	253
239-5120	137
	▲438
239-5317	328
	▲365
239-5318	365
239-7392	116
239-7854	99
239-7943	292
239-8107	113
	117
239-8155	110
	▲127
239-9954	136
	▲136
240-2500	▲100
240-5307	94
240-8613	310
	▲311
240-8917	113
240-9565	▲242
	▲243
241-0037	200
241-2501	77
241-2656	57
241-3718	2
	▲25
241-4167	496
	497
241-4287	498
	499
241-4337	255
241-4340	255
241-4342	431
241-4343	251
241-4344	431
241-4345	251
241-4346	251
241-4348	252
241-4349	252

▲ PRIMARY REFERENCE

PART NUMBER INDEX

Part No.	Page
241-4350	255
241-6498	263
241-7913	428
	429
241-7917	430
241-7919	428
	429
	430
241-8368	112
242-1584	437
	▲443
242-1585	96
	▲97
242-3282	436
242-3514	159
	▲167
242-5200	310
242-7099	90
	▲90
242-7100	90
	▲91
242-8397	403
	▲428
	▲429
242-8403	428
	429
242-8404	428
	429
242-8405	252
242-8407	252
242-8409	438
	▲439
243-1171	428
	429
243-5168	252
243-5170	252
243-7112	356
	357
244-2310	218
245-4125	▲399
245-4202	399
245-4256	399
245-6095	12
245-7434	124
	442
245-7725	137
245-8334	393
245-9129	13
246-2641	77
	81
	257
	260
	263
	270
	273
	316
	494
246-2909	261
	▲262
246-2910	261
	▲262
246-2921	260
	▲261
246-2922	260
	▲261
246-3144	15
246-4311	116
246-5959	137
	▲149
246-5960	149
246-5961	149
246-9360	3
	▲130
	▲131
	▲132
247-6875	496
	497
247-6876	500
247-6877	496
	497
247-6878	500
247-7133	280
248-2349	399
248-5316	283
	▲302
248-5317	299
	▲300
248-5318	283
	▲299
248-5319	295
	▲296
248-5320	283
	▲295
248-5358	394
248-5513	61
248-6387	3
	▲93
248-6862	152
	158
249-0313	101
249-3367	57
249-7666	236
	▲272
	▲273
249-7667	272
249-7668	272
249-7871	399
249-7872	399
250-2330	152
250-3508	188
251-1005	13
251-1198	432
251-7591	394
251-9363	3
	▲82
	▲83
252-1041	▲283
252-1047	▲404
252-4501	91
	433
	435
	▲92
252-5805	84
252-5806	84
252-6945	137
	▲392
252-9466	171
253-6252	320
254-1789	68
254-1790	▲68
254-9165	61
255-6936	194
	▲200
256-6771	1
	▲2
	▲3
256-9637	356
	357
256-9988	▲206
257-5029	424
257-9164	61
257-9788	317
258-0769	237
258-2303	237
258-2305	272
258-2308	272
258-2355	498
	499
258-5035	100
258-8473	493
	▲494
258-8477	494
258-8478	494
258-8479	494
258-8480	494
258-8481	494
258-8482	494
258-8483	494
258-8721	12
259-0509	367
259-2093	116
260-1914	424
	▲427
260-2017	219
260-3157	427
260-5152	288
260-5153	288
260-7524	12
261-0420	139
261-7990	116
261-8619	430
262-0564	60
	▲61
262-1421	134
	135
	▲136
262-7131	19
262-8042	74
262-8382	19
263-4080	188
263-4081	184
	▲188
263-9088	134
	135
263-9949	195
	▲201
263-9950	201
263-9959	68
	100

▲ PRIMARY REFERENCE

PART NUMBER INDEX

Part No.	Page
264-3883	329
264-4006	328
264-4297	130
	131
265-2106	122
	144
265-5278	175
	▲184
	▲185
265-7314	432
265-7315	434
265-9040	141
265-9042	141
266-1467	226
	▲234
266-5851	432
268-0051	3
	▲56
268-0066	319
268-1825	434
268-2760	317
268-2762	319
268-2763	318
268-2767	317
268-2769	317
	318
268-3293	311
	▲312
268-5986	134
	135
	▲137
268-9086	289
	▲290
269-0174	498
	499
269-4870	317
269-8372	130
270-0515	1
	▲307
270-1762	195
	▲202
270-1763	202
	▲203
270-1764	203
270-1766	203
270-3260	236
	▲77
270-3261	236
	▲263
270-3283	▲280
270-5291	196
270-5292	194
270-5293	196
270-7621	1
	▲90
270-8481	338
270-8482	338
270-8483	338
270-8484	338
270-8485	338
270-8486	▲338
270-8487	338
270-8488	339
270-8489	315
	▲339
270-8490	315
	▲339
270-8491	349
270-8492	▲349
270-8493	▲315
270-8494	▲266
270-8495	339
270-8496	280
270-9022	77
	▲78
270-9023	78
	▲79
270-9433	319
271-0475	311
271-1482	4
	▲32
271-4967	352
	354
	▲356
	▲357
271-4968	352
	354
	▲358
	▲359
271-4969	352
	354
	▲360
	▲361
271-4970	354
	▲362
	▲363
271-5642	137
	▲328
	▲329
271-6399	4
	▲74
271-6421	236
	▲108
	▲109
	▲110
	▲111
271-6422	236
	▲116
	▲117
	▲118
	▲119
	▲120
271-6423	4
	▲152
	▲153
	▲154
	▲155
271-6466	1
	▲4
272-0263	58
272-2928	174
	▲214
272-5492	268
	▲269
272-5494	269
272-5497	269
272-5498	269
272-5499	269
272-6541	194
272-6546	195
272-6547	195
272-6548	195
272-6549	195
272-6551	194
272-6552	197
272-6553	197
272-8384	100
272-9879	80
273-1826	▲137
273-3834	263
273-3843	263
273-3960	238
	▲240
273-3961	237
	▲238
	▲239
273-3962	236
	▲237
273-8981	194
273-9183	▲84
274-1587	18
274-6977	501
274-6978	501
274-6979	501
275-0043	137
	▲138
	▲139
	▲140
	▲141
275-0044	141
	▲142
	▲143
	▲144
275-0045	139
	▲145
275-0068	139
275-0073	152
	▲156
275-0074	116
	▲121
	▲122
	▲123
275-6706	424
276-4798	174
	▲183
276-4833	111
	▲128
276-5713	110
	▲129
279-2590	403
	▲488
279-2591	403
	▲486
279-3351	1
	▲174
279-5009	236
	▲432
	▲433
279-6053	3

▲ PRIMARY REFERENCE

PART NUMBER INDEX

Part No.	Page
279-6053	▲42
279-6627	174
	▲228
	▲229
279-6714	▲268
279-9826	317
280-1504	▲165
280-1505	▲158
	▲159
280-1506	▲160
	▲161
280-1512	▲162
	▲163
	▲164
280-2044	▲277
280-2045	277
	▲278
280-2046	278
280-2047	278
280-3365	273
280-3367	273
281-2725	83
281-3179	118
281-7796	195
282-1951	424
282-1952	424
282-1953	424
282-4390	416
	417
283-7325	236
	▲496
	▲497
	▲498
	▲499
283-7716	▲500
284-3782	372
	373
284-4645	▲406
284-8532	134
	135
285-0150	311
285-1133	136
285-2213	137
285-3629	406
	▲434
	▲435
285-5644	372
	373
285-9070	372
	373
285-9162	372
	373
286-0369	4
	▲50
286-1197	▲134
	▲135
286-2633	4
	▲46
286-2639	4
	▲43
286-7163	501
286-8064	▲501
288-1200	372
288-1200	373
288-3803	40
288-4994	322
288-6949	406
288-6950	498
	499
289-9984	498
	499
290-2612	165
290-8665	435
290-9849	216
	217
292-0486	229
292-2016	216
	217
292-4906	101
293-5033	271
294-4631	433
	434
	▲442
295-0645	324
296-0612	392
	▲393
296-0614	393
296-2861	393
296-3447	87
298-4055	411
	416
	417
298-6397	392
	▲394
298-7340	228
299-5417	393
299-5418	393
299-5790	348
	▲372
	▲373
299-9226	320
3	
300-1643	434
300-5501	392
	▲394
300-6142	392
301-0076	141
	▲147
301-0589	134
	135
302-5729	372
	373
302-5737	372
	373
302-5738	372
	373
304-5280	203
304-5687	92
	117
	▲94
304-6766	501
304-6767	501
304-9651	191
306-0177	134
306-0177	135
306-0278	218
307-0047	134
	135
308-1395	140
308-6335	491
311-8409	56
	▲57
311-8411	57
312-4668	43
313-9374	228
314-3124	434
314-4018	493
314-4218	152
314-5462	208
	209
	210
	211
316-6863	87
317-2293	174
	▲189
317-2656	440
317-6394	326
	▲349
317-9186	77
319-1676	228
319-7443	▲101
320-8210	23
321-1451	140
	▲148
321-5967	204
321-8331	140
	▲146
322-1969	140
322-2943	160
	162
322-6112	▲1
322-6115	1
	▲236
322-6118	236
	▲403
323-1272	90
	▲91
324-3306	162
326-1642	86
326-4278	15
328-3655	204
329-5070	99
329-5071	101
330-5270	277
	▲404
333-6437	194
	▲204
333-9308	204
	▲205
333-9327	91
	▲92
334-2679	205
334-2680	205
334-4603	498
	499
335-1035	498
	499

▲ PRIMARY REFERENCE

PART NUMBER INDEX

Part No.	Page	Part No.	Page	Part No.	Page
340-1645	242				
340-1646	242				
340-1648	242				

▲ PRIMARY REFERENCE

MEMORANDUM



©2009 Caterpillar
All Rights Reserved

CAT, CATERPILLAR, THEIR RESPECTIVE LOGOS, “CATERPILLAR YELLOW” AND THE POWER EDGE TRADE DRESS, AS WELL AS CORPORATE AND PRODUCT IDENTITY USED HEREIN, ARE TRADEMARKS OF CATERPILLAR AND MAY NOT BE USED WITHOUT PERMISSION.

Printed in Japan