RUTHZIL TRATOR COMERCIAL DE PEÇAS LTDA 11 97083-6812 ROLANDO

LEPBD08206
FEVEREIRO 2013

Parts Book

BULLDOZER

D85ESS-2

SERIAL NUMBER D85ESS-2 J11888- and up

KOMATSU

LEPBD08206

PARTS BOOK

D85ESS-2

Serial No. J11888 and up

ENGINE S6D125-2

Engine No. 1002678 and up

FOREWORD

When ordering a spare part, specially the part number, part name, and quantity required, and also specify your machine model code, machine serial number, engine serial number and the service meter reading.

This Parts Book describes not only standard items but also optional equipment and attachments. To order a part, please contact your nearest Komatsu distributor.

This Parts Book contains the information and special symbols as follows :

Figure And List	When you open this Parts Book, you will find and illustration on the left page (even-numbered page) for the spare parts group. Each individual part in the group is given an index number. On the right page, the component parts of the group are listed in the order of the index numbers shown on the illustration page. The part number, part name, and applicable machine serial number are given for each part.
Ref.	The Ref. is the number of the illustration shown on the page. It is not the spare part number. The numbers are not always contionous.
item	This the same as the item number in the illustration. The parts are listed in item number order.
Part No.	The number given in the Part No. Column is the part number for the part shown. It is the code used when ordering that part. It is important that there be no mistake in this code number when ordering.
Description	This gives the name of part that has the part number listed. The mark . Is put in front of the part name of an assembly part and the item is entered following the assembly. If a part marked with . Is a sub assembly, its components are marked with .. Example : ELEMENT ASSEMBLY, AIR CLEANER .ELEMENT ASSEMBLY, OUTER ..ELEMENT, OUTER ..NUT, WING ..WASHER
Qty (Quantity)	This specifies the number of pieces used for one machine. However, if a part is included in the assembly and/or component is specified.
Options	Applicable engine serial number is indcated for the engine volume, in the chassis volume, this indicates the machine serial number in which the part is ud.

Symbols and codes	Symbols and codes used in the PART No. and DESCRIPTION columns,and represent the following:

A2	The part specified in the line above can be used instead of this part.
B2	This shows a discontinued part. The part specified in the DESCRIPTION column is supplied instead as a set.
C2	This part cannot be supplied as individual part. It is supplied as an assembly. It, however, is supplied as an individual part by authorized distributors only.
A3	This part can be used instead of the part specified in the line immediately above.
C3	This indicates a part supplied as semi-finished . It requires additional work before installation.
A1	The part and the part specified in the line immediately above are interchangable.
B1	This shows a discontinued part. The part specified in the above line is supplied instead.
C1	This part cannot be supplied as individual part. It is supplied as an assembly.
KIT	This indicates kit parts. For kit parts, refere to the service kit pages provided in this Parts Book.
A4	The part specified in the DESCRIPTION column can be used instead of this part if it is used as a set.

D85ESS-2 QF-2

CONTENTS

QF-2 Foreword.....
QC-1 Contents.....
Page Reference Title

[ENGINE.]

010010 A1010-A3B9 CYLINDER HEAD.....
010020 A1110-A3A1 HEAD COVER.....
010030 A1310-A3A2 AIR INTAKE MANIFOLD.....
010040 A1370-A3A1 HEATER SWITCH.....
010050 A1410-A3A2 AIR CLEANER MOUNTING.....
010060 A1510-A3D7 EXHAUST MANIFOLD (WITHOUT COVER).....
010070 A1530-A3E7 TURBOCHARGER OIL PIPING (WITHOUT COVER).....
010080 A1530-B3E2 TURBOCHARGER (INNER PARTS).....
010090 A1610-A3K9 MUFFLER (WITHOUT COVER).....
010100 A1730-A3F3 THERMOSTAT HOUSING.....
010110 A1790-A3E3 WATER TEMPERATURE SENSOR (GAUGE PANEL TYPE).....
010120 A2010-A3F2 CYLINDER BLOCK (1/2).....
010130 A2010-B3F2 CYLINDER BLOCK (2/2).....
010140 A2040-A3E7 FRONT COVER.....
010150 A2050-A3A4 IDLER GEAR.....
010160 A2060-A3D9 CAMFOLLOWER COVER.....
010170 A2110-A3G6 OIL PAN AND SUCTION TUBE.....
010180 A2110-B3G6 OIL LEVEL GAUGE.....
010190 A2210-A3D4 FLYWHEEL HOUSING.....
010200 A2230-A3A1 FLYWHEEL.....
010210 A2250-A3A6 ENGINE MOUNTING.....
010220 A2310-A3A6 CRANKSHAFT.....
010230 A2330-A3B9 DAMPER.....
010240 A2350-A3B6 PISTON.....
010250 A2370-A3A1 CRANK PULLEY (NON HARDENING PULLEY).....
010260 A2410-A3A5 ROCKER ARM.....
010270 A2410-B3A5 CAMSHAFT.....
010280 A3010-A3A2 OIL PUMP.....
010290 A3110-A3D9 OIL FILTER.....
010300 A3110-B3D9 OIL ADAPTER.....
010310 A3310-A3B3 OIL COOLER.....
010320 A3330-A3A1 MAIN DRAIN VALVE.....
010330 A4010-A3J6 FUEL INJECTION PUMP MOUNTING.....
010340 A4030-A3C2 FUEL INJECTION PUMP PIPING.....
010350 A4080-A3A1 FUEL INJECTION PUMP DRIVE.....
010360 A4110-A3G6 FUEL FILTER.....
010370 A4130-A3A1 WATER SEPARATOR MOUNTING.....
010380 A4210-A3C2 INJECTION NOZZLE.....
010390 A4230-A3F1 FUEL RETURN.....
010400 A5010-A3F1 WATER PUMP.....
010410 A5010-B3F1 AIR VENT.....
010420 A5030-A3E3 COOLING FAN.....
010430 A5050-A3H8 FAN PULLEY (NON HARDENING PULLEY).....
010440 A5060-A3D9 FAN DRIVE.....
010450 A5060-B3D9 FAN GUARD (1/2).....
010460 A5060-C3D9 FAN GUARD (2/2).....
010470 A5210-A3C8 CORROSION RESISTER.....
010480 A6010-A3J4 ALTERNATER MOUNTING (35A)(WITH NON HARDENING PULLEY).....
010490 A6210-A3D8 STARTING MOTOR MOUNTING (7.5KW).....
010500 A6210-B3A1 STARTING MOTOR(7.5KW)(INNER PARTS).....
010510 A8110-B3A9 CYLINDER BLOCK GASKET KIT.....
010511 A8110-B3A9 CYLINDER BLOCK GASKET KIT.....
010520 A8110-F3A4 WATER PUMP GASKET KIT.....
010530 A8111-A3A8 CYLINDER HEAD GASKET KIT.....
010545 A9020-A3G5 ENGINE SPARE PARTS.....
010550 A9810-A3A8 NAME PLATE AND CAUTION (INDONESIAN).....

[ENGINE RELATED PARTS]

D85ESS-2 QC-1

Page	Reference	Title
030010	B0000-02A0	EXHAUST PIPE(FOR ROPS CAB AND SWEEP).....
030030	B0000-04A0	CAUTION PLATE(WITH TURBOCHARGER)(AIR CLEANER).....
030040	B0100-01A1	ENGINE MOUNTING.....
030050	B0500-01A0	ENGINE WIRING.....
030060	B0600-01A1	DAMPER.....
[COOLING SYSTEM]		
060010	C0100-01A0	COOLING (RADIATOR AND OIL COOLER).....
060020	C0100-02A0	COOLING (MOUNT AND RESERVE TANK).....
[FUEL TANK AND RELATED PARTS]		
090010	D0100-01A0	FUEL TANK (FOR GAUGE PANEL).....
090020	D0200-01A2	FUEL LINE (FOR WATER SEPARATOR).....
090030	D0210-01A0	ADDITIONAL FUEL STRAINER.....
[ELECTRICAL SYSTEM]		
120010	E0110-01A0	BATTERY.....
120020	E0200-01A1	VEHICLE WIRING.....
120030	E0210-01A0	BATTERY WIRING.....
120040	E0300-01A2	VEHICLE LAMP.....
[TORQUE CONV AND TRANS]		
150010	F2200-01A0	UNIVERSAL JOINT.....
150012	F2300-01A0	POWER LINE MOUNT(#J10001-J10774).....
150013	F2300-01A1	POWER LINE MOUNT(#J10775-UP).....
150014	F2300-02A0	POWER LINE PUMP (1/2).....
150015	F2300-02A1	POWER LINE PUMP (2/2).....
150016	F2300-03A0	POWER LINE APPLICATION PIPING (SUCTION AND DELIVERY).....
150017	F2300-04A0	POWER LINE APPLICATION PIPING (LUBRICATION).....
150018	F2300-05A0	POWER LINE APPLICATION PIPING (FILTRATION).....
150019	F2300-06A0	STEERING VALVE CONTROL LINKAGE.....
150020	F2300-07A0	STEERING VALVE (COVER AND LEVER).....
150021	F2300-08A0	STEERING VALVE (BODY AND SPOOL).....
150022	F2300-09A0	STEERING REDUCING VALVE.....
150023	F2300-10A0	CONTROL RELATED PARTS.....
150024	F2300-11A0	STEERING (CASE).....
150025	F2300-12A0	STEERING (COVER AND PIPING).....
150026	F2300-13A0	STEERING (BEVEL GEAR AND SHAFT).....
150027	F2300-14A0	STEERING (CLUTCH).....
150028	F2300-15A0	STEERING (BRAKE).....
150029	F2310-01A0	TORQUE CONVERTER (CASE AND PIPING).....
150030	F2310-02A0	TORQUE CONVERTER (BEAR TORQUE CONVERTER).....
150031	F2310-03A0	POWER TAKE OFF GEAR.....
150032	F2310-04A0	REAR POWER TAKE OFF COUPLING.....
150033	F2320-01A0	TRANSMISSION (CASE).....
150034	F2320-01A1	TRANSMISSION (REVERSE CLUTCH).....
150035	F2320-01A2	TRANSMISSION (FORWARD CLUTCH).....
150036	F2320-01A3	TRANSMISSION (3RD CLUTCH AND 2ND CLUTCH).....
150037	F2320-01A4	TRANSMISSION (1ST CLUTCH).....
150038	F2320-01A5	TRANSMISSION (MODULATING VALVE).....
150039	F2320-01A6	TRANSMISSION (QUICK RETURN VALVE).....
150040	F2320-01A7	TRANSMISSION (MAIN RELIEF VALVE).....
150041	F2320-01A8	TRANSMISSION (CONTROL VALVE COVER).....
150042	F2320-01A9	TRANSMISSION (CONTROL LEVER).....
150043	F2320-01A10	TRANSMISSION MOUNT.....
150050	F2380-01A0	FINAL DRIVE (MOUNT).....
150060	F2380-02A1	FINAL DRIVE (PINION).....
150070	F2380-03A1	FINAL DRIVE (CARRIER).....
150080	F2380-04A1	FINAL DRIVE (SPROCKET AND HUB).....
150090	F2730-01A1	POWER LINE (COOLER OIL LINE).....
150100	F2730-02A1	POWER LINE (CONCENTRATED PIPING).....
150110	F2820-01A1	TRAVEL CONTROL (FUEL BRACKET).....
150120	F2820-01A2	TRAVEL CONTROL (FUEL CABLE)(WITH DECAL).....
150130	F2820-01A3	TRAVEL CONTROL (BRAKE AND STEERING ROD).....
150140	F2820-01A4	TRAVEL CONTROL (LEVER AND CABLE).....
[HYDRAULIC SYSTEM]		
180010	H0100-01A0	HYDRAULIC TANK AND FILTER (TANK).....
180020	H0100-01A1	HYDRAULIC TANK AND FILTER (FILTER) (VANDALISM).....
180030	H0120-01A0	CONTROL VALVE (STD).....
180040	H0120-01A1	CONTROL VALVE (FOR RIPPER).....

D85ESS-2 QC-2

Page	Reference	Title
180050	H0120-01A2	CONTROL VALVE (FOR CAB GUARD).....
180060	H0120-03A0	CONTROL VALVE (MOUNT).....
180070	H0120-03A1	CONTROL VALVE (MOUNT).....
180080	H0120-05A0	CONTROL VALVE (MOUNTING) FOR STRAIGHT TILT.....
180090	H0210-01A0	HYDRAULIC PUMP (MOUNT).....
180100	H0310-01A0	HYDRAULIC PUMP LINE (SECTION AND DELIVERY).....
180110	H0310-01A3	HYDRAULIC PUMP LINE (SUCTION AND DELIVERY) FOR STRAIGHT TILT
180120	H0310-02A0	HYDRAULIC PUMP LINE (FILTER RETURN).....
180130	H0310-02A1	HYDRAULIC PUMP LINE (FILTER RETURN) FOR STRAIGHT TILT.....
180140	H0310-06A0	HYDRAULIC PUMP LINE (DRAIN TANK).....
180150	H0310-06A1	HYDRAULIC PUMP LINE (DRAIN TANK) FOR STRAIGHT TILT.....
180160	H0310-07A0	HYDRAULIC PUMP LINE (P.P.C. SUCTION AND DELIVERY).....
180170	H0310-07A3	HYDRAULIC PUMP LINE (P.P.C SUCTION AND DELIVERY) FOR STRAIGHT TILT.....
180180	H0310-08A0	HYDRAULIC PUMP LINE (OIL COOLER).....
180190	H0310-08A3	HYDRAULIC PUMP LINE (OIL COOLER) FOR STRAIGHT TILT.....
180200	H1410-02A0	STEERING LINE (PPC PIPING) FOR STRAIGHT TILT.....
180201	H1410-02A0	STEERING LINE (PPC PIPING) FOR STRAIGHT TILT.....
180210	H1410-03A0	STEERING LINE (PPC ELBOW) FOR STRAIGHT TILT.....
180218	H2210-01A0	LIFT CYLINDER LINE.....
180219	H2210-01A0	LIFT CYLINDER LINE.....
180220	H2210-01A0A	LIFT CYLINDER LINE.....
180221	H2210-01A0A	LIFT CYLINDER LINE.....
180230	H2210-01A1A	LIFT CYLINDER LINE FOR STRAIGHT TILT.....
180231	H2210-01A1A	LIFT CYLINDER LINE FOR STRAIGHT TILT.....
180240	H2220-01A0	ANGLE PLUG.....
180250	H2220-02A0	TILT LINE (TILT VALVE SIDE).....
180260	H2220-03A1	TILT LINE (TRACK FRAME SIDE) FOR STRAIGHT TILT.....
180270	H2250-01A3	REAR HYDRAULIC LINE (RIPPER PIPING).....
180280	H2250-02A3	REAR HYDRAULIC LINE (RIPPER PIPING).....

[MAIN FRAME AND RELATED PARTS]

210010	J2100-01A0	MAIN FRAME.....
210020	J2700-01A0	EQUALIZER BAR AND PIVOT SHAFT.....

Page Reference Title

210021	J2700-01A0	EQUALIZER BAR AND PIVOT SHAFT.....
210030	J2700-01A1	EQUALIZER BAR AND PIVOT SHAFT (J11387-).....

[OPERATORS COMPARTMENT AND CONT]

240012	K0110-01A1	OPERATOR'S SEAT.....
240013	K0110-01A1	OPERATOR'S SEAT.....
240015	K0110-01A2	OPERATOR SEAT (U TYPE).....
240020	K0310-01A1	NON SLIP SHEET (WITHOUT CAB).....
240040	K0410-01A1	ROPS (WITH CAB).....
240042	K0410-01A9	SWEEP (SWEEP AND CANOPY).....
240043	K0410-02A9	SWEEP (REAR GUARD AND NET).....
240044	K0410-03A9	SWEEP (BRACKET).....
240045	K0700-01A0	AIR CONDITIONER (CONDENSER).....
240046	K1110-01A0	CABIN (BODY).....
240047	K1110-02A0	CABIN (SPOT LIGHT).....
240048	K1110-03A0	CABIN (WIPPER FRONT).....
240049	K1110-04A0	CABIN (NOZZLE WIPPER).....
240050	K1110-05A0	CABIN (FRONT GLASS).....
240051	K1110-06A0	CABIN (BACK MIROR LH/RH).....
240052	K1110-07A0	CABIN (DOOR GLASS LH/RH).....
240053	K1110-08A0	CABIN (DOOR WIPPER LH/RH).....
240054	K1110-09A0	CABIN (DOOR LOCK ASS'Y LH/RH).....
240055	K1110-10A0	CABIN (SIDE GLASS LH/RH).....
240056	K1110-11A0	CABIN (REAR GLASS).....
240057	K1110-12A0	CABIN (HING & GASSPRING).....
240060	K2110-01A0	FLOOR FRAME (FRAME AND MOUNT)(WITHOUT CAB) FOR ANGLE DOZER..
240065	K2110-01A1	FLOOR FRAME (FRAME AND MOUNT)(WITHOUT CAB) FOR STRAIGHT TILT
240070	K2110-02A0	FLOOR FRAME (FUEL CONTROL).....
240080	K2110-03A0	FLOOR FRAME (BLADE CONTROL).....
240090	K2110-03A1	FLOOR FRAME (BLADE CONTROL) FOR STRAIGHT TILT.....
240100	K2110-05A0	FLOOR FRAME (STEERING SHAFT).....
240110	K2110-07A0	FLOOR FRAME (SPEED CONTROL)(1/2).....
240120	K2110-08A0	FLOOR FRAME (SPEED CONTROL)(2/2).....
240130	K2110-09A0	FLOOR FRAME (STEERING CONTROL MOUNT).....
240135	K2110-10A0	FLOOR FRAME (BLADE LOCK).....
240140	K2110-10A1	FLOOR FRAME (BLADE LOCK).....

Page	Reference	Title
240150	K2110-10A2	FLOOR FRAME (BLADE LOCK) FOR STRAIGHT TILT
240160	K2110-11A0	FLOOR FRAME (TRANSMISSION LOCK)
240170	K2110-12A0	FLOOR FRAME (BLADE P.P.C. VALVE MOUNT)
240180	K2110-14A0	FLOOR FRAME (BLADE PIPING) FOR STRAIGHT TILT
240182	K2110-14A1	FLOOR FRAME (BLADE PIPING)(FOR ANGLE)
240190	K2110-16A0	FLOOR FRAME (ELECTRICAL EQUIPMENT)
240200	K2110-17A0	FLOOR FRAME (WIRING)
240201	K2110-17A0	FLOOR FRAME (WIRING)
240210	K2110-19A0	FLOOR FRAME (HANDLE)(FOR ANGLE)(WITHOUT CAB)
240220	K2110-21A0	FLOOR FRAME (PILOT VALVE)
240230	K2110-22A0	FLOOR FRAME (KNOB)
240240	K2110-23A0	FLOOR FRAME (LEVER)
240250	K2120-01A1	RIGID MOUNT
240260	K2210-01B0	DASH BOARD (WITHOUT CAB)(WITH GAUGE PANEL)
240270	K2400-01A0	FLOOR (BRAKE PEDAL)
240280	K2400-02A0	FLOOR (DECAL PEDAL AND CABLE)
240290	K2500-01A0	ARM REST COVER (UPPER)
240300	K2500-02A0	ARM REST COVER (LOWER)
240310	K2520-01A0	REAR WORK EQUIPMENT CONTROL (TOWING WINCH)
240320	K2520-01A1	REAR WORK EQUIPMENT CONTROL (CONTROL)(TOWING WINCH)
240330	K2520-02A0	REAR WORK EQUIPMENT CONTROL (PIPING)(RIPPER)
240331	K2520-02A0	REAR WORK EQUIPMENT CONTROL (PIPING)(RIPPER)
240340	K2520-02A2	PPC VALVE (FOR RIPPER CONTROL)

[GUARD]

270010	M2111-01A0	LIFT CYLINDER SUPPORT
270020	M2120-01A0	RADIATOR MASK SINGLE (REINFORCED)
270030	M2140-01A0	ENGINE HOOD (WITHOUT CAB)
270040	M2140-02A0	ENGINE SIDE COVER (UPPER)
270050	M2140-03A0	ENGINE SIDE COVER (LOWER)
270060	M2140-04A0	REAR SUPPORT AND RADIATOR COVER (WITHOUT CAB)
270070	M2210-01A0	FENDER
270080	M2210-01A1	FENDER (BRACKET AND PLUG)
270090	M2210-01A2	FENDER (BRACKET COVER)
270100	M2210-01A3	FENDER (BATTERY COVER MOUNT)
270110	M2240-01A0	REAR COVER
270120	M2810-01A0	UNDER GUARD
270130	M2811-01A0	FRONT HOOK

[UNDER CARRIAGE]

300010	R0110-01A0	FRONT IDLER
300011	R0110-01A0	FRONT IDLER
300020	R0120-01A0	IDLER CUSHION
300030	R0200-01A0	TRACK ROLLER
300040	R0300-01A0	CARRIER ROLLER
300050	R0500-01A5	TRACK SHOE (MASTER PIN TYPE)(SINGLE GROUSER)
300060	R2100-01A0	TRACK FRAME
300061	R2100-01A0	TRACK FRAME

[WORK EQUIPMENT]

330010	T2110-01A0	ANGLE FRAME
330015	T2110-01A1	STRAIGHT FRAME
330020	T2115-01A0	ARM AND BRACE (ANGLE DOZER)
330025	T2115-01A1	ARM AND BRACE (TILT DOZER)
330030	T2120-01A0	ANGLE BLADE
330035	T2120-01A1	STRAIGHT BLADE
330040	T2140-01A0	LIFT CYLINDER
330041	T2140-01A0	LIFT CYLINDER
330050	T2140-01A1	LIFT CYLINDER FOR LOGGING
330051	T2140-01A1	LIFT CYLINDER FOR LOGGING
330052	T2140-02A0	LIFT CYLINDER (CYLINDER FIXING PARTS)
330060	T2150-01A2	TILT OR PITCH CYLINDER
330070	T2150-01A3	TILT AND PITCH CYLINDER
330080	T2160-01A0	TILT DOZER LINE
330090	T2400-01A0	RIPPER
330100	T2400-01A1	RIPPER CYLINDER
330110	T2510-01A0	TOWING WINCH (MOUNT)
330120	T2510-02A0	TOWING WINCH (CASE)
330130	T2510-03A0	TOWING WINCH (TRANSFER)
330131	T2510-03A0	TOWING WINCH (TRANSFER)
330140	T2510-04A0	TOWING WINCH (GEAR SHAFT, CLUTCH)
330150	T2510-05A0	TOWING WINCH (GEAR SHAFT, DRUM)

D85ESS-2 QC-4

Page	Reference	Title
330160	T2510-06A0	TOWING WINCH (GEAR SHAFT, BRAKE).....
330170	T2510-07A0	TOWING WINCH (CLUTCH).....
330180	T2510-08A0	TOWING WINCH (BRAKE).....
330190	T2510-09A0	TOWING WINCH (PUMP).....
330200	T2510-10A0	TOWING WINCH (PIPING).....
330201	T2510-10A0	TOWING WINCH (PIPING).....
330210	T2510-11A0	TOWING WINCH (VALVE, INCHING AND CLUTCH SPOOL).....
330211	T2510-11A0	TOWING WINCH (VALVE, INCHING AND CLUTCH SPOOL).....
330220	T2510-12A0	TOWING WINCH (VALVE, RELIEF AND BRAKE VALVE).....
330230	T2510-13A0	TOWING WINCH (VALVE, SEAT AND VALVE MOUNT).....
330240	T2510-14A0	TOWING WINCH (COVER).....
330250	T2510-15A0	TOWING WINCH (WIRE ROPE).....
330255	T2520-01A0	FAIR LEAD (OPTIONAL).....
330260	T2610-01A0	REAR P.T.O. SHAFT (TOWING WINCH).....
330270	T2810-01A0	DRAWBAR.....

[MARKS AND PLATES]

360010	U0100-01A0	MARKS AND PLATES (ENGLISH).....
360020	U0100-01B0	MARKS AND PLATES (INDONESIAN).....
360040	U0400-01A0	GRAVITY MARKS.....
360050	U0520-01A0	ROPS PLATES.....

[ACCESSORY]

390010	V0100-01A0	SPARE PARTS.....
390020	V0200-01A0	CAP AND OVERALL.....
390030	V0300-01A0	TOOL.....

[MISCELLANEOUS]

420010	W1111-01A0	KOMTRAX TC310(MODEM INSTALLATION).....
420020	W1111-02A0	KOMTRAX TC310 (HARNESS CLIP).....
420025	W1111-02A0	KOMTRAX TC310(HARNESS CLIP).....
420030	W1111-03A0	KOMTRAX TC310 (HARNESS INSTALLATION).....
420035	W1111-03A0	KOMTRAX TC310 (HARNESS INSTALLATION).....

[SERVICES KIT]

450004	Y1610-01A1	HYDRAULIC PUMP.....
450005	Y1610-02A1	HYDRAULIC PUMP (P.P.C. PUMP).....
450006	Y1661-01A0	CONTROL VALVE (1-SPOOL)(1/3).....
450007	Y1661-01A0	CONTROL VALVE (1-SPOOL)(1/3).....
450008	Y1661-02A0	CONTROL VALVE (1-SPOOL)(2/3).....
450009	Y1661-03A0	CONTROL VALVE (1-SPOOL)(3/3).....
450010	Y1662-01A0	CONTROL VALVE(2-SPOOL)(1/4).....
450011	Y1662-01A0	CONTROL VALVE (2-SPOOL)(1/4).....
450020	Y1662-02A0	CONTROL VALVE (2-SPOOL)(2/4).....
450021	Y1662-02A0	CONTROL VALVE (2-SPOOL)(2/4).....
450050	Y1662-03A0	CONTROL VALVE (2-SPOOL)(3/4).....
450060	Y1662-04A0	CONTROL VALVE (2-SPOOL)(4/4).....
450070	Y1664-03A0	FLOOR FRAME (PPC VALVE)(FOR BLADE CONTROL).....

D85ESS-2 QC-5

ENGINE.

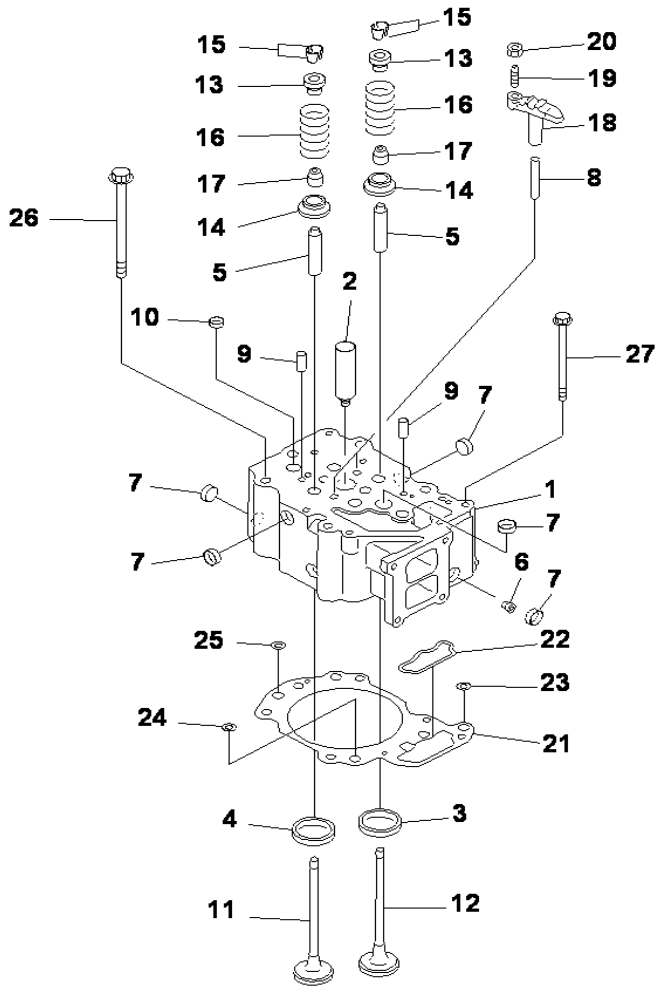

CYLINDER HEAD

INDEX	CD	PART NO.	DESCRIPTION	QTY	SERIAL NO.
		6151-12-1101	CYLINDER HEAD ASS'Y, VALV LESS.....	6	1002678-UP
1	C1	6150-12-1110	.HEAD, CYLINDER.....	1	1002678-UP
2		6136-11-1130	.SLEEVE.....	1	1002678-UP
3		6150-11-1320	.INSERT, EXHAUST VALVE (STD).....	2	1002678-UP
		6150-19-1320	.INSERT, 0.25MM, EXHAUST VALVE (OS).....	2	1002678-UP
		6150-18-1320	.INSERT, 0.50MM, EXHAUST VALVE (OS).....	2	1002678-UP
		6150-17-1320	.INSERT, 0.75MM, EXHAUST VALVE (OS).....	2	1002678-UP
		6150-16-1320	.INSERT, 1.00MM, EXHAUST VALVE (OS).....	2	1002678-UP
4		6150-11-1331	.INSERT, INTAKE VALVE (STD).....	2	1002678-UP
		6150-19-1331	.INSERT, 0.25MM, INTAKE VALVE (OS).....	2	1002678-UP
		6150-18-1331	.INSERT, 0.50MM, INTAKE VALVE (OS).....	2	1002678-UP
		6150-17-1331	.INSERT, 0.75MM, INTAKE VALVE (OS).....	2	1002678-UP
		6150-16-1331	.INSERT, 1.00MM, INTAKE VALVE (OS).....	2	1002678-UP
5		6150-12-1370	.GUIDE, VALVE.....	4	1002678-UP
6		07043-70108	.PLUG.....	1	1002678-UP
7		6162-13-1150	.PLUG.....	10	1002678-UP
8		6150-11-1140	.GUIDE.....	2	1002678-UP
9		04020-00820	.PIN, DOWEL.....	2	1002678-UP
10		07046-41810	.PLUG.....	1	1002678-UP
11		6150-42-4110	VALVE, INTAKE.....	12	1002678-UP
12		6150-42-4210	VALVE, EXHAUST.....	12	1002678-UP
13		6150-41-4510	SEAT, UPPER.....	24	1002678-UP
14		6150-41-4430	SEAT, LOWER.....	24	1002678-UP
15		6136-42-4520	COTTER, VALVE.....	48	1002678-UP
16		6150-41-4450	SPRING.....	24	1002678-UP
17		6150-41-4570	SEAL, VALVE STEM, (K1).....	24	1002678-UP
		6150-42-5600	CROSSHEAD ASS'Y.....	12	1002678-UP
18	C1	6150-42-5610	.CROSSHEAD.....	1	1002678-UP
19		6150-41-5621	.SCREW.....	1	1002678-UP
20		6150-41-5630	.NUT.....	1	1002678-UP
21		6151-12-1810	GASKET, (K1).....	6	1002678-UP
22	C1	6150-11-1920	.GROMMET, OIL.....	1	1002678-UP
23	C1	6150-11-1930	.GROMMET, OIL.....	1	1002678-UP
24	C1	6150-11-1950	.GROMMET, WATER.....	4	1002678-UP
25	C1	6150-12-1960	.GROMMET, WATER.....	1	1002678-UP
26		6150-11-1610	BOLT.....	36	1002678-UP
27		01438-01020	BOLT.....	6	1002678-UP

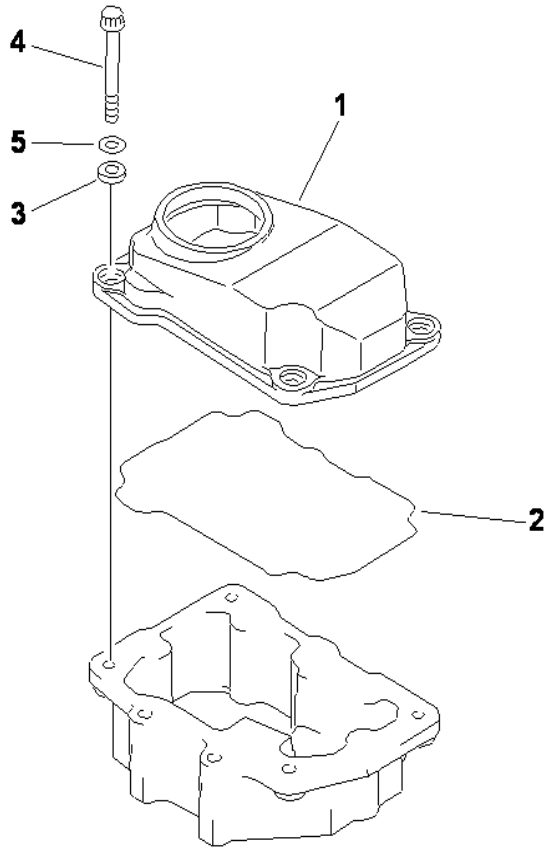

S6D125-2 S/N 1002678-UP

HEAD COVER

INDEX	CD	PART NO.	DESCRIPTION	QTY	SERIAL NO.
1		6150-11-8111	.COVER.....	6	1002678-UP
2		6150-11-8810	.GASKET (K1).....	6	1002678-UP
3		6150-11-8820	.RUBBER SEAL (K1).....	24	1002678-UP
4		6150-81-9370	.BOLT.....	24	1002678-UP
5		01640-21016	.WASHER.....	24	1002678-UP

Ref :A1110-A3A1 Page :010020

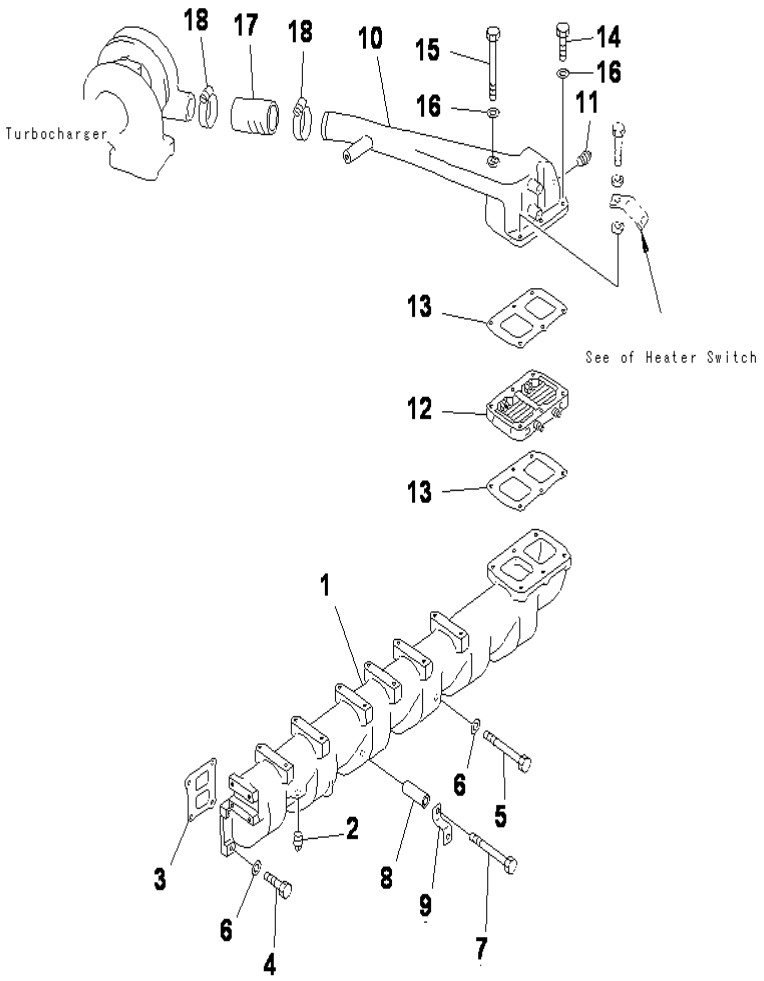

S6D125-2 S/N 1002678-UP

AIR INTAKE MANIFOLD

INDEX	CD	PART NO.	DESCRIPTION	QTY	SERIAL NO.
		6150-11-4910	INTAKE MANIFOLD A.....	1	1002678-UP
1	C1	(6150-11-4110)	.MANIFOLD, AIR INTAKE.....	1	1002678-UP
2		07042-00415	.PLUG.....	1	1002678-UP
3		6150-13-4810	GASKET (K1).....	6	1002678-UP
4		01010-81030	BOLT.....	11	1002678-UP
5		01010-81010	BOLT.....	8	1002678-UP
6		01640-21016	WASHER.....	18	1002678-UP
7		01010-81005	BOLT.....	1	1002678-UP
8		6136-11-5120	SPACER.....	1	1002678-UP
9		6162-73-6170	STAY.....	1	1002678-UP
10		6151-11-4850	CONNECTOR, AIR.....	1	1002678-UP
11		07042-00108	PLUG.....	1	1002678-UP
12		600-815-3811	HEATER, RIBBON.....	1	1002678-UP
13		6150-11-4821	GASKET (K1).....	2	1002678-UP
14		01010-81055	BOLT.....	4	1002678-UP
15		01011-81075	BOLT.....	1	1002678-UP
16		01640-21016	WASHER.....	5	1002678-UP
17		6207-11-4370	HOSE.....	1	1002678-UP
18		07281-00909	CLAMP.....	2	1002678-UP

Ref :A1310-A3A2 Page :010030

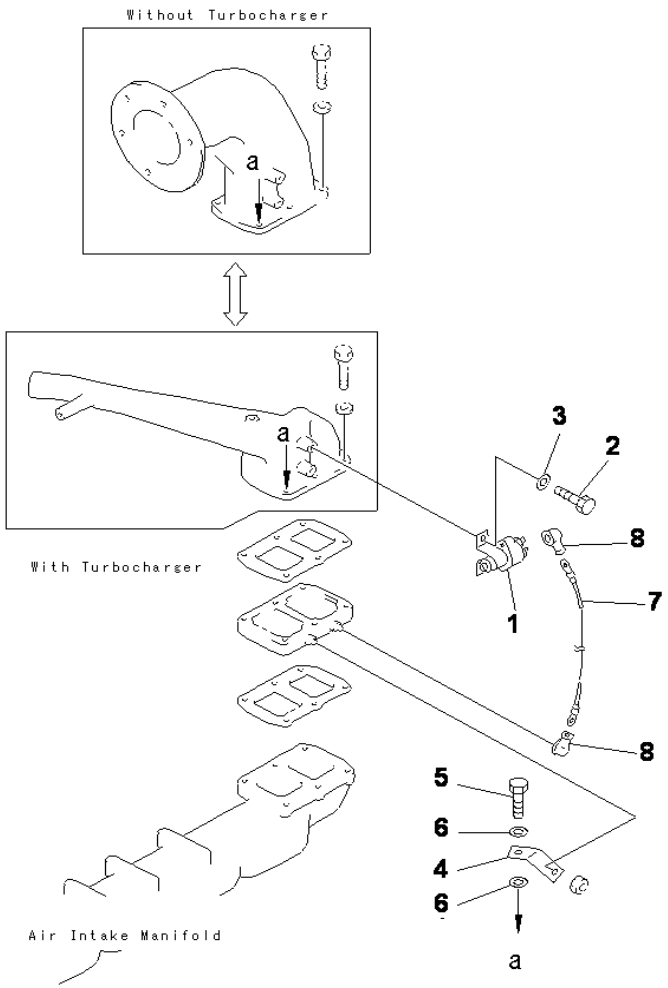

S6D125-2 S/N 1002678-UP

HEATER SWITCH

INDEX	CD	PART NO.	DESCRIPTION	QTY	SERIAL NO.
1		600-815-2170	SWITCH, HEATER.....	1	1002678-UP
2		01010-80616	BOLT.....	2	1002678-UP
3		01640-20610	WASHER.....	2	1002678-UP
4		6150-81-4330	PLATE.....	1	1002678-UP
5		01010-81055	BOLT.....	1	1002678-UP
6		01640-21016	WASHER.....	2	1002678-UP
7		6151-81-4410	WIRE, 265MM.....	1	1002678-UP
8		08038-00519	CAP.....	2	1002678-UP

Ref :A1370-A3A1 Page :010040

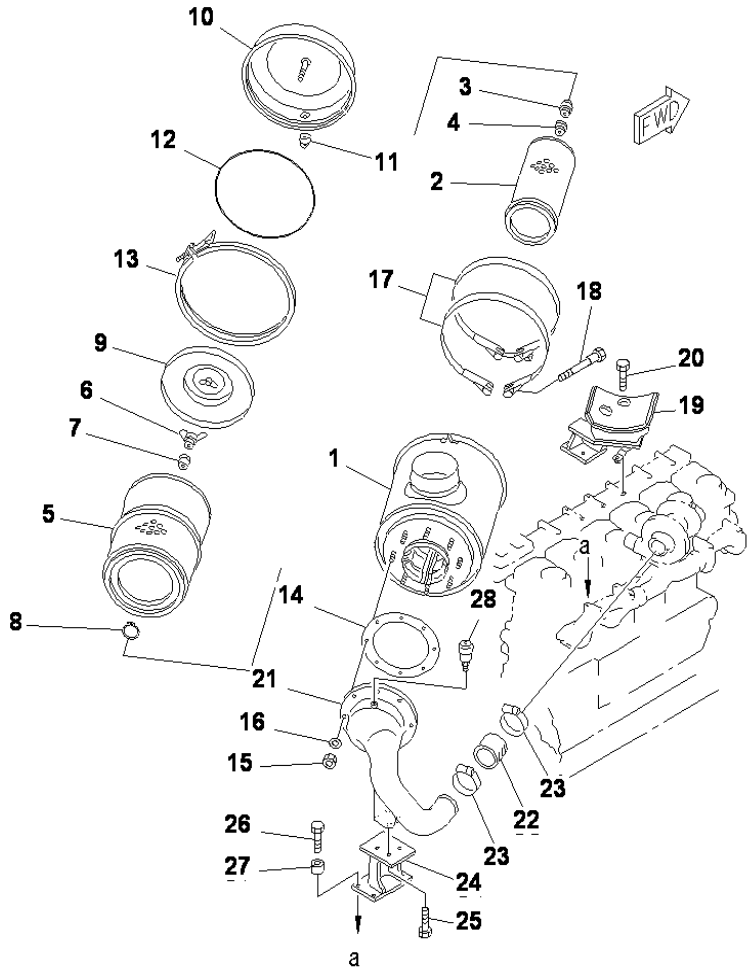

S6D125-2 S/N 1002678-UP

AIR CLEANER MOUNTING

INDEX	CD	PART NO.	DESCRIPTION	QTY	SERIAL NO.
		6711-81-7100	AIR CLEANER ASS'Y	1	1002678-UP
1		6711-81-7110	.BODY	1	1002678-UP
		6125-81-7032	.ELEMENT ASS'Y	1	1002678-UP
2	C1	600-181-4212	..ELEMENT, INNER	1	1002678-UP
3		600-181-9671	..NUT	1	1002678-UP
4		600-181-7511	..WASHER, SEAL	1	1002678-UP
		600-181-4300	..ELEMENT ASS'Y, OUTER	1	1002678-UP
5		600-181-4311	...ELEMENT, OUTER	1	1002678-UP
6		600-181-1990	...NUT, WING	1	1002678-UP
7		600-181-4591	...WASHER, SEAL	1	1002678-UP
8		04064-01510	...RING, SNAP	1	1002678-UP
9		6710-82-7130	.BAFFLE	1	1002678-UP
10		6710-82-7121	.CUP	1	1002678-UP
11		600-181-1590	.VALVE	1	1002678-UP
12		6127-81-7190	.O-RING	1	1002678-UP
13		600-181-1480	.CLAMP	1	1002678-UP
14		6127-81-4823	GASKET (K1)	1	1002678-UP
15		01580-11008	NUT	8	1002678-UP
16		01640-21016	WASHER	8	1002678-UP
17		6691-13-4610	BAND ASS'Y	2	1002678-UP
		6691-21-6550	.PIN	1	1002678-UP
		6691-21-6560	.PIN, WITH THREAD	1	1002678-UP
18		6643-11-4641	BOLT	2	1002678-UP
19		6151-11-4750	BRACKET	1	1002678-UP
20		01010-81030	BOLT	4	1002678-UP
21		6151-11-4860	CONNECTOR	1	1002678-UP
22		6151-13-4450	HOSE	1	1002678-UP
23		07289-00080	CLAMP	2	1002678-UP
24		6151-11-4880	BRACKET	1	1002678-UP
25		01010-81025	BOLT	4	1002678-UP
26		01010-81040	BOLT	4	1002678-UP
27		6631-11-5630	SPACER	4	1002678-UP
28		08670-02001	INDICATOR, DUST	1	1002678-UP

Ref :A1410-A3A2 Page :010050

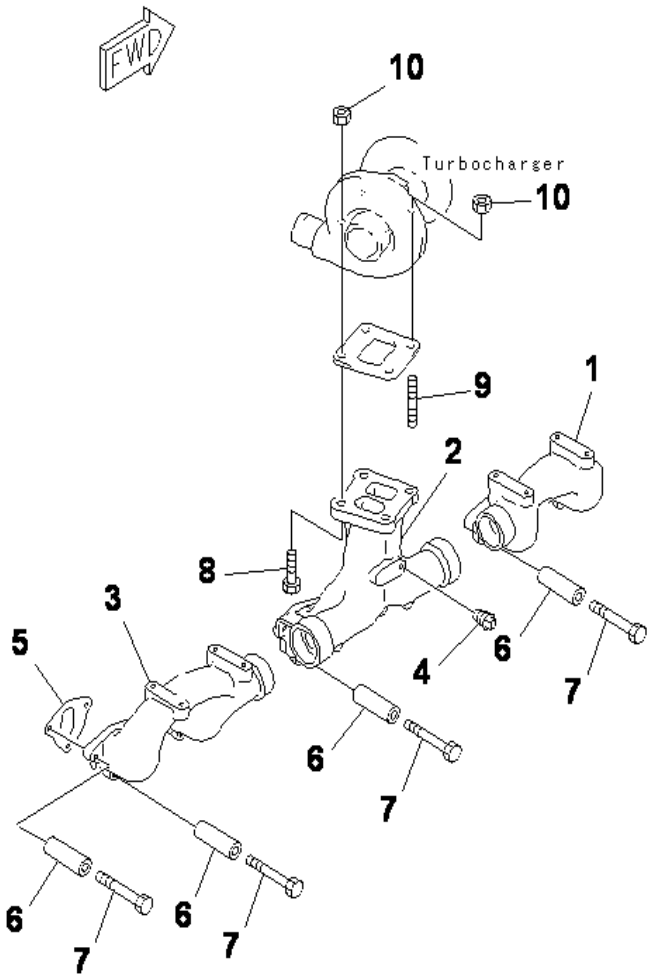

S6D125-2 S/N 1002678-UP

EXHAUST MANIFOLD (WITHOUT COVER)

INDEX	CD	PART NO.	DESCRIPTION	QTY	SERIAL NO.
1		6151-11-5110	MANIFOLD, EXHAUST, FRONT.....	1	1002678-UP
2		6151-12-5120	MANIFOLD, EXHAUST, CENTER.....	1	1002678-UP
3		6151-11-5130	MANIFOLD, EXHAUST, REAR.....	1	1002678-UP
4		07042-00108	PLUG.....	1	1002678-UP
5		6150-11-5810	GASKET (K1).....	6	1002678-UP
6		6136-11-5120	SPACER.....	18	1002678-UP
7		01011-81000	BOLT.....	18	1002678-UP
8		01050-61045	BOLT.....	2	1002678-UP
9		01140-61030	STUD.....	2	1002678-UP
10		6114-11-5590	NUT.....	4	1002678-UP

Ref :A1510-A3D7 Page :010060

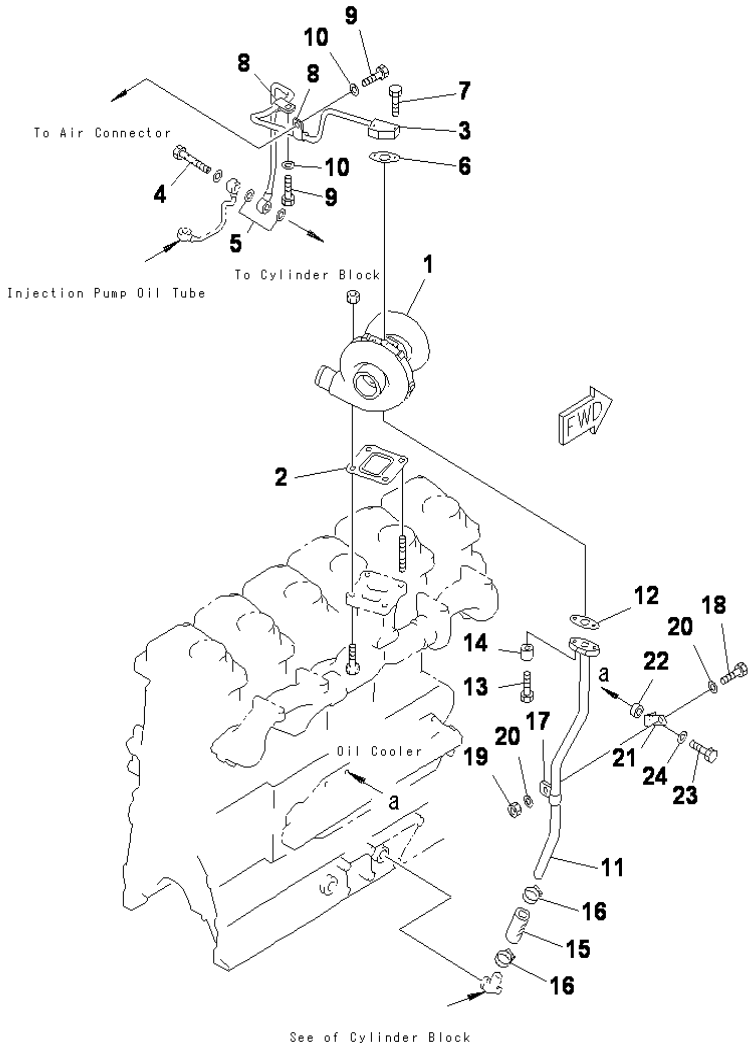

S6D125-2 S/N 1002678-UP

TURBOCHARGER OIL PIPING (WITHOUT COVER)

INDEX	CD	PART NO.	DESCRIPTION	QTY	SERIAL NO.
1		6151-82-8500	TURBOCHARGER ASS'Y, (SEE FIG.A1530-B3E2)....	1	1002678-UP
2		6131-11-5170	GASKET (K1).....	1	1002678-UP
3		6151-51-8670	TUBE, OIL.....	1	1002678-UP
4		6127-71-5710	BOLT, JOINT.....	1	1002678-UP
5		07005-01412	GASKET (K1).....	2	1002678-UP
6		6221-51-8610	GASKET (K1).....	1	1002678-UP
7		01010-80830	BOLT.....	2	1002678-UP
8		6151-53-8280	CLIP.....	2	1002678-UP
9		01010-81016	BOLT.....	2	1002678-UP
10		01640-21016	WASHER.....	2	1002678-UP
11		6151-51-8770	TUBE, OIL.....	1	1002678-UP
12		6151-51-8721	GASKET (K1).....	1	1002678-UP
13		01010-81045	BOLT.....	2	1002678-UP
14		6210-11-5820	SPACER.....	2	1002678-UP
15		6210-51-8110	HOSE.....	1	1002678-UP
16		07281-00359	CLAMP.....	2	1002678-UP
17		04434-52110	CLIP.....	1	1002678-UP
18		01010-81020	BOLT.....	1	1002678-UP
19		01580-11008	NUT.....	1	1002678-UP
20		01640-21016	WASHER.....	2	1002678-UP
21		6151-51-8780	BRACKET.....	1	1002678-UP
22		6132-21-4630	SPACER.....	1	1002678-UP
23		01010-81040	BOLT.....	1	1002678-UP
24		01640-21016	WASHER.....	1	1002678-UP

Ref :A1530-A3E7 Page :010070

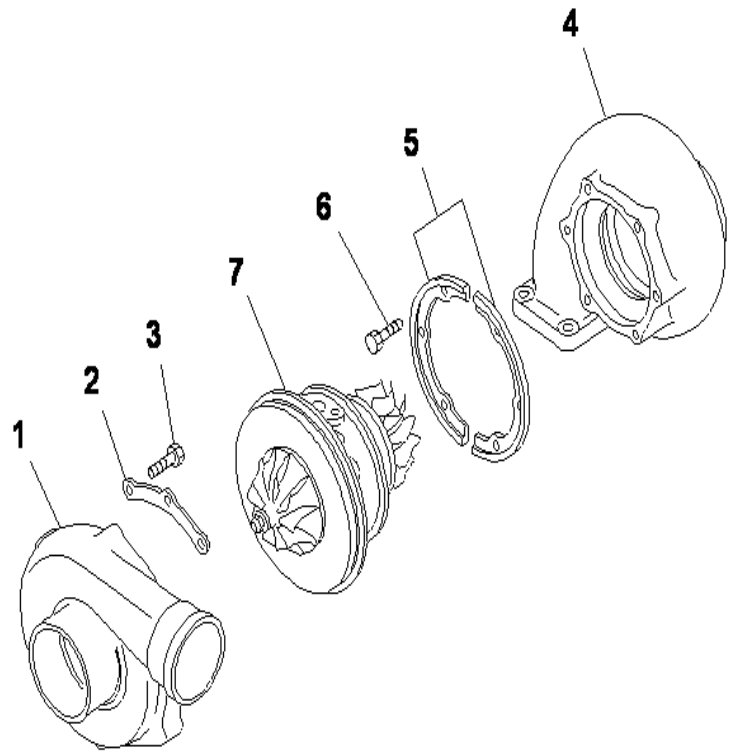

S6D125-2 S/N 1002678-UP

TURBOCHARGER (INNER PARTS)

INDEX	CD	PART NO.	DESCRIPTION	QTY	SERIAL NO.
		6151-82-8500	TURBOCHARGER ASS'Y.....	1	1002678-UP
			THE AIR RESEARCH PART NUMBER IS THAT.....		
			GA IS REMOVED FROM KOMATSU PART.....		
			NUMBER LISTED BELOW.....		
1		GA443219-0186	.HOUSING, COMPRESSOR.....	1	1002678-UP
2		GA443136-0001	.CLAMP.....	2	1002678-UP
3		GA400975-0203	.BOLT.....	6	1002678-UP
4		GA410401-0039	.HOUSING, TURBINE.....	1	1002678-UP
5		GA430295-0001	.CLAMP.....	2	1002678-UP
6		GA400450-0001	.BOLT.....	6	1002678-UP
7		GA447450-5022	.HOUSING ASS'Y.....	1	1002678-UP

Ref :A1530-B3E2 Page :010080

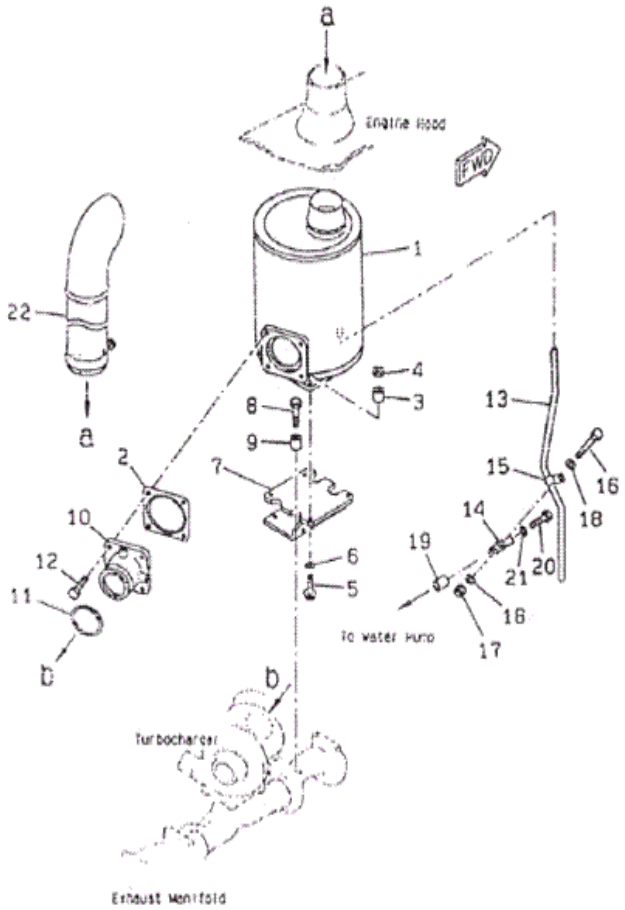

S6D125-2 S/N 1002678-UP

MUFFLER (WITHOUT COVER)

INDEX	CD	PART NO.	DESCRIPTION	QTY	SERIAL NO.
1		6151-11-8611	MUFFLER	1	1002678-UP
2		6150-11-5751	GASKET (K1)	1	1002678-UP
3		6110-23-6490	SPACER	4	1002678-UP
4		01580-01008	NUT	4	1002678-UP
5		6150-81-9370	BOLT	4	1002678-UP
6		01643-51032	WASHER	4	1002678-UP
7		6151-11-8640	BRACKET	1	1002678-UP
8		01010-81040	BOLT	4	1002678-UP
9		6631-11-5630	SPACER	4	1002678-UP
10		6151-11-8650	CONNECTOR	1	1002678-UP
11		6137-11-5291	RING, SEAL	1	1002678-UP
12		01010-81230	BOLT	4	1002678-UP
13		6151-12-8661	TUBE, DRAIN	1	1002678-UP
14		6207-65-8410	STAY	1	1002678-UP
15		04434-51010	CLIP	1	1002678-UP
16		01010-81020	BOLT	1	1002678-UP
17		01580-11008	NUT	1	1002678-UP
18		01640-21016	WASHER	2	1002678-UP
19		6151-61-3781	SPACER	1	1002678-UP
20		01010-81045	BOLT	1	1002678-UP
21		01643-31032	WASHER	1	1002678-UP
22		6150-11-5240	PIPE, EXHAUST	1	1002678-UP

Ref :A1610-A3K9 Page :010090

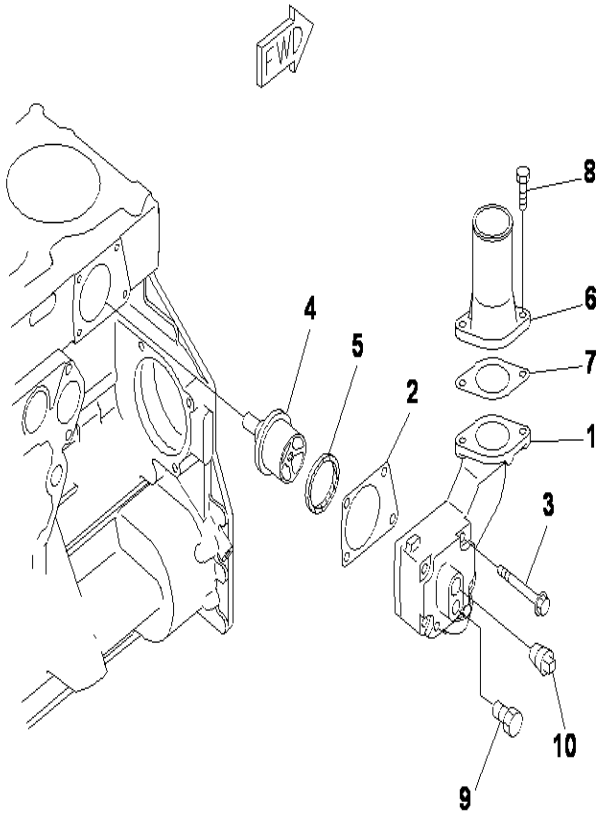

S6D125-2 S/N 1002678-UP

THERMOSTAT HOUSING

INDEX	CD	PART NO.	DESCRIPTION	QTY	SERIAL NO.
1		6150-22-6410	HOUSING	1	1002678-UP
2		6150-22-6490	GASKET (K2, K6)	1	1002678-UP
3		01437-01065	BOLT	4	1002678-UP
4		600-421-6630	THERMOSTAT	1	1002678-UP
5		6162-13-6440	SEAL (K2)	1	1002678-UP
6		6210-61-6260	CONNECTOR	1	1002678-UP
7		6210-61-6441	GASKET (K2)	1	1002678-UP
8		01010-81025	BOLT	2	1002678-UP
9		267-35-11470	PLUG	1	1002678-UP
10		07042-00415	PLUG	1	1002678-UP

Ref :A1730-A3F3 Page :010100

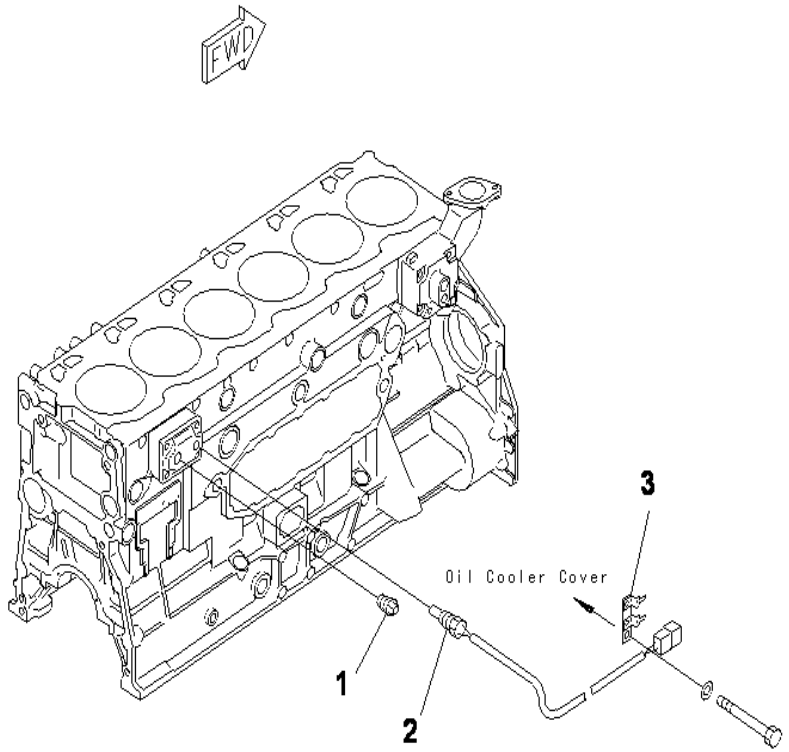

S6D125-2 S/N 1002678-UP

WATER TEMPERATURE SENSOR (GAUGE PANEL TYPE)

INDEX	CD	PART NO.	DESCRIPTION	QTY	SERIAL NO.
1		07042-00415	PLUG	1	1002678-UP
2		11Y-06-11381	SENSOR,THERMO	1	1004367-UP
		14X-06-12370	SENSOR,THERMO	1	1003521-1004366
		14X-06-12180	SENSOR,THERMO	1	1002678-1003520
3		14X-06-14360	BRACKET	1	1002678-UP

Ref :A1790-A3E3 Page :010110

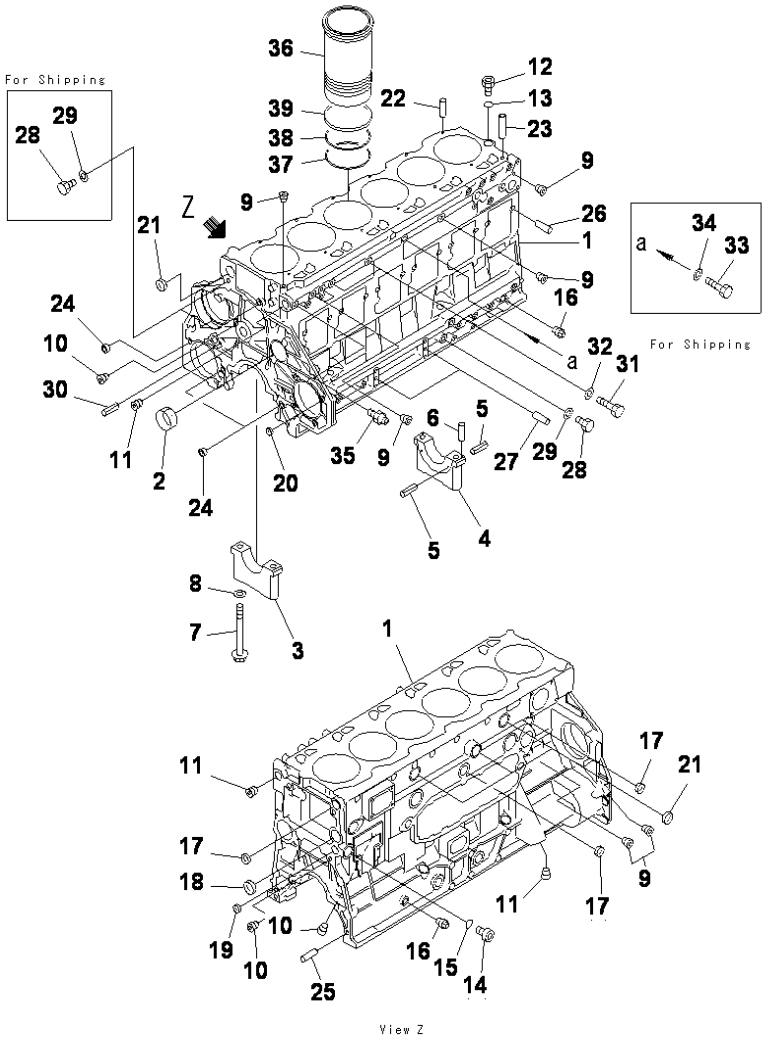

S6D125-2 S/N 1002678-UP

CYLINDER BLOCK (1/2)

INDEX	CD	PART NO.	DESCRIPTION	QTY	SERIAL NO.
		6151-22-1100	CYLINDER BLOCK ASS'Y.....	1	1002678-UP
1	C1	(6151-22-1110)	.BLOCK, CYLINDER.....	1	1002678-UP
2		6150-21-1490	.BUSHING, CAMSHAFT.....	7	1002678-UP
3	C3	6150-29-1210	.CAP, MAIN METAL,NO 1,2,3,4,5,6.....	6	1002678-UP
4	C3	6150-29-1250	.CAP, MAIN METAL, NO.7.....	1	1002678-UP
5		04025-00408	.PIN, SPRING.....	6	1002678-UP
6		04020-00514	.PIN, DOWEL.....	2	1002678-UP
7		6150-21-1710	.BOLT.....	14	1002678-UP
8		01643-31645	.WASHER.....	14	1002678-UP
9		07043-50108	.PLUG.....	7	1002678-UP
10		07043-50211	.PLUG.....	3	1002678-UP
11		07043-50617	.PLUG.....	3	1002678-UP
12		07040-12414	.PLUG.....	1	1002678-UP
13		07002-22434	.O-RING (K2).....	1	1002678-UP
14		07040-13016	.PLUG.....	1	1002678-UP
15		07002-23034	.O-RING (K2).....	1	1002678-UP
16		07042-00312	.PLUG.....	2	1002678-UP
17		07046-43016	.PLUG.....	3	1002678-UP
18		07046-44016	.PLUG.....	1	1002678-UP
19		07046-22516	.PLUG.....	1	1002678-UP
20		07046-21210	.PLUG.....	4	1002678-UP
21		07046-43516	.PLUG.....	4	1002678-UP
22		04020-00820	.DOWEL PIN.....	12	1002678-UP
23		6150-21-1170	.TUBE.....	1	1002678-UP
24		6150-41-2430	.PIN.....	3	1002678-UP
25		6150-21-4770	.PIN, DOWEL.....	2	1002678-UP
26		6150-41-2430	.PIN.....	12	1002678-UP
27		04020-01024	.PIN, DOWEL.....	2	1002678-UP
28		6110-53-5910	.PLUG.....	3	1002678-UP
29		07005-01412	.GASKET (K2).....	3	1002678-UP
30		04025-00512	.PIN, SPRING.....	1	1002678-UP
31		01050-51012	.BOLT.....	2	1002678-UP
32		07005-01012	.GASKET.....	2	1002678-UP
33		01050-51420	.BOLT, (FOR SHIPPING).....	1	1002678-UP
34		07005-01412	.GASKET, (FOR SHIPPING).....	1	1002678-UP
35		08073-10505	SWITCH, OIL PRESSURE.....	1	1002678-UP
36		6151-22-2220	LINER, CYLINDER.....	6	1002678-UP
37		6150-21-2230	O-RING, LOWER (K2).....	6	1002678-UP
38		6150-21-2240	O-RING, UPPER (K2).....	6	1002678-UP
39		6150-21-2250	SEAL, CREVICE (K2).....	6	1002678-UP

Ref :A2010-A3F2 Page :010120

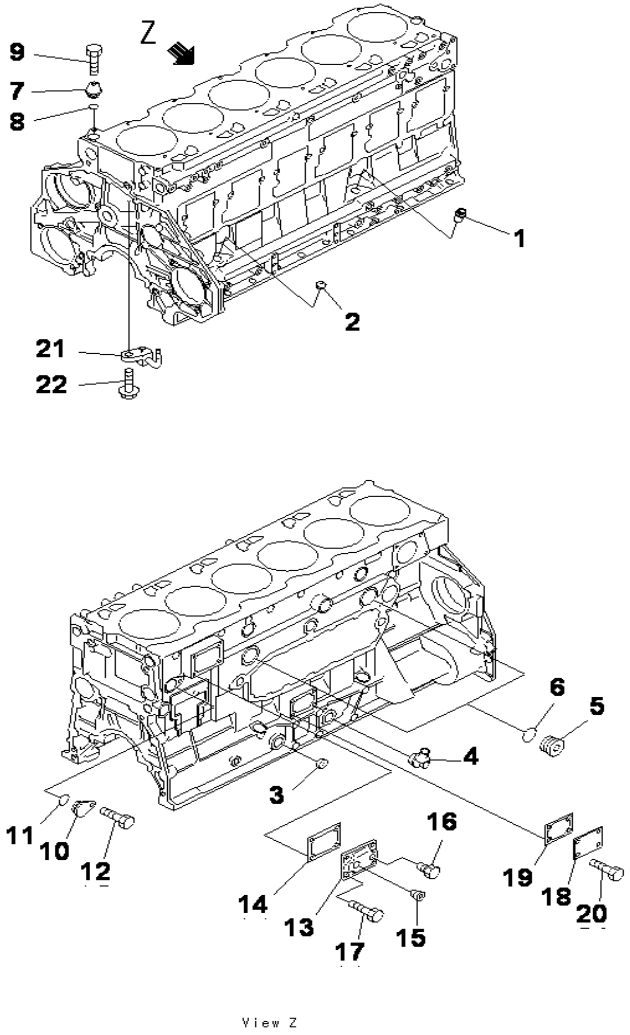

S6D125-2 S/N 1002678-UP

CYLINDER BLOCK (2/2)

INDEX	CD	PART NO.	DESCRIPTION	QTY	SERIAL NO.
1		6150-21-5910	BUSHING, OIL LEVEL GAUGE.....	1	1002678-UP
2		07046-22010	PLUG.....	3	1002678-UP
3		07046-42816	PLUG.....	1	1002678-UP
4		6151-51-8130	ELBOW, TURBOCHARGER OIL.....	1	1002678-UP
5		6150-21-1180	PLUG.....	2	1002678-UP
6		6150-21-1190	O-RING (K2).....	2	1002678-UP
7		6150-22-6110	COVER.....	1	1002678-UP
8		07000-02021	O-RING (K2).....	1	1002678-UP
9		01010-81020	BOLT.....	1	1002678-UP
10		6150-22-6120	COVER.....	1	1002678-UP
11		07000-03030	O-RING (K2).....	1	1002678-UP
12		01010-51025	BOLT.....	1	1002678-UP
13		6210-21-1960	COVER.....	1	1002678-UP
14		6210-21-1971	GASKET (K2).....	1	1002678-UP
15		07043-00415	PLUG.....	1	1002678-UP
16		287-35-11470	PLUG.....	1	1002678-UP
17		01010-51025	BOLT.....	4	1002678-UP
18		6306-21-4710	PLATE.....	1	1002678-UP
19		6206-21-6870	GASKET (K2).....	1	1002678-UP
20		01010-51020	BOLT.....	4	1002678-UP
21		6151-22-1710	NOZZLE, PISTON COOLING.....	6	1002678-UP
22		01435-00816	BOLT.....	6	1002678-UP

Ref :A2010-B3F2 Page :010130

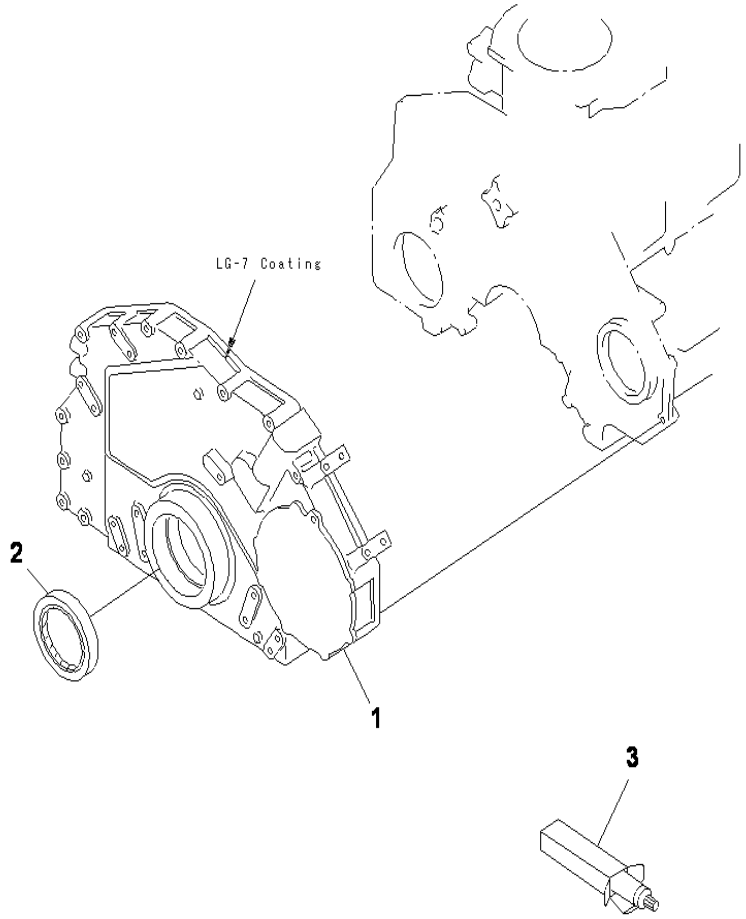

S6D125-2 S/N 1002678-UP

FRONT COVER

INDEX	CD	PART NO.	DESCRIPTION	QTY	SERIAL NO.
1		6150-22-3141	COVER, FRONT.....	1	1002678-UP
2		6150-21-3230	SEAL, FRONT (K2).....	1	1002678-UP
3		09920-00150	LIQUID GASKET, LG-7, 150G.....		1002678-UP

Ref :A2040-A3E7 Page :010140

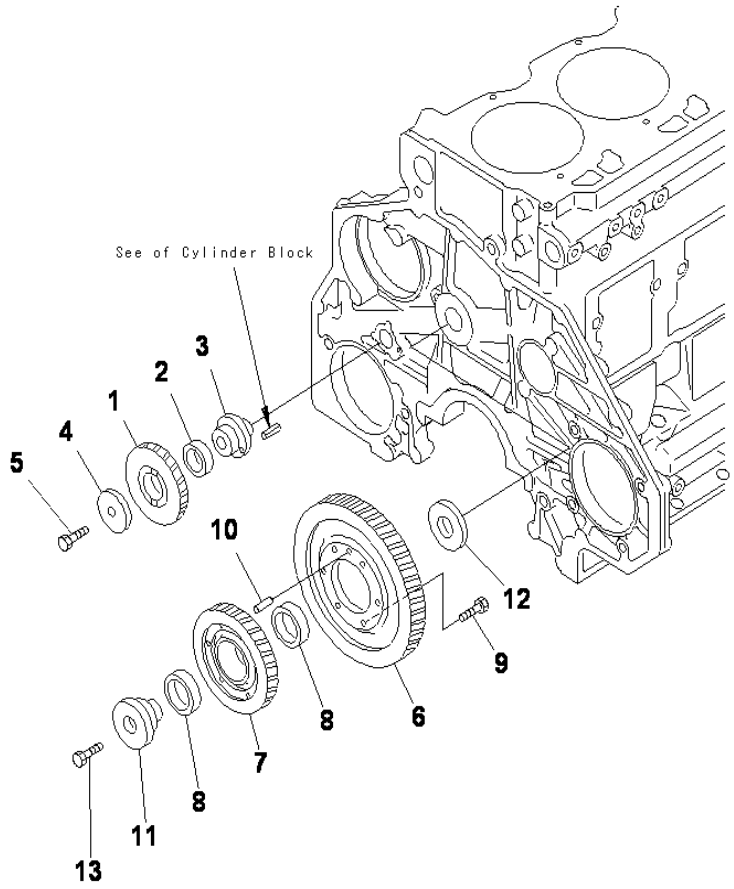

S6D125-2 S/N 1002678-UP

IDLER GEAR

INDEX	CD	PART NO.	DESCRIPTION	QTY	SERIAL NO.
		6150-31-6100	GEAR ASS'Y	1	1002678-UP
1	C1	6150-31-6110	.GEAR	1	1002678-UP
2		6150-31-6120	.BUSHING	1	1002678-UP
3		6150-21-2510	SHAFT	1	1002678-UP
4		6150-21-2520	PLATE	1	1002678-UP
5		01010-31460	BOLT	1	1002678-UP
6		6152-31-6310	GEAR	1	1002678-UP
		6150-31-6201	GEAR ASS'Y	1	1002678-UP
7	C1	6150-31-6211	.GEAR	1	1002678-UP
8		6150-31-6220	.BUSHING	2	1002678-UP
9		01010-81025	BOLT	6	1002678-UP
10		6127-21-1260	PIN, DOWEL	1	1002678-UP
11		6150-21-2411	SHAFT	1	1002678-UP
12		6150-21-2421	PLATE	1	1002678-UP
13		6150-21-2431	BOLT	1	1002678-UP

Ref :A2050-A3A4 Page :010150

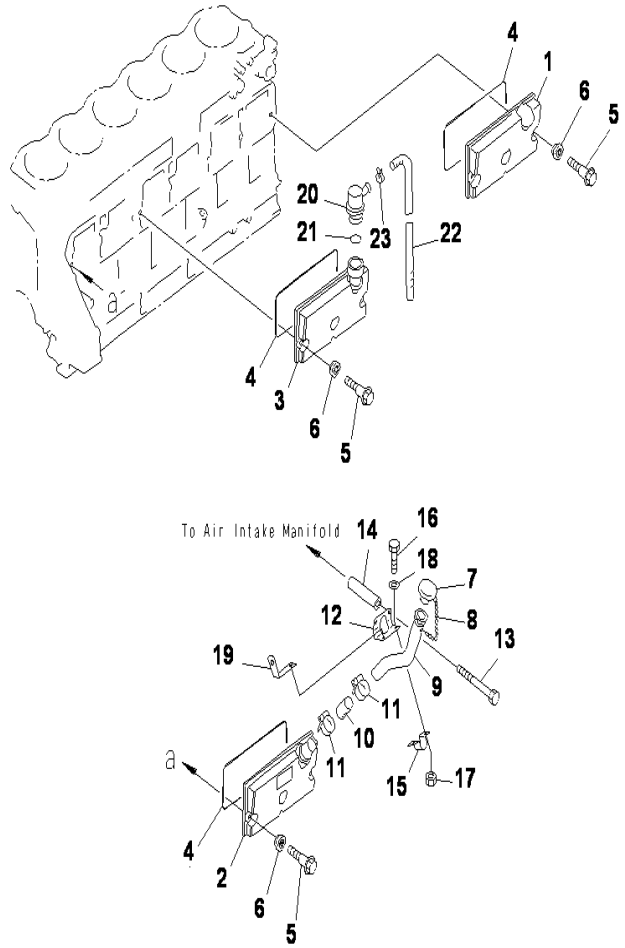

S6D125-2 S/N 1002678-UP

CAMFOLLOWER COVER

INDEX	CD	PART NO.	DESCRIPTION	QTY	SERIAL NO.
1		6150-22-6430	COVER, REAR	1	1002678-UP
2		6150-22-6500	COVER ASS'Y, FRONT	1	1002678-UP
	C1	6150-22-6420	.COVER	1	1002678-UP
		6150-21-6510	.TUBE	1	1002678-UP
3		6150-22-6600	COVER ASS'Y, CENTER	1	1002678-UP
	C1	6150-22-6420	.COVER	1	1002678-UP
	C1	6150-21-6720	.CONNECTOR	1	1002678-UP
4		6150-21-6450	GASKET (K2)	3	1002678-UP
5		6210-21-6471	BOLT	9	1002678-UP
6		6150-21-6391	PACKING (K2)	9	1002678-UP
7		6136-21-7120	CAP ASS'Y	1	1002678-UP
		6136-21-7180	.GASKET	1	1002678-UP
8		6136-21-7190	CHAIN	1	1002678-UP
9		6150-21-7120	FILLER, OIL	1	1002678-UP
10		6150-21-6530	HOSE	1	1002678-UP
11		07281-00609	CLAMP	2	1002678-UP
12		6150-21-6540	BRACKET	1	1002678-UP
13		01010-81000	BOLT	2	1002678-UP
14		6136-11-5120	SPACER	2	1002678-UP
15		6150-21-6570	CLAMP	1	1002678-UP
16		01010-51025	BOLT	2	1002678-UP
17		01580-11008	NUT	2	1002678-UP
18		01640-21016	WASHER	2	1002678-UP
19		6127-11-4421	PLATE	1	1002678-UP
20		6150-21-6710	BREATHER	1	1002678-UP
21		6114-21-5190	O-RING (K2)	1	1002678-UP
22		07286-01963	HOSE	1	1002678-UP
23		07285-00220	CLIP	1	1002678-UP

Ref :A2060-A3D9 Page :010160

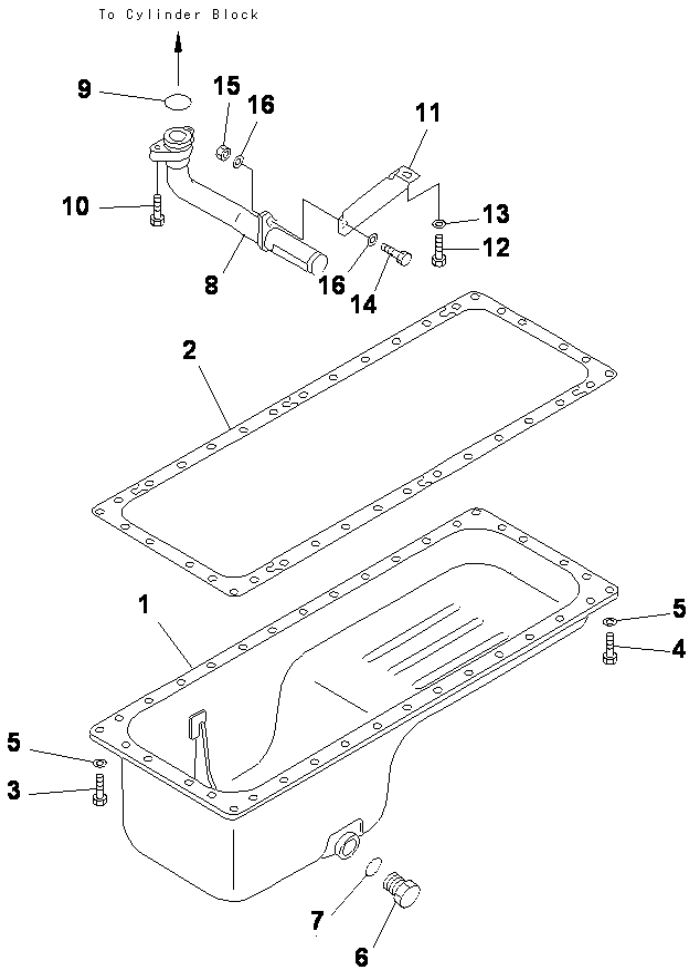

S6D125-2 S/N 1002678-UP

OIL PAN AND SUCTION TUBE

INDEX	CD	PART NO.	DESCRIPTION	QTY	SERIAL NO.
1		6150-21-5530	PAN, OIL	1	1002678-UP
2		6150-21-5813	GASKET (K2)	1	1002678-UP
3		01010-81025	BOLT	30	1002678-UP
4		01010-81030	BOLT	6	1002678-UP
5		01640-21016	WASHER	36	1002678-UP
6		6150-23-5620	PLUG	1	1002678-UP
7		07002-03634	O-RING (K2)	1	1002678-UP
8		6150-51-6330	STRAINER, OIL	1	1002678-UP
9		07000-63045	O-RING (K2)	1	1002678-UP
10		01010-81035	BOLT	2	1002678-UP
11		6150-51-6340	BRACKET	1	1002678-UP
12		01010-81020	BOLT	1	1002678-UP
13		01643-31032	WASHER	1	1002678-UP
14		01010-81030	BOLT	1	1002678-UP
15		01580-01008	NUT	1	1002678-UP
16		01643-31032	WASHER	2	1002678-UP

Ref :A2110-A3G6 Page :010170

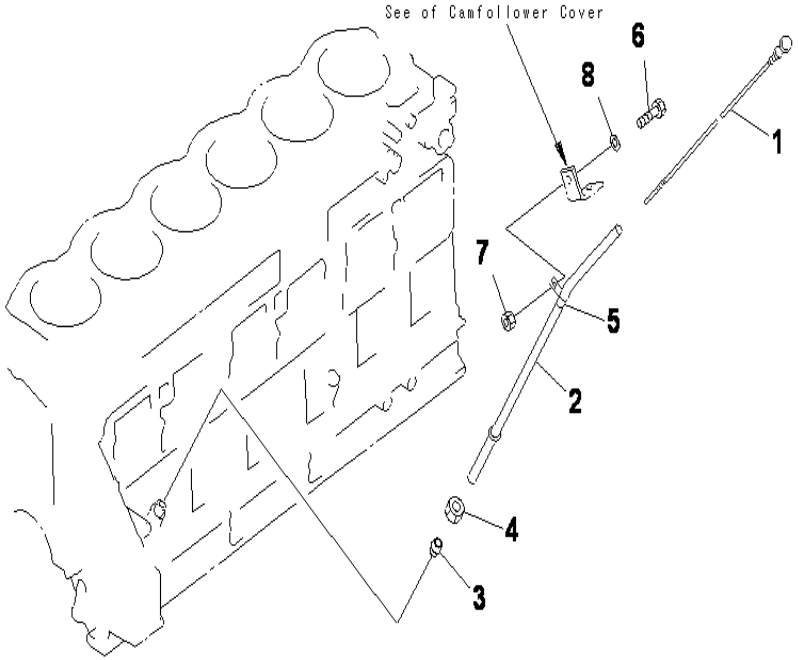

S6D125-2 S/N 1002678-UP

OIL LEVEL GAUGE

INDEX	CD	PART NO.	DESCRIPTION	QTY	SERIAL NO.
1		6150-21-5650	GAUGE, OIL LEVEL	1	1002678-UP
2		6150-22-5660	GUIDE	1	1002678-UP
3		6150-21-5920	COLLAR	1	1002678-UP
4		6150-21-5930	NUT	1	1002678-UP
5		6144-21-5650	CLIP	1	1002678-UP
6		01010-80816	BOLT	1	1002678-UP
7		01580-10806	NUT	1	1002678-UP
8		01642-20810	WASHER	1	1002678-UP

Ref :A2110-B3G6 Page :010180

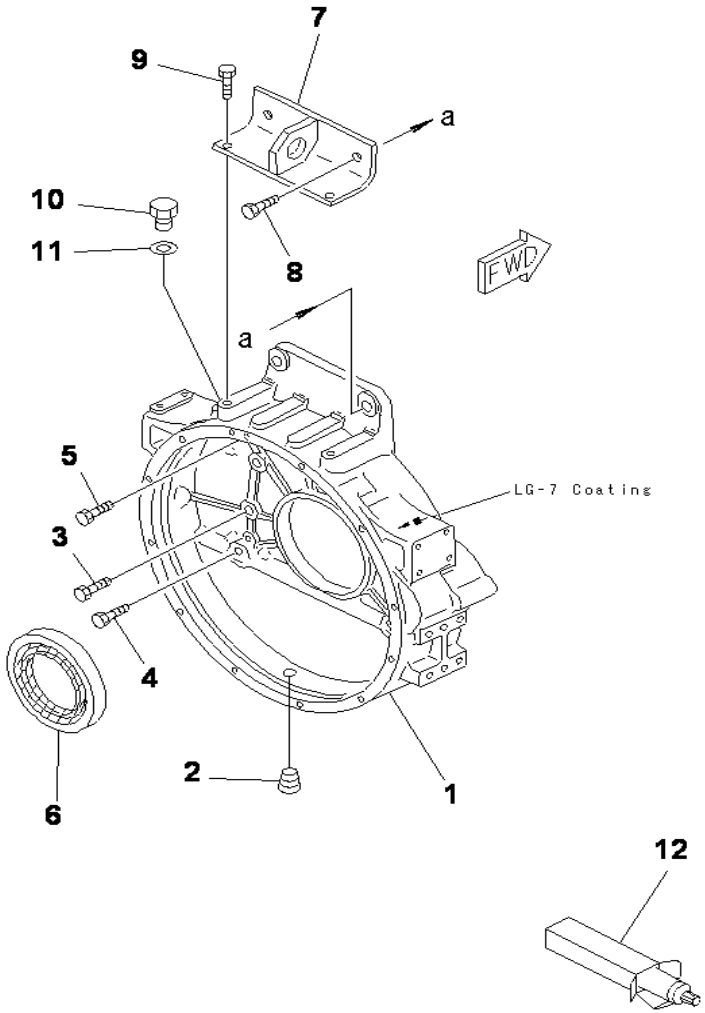

S6D125-2 S/N 1002678-UP

FLYWHEEL HOUSING

INDEX	CD	PART NO.	DESCRIPTION	QTY	SERIAL NO.
1		6150-23-4161	HOUSING, FLYWHEEL	1	1002678-UP
2		07043-70617	PLUG	1	1002678-UP
3		01010-31650	BOLT	6	1002678-UP
4		01010-31660	BOLT	2	1002678-UP
5		01010-81050	BOLT	2	1002678-UP
6		6151-21-4160	SEAL, REAR	1	1002678-UP
7		6150-21-3980	BRACKET	1	1002678-UP
8		01010-51660	BOLT	2	1002678-UP
9		01010-51025	BOLT	2	1002678-UP
10		6114-11-8910	PLUG	1	1002678-UP
11		07005-02216	GASKET	1	1002678-UP
12		(09920-00150)	LIQUID GASKET,LG-7,150G		1002678-UP

Ref :A2210-A3D4 Page :010190

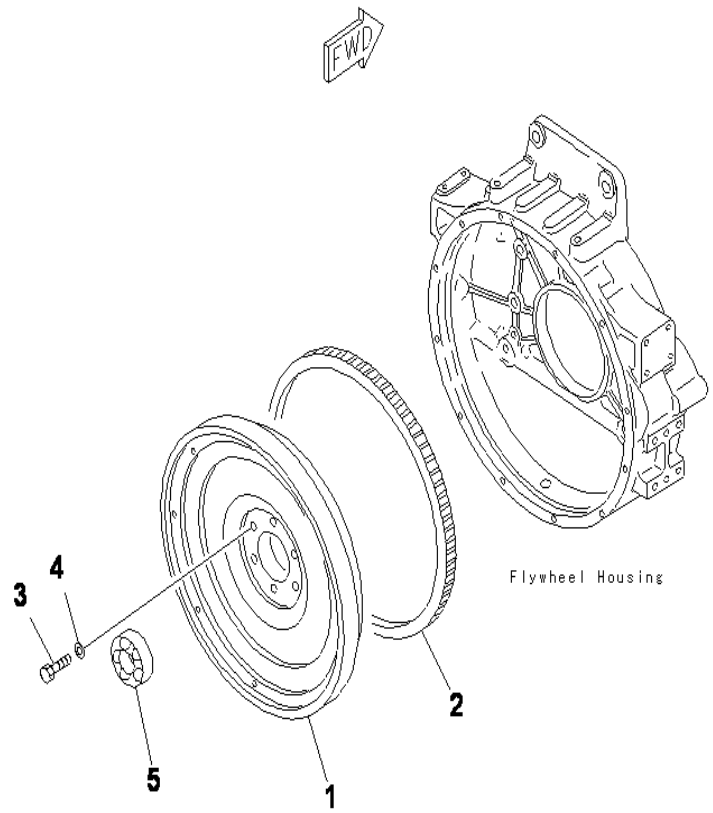

S6D125-2 S/N 1002678-UP

FLYWHEEL

INDEX	CD	PART NO.	DESCRIPTION	QTY	SERIAL NO.
		6151-31-4600	FLYWHEEL ASS'Y.....	1	1002678-UP
1	C1	6151-31-4610	.FLYWHEEL.....	1	1002678-UP
2		6150-31-1351	.GEAR, RING.....	1	1002678-UP
3		01050-31655	BOLT.....	6	1002678-UP
4		01643-31645	WASHER.....	6	1002678-UP
5		06040-06208	BEARING.....	1	1002678-UP

Ref :A2230-A3A1 Page :010200

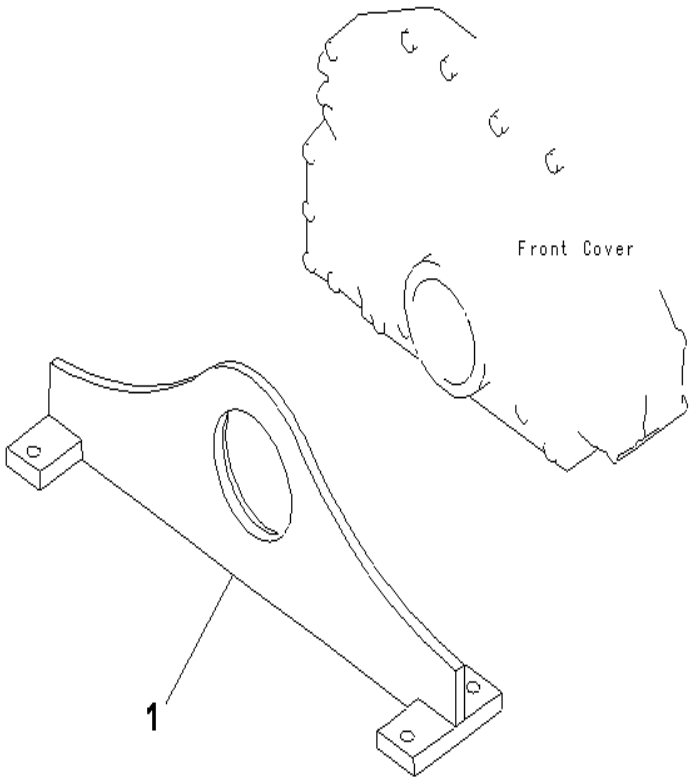

S6D125-2 S/N 1002678-UP

ENGINE MOUNTING

INDEX	CD	PART NO.	DESCRIPTION	QTY	SERIAL NO.
1		14W-01-11110	SUPPORT, FRONT.....	1	1002678-UP

Ref :A2250-A3A6 Page :010210

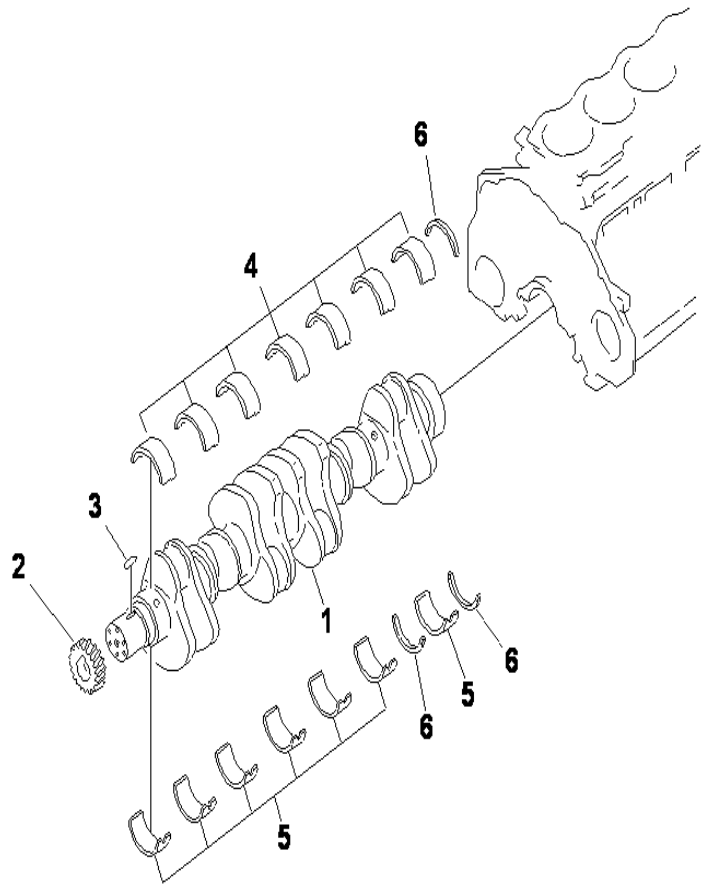

S6D125-2 S/N 1002678-UP

CRANKSHAFT

INDEX	CD	PART NO.	DESCRIPTION	QTY	SERIAL NO.
		6151-35-1010	CRANKSHAFT ASS'Y	1	1002678-UP
1	C1	6151-31-1110	.CRANKSHAFT	1	1002678-UP
2		6150-35-1120	.GEAR, CRANKSHAFT	1	1002678-UP
3		6150-31-1130	.KEY	1	1002678-UP
			STANDART		1002678-UP
		6150-21-8010	MAIN METAL ASS'Y	7	1002678-UP
4	C1	6150-21-8130	.METAL, UPPER	1	1002678-UP
5	C1	6150-21-8140	.METAL, LOWER	1	1002678-UP
6		6150-21-8050	THRUST METAL ASS'Y	1	1002678-UP
	C1	6150-21-8210	.METAL, THRUST	3	1002678-UP
			UNDERSIZE 0.25MM		1002678-UP
4		6150-29-8010	MAIN METAL ASS'Y	7	1002678-UP
	C1	6150-29-8130	.METAL, UPPER	1	1002678-UP
5	C1	615T-29-8140	.METAL, LOWER	1	1002678-UP
			UNDERSIZE 0.50MM		1002678-UP
4		6150-28-8010	MAIN METAL ASS'Y	7	1002678-UP
	C1	6150-28-8130	.METAL, UPPER	1	1002678-UP
5	C1	6150-28-8140	.METAL, LOWER	1	1002678-UP
			UNDERSIZE 0.75MM		1002678-UP
4		6150-27-8010	MAIN METAL ASS'Y	7	1002678-UP
	C1	6150-27-8130	.METAL, UPPER	1	1002678-UP
5	C1	6150-27-8140	.METAL LOWER	1	1002678-UP
			UNDERSIZE 1.00MM		1002678-UP
4		6150-26-8010	MAIN METAL ASS'Y	7	1002678-UP
	C1	6150-26-8130	.METAL, UPPER	1	1002678-UP
5	C1	6150-26-8140	.METAL, LOWER	1	1002678-UP
			OVERSIZE 0.25MM		1002678-UP
6		6150-29-8050	THRUST METAL ASS'Y	1	1002678-UP
	C1	6150-29-8210	METAL, THRUST	3	1002678-UP
			OVERSIZE 0.50MM		1002678-UP
6		6150-28-8050	THRUST METAL ASS'Y	1	1002678-UP
	C1	6150-28-8210	.METAL, THRUST	3	1002678-UP
			OVERSIZE 0.75MM		1002678-UP
6		6150-27-8050	THRUST METAL ASS'Y	1	1002678-UP
	C1	6150-27-8210	.METAL, THRUST	3	1002678-UP
			OVERSIZE 1.00MM		1002678-UP
6		6150-26-8050	THRUST METAL ASS'Y	1	1002678-UP
	C1	6150-26-8210	.METAL, THRUST	3	1002678-UP

Ref :A2310-A3A6 Page :010220

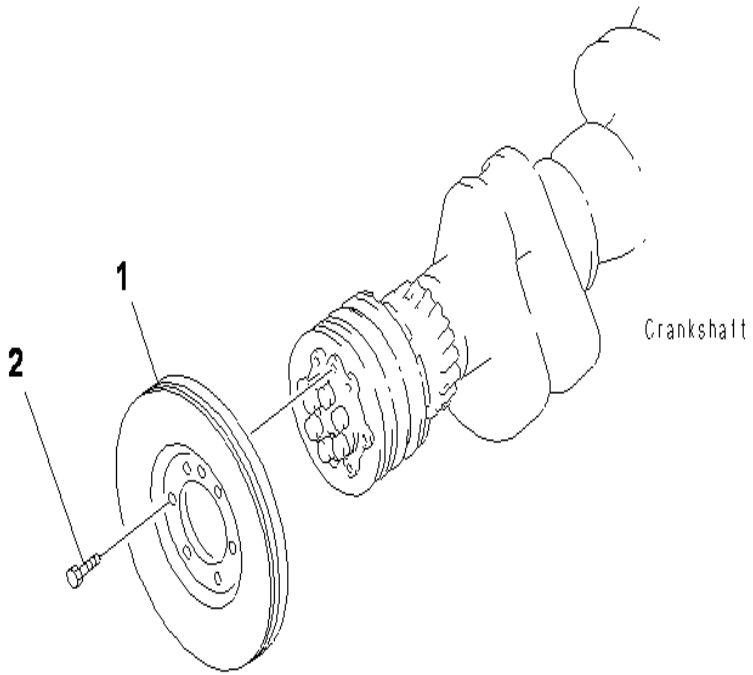

S6D125-2 S/N 1002678-UP

DAMPER

INDEX	CD	PART NO.	DESCRIPTION	QTY	SERIAL NO.
1		6151-31-8200	DAMPER ASS'Y.....	1	1002678-UP
2		01010-81225	BOLT.....	6	1002678-UP

Ref :A2330-A3B9 Page :010230

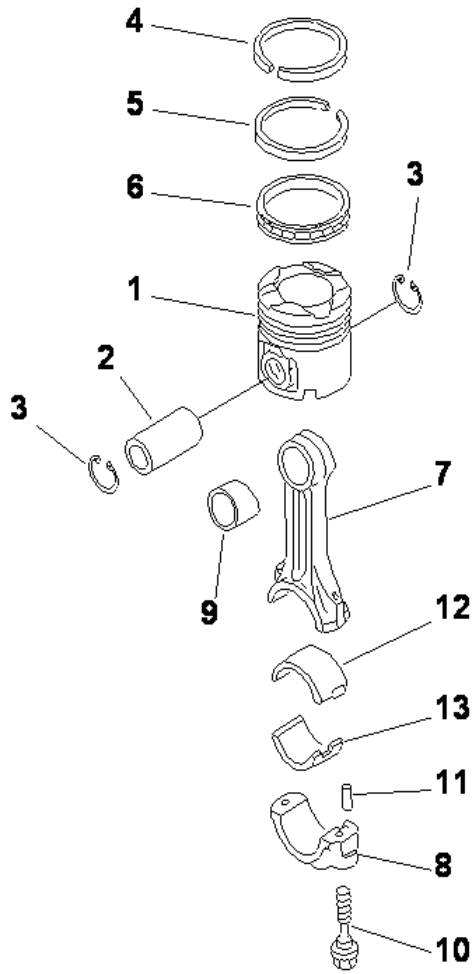

S6D125-2 S/N 1002678-UP

PISTON

INDEX	CD	PART NO.	DESCRIPTION	QTY	SERIAL NO.
1		6151-32-2110	PISTON	6	1002678-UP
2		6151-31-2420	PIN, PISTON	6	1002678-UP
3		04065-04818	RING	12	1002678-UP
		6150-32-2030	PISTON RING ASS'Y	6	1002678-UP
4	C1	6150-32-2210	.RING, TOP	1	1002678-UP
5	C1	6150-32-2220	.RING, SECOND	1	1002678-UP
6	C1	6150-32-2230	.RING, OIL	1	1002678-UP
		6151-31-3200	CONNECTING ROD ASS'Y	6	1002678-UP
7	C1	6151-31-3210	.ROD, CONNECTING	1	1002678-UP
8	C1	6150-31-3120	.CAP	1	1002678-UP
9	C3	6150-31-3130	.BUSHING	1	1002678-UP
10		6150-31-3310	.BOLT	2	1002678-UP
11		02400-10413	.PIN, DOWEL	2	1002678-UP
			STANDART		
		6150-31-3040	METAL ASS'Y	6	1002678-UP
12	C1	6150-31-3430	.METAL, UPPER	1	1002678-UP
13	C1	6150-31-3440	.METAL, LOWER	1	1002678-UP
			UNDERSIZE 0.25MM		
		6150-39-3040	METAL ASS'Y	6	1002678-UP
12	C1	6150-39-3430	.METAL, UPPER	1	1002678-UP
13	C1	6150-39-3440	.METAL, LOWER	1	1002678-UP
			UNDERSIZE 0.50MM		
		6150-38-3040	METAL ASS'Y	6	1002678-UP
12	C1	6150-38-3430	.METAL, UPPER	1	1002678-UP
13	C1	6150-38-3440	.METAL, LOWER	1	1002678-UP
			UNDERSIZE 0.75MM		1002678-UP
		6150-37-3040	METAL ASS'Y	6	1002678-UP
12	C1	6150-37-3430	.METAL, UPPER	1	1002678-UP
13	C1	6150-37-3440	.METAL, LOWER	1	1002678-UP
			UNDERSIZE 1.00MM		
		6150-36-3040	METAL ASS'Y	6	1002678-UP
12		6150-36-3430	.METAL, UPPER	1	1002678-UP
13		6150-36-3440	.METAL, LOWER	1	1002678-UP

Ref :A2350-A3B6 Page :010240

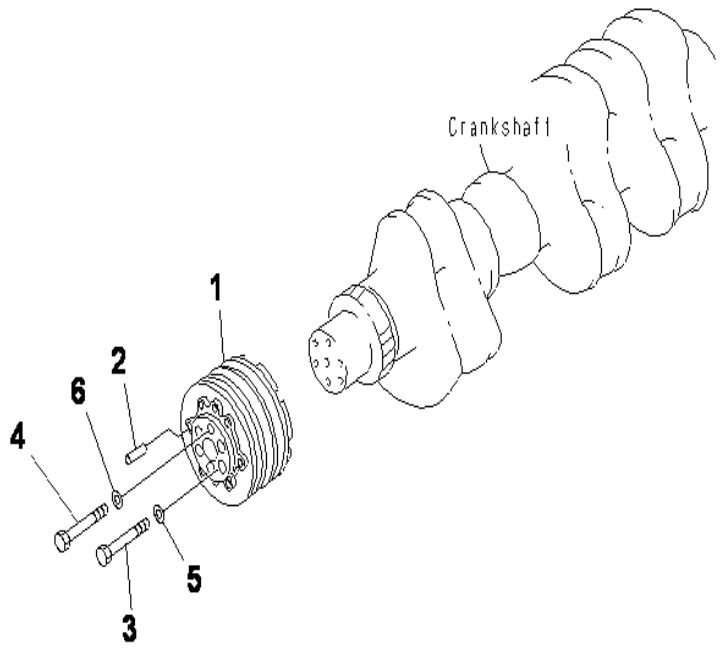

S6D125-2 S/N 1002678-UP

CRANK PULLEY (NON HARDENING PULLEY)

INDEX	CD	PART NO.	DESCRIPTION	QTY	SERIAL NO.
1		6150-31-1550	PULLEY, NON HARDENING.....	1	1002678-UP
2		04020-01228	PIN.....	1	1002678-UP
3		01051-51635	BOLT.....	5	1002678-UP
4		01051-51430	BOLT.....	1	1002678-UP
5		6150-31-1810	WASHER.....	5	1002678-UP
6		6130-32-1361	WASHER.....	1	1002678-UP

Ref :A2370-A3A1 Page :010250

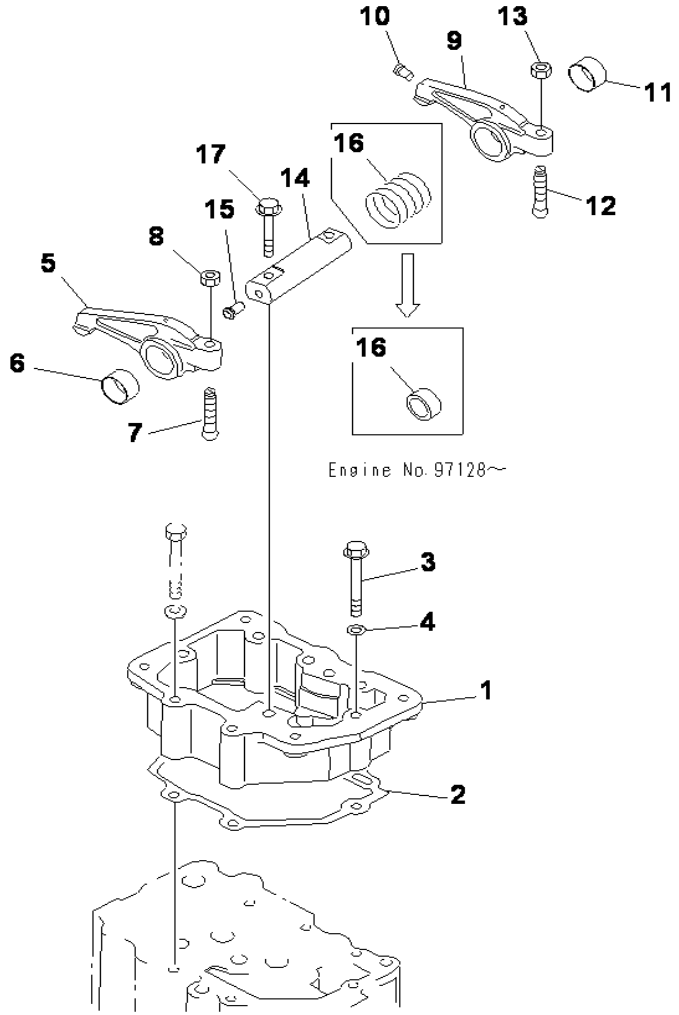

S6D125-2 S/N 1002678-UP

ROCKER ARM

INDEX	CD	PART NO.	DESCRIPTION	QTY	SERIAL NO.
1		6150-11-7110	HOUSING, ROCKER ARM.....	6	1002678-UP
2		6150-11-7812	GASKET (K1).....	6	1002678-UP
3		01437-01075	BOLT.....	40	1002678-UP
4		01643-31032	WASHER.....	40	1002678-UP
		6150-41-5450	ARM ASS'Y, INTAKE.....	6	1002678-UP
5	C1	6150-41-5410	.ARM, ROCKER.....	1	1002678-UP
6		6150-41-5420	.BUSHING.....	1	1002678-UP
7		6150-41-5540	SCREW.....	6	1002678-UP
8		01582-01008	NUT.....	6	1002678-UP
		6150-41-5550	.ARM ASS'Y, EXHAUST.....	6	1002678-UP
9	C1	6150-41-5510	.ARM, ROCKER.....	1	1002678-UP
10		6162-43-5340	.RIVET.....	1	1002678-UP
11		6150-41-5420	.BUSHING.....	1	1002678-UP
12		6150-41-5540	SCREW.....	6	1002678-UP
13		01582-01008	NUT.....	6	1002678-UP
		6150-42-5300	ROCKER ARM SHAFT A.....	6	1002678-UP
14	C1	6150-42-5310	.SHAFT.....	1	1002678-UP
15		6710-41-5340	.RIVET.....	1	1002678-UP
16		6150-41-5320	SPRING.....	6	1002678-UP
17		6150-81-9370	BOLT.....	12	1002678-UP

Ref :A2410-A3A5 Page :010260

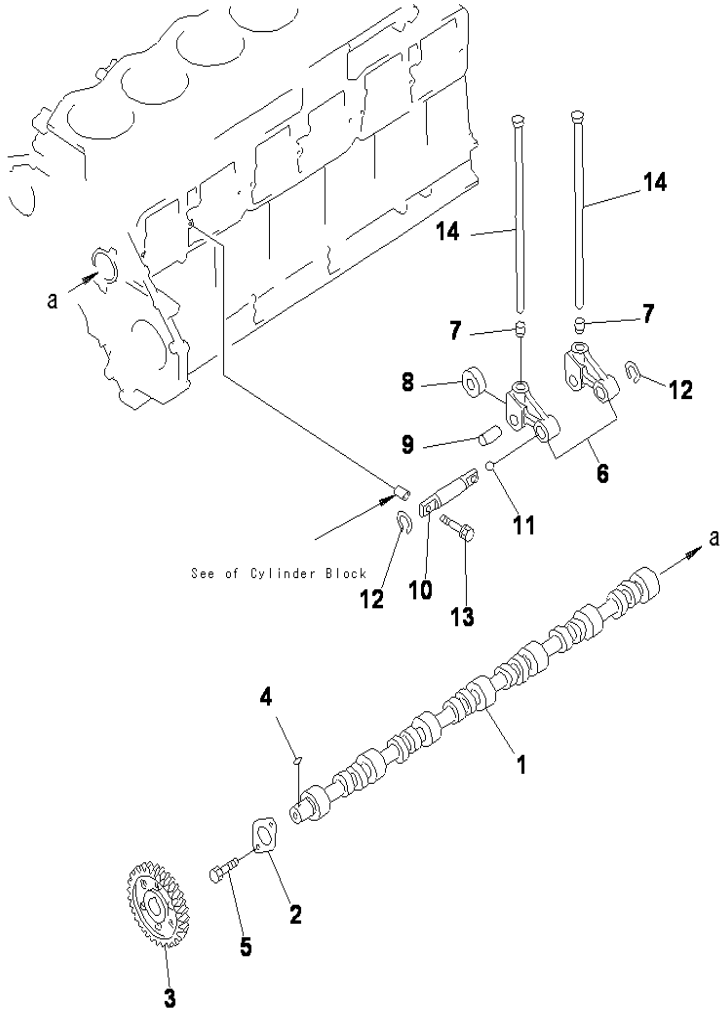

S6D125-2 S/N 1002678-UP

CAMSHAFT

INDEX	CD	PART NO.	DESCRIPTION	QTY	SERIAL NO.
		6150-41-1012	CAMSHAFT ASS'Y	1	1002678-UP
1	C1	6151-41-1112	.CAMSHAFT	1	1002678-UP
2		6150-41-1130	.PLATE, THRUST	1	1002678-UP
3		6150-41-1120	.GEAR, CAMSHAFT	1	1002678-UP
4		04010-00725	.KEY	1	1002678-UP
5		01010-81022	BOLT	2	1002678-UP
		6150-41-2011	LEVER ASS'Y	12	1002678-UP
6	C1	6150-41-2312	.LEVER	1	1002678-UP
7	C1	6150-41-2331	.SOCKET	1	1002678-UP
8	C1	6150-41-2341	.ROLLER	1	1002678-UP
9	C1	6150-41-2352	.PIN	1	1002678-UP
		6150-41-2401	SHAFT ASS'Y	6	1002678-UP
10	C1	6150-41-2711	.SHAFT	1	1002678-UP
11		6150-81-8420	.BALL	1	1002678-UP
12		04064-02012	RING, SNAP	12	1002678-UP
13		6150-41-2450	BOLT	12	1002678-UP
14		6150-41-3111	ROD, PUSH	12	1002678-UP

Ref :A2410-B3A5 Page :010270

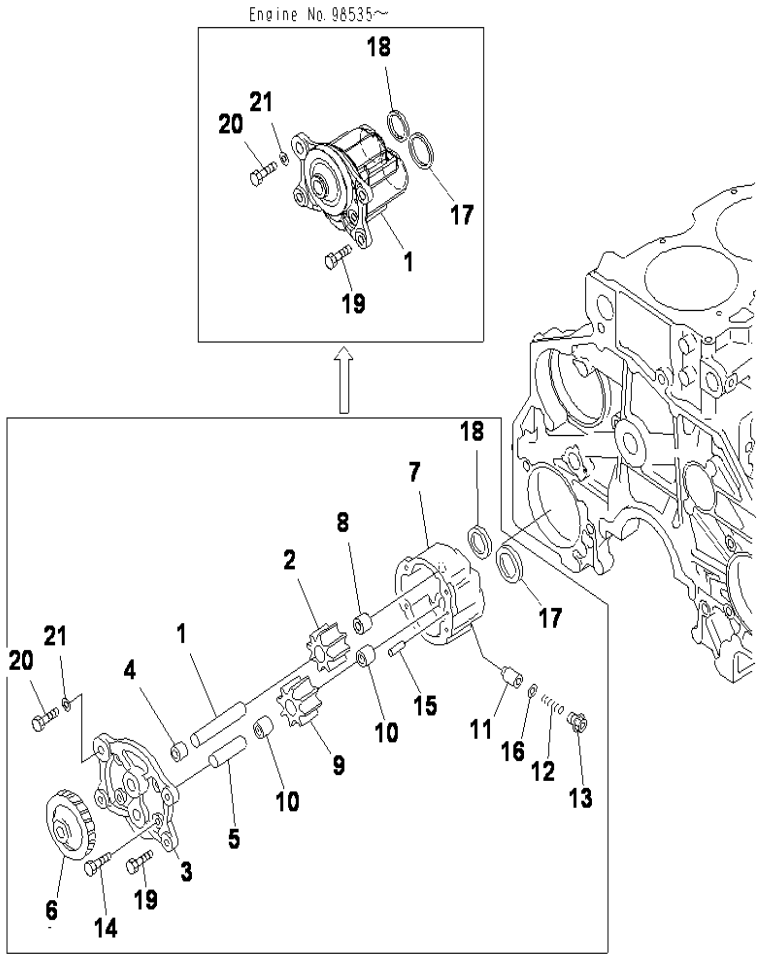

S6D125-2 S/N 1002678-UP

OIL PUMP

INDEX	CD	PART NO.	DESCRIPTION	QTY	SERIAL NO.
		6151-51-1005	OIL PUMP ASS'Y	1	1002678-UP
		6151-51-1303	.SHAFT ASS'Y	1	1002678-UP
1	C1	6151-51-1313	..SHAFT	1	1002678-UP
2	C1	6151-51-1511	..GEAR	1	1002678-UP
		6151-51-1102	.COVER ASS'Y	1	1002678-UP
3	C1	6151-51-1110	..COVER	1	1002678-UP
4		6151-51-1430	..BUSHING	1	1002678-UP
5		6151-51-1320	..SHAFT	1	1002678-UP
6		6151-51-1610	.GEAR	1	1002678-UP
		6151-51-1203	.BODY ASS'Y	1	1002678-UP
7	C1	6151-51-1213	..BODY	1	1002678-UP
8		6151-51-1430	..BUSHING	1	1002678-UP
		6151-51-1401	.GEAR ASS'Y	1	1002678-UP
9	C1	6151-51-1410	..GEAR	1	1002678-UP
10		6151-51-1421	..BUSHING	2	1002678-UP
11		6136-52-1640	.VALVE	1	1002678-UP
12		6136-52-1650	.SPRING	1	1002678-UP
13		6150-51-1660	.PLUG	1	1002678-UP
14		01010-80825	.BOLT	4	1002678-UP
15		6136-52-1620	.PIN	1	1002678-UP
16		6151-51-1710	.SHIM, 0.8MM	1	1002678-UP
17		6150-51-1710	RING	1	1002678-UP
18		6150-51-1720	RING	1	1002678-UP
19		01010-81025	BOLT	3	1002678-UP
20		01010-81035	BOLT	1	1002678-UP
21		01643-31032	WASHER	1	1002678-UP

Ref :A3010-A3A2 Page :010280

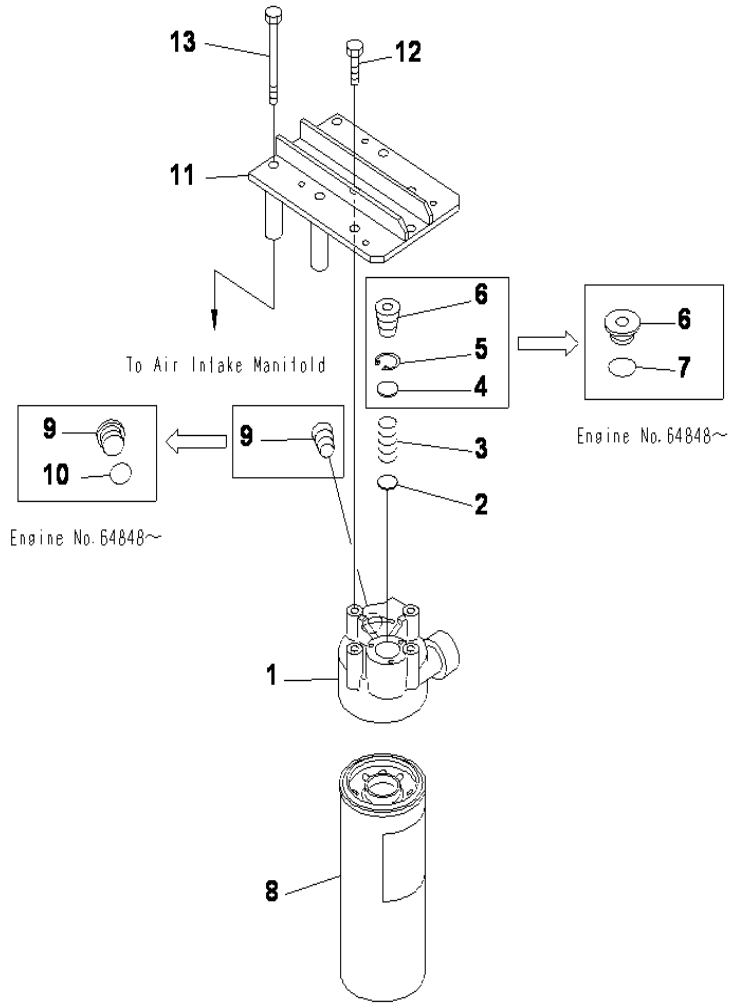

S6D125-2 S/N 1002678-UP

OIL FILTER

INDEX	CD	PART NO.	DESCRIPTION	QTY	SERIAL NO.
		6212-51-5301	OIL FILTER ASS'Y.....	1	1002678-UP
1		6212-51-5311	.HEAD.....	1	1002678-UP
2		6150-51-4920	.DISC.....	1	1002678-UP
3		6151-51-5320	.SPRING.....	1	1002678-UP
4		6150-51-4360	.RETAINER.....	1	1002678-UP
5		04065-03012	.RING.....	1	1002678-UP
6		600-211-1150	.PLUG.....	1	1002678-UP
7		07000-73035	.O-RING.....	1	1002678-UP
8		600-211-1231	.CARTRIDGE.....	1	1002678-UP
9		600-211-1130	.PLUG.....	1	1002678-UP
10		600-211-1140	.O-RING.....	1	1002678-UP
11		6151-51-5340	BRACKET.....	1	1002678-UP
12		01010-81025	BOLT.....	3	1002678-UP
13		01011-81030	BOLT.....	4	1002678-UP

Ref :A3110-A3D9 Page :010290

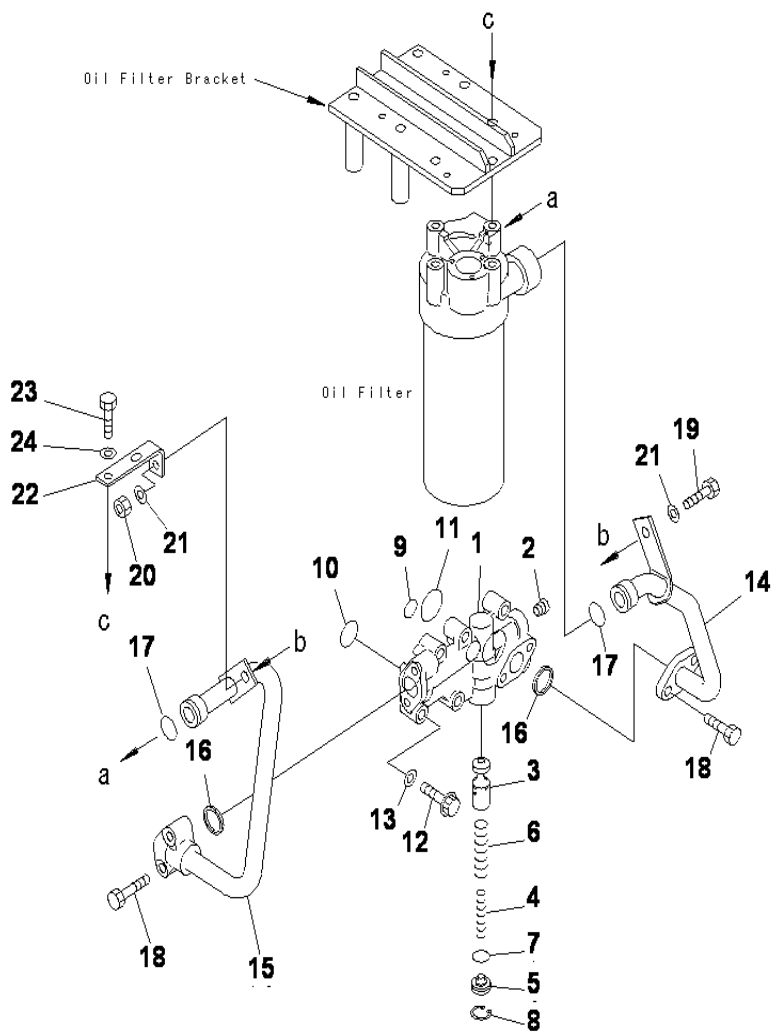

OIL ADAPTER

INDEX	CD	PART NO.	DESCRIPTION	QTY	SERIAL NO.
		6151-52-5600	ADAPTER ASS'Y	1	1002678-UP
1	C1	6151-52-5610	.BODY	1	1002678-UP
2		07043-00312	PLUG	1	1002678-UP
3		6150-51-5622	VALVE	1	1002678-UP
4		6151-51-5690	SPRING, INNER	2	1002678-UP
5		6150-51-5641	SOCKET	1	1002678-UP
6		6151-51-5680	SPRING, OUTER	1	1002678-UP
7		07000-62020	O-RING	1	1002678-UP
8		04065-02412	RING, SNAP	1	1002678-UP
9		07000-62020	O-RING (K2)	1	1002678-UP
10		07000-63028	O-RING (K2)	1	1002678-UP
11		07000-63035	O-RING (K2)	1	1002678-UP
12		6150-81-9370	BOLT	4	1002678-UP
13		01640-21016	WASHER	4	1002678-UP
14		6150-52-5850	TUBE, OIL	1	1002678-UP
15		6150-52-5860	TUBE, OIL	1	1002678-UP
16		6124-61-2181	GROMMET (K2)	2	1002678-UP
17		07000-63025	O-RING (K2)	2	1002678-UP
18		01010-81050	BOLT	4	1002678-UP
19		01010-81030	BOLT	1	1002678-UP
20		01580-11008	NUT	1	1002678-UP
21		01643-31032	WASHER	2	1002678-UP
22		6136-21-7770	PLATE	1	1002678-UP
23		01010-81035	BOLT	1	1002678-UP
24		01643-31032	WASHER	1	1002678-UP

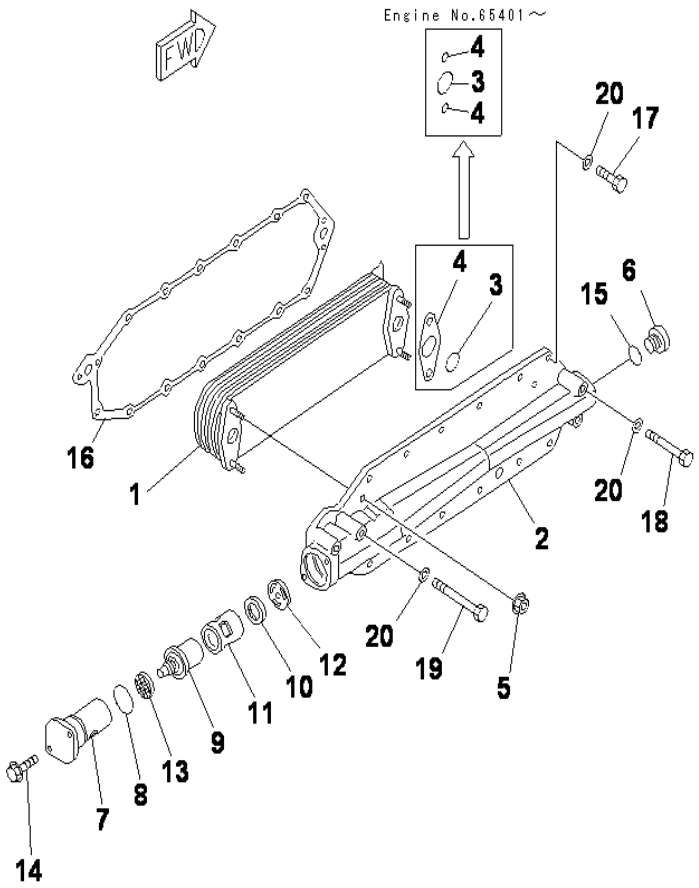

S6D125-2 S/N 1002678-UP

OIL COOLER

INDEX	CD	PART NO.	DESCRIPTION	QTY	SERIAL NO.
1		6151-61-2111	ELEMENT	1	1002678-UP
2		6150-61-2124	COVER	1	1002678-UP
3		6150-61-2510	O-RING (K2)	2	1002678-UP
4		6150-61-2520	O-RING	4	1002678-UP
5		6150-61-2580	NUT	4	1002678-UP
6		6150-61-2530	PLUG	1	1002678-UP
7		6151-62-2130	COVER	1	1002678-UP
8		07000-63042	O-RING (K2)	1	1002678-UP
9		6212-65-2610	THERMOSTAT	1	1002678-UP
10		6150-61-2540	SEAL (K2)	1	1002678-UP
11		6150-61-2141	CASE	1	1002678-UP
12		6150-61-2151	PLATE	1	1002678-UP
13		6151-62-2180	STRAINER	1	1002678-UP
14		01435-00825	BOLT	2	1002678-UP
15		6150-61-2550	O-RING (K2)	1	1002678-UP
16		6150-61-2815	GASKET (K2)	1	1002678-UP
17		01010-81025	BOLT	12	1002678-UP
18		01010-81065	BOLT	2	1002678-UP
19		01010-81080	BOLT	2	1002678-UP
20		01640-21016	WASHER	16	1002678-UP

Ref :A3310-A3B3 Page :010310

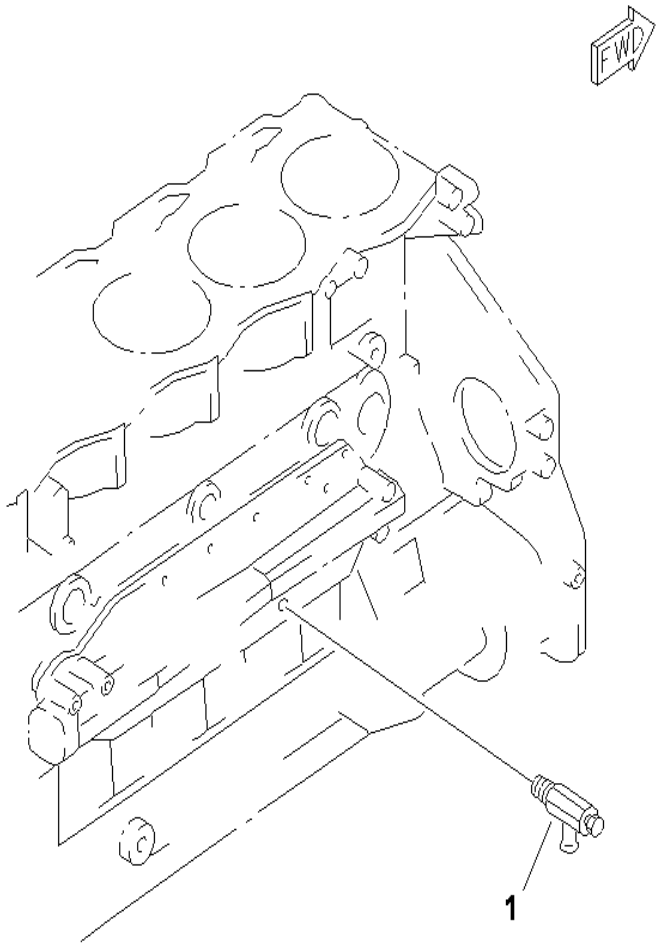

S6D125-2 S/N 1002678-UP

MAIN DRAIN VALVE

INDEX	CD	PART NO.	DESCRIPTION	QTY	SERIAL NO.
1		6140-61-6512	VALVE, DRAIN.....	1	1002678-UP

Ref :A3330-A3A1 Page :010320

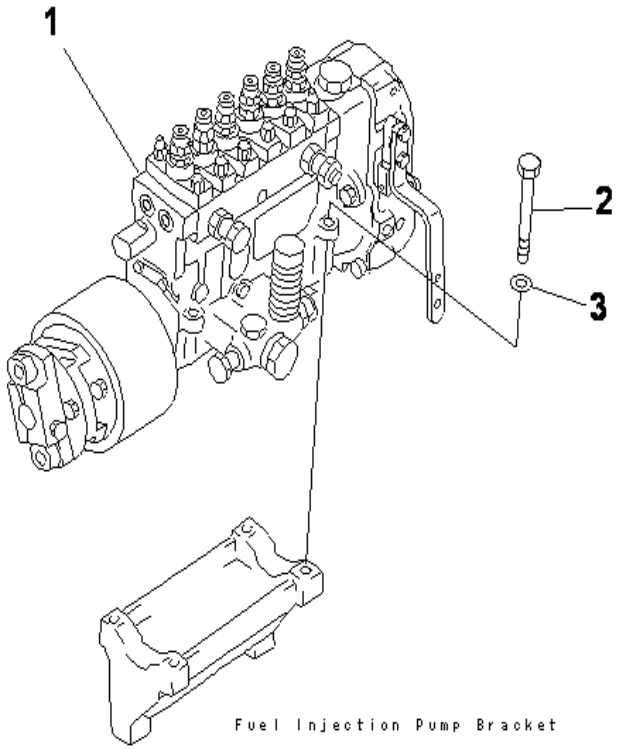

S6D125-2 S/N 1002678-UP

FUEL INJECTION PUMP MOUNTING

INDEX	CD	PART NO.	DESCRIPTION	QTY	SERIAL NO.
1		6151-72-1181	INJECTION PUMP ASS'Y.....	1	111181-UP
		6151-72-1180	INJECTION PUMP ASS'Y.....	1	1002678-111180
2		01010-80875	BOLT.....	4	1002678-UP
3		6110-71-5810	WASHER.....	4	1002678-UP

Ref :A4010-A3J6 Page :010330

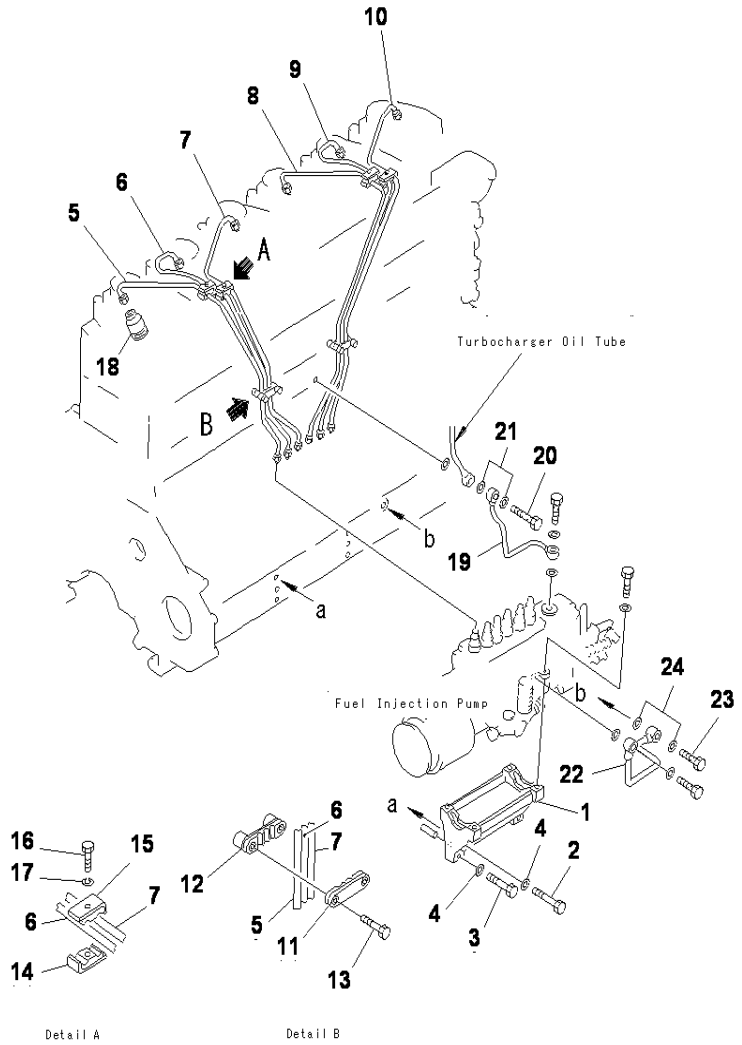

S6D125-2 S/N 1002678-UP

FUEL INJECTION PUMP PIPING

INDEX	CD	PART NO.	DESCRIPTION	QTY	SERIAL NO.
1		6150-21-6120	BRACKET	1	1002678-UP
2		01010-81080	BOLT	2	1002678-UP
3		01010-81070	BOLT	2	1002678-UP
4		01643-31032	WASHER	4	1002678-UP
5		6150-72-5110	TUBE, INJECTION, NO.1	1	1002678-UP
6		6150-72-5120	TUBE, INJECTION, NO.2	1	1002678-UP
7		6150-72-5130	TUBE, INJECTION, NO.3	1	1002678-UP
8		6150-72-5140	TUBE, INJECTION, NO.4	1	1002678-UP
9		6150-72-5150	TUBE, INJECTION, NO.5	1	1002678-UP
10		6150-72-5160	TUBE, INJECTION, NO.6	1	1002678-UP
11		6151-73-5510	CLAMP	2	1002678-UP
12		6151-73-5520	CLAMP	2	1002678-UP
13		01010-81055	BOLT	4	1002678-UP
14		6134-71-5721	CLIP, WITH THREAD	4	1002678-UP
15		6134-71-5711	CLIP		1002678-UP
16		01010-50630	BOLT	4	1002678-UP
17		01602-20619	WASHER, SPRING	4	1002678-UP
18		6215-71-9790	COVER	6	1002678-UP
19		6151-71-5660	TUBE, OIL	1	1002678-UP
20		6127-71-5710	BOLT, JOINT	1	1002678-UP
21		07005-01412	GASKET (K2)	2	1002678-UP
22		6150-71-5710	TUBE, OIL	1	1002678-UP
23		07206-31014	BOLT, JOINT	1	1002678-UP
24		07005-01412	GASKET (K2)	2	1002678-UP

Ref :A4030-A3C2 Page :010340

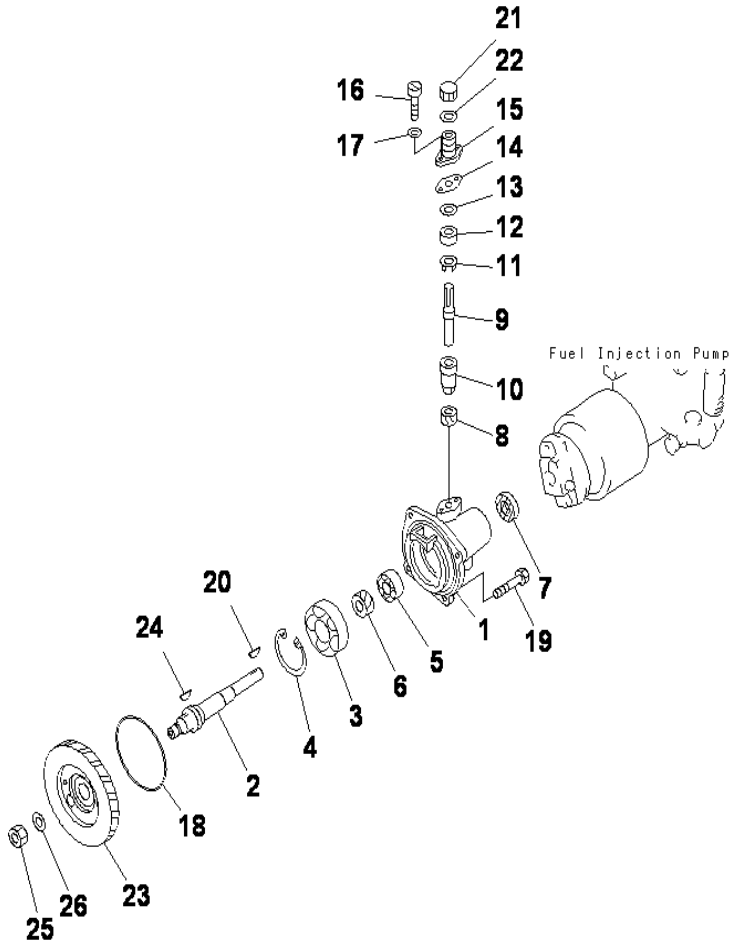

S6D125-2 S/N 1002678-UP

FUEL INJECTION PUMP DRIVE

INDEX	CD	PART NO.	DESCRIPTION	QTY	SERIAL NO.
		6150-71-3100	CASE ASS'Y, INJECTION PUMP.....	1	1002678-UP
1		6150-71-3111	.CASE.....	1	1002678-UP
2		6150-71-3120	.SHAFT.....	1	1002678-UP
3		06030-06307	.BEARING, BALL.....	1	1002678-UP
4		04065-08025	.RING, SNAP.....	1	1002678-UP
5		06000-06005	.BEARING, BALL.....	1	1002678-UP
6		6138-71-3230	.GEAR.....	1	1002678-UP
7		6150-71-3150	.SEAL, OIL.....	1	1002678-UP
		6150-81-5200	.DRIVE ASS'Y, TACHOMETER.....	1	1002678-UP
8		6110-73-3220	..GEAR.....	1	1002678-UP
9		6150-71-1610	..SHAFT.....	1	1002678-UP
10		6150-71-1620	..BUSHING.....	1	1002678-UP
11		6162-73-1970	.SPACER.....	1	1002678-UP
12		6150-71-1910	.SEAL, OIL (K2).....	1	1002678-UP
13		6162-73-1960	.WASHER, FELT (K2).....	1	1002678-UP
14		6162-73-1931	.GASKET (K2).....	1	1002678-UP
15		6162-73-1920	.HOUSING.....	1	1002678-UP
16		6110-73-3511	.SCREW.....	2	1002678-UP
17		6110-73-3520	.WASHER.....	2	1002678-UP
18		07000-62125	O-RING (K2).....	1	1002678-UP
19		01010-81025	BOLT.....	4	1002678-UP
20		04010-00516	KEY.....	1	1002678-UP
21		6136-81-5291	CAP.....	1	1002678-UP
22		6130-82-5270	GASKET.....	1	1002678-UP
23		6152-71-3230	GEAR.....	1	1002678-UP
24		04010-00519	KEY.....	1	1002678-UP
25		01583-12414	NUT.....	1	1002678-UP
26		01643-32460	WASHER.....	1	1002678-UP

Ref :A4080-A3A1 Page :010350

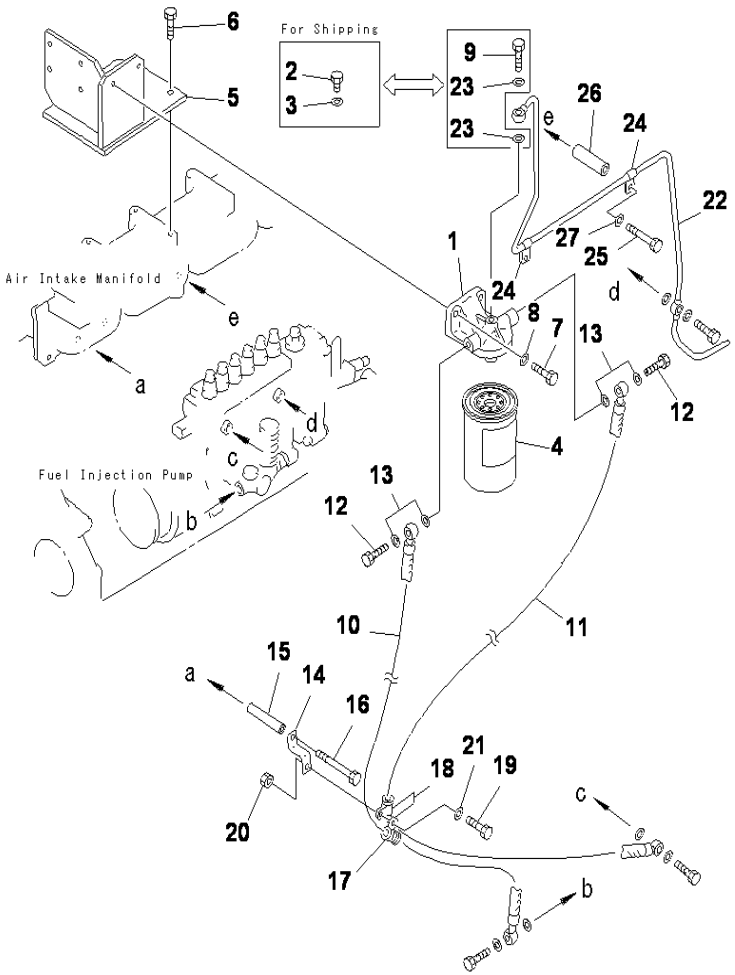

S6D125-2 S/N 1002678-UP

FUEL FILTER

INDEX	CD	PART NO.	DESCRIPTION	QTY	SERIAL NO.
		6221-71-6302	FUEL FILTER ASS'Y	1	1002678-UP
1		6221-71-6110	.COVER	1	1002678-UP
2		600-311-7520	.PLUG, (FOR SHIPPING)	1	1002678-UP
3		07005-01412	.GASKET, (FOR SHIPPING)	1	1002678-UP
4		600-311-8321	.CARTRIDGE	1	1002678-UP
		6110-73-6231	..PLUG, DRAIN	1	1002678-UP
		07005-00812	..GASKET	1	1002678-UP
5		6150-72-650	BRACKET	1	1002678-UP
6		01010-81025	BOLT	4	1002678-UP
7		01010-81025	BOLT	2	1002678-UP
8		01640-21016	WASHER	2	1002678-UP
9		6206-73-6220	JOINT	1	1002678-UP
10		07271-01485	HOSE	1	1002678-UP
11		07271-11475	HOSE	1	1002678-UP
12		07206-31014	BOLT, JOINT	2	1002678-UP
13		07005-01412	GASKET (K2)	4	1002678-UP
14		6162-73-6170	STAY	1	1002678-UP
15		6136-11-5120	SPACER	1	1002678-UP
16		01011-81005	BOLT	1	1002678-UP
17		07095-20523	CUSHION	2	1002678-UP
18		04434-53211	CLIP	2	1002678-UP
19		01010-81025	BOLT	1	1002678-UP
20		01580-11008	NUT	1	1002678-UP
21		01640-21016	WASHER	1	1002678-UP
22		6150-71-8630	TUBE	1	1002678-UP
23		07005-01412	GASKET (K2)	2	1002678-UP
24		04434-51010	CLIP	2	1002678-UP
25		01011-81020	BOLT	2	1002678-UP
26		6150-71-7130	SPACER	2	1002678-UP
27		01640-21016	WASHER	2	1002678-UP

Ref :A4110-A3G6 Page :010360

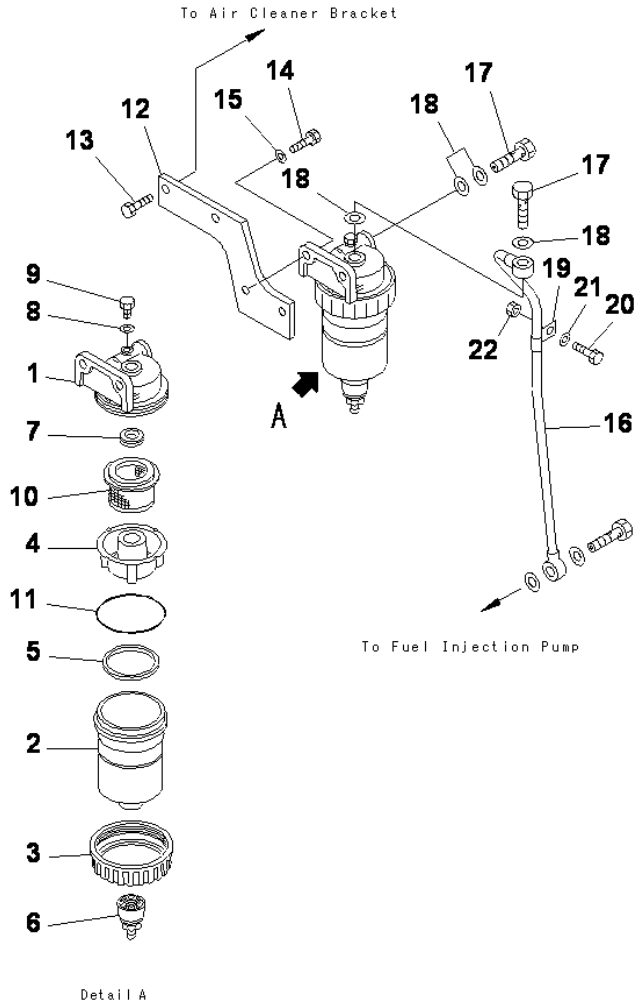

WATER SEPARATOR MOUNTING

INDEX	CD	PART NO.	DESCRIPTION	QTY	SERIAL NO.
		600-311-9732	WATER SEPARATOR A.....	1	1002678-UP
1		600-311-9912	.COVER.....	1	1002678-UP
2		600-311-9920	.CASE.....	1	1002678-UP
3		600-311-9931	.NUT.....	1	1002678-UP
4		600-311-9941	.PLATE.....	1	1002678-UP
5		600-311-9950	.RING.....	1	1002678-UP
6		600-311-9760	.PLUG.....	1	1002678-UP
7		600-311-9961	.GASKET.....	1	1002678-UP
8		07005-00812	.GASKET.....	1	1002678-UP
9		6110-73-6231	.PLUG.....	1	1002678-UP
10		600-311-9971	.SCREEN.....	1	1002678-UP
11		600-311-9490	.O-RING.....	1	1002678-UP
12		6150-71-9270	BRACKET.....	1	1002678-UP
13		01010-81025	BOLT.....	2	1002678-UP
14		01010-81025	BOLT.....	2	1002678-UP
15		01640-21016	WASHER.....	2	1002678-UP
16		6150-71-9280	TUBE.....	1	1002678-UP
17		07206-31014	JOINT.....	1	1002678-UP
18		07005-01412	GASKET.....	2	1002678-UP
19		04434-51010	CLIP.....	1	1002678-UP
20		01010-81016	BOLT.....	1	1002678-UP
21		01640-21016	WASHER.....	1	1002678-UP
22		01580-11008	NUT.....	1	1002678-UP

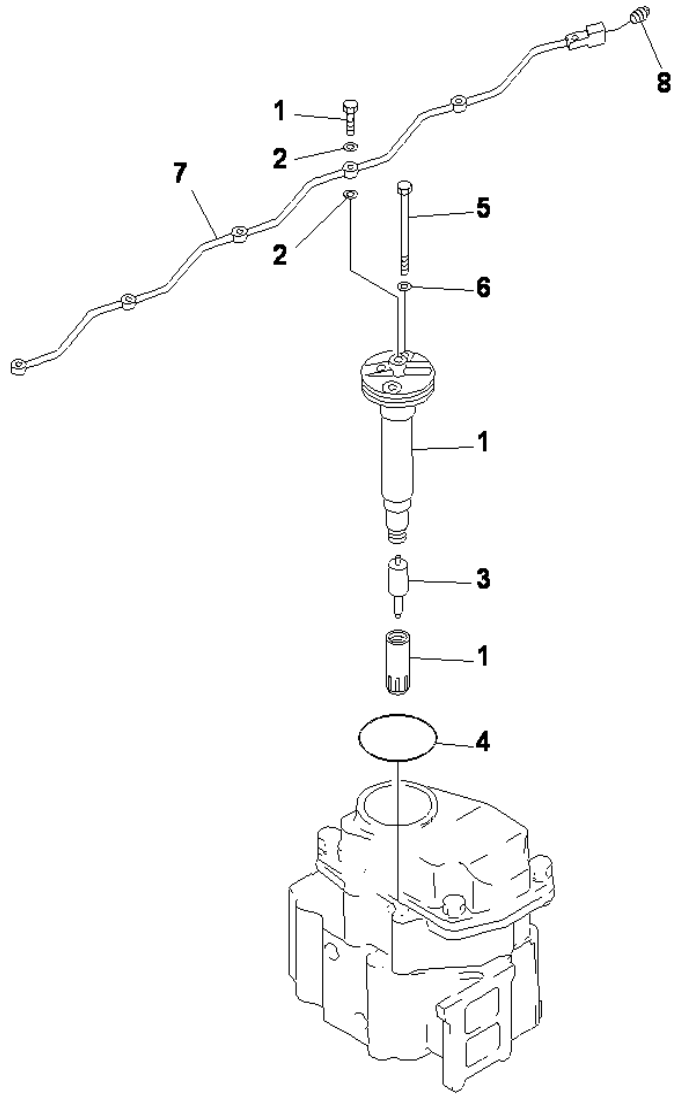

S6D125-2 S/N 1002678-UP

INJECTION NOZZLE

INDEX	CD	PART NO.	DESCRIPTION	QTY	SERIAL NO.
		6151-12-3100	NOZZLE HOLDER ASS'Y.....	6	1002678-UP
1		6151-12-3110	.HOLDER ASS'Y.....	1	1002678-UP
2		07005-00812	..GASKET (K1).....	2	1002678-UP
3		6151-12-3120	.NOZZLE.....	1	1002678-UP
4		07000-65065	.O-RING (K1).....	6	1002678-UP
5		01011-81045	BOLT.....	12	1002678-UP
6		07005-01012	GASKET (K1).....	12	1002678-UP
7		6150-71-5330	TUBE, SPILL.....	1	1002678-UP
8		07042-00108	PLUG.....	1	1002678-UP

Ref :A4210-A3C2 Page :010380

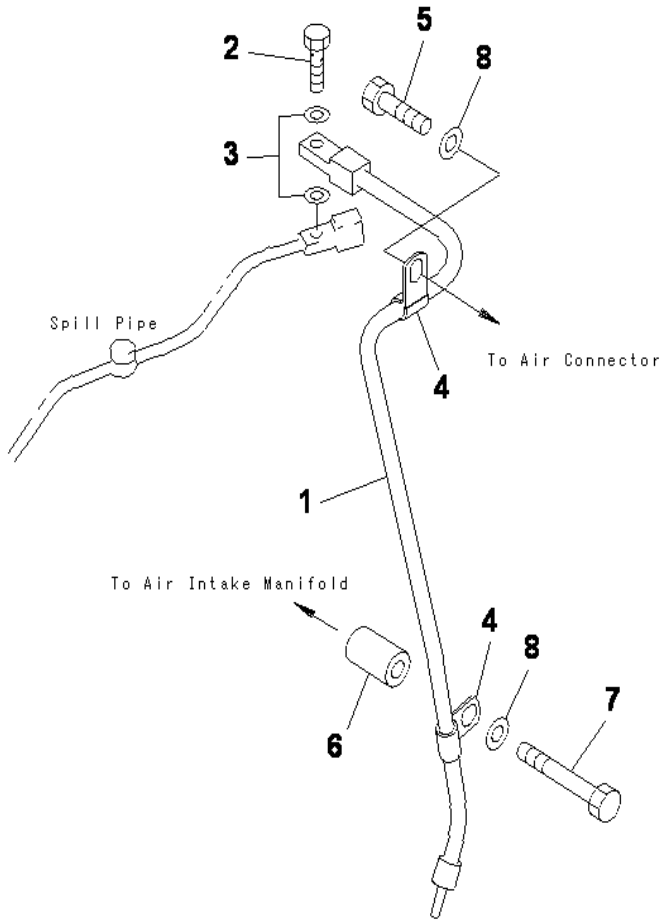

S6D125-2 S/N 1002678-UP

FUEL RETURN

INDEX	CD	PART NO.	DESCRIPTION	QTY	SERIAL NO.
1		6150-72-8640	TUBE, OVER FLOW.....	1	1002678-UP
2		6136-71-5350	BOLT, JOINT.....	1	1002678-UP
3		07005-00812	GASKET (K1).....	2	1002678-UP
4		04434-51010	CLIP.....	2	1002678-UP
5		01010-81016	BOLT.....	1	1002678-UP
6		6150-81-6920	SPACER.....	1	1002678-UP
7		01010-81070	BOLT.....	1	1002678-UP
8		01640-21016	WASHER.....	2	1002678-UP

Ref :A4230-A3F1 Page :010390

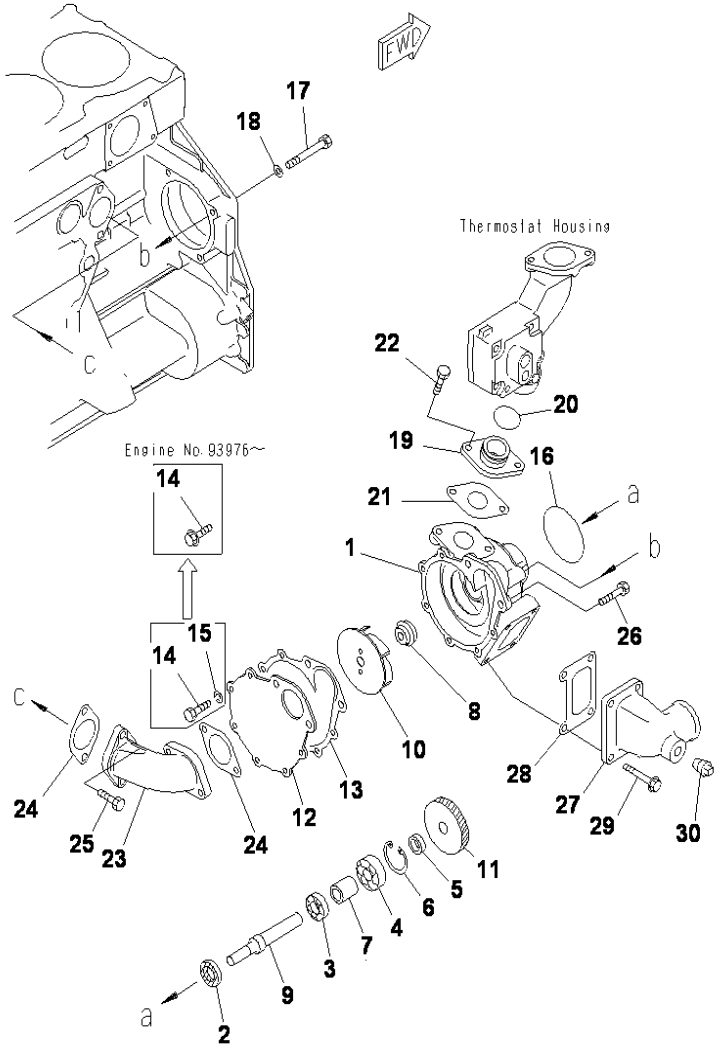

WATER PUMP

INDEX	CD	PART NO.	DESCRIPTION	QTY	SERIAL NO.
		6151-62-1101	WATER PUMP ASS'Y	1	1002678-UP
1	C1	(6151-62-1110)	.BODY	1	1002678-UP
2		6150-61-1510	.SEAL (K6)	1	1002678-UP
3		06030-06004	.BEARING	1	1002678-UP
4		06030-06304	.BEARING	1	1002678-UP
5		6150-61-1350	.SPACER	1	1002678-UP
6		04065-05220	.RING	1	1002678-UP
7		6151-61-1360	.SPACER	1	1002678-UP
8		6211-61-1533	.SEAL, WATER (K6)	1	1002678-UP
9		6151-62-1310	.SHAFT	1	1002678-UP
10		6151-61-1210	.IMPELLER	1	1002678-UP
11		6150-61-1410	.GEAR	1	1002678-UP
12		6151-61-1151	.COVER	1	1002678-UP
13		6151-61-1162	.GASKET (K6)	1	1002678-UP
14		01435-00816	.BOLT	6	1002678-UP
15		01602-20825	.WASHER, SPRING	6	1002678-UP
16		07000-62115	O-RING (K6)	1	1002678-UP
17		01011-81010	BOLT	3	1002678-UP
18		01640-21016	WASHER	3	1002678-UP
19		6150-62-6510	CONNECTOR	1	1002678-UP
20		02893-05037	O-RING (K6)	1	1002678-UP
21		6150-61-1821	GASKET (K6)	1	1002678-UP
22		01010-81020	BOLT	2	1002678-UP
23		6151-61-6311	CONNECTOR	1	1002678-UP
24		6150-61-1821	GASKET (K6)	2	1002678-UP
25		01010-81030	BOLT	2	1002678-UP
26		01010-81035	BOLT	2	1002678-UP
27		6150-61-6780	CONNECTOR	1	1002678-UP
28		6150-61-6911	GASKET (K6)	1	1002678-UP
29		01437-01025	BOLT	4	1002678-UP
30		07042-00415	PLUG	1	1002678-UP

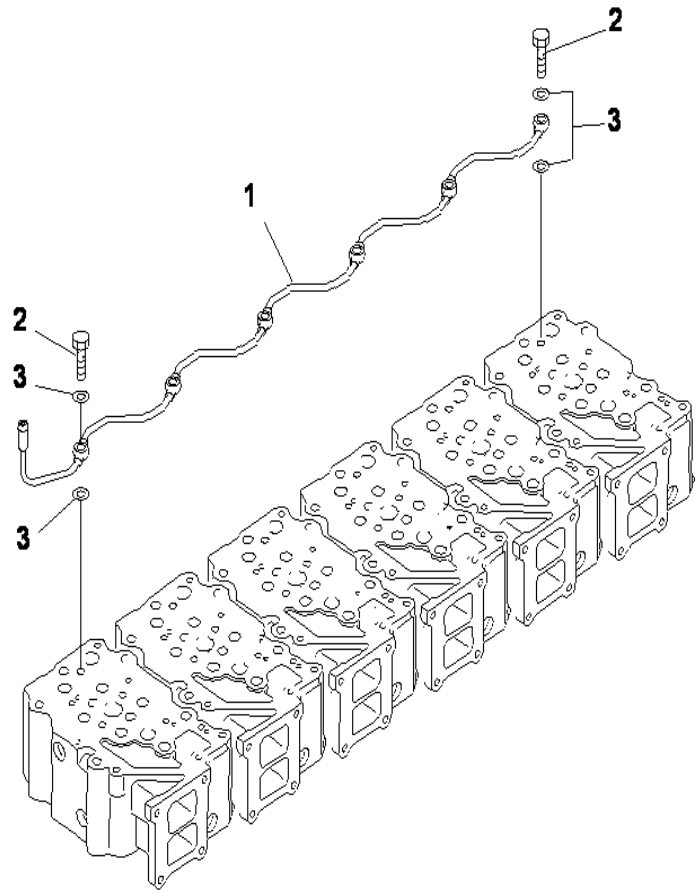

S6D125-2 S/N 1002678-UP

AIR VENT

INDEX	CD	PART NO.	DESCRIPTION	QTY	SERIAL NO.
1		6150-12-6460	TUBE.....	1	1002678-UP
2		07206-30710	BOLT, JOINT.....	6	1002678-UP
3		07005-01012	GASKET (K1).....	12	1002678-UP

Ref :A5010-B3F1 Page :010410

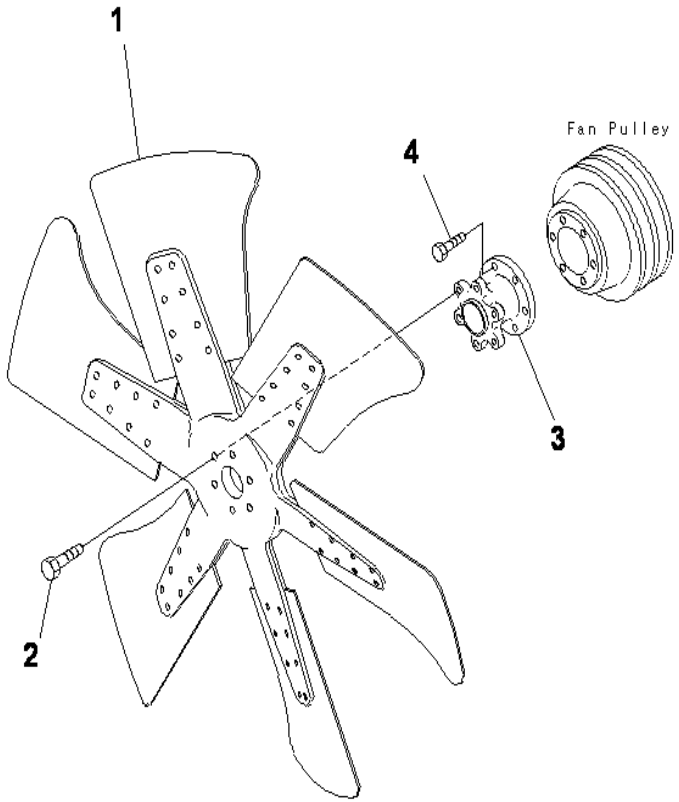

S6D125-2 S/N 1002678-UP

COOLING FAN

INDEX	CD	PART NO.	DESCRIPTION	QTY	SERIAL NO.
1		600-633-7850	FAN, COOLING.....	1	1002678-UP
2		01010-81030	BOLT.....	6	1002678-UP
3		6151-61-3720	SPACER.....	1	1002678-UP
4		01010-81040	BOLT.....	6	1002678-UP

Ref :A5030-A3E3 Page :010420

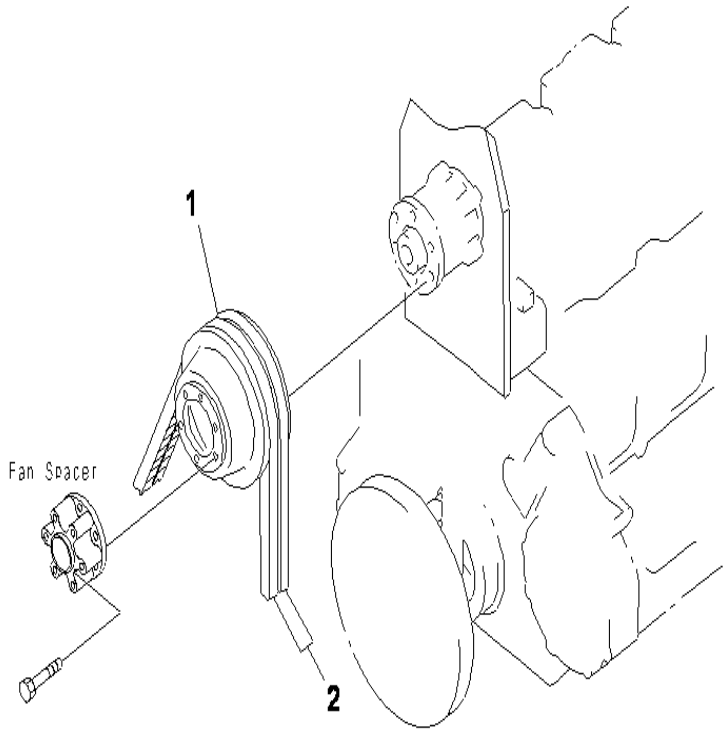

S6D125-2 S/N 1002678-UP

FAN PULLEY (NON HARDENING PULLEY)

INDEX	CD	PART NO.	DESCRIPTION	QTY	SERIAL NO.
1		6151-61-3321	PULLEY, NON HARDENING.....	1	1002678-UP
2		04121-22271	V-BELT SET.....	1	1002678-UP

Ref :A5050-A3H8 Page :010430

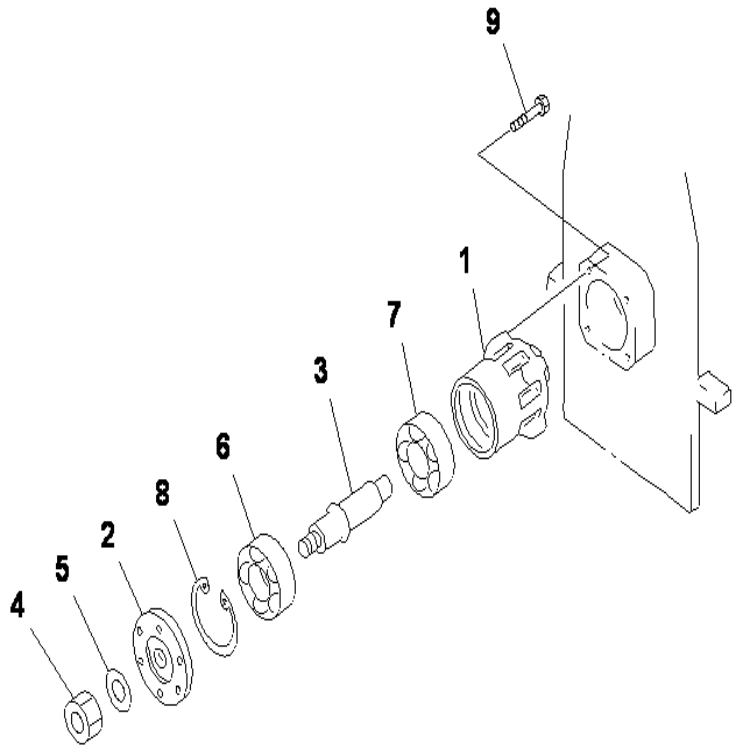

S6D125-2 S/N 1002678-UP

FAN DRIVE

INDEX	CD	PART NO.	DESCRIPTION	QTY	SERIAL NO.
		6151-61-3201	CASE ASSY.....	1	1002678-UP
1		6151-61-3152	.CASE.....	1	1002678-UP
2		6151-61-3120	.HUB.....	1	1002678-UP
3		6151-61-3170	.SHAFT.....	1	1002678-UP
4		01583-02414	.NUT.....	1	1002678-UP
5		01643-32460	.WASHER.....	1	1002678-UP
6		06037-06307	.BEARING, BALL.....	1	1002678-UP
7		06037-06206	.BEARING, BALL.....	1	1002678-UP
8		04065-08025	.RING, SNAP.....	1	1002678-UP
9		01010-51065	BOLT.....	4	1002678-UP

Ref :A5060-A3D9 Page :010440

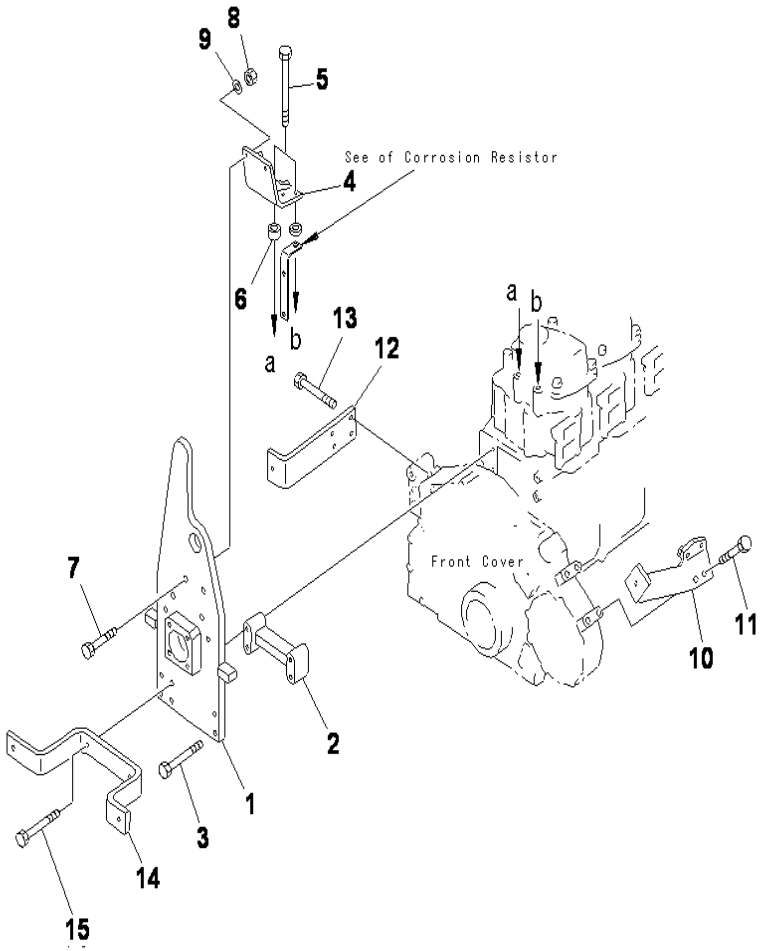

S6D125-2 S/N 1002678-UP

FAN GUARD (1/2)

INDEX	CD	PART NO.	DESCRIPTION	QTY	SERIAL NO.
1		6150-62-3810	BRACKET	1	1002678-UP
2		6150-61-3510	SPACER	1	1002678-UP
3		01010-81080	BOLT	2	1002678-UP
4		6150-61-3820	BRACKET	1	1002678-UP
5		01010-81095	BOLT	2	1002678-UP
6		6131-12-5920	SPACER	1	1002678-UP
7		01010-81040	BOLT	2	1002678-UP
8		01580-11008	NUT	2	1002678-UP
9		01643-31032	WASHER	2	1002678-UP
10		6150-62-3770	BRACKET	1	1002678-UP
11		01010-81030	BOLT	2	1002678-UP
12		6150-62-3780	BRACKET	1	1002678-UP
13		01010-81070	BOLT	4	1002678-UP
14		6150-62-3880	BRACKET	1	1002678-UP
15		01010-81090	BOLT	2	1002678-UP

Ref :A5060-B3D9 Page :010450

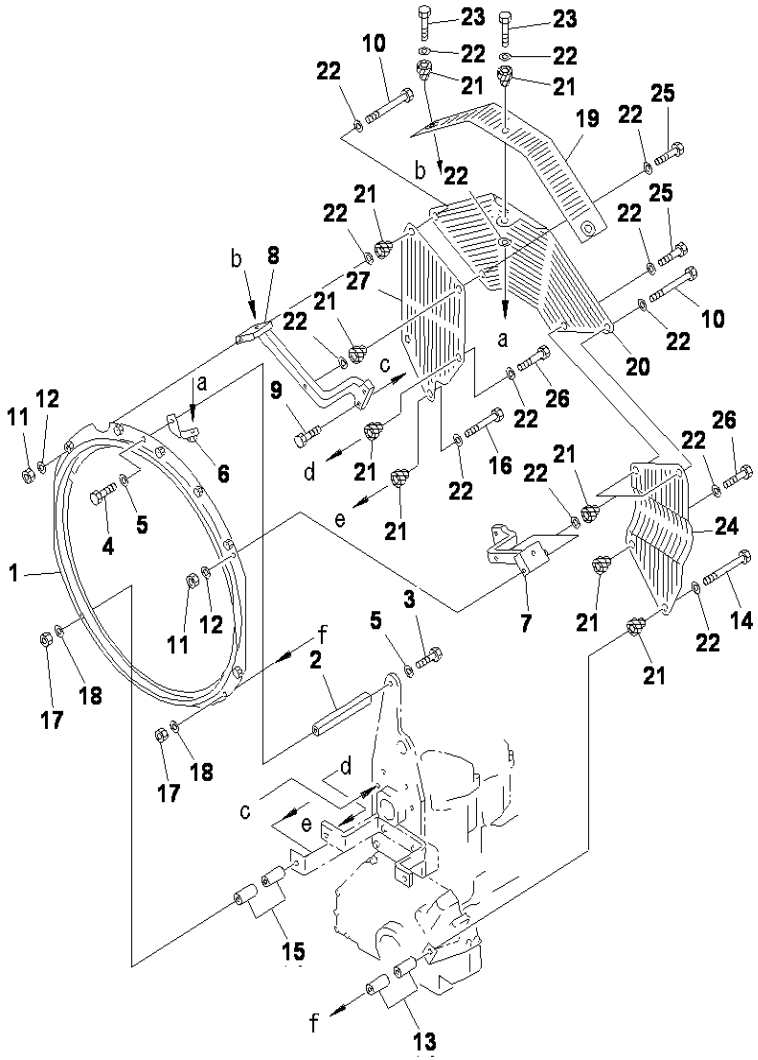

S6D125-2 S/N 1002678-UP

FAN GUARD (2/2)

INDEX	CD	PART NO.	DESCRIPTION	QTY	SERIAL NO.
1		6150-61-3710	SHROUD	1	1002678-UP
2		6150-62-3750	STAY	1	1002678-UP
3		01010-81035	BOLT	1	1002678-UP
4		01010-81030	BOLT	1	1002678-UP
5		01643-31032	WASHER	2	1002678-UP
6		6150-62-3920	BRACKET	1	1002678-UP
7		6150-62-3760	BRACKET	1	1002678-UP
8		6150-62-3860	BRACKET	1	1002678-UP
9		01010-81035	BOLT	4	1002678-UP
10		01011-81055	BOLT	2	1002678-UP
11		01580-11008	NUT	2	1002678-UP
12		01643-31032	WASHER	2	1002678-UP
13		6150-81-6920	SPACER	2	1002678-UP
14		01011-81035	BOLT	1	1002678-UP
15		6152-51-5520	SPACER	2	1002678-UP
16		01011-81060	BOLT	1	1002678-UP
17		01580-11008	NUT	2	1002678-UP
18		01643-31032	WASHER	2	1002678-UP
19		6150-62-3720	GUARD	1	1002678-UP
20		6150-62-3930	GUARD	1	1002678-UP
21		195-03-41380	CUSHION	11	1002678-UP
22		6130-32-9170	PLATE	16	1002678-UP
23		01010-81045	BOLT	3	1002678-UP
24		6150-62-3740	GUARD	1	1002678-UP
25		01010-81045	BOLT	2	1002678-UP
26		01010-81050	BOLT	2	1002678-UP
27		6150-62-3830	GUARD	1	1002678-UP

Ref :A5060-C3D9 Page :010460

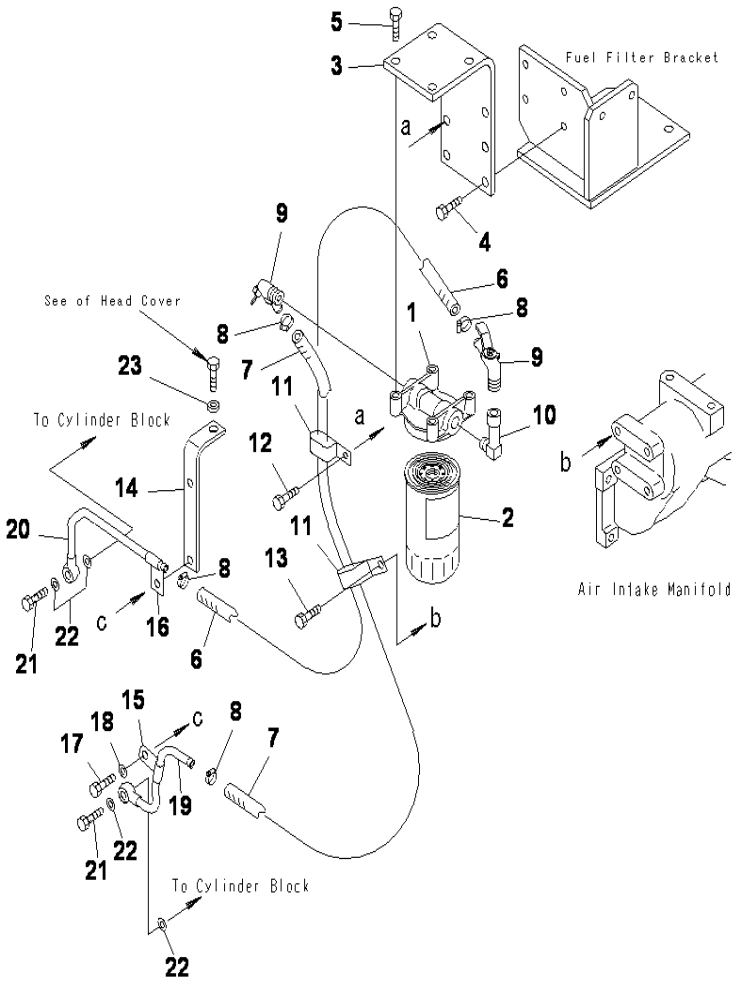

S6D125-2 S/N 1002678-UP

CORROSION RESISTER

INDEX	CD	PART NO.	DESCRIPTION	QTY	SERIAL NO.
		6150-61-8172	RESISTOR ASS'Y, CORROSION.....	1	1002678-UP
1		6150-61-8211	.HEAD.....	1	1002678-UP
2		600-411-1151	.CARTRIDGE.....	1	1002678-UP
3		6150-62-8250	BRACKET.....	1	1002678-UP
4		01010-81020	BOLT.....	3	1002678-UP
5		02010-70625	BOLT.....	4	1002678-UP
6		0726020971	HOSE.....	1	1002678-UP
7		07260-20950	HOSE.....	1	1002678-UP
8		07281-00197	CLAMP.....	4	1002678-UP
9		6150-61-8411	VALVE, WATER.....	2	1002678-UP
10		6127-61-8330	ELBOW.....	1	1002678-UP
11		6128-71-5911	CLIP.....	2	1002678-UP
12		01010-81025	BOLT.....	1	1002678-UP
13		01010-81016	BOLT.....	1	1002678-UP
14		6150-62-8230	BRACKET.....	1	1002678-UP
15		6130-71-5680	CLIP.....	1	1002678-UP
16		6162-13-5960	CLAMP.....	1	1002678-UP
17		01010-81016	BOLT.....	1	1002678-UP
18		01640-21016	WASHER.....	1	1002678-UP
19		6150-62-8210	TUBE.....	1	1002678-UP
20		6150-62-8220	TUBE.....	1	1002678-UP
21		07206-31014	BOLT.....	2	1002678-UP
22		07005-01412	GASKET (K2).....	4	1002678-UP
23		6691-21-6360	PLATE.....	1	1002678-UP

Ref :A5210-A3C8 Page :010470

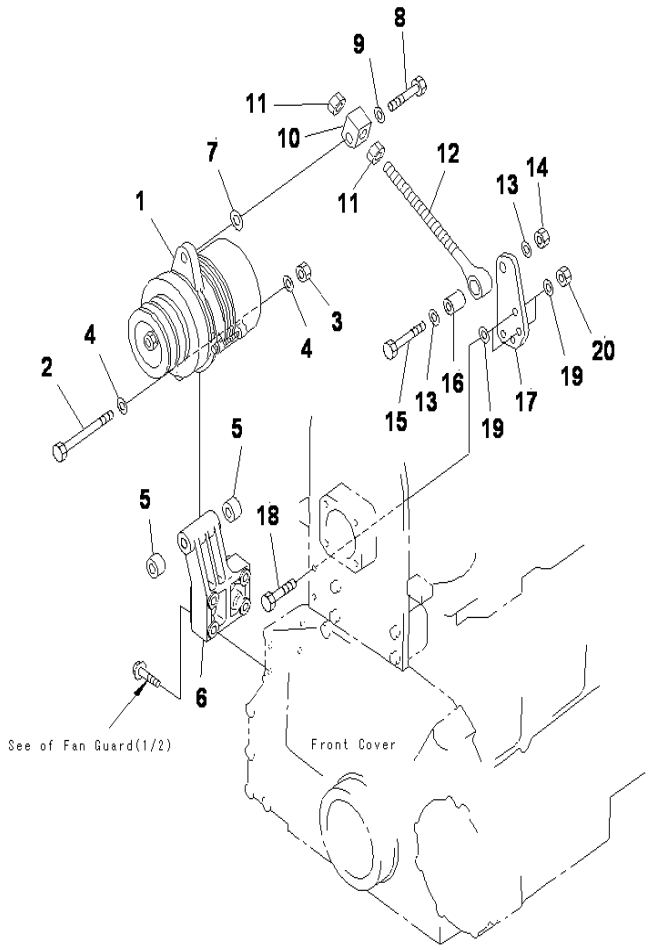

S6D125-2 S/N 1002678-UP

ALTERNATER MOUNTING (35A)(WITH NON HARDENING PULLEY)

INDEX	CD	PART NO.	DESCRIPTION	QTY	SERIAL NO.
1		600-825-3151	ALTERNATOR A. (35A)	1	1002678-UP
2		6128-21-6780	BOLT	1	1002678-UP
3		02205-10812	NUT	1	1002678-UP
4		01640-21323	WASHER	2	1002678-UP
5		560-43-12470	SPACER	2	1002678-UP
6		6150-81-6470	BRACKET	1	1002678-UP
7		01643-31445	WASHER	1	1002678-UP
8		01050-31255	BOLT	1	1002678-UP
9		01640-21223	WASHER	1	1002678-UP
10		6150-82-8690	PLATE	1	1002678-UP
11		01580-11411	NUT	2	1002678-UP
12		6150-82-8610	ROD	1	1002678-UP
13		01643-31232	WASHER	2	1002678-UP
14		01580-11210	NUT	1	1002678-UP
15		01010-51255	BOLT	1	1002678-UP
16		6215-81-6150	PIN	1	1002678-UP
17		6150-82-8650	PLATE	1	1002678-UP
18		01010-81045	BOLT	2	1002678-UP
19		01643-31032	WASHER	4	1002678-UP
20		01580-01008	NUT	2	1002678-UP

Ref :A6010-A3J4 Page :010480

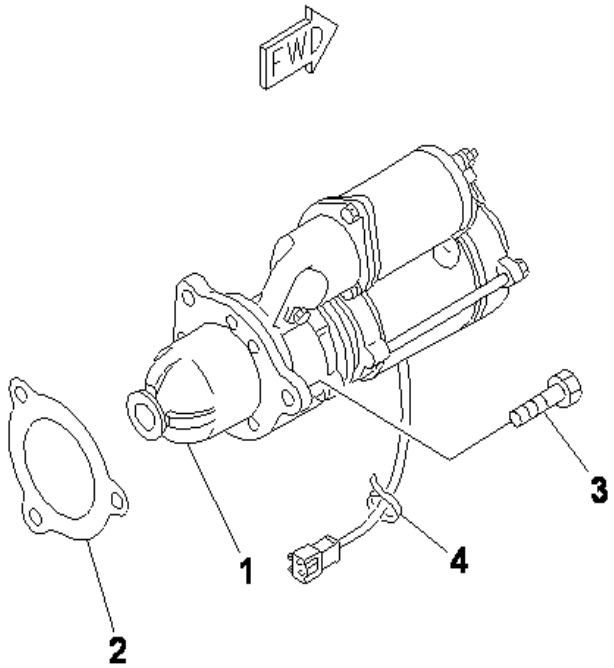

S6D125-2 S/N 1002678-UP

STARTING MOTOR MOUNTING (7.5KW)

INDEX	CD	PART NO.	DESCRIPTION	QTY	SERIAL NO.
1		600-813-6612	STARTING MOTOR ASS'Y, (7.5KW).....	1	1002678-UP
2		6221-81-6810	GASKET.....	1	1002678-UP
3		01010-51640	BOLT.....	3	1002678-UP
4		08034-00519	BAND.....	1	1002678-UP

Ref :A6210-A3D8 Page :010490

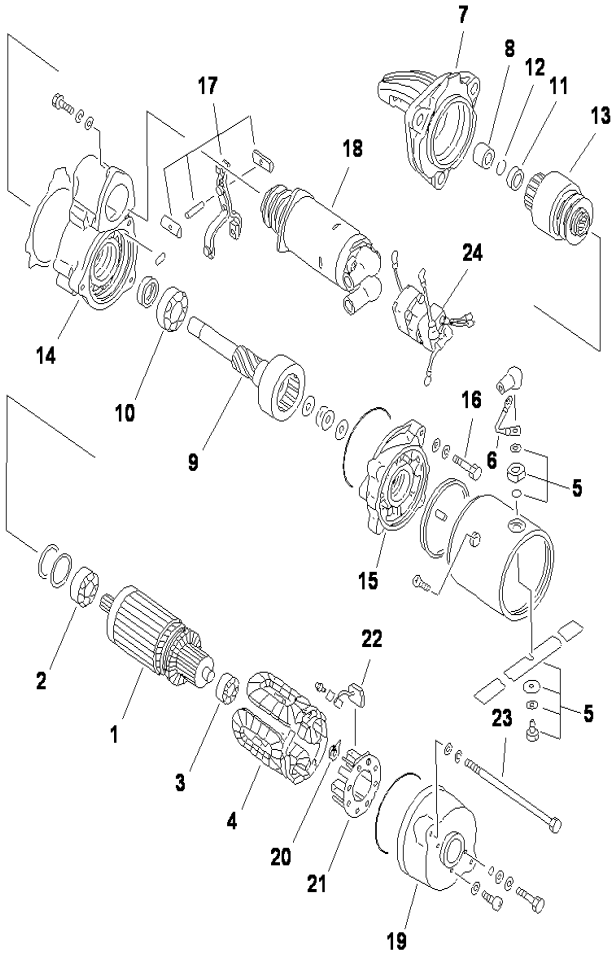

S6D125-2 S/N 1002678-UP

STARTING MOTOR(7.5KW)(INNER PARTS)

INDEX	CD	PART NO.	DESCRIPTION	QTY	SERIAL NO.
		600-813-6612	STARTING MOTOR ASS'Y, (7.5KW).....	1	1002678-UP
			THE NIKKO DENKI PART IS THAT KD.....		
			IS REMOVED FROM KOMATSU PART NUMBER.....		
			LISTED BELOW.....		
1		KD0-23100-0251	.ARMATURE ASS'Y.....	1	1002678-UP
2		KD1-0454-62047	..BEARING, BALL, FRONT.....	1	1002678-UP
3		KD1-0454-62007	..BEARING, BALL, REAR.....	1	1002678-UP
4		KD0-23230-0281	.FIELD COIL ASS'Y.....	1	1002678-UP
5		KD1-23785-0060	.LEAD WIRE ASS'Y.....	1	1002678-UP
6		KD7-23780-0200	.TERMINAL ASS'Y.....	1	1002678-UP
7		KD0-23310-0860	.BRACKET, FRONT.....	1	1002678-UP
8		KD7-23351-0080	..METAL.....	1	1002678-UP
9		KD7-23120-0310	.SHAFT ASS'Y.....	1	1002678-UP
10		KD1-0454-60067	..BEARING, BALL.....	1	1002678-UP
11		KD1-23181-0020	.STOPPER, PINION.....	1	1002678-UP
12		KD1-23914-0020	.RING, CLIP.....	1	1002678-UP
13		KD1-23500-0170	.CLUTCH ASS'Y, OVER RUNNING.....	1	1002678-UP
14		KD0-23600-0250	.CENTER BRACKET A.....	1	1002678-UP
15		KD0-23611-0690	.BRACKET, CENTER.....	1	1002678-UP
16		KD1-0240-08405	.BOLT.....	3	1002678-UP
17		KD7-23320-0060	.SHIFT LEVER ASS'Y.....	1	1002678-UP
18		KD0-47100-3940	.MAGNETIC SWITCH A.....	1	1002678-UP
		KD7-23700-0520	.REAR BRACKET ASS'Y.....	1	1002678-UP
19		KD0-23700-0130	..REAR BRACKET A.....	1	1002678-UP
20		KD1-23913-0040	..SPRING, BRUSH.....	4	1002678-UP
21		KD0-23750-0250	..BRUSH HOLDER A.....	1	1002678-UP
22		KD0-23740-0250	..BRUSH ASS'Y.....	4	1002678-UP
23		KD0-23901-0170	.BOLT.....	2	1002678-UP
24		KD0-25000-7320	.SWITCH ASS'Y.....	1	1002678-UP
		KD7-23920-0100	WASHER ASS'Y, (NOT SHOWN).....	1	1002678-UP
		KD7-09210-1560	SEAL ASS'Y, (NOT SHOWN).....	1	1002678-UP

Ref :A6210-B3A1 Page :010500

KIT See subsequent pages for details.

K-2 6153-K2-9900 CYLINDER BLOCK GASKET KIT

PDY0230

S6D125-2 S/N 1002678-UP

CYLINDER BLOCK GASKET KIT

INDEX	CD	PART NO.	DESCRIPTION	QTY	SERIAL NO.
K-2		6153-K2-9900	GASKET KIT, CYLINDER BLOCK.....	1	1002678-UP
		07000-02021	.O-RING.....	1	1002678-UP
		07000-03030	.O-RING.....	2	1002678-UP
		07000-62015	.O-RING.....	1	1002678-UP
		07000-62020	.O-RING.....	2	1002678-UP
		07000-02020	.O-RING.....	2	1002678-UP
		07000-62125	.O-RING.....	1	1002678-UP
		07000-63025	.O-RING.....	2	1002678-UP
		07000-63028	.O-RING.....	2	1002678-UP
		07000-63035	.O-RING.....	1	1002678-UP
		07000-63042	.O-RING.....	1	1002678-UP
		07000-63045	.O-RING.....	1	1002678-UP
		07002-03634	.O-RING.....	1	1002678-UP
		07002-22434	.O-RING.....	4	1002678-UP
		07002-32434	.O-RING.....	4	1002678-UP
		07002-23034	.O-RING.....	1	1002678-UP
		07005-01012	.GASKET.....	4	1002678-UP
		07005-01412	.GASKET.....	15	1002678-UP
		07005-02216	.GASKET.....	1	1002678-UP
		08034-00414	.BAND.....	3	1002678-UP
		08034-00519	.BAND.....	3	1002678-UP
		08034-00823	.BAND.....	3	1002678-UP
		6114-21-5190	.O-RING.....	1	1002678-UP
		6124-61-2181	.GROMMET.....	2	1002678-UP
		6150-21-1190	.O-RING.....	2	1002678-UP
		6150-21-2230	.O-RING.....	6	1002678-UP
		6150-21-2240	.O-RING.....	6	1002678-UP
		6150-21-2250	.SEAL.....	6	1002678-UP
		6150-21-3230	.SEAL, FRONT.....	1	1002678-UP
		6150-21-4741	.GASKET.....	1	1002678-UP
		6150-21-5812	.GASKET.....	1	1002678-UP
		6150-21-6391	.PACKING.....	9	1002678-UP
		6150-21-6450	.GASKET.....	3	1002678-UP
		6150-22-6490	.GASKET.....	1	1002678-UP
		6150-51-1710	.RING.....	1	1002678-UP
		6150-51-1720	.RING.....	1	1002678-UP
		6150-61-1821	.GASKET.....	1	1002678-UP
		6150-61-2510	.O-RING.....	2	1002678-UP
		6150-61-2540	.SEAL.....	1	1002678-UP
		6150-61-2550	.O-RING.....	1	1002678-UP
		6150-61-2562	.GASKET.....	2	1002678-UP
		6150-61-2813	.GASKET.....	1	1002678-UP
		6150-71-1910	.SEAL.....	1	1002678-UP
		6150-71-3150	.SEAL.....	1	1002678-UP
		6151-21-4160	.SEAL, REAR.....	1	1002678-UP

KIT See subsequent pages for details.

K-2 6153-K2-9900 CYLINDER BLOCK GASKET KIT

PDY0230

S6D125-2 S/N 1002678-UP

CYLINDER BLOCK GASKET KIT

INDEX	CD	PART NO.	DESCRIPTION	QTY	SERIAL NO.
		6162-73-1931	GASKET.....	1	1002678-UP
		6162-73-1960	.WASHER.....	1	1002678-UP
		6206-21-6871	.GASKET.....	1	1002678-UP
		6210-21-1971	.GASKET.....	1	1002678-UP
		6210-61-6441	.GASKET.....	1	1002678-UP

Ref :A8110-B3A9 Page :010511

KIT See subsequent pages for details.

K-6 6155-K6-9900 WATER PUMP GASKET KIT

In addition to the above gasket kit, there are other parts not included in the kit that must be ordered as individual parts.
For details of the part numbers, see the parts list.

P0Y0145

S6D125-2 S/N 1002678-UP

WATER PUMP GASKET KIT

INDEX	CD	PART NO.	DESCRIPTION	QTY	SERIAL NO.
K-6		6155-K6-9900	GASKET KIT, WATER PUMP.....	1	1002678-UP
		02893-05037	.O-RING.....	1	1002678-UP
		07000-62115	.O-RING.....	1	1002678-UP
		07000-02115	.O-RING.....	1	1002678-UP
		6150-22-6490	.GASKET.....	1	1002678-UP
		6150-61-1510	.SEAL.....	1	1002678-UP
		6150-61-1821	.GASKET.....	3	1002678-UP
		6150-61-6911	.GASKET.....	1	1002678-UP
		6151-61-1162	.GASKET.....	1	1002678-UP
		6211-61-1533	.SEAL, WATER.....	1	1002678-UP

Ref :A8110-F3A4 Page :010520

KIT See subsequent pages for details.

K-1 6154-K1-9900 CYLINDER HEAD GASKET KIT

In addition to the above gasket kit,there are other parts not included in the kit that must be ordered as individual parts.
For details of the part numbers,see the parts list.

PDY0152A

S6D125-2 S/N 1002678-UP

CYLINDER HEAD GASKET KIT

INDEX	CD	PART NO.	DESCRIPTION	QTY	SERIAL NO.
K-1		6154-K1-9900	GASKET KIT, CYLINDER HEAD.....	1	1002678-UP
		6150-41-4570	.SEAL.....	24	1002678-UP
		6151-12-1810	.GASKET.....	6	1002678-UP
		6150-11-8810	.GASKET.....	6	1002678-UP
		6150-11-8820	.RUBBER.....	24	1002678-UP
		6150-13-4810	.GASKET.....	6	1002678-UP
		6150-11-4821	.GASKET.....	2	1002678-UP
		6127-81-4823	.GASKET.....	1	1002678-UP
		6150-11-5810	.GASKET.....	6	1002678-UP
		6131-11-5170	.GASKET.....	1	1002678-UP
		07005-01412	..GASKET.....	6	1002678-UP
		6221-51-8160	.GASKET.....	1	1002678-UP
		6151-51-8721	.GASKET.....	1	1002678-UP
		6150-11-5751	.GASKET.....	1	1002678-UP
		6150-11-7812	.GASKET.....	6	1002678-UP
		07005-00812	.GASKET.....	15	1002678-UP
		07000-65065	.O-RING.....	6	1002678-UP
		07005-01012	.GASKET.....	24	1002678-UP
			THE FOLLOWING PARTS ARE NOT USED FOR.....		
			THIS MODEL.....		
1		6114-21-5190	O-RING.....	1	1002678-UP
		6151-11-5710	GASKET.....	1	1002678-UP
		07005-01412	GASKET.....	4	1002678-UP
		07005-00812	GASKET.....	11	1002678-UP
			THE FOLLOWING PARTS ARE THE PARTS NOT NOT...		
			INCLUDED IN THE GASKET KIT.....		
1		6221-51-8610	GASKET.....	1	1002678-UP

Ref :A8111-A3A8 Page :010530

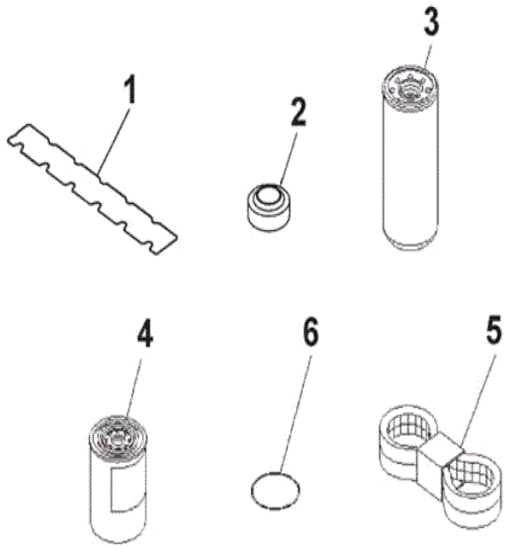

S6D125-2 S/N 1002678-UP

ENGINE SPARE PARTS

INDEX	CD	PART NO.	DESCRIPTION	QTY	SERIAL NO.
1		6150-11-8810	GASKET.....	6	1002678-UP
2		6150-11-8820	RUBBER SEAL.....	24	1002678-UP
		600-211-1231	OIL FILTER.....	1	1002678-UP
3		609-00-24461	.CARTRIDGE.....	1	1002678-UP
4		600-311-8321	CARTRIDGE, FUEL.....	1	1018963-UP
		600-311-8293	CARTRIDGE, FUEL.....	1	1002678-1018962
5		04121-22271	V-BELT.....	1	1002678-UP
6		07002-03634	O-RING.....	1	1002678-UP

Ref :A9020-A3G5 Page :010545

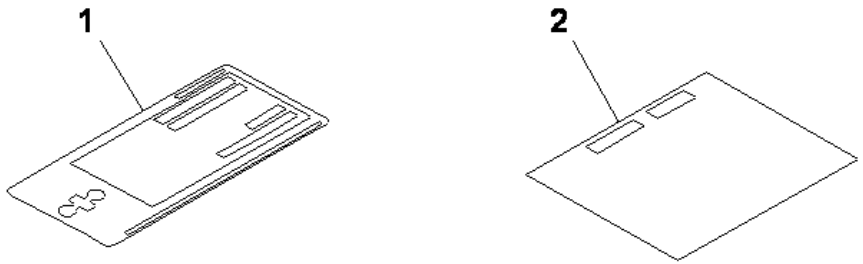

PE34670

S6D125-2 S/N 1002678-UP

NAME PLATE AND CAUTION (INDONESIAN)

INDEX	CD	PART NO.	DESCRIPTION	QTY	SERIAL NO.
1		6150-81-2190	PLATE, NAME (LIMITED SUPPLY).....	1	1002678-UP
2		09637-05161	PLATE, INSTRUCTION, AIR CLEANER.....	1	1002678-UP

Ref :A9810-A3A8 Page :010550

ENGINE RELATED PARTS

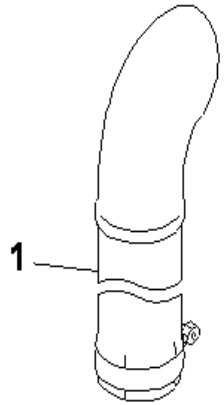

D85ESS-2 S/N J11888-UP

EXHAUST PIPE(FOR ROPS CAB AND SWEEP)

INDEX	CD	PART NO.	DESCRIPTION	QTY	SERIAL NO.
1		6150-11-5240	PIPE.....	1	J10001-UP

Ref :B0000-02A0 Page :030010

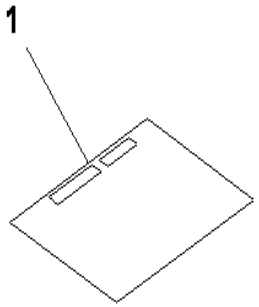

D85ESS-2 S/N J11888-UP

CAUTION PLATE(WITH TURBOCHARGER)(AIR CLEANER)

INDEX	CD	PART NO.	DESCRIPTION	QTY	SERIAL NO.
1		09637-30163	PLATE, (ENGLISH).....	1	J11888-UP
		09637-05163	PLATE, (INDONESIAN).....	1	J11888-UP

Ref :B0000-04A0 Page :030030

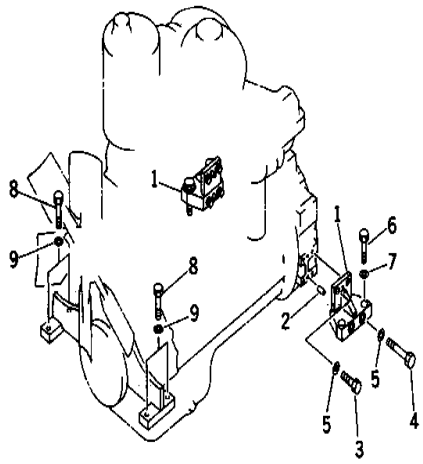

D85ESS-2 S/N J11888-UP

ENGINE MOUNTING

INDEX	CD	PART NO.	DESCRIPTION	QTY	SERIAL NO.
1		14W-01-11121	BRACKET	2	J10775-UP
		14W-01-11120	BRACKET	2	J10001-J10774
2		04020-01228	PIN	4	J10001-UP
3		01010-81645	BOLT	4	J10001-UP
4		01011-81630	BOLT	4	J10001-UP
5		01643-31645	WASHER	8	J10001-UP
6		01010-82080	BOLT	4	J10001-UP
7		01643-32060	WASHER	4	J10001-UP
8		01010-82065	BOLT	4	J10001-UP
9		01643-32060	WASHER	4	J10001-UP

Ref :B0100-01A1 Page :030040

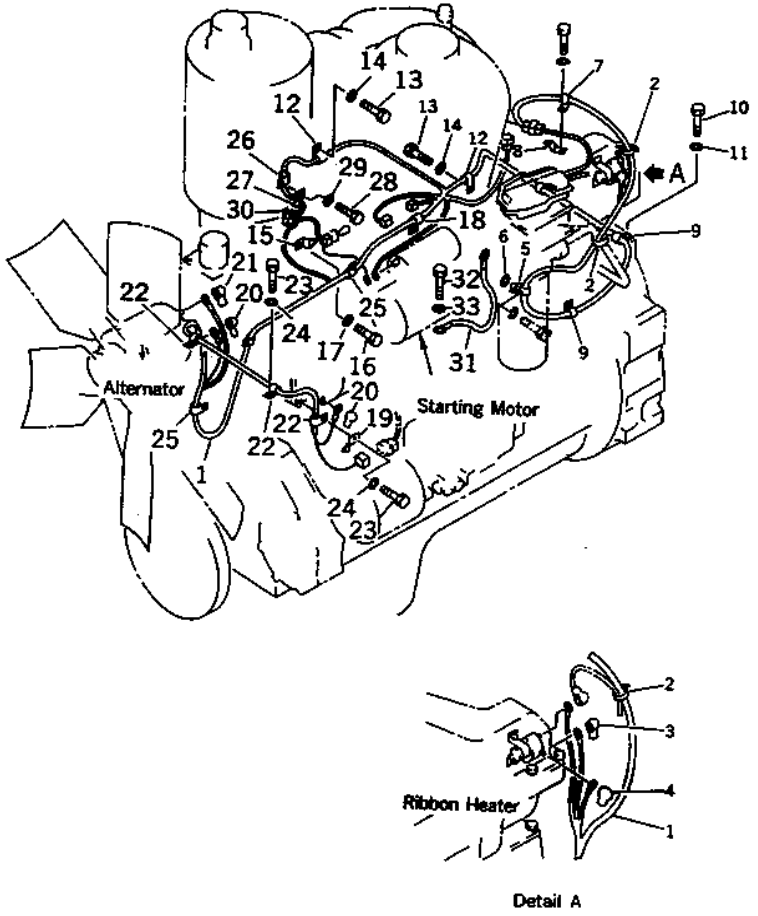

D85ESS-2 S/N J11888-UP

ENGINE WIRING

INDEX	CD	PART NO.	DESCRIPTION	QTY	SERIAL NO.
1		14X-06-J1150	WIRING HARNESS	1	J11634-UP
		14X-06-14743	.WIRING HARNESS	1	J10241-J11633
		14X-06-14181	WIRING HARNESS	1	J10001-J10240
2		08034-00519	BAND T50R	2	J10001-UP
3		08038-02027	CAP	1	J10001-UP
4		08038-00519	CAP	1	J10001-UP
5		04434-51812	CLIP	1	J14439-UP
		08036-01414	CLIP	1	J10001-J14438
6		01643-31032	WASHER	1	J10001-UP
7		04434-51812	CLIP	1	J14439-UP
		08036-01414	CLIP	1	J10001-J14438
8		08053-00910	CLIP	1	J10001-UP
9		04434-51812	CLIP	3	J14439-UP
		08036-01414	CLIP	3	J10001-J14438
10		01010-81016	BOLT	2	J10001-UP
11		01643-31032	WASHER	2	J10001-UP
12		04434-51812	CLIP	2	J14439-UP
		08036-01414	CLIP	2	J10001-J14438
13		01010-81016	BOLT	2	J10001-UP
14		01643-31032	WASHER	2	J10001-UP
15		08053-00910	CLIP	1	J10001-UP
16		01010-81016	BOLT	2	J10001-UP
17		01643-31032	WASHER	2	J10001-UP
18		08036-01214	CLIP	1	J10001-UP
19		08053-01510	CLIP	2	J10001-UP
20		08038-00519	CAP	2	J10001-UP
21		08038-00525	CAP	1	J10001-UP
22		08036-01214	CLIP	3	J10001-UP
23		01010-81016	BOLT	2	J10001-UP
24		01643-31032	WASHER	1	J10001-UP
25		08036-01414	CLIP	3	J10001-UP
26		08036-01414	CLIP	1	J11264-UP
		08036-01414	CLIP	2	J10001-J11263
27		08053-00910	CLIP	1	J10001-UP
28		01010-81016	BOLT	1	J10001-UP
29		01643-31032	WASHER	2	J10001-UP
30		08034-00536	BAND T50L	1	J10001-UP
31		08028-44050	WIRE	1	J10001-UP
32		01010-81016	BOLT	2	J10001-UP
33		01643-31032	WASHER	2	J10001-UP

Ref :B0500-01A0 Page :030050

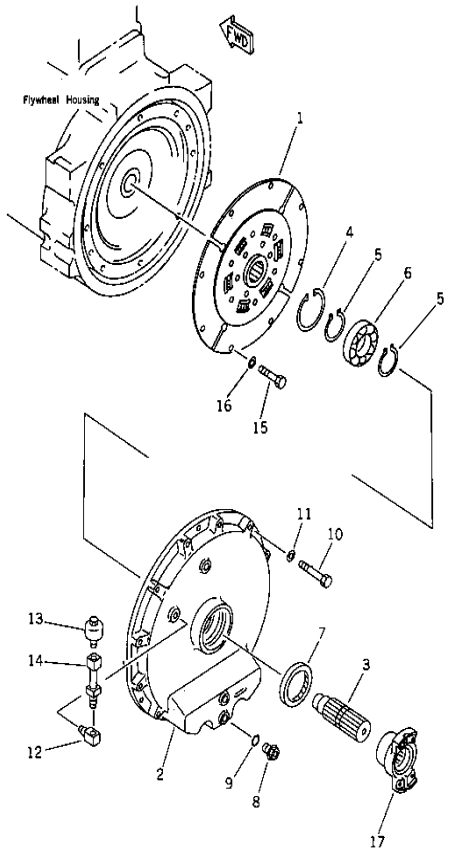

D85ESS-2 S/N J11888-UP

DAMPER

INDEX	CD	PART NO.	DESCRIPTION	QTY	SERIAL NO.
1		14X-12-11102	DISK ASS'Y	1	J10241-UP
		14X-12-11100	DISK ASS'Y	1	J10001-J10240
2		14X-12-11210	COVER	1	J10001-UP
3		14X-12-11411	SHAFT	1	J10001-UP
4		04065-01104	RING	1	J10001-UP
5		04064-06020	RING	2	J10001-UP
6		06000-06212	BRG(6212)	1	J10001-UP
7		07012-50085	SEAL	1	J10001-UP
8		07044-12412	PLUG	3	J10001-UP
9		07002-32434	O-RING	3	J10001-UP
10		01010-81250	BOLT	12	J10001-UP
11		01643-31232	WASHER	12	J10001-UP
12		568-15-11610	ELBOW	1	J10001-UP
13		07030-10252	BREATHER	1	J10001-UP
14		135-12-31230	TUBE	1	J10001-UP
15		01010-81225	BOLT	8	J10001-UP
16		01643-31232	WASHER	8	J10001-UP
17		14X-12-11311	COUPLING	1	J10241-UP
		14X-12-11310	COUPLING	1	J10001-J10240

Ref :B0600-01A1 Page :030060

COOLING SYSTEM

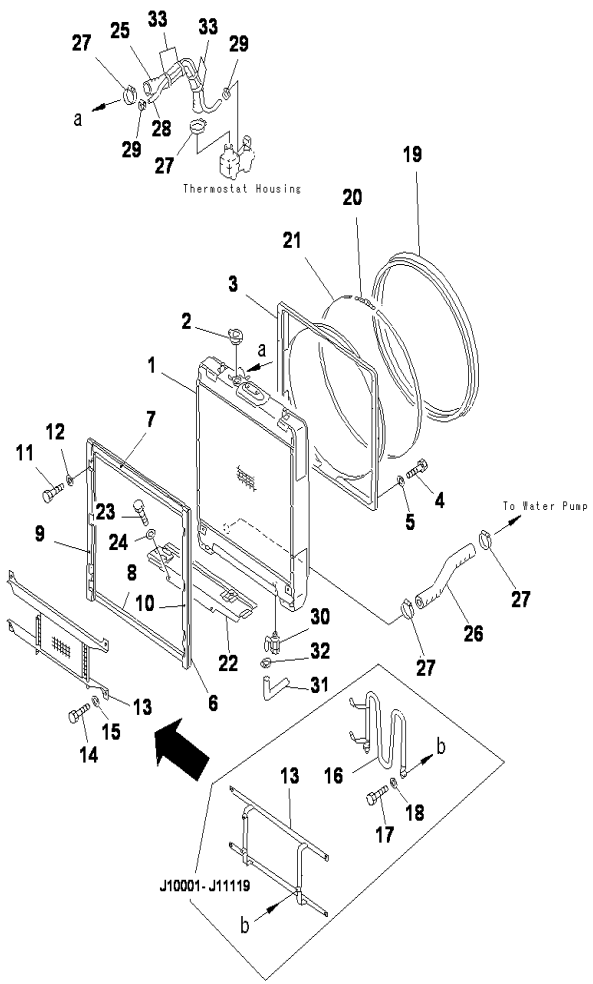

D85ESS-2 S/N J11888-UP

COOLING (RADIATOR AND OIL COOLER)

INDEX	CD	PART NO.	DESCRIPTION	QTY	SERIAL NO.
1		14X-03-11215	RADIATOR ASS'Y	1	J13829-UP
		14X-03-11214	RADIATOR ASS'Y	1	J11078-J13828
		14X-03-11213	RADIATOR ASS'Y	1	J10241-J11077
		14X-03-11211	RADIATOR ASS'Y	1	J10001-J10240
2		14X-03-11140	CAP	1	J10001-UP
3		14X-03-14212	SHROUD	1	J10001-UP
4		01010-81020	BOLT	8	J10001-UP
5		01643-31032	WASHER	8	J10001-UP
6		14X-03-16111	PLATE	1	J10001-UP
7		14X-03-16121	.SHEET	1	J10001-UP
8		14X-03-16131	.SHEET	3	J10001-UP
9		14X-03-16141	.SHEET	2	J10001-UP
10		14X-03-16151	.SHEET	2	J10001-UP
11		01010-81020	BOLT	4	J10001-UP
12		01643-31032	WASHER	4	J10001-UP
13		14Z-03-11231	OIL COOLER ASSY	1	J11264-UP
		14Z-03-11230	OIL COOLER ASSY	1	J11120-J11263
		14X-03-16111	PLATE	1	J10001-J11119
14		01010-81020	BOLT	4	J10001-UP
15		01643-31032	WASHER	4	J10001-UP
16		102-49-51190	TUBE	1	J11120-J11119
17		01010-81020	BOLT	3	J11120-J11119
18		01643-31032	WASHER	3	J10001-J11119
19		14X-03-14230	SEAL	1	J10001-UP
20		14X-03-14121	CLAMP	1	J10001-UP
21		14X-03-14220	BAND	1	J10001-UP
22		14X-03-16182	BAFFLE	1	J11120-UP
		14W-03-16181	BAFFLE	1	J10001-J11119
23		01010-81225	BOLT	2	J10001-UP
24		01643-31232	WASHER	2	J10001-UP
25		14X-03-15211	HOSE	1	J10241-UP
		14X-03-15210	HOSE	1	J10001-J10240
26		14X-03-15220	HOSE	1	J10001-UP
27		208-09-11120	CLAMP	4	J10001-UP
28		07261-20909	HOSE	1	J10001-UP
29		07280-01920	CLAMP	2	J10001-UP
30		07730-40004	VALVE	1	J10001-UP
31		07270-01520	TUBE	1	J10001-UP
32		07280-01920	CLAMP	1	J10001-UP
33		08034-00834	BAND	4	J10001-UP

Ref :C0100-01A0 Page :060010

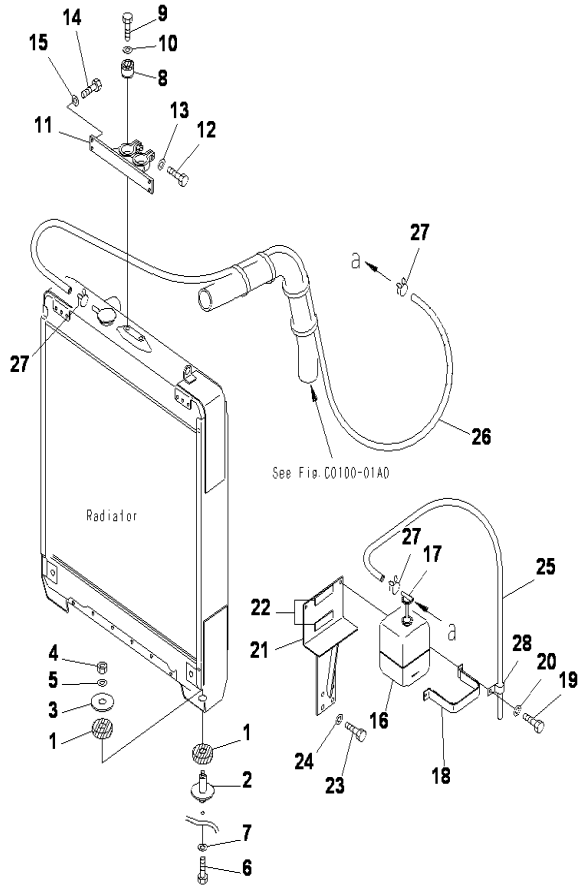

COOLING (MOUNT AND RESERVE TANK)

INDEX	CD	PART NO.	DESCRIPTION	QTY	SERIAL NO.
1		205-54-71680	CUSHION	4	J10001-UP
2		14X-03-13121	BOSS	2	J10001-UP
3		566-95-91410	PLATE	2	J10001-UP
4		01580-11411	NUT	2	J10001-UP
5		01643-31445	WASHER	2	J10001-UP
6		01010-81445	BOLT	2	J13378-UP
		01010-81455	BOLT	2	J10001-J13377
7		01643-31445	WASHER	2	J10001-UP
8		135-03-12110	DAMPER	2	J10001-UP
9		01010-81455	BOLT	2	J10001-UP
10		01643-31445	WASHER	2	J10001-UP
11		14X-03-13211	BRACKET	1	J10001-UP
12		01010-81035	BOLT	2	J10001-UP
13		01643-31032	WASHER	2	J10001-UP
14		01010-81030	BOLT	4	J10001-UP
15		01643-31032	WASHER	4	J10001-UP
16		203-03-61640	TANK	1	J10241-UP
		202-03-61110	TANK	1	J10001-J10240
17		205-03-71532	.CAP	1	J10241-UP
		205-03-71540	..PACKING	1	J10241-UP
		205-03-71531	.CAP	1	J10001-J10240
18		201-03-11361	BAND	1	J10241-UP
		203-03-56650	BRACKET	1	J10001-J10240
19		01580-10806	NUT	2	J10241-UP
		01010-80816	BOLT	2	J10001-J10240
20		01643-30823	WASHER	2	J10001-UP
21		14X-03-12112	BRACKET	1	J10241-UP
		14X-03-12111	BRACKET	1	J10001-J10240
22		205-03-71440	SHEET	2	J10001-UP
23		01010-81220	BOLT	4	J10001-UP
24		01643-31232	WASHER	4	J10001-UP
25		206-03-43331	HOSE	1	J10001-UP
26		14X-03-12130	HOSE	1	J10001-UP
27		206-03-43340	CLIP	3	J10001-UP
28		08036-10810	CLIP	1	J11888-UP

FUEL TANK AND RELATED PARTS

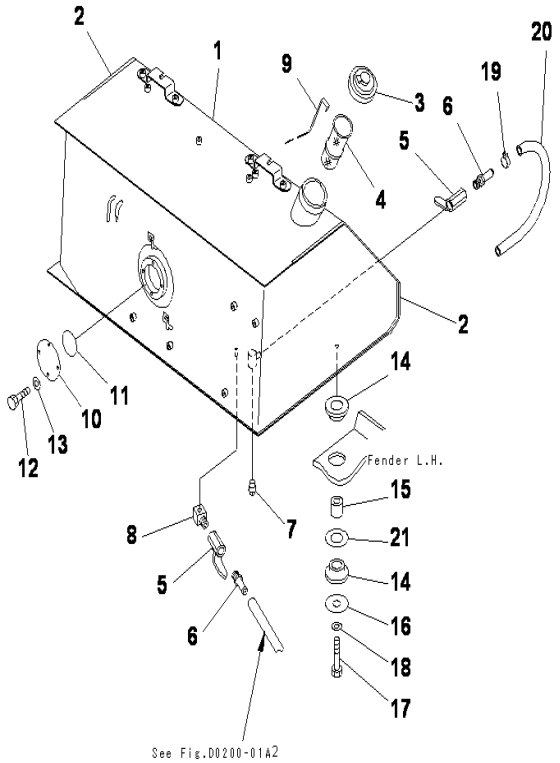

D85ESS-2 S/N J11888-UP

FUEL TANK (FOR GAUGE PANEL)

INDEX	CD	PART NO.	DESCRIPTION	QTY	SERIAL NO.
1		14X-04-11113	TANK	1	J10241-UP
		14U-04-11111	TANK	1	J10001-J10240
		01571-01016	.SEAT	9	J10241-UP
		01580-01613	.NUT	4	J10241-UP
		14X-04-11330	.JOINT	1	J10241-UP
		08036-41414	.CLIP	3	J10241-UP
		08053-01512	.CLIP	1	J10241-UP
		14X-04-11130	.FILTER	1	J10241-UP
2		14X-04-11141	.SEAL	2	J10241-UP
3		20Y-04-11161	CAP	1	J10241-UP
		20Y-04-11160	CAP	1	J10001-J10240
4		07056-18416	STRAINER	1	J10001-UP
5		07700-40240	VALVE	2	J10001-UP
6		120-04-41130	NIPPLE	2	J10001-UP
7		07042-00617	PLUG	1	J10241-UP
8		20T-04-71130	ELBOW	1	J10241-UP
9		14X-04-11151	GAUGE, FUEL	1	J10241-UP
10		14X-04-11170	COVER	1	J10241-UP
11		07000-02085	O-RING	1	J10241-UP
12		01010-81020	BOLT	4	J10241-UP
13		01643-31032	WASHER	4	J10241-UP
14		195-54-42550	CUSHION	8	J10001-UP
15		195-54-42560	BOSS	4	J10001-UP
16		14X-04-11180	PLATE	8	J10001-UP
17		01010-81680	BOLT	4	J10001-UP
18		01643-31645	WASHER	4	J10001-UP
19		07285-00115	CLIP	1	J10001-UP
20		07270-01095	TUBE	1	J10775-UP
		07270-01035	TUBE	1	J10001-J10774
21		14X-54-13350	WASHER	4	J10001-UP

Ref :D0100-01A0 Page :090010

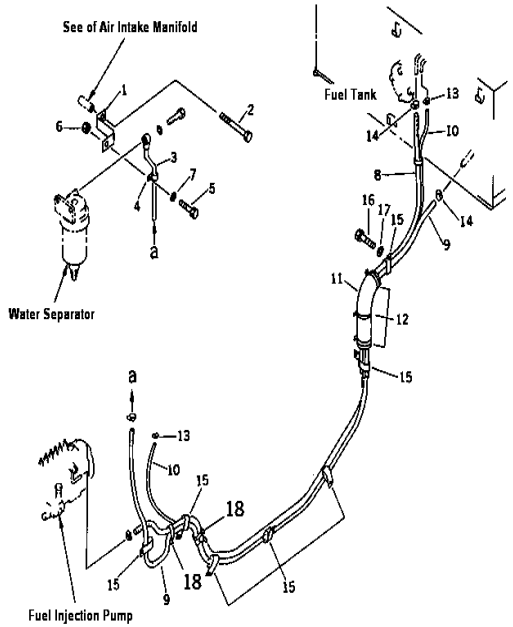

D85ESS-2 S/N J11888-UP

FUEL LINE (FOR WATER SEPARATOR)

INDEX	CD	PART NO.	DESCRIPTION	QTY	SERIAL NO.
1		14X-04-11420	PLATE	1	J10001-UP
2		01011-81010	BOLT	1	J10001-UP
3		14X-04-11410	TUBE	1	J10001-UP
		07205-21014	.JOINT	1	J10001-UP
4		04434-51010	CLIP	1	J10001-UP
5		01010-81020	BOLT	1	J10001-UP
6		01580-11008	NUT	1	J10001-UP
7		01643-31032	WASHER	1	J10001-UP
		14X-04-11510	HOSE ASS'Y	1	J10001-UP
8		14X-04-11520	.HOSE	1	J10001-UP
9		14X-04-11530	.HOSE	1	J10001-UP
10		14X-04-11540	.HOSE	1	J10001-UP
11		14Y-62-11620	COVER	1	J10001-UP
12		08034-00823	BAND	3	J10001-UP
13		07281-00130	CLIP	2	J11264-UP
		07280-01418	CLAMP	2	J10001-J11263
14		421-07-11550	CLIP	4	J11264-UP
		07281-00229	CLAMP	4	J10001-J11263
15		421-07-11550	CLIP	7	J10001-UP
16		01010-81220	BOLT	6	J10001-UP
17		01643-31232	WASHER	6	J10001-UP
18		08034-00823	BAND	2	J10001-UP

Ref :D0200-01A2 Page :090020

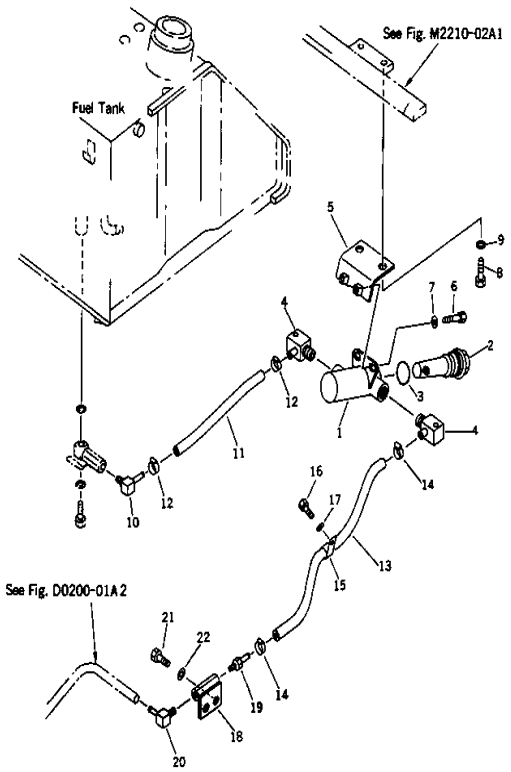

D85ESS-2 S/N J11888-UP

ADDITIONAL FUEL STRAINER

INDEX	CD	PART NO.	DESCRIPTION	QTY	SERIAL NO.
1		07058-00001	ELEMENT	1	J10722-UP
2		154-04-12531	STRAINER	1	J10722-UP
		150-04-11170	SCREEN	1	J10722-UP
		154-04-12521	CAP	1	J10722-UP
3		07002-04234	O-RING	1	J10722-UP
4		195-04-11431	ELBOW	2	J10722-UP
5		14X-04-11350	BRACKET	1	J10722-UP
		01570-00808	.NUT	2	J10722-UP
6		01010-80825	BOLT	2	J10722-UP
7		01643-30823	WASHER	2	J10722-UP
8		01010-81225	BOLT	2	J10722-UP
9		01643-31232	WASHER	2	J10722-UP
10		14X-04-11260	ELBOW	1	J10722-UP
11		142-04-13260	HOSE	1	J10722-UP
12		11Y-09-11140	CLIP	2	J11264-UP
		07281-00197	CLAMP	2	J10722-J11263
13		14X-04-11240	HOSE	1	J10722-UP
14		11Y-09-11140	CLIP	2	J11264-UP
		07281-00197	CLAMP	2	J10722-J11263
15		08036-01814	CLIP	1	J10722-UP
16		01010-81016	BOLT	1	J10722-UP
17		01643-31032	WASHER	1	J10722-UP
18		14X-04-11250	BLOCK	1	J10722-UP
19		120-04-41130	NIPPLE	1	J10722-UP
20		14X-04-11260	ELBOW	1	J10722-UP
21		01010-81225	BOLT	2	J10722-UP
22		01643-31232	WASHER	2	J10722-UP

Ref :D0210-01A0 Page :090030

ELECTRICAL SYSTEM

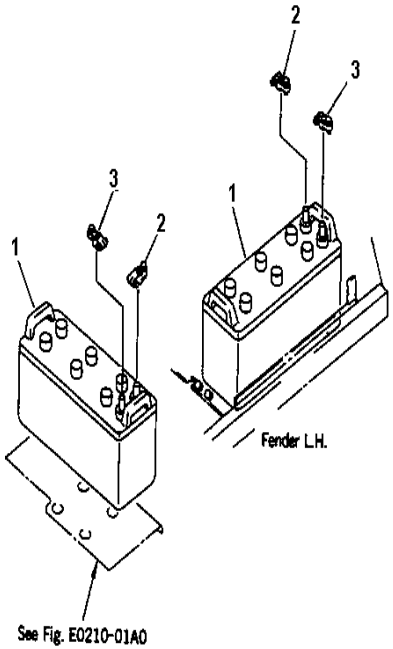

D85ESS-2 S/N J11888-UP

BATTERY

INDEX	CD	PART NO.	DESCRIPTION	QTY	SERIAL NO.
1		08000-02215	BATTERY, 12V N150.....	2	J10001-UP
2		08000-00000	.TERMINAL, (+).....	2	J10001-UP
3		08000-00001	.TERMINAL, (-).....	2	J10001-UP

Ref :E0110-01A0 Page :120010

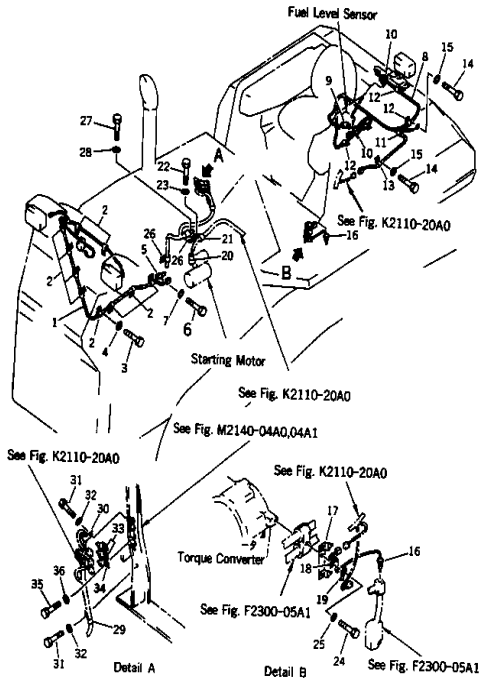

D85ESS-2 S/N J11888-UP

VEHICLE WIRING

INDEX	CD	PART NO.	DESCRIPTION	QTY	SERIAL NO.
1		14X-06-14142	WIRING HARNESS	1	J10001-UP
2		08036-01214	CLIP	10	J10001-UP
3		01010-81016	BOLT	8	J10001-UP
4		01643-31032	WASHER	8	J10001-UP
5		08053-01510	CLIP	1	J10001-UP
6		01010-81016	BOLT	1	J10001-UP
7		01643-31032	WASHER	1	J10001-UP
8		14X-06-14151	WIRING HARNESS	1	J10001-UP
9		08053-01510	CLIP	1	J10001-UP
10		08034-00414	BAND	2	J10001-UP
11		08036-11414	CLIP	1	J10001-UP
12		08036-01214	CLIP	4	J10001-UP
13		08036-01414	CLIP	1	J10001-UP
14		01010-81016	BOLT	5	J10001-UP
15		01643-31032	WASHER	5	J10001-UP
16		14X-06-12370	SENSOR, (THERMO)	1	J10778-UP
		14X-06-12180	SENSOR, (THERMO)	1	J10001-J10777
17		14X-06-14330	PLATE	1	J10001-UP
18		08036-10814	CLIP	1	J10001-UP
19		08053-01512	CLIP	1	J10001-UP
20		08038-00035	CAP	1	J10001-UP
21		08036-03014	CLIP	1	J10001-UP
22		01010-81016	BOLT	1	J10001-UP
23		01643-31032	WASHER	1	J10001-UP
24		01010-81016	BOLT	1	J10001-UP
25		01643-31032	WASHER	1	J10001-UP
26		08036-03014	CLIP	2	J10001-UP
27		01010-81016	BOLT	2	J10001-UP
28		01643-31032	WASHER	2	J10001-UP
29		08036-03014	CLIP	1	J10001-UP
30		08036-02514	CLIP	2	J10001-UP
31		01010-81025	BOLT	2	J10001-UP
32		01643-31032	WASHER	2	J10001-UP
33		08053-00910	CLIP	2	J10001-UP
34		08053-01510	CLIP	1	J10001-UP
35		01010-81016	BOLT	3	J10001-UP
36		01643-31032	WASHER	3	J10001-UP

Ref :E0200-01A1 Page :120020

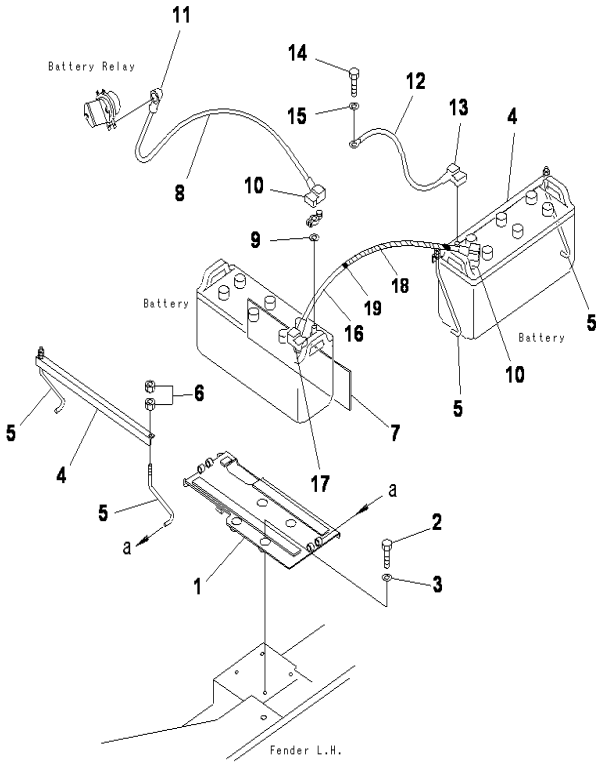

D85ESS-2 S/N J11888-UP

BATTERY WIRING

INDEX	CD	PART NO.	DESCRIPTION	QTY	SERIAL NO.
1		14X-54-13173	PLATE	1	J10001-UP
		08036-41414	.CLIP	2	J10001-UP
		09245-50060	.HOOK	1	J10001-UP
		09465-04845	.BOSS	4	J10001-UP
2		01010-81225	BOLT	4	J10001-UP
3		01643-31232	WASHER	4	J10001-UP
4		120-06-31141	HOLDER	2	J10241-UP
		14X-06-12240	HOLDER	2	J10001-J10240
5		120-06-31151	BOLT	4	J10001-UP
6		01580-11008	NUT	8	J10001-UP
7		120-06-31171	PLATE	1	J10001-UP
8		08028-64040	WIRE	1	J10241-UP
		08028-44040	WIRE	1	J10001-J10240
9		01643-31032	WASHER	1	J10001-UP
10		14X-06-12280	COVER, R.H	2	J10241-UP
		14X-06-12260	COVER, L.H	1	J10001-J10240
11		08038-00035	CAP	1	J10001-UP
12		08028-44040	WIRE	1	J10001-UP
13		14X-06-12260	COVER, L.H	1	J10001-UP
14		01010-81016	BOLT	1	J10001-UP
15		01643-31032	WASHER	1	J10001-UP
16		08028-64070	CABLE	1	J10241-UP
		08028-44070	CABLE	1	J10001-J10240
17		14X-06-12270	COVER, R.H	1	J10001-UP
18		08017-31904	CONDUIT	1	J10001-UP
19		08034-00414	BAND	2	J10001-UP

Ref :E0210-01A0 Page :120030

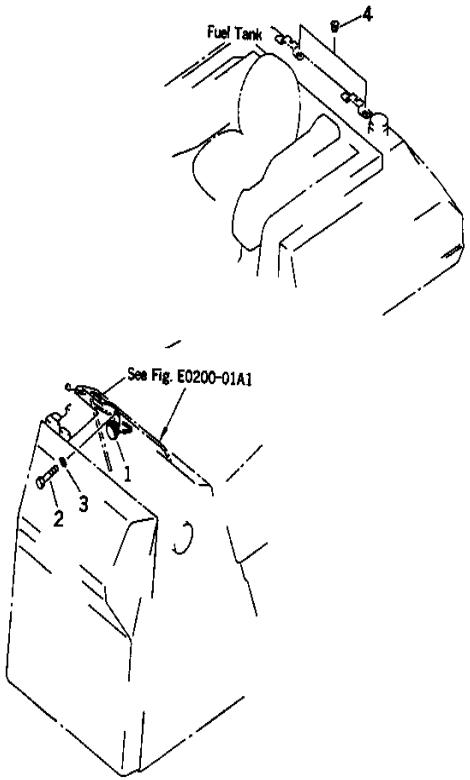

D85ESS-2 S/N J11888-UP

VEHICLE LAMP

INDEX	CD	PART NO.	DESCRIPTION	QTY	SERIAL NO.
1		08160-62420	HORN	1	J11264-UP
		20Y-06-J1120	HORN	1	J10445-J11263
		08160-62430	HORN	1	J10001-J10444
2		01010-80816	BOLT	2	J10001-UP
3		01643-30823	WASHER	2	J10001-UP
4		07049-01012	PLUG	2	J10001-UP

Ref :E0300-01A2 Page :120040

TORQUE CONV AND TRANS

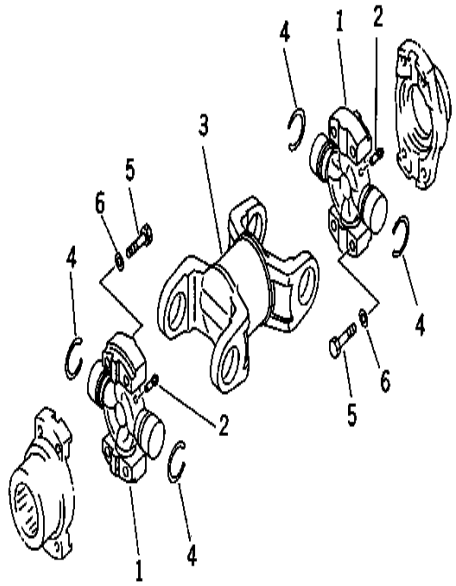

D85ESS-2 S/N J11888-UP

UNIVERSAL JOINT

INDEX	CD	PART NO.	DESCRIPTION	QTY	SERIAL NO.
		14X-11-11200	JOINT ASS'Y.....	1	J11057-UP
		14X-11-11100	JOINT ASS'Y.....	1	J10001-J11056
1		14X-11-11210	.PIN ASS'Y, CROSS.....	2	J11057-UP
		14X-11-11110	.PIN ASS'Y, CROSS.....	2	J10001-J11056
2		131-10-46181	.FITTING GREASE.....	1	J10001-UP
3		14X-11-11221	.SHAFT ASSY.....	1	J11306-UP
		14X-11-11220	.SHAFT ASS'Y.....	1	J11057-J11305
		14X-11-11120	.SHAFT ASS'Y.....	1	J10001-J11056
4		14X-11-11230	.RING,SNAP.....	2	J11057-UP
		14X-11-11130	.RING,SNAP.....	2	J10001-J11056
5		01010-81255	BOLT.....	8	J10001-UP
6		01643-51232	WASHER.....	8	J10001-UP

Ref :F2200-01A0 Page :150010

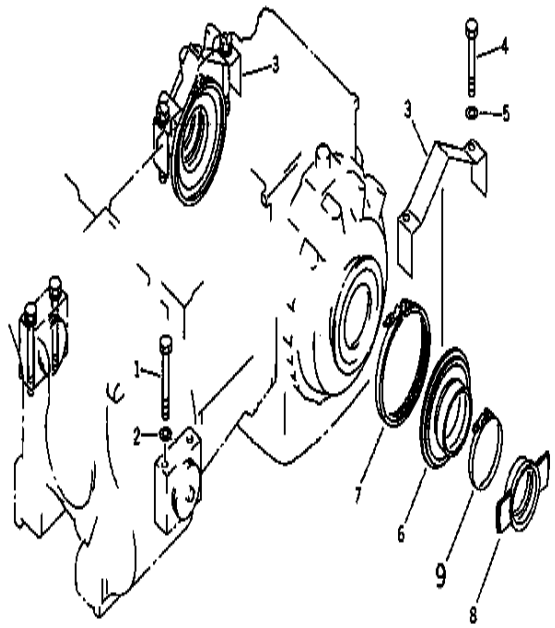

D85ESS-2 S/N J11888-UP

POWER LINE MOUNT(#J10001-J10774)

INDEX	CD	PART NO.	DESCRIPTION	QTY	SERIAL NO.
1		01011-52080	BOLT	4	J10001-J10774
2		708-27-12581	WASHER	4	J10001-J10774
3		14Y-21-13140	COVER	2	J10001-J10774
4		01011-81630	BOLT	4	J10001-J10774
5		01643-31645	WASHER	4	J10001-J10774
6		14Y-21-13160	SEAL	2	J10001-J10774
7		14Y-21-13210	COUPLING	2	J10001-J10774
		195-21-32410	.NUT	1	J10001-J10774
8		14Y-21-13171	CAGE	2	J10001-J10774
9		14Y-21-13190	CLAMP	2	J10001-J10774
		195-21-32410	.NUT	1	J10001-J10774

Ref :F2300-01A0 Page :150012

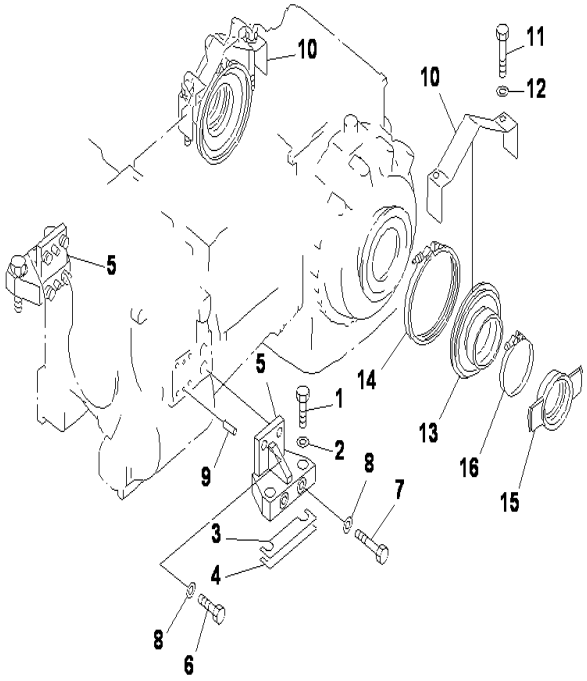

D85ESS-2 S/N J11888-UP

POWER LINE MOUNT(#J10775-UP)

INDEX	CD	PART NO.	DESCRIPTION	QTY	SERIAL NO.
1		01010-82080	BOLT	4	J10775-UP
2		708-27-12581	WASHER	4	J10775-UP
3		14X-01-11310	SHIM	2	J10775-UP
4		14X-01-11320	SHIM	1	J10775-UP
5		14W-01-11121	BRACKET	2	J10775-UP
6		01010-81645	BOLT	4	J10775-UP
7		01011-81630	BOLT	4	J10775-UP
8		01643-31645	WASHER	8	J10775-UP
9		04020-01228	PIN	4	J10775-UP
10		14Y-21-13140	COVER	2	J10775-UP
11		01011-81630	BOLT	4	J10775-UP
12		01643-31645	WASHER	4	J10775-UP
13		14Y-21-13160	SEAL	2	J10775-UP
14		14Y-21-13210	COUPLING	2	J10775-UP
		195-21-32410	.NUT	1	J10775-UP
15		14Y-21-13171	CAGE	2	J10775-UP
16		14Y-21-13190	CLAMP	2	J10775-UP
		195-21-32410	.NUT	1	J10775-UP

Ref :F2300-01A1 Page :150013

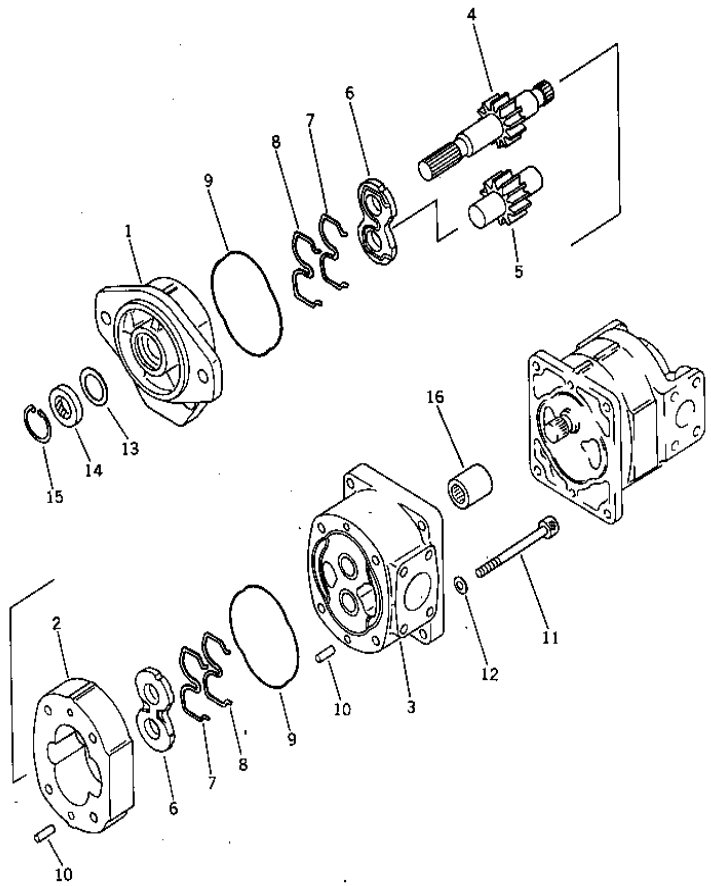

D85ESS-2 S/N J11888-UP

POWER LINE PUMP (1/2)

INDEX	CD	PART NO.	DESCRIPTION	QTY	SERIAL NO.
		705-51-20370	PUMP ASS'Y, (SAL(2)45+45).....	1	J10001-UP
			THIS ASSEMBLY CONSIST OF ALL PARTS.....		
			SHOWN IN FIGS.F2300-02A0 AND F2300-02A1.....		
		705-11-33210	.PUMP ASS'Y, (SAL(2)45).....	1	J10001-UP
1	C1	(705-17-02011)	..BRACKET ASS'Y.....	1	J10001-UP
	C1	(705-17-02353)	...BUSHING.....	2	J10001-UP
2	C1	(705-17-33012)	..CASE, GEAR.....	1	J10001-UP
3	C1	(705-17-02221)	..CARRIER.....	1	J10001-UP
	C1	(705-17-02353)	...BUSHING.....	2	J10001-UP
4	C1	(705-17-33430)	..GEAR, DRIVE.....	1	J10001-UP
5	C1	(705-17-33512)	..GEAR, DRIVEN.....	1	J10001-UP
6		705-17-02612	PLATE, SIDE.....	2	J10001-UP
7		705-17-02440	RING.....	2	J10001-UP
8		705-17-02472	RING.....	2	J10001-UP
9		705-17-02381	O-RING.....	2	J10001-UP
10		04020-01024	PIN.....	4	J10001-UP
11		01253-61210	BOLT.....	4	J10001-UP
12		01643-51232	WASHER.....	4	J10001-UP
13		705-17-02870	PLATE.....	1	J10001-UP
14		705-17-02810	SEAL, OIL.....	1	J10001-UP
15		04065-04018	RING, SNAP.....	1	J10001-UP
16		705-17-12330	COUPLING.....	1	J10001-UP

Ref :F2300-02A0 Page :150014

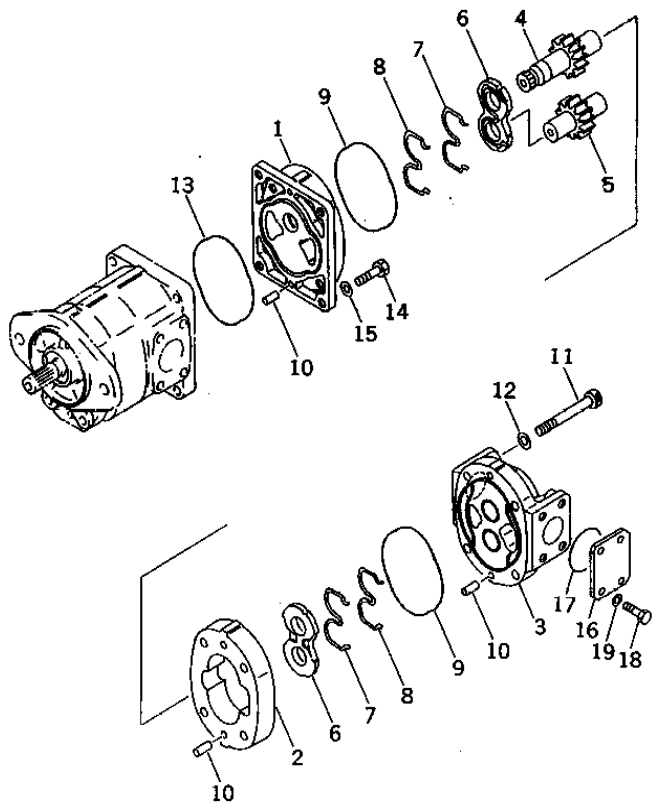

D85ESS-2 S/N J11888-UP

POWER LINE PUMP (2/2)

INDEX	CD	PART NO.	DESCRIPTION	QTY	SERIAL NO.
		(705-51-20370)	PUMP ASS'Y, (SAL(2)45+45).....	1	J10001-UP
			THIS ASSEMBLY CONSIST OF ALL PARTS.....		
			SHOWN IN FIGS. F2300-02A0 AND F2300-02A1....		
		705-11-33530	.PUMP ASS'Y, (SAL(2)45).....	1	J10001-UP
1	C1	(705-17-02510)	..BRACKET.....	1	J10001-UP
	C1	(705-17-02353)	...BUSHING.....	2	J10001-UP
2	C1	(705-17-33012)	..CASE, GEAR.....	1	J10001-UP
3	C1	(705-17-02122)	..COVER ASS'Y.....	1	J10001-UP
	C1	(705-17-02353)	...BUSHING.....	2	J10001-UP
4	C1	(705-17-33450)	..GEAR, DRIVE.....	1	J10001-UP
5	C1	(705-17-33512)	..GEAR, DRIVEN.....	1	J10001-UP
6		705-17-02612	..PLATE, SIDE.....	2	J10001-UP
7		705-17-02440	..RING, BACK-UP.....	2	J10001-UP
8		705-17-02472	..RING, SEAL.....	2	J10001-UP
9		705-17-02381	..O-RING.....	2	J10001-UP
10		04020-01024	..PIN.....	6	J10001-UP
11		01253-61200	..BOLT.....	4	J10001-UP
12		01643-51232	..WASHER.....	4	J10001-UP
13		705-17-02480	.O-RING.....	1	J10001-UP
14		01252-61035	.BOLT.....	4	J10001-UP
15		01643-51032	.WASHER.....	4	J10001-UP
16		705-17-02881	.PLATE.....	1	J10001-UP
17		07000-13038	.O-RING.....	1	J10001-UP
18		01010-81025	.BOLT.....	4	J10001-UP
19		01643-51032	.WASHER.....	4	J10001-UP

Ref :F2300-02A1 Page :150015

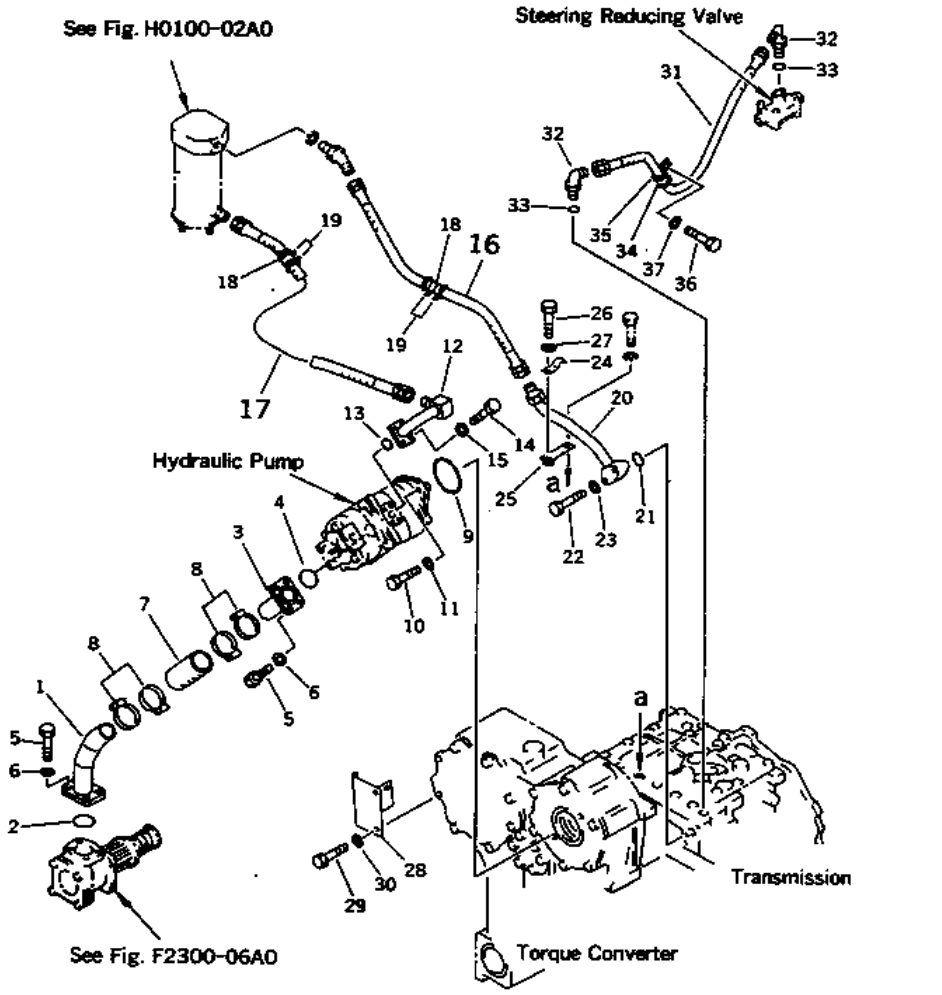

D85ESS-2 S/N J11888-UP

POWER LINE APPLICATION PIPING (SUCTION AND DELIVERY)

INDEX	CD	PART NO.	DESCRIPTION	QTY	SERIAL NO.
1		14X-49-11211	TUBE	1	J10001-UP
2		07000-72060	O-RING	1	J10001-UP
3		14X-49-11221	TUBE	1	J10001-UP
4		07000-73048	O-RING	1	J10001-UP
5		01010-81245	BOLT	8	J10001-UP
6		01643-51232	WASHER	8	J10001-UP
7		07260-24713	HOSE	1	J10001-UP
8		07289-00055	CLAMP	4	J10001-UP
9		07000-72105	O-RING	1	J10001-UP
10		01010-81235	BOLT	2	J10001-UP
11		01643-31232	WASHER	2	J10001-UP
12		14X-49-11312	TUBE	1	J10001-UP
13		07000-73025	O-RING	1	J10001-UP
14		01010-80840	BOLT	4	J10001-UP
15		01643-50823	WASHER	4	J10001-UP
16		0710220607	HOSE	1	J10001-UP
17		07102-20611	HOSE	1	J10001-UP
18		07095-20627	CUSHION	2	J10001-UP
19		08034-00536	BAND	4	J10001-UP
20		14X-49-11411	TUBE	1	J10001-UP
21		07000-73028	O-RING	1	J10001-UP
22		01010-81060	BOLT	2	J10001-UP
23		01643-31032	WASHER	2	J10001-UP
24		112-62-32150	CLAMP	1	J10001-UP
25		14X-49-11430	PLATE	1	J10001-UP
26		01010-81025	BOLT	1	J10001-UP
27		01643-31032	WASHER	1	J10001-UP
28		14Y-62-11142	BRACKET	1	J10001-UP
29		01010-81240	BOLT	2	J10001-UP
30		01645-31232	WASHER	2	J10001-UP
31		07102-20408	HOSE	1	J10001-UP
32		07235-10422	ELBOW	2	J10001-UP
33		07002-62034	O-RING	2	J10001-UP
34		04434-52712	CLIP	1	J10001-UP
35		07095-20420	CUSHION	1	J10001-UP
36		01010-81225	BOLT	1	J10001-UP
37		01643-31232	WASHER	1	J10001-UP

Ref :F2300-03A0 Page :150016

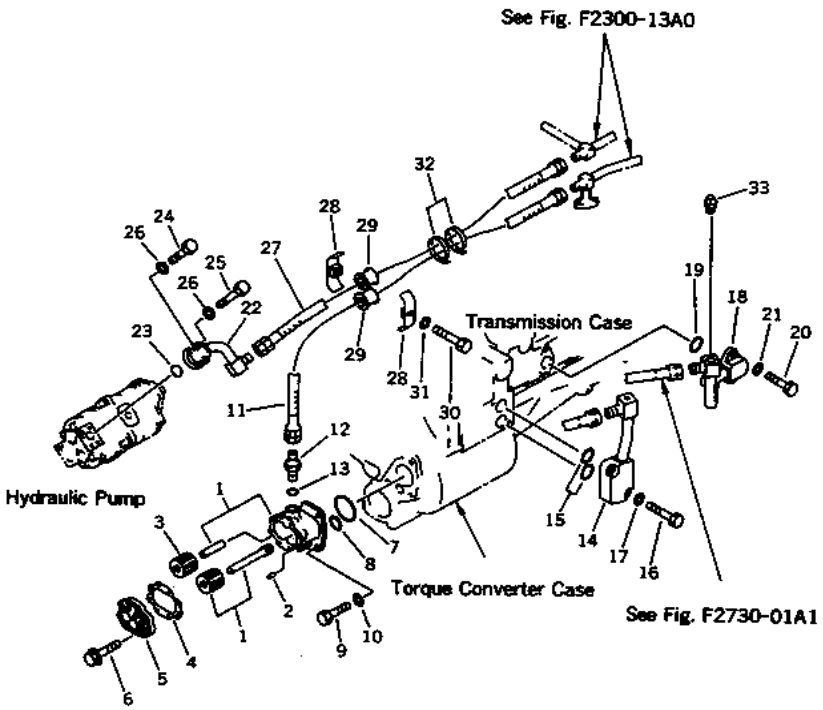

D85ESS-2 S/N J11888-UP

POWER LINE APPLICATION PIPING (LUBRICATION)

INDEX	CD	PART NO.	DESCRIPTION	QTY	SERIAL NO.
		14X-49-11600	PUMP ASS'Y	1	J10001-UP
1		TPA50204010A	.SHAFT ASS'Y	1	J10001-UP
2		TP15-2206124	..PIN	1	J10001-UP
3		TPA50154010A	.GEAR ASS'Y	1	J10001-UP
4		TPA50164010A	.PACKING	1	J10001-UP
5		TPA50134010A	.COVER ASS'Y	1	J10001-UP
6		TP0812082562	.BOLT	8	J10001-UP
7		07000-72080	O-RING	1	J10001-UP
8		07000-73038	O-RING	1	J10001-UP
9		01010-81235	BOLT	3	J10001-UP
10		01643-31232	WASHER	3	J10001-UP
11		07102-20612	HOSE	1	J10001-UP
12		07230-20628	UNION	1	J10001-UP
13		07002-62434	O-RING	1	J10001-UP
14		14X-49-11511	TUBE	1	J10001-UP
15		07000-73045	O-RING	2	J10001-UP
16		01010-81245	BOLT	2	J10001-UP
17		01643-31232	WASHER	2	J10001-UP
18		14X-49-11521	TUBE	1	J10001-UP
19		07000-73042	O-RING	1	J10001-UP
20		01010-81235	BOLT	2	J10001-UP
21		01643-31232	WASHER	2	J10001-UP
22		14X-49-11320	TUBE	1	J10001-UP
23		07000-73030	O-RING	1	J10001-UP
24		01010-80840	BOLT	2	J10001-UP
25		01010-80850	BOLT	2	J10001-UP
26		01643-50823	WASHER	4	J10001-UP
27		07102-20610	HOSE	1	J10001-UP
28		07094-20620	HOSE	4	J10001-UP
29		07095-00628	CUSHION	4	J10001-UP
30		01010-81270	BOLT	2	J10001-UP
31		01643-31232	WASHER	2	J10001-UP
32		08034-00536	BAND	2	J10001-UP
33		07042-70108	PLUG	1	J10001-UP

Ref :F2300-04A0 Page :150017

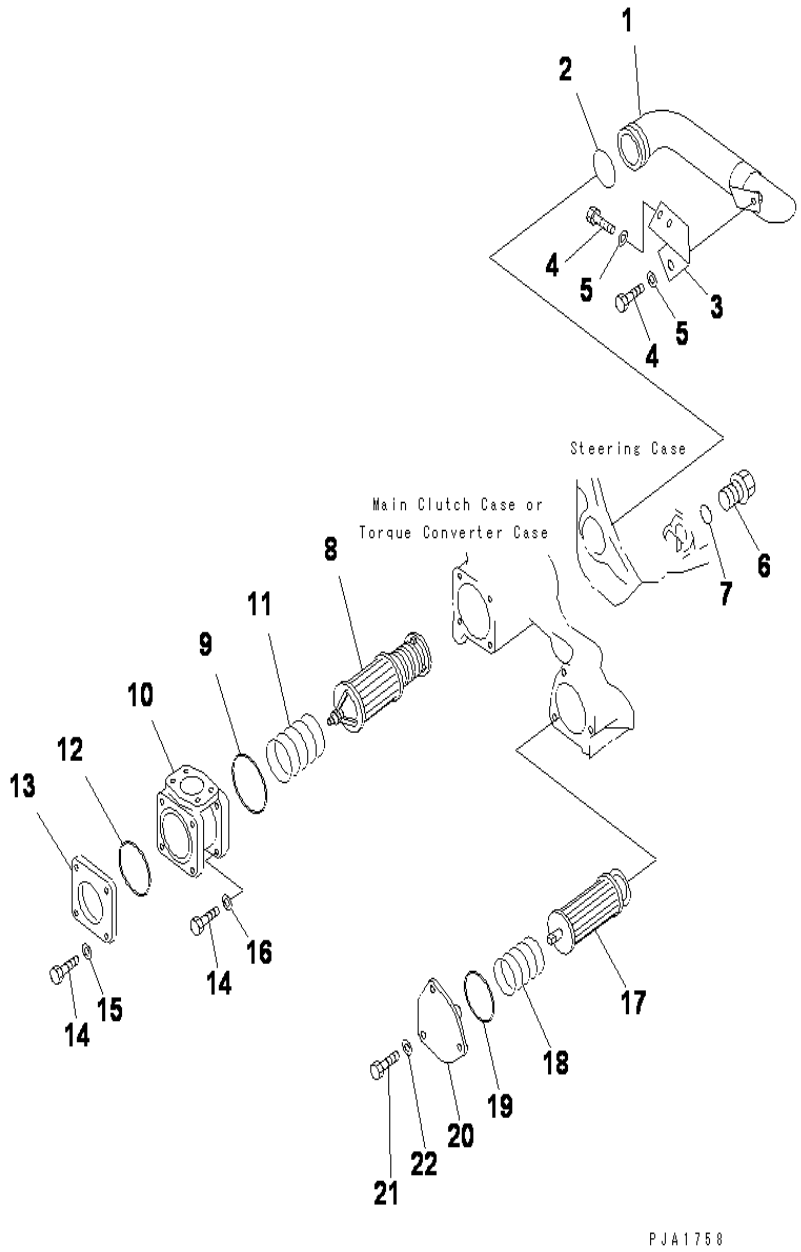

D85ESS-2 S/N J11888-UP

POWER LINE APPLICATION PIPING (FILTRATION)

INDEX	CD	PART NO.	DESCRIPTION	QTY	SERIAL NO.
1		14X-49-11111	TUBE	1	J10001-UP
2		07000-72065	O-RING	1	J10001-UP
3		14X-49-11121	BRACKET	1	J10001-UP
4		01010-81225	BOLT	3	J10001-UP
5		01643-31232	WASHER	3	J10001-UP
6		6150-23-5620	PLUG	1	J10001-UP
7		07002-33634	O-RING	1	J10001-UP
8		14X-49-12310	MAGNET ASS'Y	1	J10001-UP
9		07000-72110	O-RING	1	J10001-UP
10		14X-49-12330	HEAD	1	J10001-UP
11		14X-49-12320	SPRING	1	J10001-UP
12		07000-72100	O-RING	1	J10001-UP
13		14X-49-12340	COVER	1	J10001-UP
14		01010-81235	BOLT	8	J10001-UP
15		01643-31232	WASHER	4	J10001-UP
16		01643-51232	WASHER	4	J10001-UP
17		14X-10-11712	STRAINER	1	J10001-UP
18		14X-49-12411	SPRING	1	J10001-UP
19		07000-72090	O-RING	1	J10001-UP
20		14X-10-11721	COVER	1	J10001-UP
21		01010-81235	BOLT	3	J10001-UP
22		01643-31232	WASHER	3	J10001-UP

Ref :F2300-05A0 Page :150018

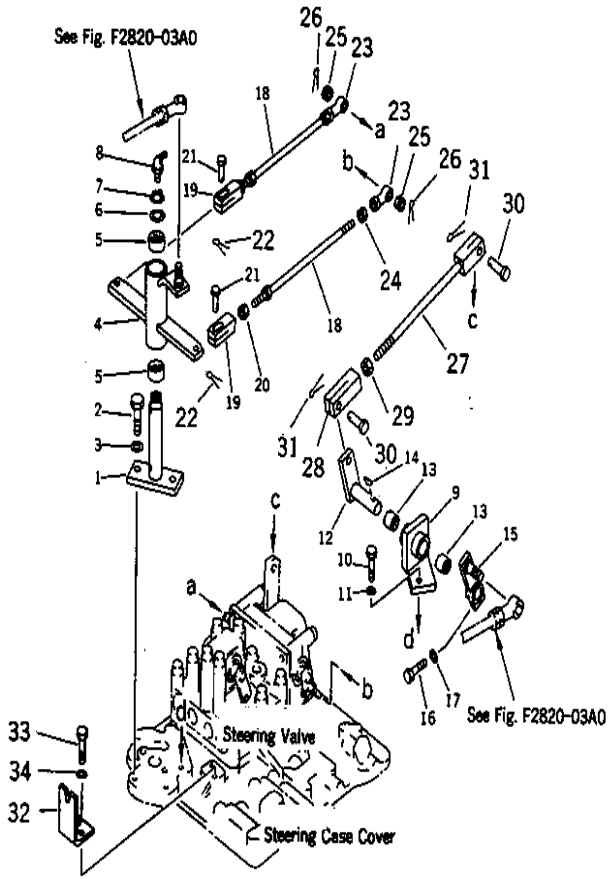

D85ESS-2 S/N J11888-UP

STEERING VALVE CONTROL LINKAGE

INDEX	CD	PART NO.	DESCRIPTION	QTY	SERIAL NO.
1		14Y-43-11710	BRACKET	1	J10001-UP
2		01010-81235	BOLT	2	J10001-UP
3		01643-31232	WASHER	2	J10001-UP
4		14Y-43-11720	LEVER	1	J10001-UP
5		06123-02518	BEARING	2	J10001-UP
6		01643-31845	WASHER	1	J10001-UP
7		04064-01812	RING	1	J10001-UP
8		07020-00900	FITTING	1	J10001-UP
9		14X-43-12620	BRACKET	1	J10001-UP
10		01010-81030	BOLT	2	J10001-UP
11		01643-31032	WASHER	2	J10001-UP
12		14X-43-12610	LEVER	1	J10001-UP
13		06124-02020	BEARING	2	J10001-UP
14		04010-00519	KEY	1	J10001-UP
15		14X-43-12630	LEVER	1	J10001-UP
16		01010-80830	BOLT	1	J10001-UP
17		01643-50823	WASHER	1	J10001-UP
18		04248-31031	ROD	2	J10001-UP
19		207-43-31560	YOKE	2	J10001-UP
20		01582-11210	NUT	2	J10001-UP
21		04205-11028	PIN	2	J10001-UP
22		04050-13020	COTTER PIN	2	J10001-UP
23		04250-91056	END	2	J10001-UP
24		01508-41006	NUT	2	J10001-UP
25		01593-31008	NUT	2	J10001-UP
26		04050-12018	COTTER PIN	2	J10001-UP
27		04244-51225	ROD	1	J10001-UP
28		04211-21266	YOKE	1	J10001-UP
29		01582-11210	NUT	1	J10001-UP
30		04205-11235	PIN	2	J10001-UP
31		04050-13022	PIN	2	J10001-UP
32		14Y-43-11730	PLATE	1	J10001-UP
33		01010-81030	BOLT	2	J10001-UP
34		01643-31032	WASHER	2	J10001-UP

Ref :F2300-06A0 Page :150019

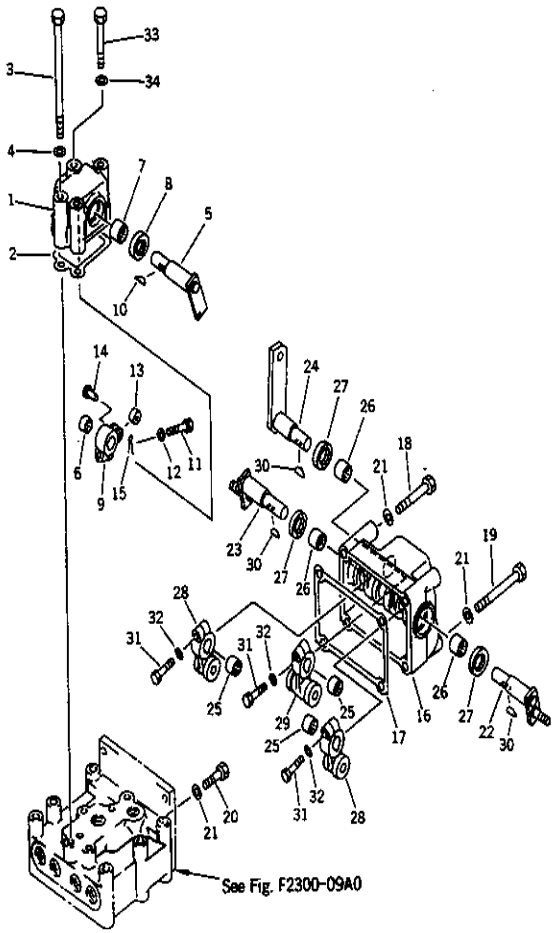

D85ESS-2 S/N J11888-UP

STEERING VALVE (COVER AND LEVER)

INDEX	CD	PART NO.	DESCRIPTION	QTY	SERIAL NO.
		14X-40-00010	STEERING VALVE ASS'Y.....	1	J10001-UP
			THIS ASSEMBLY CONSIST OF ALL PARTS.....		
			SHOWN IN FIGS.F2300-07A0 AND F2300-08A0.....		
1		14X-40-11610	.COVER.....	1	J10001-UP
2		14X-40-11640	.GASKET.....	1	J10001-UP
3		01010-81090	.BOLT.....	2	J10001-UP
4		01643-31032	.WASHER.....	2	J10001-UP
5		14X-40-11630	.LEVER.....	1	J10001-UP
6		06120-01612	.BEARING.....	1	J10001-UP
7		06120-02216	.BEARING.....	1	J10001-UP
8		195-40-11650	.SEAL.....	1	J10001-UP
9		14X-40-11620	.LEVER.....	1	J10001-UP
10		04010-00519	.KEY.....	1	J10001-UP
11		01010-80830	.BOLT.....	1	J10001-UP
12		01643-50823	.WASHER.....	1	J10001-UP
13		103-43-21380	.ROLLER.....	1	J10001-UP
14		04205-00622	.PIN.....	1	J10001-UP
15		04050-11612	.COTTER PIN.....	1	J10001-UP
16		14X-40-11712	.COVER.....	1	J10001-UP
17		14X-40-11721	.GASKET.....	1	J10001-UP
18		01010-81090	.BOLT.....	2	J10001-UP
19		01011-51005	.BOLT.....	2	J10001-UP
20		01010-81025	.BOLT.....	2	J10001-UP
21		01643-31032	.WASHER.....	6	J10001-UP
22		14X-40-11731	.LEVER.....	1	J10001-UP
23		17A-40-11740	.LEVER.....	1	J10001-UP
24		14X-40-11761	.LEVER.....	1	J10001-UP
25		06120-01612	.BEARING.....	3	J10001-UP
26		06120-02216	.BEARING.....	3	J10001-UP
27		195-40-11650	.SEAL.....	3	J10001-UP
28		14X-40-11810	.LEVER ASS'Y.....	2	J10001-UP
29		14X-40-11840	.LEVER ASS'Y.....	1	J10001-UP
30		04010-00519	.KEY.....	3	J10001-UP
31		01010-80830	.BOLT.....	3	J10001-UP
32		01643-50823	.WASHER.....	3	J10001-UP
33		0101151075	BOLT.....	2	J10001-UP
34		01643-31032	WASHER.....	2	J10001-UP

Ref :F2300-07A0 Page :150020

FIG.F2300-0901 STEERING VALVE (BODY AND SPOOL)

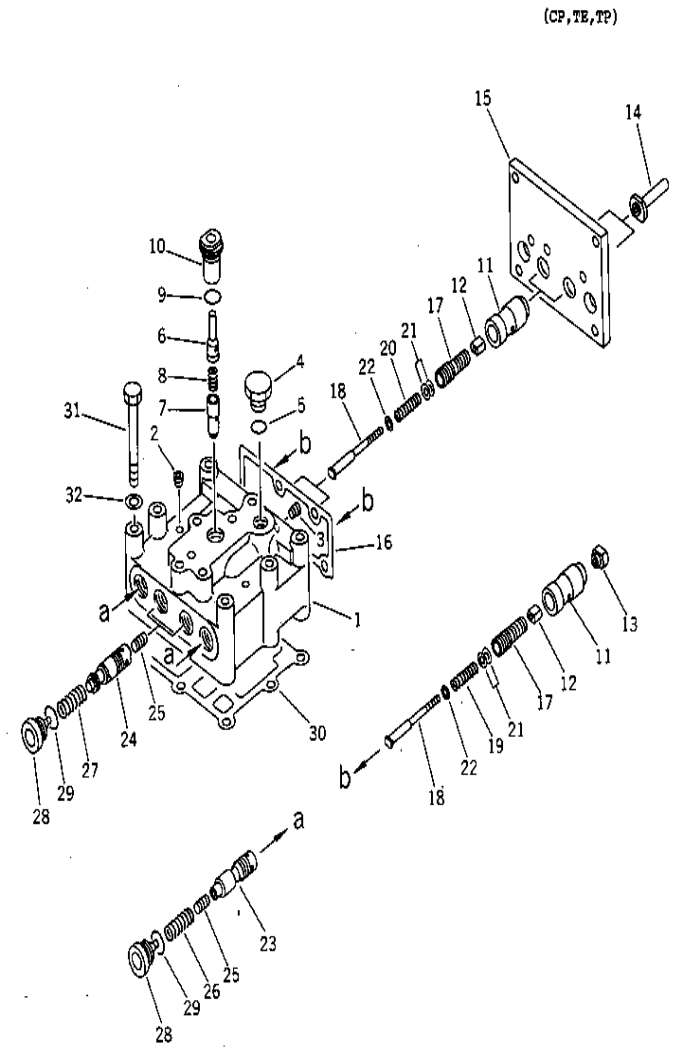

D85ESS-2 S/N J11888-UP

STEERING VALVE (BODY AND SPOOL)

INDEX	CD	PART NO.	DESCRIPTION	QTY	SERIAL NO.
		14X-40-00010	STEERING VALVE ASS'Y.....	1	J10001-UP
			THIS ASSEMBLY CONSIST OF ALL PARTS.....		
			SHOWN IN FIGS.F2300-07A0 AND F2300-08A0.....		
1		14X-40-11112	.BODY.....	1	J10001-UP
2		07043-70108	.PLUG.....	3	J10001-UP
3		07043-70108	.PLUG.....	1	J10001-UP
4		07040-12012	.PLUG.....	1	J10001-UP
5		07002-32034	.O-RING.....	1	J10001-UP
6		14X-40-11660	.VALVE.....	1	J10001-UP
7		14X-40-11670	.VALVE.....	1	J10001-UP
8		07750-01628	.SPRING.....	1	J10001-UP
9		07002-32434	.O-RING.....	1	J10001-UP
10		14X-40-11650	.BODY.....	1	J10001-UP
11		14X-40-11241	.CYLINDER.....	4	J10001-UP
12		14X-40-11261	.NUT.....	4	J10001-UP
13		14X-40-11272	.NUT.....	2	J10001-UP
14		14X-40-11373	.NUT.....	2	J10001-UP
15		14X-40-11411	.COVER.....	1	J10001-UP
16		14X-40-11421	.GASKET.....	1	J10001-UP
17		14X-40-11231	.GUIDE.....	4	J10001-UP
18		14X-40-11221	.BOLT.....	4	J10001-UP
19		14Z-40-11380	.SPRING.....	2	J10001-UP
20		14X-40-11381	.SPRING.....	2	J10001-UP
21		175-15-56470	.SHIM, 0.5MM.....	8	J10001-UP
22		14Z-40-11340	.GUIDE.....	4	J10001-UP
23		14X-40-11212	.VALVE.....	2	J10001-UP
24		14X-40-11312	.VALVE.....	2	J10001-UP
25		195-40-31540	.PISTON.....	4	J10001-UP
26		14X-40-11291	.SPRING.....	2	J10001-UP
27		14X-40-11391	.SPRING.....	2	J10001-UP
28		14X-40-11251	.PLUG.....	4	J10001-UP
29		07002-32434	.O-RING.....	4	J10001-UP
30		14X-40-11491	GASKET.....	1	J10001-UP
31		01011-81005	BOLT.....	7	J10001-UP
32		01643-31032	WASHER.....	7	J10001-UP

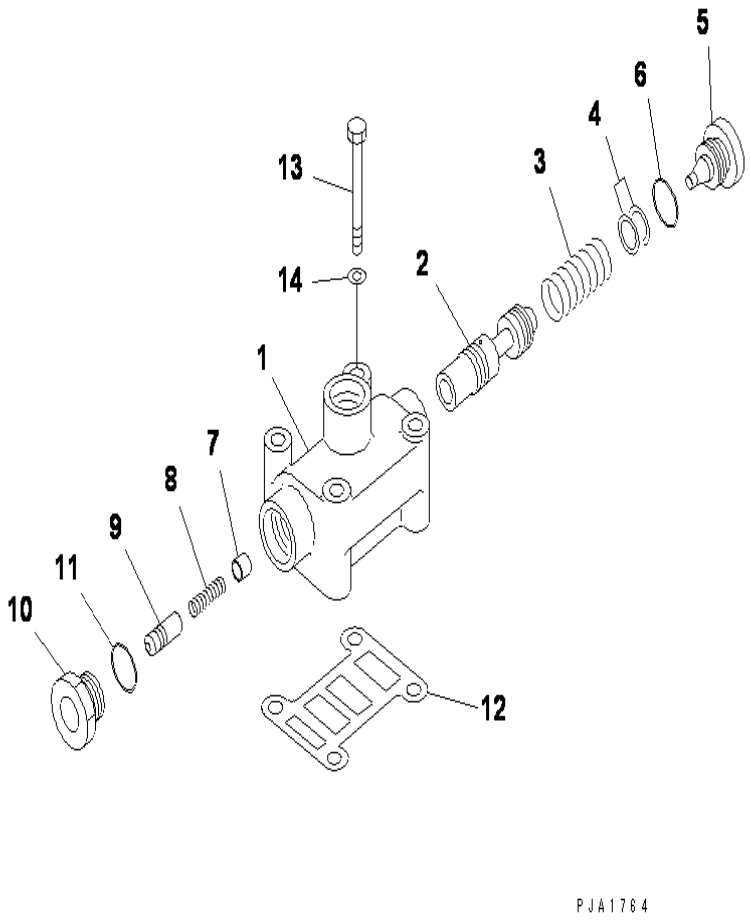

D85ESS-2 S/N J11888-UP

STEERING REDUCING VALVE

INDEX	CD	PART NO.	DESCRIPTION	QTY	SERIAL NO.
		14X-49-00010	VALVE ASS'Y.....	1	J10001-UP
1		14X-49-13110	.BODY.....	1	J10001-UP
2		14X-49-13120	.SPOOL.....	1	J10001-UP
3		14X-49-11390	.SPRING.....	1	J10001-UP
4		14Z-40-11350	.SHIM, 0.5MM.....	6	J10001-UP
5		14X-40-11251	.PLUG.....	1	J10001-UP
6		07002-32434	.O-RING.....	1	J10001-UP
7		22W-75-18890	.VALVE.....	1	J10001-UP
8		125-15-15290	.SPRING.....	1	J10001-UP
9		22W-75-18880	.SLEEVE.....	1	J10001-UP
10		07040-12412	.PLUG.....	1	J10001-UP
11		07002-32434	.O-RING.....	1	J10001-UP
12		14X-49-13130	GASKET.....	1	J10001-UP
13		01010-80870	BOLT.....	4	J10001-UP
14		01643-30823	WASHER.....	4	J10001-UP

Ref :F2300-09A0 Page :150022

FIG.F2300-1102 CONTROL RELATED PARTS

(TE,TP)

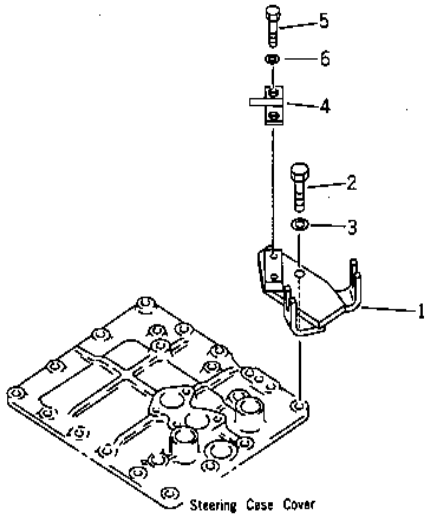

D85ESS-2 S/N J11888-UP

CONTROL RELATED PARTS

INDEX	CD	PART NO.	DESCRIPTION	QTY	SERIAL NO.
1		14Z-43-11192	BRACKET	1	J10775-UP
		14Z-43-11190	BRACKET	1	J10001-J10774
2		01010-81245	BOLT	2	J10001-UP
3		01643-31232	WASHER	2	J10001-UP
4		14Z-43-11250	PLATE	1	J10001-UP
5		01010-81020	BOLT	2	J10001-UP
6		01643-31032	WASHER	2	J10001-UP

Ref :F2300-10A0 Page :150023

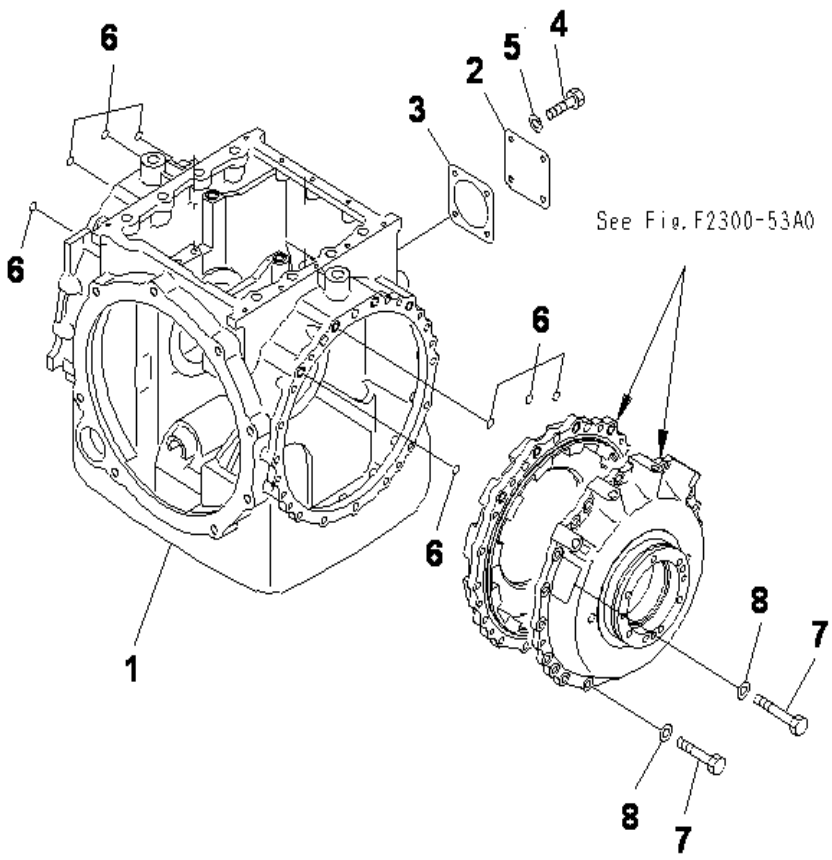

D85ESS-2 S/N J11888-UP

STEERING (CASE)

INDEX	CD	PART NO.	DESCRIPTION	QTY	SERIAL NO.
1		14X-22-15112	CASE	1	J10001-UP
2		14Y-22-15160	PLATE	1	J10001-UP
3		14Y-22-15170	GASKET	1	J10001-UP
4		01010-81230	BOLT	4	J10001-UP
5		01643-31232	WASHER	4	J10001-UP
6		07000-72018	O-RING	8	J10001-UP
7		01010-81255	BOLT	32	J10001-UP
8		01643-31232	WASHER	32	J10001-UP

Ref :F2300-11A0 Page :150024

FIG. F2300-1301 STEERING (COVER AND PIPING)

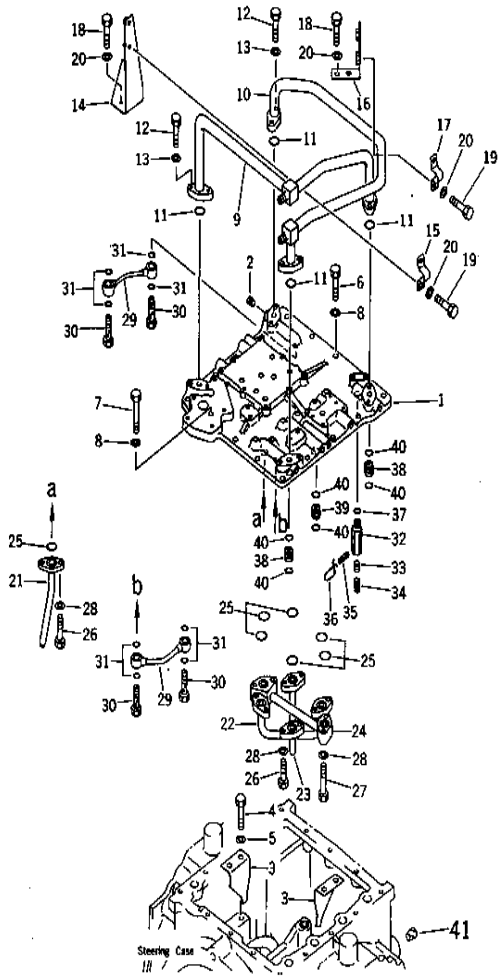

D85ESS-2 S/N J11888-UP

STEERING (COVER AND PIPING)

INDEX	CD	PART NO.	DESCRIPTION	QTY	SERIAL NO.
1		14X-22-16112	COVER	1	J10001-UP
2		07043-70211	PLUG	9	J10001-UP
3		14X-22-15130	PLATE	2	J10001-UP
4		01010-81230	BOLT	4	J10001-UP
5		01643-31232	WASHER	4	J10001-UP
6		01010-81235	BOLT	15	J10001-UP
7		01010-81265	BOLT	1	J10001-UP
8		01643-31232	WASHER	16	J10001-UP
9		14X-22-16251	TUBE	1	J10001-UP
10		14X-22-16261	TUBE	1	J10001-UP
11		07000-73025	O-RING	4	J10001-UP
12		01010-81040	BOLT	8	J10001-UP
13		01643-51032	WASHER	8	J10001-UP
14		14X-22-16271	BRACKET	1	J10001-UP
15		07282-12286	CLAMP	1	J10001-UP
16		14X-22-16280	BRACKET	1	J10001-UP
17		07282-12288	CLAMP	1	J10001-UP
18		01010-81025	BOLT	4	J10001-UP
19		01010-81020	BOLT	4	J10001-UP
20		01643-51032	WASHER	8	J10001-UP
21		14X-22-16240	TUBE	1	J10001-UP
22		14X-22-16221	TUBE	1	J10001-UP
23		14X-22-16231	TUBE	1	J10001-UP
24		14X-22-16212	TUBE	1	J10001-UP
25		07000-73022	O-RING	6	J10001-UP
26		01010-81035	BOLT	10	J10001-UP
27		01010-81050	BOLT	4	J10001-UP
28		01643-51032	WASHER	14	J10001-UP
29		14X-22-16290	TUBE	2	J10001-UP
30		07206-31014	JOINT	4	J10001-UP
31		07005-01412	GASKET	8	J10001-UP
32		14X-22-16160	BODY	2	J10001-UP
33		287-15-15360	PISTON	2	J10001-UP
34		234-15-15120	SPRING	2	J10001-UP
35		04025-00320	SPRING PIN	2	J10001-UP
36		04059-01010	WIRE	2	J10001-UP
37		0700231423	O-RING	2	J10001-UP
38		14X-22-16170	SLEEVE	8	J10001-UP
39		14X-22-16180	SLEEVE	2	J10001-UP
40		07000-72018	O-RING	20	J10001-UP
41		07049-001215	PLUG	3	J10001-UP

Ref :F2300-12A0 Page :150025

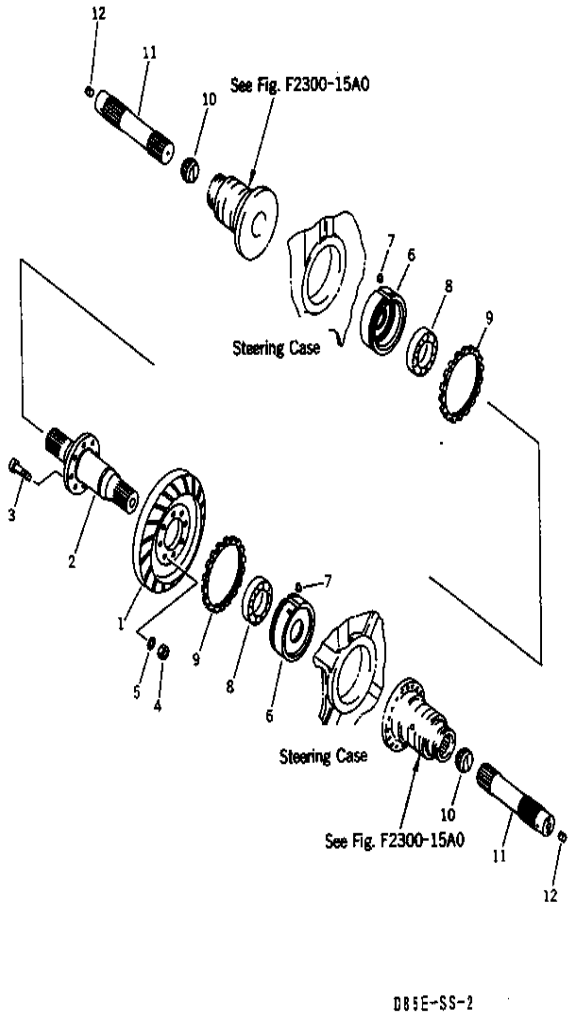

D85ESS-2 S/N J11888-UP

STEERING (BEVEL GEAR AND SHAFT)

INDEX	CD	PART NO.	DESCRIPTION	QTY	SERIAL NO.
1		14X-22-11210	GEAR, BEVEL	1	J10001-UP
2		14X-22-11122	SHAFT	1	J10001-UP
3		01084-01655	BOLT	8	J10001-UP
4		01582-11613	NUT	8	J10001-UP
5		01643-31645	WASHER	8	J10001-UP
6		14X-22-11130	CAGE	2	J10001-UP
7		14Y-22-11140	PIN	2	J10001-UP
8		06002-32214	BEARING	2	J10001-UP
9		144-21-12310	SCREW	2	J10001-UP
10		14Y-22-14171	SHAFT	2	J10001-UP
11		14Y-22-14121	SHAFT	2	J10001-UP
12		14Y-22-14160	BUTTON	2	J10001-UP

Ref :F2300-13A0 Page :150026

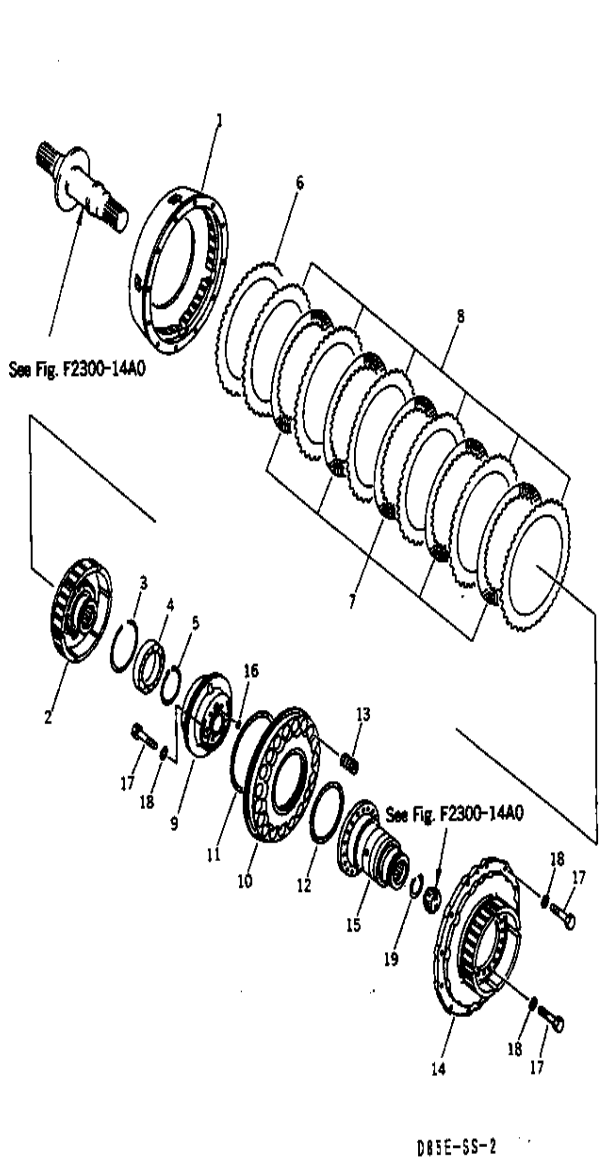

D85ESS-2 S/N J11888-UP

STEERING (CLUTCH)

INDEX	CD	PART NO.	DESCRIPTION	QTY	SERIAL NO.
		14X-22-00010	CLUTCH ASS'Y.....	2	J10001-UP
			THISASSEMBLY CONSIST OF ALL PARTS.....		
			SHOWN IN FIGS. F2300-14A0 AND F2300-15A0....		
1		14X-22-12110	.DRUM.....	1	J10001-UP
2		14X-22-12120	.DRUM.....	1	J10001-UP
3		04071-00130	.RING SNAP.....	1	J10001-UP
4		06030-06017	.BEARING.....	1	J10001-UP
5		04064-08530	.SNAP RING.....	1	J10001-UP
6		14X-22-12210	.PLATE.....	1	J10001-UP
7		14X-22-12150	.DISC.....	5	J10001-UP
8		14X-22-12160	.PLATE.....	6	J10001-UP
9		14X-22-12141	.PISTON.....	1	J10001-UP
10		14X-22-12130	.PLATE.....	1	J10001-UP
11		103-15-29210	.SEAL RING.....	1	J10001-UP
12		362-15-19220	.SEAL RING.....	1	J10001-UP
13		14X-22-12170	.SPRING.....	19	J10001-UP
14		14X-22-13120	.HUB.....	1	J10001-UP
15		14X-22-14110	.HUB.....	1	J10001-UP
16		07000-72021	.O-RING.....	1	J10001-UP
17		01010-81235	.BOLT.....	36	J10001-UP
18		01643-31232	.WASHER.....	36	J10001-UP
19		14Y-22-14180	.RING,SNAP.....	1	J10001-UP

Ref :F2300-14A0 Page :150027

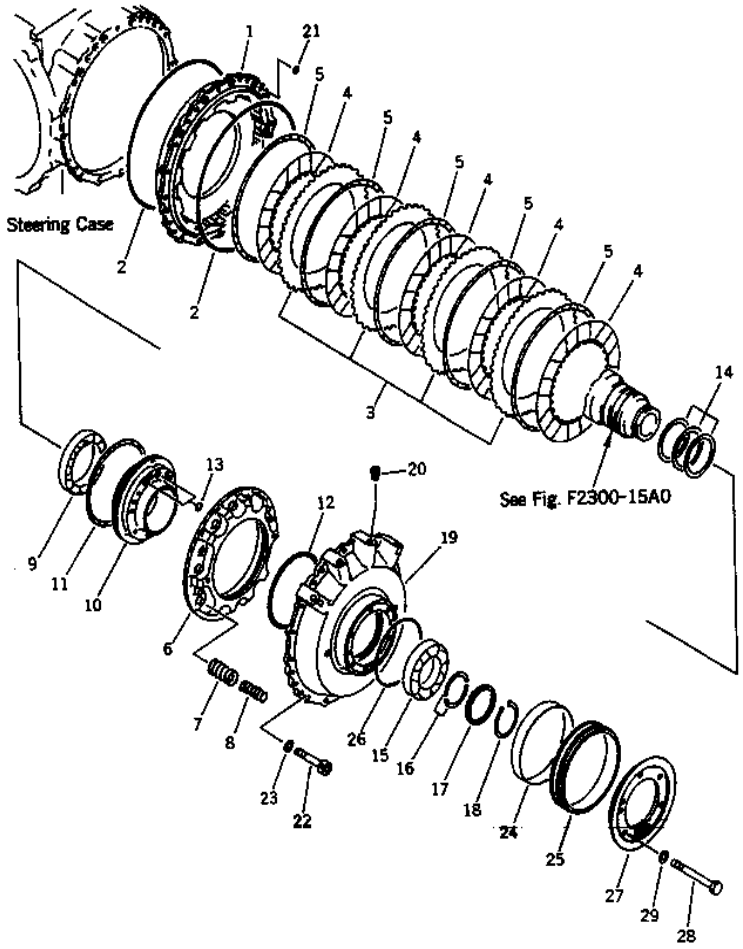

D85ESS-2 S/N J11888-UP

STEERING (BRAKE)

INDEX	CD	PART NO.	DESCRIPTION	QTY	SERIAL NO.
		14X-22-00010	CLUTCH ASS'Y	2	J10001-UP
			THIS ASSEMBLY CONSIST OF ALL PARTS		
			SHOWN IN FIGS. F2300-14A0 AND F2300-15A0		
1		14Y-22-13112	.DRUM	1	J10001-UP
2		07000-05405	.O-RING	2	J10001-UP
3		14Y-22-13150	.PLATE	4	J10001-UP
4		14Y-22-13140	.DISC	5	J10001-UP
5		14Y-22-13160	.SPRING	5	J10001-UP
6		14Y-22-13131	.PISTON	1	J10001-UP
7		14Y-22-13170	.SPRING	14	J10001-UP
8		14Y-22-13180	.SPRING	14	J10001-UP
9		17M-09-11150	.BEARING	1	J10001-UP
10		14Y-22-14130	.CAGE	1	J10001-UP
11		103-15-12820	.SEAL RING	1	J10001-UP
12		23A-15-19210	.SEAL RING	1	J10001-UP
13		07000-72018	.O-RING	2	J10001-UP
14		14Y-22-13270	.SEAL RING	3	J10001-UP
15		06030-06217	.BEARING	1	J10001-UP
16		14Y-22-14140	.SPACER	2	J10001-UP
17		14Y-22-14150	.SPACER	1	J10001-UP
18		04064-08530	.SNAP RING	1	J10001-UP
19		14Y-22-15120	.COVER	1	J10001-UP
20		07043-70312	.PLUG	6	J10001-UP
21		07000-72018	.O-RING	2	J10001-UP
22		01252-41245	.BOLT	4	J10001-UP
23		01643-31232	.WASHER	4	J10001-UP
24		14Y-21-13130	.BUSHING	1	J10001-UP
25		14Y-21-13241	.COLLAR	1	J10001-UP
26		14Y-22-15220	.O-RING	1	J10001-UP
27		14Y-21-13150	.FLANGE	1	J10001-UP
28		01011-81205	.BOLT	6	J10001-UP
29		01643-31232	.WASHER	6	J10001-UP

Ref :F2300-15A0 Page :150028

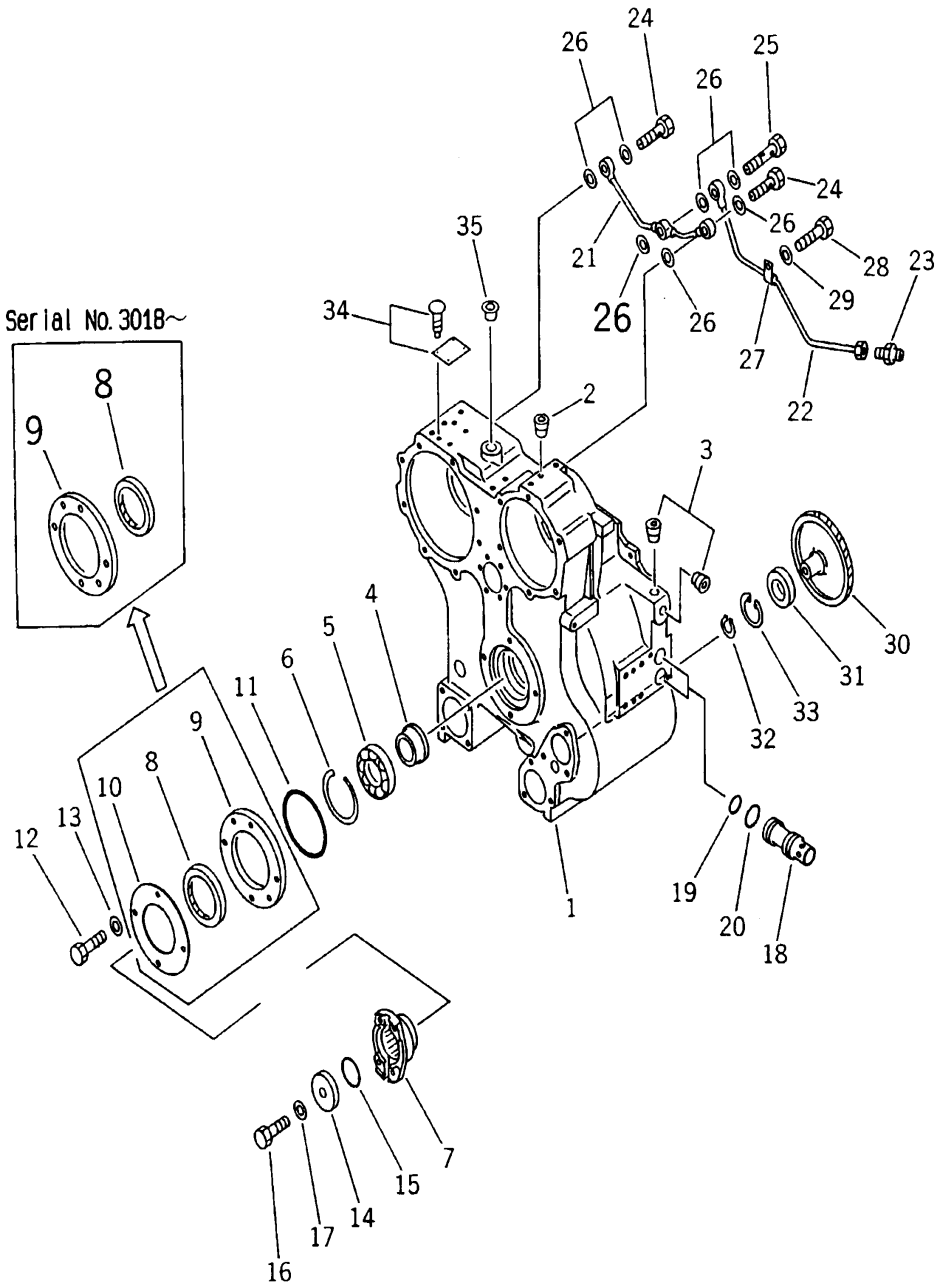

D85ESS-2 S/N J11888-UP

TORQUE CONVERTER (CASE AND PIPING)

INDEX	CD	PART NO.	DESCRIPTION	QTY	SERIAL NO.
1		14X-13-13112	CASE	1	J10001-UP
2		07043-70108	PLUG	8	J10001-UP
3		07043-A0617	PLUG	2	J10001-UP
4		14X-13-11370	SPACER	1	J10001-UP
5		06032-01016	BEARING	1	J10001-UP
6		04071-00125	RING	1	J10001-UP
7		14X-13-11360	COUPLING	1	J10001-UP
8		07012-50110	SEAL, OIL (K1)	1	J10001-UP
9		14X-13-13351	RETAINER	1	J10001-UP
10		14X-13-13360	PLATE	1	J10001-UP
11		07000-75260	O-RING (K1)	1	J10001-UP
12		01010-81235	BOLT	4	J10001-UP
13		01643-31232	WASHER	4	J10001-UP
14		22W-15-16270	HOLDER	1	J10001-UP
15		07000-75055	O-RING (K1)	1	J10001-UP
16		01050-51670	BOLT	1	J10001-UP
17		01643-31645	WASHER	1	J10001-UP
18		14X-13-12550	SLEEVE	2	J10001-UP
19		07000-73030	O-RING (K1)	2	J10001-UP
20		0706073032	O-RING (K1)	2	J10001-UP
21		14X-10-11320	TUBE	1	J10001-UP
22		14X-13-13261	TUBE	1	J10001-UP
23		07213-50813	NIPPLE	1	J10001-UP
24		07206-30812	JOINT	2	J10001-UP
25		14X-10-11330	JOINT	1	J10001-UP
26		07005-01212	GASKET (K1)	7	J10001-UP
27		04434-50810	CLIP	1	J10001-UP
28		01010-81020	BOLT	1	J10001-UP
29		01643-31032	WASHER	1	J10001-UP
30		14X-13-14111	GEAR	1	J10001-UP
31		174-13-24490	BEARING	1	J10001-UP
32		04064-03515	RING	1	J10001-UP
33		04065-07225	RING	1	J10001-UP
34		09607-05080	PLATE, NAME (LIMITED SUPPLY)	1	J10001-UP
		04418-13060	SCREW	4	J10001-UP
35		07048-02216	PLUG	1	J10001-UP

Ref :F2310-01A0 Page :150029

FIG. F2310-0202 TORQUE CONVERTER (BEAR TORQUE CONVERTER)

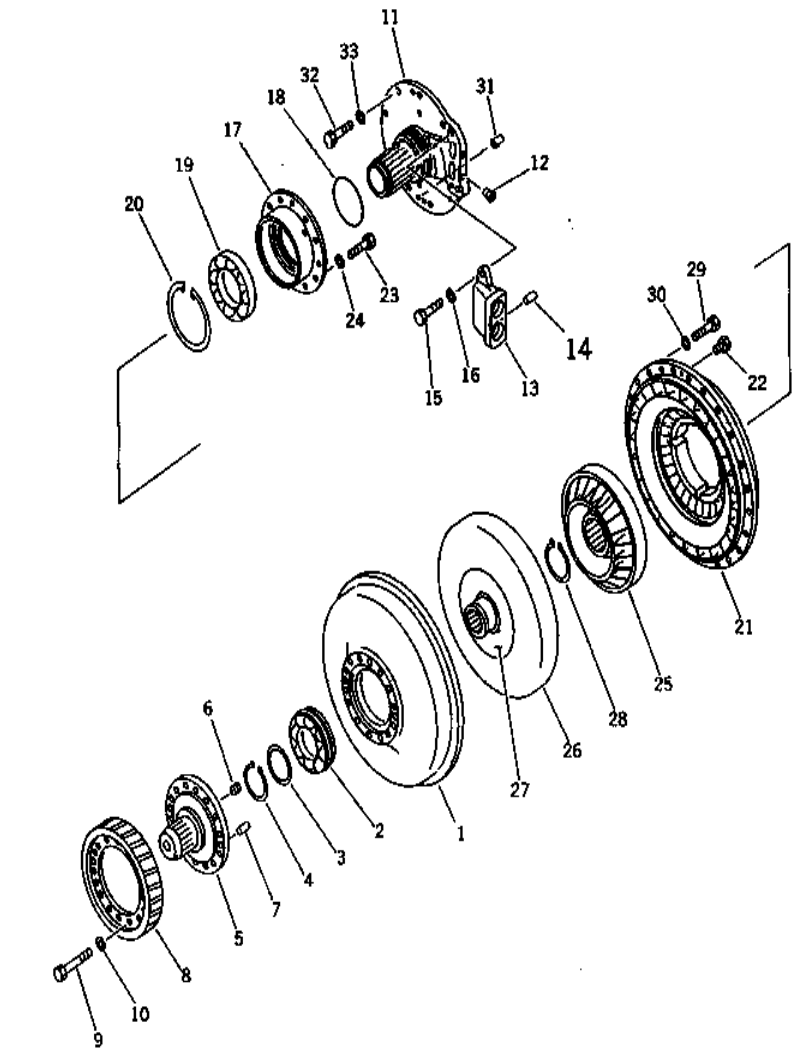

D85ESS-2 S/N J11888-UP

TORQUE CONVERTER (BEAR TORQUE CONVERTER)

INDEX	CD	PART NO.	DESCRIPTION	QTY	SERIAL NO.
		14X-13-00010	TORQUE CONVERTER A.....	1	J10001-UP
1		14X-13-11211	.CASE, DRIVE.....	1	J10001-UP
2		06043-06214	.BEARING.....	1	J10001-UP
3		711-47-11770	.PLATE.....	1	J10001-UP
4		04064-07025	.RING.....	1	J10001-UP
5		14X-13-11351	.SHAFT.....	1	J10001-UP
6		198-15-26511	.ORIFICE.....	1	J10001-UP
7		04020-01434	.PIN.....	2	J10001-UP
8		14X-13-11221	.GEAR.....	1	J10001-UP
9		01010-81060	.BOLT.....	14	J10001-UP
10		01643-31032	.WASHER.....	14	J10001-UP
11		14X-13-12540	.SHAFT.....	1	J10001-UP
12		07043-70211	.PLUG.....	2	J10001-UP
13		14X-13-12531	.FLANGE.....	1	J10001-UP
14		04020-00820	.DOWEL PIN.....	2	J10001-UP
15		01010-81030	.BOLT.....	2	J10001-UP
16		01643-31032	.WASHER.....	2	J10001-UP
17		14X-13-11141	.RETAINER.....	1	J10001-UP
18		07018-31054	.SEAL RING.....	1	J10001-UP
19		14X-13-31160	.BEARING.....	1	J10001-UP
20		04071-00140	.RING.....	1	J10001-UP
21		14X-13-11120	.PUMP.....	1	J10001-UP
22		07040-10807	.PLUG.....	2	J10001-UP
23		01010-81035	.BOLT.....	14	J10001-UP
24		01643-31032	.WASHER.....	14	J10001-UP
25		14X-13-32110	.STATOR.....	1	J10001-UP
26		14X-13-11521	.TURBINE.....	1	J10001-UP
27		14X-13-11531	..BOSS.....	1	J10001-UP
28		04064-07025	.RING.....	1	J10001-UP
29		01010-81035	.BOLT.....	24	J10001-UP
30		01643-31032	.WASHER.....	24	J10001-UP
31		04020-01228	PIN.....	1	J10001-UP
32		01010-81030	BOLT.....	8	J10001-UP
33		01643-31032	WASHER.....	8	J10001-UP

Ref :F2310-02A0 Page :150030

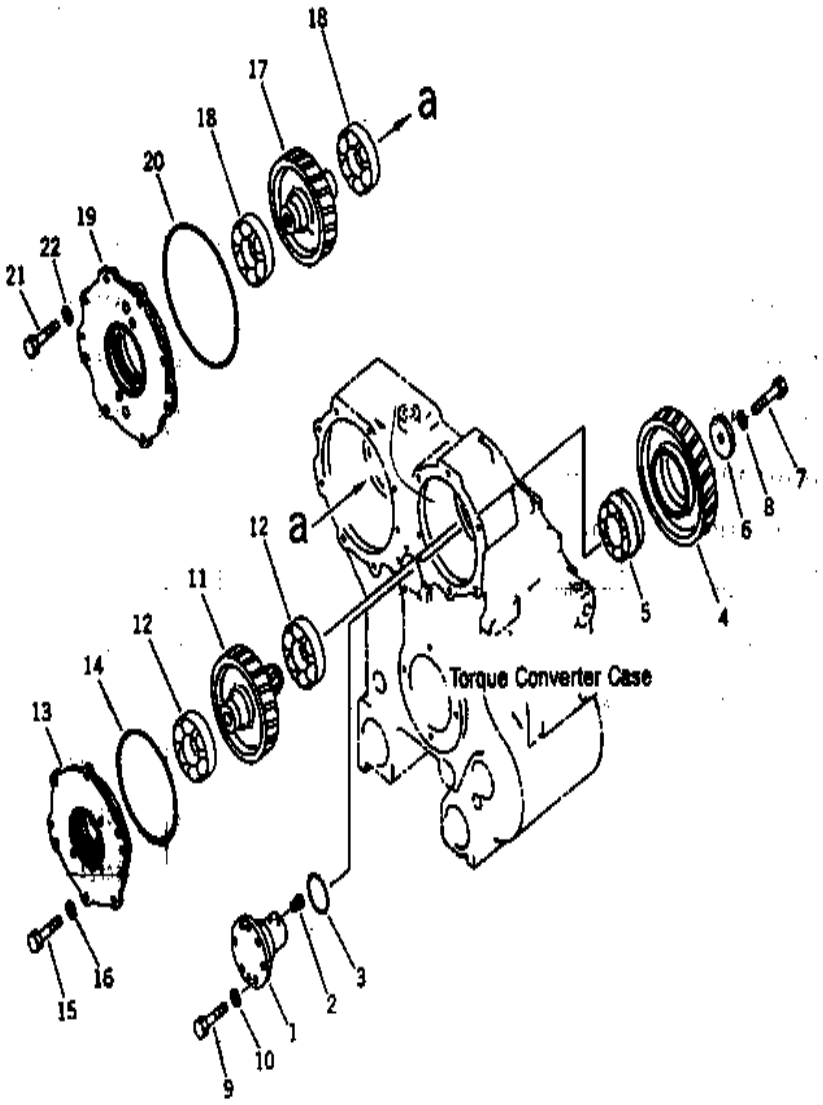

D85ESS-2 S/N J11888-UP

POWER TAKE OFF GEAR

INDEX	CD	PART NO.	DESCRIPTION	QTY	SERIAL NO.
1		14X-13-14241	SHAFT	1	J10001-UP
2		07043-70211	PLUG	1	J10001-UP
3		07000-72070	O-RING	1	J10001-UP
4		134-13-64220	GEAR	1	J10001-UP
5		711-49-14230	BEARING	1	J10001-UP
6		144-10-12180	HOLDER	1	J10001-UP
7		01010-61460	BOLT	1	J10001-UP
8		01643-31445	WASHER	1	J10001-UP
9		01010-81235	BOLT	6	J10001-UP
10		01643-31232	WASHER	6	J10001-UP
11		14X-13-14321	GEAR	1	J10001-UP
12		06000-06311	BEARING	2	J10001-UP
13		14X-13-14340	COVER	1	J10001-UP
14		07000-75210	O-RING	1	J10001-UP
15		01010-81235	BOLT	6	J10001-UP
16		01643-31232	WASHER	6	J10001-UP
17		14X-13-14421	GEAR	1	J10001-UP
18		06030-06311	BEARING	2	J10001-UP
19		17M-13-44350	COVER	1	J12931-UP
		14X-13-14441	COVER	1	J10001-J12930
20		07000-75260	O-RING	1	J10001-UP
21		01010-81235	BOLT	6	J10001-UP
22		01643-31232	WASHER	6	J10001-UP

Ref :F2310-03A0 Page :150031

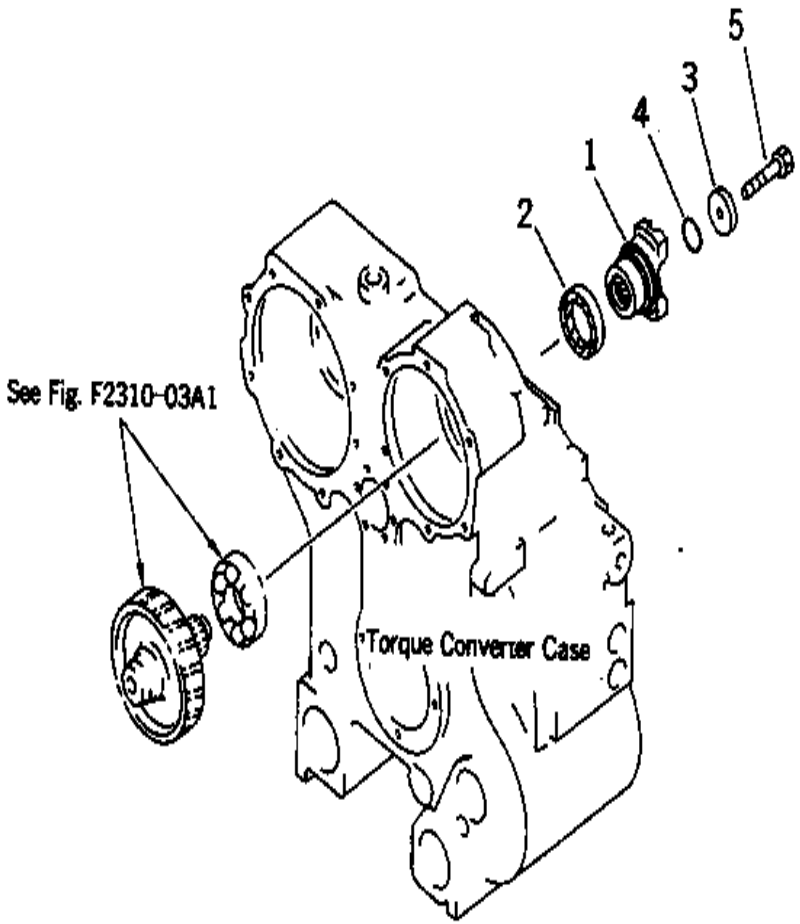

D85ESS-2 S/N J11888-UP

REAR POWER TAKE OFF COUPLING

INDEX	CD	PART NO.	DESCRIPTION	QTY	SERIAL NO.
1		14X-13-11660	YOKE	1	J10001-UP
2		07012-10070	SEAL	1	J10001-UP
3		363-15-22940	HOLDER, 10.6MM	1	J10001-UP
4		07000-75042	O-RING	1	J10001-UP
5		01050-51480	BOLT	1	J10001-UP

Ref :F2310-04A0 Page :150032

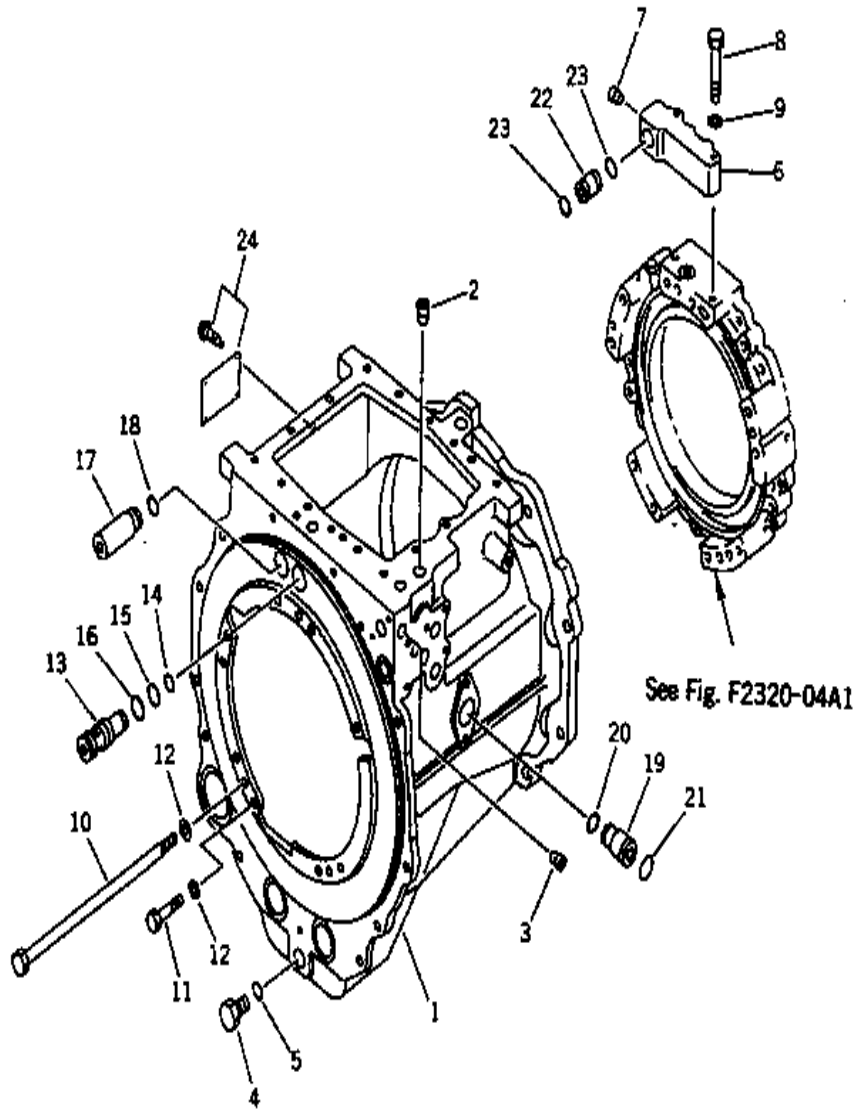

D85ESS-2 S/N J11888-UP

TRANSMISSION (CASE)

INDEX	CD	PART NO.	DESCRIPTION	QTY	SERIAL NO.
		14X-15-00012	TRANSMISSION ASS'Y.....	1	J10001-UP
			THIS ASSEMBLY CONSIST OF ALL PARTS.....		
			SHOWN IN FIGS.F2320-01A0 TO F2320-01A10.....		
		134-15-00260	.CASE ASSY.....	1	J10001-UP
1	C1		..CASE.....	1	J10001-UP
2		07043-70617	..PLUG.....	2	J10001-UP
3		07043-70415	..PLUG.....	2	J10001-UP
4		07044-12412	.PLUG.....	1	J10001-UP
5		07002-02434	.O-RING (K3).....	1	J10001-UP
6		14X-15-15141	.BLOCK.....	1	J10001-UP
7		07043-70312	.PLUG.....	1	J10001-UP
8		01010-81065	.BOLT.....	2	J10001-UP
9		01643-31032	.WASHER.....	2	J10001-UP
10		232-15-11240	.BOLT.....	8	J10001-UP
11		01010-61440	.BOLT.....	4	J10001-UP
12		145-14-11571	.WASHER.....	12	J10001-UP
13		14X-15-15161	.SLEEVE.....	1	J10001-UP
14		07000-73022	.O-RING (K3).....	1	J10001-UP
15		07000-73025	.O-RING (K3).....	1	J10001-UP
16		07000-73028	.O-RING (K3).....	1	J10001-UP
17		14X-15-15170	.SLEEVE.....	1	J10001-UP
18		07000-73022	.O-RING (K3).....	1	J10001-UP
19		14X-15-14150	.SLEEVE.....	1	J10001-UP
20		07000-73022	.O-RING (K3).....	1	J10001-UP
21		07000-73025	.O-RING (K3).....	1	J10001-UP
22		14X-15-15181	.SLEEVE.....	1	J10001-UP
23		07000-73022	.O-RING (K3).....	2	J10001-UP
24		09608-05080	.PLATE, NAME, (LIMITED SUPPLY).....	1	J10001-UP
		04418-13060	.SCREW.....	4	J10001-UP

Ref :F2320-01A0 Page :150033

FIG.F2320-0202 TRANSMISSION (REVERSE CLUTCH)

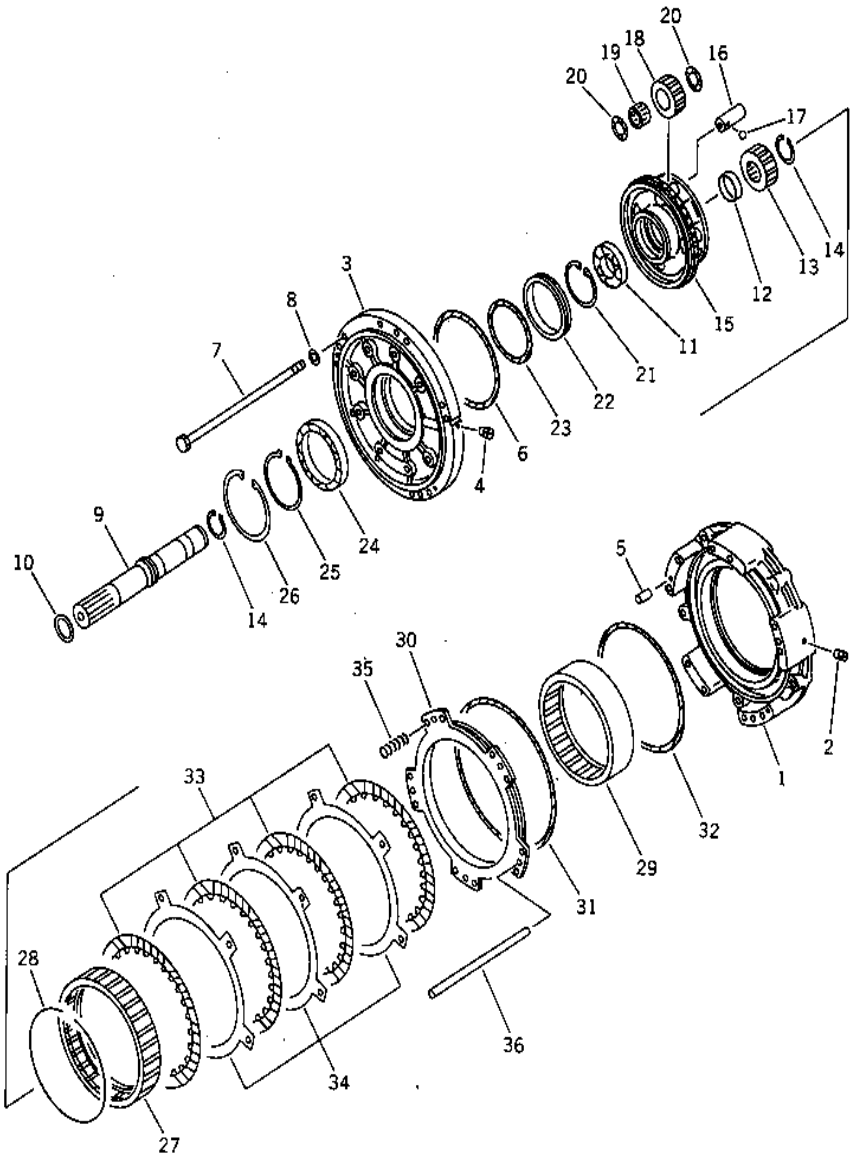

D85ESS-2 S/N J11888-UP

TRANSMISSION (REVERSE CLUTCH)

INDEX	CD	PART NO.	DESCRIPTION	QTY	SERIAL NO.
		14X-15-00012	TRANSMISSION ASS'Y.....	1	J10001-UP
			THIS ASSEMBLY CONSIST OF ALL PARTS.....		
			SHOWN IN FIGS. F2320-01A0 TO F2320-01A10....		
		14X-15-00270	.HOUSING ASS'Y.....	1	J10001-UP
1	C1		..HOUSING.....	1	J10001-UP
2		145-14-11320	..PLUG.....	1	J10001-UP
		14X-15-00280	.HOUSING ASS'Y.....	1	J10001-UP
3	C1		..HOUSING.....	1	J10001-UP
4		175-15-11230	..PLUG.....	1	J10001-UP
5		04020-01228	.PIN.....	4	J10001-UP
6		07018-12105	.RING, SEAL (K3).....	1	J10001-UP
7		144-15-21191	.BOLT.....	3	J10001-UP
8		145-14-11571	.WASHER.....	3	J10001-UP
9		14X-15-12110	.SHAFT.....	1	J10001-UP
10		07018-10552	.SEAL RING (K3).....	1	J10001-UP
11		06030-06210	.BEARING.....	1	J10001-UP
12		14X-15-12140	.SPACER.....	1	J10001-UP
13		14X-15-12210	.GEAR.....	1	J10001-UP
14		04064-05020	.RING.....	4	J10001-UP
15		14X-15-12310	.CARRIER.....	2	J10001-UP
16		14X-15-12540	.SHAFT.....	4	J10001-UP
17		04260-00635	.BALL.....	4	J10001-UP
18		14X-15-12410	.GEAR.....	4	J10001-UP
19		14X-15-19440	.BEARING.....	4	J10001-UP
20		09233-12920	.WASHER.....	4	J10001-UP
21		04077-00090	.RING.....	8	J10001-UP
22		14X-15-12190	.SPACER.....	1	J10001-UP
23		07018-11355	.RING, SEAL (K3).....	1	J10001-UP
24		06030-06922	.BEARING.....	1	J10001-UP
25		04070-00110	.RING.....	1	J10001-UP
26		04077-00150	.RING.....	1	J10001-UP
27		14X-15-12611	.RING GEAR.....	1	J10001-UP
28		14X-15-19520	.SNAP RING.....	1	J10001-UP
29		14X-15-12621	.RING GEAR.....	1	J10001-UP
30		14X-15-12771	.PISTON.....	1	J10001-UP
31		425-15-19250	.SEAL, RING (K3).....	1	J10001-UP
32		113-15-12870	.RING, SEAL (K3).....	1	J10001-UP
33		424-15-12711	.DISC.....	4	J10001-UP
34		424-15-12720	.PLATE.....	3	J10001-UP
35		145-14-12790	.SPRING.....	10	J10001-UP
36		232-15-11270	.PIN.....	5	J10001-UP

Ref :F2320-01A1 Page :150034

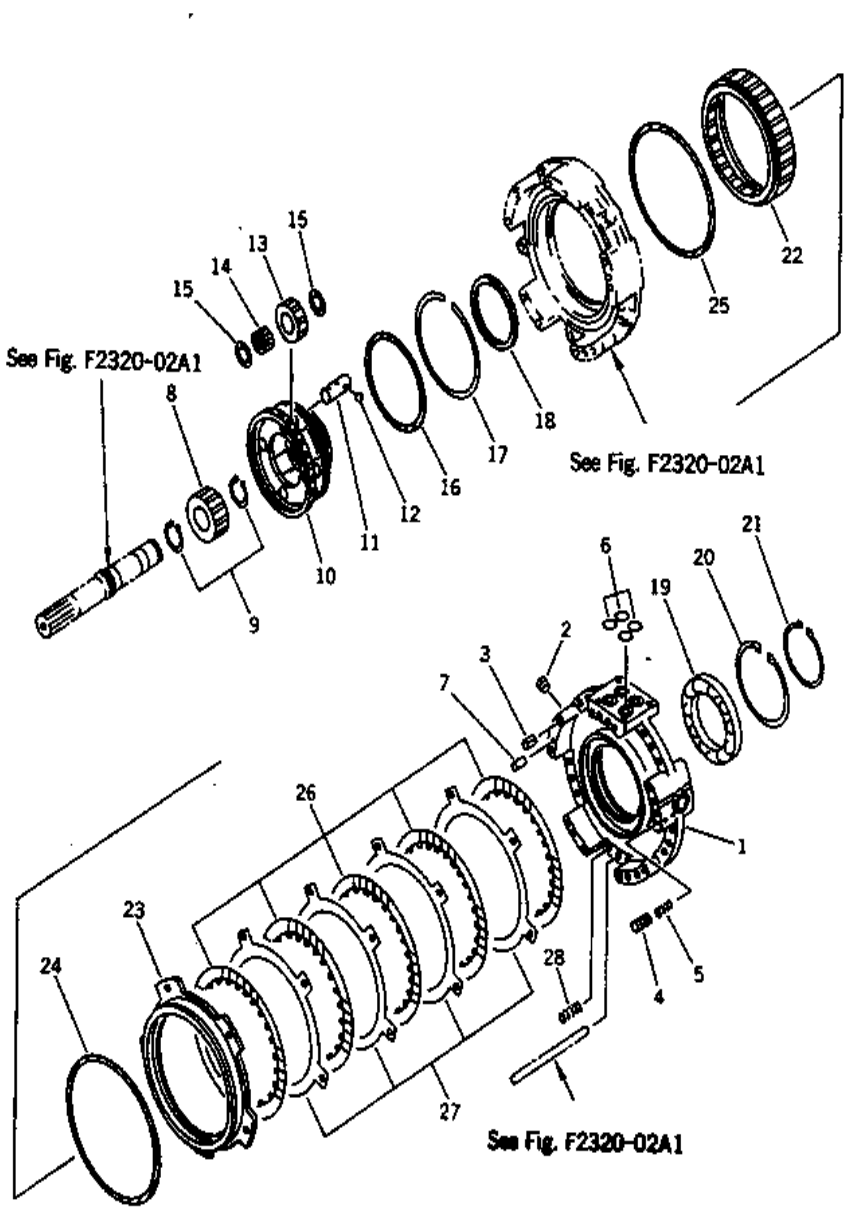

D85ESS-2 S/N J11888-UP

TRANSMISSION (FORWARD CLUTCH)

INDEX	CD	PART NO.	DESCRIPTION	QTY	SERIAL NO.
		(14X-15-00012)	TRANSMISSION ASS'Y	1	J10241-UP
			THIS ASSEMBLY CONSIST OF ALL PARTS		
			SHOWN IN FIGS. F2320-01A0 TO F2320-01A10		
		14X-15-00260	.HOUSING ASS'Y	1	J10241-UP
1	C1		..HOUSING	1	J10241-UP
2		568-15-11380	..PLUG	1	J10241-UP
3		569-15-41310	.SLEEVE	11	J10241-UP
4		287-15-15360	.PISTON	1	J10241-UP
5		700-80-51390	.SPRING	1	J10241-UP
6		07000-73030	.O-RING	4	J10241-UP
7		04020-01228	.PIN	4	J10241-UP
8		14X-15-12220	.GEAR	1	J10241-UP
9		04064-05020	.RING	2	J10241-UP
10		14X-15-12340	.CARRIER	1	J10241-UP
11		14X-15-12540	.SHAFT	4	J10241-UP
12		04260-00635	.BALL	4	J10241-UP
13		14X1512420	.GEAR	4	J10241-UP
14		14X-15-19440	.BEARING	4	J10241-UP
15		09233-12920	.WASHER	8	J10241-UP
16		14X-15-19210	.SEAL RING	1	J10241-UP
17		14X-15-19530	.SNAP RING	1	J10241-UP
18		421-15-12150	.SPACER	1	J10241-UP
19		06000-06926	.BEARING	1	J10241-UP
20		04071-00180	.RING,SNAP	1	J10241-UP
21		04070-00130	.RING SNAP	1	J10241-UP
22		14X-15-12661	.RING GEAR	1	J10241-UP
23		14X-15-12740	.PISTON	1	J10241-UP
24		562-15-19220	.SEAL RING	1	J10241-UP
25		125-15-22870	.RING, SEAL	1	J10241-UP
26		424-15-12711	.DISC	5	J10241-UP
27		424-15-12720	.PLATE	4	J10241-UP
28		14X-15-12910	.SPRING	10	J10241-UP

Ref :F2320-01A2 Page :150035

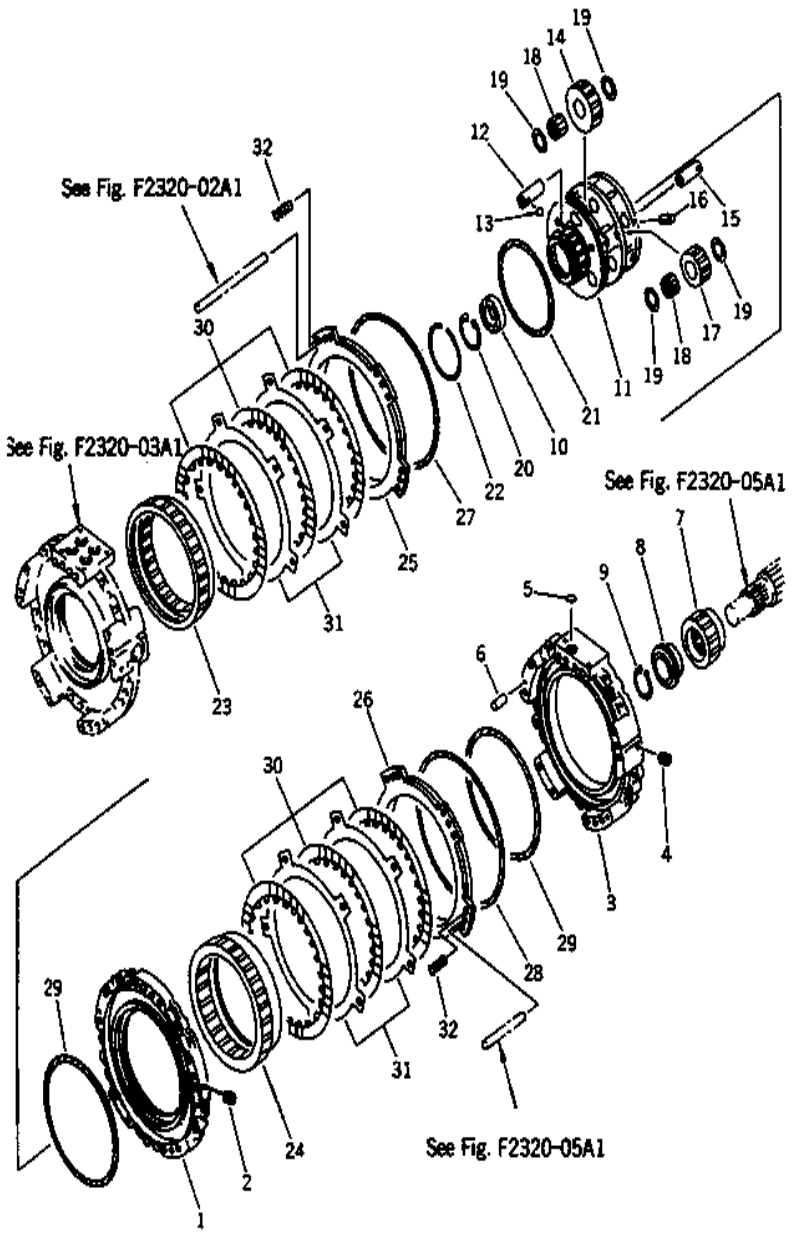

D85ESS-2 S/N J11888-UP

TRANSMISSION (3RD CLUTCH AND 2ND CLUTCH)

INDEX	CD	PART NO.	DESCRIPTION	QTY	SERIAL NO.
		(14X-15-00012)	TRANSMISSION ASS'Y	1	J10241-UP
			THIS ASSEMBLY CONSIST OF ALL PARTS		
			SHOWN IN FIGS. F2320-01A0 TO F2320-01A10		
		14X-15-00250	.HOUSING ASS'Y	1	J10241-UP
1	C1		..HOUSING	1	J10241-UP
2		145-14-11320	..PLUG	1	J10241-UP
		14X-15-00240	.HOUSING ASS'Y	1	J10241-UP
3	C1		..HOUSING	1	J10241-UP
4		145-14-11320	..PLUG	1	J10241-UP
5		07000-72020	.O-RING (K3)	1	J10241-UP
6		04020-01228	.PIN	2	J10241-UP
7		14X-15-12240	.GEAR	1	J10241-UP
8		14X-15-12160	.SPACER	1	J10241-UP
9		04064-05520	.RING,SNAP	1	J10241-UP
10		14X-15-19310	.BEARING	1	J10241-UP
11		14X-15-12330	.CARRIER	1	J10241-UP
12		14X-15-12530	.SHAFT	3	J10241-UP
13		04260-00635	.BALL	3	J10241-UP
14		14X-15-12430	.GEAR	3	J10241-UP
15		14X-15-12520	.SHAFT	3	J10241-UP
16		04025-00620	.PIN,SPRING	3	J10241-UP
17		14X-15-12440	.GEAR	3	J10241-UP
18		14X-15-19420	.BEARING	6	J10241-UP
19		154-15-12550	.THRUST WASHER	12	J10241-UP
20		04065-07225	.RING	1	J10241-UP
21		0701812105	.RING, SEAL (K3)	1	J10241-UP
22		14X-15-19510	.SNAP RING	1	J10241-UP
23		14X-15-12640	.RING GEAR	1	J10241-UP
24		14X-15-12670	.RING GEAR	1	J10241-UP
25		424-15-12750	.PISTON	1	J10241-UP
26		424-15-12760	.PISTON	1	J10241-UP
27		568-15-12850	.SEAL (K3)	1	J10241-UP
28		144-15-22881	.SEAL RING (K3)	1	J10241-UP
29		113-15-12870	.SEAL (K3)	2	J10241-UP
30		424-15-12711	.DISC	6	J10241-UP
31		424-15-12720	.PLATE	4	J10241-UP
32		103-15-22911	.SPRING	20	J10241-UP

Ref :F2320-01A3 Page :150036

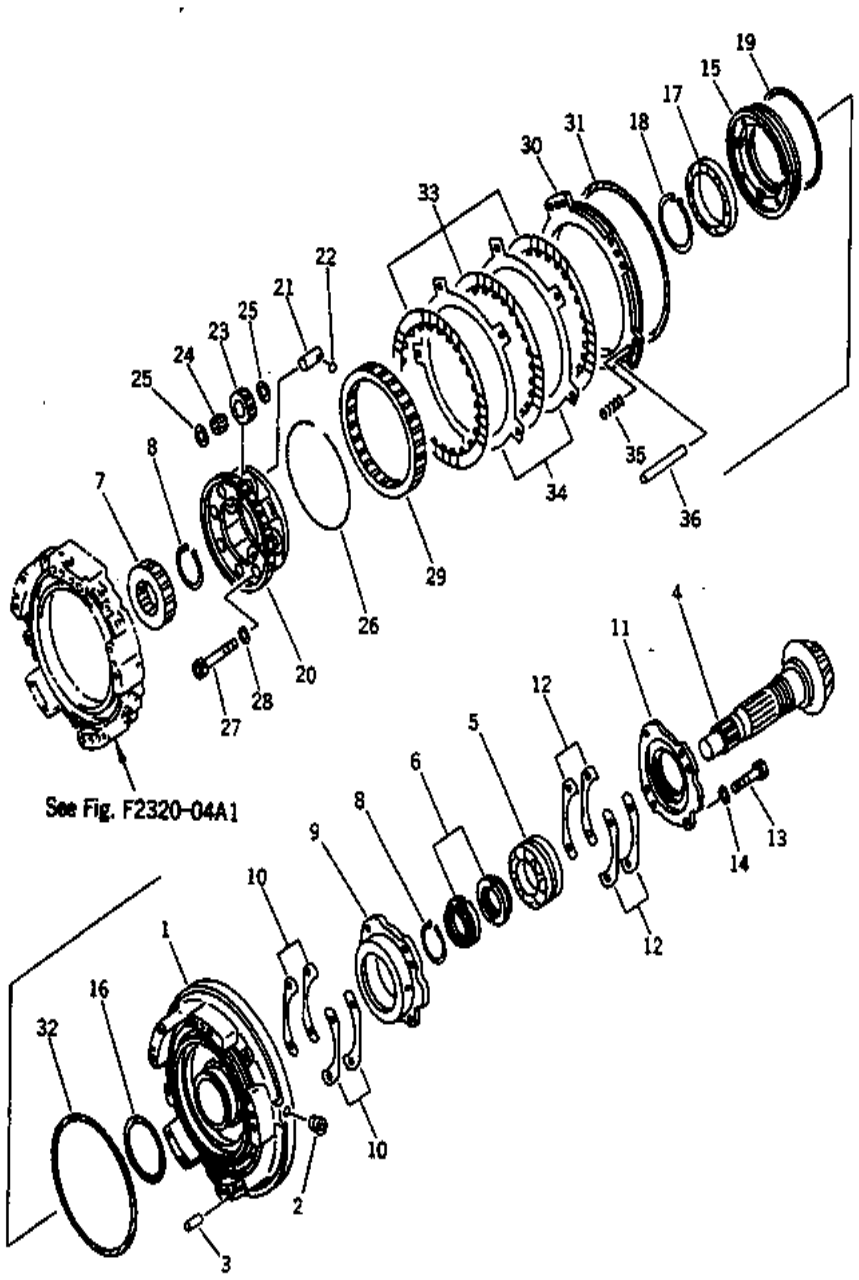

D85ESS-2 S/N J11888-UP

TRANSMISSION (1ST CLUTCH)

INDEX	CD	PART NO.	DESCRIPTION	QTY	SERIAL NO.
		(14X-15-00012)	TRANSMISSION ASS'Y.....	1	J10241-UP
			THIS ASSEMBLY CONSIST OF ALL PARTS.....		
			SHOWN IN FIGS.F2320-01A0 TO F2320-01A10.....		
		14X-15-00230	.HOUSING ASS'Y.....	1	J10241-UP
1	C1		..HOUSING.....	1	J10241-UP
2		07043-70415	..PLUG.....	1	J10241-UP
3		04020-01228	.PIN.....	2	J10241-UP
4		14X-15-12931	.SHAFT.....	1	J10241-UP
5		144-15-22810	.BEARING.....	1	J10241-UP
6		14X-15-13251	.NUT.....	2	J10241-UP
7		14X-15-12250	.GEAR.....	1	J10241-UP
8		04064-07025	.RING.....	2	J10241-UP
9		14X-15-13140	.CAGE.....	1	J10241-UP
10		14X-15-05010	.SHIM KIT (K3).....	1	J10241-UP
11		14X-15-13130	.COVER.....	1	J10241-UP
12		14X-15-05020	.SHIM KIT (K3).....	1	J10241-UP
13		01010-81450	.BOLT.....	4	J10241-UP
14		01643-31445	.WASHER.....	4	J10241-UP
15		134-15-62370	.COVER.....	1	J10241-UP
16		14X-15-19210	.SEAL RING (K3).....	1	J10241-UP
17		06000-06924	.BEARING.....	1	J10241-UP
18		04070-00120	.RING.....	1	J10241-UP
19		0701812105	.RING, SEAL (K3).....	1	J10241-UP
20		14X-15-12350	.CARRIER.....	1	J10241-UP
21		14X-15-12510	.SHAFT.....	4	J10241-UP
22		04260-00635	.BALL.....	4	J10241-UP
23		421-15-12450	.GEAR.....	4	J10241-UP
24		421-15-19411	.BEARING.....	4	J10241-UP
25		235-15-12590	.THRUST WASHER.....	8	J10241-UP
26		14X-15-19520	.SNAP RING.....	1	J10241-UP
27		01252-41060	.BOLT.....	4	J10241-UP
28		01643-51032	.WASHER.....	4	J10241-UP
29		14X-15-12680	.RING GEAR.....	1	J10241-UP
30		14X-15-12760	.PISTON.....	1	J10241-UP
31		144-15-22881	.SEAL RING (K3).....	1	J10241-UP
32		232-15-19220	.SEAL RING (K3).....	1	J10241-UP
33		424-15-12711	.DISC.....	3	J10241-UP
34		424-15-12720	.PLATE.....	2	J10241-UP
35		103-15-22911	.SPRING.....	10	J10241-UP
36		155-15-12770	.PIN.....	5	J10241-UP

Ref :F2320-01A4 Page :150037

FIG.F2320-0602 TRANSMISSION (MODULATING VALVE)

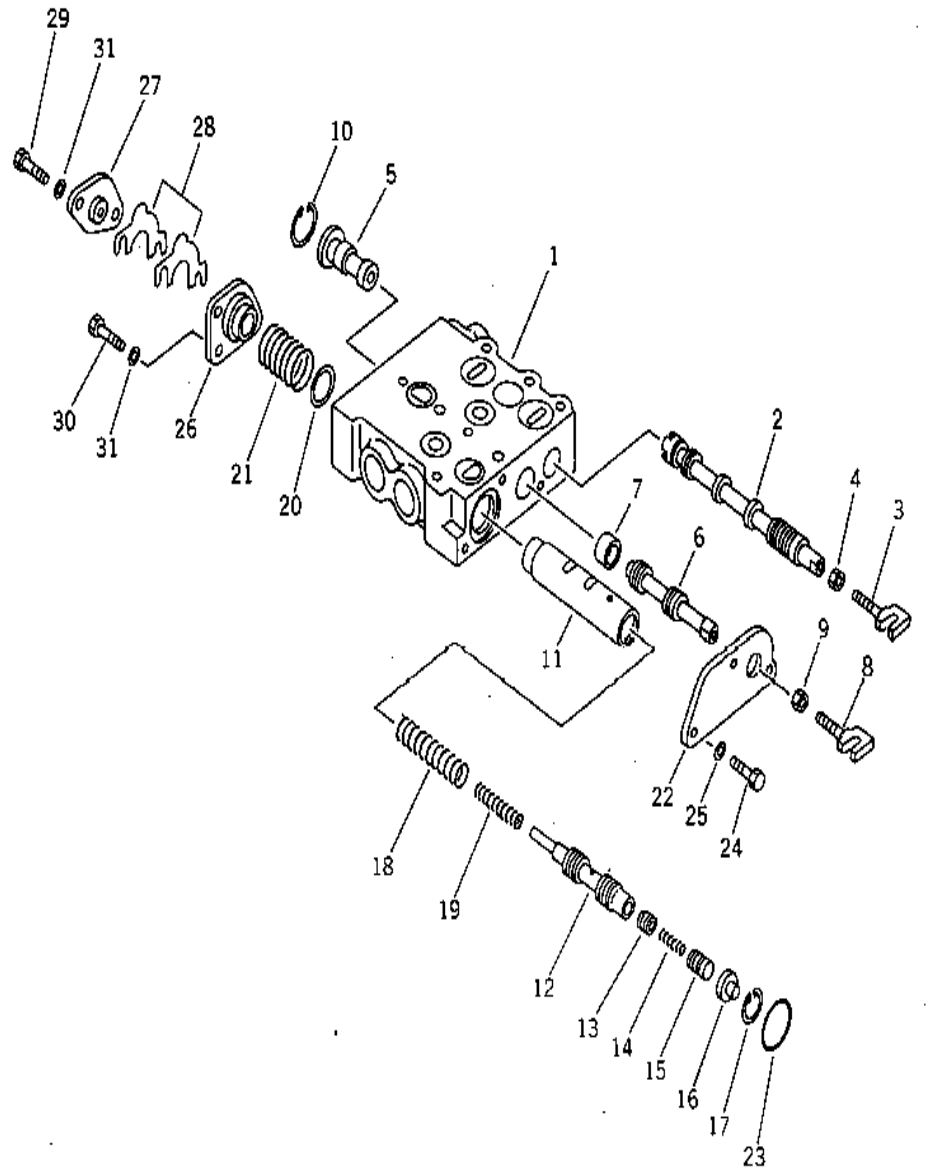

D85ESS-2 S/N J11888-UP

TRANSMISSION (MODULATING VALVE)

INDEX	CD	PART NO.	DESCRIPTION	QTY	SERIAL NO.
		(14X-15-00012)	TRANSMISSION ASS'Y.....	1	J10241-UP
			THIS ASSEMBLY CONSIST OF ALL PARTS.....		
			SHOWN IN FIGS.F2320-01A0 TO F2320-01A10.....		
		14X-15-15003	.CONTROL VALVE ASS'Y.....	1	J10241-UP
			THIS ASSEMBLY CONSIST OF ALL PARTS.....		
			SHOWN IN FIGS. F2320-01A0 TO F2320-01A10....		
1		14X-15-15230	.VALVE BODY.....	1	J10241-UP
2		134-15-15131	..SPOOL.....	1	J10241-UP
3		09363-00850	..YOKE.....	1	J10241-UP
4		01580-10806	..NUT.....	1	J10241-UP
5		125-15-15141	..STOPPER.....	1	J10241-UP
6		17A-15-25120	..SPOOL.....	1	J10241-UP
7		14X-15-15260	..COLLAR.....	1	J10241-UP
8		09363-00850	..YOKE.....	1	J10241-UP
9		01580-10806	..NUT.....	1	J10241-UP
10		04065-03012	..RING.....	1	J10241-UP
11		14X-15-15210	..VALVE.....	1	J10241-UP
12		125-15-15220	..VALVE.....	1	J10241-UP
13		103-15-15460	..VALVE.....	1	J10241-UP
14		125-15-15290	..SPRING.....	1	J10241-UP
15		144-40-21830	..VALVE.....	1	J10241-UP
16		125-15-15230	..STOPPER.....	1	J10241-UP
17		120-09-15110	..SNAP RING.....	1	J10241-UP
18		14X-15-16220	..SPRING.....	1	J10241-UP
19		14X-15-16260	..SPRING.....	1	J10241-UP
20		125-15-15260	..WASHER.....	1	J10241-UP
21		125-15-15330	..SPRING.....	1	J10241-UP
22		125-15-15390	..COVER.....	1	J10241-UP
23		07000-73038	..O-RING (K4).....	1	J10241-UP
24		01010-80820	..BOLT.....	3	J10241-UP
25		01643-30823	..WASHER.....	3	J10241-UP
26		134-15-15270	..SPACER.....	1	J10241-UP
27		134-15-15280	..COVER.....	1	J10241-UP
28		125-15-15170	..SHIM, 0.5MM (K4).....	5	J10241-UP
29		01010-80830	..BOLT.....	2	J10241-UP
30		01010-80820	..BOLT.....	1	J10241-UP
31		01643-30823	..WASHER.....	3	J10241-UP

Ref :F2320-01A5 Page :150038

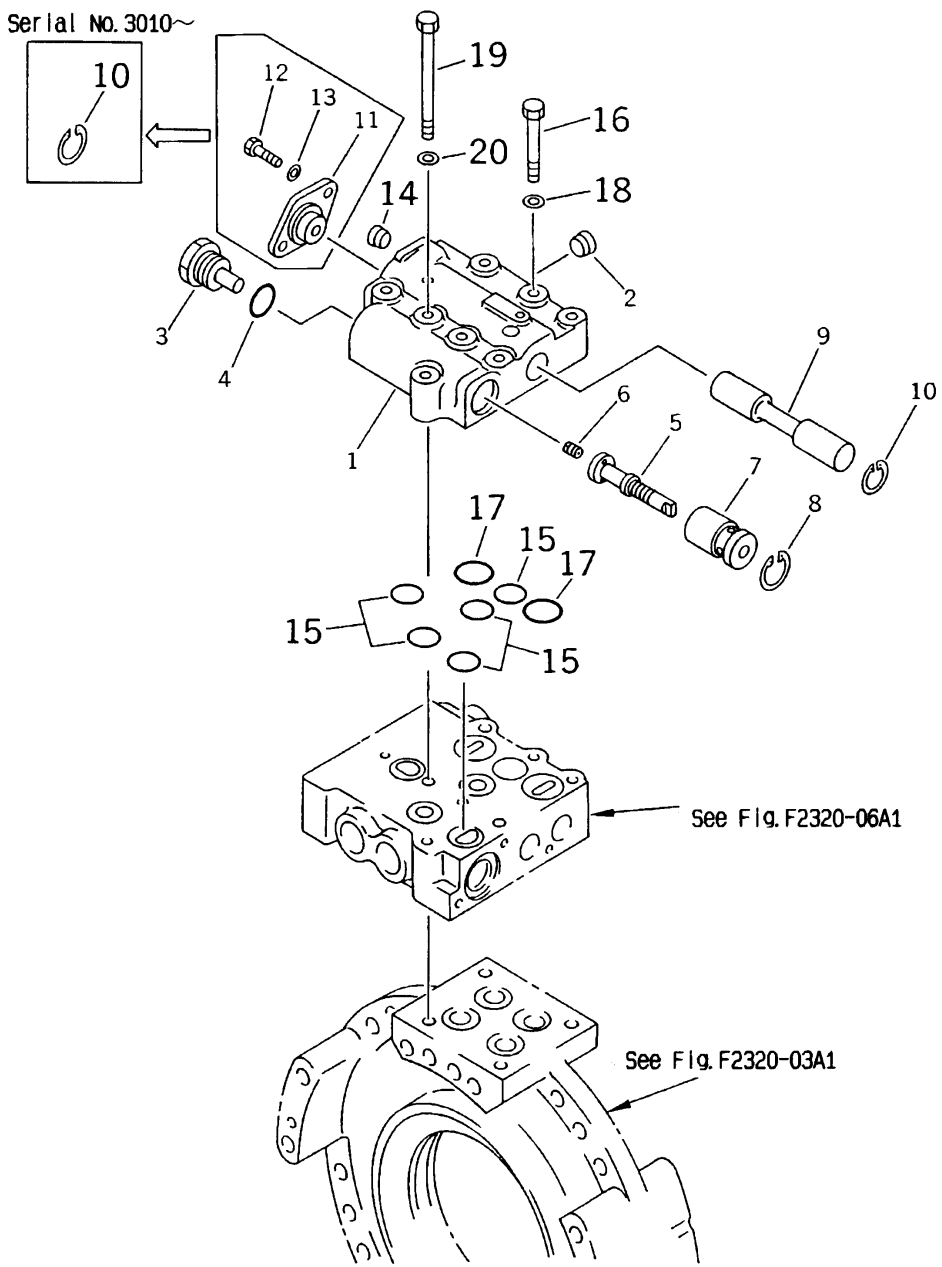

D85ESS-2 S/N J11888-UP

TRANSMISSION (QUICK RETURN VALVE)

INDEX	CD	PART NO.	DESCRIPTION	QTY	SERIAL NO.
		(14X-15-00012)	TRANSMISSION ASS'Y.....	1	J10241-UP
			THIS ASSEMBLY CONSIST OF ALL PARTS.....		
			SHOWN IN FIGS. F2320-01A0 TO F2320-01A10....		
		(14X-15-15003)	.CONTROL VALVE ASS'Y.....	1	J10241-UP
			THIS ASSEMBLY CONSIST OF ALL PARTS.....		
			SHOWN IN FIGS. F2320-01A0 TO F2320-01A10....		
1		134-15-35411	..BODY.....	1	J10241-UP
2		07043-00415	..PLUG.....	1	J10241-UP
3		134-15-35360	..PLUG.....	1	J10241-UP
4		07002-03034	..O-RING (K4).....	1	J10241-UP
		14X-15-15330	..VALVE.....	1	J10241-UP
5	C1		...VALVE.....	1	J10241-UP
6	C1		...PLUG.....	1	J10241-UP
7		134-15-15350	.SLEEVE.....	1	J10241-UP
8		04065-03212	..RING.....	1	J10241-UP
9		134-15-25350	..SPACER.....	1	J10241-UP
10		04065-02512	..RING.....	2	J10241-UP
11		07043-00108	..PLUG.....	1	J10241-UP
12		07000-73025	..O-RING (K4).....	5	J10241-UP
13		07000-73030	..O-RING (K4).....	2	J10241-UP
14		01010-81055	..BOLT.....	4	J10241-UP
15		01643-31032	..WASHER.....	4	J10241-UP
16		01011-51010	..BOLT.....	4	J10241-UP
17		01643-31032	..WASHER.....	4	J10241-UP

Ref :F2320-01A6 Page :150039

FIG.F2320-0802 TRANSMISSION (MAIN RELIEF VALVE)

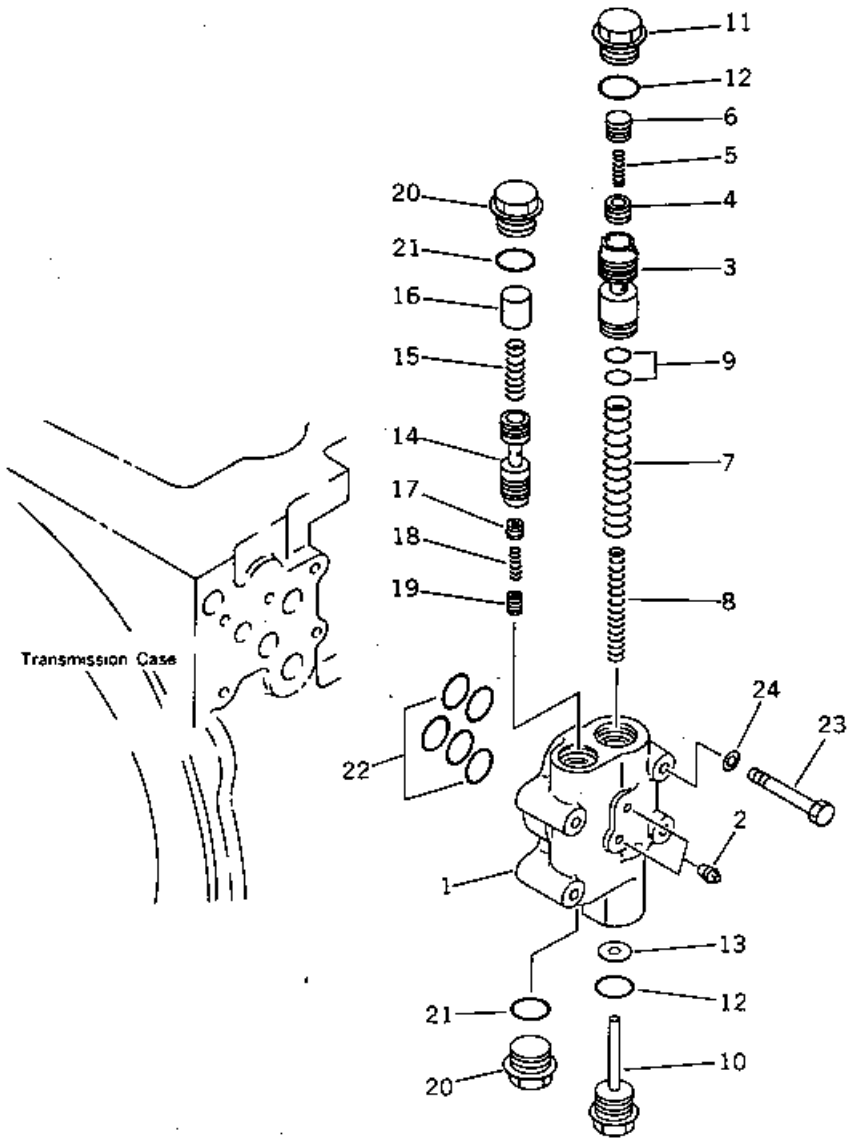

D85ESS-2 S/N J11888-UP

TRANSMISSION (MAIN RELIEF VALVE)

INDEX	CD	PART NO.	DESCRIPTION	QTY	SERIAL NO.
		14X-15-00012	TRANSMISSION ASS'Y.....	1	J10241-UP
			THIS ASSEMBLY CONSIST OF ALL PARTS.....		
			SHOWN IN FIGS.F2320-01A0 TO F2320-01A10.....		
		14X-15-16003	.VALVE ASS'Y.....	1	J10241-UP
1		17A-15-25131	..VALVE BODY.....	1	J10241-UP
2		07042-20108	..PLUG.....	3	J10241-UP
3		41E-15-15230	..VALVE.....	1	J10241-UP
4		426-15-15490	..VALVE.....	1	J10241-UP
5		198-15-15770	..SPRING.....	1	J10241-UP
6		426-15-15480	..VALVE.....	1	J10241-UP
7		41E-15-16251	..SPRING.....	1	J10241-UP
8		426-15-16261	..SPRING.....	1	J10241-UP
9		199-15-15570	..SHIM, 0.5MM.....	6	J10241-UP
10		426-15-15810	..PLUG.....	1	J10241-UP
11		426-15-15820	..PLUG.....	1	J10241-UP
12		07002-03034	..O-RING.....	2	J10241-UP
13		22W-43-17330	..WASHER.....	1	J10241-UP
14		12H-15-14130	..SPOOL.....	1	J10241-UP
15		14X-15-16210	..SPRING.....	1	J10241-UP
16		12H-15-14140	..GUIDE.....	1	J10241-UP
17		104-15-25490	..VALVE.....	1	J10241-UP
18		125-15-15290	..SPRING.....	1	J10241-UP
19		104-15-25480	..VALVE.....	1	J10241-UP
20		426-15-15820	..PLUG.....	2	J10241-UP
21		07002-03034	..O-RING.....	2	J10241-UP
22		07000-73030	..O-RING.....	5	J10241-UP
23		01010-81065	.BOLT.....	4	J10241-UP
24		01643-31032	.WASHER.....	4	J10241-UP

Ref :F2320-01A7 Page :150040

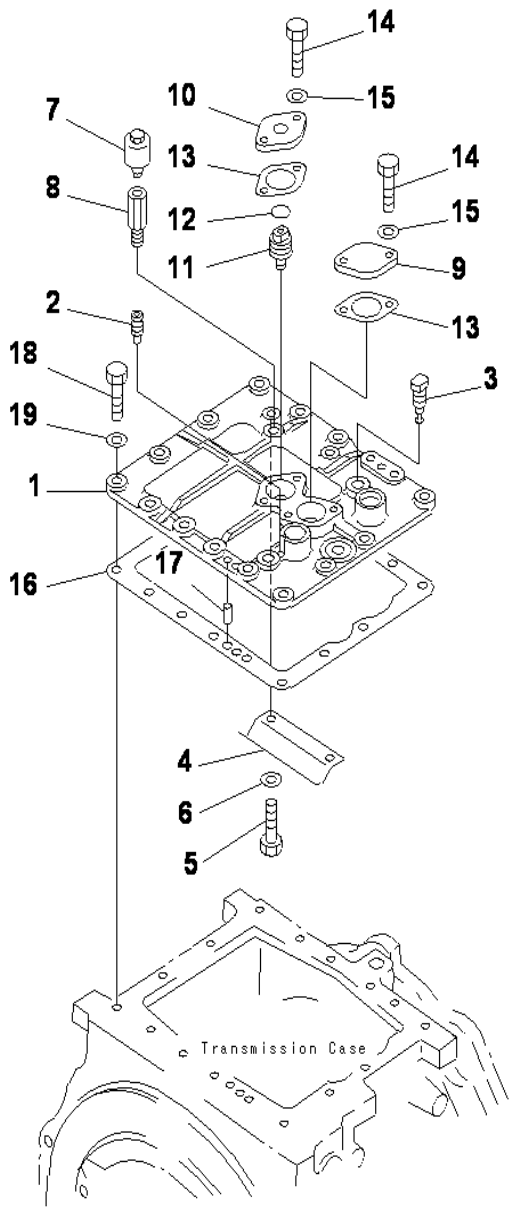

D85ESS-2 S/N J11888-UP

TRANSMISSION (CONTROL VALVE COVER)

INDEX	CD	PART NO.	DESCRIPTION	QTY	SERIAL NO.
		14X-15-00012	TRANSMISSION ASS'Y.....	1	J10241-UP
			THIS ASSEMBLY CONSIST OF ALL PARTS.....		
			SHOWN IN FIGS.F2320-01A0 TO F2320-01A10.....		
		14X-15-00372	.COVER ASS'Y.....	1	J10241-UP
			THIS ASSEMBLY CONSIST OF ALL PARTS.....		
			SHOWN IN FIGS.F2320-01A0 TO F2320-01A10.....		
1		14X-15-15812	..COVER.....	1	J10241-UP
2		14X-15-15750	..SCREW.....	1	J10241-UP
3		14X-15-15760	..SCREW.....	1	J10241-UP
4		14X-15-15770	..PLATE.....	1	J10241-UP
5		01010-81025	..BOLT.....	2	J10241-UP
6		01643-31032	..WASHER.....	2	J10241-UP
7		07030-00252	.BREATHER.....	1	J10241-UP
8		170-21-11190	.ELBOW.....	2	J10241-UP
9		125-15-21640	.PLATE.....	1	J10241-UP
10		14X-15-15821	.COVER.....	1	J10241-UP
11		14X-15-16450	.PLUG.....	1	J10241-UP
12		07000-72020	.O-RING (K6).....	1	J10241-UP
13		113-15-11641	.GASKET (K6).....	2	J10241-UP
14		01010-81025	.BOLT.....	4	J10241-UP
15		01643-31032	.WASHER.....	4	J10241-UP
16		14X-15-15910	.GASKET (K6).....	1	J10241-UP
17		04020-01228	.PIN.....	2	J10241-UP
18		01010-81225	.BOLT.....	15	J10241-UP
19		01643-31232	.WASHER.....	15	J10241-UP

Ref :F2320-01A8 Page :150041

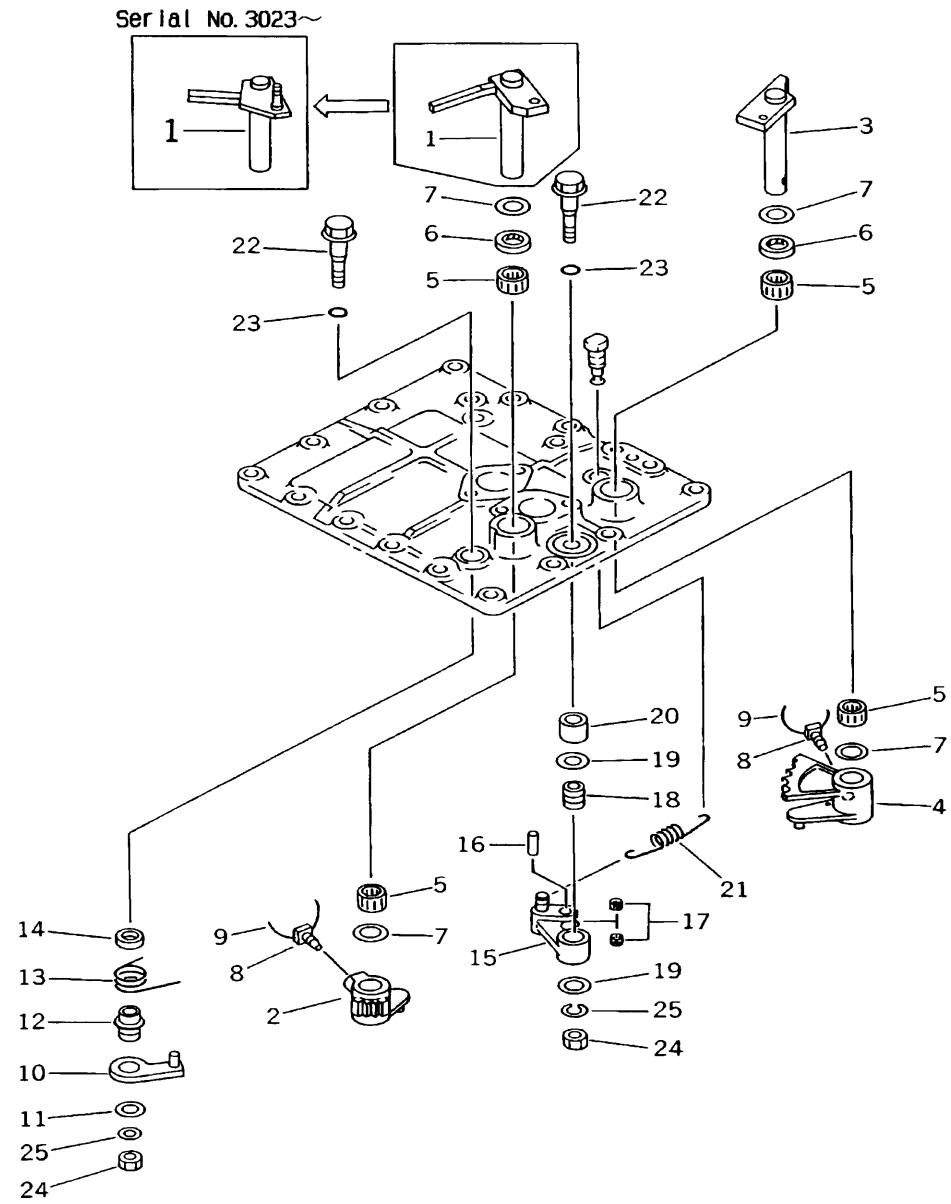

TRANSMISSION (CONTROL LEVER)

INDEX	CD	PART NO.	DESCRIPTION	QTY	SERIAL NO.
		(14X-15-00012)	TRANSMISSION ASS'Y.....	1	J10001-UP
			THIS ASSEMBLY CONSISTS OF ALL PARTS.....		
			SHOWN IN FIGS.F2320-01A0 TO F2320-01A10.....		
		(14X-15-00372)	.COVER ASS'Y.....	1	J10001-UP
			THIS ASSEMBLY CONSISTS OFF ALL PARTS.....		
			SHOWN IN FIGS.F2320-01A0 TO F2320-01A10.....		
1		14X-15-15713	..LEVER.....	1	J10001-UP
2		14X-15-15721	..LEVER.....	1	J10001-UP
3		14X-15-15611	..LEVER.....	1	J10001-UP
4		14X-15-15622	..LEVER.....	1	J10001-UP
5		06120-02016	..BEARING, SEAL (K6).....	4	J10001-UP
6		144-15-29110	..OIL SEAL (K6).....	2	J10001-UP
7		144-15-25570	..WASHER.....	4	J10001-UP
8		01306-11025	..SCREW.....	2	J10001-UP
9		04059-01010	..WIRE.....	2	J10001-UP
10		14X-15-15791	..LEVER.....	1	J10001-UP
11		175-15-45660	..WASHER.....	1	J10001-UP
12		14X-15-15671	..BUSHING.....	1	J10001-UP
13		14X-15-16192	..SPRING.....	1	J10001-UP
14		14X-15-15840	..COLLAR.....	1	J10001-UP
15		125-15-11440	..LEVER.....	1	J10001-UP
16		144-15-25691	..ROLLER.....	1	J10001-UP
17		144-15-29121	..BEARING.....	2	J10001-UP
18		144-15-25670	..BUSHING.....	1	J10001-UP
19		175-15-45660	..WASHER.....	2	J10001-UP
20		14X-15-15830	..COLLER.....	1	J10001-UP
21		17A-15-26180	..SPRING.....	1	J10001-UP
22		134-15-21450	..SCREW.....	2	J10001-UP
23		07000-02015	..O-RING.....	2	J10001-UP
24		01580-11008	..NUT.....	2	J10001-UP
25		01602-21030	..WASHER.....	2	J10001-UP

FIG.F2320-1102 TRANSMISSION MOUNT

(TE,TEX,TP,TPX)

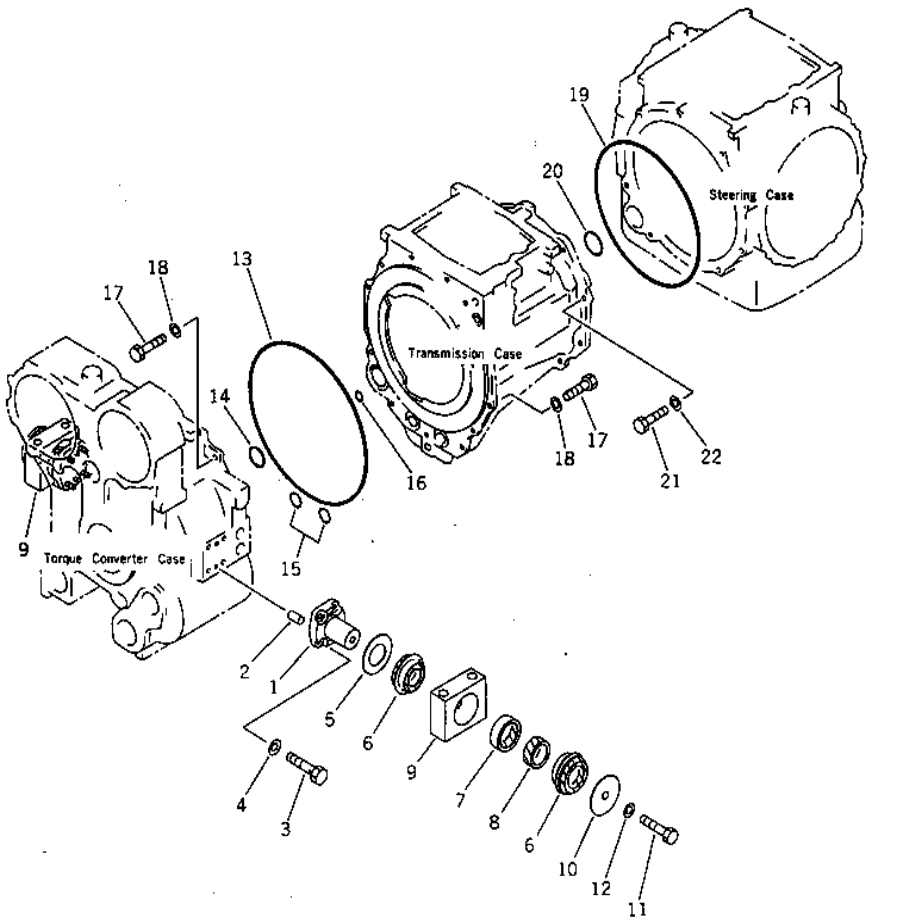

D85ESS-2 S/N J11888-UP

TRANSMISSION MOUNT

INDEX	CD	PART NO.	DESCRIPTION	QTY	SERIAL NO.
1		14X-01-11122	PIN	2	J10241-J10774
2		04020-01228	PIN	4	J10241-J10774
3		01010-81645	BOLT	8	J10241-J10774
4		01643-31645	WASHER	8	J10241-J10774
5		14X-01-11140	SPACER	2	J10241-J10774
6		14X-01-11180	CUSHION	4	J10241-J10774
7		154-01-21320	CUSHION	2	J10241-J10774
8		154-01-21330	CUSHION	2	J10241-J10774
9		14X-01-11130	CAP	2	J10241-J10774
10		14X-01-11150	PLATE	2	J10241-J10774
11		01010-81645	BOLT	2	J10241-J10774
12		01643-31645	WASHER	2	J10241-J10774
13		568-33-11410	O-RING (K7)	1	J10241-UP
14		07000-72075	O-RING (K7)	1	J10241-UP
15		07000-72055	O-RING (K7)	2	J10241-UP
16		07000-73030	O-RING (K7)	1	J10241-UP
17		01010-81235	BOLT	13	J10241-UP
18		01643-31232	WASHER	13	J10241-UP
19		07000-05440	O-RING	1	J10775-UP
		07000-75440	O-RING	1	J10241-J10774
20		07000-72075	O-RING (K7)	1	J10241-UP
21		01010-81650	BOLT	8	J10241-UP
22		01643-31645	WASHER	8	J10241-UP

Ref :F2320-01A10 Page :150043

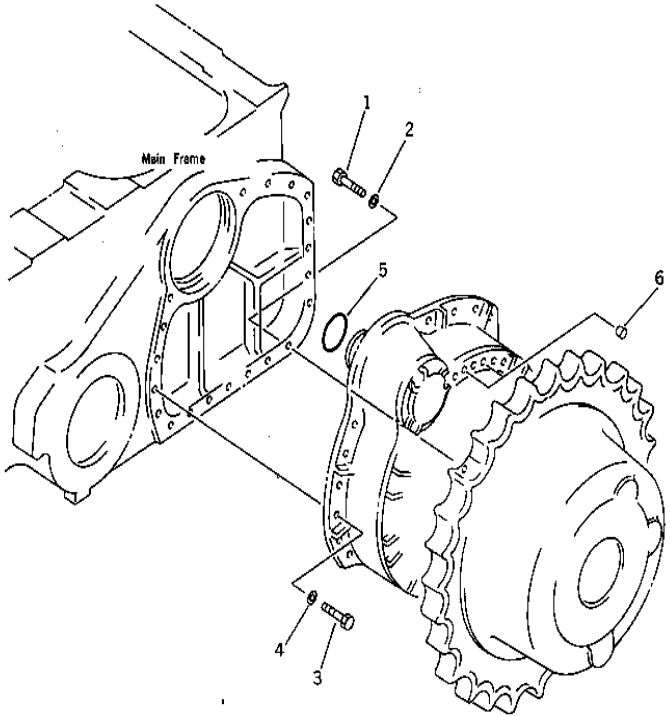

D85ESS-2 S/N J11888-UP

FINAL DRIVE (MOUNT)

INDEX	CD	PART NO.	DESCRIPTION	QTY	SERIAL NO.
1		01010-82070	BOLT	22	J10001-UP
2		01643-32060	WASHER	22	J10001-UP
3		01010-82055	BOLT	18	J10001-UP
4		01643-32060	WASHER	18	J10001-UP
5		07000-05105	O-RING	2	J10001-UP
6		07049-01620	PLUG	4	J10001-UP

Ref :F2380-01A0 Page :150050

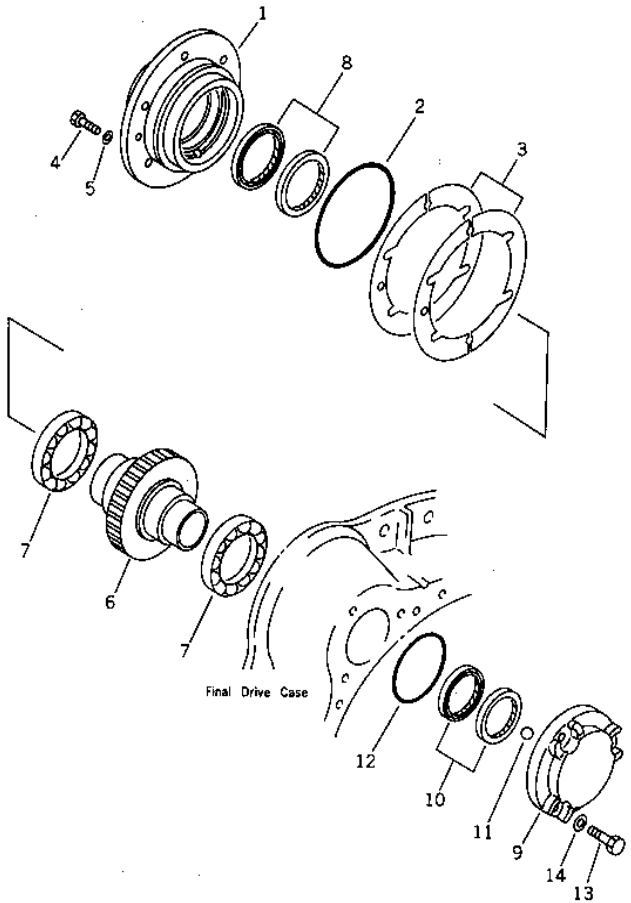

D85ESS-2 S/N J11888-UP

FINAL DRIVE (PINION)

INDEX	CD	PART NO.	DESCRIPTION	QTY	SERIAL NO.
		14Y-27-00310	FINAL DRIVE ASS'Y,L.H.....	1	J11432-UP
		14Y-27-00015	FINAL DRIVE ASS'Y, L.H.....	1	J11258-J11431
		14Y-27-00014	FINAL DRIVE ASS'Y, L.H.....	1	J11228-J11257
		14Y-27-00013	FINAL DRIVE ASS'Y, L.H.....	1	J11048-J11227
		14Y-27-00011	FINAL DRIVE ASS'Y, L.H.....	1	J10241-J11047
		14Y-27-00320	FINAL DRIVE ASS'Y,R.H.....	1	J11432-UP
		14Y-27-00025	FINAL DRIVE ASS'Y, R.H.....	1	J11258-J11431
		14Y-27-00024	FINAL DRIVE ASS'Y, R.H.....	1	J11228-J11257
		14Y-27-00023	FINAL DRIVE ASS'Y, R.H.....	1	J11048-J11227
		14Y-27-00021	FINAL DRIVE ASS'Y, R.H.....	1	J10241-J11047
1		14X-27-11220	.CAGE.....	1	J10241-UP
2		07000-05165	.O-RING.....	1	J10241-UP
3		14X-27-05010	.SHIM KIT.....	1	J10241-UP
		14X-27-11260	.SHIM.....	6	J10241-UP
		14X-27-11270	.SHIM.....	4	J10241-UP
		14X-27-11280	.SHIM.....	2	J10241-UP
4		01010-81235	.BOLT.....	6	J10241-UP
5		01643-31232	.WASHER.....	6	J10241-UP
6		14X-27-31210	.PINION.....	1	J11432-UP
		14X-27-11212	PINION.....	1	J10241-J11431
7		14X-27-11231	.BEARING.....	2	J10241-UP
8		07013-10080	.SEAL, OIL.....	1	J10241-UP
9		14X-27-11243	.COVER.....	1	J10241-UP
10		209-03-12270	.SEAL, OIL.....	2	J10241-UP
11		04260-01905	.BALL.....	1	J10241-UP
12		07000-02110	.O-RING.....	1	J10241-UP
13		01010-81245	.BOLT.....	3	J10241-UP
14		01643-31232	.WASHER.....	3	J10241-UP

Ref :F2380-02A1 Page :150060

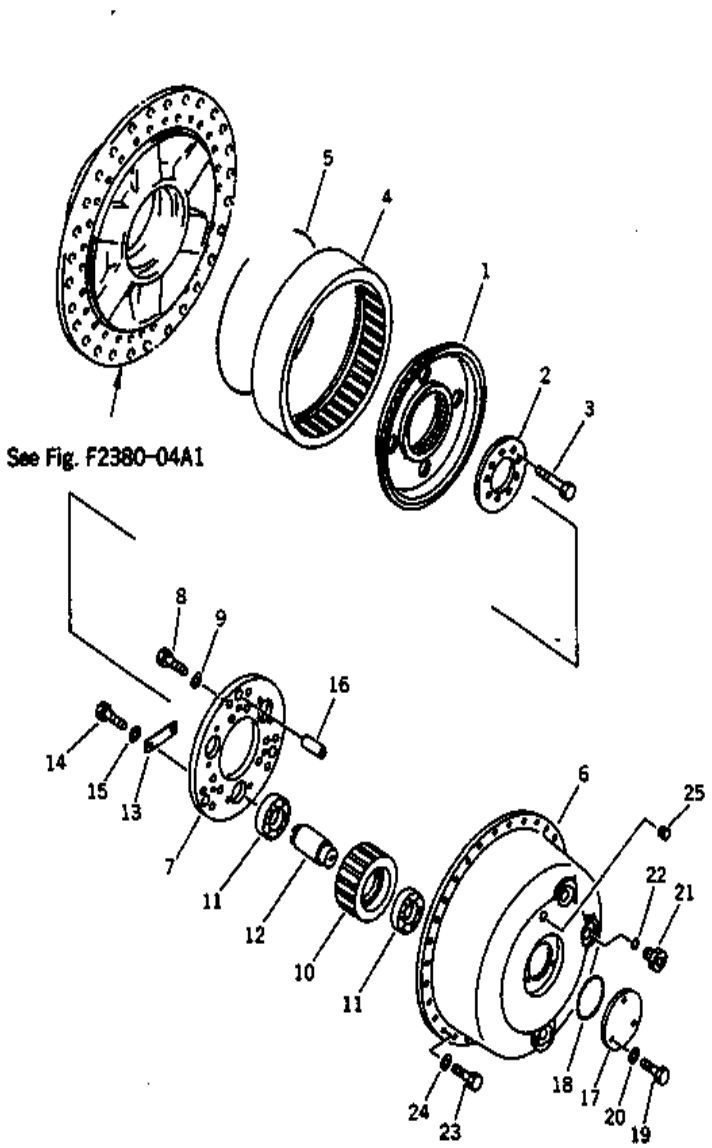

D85ESS-2 S/N J11888-UP

FINAL DRIVE (CARRIER)

INDEX	CD	PART NO.	DESCRIPTION	QTY	SERIAL NO.
		14Y-27-00310	FINAL DRIVE ASS'Y, L.H.....	1	J11432-UP
		14Y-27-00015	FINAL DRIVE ASS'Y, L.H.....	1	J11258-J11431
		14Y-27-00014	FINAL DRIVE ASS'Y, L.H.....	1	J11228-J11257
		14Y-27-00013	FINAL DRIVE ASS'Y, L.H.....	1	J11048-J11227
		14Y-27-00011	FINAL DRIVE ASS'Y, L.H.....	1	J10241-J11047
		14Y-27-00320	FINAL DRIVE ASS'Y, R.H.....	1	J11432-UP
		14Y-27-00025	FINAL DRIVE ASS'Y, R.H.....	1	J11258-J11431
		14Y-27-00024	FINAL DRIVE ASS'Y, R.H.....	1	J11228-J11257
		14Y-27-00023	FINAL DRIVE ASS'Y, R.H.....	1	J11048-J11227
		14Y-27-00021	FINAL DRIVE ASS'Y, R.H.....	1	J10241-J11047
1		14X-27-11622	.HUB.....	1	J11258-UP
		14X-27-11621	.HUB.....	1	J10241-J11257
2		14X-27-11633	.HOLDER.....	1	J11258-UP
		14X-27-11632	.HOLDER.....	1	J11048-J11257
		14X-27-11631	.HOLDER.....	1	J10241-J11047
3		01011-61600	.BOLT.....	9	J10241-UP
4		14X-27-11612	.GEAR.....	1	J10241-UP
5		14X-27-11640	.RING, SNAP.....	1	J10241-UP
		14X-27-11502	.CARRIER ASS'Y.....	1	J10241-UP
6		14X-27-11512	..CARRIER.....	1	J10241-UP
7		14X-27-11552	..PLATE.....	1	J10241-UP
8		01010-82055	..BOLT.....	6	J10241-UP
9		01643-32060	..WASHER.....	6	J10241-UP
10		14X-27-11522	.GEAR.....	3	J10241-UP
11		14X-27-11531	.BEARING.....	6	J10241-UP
12		14X-27-11542	.SHAFT.....	3	J10241-UP
13		14X-27-11560	.LOCK.....	3	J10241-UP
14		01010-81235	.BOLT.....	6	J10241-UP
15		01643-31232	.WASHER.....	6	J10241-UP
16		195-27-11140	.PIN, DOWEL.....	3	J10241-UP
17		14X-27-11431	.COVER.....	1	J10241-UP
18		07000-02115	.O-RING.....	1	J10241-UP
19		01010-81235	.BOLT.....	3	J10241-UP
20		01643-31232	.WASHER.....	3	J10241-UP
21		07041-13612	.PLUG.....	3	J10241-UP
22		07002-03634	.O-RING.....	3	J10241-UP
23		01010-81645	.BOLT.....	30	J10241-UP
24		01643-31645	.WASHER.....	30	J10001-UP
25		07049-02025	.PLUG.....	1	J10001-UP

Ref :F2380-03A1 Page :150070

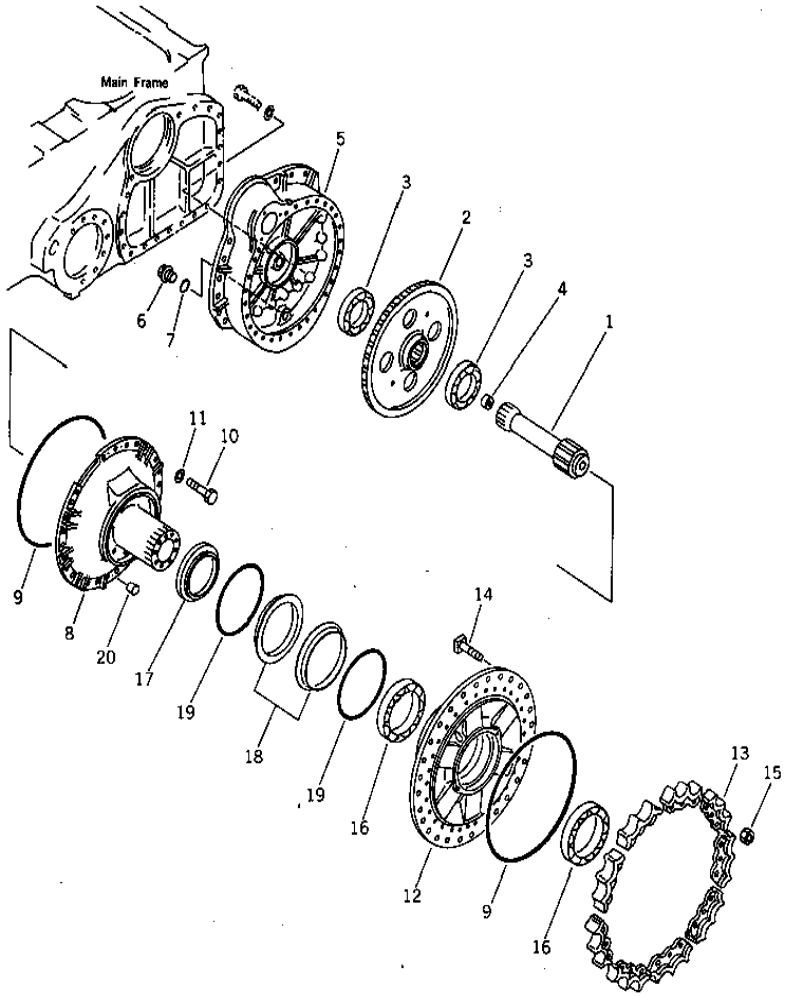

D85ESS-2 S/N J11888-UP

FINAL DRIVE (SPROCKET AND HUB)

INDEX	CD	PART NO.	DESCRIPTION	QTY	SERIAL NO.
		14Y-27-00310	FINAL DRIVE ASS'Y L.H.....	1	J11432-UP
		14Y-27-00015	FINAL DRIVE ASS'Y, L.H.....	1	J11258-J11431
		14Y-27-00014	FINAL DRIVE ASS'Y, L.H.....	1	J11228-J11257
		14Y-27-00013	FINAL DRIVE ASS'Y, L.H.....	1	J11048-J11227
		14Y-27-00011	FINAL DRIVE ASS'Y, L.H.....	1	J10241-J11047
		14Y-27-00320	FINAL DRIVE ASS'Y R.H.....	1	J11432-UP
		14Y-27-00025	FINAL DRIVE ASS'Y, R.H.....	1	J11258-J11431
		14Y-27-00024	FINAL DRIVE ASS'Y, R.H.....	1	J11228-J11257
		14Y-27-00023	FINAL DRIVE ASS'Y, R.H.....	1	J11048-J11227
		14Y-27-00021	FINAL DRIVE ASS'Y, R.H.....	1	J10241-J11047
1		14Y-27-11412	.PINION.....	1	J10241-UP
2		14X-27-11312	.GEAR.....	1	J11048-UP
		14X-27-11311	.GEAR.....	1	J10241-J11047
3		06040-06024	.BEARING.....	2	J10241-UP
4		14X-27-11420	.COLLAR.....	1	J10241-UP
5		14X-27-31110	.CASE, L.H.....	1	J11228-UP
		14X-27-11115	.CASE, L.H.....	1	J11048-J11227
		14X-27-11113	.CASE, L.H.....	1	J10241-J11047
		14X-27-31120	.CASE, R.H.....	1	J11048-UP
		14X-27-11123	.CASE, R.H.....	1	J10241-J11047
6		07044-13620	.PLUG.....	1	J10241-UP
7		07002-03634	.O-RING.....	1	J10241-UP
8		14Y-27-31150	.COVER, L.H.....	1	J11432-UP
		14Y-27-11156	.COVER, L.H.....	1	J11258-J11431
		14Y-27-11155	.COVER, L.H.....	1	J11048-J11257
		14Y-27-11152	.COVER, L.H.....	1	J10241-J11047
		14Y-27-31160	.COVER, R.H.....	1	J11258-UP
		14Y-27-11165	.COVER, R.H.....	1	J11048-J11257
		14Y-27-11162	.COVER, R.H.....	1	J10241-J11047
9		14X-27-11170	.O-RING.....	2	J10241-UP
10		01010-81645	.BOLT.....	28	J10241-UP
11		01643-31645	.WASHER.....	28	J10241-UP
12		14X-27-31710	.HUB.....	1	J11438-UP
		14X-27-11711	.HUB.....	1	J11258-J11437
		14X-27-11710	.HUB.....	1	J10241-J11257
13		14X-27-15112	.TEETH.....	9	J10241-UP
14		154-27-12320	.BOLT.....	27	J10241-UP
15		01803-02228	.NUT.....	27	J10241-UP
16		14X-27-11721	.BEARING.....	2	J10241-UP
17		14X-27-11751	.COLLAR.....	1	J10241-UP
		14X-27-00101	.FLOTING SEAL ASS'Y.....	1	J11258-UP
		14X-27-00100	.FLOATING SEAL ASS'Y.....	1	J10241-J11257
18		14X-27-00111	..SEAL ASS'Y.....	1	J11258-UP
		14X-27-00110	..SEAL ASS'Y.....	1	J10241-J11257
19		14X-27-00120	..O-RING ASS'Y.....	1	J10241-UP
20		07049-01620	.PLUG.....	1	J10241-UP

Ref :F2380-04A1 Page :150080

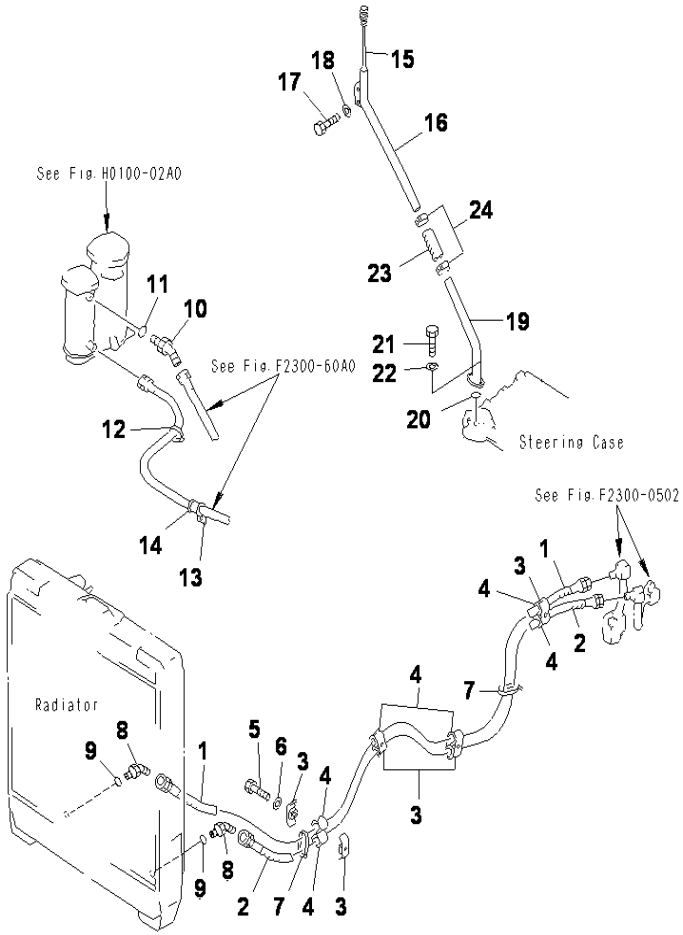

D85ESS-2 S/N J11888-UP

POWER LINE (COOLER OIL LINE)

INDEX	CD	PART NO.	DESCRIPTION	QTY	SERIAL NO.
1		07102-20630	HOSE	1	J10001-UP
2		07102-20627	HOSE	1	J10001-UP
3		07094-20620	CLAMP	8	J10001-UP
4		07095-00628	CUSHION	10	J10613-UP
		07095-00628	CUSHION	8	J10001-J10612
5		01010-81270	BOLT	4	J10001-UP
6		01643-31232	WASHER	4	J10001-UP
7		08034-00536	BAND	7	J10613-UP
		08034-00536	BAND	3	J10001-J10612
8		14X-49-13310	ELBOW	2	J10001-UP
9		07002-32434	O-RING	2	J10001-UP
10		07236-10628	ELBOW	1	J10001-UP
11		07002-32434	O-RING	1	J10001-UP
12		08034-00536	BAND	4	J10001-UP
13		04434-53412	CLIP	1	J10001-UP
14		07095-20627	CUSHION	1	J10001-UP
15		14X-49-12213	GAUGE	1	J10241-UP
		14X-49-12212	GAUGE	1	J10001-J10240
16		14X-49-12225	FILLER	1	J11258-UP
		14X-49-12224	FILLER	1	J10241-J11257
		14X-49-12222	FILLER	1	J10001-J10240
17		01010-81225	BOLT	2	J10001-UP
18		01643-31232	WASHER	2	J10001-UP
19		14X-49-12231	FILLER	1	J11258-UP
		14X-49-12230	FILLER	1	J10001-J11257
		14X-49-12241	.FLANGE	1	J11258-UP
20		07000-73035	O-RING	1	J10001-UP
21		01010-81250	BOLT	2	J11258-UP
		01010-81245	BOLT	1	J10001-J11257
22		01643-31232	WASHER	2	J11258-UP
		01643-31232	WASHER	1	J10001-J11257
23		07260-23211	HOSE	1	J10001-UP
24		07289-00045	CLAMP	2	J11258-UP
		07281-00549	CLAMP	2	J10001-J11257

Ref :F2730-01A1 Page :150090

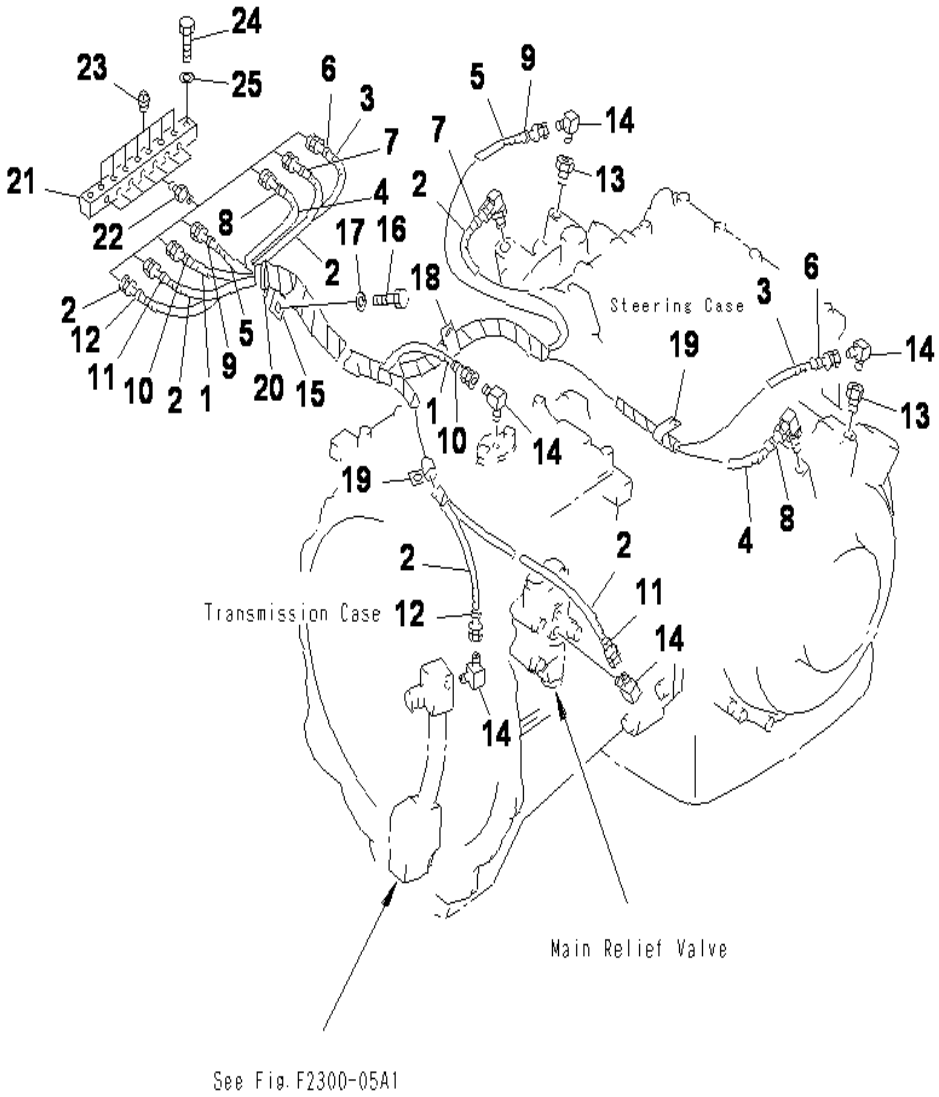

D85ESS-2 S/N J11888-UP

POWER LINE (CONCENTRATED PIPING)

INDEX	CD	PART NO.	DESCRIPTION	QTY	SERIAL NO.
		14X-49-11831	HOSE ASS'Y	1	J10001-UP
1		14X-49-11940	.HOSE	1	J10775-UP
		14X-49-11950	.HOSE	1	J10001-J10774
2		17A-49-17710	.HOSE	3	J10001-UP
3		17A-49-17141	.HOSE	1	J10001-UP
4		17A-49-17571	.HOSE	1	J10001-UP
5		17A-49-17721	.HOSE	1	J10775-UP
		14X-49-11970	.HOSE	1	J10001-J10774
6		203-62-57910	.MARK, 1	2	J10001-UP
7		203-62-57920	.MARK, 2	2	J10001-UP
8		203-62-57930	.MARK, 3	2	J10001-UP
9		203-62-57940	.MARK, 4	2	J10001-UP
10		203-62-57950	.MARK, 5	2	J10001-UP
11		203-62-57960	.MARK, 6	2	J10001-UP
12		203-62-57970	.MARK, 7	2	J10001-UP
13		21T-38-11390	BUSHING	4	J10001-UP
14		202-62-21430	ELBOW	7	J10001-UP
15		04434-52712	CLIP	1	J10001-UP
16		01010-81220	BOLT	1	J10001-UP
17		01643-31232	WASHER	1	J10001-UP
18		04434-52212	CLIP	1	J10001-UP
19		04434-51912	CLIP	2	J10001-UP
20		08034-00536	BAND	4	J10001-UP
21		14X-49-11810	BLOCK	1	J10001-UP
22		203-62-21740	NIPPLE	7	J10001-UP
23		07042-20108	PLUG	7	J10001-UP
24		01010-81245	BOLT	2	J10001-UP
25		01643-31232	WASHER	2	J10001-UP

Ref :F2730-02A1 Page :150100

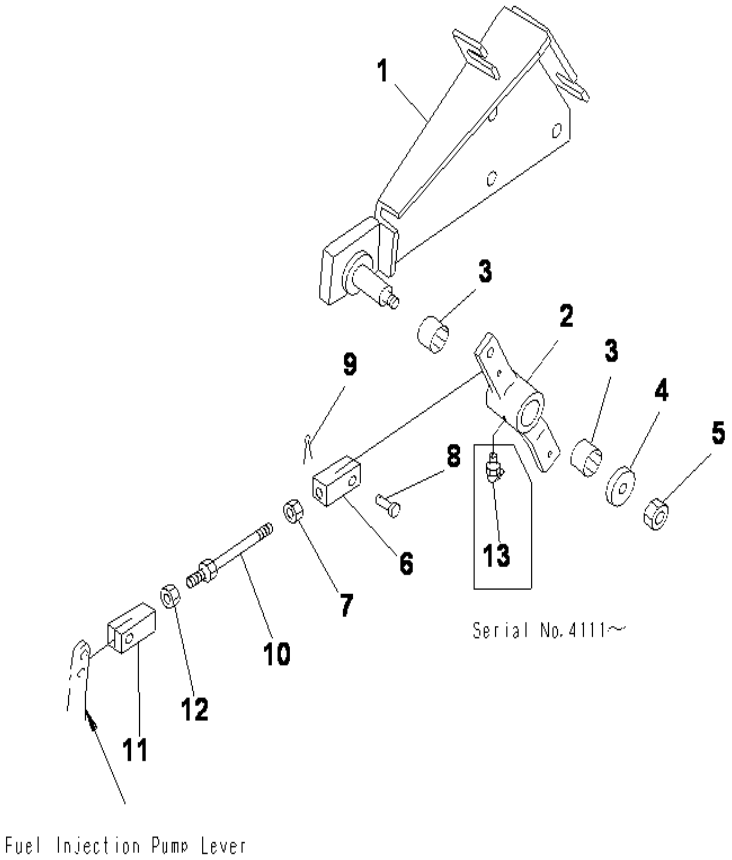

D85ESS-2 S/N J11888-UP

TRAVEL CONTROL (FUEL BRACKET)

INDEX	CD	PART NO.	DESCRIPTION	QTY	SERIAL NO.
1		14X-43-13324	BRACKET	1	J11264-UP
		14X-43-13323	BRACKET	1	J11258-J11263
		14X-43-13322	BRACKET	1	J10241-J11257
		14X-43-13321	BRACKET	1	J10001-J10240
		14X-43-13881	PIN	1	J11264-UP
2		14X-43-13313	LEVER	1	J11306-UP
		14X-43-13312	LEVER	1	J10001-J11305
3		06123-01614	BEARING	2	J10001-UP
4		113-43-23230	WASHER	1	J10001-UP
5		01598-00809	NUT	1	J10001-UP
6		04221-20844	YOKE	1	J10241-UP
		04220-20832	YOKE	1	J10001-J10240
7		01508-40805	NUT	1	J10001-UP
8		04205-10822	PIN	1	J10001-UP
9		04050-12015	COTTER PIN	1	J10001-UP
10		04248-30812	ROD	1	J10001-UP
11		04211-20844	YOKE	1	J11306-UP
		21K-43-11350	YOKE	1	J10001-J11305
12		01580-10806	NUT	1	J10001-UP
13		07020-00900	FITTING	1	J11306-UP

Ref :F2820-01A1 Page :150110

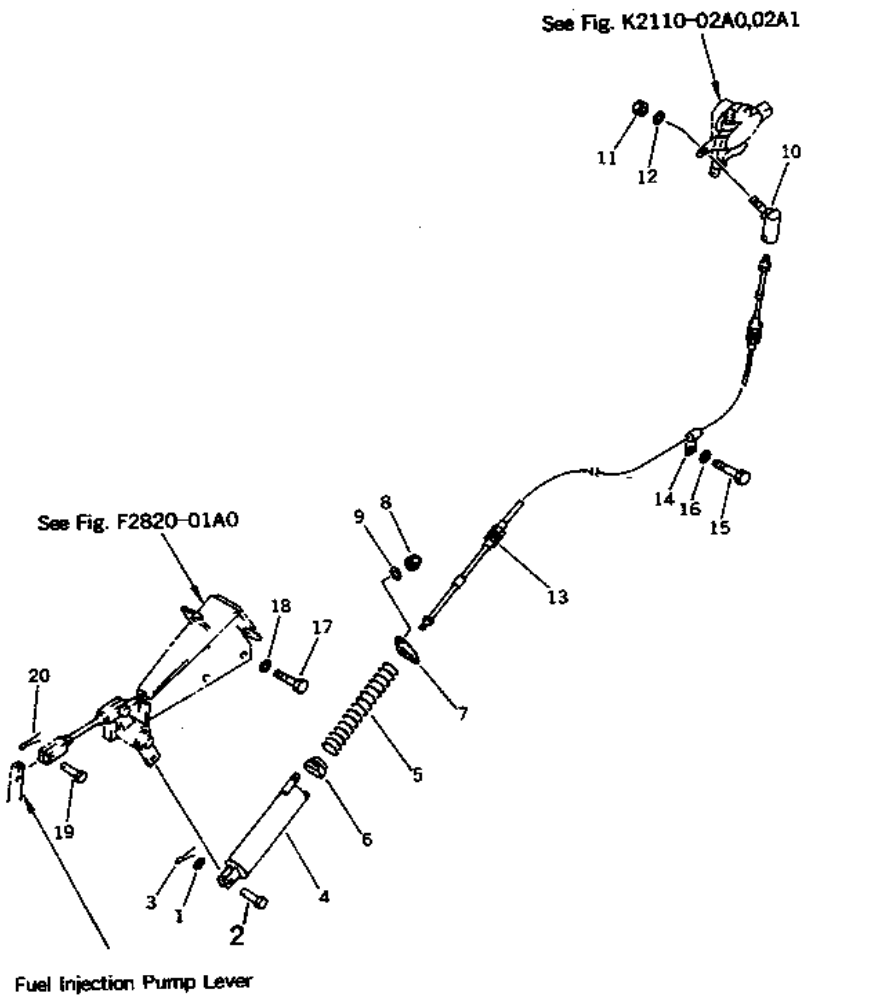

D85ESS-2 S/N J11888-UP

TRAVEL CONTROL (FUEL CABLE)(WITH DECAL)

INDEX	CD	PART NO.	DESCRIPTION	QTY	SERIAL NO.
1		01641-20608	WASHER	1	J10001-UP
2		04205-10622	PIN	1	J10001-UP
3		04050-11612	PIN, COTTER	1	J10001-UP
4		14X-43-13330	COUPLING	1	J10001-UP
5		135-43-15821	SPRING	1	J10001-UP
6		12H-43-12420	NUT	1	J10001-UP
7		124-43-26372	PLATE	1	J10001-UP
8		01598-00608	NUT	2	J10001-UP
9		01640-20610	WASHER	2	J10001-UP
10		103-43-25160	ROD END	1	J10001-UP
11		01580-10504	NUT	1	J10001-UP
12		01641-20508	WASHER, SPRING	1	J10001-UP
13		14X-43-13350	CABLE	1	J10001-UP
14		08036-01210	CLIP	1	J10001-UP
15		01010-81020	BOLT	1	J10001-UP
16		01643-31032	WASHER	1	J10001-UP
17		01010-81020	BOLT	3	J10001-UP
18		01643-31032	WASHER	3	J10001-UP
19		04205-10822	PIN	1	J10001-UP
20		04050-12015	PIN, COTTER	1	J11306-UP
		04050-11015	PIN, COTTER	1	J10001-J11305

Ref :F2820-01A2 Page :150120

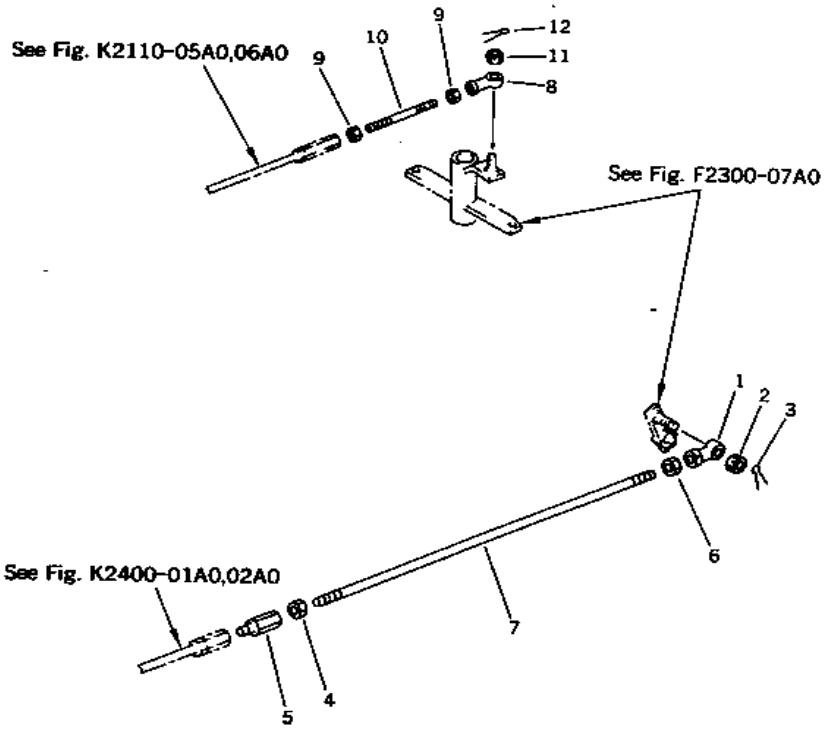

D85ESS-2 S/N J11888-UP

TRAVEL CONTROL (BRAKE AND STEERING ROD)

INDEX	CD	PART NO.	DESCRIPTION	QTY	SERIAL NO.
1		04250-81474	END	1	J10001-UP
2		01593-31411	NUT	1	J10001-UP
3		04050-13022	PIN	1	J10001-UP
4		01582-11411	NUT	1	J10001-UP
5		17A-43-24170	JOINT	1	J10001-UP
6		01582-11411	NUT	1	J10001-UP
7		04245-41480	ROD	1	J10001-UP
8		04250-81265	ROD END	1	J10001-UP
9		01582-11210	NUT	2	J10001-UP
10		04245-41214	ROD	1	J10001-UP
11		01593-31210	NUT	1	J10001-UP
12		04050-13020	COTTER PIN	1	J10001-UP

Ref :F2820-01A3 Page :150130

FIG.F2820-0601 TRAVEL CONTROL (LEVER AND CABLE)

(TE,TEX,TP,TPX)

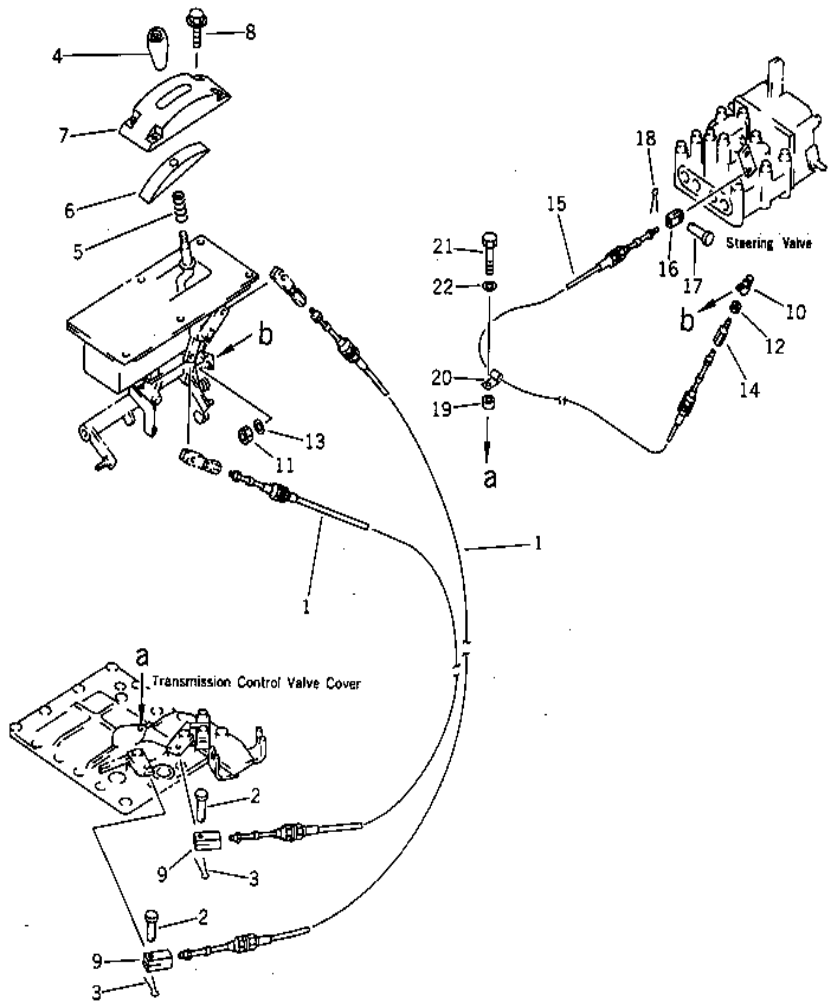

D85ESS-2 S/N J11888-UP

TRAVEL CONTROL (LEVER AND CABLE)

INDEX	CD	PART NO.	DESCRIPTION	QTY	SERIAL NO.
1		362-43-34150	CABLE	2	J10001-UP
2		01590-30809	NUT	2	J10001-UP
3		04050-12015	COTTER PIN	2	J10241-UP
4		14Z-43-11310	KNOB	1	J10001-J10240
5		205-43-73360	SPRING	1	J10001-J10240
6		14X-54-16560	COVER	1	J10001-J10240
7		14X-54-16551	COVER	1	J10001-J10240
8		01439-00814	BOLT	4	J10001-J10240
9		04250-80847	ROD END	2	J10241-UP
10		01580-10605	NUT	1	J10001-UP
11		14Z-43-12740	ROD END	1	J10001-UP
12		01508-40603	NUT	1	J10001-UP
13		01643-30623	WASHER	1	J10001-UP
14		14Z-43-12790	ROD	1	J10001-UP
15		14Z-43-12710	CABLE	1	J10001-UP
16		154-43-14580	YOKE	1	J10001-UP
17		04205-10618	PIN	1	J10001-UP
18		04050-11612	COTTER PIN	1	J10001-UP
19		103-21-21260	BOSS	1	J10001-UP
20		08036-00814	CLIP	1	J10001-UP
21		01010-81040	BOLT	1	J10001-UP
22		01643-31032	WASHER	1	J10001-UP

Ref :F2820-01A4 Page :150140

HYDRAULIC SYSTEM

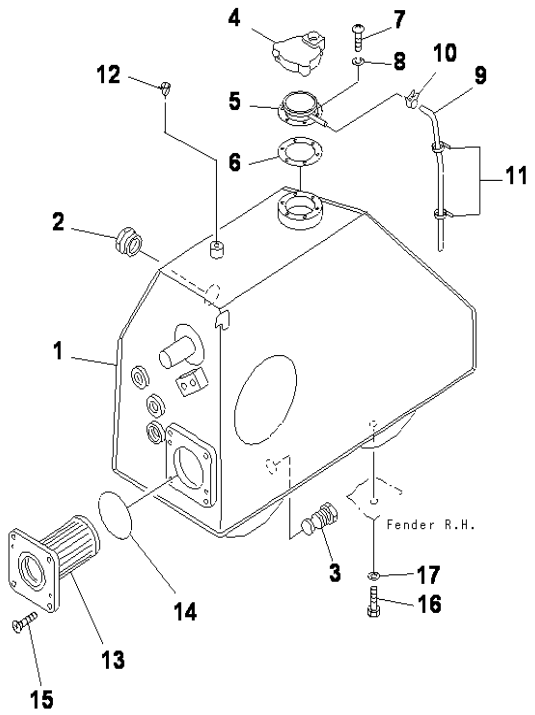

D85ESS-2 S/N J11888-UP

HYDRAULIC TANK AND FILTER (TANK)

INDEX	CD	PART NO.	DESCRIPTION	QTY	SERIAL NO.
1		14X-60-11114	TANK	1	J10277-UP
		14X-60-11113	TANK	1	J10001-J10276
		01571-01218	.SEAT	2	J10277-UP
		01573-22380	.SEAT	1	J10277-UP
		01580-01613	.NUT	4	J10277-UP
2		20N-60-11143	OIL GAUGE	1	J11581-UP
		20N-60-11142	OIL GAUGE	1	J10277-J11580
		20N-60-11141	GAUGE	1	J10001-J10276
		20N-60-11181	.GASKET	1	J10277-UP
		20N-60-11180	.GASKET	1	J10001-J10276
3		195-49-31280	VALVE		J10001-UP
4		14X-60-11130	CAP A	1	J10001-UP
		20Y-60-21470	.ELEMENT	1	J10001-UP
5		201-60-12171	FILLER NECK	1	J10001-UP
		205-60-51470	.FILLER NECK	1	J10001-UP
6		205-60-51460	GASKET	1	J10001-UP
7		01220-40514	SCREW	6	J10001-UP
8		01601-20513	WASHER	6	J10001-UP
9		07270-60812	TUBE	1	J10277-UP
		07270-00880	TUBE	1	J10001-J10276
10		07285-00095	CLAMP	2	J10001-UP
11		08034-00536	BAND	2	J10277-UP
12		07049-01215	PLUG	2	J10001-UP
13		14X-60-11120	STRAINER	1	J10001-UP
14		07000-02090	O-RING	1	J10001-UP
15		01224-40616	SCREW	2	J10001-UP
16		01010-81645	BOLT	4	J10001-UP
17		01643-31645	WASHER	4	J10001-UP

Ref :H0100-01A0 Page :180010

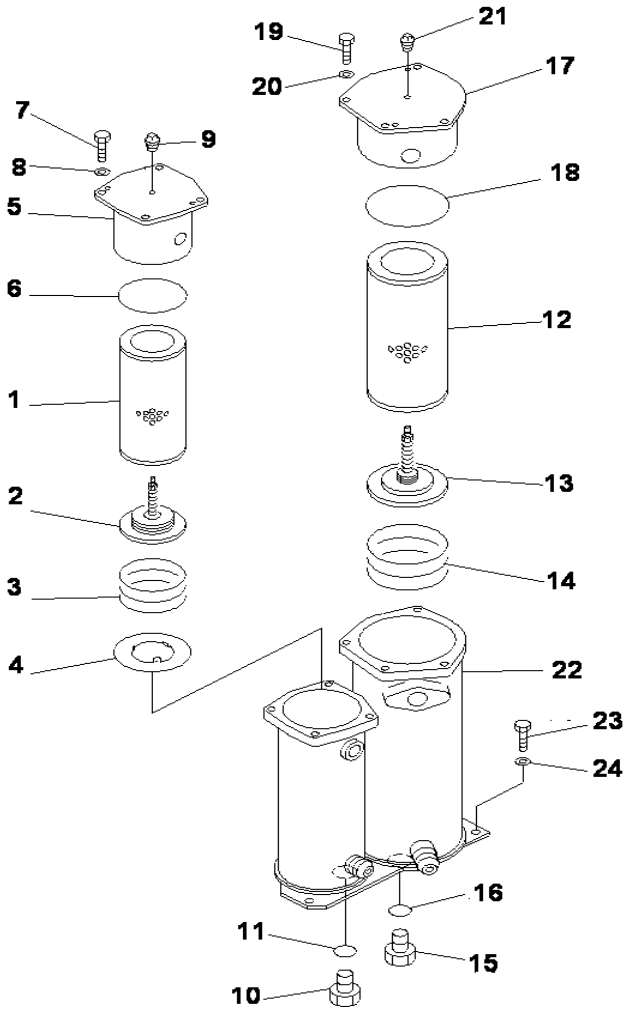

D85ESS-2 S/N J11888-UP

HYDRAULIC TANK AND FILTER (FILTER) (VANDALISM)

INDEX	CD	PART NO.	DESCRIPTION	QTY	SERIAL NO.
1		07063-01054	ELEMENT	1	J10001-UP
2		144-60-21160	VALVE ASS'Y	1	J10001-UP
3		198-49-11460	SPRING	1	J10001-UP
4		134-49-61920	PLATE	1	J10001-UP
5		14X-49-12124	COVER	1	J10001-UP
6		07000-72110	O-RING	1	J10001-UP
7		01010-81025	BOLT	4	J10001-UP
8		01643-31032	WASHER	4	J10001-UP
9		07042-30108	PLUG	1	J10001-UP
10		07040-12412	PLUG	1	J10001-UP
11		07002-32434	O-RING	1	J10001-UP
12		07063-01100	ELEMENT	1	J10001-UP
13		203-60-52250	VALVE ASS'Y	1	J10001-UP
14		21T-60-13650	SPRING	1	J10001-UP
15		07040-12412	PLUG	1	J10001-UP
16		07002-02434	O-RING	1	J10001-UP
17		14X-60-11225	COVER	1	J10001-UP
18		07000-02140	O-RING	1	J10001-UP
19		01010-81025	BOLT	4	J10001-UP
20		01643-31032	WASHER	4	J10001-UP
21		07042-30108	PLUG	1	J10001-UP
22		14X-60-11250	CASE ASS'Y	1	J10001-UP
		14X-49-12113	.CASE	1	J10001-UP
		14X-60-11214	.CASE	1	J10001-UP
23		01010-81225	BOLT	4	J10001-UP
24		01643-31232	WASHER	4	J10001-UP

Ref :H0100-01A1 Page :180020

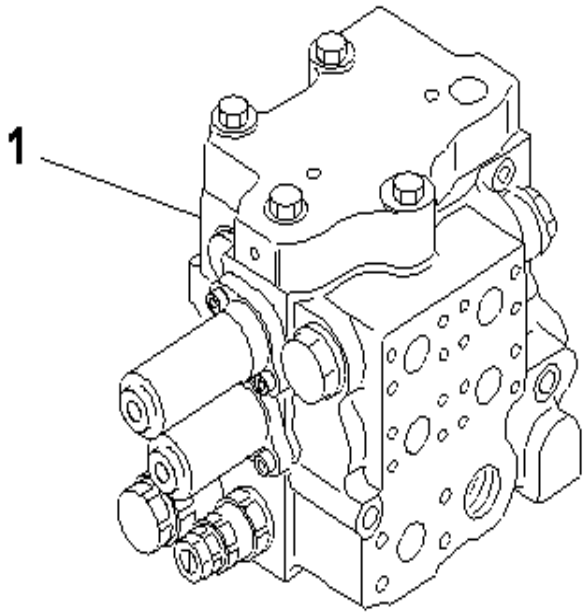

D85ESS-2 S/N J11888-UP

CONTROL VALVE (STD)

INDEX	CD	PART NO.	DESCRIPTION	QTY	SERIAL NO.
1		723-62-12100	VALVE ASSY (C&B).....	1	J10001-UP

Ref :H0120-01A0 Page :180030

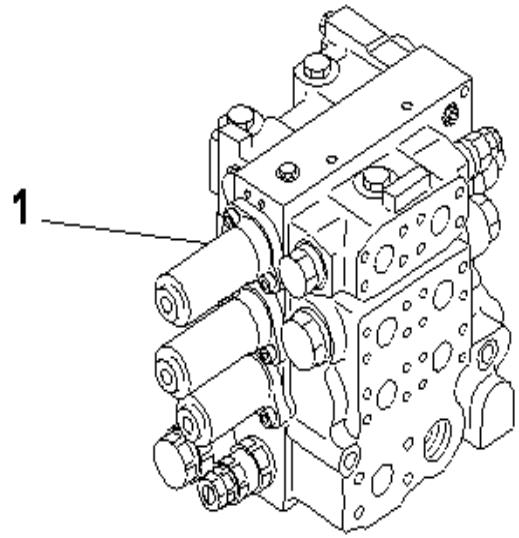

D85ESS-2 S/N J11888-UP

CONTROL VALVE (FOR RIPPER)

INDEX	CD	PART NO.	DESCRIPTION	QTY	SERIAL NO.
1		723-63-12101	VALVE ASS'Y (C&B3).....	1	J10001-UP

Ref :H0120-01A1 Page :180040

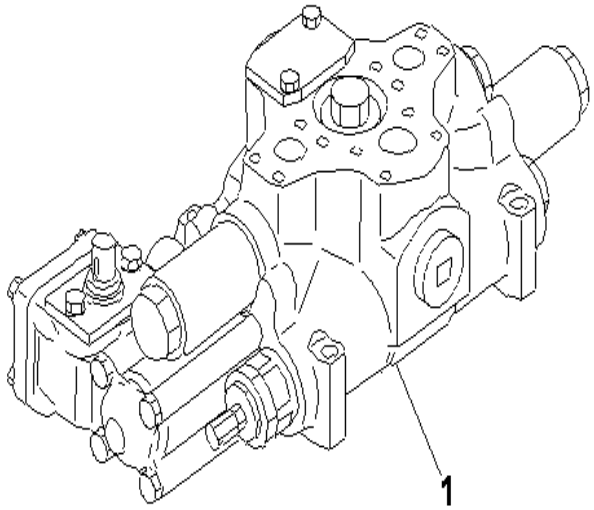

D85ESS-2 S/N J11888-UP

CONTROL VALVE (FOR CAB GUARD)

INDEX	CD	PART NO.	DESCRIPTION	QTY	SERIAL NO.
1		700-91-34000	VALVE A(C&B1).....	1	J10001-UP

Ref :H0120-01A2 Page :180050

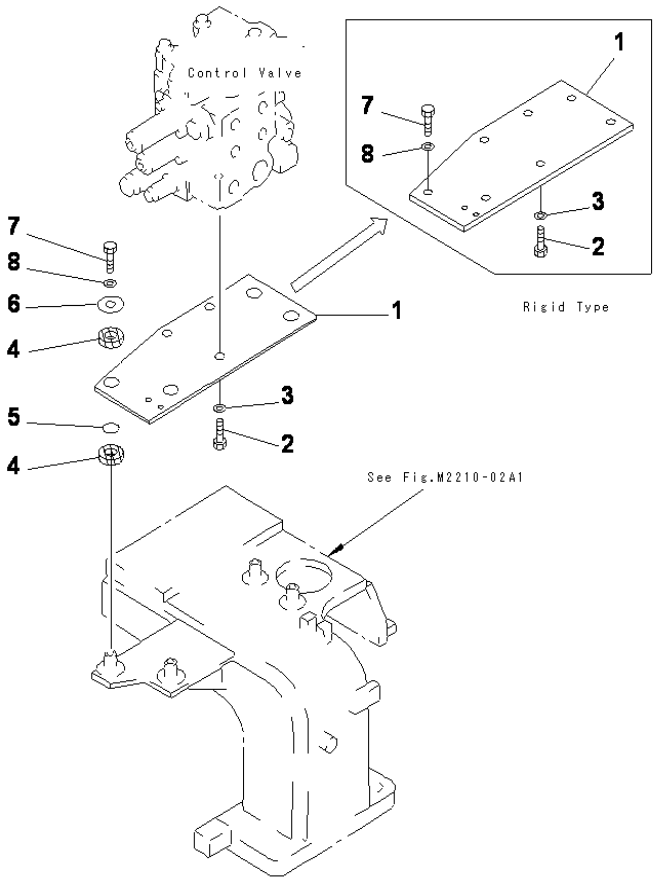

D85ESS-2 S/N J11888-UP

CONTROL VALVE (MOUNT)

INDEX	CD	PART NO.	DESCRIPTION	QTY	SERIAL NO.
1		14X-60-12112	PLATE	1	J10001-UP
2		01010-81435	BOLT	3	J10001-UP
3		01643-31445	WASHER	3	J10001-UP
4		14X-60-12120	CUSHION	8	J10001-UP
5		07000-03025	O-RING	4	J10001-UP
6		566-35-42430	PLATE	4	J10001-UP
7		01010-81225	BOLT	4	J10001-UP
8		01643-31232	WASHER	4	J10001-UP

Ref :H0120-03A0 Page :180060

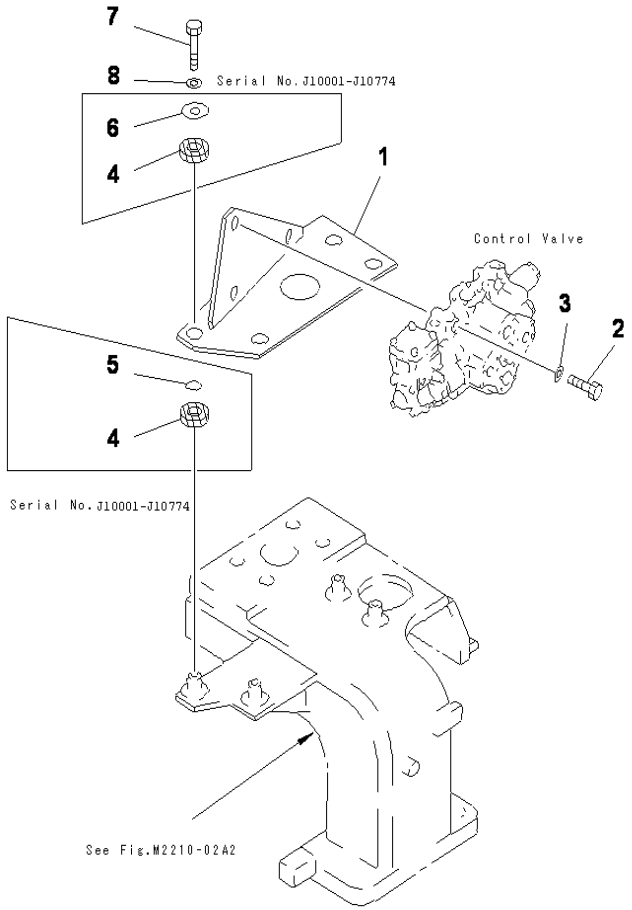

D85ESS-2 S/N J11888-UP

CONTROL VALVE (MOUNT)

INDEX	CD	PART NO.	DESCRIPTION	QTY	SERIAL NO.
1		14W-60-11130	BRACKET	1	J10775-UP
		14W-60-11110	BRACKET	1	J10001-J10774
2		01010-81285	BOLT	3	J10001-UP
3		01643-31232	WASHER	6	J10001-UP
4		14X-60-12120	CUSHION	8	J10001-J10774
5		07000-03025	O-RING	4	J10001-J10774
6		566-35-42430	PLATE	4	J10001-J10774
7		01010-81230	BOLT	4	J10775-UP
		01010-81225	BOLT	4	J10001-J10774
8		01643-31232	WASHER	4	J10001-UP

Ref :H0120-03A1 Page :180070

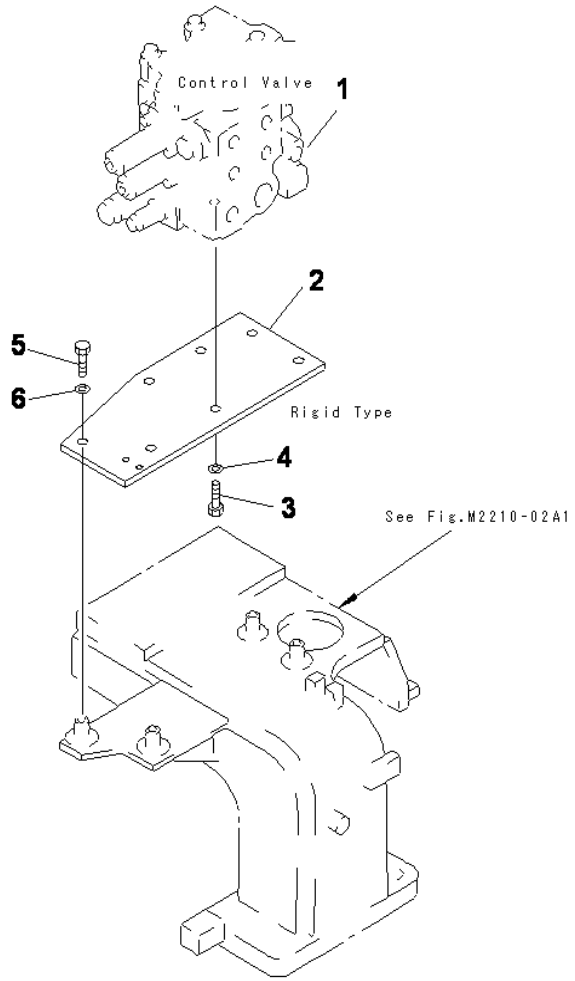

D85ESS-2 S/N J11888-UP

CONTROL VALVE (MOUNTING) FOR STRAIGHT TILT

INDEX	CD	PART NO.	DESCRIPTION	QTY	SERIAL NO.
1		723-62-12100	CONTROL VALVE ASS'Y.....	1	J11301-UP
2		14X-60-12130	PLATE (RIGID TYPE).....	1	J11301-UP
3		01010-81435	BOLT.....	3	J11301-UP
4		01643-31445	WASHER.....	3	J11301-UP
5		01010-81230	BOLT (RIGID TYPE).....	4	J11301-UP
6		01643-31232	WASHER.....	4	J11301-UP

Ref :H0120-05A0 Page :180080

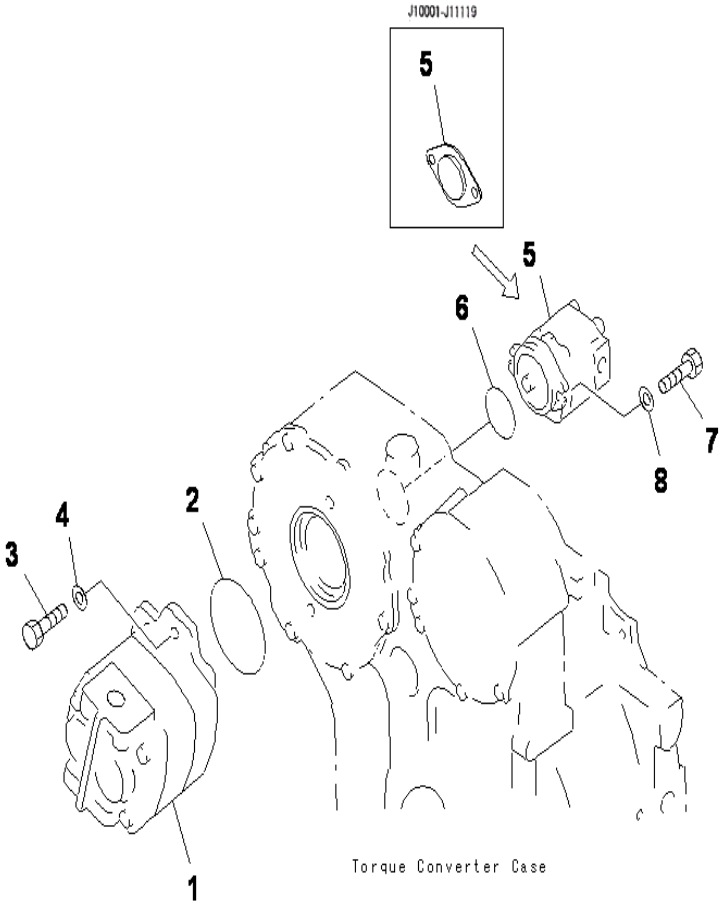

D85ESS-2 S/N J11888-UP

HYDRAULIC PUMP (MOUNT)

INDEX	CD	PART NO.	DESCRIPTION	QTY	SERIAL NO.
1		705-11-38010	PUMP ASS'Y, SAL (3)80.....	1	J10541-UP
		705-11-40010	PUMP ASS'Y, SAL (3)100.....	1	J10001-J10540
2		07000-02130	O-RING.....	1	J10001-UP
3		01010-81645	BOLT.....	2	J10001-UP
4		01643-31645	WASHER.....	2	J10001-UP
5		705-41-01050	PUMP ASS'Y.....	1	J11120-UP
		14W-60-11120	COVER.....	1	J10001-J11119
6		07000-02085	O-RING.....	1	J10001-UP
7		01010-81030	BOLT.....	2	J11120-UP
		01010-81025	BOLT.....	2	J10001-J11119
8		01643-31032	WASHER.....	2	J10001-UP

Ref :H0210-01A0 Page :180090

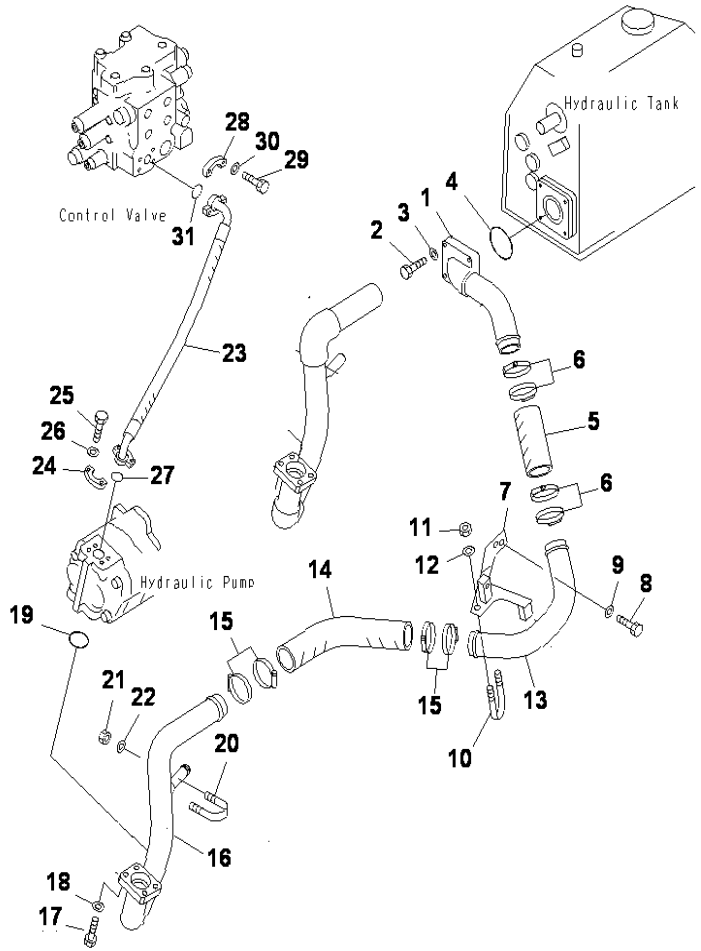

D85ESS-2 S/N J11888-UP

HYDRAULIC PUMP LINE (SECTION AND DELIVERY)

INDEX	CD	PART NO.	DESCRIPTION	QTY	SERIAL NO.
1		14Y-62-11113	PIPE	1	J11078-UP
		14Y-62-11112	PIPE	1	J10241-J11077
		14Y-62-11111	PIPE	1	J10001-J10240
		14Y-62-11172	.ELBOW	1	J11078-UP
2		01010-81050	BOLT	4	J10001-UP
3		01643-31032	WASHER	4	J10001-UP
4		07000-02090	O-RING	1	J10001-UP
5		07260-25818	HOSE	1	J10001-UP
6		07281-00809	CLAMP	4	J10001-UP
7		14Y-62-11122	BRACKET	1	J10001-UP
		01573-12306	.SEAT	2	J10001-UP
8		01010-81225	BOLT	2	J10001-UP
9		01643-31232	WASHER	2	J10001-UP
10		07283-26155	CLIP	1	J10001-UP
11		01599-01011	NUT	2	J10001-UP
12		01643-31032	WASHER	2	J10001-UP
13		14Y-62-11183	PIPE	1	J11078-UP
		14Y-62-11182	PIPE	1	J10241-J11077
		14Y-62-11181	PIPE	1	J10001-J10240
14		14Y-62-11131	HOSE	1	J10001-UP
15		07281-00809	CLAMP	4	J10001-UP
16		14X-62-11113	PIPE	1	J11120-UP
		14W-62-11192	PIPE	1	J11078-J11119
		14W-62-11191	PIPE	1	J10241-J11077
		14W-62-11190	PIPE	1	J10001-J10240
		14X-62-11130	.FLANGE	1	J10001-UP
17		01010-81245	BOLT	4	J10001-UP
18		01643-51232	WASHER	4	J10001-UP
19		07000-02060	O-RING	1	J10001-UP
20		07283-26155	CLIP	1	J10001-UP
21		01599-01011	NUT	2	J10001-UP
22		01643-31032	WASHER	2	J10001-UP
23		14W-62-11111	HOSE	1	J10064-UP
		14W-62-11110	HOSE	1	J10001-J10063
24		07371-31049	FLANGE	2	J10001-UP
25		07372-21035	BOLT	4	J10001-UP
26		01643-51032	WASHER	4	J10001-UP
27		07000-13032	O-RING	1	J10001-UP
28		07371-31255	FLANGE	2	J10001-UP
29		07372-21035	BOLT	4	J10001-UP
30		01643-51032	WASHER	4	J10001-UP
31		07000-13038	O-RING	1	J10001-UP

Ref :H0310-01A0 Page :180100

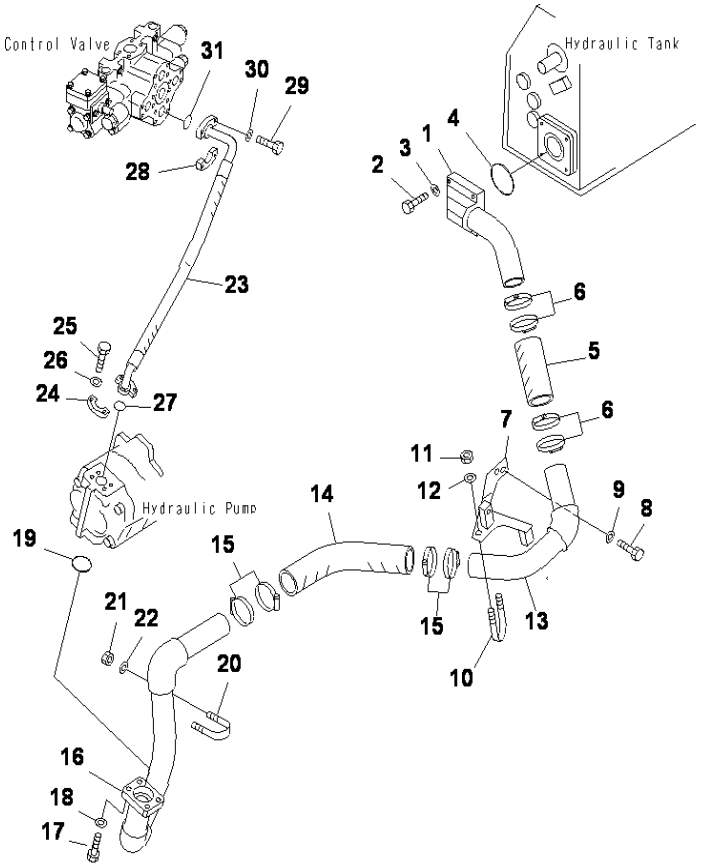

HYDRAULIC PUMP LINE (SUCTION AND DELIVERY) FOR STRAIGHT TILT

INDEX	CD	PART NO.	DESCRIPTION	QTY	SERIAL NO.
1		14Y-62-21110	PIPE	1	J11301-UP
		14Y-62-11172	.ELBOW	1	J11301-UP
2		01010-81050	BOLT	4	J11301-UP
3		01643-31032	WASHER	4	J11301-UP
4		07000-02090	O-RING	1	J11301-UP
5		07260-25818	HOSE	1	J11301-UP
6		07289-00070	CLAMP	2	J11301-UP
7		14Y-62-21120	BRACKET	1	J11301-UP
		01573-12306	.SEAT	2	J11888-UP
8		01010-81225	BOLT	2	J11301-UP
9		01643-31232	WASHER	2	J11301-UP
10		07283-26155	CLIP	1	J11301-UP
11		01599-01011	NUT	2	J11301-UP
12		01643-31032	WASHER	2	J11301-UP
13		14Y-62-21180	PIPE	1	J11301-UP
14		14Y-62-11131	HOSE	1	J11301-UP
15		07289-00070	CLAMP	2	J11301-UP
16		14X-62-11113	PIPE	1	J11301-UP
		14X-62-11130	.FLANGE	1	J11301-UP
17		01010-81245	BOLT	4	J11301-UP
18		01643-51232	WASHER	4	J11301-UP
19		07000-02060	O-RING	1	J11301-UP
20		07283-26155	CLIP	1	J11301-UP
21		01599-01011	NUT	2	J11301-UP
22		01643-31032	WASHER	2	J11301-UP
23		14X-62-11121	HOSE	1	J11301-UP
24		07371-31049	FLANGE	2	J11301-UP
25		07372-21035	BOLT	4	J11301-UP
26		01643-51032	WASHER	4	J11301-UP
27		07000-13032	O-RING	1	J11301-UP
28		07371-51260	FLANGE	2	J11301-UP
29		01010-81245	BOLT	4	J11301-UP
30		01643-31232	WASHER	4	J11301-UP
31		07000-13038	O-RING	1	J11301-UP

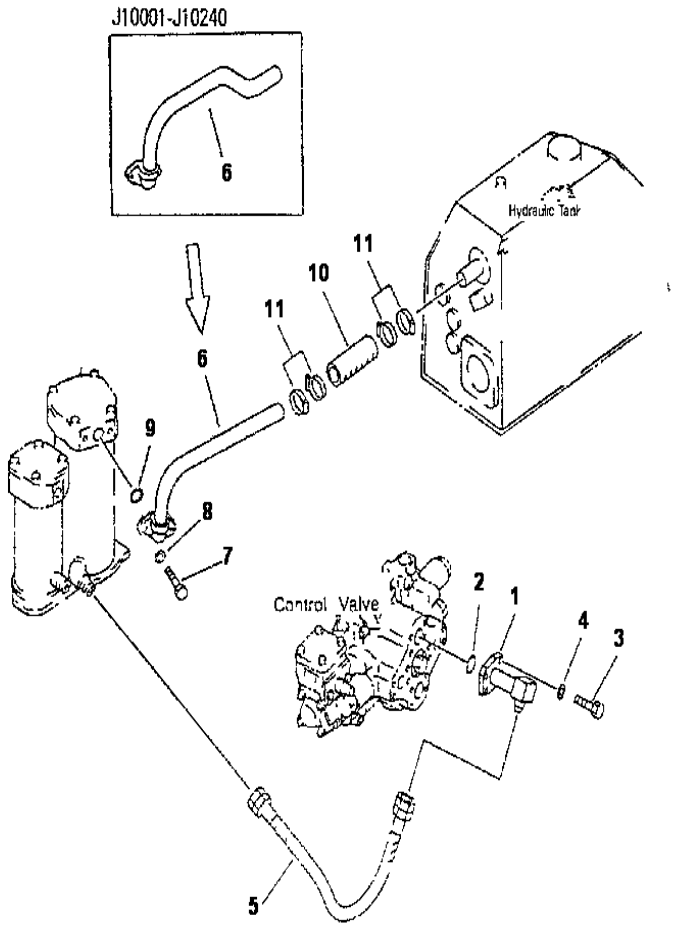

D85ESS-2 S/N J11888-UP

HYDRAULIC PUMP LINE (FILTER RETURN)

INDEX	CD	PART NO.	DESCRIPTION	QTY	SERIAL NO.
1		14W-62-11141	TUBE	1	J10001-UP
		14W-62-11210	.FLANGE	1	J10001-UP
		07241-A1034	.ELBOW	1	J10001-UP
2		07000-13038	O-RING	1	J10001-UP
3		01010-81035	BOLT	4	J10001-UP
4		01643-51032	WASHER	4	J10001-UP
5		07102-21006	HOSE	1	J10001-UP
6		14Y-62-11164	TUBE	1	J10001-UP
		14Y-62-11551	.FLANGE	1	J10001-UP
7		01010-81030	BOLT	2	J10001-UP
8		01643-31032	WASHER	2	J10001-UP
9		07000-03035	O-RING	1	J10001-UP
10		203-62-22221	HOSE	1	J10001-UP
11		07289-00045	CLAMP	2	J10001-UP

Ref :H0310-02A0 Page :180120

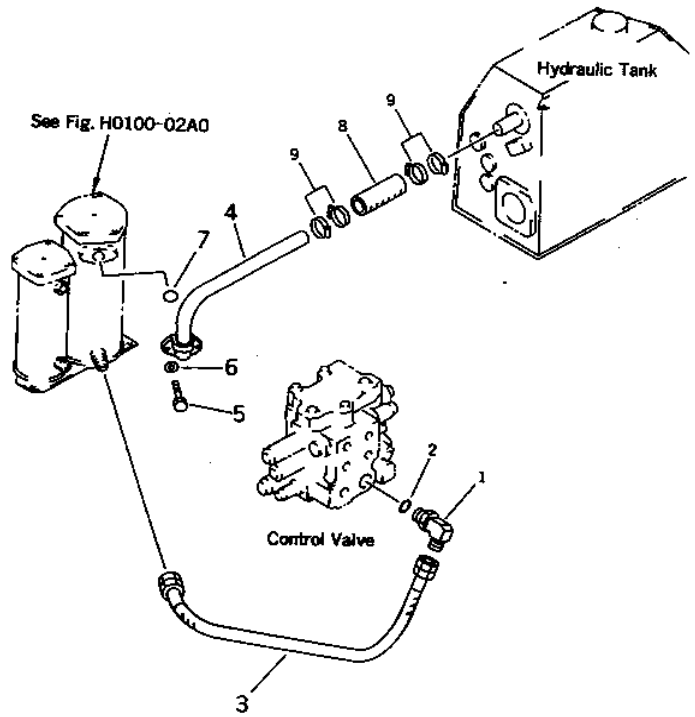

D85ESS-2 S/N J11888-UP

HYDRAULIC PUMP LINE (FILTER RETURN) FOR STRAIGHT TILT

INDEX	CD	PART NO.	DESCRIPTION	QTY	SERIAL NO.
1		14Y-62-11191	ELBOW	1	J11301-UP
		07102-210A4	HOSE	1	J11301-UP
2		07002-03334	O-RING	1	J11301-UP
3		07102-21004	HOSE	1	J11301-UP
4		14Y-62-11164	TUBE	1	J11301-UP
		14Y-62-11551	.FLANGE	1	J11301-UP
5		01010-81030	BOLT	2	J11301-UP
6		01643-31032	WASHER	2	J11301-UP
7		07000-03035	O-RING	1	J11301-UP
8		203-62-22221	HOSE	1	J11301-UP
9		07289-00045	CLAMP	2	J11301-UP

Ref :H0310-02A1 Page :180130

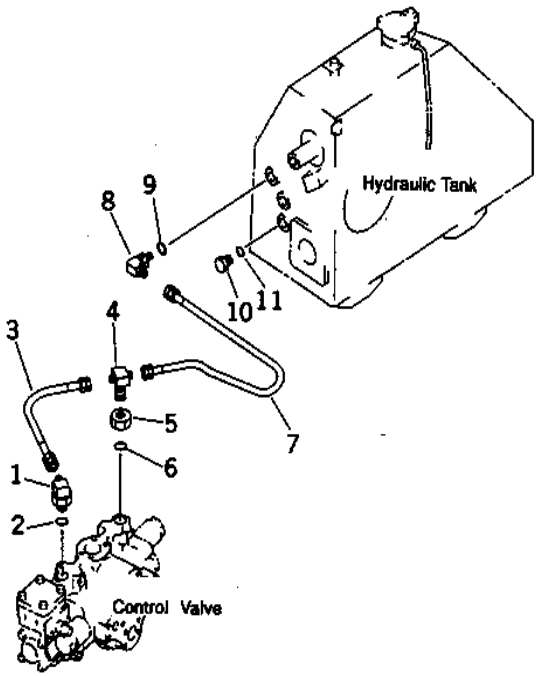

D85ESS-2 S/N J11888-UP

HYDRAULIC PUMP LINE (DRAIN TANK)

INDEX	CD	PART NO.	DESCRIPTION	QTY	SERIAL NO.
1		205-62-66181	ELBOW	1	J10001-UP
2		07002-02434	O-RING	1	J10001-UP
3		07102-20206	HOSE	1	J10001-UP
4		205-62-66170	TEE	1	J10001-UP
5		07239-12410	NUT	1	J10001-UP
6		07002-02434	O-RING	1	J10001-UP
7		205-62-52410	HOSE	1	J10001-UP
8		20N-63-66190	ELBOW	1	J10001-UP
		01583-12012	.NUT	1	J10001-UP
9		07002-02034	O-RING	1	J10001-UP
10		07040-12412	PLUG	1	J10001-UP
11		07002-02434	O-RING	1	J10001-UP

Ref :H0310-06A0 Page :180140

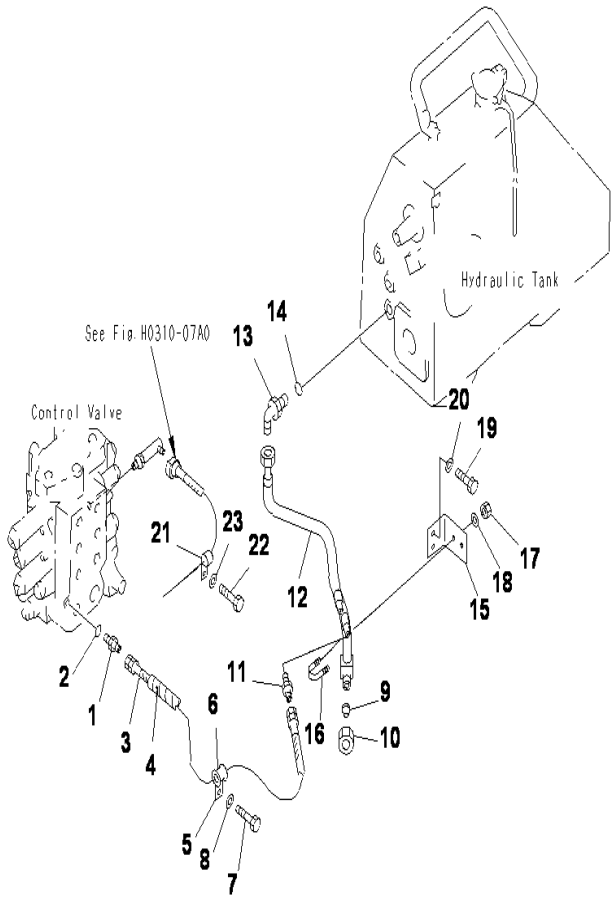

D85ESS-2 S/N J11888-UP

HYDRAULIC PUMP LINE (DRAIN TANK) FOR STRAIGHT TILT

INDEX	CD	PART NO.	DESCRIPTION	QTY	SERIAL NO.
1		205-62-55270	NIPPLE	1	J11301-UP
2		07002-01423	O-RING	1	J11301-UP
3		07102-20308	HOSE	1	J11301-UP
4		08210-01204	SPIRAL TUBE	1	J11301-UP
5		04434-52512	CLIP	1	J11301-UP
6		07095-20318	CUSHION	1	J11301-UP
7		01010-81225	BOLT	1	J11301-UP
8		01643-31232	WASHER	1	J11301-UP
9		07222-00515	PLUG	1	J11301-UP
10		07221-20522	NUT	1	J11301-UP
11		07238-10315	CONNECTOR	1	J11301-UP
12		14Y-62-21811	TUBE	1	J11301-UP
		072-90-20522	.SLEEVE	1	J11301-UP
		07241-A0522	.ELBOW	1	J11301-UP
13		07235-10522	ELBOW	1	J11301-UP
14		07002-02434	O-RING	1	J11301-UP
15		14Y-62-11821	PLATE	1	J11301-UP
16		07283-22236	CLIP	1	J11301-UP
17		01599-01011	NUT	2	J11301-UP
18		01643-31032	WASHER	2	J11301-UP
19		01010-81225	BOLT	2	J11301-UP
20		01643-31232	WASHER	2	J11301-UP
21		04434-51312	CLIP	1	J11301-UP
22		01010-81220	BOLT	1	J11301-UP
23		01643-31232	WASHER	1	J11301-UP

Ref :H0310-06A1 Page :180150

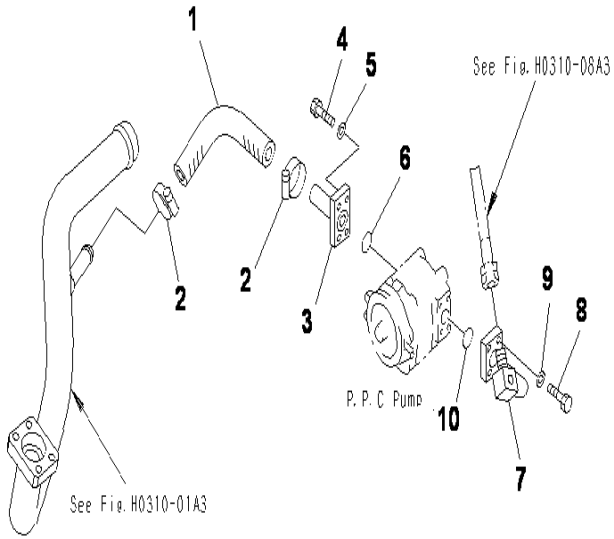

D85ESS-2 S/N J11888-UP

HYDRAULIC PUMP LINE (P.P.C. SUCTION AND DELIVERY)

INDEX	CD	PART NO.	DESCRIPTION	QTY	SERIAL NO.
1		14Y-62-11710	HOSE	1	J11120-UP
3		14Y-62-11721	TUBE	1	J11120-UP
		21X-62-23460	.FLANGE	1	J11120-UP
4		01010-80835	BOLT	4	J11120-UP
5		01643-50823	WASHER	4	J11120-UP
2		07289-00045	CLAMP	2	J11120-UP
6		07000-03025	O-RING	1	J11120-UP
7		14Y-62-11762	TUBE	1	J13527-UP
		14Y-62-11761	TUBE	1	J11120-J13526
		07241-A0422	.ELBOW	1	J11120-UP
		14Y-62-12190	.FLANGE	1	J11120-UP
8		01010-80830	BOLT	4	J11120-UP
9		01643-50823	WASHER	4	J11120-UP
10		07000-03022	O-RING	1	J11120-UP

Ref :H0310-07A0 Page :180160

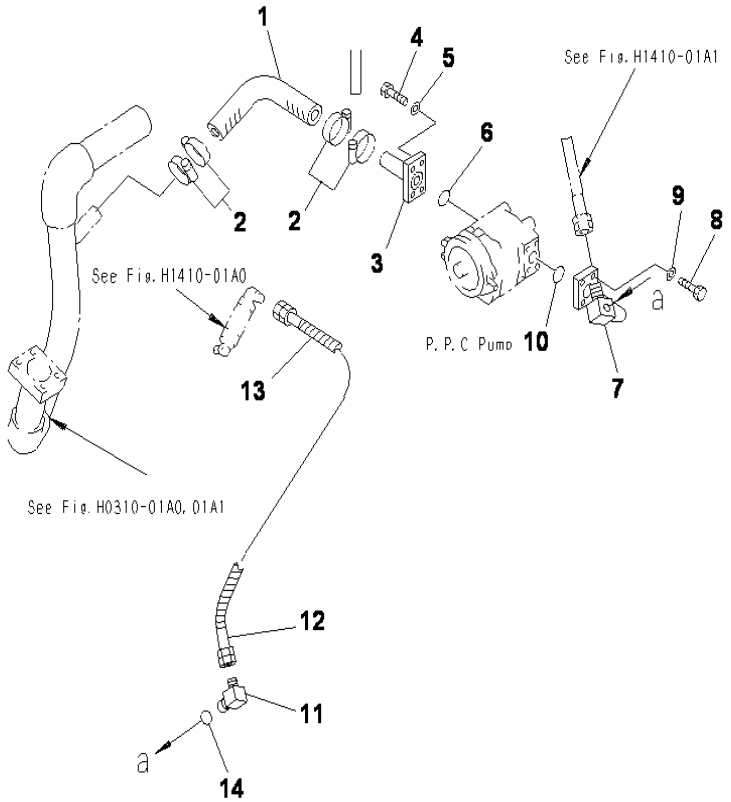

D85ESS-2 S/N J11888-UP

HYDRAULIC PUMP LINE (P.P.C SUCTION AND DELIVERY) FOR STRAIGHT TILT

INDEX	CD	PART NO.	DESCRIPTION	QTY	SERIAL NO.
1		14Y-62-11710	HOSE	1	J11301-UP
2		07289-00045	CLAMP	2	J11301-UP
3		14Y-62-11721	TUBE	1	J11301-UP
		21X-62-23460	.FLANGE	1	J11301-UP
4		01010-80835	BOLT	4	J11301-UP
5		01643-50823	WASHER	4	J11301-UP
6		07000-03025	O-RING	1	J11301-UP
7		14Y-62-11771	TUBE	1	J11301-UP
8		01010-80835	BOLT	4	J11301-UP
9		01643-50823	WASHER	4	J11301-UP
10		07000-03022	O-RING	1	J11301-UP
11		203-62-33680	ELBOW	1	J11301-UP
12		14X-43-14890	HOSE	1	J11301-UP
13		08210-01203	SPIRAL TUBE	1	J11301-UP
14		07002-01023	O-RING	1	J11301-UP

Ref :H0310-07A3 Page :180170

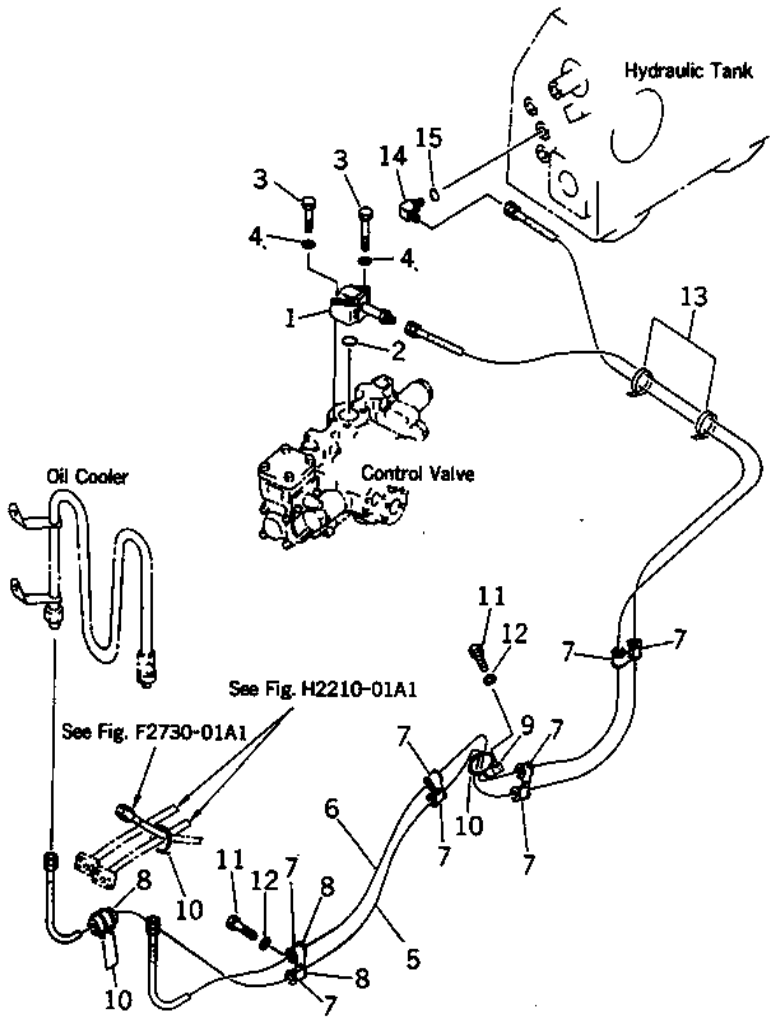

D85ESS-2 S/N J11888-UP

HYDRAULIC PUMP LINE (OIL COOLER)

INDEX	CD	PART NO.	DESCRIPTION	QTY	SERIAL NO.
1		154-60-21280	PLATE	1	J11120-UP
		14W-62-11150	TUBE	1	J10001-J11119
2		07000-13042	O-RING	1	J11120-UP
		07000-13045	O-RING	1	J10001-J11119
3		01010-81025	BOLT	4	J11120-UP
		01010-81060	BOLT	2	J10001-J11119
		01010-81055	BOLT	2	J10001-J11119
4		01643-31032	WASHER	4	J10001-UP
5		07102-20447	HOSE	1	J11120-UP
		07102-20447	HOSE	2	J10001-J11119
6		07102-20446	HOSE	1	J11120-UP
7		04434-52712	CLIP	8	J10001-UP
8		07095-20420	CUSHION	10	J11120-UP
		07095-20420	CUSHION	9	J10001-J11119
9		14Y-62-11750	CLIP	1	J10001-UP
10		08034-00536	BAND	5	J10001-UP
11		01010-81220	BOLT	5	J10001-UP
12		01643-31232	WASHER	5	J10001-UP
13		08034-00536	BAND	2	J11120-UP
		08034-00536	BAND	4	J10001-J11119
14		07235-10422	ELBOW	1	J10001-UP
15		07002-02034	O-RING	1	J10001-UP

Ref :H0310-08A0 Page :180180

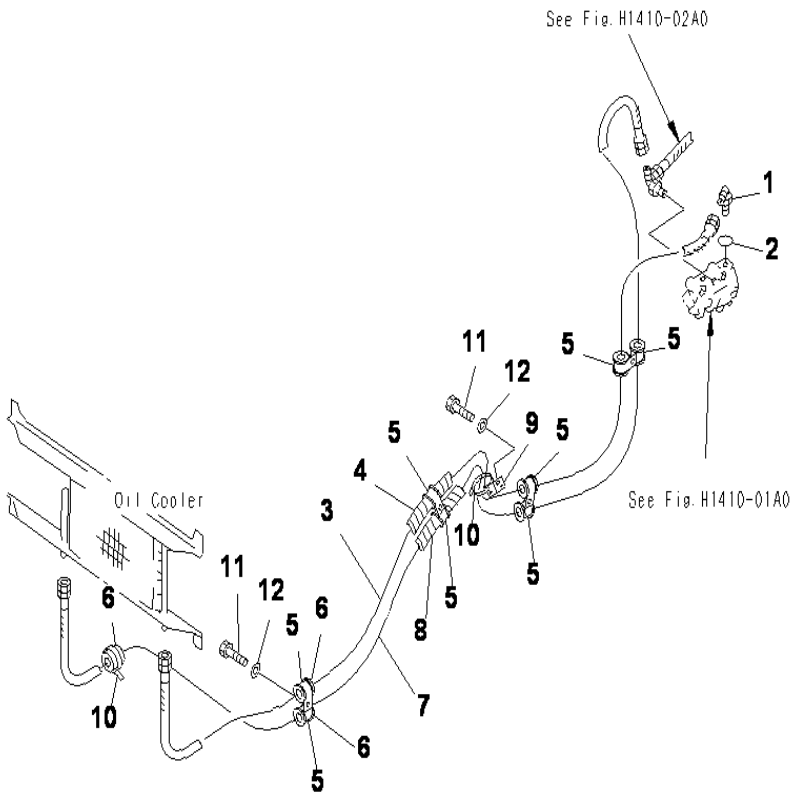

D85ESS-2 S/N J11888-UP

HYDRAULIC PUMP LINE (OIL COOLER) FOR STRAIGHT TILT

INDEX	CD	PART NO.	DESCRIPTION	QTY	SERIAL NO.
1		07235-10422	ELBOW	1	J11301-UP
2		07002-02034	O-RING	1	J11301-UP
3		07102-20435	HOSE	1	J11301-UP
4		08210-01802	SPIRAL TUBE	1	J11301-UP
5		04434-52712	CLIP	8	J11301-UP
6		07095-20420	CUSHION	9	J11301-UP
7		07102-20432	HOSE	1	J11301-UP
8		08210-01802	SPIRAL TUBE	1	J11301-UP
9		20Y-62-15960	COVER	1	J11301-UP
10		08034-00536	BAND	2	J11301-UP
11		01010-81220	BOLT	2	J11301-UP
12		01643-31232	WASHER	2	J11301-UP

Ref :H0310-08A3 Page :180190

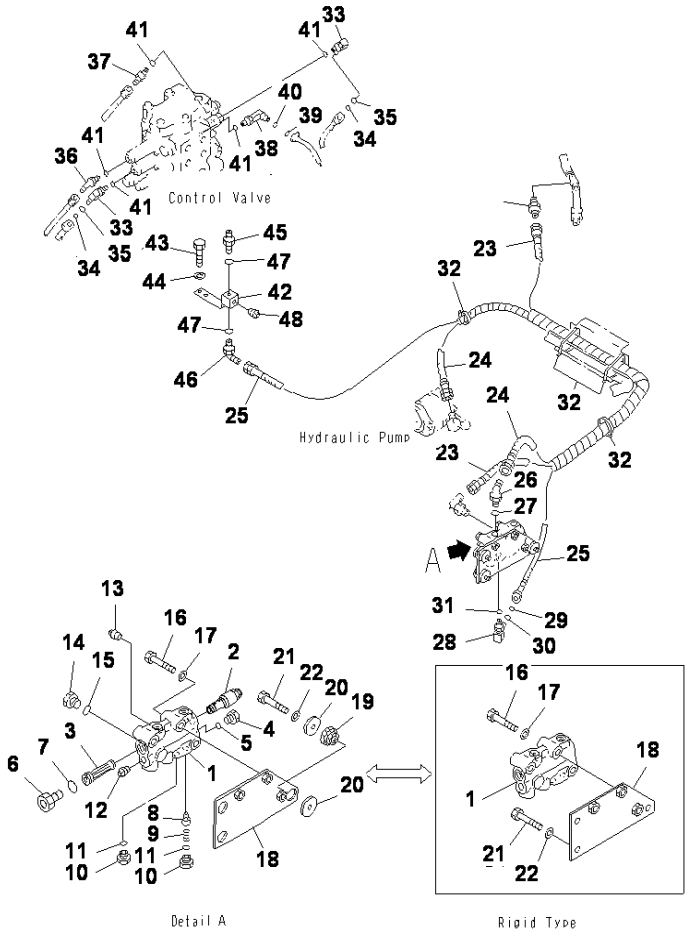

D85ESS-2 S/N J11888-UP

STEERING LINE (PPC PIPING) FOR STRAIGHT TILT

INDEX	CD	PART NO.	DESCRIPTION	QTY	SERIAL NO.
1		14Z-43-12111	BODY	1	J11301-UP
2		708-23-00910	RELIEF VALVE A	1	J11301-UP
3		704-28-02751	STRAINER	1	J11301-UP
4		07040-11409	PLUG	1	J11301-UP
5		07002-01423	O-RING	1	J11301-UP
6		07040-12412	PLUG	1	J11301-UP
7		07002-02434	O-RING	1	J11301-UP
8		205-60-51390	POPPET	1	J11301-UP
9		700-80-52150	SPRING	1	J11301-UP
10		103-49-14280	PLUG	2	J11301-UP
11		07002-01623	O-RING	2	J11301-UP
12		07042-70211	PLUG	1	J11301-UP
13		07042-70312	PLUG	1	J11301-UP
14		07040-12012	PLUG	1	J11301-UP
15		07002-02034	O-RING	1	J11301-UP
16		01010-81275	BOLT	3	J11301-UP
17		01643-31232	WASHER	3	J11301-UP
18		14Z-43-12120	PLATE	1	J11301-UP
19		195-03-41380	CUSHION	3	J11301-UP
20		178-60-12250	COLLAR	6	J11301-UP
21		01010-81050	BOLT	3	J11301-UP
22		01643-31032	WASHER	3	J11301-UP
23		07102-20413	HOSE	1	J11301-UP
24		07108-20417	HOSE	1	J11301-UP
25		14X-43-14771	HOSE	1	J11301-UP
26		07235-10422	ELBOW	1	J11301-UP
27		07002-02034	O-RING	1	J11301-UP
28		20Y-62-22271	ELBOW	1	J11301-UP
		01583-51408	.NUT	1	J11301-UP
29		201-60-11390	.O-RING	1	J11301-UP
30		20Y-62-19560	.O-RING	1	J11301-UP
31		07002-01423	O-RING	1	J11301-UP
32		08034-00536	BAND T50L	5	J11301-UP
33		20Y-62-22271	ELBOW	2	J11301-UP
		01583-51408	.NUT	1	J11301-UP
34		201-60-11390	.O-RING	1	J11301-UP
35		20Y-62-19560	.O-RING	1	J11301-UP
36		14X-43-14870	ELBOW	1	J11301-UP
37		07230-10210	NIPPLE	1	J11301-UP
38		14X-43-14840	ELBOW	1	J11301-UP
39		201-60-11390	.O-RING	1	J11301-UP
40		20Y-62-19560	.O-RING	1	J11301-UP
41		07002-01423	O-RING	5	J11301-UP
42		14X-43-15710	BRACKET	1	J11301-UP
43		01010-81025	BOLT	2	J11301-UP
44		01643-31032	WASHER	2	J11301-UP
45		20Y-62-16630	NIPPLE	1	J11301-UP

Ref :H1410-02A0 Page :180200

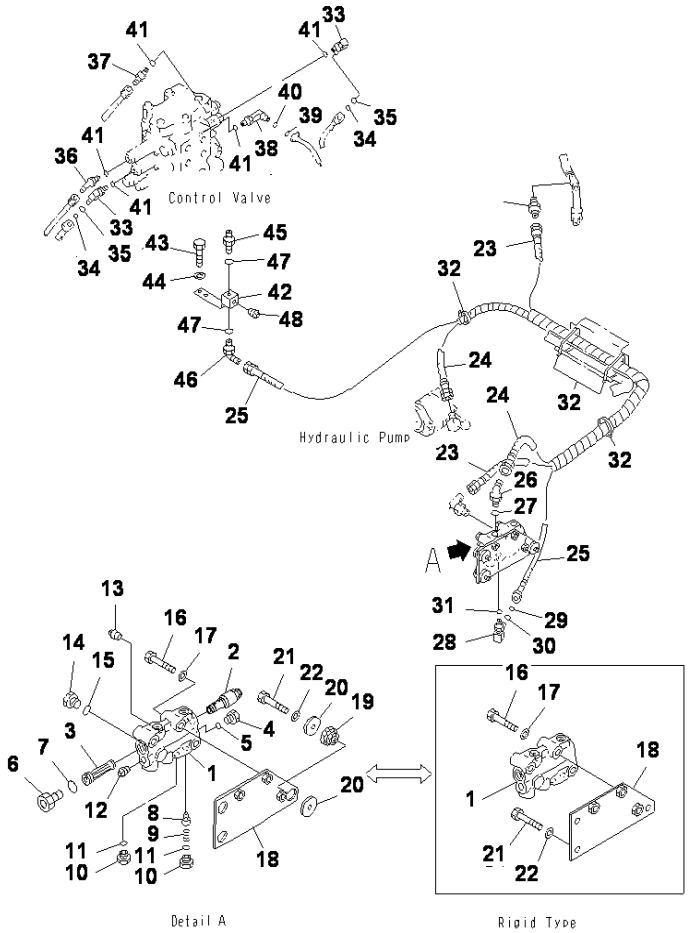

D85ESS-2 S/N J11888-UP

STEERING LINE (PPC PIPING) FOR STRAIGHT TILT

INDEX	CD	PART NO.	DESCRIPTION	QTY	SERIAL NO.
46		07235-10210	ELBOW	1	J11301-UP
47		07002-01423	O-RING	2	J11301-UP
48		07042-30108	PLUG	1	J11301-UP

Ref :H1410-02A0 Page :180201

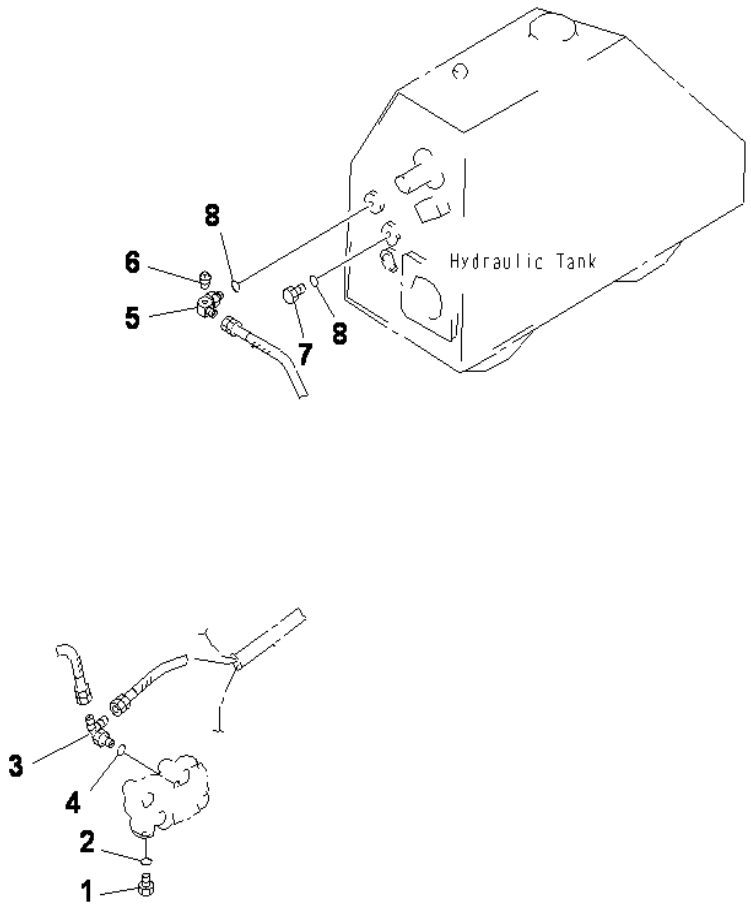

D85ESS-2 S/N J11888-UP

STEERING LINE (PPC ELBOW) FOR STRAIGHT TILT

INDEX	CD	PART NO.	DESCRIPTION	QTY	SERIAL NO.
1		07040-11409	PLUG	1	J11301-UP
2		07002-01423	O-RING	1	J11301-UP
3		14X-43-14760	ELBOW	1	J11301-UP
4		07002-02034	O-RING	1	J11301-UP
5		14X-78-11220	ELBOW	1	J11301-UP
6		07042-70108	PLUG	1	J11301-UP
7		07040-12012	PLUG	1	J11301-UP
8		07002-02034	O-RING	2	J11301-UP

Ref :H1410-03A0 Page :180210

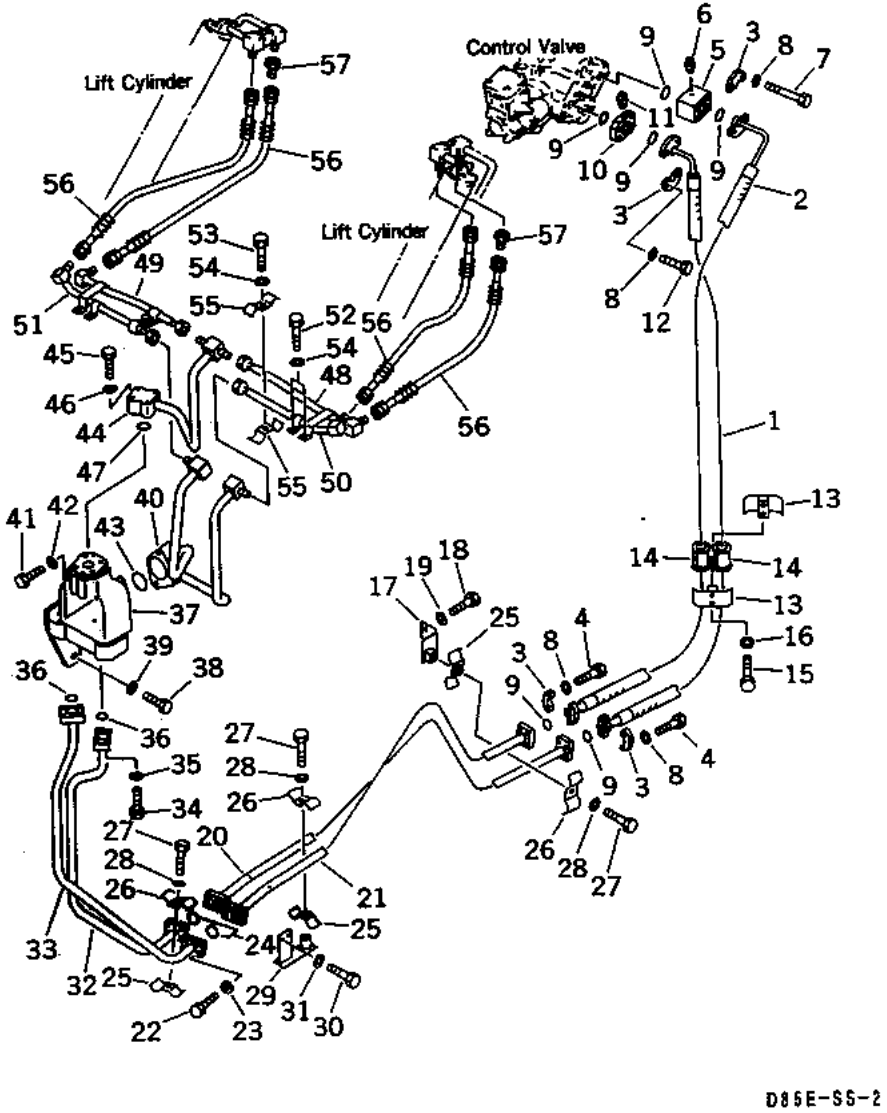

D85ESS-2 S/N J11888-UP

LIFT CYLINDER LINE

INDEX	CD	PART NO.	DESCRIPTION	QTY	SERIAL NO.
1		07124-01017	HOSE	1	J10001-J10774
2		14W-62-11131	HOSE	1	J10001-J10774
3		07371-31049	FLANGE	8	J10001-J10774
4		07372-21035	BOLT	8	J10001-J10774
5		14W-62-11171	SPACER	1	J10001-J10774
6		07042-20108	PLUG	1	J10001-J10774
7		01010-81090	BOLT	4	J10001-J10774
8		01643-51032	WASHER	16	J10001-J10774
9		07000-13032	O-RING	6	J10001-J10774
10		195-60-45180	SPACER	1	J10001-J10774
11		07042-20108	PLUG	1	J10001-J10774
12		01010-81055	BOLT	4	J10001-J10774
13		07094-21024	CLAMP	2	J10001-J10774
14		07095-01035	CUSHION	2	J10001-J10774
15		01010-81275	BOLT	2	J10001-J10774
16		01643-31232	WASHER	2	J10001-J10774
17		14Y-62-11631	PLATE	1	J10001-J10774
18		01010-81235	BOLT	2	J10001-J10774
19		01643-31232	WASHER	2	J10001-J10774
20		14Y-62-11580	TUBE	1	J10001-J10774
21		14Y-62-11590	TUBE	1	J10001-J10774
22		07372-21035	BOLT	8	J10001-J10774
23		01643-51032	WASHER	8	J10001-J10774
24		07000-13035	O-RING	2	J10001-J10774
25		175-61-34320	CLAMP	3	J10001-J10774
26		14Y-62-11570	CLAMP	3	J10001-J10774
27		01010-81235	BOLT	3	J10001-J10774
28		01643-31232	WASHER	3	J10001-J10774
29		14Y-62-11640	BRACKET	1	J10001-J10774
30		01010-81225	BOLT	2	J10001-J10774
31		01643-31232	WASHER	2	J10001-J10774
32		14Y-62-12150	TUBE	1	J10001-J10774
33		14Y-62-12160	TUBE	1	J10001-J10774
34		07372-21040	BOLT	8	J10001-J10774
35		01643-51032	WASHER	8	J10001-J10774
36		07000-13035	O-RING	2	J10001-J10774
37		14X-62-12201	VALVE ASS'Y	1	J10001-J10774
38		01010-81230	BOLT	2	J10775-J10774
39		01643-31230	WASHER	2	J10001-J10774
40		14Y-62-11685	TUBE	1	J10001-J10774
41		0101151210	BOLT	2	J10001-J10774
42		01643-31232	WASHER	2	J10001-J10774
43		07000-12055	O-RING	1	J10001-J10774
44		14Y-62-11695	TUBE	1	J10001-J10774
45		01010-81080	BOLT	4	J10001-J10774

Ref :H2210-01A0 Page :180218

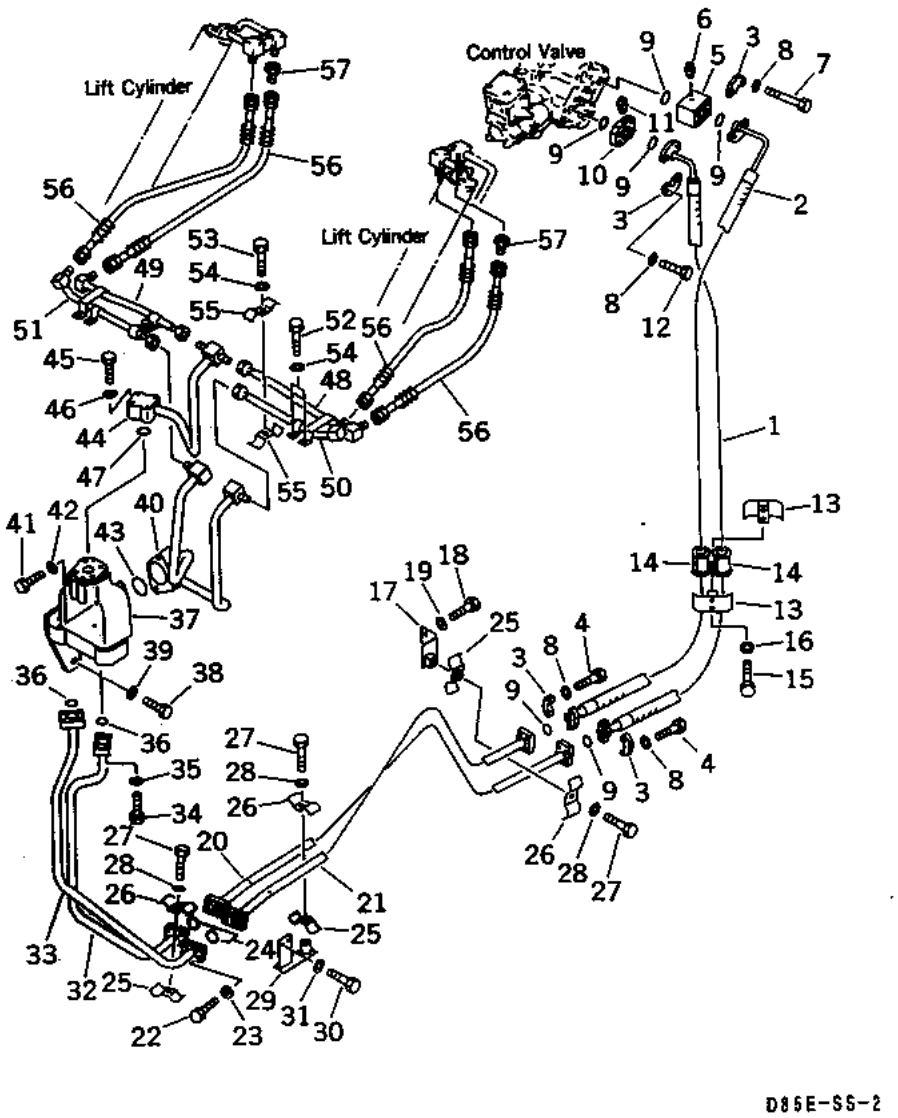

D85ESS-2 S/N J11888-UP

LIFT CYLINDER LINE

INDEX	CD	PART NO.	DESCRIPTION	QTY	SERIAL NO.
46		01643-31032	WASHER	4	J10001-J10774
47		07000-13048	O-RING	1	J10001-J10774
48		14Y-62-11512	TUBE, L.H.	1	J10001-J10774
49		14Y-62-11522	TUBE, R.H.	1	J10001-J10774
50		14Y-62-11531	TUBE, L.H.	1	J10001-J10774
51		14Y-62-11541	TUBE, R.H.	1	J10001-J10774
52		01010-81225	BOLT	4	J10001-J10774
53		01010-81235	BOLT	2	J10001-J10774
54		01643-31232	WASHER	6	J10001-J10774
55		425-88-01380	CLAMP	4	J10001-J10774
56		07123-20607	HOSE	4	J10001-J10774
57		14U-62-11130	NIPPLE	2	J10001-J10774

Ref :H2210-01A0 Page :180219

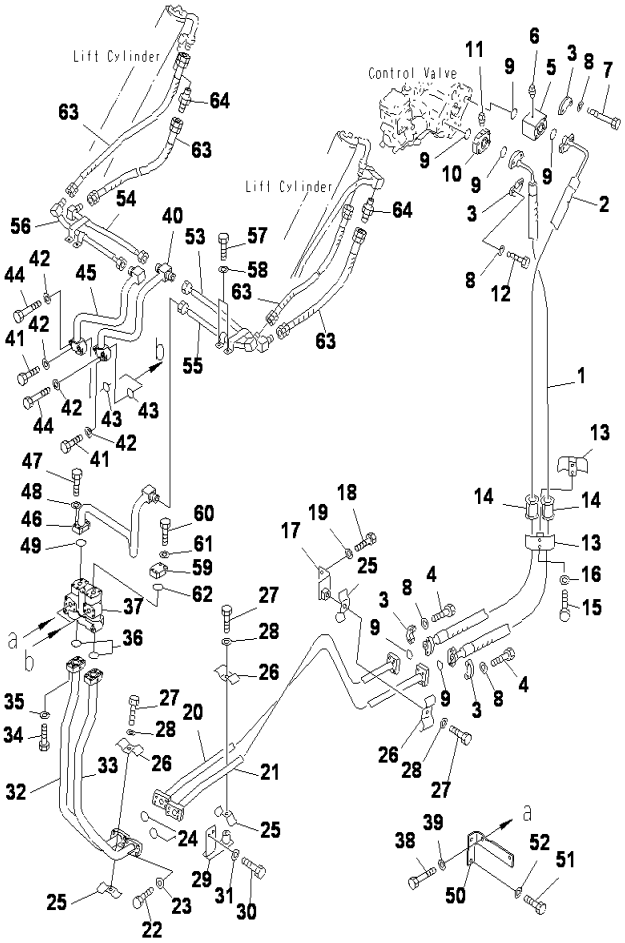

D85ESS-2 S/N J11888-UP

LIFT CYLINDER LINE

INDEX	CD	PART NO.	DESCRIPTION	QTY	SERIAL NO.
1		07124-01017	HOSE	1	J10775-UP
2		14W-62-11131	HOSE	1	J10775-UP
3		07371-31049	FLANGE	8	J10775-UP
4		07372-21035	BOLT	8	J10775-UP
5		14W-62-11171	SPACER	1	J10775-UP
6		07042-20108	PLUG	1	J10775-UP
7		01010-81090	BOLT	4	J10775-UP
8		01643-51032	WASHER	16	J10775-UP
9		07000-13032	O-RING	6	J10775-UP
10		195-60-45180	SPACER	1	J10775-UP
11		07042-20108	PLUG	1	J10775-UP
12		01010-81055	BOLT	4	J10775-UP
13		07094-21024	CLAMP	2	J10775-UP
14		07095-01035	CUSHION	2	J10775-UP
15		01010-81275	BOLT	2	J10775-UP
16		01643-31232	WASHER	2	J10775-UP
17		14Y-62-11631	PLATE	1	J10775-UP
18		01010-81235	BOLT	2	J10775-UP
19		01643-31232	WASHER	2	J10775-UP
20		14Y-62-21580	TUBE	1	J10775-UP
21		14Y-62-21590	TUBE	1	J10775-UP
22		07372-21040	BOLT	8	J10775-UP
23		01643-51032	WASHER	8	J10775-UP
24		07000-13035	O-RING	2	J10775-UP
25		175-61-34320	CLAMP	3	J10775-UP
26		14Y-62-11570	CLAMP	3	J10775-UP
27		01010-81235	BOLT	3	J10775-UP
28		01643-31232	WASHER	3	J10775-UP
29		14Y-62-11640	BRACKET	1	J10775-UP
30		01010-81225	BOLT	2	J10775-UP
31		01643-31232	WASHER	2	J10775-UP
32		14X-62-16210	TUBE	1	J10775-UP
33		14X-62-16220	TUBE	1	J10775-UP
34		07372-21040	BOLT	8	J10775-UP
35		01643-51032	WASHER	8	J10775-UP
34		07000-13035	O-RING	2	J10775-UP
37		14X-62-16102	VALVE ASS'Y	1	J10775-UP
38		01010-81025	BOLT	2	J10775-UP
39		01643-31032	WASHER	2	J10775-UP
40		14X-62-16250	TUBE	1	J10775-UP
41		01010-80835	BOLT	4	J10775-UP
42		01643-30823	WASHER	8	J10775-UP
43		07000-13030	O-RING	2	J10775-UP
44		01010-80850	BOLT	4	J10775-UP
45		14X-62-16240	TUBE R.H	1	J10775-UP

Ref :H2210-01A0A Page :180220

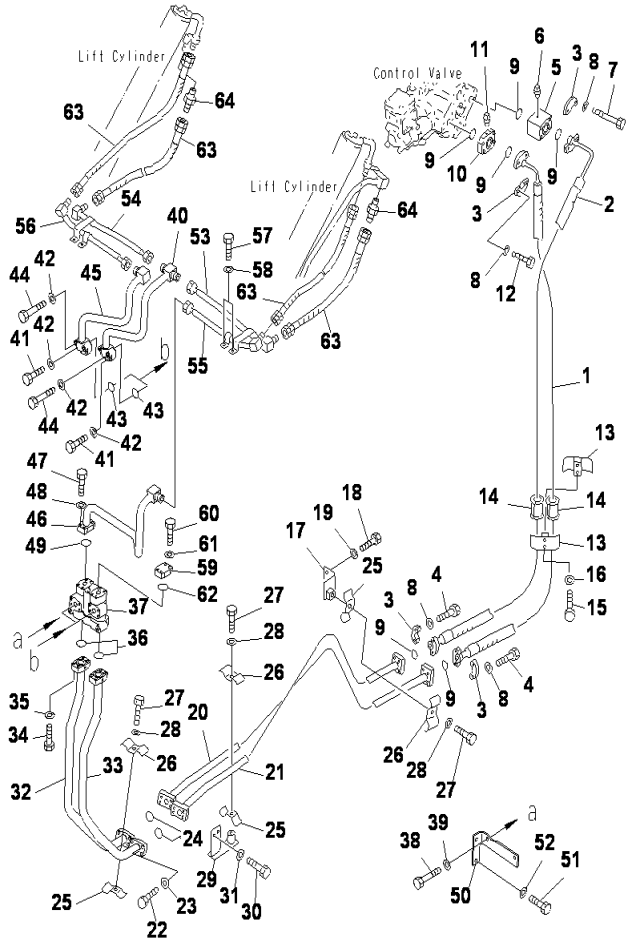

D85ESS-2 S/N J11888-UP

LIFT CYLINDER LINE

INDEX	CD	PART NO.	DESCRIPTION	QTY	SERIAL NO.
46		14X-62-16230	TUBE L.H	1	J10775-UP
		14X-62-16280	.FLANGE	1	J10775-UP
		07241-A0628	.ELBOW	1	J10775-UP
47		01010-80835	BOLT	4	J10775-UP
48		01643-30823	WASHER	4	J10775-UP
49		07000-13030	O-RING	1	J16678-UP
		07000-13030	O-RING	1	J16482-J16677
		07000-13035	O-RING	1	J10775-J16481
50		14X-62-16180	BRACKET	1	J10775-UP
51		01010-81020	BOLT	2	J10775-UP
52		01643-31032	WASHER	2	J10775-UP
53		14Y-62-21510	TUBE	1	J10775-UP
		14Y-62-12210	.NUT,SLEEVE	1	J10775-UP
		14Y-62-12220	.NUT,SLEEVE	1	J10775-UP
54		14Y-62-21520	TUBE	1	J10775-UP
55		14Y-62-21530	TUBE LH	1	J10775-UP
56		14Y-62-21540	TUBE LH	1	J10775-UP
57		01010-81265	BOLT	4	J16482-UP
		01010-81265	BOLT	2	J10775-J16481
58		01643-31232	WASHER	8	J16482-UP
		01643-31232	WASHER	4	J10775-J16481
59		21K-62-15313	FLANGE	1	J10775-UP
60		01010-80820	BOLT	4	J10775-UP
61		01643-30823	WASHER	4	J10775-UP
62		07000-13030	O-RING	1	J10775-UP
63		07123-20607	HOSE	4	J10775-UP
64		14U-62-11140	NIPPLE	2	J10775-UP

Ref :H2210-01A0A Page :180221

D85ESS-2 S/N J11888-UP

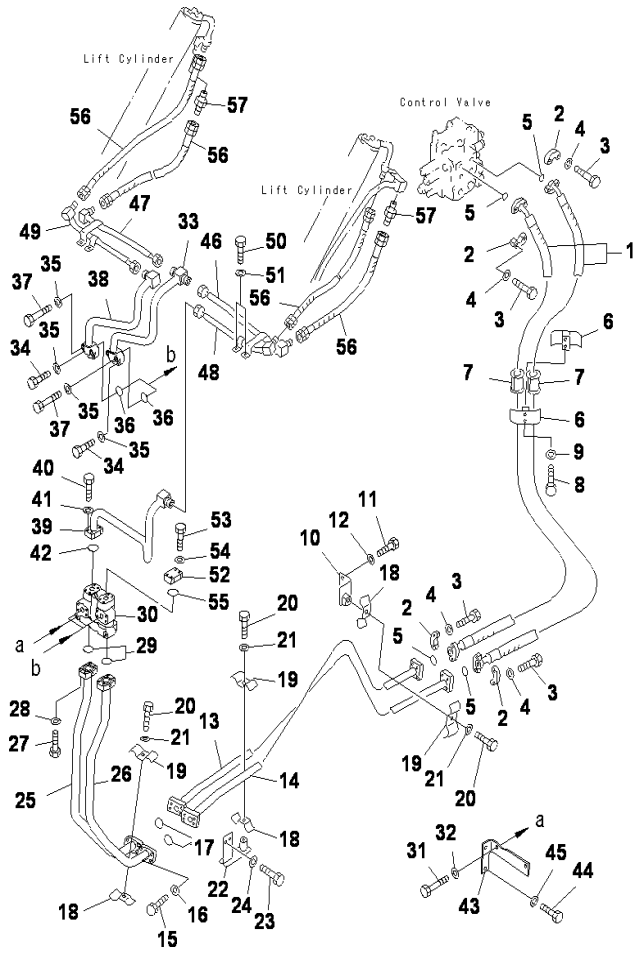

LIFT CYLINDER LINE FOR STRAIGHT TILT

INDEX	CD	PART NO.	DESCRIPTION	QTY	SERIAL NO.
1		07122-01018	HOSE	2	J11301-UP
2		07371-31049	FLANGE	8	J11301-UP
3		07372-21035	BOLT	16	J11301-UP
4		01643-51032	WASHER	16	J11301-UP
5		07000-13032	O-RING	4	J11301-UP
6		07094-21024	CLAMP	2	J11301-UP
7		07095-01035	CUSHION	2	J11301-UP
8		01010-81275	BOLT	2	J11301-UP
9		01643-31232	WASHER	2	J11301-UP
10		14Y-62-11631	PLATE	1	J11301-UP
		01572-21225	.SEAT	1	J11301-UP
11		01010-81235	BOLT	2	J11301-UP
12		01643-31232	WASHER	2	J11301-UP
13		14Y-62-21580	TUBE	1	J11301-UP
		07374-01034	.FLANGE	2	J11301-UP
14		14Y-62-21590	TUBE	1	J11301-UP
		07370-31034	.FLANGE	1	J11301-UP
17		07000-13035	O-RING	2	J11301-UP
15		07372-21040	BOLT	8	J11301-UP
16		01643-51032	WASHER	8	J11301-UP
18		175-61-34320	CLAMP	3	J11301-UP
19		14Y-62-11570	CLAMP	3	J11301-UP
20		01010-81235	BOLT	3	J11301-UP
21		01643-31232	WASHER	3	J11301-UP
22		14Y-62-11640	BRACKET	1	J11301-UP
		01572-21225	.SEAT	1	J11301-UP
23		01010-81225	BOLT	1	J11301-UP
24		01643-31232	WASHER	1	J11301-UP
25		14X-62-16210	TUBE	1	J11301-UP
26		14X-62-16220	TUBE	1	J11301-UP
27		07372-21040	BOLT	8	J11301-UP
28		01643-51032	WASHER	8	J11301-UP
29		07000-13035	O-RING	2	J11301-UP
30		14X-62-16102	VALVE ASS'Y	1	J11301-UP
31		01010-81025	BOLT	2	J11301-UP
32		01643-31032	WASHER	2	J11301-UP
33		14X-62-16250	TUBE	1	J11301-UP
34		01010-80835	BOLT	4	J11301-UP
35		01643-30823	WASHER	8	J11301-UP
36		07000-13030	O-RING	2	J11301-UP
37		01010-80850	BOLT	4	J11301-UP
38		14X-62-16240	TUBE R.H	1	J11301-UP
39		14X-62-16230	TUBE L.H	1	J11301-UP
40		01010-80835	BOLT	4	J11301-UP
41		01643-30823	WASHER	4	J11301-UP
42		07000-13030	O-RING	1	J16678-UP
		07000-13035	O-RING	1	J11301-J16677
43		14X-62-16180	BRACKET	1	J11301-UP
44		01010-81020	BOLT	2	J11301-UP

45		01643-31032	WASHER.....	2	J11301-UP

Ref :H2210-01A1A Page :180230

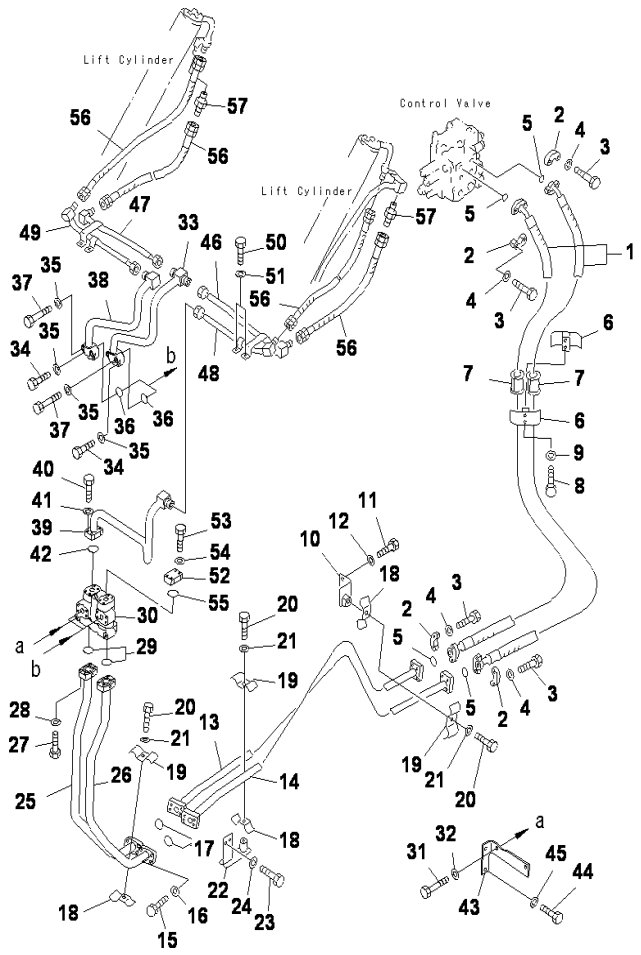

D85ESS-2 S/N J11888-UP

LIFT CYLINDER LINE FOR STRAIGHT TILT

INDEX	CD	PART NO.	DESCRIPTION	QTY	SERIAL NO.
46		14Y-62-21510	TUBE	1	J11301-UP
47		14Y-62-21520	TUBE	1	J11301-UP
48		14Y-62-21530	TUBE LH	1	J11301-UP
49		14Y-62-21540	TUBE LH	1	J11301-UP
50		01010-81265	BOLT	4	J11301-UP
51		01643-31232	WASHER	4	J11301-UP
52		21K-62-15313	FLANGE	1	J11301-UP
53		01010-80820	BOLT	4	J11301-UP
54		01643-30823	WASHER	4	J11301-UP
55		07000-13030	O-RING	1	J11301-UP
56		07123-00607	HOSE	4	J11301-UP
57		14Y-62-12180	NIPPLE	2	J11301-UP

Ref :H2210-01A1A Page :180231

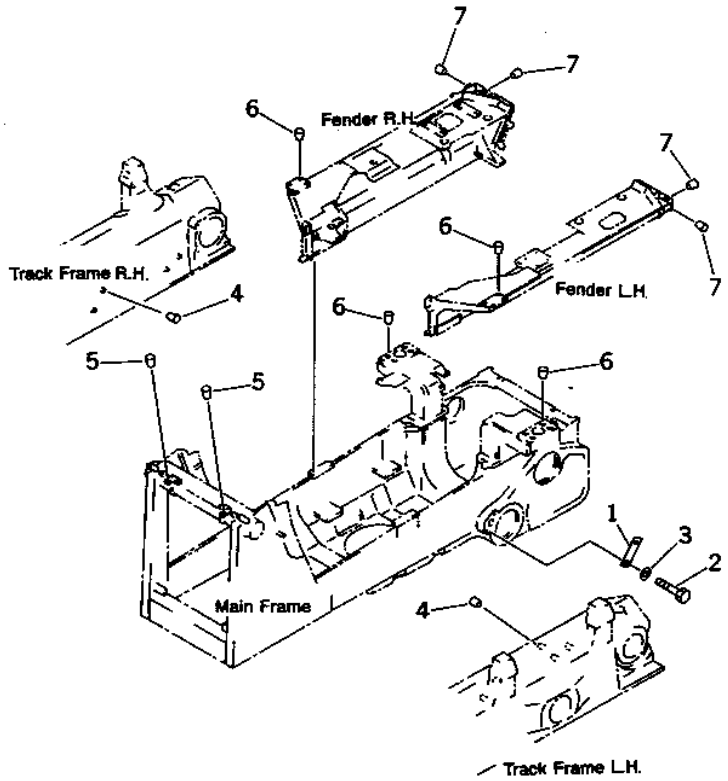

D85ESS-2 S/N J11888-UP

ANGLE PLUG

INDEX	CD	PART NO.	DESCRIPTION	QTY	SERIAL NO.
1		14X-62-11460	PLATE	2	J10001-UP
2		01010-82040	BOLT	4	J10001-UP
3		01643-32060	WASHER	4	J10001-UP
4		07049-01215	PLUG	14	J10001-UP
5		07049-01215	PLUG	8	J10001-UP
6		07049-01620	PLUG	16	J10001-UP
7		07049-01215	PLUG	8	J10001-UP

Ref :H2220-01A0 Page :180240

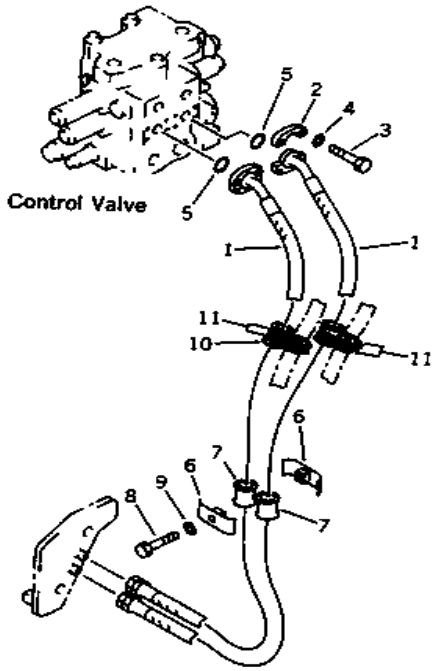

D85ESS-2 S/N J11888-UP

TILT LINE (TILT VALVE SIDE)

INDEX	CD	PART NO.	DESCRIPTION	QTY	SERIAL NO.
1		14Y-62-11211	HOSE	2	J11301-UP
2		07371-31049	FLANGE	4	J11301-UP
3		07372-21035	BOLT	8	J11301-UP
4		01643-51032	WASHER	8	J11301-UP
5		07000-13032	O-RING	2	J11301-UP
6		07094-20417	CLAMP	2	J11301-UP
7		07095-00421	CUSHION	2	J11301-UP
8		01010-81255	BOLT	1	J11301-UP
9		01643-31232	WASHER	1	J11301-UP
10		07095-20420	CUSHION	2	J11301-UP
11		08034-00536	BAND T50L	8	J11301-UP

Ref :H2220-02A0 Page :180250

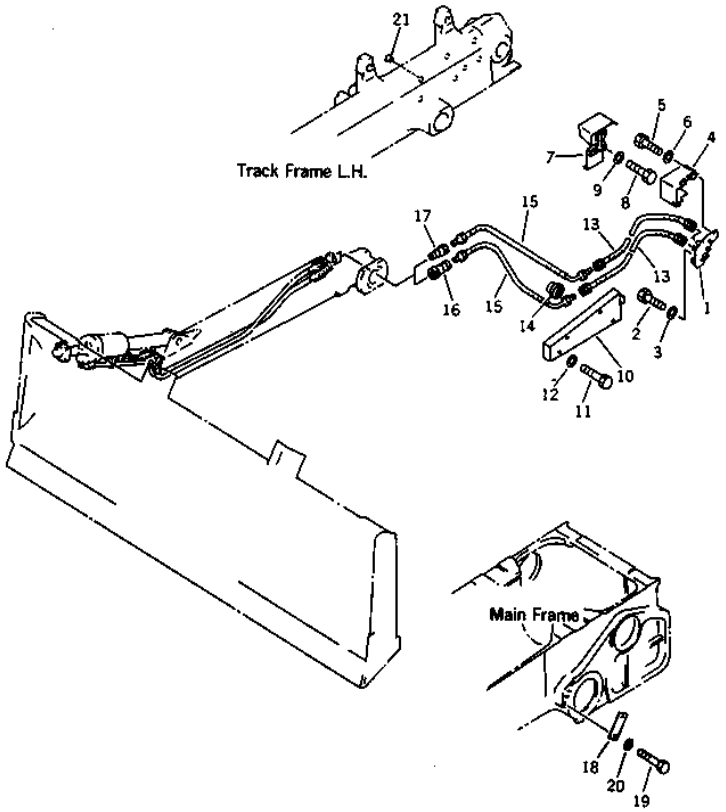

D85ESS-2 S/N J11888-UP

TILT LINE (TRACK FRAME SIDE) FOR STRAIGHT TILT

INDEX	CD	PART NO.	DESCRIPTION	QTY	SERIAL NO.
1		14Y-62-11312	BRACKET RH	1	J11301-UP
		01572-21216	.SEAT	1	J11301-UP
2		01010-82055	BOLT	2	J11301-UP
3		01643-32060	WASHER	2	J11301-UP
4		14Y-62-11322	COVER RH	1	J11301-UP
5		01010-81235	BOLT	4	J11301-UP
6		01643-31232	WASHER	4	J11301-UP
7		14Y-62-11343	COVER RH	1	J11301-UP
8		01010-81235	BOLT	2	J11301-UP
9		01643-31232	WASHER	2	J11301-UP
10		14Y-62-11353	COVER RH	1	J11301-UP
11		01010-81265	BOLT	5	J11301-UP
12		01643-31232	WASHER	5	J11301-UP
13		10E-85-25460	HOSE	2	J11301-UP
14		14Y-62-11360	RUBBER	1	J11301-UP
15		14X-62-11650	HOSE	2	J11301-UP
16		10E-60-16340	COUPLING	1	J11301-UP
17		10E-60-16350	COUPLING	1	J11301-UP
18		14X-62-11460	PLATE	1	J11301-UP
19		01010-82040	BOLT	2	J11301-UP
20		01643-32060	WASHER	2	J11301-UP
21		07049-01215	PLUG	7	J11301-UP

Ref :H2220-03A1 Page :180260

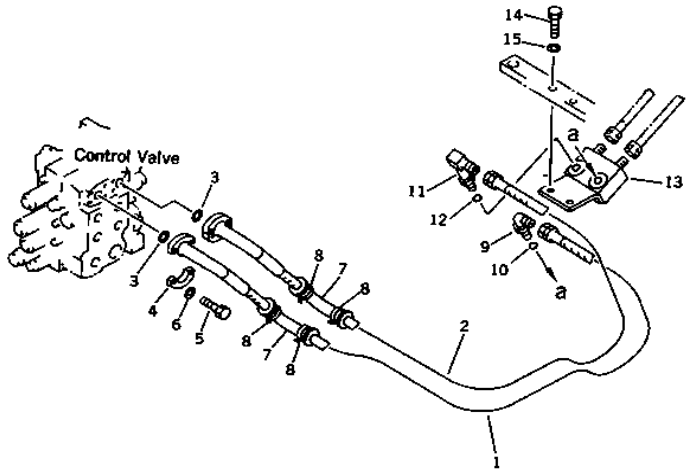

D85ESS-2 S/N J11888-UP

REAR HYDRAULIC LINE (RIPPER PIPING)

INDEX	CD	PART NO.	DESCRIPTION	QTY	SERIAL NO.
1		14X-78-11120	HOSE	1	J11587-UP
2		14X-78-11260	HOSE	1	J11587-UP
3		07000-13032	O-RING	2	J11587-UP
4		07371-31049	FLANGE	4	J11587-UP
5		07372-21035	BOLT	8	J11587-UP
6		01643-31032	WASHER	8	J11587-UP
7		07095-20627	CUSHION	2	J11587-UP
8		08034-00823	BAND	4	J11587-UP
9		07235-10628	ELBOW	1	J11587-UP
10		07002-12434	O-RING	1	J11587-UP
11		113-62-32110	ELBOW	1	J11587-UP
		01583-52414	.NUT	1	J11587-UP
12		07002-12434	O-RING	1	J11587-UP
13		14X-78-11111	BRACKET	1	J11587-UP
		01580-11210	.NUT	1	J11587-UP
		07240-50633	.JOINT	1	J11587-UP
14		01010-81245	BOLT	2	J11587-UP
15		01643-31232	WASHER	2	J11587-UP

Ref :H2250-01A3 Page :180270

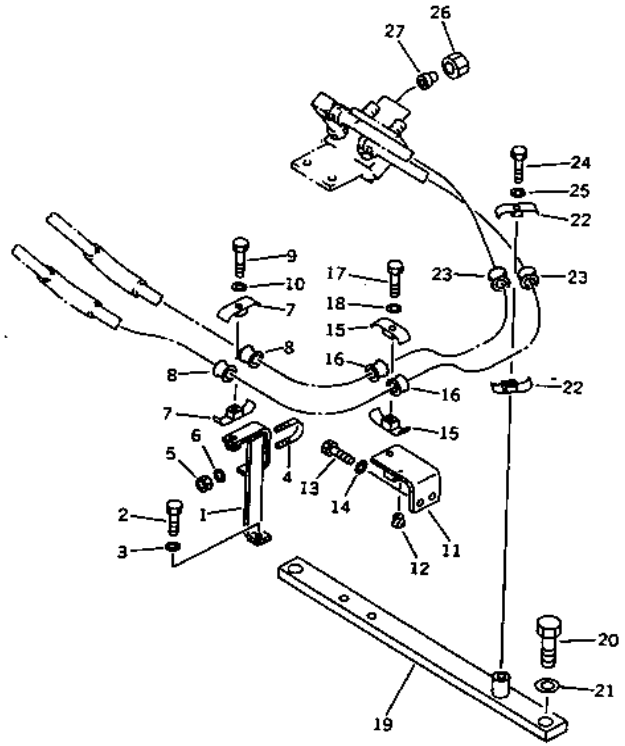

D85ESS-2 S/N J11888-UP

REAR HYDRAULIC LINE (RIPPER PIPING)

INDEX	CD	PART NO.	DESCRIPTION	QTY	SERIAL NO.
1		14X-78-11171	BRACKET	1	J11587-UP
		01580-01210	.NUT	1	J11587-UP
		01643-31445	.WASHER	1	J11587-UP
2		01010-81245	BOLT	1	J11587-UP
3		01643-31232	WASHER	1	J11587-UP
4		07283-22236	CLIP	1	J11587-UP
5		01599-01011	NUT	2	J11587-UP
6		01643-31032	WASHER	2	J11587-UP
7		07094-20620	CLAMP	2	J11587-UP
8		07095-00628	CUSHION	2	J11587-UP
9		01010-81270	BOLT	1	J11587-UP
10		01643-31232	WASHER	1	J11587-UP
11		14X-78-11160	BRACKET	1	J11587-UP
		01573-22306	.SEAT	1	J11587-UP
		01580-01210	.NUT	1	J11587-UP
12		07049-01215	PLUG	2	J11587-UP
13		01010-81225	BOLT	2	J11587-UP
14		01643-31232	WASHER	2	J11587-UP
15		07094-20620	CLAMP	2	J11587-UP
16		07095-00628	CUSHION	2	J11587-UP
17		01010-81270	BOLT	1	J11587-UP
18		01643-31232	WASHER	1	J11587-UP
19		14X-78-11210	.PLATE	1	J11587-UP
20		01010-82485	BOLT	2	J11587-UP
21		01643-32460	WASHER	2	J11587-UP
22		07094-20620	CLAMP	2	J11587-UP
23		07095-00628	CUSHION	2	J11587-UP
24		01010-81270	BOLT	1	J11587-UP
25		01643-31232	WASHER	1	J11587-UP
26		07221-20628	NUT	2	J11587-UP
27		07222-00616	PLUG	2	J11587-UP

Ref :H2250-02A3 Page :180280

MAIN FRAME AND RELATED PARTS

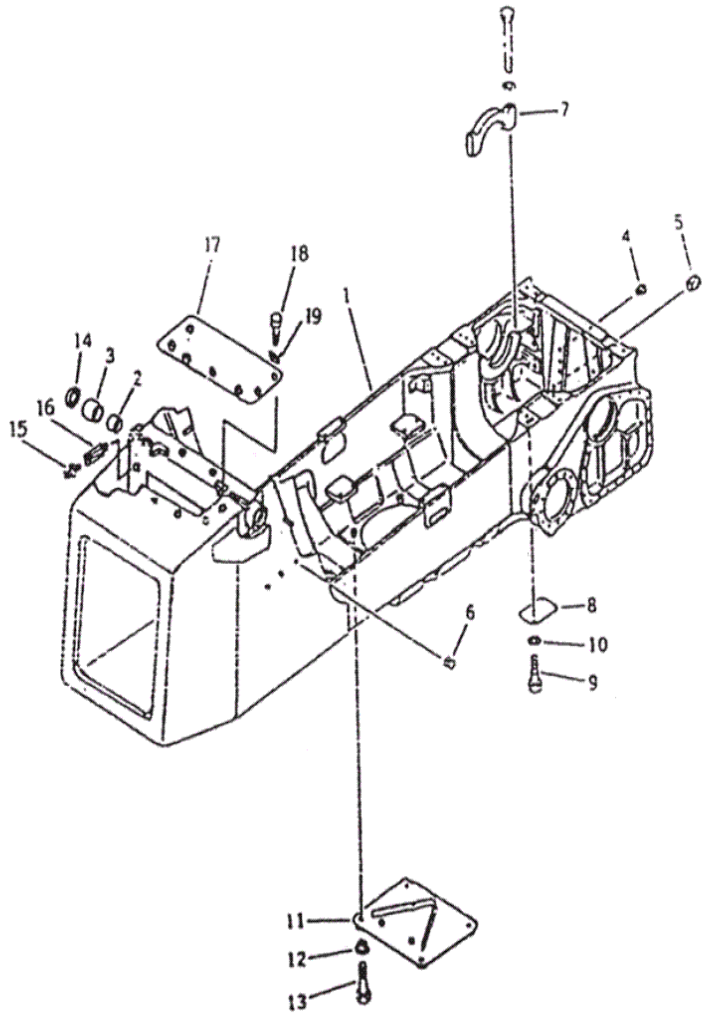

D85ESS-2 S/N J11888-UP

MAIN FRAME

INDEX	CD	PART NO.	DESCRIPTION	QTY	SERIAL NO.
1		14U-21-J1210	FRAME ASSY	1	J14218-UP
		14U-21-11003	FRAME ASS'Y	1	J10961-J14217
		14U-21-11002	FRAME ASS'Y	1	J10775-J10960
		14U-21-11001	FRAME ASS'Y	1	J10241-J10774
		14Y-21-11004	FRAME ASS'Y	1	J10001-J10240
		14Y-21-11104	.CASE ASS'Y	1	J14218-UP
2		144-70-15171	.BUSHING	2	J10001-UP
3		144-70-15181	.BUSHING	2	J10001-UP
4		14Y-21-13110	CAP	2	J10001-UP
5		07049-02430	PLUG	14	J10001-UP
6		07049-03342	PLUG	6	J10001-UP
7		09415-02520	CAP	1	J10001-UP
8		14Y-21-14121	PLATE	2	J10241-UP
		14Y-21-14120	PLATE	2	J10001-J10240
9		01010-81225	BOLT	4	J10001-UP
10		01643-31232	WASHER	4	J10001-UP
11		14U-21-11120	COVER	1	J10001-UP
		14Y-21-14114	.COVER	1	J10001-UP
		14X-54-15960	.PLATE	1	J10001-UP
12		14Y-21-14141	BOSS	4	J10001-UP
13		01010-81645	BOLT	4	J10001-UP
14		130-09-12370	OIL SEAL	2	J10001-UP
15		07020-00900	FITTING, GREASE	2	J10565-UP
		07020-00000	FITTING, GREASE	2	J10001-J10564
16		22X-47-18220	NIPPLE	2	J10565-UP
17		14U-21-11250	COVER	1	J10565-UP
18		01010-81025	BOLT	7	J10565-UP
19		01643-31032	WASHER	7	J10565-UP

Ref :J2100-01A0 Page :210010

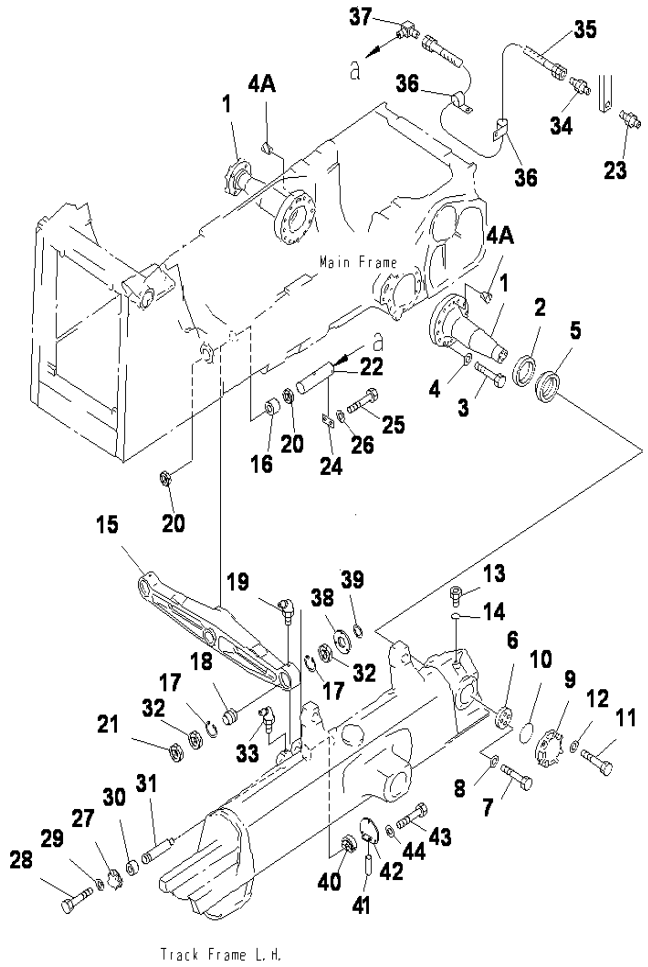

D85ESS-2 S/N J11888-UP

EQUALIZER BAR AND PIVOT SHAFT

INDEX	CD	PART NO.	DESCRIPTION	QTY	SERIAL NO.
		14Y-30-00210	PIVOT SHAFT ASS'Y	2	J10001-UP
1		14Y-30-17111	.SHAFT	1	J10001-UP
2		14Y-30-18160	.RING	2	J10001-UP
3		01010-82075	BOLT	24	J10001-UP
4		01643-32060	WASHER	24	J10001-UP
4A		07049-02025	PLUG	4	J10001-UP
5		14Y-30-18150	SEAL	2	J10001-UP
6		14Y-30-18121	SPACER	2	J10001-UP
7		01010-82055	BOLT	8	J10001-UP
8		01643-32060	WASHER	8	J10001-UP
9		14Y-30-18111	COVER	2	J10001-UP
10		07000-02145	O-RING	2	J10001-UP
11		01010-82055	BOLT	8	J10001-UP
12		01643-32060	WASHER	8	J10001-UP
13		07040-12414	PLUG	2	J10001-UP
14		07002-02434	O-RING	2	J10001-UP
		14Y-50-J1120	EQUALIZER BAR ASS'Y	1	J11387-UP
		14Y-50-00012	EQUALIZER BAR A	1	J10241-J11386
		14Y-50-00011	EQUALIZER BAR ASS'Y	1	J10001-J10240
15		14Y-50-11110	.BAR	1	J10001-J11386
16		14Y-50-11250	.BUSHING	1	J10241-UP
		14Y-50-11220	.BUSHING	2	J10001-J10240
17		04065-09030	.RING	4	J10001-J11386
18		14Y-50-11460	.BUSHING	2	J10001-J11386
19		07020-00000	FITTING	2	J10241-UP
		07020-00675	FITTING	2	J10001-J10240
20		130-09-12911	DUST SEAL	2	J10001-UP
21		14Y-50-11323	SEAL	4	J10001-UP
22		14Y-50-11240	PIN	1	J10001-UP
23		07020-00000	FITTING	1	J10001-UP
24		14Y-50-11390	LOCK	1	J10001-UP
25		01010-81640	BOLT	2	J10001-UP
26		01643-31645	WASHER	2	J10001-UP
27		14X-50-12110	COVER	2	J10001-UP
28		01010-81230	BOLT	8	J10001-UP
29		01643-51232	WASHER	8	J10001-UP
30		14Y-50-11421	BUSHING	4	J10001-UP
31		14Z-50-31530	PIN	2	J11387-UP
		14Y-50-11530	PIN	2	J10703-J11386
		14Y-50-11314	PIN	2	J10001-J10702
32		14Y-50-11323	SEAL	1	J10001-UP
33		07020-00675	FITTING	2	J10001-UP
34		208-06-11220	NIPPLE	1	J10001-UP
35		21Y-70-14580	HOSE	1	J10001-UP
36		04434-51312	CLIP	2	J10001-UP

Ref :J2700-01A0 Page :210020

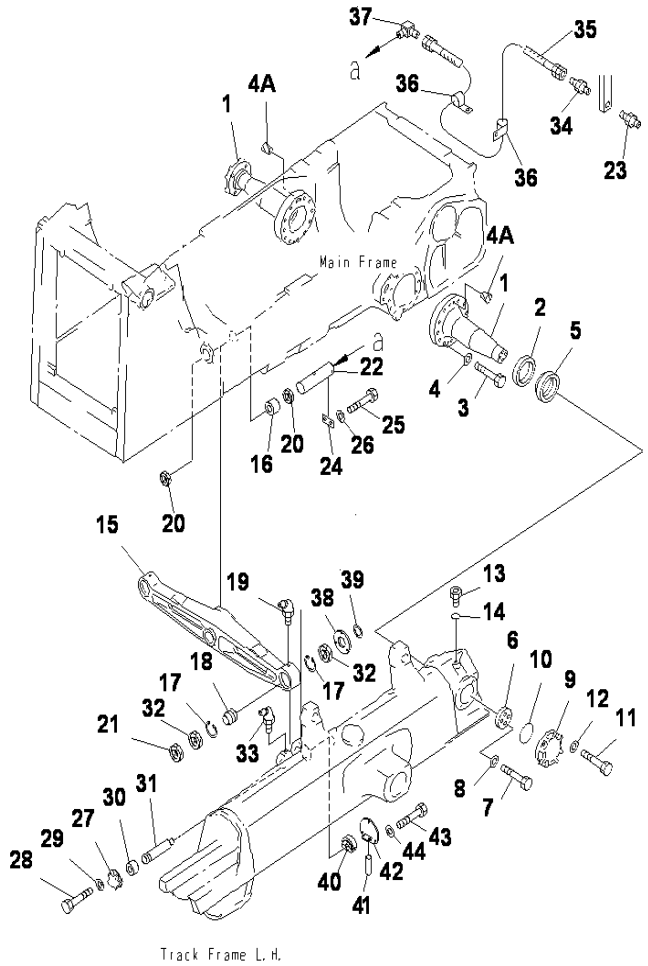

EQUALIZER BAR AND PIVOT SHAFT

INDEX	CD	PART NO.	DESCRIPTION	QTY	SERIAL NO.
37		203-62-42920	ELBOW	1	J11387-J11386
38		14Y-50-11551	PLATE	2	J11387-J11386
39		14Y-50-11540	COVER	2	J11387-J11386
40		14Y-50-11510	STOPPER	2	J11387-J11386
41		04022-08025	PIN	4	J11387-J11386
42		14Y-50-11561	COVER	2	J11387-J11386
43		01011-81235	BOLT	6	J11387-J11386
44		01643-31232	WASHER	6	J10703-J11386

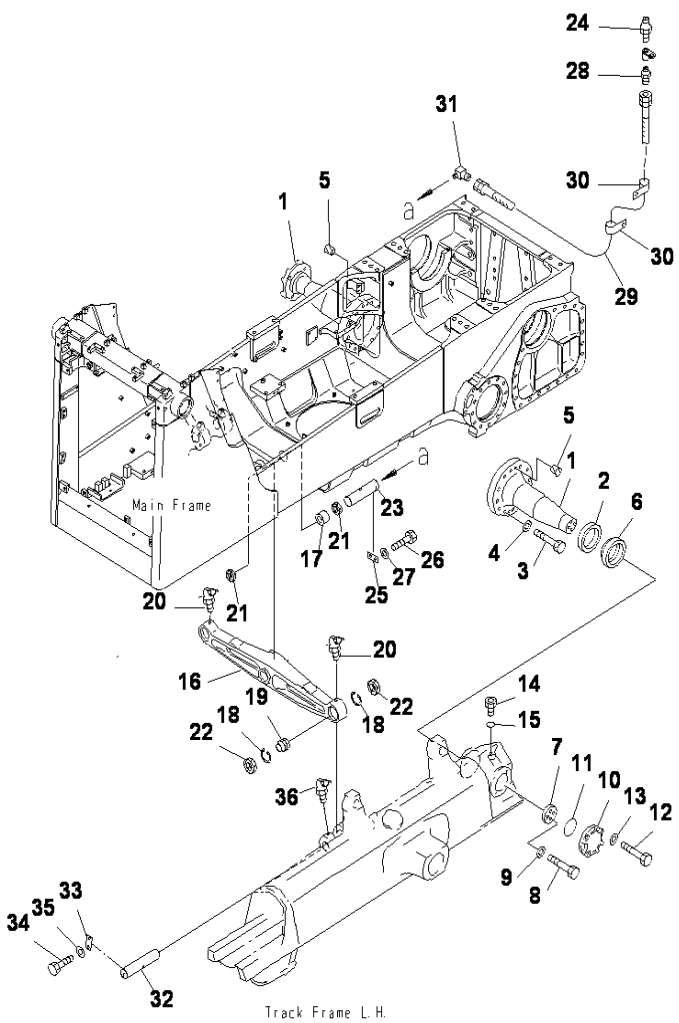

D85ESS-2 S/N J11888-UP

EQUALIZER BAR AND PIVOT SHAFT (J11387-)

INDEX	CD	PART NO.	DESCRIPTION	QTY	SERIAL NO.
		14Y-30-00210	PIVOT SHAFT ASS'Y	2	J11387-UP
1		14Y-30-17111	.SHAFT	2	J11387-UP
2		14Y-30-18160	.RING	2	J11387-UP
3		01010-82075	BOLT	24	J11387-UP
4		01643-32060	WASHER	24	J11387-UP
5		07049-02025	PLUG	4	J11387-UP
6		14Y-30-18150	SEAL	2	J11387-UP
7		14Y-30-18121	SPACER	2	J11387-UP
8		01010-82055	BOLT	8	J11387-UP
9		01643-32060	WASHER	8	J11387-UP
10		14Y-30-18111	COVER	2	J11387-UP
11		07000-02145	O-RING	2	J11387-UP
12		01010-82055	BOLT	8	J11387-UP
13		01643-32060	WASHER	8	J11387-UP
14		07040-12414	PLUG	2	J11387-UP
15		07002-02434	O-RING	2	J11387-UP
		14Y-50-J1120	EQUALIZER BAR ASS'Y	1	J11387-UP
16		14Y-50-11110	.BAR	1	J11387-UP
17		14Y-50-11250	.BUSHING	1	J11387-UP
18		04065-09030	.RING	4	J11387-UP
19		14Y-50-11460	.BUSHING	2	J11387-UP
20		07020-00000	FITTING	2	J11387-UP
21		130-09-12911	SEAL	2	J11387-UP
22		14Y-50-11323	SEAL	4	J11387-UP
23		14Y-50-11240	PIN	1	J11387-UP
24		07020-00000	FITTING	1	J11387-UP
25		14Y-50-11390	LOCK	1	J11387-UP
26		01010-81640	BOLT	2	J11387-UP
27		01643-31645	WASHER	2	J11387-UP
28		208-06-11220	NIPPLE	1	J11387-UP
29		21Y-70-14580	HOSE	1	J11387-UP
30		04434-51312	CLIP	2	J11387-UP
31		203-62-42920	ELBOW	1	J11387-UP
32		14Z-50-31530	PIN	2	J11983-UP
		14Z-50-J1110	PIN	2	J11658-J11982
		14Z-50-31530	PIN	2	J11387-J11657
33		14Y-50-11390	LOCK	2	J11387-UP
34		01010-81640	BOLT	4	J11387-UP
35		01643-31645	WASHER	4	J11387-UP
36		07020-00675	FITTING	2	J11387-UP

Ref :J2700-01A1 Page :210030

OPERATORS COMPARTMENT AND CONT

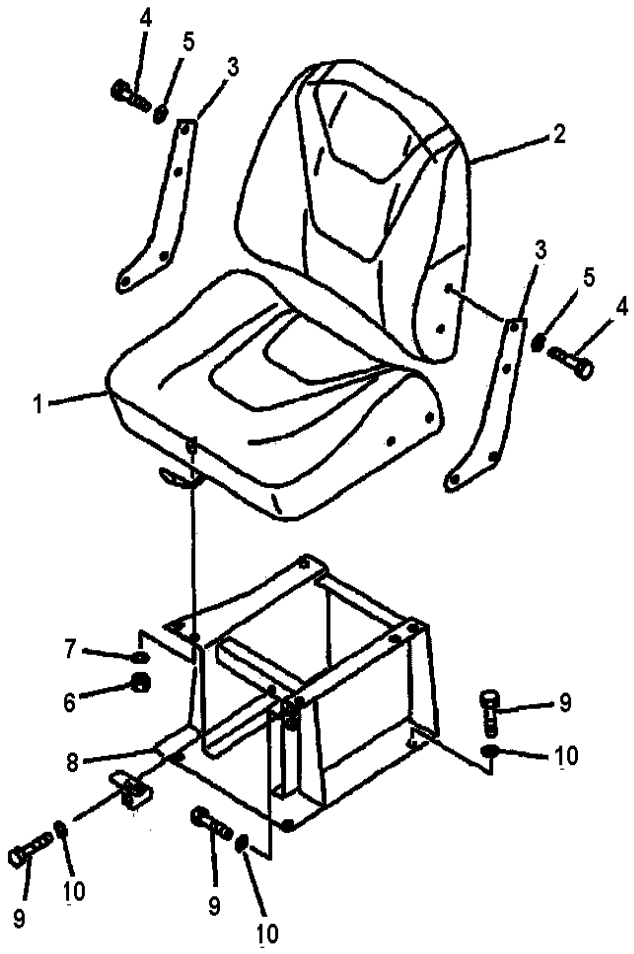

D85ESS-2 S/N J11888-UP

OPERATOR'S SEAT

INDEX	CD	PART NO.	DESCRIPTION	QTY	SERIAL NO.
		144-57-J1201	OP. SEAT ASS'Y.....	1	J12159-UP
		144-57-J1200	OP. SEAT ASS'Y.....	1	J11476-J12158
		144-57-J1211	.SEAT ASS'Y.....	1	J11476-UP
1		144-57-J1220	..CUSHION, SEAT.....	1	J11476-UP
		114-57-41260	..CUSHION, SEAT.....	1	J10001-J11475
2		144-57-J1230	..CUSHION.....	1	J11476-UP
		114-57-41270	..CUSHION.....	1	J10001-J11475
3		144-57-J1111	SPACER.....	1	J10001-UP
		144-57-J1130	SPACER.....	1	J10001-UP
4		01010-81025	BOLT.....	4	J10001-UP
5		01643-31032	WASHER.....	4	J10001-UP
6		01580-01210	NUT.....	8	J10001-UP
7		01602-21236	WASHER.....	8	J10001-UP
8		14X-57-J1111	BRACKET.....	1	J11634-UP
		14X-57-J1110	BRACKET.....	1	J11476-J11633
		14X-57-11113	BRACKET.....	1	J10241-J11475
		14X-57-11112	BRACKET.....	1	J10001-J10240
9		01010-81225	BOLT.....	4	J10001-UP
10		01602-21236	WASHER.....	4	J10001-UP

Ref :K0110-01A1 Page :240012

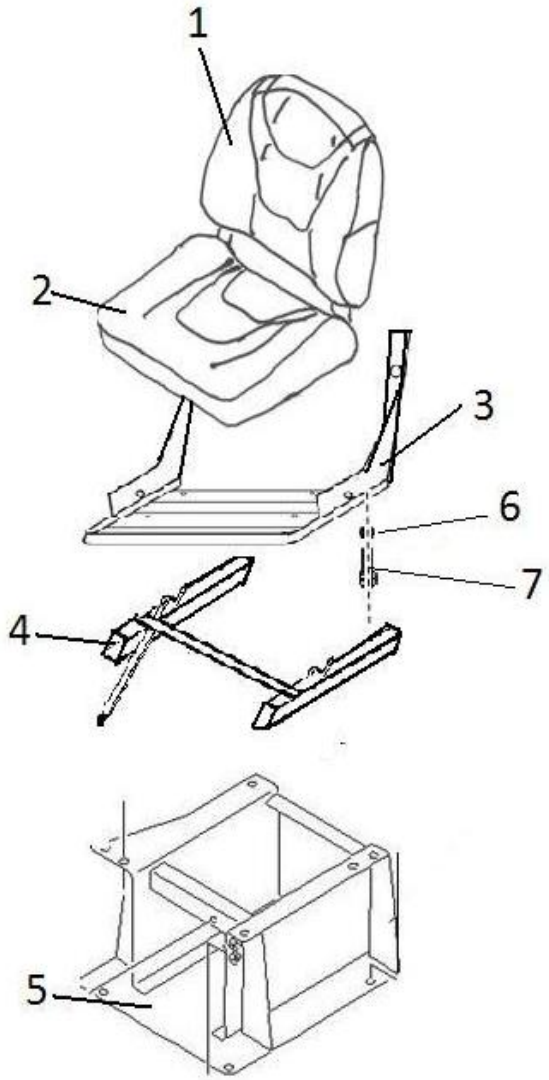

D85ESS-2 S/N J11888-UP

OPERATOR'S SEAT

INDEX	CD	PART NO.	DESCRIPTION	QTY	SERIAL NO.
		144-57-J1201	OP. SEAT ASS'Y(.....	1	J16678-UP
1		144-57-J1220	.BACK SEAT ASS'Y.....	1	J16678-UP
2		144-57-J1230	.CUSHION SEAT AS.....	1	J16678-UP
3		144-57-J1240	FRAME OP.SEAT A.....	1	J11888-UP
4		14X-57-J1111	BRACKET.....	1	J16678-UP
5		144-57-J1420	SLIDER ASS'Y.....	1	J11888-UP
6		144-57-J1430	WASHER SPRING.....	1	J11888-UP
7		144-57-J1440	BOLT.....	1	J11888-UP

Ref :K0110-01A1 Page :240013

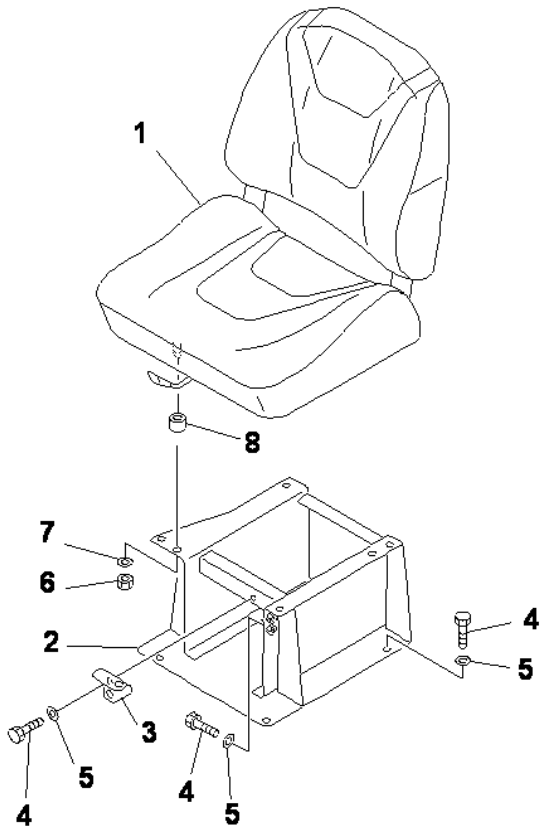

D85ESS-2 S/N J11888-UP

OPERATOR SEAT (U TYPE)

INDEX	CD	PART NO.	DESCRIPTION	QTY	SERIAL NO.
1		14X-57-15000	SEAT ASS'Y	1	J10001-UP
2		14X-57-11114	BRACKET	1	J10001-UP
3		14X-57-11380	PLATE	1	J10001-UP
4		01010-81230	BOLT	6	J10001-UP
5		01643-31232	WASHER	6	J10001-UP
6		01580-11210	NUT	4	J10001-UP
7		01643-31232	WASHER	4	J10001-UP
8		201-03-29160	SPACER	4	J10001-UP

Ref :K0110-01A2 Page :240015

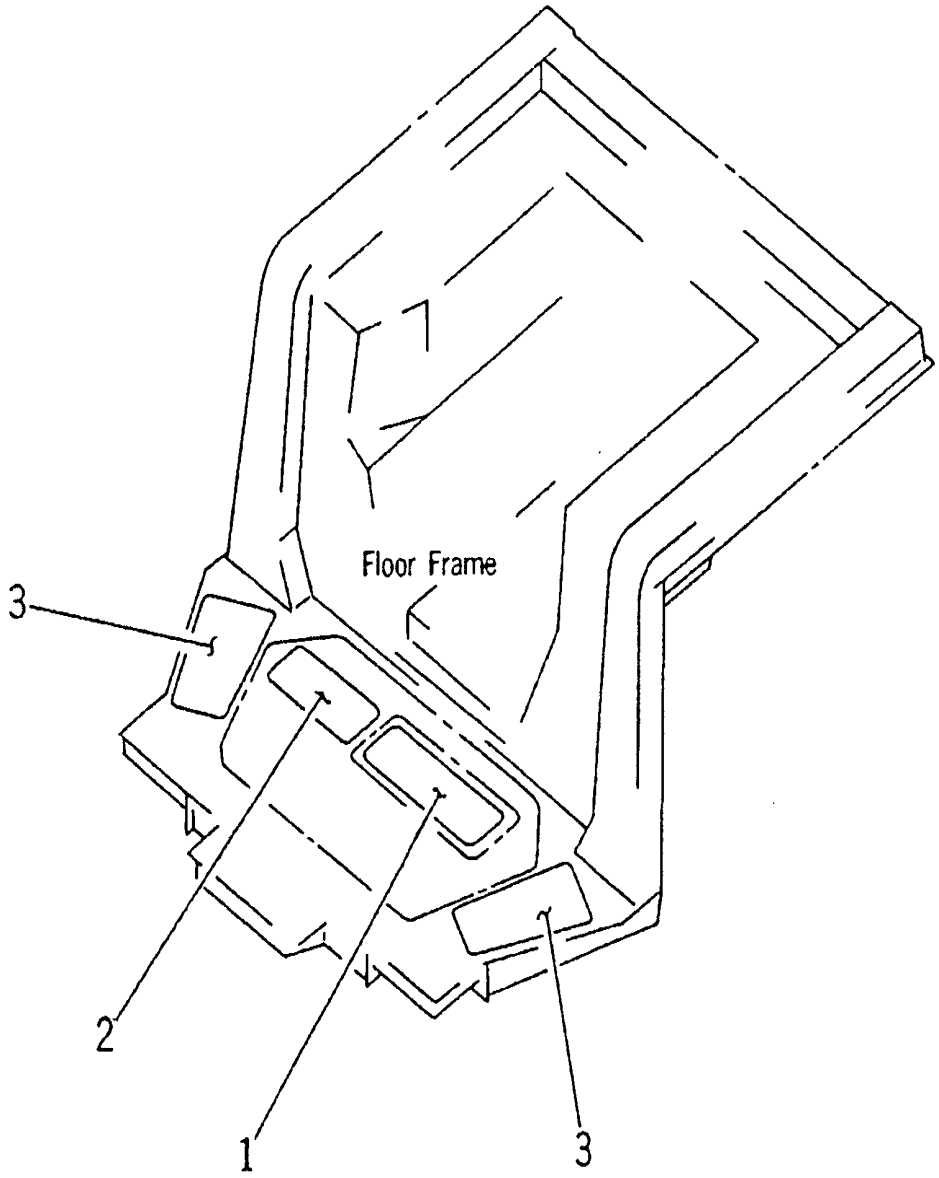

D85ESS-2 S/N J11888-UP

NON SLIP SHEET (WITHOUT CAB)

INDEX	CD	PART NO.	DESCRIPTION	QTY	SERIAL NO.
1		14X-54-16240	SHEET	1	J11888-UP
2		14X-54-16250	SHEET	1	J11888-UP
3		14X-54-16260	SHEET	2	J11888-UP

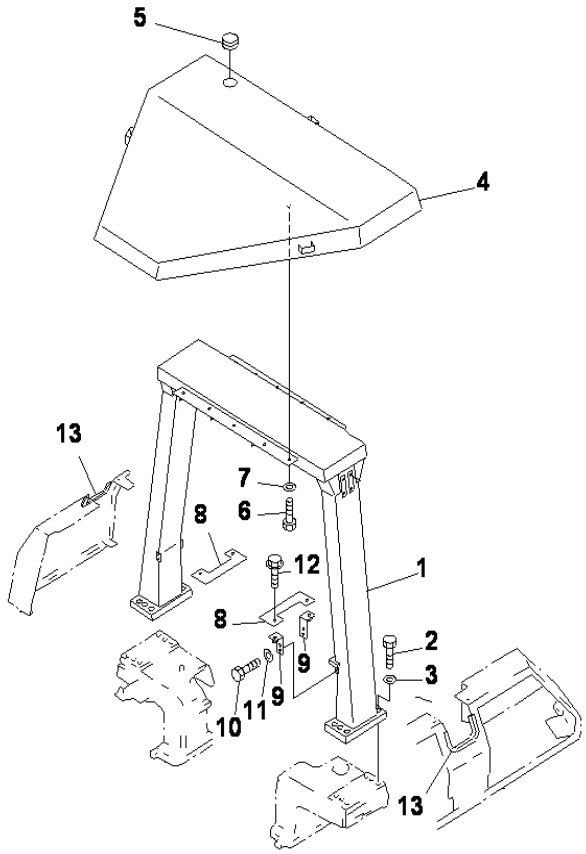

D85ESS-2 S/N J11888-UP

ROPS (WITH CAB)

INDEX	CD	PART NO.	DESCRIPTION	QTY	SERIAL NO.
1		14X-97-81113	GUARD	1	J10001-UP
2		01010-82470	BOLT	12	J10001-UP
3		01643-32460	WASHER	12	J10001-UP
4		14X-97-81410	ROOF	1	J10001-UP
5		08037-05016	GROMMET	1	J10001-UP
6		01010-81230	BOLT	10	J10001-UP
7		01643-31232	WASHER	10	J10001-UP
8		14X-54-14411	PLATE	2	J10001-UP
9		14X-54-14371	BRACKET	4	J10001-UP
		01580-01210	.NUT	1	J10001-UP
10		01010-81225	BOLT	8	J10001-UP
11		01643-31232	WASHER	8	J10001-UP
12		01439-01225	BOLT	4	J10001-UP
13		14X-54-24280	SEAL	2	J10001-UP

Ref :K0410-01A1 Page :240040

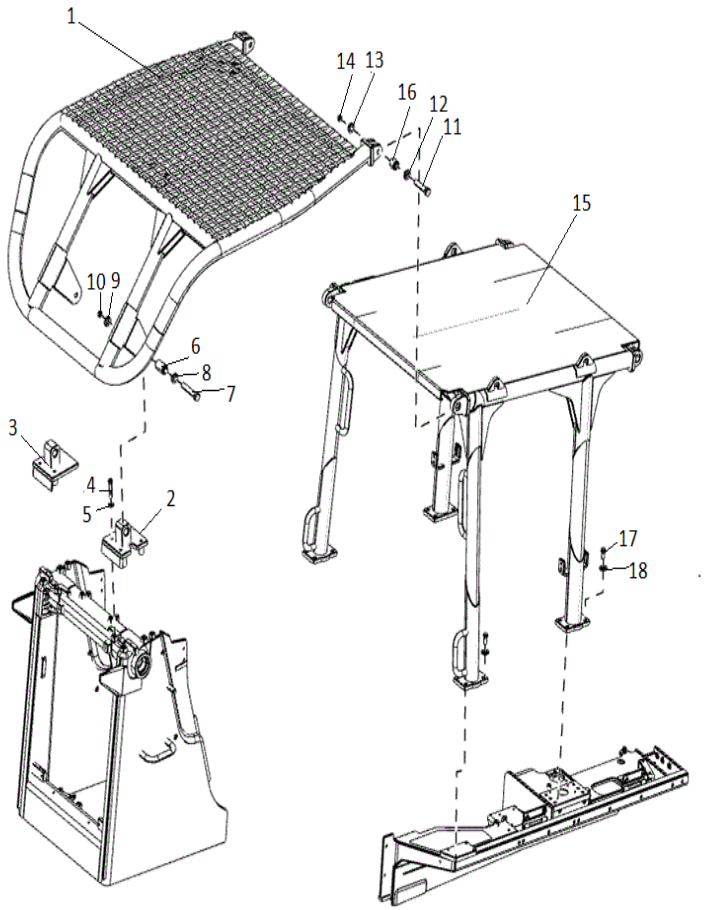

D85ESS-2 S/N J11888-UP

SWEEP (SWEEP AND CANOPY)

INDEX	CD	PART NO.	DESCRIPTION	QTY	SERIAL NO.
1		14U-906-J370	SWEEP	1	J16622-UP
		14X-906-J130	GUARD, FRONT	1	J11888-J16621
2		14U-906-J350	BRACKET LH	1	J16622-UP
		14X-906-J230	BRACKET LH	1	J11888-J16621
3		14U-906-J360	BRACKET RH	1	J16622-UP
		14X-906-J240	BRACKET RH	1	J11888-J16621
4		01010-81695	BOLT	3	J16622-UP
		01010-81640	BOLT	8	J13293-J16621
5		01643-31645	WASHER	3	J16622-UP
		01643-31643	WASHER	8	J13293-J16621
6		195-97-81311	VIBRA ISOLATOR	2	J13293-UP
7		14X-54-J1470	BOLT	2	J16622-UP
		01011-82420	BOLT	2	J13293-J16621
8		01643-32460	WASHER	4	J16622-UP
		01643-22460	WASHER	2	J18888-J16621
9		01602-22472	WASHER	2	J13293-J16621
10		01580-12419	NUT	2	J13293-UP
11		0101932430	BOLT	2	J16622-UP
		01011-82420	BOLT	2	J13293-J16621
12		01643-32460	WASHER	4	J16622-UP
		01643-22460	WASHER	2	J13293-J16621
13		01602-22472	WASHER	2	J13293-J16621
14		01580-12419	NUT	2	J13293-UP
15		14U-906-J121	CANOPY	1	J16622-UP
		14X-906-J120	CANOPY	1	J13293-J16621
16		134-X0-62230	CUSHION	2	J11888-UP
17		01010-81640	BOLT	16	J13293-UP
18		01643-31645	WASHER	16	J16622-UP
		01643-31643	WASHER	16	J13293-J16621

Ref :K0410-01A9 Page :240042

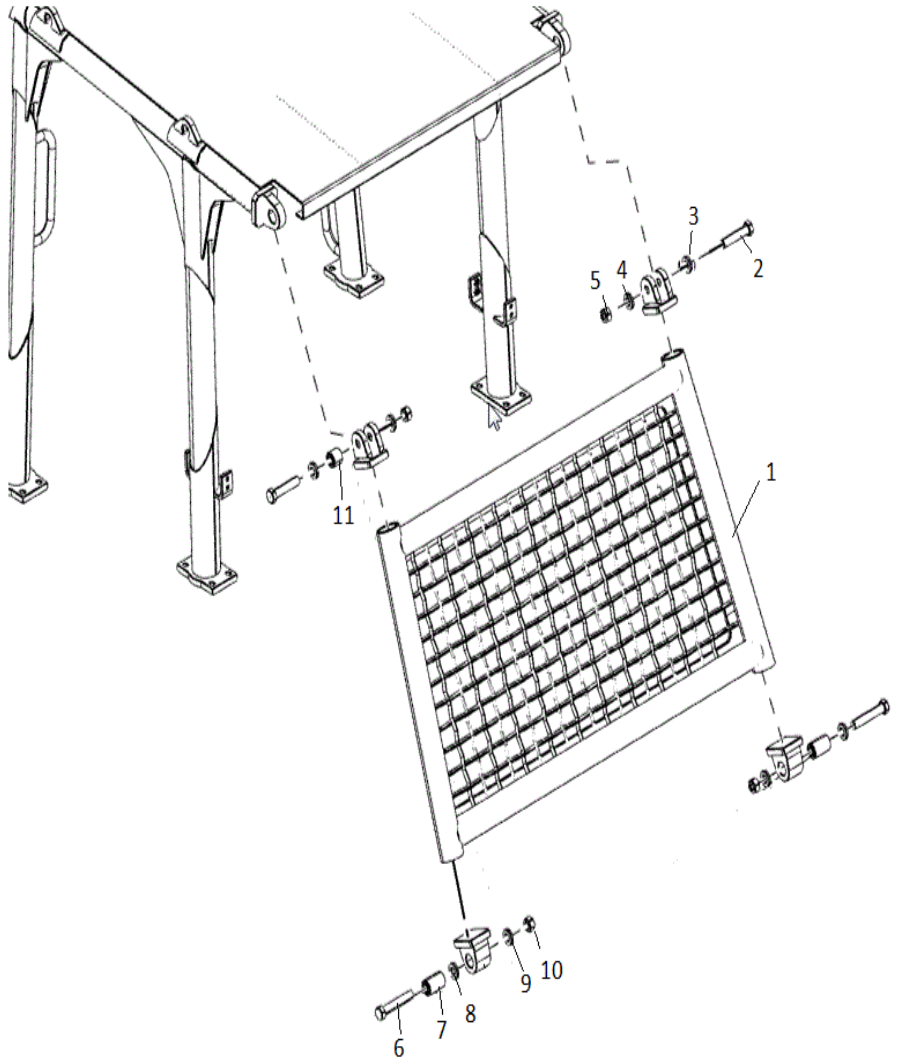

D85ESS-2 S/N J11888-UP

SWEEP (REAR GUARD AND NET)

INDEX	CD	PART NO.	DESCRIPTION	QTY	SERIAL NO.
1		14U-906-J141	GUARD (REAR)	1	J16622-UP
		14X-906-J140	GUARD REAR	1	J13293-J16621
		14U-906-J260	.BRACKET	2	J16622-UP
		14U-906-J270	.BRACKET	2	J16621-UP
2		01019-32430	BOLT	2	J16622-UP
		01011-82440	BOLT	2	J13293-J16621
3		01643-32460	WASHER	2	J16622-UP
		01643-72460	WASHER	4	J13293-J16621
4		01602-22472	WASHER	2	J13293-J16621
5		01580-12419	NUT	2	J13293-UP
6		14X-54-J1470	BOLT	2	J16622-UP
		01011-82440	BOLT	2	J13293-J16621
7		195-978-1311	VIBRA ISOLATOR	2	J13293-UP
8		01643-32460	WASHER	4	J13293-J16621
9		01643-32460	WASHER	4	J16622-UP
		01602-22472	WASHER	2	J13293-J16621
10		01580-12419	NUT	2	J13293-UP
11		134-X0-62230	CUSHION	2	J16622-UP

Ref :K0410-02A9 Page :240043

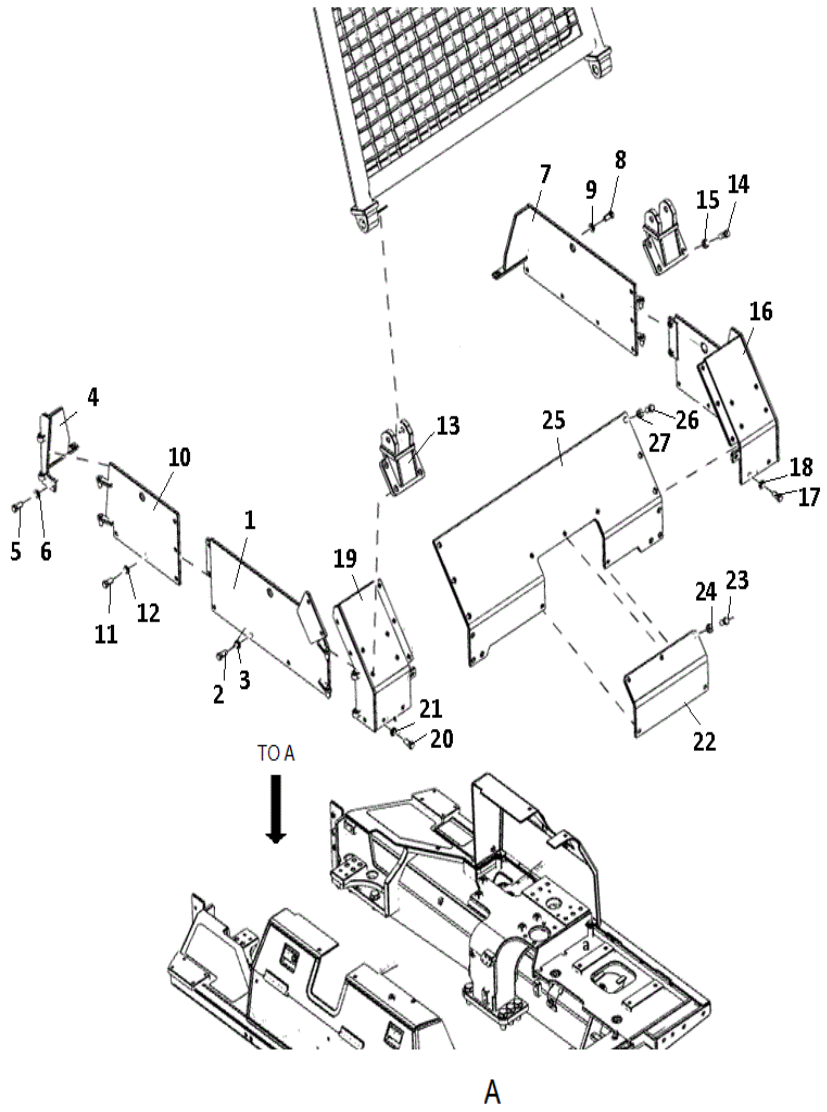

D85ESS-2 S/N J11888-UP

SWEEP (BRACKET)

INDEX	CD	PART NO.	DESCRIPTION	QTY	SERIAL NO.
1		14U-906-J150	COVER LH	1	J16622-UP
2		01010-81640	BOLT	6	J16622-UP
3		01643-31645	WASHER	6	J16622-UP
4		14U-906-J160	COVER LH	1	J16622-UP
5		01010-81640	BOLT	2	J16622-UP
6		01643-31645	WASHER	2	J16622-UP
7		14U-906-J170	COVER RH	1	J16622-UP
8		01010-81640	BOLT	7	J16622-UP
9		01643-31645	WASHER	7	J16622-UP
10		14U906J180	COVER LH	1	J16622-UP
11		01010-81640	BOLT	5	J16622-UP
12		01643-31645	WASHER	5	J16622-UP
13		14U-906-J310	BRACKET	2	J16622-UP
14		01010-81655	BOLT	8	J16622-UP
15		01643-31645	WASHER	8	J16622-UP
16		14U-906-J320	COVER RH	1	J16622-UP
17		01010-81640	BOLT	6	J16622-UP
18		01643-31645	WASHER	6	J16622-UP
19		14U-906-J330	COVER LH	1	J16622-UP
20		01010-81640	BOLT	3	J16622-UP
21		01643-31645	WASHER	3	J16622-UP
22		14U-906-1260	COVER	1	J16622-UP
23		01010-81630	BOLT	5	J16622-UP
24		01643-31645	WASHER	5	J16622-UP
25		14U-906-1210	COVER	1	J16622-UP
26		01010-81640	BOLT	12	J16622-UP
27		01643-31645	WASHER	3	J16622-UP

Ref :K0410-03A9 Page :240044

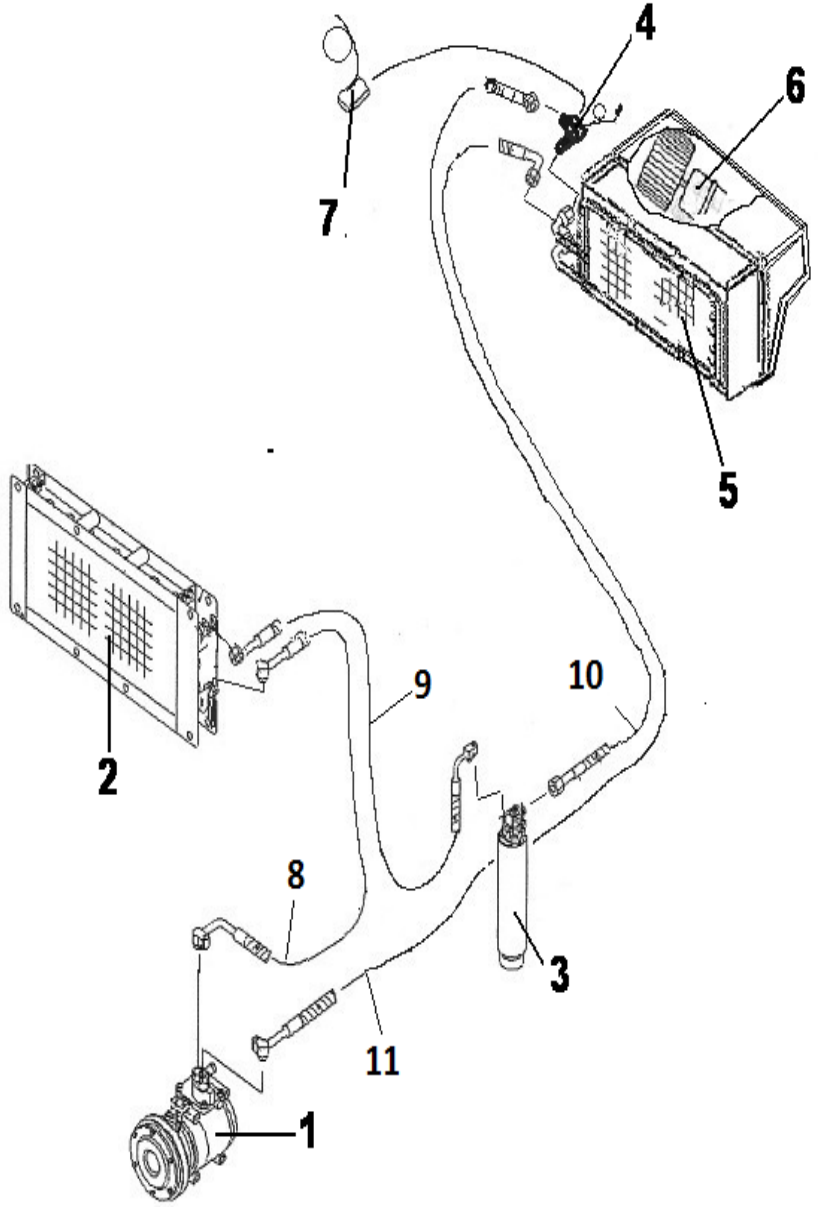

D85ESS-2 S/N J11888-UP

AIR CONDITIONER (CONDENSER)

INDEX	CD	PART NO.	DESCRIPTION	QTY	SERIAL NO.
		14X979J110	AIR CON KIT.....	1	J14729-UP
1		VP-00-02701	.COMPRESSOR.....	1	J14729-UP
		VP00033	.PRESSURE SWITCH.....	1	J14729-UP
2		VP0001712	.CONDENSOR.....	1	J14729-UP
3		VP0001170	.RECEIVER DRIER.....	1	J14729-UP
4		VP0002503	.EXPANTION VALVE.....	1	J14729-UP
5		VP01000907	.EVAPORATOR.....	1	J14729-UP
6		VP0006021	.BLOWER.....	1	J14729-UP
7		VP001270	.THERMOSTART.....	1	J14729-UP
8		VP011500	.HOSE.....	1	J14729-UP
9		VP01107001	.HOSE.....	1	J14729-UP
10		VP01107002	.HOSE.....	1	J14729-UP
11		VP01107003	.HOSE.....	1	J14729-UP

Ref :K0700-01A0 Page :240045

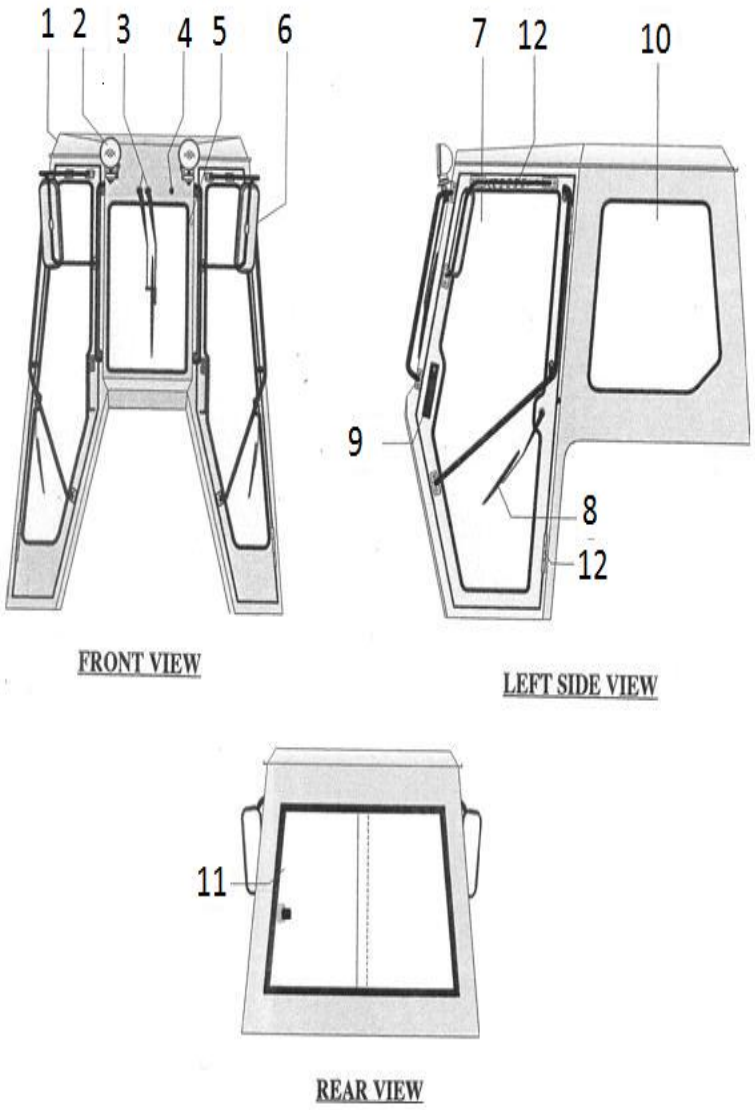

D85ESS-2 S/N J11888-UP

CABIN (BODY)

INDEX	CD	PART NO.	DESCRIPTION	QTY	SERIAL NO.
		14X-54-J2340	CABIN ASS'Y.....	1	J14529-UP
1		11CB01001-D85	.CABIN ASS'Y.....	1	J14729-UP
2		11CB01002-D85	..SPOT LIGHT.....	2	J14729-UP
3		11CB01003-D85	..FRONT WIPPER.....	1	J14729-UP
4		11CB01004-D85	..NOZZLE WIPPER.....	3	J14729-UP
5		11CB01005-D85	..FRONT GLASS.....	1	J14729-UP
6		11CB01006-D85	..BACK MIROR L.H, R.H.....	2	J14729-UP
7		11CB01007-D85	..DOOR GLASS L.H, R.H.....	2	J14729-UP
8		11CB01008-D85	..DOOR WIPPER.....	2	J14729-UP
9		11CB01009-D85	..DOOR LOCK L.H, R.H.....	2	J14729-UP
10		11CB01010-D85	..SIDE GLASS L.H, R.H.....	2	J14729-UP
11		11CB01011-D85	..REAR GLASS.....	2	J14729-UP
12		11CB01012-D85	..HING & GASSPRING.....	2	J14729-UP

Ref :K1110-01A0 Page :240046

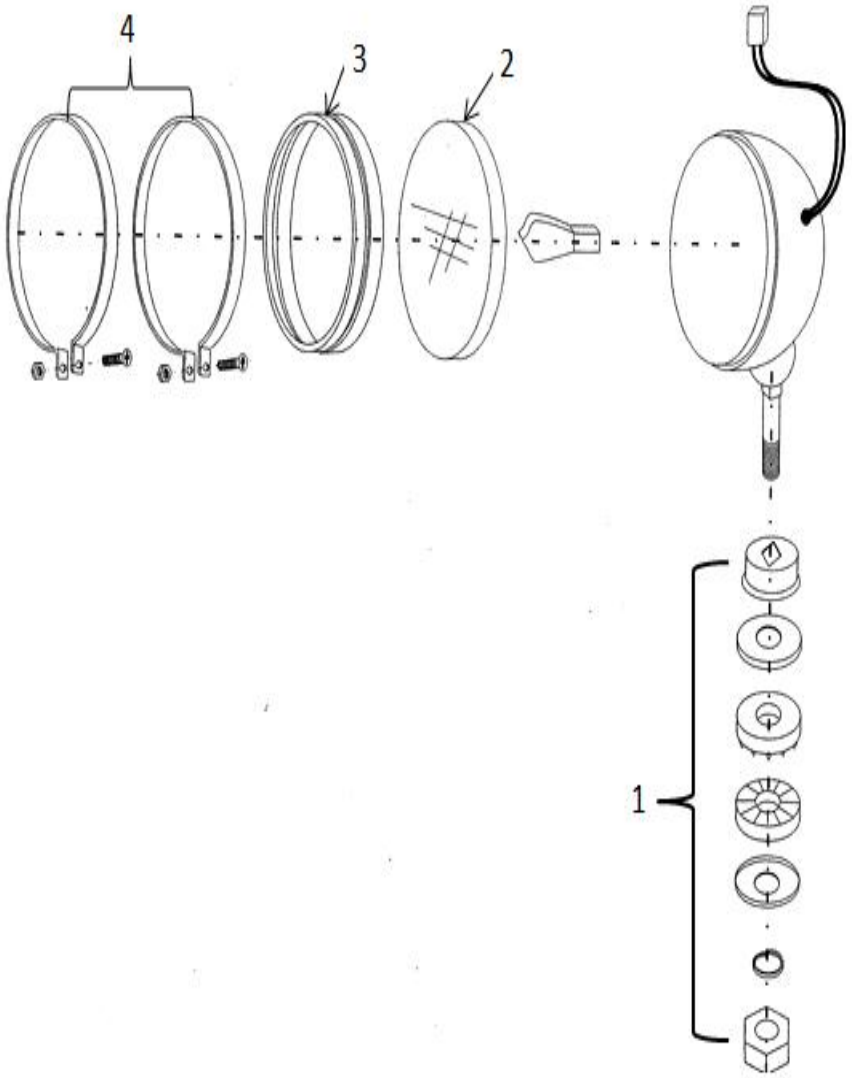

D85ESS-2 S/N J11888-UP

CABIN (SPOT LIGHT)

INDEX	CD	PART NO.	DESCRIPTION	QTY	SERIAL NO.
		14X-54-J2340	CABIN ASS'Y.....	1	J14729-UP
		11CB01001-D85	.CABIN ASS'Y.....	1	J14729-UP
		101044-D85	..SPOT LIGHT ASS'Y.....	2	J14729-UP
1			...MOUNTING PARTS.....	1	J14729-UP
2			...GLASS.....	1	J14729-UP
3			...CLAMP.....	1	J14729-UP
4			...CLAMP ASSY.....	2	J14729-UP

Ref :K1110-02A0 Page :240047

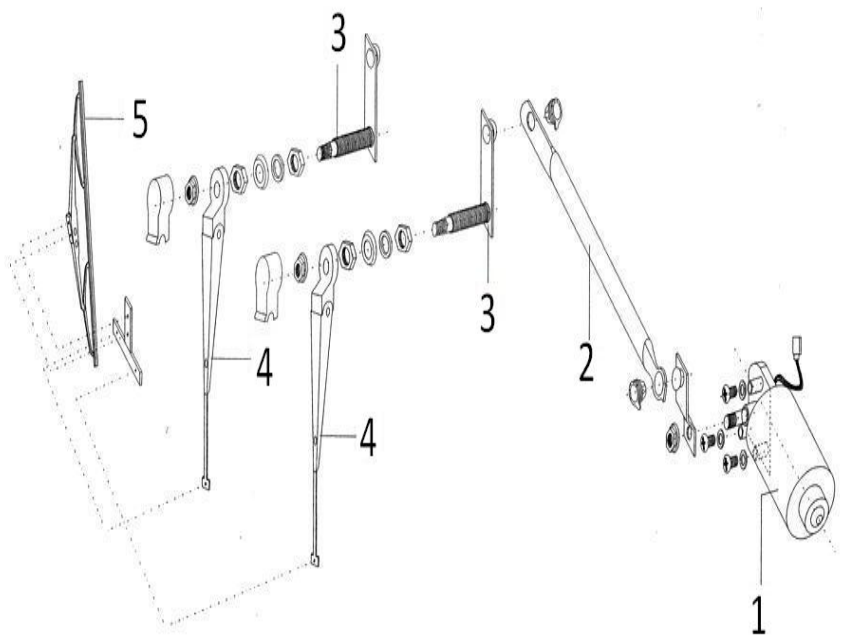

D85ESS-2 S/N J11888-UP

CABIN (WIPPER FRONT)

INDEX	CD	PART NO.	DESCRIPTION	QTY	SERIAL NO.
		14X-54-J2340	CABIN ASS'Y.....	1	J14729-UP
		11CB01001-D85	.CABIN ASS'Y.....	1	J14729-UP
		11CB01003-D85	..WIPPER FRONT ASS'Y.....	1	J14729-UP
1		101026-D85	...MOTOR WIPPER.....	1	J14729-UP
2		101043-D85	...LINKCAGE.....	1	J14729-UP
3		101040-D85	...JOINT LINKCAGE.....	2	J14729-UP
4		101036-D85	...ARM.....	2	J14729-UP
5		101032-D85	...WIPPER BLADE.....	1	J14729-UP

Ref :K1110-03A0 Page :240048

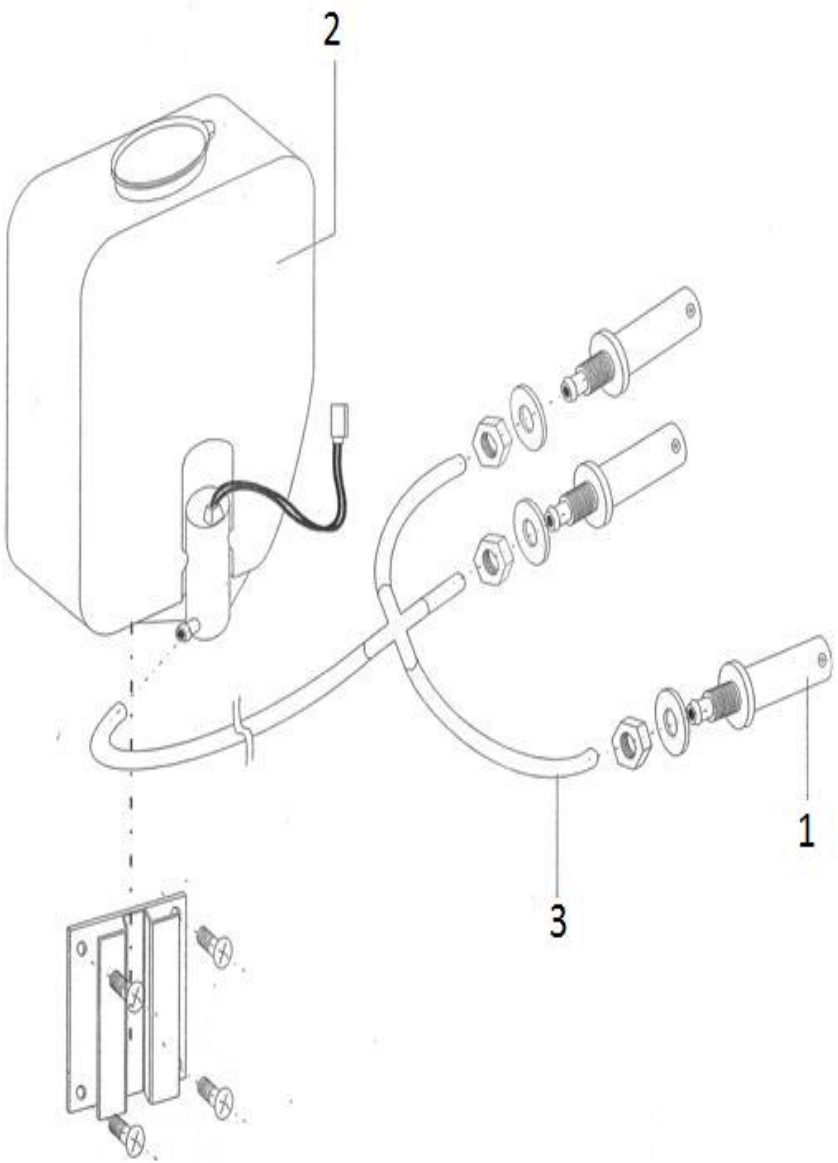

D85ESS-2 S/N J11888-UP

CABIN (NOZZLE WIPPER)

INDEX	CD	PART NO.	DESCRIPTION	QTY	SERIAL NO.
		14X-54-J2340	CABIN ASS'Y.....	1	J14729-UP
		11CB01001-D85	.CABIN ASS'Y.....	1	J14729-UP
		11CB1004D-85	..NOZZLE WIPPER.....	3	J14729-UP
1		101049-D85	...NOZZLE.....	3	J14729-UP
2		101051-D85	...WATER TANK + MOTOR.....	1	J14729-UP
3		101057-D85	...HOSE.....	1	J14729-UP

Ref :K1110-04A0 Page :240049

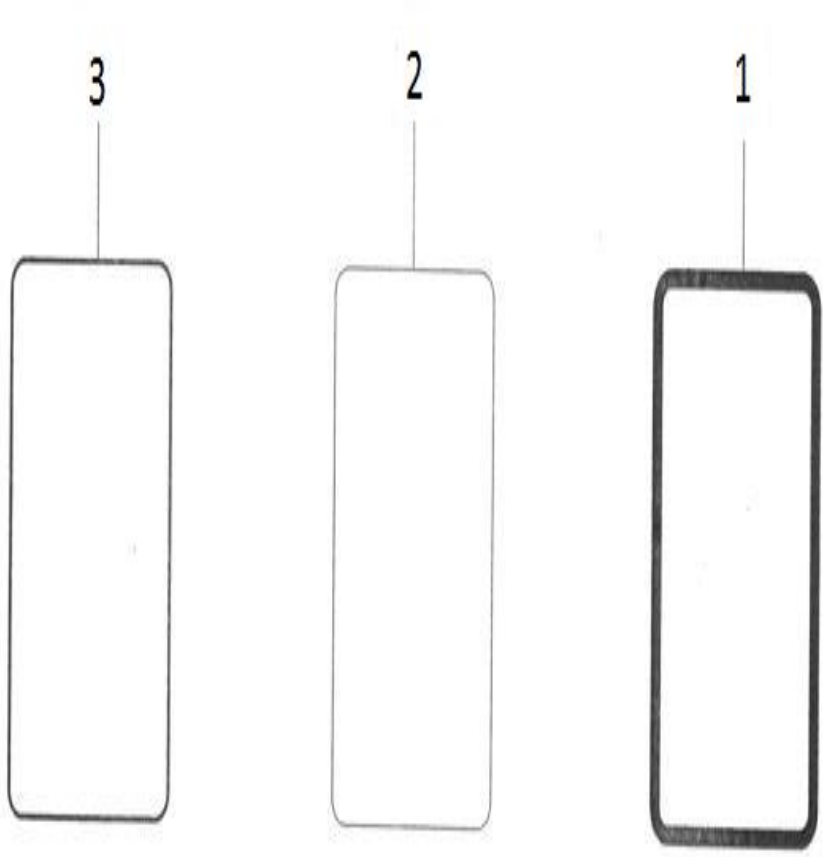

D85ESS-2 S/N J11888-UP

CABIN (FRONT GLASS)

INDEX	CD	PART NO.	DESCRIPTION	QTY	SERIAL NO.
		14X-54-J2340	CABIN ASS'Y.....	1	J14729-UP
		11CB01001-D85	.CABIN ASS'Y.....	1	J14729-UP
1		101055-001-D85	..TRIM RUBBER GLASS.....	1	J14729-UP
2		101001-D85	..FRONT GLASS.....	1	J14729-UP
3		101056-001-D85	..LOCK TRIM RUBBER.....	1	J14729-UP

Ref :K1110-05A0 Page :240050

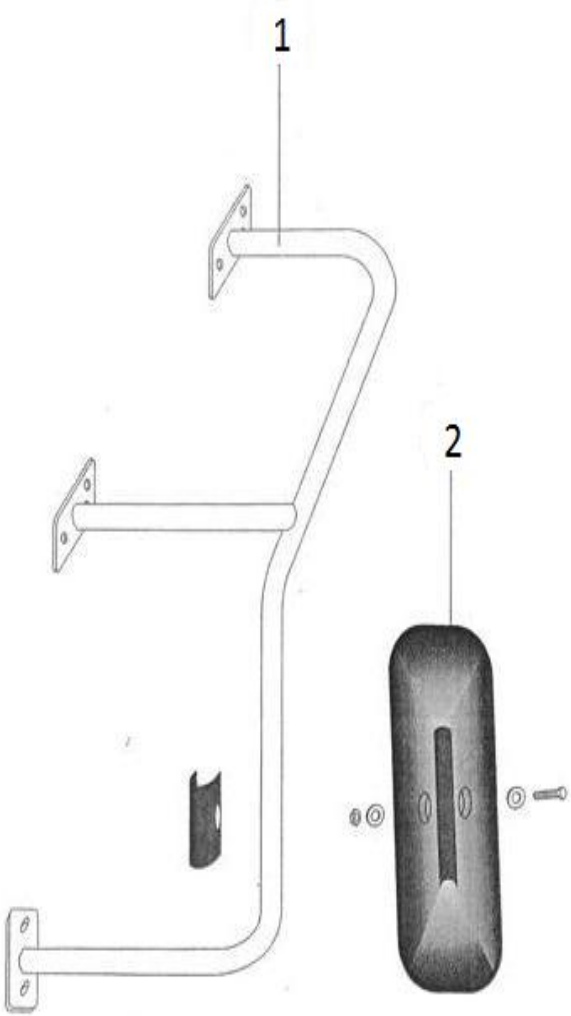

D85ESS-2 S/N J11888-UP

CABIN (BACK MIROR LH/RH)

INDEX	CD	PART NO.	DESCRIPTION	QTY	SERIAL NO.
		14X-54-J2340	CABIN ASS'Y.....	1	J14729-UP
		11CB01001-D85	.CABIN ASS'Y.....	1	J14729-UP
1		101058-D85	..BACK MIROR STAY (LH).....	1	J14729-UP
		101059-D85	..BACK MIROR STAY (RH).....	1	J14729-UP
2		101046-D85	..BACK MIROR.....	1	J14729-UP

Ref :K1110-06A0 Page :240051

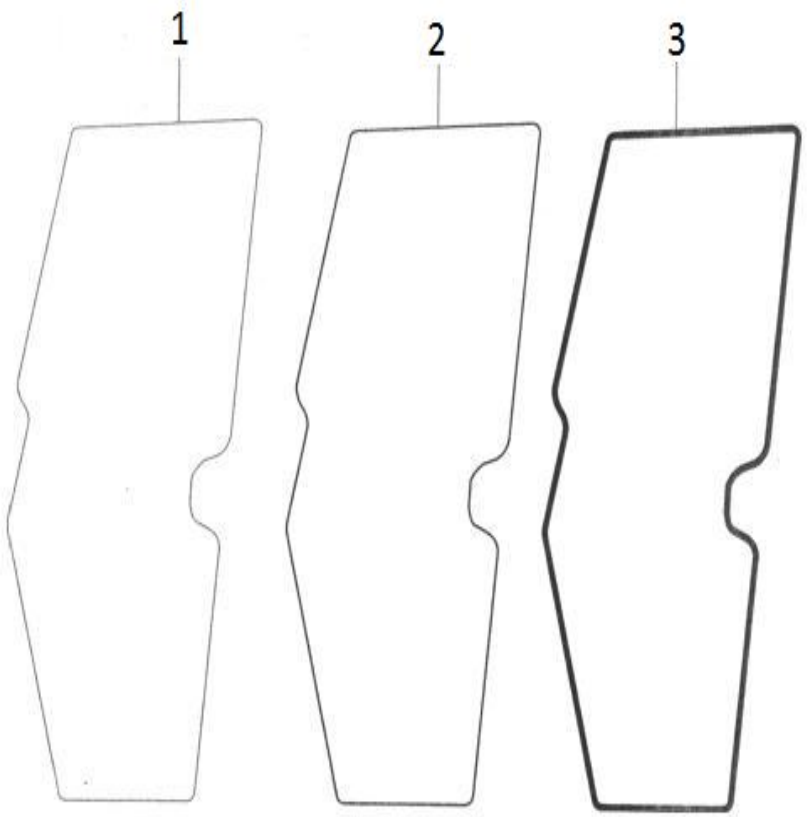

D85ESS-2 S/N J11888-UP

CABIN (DOOR GLASS LH/RH)

INDEX	CD	PART NO.	DESCRIPTION	QTY	SERIAL NO.
		14X-54-J2340	CABIN ASS'Y.....	1	J14729-UP
		11CB01001-D85	.CABIN ASS'Y.....	1	J14729-UP
1		101014-D85	..DOOR GLASS (LH).....	1	J14729-UP
		101018-D85	..DOOR GLASS (RH).....	1	J14729-UP
2		101056-013-D85	..LOCK TRIM RUBBER.....	1	J14729-UP
3		101055-013-D85	..TRIM RUBBER GLASS.....	1	J14729-UP

Ref :K1110-07A0 Page :240052

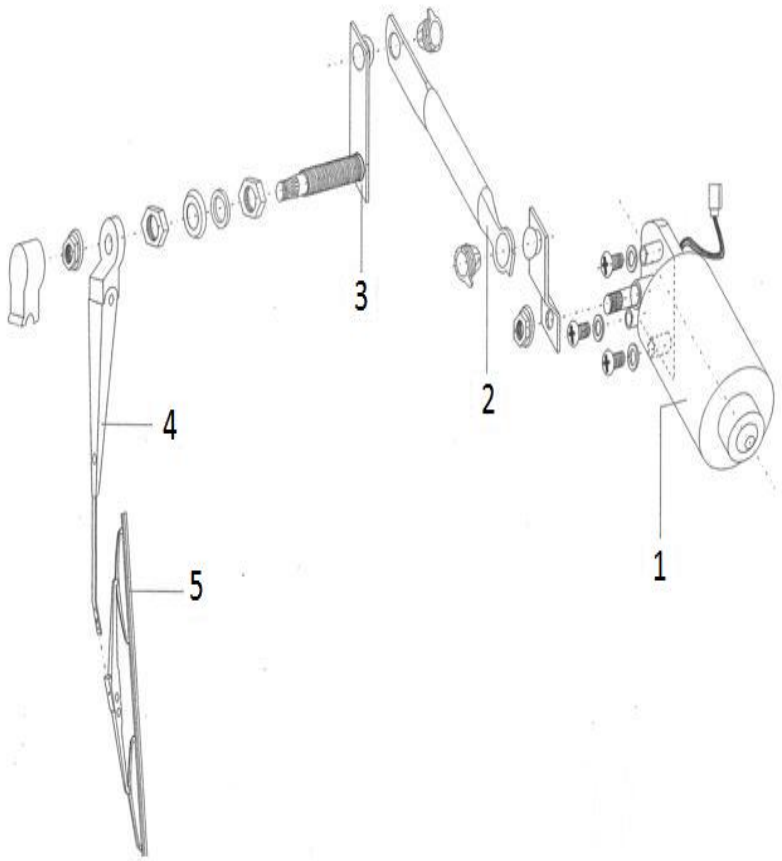

D85ESS-2 S/N J11888-UP

CABIN (DOOR WIPPER LH/RH)

INDEX	CD	PART NO.	DESCRIPTION	QTY	SERIAL NO.
		14X-54-J2340	CABIN ASS'Y.....	1	J14729-UP
		11CB01001-D85	.CABIN ASS'Y.....	1	J14729-UP
1		101026-D85	..MOTOR WIPPER.....	1	J14729-UP
2		101043-D85	..LINKCAGE.....	1	J14729-UP
3		101040-D85	..JOINT LINGCAGE.....	1	J14729-UP
4		101038-D85	..ARM.....	1	J14729-UP
5		101031-D85	..WIPPER BLADE.....	1	J14729-UP

Ref :K1110-08A0 Page :240053

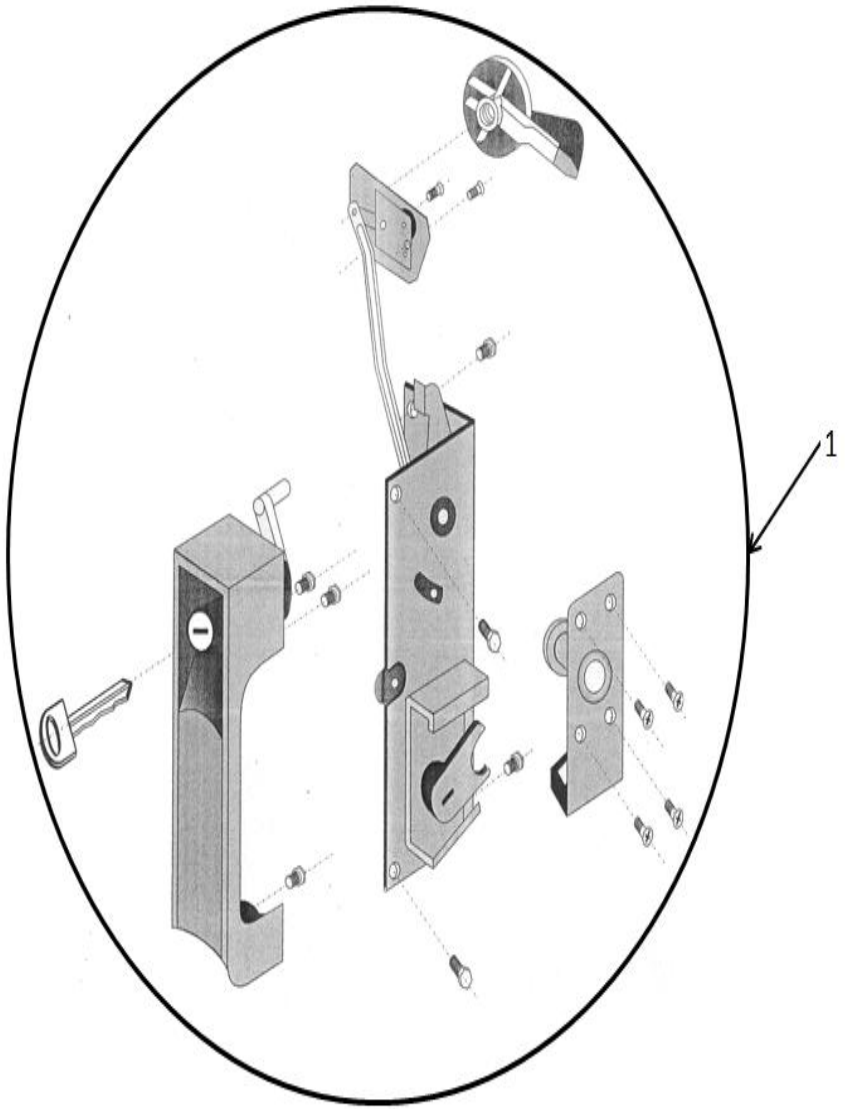

D85ESS-2 S/N J11888-UP

CABIN (DOOR LOCK ASS'Y LH/RH)

INDEX	CD	PART NO.	DESCRIPTION	QTY	SERIAL NO.
		14X-54-J2340	CABIN ASS'Y.....	1	J14729-UP
		11CB01001-D85	.CABIN ASSY.....	1	J14729-UP
1		101029-D85	..DOOR LOCK LH.....	1	J14729-UP
		101030-D85	..DOOR LOCK RH.....	1	J14729-UP

Ref :K1110-09A0 Page :240054

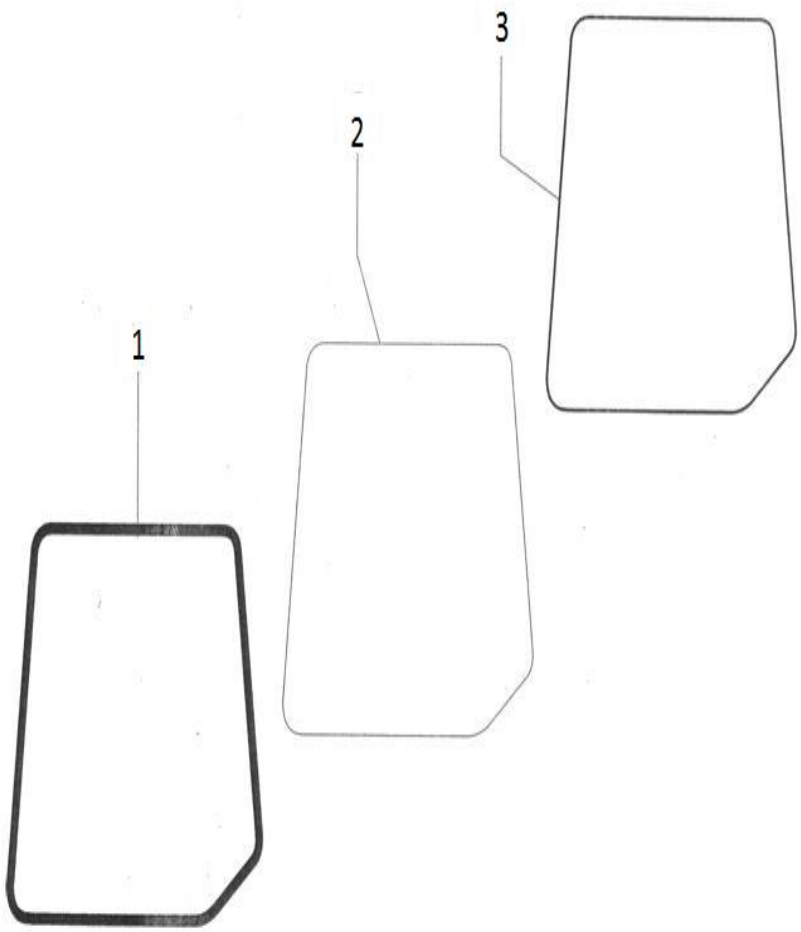

D85ESS-2 S/N J11888-UP

CABIN (SIDE GLASS LH/RH)

INDEX	CD	PART NO.	DESCRIPTION	QTY	SERIAL NO.
		14X-54-J2340	CABIN ASS'Y.....	1	J14729-UP
		11CB01001-D85	.CABIN ASS'Y.....	1	J14729-UP
1		101055-005-D85	..TRIM RUBBER GLASS.....	1	J14729-UP
2		101005-D85	..SIDE GLASS (LH).....	1	J14729-UP
		101009-D85	..SIDE GLASS(RH).....	1	J14729-UP
3		101056-005-D85	..LOCK TRIM RUBBER.....	1	J14729-UP

Ref :K1110-10A0 Page :240055

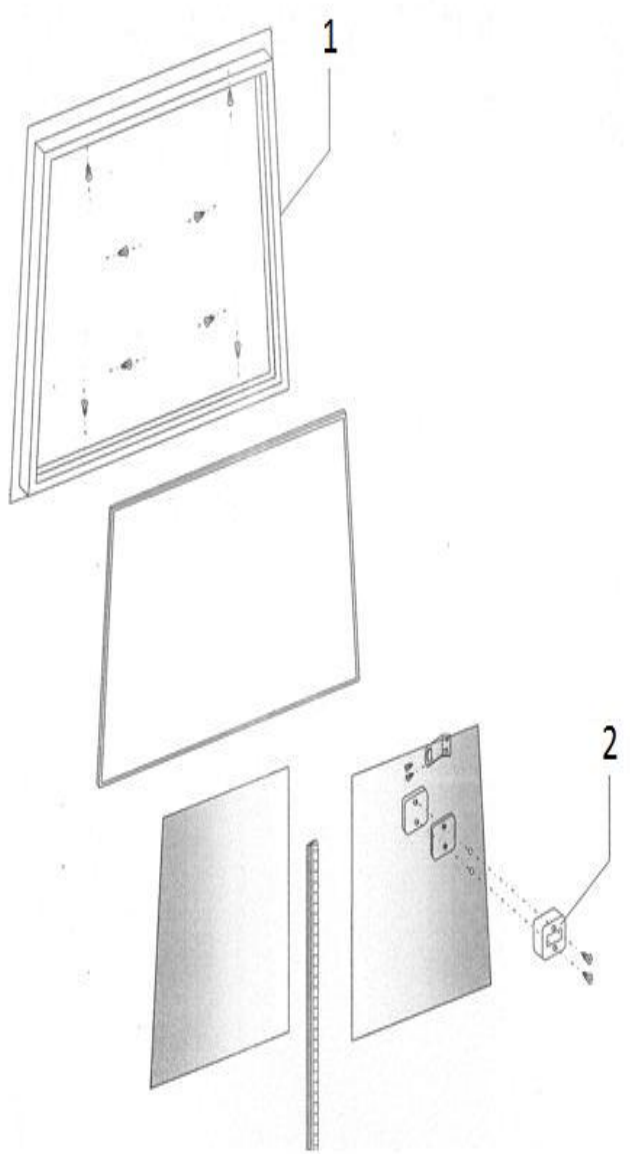

D85ESS-2 S/N J11888-UP

CABIN (REAR GLASS)

INDEX	CD	PART NO.	DESCRIPTION	QTY	SERIAL NO.
		14X-54-J2340	CABIN ASS'Y.....	1	J14729-UP
		11CB01001-D85	.CABIN ASS'Y.....	1	J14729-UP
1		101022-D85	..REAR GLASS ASS'Y.....	1	J14729-UP
2		101053-D85	..GLASS LOCK.....	1	J14729-UP

Ref :K1110-11A0 Page :240056

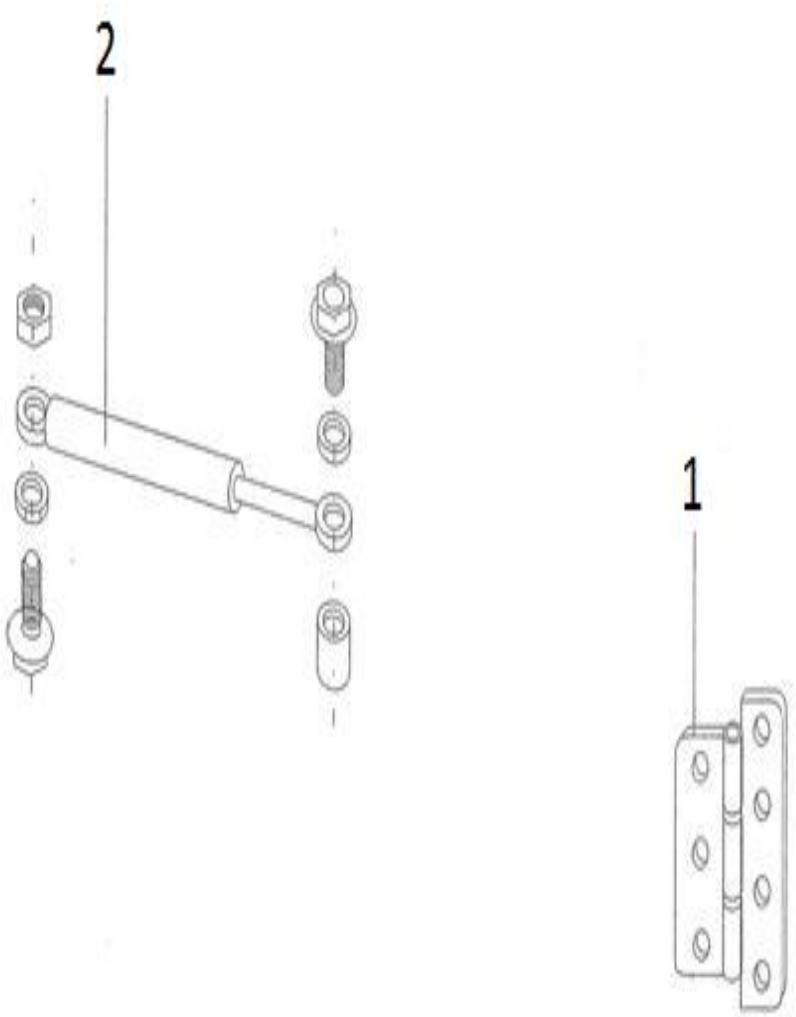

D85ESS-2 S/N J11888-UP

CABIN (HING & GASSPRING)

INDEX	CD	PART NO.	DESCRIPTION	QTY	SERIAL NO.
		14X-54-J2340	CABIN ASS'Y.....	1	J14729-UP
		11CB01001-D85	.CABIN ASS'Y.....	1	J14729-UP
1		101060-D85	..HING.....	4	J14729-UP
2		101050-D85	..GASSPRING.....	2	J14729-UP

Ref :K1110-12A0 Page :240057

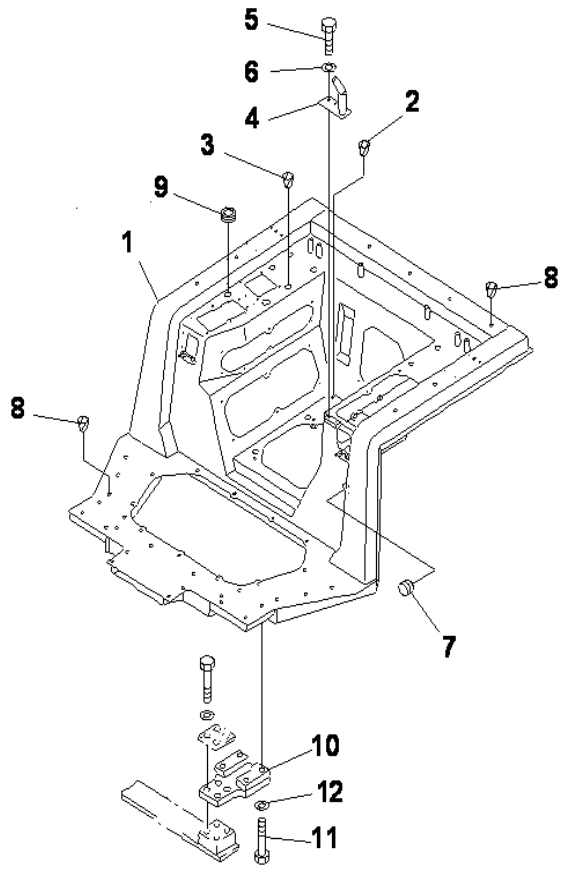

D85ESS-2 S/N J11888-UP

FLOOR FRAME (FRAME AND MOUNT)(WITHOUT CAB) FOR ANGLE DOZER

INDEX	CD	PART NO.	DESCRIPTION	QTY	SERIAL NO.
1		14X-54-15510	FRAME	1	J10241-UP
		14W-54-16113	FRAME	1	J10001-J10240
2		07049-01215	PLUG	2	J10241-UP
3		07049-02430	PLUG	2	J10241-UP
4		14X-54-16840	.BRACKET	1	J10001-UP
5		01010-81025	BOLT	2	J10001-UP
6		01643-31032	WASHER	2	J10001-UP
7		09415-03614	CAP	1	J10001-UP
8		07049-01215	PLUG	8	J10001-UP
9		08037-02512	GROMMET	1	J10001-UP
10		14X-54-17150	BRACKET	2	J10001-UP
11		01010-81680	BOLT	8	J10001-UP
12		01643-31645	WASHER	8	J10001-UP

Ref :K2110-01A0 Page :240060

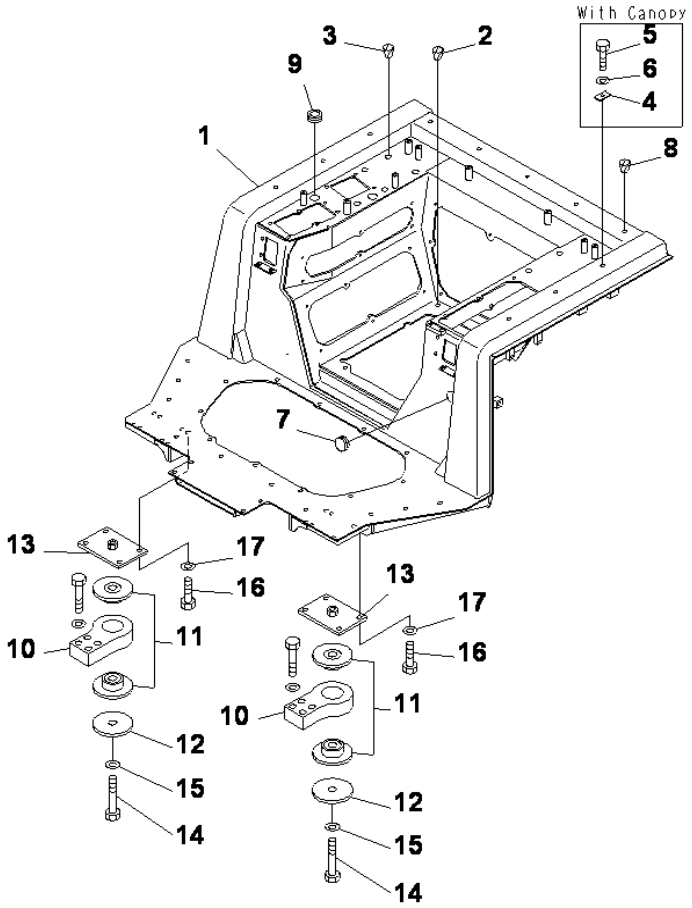

D85ESS-2 S/N J11888-UP

FLOOR FRAME (FRAME AND MOUNT)(WITHOUT CAB) FOR STRAIGHT TILT

INDEX	CD	PART NO.	DESCRIPTION	QTY	SERIAL NO.
1		14X-54-25515	FRAME	1	J10001-UP
2		07049-01215	PLUG	2	J10001-UP
3		07049-02430	PLUG	2	J10001-UP
4		14X-54-25190	PLATE	2	J10001-UP
5		01010-81225	BOLT	2	J10001-UP
6		01643-31232	WASHER	2	J10001-UP
7		09415-03614	CAP	1	J10001-UP
8		07049-01215	PLUG	8	J10001-UP
9		08037-02512	GROMMET	1	J10001-UP
10		14X-54-27120	BRACKET	2	J10001-UP
11		15A-54-15110	RUBBER	4	J10001-UP
12		17M-54-24351	PLATE	2	J10001-UP
13		14X-54-27130	PLATE	2	J10001-UP
14		0101182435	BOLT	2	J10001-UP
15		01643-32460	WASHER	2	J10001-UP
16		01010-81635	BOLT	8	J11888-UP
17		01643-31645	WASHER	8	J11888-UP

Ref :K2110-01A1 Page :240065

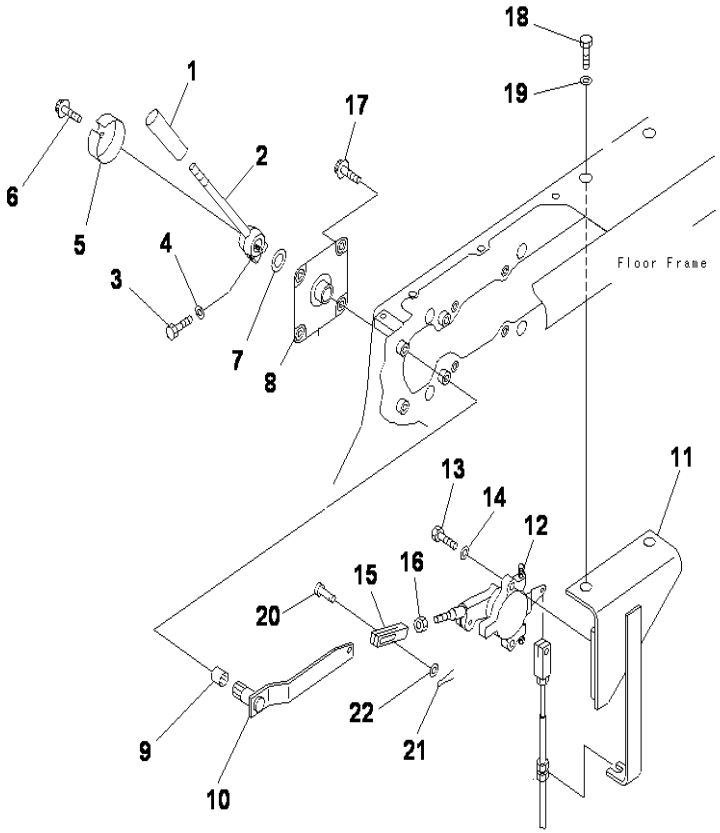

D85ESS-2 S/N J11888-UP

FLOOR FRAME (FUEL CONTROL)

INDEX	CD	PART NO.	DESCRIPTION	QTY	SERIAL NO.
1		09304-01240	KNOB	1	J10001-UP
2		14X-43-13373	LEVER	1	J10241-UP
		14X-43-13372	LEVER	1	J10001-J10240
3		01010-80830	BOLT	1	J10001-UP
4		01643-30823	WASHER	1	J10001-UP
5		14X-43-13432	COVER	1	J10241-UP
6		01439-00814	BOLT	1	J10001-UP
7		01640-22032	WASHER	1	J10001-UP
8		14X-43-13460	BRACKET	1	J10775-UP
		14X-43-13440	BRACKET	1	J10001-J10774
9		06124-02020	BEARING	1	J10001-UP
10		14X-43-13382	LEVER	1	J10241-UP
11		14Z-43-13364	BRACKET	1	J10241-UP
12		14X-43-13412	LEVER ASS'Y	1	J10241-UP
13		01252-41025	BOLT	2	J10001-UP
14		01643-31032	WASHER	2	J10001-UP
15		198-43-12430	JOINT	1	J10241-UP
16		01580-10806	NUT	1	J10241-UP
17		01439-01020	BOLT	4	J10241-UP
18		01010-81680	BOLT	2	J10241-UP
19		01643-31645	WASHER	2	J10241-UP
20		04205-10825	PIN	1	J10241-UP
21		04050-12015	COTTER PIN	1	J10241-UP
22		01641-20812	WASHER	1	J10241-UP

Ref :K2110-02A0 Page :240070

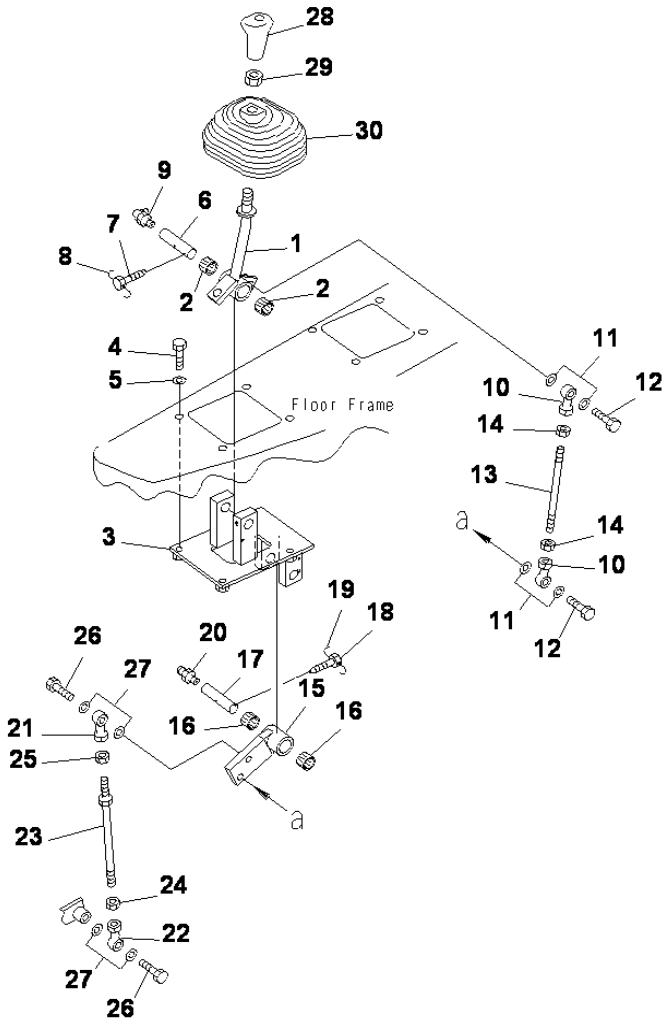

FLOOR FRAME (BLADE CONTROL)

INDEX	CD	PART NO.	DESCRIPTION	QTY	SERIAL NO.
1		14W-43-14111	LEVER	1	J10241-UP
2		06123-01614	BEARING	2	J10241-UP
3		14W-43-14151	BRACKET	1	J10241-UP
4		01010-80820	BOLT	4	J10241-UP
5		01643-30823	WASHER	4	J10241-UP
6		135-43-11171	SHAFT	1	J10241-UP
7		01306-00616	SCREW	1	J10241-UP
8		04059-01020	WIRE	1	J10241-UP
9		07020-00900	FITTING	1	J10241-UP
10		04250-81056	END	2	J10241-UP
11		01643-31032	WASHER	4	J10241-UP
12		01010-81035	BOLT	2	J10241-UP
13		04245-41009	ROD	1	J10241-UP
14		01582-11008	NUT	2	J10241-UP
15		14W-43-14121	LEVER	1	J10241-UP
16		06123-01614	BEARING	2	J10241-UP
17		135-43-11171	SHAFT	1	J10241-UP
18		01306-00616	SCREW	1	J10241-UP
19		04059-01020	WIRE	1	J10241-UP
20		07020-00000	FITTING	1	J10241-UP
21		04250-81056	END	1	J10241-UP
22		04250-91056	END	1	J10241-UP
23		04248-31015	ROD	1	J10241-UP
24		01508-41006	NUT	1	J10241-UP
25		01582-11008	NUT	1	J10241-UP
26		01010-81035	BOLT	2	J10241-UP
27		01643-31032	WASHER	4	J10241-UP
28		14X-43-14171	KNOB	1	J11057-UP
		14X-43-14170	KNOB	1	J10241-J11056
29		20T-43-71190	NUT	1	J10241-UP
30		14X-43-11320	BOOT	1	J10241-UP

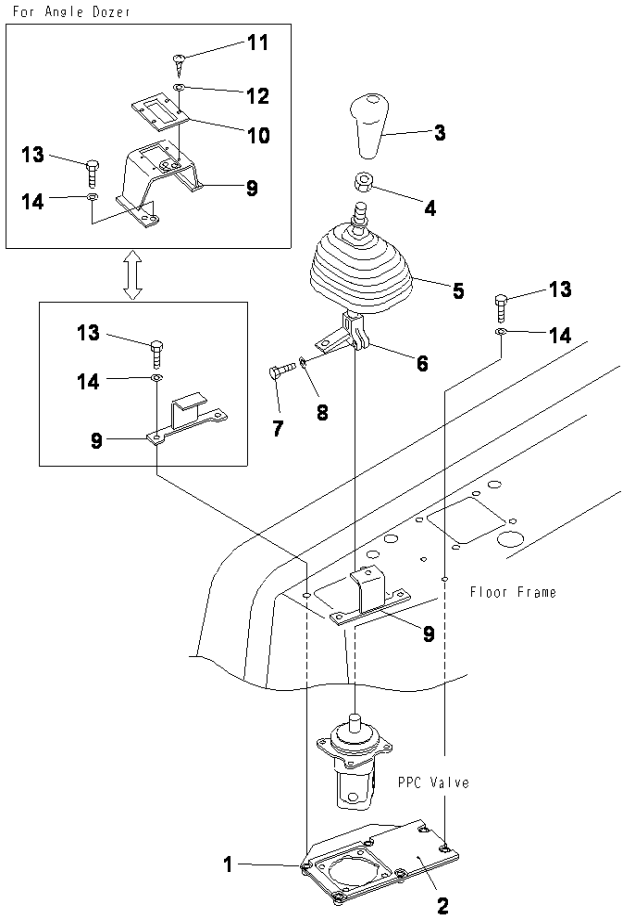

D85ESS-2 S/N J11888-UP

FLOOR FRAME (BLADE CONTROL) FOR STRAIGHT TILT

INDEX	CD	PART NO.	DESCRIPTION	QTY	SERIAL NO.
1		14X-43-22131	COVER	1	J11301-UP
2		14X-43-22291	.SEAL	1	J11301-UP
3		14X-43-14171	KNOB	1	J11301-UP
4		20T-43-71190	NUT	1	J11301-UP
5		14X-43-11320	BOOT	1	J11301-UP
6		14X-43-14493	LEVER RH	1	J11301-UP
7		01010-81030	BOLT	1	J11301-UP
8		01643-31032	WASHER	1	J11301-UP
9		14X-43-14150	PLATE	2	J11301-UP
10		14X-78-11270	PLATE, (FOR ANGLE DOZER)	1	J11301-UP
11		01370-00512	SCREW, (FOR ANGLE DOZER)	4	J11301-UP
12		01641-20508	WASHER, (FOR ANGLE DOZER)	4	J11301-UP
13		01010-80830	BOLT	6	J11301-UP
14		01643-30823	WASHER	6	J11301-UP

Ref :K2110-03A1 Page :240090

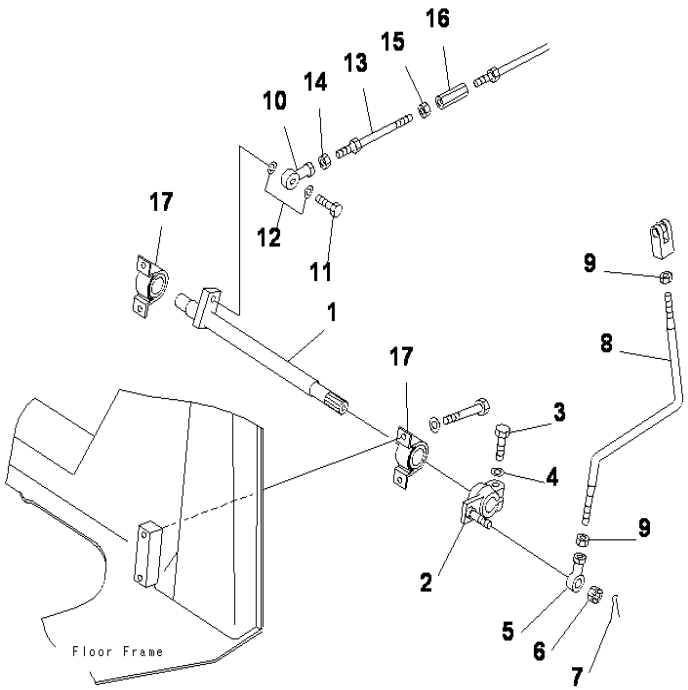

D85ESS-2 S/N J11888-UP

FLOOR FRAME (STEERING SHAFT)

INDEX	CD	PART NO.	DESCRIPTION	QTY	SERIAL NO.
1		14X-43-12820	SHAFT	1	J10001-UP
2		17A-43-25241	LEVER	1	J10001-UP
3		01010-81245	BOLT	1	J10001-UP
4		01643-31232	WASHER	1	J10001-UP
5		04250-81265	ROD END	1	J10001-UP
6		01593-31210	NUT	1	J10001-UP
7		04050-13020	PIN, COTTER	1	J10001-UP
8		14X-43-11230	ROD	1	J10001-UP
9		01582-11210	NUT	2	J10001-UP
10		04250-81265	END, ROD	1	J10001-UP
11		01010-81240	BOLT	1	J10001-UP
12		04254-11232	SPACER	2	J10001-UP
13		04248-31228	ROD	1	J10001-UP
14		01582-11210	NUT	1	J10001-UP
15		01508-41207	NUT	1	J10001-UP
16		154-61-16720	TURN BUCKLE	1	J10001-UP
17		06125-02557	BEARING	2	J10001-UP

Ref :K2110-05A0 Page :240100

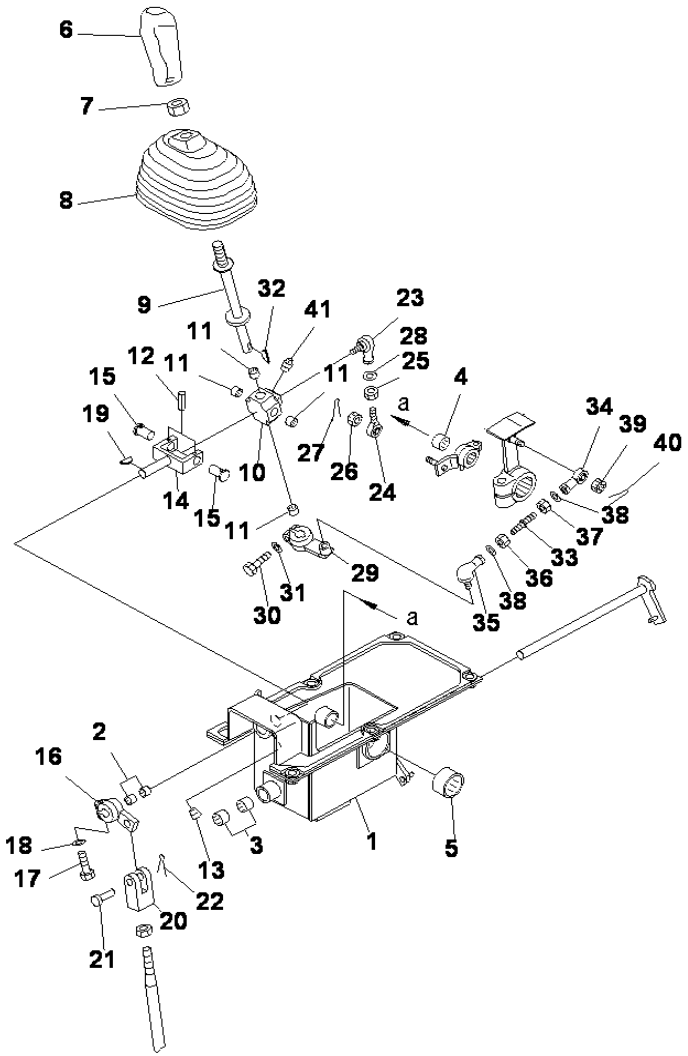

D85ESS-2 S/N J11888-UP

FLOOR FRAME (SPEED CONTROL)(1/2)

INDEX	CD	PART NO.	DESCRIPTION	QTY	SERIAL NO.
1		14X-43-12950	BRACKET	1	J10775-UP
		14X-43-12850	BRACKET	1	J10241-J10774
2		06123-01414	BEARING	2	J10241-UP
3		06124-01416	BEARING	2	J10241-UP
4		06124-01616	BEARING	1	J10241-UP
5		06124-03520	BEARING	1	J10241-UP
6		17A-43-25682	KNOB	1	J10241-UP
7		20T-43-71190	NUT	1	J10241-UP
8		14X-43-11320	BOOT	1	J10241-UP
9		14X-43-11115	LEVER	1	J10241-UP
10		17A-43-25151	YOKE	1	J10241-UP
11		06123-01414	BEARING	4	J10241-UP
12		04025-00520	SPRING PIN	2	J10241-UP
13		07043-00108	PLUG	1	J10241-UP
14		17A-43-25131	YOKE	1	J10241-UP
15		17A-43-25140	PIN	2	J10241-UP
16		14X-43-11260	LEVER	1	J10241-UP
17		01010-80830	BOLT	1	J10241-UP
18		01643-30823	WASHER	1	J10241-UP
19		04010-00516	KEY	1	J10241-UP
20		581-60-12610	YOKE	1	J10241-UP
21		04205-11240	PIN	1	J10241-UP
22		04050-13022	PIN	1	J10241-UP
23		04256-40817	JOINT	1	J10241-UP
24		04252-20853	END	1	J10241-UP
25		01580-10806	NUT	2	J10241-UP
26		01590-30809	NUT	1	J10241-UP
27		04050-12015	COTTER PIN	1	J10241-UP
28		01643-30823	WASHER	2	J10241-UP
29		17A-43-25161	LEVER	1	J10973-UP
		17A-43-25160	LEVER	1	J10241-J10972
30		01010-80825	BOLT	1	J10973-UP
		01010-80830	BOLT	1	J10241-J10972
31		01643-30823	WASHER	1	J10241-UP
32		04010-00516	KEY	1	J10241-UP
33		205-43-72920	BOLT	1	J10241-UP
34		04250-90847	END	1	J10241-UP
35		04256-40817	JOINT	1	J10241-UP
36		01580-10806	NUT	1	J10241-UP
37		01508-20805	NUT	1	J10241-UP
38		01643-30823	WASHER	2	J10241-UP
39		01590-30809	NUT	1	J10241-UP
40		04050-12015	COTTER PIN	1	J10241-UP
41		07042-00108	PLUG	1	J10241-UP

Ref :K2110-07A0 Page :240110

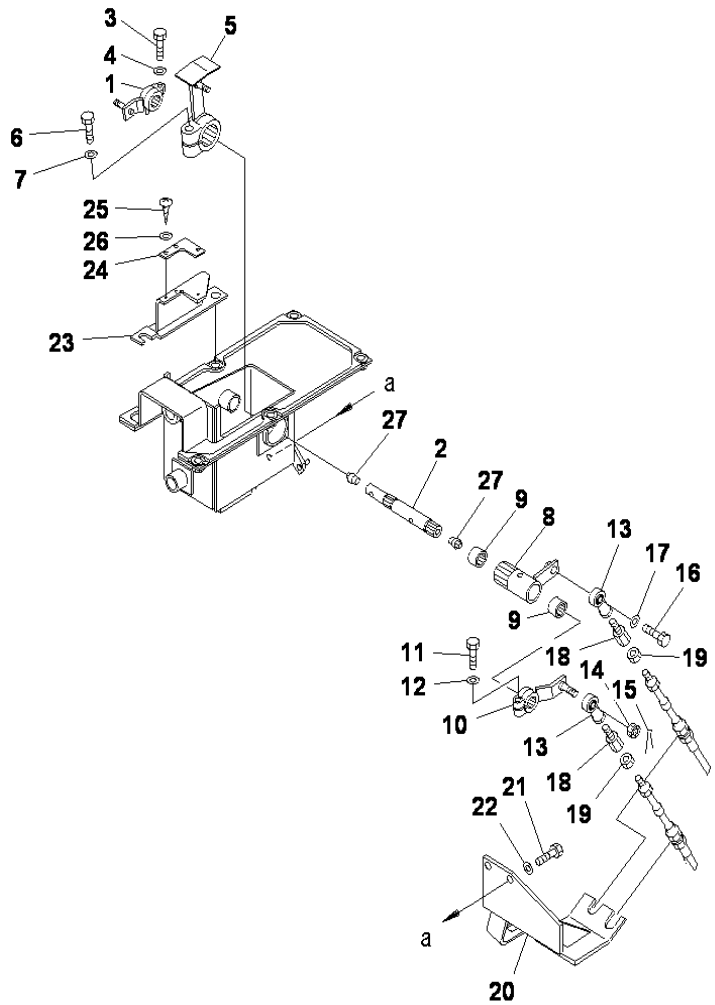

D85ESS-2 S/N J11888-UP

FLOOR FRAME (SPEED CONTROL)(2/2)

INDEX	CD	PART NO.	DESCRIPTION	QTY	SERIAL NO.
1		17A-43-25171	LEVER	1	J10241-UP
2		17A-43-25221	SHAFT	1	J10241-UP
3		01010-80830	BOLT	1	J10241-UP
4		01643-30823	WASHER	1	J10241-UP
5		14X-43-12920	LEVER	1	J10241-UP
6		01010-81245	BOLT	1	J10241-UP
7		01643-31232	WASHER	1	J10241-UP
8		14X-43-12810	LEVER	1	J10241-UP
9		06123-02018	BEARING	2	J10241-UP
10		14X-43-11240	LEVER	1	J10241-UP
11		01010-80830	BOLT	1	J10241-UP
12		01643-30823	WASHER	1	J10241-UP
13		04250-91056	END	2	J10241-UP
14		01593-31008	NUT	1	J10241-UP
15		04050-12018	COTTER PIN	2	J10241-UP
16		01010-81035	BOLT	2	J10241-UP
17		01643-31032	WASHER	2	J10241-UP
18		14Z-43-11170	JOINT	2	J10241-UP
19		01508-41006	NUT	2	J10241-UP
20		14X-43-12840	BRACKET	1	J10241-UP
21		01010-81025	BOLT	2	J10241-UP
22		01643-31032	WASHER	2	J10241-UP
23		14X-43-11280	GUIDE	1	J10241-UP
24		14X-43-11290	PLATE	1	J10241-UP
25		01370-00508	SCREW	3	J10241-UP
26		01641-20508	WASHER	3	J10241-UP
27		07042-00108	PLUG	2	J10241-UP

Ref :K2110-08A0 Page :240120

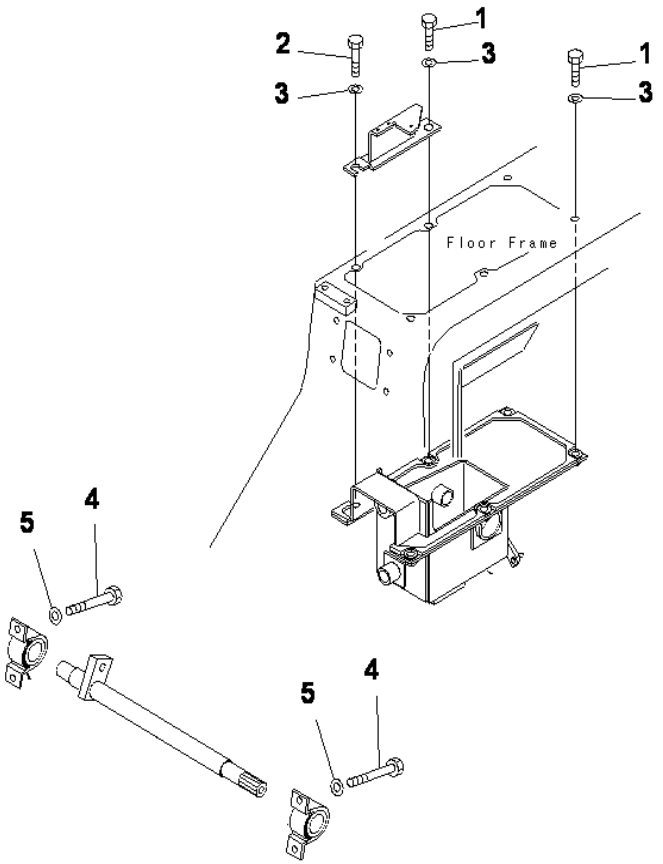

D85ESS-2 S/N J11888-UP

FLOOR FRAME (STEERING CONTROL MOUNT)

INDEX	CD	PART NO.	DESCRIPTION	QTY	SERIAL NO.
1		01010-81030	BOLT	5	J10001-UP
2		01010-81035	BOLT	1	J10001-UP
3		01643-31032	WASHER	6	J10001-UP
4		01010-81020	BOLT	4	J10001-UP
5		01643-31032	WASHER	4	J10001-UP

Ref :K2110-09A0 Page :240130

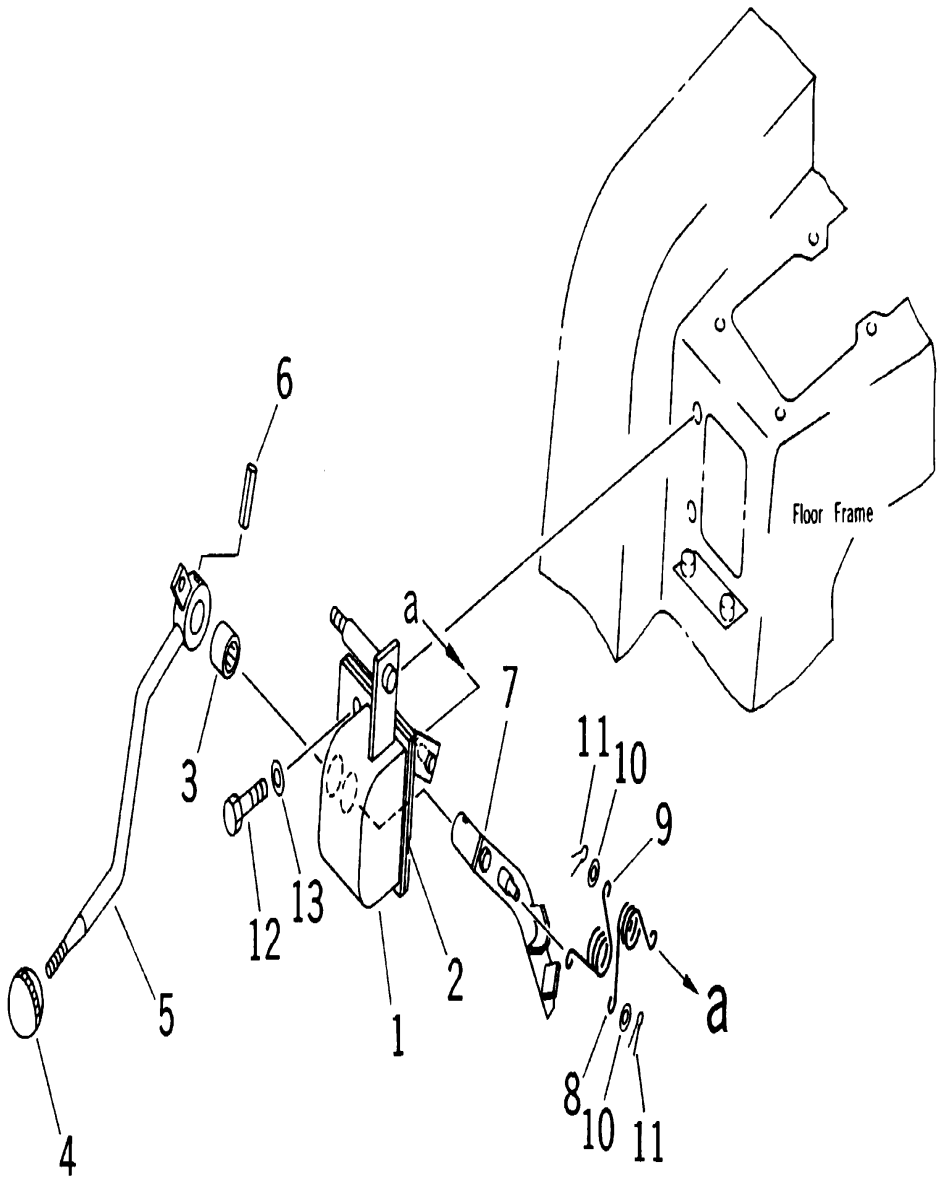

D85ESS-2 S/N J11888-UP

FLOOR FRAME (BLADE LOCK)

INDEX	CD	PART NO.	DESCRIPTION	QTY	SERIAL NO.
1		14X-43-14413	BRACKET	1	J10001-J10240
2		14X-43-14340	SHEET	1	J10001-J10240
3		06124-02020	BEARING	1	J10001-J10240
4		09304-10835	KNOB	1	J10001-J10240
5		14X-43-14452	LEVER	1	J10001-J10240
6		14X-43-14520	PIN	1	J10001-J10240
7		14X-43-14423	LEVER	1	J10001-J10240
8		09463-00002	SPRING	1	J10001-J10240
9		09463-00006	SPRING	1	J10001-J10240
10		01641-20608	WASHER	2	J10001-J10240
11		04050-11612	COTTER PIN	2	J10001-J10240
12		01010-81025	BOLT	2	J10001-J10240
13		01643-31032	WASHER	2	J10001-J10240

Ref :K2110-10A0 Page :240135

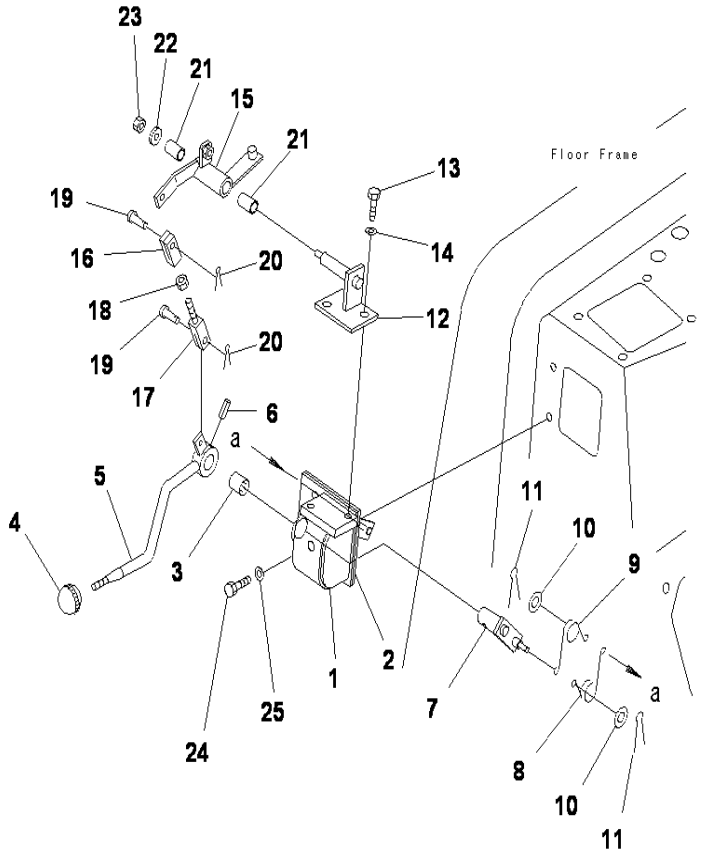

D85ESS-2 S/N J11888-UP

FLOOR FRAME (BLADE LOCK)

INDEX	CD	PART NO.	DESCRIPTION	QTY	SERIAL NO.
1		14X-43-14560	BRACKET	1	J10775-UP
		14X-43-14413	BRACKET	1	J10241-J10774
2		14X-43-14340	.SHEET	1	J10241-UP
3		06124-02020	BEARING	1	J10241-UP
4		09304-10835	KNOB	1	J10241-UP
5		14X-43-24451	LEVER	1	J10241-UP
6		14X-43-14520	PIN	1	J10241-UP
7		14X-43-14423	LEVER	1	J10241-UP
8		09463-00002	SPRING	1	J10241-UP
9		09463-00006	SPRING	1	J10241-UP
10		01641-20608	WASHER	2	J10241-UP
11		04050-11612	PIN, COTTER	2	J10241-UP
12		14X-43-14540	BRACKET	1	J10241-UP
13		01010-81020	BOLT	2	J10241-UP
14		01643-31032	WASHER	2	J10241-UP
15		14X-43-14483	LEVER	1	J10241-UP
16		04210-20832	YOKE	1	J10241-UP
17		04244-40805	ROD	1	J10241-UP
18		01580-10806	NUT	1	J10241-UP
19		04205-10822	PIN	2	J10241-UP
20		04050-12015	COTTER PIN	2	J10241-UP
21		09350-01420	BUSHING	2	J10241-UP
22		113-43-23230	WASHER	1	J10241-UP
23		01598-00809	NUT	1	J10241-UP
24		01010-81025	BOLT	2	J10241-UP
25		01643-31032	WASHER	2	J10241-UP

Ref :K2110-10A1 Page :240140

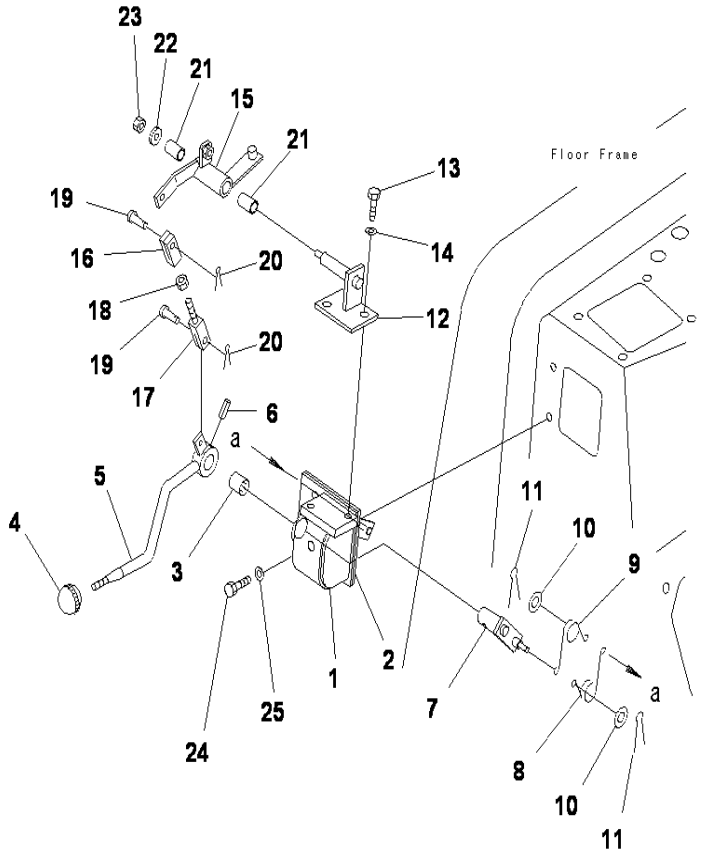

D85ESS-2 S/N J11888-UP

FLOOR FRAME (BLADE LOCK) FOR STRAIGHT TILT

INDEX	CD	PART NO.	DESCRIPTION	QTY	SERIAL NO.
1		14X-43-14560	BRACKET	1	J11301-UP
2		14X-43-14340	.SHEET	1	J11301-UP
3		06124-02020	BEARING	1	J11301-UP
4		09304-10835	KNOB	1	J11301-UP
5		14X-43-14452	LEVER	1	J11301-UP
6		14X-43-14520	PIN	1	J11301-UP
7		14X-43-14423	LEVER	1	J11301-UP
8		09463-00002	SPRING	1	J11301-UP
9		09463-00006	SPRING	1	J11301-UP
10		01641-20608	WASHER	2	J11301-UP
11		04050-11612	PIN, COTTER	2	J11301-UP
12		14X-43-14540	BRACKET	1	J11301-UP
13		01010-81020	BOLT	2	J11301-UP
14		01643-31032	WASHER	2	J11301-UP
15		14X-43-14483	LEVER	1	J11301-UP
16		04210-20832	YOKE	1	J11301-UP
17		04244-40805	ROD	1	J11301-UP
20		01580-10806	NUT	1	J11301-UP
18		04205-10822	PIN	2	J11301-UP
19		04050-12015	COTTER PIN	2	J11301-UP
21		09350-01420	BUSHING	2	J11301-UP
22		113-43-23230	WASHER	1	J11301-UP
23		01598-00809	NUT	1	J11301-UP
24		01010-81025	BOLT	2	J11301-UP
25		01643-31032	WASHER	2	J11301-UP

Ref :K2110-10A2 Page :240150

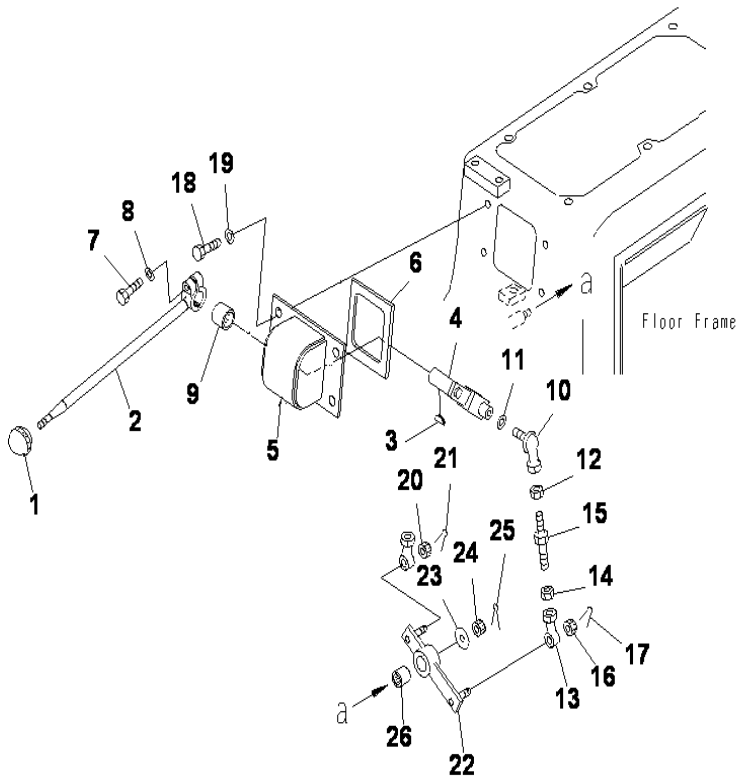

D85ESS-2 S/N J11888-UP

FLOOR FRAME (TRANSMISSION LOCK)

INDEX	CD	PART NO.	DESCRIPTION	QTY	SERIAL NO.
1		09304-10835	KNOB	1	J10241-UP
2		124-43-65430	LEVER	1	J10241-UP
3		04010-00516	KEY	1	J10241-UP
4		124-43-51272	LEVER	1	J10241-UP
5		14Z-43-11751	BRACKET	1	J10241-UP
6		14Z-43-11940	.SHEET	1	J10241-UP
7		01010-80830	BOLT	1	J10241-UP
8		01643-30823	WASHER	1	J10241-UP
9		06124-02020	BEARING	1	J10241-UP
10		04256-40817	JOINT	1	J10241-UP
11		01643-30823	WASHER	2	J10241-UP
12		01580-10806	NUT	1	J10241-UP
13		04250-90847	END	1	J10241-UP
14		01508-40805	NUT	1	J10241-UP
15		581-43-11870	ROD	1	J10241-UP
16		01590-30809	NUT	1	J10241-UP
17		04050-12015	COTTER PIN	1	J10241-UP
18		01010-81025	BOLT	1	J10241-UP
19		01643-31032	WASHER	1	J10241-UP
20		01590-30809	NUT	3	J10241-UP
21		04050-12015	COTTER PIN	3	J10241-UP
22		17A-43-25531	LEVER	1	J10241-UP
23		113-43-23230	WASHER	1	J10241-UP
24		01590-30809	NUT	1	J10241-UP
25		04050-12015	COTTER PIN	1	J10241-UP
26		06124-01416	BEARING	1	J10241-UP

Ref :K2110-11A0 Page :240160

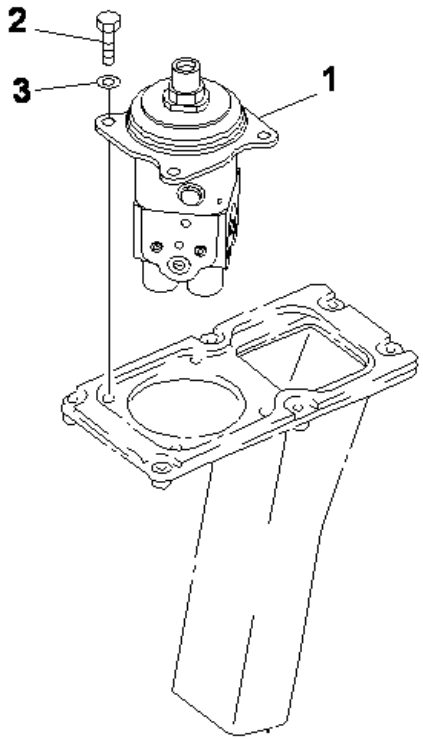

D85ESS-2 S/N J11888-UP

FLOOR FRAME (BLADE P.P.C. VALVE MOUNT)

INDEX	CD	PART NO.	DESCRIPTION	QTY	SERIAL NO.
1		702-16-01341	PILOT VALVE A.....	1	J10001-UP
2		01010-80820	BOLT.....	4	J10001-UP
3		01643-30823	WASHER.....	4	J10001-UP

Ref :K2110-12A0 Page :240170

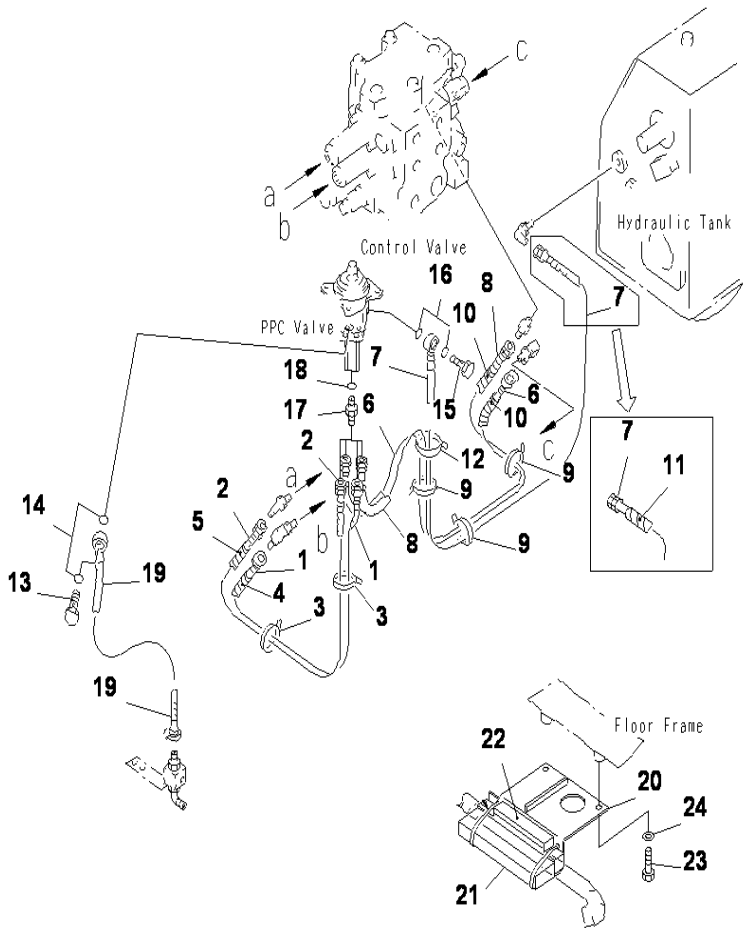

D85ESS-2 S/N J11888-UP

FLOOR FRAME (BLADE PIPING) FOR STRAIGHT TILT

INDEX	CD	PART NO.	DESCRIPTION	QTY	SERIAL NO.
1		14X-43-14850	HOSE	1	J11301-UP
2		07184-00206	HOSE,SLIM	1	J11301-UP
3		08034-00519	BAND	2	J11301-UP
4		08210-01203	SPIRAL TUBE	1	J11301-UP
5		08210-01204	SPIRAL TUBE	1	J11301-UP
6		14X-43-14860	HOSE	1	J11301-UP
7		203-62-57632	HOSE	1	J11301-UP
8		07184-00211	HOSE	1	J11301-UP
9		08034-00519	BAND	3	J11301-UP
10		08210-01207	SPIRAL TUBE	2	J11301-UP
11		08210-01208	SPIRAL TUBE	1	J11301-UP
12		08034-00536	BAND	1	J11301-UP
13		702-16-53240	PLUG	1	J11301-UP
14		07000-02018	O-RING	2	J11301-UP
15		203-62-57730	EYE BOLT	1	J11301-UP
16		07000-02018	O-RING	2	J11301-UP
17		07230-20210	UNION	4	J11301-UP
18		07002-01423	O-RING	4	J11301-UP
19		14X-43-24720	HOSE	1	J11301-UP
20		14X-43-24741	BRACKET	1	J11301-UP
21		14X-43-24931	.SHEET	1	J11301-UP
22		14X-43-24941	.SHEET	1	J11301-UP
23		01010-81020	BOLT	2	J11301-UP
24		01643-31032	WASHER	2	J11301-UP

Ref :K2110-14A0 Page :240180

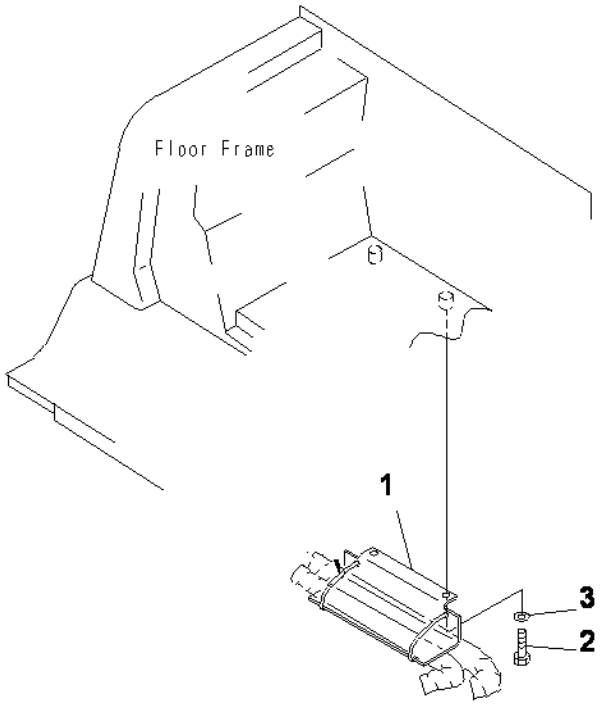

D85ESS-2 S/N J11888-UP

FLOOR FRAME (BLADE PIPING)(FOR ANGLE)

INDEX	CD	PART NO.	DESCRIPTION	QTY	SERIAL NO.
1		14X-43-14741	BRACKET	1	J10241-UP
		14X-43-14740	BRACKET	1	J10001-J10240
2		01010-81020	BOLT	2	J10001-UP
3		01643-31032	WASHER	2	J10001-UP

Ref :K2110-14A1 Page :240182

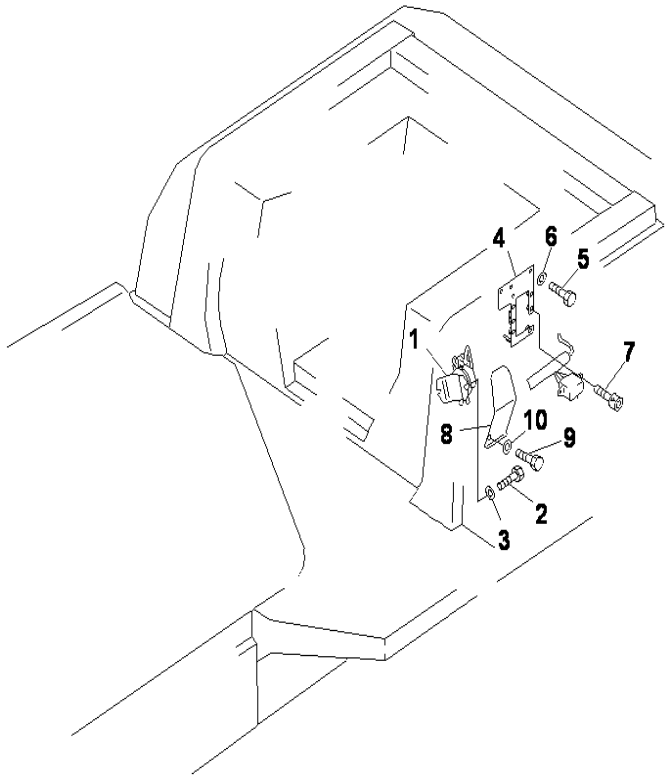

D85ESS-2 S/N J11888-UP

FLOOR FRAME (ELECTRICAL EQUIPMENT)

INDEX	CD	PART NO.	DESCRIPTION	QTY	SERIAL NO.
1		08088-31000	SWITCH	1	J10241-UP
		22W-06-13220	SWITCH	1	J10001-J10240
2		01010-80825	BOLT	2	J10001-UP
3		01643-30823	WASHER	2	J10001-UP
4		1240662120	BRACKET	1	J10001-UP
5		01010-81020	BOLT	2	J10001-UP
6		01643-31032	WASHER	2	J10001-UP
7		0125270820	BOLT	4	J10001-UP
8		134-06-61320	COVER	1	J10001-UP
9		01010-81220	BOLT	1	J10001-UP
10		01643-31232	WASHER	1	J10001-UP

Ref :K2110-16A0 Page :240190

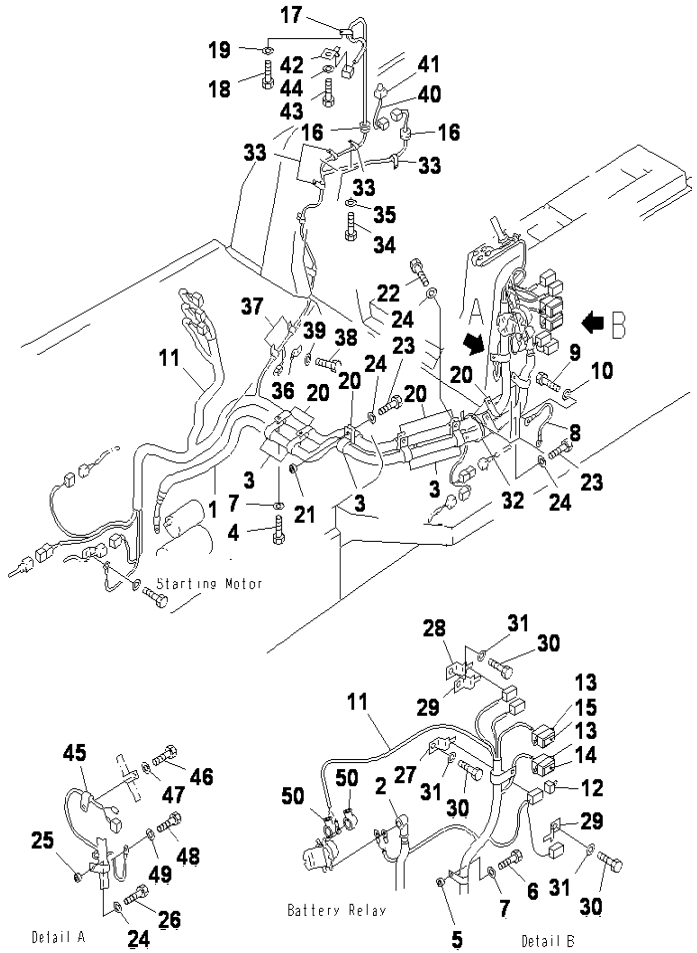

D85ESS-2 S/N J11888-UP

FLOOR FRAME (WIRING)

INDEX	CD	PART NO.	DESCRIPTION	QTY	SERIAL NO.
1		14X-06-24111	CABLE	1	J10001-UP
2		08038-00035	CAP	1	J10001-UP
3		04434-52310	CLIP	7	J10001-UP
4		01010-81020	BOLT	6	J10001-UP
5		581-95-19870	BOSS	1	J10001-UP
6		01010-51025	BOLT	1	J10001-UP
7		01643-31032	WASHER	7	J10001-UP
8		14X-06-14390	WIRE	1	J10001-UP
9		01010-81016	BOLT	1	J10001-UP
10		01643-31032	WASHER	1	J10001-UP
11		14X-06-24124	WIRING HARNESS	1	J10001-UP
		21X-06-31530	.CONNECTOR	1	J10001-UP
12		20T-06-81230	.FUSIBLE LINK	1	J10001-UP
		20T0681220	.CONNECTOR	1	J10001-UP
13		20T-06-71560	.FUSE BOX	2	J10001-UP
14		134-06-61440	.PLATE FUSE	1	J10001-UP
15		14X-06-14320	.PLATE FUSE	1	J10001-UP
16		135-06-34250	GROMMET	2	J10001-UP
17		04434-51010	CLIP	1	J10001-UP
18		01010-81016	BOLT	1	J10001-UP
19		01643-31032	WASHER	1	J10001-UP
20		04434-52310	CLIP	8	J10001-UP
21		201-03-29160	SPACER	1	J10001-UP
22		01010-81016	BOLT	3	J10001-UP
23		01010-81035	BOLT	1	J10001-UP
24		01643-31032	WASHER	4	J10001-UP
25		581-95-19870	BOSS	1	J10001-UP
26		01010-81025	BOLT	1	J10001-UP
27		08053-01510	CLIP	1	J10001-UP
28		08053-00910	CLIP	1	J10001-UP
29		08193-20010	CLIP	2	J10001-UP
30		01010-81020	BOLT	4	J10001-UP
31		01643-31032	WASHER	4	J10001-UP
32		08034-00823	BAND	2	J10001-UP
33		04434-51010	CLIP	6	J10001-UP
34		01010-81016	BOLT	6	J10001-UP
35		01643-31032	WASHER	6	J10001-UP
36		08193-20010	CLIP	1	J10001-UP
37		04434-51010	CLIP	2	J10001-UP
38		01010-81016	BOLT	2	J10001-UP
39		01643-31032	WASHER	2	J10001-UP
40		14X-06-21710	WIRING HARNESS	1	J10001-UP
41		08064-10000	PUSH SWITCH	1	J10001-UP
42		08193-20010	CLIP	1	J10001-UP
43		01010-81016	BOLT	1	J10001-UP
44		01643-31032	WASHER	1	J10001-UP

Ref :K2110-17A0 Page :240200

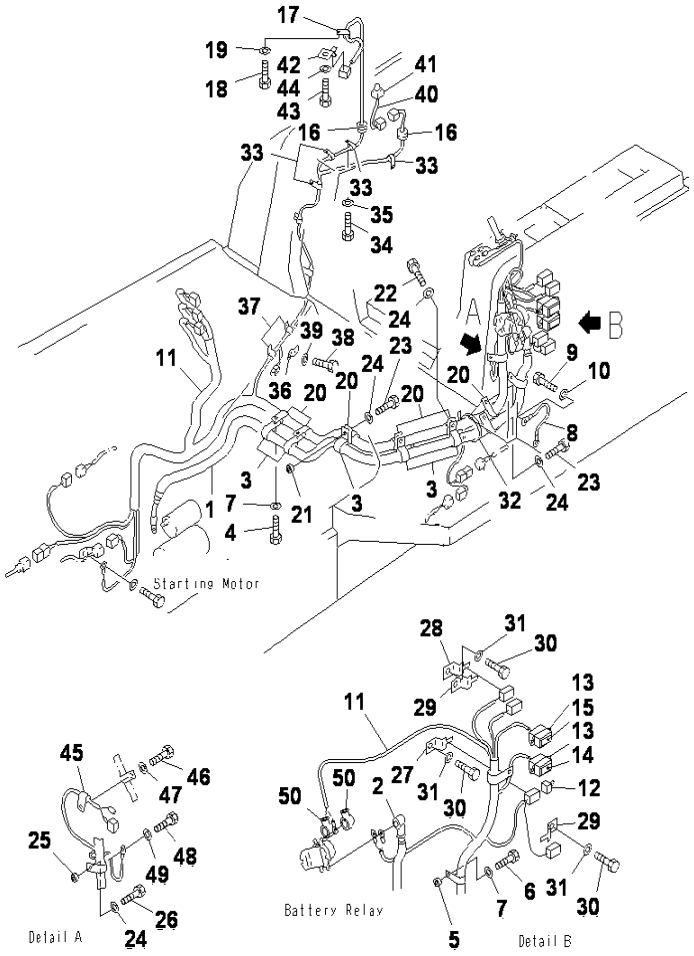

D85ESS-2 S/N J11888-UP

FLOOR FRAME (WIRING)

INDEX	CD	PART NO.	DESCRIPTION	QTY	SERIAL NO.
45		04434-51010	CLIP	1	J10001-UP
46		01010-81020	BOLT	1	J10001-UP
47		01643-31032	WASHER	1	J10001-UP
48		01010-81016	BOLT	1	J10001-UP
49		01643-31032	WASHER	1	J10001-UP
50		08038-00519	CAP	2	J10001-UP

Ref :K2110-17A0 Page :240201

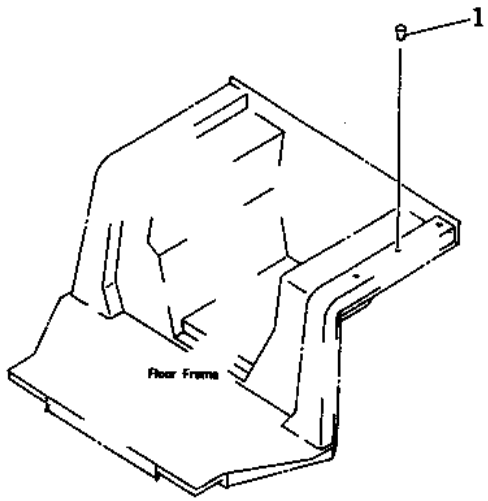

D85ESS-2 S/N J11888-UP

FLOOR FRAME (HANDLE)(FOR ANGLE)(WITHOUT CAB)

INDEX	CD	PART NO.	DESCRIPTION	QTY	SERIAL NO.
1		07049-01215	PLUG	4	J10001-UP

Ref :K2110-19A0 Page :240210

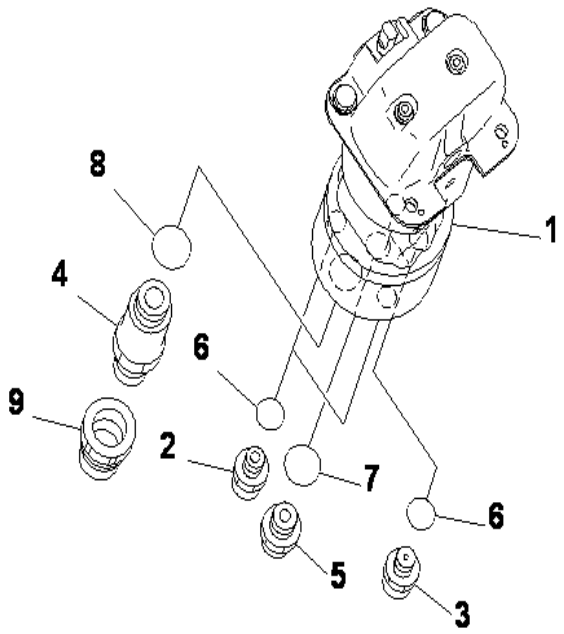

D85ESS-2 S/N J11888-UP

FLOOR FRAME (PILOT VALVE)

INDEX	CD	PART NO.	DESCRIPTION	QTY	SERIAL NO.
1		702-16-05060	PILOT VALVE	1	J10001-UP
2		114-40-48481	JOINT	2	J10001-UP
3		14X-40-21480	JOINT	2	J10001-UP
4		134-49-61750	UNION	1	J10001-UP
5		134-49-61761	JOINT	1	J10001-UP
6		07002-21423	O-RING	4	J10001-UP
7		07002-21823	O-RING	1	J10001-UP
8		07002-22434	O-RING	1	J10001-UP
9		134-49-61731	COUPLING	1	J10001-UP

Ref :K2110-21A0 Page :240220

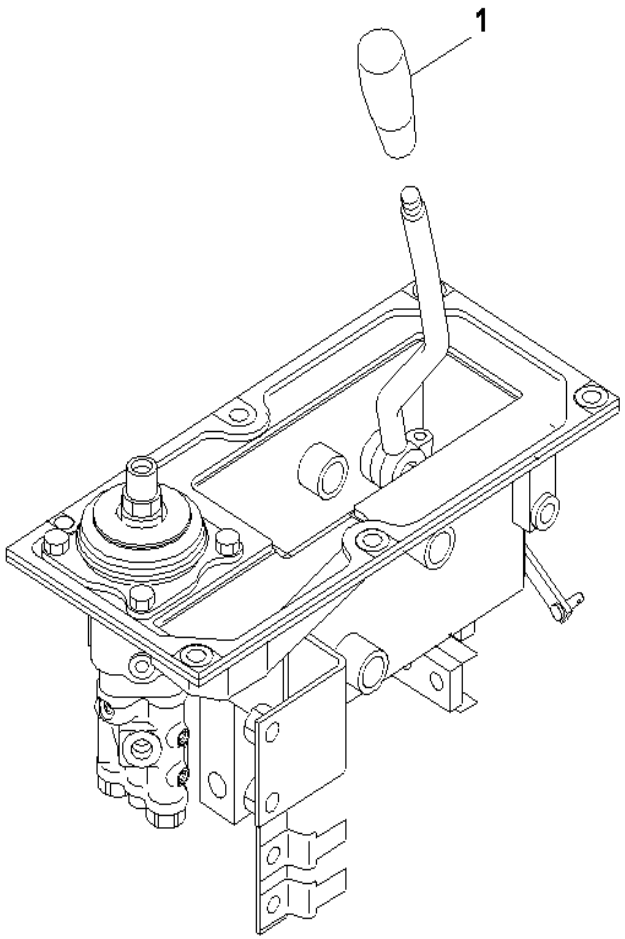

D85ESS-2 S/N J11888-UP

FLOOR FRAME (KNOB)

INDEX	CD	PART NO.	DESCRIPTION	QTY	SERIAL NO.
1		14Z-43-11310	KNOB	1	J10001-UP

Ref :K2110-22A0 Page :240230

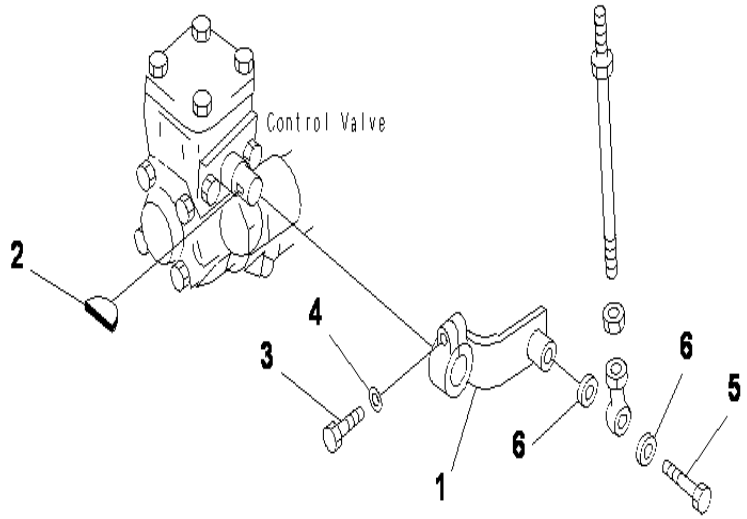

D85ESS-2 S/N J11888-UP

FLOOR FRAME (LEVER)

INDEX	CD	PART NO.	DESCRIPTION	QTY	SERIAL NO.
1		14W-43-14130	LEVER	1	J10001-UP
2		04010-00519	KEY	1	J10001-UP
3		01010-80830	BOLT	1	J10001-UP
4		01643-30823	WASHER	1	J10001-UP
5		01010-81035	BOLT	1	J10001-UP
6		04254-11032	SPACER	2	J10001-UP

Ref :K2110-23A0 Page :240240

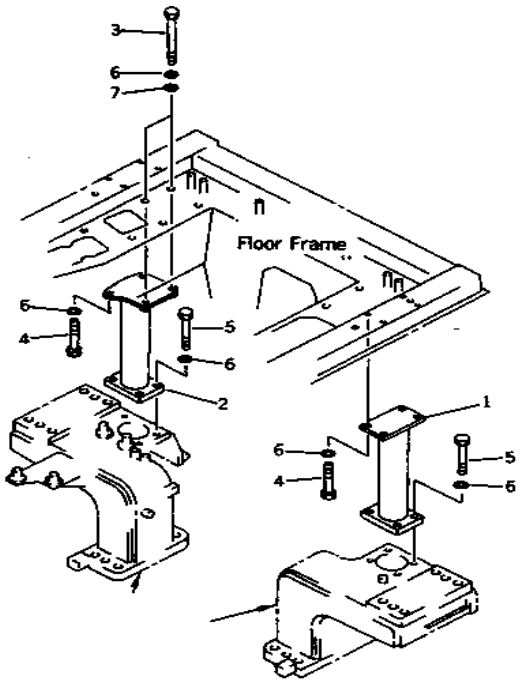

D85ESS-2 S/N J11888-UP

RIGID MOUNT

INDEX	CD	PART NO.	DESCRIPTION	QTY	SERIAL NO.
1		14X-54-17143	BRACKET LH.....	1	J10001-UP
2		14X-54-17171	BRACKET RH.....	1	J10001-UP
3		01011-81605	BOLT.....	4	J10001-UP
4		01010-81655	BOLT.....	4	J10001-UP
5		01010-81665	BOLT.....	8	J10001-UP
6		20T-01-35570	SPACER.....	16	J10001-UP
7		01643-31645	WASHER.....	16	J10001-UP

Ref :K2120-01A1 Page :240250

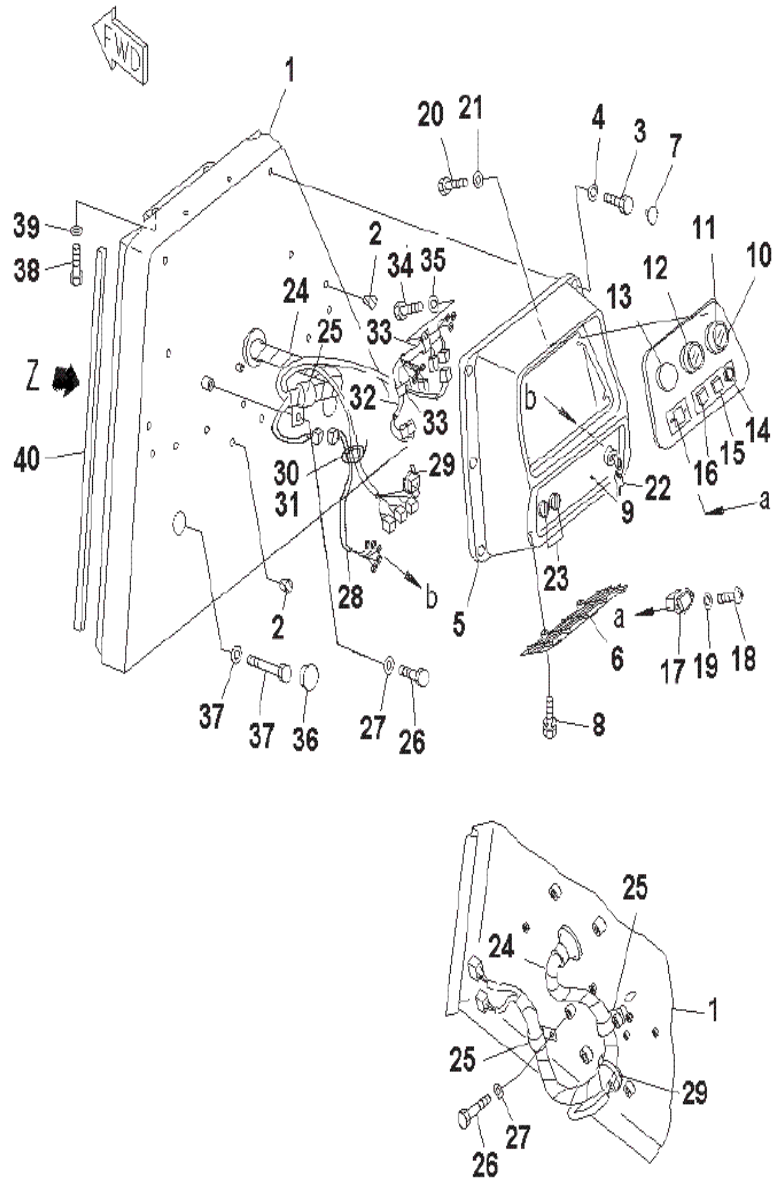

D85ESS-2 S/N J11888-UP

DASH BOARD (WITHOUT CAB)(WITH GAUGE PANEL)

INDEX	CD	PART NO.	DESCRIPTION	QTY	SERIAL NO.
1		14X-54-18115	COVER	1	J10001-UP
2		07049-01215	PLUG	8	J10001-UP
3		01010-80820	BOLT	9	J10001-UP
4		01643-30823	WASHER	9	J10001-UP
5		134-54-69120	DASHBOARD	1	J11264-UP
		14X-54-19110	DASHBOARD	1	J10001-J11263
6		14X-54-19120	COVER	1	J10001-UP
7		14X-54-19130	CAP	6	J10001-UP
8		14X-54-19170	BOLT	2	J10001-UP
9		14X-54-18841	PANEL	1	J10241-UP
		14X-54-18840	PANEL	1	J10001-J10240
10		14X-06-12410	PANEL	1	J10001-UP
11		14X-06-12361	GAUGE, OIL TEMPERATUR	1	J11264-UP
		14X-06-12360	GAUGE, OIL TEMPERATURE	1	J10778-J11263
		195-06-23120	GAUGE, OIL TEMPERATURE	1	J10001-J10777
12		14X-06-12351	GAUGE, WATER TEMPERATUR	1	J11264-UP
		14X-06-12350	GAUGE, WATER TEMPERATURE	1	J10778-J11263
		195-06-23110	GAUGE, WATER TEMPERATURE	1	J10001-J10777
13		09414-00053	CAP	1	J10001-UP
14		144-06-81220	SIGNAL HEA	1	J10001-UP
15		103-06-32250	LAMPPRESSURE	1	J10001-UP
16		103-06-32240	LAMPCHARGE	1	J10001-UP
17		21S-06-11140	SERVICE METER	1	J10001-UP
18		01220-40312	SCREW	2	J10001-UP
19		01641-20305	WASHER	2	J10001-UP
20		01010-80816	BOLT	1	J10001-UP
21		01643-30823	WASHER	1	J10001-UP
22		08086-10000	SWITCH	1	J10001-UP
23		14X-06-12160	SWITCH	2	J10001-UP
24		14X-06-14520	WIRING HARNESS	1	J10001-UP
25		08036-03014	CLIP	3	J10001-UP
26		01010-81016	BOLT	3	J10001-UP
27		01643-31032	WASHER	3	J10001-UP
28		14X-06-14410	WIRING HARNESS	1	J10001-UP
29		08034-00519	BAND	2	J10001-UP
30		08023-04007	TUBE	2	J12001-UP
31		08034-00414	BAND	2	J12001-UP
32		14X-06-14510	WIRING HARNESS	1	J10001-UP
33		08036-01414	CLIP	2	J10001-UP
34		01010-80816	BOLT	2	J10001-UP
35		01643-30823	WASHER	2	J10001-UP
36		14X-54-18150	CAP	2	J10001-UP
37		01010-81290	BOLT	2	J10001-UP
38		01010-81225	BOLT	2	J10001-UP
39		01643-31232	WASHER	4	J10001-UP
40		14X-54-12940	SEAL	2	J10001-UP

Ref :K2210-01B0 Page :240260

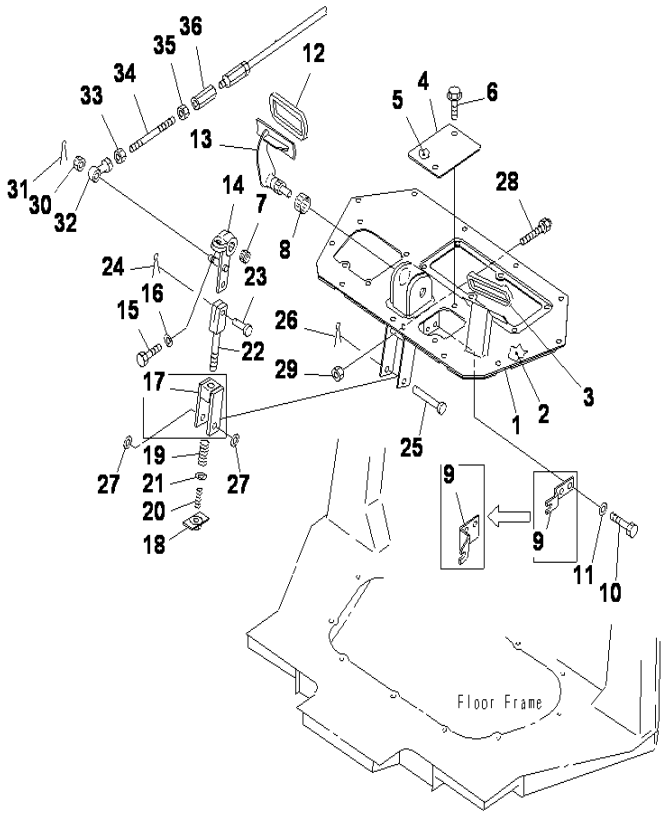

D85ESS-2 S/N J11888-UP

FLOOR (BRAKE PEDAL)

INDEX	CD	PART NO.	DESCRIPTION	QTY	SERIAL NO.
1		14X-43-12421	FLOOR	1	J11264-UP
		14X-43-12420	FLOOR	1	J10775-J11263
		14X-43-12313	FLOOR	1	J10001-J10774
2		14X-43-12360	.SHEET	1	J10001-UP
3		14X-43-13760	PEDAL CAP	1	J10001-UP
4		14X-43-12450	COVER	2	J10775-UP
		14X-43-12350	COVER	1	J10001-J10774
5		14X-43-12390	.SHEET	2	J10001-UP
6		01439-01225	BOLT	2	J10001-UP
7		06124-02020	BEARING	1	J10001-UP
8		06124-03020	BEARING	1	J10001-UP
9		14X-43-13912	PLATE	1	J11258-UP
		14X-43-13770	PLATE	2	J10001-J11257
10		01010-81225	BOLT	2	J10001-UP
11		01643-31232	WASHER	2	J10001-UP
12		14X-43-12110	PEDAL CAP	1	J10001-UP
13		14X-43-12212	PEDAL	1	J10001-UP
14		17A-43-24140	LEVER	1	J10001-UP
15		01010-81245	BOLT	1	J10001-UP
16		01643-51232	WASHER	1	J10001-UP
17		14X-43-12251	HOLDER	1	J10775-UP
		14X-43-12250	HOLDER	1	J10001-J10774
18		14X-43-12260	PLATE	1	J10001-UP
19		700-84-11660	SPRING	1	J10001-UP
20		205-43-51470	SPRING	1	J10001-UP
21		01641-21223	WASHER	1	J10001-UP
22		14X-43-12270	ROD	1	J10775-UP
		04244-41212	ROD	1	J10001-J10774
23		04205-11238	PIN	1	J10001-UP
24		04050-13022	PIN	1	J10001-UP
25		14X-43-11270	PIN	1	J10001-UP
26		04050-13022	PIN	1	J10001-UP
27		01641-21223	WASHER	2	J10001-UP
28		09311-41237	BUMPER	1	J10001-UP
29		01580-11210	NUT	1	J10001-UP
30		01593-31411	NUT	1	J10001-UP
31		04050-13022	PIN	1	J10001-UP
32		04250-81474	END	1	J10001-UP
33		01582-11411	NUT	1	J10001-UP
34		14X-43-12410	ROD	1	J10001-UP
35		01508-41408	NUT	1	J10001-UP
36		17A-43-24160	JOINT	1	J10001-UP

Ref :K2400-01A0 Page :240270

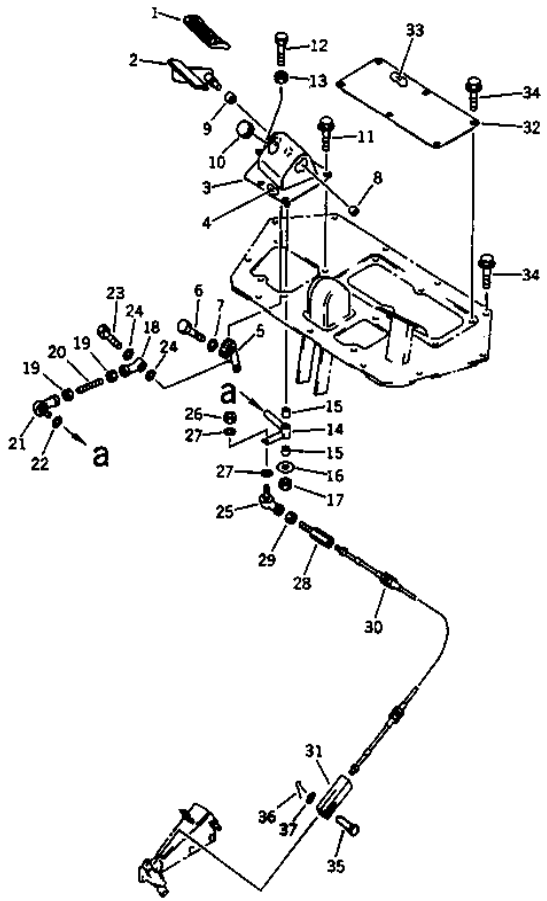

D85ESS-2 S/N J11888-UP

FLOOR (DECAL PEDAL AND CABLE)

INDEX	CD	PART NO.	DESCRIPTION	QTY	SERIAL NO.
1		14X-43-13760	CAP, PEDAL	1	J10001-UP
2		14X-43-13512YZ	PEDAL	1	J10001-UP
3		14X-43-13780	BRACKET	4	J10775-UP
		14X-43-13713	BRACKET	1	J10001-J10774
4		14X-43-12380	.SHEET	1	J10001-J10774
5		14X-43-13753	LEVER	1	J10001-UP
6		01010-80830	BOLT	1	J10001-UP
7		01643-30823	WASHER	1	J10001-UP
8		06124-01616	BEARING	1	J10001-UP
9		06124-02020	BEARING	1	J10001-UP
10		09415-02512	CAP	1	J10001-UP
11		01439-01225	BOLT	4	J10001-UP
12		01016-50830	BOLT	1	J10001-UP
13		01580-10806	NUT	2	J10001-UP
14		14X-43-13722	LEVER	1	J10001-UP
15		09350-01415	BUSHING	2	J10001-UP
16		113-43-23230	WASHER	1	J10001-UP
17		01598-00809	NUT	1	J10001-UP
18		04250-80847	ROD END	1	J10001-UP
19		01580-10806	NUT	1	J10001-UP
20		04245-40805	ROD	1	J10001-UP
21		04256-40817	JOINT	1	J10001-UP
22		01643-30823	WASHER	1	J10001-UP
23		01010-80830	BOLT	1	J10001-UP
24		04254-10823	SPACER	2	J10001-UP
25		04256-50615	JOINT	1	J10001-UP
26		01580-10605	NUT	1	J10001-UP
27		01641-20608	WASHER	2	J10001-UP
28		14Z-43-12890	ROD	1	J11258-UP
		14Z-43-12790	ROD	1	J10001-J11257
29		01508-40603	NUT	1	J10001-UP
30		14X-43-13734	CABLE	1	J11264-UP
		14X-43-13733	CABLE	1	J11258-J11263
		14X-43-13732	CABLE	1	J10001-J11257
31		14X-43-13790	JOINT	1	J11258-UP
		14X-43-13740	JOINT	1	J10001-J11257
32		14X-43-12430	COVER	1	J10775-UP
		14X-43-12333	COVER	1	J10001-J10774
33		14X-43-12370	.SHEET	1	J10001-J10774
34		01439-01225	BOLT	17	J10001-UP
35		04205-10625	PIN	1	J10775-UP
		04205-10622	PIN	1	J10001-J10774
36		04050-11612	COTTER PIN	1	J10001-UP
37		01641-20608	WASHER	1	J10001-UP

Ref :K2400-02A0 Page :240280

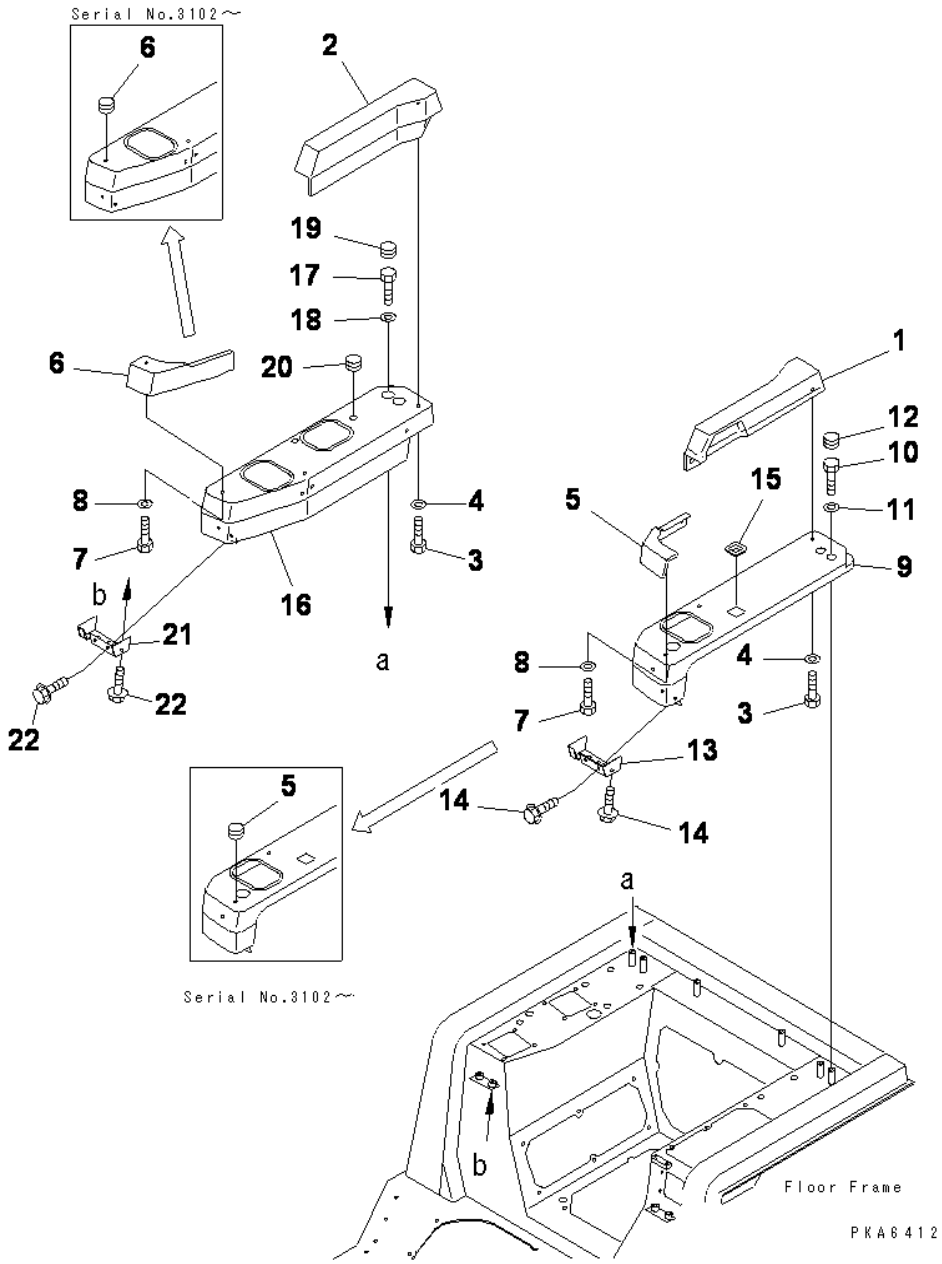

ARM REST COVER (UPPER)

INDEX	CD	PART NO.	DESCRIPTION	QTY	SERIAL NO.
1		14X-54-16532	ARM REST LH.....	1	J10241-UP
2		14X-54-16542	ARM REST RH.....	1	J10241-UP
3		01010-80812	BOLT.....	8	J10241-UP
4		01643-30823	WASHER.....	8	J10241-UP
5		09415-00706	CAP, L.H.....	1	J10775-UP
		14X-54-16611	PAD, L.H.....	1	J10241-J10774
6		09415-00706	CAP, R.H.....	1	J10775-UP
		14X-54-16621	PAD, R.H.....	1	J10775-J10774
7		01010-80812	BOLT.....	6	J10775-J10774
8		01643-30823	WASHER.....	6	J10241-J10774
9		17A-54-16711	COVER LH.....	1	J10241-UP
10		01010-81020	BOLT.....	2	J10241-UP
11		01643-31032	WASHER.....	2	J10241-UP
12		09415-02512	CAP.....	2	J10241-UP
13		14X-54-16442	COVER LH.....	1	J10241-UP
14		01439-00814	BOLT.....	4	J10241-UP
15		14X-43-12940	COVER.....	1	J10775-UP
		17A-43-25380	COVER.....	1	J10241-J10774
16		14X-54-16912	COVER, R.H (FOR REAR ATTACHMENT).....	1	J10775-UP
		17A-54-16870	COVER, R.H.....	1	J10241-J10774
17		01010-81020	BOLT.....	2	J10241-UP
18		01643-31032	WASHER.....	2	J10241-UP
19		09415-02512	CAP.....	2	J10241-UP
20		09415-01610	CAP (FOR RIPPER OR RM HYD.ITAKE).....	1	J10241-UP
21		14X-54-16452	COVER, R.H.....	1	J10241-UP
22		01439-00814	BOLT.....	4	J10241-UP

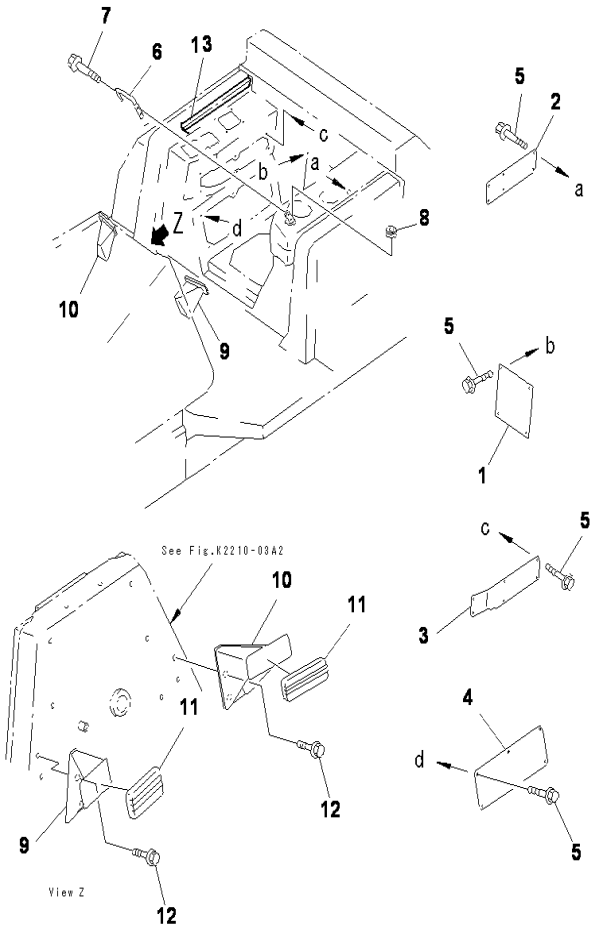

D85ESS-2 S/N J11888-UP

ARM REST COVER (LOWER)

INDEX	CD	PART NO.	DESCRIPTION	QTY	SERIAL NO.
1		14X-54-16711	COVER	1	J10241-UP
		14X-54-16710	COVER	1	J10001-J10240
2		14X-54-16721	COVER	1	J10001-UP
3		14X-54-16731	COVER	1	J10001-UP
4		14X-54-16741	COVER	2	J10001-UP
5		01439-00820	BOLT	32	J10001-UP
6		14X-54-16631	HANDLE	1	J10001-UP
7		01439-01020	BOLT	2	J10001-UP
8		14X-54-16660	GROMMET	1	J10001-UP
9		14X-91-15711	BRACKET L.H	1	J10001-UP
10		14X-91-15721	BRACKET R.H	1	J10001-UP
11		203-43-56450	PEDAL CAP	2	J10001-UP
12		01439-01225	BOLT	4	J10001-UP
13		14X-54-16230	SEAL	1	J10775-UP

Ref :K2500-02A0 Page :240300

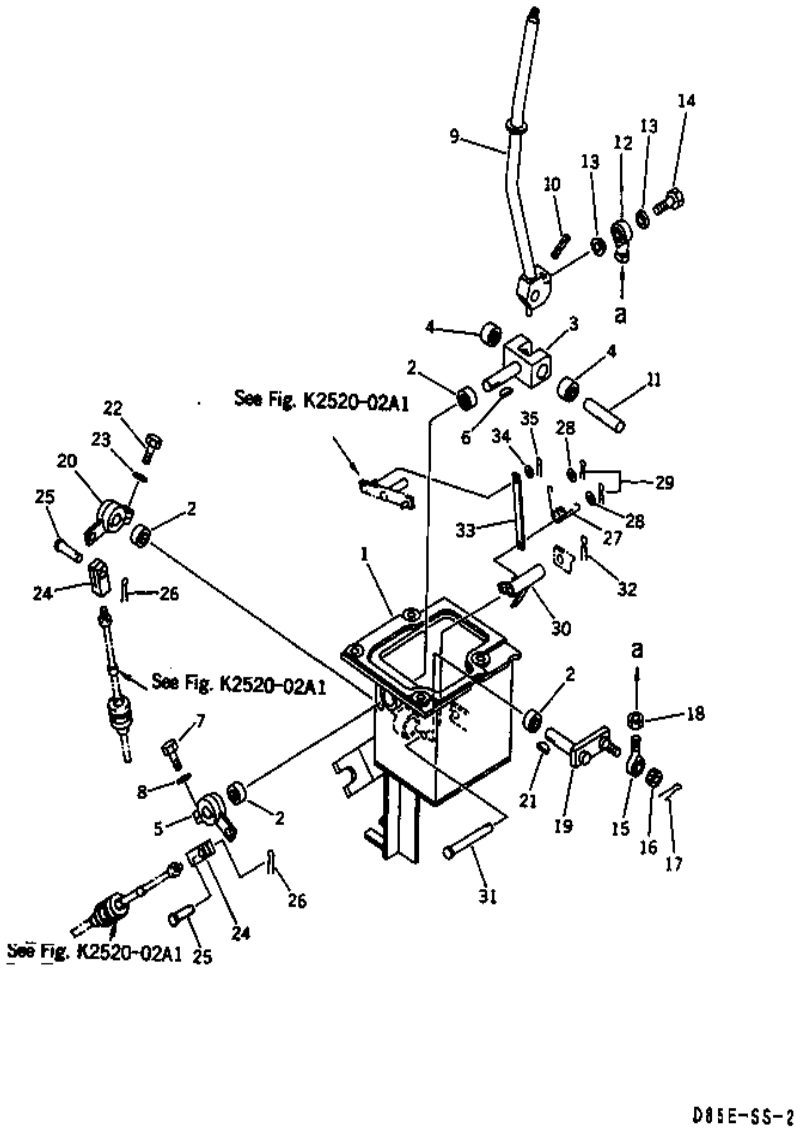

D85ESS-2 S/N J11888-UP

REAR WORK EQUIPMENT CONTROL (TOWING WINCH)

INDEX	CD	PART NO.	DESCRIPTION	QTY	SERIAL NO.
1		14W-960-7250	BRACKET	1	J10775-UP
		14W-960-7112	BRACKET	1	J10241-J10774
		14W-960-7111	BRACKET	1	J10001-J10240
2		06123-01414	BEARING	4	J10001-UP
3		14Y-43-11121	YOKE	1	J10001-UP
4		06124-01416	BEARING	2	J10001-UP
5		14W-96-07141	LEVER	1	J10001-UP
6		04010-00516	KEY	1	J10001-UP
7		01010-80830	BOLT	1	J10001-UP
8		01643-30823	WASHER	1	J10001-UP
9		14W-960-7131	LEVER	1	J10001-UP
10		04025-00332	SPRING PIN	1	J10001-UP
11		363-43-27161	PIN	1	J10001-UP
12		04250-81056	END	1	J10001-UP
13		04254-11032	SPACER	2	J10001-UP
14		01010-81035	BOLT	1	J10001-UP
15		04252-21061	END	1	J10001-UP
16		01593-31008	NUT	1	J10001-UP
17		04050-12018	COTTER PIN	1	J10001-UP
18		01582-11008	NUT	1	J10001-UP
19		14W-96-07151	LEVER	1	J10001-UP
20		14W-960-7161	LEVER	1	J10001-UP
21		04010-00516	KEY	1	J10001-UP
22		01010-80830	BOLT	1	J10001-UP
23		01643-30823	WASHER	1	J10001-UP
24		04210-20832	YOKE	2	J10001-UP
25		04205-10825	PIN	2	J10001-UP
26		04050-12015	COTTER PIN	2	J10001-UP
27		09463-00002	SPRING	1	J10001-UP
28		01641-20608	WASHER	2	J10001-UP
29		04052-10633	PIN	2	J10001-UP
30		14W-960-7171	LEVER	1	J10001-UP
31		195-61-45280	PIN	1	J10001-UP
32		04050-12015	COTTER PIN	1	J10001-UP
33		14W-96-07181	PLATE	1	J10001-UP
34		01641-20608	WASHER	1	J10001-UP
35		04050-11612	PIN, COTTER	1	J10001-UP

Ref :K2520-01A0 Page :240310

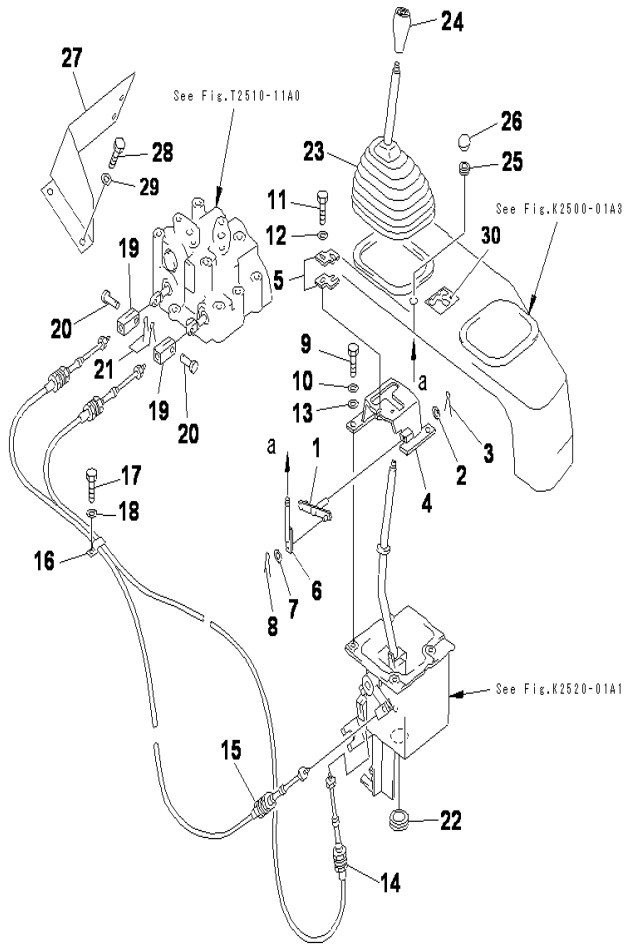

D85ESS-2 S/N J11888-UP

REAR WORK EQUIPMENT CONTROL (CONTROL)(TOWING WINCH)

INDEX	CD	PART NO.	DESCRIPTION	QTY	SERIAL NO.
1		14W-96-07192	PLATE	1	J10001-UP
2		01641-20812	WASHER	1	J10001-UP
3		04050-12015	COTTER PIN	1	J10001-UP
4		14W-96-07231	BRACKET	1	J10001-UP
5		14W-96-07240	PLATE	2	J10001-UP
6		14W-96-07211	ROD	1	J10001-UP
7		01641-20608	WASHER	1	J10001-UP
8		04050-11612	COTTER PIN	1	J10001-UP
9		01010-80830	BOLT	4	J14214-UP
		01010-80830	BOLT	6	J10001-J14213
10		01643-30823	WASHER	4	J14214-UP
		01643-30823	WASHER	6	J10001-J14213
11		01010-80835	BOLT	2	J14214-UP
12		01643-30823	WASHER	2	J14214-UP
13		01643-31032	WASHER	4	J10001-UP
14		15A-91-61210	CABLE	1	J10001-UP
15		19M-43-15350	CABLE	1	J10001-UP
16		195-01-14450	CLIP	2	J10001-UP
17		01010-81225	BOLT	1	J10001-UP
18		01643-31232	WASHER	1	J10001-UP
19		04210-20832	YOKE	2	J10001-UP
20		04205-10825	PIN	2	J10001-UP
21		04050-12015	COTTER PIN	2	J10001-UP
22		09415-02512	CAP	1	J10001-UP
23		14X-43-11320	BOOT	1	J10001-UP
24		14Z-43-11310	KNOB	1	J10001-UP
25		08037-01008	GROMMET	1	J10001-UP
26		09304-10835	KNOB	1	J10001-UP
27		14X-96-06341	COVER	1	J10001-UP
28		01010-81225	BOLT	2	J10001-UP
29		01643-31232	WASHER	2	J10001-UP
30		14W-96-07310	PLATE	1	J10001-UP

Ref :K2520-01A1 Page :240320

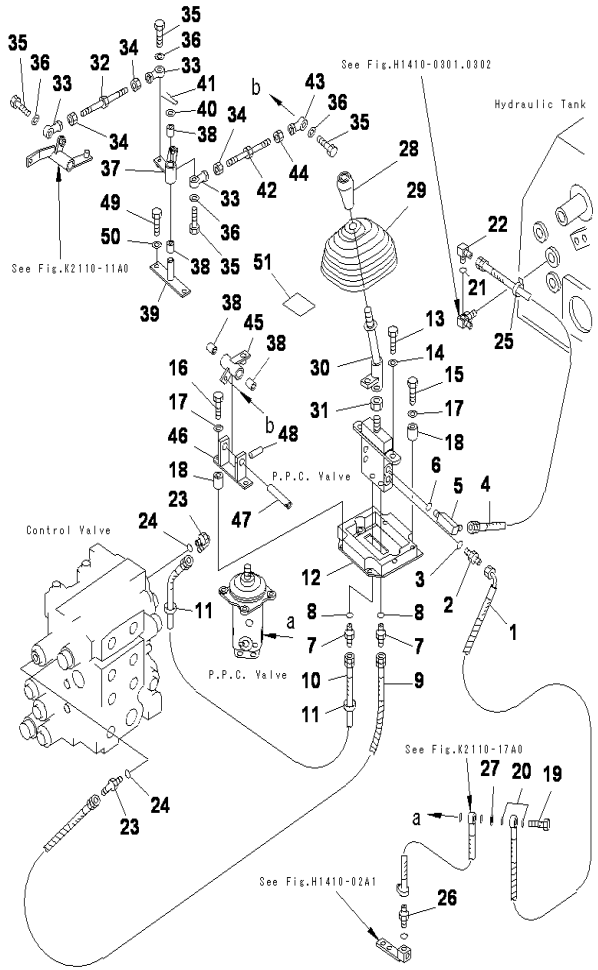

D85ESS-2 S/N J11888-UP

REAR WORK EQUIPMENT CONTROL (PIPING)(RIPPER)

INDEX	CD	PART NO.	DESCRIPTION	QTY	SERIAL NO.
		(702-16-01230)	CONTROL VALVE	1	J10001-UP
1		14X-78-11510	HOSE	1	J10001-UP
2		20N-62-31250	NIPPLE	1	J10001-UP
3		07002-01423	O-RING	1	J10001-UP
4		07102-20206	HOSE	1	J10001-UP
5		20U-62-22430	ELBOW	1	J10001-UP
6		07002-01423	O-RING	1	J10001-UP
7		20N-62-31250	NIPPLE	2	J10001-UP
8		07002-01423	O-RING	2	J10001-UP
9		14X-78-11240	HOSE	1	J10001-UP
10		07102-20206	HOSE	1	J10001-UP
11		14X-43-14820	MARK	2	J10001-UP
12		14X-78-11420	BRACKET (WITH CAB)	1	J10001-UP
		14X-78-11560	.BRACKET,(WITHOUT CAB)	1	J10001-UP
13		01010-81030	BOLT	2	J10001-UP
14		01643-31032	WASHER	2	J10001-UP
15		01010-80845	BOLT	2	J10001-UP
16		01010-80855	BOLT	2	J10001-UP
17		01643-30823	WASHER	4	J10001-UP
18		6162-23-5770	BOSS	4	J10001-UP
19		14X-78-11470	EYE-BOLT	1	J10001-UP
20		07000-02018	O-RING	2	J10001-UP
21		07002-02034	O-RING	1	J10001-UP
22		203-62-42920	ELBOW	1	J10001-UP
23		07235-10210	ELBOW	2	J10001-UP
24		07002-01423	O-RING	2	J10001-UP
25		08034-00519	BAND T50R	1	J10001-UP
26		20Y-62-22410	NIPPLE	1	J10001-UP
27		287-15-15710	SHIM	1	J10001-UP
28		14Z-43-11310	KNOB	1	J10001-UP
29		14X-43-11320	BOOT	1	J10001-UP
30		14X-78-11410	LEVER	1	J10001-UP
31		01583-11408	NUT	1	J10001-UP
32		04245-50813	ROD	1	J10001-UP
33		04250-80847	ROD END	3	J10001-UP
34		01580-10806	NUT	3	J10001-UP
35		01010-80830	BOLT	4	J10001-UP
36		01643-30823	WASHER	4	J10001-UP
37		14X-78-11530	LEVER	1	J10001-UP
38		09350-01415	BUSHING	4	J10001-UP
39		14X-78-11520	LEVER	1	J10001-UP
40		01641-21423	WASHER	1	J10001-UP
41		04050-14028	PIN	1	J10001-UP
42		04248-30808	ROD	1	J10001-UP
43		04250-90847	END	1	J10001-UP
44		01508-40805	NUT	1	J10001-UP

Ref :K2520-02A0 Page :240330

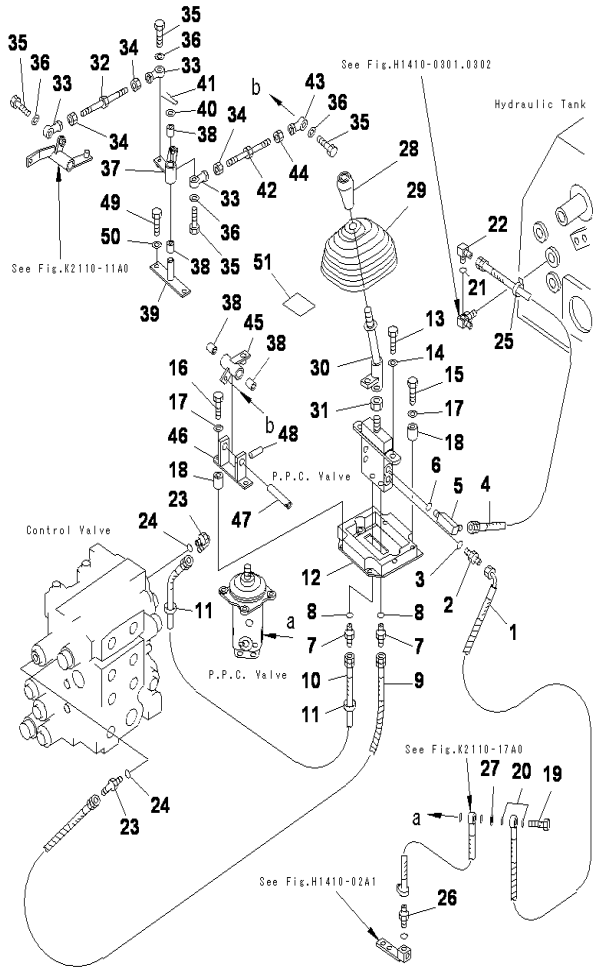

D85ESS-2 S/N J11888-UP

REAR WORK EQUIPMENT CONTROL (PIPING)(RIPPER)

INDEX	CD	PART NO.	DESCRIPTION	QTY	SERIAL NO.
45		14X-78-11540	LEVER	1	J10001-UP
46		14X-78-11550	BRACKET	1	J10001-UP
47		113-43-41630	PIN	1	J10001-UP
48		04025-00324	PIN, SPRING	1	J10001-UP
49		01010-80835	BOLT	2	J10001-UP
50		01643-30823	WASHER	2	J10001-UP
51		14X-78-11180	PLATE OPERATING, RIPPER	1	J10001-UP

Ref :K2520-02A0 Page :240331

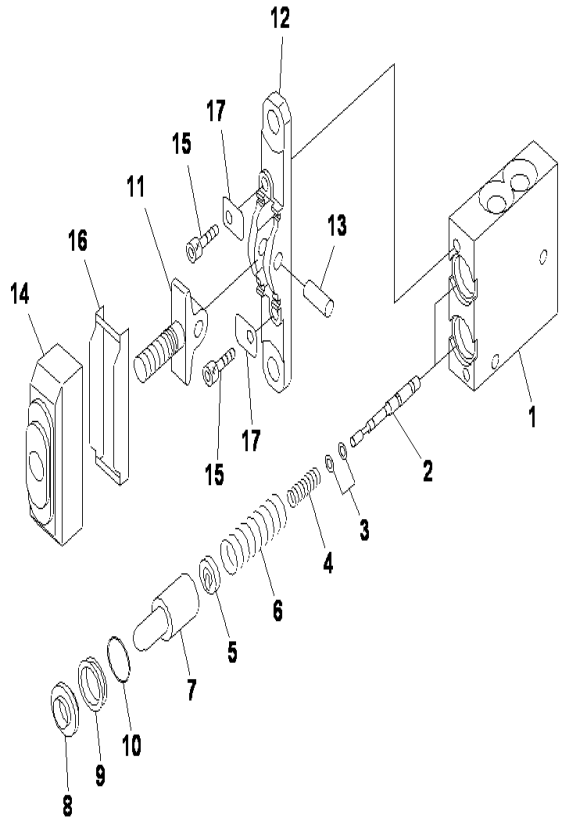

D85ESS-2 S/N J11888-UP

PPC VALVE (FOR RIPPER CONTROL)

INDEX	CD	PART NO.	DESCRIPTION	QTY	SERIAL NO.
		702-16-01230	CONTROL VALVE.....	1	J10001-UP
1		702-16-54540	.BODY, VALVE.....	1	J10001-UP
2		702-16-53120	.VALVE.....	2	J10001-UP
3		702-16-51140	.SHIM 0.30MM.....	2	J10001-UP
		702-16-54670	.SHIM 0.20MM.....	4	J10001-UP
4		702-16-54550	.SPRING.....	2	J10001-UP
5		702-16-54571	.RETAINER.....	2	J10001-UP
6		702-16-54560	.SPRING.....	2	J10001-UP
7		702-16-53170	.PISTON.....	2	J10001-UP
8		702-16-51270	.SEAL.....	2	J10001-UP
9		702-16-54580	.COLLAR.....	2	J10001-UP
10		702-16-54590	.O-RING.....	2	J10001-UP
11		702-16-54610	.LEVER.....	1	J10001-UP
12		702-16-54620	.PLATE.....	1	J10001-UP
13		702-16-54630	.SHAFT.....	1	J10001-UP
14		702-16-54641	.BOOT.....	1	J10001-UP
15		01252-30625	.BOLT.....	2	J10001-UP
16		702-16-54660	.PLATE.....	1	J10001-UP
17		702-16-54650	.PLATE.....	2	J10001-UP

Ref :K2520-02A2 Page :240340

GUARD

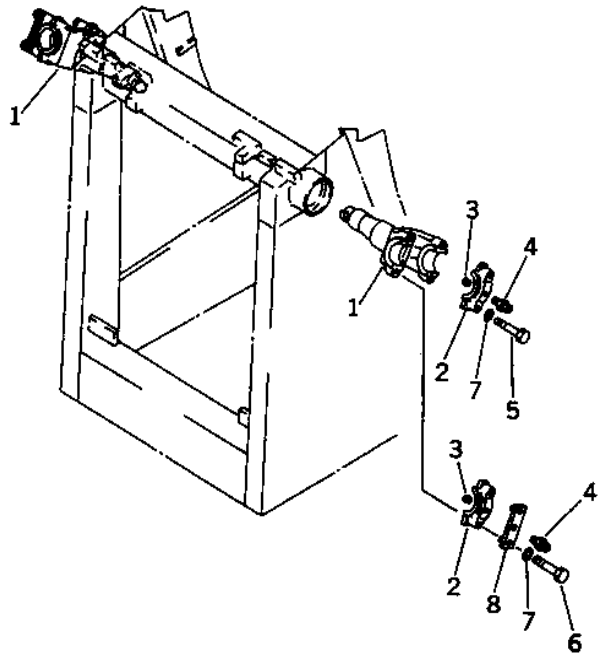

D85ESS-2 S/N J11888-UP

LIFT CYLINDER SUPPORT

INDEX	CD	PART NO.	DESCRIPTION	QTY	SERIAL NO.
		14Y-71-00110	YOKE ASSY'	1	J11161-UP
		14Y-71-00211	YOKE ASSY'	1	J10565-J11160
		14Y-71-00210	YOKE ASS'Y	1	J10001-J10564
1		14Y-71-13310	.YOKE	2	J11161-UP
		14Y-71-33310	.YOKE	2	J10565-J11160
		14Y-71-13310	.YOKE	2	J10001-J10564
2		14Y-71-13320	.CAP	4	J10001-UP
3		144-70-15251	.PIN	4	J10001-UP
4		07020-00675	.FITTING, GREASE	4	J11161-UP
		07020-00000	.FITTING, GREASE	4	J10001-J11160
5		01010-81670	BOLT	4	J10001-UP
6		01010-81695	BOLT	4	J10001-UP
7		01643-31645	WASHER	4	J10001-UP
		01643-31645	WASHER	8	J10001-UP
8		14W-71-13110	COVER	2	J10001-UP

Ref :M2111-01A0 Page :270010

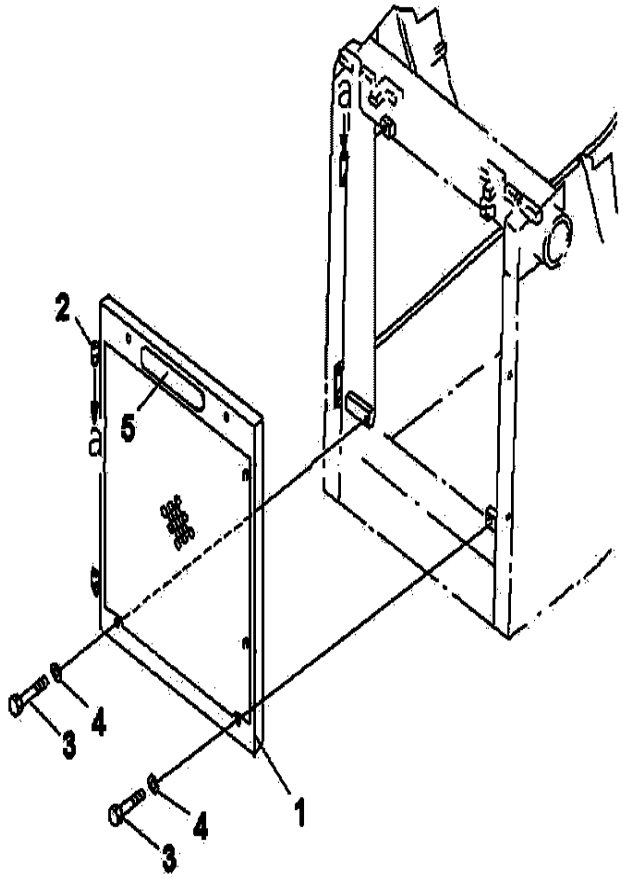

D85ESS-2 S/N J11888-UP

RADIATOR MASK SINGLE (REINFORCED)

INDEX	CD	PART NO.	DESCRIPTION	QTY	SERIAL NO.
1		14U-54-11190	MASK (SINGLE).....	1	J11432-UP
2		144-54-11940	.PIN.....	2	J11432-UP
3		01010-81660	BOLT.....	4	J11432-UP
4		01643-31645	WASHER.....	4	J11432-UP
5		09690-P0280	MARK.....	1	J11432-UP

Ref :M2120-01A0 Page :270020

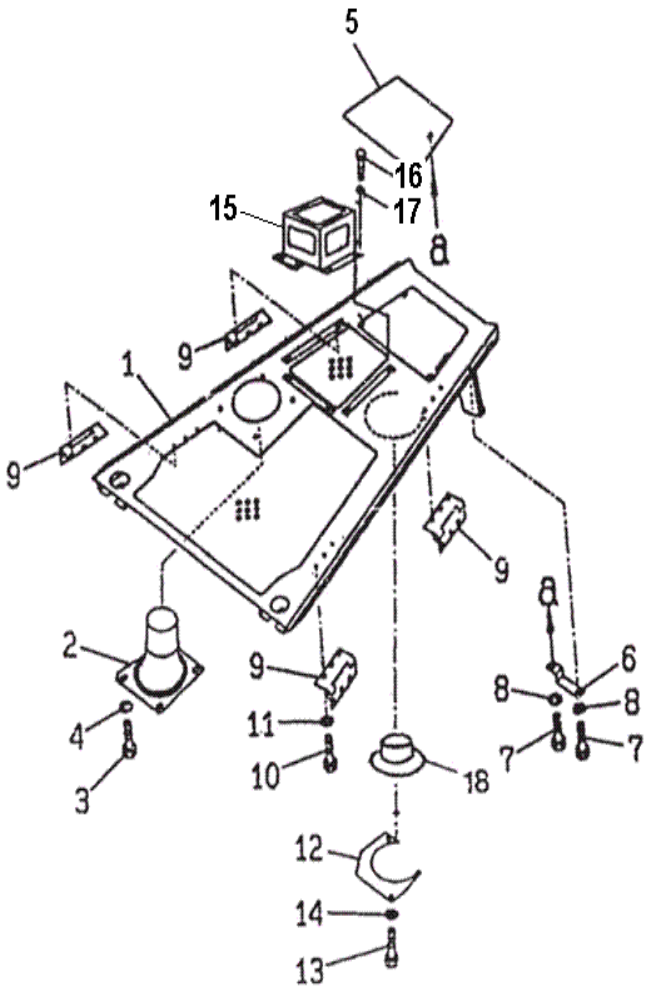

D85ESS-2 S/N J11888-UP

ENGINE HOOD (WITHOUT CAB)

INDEX	CD	PART NO.	DESCRIPTION	QTY	SERIAL NO.
1		14X-54-J1180	HOOD	1	J11217-UP
		14X-54-J9972	HOOD	1	J10679-J11216
		14C-54-J1150	HOOD	1	J10001-J10678
2		14X-54-12810	PIPE	1	J10001-UP
3		01010-81220	BOLT	4	J10001-UP
4		130-43-64260	COLLAR	4	J10001-UP
5		14X-54-12270	PLATE	1	J10001-UP
6		14X-54-12280	PLATE	2	J10001-UP
7		01010-81220	BOLT	4	J10001-UP
8		01643-31232	WASHER	4	J10001-UP
9		14X-91-11330	HINGE	4	J10241-UP
		203-54-52412	HINGE	4	J10001-J10240
10		01010-81025	BOLT	12	J10001-UP
11		01643-31032	WASHER	12	J10001-UP
12		14X-54-J2121	PLATE	1	J11217-UP
		14X-54-J2120	PLATE	1	J10001-J11216
13		01010-81225	BOLT	2	J10001-UP
14		01643-31232	WASHER	2	J10001-UP
15		15B-54-J1621	COVER	1	J10001-UP
16		01010-81225	BOLT	6	J11217-UP
		01010-81230	BOLT	6	J10679-J11216
17		01643-31232	WASHER	6	J10001-UP
18		14X-54-12970	BOOT	1	J10001-UP

Ref :M2140-01A0 Page :270030

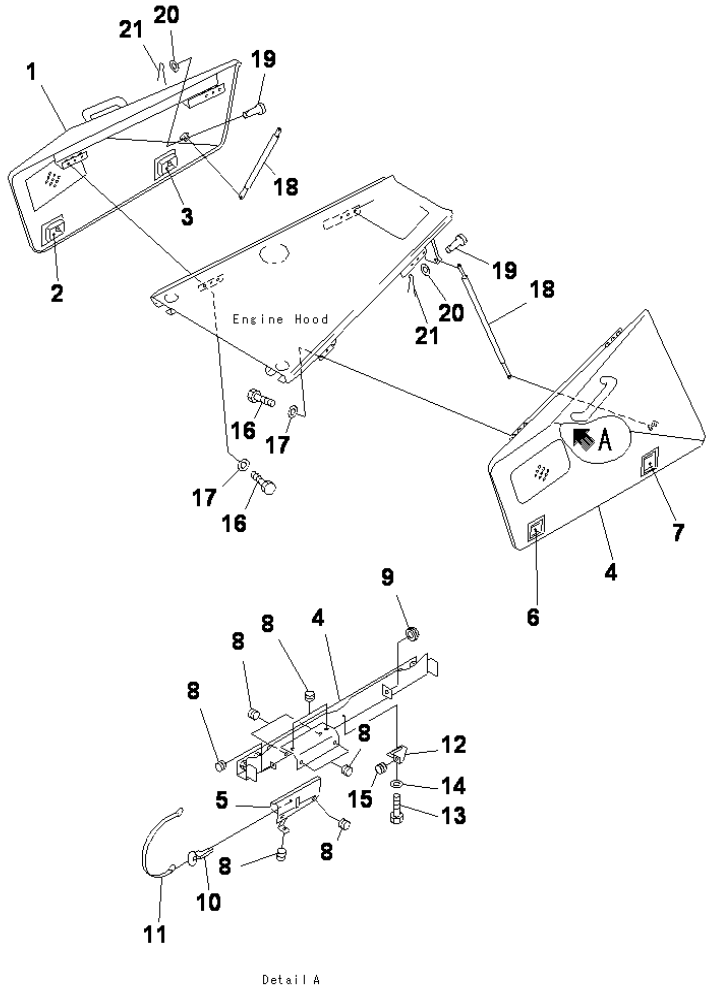

D85ESS-2 S/N J11888-UP

ENGINE SIDE COVER (UPPER)

INDEX	CD	PART NO.	DESCRIPTION	QTY	SERIAL NO.
1		14U-54-12880	COVER, R.H.....	1	J10241-UP
		14C-54-J1120	COVER, R.H.....	1	J10001-J10240
2		17A-54-14230	.LOCK (WELDED).....	1	J10001-UP
3		17A-54-14240	.LOCK (WELDED).....	1	J10001-UP
4		14U-54-12871	COVER, L.H.....	1	J10241-UP
		14C-54-J1110	COVER, L.H.....	1	J10001-J10240
5		14X-54-12731	.HINGE (WELDED).....	1	J10001-UP
6		17A-54-14230	.LOCK (WELDED).....	1	J10001-UP
7		17A-54-14240	.LOCK (WELDED).....	1	J10001-UP
8		09415-01008	CAP.....	11	J10001-UP
9		08037-01610	GROMMET.....	1	J10001-UP
10		14X-54-12770	HOLDER.....	1	J10001-UP
11		14X-54-12750	HOLDER.....	1	J10001-UP
12		14X-54-12761	GUIDE.....	1	J10001-UP
13		01010-81020	BOLT.....	1	J10001-UP
14		01643-31032	WASHER.....	1	J10001-UP
15		09415-01008	CAP.....	1	J10001-UP
16		01010-81025	BOLT.....	12	J10241-UP
		01010-81025	BOLT.....	16	J10001-J10240
17		01643-31032	WASHER.....	12	J10241-UP
		01643-31032	WASHER.....	16	J10001-J10240
18		14X-54-12780	DUMPER.....	2	J10001-UP
19		04205-10828	PIN.....	4	J10001-UP
20		01641-20812	WASHER.....	4	J10001-UP
21		04050-12015	PIN, COTTER.....	4	J10001-UP

Ref :M2140-02A0 Page :270040

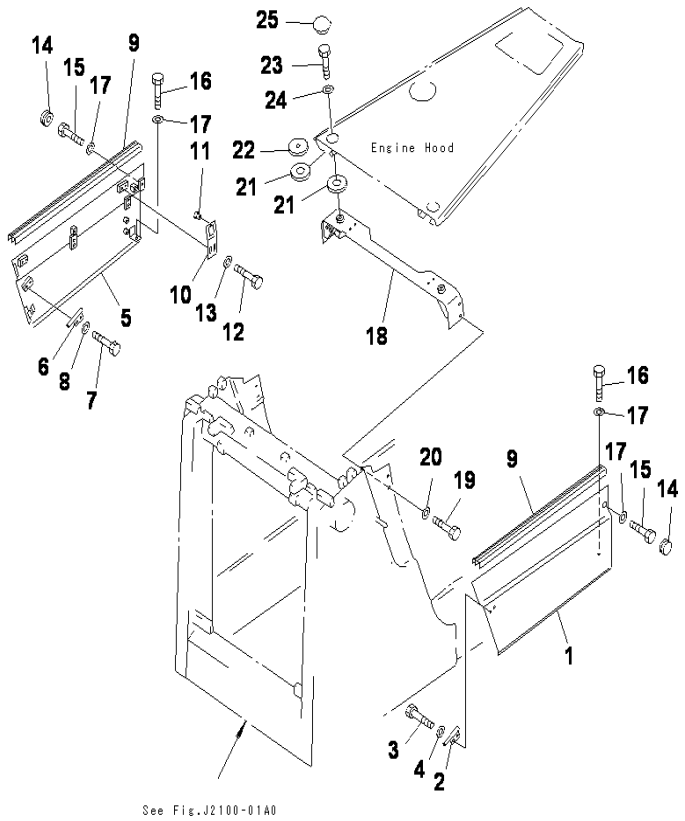

D85ESS-2 S/N J11888-UP

ENGINE SIDE COVER (LOWER)

INDEX	CD	PART NO.	DESCRIPTION	QTY	SERIAL NO.
1		14X-54-12334	COVER, L.H.....	1	J10001-UP
2		14X-54-12470	GUIDE.....	1	J10001-UP
3		01010-81225	BOLT.....	2	J10001-UP
4		01643-31232	WASHER.....	2	J10001-UP
5		14X-54-12344	COVER, R.H.....	1	J10001-UP
6		14X-54-12470	GUIDE.....	1	J10001-UP
7		01010-81225	BOLT.....	2	J10001-UP
8		01643-31232	WASHER.....	2	J10001-UP
9		14X-54-12930	SEAL.....	2	J10001-UP
10		14X-54-13980	PLATE.....	4	J10001-UP
11		14X-54-12960	STOPER.....	4	J10001-UP
12		01010-81225	BOLT.....	8	J10001-UP
13		01643-31232	WASHER.....	8	J10001-UP
14		09415-02512	CAP.....	2	J10001-UP
15		01010-81235	BOLT.....	2	J10001-UP
16		01010-81225	BOLT.....	2	J10001-UP
17		01643-31232	WASHER.....	4	J10001-UP
18		14X-54-12125	BRACKET.....	1	J10001-UP
19		01010-81235	BOLT.....	4	J10001-UP
20		01643-31232	WASHER.....	4	J10001-UP
21		195-54-46180	PLATE.....	4	J10001-UP
22		6930-21-4120	PLATE.....	2	J10001-UP
23		01010-81640	BOLT.....	2	J10001-UP
24		01643-31645	WASHER.....	2	J10001-UP
25		14X-54-12590	CAP.....	2	J10001-UP

Ref :M2140-03A0 Page :270050

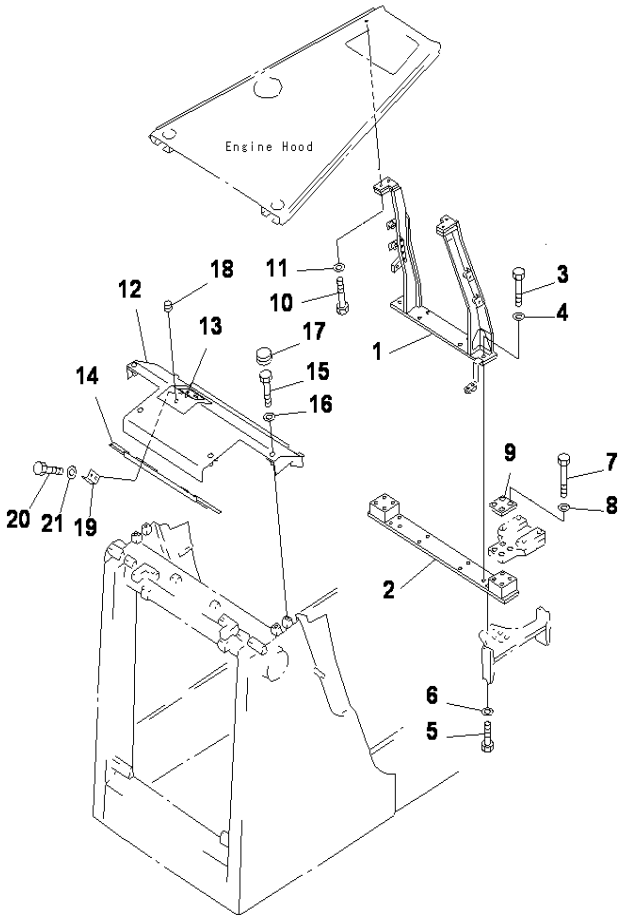

D85ESS-2 S/N J11888-UP

REAR SUPPORT AND RADIATOR COVER (WITHOUT CAB)

INDEX	CD	PART NO.	DESCRIPTION	QTY	SERIAL NO.
		14X-54-J1230	BRACKET	1	J10001-UP
1		14X-54-J1240	.BRACKET	1	J10001-UP
2		14X-54-12190	.PLATE	1	J10001-UP
3		01010-81230	.BOLT	6	J10001-UP
4		01643-31232	.WASHER	6	J10001-UP
5		01010-81250	BOLT	4	J10001-UP
6		01643-31232	WASHER	4	J10001-UP
7		01011-82040	BOLT	8	J10001-UP
8		01643-32060	WASHER	8	J10001-UP
9		14X-54-17160	PLATE	2	J10001-UP
10		01010-81255	BOLT	4	J10001-UP
11		01643-31232	WASHER	4	J10001-UP
12		14X-54-12143	COVER	1	J10001-UP
13		17A-54-14230	.LOCK	1	J10001-UP
14		14X-54-12680	.BAFFLE	1	J10001-UP
15		01010-81245	BOLT	4	J10001-UP
16		01643-31232	WASHER	4	J10001-UP
17		09415-02512	CAP	4	J10001-UP
18		09415-00506	CAP	1	J10001-UP
19		14X-54-12150	PLATE	1	J10001-UP
20		01010-81020	BOLT	2	J10001-UP
21		01643-31032	WASHER	2	J10001-UP

Ref :M2140-04A0 Page :270060

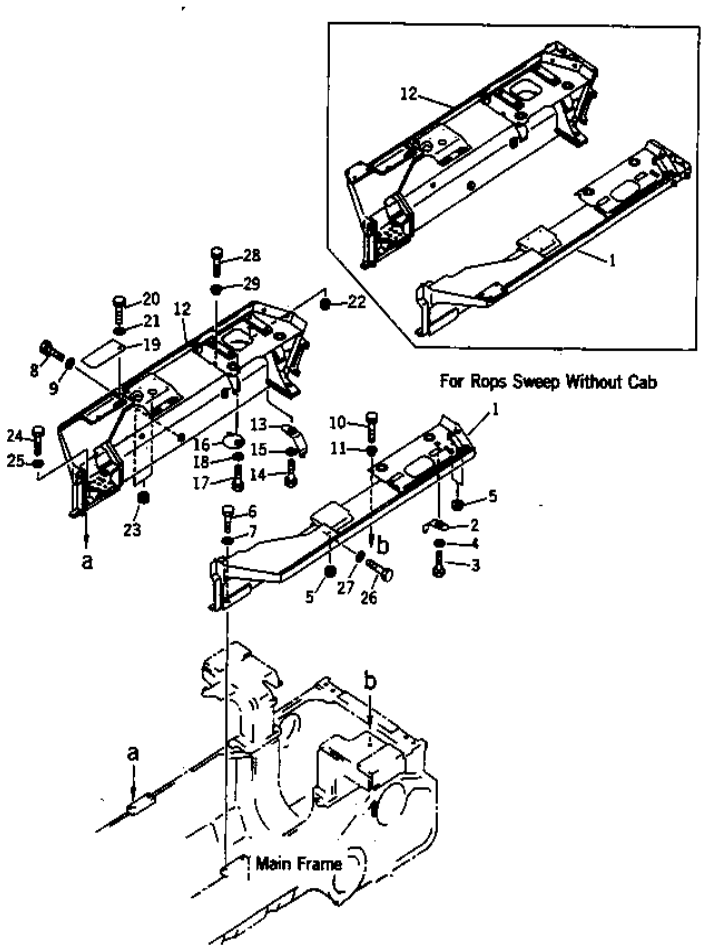

D85ESS-2 S/N J11888-UP

FENDER

INDEX	CD	PART NO.	DESCRIPTION	QTY	SERIAL NO.
1		14U-54-11232	FENDER, L.H.....	1	J10241-UP
		14W-54-13112	FENDER, L.H.....	1	J10001-J10240
		14X-54-21230	FENDER, L.H (FOR ROPS SWEEP).....	1	J15678-UP
2		14X-54-13151	COVER.....	2	J10001-UP
3		01010-81220	BOLT.....	2	J10001-UP
4		01643-31232	WASHER.....	2	J10001-UP
5		09415-03620	CAP.....	3	J10001-UP
6		01010-82460	BOLT.....	4	J10001-UP
7		01643-32460	WASHER.....	4	J10001-UP
8		01010-81630	BOLT.....	1	J10001-UP
9		01643-31645	WASHER.....	1	J10001-UP
10		01010-81235	BOLT.....	2	J10001-UP
11		14W-54-13190	BOSS.....	2	J10001-UP
12		14U-54-11242	FENDER, R.H.....	1	J10241-UP
		14W-54-13122	FENDER, R.H.....	1	J10001-J10240
		14X-54-21240	FENDER R.H (FOR ROPS SWEEP).....	1	J15678-UP
13		14X-54-13151	COVER.....	2	J10001-UP
14		01010-81220	BOLT.....	2	J10001-UP
15		01643-31232	WASHER.....	2	J10001-UP
16		14X-54-13160	COVER.....	1	J10001-UP
17		01010-81225	BOLT.....	1	J10001-UP
18		01643-31232	WASHER.....	1	J10001-UP
19		14X-54-23130	COVER.....	1	J10001-UP
20		01010-81225	BOLT.....	1	J10001-UP
21		01643-31232	WASHER.....	1	J10001-UP
22		09415-03620	CAP.....	3	J10001-UP
23		09415-05022	CAP.....	2	J10001-UP
24		01010-82460	BOLT.....	4	J10001-UP
25		01643-32460	WASHER.....	4	J10001-UP
26		01010-81630	BOLT.....	1	J10001-UP
27		01643-31645	WASHER.....	1	J10001-UP
28		01010-81235	BOLT.....	2	J10001-UP
29		14W-54-13190	BOSS.....	2	J10001-UP

Ref :M2210-01A0 Page :270070

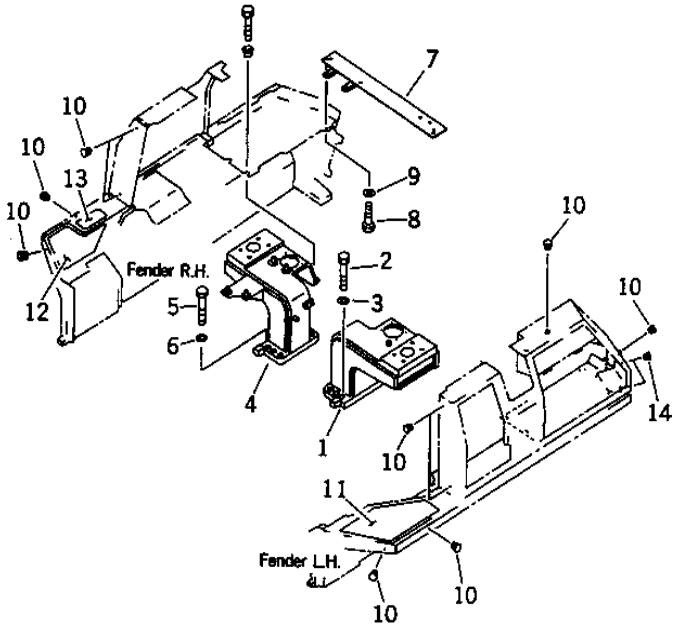

D85ESS-2 S/N J11888-UP

FENDER (BRACKET AND PLUG)

INDEX	CD	PART NO.	DESCRIPTION	QTY	SERIAL NO.
1		14X-54-13313	BRACKET, L.H.....	1	J15678-UP
		14X-54-14930	BRACKET, L.H.....	1	J10775-UP
		14W-54-13413	BRACKET, L.H.....	1	J10001-J10774
2		01010-82470	BOLT.....	6	J10001-UP
3		01643-32460	WASHER.....	6	J10001-UP
4		14X-54-13323	BRACKET, R.H.....	1	J15678-UP
		14X-54-14940	BRACKET, R.H.....	1	J10775-UP
		14W-54-13423	BRACKET, R.H.....	1	J10001-J10774
5		01010-82470	BOLT.....	6	J10001-UP
6		01643-32460	WASHER.....	6	J10001-UP
7		14X-54-13145	BRACKET.....	1	J10001-UP
8		01010-81225	BOLT.....	4	J10001-UP
9		01643-31232	WASHER.....	4	J10001-UP
10		07049-01215	PLUG.....	10	J10001-UP
11		14W-54-13810	SHEET, L.H.....	1	J10001-UP
12		14W-54-13820	SHEET, R.H.....	1	J10001-UP
13		14X-54-13830	SHEET, R.H.....	1	J10001-UP
14		07049-01215	PLUG.....	4	J10001-UP

Ref :M2210-01A1 Page :270080

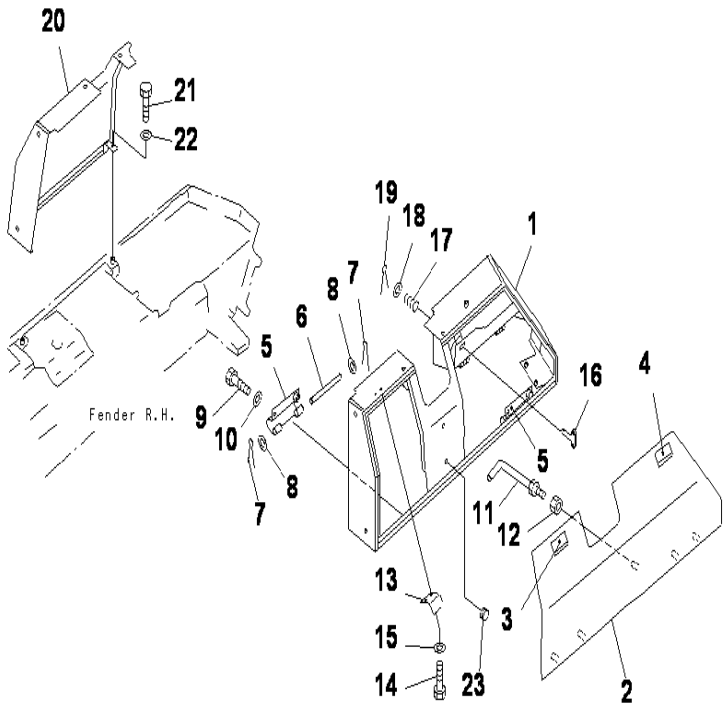

D85ESS-2 S/N J11888-UP

FENDER (BRACKET COVER)

INDEX	CD	PART NO.	DESCRIPTION	QTY	SERIAL NO.
1		14U-54-11261	COVER, L.H.....	1	J10241-UP
		14X-54-14112	COVER, L.H.....	1	J10001-J10240
2		14U-54-11252	COVER.....	1	J10241-UP
		14X-54-14231	COVER.....	1	J10001-J10240
3		17A-54-14230	.LOCK.....	1	J10001-UP
4		17A-54-14240	LOCK.....	1	J10001-UP
5		14X-54-14242	HINGE.....	2	J10241-UP
6		14X-54-14251	PIN.....	2	J10001-UP
7		04050-13020	PIN, COTTER.....	4	J10001-UP
8		01641-21016	WASHER.....	4	J10001-UP
9		01010-81020	BOLT.....	4	J10001-UP
10		01643-31032	WASHER.....	4	J10001-UP
11		14X-54-14271	HOOK.....	1	J10001-UP
12		01580-11008	NUT.....	1	J10001-UP
13		14X-54-35380	PLATE.....	2	J10001-UP
14		01010-81225	BOLT.....	4	J10001-UP
15		01643-31232	WASHER.....	4	J10001-UP
16		09459-11033	LOCK.....	1	J10001-UP
17		09459-01614	SPRING.....	1	J10001-UP
18		01642-21016	WASHER.....	1	J10001-UP
19		04050-13015	PIN.....	1	J10001-UP
20		14X-54-14123	COVER.....	1	J10241-UP
		14X-54-14122	COVER.....	1	J10001-J10240
21		01010-81225	BOLT.....	2	J10001-UP
22		01643-31232	WASHER.....	2	J10001-UP
23		09415-00506	CAP.....	2	J10001-UP

Ref :M2210-01A2 Page :270090

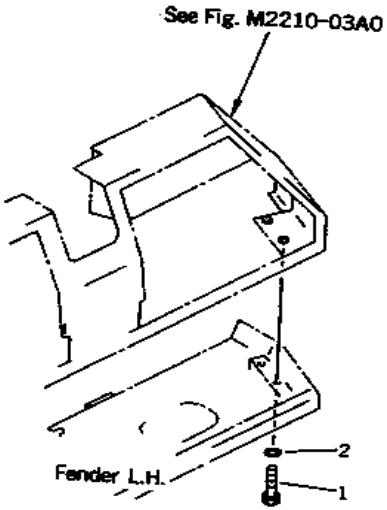

D85E-SS-2

D85ESS-2 S/N J11888-UP

FENDER (BATTERY COVER MOUNT)

INDEX	CD	PART NO.	DESCRIPTION	QTY	SERIAL NO.
1		01010-81225	BOLT	3	J10001-UP
2		01643-31232	WASHER	1	J10964-UP
		130-43-64260	COLLAR	2	J10964-UP
		01643-21232	WASHER	3	J10001-J10963

Ref :M2210-01A3 Page :270100

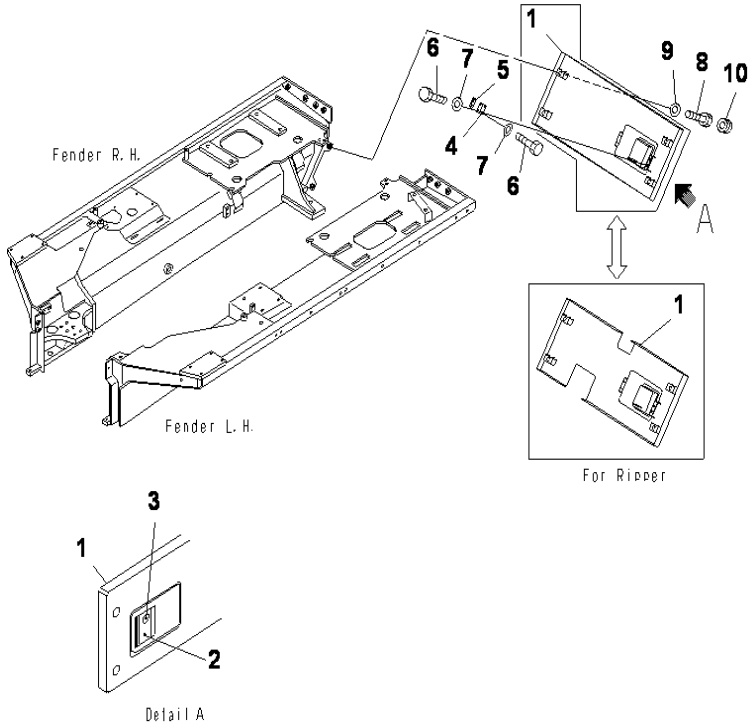

D85ESS-2 S/N J11888-UP

REAR COVER

INDEX	CD	PART NO.	DESCRIPTION	QTY	SERIAL NO.
1		14X-54-14312	COVER	1	J11264-UP
2		14X-54-12910	.LOCK (WELDED)	1	J11264-UP
3		421-54-11381	..LOCK	1	J11264-UP
4		09461-00013	PLATE	1	J11264-UP
5		09461-00014	PLATE	1	J11264-UP
6		01010-81020	BOLT	4	J11264-UP
7		01643-31032	WASHER	4	J11264-UP
8		01010-81235	BOLT	4	J11264-UP
9		01643-31232	WASHER	4	J11264-UP
10		09415-02512	CAP	4	J11264-UP

Ref :M2240-01A0 Page :270110

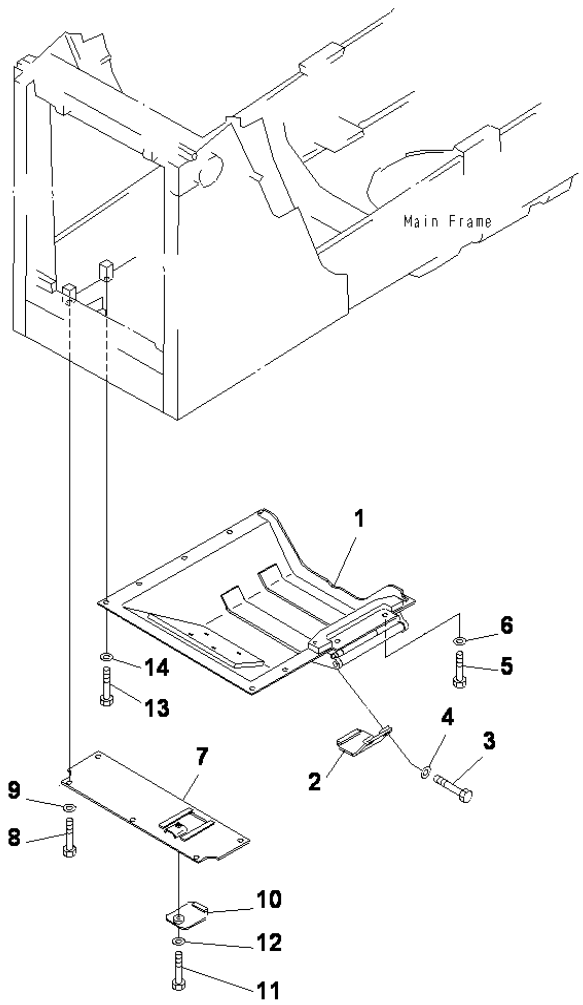

D85ESS-2 S/N J11888-UP

UNDER GUARD

INDEX	CD	PART NO.	DESCRIPTION	QTY	SERIAL NO.
1		14X-54-J2130	GUARD FRONT	1	J10325-UP
		14U-54-11140	GUARD, FRONT	1	J10001-J10324
2		14X-54-J1150	COVER	1	J10325-UP
		14X-54-15321	COVER	1	J10001-J10324
3		01010-81225	BOLT	2	J10001-UP
4		01643-31232	WASHER	2	J10001-UP
5		01010-81640	BOLT	2	J10001-UP
6		01643-31645	WASHER	2	J10001-UP
7		14U-54-11130	COVER	1	J10001-UP
8		01010-81640	BOLT	5	J10001-UP
9		01643-31645	WASHER	5	J10001-UP
10		14X-54-15220	COVER	1	J10001-UP
11		01010-81225	BOLT	1	J10001-UP
12		01643-31232	WASHER	1	J10001-UP
13		01010-81640	BOLT	8	J10001-UP
14		01643-31645	WASHER	8	J10001-UP

Ref :M2810-01A0 Page :270120

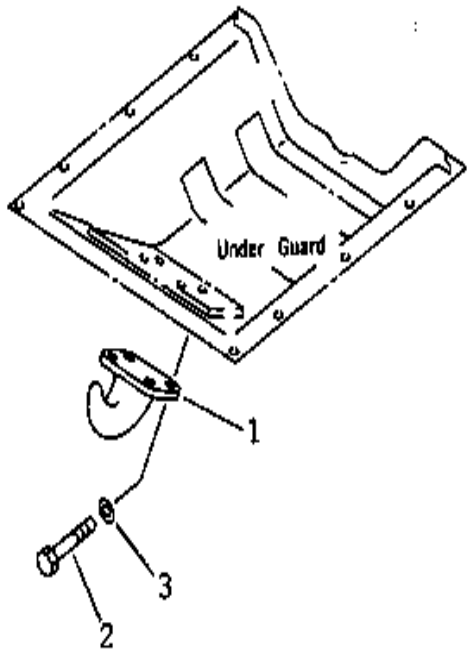

D85ESS-2 S/N J11888-UP

FRONT HOOK

INDEX	CD	PART NO.	DESCRIPTION	QTY	SERIAL NO.
1		141-95-82120	HOOK	1	J10001-UP
2		01010-82055	BOLT	4	J10001-UP
3		01643-32060	WASHER	4	J10001-UP

Ref :M2811-01A0 Page :270130

UNDER CARRIAGE

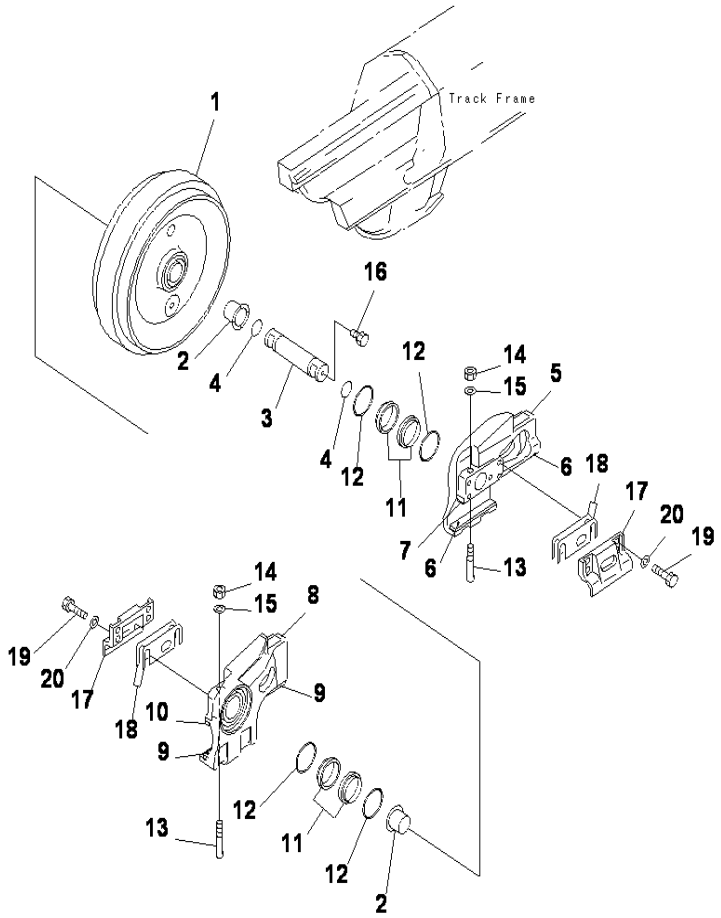

D85ESS-2 S/N J11888-UP

FRONT IDLER

INDEX	CD	PART NO.	DESCRIPTION	QTY	SERIAL NO.
		14X-30-00116	IDLER ASSY	2	J12458-UP
		14X-30-00115	IDLER ASSY	2	J11639-J12457
		14X-30-00113	IDLER ASSY	2	J10775-J11638
		14X-30-00112	IDLER ASS'Y	2	J10241-J10774
		14X-30-00160	IDLER ASS'Y	2	J10124-J10240
		14X-30-00111	IDLER ASS'Y	2	J10001-J10123
1		14X-30-12115	.IDLER	1	J12458-UP
		14X-30-12114	.IDLER	1	J11639-J12457
		14X-30-12113	.IDLER	1	J10124-J11638
		14X-30-12112	.IDLER	1	J10001-J10123
2		14X-30-12181	.BUSHING	2	J11639-UP
		14X-30-12180	.BUSHING	4	J10001-J11638
3		14X-30-12164	.SHAFT	1	J11639-UP
		14X-30-12163	.SHAFT	1	J10241-J11638
		14X-30-12162	.SHAFT	1	J10001-J10240
4		427-15-15910	.O-RING	2	J10001-UP
5		14X-30-12128	.SUPPORT, L.H	1	J12458-UP
		14X-30-12127	.SUPPORT L.H	1	J10775-J12457
		14X-30-12126	.SUPPORT, L.H	1	J10241-J10774
		14X-30-12360	.SUPPORT, L.H	1	J10001-J10240
6		14X-30-12232	..PLATE (WELDED)	2	J10775-UP
		14X-30-12231	..PLATE (WELDED)	1	J10001-J10774
7		14X-30-12263	..PLATE (WELDED)	1	J10775-UP
		14X-30-12262	..PLATE (WELDED)	1	J10241-J10774
		14X-30-12261	..PLATE (WELDED)	1	J10001-J10240
8		14X-30-12148	.SUPPORT, R.H	1	J12458-UP
		14X-30-12147	.SUPPORT R.H	1	J10775-J12457
		14X-30-12146	.SUPPORT, R.H	1	J10241-J10774
		14X-30-12380	.SUPPORT, R.H	1	J10001-J10240
9		14X-30-12232	..PLATE (WELDED)	2	J10775-UP
		14X-30-12231	..PLATE (WELDED)	2	J10001-J10774
10		14X-30-12263	..PLATE (WELDED)	1	J10775-UP
		14X-30-12262	..PLATE (WELDED)	1	J10001-J10774
		205-30-00220	.SEAL RING ASSY	2	J10241-UP
		205-30-00052	.SEAL RING ASSY	2	J10001-J10240
11		205-30-66651	..SEAL ASSY	2	J10241-UP
		205-30-00150	..SEAL ASSY	1	J10001-J10240
12		205-30-66561	..O-RING ASS'Y	2	J10241-UP
		205-30-00061	..O-RING ASSY	1	J10001-J10240
13		130-30-13170	.BOLT	2	J10001-UP
14		01582-11613	.NUT	2	J10001-UP
15		01643-31645	.WASHER	2	J10001-UP
16		07052-31217	.PLUG	2	J10001-UP
17		14X-30-12224	.COVER	4	J10775-UP
		14X-30-12223	.COVER	4	J10001-J10774
18		14X-30-12252	.SHIM, 1.0MM	28	J10241-UP

Ref :R0110-01A0 Page :300010

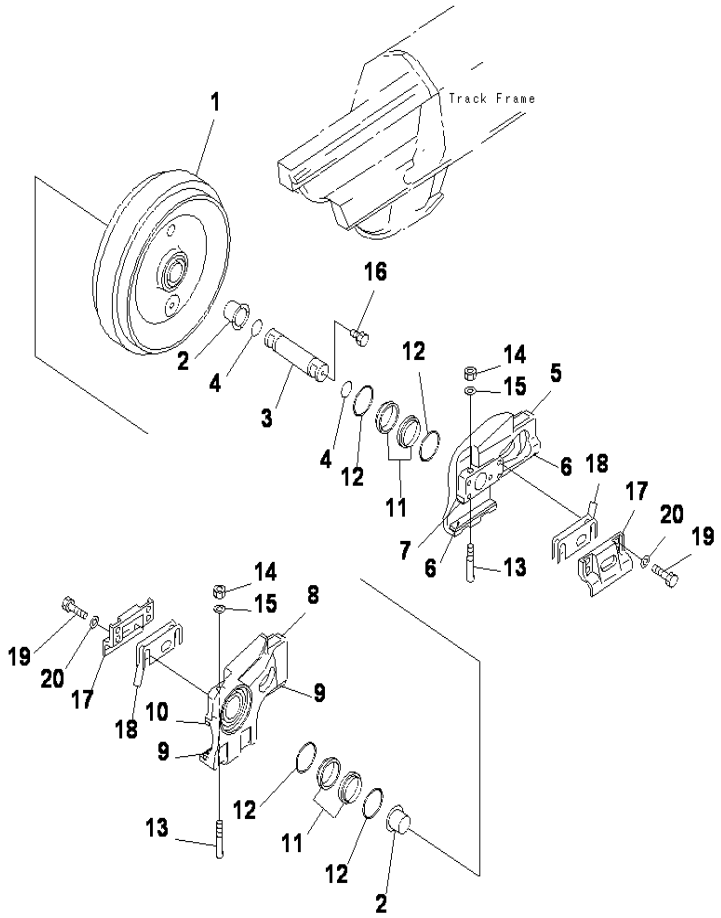

D85ESS-2 S/N J11888-UP

FRONT IDLER

INDEX	CD	PART NO.	DESCRIPTION	QTY	SERIAL NO.
19		01010-81645	BOLT	16	J10001-UP
20		01643-31645	WASHER	16	J10001-UP

Ref :R0110-01A0 Page :300011

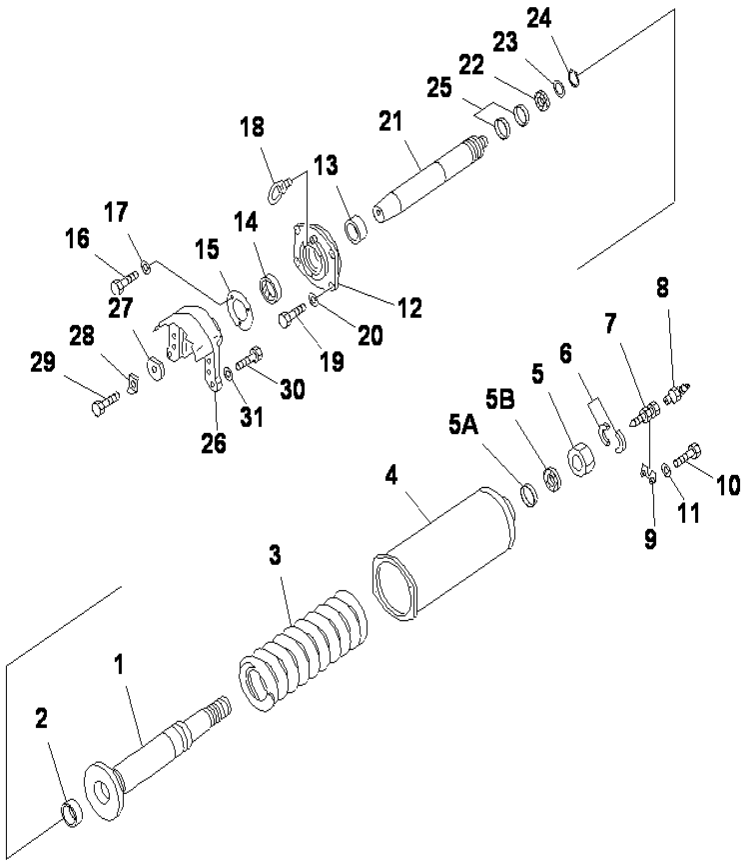

D85ESS-2 S/N J11888-UP

IDLER CUSHION

INDEX	CD	PART NO.	DESCRIPTION	QTY	SERIAL NO.
1		14X-30-13512	CYLINDER	2	J12982-UP
		14X-30-13511	CYLINDER	2	J12931-J12981
		14X-30-13510	CYLINDER	2	J11432-J12930
2		07177-09040	BUSHING	2	J11432-UP
3		14Z-30-31111	SPRING	2	J11432-UP
4		14X-30-13530	CABIN	2	J11432-UP
5		14X-30-13310	NUT	2	J11432-UP
5A		07177-08040	BUSHING	2	J11432-UP
5B		195-50-22860	SEAL	2	J11432-UP
6		14X-30-13241	SPACER	4	J11432-UP
7		203-30-42260	VALVE	2	J11432-UP
8		07020-00900	FITTING	2	J11432-UP
9		14X-30-33170	PLATE	2	J11432-UP
10		01010-80830	BOLT	4	J11432-UP
11		01643-30823	WASHER	4	J11432-UP
12		14X-30-13164	HOLDER	2	J11432-UP
13		07177-09040	BUSHING	2	J11432-UP
14		207-30-54160	SEAL	2	J11432-UP
15		135-30-14620	COVER	2	J11432-UP
16		01010-81020	BOLT	6	J11432-UP
17		01643-31032	WASHER	6	J11432-UP
18		04530-11018	BOLT	2	J11432-UP
19		01010-81235	BOLT	8	J11432-UP
20		01643-31232	WASHER	8	J11432-UP
21		14X-30-13143	PISTON	2	J11432-UP
22		150-30-13442	PACKIN	2	J11432-UP
23		150-30-13480	RING	2	J11432-UP
24		150-30-13460	RING SNAP	2	J11432-UP
25		150-30-13430	RING	4	J11432-UP
26		14X-30-13124	YOKE	2	J11432-UP
27		195-30-14151	WASHER	2	J11432-UP
28		195-30-14160	LOCK	2	J11432-UP
29		01010-82460	BOLT	2	J11432-UP
30		01010-82070	BOLT	12	J11432-UP
31		01643-32060	WASHER	12	J11432-UP

Ref :R0120-01A0 Page :300020

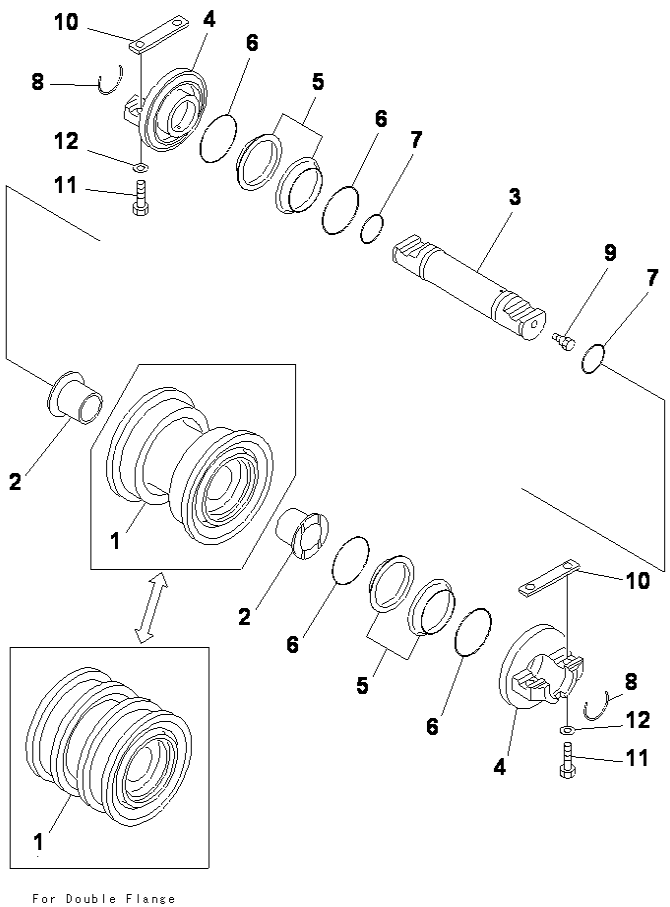

For Double Flange

D85ESS-2 S/N J11888-UP

TRACK ROLLER

INDEX	CD	PART NO.	DESCRIPTION	QTY	SERIAL NO.
		14X-30-00087	TRACK ROLLER ASS'Y, SINGLE FLANGE.....	12	J12518-UP
		14X-30-00086	TRACK ROLLER ASSY, SINGLE FLANGE.....	12	J11387-J12517
		14X-30-00084	TRACK ROLLER ASSY, SINGLE FLANGE.....	12	J11264-J11386
		14X-30-00083	TRACK ROLLER ASS'Y, SINGLE FLANGE.....	12	J10775-J11263
		14X-30-00082	TRACK ROLLER ASS'Y, SINGLE FLANGE.....	12	J10241-J10774
		14X-30-00081	TRACK ROLLER ASS'Y, SINGLE FLANGE.....	12	J10001-J10240
		14X-30-00096	TRACK ROLLER ASSY, DOUBLE FLANGE.....	4	J12518-UP
		14X-30-00095	TRACK ROLLER ASSY, DOUBLE FLANGE.....	4	J11387-J12517
		14X-30-00093	TRACK ROLLER ASS'Y, DOUBLE FLANGE.....	4	J11264-J11386
		14X-30-00092	TRACK ROLLER ASS'Y, DOUBLE FLANGE.....	4	J10775-J11263
		14X-30-00091	TRACK ROLLER ASS'Y, DOUBLE FLANGE.....	4	J10241-J10774
1		14X-30-14311	.ROLLER, SINGLE FLANGE.....	1	J10001-UP
		14X-30-14310	.ROLLER, SINGLE FLANGE.....	1	J11387-UP
		14X-30-14112	.ROLLER, SINGLE FLANGE.....	1	J10775-J11386
		14X-30-14111	.ROLLER, SINGLE FLANGE.....	1	J10001-J10774
		14X-30-14321	.ROLLER, DOUBLE FLANGE.....	1	J10001-UP
		14X-30-14320	.ROLLER, DOUBLE FLANGE.....	1	J11387-UP
		14X-30-14122	.ROLLER, DOUBLE FLANGE.....	1	J10775-J11386
		14X-30-14121	.ROLLER, DOUBLE FLANGE.....	1	J10001-J10774
2		14X-30-13340	.BUSHING.....	2	J11387-UP
		14X-30-12180	.BUSHING.....	2	J10001-J11386
3		14X-30-14152	.SHAFT.....	1	J11387-UP
		14X-30-14151	.SHAFT.....	1	J10001-J11386
4		14X-30-14331	.COLLAR.....	2	J10001-UP
		14X-30-14330	.COLLAR.....	2	J11387-UP
		14X-30-14133	.COLLAR.....	2	J10775-J11386
		14X-30-14132	.COLLAR.....	2	J10001-J10774
		205-30-00220	.FLOATING SEAL ASSY.....	2	J11264-UP
		205-30-00052	.FLOATING SEAL ASSY.....	2	J10001-J11263
5		205-30-66651	..SEAL RING ASSY.....	2	J11264-UP
		205-30-00150	..SEAL RING ASS'Y.....	1	J10001-J11263
6		205-30-66561	..O-RING.....	2	J10241-UP
		205-30-00061	..O-RING ASS'Y.....	1	J10001-J10240
7		427-15-15910	.O-RING.....	2	J10001-UP
8		14X-30-14161	.LOCK.....	2	J10001-UP
9		07052-31217	.PLUG.....	1	J10001-UP
10		14X-30-14170	.KEY.....	2	J10001-UP
11		01010-81865	BOLT.....	64	J10001-UP
12		01643-31845	WASHER.....	64	J10001-UP

Ref :R0200-01A0 Page :300030

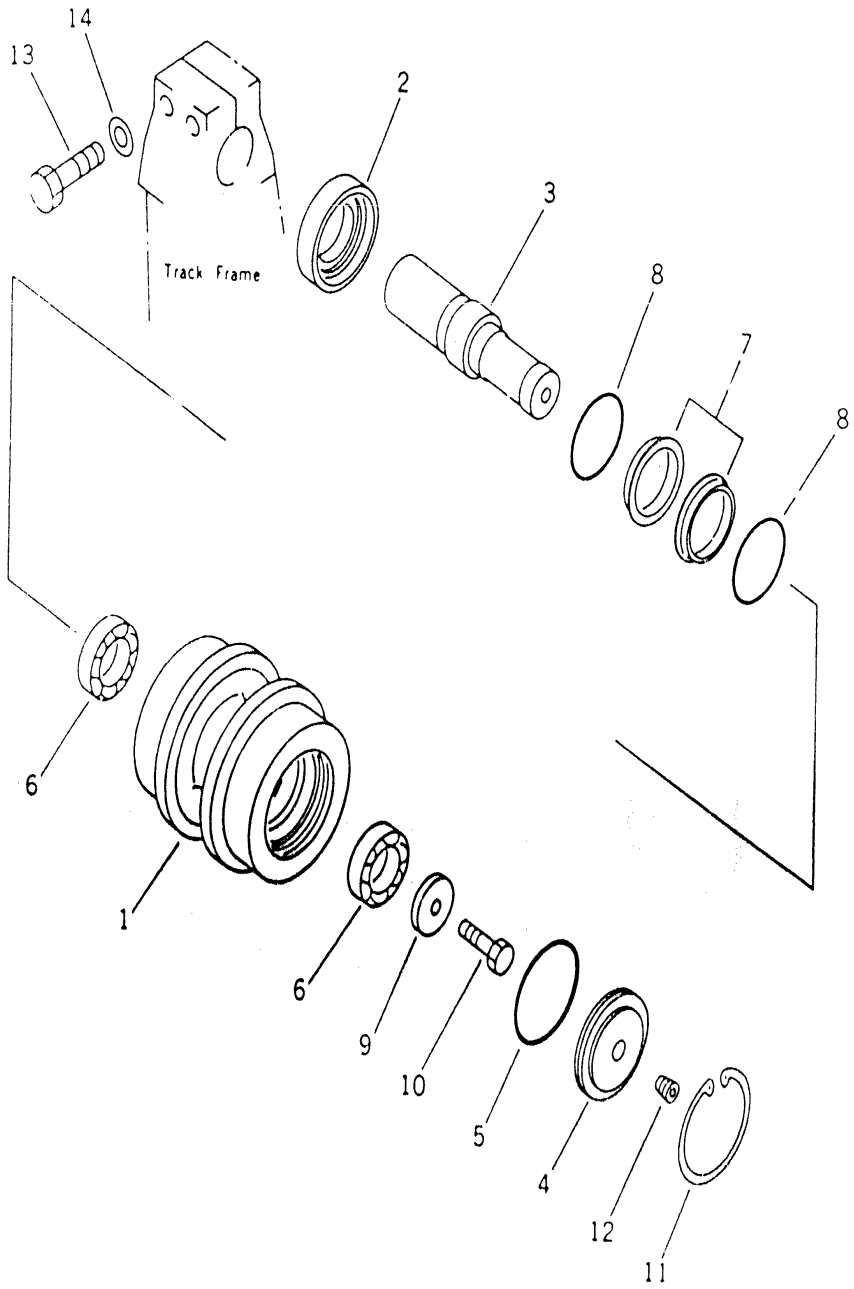

D85ESS-2 S/N J11888-UP

CARRIER ROLLER

INDEX	CD	PART NO.	DESCRIPTION	QTY	SERIAL NO.
		14X-30-00143	CARRIER ROLLER ASS'Y	4	J13256-UP
		14X-30-00142	CARRIER ROLLER ASS'Y	4	J10775-J13255
		14X-30-00141	CARRIER ROLLER ASS'Y	4	J10241-J10774
		14X-30-00140	CARRIER ROLLER ASS'Y	4	J10001-J10240
1		14X-30-15212	.ROLLER	1	J10775-UP
		14X-30-15211	.ROLLER	1	J10001-J10774
		14X-30-00171	.SHAFT	1	J10241-UP
		14X-30-00170	.SHAFT ASS'Y	1	J10001-J10240
2		14X-30-15140	..RING	1	J10241-UP
		14X-30-15121	..RING	1	J10001-J10240
3		14X-30-15222	..SHAFT	1	J13256-UP
		14X-30-15221	..SHAFT	1	J10001-J13255
4		14X-30-15131	.COVER	1	J10001-UP
5		07000-12105	.O-RING	1	J10001-UP
6		14X-30-15240	.BEARING	2	J10001-UP
		141-30-00616	.SEAL RING ASS'Y	1	J10001-UP
7		141-30-00623	..SEAL ASS'Y	1	J10001-UP
8		141-30-00630	..O-RING ASS'Y	1	J10001-UP
9		14X-30-15251	.HOLDER	1	J10001-UP
10		01010-81630	.BOLT	1	J11097-UP
		01010-81630	.BOLT	4	J10001-J11096
11		04065-01154	.RING	1	J10001-UP
12		20Y-30-16330	.PLUG	1	J12064-UP
		299-10-14160	.PLUG	1	J10001-J12063
13		01010-82085	BOLT	8	J10001-UP
14		01643-32060	WASHER	8	J10001-UP

Ref :R0300-01A0 Page :300040

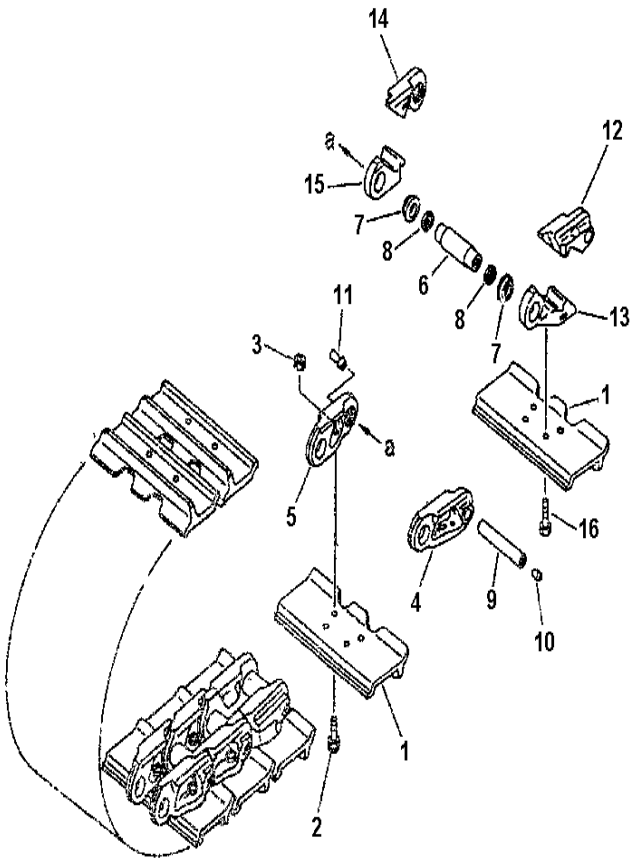

D85ESS-2 S/N J11888-UP

TRACK SHOE (MASTER PIN TYPE)(SINGLE GROUSER)

INDEX	CD	PART NO.	DESCRIPTION	QTY	SERIAL NO.
		14U-32-01251	TRACK SHOE ASS'Y.....	1	J11715-UP
		14U-32-01250	TRACK SHOE ASS'Y.....	1	J11264-J11714
		14U-32-01200	TRACK SHOE ASS'Y.....	1	J10001-J11263
1		14X-32-11370	.SHOE, TRACK.....	82	J10001-UP
2		14X-32-11210	.BOLT, SHOE (KIT).....	328	J11264-UP
		14X-32-11210	.BOLT, SHOE (KIT).....	320	J10001-J11263
3		14X-32-11220	.NUT, SHOE (KIT).....	328	J11264-UP
		14X-32-11220	.NUT, SHOE (KIT).....	320	J10001-J11263
		14U-32-00021	.TRACK LINK ASS'Y.....	1	J11715-UP
		14U-32-00020	.TRACK LINK ASS'Y.....	1	J11264-J11714
		14U-32-00010	.TRACK LINK ASS'Y.....	1	J10001-J11263
4		14X-32-11120	..LINK, TRACK, L.H.....	82	J11264-UP
		14X-32-11120	..LINK, TRACK, L.H.....	80	J10001-J11263
5		14X-32-11130	..LINK, TRACK, R.H.....	82	J11264-UP
		14X-32-11130	..LINK, TRACK, R.H.....	80	J10001-J11263
6		14X-32-11140	..BUSHING.....	84	J10001-UP
7		14X-32-12200	..SEAL ASSY.....	84	J11715-UP
		14X-32-11200	..SEAL ASS'Y.....	168	J10001-J11714
8		144-32-21191	..SPACER.....	168	J10001-UP
9		144-32-21151	..PIN.....	84	J10001-UP
10		07059-11830	..PLUG, LARGE.....	84	J10001-UP
11		07059-20721	..PLUG, SMALL.....	84	J10001-UP
12		14X-32-11320	..LINK, MASTER, L.H, PIN SIDE.....	2	J11264-UP
		14X-32-11320	..LINK, MASTER, L.H, PIN SIDE.....	4	J10001-J11263
13		14X-32-11330	..LINK, MASTER, L.H, BUSHING SIDE.....	2	J11264-UP
		14X-32-11330	..LINK, MASTER, L.H, BUSHING SIDE.....	4	J10001-J11263
14		14X-32-11420	..LINK, MASTER, R.H, PIN SIDE.....	2	J11264-UP
		14X-32-11420	..LINK, MASTER, R.H, PIN SIDE.....	4	J10001-J11263
15		14X-32-11430	..LINK, MASTER, R.H, BUSHING SIDE.....	2	J11264-UP
		14X-32-11430	..LINK, MASTER, R.H, BUSHING SID.....	4	J10001-J11263
16		14X-32-11350	..BOLT, MASTER.....	8	J11264-UP
		14X-32-11350	..BOLT, MASTER.....	16	J10001-J11263
		510MM WIDE	.....		
		14U-32-J1110	TRACK SHOE ASS'Y.....	1	J11715-UP
		14U-32-01220	TRACK SHOE ASS'Y.....	1	J10001-J11714
1		14X-32-11110	.SHOE,TRACK.....	82	J11715-UP
2		14X-32-11210	BOLT, SHOE (KIT).....	328	J11715-UP
3		14X-32-11220	NUT.....	328	J11715-UP
		14U-32-J1130	.TRACK LINK ASS'Y.....	2	J11715-UP
		SERVICE KIT	.....		
		14X-32-05000	SHOE BOLT AND NUT (KIT).....	1	J10001-UP
2		14X-32-11210	.BOLT, SHOE.....	30	J10001-UP
3		14X-32-11220	.NUT, SHOE.....	30	J10001-UP

Ref :R0500-01A5 Page :300050

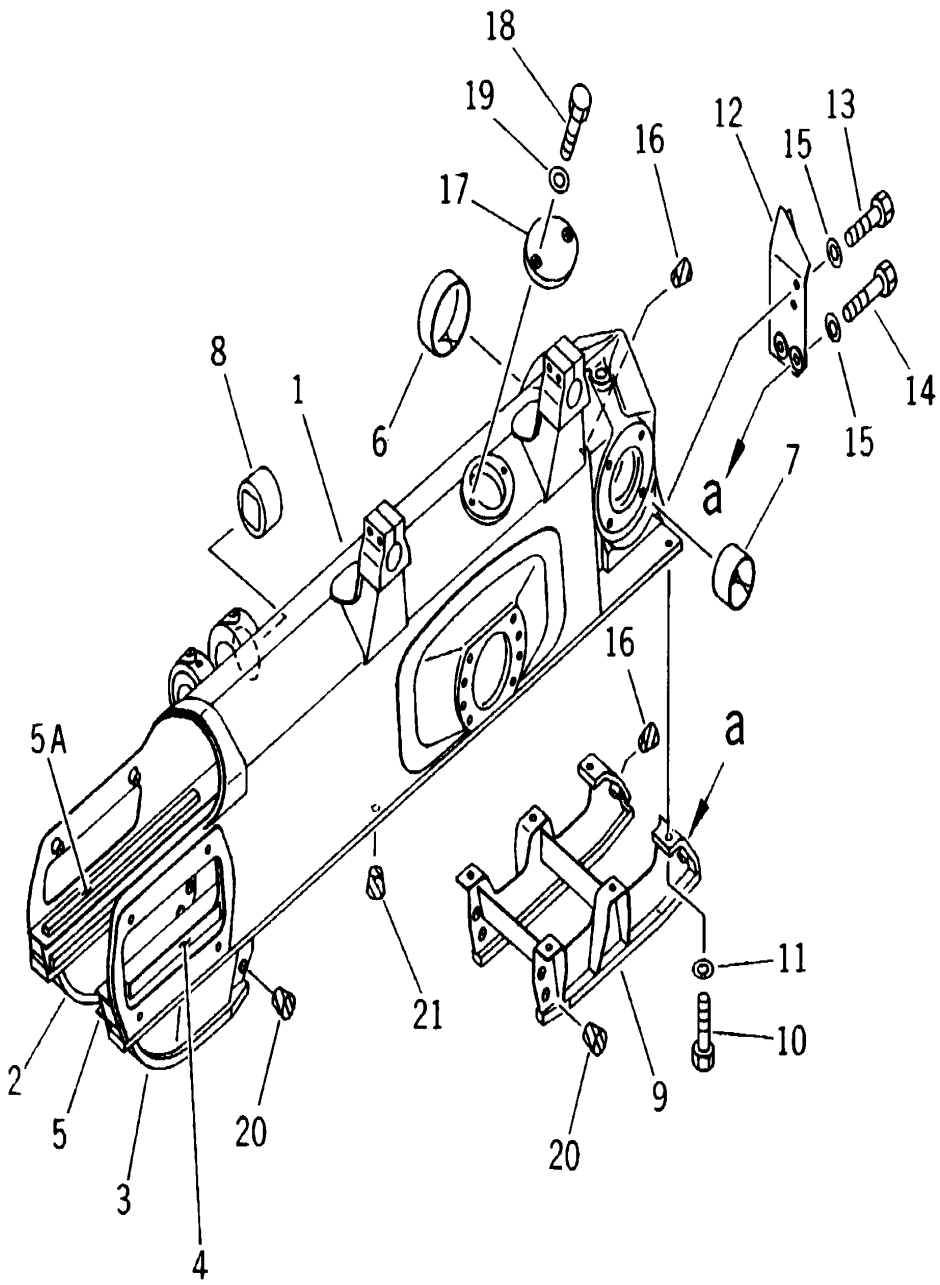

TRACK FRAME

INDEX	CD	PART NO.	DESCRIPTION	QTY	SERIAL NO.
		14U-30-21112	.FRAME LH	1	J12931-UP
		14U-30-21111	TRACK FRAME ASS'Y, L.H	1	J12443-J12930
		14U-30-J1130	TRACK FRAME ASS'Y, L.H	1	J11626-J12442
		14U-30-00013	TRACK FRAME ASS'Y, L.H	1	J10775-J11625
		14U-30-00012	TRACK FRAME ASS'Y, L.H	1	J10241-J10774
		14U-30-00011	TRACK FRAME ASS'Y, L.H	1	J10001-J10240
		14U-30-21122	FRAME RH	1	J12931-UP
		14U-30-21121	TRACK FRAME ASS'Y, R.H	1	J12443-J12930
		14U-30-J1140	TRACK FRAME ASS'Y, R.H	1	J11626-J12442
		14U-30-00023	TRACK FRAME ASS'Y, R.H	1	J10775-J11625
		14U-30-00022	TRACK FRAME ASS'Y, R.H	1	J10241-J10774
		14U-30-00021	TRACK FRAME ASS'Y, R.H	1	J10001-J10240
1		14U-30-J1110	.FRAME L.H	1	J10775-UP
		14U-30-11113	.FRAME, L.H	1	J10241-J10774
		14U-30-11112	.FRAME, L.H	1	J10001-J10240
		14U-30-J1120	.FRAME R.H	1	J10775-UP
		14U-30-11123	.FRAME, R.H	1	J10241-J10774
		14U-30-11122	.FRAME, R.H	1	J10001-J10240
2		14X-30-11292	..GUARD, R.H (WELDED)	1	J10001-UP
		14X-30-11312	..GUARD, L.H (WELDED)	1	J10001-UP
3		14X-30-11312	..GUARD, L.H (WELDED)	1	J10001-UP
		14X-30-11292	..GUARD, R.H (WELDED)	1	J10001-UP
4		14X-30-11D51	..PLATE (WELDED)	1	J10241-UP
		14X-30-11D50	..PLATE (WELDED)	1	J10001-J10240
5		14X-30-11D61	..PLATE (WELDED)	1	J10241-UP
		14X-30-11D60	..PLATE (WELDED)	1	J10001-J10240
5A		14X-30-11D92	..PLATE (WELDED)	1	J10241-UP
		14X-30-11D90	..PLATE (WELDED)	1	J10001-J10240
6		14Y-30-18130	.BUSHING	1	J10001-UP
7		14Y-30-18140	.BUSHING	1	J10001-UP
8		14Y-50-11521	BUSHING	1	J10775-UP
		14Y-50-11450	.BUSHING	1	J10001-J10774
9		14Y-30-16133	GUARD	1	J10001-UP
10		01010-81845	BOLT	12	J10001-UP
11		01643-31845	WASHER	12	J10001-UP
12		14X-30-11352	BRACKET	1	J16678-UP
		14X-30-11362	BRACKET	1	J16678-UP
		14X-30-11362	BRACKET	2	J10265-J16677
		14X-30-11361	BRACKET, L.H	1	J10001-J10264
		14X-30-11362	BRACKET	1	J16678-UP
		14X-30-11352	BRACKET	1	J16678-UP
		14X-30-11352	BRACKET, R.H	2	J10265-J16677
		14X-30-11351	BRACKET, R.H	1	J10001-J10264
13		01010-81845	BOLT	8	J10265-UP
14		01010-81865	BOLT	8	J10265-UP
15		01643-31845	WASHER	16	J10265-UP

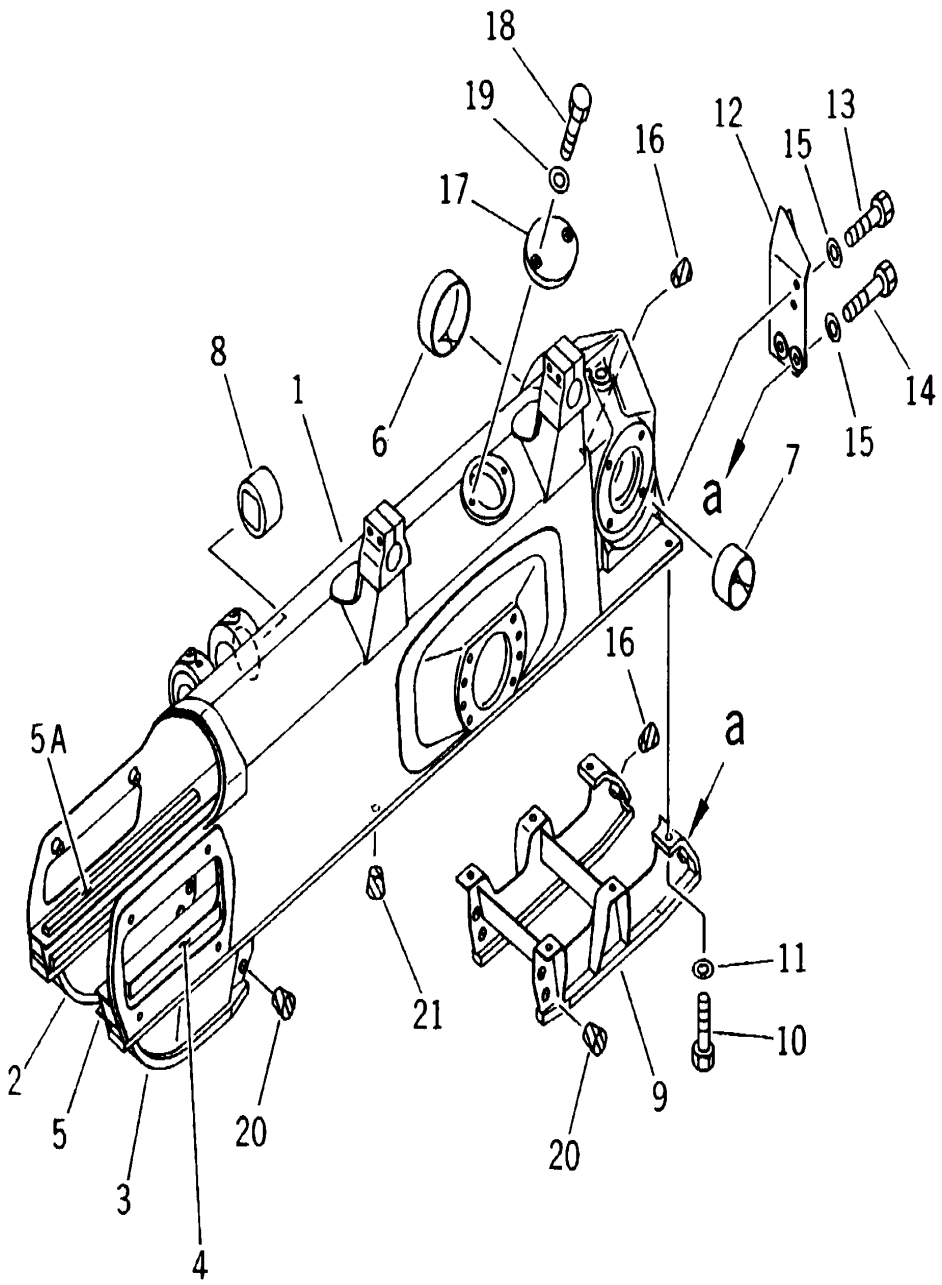

D85ESS-2 S/N J11888-UP

TRACK FRAME

INDEX	CD	PART NO.	DESCRIPTION	QTY	SERIAL NO.
16		07049-01822	PLUG	4	J11888-UP
17		14Y-30-11277	COVER	2	J11888-UP
18		01010-81225	BOLT	8	J10001-UP
19		01643-31232	WASHER	8	J10001-UP
20		07049-01215	PLUG	16	J10001-UP
21		07049-01822	PLUG	20	J10001-UP

Ref :R2100-01A0 Page :300061

WORK EQUIPMENT

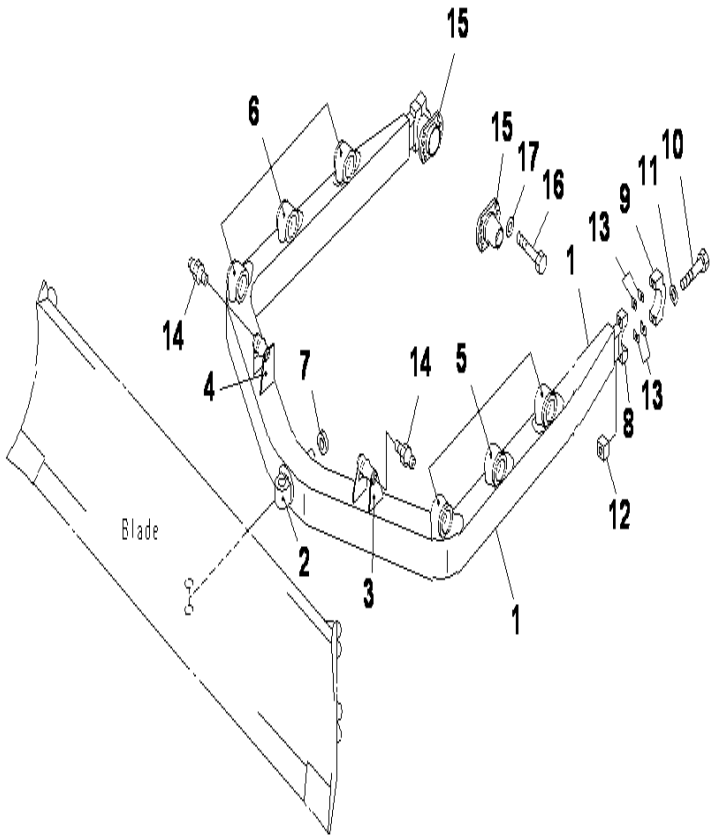

D85ESS-2 S/N J11888-UP

ANGLE FRAME

INDEX	CD	PART NO.	DESCRIPTION	QTY	SERIAL NO.
		14U-70-00011	C-FRAME ASS'Y	1	J10682-UP
		14U-70-00010	C-FRAME ASS'Y	1	J10001-J10681
1		14U-70-12511	.FRAME	1	J10682-UP
		14U-70-J1110	.FRAME	1	J10001-J10681
2		14U-70-12520	..PIN	1	J10682-UP
		14U-70-12120	..PIN	1	J10001-J10681
3		14U-70-12151	..BRACKET, L.H (WELDED)	1	J10682-UP
4		14U-70-12160	..BRACKET, R.H (WELDED)	1	J10001-UP
5		154-70-13134	..BRACKET, L.H (WELDED)	3	J10001-UP
6		154-70-13124	..BRACKET, R.H (WELDED)	3	J10001-UP
7		14U-70-12530	...COLLAR	1	J10682-UP
		140-70-13130	...COLLAR	1	J10001-J10681
8		14X-70-12130	..PIVOT, (WELDED) (KIT)	2	J10001-UP
9		14Y-71-22150	.CAP (KIT)	2	J11264-UP
		14Y-71-12150	.CAP (KIT)	2	J10001-J11263
10		01011-82465	.BOLT	4	J10001-UP
11		01643-32460	.WASHER	4	J10001-UP
12		130-70-13241	.NUT	4	J10001-UP
13		14Y-71-22280	.SHIM	20	J10001-UP
14		07020-00000	FITTING	2	J10001-UP
15		14Z-71-33212	TRUNNION	2	J11650-UP
		14Z-71-33211	TRUNNION	2	J11443-J11649
		14Y-71-13211	TRUNNION	2	J10001-J11442
16		01010-82065	BOLT	16	J10001-UP
17		01643-32060	WASHER	16	J10001-UP
			SERVICE KIT		J11888-UP
		14X-70-00071	PIVOT ASSY	2	J11264-UP
		14X-70-00070	PIVOT ASS'Y	2	J10001-J11263
8		14X-70-12130	.PIVOT	1	J10001-UP
9		14Y-71-22150	.CAP	1	J11264-UP
		14Y-71-12150	.CAP	1	J10001-J11263
10		01011-82465	.BOLT	2	J10001-UP
11		01643-32460	.WASHER	2	J10001-UP
12		130-70-13241	.NUT	2	J10001-UP
13		14Y-71-22280	.SHIM, T=1.0	20	J11888-UP

Ref :T2110-01A0 Page :330010

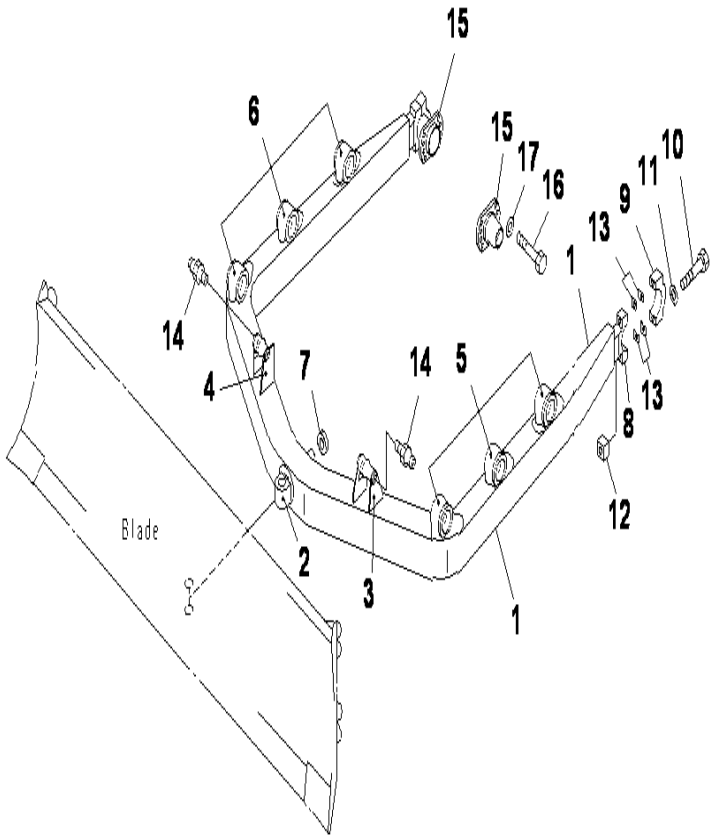

D85ESS-2 S/N J11888-UP

STRAIGHT FRAME

INDEX	CD	PART NO.	DESCRIPTION	QTY	SERIAL NO.
		14Y-71-01191	FRAME ASS'Y, L.H.....	1	J15678-UP
		14Y-71-01190	FRAME ASS'Y, L.H.....	1	J11924-J15677
		14Y-71-00191	FRAME ASS'Y, L.H.....	1	J10001-J11923
		14Y-71-01181	FRAME ASS'Y, R.H.....	1	J15678-UP
		14Y-71-01180	FRAME ASS'Y, R.H.....	1	J11924-J15677
		14Y-71-00181	FRAME ASS'Y, R.H.....	1	J10001-J11923
1	C1	14Y-71-33511	.FRAME, L.H.....	1	J15678-UP
	C1	14Y-71-33510	.FRAME, L.H.....	1	J11924-J15677
	C1		.FRAME, L.H.....	1	J10001-J11923
	C1	14Y-71-33522	.FRAME, R.H.....	1	J15678-UP
	C1	14Y-71-33521	.FRAME, R.H.....	1	J11924-J15677
	C1		.FRAME, R.H.....	1	J10001-J11923
2		14Y-71-12131	..JOINT (WELDED).....	1	J10001-UP
3	C1	14Y-71-13530	..BEARING, L.H (WELDED)(KIT).....	1	J10001-UP
	C1	14X-71-52140	..BEARING, R.H (WELDED)(KIT).....	1	J10001-UP
4		14Y-71-12170	..BRACKET (WELDED).....	1	J10001-UP
5		14Y-71-13181	..BRACKET (WELDED).....	1	J10001-UP
6		14Y-71-22151	CAP (KIT).....	1	J15678-UP
		14Y-71-22150	CAP (KIT).....	1	J10001-J15677
7		01011-82465	BOLT (KIT).....	4	J10001-UP
8		01643-32460	WASHER (KIT).....	4	J10001-UP
9		130-70-13241	NUT (KIT).....	4	J10001-UP
9A		14Y-71-22280	SHIM, T=1.0 (KIT).....	40	J10001-UP
10		14X-71-12230	BEARING.....	2	J10001-UP
11		14Z-71-33212	TRUNNION.....	2	J11939-UP
		14Z-71-33211	TRUNNION.....	2	J10001-J11938
12		01010-82065	BOLT.....	16	J10001-UP
13		01643-32060	WASHER.....	16	J10001-UP
14		14Y-71-33710	STEP.....	2	J10001-UP
15		01010-81240	BOLT.....	8	J10001-UP
16		01643-31232	WASHER.....	8	J10001-UP
		SERVICE KIT	.....		
		14Y-71-00082	PIVOT ASSY, L.H.....	2	J15678-UP
		14Y-71-00081	PIVOT ASSY, L.H.....	2	J10001-J15677
		14Y-71-00092	PIVOT ASS'Y, R.H.....	2	J15678-UP
		14Y-71-00091	PIVOT ASS'Y, R.H.....	2	J10001-J15677
3	C1		.BEARING, L.H.....	1	J10001-UP
	C1		.BEARING, R.H.....	1	J10001-UP
6		14Y-71-22150	.CAP.....	1	J10001-UP
7		01011-82465	.BOLT.....	2	J10001-UP
8		01643-32460	.WASHER.....	2	J10001-UP
9		130-70-13241	.NUT.....	2	J10001-UP
9A		14Y-71-22280	.SHIM, T=1.0.....	20	J10001-UP

Ref :T2110-01A1 Page :330015

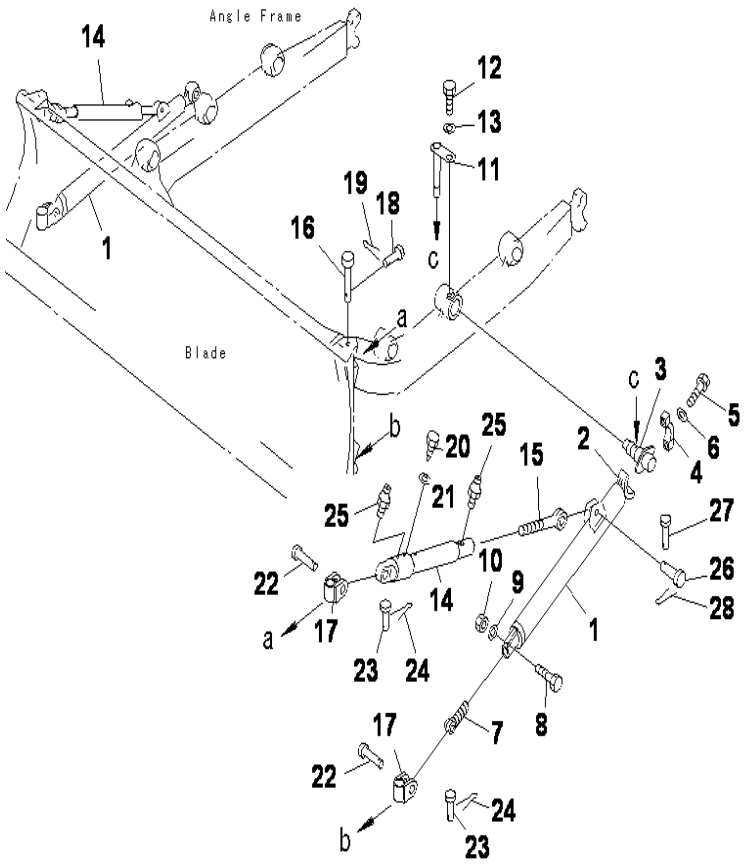

ARM AND BRACE (ANGLE DOZER)

INDEX	CD	PART NO.	DESCRIPTION	QTY	SERIAL NO.
1		14U-70-13111	ARM	2	J10001-UP
2		175-70-12150	.BRACKET	1	J10001-UP
3		154-70-12162	SHAFT	2	J10001-UP
4		175-70-12160	CAP	2	J10001-UP
5		01010-82095	BOLT	8	J10001-UP
6		01643-32060	WASHER	8	J10001-UP
7		15B-85-41421	SCREW	2	J10001-UP
8		01010-81880	BOLT	4	J10001-UP
9		01643-31845	WASHER	4	J10001-UP
10		01580-11815	NUT	4	J10001-UP
11		154-70-19181	PIN	2	J10001-UP
12		01010-81420	BOLT	6	J10001-UP
13		205-06-62271	WASHER	6	J10001-UP
14		15B-85-41450	BRACE	2	J10001-UP
15		15B-85-41460	SCREW	2	J10001-UP
16		144-85-46150	PIN	4	J10001-UP
17		14W-70-13110	JOINT	4	J10001-UP
18		170-70-12240	PIN	4	J10001-UP
19		04050-14025	PIN	4	J10001-UP
20		175-70-12221	SCREW	2	J10001-UP
21		01643-31445	WASHER	2	J10001-UP
22		144-85-41280	PIN	4	J10001-UP
23		144-85-41290	PIN	4	J10001-UP
24		04050-14025	PIN	4	J10001-UP
25		07020-00000	FITTING	4	J10001-UP
26		150-70-13411	PIN	2	J10001-UP
27		170-70-12240	PIN	2	J10001-UP
28		04050-14025	PIN	2	J10001-UP
			SERVICE KIT		
		150-70-00214	CAP ASS'Y	2	J10001-UP
2	C1		.BRACKET (WELDED)	1	J10001-UP
4		175-70-12160	.CAP	1	J10001-UP
5		01010-82095	.BOLT	4	J10001-UP
6		01643-32060	.WASHER	4	J10001-UP

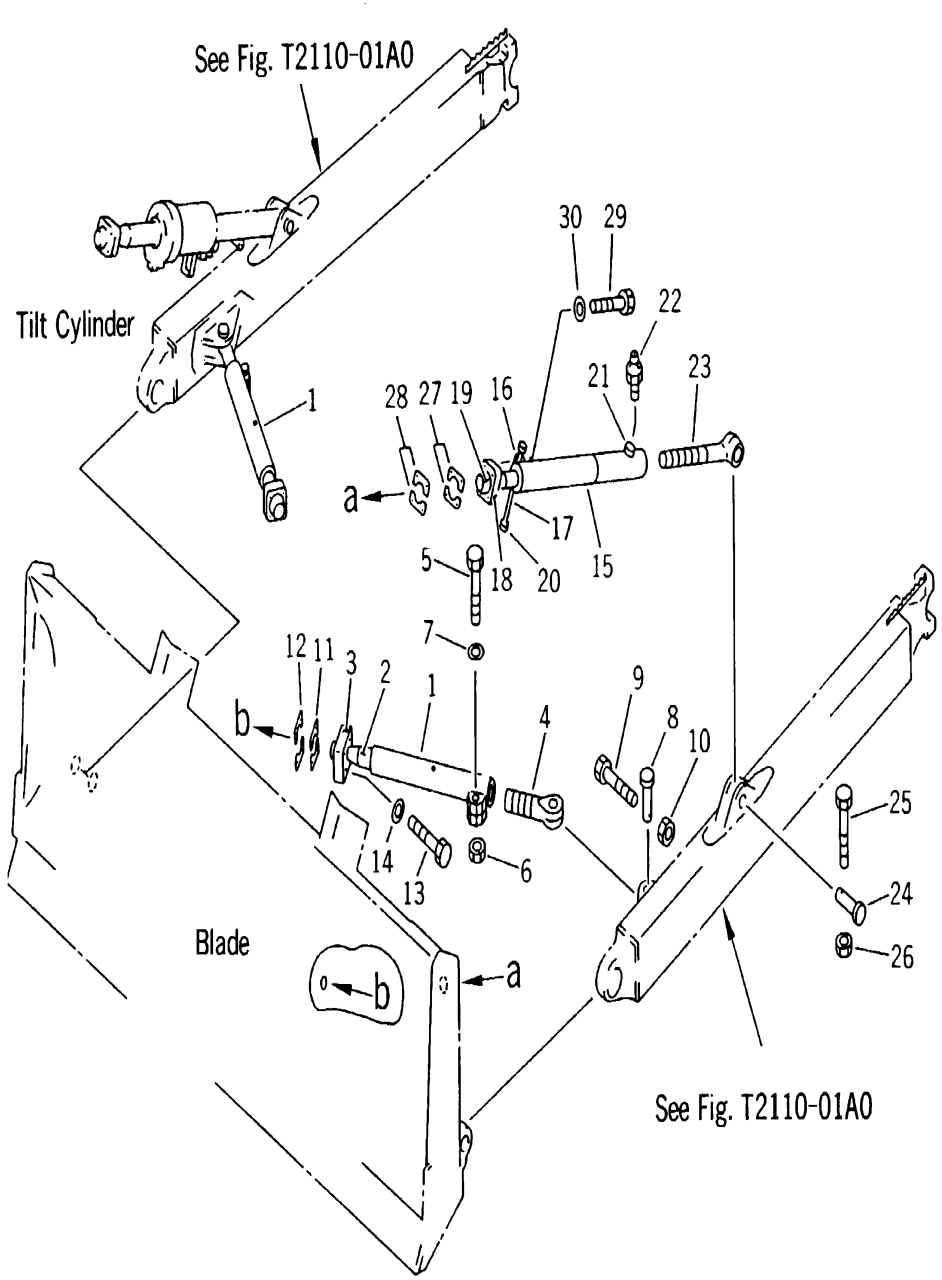

D85ESS-2 S/N J11888-UP

ARM AND BRACE (TILT DOZER)

INDEX	CD	PART NO.	DESCRIPTION	QTY	SERIAL NO.
		14Y-71-00151	CENTER BRACE ASS'Y	2	J10001-UP
1		14Y-71-13110	.BRACE	1	J10001-UP
2		14Y-71-13120	..SHAFT (WELDED)	1	J10001-UP
3		144-817-2420	..RETAINER	1	J10001-UP
4		144-81-72570	.JOINT	1	J10001-UP
5		01011-82025	.BOLT	1	J10001-UP
6		01580-12016	.NUT	1	J10001-UP
7		01643-32060	.WASHER	1	J10001-UP
8		13F-Z2-75610	PIN	2	J10001-UP
9		01010-81265	BOLT	2	J10001-UP
10		01598-01214	NUT	2	J10001-UP
		144-81-70670	SHIM KIT	2	J10001-UP
11		144-81-72381	.SHIM, 1.0MM	2	J10001-UP
12		144-81-72391	.SHIM, 0.5MM	2	J10001-UP
13		01010-82075	BOLT	8	J10001-UP
14		01643-32060	WASHER	8	J10001-UP
		14Y-71-00161	TILT BRACE ASSY	1	J10001-UP
15		14X-71-13111	.BRACE	1	J10001-UP
16		14X-71-11E20	..PLATE (WELDED)	1	J10001-UP
17		144-817-2280	..ROD	1	J10001-UP
18		144-817-2420	..RETAINER	1	J10001-UP
19		14Y-711-3120	..SHAFT (WELDED)	1	J10001-UP
20		19N-911-1250	..SPACER (WELDED)	1	J10001-UP
21		01099-03417	..PROTECTOR (WELDED)	1	J10001-UP
22		07020-00000	FITTING	1	J10001-UP
23		144-92-02122	JOINT	1	J10001-UP
24		13F-Z2-75610	PIN	2	J10001-UP
25		01010-81265	BOLT	2	J10001-UP
26		01598-01214	NUT	2	J10001-UP
		144-81-70670	SHIM KIT	2	J10001-UP
27		144-81-72381	.SHIM, 1.0MM	4	J10001-UP
28		144-81-72391	.SHIM, 0.5MM	8	J10001-UP
29		01010-82075	BOLT	8	J10001-UP
30		01643-32060	WASHER	8	J10001-UP

Ref :T2115-01A1 Page :330025

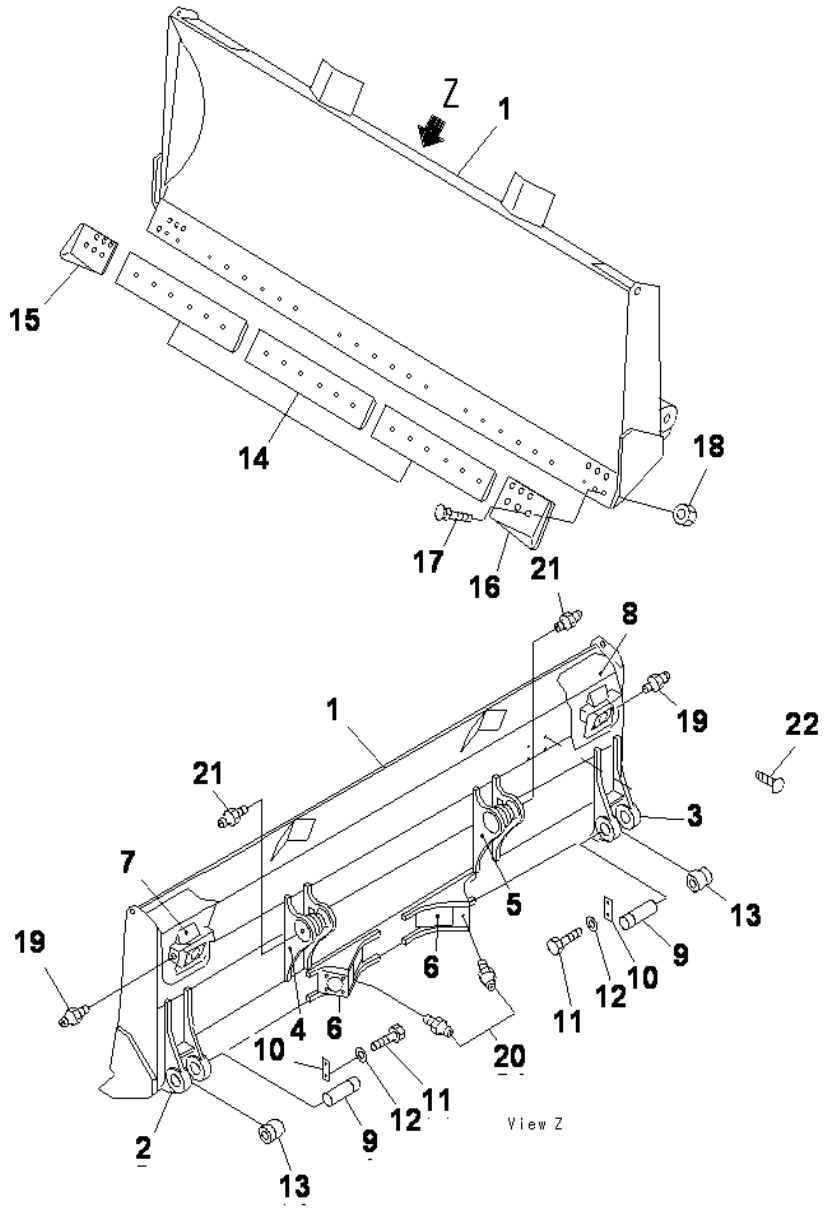

ANGLE BLADE

INDEX	CD	PART NO.	DESCRIPTION	QTY	SERIAL NO.
1		14U-70-11110	BLADE.....	1	J10001-UP
2		14U-70-11120	.BRACKET (WELDED).....	1	J10001-UP
3		14U-70-11130	.BRACKET, L.H (WELDED).....	1	J10001-UP
4		14U-70-11140	.BRACKET, R.H (WELDED).....	1	J10001-UP
5		154-70-11314	EDGE, CUTTING.....	3	J10001-UP
6		150-70-21356	BIT, L.H.....	1	J10001-UP
7		150-70-21346	BIT, R.H.....	1	J10001-UP
8		02090-11270	BOLT.....	36	J10001-UP
9		02290-11219	NUT.....	36	J10001-UP
10		144-70-11160	PIN.....	1	J10001-UP
11		04050-18080	PIN, COTTER.....	1	J10001-UP

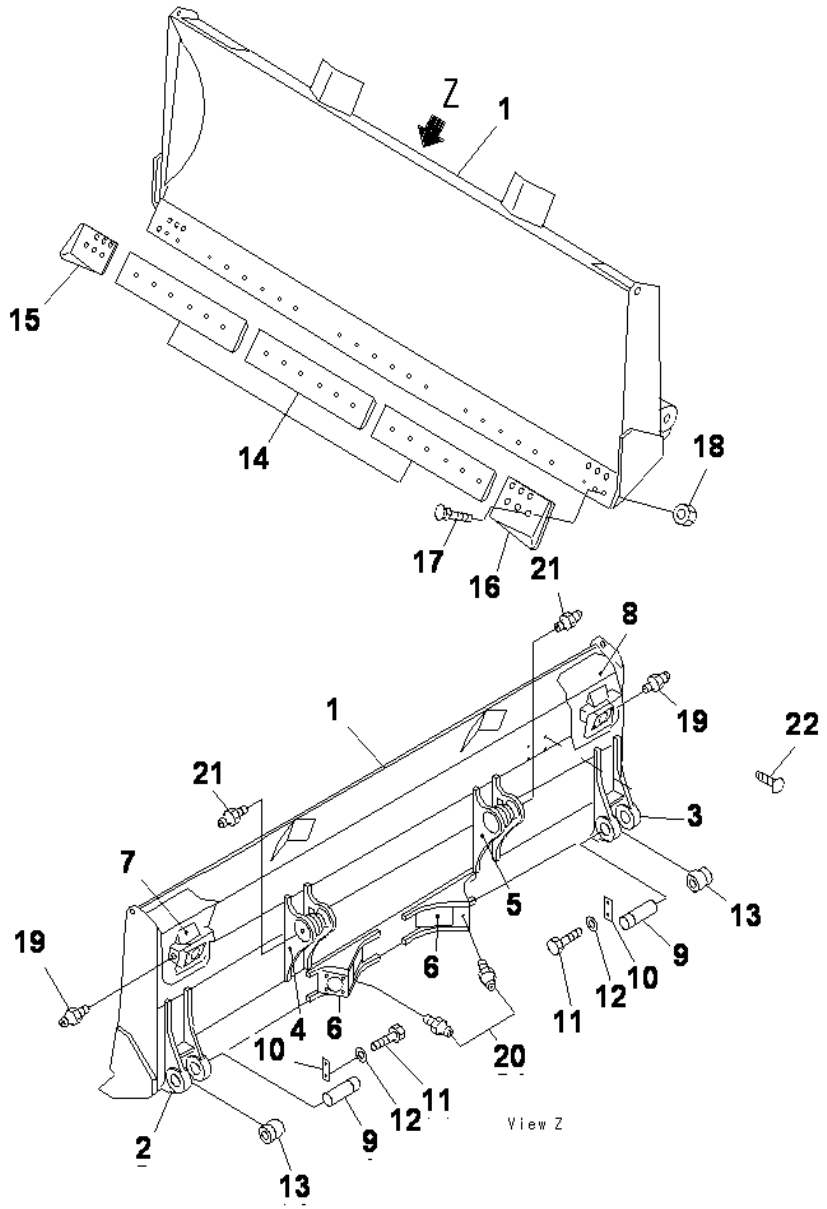

STRAIGHT BLADE

INDEX	CD	PART NO.	DESCRIPTION	QTY	SERIAL NO.
1		14U-71-11112	BLADE	1	J10001-UP
2		14Y-71-11123	.BRACKET, L.H (WELDED)	1	J10001-UP
3		14Y-71-11133	.BRACKET, R.H (WELDED)	1	J10001-UP
4		14Y-71-11141	.BRACKET, L.H (WELDED)	1	J10001-UP
5		14Y-71-11151	.BRACKET (WELDED)	2	J10001-UP
6		14X-71-11163	.BRACKET, L.H (WELDED)	1	J10001-UP
7		14X-71-11261	.BRACKET, R.H (WELDED)	1	J10001-UP
8		14Y-71-11190	.BRACKET, R.H (WELDED)	1	J10001-UP
9		144-81-71260	SHAFT	2	J10001-UP
10		144-92-01780	LOCK	2	J10001-UP
11		01010-81635	BOLT	4	J10001-UP
12		01643-31645	WASHER	4	J10001-UP
13		14X-71-12240	CAP	2	J10001-UP
14		154-72-11151	CUTTING EDGE	3	J10001-UP
15		150-70-21346	END BIT R.H	1	J10001-UP
16		150-70-21356	END BIT L.H	1	J10001-UP
17		02090-11270	BOLT	30	J10001-UP
18		02290-11219	NUT	30	J10001-UP
19		07020-00000	FITTING	2	J10001-UP
20		07020-00000	FITTING	2	J10001-UP
21		07020-00000	FITTING	2	J10001-UP
22		07049-01215	PLUG	4	J10001-UP

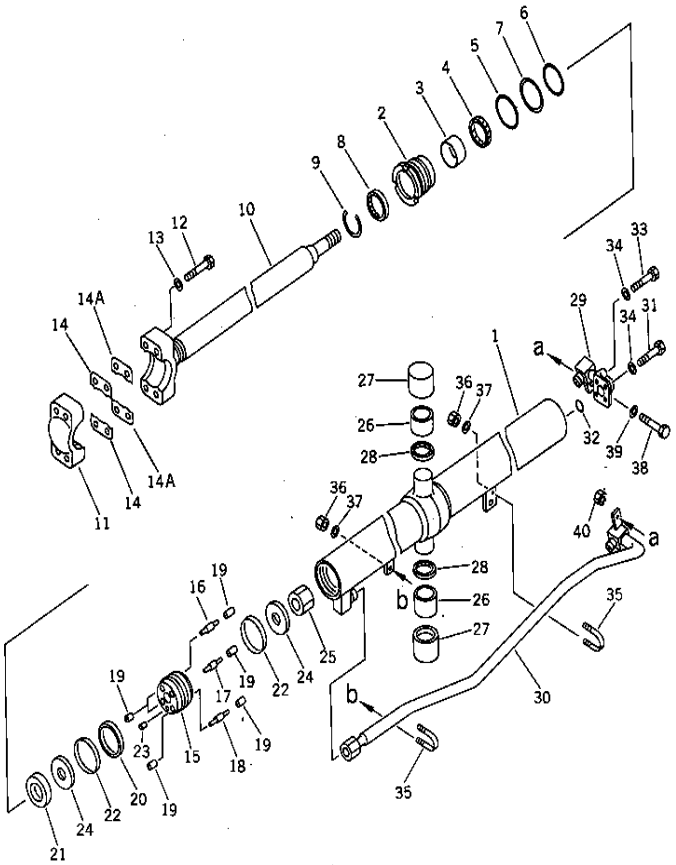

D85ESS-2 S/N J11888-UP

LIFT CYLINDER

INDEX	CD	PART NO.	DESCRIPTION	QTY	SERIAL NO.
G1		14Y-63-X1017	CYLINDER GROUP LH.....	1	J16678-UP
		(14Y-63-X1016)	CYLINDER GROUP, LIFT, L.H.....	1	J12930-J16677
		(14Y-63-X1114)	CYLINDER GROUP, LIFT, L.H.....	1	J10001-J12929
G1		14Y-63-X1027	CYLINDER GROUP, LIFT R.H.....	1	J16678-UP
		(14Y-63-X1026)	CYLINDER GROUP, LIFT, R.H.....	1	J12930-J16677
		(14Y-63-X1124)	CYLINDER GROUP, LIFT, R.H.....	1	J10001-J12929
		14Y-63-01016	CYLINDER ASS'Y.....	2	J12930-UP
		14Y-63-01013	CYLINDER ASS'Y.....	2	J10001-J12929
1		14Y-63-12143	.CYLINDER, L.H.....	1	J10001-UP
2		707-29-95240	.HEAD, CYLINDER.....	1	J12930-UP
		707-29-95730	.HEAD, CYLINDER.....	1	J10001-J12929
3		707-52-90401	.BUSHING.....	1	J12930-UP
		707-52-10660	.BUSHING.....	1	J10001-J12929
4		707-51-65030	.PACKING, ROD.....	1	J12930-UP
		707-51-65211	.PACKING, ROD.....	1	J10001-J12929
4A		707-51-65640	.PACKING, BUFFER.....	1	J12930-UP
5		07000-12095	.O-RING.....	1	J12930-UP
		07000-02095	.O-RING.....	1	J10001-J12929
6		07000-12090	.O-RING.....	1	J10001-UP
7		707-35-52780	.RING, BACK-UP.....	1	J10001-UP
8		707-56-65540	.SEAL, DUST.....	1	J12930-UP
		144-63-92170	.SEAL, DUST.....	1	J10001-J12929
9		07179-12079	.RING, SNAP.....	1	J10001-UP
10		14Y-63-12121	.ROD, PISTON.....	1	J10001-UP
11		707-66-70020	.CAP.....	1	J10001-UP
12		01011-81600	.BOLT.....	1	J12930-UP
		01011-51600	.BOLT.....	4	J10001-J12929
13		01643-51645	.WASHER.....	4	J10001-UP
14		707-88-11290	.SHIM, 1.0MM.....	6	J10001-UP
14A		707-88-11300	.SHIM, 0.5MM.....	6	J10001-UP
		14Y-63-12131	.PISTON SUB ASS'Y.....	1	J10001-UP
15		707-37-95010	..PISTON.....	1	J10001-UP
16	C1		..VALVE, PISTON.....	1	J10001-UP
17	C1		..VALVE, PISTON.....	1	J10001-UP
18	C1		..VALVE, PISTON.....	2	J10001-UP
19	C1		..SEAT, VALVE.....	8	J10001-UP
20		707-44-95180	.RING, PISTON.....	1	J10001-UP
21		707-69-95010	.SLINDER.....	1	J10001-UP
22		707-39-95120	.RING, WEAR.....	2	J10001-UP
23		130-63-12761	.PIN, DOWEL.....	2	J10001-UP
24		707-40-95010	.RETAINER.....	2	J10001-UP
25		707-67-33030	.NUT.....	1	J12930-UP
		707-68-10330	.NUT.....	1	J10001-J12929
26		144-60-15450	BUSHING.....	4	J10001-UP
27		144-60-15431	BUSHING.....	4	J10001-UP
28		07145-00055	SEAL, DUST.....	4	J10001-UP

Ref :T2140-01A0 Page :330040

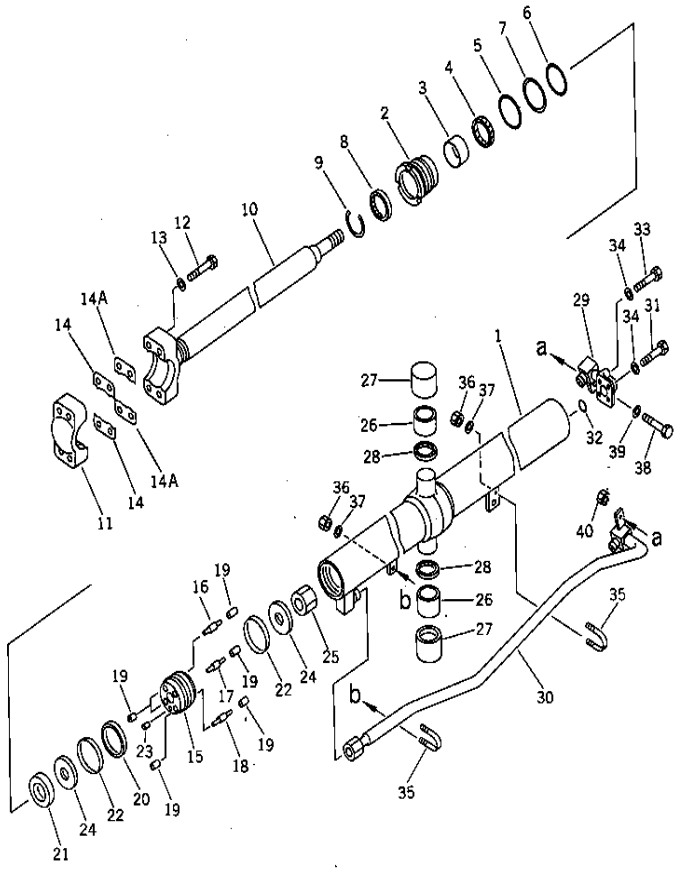

D85ESS-2 S/N J11888-UP

LIFT CYLINDER

INDEX	CD	PART NO.	DESCRIPTION	QTY	SERIAL NO.
29		707-86-67140	TUBE, L.H.	1	J12930-UP
		14Y-63-12181	TUBE, L.H.	1	J10001-J12929
		707-86-67150	TUBE, R.H.	1	J12930-UP
		14Y-63-12281	TUBE, R.H.	1	J10001-J12929
30		14Y-63-12174	TUBE, L.H.	1	J12930-UP
		14Y-63-12172	TUBE, L.H.	1	J10001-J12929
		14Y-63-12274	TUBE, R.H.	1	J12930-UP
		14Y-63-12270	TUBE, R.H.	1	J10001-J12929
31		07372-21040	BOLT	4	J10001-UP
32		07000-13030	O-RING	2	J10001-UP
33		07372-21050	BOLT	4	J10001-UP
34		01643-51032	WASHER	8	J10001-UP
35		07283-32738	CLIP	4	J12930-UP
		07283-22738	CLIP	4	J10001-J12929
36		01597-01009	NUT	8	J12930-UP
		01599-01011	NUT	8	J10001-J12929
37		01643-31032	WASHER	8	J10001-UP
38		01010-81040	BOLT	2	J12930-UP
		01010-81020	BOLT	2	J10001-J12929
39		01643-31032	WASHER	2	J10001-UP
40		707-88-03150	SPACER	1	J12930-UP
		707-99-25890	SERVICE	2	J12930-UP
		707-98-28600	SERVICE	2	J10001-J12929

Ref :T2140-01A0 Page :330041

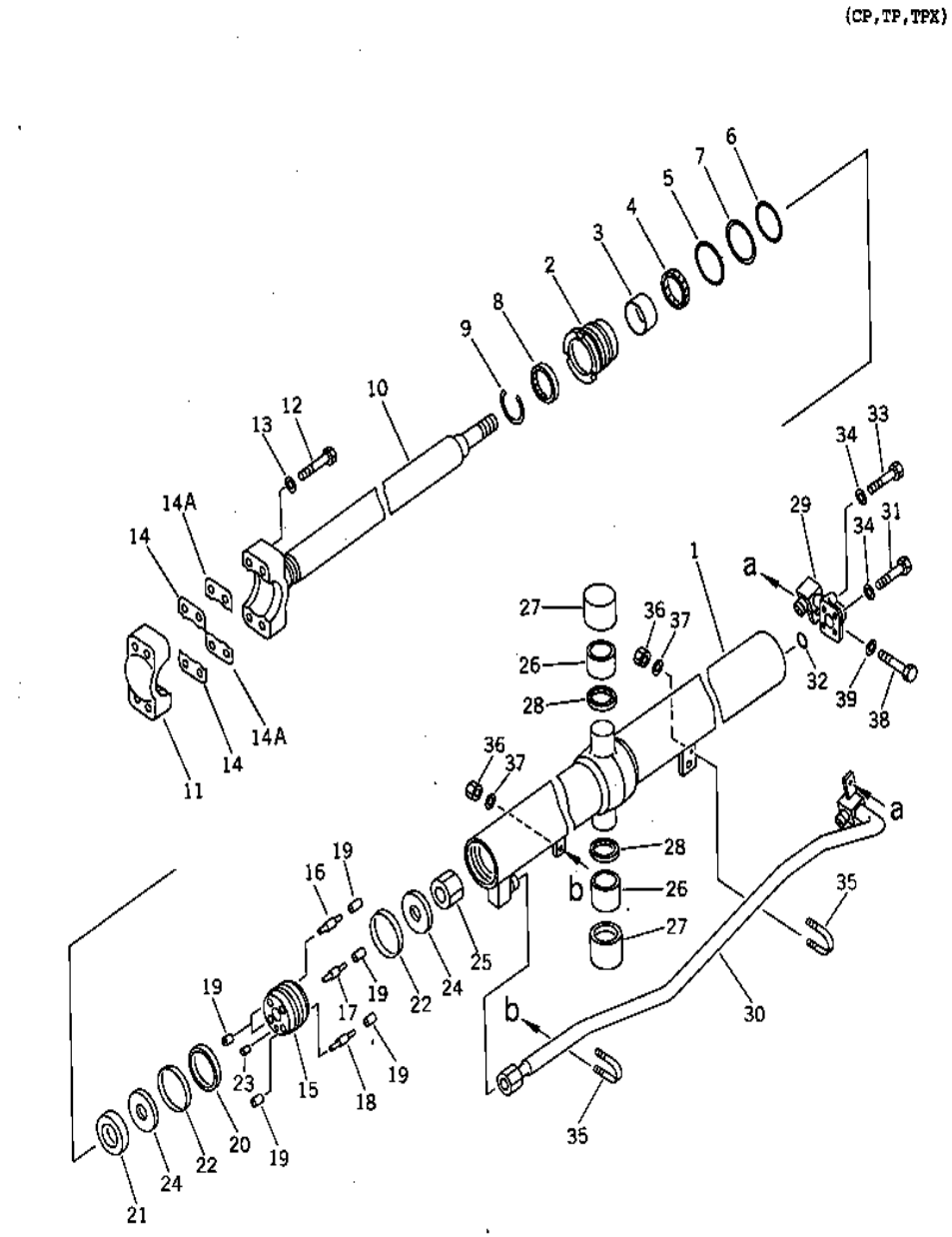

D85ESS-2 S/N J11888-UP

LIFT CYLINDER FOR LOGGING

INDEX	CD	PART NO.	DESCRIPTION	QTY	SERIAL NO.
	G1	707-00-95200	CYLINDER GROUP, LIFT, L.H.....	1	J10001-UP
	G1	707-00-95210	CYLINDER GROUP, LIFT, R.H.....	1	J10001-UP
			==========.....		
		14Y-63-01013	CYLINDER ASS'Y.....	2	J10001-UP
1		14Y-63-12143	.CYLINDER, L.H.....	1	J10001-UP
2		707-29-95730	.HEAD, CYLINDER.....	1	J10001-UP
3		707-52-10660	.BUSHING.....	1	J10001-UP
4		707-51-65211	.PACKING, ROD (K8).....	1	J10001-UP
5		07000-02095	.O-RING (K8).....	1	J10001-UP
6		07000-12090	.O-RING (K8).....	1	J10001-UP
7		707-35-52780	.RING, BACK-UP (K8).....	1	J10001-UP
8		144-63-92170	.SEAL, DUST (K8).....	1	J10001-UP
9		07179-12079	.RING, SNAP.....	1	J10001-UP
10		14Y-63-12121	.ROD, PISTON.....	1	J10001-UP
11		707-66-70020	.CAP.....	1	J10001-UP
12		01011-51600	.BOLT.....	4	J10001-UP
13		01643-51645	.WASHER.....	4	J10001-UP
14		707-88-11290	.SHIM, 1.0MM.....	6	J10001-UP
14A		707-88-11300	.SHIM, 0.5MM.....	6	J10001-UP
		14Y-63-12131	.PISTON SUB ASS'Y.....	1	J10001-UP
15		707-37-95010	..PISTON.....	1	J10001-UP
16	C1		..VALVE, PISTON.....	1	J10001-UP
17	C1		..VALVE, PISTON.....	1	J10001-UP
18	C1		..VALVE, PISTON.....	2	J10001-UP
19	C1		..SEAT, VALVE.....	8	J10001-UP
20		707-44-95180	.RING, PISTON (K8).....	1	J10001-UP
21		707-69-95010	.SLINDER.....	1	J10001-UP
22		707-39-95120	.RING, WEAR (K8).....	2	J10001-UP
23		130-63-12761	.PIN, DOWEL.....	2	J10001-UP
24		707-40-95010	.RETAINER.....	2	J10001-UP
25		707-68-10330	.NUT.....	1	J10001-UP
26		144-60-10330	BUSHING.....	4	J10001-UP
27		144-60-15431	BUSHING.....	4	J10001-UP
28		07145-00055	SEAL, DUST (K8).....	4	J10001-UP
29		14Y-63-12181	TUBE, L.H.....	1	J10001-UP
		14Y-63-12281	TUBE, R.H.....	1	J10001-UP
30		14Y-63-12172	TUBE, L.H.....	1	J10001-UP
		14Y-63-12270	TUBE, R.H.....	1	J10001-UP
31		07372-21040	BOLT.....	4	J10001-UP
32		07000-13030	O-RING (K8).....	2	J10001-UP
33		07372-21050	BOLT.....	4	J10001-UP
34		01643-51032	WASHER.....	8	J10001-UP
35		07283-22738	CLIP.....	4	J10001-UP
36		01599-01011	NUT.....	8	J10001-UP

Ref :T2140-01A1 Page :330050

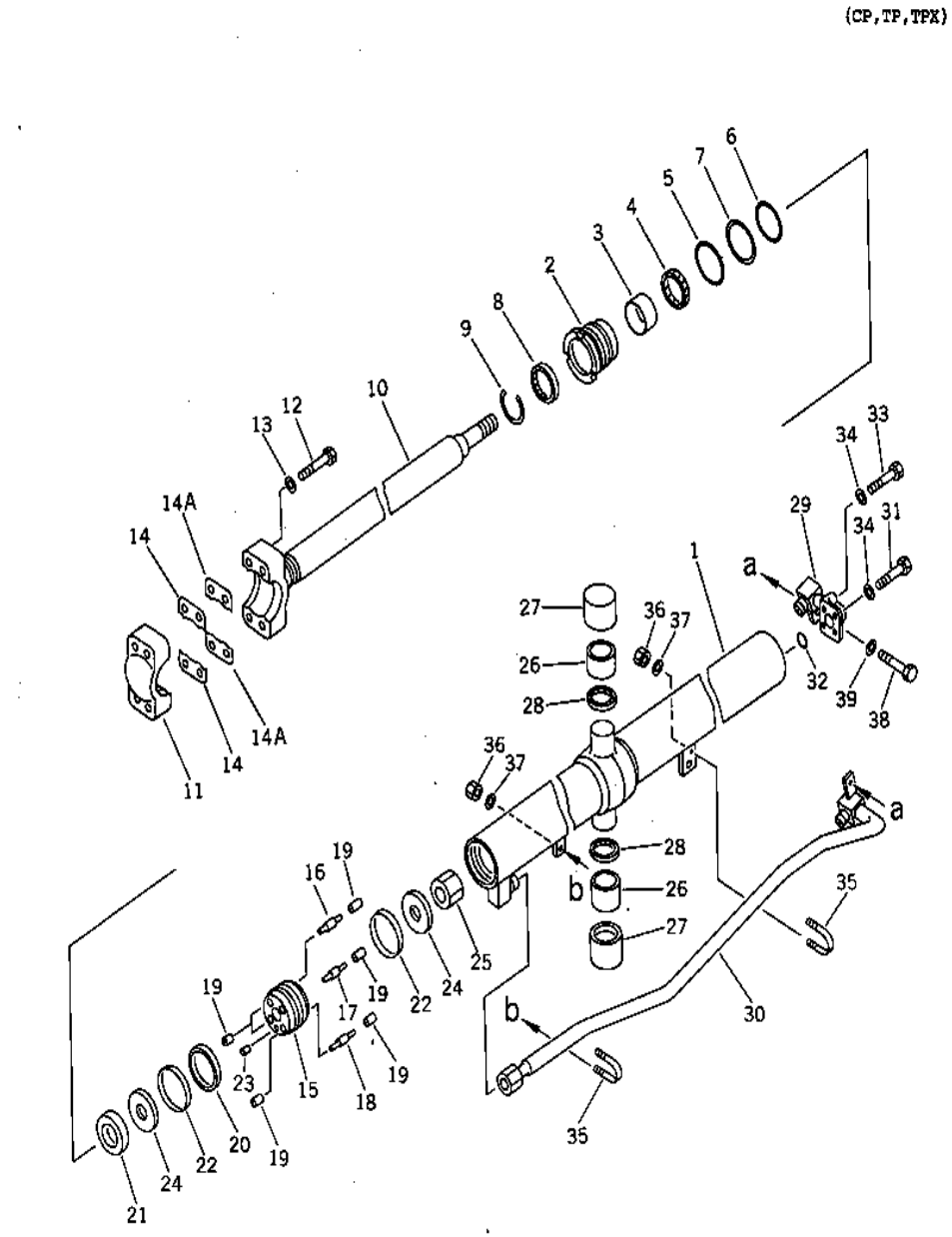

D85ESS-2 S/N J11888-UP

LIFT CYLINDER FOR LOGGING

INDEX	CD	PART NO.	DESCRIPTION	QTY	SERIAL NO.
37		01643-31032	WASHER	8	J10001-UP
38		01010-81020	BOLT	2	J10001-UP
39		01643-31032	WASHER	2	J10001-UP
			==========		
		7079828600	SERVICE	2	J10001-UP

Ref :T2140-01A1 Page :330051

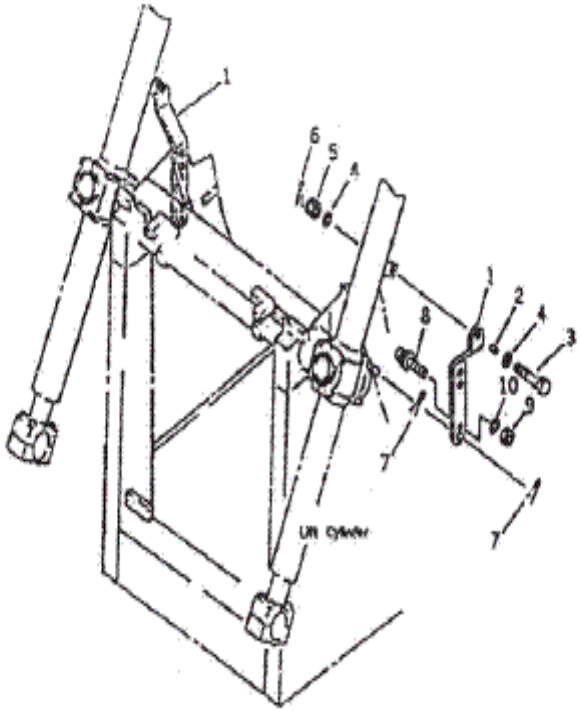

D85ESS-2 S/N J11888-UP

LIFT CYLINDER (CYLINDER FIXING PARTS)

INDEX	CD	PART NO.	DESCRIPTION	QTY	SERIAL NO.
1		14X-54-12950	PLATE	2	J10001-J16613
2		423-82-51720	SPACER	2	J10001-J16613
3		01012-81250	BOLT	2	J10001-J16613
4		01643-31232	WASHER	4	J10001-J16613
5		01590-31215	NUT	2	J10001-J16613
6		04050-13022	PIN	2	J10001-J16613
7		04050-18080	PIN	4	J10001-J16613
8		09311-41237	BUMPER	2	J10001-J16613
9		01580-11210	NUT	2	J10001-J16613
10		01643-31232	WASHER	2	J10001-J16613

Ref :T2140-02A0 Page :330052

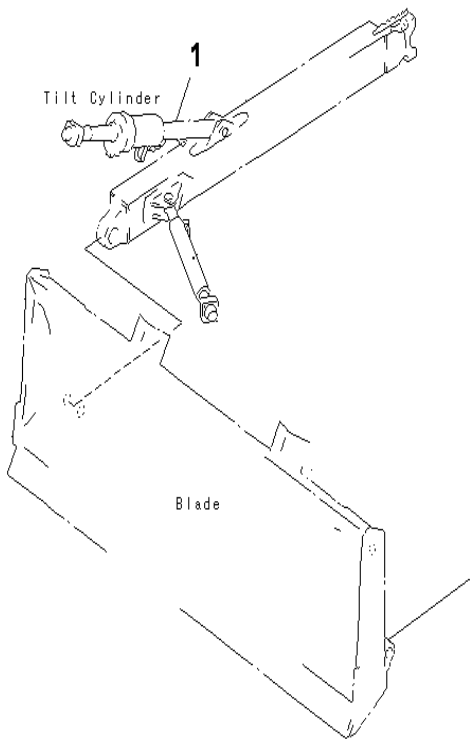

D85ESS-2 S/N J11888-UP

TILT OR PITCH CYLINDER

INDEX	CD	PART NO.	DESCRIPTION	QTY	SERIAL NO.
1		707-01-0C301	TILT CYLINDER.....	1	J10001-UP

Ref :T2150-01A2 Page :330060

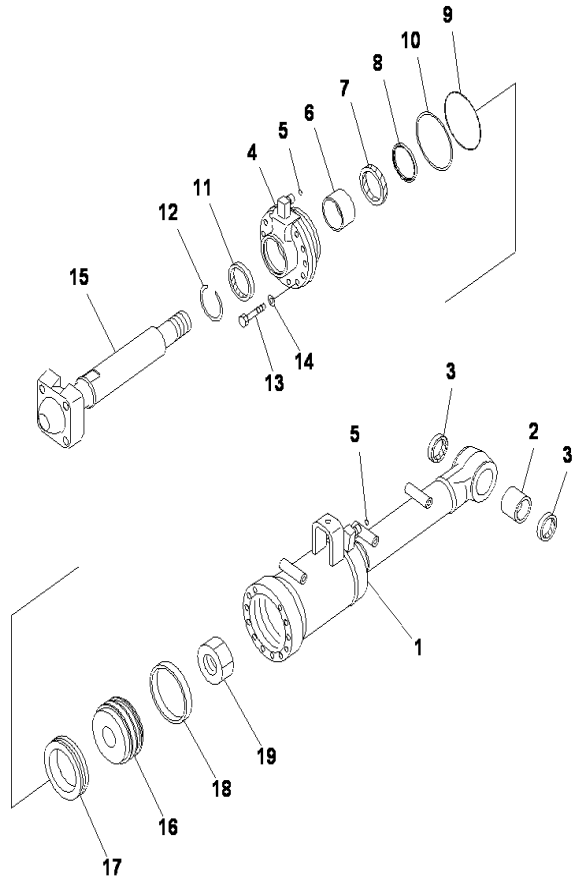

D85ESS-2 S/N J11888-UP

TILT AND PITCH CYLINDER

INDEX	CD	PART NO.	DESCRIPTION	QTY	SERIAL NO.
		707-01-0C301	TILT CYLINDER ASS'Y,(FOR TILT DOZER).....	1	J10001-UP
1		707-13-14630	.CYLINDER.....	1	J10001-UP
2		07143-10505	.BUSHING.....	1	J10001-UP
3		07145-00050	.SEAL, DUST (KIT).....	2	J10001-UP
4		707-27-14880	.HEAD, CYLINDER.....	1	J10001-UP
5		02896-11009	.O-RING.....	2	J10001-UP
6		707-52-90471	.BUSHING.....	1	J10001-UP
7		707-51-70030	.PACKING,ROD (KIT).....	1	J10001-UP
8		707-51-70640	.RING, BUFFER.....	1	J10001-UP
9		07000-12135	.O-RING.....	1	J10001-UP
10		07146-02136	.RING, BACK-UP (KIT).....	1	J10001-UP
11		707-56-70540	.SEAL,DUST (KIT).....	1	J10001-UP
12		07179-12084	.RING, SNAP.....	1	J10001-UP
13		01010-81455	.BOLT.....	12	J10001-UP
14		01643-31445	.WASHER.....	12	J10001-UP
15		14Y-63-52121	.ROD, PISTON.....	1	J10001-UP
16		707-36-14120	.PISTON.....	1	J10001-UP
17		707-44-14180	.RING, PISTON (KIT).....	1	J10001-UP
18		07156-01417	.RING, WEAR (KIT).....	1	J10001-UP
19		707-67-52020	.NUT.....	1	J10001-UP
			==========.....		
		707-99-52160	SERVICE KIT.....	1	J10001-UP

Ref :T2150-01A3 Page :330070

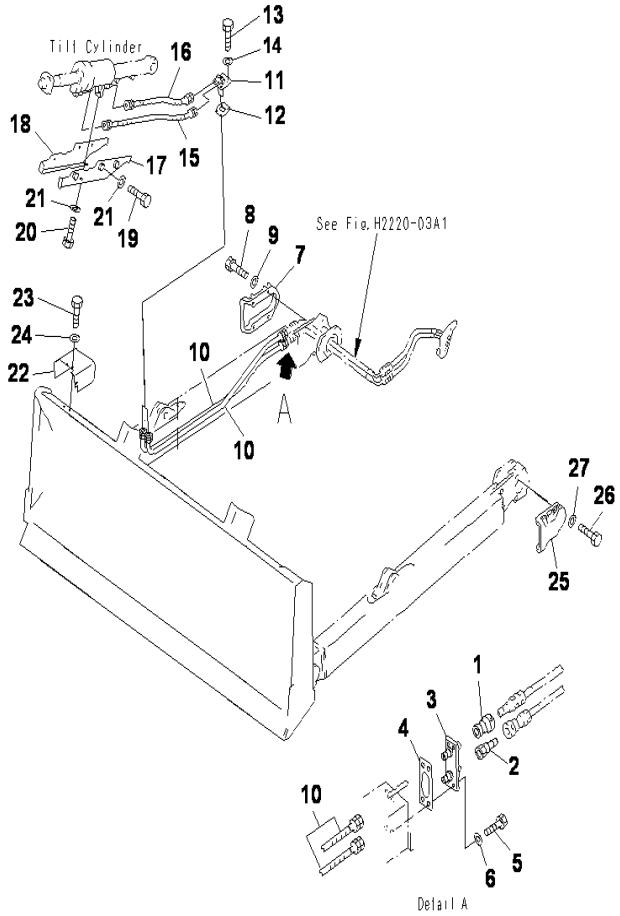

D85ESS-2 S/N J11888-UP

TILT DOZER LINE

INDEX	CD	PART NO.	DESCRIPTION	QTY	SERIAL NO.
1		10E-60-16340	COUPLING	1	J10001-UP
2		10E-60-16350	COUPLING	1	J10001-UP
3		14Y-62-11410	BRACKET	1	J10001-UP
4		14Y-62-11420	GASKET	1	J10001-UP
5		01010-81225	BOLT	4	J10001-UP
6		01643-31232	WASHER	4	J10001-UP
7		14Y-71-12160	COVER	1	J10001-UP
8		01010-81630	BOLT	4	J10001-UP
9		01643-31645	WASHER	4	J10001-UP
10		13F-62-32570	HOSE	2	J10001-UP
11		14Y-62-11430	BRACKET	1	J10001-UP
12		14Y-62-11440	GASKET	1	J10001-UP
13		01010-81225	BOLT	4	J10001-UP
14		01643-31232	WASHER	4	J10001-UP
15		14Y-62-11470	HOSE	1	J10001-UP
16		14Y-62-11480	HOSE	1	J10001-UP
17		14Y-62-11450	COVER LH	1	J10001-UP
18		14Y-62-11460	COVER RH	1	J10001-UP
19		01010-81225	BOLT	6	J10001-UP
20		01010-81235	BOLT	1	J10001-UP
21		01643-31232	WASHER	7	J10001-UP
22		14Y-62-11492	PLATE	1	J10001-UP
23		01010-81225	BOLT	4	J10001-UP
24		01643-31232	WASHER	4	J10001-UP
25		14Y-71-12160	COVER	1	J10001-UP
26		01010-81630	BOLT	4	J10001-UP
27		01643-31645	WASHER	4	J10001-UP

Ref :T2160-01A0 Page :330080

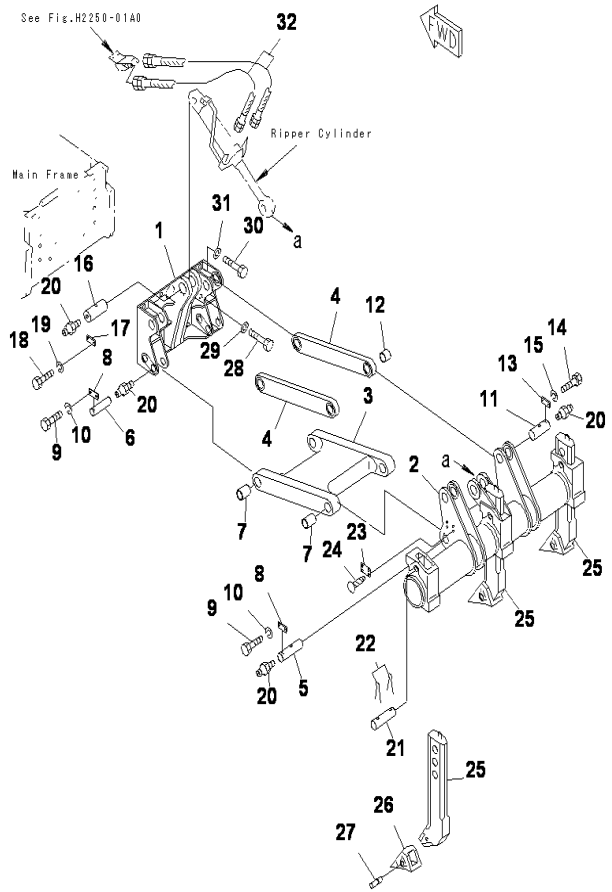

D85ESS-2 S/N J11888-UP

RIPPER

INDEX	CD	PART NO.	DESCRIPTION	QTY	SERIAL NO.
1		144-78-11112	SUPPORT	1	J10001-UP
2		144-78-11511	BEAM	1	J10001-UP
3		144-78-11174	LINK	1	J15817-UP
		144-78-11174	LINK	2	J10001-J15816
4		144-78-11162	LINK	1	J10001-UP
6		14X-78-11310	PIN	2	J10001-UP
5		144-87-48470	PIN	2	J10001-UP
7		141-78-11321	BUSHING	4	J10001-UP
8		04082-00212	LOCK	4	J10001-UP
9		01010-81225	BOLT	8	J10001-UP
10		01602-21236	WASHER	8	J10001-UP
11		144-87-48480	PIN	4	J10001-UP
12		141-78-11311	BUSHING	4	J10001-UP
13		04082-00212	LOCK	4	J10001-UP
14		01010-81225	BOLT	8	J10001-UP
15		01602-21236	WASHER	8	J10001-UP
16		144-87-48491	PIN	2	J10001-UP
17		04082-00514	LOCK	2	J10001-UP
18		01010-81435	BOLT	4	J10001-UP
19		01602-21442	WASHER	4	J10001-UP
20		07020-00000	FITTING	10	J10001-UP
21		144-78-11570	PIN	3	J10001-UP
22		04050-10060	PIN	6	J10001-UP
23		09601-50000	PLATE, NAME,(LIMITED SUPPLY)	1	J11924-UP
		09601-00835	PLATE, NAME,(LIMITED SUPPLY)	1	J10001-J11923
24		04418-13060	SCREW	4	J10001-UP
25		144-78-11245	SHANK	3	J10001-UP
26		141-78-11253	POINT	3	J10001-UP
27		09244-02508	PIN	3	J10001-UP
28		01010-83390	BOLT	6	J10001-UP
29		01643-33380	WASHER	6	J10001-UP
30		01010-82480	BOLT	10	J10001-UP
31		01643-32460	WASHER	10	J10001-UP
32		07086-20611	HOSE	2	J10001-UP

Ref :T2400-01A0 Page :330090

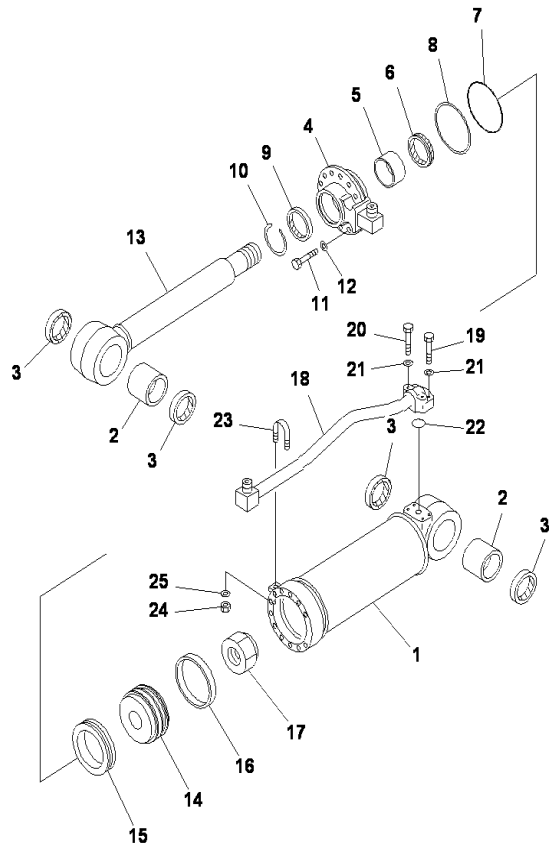

D85ESS-2 S/N J11888-UP

RIPPER CYLINDER

INDEX	CD	PART NO.	DESCRIPTION	QTY	SERIAL NO.
		14X-63-X1052	CYLINDER GROUP, RIPPER	1	J10001-UP
			==========		
		14X-63-01052	CYLINDER ASS'Y, RIPPER	1	J10001-UP
1		14X-63-42142	.CYLINDER	1	J10001-UP
2		07143-10707	.BUSHING	2	J10001-UP
3		07145-00075	.SEAL, DUST (KIT)	4	J10001-UP
4		707-27-14781	.HEAD, CYLINDER	1	J10001-UP
5		707-52-10701	.BUSHING	1	J10001-UP
6		707-51-70211	.PACKING, ROD (KIT)	1	J10001-UP
7		07000-12135	.O-RING (KIT)	1	J10001-UP
8		07146-02136	.RING, BACK-UP (KIT)	1	J10001-UP
9		707-56-70740	.SEAL, DUST (KIT)	1	J10001-UP
10		07179-12084	.RING, SNAP	1	J10001-UP
11		01010-81455	.BOLT	12	J10001-UP
12		01643-31445	.WASHER	12	J10001-UP
13		14X-63-42121	.ROD	1	J10001-UP
14		707-36-14120	.PISTON	1	J10001-UP
15		707-44-14180	.RING, PISTON (KIT)	1	J10001-UP
16		07156-01417	.RING, WEAR (KIT)	1	J10001-UP
17		07165-15252	.NUT	1	J10001-UP
18		14X-63-42182	TUBE	1	J10001-UP
19		07372-21040	BOLT	2	J10001-UP
20		07372-21050	BOLT	2	J10001-UP
21		01643-51032	WASHER	4	J10001-UP
22		07000-13030	O-RING (KIT)	1	J10001-UP
23		07283-22738	CLIP	1	J10001-UP
24		01599-01011	NUT	2	J10001-UP
25		01643-31032	WASHER	2	J10001-UP
			==========		
		707-98-52130	SERVICE KIT	1	J10001-UP

Ref :T2400-01A1 Page :330100

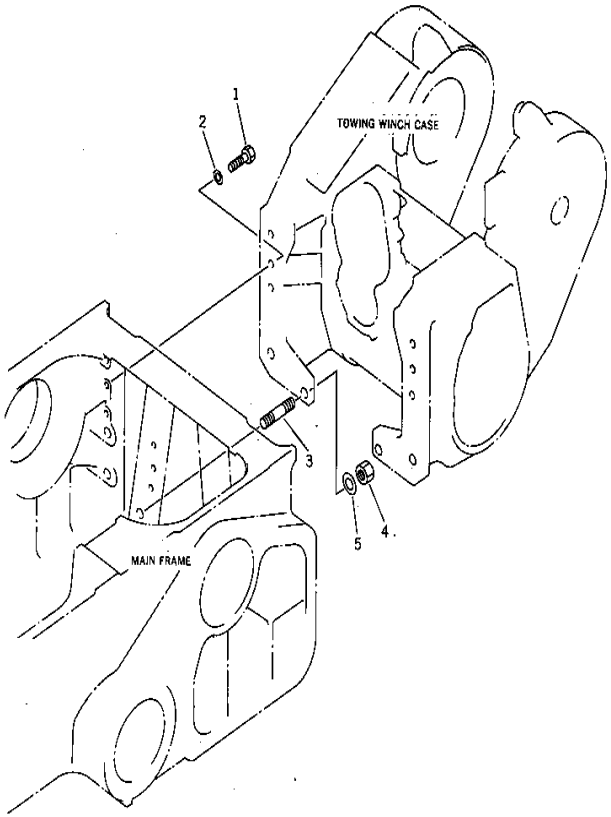

D85ESS-2 S/N J11888-UP

TOWING WINCH (MOUNT)

INDEX	CD	PART NO.	DESCRIPTION	QTY	SERIAL NO.
1		01010-82465	BOLT	6	J10001-UP
2		01643-32460	WASHER	6	J10001-UP
3		01124-53370	STUD BOLT	4	J10001-UP
4		01580-13326	NUT	4	J10001-UP
5		01643-33380	WASHER	4	J10001-UP

Ref :T2510-01A0 Page :330110

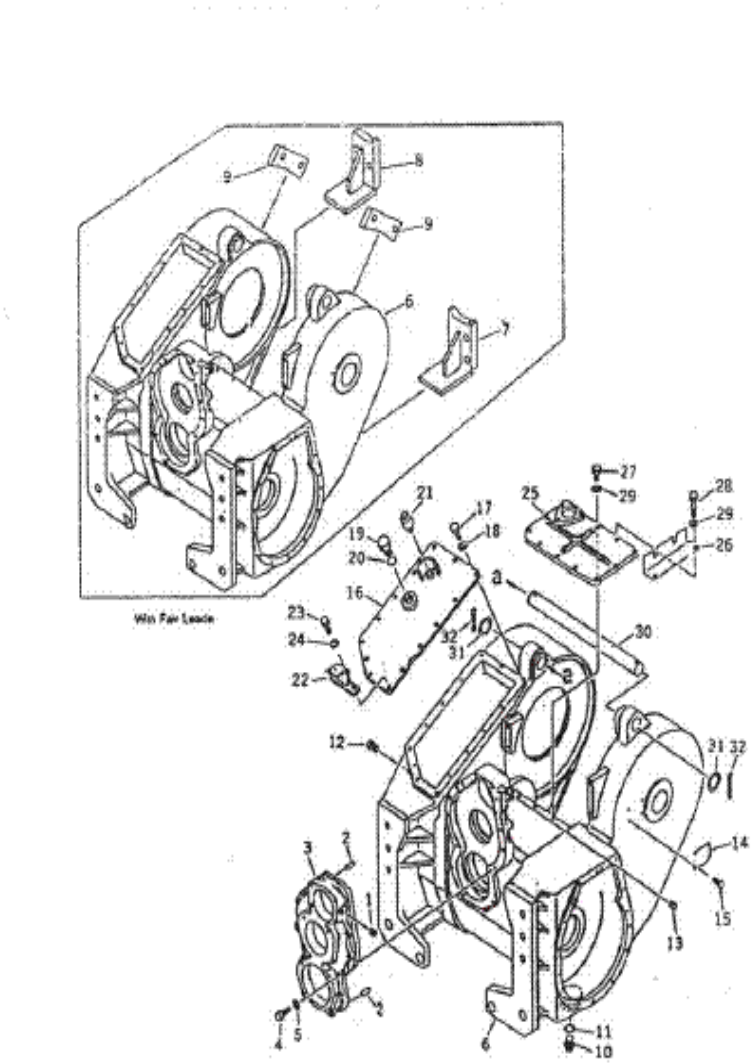

D85ESS-2 S/N J11888-UP

TOWING WINCH (CASE)

INDEX	CD	PART NO.	DESCRIPTION	QTY	SERIAL NO.
1		07043-00108	PLUG	1	J10001-UP
2		04020-01228	PIN	2	J10001-UP
3		14X-96-03850	COVER	1	J10001-UP
4		01010-81245	BOLT	11	J10001-UP
5		01643-31232	WASHER	11	J10001-UP
6		134-96-01610	CASE ASSY	1	J10514-UP
		14X-960-3813	CASE ASS'Y	1	J10484-J10513
		14X-960-3812	CASE ASS'Y	1	J10001-J10483
		14X-960-8213	CASE (WITH FAIR LEAD)	1	J10514-UP
		14X-960-8212	CASE (WITH FAIR LEAD)	1	J10484-J10513
		14X-960-8210	CASE (WITH FAIR LEAD)	1	J10001-J10483
7		14X-960-8221	BRACKET, L.H (WITH FAIR LEAD)	1	J10484-UP
		14X-960-8220	BRACKET, L.H (WITH FAIR LEAD)	1	J10001-J10483
8		14X-960-8231	BRACKET, R.H (WITH FAIR LEAD)	1	J10484-UP
		14X-960-8230	BRACKET, R.H (WITH FAIR LEAD)	1	J10001-J10483
9		14X-960-8240	PLATE, (WITH FAIR LEAD)	2	J10001-UP
10		07044-13620	PLUG	1	J10001-UP
11		07002-03634	O-RING	1	J10001-UP
12		144-91-61820	PLUG	1	J10001-UP
13		07043-00108	PLUG	1	J10001-UP
14		09601-50000	PLATE, NAME, (LIMITED SUPPLY)	1	J11294-UP
		09601-00835	PLATE, NAME, (LIMITED SUPPLY)	1	J10001-J11293
15		04418-13060	SCREW	4	J10001-UP
16		14X-960-3751	COVER	1	J10484-UP
		14X-960-3750	COVER	1	J10001-J10483
17		01010-81230	BOLT	12	J10001-UP
18		01643-31232	WASHER	12	J10001-UP
19		07040-13618	PLUG	1	J10001-UP
20		07002-03634	O-RING	1	J10001-UP
21		07030-00252	BREATHER	1	J10001-UP
22		14X-960-6450	BRACKET	1	J10484-UP
		14W-960-7190	BRACKET	1	J10001-J10483
23		01010-81235	BOLT	2	J10001-UP
24		01643-31232	WASHER	2	J10001-UP
25		14X-96-03871	COVER	1	J10514-UP
		14X-960-3870	COVER	1	J10001-J10513
26		14W-96-07220	BRACKET	1	J10001-UP
27		01010-81235	BOLT	8	J10001-UP
28		01010-81260	BOLT	2	J10001-UP
29		01643-31232	WASHER	10	J10001-UP
30		14X-96-03731	BAR	1	J10001-UP
31		176-43-54481	WASHER	2	J10001-UP
32		04050-00060	COTTER PIN	2	J10001-UP

Ref :T2510-02A0 Page :330120

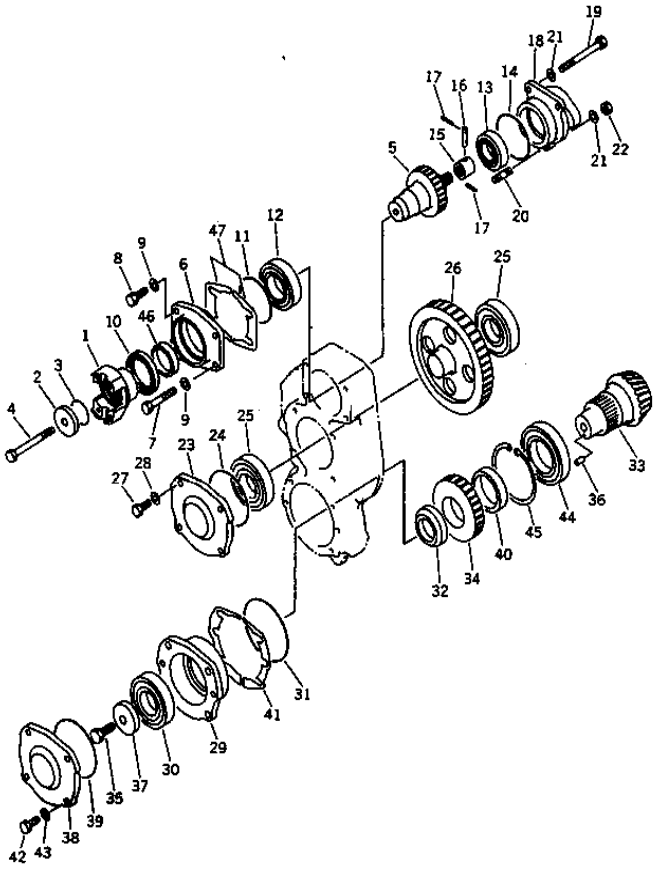

D85ESS-2 S/N J11888-UP

TOWING WINCH (TRANSFER)

INDEX	CD	PART NO.	DESCRIPTION	QTY	SERIAL NO.
1		14X-96-04110	COUPLING	1	J10001-UP
2		15B-96-04320	PLATE	1	J10001-UP
3		155-15-19620	O RING	1	J10001-UP
4		01011-81400	BOLT	1	J10001-UP
5		14X-96-04140	GEAR	1	J10001-UP
6		14X-96-04180	CAGE	1	J10001-UP
7		01010-81295	BOLT	1	J10001-UP
8		01010-81235	BOLT	3	J10001-UP
9		01643-31232	WASHER	4	J10001-UP
10		07012-10075	SEAL	1	J10001-UP
11		07000-02105	O-RING	1	J10001-UP
12		06002-30212	BRG 30212JR	1	J10001-UP
13		06002-30209	BEARING	1	J10001-UP
14		07000-72105	O-RING	1	J10001-UP
15		14X-96-04220	COUPLING	1	J10001-UP
16		144-91-64220	PIN	1	J10001-UP
17		04050-11208	PIN	2	J10001-UP
18		14X-96-04210	CAGE	1	J10001-UP
19		01011-81200	BOLT	2	J10001-UP
20		01124-51235	STUD	1	J10001-UP
21		01643-31232	WASHER	3	J10001-UP
22		01580-11210	NUT	1	J10001-UP
23		14X-96-01130	COVER	1	J10001-UP
24		07000-02130	O-RING	1	J10001-UP
25		06040-06311	BRG(6311C4)	2	J10001-UP
26		14X-96-04150	GEAR	1	J10001-UP
27		01010-81235	BOLT	4	J10001-UP
28		01643-31232	WASHER	4	J10001-UP
29		14X-96-01190	CAGE	1	J10001-UP
30		06040-06311	BRG(6311C4)	1	J10001-UP
31		07000-02145	O-RING	1	J10001-UP
32		14X-96-04370	SPACER	1	J10001-UP
33		14X-96-04361	PINION	1	J10001-UP
34		14X-96-04350	GEAR	1	J10001-UP
35		01010-81450	BOLT	1	J10001-UP
36		04020-00820	DOWEL PIN	1	J10001-UP
37		15B-96-04310	PLATE	1	J10001-UP
38		14X-96-01130	COVER	1	J10001-UP
39		07000-02130	O-RING	1	J10001-UP
40		14X-96-04380	SPACER	1	J10001-UP
41		14X-96-00510	SHIM KIT	4	J11888-UP
42		01010-81245	BOLT	4	J10001-UP
43		01643-31232	WASHER	4	J10001-UP
44		06041-00216	BRG(N216WC4)	1	J10001-UP
45		04077-00140	RING	1	J10001-UP

Ref :T2510-03A0 Page :330130

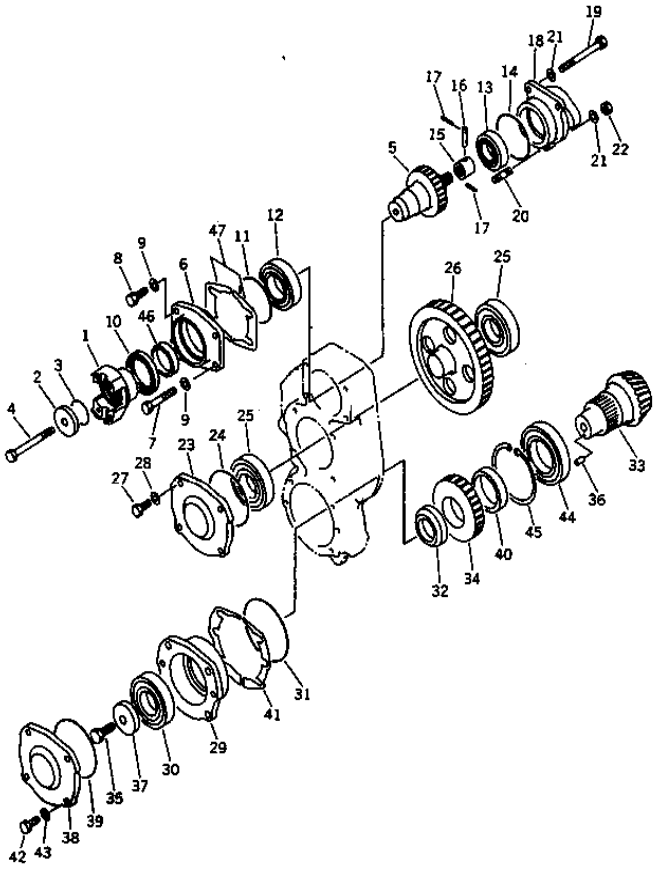

D85ESS-2 S/N J11888-UP

TOWING WINCH (TRANSFER)

INDEX	CD	PART NO.	DESCRIPTION	QTY	SERIAL NO.
46		14X-96-04260	SPACER.....	1	J10001-UP
47		14X-96-00520	SHIM KIT.....	1	J10001-UP

Ref :T2510-03A0 Page :330131

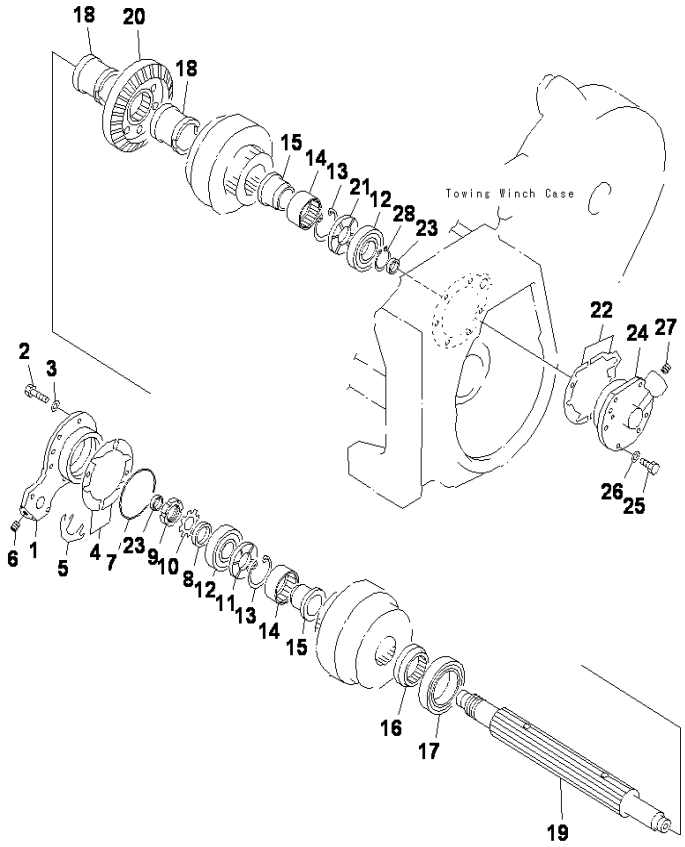

D85ESS-2 S/N J11888-UP

TOWING WINCH (GEAR SHAFT, CLUTCH)

INDEX	CD	PART NO.	DESCRIPTION	QTY	SERIAL NO.
1		14X-96-02780	COVER	1	J10001-UP
2		01010-81235	BOLT	8	J10001-UP
3		01643-31232	WASHER	8	J10001-UP
4		14X-96-00530	SHIM KIT	1	J10001-UP
5		14X-96-00540	SHIM KIT	1	J10001-UP
6		07043-00312	PLUG	1	J10001-UP
7		07000-05130	O-RING	1	J10001-UP
8		144-91-61270	WASHER	1	J10001-UP
9		01530-04812	NUT	1	J10001-UP
10		01658-04823	WASHER	1	J10001-UP
11		144-91-62730	SPACER	1	J10001-UP
12		06002-30310	BEARING	2	J10001-UP
13		04065-08225	RING	2	J10001-UP
14		144-91-67950	BEARING	2	J10001-UP
15		14X-96-02710	SPACER	2	J10001-UP
16		15B-96-01221	SPACER	1	J10001-UP
17		06040-06018	BEARING	1	J10001-UP
18		14X-96-01210	SPACER	2	J10001-UP
19		14X-96-01230	SHAFT	1	J10001-UP
20		14X-96-01181	GEAR	1	J10001-UP
21		144-91-62730	SPACER	1	J10001-UP
22		14X-96-00550	SHIM KIT	1	J10001-UP
23		144-91-62770	SEAL	2	J10001-UP
24		14X-96-01281	COVER	1	J10001-UP
25		01010-81235	BOLT	6	J10001-UP
26		01643-31232	WASHER	6	J10001-UP
27		07043-00312	PLUG	1	J10001-UP
28		04064-05020	RING	1	J10001-UP

Ref :T2510-04A0 Page :330140

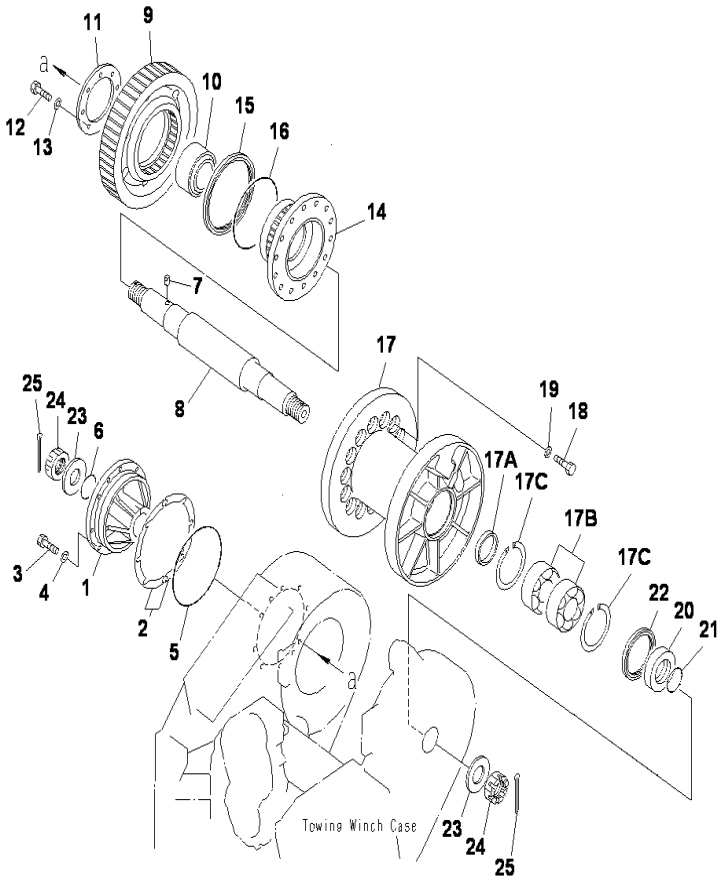

D85ESS-2 S/N J11888-UP

TOWING WINCH (GEAR SHAFT, DRUM)

INDEX	CD	PART NO.	DESCRIPTION	QTY	SERIAL NO.
1		134-96-01650	COVER	1	J10001-UP
2		14X-96-00560	SHIM KIT	1	J10001-UP
3		01010-81235	BOLT	8	J10001-UP
4		01643-31232	WASHER	8	J10001-UP
5		07000-15230	O-RING	1	J10001-UP
6		07000-02085	O-RING	1	J10001-UP
7		150-95-12410	PIN	1	J10001-UP
8		14X-96-01690	SHAFT	1	J10001-UP
9		14X-96-01640	GEAR	1	J10001-UP
10		150-951-1130	BEARING	2	J10001-UP
11		134-96-01690	PLATE	1	J10001-UP
12		01010-81435	BOLT	8	J10001-UP
13		01643-31445	WASHER	8	J10001-UP
14		14X-96-01610	DRUM	1	J10001-UP
15		15B-96-07980	SEAL	1	J10001-UP
16		07000-05240	O-RING	1	J10001-UP
17		134-96-01860	DRUM	1	J10001-UP
17A		134-96-01850	SPACER	1	J10001-UP
17B		0634202218	BEARING	2	J10001-UP
17C		04071-00160	RING	2	J10001-UP
18		01010-82050	BOLT	14	J10001-UP
19		01643-32060	WASHER	14	J10001-UP
20		134-960-1840	SPACER	1	J10001-UP
21		07000-03088	O-RING	1	J10001-UP
22		07012-10140	SEAL	1	J10001-UP
23		150-80-11250	WASHER	2	J10001-UP
24		150-95-12450	NUT	2	J10001-UP
25		150-95-12460	COTTERPIN	2	J10001-UP

Ref :T2510-05A0 Page :330150

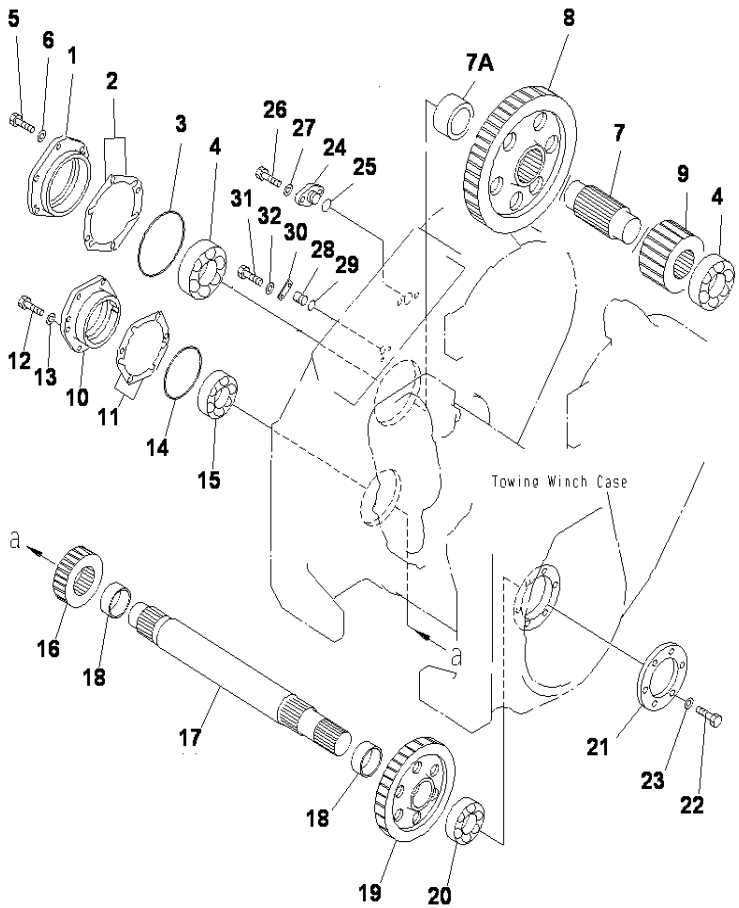

D85ESS-2 S/N J11888-UP

TOWING WINCH (GEAR SHAFT, BRAKE)

INDEX	CD	PART NO.	DESCRIPTION	QTY	SERIAL NO.
1		14X-96-01410	COVER	1	J10001-UP
2		14X-96-00570	SHIM KIT	1	J10001-UP
3		07000-05170	O-RING	1	J10001-UP
4		06002-32314	BEARING	2	J10001-UP
5		01010-81235	BOLT	6	J10001-UP
6		01643-31232	WASHER	6	J10001-UP
7		134-960-1870	SHAFT	1	J10001-UP
7A		134-960-1880	SPACER	1	J10001-UP
8		14X-96-01491	GEAR	1	J10484-UP
		14X-960-1490	GEAR	1	J10001-J10483
9		14X-96-01630	GEAR	1	J10001-UP
10		14X-96-01480	COVER	1	J10001-UP
11		14X-96-00580	SHIM KIT	1	J10001-UP
12		01010-81235	BOLT	6	J10001-UP
13		01643-31232	WASHER	6	J10001-UP
14		07000-05140	O-RING	1	J10001-UP
15		06002-32213	BEARING	1	J10001-UP
16		14X-96-01391	GEAR	1	J10484-UP
		14X-960-1390	GEAR	1	J10001-J10483
17		14X-96-01370	SHAFT	1	J10001-UP
18		14X-96-01360	SPACER	2	J10001-UP
19		14X-96-01351	GEAR	1	J10484-UP
		14X-960-1350	GEAR	1	J10001-J10483
20		06002-32213	BEARING	1	J10001-UP
21		14X-96-01320	COVER	1	J10001-UP
22		01010-81235	BOLT	6	J10001-UP
23		01643-31232	WASHER	6	J10001-UP
24		134-96-01940	PLUG	1	J10001-UP
25		0700012030	O-RING	1	J10001-UP
26		01010-81235	BOLT	2	J10001-UP
27		01643-31232	WASHER	2	J10001-UP
28		134-960-1890	PLUG	1	J10001-UP
29		0700013022	O-RING	1	J10001-UP
30		130-90-13140	PLATE	1	J10001-UP
31		01010-80820	BOLT	2	J10001-UP
32		01643-30823	WASHER	2	J10001-UP

Ref :T2510-06A0 Page :330160

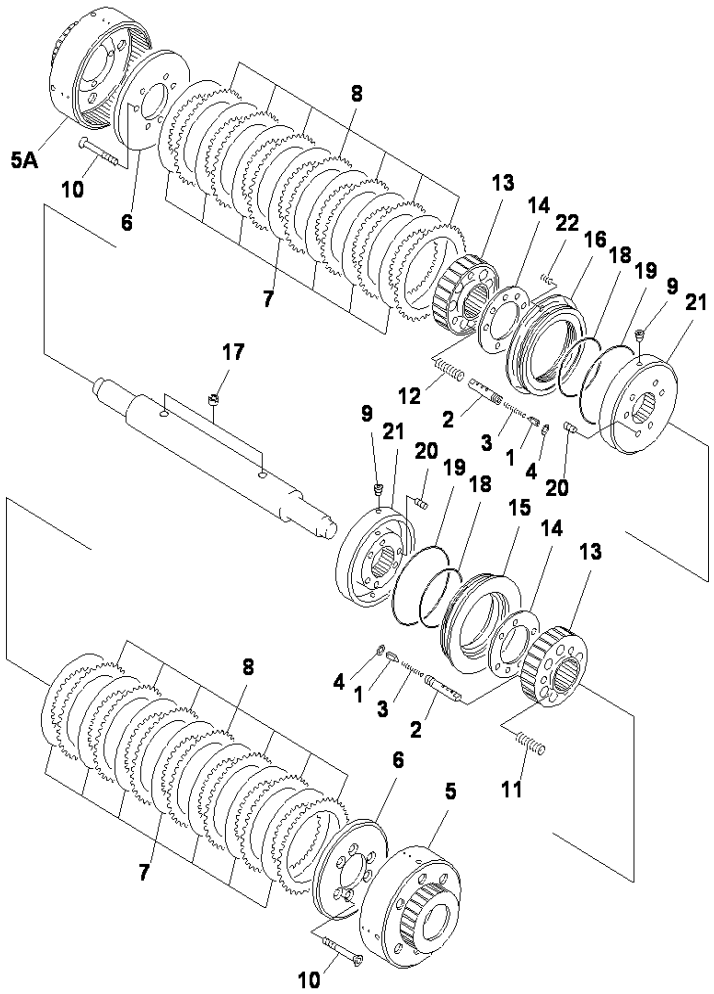

TOWING WINCH (CLUTCH)

INDEX	CD	PART NO.	DESCRIPTION	QTY	SERIAL NO.
1		175-91-62620	SPOOL	2	J10001-UP
2		175-91-62610	HOUSING	2	J10001-UP
3		175-91-62630	SNAPRING	2	J10001-UP
4		175-91-62640	SNAPRING	2	J10001-UP
5		14X-96-02661	GEAR	1	J10484-UP
		14X-960-2660	GEAR	2	J10001-J10483
5A		14X-96-02670	GEAR	1	J10001-UP
6		14X-96-02650	PLATE	2	J10001-UP
7		176-76-13230	DISK	14	J10001-UP
8		100-22-15210	PLATE	14	J10001-UP
9		07043-70108	PLUG	4	J10001-UP
10		14X-96-02510	BOLT	12	J10001-UP
11		144-91-62590	SPRING	6	J10001-UP
12		14X-96-02580	SPRING	6	J10001-UP
13		144-91-62850	DRUM	2	J10001-UP
14		144-91-62550	PLATE	2	J10001-UP
15		144-91-62560	PISTON	1	J10001-UP
16		14X-96-02570	PISTON	1	J10001-UP
17		144-91-62520	SEAL	4	J10001-UP
18		07000-05135	O-RING	2	J10001-UP
19		07000-05190	O-RING	2	J10001-UP
20		144-91-62570	SETSCREW	12	J10001-UP
21		144-91-62540	HOUSING	2	J10001-UP
22		14X-96-02590	SPRING	4	J10001-UP

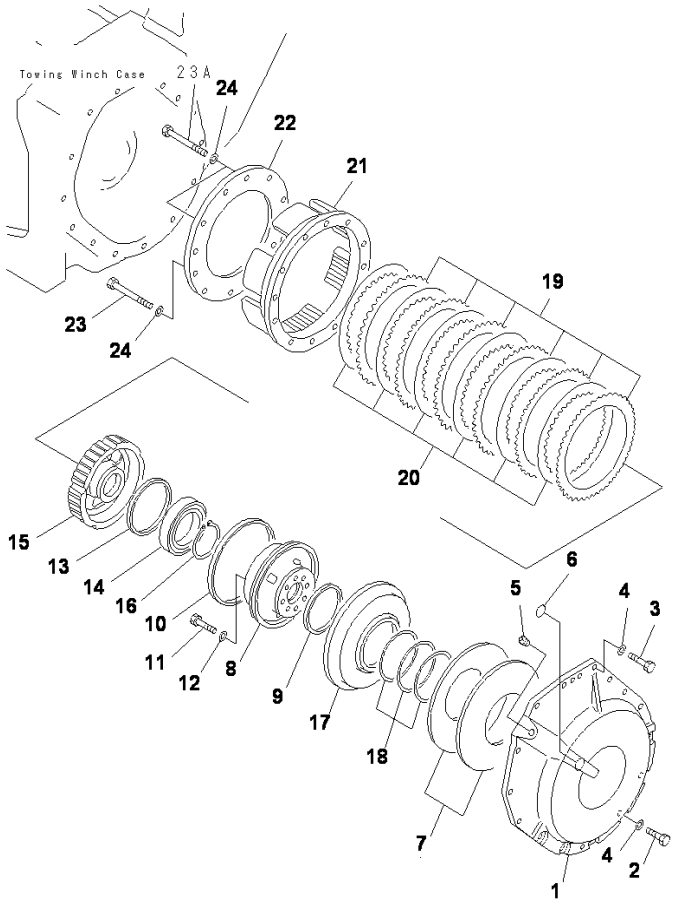

D85ESS-2 S/N J11888-UP

TOWING WINCH (BRAKE)

INDEX	CD	PART NO.	DESCRIPTION	QTY	SERIAL NO.
1		14X-96-03141	COVER	1	J10484-UP
		14X-960-3140	COVER	1	J10001-J10483
2		01010-81235	BOLT	12	J10484-UP
		01010-81235	BOLT	11	J10001-J10483
3		01010-81260	BOLT	3	J10001-UP
4		01643-31232	WASHER	15	J10484-UP
		01643-31232	WASHER	14	J10001-J10483
5		07042-30312	PLUG	1	J10001-UP
6		07000-73025	O-RING	1	J10001-UP
7		14X-96-03190	SPRING	2	J10001-UP
8		14X-96-03130	HOUSING	1	J10001-UP
9		14X-10-19210	SEAL RING	1	J10001-UP
10		103-15-29210	SEAL RING	1	J10001-UP
11		01010-81260	BOLT	7	J10001-UP
12		01643-31232	WASHER	7	J10001-UP
13		04071-00140	RING	1	J10001-UP
14		06030-06018	BEARING	1	J10001-UP
15		14X-96-03120	DRUM	1	J10001-UP
16		04064-09030	SNAP RING	1	J10001-UP
17		14X-96-03151	PISTON	1	J10001-UP
18		14X-96-00590	SPACER KIT	1	J10001-UP
19		14X-96-03180	PLATE	6	J10001-UP
20		14X-96-03171	DISK	6	J10484-UP
		14X-960-3170	DISK	6	J10001-J10483
21		14X-96-03110	DRUM	1	J10001-UP
22		14X-96-03161	PLATE	1	J10001-UP
23		01011-81230	BOLT	10	J10001-UP
23A		01011-81225	BOLT	2	J10001-UP
24		01643-31232	WASHER	12	J10001-UP

Ref :T2510-08A0 Page :330180

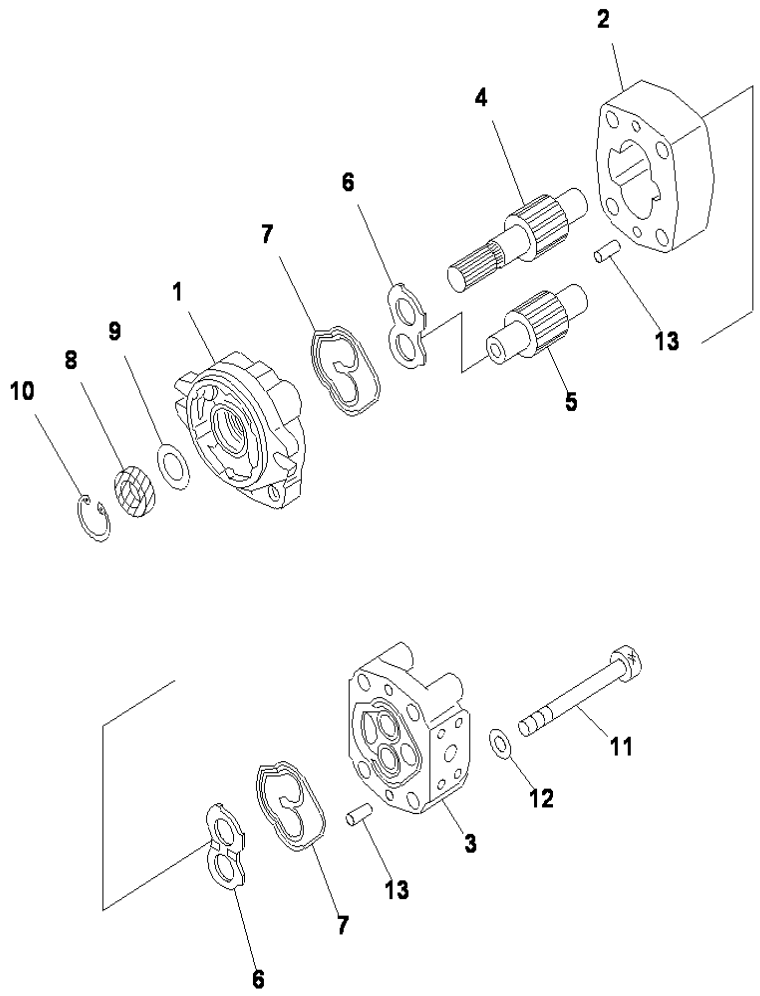

D85ESS-2 S/N J11888-UP

TOWING WINCH (PUMP)

INDEX	CD	PART NO.	DESCRIPTION	QTY	SERIAL NO.
		705-41-01200	PUMP,(SBR(1)21).....	1	J10001-UP
1	C1	705-41-80230	.BRACKET.....	1	J10001-UP
	C1	705-41-80620	..BUSHING, PLANE (DRIVE SIDE).....	1	J10001-UP
	C1	705-41-80610	..BUSHING, PLANE (DRIVE SIDE).....	1	J10001-UP
2	C1	705-40-33011	.CASE, GEAR.....	1	J10001-UP
3	C1	705-40-80131	.COVER.....	1	J10001-UP
	C1	705-41-80610	..BUSHING, PLANE (DRIVE SIDE).....	1	J10001-UP
	C1	705-41-80620	..BUSHING, PLANE (DRIVEN SIDE).....	1	J10001-UP
4	C1	705-40-33411	.GEAR, DRIVE.....	1	J10001-UP
5	C1	705-40-33511	.GEAR, DRIVEN.....	1	J10001-UP
6		705-40-83720	.SIDE PLATE.....	2	J10001-UP
7		705-40-80760	.SEAL.....	2	J10001-UP
8		705-40-80810	.SEAL, OIL.....	1	J10001-UP
9		705-40-80870	.PLATE.....	1	J10001-UP
10		04065-03515	.RING, SNAP.....	1	J10001-UP
11		01253-71210	.BOLT.....	4	J10001-UP
12		01643-51232	.WASHER.....	4	J10001-UP
13		04020-00820	.PIN.....	4	J10001-UP

Ref :T2510-09A0 Page :330190

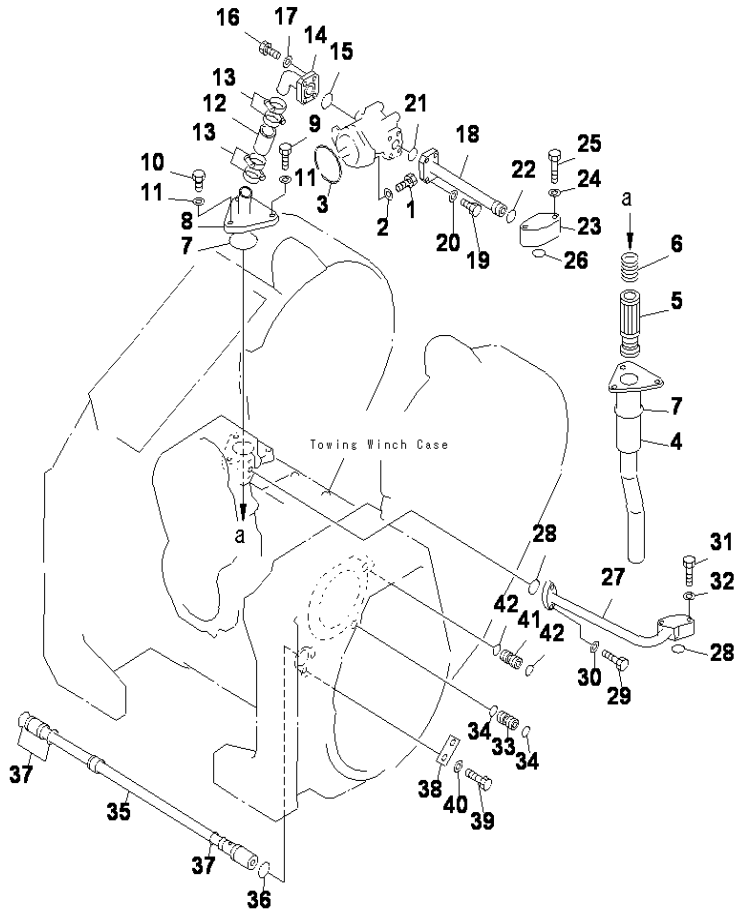

D85ESS-2 S/N J11888-UP

TOWING WINCH (PIPING)

INDEX	CD	PART NO.	DESCRIPTION	QTY	SERIAL NO.
1		01010-81030	BOLT	2	J10001-UP
2		01643-31032	WASHER	2	J10001-UP
3		07000-72085	O-RING	1	J10001-UP
4		14X-96-06123	TUBE	1	J10514-UP
		14X-960-6122	TUBE	1	J10484-J10513
		14X-960-6121	TUBE	1	J10001-J10483
5		14X-96-06462	STRAINER	1	J10514-UP
		14X-960-6461	MAGNET ASS'Y	1	J10264-J10513
		14X-960-6460	MAGNET ASS'Y	1	J10484-J10263
		125-15-11722	MAGNET ASS'Y	1	J10001-J10483
6		176-62-15240	SPRING	1	J10001-UP
7		07000-72085	O-RING	2	J10001-UP
8		14X-96-06132	TUBE	1	J10001-UP
9		01010-81280	BOLT	2	J10001-UP
10		01010-81245	BOLT	1	J10001-UP
11		01643-31232	WASHER	3	J10001-UP
12		07260-02609	HOSE	1	J10001-UP
13		07281-00489	CLAMP	4	J10001-UP
14		14X-96-06142	TUBE	1	J10001-UP
15		07000-73032	O-RING	1	J10001-UP
16		01010-81040	BOLT	4	J10001-UP
17		01602-21030	WASHER	4	J10001-UP
18		14X-96-06190	TUBE	1	J10001-UP
19		01010-80835	BOLT	4	J10001-UP
20		01602-20825	WASHER	4	J10001-UP
21		07000-73025	O-RING	1	J10001-UP
22		07000-73022	O-RING	1	J10001-UP
23		14X-96-06170	BLOCK	1	J10001-UP
24		01643-31032	WASHER	2	J10001-UP
25		01011-81080	BOLT	2	J10001-UP
26		07000-73025	O-RING	1	J10001-UP
27		14X-96-06150	TUBE	1	J10001-UP
28		07000-73025	O-RING	2	J10001-UP
29		01010-81030	BOLT	2	J10001-UP
30		01602-21030	WASHER	2	J10001-UP
31		01011-81080	BOLT	2	J10001-UP
32		01643-31032	WASHER	2	J10001-UP
33		15B-96-06260	SLEEVE	1	J10001-UP
34		07000-72021	O-RING	2	J10001-UP
35		14X-96-06391	TUBE	1	J10001-UP
36		07000-73028	O-RING	1	J10001-UP
37		07000-73025	O-RING	3	J10001-UP
38		04082-00206	LOCK	1	J10001-UP
39		01010-81225	BOLT	2	J10001-UP
40		01643-31232	WASHER	2	J10001-UP

Ref :T2510-10A0 Page :330200

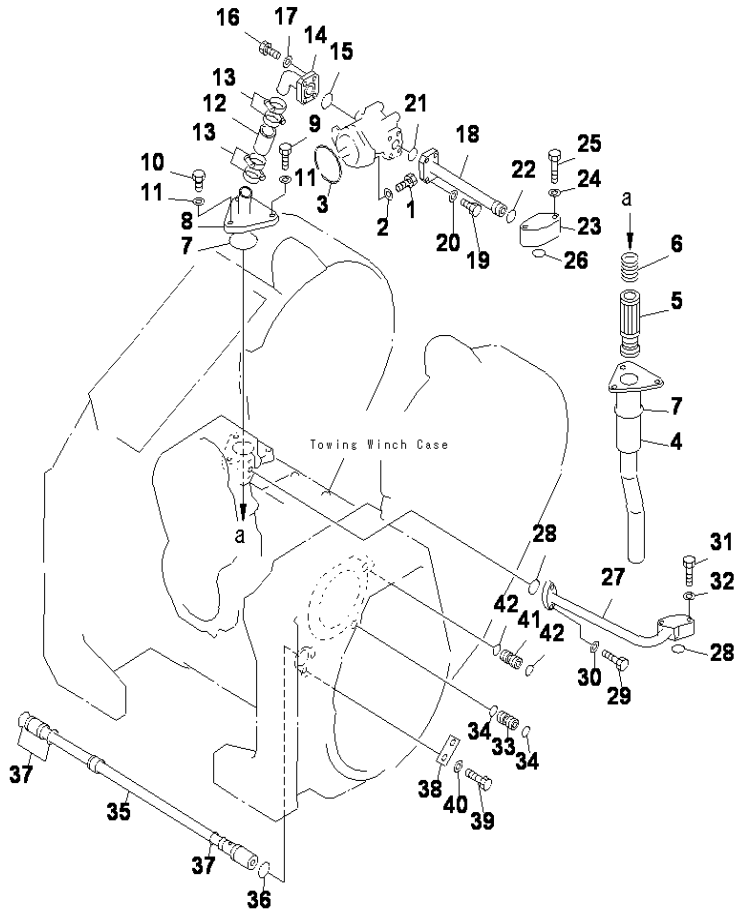

D85ESS-2 S/N J11888-UP

TOWING WINCH (PIPING)

INDEX	CD	PART NO.	DESCRIPTION	QTY	SERIAL NO.
41		14X-96-06260	SLEEVE.....	1	J10001-UP
42		07000-72021	O-RING.....	2	J10001-UP

Ref :T2510-10A0 Page :330201

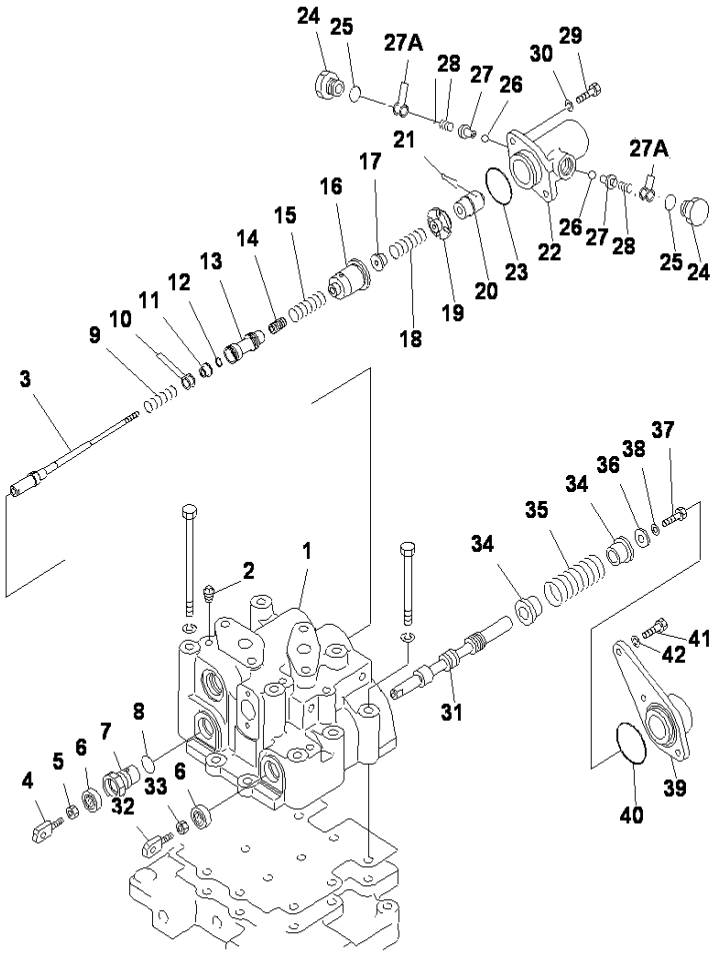

D85ESS-2 S/N J11888-UP

TOWING WINCH (VALVE, INCHING AND CLUTCH SPOOL)

INDEX	CD	PART NO.	DESCRIPTION	QTY	SERIAL NO.
		14X-96-00012	CONTROL VALVE ASS'Y.....	1	J10514-UP
		14X-960-0011	CONTROL VALVE ASS'Y.....	1	J10484-J10513
		14X-960-0010	CONTROL VALVE ASS'Y.....	1	J10001-J10483
			THIS ASSEMBLY CONSIST OF ALL PARTS.....		
			SHOWN IN FIGS. T2510-11A0 AND T2510-12A0....		
1	C1	14X-96-05210	.BODY, VALVE.....	1	J10001-UP
2		07042-20108	.PLUG.....	8	J10001-UP
3		14X-96-05122	.SPOOL.....	1	J10484-UP
		14X-960-5121	.SPOOL.....	1	J10001-J10483
4		15B-96-05330	.YOKE.....	1	J10001-UP
5		01580-10806	.NUT.....	1	J10001-UP
6		113-15-29110	.SEAL, OIL.....	2	J10001-UP
7		14X-96-05220	.COVER.....	1	J10001-UP
8		07002-02434	.O-RING.....	1	J10001-UP
9		14X-96-05230	.SPRING.....	1	J10001-UP
10		14X-96-05310	.SHIM.....	2	J10001-UP
11		14X-96-05240	.GUIDE.....	1	J10001-UP
12		150-43-14960	.SNAPRING.....	1	J10001-UP
13		14X-96-05250	.VALVE.....	1	J10001-UP
14		14X-96-05260	.SLEEVE.....	1	J10001-UP
15		709-32-11780	.SPRING.....	1	J10001-UP
16		14X-96-05270	.CAGE.....	1	J10001-UP
17		14X-96-05280	.COLLAR.....	1	J10001-UP
18		709-32-11780	.SPRING.....	1	J10001-UP
19		14X-96-05290	.STOPPER.....	1	J10001-UP
20		14X-96-05141	.DETENT.....	1	J10484-UP
		14X-960-5140	.DETENT.....	1	J10001-J10483
21		04050-01618	.COTTER PIN.....	1	J10001-UP
22		15B-96-05230	.COVER.....	1	J10001-UP
23		07000-73035	.O-RING.....	1	J10001-UP
24		175-91-64180	.PLUG.....	2	J10001-UP
25		07000-72015	.O-RING.....	2	J10001-UP
26		04260-00635	.BALL.....	2	J10001-UP
27		14X-96-05160	.GUIDE.....	2	J10484-UP
		701-33-31330	.GUIDE.....	2	J10001-J10483
27A		702-21-31360	.SPACER.....	4	J10001-UP
28		709-62-31180	.SPRING.....	2	J10001-UP
29		01010-80820	.BOLT.....	2	J10001-UP
30		01602-20825	.WASHER.....	2	J10001-UP
31		14X-96-05132	.SPOOL.....	1	J10001-UP
32		15B-96-05330	.YOKE.....	1	J10001-UP
33		01580-10806	.NUT.....	1	J10001-UP
34		175-91-64210	.COLLAR.....	2	J10001-UP
35		14X-96-05110	.SPRING.....	1	J10001-UP
36		175-91-64230	.WASHER.....	1	J10001-UP

Ref :T2510-11A0 Page :330210

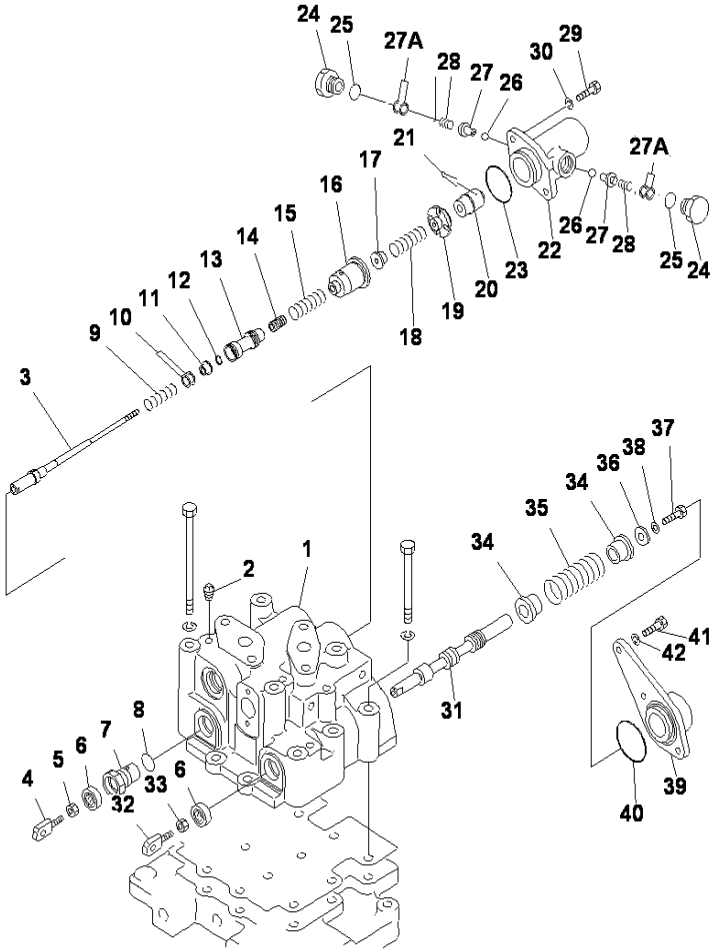

D85ESS-2 S/N J11888-UP

TOWING WINCH (VALVE, INCHING AND CLUTCH SPOOL)

INDEX	CD	PART NO.	DESCRIPTION	QTY	SERIAL NO.
37		01010-80816	BOLT	1	J10001-UP
38		01643-50823	WASHER	1	J10001-UP
39		15B-96-05240	COVER	1	J10001-UP
40		07000-73048	O-RING	1	J10001-UP
41		01010-80820	BOLT	3	J10001-UP
42		01602-20825	WASHER	3	J10001-UP

Ref :T2510-11A0 Page :330211

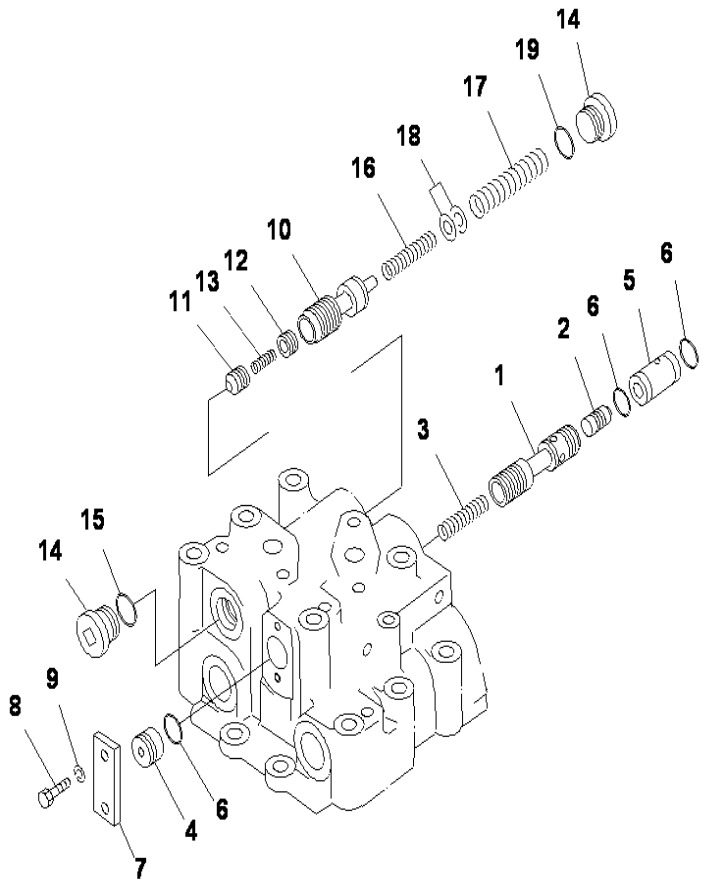

D85ESS-2 S/N J11888-UP

TOWING WINCH (VALVE, RELIEF AND BRAKE VALVE)

INDEX	CD	PART NO.	DESCRIPTION	QTY	SERIAL NO.
		14X-96-00012	CONTROL VALVE ASS'Y.....	1	J10514-UP
		14X-960-0011	CONTROL VALVE ASS'Y.....	1	J10484-J10513
		14X-960-0010	CONTROL VALVE ASS'Y.....	1	J10001-J10483
			THIS ASSEMBLY CONSIST OF ALL PARTS.....		
			SHOWN IN FIGS. T2510-11A0 AND T2510-12A0....		
1		15B-96-05350	.SPOOL.....	1	J10484-J10483
2		15B-96-05340	.PISTON.....	1	J10484-J10483
3		175-91-64360	.SPRING.....	1	J10484-J10483
4		175-91-64370	.STOPER.....	1	J10484-J10483
5		175-91-64330	.STOPER.....	1	J10484-J10483
6		07000-72018	.O-RING.....	3	J10484-J10483
7		15B-96-05260	.COVER.....	1	J10484-J10483
8		01010-80820	.BOLT.....	2	J10484-J10483
9		01602-20825	.WASHER.....	2	J10001-J10483
10		104-15-25210	.SPOOL.....	1	J10001-UP
11		104-15-25480	.VALVE.....	1	J10001-UP
12		104-15-25490	.VALVE.....	1	J10001-UP
13		125-15-15290	.SPRING.....	1	J10001-UP
14		102-10-46360	.PLUG.....	2	J10001-UP
15		07002-02434	.O-RING.....	1	J10001-UP
16		104-15-25280	.SPRING.....	1	J10001-UP
17		104-15-25290	.SPRING.....	1	J10001-UP
18		112-10-46210	.SHIM.....	6	J10001-UP
19		07002-02434	.O-RING.....	1	J10001-UP

Ref :T2510-12A0 Page :330220

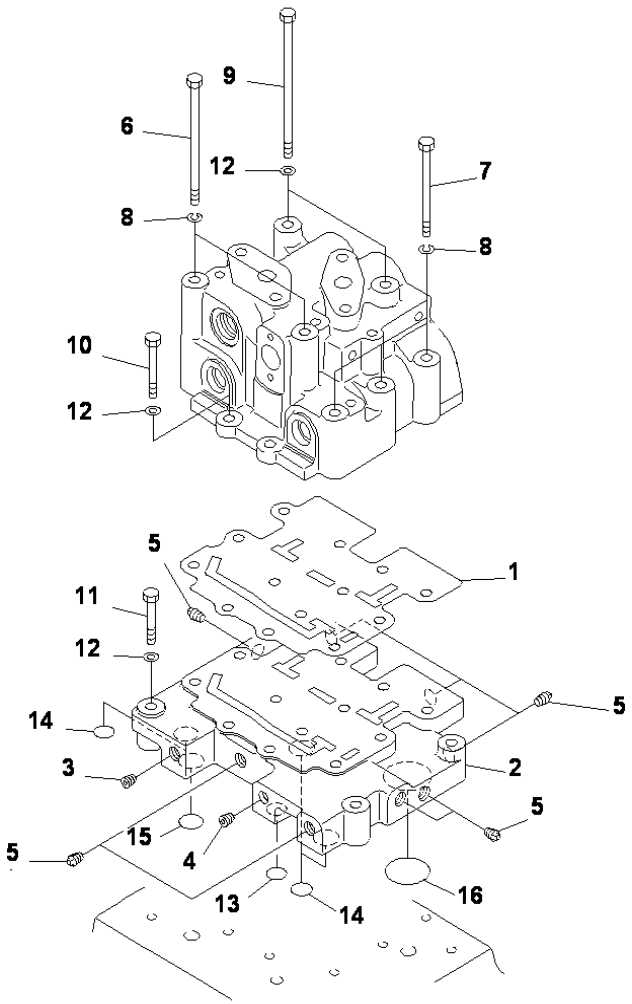

D85ESS-2 S/N J11888-UP

TOWING WINCH (VALVE, SEAT AND VALVE MOUNT)

INDEX	CD	PART NO.	DESCRIPTION	QTY	SERIAL NO.
1		15B-96-05251	GASKET	1	J10001-UP
2		15B-96-05221	VALVE SEAT	1	J10001-UP
3		07043-00312	PLUG	1	J10001-UP
4		07043-00211	PLUG	1	J10001-UP
5		07042-20312	PLUG	8	J10001-UP
6		01011-81030	BOLT	2	J10001-UP
7		01010-81080	BOLT	3	J10001-UP
8		01602-21030	WASHER	5	J10001-UP
9		01011-81065	BOLT	2	J10001-UP
10		01010-81065	BOLT	2	J10001-UP
11		01010-81055	BOLT	3	J10001-UP
12		01643-31032	WASHER	7	J10001-UP
13		07000-72016	O-RING	1	J10001-UP
14		07000-72018	O-RING	3	J10001-UP
15		07000-72020	O-RING	1	J10001-UP
16		07000-73038	O-RING	1	J10001-UP

Ref :T2510-13A0 Page :330230

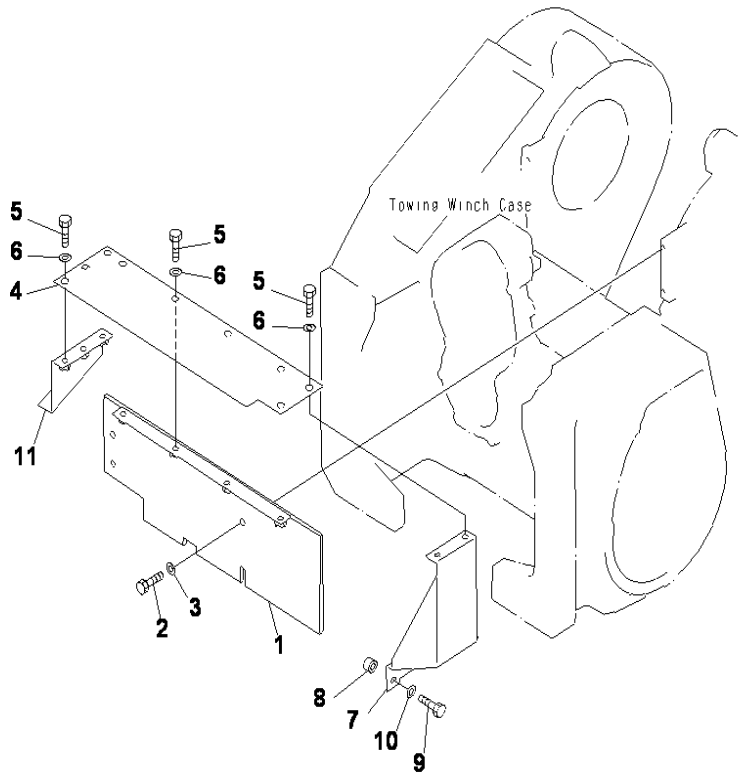

D85ESS-2 S/N J11888-UP

TOWING WINCH (COVER)

INDEX	CD	PART NO.	DESCRIPTION	QTY	SERIAL NO.
1		14X-96-03794	COVER	1	J10484-UP
		14X-960-3792	COVER	1	J10001-J10483
2		01010-81230	BOLT	4	J10001-UP
3		01643-31232	WASHER	4	J10001-UP
4		14X-960-6312	COVER	1	J10001-UP
5		01010-81225	BOLT	9	J10001-UP
6		01643-31232	WASHER	9	J10001-UP
7		14X-960-6322	COVER	1	J10001-UP
8		15B-96-06320	SEAT	3	J10001-UP
9		01010-81225	BOLT	1	J10001-UP
10		01643-31232	WASHER	1	J10001-UP
11		14X-960-6333	COVER	1	J10484-UP
		14X-960-6331	COVER	1	J10001-J10483

Ref :T2510-14A0 Page :330240

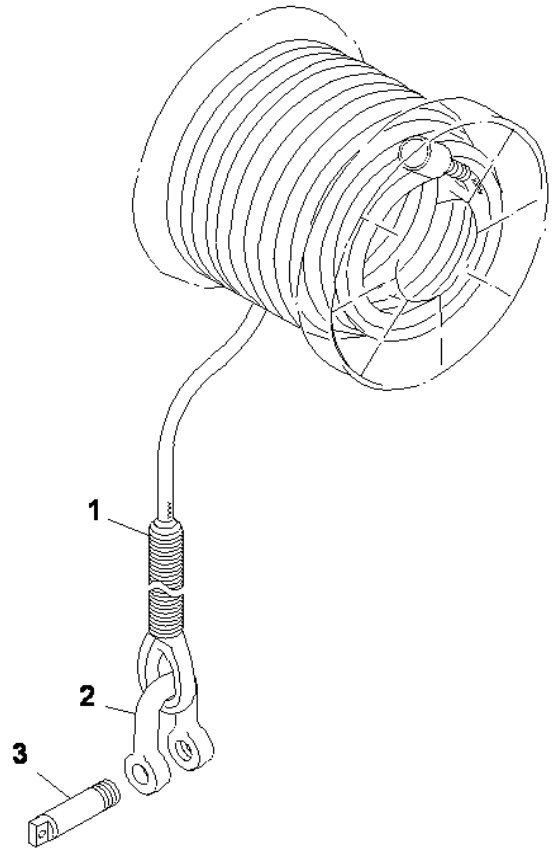

D85ESS-2 S/N J11888-UP

TOWING WINCH (WIRE ROPE)

INDEX	CD	PART NO.	DESCRIPTION	QTY	SERIAL NO.
1		14X-96-0J140	ROPE, WIRE.....	1	J10349-UP
		14X-96-01960	ROPE, WIRE.....	1	J10001-J10348
2		144-94-71410	HOOK.....	1	J10001-UP
3		144-94-71420	PIN.....	1	J10001-UP

Ref :T2510-15A0 Page :330250

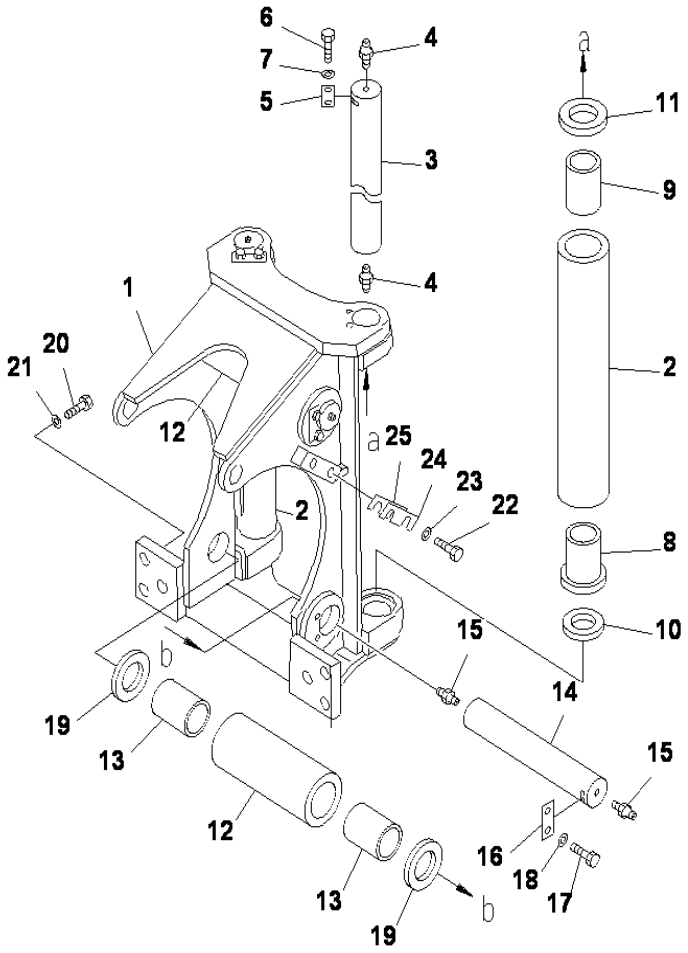

FAIR LEAD (OPTIONAL)

INDEX	CD	PART NO.	DESCRIPTION	QTY	SERIAL NO.
1		14X-960-8111	FRAME	1	J10001-UP
2		14X-960-8130	ROLLER	2	J10001-UP
3		14X-960-8120	SHAFT	2	J10001-UP
4		07020-00000	FITTING, GREASE	4	J10001-UP
5		04082-00514	LOCK	2	J10001-UP
6		01010-81435	BOLT	4	J10001-UP
7		01643-31445	WASHER	4	J10001-UP
8		144-947-5140	BUSHING	2	J10001-UP
9		144-947-5130	BUSHING	2	J10001-UP
10		150-95-18060	BUSHING	2	J10001-UP
11		150-95-18120	SPACER	2	J10001-UP
12		14X-960-8150	ROLLER	2	J10001-UP
13		144-947-5130	BUSHING	4	J10001-UP
14		14X-960-8140	SHAFT	2	J10001-UP
15		07020-00000	FITTING, GREASE	4	J10001-UP
16		04082-00514	LOCK	2	J10001-UP
17		01010-81435	BOLT	4	J10001-UP
18		01643-31445	WASHER	4	J10001-UP
19		150-95-18120	SPACER	4	J10001-UP
20		01010-82470	BOLT	6	J10001-UP
21		01643-32460	WASHER	6	J10001-UP
22		01010-82460	BOLT	4	J10001-UP
23		01643-32460	WASHER	4	J10001-UP
24		14X-960-8250	SHIM, 1.0MM	2	J10001-UP
25		14X-960-8260	SHIM, 0.5MM	4	J10001-UP

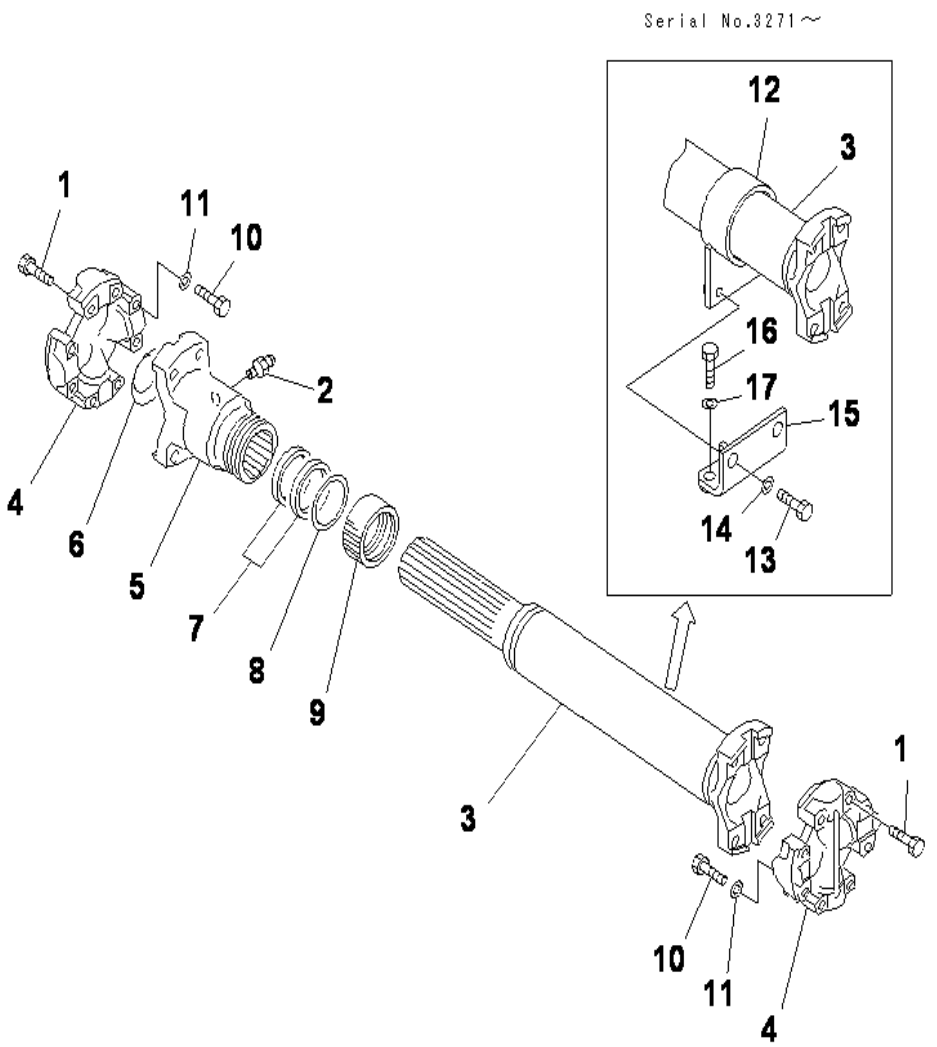

D85ESS-2 S/N J11888-UP

REAR P.T.O. SHAFT (TOWING WINCH)

INDEX	CD	PART NO.	DESCRIPTION	QTY	SERIAL NO.
		14W-67-11100	P.T.O. SHAFT ASS'Y	1	J10001-UP
1		01010-81050	.BOLT	8	J10001-UP
2		07020-00000	.FITTING	1	J10001-UP
3		14W-67-11110	.SHAFT	1	J10001-UP
4		154-66-12100	.SPIDER ASS'Y	2	J10001-UP
5		154-67-11180	.COUPLING	1	J10001-UP
6		07046-15020	..PLUG	1	J10001-UP
7		154-67-11321	.GASKET	2	J10001-UP
8		154-67-11331	.RETAINER	1	J10001-UP
9		170-65-11211	.NUT	1	J10001-UP
10		07372-21045	BOLT	8	J10001-UP
11		01643-51032	WASHER	8	J10001-UP
12		14W-67-11150	BRACKET	1	J10001-UP
13		01010-81235	BOLT	2	J10001-UP
14		01643-31232	WASHER	2	J10001-UP
15		14W-67-11160	BRACKET	1	J10001-UP
16		01010-81250	BOLT	2	J10001-UP
17		01643-31232	WASHER	2	J10001-UP
		SERVICE PARTS			
		14W-67-00010	SHAFT ASSY	1	J10001-UP
2		07020-00000	.FITTING	1	J10001-UP
3		14W-67-11110	.SHAFT	1	J10001-UP
5		154-67-11180	.COUPLING	1	J10001-UP
7		154-67-11321	.GASKET	2	J10001-UP
8		154-67-11331	.RETAINER	1	J10001-UP
9		170-65-11211	.NUT	1	J10001-UP

Ref :T2610-01A0 Page :330260

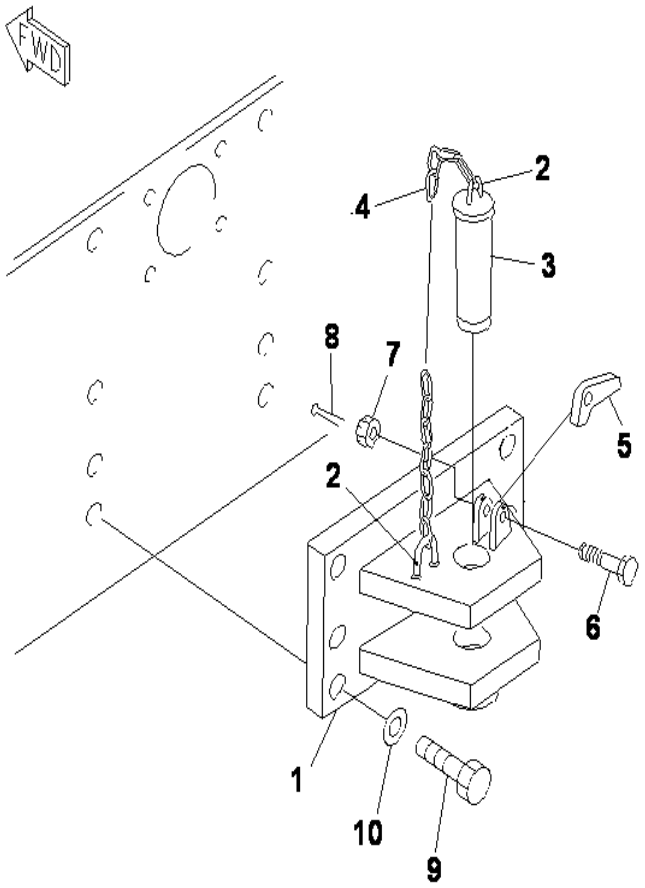

D85ESS-2 S/N J11888-UP

DRAWBAR

INDEX	CD	PART NO.	DESCRIPTION	QTY	SERIAL NO.
		14X-69-31101	BRACKET.....	1	J10001-UP
1		14X-69-31111	.BRACKET.....	1	J10001-UP
2		130-70-12210	.HOOK.....	2	J10001-UP
3		130-69-11190	.PIN.....	1	J10001-UP
4		150-70-13420	.CHAIN.....	1	J10001-UP
5		09249-00016	LATCH.....	1	J10001-UP
6		01052-51265	BOLT.....	1	J10001-UP
7		01592-11215	NUT.....	1	J10001-UP
8		04050-13025	PIN.....	1	J10001-UP
9		01010-82465	BOLT.....	6	J10001-UP
10		01643-32460	WASHER.....	6	J10001-UP

Ref :T2810-01A0 Page :330270

MARKS AND PLATES

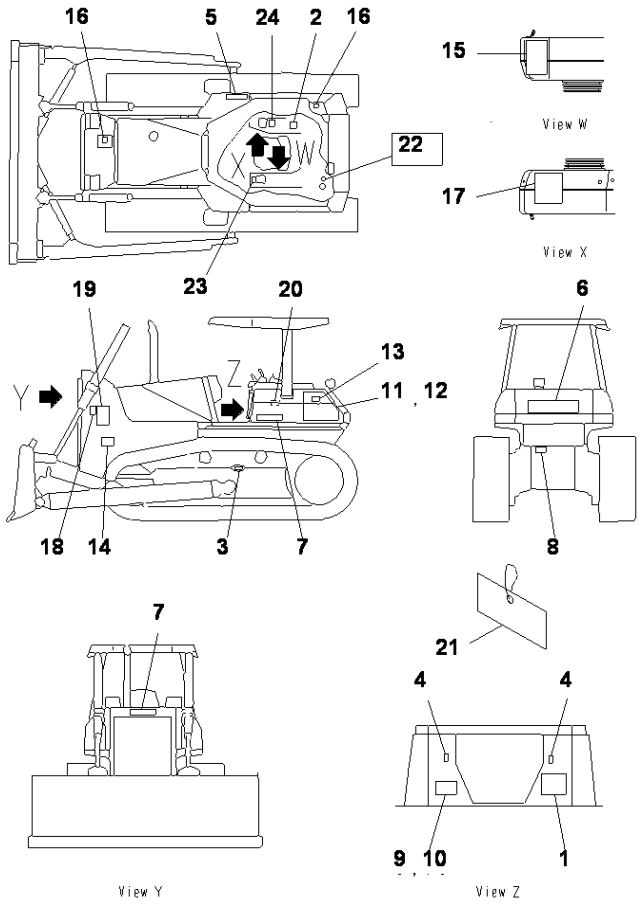

D85ESS-2 S/N J11888-UP

MARKS AND PLATES (ENGLISH)

INDEX	CD	PART NO.	DESCRIPTION	QTY	SERIAL NO.
1		14X-98-22711	OIL CHART LUBRI	1	J10001-UP
2		09651-A0641	PLATE,SAFETY	1	J10001-UP
3		09657-A0881	PLATE	2	J10001-UP
4		14X-98-11170	PLATE	2	J10001-UP
5		14X-98-11570	PLATE	1	J10001-UP
6		09690-P1000	MARK	1	J10001-UP
7		09690-P0560	MARK	3	J10001-UP
8		09690-M0063	MARK PLATE	1	J10001-UP
9		20Y-00-J1160	NAME PLATE	1	J10001-UP
10		04418-13060	SCREW	4	J10001-UP
11		14U-98-21220	PLATE MARK	1	J10001-UP
12		14U-98-21230	PLATE MARK	2	J10001-UP
13		14X-98-23160	PLATE MARK	1	J10001-UP
14		14U-98-11230	PLATE	2	J10001-UP
15		09802-B0750	PLATE	1	J10001-UP
16		09653-A0481	PLATE,SAFETY	2	J10001-UP
17		09654-B0641	PLATE	1	J10001-UP
18		09667-A0481	PLATE,SAFETY	2	J10001-UP
19		09806-B1201	PLATE	2	J10001-UP
20		09808-A0881	PLATE,SAFETY	1	J10001-UP
21		09963-A1640	PLATE	1	J10001-UP
22		09669-0000E	CAUTION PLATE	1	J10001-UP
23		14X-98-11240	PLATE	1	J10001-UP
24		14X-98-11250	PLATE	1	J10001-UP

Ref :U0100-01A0 Page :360010

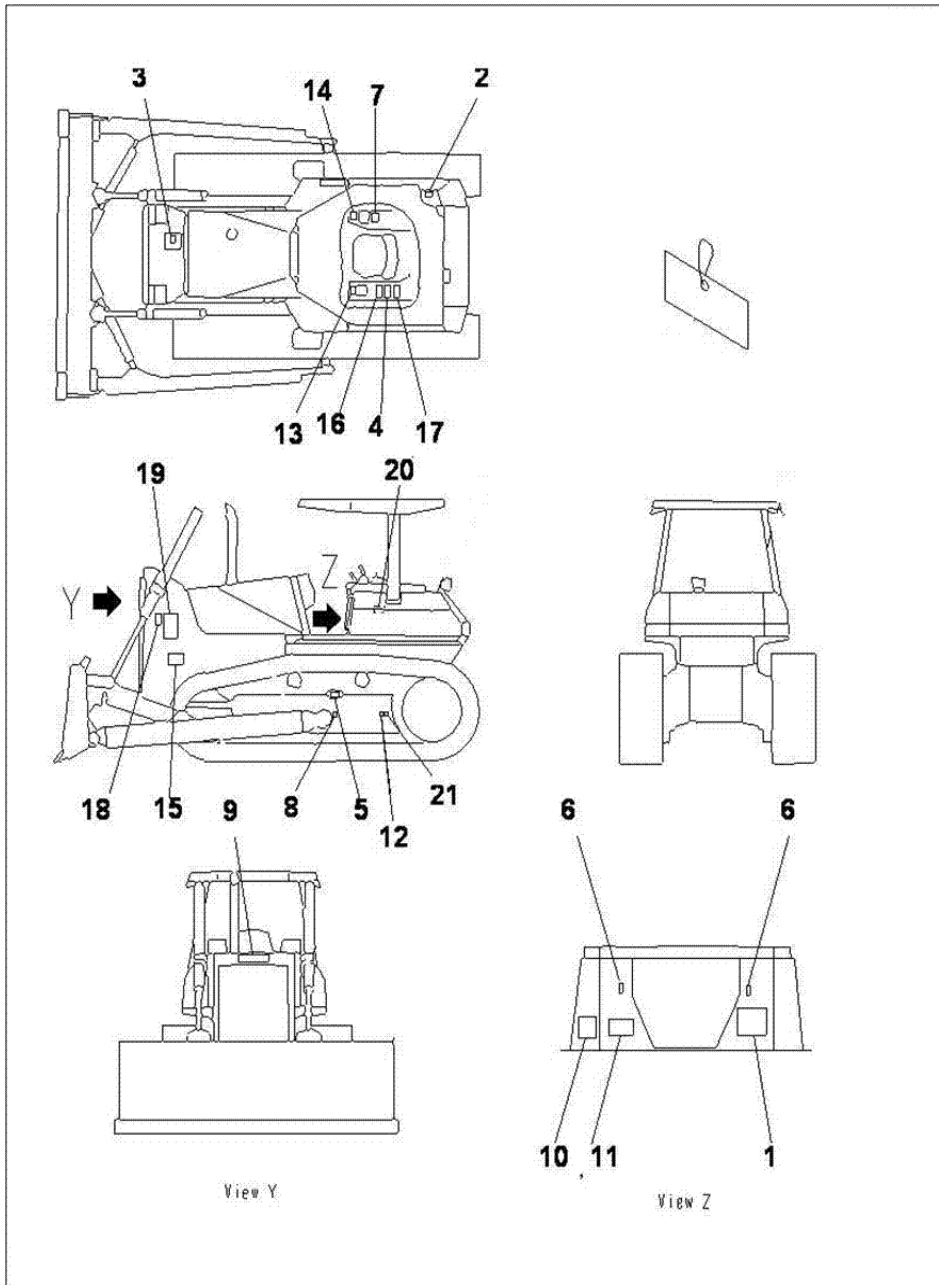

MARKS AND PLATES (INDONESIAN)

INDEX	CD	PART NO.	DESCRIPTION	QTY	SERIAL NO.
1		14U-98-11133	PLATE, CHART, OIL	1	J11264-UP
		14U-98-11132	PLATE, CHART, OIL	1	J10241-J11263
		14U-98-11130	PLATE, CHART, OIL	1	J10001-J10240
2		09653-A0481	PLATE,SAFETY, OPERATING OIL TANK	1	J11264-UP
		14X-98-12120	PLATE, SAFETY, OPERATING OIL TANK	1	J10001-J11263
3		09653-A0481	PLATE,SAFETY, RADIATOR	1	J11264-UP
		14X-98-12130	PLATE, SAFETY, RADIATOR	1	J10001-J11263
4		09654-B0641	PLATE, CAUTION BEFORE AND AFTER OPERAT IO.....J16677	1	J11264-UP
		14X-98-12140	PLATE, CAUTION BEFORE AND AFTER OPERATIO	1	J10001-J11263
5		09657-A0881	PLATE, SAFETY, ADJUSTION TRACK SHOE	2	J11264-UP
		14X-98-12150	PLATE, SAFETY, ADJUSTION TRACK SHOE	2	J10001-J11263
6		14X-98-11170	PLATE, OPERATING, LOCK	2	J10001-UP
7		14W-96-07310	PLATE	1	J11264-UP
8		21U-98-31160	GRAVITY, MARK	2	J11264-UP
9		09690-P0450	PLATE, MARK, KOMATSU, FRONT		J11264-UP
10		17A-98-41510	PLATE	1	J11264-UP
11		09602-120D1	NAME PLATE	1	J11264-UP
12		21U-98-31150	MARK	4	J11264-UP
13		14X-98-11240	PLATE, OPERATING, STEERING LEVER	1	J10001-UP
14		14X-98-11260	PLATE, OPERATING	1	J10001-UP
15		14U-98-11190	PLATE	2	J10349-UP
16		09651-A0641	PLATE, CAUTION BEFORE OPERATION	1	J11264-UP
17		09802-B0750	PLATE, CAUTION SAFETY CONFIRM OF REAR	1	J11264-UP
18		09667-A0481	PLATE,SAFETY	2	J11264-UP
19		09806-B1201	PLATE, DANGER, KEEP AWAY	2	J11264-UP
20		09808-A0881	PLATE, CAUTION, BATTERY CABLE	1	J11264-UP
21		09960-00802	MARK	4	J11264-UP

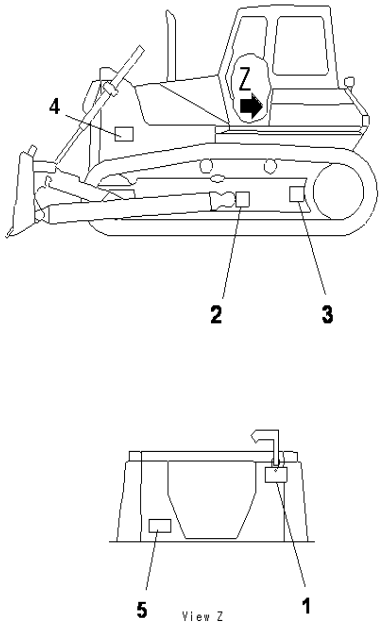

D85ESS-2 S/N J11888-UP

GRAVITY MARKS

INDEX	CD	PART NO.	DESCRIPTION	QTY	SERIAL NO.
1		130-98-79210	TABLE	1	J11888-UP
2		09960-00611	MARK PLATE	2	J11888-UP
3		09960-00801	MARK	4	J11888-UP
4		09960-00802	MARK	4	J11888-UP
5		17A-98-41510	PLATE	1	J11888-UP

Ref :U0400-01A0 Page :360040

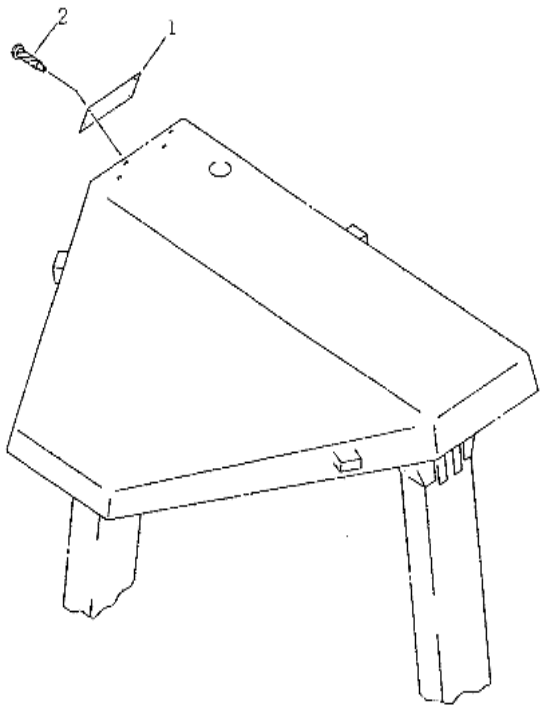

D85ESS-2 S/N J11888-UP

ROPS PLATES

INDEX	CD	PART NO.	DESCRIPTION	QTY	SERIAL NO.
1		09620-30200	PLATE.....	1	J10001-UP
2		04418-13060	SCREW.....	4	J10001-UP

Ref :U0520-01A0 Page :360050

ACCESSORY

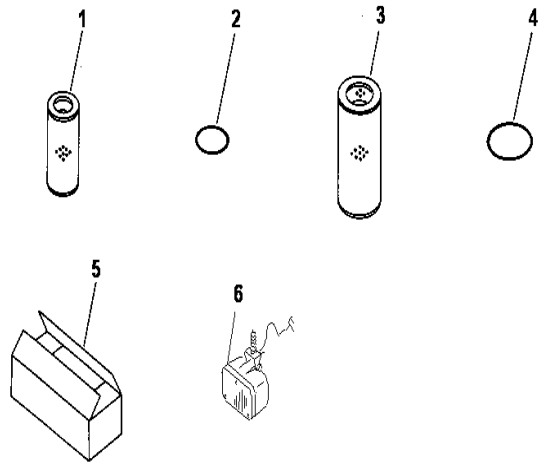

D85ESS-2 S/N J11888-UP

SPARE PARTS

INDEX	CD	PART NO.	DESCRIPTION	QTY	SERIAL NO.
1		201-60-71180	ELEMENT.....	1	J10637-UP
		07063-01054	ELEMENT.....	1	J10001-J10636
2		07000-72100	O-RING.....	1	J10001-UP
3		203-60-61230	ELEMENT.....	1	J11372-UP
		07063-01100	ELEMENT.....	1	J10961-J11371
4		07000-02135	O-RING.....	1	J10001-UP
5		09059-00800	BOX, SPARE PARTS.....	1	J10001-UP
6		14X-06-11120	WORK LAMP ASSY.....	3	J11632-UP

Ref :V0100-01A0 Page :390010

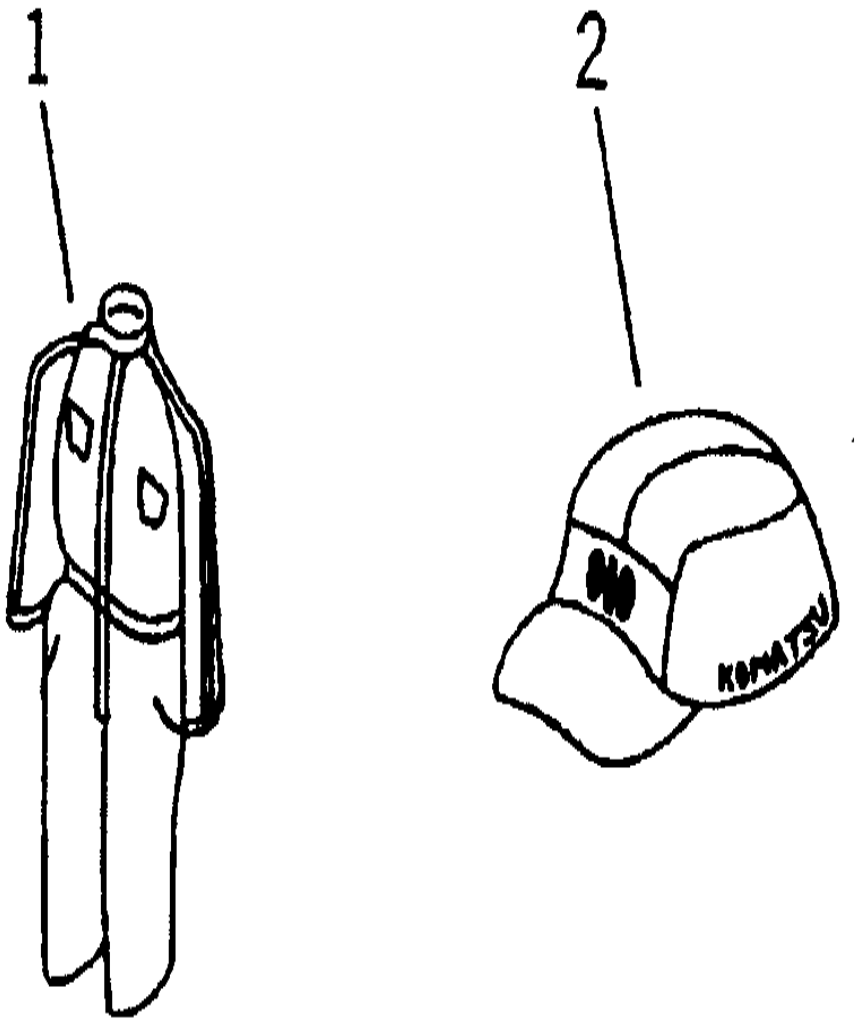

D85ESS-2 S/N J11888-UP

CAP AND OVERALL

INDEX	CD	PART NO.	DESCRIPTION	QTY	SERIAL NO.
1		09980-10550	OVERALL	1	J10001-UP
2		09982-20057	CAP	1	J10001-UP

Ref :V0200-01A0 Page :390020

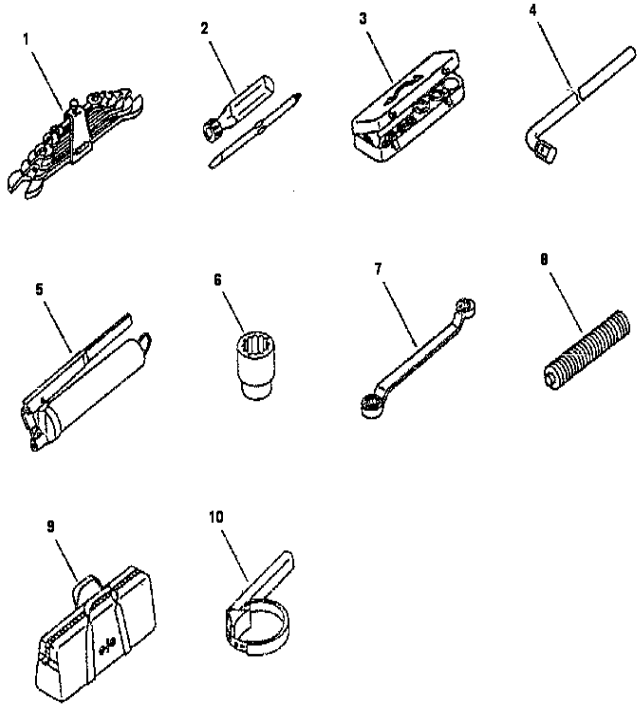

D85ESS-2 S/N J11888-UP

TOOL

INDEX	CD	PART NO.	DESCRIPTION	QTY	SERIAL NO.
1		09000-30006	WRENCH SET	1	J10001-UP
2		09033-00190	DRIVER, SCREW	1	J10001-UP
3		0902010285	SOCKET WRENCH SET	1	J10001-UP
4		09024-00300	HANDLE	1	J10001-UP
5		07952-70002	GREASE PUMP ASS'Y	1	J10001-UP
6		09021-03653	SOCKET, 36MM	1	J10001-UP
7		0901102427	WRENCH	1	J10001-UP
8		07950-90403	CARTRIDGE, GREASE	1	J10001-UP
9		09056-05513	BAG, TOOL	1	J10001-UP
10		09019-28035	WRENCH, FILTER	1	J12001-UP
		09019-08035	WRENCH, FILTER	1	J10001-J12000

Ref :V0300-01A0 Page :390030

MISCELLANEOUS

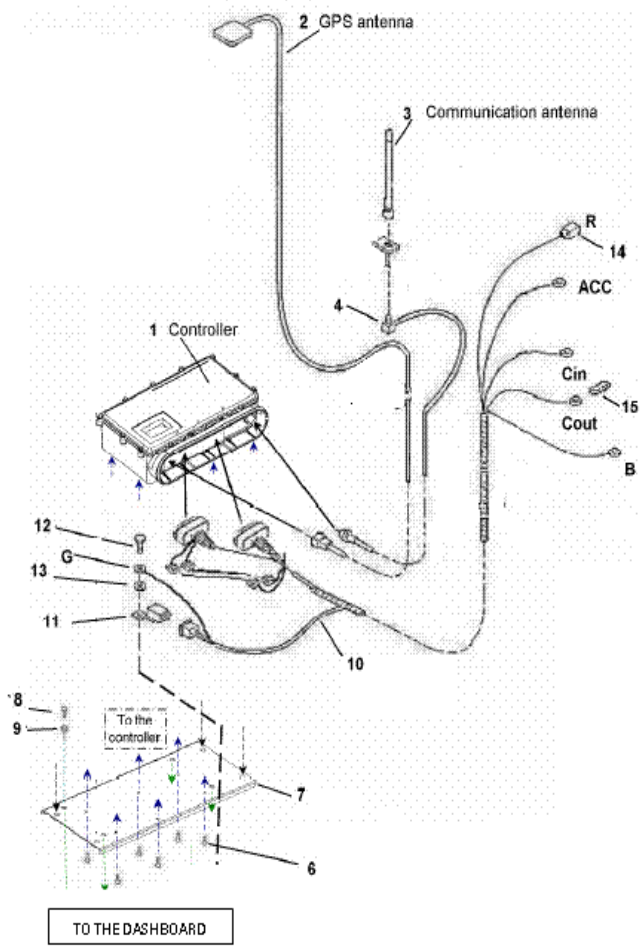

D85ESS-2 S/N J11888-UP

KOMTRAX TC310(MODEM INSTALLATION)

INDEX	CD	PART NO.	DESCRIPTION	QTY	SERIAL NO.
1		7826-24-3003	CONTROLLER	1	J16347-UP
		7826-24-3002	CONTROLLER	1	J13325-J16346
2		8A13-10-1320	GPS ANTENNA	1	J13325-UP
3		8A13-10-2100	ANTENNA	1	J13325-UP
4		8A13-10-2200	CABLE ANTENA	1	J13325-UP
5		14X-06-J1110	BASE	1	J13325-J15941
6		01023-60308	SCREW	6	J13325-UP
7		14X-54-J1440	PLATE	1	J15942-UP
		14X-06-J1120	PLATE	1	J13325-J15941
8		01010-80610	BOLT	8	J13325-UP
9		01643-30623	WASHER	8	J13325-J15941
10		782-62-43250	WIRING HARNESS	1	J15942-UP
		14X-06-J1161	WIRING HARNESS	1	J13997-J15941
		14X-06-J1160	WIRING HARNESS	1	J13325-J13996
11		569-06-61960	RELAY (24V)	1	J13325-UP
12		01435-00610	BOLT	1	J13325-UP
13		01611-06060	WASHER	1	J13325-UP
14		7826-21-1910	U-CONNECTOR	2	J13325-J15941
15		7826-21-1960	CAP	2	J13325-J15941

Ref :W1111-01A0 Page :420010

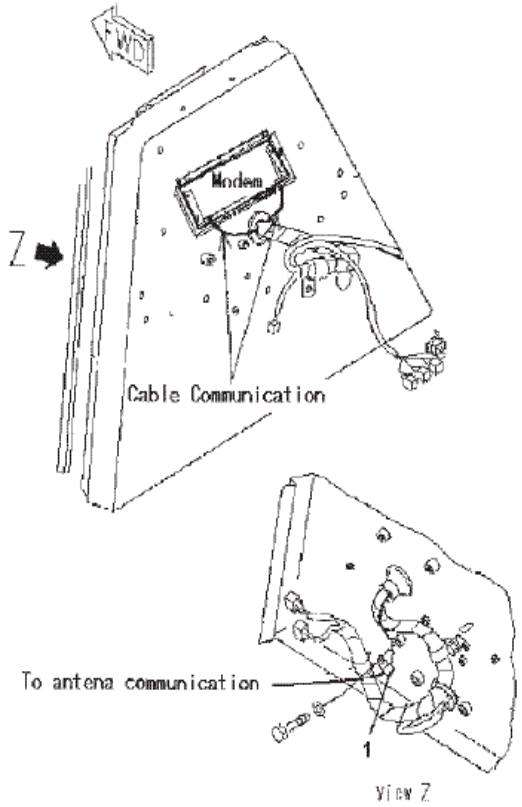

D85ESS-2 S/N J11888-UP

KOMTRAX TC310 (HARNESS CLIP)

INDEX	CD	PART NO.	DESCRIPTION	QTY	SERIAL NO.
1		04434-51012	CLIP.....	1	J13325-J13996

Ref :W1111-02A0 Page :420020

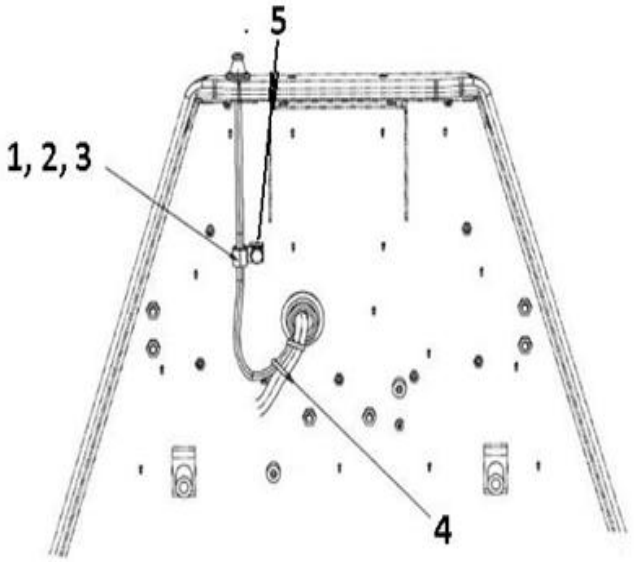

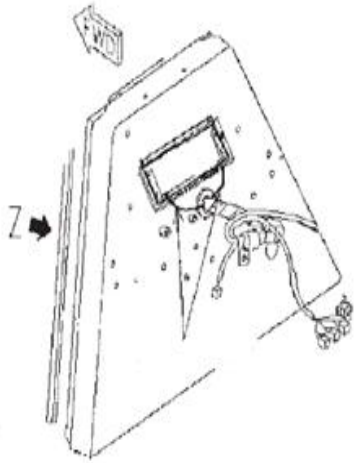

D85ESS-2 S/N J11888-UP

KOMTRAX TC310(HARNESS CLIP)

INDEX	CD	PART NO.	DESCRIPTION	QTY	SERIAL NO.
1		01643-31032	WASHER	1	J16482-UP
2		01010-81020	BOLT	1	J16482-UP
3		04434-51610	CLIP	1	J16482-UP
4		21W-62-38390	NYLON BAND	2	J13325-UP
5		01572-21016	SEAT	1	J16482-UP

Ref :W1111-02A0 Page :420025

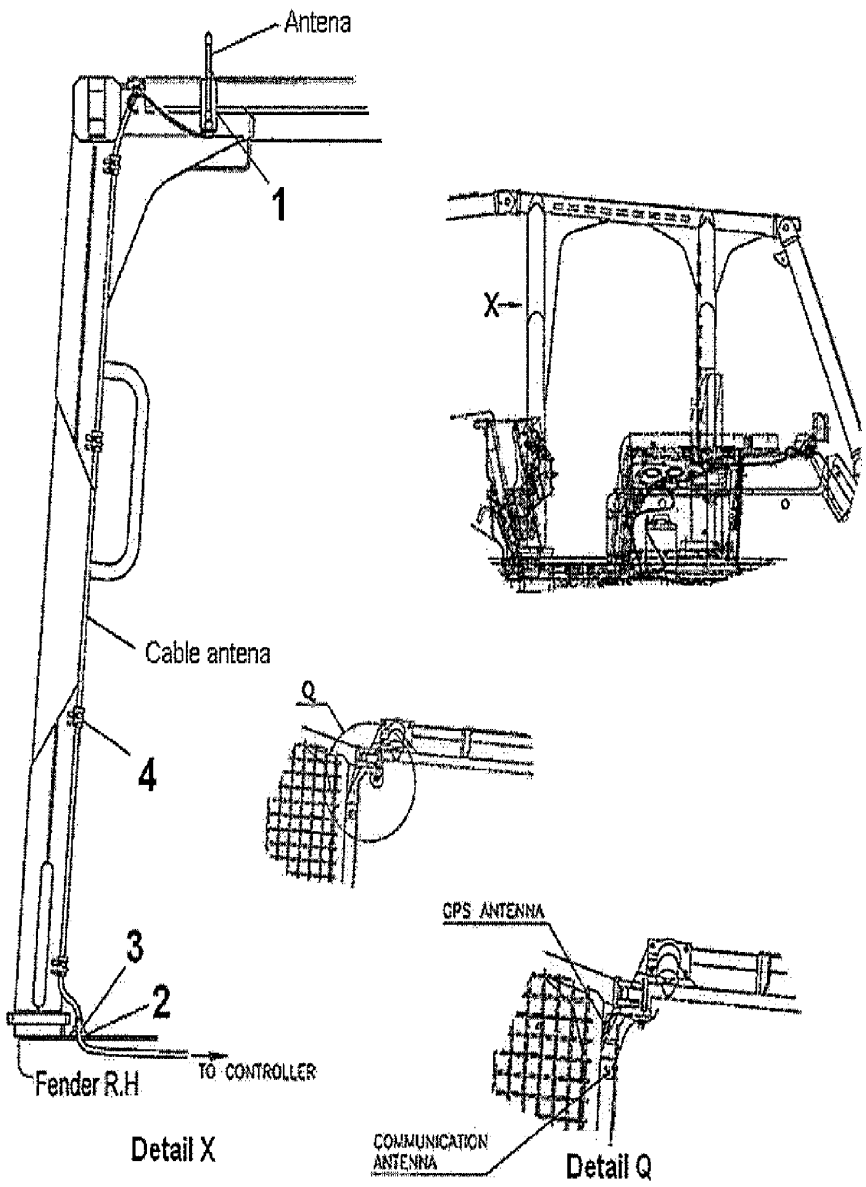

D85ESS-2 S/N J11888-UP

KOMTRAX TC310 (HARNESS INSTALLATION)

INDEX	CD	PART NO.	DESCRIPTION	QTY	SERIAL NO.
1		144-54-J1610	PLATE (WELDED).....	1	J13325-J13996
2		144-54-J1620	PLATE (WELDED).....	1	J13325-J13996
3		08036-D1630	CLIP (WELDED).....	5	J15942-J16481
4		08037-11025	GROMMET.....	1	J13325-J13996

Ref :W1111-03A0 Page :420030

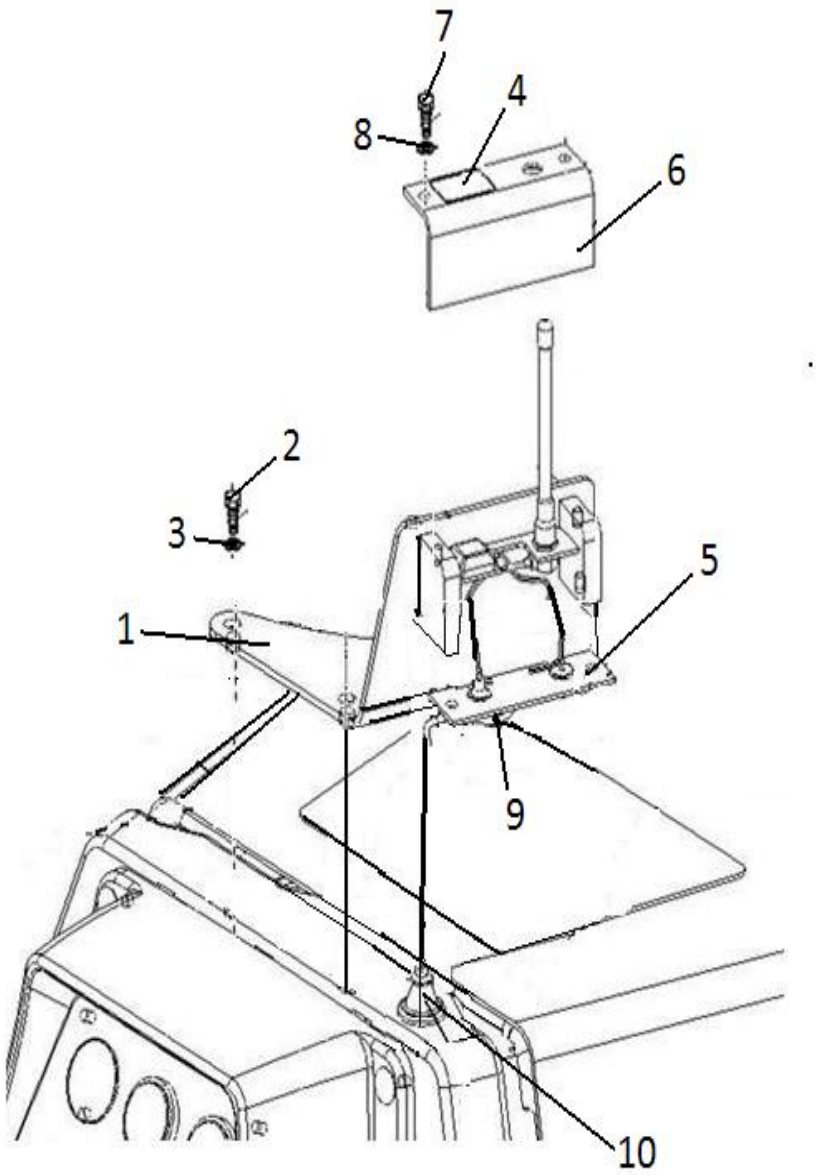

D85ESS-2 S/N J11888-UP

KOMTRAX TC310 (HARNESS INSTALLATION)

INDEX	CD	PART NO.	DESCRIPTION	QTY	SERIAL NO.
1		14X-54-J1420	BRACKET	1	J15942-UP
2		01010-81230	BOLT	2	J16482-UP
3		01643-31232	WASHER	2	J15942-UP
4		23B-54-J1130	COVER ABS	1	J15942-UP
5		23B-54-J1180	PLATE	1	J15942-UP
6		23B-54-J1190	PLATE	1	J15942-UP
7		01010-80816	BOLT	4	J15942-UP
8		01643-30823	WASHER	4	J15942-UP
9		23B-06-J1100	WIRING HARNESS	1	J15942-UP
10		08037-11425	GROMMET	1	J16482-UP

Ref :W1111-03A0 Page :420035

SERVICES KIT

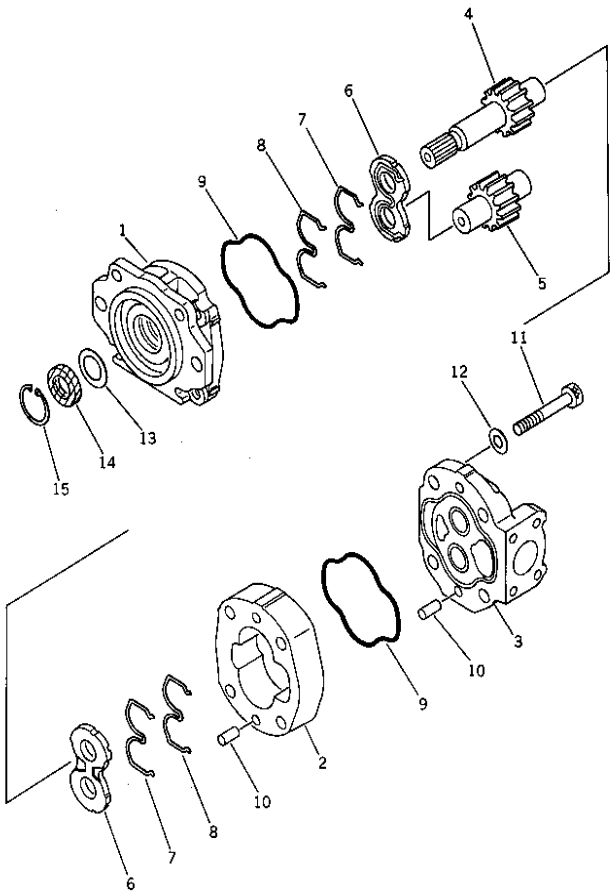

D85ESS-2 S/N J11888-UP

HYDRAULIC PUMP

INDEX	CD	PART NO.	DESCRIPTION	QTY	SERIAL NO.
		705-11-38010	PUMP ASS'Y, SAL (3)80.....	1	J10541-UP
		705-11-40010	PUMP ASS'Y, SAL (3)100.....	1	J10001-J10540
1	C1	(705-17-03012)	.BRACKET.....	1	J10541-UP
	C1	(705-17-03352)	..BUSHING.....	2	J10541-UP
2	C1	(705-17-38010)	.CASE, GEAR.....	1	J10541-UP
3	C1	(705-17-03121)	.COVER.....	1	J10541-UP
	C1	(705-17-03352)	..BUSHING.....	2	J10541-UP
4	C1	(705-17-38411)	.GEAR DRIVE.....	1	J10541-UP
5	C1	(708-17-38511)	.GEAR, DRIVEN.....	1	J10541-UP
6		705-17-03610	.PLATE, SIDE.....	2	J10541-UP
7		705-17-03440	.RING.....	2	J10541-UP
8		705-17-03470	.SEAL.....	2	J10541-UP
9		705-17-03380	.O-RING.....	2	J10541-UP
10		04020-01228	.PIN, DOWEL.....	4	J10541-UP
11		705-17-03760	.BOLT.....	4	J10541-UP
12		01643-51645	.WASHER.....	4	J10541-UP
13		705-17-03870	.PLATE.....	1	J10541-UP
14		705-17-03810	.SEAL, OIL.....	1	J10541-UP
15		04065-05220	.RING, SNAP.....	1	J10541-UP

Ref :Y1610-01A1 Page :450004

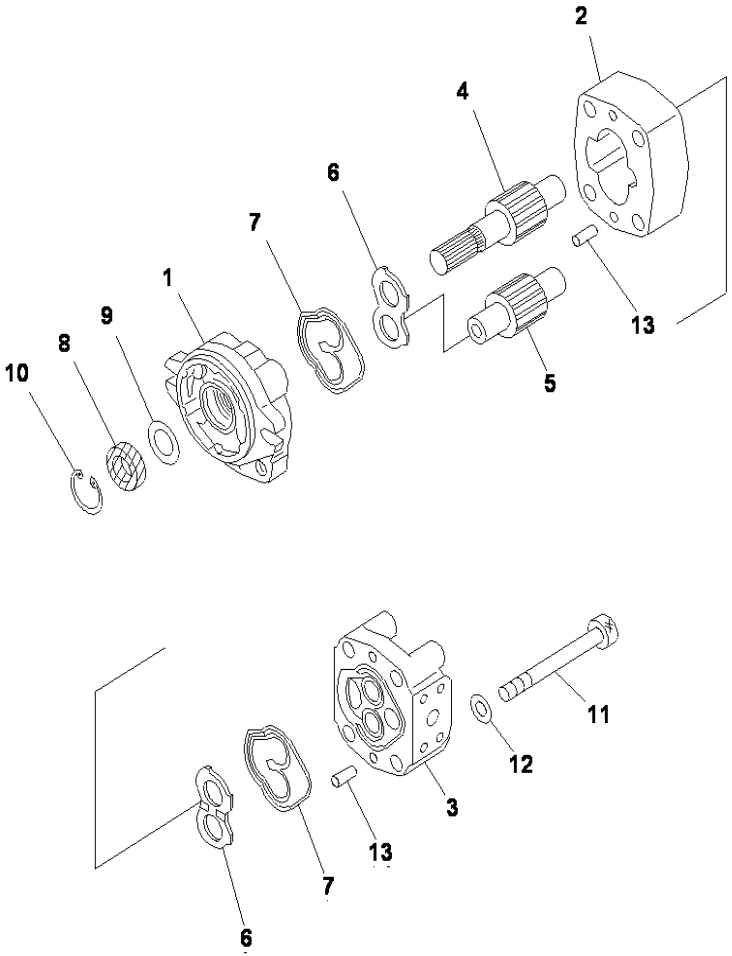

D85ESS-2 S/N J11888-UP

HYDRAULIC PUMP (P.P.C. PUMP)

INDEX	CD	PART NO.	DESCRIPTION	QTY	SERIAL NO.
		705-41-01050	PUMP ASS'Y, (SBR(1)14).....	1	J11120-UP
1	C1	(705-41-80210)	.BRACKET.....	1	J11120-UP
	C1	(705-40-80620)	..BUSHING, (DRIVE SIDE).....	1	J11120-UP
	C1	(705-40-80610)	..BUSHING, (DRIVEN SIDE).....	1	J11120-UP
2	C1	(705-40-26011)	.CASE, GEAR.....	1	J11120-UP
3	C1	(705-40-80111)	.COVER.....	1	J11120-UP
	C1	(705-40-80610)	..BUSHING, (DRIVE SIDE).....	1	J11120-UP
	C1	(705-40-80620)	..BUSHING, (DRIVEN SIDE).....	1	J11120-UP
4	C1	(705-40-26411)	.GEAR DRIVE.....	1	J11120-UP
5	C1	(705-40-26511)	.GEAR DRIVEN.....	1	J11120-UP
6		705-40-80720	.PLATE, SIDE.....	2	J11120-UP
7		705-40-80760	.SEAL.....	2	J11120-UP
8		705-40-80810	.SEAL, OIL.....	1	J11120-UP
9		705-40-80870	.PLATE.....	1	J11120-UP
10		04065-03515	.RING, SNAP.....	1	J11120-UP
11		705-41-80890	.BOLT.....	4	J11120-UP
12		01643-51232	.WASHER.....	4	J11120-UP
13		04020-00820	.DOWEL PIN.....	4	J11120-UP

Ref :Y1610-02A1 Page :450005

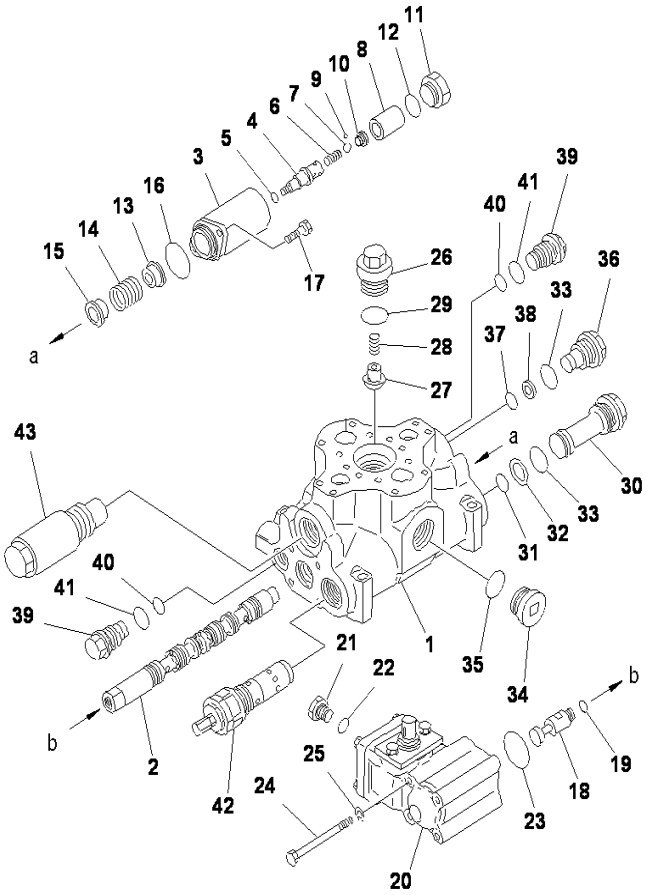

CONTROL VALVE (1-SPOOL)(1/3)

INDEX	CD	PART NO.	DESCRIPTION	QTY	SERIAL NO.
		700-91-34000	VALVE ASS'Y.....	1	J10001-UP
			THIS ASSEMBLY CONSIST OF ALL PARTS.....		
			SHOWN IN FIGS. Y1661-01A0 TO Y1661-03A0.....		
1	C1		.VALVE.....	1	J10001-UP
2	C1		.SPOOL.....	1	J10001-UP
3		700-91-11230	.CASE.....	1	J10001-UP
4		700-91-34130	.PLUG.....	1	J10001-UP
5		07000-11006	.O-RING.....	1	J10001-UP
6		700-82-11380	.SPRING.....	1	J10001-UP
7		04260-00952	.BALL.....	1	J10001-UP
8		700-91-34140	.DETENT.....	1	J10001-UP
9		700-84-11730	.BALL.....	3	J10001-UP
10		700-21-11210	.PLUG.....	1	J10001-UP
11		700-92-11430	.PLUG.....	1	J10001-UP
12		07002-03034	.O-RING.....	1	J10001-UP
13		700-91-11380	.RETAINER.....	1	J10001-UP
14		700-91-11390	.SPRING.....	1	J10001-UP
15		700-91-11260	.RETAINER.....	1	J10001-UP
16		07000-03042	.O-RING.....	1	J10001-UP
17		01252-30820	.BOLT.....	2	J10001-UP
18		700-93-11390	.JOINT.....	1	J10001-UP
19		07002-11423	.O-RING.....	1	J10001-UP
20		702-13-21601	.ROTARY SEAL ASS'Y.....	1	J10001-UP
21		700-91-11290	.PLUG.....	1	J10001-UP
22		07000-02020	.O-RING.....	1	J10001-UP
23		07000-03042	.O-RING.....	1	J10001-UP
24		430-07-23560	.BOLT.....	4	J10001-UP
25		01602-20825	.WASHER, SPRING.....	4	J10001-UP
26		700-93-11481	.PLUG.....	1	J10001-UP
27		700-93-11461	.VALVE, CHECK.....	1	J10001-UP
28		700-93-11471	.SPRING.....	1	J10001-UP
29		07002-13634	.O-RING.....	1	J10001-UP
30		700-93-11310	.PLUG.....	1	J10001-UP
31		700-93-11320	.O RING.....	1	J10001-UP
32		700-93-11330	.RING, BACK-UP.....	1	J10001-UP
33		07002-03634	.O-RING.....	2	J10001-UP
34		07040-13618	.PLUG.....	1	J10001-UP
35		07002-13634	.O-RING.....	1	J10001-UP
36		700-94-11260	.PLUG.....	1	J10001-UP
37		07000-12018	.O-RING.....	1	J10001-UP
38		07001-02018	RING, BACK-UP.....	1	J10001-UP
39		700-22-11360	.PLUG.....	2	J10001-UP
40		07000-02014	.O-RING.....	2	J10001-UP

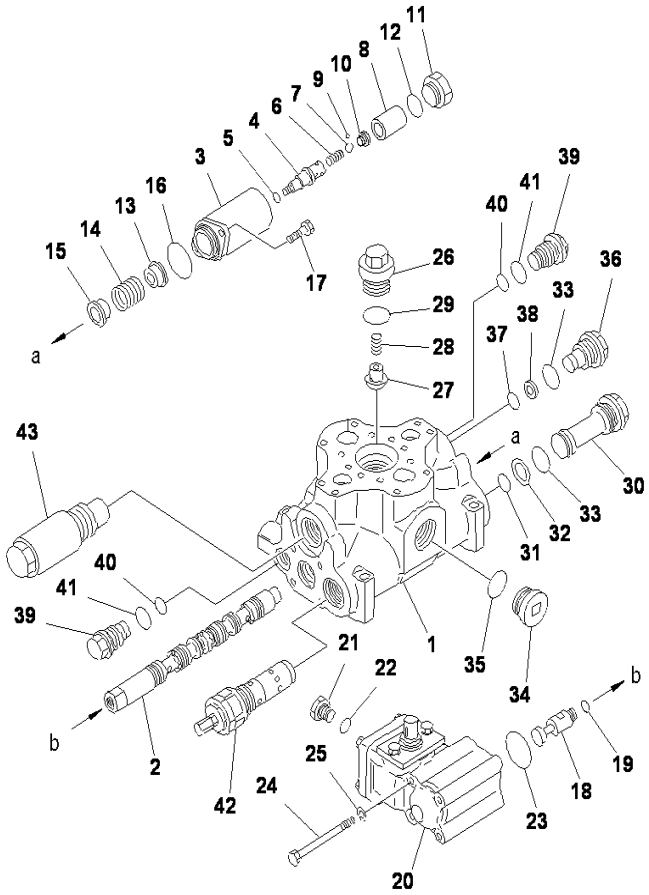

D85ESS-2 S/N J11888-UP

CONTROL VALVE (1-SPOOL)(1/3)

INDEX	CD	PART NO.	DESCRIPTION	QTY	SERIAL NO.
41		07002-02434	.O-RING.....	2	J10001-UP
42		700-93-56000	.VALVE ASS'Y.....	1	J10001-UP
43		700-90-74001	.SUCTION VALVE ASS'Y.....	1	J10001-UP

Ref :Y1661-01A0 Page :450007

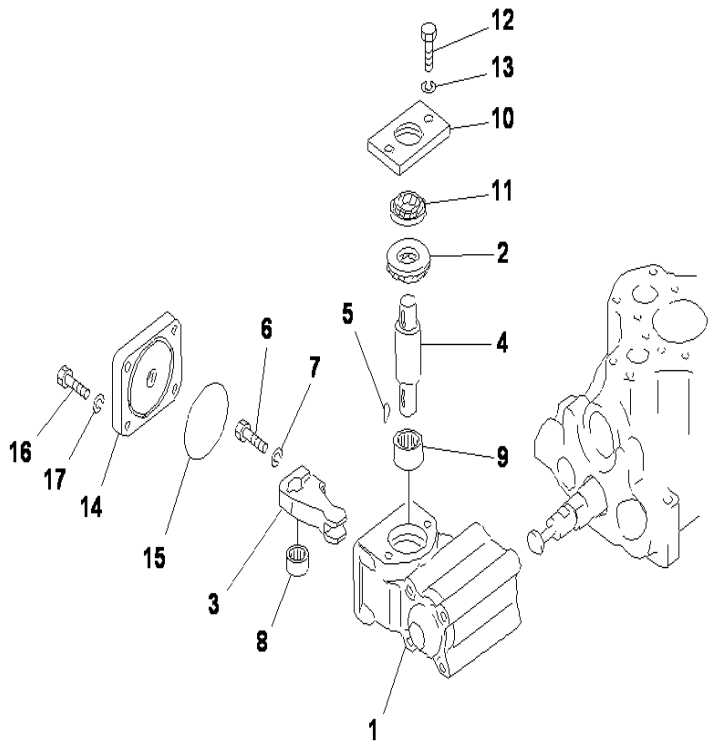

D85ESS-2 S/N J11888-UP

CONTROL VALVE (1-SPOOL)(2/3)

INDEX	CD	PART NO.	DESCRIPTION	QTY	SERIAL NO.
		700-91-34000	VALVE ASS'Y.....	1	J10001-UP
			THIS ASSEMBLY CONSIST OF ALL PARTS.....		
			SHOWN IN FIGS. Y1661-01A0 TO Y1661-03A0.....		
		702-13-21601	.ROTARY SEAL ASS'Y.....	1	J10001-UP
1		702-13-21610	..CASE.....	1	J10001-UP
2		07430-11161	..SEAL, OIL.....	1	J10001-UP
3		702-13-21642	..LEVER.....	1	J10001-UP
4		702-13-21650	..SHAFT.....	1	J10001-UP
5		04010-00519	..KEY.....	1	J10001-UP
6		01010-80835	..BOLT.....	1	J10001-UP
7		01602-00825	..WASHER, SPRING.....	1	J10001-UP
8		702-13-21620	..BEARING.....	1	J10001-UP
9		06120-02520	..BEARING.....	1	J10001-UP
10		701-51-32170	..PLATE.....	1	J10001-UP
11		07016-00256	..SEAL.....	1	J10001-UP
12		01010-80820	..BOLT.....	2	J10001-UP
13		01602-00925	..WASHER, SPRING.....	2	J10001-UP
14		702-13-21630	..COVER.....	1	J10001-UP
15		07000-02065	..O-RING.....	1	J10001-UP
16		01010-80830	..BOLT.....	4	J10001-UP
17		01602-20825	..WASHER, SPRING.....	4	J10001-UP

Ref :Y1661-02A0 Page :450008

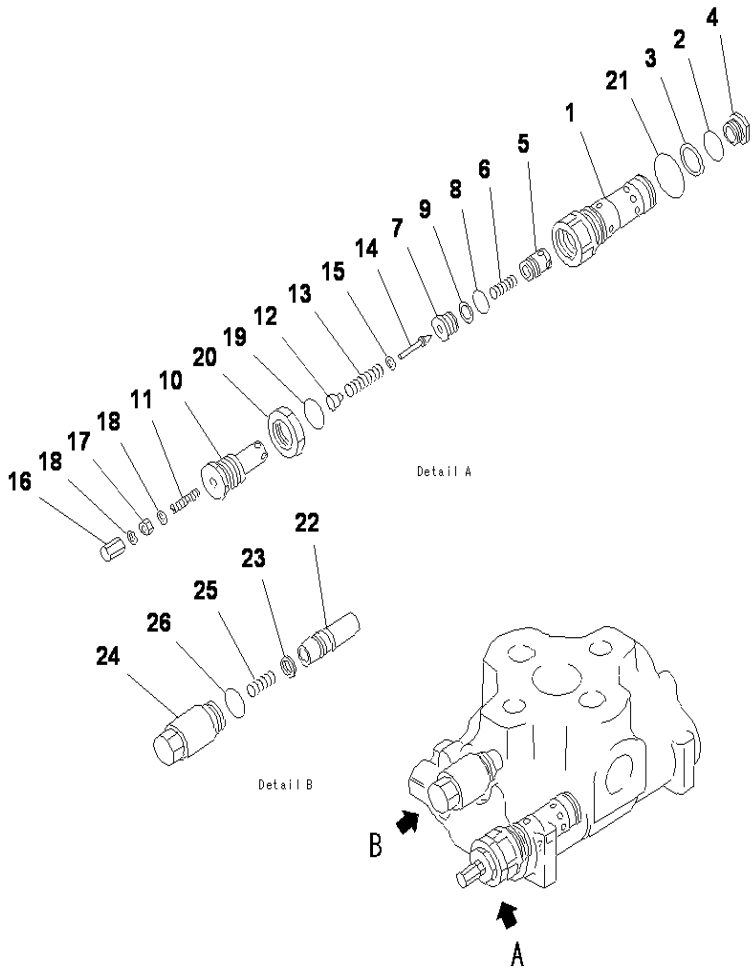

CONTROL VALVE (1-SPOOL)(3/3)

INDEX	CD	PART NO.	DESCRIPTION	QTY	SERIAL NO.
		700-91-34000	VALVE ASS'Y.....		J10001-UP
			THIS ASSEMBLY CONSIST OF ALL PARTS.....		
			SHOWN IN FIGS. Y1661-01A0 TO Y1661-03A0.....		
		700-93-56000	.VALVE ASS'Y.....	1	J10001-UP
1	C1		..SLEEVE.....	1	J10001-UP
2		700-93-11320	..O RING.....	1	J10001-UP
3		100-93-11330	..RING, BACK-UP.....	1	J10001-UP
4	C1		..PLUG.....	1	J10001-UP
5	C1		..VALVE.....	1	J10001-UP
6		700-90-51320	..SPRING.....	1	J10001-UP
7		700-90-51150	..SEAT.....	1	J10001-UP
8		07000-22016	..O-RING.....	1	J10001-UP
9		07001-02016	..RING, BACK-UP.....	1	J10001-UP
10		700-90-51270	..HOLDER.....	1	J10001-UP
11		700-90-51281	..SCREW.....	1	J10001-UP
12		700-90-51250	..RETAINER.....	1	J10001-UP
13		700-90-51160	..SPRING.....	1	J10001-UP
14		700-80-61190	..POPPET.....	1	J10001-UP
15		700-80-51240	..SPACER.....	1	J10001-UP
16		700-90-51311	..NUT.....	1	J10001-UP
17		01580-10806	..NUT.....	1	J10001-UP
18		700-90-51290	..WASHER, SEAL.....	2	J10001-UP
19		07002-03034	..O-RING.....	1	J10001-UP
20		700-90-51190	..NUT.....	1	J10001-UP
21		07002-03634	..O-RING.....	1	J10001-UP
		700-90-74001	.SUCTION VALVE ASS'Y.....	1	J10001-UP
22	C1		..VALVE.....	1	J10001-UP
23	C1		..SEAL.....	1	J10001-UP
24		700-90-61211	..SLEEVE.....	1	J10001-UP
25		700-90-61170	..SPRING.....	1	J10001-UP
26		07002-03634	..O-RING.....	1	J10001-UP

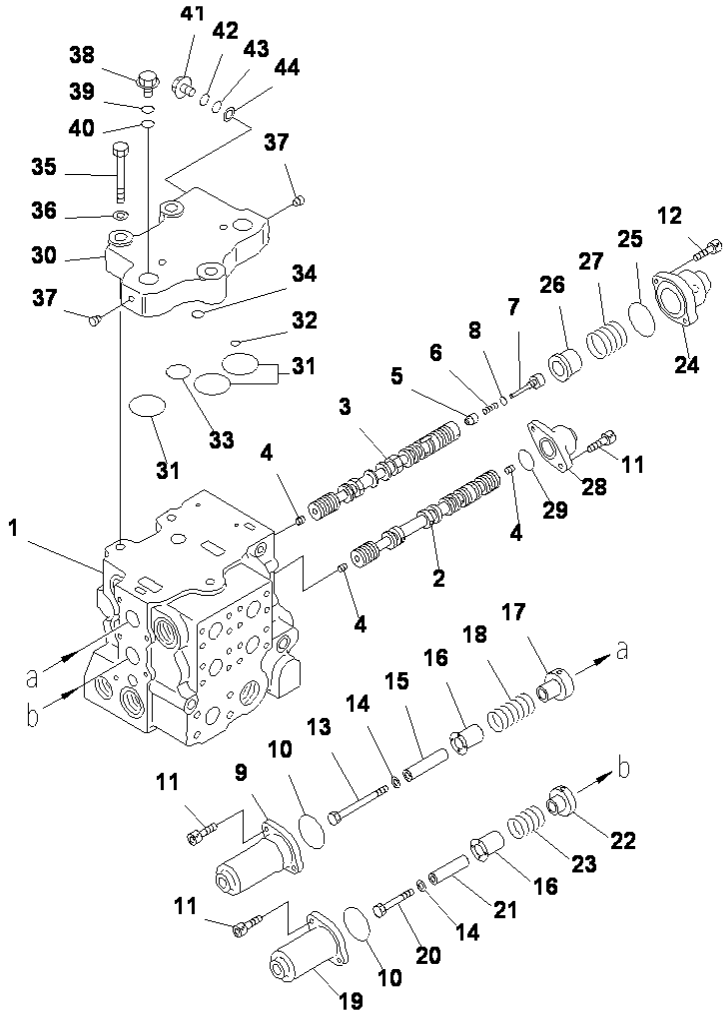

CONTROL VALVE(2-SPOOL)(1/4)

INDEX	CD	PART NO.	DESCRIPTION	QTY	SERIAL NO.
		723-62-12100	CONTROL VALVE.....	1	J11301-UP
			THIS ASSEMBLY CONSIST OF ALL PARTS SHOWN....		
			IN FIGS. Y1662-01A0 TO Y1662-04A0.....		
1	C1		.BODY.....	1	J11301-UP
2	C1		.SPOOL.....	1	J11301-UP
3	C1		.SPOOL.....	1	J11301-UP
4	C1		.PLUG.....	3	J11301-UP
5		723-63-31630	.VALVE.....	1	J11301-UP
6		706-76-71130	.SPRING.....	1	J11301-UP
7		723-63-31640	.PLUG.....	1	J11301-UP
8		07002-11023	.O-RING.....	1	J11301-UP
9		723-63-31650	.CASE.....	1	J11301-UP
10		07430-71380	.O-RING.....	2	J11301-UP
11		01252-60820	.BOLT.....	6	J11301-UP
12		01252-60825	.BOLT.....	2	J11301-UP
13		01010-81095	.BOLT.....	1	J11301-UP
14		01643-31032	.WASHER.....	2	J11301-UP
15		723-63-31660	.SPACER.....	1	J11301-UP
16		723-63-31670	.RETAINER.....	2	J11301-UP
17		723-63-31680	.RETAINER.....	1	J11301-UP
18		723-63-41510	.SPRING.....	1	J11301-UP
19		723-63-31710	.CASE.....	1	J11301-UP
20		01010-81075	.BOLT.....	1	J11301-UP
21		723-63-31720	.SPACER.....	1	J11301-UP
22		723-63-31730	.RETAINER.....	1	J11301-UP
23		723-63-31740	.SPRING.....	1	J11301-UP
24		723-63-31750	.CASE.....	1	J11301-UP
25		723-63-31760	.O-RING.....	1	J11301-UP
26		723-63-31770	.RETAINER.....	1	J11301-UP
27		723-63-41520	.SPRING.....	1	J11301-UP
28		723-63-31790	.CASE.....	1	J11301-UP
29		100-30-15140	.O-RING.....	1	J11301-UP
30		723-63-31260	.COVER.....	1	J11301-UP
31		07000-03048	.O-RING.....	3	J11301-UP
32		07000-01009	.O-RING.....	1	J11301-UP
33		07000-13030	.O-RING.....	1	J11301-UP
34		07000-12012	.O-RING.....	1	J11301-UP
35		01010-61465	.BOLT.....	3	J11301-UP
36		01643-31445	.WASHER.....	3	J11301-UP
37	C1		.PLUG.....	2	J11301-UP
38		723-63-41530	.PLUG.....	1	J11301-UP
39		07002-01423	.O-RING.....	1	J11301-UP
40		07000-01007	.O-RING.....	1	J11301-UP
41		723-62-31710	.PLUG.....	1	J11301-UP
42		07002-11423	.O-RING.....	1	J11301-UP

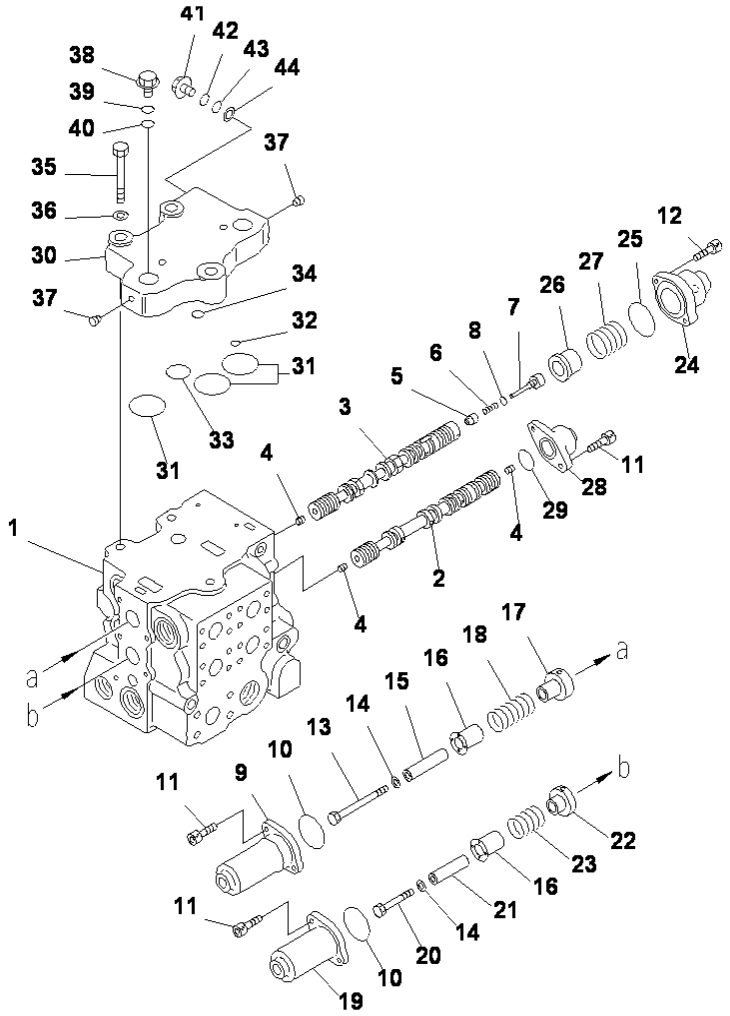

D85ESS-2 S/N J11888-UP

CONTROL VALVE (2-SPOOL)(1/4)

INDEX	CD	PART NO.	DESCRIPTION	QTY	SERIAL NO.
43		07000-11007	O-RING.....	1	J11301-UP
44		07001-01007	RING,BACK-UP.....	1	J11301-UP

Ref :Y1662-01A0 Page :450011

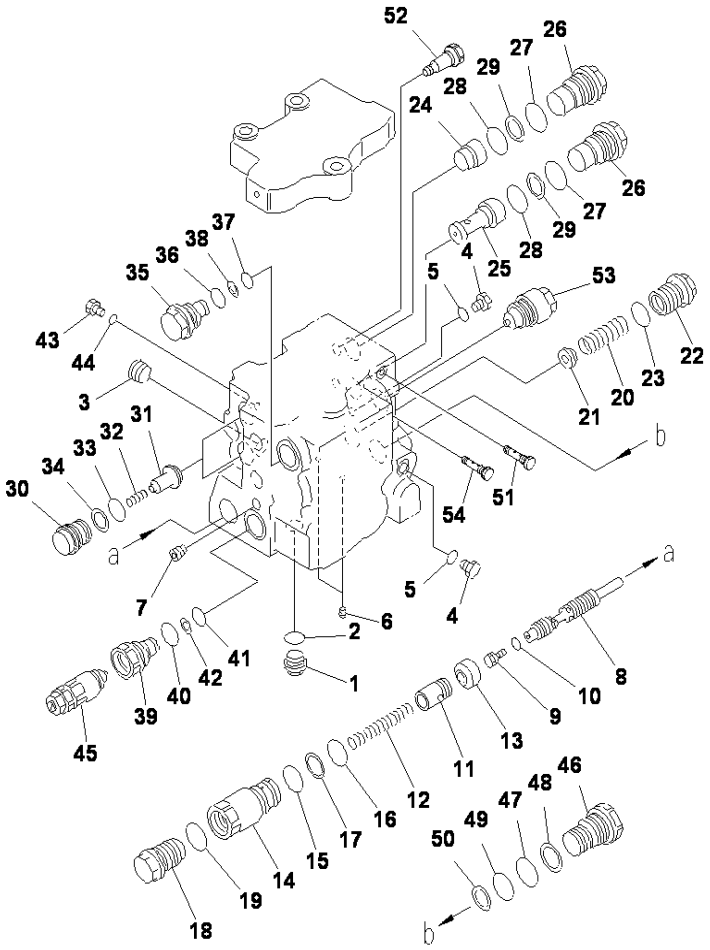

CONTROL VALVE (2-SPOOL)(2/4)

INDEX	CD	PART NO.	DESCRIPTION	QTY	SERIAL NO.
		(723-62-12100)	CONTROL VALVE	1	J11301-UP
			THIS ASSEMBLY CONSIST OF ALL PARTS SHOWN		
			IN FIGS.Y1662-01A0 TO Y1662-04A0		
1		709-74-91860	.PLUG	1	J11301-UP
2		07002-12434	.O-RING	1	J11301-UP
3		07043-70617	.PLUG	1	J11301-UP
4		07040-11409	.PLUG	2	J11301-UP
5		07002-11423	.O-RING	2	J11301-UP
6	C1		.PLUG	9	J11301-UP
7	C1		.PLUG	2	J11301-UP
8	C1		.SPOOL	1	J11301-UP
9		723-62-31520	.PLUG	1	J11301-UP
10		07002-10823	.O-RING	1	J11301-UP
11		723-62-31530	.PISTON	1	J11301-UP
12		723-62-31540	.SPRING	1	J11301-UP
13		723-62-31640	.GUIDE	1	J11301-UP
14		723-62-31630	.PLUG	1	J11301-UP
15		07002-04234	.O-RING	1	J11301-UP
16		07000-13032	.O-RING	1	J11301-UP
17		07001-03032	.RING,BACK-UP	1	J11301-UP
18		723-62-31570	.PLUG	1	J11301-UP
19		07002-03634	.O-RING	1	J11301-UP
20		723-62-31580	.SPRING	1	J11301-UP
21		723-62-31590	.RETAINER	1	J11301-UP
22		723-62-31610	.PLUG	1	J11301-UP
23		07002-13634	.O-RING	1	J11301-UP
24	C1		.RETAINER	1	J11301-UP
25	C1		.ORIFICE	1	J11301-UP
26		723-62-31720	.PLUG	2	J11301-UP
27		700-61-49160	.O-RING	2	J11301-UP
28		723-63-31850	O-RING	2	J11301-UP
29		723-63-31860	.RING	2	J11301-UP
30		709-74-92821	.PLUG	2	J11301-UP
31		709-94-92811	.VALVE	2	J11301-UP
32		709-94-91751	.SPRING	2	J11301-UP
33		700-93-11320	.O-RING	2	J11301-UP
34		700-93-11330	.RING	2	J11301-UP
35		723-63-31880	.PLUG	1	J11301-UP
36		07002-03634	.O-RING	1	J11301-UP
37		07000-12018	.O-RING	1	J11301-UP
38		07001-02018	.RING	1	J11301-UP
39		723-62-31750	.PLUG	1	J11301-UP
40		07002-03634	.O-RING	1	J11301-UP
41		07000-12018	.O-RING	1	J11301-UP
42		07001-02018	.RING,BACK-UP	1	J11301-UP

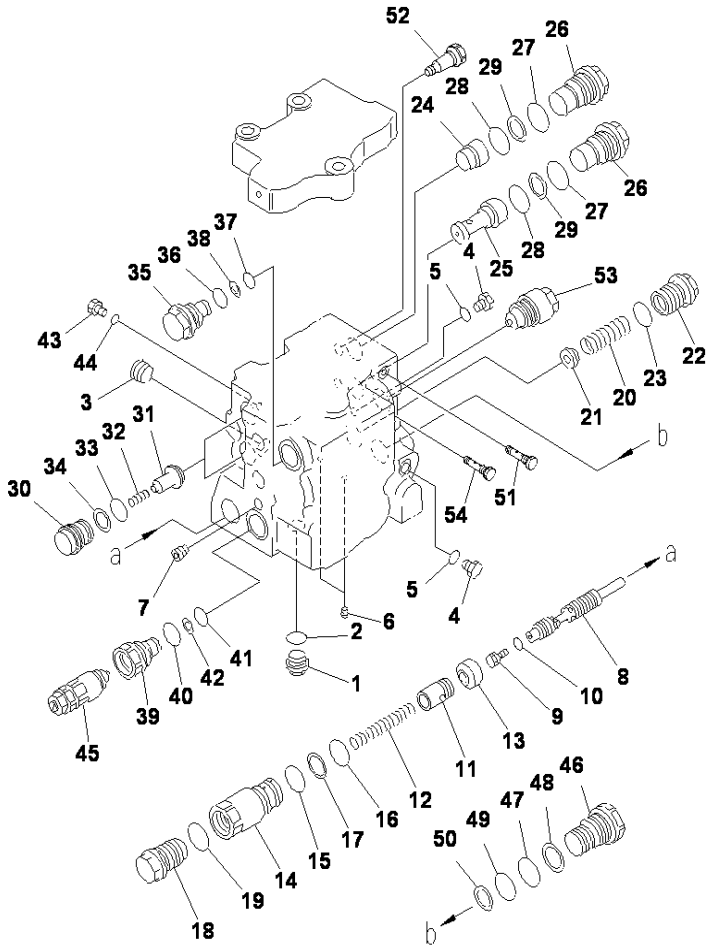

D85ESS-2 S/N J11888-UP

CONTROL VALVE (2-SPOOL)(2/4)

INDEX	CD	PART NO.	DESCRIPTION	QTY	SERIAL NO.
43		07040-11007	.PLUG	2	J11301-UP
44		07002-11023	.O-RING	2	J11301-UP
45	C1		.VALVE ASS'Y SUCTION AND SAFETY	1	J11301-UP
46		723-63-31990	.PLUG	1	J11301-UP
47		07000-13035	.O-RING	1	J11301-UP
48		07001-03035	.RING,BACK-UP	1	J11301-UP
49		07000-13030	.O-RING	1	J11301-UP
50		07001-03030	.RING,BACK-UP	1	J11301-UP
51		(723-60-23301)	.VALVE ASS'Y CHECK	1	J11301-UP
52		(723-60-23400)	.VALVE ASS'Y CHECK	2	J11301-UP
53		(723-60-23800)	.VALVE ASS'Y SUCTION	1	J11301-UP
54		(723-60-23601)	.VALVE ASS'Y CHECK	1	J11301-UP

Ref :Y1662-02A0 Page :450021

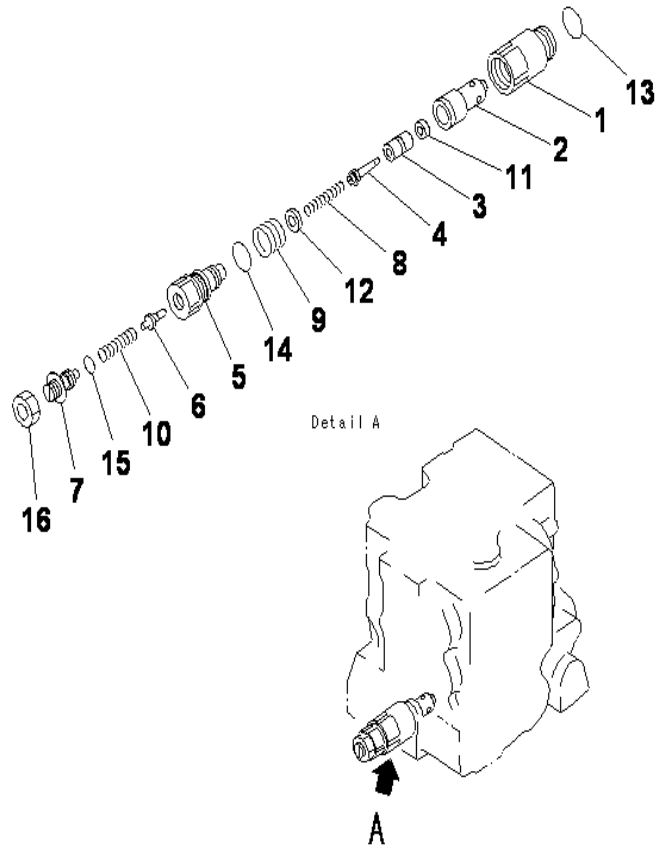

D85ESS-2 S/N J11888-UP

CONTROL VALVE (2-SPOOL)(3/4)

INDEX	CD	PART NO.	DESCRIPTION	QTY	SERIAL NO.
		(723-62-12100)	CONTROL VALVE.....	1	J11301-UP
			THIS ASSEMBLY CONSIST OF ALL PARTS SHOWN....		
			IN FIGS.Y1662-01A0 TO Y1662-04A0.....		
		723-60-11100	.VALVE ASS'Y,SUCTION AND SAFETY.....	1	J11301-UP
1	C1		..SLEEVE.....	1	J11301-UP
2	C1		..SLEEVE.....	1	J11301-UP
3	C1		..POPPET.....	1	J11301-UP
4	C1		..PISTON.....	1	J11301-UP
5	C1		..PLUG.....	1	J11301-UP
6	C1		..POPPET.....	1	J11301-UP
7	C1		..SCREW.....	1	J11301-UP
8	C1		..SPRING.....	1	J11301-UP
9	C1		..SPRING.....	1	J11301-UP
10	C1		..SPRING.....	1	J11301-UP
11	C1		..SEAL.....	1	J11301-UP
12	C1		..SEAL.....	1	J11301-UP
13		709-25-11390	..O-RING.....	1	J11301-UP
14	C1		..O-RING.....	1	J11301-UP
15	C1		..O-RING.....	1	J11301-UP
16	C1		..NUT.....	1	J11301-UP

Ref :Y1662-03A0 Page :450050

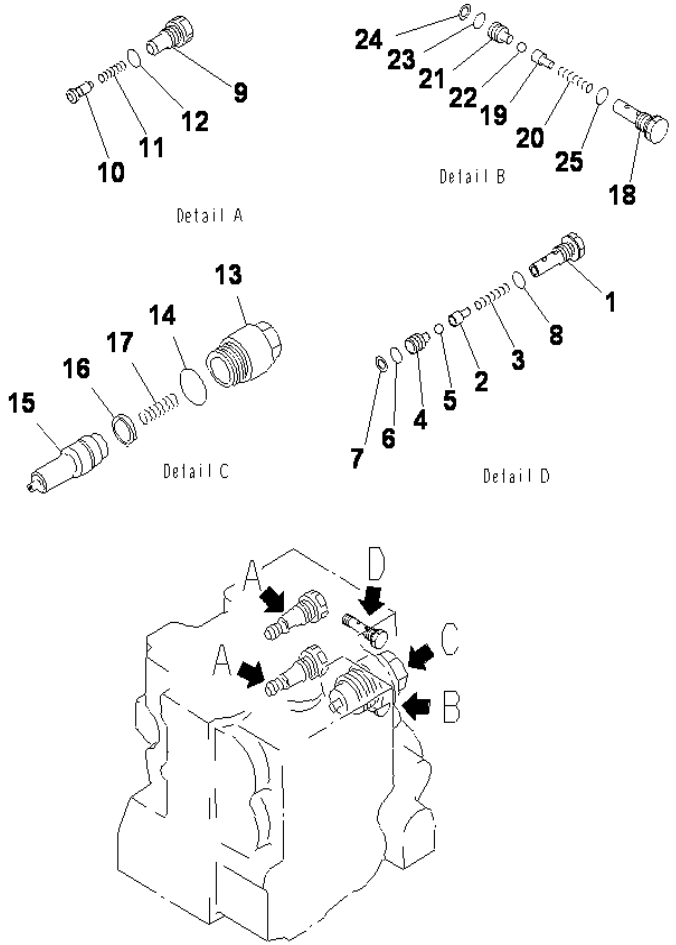

D85ESS-2 S/N J11888-UP

CONTROL VALVE (2-SPOOL)(4/4)

INDEX	CD	PART NO.	DESCRIPTION	QTY	SERIAL NO.
		(723-62-12100)	CONTROL VALVE	1	J11301-UP
			THIS ASSEMBLY CONSIST OF ALL PARTS SHOWN		
			IN FIGS.Y1662-01A0 TO Y1662-04A0		
		723-60-23301	.VALVE ASS'Y	1	J11301-UP
1	C1		..SLEEVE	1	J11301-UP
2	C1		..RETAINER	1	J11301-UP
3	C1		..SPRING	1	J11301-UP
4	C1		..SEAT	1	J11301-UP
5	C1		..BALL	1	J11301-UP
6		07000-11005	..O-RING	1	J11301-UP
7		07001-01005	....RING	1	J11301-UP
8		07002-11023	..O-RING	1	J11301-UP
		723-60-23400	.VALVE ASS'Y,CHECK	2	J11301-UP
9	C1		..SLEEVE	1	J11301-UP
10	C1		..VALVE	1	J11301-UP
11	C1		..SPRING	1	J11301-UP
12		07002-11823	..O-RING	1	J11301-UP
		723-60-23800	.VALVE ASS'Y,SUCTION	1	J11301-UP
13	C1		..SLEEVE	1	J11301-UP
14		07002-13634	..O-RING	1	J11301-UP
15	C1		..VALVE	1	J11301-UP
16	C1		..SEAL	1	J11301-UP
17	C1		..SPRING	1	J11301-UP
		723-60-23601	.VALVE ASS'Y,CHECK	1	J11301-UP
18	C1		..SLEEVE	1	J11301-UP
19	C1		..RETAINER	1	J11301-UP
20	C1		..SPRING	1	J11301-UP
21	C1		..SEAT	1	J11301-UP
22	C1		..BALL	1	J11301-UP
23		07000-11005	..O-RING	1	J11301-UP
24		07001-01005	..RING,BACK-UP	1	J11301-UP
25		07002-11023	..O-RING	1	J11301-UP

Ref :Y1662-04A0 Page :450060

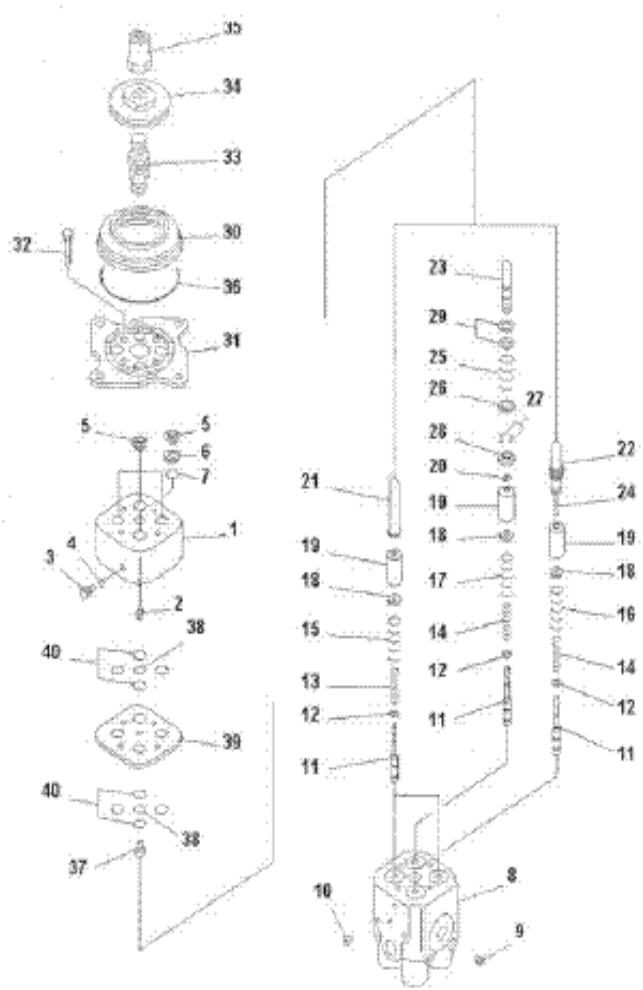

D85ESS-2 S/N J11888-UP

FLOOR FRAME (PPC VALVE)(FOR BLADE CONTROL)

INDEX	CD	PART NO.	DESCRIPTION	QTY	SERIAL NO.
		(702-16-01341)	PILOT VALVE ASS'Y.....	1	J11888-UP
1	C1		..BODY.....	1	J11301-UP
2	C1		.PLUG.....	1	J11301-UP
3		07040-10807	.PLUG.....	1	J11301-UP
4		07002-00823	.O-RING.....	1	J11301-UP
5		702-16-51270	.SEAL.....	4	J11301-UP
6		702-16-55570	.COLLAR.....	1	J11301-UP
7		07000-02020	.O-RING.....	1	J11301-UP
8	C1		.BODY VALVE.....	1	J11301-UP
9		708-18-12570	.PLUG.....	2	J11301-UP
10		706-86-51180	.PLUG.....	2	J11301-UP
11	C1		.VALVE.....	4	J11301-UP
12		702-16-51140	.SHIM, 0.3MM.....	4	J11301-UP
13		702-16-53420	.SPRING.....	2	J11301-UP
14		702-16-55620	.SPRING.....	2	J11301-UP
15		702-16-53150	.SPRING.....	2	J11301-UP
16		702-16-53160	.SPRING.....	1	J11301-UP
17		702-16-55630	.SPRING.....	1	J11301-UP
		702-16-54420	.SPRING.....	1	J11301-UP
18		702-16-53140	.RETAINER.....	4	J11301-UP
19		702-16-55470	.PISTON.....	4	J11301-UP
20	C1		.SHIM.....	1	J11301-UP
21	C1		.PISTON.....	2	J11301-UP
22	C1		.PISTON.....	1	J11301-UP
23	C1		.PISTON.....	1	J11301-UP
24	C1		.SPRING.....	1	J11301-UP
	C1		.SPRING.....	1	J11301-UP
25	C1		.SPRING.....	1	J11301-UP
26	C1		.COLLAR.....	1	J11301-UP
27	C1		.BALL.....	13	J11301-UP
28	C1		.RETAINER.....	1	J11301-UP
29	C1		.SPACER.....	2	J11301-UP
30		702-16-53190	.BOOT.....	1	J11301-UP
31		702-16-53210	.PLATE.....	1	J11301-UP
32		01010-50670	.BOLT.....	4	J11301-UP
33		702-16-51240	.JOINT.....	1	J11301-UP
34		702-16-53220	.DISC.....	1	J11301-UP
35		702-16-53230	.NUT.....	1	J11301-UP
36		07000-02070	.O-RING.....	1	J11301-UP
37	C1		.ORIFICE.....	1	J11301-UP
38	C1		.O-RING.....	2	J11301-UP
39	C1		.PLATE.....	1	J11301-UP
40	C1		.O-RING.....	8	J11301-UP

Ref :Y1664-03A0 Page :450070

INDEX

PART NO.	FIG.NO.	INDEX	PAGE
(09920-00150)	A2210-A3D4	12	010190
(14X-15-00012)	F2320-01A2		150035
(14X-15-00012)	F2320-01A3		150036
(14X-15-00012)	F2320-01A4		150037
(14X-15-00012)	F2320-01A5		150038
(14X-15-00012)	F2320-01A6		150039
(14X-15-00012)	F2320-01A9		150042
(14X-15-00372)	F2320-01A9		150042
(14X-15-15003)	F2320-01A6		150039
(14Y-63-X1016)	T2140-01A0		330040
(14Y-63-X1026)	T2140-01A0		330040
(14Y-63-X1114)	T2140-01A0		330040
(14Y-63-X1124)	T2140-01A0		330040
(6150-11-4110)	A1310-A3A2	1	010030
(6151-22-1110)	A2010-A3F2	1	010120
(6151-62-1110)	A5010-A3F1	1	010400
(702-16-01230)	K2520-02A0		240330
(702-16-01341)	Y1664-03A0		450070
(705-17-02011)	F2300-02A0	1	150014
(705-17-02122)	F2300-02A1	3	150015
(705-17-02221)	F2300-02A0	3	150014
(705-17-02353)	F2300-02A0		150014
(705-17-02353)	F2300-02A1		150015
(705-17-02510)	F2300-02A1	1	150015
(705-17-03012)	Y1610-01A1	1	450004
(705-17-03121)	Y1610-01A1	3	450004
(705-17-03352)	Y1610-01A1		450004
(705-17-33012)	F2300-02A0	2	150014
(705-17-33012)	F2300-02A1	2	150015
(705-17-33430)	F2300-02A0	4	150014
(705-17-33450)	F2300-02A1	4	150015
(705-17-33512)	F2300-02A0	5	150014
(705-17-33512)	F2300-02A1	5	150015
(705-17-38010)	Y1610-01A1	2	450004
(705-17-38411)	Y1610-01A1	4	450004
(705-40-26011)	Y1610-02A1	2	450005
(705-40-26411)	Y1610-02A1	4	450005
(705-40-26511)	Y1610-02A1	5	450005
(705-40-80111)	Y1610-02A1	3	450005
(705-40-80610)	Y1610-02A1		450005
(705-40-80620)	Y1610-02A1		450005
(705-41-80210)	Y1610-02A1	1	450005
(705-51-20370)	F2300-02A1		150015
(708-17-38511)	Y1610-01A1	5	450004
01010-31460	A2050-A3A4	5	010150
01010-31650	A2210-A3D4	3	010190
01010-31660	A2210-A3D4	4	010190
01010-50630	A4030-A3C2	16	010340
01010-50670	Y1664-03A0	32	450070
01010-51020	A2010-B3F2	20	010130

PART NO.	FIG.NO.	INDEX	PAGE
01010-51025	A2010-B3F2	12	010130
01010-51025	A2010-B3F2	17	010130
01010-51025	A2060-A3D9	16	010160
01010-51025	A2210-A3D4	9	010190
01010-51025	K2110-17A0	6	240200
01010-51065	A5060-A3D9	9	010440
01010-51255	A6010-A3J4	15	010480
01010-51640	A6210-A3D8	3	010490
01010-51660	A2210-A3D4	8	010190
01010-61440	F2320-01A0	11	150033
01010-61460	F2310-03A0	7	150031
01010-80610	W1111-01A0	8	420010
01010-80616	A1370-A3A1	2	010040
01010-80812	K2500-01A0	3	240290
01010-80812	K2500-01A0	7	240290
01010-80816	A2110-B3G6	6	010180
01010-80816	C0100-02A0		060020
01010-80816	E0300-01A2	2	120040
01010-80816	K2210-01B0	20	240260
01010-80816	K2210-01B0	34	240260
01010-80816	T2510-11A0	37	330211
01010-80816	W1111-03A0	7	420035
01010-80820	F2320-01A5	24	150038
01010-80820	F2320-01A5	30	150038
01010-80820	H2210-01A0A	60	180221
01010-80820	H2210-01A1A	53	180231
01010-80820	K2110-03A0	4	240080
01010-80820	K2110-12A0	2	240170
01010-80820	K2210-01B0	3	240260
01010-80820	T2510-06A0	31	330160
01010-80820	T2510-11A0	29	330210
01010-80820	T2510-11A0	41	330211
01010-80820	T2510-12A0	8	330220
01010-80820	Y1661-02A0	12	450008
01010-80825	A3010-A3A2	14	010280
01010-80825	D0210-01A0	6	090030
01010-80825	K2110-07A0	30	240110
01010-80825	K2110-16A0	2	240190
01010-80830	F2300-06A0	16	150019
01010-80830	F2300-07A0	11	150020
01010-80830	F2300-07A0	31	150020
01010-80830	F2320-01A5	29	150038
01010-80830	H0310-07A0	8	180160
01010-80830	K2110-02A0	3	240070
01010-80830	K2110-03A1	13	240090
01010-80830	K2110-07A0	17	240110
01010-80830	K2110-07A0		240110
01010-80830	K2110-08A0	11	240120
01010-80830	K2110-08A0	3	240120
01010-80830	K2110-11A0	7	240160

PART NO.	FIG.NO.	INDEX	PAGE
01010-80830	K2110-23A0	3	240240
01010-80830	K2400-02A0	23	240280
01010-80830	K2400-02A0	6	240280
01010-80830	K2520-01A0	22	240310
01010-80830	K2520-01A0	7	240310
01010-80830	K2520-01A1	9	240320
01010-80830	K2520-01A1		240320
01010-80830	K2520-02A0	35	240330
01010-80830	R0120-01A0	10	300020
01010-80830	Y1661-02A0	16	450008
01010-80835	H0310-07A0	4	180160
01010-80835	H0310-07A3	4	180170
01010-80835	H0310-07A3	8	180170
01010-80835	H2210-01A0A	41	180220
01010-80835	H2210-01A0A	47	180221
01010-80835	H2210-01A1A	34	180230
01010-80835	H2210-01A1A	40	180230
01010-80835	K2520-01A1	11	240320
01010-80835	K2520-02A0	49	240331
01010-80835	T2510-10A0	19	330200
01010-80835	Y1661-02A0	6	450008
01010-80840	F2300-03A0	14	150016
01010-80840	F2300-04A0	24	150017
01010-80845	K2520-02A0	15	240330
01010-80850	F2300-04A0	25	150017
01010-80850	H2210-01A0A	44	180220
01010-80850	H2210-01A1A	37	180230
01010-80855	K2520-02A0	16	240330
01010-80870	F2300-09A0	13	150022
01010-80875	A4010-A3J6	2	010330
01010-81000	A2060-A3D9	13	010160
01010-81005	A1310-A3A2	7	010030
01010-81010	A1310-A3A2	5	010030
01010-81016	A4130-A3A1	20	010370
01010-81016	A4230-A3F1	5	010390
01010-81016	A5210-A3C8	13	010470
01010-81016	A5210-A3C8	17	010470
01010-81016	B0500-01A0	10	030050
01010-81016	B0500-01A0	13	030050
01010-81016	B0500-01A0	16	030050
01010-81016	B0500-01A0	23	030050
01010-81016	B0500-01A0	28	030050
01010-81016	B0500-01A0	32	030050
01010-81016	D0210-01A0	16	090030
01010-81016	E0200-01A1	14	120020
01010-81016	E0200-01A1	22	120020
01010-81016	E0200-01A1	24	120020
01010-81016	E0200-01A1	27	120020
01010-81016	E0200-01A1	3	120020
01010-81016	E0200-01A1	35	120020

PART NO.	FIG.NO.	INDEX	PAGE
01010-81016	E0200-01A1	6	120020
01010-81016	E0210-01A0	14	120030
01010-81016	K2110-17A0	18	240200
01010-81016	K2110-17A0	22	240200
01010-81016	K2110-17A0	34	240200
01010-81016	K2110-17A0	38	240200
01010-81016	K2110-17A0	43	240200
01010-81016	K2110-17A0	9	240200
01010-81016	K2110-17A0	48	240201
01010-81016	K2210-01B0	26	240260
01010-81020	A1610-A3K9	16	010090
01010-81020	A2010-B3F2	9	010130
01010-81020	A2110-A3G6	12	010170
01010-81020	A5010-A3F1	22	010400
01010-81020	A5210-A3C8	4	010470
01010-81020	C0100-01A0	11	060010
01010-81020	C0100-01A0	14	060010
01010-81020	C0100-01A0	17	060010
01010-81020	C0100-01A0	4	060010
01010-81020	D0100-01A0	12	090010
01010-81020	D0200-01A2	5	090020
01010-81020	F2300-10A0	5	150023
01010-81020	F2300-12A0	19	150025
01010-81020	F2310-01A0	28	150029
01010-81020	F2820-01A2	15	150120
01010-81020	F2820-01A2	17	150120
01010-81020	H2210-01A0A	51	180221
01010-81020	H2210-01A1A	44	180230
01010-81020	K2110-09A0	4	240130
01010-81020	K2110-10A1	13	240140
01010-81020	K2110-10A2	13	240150
01010-81020	K2110-14A0	23	240180
01010-81020	K2110-14A1	2	240182
01010-81020	K2110-16A0	5	240190
01010-81020	K2110-17A0	30	240200
01010-81020	K2110-17A0	4	240200
01010-81020	K2110-17A0	46	240201
01010-81020	K2500-01A0	10	240290
01010-81020	K2500-01A0	17	240290
01010-81020	M2140-02A0	13	270040
01010-81020	M2140-04A0	20	270060
01010-81020	M2210-01A2	9	270090
01010-81020	M2240-01A0	6	270110
01010-81020	R0120-01A0	16	300020
01010-81020	T2140-01A0		330041
01010-81020	T2140-01A1	38	330051
01010-81020	W1111-02A0	2	420025
01010-81022	A2410-B3A5	5	010270
01010-81025	A1410-A3A2	25	010050
01010-81025	A1730-A3F3	8	010100

PART NO.	FIG.NO.	INDEX	PAGE
01010-81025	A2050-A3A4	9	010150
01010-81025	A2110-A3G6	3	010170
01010-81025	A3010-A3A2	19	010280
01010-81025	A3110-A3D9	12	010290
01010-81025	A3310-A3B3	17	010310
01010-81025	A4080-A3A1	19	010350
01010-81025	A4110-A3G6	19	010360
01010-81025	A4110-A3G6	6	010360
01010-81025	A4110-A3G6	7	010360
01010-81025	A4130-A3A1	13	010370
01010-81025	A4130-A3A1	14	010370
01010-81025	A5210-A3C8	12	010470
01010-81025	E0200-01A1	31	120020
01010-81025	F2300-02A1	18	150015
01010-81025	F2300-03A0	26	150016
01010-81025	F2300-07A0	20	150020
01010-81025	F2300-12A0	18	150025
01010-81025	F2320-01A8	14	150041
01010-81025	F2320-01A8	5	150041
01010-81025	H0100-01A1	19	180020
01010-81025	H0100-01A1	7	180020
01010-81025	H0210-01A0		180090
01010-81025	H0310-08A0	3	180180
01010-81025	H1410-02A0	43	180200
01010-81025	H2210-01A0A	38	180220
01010-81025	H2210-01A1A	31	180230
01010-81025	J2100-01A0	18	210010
01010-81025	K0110-01A1	4	240012
01010-81025	K2110-01A0	5	240060
01010-81025	K2110-08A0	21	240120
01010-81025	K2110-10A0	12	240135
01010-81025	K2110-10A1	24	240140
01010-81025	K2110-10A2	24	240150
01010-81025	K2110-11A0	18	240160
01010-81025	K2110-17A0	26	240200
01010-81025	M2140-01A0	10	270030
01010-81025	M2140-02A0	16	270040
01010-81025	M2140-02A0		270040
01010-81030	A1310-A3A2	4	010030
01010-81030	A1410-A3A2	20	010050
01010-81030	A2110-A3G6	14	010170
01010-81030	A2110-A3G6	4	010170
01010-81030	A3110-B3D9	19	010300
01010-81030	A5010-A3F1	25	010400
01010-81030	A5030-A3E3	2	010420
01010-81030	A5060-B3D9	11	010450
01010-81030	A5060-C3D9	4	010460
01010-81030	C0100-02A0	14	060020
01010-81030	F2300-06A0	10	150019
01010-81030	F2300-06A0	33	150019

PART NO.	FIG.NO.	INDEX	PAGE
01010-81030	F2310-02A0	15	150030
01010-81030	F2310-02A0	32	150030
01010-81030	H0210-01A0	7	180090
01010-81030	H0310-02A0	7	180120
01010-81030	H0310-02A1	5	180130
01010-81030	K2110-03A1	7	240090
01010-81030	K2110-09A0	1	240130
01010-81030	K2520-02A0	13	240330
01010-81030	T2510-10A0	1	330200
01010-81030	T2510-10A0	29	330200
01010-81035	A2110-A3G6	10	010170
01010-81035	A3010-A3A2	20	010280
01010-81035	A3110-B3D9	23	010300
01010-81035	A5010-A3F1	26	010400
01010-81035	A5060-C3D9	3	010460
01010-81035	A5060-C3D9	9	010460
01010-81035	C0100-02A0	12	060020
01010-81035	F2300-12A0	26	150025
01010-81035	F2310-02A0	23	150030
01010-81035	F2310-02A0	29	150030
01010-81035	H0310-02A0	3	180120
01010-81035	K2110-03A0	12	240080
01010-81035	K2110-03A0	26	240080
01010-81035	K2110-08A0	16	240120
01010-81035	K2110-09A0	2	240130
01010-81035	K2110-17A0	23	240200
01010-81035	K2110-23A0	5	240240
01010-81035	K2520-01A0	14	240310
01010-81040	A1410-A3A2	26	010050
01010-81040	A1610-A3K9	8	010090
01010-81040	A5030-A3E3	4	010420
01010-81040	A5060-B3D9	7	010450
01010-81040	F2300-12A0	12	150025
01010-81040	F2820-01A4	21	150140
01010-81040	T2140-01A0	38	330041
01010-81040	T2510-10A0	16	330200
01010-81045	A1610-A3K9	20	010090
01010-81045	A5060-C3D9	23	010460
01010-81045	A5060-C3D9	25	010460
01010-81045	A6010-A3J4	18	010480
01010-81050	A2210-A3D4	5	010190
01010-81050	A3110-B3D9	18	010300
01010-81050	A5060-C3D9	26	010460
01010-81050	F2300-12A0	27	150025
01010-81050	H0310-01A0	2	180100
01010-81050	H0310-01A3	2	180110
01010-81050	H1410-02A0	21	180200
01010-81050	T2610-01A0	1	330260
01010-81055	A1310-A3A2	14	010030
01010-81055	A1370-A3A1	5	010040

PART NO.	FIG.NO.	INDEX	PAGE
01010-81055	A4030-A3C2	13	010340
01010-81055	F2320-01A6	14	150039
01010-81055	H0310-08A0		180180
01010-81055	H2210-01A0	12	180218
01010-81055	H2210-01A0A	12	180220
01010-81055	T2510-13A0	11	330230
01010-81060	F2300-03A0	22	150016
01010-81060	F2310-02A0	9	150030
01010-81060	H0310-08A0		180180
01010-81065	A3310-A3B3	18	010310
01010-81065	F2320-01A0	8	150033
01010-81065	F2320-01A7	23	150040
01010-81065	T2510-13A0	10	330230
01010-81070	A4030-A3C2	3	010340
01010-81070	A4230-A3F1	7	010390
01010-81070	A5060-B3D9	13	010450
01010-81080	A3310-A3B3	19	010310
01010-81080	A4030-A3C2	2	010340
01010-81080	A5060-B3D9	3	010450
01010-81080	H2210-01A0	45	180218
01010-81080	T2510-13A0	7	330230
01010-81090	A5060-B3D9	15	010450
01010-81090	F2300-07A0	18	150020
01010-81090	F2300-07A0	3	150020
01010-81090	H2210-01A0	7	180218
01010-81090	H2210-01A0A	7	180220
01010-81095	A5060-B3D9	5	010450
01010-81220	C0100-02A0	23	060020
01010-81220	D0200-01A2	16	090020
01010-81220	F2730-02A1	16	150100
01010-81220	H0310-06A1	22	180150
01010-81220	H0310-08A0	11	180180
01010-81220	H0310-08A3	11	180190
01010-81220	K2110-16A0	9	240190
01010-81220	M2140-01A0	3	270030
01010-81220	M2140-01A0	7	270030
01010-81220	M2210-01A0	14	270070
01010-81220	M2210-01A0	3	270070
01010-81225	A2330-A3B9	2	010230
01010-81225	B0600-01A1	15	030060
01010-81225	C0100-01A0	23	060010
01010-81225	D0210-01A0	21	090030
01010-81225	D0210-01A0	8	090030
01010-81225	E0210-01A0	2	120030
01010-81225	F2300-03A0	36	150016
01010-81225	F2300-05A0	4	150018
01010-81225	F2320-01A8	18	150041
01010-81225	F2730-01A1	17	150090
01010-81225	H0100-01A1	23	180020
01010-81225	H0120-03A0	7	180060

PART NO.	FIG.NO.	INDEX	PAGE
01010-81225	H0120-03A1		180070
01010-81225	H0310-01A0	8	180100
01010-81225	H0310-01A3	8	180110
01010-81225	H0310-06A1	19	180150
01010-81225	H0310-06A1	7	180150
01010-81225	H2210-01A0	30	180218
01010-81225	H2210-01A0	52	180219
01010-81225	H2210-01A0A	30	180220
01010-81225	H2210-01A1A	23	180230
01010-81225	H2250-02A3	13	180280
01010-81225	J2100-01A0	9	210010
01010-81225	K0110-01A1	9	240012
01010-81225	K0410-01A1	10	240040
01010-81225	K2110-01A1	5	240065
01010-81225	K2210-01B0	38	240260
01010-81225	K2400-01A0	10	240270
01010-81225	K2520-01A1	17	240320
01010-81225	K2520-01A1	28	240320
01010-81225	M2140-01A0	13	270030
01010-81225	M2140-01A0	16	270030
01010-81225	M2140-03A0	12	270050
01010-81225	M2140-03A0	16	270050
01010-81225	M2140-03A0	3	270050
01010-81225	M2140-03A0	7	270050
01010-81225	M2210-01A0	17	270070
01010-81225	M2210-01A0	20	270070
01010-81225	M2210-01A1	8	270080
01010-81225	M2210-01A2	14	270090
01010-81225	M2210-01A2	21	270090
01010-81225	M2210-01A3	1	270100
01010-81225	M2810-01A0	11	270120
01010-81225	M2810-01A0	3	270120
01010-81225	R2100-01A0	18	300061
01010-81225	T2160-01A0	13	330080
01010-81225	T2160-01A0	19	330080
01010-81225	T2160-01A0	23	330080
01010-81225	T2160-01A0	5	330080
01010-81225	T2400-01A0	14	330090
01010-81225	T2400-01A0	9	330090
01010-81225	T2510-10A0	39	330200
01010-81225	T2510-14A0	5	330240
01010-81225	T2510-14A0	9	330240
01010-81230	A1610-A3K9	12	010090
01010-81230	F2300-11A0	4	150024
01010-81230	F2300-12A0	4	150025
01010-81230	H0120-03A1	7	180070
01010-81230	H0120-05A0	5	180080
01010-81230	H2210-01A0	38	180218
01010-81230	J2700-01A0	28	210020
01010-81230	K0110-01A2	4	240015

PART NO.	FIG.NO.	INDEX	PAGE
01010-81230	K0410-01A1	6	240040
01010-81230	M2140-01A0		270030
01010-81230	M2140-04A0	3	270060
01010-81230	T2510-02A0	17	330120
01010-81230	T2510-14A0	2	330240
01010-81230	W1111-03A0	2	420035
01010-81235	F2300-03A0	10	150016
01010-81235	F2300-04A0	20	150017
01010-81235	F2300-04A0	9	150017
01010-81235	F2300-05A0	14	150018
01010-81235	F2300-05A0	21	150018
01010-81235	F2300-06A0	2	150019
01010-81235	F2300-12A0	6	150025
01010-81235	F2300-14A0	17	150027
01010-81235	F2310-01A0	12	150029
01010-81235	F2310-03A0	15	150031
01010-81235	F2310-03A0	21	150031
01010-81235	F2310-03A0	9	150031
01010-81235	F2320-01A10	17	150043
01010-81235	F2380-02A1	4	150060
01010-81235	F2380-03A1	14	150070
01010-81235	F2380-03A1	19	150070
01010-81235	H2210-01A0	18	180218
01010-81235	H2210-01A0	27	180218
01010-81235	H2210-01A0	53	180219
01010-81235	H2210-01A0A	18	180220
01010-81235	H2210-01A0A	27	180220
01010-81235	H2210-01A1A	11	180230
01010-81235	H2210-01A1A	20	180230
01010-81235	H2220-03A1	5	180260
01010-81235	H2220-03A1	8	180260
01010-81235	M2140-03A0	15	270050
01010-81235	M2140-03A0	19	270050
01010-81235	M2210-01A0	10	270070
01010-81235	M2210-01A0	28	270070
01010-81235	M2240-01A0	8	270110
01010-81235	R0120-01A0	19	300020
01010-81235	T2160-01A0	20	330080
01010-81235	T2510-02A0	23	330120
01010-81235	T2510-02A0	27	330120
01010-81235	T2510-03A0	27	330130
01010-81235	T2510-03A0	8	330130
01010-81235	T2510-04A0	2	330140
01010-81235	T2510-04A0	25	330140
01010-81235	T2510-05A0	3	330150
01010-81235	T2510-06A0	12	330160
01010-81235	T2510-06A0	22	330160
01010-81235	T2510-06A0	26	330160
01010-81235	T2510-06A0	5	330160
01010-81235	T2510-08A0	2	330180

PART NO.	FIG.NO.	INDEX	PAGE
01010-81235	T2510-08A0		330180
01010-81235	T2610-01A0	13	330260
01010-81240	F2300-03A0	29	150016
01010-81240	K2110-05A0	11	240100
01010-81240	T2110-01A1	15	330015
01010-81245	F2300-03A0	5	150016
01010-81245	F2300-04A0	16	150017
01010-81245	F2300-10A0	2	150023
01010-81245	F2380-02A1	13	150060
01010-81245	F2730-01A1		150090
01010-81245	F2730-02A1	24	150100
01010-81245	H0310-01A0	17	180100
01010-81245	H0310-01A3	17	180110
01010-81245	H0310-01A3	29	180110
01010-81245	H2250-01A3	14	180270
01010-81245	H2250-02A3	2	180280
01010-81245	K2110-05A0	3	240100
01010-81245	K2110-08A0	6	240120
01010-81245	K2400-01A0	15	240270
01010-81245	M2140-04A0	15	270060
01010-81245	T2510-02A0	4	330120
01010-81245	T2510-03A0	42	330130
01010-81245	T2510-10A0	10	330200
01010-81250	B0600-01A1	10	030060
01010-81250	F2730-01A1	21	150090
01010-81250	M2140-04A0	5	270060
01010-81250	T2610-01A0	16	330260
01010-81255	F2200-01A0	5	150010
01010-81255	F2300-11A0	7	150024
01010-81255	H2220-02A0	8	180250
01010-81255	M2140-04A0	10	270060
01010-81260	T2510-02A0	28	330120
01010-81260	T2510-08A0	11	330180
01010-81260	T2510-08A0	3	330180
01010-81265	F2300-12A0	7	150025
01010-81265	H2210-01A0A	57	180221
01010-81265	H2210-01A0A		180221
01010-81265	H2210-01A1A	50	180231
01010-81265	H2220-03A1	11	180260
01010-81265	T2115-01A1	25	330025
01010-81265	T2115-01A1	9	330025
01010-81270	F2300-04A0	30	150017
01010-81270	F2730-01A1	5	150090
01010-81270	H2250-02A3	17	180280
01010-81270	H2250-02A3	24	180280
01010-81270	H2250-02A3	9	180280
01010-81275	H1410-02A0	16	180200
01010-81275	H2210-01A0	15	180218
01010-81275	H2210-01A0A	15	180220
01010-81275	H2210-01A1A	8	180230

PART NO.	FIG.NO.	INDEX	PAGE
01010-81280	T2510-10A0	9	330200
01010-81285	H0120-03A1	2	180070
01010-81290	K2210-01B0	37	240260
01010-81295	T2510-03A0	7	330130
01010-81420	T2115-01A0	12	330020
01010-81435	H0120-03A0	2	180060
01010-81435	H0120-05A0	3	180080
01010-81435	T2400-01A0	18	330090
01010-81435	T2510-05A0	12	330150
01010-81435	T2520-01A0	17	330255
01010-81435	T2520-01A0	6	330255
01010-81445	C0100-02A0	6	060020
01010-81450	F2320-01A4	13	150037
01010-81450	T2510-03A0	35	330130
01010-81455	C0100-02A0	9	060020
01010-81455	C0100-02A0		060020
01010-81455	T2150-01A3	13	330070
01010-81455	T2400-01A1	11	330100
01010-81630	K0410-03A9	23	240044
01010-81630	M2210-01A0	26	270070
01010-81630	M2210-01A0	8	270070
01010-81630	R0300-01A0	10	300040
01010-81630	R0300-01A0		300040
01010-81630	T2160-01A0	26	330080
01010-81630	T2160-01A0	8	330080
01010-81635	K2110-01A1	16	240065
01010-81635	T2120-01A1	11	330035
01010-81640	J2700-01A0	25	210020
01010-81640	J2700-01A1	26	210030
01010-81640	J2700-01A1	34	210030
01010-81640	K0410-01A9	17	240042
01010-81640	K0410-01A9		240042
01010-81640	K0410-03A9	11	240044
01010-81640	K0410-03A9	17	240044
01010-81640	K0410-03A9	2	240044
01010-81640	K0410-03A9	20	240044
01010-81640	K0410-03A9	26	240044
01010-81640	K0410-03A9	5	240044
01010-81640	K0410-03A9	8	240044
01010-81640	M2140-03A0	23	270050
01010-81640	M2810-01A0	13	270120
01010-81640	M2810-01A0	5	270120
01010-81640	M2810-01A0	8	270120
01010-81645	B0100-01A1	3	030040
01010-81645	F2300-01A1	6	150013
01010-81645	F2320-01A10	11	150043
01010-81645	F2320-01A10	3	150043
01010-81645	F2380-03A1	23	150070
01010-81645	F2380-04A1	10	150080
01010-81645	H0100-01A0	16	180010

PART NO.	FIG.NO.	INDEX	PAGE
01010-81645	H0210-01A0	3	180090
01010-81645	J2100-01A0	13	210010
01010-81645	R0110-01A0	19	300011
01010-81650	F2320-01A10	21	150043
01010-81655	K0410-03A9	14	240044
01010-81655	K2120-01A1	4	240250
01010-81660	M2120-01A0	3	270020
01010-81665	K2120-01A1	5	240250
01010-81670	M2111-01A0	5	270010
01010-81680	D0100-01A0	17	090010
01010-81680	K2110-01A0	11	240060
01010-81680	K2110-02A0	18	240070
01010-81695	K0410-01A9	4	240042
01010-81695	M2111-01A0	6	270010
01010-81845	R2100-01A0	10	300060
01010-81845	R2100-01A0	13	300060
01010-81865	R0200-01A0	11	300030
01010-81865	R2100-01A0	14	300060
01010-81880	T2115-01A0	8	330020
01010-82040	H2220-01A0	2	180240
01010-82040	H2220-03A1	19	180260
01010-82050	T2510-05A0	18	330150
01010-82055	F2380-01A0	3	150050
01010-82055	F2380-03A1	8	150070
01010-82055	H2220-03A1	2	180260
01010-82055	J2700-01A0	11	210020
01010-82055	J2700-01A0	7	210020
01010-82055	J2700-01A1	12	210030
01010-82055	J2700-01A1	8	210030
01010-82055	M2811-01A0	2	270130
01010-82065	B0100-01A1	8	030040
01010-82065	T2110-01A0	16	330010
01010-82065	T2110-01A1	12	330015
01010-82070	F2380-01A0	1	150050
01010-82070	R0120-01A0	30	300020
01010-82075	J2700-01A0	3	210020
01010-82075	J2700-01A1	3	210030
01010-82075	T2115-01A1	13	330025
01010-82075	T2115-01A1	29	330025
01010-82080	B0100-01A1	6	030040
01010-82080	F2300-01A1	1	150013
01010-82085	R0300-01A0	13	300040
01010-82095	T2115-01A0	5	330020
01010-82460	M2210-01A0	24	270070
01010-82460	M2210-01A0	6	270070
01010-82460	R0120-01A0	29	300020
01010-82460	T2520-01A0	22	330255
01010-82465	T2510-01A0	1	330110
01010-82465	T2810-01A0	9	330270
01010-82470	K0410-01A1	2	240040

PART NO.	FIG.NO.	INDEX	PAGE
01010-82470	M2210-01A1	2	270080
01010-82470	M2210-01A1	5	270080
01010-82470	T2520-01A0	20	330255
01010-82480	T2400-01A0	30	330090
01010-82485	H2250-02A3	20	180280
01010-83390	T2400-01A0	28	330090
01011-51005	F2300-07A0	19	150020
01011-51010	F2320-01A6	16	150039
01011-51600	T2140-01A0		330040
01011-51600	T2140-01A1	12	330050
01011-52080	F2300-01A0	1	150012
01011-61600	F2380-03A1	3	150070
01011-81000	A1510-A3D7	7	010060
01011-81005	A4110-A3G6	16	010360
01011-81005	F2300-08A0	31	150021
01011-81010	A5010-A3F1	17	010400
01011-81010	D0200-01A2	2	090020
01011-81020	A4110-A3G6	25	010360
01011-81030	A3110-A3D9	13	010290
01011-81030	T2510-13A0	6	330230
01011-81035	A5060-C3D9	14	010460
01011-81045	A4210-A3C2	5	010380
01011-81055	A5060-C3D9	10	010460
01011-81060	A5060-C3D9	16	010460
01011-81065	T2510-13A0	9	330230
01011-81075	A1310-A3A2	15	010030
01011-81080	T2510-10A0	25	330200
01011-81080	T2510-10A0	31	330200
01011-81200	T2510-03A0	19	330130
01011-81205	F2300-15A0	28	150028
01011-81225	T2510-08A0	23A	330180
01011-81230	T2510-08A0	23	330180
01011-81235	J2700-01A0	43	210021
01011-81400	T2510-03A0	4	330130
01011-81600	T2140-01A0	12	330040
01011-81605	K2120-01A1	3	240250
01011-81630	B0100-01A1	4	030040
01011-81630	F2300-01A0	4	150012
01011-81630	F2300-01A1	11	150013
01011-81630	F2300-01A1	7	150013
01011-82025	T2115-01A1	5	330025
01011-82040	M2140-04A0	7	270060
01011-82420	K0410-01A9		240042
01011-82440	K0410-02A9		240043
01011-82465	T2110-01A0	10	330010
01011-82465	T2110-01A1	7	330015
01012-81250	T2140-02A0	3	330052
01016-50830	K2400-02A0	12	240280
01019-32430	K0410-02A9	2	240043
01023-60308	W1111-01A0	6	420010

PART NO.	FIG.NO.	INDEX	PAGE
01050-31255	A6010-A3J4	8	010480
01050-31655	A2230-A3A1	3	010200
01050-51012	A2010-A3F2	31	010120
01050-51420	A2010-A3F2	33	010120
01050-51480	F2310-04A0	5	150032
01050-51670	F2310-01A0	16	150029
01050-61045	A1510-A3D7	8	010060
01051-51430	A2370-A3A1	4	010250
01051-51635	A2370-A3A1	3	010250
01052-51265	T2810-01A0	6	330270
01084-01655	F2300-13A0	3	150026
01099-03417	T2115-01A1	21	330025
01124-51235	T2510-03A0	20	330130
01124-53370	T2510-01A0	3	330110
01140-61030	A1510-A3D7	9	010060
01220-40312	K2210-01B0	18	240260
01220-40514	H0100-01A0	7	180010
01224-40616	H0100-01A0	15	180010
01252-30625	K2520-02A2	15	240340
01252-30820	Y1661-01A0	17	450006
01252-41025	K2110-02A0	13	240070
01252-41060	F2320-01A4	27	150037
01252-41245	F2300-15A0	22	150028
01252-61035	F2300-02A1	14	150015
01253-61200	F2300-02A1	11	150015
01253-61210	F2300-02A0	11	150014
01253-71210	T2510-09A0	11	330190
01306-00616	K2110-03A0	18	240080
01306-00616	K2110-03A0	7	240080
01306-11025	F2320-01A9	8	150042
01370-00508	K2110-08A0	25	240120
01370-00512	K2110-03A1	11	240090
01435-00610	W1111-01A0	12	420010
01435-00816	A2010-B3F2	22	010130
01435-00816	A5010-A3F1	14	010400
01435-00825	A3310-A3B3	14	010310
01437-01025	A5010-A3F1	29	010400
01437-01065	A1730-A3F3	3	010100
01437-01075	A2410-A3A5	3	010260
01438-01020	A1010-A3B9	27	010010
01439-00814	F2820-01A4	8	150140
01439-00814	K2110-02A0	6	240070
01439-00814	K2500-01A0	14	240290
01439-00814	K2500-01A0	22	240290
01439-00820	K2500-02A0	5	240300
01439-01020	K2110-02A0	17	240070
01439-01020	K2500-02A0	7	240300
01439-01225	K0410-01A1	12	240040
01439-01225	K2400-01A0	6	240270
01439-01225	K2400-02A0	11	240280

PART NO.	FIG.NO.	INDEX	PAGE
01439-01225	K2400-02A0	34	240280
01439-01225	K2500-02A0	12	240300
01508-20805	K2110-07A0	37	240110
01508-40603	F2820-01A4	12	150140
01508-40603	K2400-02A0	29	240280
01508-40805	F2820-01A1	7	150110
01508-40805	K2110-11A0	14	240160
01508-40805	K2520-02A0	44	240330
01508-41006	F2300-06A0	24	150019
01508-41006	K2110-03A0	24	240080
01508-41006	K2110-08A0	19	240120
01508-41207	K2110-05A0	15	240100
01508-41408	K2400-01A0	35	240270
01530-04812	T2510-04A0	9	330140
01570-00808	D0210-01A0		090030
01571-01016	D0100-01A0		090010
01571-01218	H0100-01A0		180010
01572-21016	W1111-02A0	5	420025
01572-21216	H2220-03A1		180260
01572-21225	H2210-01A1A		180230
01573-12306	H0310-01A0		180100
01573-12306	H0310-01A3		180110
01573-22306	H2250-02A3		180280
01573-22380	H0100-01A0		180010
01580-01008	A1610-A3K9	4	010090
01580-01008	A2110-A3G6	15	010170
01580-01008	A6010-A3J4	20	010480
01580-01210	H2250-02A3		180280
01580-01210	K0110-01A1	6	240012
01580-01210	K0410-01A1		240040
01580-01613	D0100-01A0		090010
01580-01613	H0100-01A0		180010
01580-10504	F2820-01A2	11	150120
01580-10605	F2820-01A4	10	150140
01580-10605	K2400-02A0	26	240280
01580-10806	A2110-B3G6	7	010180
01580-10806	C0100-02A0	19	060020
01580-10806	F2320-01A5	4	150038
01580-10806	F2320-01A5	9	150038
01580-10806	F2820-01A1	12	150110
01580-10806	K2110-02A0	16	240070
01580-10806	K2110-07A0	25	240110
01580-10806	K2110-07A0	36	240110
01580-10806	K2110-10A1	18	240140
01580-10806	K2110-10A2	20	240150
01580-10806	K2110-11A0	12	240160
01580-10806	K2400-02A0	13	240280
01580-10806	K2400-02A0	19	240280
01580-10806	K2520-02A0	34	240330
01580-10806	T2510-11A0	33	330210

PART NO.	FIG.NO.	INDEX	PAGE
01580-10806	T2510-11A0	5	330210
01580-10806	Y1661-03A0	17	450009
01580-11008	A1410-A3A2	15	010050
01580-11008	A1610-A3K9	17	010090
01580-11008	A2060-A3D9	17	010160
01580-11008	A3110-B3D9	20	010300
01580-11008	A4110-A3G6	20	010360
01580-11008	A4130-A3A1	22	010370
01580-11008	A5060-B3D9	8	010450
01580-11008	A5060-C3D9	11	010460
01580-11008	A5060-C3D9	17	010460
01580-11008	D0200-01A2	6	090020
01580-11008	E0210-01A0	6	120030
01580-11008	F2320-01A9	24	150042
01580-11008	M2210-01A2	12	270090
01580-11210	A6010-A3J4	14	010480
01580-11210	H2250-01A3		180270
01580-11210	K0110-01A2	6	240015
01580-11210	K2400-01A0	29	240270
01580-11210	T2140-02A0	9	330052
01580-11210	T2510-03A0	22	330130
01580-11411	A6010-A3J4	11	010480
01580-11411	C0100-02A0	4	060020
01580-11815	T2115-01A0	10	330020
01580-12016	T2115-01A1	6	330025
01580-12419	K0410-01A9	10	240042
01580-12419	K0410-01A9	14	240042
01580-12419	K0410-02A9	10	240043
01580-12419	K0410-02A9	5	240043
01580-13326	T2510-01A0	4	330110
01582-01008	A2410-A3A5	13	010260
01582-01008	A2410-A3A5	8	010260
01582-11008	K2110-03A0	14	240080
01582-11008	K2110-03A0	25	240080
01582-11008	K2520-01A0	18	240310
01582-11210	F2300-06A0	20	150019
01582-11210	F2300-06A0	29	150019
01582-11210	F2820-01A3	9	150130
01582-11210	K2110-05A0	14	240100
01582-11210	K2110-05A0	9	240100
01582-11411	F2820-01A3	4	150130
01582-11411	F2820-01A3	6	150130
01582-11411	K2400-01A0	33	240270
01582-11613	F2300-13A0	4	150026
01582-11613	R0110-01A0	14	300010
01583-02414	A5060-A3D9	4	010440
01583-11408	K2520-02A0	31	240330
01583-12012	H0310-06A0		180140
01583-12414	A4080-A3A1	25	010350
01583-51408	H1410-02A0		180200

PART NO.	FIG.NO.	INDEX	PAGE
01583-52414	H2250-01A3		180270
01590-30809	F2820-01A4	2	150140
01590-30809	K2110-07A0	26	240110
01590-30809	K2110-07A0	39	240110
01590-30809	K2110-11A0	16	240160
01590-30809	K2110-11A0	20	240160
01590-30809	K2110-11A0	24	240160
01590-31215	T2140-02A0	5	330052
01592-11215	T2810-01A0	7	330270
01593-31008	F2300-06A0	25	150019
01593-31008	K2110-08A0	14	240120
01593-31008	K2520-01A0	16	240310
01593-31210	F2820-01A3	11	150130
01593-31210	K2110-05A0	6	240100
01593-31411	F2820-01A3	2	150130
01593-31411	K2400-01A0	30	240270
01597-01009	T2140-01A0	36	330041
01598-00608	F2820-01A2	8	150120
01598-00809	F2820-01A1	5	150110
01598-00809	K2110-10A1	23	240140
01598-00809	K2110-10A2	23	240150
01598-00809	K2400-02A0	17	240280
01598-01214	T2115-01A1	10	330025
01598-01214	T2115-01A1	26	330025
01599-01011	H0310-01A0	11	180100
01599-01011	H0310-01A0	21	180100
01599-01011	H0310-01A3	11	180110
01599-01011	H0310-01A3	21	180110
01599-01011	H0310-06A1	17	180150
01599-01011	H2250-02A3	5	180280
01599-01011	T2140-01A0		330041
01599-01011	T2140-01A1	36	330050
01599-01011	T2400-01A1	24	330100
01601-20513	H0100-01A0	8	180010
01602-00825	Y1661-02A0	7	450008
01602-00925	Y1661-02A0	13	450008
01602-20619	A4030-A3C2	17	010340
01602-20825	A5010-A3F1	15	010400
01602-20825	T2510-10A0	20	330200
01602-20825	T2510-11A0	30	330210
01602-20825	T2510-11A0	42	330211
01602-20825	T2510-12A0	9	330220
01602-20825	Y1661-01A0	25	450006
01602-20825	Y1661-02A0	17	450008
01602-21030	F2320-01A9	25	150042
01602-21030	T2510-10A0	17	330200
01602-21030	T2510-10A0	30	330200
01602-21030	T2510-13A0	8	330230
01602-21236	K0110-01A1	10	240012
01602-21236	K0110-01A1	7	240012

PART NO.	FIG.NO.	INDEX	PAGE
01602-21236	T2400-01A0	10	330090
01602-21236	T2400-01A0	15	330090
01602-21442	T2400-01A0	19	330090
01602-22472	K0410-01A9	13	240042
01602-22472	K0410-01A9	9	240042
01602-22472	K0410-02A9	4	240043
01602-22472	K0410-02A9		240043
01611-06060	W1111-01A0	13	420010
01640-20610	A1370-A3A1	3	010040
01640-20610	F2820-01A2	9	150120
01640-21016	A1110-A3A1	5	010020
01640-21016	A1310-A3A2	16	010030
01640-21016	A1310-A3A2	6	010030
01640-21016	A1370-A3A1	6	010040
01640-21016	A1410-A3A2	16	010050
01640-21016	A1610-A3K9	18	010090
01640-21016	A2060-A3D9	18	010160
01640-21016	A2110-A3G6	5	010170
01640-21016	A3110-B3D9	13	010300
01640-21016	A3310-A3B3	20	010310
01640-21016	A4110-A3G6	21	010360
01640-21016	A4110-A3G6	27	010360
01640-21016	A4110-A3G6	8	010360
01640-21016	A4130-A3A1	15	010370
01640-21016	A4130-A3A1	21	010370
01640-21016	A4230-A3F1	8	010390
01640-21016	A5010-A3F1	18	010400
01640-21016	A5210-A3C8	18	010470
01640-21223	A6010-A3J4	9	010480
01640-21323	A6010-A3J4	4	010480
01640-22032	K2110-02A0	7	240070
01641-20305	K2210-01B0	19	240260
01641-20508	F2820-01A2	12	150120
01641-20508	K2110-03A1	12	240090
01641-20508	K2110-08A0	26	240120
01641-20608	F2820-01A2	1	150120
01641-20608	K2110-10A0	10	240135
01641-20608	K2110-10A1	10	240140
01641-20608	K2110-10A2	10	240150
01641-20608	K2400-02A0	27	240280
01641-20608	K2400-02A0	37	240280
01641-20608	K2520-01A0	28	240310
01641-20608	K2520-01A0	34	240310
01641-20608	K2520-01A1	7	240320
01641-20812	K2110-02A0	22	240070
01641-20812	K2520-01A1	2	240320
01641-20812	M2140-02A0	20	270040
01641-21016	M2210-01A2	8	270090
01641-21223	K2400-01A0	21	240270
01641-21223	K2400-01A0	27	240270

PART NO.	FIG.NO.	INDEX	PAGE
01641-21423	K2520-02A0	40	240330
01642-20810	A2110-B3G6	8	010180
01642-21016	M2210-01A2	18	270090
01643-21232	M2210-01A3		270100
01643-22460	K0410-01A9		240042
01643-30623	F2820-01A4	13	150140
01643-30623	W1111-01A0	9	420010
01643-30823	C0100-02A0	20	060020
01643-30823	D0210-01A0	7	090030
01643-30823	E0300-01A2	3	120040
01643-30823	F2300-09A0	14	150022
01643-30823	F2320-01A5	25	150038
01643-30823	F2320-01A5	31	150038
01643-30823	H2210-01A0A	42	180220
01643-30823	H2210-01A0A	48	180221
01643-30823	H2210-01A0A	61	180221
01643-30823	H2210-01A1A	35	180230
01643-30823	H2210-01A1A	41	180230
01643-30823	H2210-01A1A	54	180231
01643-30823	K2110-02A0	4	240070
01643-30823	K2110-03A0	5	240080
01643-30823	K2110-03A1	14	240090
01643-30823	K2110-07A0	18	240110
01643-30823	K2110-07A0	28	240110
01643-30823	K2110-07A0	31	240110
01643-30823	K2110-07A0	38	240110
01643-30823	K2110-08A0	12	240120
01643-30823	K2110-08A0	4	240120
01643-30823	K2110-11A0	11	240160
01643-30823	K2110-11A0	8	240160
01643-30823	K2110-12A0	3	240170
01643-30823	K2110-16A0	3	240190
01643-30823	K2110-23A0	4	240240
01643-30823	K2210-01B0	21	240260
01643-30823	K2210-01B0	35	240260
01643-30823	K2210-01B0	4	240260
01643-30823	K2400-02A0	22	240280
01643-30823	K2400-02A0	7	240280
01643-30823	K2500-01A0	4	240290
01643-30823	K2500-01A0	8	240290
01643-30823	K2520-01A0	23	240310
01643-30823	K2520-01A0	8	240310
01643-30823	K2520-01A1	10	240320
01643-30823	K2520-01A1	12	240320
01643-30823	K2520-01A1		240320
01643-30823	K2520-02A0	17	240330
01643-30823	K2520-02A0	36	240330
01643-30823	K2520-02A0	50	240331
01643-30823	R0120-01A0	11	300020
01643-30823	T2510-06A0	32	330160

PART NO.	FIG.NO.	INDEX	PAGE
01643-30823	W1111-03A0	8	420035
01643-31032	A1610-A3K9	21	010090
01643-31032	A2110-A3G6	13	010170
01643-31032	A2110-A3G6	16	010170
01643-31032	A2410-A3A5	4	010260
01643-31032	A3010-A3A2	21	010280
01643-31032	A3110-B3D9	21	010300
01643-31032	A3110-B3D9	24	010300
01643-31032	A4030-A3C2	4	010340
01643-31032	A5060-B3D9	9	010450
01643-31032	A5060-C3D9	12	010460
01643-31032	A5060-C3D9	18	010460
01643-31032	A5060-C3D9	5	010460
01643-31032	A6010-A3J4	19	010480
01643-31032	B0500-01A0	11	030050
01643-31032	B0500-01A0	14	030050
01643-31032	B0500-01A0	17	030050
01643-31032	B0500-01A0	24	030050
01643-31032	B0500-01A0	29	030050
01643-31032	B0500-01A0	33	030050
01643-31032	B0500-01A0	6	030050
01643-31032	C0100-01A0	12	060010
01643-31032	C0100-01A0	15	060010
01643-31032	C0100-01A0	18	060010
01643-31032	C0100-01A0	5	060010
01643-31032	C0100-02A0	13	060020
01643-31032	C0100-02A0	15	060020
01643-31032	D0100-01A0	13	090010
01643-31032	D0200-01A2	7	090020
01643-31032	D0210-01A0	17	090030
01643-31032	E0200-01A1	15	120020
01643-31032	E0200-01A1	23	120020
01643-31032	E0200-01A1	25	120020
01643-31032	E0200-01A1	28	120020
01643-31032	E0200-01A1	32	120020
01643-31032	E0200-01A1	36	120020
01643-31032	E0200-01A1	4	120020
01643-31032	E0200-01A1	7	120020
01643-31032	E0210-01A0	15	120030
01643-31032	E0210-01A0	9	120030
01643-31032	F2300-03A0	23	150016
01643-31032	F2300-03A0	27	150016
01643-31032	F2300-06A0	11	150019
01643-31032	F2300-06A0	34	150019
01643-31032	F2300-07A0	21	150020
01643-31032	F2300-07A0	34	150020
01643-31032	F2300-07A0	4	150020
01643-31032	F2300-08A0	32	150021
01643-31032	F2300-10A0	6	150023
01643-31032	F2310-01A0	29	150029

PART NO.	FIG.NO.	INDEX	PAGE
01643-31032	F2310-02A0	10	150030
01643-31032	F2310-02A0	16	150030
01643-31032	F2310-02A0	24	150030
01643-31032	F2310-02A0	30	150030
01643-31032	F2310-02A0	33	150030
01643-31032	F2320-01A0	9	150033
01643-31032	F2320-01A6	15	150039
01643-31032	F2320-01A6	17	150039
01643-31032	F2320-01A7	24	150040
01643-31032	F2320-01A8	15	150041
01643-31032	F2320-01A8	6	150041
01643-31032	F2820-01A2	16	150120
01643-31032	F2820-01A2	18	150120
01643-31032	F2820-01A4	22	150140
01643-31032	H0100-01A1	20	180020
01643-31032	H0100-01A1	8	180020
01643-31032	H0210-01A0	8	180090
01643-31032	H0310-01A0	12	180100
01643-31032	H0310-01A0	22	180100
01643-31032	H0310-01A0	3	180100
01643-31032	H0310-01A3	12	180110
01643-31032	H0310-01A3	22	180110
01643-31032	H0310-01A3	3	180110
01643-31032	H0310-02A0	8	180120
01643-31032	H0310-02A1	6	180130
01643-31032	H0310-06A1	18	180150
01643-31032	H0310-08A0	4	180180
01643-31032	H1410-02A0	22	180200
01643-31032	H1410-02A0	44	180200
01643-31032	H2210-01A0	46	180219
01643-31032	H2210-01A0A	39	180220
01643-31032	H2210-01A0A	52	180221
01643-31032	H2210-01A1A	32	180230
01643-31032	H2210-01A1A	45	180230
01643-31032	H2250-01A3	6	180270
01643-31032	H2250-02A3	6	180280
01643-31032	J2100-01A0	19	210010
01643-31032	K0110-01A1	5	240012
01643-31032	K2110-01A0	6	240060
01643-31032	K2110-02A0	14	240070
01643-31032	K2110-03A0	11	240080
01643-31032	K2110-03A0	27	240080
01643-31032	K2110-03A1	8	240090
01643-31032	K2110-08A0	17	240120
01643-31032	K2110-08A0	22	240120
01643-31032	K2110-09A0	3	240130
01643-31032	K2110-09A0	5	240130
01643-31032	K2110-10A0	13	240135
01643-31032	K2110-10A1	14	240140
01643-31032	K2110-10A1	25	240140

PART NO.	FIG.NO.	INDEX	PAGE
01643-31032	K2110-10A2	14	240150
01643-31032	K2110-10A2	25	240150
01643-31032	K2110-11A0	19	240160
01643-31032	K2110-14A0	24	240180
01643-31032	K2110-14A1	3	240182
01643-31032	K2110-16A0	6	240190
01643-31032	K2110-17A0	10	240200
01643-31032	K2110-17A0	19	240200
01643-31032	K2110-17A0	24	240200
01643-31032	K2110-17A0	31	240200
01643-31032	K2110-17A0	35	240200
01643-31032	K2110-17A0	39	240200
01643-31032	K2110-17A0	44	240200
01643-31032	K2110-17A0	7	240200
01643-31032	K2110-17A0	47	240201
01643-31032	K2110-17A0	49	240201
01643-31032	K2210-01B0	27	240260
01643-31032	K2500-01A0	11	240290
01643-31032	K2500-01A0	18	240290
01643-31032	K2520-01A1	13	240320
01643-31032	K2520-02A0	14	240330
01643-31032	M2140-01A0	11	270030
01643-31032	M2140-02A0	14	270040
01643-31032	M2140-02A0	17	270040
01643-31032	M2140-02A0		270040
01643-31032	M2140-04A0	21	270060
01643-31032	M2210-01A2	10	270090
01643-31032	M2240-01A0	7	270110
01643-31032	R0120-01A0	17	300020
01643-31032	T2140-01A0	37	330041
01643-31032	T2140-01A0	39	330041
01643-31032	T2140-01A1	37	330051
01643-31032	T2140-01A1	39	330051
01643-31032	T2400-01A1	25	330100
01643-31032	T2510-10A0	2	330200
01643-31032	T2510-10A0	24	330200
01643-31032	T2510-10A0	32	330200
01643-31032	T2510-13A0	12	330230
01643-31032	W1111-02A0	1	420025
01643-31230	H2210-01A0	39	180218
01643-31232	A6010-A3J4	13	010480
01643-31232	B0600-01A1	11	030060
01643-31232	B0600-01A1	16	030060
01643-31232	C0100-01A0	24	060010
01643-31232	C0100-02A0	24	060020
01643-31232	D0200-01A2	17	090020
01643-31232	D0210-01A0	22	090030
01643-31232	D0210-01A0	9	090030
01643-31232	E0210-01A0	3	120030
01643-31232	F2300-03A0	11	150016

PART NO.	FIG.NO.	INDEX	PAGE
01643-31232	F2300-03A0	37	150016
01643-31232	F2300-04A0	10	150017
01643-31232	F2300-04A0	17	150017
01643-31232	F2300-04A0	21	150017
01643-31232	F2300-04A0	31	150017
01643-31232	F2300-05A0	15	150018
01643-31232	F2300-05A0	22	150018
01643-31232	F2300-05A0	5	150018
01643-31232	F2300-06A0	3	150019
01643-31232	F2300-10A0	3	150023
01643-31232	F2300-11A0	5	150024
01643-31232	F2300-11A0	8	150024
01643-31232	F2300-12A0	5	150025
01643-31232	F2300-12A0	8	150025
01643-31232	F2300-14A0	18	150027
01643-31232	F2300-15A0	23	150028
01643-31232	F2300-15A0	29	150028
01643-31232	F2310-01A0	13	150029
01643-31232	F2310-03A0	10	150031
01643-31232	F2310-03A0	16	150031
01643-31232	F2310-03A0	22	150031
01643-31232	F2320-01A10	18	150043
01643-31232	F2320-01A8	19	150041
01643-31232	F2380-02A1	14	150060
01643-31232	F2380-02A1	5	150060
01643-31232	F2380-03A1	15	150070
01643-31232	F2380-03A1	20	150070
01643-31232	F2730-01A1	18	150090
01643-31232	F2730-01A1	22	150090
01643-31232	F2730-01A1	6	150090
01643-31232	F2730-01A1		150090
01643-31232	F2730-02A1	17	150100
01643-31232	F2730-02A1	25	150100
01643-31232	H0100-01A1	24	180020
01643-31232	H0120-03A0	8	180060
01643-31232	H0120-03A1	3	180070
01643-31232	H0120-03A1	8	180070
01643-31232	H0120-05A0	6	180080
01643-31232	H0310-01A0	9	180100
01643-31232	H0310-01A3	30	180110
01643-31232	H0310-01A3	9	180110
01643-31232	H0310-06A1	20	180150
01643-31232	H0310-06A1	23	180150
01643-31232	H0310-06A1	8	180150
01643-31232	H0310-08A0	12	180180
01643-31232	H0310-08A3	12	180190
01643-31232	H1410-02A0	17	180200
01643-31232	H2210-01A0	16	180218
01643-31232	H2210-01A0	19	180218
01643-31232	H2210-01A0	28	180218

PART NO.	FIG.NO.	INDEX	PAGE
01643-31232	H2210-01A0	31	180218
01643-31232	H2210-01A0	42	180218
01643-31232	H2210-01A0	54	180219
01643-31232	H2210-01A0A	16	180220
01643-31232	H2210-01A0A	19	180220
01643-31232	H2210-01A0A	28	180220
01643-31232	H2210-01A0A	31	180220
01643-31232	H2210-01A0A	58	180221
01643-31232	H2210-01A0A		180221
01643-31232	H2210-01A1A	12	180230
01643-31232	H2210-01A1A	21	180230
01643-31232	H2210-01A1A	24	180230
01643-31232	H2210-01A1A	9	180230
01643-31232	H2210-01A1A	51	180231
01643-31232	H2220-02A0	9	180250
01643-31232	H2220-03A1	12	180260
01643-31232	H2220-03A1	6	180260
01643-31232	H2220-03A1	9	180260
01643-31232	H2250-01A3	15	180270
01643-31232	H2250-02A3	10	180280
01643-31232	H2250-02A3	14	180280
01643-31232	H2250-02A3	18	180280
01643-31232	H2250-02A3	25	180280
01643-31232	H2250-02A3	3	180280
01643-31232	J2100-01A0	10	210010
01643-31232	J2700-01A0	44	210021
01643-31232	K0110-01A2	5	240015
01643-31232	K0110-01A2	7	240015
01643-31232	K0410-01A1	11	240040
01643-31232	K0410-01A1	7	240040
01643-31232	K2110-01A1	6	240065
01643-31232	K2110-05A0	4	240100
01643-31232	K2110-08A0	7	240120
01643-31232	K2110-16A0	10	240190
01643-31232	K2210-01B0	39	240260
01643-31232	K2400-01A0	11	240270
01643-31232	K2520-01A1	18	240320
01643-31232	K2520-01A1	29	240320
01643-31232	M2140-01A0	14	270030
01643-31232	M2140-01A0	17	270030
01643-31232	M2140-01A0	8	270030
01643-31232	M2140-03A0	13	270050
01643-31232	M2140-03A0	17	270050
01643-31232	M2140-03A0	20	270050
01643-31232	M2140-03A0	4	270050
01643-31232	M2140-03A0	8	270050
01643-31232	M2140-04A0	11	270060
01643-31232	M2140-04A0	16	270060
01643-31232	M2140-04A0	4	270060
01643-31232	M2140-04A0	6	270060

PART NO.	FIG.NO.	INDEX	PAGE
01643-31232	M2210-01A0	15	270070
01643-31232	M2210-01A0	18	270070
01643-31232	M2210-01A0	21	270070
01643-31232	M2210-01A0	4	270070
01643-31232	M2210-01A1	9	270080
01643-31232	M2210-01A2	15	270090
01643-31232	M2210-01A2	22	270090
01643-31232	M2210-01A3	2	270100
01643-31232	M2240-01A0	9	270110
01643-31232	M2810-01A0	12	270120
01643-31232	M2810-01A0	4	270120
01643-31232	R0120-01A0	20	300020
01643-31232	R2100-01A0	19	300061
01643-31232	T2110-01A1	16	330015
01643-31232	T2140-02A0	10	330052
01643-31232	T2140-02A0	4	330052
01643-31232	T2160-01A0	14	330080
01643-31232	T2160-01A0	21	330080
01643-31232	T2160-01A0	24	330080
01643-31232	T2160-01A0	6	330080
01643-31232	T2510-02A0	18	330120
01643-31232	T2510-02A0	24	330120
01643-31232	T2510-02A0	29	330120
01643-31232	T2510-02A0	5	330120
01643-31232	T2510-03A0	21	330130
01643-31232	T2510-03A0	28	330130
01643-31232	T2510-03A0	43	330130
01643-31232	T2510-03A0	9	330130
01643-31232	T2510-04A0	26	330140
01643-31232	T2510-04A0	3	330140
01643-31232	T2510-05A0	4	330150
01643-31232	T2510-06A0	13	330160
01643-31232	T2510-06A0	23	330160
01643-31232	T2510-06A0	27	330160
01643-31232	T2510-06A0	6	330160
01643-31232	T2510-08A0	12	330180
01643-31232	T2510-08A0	24	330180
01643-31232	T2510-08A0	4	330180
01643-31232	T2510-08A0		330180
01643-31232	T2510-10A0	11	330200
01643-31232	T2510-10A0	40	330200
01643-31232	T2510-14A0	10	330240
01643-31232	T2510-14A0	3	330240
01643-31232	T2510-14A0	6	330240
01643-31232	T2610-01A0	14	330260
01643-31232	T2610-01A0	17	330260
01643-31232	W1111-03A0	3	420035
01643-31445	A6010-A3J4	7	010480
01643-31445	C0100-02A0	10	060020
01643-31445	C0100-02A0	5	060020

PART NO.	FIG.NO.	INDEX	PAGE
01643-31445	C0100-02A0	7	060020
01643-31445	F2310-03A0	8	150031
01643-31445	F2320-01A4	14	150037
01643-31445	H0120-03A0	3	180060
01643-31445	H0120-05A0	4	180080
01643-31445	H2250-02A3		180280
01643-31445	T2115-01A0	21	330020
01643-31445	T2150-01A3	14	330070
01643-31445	T2400-01A1	12	330100
01643-31445	T2510-05A0	13	330150
01643-31445	T2520-01A0	18	330255
01643-31445	T2520-01A0	7	330255
01643-31643	K0410-01A9		240042
01643-31645	A2010-A3F2	8	010120
01643-31645	A2230-A3A1	4	010200
01643-31645	B0100-01A1	5	030040
01643-31645	D0100-01A0	18	090010
01643-31645	F2300-01A0	5	150012
01643-31645	F2300-01A1	12	150013
01643-31645	F2300-01A1	8	150013
01643-31645	F2300-13A0	5	150026
01643-31645	F2310-01A0	17	150029
01643-31645	F2320-01A10	12	150043
01643-31645	F2320-01A10	22	150043
01643-31645	F2320-01A10	4	150043
01643-31645	F2380-03A1	24	150070
01643-31645	F2380-04A1	11	150080
01643-31645	H0100-01A0	17	180010
01643-31645	H0210-01A0	4	180090
01643-31645	J2700-01A0	26	210020
01643-31645	J2700-01A1	27	210030
01643-31645	J2700-01A1	35	210030
01643-31645	K0410-01A9	18	240042
01643-31645	K0410-01A9	5	240042
01643-31645	K0410-03A9	12	240044
01643-31645	K0410-03A9	15	240044
01643-31645	K0410-03A9	18	240044
01643-31645	K0410-03A9	21	240044
01643-31645	K0410-03A9	24	240044
01643-31645	K0410-03A9	27	240044
01643-31645	K0410-03A9	3	240044
01643-31645	K0410-03A9	6	240044
01643-31645	K0410-03A9	9	240044
01643-31645	K2110-01A0	12	240060
01643-31645	K2110-01A1	17	240065
01643-31645	K2110-02A0	19	240070
01643-31645	K2120-01A1	7	240250
01643-31645	M2111-01A0	7	270010
01643-31645	M2111-01A0		270010
01643-31645	M2120-01A0	4	270020

PART NO.	FIG.NO.	INDEX	PAGE
01643-31645	M2140-03A0	24	270050
01643-31645	M2210-01A0	27	270070
01643-31645	M2210-01A0	9	270070
01643-31645	M2810-01A0	14	270120
01643-31645	M2810-01A0	6	270120
01643-31645	M2810-01A0	9	270120
01643-31645	R0110-01A0	15	300010
01643-31645	R0110-01A0	20	300011
01643-31645	T2120-01A1	12	330035
01643-31645	T2160-01A0	27	330080
01643-31645	T2160-01A0	9	330080
01643-31845	F2300-06A0	6	150019
01643-31845	R0200-01A0	12	300030
01643-31845	R2100-01A0	11	300060
01643-31845	R2100-01A0	15	300060
01643-31845	T2115-01A0	9	330020
01643-32060	B0100-01A1	7	030040
01643-32060	B0100-01A1	9	030040
01643-32060	F2380-01A0	2	150050
01643-32060	F2380-01A0	4	150050
01643-32060	F2380-03A1	9	150070
01643-32060	H2220-01A0	3	180240
01643-32060	H2220-03A1	20	180260
01643-32060	H2220-03A1	3	180260
01643-32060	J2700-01A0	12	210020
01643-32060	J2700-01A0	4	210020
01643-32060	J2700-01A0	8	210020
01643-32060	J2700-01A1	13	210030
01643-32060	J2700-01A1	4	210030
01643-32060	J2700-01A1	9	210030
01643-32060	M2140-04A0	8	270060
01643-32060	M2811-01A0	3	270130
01643-32060	R0120-01A0	31	300020
01643-32060	R0300-01A0	14	300040
01643-32060	T2110-01A0	17	330010
01643-32060	T2110-01A1	13	330015
01643-32060	T2115-01A0	6	330020
01643-32060	T2115-01A1	14	330025
01643-32060	T2115-01A1	30	330025
01643-32060	T2115-01A1	7	330025
01643-32060	T2510-05A0	19	330150
01643-32460	A4080-A3A1	26	010350
01643-32460	A5060-A3D9	5	010440
01643-32460	H2250-02A3	21	180280
01643-32460	K0410-01A1	3	240040
01643-32460	K0410-01A9	12	240042
01643-32460	K0410-01A9	8	240042
01643-32460	K0410-02A9	3	240043
01643-32460	K0410-02A9	8	240043
01643-32460	K0410-02A9	9	240043

PART NO.	FIG.NO.	INDEX	PAGE
01643-32460	K2110-01A1	15	240065
01643-32460	M2210-01A0	25	270070
01643-32460	M2210-01A0	7	270070
01643-32460	M2210-01A1	3	270080
01643-32460	M2210-01A1	6	270080
01643-32460	T2110-01A0	11	330010
01643-32460	T2110-01A1	8	330015
01643-32460	T2400-01A0	31	330090
01643-32460	T2510-01A0	2	330110
01643-32460	T2520-01A0	21	330255
01643-32460	T2520-01A0	23	330255
01643-32460	T2810-01A0	10	330270
01643-33380	T2400-01A0	29	330090
01643-33380	T2510-01A0	5	330110
01643-50823	F2300-03A0	15	150016
01643-50823	F2300-04A0	26	150017
01643-50823	F2300-06A0	17	150019
01643-50823	F2300-07A0	12	150020
01643-50823	F2300-07A0	32	150020
01643-50823	H0310-07A0	5	180160
01643-50823	H0310-07A0	9	180160
01643-50823	H0310-07A3	5	180170
01643-50823	H0310-07A3	9	180170
01643-50823	T2510-11A0	38	330211
01643-51032	A1610-A3K9	6	010090
01643-51032	F2300-02A1	15	150015
01643-51032	F2300-02A1	19	150015
01643-51032	F2300-12A0	13	150025
01643-51032	F2300-12A0	20	150025
01643-51032	F2300-12A0	28	150025
01643-51032	F2320-01A4	28	150037
01643-51032	H0310-01A0	26	180100
01643-51032	H0310-01A0	30	180100
01643-51032	H0310-01A3	26	180110
01643-51032	H0310-02A0	4	180120
01643-51032	H2210-01A0	23	180218
01643-51032	H2210-01A0	35	180218
01643-51032	H2210-01A0	8	180218
01643-51032	H2210-01A0A	23	180220
01643-51032	H2210-01A0A	35	180220
01643-51032	H2210-01A0A	8	180220
01643-51032	H2210-01A1A	16	180230
01643-51032	H2210-01A1A	28	180230
01643-51032	H2210-01A1A	4	180230
01643-51032	H2220-02A0	4	180250
01643-51032	T2140-01A0	34	330041
01643-51032	T2140-01A1	34	330050
01643-51032	T2400-01A1	21	330100
01643-51032	T2610-01A0	11	330260
01643-51232	F2200-01A0	6	150010

PART NO.	FIG.NO.	INDEX	PAGE
01643-51232	F2300-02A0	12	150014
01643-51232	F2300-02A1	12	150015
01643-51232	F2300-03A0	6	150016
01643-51232	F2300-05A0	16	150018
01643-51232	H0310-01A0	18	180100
01643-51232	H0310-01A3	18	180110
01643-51232	J2700-01A0	29	210020
01643-51232	K2400-01A0	16	240270
01643-51232	T2510-09A0	12	330190
01643-51232	Y1610-02A1	12	450005
01643-51645	T2140-01A0	13	330040
01643-51645	T2140-01A1	13	330050
01643-51645	Y1610-01A1	12	450004
01643-72460	K0410-02A9		240043
01645-31232	F2300-03A0	30	150016
01658-04823	T2510-04A0	10	330140
01803-02228	F2380-04A1	15	150080
02010-70625	A5210-A3C8	5	010470
02090-11270	T2120-01A0	8	330030
02090-11270	T2120-01A1	17	330035
02205-10812	A6010-A3J4	3	010480
02290-11219	T2120-01A0	9	330030
02290-11219	T2120-01A1	18	330035
02400-10413	A2350-A3B6	11	010240
02893-05037	A5010-A3F1	20	010400
02896-11009	T2150-01A3	5	330070
04010-00516	A4080-A3A1	20	010350
04010-00516	K2110-07A0	19	240110
04010-00516	K2110-07A0	32	240110
04010-00516	K2110-11A0	3	240160
04010-00516	K2520-01A0	21	240310
04010-00516	K2520-01A0	6	240310
04010-00519	A4080-A3A1	24	010350
04010-00519	F2300-06A0	14	150019
04010-00519	F2300-07A0	10	150020
04010-00519	F2300-07A0	30	150020
04010-00519	K2110-23A0	2	240240
04010-00519	Y1661-02A0	5	450008
04010-00725	A2410-B3A5	4	010270
04020-00514	A2010-A3F2	6	010120
04020-00820	A1010-A3B9	9	010010
04020-00820	A2010-A3F2	22	010120
04020-00820	F2310-02A0	14	150030
04020-00820	T2510-03A0	36	330130
04020-00820	T2510-09A0	13	330190
04020-00820	Y1610-02A1	13	450005
04020-01024	A2010-A3F2	27	010120
04020-01024	F2300-02A0	10	150014
04020-01024	F2300-02A1	10	150015
04020-01228	A2370-A3A1	2	010250

PART NO.	FIG.NO.	INDEX	PAGE
04020-01228	B0100-01A1	2	030040
04020-01228	F2300-01A1	9	150013
04020-01228	F2310-02A0	31	150030
04020-01228	F2320-01A1	5	150034
04020-01228	F2320-01A10	2	150043
04020-01228	F2320-01A2	7	150035
04020-01228	F2320-01A3	6	150036
04020-01228	F2320-01A4	3	150037
04020-01228	F2320-01A8	17	150041
04020-01228	T2510-02A0	2	330120
04020-01228	Y1610-01A1	10	450004
04020-01434	F2310-02A0	7	150030
04022-08025	J2700-01A0	41	210021
04025-00320	F2300-12A0	35	150025
04025-00324	K2520-02A0	48	240331
04025-00332	K2520-01A0	10	240310
04025-00408	A2010-A3F2	5	010120
04025-00512	A2010-A3F2	30	010120
04025-00520	K2110-07A0	12	240110
04025-00620	F2320-01A3	16	150036
04050-00060	T2510-02A0	32	330120
04050-01618	T2510-11A0	21	330210
04050-10060	T2400-01A0	22	330090
04050-11015	F2820-01A2		150120
04050-11208	T2510-03A0	17	330130
04050-11612	F2300-07A0	15	150020
04050-11612	F2820-01A2	3	150120
04050-11612	F2820-01A4	18	150140
04050-11612	K2110-10A0	11	240135
04050-11612	K2110-10A1	11	240140
04050-11612	K2110-10A2	11	240150
04050-11612	K2400-02A0	36	240280
04050-11612	K2520-01A0	35	240310
04050-11612	K2520-01A1	8	240320
04050-12015	F2820-01A1	9	150110
04050-12015	F2820-01A2	20	150120
04050-12015	F2820-01A4	3	150140
04050-12015	K2110-02A0	21	240070
04050-12015	K2110-07A0	27	240110
04050-12015	K2110-07A0	40	240110
04050-12015	K2110-10A1	20	240140
04050-12015	K2110-10A2	19	240150
04050-12015	K2110-11A0	17	240160
04050-12015	K2110-11A0	21	240160
04050-12015	K2110-11A0	25	240160
04050-12015	K2520-01A0	26	240310
04050-12015	K2520-01A0	32	240310
04050-12015	K2520-01A1	21	240320
04050-12015	K2520-01A1	3	240320
04050-12015	M2140-02A0	21	270040

PART NO.	FIG.NO.	INDEX	PAGE
04050-12018	F2300-06A0	26	150019
04050-12018	K2110-08A0	15	240120
04050-12018	K2520-01A0	17	240310
04050-13015	M2210-01A2	19	270090
04050-13020	F2300-06A0	22	150019
04050-13020	F2820-01A3	12	150130
04050-13020	K2110-05A0	7	240100
04050-13020	M2210-01A2	7	270090
04050-13022	F2300-06A0	31	150019
04050-13022	F2820-01A3	3	150130
04050-13022	K2110-07A0	22	240110
04050-13022	K2400-01A0	24	240270
04050-13022	K2400-01A0	26	240270
04050-13022	K2400-01A0	31	240270
04050-13022	T2140-02A0	6	330052
04050-13025	T2810-01A0	8	330270
04050-14025	T2115-01A0	19	330020
04050-14025	T2115-01A0	24	330020
04050-14025	T2115-01A0	28	330020
04050-14028	K2520-02A0	41	240330
04050-18080	T2120-01A0	11	330030
04050-18080	T2140-02A0	7	330052
04052-10633	K2520-01A0	29	240310
04059-01010	F2300-12A0	36	150025
04059-01010	F2320-01A9	9	150042
04059-01020	K2110-03A0	19	240080
04059-01020	K2110-03A0	8	240080
04064-01510	A1410-A3A2	8	010050
04064-01812	F2300-06A0	7	150019
04064-02012	A2410-B3A5	12	010270
04064-03515	F2310-01A0	32	150029
04064-05020	F2320-01A1	14	150034
04064-05020	F2320-01A2	9	150035
04064-05020	T2510-04A0	28	330140
04064-05520	F2320-01A3	9	150036
04064-06020	B0600-01A1	5	030060
04064-07025	F2310-02A0	28	150030
04064-07025	F2310-02A0	4	150030
04064-07025	F2320-01A4	8	150037
04064-08530	F2300-14A0	5	150027
04064-08530	F2300-15A0	18	150028
04064-09030	T2510-08A0	16	330180
04065-01104	B0600-01A1	4	030060
04065-01154	R0300-01A0	11	300040
04065-02412	A3110-B3D9	8	010300
04065-02512	F2320-01A6	10	150039
04065-03012	A3110-A3D9	5	010290
04065-03012	F2320-01A5	10	150038
04065-03212	F2320-01A6	8	150039
04065-03515	T2510-09A0	10	330190

PART NO.	FIG.NO.	INDEX	PAGE
04065-03515	Y1610-02A1	10	450005
04065-04018	F2300-02A0	15	150014
04065-04818	A2350-A3B6	3	010240
04065-05220	A5010-A3F1	6	010400
04065-05220	Y1610-01A1	15	450004
04065-07225	F2310-01A0	33	150029
04065-07225	F2320-01A3	20	150036
04065-08025	A4080-A3A1	4	010350
04065-08025	A5060-A3D9	8	010440
04065-08225	T2510-04A0	13	330140
04065-09030	J2700-01A0	17	210020
04065-09030	J2700-01A1	18	210030
04070-00110	F2320-01A1	25	150034
04070-00120	F2320-01A4	18	150037
04070-00130	F2320-01A2	21	150035
04071-00125	F2310-01A0	6	150029
04071-00130	F2300-14A0	3	150027
04071-00140	F2310-02A0	20	150030
04071-00140	T2510-08A0	13	330180
04071-00160	T2510-05A0	17C	330150
04071-00180	F2320-01A2	20	150035
04077-00090	F2320-01A1	21	150034
04077-00140	T2510-03A0	45	330130
04077-00150	F2320-01A1	26	150034
04082-00206	T2510-10A0	38	330200
04082-00212	T2400-01A0	13	330090
04082-00212	T2400-01A0	8	330090
04082-00514	T2400-01A0	17	330090
04082-00514	T2520-01A0	16	330255
04082-00514	T2520-01A0	5	330255
04121-22271	A5050-A3H8	2	010430
04205-00622	F2300-07A0	14	150020
04205-10618	F2820-01A4	17	150140
04205-10622	F2820-01A2	2	150120
04205-10622	K2400-02A0		240280
04205-10625	K2400-02A0	35	240280
04205-10822	F2820-01A1	8	150110
04205-10822	F2820-01A2	19	150120
04205-10822	K2110-10A1	19	240140
04205-10822	K2110-10A2	18	240150
04205-10825	K2110-02A0	20	240070
04205-10825	K2520-01A0	25	240310
04205-10825	K2520-01A1	20	240320
04205-10828	M2140-02A0	19	270040
04205-11028	F2300-06A0	21	150019
04205-11235	F2300-06A0	30	150019
04205-11238	K2400-01A0	23	240270
04205-11240	K2110-07A0	21	240110
04210-20832	K2110-10A1	16	240140
04210-20832	K2110-10A2	16	240150

PART NO.	FIG.NO.	INDEX	PAGE
04210-20832	K2520-01A0	24	240310
04210-20832	K2520-01A1	19	240320
04211-20844	F2820-01A1	11	150110
04211-21266	F2300-06A0	28	150019
04220-20832	F2820-01A1		150110
04221-20844	F2820-01A1	6	150110
04244-40805	K2110-10A1	17	240140
04244-40805	K2110-10A2	17	240150
04244-41212	K2400-01A0		240270
04244-51225	F2300-06A0	27	150019
04245-40805	K2400-02A0	20	240280
04245-41009	K2110-03A0	13	240080
04245-41214	F2820-01A3	10	150130
04245-41480	F2820-01A3	7	150130
04245-50813	K2520-02A0	32	240330
04248-30808	K2520-02A0	42	240330
04248-30812	F2820-01A1	10	150110
04248-31015	K2110-03A0	23	240080
04248-31031	F2300-06A0	18	150019
04248-31228	K2110-05A0	13	240100
04250-80847	F2820-01A4	9	150140
04250-80847	K2400-02A0	18	240280
04250-80847	K2520-02A0	33	240330
04250-81056	K2110-03A0	10	240080
04250-81056	K2110-03A0	21	240080
04250-81056	K2520-01A0	12	240310
04250-81265	F2820-01A3	8	150130
04250-81265	K2110-05A0	10	240100
04250-81265	K2110-05A0	5	240100
04250-81474	F2820-01A3	1	150130
04250-81474	K2400-01A0	32	240270
04250-90847	K2110-07A0	34	240110
04250-90847	K2110-11A0	13	240160
04250-90847	K2520-02A0	43	240330
04250-91056	F2300-06A0	23	150019
04250-91056	K2110-03A0	22	240080
04250-91056	K2110-08A0	13	240120
04252-20853	K2110-07A0	24	240110
04252-21061	K2520-01A0	15	240310
04254-10823	K2400-02A0	24	240280
04254-11032	K2110-23A0	6	240240
04254-11032	K2520-01A0	13	240310
04254-11232	K2110-05A0	12	240100
04256-40817	K2110-07A0	23	240110
04256-40817	K2110-07A0	35	240110
04256-40817	K2110-11A0	10	240160
04256-40817	K2400-02A0	21	240280
04256-50615	K2400-02A0	25	240280
04260-00635	F2320-01A1	17	150034
04260-00635	F2320-01A2	12	150035

PART NO.	FIG.NO.	INDEX	PAGE
04260-00635	F2320-01A3	13	150036
04260-00635	F2320-01A4	22	150037
04260-00635	T2510-11A0	26	330210
04260-00952	Y1661-01A0	7	450006
04260-01905	F2380-02A1	11	150060
04418-13060	F2310-01A0		150029
04418-13060	F2320-01A0		150033
04418-13060	T2400-01A0	24	330090
04418-13060	T2510-02A0	15	330120
04418-13060	U0100-01A0	10	360010
04418-13060	U0520-01A0	2	360050
04434-50810	F2310-01A0	27	150029
04434-51010	A1610-A3K9	15	010090
04434-51010	A4110-A3G6	24	010360
04434-51010	A4130-A3A1	19	010370
04434-51010	A4230-A3F1	4	010390
04434-51010	D0200-01A2	4	090020
04434-51010	K2110-17A0	17	240200
04434-51010	K2110-17A0	33	240200
04434-51010	K2110-17A0	37	240200
04434-51010	K2110-17A0	45	240201
04434-51012	W1111-02A0	1	420020
04434-51312	H0310-06A1	21	180150
04434-51312	J2700-01A0	36	210020
04434-51312	J2700-01A1	30	210030
04434-51610	W1111-02A0	3	420025
04434-51812	B0500-01A0	12	030050
04434-51812	B0500-01A0	5	030050
04434-51812	B0500-01A0	7	030050
04434-51812	B0500-01A0	9	030050
04434-51912	F2730-02A1	19	150100
04434-52212	F2730-02A1	18	150100
04434-52310	K2110-17A0	20	240200
04434-52310	K2110-17A0	3	240200
04434-52512	H0310-06A1	5	180150
04434-52712	F2300-03A0	34	150016
04434-52712	F2730-02A1	15	150100
04434-52712	H0310-08A0	7	180180
04434-52712	H0310-08A3	5	180190
04434-53211	A4110-A3G6	18	010360
04434-53412	F2730-01A1	13	150090
04530-11018	R0120-01A0	18	300020
06000-06005	A4080-A3A1	5	010350
06000-06212	B0600-01A1	6	030060
06000-06311	F2310-03A0	12	150031
06000-06924	F2320-01A4	17	150037
06000-06926	F2320-01A2	19	150035
06002-30209	T2510-03A0	13	330130
06002-30212	T2510-03A0	12	330130
06002-30310	T2510-04A0	12	330140

PART NO.	FIG.NO.	INDEX	PAGE
06002-32213	T2510-06A0	15	330160
06002-32213	T2510-06A0	20	330160
06002-32214	F2300-13A0	8	150026
06002-32314	T2510-06A0	4	330160
06030-06004	A5010-A3F1	3	010400
06030-06017	F2300-14A0	4	150027
06030-06018	T2510-08A0	14	330180
06030-06210	F2320-01A1	11	150034
06030-06217	F2300-15A0	15	150028
06030-06304	A5010-A3F1	4	010400
06030-06307	A4080-A3A1	3	010350
06030-06311	F2310-03A0	18	150031
06030-06922	F2320-01A1	24	150034
06032-01016	F2310-01A0	5	150029
06037-06206	A5060-A3D9	7	010440
06037-06307	A5060-A3D9	6	010440
06040-06018	T2510-04A0	17	330140
06040-06024	F2380-04A1	3	150080
06040-06208	A2230-A3A1	5	010200
06040-06311	T2510-03A0	25	330130
06040-06311	T2510-03A0	30	330130
06041-00216	T2510-03A0	44	330130
06043-06214	F2310-02A0	2	150030
06120-01612	F2300-07A0	25	150020
06120-01612	F2300-07A0	6	150020
06120-02016	F2320-01A9	5	150042
06120-02216	F2300-07A0	26	150020
06120-02216	F2300-07A0	7	150020
06120-02520	Y1661-02A0	9	450008
06123-01414	K2110-07A0	11	240110
06123-01414	K2110-07A0	2	240110
06123-01414	K2520-01A0	2	240310
06123-01614	F2820-01A1	3	150110
06123-01614	K2110-03A0	16	240080
06123-01614	K2110-03A0	2	240080
06123-02018	K2110-08A0	9	240120
06123-02518	F2300-06A0	5	150019
06124-01416	K2110-07A0	3	240110
06124-01416	K2110-11A0	26	240160
06124-01416	K2520-01A0	4	240310
06124-01616	K2110-07A0	4	240110
06124-01616	K2400-02A0	8	240280
06124-02020	F2300-06A0	13	150019
06124-02020	K2110-02A0	9	240070
06124-02020	K2110-10A0	3	240135
06124-02020	K2110-10A1	3	240140
06124-02020	K2110-10A2	3	240150
06124-02020	K2110-11A0	9	240160
06124-02020	K2400-01A0	7	240270
06124-02020	K2400-02A0	9	240280

PART NO.	FIG.NO.	INDEX	PAGE
06124-03020	K2400-01A0	8	240270
06124-03520	K2110-07A0	5	240110
06125-02557	K2110-05A0	17	240100
07000-02014	Y1661-01A0	40	450006
07000-02015	F2320-01A9	23	150042
07000-02018	K2110-14A0	14	240180
07000-02018	K2110-14A0	16	240180
07000-02018	K2520-02A0	20	240330
07000-02020	Y1661-01A0	22	450006
07000-02021	A2010-B3F2	8	010130
07000-02060	H0310-01A0	19	180100
07000-02060	H0310-01A3	19	180110
07000-02065	Y1661-02A0	15	450008
07000-02085	D0100-01A0	11	090010
07000-02085	H0210-01A0	6	180090
07000-02085	T2510-05A0	6	330150
07000-02090	H0100-01A0	14	180010
07000-02090	H0310-01A0	4	180100
07000-02090	H0310-01A3	4	180110
07000-02095	T2140-01A0		330040
07000-02095	T2140-01A1	5	330050
07000-02105	T2510-03A0	11	330130
07000-02110	F2380-02A1	12	150060
07000-02115	F2380-03A1	18	150070
07000-02130	H0210-01A0	2	180090
07000-02130	T2510-03A0	24	330130
07000-02130	T2510-03A0	39	330130
07000-02135	V0100-01A0	4	390010
07000-02140	H0100-01A1	18	180020
07000-02145	J2700-01A0	10	210020
07000-02145	J2700-01A1	11	210030
07000-02145	T2510-03A0	31	330130
07000-03022	H0310-07A0	10	180160
07000-03022	H0310-07A3	10	180170
07000-03025	H0120-03A0	5	180060
07000-03025	H0120-03A1	5	180070
07000-03025	H0310-07A0	6	180160
07000-03025	H0310-07A3	6	180170
07000-03030	A2010-B3F2	11	010130
07000-03035	H0310-02A0	9	180120
07000-03035	H0310-02A1	7	180130
07000-03042	Y1661-01A0	16	450006
07000-03042	Y1661-01A0	23	450006
07000-03088	T2510-05A0	21	330150
07000-05105	F2380-01A0	5	150050
07000-05130	T2510-04A0	7	330140
07000-05135	T2510-07A0	18	330170
07000-05140	T2510-06A0	14	330160
07000-05165	F2380-02A1	2	150060
07000-05170	T2510-06A0	3	330160

PART NO.	FIG.NO.	INDEX	PAGE
07000-05190	T2510-07A0	19	330170
07000-05240	T2510-05A0	16	330150
07000-05405	F2300-15A0	2	150028
07000-05440	F2320-01A10	19	150043
07000-11006	Y1661-01A0	5	450006
07000-12018	Y1661-01A0	37	450006
07000-12055	H2210-01A0	43	180218
07000-12090	T2140-01A0	6	330040
07000-12090	T2140-01A1	6	330050
07000-12095	T2140-01A0	5	330040
07000-12105	R0300-01A0	5	300040
07000-12135	T2150-01A3	9	330070
07000-12135	T2400-01A1	7	330100
07000-13030	H2210-01A0A	43	180220
07000-13030	H2210-01A0A	49	180221
07000-13030	H2210-01A0A	62	180221
07000-13030	H2210-01A0A		180221
07000-13030	H2210-01A1A	36	180230
07000-13030	H2210-01A1A	42	180230
07000-13030	H2210-01A1A	55	180231
07000-13030	T2140-01A0	32	330041
07000-13030	T2140-01A1	32	330050
07000-13030	T2400-01A1	22	330100
07000-13032	H0310-01A0	27	180100
07000-13032	H0310-01A3	27	180110
07000-13032	H2210-01A0	9	180218
07000-13032	H2210-01A0A	9	180220
07000-13032	H2210-01A1A	5	180230
07000-13032	H2220-02A0	5	180250
07000-13032	H2250-01A3	3	180270
07000-13035	H2210-01A0	24	180218
07000-13035	H2210-01A0	36	180218
07000-13035	H2210-01A0A	24	180220
07000-13035	H2210-01A0A	34	180220
07000-13035	H2210-01A0A		180221
07000-13035	H2210-01A1A	17	180230
07000-13035	H2210-01A1A	29	180230
07000-13035	H2210-01A1A		180230
07000-13038	F2300-02A1	17	150015
07000-13038	H0310-01A0	31	180100
07000-13038	H0310-01A3	31	180110
07000-13038	H0310-02A0	2	180120
07000-13042	H0310-08A0	2	180180
07000-13045	H0310-08A0		180180
07000-13048	H2210-01A0	47	180219
07000-15230	T2510-05A0	5	330150
07000-22016	Y1661-03A0	8	450009
07000-62020	A3110-B3D9	7	010300
07000-62020	A3110-B3D9	9	010300
07000-62115	A5010-A3F1	16	010400

PART NO.	FIG.NO.	INDEX	PAGE
07000-62125	A4080-A3A1	18	010350
07000-63025	A3110-B3D9	17	010300
07000-63028	A3110-B3D9	10	010300
07000-63035	A3110-B3D9	11	010300
07000-63042	A3310-A3B3	8	010310
07000-63045	A2110-A3G6	9	010170
07000-65065	A4210-A3C2	4	010380
07000-72015	T2510-11A0	25	330210
07000-72016	T2510-13A0	13	330230
07000-72018	F2300-11A0	6	150024
07000-72018	F2300-12A0	40	150025
07000-72018	F2300-15A0	13	150028
07000-72018	F2300-15A0	21	150028
07000-72018	T2510-12A0	6	330220
07000-72018	T2510-13A0	14	330230
07000-72020	F2320-01A3	5	150036
07000-72020	F2320-01A8	12	150041
07000-72020	T2510-13A0	15	330230
07000-72021	F2300-14A0	16	150027
07000-72021	T2510-10A0	34	330200
07000-72021	T2510-10A0	42	330201
07000-72055	F2320-01A10	15	150043
07000-72060	F2300-03A0	2	150016
07000-72065	F2300-05A0	2	150018
07000-72070	F2310-03A0	3	150031
07000-72075	F2320-01A10	14	150043
07000-72075	F2320-01A10	20	150043
07000-72080	F2300-04A0	7	150017
07000-72085	T2510-10A0	3	330200
07000-72085	T2510-10A0	7	330200
07000-72090	F2300-05A0	19	150018
07000-72100	F2300-05A0	12	150018
07000-72100	V0100-01A0	2	390010
07000-72105	F2300-03A0	9	150016
07000-72105	T2510-03A0	14	330130
07000-72110	F2300-05A0	9	150018
07000-72110	H0100-01A1	6	180020
07000-73022	F2300-12A0	25	150025
07000-73022	F2320-01A0	14	150033
07000-73022	F2320-01A0	18	150033
07000-73022	F2320-01A0	20	150033
07000-73022	F2320-01A0	23	150033
07000-73022	T2510-10A0	22	330200
07000-73025	F2300-03A0	13	150016
07000-73025	F2300-12A0	11	150025
07000-73025	F2320-01A0	15	150033
07000-73025	F2320-01A0	21	150033
07000-73025	F2320-01A6	12	150039
07000-73025	T2510-08A0	6	330180
07000-73025	T2510-10A0	21	330200

PART NO.	FIG.NO.	INDEX	PAGE
07000-73025	T2510-10A0	26	330200
07000-73025	T2510-10A0	28	330200
07000-73025	T2510-10A0	37	330200
07000-73028	F2300-03A0	21	150016
07000-73028	F2320-01A0	16	150033
07000-73028	T2510-10A0	36	330200
07000-73030	F2300-04A0	23	150017
07000-73030	F2310-01A0	19	150029
07000-73030	F2320-01A10	16	150043
07000-73030	F2320-01A2	6	150035
07000-73030	F2320-01A6	13	150039
07000-73030	F2320-01A7	22	150040
07000-73032	T2510-10A0	15	330200
07000-73035	A3110-A3D9	7	010290
07000-73035	F2730-01A1	20	150090
07000-73035	T2510-11A0	23	330210
07000-73038	F2300-04A0	8	150017
07000-73038	F2320-01A5	23	150038
07000-73038	T2510-13A0	16	330230
07000-73042	F2300-04A0	19	150017
07000-73045	F2300-04A0	15	150017
07000-73048	F2300-03A0	4	150016
07000-73048	T2510-11A0	40	330211
07000-75042	F2310-04A0	4	150032
07000-75055	F2310-01A0	15	150029
07000-75210	F2310-03A0	14	150031
07000-75260	F2310-01A0	11	150029
07000-75260	F2310-03A0	20	150031
07000-75440	F2320-01A10		150043
07001-02016	Y1661-03A0	9	450009
07001-02018	Y1661-01A0	38	450006
07002-00823	Y1664-03A0	4	450070
07002-01023	H0310-07A3	14	180170
07002-01423	H0310-06A1	2	180150
07002-01423	H1410-02A0	31	180200
07002-01423	H1410-02A0	41	180200
07002-01423	H1410-02A0	5	180200
07002-01423	H1410-02A0	47	180201
07002-01423	H1410-03A0	2	180210
07002-01423	K2110-14A0	18	240180
07002-01423	K2520-02A0	24	240330
07002-01423	K2520-02A0	3	240330
07002-01423	K2520-02A0	6	240330
07002-01423	K2520-02A0	8	240330
07002-01623	H1410-02A0	11	180200
07002-02034	H0310-06A0	9	180140
07002-02034	H0310-08A0	15	180180
07002-02034	H0310-08A3	2	180190
07002-02034	H1410-02A0	15	180200
07002-02034	H1410-02A0	27	180200

PART NO.	FIG.NO.	INDEX	PAGE
07002-02034	H1410-03A0	4	180210
07002-02034	H1410-03A0	8	180210
07002-02034	K2520-02A0	21	240330
07002-02434	F2320-01A0	5	150033
07002-02434	H0100-01A1	16	180020
07002-02434	H0310-06A0	11	180140
07002-02434	H0310-06A0	2	180140
07002-02434	H0310-06A0	6	180140
07002-02434	H0310-06A1	14	180150
07002-02434	H1410-02A0	7	180200
07002-02434	J2700-01A0	14	210020
07002-02434	J2700-01A1	15	210030
07002-02434	T2510-11A0	8	330210
07002-02434	T2510-12A0	15	330220
07002-02434	T2510-12A0	19	330220
07002-02434	Y1661-01A0	41	450007
07002-03034	F2320-01A6	4	150039
07002-03034	F2320-01A7	12	150040
07002-03034	F2320-01A7	21	150040
07002-03034	Y1661-01A0	12	450006
07002-03034	Y1661-03A0	19	450009
07002-03334	H0310-02A1	2	180130
07002-03634	A2110-A3G6	7	010170
07002-03634	F2380-03A1	22	150070
07002-03634	F2380-04A1	7	150080
07002-03634	T2510-02A0	11	330120
07002-03634	T2510-02A0	20	330120
07002-03634	Y1661-01A0	33	450006
07002-03634	Y1661-03A0	21	450009
07002-03634	Y1661-03A0	26	450009
07002-04234	D0210-01A0	3	090030
07002-11423	Y1661-01A0	19	450006
07002-12434	H2250-01A3	10	180270
07002-12434	H2250-01A3	12	180270
07002-13634	Y1661-01A0	29	450006
07002-13634	Y1661-01A0	35	450006
07002-21423	K2110-21A0	6	240220
07002-21823	K2110-21A0	7	240220
07002-22434	A2010-A3F2	13	010120
07002-22434	K2110-21A0	8	240220
07002-23034	A2010-A3F2	15	010120
07002-32034	F2300-08A0	5	150021
07002-32434	B0600-01A1	9	030060
07002-32434	F2300-08A0	29	150021
07002-32434	F2300-08A0	9	150021
07002-32434	F2300-09A0	11	150022
07002-32434	F2300-09A0	6	150022
07002-32434	F2730-01A1	11	150090
07002-32434	F2730-01A1	9	150090
07002-32434	H0100-01A1	11	180020

PART NO.	FIG.NO.	INDEX	PAGE
07002-33634	F2300-05A0	7	150018
07002-62034	F2300-03A0	33	150016
07002-62434	F2300-04A0	13	150017
07005-00812	A4110-A3G6		010360
07005-00812	A4130-A3A1	8	010370
07005-00812	A4210-A3C2	2	010380
07005-00812	A4230-A3F1	3	010390
07005-00812	A8111-A3A8		010530
07005-01012	A2010-A3F2	32	010120
07005-01012	A4210-A3C2	6	010380
07005-01012	A5010-B3F1	3	010410
07005-01212	F2310-01A0	26	150029
07005-01412	A2010-A3F2	29	010120
07005-01412	A2010-A3F2	34	010120
07005-01412	A4030-A3C2	21	010340
07005-01412	A4030-A3C2	24	010340
07005-01412	A4110-A3G6	13	010360
07005-01412	A4110-A3G6	23	010360
07005-01412	A4110-A3G6	3	010360
07005-01412	A4130-A3A1	18	010370
07005-01412	A5210-A3C8	22	010470
07005-01412	A8111-A3A8		010530
07005-01412	F2300-12A0	31	150025
07005-02216	A2210-A3D4	11	010190
07012-10070	F2310-04A0	2	150032
07012-10075	T2510-03A0	10	330130
07012-10140	T2510-05A0	22	330150
07012-50085	B0600-01A1	7	030060
07012-50110	F2310-01A0	8	150029
07013-10080	F2380-02A1	8	150060
07016-00256	Y1661-02A0	11	450008
07018-10552	F2320-01A1	10	150034
07018-11355	F2320-01A1	23	150034
07018-12105	F2320-01A1	6	150034
07018-31054	F2310-02A0	18	150030
07020-00000	J2100-01A0		210010
07020-00000	J2700-01A0	19	210020
07020-00000	J2700-01A0	23	210020
07020-00000	J2700-01A1	20	210030
07020-00000	J2700-01A1	24	210030
07020-00000	K2110-03A0	20	240080
07020-00000	M2111-01A0		270010
07020-00000	T2110-01A0	14	330010
07020-00000	T2115-01A0	25	330020
07020-00000	T2115-01A1	22	330025
07020-00000	T2120-01A1	19	330035
07020-00000	T2120-01A1	20	330035
07020-00000	T2120-01A1	21	330035
07020-00000	T2400-01A0	20	330090
07020-00000	T2520-01A0	15	330255

PART NO.	FIG.NO.	INDEX	PAGE
07020-00000	T2520-01A0	4	330255
07020-00000	T2610-01A0	2	330260
07020-00675	J2700-01A0	33	210020
07020-00675	J2700-01A0		210020
07020-00675	J2700-01A1	36	210030
07020-00675	M2111-01A0	4	270010
07020-00900	F2300-06A0	8	150019
07020-00900	F2820-01A1	13	150110
07020-00900	J2100-01A0	15	210010
07020-00900	K2110-03A0	9	240080
07020-00900	R0120-01A0	8	300020
07030-00252	F2320-01A8	7	150041
07030-00252	T2510-02A0	21	330120
07030-10252	B0600-01A1	13	030060
07040-10807	F2310-02A0	22	150030
07040-11409	H1410-02A0	4	180200
07040-11409	H1410-03A0	1	180210
07040-12012	F2300-08A0	4	150021
07040-12012	H1410-02A0	14	180200
07040-12012	H1410-03A0	7	180210
07040-12412	F2300-09A0	10	150022
07040-12412	H0100-01A1	10	180020
07040-12412	H0100-01A1	15	180020
07040-12412	H0310-06A0	10	180140
07040-12412	H1410-02A0	6	180200
07040-12414	A2010-A3F2	12	010120
07040-12414	J2700-01A0	13	210020
07040-12414	J2700-01A1	14	210030
07040-13016	A2010-A3F2	14	010120
07040-13618	T2510-02A0	19	330120
07040-13618	Y1661-01A0	34	450006
07041-13612	F2380-03A1	21	150070
07042-00108	A1310-A3A2	11	010030
07042-00108	A1510-A3D7	4	010060
07042-00108	A4210-A3C2	8	010380
07042-00108	K2110-07A0	41	240110
07042-00108	K2110-08A0	27	240120
07042-00312	A2010-A3F2	16	010120
07042-00415	A1310-A3A2	2	010030
07042-00415	A1730-A3F3	10	010100
07042-00415	A1790-A3E3	1	010110
07042-00415	A5010-A3F1	30	010400
07042-00617	D0100-01A0	7	090010
07042-20108	F2320-01A7	2	150040
07042-20108	F2730-02A1	23	150100
07042-20108	H2210-01A0	11	180218
07042-20108	H2210-01A0	6	180218
07042-20108	H2210-01A0A	11	180220
07042-20108	H2210-01A0A	6	180220
07042-20108	T2510-11A0	2	330210

PART NO.	FIG.NO.	INDEX	PAGE
07042-20312	T2510-13A0	5	330230
07042-30108	H0100-01A1	21	180020
07042-30108	H0100-01A1	9	180020
07042-30108	H1410-02A0	48	180201
07042-30312	T2510-08A0	5	330180
07042-70108	F2300-04A0	33	150017
07042-70108	H1410-03A0	6	180210
07042-70211	H1410-02A0	12	180200
07042-70312	H1410-02A0	13	180200
07043-00108	F2320-01A6	11	150039
07043-00108	K2110-07A0	13	240110
07043-00108	T2510-02A0	1	330120
07043-00108	T2510-02A0	13	330120
07043-00211	T2510-13A0	4	330230
07043-00312	A3110-B3D9	2	010300
07043-00312	T2510-04A0	27	330140
07043-00312	T2510-04A0	6	330140
07043-00312	T2510-13A0	3	330230
07043-00415	A2010-B3F2	15	010130
07043-00415	F2320-01A6	2	150039
07043-50108	A2010-A3F2	9	010120
07043-50211	A2010-A3F2	10	010120
07043-50617	A2010-A3F2	11	010120
07043-70108	A1010-A3B9	6	010010
07043-70108	F2300-08A0	2	150021
07043-70108	F2300-08A0	3	150021
07043-70108	F2310-01A0	2	150029
07043-70108	T2510-07A0	9	330170
07043-70211	F2300-12A0	2	150025
07043-70211	F2310-02A0	12	150030
07043-70211	F2310-03A0	2	150031
07043-70312	F2300-15A0	20	150028
07043-70312	F2320-01A0	7	150033
07043-70415	F2320-01A0	3	150033
07043-70415	F2320-01A4	2	150037
07043-70617	A2210-A3D4	2	010190
07043-70617	F2320-01A0	2	150033
07043-A0617	F2310-01A0	3	150029
07044-12412	B0600-01A1	8	030060
07044-12412	F2320-01A0	4	150033
07044-13620	F2380-04A1	6	150080
07044-13620	T2510-02A0	10	330120
07046-15020	T2610-01A0	6	330260
07046-21210	A2010-A3F2	20	010120
07046-22010	A2010-B3F2	2	010130
07046-22516	A2010-A3F2	19	010120
07046-41810	A1010-A3B9	10	010010
07046-42816	A2010-B3F2	3	010130
07046-43016	A2010-A3F2	17	010120
07046-43516	A2010-A3F2	21	010120

PART NO.	FIG.NO.	INDEX	PAGE
07046-44016	A2010-A3F2	18	010120
07048-02216	F2310-01A0	35	150029
07049-001215	F2300-12A0	41	150025
07049-01012	E0300-01A2	4	120040
07049-01215	H0100-01A0	12	180010
07049-01215	H2220-01A0	4	180240
07049-01215	H2220-01A0	5	180240
07049-01215	H2220-01A0	7	180240
07049-01215	H2220-03A1	21	180260
07049-01215	H2250-02A3	12	180280
07049-01215	K2110-01A0	2	240060
07049-01215	K2110-01A0	8	240060
07049-01215	K2110-01A1	2	240065
07049-01215	K2110-01A1	8	240065
07049-01215	K2110-19A0	1	240210
07049-01215	K2210-01B0	2	240260
07049-01215	M2210-01A1	10	270080
07049-01215	M2210-01A1	14	270080
07049-01215	R2100-01A0	20	300061
07049-01215	T2120-01A1	22	330035
07049-01620	F2380-01A0	6	150050
07049-01620	F2380-04A1	20	150080
07049-01620	H2220-01A0	6	180240
07049-01822	R2100-01A0	16	300061
07049-01822	R2100-01A0	21	300061
07049-02025	F2380-03A1	25	150070
07049-02025	J2700-01A0	4A	210020
07049-02025	J2700-01A1	5	210030
07049-02430	J2100-01A0	5	210010
07049-02430	K2110-01A0	3	240060
07049-02430	K2110-01A1	3	240065
07049-03342	J2100-01A0	6	210010
07052-31217	R0110-01A0	16	300010
07052-31217	R0200-01A0	9	300030
07056-18416	D0100-01A0	4	090010
07058-00001	D0210-01A0	1	090030
07059-11830	R0500-01A5	10	300050
07059-20721	R0500-01A5	11	300050
07063-01054	H0100-01A1	1	180020
07063-01054	V0100-01A0		390010
07063-01100	H0100-01A1	12	180020
07063-01100	V0100-01A0		390010
07086-20611	T2400-01A0	32	330090
07094-20417	H2220-02A0	6	180250
07094-20620	F2300-04A0	28	150017
07094-20620	F2730-01A1	3	150090
07094-20620	H2250-02A3	15	180280
07094-20620	H2250-02A3	22	180280
07094-20620	H2250-02A3	7	180280
07094-21024	H2210-01A0	13	180218

PART NO.	FIG.NO.	INDEX	PAGE
07094-21024	H2210-01A0A	13	180220
07094-21024	H2210-01A1A	6	180230
07095-00421	H2220-02A0	7	180250
07095-00628	F2300-04A0	29	150017
07095-00628	F2730-01A1	4	150090
07095-00628	F2730-01A1		150090
07095-00628	H2250-02A3	16	180280
07095-00628	H2250-02A3	23	180280
07095-00628	H2250-02A3	8	180280
07095-01035	H2210-01A0	14	180218
07095-01035	H2210-01A0A	14	180220
07095-01035	H2210-01A1A	7	180230
07095-20318	H0310-06A1	6	180150
07095-20420	F2300-03A0	35	150016
07095-20420	H0310-08A0	8	180180
07095-20420	H0310-08A0		180180
07095-20420	H0310-08A3	6	180190
07095-20420	H2220-02A0	10	180250
07095-20523	A4110-A3G6	17	010360
07095-20627	F2300-03A0	18	150016
07095-20627	F2730-01A1	14	150090
07095-20627	H2250-01A3	7	180270
07102-20206	H0310-06A0	3	180140
07102-20206	K2520-02A0	10	240330
07102-20206	K2520-02A0	4	240330
07102-20308	H0310-06A1	3	180150
07102-20408	F2300-03A0	31	150016
07102-20413	H1410-02A0	23	180200
07102-20432	H0310-08A3	7	180190
07102-20435	H0310-08A3	3	180190
07102-20446	H0310-08A0	6	180180
07102-20447	H0310-08A0	5	180180
07102-20447	H0310-08A0		180180
07102-20610	F2300-04A0	27	150017
07102-20611	F2300-03A0	17	150016
07102-20612	F2300-04A0	11	150017
07102-20627	F2730-01A1	2	150090
07102-20630	F2730-01A1	1	150090
07102-21004	H0310-02A1	3	180130
07102-21006	H0310-02A0	5	180120
07102-210A4	H0310-02A1		180130
07108-20417	H1410-02A0	24	180200
07122-01018	H2210-01A1A	1	180230
07123-00607	H2210-01A1A	56	180231
07123-20607	H2210-01A0	56	180219
07123-20607	H2210-01A0A	63	180221
07124-01017	H2210-01A0	1	180218
07124-01017	H2210-01A0A	1	180220
07143-10505	T2150-01A3	2	330070
07143-10707	T2400-01A1	2	330100

PART NO.	FIG.NO.	INDEX	PAGE
07145-00050	T2150-01A3	3	330070
07145-00055	T2140-01A0	28	330040
07145-00055	T2140-01A1	28	330050
07145-00075	T2400-01A1	3	330100
07146-02136	T2150-01A3	10	330070
07146-02136	T2400-01A1	8	330100
07156-01417	T2150-01A3	18	330070
07156-01417	T2400-01A1	16	330100
07165-15252	T2400-01A1	17	330100
07177-08040	R0120-01A0	5A	300020
07177-09040	R0120-01A0	13	300020
07177-09040	R0120-01A0	2	300020
07179-12079	T2140-01A0	9	330040
07179-12079	T2140-01A1	9	330050
07179-12084	T2150-01A3	12	330070
07179-12084	T2400-01A1	10	330100
07184-00206	K2110-14A0	2	240180
07184-00211	K2110-14A0	8	240180
072-90-20522	H0310-06A1		180150
07205-21014	D0200-01A2		090020
07206-30710	A5010-B3F1	2	010410
07206-30812	F2310-01A0	24	150029
07206-31014	A4030-A3C2	23	010340
07206-31014	A4110-A3G6	12	010360
07206-31014	A4130-A3A1	17	010370
07206-31014	A5210-A3C8	21	010470
07206-31014	F2300-12A0	30	150025
07213-50813	F2310-01A0	23	150029
07221-20522	H0310-06A1	10	180150
07221-20628	H2250-02A3	26	180280
07222-00515	H0310-06A1	9	180150
07222-00616	H2250-02A3	27	180280
07230-10210	H1410-02A0	37	180200
07230-20210	K2110-14A0	17	240180
07230-20628	F2300-04A0	12	150017
07235-10210	H1410-02A0	46	180201
07235-10210	K2520-02A0	23	240330
07235-10422	F2300-03A0	32	150016
07235-10422	H0310-08A0	14	180180
07235-10422	H0310-08A3	1	180190
07235-10422	H1410-02A0	26	180200
07235-10522	H0310-06A1	13	180150
07235-10628	H2250-01A3	9	180270
07236-10628	F2730-01A1	10	150090
07238-10315	H0310-06A1	11	180150
07239-12410	H0310-06A0	5	180140
07240-50633	H2250-01A3		180270
07241-A0422	H0310-07A0		180160
07241-A0522	H0310-06A1		180150
07241-A0628	H2210-01A0A		180221

PART NO.	FIG.NO.	INDEX	PAGE
07241-A1034	H0310-02A0		180120
07260-02609	T2510-10A0	12	330200
07260-20950	A5210-A3C8	7	010470
07260-23211	F2730-01A1	23	150090
07260-24713	F2300-03A0	7	150016
07260-25818	H0310-01A0	5	180100
07260-25818	H0310-01A3	5	180110
07261-20909	C0100-01A0	28	060010
07270-00880	H0100-01A0		180010
07270-01035	D0100-01A0		090010
07270-01095	D0100-01A0	20	090010
07270-01520	C0100-01A0	31	060010
07270-60812	H0100-01A0	9	180010
07271-01485	A4110-A3G6	10	010360
07271-11475	A4110-A3G6	11	010360
07280-01418	D0200-01A2		090020
07280-01920	C0100-01A0	29	060010
07280-01920	C0100-01A0	32	060010
07281-00130	D0200-01A2	13	090020
07281-00197	A5210-A3C8	8	010470
07281-00197	D0210-01A0		090030
07281-00229	D0200-01A2		090020
07281-00489	T2510-10A0	13	330200
07281-00549	F2730-01A1		150090
07281-00609	A2060-A3D9	11	010160
07281-00809	H0310-01A0	15	180100
07281-00809	H0310-01A0	6	180100
07281-00909	A1310-A3A2	18	010030
07282-12286	F2300-12A0	15	150025
07282-12288	F2300-12A0	17	150025
07283-22236	H0310-06A1	16	180150
07283-22236	H2250-02A3	4	180280
07283-22738	T2140-01A0		330041
07283-22738	T2140-01A1	35	330050
07283-22738	T2400-01A1	23	330100
07283-26155	H0310-01A0	10	180100
07283-26155	H0310-01A0	20	180100
07283-26155	H0310-01A3	10	180110
07283-26155	H0310-01A3	20	180110
07283-32738	T2140-01A0	35	330041
07285-00095	H0100-01A0	10	180010
07285-00115	D0100-01A0	19	090010
07285-00220	A2060-A3D9	23	010160
07286-01963	A2060-A3D9	22	010160
07289-00045	F2730-01A1	24	150090
07289-00045	H0310-02A0	11	180120
07289-00045	H0310-02A1	9	180130
07289-00045	H0310-07A0	2	180160
07289-00045	H0310-07A3	2	180170
07289-00055	F2300-03A0	8	150016

PART NO.	FIG.NO.	INDEX	PAGE
07289-00070	H0310-01A3	15	180110
07289-00070	H0310-01A3	6	180110
07289-00080	A1410-A3A2	23	010050
07370-31034	H2210-01A1A		180230
07371-31049	H0310-01A0	24	180100
07371-31049	H0310-01A3	24	180110
07371-31049	H2210-01A0	3	180218
07371-31049	H2210-01A0A	3	180220
07371-31049	H2210-01A1A	2	180230
07371-31049	H2220-02A0	2	180250
07371-31049	H2250-01A3	4	180270
07371-31255	H0310-01A0	28	180100
07371-51260	H0310-01A3	28	180110
07372-21035	H0310-01A0	25	180100
07372-21035	H0310-01A0	29	180100
07372-21035	H0310-01A3	25	180110
07372-21035	H2210-01A0	22	180218
07372-21035	H2210-01A0	4	180218
07372-21035	H2210-01A0A	4	180220
07372-21035	H2210-01A1A	3	180230
07372-21035	H2220-02A0	3	180250
07372-21035	H2250-01A3	5	180270
07372-21040	H2210-01A0	34	180218
07372-21040	H2210-01A0A	22	180220
07372-21040	H2210-01A0A	34	180220
07372-21040	H2210-01A1A	15	180230
07372-21040	H2210-01A1A	27	180230
07372-21040	T2140-01A0	31	330041
07372-21040	T2140-01A1	31	330050
07372-21040	T2400-01A1	19	330100
07372-21045	T2610-01A0	10	330260
07372-21050	T2140-01A0	33	330041
07372-21050	T2140-01A1	33	330050
07372-21050	T2400-01A1	20	330100
07374-01034	H2210-01A1A		180230
07430-11161	Y1661-02A0	2	450008
07700-40240	D0100-01A0	5	090010
07730-40004	C0100-01A0	30	060010
07750-01628	F2300-08A0	8	150021
07950-90403	V0300-01A0	8	390030
07952-70002	V0300-01A0	5	390030
08000-00000	E0110-01A0	2	120010
08000-00001	E0110-01A0	3	120010
08000-02215	E0110-01A0	1	120010
08017-31904	E0210-01A0	18	120030
08023-04007	K2210-01B0	30	240260
08028-44040	E0210-01A0	12	120030
08028-44040	E0210-01A0		120030
08028-44050	B0500-01A0	31	030050
08028-44070	E0210-01A0		120030

PART NO.	FIG.NO.	INDEX	PAGE
08028-64040	E0210-01A0	8	120030
08028-64070	E0210-01A0	16	120030
08034-00414	E0200-01A1	10	120020
08034-00414	E0210-01A0	19	120030
08034-00414	K2210-01B0	31	240260
08034-00519	A6210-A3D8	4	010490
08034-00519	B0500-01A0	2	030050
08034-00519	K2110-14A0	3	240180
08034-00519	K2110-14A0	9	240180
08034-00519	K2210-01B0	29	240260
08034-00519	K2520-02A0	25	240330
08034-00536	B0500-01A0	30	030050
08034-00536	F2300-03A0	19	150016
08034-00536	F2300-04A0	32	150017
08034-00536	F2730-01A1	12	150090
08034-00536	F2730-01A1	7	150090
08034-00536	F2730-01A1		150090
08034-00536	F2730-02A1	20	150100
08034-00536	H0100-01A0	11	180010
08034-00536	H0310-08A0	10	180180
08034-00536	H0310-08A0	13	180180
08034-00536	H0310-08A0		180180
08034-00536	H0310-08A3	10	180190
08034-00536	H1410-02A0	32	180200
08034-00536	H2220-02A0	11	180250
08034-00536	K2110-14A0	12	240180
08034-00823	D0200-01A2	12	090020
08034-00823	D0200-01A2	18	090020
08034-00823	H2250-01A3	8	180270
08034-00823	K2110-17A0	32	240200
08034-00834	C0100-01A0	33	060010
08036-00814	F2820-01A4	20	150140
08036-01210	F2820-01A2	14	150120
08036-01214	B0500-01A0	18	030050
08036-01214	B0500-01A0	22	030050
08036-01214	E0200-01A1	12	120020
08036-01214	E0200-01A1	2	120020
08036-01414	B0500-01A0	25	030050
08036-01414	B0500-01A0	26	030050
08036-01414	B0500-01A0		030050
08036-01414	E0200-01A1	13	120020
08036-01414	K2210-01B0	33	240260
08036-01814	D0210-01A0	15	090030
08036-02514	E0200-01A1	30	120020
08036-03014	E0200-01A1	21	120020
08036-03014	E0200-01A1	26	120020
08036-03014	E0200-01A1	29	120020
08036-03014	K2210-01B0	25	240260
08036-10810	C0100-02A0	28	060020
08036-10814	E0200-01A1	18	120020

PART NO.	FIG.NO.	INDEX	PAGE
08036-11414	E0200-01A1	11	120020
08036-41414	D0100-01A0		090010
08036-41414	E0210-01A0		120030
08036-D1630	W1111-03A0	3	420030
08037-01008	K2520-01A1	25	240320
08037-01610	M2140-02A0	9	270040
08037-02512	K2110-01A0	9	240060
08037-02512	K2110-01A1	9	240065
08037-05016	K0410-01A1	5	240040
08037-11025	W1111-03A0	4	420030
08037-11425	W1111-03A0	10	420035
08038-00035	E0200-01A1	20	120020
08038-00035	E0210-01A0	11	120030
08038-00035	K2110-17A0	2	240200
08038-00519	A1370-A3A1	8	010040
08038-00519	B0500-01A0	20	030050
08038-00519	B0500-01A0	4	030050
08038-00519	K2110-17A0	50	240201
08038-00525	B0500-01A0	21	030050
08038-02027	B0500-01A0	3	030050
08053-00910	B0500-01A0	15	030050
08053-00910	B0500-01A0	27	030050
08053-00910	B0500-01A0	8	030050
08053-00910	E0200-01A1	33	120020
08053-00910	K2110-17A0	28	240200
08053-01510	B0500-01A0	19	030050
08053-01510	E0200-01A1	34	120020
08053-01510	E0200-01A1	5	120020
08053-01510	E0200-01A1	9	120020
08053-01510	K2110-17A0	27	240200
08053-01512	D0100-01A0		090010
08053-01512	E0200-01A1	19	120020
08064-10000	K2110-17A0	41	240200
08073-10505	A2010-A3F2	35	010120
08086-10000	K2210-01B0	22	240260
08088-31000	K2110-16A0	1	240190
08160-62420	E0300-01A2	1	120040
08160-62430	E0300-01A2		120040
08193-20010	K2110-17A0	29	240200
08193-20010	K2110-17A0	36	240200
08193-20010	K2110-17A0	42	240200
08210-01203	H0310-07A3	13	180170
08210-01203	K2110-14A0	4	240180
08210-01204	H0310-06A1	4	180150
08210-01204	K2110-14A0	5	240180
08210-01207	K2110-14A0	10	240180
08210-01208	K2110-14A0	11	240180
08210-01802	H0310-08A3	4	180190
08210-01802	H0310-08A3	8	180190
08670-02001	A1410-A3A2	28	010050

PART NO.	FIG.NO.	INDEX	PAGE
09000-30006	V0300-01A0	1	390030
09019-08035	V0300-01A0		390030
09019-28035	V0300-01A0	10	390030
09021-03653	V0300-01A0	6	390030
09024-00300	V0300-01A0	4	390030
09033-00190	V0300-01A0	2	390030
09056-05513	V0300-01A0	9	390030
09059-00800	V0100-01A0	5	390010
09233-12920	F2320-01A1	20	150034
09233-12920	F2320-01A2	15	150035
09244-02508	T2400-01A0	27	330090
09245-50060	E0210-01A0		120030
09249-00016	T2810-01A0	5	330270
09304-01240	K2110-02A0	1	240070
09304-10835	K2110-10A0	4	240135
09304-10835	K2110-10A1	4	240140
09304-10835	K2110-10A2	4	240150
09304-10835	K2110-11A0	1	240160
09304-10835	K2520-01A1	26	240320
09311-41237	K2400-01A0	28	240270
09311-41237	T2140-02A0	8	330052
09350-01415	K2400-02A0	15	240280
09350-01415	K2520-02A0	38	240330
09350-01420	K2110-10A1	21	240140
09350-01420	K2110-10A2	21	240150
09363-00850	F2320-01A5	3	150038
09363-00850	F2320-01A5	8	150038
09414-00053	K2210-01B0	13	240260
09415-00506	M2140-04A0	18	270060
09415-00506	M2210-01A2	23	270090
09415-00706	K2500-01A0	5	240290
09415-00706	K2500-01A0	6	240290
09415-01008	M2140-02A0	15	270040
09415-01008	M2140-02A0	8	270040
09415-01610	K2500-01A0	20	240290
09415-02512	K2400-02A0	10	240280
09415-02512	K2500-01A0	12	240290
09415-02512	K2500-01A0	19	240290
09415-02512	K2520-01A1	22	240320
09415-02512	M2140-03A0	14	270050
09415-02512	M2140-04A0	17	270060
09415-02512	M2240-01A0	10	270110
09415-02520	J2100-01A0	7	210010
09415-03614	K2110-01A0	7	240060
09415-03614	K2110-01A1	7	240065
09415-03620	M2210-01A0	22	270070
09415-03620	M2210-01A0	5	270070
09415-05022	M2210-01A0	23	270070
09459-01614	M2210-01A2	17	270090
09459-11033	M2210-01A2	16	270090

PART NO.	FIG.NO.	INDEX	PAGE
09461-00013	M2240-01A0	4	270110
09461-00014	M2240-01A0	5	270110
09463-00002	K2110-10A0	8	240135
09463-00002	K2110-10A1	8	240140
09463-00002	K2110-10A2	8	240150
09463-00002	K2520-01A0	27	240310
09463-00006	K2110-10A0	9	240135
09463-00006	K2110-10A1	9	240140
09463-00006	K2110-10A2	9	240150
09465-04845	E0210-01A0		120030
09601-00835	T2400-01A0		330090
09601-00835	T2510-02A0		330120
09601-50000	T2400-01A0	23	330090
09601-50000	T2510-02A0	14	330120
09602-120D1	U0100-01B0	11	360020
09607-05080	F2310-01A0	34	150029
09608-05080	F2320-01A0	24	150033
09620-30200	U0520-01A0	1	360050
09637-05163	B0000-04A0		030030
09637-30163	B0000-04A0	1	030030
09651-A0641	U0100-01A0	2	360010
09651-A0641	U0100-01B0	16	360020
09653-A0481	U0100-01A0	16	360010
09653-A0481	U0100-01B0	2	360020
09653-A0481	U0100-01B0	3	360020
09654-B0641	U0100-01A0	17	360010
09654-B0641	U0100-01B0	4	360020
09657-A0881	U0100-01A0	3	360010
09657-A0881	U0100-01B0	5	360020
09667-A0481	U0100-01A0	18	360010
09667-A0481	U0100-01B0	18	360020
09669-0000E	U0100-01A0	22	360010
09690-M0063	U0100-01A0	8	360010
09690-P0280	M2120-01A0	5	270020
09690-P0450	U0100-01B0	9	360020
09690-P0560	U0100-01A0	7	360010
09690-P1000	U0100-01A0	6	360010
09802-B0750	U0100-01A0	15	360010
09802-B0750	U0100-01B0	17	360020
09806-B1201	U0100-01A0	19	360010
09806-B1201	U0100-01B0	19	360020
09808-A0881	U0100-01A0	20	360010
09808-A0881	U0100-01B0	20	360020
09920-00150	A2040-A3E7	3	010140
09960-00611	U0400-01A0	2	360040
09960-00801	U0400-01A0	3	360040
09960-00802	U0100-01B0	21	360020
09960-00802	U0400-01A0	4	360040
09963-A1640	U0100-01A0	21	360010
09980-10550	V0200-01A0	1	390020

PART NO.	FIG.NO.	INDEX	PAGE
09982-20057	V0200-01A0	2	390020
100-22-15210	T2510-07A0	8	330170
100-93-11330	Y1661-03A0	3	450009
101001-D85	K1110-05A0	2	240050
101005-D85	K1110-10A0	2	240055
101009-D85	K1110-10A0		240055
101014-D85	K1110-07A0	1	240052
101018-D85	K1110-07A0		240052
101022-D85	K1110-11A0	1	240056
101026-D85	K1110-03A0	1	240048
101026-D85	K1110-08A0	1	240053
101029-D85	K1110-09A0	1	240054
101030-D85	K1110-09A0		240054
101031-D85	K1110-08A0	5	240053
101032-D85	K1110-03A0	5	240048
101036-D85	K1110-03A0	4	240048
101038-D85	K1110-08A0	4	240053
101040-D85	K1110-03A0	3	240048
101040-D85	K1110-08A0	3	240053
101043-D85	K1110-03A0	2	240048
101043-D85	K1110-08A0	2	240053
101044-D85	K1110-02A0		240047
101046-D85	K1110-06A0	2	240051
101049-D85	K1110-04A0	1	240049
101050-D85	K1110-12A0	2	240057
101051-D85	K1110-04A0	2	240049
101053-D85	K1110-11A0	2	240056
101055-001-D85	K1110-05A0	1	240050
101055-005-D85	K1110-10A0	1	240055
101055-013-D85	K1110-07A0	3	240052
101056-001-D85	K1110-05A0	3	240050
101056-005-D85	K1110-10A0	3	240055
101056-013-D85	K1110-07A0	2	240052
101057-D85	K1110-04A0	3	240049
101058-D85	K1110-06A0	1	240051
101059-D85	K1110-06A0		240051
101060-D85	K1110-12A0	1	240057
102-10-46360	T2510-12A0	14	330220
102-49-51190	C0100-01A0	16	060010
103-06-32240	K2210-01B0	16	240260
103-06-32250	K2210-01B0	15	240260
103-15-12820	F2300-15A0	11	150028
103-15-15460	F2320-01A5	13	150038
103-15-22911	F2320-01A3	32	150036
103-15-22911	F2320-01A4	35	150037
103-15-29210	F2300-14A0	11	150027
103-15-29210	T2510-08A0	10	330180
103-21-21260	F2820-01A4	19	150140
103-43-21380	F2300-07A0	13	150020
103-43-25160	F2820-01A2	10	150120

PART NO.	FIG.NO.	INDEX	PAGE
103-49-14280	H1410-02A0	10	180200
104-15-25210	T2510-12A0	10	330220
104-15-25280	T2510-12A0	16	330220
104-15-25290	T2510-12A0	17	330220
104-15-25480	F2320-01A7	19	150040
104-15-25480	T2510-12A0	11	330220
104-15-25490	F2320-01A7	17	150040
104-15-25490	T2510-12A0	12	330220
10E-60-16340	H2220-03A1	16	180260
10E-60-16340	T2160-01A0	1	330080
10E-60-16350	H2220-03A1	17	180260
10E-60-16350	T2160-01A0	2	330080
10E-85-25460	H2220-03A1	13	180260
112-10-46210	T2510-12A0	18	330220
112-62-32150	F2300-03A0	24	150016
113-15-11641	F2320-01A8	13	150041
113-15-12870	F2320-01A1	32	150034
113-15-12870	F2320-01A3	29	150036
113-15-29110	T2510-11A0	6	330210
113-43-23230	F2820-01A1	4	150110
113-43-23230	K2110-10A1	22	240140
113-43-23230	K2110-10A2	22	240150
113-43-23230	K2110-11A0	23	240160
113-43-23230	K2400-02A0	16	240280
113-43-41630	K2520-02A0	47	240331
113-62-32110	H2250-01A3	11	180270
114-40-48481	K2110-21A0	2	240220
114-57-41260	K0110-01A1		240012
114-57-41270	K0110-01A1		240012
11CB01001-D85	K1110-01A0	1	240046
11CB01001-D85	K1110-02A0		240047
11CB01001-D85	K1110-03A0		240048
11CB01001-D85	K1110-04A0		240049
11CB01001-D85	K1110-05A0		240050
11CB01001-D85	K1110-06A0		240051
11CB01001-D85	K1110-07A0		240052
11CB01001-D85	K1110-08A0		240053
11CB01001-D85	K1110-09A0		240054
11CB01001-D85	K1110-10A0		240055
11CB01001-D85	K1110-11A0		240056
11CB01001-D85	K1110-12A0		240057
11CB01002-D85	K1110-01A0	2	240046
11CB01003-D85	K1110-01A0	3	240046
11CB01003-D85	K1110-03A0		240048
11CB01004-D85	K1110-01A0	4	240046
11CB01005-D85	K1110-01A0	5	240046
11CB01006-D85	K1110-01A0	6	240046
11CB01007-D85	K1110-01A0	7	240046
11CB01008-D85	K1110-01A0	8	240046
11CB01009-D85	K1110-01A0	9	240046

PART NO.	FIG.NO.	INDEX	PAGE
11CB01010-D85	K1110-01A0	10	240046
11CB01011-D85	K1110-01A0	11	240046
11CB01012-D85	K1110-01A0	12	240046
11CB1004D-85	K1110-04A0		240049
11Y-06-11381	A1790-A3E3	2	010110
11Y-09-11140	D0210-01A0	12	090030
11Y-09-11140	D0210-01A0	14	090030
120-04-41130	D0100-01A0	6	090010
120-04-41130	D0210-01A0	19	090030
120-06-31141	E0210-01A0	4	120030
120-06-31151	E0210-01A0	5	120030
120-06-31171	E0210-01A0	7	120030
120-09-15110	F2320-01A5	17	150038
124-43-26372	F2820-01A2	7	150120
124-43-51272	K2110-11A0	4	240160
124-43-65430	K2110-11A0	2	240160
125-15-11440	F2320-01A9	15	150042
125-15-11722	T2510-10A0		330200
125-15-15141	F2320-01A5	5	150038
125-15-15170	F2320-01A5	28	150038
125-15-15220	F2320-01A5	12	150038
125-15-15230	F2320-01A5	16	150038
125-15-15260	F2320-01A5	20	150038
125-15-15290	F2300-09A0	8	150022
125-15-15290	F2320-01A5	14	150038
125-15-15290	F2320-01A7	18	150040
125-15-15290	T2510-12A0	13	330220
125-15-15330	F2320-01A5	21	150038
125-15-15390	F2320-01A5	22	150038
125-15-21640	F2320-01A8	9	150041
125-15-22870	F2320-01A2	25	150035
12H-15-14130	F2320-01A7	14	150040
12H-15-14140	F2320-01A7	16	150040
12H-43-12420	F2820-01A2	6	150120
130-09-12370	J2100-01A0	14	210010
130-09-12911	J2700-01A0	20	210020
130-09-12911	J2700-01A1	21	210030
130-30-13170	R0110-01A0	13	300010
130-43-64260	M2140-01A0	4	270030
130-43-64260	M2210-01A3		270100
130-63-12761	T2140-01A0	23	330040
130-63-12761	T2140-01A1	23	330050
130-69-11190	T2810-01A0	3	330270
130-70-12210	T2810-01A0	2	330270
130-70-13241	T2110-01A0	12	330010
130-70-13241	T2110-01A1	9	330015
130-90-13140	T2510-06A0	30	330160
130-98-79210	U0400-01A0	1	360040
131-10-46181	F2200-01A0	2	150010
134-06-61320	K2110-16A0	8	240190

PART NO.	FIG.NO.	INDEX	PAGE
134-06-61440	K2110-17A0	14	240200
134-13-64220	F2310-03A0	4	150031
134-15-00260	F2320-01A0		150033
134-15-15131	F2320-01A5	2	150038
134-15-15270	F2320-01A5	26	150038
134-15-15280	F2320-01A5	27	150038
134-15-15350	F2320-01A6	7	150039
134-15-21450	F2320-01A9	22	150042
134-15-25350	F2320-01A6	9	150039
134-15-35360	F2320-01A6	3	150039
134-15-35411	F2320-01A6	1	150039
134-15-62370	F2320-01A4	15	150037
134-49-61731	K2110-21A0	9	240220
134-49-61750	K2110-21A0	4	240220
134-49-61761	K2110-21A0	5	240220
134-49-61920	H0100-01A1	4	180020
134-54-69120	K2210-01B0	5	240260
134-96-01610	T2510-02A0	6	330120
134-96-01650	T2510-05A0	1	330150
134-96-01690	T2510-05A0	11	330150
134-96-01850	T2510-05A0	17A	330150
134-96-01860	T2510-05A0	17	330150
134-96-01940	T2510-06A0	24	330160
134-960-1840	T2510-05A0	20	330150
134-960-1870	T2510-06A0	7	330160
134-960-1880	T2510-06A0	7A	330160
134-960-1890	T2510-06A0	28	330160
134-X0-62230	K0410-01A9	16	240042
134-X0-62230	K0410-02A9	11	240043
135-03-12110	C0100-02A0	8	060020
135-06-34250	K2110-17A0	16	240200
135-12-31230	B0600-01A1	14	030060
135-30-14620	R0120-01A0	15	300020
135-43-11171	K2110-03A0	17	240080
135-43-11171	K2110-03A0	6	240080
135-43-15821	F2820-01A2	5	150120
13F-62-32570	T2160-01A0	10	330080
13F-Z2-75610	T2115-01A1	24	330025
13F-Z2-75610	T2115-01A1	8	330025
140-70-13130	T2110-01A0		330010
141-30-00616	R0300-01A0		300040
141-30-00623	R0300-01A0	7	300040
141-30-00630	R0300-01A0	8	300040
141-78-11253	T2400-01A0	26	330090
141-78-11311	T2400-01A0	12	330090
141-78-11321	T2400-01A0	7	330090
141-95-82120	M2811-01A0	1	270130
142-04-13260	D0210-01A0	11	090030
144-06-81220	K2210-01B0	14	240260
144-10-12180	F2310-03A0	6	150031

PART NO.	FIG.NO.	INDEX	PAGE
144-15-21191	F2320-01A1	7	150034
144-15-22810	F2320-01A4	5	150037
144-15-22881	F2320-01A3	28	150036
144-15-22881	F2320-01A4	31	150037
144-15-25570	F2320-01A9	7	150042
144-15-25670	F2320-01A9	18	150042
144-15-25691	F2320-01A9	16	150042
144-15-29110	F2320-01A9	6	150042
144-15-29121	F2320-01A9	17	150042
144-21-12310	F2300-13A0	9	150026
144-32-21151	R0500-01A5	9	300050
144-32-21191	R0500-01A5	8	300050
144-40-21830	F2320-01A5	15	150038
144-54-11940	M2120-01A0	2	270020
144-54-J1610	W1111-03A0	1	420030
144-54-J1620	W1111-03A0	2	420030
144-57-J1111	K0110-01A1	3	240012
144-57-J1130	K0110-01A1		240012
144-57-J1200	K0110-01A1		240012
144-57-J1201	K0110-01A1		240012
144-57-J1201	K0110-01A1		240013
144-57-J1211	K0110-01A1		240012
144-57-J1220	K0110-01A1	1	240012
144-57-J1220	K0110-01A1	1	240013
144-57-J1230	K0110-01A1	2	240012
144-57-J1230	K0110-01A1	2	240013
144-57-J1240	K0110-01A1	3	240013
144-57-J1420	K0110-01A1	5	240013
144-57-J1430	K0110-01A1	6	240013
144-57-J1440	K0110-01A1	7	240013
144-60-10330	T2140-01A1	26	330050
144-60-15431	T2140-01A0	27	330040
144-60-15431	T2140-01A1	27	330050
144-60-15450	T2140-01A0	26	330040
144-60-21160	H0100-01A1	2	180020
144-63-92170	T2140-01A0		330040
144-63-92170	T2140-01A1	8	330050
144-70-11160	T2120-01A0	10	330030
144-70-15171	J2100-01A0	2	210010
144-70-15181	J2100-01A0	3	210010
144-70-15251	M2111-01A0	3	270010
144-78-11112	T2400-01A0	1	330090
144-78-11162	T2400-01A0	4	330090
144-78-11174	T2400-01A0	3	330090
144-78-11174	T2400-01A0		330090
144-78-11245	T2400-01A0	25	330090
144-78-11511	T2400-01A0	2	330090
144-78-11570	T2400-01A0	21	330090
144-81-70670	T2115-01A1		330025
144-81-71260	T2120-01A1	9	330035

PART NO.	FIG.NO.	INDEX	PAGE
144-81-72381	T2115-01A1	11	330025
144-81-72381	T2115-01A1	27	330025
144-81-72391	T2115-01A1	12	330025
144-81-72391	T2115-01A1	28	330025
144-81-72570	T2115-01A1	4	330025
144-817-2280	T2115-01A1	17	330025
144-817-2420	T2115-01A1	18	330025
144-817-2420	T2115-01A1	3	330025
144-85-41280	T2115-01A0	22	330020
144-85-41290	T2115-01A0	23	330020
144-85-46150	T2115-01A0	16	330020
144-87-48470	T2400-01A0	5	330090
144-87-48480	T2400-01A0	11	330090
144-87-48491	T2400-01A0	16	330090
144-91-61270	T2510-04A0	8	330140
144-91-61820	T2510-02A0	12	330120
144-91-62520	T2510-07A0	17	330170
144-91-62540	T2510-07A0	21	330170
144-91-62550	T2510-07A0	14	330170
144-91-62560	T2510-07A0	15	330170
144-91-62570	T2510-07A0	20	330170
144-91-62590	T2510-07A0	11	330170
144-91-62730	T2510-04A0	11	330140
144-91-62730	T2510-04A0	21	330140
144-91-62770	T2510-04A0	23	330140
144-91-62850	T2510-07A0	13	330170
144-91-64220	T2510-03A0	16	330130
144-91-67950	T2510-04A0	14	330140
144-92-01780	T2120-01A1	10	330035
144-92-02122	T2115-01A1	23	330025
144-94-71410	T2510-15A0	2	330250
144-94-71420	T2510-15A0	3	330250
144-947-5130	T2520-01A0	13	330255
144-947-5130	T2520-01A0	9	330255
144-947-5140	T2520-01A0	8	330255
145-14-11320	F2320-01A1	2	150034
145-14-11320	F2320-01A3	2	150036
145-14-11320	F2320-01A3	4	150036
145-14-11571	F2320-01A0	12	150033
145-14-11571	F2320-01A1	8	150034
145-14-12790	F2320-01A1	35	150034
14C-54-J1110	M2140-02A0		270040
14C-54-J1120	M2140-02A0		270040
14C-54-J1150	M2140-01A0		270030
14U-04-11111	D0100-01A0		090010
14U-21-11001	J2100-01A0		210010
14U-21-11002	J2100-01A0		210010
14U-21-11003	J2100-01A0		210010
14U-21-11120	J2100-01A0	11	210010
14U-21-11250	J2100-01A0	17	210010

PART NO.	FIG.NO.	INDEX	PAGE
14U-21-J1210	J2100-01A0	1	210010
14U-30-00011	R2100-01A0		300060
14U-30-00012	R2100-01A0		300060
14U-30-00013	R2100-01A0		300060
14U-30-00021	R2100-01A0		300060
14U-30-00022	R2100-01A0		300060
14U-30-00023	R2100-01A0		300060
14U-30-11112	R2100-01A0		300060
14U-30-11113	R2100-01A0		300060
14U-30-11122	R2100-01A0		300060
14U-30-11123	R2100-01A0		300060
14U-30-21111	R2100-01A0		300060
14U-30-21112	R2100-01A0		300060
14U-30-21121	R2100-01A0		300060
14U-30-21122	R2100-01A0		300060
14U-30-J1110	R2100-01A0	1	300060
14U-30-J1120	R2100-01A0		300060
14U-30-J1130	R2100-01A0		300060
14U-30-J1140	R2100-01A0		300060
14U-32-00010	R0500-01A5		300050
14U-32-00020	R0500-01A5		300050
14U-32-00021	R0500-01A5		300050
14U-32-01200	R0500-01A5		300050
14U-32-01220	R0500-01A5		300050
14U-32-01250	R0500-01A5		300050
14U-32-01251	R0500-01A5		300050
14U-32-J1110	R0500-01A5		300050
14U-32-J1130	R0500-01A5		300050
14U-54-11130	M2810-01A0	7	270120
14U-54-11140	M2810-01A0		270120
14U-54-11190	M2120-01A0	1	270020
14U-54-11232	M2210-01A0	1	270070
14U-54-11242	M2210-01A0	12	270070
14U-54-11252	M2210-01A2	2	270090
14U-54-11261	M2210-01A2	1	270090
14U-54-12871	M2140-02A0	4	270040
14U-54-12880	M2140-02A0	1	270040
14U-62-11130	H2210-01A0	57	180219
14U-62-11140	H2210-01A0A	64	180221
14U-70-00010	T2110-01A0		330010
14U-70-00011	T2110-01A0		330010
14U-70-11110	T2120-01A0	1	330030
14U-70-11120	T2120-01A0	2	330030
14U-70-11130	T2120-01A0	3	330030
14U-70-11140	T2120-01A0	4	330030
14U-70-12120	T2110-01A0		330010
14U-70-12151	T2110-01A0	3	330010
14U-70-12160	T2110-01A0	4	330010
14U-70-12511	T2110-01A0	1	330010
14U-70-12520	T2110-01A0	2	330010

PART NO.	FIG.NO.	INDEX	PAGE
14U-70-12530	T2110-01A0	7	330010
14U-70-13111	T2115-01A0	1	330020
14U-70-J1110	T2110-01A0		330010
14U-71-11112	T2120-01A1	1	330035
14U-906-1210	K0410-03A9	25	240044
14U-906-1260	K0410-03A9	22	240044
14U-906-J121	K0410-01A9	15	240042
14U-906-J141	K0410-02A9	1	240043
14U-906-J150	K0410-03A9	1	240044
14U-906-J160	K0410-03A9	4	240044
14U-906-J170	K0410-03A9	7	240044
14U-906-J260	K0410-02A9		240043
14U-906-J270	K0410-02A9		240043
14U-906-J310	K0410-03A9	13	240044
14U-906-J320	K0410-03A9	16	240044
14U-906-J330	K0410-03A9	19	240044
14U-906-J350	K0410-01A9	2	240042
14U-906-J360	K0410-01A9	3	240042
14U-906-J370	K0410-01A9	1	240042
14U-98-11130	U0100-01B0		360020
14U-98-11132	U0100-01B0		360020
14U-98-11133	U0100-01B0	1	360020
14U-98-11190	U0100-01B0	15	360020
14U-98-11230	U0100-01A0	14	360010
14U-98-21220	U0100-01A0	11	360010
14U-98-21230	U0100-01A0	12	360010
14W-01-11110	A2250-A3A6	1	010210
14W-01-11120	B0100-01A1		030040
14W-01-11121	B0100-01A1	1	030040
14W-01-11121	F2300-01A1	5	150013
14W-03-16181	C0100-01A0		060010
14W-43-14111	K2110-03A0	1	240080
14W-43-14121	K2110-03A0	15	240080
14W-43-14130	K2110-23A0	1	240240
14W-43-14151	K2110-03A0	3	240080
14W-54-13112	M2210-01A0		270070
14W-54-13122	M2210-01A0		270070
14W-54-13190	M2210-01A0	11	270070
14W-54-13190	M2210-01A0	29	270070
14W-54-13413	M2210-01A1		270080
14W-54-13423	M2210-01A1		270080
14W-54-13810	M2210-01A1	11	270080
14W-54-13820	M2210-01A1	12	270080
14W-54-16113	K2110-01A0		240060
14W-60-11110	H0120-03A1		180070
14W-60-11120	H0210-01A0		180090
14W-60-11130	H0120-03A1	1	180070
14W-62-11110	H0310-01A0		180100
14W-62-11111	H0310-01A0	23	180100
14W-62-11131	H2210-01A0	2	180218

PART NO.	FIG.NO.	INDEX	PAGE
14W-62-11131	H2210-01A0A	2	180220
14W-62-11141	H0310-02A0	1	180120
14W-62-11150	H0310-08A0		180180
14W-62-11171	H2210-01A0	5	180218
14W-62-11171	H2210-01A0A	5	180220
14W-62-11190	H0310-01A0		180100
14W-62-11191	H0310-01A0		180100
14W-62-11192	H0310-01A0		180100
14W-62-11210	H0310-02A0		180120
14W-67-00010	T2610-01A0		330260
14W-67-11100	T2610-01A0		330260
14W-67-11110	T2610-01A0	3	330260
14W-67-11150	T2610-01A0	12	330260
14W-67-11160	T2610-01A0	15	330260
14W-70-13110	T2115-01A0	17	330020
14W-71-13110	M2111-01A0	8	270010
14W-96-07141	K2520-01A0	5	240310
14W-96-07151	K2520-01A0	19	240310
14W-96-07181	K2520-01A0	33	240310
14W-96-07192	K2520-01A1	1	240320
14W-96-07211	K2520-01A1	6	240320
14W-96-07220	T2510-02A0	26	330120
14W-96-07231	K2520-01A1	4	240320
14W-96-07240	K2520-01A1	5	240320
14W-96-07310	K2520-01A1	30	240320
14W-96-07310	U0100-01B0	7	360020
14W-960-7111	K2520-01A0		240310
14W-960-7112	K2520-01A0		240310
14W-960-7131	K2520-01A0	9	240310
14W-960-7161	K2520-01A0	20	240310
14W-960-7171	K2520-01A0	30	240310
14W-960-7190	T2510-02A0		330120
14W-960-7250	K2520-01A0	1	240310
14X-01-11122	F2320-01A10	1	150043
14X-01-11130	F2320-01A10	9	150043
14X-01-11140	F2320-01A10	5	150043
14X-01-11150	F2320-01A10	10	150043
14X-01-11180	F2320-01A10	6	150043
14X-01-11310	F2300-01A1	3	150013
14X-01-11320	F2300-01A1	4	150013
14X-03-11140	C0100-01A0	2	060010
14X-03-11211	C0100-01A0		060010
14X-03-11213	C0100-01A0		060010
14X-03-11214	C0100-01A0		060010
14X-03-11215	C0100-01A0	1	060010
14X-03-12111	C0100-02A0		060020
14X-03-12112	C0100-02A0	21	060020
14X-03-12130	C0100-02A0	26	060020
14X-03-13121	C0100-02A0	2	060020
14X-03-13211	C0100-02A0	11	060020

PART NO.	FIG.NO.	INDEX	PAGE
14X-03-14121	C0100-01A0	20	060010
14X-03-14212	C0100-01A0	3	060010
14X-03-14220	C0100-01A0	21	060010
14X-03-14230	C0100-01A0	19	060010
14X-03-15210	C0100-01A0		060010
14X-03-15211	C0100-01A0	25	060010
14X-03-15220	C0100-01A0	26	060010
14X-03-16111	C0100-01A0	6	060010
14X-03-16111	C0100-01A0		060010
14X-03-16121	C0100-01A0	7	060010
14X-03-16131	C0100-01A0	8	060010
14X-03-16141	C0100-01A0	9	060010
14X-03-16151	C0100-01A0	10	060010
14X-03-16182	C0100-01A0	22	060010
14X-04-11113	D0100-01A0	1	090010
14X-04-11130	D0100-01A0		090010
14X-04-11141	D0100-01A0	2	090010
14X-04-11151	D0100-01A0	9	090010
14X-04-11170	D0100-01A0	10	090010
14X-04-11180	D0100-01A0	16	090010
14X-04-11240	D0210-01A0	13	090030
14X-04-11250	D0210-01A0	18	090030
14X-04-11260	D0210-01A0	10	090030
14X-04-11260	D0210-01A0	20	090030
14X-04-11330	D0100-01A0		090010
14X-04-11350	D0210-01A0	5	090030
14X-04-11410	D0200-01A2	3	090020
14X-04-11420	D0200-01A2	1	090020
14X-04-11510	D0200-01A2		090020
14X-04-11520	D0200-01A2	8	090020
14X-04-11530	D0200-01A2	9	090020
14X-04-11540	D0200-01A2	10	090020
14X-06-11120	V0100-01A0	6	390010
14X-06-12160	K2210-01B0	23	240260
14X-06-12180	A1790-A3E3		010110
14X-06-12180	E0200-01A1		120020
14X-06-12240	E0210-01A0		120030
14X-06-12260	E0210-01A0	13	120030
14X-06-12260	E0210-01A0		120030
14X-06-12270	E0210-01A0	17	120030
14X-06-12280	E0210-01A0	10	120030
14X-06-12350	K2210-01B0		240260
14X-06-12351	K2210-01B0	12	240260
14X-06-12360	K2210-01B0		240260
14X-06-12361	K2210-01B0	11	240260
14X-06-12370	A1790-A3E3		010110
14X-06-12370	E0200-01A1	16	120020
14X-06-12410	K2210-01B0	10	240260
14X-06-14142	E0200-01A1	1	120020
14X-06-14151	E0200-01A1	8	120020

PART NO.	FIG.NO.	INDEX	PAGE
14X-06-14181	B0500-01A0		030050
14X-06-14320	K2110-17A0	15	240200
14X-06-14330	E0200-01A1	17	120020
14X-06-14360	A1790-A3E3	3	010110
14X-06-14390	K2110-17A0	8	240200
14X-06-14410	K2210-01B0	28	240260
14X-06-14510	K2210-01B0	32	240260
14X-06-14520	K2210-01B0	24	240260
14X-06-14743	B0500-01A0		030050
14X-06-21710	K2110-17A0	40	240200
14X-06-24111	K2110-17A0	1	240200
14X-06-24124	K2110-17A0	11	240200
14X-06-J1110	W1111-01A0	5	420010
14X-06-J1120	W1111-01A0		420010
14X-06-J1150	B0500-01A0	1	030050
14X-06-J1160	W1111-01A0		420010
14X-06-J1161	W1111-01A0		420010
14X-10-11320	F2310-01A0	21	150029
14X-10-11330	F2310-01A0	25	150029
14X-10-11712	F2300-05A0	17	150018
14X-10-11721	F2300-05A0	20	150018
14X-10-19210	T2510-08A0	9	330180
14X-11-11100	F2200-01A0		150010
14X-11-11110	F2200-01A0		150010
14X-11-11120	F2200-01A0		150010
14X-11-11130	F2200-01A0		150010
14X-11-11200	F2200-01A0		150010
14X-11-11210	F2200-01A0	1	150010
14X-11-11220	F2200-01A0		150010
14X-11-11221	F2200-01A0	3	150010
14X-11-11230	F2200-01A0	4	150010
14X-12-11100	B0600-01A1		030060
14X-12-11102	B0600-01A1	1	030060
14X-12-11210	B0600-01A1	2	030060
14X-12-11310	B0600-01A1		030060
14X-12-11311	B0600-01A1	17	030060
14X-12-11411	B0600-01A1	3	030060
14X-13-00010	F2310-02A0		150030
14X-13-11120	F2310-02A0	21	150030
14X-13-11141	F2310-02A0	17	150030
14X-13-11211	F2310-02A0	1	150030
14X-13-11221	F2310-02A0	8	150030
14X-13-11351	F2310-02A0	5	150030
14X-13-11360	F2310-01A0	7	150029
14X-13-11370	F2310-01A0	4	150029
14X-13-11521	F2310-02A0	26	150030
14X-13-11531	F2310-02A0	27	150030
14X-13-11660	F2310-04A0	1	150032
14X-13-12531	F2310-02A0	13	150030
14X-13-12540	F2310-02A0	11	150030

PART NO.	FIG.NO.	INDEX	PAGE
14X-13-12550	F2310-01A0	18	150029
14X-13-13112	F2310-01A0	1	150029
14X-13-13261	F2310-01A0	22	150029
14X-13-13351	F2310-01A0	9	150029
14X-13-13360	F2310-01A0	10	150029
14X-13-14111	F2310-01A0	30	150029
14X-13-14241	F2310-03A0	1	150031
14X-13-14321	F2310-03A0	11	150031
14X-13-14340	F2310-03A0	13	150031
14X-13-14421	F2310-03A0	17	150031
14X-13-14441	F2310-03A0		150031
14X-13-31160	F2310-02A0	19	150030
14X-13-32110	F2310-02A0	25	150030
14X-15-00012	F2320-01A0		150033
14X-15-00012	F2320-01A1		150034
14X-15-00012	F2320-01A7		150040
14X-15-00012	F2320-01A8		150041
14X-15-00230	F2320-01A4		150037
14X-15-00240	F2320-01A3		150036
14X-15-00250	F2320-01A3		150036
14X-15-00260	F2320-01A2		150035
14X-15-00270	F2320-01A1		150034
14X-15-00280	F2320-01A1		150034
14X-15-00372	F2320-01A8		150041
14X-15-05010	F2320-01A4	10	150037
14X-15-05020	F2320-01A4	12	150037
14X-15-12110	F2320-01A1	9	150034
14X-15-12140	F2320-01A1	12	150034
14X-15-12160	F2320-01A3	8	150036
14X-15-12190	F2320-01A1	22	150034
14X-15-12210	F2320-01A1	13	150034
14X-15-12220	F2320-01A2	8	150035
14X-15-12240	F2320-01A3	7	150036
14X-15-12250	F2320-01A4	7	150037
14X-15-12310	F2320-01A1	15	150034
14X-15-12330	F2320-01A3	11	150036
14X-15-12340	F2320-01A2	10	150035
14X-15-12350	F2320-01A4	20	150037
14X-15-12410	F2320-01A1	18	150034
14X-15-12430	F2320-01A3	14	150036
14X-15-12440	F2320-01A3	17	150036
14X-15-12510	F2320-01A4	21	150037
14X-15-12520	F2320-01A3	15	150036
14X-15-12530	F2320-01A3	12	150036
14X-15-12540	F2320-01A1	16	150034
14X-15-12540	F2320-01A2	11	150035
14X-15-12611	F2320-01A1	27	150034
14X-15-12621	F2320-01A1	29	150034
14X-15-12640	F2320-01A3	23	150036
14X-15-12661	F2320-01A2	22	150035

PART NO.	FIG.NO.	INDEX	PAGE
14X-15-12670	F2320-01A3	24	150036
14X-15-12680	F2320-01A4	29	150037
14X-15-12740	F2320-01A2	23	150035
14X-15-12760	F2320-01A4	30	150037
14X-15-12771	F2320-01A1	30	150034
14X-15-12910	F2320-01A2	28	150035
14X-15-12931	F2320-01A4	4	150037
14X-15-13130	F2320-01A4	11	150037
14X-15-13140	F2320-01A4	9	150037
14X-15-13251	F2320-01A4	6	150037
14X-15-14150	F2320-01A0	19	150033
14X-15-15003	F2320-01A5		150038
14X-15-15141	F2320-01A0	6	150033
14X-15-15161	F2320-01A0	13	150033
14X-15-15170	F2320-01A0	17	150033
14X-15-15181	F2320-01A0	22	150033
14X-15-15210	F2320-01A5	11	150038
14X-15-15230	F2320-01A5	1	150038
14X-15-15260	F2320-01A5	7	150038
14X-15-15330	F2320-01A6		150039
14X-15-15611	F2320-01A9	3	150042
14X-15-15622	F2320-01A9	4	150042
14X-15-15671	F2320-01A9	12	150042
14X-15-15713	F2320-01A9	1	150042
14X-15-15721	F2320-01A9	2	150042
14X-15-15750	F2320-01A8	2	150041
14X-15-15760	F2320-01A8	3	150041
14X-15-15770	F2320-01A8	4	150041
14X-15-15791	F2320-01A9	10	150042
14X-15-15812	F2320-01A8	1	150041
14X-15-15821	F2320-01A8	10	150041
14X-15-15830	F2320-01A9	20	150042
14X-15-15840	F2320-01A9	14	150042
14X-15-15910	F2320-01A8	16	150041
14X-15-16003	F2320-01A7		150040
14X-15-16192	F2320-01A9	13	150042
14X-15-16210	F2320-01A7	15	150040
14X-15-16220	F2320-01A5	18	150038
14X-15-16260	F2320-01A5	19	150038
14X-15-16450	F2320-01A8	11	150041
14X-15-19210	F2320-01A2	16	150035
14X-15-19210	F2320-01A4	16	150037
14X-15-19310	F2320-01A3	10	150036
14X-15-19420	F2320-01A3	18	150036
14X-15-19440	F2320-01A1	19	150034
14X-15-19440	F2320-01A2	14	150035
14X-15-19510	F2320-01A3	22	150036
14X-15-19520	F2320-01A1	28	150034
14X-15-19520	F2320-01A4	26	150037
14X-15-19530	F2320-01A2	17	150035

PART NO.	FIG.NO.	INDEX	PAGE
14X-22-00010	F2300-14A0		150027
14X-22-00010	F2300-15A0		150028
14X-22-11122	F2300-13A0	2	150026
14X-22-11130	F2300-13A0	6	150026
14X-22-11210	F2300-13A0	1	150026
14X-22-12110	F2300-14A0	1	150027
14X-22-12120	F2300-14A0	2	150027
14X-22-12130	F2300-14A0	10	150027
14X-22-12141	F2300-14A0	9	150027
14X-22-12150	F2300-14A0	7	150027
14X-22-12160	F2300-14A0	8	150027
14X-22-12170	F2300-14A0	13	150027
14X-22-12210	F2300-14A0	6	150027
14X-22-13120	F2300-14A0	14	150027
14X-22-14110	F2300-14A0	15	150027
14X-22-15112	F2300-11A0	1	150024
14X-22-15130	F2300-12A0	3	150025
14X-22-16112	F2300-12A0	1	150025
14X-22-16160	F2300-12A0	32	150025
14X-22-16170	F2300-12A0	38	150025
14X-22-16180	F2300-12A0	39	150025
14X-22-16212	F2300-12A0	24	150025
14X-22-16221	F2300-12A0	22	150025
14X-22-16231	F2300-12A0	23	150025
14X-22-16240	F2300-12A0	21	150025
14X-22-16251	F2300-12A0	9	150025
14X-22-16261	F2300-12A0	10	150025
14X-22-16271	F2300-12A0	14	150025
14X-22-16280	F2300-12A0	16	150025
14X-22-16290	F2300-12A0	29	150025
14X-27-00100	F2380-04A1		150080
14X-27-00101	F2380-04A1		150080
14X-27-00110	F2380-04A1		150080
14X-27-00111	F2380-04A1	18	150080
14X-27-00120	F2380-04A1	19	150080
14X-27-05010	F2380-02A1	3	150060
14X-27-11113	F2380-04A1		150080
14X-27-11115	F2380-04A1		150080
14X-27-11123	F2380-04A1		150080
14X-27-11170	F2380-04A1	9	150080
14X-27-11212	F2380-02A1		150060
14X-27-11220	F2380-02A1	1	150060
14X-27-11231	F2380-02A1	7	150060
14X-27-11243	F2380-02A1	9	150060
14X-27-11260	F2380-02A1		150060
14X-27-11270	F2380-02A1		150060
14X-27-11280	F2380-02A1		150060
14X-27-11311	F2380-04A1		150080
14X-27-11312	F2380-04A1	2	150080
14X-27-11420	F2380-04A1	4	150080

PART NO.	FIG.NO.	INDEX	PAGE
14X-27-11431	F2380-03A1	17	150070
14X-27-11502	F2380-03A1		150070
14X-27-11512	F2380-03A1	6	150070
14X-27-11522	F2380-03A1	10	150070
14X-27-11531	F2380-03A1	11	150070
14X-27-11542	F2380-03A1	12	150070
14X-27-11552	F2380-03A1	7	150070
14X-27-11560	F2380-03A1	13	150070
14X-27-11612	F2380-03A1	4	150070
14X-27-11621	F2380-03A1		150070
14X-27-11622	F2380-03A1	1	150070
14X-27-11631	F2380-03A1		150070
14X-27-11632	F2380-03A1		150070
14X-27-11633	F2380-03A1	2	150070
14X-27-11640	F2380-03A1	5	150070
14X-27-11710	F2380-04A1		150080
14X-27-11711	F2380-04A1		150080
14X-27-11721	F2380-04A1	16	150080
14X-27-11751	F2380-04A1	17	150080
14X-27-15112	F2380-04A1	13	150080
14X-27-31110	F2380-04A1	5	150080
14X-27-31120	F2380-04A1		150080
14X-27-31210	F2380-02A1	6	150060
14X-27-31710	F2380-04A1	12	150080
14X-30-00081	R0200-01A0		300030
14X-30-00082	R0200-01A0		300030
14X-30-00083	R0200-01A0		300030
14X-30-00084	R0200-01A0		300030
14X-30-00086	R0200-01A0		300030
14X-30-00087	R0200-01A0		300030
14X-30-00091	R0200-01A0		300030
14X-30-00092	R0200-01A0		300030
14X-30-00093	R0200-01A0		300030
14X-30-00095	R0200-01A0		300030
14X-30-00096	R0200-01A0		300030
14X-30-00111	R0110-01A0		300010
14X-30-00112	R0110-01A0		300010
14X-30-00113	R0110-01A0		300010
14X-30-00115	R0110-01A0		300010
14X-30-00116	R0110-01A0		300010
14X-30-00140	R0300-01A0		300040
14X-30-00141	R0300-01A0		300040
14X-30-00142	R0300-01A0		300040
14X-30-00143	R0300-01A0		300040
14X-30-00160	R0110-01A0		300010
14X-30-00170	R0300-01A0		300040
14X-30-00171	R0300-01A0		300040
14X-30-11292	R2100-01A0	2	300060
14X-30-11292	R2100-01A0		300060
14X-30-11312	R2100-01A0	3	300060

PART NO.	FIG.NO.	INDEX	PAGE
14X-30-11312	R2100-01A0		300060
14X-30-11351	R2100-01A0		300060
14X-30-11352	R2100-01A0	12	300060
14X-30-11352	R2100-01A0		300060
14X-30-11361	R2100-01A0		300060
14X-30-11362	R2100-01A0		300060
14X-30-11D50	R2100-01A0		300060
14X-30-11D51	R2100-01A0	4	300060
14X-30-11D60	R2100-01A0		300060
14X-30-11D61	R2100-01A0	5	300060
14X-30-11D90	R2100-01A0		300060
14X-30-11D92	R2100-01A0	5A	300060
14X-30-12112	R0110-01A0		300010
14X-30-12113	R0110-01A0		300010
14X-30-12114	R0110-01A0		300010
14X-30-12115	R0110-01A0	1	300010
14X-30-12126	R0110-01A0		300010
14X-30-12127	R0110-01A0		300010
14X-30-12128	R0110-01A0	5	300010
14X-30-12146	R0110-01A0		300010
14X-30-12147	R0110-01A0		300010
14X-30-12148	R0110-01A0	8	300010
14X-30-12162	R0110-01A0		300010
14X-30-12163	R0110-01A0		300010
14X-30-12164	R0110-01A0	3	300010
14X-30-12180	R0110-01A0		300010
14X-30-12180	R0200-01A0		300030
14X-30-12181	R0110-01A0	2	300010
14X-30-12223	R0110-01A0		300010
14X-30-12224	R0110-01A0	17	300010
14X-30-12231	R0110-01A0		300010
14X-30-12232	R0110-01A0	6	300010
14X-30-12232	R0110-01A0	9	300010
14X-30-12252	R0110-01A0	18	300010
14X-30-12261	R0110-01A0		300010
14X-30-12262	R0110-01A0		300010
14X-30-12263	R0110-01A0	10	300010
14X-30-12263	R0110-01A0	7	300010
14X-30-12360	R0110-01A0		300010
14X-30-12380	R0110-01A0		300010
14X-30-13124	R0120-01A0	26	300020
14X-30-13143	R0120-01A0	21	300020
14X-30-13164	R0120-01A0	12	300020
14X-30-13241	R0120-01A0	6	300020
14X-30-13310	R0120-01A0	5	300020
14X-30-13340	R0200-01A0	2	300030
14X-30-13510	R0120-01A0		300020
14X-30-13511	R0120-01A0		300020
14X-30-13512	R0120-01A0	1	300020
14X-30-13530	R0120-01A0	4	300020

PART NO.	FIG.NO.	INDEX	PAGE
14X-30-14111	R0200-01A0		300030
14X-30-14112	R0200-01A0		300030
14X-30-14121	R0200-01A0		300030
14X-30-14122	R0200-01A0		300030
14X-30-14132	R0200-01A0		300030
14X-30-14133	R0200-01A0		300030
14X-30-14151	R0200-01A0		300030
14X-30-14152	R0200-01A0	3	300030
14X-30-14161	R0200-01A0	8	300030
14X-30-14170	R0200-01A0	10	300030
14X-30-14310	R0200-01A0		300030
14X-30-14311	R0200-01A0	1	300030
14X-30-14320	R0200-01A0		300030
14X-30-14321	R0200-01A0		300030
14X-30-14330	R0200-01A0		300030
14X-30-14331	R0200-01A0	4	300030
14X-30-15121	R0300-01A0		300040
14X-30-15131	R0300-01A0	4	300040
14X-30-15140	R0300-01A0	2	300040
14X-30-15211	R0300-01A0		300040
14X-30-15212	R0300-01A0	1	300040
14X-30-15221	R0300-01A0		300040
14X-30-15222	R0300-01A0	3	300040
14X-30-15240	R0300-01A0	6	300040
14X-30-15251	R0300-01A0	9	300040
14X-30-33170	R0120-01A0	9	300020
14X-32-05000	R0500-01A5		300050
14X-32-11110	R0500-01A5	1	300050
14X-32-11120	R0500-01A5	4	300050
14X-32-11120	R0500-01A5		300050
14X-32-11130	R0500-01A5	5	300050
14X-32-11130	R0500-01A5		300050
14X-32-11140	R0500-01A5	6	300050
14X-32-11200	R0500-01A5		300050
14X-32-11210	R0500-01A5	2	300050
14X-32-11210	R0500-01A5		300050
14X-32-11220	R0500-01A5	3	300050
14X-32-11220	R0500-01A5		300050
14X-32-11320	R0500-01A5	12	300050
14X-32-11320	R0500-01A5		300050
14X-32-11330	R0500-01A5	13	300050
14X-32-11330	R0500-01A5		300050
14X-32-11350	R0500-01A5	16	300050
14X-32-11350	R0500-01A5		300050
14X-32-11370	R0500-01A5	1	300050
14X-32-11420	R0500-01A5	14	300050
14X-32-11420	R0500-01A5		300050
14X-32-11430	R0500-01A5	15	300050
14X-32-11430	R0500-01A5		300050
14X-32-12200	R0500-01A5	7	300050

PART NO.	FIG.NO.	INDEX	PAGE
14X-40-00010	F2300-07A0		150020
14X-40-00010	F2300-08A0		150021
14X-40-11112	F2300-08A0	1	150021
14X-40-11212	F2300-08A0	23	150021
14X-40-11221	F2300-08A0	18	150021
14X-40-11231	F2300-08A0	17	150021
14X-40-11241	F2300-08A0	11	150021
14X-40-11251	F2300-08A0	28	150021
14X-40-11251	F2300-09A0	5	150022
14X-40-11261	F2300-08A0	12	150021
14X-40-11272	F2300-08A0	13	150021
14X-40-11291	F2300-08A0	26	150021
14X-40-11312	F2300-08A0	24	150021
14X-40-11373	F2300-08A0	14	150021
14X-40-11381	F2300-08A0	20	150021
14X-40-11391	F2300-08A0	27	150021
14X-40-11411	F2300-08A0	15	150021
14X-40-11421	F2300-08A0	16	150021
14X-40-11491	F2300-08A0	30	150021
14X-40-11610	F2300-07A0	1	150020
14X-40-11620	F2300-07A0	9	150020
14X-40-11630	F2300-07A0	5	150020
14X-40-11640	F2300-07A0	2	150020
14X-40-11650	F2300-08A0	10	150021
14X-40-11660	F2300-08A0	6	150021
14X-40-11670	F2300-08A0	7	150021
14X-40-11712	F2300-07A0	16	150020
14X-40-11721	F2300-07A0	17	150020
14X-40-11731	F2300-07A0	22	150020
14X-40-11761	F2300-07A0	24	150020
14X-40-11810	F2300-07A0	28	150020
14X-40-11840	F2300-07A0	29	150020
14X-40-21480	K2110-21A0	3	240220
14X-43-11115	K2110-07A0	9	240110
14X-43-11230	K2110-05A0	8	240100
14X-43-11240	K2110-08A0	10	240120
14X-43-11260	K2110-07A0	16	240110
14X-43-11270	K2400-01A0	25	240270
14X-43-11280	K2110-08A0	23	240120
14X-43-11290	K2110-08A0	24	240120
14X-43-11320	K2110-03A0	30	240080
14X-43-11320	K2110-03A1	5	240090
14X-43-11320	K2110-07A0	8	240110
14X-43-11320	K2520-01A1	23	240320
14X-43-11320	K2520-02A0	29	240330
14X-43-12110	K2400-01A0	12	240270
14X-43-12212	K2400-01A0	13	240270
14X-43-12250	K2400-01A0		240270
14X-43-12251	K2400-01A0	17	240270
14X-43-12260	K2400-01A0	18	240270

PART NO.	FIG.NO.	INDEX	PAGE
14X-43-12270	K2400-01A0	22	240270
14X-43-12313	K2400-01A0		240270
14X-43-12333	K2400-02A0		240280
14X-43-12350	K2400-01A0		240270
14X-43-12360	K2400-01A0	2	240270
14X-43-12370	K2400-02A0	33	240280
14X-43-12380	K2400-02A0	4	240280
14X-43-12390	K2400-01A0	5	240270
14X-43-12410	K2400-01A0	34	240270
14X-43-12420	K2400-01A0		240270
14X-43-12421	K2400-01A0	1	240270
14X-43-12430	K2400-02A0	32	240280
14X-43-12450	K2400-01A0	4	240270
14X-43-12610	F2300-06A0	12	150019
14X-43-12620	F2300-06A0	9	150019
14X-43-12630	F2300-06A0	15	150019
14X-43-12810	K2110-08A0	8	240120
14X-43-12820	K2110-05A0	1	240100
14X-43-12840	K2110-08A0	20	240120
14X-43-12850	K2110-07A0		240110
14X-43-12920	K2110-08A0	5	240120
14X-43-12940	K2500-01A0	15	240290
14X-43-12950	K2110-07A0	1	240110
14X-43-13312	F2820-01A1		150110
14X-43-13313	F2820-01A1	2	150110
14X-43-13321	F2820-01A1		150110
14X-43-13322	F2820-01A1		150110
14X-43-13323	F2820-01A1		150110
14X-43-13324	F2820-01A1	1	150110
14X-43-13330	F2820-01A2	4	150120
14X-43-13350	F2820-01A2	13	150120
14X-43-13372	K2110-02A0		240070
14X-43-13373	K2110-02A0	2	240070
14X-43-13382	K2110-02A0	10	240070
14X-43-13412	K2110-02A0	12	240070
14X-43-13432	K2110-02A0	5	240070
14X-43-13440	K2110-02A0		240070
14X-43-13460	K2110-02A0	8	240070
14X-43-13512YZ	K2400-02A0	2	240280
14X-43-13713	K2400-02A0		240280
14X-43-13722	K2400-02A0	14	240280
14X-43-13732	K2400-02A0		240280
14X-43-13733	K2400-02A0		240280
14X-43-13734	K2400-02A0	30	240280
14X-43-13740	K2400-02A0		240280
14X-43-13753	K2400-02A0	5	240280
14X-43-13760	K2400-01A0	3	240270
14X-43-13760	K2400-02A0	1	240280
14X-43-13770	K2400-01A0		240270
14X-43-13780	K2400-02A0	3	240280

PART NO.	FIG.NO.	INDEX	PAGE
14X-43-13790	K2400-02A0	31	240280
14X-43-13881	F2820-01A1		150110
14X-43-13912	K2400-01A0	9	240270
14X-43-14150	K2110-03A1	9	240090
14X-43-14170	K2110-03A0		240080
14X-43-14171	K2110-03A0	28	240080
14X-43-14171	K2110-03A1	3	240090
14X-43-14340	K2110-10A0	2	240135
14X-43-14340	K2110-10A1	2	240140
14X-43-14340	K2110-10A2	2	240150
14X-43-14413	K2110-10A0	1	240135
14X-43-14413	K2110-10A1		240140
14X-43-14423	K2110-10A0	7	240135
14X-43-14423	K2110-10A1	7	240140
14X-43-14423	K2110-10A2	7	240150
14X-43-14452	K2110-10A0	5	240135
14X-43-14452	K2110-10A2	5	240150
14X-43-14483	K2110-10A1	15	240140
14X-43-14483	K2110-10A2	15	240150
14X-43-14493	K2110-03A1	6	240090
14X-43-14520	K2110-10A0	6	240135
14X-43-14520	K2110-10A1	6	240140
14X-43-14520	K2110-10A2	6	240150
14X-43-14540	K2110-10A1	12	240140
14X-43-14540	K2110-10A2	12	240150
14X-43-14560	K2110-10A1	1	240140
14X-43-14560	K2110-10A2	1	240150
14X-43-14740	K2110-14A1		240182
14X-43-14741	K2110-14A1	1	240182
14X-43-14760	H1410-03A0	3	180210
14X-43-14771	H1410-02A0	25	180200
14X-43-14820	K2520-02A0	11	240330
14X-43-14840	H1410-02A0	38	180200
14X-43-14850	K2110-14A0	1	240180
14X-43-14860	K2110-14A0	6	240180
14X-43-14870	H1410-02A0	36	180200
14X-43-14890	H0310-07A3	12	180170
14X-43-15710	H1410-02A0	42	180200
14X-43-22131	K2110-03A1	1	240090
14X-43-22291	K2110-03A1	2	240090
14X-43-24451	K2110-10A1	5	240140
14X-43-24720	K2110-14A0	19	240180
14X-43-24741	K2110-14A0	20	240180
14X-43-24931	K2110-14A0	21	240180
14X-43-24941	K2110-14A0	22	240180
14X-49-00010	F2300-09A0		150022
14X-49-11111	F2300-05A0	1	150018
14X-49-11121	F2300-05A0	3	150018
14X-49-11211	F2300-03A0	1	150016
14X-49-11221	F2300-03A0	3	150016

PART NO.	FIG.NO.	INDEX	PAGE
14X-49-11312	F2300-03A0	12	150016
14X-49-11320	F2300-04A0	22	150017
14X-49-11390	F2300-09A0	3	150022
14X-49-11411	F2300-03A0	20	150016
14X-49-11430	F2300-03A0	25	150016
14X-49-11511	F2300-04A0	14	150017
14X-49-11521	F2300-04A0	18	150017
14X-49-11600	F2300-04A0		150017
14X-49-11810	F2730-02A1	21	150100
14X-49-11831	F2730-02A1		150100
14X-49-11940	F2730-02A1	1	150100
14X-49-11950	F2730-02A1		150100
14X-49-11970	F2730-02A1		150100
14X-49-12113	H0100-01A1		180020
14X-49-12124	H0100-01A1	5	180020
14X-49-12212	F2730-01A1		150090
14X-49-12213	F2730-01A1	15	150090
14X-49-12222	F2730-01A1		150090
14X-49-12224	F2730-01A1		150090
14X-49-12225	F2730-01A1	16	150090
14X-49-12230	F2730-01A1		150090
14X-49-12231	F2730-01A1	19	150090
14X-49-12241	F2730-01A1		150090
14X-49-12310	F2300-05A0	8	150018
14X-49-12320	F2300-05A0	11	150018
14X-49-12330	F2300-05A0	10	150018
14X-49-12340	F2300-05A0	13	150018
14X-49-12411	F2300-05A0	18	150018
14X-49-13110	F2300-09A0	1	150022
14X-49-13120	F2300-09A0	2	150022
14X-49-13130	F2300-09A0	12	150022
14X-49-13310	F2730-01A1	8	150090
14X-50-12110	J2700-01A0	27	210020
14X-54-12125	M2140-03A0	18	270050
14X-54-12143	M2140-04A0	12	270060
14X-54-12150	M2140-04A0	19	270060
14X-54-12190	M2140-04A0	2	270060
14X-54-12270	M2140-01A0	5	270030
14X-54-12280	M2140-01A0	6	270030
14X-54-12334	M2140-03A0	1	270050
14X-54-12344	M2140-03A0	5	270050
14X-54-12470	M2140-03A0	2	270050
14X-54-12470	M2140-03A0	6	270050
14X-54-12590	M2140-03A0	25	270050
14X-54-12680	M2140-04A0	14	270060
14X-54-12731	M2140-02A0	5	270040
14X-54-12750	M2140-02A0	11	270040
14X-54-12761	M2140-02A0	12	270040
14X-54-12770	M2140-02A0	10	270040
14X-54-12780	M2140-02A0	18	270040

PART NO.	FIG.NO.	INDEX	PAGE
14X-54-12810	M2140-01A0	2	270030
14X-54-12910	M2240-01A0	2	270110
14X-54-12930	M2140-03A0	9	270050
14X-54-12940	K2210-01B0	40	240260
14X-54-12950	T2140-02A0	1	330052
14X-54-12960	M2140-03A0	11	270050
14X-54-12970	M2140-01A0	18	270030
14X-54-13145	M2210-01A1	7	270080
14X-54-13151	M2210-01A0	13	270070
14X-54-13151	M2210-01A0	2	270070
14X-54-13160	M2210-01A0	16	270070
14X-54-13173	E0210-01A0	1	120030
14X-54-13313	M2210-01A1	1	270080
14X-54-13323	M2210-01A1	4	270080
14X-54-13350	D0100-01A0	21	090010
14X-54-13830	M2210-01A1	13	270080
14X-54-13980	M2140-03A0	10	270050
14X-54-14112	M2210-01A2		270090
14X-54-14122	M2210-01A2		270090
14X-54-14123	M2210-01A2	20	270090
14X-54-14231	M2210-01A2		270090
14X-54-14242	M2210-01A2	5	270090
14X-54-14251	M2210-01A2	6	270090
14X-54-14271	M2210-01A2	11	270090
14X-54-14312	M2240-01A0	1	270110
14X-54-14371	K0410-01A1	9	240040
14X-54-14411	K0410-01A1	8	240040
14X-54-14930	M2210-01A1		270080
14X-54-14940	M2210-01A1		270080
14X-54-15220	M2810-01A0	10	270120
14X-54-15321	M2810-01A0		270120
14X-54-15510	K2110-01A0	1	240060
14X-54-15960	J2100-01A0		210010
14X-54-16230	K2500-02A0	13	240300
14X-54-16240	K0310-01A1	1	240020
14X-54-16250	K0310-01A1	2	240020
14X-54-16260	K0310-01A1	3	240020
14X-54-16442	K2500-01A0	13	240290
14X-54-16452	K2500-01A0	21	240290
14X-54-16532	K2500-01A0	1	240290
14X-54-16542	K2500-01A0	2	240290
14X-54-16551	F2820-01A4	7	150140
14X-54-16560	F2820-01A4	6	150140
14X-54-16611	K2500-01A0		240290
14X-54-16621	K2500-01A0		240290
14X-54-16631	K2500-02A0	6	240300
14X-54-16660	K2500-02A0	8	240300
14X-54-16710	K2500-02A0		240300
14X-54-16711	K2500-02A0	1	240300
14X-54-16721	K2500-02A0	2	240300

PART NO.	FIG.NO.	INDEX	PAGE
14X-54-16731	K2500-02A0	3	240300
14X-54-16741	K2500-02A0	4	240300
14X-54-16840	K2110-01A0	4	240060
14X-54-16912	K2500-01A0	16	240290
14X-54-17143	K2120-01A1	1	240250
14X-54-17150	K2110-01A0	10	240060
14X-54-17160	M2140-04A0	9	270060
14X-54-17171	K2120-01A1	2	240250
14X-54-18115	K2210-01B0	1	240260
14X-54-18150	K2210-01B0	36	240260
14X-54-18840	K2210-01B0		240260
14X-54-18841	K2210-01B0	9	240260
14X-54-19110	K2210-01B0		240260
14X-54-19120	K2210-01B0	6	240260
14X-54-19130	K2210-01B0	7	240260
14X-54-19170	K2210-01B0	8	240260
14X-54-21230	M2210-01A0		270070
14X-54-21240	M2210-01A0		270070
14X-54-23130	M2210-01A0	19	270070
14X-54-24280	K0410-01A1	13	240040
14X-54-25190	K2110-01A1	4	240065
14X-54-25515	K2110-01A1	1	240065
14X-54-27120	K2110-01A1	10	240065
14X-54-27130	K2110-01A1	13	240065
14X-54-35380	M2210-01A2	13	270090
14X-54-J1150	M2810-01A0	2	270120
14X-54-J1180	M2140-01A0	1	270030
14X-54-J1230	M2140-04A0		270060
14X-54-J1240	M2140-04A0	1	270060
14X-54-J1420	W1111-03A0	1	420035
14X-54-J1440	W1111-01A0	7	420010
14X-54-J1470	K0410-01A9	7	240042
14X-54-J1470	K0410-02A9	6	240043
14X-54-J2120	M2140-01A0		270030
14X-54-J2121	M2140-01A0	12	270030
14X-54-J2130	M2810-01A0	1	270120
14X-54-J2340	K1110-01A0		240046
14X-54-J2340	K1110-02A0		240047
14X-54-J2340	K1110-03A0		240048
14X-54-J2340	K1110-04A0		240049
14X-54-J2340	K1110-05A0		240050
14X-54-J2340	K1110-06A0		240051
14X-54-J2340	K1110-07A0		240052
14X-54-J2340	K1110-08A0		240053
14X-54-J2340	K1110-09A0		240054
14X-54-J2340	K1110-10A0		240055
14X-54-J2340	K1110-11A0		240056
14X-54-J2340	K1110-12A0		240057
14X-54-J9972	M2140-01A0		270030
14X-57-11112	K0110-01A1		240012

PART NO.	FIG.NO.	INDEX	PAGE
14X-57-11113	K0110-01A1		240012
14X-57-11114	K0110-01A2	2	240015
14X-57-11380	K0110-01A2	3	240015
14X-57-15000	K0110-01A2	1	240015
14X-57-J1110	K0110-01A1		240012
14X-57-J1111	K0110-01A1	8	240012
14X-57-J1111	K0110-01A1	4	240013
14X-60-11113	H0100-01A0		180010
14X-60-11114	H0100-01A0	1	180010
14X-60-11120	H0100-01A0	13	180010
14X-60-11130	H0100-01A0	4	180010
14X-60-11214	H0100-01A1		180020
14X-60-11225	H0100-01A1	17	180020
14X-60-11250	H0100-01A1	22	180020
14X-60-12112	H0120-03A0	1	180060
14X-60-12120	H0120-03A0	4	180060
14X-60-12120	H0120-03A1	4	180070
14X-60-12130	H0120-05A0	2	180080
14X-62-11113	H0310-01A0	16	180100
14X-62-11113	H0310-01A3	16	180110
14X-62-11121	H0310-01A3	23	180110
14X-62-11130	H0310-01A0		180100
14X-62-11130	H0310-01A3		180110
14X-62-11460	H2220-01A0	1	180240
14X-62-11460	H2220-03A1	18	180260
14X-62-11650	H2220-03A1	15	180260
14X-62-12201	H2210-01A0	37	180218
14X-62-16102	H2210-01A0A	37	180220
14X-62-16102	H2210-01A1A	30	180230
14X-62-16180	H2210-01A0A	50	180221
14X-62-16180	H2210-01A1A	43	180230
14X-62-16210	H2210-01A0A	32	180220
14X-62-16210	H2210-01A1A	25	180230
14X-62-16220	H2210-01A0A	33	180220
14X-62-16220	H2210-01A1A	26	180230
14X-62-16230	H2210-01A0A	46	180221
14X-62-16230	H2210-01A1A	39	180230
14X-62-16240	H2210-01A0A	45	180220
14X-62-16240	H2210-01A1A	38	180230
14X-62-16250	H2210-01A0A	40	180220
14X-62-16250	H2210-01A1A	33	180230
14X-62-16280	H2210-01A0A		180221
14X-63-01052	T2400-01A1		330100
14X-63-42121	T2400-01A1	13	330100
14X-63-42142	T2400-01A1	1	330100
14X-63-42182	T2400-01A1	18	330100
14X-63-X1052	T2400-01A1		330100
14X-69-31101	T2810-01A0		330270
14X-69-31111	T2810-01A0	1	330270
14X-70-00070	T2110-01A0		330010

PART NO.	FIG.NO.	INDEX	PAGE
14X-70-00071	T2110-01A0		330010
14X-70-12130	T2110-01A0	8	330010
14X-71-11163	T2120-01A1	6	330035
14X-71-11261	T2120-01A1	7	330035
14X-71-11E20	T2115-01A1	16	330025
14X-71-12230	T2110-01A1	10	330015
14X-71-12240	T2120-01A1	13	330035
14X-71-13111	T2115-01A1	15	330025
14X-71-52140	T2110-01A1		330015
14X-78-11111	H2250-01A3	13	180270
14X-78-11120	H2250-01A3	1	180270
14X-78-11160	H2250-02A3	11	180280
14X-78-11171	H2250-02A3	1	180280
14X-78-11180	K2520-02A0	51	240331
14X-78-11210	H2250-02A3	19	180280
14X-78-11220	H1410-03A0	5	180210
14X-78-11240	K2520-02A0	9	240330
14X-78-11260	H2250-01A3	2	180270
14X-78-11270	K2110-03A1	10	240090
14X-78-11310	T2400-01A0	6	330090
14X-78-11410	K2520-02A0	30	240330
14X-78-11420	K2520-02A0	12	240330
14X-78-11470	K2520-02A0	19	240330
14X-78-11510	K2520-02A0	1	240330
14X-78-11520	K2520-02A0	39	240330
14X-78-11530	K2520-02A0	37	240330
14X-78-11540	K2520-02A0	45	240331
14X-78-11550	K2520-02A0	46	240331
14X-78-11560	K2520-02A0		240330
14X-906-J120	K0410-01A9		240042
14X-906-J130	K0410-01A9		240042
14X-906-J140	K0410-02A9		240043
14X-906-J230	K0410-01A9		240042
14X-906-J240	K0410-01A9		240042
14X-91-11330	M2140-01A0	9	270030
14X-91-15711	K2500-02A0	9	240300
14X-91-15721	K2500-02A0	10	240300
14X-96-00012	T2510-11A0		330210
14X-96-00012	T2510-12A0		330220
14X-96-00510	T2510-03A0	41	330130
14X-96-00520	T2510-03A0	47	330131
14X-96-00530	T2510-04A0	4	330140
14X-96-00540	T2510-04A0	5	330140
14X-96-00550	T2510-04A0	22	330140
14X-96-00560	T2510-05A0	2	330150
14X-96-00570	T2510-06A0	2	330160
14X-96-00580	T2510-06A0	11	330160
14X-96-00590	T2510-08A0	18	330180
14X-96-01130	T2510-03A0	23	330130
14X-96-01130	T2510-03A0	38	330130

PART NO.	FIG.NO.	INDEX	PAGE
14X-96-01181	T2510-04A0	20	330140
14X-96-01190	T2510-03A0	29	330130
14X-96-01210	T2510-04A0	18	330140
14X-96-01230	T2510-04A0	19	330140
14X-96-01281	T2510-04A0	24	330140
14X-96-01320	T2510-06A0	21	330160
14X-96-01351	T2510-06A0	19	330160
14X-96-01360	T2510-06A0	18	330160
14X-96-01370	T2510-06A0	17	330160
14X-96-01391	T2510-06A0	16	330160
14X-96-01410	T2510-06A0	1	330160
14X-96-01480	T2510-06A0	10	330160
14X-96-01491	T2510-06A0	8	330160
14X-96-01610	T2510-05A0	14	330150
14X-96-01630	T2510-06A0	9	330160
14X-96-01640	T2510-05A0	9	330150
14X-96-01690	T2510-05A0	8	330150
14X-96-01960	T2510-15A0		330250
14X-96-02510	T2510-07A0	10	330170
14X-96-02570	T2510-07A0	16	330170
14X-96-02580	T2510-07A0	12	330170
14X-96-02590	T2510-07A0	22	330170
14X-96-02650	T2510-07A0	6	330170
14X-96-02661	T2510-07A0	5	330170
14X-96-02670	T2510-07A0	5A	330170
14X-96-02710	T2510-04A0	15	330140
14X-96-02780	T2510-04A0	1	330140
14X-96-03110	T2510-08A0	21	330180
14X-96-03120	T2510-08A0	15	330180
14X-96-03130	T2510-08A0	8	330180
14X-96-03141	T2510-08A0	1	330180
14X-96-03151	T2510-08A0	17	330180
14X-96-03161	T2510-08A0	22	330180
14X-96-03171	T2510-08A0	20	330180
14X-96-03180	T2510-08A0	19	330180
14X-96-03190	T2510-08A0	7	330180
14X-96-03731	T2510-02A0	30	330120
14X-96-03794	T2510-14A0	1	330240
14X-96-03850	T2510-02A0	3	330120
14X-96-03871	T2510-02A0	25	330120
14X-96-04110	T2510-03A0	1	330130
14X-96-04140	T2510-03A0	5	330130
14X-96-04150	T2510-03A0	26	330130
14X-96-04180	T2510-03A0	6	330130
14X-96-04210	T2510-03A0	18	330130
14X-96-04220	T2510-03A0	15	330130
14X-96-04260	T2510-03A0	46	330131
14X-96-04350	T2510-03A0	34	330130
14X-96-04361	T2510-03A0	33	330130
14X-96-04370	T2510-03A0	32	330130

PART NO.	FIG.NO.	INDEX	PAGE
14X-96-04380	T2510-03A0	40	330130
14X-96-05110	T2510-11A0	35	330210
14X-96-05122	T2510-11A0	3	330210
14X-96-05132	T2510-11A0	31	330210
14X-96-05141	T2510-11A0	20	330210
14X-96-05160	T2510-11A0	27	330210
14X-96-05210	T2510-11A0	1	330210
14X-96-05220	T2510-11A0	7	330210
14X-96-05230	T2510-11A0	9	330210
14X-96-05240	T2510-11A0	11	330210
14X-96-05250	T2510-11A0	13	330210
14X-96-05260	T2510-11A0	14	330210
14X-96-05270	T2510-11A0	16	330210
14X-96-05280	T2510-11A0	17	330210
14X-96-05290	T2510-11A0	19	330210
14X-96-05310	T2510-11A0	10	330210
14X-96-06123	T2510-10A0	4	330200
14X-96-06132	T2510-10A0	8	330200
14X-96-06142	T2510-10A0	14	330200
14X-96-06150	T2510-10A0	27	330200
14X-96-06170	T2510-10A0	23	330200
14X-96-06190	T2510-10A0	18	330200
14X-96-06260	T2510-10A0	41	330201
14X-96-06341	K2520-01A1	27	240320
14X-96-06391	T2510-10A0	35	330200
14X-96-06462	T2510-10A0	5	330200
14X-96-0J140	T2510-15A0	1	330250
14X-960-0010	T2510-11A0		330210
14X-960-0010	T2510-12A0		330220
14X-960-0011	T2510-11A0		330210
14X-960-0011	T2510-12A0		330220
14X-960-1350	T2510-06A0		330160
14X-960-1390	T2510-06A0		330160
14X-960-1490	T2510-06A0		330160
14X-960-2660	T2510-07A0		330170
14X-960-3140	T2510-08A0		330180
14X-960-3170	T2510-08A0		330180
14X-960-3750	T2510-02A0		330120
14X-960-3751	T2510-02A0	16	330120
14X-960-3792	T2510-14A0		330240
14X-960-3812	T2510-02A0		330120
14X-960-3813	T2510-02A0		330120
14X-960-3870	T2510-02A0		330120
14X-960-5121	T2510-11A0		330210
14X-960-5140	T2510-11A0		330210
14X-960-6121	T2510-10A0		330200
14X-960-6122	T2510-10A0		330200
14X-960-6312	T2510-14A0	4	330240
14X-960-6322	T2510-14A0	7	330240
14X-960-6331	T2510-14A0		330240

PART NO.	FIG.NO.	INDEX	PAGE
14X-960-6333	T2510-14A0	11	330240
14X-960-6450	T2510-02A0	22	330120
14X-960-6460	T2510-10A0		330200
14X-960-6461	T2510-10A0		330200
14X-960-8111	T2520-01A0	1	330255
14X-960-8120	T2520-01A0	3	330255
14X-960-8130	T2520-01A0	2	330255
14X-960-8140	T2520-01A0	14	330255
14X-960-8150	T2520-01A0	12	330255
14X-960-8210	T2510-02A0		330120
14X-960-8212	T2510-02A0		330120
14X-960-8213	T2510-02A0		330120
14X-960-8220	T2510-02A0		330120
14X-960-8221	T2510-02A0	7	330120
14X-960-8230	T2510-02A0		330120
14X-960-8231	T2510-02A0	8	330120
14X-960-8240	T2510-02A0	9	330120
14X-960-8250	T2520-01A0	24	330255
14X-960-8260	T2520-01A0	25	330255
14X-97-81113	K0410-01A1	1	240040
14X-97-81410	K0410-01A1	4	240040
14X-98-11170	U0100-01A0	4	360010
14X-98-11170	U0100-01B0	6	360020
14X-98-11240	U0100-01A0	23	360010
14X-98-11240	U0100-01B0	13	360020
14X-98-11250	U0100-01A0	24	360010
14X-98-11260	U0100-01B0	14	360020
14X-98-11570	U0100-01A0	5	360010
14X-98-12120	U0100-01B0		360020
14X-98-12130	U0100-01B0		360020
14X-98-12140	U0100-01B0		360020
14X-98-12150	U0100-01B0		360020
14X-98-22711	U0100-01A0	1	360010
14X-98-23160	U0100-01A0	13	360010
14Y-21-11004	J2100-01A0		210010
14Y-21-11104	J2100-01A0		210010
14Y-21-13110	J2100-01A0	4	210010
14Y-21-13130	F2300-15A0	24	150028
14Y-21-13140	F2300-01A0	3	150012
14Y-21-13140	F2300-01A1	10	150013
14Y-21-13150	F2300-15A0	27	150028
14Y-21-13160	F2300-01A0	6	150012
14Y-21-13160	F2300-01A1	13	150013
14Y-21-13171	F2300-01A0	8	150012
14Y-21-13171	F2300-01A1	15	150013
14Y-21-13190	F2300-01A0	9	150012
14Y-21-13190	F2300-01A1	16	150013
14Y-21-13210	F2300-01A0	7	150012
14Y-21-13210	F2300-01A1	14	150013
14Y-21-13241	F2300-15A0	25	150028

PART NO.	FIG.NO.	INDEX	PAGE
14Y-21-14114	J2100-01A0		210010
14Y-21-14120	J2100-01A0		210010
14Y-21-14121	J2100-01A0	8	210010
14Y-21-14141	J2100-01A0	12	210010
14Y-22-11140	F2300-13A0	7	150026
14Y-22-13112	F2300-15A0	1	150028
14Y-22-13131	F2300-15A0	6	150028
14Y-22-13140	F2300-15A0	4	150028
14Y-22-13150	F2300-15A0	3	150028
14Y-22-13160	F2300-15A0	5	150028
14Y-22-13170	F2300-15A0	7	150028
14Y-22-13180	F2300-15A0	8	150028
14Y-22-13270	F2300-15A0	14	150028
14Y-22-14121	F2300-13A0	11	150026
14Y-22-14130	F2300-15A0	10	150028
14Y-22-14140	F2300-15A0	16	150028
14Y-22-14150	F2300-15A0	17	150028
14Y-22-14160	F2300-13A0	12	150026
14Y-22-14171	F2300-13A0	10	150026
14Y-22-14180	F2300-14A0	19	150027
14Y-22-15120	F2300-15A0	19	150028
14Y-22-15160	F2300-11A0	2	150024
14Y-22-15170	F2300-11A0	3	150024
14Y-22-15220	F2300-15A0	26	150028
14Y-27-00011	F2380-02A1		150060
14Y-27-00011	F2380-03A1		150070
14Y-27-00011	F2380-04A1		150080
14Y-27-00013	F2380-02A1		150060
14Y-27-00013	F2380-03A1		150070
14Y-27-00013	F2380-04A1		150080
14Y-27-00014	F2380-02A1		150060
14Y-27-00014	F2380-03A1		150070
14Y-27-00014	F2380-04A1		150080
14Y-27-00015	F2380-02A1		150060
14Y-27-00015	F2380-03A1		150070
14Y-27-00015	F2380-04A1		150080
14Y-27-00021	F2380-02A1		150060
14Y-27-00021	F2380-03A1		150070
14Y-27-00021	F2380-04A1		150080
14Y-27-00023	F2380-02A1		150060
14Y-27-00023	F2380-03A1		150070
14Y-27-00023	F2380-04A1		150080
14Y-27-00024	F2380-02A1		150060
14Y-27-00024	F2380-03A1		150070
14Y-27-00024	F2380-04A1		150080
14Y-27-00025	F2380-02A1		150060
14Y-27-00025	F2380-03A1		150070
14Y-27-00025	F2380-04A1		150080
14Y-27-00310	F2380-02A1		150060
14Y-27-00310	F2380-03A1		150070

PART NO.	FIG.NO.	INDEX	PAGE
14Y-27-00310	F2380-04A1		150080
14Y-27-00320	F2380-02A1		150060
14Y-27-00320	F2380-03A1		150070
14Y-27-00320	F2380-04A1		150080
14Y-27-11152	F2380-04A1		150080
14Y-27-11155	F2380-04A1		150080
14Y-27-11156	F2380-04A1		150080
14Y-27-11162	F2380-04A1		150080
14Y-27-11165	F2380-04A1		150080
14Y-27-11412	F2380-04A1	1	150080
14Y-27-31150	F2380-04A1	8	150080
14Y-27-31160	F2380-04A1		150080
14Y-30-00210	J2700-01A0		210020
14Y-30-00210	J2700-01A1		210030
14Y-30-11277	R2100-01A0	17	300061
14Y-30-16133	R2100-01A0	9	300060
14Y-30-17111	J2700-01A0	1	210020
14Y-30-17111	J2700-01A1	1	210030
14Y-30-18111	J2700-01A0	9	210020
14Y-30-18111	J2700-01A1	10	210030
14Y-30-18121	J2700-01A0	6	210020
14Y-30-18121	J2700-01A1	7	210030
14Y-30-18130	R2100-01A0	6	300060
14Y-30-18140	R2100-01A0	7	300060
14Y-30-18150	J2700-01A0	5	210020
14Y-30-18150	J2700-01A1	6	210030
14Y-30-18160	J2700-01A0	2	210020
14Y-30-18160	J2700-01A1	2	210030
14Y-43-11121	K2520-01A0	3	240310
14Y-43-11710	F2300-06A0	1	150019
14Y-43-11720	F2300-06A0	4	150019
14Y-43-11730	F2300-06A0	32	150019
14Y-50-00011	J2700-01A0		210020
14Y-50-00012	J2700-01A0		210020
14Y-50-11110	J2700-01A0	15	210020
14Y-50-11110	J2700-01A1	16	210030
14Y-50-11220	J2700-01A0		210020
14Y-50-11240	J2700-01A0	22	210020
14Y-50-11240	J2700-01A1	23	210030
14Y-50-11250	J2700-01A0	16	210020
14Y-50-11250	J2700-01A1	17	210030
14Y-50-11314	J2700-01A0		210020
14Y-50-11323	J2700-01A0	21	210020
14Y-50-11323	J2700-01A0	32	210020
14Y-50-11323	J2700-01A1	22	210030
14Y-50-11390	J2700-01A0	24	210020
14Y-50-11390	J2700-01A1	25	210030
14Y-50-11390	J2700-01A1	33	210030
14Y-50-11421	J2700-01A0	30	210020
14Y-50-11450	R2100-01A0		300060

PART NO.	FIG.NO.	INDEX	PAGE
14Y-50-11460	J2700-01A0	18	210020
14Y-50-11460	J2700-01A1	19	210030
14Y-50-11510	J2700-01A0	40	210021
14Y-50-11521	R2100-01A0	8	300060
14Y-50-11530	J2700-01A0		210020
14Y-50-11540	J2700-01A0	39	210021
14Y-50-11551	J2700-01A0	38	210021
14Y-50-11561	J2700-01A0	42	210021
14Y-50-J1120	J2700-01A0		210020
14Y-50-J1120	J2700-01A1		210030
14Y-62-11111	H0310-01A0		180100
14Y-62-11112	H0310-01A0		180100
14Y-62-11113	H0310-01A0	1	180100
14Y-62-11122	H0310-01A0	7	180100
14Y-62-11131	H0310-01A0	14	180100
14Y-62-11131	H0310-01A3	14	180110
14Y-62-11142	F2300-03A0	28	150016
14Y-62-11164	H0310-02A0	6	180120
14Y-62-11164	H0310-02A1	4	180130
14Y-62-11172	H0310-01A0		180100
14Y-62-11172	H0310-01A3		180110
14Y-62-11181	H0310-01A0		180100
14Y-62-11182	H0310-01A0		180100
14Y-62-11183	H0310-01A0	13	180100
14Y-62-11191	H0310-02A1	1	180130
14Y-62-11211	H2220-02A0	1	180250
14Y-62-11312	H2220-03A1	1	180260
14Y-62-11322	H2220-03A1	4	180260
14Y-62-11343	H2220-03A1	7	180260
14Y-62-11353	H2220-03A1	10	180260
14Y-62-11360	H2220-03A1	14	180260
14Y-62-11410	T2160-01A0	3	330080
14Y-62-11420	T2160-01A0	4	330080
14Y-62-11430	T2160-01A0	11	330080
14Y-62-11440	T2160-01A0	12	330080
14Y-62-11450	T2160-01A0	17	330080
14Y-62-11460	T2160-01A0	18	330080
14Y-62-11470	T2160-01A0	15	330080
14Y-62-11480	T2160-01A0	16	330080
14Y-62-11492	T2160-01A0	22	330080
14Y-62-11512	H2210-01A0	48	180219
14Y-62-11522	H2210-01A0	49	180219
14Y-62-11531	H2210-01A0	50	180219
14Y-62-11541	H2210-01A0	51	180219
14Y-62-11551	H0310-02A0		180120
14Y-62-11551	H0310-02A1		180130
14Y-62-11570	H2210-01A0	26	180218
14Y-62-11570	H2210-01A0A	26	180220
14Y-62-11570	H2210-01A1A	19	180230
14Y-62-11580	H2210-01A0	20	180218

PART NO.	FIG.NO.	INDEX	PAGE
14Y-62-11590	H2210-01A0	21	180218
14Y-62-11620	D0200-01A2	11	090020
14Y-62-11631	H2210-01A0	17	180218
14Y-62-11631	H2210-01A0A	17	180220
14Y-62-11631	H2210-01A1A	10	180230
14Y-62-11640	H2210-01A0	29	180218
14Y-62-11640	H2210-01A0A	29	180220
14Y-62-11640	H2210-01A1A	22	180230
14Y-62-11685	H2210-01A0	40	180218
14Y-62-11695	H2210-01A0	44	180218
14Y-62-11710	H0310-07A0	1	180160
14Y-62-11710	H0310-07A3	1	180170
14Y-62-11721	H0310-07A0	3	180160
14Y-62-11721	H0310-07A3	3	180170
14Y-62-11750	H0310-08A0	9	180180
14Y-62-11761	H0310-07A0		180160
14Y-62-11762	H0310-07A0	7	180160
14Y-62-11771	H0310-07A3	7	180170
14Y-62-11821	H0310-06A1	15	180150
14Y-62-12150	H2210-01A0	32	180218
14Y-62-12160	H2210-01A0	33	180218
14Y-62-12180	H2210-01A1A	57	180231
14Y-62-12190	H0310-07A0		180160
14Y-62-12210	H2210-01A0A		180221
14Y-62-12220	H2210-01A0A		180221
14Y-62-21110	H0310-01A3	1	180110
14Y-62-21120	H0310-01A3	7	180110
14Y-62-21180	H0310-01A3	13	180110
14Y-62-21510	H2210-01A0A	53	180221
14Y-62-21510	H2210-01A1A	46	180231
14Y-62-21520	H2210-01A0A	54	180221
14Y-62-21520	H2210-01A1A	47	180231
14Y-62-21530	H2210-01A0A	55	180221
14Y-62-21530	H2210-01A1A	48	180231
14Y-62-21540	H2210-01A0A	56	180221
14Y-62-21540	H2210-01A1A	49	180231
14Y-62-21580	H2210-01A0A	20	180220
14Y-62-21580	H2210-01A1A	13	180230
14Y-62-21590	H2210-01A0A	21	180220
14Y-62-21590	H2210-01A1A	14	180230
14Y-62-21811	H0310-06A1	12	180150
14Y-63-01013	T2140-01A0		330040
14Y-63-01013	T2140-01A1		330050
14Y-63-01016	T2140-01A0		330040
14Y-63-12121	T2140-01A0	10	330040
14Y-63-12121	T2140-01A1	10	330050
14Y-63-12131	T2140-01A0		330040
14Y-63-12131	T2140-01A1		330050
14Y-63-12143	T2140-01A0	1	330040
14Y-63-12143	T2140-01A1	1	330050

PART NO.	FIG.NO.	INDEX	PAGE
14Y-63-12172	T2140-01A0		330041
14Y-63-12172	T2140-01A1	30	330050
14Y-63-12174	T2140-01A0	30	330041
14Y-63-12181	T2140-01A0		330041
14Y-63-12181	T2140-01A1	29	330050
14Y-63-12270	T2140-01A0		330041
14Y-63-12270	T2140-01A1		330050
14Y-63-12274	T2140-01A0		330041
14Y-63-12281	T2140-01A0		330041
14Y-63-12281	T2140-01A1		330050
14Y-63-52121	T2150-01A3	15	330070
14Y-63-X1017	T2140-01A0	G1	330040
14Y-63-X1027	T2140-01A0	G1	330040
14Y-71-00081	T2110-01A1		330015
14Y-71-00082	T2110-01A1		330015
14Y-71-00091	T2110-01A1		330015
14Y-71-00092	T2110-01A1		330015
14Y-71-00110	M2111-01A0		270010
14Y-71-00151	T2115-01A1		330025
14Y-71-00161	T2115-01A1		330025
14Y-71-00181	T2110-01A1		330015
14Y-71-00191	T2110-01A1		330015
14Y-71-00210	M2111-01A0		270010
14Y-71-00211	M2111-01A0		270010
14Y-71-01180	T2110-01A1		330015
14Y-71-01181	T2110-01A1		330015
14Y-71-01190	T2110-01A1		330015
14Y-71-01191	T2110-01A1		330015
14Y-71-11123	T2120-01A1	2	330035
14Y-71-11133	T2120-01A1	3	330035
14Y-71-11141	T2120-01A1	4	330035
14Y-71-11151	T2120-01A1	5	330035
14Y-71-11190	T2120-01A1	8	330035
14Y-71-12131	T2110-01A1	2	330015
14Y-71-12150	T2110-01A0		330010
14Y-71-12160	T2160-01A0	25	330080
14Y-71-12160	T2160-01A0	7	330080
14Y-71-12170	T2110-01A1	4	330015
14Y-71-13110	T2115-01A1	1	330025
14Y-71-13120	T2115-01A1	2	330025
14Y-71-13181	T2110-01A1	5	330015
14Y-71-13211	T2110-01A0		330010
14Y-71-13310	M2111-01A0	1	270010
14Y-71-13310	M2111-01A0		270010
14Y-71-13320	M2111-01A0	2	270010
14Y-71-13530	T2110-01A1	3	330015
14Y-71-22150	T2110-01A0	9	330010
14Y-71-22150	T2110-01A1	6	330015
14Y-71-22150	T2110-01A1		330015
14Y-71-22151	T2110-01A1	6	330015

PART NO.	FIG.NO.	INDEX	PAGE
14Y-71-22280	T2110-01A0	13	330010
14Y-71-22280	T2110-01A1	9A	330015
14Y-71-33310	M2111-01A0		270010
14Y-71-33510	T2110-01A1		330015
14Y-71-33511	T2110-01A1	1	330015
14Y-71-33521	T2110-01A1		330015
14Y-71-33522	T2110-01A1		330015
14Y-71-33710	T2110-01A1	14	330015
14Y-711-3120	T2115-01A1	19	330025
14Z-03-11230	C0100-01A0		060010
14Z-03-11231	C0100-01A0	13	060010
14Z-30-31111	R0120-01A0	3	300020
14Z-40-11340	F2300-08A0	22	150021
14Z-40-11350	F2300-09A0	4	150022
14Z-40-11380	F2300-08A0	19	150021
14Z-43-11170	K2110-08A0	18	240120
14Z-43-11190	F2300-10A0		150023
14Z-43-11192	F2300-10A0	1	150023
14Z-43-11250	F2300-10A0	4	150023
14Z-43-11310	F2820-01A4	4	150140
14Z-43-11310	K2110-22A0	1	240230
14Z-43-11310	K2520-01A1	24	240320
14Z-43-11310	K2520-02A0	28	240330
14Z-43-11751	K2110-11A0	5	240160
14Z-43-11940	K2110-11A0	6	240160
14Z-43-12111	H1410-02A0	1	180200
14Z-43-12120	H1410-02A0	18	180200
14Z-43-12710	F2820-01A4	15	150140
14Z-43-12740	F2820-01A4	11	150140
14Z-43-12790	F2820-01A4	14	150140
14Z-43-12790	K2400-02A0		240280
14Z-43-12890	K2400-02A0	28	240280
14Z-43-13364	K2110-02A0	11	240070
14Z-50-31530	J2700-01A0	31	210020
14Z-50-31530	J2700-01A1	32	210030
14Z-50-31530	J2700-01A1		210030
14Z-50-J1110	J2700-01A1		210030
14Z-71-33211	T2110-01A0		330010
14Z-71-33211	T2110-01A1		330015
14Z-71-33212	T2110-01A0	15	330010
14Z-71-33212	T2110-01A1	11	330015
150-04-11170	D0210-01A0		090030
150-30-13430	R0120-01A0	25	300020
150-30-13442	R0120-01A0	22	300020
150-30-13460	R0120-01A0	24	300020
150-30-13480	R0120-01A0	23	300020
150-43-14960	T2510-11A0	12	330210
150-70-00214	T2115-01A0		330020
150-70-13411	T2115-01A0	26	330020
150-70-13420	T2810-01A0	4	330270

PART NO.	FIG.NO.	INDEX	PAGE
150-70-21346	T2120-01A0	7	330030
150-70-21346	T2120-01A1	15	330035
150-70-21356	T2120-01A0	6	330030
150-70-21356	T2120-01A1	16	330035
150-80-11250	T2510-05A0	23	330150
150-95-12410	T2510-05A0	7	330150
150-95-12450	T2510-05A0	24	330150
150-95-12460	T2510-05A0	25	330150
150-95-18060	T2520-01A0	10	330255
150-95-18120	T2520-01A0	11	330255
150-95-18120	T2520-01A0	19	330255
150-951-1130	T2510-05A0	10	330150
154-01-21320	F2320-01A10	7	150043
154-01-21330	F2320-01A10	8	150043
154-04-12521	D0210-01A0		090030
154-04-12531	D0210-01A0	2	090030
154-15-12550	F2320-01A3	19	150036
154-27-12320	F2380-04A1	14	150080
154-43-14580	F2820-01A4	16	150140
154-60-21280	H0310-08A0	1	180180
154-61-16720	K2110-05A0	16	240100
154-66-12100	T2610-01A0	4	330260
154-67-11180	T2610-01A0	5	330260
154-67-11321	T2610-01A0	7	330260
154-67-11331	T2610-01A0	8	330260
154-70-11314	T2120-01A0	5	330030
154-70-12162	T2115-01A0	3	330020
154-70-13124	T2110-01A0	6	330010
154-70-13134	T2110-01A0	5	330010
154-70-19181	T2115-01A0	11	330020
154-72-11151	T2120-01A1	14	330035
155-15-12770	F2320-01A4	36	150037
155-15-19620	T2510-03A0	3	330130
15A-54-15110	K2110-01A1	11	240065
15A-91-61210	K2520-01A1	14	240320
15B-54-J1621	M2140-01A0	15	270030
15B-85-41421	T2115-01A0	7	330020
15B-85-41450	T2115-01A0	14	330020
15B-85-41460	T2115-01A0	15	330020
15B-96-01221	T2510-04A0	16	330140
15B-96-04310	T2510-03A0	37	330130
15B-96-04320	T2510-03A0	2	330130
15B-96-05221	T2510-13A0	2	330230
15B-96-05230	T2510-11A0	22	330210
15B-96-05240	T2510-11A0	39	330211
15B-96-05251	T2510-13A0	1	330230
15B-96-05260	T2510-12A0	7	330220
15B-96-05330	T2510-11A0	32	330210
15B-96-05330	T2510-11A0	4	330210
15B-96-05340	T2510-12A0	2	330220

PART NO.	FIG.NO.	INDEX	PAGE
15B-96-05350	T2510-12A0	1	330220
15B-96-06260	T2510-10A0	33	330200
15B-96-06320	T2510-14A0	8	330240
15B-96-07980	T2510-05A0	15	330150
170-21-11190	F2320-01A8	8	150041
170-65-11211	T2610-01A0	9	330260
170-70-12240	T2115-01A0	18	330020
170-70-12240	T2115-01A0	27	330020
174-13-24490	F2310-01A0	31	150029
175-15-11230	F2320-01A1	4	150034
175-15-45660	F2320-01A9	11	150042
175-15-45660	F2320-01A9	19	150042
175-15-56470	F2300-08A0	21	150021
175-61-34320	H2210-01A0	25	180218
175-61-34320	H2210-01A0A	25	180220
175-61-34320	H2210-01A1A	18	180230
175-70-12150	T2115-01A0	2	330020
175-70-12160	T2115-01A0	4	330020
175-70-12221	T2115-01A0	20	330020
175-91-62610	T2510-07A0	2	330170
175-91-62620	T2510-07A0	1	330170
175-91-62630	T2510-07A0	3	330170
175-91-62640	T2510-07A0	4	330170
175-91-64180	T2510-11A0	24	330210
175-91-64210	T2510-11A0	34	330210
175-91-64230	T2510-11A0	36	330210
175-91-64330	T2510-12A0	5	330220
175-91-64360	T2510-12A0	3	330220
175-91-64370	T2510-12A0	4	330220
176-43-54481	T2510-02A0	31	330120
176-62-15240	T2510-10A0	6	330200
176-76-13230	T2510-07A0	7	330170
178-60-12250	H1410-02A0	20	180200
17A-15-25120	F2320-01A5	6	150038
17A-15-25131	F2320-01A7	1	150040
17A-15-26180	F2320-01A9	21	150042
17A-40-11740	F2300-07A0	23	150020
17A-43-24140	K2400-01A0	14	240270
17A-43-24160	K2400-01A0	36	240270
17A-43-24170	F2820-01A3	5	150130
17A-43-25131	K2110-07A0	14	240110
17A-43-25140	K2110-07A0	15	240110
17A-43-25151	K2110-07A0	10	240110
17A-43-25160	K2110-07A0		240110
17A-43-25161	K2110-07A0	29	240110
17A-43-25171	K2110-08A0	1	240120
17A-43-25221	K2110-08A0	2	240120
17A-43-25241	K2110-05A0	2	240100
17A-43-25380	K2500-01A0		240290
17A-43-25531	K2110-11A0	22	240160

PART NO.	FIG.NO.	INDEX	PAGE
17A-43-25682	K2110-07A0	6	240110
17A-49-17141	F2730-02A1	3	150100
17A-49-17571	F2730-02A1	4	150100
17A-49-17710	F2730-02A1	2	150100
17A-49-17721	F2730-02A1	5	150100
17A-54-14230	M2140-02A0	2	270040
17A-54-14230	M2140-02A0	6	270040
17A-54-14230	M2140-04A0	13	270060
17A-54-14230	M2210-01A2	3	270090
17A-54-14240	M2140-02A0	3	270040
17A-54-14240	M2140-02A0	7	270040
17A-54-14240	M2210-01A2	4	270090
17A-54-16711	K2500-01A0	9	240290
17A-54-16870	K2500-01A0		240290
17A-98-41510	U0100-01B0	10	360020
17A-98-41510	U0400-01A0	5	360040
17M-09-11150	F2300-15A0	9	150028
17M-13-44350	F2310-03A0	19	150031
17M-54-24351	K2110-01A1	12	240065
195-01-14450	K2520-01A1	16	240320
195-03-41380	A5060-C3D9	21	010460
195-03-41380	H1410-02A0	19	180200
195-04-11431	D0210-01A0	4	090030
195-06-23110	K2210-01B0		240260
195-06-23120	K2210-01B0		240260
195-21-32410	F2300-01A0		150012
195-21-32410	F2300-01A1		150013
195-27-11140	F2380-03A1	16	150070
195-30-14151	R0120-01A0	27	300020
195-30-14160	R0120-01A0	28	300020
195-40-11650	F2300-07A0	27	150020
195-40-11650	F2300-07A0	8	150020
195-40-31540	F2300-08A0	25	150021
195-49-31280	H0100-01A0	3	180010
195-50-22860	R0120-01A0	5B	300020
195-54-42550	D0100-01A0	14	090010
195-54-42560	D0100-01A0	15	090010
195-54-46180	M2140-03A0	21	270050
195-60-45180	H2210-01A0	10	180218
195-60-45180	H2210-01A0A	10	180220
195-61-45280	K2520-01A0	31	240310
195-97-81311	K0410-01A9	6	240042
195-978-1311	K0410-02A9	7	240043
198-15-15770	F2320-01A7	5	150040
198-15-26511	F2310-02A0	6	150030
198-43-12430	K2110-02A0	15	240070
198-49-11460	H0100-01A1	3	180020
199-15-15570	F2320-01A7	9	150040
19M-43-15350	K2520-01A1	15	240320
19N-911-1250	T2115-01A1	20	330025

PART NO.	FIG.NO.	INDEX	PAGE
201-03-11361	C0100-02A0	18	060020
201-03-29160	K0110-01A2	8	240015
201-03-29160	K2110-17A0	21	240200
201-60-11390	H1410-02A0	29	180200
201-60-11390	H1410-02A0	34	180200
201-60-11390	H1410-02A0	39	180200
201-60-12171	H0100-01A0	5	180010
201-60-71180	V0100-01A0	1	390010
202-03-61110	C0100-02A0		060020
202-62-21430	F2730-02A1	14	150100
203-03-56650	C0100-02A0		060020
203-03-61640	C0100-02A0	16	060020
203-30-42260	R0120-01A0	7	300020
203-43-56450	K2500-02A0	11	240300
203-54-52412	M2140-01A0		270030
203-60-52250	H0100-01A1	13	180020
203-60-61230	V0100-01A0	3	390010
203-62-21740	F2730-02A1	22	150100
203-62-22221	H0310-02A0	10	180120
203-62-22221	H0310-02A1	8	180130
203-62-33680	H0310-07A3	11	180170
203-62-42920	J2700-01A0	37	210021
203-62-42920	J2700-01A1	31	210030
203-62-42920	K2520-02A0	22	240330
203-62-57632	K2110-14A0	7	240180
203-62-57730	K2110-14A0	15	240180
203-62-57910	F2730-02A1	6	150100
203-62-57920	F2730-02A1	7	150100
203-62-57930	F2730-02A1	8	150100
203-62-57940	F2730-02A1	9	150100
203-62-57950	F2730-02A1	10	150100
203-62-57960	F2730-02A1	11	150100
203-62-57970	F2730-02A1	12	150100
205-03-71440	C0100-02A0	22	060020
205-03-71531	C0100-02A0		060020
205-03-71532	C0100-02A0	17	060020
205-03-71540	C0100-02A0		060020
205-06-62271	T2115-01A0	13	330020
205-30-00052	R0110-01A0		300010
205-30-00052	R0200-01A0		300030
205-30-00061	R0110-01A0		300010
205-30-00061	R0200-01A0		300030
205-30-00150	R0110-01A0		300010
205-30-00150	R0200-01A0		300030
205-30-00220	R0110-01A0		300010
205-30-00220	R0200-01A0		300030
205-30-66561	R0110-01A0	12	300010
205-30-66561	R0200-01A0	6	300030
205-30-66651	R0110-01A0	11	300010
205-30-66651	R0200-01A0	5	300030

PART NO.	FIG.NO.	INDEX	PAGE
205-43-51470	K2400-01A0	20	240270
205-43-72920	K2110-07A0	33	240110
205-43-73360	F2820-01A4	5	150140
205-54-71680	C0100-02A0	1	060020
205-60-51390	H1410-02A0	8	180200
205-60-51460	H0100-01A0	6	180010
205-60-51470	H0100-01A0		180010
205-62-52410	H0310-06A0	7	180140
205-62-55270	H0310-06A1	1	180150
205-62-66170	H0310-06A0	4	180140
205-62-66181	H0310-06A0	1	180140
206-03-43331	C0100-02A0	25	060020
206-03-43340	C0100-02A0	27	060020
207-30-54160	R0120-01A0	14	300020
207-43-31560	F2300-06A0	19	150019
208-06-11220	J2700-01A0	34	210020
208-06-11220	J2700-01A1	28	210030
208-09-11120	C0100-01A0	27	060010
209-03-12270	F2380-02A1	10	150060
20N-60-11141	H0100-01A0		180010
20N-60-11142	H0100-01A0		180010
20N-60-11143	H0100-01A0	2	180010
20N-60-11180	H0100-01A0		180010
20N-60-11181	H0100-01A0		180010
20N-62-31250	K2520-02A0	2	240330
20N-62-31250	K2520-02A0	7	240330
20N-63-66190	H0310-06A0	8	180140
20T-01-35570	K2120-01A1	6	240250
20T-04-71130	D0100-01A0	8	090010
20T-06-71560	K2110-17A0	13	240200
20T-06-81230	K2110-17A0	12	240200
20T-43-71190	K2110-03A0	29	240080
20T-43-71190	K2110-03A1	4	240090
20T-43-71190	K2110-07A0	7	240110
20U-62-22430	K2520-02A0	5	240330
20Y-00-J1160	U0100-01A0	9	360010
20Y-04-11160	D0100-01A0		090010
20Y-04-11161	D0100-01A0	3	090010
20Y-06-J1120	E0300-01A2		120040
20Y-30-16330	R0300-01A0	12	300040
20Y-60-21470	H0100-01A0		180010
20Y-62-15960	H0310-08A3	9	180190
20Y-62-16630	H1410-02A0	45	180200
20Y-62-19560	H1410-02A0	30	180200
20Y-62-19560	H1410-02A0	35	180200
20Y-62-19560	H1410-02A0	40	180200
20Y-62-22271	H1410-02A0	28	180200
20Y-62-22271	H1410-02A0	33	180200
20Y-62-22410	K2520-02A0	26	240330
21K-43-11350	F2820-01A1		150110

PART NO.	FIG.NO.	INDEX	PAGE
21K-62-15313	H2210-01A0A	59	180221
21K-62-15313	H2210-01A1A	52	180231
21S-06-11140	K2210-01B0	17	240260
21T-38-11390	F2730-02A1	13	150100
21T-60-13650	H0100-01A1	14	180020
21U-98-31150	U0100-01B0	12	360020
21U-98-31160	U0100-01B0	8	360020
21W-62-38390	W1111-02A0	4	420025
21X-06-31530	K2110-17A0		240200
21X-62-23460	H0310-07A0		180160
21X-62-23460	H0310-07A3		180170
21Y-70-14580	J2700-01A0	35	210020
21Y-70-14580	J2700-01A1	29	210030
22W-06-13220	K2110-16A0		240190
22W-15-16270	F2310-01A0	14	150029
22W-43-17330	F2320-01A7	13	150040
22W-75-18880	F2300-09A0	9	150022
22W-75-18890	F2300-09A0	7	150022
22X-47-18220	J2100-01A0	16	210010
232-15-11240	F2320-01A0	10	150033
232-15-11270	F2320-01A1	36	150034
232-15-19220	F2320-01A4	32	150037
234-15-15120	F2300-12A0	34	150025
235-15-12590	F2320-01A4	25	150037
23A-15-19210	F2300-15A0	12	150028
23B-06-J1100	W1111-03A0	9	420035
23B-54-J1130	W1111-03A0	4	420035
23B-54-J1180	W1111-03A0	5	420035
23B-54-J1190	W1111-03A0	6	420035
267-35-11470	A1730-A3F3	9	010100
287-15-15360	F2300-12A0	33	150025
287-15-15360	F2320-01A2	4	150035
287-15-15710	K2520-02A0	27	240330
287-35-11470	A2010-B3F2	16	010130
299-10-14160	R0300-01A0		300040
362-15-19220	F2300-14A0	12	150027
362-43-34150	F2820-01A4	1	150140
363-15-22940	F2310-04A0	3	150032
363-43-27161	K2520-01A0	11	240310
41E-15-15230	F2320-01A7	3	150040
41E-15-16251	F2320-01A7	7	150040
421-07-11550	D0200-01A2	14	090020
421-07-11550	D0200-01A2	15	090020
421-15-12150	F2320-01A2	18	150035
421-15-12450	F2320-01A4	23	150037
421-15-19411	F2320-01A4	24	150037
421-54-11381	M2240-01A0	3	270110
423-82-51720	T2140-02A0	2	330052
424-15-12711	F2320-01A1	33	150034
424-15-12711	F2320-01A2	26	150035

PART NO.	FIG.NO.	INDEX	PAGE
424-15-12711	F2320-01A3	30	150036
424-15-12711	F2320-01A4	33	150037
424-15-12720	F2320-01A1	34	150034
424-15-12720	F2320-01A2	27	150035
424-15-12720	F2320-01A3	31	150036
424-15-12720	F2320-01A4	34	150037
424-15-12750	F2320-01A3	25	150036
424-15-12760	F2320-01A3	26	150036
425-15-19250	F2320-01A1	31	150034
425-88-01380	H2210-01A0	55	180219
426-15-15480	F2320-01A7	6	150040
426-15-15490	F2320-01A7	4	150040
426-15-15810	F2320-01A7	10	150040
426-15-15820	F2320-01A7	11	150040
426-15-15820	F2320-01A7	20	150040
426-15-16261	F2320-01A7	8	150040
427-15-15910	R0110-01A0	4	300010
427-15-15910	R0200-01A0	7	300030
430-07-23560	Y1661-01A0	24	450006
560-43-12470	A6010-A3J4	5	010480
562-15-19220	F2320-01A2	24	150035
566-35-42430	H0120-03A0	6	180060
566-35-42430	H0120-03A1	6	180070
566-95-91410	C0100-02A0	3	060020
568-15-11380	F2320-01A2	2	150035
568-15-11610	B0600-01A1	12	030060
568-15-12850	F2320-01A3	27	150036
568-33-11410	F2320-01A10	13	150043
569-06-61960	W1111-01A0	11	420010
569-15-41310	F2320-01A2	3	150035
581-43-11870	K2110-11A0	15	240160
581-60-12610	K2110-07A0	20	240110
581-95-19870	K2110-17A0	25	240200
581-95-19870	K2110-17A0	5	240200
600-181-1480	A1410-A3A2	13	010050
600-181-1590	A1410-A3A2	11	010050
600-181-1990	A1410-A3A2	6	010050
600-181-4212	A1410-A3A2	2	010050
600-181-4300	A1410-A3A2		010050
600-181-4311	A1410-A3A2	5	010050
600-181-4591	A1410-A3A2	7	010050
600-181-7511	A1410-A3A2	4	010050
600-181-9671	A1410-A3A2	3	010050
600-211-1130	A3110-A3D9	9	010290
600-211-1140	A3110-A3D9	10	010290
600-211-1150	A3110-A3D9	6	010290
600-211-1231	A3110-A3D9	8	010290
600-311-7520	A4110-A3G6	2	010360
600-311-8321	A4110-A3G6	4	010360
600-311-8321	A9020-A3G5	4	010545

PART NO.	FIG.NO.	INDEX	PAGE
600-311-9490	A4130-A3A1	11	010370
600-311-9732	A4130-A3A1		010370
600-311-9760	A4130-A3A1	6	010370
600-311-9912	A4130-A3A1	1	010370
600-311-9920	A4130-A3A1	2	010370
600-311-9931	A4130-A3A1	3	010370
600-311-9941	A4130-A3A1	4	010370
600-311-9950	A4130-A3A1	5	010370
600-311-9961	A4130-A3A1	7	010370
600-311-9971	A4130-A3A1	10	010370
600-411-1151	A5210-A3C8	2	010470
600-421-6630	A1730-A3F3	4	010100
600-633-7850	A5030-A3E3	1	010420
600-813-6612	A6210-A3D8	1	010490
600-813-6612	A6210-B3A1		010500
600-815-2170	A1370-A3A1	1	010040
600-815-3811	A1310-A3A2	12	010030
600-825-3151	A6010-A3J4	1	010480
6110-23-6490	A1610-A3K9	3	010090
6110-53-5910	A2010-A3F2	28	010120
6110-71-5810	A4010-A3J6	3	010330
6110-73-3220	A4080-A3A1	8	010350
6110-73-3511	A4080-A3A1	16	010350
6110-73-3520	A4080-A3A1	17	010350
6110-73-6231	A4110-A3G6		010360
6110-73-6231	A4130-A3A1	9	010370
6114-11-5590	A1510-A3D7	10	010060
6114-11-8910	A2210-A3D4	10	010190
6114-21-5190	A2060-A3D9	21	010160
6124-61-2181	A3110-B3D9	16	010300
6125-81-7032	A1410-A3A2		010050
6127-11-4421	A2060-A3D9	19	010160
6127-21-1260	A2050-A3A4	10	010150
6127-61-8330	A5210-A3C8	10	010470
6127-71-5710	A1530-A3E7	4	010070
6127-71-5710	A4030-A3C2	20	010340
6127-81-4823	A1410-A3A2	14	010050
6127-81-7190	A1410-A3A2	12	010050
6128-21-6780	A6010-A3J4	2	010480
6128-71-5911	A5210-A3C8	11	010470
6130-32-1361	A2370-A3A1	6	010250
6130-32-9170	A5060-C3D9	22	010460
6130-71-5680	A5210-A3C8	15	010470
6130-82-5270	A4080-A3A1	22	010350
6131-11-5170	A1530-A3E7	2	010070
6131-12-5920	A5060-B3D9	6	010450
6134-71-5711	A4030-A3C2	15	010340
6134-71-5721	A4030-A3C2	14	010340
6136-11-1130	A1010-A3B9	2	010010
6136-11-5120	A1310-A3A2	8	010030

PART NO.	FIG.NO.	INDEX	PAGE
6136-11-5120	A1510-A3D7	6	010060
6136-11-5120	A2060-A3D9	14	010160
6136-11-5120	A4110-A3G6	15	010360
6136-21-7120	A2060-A3D9	7	010160
6136-21-7180	A2060-A3D9		010160
6136-21-7190	A2060-A3D9	8	010160
6136-21-7770	A3110-B3D9	22	010300
6136-42-4520	A1010-A3B9	15	010010
6136-52-1620	A3010-A3A2	15	010280
6136-52-1640	A3010-A3A2	11	010280
6136-52-1650	A3010-A3A2	12	010280
6136-71-5350	A4230-A3F1	2	010390
6136-81-5291	A4080-A3A1	21	010350
6137-11-5291	A1610-A3K9	11	010090
6138-71-3230	A4080-A3A1	6	010350
6140-61-6512	A3330-A3A1	1	010320
6144-21-5650	A2110-B3G6	5	010180
6150-11-1140	A1010-A3B9	8	010010
6150-11-1320	A1010-A3B9	3	010010
6150-11-1331	A1010-A3B9	4	010010
6150-11-1610	A1010-A3B9	26	010010
6150-11-1920	A1010-A3B9	22	010010
6150-11-1930	A1010-A3B9	23	010010
6150-11-1950	A1010-A3B9	24	010010
6150-11-4821	A1310-A3A2	13	010030
6150-11-4910	A1310-A3A2		010030
6150-11-5240	A1610-A3K9	22	010090
6150-11-5240	B0000-02A0	1	030010
6150-11-5751	A1610-A3K9	2	010090
6150-11-5810	A1510-A3D7	5	010060
6150-11-7110	A2410-A3A5	1	010260
6150-11-7812	A2410-A3A5	2	010260
6150-11-8111	A1110-A3A1	1	010020
6150-11-8810	A1110-A3A1	2	010020
6150-11-8820	A1110-A3A1	3	010020
6150-12-1110	A1010-A3B9	1	010010
6150-12-1370	A1010-A3B9	5	010010
6150-12-1960	A1010-A3B9	25	010010
6150-12-6460	A5010-B3F1	1	010410
6150-13-4810	A1310-A3A2	3	010030
6150-16-1320	A1010-A3B9		010010
6150-16-1331	A1010-A3B9		010010
6150-17-1320	A1010-A3B9		010010
6150-17-1331	A1010-A3B9		010010
6150-18-1320	A1010-A3B9		010010
6150-18-1331	A1010-A3B9		010010
6150-19-1320	A1010-A3B9		010010
6150-19-1331	A1010-A3B9		010010
6150-21-1170	A2010-A3F2	23	010120
6150-21-1180	A2010-B3F2	5	010130

PART NO.	FIG.NO.	INDEX	PAGE
6150-21-1190	A2010-B3F2	6	010130
6150-21-1490	A2010-A3F2	2	010120
6150-21-1710	A2010-A3F2	7	010120
6150-21-2230	A2010-A3F2	37	010120
6150-21-2240	A2010-A3F2	38	010120
6150-21-2250	A2010-A3F2	39	010120
6150-21-2411	A2050-A3A4	11	010150
6150-21-2421	A2050-A3A4	12	010150
6150-21-2431	A2050-A3A4	13	010150
6150-21-2510	A2050-A3A4	3	010150
6150-21-2520	A2050-A3A4	4	010150
6150-21-3230	A2040-A3E7	2	010140
6150-21-3980	A2210-A3D4	7	010190
6150-21-4770	A2010-A3F2	25	010120
6150-21-5530	A2110-A3G6	1	010170
6150-21-5650	A2110-B3G6	1	010180
6150-21-5813	A2110-A3G6	2	010170
6150-21-5910	A2010-B3F2	1	010130
6150-21-5920	A2110-B3G6	3	010180
6150-21-5930	A2110-B3G6	4	010180
6150-21-6120	A4030-A3C2	1	010340
6150-21-6391	A2060-A3D9	6	010160
6150-21-6450	A2060-A3D9	4	010160
6150-21-6510	A2060-A3D9		010160
6150-21-6530	A2060-A3D9	10	010160
6150-21-6540	A2060-A3D9	12	010160
6150-21-6570	A2060-A3D9	15	010160
6150-21-6710	A2060-A3D9	20	010160
6150-21-6720	A2060-A3D9		010160
6150-21-7120	A2060-A3D9	9	010160
6150-21-8010	A2310-A3A6		010220
6150-21-8050	A2310-A3A6	6	010220
6150-21-8130	A2310-A3A6	4	010220
6150-21-8140	A2310-A3A6	5	010220
6150-21-8210	A2310-A3A6		010220
6150-22-3141	A2040-A3E7	1	010140
6150-22-5660	A2110-B3G6	2	010180
6150-22-6110	A2010-B3F2	7	010130
6150-22-6120	A2010-B3F2	10	010130
6150-22-6410	A1730-A3F3	1	010100
6150-22-6420	A2060-A3D9		010160
6150-22-6430	A2060-A3D9	1	010160
6150-22-6490	A1730-A3F3	2	010100
6150-22-6500	A2060-A3D9	2	010160
6150-22-6600	A2060-A3D9	3	010160
6150-23-4161	A2210-A3D4	1	010190
6150-23-5620	A2110-A3G6	6	010170
6150-23-5620	F2300-05A0	6	150018
6150-26-8010	A2310-A3A6	4	010220
6150-26-8050	A2310-A3A6	6	010220

PART NO.	FIG.NO.	INDEX	PAGE
6150-26-8130	A2310-A3A6		010220
6150-26-8140	A2310-A3A6	5	010220
6150-26-8210	A2310-A3A6		010220
6150-27-8010	A2310-A3A6	4	010220
6150-27-8050	A2310-A3A6	6	010220
6150-27-8130	A2310-A3A6		010220
6150-27-8140	A2310-A3A6	5	010220
6150-27-8210	A2310-A3A6		010220
6150-28-8010	A2310-A3A6	4	010220
6150-28-8050	A2310-A3A6	6	010220
6150-28-8130	A2310-A3A6		010220
6150-28-8140	A2310-A3A6	5	010220
6150-28-8210	A2310-A3A6		010220
6150-29-1210	A2010-A3F2	3	010120
6150-29-1250	A2010-A3F2	4	010120
6150-29-8010	A2310-A3A6	4	010220
6150-29-8050	A2310-A3A6	6	010220
6150-29-8130	A2310-A3A6		010220
6150-29-8210	A2310-A3A6		010220
6150-31-1130	A2310-A3A6	3	010220
6150-31-1351	A2230-A3A1	2	010200
6150-31-1550	A2370-A3A1	1	010250
6150-31-1810	A2370-A3A1	5	010250
6150-31-3040	A2350-A3B6		010240
6150-31-3120	A2350-A3B6	8	010240
6150-31-3130	A2350-A3B6	9	010240
6150-31-3310	A2350-A3B6	10	010240
6150-31-3430	A2350-A3B6	12	010240
6150-31-3440	A2350-A3B6	13	010240
6150-31-6100	A2050-A3A4		010150
6150-31-6110	A2050-A3A4	1	010150
6150-31-6120	A2050-A3A4	2	010150
6150-31-6201	A2050-A3A4		010150
6150-31-6211	A2050-A3A4	7	010150
6150-31-6220	A2050-A3A4	8	010150
6150-32-2030	A2350-A3B6		010240
6150-32-2210	A2350-A3B6	4	010240
6150-32-2220	A2350-A3B6	5	010240
6150-32-2230	A2350-A3B6	6	010240
6150-35-1120	A2310-A3A6	2	010220
6150-36-3040	A2350-A3B6		010240
6150-36-3430	A2350-A3B6	12	010240
6150-36-3440	A2350-A3B6	13	010240
6150-37-3040	A2350-A3B6		010240
6150-37-3430	A2350-A3B6	12	010240
6150-37-3440	A2350-A3B6	13	010240
6150-38-3040	A2350-A3B6		010240
6150-38-3430	A2350-A3B6	12	010240
6150-38-3440	A2350-A3B6	13	010240
6150-39-3040	A2350-A3B6		010240

PART NO.	FIG.NO.	INDEX	PAGE
6150-39-3430	A2350-A3B6	12	010240
6150-39-3440	A2350-A3B6	13	010240
6150-41-1012	A2410-B3A5		010270
6150-41-1120	A2410-B3A5	3	010270
6150-41-1130	A2410-B3A5	2	010270
6150-41-2011	A2410-B3A5		010270
6150-41-2312	A2410-B3A5	6	010270
6150-41-2331	A2410-B3A5	7	010270
6150-41-2341	A2410-B3A5	8	010270
6150-41-2352	A2410-B3A5	9	010270
6150-41-2401	A2410-B3A5		010270
6150-41-2430	A2010-A3F2	24	010120
6150-41-2430	A2010-A3F2	26	010120
6150-41-2450	A2410-B3A5	13	010270
6150-41-2711	A2410-B3A5	10	010270
6150-41-3111	A2410-B3A5	14	010270
6150-41-4430	A1010-A3B9	14	010010
6150-41-4450	A1010-A3B9	16	010010
6150-41-4510	A1010-A3B9	13	010010
6150-41-4570	A1010-A3B9	17	010010
6150-41-5320	A2410-A3A5	16	010260
6150-41-5410	A2410-A3A5	5	010260
6150-41-5420	A2410-A3A5	11	010260
6150-41-5420	A2410-A3A5	6	010260
6150-41-5450	A2410-A3A5		010260
6150-41-5510	A2410-A3A5	9	010260
6150-41-5540	A2410-A3A5	12	010260
6150-41-5540	A2410-A3A5	7	010260
6150-41-5550	A2410-A3A5		010260
6150-41-5621	A1010-A3B9	19	010010
6150-41-5630	A1010-A3B9	20	010010
6150-42-4110	A1010-A3B9	11	010010
6150-42-4210	A1010-A3B9	12	010010
6150-42-5300	A2410-A3A5		010260
6150-42-5310	A2410-A3A5	14	010260
6150-42-5600	A1010-A3B9		010010
6150-42-5610	A1010-A3B9	18	010010
6150-51-1660	A3010-A3A2	13	010280
6150-51-1710	A3010-A3A2	17	010280
6150-51-1720	A3010-A3A2	18	010280
6150-51-4360	A3110-A3D9	4	010290
6150-51-4920	A3110-A3D9	2	010290
6150-51-5622	A3110-B3D9	3	010300
6150-51-5641	A3110-B3D9	5	010300
6150-51-6330	A2110-A3G6	8	010170
6150-51-6340	A2110-A3G6	11	010170
6150-52-5850	A3110-B3D9	14	010300
6150-52-5860	A3110-B3D9	15	010300
6150-61-1350	A5010-A3F1	5	010400
6150-61-1410	A5010-A3F1	11	010400

PART NO.	FIG.NO.	INDEX	PAGE
6150-61-1510	A5010-A3F1	2	010400
6150-61-1821	A5010-A3F1	21	010400
6150-61-1821	A5010-A3F1	24	010400
6150-61-2124	A3310-A3B3	2	010310
6150-61-2141	A3310-A3B3	11	010310
6150-61-2151	A3310-A3B3	12	010310
6150-61-2510	A3310-A3B3	3	010310
6150-61-2520	A3310-A3B3	4	010310
6150-61-2530	A3310-A3B3	6	010310
6150-61-2540	A3310-A3B3	10	010310
6150-61-2550	A3310-A3B3	15	010310
6150-61-2580	A3310-A3B3	5	010310
6150-61-2815	A3310-A3B3	16	010310
6150-61-3510	A5060-B3D9	2	010450
6150-61-3710	A5060-C3D9	1	010460
6150-61-3820	A5060-B3D9	4	010450
6150-61-6780	A5010-A3F1	27	010400
6150-61-6911	A5010-A3F1	28	010400
6150-61-8172	A5210-A3C8		010470
6150-61-8211	A5210-A3C8	1	010470
6150-61-8411	A5210-A3C8	9	010470
6150-62-3720	A5060-C3D9	19	010460
6150-62-3740	A5060-C3D9	24	010460
6150-62-3750	A5060-C3D9	2	010460
6150-62-3760	A5060-C3D9	7	010460
6150-62-3770	A5060-B3D9	10	010450
6150-62-3780	A5060-B3D9	12	010450
6150-62-3810	A5060-B3D9	1	010450
6150-62-3830	A5060-C3D9	27	010460
6150-62-3860	A5060-C3D9	8	010460
6150-62-3880	A5060-B3D9	14	010450
6150-62-3920	A5060-C3D9	6	010460
6150-62-3930	A5060-C3D9	20	010460
6150-62-6510	A5010-A3F1	19	010400
6150-62-8210	A5210-A3C8	19	010470
6150-62-8220	A5210-A3C8	20	010470
6150-62-8230	A5210-A3C8	14	010470
6150-62-8250	A5210-A3C8	3	010470
6150-71-1610	A4080-A3A1	9	010350
6150-71-1620	A4080-A3A1	10	010350
6150-71-1910	A4080-A3A1	12	010350
6150-71-3100	A4080-A3A1		010350
6150-71-3111	A4080-A3A1	1	010350
6150-71-3120	A4080-A3A1	2	010350
6150-71-3150	A4080-A3A1	7	010350
6150-71-5330	A4210-A3C2	7	010380
6150-71-5710	A4030-A3C2	22	010340
6150-71-7130	A4110-A3G6	26	010360
6150-71-8630	A4110-A3G6	22	010360
6150-71-9270	A4130-A3A1	12	010370

PART NO.	FIG.NO.	INDEX	PAGE
6150-71-9280	A4130-A3A1	16	010370
6150-72-5110	A4030-A3C2	5	010340
6150-72-5120	A4030-A3C2	6	010340
6150-72-5130	A4030-A3C2	7	010340
6150-72-5140	A4030-A3C2	8	010340
6150-72-5150	A4030-A3C2	9	010340
6150-72-5160	A4030-A3C2	10	010340
6150-72-650	A4110-A3G6	5	010360
6150-72-8640	A4230-A3F1	1	010390
6150-81-4330	A1370-A3A1	4	010040
6150-81-5200	A4080-A3A1		010350
6150-81-6470	A6010-A3J4	6	010480
6150-81-6920	A4230-A3F1	6	010390
6150-81-6920	A5060-C3D9	13	010460
6150-81-8420	A2410-B3A5	11	010270
6150-81-9370	A1110-A3A1	4	010020
6150-81-9370	A1610-A3K9	5	010090
6150-81-9370	A2410-A3A5	17	010260
6150-81-9370	A3110-B3D9	12	010300
6150-82-8610	A6010-A3J4	12	010480
6150-82-8650	A6010-A3J4	17	010480
6150-82-8690	A6010-A3J4	10	010480
6151-11-4750	A1410-A3A2	19	010050
6151-11-4850	A1310-A3A2	10	010030
6151-11-4860	A1410-A3A2	21	010050
6151-11-4880	A1410-A3A2	24	010050
6151-11-5110	A1510-A3D7	1	010060
6151-11-5130	A1510-A3D7	3	010060
6151-11-8611	A1610-A3K9	1	010090
6151-11-8640	A1610-A3K9	7	010090
6151-11-8650	A1610-A3K9	10	010090
6151-12-1101	A1010-A3B9		010010
6151-12-1810	A1010-A3B9	21	010010
6151-12-3100	A4210-A3C2		010380
6151-12-3110	A4210-A3C2	1	010380
6151-12-3120	A4210-A3C2	3	010380
6151-12-5120	A1510-A3D7	2	010060
6151-12-8661	A1610-A3K9	13	010090
6151-13-4450	A1410-A3A2	22	010050
6151-21-4160	A2210-A3D4	6	010190
6151-22-1100	A2010-A3F2		010120
6151-22-1710	A2010-B3F2	21	010130
6151-22-2220	A2010-A3F2	36	010120
6151-31-1110	A2310-A3A6	1	010220
6151-31-2420	A2350-A3B6	2	010240
6151-31-3200	A2350-A3B6		010240
6151-31-3210	A2350-A3B6	7	010240
6151-31-4600	A2230-A3A1		010200
6151-31-4610	A2230-A3A1	1	010200
6151-31-8200	A2330-A3B9	1	010230

PART NO.	FIG.NO.	INDEX	PAGE
6151-32-2110	A2350-A3B6	1	010240
6151-35-1010	A2310-A3A6		010220
6151-41-1112	A2410-B3A5	1	010270
6151-51-1005	A3010-A3A2		010280
6151-51-1102	A3010-A3A2		010280
6151-51-1110	A3010-A3A2	3	010280
6151-51-1203	A3010-A3A2		010280
6151-51-1213	A3010-A3A2	7	010280
6151-51-1303	A3010-A3A2		010280
6151-51-1313	A3010-A3A2	1	010280
6151-51-1320	A3010-A3A2	5	010280
6151-51-1401	A3010-A3A2		010280
6151-51-1410	A3010-A3A2	9	010280
6151-51-1421	A3010-A3A2	10	010280
6151-51-1430	A3010-A3A2	4	010280
6151-51-1430	A3010-A3A2	8	010280
6151-51-1511	A3010-A3A2	2	010280
6151-51-1610	A3010-A3A2	6	010280
6151-51-1710	A3010-A3A2	16	010280
6151-51-5320	A3110-A3D9	3	010290
6151-51-5340	A3110-A3D9	11	010290
6151-51-5680	A3110-B3D9	6	010300
6151-51-5690	A3110-B3D9	4	010300
6151-51-8130	A2010-B3F2	4	010130
6151-51-8670	A1530-A3E7	3	010070
6151-52-5600	A3110-B3D9		010300
6151-52-5610	A3110-B3D9	1	010300
6151-61-1151	A5010-A3F1	12	010400
6151-61-1162	A5010-A3F1	13	010400
6151-61-1210	A5010-A3F1	10	010400
6151-61-1360	A5010-A3F1	7	010400
6151-61-2111	A3310-A3B3	1	010310
6151-61-3120	A5060-A3D9	2	010440
6151-61-3152	A5060-A3D9	1	010440
6151-61-3170	A5060-A3D9	3	010440
6151-61-3201	A5060-A3D9		010440
6151-61-3321	A5050-A3H8	1	010430
6151-61-3720	A5030-A3E3	3	010420
6151-61-3781	A1610-A3K9	19	010090
6151-61-6311	A5010-A3F1	23	010400
6151-62-1101	A5010-A3F1		010400
6151-62-1310	A5010-A3F1	9	010400
6151-62-2130	A3310-A3B3	7	010310
6151-62-2180	A3310-A3B3	13	010310
6151-71-5660	A4030-A3C2	19	010340
6151-72-1180	A4010-A3J6		010330
6151-72-1181	A4010-A3J6	1	010330
6151-73-5510	A4030-A3C2	11	010340
6151-73-5520	A4030-A3C2	12	010340
6151-81-4410	A1370-A3A1	7	010040

PART NO.	FIG.NO.	INDEX	PAGE
6151-82-8500	A1530-A3E7	1	010070
6151-82-8500	A1530-B3E2		010080
6152-31-6310	A2050-A3A4	6	010150
6152-51-5520	A5060-C3D9	15	010460
6152-71-3230	A4080-A3A1	23	010350
615T-29-8140	A2310-A3A6	5	010220
6162-13-1150	A1010-A3B9	7	010010
6162-13-5960	A5210-A3C8	16	010470
6162-13-6440	A1730-A3F3	5	010100
6162-23-5770	K2520-02A0	18	240330
6162-43-5340	A2410-A3A5	10	010260
6162-73-1920	A4080-A3A1	15	010350
6162-73-1931	A4080-A3A1	14	010350
6162-73-1960	A4080-A3A1	13	010350
6162-73-1970	A4080-A3A1	11	010350
6162-73-6170	A1310-A3A2	9	010030
6162-73-6170	A4110-A3G6	14	010360
6206-21-6870	A2010-B3F2	19	010130
6206-73-6220	A4110-A3G6	9	010360
6207-11-4370	A1310-A3A2	17	010030
6207-65-8410	A1610-A3K9	14	010090
6210-21-1960	A2010-B3F2	13	010130
6210-21-1971	A2010-B3F2	14	010130
6210-21-6471	A2060-A3D9	5	010160
6210-61-6260	A1730-A3F3	6	010100
6210-61-6441	A1730-A3F3	7	010100
6211-61-1533	A5010-A3F1	8	010400
6212-51-5301	A3110-A3D9		010290
6212-51-5311	A3110-A3D9	1	010290
6212-65-2610	A3310-A3B3	9	010310
6215-71-9790	A4030-A3C2	18	010340
6215-81-6150	A6010-A3J4	16	010480
6221-51-8610	A8111-A3A8	1	010530
6221-71-6110	A4110-A3G6	1	010360
6221-71-6302	A4110-A3G6		010360
6221-81-6810	A6210-A3D8	2	010490
6306-21-4710	A2010-B3F2	18	010130
6631-11-5630	A1410-A3A2	27	010050
6631-11-5630	A1610-A3K9	9	010090
6643-11-4641	A1410-A3A2	18	010050
6691-13-4610	A1410-A3A2	17	010050
6691-21-6360	A5210-A3C8	23	010470
6691-21-6550	A1410-A3A2		010050
6691-21-6560	A1410-A3A2		010050
6710-41-5340	A2410-A3A5	15	010260
6710-82-7121	A1410-A3A2	10	010050
6710-82-7130	A1410-A3A2	9	010050
6711-81-7100	A1410-A3A2		010050
6711-81-7110	A1410-A3A2	1	010050
6930-21-4120	M2140-03A0	22	270050

PART NO.	FIG.NO.	INDEX	PAGE
700-21-11210	Y1661-01A0	10	450006
700-22-11360	Y1661-01A0	39	450006
700-80-51240	Y1661-03A0	15	450009
700-80-51390	F2320-01A2	5	150035
700-80-52150	H1410-02A0	9	180200
700-80-61190	Y1661-03A0	14	450009
700-82-11380	Y1661-01A0	6	450006
700-84-11660	K2400-01A0	19	240270
700-84-11730	Y1661-01A0	9	450006
700-90-51150	Y1661-03A0	7	450009
700-90-51160	Y1661-03A0	13	450009
700-90-51190	Y1661-03A0	20	450009
700-90-51250	Y1661-03A0	12	450009
700-90-51270	Y1661-03A0	10	450009
700-90-51281	Y1661-03A0	11	450009
700-90-51290	Y1661-03A0	18	450009
700-90-51311	Y1661-03A0	16	450009
700-90-51320	Y1661-03A0	6	450009
700-90-61170	Y1661-03A0	25	450009
700-90-61211	Y1661-03A0	24	450009
700-90-74001	Y1661-01A0	43	450007
700-90-74001	Y1661-03A0		450009
700-91-11230	Y1661-01A0	3	450006
700-91-11260	Y1661-01A0	15	450006
700-91-11290	Y1661-01A0	21	450006
700-91-11380	Y1661-01A0	13	450006
700-91-11390	Y1661-01A0	14	450006
700-91-34000	H0120-01A2	1	180050
700-91-34000	Y1661-01A0		450006
700-91-34000	Y1661-02A0		450008
700-91-34000	Y1661-03A0		450009
700-91-34130	Y1661-01A0	4	450006
700-91-34140	Y1661-01A0	8	450006
700-92-11430	Y1661-01A0	11	450006
700-93-11310	Y1661-01A0	30	450006
700-93-11320	Y1661-01A0	31	450006
700-93-11320	Y1661-03A0	2	450009
700-93-11330	Y1661-01A0	32	450006
700-93-11390	Y1661-01A0	18	450006
700-93-11461	Y1661-01A0	27	450006
700-93-11471	Y1661-01A0	28	450006
700-93-11481	Y1661-01A0	26	450006
700-93-56000	Y1661-01A0	42	450007
700-93-56000	Y1661-03A0		450009
700-94-11260	Y1661-01A0	36	450006
701-33-31330	T2510-11A0		330210
701-51-32170	Y1661-02A0	10	450008
702-13-21601	Y1661-01A0	20	450006
702-13-21601	Y1661-02A0		450008
702-13-21610	Y1661-02A0	1	450008

PART NO.	FIG.NO.	INDEX	PAGE
702-13-21620	Y1661-02A0	8	450008
702-13-21630	Y1661-02A0	14	450008
702-13-21642	Y1661-02A0	3	450008
702-13-21650	Y1661-02A0	4	450008
702-16-01230	K2520-02A2		240340
702-16-01341	K2110-12A0	1	240170
702-16-05060	K2110-21A0	1	240220
702-16-51140	K2520-02A2	3	240340
702-16-51270	K2520-02A2	8	240340
702-16-53120	K2520-02A2	2	240340
702-16-53170	K2520-02A2	7	240340
702-16-53240	K2110-14A0	13	240180
702-16-54540	K2520-02A2	1	240340
702-16-54550	K2520-02A2	4	240340
702-16-54560	K2520-02A2	6	240340
702-16-54571	K2520-02A2	5	240340
702-16-54580	K2520-02A2	9	240340
702-16-54590	K2520-02A2	10	240340
702-16-54610	K2520-02A2	11	240340
702-16-54620	K2520-02A2	12	240340
702-16-54630	K2520-02A2	13	240340
702-16-54641	K2520-02A2	14	240340
702-16-54650	K2520-02A2	17	240340
702-16-54660	K2520-02A2	16	240340
702-16-54670	K2520-02A2		240340
702-21-31360	T2510-11A0	27A	330210
704-28-02751	H1410-02A0	3	180200
705-11-33210	F2300-02A0		150014
705-11-33530	F2300-02A1		150015
705-11-38010	H0210-01A0	1	180090
705-11-38010	Y1610-01A1		450004
705-11-40010	H0210-01A0		180090
705-11-40010	Y1610-01A1		450004
705-17-02381	F2300-02A0	9	150014
705-17-02381	F2300-02A1	9	150015
705-17-02440	F2300-02A0	7	150014
705-17-02440	F2300-02A1	7	150015
705-17-02472	F2300-02A0	8	150014
705-17-02472	F2300-02A1	8	150015
705-17-02480	F2300-02A1	13	150015
705-17-02612	F2300-02A0	6	150014
705-17-02612	F2300-02A1	6	150015
705-17-02810	F2300-02A0	14	150014
705-17-02870	F2300-02A0	13	150014
705-17-02881	F2300-02A1	16	150015
705-17-03380	Y1610-01A1	9	450004
705-17-03440	Y1610-01A1	7	450004
705-17-03470	Y1610-01A1	8	450004
705-17-03610	Y1610-01A1	6	450004
705-17-03760	Y1610-01A1	11	450004

PART NO.	FIG.NO.	INDEX	PAGE
705-17-03810	Y1610-01A1	14	450004
705-17-03870	Y1610-01A1	13	450004
705-17-12330	F2300-02A0	16	150014
705-40-33011	T2510-09A0	2	330190
705-40-33411	T2510-09A0	4	330190
705-40-33511	T2510-09A0	5	330190
705-40-80131	T2510-09A0	3	330190
705-40-80720	Y1610-02A1	6	450005
705-40-80760	T2510-09A0	7	330190
705-40-80760	Y1610-02A1	7	450005
705-40-80810	T2510-09A0	8	330190
705-40-80810	Y1610-02A1	8	450005
705-40-80870	T2510-09A0	9	330190
705-40-80870	Y1610-02A1	9	450005
705-40-83720	T2510-09A0	6	330190
705-41-01050	H0210-01A0	5	180090
705-41-01050	Y1610-02A1		450005
705-41-01200	T2510-09A0		330190
705-41-80230	T2510-09A0	1	330190
705-41-80610	T2510-09A0		330190
705-41-80620	T2510-09A0		330190
705-41-80890	Y1610-02A1	11	450005
705-51-20370	F2300-02A0		150014
707-00-95200	T2140-01A1		330050
707-00-95210	T2140-01A1		330050
707-01-0C301	T2150-01A2	1	330060
707-01-0C301	T2150-01A3		330070
707-13-14630	T2150-01A3	1	330070
707-27-14781	T2400-01A1	4	330100
707-27-14880	T2150-01A3	4	330070
707-29-95240	T2140-01A0	2	330040
707-29-95730	T2140-01A0		330040
707-29-95730	T2140-01A1	2	330050
707-35-52780	T2140-01A0	7	330040
707-35-52780	T2140-01A1	7	330050
707-36-14120	T2150-01A3	16	330070
707-36-14120	T2400-01A1	14	330100
707-37-95010	T2140-01A0	15	330040
707-37-95010	T2140-01A1	15	330050
707-39-95120	T2140-01A0	22	330040
707-39-95120	T2140-01A1	22	330050
707-40-95010	T2140-01A0	24	330040
707-40-95010	T2140-01A1	24	330050
707-44-14180	T2150-01A3	17	330070
707-44-14180	T2400-01A1	15	330100
707-44-95180	T2140-01A0	20	330040
707-44-95180	T2140-01A1	20	330050
707-51-65030	T2140-01A0	4	330040
707-51-65211	T2140-01A0		330040
707-51-65211	T2140-01A1	4	330050

PART NO.	FIG.NO.	INDEX	PAGE
707-51-65640	T2140-01A0	4A	330040
707-51-70030	T2150-01A3	7	330070
707-51-70211	T2400-01A1	6	330100
707-51-70640	T2150-01A3	8	330070
707-52-10660	T2140-01A0		330040
707-52-10660	T2140-01A1	3	330050
707-52-10701	T2400-01A1	5	330100
707-52-90401	T2140-01A0	3	330040
707-52-90471	T2150-01A3	6	330070
707-56-65540	T2140-01A0	8	330040
707-56-70540	T2150-01A3	11	330070
707-56-70740	T2400-01A1	9	330100
707-66-70020	T2140-01A0	11	330040
707-66-70020	T2140-01A1	11	330050
707-67-33030	T2140-01A0	25	330040
707-67-52020	T2150-01A3	19	330070
707-68-10330	T2140-01A0		330040
707-68-10330	T2140-01A1	25	330050
707-69-95010	T2140-01A0	21	330040
707-69-95010	T2140-01A1	21	330050
707-86-67140	T2140-01A0	29	330041
707-86-67150	T2140-01A0		330041
707-88-03150	T2140-01A0	40	330041
707-88-11290	T2140-01A0	14	330040
707-88-11290	T2140-01A1	14	330050
707-88-11300	T2140-01A0	14A	330040
707-88-11300	T2140-01A1	14A	330050
707-98-28600	T2140-01A0		330041
707-98-52130	T2400-01A1		330100
707-99-25890	T2140-01A0		330041
707-99-52160	T2150-01A3		330070
708-23-00910	H1410-02A0	2	180200
708-27-12581	F2300-01A0	2	150012
708-27-12581	F2300-01A1	2	150013
709-32-11780	T2510-11A0	15	330210
709-32-11780	T2510-11A0	18	330210
709-62-31180	T2510-11A0	28	330210
711-47-11770	F2310-02A0	3	150030
711-49-14230	F2310-03A0	5	150031
723-62-12100	H0120-01A0	1	180030
723-62-12100	H0120-05A0	1	180080
723-63-12101	H0120-01A1	1	180040
782-62-43250	W1111-01A0	10	420010
7826-21-1910	W1111-01A0	14	420010
7826-21-1960	W1111-01A0	15	420010
7826-24-3002	W1111-01A0		420010
7826-24-3003	W1111-01A0	1	420010
8A13-10-1320	W1111-01A0	2	420010
8A13-10-2100	W1111-01A0	3	420010
8A13-10-2200	W1111-01A0	4	420010

PART NO.	FIG.NO.	INDEX	PAGE
GA400450-0001	A1530-B3E2	6	010080
GA400975-0203	A1530-B3E2	3	010080
GA410401-0039	A1530-B3E2	4	010080
GA430295-0001	A1530-B3E2	5	010080
GA443136-0001	A1530-B3E2	2	010080
GA443219-0186	A1530-B3E2	1	010080
GA447450-5022	A1530-B3E2	7	010080
KD0-23100-0251	A6210-B3A1	1	010500
VP-00-02701	K0700-01A0	1	240045

PART NO.	FIG.NO.	INDEX	PAGE



@ 2013 KOMATSU
All Right Reserved
Printed in Indonesia 02 - 2013