FEVEREIRO 1971

CATERPILLAR

PARTS BOOK

RUTHZIL TRATOR COMERCIAL DE PEÇAS LTDA 11 97083-6812 ROLANDO CITRANGULO

D8H TRACTOR

SERIAL NUMBERS

86A5329-UP

QUICK REFERENCE CHARTS

USE THESE CHARTS TO RECORD FREQUENTLY USED MAINTENANCE INFORMATION

MACHINE SERIAL NO.	
EQUIPMENT NO.	

FREQUENTLY REPLACED ITEMS

PART NO.	PART NAME

FLUIDS & LUBRICANTS

WHERE USED	TYPE	AMOUNT

OTHER MAINTENANCE ITEMS

FORM UEG0325S

D8H TRACTOR
DIRECT DRIVE

SERIAL NUMBERS

36A5329 — UP

PUBLISHED FEBRUARY 1971

INDEX
Diesel Engine

(Page 10)

Name	Page	Name	Page
Accessory Drive	32	Gasket Kits	28
Air Cleaner	18	Gauge — Fuel	50
Air Filter Service Indicator	20	Gauge — Oil	50
Alternator	54	Governor	32
Battery and Wiring	56	Governor Control	31
Battery Box	62	Glow Plug and Wiring	61
Breather	20	Heat Indicator	50
Camshaft	30	Idler Gear — Water Pump	16
Connecting Rod	29	Manifolds	17
Crankshaft	27	Oil Cooler — Engine	47
Crankshaft Bearings	28	Oil Cooler — Transmission	47
Cylinder Block and Covers	24	Oil Filler	20
Cylinder Head	22	Oil Filter	43
Exhaust Pipe	17	Oil Lines	43
Fan Drive	13	Oil Pump Drive	49
Fan — Suction	12	Piston	29
Flywheel	29	Power Take-Off Drive — Rear	34
Fuel Filter	37	Power Take-Off Housing — Rear	35
Fuel Filter and Lines — Primary	38	Pump — Fuel Priming	39
Fuel Injection System	41	Pump — Fuel Transfer	39
Fuel Lines	36	Pump — Oil	48
Fuel Pump Control	31	Pump — Water	15
Fuel Ratio Control	37	Rack Stop	34

Name	Page
Radiator	10
Radiator Guard	12
Service Meter	30
Specifications	220
Starter — Electric	51
Support — Engine	16
Transfers	218
Turbocharger	21
Valve Mechanism	22
Water Lines	14

Clutch, Transmission and Chassis

(Page 63)

Bevel Gear Case and Covers	95
Brake Hydraulic Mechanism	91
Brakes	88
Drawbar	107
Equalizer Bar and Suspension	98
Fenders	104
Final Drive	92
Flywheel Clutch	68
Flywheel Clutch Control	65
Flywheel Clutch Hydraulic Mechanism Control	64
Front Idler	96
Fuel Tank	102
Gear Shift Control	65
Hood and Dash	103
Hydraulic Control — Steering Clutch	84
Lubrication System — Final Drive	94
Lubrication System — Steering Clutch	74
Lubrication System — Transmission	74
Power Train	63
Seat Cushions and Frame	106
Steering Clutch	87
Tool Box	107
Track	101
Track Carrier Roller	101
Track Roller	100
Track Roller Frame	99
Track Roller Frame Guard	98
Transmission	72

Attachments

(Page 108)

Alternator	135
Brush Guard	157
Cab	176
Canopy	175
C-Frame — Tandem Pusher	156
Counterweight	202
Crankcase Guard	158
Decelerator Control	200
Defroster Fan	192
Drawbar — Swinging	202
Dust Ejector	169
Emergency Starting Receptacle	152
Engine Enclosure	167
Equalizer Bar	203
Ether Starting Aid	195
Fan — Reversible Blade	169
Fan and Guard — Blower	170
Final Drive Steel Case	203
Front Pull Hook	159
Fuel Tank	196
Heater — Cab	187
High Speed Oil Change	199
Instrument Panel Protection	163
Lighting System	144
Muffler	168
Operator Protective Arrangement	171
Protection Covers	160
Push Block	154
Push Plate	153
Radiator Core Protector Grid	166
Radiator Grill Plate	165
Radiator Guard Hinge	164
Screen and Sweep	174
Sender	194
Starting — Gasoline	108
Tools	216
Track	212
Track Roller Frame	207
Track Roller Frame and Support	204
Track Roller Guard	210
Track Sprocket	205
Windshield Wiper	193

INDEX ALPHABÉTIQUE

Moteur Diesel

(Page 10)

Désignation	Page
Alternateur	54
Arbre à cames	30
Batterie et installation électrique	56
Bielles	29
Bloc-cylindres	24
Bougies de départ et installation électrique	61
Butée élastique de course de crémaillère	34
Canalisations de carburant	36
Canalisations de graissage	43
Caractéristiques	221
Coffre à batterie	62
Collecteurs	17
Compteur d'entretien	30
Coussinets de vilebrequin	28
Culasses	22
Démarreur électrique	51
Entraînements secondaires	32
Filtre à air	18
Filtre à air (indicateur de colmatage)	20
Filtre à carburant diesel	37
Filtre à huile de graissage	43
Groupe d'injection de carburant	41
Instructions sur décalcomanies	218
Jeux de joints	28
Limiteur d'injection	37
Manomètre de pression de carburant	50
Manomètre de pression d'huile	50
Pistons	29
Pompe à eau	15
Pompe à eau (engrenage intermédiaire)	16
Pompe à huile de graissage	48
Pompe à huile (entraînement)	49
Pompe d'alimentation de carburant	39
Pompe d'amorçage	39
Préfiltre à carburant et canalisations	38
Prise de force arrière (carter)	35
Prise de force arrière (entraînement)	34
Protège-radiateur	12
Radiateur	10
Réfrigérant d'huile de graissage (boîte de vitesses)	47
Réfrigérant d'huile de graissage (moteur)	47
Régulateur	32
Régulateur (commande)	31
Reniflard	20
Soupapes et train de commande	22
Support moteur	16
Thermomètre (eau)	50
Tubulure de remplissage d'huile	20
Turbocompresseur	21
Tuyau d'échappement	17
Tuyauterie d'eau	14
Ventilateur aspirant	12
Ventilateur (entraînement)	13
Vilebrequin	27
Volant	29

Bâti et organes de transmission

(Page 63)

Désignation	Page
Barre d'attelage	107
Bâti arrière	95
Boîte de vitesses	72
Boîte de vitesses (commande)	65
Boîte de vitesses (graissage)	74
Capot et tablier	103
Chaînes de roulement	101
Châssis porteurs	99
Châssis porteurs (tôlerie de protection)	98
Coffre à outils	107
Embrayage principal	68
Embrayage principal (commande)	65
Embrayage principal (servo)	64
Embrayages de direction	87
Embrayages de direction (servo-hydraulique)	84
Freins	88
Galets inférieurs	100
Galets supérieurs	101

Désignation	Page
Garde-boue	104
Mécanisme de transmission	63
Réducteurs de barbotin	92
Réducteurs de barbotin (graissage)	94
Réservoir à carburant	102
Roues avant	96
Servo des embrayages de direction (canalisations)	74
Servo hydraulique de frein	91
Siège et bâti de siège	106
Traverse de suspension	98

Accessoires
(Page 108)

Alternateur	135
Barbotin	205
Barre d'attelage oscillante	202
Bâti de protection du conducteur	171
Cabine	176
Capot	167
Carter (acier) de réducteur	203
Chaînes de roulement	212
Charnières (protège-radiateur)	164
Châssis en U (pousseur tandem)	156
Châssis porteurs	207
Châssis porteurs et support	204
Contrepoids	202
Couvercles de protection	160
Crochet avant	159
Décélérateur (commande)	200
Dégivreur	192
Dispositif de vidange et remplissage rapide (huile)	199
Éclairage électrique	144
Éjecteur automatique de poussière	169
Émetteur de signalisation lumineuse	194
Essuie-glace	193
Grille AR et barre pare-branches	174
Grille de protection de tableau de bord	163
Grille de radiateur renforcée	165
Grille (protection du faisceau de radiateur)	166
Injection d'éther	195
Moteur de lancement à essence	108
Outillage	216
Plateau de poussée	153
Prise de batteries auxiliaires de démarrage	152
Protège-carter moteur	158
Protège-galets	210
Radiateur de chauffage cabine	187
Réservoir à carburant	196
Silencieux d'échappement	168
Tampon de poussée	154
Toit	175
Tôle pare-broussailles	157
Traverse de suspension	203
Ventilateur à pales réversibles	169
Ventilateur soufflant et grille de protection	170

INDICE
Motor Diesel
(Página 10)

Nombre	Página
Alternador	54
Arbol de Levas	30
Arranque Eléctrico	51
Batería y Alambrado	56
Bielas	29
Bloque del Motor y Tapas	24
Bomba del Aceite	48
Bomba del Agua	15
Bomba de Cebado del Combustible	39
Bomba de Transferencia del Combustible	39
Bujías Incandescentes y Alambrado	61
Cajas con Empaquetaduras	28
Calcomanías	218

Nombre	Página
Cigüeñal	27
Cojinetes de Bancada	28
Control de Relación de Presión	37
Control del Regulador	31
Culata	22
Enfriador del Aceite de la Transmisión	47
Enfriador del Aceite del Motor	47
Engranaje Loco de la Bomba del Agua	16
Especificaciones	222
Filtro del Aceite	43
Filtro de Aire	18
Filtro del Combustible	37
Filtro Primario del Combustible y Tuberías	38
Indicador de Servicio del Filtro de Aire	20
Indicador de Temperatura	50
Mando de Accesorios	32
Mando de la Bomba del Aceite	49
Mando del Ventilador	13
Manómetro del Aceite	50
Manómetro del Combustible	50
Mecanismo de las Válvulas	22
Medidor de Servicio	30
Múltiples	17
Pistón	29
Protección del Radiador	12
Radiador	10
Regulador	32
Respiradero	20
Sistema de Inyección del Combustible	41
Soporte del Motor	16
Toma de Fuerza Delantera	35
Toma de Fuerza Trasera	34
Tope de la Cremallera	34
Tuberías del Aceite	43
Tuberías del Agua	14
Tuberías del Combustible	36
Tubo de Escape	17
Tubo de Llenado del Aceite	20
Ventilador de Succión	12
Volante	29

Embrague, Transmisión y Chasís

(Página 63)

Barra Compensadora y Suspensión	98
Barra de Tiro	107
Bastidor de los Rodillos	99
Caja de Herramientas	107
Caja de la Corona y Tapas	95
Capota y Tablero	103
Carril	101
Cojines del Asiento y Bastidor	106
Control de Cambios	65
Control del Embrague Principal	65
Control del Mecanismo Hidráulico del Embrague Principal	64
Control Hidráulico de los Embragues de Dirección	84
Embrague Principal	68
Embragues de Dirección	87
Frenos	88
Mandos Finales	92
Mecanismo de los Frenos Hidráulicos	91
Protección del Bastidor de los Rodillos	98
Rodillos Inferiores	100
Rodillos Superiores	101
Ruedas Guías	96
Sistema de Lubricación de la Transmisión	74
Sistema de Lubricación de los Embragues de Dirección	74
Sistema de Lubricación de los Mandos Finales	94
Tanque del Combustible	102
Tapabarros	104
Transmisión	72
Tren de Potencia	63

Accesorios

(Página 108)

Alternador	135
Barra de Tiro Giratoria	202
Barra Compensadora	203
Bastidor "C" de Empujador Tándem	156
Bastidor de los Rodillos	207

Nombre	Página
Bastidor de los Rodillos y Soporte	204
Bloque de Empuje	154
Cabina	176
Caja de Mandos Finales	203
Calentador de la Cabina	187
Cambio del Aceite de Alta Velocidad	199
Carril	212
Conjunto de Protección del Operador	171
Contrapeso	202
Control Descelerador	200
Cubierta del Motor	167
Eyector	169
Gancho Delantero	159
Herramientas	216
Inyector de Eter	195
Limpia Parabrisas	193
Motor de Arranque de Gasolina	108
Plancha de Empuje	153
Protección contra Maleza	157
Protección de los Rodillos	210
Protección del Cárter	158
Protección del Radiador Engoznada	164
Protección del Tablero de Instrumentos	163
Receptáculo para Arranque de Emergencia	152
Reja del Radiador	165
Reja Protectora del Radiador	166
Reja y Protección Delatera	174
Rueda Dentada	205
Sistema de Luces	144
Tanque del Combustible	196
Tapas Protectoras	160
Toldo	175
Transmisión	194
Ventilador	168
Ventilador de Paletas Reversibles	169
Ventilador Descongelador	192
Ventilador Insuflador y Protección	170

ÍNDICE

Motor Diesel

(Página 10)

Designação	Página
Arrefecedor do óleo	47
Arrefecedor do óleo da caixa de mudanças	47
Árvore de comando das válvulas	30
Árvore de manivelas (virabrequim)	27
Batente da cremalheira do combustível	34
Bateria e instalação elétrica	56
Biela	29
Bloco do motor e tampas	24
Bocal de enchimento de óleo	20
Bomba d'água	15
Bomba de óleo	48
Bomba de purgação do combustível	39
Bomba de transferência do combustível	39
Cabeçote	22
Caixa da tomada de fôrça traseira	35
Coletores	17
Comando da bomba de óleo	49
Comando da tomada de fôrça traseira	34
Comando de acessórios	32
Comando do ventilador	13
Contrôle do regulador de velocidade (acelerador manual)	31
Decalcomanias	218
Engrenagem intermediária da bomba d'água	16
Especificações	223
Filtro de óleo	43
Filtro primário do combustível e tubulações	38
Filtro principal do combustível	37
Gerador alternador	54
Indicador de limpeza do purificador	20

Designação	Página
Indicador de temperatura (termômetro)	50
Jogos de juntas	28
Limitador do combustível	37
Mancais principais do motor	28
Manômetro do combustível	50
Manômetro do óleo	50
Marcador de horas de serviços	30
Mecanismo das válvulas	22
Motor de arranque elétrico	51
Pistão	29
Protetor do radiador	12
Purificador de ar	18
Radiador	10
Regulador de velocidade	32
Respiro	20
Sistema de injeção do combustível	41
Suporte do motor	16
Tubo de descarga	17
Tubos d'água	14
Tubulações de óleo	43
Tubulações do combustível	36
Turbocompressor	21
Vela de aquecimento e instalação	61
Ventilador de sucção	12
Volante do motor	29

Embreagem, Transmissão e Chassi

(Página 63)

Armação do assento e almofadas	106
Armações dos rolêtes	99
Barra de suspensão e estabilizadora	98
Barra de tração	107
Caixa da coroa e tampas	95
Caixa das ferramentas	107
Caixa de mudanças	72
Capô e painel	103
Comando final	92
Comando hidráulico das embreagens de direção	84
Contrôle da embreagem do motor	65
Contrôle das marchas	65
Embreagem de direção	87
Embreagem do motor	68
Esteira	101
Freios	88
Mecanismo hidráulico de contrôle da embreagem principal	64
Paralamas	104
Protetor das armações dos rolêtes	98
Reforçador hidráulico dos freios	91
Roda-guia das esteiras	96
Rolête inferior	100
Rolête superior	101
Sistema de lubrificação da caixa de mudanças	83
Sistema de lubrificação das embreagens de direção	74
Sistema de lubrificação dos comandos finais	94
Sistema de transmissão	63
Tanque de combustível	102

Acessórios

(Página 108)

Aquecedor da cabine	187
Armação "C" para empuxo em tandem	156
Armação dos rolêtes de esteira	204
Arranjo de troca rápida de óleo	199
Barra de suspensão e estabilizadora	203
Barra de tração oscilável	202
Bloco de empuxo	154
Cabine	176
Caixa de aço dos comandos finais	203
Capô e tampas laterais	167
Chapa de empuxo	153
Conexão de abastecimento rápido de combustível	196
Descongelador do parabrisa	192
Decelerador	200
Dobradiças para o grade do radiador	164

Designação	Página
Ejetor de pó	169
Emissor de sinalização de carga do scraper	194
Esteira	212
Estrutura de proteção contra capotagem	171
Ferramentas	216
Gancho dianteiro	159
Gerador alternador	135
Grade articulada do radiador	165
Grelha de proteção do radiador	166
Guarda-mato	157
Injetor de éter	195
Lastro	202
Limpador do parabrisa	193
Motor de partida a gasolina	108
Protetor do cárter	158
Protetor do painel de instrumentos	163
Protetor dos rolêtes inferiores	210
Roda motriz	205
Silenciador	168
Sistema de iluminação	144
Tampas com trava (radiador, cárter e tanque de combustível	160
Tôldo	175
Tomada para baterias auxiliares	152
Ventilador de pás reversíveis	169
Ventilador de sôpro e protetor	170

INHALTSVERZEICHNIS

Dieselmotor

(Seite 10)

Bezeichnung	Seite
Abziehbilder	218
Anlasser, elektrisch	51
Auspuffrohr	17
Batterie und Verdrahtung	56
Batteriekasten	62
Dichtungssätze	28
Drehstromlichtmaschine	54
Einspritzanlage	41
Entlüfter	20
Gasgestänge	31
Getriebeölkühler	47
Glühkerzen und Verdrahtung	61
Kolben	29
Kraftstoffentlüftungspumpe	39
Kraftstoffilter	37
Kraftstofförderpumpe	39
Kraftstoffgemischregler	37
Kraftstoffleitungen	36
Kraftstoffmesser	50
Kraftstoffpumpensteuerung	31
Kraftstoffvorfilter und -leitungen	38
Krümmer	17
Kühlernetz	10
Kühlerverkleidung	12
Kurbellager	28
Kurbelwelle	27
Lüfterantrieb	13
Luftfilter-Wartungsanzeige	20
Luftreiniger	18
Motoraufhängung	16
Motorblock und Deckel	24
Motorölkühler	47
Nockenwelle	30
Öleinfüllstutzen	20
Ölleitungen	43
Ölmeßstab	50
Pleuel	29
Regler	32
Sauglüfter	12
Schmierfilter	43
Schmierpumpe	48
Schmierpumpenantrieb	49
Schwungscheibe	29
Steuerantrieb	32
Technische Daten	224
Turbolader	21
Ventilsteuerung	22
Wärmeanzeige	50
Wartungsmesser	30
Wasserleitungen	14
Wasserpumpe	15
Zahnstangenanschlag	34

Bezeichnung	Seite
Zapfwellenantrieb, hinten	34
Zapfwellengehäuse, hinten	35
Zwischenrad der Wasserpumpe	16
Zylinderkopf	22

Kupplung, Getriebe und Laufwerk

(Seite 63)

Bremsen	88
Bremshydraulik	91
Getriebe	72
Getriebeschmiersystem	74
Hauptkupplung	68
Hauptkupplungsgestänge	65
Hauptkupplungshydraulik	64
Kraftstofftank	102
Kraftübertragung	63
Laufkette	101
Laufrolle	100
Laufrollenschutz	98
Laufwerksrahmen	99
Leitrad	96
Lenkkupplung	87
Lenkkupplungshydraulik	84
Motorhaube und Armaturenbrett	103
Quertraverse und Auflager	98
Schaltgestänge	65
Schmiersystem der Lenkkupplung	74
Schmiersystem des Seitenantriebs	94
Schutzbleche	104
Seitenantrieb	92
Sitzkissen und -rahmen	106
Stützrolle	101
Tellerradgehäuse und Deckel	95
Werkzeugkasten	107
Zughaken	107

Zubehör

(Seite 108)

Antriebsrad	205
Ätherstarthilfe	195
Beleuchtungsanlage	144
Benzinstartermotor	108
Drehstromlichtmaschine	135
Drucklüfter und Verkleidung	170
Entfrostergebläse	192
Fahrerhaus	176
Fahrerhausheizung	187
Frontzughaken	159
Gasreduzierpedal	200
Gegengewicht	202
Instrumentenabdecke	163
Kraftstofftank	196
Kühlergrill	165
Kühlerschutz	166
Kühlerschutz mit Scharnieren	164
Laufkette	212
Laufrollenverkleidung	210
Laufwerksrahmen	207
Laufwerksrahmen und Aufhängung	204
Motorseitenverkleidung	157
Motorverkleidung	167
Notstartanschluß	152
Ölschnellwechselanschluß	199
Panzerwanne	158
Quertraverse	203
Schalldämpfer	168
Scheibenwischer	193
Schubblock	154
Schubplatte	153
Schutzdach	171
Schutzgitter und -bügel	174
Schutzverkleidung	160
Sender der Signalanlage	194
Seitenantriebsgehäuse	203
Staubauswerfer	169
U-Heckschubrahmen	156
Umkehrlüfter	169
Werkzeuge	216
Wetterdach	175
Zugbalken, unstarr	202

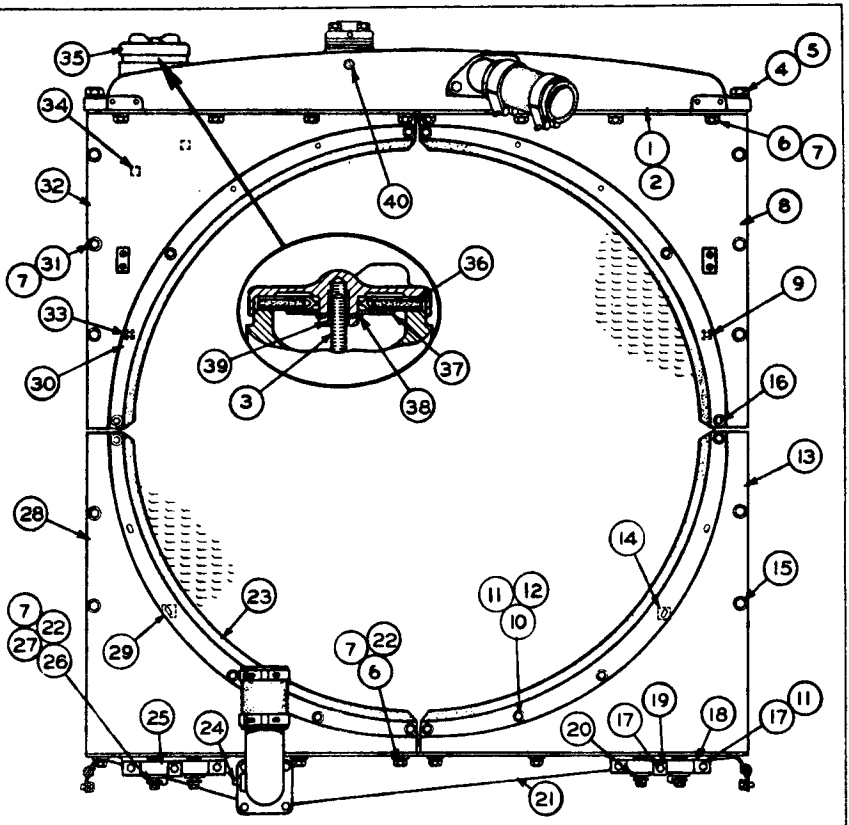

REF. NO	PART NUMBER	DESCRIPTION	QTY
1	2S8723	TANK ASSEM.	1
2	5M6214	PLUG	1
3	1S286	STUD	1
		(Parts of 2S8723 Tank Assem.)	
4	2A1538	BOLT	2
5	3B4512	LOCKWASHER	2
6	S 1621	BOLT	14
7	3B4508	LOCKWASHER	20
8	7S5069	SHIELD ASSEM. ---(R. H. -Upper)---	1
9	9F2978	NUT----------(Weld)----------	4
		(Part of 7S5069 Shield Assem.)	
10	S 1594	BOLT	10
11	3B4506	LOCKWASHER	14
12	4B4278	WASHER	10
13	7S5067	SHIELD ASSEM. ---(R. H. -Lower)---	1
14	9F2978	NUT----------(Weld)----------	4
		(Part of 7S5067 Shield Assem.)	
15	1P3380	SCREW	10
16	9S2087	SCREW	4
17	S 1571	BOLT	6
18	5S575	BRACKET	2
19	9S1333	LOCK	2
20	3H8726	BLOCK	4

REF. NO.	PART NUMBER	DESCRIPTION	QTY.
21	2S8732	TANK	1
22	4B4280	WASHER	12
23	2S6935	BAFFLE	4
24	2B7457	PLUG	1
25	7H2988	CAP	2
26	L 1329	BOLT	4
27	1D4719	NUT	4
28	7S5068	SHIELD ASSEM. ---(L. H. -Lower)---	1
29	9F2978	NUT----------(Weld)----------	4
		(Part of 7S5068 Shield Assem.)	
30	2S6934	STRIP	4
31	1A5822	BOLT	2
32	7S5070	SHIELD ASSEM. ---(L. H. -Upper)---	1
33	9F2978	NUT----------(Weld)----------	4
34	5M3012	LUG	2
		(Parts of 7S5070 Shield Assem.)	
35	7S7809	CAP ASSEM.	1
36	2S5200	GASKET ASSEM.	1
37	2S2846	RETAINER	1
38	6H9144	RING	1
39	7S7807	INSERT	1
		(Parts of 7S7809 Cap Assem.)	
40	2B7558	CORK	1

111425

RADIATOR (2S8846 N/S)—Rear View
Note: 6F6041 Rust Inhibitor is available
Refer also to Page 161 for special parts

REF NO	PART NUMBER	DESCRIPTION	QTY
1	7B3235	BOLT	2
2	3B4508	LOCKWASHER	2
3	4H7380	GASKET	1
4	5S4629	GASKET	2
5	5S1211	COVER	1
6	5S5080	BOLT	5
7	3B4505	LOCKWASHER	5
8	5S1213	PLATE	1
9	8H2063	CLAMP	2
10	5S1218	VALVE ASSEM.	1

REF NO	PART NUMBER	DESCRIPTION	QTY
11	2S8730	GASKET	2
12	2S8729	STRIP	4
13	5M7393	STRIP	4
	2S6948	BAFFLE ASSEM.	4
		Each consisting of:	
14	2S6951	BAFFLE	1
15	6B4594	RIVET	7
16	2S6949	PLATE	1
17	2S6950	STRIP	1
18	3S6339	BRACKET	2
19	2S1216	BOLT	2
20	2B1940	NUT	2
21	3B4509	LOCKWASHER	2
22	2S1212	BUSHING ASSEM.	2
23	1S5360	CLAMP ASSEM.	2
24	T 573	BOLT	2
25	3B4506	LOCKWASHER	98
26	9S2087	SCREW	20
27	3S7712	HOSE	1
28	3S6338	BRACKET	1
29	S 1590	BOLT	6
	1D4717	NUT	6
30	4B4278	WASHER	12
31	3S7737	ELBOW	1
	2S6953	BAFFLE ASSEM.	2
		Each consisting of:	
32	2S6955	BAFFLE	1
33	2S6956	STRIP	1
34	6B4594	RIVET	3
35	2S6954	PLATE	1
36	T 102	BOLT	4
37	4B7739	PLUG	1
38	8H9819	ADAPTER	1
39	S 1588	BOLT	2
40	8H9818	GASKET	1
41	2H5572	GASKET	1
42	S 1588	BOLT	4
	5S662	BAFFLE ASSEM.	1
		Consisting of:	
43	5S641	PLATE	1
44	2S8859	STRIP	1
45	6B4594	RIVET	12
46	5S652	BAFFLE	1
47	2S6939	ELBOW	1
48	5H4454	CLAMP	2
49	2S884	HOSE	1
50	5S584	STRIP	1
51	8S2646	CORE ASSEM.	1
52	1F1560	SPACER	2
53	1A2029	BOLT	80

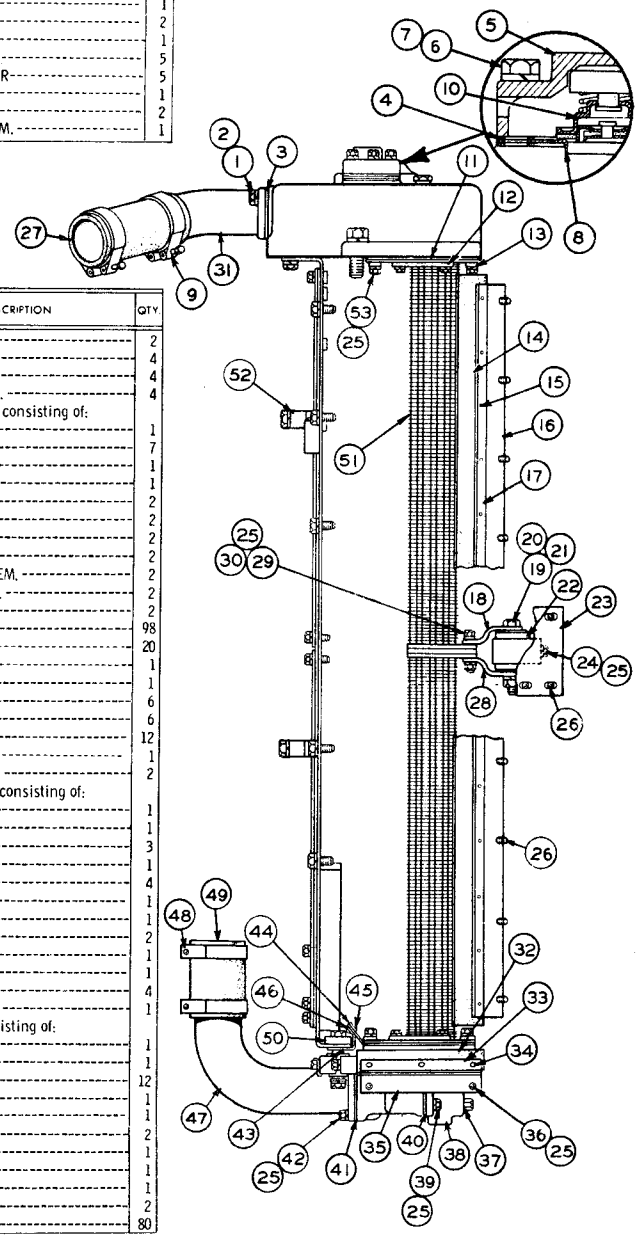

RADIATOR (2S8846 N/S)—Side View
Refer also to Page 166 for special parts

REF NO.	PART NUMBER	DESCRIPTION	QTY.
1	S1566	BOLT	10
2	3B4510	LOCKWASHER	10
3	4D3704	WASHER	10
4	7S9524	PLATE ASSEM.	1
5	7S9523	PLATE ASSEM.	1
6	1A458	BOLT	8
7	3B4512	LOCKWASHER	8
8	4B5276	WASHER	4
9	7S4019	GUARD ASSEM.	1
10	8F6124	BOLT	14
11	1B4209	NUT	14
12	3B4516	LOCKWASHER	14
13	5S871	GUARD ASSEM.	1
14	7S3332	BAFFLE ASSEM.	1
15	9F2978	NUT-(Weld)	4
16	7S3281	BAFFLE-(End)	2
	7S3289	BAFFLE-(Center)	1
17	6B4594	RIVET	13
18	S1588	BOLT	4
	3B4506	LOCKWASHER	4

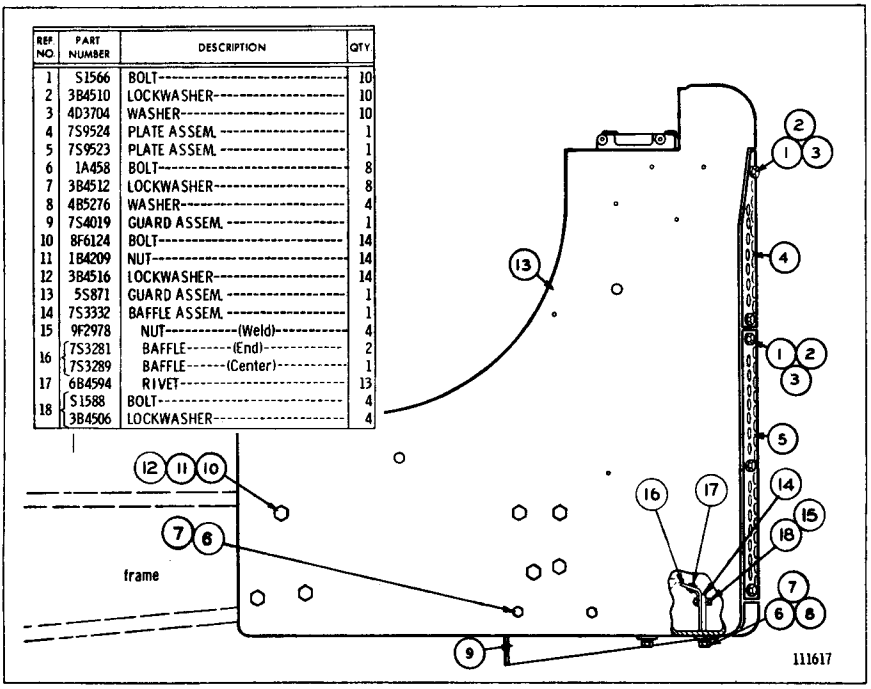

RADIATOR GUARD (2S9670 N/S)
9M4518 Deflector and Guard is available
Refer also to Pages 164, 165 & 166 for special parts

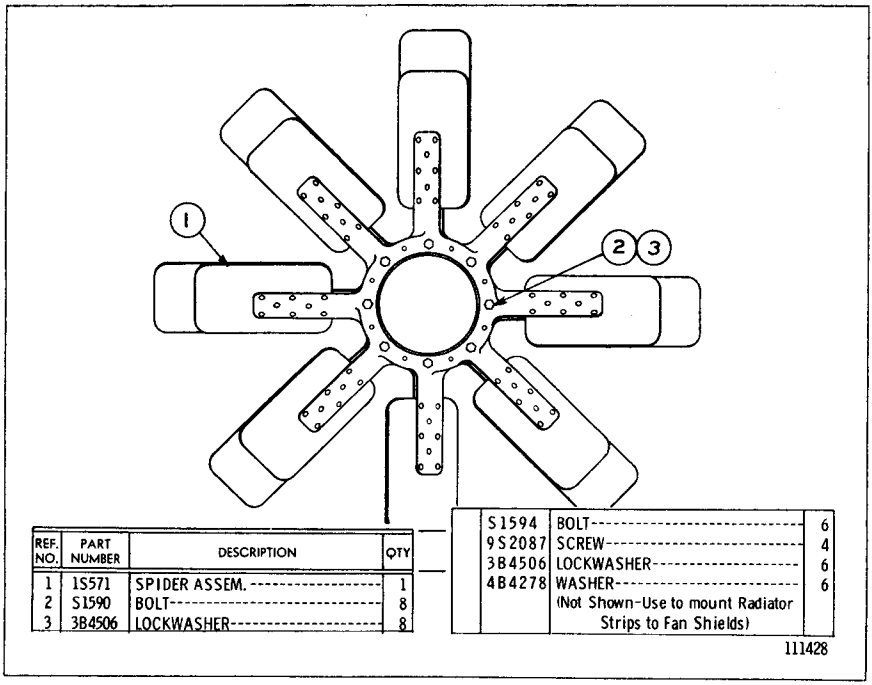

REF. NO.	PART NUMBER	DESCRIPTION	QTY
1	1S571	SPIDER ASSEM.	1
2	S1590	BOLT	8
3	3B4506	LOCKWASHER	8

	S1594	BOLT	6
	9S2087	SCREW	4
	3B4506	LOCKWASHER	6
	4B4278	WASHER	6
		(Not Shown-Use to mount Radiator Strips to Fan Shields)	

SUCTION FAN (2S8866 N/S)
Refer also to Pages 169 & 170 for special parts

FAN DRIVE (9S3132 N/S)

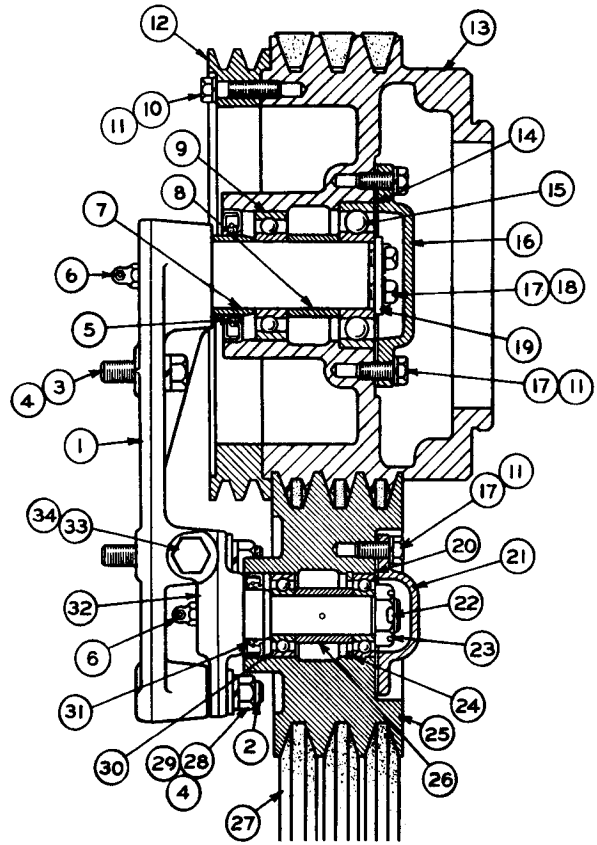

REF. NO.	PART NUMBER	DESCRIPTION	QTY
1	8S5142	BRACKET ASSEM.	1
2	1M6422	STUD	3
		(Part of Bracket Assem. 8S5142)	
3	S 1587	BOLT	3
4	3B4508	LOCKWASHER	6
5	5M9739	SEAL	1
6	3B8488	FITTING	2
7	4H1566	SPACER	1
8	1S4242	SPACER	1
9	6H3957	BEARING	1
10	S1591	BOLT	4
11	3B4506	LOCKWASHER	13
12	9S3065	PULLEY	1
13	2S8892	PULLEY	1
14	2S8869	GASKET	1
15	2H3712	BEARING	1
16	2S8868	COVER	1
17	S1594	BOLT	11
18	9M909	LOCK	2
19	7S1175	WASHER	1
20	8H5027	GASKET	1
21	8H5026	COVER	1
22	3B4628	COTTER PIN	1
23	5F8913	NUT	1
24	8B2327	RING	1
25	3S7517	PULLEY	1
26	9M4241	SPACER	1
27	3S7520	VEE BELT SET	1
		(Consists of 3 Belts)	
28	1B4205	NUT	3
29	1F7960	WASHER	3
30	6B1124	BEARING	2
31	5M9735	SEAL	1
32	2S8880	BRACKET ASSEM.	1
33	9M4571	BOLT	1
34	1D5118	NUT	1

130955

ONLY "CATERPILLAR" PARTS GIVE "CATERPILLAR" PERFORMANCE

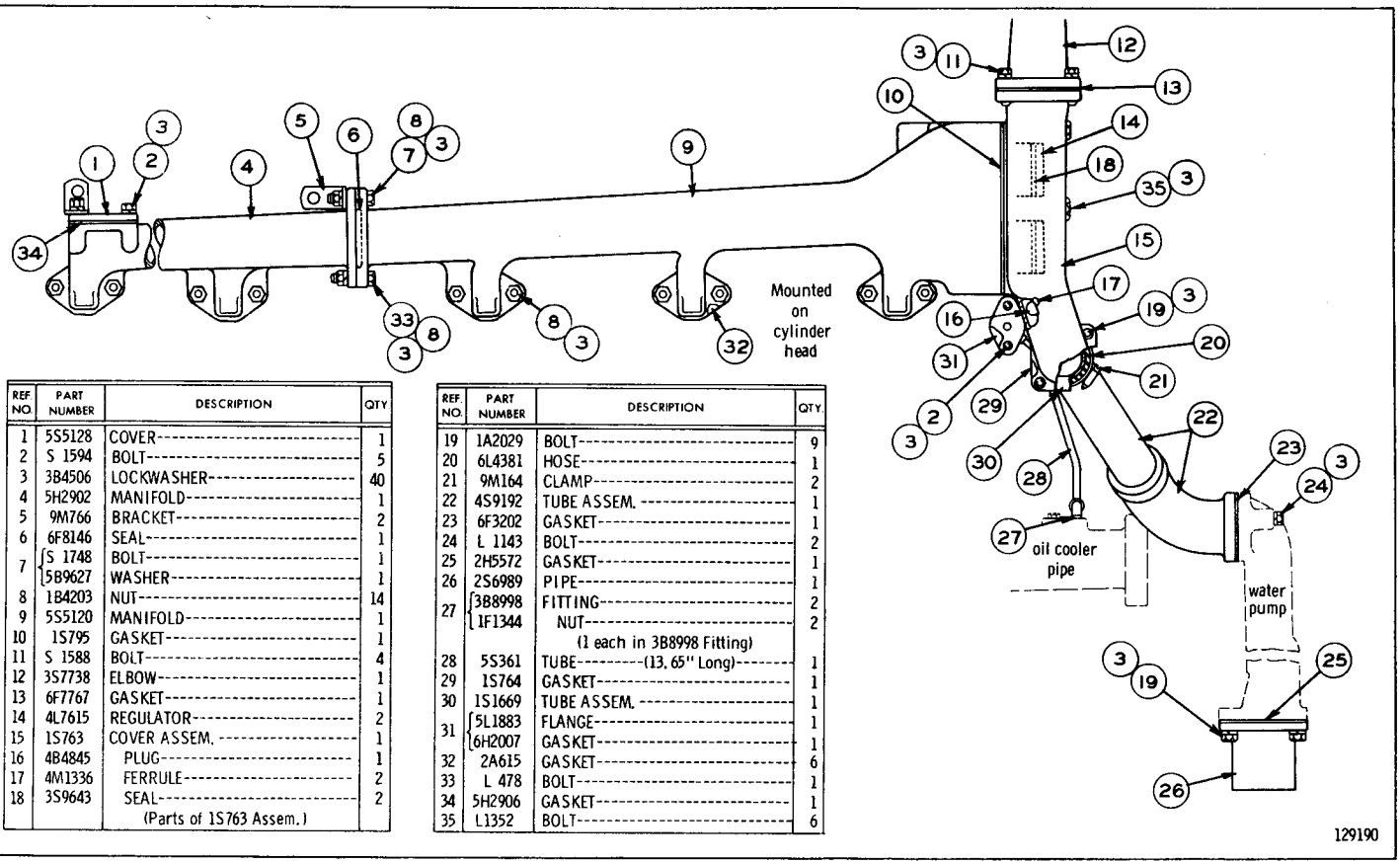

REF. NO.	PART NUMBER	DESCRIPTION	QTY.
1	5S5128	COVER	1
2	S 1594	BOLT	5
3	3B4506	LOCKWASHER	40
4	5H2902	MANIFOLD	1
5	9M766	BRACKET	2
6	6F8146	SEAL	1
7	S 1748	BOLT	1
	5B9627	WASHER	1
8	1B4203	NUT	14
9	5S5120	MANIFOLD	1
10	1S795	GASKET	1
11	S 1588	BOLT	4
12	3S7738	ELBOW	1
13	6F7767	GASKET	1
14	4L7615	REGULATOR	2
15	1S763	COVER ASSEM.	1
16	4B4845	PLUG	1
17	4M1336	FERRULE	2
18	3S9643	SEAL	2
		(Parts of 1S763 Assem.)	

REF. NO.	PART NUMBER	DESCRIPTION	QTY.
19	1A2029	BOLT	9
20	6L4381	HOSE	1
21	9M164	CLAMP	2
22	4S9192	TUBE ASSEM.	1
23	6F3202	GASKET	1
24	L 1143	BOLT	2
25	2H5572	GASKET	1
26	2S6989	PIPE	1
27	3B8998	FITTING	2
	1F1344	NUT	2
		(1 each in 3B8998 Fitting)	
28	5S361	TUBE--(13.65" Long)	1
29	1S764	GASKET	1
30	1S1669	TUBE ASSEM.	1
31	5L1883	FLANGE	1
	6H2007	GASKET	1
32	2A615	GASKET	6
33	L 478	BOLT	1
34	5H2906	GASKET	1
35	L1352	BOLT	6

WATER LINES (5S486 N/S)

5S1911 WATER PUMP ASSEMBLY (4S7757 N/S)

See Page 28 for Gasket Kits

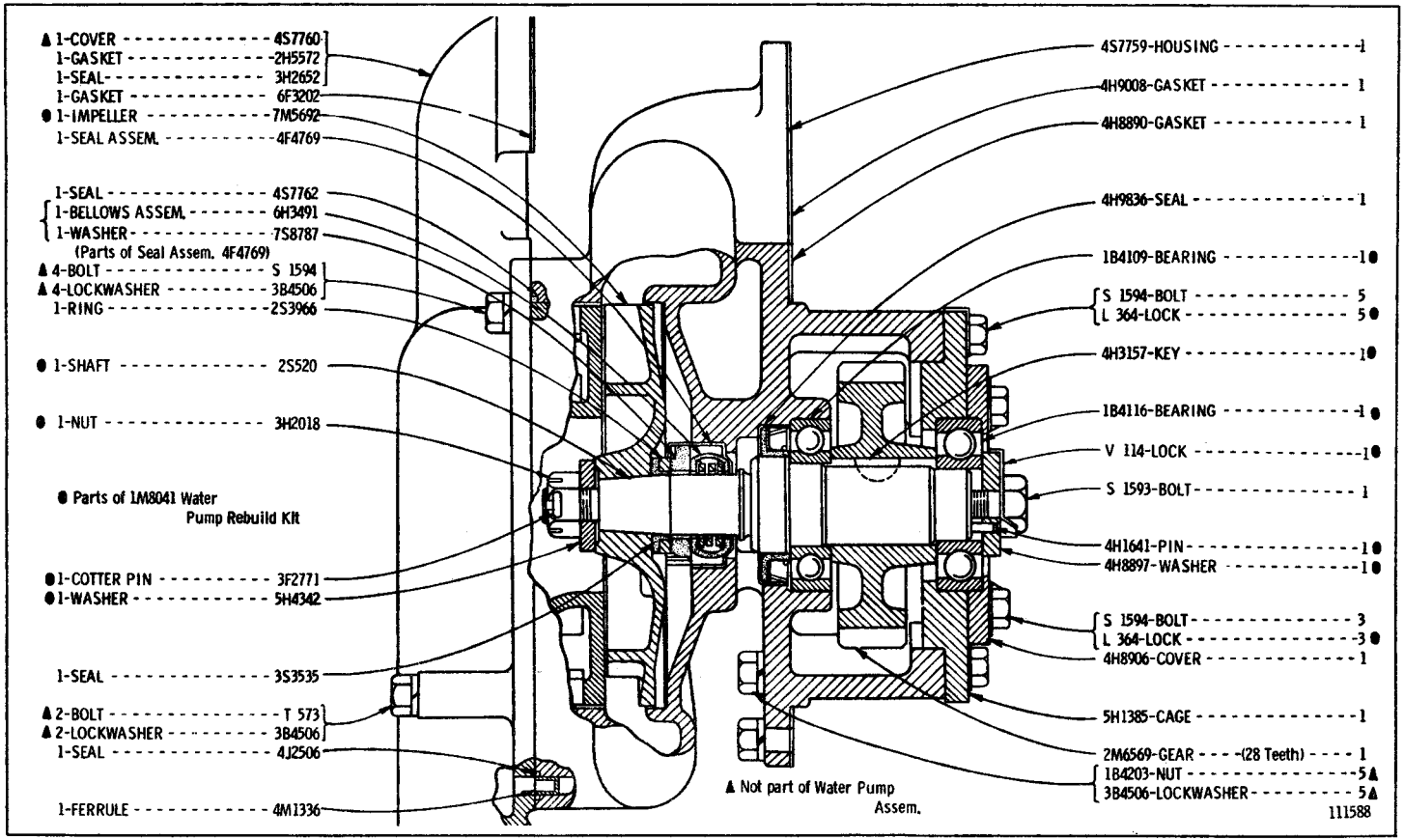

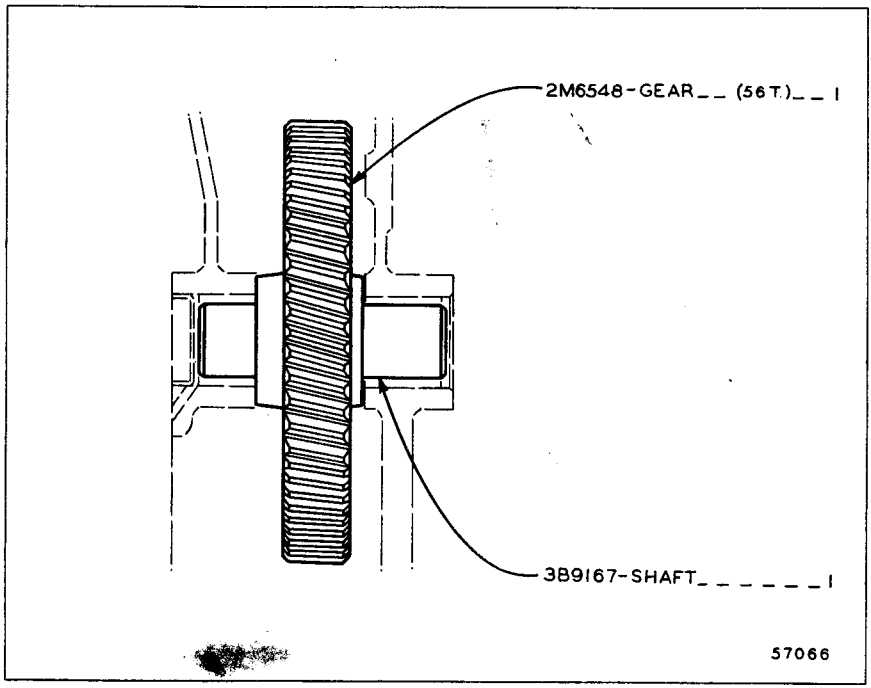

WATER PUMP IDLER GEAR (5H4204 N/S)

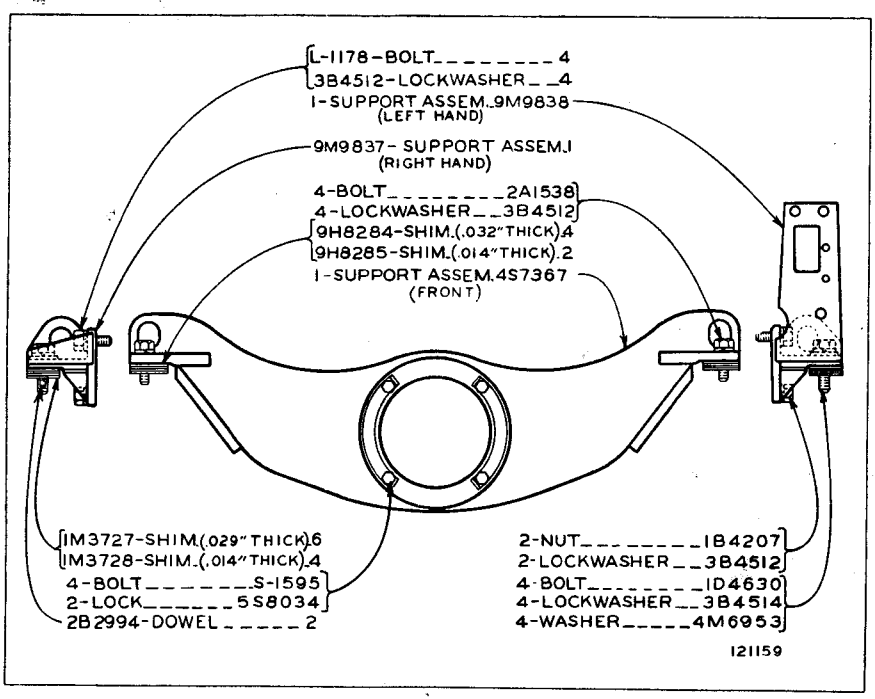

ENGINE SUPPORT (4S7369 N/S)

MANIFOLDS AND EXHAUST PIPE (9S2370 N/S & 4S8519 N/S)

Note: 7S5003 Rain Cap Assembly is available

Refer also to Page 168 for special parts

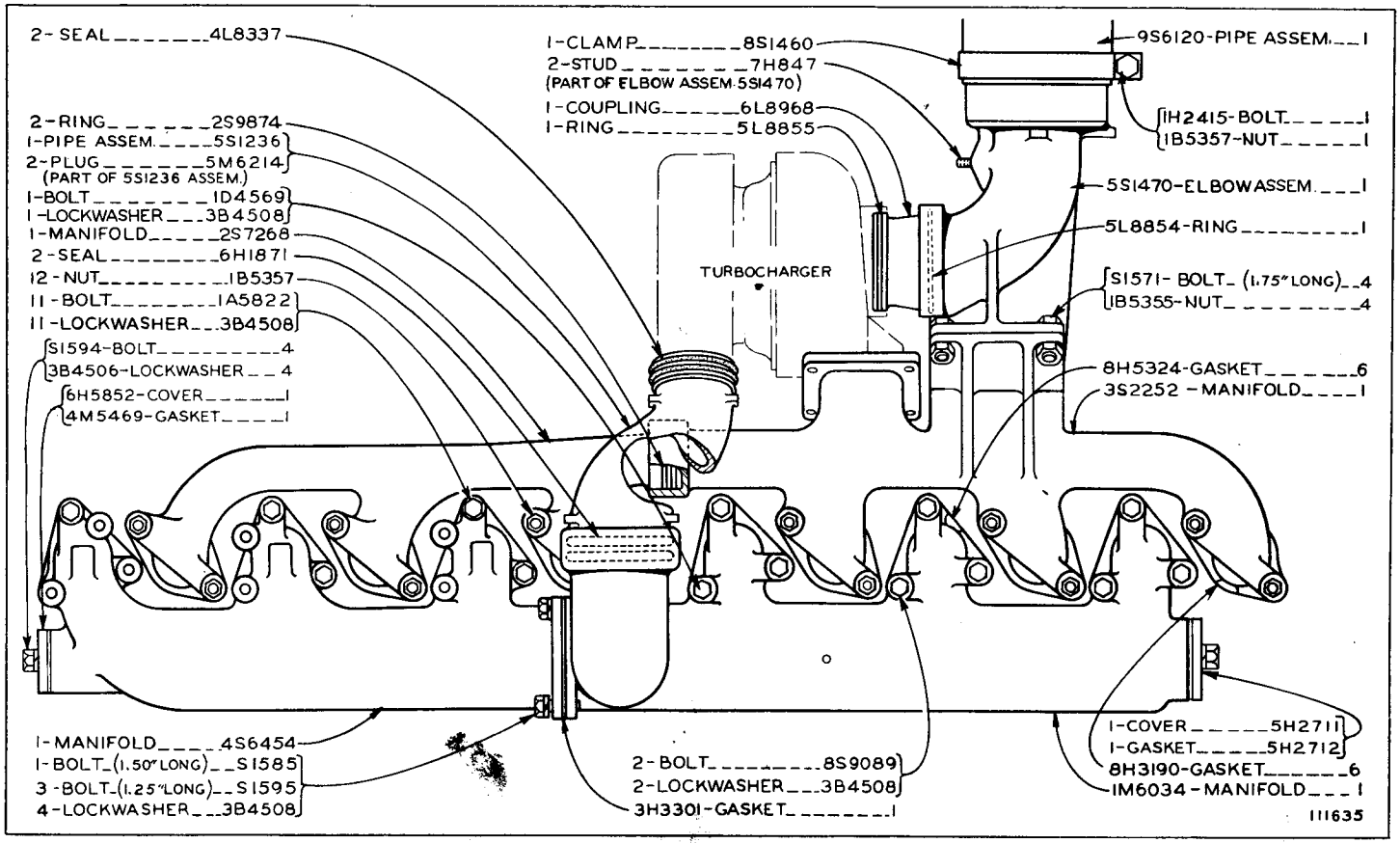

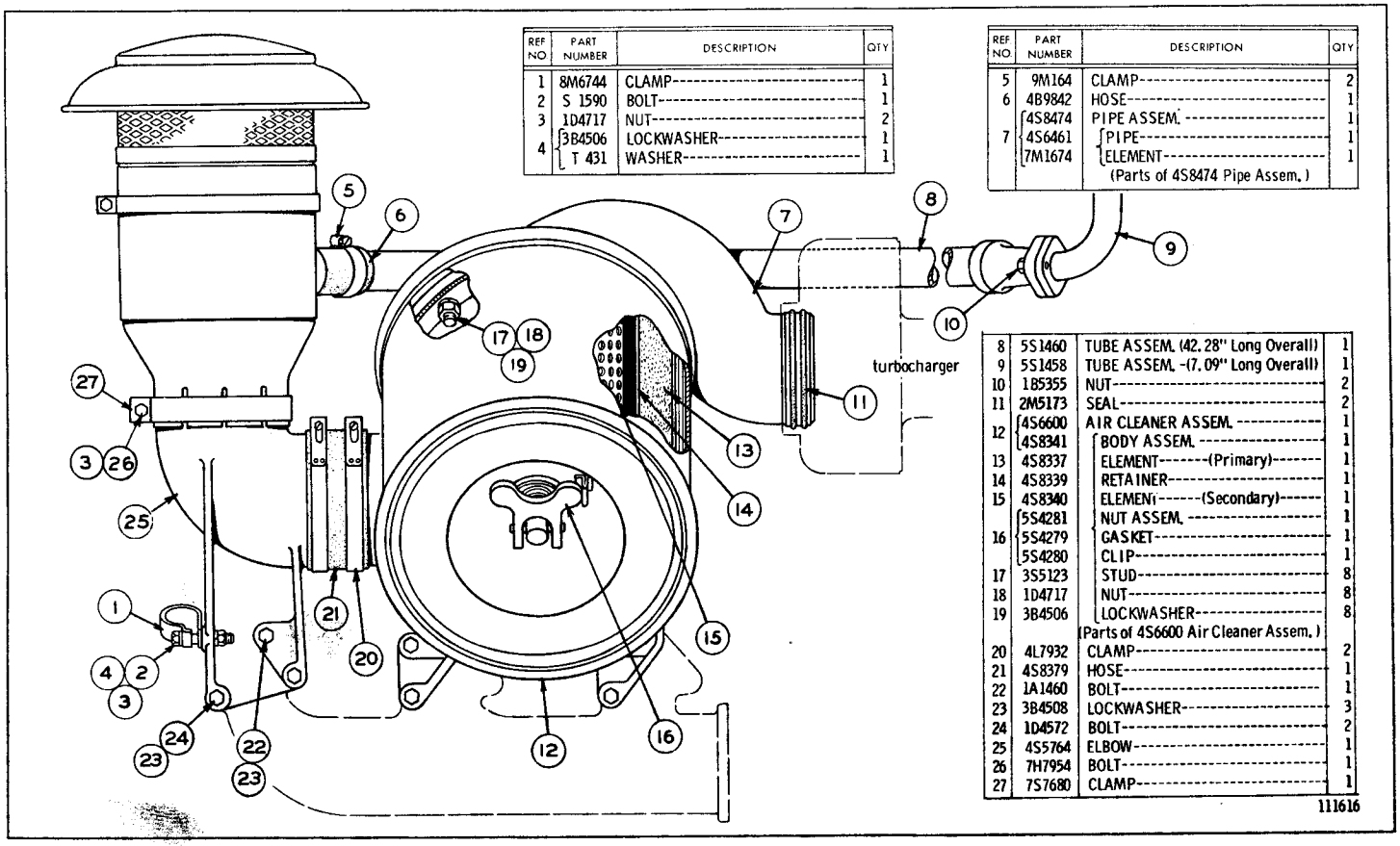

REF NO	PART NUMBER	DESCRIPTION	QTY
1	8M6744	CLAMP	1
2	S 1590	BOLT	1
3	1D4717	NUT	2
4	3B4506	LOCKWASHER	1
	T 431	WASHER	1

REF NO	PART NUMBER	DESCRIPTION	QTY
5	9M164	CLAMP	2
6	4B9842	HOSE	1
7	4S8474	PIPE ASSEM.	1
	4S6461	PIPE	1
	7M1674	ELEMENT	1
		(Parts of 4S8474 Pipe Assem.)	

8	5S1460	TUBE ASSEM. (42.28" Long Overall)	1
9	5S1458	TUBE ASSEM. (7.09" Long Overall)	1
10	1B5355	NUT	2
11	2M5173	SEAL	2
12	4S6600	AIR CLEANER ASSEM.	1
	4S8341	BODY ASSEM.	1
13	4S8337	ELEMENT (Primary)	1
14	4S8339	RETAINER	1
15	4S8340	ELEMENT (Secondary)	1
	5S4281	NUT ASSEM.	1
16	5S4279	GASKET	1
	5S4280	CLIP	1
17	3S5123	STUD	8
18	1D4717	NUT	8
19	3B4506	LOCKWASHER	8
		(Parts of 4S6600 Air Cleaner Assem.)	
20	4L7932	CLAMP	2
21	4S8379	HOSE	1
22	1A1460	BOLT	1
23	3B4508	LOCKWASHER	3
24	1D4572	BOLT	2
25	4S5764	ELBOW	1
26	7H7954	BOLT	1
27	7S7680	CLAMP	1

AIR CLEANER (4S8508 N/S)—Side View

7S9396 Prescreener and 8S2384 Air Stack are available where material other than dust may be drawn into the air cleaner

AIR CLEANER (4S8508 N/S)—End View

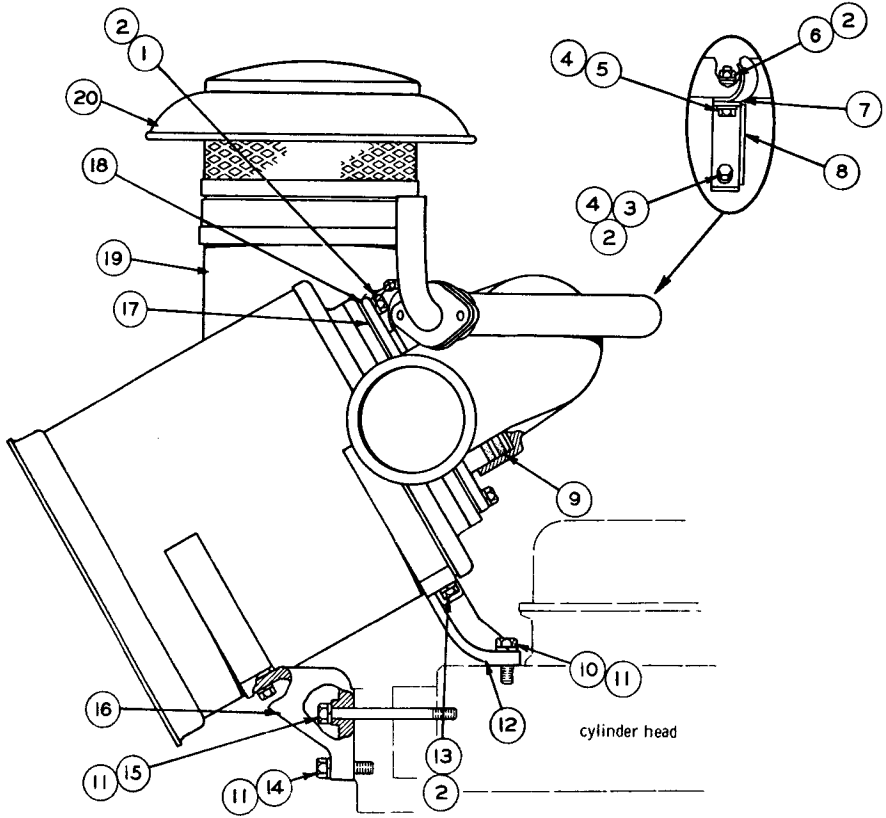

REF NO	PART NUMBER	DESCRIPTION	QTY
1	1A2029	BOLT	7
2	3B4506	LOCKWASHER	13
3	S-1588	BOLT	1
4	4B4278	WASHER	2
5	S-1571	BOLT	1
6	1D4717	NUT	1
7	4S8793	CLAMP	1
8	4S8796	BRACKET ASSEM.	1
9	7M6952	SEAL	2
10	S-1585	BOLT	2
11	3B4508	LOCKWASHER	6
12	4S8450	BRACKET	1
13	3B1915	BOLT	4
14	1A1460	BOLT	2
15	1D4572	BOLT	2
16	4S6444	BRACKET	2
17	3S2317	GASKET	1
18	3S1588	FLANGE	1
19	4S7455	PRECLEANER ASSEM.	1
	4S8473	BODY ASSEM.	1
	S-1591	BOLT	2
	1D4717	NUT	2
20	4S8472	HOOD ASSEM.	1
		(Parts of 4S7455 Precleaner Assem.)	

97807

ONLY "CATERPILLAR" PARTS GIVE "CATERPILLAR" PERFORMANCE

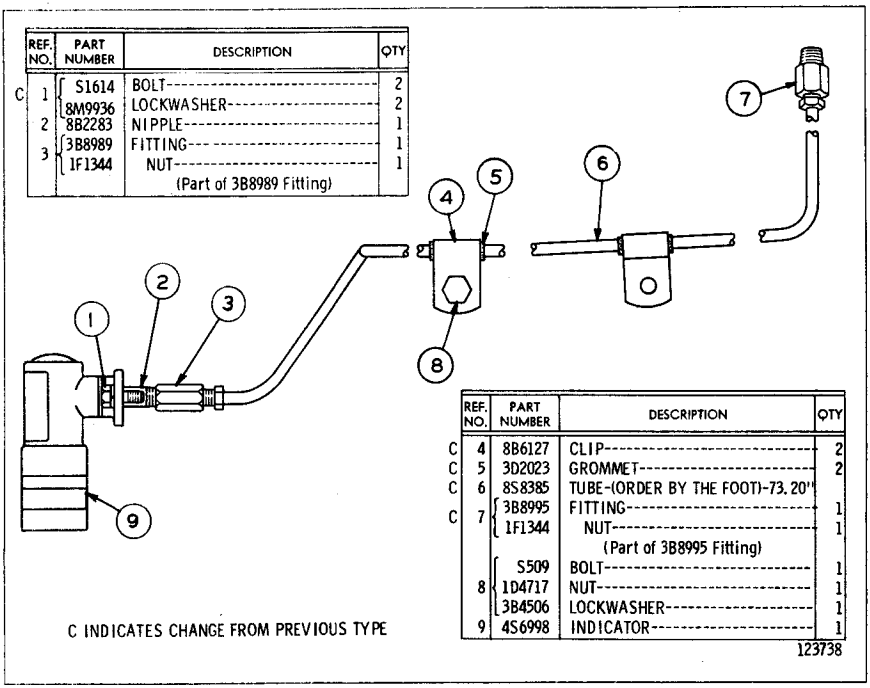

REF. NO.	PART NUMBER	DESCRIPTION	QTY
C 1	S1614	BOLT	2
	8M9936	LOCKWASHER	2
2	8B2283	NIPPLE	1
3	3B8989	FITTING	1
	1F1344	NUT (Part of 3B8989 Fitting)	1

REF. NO.	PART NUMBER	DESCRIPTION	QTY
C 4	8B6127	CLIP	2
C 5	3D2023	GROMMET	2
C 6	8S8385	TUBE-(ORDER BY THE FOOT)-73.20"	
C 7	3B8995	FITTING	1
	1F1344	NUT (Part of 3B8995 Fitting)	1
8	S509	BOLT	1
	1D4717	NUT	1
	3B4506	LOCKWASHER	1
9	4S6998	INDICATOR	1

C INDICATES CHANGE FROM PREVIOUS TYPE

123738

AIR FILTER SERVICE INDICATOR (4S8493 N/S)

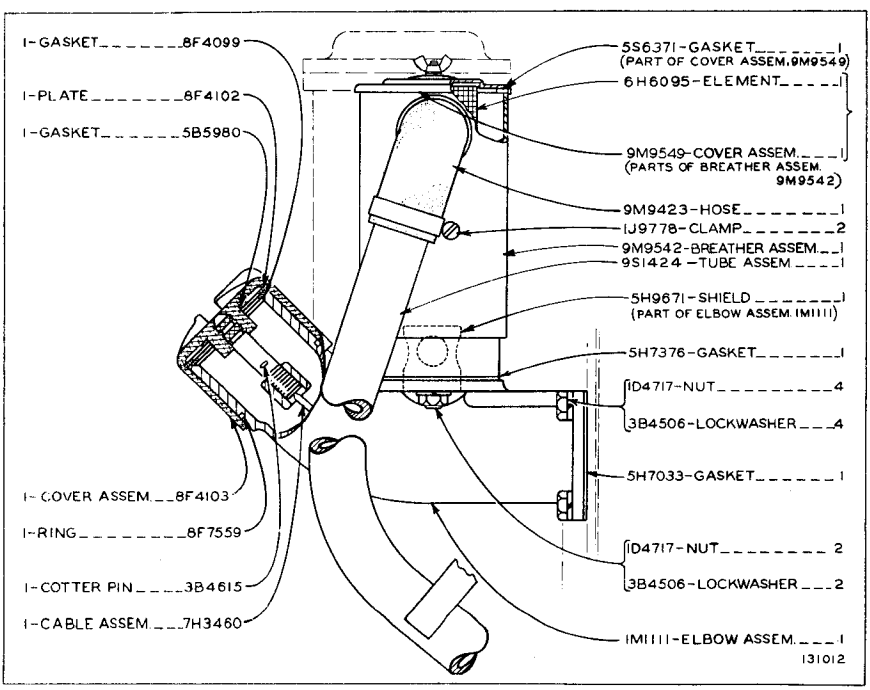

BREATHER AND OIL FILLER (1M1123 N/S)

Refer also to Page 162 for special parts

1P1163 TURBOCHARGER ASSEMBLY (3S2341 N/S)

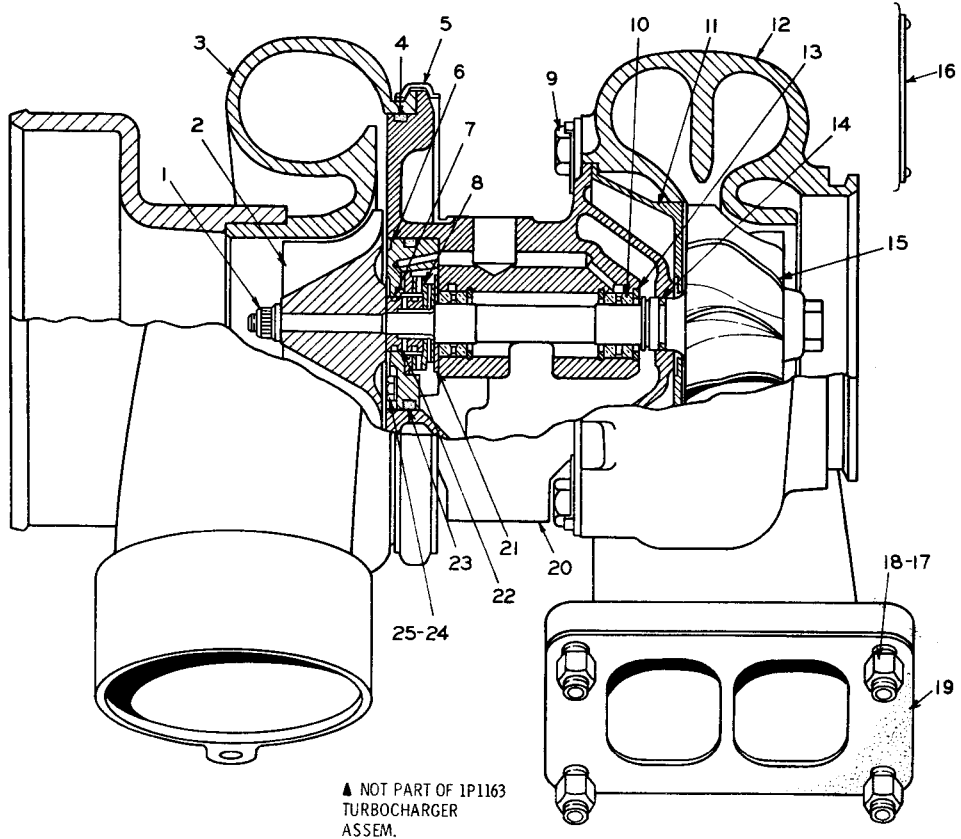

▲ NOT PART OF 1P1163 TURBOCHARGER ASSEM.

1-CARTRIDGE ASSEM. ---------1P1162
(Consists of all parts shown except those marked ▲ and ●)

REF. NO.	PART NUMBER	DESCRIPTION	QTY
1	3S4484	NUT	1
2	1P1161	WHEEL	1
● 3	9S2609	HOUSING ASSEM. --(Compressor)-	1
4	3S5135	SEAL	1
● 5	3S5129	CLAMP	1
6	8S5169	PLATE ASSEM.	1
7	9M8919	RING	2
8	8S8042	COLLAR	1
●	3S5126	BOLT	6
● 9	3S5127	PLATE-------( )--------	3
●	3S5128	PLATE-------( )--------	3
10	9M8916	BEARING	2
11	9S9327	SHROUD	1
● 12	9S2608	HOUSING--------(Turbine)------	1
13	9M8915	RING	3
14	9S8012	RING	1
15	8S5167	SHAFT AND WHEEL ASSEM.	1
●	8S8097	NAMEPLATE	1
16	8S8096	NAMEPLATE	1
	2F808	SCREW	2
▲ 17	9L2295	BOLT	4
▲ 18	8M2296	NUT	4
▲ 19	1S4295	GASKET	1
20	4S9702	HOUSING ASSEM. --(Center)------	1
21	9M8917	BEARING	1
22	8S8043	SPACER	1
23	3S4489	SEAL	1
24	3S4488	SCREW	3
25	3S4487	PLATE	3
	FMO31778	FORM	1
		(Turbocharger installation check list)	

111190

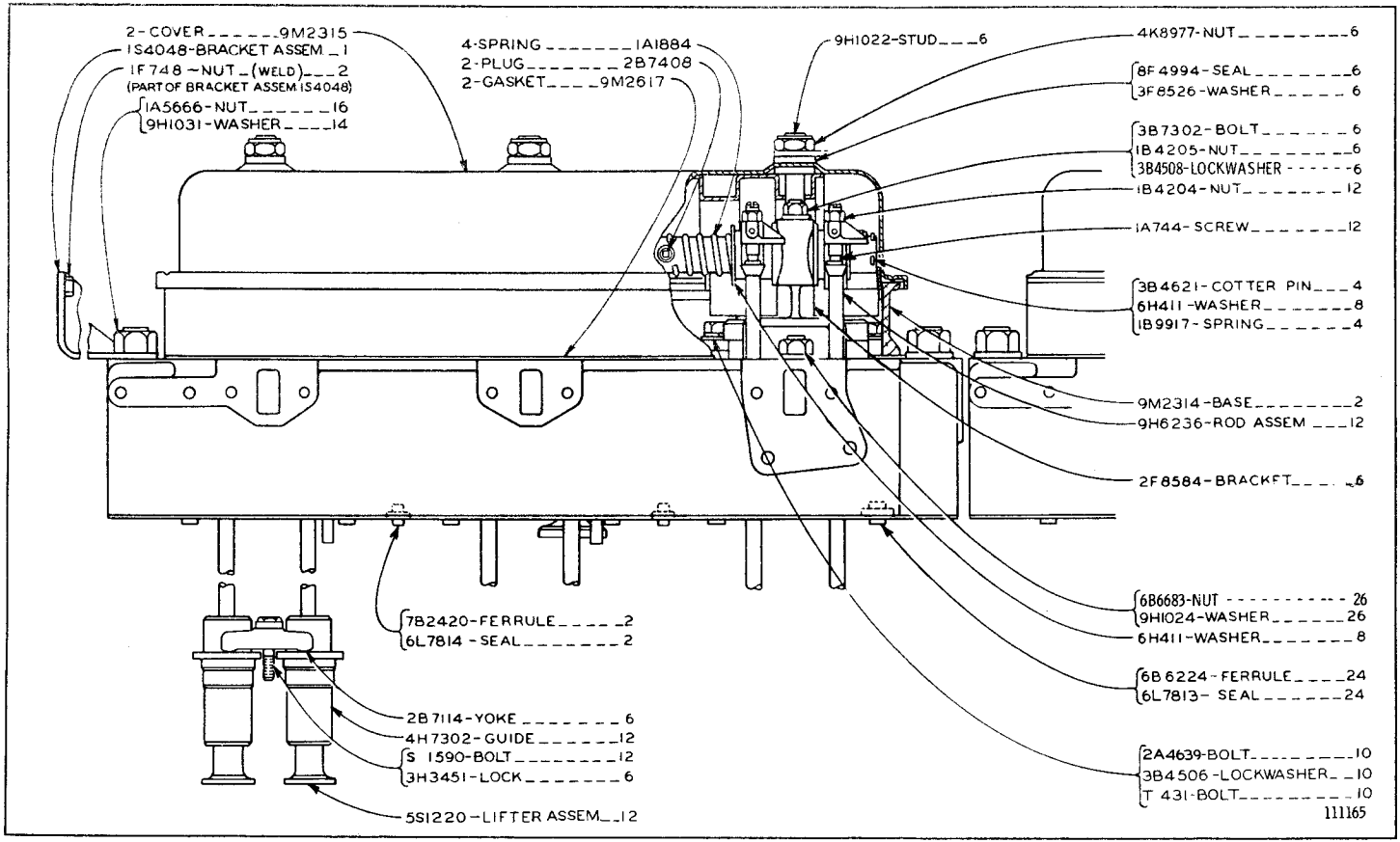

CYLINDER HEAD AND VALVE MECHANISM (8H5864 N/S)—Side View

Refer also to Page 108 for special parts
See Page 28 for Gasket Kits

CYLINDER HEAD AND VALVE MECHANISM (8H5864 N/S)—End View

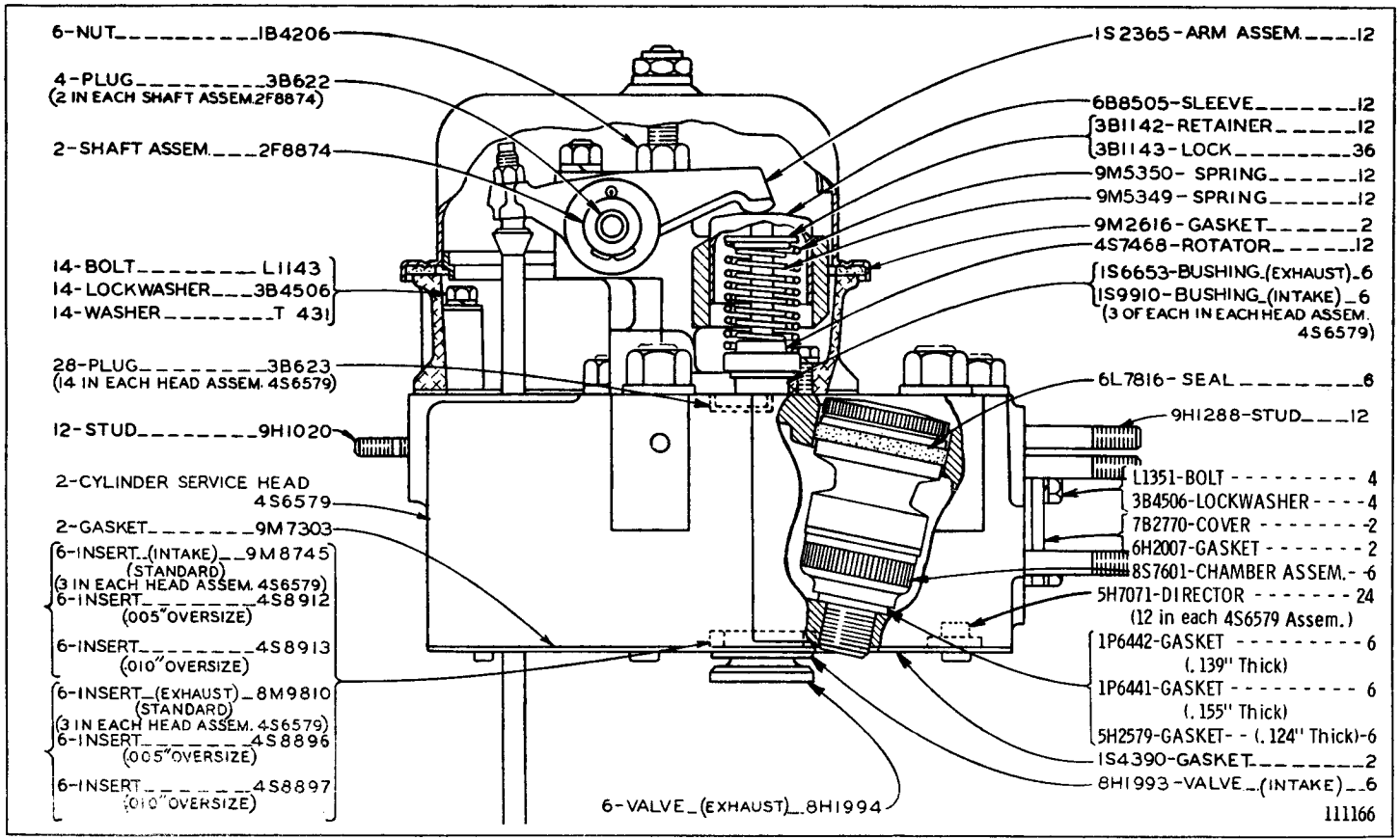

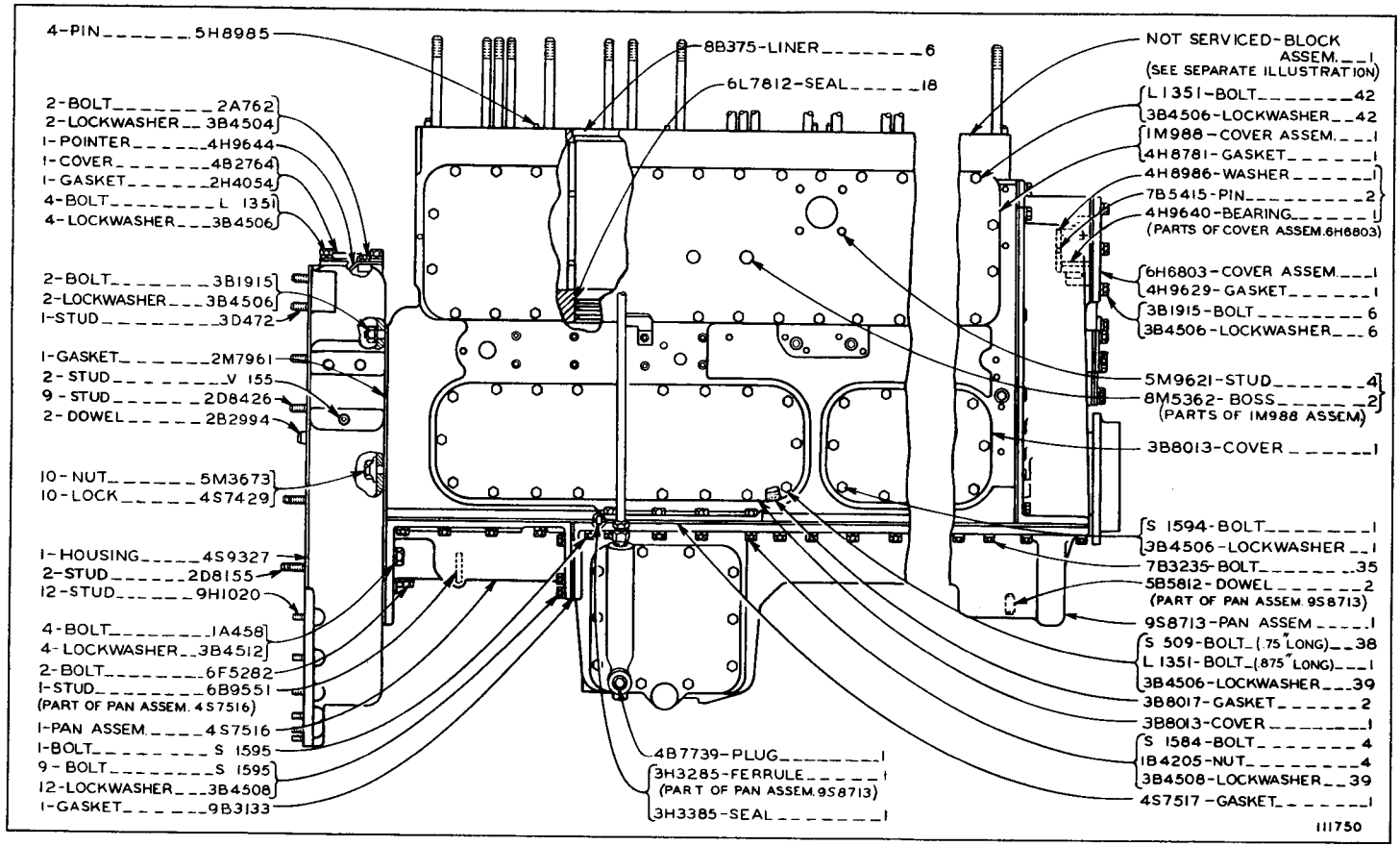

CYLINDER BLOCK AND COVERS (4S6862 N/S)—Side View

Cylinder Block parts are shown on Page 26. Note: 3S4032 Piston and Liner Group, consisting of: 1—Piston Assembly, 1—Liner and 3—Seal, is available. Refer also to Page 108 for special parts. See Page 28 for Gasket Kits

CYLINDER BLOCK AND COVERS (4S6862 N/S)—Front View

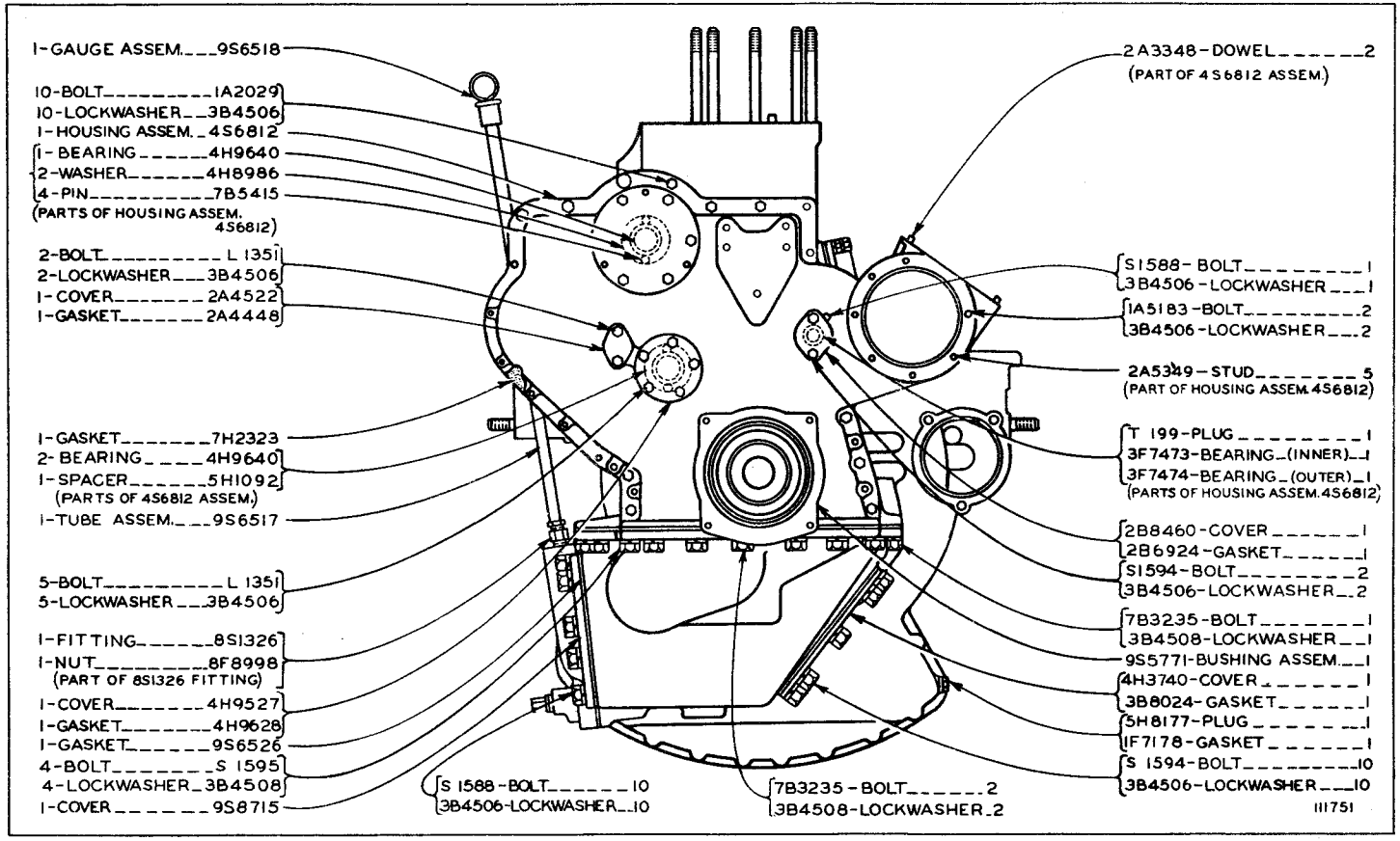

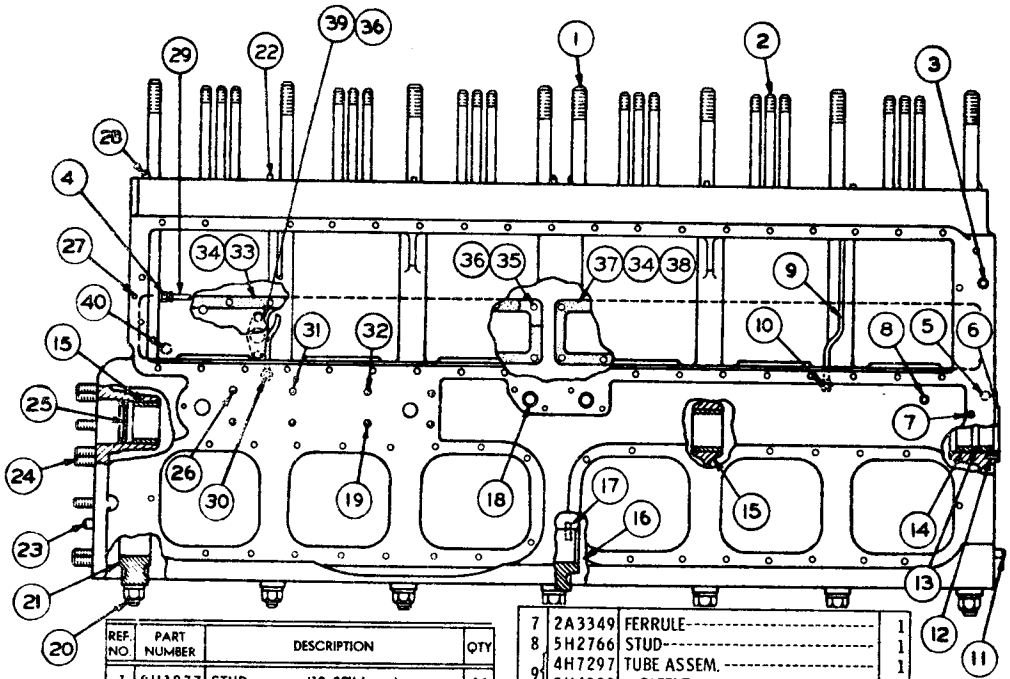

REF. NO.	PART NUMBER	DESCRIPTION	QTY
1	9H1077	STUD---------(10.32" Long)--------	16
2	9M488	STUD---------(8" Long)----------	26
3	2A3798	DOWEL----------	2
4	3B8995	FITTING----------	1
	1F1344	NUT----------	1
		(Part of 3B8995 Fitting)	
5	5M6214	PLUG----------	1
6	4H8986	WASHER----------	1
7	2A3349	FERRULE----------	1
8	5H2766	STUD----------	1
9	4H7297	TUBE ASSEM.----------	1
	5H4390	SLEEVE----------	1
		(Part of 4H7297 Assem.)	
10	L1547	NUT----------	1
11	1A5919	DOWEL----------	2
12	7B5415	DOWEL----------	2
13	5H1092	SPACER----------	1
14	4H9640	BEARING----------	2
15	8F8523	BEARING----------	3
16	4S9346	CAP GROUP--------(Center)--------	1
	4S9350	SHIM----------(Long)---------	1
	4S9349	SHIM---------(Short)----------	6
		(Parts of 4S9346 Group)	
17	5B5812	DOWEL----------	1
18	5H2786	TUBE----------	2
19	1H4004	STUD---------(2.6875" long)-------	5
20	1P667	STUD----------	14
	1A5666	NUT----------	14
	4M6953	WASHER----------	14
21	4S9360	CAP GROUP----(Intermediate)-----	6
	4S9362	SHIM----------(Long)---------	12
	4S9363	SHIM---------(Short)----------	36
	7F1826	STUD----------	12
		(one-sixth each in 4S9360 Group)	
22	5H8985	PIN----------	4
23	2B2994	DOWEL----------	2
24	4B3251	STUD----------	10
25	S519	PLUG----------	1
26	V113	STUD---------(5.50" Long)--------	1
27	4F6024	DOWEL----------	1
28	L2061	DOWEL----------	4
29	4H8795	TUBE ASSEM.----------	1
30	L1547	NUT----------	1
	5H4390	SLEEVE----------	1
		(Parts of 4H8795 Assem.)	
31	5B1229	STUD---------(7.125" Long)--------	1
32	1F3391	STUD---------(6.50" Long)--------	1
33	5S384	COVER----------	1
34	4H9576	GASKET----------	2
35	1A2029	BOLT---------(1.125" Long)---------	38
	S1591	BOLT---------(1.50" Long)---------	2
36	3B4506	LOCKWASHER----------	42
37	4H5360	COVER----------	1
38	2H8829	PLUG----------	1
	4F9325	GASKET----------	1
	9F5830	COVER----------	1
39	7F7590	GASKET----------	1
	L1351	BOLT----------	2
40	3J5390	PLUG----------	1
	FM030102	FORM--(Bearing Cap Installation)--	1

111155

CYLINDER BLOCK ASSEMBLY (8S4631 N/S)

Part of Cylinder Block and Covers shown on Page 24

Note: For Field Replacement order 5S1691 Service Block Group plus 1—9S4928 Hardware Kit

CRANKSHAFT (4S7408 N/S)

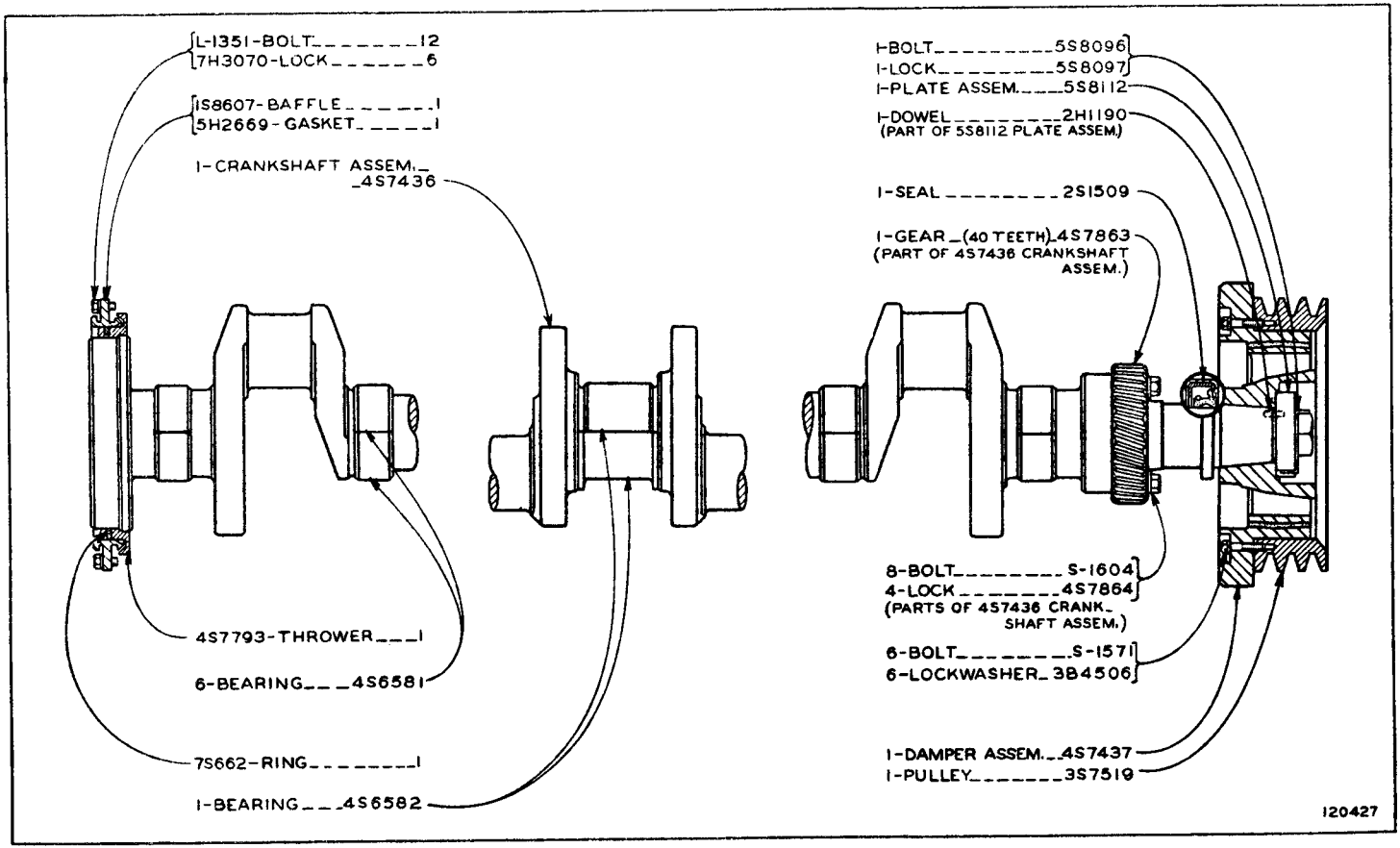

ONLY "CATERPILLAR" PARTS GIVE "CATERPILLAR" PERFORMANCE

4S9387	FOR USE WITH STANDARD CRANKSHAFT	
	Consists of:	
	Complete set of Bearing Assemblies as shown with Standard Crankshaft	
4S9388	FOR USE WITH .025 UNDERSIZE CRANKSHAFT	
	Consists of:	
6	4S9396	Bearing Assembly--Intermediate
1	4S9397	Bearing Assembly--Center
4S9389	FOR USE WITH .050 UNDERSIZE CRANKSHAFT	
	Consists of:	
6	4S9398	Bearing Assembly--Intermediate
1	4S9399	Bearing Assembly--Center

CRANKSHAFT BEARING REPLACEMENT GROUPS

2P3987	Diesel Engine Complete
2P3986	Valve Grinding
4S8935	Water Pump
9S1907	Transmission
2P4003	Transmission Oil System
9S1903	Flywheel Clutch

GASKET KITS

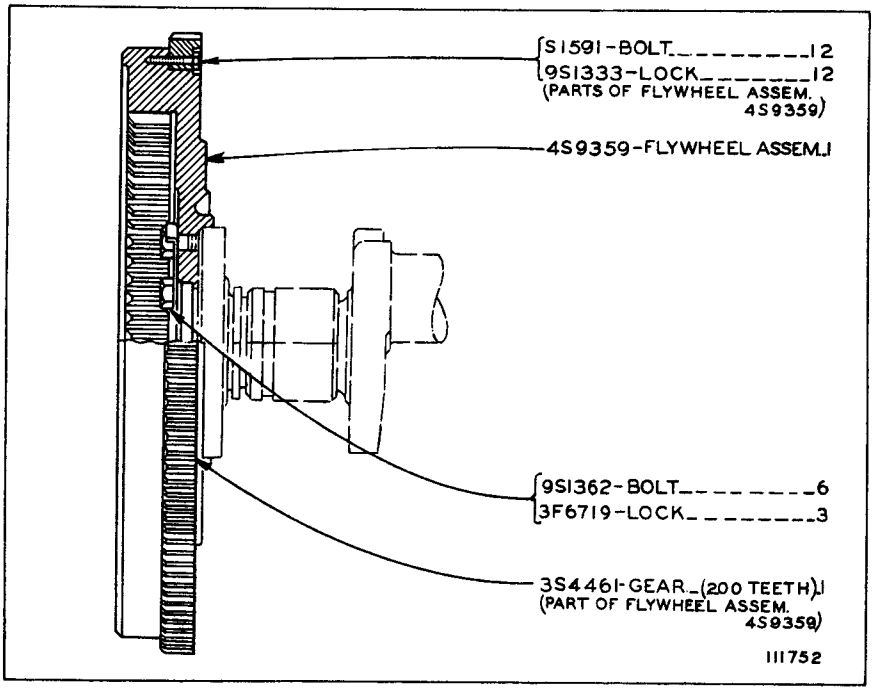

FLYWHEEL (4S7417 N/S)
Refer also to Page 108 for special parts

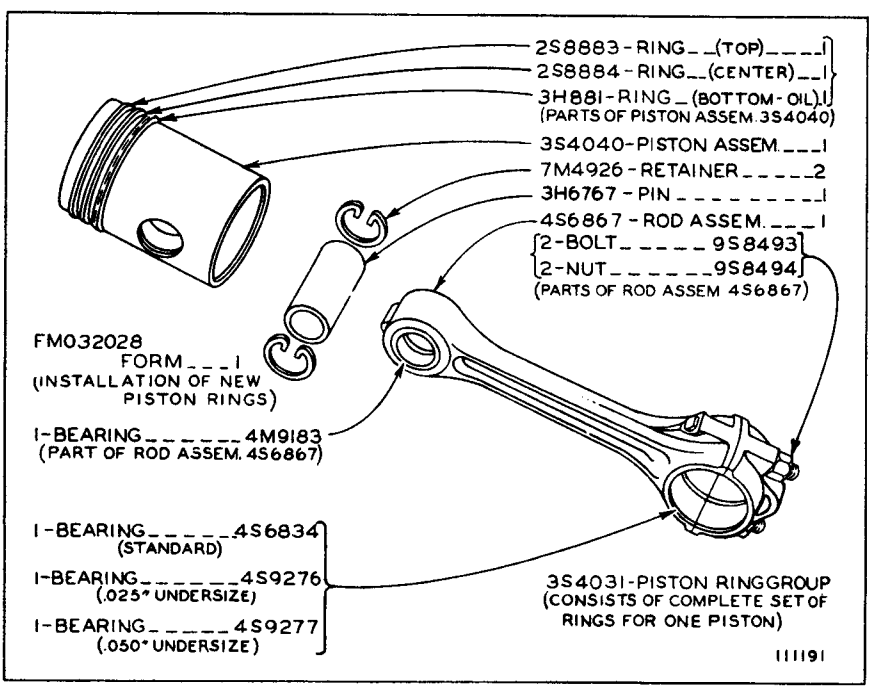

CONNECTING ROD AND PISTON (4S6868 N/S)—6 Required
Note: 3S4032 Piston and Liner Group, Consisting of:
1—Piston Assembly, 1—Liner and 3—Seal, is available

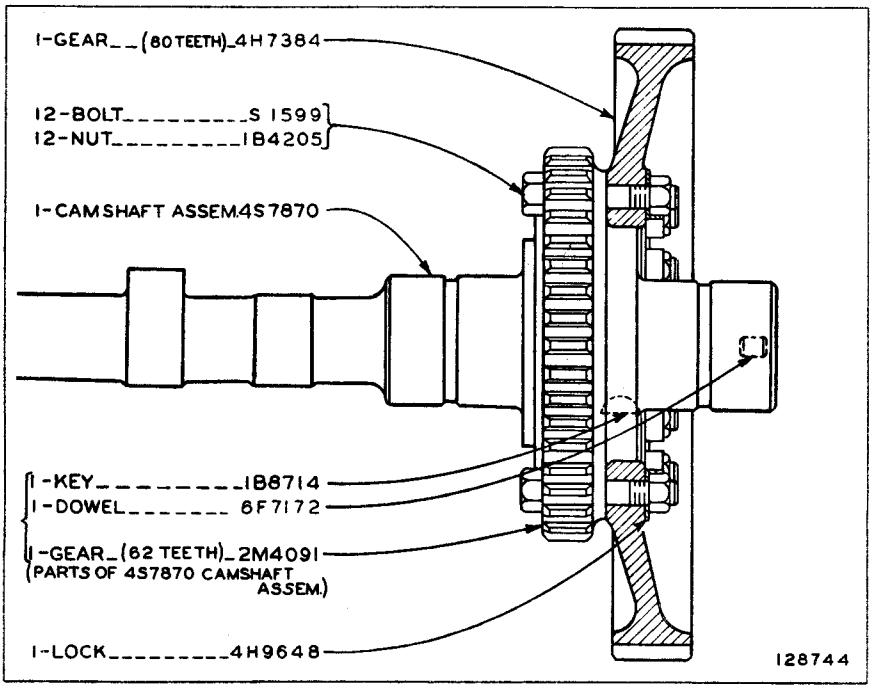

CAMSHAFT (4H9649 N/S)

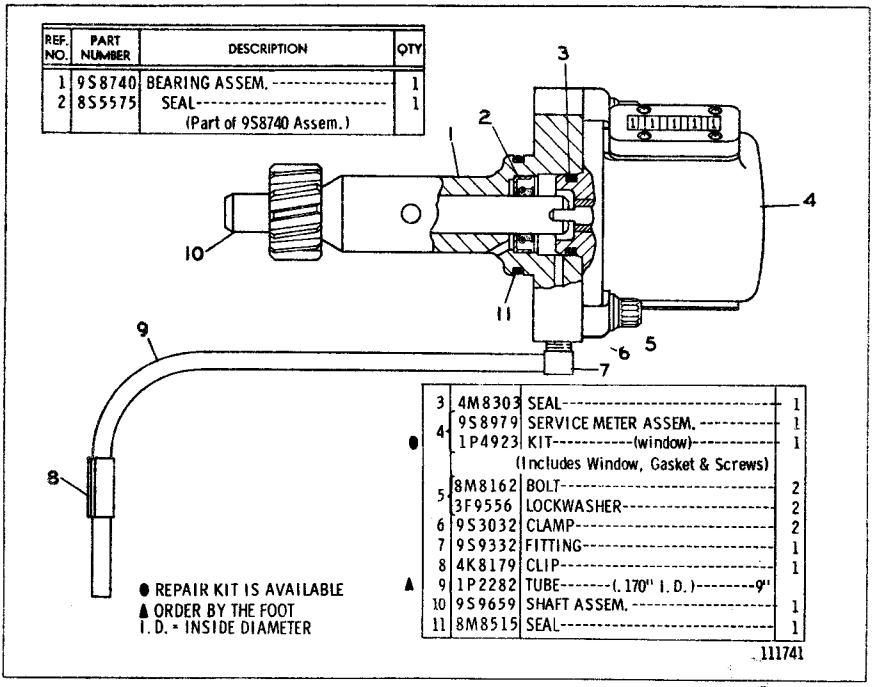

9S8978 SERVICE METER GROUP

ALWAYS GIVE SERIAL NUMBER WHEN ORDERING PARTS

GOVERNOR CONTROL (9H5339 N/S & 9M4548 N/S)

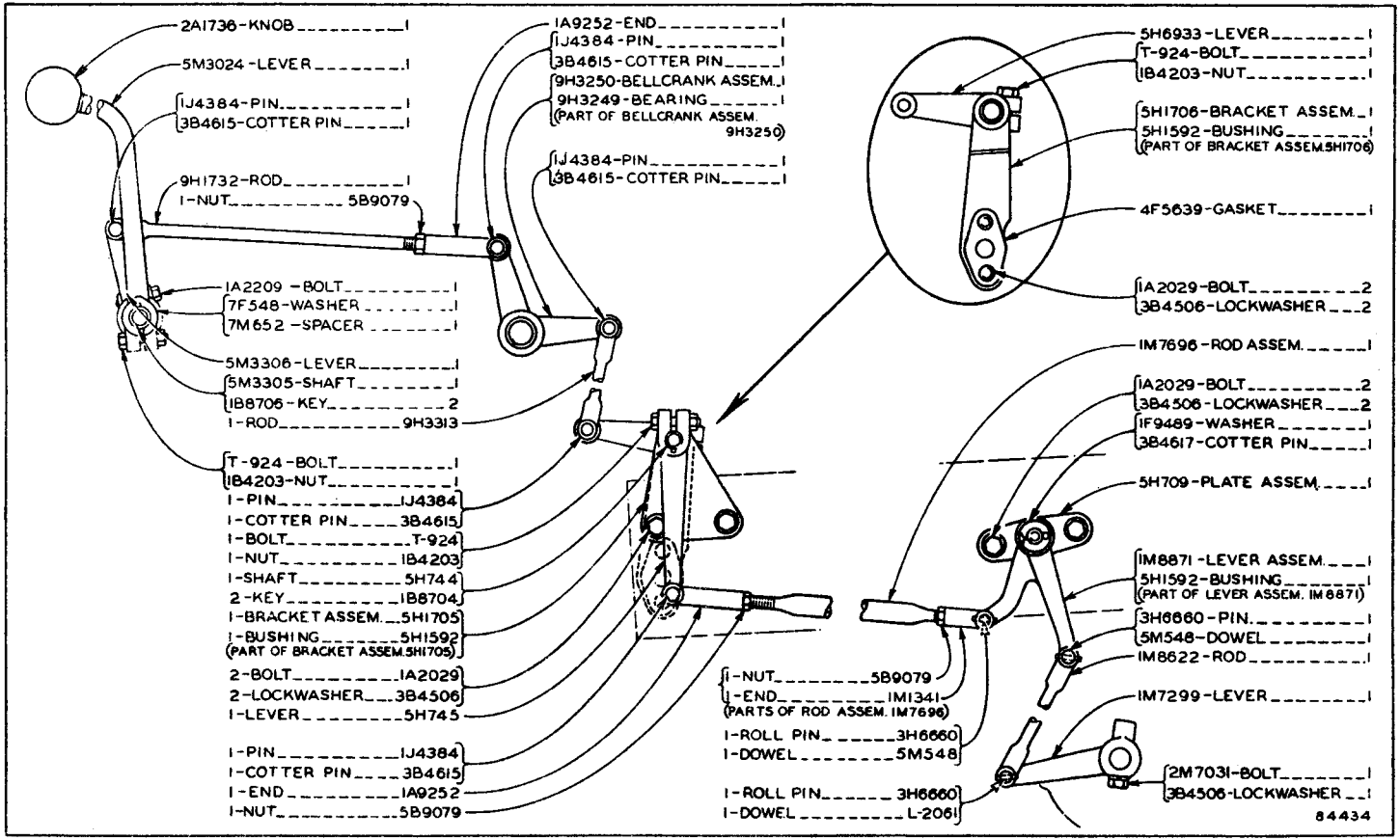

ONLY "CATERPILLAR" PARTS GIVE "CATERPILLAR" PERFORMANCE

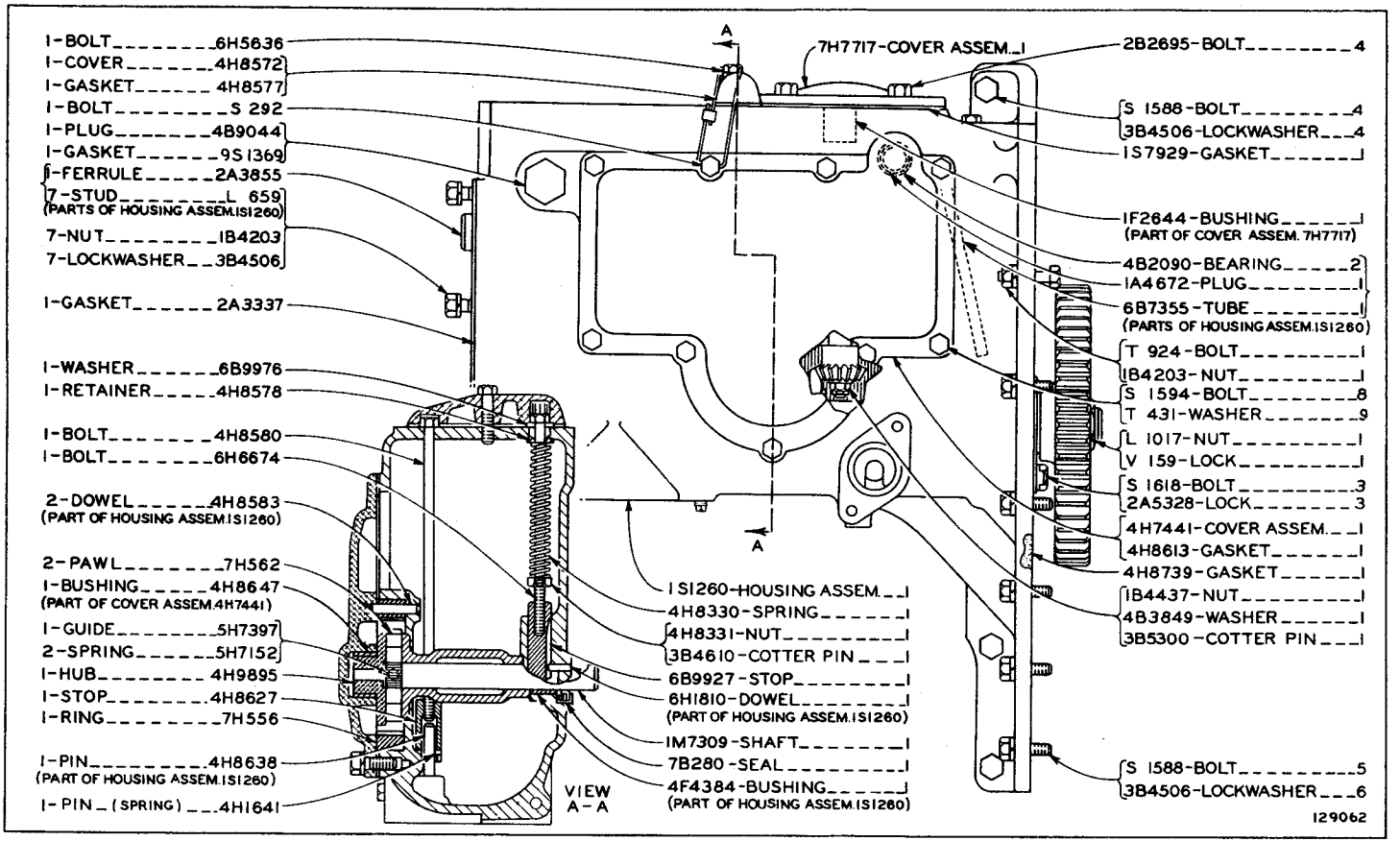

ACCESSORY DRIVE AND GOVERNOR (9S6503 N/S)—Part 1

ACCESSORY DRIVE AND GOVERNOR (9S6503 N/S)—Part 2

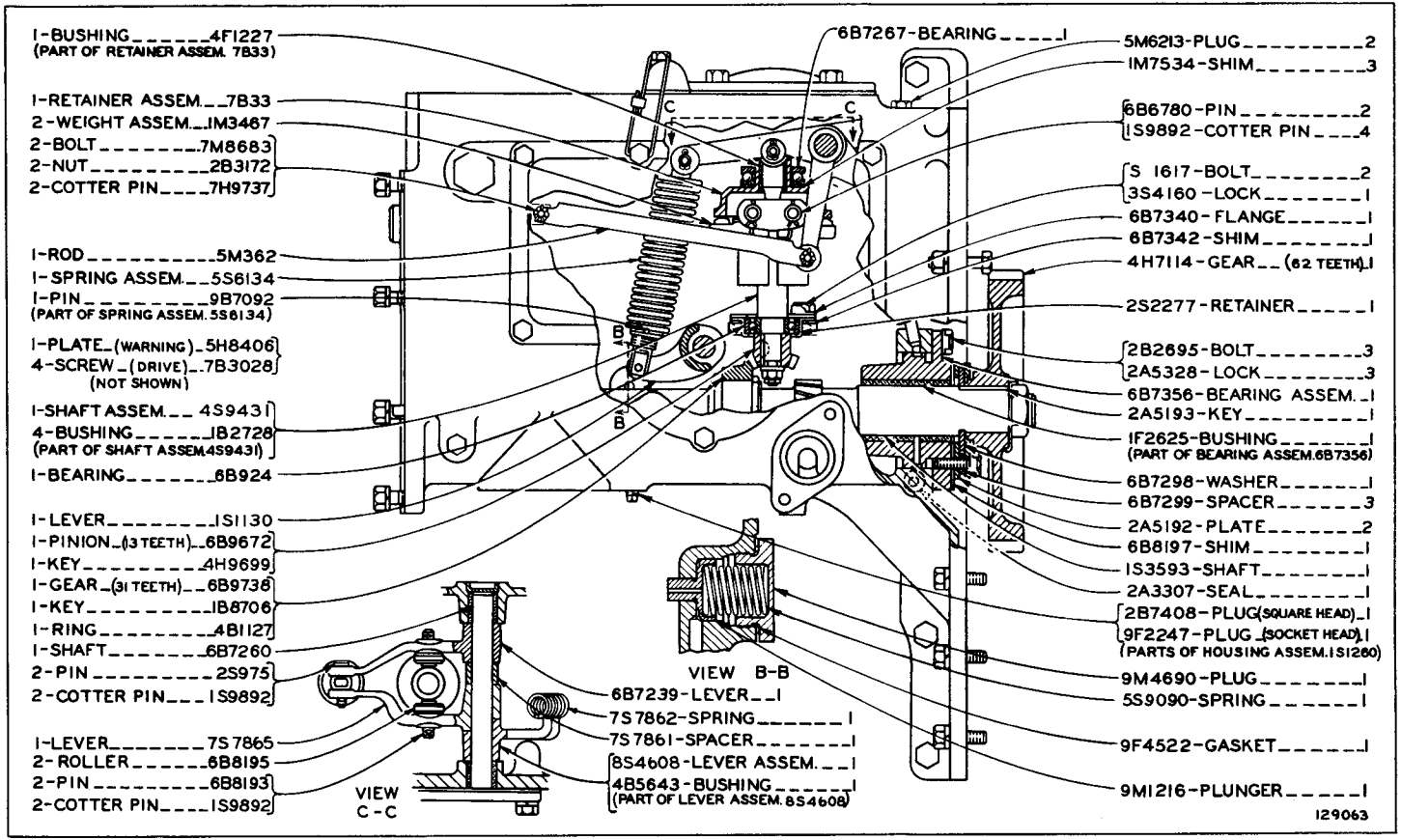

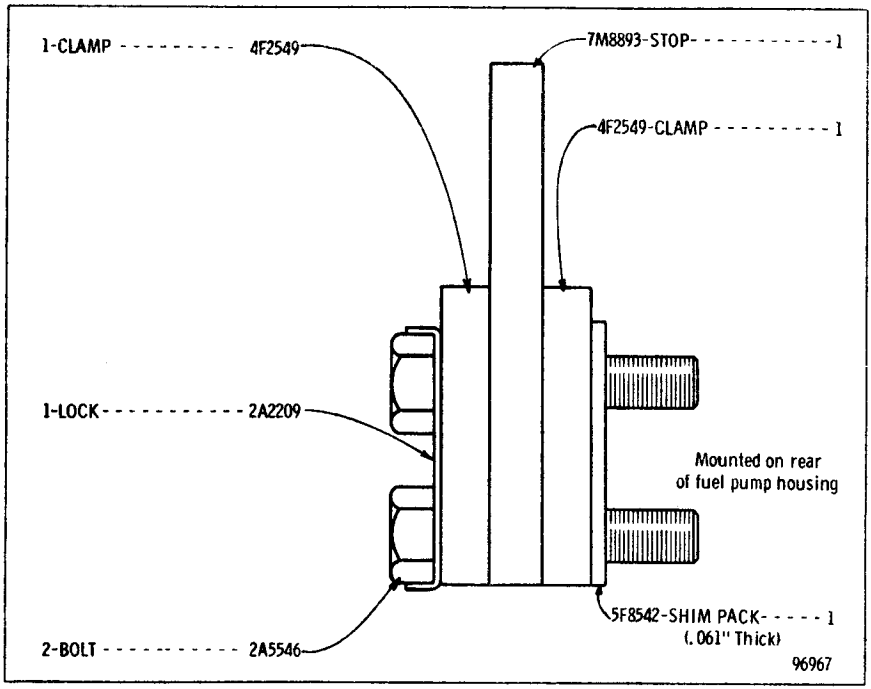

RACK STOP (2S88 N/S)

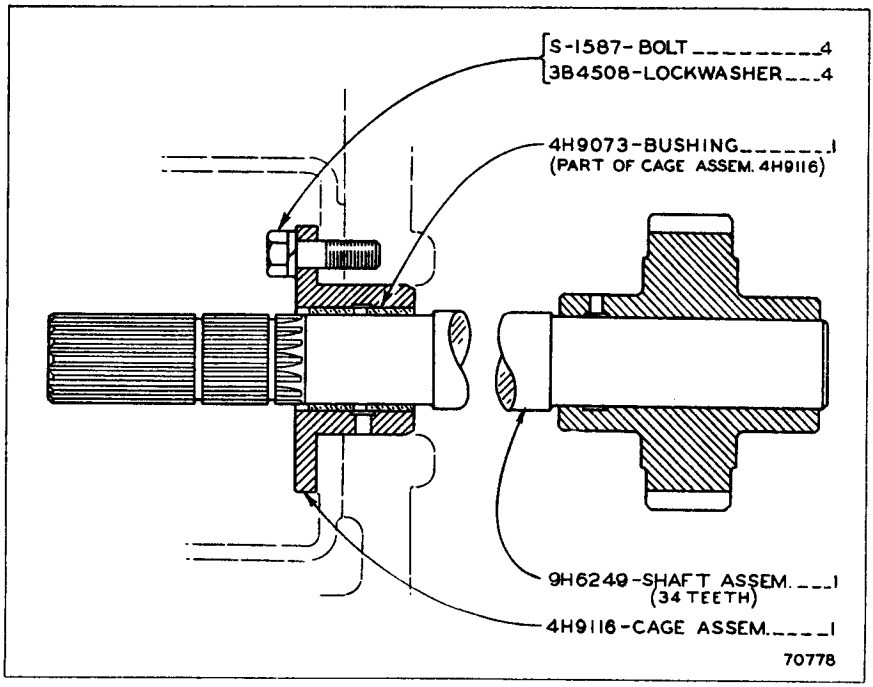

REAR POWER TAKE-OFF DRIVE (9H6248 N/S)

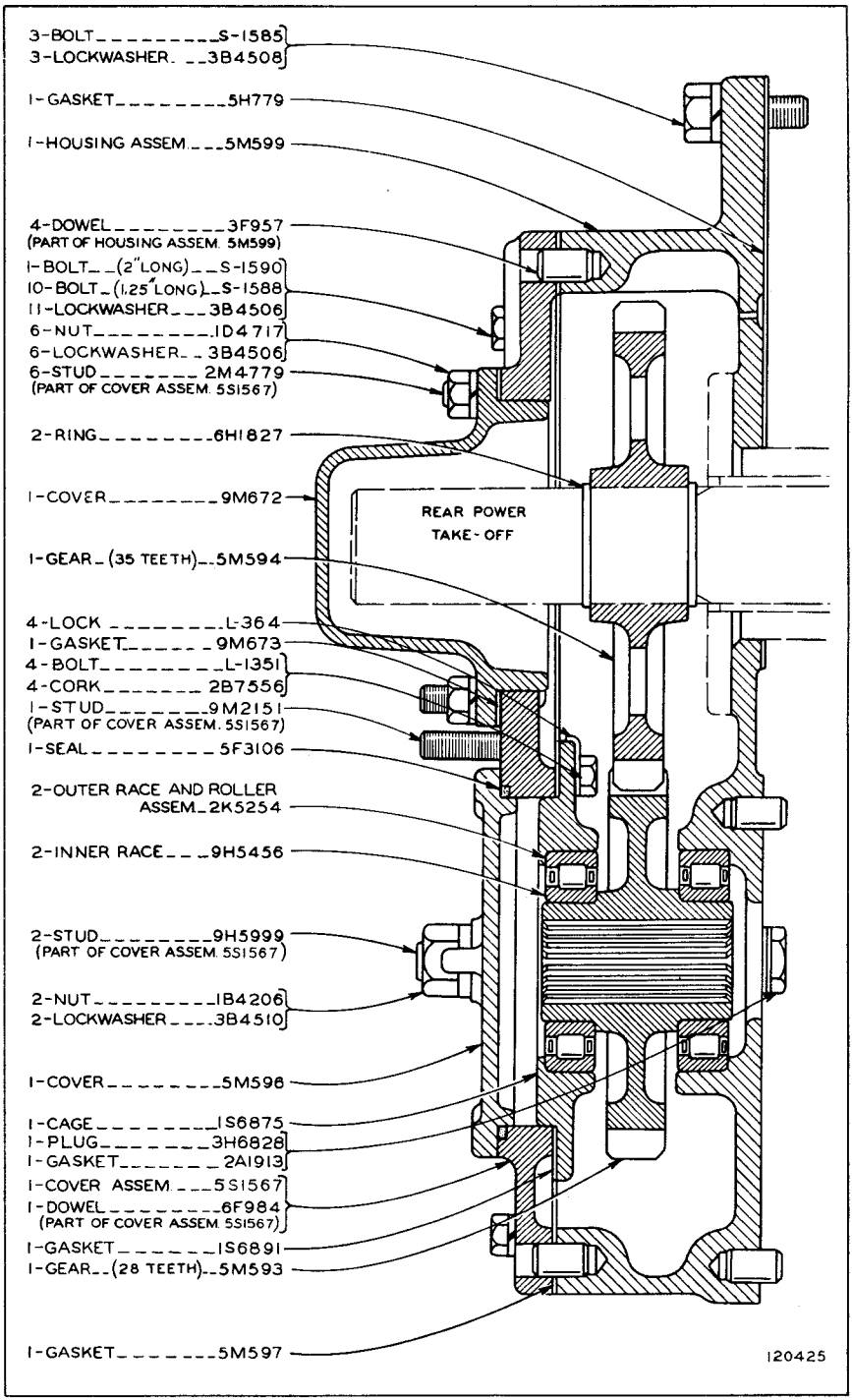

REAR POWER TAKE-OFF HOUSING (3S1660 N/S)

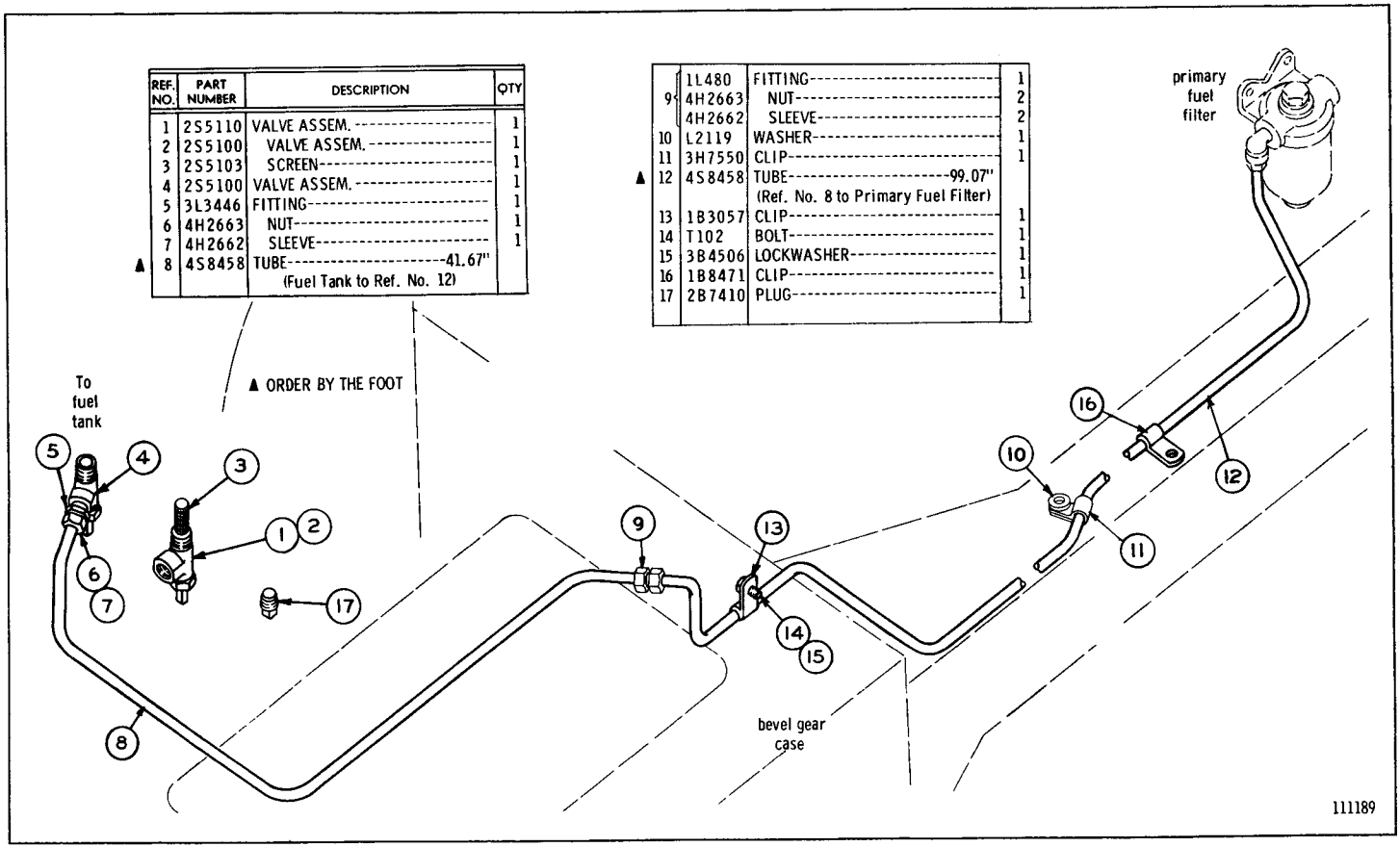

FUEL LINES (2S8591 N/S)
AS VIEWED FROM REAR RIGHT HAND SIDE OF MACHINE

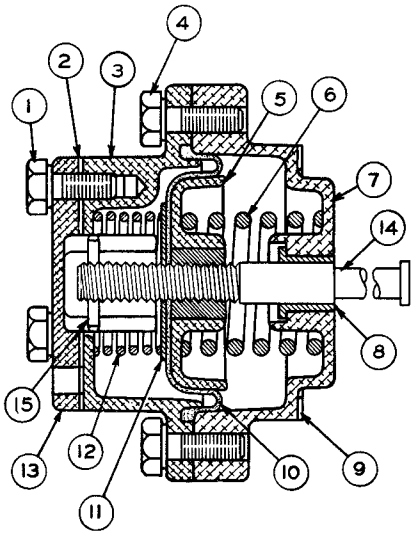

REF. NO.	PART NUMBER	DESCRIPTION	QTY
1	2A762	BOLT---------(.625" long)---------	3
		-or-	
	S1347	BOLT---------(.75" long)---------	3
	3B4504	LOCKWASHER----------	3
	2S4652	WASHER----------	3
2	6L5766	GASKET----------	1
3	6L5767	COVER----------	1
4	4F7957	BOLT---------(.875" long)---------	2
	2M5471	BOLT---------(1.75" long)---------	2
5	5S6120	RETAINER ASSEM.----------	1
6	6L5772	SPRING----------	1
7	8S5447	HOUSING ASSEM.----------	1
8	8S5448	BEARING----------	1
		(Part of 8S5447 Assem.)	
9	6L5773	GASKET----------	1
10	4S7458	DIAPHRAGM----------	1
11	6L5769	WASHER----------	1
12	6L5768	SPRING----------	1
13	6L5764	COVER----------	1
14	8L4183	BOLT----------	1
15	6L6035	DOWEL----------	1

107338

FUEL RATIO CONTROL (8S5095 N/S)

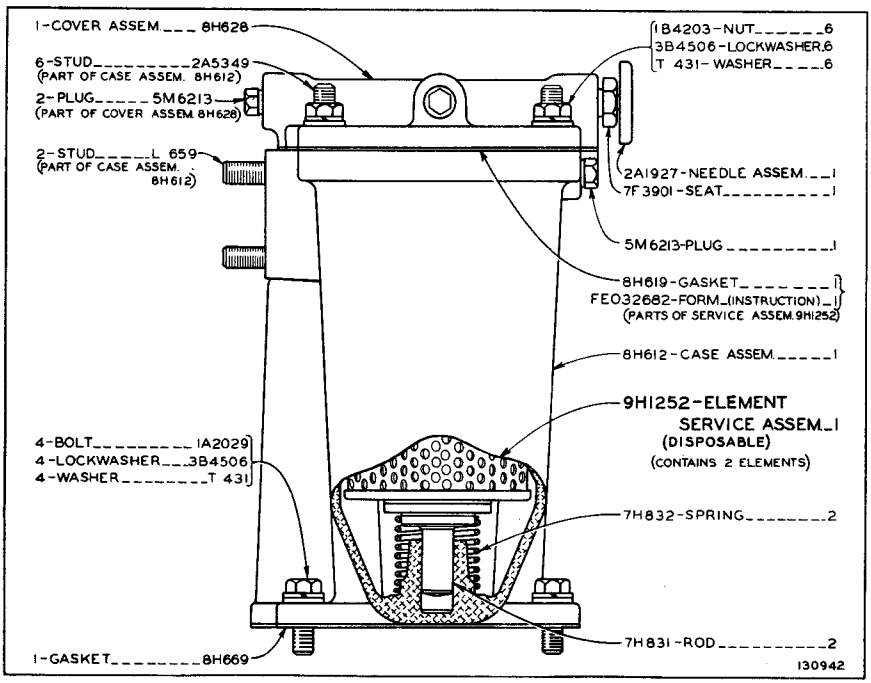

1P3 FUEL FILTER GROUP

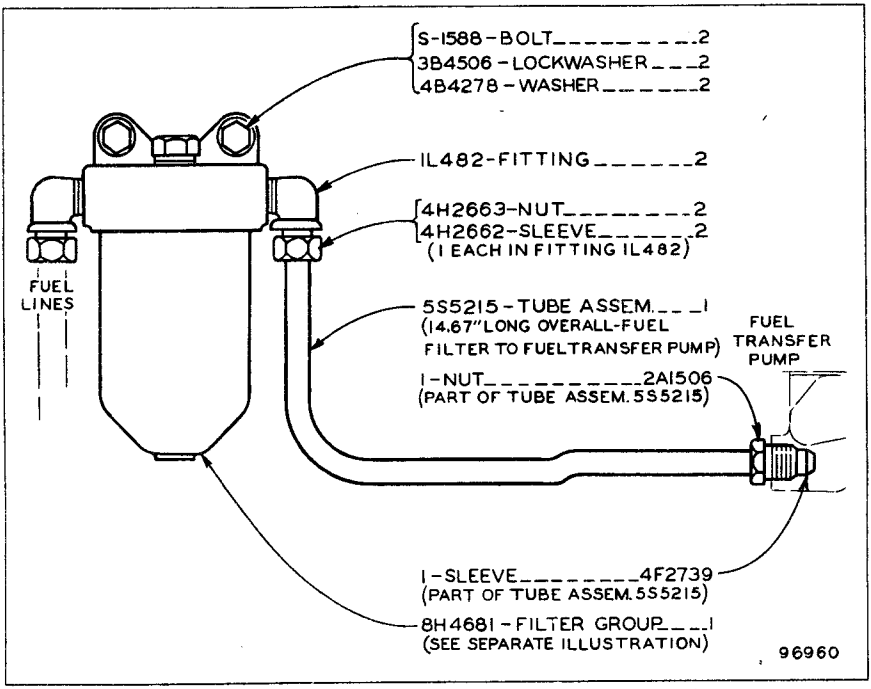

PRIMARY FUEL FILTER AND LINES (1M3231 N/S)

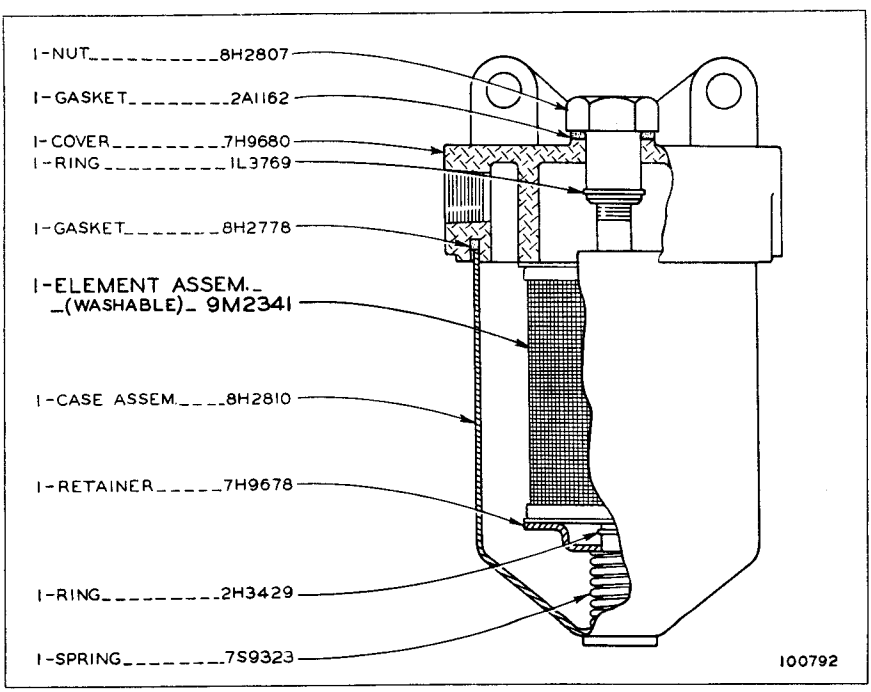

8H4681 PRIMARY FUEL FILTER GROUP
Part of Primary Fuel Filter and Lines

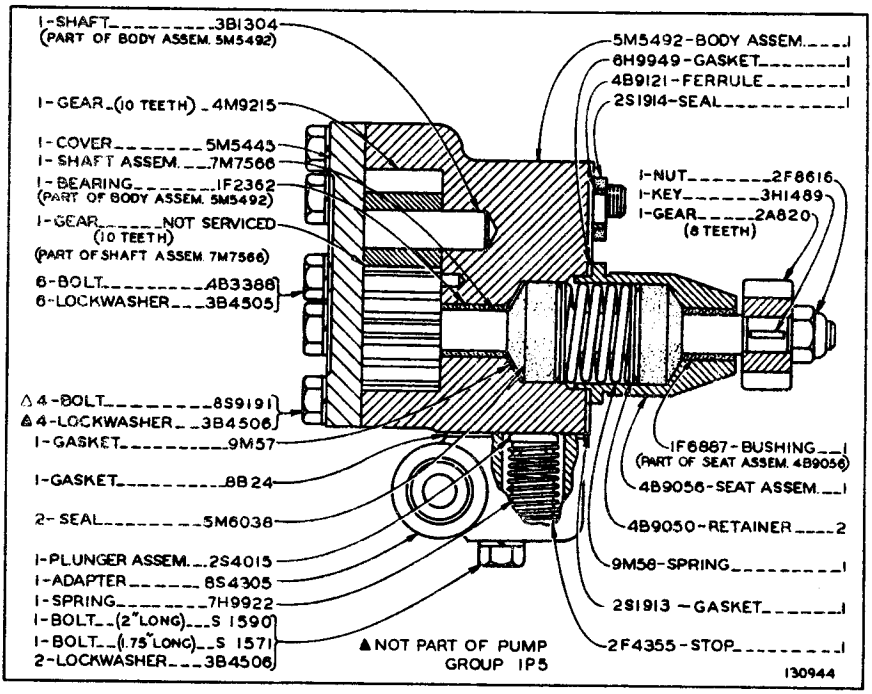

1P5 FUEL TRANSFER PUMP GROUP (1P4 N/S)

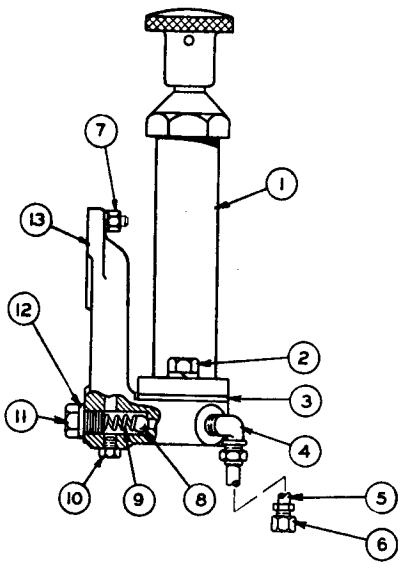

REF. NO.	PART NUMBER	DESCRIPTION	QTY
1	2S308	PUMP ASSEM. (See Separate Illustration)	1
2	S1594	BOLT	2
	3B4506	LOCKWASHER	2
3	2H2519	GASKET	1
4	5L9746	FITTING	1
	4H2497	NUT	1
	4H2496	SLEEVE (Parts of 5L9746 Fitting)	1
5	8S4301	TUBE	1
6	5M3528	FITTING	1
	8F8997	NUT (Part of 5M3528 Fitting)	1
7	1B4203	NUT	2
	3B4506	LOCKWASHER	2
	1A2024	GASKET	1
8	7B6368	BALL	2
9	9M4173	SPRING	2
10	2S7905	PLUG	1
11	1K6705	BOLT (.50" long)	1
	6H1717	BOLT (1.125" long)	1
12	4F9325	GASKET	2
13	8S4300	BRACKET	1

130945

1P287 FUEL PRIMING PUMP GROUP
2S308 Fuel Priming Pump parts are shown on Page 40

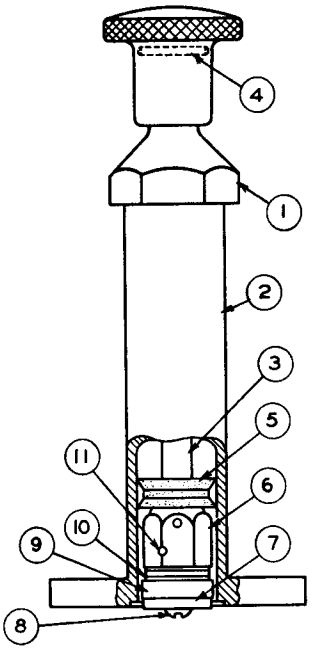

REF NO	PART NUMBER	DESCRIPTION	QTY
1	2S311	CAP	1
2	2S312	BARREL ASSEM.	1
3	2S309	ROD ASSEM.	1
	2S310	ROD	1
4	9F7882	PIN	1
		(Parts of 2S309 Rod Assem.)	
5	2S315	SEAL	1
6	2S316	NUT	1
7	3S8427	WASHER	1
8	4B1236	SCREW	1
9	2S317	HOLDER	1
10	7M7219	BEARING	1
	7M7193	RACE	2
11	2L5894	PIN	2

110628

2S308 FUEL PRIMING PUMP ASSEMBLY
Part of 1P287 Fuel Priming Pump Group shown on Page 39

FUEL PUMP HOUSING (9S6502 N/S)

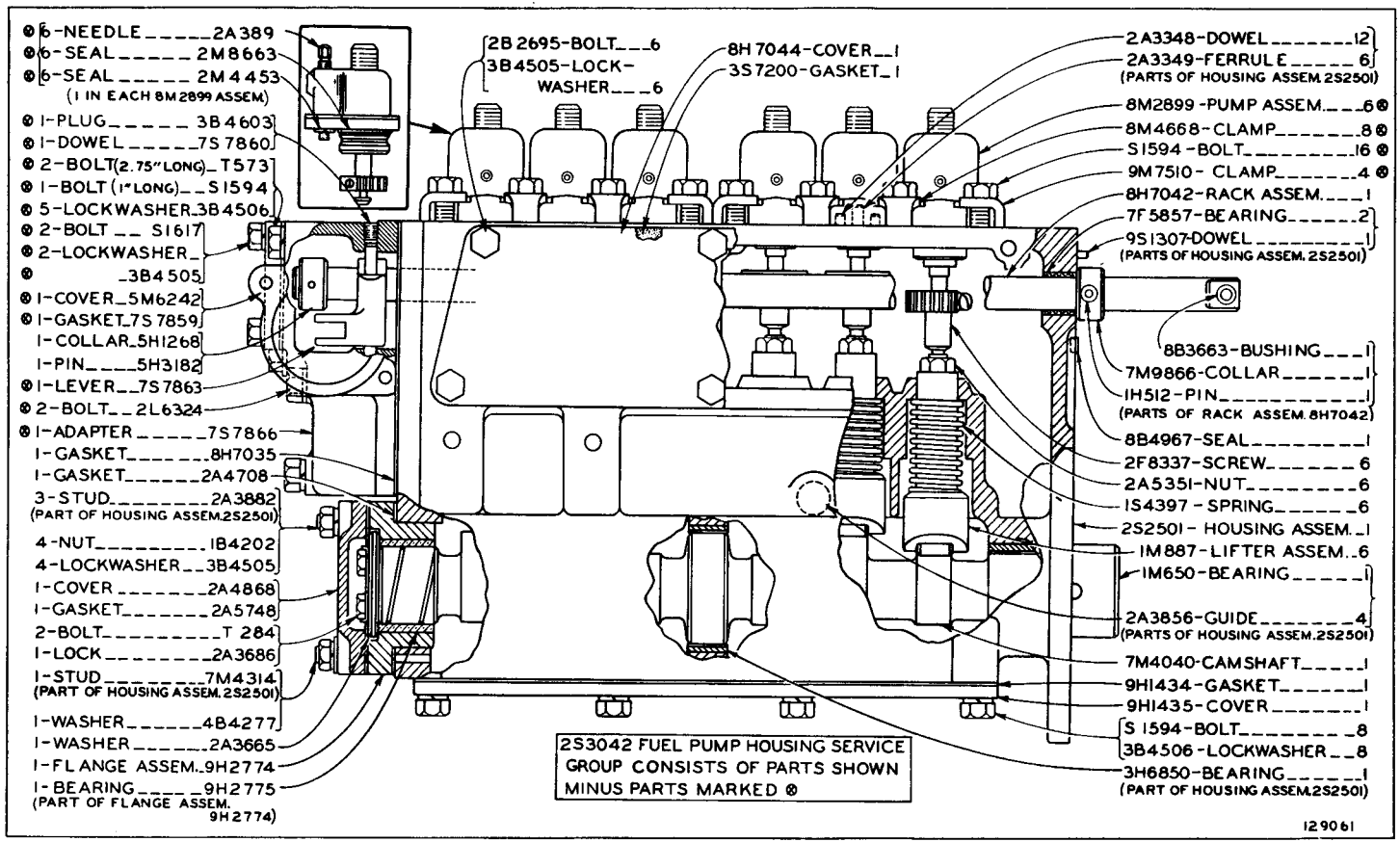

ONLY "CATERPILLAR" PARTS GIVE "CATERPILLAR" PERFORMANCE

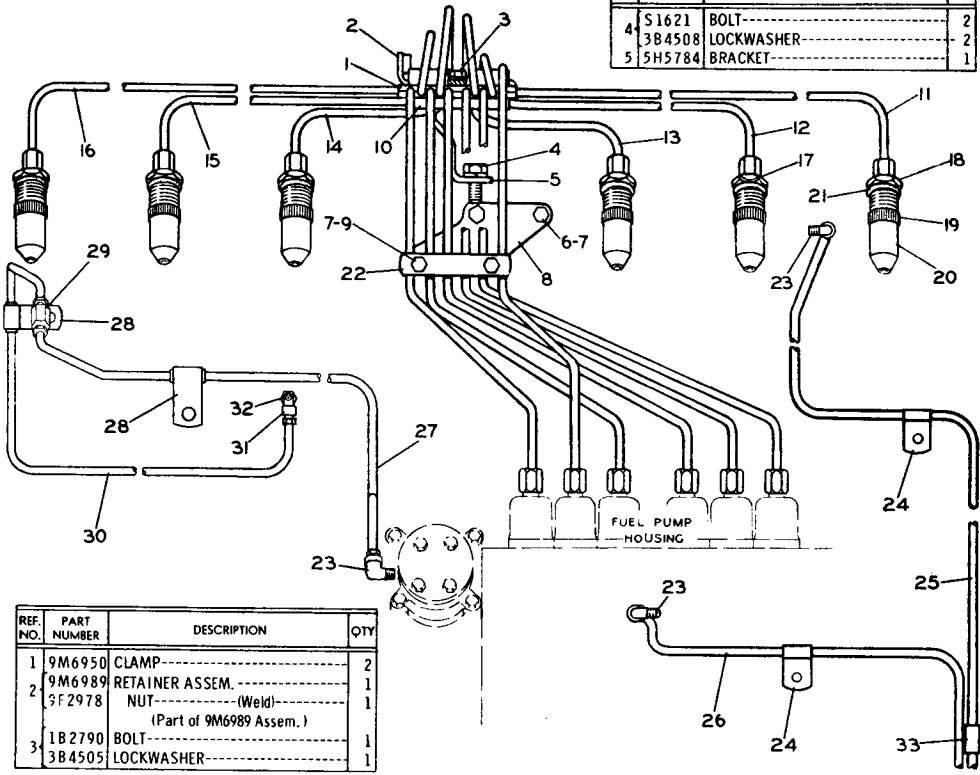

REF. NO.	PART NUMBER	DESCRIPTION	QTY.
4	S1621	BOLT	2
	3B4508	LOCKWASHER	2
5	5H5784	BRACKET	1

REF. NO.	PART NUMBER	DESCRIPTION	QTY.
1	9M6950	CLAMP	2
2	9M6989	RETAINER ASSEM.	1
	9F2978	NUT---(Weld)	1
		(Part of 9M6989 Assem.)	
3	1B2790	BOLT	1
	3B4505	LOCKWASHER	1

REF. NO.	PART NUMBER	DESCRIPTION	QTY.
6	L1351	BOLT	2
7	3B4506	LOCKWASHER	4
8	5H5714	BRACKET ASSEM.	1
	9F2978	NUT---(Weld)	2
		(Part of 5H5714 Assem.)	
9	3B1915	BOLT	2
10	9M6987	RETAINER	1
11	4H9611	LINE ASSEM.---(No. 1)	1
12	4H9612	LINE ASSEM.---(No. 2)	1
13	4H9613	LINE ASSEM.---(No. 3)	1
14	4H9614	LINE ASSEM.---(No. 4)	1
15	4H9615	LINE ASSEM.---(No. 5)	1
16	4H9616	LINE ASSEM.---(No. 6)	1
17	6F1069	SEAL ASSEM.	6
18	5H7225	NUT	6
19	7M4603	BODY	6
20	5M4086	NOZZLE ASSEM.	6
		(1 each in 6F1069 Assem.)	
21	5B3718	SEAL	6
22	2B4443	CLAMP	2
	2A2071	RETAINER	1
23	3B8998	FITTING---(To Fuel Filter)	3
	1F1344	NUT	3
		(1 in each 3B8998 Fitting)	
24	L2072	CLIP---(To Cylinder Block)	3
▲ 25	4S8385	TUBE---41.00"	
▲ 26	4S8385	TUBE---24.46"	
▲ 27	4S8385	TUBE---45.06"	
28	8F1179	CLIP	3
	4B6029	GROMMET	3
29	3B8990	FITTING	1
	1F1344	NUT	1
		(Part of 3B8990 Fitting)	
▲ 30	4S8385	TUBE---43.23"	
31	1L9873	FITTING	1
	1F1344	NUT	1
		(Part of 1L9873 Fitting)	
32	5M6214	PLUG	1
33	2B2404	CLIP	1

FUEL INJECTION VALVES AND LINES (9S6501 N/S)

OIL LINES AND FILTER (1S373 N/S)—Part 1 of 3
AS VIEWED FROM RIGHT HAND SIDE OF ENGINE

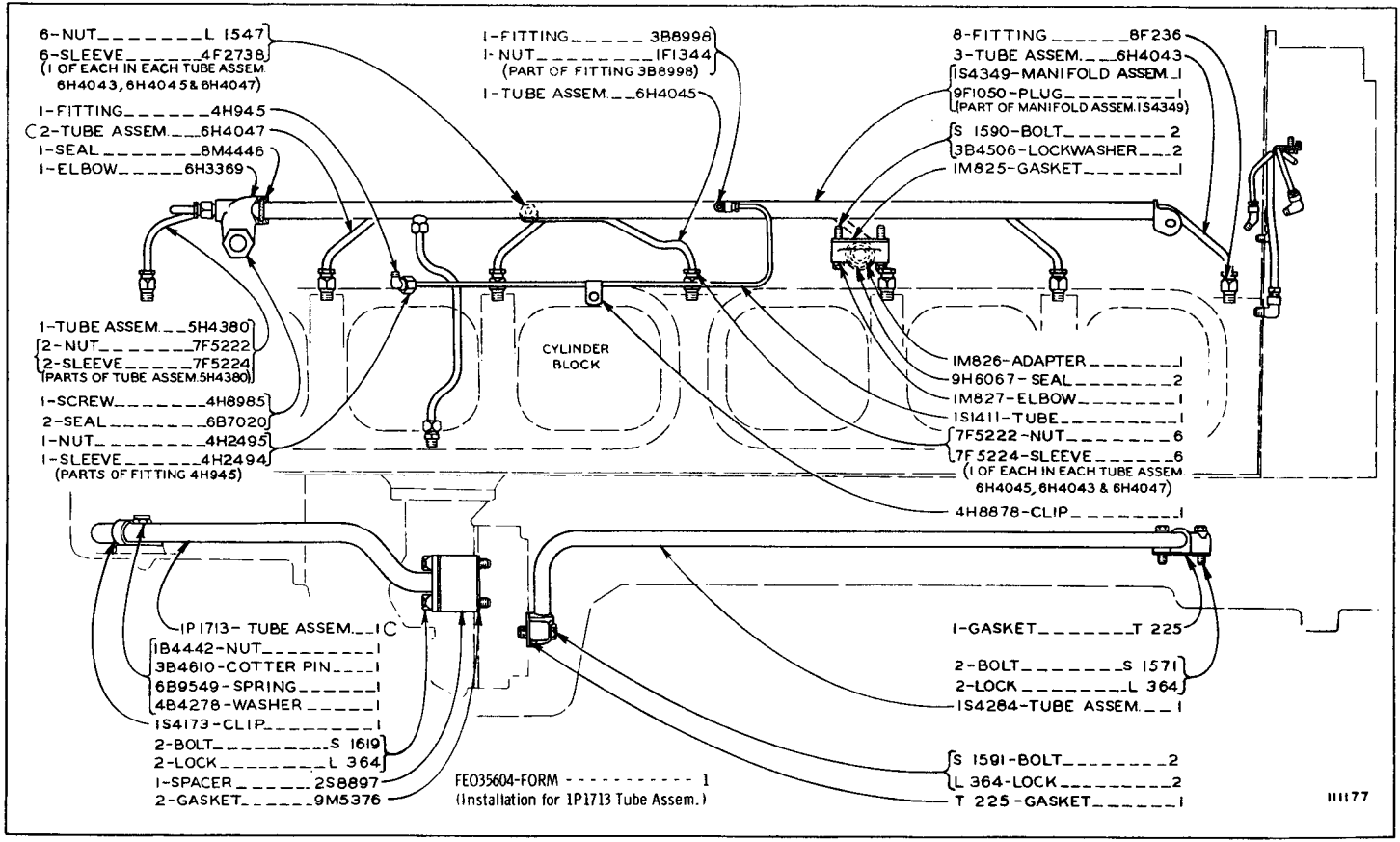

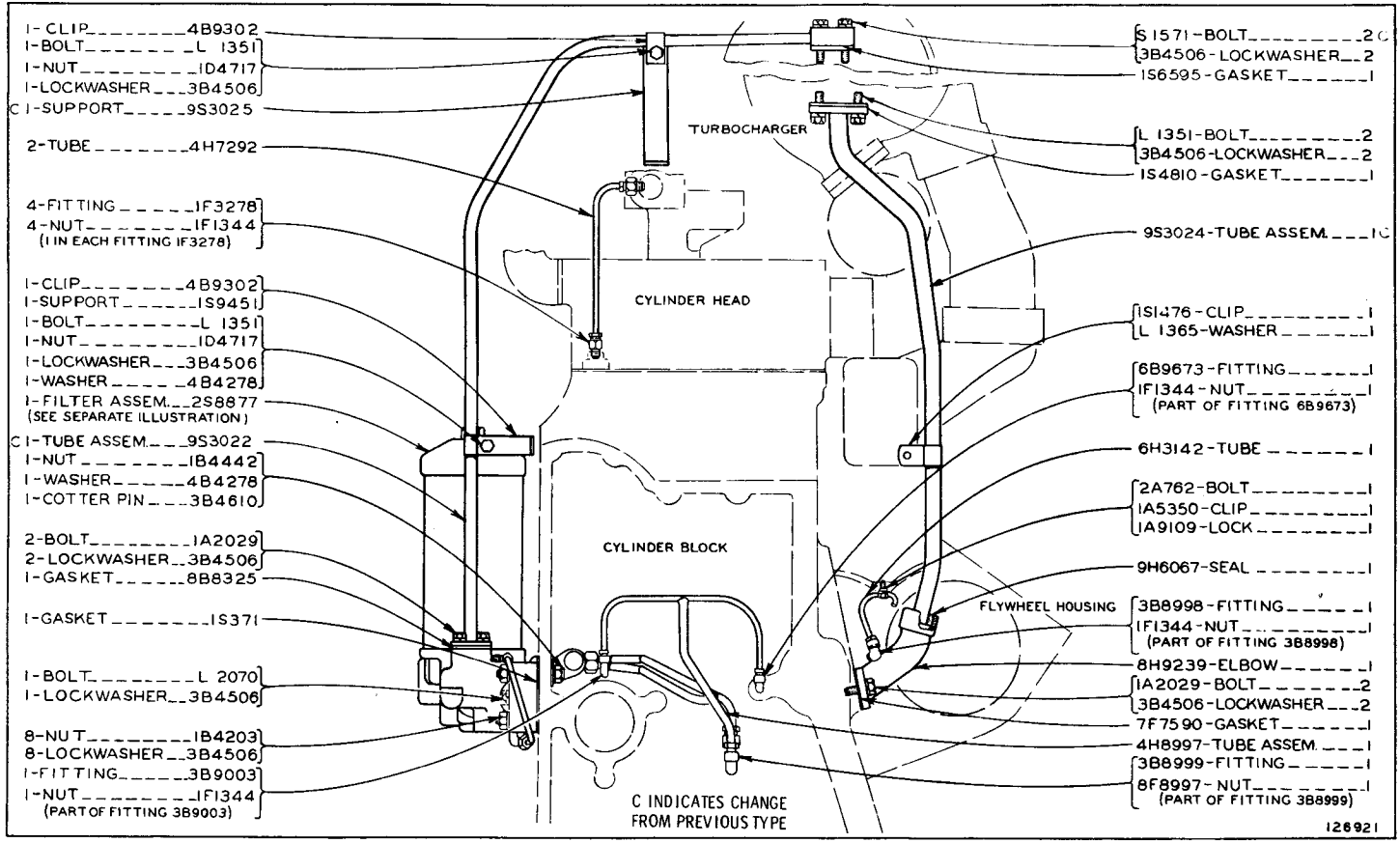

OIL LINES AND FILTER (1S373 N/S)—Part 2 of 3
AS VIEWED FROM FRONT OF ENGINE
2S8877 Oil Filter parts are shown on Page 46

OIL LINES AND FILTER (1S373 N/S)—Part 3 of 3
AS VIEWED FROM RIGHT HAND SIDE OF ENGINE

REF NO.	PART NUMBER	DESCRIPTION	QTY
1	1A2029	BOLT----------(1" Long)----------	13
2	3B4506	LOCKWASHER----------	19
3	5S347	TUBE ASSEM. ----------	1
	9F2978	NUT----------	1
		(Part of 5S347 Tube Assem.)	
4	9H6067	SEAL----------	4
5	5S355	TUBE ASSEM. -(8.78" Long Overall)-	1
6	9H8217	GASKET----------	4
7	S-1571	BOLT--------(1.75" Long)---------	1
8	S-1588	BOLT---------(1.25" Long)--------	4
9	1S735	TUBE ASSEM. ----------	1
10	2M1028	ELBOW----------	1
		(Part of 1S735 Tube Assem.)	
11	7B7129	GASKET----------	1
12	8M5521	GASKET----------	1
13	1S733	ELBOW----------	1

REF NO.	PART NUMBER	DESCRIPTION	QTY
14	L-2070	BOLT---------(2.25" Long)--------	1
15	5S351	TUBE ASSEM. ----------	1
16	1D4717	NUT----------	1
17	5K3118	CLAMP----------	2
18	2H8829	PLUG----------	1
19	6F7062	GASKET----------	1
20	5S337	TUBE ASSEM. (18.77" Long Overall)	1
	9F2978	NUT----------	1
		(Part of 5S337 Tube Assem.)	
21	5S265	ELBOW----------	1
22	4H5952	GASKET----------	1
23	5H8177	PLUG----------	1
24	6F7062	WASHER----------	1
25	5S269	ELBOW----------	1
26	4H5952	GASKET----------	1

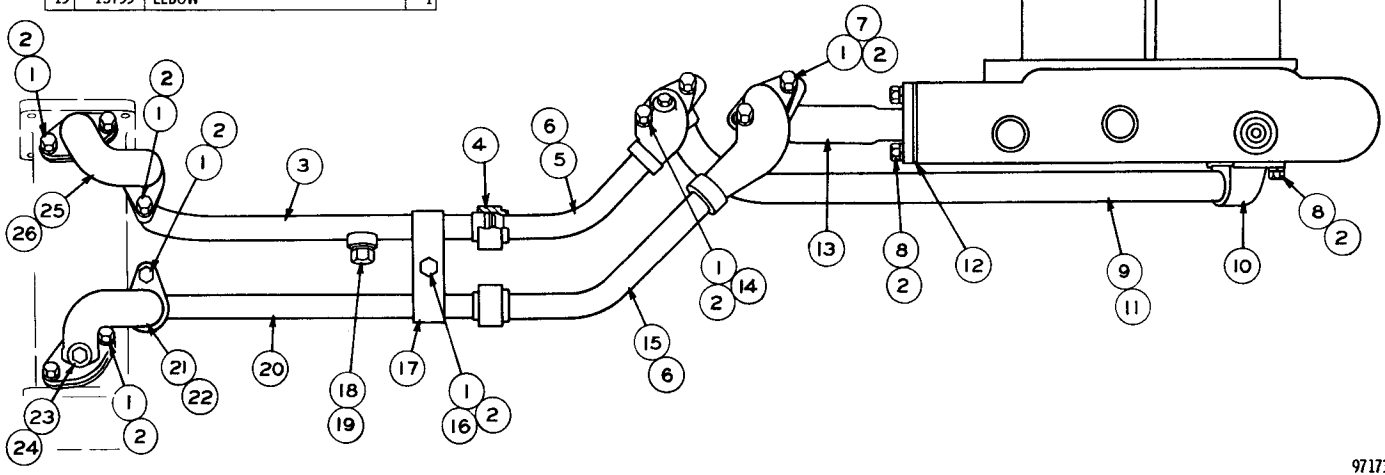

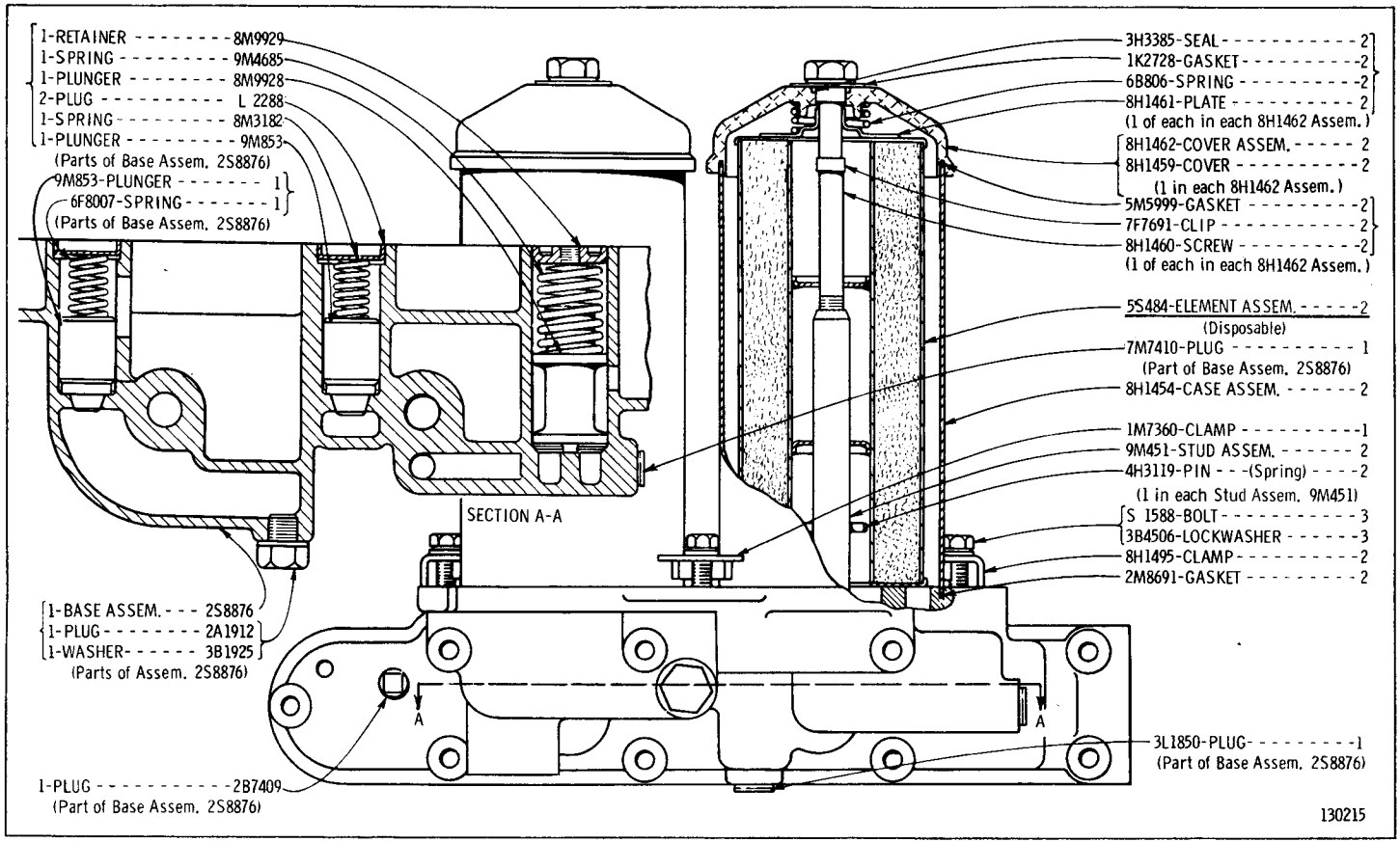

2S8877 OIL FILTER ASSEMBLY

Part of Oil Lines and Filter shown on Page 44

ENGINE AND TRANSMISSION OIL COOLER (5S607 N/S)

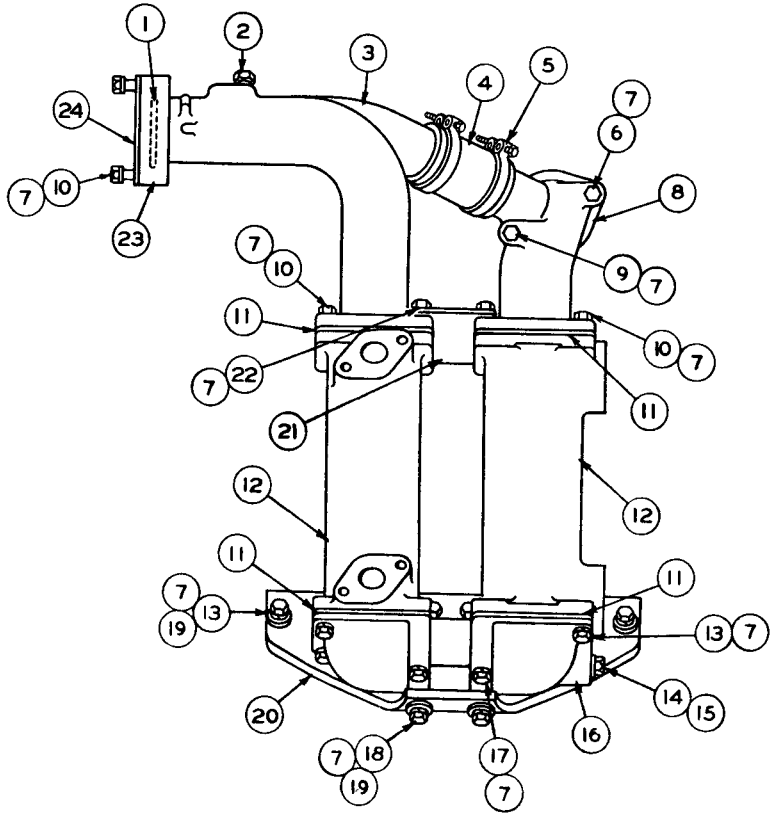

REF NO	PART NUMBER	DESCRIPTION	QTY
1	3H2652	SEAL	1
2	5M6214	PLUG	1
3	5S636	PIPE	1
4	6L7965	HOSE	1
5	3K7583	CLAMP	2
6	S 1590	BOLT	1
7	3B4506	LOCKWASHER	24
8	5S639	PIPE	1
	2H5571	GASKET	1
9	8S9191	BOLT	1
10	S1588	BOLT	6
11	2M5414	GASKET	4
12	9M8041	CORE ASSEM.	2
13	1A2029	BOLT	8
14	2H8829	PLUG	1
15	6F7062	GASKET	1
16	5S637	BONNET	1
17	S 1619	BOLT	2
18	T 65	BOLT	2
19	4B4278	WASHER	6
20	5S638	SUPPORT	1
21	5S640	SUPPORT	1
22	S 1591	BOLT	4
23	1S2093	FLANGE	1
24	4H9008	GASKET	1

111586

ONLY "CATERPILLAR" PARTS GIVE "CATERPILLAR" PERFORMANCE

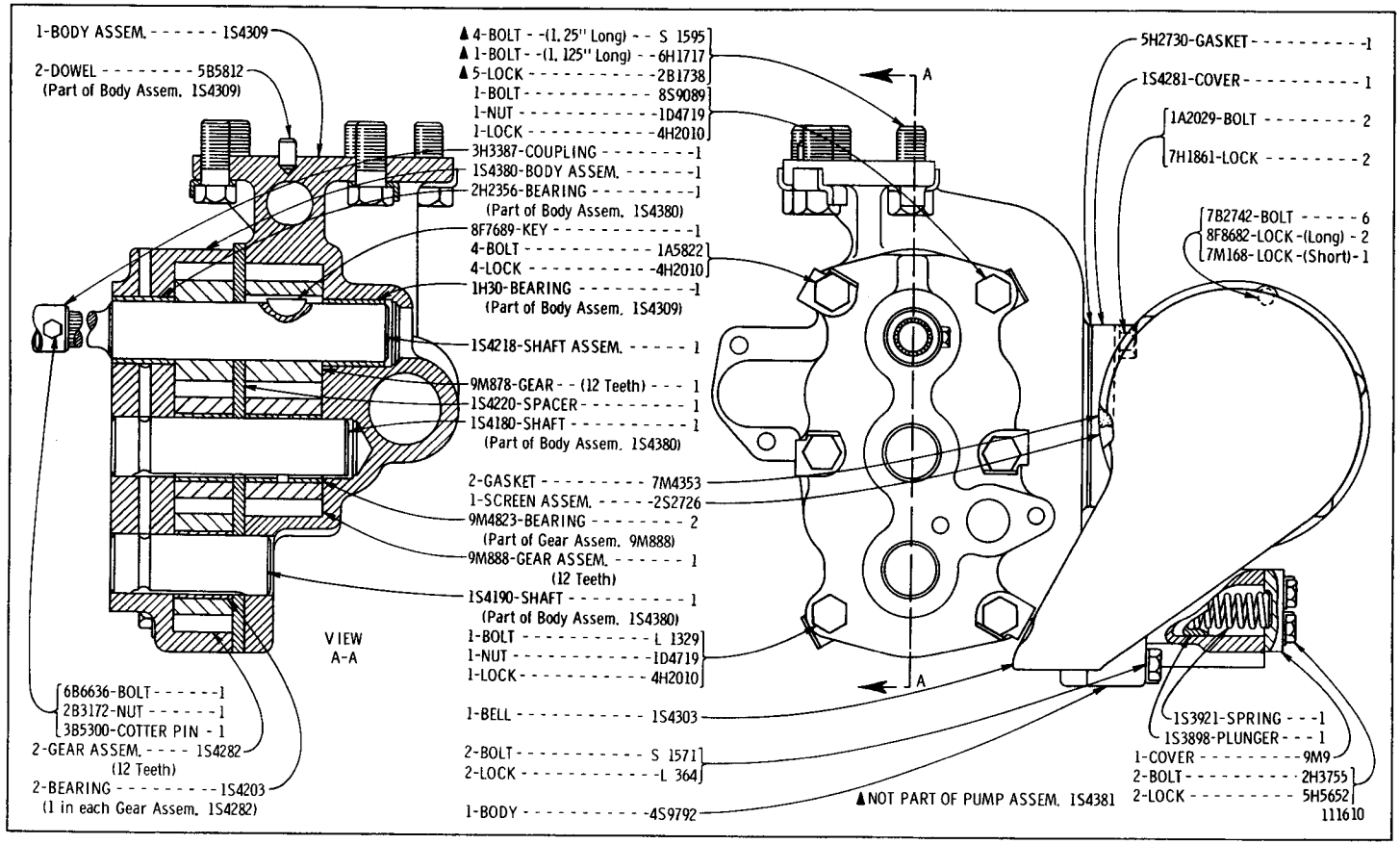

1S4381 OIL PUMP ASSEMBLY (3H3093 N/S)

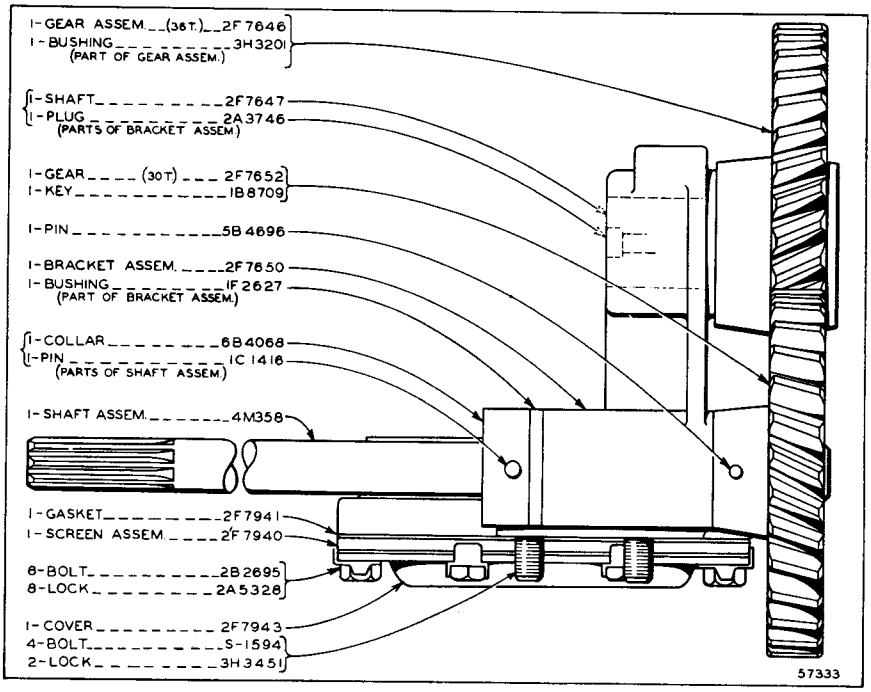

OIL PUMP DRIVE (4M359 N/S)

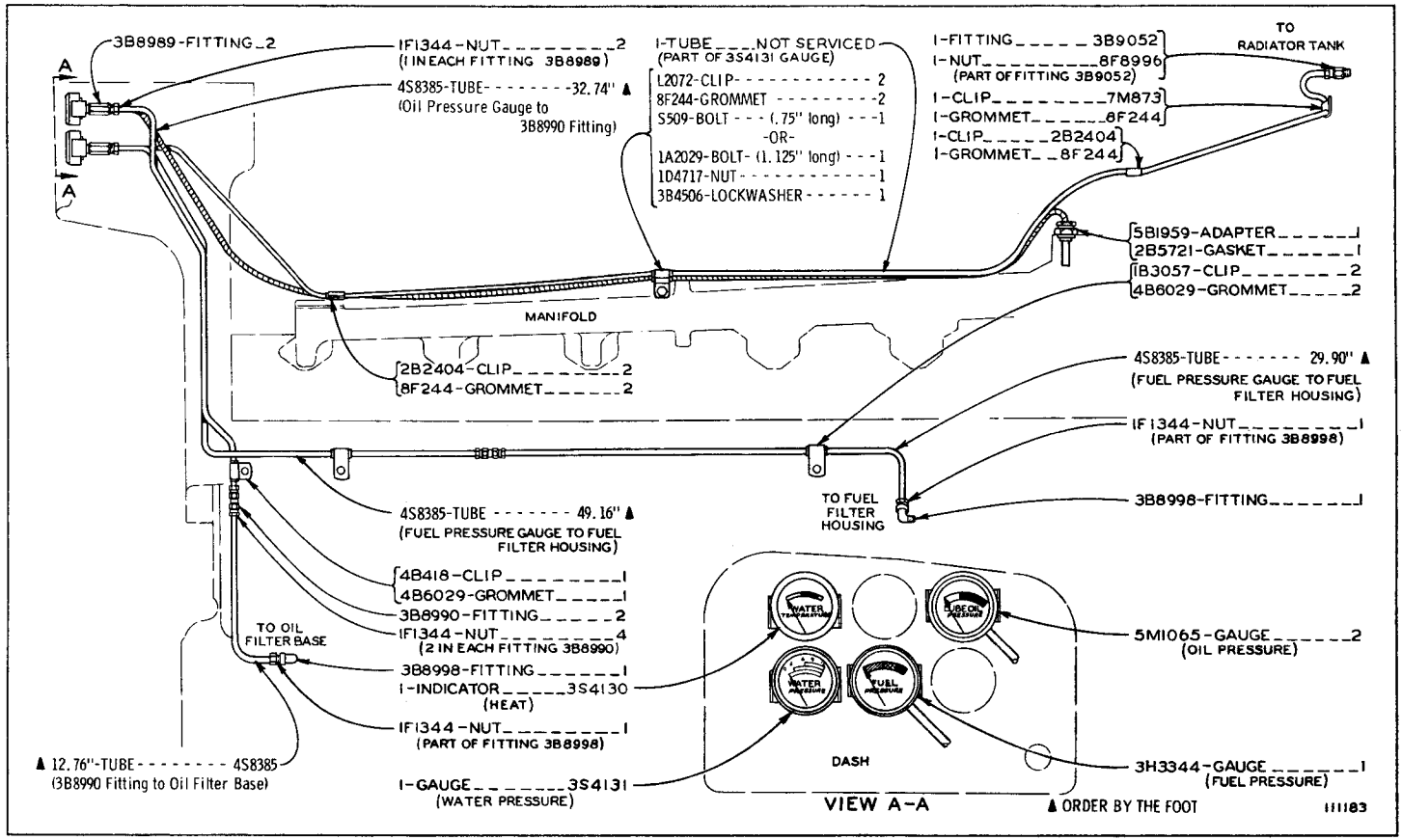

OIL GAUGE, FUEL GAUGE AND HEAT INDICATOR (9H2912 N/S)

Refer also to Page 163 for special parts

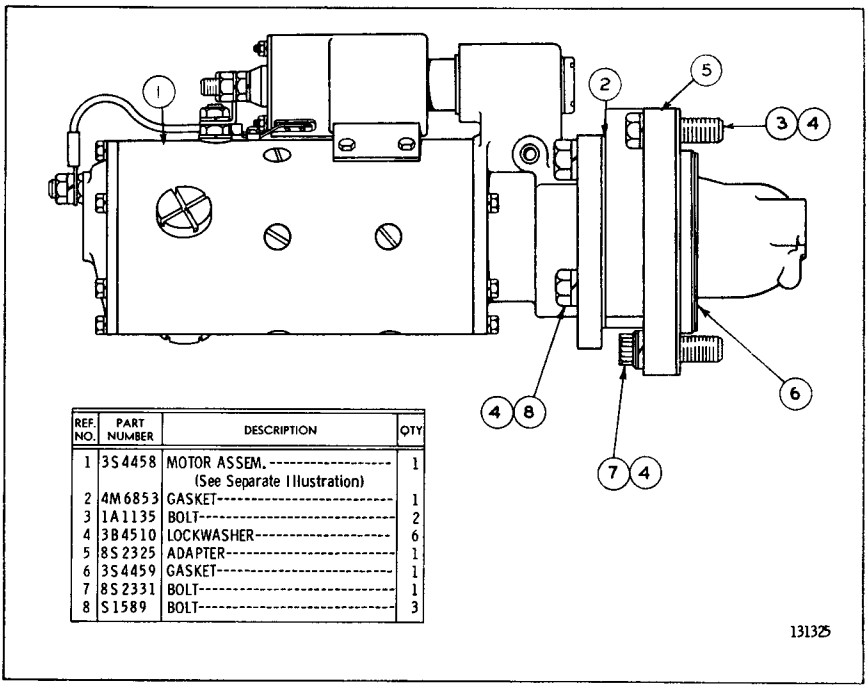

REF. NO.	PART NUMBER	DESCRIPTION	QTY
1	3S4458	MOTOR ASSEM. (See Separate Illustration)	1
2	4M6853	GASKET	1
3	1A1135	BOLT	2
4	3B4510	LOCKWASHER	6
5	8S2325	ADAPTER	1
6	3S4459	GASKET	1
7	8S2331	BOLT	1
8	S1589	BOLT	3

3S4463 ELECTRIC STARTER GROUP—24 Volt
3S4458 Motor parts are shown on Pages 52 and 53
Refer also to Page 108 for special parts

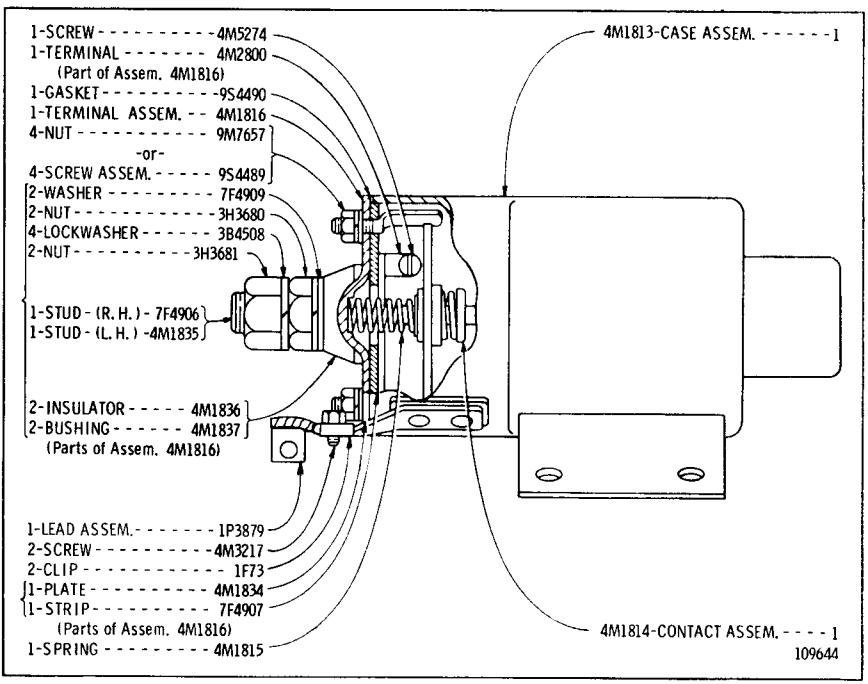

4M1812 SOLENOID SWITCH ASSEMBLY
Part of 3S4458 Starting Motor Assembly shown on Page 53

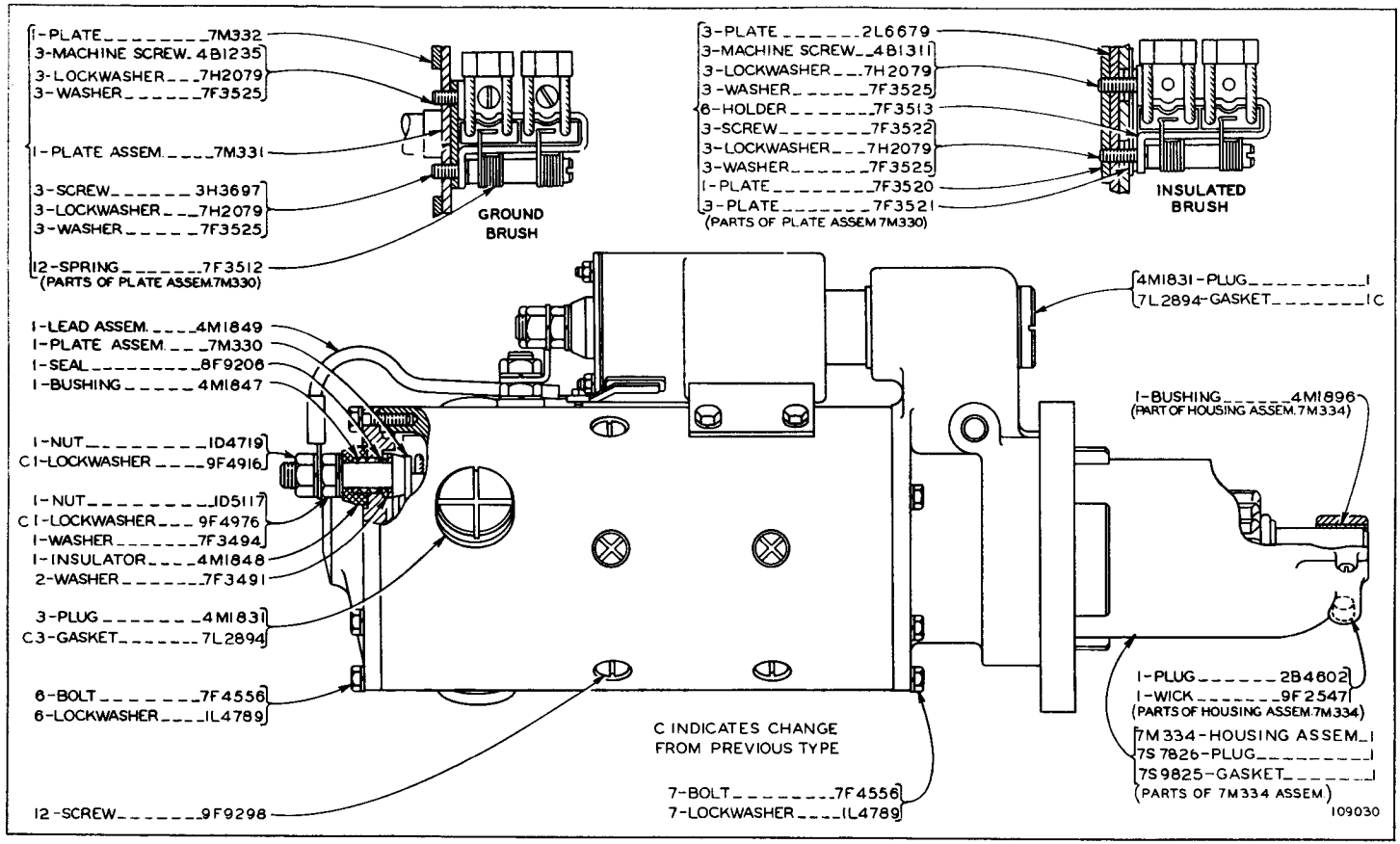

3S4458 MOTOR ASSEMBLY—24 Volt—Part 1

Part of 3S4463 Electric Starter Group shown on Page 51

3S4458 MOTOR ASSEMBLY—24 Volt—Part 2

Part of 3S4463 Electric Starter Group shown on Page 51

4M1812 Solenoid Switch parts are shown on Page 51

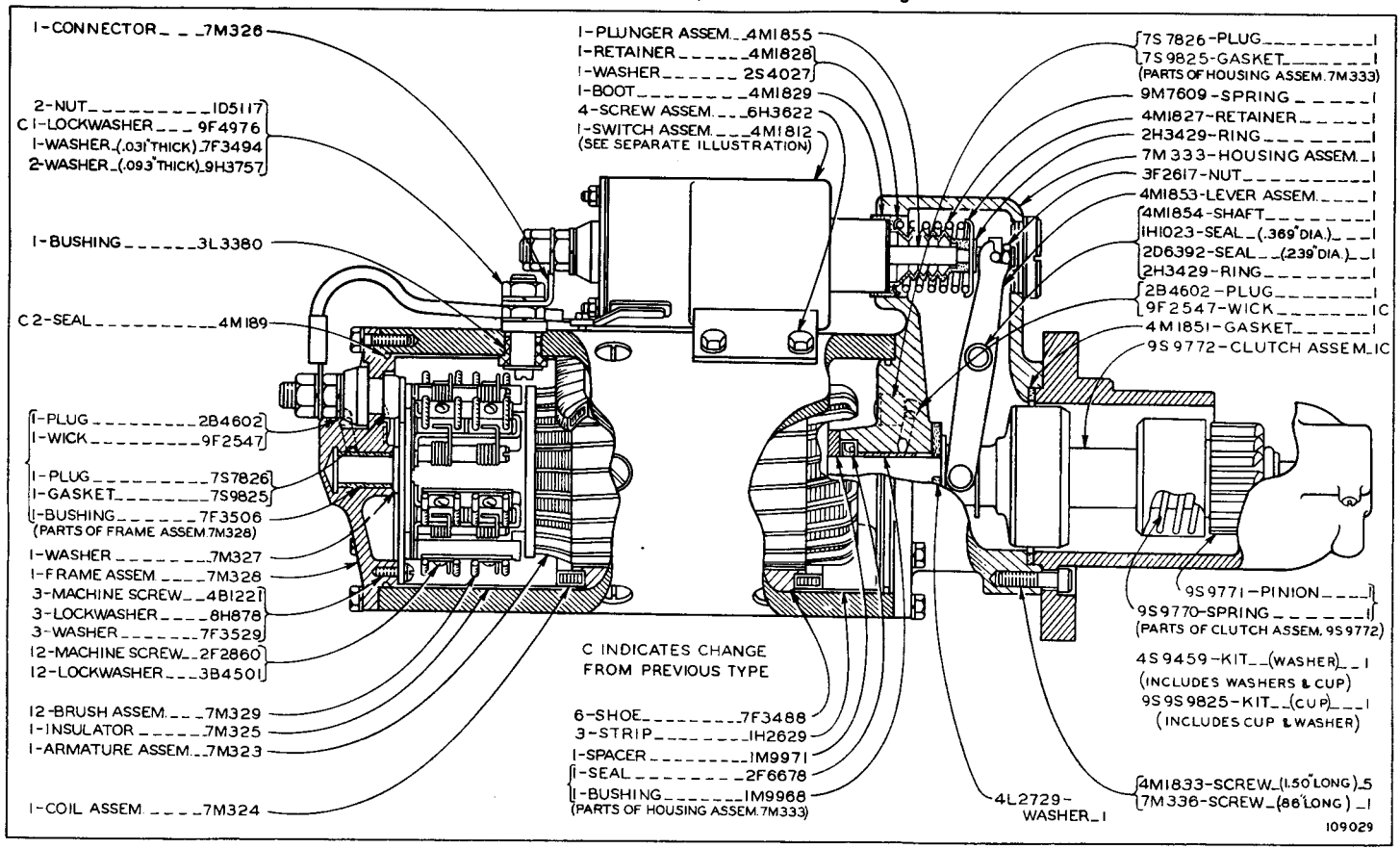

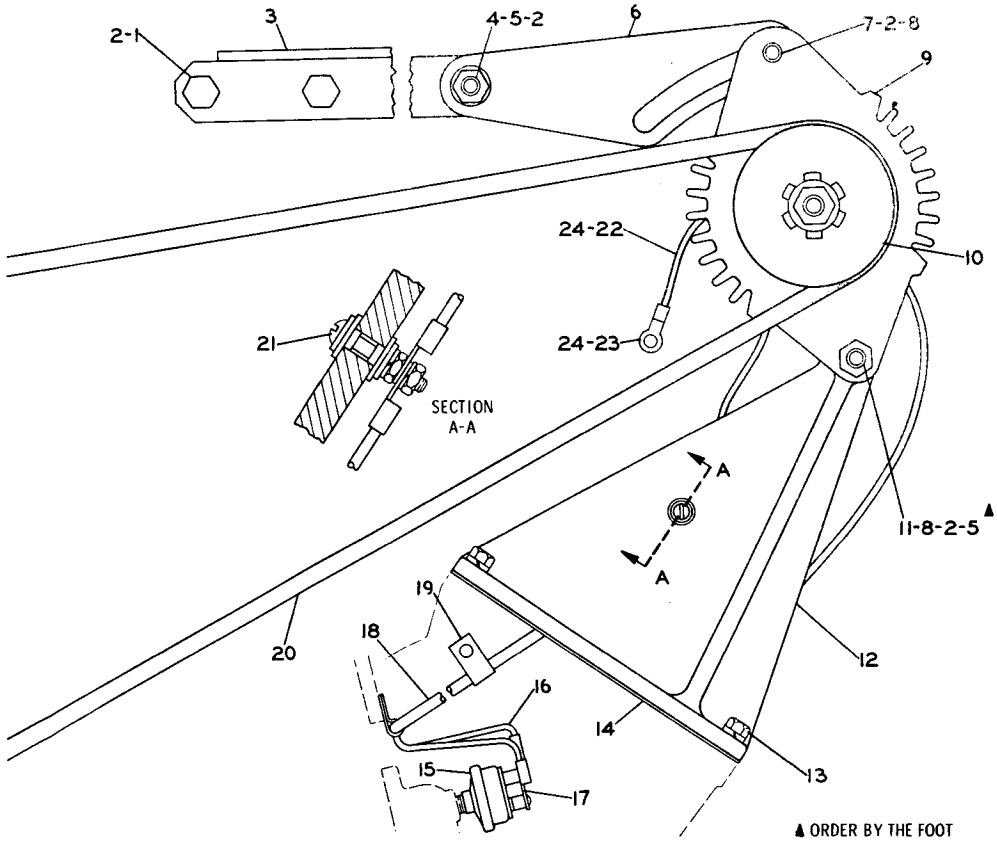

REF. NO.	PART NUMBER	DESCRIPTION	QTY
1	7B3235	BOLT	2
2	3B4508	LOCKWASHER	5
3	2S2319	BRACKET ASSEM.	1
4	S1585	BOLT	1
5	1D4719	NUT	2
6	8S4191	STRAP	1
7	1A1460	BOLT	1
	8S4223	SPACER	1
8	8M4791	WASHER	3
9	9S4070	ALTERNATOR ASSEM. (See Separate Illustration)	1
10	1P3957	PULLEY-(Drive)	1
11	9H8260	BOLT	1
12	8S4186	BRACKET	1
13	1A2029	BOLT	5
	3B4506	LOCKWASHER	5
14	9H1416	GASKET	1
15	4D4785	SWITCH	1
16	1P4323	WIRE ASSEM.	1
	3S2093	TIE	2
17	2L8076	TERMINAL	4
18	4S8759	TUBE-33"	
19	8M2772	CLIP	4
20	8M8335	VEE BELT	1
21	2F7888	SCREW	1
	4B2049	NUT	2
	3B4502	LOCKWASHER	2
	4B4274	WASHER	2
	5L4282	BUSHING	2
22	4H8185	WIRE ASSEM.	1
	9F5321	TERMINAL	1
23	9F9353	TERMINAL	1
24	8B653	INSULATOR	2

111168

▲ ORDER BY THE FOOT

ALTERNATOR (1P4343 N/S)—24 Volt, 19 Ampere

Refer also to Page 135 for special parts

9S4070 ALTERNATOR ASSEMBLY

Part of Alternator

7S5897 ALTERNATOR ASSEM. CONSISTS OF ALL PARTS EXCEPT THOSE MARKED BY ▲.
REPAIR KITS ARE AVAILABLE MARKED ●

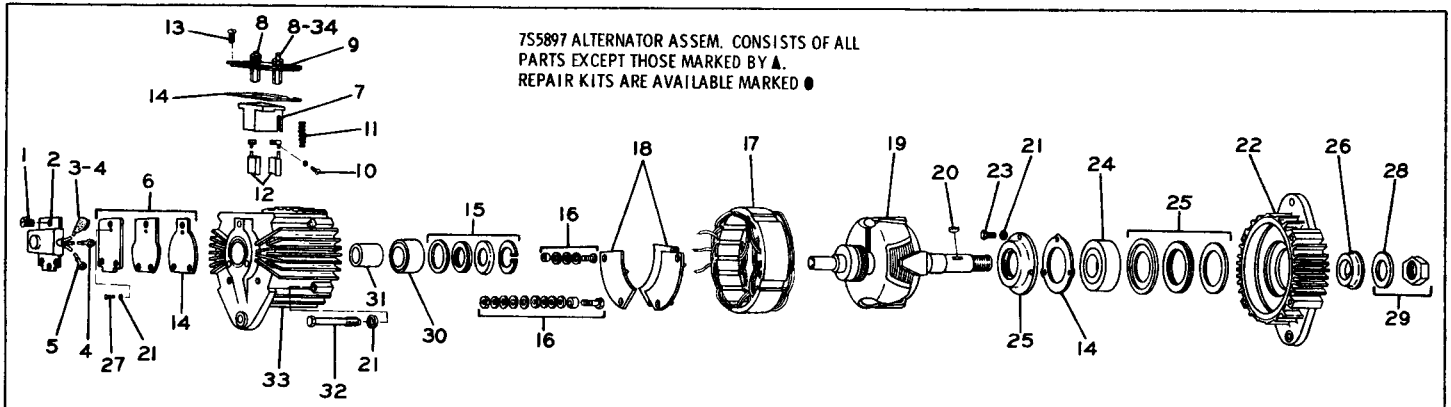

REF. NO.	PART NUMBER	DESCRIPTION	QTY
1	1P1135	SCREW	3
▲	9S2329	REGULATOR ASSEM.	1
2	3K6234	SCREW	1
	4B4863	WASHER	1
3	7S7182	BOOT	1
4	2L8076	TERMINAL	2
5	2L8077	TERMINAL	1
		(Parts of 9S2329 Assem.)	
● 6	1P1091	KIT (Reg. Mounting Plate & Gasket)	1
7	1P1145	HOLDER ASSEM.	1
	1P1137	HOLDER	1
8	4B2049	NUT	3
	3B4502	LOCKWASHER	3
9	1P1138	FIELD TERMINAL & PLATE ASSEM.	1
10	5S4245	SCREW	2
	6B4542	LOCKWASHER	2
		(Parts of 1P1145 Assem.)	

REF. NO.	PART NUMBER	DESCRIPTION	QTY
● 11	1P1088	KIT-----(2 Brush Springs)-----	1
● 12	1P1130	KIT---------(2 Brushes)---------	1
13	5H8548	SCREW ASSEM.	4
● 14	1P1090	KIT---------(3 Gaskets)---------	1
● 15	1P1080	KIT----(Retainer and Seals)------	1
● 16	1P1129	KIT	1
		(Terminal Stud and Hardware)	
17	1P1078	RECTIFIER & STATOR ASSEM.	1
18	1P1076	PLATE & RECTIFIER ASSEM. (Positive)	1
	1P1077	PLATE & RECTIFIER ASSEM. (Negative)	1
		(Parts of 1P1078 Assem.)	
19	1P1185	ROTOR ASSEM.	1
20	1B8705	KEY	1
21	3B4502	LOCKWASHER	8

REF. NO.	PART NUMBER	DESCRIPTION	QTY
22	1P1223	HEAD ASSEM.	1
	6D9953	PIN	
		(Part of 1P1223 Assem.)	
23	5M6755	SCREW	3
24	1B5387	BEARING	1
● 25	1P1084	KIT------(Retainer and Seal)------	1
		(Seal and 3 Retainers)	
26	1P1082	SPACER	1
27	5H6467	SCREW	1
28	3B4511	LOCKWASHER	1
● 29	1P1131	KIT (Shaft Parts-Nut & Lockwasher)	1
30	2L611	BEARING	1
31	1P1134	RACE	1
● 32	1P1086	KIT---(Frame Screw-4 Screws)---	1
33	1P1079	HEAD ASSEM.	1
34	4B4274	WASHER	1

110395

REF. NO.	PART NUMBER	DESCRIPTION	QTY
1	8B6678	GROMMET	2
2	5S8580	WIRE ASSEM.	1
	2L8066	TERMINAL (Part of 5S8580 Assem.)	2
3	5M6668	SCREW	2
4	5M2555	CIRCUIT BREAKER	1
5	7S6402	SWITCH ASSEM. --(three position)-	1
	7S5432	KNOB (Part of 7S6402 Assem.)	1
6	8S9683	HARNESS ASSEM. (See Separate Illustration)	1
7	1F7307	AMMETER	1
8	S509	BOLT	6
9	3B4506	LOCKWASHER	6
10	4S6336	BUTTON	1

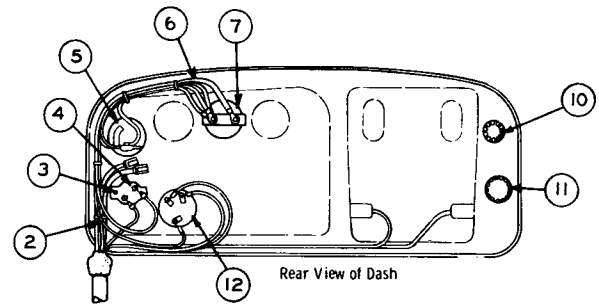

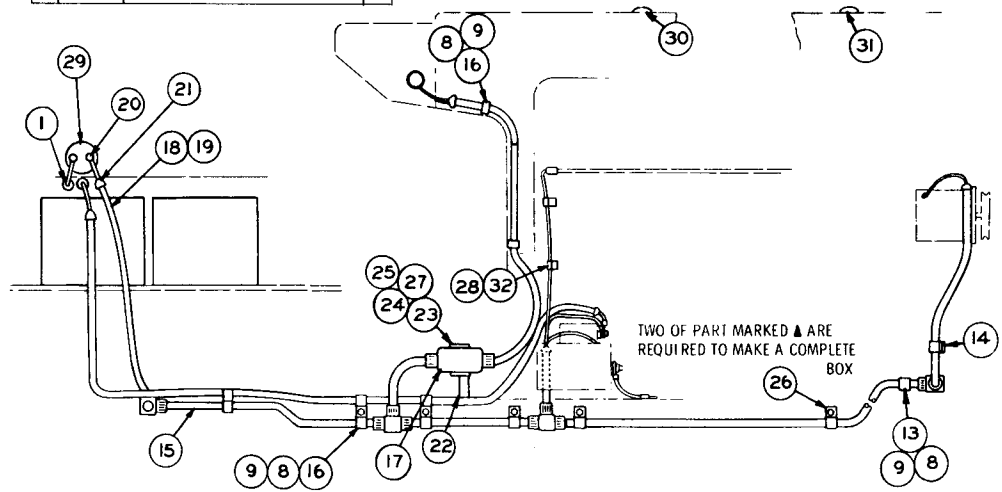

11	5K3546	BUTTON	1
12	8S7713	SWITCH ASSEM.	1
	8F3437	LEVER	1
	5L7200	SCREW	1
	3B4501	LOCKWASHER	1
		(Parts of 8S7713 Assem.)	
13	1S994	CLIP	1
14	8M2773	CLIP	1
15	8S9682	HARNESS ASSEM. (See Separate Illustration)	1
16	9M9738	CLIP	7
▲ 17	1S7786	BOX	2
18	9S5633	CABLE ASSEM.	1
19	4S8732	CONDUIT--3 Feet	
20	1S7252	TERMINAL	2
21	1S2244	BOOT	2
	1S4915	LINER	2
	3S2093	TIE	2
		(Parts of 9S5633 Assem.)	
22	2S3162	BRACKET	1
23	2S3196	BRACKET	1
24	S1615	BOLT	2
	1B4330	NUT	2
25	3B4504	LOCKWASHER	2
26	8S948	CLIP	2
27	4B4276	WASHER	2
28	3D2023	GROMMET	2
29	7H7290	SWITCH ASSEM. (See Separate Illustration)	1
	8H8648	PLATE	1
30	1L6377	BUTTON	1
31	3L8852	BUTTON	1
32	7B9919	CLIP	2

111162

BATTERY AND WIRING (1P4881 N/S)—24 Volt—Part 1

8S9682 and 8S9683 Wiring Harness and 7H7290 Switch parts are shown on Pages 59, 60 and 61

See Page 58 for Wiring Diagram. Refer also to Page 108 for special parts

BATTERY AND WIRING (1P4881 N/S)—24 Volt—Part 2

See Page 58 for Wiring Diagram

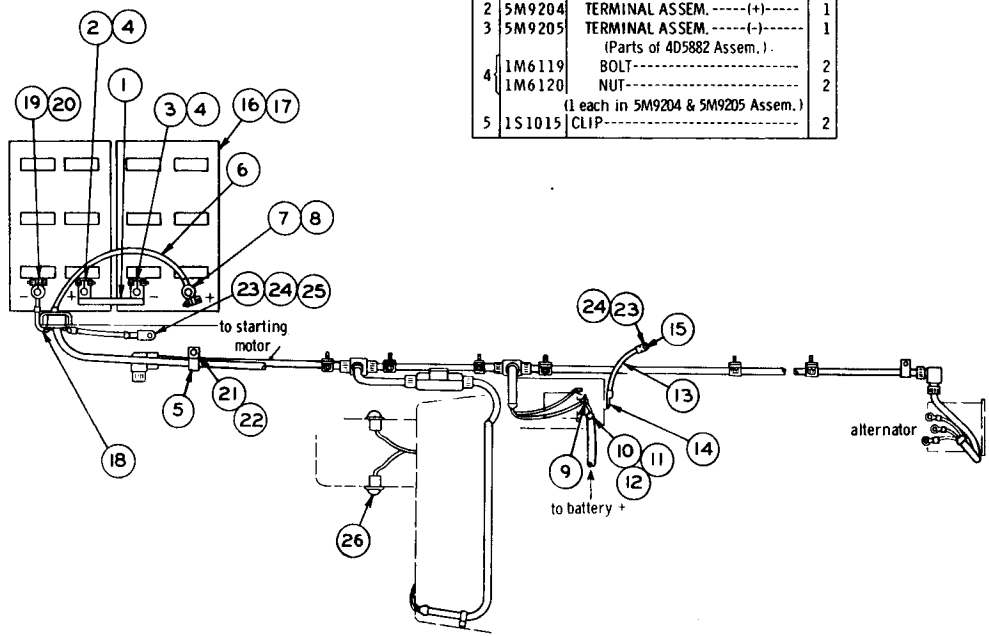

REF. NO.	PART NUMBER	DESCRIPTION	QTY
1	4D5882	CABLE ASSEM.	1
2	5M9204	TERMINAL ASSEM. -----(+)-----	1
3	5M9205	TERMINAL ASSEM. -----(-)-----	1
		(Parts of 4D5882 Assem.)	
4	1M6119	BOLT	2
	1M6120	NUT	2
		(1 each in 5M9204 & 5M9205 Assem.)	
5	1S1015	CLIP	2

6	9S4613	CABLE ASSEM.	1
	4S8732	CONDUIT----------8 Feet	
7	3S6049	TERMINAL ASSEM. -----(+)-----	1
8	2D8788	BOLT	1
	2D8787	NUT	1
		(Parts of 3S6049 Assem.)	
9	1S7251	TERMINAL--(to starting motor)---	1
10	1S2244	BOOT	2
11	3S2093	TIE	2
12	1S4915	LINER	2
		(Parts of 9S4613 Assem.)	
13	3S8624	CABLE ASSEM.	1
14	1S7252	TERMINAL	1
15	1S7251	TERMINAL	1
		(Parts of 3S8624 Assem.)	
16	4S9219	BATTERY	2
	5S8405	PLUG	12
		(6 in 4S9219 Battery)	
17	9M5775	MAT	2
18	9S4611	CABLE ASSEM.	1
	1S7252	TERMINAL	1
19	3S6050	TERMINAL ASSEM. -----(-)-----	1
		(Parts of 9S4611 Assem.)	
20	2D8788	BOLT	1
	2D8787	NUT	1
		(Parts of 3S6050 Assem.)	
21	S1587	BOLT	1
	3B4508	LOCKWASHER	1
22	8B2133	BOSS	1
23	S509	BOLT	2
24	3B4506	LOCKWASHER	2
25	4B4278	WASHER	1
26	3S8642	LAMP ASSEM.	2
	2D1959	BULB	2
		(1 in each 3S8642 Assem.)	

111163

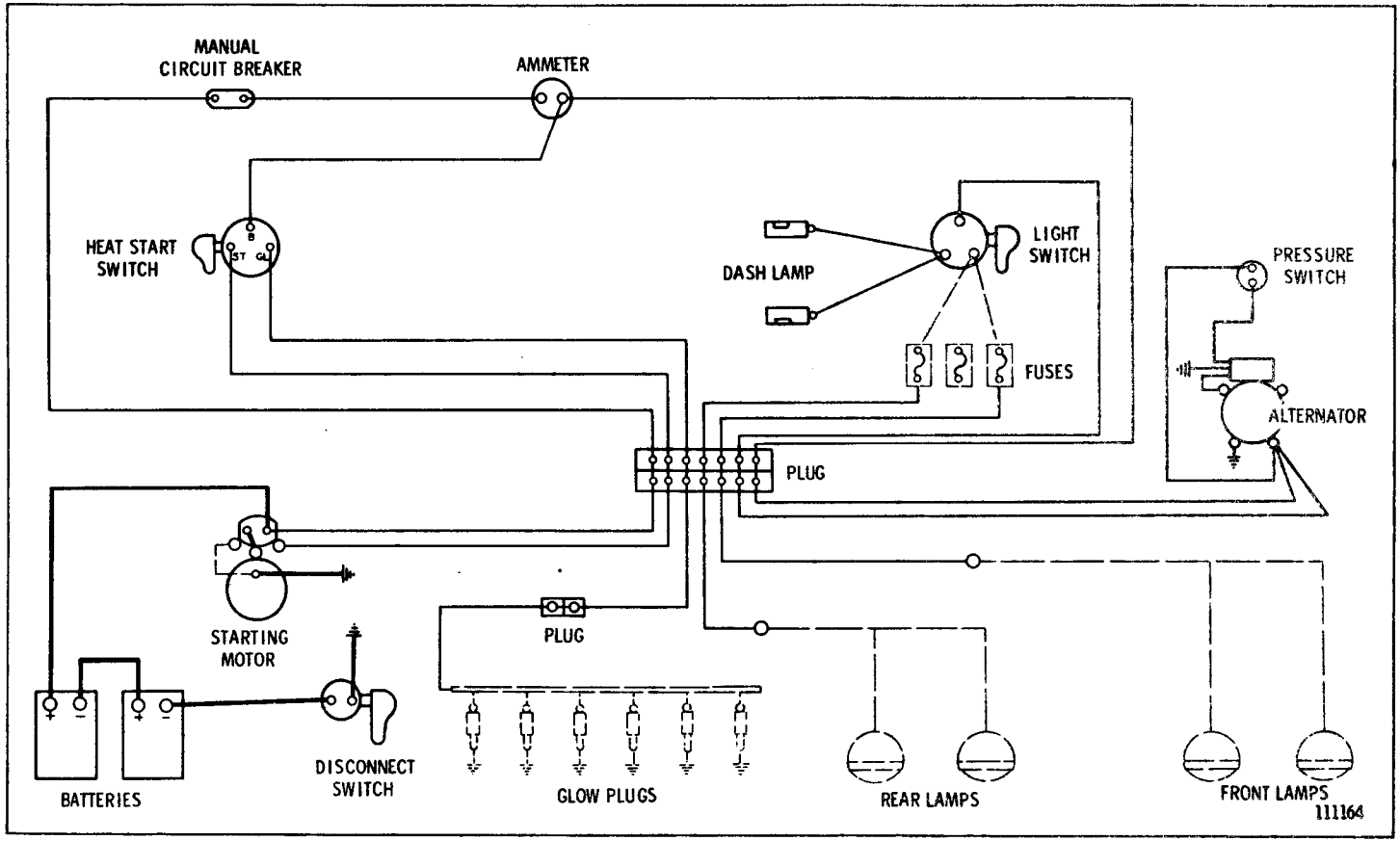

WIRING DIAGRAM—24 Volt System

ALWAYS GIVE SERIAL NUMBER WHEN ORDERING PARTS

8S9682 WIRING HARNESS ASSEMBLY—24 Volt

Part of Battery and Wiring shown on Page 56

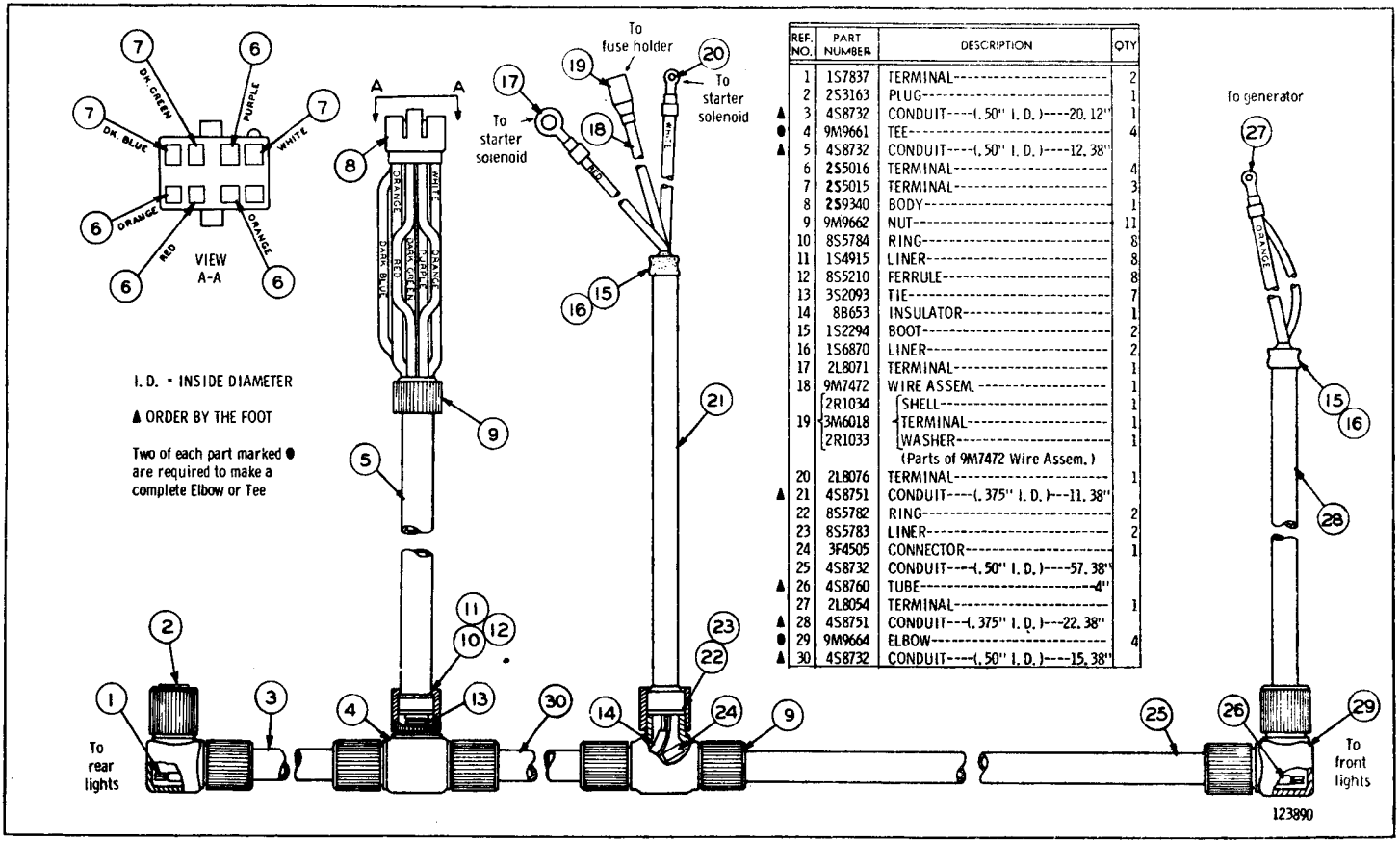

REF. NO.	PART NUMBER	DESCRIPTION	QTY
1	1S7837	TERMINAL	2
2	2S3163	PLUG	1
▲ 3	4S8732	CONDUIT----(.50" I. D.)----20.12"	1
● 4	9M9661	TEE	4
▲ 5	4S8732	CONDUIT----(.50" I. D.)----12.38"	
6	2S5016	TERMINAL	4
7	2S5015	TERMINAL	3
8	2S9340	BODY	1
9	9M9662	NUT	11
10	8S5784	RING	8
11	1S4915	LINER	8
12	8S5210	FERRULE	8
13	3S2093	TIE	7
14	8B653	INSULATOR	1
15	1S2294	BOOT	2
16	1S6870	LINER	2
17	2L8071	TERMINAL	1
18	9M7472	WIRE ASSEM.	1
19	2R1034	SHELL	1
	3M6018	TERMINAL	1
	2R1033	WASHER	1
		(Parts of 9M7472 Wire Assem.)	
20	2L8076	TERMINAL	1
▲ 21	4S8751	CONDUIT----(.375" I. D.)---11.38"	
22	8S5782	RING	2
23	8S5783	LINER	2
24	3F4505	CONNECTOR	1
25	4S8732	CONDUIT----(.50" I. D.)----57.38"	
▲ 26	4S8760	TUBE----4"	
27	2L8054	TERMINAL	1
▲ 28	4S8751	CONDUIT---(.375" I. D.)---22.38"	
● 29	9M9664	ELBOW	4
▲ 30	4S8732	CONDUIT----(.50" I. D.)----15.38"	

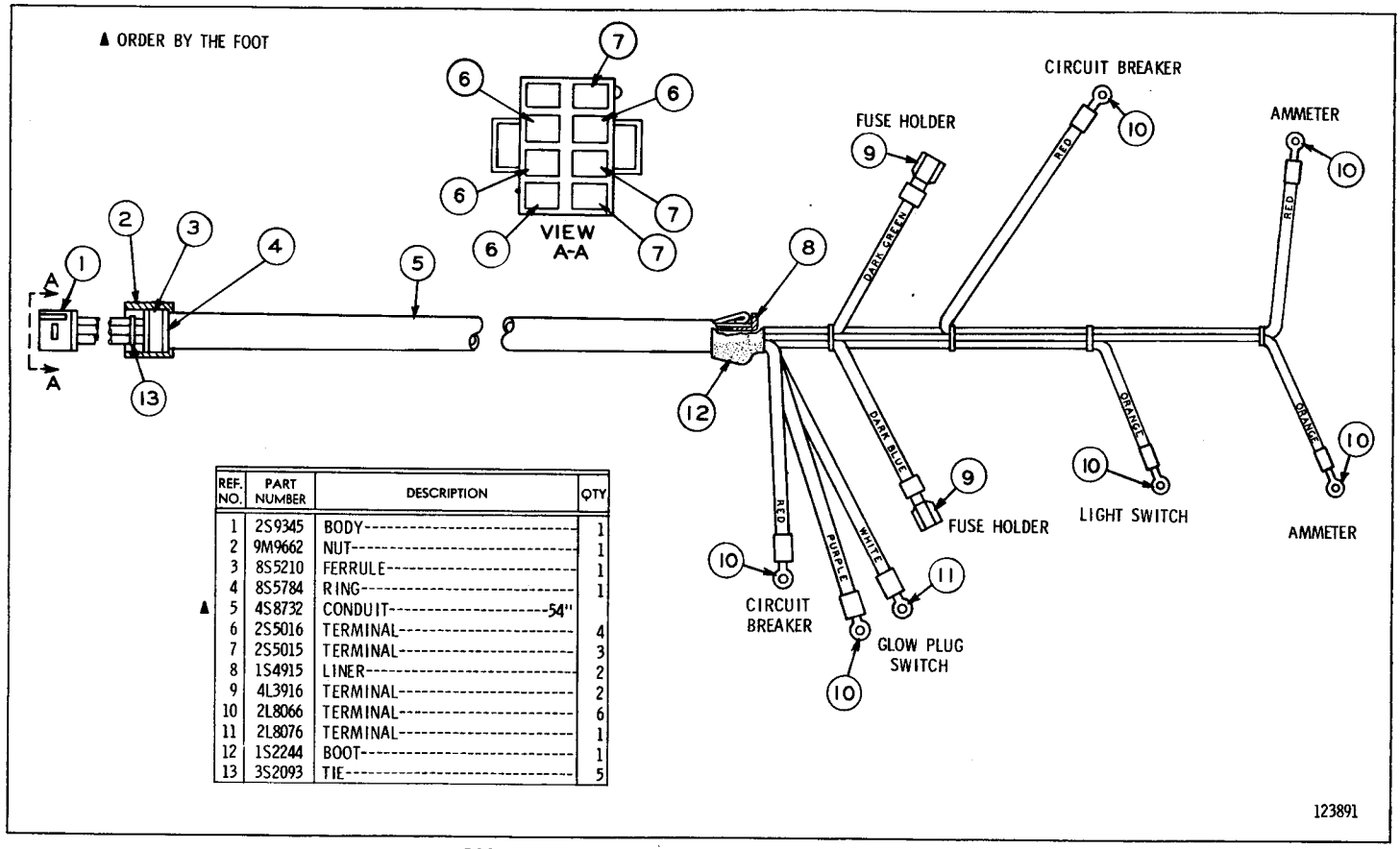

REF. NO.	PART NUMBER	DESCRIPTION	QTY
1	2S9345	BODY	1
2	9M9662	NUT	1
3	8S5210	FERRULE	1
4	8S5784	RING	1
▲ 5	4S8732	CONDUIT-----54"	
6	2S5016	TERMINAL	4
7	2S5015	TERMINAL	3
8	1S4915	LINER	2
9	4L3916	TERMINAL	2
10	2L8066	TERMINAL	6
11	2L8076	TERMINAL	1
12	1S2244	BOOT	1
13	3S2093	TIE	5

8S9683 WIRING HARNESS ASSEMBLY—24 Volt

Part of Battery and Wiring shown on Page 56

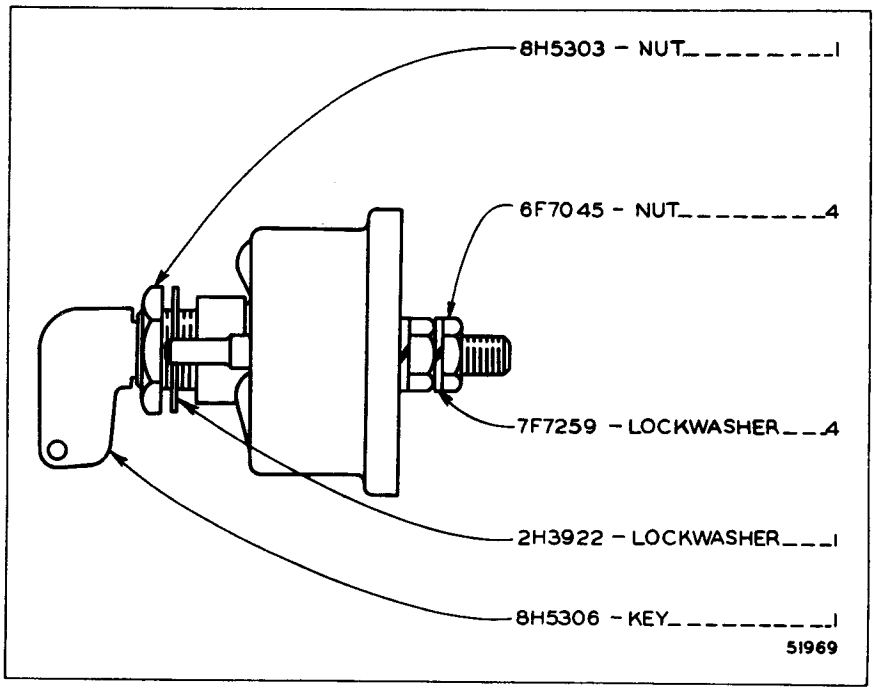

7H7290 DISCONNECT SWITCH ASSEMBLY
Part of Battery and Wiring shown on Pages 56 and 131

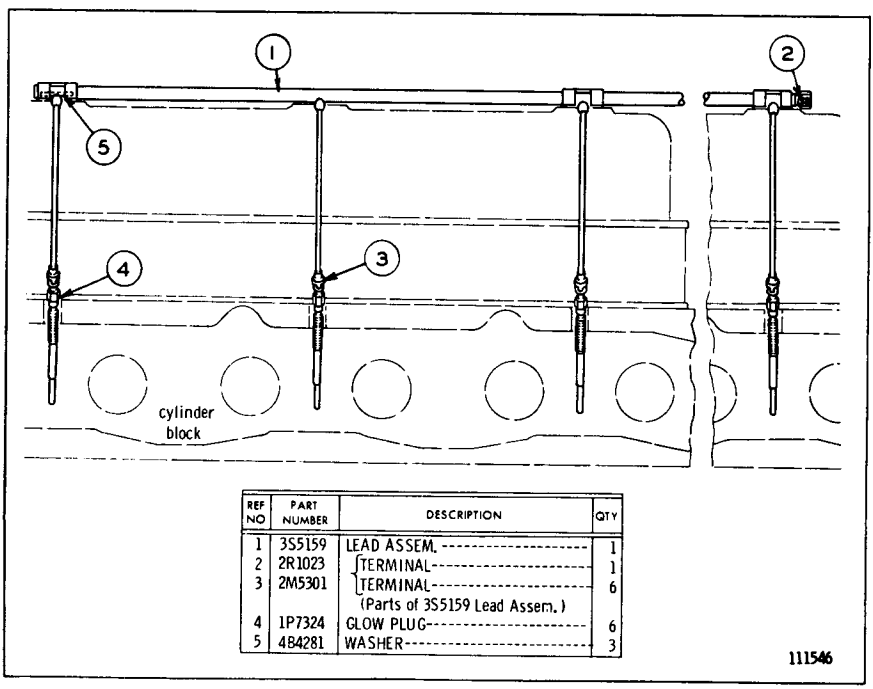

REF NO	PART NUMBER	DESCRIPTION	QTY
1	3S5159	LEAD ASSEM.	1
2	2R1023	TERMINAL	1
3	2M5301	TERMINAL	6
		(Parts of 3S5159 Lead Assem.)	
4	1P7324	GLOW PLUG	6
5	4B4281	WASHER	3

3S5160 GLOW PLUG AND WIRING GROUP

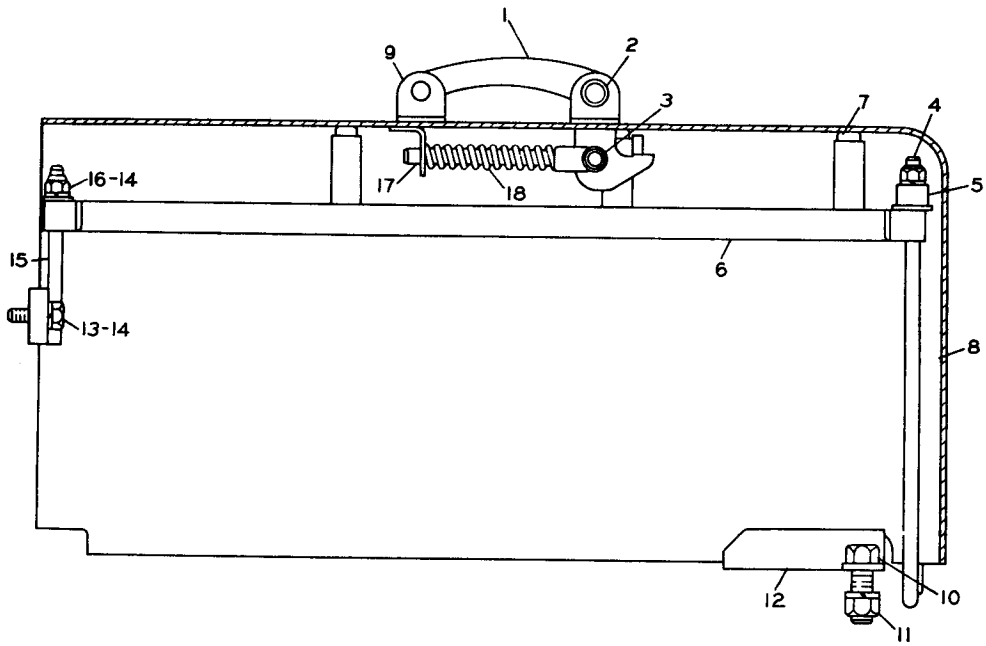

REF. NO.	PART NUMBER	DESCRIPTION	QTY
1	1H7365	HANDLE	1
2	2B2938	PIN	1
	3B4617	COTTER PIN	1
3	1J4384	PIN	1
	3B4615	COTTER PIN	1
4	9S5086	BOLT	2
5	9M4136	SPACER	4
6	9S2539	HOLD DOWN ASSEM.	1
7	9M5617	GROMMET	12
		(Part of 9S2539 Assem.)	
8	9S4944	COVER ASSEM.	1
	9S5323	PIN	2
9	1S6385	LUG	4
		(Parts of 9S4944 Assem.)	
10	7B3235	BOLT	2
11	1D4719	NUT	2
	3B4508	LOCKWASHER	2
12	9S5061	BRACKET ASSEM.	1
13	S1594	BOLT	6
14	3B4506	LOCKWASHER	13
15	9S6862	ROD ASSEM.	3
16	9H8524	NUT	7
	4B5271	WASHER	7
17	1H7366	ROD	1
18	1B9920	SPRING	1

109033

9S5327 BATTERY BOX GROUP

Refer also to Page 108 for special parts

POWER TRAIN ARRANGEMENT (8H3666 N/S)

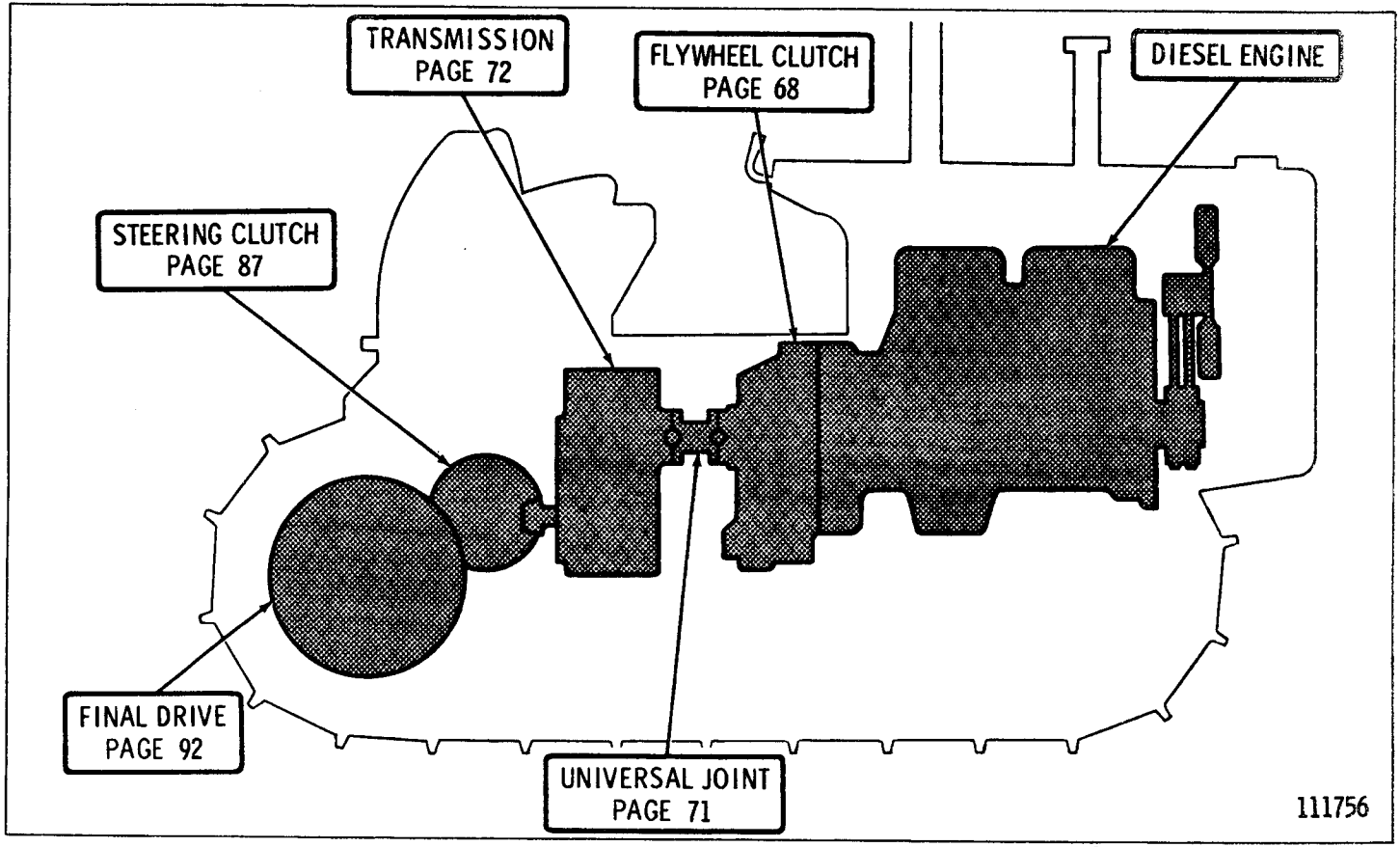

ONLY "CATERPILLAR" PARTS GIVE "CATERPILLAR" PERFORMANCE

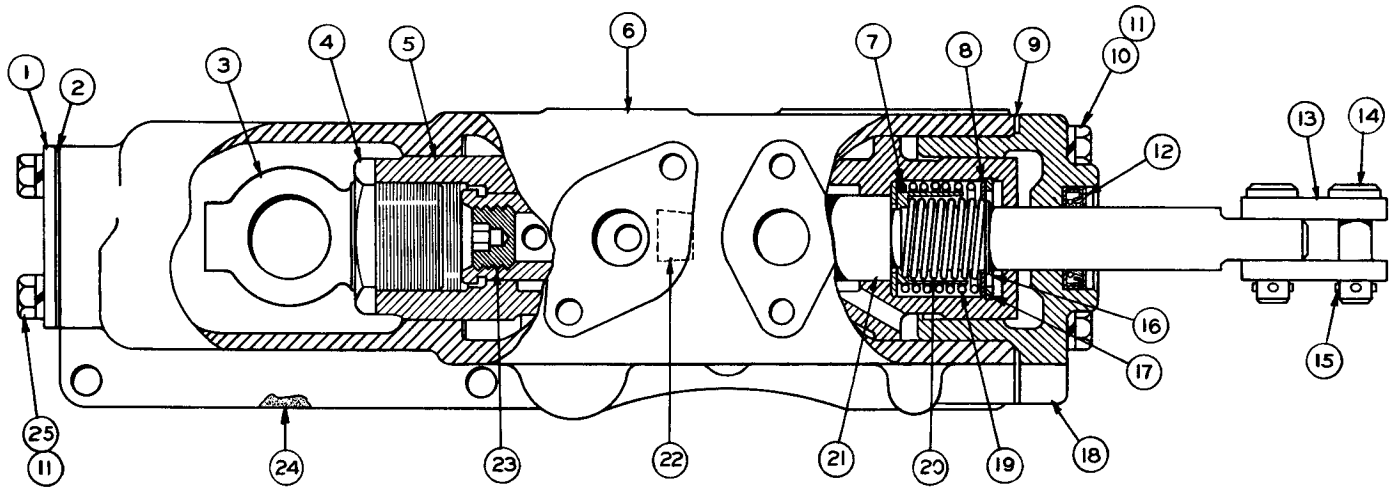

REF. NO.	PART NUMBER	DESCRIPTION	QTY
1	9F6315	COVER	1
2	9F6303	GASKET	1
3	5S4064	COUPLING	1
4	T259	NUT	1
5	5S1982	PISTON	1
6	5S1983	BODY	1
7	2H1731	SPACER	1
8	2H1730	WASHER	2
9	5S4762	GASKET	1

REF. NO.	PART NUMBER	DESCRIPTION	QTY
10	S1591	BOLT	4
11	3B4506	LOCKWASHER	8
12	2D1521	SEAL	1
13	2H1729	LINK	2
14	8B1419	PIN	2
15	3B4617	COTTER PIN	2
16	6H6109	RING (Inner)	1
17	3H1816	RING (Outer)	1

REF. NO.	PART NUMBER	DESCRIPTION	QTY
18	5S4065	COVER	1
19	1A2180	SPRING (Outer)	1
20	1A8312	SPRING (Inner)	1
21	5S4063	VALVE	1
22	7M7410	PLUG	1
23	3L1850	PLUG	1
24	5S4761	GASKET	1
25	S509	BOLT	4

123885

FLYWHEEL CLUTCH HYDRAULIC MECHANISM CONTROL (5S4802 N/S)

GEAR SHIFT AND FLYWHEEL CLUTCH CONTROL (9H6749 N/S)—Part 1 of 3
AS VIEWED FROM FRONT OF MACHINE

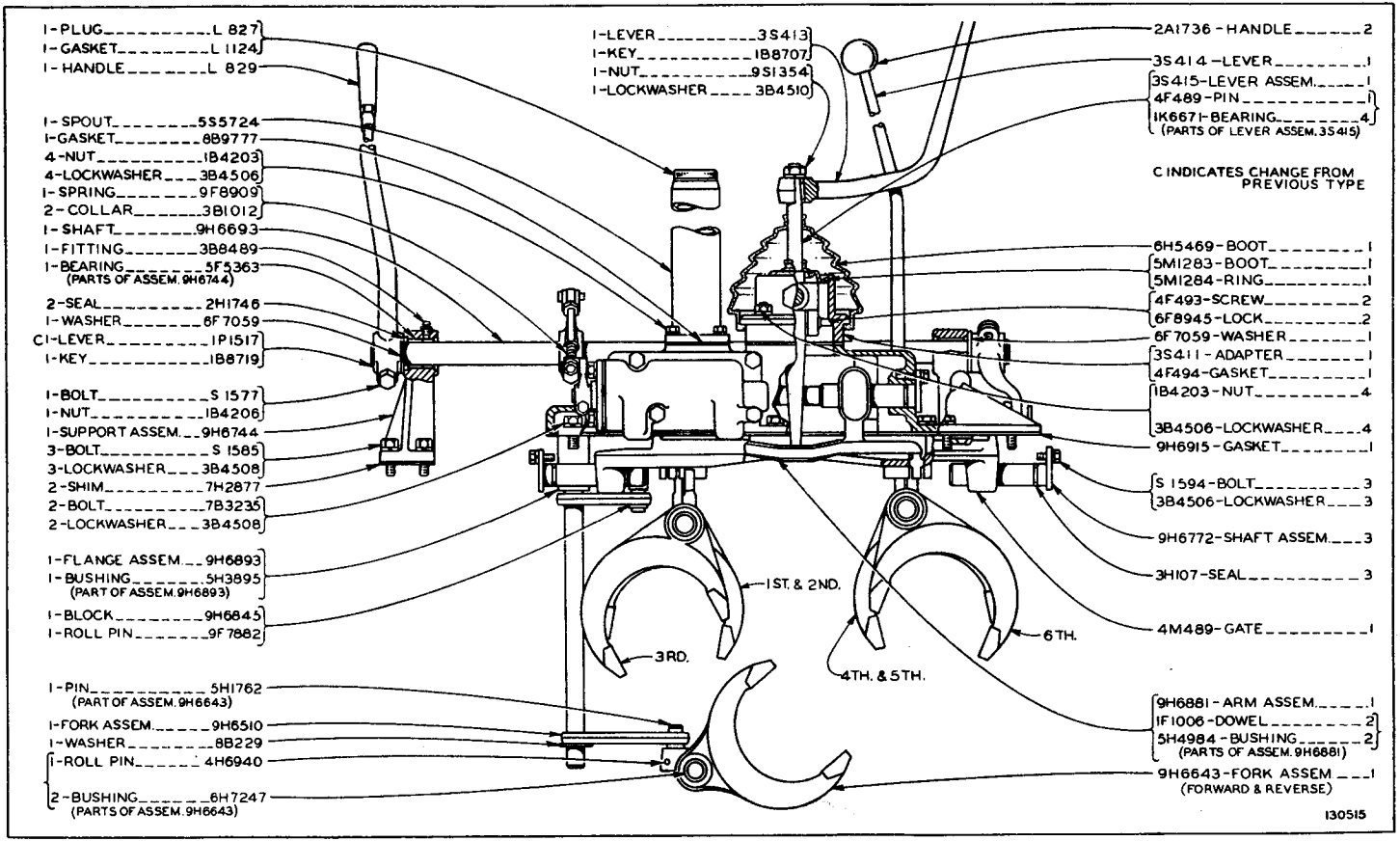

ONLY "CATERPILLAR" PARTS GIVE "CATERPILLAR" PERFORMANCE

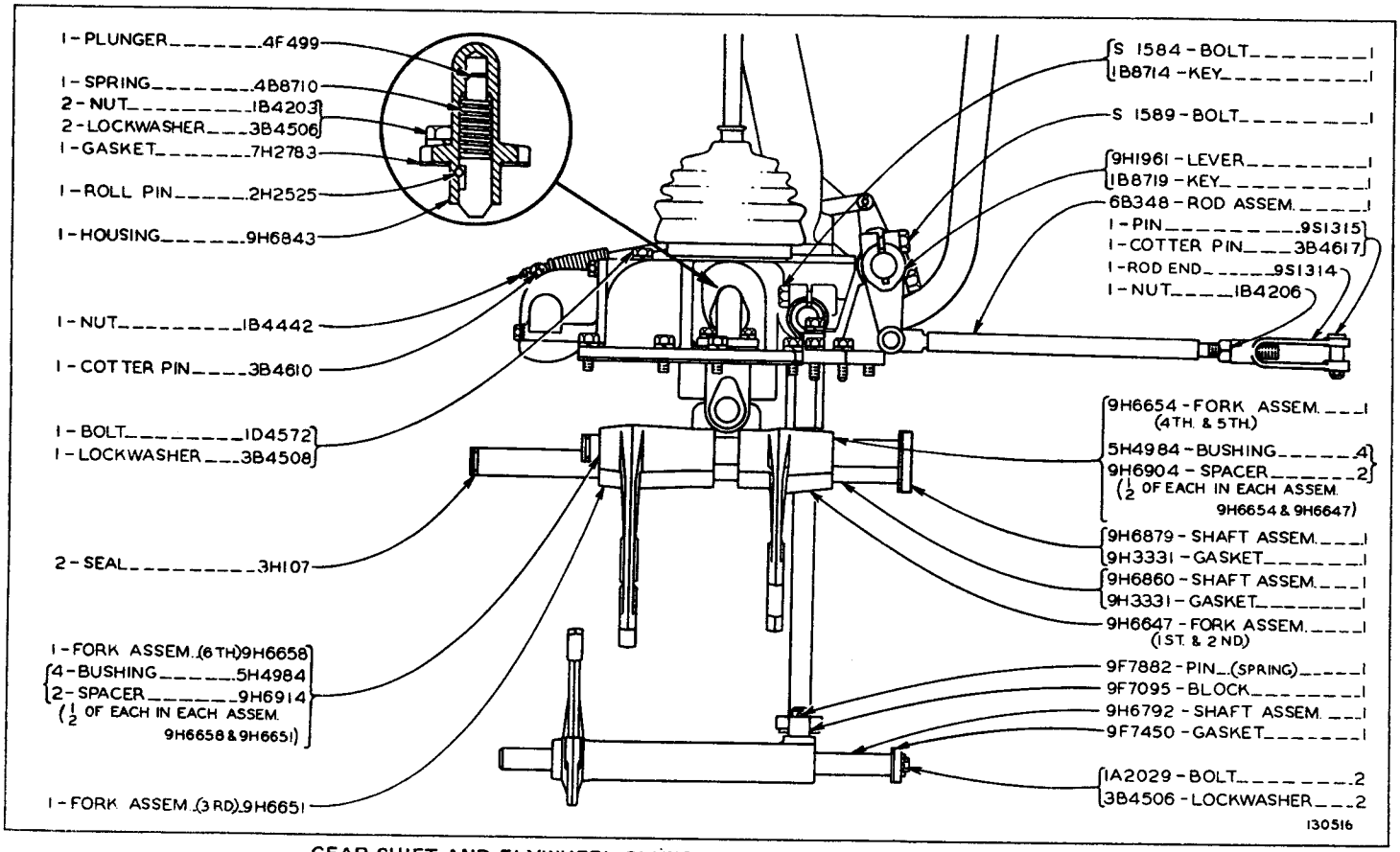

GEAR SHIFT AND FLYWHEEL CLUTCH CONTROL (9H6749 N/S)—Part 2 of 3
AS VIEWED FROM LEFT HAND SIDE OF MACHINE

GEAR SHIFT AND FLYWHEEL CLUTCH CONTROL (9H6749 N/S)—Top View—Part 3 of 3

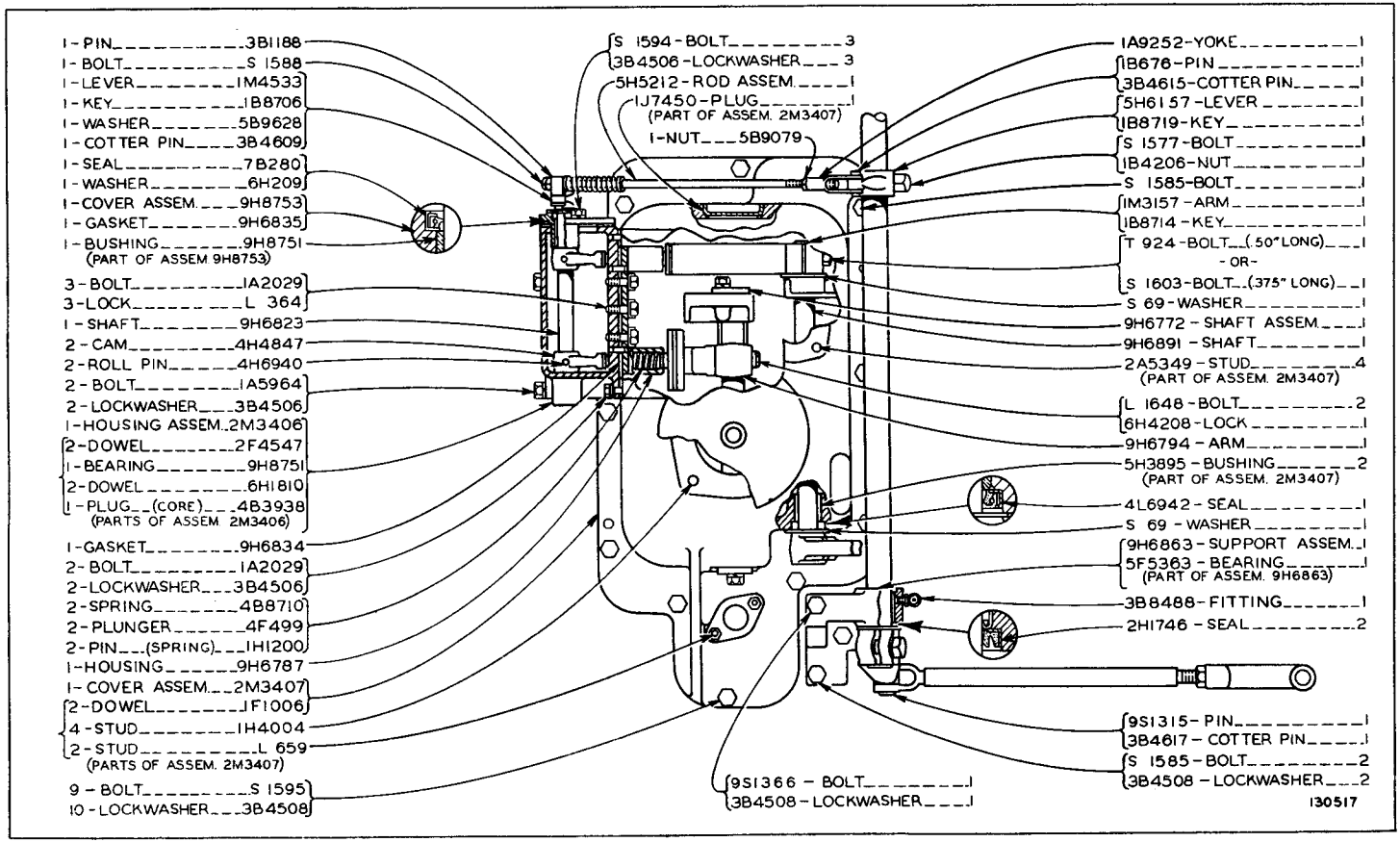

ONLY "CATERPILLAR" PARTS GIVE "CATERPILLAR" PERFORMANCE

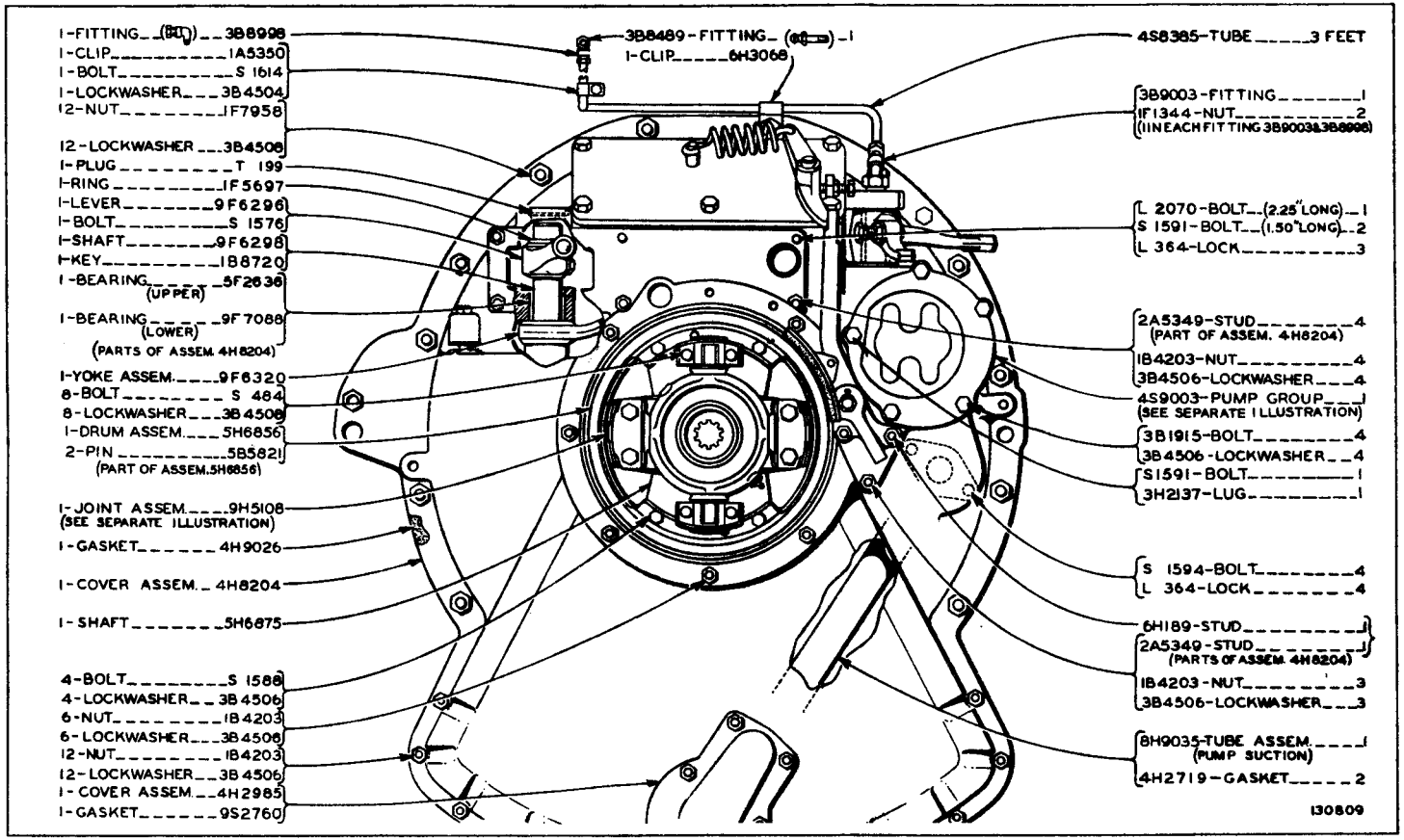

9H5110 FLYWHEEL CLUTCH GROUP—Part 1 of 3

4S9003 Oil Pump and 9H5108 Universal Joint parts are shown on Page 71

See Page 28 for Gasket Kit

9H5110 FLYWHEEL CLUTCH GROUP—Part 2 of 3

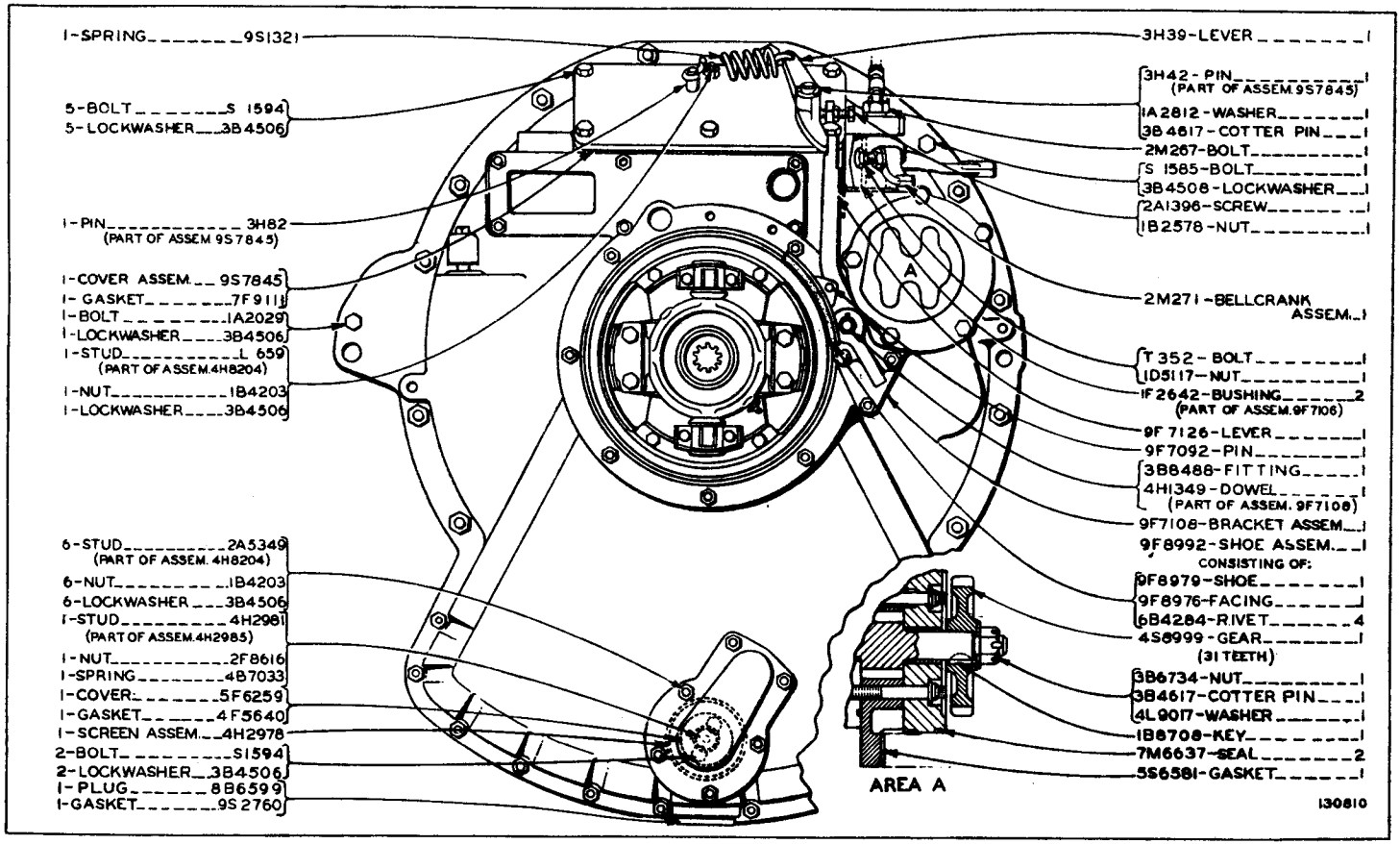

ONLY "CATERPILLAR" PARTS GIVE "CATERPILLAR" PERFORMANCE

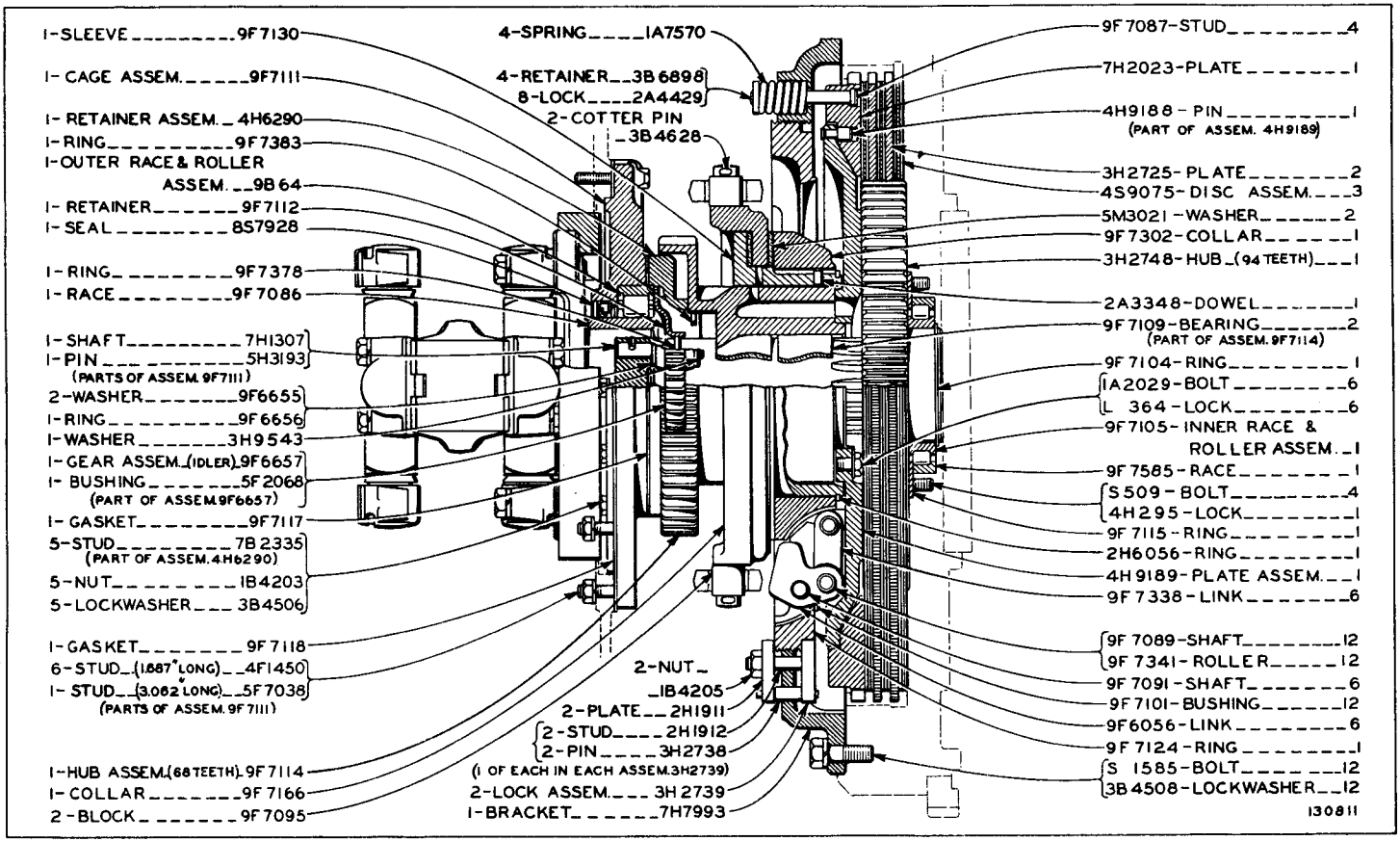

9H5110 FLYWHEEL CLUTCH GROUP—Part 3 of 3

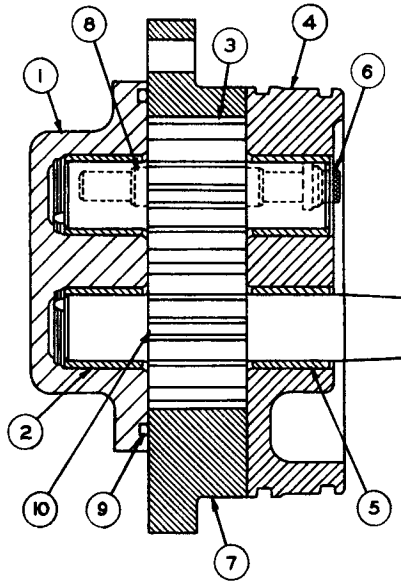

REF NO	PART NUMBER	DESCRIPTION	QTY
1	4S8994	COVER ASSEM.	1
2	2S7931	BEARING (Part of 4S8994 Cover Assem.)	2
3	4S9001	GEAR-(10 Teeth-Idler)	1
4	4S8998	COVER ASSEM.	1
5	2S7931	BEARING (Part of 4S8998 Cover Assem.)	2
6	4S9002	BOLT	4
	8M3175	WASHER	4
7	4S8996	BODY ASSEM.	1
8	8M8489	DOWEL (Part of 4S8996 Body Assem.)	4
9	4M189	SEAL	1
10	4S9000	GEAR-(10 Teeth-Drive)	1

97216

4S9003 FLYWHEEL CLUTCH OIL PUMP GROUP
Part of 9H5110 Flywheel Clutch Group shown on Page 68

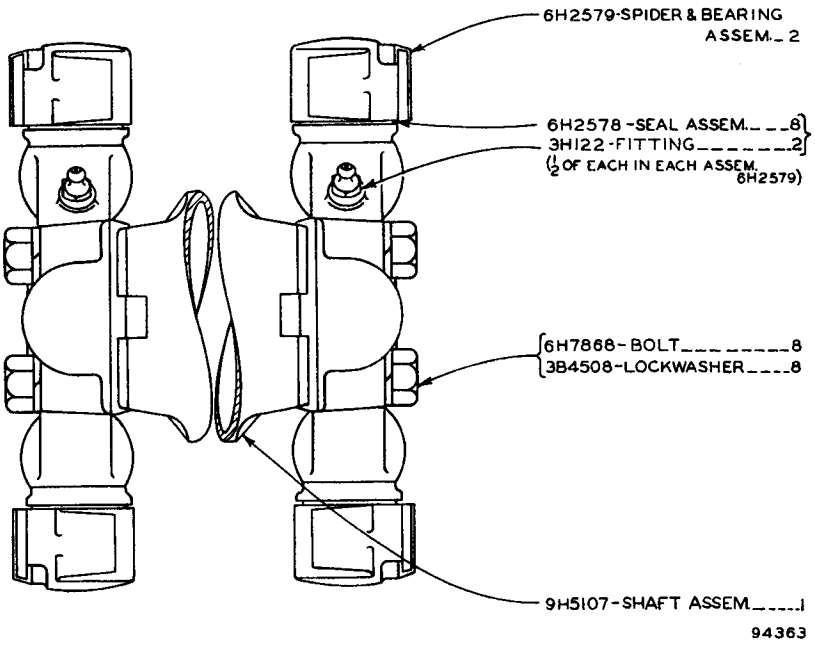

94363

9H5108 UNIVERSAL JOINT ASSEMBLY
Part of 9H5110 Flywheel Clutch Group shown on Page 68

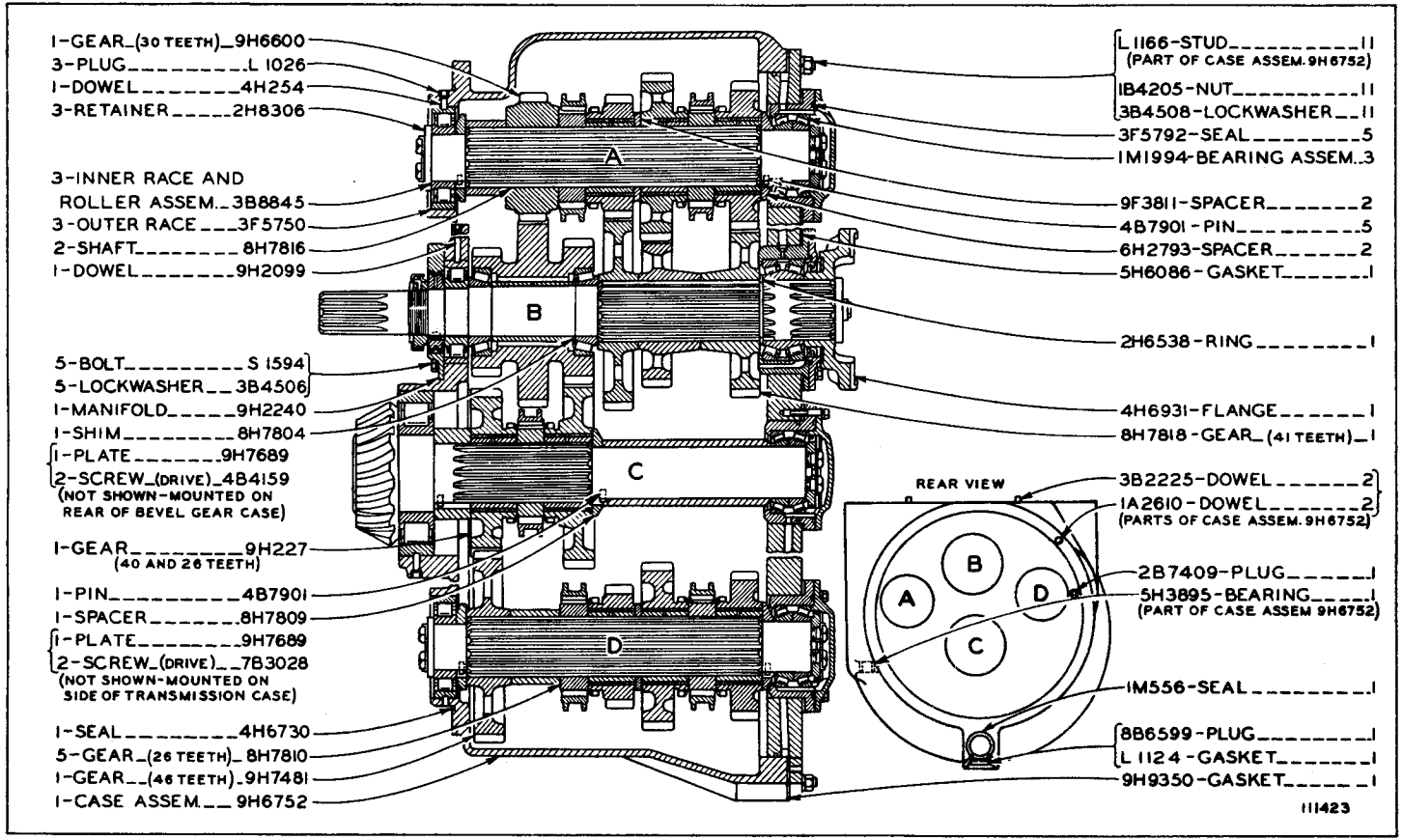

TRANSMISSION (9H6833 N/S)—Part 1

Note: This Group provides the following speeds: (Forward) First—1.5, Second—1.9, Third—2.7, Fourth—3.5, Fifth—4.6 & Sixth—6.3 M.P.H.; (Reverse) First—1.5, Second—2.0, Third—2.7, Fourth—3.6, Fifth—4.6 & Sixth—6.4 M.P.H.
Only separate parts serviced. When complete Group is required order 4M2588 Transmission Unit

TRANSMISSION (9H6833 N/S)—Part 2

See Page 28 for Gasket Kits

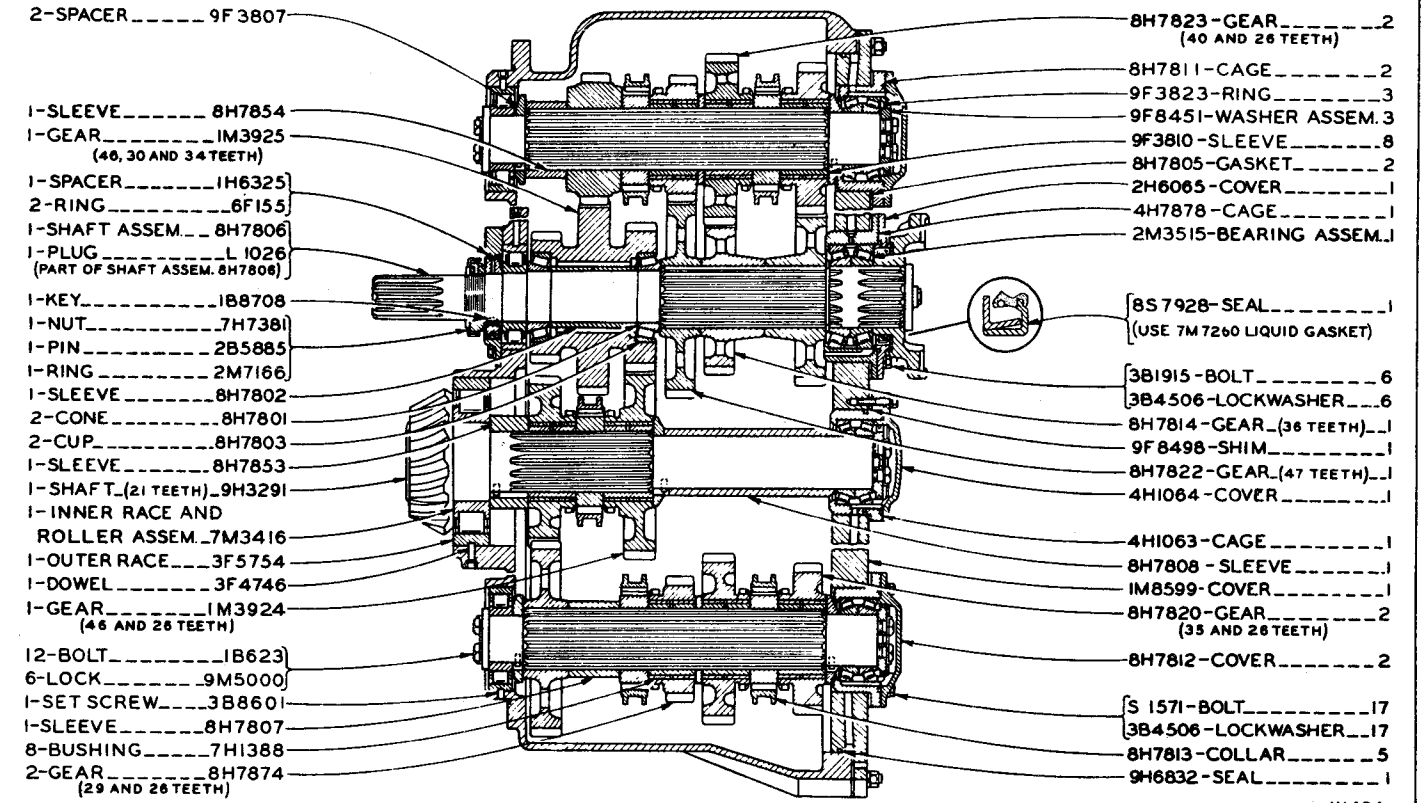

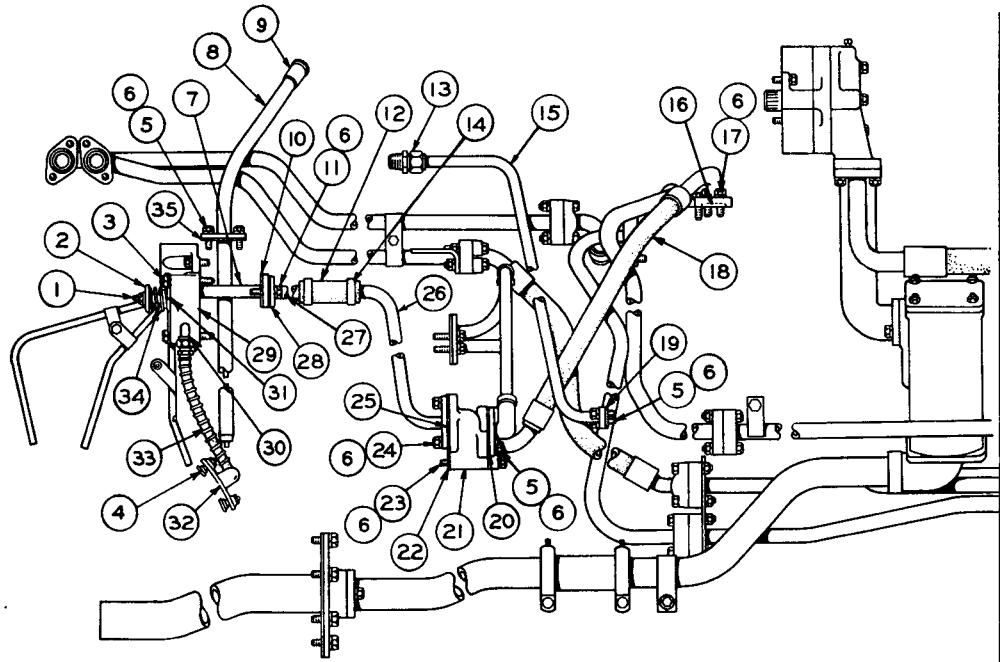

REF. NO.	PART NUMBER	DESCRIPTION	QTY
5	S1594	BOLT----------(1" long)----------	6
6	3B4506	LOCKWASHER----------	14
7	7S7372	TUBE ASSEM. ----------	1
	8M4445	SEAL----------	1
8	8H7702	GUIDE ASSEM. ----------	1
9	7M378	PLUNGER ASSEM. ----------	1
10	3S8656	GASKET----------	1
11	S1591	BOLT----------	2
12	2S9402	HOSE----------	1
13	6H1993	FITTING----------	1
	6H3137	NUT----------	1
	6H3136	SLEEVE----------	1
		(Parts of 6H1993 Fitting)	
14	2S3440	CLAMP----------	2
15	5S1922	TUBE ASSEM. ----(28. 93" long)----	1
16	8M4987	SEAL----------	2
17	S1588	BOLT----------	2
18	5S4061	HOSE ASSEM. ----(24. 12" long)----	1
		(Ref. No. 21 to Flywheel Clutch)	
19	1H9027	GASKET----------	1
20	9M5252	GASKET----------	1
21	5S1981	HOUSING----------	1
22	6L5588	GASKET----------	1
23	T65	BOLT----------(3. 50" long)----------	2
24	1A2029	BOLT---------(1. 125" long)---------	2
25	7B6473	GASKET----------	1
26	2S9407	TUBE ASSEM.-(13. 57" long overall)-	1
27	2S9408	TUBE ASSEM.-(13. 30" long overall)-	1
28	8F6647	GASKET----------	1
29	7S7370	BLOCK ASSEM. ----------	1
30	7S7369	ELBOW----------	1
31	1M5471	VALVE----------	1
32	7S7367	FITTING----------	1
33	7S7368	HOSE ASSEM.-(10. 62" long overall)-	1
		(Ref. No. 29 to Brake Band)	
34	1S7139	SPRING----------	1
35	9F5940	GASKET----------	1

REF. NO.	PART NUMBER	DESCRIPTION	QTY
1	2F8616	NUT----------	1
	4B4278	WASHER-------(Plain)----------	1
2	2D7091	WASHER---------(Cup)----------	1

REF. NO.	PART NUMBER	DESCRIPTION	QTY
3	L1143	BOLT----------	2
	3S8744	LOCK----------	1
4	7S9686	BOLT----------	2
	1B4203	NUT----------	2
	2H3504	LOCK----------	2

110652

TRANSMISSION AND STEERING CLUTCH LUBRICATION SYSTEM (5S8646 N/S)—Part 1 of 4

Serial No. 36A5329 to 36A5335 inclusive

See Page 28 for Gasket Kits

TRANSMISSION AND STEERING CLUTCH LUBRICATION SYSTEM (5S8646 N/S)—Part 2 of 4

Serial No. 36A5329 to 36A5335 inclusive

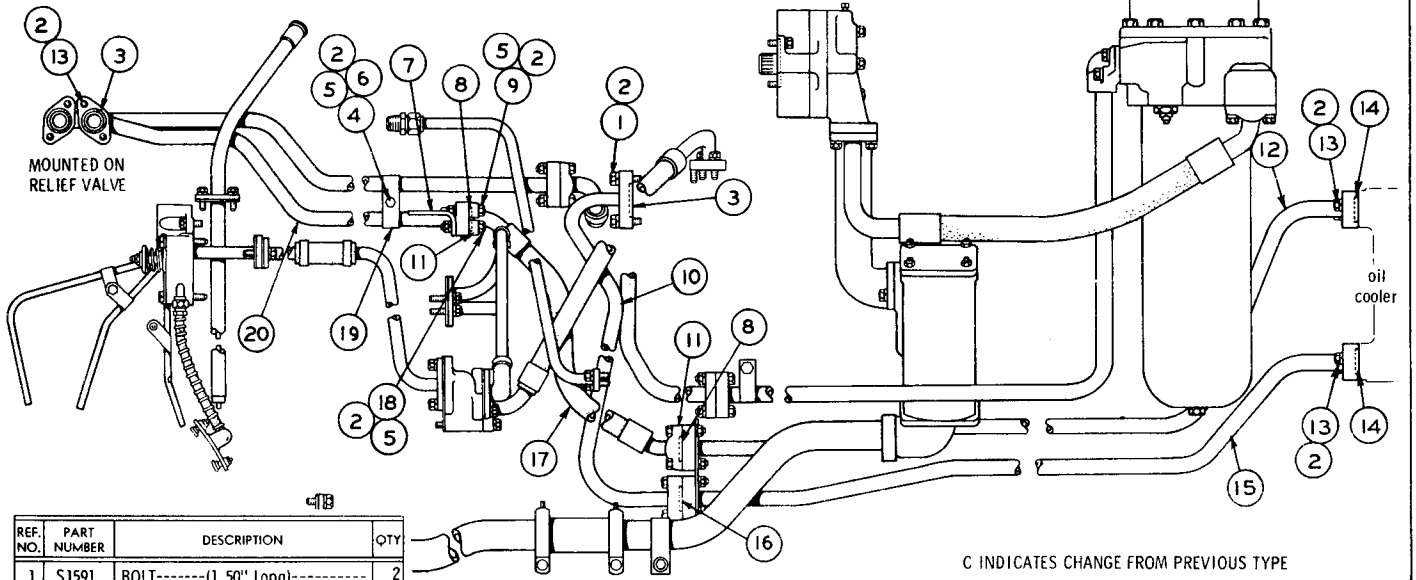

REF. NO.	PART NUMBER	DESCRIPTION	QTY
1	S1591	BOLT-------(1.50" Long)----------	2
2	3B4506	LOCKWASHER----------	11
3	8M4987	SEAL----------	2
4	S1588	BOLT----------	1
5	1D4717	NUT----------	5
6	4B4278	WASHER----------	2
7	2S9722	SUPPORT----------	1
	4B4280	WASHER----------	1
8	8M4988	SEAL----------	2
9	S1590	BOLT----------	2
10	5S1897	TUBE ASSEM. ----(32.01" long)---- (Ref. No. 15 to Flywheel Clutch)	1
11	2K190	FLANGE----------	4
12	5S722	TUBE ASSEM. ----(64.22" long)---- (Ref. No. 17 to Oil Cooler)	1
13	S1571	BOLT----------	8
14	8M4986	SEAL----------	2

C INDICATES CHANGE FROM PREVIOUS TYPE

15	5S720	TUBE ASSEM. ----(59.50" long)---- (Ref. No. 10 to Oil Cooler)	1
16	8M5248	SEAL----------	1
17	5S806	HOSE ASSEM. ----(20.12" long)---- (Ref. No. 12 to Ref. No. 20)	1
18	L2070	BOLT----------	2
19	4S8002	CLAMP----------	2
20	2S9721	TUBE ASSEM. ----(39.23" long)---- (Ref. No. 17 to Relief Valve)	1

110653

ONLY "CATERPILLAR" PARTS GIVE "CATERPILLAR" PERFORMANCE

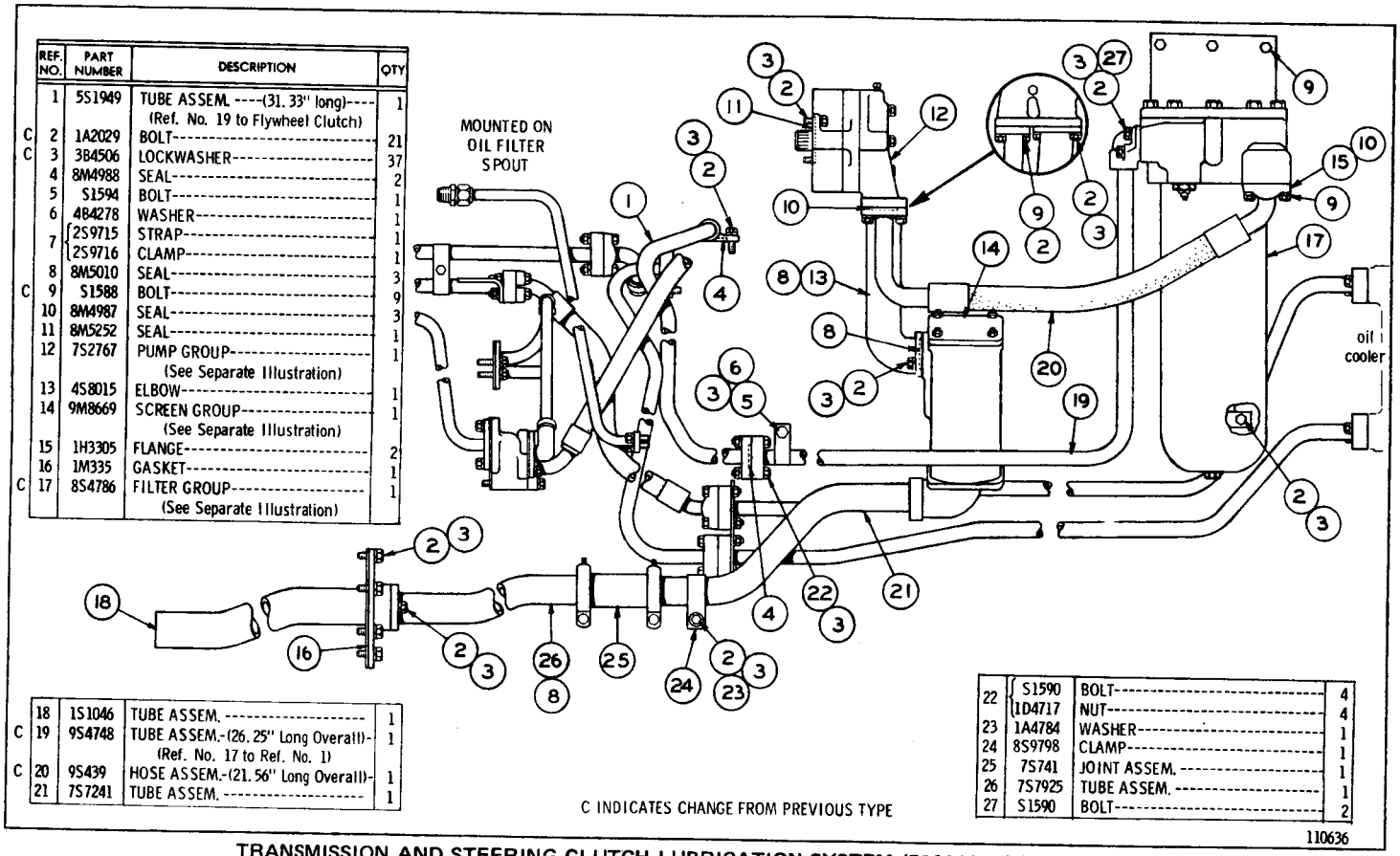

REF. NO.	PART NUMBER	DESCRIPTION	QTY
1	5S1949	TUBE ASSEM. ----(31.33" long)---- (Ref. No. 19 to Flywheel Clutch)	1
C 2	1A2029	BOLT	21
C 3	3B4506	LOCKWASHER	37
4	8M4988	SEAL	2
5	S1594	BOLT	1
6	4B4278	WASHER	1
7	2S9715	STRAP	1
	2S9716	CLAMP	1
8	8M5010	SEAL	3
C 9	S1588	BOLT	9
10	8M4987	SEAL	3
11	8M5252	SEAL	1
12	7S2767	PUMP GROUP (See Separate Illustration)	1
13	4S8015	ELBOW	1
14	9M8669	SCREEN GROUP (See Separate Illustration)	1
15	1H3305	FLANGE	2
16	1M335	GASKET	1
C 17	8S4786	FILTER GROUP (See Separate Illustration)	1
18	1S1046	TUBE ASSEM.	1
C 19	9S4748	TUBE ASSEM.-(26.25" Long Overall)- (Ref. No. 17 to Ref. No. 1)	1
C 20	9S439	HOSE ASSEM.-(21.56" Long Overall)-	1
21	7S7241	TUBE ASSEM.	1
22	S1590	BOLT	4
	1D4717	NUT	4
23	1A4784	WASHER	1
24	8S9798	CLAMP	1
25	7S741	JOINT ASSEM.	1
26	7S7925	TUBE ASSEM.	1
27	S1590	BOLT	2

TRANSMISSION AND STEERING CLUTCH LUBRICATION SYSTEM (5S8646 N/S)—Part 3 of 4
Serial No. 36A5329 to 36A5335 inclusive
9M8669 Screen, 8S4786 Filter and 7S2767 Pump parts are shown on Pages 82 and 83

TRANSMISSION AND STEERING CLUTCH LUBRICATION SYSTEM (5S8646 N/S)—Part 4 of 4

Serial No. 36A5329 to 36A5335 inclusive

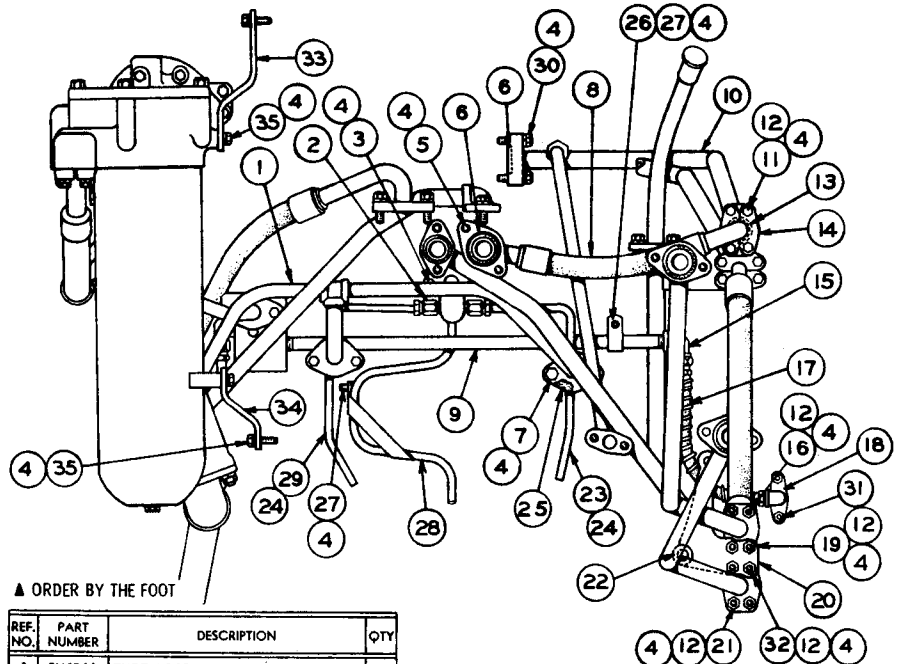

▲ ORDER BY THE FOOT

REF. NO.	PART NUMBER	DESCRIPTION	QTY
1	9H6844	TUBE ASSEM.-----(Oil Supply)----- (Relief Valve to Transmission)	1
2	3B8996	FITTING----------	2
	8F8997	NUT---------- (1 in each 3B8996 Fitting)	2
3	L1351	BOLT----------	2
C 4	3B4506	LOCKWASHER----------	30
5	S1588	BOLT----------	2
6	8M4987	SEAL----------	2
7	S1591	BOLT----------	4

▲ ORDER BY THE FOOT

C INDICATES CHANGE FROM PREVIOUS TYPE

8	5S4060	HOSE ASSEM.-(13.25" long overall)- (Ref. No. 10 To Flywheel Clutch)	1
9	7S7375	PIPE---------- (Block Assem. to Ref. No. 17)	1
10	5S1921	TUBE ASSEM.-----(46.46" long)----- (Ref. No. 8 to Relief Valve)	1
11	S1590	BOLT----------(2" long)----------	4
12	1D4717	NUT----------	12
13	8M4988	SEAL----------	1
14	2K190	FLANGE----------	2
15	7S7507	FITTING----------	1
16	7H7954	BOLT----------	2
17	7S7368	HOSE ASSEM.-(10.62" long overall)- (Ref. No. 9 to Brake Band)	1
18	7S7367	FITTING----------	1
19	L2070	BOLT----------(2.25" long)------	2
20	2S9703	PLATE----------	1
21	L1143	BOLT------(2.50" long)----------	2
22	3H7654	WASHER----------	2
▲ 23	4S8457	TUBE------(Left Hand)------20.34" (Pinion Sprayer)	
24	7B9919	CLIP----------	2
25	9H3331	GASKET----------	1
26	1S3618	CLIP----------	2
27	T102	BOLT----------	4
28	2S8311	TUBE ASSEM.------(Center)------ (Pinion Sprayer)	1
29	1M2675	TUBE--------(Right Hand)--------- (Pinion Sprayer)	1
30	S1571	BOLT--------(1.75" Long)----------	2
	7S9686	BOLT----------	2
31	1B4203	NUT----------	2
	2H3504	LOCK----------	2
32	T573	BOLT-------(2.75" Long)----------	2
C 33	8S4789	BRACKET----------	1
C 34	8S4780	BRACKET----------	1
C 35	S1594	BOLT-------(1.00" Long)----------	4

110654

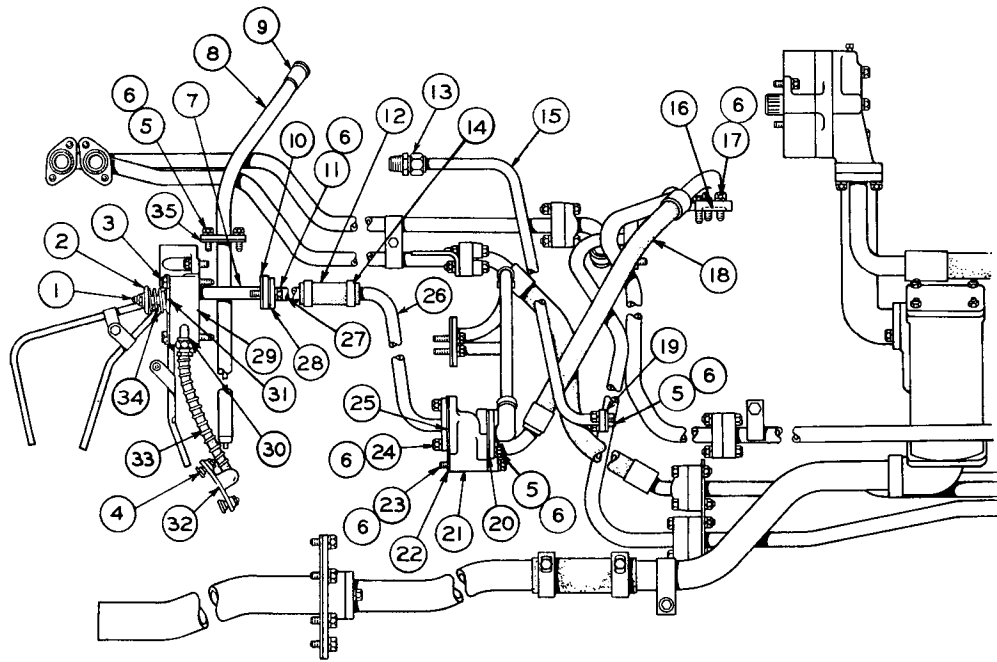

REF. NO.	PART NUMBER	DESCRIPTION	QTY
5	S1594	BOLT----------(1" long)----------	6
6	3B4506	LOCKWASHER----------	14
7	7S7372	TUBE ASSEM. ----------	1
	8M4445	SEAL----------	1
8	8H7702	GUIDE ASSEM. ----------	1
9	7M378	PLUNGER ASSEM. ----------	1
10	3S8656	GASKET----------	1
11	S1591	BOLT----------	2
12	2S9402	HOSE----------	1
13	6H1993	FITTING----------	1
	6H3137	NUT----------	1
	6H3136	SLEEVE----------	1
		(Parts of 6H1993 Fitting)	
14	2S3440	CLAMP----------	2
15	5S1922	TUBE ASSEM. ----(28. 93" long)----	1
16	8M4987	SEAL----------	2
17	S1588	BOLT----------	2
18	5S4061	HOSE ASSEM. ----(24. 12" long)----	1
		(Ref. No. 21 to Flywheel Clutch)	
19	1H9027	GASKET----------	1
20	9M5252	GASKET----------	1
21	5S1981	HOUSING----------	1
22	6L5588	GASKET----------	1
23	T65	BOLT---------(3. 50" long)---------	2
24	1A2029	BOLT--------(1. 125" long)--------	2
25	7B6473	GASKET----------	1
26	2S9407	TUBE ASSEM.-(13. 57" long overall)-	1
27	2S9408	TUBE ASSEM.-(13. 30" long overall)-	1
28	8F6647	GASKET----------	1
29	7S7370	BLOCK ASSEM. ----------	1
30	7S7369	ELBOW----------	1
31	1M5471	VALVE----------	1
32	7S7367	FITTING----------	1
33	7S7368	HOSE ASSEM.-(10. 62" long overall)-	1
		(Ref. No. 29 to Brake Band)	
34	1S7139	SPRING----------	1
35	9F5940	GASKET----------	1

111746

REF. NO.	PART NUMBER	DESCRIPTION	QTY
1	2F8616	NUT----------	1
	4B4278	WASHER--------(Plain)----------	1
2	2D7091	WASHER---------(Cup)----------	1

REF. NO.	PART NUMBER	DESCRIPTION	QTY
3	L1143	BOLT----------	2
	3S8744	LOCK----------	1
4	7S9686	BOLT----------	2
	1B4203	NUT----------	2
	2H3504	LOCK----------	2

TRANSMISSION AND STEERING CLUTCH LUBRICATION SYSTEM (5S8646 N/S)—Part 1 of 4

Effective with Serial No. 36A5336

See Page 28 for Gasket Kits

TRANSMISSION AND STEERING CLUTCH LUBRICATION SYSTEM (5S8646 N/S)—Part 2 of 4

Effective with Serial No. 36A5336

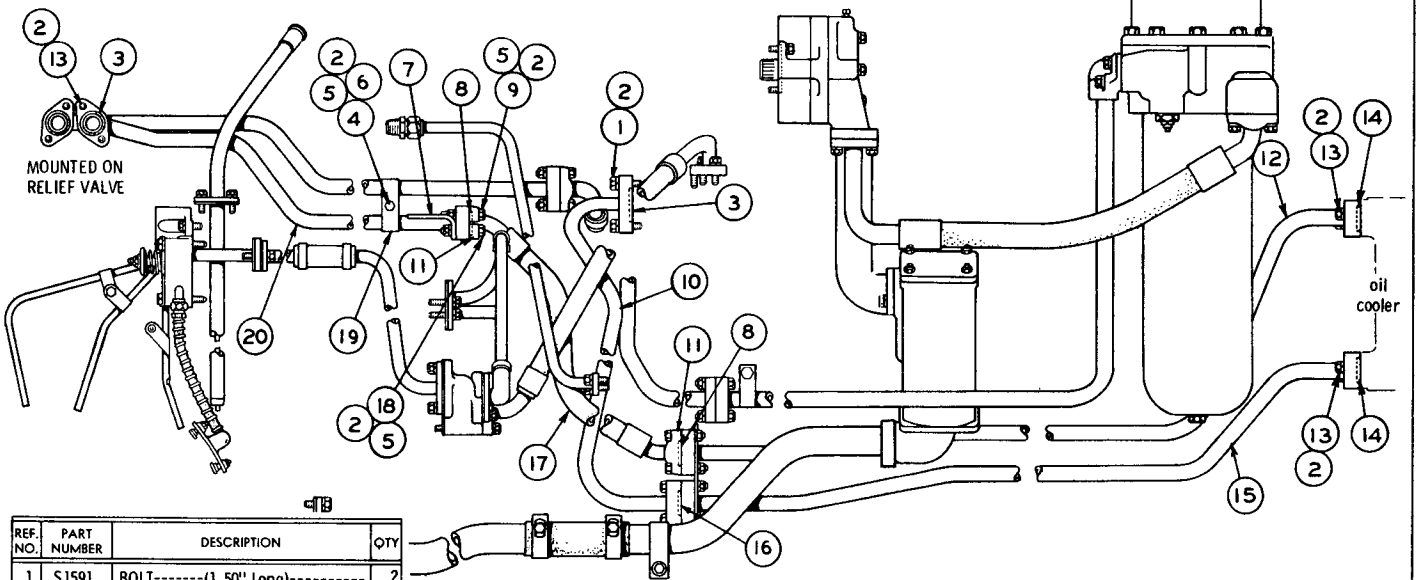

REF. NO.	PART NUMBER	DESCRIPTION	QTY
1	S1591	BOLT-------(1.50" Long)----------	2
2	3B4506	LOCKWASHER----------	11
3	8M4987	SEAL----------	2
4	S1588	BOLT----------	1
5	1D4717	NUT----------	5
6	4B4278	WASHER----------	2
7	2S9722	SUPPORT----------	1
	4B4280	WASHER----------	1
8	8M4988	SEAL----------	2
9	S1590	BOLT----------	2
10	5S1897	TUBE ASSEM. ----(32.01" long)---- (Ref. No. 15 to Flywheel Clutch)	1
11	2K190	FLANGE----------	4
12	5S722	TUBE ASSEM. ----(64.22" long)---- (Ref. No. 17 to Oil Cooler)	1
13	S1571	BOLT----------	8
14	8M4986	SEAL----------	2
15	5S720	TUBE ASSEM. ----(59.50" long)---- (Ref. No. 10 to Oil Cooler)	1
16	8M5248	SEAL----------	1
17	5S806	HOSE ASSEM. ----(20.12" long)---- (Ref. No. 12 to Ref. No. 20)	1
18	L2070	BOLT----------	2
19	4S8002	CLAMP----------	2
20	2S9721	TUBE ASSEM. ----(39.23" long)---- (Ref. No. 17 to Relief Valve)	1

111747

ONLY "CATERPILLAR" PARTS GIVE "CATERPILLAR" PERFORMANCE

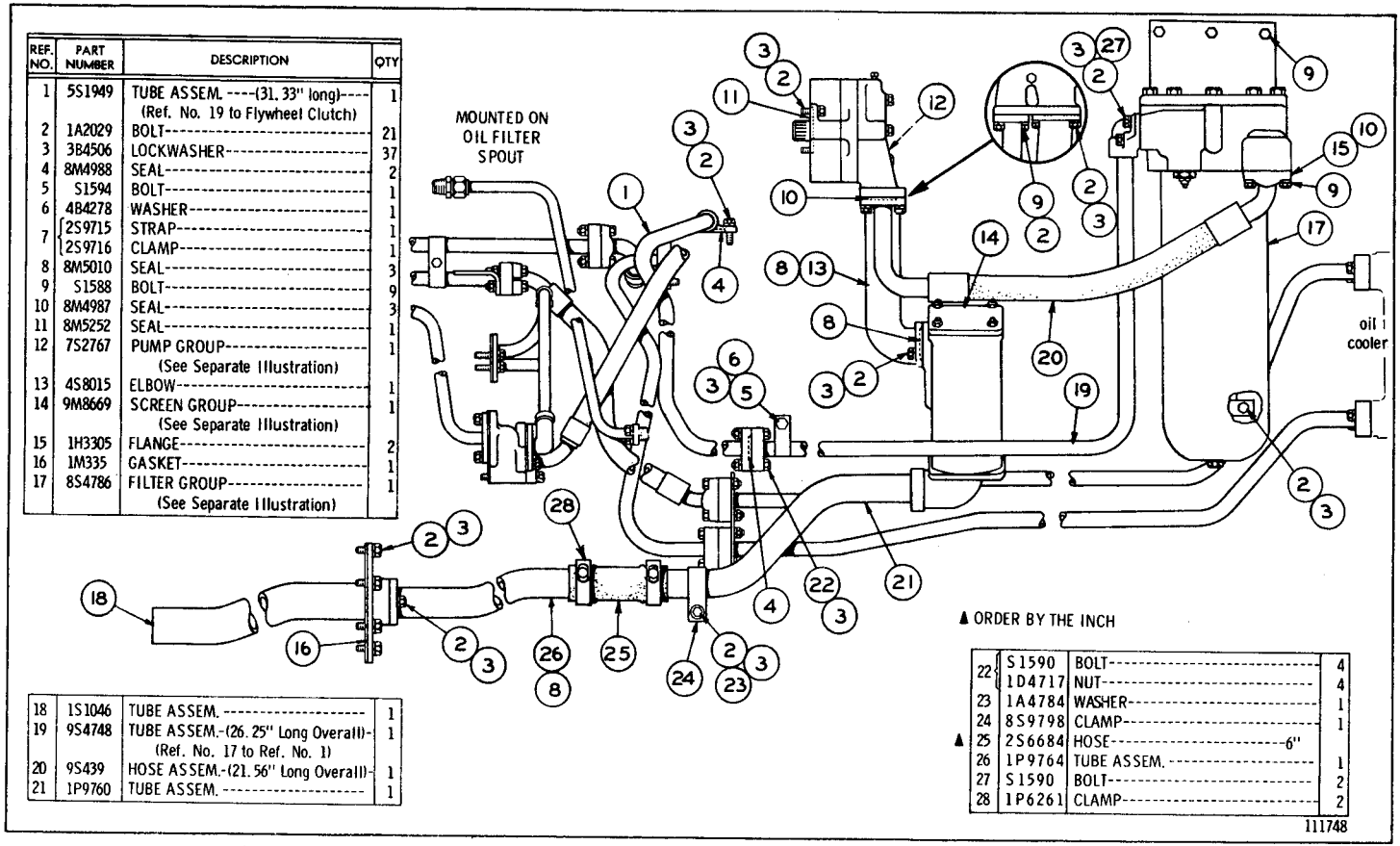

REF. NO.	PART NUMBER	DESCRIPTION	QTY
1	5S1949	TUBE ASSEM. ----(31.33" long)---- (Ref. No. 19 to Flywheel Clutch)	1
2	1A2029	BOLT	21
3	3B4506	LOCKWASHER	37
4	8M4988	SEAL	2
5	S1594	BOLT	1
6	4B4278	WASHER	1
7	2S9715	STRAP	1
	2S9716	CLAMP	1
8	8M5010	SEAL	3
9	S1588	BOLT	9
10	8M4987	SEAL	3
11	8M5252	SEAL	1
12	7S2767	PUMP GROUP (See Separate Illustration)	1
13	4S8015	ELBOW	1
14	9M8669	SCREEN GROUP (See Separate Illustration)	1
15	1H3305	FLANGE	2
16	1M335	GASKET	1
17	8S4786	FILTER GROUP (See Separate Illustration)	1

18	1S1046	TUBE ASSEM.	1
19	9S4748	TUBE ASSEM.-(26.25" Long Overall)- (Ref. No. 17 to Ref. No. 1)	1
20	9S439	HOSE ASSEM.-(21.56" Long Overall)-	1
21	1P9760	TUBE ASSEM.	1

22	S1590	BOLT	4
	1D4717	NUT	4
23	1A4784	WASHER	1
24	8S9798	CLAMP	1
▲ 25	2S6684	HOSE----------6"	
26	1P9764	TUBE ASSEM.	1
27	S1590	BOLT	2
28	1P6261	CLAMP	2

TRANSMISSION AND STEERING CLUTCH LUBRICATION SYSTEM (5S8646 N/S)—Part 3 of 4

Effective with Serial No. 36A5336

9M8669 Screen, 8S4786 Filter and 7S2767 Pump parts are shown on Pages 82 and 83

TRANSMISSION AND STEERING CLUTCH LUBRICATION SYSTEM (5S8646 N/S)—Part 4 of 4

Effective with Serial No. 36A5336

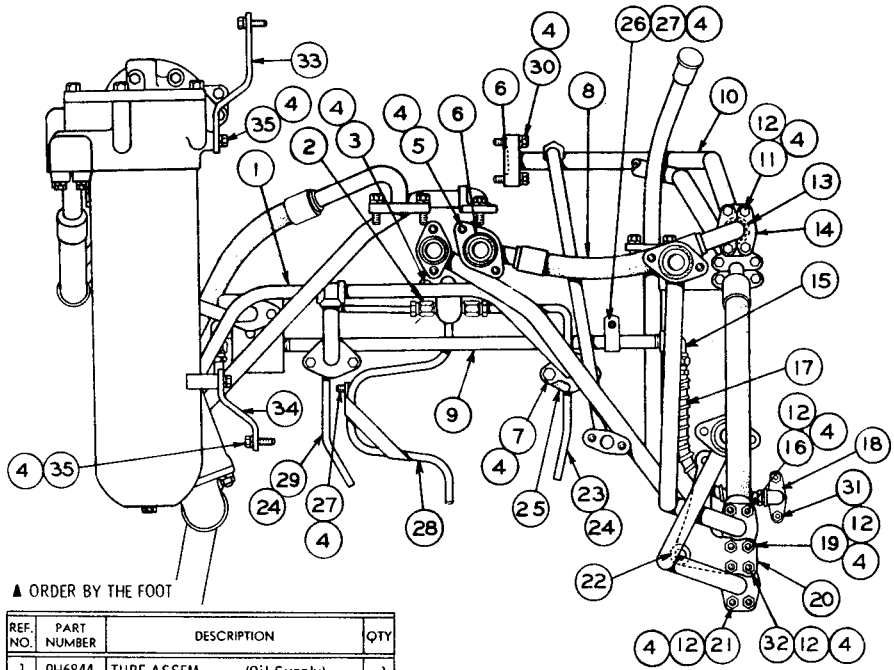

▲ ORDER BY THE FOOT

REF. NO.	PART NUMBER	DESCRIPTION	QTY
1	9H6844	TUBE ASSEM.-----(Oil Supply)----- (Relief Valve to Transmission)	1
2	3B8996	FITTING----------	2
	8F8997	NUT---------- (1 in each 3B8996 Fitting)	2
3	L1351	BOLT----------	2
4	3B4506	LOCKWASHER----------	30
5	S1588	BOLT----------	2
6	8M4987	SEAL----------	2
7	S1591	BOLT----------	4
8	5S4060	HOSE ASSEM.-(13.25" long overall)- (Ref. No. 10 To Flywheel Clutch)	1
9	7S7375	PIPE---------- (Block Assem. to Ref. No. 17)	1
10	5S1921	TUBE ASSEM.----(46.46" long)----- (Ref. No. 8 to Relief Valve)	1
11	S1590	BOLT----------(2" long)----------	4
12	1D4717	NUT----------	12
13	8M4988	SEAL----------	1
14	2K190	FLANGE----------	2
15	7S7507	FITTING----------	1
16	7H7954	BOLT----------	2
17	7S7368	HOSE ASSEM.-(10.62" long overall)- (Ref. No. 9 to Brake Band)	1
18	7S7367	FITTING----------	1
19	L2070	BOLT----------(2.25" long)-----	2
20	2S9703	PLATE----------	1
21	L1143	BOLT------(2.50" long)----------	2
22	3H7654	WASHER----------	2
▲ 23	4S8457	TUBE------(Left Hand)------20.34" (Pinion Sprayer)	
24	7B9919	CLIP----------	2
25	9H3331	GASKET----------	1
26	1S3618	CLIP----------	2
27	T102	BOLT----------	4
28	2S8311	TUBE ASSEM.------(Center)------ (Pinion Sprayer)	1
29	1M2675	TUBE--------(Right Hand)--------- (Pinion Sprayer)	1
30	S1571	BOLT--------(1.75" Long)---------	2
	7S9686	BOLT----------	2
31	1B4203	NUT----------	2
	2H3504	LOCK----------	2
32	T573	BOLT-------(2.75" Long)----------	2
33	8S4789	BRACKET----------	1
34	8S4780	BRACKET----------	1
35	S1594	BOLT-------(1.00" Long)----------	4

111749

ONLY "CATERPILLAR" PARTS GIVE "CATERPILLAR" PERFORMANCE

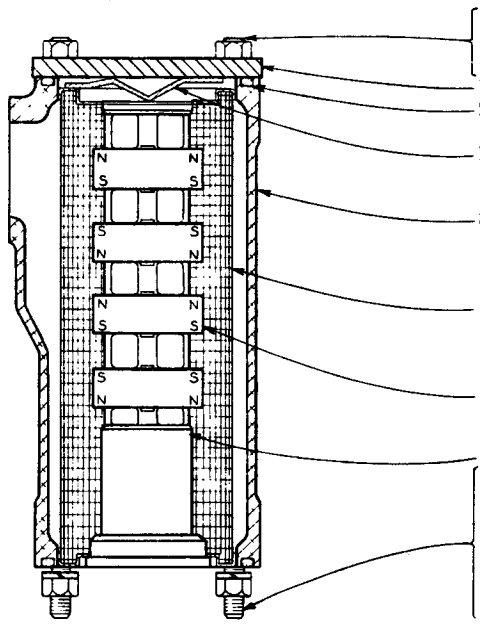

9M8669 MAGNETIC SCREEN GROUP
Part of Transmission and Steering Clutch Lubrication System
shown on Pages 76 and 80

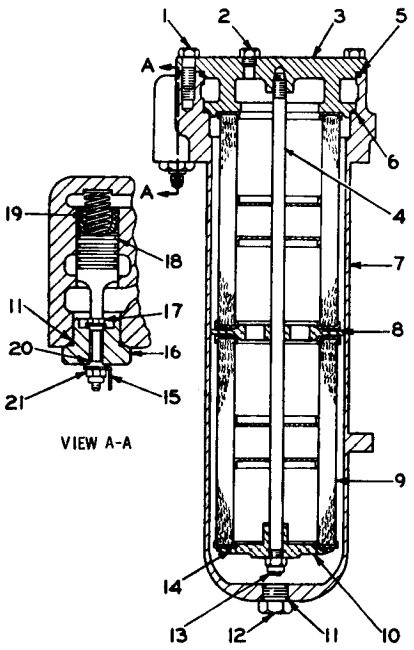

REF. NO.	PART NUMBER	DESCRIPTION	QTY
1	7B3235	BOLT	5
2	9S4191	PLUG	1
	3J1907	SEAL	1
3	8S4785	COVER ASSEM.	1
4	8S4784	STUD (Part of 8S4785 Assem.)	1
5	8F8733	SEAL	1
6	6D9157	SEAL	1
7	8S2209	HOUSING ASSEM.	1
8	8S4781	RETAINER	1
9	4J6064	ELEMENT ASSEM.	2
10	3S9847	RETAINER	1
11	3D2824	SEAL	2
12	2R8283	PLUG	1
13	2H3788	NUT	1
14	1H8128	SEAL	1
15	8S1813	TERMINAL	1
16	1P2085	PLUG	1
17	1P2086	SCREW	1
18	9S9602	SPOOL	1
19	2S5816	SPRING	1
20	8S1814	INSULATOR	2
21	4L1250	NUT	1

8S4786 OIL FILTER GROUP
Part of Transmission and Steering Clutch Lubrication System
shown on Pages 76 and 80

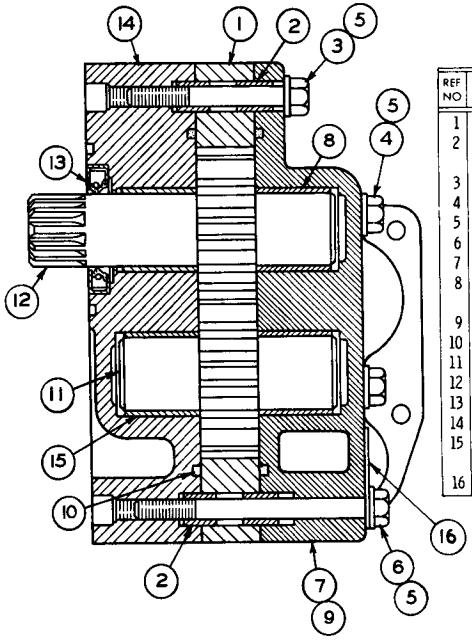

REF NO	PART NUMBER	DESCRIPTION	QTY
1	2S704	BODY ASSEM.	1
2	8M8489	DOWEL (Part of 2S704 Body Assem.)	4
3	T 573	BOLT	1
4	T 65	BOLT	4
5	3S4	WASHER	6
6	8S9191	BOLT	1
7	2M3437	MANIFOLD ASSEM.	1
8	5M3320	BEARING (Part of 2M3437 Manifold Assem.)	2
9	5M6214	PLUG	1
10	8F9516	SEAL	2
11	2S8575	GEAR-(12 Teeth-Idler)	1
12	2S8574	GEAR-(12 Teeth-Drive)	1
13	5S6622	SEAL	1
14	2M3436	COVER ASSEM.	1
15	5M3320	BEARING (Part of 2M3436 Assem.)	2
16	8S5726	PLATE-(Identification)	1

7S2767 OIL PUMP GROUP
Part of Transmission and Steering Clutch Lubrication System
shown on Pages 76 and 80

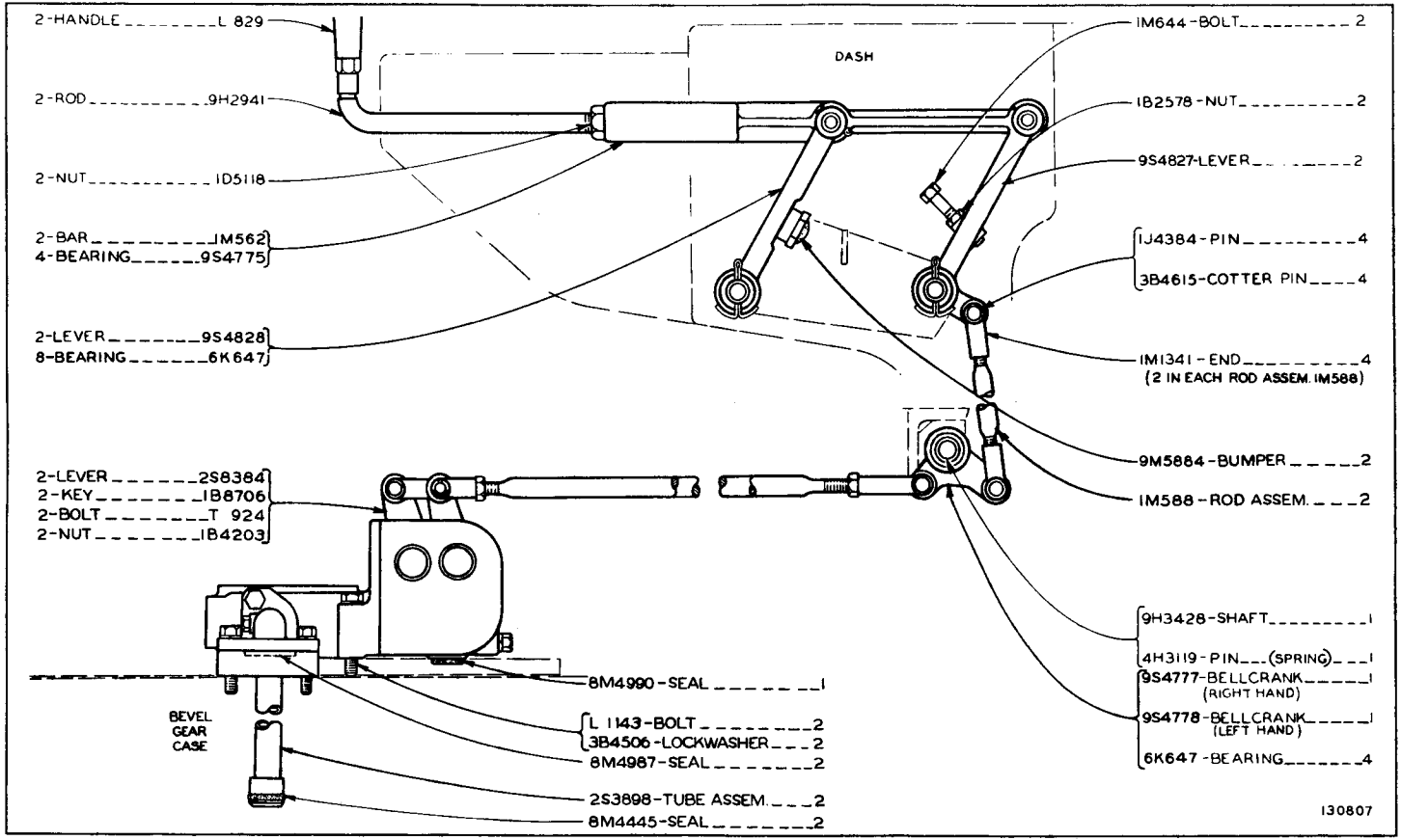

STEERING CLUTCH HYDRAULIC CONTROL (9H5365 N/S)—As Viewed from Right Hand Side of Machine

STEERING CLUTCH HYDRAULIC CONTROL (9H5365 N/S)—Top View

2S8408 Hydraulic Valve parts are shown on Page 86

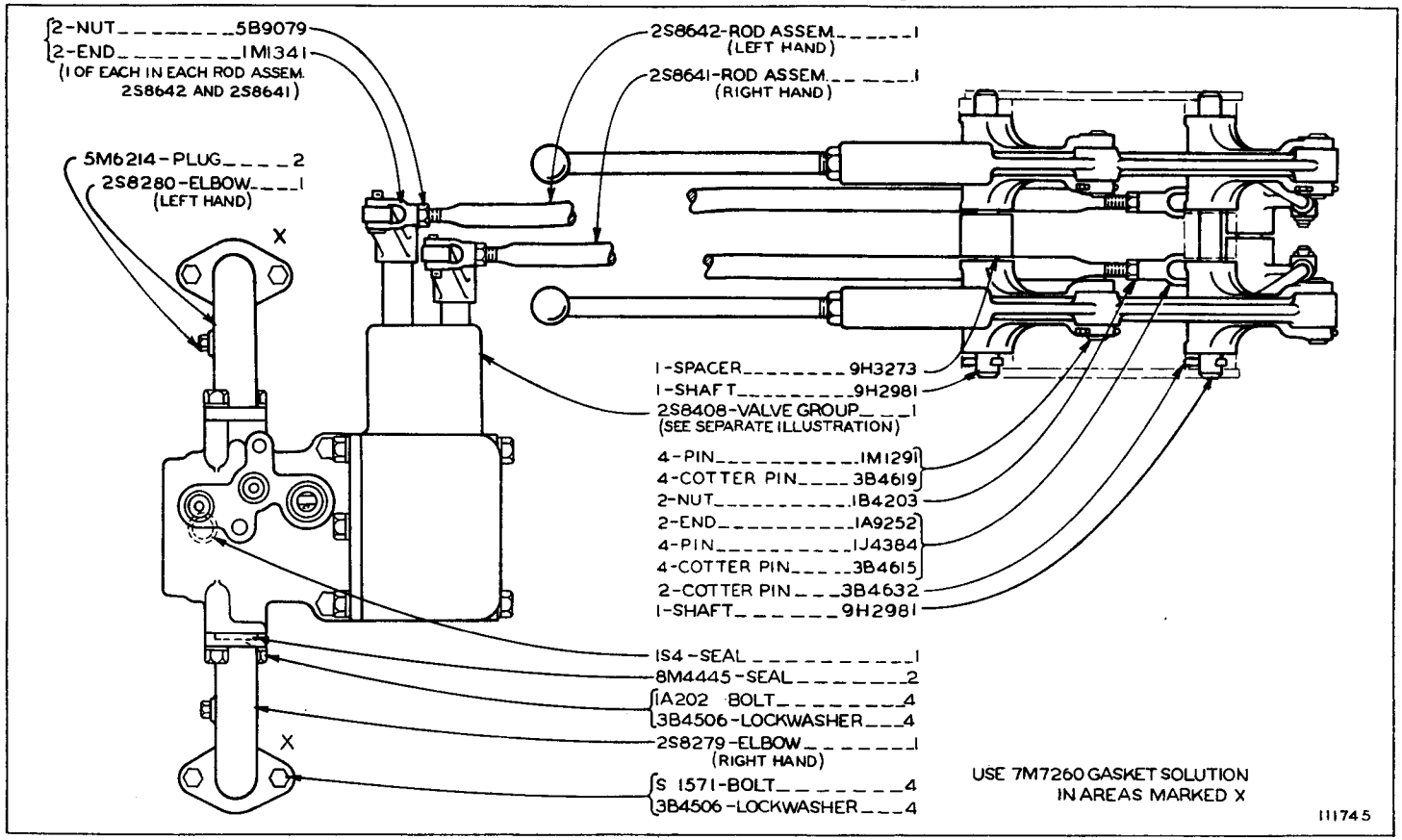

ONLY "CATERPILLAR" PARTS GIVE "CATERPILLAR" PERFORMANCE

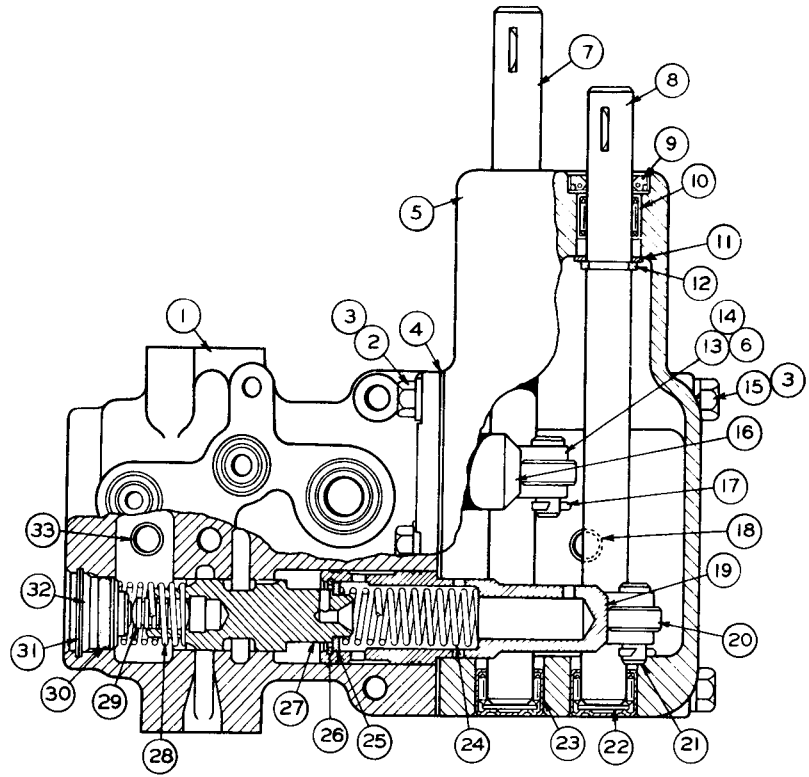

REF NO	PART NUMBER	DESCRIPTION	QTY
1	5S5780	HOUSING	1
2	S-1594	BOLT	3
3	3B4506	LOCKWASHER	5
4	2S8414	GASKET	1
5	2S8307	HOUSING	1
6	1B8706	KEY	2
7	2S8380	SHAFT	1
8	2S8395	SHAFT	1
9	9H223	SEAL	2
10	7F7983	BEARING	2
11	3B9363	WASHER	2
12	3S7005	RING	2
13	2S8396	LEVER	2
14	S-1588	BOLT	2
15	1A5183	BOLT	2
16	5S5778	PLUNGER-------(Left Hand)--------	1
17	3B4615	COTTER PIN	2
18	2S8413	STAND PIPE	1
19	5S5777	PLUNGER-------(Right Hand)------	1
20	2S8411	ROLLER	2
21	1J4384	PIN	2
22	5S6876	SPACER	2
23	3J7584	BEARING	2
24	2S8410	SPRING	2
25	2S8415	WASHER	2
26	3K6837	RING	2
27	2S8397	VALVE	2
28	2S8398	SPRING	2
29	5M2504	SLUG	2
30	8M4445	SEAL	2
31	8H1037	RING	2
32	4S6323	PLUG	2
33	2S8412	STAND PIPE	1

120527

2S8408 STEERING CLUTCH HYDRAULIC VALVE GROUP

Part of Steering Clutch Hydraulic Control shown on Page 85

STEERING CLUTCH (9H4147 N/S)

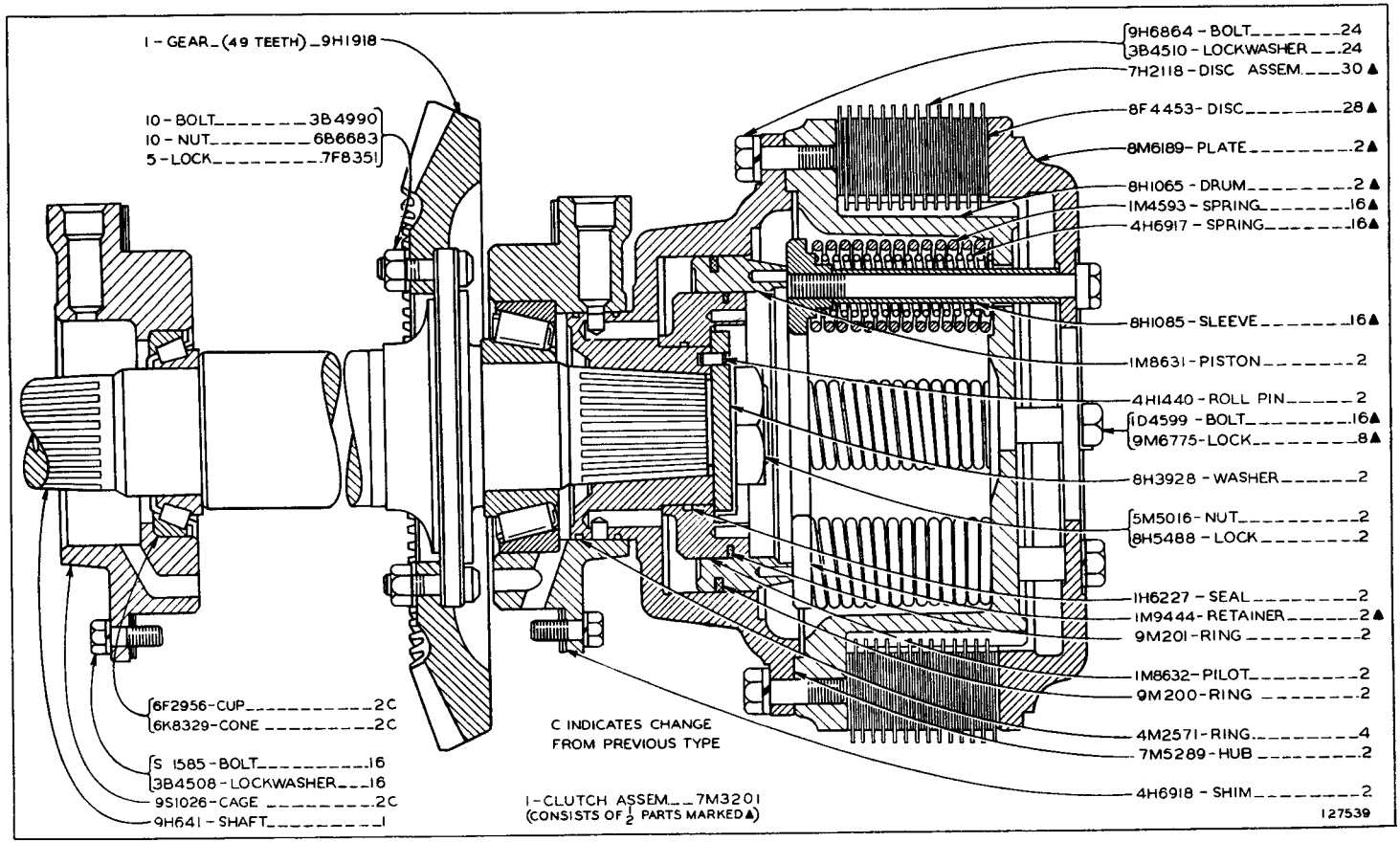

ONLY "CATERPILLAR" PARTS GIVE "CATERPILLAR" PERFORMANCE

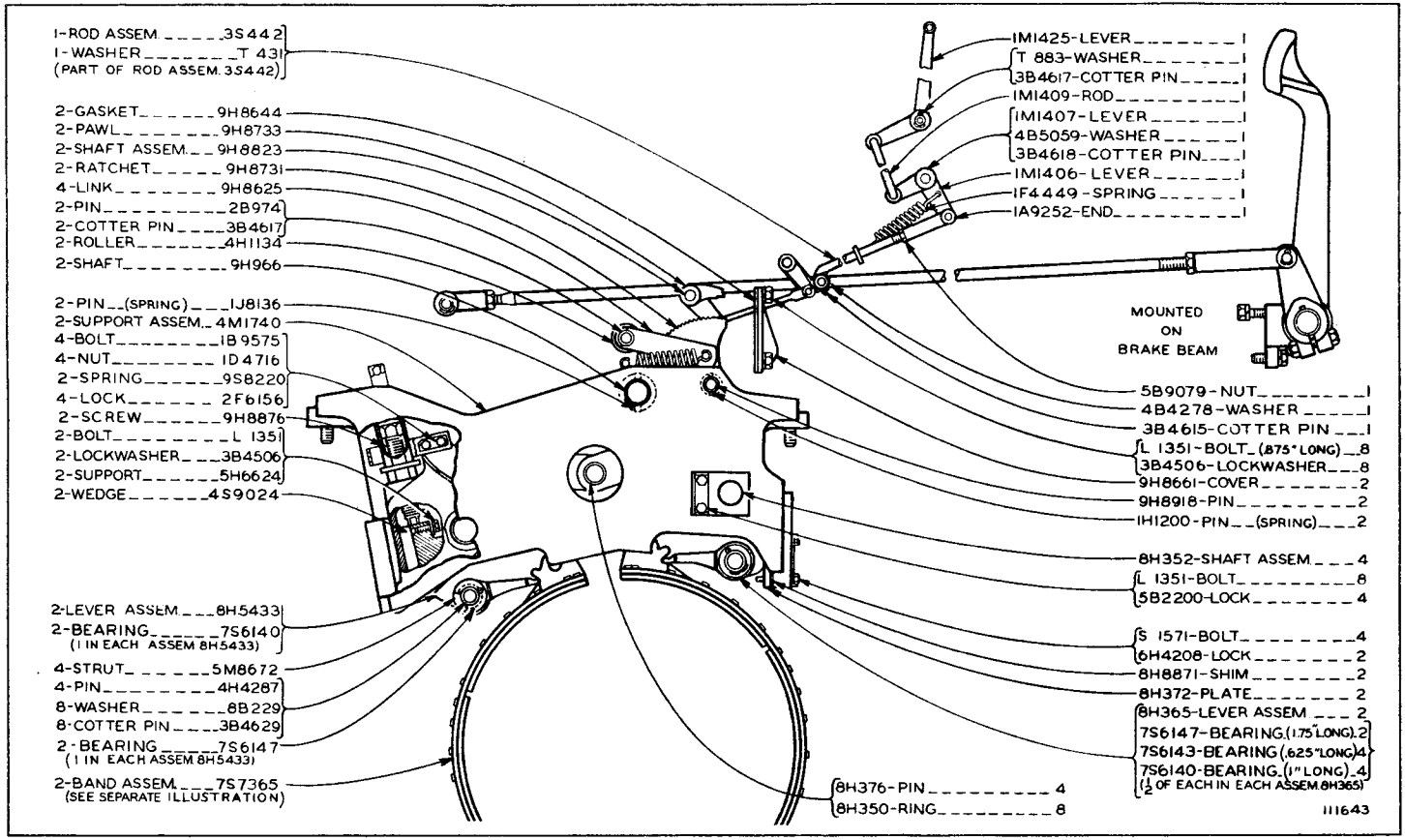

BRAKES (9H7600 N/S)—As Viewed from Right Hand Side of Machine
7S7365 Brake Band parts are shown on Page 90

BRAKES (9H7600 N/S)—Top View

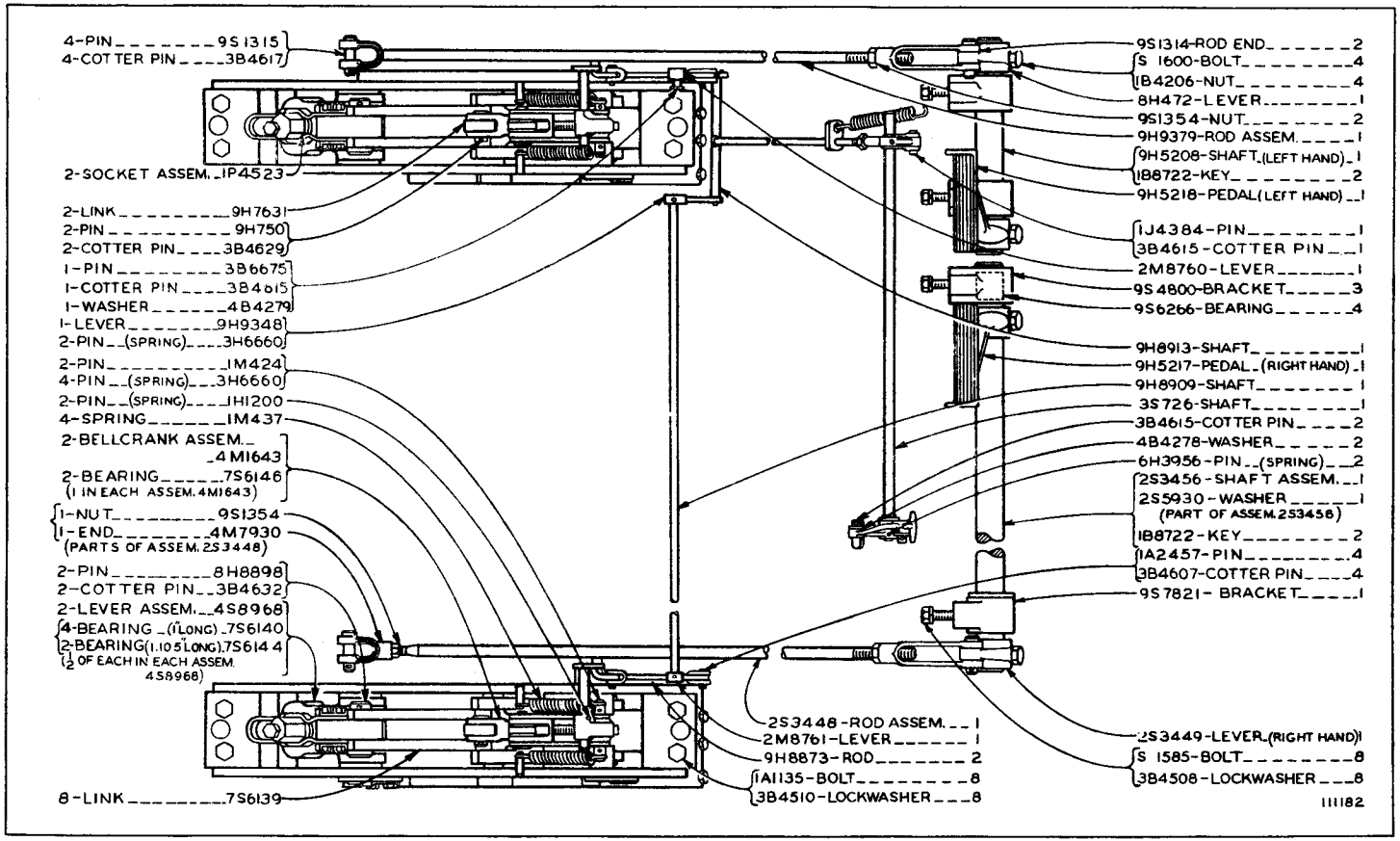

ONLY "CATERPILLAR" PARTS GIVE "CATERPILLAR" PERFORMANCE

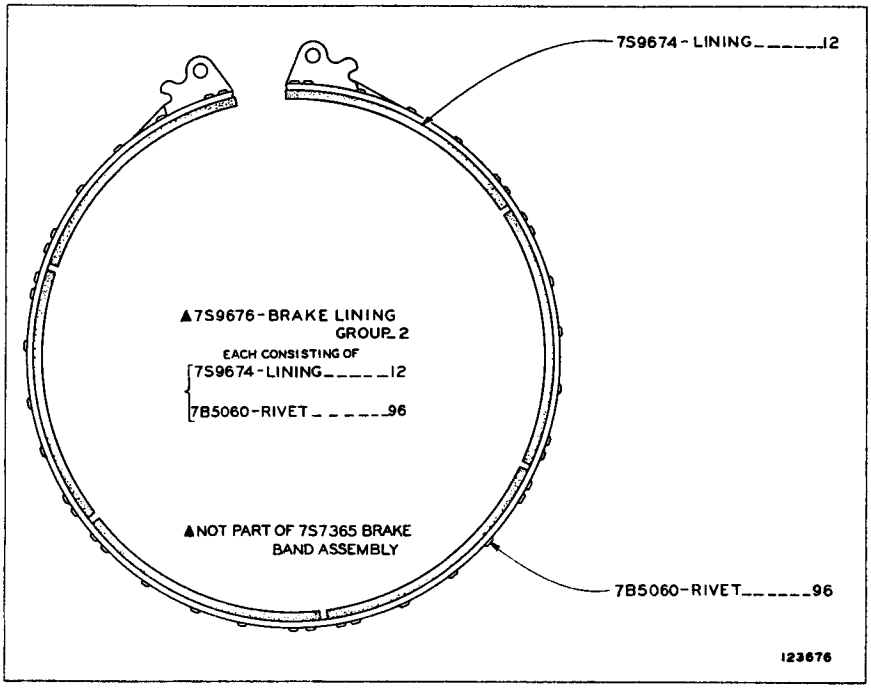

7S7365 BRAKE BAND ASSEMBLY—2 Required
Part of Brakes shown on Page 88

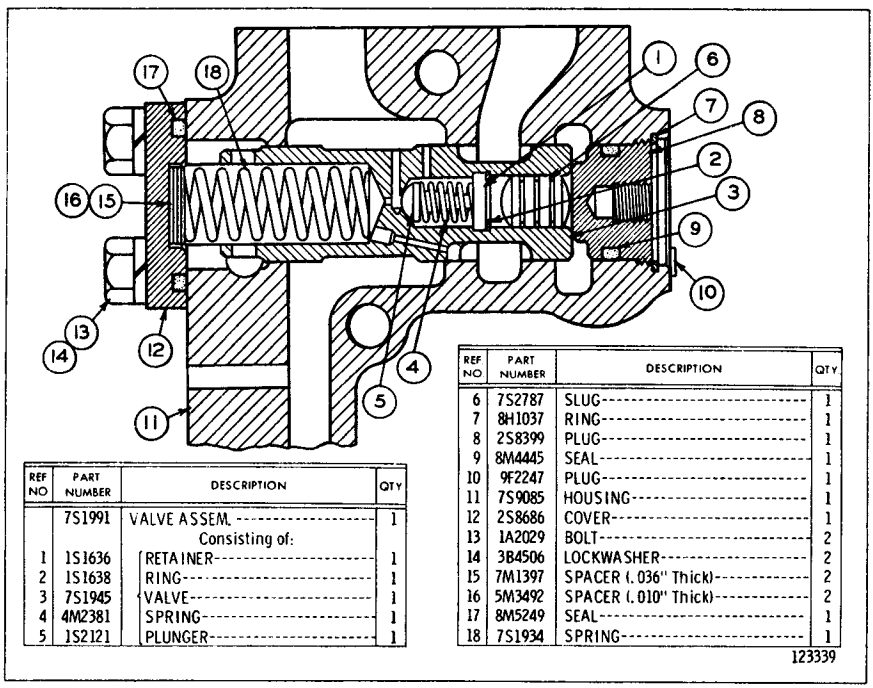

REF NO	PART NUMBER	DESCRIPTION	QTY
	7S1991	VALVE ASSEM.	1
		Consisting of:	
1	1S1636	RETAINER	1
2	1S1638	RING	1
3	7S1945	VALVE	1
4	4M2381	SPRING	1
5	1S2121	PLUNGER	1

REF NO	PART NUMBER	DESCRIPTION	QTY
6	7S2787	SLUG	1
7	8H1037	RING	1
8	2S8399	PLUG	1
9	8M4445	SEAL	1
10	9F2247	PLUG	1
11	7S9085	HOUSING	1
12	2S8686	COVER	1
13	1A2029	BOLT	2
14	3B4506	LOCKWASHER	2
15	7M1397	SPACER (.036" Thick)	2
16	5M3492	SPACER (.010" Thick)	2
17	8M5249	SEAL	1
18	7S1934	SPRING	1

7S9086 RELIEF VALVE GROUP
Part of Brake Hydraulic Mechanism

BRAKE HYDRAULIC MECHANISM (2S8402 N/S)

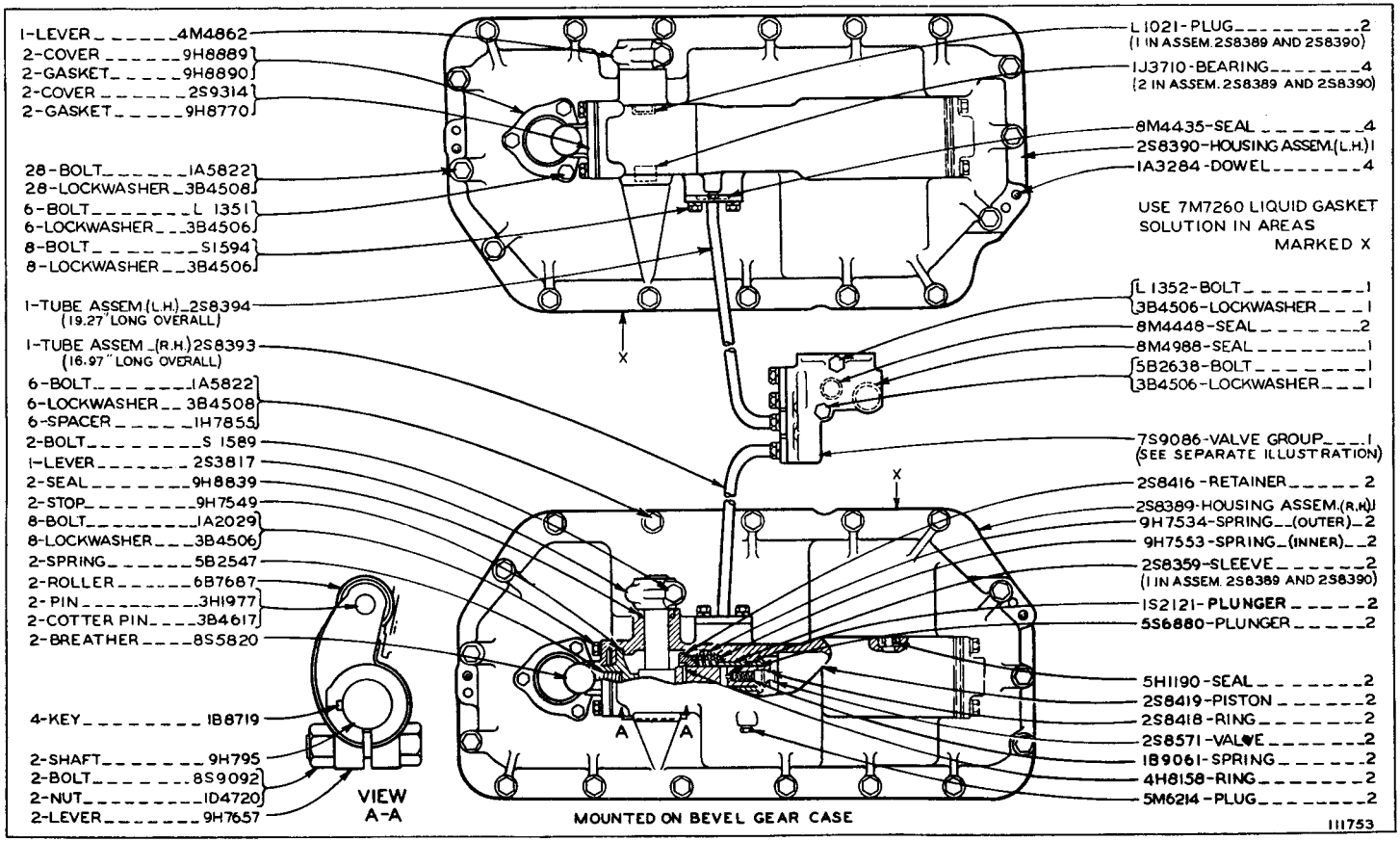

ONLY "CATERPILLAR" PARTS GIVE "CATERPILLAR" PERFORMANCE

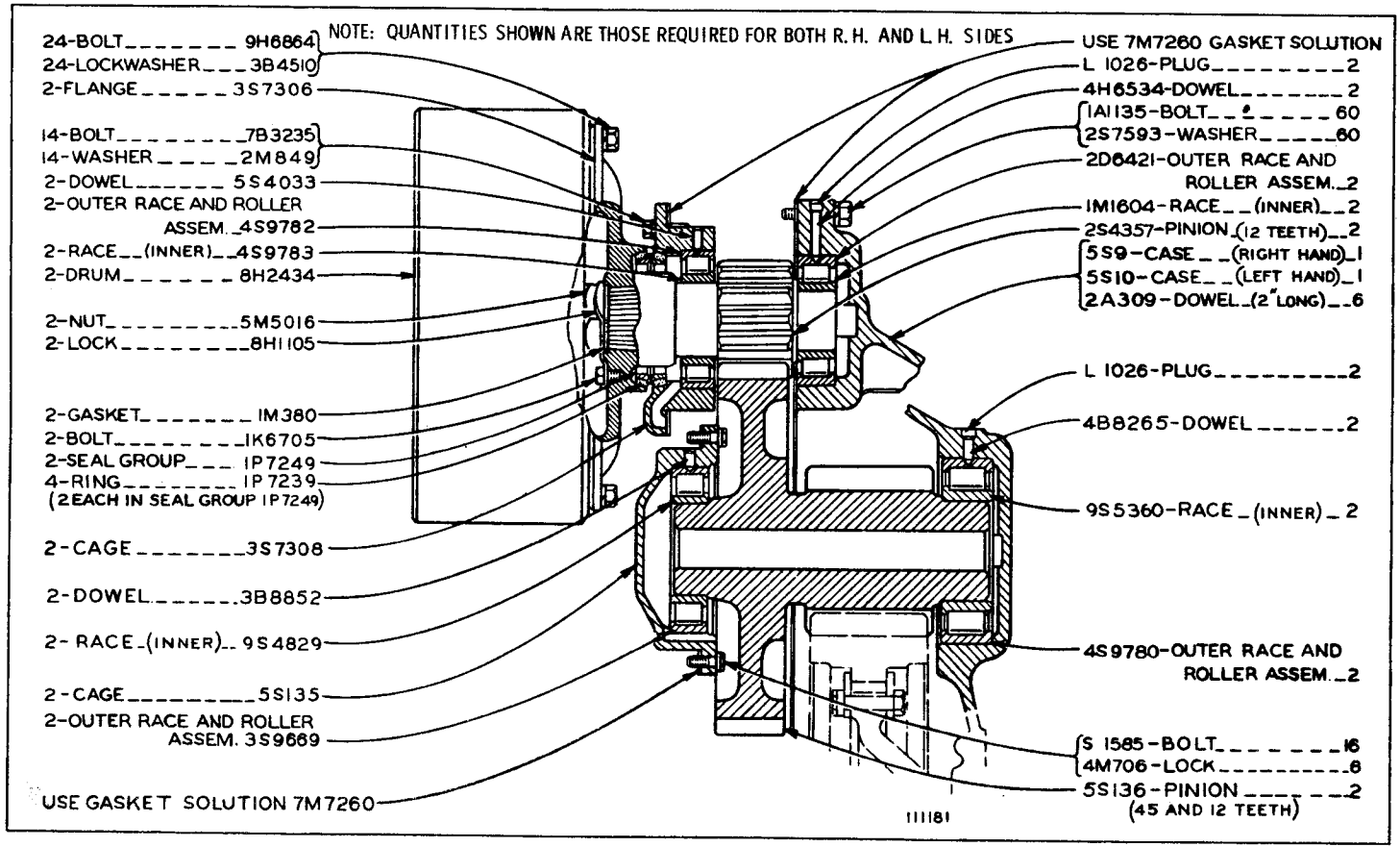

FINAL DRIVE (8H2059 N/S)—Upper Half—Part 1

Refer also to Page 203 for special parts

FINAL DRIVE (8H2059 N/S)—Lower Half—Part 2

Refer also to Page 205 for special parts

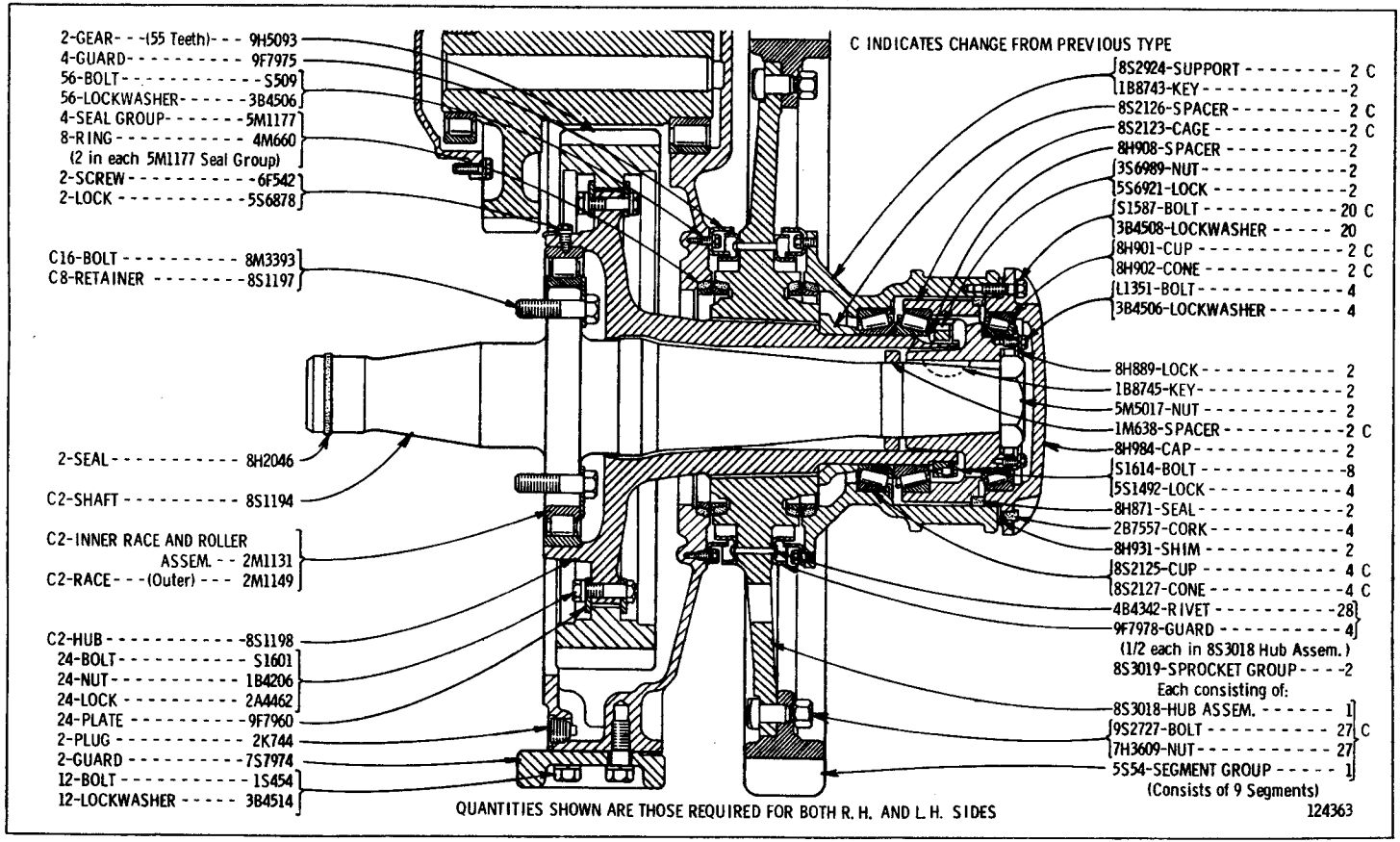

ONLY "CATERPILLAR" PARTS GIVE "CATERPILLAR" PERFORMANCE

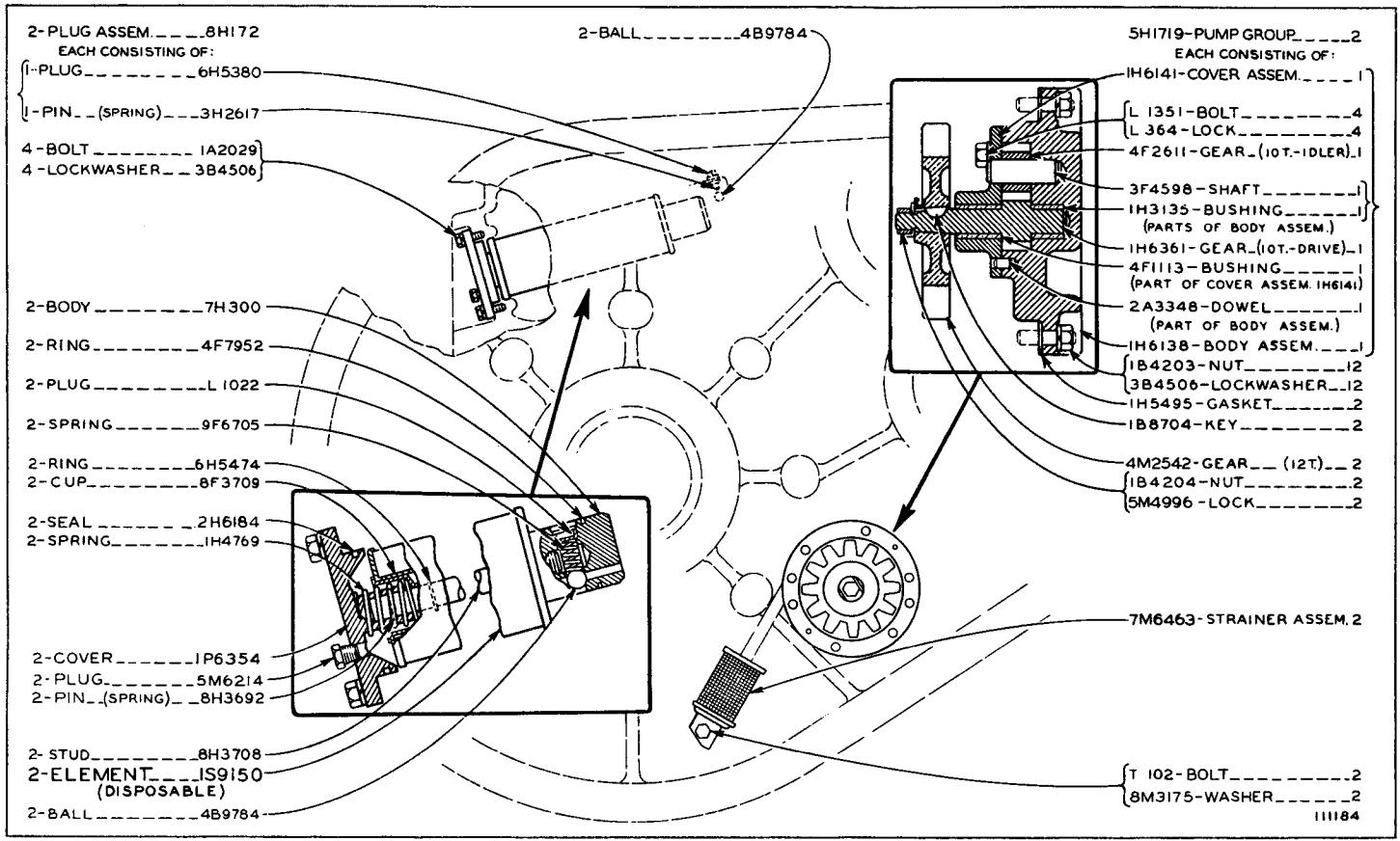

FINAL DRIVE LUBRICATION SYSTEM (8H3825 N/S)

BEVEL GEAR CASE AND COVERS (9H5102 N/S)

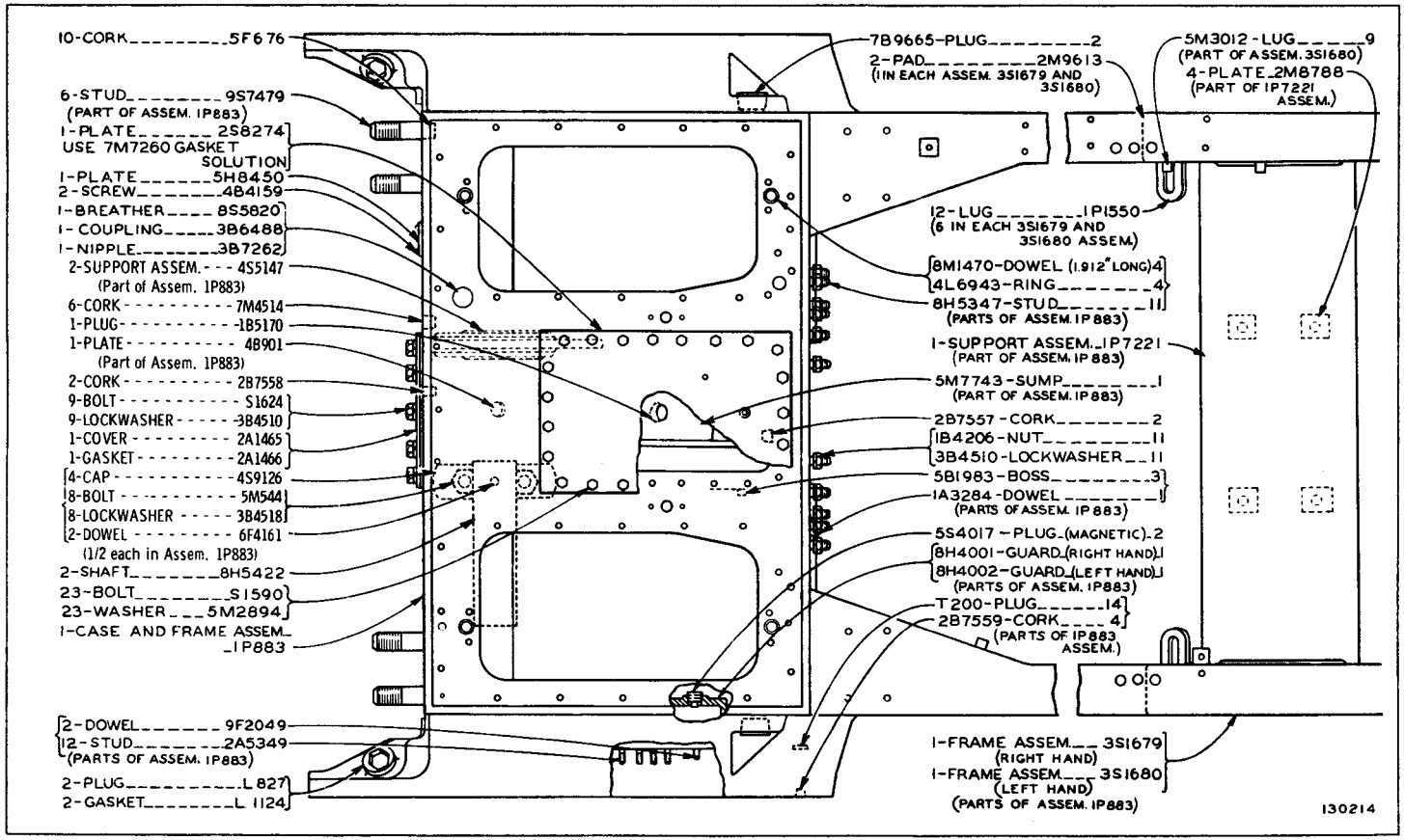

ONLY "CATERPILLAR" PARTS GIVE "CATERPILLAR" PERFORMANCE

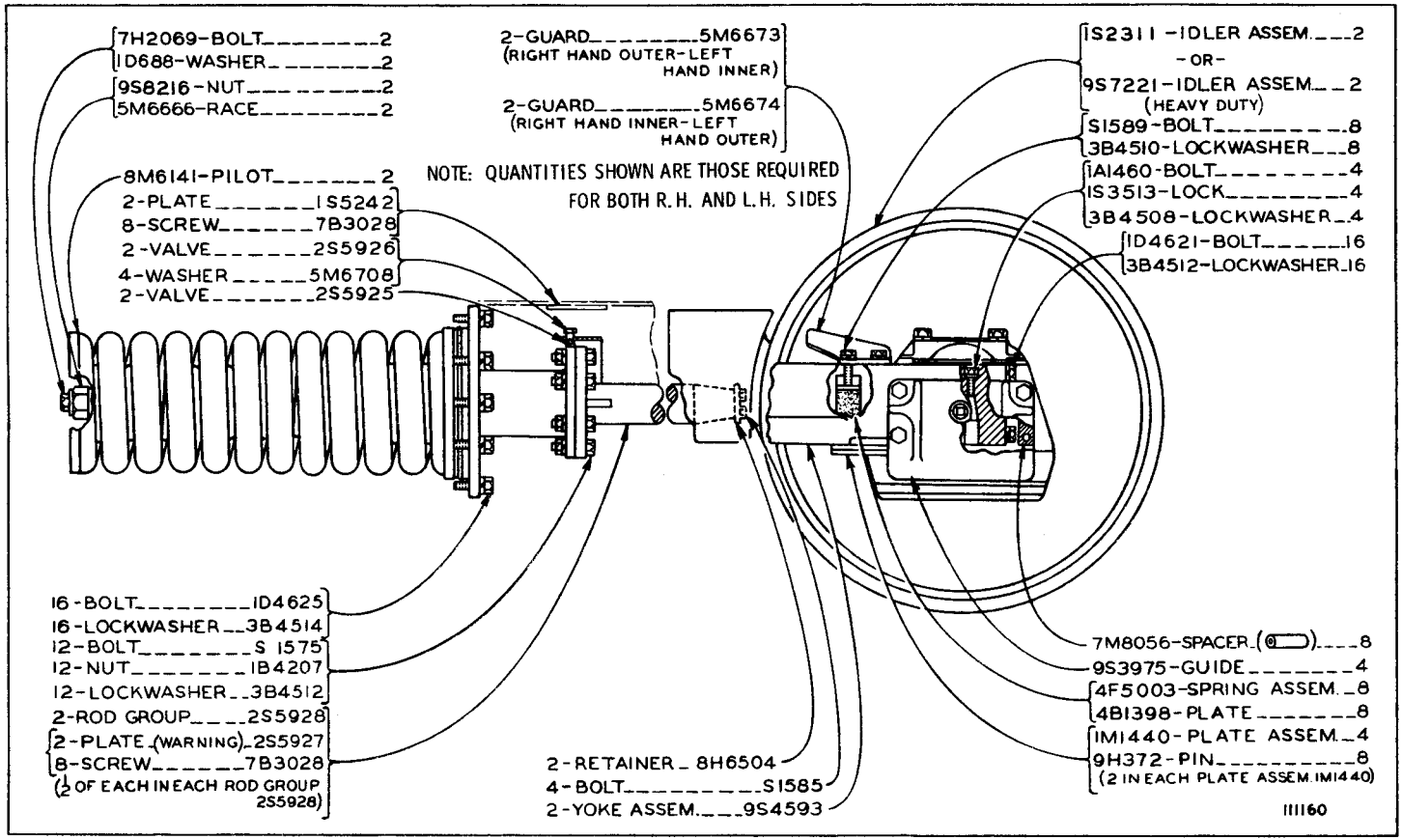

FRONT IDLER (9S4595 N/S)—Part 1

Also part of 1P8316 Six Roller Track Roller Frame and Support Arrangement listed on Page 204

Refer also to Page 204 for special parts

FRONT IDLER (9S4595 N/S)—Part 2

Also part of 1P8316 Six Roller Track Roller Frame and Support Arrangement listed on Page 204

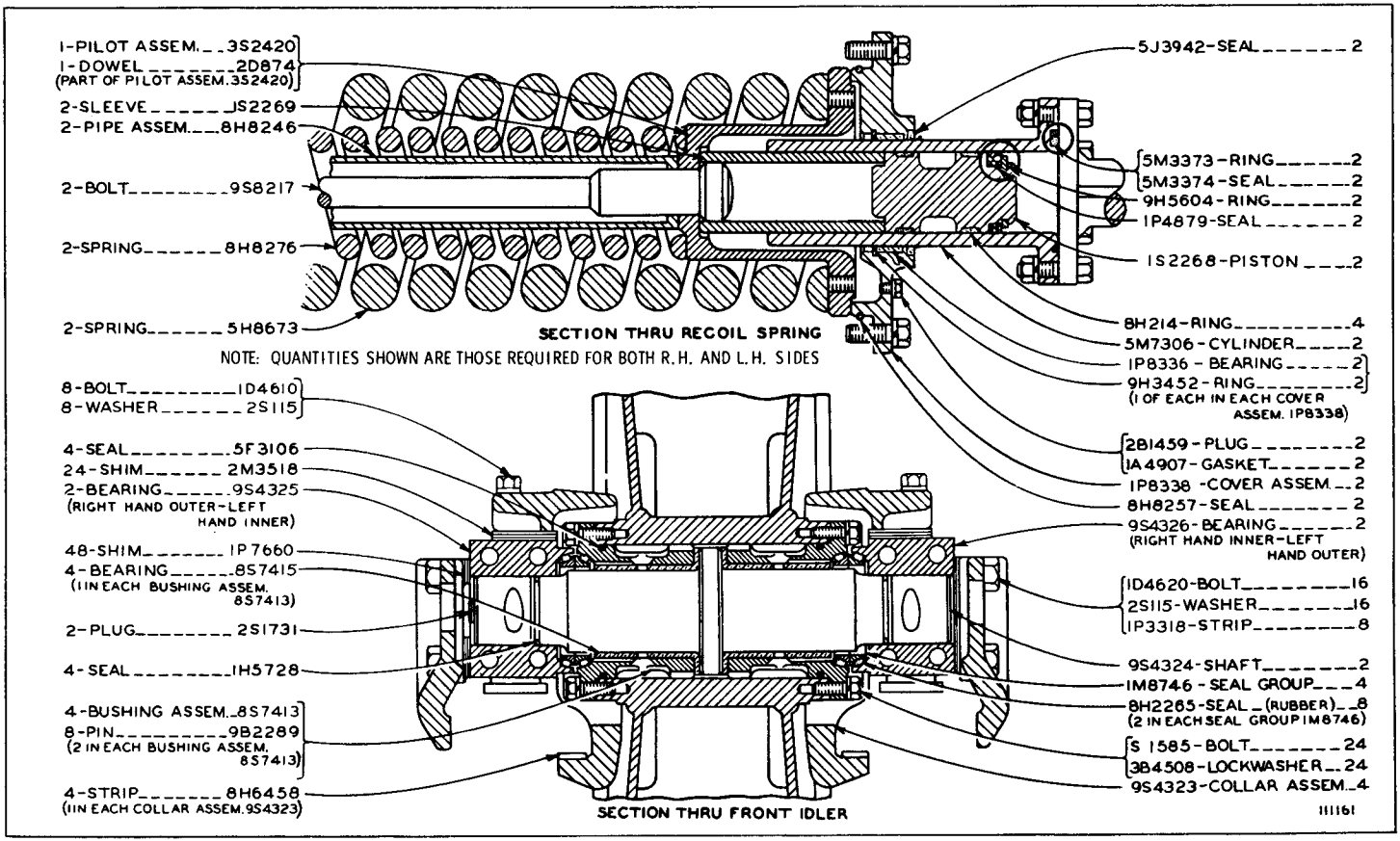

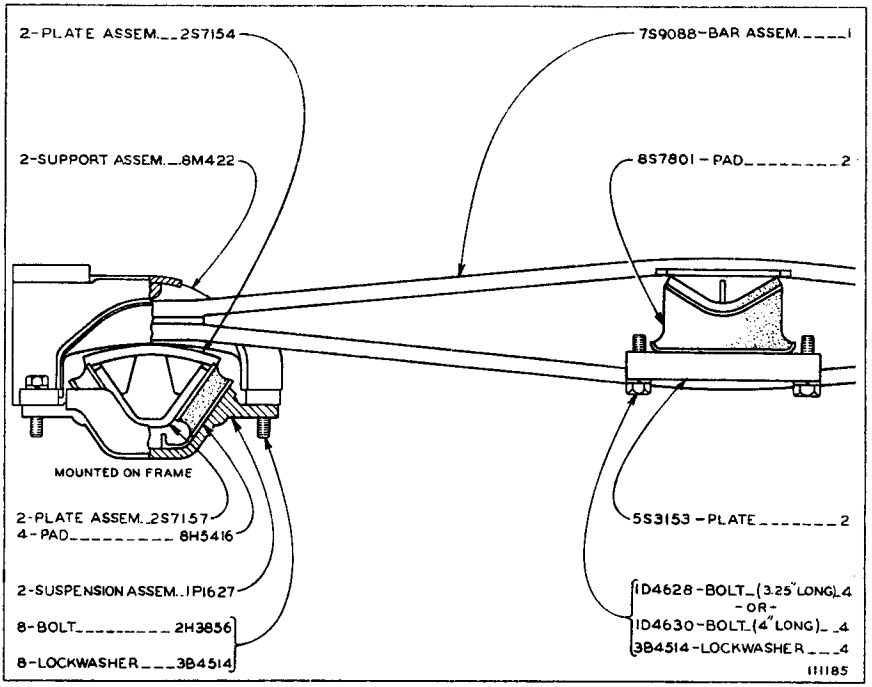

EQUALIZER BAR AND SUSPENSION (2M9617 N/S)
Refer also to Page 203 for special parts

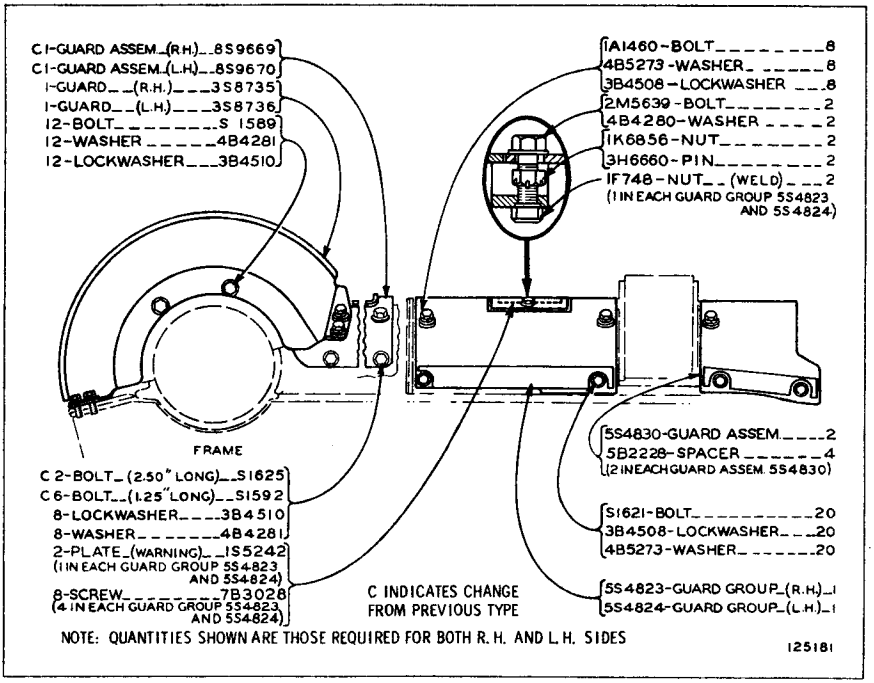

TRACK ROLLER FRAME GUARD (9H6505 N/S)
Also part of 1P8316 Six Roller Track Roller Frame and Support Arrangement listed on Page 204. Refer also to Page 204 for special parts

TRACK ROLLER FRAME (9H6492 N/S)

Also part of 1P8316 Six Roller Track Roller Frame and Support Arrangement listed on Page 204

Refer also to Pages 204 and 207 for special parts

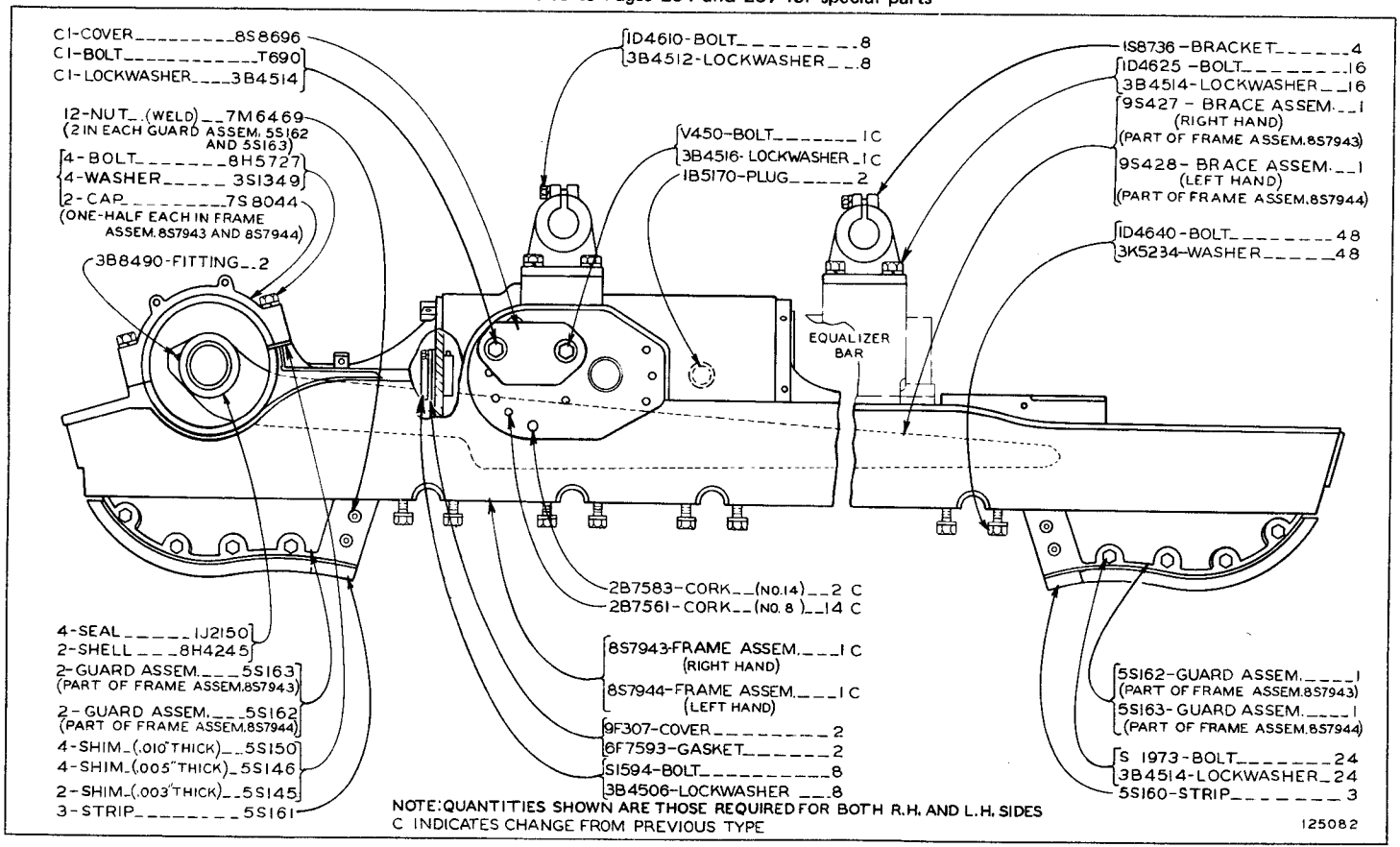

NOTE: QUANTITIES SHOWN ARE THOSE REQUIRED FOR BOTH R.H. AND L.H. SIDES

C INDICATES CHANGE FROM PREVIOUS TYPE

125082

ONLY "CATERPILLAR" PARTS GIVE "CATERPILLAR" PERFORMANCE

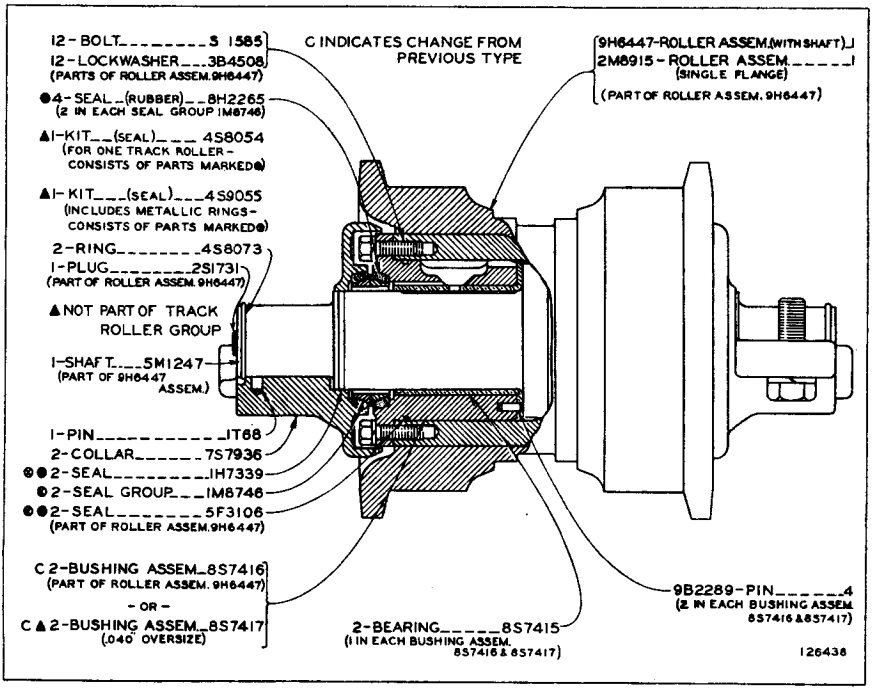

7S9041 TRACK ROLLER GROUP—Single Flange—6 Required
Also part of 1P8316 & 1P8317 Track Roller Frame and Support Arrangements
listed on Page 204. Note: 4S8054 Track Roller Seal Kit is available

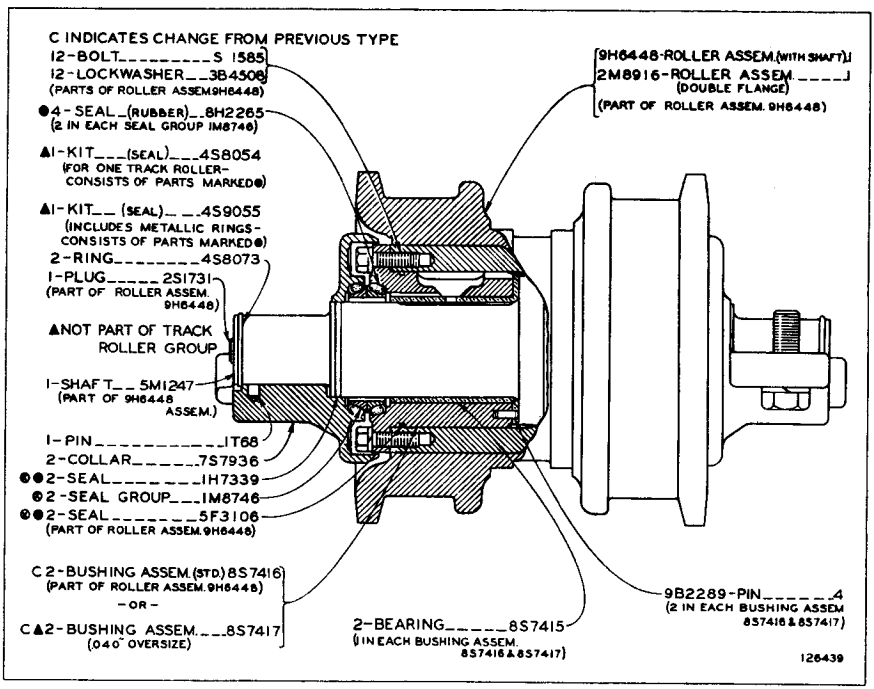

7S9042 TRACK ROLLER GROUP—Double Flange—6 Required
Also part of 1P8316 & 1P8317 Track Roller Frame and Support Arrangements
and 8M432 Track Roller Frame Group shown on Pages 204 and 207
Note: 4S8054 Track Roller Seal Kit is available

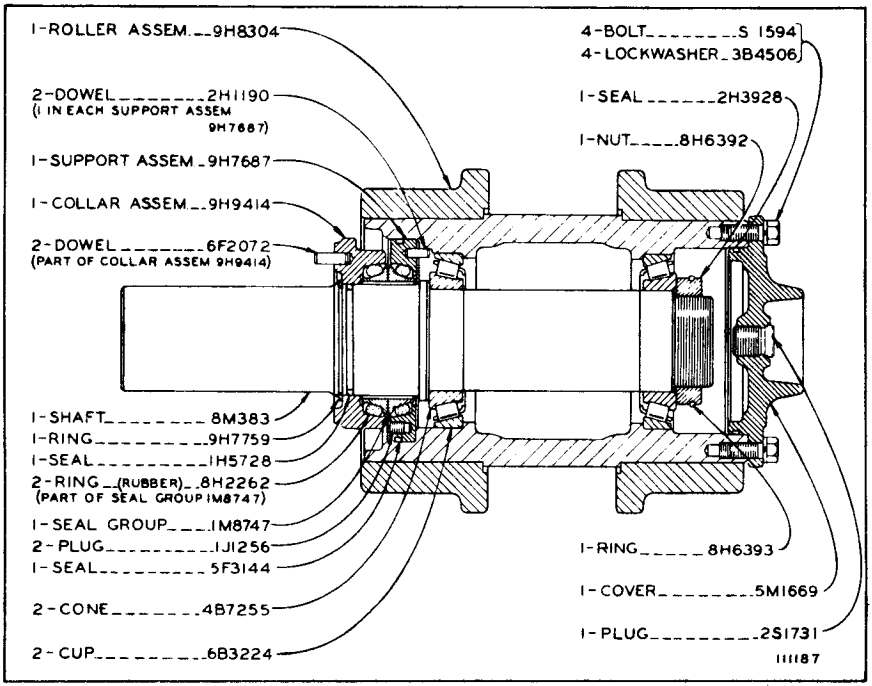

8M380 TRACK CARRIER ROLLER GROUP—4 Required
Also part of 1P8316 & 1P8317 Track Roller Frame and Support Arrangements listed on Page 204

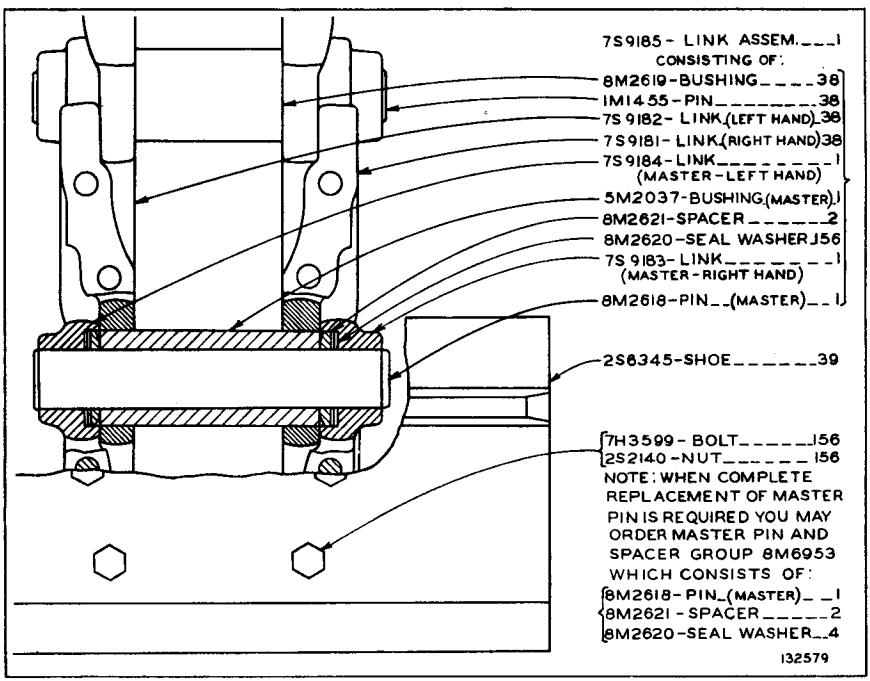

7S9189 TRACK GROUP—22" Grouser Shoe—2 Required
Note: 1P1917 Track Pin & Bushing Group, consisting of a complete set of Pins & Bushings for one Track, is available
Refer also to Pages 212 through 215 for special parts

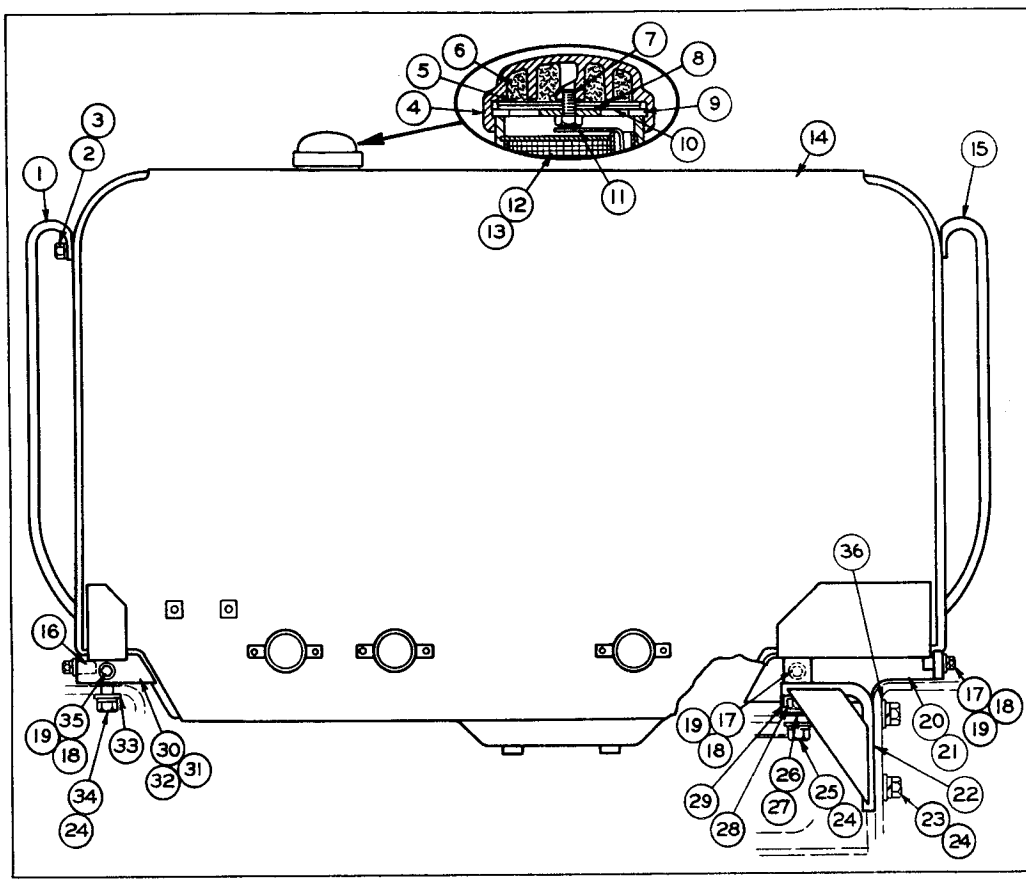

REF. NO.	PART NUMBER	DESCRIPTION	QTY
1	2S8653	GRAB IRON	1
2	2H3855	BOLT	2
3	3B4508	LOCKWASHER	2
4	4B5441	CAP ASSEM.	1
5	4B5423	GASKET	1
6	4B5949	ELEMENT	2
7	3H8389	BOLT	1
8	7B2002	WASHER	1
9	2A1763	GASKET	1
10	3F4134	BAFFLE	1
11	2S9391	PLUNGER	1
12	8H3498	STRAINER ASSEM.	1
13	8H3497	RING	1
14	1P2735	TANK ASSEM.	1
15	2S8654	GRAB IRON--------(L.H.)	1
16	5M3012	LUG	2
17	L1351	BOLT	6
18	3B4506	LOCKWASHER	7
19	4B4278	WASHER	7
20	3S6688	COVER ASSEM.	1
21	9B1006	WASHER	1
22	2S9386	SUPPORT ASSEM.	1
23	1A458	BOLT	2
24	3B4512	LOCKWASHER	7
25	3B2968	BOLT	1
26	3S438	SHIM---------(.060" Thick)	4
27	2A2523	SHIM---------(.0320" Thick)	2
28	S1626	BOLT	2
	2S9389	LOCK	1
29	2S7612	SPACER	1
30	3S6687	COVER ASSEM.	1
31	5B5840	SPACER	1
32	9B1006	WASHER	1
33	6F7048	WASHER	3
34	L1178	BOLT	2
35	S1588	BOLT	1
36	4B4283	WASHER	2

111649

FUEL TANK (2S7168 N/S)–134 U.S. Gallon

Refer also to Pages 160, 161 and 196 through 198 for special parts

HOOD AND DASH (9H631 N/S)

Refer also to Pages 163 and 167 for special parts

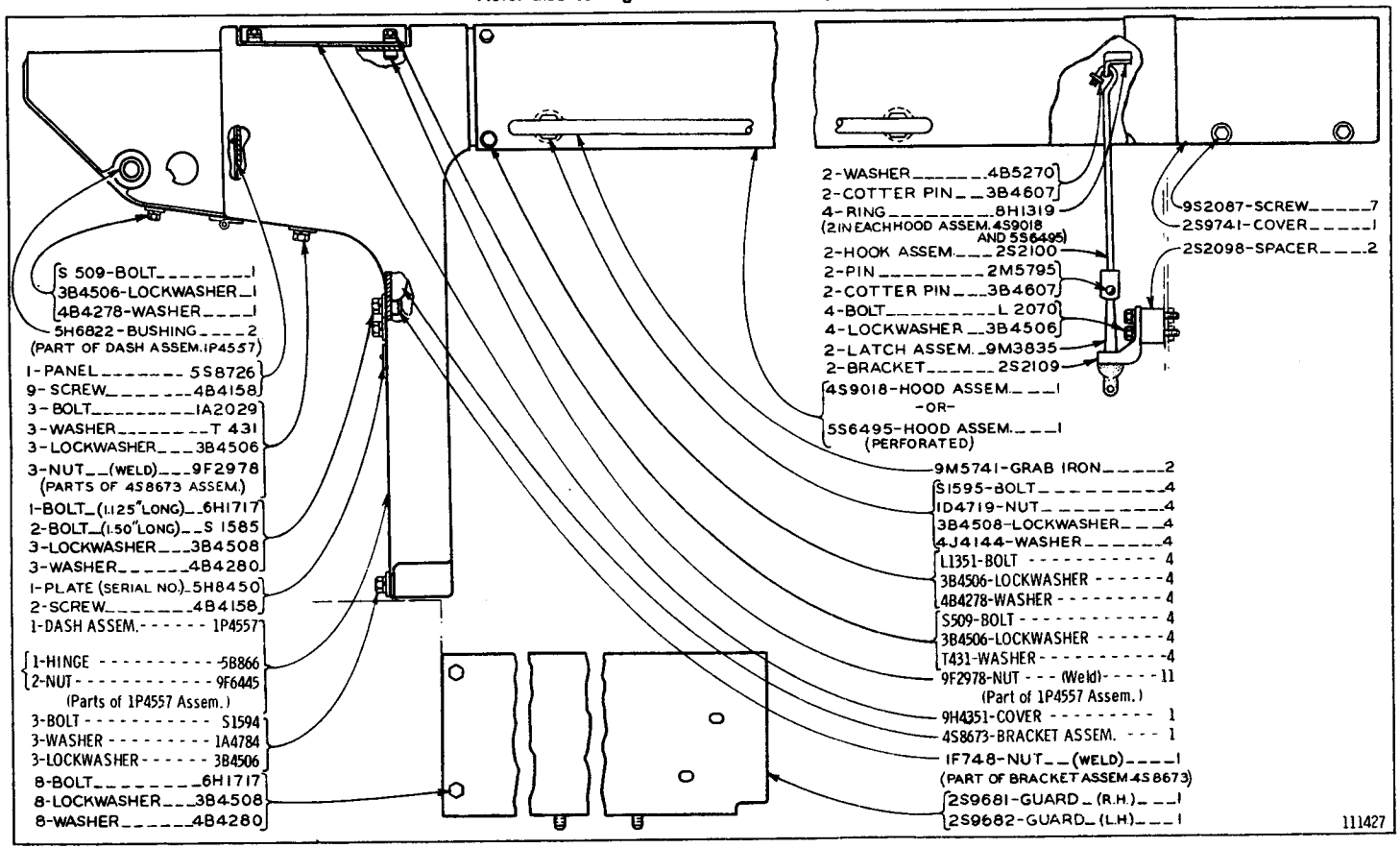

ONLY "CATERPILLAR" PARTS GIVE "CATERPILLAR" PERFORMANCE

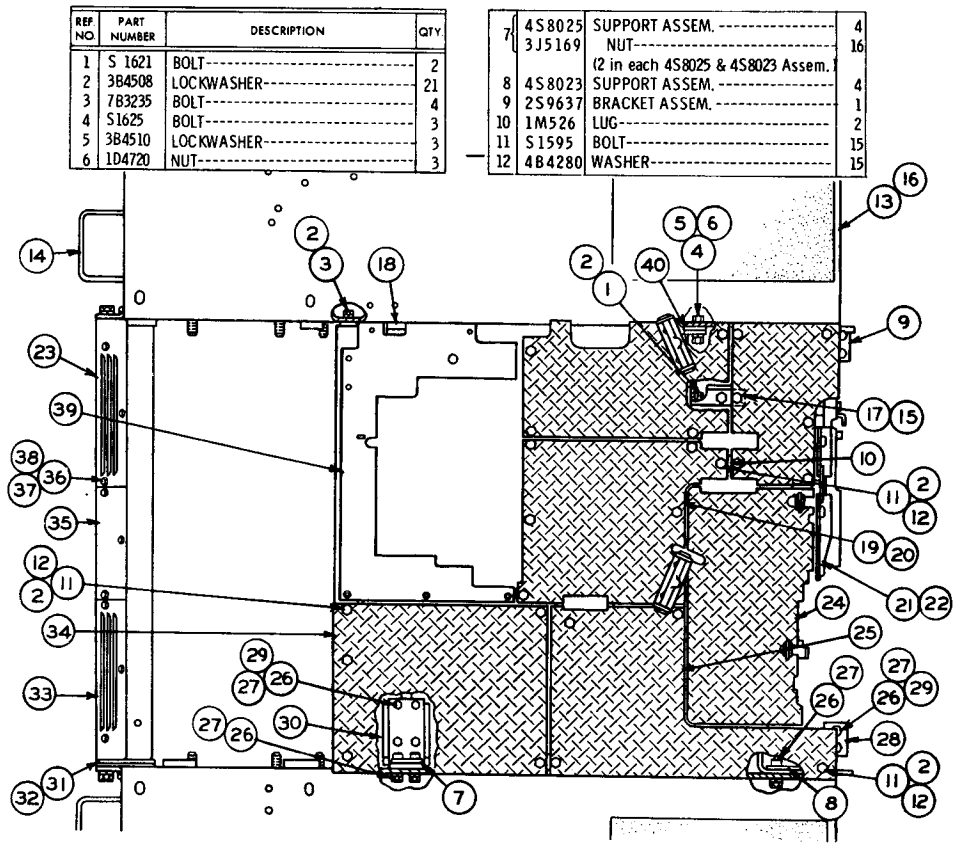

REF NO	PART NUMBER	DESCRIPTION	QTY
1	S 1621	BOLT	2
2	3B4508	LOCKWASHER	21
3	7B3235	BOLT	4
4	S1625	BOLT	3
5	3B4510	LOCKWASHER	3
6	1D4720	NUT	3
7	4S8025	SUPPORT ASSEM.	4
	3J5169	NUT (2 in each 4S8025 & 4S8023 Assem.)	16
8	4S8023	SUPPORT ASSEM.	4
9	2S9637	BRACKET ASSEM.	1
10	1M526	LUG	2
11	S1595	BOLT	15
12	4B4280	WASHER	15
13	1P890	FENDER ASSEM. ----(Left Hand)----	1
	3F5016	LUG	1
	2H2882	ANGLE ASSEM. (Parts of 1P890 Assem.)	1
14	9S5356	GRAB IRON (1 in each 1P890 & 1P889 Assem.)	2
15	1F748	NUT---------(Weld)--------- (2 in each 2H2882 & 9H993 Assem.)	4
16	1P889	FENDER ASSEM. ---(Right Hand)---	1
	3F5016	LUG	2
	9S3385	ANGLE ASSEM. (Parts of 1P889 Assem.)	1
17	9H993	SUPPORT ASSEM.	1
18	2S7663	BRACKET ASSEM.	1
19	3S318	PLATE ASSEM.	1
20	1F748	NUT----------(Weld)---------- (Part of 3S318 Plate Assem.)	1
21	2S3846	ANGLE ASSEM.	1
22	9F2978	NUT----------(Weld)---------- (Part of 2S3846 Assem.)	3
23	2S8362	DOOR----------(L. H.)----------	1
24	2S9307	COVER ASSEM.	1
25	2S9309	PLATE ASSEM.	1
26	1A1135	BOLT	33
27	3B4510	LOCKWASHER	33
28	2S9441	BRACKET ASSEM.	1
29	L 2119	WASHER	17
30	4S7603	BRACKET ASSEM.	1
31	2S7613	SHIM--------(.030" Thick)--------	2
32	2S7628	SHIM--------(.060" Thick)--------	2
33	2S8361	DOOR----------(Right Hand)-----	1
34	8S3091	PLATE	1
35	2S8363	DOOR	1
36	S 509	BOLT	9
37	3B4506	LOCKWASHER	9
38	4B4278	WASHER	9
39	3S3478	PLATE ASSEM.	1
40	9S3963	PLATE	1

111743

FENDERS (2S8593 N/S)—Part 1

FENDERS (2S8593 N/S)—Part 2

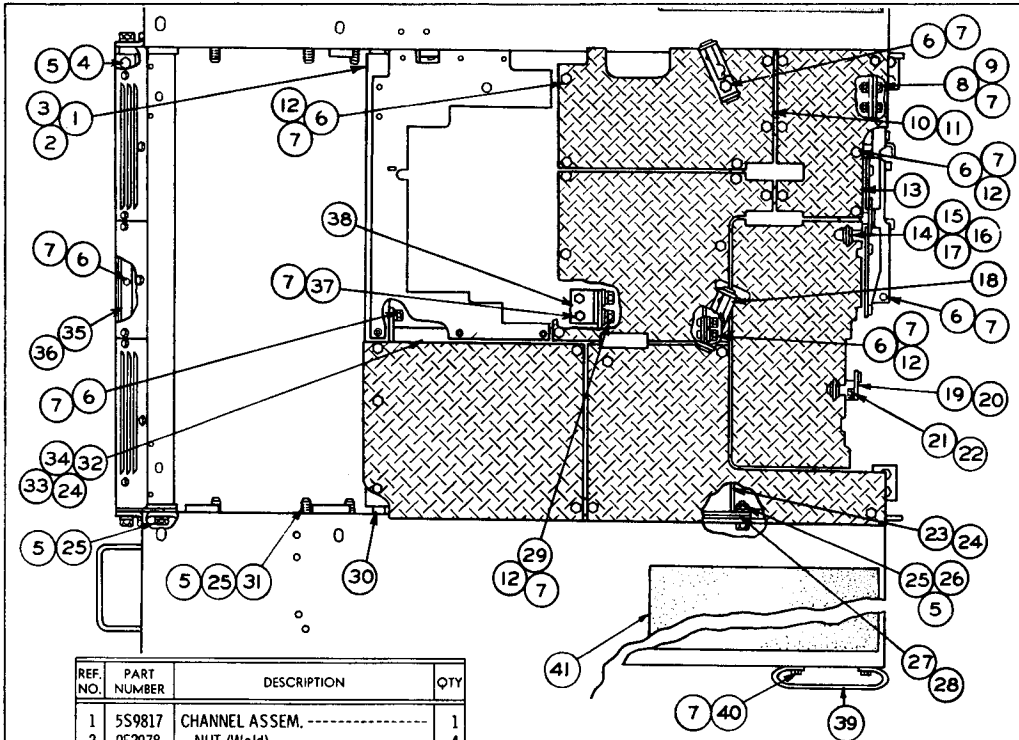

REF. NO.	PART NUMBER	DESCRIPTION	QTY
1	5S9817	CHANNEL ASSEM.	1
2	9F2978	NUT (Weld)	4
3	1F748	NUT (Weld)	7
		(Parts of 5S9817 Channel Assem.)	
4	1D4586	BOLT	2
5	3B4510	LOCKWASHER	27
6	S1595	BOLT	23
7	3B4508	LOCKWASHER	33
8	S 1603	BOLT	2
9	1B4205	NUT	2
10	1P1492	PLATE ASSEM.	1
11	1F748	NUT—(Weld)	2
		(Part of 1P1492 Assem.)	
12	4B4280	WASHER	15
13	2S9311	PLATE	1
14	9B1683	FASTENER	2
15	4B7033	SPRING	2
16	3B5301	COTTER PIN	2
17	1A4784	WASHER	2
18	5H156	SUPPORT	2
19	5S1574	SUPPORT ASSEM.	1
20	6B2882	SPACER	1
		(Part of 5S1574 Support Assem.)	
21	1D4717	NUT	1
22	3B4506	LOCKWASHER	1
23	9S2150	BEAM ASSEM.	1
24	1F748	NUT—(Weld)	6
		(3 in each Assem. 9S2150 and 2S9303)	
25	1A1135	BOLT—(2" long)	11
26	1D4720	NUT	3
27	5M7386	SHIM—(.060" Thick)	2
28	5M7387	SHIM—(.036" Thick)	2
29	4B3823	BOLT	2
30	9H742	BRACKET	1
31	S 1566	BOLT—(1.15" Long)	14
32	2S9303	ANGLE ASSEM.	1
33	2H2880	ANGLE ASSEM.	2
		(Part of 2S9303 Angle Assem.)	
34	1F748	NUT—(Weld)	2
		(Part of 2H2880 Angle Assem.)	
35	2S8382	SUPPORT ASSEM.	1
36	3J5169	NUT—(Weld)	8
		(Part of 2S8382 Support Assem.)	
37	7B3235	BOLT	2
38	3S322	BRACKET	1
39	7B4488	GRAB IRON	2
40	S1585	BOLT	4
	1D4719	NUT	4
41	9S3968	TREAD	2

111744

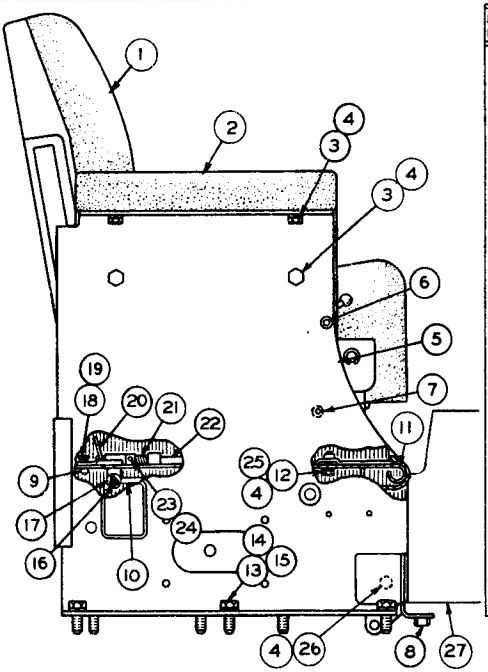

REF. NO.	PART NUMBER	DESCRIPTION	QTY
1	5S45	SEAT ASSEM. (See Separate Illustration)	1
2	8H9167	CUSHION ASSEM.	2
3	6F7030	BOLT	8
4	3B4506	LOCKWASHER	15
5	3S1716	SEAT ASSEM.	1
6	2B3191	PIN	1
7	9F2978	NUT-(Weld)	11
8	1F748	NUT-(Weld)	4
9	9F6445	NUT-(Weld) (Parts of 3S1716 Assem.)	2
10	2S1715	ROD	1
11	3S1692	HINGE ASSEM.	1
12	S509	BOLT	4
13	S1595	BOLT	6
14	3B4508	LOCKWASHER	6
15	4B4280	WASHER	6
16	3B4607	COTTER PIN	2
17	4B4276	WASHER	2
18	2A762	BOLT	2
19	3B4504	LOCKWASHER	2
20	3S1682	LATCH	1
21	8B3090	SPRING	1
22	3S1684	ROD	1
23	7M5182	BLOCK	1
24	9F7882	PIN	1
25	4B4278	WASHER	4
26	L1351	BOLT	3
27	1P1477	PLATE ASSEM.	1
	9F2978	NUT-(Weld) (Part of 1P1477 Assem.)	2

130520

ADJUSTABLE SEAT CUSHIONS AND FRAME (2S8595 N/S)
Note: 6D4709 Seat Belt Assembly is available

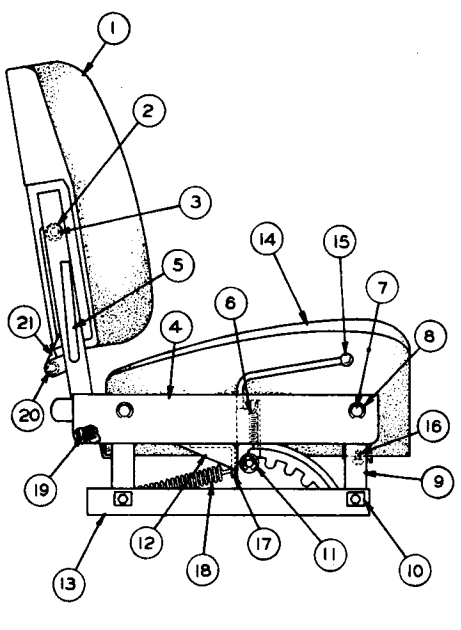

REF NO	PART NUMBER	DESCRIPTION	QTY
1	7S5387	CUSHION ASSEM.	1
2	7F3494	WASHER	2
3	7S5386	ROLLER	4
	7S5381	BRACKET ASSEM. -(Right Hand)	1
	7S5382	BRACKET ASSEM. -(Left Hand)	1
4	7S5391	FRAME ASSEM.	1
	7S5750	FRAME ASSEM.	1
5	7S5385	LINK ASSEM.	1
6	7S5758	SPRING	1
7	7S5755	PIN	4
8	2R364	RING	8
9	7S5753	LEVER ASSEM.	2
10	7S5759	NUT	4
11	T883	WASHER	2
	7S5757	RING	2
12	7S5754	LEVER ASSEM.	1
13	7S5751	ANGLE ASSEM. -(Right Hand)	1
	7S5752	ANGLE ASSEM. -(Left Hand) (Parts of 7S5391 Frame Assem.)	1
14	7S5390	CUSHION ASSEM.	1
15	7S5380	KNOB	1
16	2K7115	SCREW	12
	4F2293	LOCKWASHER	12
17	7S5389	BRACKET	1
18	7S5388	SPRING	1
19	7S5383	SPRING	2
20	7S5757	RING	4
21	7S5384	LINK	2

109872

5S45 SEAT ASSEMBLY
Part of Adjustable Seat Cushions and Frame

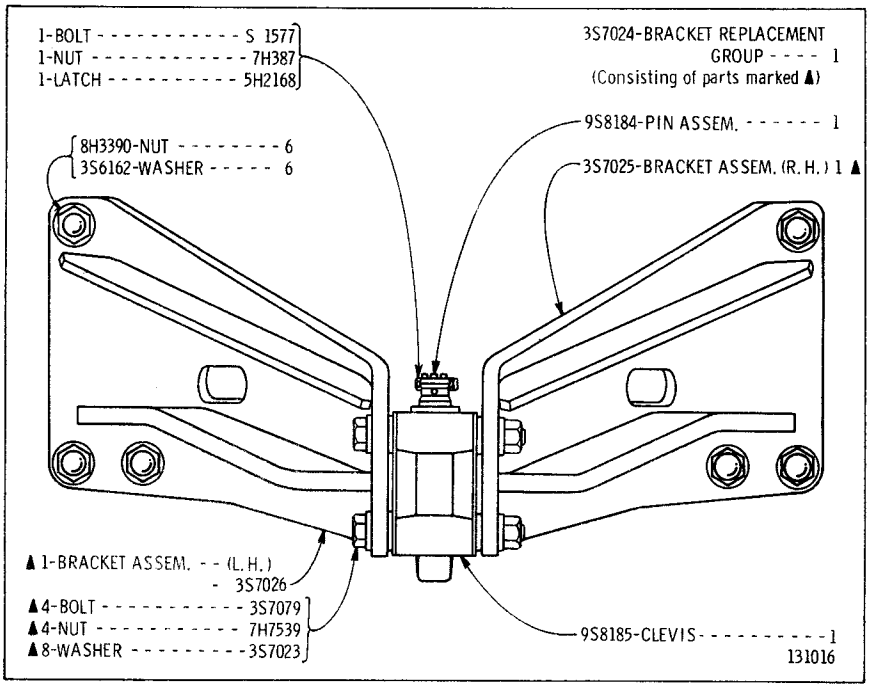

3S7384 DRAWBAR GROUP

Refer also to Page 202 for special parts

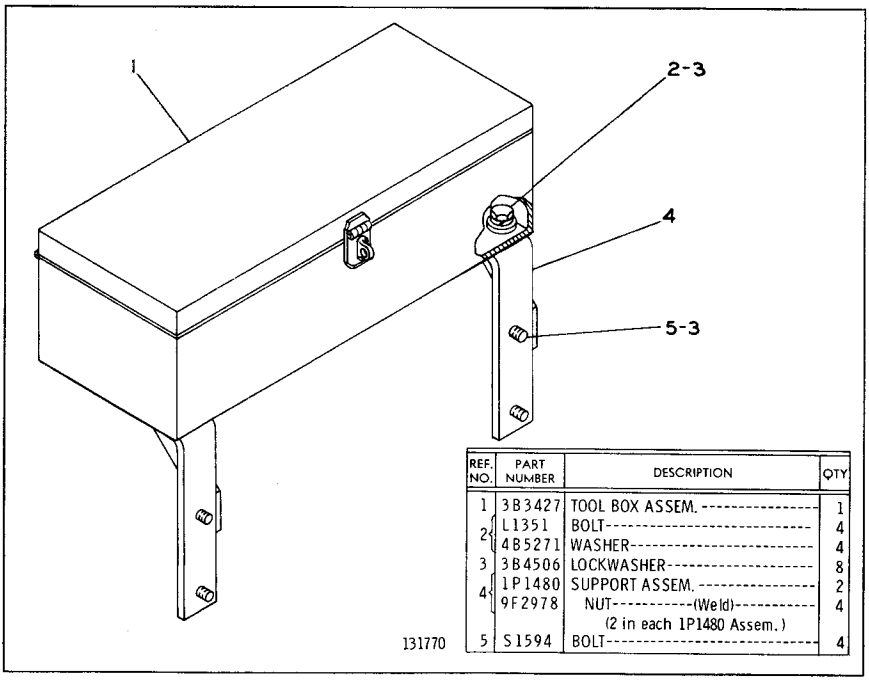

REF. NO.	PART NUMBER	DESCRIPTION	QTY
1	3B3427	TOOL BOX ASSEM.	1
2	L1351	BOLT	4
	4B5271	WASHER	4
3	3B4506	LOCKWASHER	8
4	1P1480	SUPPORT ASSEM.	2
	9F2978	NUT-(Weld) (2 in each 1P1480 Assem.)	4
5	S1594	BOLT	4

1P1037 TOOL BOX GROUP

		Consists of:	Page
1	.....	Battery and Wiring Group	130
1	.....	Battery Box Group	129
1	.....	Block Assembly	113
1	.....	Fan Drive Group	110
1	9H3414	Clutch & Pinion Control Group	125
1	9H4437	Starting Engine Fuel System	118
1	7M4561	Compression Release Control Group	112
1	1S4427	Choke & Throttle Control Group	128
1	2S9802	Generator Group	122
1	7S6280	Starting Engine Arrangement	109
1	L364	Lock	
1	1A2024	Gasket--Cover to Filter Case	
6	2A1278	End--Rod	
2	1B4203	Nut--Filter Case	
6	1B4203	Nut--Rod End	
2	3B4506	Lockwasher--3/8"--Filter Case	
6	6B4040	Rod--Compression Release	
1	7B280	Seal--Shaft	
1	7B290	Screw	
1	7B7770	Cover--Filter Case	
3	1F6618	Bracket--Shaft	
1	4H7316	Shaft--Compression Release	
6	5H2579	Gasket	
1	5M6214	Plug--Priming Pump Adapter	
1	5M6214	Plug--To Engine Oil Cooler Tube Assembly	
1	7M4535	Detent Group	
2	2P483	Chamber Assembly	
1	2S2665	Angle Assembly	
1	2S4367	Panel--To Dash	
1	2S8300	Shaft--To Steering Clutch Control	
1	3S1813	Pipe--Air Induction	
1	3S6836	Bracket Assembly	
1	4S7418	Flywheel Assembly	

1P3965 GASOLINE STARTING ARRANGEMENT—12 Volt
FACTORY INSTALLATION ONLY

		Consists of:	Page
1	.....	Camshaft and Governor	117
2	.....	Connecting Rod and Piston	116
1	.....	Crankshaft	116
1	.....	Cylinder Block, Cylinder Head & Valve Mechanism	114
1	9H4826	Clutch Group	124
1	9H6203	Ignition System Group	122
1	7M7793	Electric Starter Group	120
1	9M9229	Transmission & STarter Pinion Group	126
1	9M9239	Water Lines Group	109
1	9M9241	Manifold, Carburetor & Air Cleaner Group	111
1	3S2364	Oil Pump Group	119
1	7S6239	Support Group	119

7S6280 GASOLINE STARTING ENGINE ARRANGEMENT
Part of 1P3965 Gasoline Starting Engine Arrangement

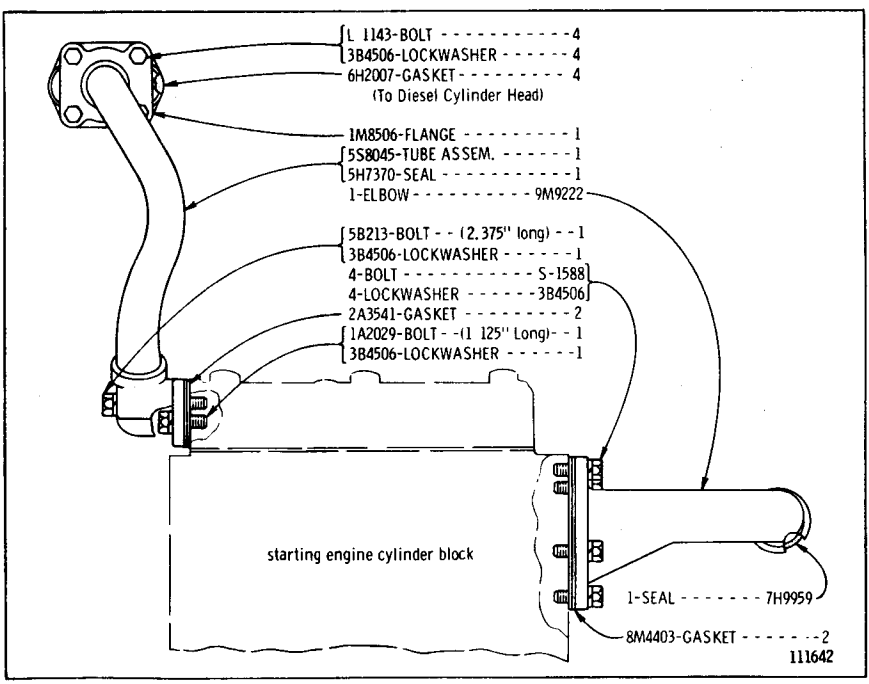

9M9239 WATER LINES GROUP
Part of 7S6280 Arrangement

C INDICATES CHANGE FROM PREVIOUS TYPE

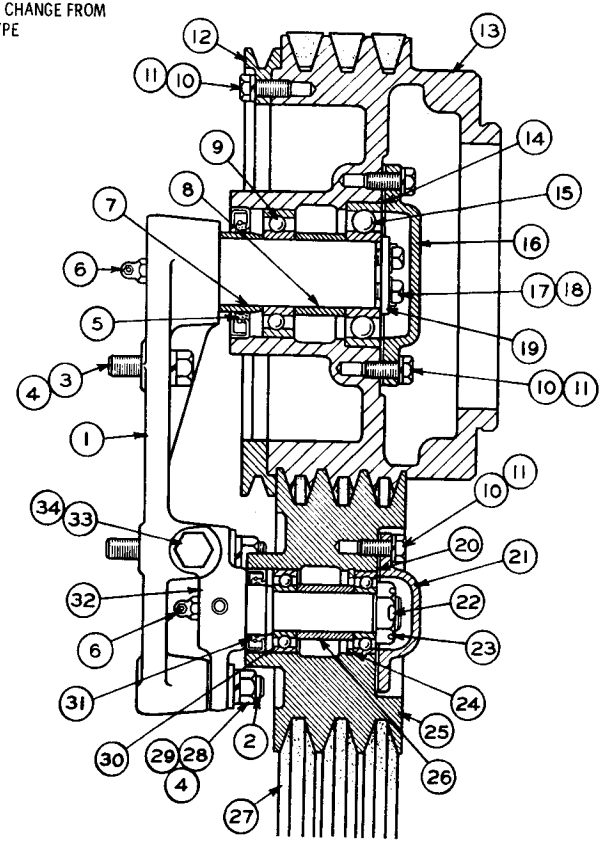

C	REF NO	PART NUMBER	DESCRIPTION	QTY
C	1	8S5142	BRACKET ASSEM.	1
	2	1M6422	STUD	3
			(Part of Bracket Assem. 8S5142)	
	3	S 1587	BOLT	3
	4	3B4508	LOCKWASHER	6
	5	5M9739	SEAL	1
	6	3B8488	FITTING	2
	7	4H1566	SPACER	1
C	8	1S4242	SPACER	1
	9	6H3957	BEARING	1
	10	S 1594	BOLT	13
	11	3B4506	LOCKWASHER	13
	12	2S5201	PULLEY	1
	13	2S8892	PULLEY	1
	14	2S8869	GASKET	1
	15	2H3712	BEARING	1
	16	2S8868	COVER	1
C	17	S1594	BOLT	2
C	18	9M909	LOCK	2
C	19	7S1175	WASHER	1
	20	8H5027	GASKET	1
	21	8H5026	COVER	1
	22	3B4629	COTTER PIN	1
	23	5F8913	NUT	1
	24	8B2327	RING	1
	25	3S7517	PULLEY	1
	26	9M4241	SPACER	1
	27	3S7520	VEE BELT SET	1
			(Consists of 3 Belts)	
	28	1B4205	NUT	3
C	29	1F7960	WASHER	3
	30	6B1124	BEARING	2
	31	5M9735	SEAL	1
	32	2S8880	BRACKET ASSEM.	1
	33	9M4571	BOLT	1
	34	1D5118	NUT	1

127895

FAN DRIVE (2S8263 N/S)

Part of 1P3965 Arrangement listed on Page 108

9M9241 MANIFOLD, CARBURETOR AND AIR CLEANER GROUP

Part of 7S6280 Arrangement listed on Page 109

7M6038 Carburetor parts are shown on Page 112

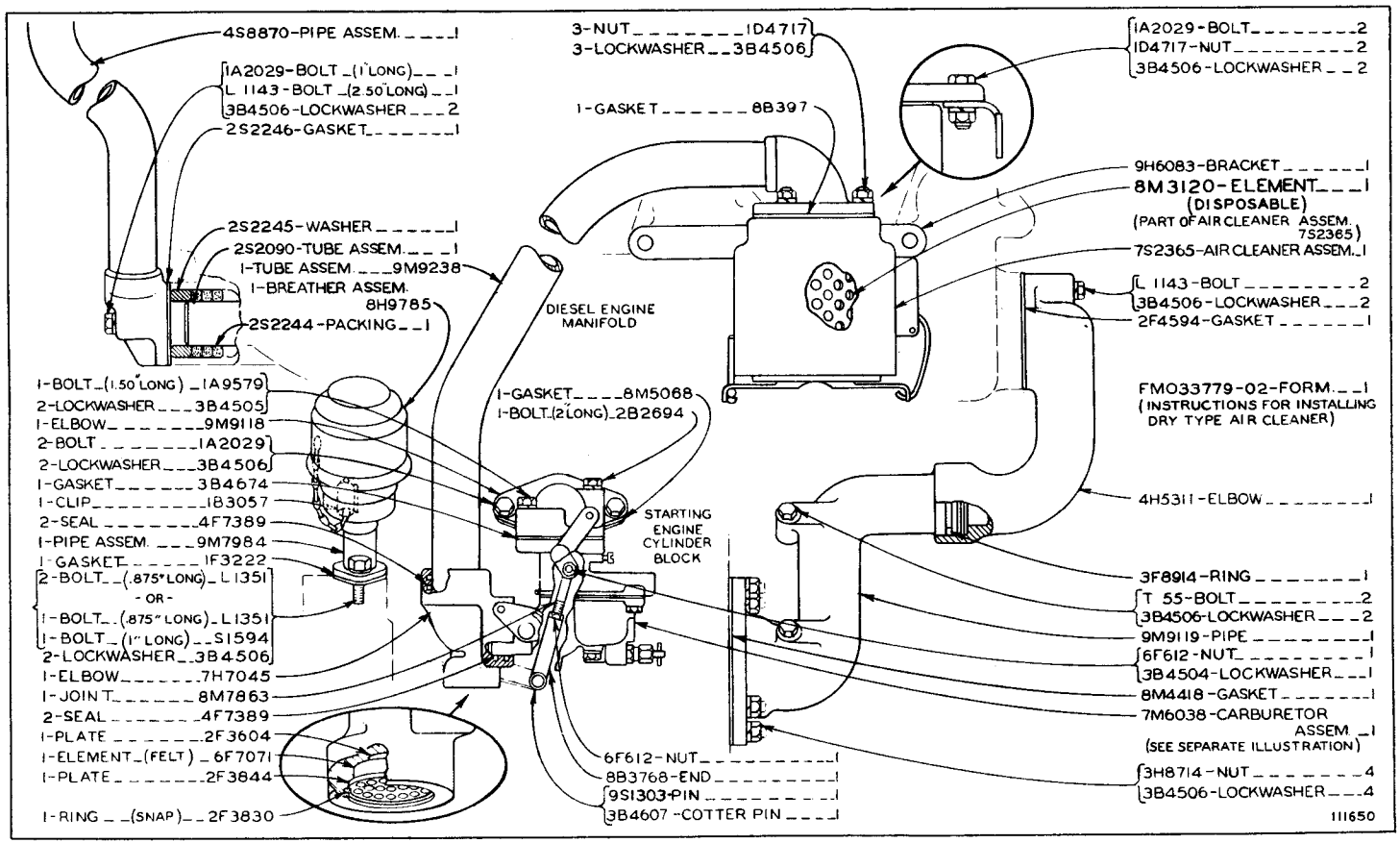

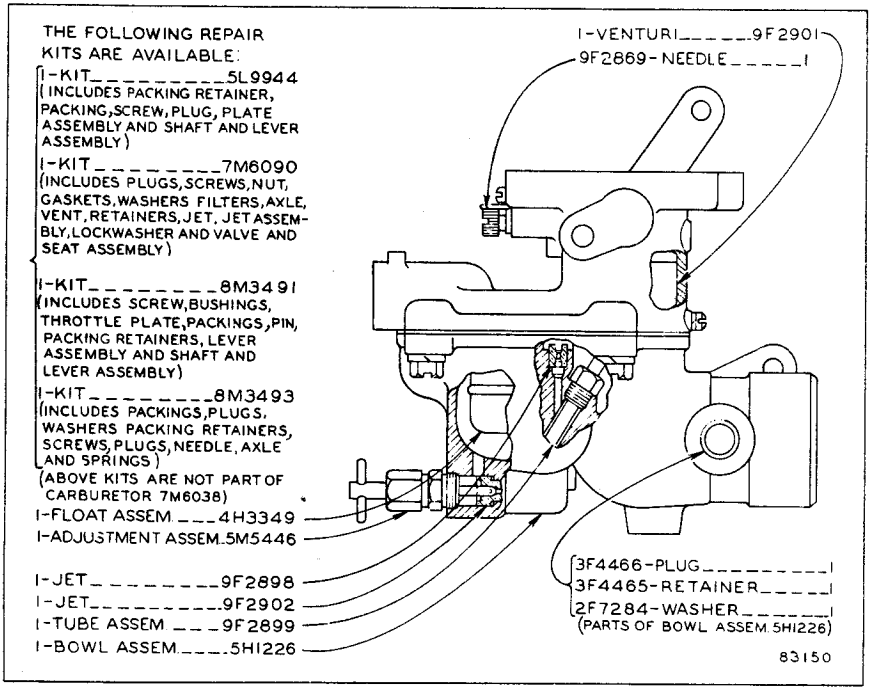

7M6038 CARBURETOR ASSEMBLY
Part of 9M9241 Manifold, Carburetor and Air Cleaner Group shown on Page 111

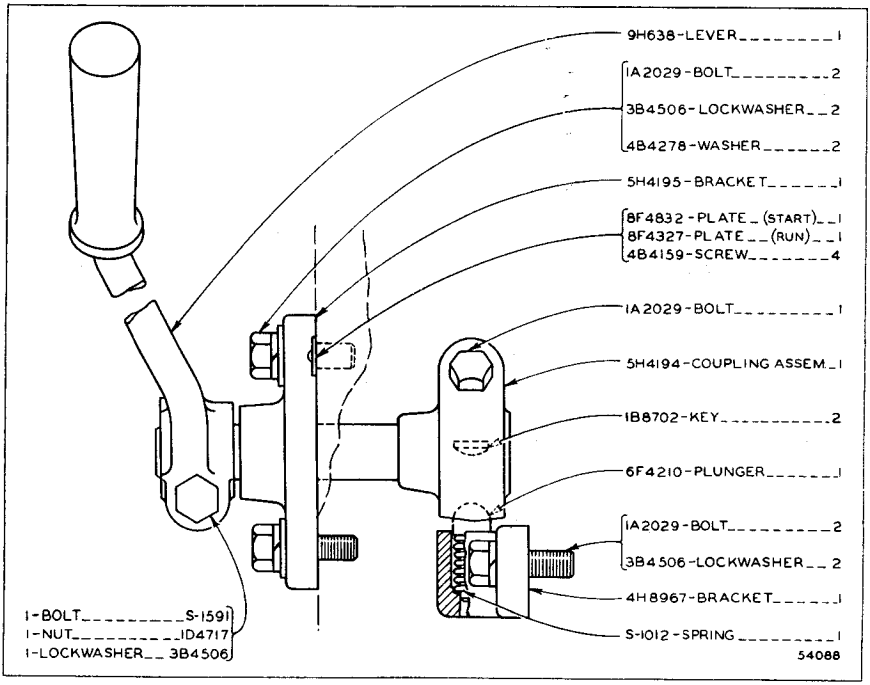

7M4561 COMPRESSION RELEASE CONTROL GROUP
Part of 1P3965 Arrangement listed on Page 108

CYLINDER BLOCK ASSEMBLY (4S6861 N/S)

Part of 1P3965 Arrangement listed on Page 108

Note: For Field Replacement order 5S1691 Service Block Group plus 1–9S4928 Hardware Kit

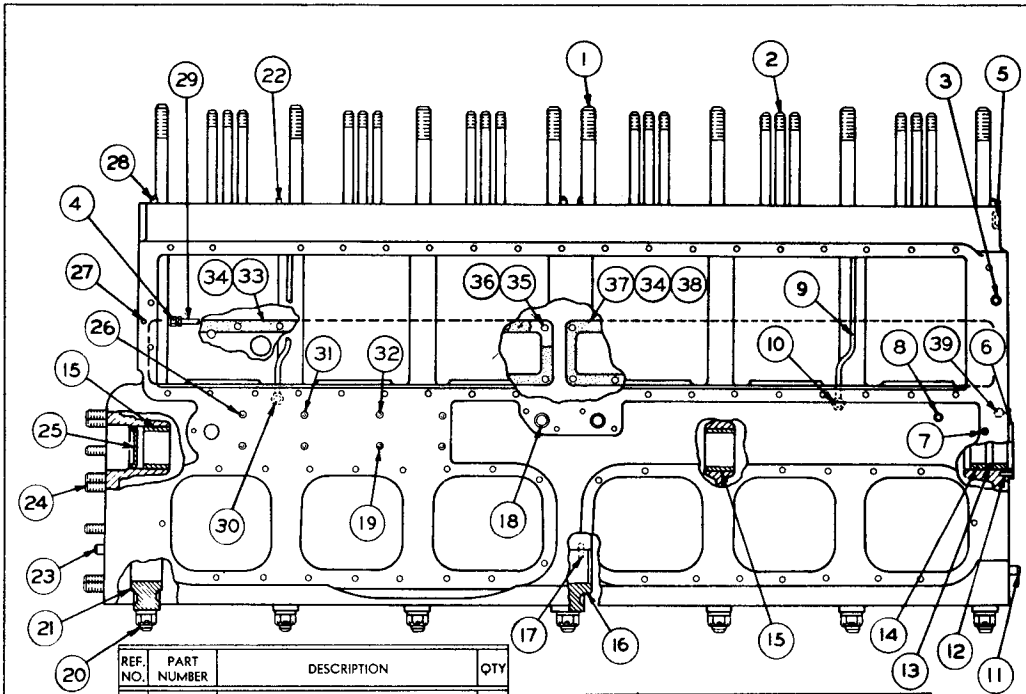

REF. NO.	PART NUMBER	DESCRIPTION	QTY
1	9H1077	STUD--------(10.32" Long)--------	16
2	9M488	STUD---------(8" Long)----------	26
3	2A3798	DOWEL----------	2
4	3B8995	FITTING----------	1
	1F1344	NUT----------	1
		(Part of 3B8995 Fitting)	
5	9H6133	PLUG----------	1
6	4H8986	WASHER----------	1
7	2A3349	FERRULE----------	1
8	5H2766	STUD----------	1
9	4H7297	TUBE ASSEM.----------	1
	5H4390	SLEEVE----------	1
		(Part of 4H7297 Assem.)	
10	L1547	NUT----------	1
11	1A5919	DOWEL----------	2
12	7B5415	DOWEL----------	2
13	5H1092	SPACER----------	1
14	4H9640	BEARING----------	2
15	8F8523	BEARING----------	3
16	4S9346	CAP GROUP-------(Center)--------	1
	4S9350	SHIM----------(Long)---------	1
	4S9349	SHIM---------(Short)----------	6
		(Parts of 4S9346 Group)	
17	5B5812	DOWEL----------	1
18	5H2786	TUBE----------	2
19	1H4004	STUD--------(2.6875" long)-------	5
20	1P667	STUD----------	14
	1A5666	NUT----------	14
	4M6953	WASHER----------	14
21	4S9360	CAP GROUP----(Intermediate)-----	6
	4S9362	SHIM----------(Long)----------	12
	4S9363	SHIM---------(Short)----------	36
	7F1826	STUD----------	12
		(one-sixth each in 4S9360 Group)	
22	5H8985	PIN----------	4
23	2B2994	DOWEL----------	2
24	4B3251	STUD----------	10
25	S519	PLUG----------	1
26	V113	STUD---------(5.50" Long)--------	1
27	4F6024	DOWEL----------	1
28	L2061	DOWEL----------	4
29	4H8795	TUBE ASSEM.----------	1
30	L1547	NUT----------	1
	5H4390	SLEEVE----------	1
		(Parts of 4H8795 Assem.)	
31	5B1229	STUD--------(7.125" Long)--------	1
32	1F3391	STUD---------(6.50" Long)--------	1
33	5S384	COVER----------	1
34	4H9576	GASKET----------	2
35	1A2029	BOLT--------(1.125" Long)--------	34
	S1591	BOLT--------(1.50" Long)---------	2
36	3B4506	LOCKWASHER----------	36
37	7H9829	COVER----------	1
38	2H8829	PLUG----------	1
	4F9325	GASKET----------	1
39	5M6214	PLUG----------	1
	FM030102	FORM--(Bearing Cap Installation)--	1

131446

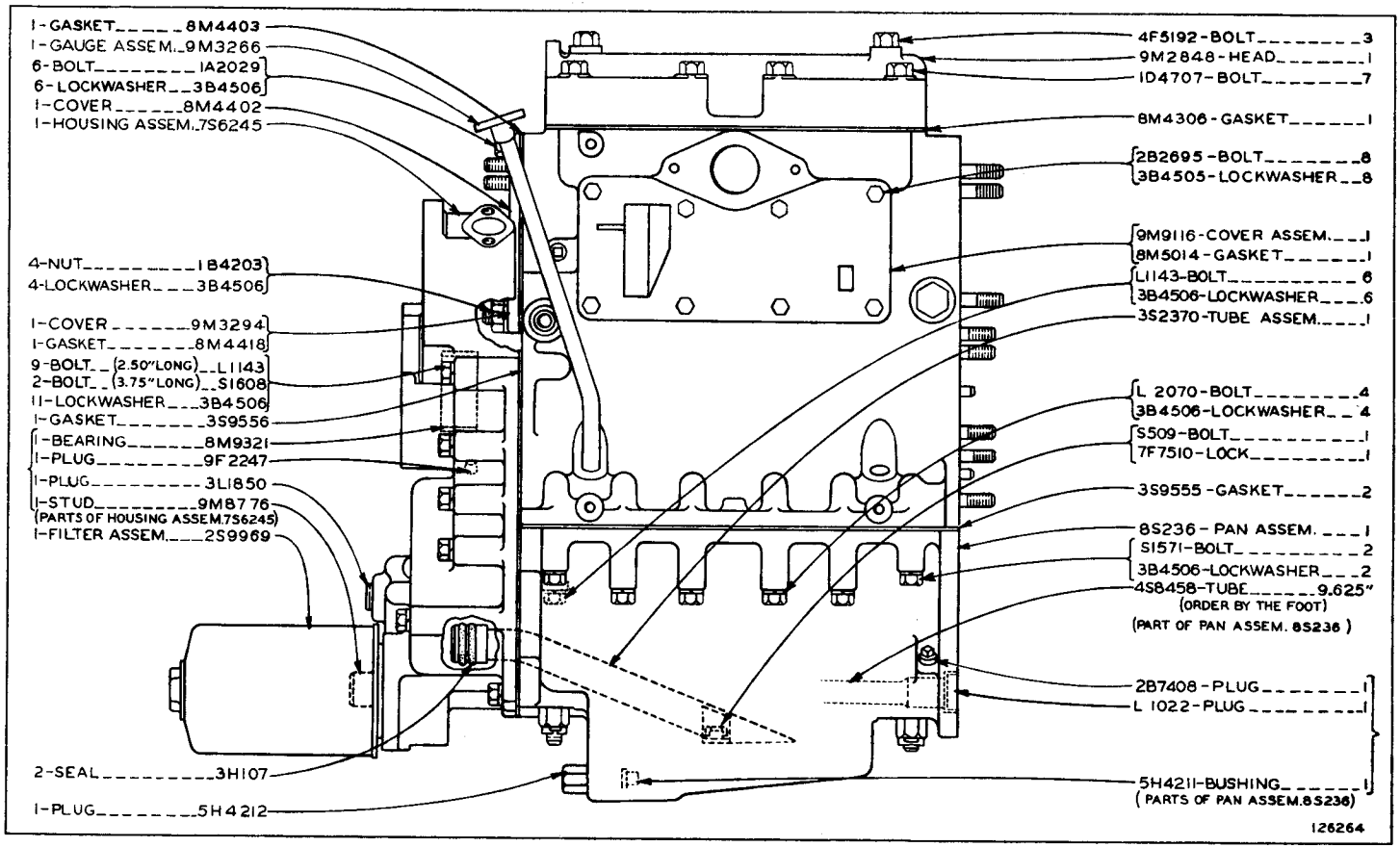

CYLINDER BLOCK, CYLINDER HEAD AND VALVE MECHANISM (7S6258 N/S)—Part 1
Part of 7S6280 Arrangement listed on Page 109

CYLINDER BLOCK, CYLINDER HEAD AND VALVE MECHANISM (7S6258 N/S)—Part 2

Part of 7S6280 Arrangement listed on Page 109

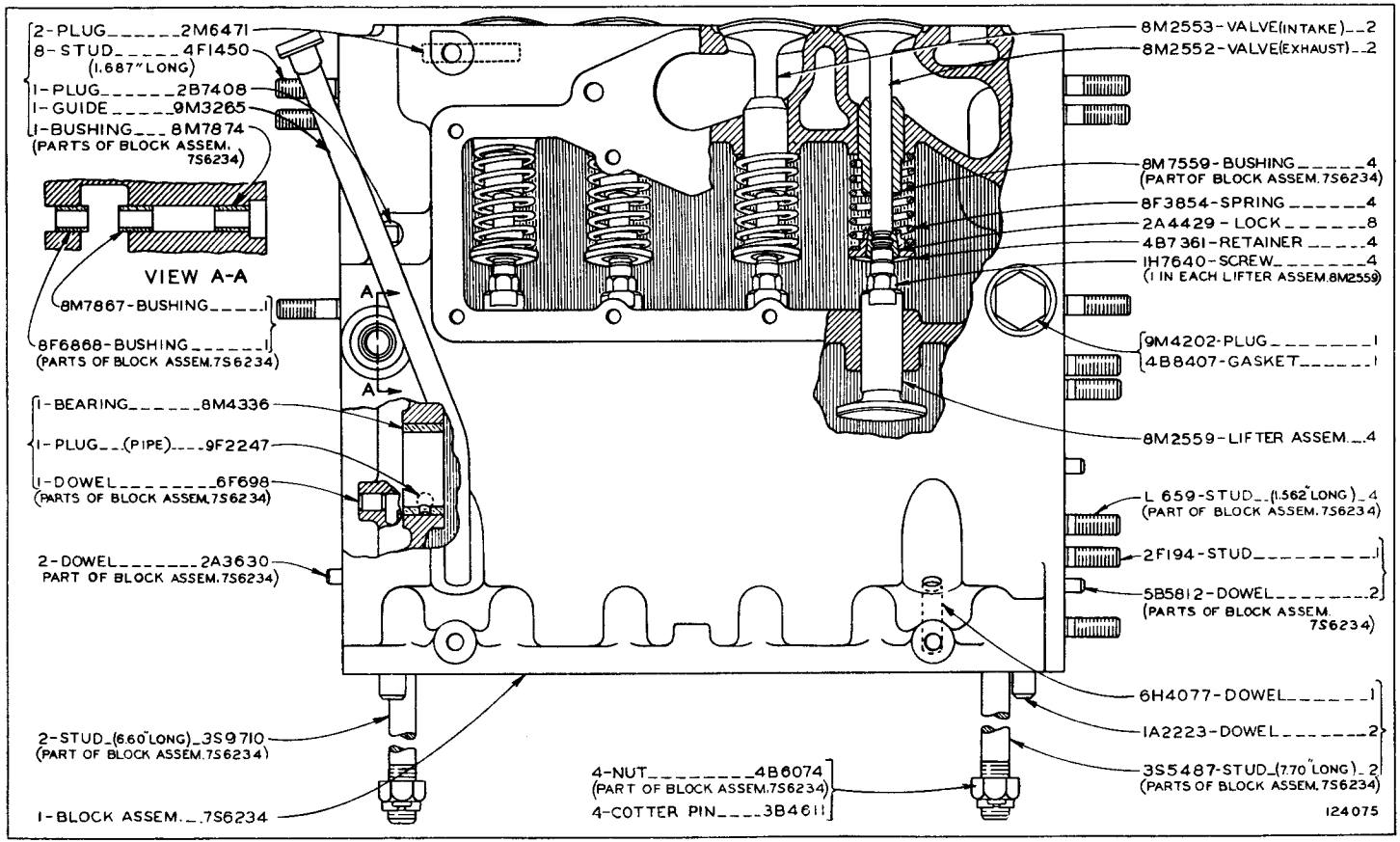

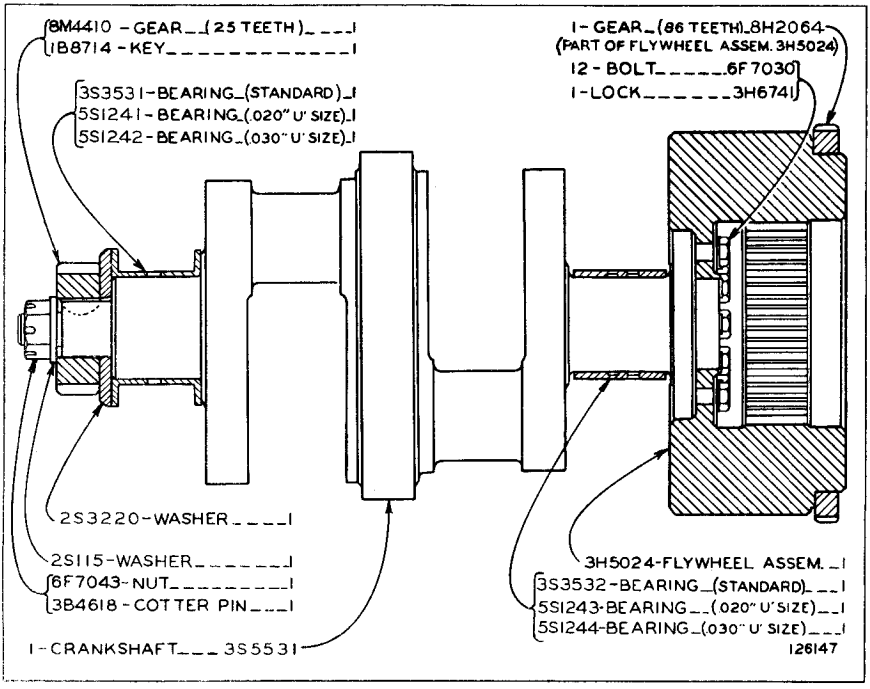

CRANKSHAFT (3S5532 N/S)
Part of 7S6280 Arrangement listed on Page 109

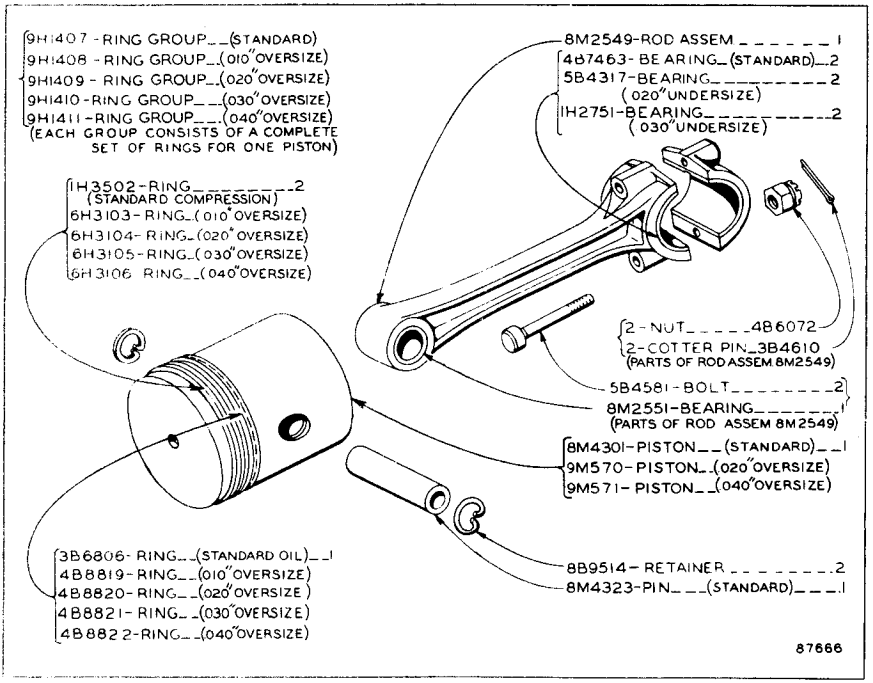

CONNECTING ROD AND PISTON (8M2572 N/S)—2 Required
Part of 7S6280 Arrangement listed on Page 109

CAMSHAFT AND GOVERNOR (7S6287 N/S)

Part of 7S6280 Arrangement listed on Page 109

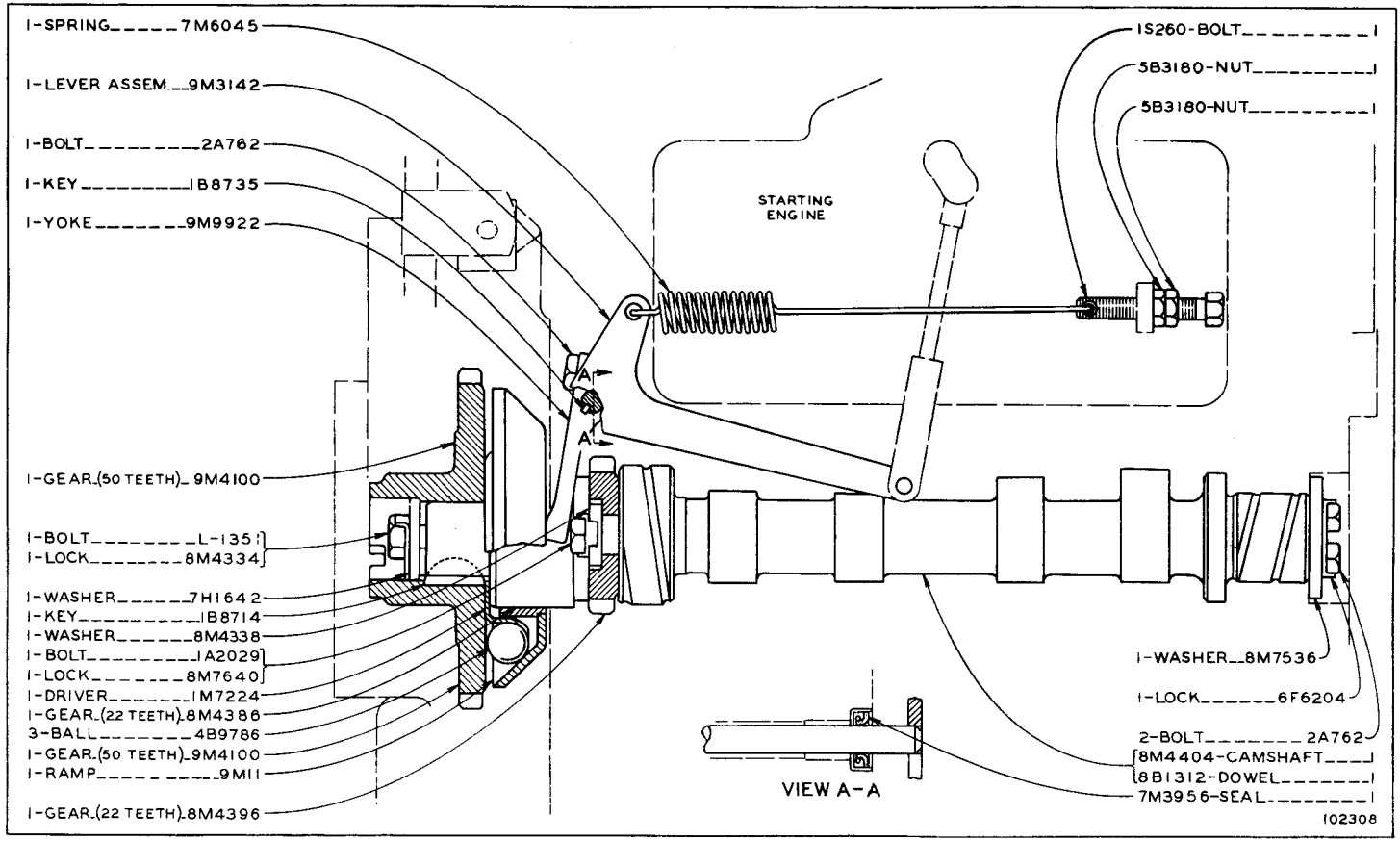

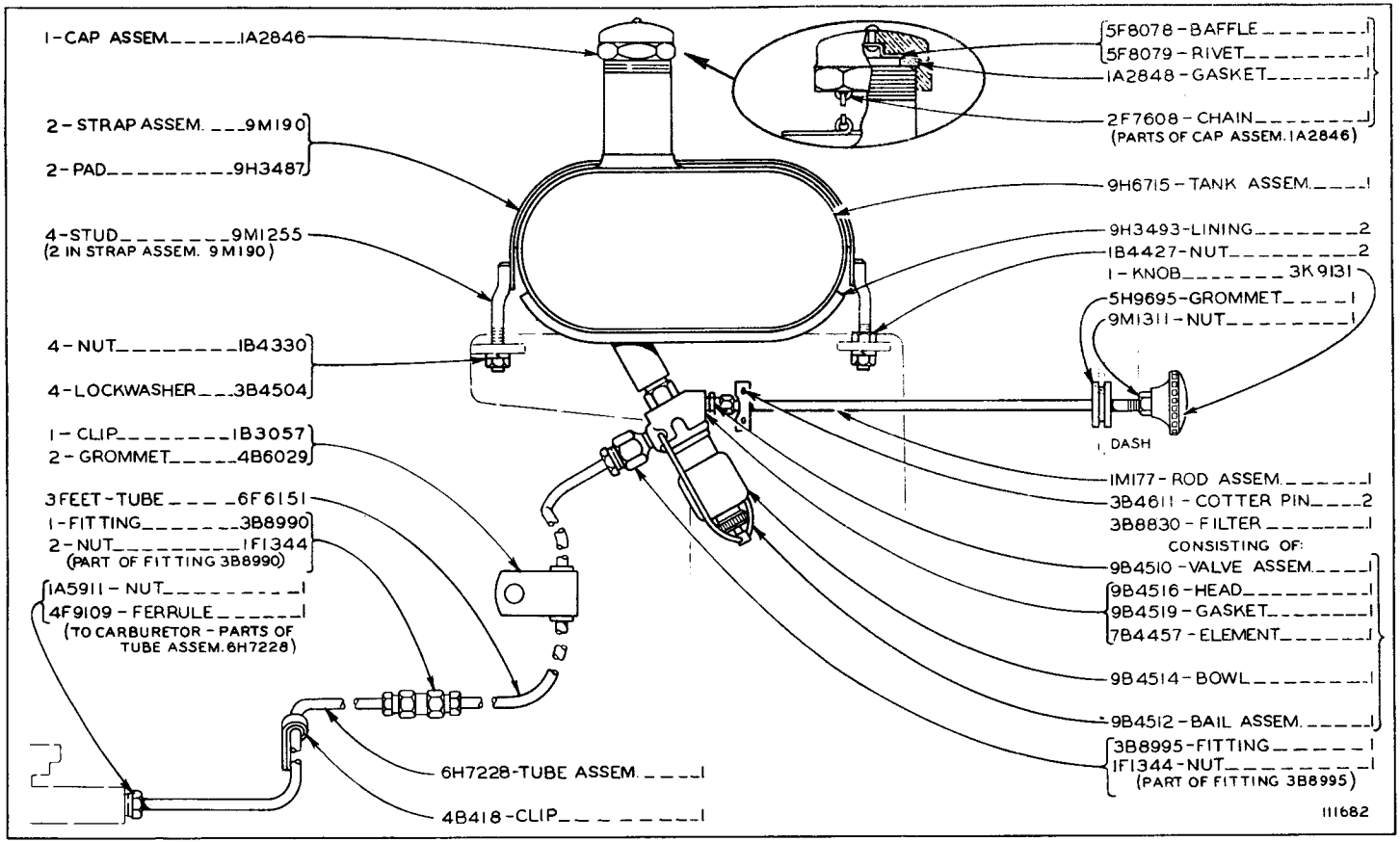

9H4437 FUEL SYSTEM

Part of 1P3965 Arrangement listed on Page 108

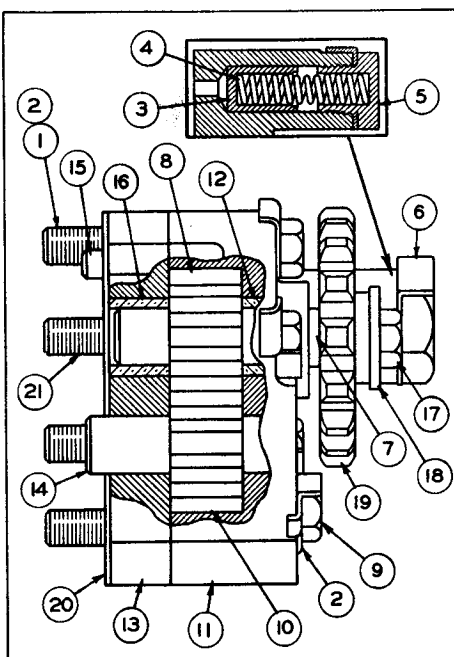

REF NO	PART NUMBER	DESCRIPTION	QTY
	3S2363	OIL PUMP ASSEM.	1
		Consisting of:	
1	2A5546	BOLT	1
2	7F2836	LOCK	2
3	3S2354	PLUNGER	1
4	9S1510	SPRING	1
5	3S2356	PLUG	1
6	3S2362	LOCK	1
7	8M1327	SHAFT ASSEM.	1
8	Not Serv.	GEAR----(10 Teeth-Drive) (Part of 8M1327 Shaft Assem.)	1
9	7B8167	BOLT	1
10	4M9715	GEAR------(10 Teeth-Idler)	1
11	3S2359	BODY ASSEM.	1
12	1S1125	BEARING (Part of 3S2359 Body Assem.)	1
13	3S2361	PLATE ASSEM.	1
14	4M9710	SHAFT	1
15	3H703	DOWEL	1
16	8F6058	BUSHING (Parts of 3S2361 Plate Assem.)	1
17	4F7957	BOLT	1
18	7M3510	WASHER	1
19	1S1082	GEAR-------(20 Teeth-Drive)	1
20	3S2365	GASKET	1
21	2B2694	BOLT	4
	2A5328	LOCK	4

126148

3S2364 OIL PUMP GROUP
Part of 7S6280 Arrangement listed on Page 109

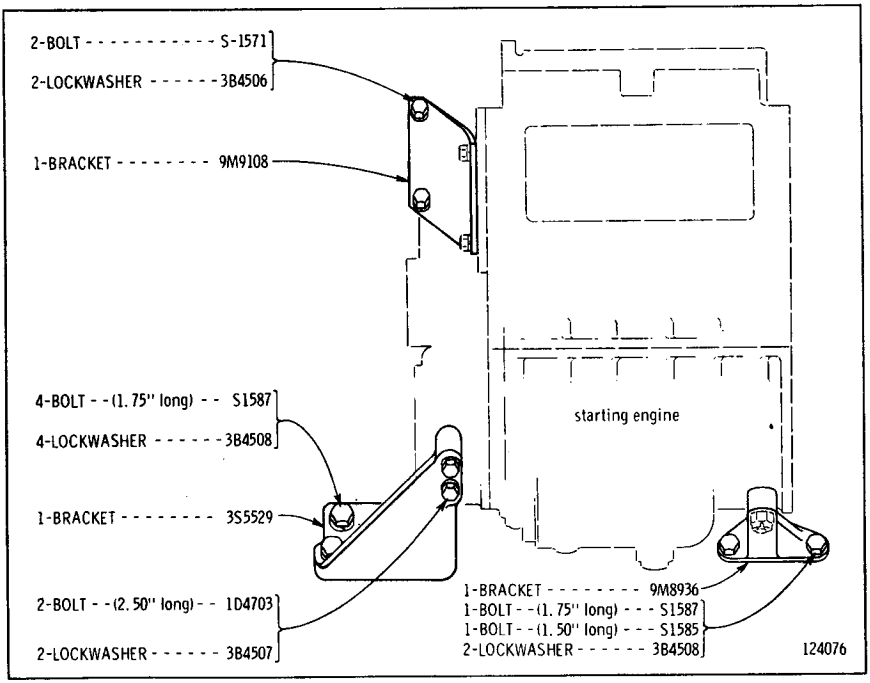

7S6239 ENGINE SUPPORT GROUP
Part of 7S6280 Arrangement listed on Page 109

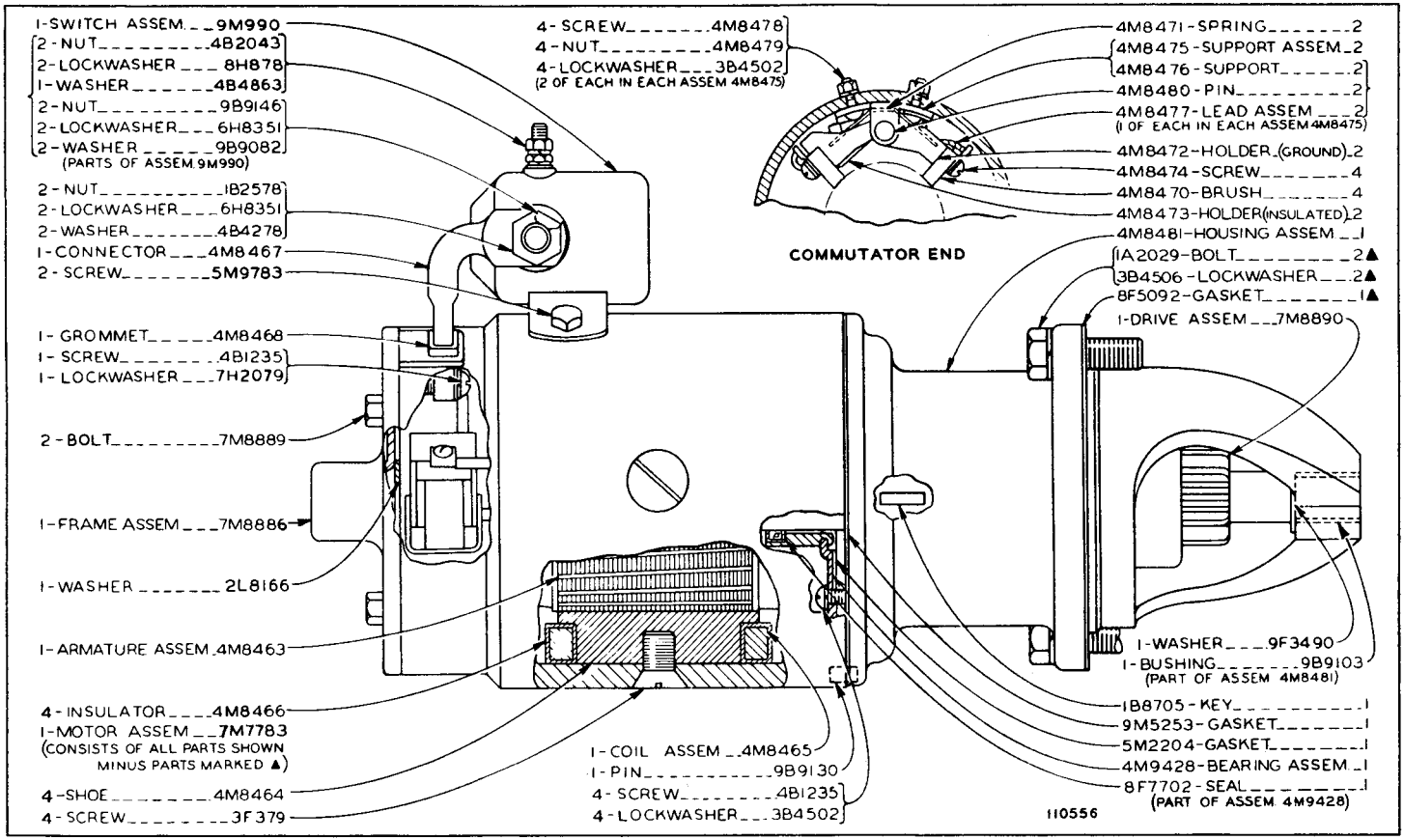

7M7793 ELECTRIC STARTER GROUP—12 Volt
Part of 7S6280 Arrangement listed on Page 109

1S150 GENERATOR ASSEMBLY—12 Volt, 24 Ampere

Part of 2S9802 Generator Group shown on Page 122

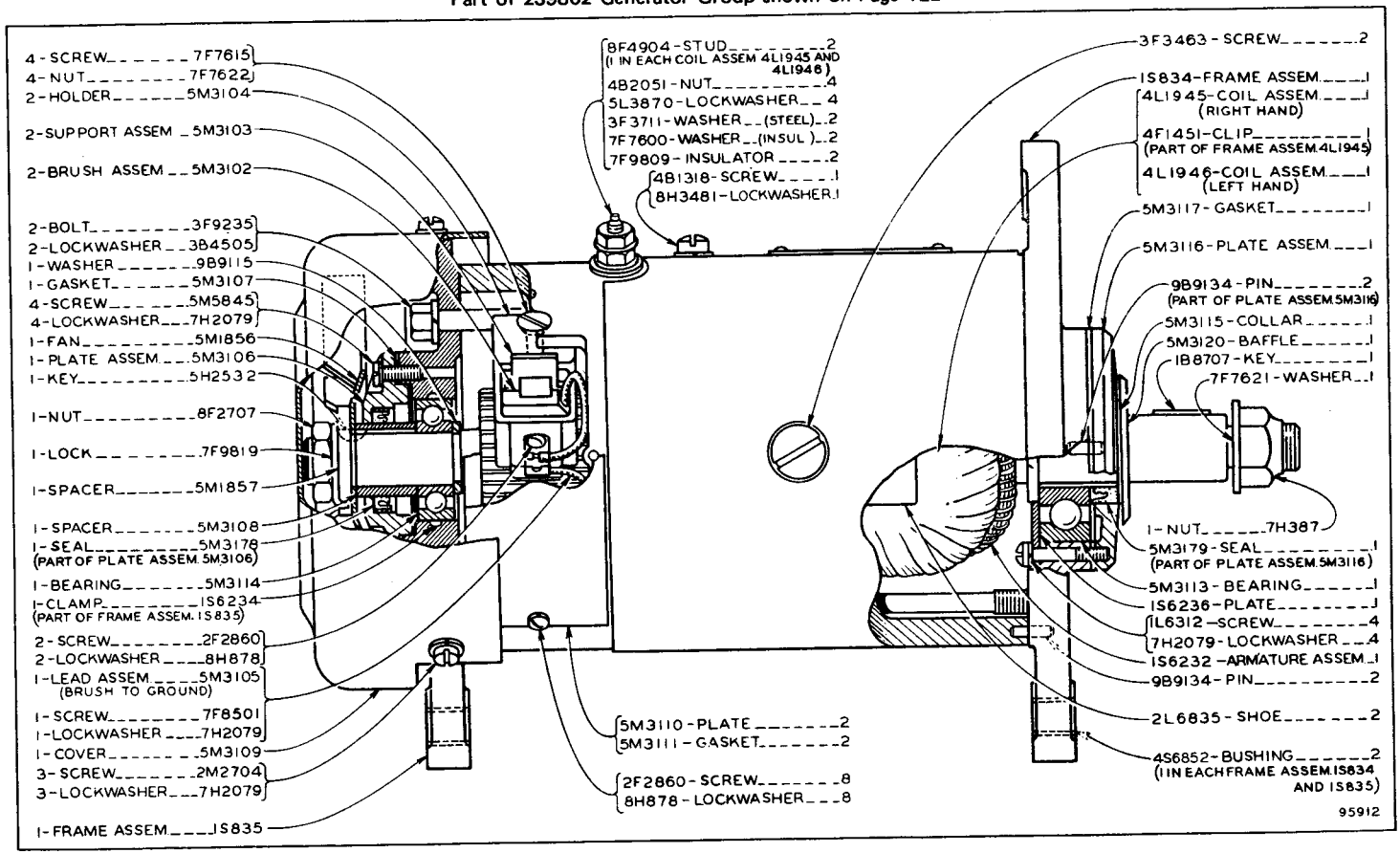

ONLY "CATERPILLAR" PARTS GIVE "CATERPILLAR" PERFORMANCE

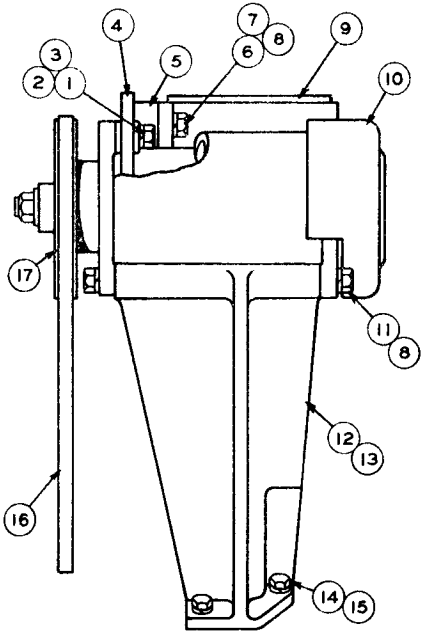

REF NO	PART NUMBER	DESCRIPTION	QTY
1	3H5368	BOLT	1
2	3B4507	LOCKWASHER	1
3	4S9191	WASHER	2
4	4S8874	STRAP	1
5	4S8875	SPACER	1
6	3322-A	BOLT	1
	7B3235	BOLT	1
7	1D4719	NUT	1
8	3B4508	LOCKWASHER	4
9	2S2319	BRACKET ASSEM.	1
10	1S150	GENERATOR ASSEM. (See Separate Illustration)	1
11	S-1604	BOLT	2
12	4S8873	BRACKET	1
13	9H1416	GASKET	1
14	1A2029	BOLT	5
15	3B4506	LOCKWASHER	5
16	8M8335	VEE BELT	1
17	4S8895	PULLEY	1

2S9802 GENERATOR GROUP—12 Volt, 24 Ampere
Part of 1P3965 Arrangement listed on Page 108
1S150 Generator parts are shown on Page 121

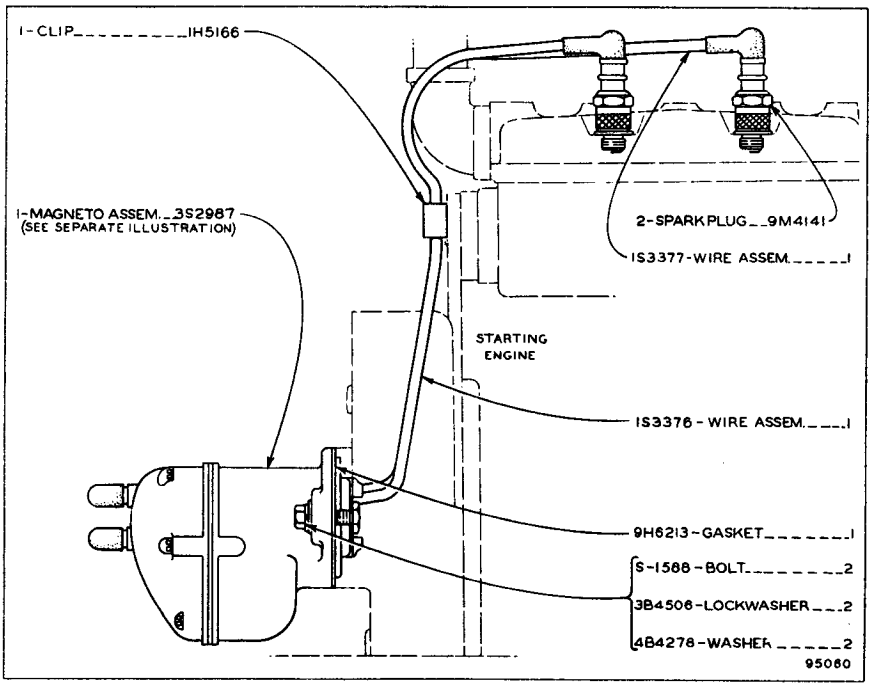

9H6203 IGNITION SYSTEM
Part of 7S6280 Arrangement listed on Page 109

3S2987 MAGNETO ASSEMBLY
Part of 9H6203 Ignition System

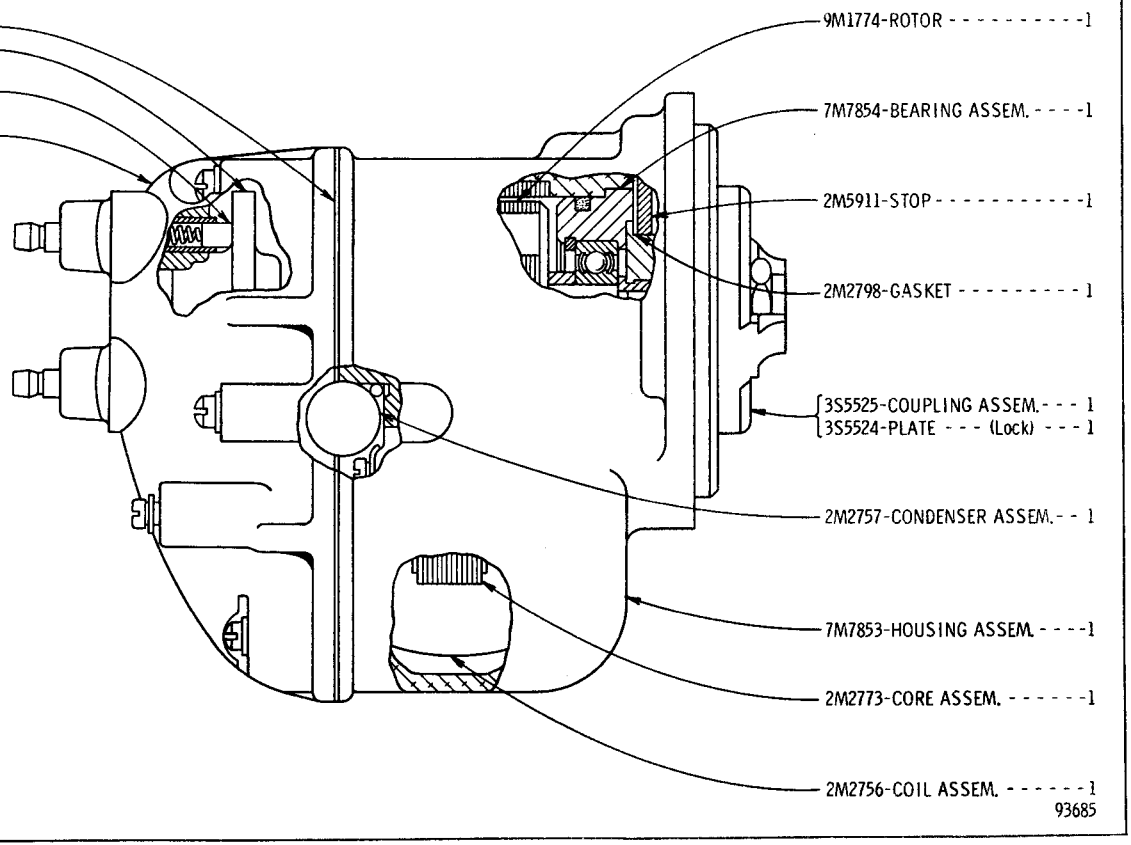

ONLY "CATERPILLAR" PARTS GIVE "CATERPILLAR" PERFORMANCE

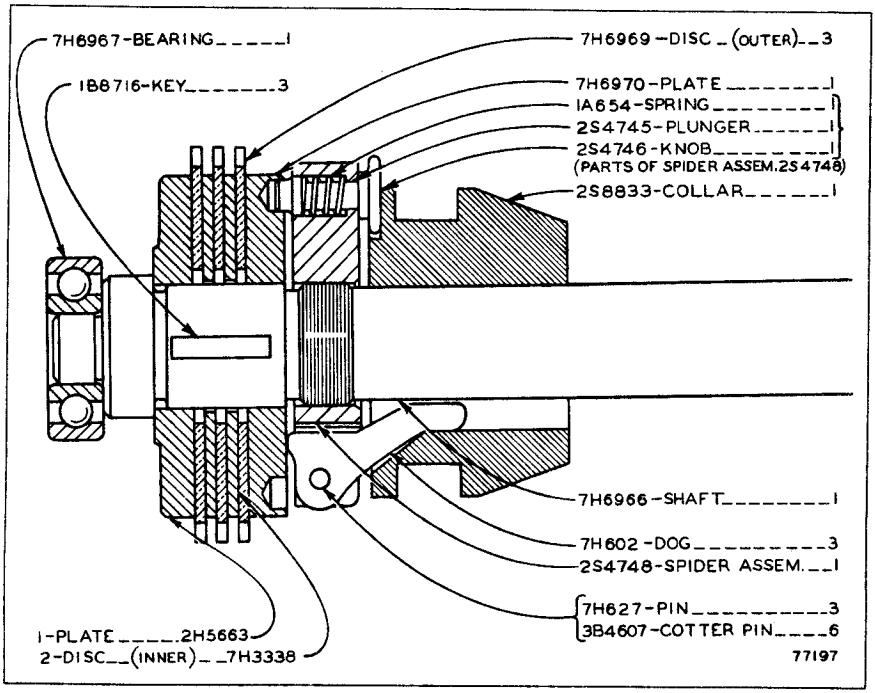

9H4826 CLUTCH GROUP
Part of 7S6280 Arrangement listed on Page 109

9S3414 CLUTCH AND PINION CONTROL GROUP

Part of 1P3965 Arrangement listed on Page 108

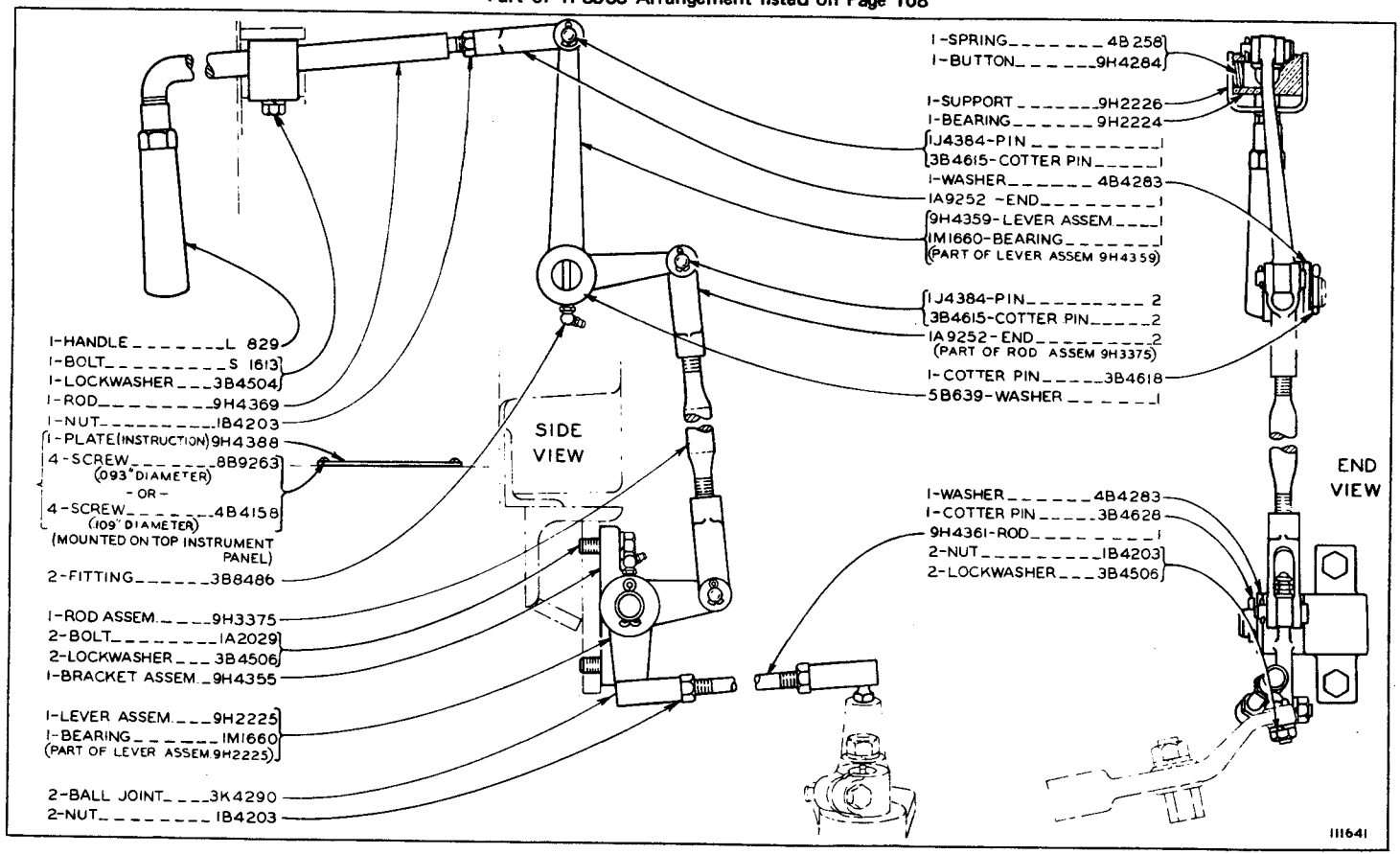

ONLY "CATERPILLAR" PARTS GIVE "CATERPILLAR" PERFORMANCE

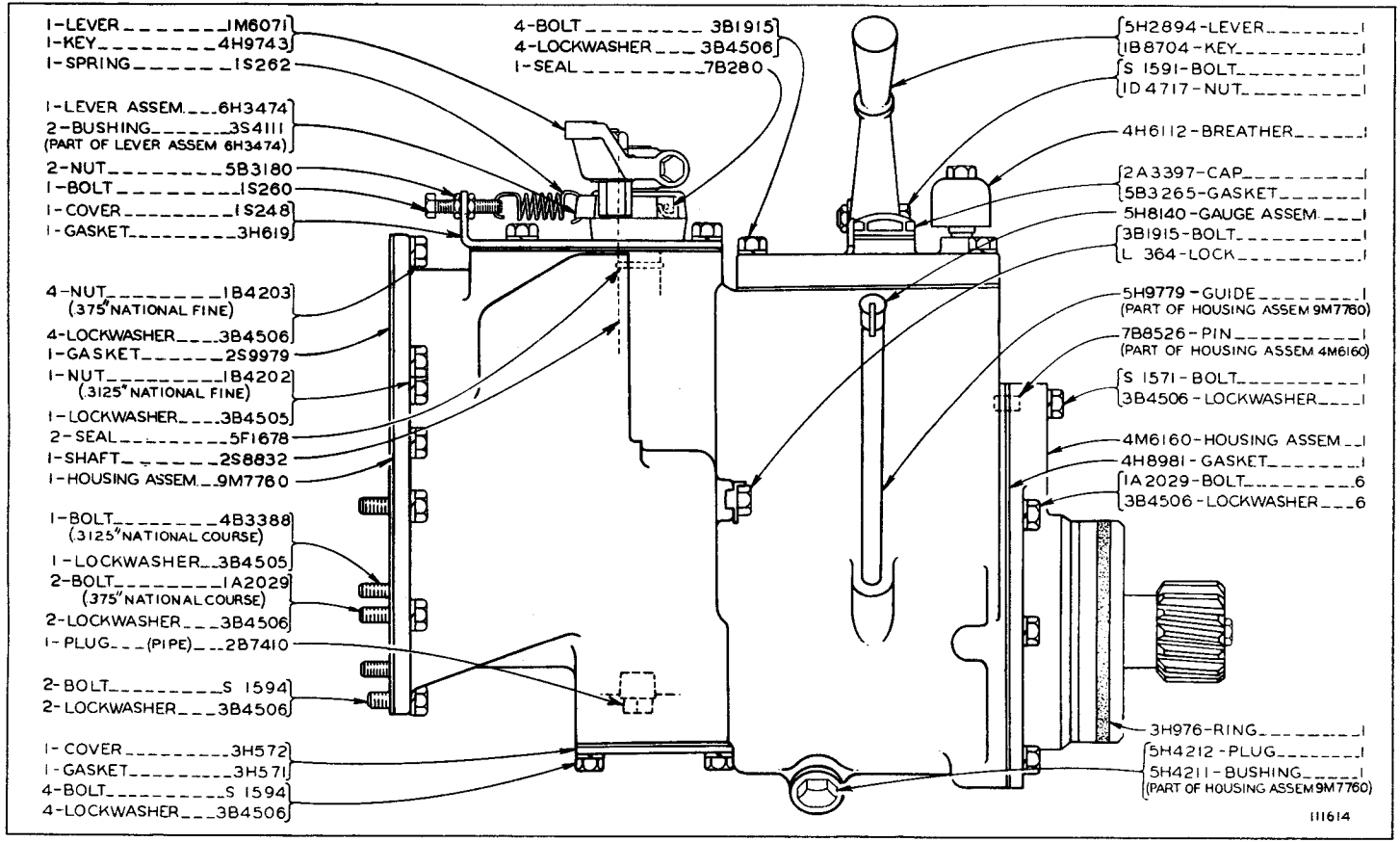

9M9229 TRANSMISSION AND STARTER PINION GROUP—Part 1
Part of 7S6280 Arrangement listed on Page 109

9M9229 TRANSMISSION AND STARTER PINION GROUP—Part 2

Part of 7S6280 Arrangement listed on Page 109

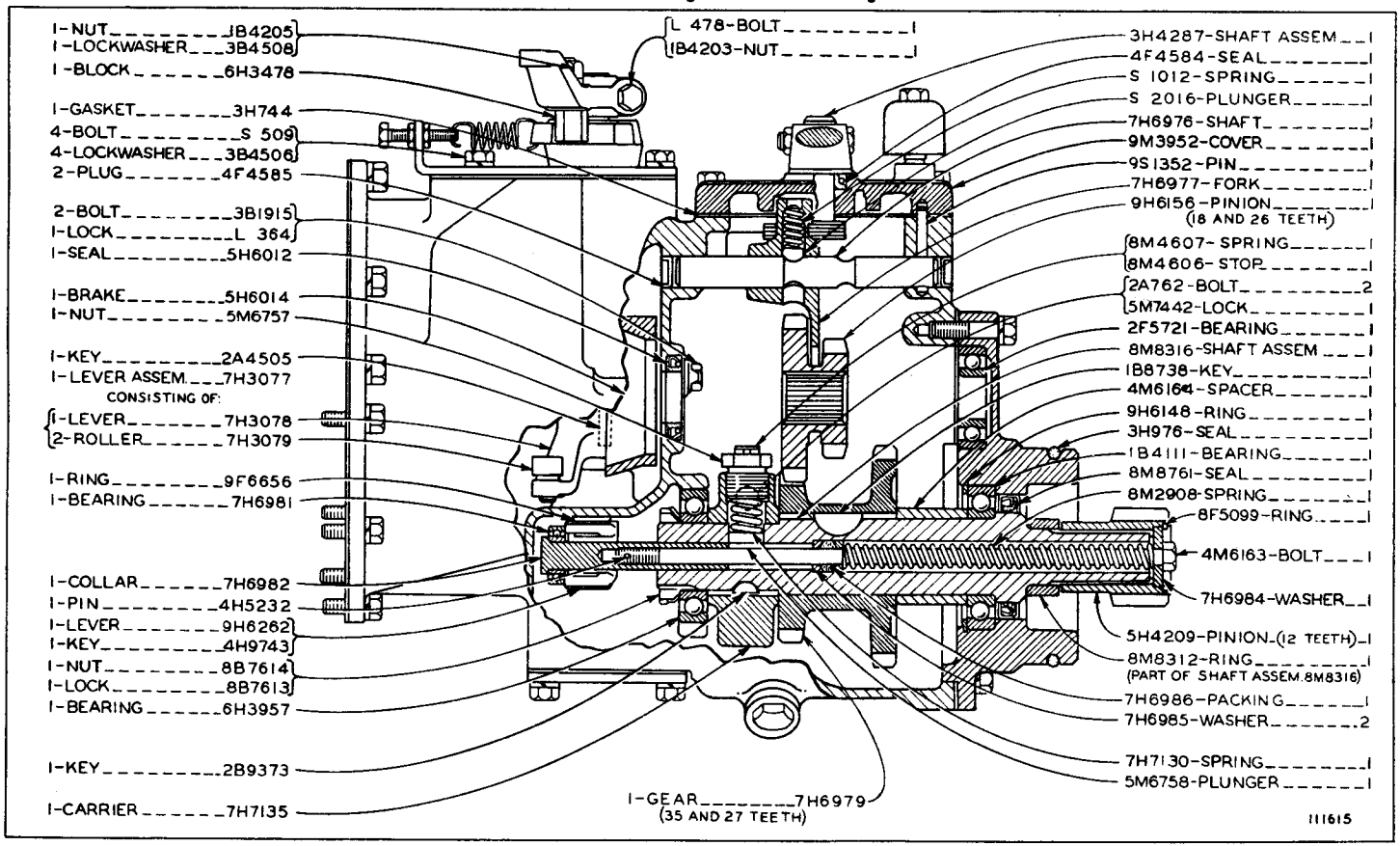

ONLY "CATERPILLAR" PARTS GIVE "CATERPILLAR" PERFORMANCE

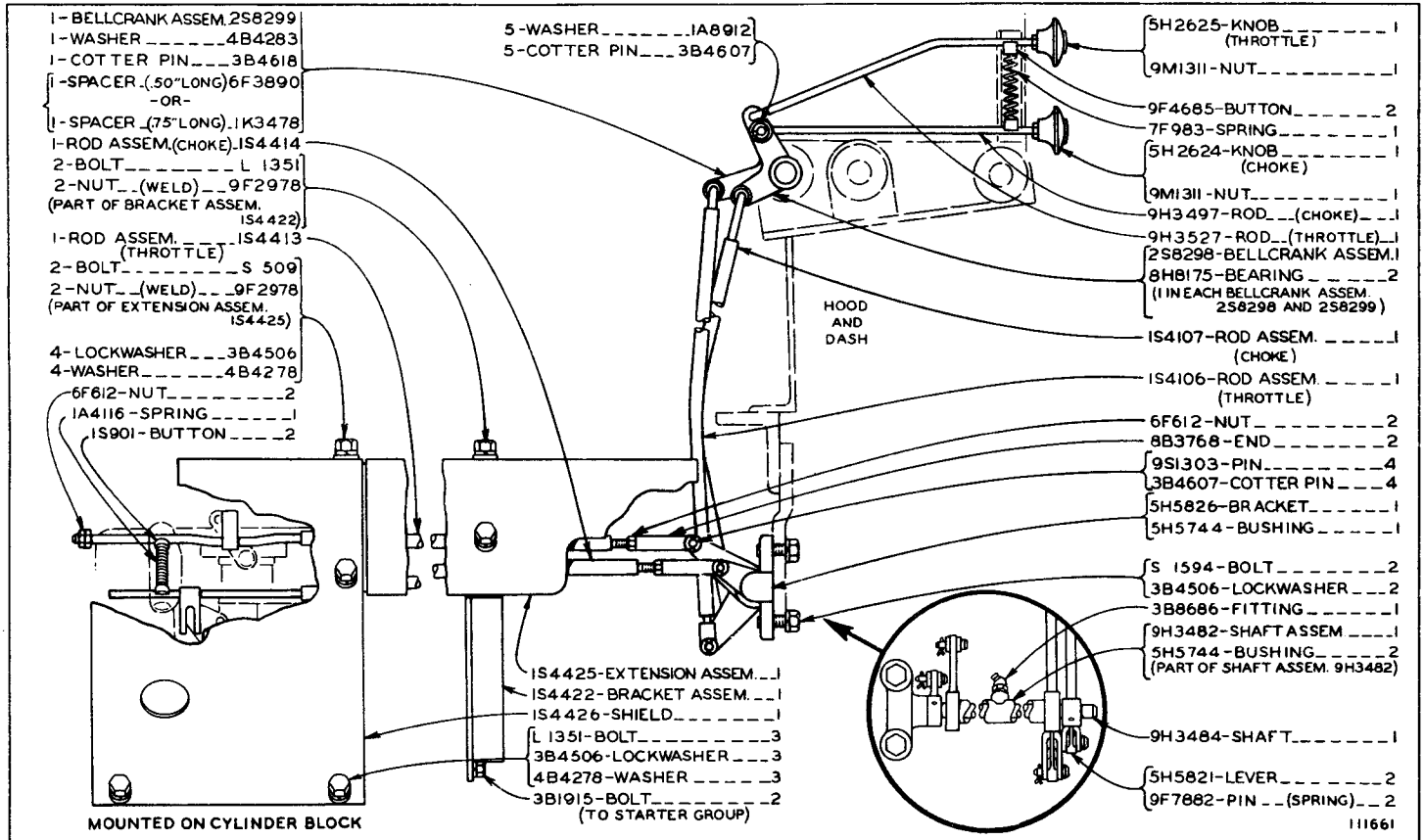

1S4427 CHOKE AND THROTTLE CONTROL GROUP

Part of 1P3965 Arrangement listed on Page 108

BATTERY BOX (9S5326 N/S)

Part of 1P3965 Arrangement listed on Page 108

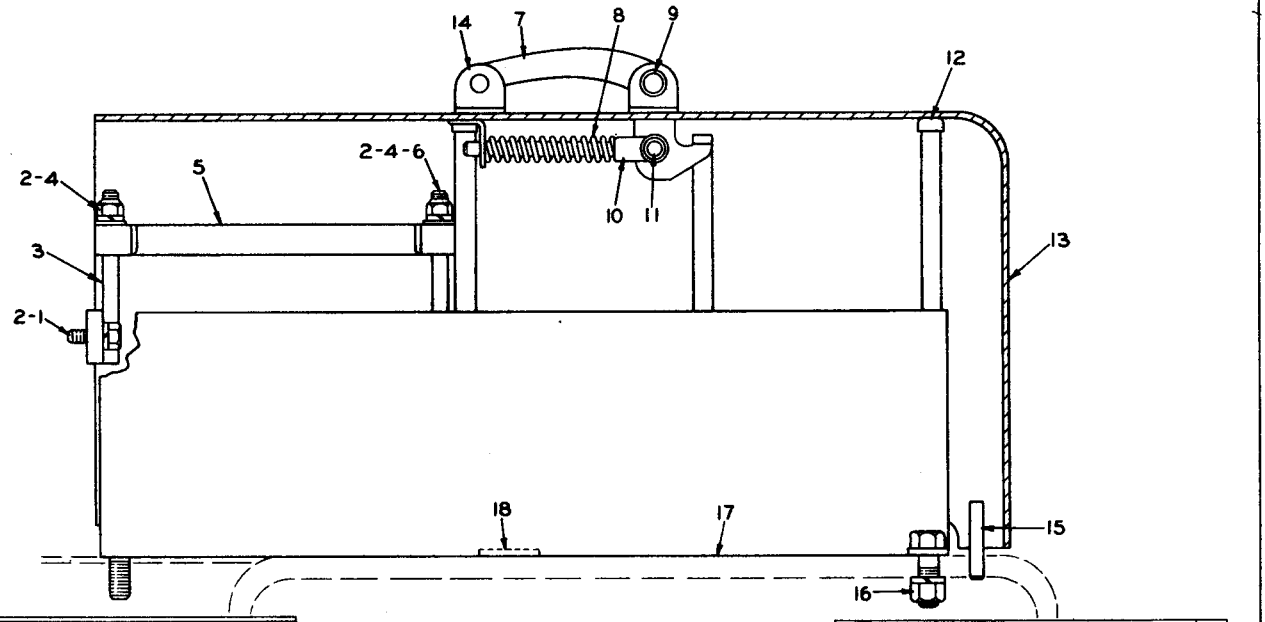

REF. NO.	PART NUMBER	DESCRIPTION	QTY
1	S1594	BOLT	2
2	3B4506	LOCKWASHER	4
3	9S6862	ROD ASSEM.	1
4	9H8524	NUT	2
	4B5271	WASHER	2
5	9S5325	HOLD DOWN ASSEM.	1
6	1S6957	BOLT	1
7	1H7365	HANDLE	1
8	1B9920	SPRING	1
9	2B2938	PIN	1
	3B4617	COTTER PIN	1
10	1H7366	ROD	1
11	1J4384	PIN	1
	3B4615	COTTER PIN	1
12	9M5617	GROMMET	4
13	9S4944	COVER ASSEM.	1
14	1S6385	LUG	3
15	9S5323	PIN	2
		(Parts of 9S4944 Assem.)	
16	7B3235	BOLT	4
	1D4719	NUT	2
	3B4508	LOCKWASHER	4
17	9S5318	BOX ASSEM.	1
18	8M5745	PLATE	1
		(Part of 9S5318 Assem.)	

110648

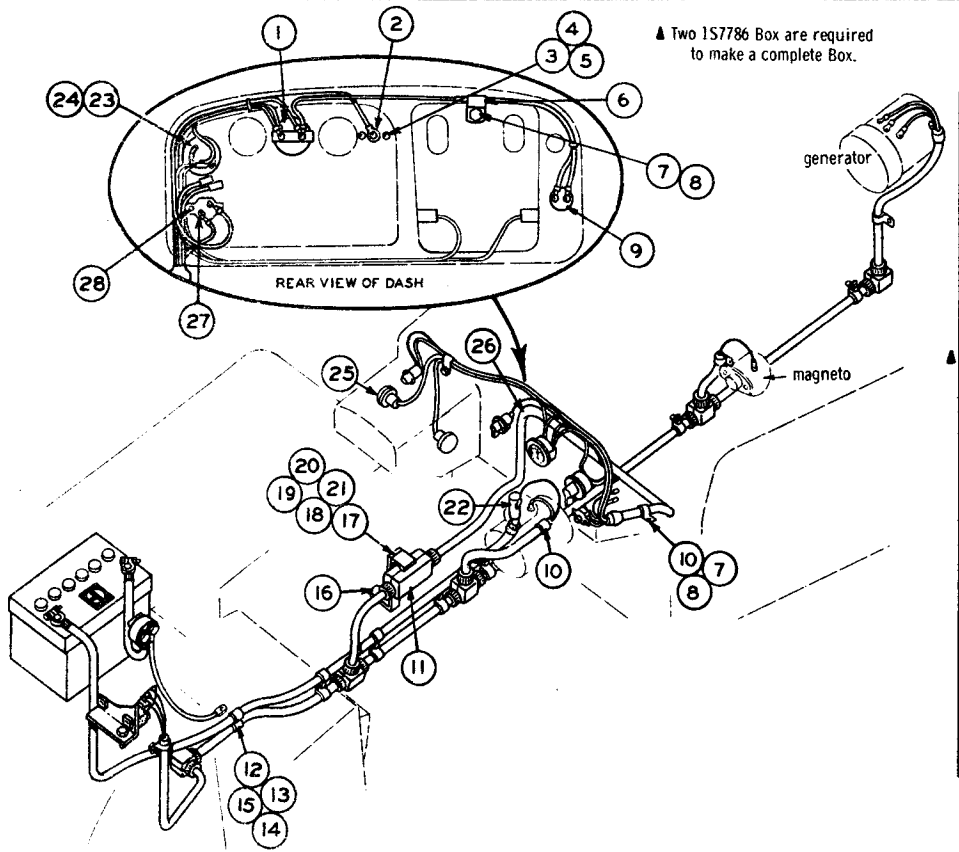

REF. NO.	PART NUMBER	DESCRIPTION	QTY
1	1F7307	AMMETER	1
2	4F4784	SWITCH ASSEM.	1
3	4B1268	SCREW	2
4	4B2043	NUT	2
5	3B4501	LOCKWASHER	2
6	8M2770	CLIP	1
7	S509	BOLT	3
8	3B4506	LOCKWASHER	3
9	3F1006	SWITCH	1
10	9M9738	CLIP	3
▲ 11	1S7786	BOX	2
12	1S1015	CLIP	2
13	S1587	BOLT	1
14	3B4508	LOCKWASHER	1
15	8B2133	BOSS	1
16	2S3162	BRACKET	1
17	2S3196	BRACKET	1
18	S1615	BOLT	2
19	1B4330	NUT	2
20	3B4504	LOCKWASHER	2
21	4B4276	WASHER	2
22	8M5397	BOOT	1
23	7S6402	SWITCH ASSEM.	1
24	7S5432	KNOB	1
25	3S8641	LAMP ASSEM.	2
	7M9957	BULB	1
26	2S2630	HARNESS (See Separate Illustration)	1
27	5M2555	CIRCUIT BREAKER	1
28	5M6668	SCREW	2

BATTERY AND WIRING (1P930 N/S)—12 Volt—As Viewed from Rear Right Hand Side of Machine—Part 1
Part of 1P3965 Arrangement listed on Page 108
2S2630 Wiring Harness parts are shown on Page 133. See Page 132 for Wiring Diagram

BATTERY AND WIRING (1P930 N/S)—12 Volt—As Viewed from Rear Right Hand Side of Machine—Part 2
Part of 1P3965 Arrangement listed on Page 108. 7H7290 Switch and 2S2631 Wiring Harness parts are shown on Pages 61 and 134. See Page 132 for Wiring Diagram

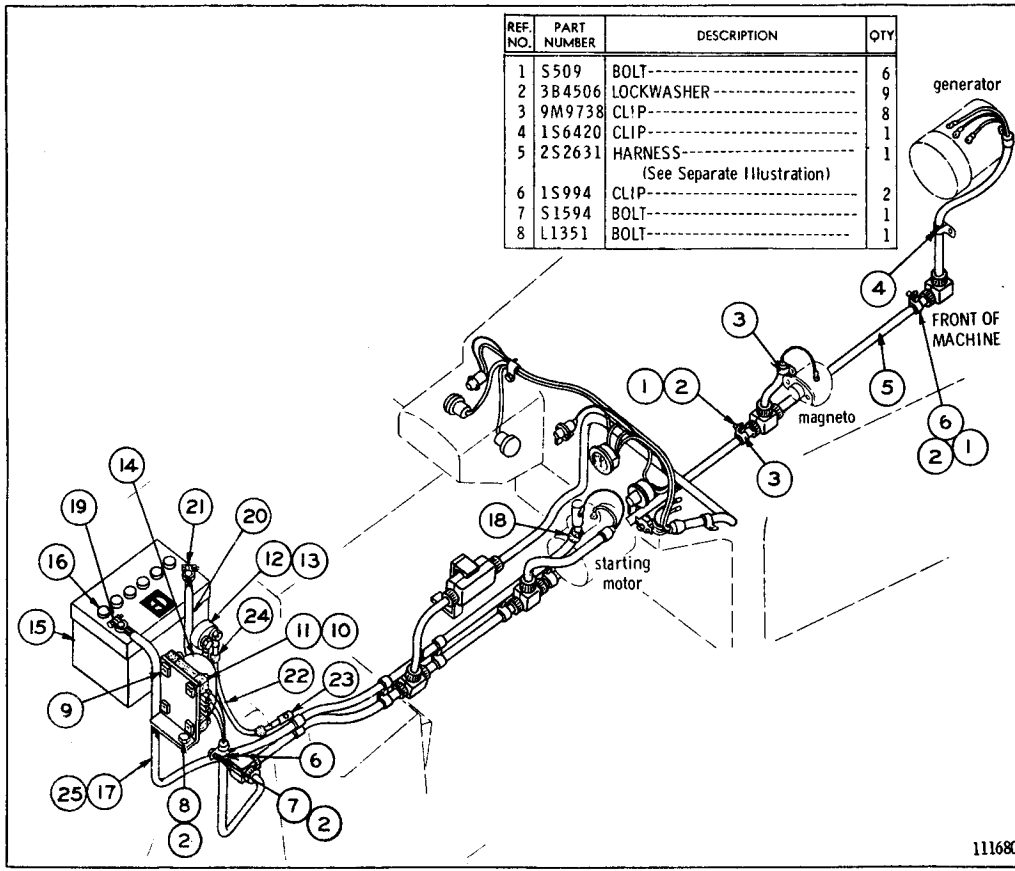

REF. NO.	PART NUMBER	DESCRIPTION	QTY
1	S509	BOLT	6
2	3B4506	LOCKWASHER	9
3	9M9738	CLIP	8
4	1S6420	CLIP	1
5	2S2631	HARNESS (See Separate Illustration)	1
6	1S994	CLIP	2
7	S1594	BOLT	1
8	L1351	BOLT	1
9	7M5160	BRACKET ASSEM.	1
10	9F6445	NUT—(Weld) (Part of 7M5160 Assem.)	4
11	7B2742	BOLT	4
	3B4504	LOCKWASHER	4
12	7H7290	SWITCH ASSEM. (See Separate Illustration)	1
13	8H8648	PLATE	1
14	2M6495	REGULATOR	1
	8M3146	KIT—(Shockmount) (Includes Brackets, Grommets, Lead Assem. and Hardware)	1
15	5S8374	BATTERY	1
16	5S8405	PLUG (Part of 5S8374 Battery)	6
17	9S4612	CABLE ASSEM.	1
	4S8732	CONDUIT—8 Feet	1
	1S7839	TERMINAL	1
18	1S2244	BOOT	2
	1S4915	LINER	2
	3S2093	TIE	2
	3S6049	TERMINAL ASSEM. —(+)— (Parts of 9S4612 Assem.)	1
19	2D8788	BOLT	1
	2D8787	NUT (Parts of 3S6049 Assem.)	1
20	9S4611	CABLE ASSEM.	1
	1S7252	TERMINAL	1
	3S6050	TERMINAL ASSEM. —(-)— (Parts of 9S4611 Assem.)	1
21	2D8788	BOLT	1
	2D8787	NUT (Parts of 3S6050 Assem.)	1
22	9S5633	CABLE ASSEM.	1
	4S8732	CONDUIT—3 Feet	
23	1S7252	TERMINAL	2
24	1S2244	BOOT	2
	1S4915	LINER	2
	3S2093	TIE (Parts of 9S5633 Assem.)	2
25	8B6678	GROMMET	2

ONLY "CATERPILLAR" PARTS GIVE "CATERPILLAR" PERFORMANCE

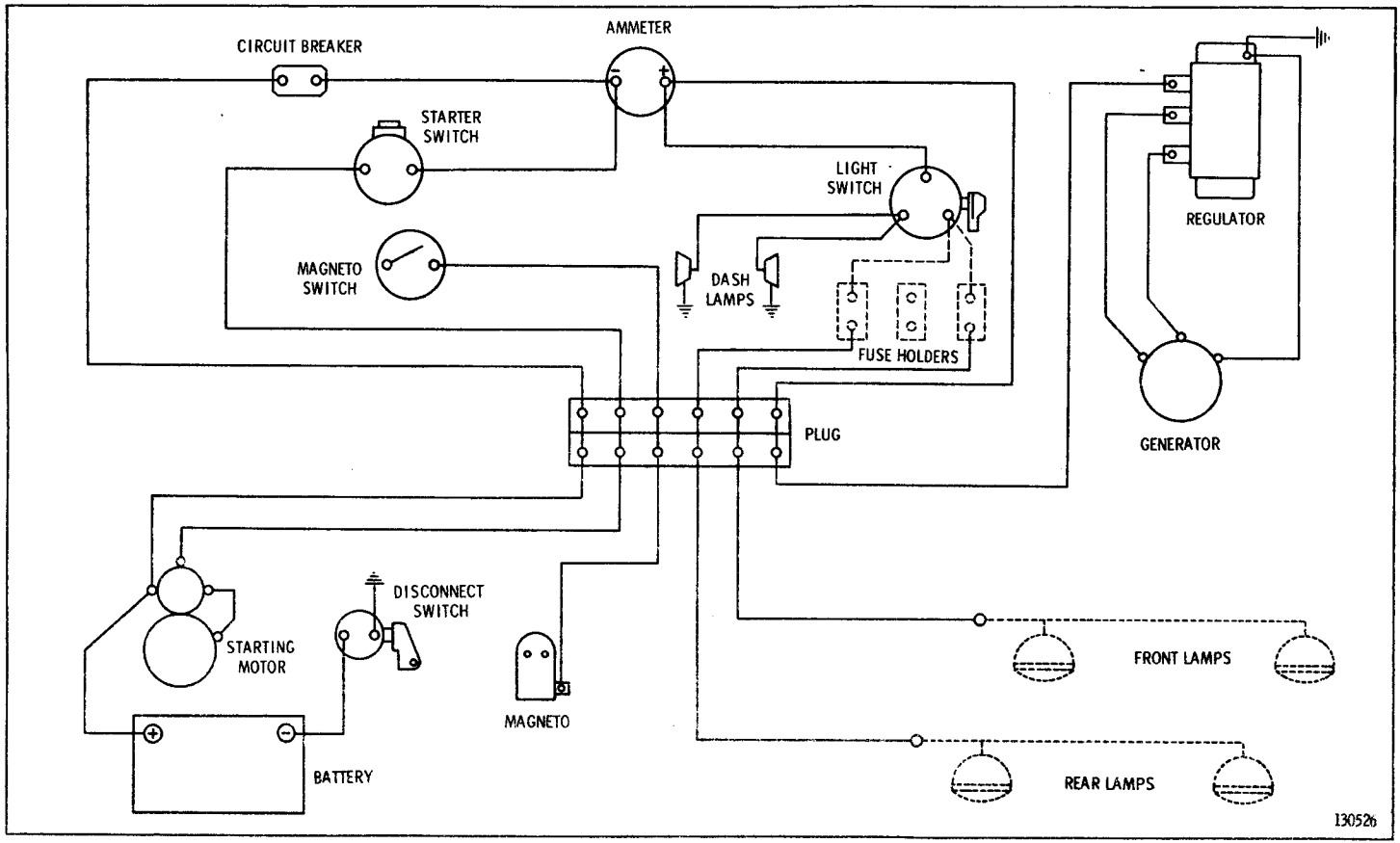

WIRING DIAGRAM—12 Volt System

2S2630 WIRING HARNESS ASSEMBLY—12 Volt

Part of Battery and Wiring shown on Page 130

C INDICATES CHANGE FROM PREVIOUS TYPE

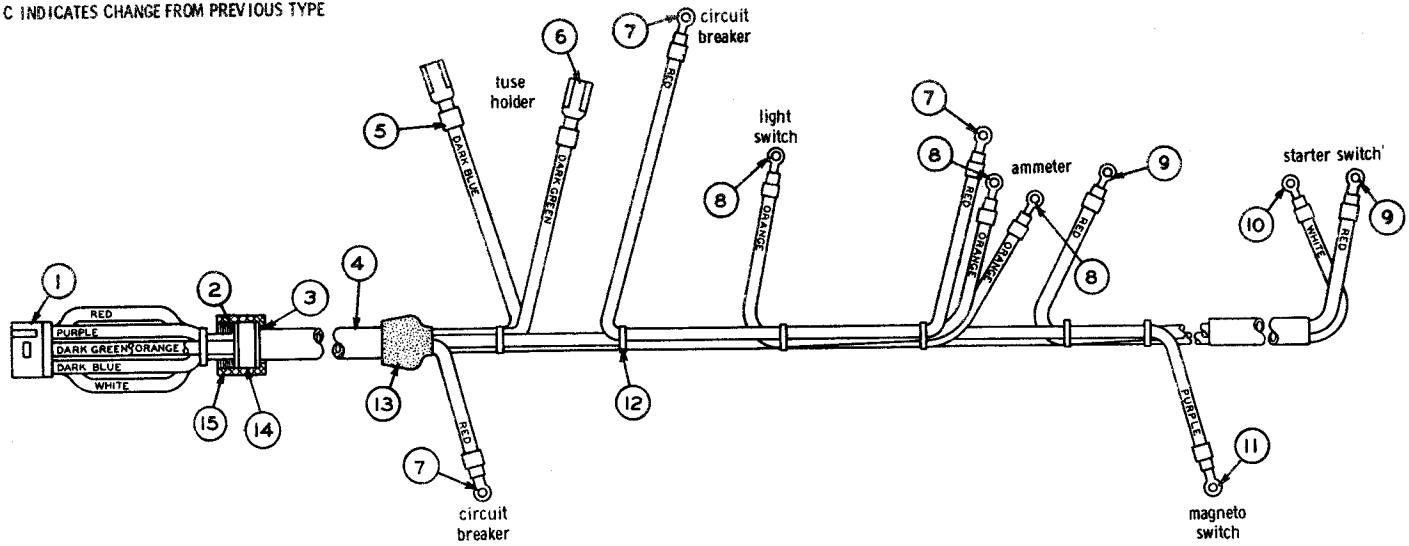

	REF. NO.	PART NUMBER	DESCRIPTION	QTY.
	1	2S5060	PLUG ASSEM.	1
	2	1S4915	LINER	2
C	3	8S5784	RING	1
	4	1S3557	CONDUIT (5 Feet)	
	5	4L3916	TERMINAL (Dark Blue Wire)	1
	6	4L3916	TERMINAL (Dark Green Wire)	1
	7	2L8066	TERMINAL (Red Wire)	3

	REF. NO.	PART NUMBER	DESCRIPTION	QTY.
	8	2L8066	TERMINAL (Orange Wire)	3
	9	2L8076	TERMINAL (Red Wire)	2
	10	2L8076	TERMINAL (White Wire)	1
	11	2L8066	TERMINAL (Purple Wire)	1
	12	3S2093	TIE	7
	13	1S2244	BOOT	1
C	14	8S5210	FERRULE	1
	15	9M9662	NUT	1

129651

ONLY "CATERPILLAR" PARTS GIVE "CATERPILLAR" PERFORMANCE

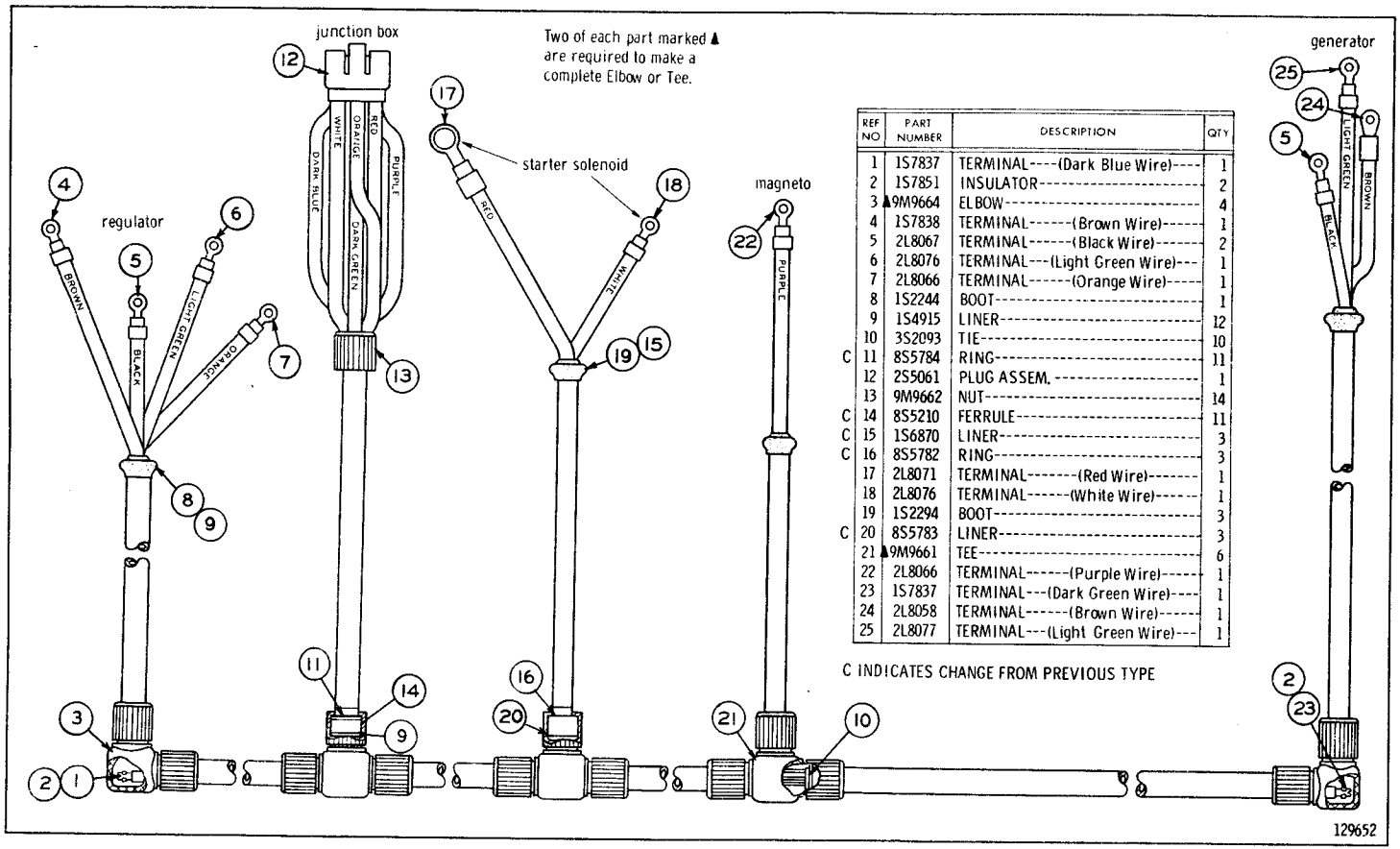

C	REF NO	PART NUMBER	DESCRIPTION	QTY
	1	1S7837	TERMINAL----(Dark Blue Wire)----	1
	2	1S7851	INSULATOR----------	2
	3	▲9M9664	ELBOW----------	4
	4	1S7838	TERMINAL------(Brown Wire)------	1
	5	2L8067	TERMINAL------(Black Wire)------	2
	6	2L8076	TERMINAL---(Light Green Wire)---	1
	7	2L8066	TERMINAL------(Orange Wire)-----	1
	8	1S2244	BOOT----------	1
	9	1S4915	LINER----------	12
	10	3S2093	TIE----------	10
C	11	8S5784	RING----------	11
	12	2S5061	PLUG ASSEM.----------	1
	13	9M9662	NUT----------	14
C	14	8S5210	FERRULE----------	11
C	15	1S6870	LINER----------	3
C	16	8S5782	RING----------	3
	17	2L8071	TERMINAL-------(Red Wire)-------	1
	18	2L8076	TERMINAL------(White Wire)------	1
	19	1S2294	BOOT----------	3
C	20	8S5783	LINER----------	3
	21	▲9M9661	TEE----------	6
	22	2L8066	TERMINAL------(Purple Wire)------	1
	23	1S7837	TERMINAL---(Dark Green Wire)----	1
	24	2L8058	TERMINAL------(Brown Wire)------	1
	25	2L8077	TERMINAL---(Light Green Wire)---	1

C INDICATES CHANGE FROM PREVIOUS TYPE

2S2631 WIRING HARNESS ASSEMBLY—12 Volt

Part of Battery and Wiring shown on Page 131

9S2123	ARRANGEMENT--12 VOLT, 75 AMPERE		
	CONSISTS OF:		PAGE
1	9S2124	ALTERNATOR WIRING GROUP	141
1	9S3164	ALTERANTOR GROUP	140
9S3408	ARRANGEMENT--24 VOLT, 50 AMPERE		
	CONSISTS OF:		
1	8S4224	ALTERANTOR GROUP	135
1	8M7892	AMMETER--TO DASH	
1	9S173	CIRCUIT BREAKER--TO DASH	

ALTERNATOR ARRANGEMENTS
FACTORY INSTALLATION

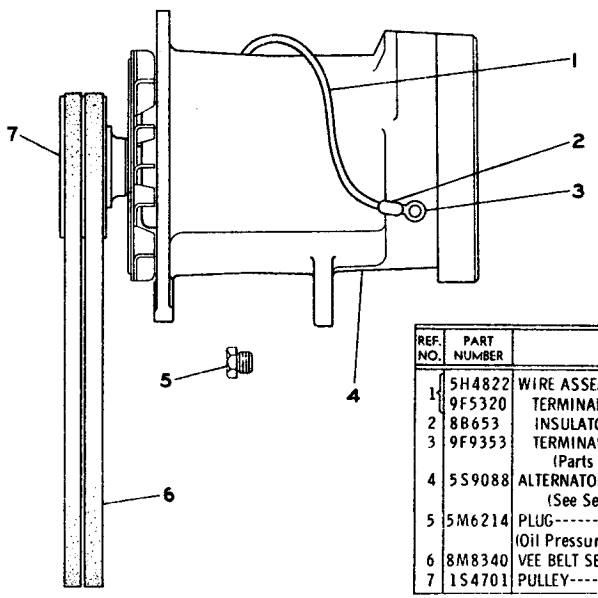

REF. NO.	PART NUMBER	DESCRIPTION	QTY
1	5H4822	WIRE ASSEM.	1
	9F5320	TERMINAL-----(Alternator)-----	1
2	8B653	INSULATOR	2
3	9F9353	TERMINAL-----(Ground)-------- (Parts of 5H4822 Assem.)	1
4	5S9088	ALTERNATOR ASSEM. (See Separate Illustration)	1
5	5M6214	PLUG (Oil Pressure Sensing Switch Hole)	1
6	8M8340	VEE BELT SET-(Consists of 2 Belts)--	1
7	1S4701	PULLEY	1

111167

8S4224 ALTERNATOR GROUP–24 Volt, 50 Ampere
Part of 9S3408 Alternator Arrangement
5S9088 Alternator parts are shown on Pages 136 and 137

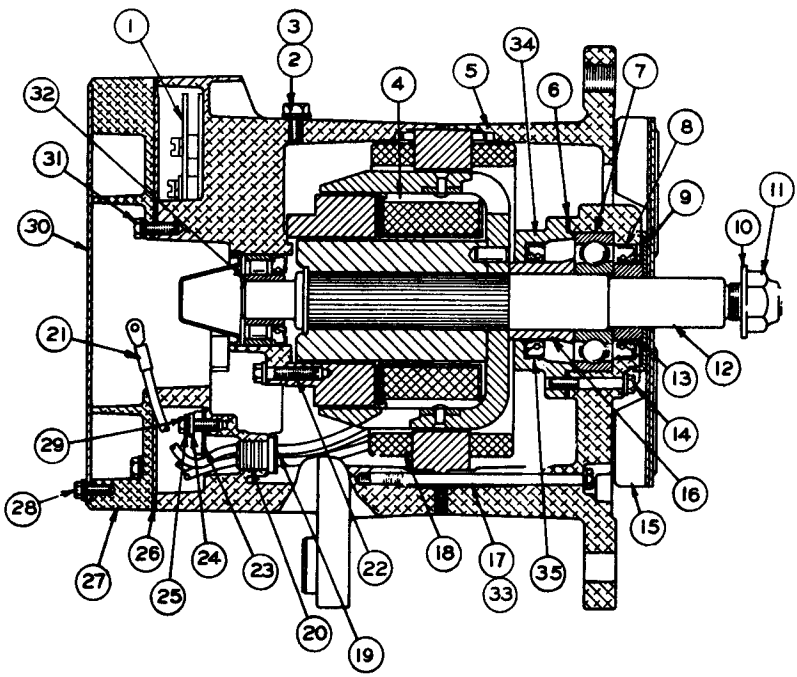

C INDICATES CHANGE FROM PREVIOUS TYPE

REF. NO.	PART NUMBER	DESCRIPTION	QTY
1	9S2259	REGULATOR ASSEM.	1
2	9S2011	SCREW	1
3	1L4789	LOCKWASHER	1
4	9S2248	FIELD COIL AND SUPPORT ASSEM.	1
5	9S2279	FRAME	1
6	9S2256	GASKET	1
C 7	2F5721	BEARING	1
8	9S2391	SEAL	1
9	9S2252	SLINGER	1
10	7F7621	WASHER	1
11	7H387	NUT	1
12	9S2302	ROTOR ASSEM.	1
13	9S2254	COLLAR	1
14	9S2008	SCREW	4
15	9S2258	FAN AND BAFFLE ASSEM.	1
16	9S2261	COLLAR	1
17	9S2009	BOLT	4
18	9S2004	STATOR ASSEM.	1
19	9S2006	INSULATOR	1
20	9S2005	GROMMET	1
21	9S2014	CLIP	3
		(Parts of 9S2004 Stator Assem.)	

REF. NO.	PART NUMBER	DESCRIPTION	QTY
22	9S2007	SCREW	3
23	9S2301	INSULATION	1
24	9S2300	INSULATOR	4
25	9S2247	WASHER---------(Spring)	4
	4B4863	WASHER---------(Plain)	4
26	9S2262	GASKET	1
27	9S2255	COVER	1
28	9S2544	SCREW	4
	8H878	LOCKWASHER	4
29	9S2440	SCREW	4
30	9S2260	PLATE	1
31	9S2437	SCREW	5
	7H2079	LOCKWASHER	5
32	9S2242	RACE	1
C 33	3B4502	LOCKWASHER	4
34	9S2390	RETAINER ASSEM.	1
35	9S2391	SEAL	1
		(Part of 9S2390 Retainer Assem.)	

111674

5S9088 ALTERNATOR ASSEMBLY—Part 1
Part of 8S4224 Alternator Group shown on Page 135

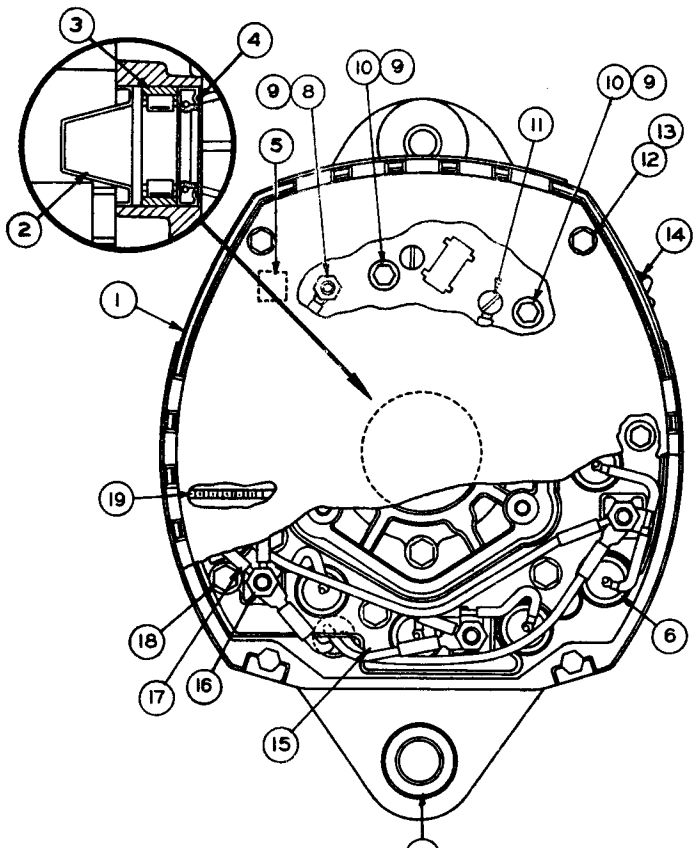

▲ NOT PART OF 5S9088 ALTERNATOR ASSEM. C INDICATES CHANGE FROM PREVIOUS TYPE

	REF. NO.	PART NUMBER	DESCRIPTION	QTY
	1	9S2398	HOUSING ASSEM.	1
	2	9S2397	COVER	1
	3	9S2395	BEARING	1
	4	9S2394	SEAL	1
	5	9F2247	PLUG	1
	6	9S2393	DIODE	3
	7	9S2396	BUSHING	1
			(Parts of 9S2398 Assem.)	
C	8	4B2043	NUT	1
C	9	9B7233	LOCKWASHER----(Shakeproof)	3
C		9S9830	SCREW	2
C	10	8H878	LOCKWASHER	2
C		8F1326	WASHER	3
C	11	9S9829	SCREW ASSEM.	1
	12	9S2438	SCREW	2
	13	7H2079	LOCKWASHER	2

	REF. NO.	PART NUMBER	DESCRIPTION	QTY
	14	9S2389	STUD ASSEM.	1
	15	9S2292	HEAT SINK ASSEM.	1
	16	4B2043	NUT	3
	17	9S2246	LEAD ASSEM.	1
	18	9S2542	SCREW	1
	19	9S2250	GROMMET	1
▲		9S2013	KIT--------(Terminal Relay)-------	1
			(Consists of such parts as Bushing, "O" Ring and Hardware)	
▲		9S2012	KIT------(Terminal Output)-------	1
			(Consists of such parts as Gaskets, Terminal, and Hardware)	
▲		9S2290	KIT--------(For Heat Sink)--------	1
			(Diode Junction Hardware)	
▲		9S2291	KIT--------(For Heat Sink)--------	1
			(Positive Diode Heat Sink Hardware)	

107769

5S9088 ALTERNATOR ASSEMBLY--Part 2
Part of 8S4224 Alternator Group shown on Page 135

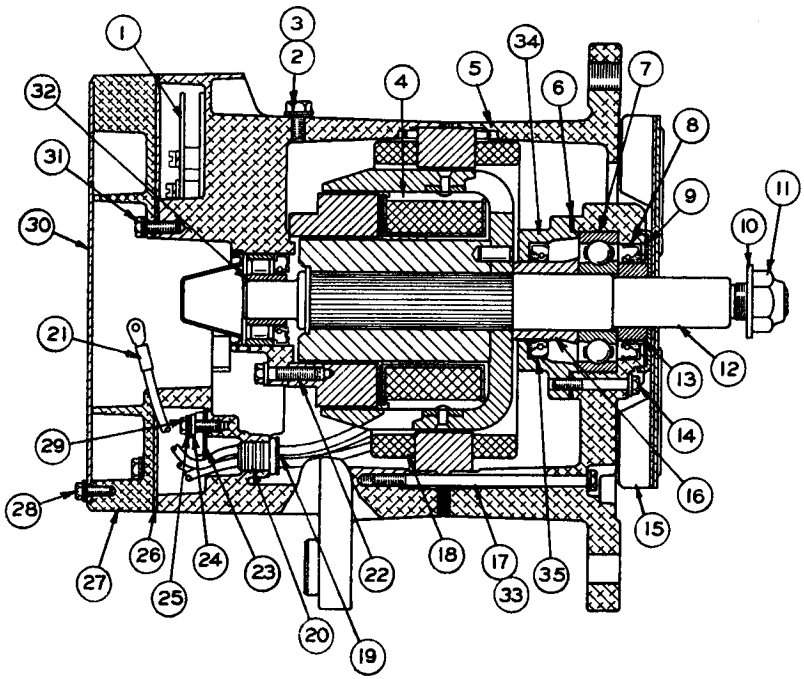

C INDICATES CHANGE FROM PREVIOUS TYPE

REF. NO.	PART NUMBER	DESCRIPTION	QTY
1	9S3196	REGULATOR ASSEM.	1
2	9S2011	SCREW	1
3	1L4789	LOCKWASHER	1
4	9S3198	FIELD COIL AND SUPPORT ASSEM.	1
5	9S2279	FRAME	1
6	9S2256	GASKET	1
C 7	2F5721	BEARING	1
8	9S2391	SEAL	1
9	9S2252	SLINGER	1
10	7F7621	WASHER	1
11	7H387	NUT	1
12	9S2302	ROTOR ASSEM.	1
13	9S2254	COLLAR	1
14	9S2008	SCREW	4
15	9S2258	FAN AND BAFFLE ASSEM.	1
16	9S2261	COLLAR	1
17	9S2009	BOLT	4
18	9S3451	STATOR ASSEM.	1
19	9S2006	INSULATOR	1
20	9S2005	GROMMET	1
21	9S2014	CLIP	3
		(Parts of 9S3451 Stator Assem.)	

REF. NO.	PART NUMBER	DESCRIPTION	QTY
22	9S2007	SCREW	3
23	9S2301	INSULATION	1
24	9S2300	INSULATOR	4
25	9S2247	WASHER---(Spring)---	4
	4B4863	WASHER---(Plain)---	4
26	9S2262	GASKET	1
27	9S2255	COVER	1
28	9S2544	SCREW	4
	8H878	LOCKWASHER	4
29	9S2440	SCREW	4
30	9S2260	PLATE	1
31	9S2437	SCREW	5
	7H2079	LOCKWASHER	5
32	9S2242	RACE	4
C 33	3B4502	LOCKWASHER	1
34	9S2390	RETAINER ASSEM.	1
35	9S2391	SEAL (Part of 9S2390 Retainer Assem.)	1

111675

5S6698 ALTERNATOR ASSEMBLY—Part 1
Part of 9S3164 Alternator Group shown on Page 140

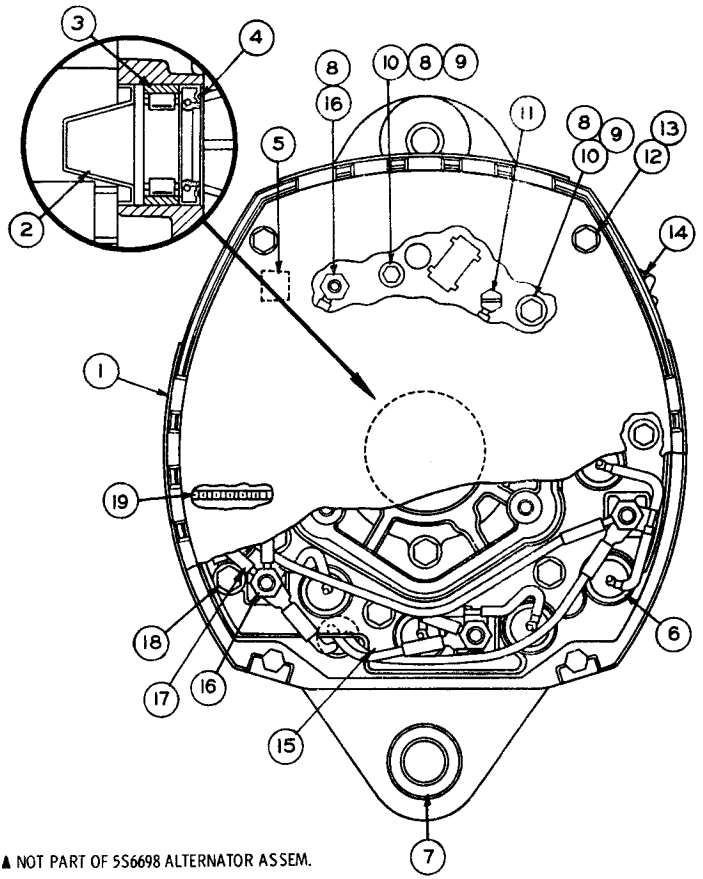

▲ NOT PART OF 5S6698 ALTERNATOR ASSEM.

	REF. NO.	PART NUMBER	DESCRIPTION	QTY
	1	9S2398	HOUSING ASSEM.	1
	2	9S2397	COVER	1
	3	9S2395	BEARING	1
	4	9S2394	SEAL	1
	5	9F2247	PLUG	1
	6	9S2393	DIODE	3
	7	9S2396	BUSHING (Parts of 9S2398 Assem.)	1
C	8	9B7233	LOCKWASHER	3
C	9	8F1326	WASHER	3
C	10	9S9830	BOLT	2
		8H878	LOCKWASHER	2
C	11	9S9829	SCREW ASSEM.	1
	12	9S2438	SCREW	2
	13	7H2079	LOCKWASHER	2
	14	9S2389	STUD ASSEM.	1

C INDICATES CHANGE FROM PREVIOUS TYPE

	REF. NO.	PART NUMBER	DESCRIPTION	QTY
	15	9S2292	HEAT SINK ASSEM.	1
C	16	4B2043	NUT	4
	17	9S2246	LEAD ASSEM.	1
	18	9S2542	SCREW	1
	19	9S2250	GROMMET	1
▲		9S2013	KIT--------(Terminal Relay)------- (Consists of such parts as Bushing, "O" Ring and Hardware)	1
▲		9S2012	KIT------(Terminal Output)------- (Consists of such parts as Gaskets, Terminal, and Hardware)	1
▲		9S2290	KIT--------(For Heat Sink)-------- (Diode Junction Hardware)	1
▲		9S2291	KIT--------(For Heat Sink)-------- (Positive Diode Heat Sink Hardware)	1

108933

5S6698 ALTERNATOR ASSEMBLY—Part 2
Part of 9S3164 Alternator Group shown on Page 140

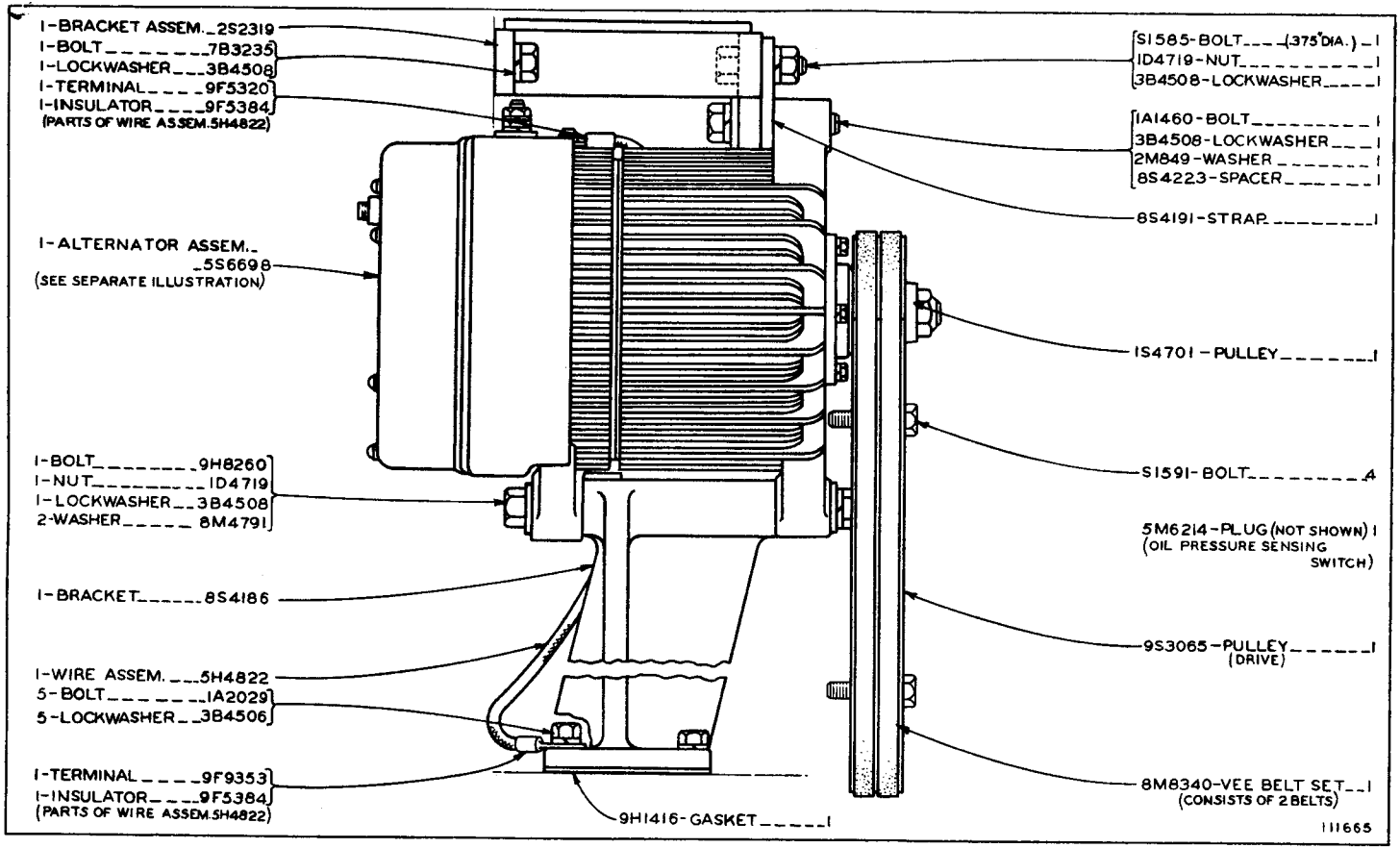

9S3164 ALTERNATOR GROUP—12 Volt, 75 Ampere
Part of 9S2123 Alternator Arrangement listed on Page 135
5S6698 Alternator parts are shown on Page 138

9S2124 ALTERNATOR WIRING GROUP

Part of 9S2123 Alternator Arrangement listed on Page 135

8S6952 Wiring Harness parts are shown on Page 142

REF. NO.	PART NUMBER	DESCRIPTION	QTY
1	2S5973	HARNESS	1
2	4S8732	CONDUIT 5 feet	
3	2S5060	PLUG ASSEM.	1
4	9M9662	NUT	1
5	1S4915	LINER	2
6	8S5210	FERRULE	1
7	8S5784	RING	1
8	1S2244	BOOT	1
9	2L8067	TERMINAL (Red Wire)	2
10	4L3916	TERMINAL (Dark Blue and Dark Green Wire)	2
11	2L8076	TERMINAL (Red and White Wire)	3
12	3S2093	TIE	7
13	2L8066	TERMINAL (Orange, Purple and Red Wire) (Parts of Harness 2S5973)	4
14	8S6952	HARNESS (See Separate Illustration)	1
15	9S2125	PANEL	1
16	9S4693	CIRCUIT BREAKER	1
17	5L4507	SCREW	2
18	8M7892	AMMETER	1

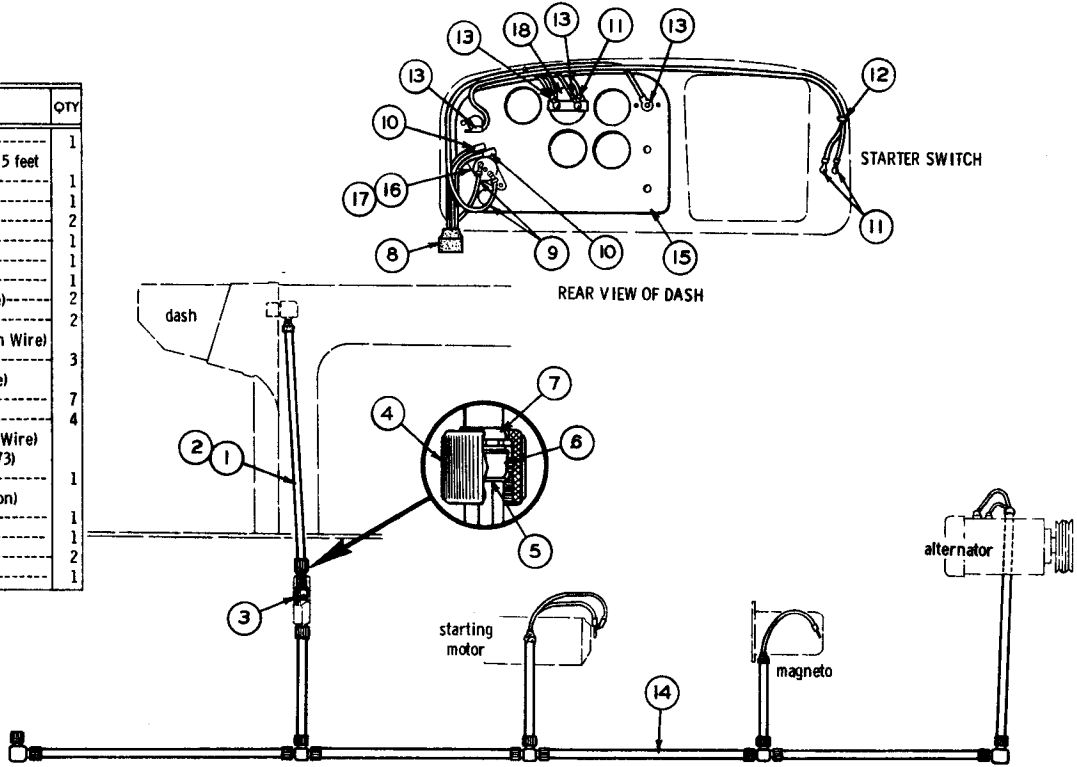

REF. NO.	PART NUMBER	DESCRIPTION	QTY
1	2S3163	PLUG	1
2	1S7837	TERMINAL	2
3	4S8760	TUBE---------- 1 foot	
▲ 4	9M9664	ELBOW	4
5	4S8782	CONDUIT-(.50" Diameter)-- 9 feet (Use as required)	
6	3S2093	TIE	8
7	8S5210	FERRULE	10
8	2S5061	PLUG ASSEM.	1
9	9M9662	NUT	14
10	8S5784	RING	10
11	1S4915	LINER	10
12	8S5783	LINER	3
13	8S5782	RING	3
14	2L8071	TERMINAL	1
15	2L8076	TERMINAL	1
16	1S2294	BOOT	3
17	4S8751	CONDUIT-(.375" Diameter)- 5 feet (Use as required)	
18	1S6870	LINER	3
▲ 19	9M9661	TEE	6
20	2L8066	TERMINAL	1
21	2L8054	TERMINAL	1

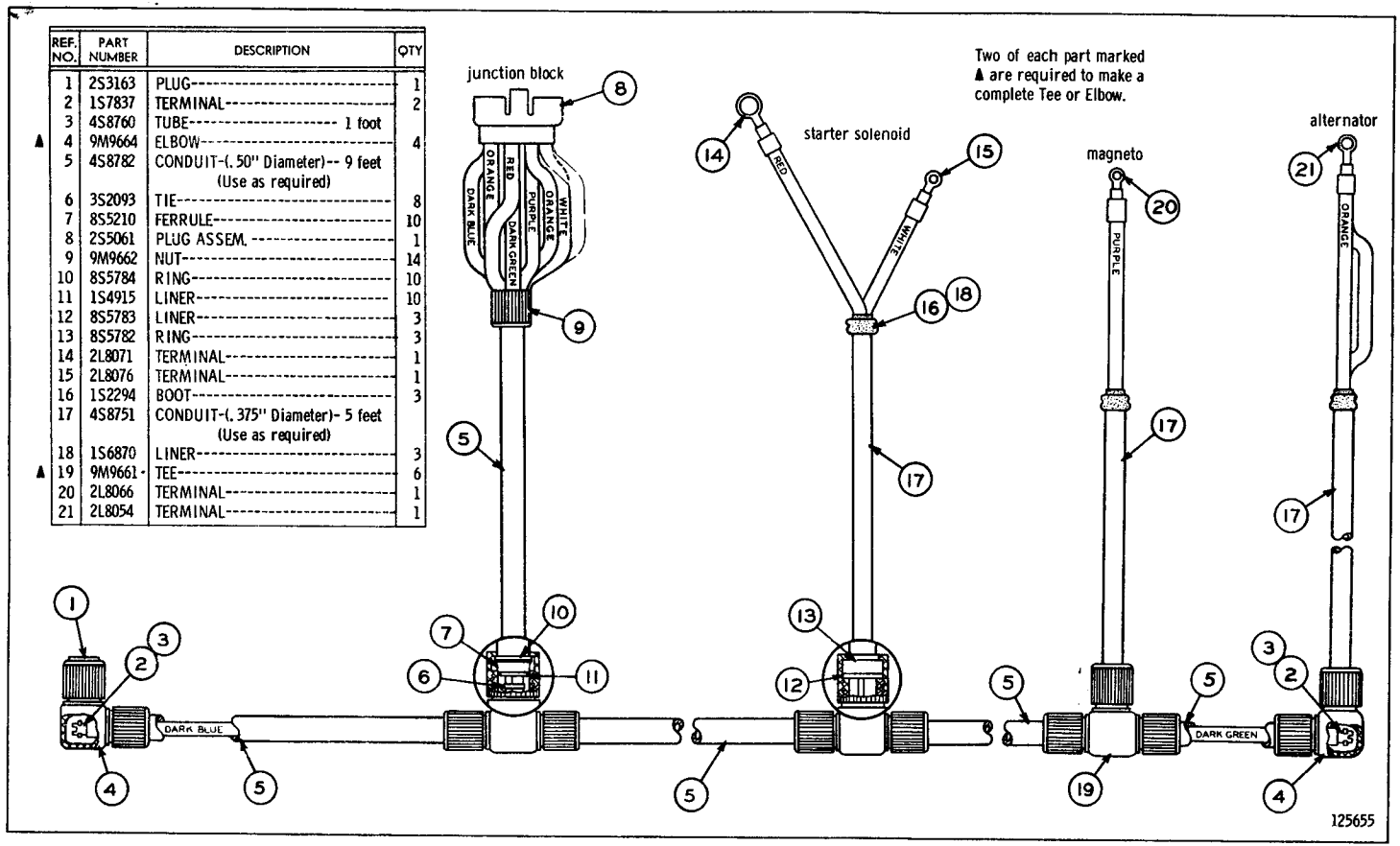

8S6952 WIRING HARNESS ASSEMBLY

Part of 9S2124 Alternator Wiring Group shown on Page 141

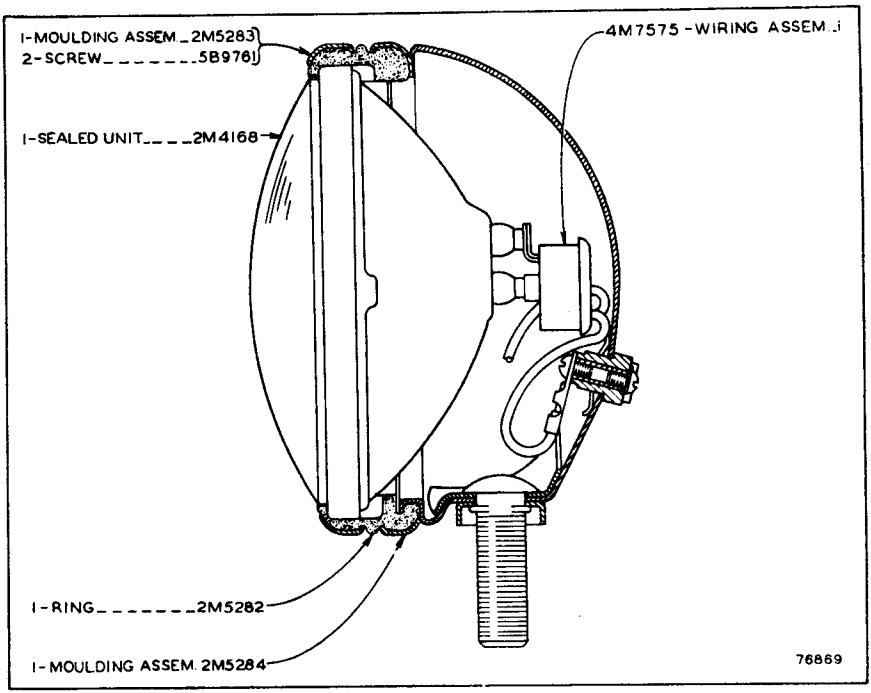

2M856 FLOOD LAMP ASSEMBLY
Part of 2S3431 & 1P1641 Lighting Systems shown on Pages 145 & 147

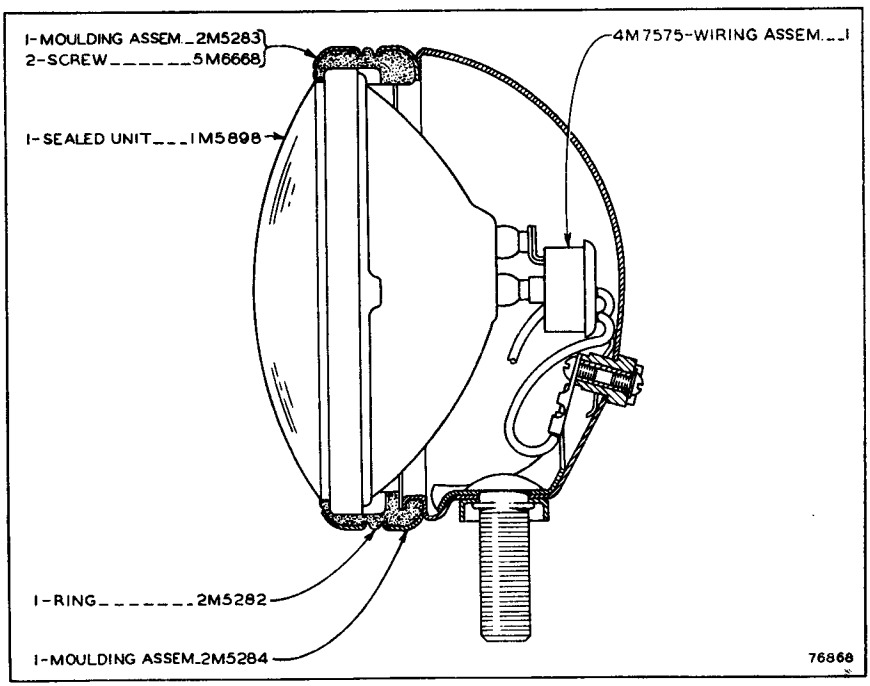

1M1882 FLOOD LAMP ASSEMBLY
Part of 5S8743 & 1P1640 Lighting Systems shown on Page 149 & 151

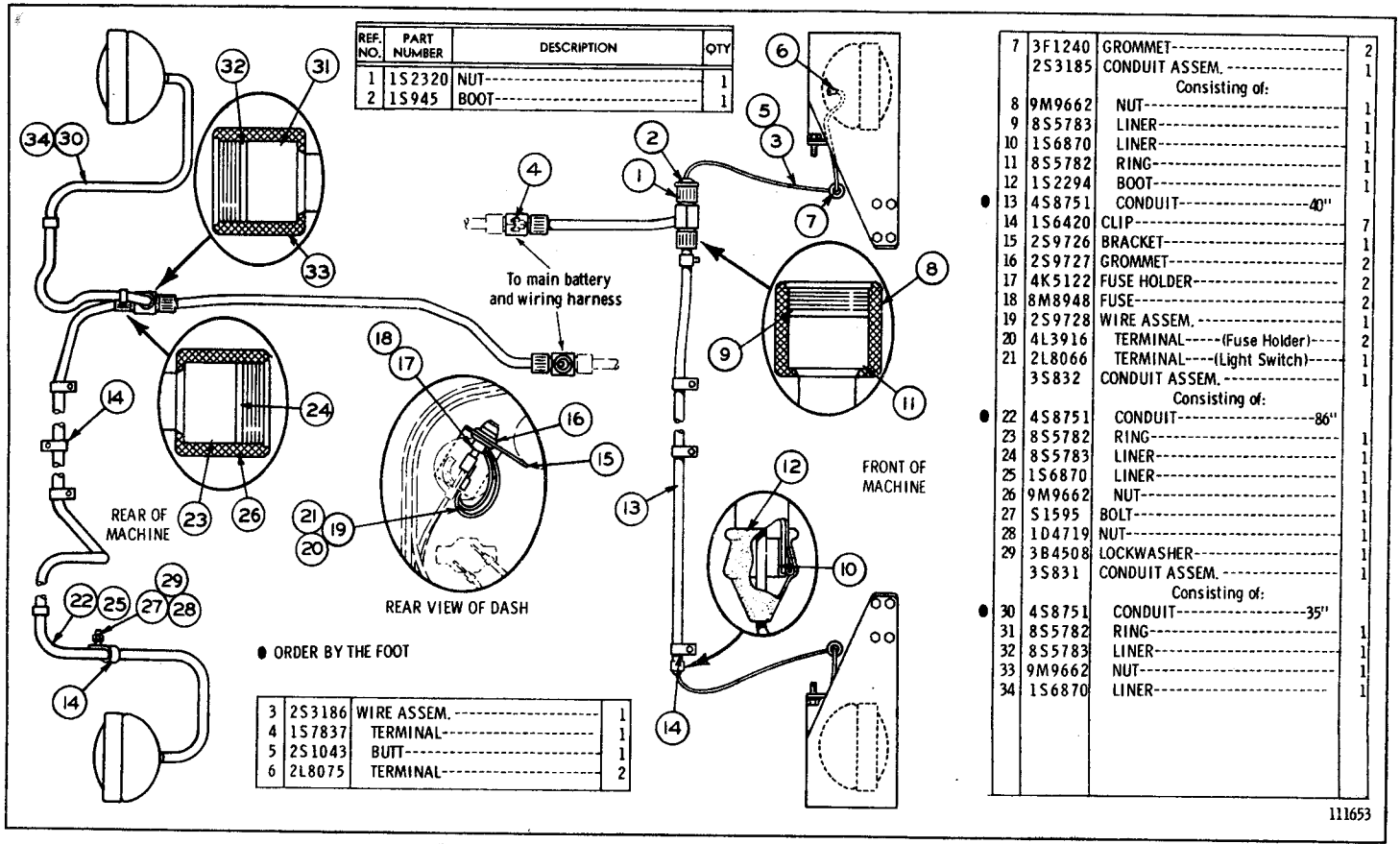

REF. NO.	PART NUMBER	DESCRIPTION	QTY
1	1S2320	NUT	1
2	1S945	BOOT	1

3	2S3186	WIRE ASSEM.	1
4	1S7837	TERMINAL	1
5	2S1043	BUTT	1
6	2L8075	TERMINAL	2

7	3F1240	GROMMET	2
	2S3185	CONDUIT ASSEM.	1
		Consisting of:	
8	9M9662	NUT	1
9	8S5783	LINER	1
10	1S6870	LINER	1
11	8S5782	RING	1
12	1S2294	BOOT	1
● 13	4S8751	CONDUIT--40"	
14	1S6420	CLIP	7
15	2S9726	BRACKET	1
16	2S9727	GROMMET	2
17	4K5122	FUSE HOLDER	2
18	8M8948	FUSE	2
19	2S9728	WIRE ASSEM.	1
20	4L3916	TERMINAL--(Fuse Holder)	2
21	2L8066	TERMINAL--(Light Switch)	1
	3S832	CONDUIT ASSEM.	1
		Consisting of:	
● 22	4S8751	CONDUIT--86"	
23	8S5782	RING	1
24	8S5783	LINER	1
25	1S6870	LINER	1
26	9M9662	NUT	1
27	S1595	BOLT	1
28	1D4719	NUT	1
29	3B4508	LOCKWASHER	1
	3S831	CONDUIT ASSEM.	1
		Consisting of:	
● 30	4S8751	CONDUIT--35"	
31	8S5782	RING	1
32	8S5783	LINER	1
33	9M9662	NUT	1
34	1S6870	LINER	1

2S3431 LIGHTING SYSTEM--12 Volt, 4 Lamp--Part 1

2S3431 LIGHTING SYSTEM—12 Volt, 4 Lamp—Part 2

2M856 Lamp parts are shown on Page 143

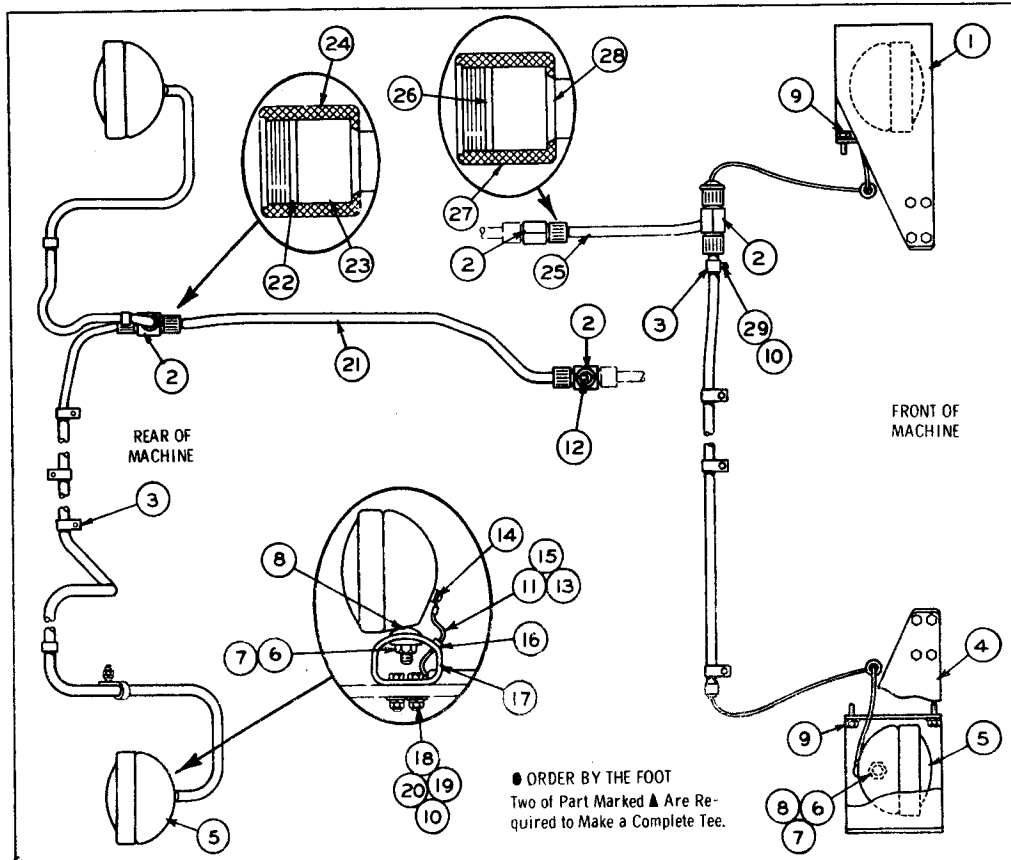

REF. NO.	PART NUMBER	DESCRIPTION	QTY
1	1M3070	GUARD ASSEM. ------(L. H.)------	1
2	9M9661	TEE----------	8
3	8M2773	CLIP----------	6
4	1M3069	GUARD ASSEM. ------(R. H.)------	1
5	2M856	LAMP ASSEM. ----------	4
		(See Separate Illustration)	
6	1B4206	NUT----------	4
7	3B4510	LOCKWASHER----------	4
8	2B8352	WASHER----------	8
9	9S2087	SCREW----------	12
10	3B4506	LOCKWASHER----------	10
11	2S3169	WIRE ASSEM. ----------	1
12	1S7837	TERMINAL----------	1
13	2S1043	BUTT----------	1
14	2L8075	TERMINAL----------	2
15	1S2294	BOOT----------	2
16	9H5156	GROMMET----------	2
17	1S1888	BRACKET----------	2
18	2A4996	BOLT----------	8
19	1B4203	NUT----------	8
20	4B5271	WASHER----------	8
	2S3168	CONDUIT ASSEM. ----------	1
		Consisting of:	
● 21	4S8751	CONDUIT----------29"	
22	8S5783	LINER----------	2
23	8S5782	RING----------	2
24	9M9662	NUT----------	2
	2S3187	CONDUIT ASSEM. ----------	1
		Consisting of:	
● 25	4S8751	CONDUIT----------46"	
26	8S5783	LINER----------	2
27	9M9662	NUT----------	2
28	8S5782	RING----------	2
29	T102	BOLT----------	2

111654

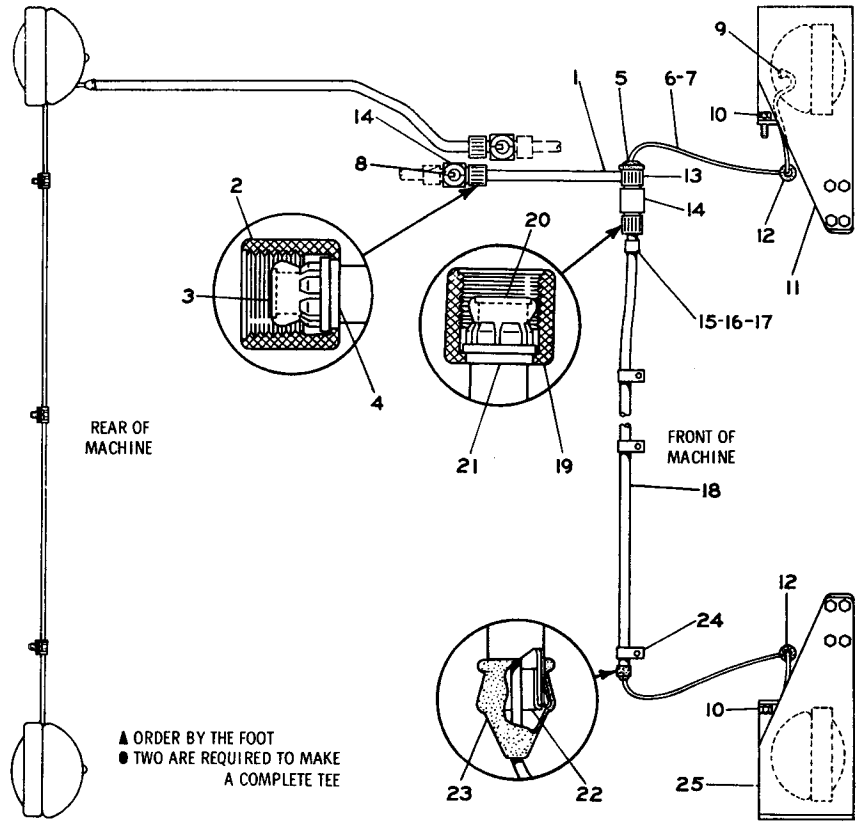

REF. NO.	PART NUMBER	DESCRIPTION	QTY
	2S3187	CONDUIT ASSEM.	1
		Consisting of:	
▲ 1	4S8751	CONDUIT--46"	
2	9M9662	NUT	2
3	8S5783	LINER	2
4	8S5782	RING	2
5	1S945	BOOT	1
6	2S3186	WIRE ASSEM.	1
7	2S1043	BUTT	1
8	1S7837	TERMINAL	1
9	2L8075	TERMINAL	2
		(Parts of 2S3186 Assem.)	
10	9S2087	SCREW	12
11	1M3070	GUARD ASSEM.--(L. H.)	1
12	3F1240	GROMMET	2
13	1S2320	NUT	1
● 14	9M9661	TEE	4
15	8M2773	CLIP	2
16	T102	BOLT	2
17	3B4506	LOCKWASHER	2
	2S3185	CONDUIT ASSEM.	1
		Consisting of:	
▲ 18	4S8751	CONDUIT--39.50"	
19	9M9662	NUT	1
20	8S5783	LINER	1
21	8S5782	RING	1
22	1S6870	LINER	1
23	1S2294	BOOT	1
24	1S6420	CLIP	5
25	1M3069	GUARD ASSEM.--(R. H.)	1

1P1641 LIGHTING SYSTEM—12 Volt, 4 Lamp—Part 1
FOR USE WITH ROLL-OVER PROTECTIVE STRUCTURE

1P1641 LIGHTING SYSTEM—12 Volt, 4 Lamp—Part 2
FOR USE WITH ROLL-OVER PROTECTIVE STRUCTURE

2M856 Lamp parts are shown on Page 143

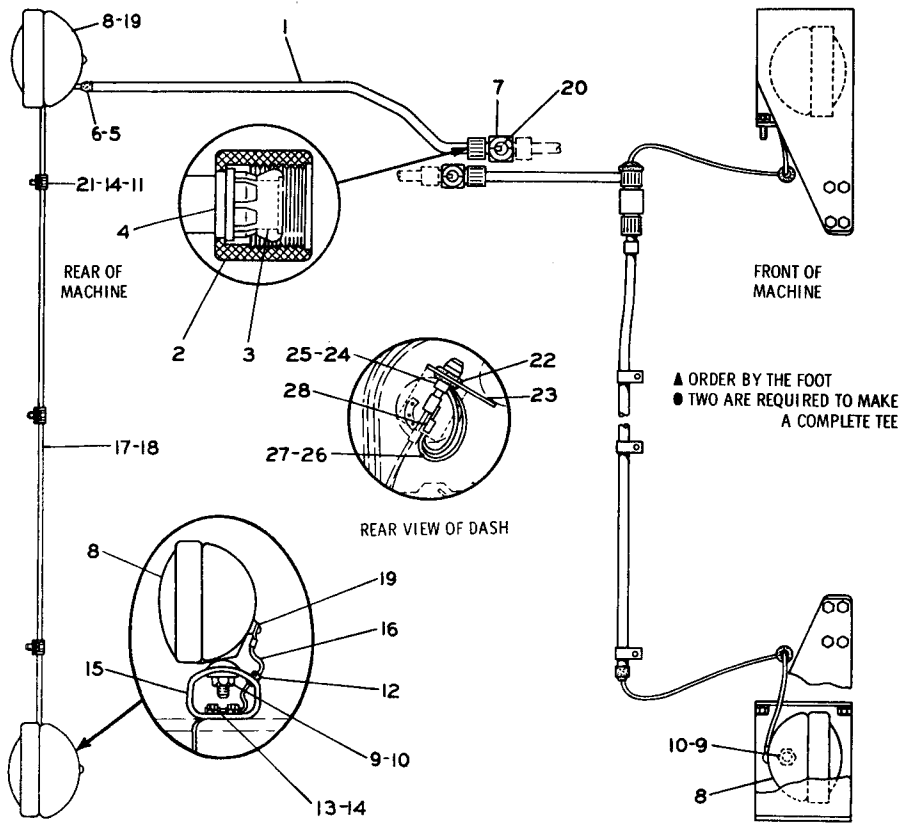

REF. NO.	PART NUMBER	DESCRIPTION	QTY
	2S3185	CONDUIT ASSEM. Consisting of:	1
▲ 1	4S8751	CONDUIT---39.50"	
2	9M9662	NUT	1
3	8S5783	LINER	1
4	8S5782	RING	1
5	1S6870	LINER	1
6	1S2294	BOOT	1
● 7	9M9661	TEE	2
8	2M856	LAMP ASSEM. (See Separate Illustration)	4
9	1B4206	NUT	4
	3B4510	LOCKWASHER	4
10	2B8352	WASHER	8
11	1H5166	CLIP	5
12	9H5156	GROMMET	2
13	S1594	BOLT	8
14	3B4506	LOCKWASHER	11
15	1S1888	BRACKET	2
16	1P1642	WIRE ASSEM.	1
▲ 17	4S8760	TUBE---95"	
	2S1043	BUTT	1
18	3S2093	TIE	6
19	2L8075	TERMINAL	2
20	1S7837	TERMINAL (Parts of 1P1642 Assem.)	1
21	T102	BOLT	3
22	2S9727	GROMMET	2
23	2S9726	BRACKET	1
24	4K5122	FUSE HOLDER	2
25	8M8948	FUSE---(15 Amps)	2
26	2S9728	WIRE ASSEM.	1
27	4L3916	TERMINAL--(Fuse Holder)	2
28	2L8057	TERMINAL---(Light-Switch) (Parts of 2S9728 Assem.)	1

130512

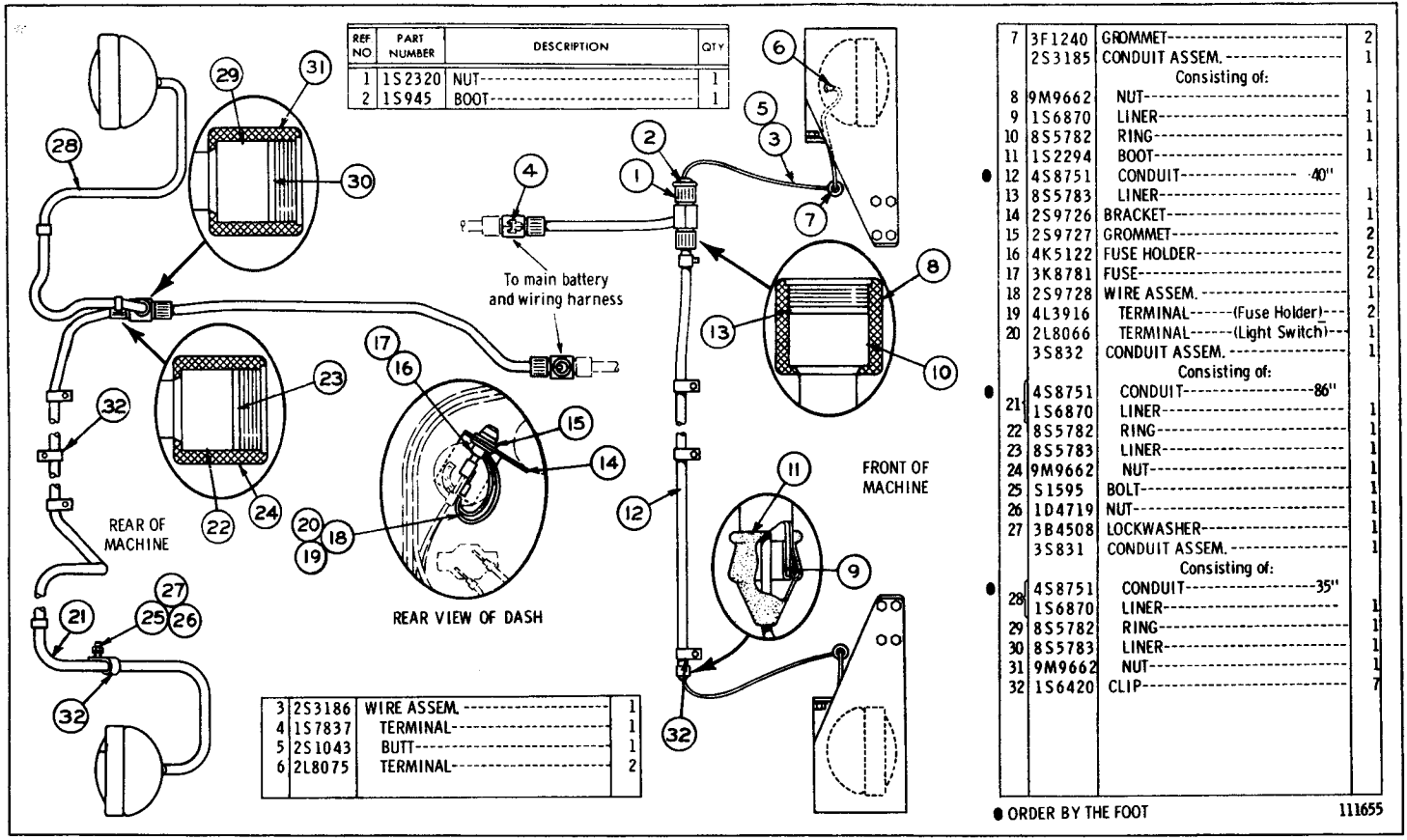

REF NO	PART NUMBER	DESCRIPTION	QTY
1	1S2320	NUT	1
2	1S945	BOOT	1

3	2S3186	WIRE ASSEM.	1
4	1S7837	TERMINAL	1
5	2S1043	BUTT	1
6	2L8075	TERMINAL	2

7	3F1240	GROMMET	2
	2S3185	CONDUIT ASSEM.	1
		Consisting of:	
8	9M9662	NUT	1
9	1S6870	LINER	1
10	8S5782	RING	1
11	1S2294	BOOT	1
• 12	4S8751	CONDUIT 40"	
13	8S5783	LINER	1
14	2S9726	BRACKET	1
15	2S9727	GROMMET	2
16	4K5122	FUSE HOLDER	2
17	3K8781	FUSE	2
18	2S9728	WIRE ASSEM.	1
19	4L3916	TERMINAL (Fuse Holder)	2
20	2L8066	TERMINAL (Light Switch)	1
	3S832	CONDUIT ASSEM.	1
		Consisting of:	
• 21	4S8751	CONDUIT 86"	
	1S6870	LINER	1
22	8S5782	RING	1
23	8S5783	LINER	1
24	9M9662	NUT	1
25	S1595	BOLT	1
26	1D4719	NUT	1
27	3B4508	LOCKWASHER	1
	3S831	CONDUIT ASSEM.	1
		Consisting of:	
• 28	4S8751	CONDUIT 35"	
	1S6870	LINER	1
29	8S5782	RING	1
30	8S5783	LINER	1
31	9M9662	NUT	1
32	1S6420	CLIP	7

• ORDER BY THE FOOT

111655

5S8743 LIGHTING SYSTEM—24 Volt, 4 Lamp—Part 1

5S8743 LIGHTING SYSTEM—24 Volt, 4 Lamp—Part 2

1M1882 Lamp parts are shown on Page 143

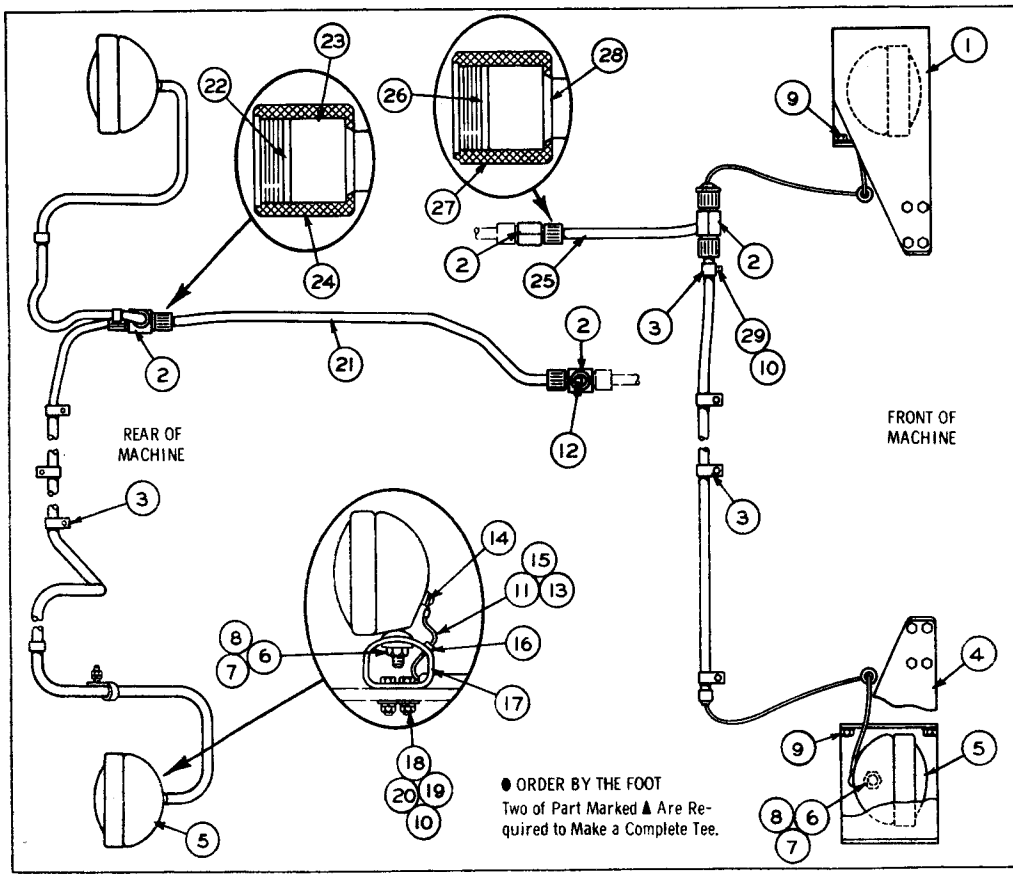

REF. NO.	PART NUMBER	DESCRIPTION	QTY.
1	1M3070	GUARD ASSEM. -----(Left Hand)---	1
▲ 2	9M9661	TEE----------	8
3	8M2773	CLIP----------	6
4	1M3069	GUARD ASSEM. ----(Right Hand)---	1
5	1M1882	LAMP ASSEM. ---------- (See Separate Illustration)	4
6	1B4206	NUT----------	4
7	3B4510	LOCKWASHER----------	4
8	2B8352	WASHER----------	8
9	9S2087	SCREW----------	12
10	3B4506	LOCKWASHER----------	10
11	2S3169	WIRE ASSEM. ----------	1
12	1S7837	TERMINAL----------	1
13	2S1043	BUTT----------	1
14	2L8075	TERMINAL---------- (Parts of 2S3169 Wire Assem.)	2
15	1S2294	BOOT----------	2
16	9H5156	GROMMET----------	2
17	1S1888	BRACKET----------	2
18	2A4996	BOLT----------	8
19	1B4203	NUT----------	8
20	4B5271	WASHER----------	8
	2S3168	CONDUIT ASSEM. ---------- Consisting of:	1
● 21	4S8751	CONDUIT----------29"	
22	8S5783	LINER----------	2
23	8S5782	RING----------	2
24	9M9662	NUT----------	2
	2S3187	CONDUIT ASSEM. ---------- Consisting of:	1
● 25	4S8751	CONDUIT----------46"	
26	8S5783	LINER----------	2
27	9M9662	NUT----------	2
28	8S5782	RING----------	2
29	T 102	BOLT----------	2

111656

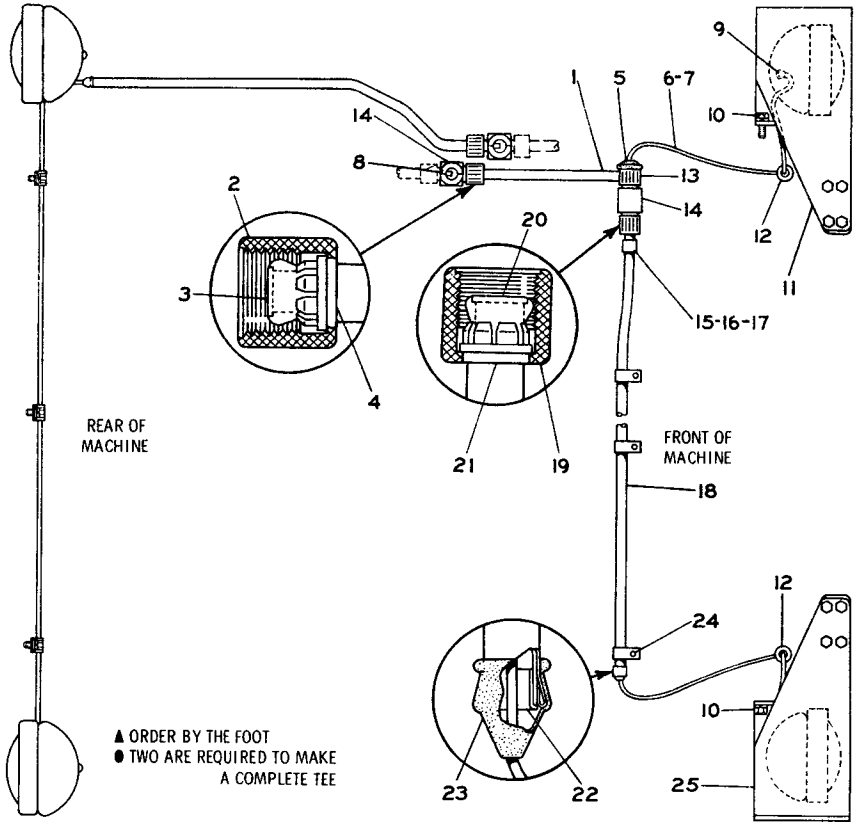

REF. NO.	PART NUMBER	DESCRIPTION	QTY
	2S3187	CONDUIT ASSEM.	1
		Consisting of:	
▲ 1	4S8751	CONDUIT--46"	
2	9M9662	NUT	2
3	8S5783	LINER	2
4	8S5782	RING	2
5	1S945	BOOT	1
6	2S3186	WIRE ASSEM.	1
7	2S1043	BUTT	1
8	1S7837	TERMINAL	1
9	2L8075	TERMINAL	2
		(Parts of 2S3186 Assem.)	
10	9S2087	SCREW	12
11	1M3070	GUARD ASSEM. --(L. H.)--	1
12	3F1240	GROMMET	2
13	1S2320	NUT	1
● 14	9M9661	TEE	4
15	8M2773	CLIP	2
16	T102	BOLT	2
17	3B4506	LOCKWASHER	2
	2S3185	CONDUIT ASSEM.	1
		Consisting of:	
▲ 18	4S8751	CONDUIT--39.50"	
19	9M9662	NUT	1
20	8S5783	LINER	1
21	8S5782	RING	1
22	1S6870	LINER	1
23	1S2294	BOOT	1
24	1S6420	CLIP	5
25	1M3069	GUARD ASSEM. --(R. H.)--	1

1P1640 LIGHTING SYSTEM--24 Volt, 4 Lamp--Part 1
FOR USE WITH ROLL-OVER PROTECTIVE STRUCTURE

1P1640 LIGHTING SYSTEM—24 Volt, 4 Lamp—Part 2
FOR USE WITH ROLL-OVER PROTECTIVE STRUCTURE

1M1882 Lamp parts are shown on Page 143

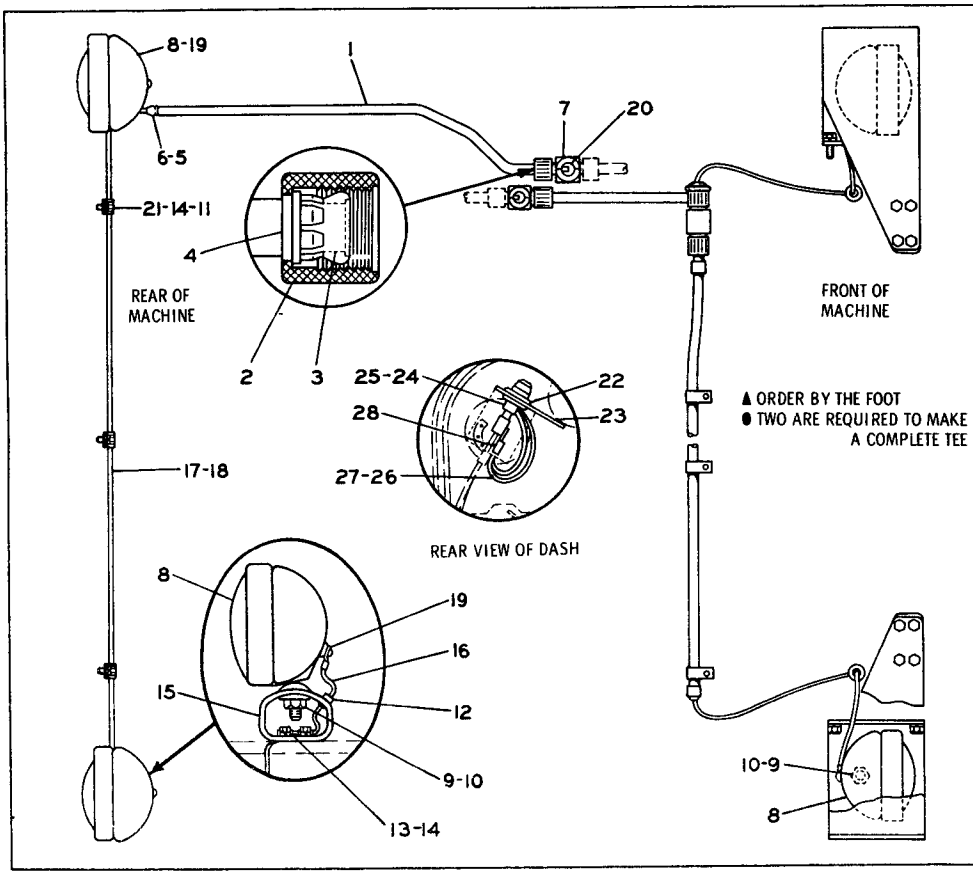

REF. NO.	PART NUMBER	DESCRIPTION	QTY
	2S3185	CONDUIT ASSEM.	1
		Consisting of:	
▲ 1	4S8751	CONDUIT----------39.50"	
2	9M9662	NUT	1
3	8S5783	LINER	1
4	8S5782	RING	1
5	1S6870	LINER	1
6	1S2294	BOOT	1
● 7	9M9661	TEE	2
8	1M1882	LAMP ASSEM.	4
		(See Separate Illustration)	
9	1B4206	NUT	4
	3B4510	LOCKWASHER	4
10	2B8352	WASHER	8
11	1H5166	CLIP	5
12	9H5156	GROMMET	2
13	S1594	BOLT	8
14	3B4506	LOCKWASHER	11
15	1S1888	BRACKET	2
16	1P1642	WIRE ASSEM.	1
▲ 17	4S8760	TUBE----------95"	
	2S1043	BUTT	1
18	3S2093	TIES	6
19	2L8075	TERMINAL	2
20	1S7837	TERMINAL	1
		(Parts of 1P1642 Assem.)	
21	T102	BOLT	3
22	2S9727	GROMMET	2
23	2S9726	BRACKET	1
24	4K5122	FUSE HOLDER	2
25	3K8781	FUSE	2
26	2S9728	WIRE ASSEM.	1
27	4L3916	TERMINAL--(Fuse Holder)	2
28	2L8057	TERMINAL---(Light-Switch)	1
		(Parts of 2S9728 Assem.)	

130510

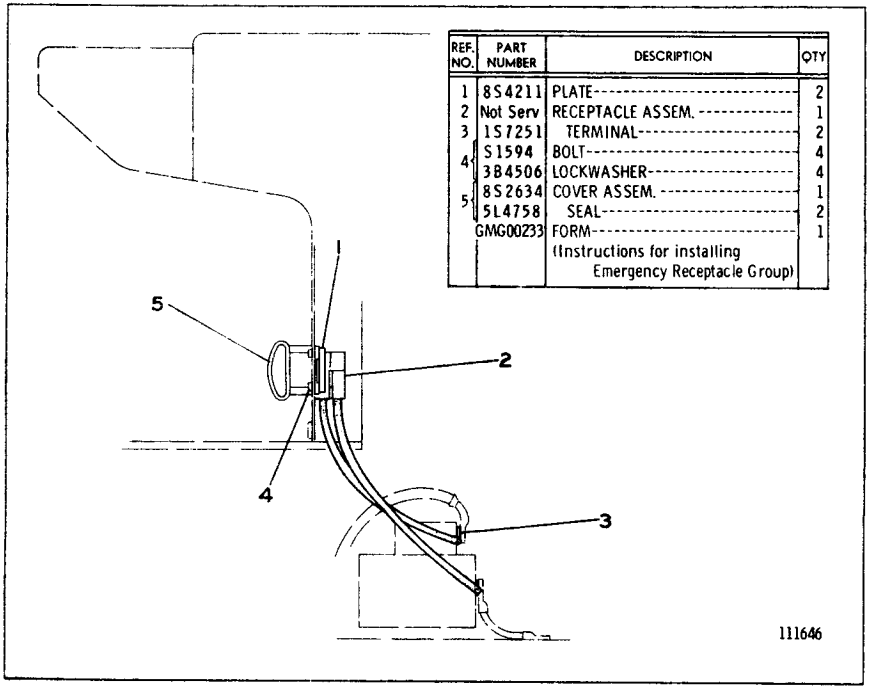

REF. NO.	PART NUMBER	DESCRIPTION	QTY
1	8S4211	PLATE	2
2	Not Serv	RECEPTACLE ASSEM.	1
3	1S7251	TERMINAL	2
4	S1594	BOLT	4
	3B4506	LOCKWASHER	4
5	8S2634	COVER ASSEM.	1
	5L4758	SEAL	2
	GMG00233	FORM (Instructions for installing Emergency Receptacle Group)	1

9S8314 EMERGENCY STARTING RECEPTACLE GROUP

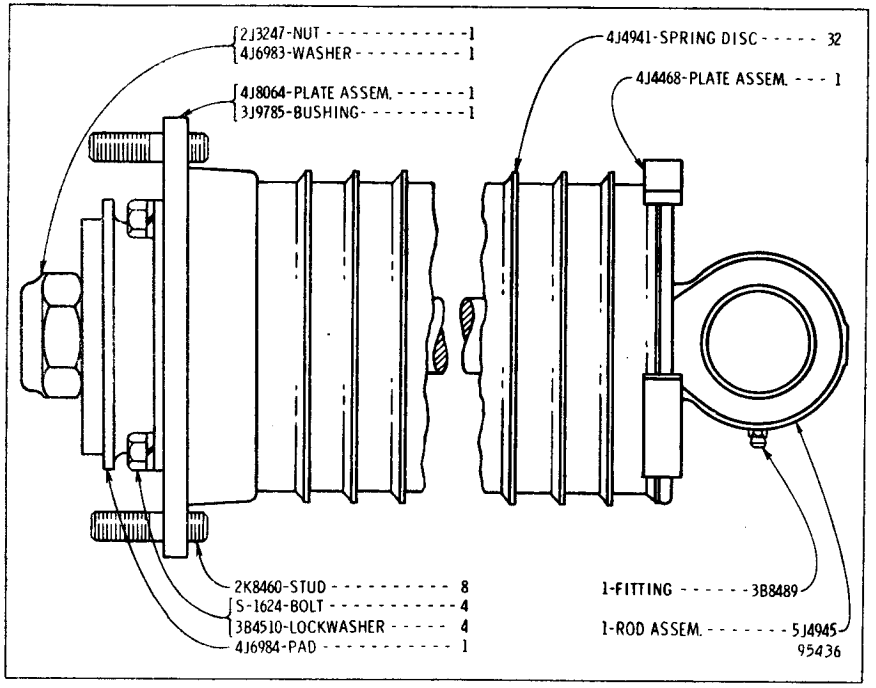

5J4946 SPRING GROUP
Part of 6J1838 Push Plate Group

6J1838 CUSHIONED PUSH PLATE GROUP

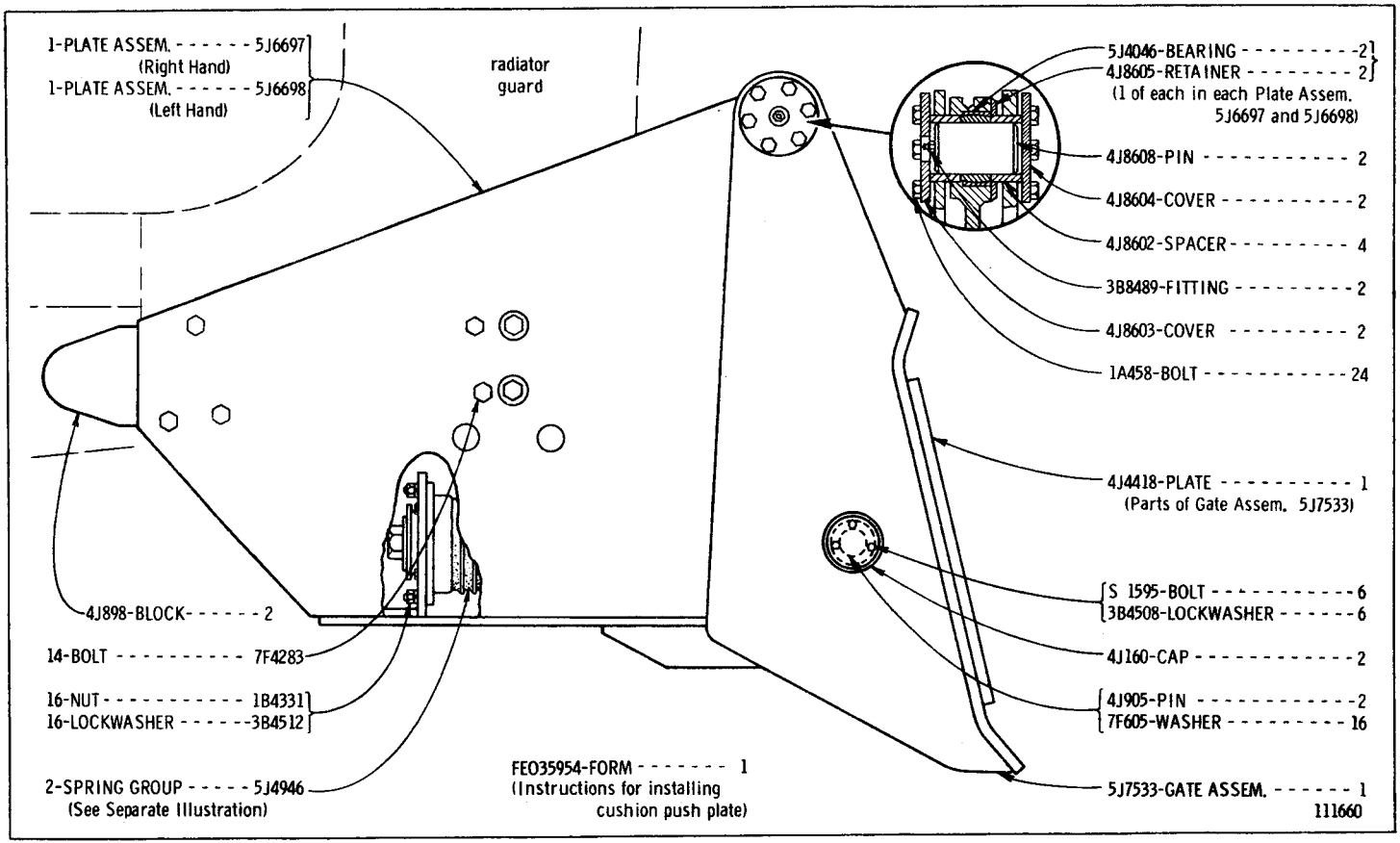

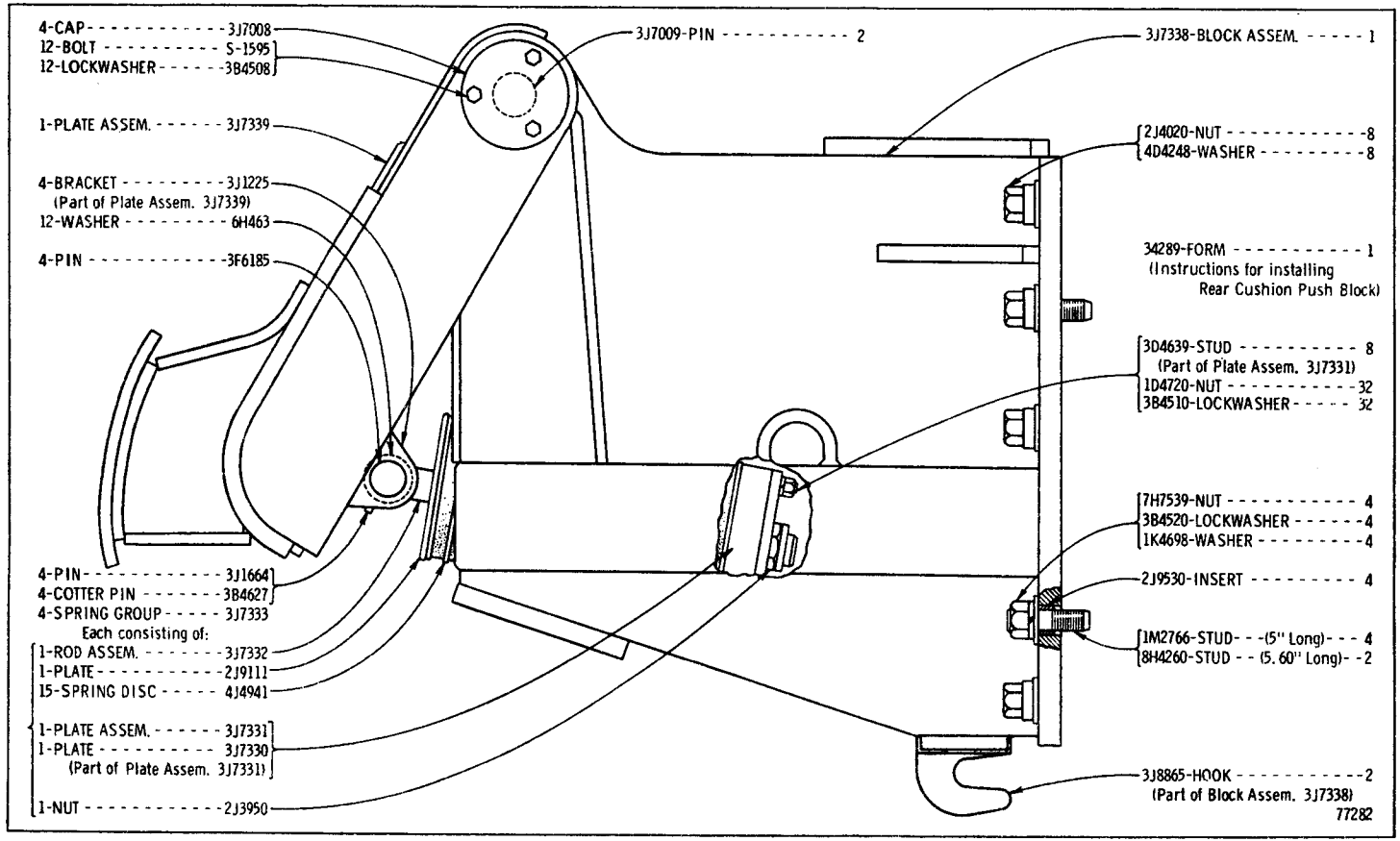

3J8148 PUSH BLOCK GROUP
FOR USE WITH 8C BULLDOZER OR PUSH PLATE

5J4843 PUSH BLOCK GROUP
CANNOT BE USED WITH REAR CABLE CONTROL
5J4953 Spring parts are shown on Page 156

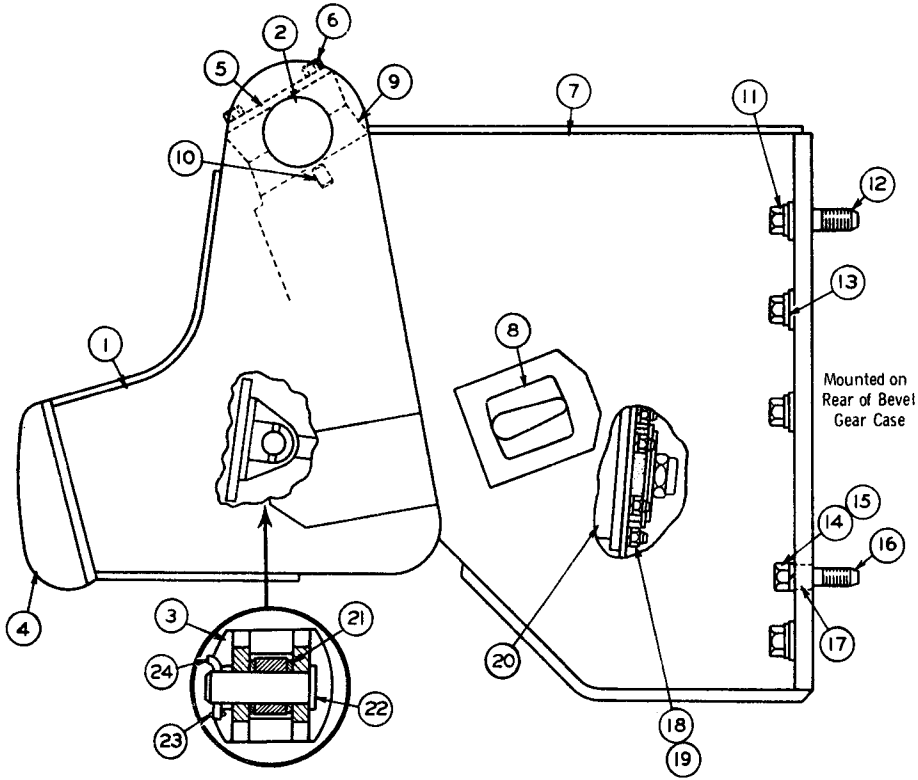

REF NO	PART NUMBER	DESCRIPTION	QTY
1	5J4841	PLATE ASSEM.	1
2	5J4817	TRUNNION	2
3	3J1225	BRACKET	2
4	6J4870	BLOCK (Push)	1
		(Parts of Plate Assem. 5J4841)	
5	5J4840	CAP	2
6	4J8622	BOLT	12
7	5J6536	BLOCK ASSEM.	1
8	3J8865	HOOK	2
9	5J4831	CAP	2
10	2B2994	DOWEL	2
		(Parts of Block Assem. 5J6536)	
11	2J4020	NUT	8
12	9S7479	STUD	2
13	4D4248	WASHER	8
14	7H7539	NUT	4
15	3B4520	LOCKWASHER	4
16	1M2766	STUD	4
17	2J9530	INSERT	4
18	1B4331	NUT	16
19	3B4512	LOCKWASHER	16
20	5J4953	SPRING GROUP	2
		(See Separate Illustration)	
21	6H463	WASHER	12
22	3F6185	PIN	2
23	3B4627	COTTER PIN	2
24	4J6901	PIN	2

ONLY "CATERPILLAR" PARTS GIVE "CATERPILLAR" PERFORMANCE

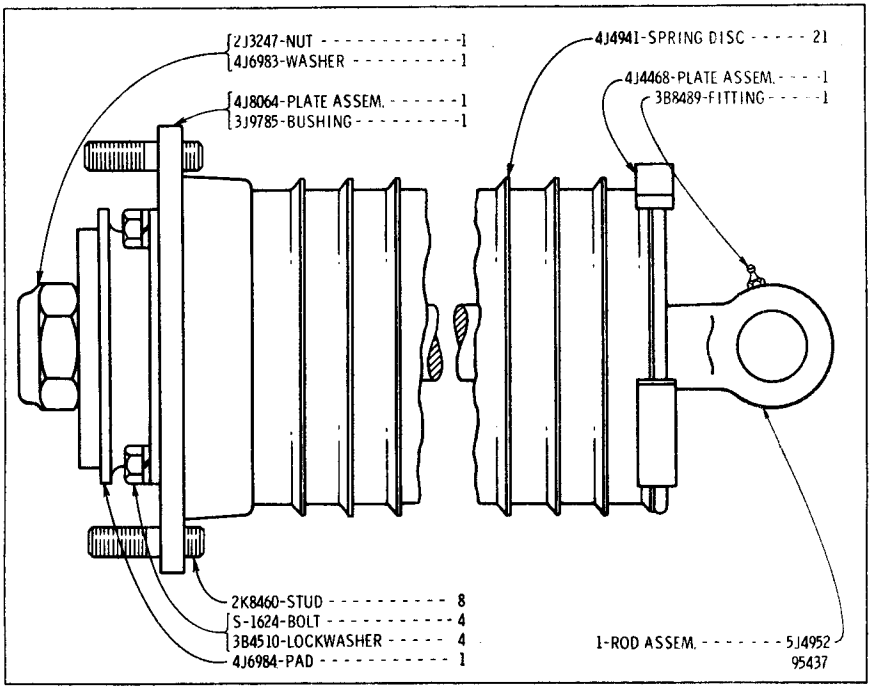

5J4953 SPRING GROUP
Part of 5J4843 Push Block Group shown on Page 155

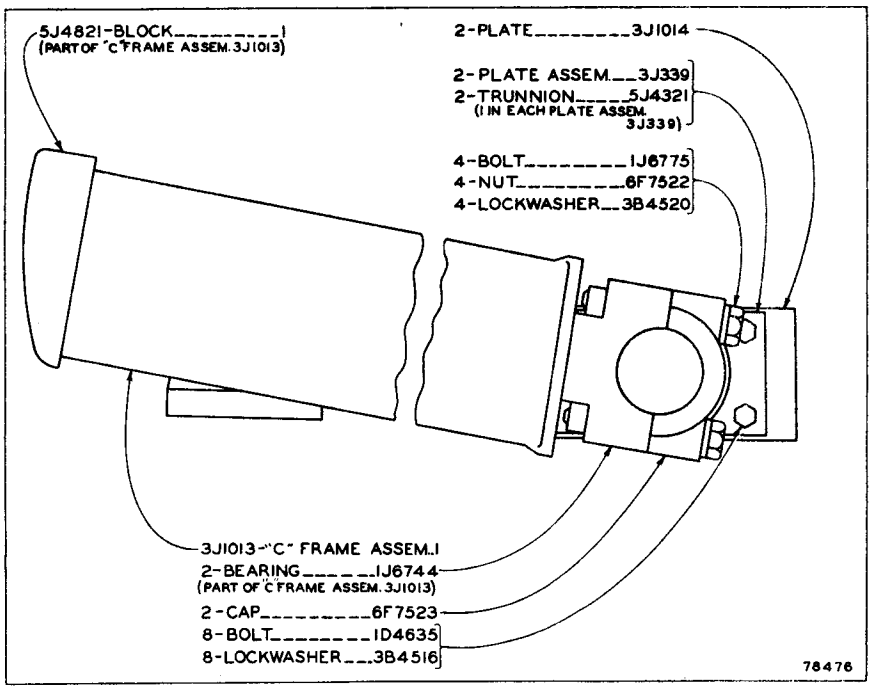

3J1012 C-FRAME GROUP—Tandem Pusher
NOT RECOMMENDED FOR 8C BULLDOZER

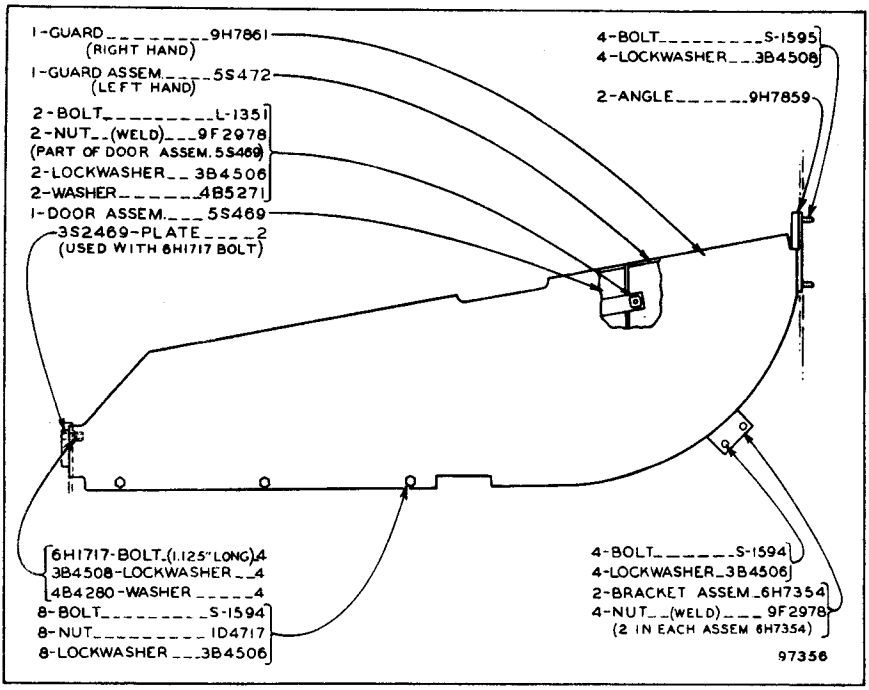

5S473 BRUSH GUARD GROUP
FOR USE WITHOUT HYDRAULIC BULLDOZER

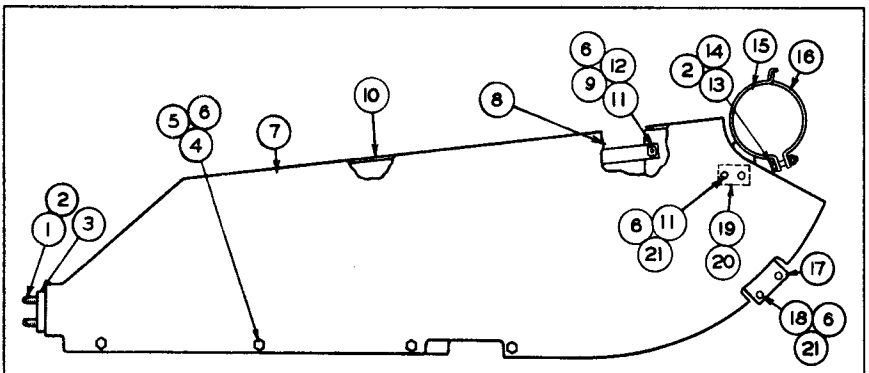

REF NO	PART NUMBER	DESCRIPTION	QTY
1	S-1621	BOLT	4
2	3B4508	LOCKWASHER	6
3	3S2469	PLATE	2
4	S-1594	BOLT	8
5	1D4717	NUT	8
6	3B4506	LOCKWASHER	18
7	3S2467	GUARD--------(Right Hand)--------	1
8	5S478	DOOR ASSEM.	1
9	9F2978	NUT (Part of 5S478 Door Assem.)	2
10	5S476	GUARD ASSEM. ----(Left Hand)----	1
11	L-1351	BOLT	2

REF NO	PART NUMBER	DESCRIPTION	QTY
12	4B5271	WASHER	2
13	S-1579	BOLT	2
14	1B4205	NUT	2
15	3S7336	CLAMP ASSEM.	2
16	3S7334	CLAMP	2
17	6H7354	BRACKET ASSEM.	2
18	S-1591	BOLT	4
19	1S9691	BRACKET ASSEM. --(Right Hand)---	1
20	1S9692	BRACKET ASSEM. ---(Left Hand)----	1
21	9F2978	NUT (2 in each Assem. 1S9691, 1S9692 & 6H7354)	8

97357

5S479 BRUSH GUARD GROUP
FOR USE WITH HYDRAULIC BULLDOZER

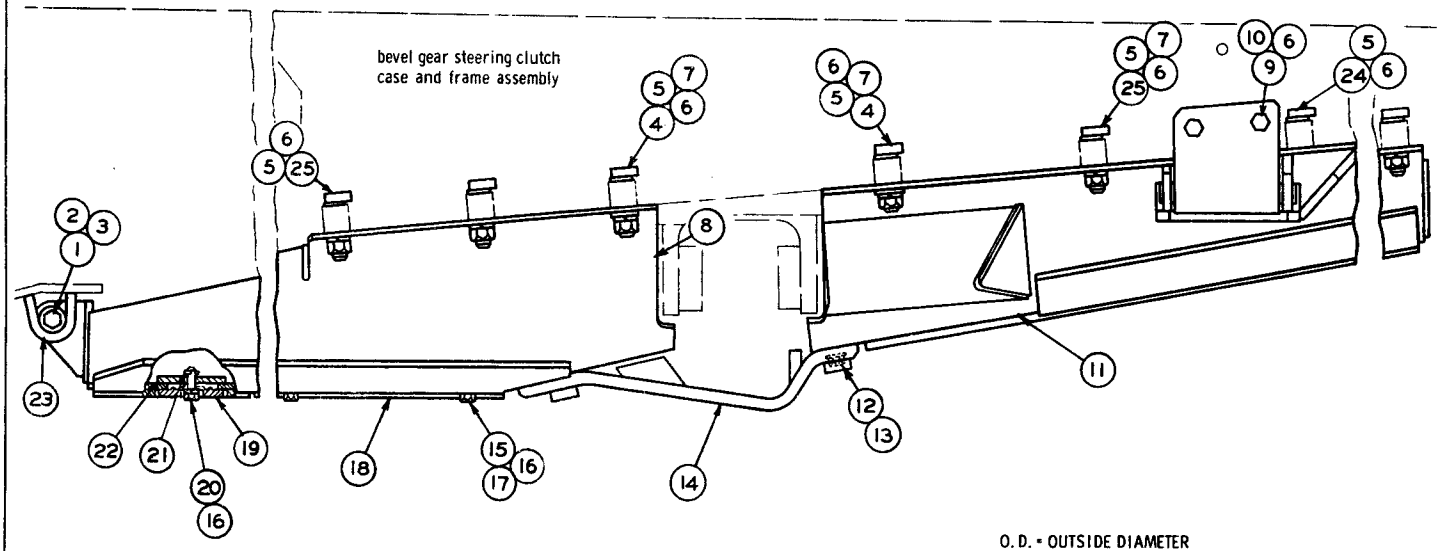

O. D. = OUTSIDE DIAMETER

REF. NO.	PART NUMBER	DESCRIPTION	QTY.
1	L1178	BOLT	2
2	3B4512	LOCKWASHER	2
3	1S7771	SPACER	2
4	4M5131	BOLT-----(4.24" long)-----	4
5	1B4333	NUT	13
	1A1898	WASHER------(1.75" O. D.)------	13
6	3B4516	LOCKWASHER	15
7	4B4285	WASHER------(2.00" O. D.)------	4
8	7S9658	GUARD ASSEM.------(Rear)------	1

REF. NO.	PART NUMBER	DESCRIPTION	QTY.
9	7F4283	BOLT	2
10	1B4209	NUT	2
11	9S9547	GUARD ASSEM. ------(Front)------	1
12	S1973	BOLT	5
13	7M8659	WASHER	5
14	7S9657	GUARD ASSEM.	1
15	6H1717	BOLT	4
16	3B4508	LOCKWASHER	5
17	V531	WASHER	4

18	2S9437	DOOR ASSEM.	1
19	8S8673	COVER	2
20	2S9732	BOLT	1
21	4H5128	PIN----------(Spring)----------	1
22	2S9434	STRIP	2
23	2S9436	BRACKET	2
24	1S1884	BOLT---------(3.75" long)---------	1
25	5S5764	BOLT----------(4" long)----------	8
	FE034474	FORM	1
	FM055162	FORM	1
	(Instructions for installing Crankcase Guard)		

111662

9S9548 CRANKCASE GUARD GROUP—Heavy Duty
FOR USE WHERE EXTREMELY ROUGH OPERATING CONDITIONS EXIST

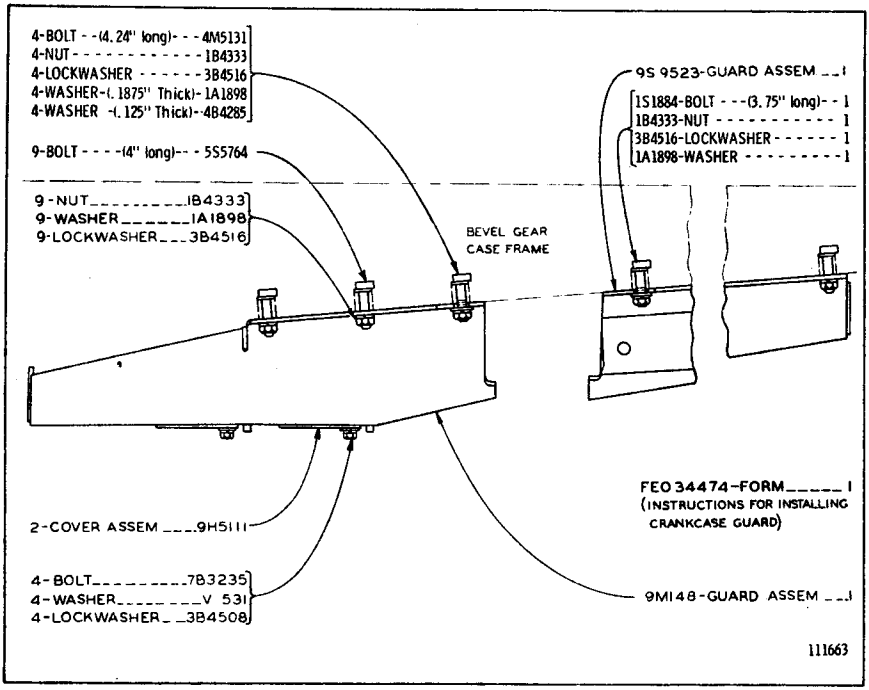

9S9522 CRANKCASE GUARD GROUP

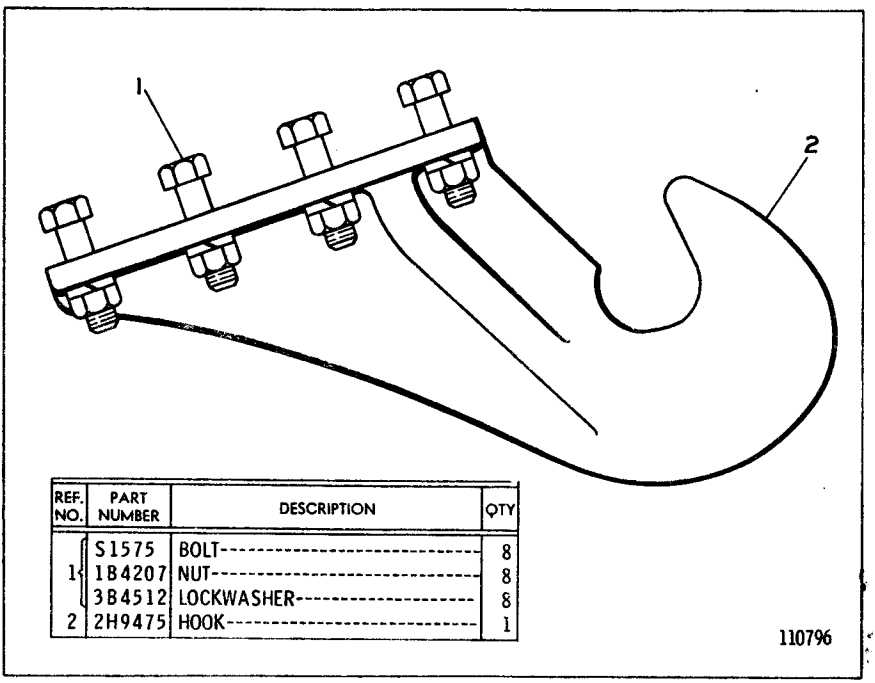

REF. NO.	PART NUMBER	DESCRIPTION	QTY
1	S1575	BOLT	8
	1B4207	NUT	8
	3B4512	LOCKWASHER	8
2	2H9475	HOOK	1

2H9476 FRONT PULL HOOK GROUP
FOR USE WITH CRANKCASE GUARD

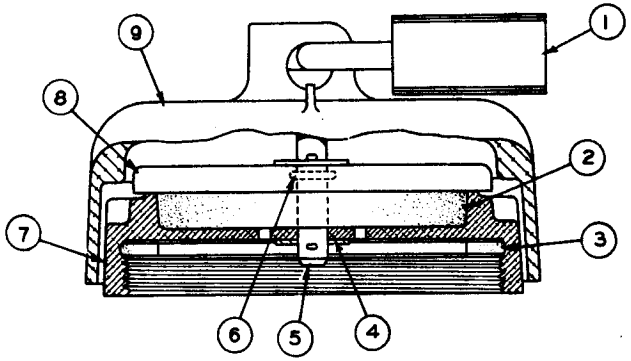

NOTE: FOR SERVICE OF PADLOCK AND KEY ORDER 8S7949 PADLOCK GROUP

▲ NOT PART OF 5S8033 CAP GROUP

REF. NO.	PART NUMBER	DESCRIPTION	QTY
1	Not Serv	PADLOCK	1
▲	8M439	KEY---------(Not Shown)---------	2
2	5S7657	FILTER	1
3	2A1763	GASKET	1
4	4J1105	SHIM	2
5	5S7651	PIN	1
	3B4605	COTTER PIN	2
6	5F9144	SEAL	1
7	5S8006	CAP	1
8	5S7646	LID	1
9	5S7998	COVER	1

124127

5S8033 PROTECTION COVER GROUP—Fuel Tank Cap
Only spearate parts serviced. When complete Group is required order 1P8678

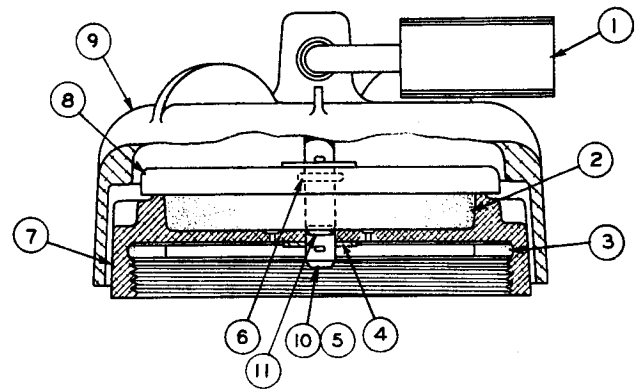

NOTE: FOR SERVICE OF PADLOCK AND KEY ORDER 8S7949 PADLOCK GROUP

▲ NOT PART OF 1P8678 CAP GROUP

REF. NO.	PART NUMBER	DESCRIPTION	QTY
1	Not Serv	PADLOCK	1
▲	8M439	KEY---------(Not Shown)---------	2
2	5S7657	FILTER	1
3	2A1763	GASKET	1
4	4J1105	SHIM	2
5	3B4605	COTTER PIN	2
6	5F9144	SEAL	1
7	1P8680	CAP	1
8	5S7646	LID	1
9	1P8050	COVER ASSEM.	1
	1P8052	RETAINER	1
10	1P8679	PIN	1
11	8F9538	SEAL	1

111574

1P8678 PROTECTION COVER GROUP—Fuel Tank Cap

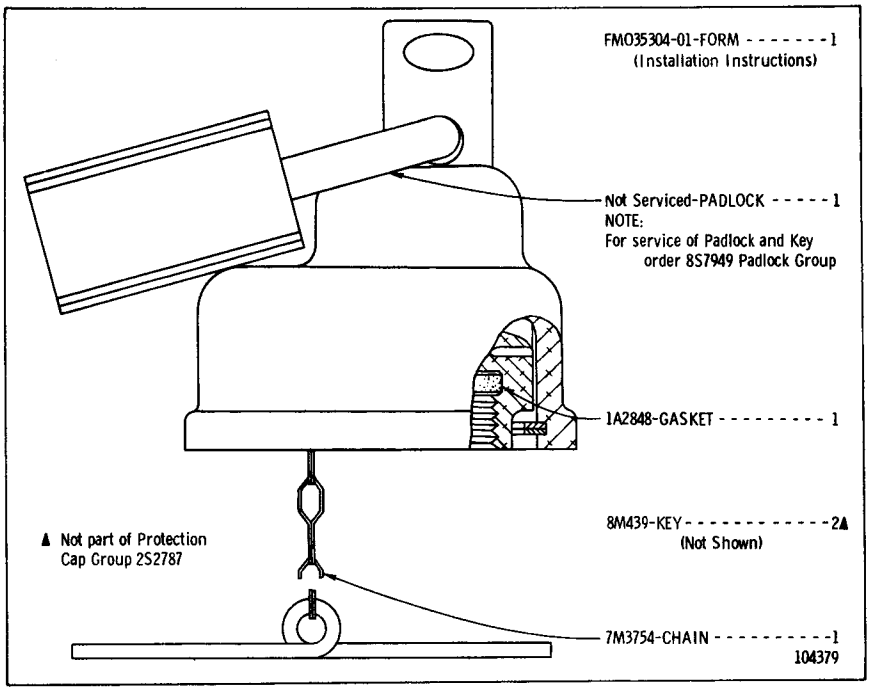

2S2787 PROTECTION COVER GROUP—Fuel Tank Cap

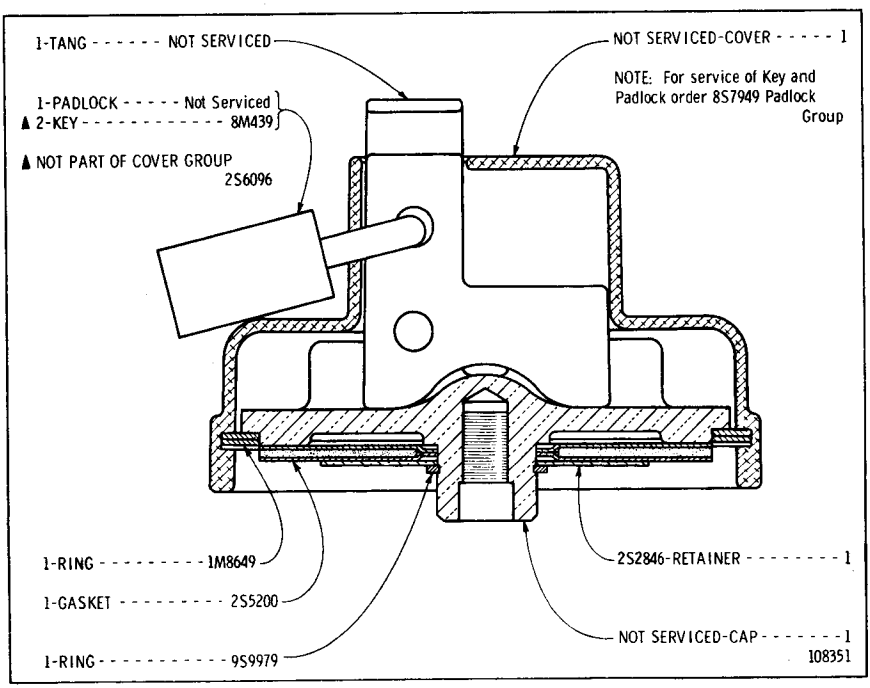

2S6096 PROTECTION COVER GROUP—Radiator Cap

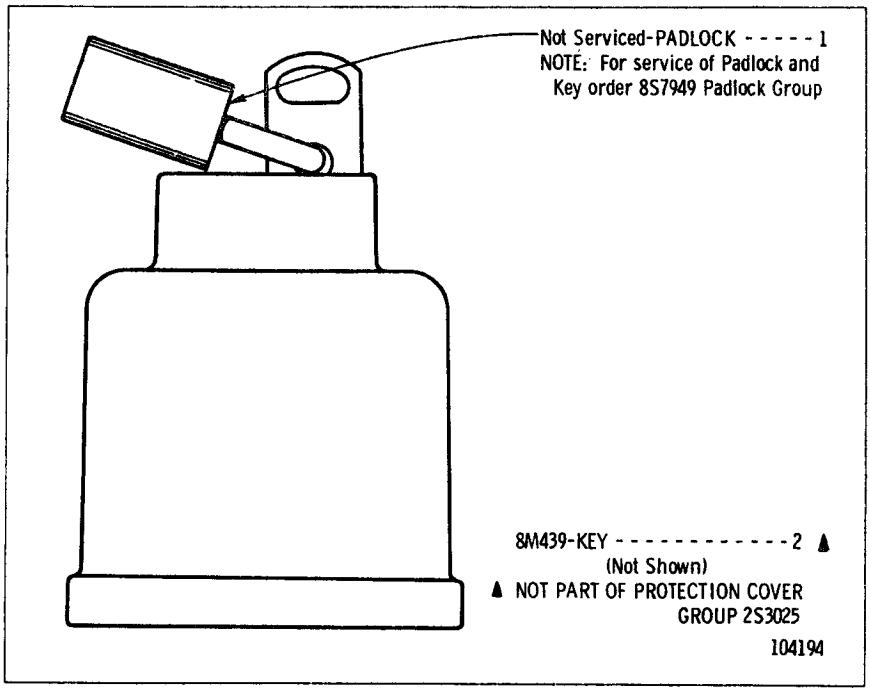

2S3025 PROTECTION COVER GROUP—Oil Filler Cap

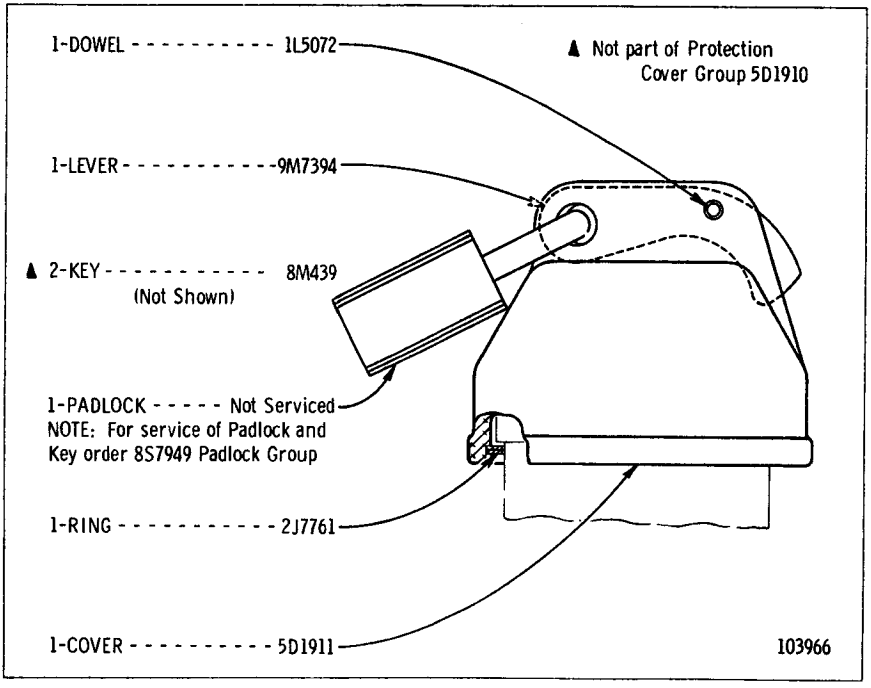

5D1910 PROTECTION COVER GROUP—Hydraulic Tank Cap

9S5646 PROTECTION COVER GROUP—Instrument Panel

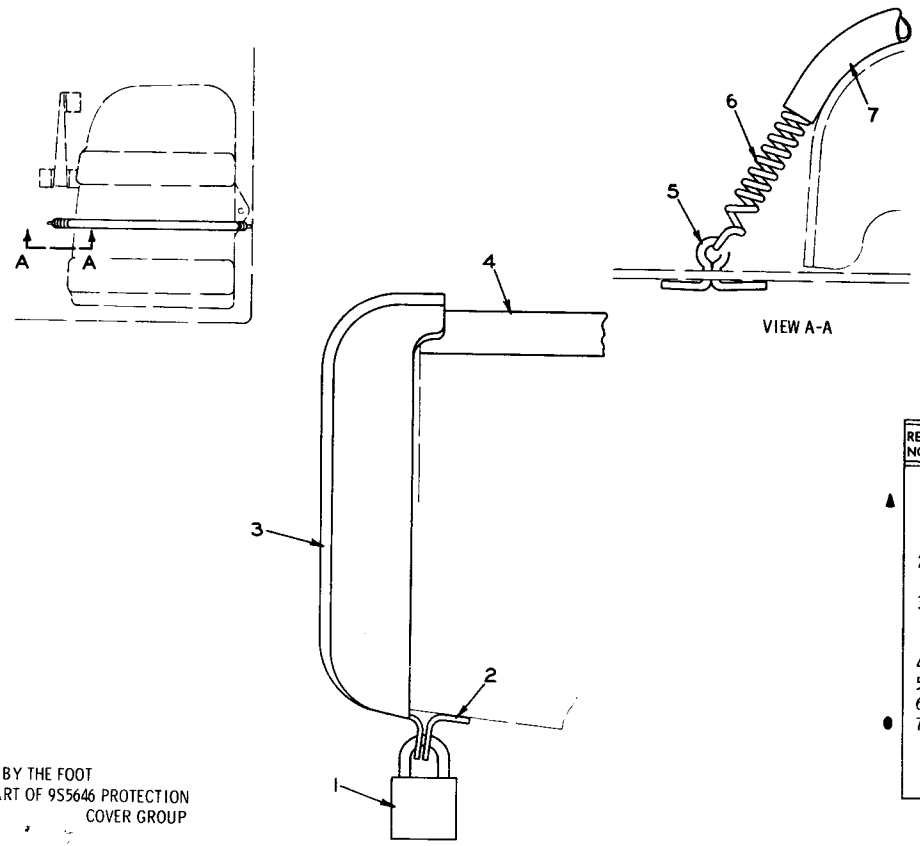

REF. NO.	PART NUMBER	DESCRIPTION	QTY
▲ 1	Not Serv	PADLOCK	1
	8M439	KEY	2
		NOTE: For Service of Padlock and Key Order 8S7949 Padlock Group	
2	7M3222	ANGLE	1
	7M2465	COVER ASSEM.	1
3	7M3218	TANG	2
	7M1530	RIVET	4
		(Parts of 7M2465 Assem.)	
4	9S9521	PLATE	1
5	3B4626	COTTER PIN	2
6	9S5645	SPRING	1
● 7	4S8757	TUBE--12"	
	GMG00147	FORM	1
		(Instructions for installing Vandalism Guard Group	

128379

● ORDER BY THE FOOT
▲ NOT PART OF 9S5646 PROTECTION COVER GROUP

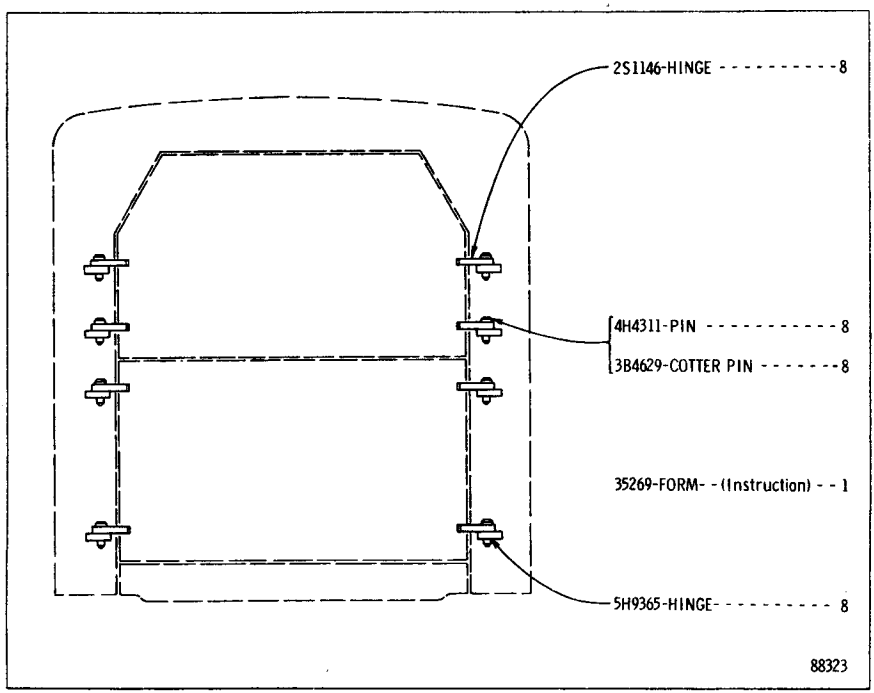

2S1161 RADIATOR GUARD HINGE GROUP
Note: 2S1160 Hinge Group, consisting of 4 complete hinges to mount 1 guard, is available

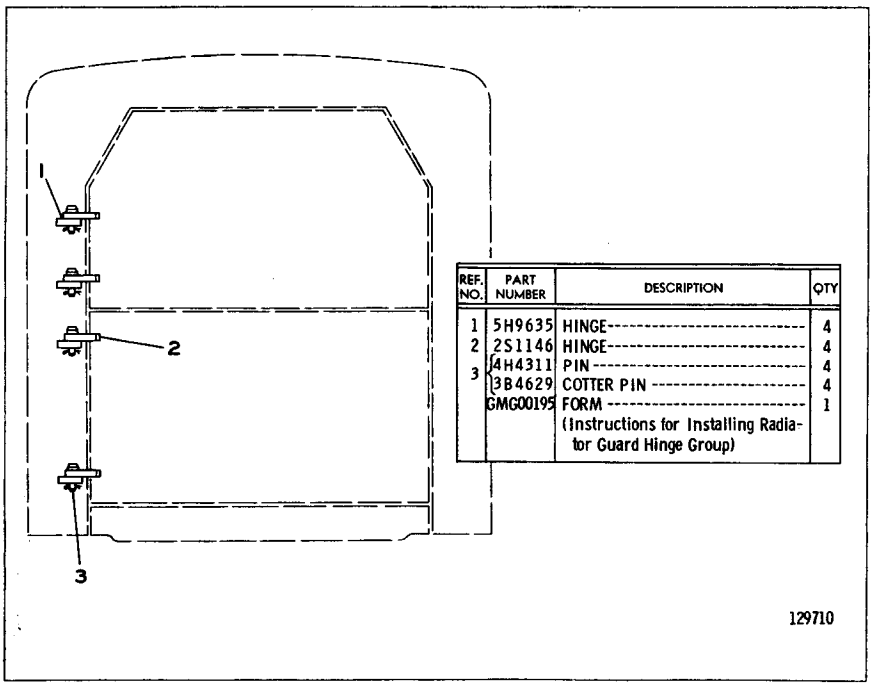

REF. NO.	PART NUMBER	DESCRIPTION	QTY
1	5H9635	HINGE	4
2	2S1146	HINGE	4
3	4H4311	PIN	4
	3B4629	COTTER PIN	4
	GMG00195	FORM (Instructions for Installing Radiator Guard Hinge Group)	1

9S8204 RADIATOR GUARD HINGE GROUP—Field Installation

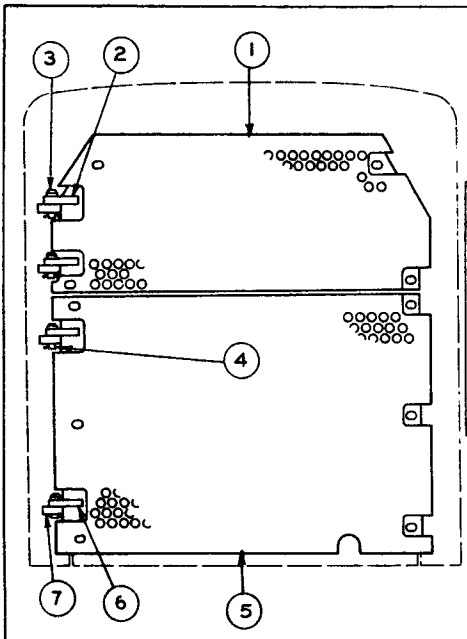

REF. NO.	PART NUMBER	DESCRIPTION	QTY
1	9S8234	PLATE ASSEM.	1
2	2S1146	HINGE	2
3	4H4311	PIN	4
4	3B4629	COTTER PIN	4
5	9S8232	PLATE ASSEM.	1
6	2S1146	HINGE	2
7	5H9365	HINGE	4
	GMG00195	FORM (Instructions for installing Hinged Plate Group)	1

7S5536 RADIATOR GRILL PLATE GROUP

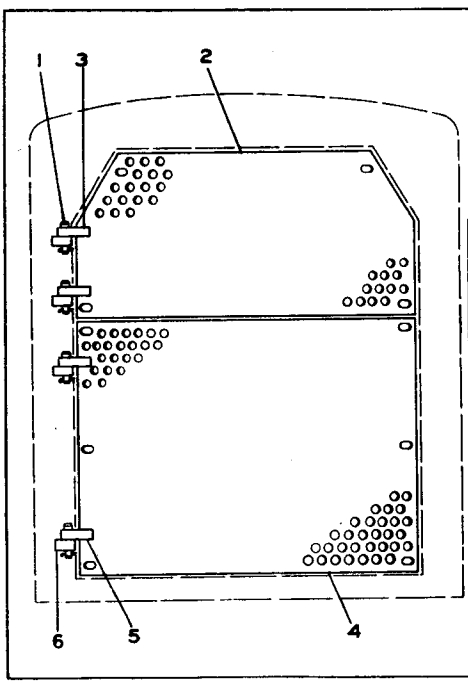

REF. NO.	PART NUMBER	DESCRIPTION	QTY
1	4H4311	PIN	4
	3B4629	COTTER PIN	4
2	9S8278	PLATE ASSEM.	1
3	2S1146	HINGE (Part of 9S8278 Assem.)	2
4	9S8277	PLATE ASSEM.	1
5	2S1146	HINGE (Part of 9S8277 Assem.)	2
6	5H9365	HINGE	4

9S8276 RADIATOR GRILL HINGED PLATE GROUP—Factory Installation

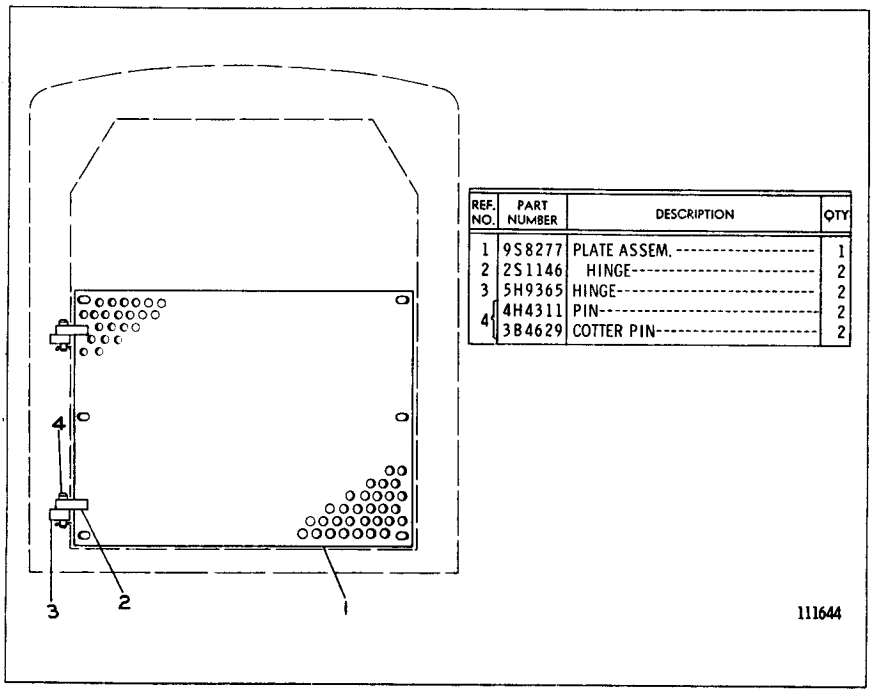

REF. NO.	PART NUMBER	DESCRIPTION	QTY
1	9S8277	PLATE ASSEM.	1
2	2S1146	HINGE	2
3	5H9365	HINGE	2
4	4H4311	PIN	2
	3B4629	COTTER PIN	2

1P7593 RADIATOR GRILL HINGED PLATE GROUP—Factory Installation
FOR USE WITH FAN BLAST DEFLECTOR

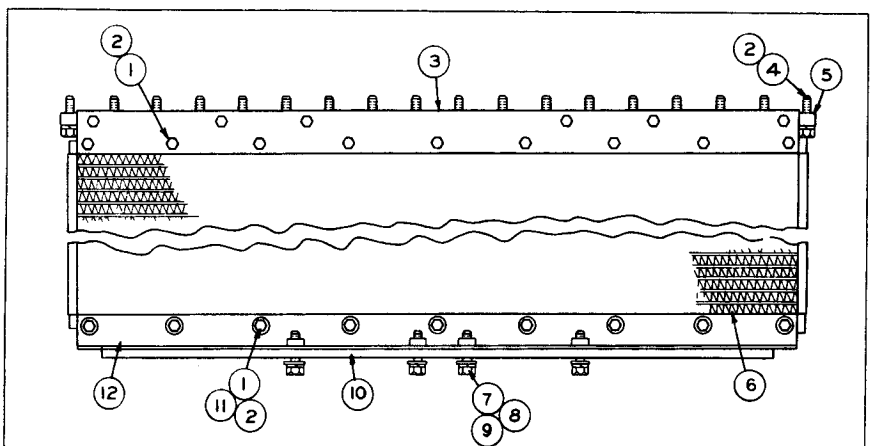

REF NO	PART NUMBER	DESCRIPTION	QTY
1	S509	BOLT	24
2	3E4506	LOCKWASHER	42
3	8S1975	SUPPORT	1
4	S1591	BOLT	18
5	3S7612	STRIP	1
6	8S1970	GRID ASSEM.	1
7	S1587	BOLT	4

REF NO	PART NUMBER	DESCRIPTION	QTY
8	3E4508	LOCKWASHER	4
9	4E4280	WASHER	4
10	5S664	STRIP	1
11	4E4278	WASHER	9
12	8S1972	SUPPORT ASSEM.	1
	1F748	NUT (Weld) (Part of 8S1972 Support Assem.)	4

9S2323 RADIATOR CORE PROTECTION GRID GROUP
Note: This group prevents sandblasting of Radiator Core

8S6900 ENGINE ENCLOSURE GROUP

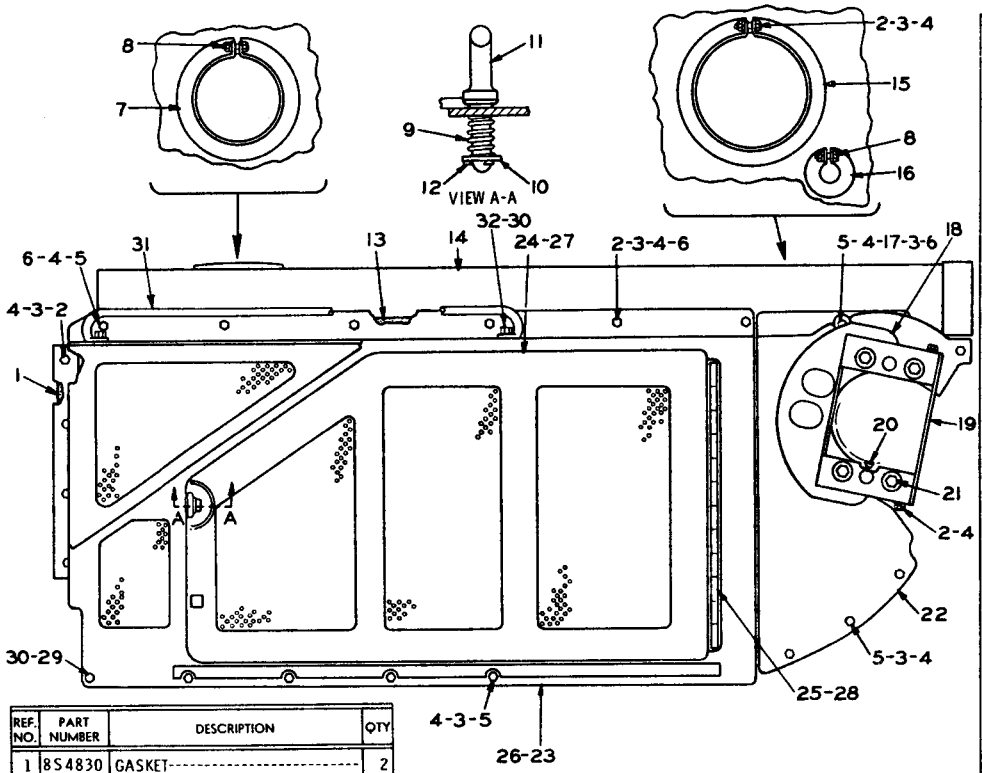

REF. NO.	PART NUMBER	DESCRIPTION	QTY.
1	8S4830	GASKET	2
2	L1351	BOLT	27
3	1D4717	NUT	37
4	3B4506	LOCKWASHER	47
5	1A2029	BOLT	20
6	4B4278	WASHER	14
7	7S5289	CLAMP ASSEM.	1
8	4F7957	BOLT	2
	1B4330	NUT	2
	3B4504	LOCKWASHER	2
9	4B7033	SPRING	2
10	1A4784	WASHER	2
11	9B1783	FASTENER	2
12	3B4623	COTTER PIN	2
13	8S4829	GASKET	2
14	5S7640	HOOD ASSEM.	1
	9F2978	NUT	4
15	7S5286	CLAMP ASSEM.	1
16	7S5293	CLAMP ASSEM.	1
17	8M4069	WASHER	2
	8S4790	SPACER	2
18	8S4833	GUARD ASSEM. (R. H.)	1
	8S4834	GUARD ASSEM. (L. H.)	1
19	8S4839	PLATE ASSEM.	2
20	3B8486	FITTING	2
21	1D4614	BOLT	8
	3B4512	LOCKWASHER	8
	4B4283	WASHER	24
	1D5874	SPACER	8
22	8S4791	PLATE ASSEM. (R. H.)	1
	8S4792	PLATE ASSEM. (L. H.)	1
23	8S4811	SIDE ASSEM. (R. H.)	1
24	8S4797	DOOR ASSEM.	1
25	8S4816	HINGE	1
26	8S4812	SIDE ASSEM. (L. H.)	1
27	8S4798	DOOR ASSEM.	1
28	8S4816	HINGE	1
29	4B3823	BOLT	2
	4B4280	WASHER	6
30	3B4508	LOCKWASHER	6
31	9M5742	GRAB IRON	2
32	S1595	BOLT	4
	1D4719	NUT	4

111648

ONLY "CATERPILLAR" PARTS GIVE "CATERPILLAR" PERFORMANCE

REF. NO.	PART NUMBER	DESCRIPTION	QTY
1	8S5121	MUFFLER ASSEM.	1
2	2B6296	STUD	2
3	8S5260	COVER	1
4	S1571	BOLT	1
	1B5355	NUT	1
5	6F8814	CLAMP	1
6	8S4687	ELBOW	1
7	8S4689	TUBE ASSEM.	1
8	L1351	BOLT	2
	1D4717	NUT	2
	3B4506	LOCKWASHER	2
	3F1417	WASHER	2

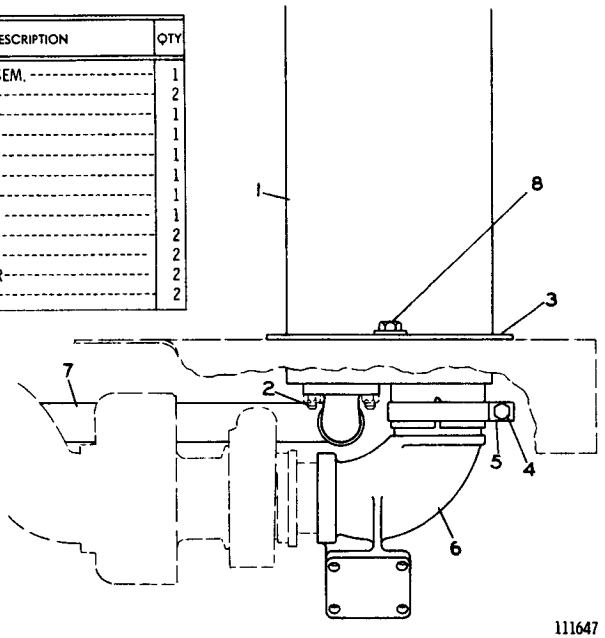

8S5406 MUFFLER GROUP
FOR USE WITH ENGINE ENCLOSURE

REF. NO.	PART NUMBER	DESCRIPTION	QTY
1	8S5121	MUFFLER ASSEM.	1
2	2B6296	STUD	2
		(Part of 8S5121 Assem.)	
3	8S5196	HOOD ASSEM.	1
4	S1571	BOLT	1
	1B5355	NUT	1
5	6F8814	CLAMP	1
6	8S4687	ELBOW	1
7	8S4689	TUBE ASSEM.	1

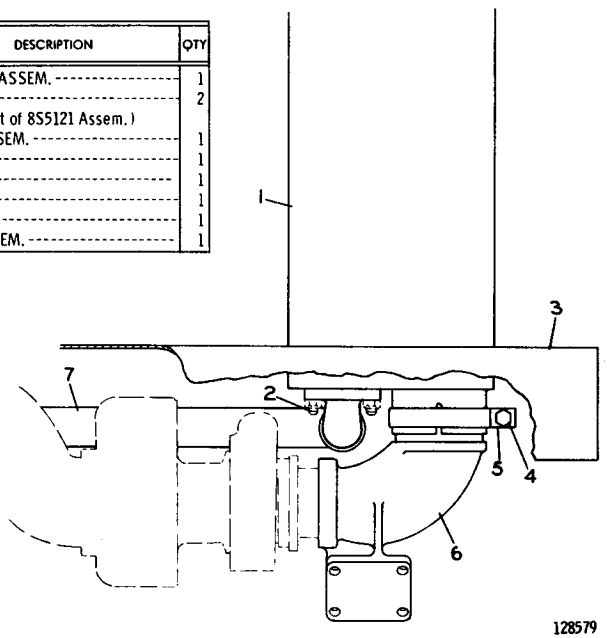

8S4990 MUFFLER GROUP

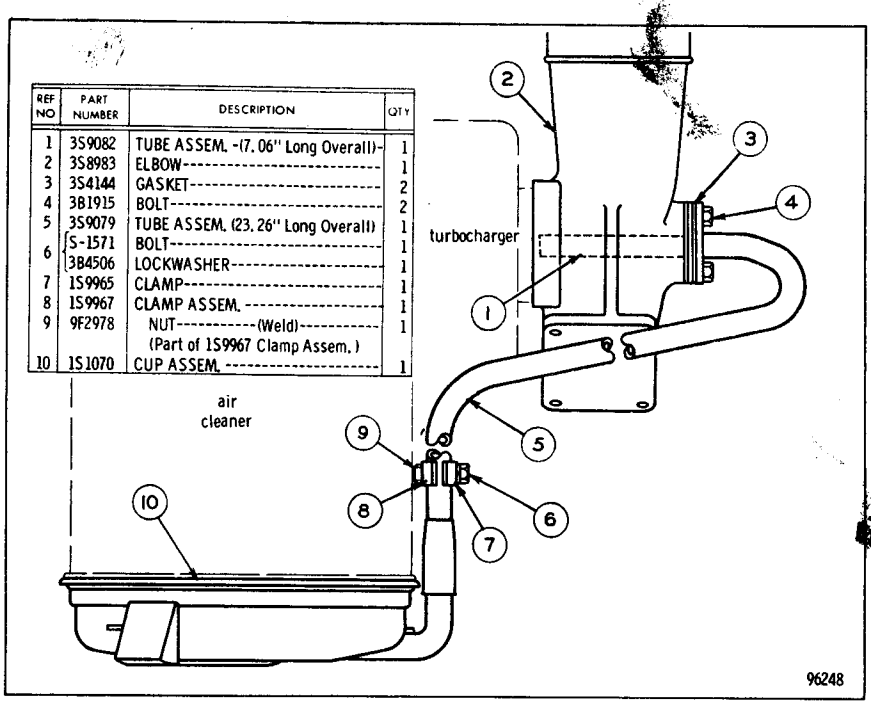

3S9077 DUST EJECTOR GROUP—Air Cleaner

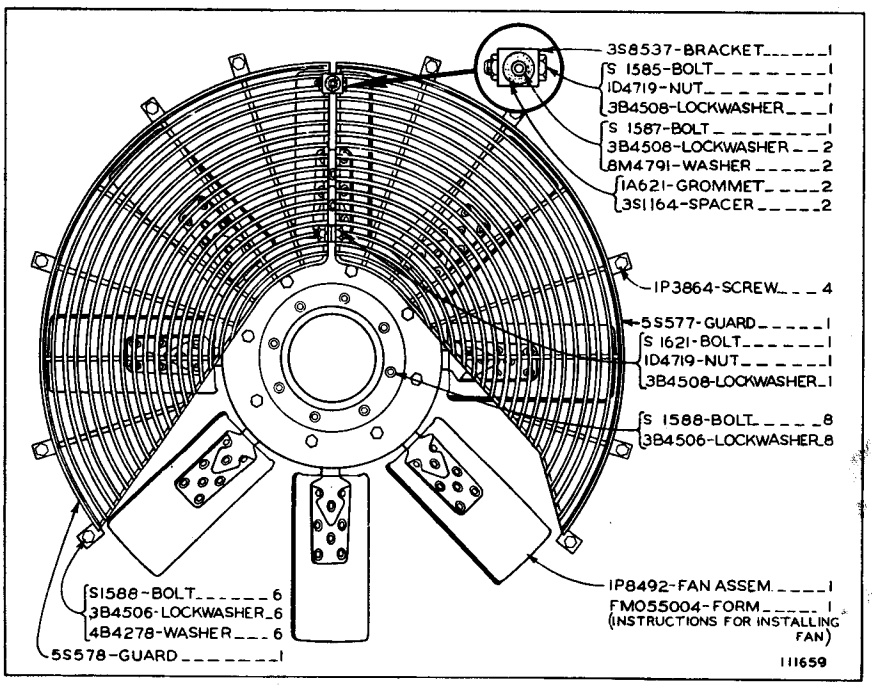

5S1161 FAN GROUP—Reversible Blade

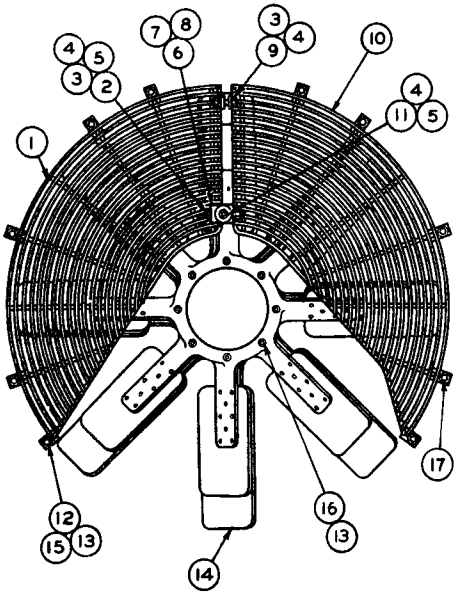

REF NO	PART NUMBER	DESCRIPTION	QTY
1	5S578	GUARD--------(Left Hand)---------	1
2	S 1585	BOLT----------	1
3	1D4719	NUT----------	2
4	3B4508	LOCKWASHER----------	3
5	8M4791	WASHER----------	2
6	3S8537	BRACKET----------	1
7	1A621	GROMMET----------	2
8	3S1164	SPACER----------	2
9	6H1717	BOLT----------	1
10	5S577	GUARD-------(Right Hand)--------	1
11	S 1587	BOLT----------	1
12	S 1588	BOLT----------	6
13	3B4506	LOCKWASHER----------	14
14	1S572	SPIDER ASSEM. ----------	1
15	4B4278	WASHER----------	6
16	3B1915	BOLT----------	8
17	1P3864	SCREW----------	4

5S1143 BLOWER FAN AND GUARD GROUP

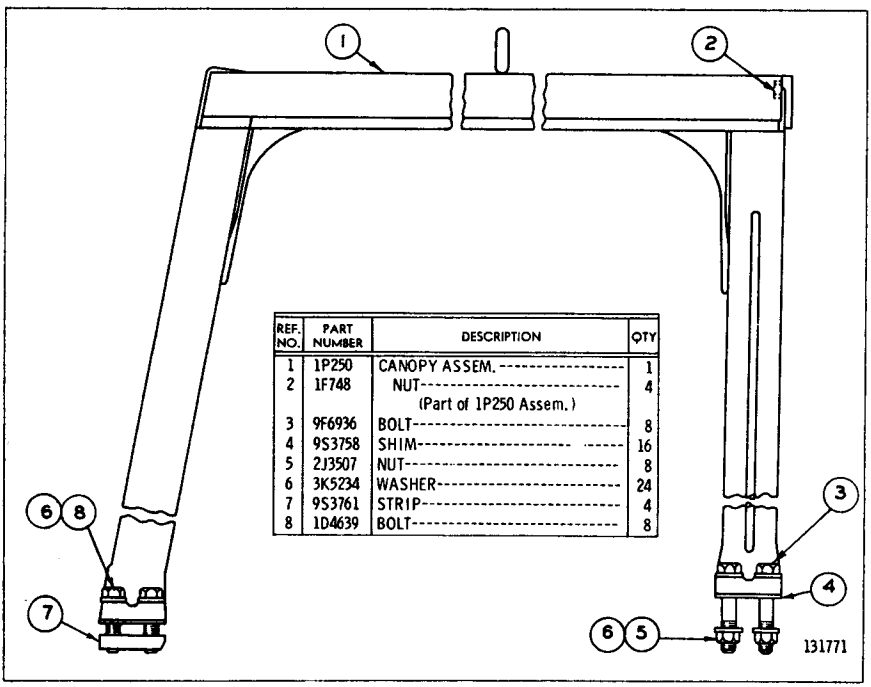

REF. NO.	PART NUMBER	DESCRIPTION	QTY
1	1P250	CANOPY ASSEM. ----------	1
2	1F748	NUT---------- (Part of 1P250 Assem.)	4
3	9F6936	BOLT----------	8
4	9S3758	SHIM----------	16
5	2J3507	NUT----------	8
6	3K5234	WASHER----------	24
7	9S3761	STRIP----------	4
8	1D4639	BOLT----------	8

1P249 ROLL-OVER PROTECTIVE STRUCTURE GROUP
Part of 1P258 Operator Protective Arrangement

		CONSISTS OF:	PAGE
1	1P127	MOUNTING GROUP	172
1	1P249	ROLL-OVER PROTECTIVE STRUCTURE GROUP	170
1	9S7780	VISOR GROUP	171
1	6D4709	SEAT BELT ASSEMBLY	

1P258 OPERATOR PROTECTIVE ARRANGEMENT

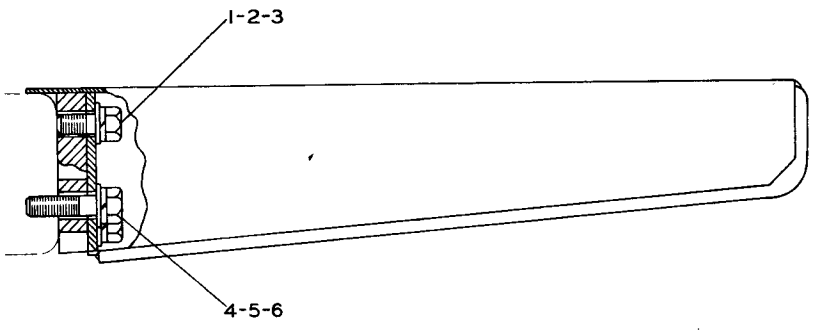

REF. NO.	PART NUMBER	DESCRIPTION	QTY
1	7S9372	BOLT	12
2	3B4510	LOCKWASHER	12
3	4B4281	WASHER	12

REF. NO.	PART NUMBER	DESCRIPTION	QTY
4	1A1460	BOLT	4
5	3B4508	LOCKWASHER	4
6	4B4280	WASHER	4

126246

9S7780 VISOR GROUP
Part of 1P258 Operator Protective Arrangement

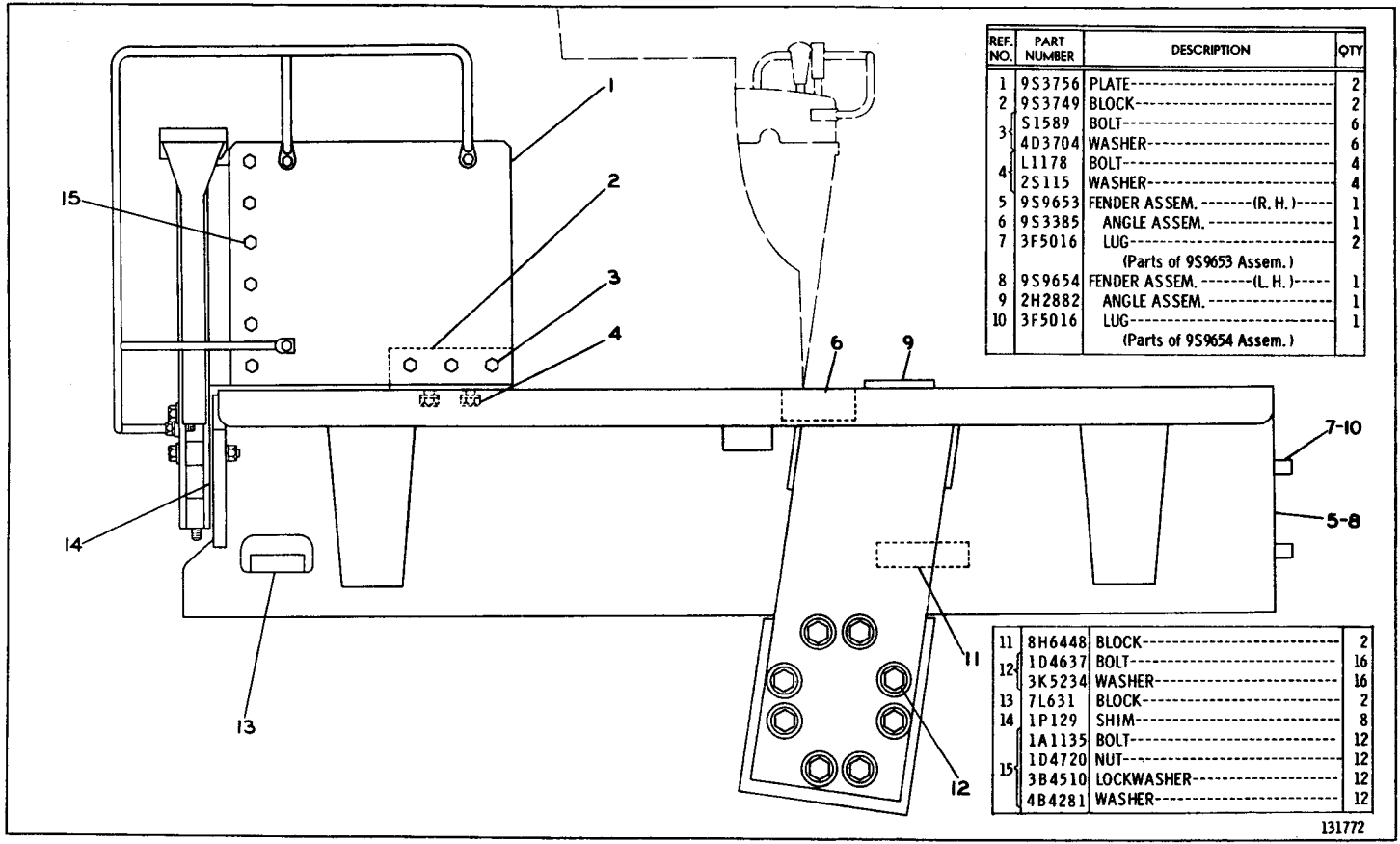

REF. NO.	PART NUMBER	DESCRIPTION	QTY
1	9S3756	PLATE	2
2	9S3749	BLOCK	2
3	S1589	BOLT	6
	4D3704	WASHER	6
4	L1178	BOLT	4
	2S115	WASHER	4
5	9S9653	FENDER ASSEM. -(R. H.)	1
6	9S3385	ANGLE ASSEM.	1
7	3F5016	LUG	2
		(Parts of 9S9653 Assem.)	
8	9S9654	FENDER ASSEM. -(L. H.)	1
9	2H2882	ANGLE ASSEM.	1
10	3F5016	LUG	1
		(Parts of 9S9654 Assem.)	

11	8H6448	BLOCK	2
12	1D4637	BOLT	16
	3K5234	WASHER	16
13	7L631	BLOCK	2
14	1P129	SHIM	8
15	1A1135	BOLT	12
	1D4720	NUT	12
	3B4510	LOCKWASHER	12
	4B4281	WASHER	12

1P127 MOUNTING GROUP—Side View
Part of 1P258 Operator Protective Arrangement listed on Page 171

1P127 MOUNTING GROUP—End View

Part of 1P258 Operator Protective Arrangement listed on Page 171

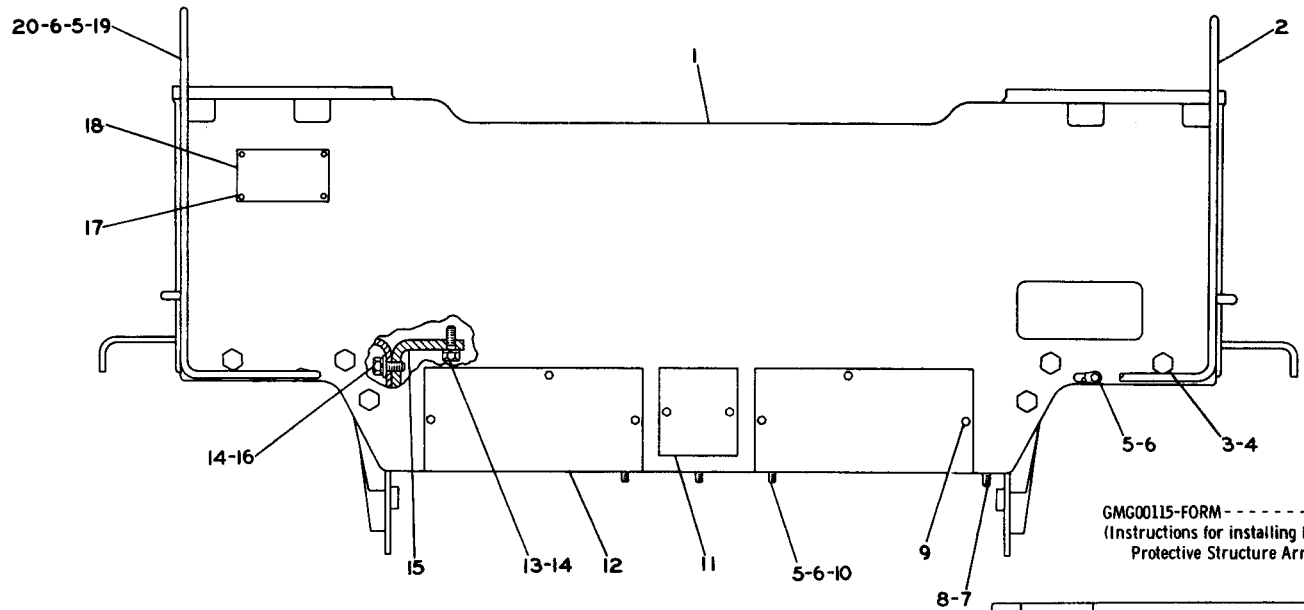

GMG00115-FORM - - - - - - - - - - - - 1
(Instructions for installing Roll over Protective Structure Arrangement)

REF. NO.	PART NUMBER	DESCRIPTION	QTY
1	1P133	SUPPORT ASSEM.	1
2	9S3747	GRAB IRON ASSEM.	1
3	1D4643	BOLT	6
	2J3507	NUT	6
4	3K5234	WASHER	12
5	S1585	BOLT	11
6	3B4508	LOCKWASHER	11
7	6J3913	BOLT	2
8	4D3704	WASHER	2
9	S509	BOLT	8
	3B4506	LOCKWASHER	8
10	4B4280	WASHER	9
11	1P130	PLATE	1
12	1P132	PLATE	2
13	L1178	BOLT	1
14	3B4512	LOCKWASHER	3
15	1P121	SUPPORT ASSEM.	1
16	1A458	BOLT	2
	4B4283	WASHER	2
17	4B4158	SCREW	4
18	1P7068	PLATE	1
19	9S3748	GRAB IRON ASSEM. (L.H.)	1
20	1D4719	NUT	6

131773

ONLY "CATERPILLAR" PARTS GIVE "CATERPILLAR" PERFORMANCE

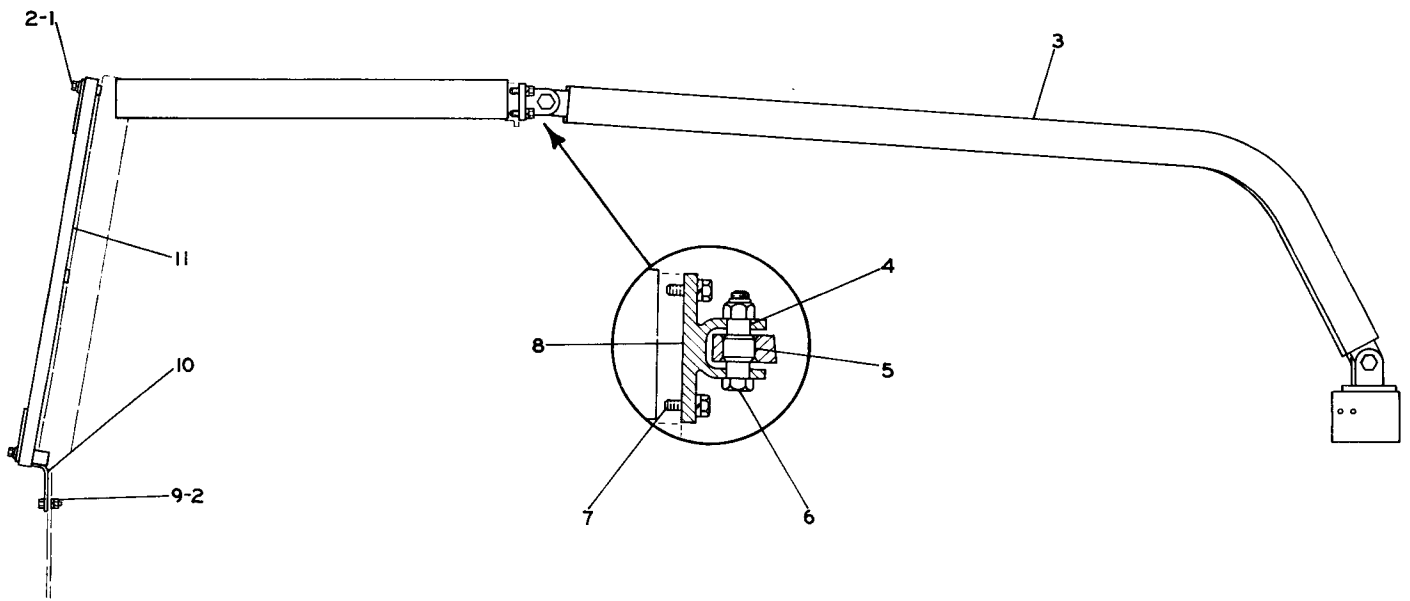

REF. NO.	PART NUMBER	DESCRIPTION	QTY
1	S1595	BOLT	6
	4B4280	WASHER	6
	4S8105	SPACER	3
2	3B4508	LOCKWASHER	9
3	1P2770	FRAME ASSEM.	1
4	1P2772	SPACER	8
5	9S5187	MOUNTING	4
6	1D4641	BOLT	4
	2H3791	NUT	4
7	S1589	BOLT	8
	3B4510	LOCKWASHER	8
8	1P2773	BRACKET ASSEM.	2
9	S1585	BOLT	3
	1D4719	NUT	3
10	1P3785	BRACKET ASSEM.	1
11	9S5401	SCREEN ASSEM.	1
	GMG00514	FORM (Instructions for installing Screen and Sweep Groups)	1

132314

1P3941 SCREEN AND SWEEP GROUP
FOR USE WITH ROLL-OVER PROTECTIVE STRUCTURE

9S948 CANOPY GROUP

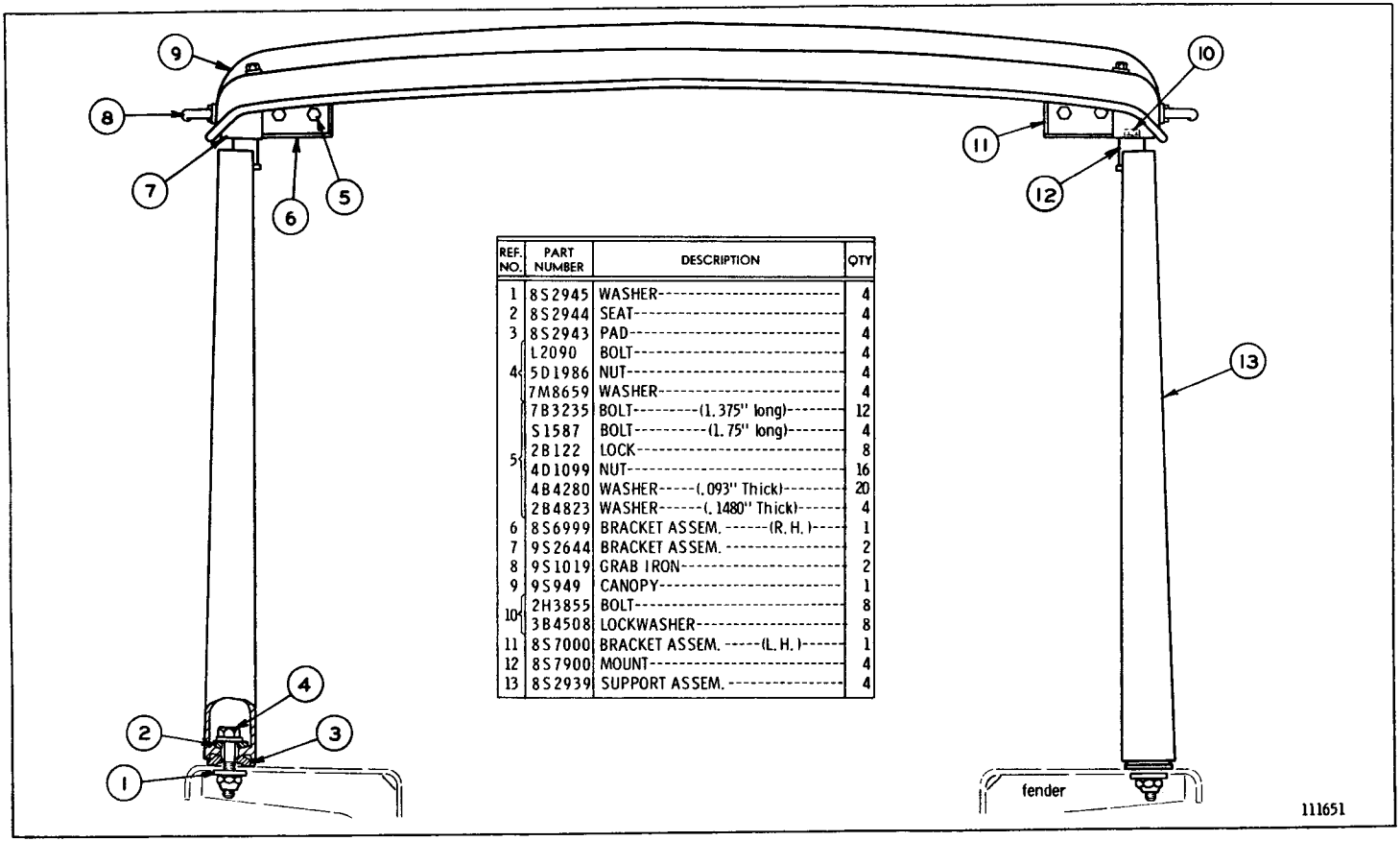

REF. NO.	PART NUMBER	DESCRIPTION	QTY
1	8S2945	WASHER	4
2	8S2944	SEAT	4
3	8S2943	PAD	4
4	L2090	BOLT	4
	5D1986	NUT	4
	7M8659	WASHER	4
5	7B3235	BOLT---(1.375" long)	12
	S1587	BOLT---(1.75" long)	4
	2B122	LOCK	8
	4D1099	NUT	16
	4B4280	WASHER---(.093" Thick)	20
	2B4823	WASHER---(.1480" Thick)	4
6	8S6999	BRACKET ASSEM.---(R.H.)	1
7	9S2644	BRACKET ASSEM.	2
8	9S1019	GRAB IRON	2
9	9S949	CANOPY	1
10	2H3855	BOLT	8
	3B4508	LOCKWASHER	8
11	8S7000	BRACKET ASSEM.---(L.H.)	1
12	8S7900	MOUNT	4
13	8S2939	SUPPORT ASSEM.	4

ONLY "CATERPILLAR" PARTS GIVE "CATERPILLAR" PERFORMANCE

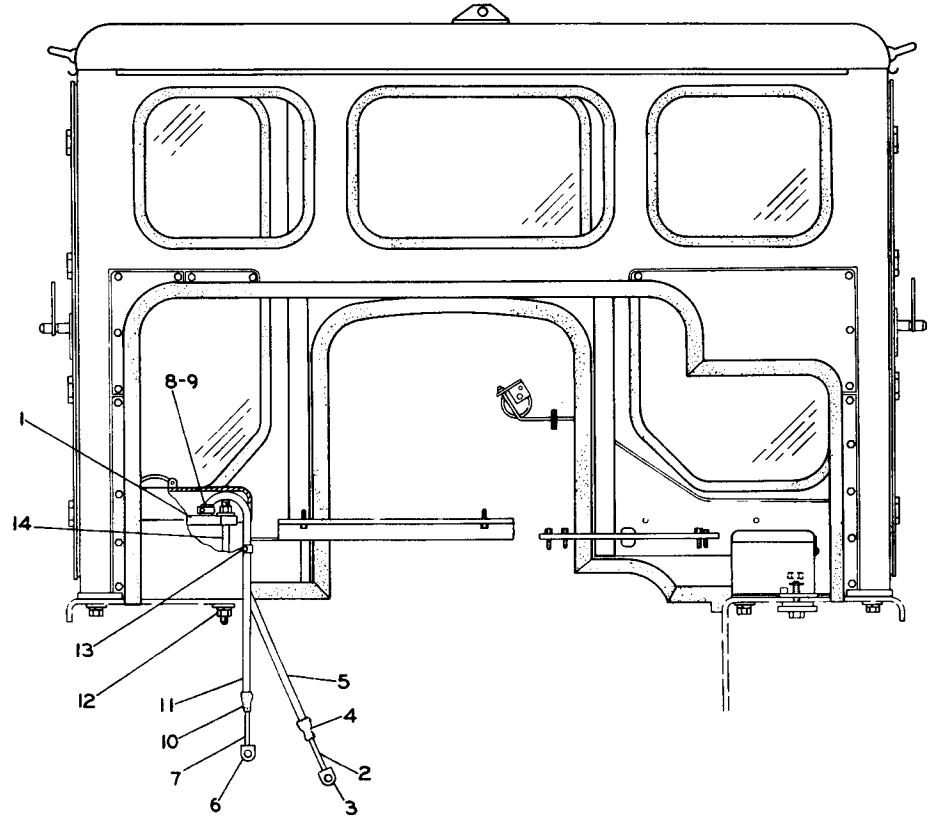

REF. NO.	PART NUMBER	DESCRIPTION	QTY
1	3S4620	HOLDDOWN ASSEM.	1
	4S7328	CABLE ASSEM.	1
2	3S6049	TERMINAL ASSEM.	1
	2D8788	BOLT	1
	2D8787	NUT	1
3	1S7839	TERMINAL	1
4	1S2244	BOOT	2
	1S4915	LINER	2
	3S2093	TIE	2
▲ 5	4S8732	CONDUIT-----110"	
6	1S7839	TERMINAL	1
7	2S3388	CABLE ASSEM.	1
8	3D2098	TERMINAL ASSEM.	1
9	2D8788	BOLT	1
	2D8787	NUT	1
10	1S2244	BOOT	2
	3S2093	TIE	2
	1S4915	LINER	2
▲ 11	4S8732	CONDUIT-----20"	
12	S1585	BOLT	4
	1D4719	NUT	4
	3B4508	LOCKWASHER	4
	9M9015	CLAMP	1
13	T102	BOLT	1
	3B4506	LOCKWASHER	1
14	1S6957	BOLT-----(Anchor)	2
	9H8524	NUT	2
	4B5271	WASHER	2
	9M5617	GROMMET	4

▲ ORDER BY THE FOOT

111624

1P1957 CAB ARRANGEMENT—12 Volt—Rear View—Part 1
FOR USE WITH HYDRAULIC BULLDOZER

Only separate parts serviced. When complete Arrangement is required order 1P9065 shown on Pages 178 and 179

1P1957 CAB ARRANGEMENT—12 Volt—Rear View—Part 2

FOR USE WITH HYDRAULIC BULLDOZER

3S1628 Cab, 4S6937 Cab Wiring and 3B3460 Tool Box parts are shown on Pages 184 through 187.

Only separate parts serviced. When complete Arrangement is required order 1P9065 shown on Pages 178 and 179

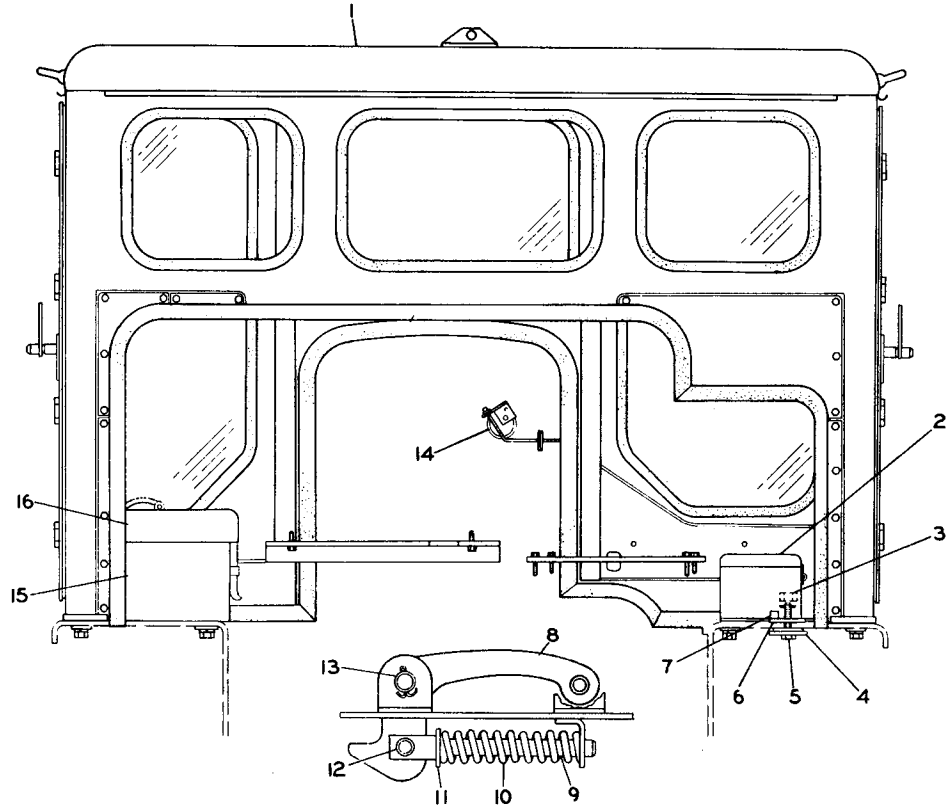

ENLARGED VIEW OF HANDLE

REF. NO.	PART NUMBER	DESCRIPTION	QTY
1	3S1628	CAB GROUP	1
2	3B3460	TOOL BOX GROUP (See Separate Illustration)	1
3	9S4190	PLUG	1
	2M9780	SEAL	1
4	8S8673	COVER	1
5	2S9732	BOLT	1
	3B4508	LOCKWASHER	1
	4H5128	PIN	1
6	2S9434	STRIP	1
7	4K1650	BLOCK	1
8	1H7365	HANDLE	1
9	1H7366	ROD	1
10	1B9920	SPRING	1
11	T431	WASHER	1
12	1J4384	PIN	1
	3B4615	COTTER PIN	1
	3B8153	PIN	1
13	3B4617	COTTER PIN	1
	2B4823	WASHER	1
14	4S6937	WIRING GROUP (See Separate Illustration)	1
15	3S3351	BOX ASSEM.	1
	9F2978	NUT (Weld)	1
	3S4634	COVER ASSEM.	1
16	1S6385	LUG	4
	9M5617	GROMMET	4

111625

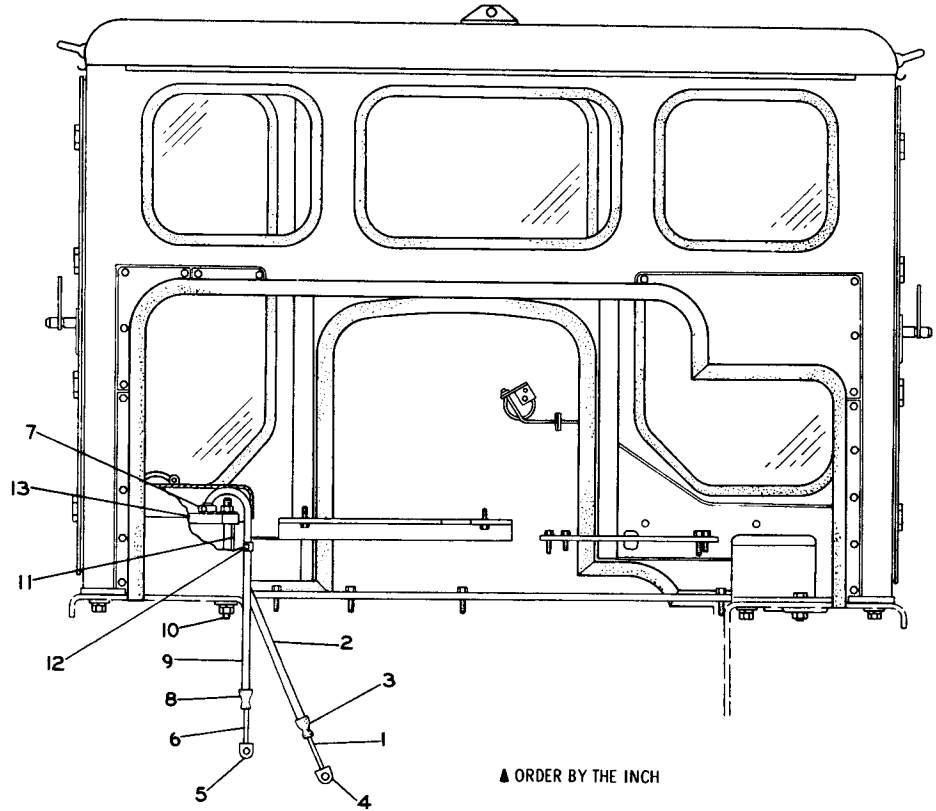

▲ ORDER BY THE INCH

REF. NO.	PART NUMBER	DESCRIPTION	QTY
	4S7328	CABLE ASSEM.	1
1	3S6049	TERMINAL ASSEM.	1
	2D8788	BOLT	1
	2D8787	NUT	1
▲ 2	4S8732	CONDUIT--110"	
	1S2244	BOOT	2
3	1S4915	LINER	2
	3S2093	TIE	2
4	1S7839	TERMINAL	1
5	1S7839	TERMINAL	1
6	2S3388	CABLE ASSEM.	1
	3D2098	TERMINAL ASSEM.	1
7	2D8788	BOLT	1
	2D8787	NUT	1
	1S2244	BOOT	2
8	1S4915	LINER	2
	3S2093	TIE	2
▲ 9	4S8732	CONDUIT--20"	
	S1585	BOLT	4
10	1D4719	NUT	4
	3B4508	LOCKWASHER	4
	1S6957	BOLT--(Anchor)	2
11	9H8524	NUT	2
	4B5271	WASHER	2
	9M5617	GROMMET	4
	9M9015	CLAMP	1
12	T102	BOLT	1
	3B4506	LOCKWASHER	1
13	3S4620	HOLDDOWN ASSEM.	1

111630

1P9065 CAB ARRANGEMENT—12 Volt—Rear View—Part 1
FOR USE WITH HYDRAULIC BULLDOZER

1P9065 CAB ARRANGEMENT—12 Volt—Rear View—Part 2

FOR USE WITH HYDRAULIC BULLDOZER

3S1628 Cab, 4S6937 Cab Wiring, 1P9052 Floor Mat & 3B3460 Tool Box parts are shown on Pages 184 through 187

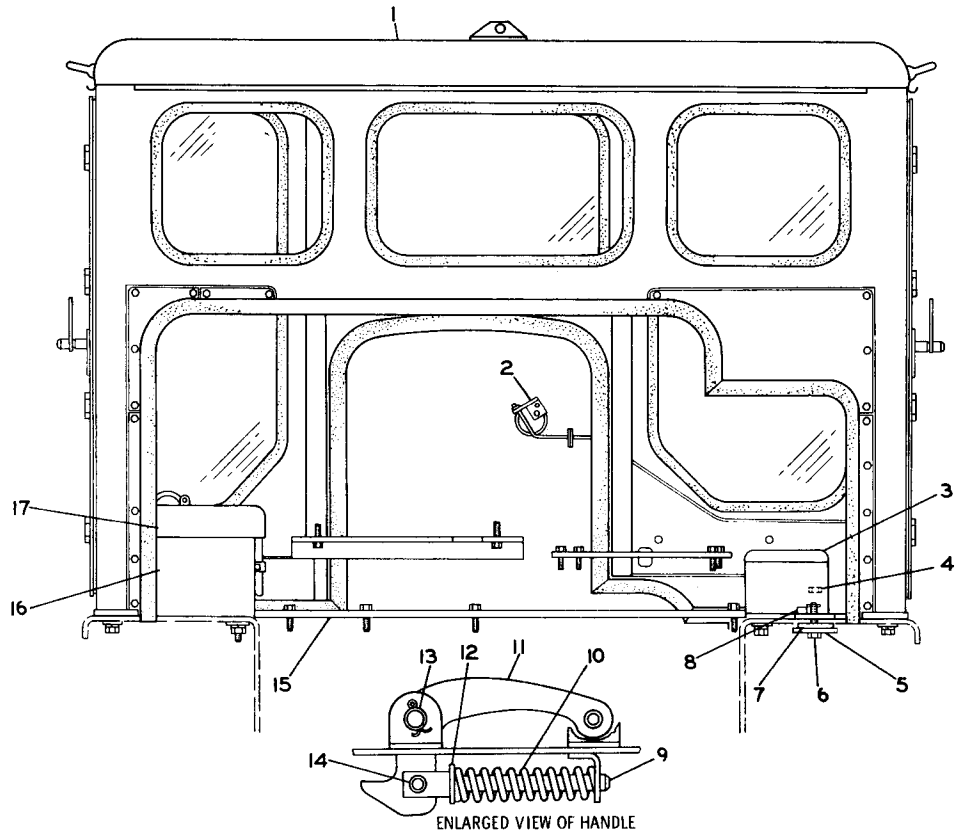

ENLARGED VIEW OF HANDLE

REF. NO.	PART NUMBER	DESCRIPTION	QTY
1	3S1628	CAB GROUP	1
2	4S6937	WIRING GROUP	1
3	3B3460	TOOL BOX GROUP (See Separate Illustration)	1
4	9S4190	PLUG	1
	2M9780	SEAL	1
5	8S8673	COVER	1
6	2S9732	BOLT	1
	3B4508	LOCKWASHER	1
	4H5128	PIN	1
7	2S9434	STRIP	1
8	4K1650	BLOCK	1
9	1H7366	ROD	1
10	1B9920	SPRING	1
11	1H7365	HANDLE	1
12	T431	WASHER	1
13	3B8153	PIN	1
	3B4617	COTTER PIN	1
	2B4823	WASHER	1
14	1J4384	PIN	1
	3B4615	COTTER PIN	1
15	1P9052	FLOOR MAT GROUP (See Separate Illustration)	1
16	3S3351	BOX ASSEM.	1
	9F2978	NUT-----(Weld)	1
17	3S4634	COVER ASSEM.	1
	1S6385	LUG	4
	9M5617	GROMMET	4

111631

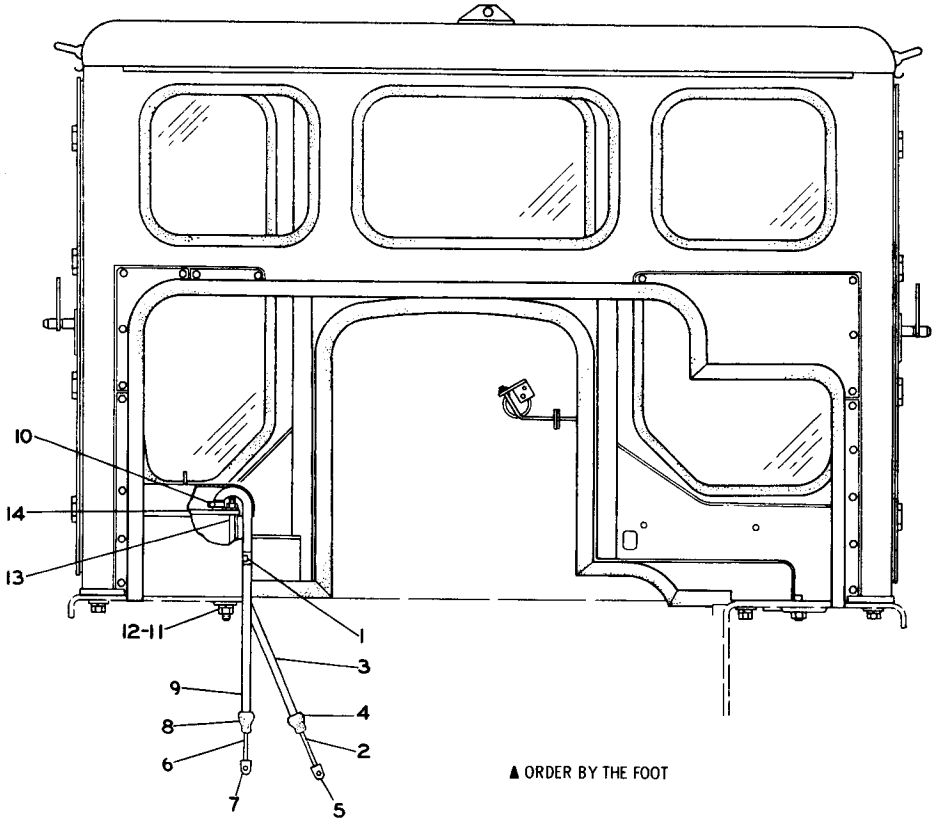

REF. NO.	PART NUMBER	DESCRIPTION	QTY
1	7S1912	CLIP	1
	S509	BOLT	1
	3B4506	LOCKWASHER	1
	4B4278	WASHER	1
2	9S956	CABLE ASSEM.	1
	3S6049	TERMINAL ASSEM.	1
	2D8788	BOLT	1
	2D8787	NUT	1
▲ 3	4S8732	CONDUIT---104"	
4	1S2244	BOOT	2
	1S4915	LINER	2
	3S2093	TIE	2
5	1S7251	TERMINAL	1
6	8S6937	CABLE ASSEM.	1
7	1S7252	TERMINAL	1
8	1S2244	BOOT	2
	3S2093	TIE	2
	1S4915	LINER	2
▲ 9	4S8732	CONDUIT---49"	
10	3S6050	TERMINAL ASSEM.	1
	2D8788	BOLT	1
	2D8787	NUT	1
11	S1603	BOLT---(1.50" long)	2
	1B4205	NUT	2
	S1629	BOLT---(1" long)	2
12	3B4508	LOCKWASHER	2
13	5S8661	BOLT	2
	9H8524	NUT	6
	4B5271	WASHER	6
14	5S8583	HOLDDOWN ASSEM.	1
	9F2978	NUT---(Weld)	3

▲ ORDER BY THE FOOT

111626

1P1958 CAB ARRANGEMENT—24 Volt—Rear View—Part 1
FOR USE WITH HYDRAULIC BULLDOZER

Only separate parts serviced. When complete Arrangement is required order 1P9064 shown on Pages 182 and 183

1P1958 CAB ARRANGEMENT—24 Volt—Rear View—Part 2

FOR USE WITH HYDRAULIC BULLDOZER

3S1628 Cab & 4S6937 Cab Wiring parts are shown on Pages 184, 185, and 186

Only separate parts serviced. When complete Arrangement is required order 1P9064 shown on Pages 182 and 183

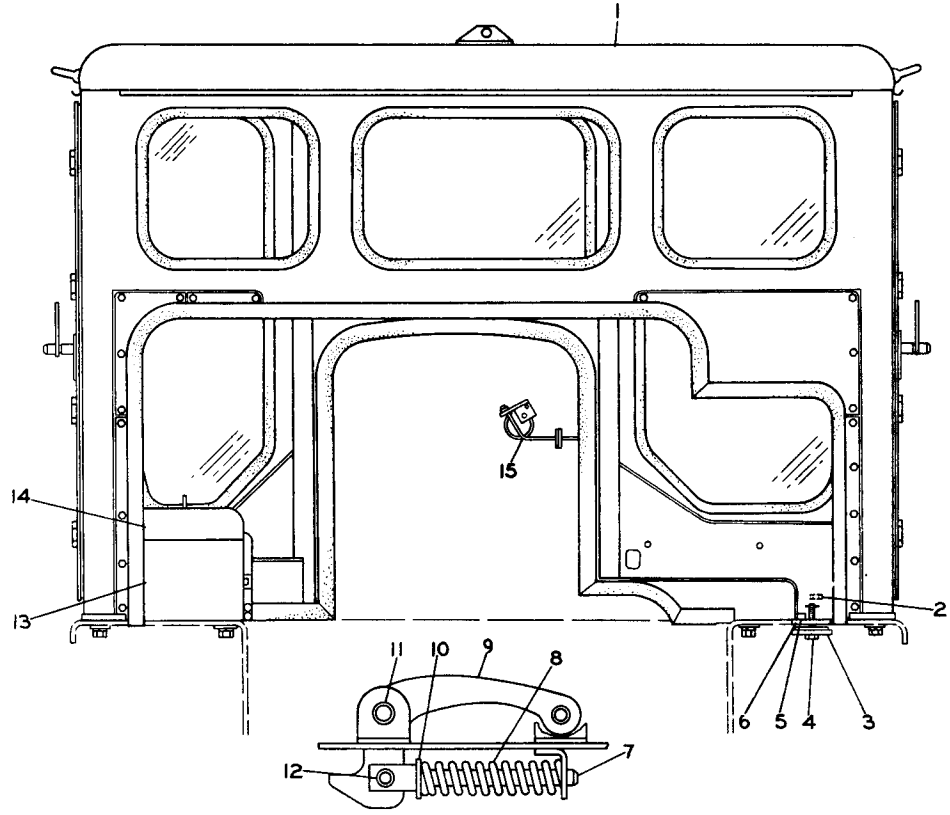

REF. NO.	PART NUMBER	DESCRIPTION	QTY
1	3S1628	CAB GROUP (See Separate Illustration)	1
2	9S4190	PLUG	1
	2M9780	SEAL	1
3	8S8673	COVER	1
4	2S9732	BOLT	1
	3B4508	LOCKWASHER	1
	4H5128	PIN	1
5	4K1650	BLOCK	1
6	2S9434	STRIP	1
7	1H7366	ROD	2
8	1B9920	SPRING	2
9	1H7365	HANDLE	2
10	T431	WASHER	1
11	2B2938	PIN	2
	3B4617	COTTER PIN	2
12	1J4384	PIN	2
	3B4615	COTTER PIN	2
13	5S8582	BOX ASSEM.	1
	9F2978	NUT (Weld)	3
14	8S6950	COVER ASSEM.	1
	1S6385	LUG	8
15	4S6937	WIRING GROUP (See Separate Illustration)	1

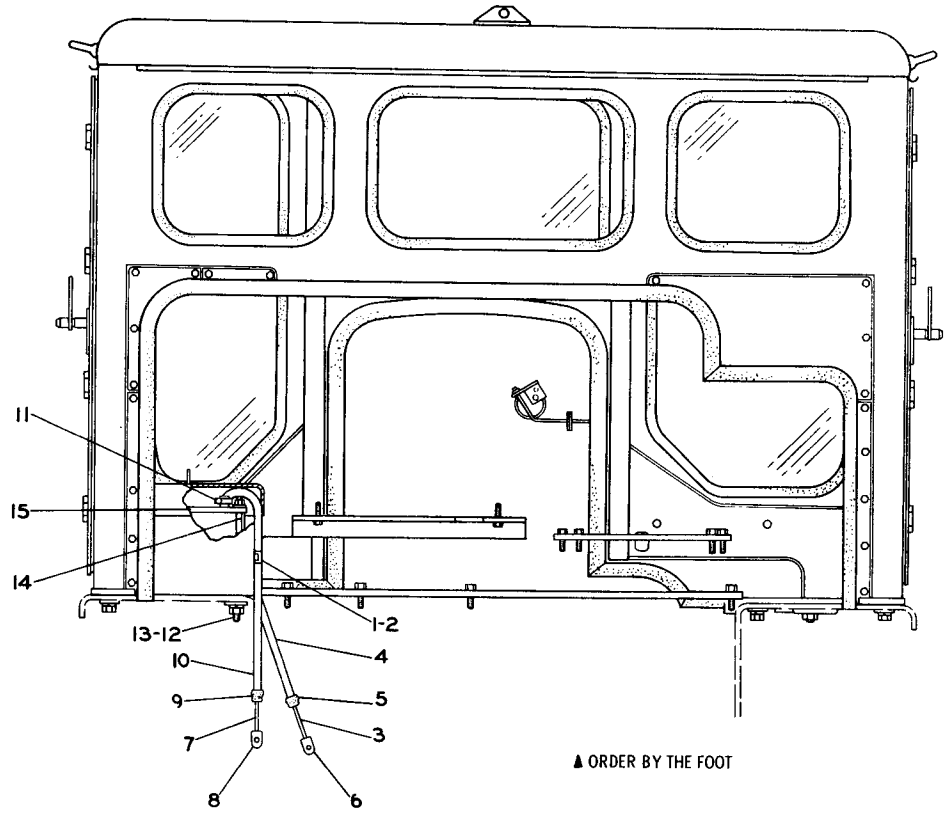

REF. NO.	PART NUMBER	DESCRIPTION	QTY
1	7S1912	CLIP	1
	S509	BOLT	1
	4B4278	WASHER	1
2	3B4506	LOCKWASHER	1
3	9S956	CABLE ASSEM.	1
	3S6049	TERMINAL ASSEM.	1
	2D8788	BOLT	1
	2D8787	NUT	1
▲ 4	4S8732	CONDUIT--104"	
5	1S2244	BOOT	2
	1S4915	LINER	2
	3S2093	TIE	2
6	1S7251	TERMINAL	1
7	8S6937	CABLE ASSEM.	1
8	1S7252	TERMINAL	1
9	1S2244	BOOT	2
	1S4915	LINER	2
	3S2093	TIE	2
▲ 10	4S8732	CONDUIT--49"	
11	3S6050	TERMINAL ASSEM.	1
	2D8788	BOLT	1
	2D8787	NUT	1
12	S1603	BOLT--(1.50" long)	2
	1B4205	NUT	2
	S1629	BOLT--(1" long)	2
13	3B4508	LOCKWASHER--(1" long)	4
14	5S8661	BOLT	2
	9H8524	NUT	6
	4B5271	WASHER	6
15	1P9444	HOLDDOWN ASSEM.	1
	9M5617	GROMMET	14

▲ ORDER BY THE FOOT

111632

1P9064 CAB ARRANGEMENT—24 Volt—Rear View—Part 1
FOR USE WITH HYDRAULIC BULLDOZER

1P9064 CAB ARRANGEMENT—24 Volt—Rear View—Part 2
FOR USE WITH HYDRAULIC BULLDOZER
3S1628 Cab, 4S6937 Cab Wiring & 1P9052 Floor Mat parts are shown on Pages 184, 185 & 186

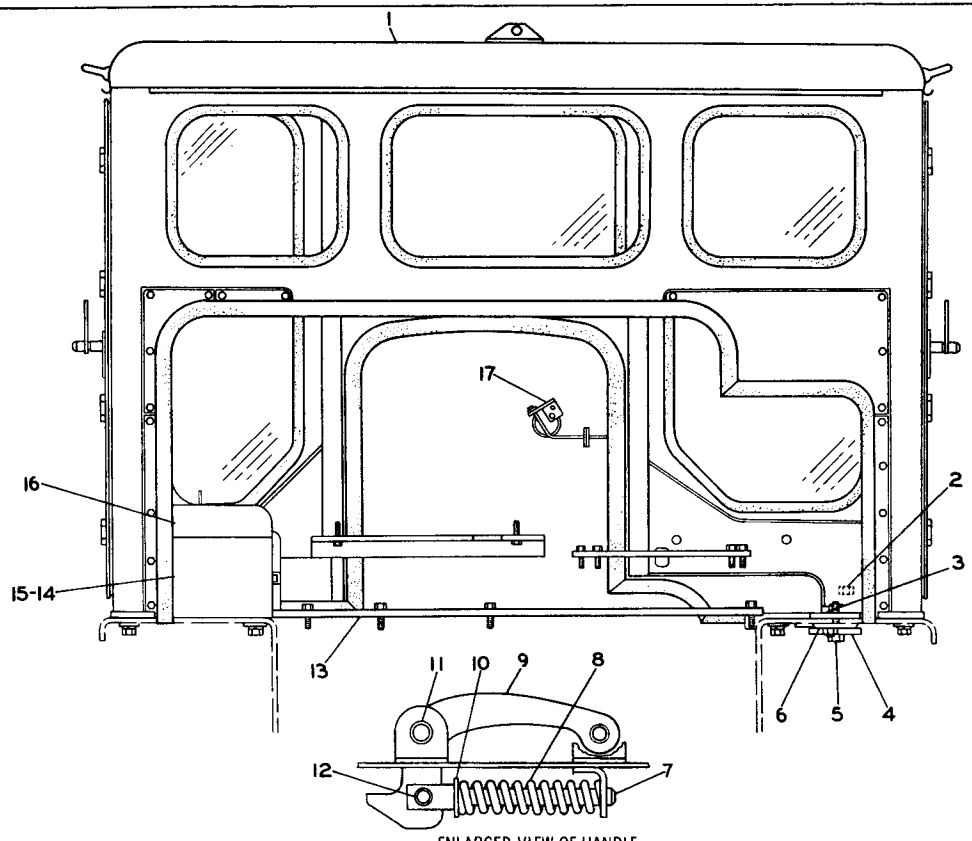

ENLARGED VIEW OF HANDLE

REF. NO.	PART NUMBER	DESCRIPTION	QTY
1	3S1628	CAB GROUP (See Separate Illustration)	1
2	9S4190	PLUG	1
	2M9780	SEAL	1
3	4K1650	BLOCK	1
4	8S8673	COVER	1
5	2S9732	BOLT	1
	3B4508	LOCKWASHER	1
	4H5128	PIN	1
6	2S9434	STRIP	1
7	1H7366	ROD	2
8	1B9920	SPRING	2
9	1H7365	HANDLE	2
10	T431	WASHER	1
11	2B2928	PIN	2
	3B4617	COTTER PIN	2
12	1J4384	PIN	2
	3B4615	COTTER PIN	2
13	1P9052	FLOOR MAT GROUP (See Separate Illustration)	1
14	9S7807	BOX ASSEM.	1
	9F2978	NUT-(Weld)	3
	1J8532	BOLT-(Eyebolt)	1
	5B8030	SPACER	1
15	3B1915	BOLT-(1.375" long)	1
	1D4717	NUT	1
	3B4506	LOCKWASHER	1
16	9S7806	COVER ASSEM.	1
	1S6385	LUG	8
17	4S6937	WIRING GROUP (See Separate Illustration)	1

111633

ONLY "CATERPILLAR" PARTS GIVE "CATERPILLAR" PERFORMANCE

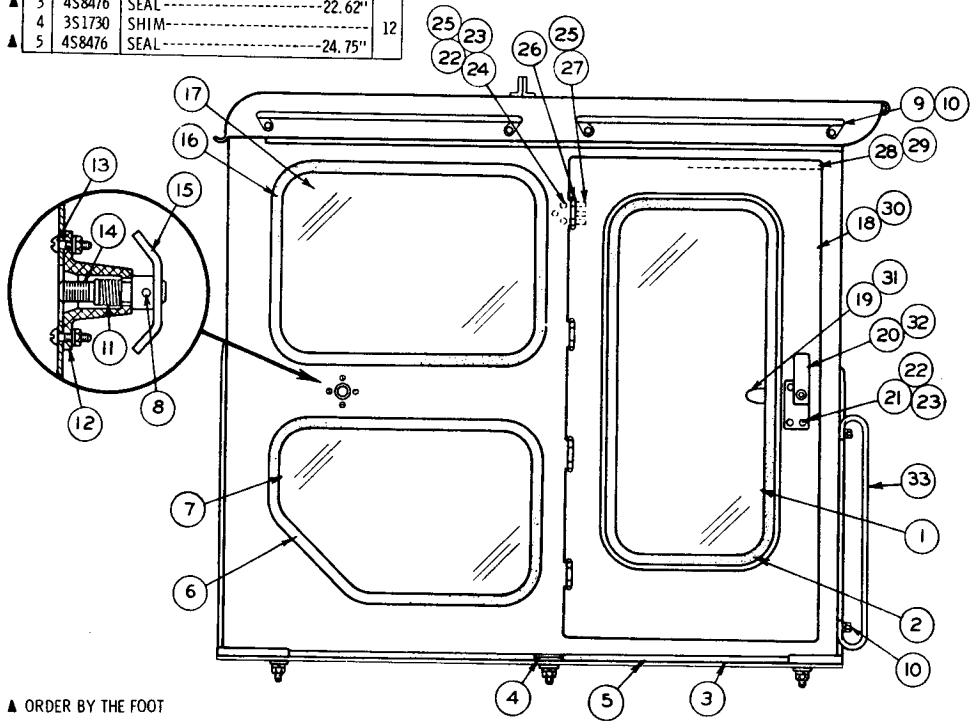

REF. NO.	PART NUMBER	DESCRIPTION	QTY
1	7S3827	GLASS---------(Untinted)---------	2
▲ 2	9S3222	SEAL----------203.50"	
▲ 3	4S8476	SEAL----------22.62"	
4	3S1730	SHIM----------	12
▲ 5	4S8476	SEAL----------24.75"	
▲ 6	9S3222	SEAL----------159.62"	
7	7S3836	GLASS---------(Untinted)---------	2
8	5B3155	PIN----------	2
9	8S8782	GRAB IRON----------	4
10	S1595	BOLT----------	12
	3B4508	LOCKWASHER----------	12
11	L955	SPRING----------	2
12	5B2905	BRACKET----------	2
	4B1245	SCREW----------	8
13	4B2051	NUT----------	8
	3B4503	LOCKWASHER----------	8
14	5B2907	SCREW----------	2
15	6H3608	CRANK ASSEM. ----------	2
▲ 16	9S3222	SEAL----------173.50"	
17	7S3835	GLASS---------(Untinted)---------	2
18	8H2357	DOOR ASSEM. ----(Right Hand)----	1
19	1H7486	LATCH ASSEM. ----------	1
20	6H6173	HANDLE ASSEM. ----------	1
		(Parts of 8H2357 Assem.)	
21	2A4781	BOLT----------	8
22	1B4330	NUT----------	32
23	3B4504	LOCKWASHER------(Plain)-------	32
24	4B1283	SCREW----------	24
25	8F8052	LOCKWASHER-----(Tooth)-------	48
26	1H7482	HINGE----------	8
27	4B1282	SCREW----------	24
28	1H7483	GASKET----------(Top)----------	2
29	1H7484	GASKET---------(Rear)---------	2
		(1/2 in each 8H2357 & 8H2358 Assem.)	
30	8H2358	DOOR ASSEM. -----(Left Hand)-----	1
31	1H7485	LATCH ASSEM. ----------	1
32	6H6174	HANDLE ASSEM. ----------	1
		(Parts of 8H2358 Assem.)	
33	8S8781	GRAB IRON----------	2
	FMO35667	FORM----(Cab Installation)--------	1

▲ ORDER BY THE FOOT

3S1628 CAB GROUP—Part 1

Part of 1P1957, 1P9065, 1P1958 & 1P9064 Cab Arrangements shown on Pages 177, 179, 181 & 183

3S1628 CAB GROUP—Part 2

Part of 1P1957, 1P9065, 1P1958 and 1P9064 Cab Arrangements shown on Pages 177, 179, 181 & 183

▲ ORDER BY THE FOOT

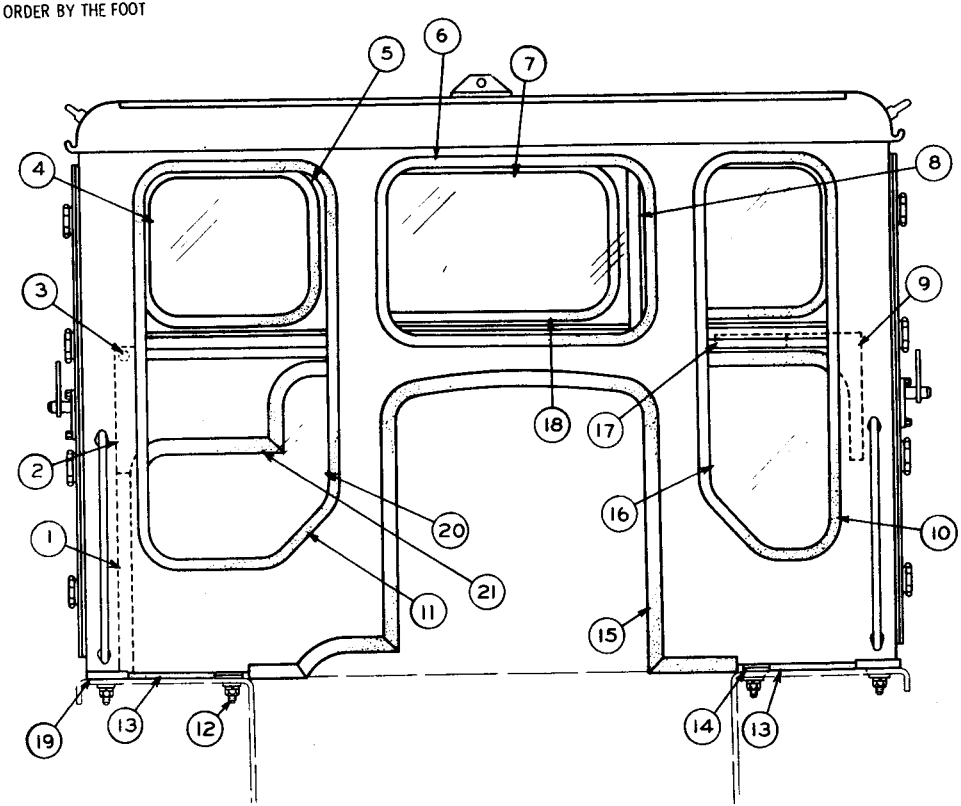

REF. NO.	PART NUMBER	DESCRIPTION	QTY
1	3S817	STRIP	2
2	3S816	CORNER	1
3	2A762	BOLT	22
	3B4504	LOCKWASHER	22
	4B5269	WASHER	22
4	7S3833	GLASS-(Untinted)	2
▲ 5	9S3222	SEAL-116.50"	
▲ 6	9S3222	SEAL-58.75"	
7	7S3834	GLASS-(Untinted)	1
8	3S853	GLASS-(Untinted)	1
9	3S819	COVER	1
▲ 10	9S3222	SEAL-97"	
▲ 11	9S3222	SEAL-109.50"	
12	1D4608	BOLT	8
	1B4331	NUT	8
	3B4512	LOCKWASHER	8
	1D688	WASHER	16
▲ 13	4S8476	SEAL-8.19"	
14	3S1731	SHIM	12
▲ 15	4S8747	SEAL-102"	
16	3S852	GLASS-(Untinted)	1
17	3S818	STRIP	1
▲ 18	9S3222	SEAL-75.25"	
19	3S7072	SHIM	3
20	3S854	GLASS-(Untinted)	1
▲ 21	4S8747	SEAL-128"	
	5H4845	TOOL GROUP	1
		Consisting of:	
	5H4846	HANDLE	1
	5H4847	END-(Straight)	1
	5H4848	BIT-(Curled)	1
		(Not Shown-Seal Installation)	

111629

ONLY "CATERPILLAR" PARTS GIVE "CATERPILLAR" PERFORMANCE

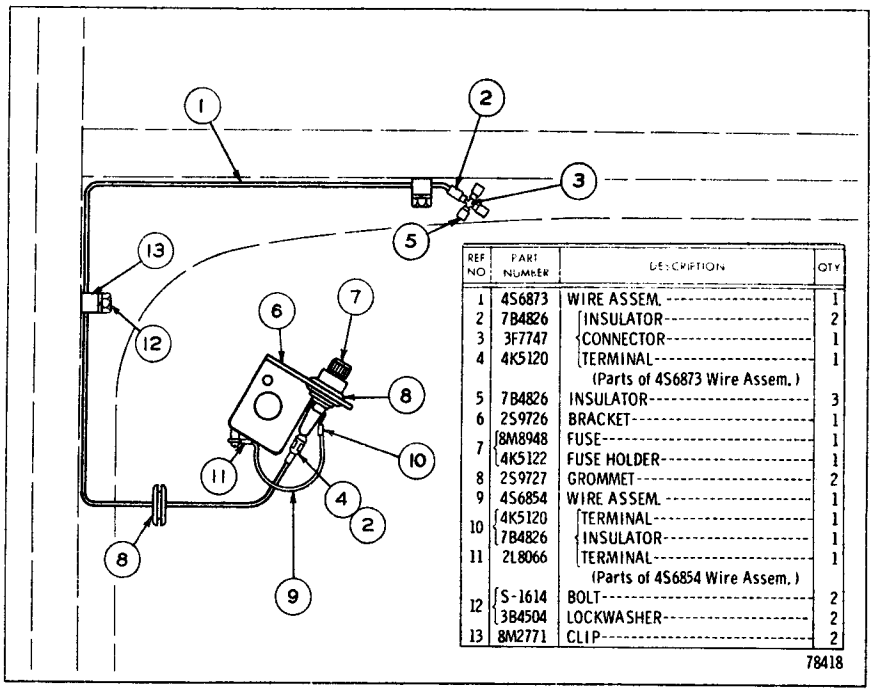

REF NO	PART NUMBER	DESCRIPTION	QTY
1	4S6873	WIRE ASSEM.	1
2	7B4826	INSULATOR	2
3	3F7747	CONNECTOR	1
4	4K5120	TERMINAL	1
		(Parts of 4S6873 Wire Assem.)	
5	7B4826	INSULATOR	3
6	2S9726	BRACKET	1
7	8M8948	FUSE	1
	4K5122	FUSE HOLDER	1
8	2S9727	GROMMET	2
9	4S6854	WIRE ASSEM.	1
10	4K5120	TERMINAL	1
	7B4826	INSULATOR	1
11	2L8066	TERMINAL	1
		(Parts of 4S6854 Wire Assem.)	
12	S-1614	BOLT	2
	3B4504	LOCKWASHER	2
13	8M2771	CLIP	2

4S6937 CAB WIRING GROUP
Part of 1P1957, 1P9065, 1P1958 and 1P9064 Cab Arrangements
shown on Pages 177, 179, 181 and 183

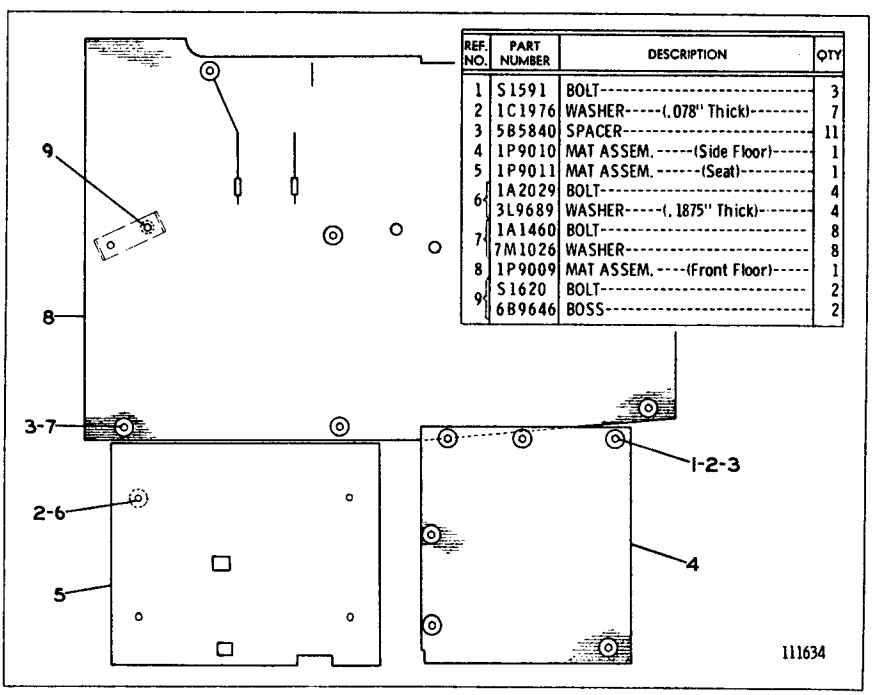

REF. NO.	PART NUMBER	DESCRIPTION	QTY
1	S1591	BOLT	3
2	1C1976	WASHER-----(.078" Thick)	7
3	5B5840	SPACER	11
4	1P9010	MAT ASSEM.-----(Side Floor)	1
5	1P9011	MAT ASSEM.------(Seat)	1
6	1A2029	BOLT	4
	3L9689	WASHER-----(.1875" Thick)	4
7	1A1460	BOLT	8
	7M1026	WASHER	8
8	1P9009	MAT ASSEM.----(Front Floor)	1
9	S1620	BOLT	2
	6B9646	BOSS	2

1P9052 FLOOR MAT GROUP
Part of 1P9065 and 1P9064 Cab Arrangements
shown on Pages 179 and 183

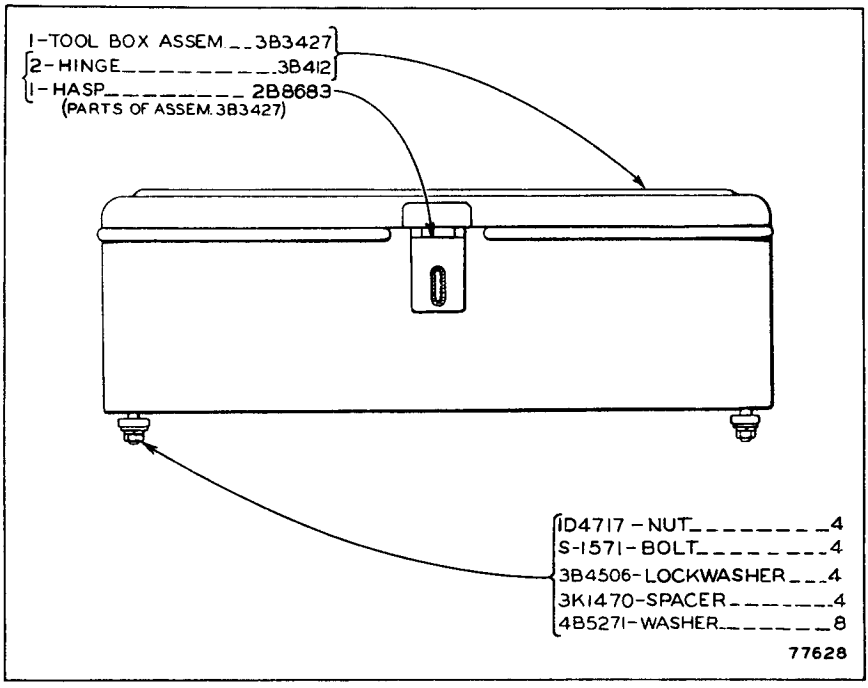

3B3460 TOOL BOX GROUP
Part of 1P1957 & 1P9065 Cab Arrangements shown on Pages 177 & 179

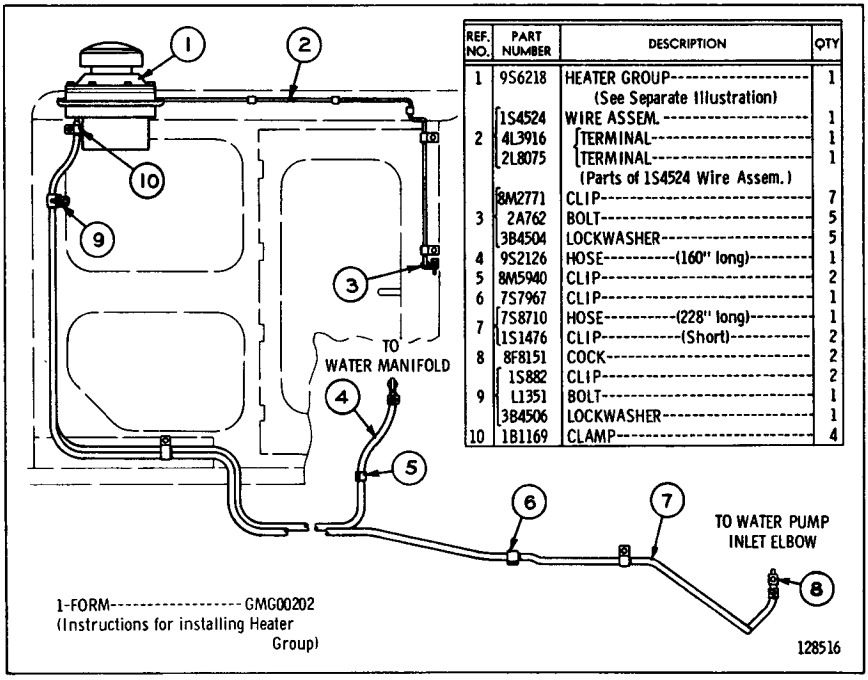

REF. NO.	PART NUMBER	DESCRIPTION	QTY
1	9S6218	HEATER GROUP (See Separate Illustration)	1
2	1S4524	WIRE ASSEM.	1
	4L3916	TERMINAL	1
	2L8075	TERMINAL (Parts of 1S4524 Wire Assem.)	1
3	8M2771	CLIP	7
	2A762	BOLT	5
	3B4504	LOCKWASHER	5
4	9S2126	HOSE----------(160" long)	1
5	8M5940	CLIP	2
6	7S7967	CLIP	1
7	7S8710	HOSE----------(228" long)	1
	1S1476	CLIP----------(Short)	2
8	8F8151	COCK	2
9	1S882	CLIP	2
	L1351	BOLT	1
	3B4506	LOCKWASHER	1
10	1B1169	CLAMP	4

1P3723 HEATER GROUP—Roof Mounted—24 Volt
9S6218 Cab Heater parts are shown on Page 189

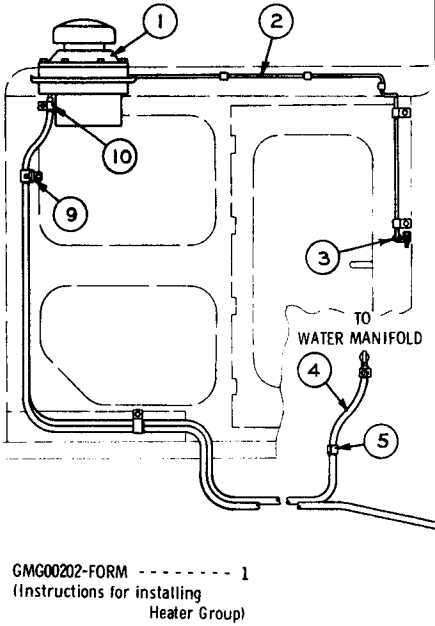

REF. NO.	PART NUMBER	DESCRIPTION	QTY
1	5S480	HEATER GROUP (See Separate Illustration)	1
2	1S4524	WIRE ASSEM.	1
	4L3916	TERMINAL	1
	2L8075	TERMINAL (Parts of 1S4524 Wire Assem.)	1
3	8M2771	CLIP	7
	2A762	BOLT	5
	3B4504	LOCKWASHER	5
4	9S2126	HOSE (160" long)	1
5	8M5940	CLIP	2
6	7S7967	CLIP	1
7	7S8710	HOSE (228" long)	1
	1S1476	CLIP (Short)	2
8	8F8151	COCK	2
9	1S882	CLIP	2
	L1351	BOLT	1
	3B4506	LOCKWASHER	1
10	1B1169	CLAMP	4

8S5378 HEATER GROUP—12 Volt
Roof Mounted—Right Rear Corner

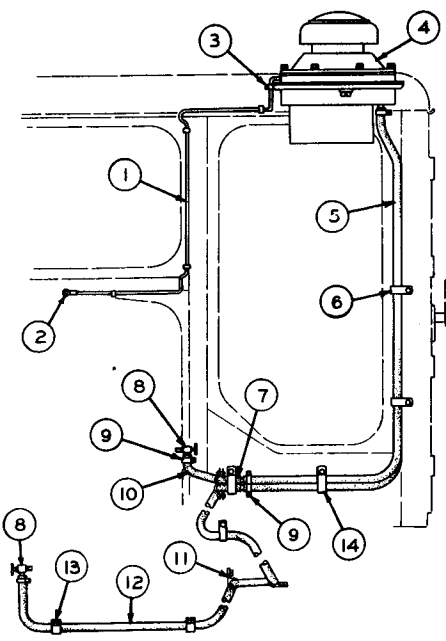

	REF. NO.	PART NUMBER	DESCRIPTION	QTY
C	1	1S4524	WIRE ASSEM.	1
		4L3916	TERMINAL	1
	2	2L8075	TERMINAL (Parts of 1S4524 Wire Assem.)	1
		8M2771	CLIP	5
C	3	2A762	BOLT	5
		3B4504	LOCKWASHER	5
	4	5S480	HEATER GROUP (See Separate Illustration)	1
C	5	5S5888	HOSE (72" long)	2
		1S870	CLAMP	2
C	6	S509	BOLT	2
		9F5644	LOCKWASHER	2
		8S4424	HOSE (2" long)	4
C	7	2S2593	TUBE (8.46" long)	2
C	8	8F8151	COCK	2
C	9	1B1169	CLAMP	8
	10	6B7463	HOSE (21.625" long)	1
	11	8M5940	CLIP	2
	12	5S5313	HOSE (138" long)	1
	13	1S1476	CLIP	3
		1S882	CLIP	2
C	14	L1351	BOLT	2
		3B4506	LOCKWASHER	2

C INDICATES CHANGE
FROM PREVIOUS TYPE

5S148 HEATER GROUP—12 Volt—Roof Mounted
Only separate parts serviced

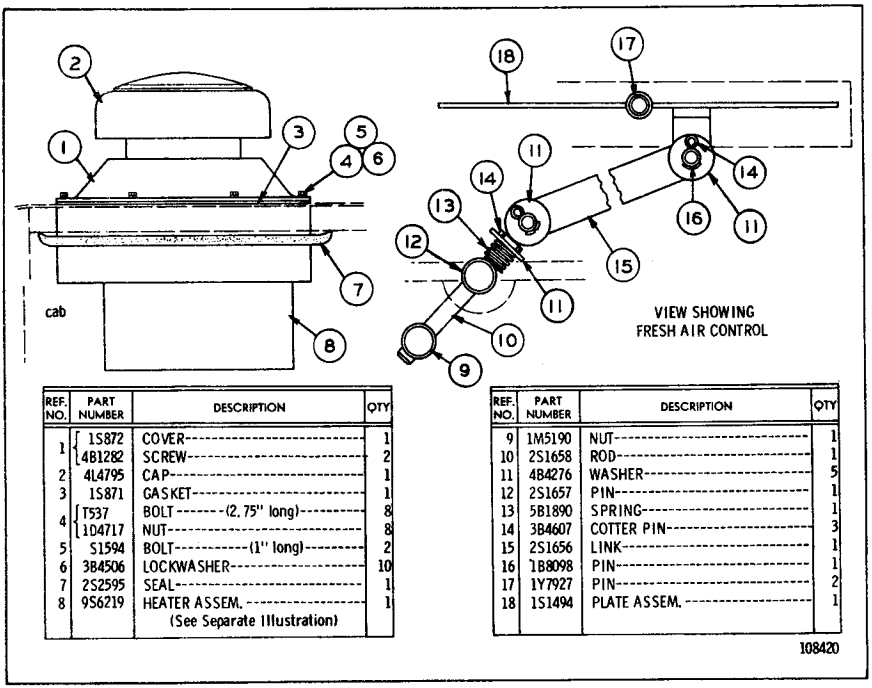

REF. NO.	PART NUMBER	DESCRIPTION	QTY
1	1S872	COVER	1
	4B1282	SCREW	2
2	4L4795	CAP	1
3	1S871	GASKET	1
4	T537	BOLT -------(2.75" long)---------	8
	1D4717	NUT	8
5	S1594	BOLT----------(1" long)---------	2
6	3B4506	LOCKWASHER	10
7	2S2595	SEAL	1
8	9S6219	HEATER ASSEM. (See Separate Illustration)	1

REF. NO.	PART NUMBER	DESCRIPTION	QTY
9	1M5190	NUT	1
10	2S1658	ROD	1
11	4B4276	WASHER	5
12	2S1657	PIN	1
13	5B1890	SPRING	1
14	3B4607	COTTER PIN	3
15	2S1656	LINK	1
16	1B8098	PIN	1
17	1Y7927	PIN	2
18	1S1494	PLATE ASSEM.	1

108420

9S6218 CAB HEATER GROUP
Part of 1P3723 Heater Group shown on Page 187
9S6219 Hot Water Heater parts are shown on Page 190

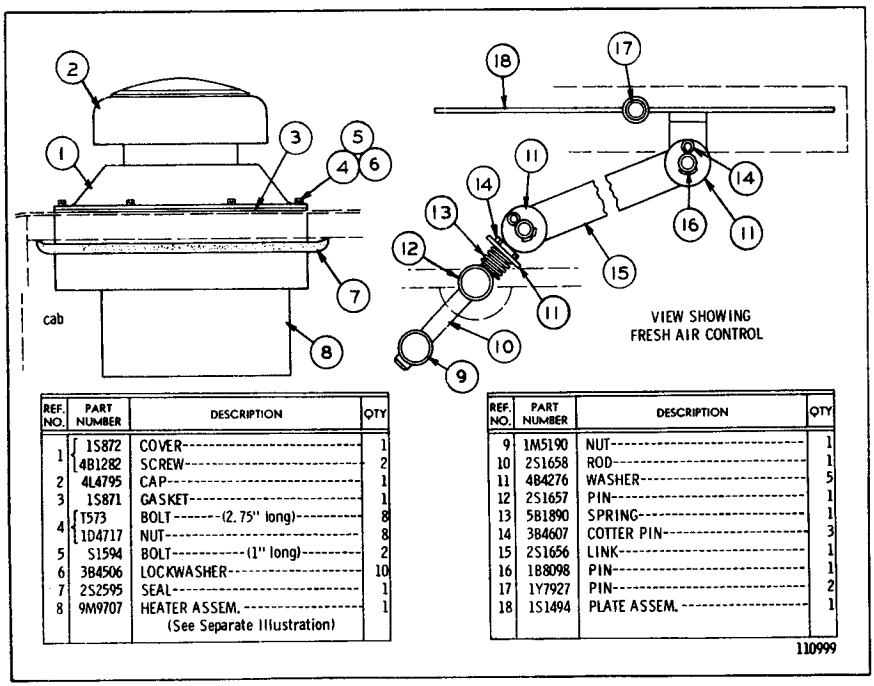

REF. NO.	PART NUMBER	DESCRIPTION	QTY
1	1S872	COVER	1
	4B1282	SCREW	2
2	4L4795	CAP	1
3	1S871	GASKET	1
4	T573	BOLT -------(2.75" long)---------	8
	1D4717	NUT	8
5	S1594	BOLT----------(1" long)---------	2
6	3B4506	LOCKWASHER	10
7	2S2595	SEAL	1
8	9M9707	HEATER ASSEM. (See Separate Illustration)	1

REF. NO.	PART NUMBER	DESCRIPTION	QTY
9	1M5190	NUT	1
10	2S1658	ROD	1
11	4B4276	WASHER	5
12	2S1657	PIN	1
13	5B1890	SPRING	1
14	3B4607	COTTER PIN	3
15	2S1656	LINK	1
16	1B8098	PIN	1
17	1Y7927	PIN	2
18	1S1494	PLATE ASSEM.	1

110999

5S480 CAB HEATER GROUP
Part of 8S5378 and 5S148 Heater Groups
9M9707 Hot Water Heater parts are shown on Page 191

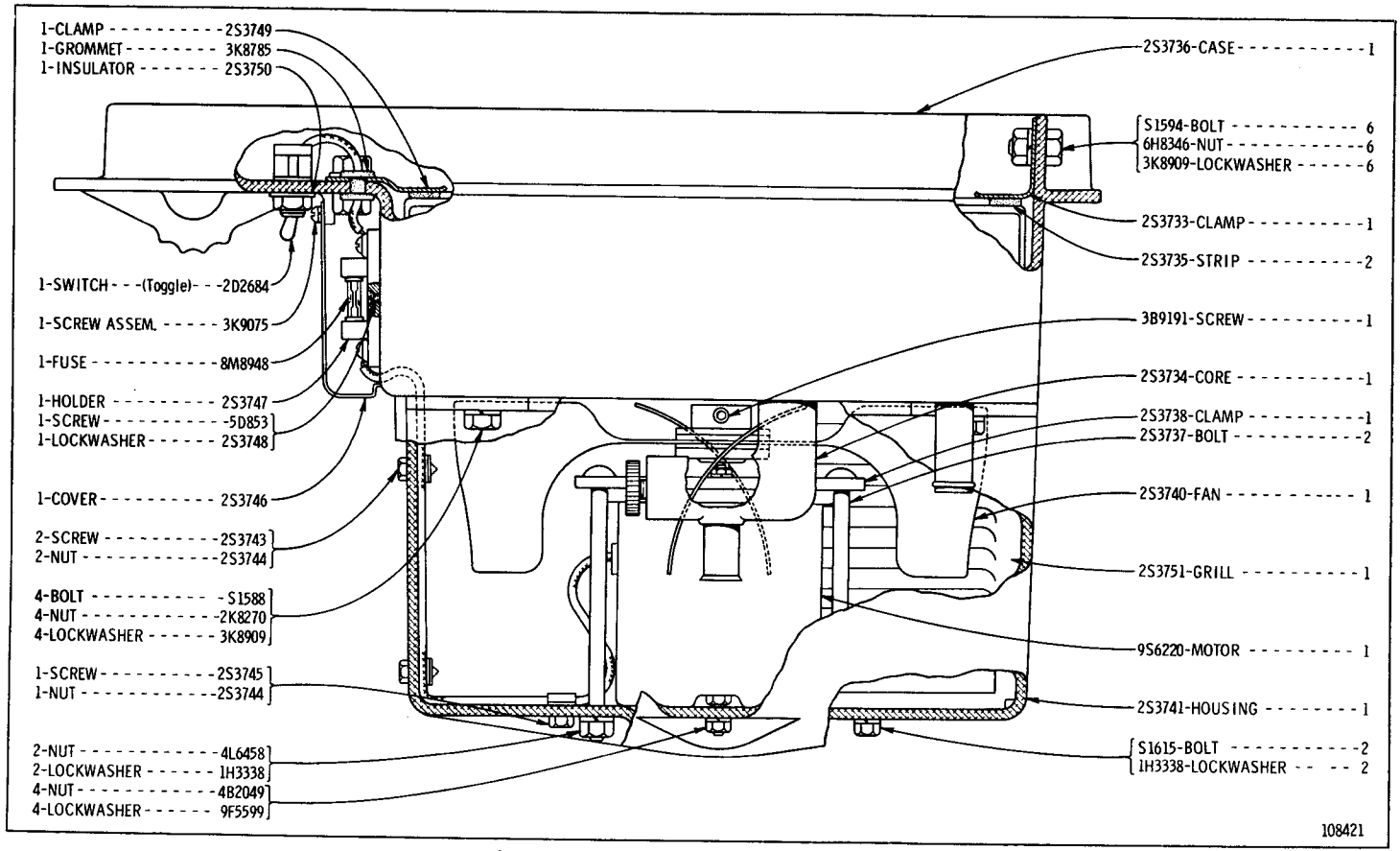

9S6219 HOT WATER HEATER ASSEMBLY

Part of 9S6218 Cab Heater Group shown on Page 189

9M9707 HOT WATER HEATER ASSEMBLY

Part of 5S480 Cab Heater Group shown on Page 189

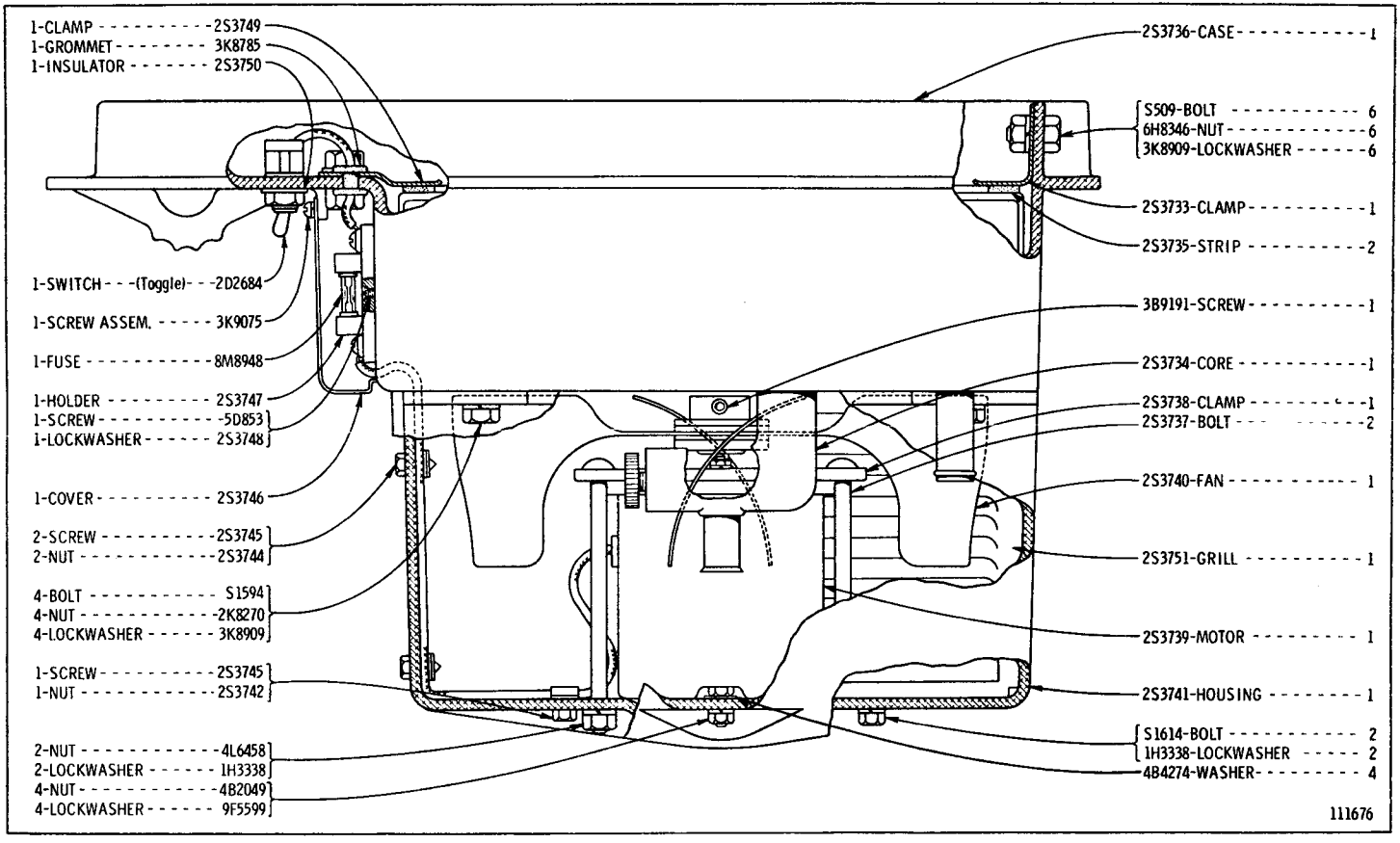

ONLY "CATERPILLAR" PARTS GIVE "CATERPILLAR" PERFORMANCE

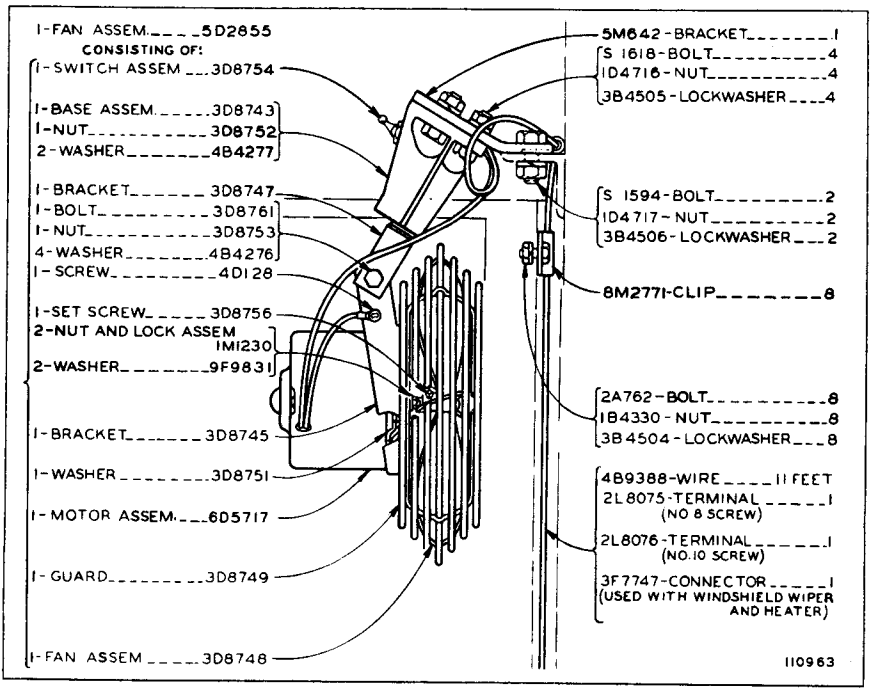

5M2022 DEFROSTER FAN GROUP—12 Volt

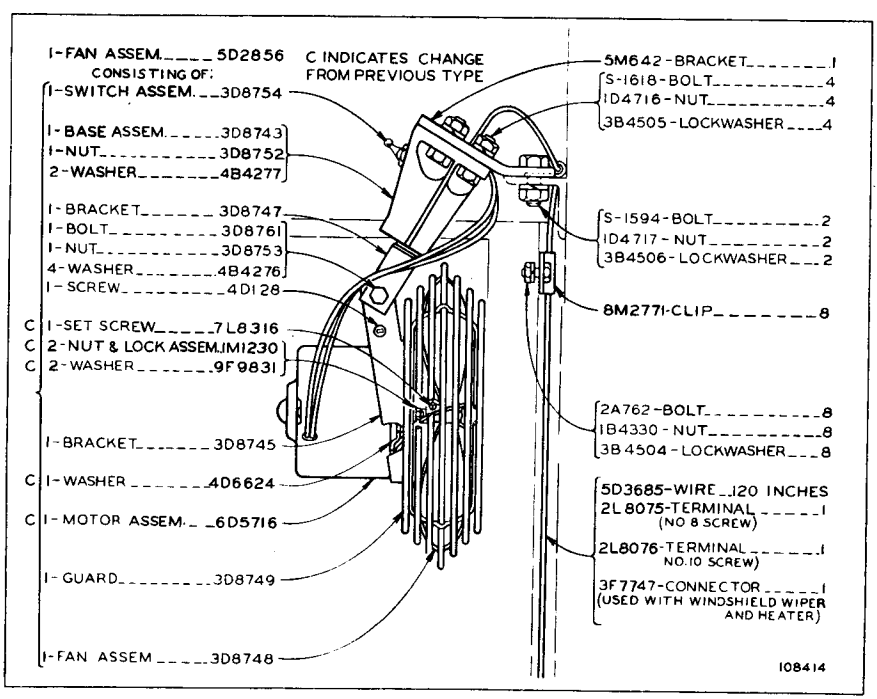

9S6222 DEFROSTER FAN GROUP—24 Volt

ALWAYS GIVE SERIAL NUMBER WHEN ORDERING PARTS

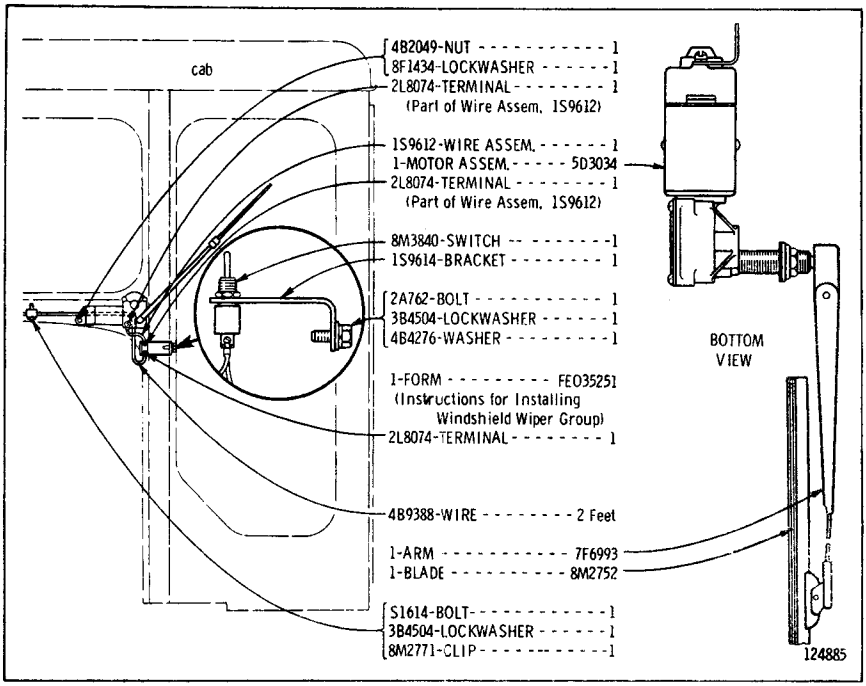

4S6857 WINDSHIELD WIPER GROUP—12 Volt

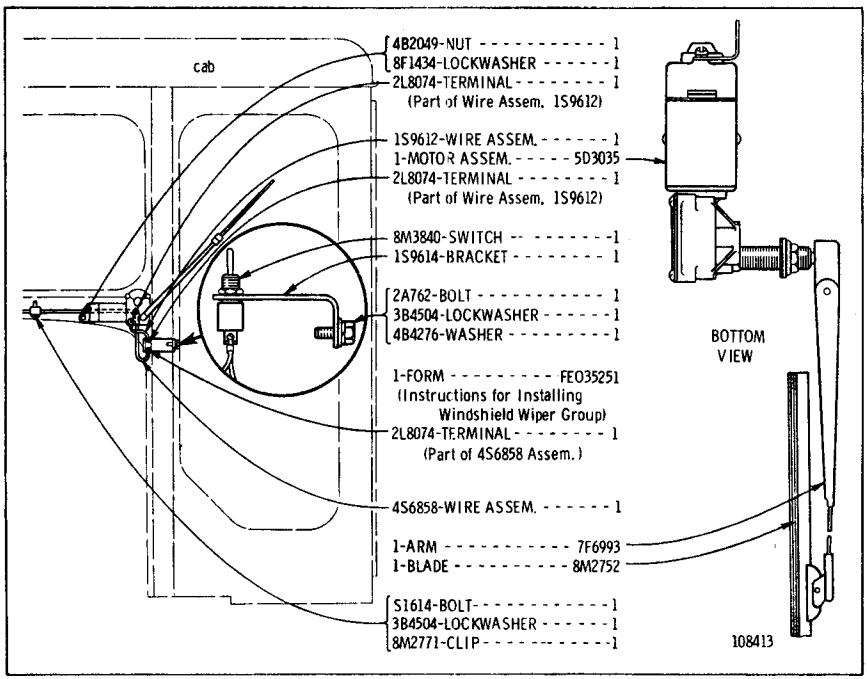

9S6221 WINDSHIELD WIPER GROUP—24 Volt

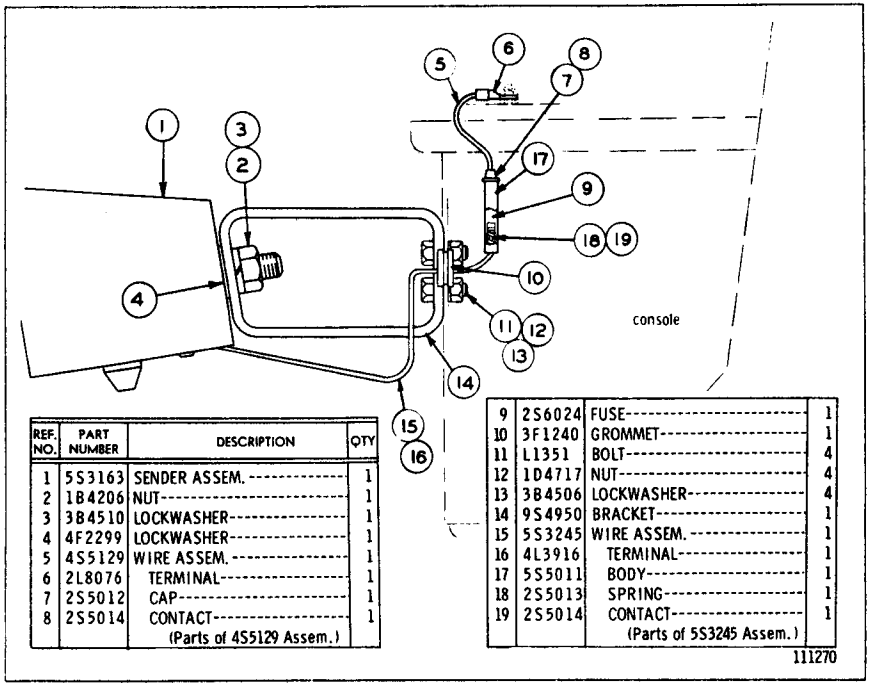

REF. NO.	PART NUMBER	DESCRIPTION	QTY
1	5S3163	SENDER ASSEM.	1
2	1B4206	NUT	1
3	3B4510	LOCKWASHER	1
4	4F2299	LOCKWASHER	1
5	4S5129	WIRE ASSEM.	1
6	2L8076	TERMINAL	1
7	2S5012	CAP	1
8	2S5014	CONTACT	1
		(Parts of 4S5129 Assem.)	
9	2S6024	FUSE	1
10	3F1240	GROMMET	1
11	L1351	BOLT	4
12	1D4717	NUT	4
13	3B4506	LOCKWASHER	4
14	9S4950	BRACKET	1
15	5S3245	WIRE ASSEM.	1
16	4L3916	TERMINAL	1
17	5S5011	BODY	1
18	2S5013	SPRING	1
19	2S5014	CONTACT	1
		(Parts of 5S3245 Assem.)	

5S3171 SENDER GROUP—12 Volt
SIGNALS OPERATOR WHEN SCRAPER BOWL IS FULL

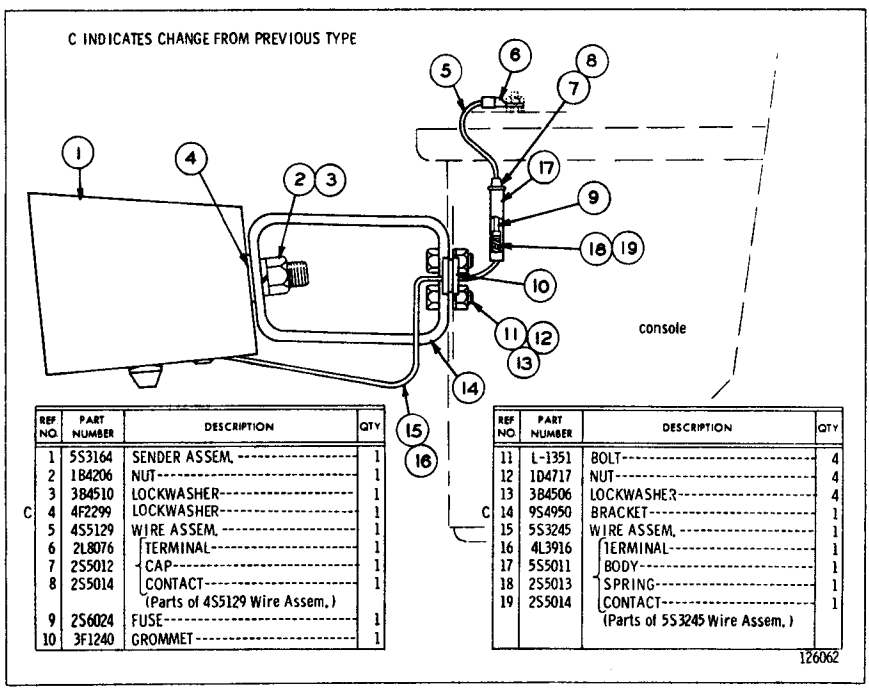

REF NO.	PART NUMBER	DESCRIPTION	QTY
1	5S3164	SENDER ASSEM.	1
2	1B4206	NUT	1
3	3B4510	LOCKWASHER	1
C 4	4F2299	LOCKWASHER	1
5	4S5129	WIRE ASSEM.	1
6	2L8076	TERMINAL	1
7	2S5012	CAP	1
8	2S5014	CONTACT	1
		(Parts of 4S5129 Wire Assem.)	
9	2S6024	FUSE	1
10	3F1240	GROMMET	1

REF NO.	PART NUMBER	DESCRIPTION	QTY
11	L-1351	BOLT	4
12	1D4717	NUT	4
13	3B4506	LOCKWASHER	4
C 14	9S4950	BRACKET	1
15	5S3245	WIRE ASSEM.	1
16	4L3916	TERMINAL	1
17	5S5011	BODY	1
18	2S5013	SPRING	1
19	2S5014	CONTACT	1
		(Parts of 5S3245 Wire Assem.)	

8S2956 SENDER GROUP—24 Volt
SIGNALS OPERATOR WHEN SCRAPER BOWL IS FULL

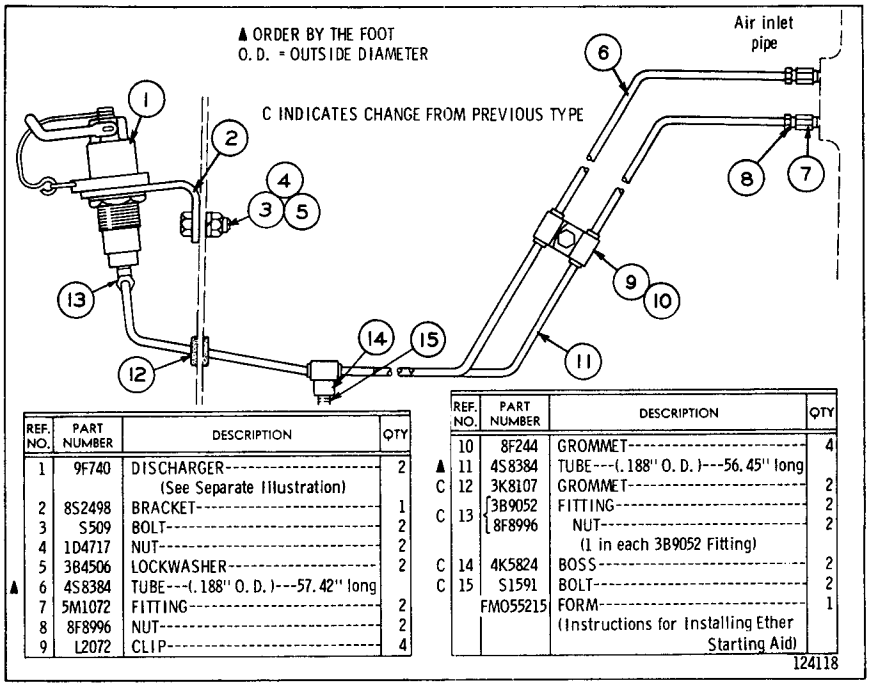

REF. NO.	PART NUMBER	DESCRIPTION	QTY
1	9F740	DISCHARGER (See Separate Illustration)	2
2	8S2498	BRACKET	1
3	S509	BOLT	2
4	1D4717	NUT	2
5	3B4506	LOCKWASHER	2
▲ 6	4S8384	TUBE---(.188" O. D.)---57.42" long	
7	5M1072	FITTING	2
8	8F8996	NUT	2
9	L2072	CLIP	4

REF. NO.	PART NUMBER	DESCRIPTION	QTY
10	8F244	GROMMET	4
▲ 11	4S8384	TUBE---(.188" O. D.)---56.45" long	
C 12	3K8107	GROMMET	2
C 13	3B9052	FITTING	2
	8F8996	NUT (1 in each 3B9052 Fitting)	2
C 14	4K5824	BOSS	2
C 15	S1591	BOLT	2
	FM055215	FORM (Instructions for Installing Ether Starting Aid)	1

124118

8S1787 ETHER STARTING AID GROUP

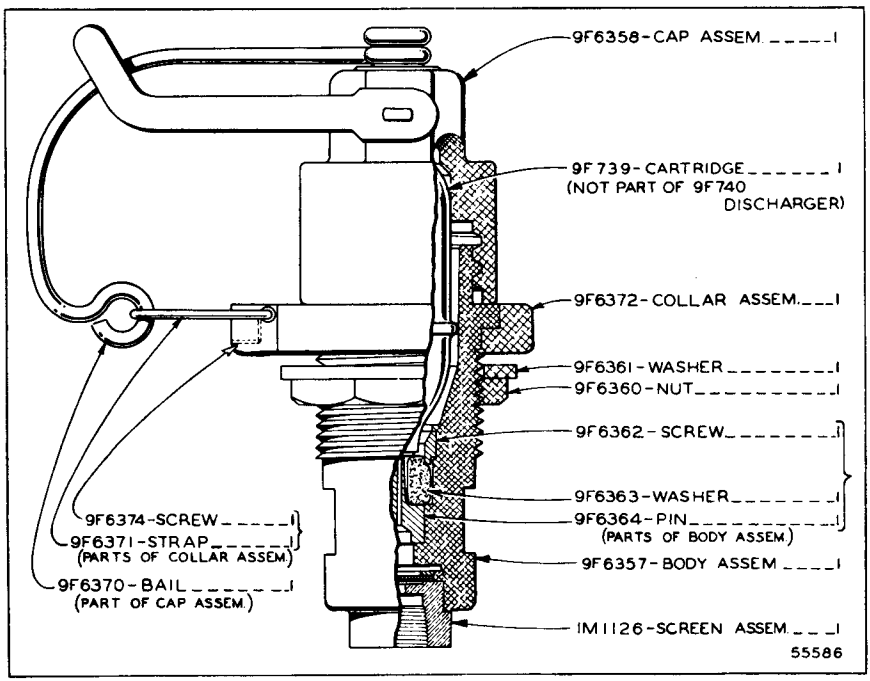

9F740 DISCHARGER GROUP
Part of 8S1787 Ether Starting Aid Group

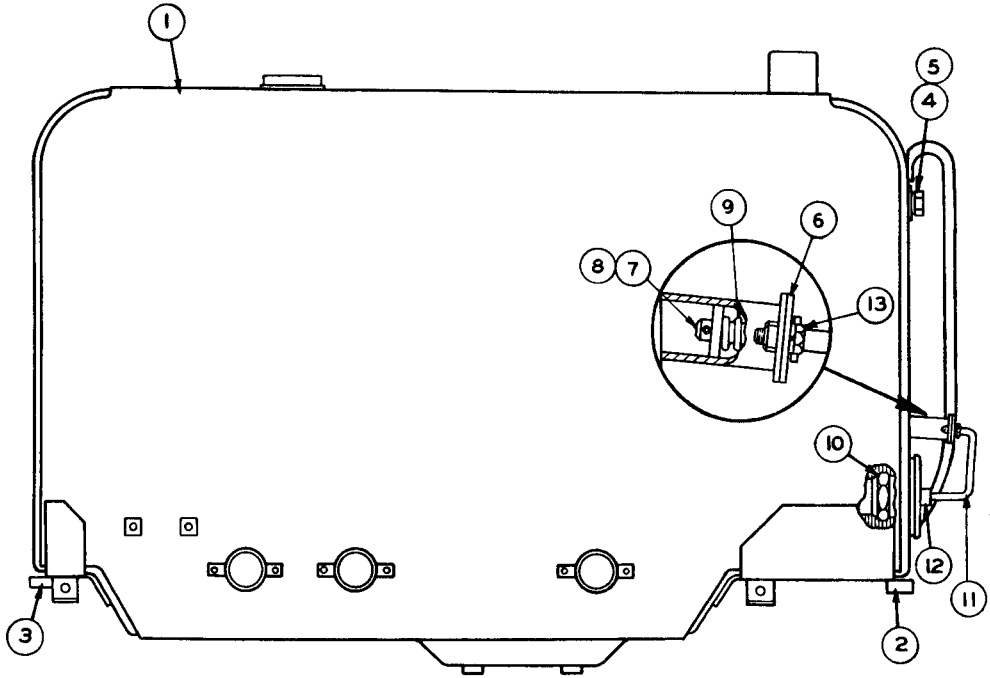

REF. NO.	PART NUMBER	DESCRIPTION	QTY
1	4S7608	TANK ASSEM.	1
2	3S3352	LUG	2
3	3S6191	LUG	2
4	4J4742	BODY ASSEM.	1
5	7M8485	"O" RING	1
6	9S4754	PLATE	1
7	9F7882	PIN	2
8	3L9689	WASHER	1
9	5J3719	SPRING	1
10	5D8418	ADAPTER	1
	6D2492	SEAL	1
11	9S4755	ROD ASSEM.	1
	1A4784	WASHER	1
12	5S105	COVER ASSEM.	1
	2B4031	GASKET	1
13	S1617	BOLT	2
	3B4505	LOCKWASHER	2

4S7600 FUEL TANK GROUP—Rapid Filling—134 U.S. Gallon

1P4817 FUEL TANK GROUP–Rapid Filling–134 U.S. Gallon
FOR USE WITH AUTOMATIC SHUT-OFF NOZZLE FUELING SYSTEMS

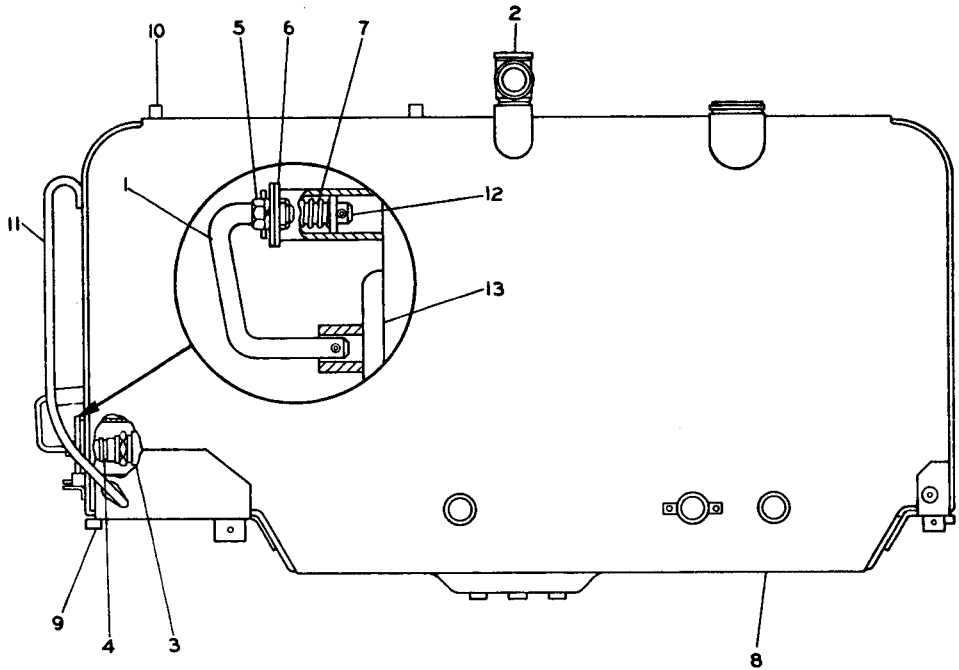

REF. NO.	PART NUMBER	DESCRIPTION	QTY
1	9S4755	ROD ASSEM.	1
	1A4784	WASHER	1
2	7D6006	VENT ASSEM.	1
3	3B7826	COUPLING	1
4	7D6005	NIPPLE ASSEM.	1
5	S1617	BOLT	2
	3B4505	LOCKWASHER	2
6	9S4754	PLATE	1
7	5J3719	SPRING	1
8	1P4816	TANK ASSEM.	1
9	5M3012	LUG	2
10	8F9836	LUG	3
11	2S8654	GRAB IRON------(L.H.)	1
	GMG00565	FORM	1
	(Instructions for installing Tank Assem.)		
12	9F7882	PIN	2
	3L9689	WASHER	1
13	5S105	COVER ASSEM.	1
	2B4031	GASKET	1

THE FOLLOWING REPAIR KITS ARE AVAILABLE:
7D8059-KIT- - - (Seal-Nipple Assem.) - - - - 1
7D8063-KIT- - - - - (Vent Assem.) - - - - - - - 1

111639

ONLY "CATERPILLAR" PARTS GIVE "CATERPILLAR" PERFORMANCE

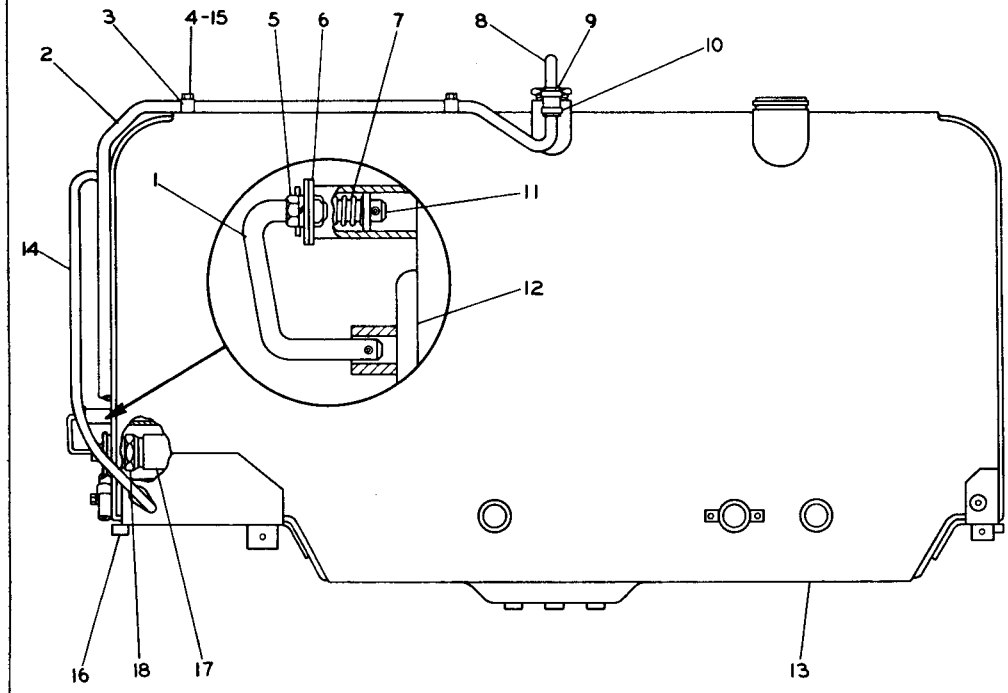

REF. NO.	PART NUMBER	DESCRIPTION	QTY
1	9S4755	ROD ASSEM.	1
	1A4784	WASHER	1
		(Part of 9S4755 Assem.)	
2	4S8388	TUBE-----(.750" O. D.)-----69.21"	
3	5K9660	CLIP	3
4	S509	BOLT	3
	3B4506	LOCKWASHER	3
5	S1617	BOLT	2
	3B4505	LOCKWASHER	2
6	9S4754	PLATE	1
7	5J3719	SPRING	1
8	1P4813	TUBE ASSEM.	1
9	1P4862	HOSE	1
10	7H1442	CLAMP	2
11	9F7882	PIN	2
	3L9689	WASHER	1
12	5S105	COVER ASSEM.	1
	2B4031	GASKET	1
		(Part of 5S105 Assem.)	
13	1P4816	TANK ASSEM.	1
14	2S8654	GRAB IRON-------(L. H.)	1
15	8F9836	LUG	3
16	5M3012	LUG	2
	GMG00565	FORM	1
		(Instructions for installing Tank Assem.)	
17	1P4808	COUPLING	1
18	5D8418	ADAPTER	1
	6D2492	SEAL	1

▲ ORDER BY THE FOOT
O. D. =OUTSIDE DIAMETER

111640

1P4818 FUEL TANK GROUP—Rapid Filling—134 U.S. Gallon
FOR USE WITH MANUAL SHUT-OFF FUELING EQUIPMENT

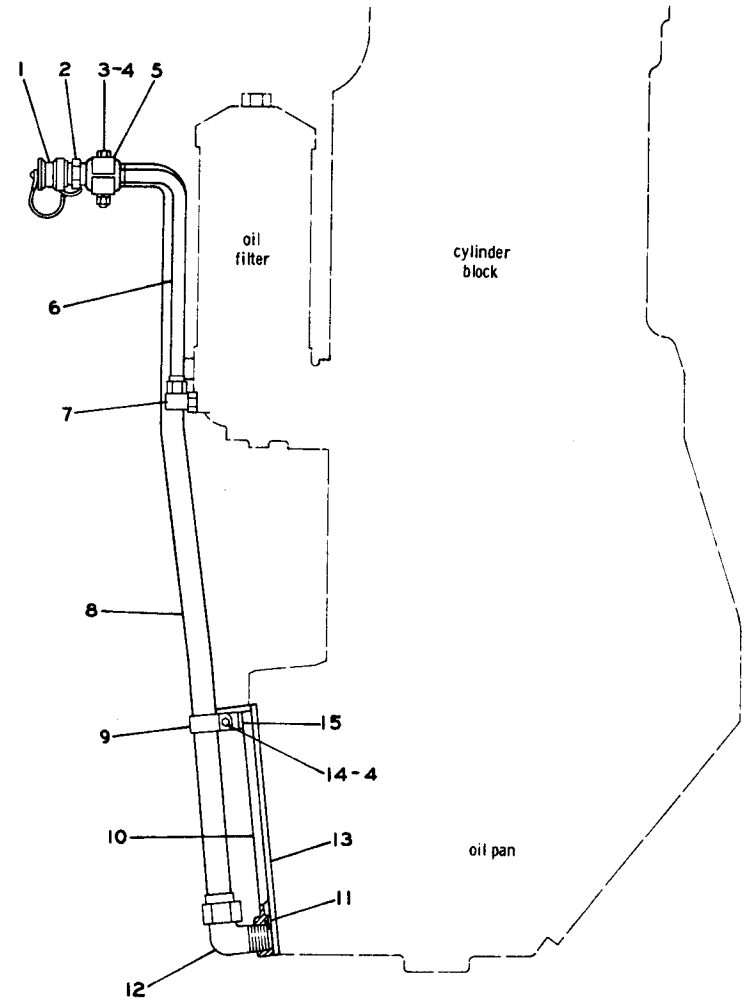

REF. NO.	PART NUMBER	DESCRIPTION	QTY
1	9S9272	CAP ASSEM.	2
2	9S9271	COUPLER	2
3	S1591	BOLT	1
4	1D4717	NUT	2
	3B4506	LOCKWASHER	2
5	6M8474	CLAMP	2
	2H432	SPACER	2
6	9S8717	TUBE ASSEM.	1
7	4D354	FITTING	1
	3K360	SEAL	1
8	9S6522	TUBE ASSEM.	1
9	1S724	CLIP	1
10	1P704	COVER ASSEM.	1
11	1P703	BAFFLE	1
	8S7499	PIN	2
12	9S7296	ELBOW	1
13	9S6526	GASKET	1
14	S509	BOLT	1
15	9S6524	BRACKET	1
	9S9766	PLATE (Instruction)	1
	4B4158	SCREW	4
		(Not Shown)	

132094

9S8720 HIGH SPEED OIL CHANGE GROUP
Note: 9S9751 High Speed Oil Change Coupling Group, consisting of: 1–9S9273 Coupler and 1–9S9274 Plug Assembly, is available

REF. NO.	PART NUMBER	DESCRIPTION	QTY
1	1A2812	WASHER	1
	3B4617	COTTER PIN	1
2	5M8736	SUPPORT ASSEM.	1
3	5M8735	PEDAL ASSEM.	1
4	S1595	BOLT	2
	3B4508	LOCKWASHER	2
5	1J4384	PIN	4
	3B4615	COTTER PIN	4
6	1A9252	END	2
7	5B9079	NUT	4
8	8H460	ROD ASSEM.	1
9	1M1341	END	1
10	5B9079	NUT	1
		(Parts of 8H460 Assem.)	

REF. NO.	PART NUMBER	DESCRIPTION	QTY
11	2M2967	LEVER ASSEM.	1
	1K6676	BUSHING	1
		(Part of 2M2967 Assem.)	
12	1F9489	WASHER	1
13	3B4617	COTTER PIN	1
14	2M2829	ROD	1
15	1B4203	NUT	2
	3B4506	LOCKWASHER	2
16	2M2830	ROD	1
17	9S2153	SHAFT	1
18	3B4632	COTTER PIN	1
19	9S2152	LEVER ASSEM.	1
	1H4563	BEARING	2
		(Part of 9S2152 Assem.)	
20	5M2027	JOINT	2

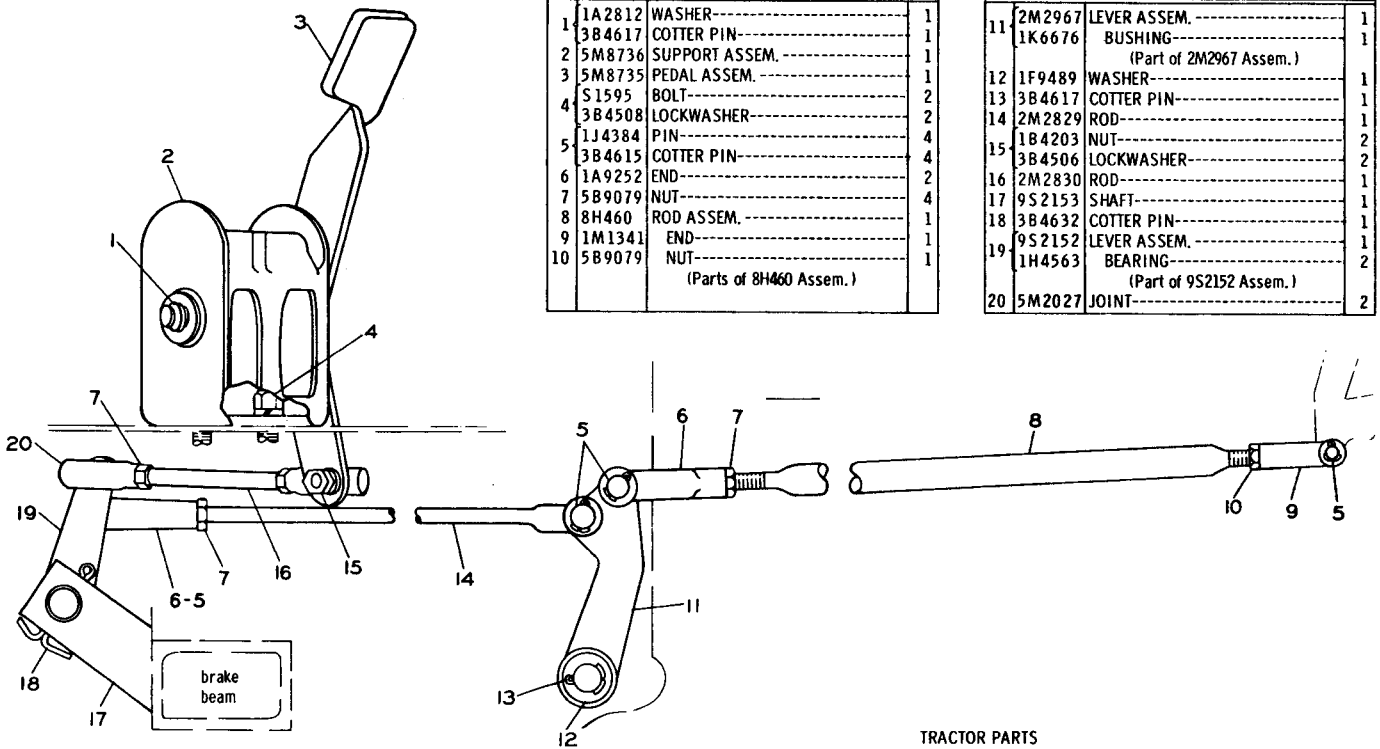

9S2181 DECELERATOR CONTROL GROUP—Part 1

9S2181 DECELERATOR CONTROL GROUP—Part 2

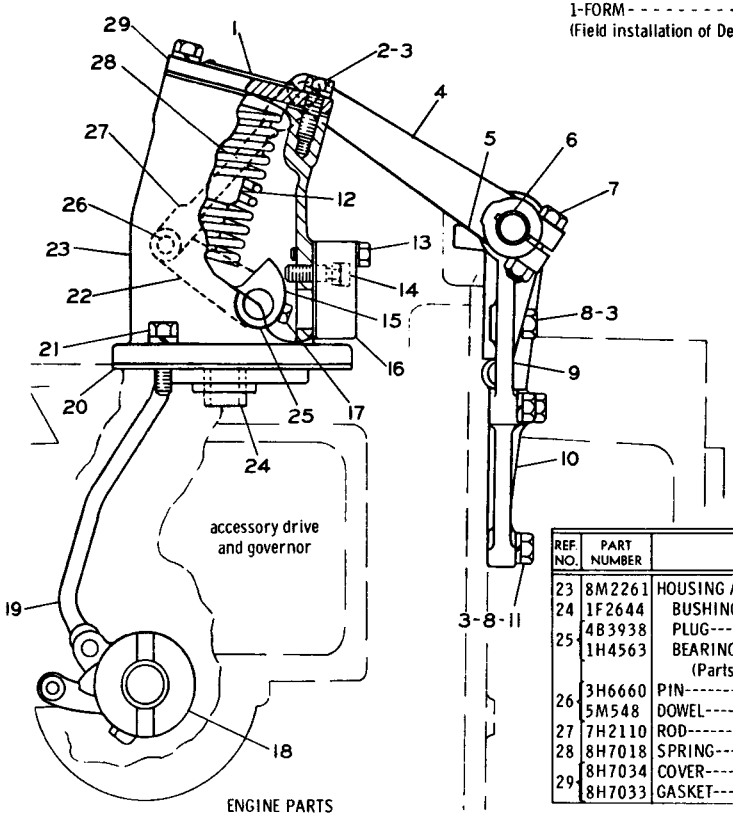

REF. NO.	PART NUMBER	DESCRIPTION	QTY
23	8M2261	HOUSING ASSEM.	1
24	1F2644	BUSHING	1
25	4B3938	PLUG	1
	1H4563	BEARING	2
		(Parts of 8M2261 Assem.)	
26	3H6660	PIN	2
	5M548	DOWEL	2
27	7H2110	ROD	1
28	8H7018	SPRING	1
29	8H7034	COVER	1
	8H7033	GASKET	1

REF. NO.	PART NUMBER	DESCRIPTION	QTY
1	8M6524	PLATE	1
	4B4158	SCREW	2
2	1A2029	BOLT	2
3	3B4506	LOCKWASHER	6
4	8H455	LEVER	1
5	4H3674	LEVER	1
	5B2208	BOLT	1
6	9H505	SHAFT	1
	1B8706	KEY	2
7	T924	BOLT	1
	1B4203	NUT	1
8	S1571	BOLT—(1.75" long)	3
9	8H483	BRACKET ASSEM.	1
	8H8175	BEARING	1
		(Part of 8H483 Assem.)	
10	8H484	BRACKET ASSEM.	1
	8H8175	BEARING	1
		(Part of 8H484 Assem.)	
11	S1590	BOLT—(2" long)	1
12	8H7021	GUIDE	1
	8H7109	SEAT ASSEM.	1
13	1A9579	BOLT	2
	8F7242	WASHER	2
14	8H7025	SCREW	1
15	8H7017	LEVER	1
16	8H7031	COVER	1
	8H7032	GASKET	1
17	7B2742	BOLT	1
	7F2836	LOCK	1
18	8H7022	HUB	1
19	1S718	LEVER ASSEM.	1
20	1S7929	GASKET	1
	S1618	BOLT—(1" long)	2
21	1D4540	BOLT—(2.75" long)	2
	3B4505	LOCKWASHER	4
22	8H7103	LEVER ASSEM.	1
	5H1190	SEAL	1

128941

ONLY "CATERPILLAR" PARTS GIVE "CATERPILLAR" PERFORMANCE

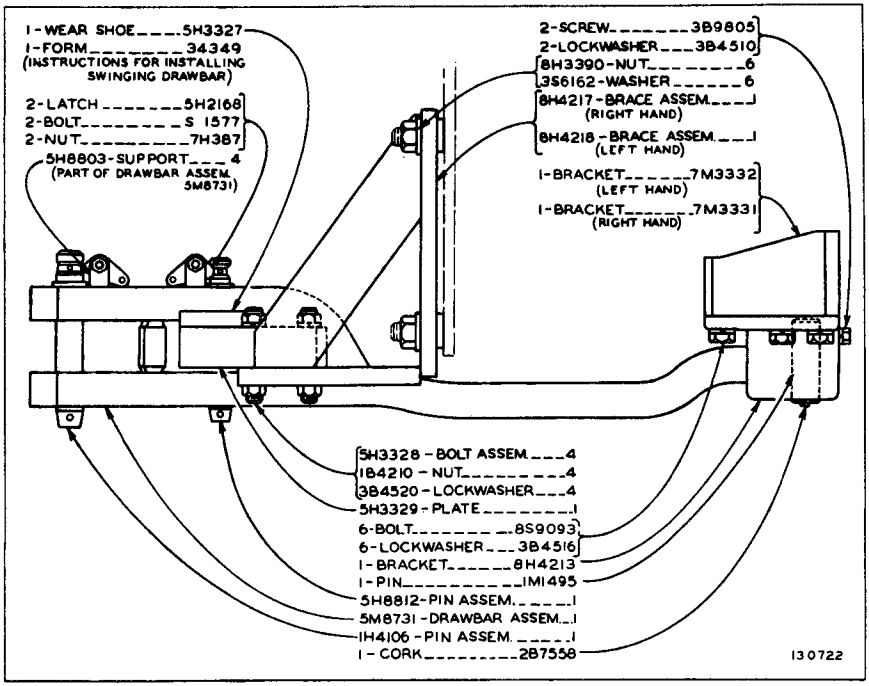

5M8732 SWINGING DRAWBAR GROUP

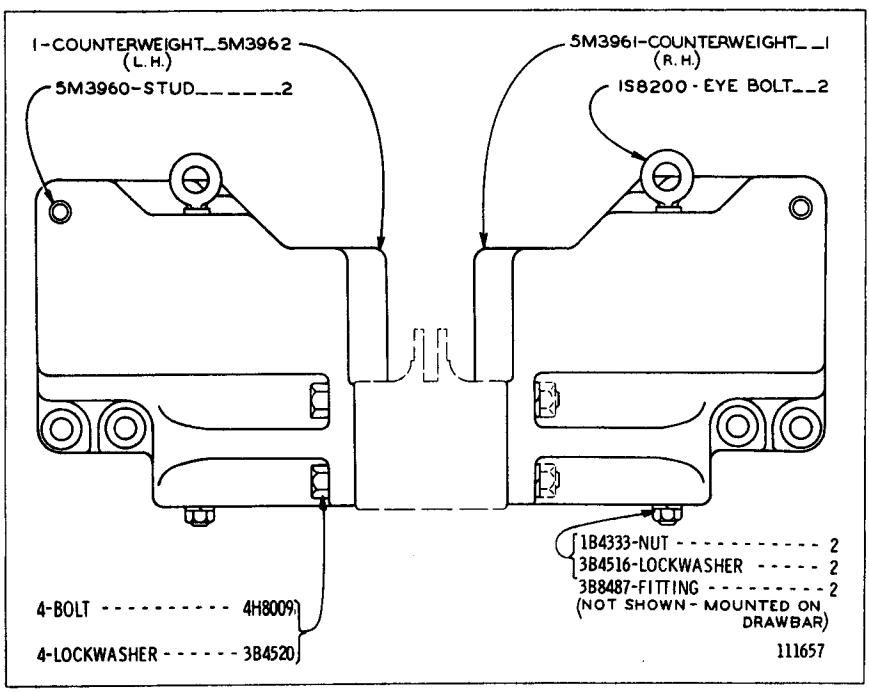

1S8717 COUNTERWEIGHT GROUP—3500 Pounds
FOR USE WITHOUT RIPPER

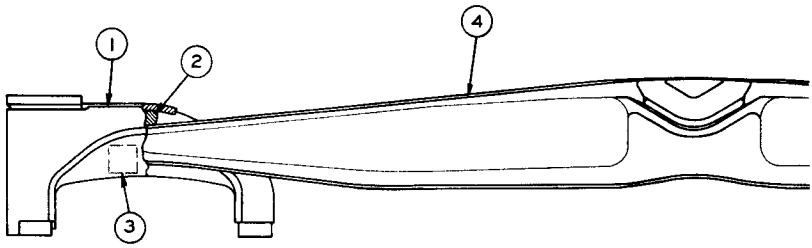

REF. NO.	PART NUMBER	DESCRIPTION	QTY
1	9S320	SUPPORT ASSEM.	2
2	5M4476	LUG	2
3	3F5234	PLATE	4
		(One-half each in 9S320 Support Assem.)	
4	8S2153	EQUALIZER BAR	1

124553

9S2976 EQUALIZER BAR GROUP—Heavy Duty
Factory Installation

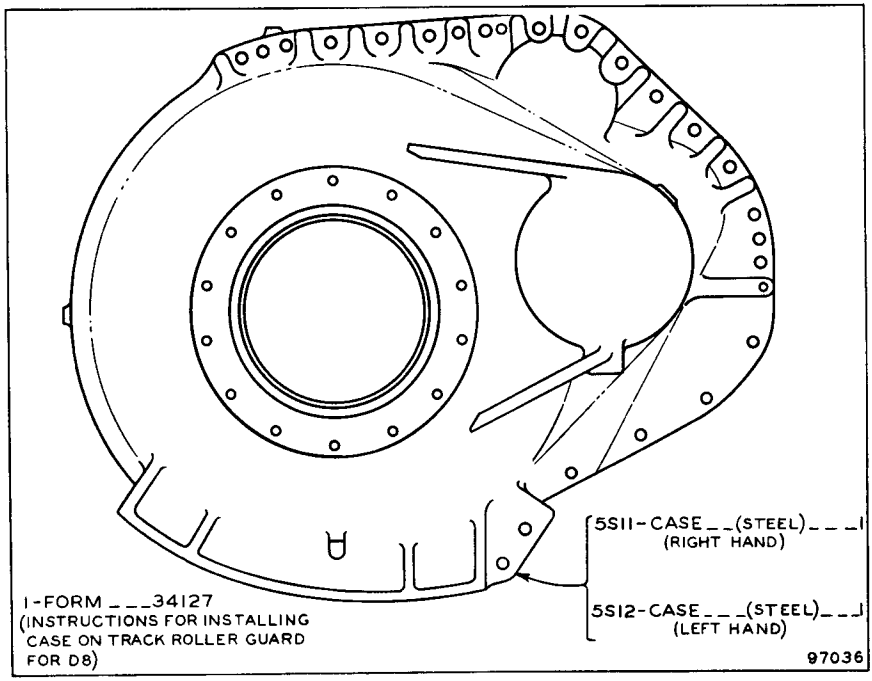

5S165 FINAL DRIVE STEEL CASE GROUP
Only separate parts serviced

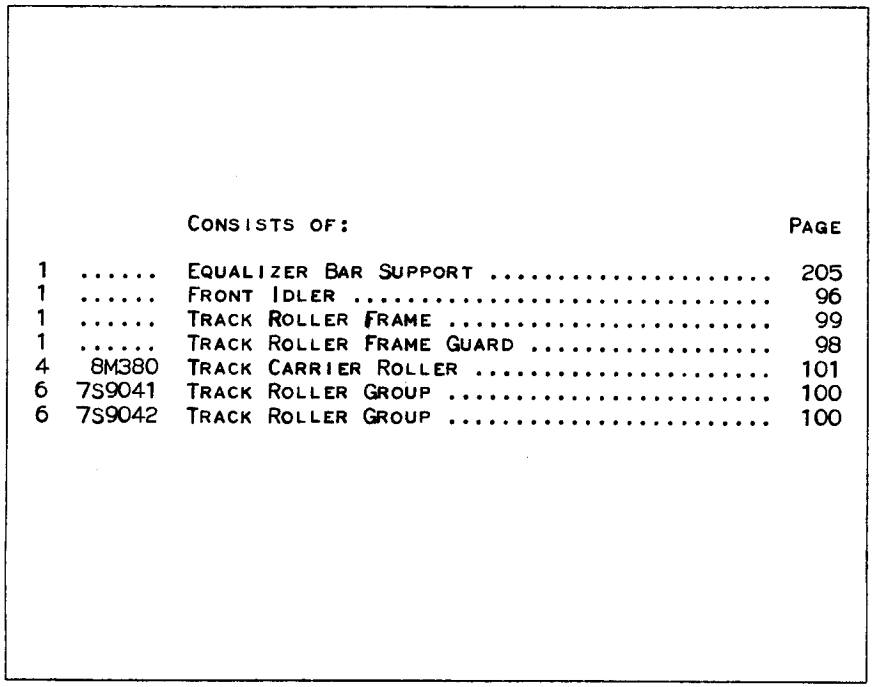

		Consists of:	Page
1	.....	Equalizer Bar Support	205
1	.....	Front Idler	96
1	.....	Track Roller Frame	99
1	.....	Track Roller Frame Guard	98
4	8M380	Track Carrier Roller	101
6	7S9041	Track Roller Group	100
6	7S9042	Track Roller Group	100

1P8316 SIX ROLLER TRACK ROLLER FRAME AND SUPPORT ARRANGEMENT

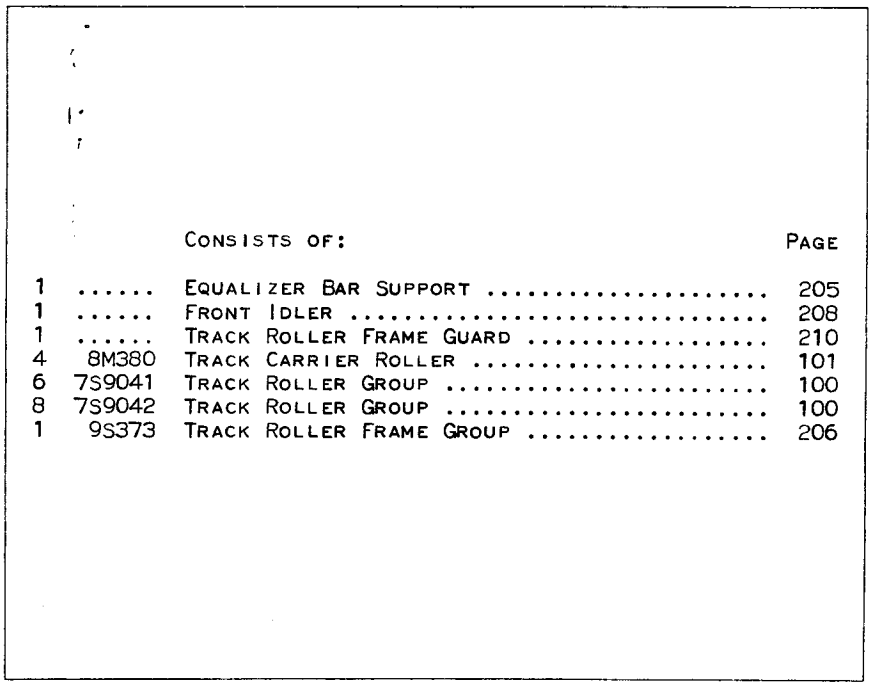

		Consists of:	Page
1	.....	Equalizer Bar Support	205
1	.....	Front Idler	208
1	.....	Track Roller Frame Guard	210
4	8M380	Track Carrier Roller	101
6	7S9041	Track Roller Group	100
8	7S9042	Track Roller Group	100
1	9S373	Track Roller Frame Group	206

1P8317 SEVEN ROLLER TRACK ROLLER FRAME AND SUPPORT ARRANGEMENT

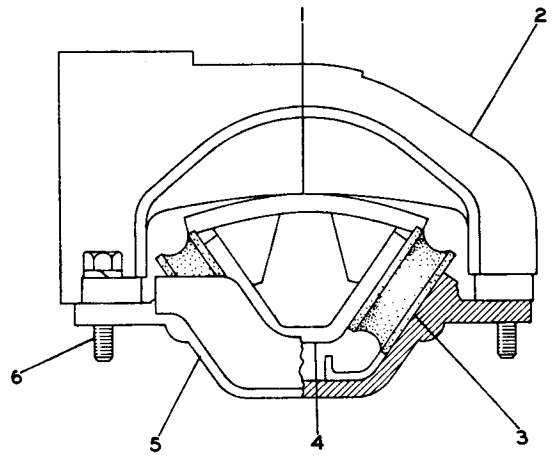

REF. NO.	PART NUMBER	DESCRIPTION	QTY
1	2S7154	PLATE ASSEM.	2
2	8M422	SUPPORT ASSEM.	2
3	8H5416	PAD	4
4	2S7157	PLATE ASSEM.	2
5	1P1627	SUSPENSION ASSEM.	2
6	2H3856	BOLT	8
	3B4514	LOCKWASHER	8

111671

EQUALIZER BAR SUPPORT (1P8315 N/S)
Part of 1P8316 and 1P8317 Track Roller Frame and Support Arrangements

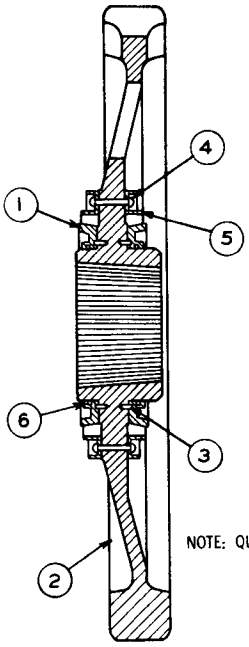

Note: 1M3864 Sprocket Rim is available for replacement of worn Sprocket Rim

REF NO.	PART NUMBER	DESCRIPTION	QTY
1	4M656	RETAINER	4
2	8M5669	SPROCKET ASSEM.	2
3	5H3182	PIN (For Tractors equipped with Bellows Seals)	12
		-or-	
	7M5130	PIN (For Tractors equipped with Floating Ring Seals) (6 each in 8M5669 Sprocket Assem.)	12
4	4B4342	RIVET (14 in each 8M5669 Sprocket Assem.)	28
5	9F7978	GUARD (2 in each 8M5669 Sprocket Assem.)	4
6	1M9015	SEAL	4

NOTE: QUANTITIES SHOWN ARE REQUIRED FOR RIGHT HAND AND LEFT HAND FINAL DRIVE

98987

8M6138 SNOW SPROCKET GROUP

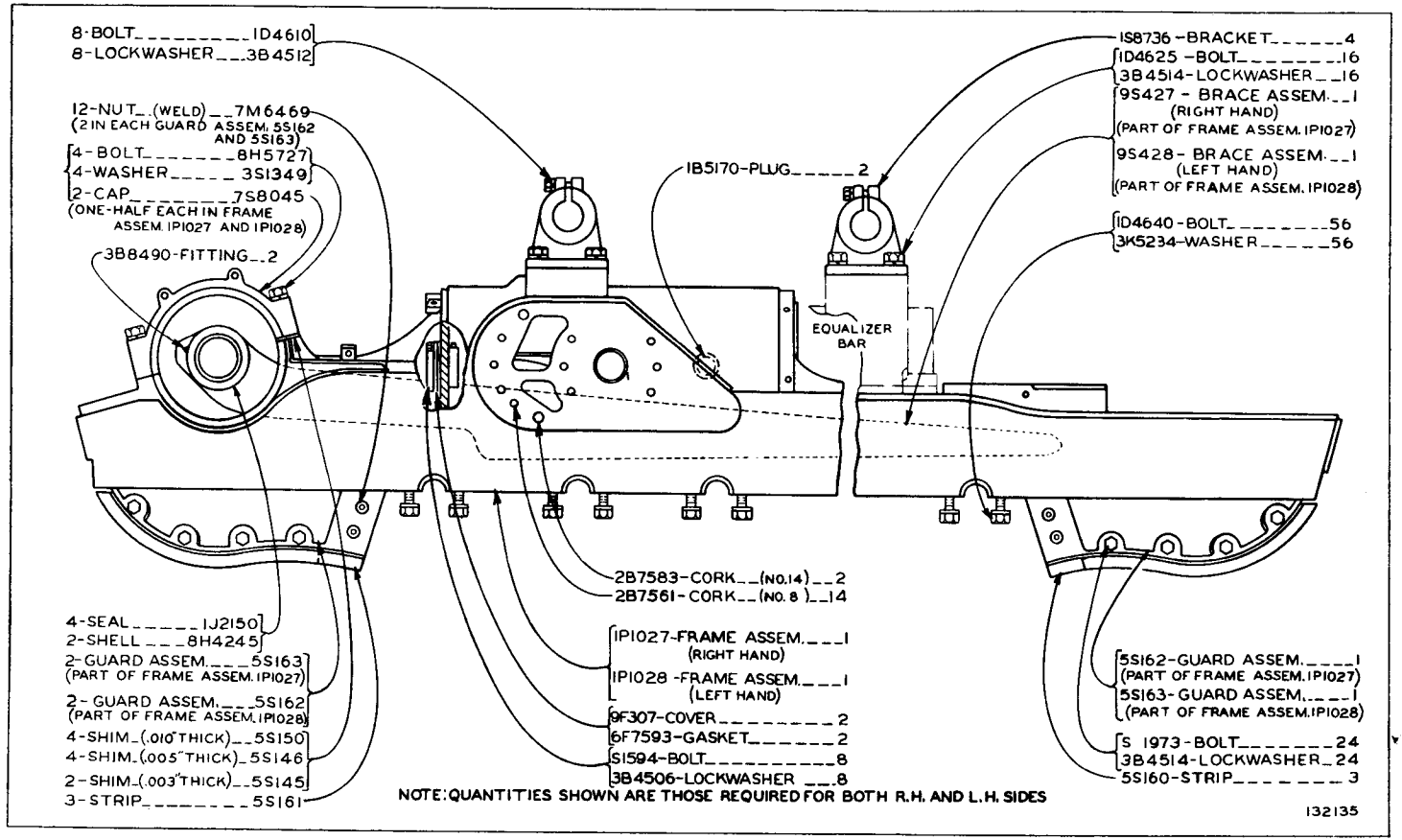

9S373 TRACK ROLLER FRAME GROUP

Part of 1P8317 Track Roller Frame and Support Arrangement listed on Page 204

Note: Two additional 7S9042 Roller Groups are required

8M432 SEVEN ROLLER TRACK ROLLER FRAME GROUP

7S9042 Track Roller parts are shown on Page 100

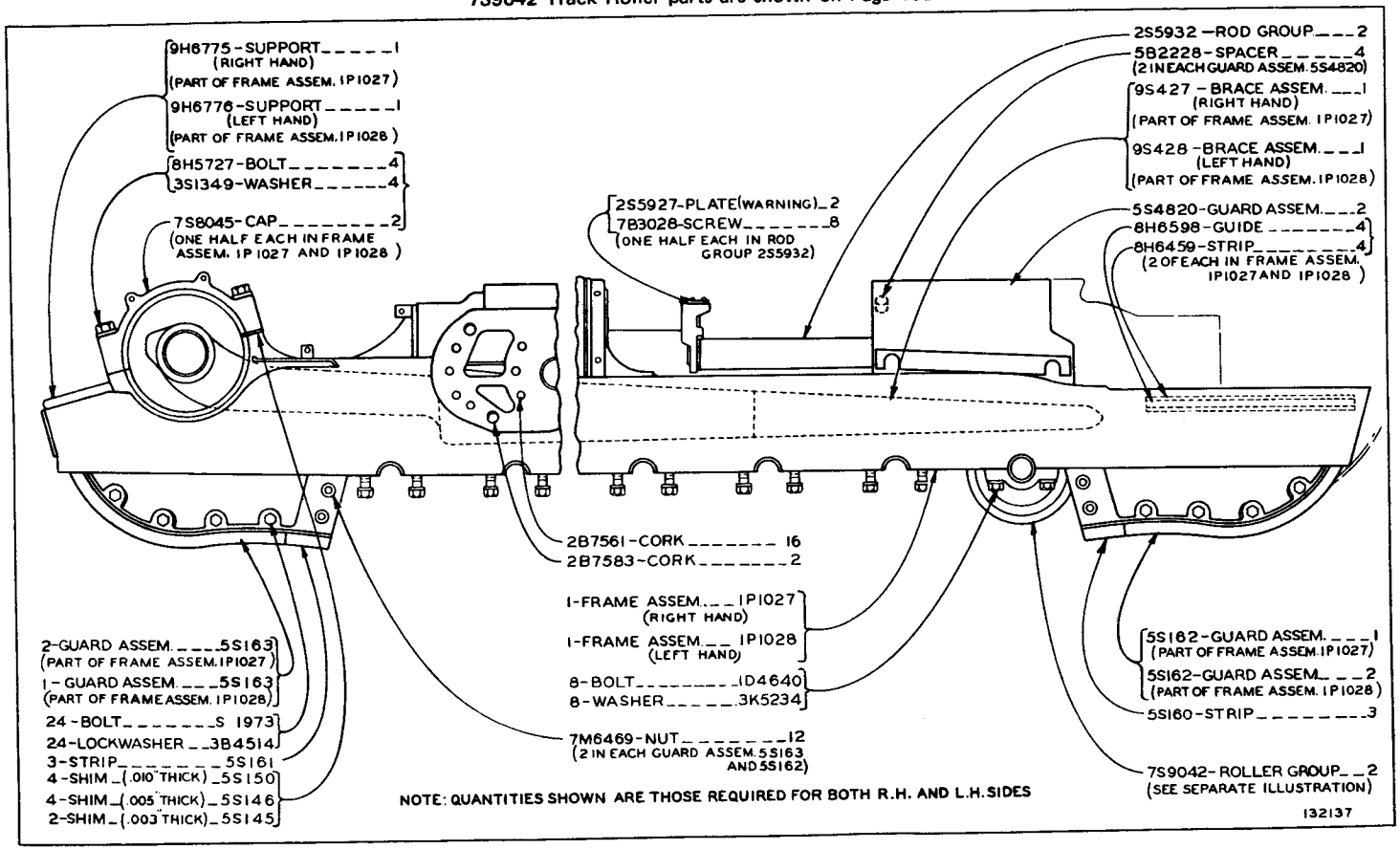

ONLY "CATERPILLAR" PARTS GIVE "CATERPILLAR" PERFORMANCE

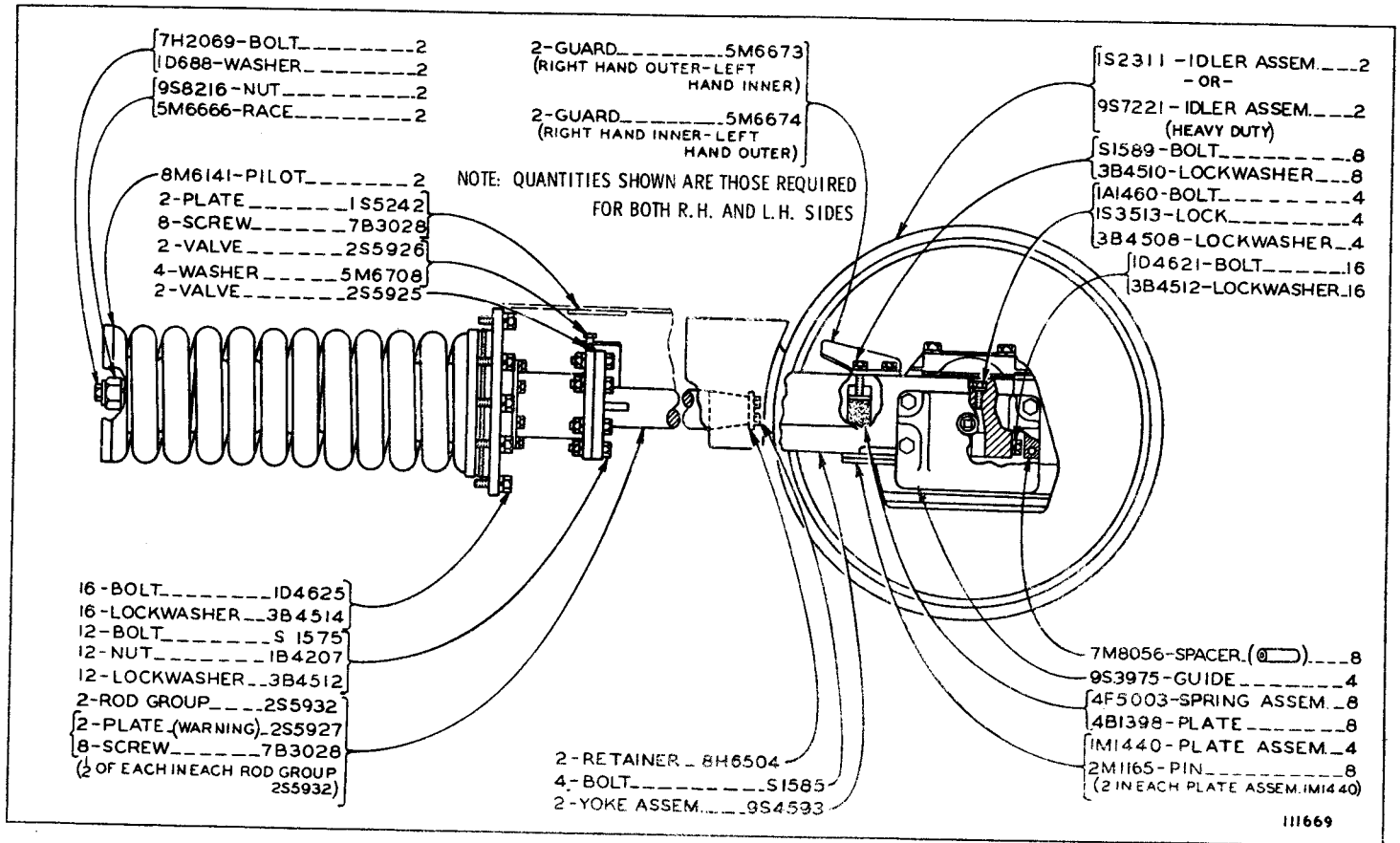

FRONT IDLER (7S2036 N/S)—Part 1

Part of 1P8317 Track Roller Frame and Support Arrangement listed on Page 204

FRONT IDLER (7S2036 N/S)—Part 2

Part of 1P8317 Track Roller Frame and Support Arrangement listed on Page 204

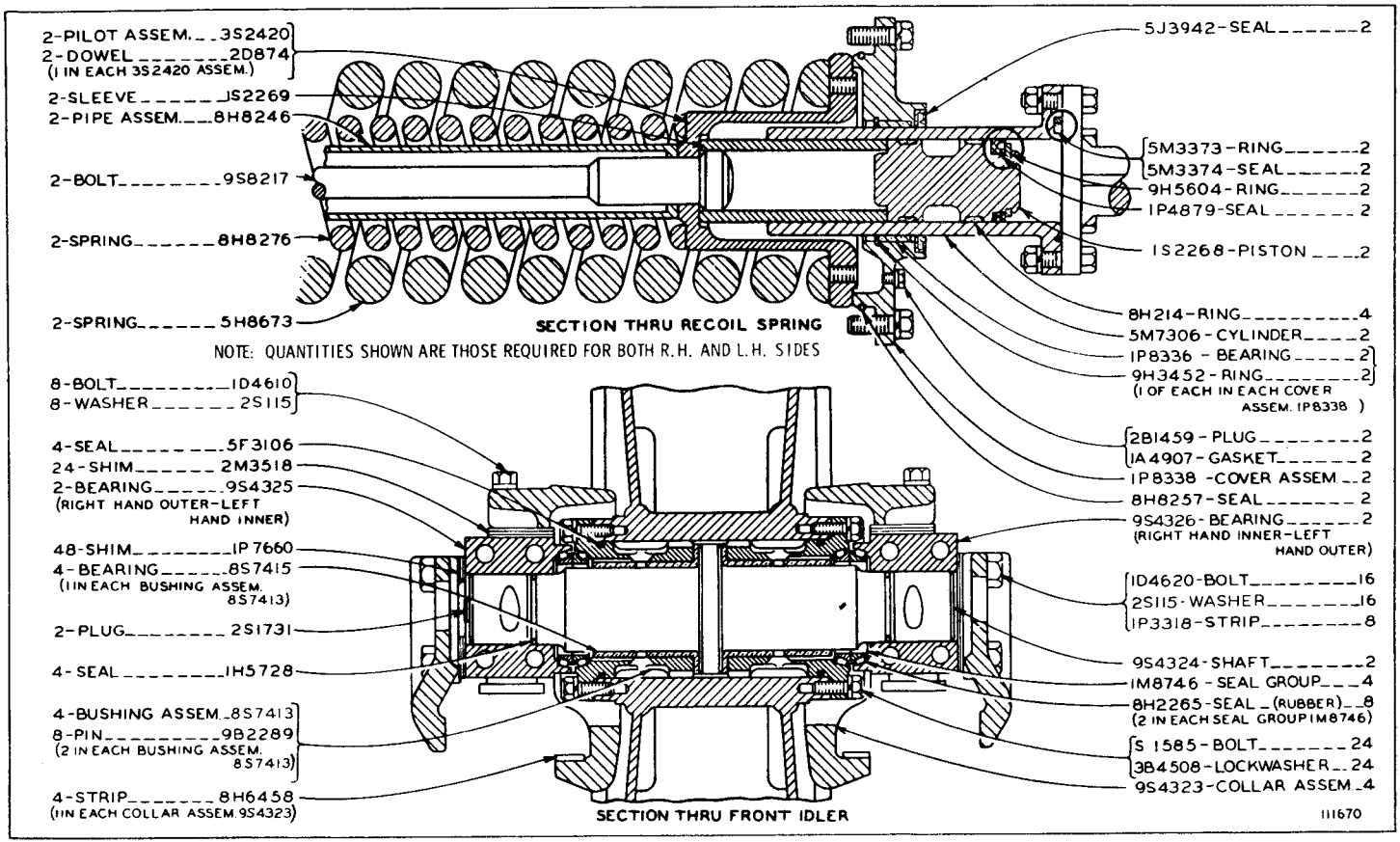

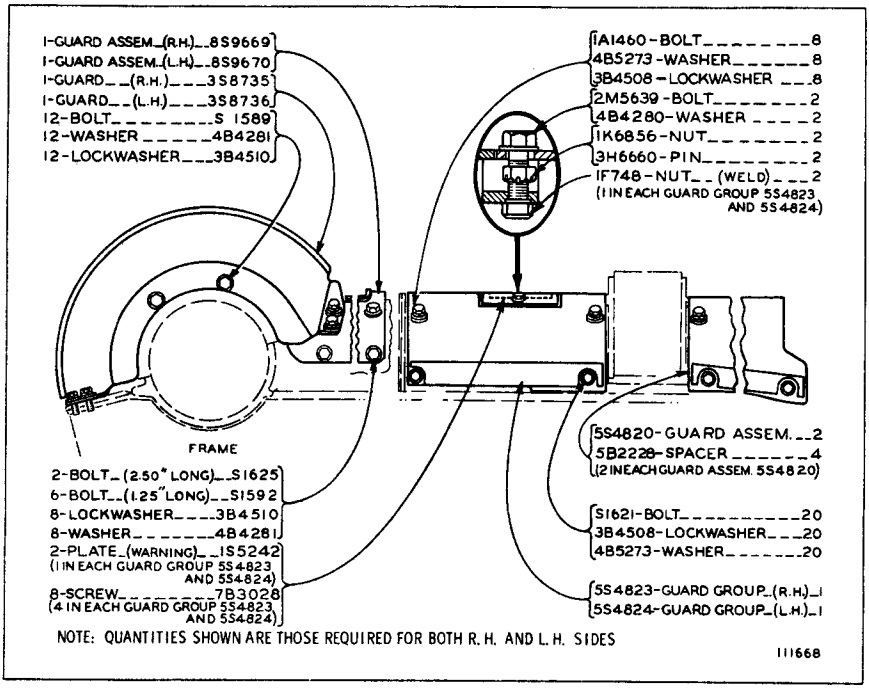

TRACK ROLLER FRAME GUARD (7S2035 N/S)
Part of 1P8317 Track Roller Frame and Support Arrangement listed on Page 204

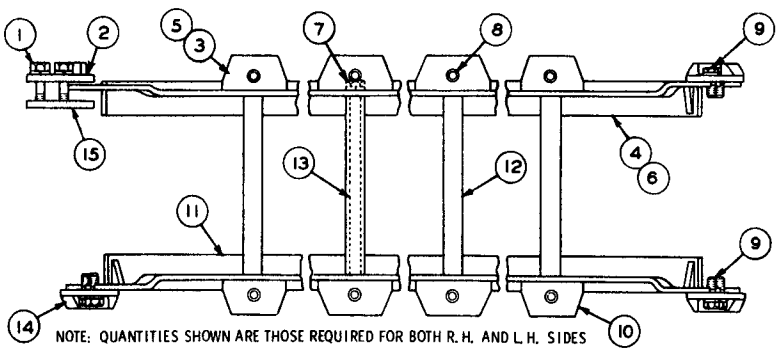

REF NO	PART NUMBER	DESCRIPTION	QTY
1	1S 1625	BOLT	4
	3B4510	LOCKWASHER	4
2	7S8035	PLATE ASSEM. ----(Right Hand)---	1
	7S8036	PLATE ASSEM. -----(Left Hand)----	1
3	7S8057	GUARD ASSEM. (Right Hand-Inner)	1
4	8M1132	STRIP (Part of 7S8011 Guard Assem.)	1
5	7S8058	GUARD ASSEM. -(Left Hand-Inner)-	1
6	8M1132	STRIP (Part of 7S8012 Guard Assem.)	1
7	1B4209	NUT	24
	3B4516	LOCKWASHER	24

REF NO	PART NUMBER	DESCRIPTION	QTY
8	1D4709	BOLT	24
	3K5234	WASHER	24
9	2H3757	BOLT	12
	9H1031	WASHER	12
10	7S8055	GUARD ASSEM. ------(Outer)------	2
11	8M1132	STRIP (1 in each 7S8055 Guard Assem.)	2
12	7S8019	TUBE	12
13	7S8020	ROD	12
14	5S5746	RETAINER	6
15	7M6774	PLATE	2

123157

7S8061 TRACK ROLLER GUARD GROUP
FOR USE WITH 7 ROLLER TRACK ROLLER FRAME

ALWAYS GIVE SERIAL NUMBER WHEN ORDERING PARTS

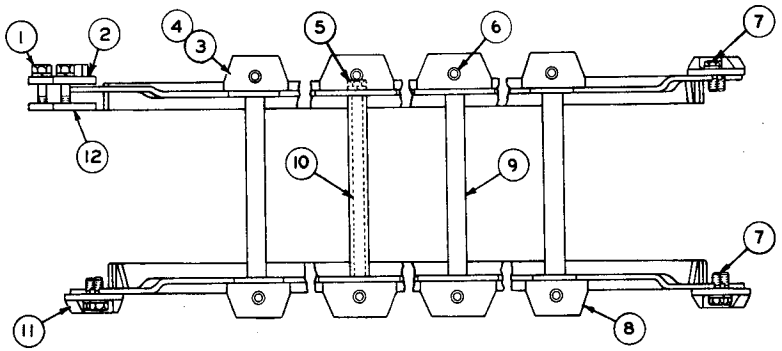

REF. NO.	PART NUMBER	DESCRIPTION	QTY
1	S1625	BOLT	4
	3B4510	LOCKWASHER	4
2	7S8035	PLATE ASSEM. (R. H.)	1
	7S8036	PLATE ASSEM. (L. H.)	1
3	1P1023	GUARD ASSEM. (R. H. - Inner)	1
4	1P1024	GUARD ASSEM. (L. H. - Inner)	1
5	1B4208	NUT	24
	3B4514	LOCKWASHER	24
6	1D4709	BOLT	24
	3K5234	WASHER	24
7	2H3757	BOLT	12
	9H1031	WASHER	12
8	1P1025	GUARD ASSEM. (Outer)	2
9	1P1014	PIPE	12
10	1P1013	ROD	12
11	5S5746	RETAINER	6
12	7M6774	PLATE	2

132140

1P1026 TRACK ROLLER GUARD GROUP
Provides uneven roller spacing when equipped with 1P1027 & 1P1028 Frame Assemblies

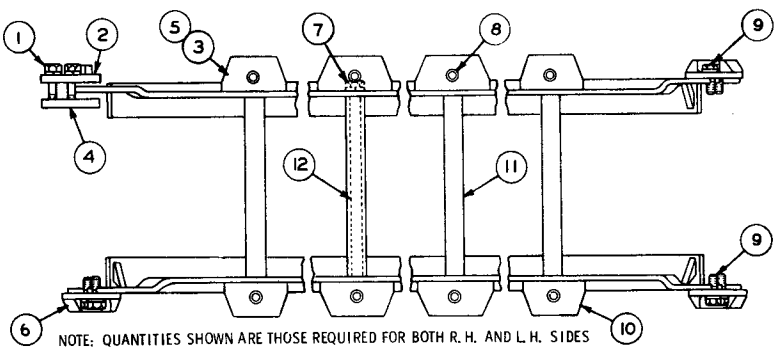

NOTE: QUANTITIES SHOWN ARE THOSE REQUIRED FOR BOTH R. H. AND L. H. SIDES

REF. NO.	PART NUMBER	DESCRIPTION	QTY
1	S1625	BOLT	4
	3B4510	LOCKWASHER	4
2	7S8035	PLATE ASSEM. (R. H.)	1
	7S8036	PLATE ASSEM. (L. H.)	1
3	1P5899	GUARD ASSEM. (R. H. - Inner)	1
4	7M6774	PLATE	2
5	1P5900	GUARD ASSEM. (L. H. - Inner)	1
6	5S5746	RETAINER	6
7	1B4208	NUT	20
	3B4514	LOCKWASHER	20
8	1D4709	BOLT	20
	3K5234	WASHER	20
9	2H3757	BOLT	12
	9H1031	WASHER	12
10	1P5901	GUARD ASSEM. (Outer)	2
11	1P1014	TUBE	10
12	1P1013	ROD	10

111667

1P5903 TRACK ROLLER GUARD GROUP
FOR USE WITH 6 ROLLER TRACK ROLLER FRAME

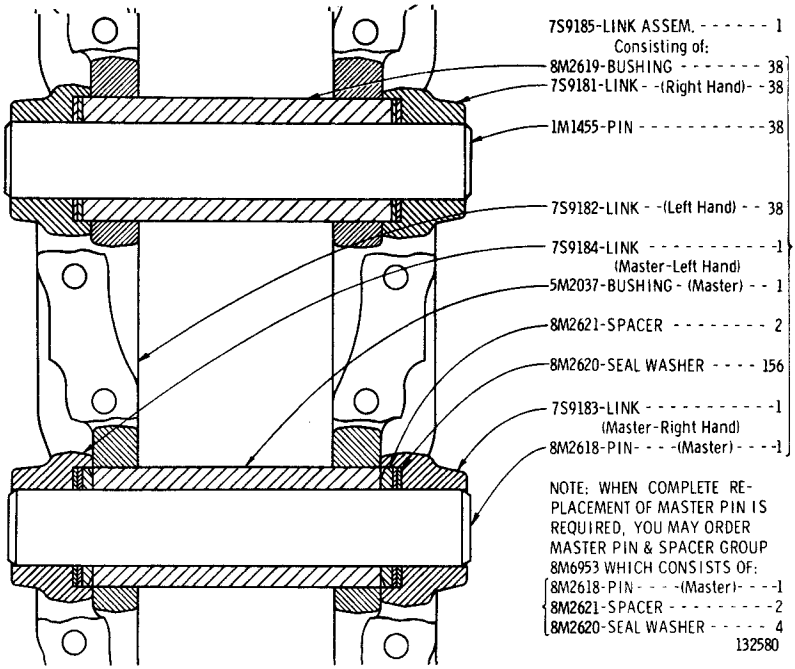

NAME	SHOE (39 Required for one Track)	COMPLETE TRACK GROUP (Hardware Included) 2 Required per Tractor
24" GROUSER SHOE	2S6346	7S9190
26" GROUSER SHOE	2S6347	7S9196
26" GROUSER SHOE	1M436	2P545
28" GROUSER SHOE	2S6364	7S9197

7H3599 Track Shoe Bolt—156 Required for one Track
2S2140 Nut—Used with 7H3599

NOTE: 1P1917 Track Pin and Bushing Group, consisting of a complete set of Pins and Bushings for one Track, is available

TRACK GROUPS—2 Groups Required
FOR USE WITH SIX ROLLER TRACK ROLLER FRAME

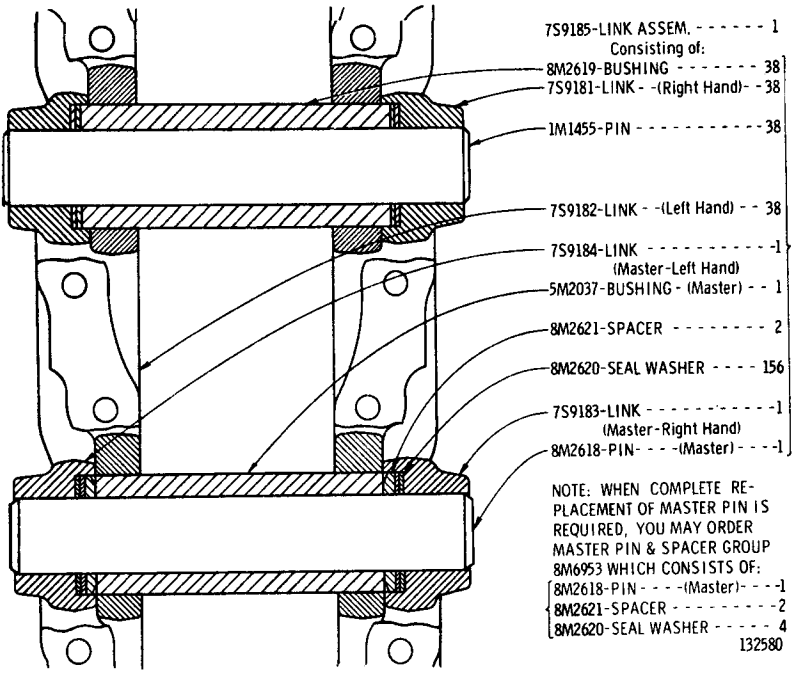

NAME	SHOE (39 Required for one Track)	COMPLETE TRACK GROUP (Hardware Included) 2 Required per Tractor
18" Grouser Shoe	7S9095	7S9508
20" Grouser Shoe	7S9096	7S9510
22" Grouser Shoe	7S9093	7S9511

9M7444 Track Shoe Bolt—156 Required for one Track
2S2140 Nut—Used with 9M7444

NOTE: 1P1917 Track Pin and Bushing Group, consisting of a complete set of Pins and Bushings for one Track, is available

TRACK GROUPS—2 Groups Required
FOR USE WITH SIX ROLLER TRACK ROLLER FRAME
FOR USE WHERE EXTREMELY RUGGED OPERATING CONDITIONS EXIST

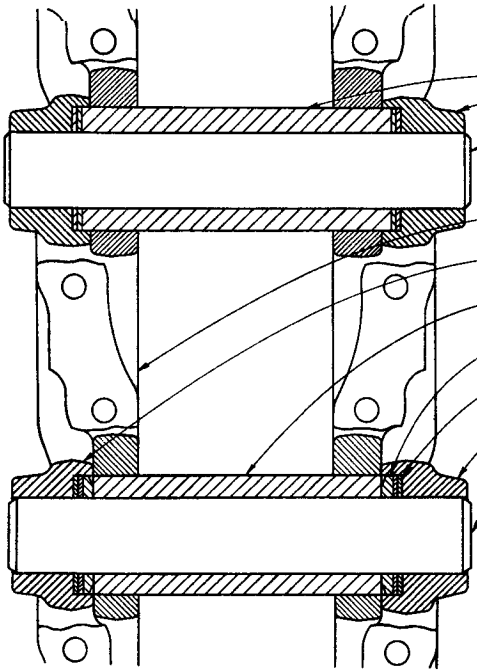

NAME	SHOE (41 Required for one Track)	COMPLETE TRACK GROUP (Hardware Included) 2 Required per Tractor
22" Grouser Shoe	2S6345	7S9198
24" Grouser Shoe	2S6346	7S9199
26" Grouser Shoe	2S6347	7S9201
28" Grouser Shoe	2S6364	7S9202

7H3599 TRACK SHOE BOLT--164 REQUIRED FOR ONE TRACK
2S2140 NUT--USED WITH 7H3599

NOTE: 1P1917 TRACK PIN AND BUSHING GROUP, CONSISTING OF A COMPLETE SET OF PINS AND BUSHINGS FOR ONE TRACK, IS AVAILABLE

TRACK GROUPS—2 Groups Required
FOR USE WITH SEVEN ROLLER TRACK ROLLER FRAME

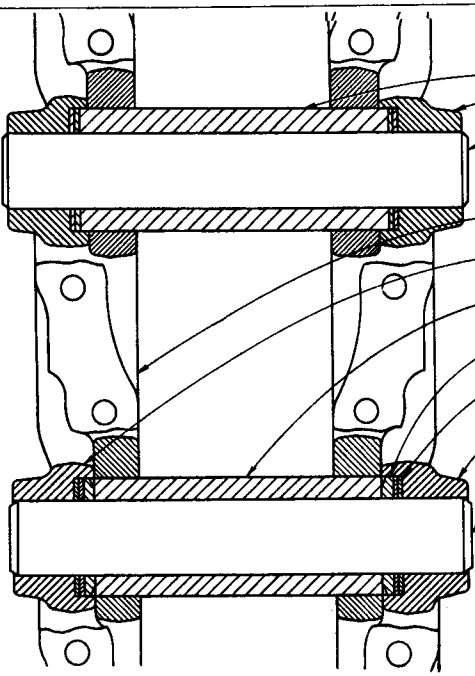

NAME	SHOE (41 REQUIRED FOR ONE TRACK)	COMPLETE TRACK GROUP (HARDWARE INCLUDED) 2 REQUIRED PER TRACTOR
18" GROUSER SHOE	7S9095	7S9513
20" GROUSER SHOE	7S9096	7S9514
22" GROUSER SHOE	7S9093	7S9515
24" GROUSER SHOE	7S9094	7S9516

9M7444 TRACK SHOE BOLT--164 REQUIRED FOR ONE TRACK
2S2140 NUT--USED WITH 9M7444

NOTE: 1P1917 TRACK PIN AND BUSHING GROUP, CONSISTING OF A COMPLETE SET OF PINS AND BUSHINGS FOR ONE TRACK, IS AVAILABLE

TRACK GROUPS--2 Required
FOR USE WITH SEVEN ROLLER TRACK ROLLER FRAME
FOR USE WHERE EXTREMELY RUGGED OPERATING CONDITIONS EXIST

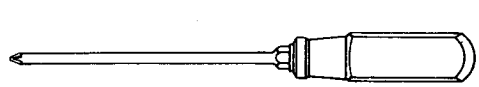

9S1738 SCREWDRIVER
NO. 2 PHILLIPS



8S2265 STRAP WRENCH ASSEM.

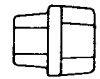

5S9569 SOCKET

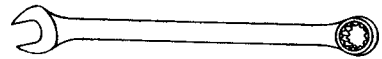

8H8503 WRENCH (5/16" Opening)
8H8505 WRENCH (3/8" Opening)
8H8513 WRENCH (7/8" Opening)
8H8508 WRENCH (9/16" Opening)
8H8509 WRENCH (5/8" Opening)
8H8511 WRENCH (3/4" Opening)
8H8515 WRENCH (1" Opening)

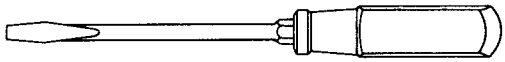

1F1157 SCREWDRIVER



5S9568 SOCKET

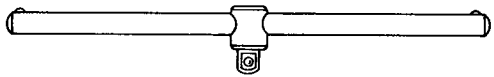

5S9566 WRENCH

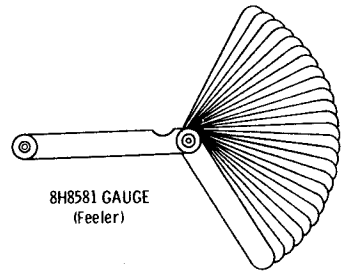

8H8581 GAUGE
(Feeler)



8H8549 SOCKET (9/16" Opening)
8H8554 SOCKET (7/8" Opening)
8H8555 SOCKET (15/16" Opening)
8H8556 SOCKET (1" Opening)
9S1730 SOCKET (11/8" Opening)

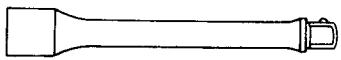

5S9567 EXTENSION

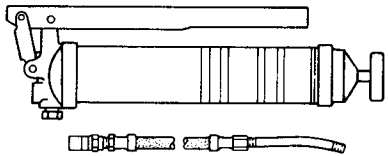

8F9866 GREASE GUN (Lever)
(See Separate Illustration)

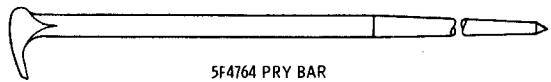

5F4764 PRY BAR

108502

9S7977 TOOL GROUP

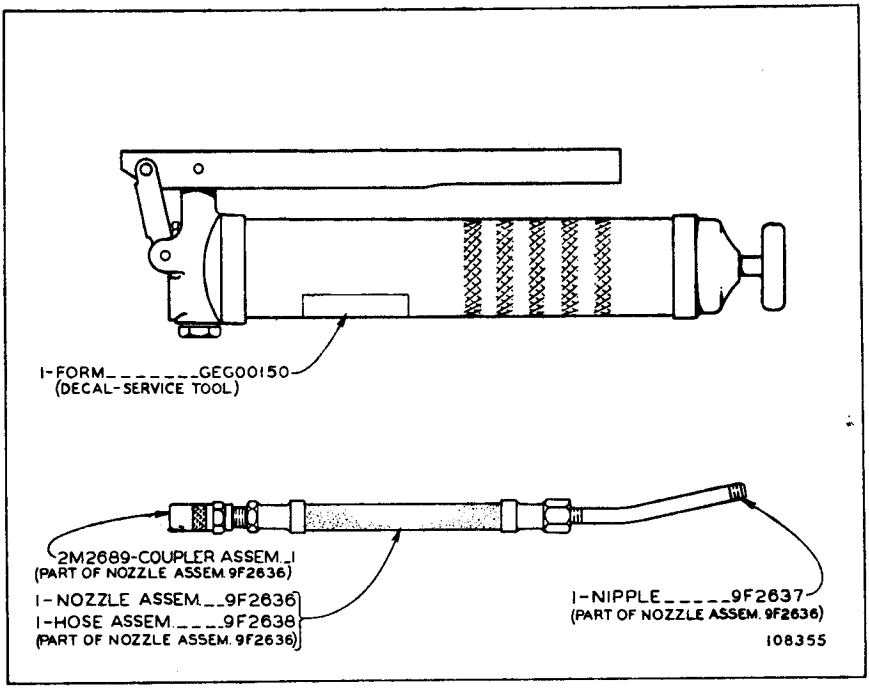

8F9866 GREASE GUN
Part of 9S7977 Tool Group

QUANTITY USED	PART NUMBER	DESCRIPTION
1	6H4356	PLATE--WARNING ON CONTROL SUPPORT
3	2M6831	PLATE--SERIAL NUMBER ON BACK OF BEVEL GEAR CASE, L.H. SIDE OF CYLINDER BLOCK AND LOWER R.H. DASH PLATE
1	7S9346	PLATE--ORIGIN BELOW SERIAL NUMBER PLATE ON DASH
1	8S3696	PLATE--DIRECT ELECTRIC STARTING INSTRUCTIONS ON CONSOLE TOP
18	4B4158	DRIVE SCREW
1	8S8055	TRANSFER--HYDRAULIC SYSTEM INSTRUCTIONS ON TOP OF HYDRAULIC TANK
1	9S8072	FILM--ORIGIN NEAR SERIAL NUMBER PLATE ON DASH
1	5S7066	TRANSFER GROUP
CONSISTING OF:		
1	.....	TRANSFER--AIR CLEANER INSTRUCTIONS ON DIESEL AIR CLEANER
4	.....	TRANSFER--FILTER INSTRUCTIONS ON CRANKCASE OIL FILTER COVER, BACK OF FUEL TANK, ABOVE FINAL DRIVE FILTERS AND TRANSMISSION FILTER HOUSING
1	.....	TRANSFER--PRECLEANER INSTRUCTIONS ON SIDE OF PRECLEANER
1	.....	TRANSFER--FUEL OIL CAPACITY 6" TO LEFT OF FUEL TANK FILLER NECK
2	.....	FILM--CORPORATE SYMBOL ON EACH SIDE OF FUEL TANK
2	8S5497	TRANSFER--CATERPILLAR ON EACH SIDE OF HOOD
1	8S8958	TRANSFER--CATERPILLAR ON BACK OF FUEL TANK
1	6H6000	FILM--WARNING ON DASH
2	8S3936	FILM--D8H ON EACH SIDE OF FUEL TANK

NAME PLATES AND TRANSFERS

RELATED REPAIR ITEMS

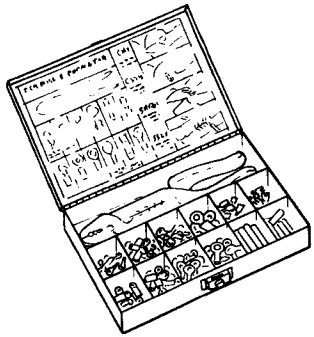

1P2305 ELECTRIC TERMINAL KIT

(Insulated)

(Includes terminals, wire joints and crimping tool)

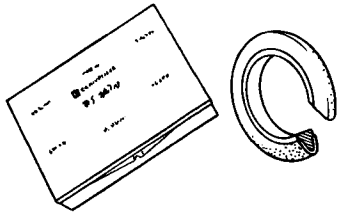

9S3138 SEAL KIT

(Includes 28 metal - backed seals)

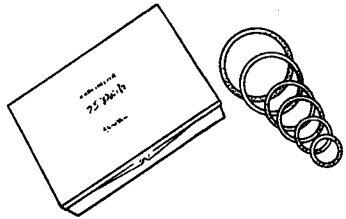

9S3135 SEAL KIT

(Includes 60 rubber O-ring seals)

THREADED INSERTS KITS

Master (Includes inserts and tools)

Coarse	Fine	Size
9S3700	9S3500	Assorted

Repair (Includes inserts and tools)

9S3510	9S3509	#10
9S3512	9S3511	1/4
9S3514	9S3513	5/16
9S3618	9S3515	3/8
9S3620	9S3619	7/16
9S3622	9S3621	1/2
9S3624	9S3623	9/16
9S3626	9S3625	5/8
9S3628	9S3627	3/4
9S3630	9S3629	7/8
9S3632	9S3631	1
9S3633		1 1/8
9S3635		1 1/4
9S3637		1 1/2

Refill (Includes inserts)

9S3674	9S3673	#10
9S3649	9S3639	1/4
9S3650	9S3640	5/16
9S3651	9S3641	3/8
9S3652	9S3642	7/16
9S3653	9S3643	1/2
9S3654	9S3644	9/16
9S3655	9S3645	5/8
9S3656	9S3646	3/4
9S3657	9S3647	7/8
9S3658	9S3648	1 -
9S3675		1 1/8
9S3677		1 1/4
9S3679		1 1/2

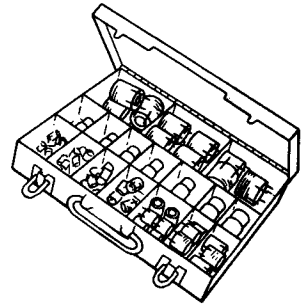

HARDWARE ASSORTMENT KITS

8S7198 Course Thread Hex Nut

8S7197 Fine Thread Hex Nut

8S7196 Lockwasher Assortment

8S7195 Flatwasher Assortment

8S7193 Woodruff Key Assortment

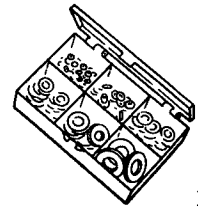

132096

SPECIFICATIONS

(SUBJECT TO CHANGE WITHOUT NOTICE)

Weight, shipping (approximate) ..... 49,000 lbs.

DIMENSIONS

Length	17'
Height	8'
Width	8' 11"
Gauge	84"
Ground Clearance	19 7/8"
Drawbar Height	21"

CAPACITIES

Cooling System	31 U.S. Gal.
Crankcase, lubricating oil	8 3/4 U.S. Gal.
Transmission, Steering Clutch and Brake, lubricating oil	31 U.S. Gal.
Flywheel Clutch	4 U.S. Gal.
Final Drive, lubricating oil, each side	9 U.S. Gal.
Fuel Tank	134 U.S. Gal.

ATTACHMENTS

Additional equipment such as Canopy Top, Cab, Cab Heater, Track Roller Guard, Crankcase Guard, Hydraulic Controls, etc., are available at extra cost. Consult your Caterpillar Dealer.

MACHINE SERIAL NUMBER PLATE LOCATION

Serial number plates are located on the back of the Bevel Gear Case, on the left-hand side of the Cylinder Block and on lower right-hand Dash Plate.

CARACTÉRISTIQUES

(PEUVENT ÊTRE MODIFIÉES SANS PRÉAVIS)

Poids (approx.), en ordre d'expédition	22 200 kg

DIMENSIONS

Longueur	5 180 mm
Hauteur	2 440 mm
Largeur	2 720 mm
Voie	2 130 mm
Garde au sol	500 mm
Hauteur de la barre d'attelage	530 mm

CONTENANCES

Circuit de refroidissement	117 litres
Circuit de graissage :	
Carter moteur	33 litres
Transmission, embrayage de direction et frein	117 litres
Embrayage principal	15 litres
Réducteurs latéraux (chaque côté)	34 litres
Réservoir de combustible	507 litres

ACCESSOIRES

Les équipements tels que toit, cabine, radiateur de chauffage cabine, protège-galets, protège-carter moteur, commandes hydrauliques, etc., sont facultatifs et facturés en sus. Consulter le concessionnaire Caterpillar.

MARQUAGE DU NUMÉRO DE SÉRIE

Les plaques portant le numéro de série sont situées sur la face arrière du bâti, du côté gauche du bloc-cylindres et sur la tôle inférieure droite de tablier.

ESPECIFICACIONES

(SUJETAS A CAMBIO SIN PREVIO AVISO)

Peso de Embarque Aproximado	22,200 kg

DIMENSIONES

Longitud	5 180 mm
Alto	2 440 mm
Ancho	2 720 mm
Trocha	2 130 mm
Despeje del Suelo	500 mm
Altura de la Barra de Tiro	530 mm

CAPACIDADES

Sistema de Enfriamiento	117 litros
Aceite Lubricante del Cárter	33 litros
Transmisión, Embragues de dirección y freno	117 litros
Embrague Principal	15 litros
Mando Final (cada uno)	34 litros
Tanque del Combustible	507 litros

ACCESORIOS

Equipo adicional tal como Toldo, Cabina, Calentador de la Cabina, Protección de los Rodillos, Protección del Cárter, Controles Hidráulicos, etc. se suministran a costo extra. Vea al Distribuidor de Caterpillar.

UBICACION DE LAS PLACAS CON EL NUMERO DE SERIE DE LA MAQUINA

Las placas con el número de serie están colocadas en la parte de atrás de la caja de la corona, en el lado izquierdo del bloque del motor y en el lado inferior derecho del tablero.

ESPECIFICAÇÕES

(SUJEITAS A ALTERAÇÕES SEM AVISO PRÉVIO)

Pêso de embarque (aproximado)	22,200 kg

DIMENSÕES

Comprimento	5 180 mm
Altura	2 440 mm
Largura	2 720 mm
Bitola (centro a centro das esteiras)	2 130 mm
Altura livre por baixo	500 mm
Altura da barra de tração	530 mm

QUANTIDADES CONTIDAS

Sistema de arrefecimento	117 litros
Cárter do motor	33 litros
Caixa de mudanças, coroa, embreagens de direção e freios	117 litros
Embreagem do motor	15 litros
Comandos finais (cada)	34 litros
Tanque de combustível	507 litros

ACESSÓRIOS

Existem disponíveis equipamentos extras tais como tôldo, cabine, aquecedor da cabine, protetores dos rolêtes das esteiras, protetor do cárter, comandos hidráulicos, etc. Consulte o seu revendedor Caterpillar.

SITUAÇÃO DO NÚMERO DE SÉRIE

Existem placas com o número de série no lado esquerdo do bloco do motor, atrás da caixa da coroa e embreagens de direção e no lado direito inferior do painel da plataforma.

TECHNISCHE DATEN

(UNVERBINDLICH, ÄNDERUNGEN VORBEHALTEN)

Versandgewicht, etwa	22 200 kg

ABMESSUNGEN

Länge	5 180 mm
Höhe	2 440 mm
Breite	2 720 mm
Spurweite	2 130 mm
Bodenfreiheit	500 mm
Zugbalkenhöhe	530 mm

FÜLLMENGEN

Kühlsystem	117 l
Kurbelgehäuse	33 l
Getriebe, Lenkkupplung und Bremse	117 l
Hauptkupplung	15 l
Seitenantriebe, je	34 l
Kraftstofftank	507 l

ZUBEHÖR

Zusätzliche Ausrüstung wie Wetterdach, Fahrerhaus, Fahrerhausheizung, Laufrollenschutz, Kurbelgehäuseschutz, Hydraulikanlagen usw. sind gegen Aufpreis erhältlich. Fragen Sie Ihren Caterpillar-Händler.

LAGE DER SERIENNUMMERNSCHILDER

Seriennummernschilder befinden sich rückwärts am Tellerradgehäuse, links am Motorblock und rechts unten am Armaturenbrett.

PRINTED IN U.S.A. FORM UEG0325S