CATERPILLAR®

UEG0315S
May 1981

RUTHZIL TRATOR COMERCIAL DE PEÇAS LTDA 11 97083-6812 ROLANDO CITRANGULO

D8H
Tractor

46A24433 to Last Built

© 1981 Caterpillar
All Rights Reserved
TECHNICAL INFORMATION DEPARTMENT
PARTS & SERVICE SUPPORT

FORM UEG0315S

D8H TRACTOR
POWER SHIFT

SERIAL NUMBERS

46A24433 TO LAST BUILT

REVISION PUBLISHED MAY 1981

INDEX
Diesel Engine

(Page 10)

Name	Page
Accessory Drive & Governor	34
Air Cleaner	18
Air Filter Service Indicator	17
Air Lines	16A
Alternator	54
Alternator Head	54D
Barrel—Fuel Priming Pump	38A
Battery and Wiring	56
Battery Box	62
Breather	17
Camshaft	30
Connecting Rod	29
Crankshaft	27
Crankshaft Bearings	28
Cylinder Block & Covers	24
Cylinder Head	22
Electric Hour Meter	38-1
Engine Support	16
Exhaust Pipe	21
Fan and Guard—Blower	16
Fan Drive	14A
Flywheel	29
Fuel Filter	39
Fuel Filter & Lines—Primary	37
Fuel Injection System	42
Fuel Pump Housing	41
Fuel Ratio Control	36
Gasket Kits	28
Gauge—Fuel	43
Gauge—Oil	43
Glow Plug and Wiring	61
Governor	40D
Governor Control	32
Heat Indicator	43
Idler Gear—Water Pump	12
Manifolds	21
Muffler	21B
Oil Cooler—Engine	44
Oil Cooler—Torque Converter	44
Oil Filler	17
Oil Filter	45
Oil Lines	45
Oil Pump Drive	50
Piston	29
Power Take-Off Drive—Rear	30
Power Take-Off Housing—Rear	31
Pump—Fuel Priming	39
Pump—Fuel Transfer	38
Pump—Oil	49
Pump—Water	12A
Rack Stop	36
Radiator	10

Name	Page
Radiator Guard	12
Service Meter	37
Specifications	226
Starter—Electric	51
Timing Gear Housing	23B
Transfers	224
Turbocharger	20
Valve Mechanism	22
Water Lines	13

Transmission and Chassis

(Page 63)

Bevel Gear Case & Covers	95	Steering Clutch	90
Brake Hydraulic Mechanism	91	Steering Clutch Hydraulic Control	88
Brakes	92	Steering Clutch Lubrication System	79
Drawbar	97	Tool Box	108
Equalizer & Suspension Bar	97	Torque Converter Fluid Cooler Lines	66
Equalizer Bar Support & Track Roller Frame	97B	Torque Divider	64
Fenders	110	Track	107
Final Drive	98	Track Carrier Roller	105
Final Drive Lubrication System	96	Track Roller	106
Frame and Case	95C	Track Roller Frame	104
Front Idler	100	Track Roller Frame Guards	105
Fuel Lines	113	Transfer Gears	78
Fuel Tank	112	Transmission—Range	66B
Hood and Dash	109	Transmission Case & Covers	68
Planetary Transmission	76	Transmission Control Linkage	70
Power Train	63	Tranmission Gauge	86
Power Train Oil Lines	84F-7	Transmission Hydraulic Control	69
Pressure Control Valve	75B	Transmission Lubrication System	79
Seat Cushion and Frame	107	Trunnion	104D

Attachments

(Page 114)

Air Conditioner	204A	Lighting System	152
Alternator	140	Mounting—ROPS	183J
Brush Guard	166	Muffler	177
Cab	186	Operator Protective	181
Canopy	179	Protection Covers	169
C-Frame—Tandem Pusher	165	Protection Cover—Instrument Panel	172
Condenser Service Door	204G-2	Push Block	163
Counterweight	203	Push Plate	162
Crankcase Guard	167	Radiator Core Protector Grid	175
Drawbar—Swinging	209	Radiator Grill Plate	174
Dust Ejector	178	Radiator Guard Hinge	173
Electric Horn	161B	Roll-Over Protective Structure	180C
Emergency Starting Receptacle	161	Screen and Sweep	180
Engine Enclosure	176	Seat	178
Equalizer Bar	210	Sender	202
Ether Starting Aid	204	Snow Sprocket	222
Fan—Defroster	200	Starting—Gasoline	114
Fan—Reversible Blade	178	Tools	223
Final Drive Steel Case	209	Track	218
Front Pull Hook	168	Track Roller Frame	215
Fuel Tank—Rapid Fill	205	Track Roller Frame & Support	210
Heater—Cab	196	Track Roller Guard	216
High Speed Oil Change	208	Windshield Wiper	200A
Jacket Water Heater	196B		

INDEX ALPHABÉTIQUE

Moteur diesel

(Page 10)

Désignation	Page
Alternateur	54
Arbre à cames	30
Batterie et installation électrique	56
Bielles	29
Bloc-cylindres	24
Bougies de départ et installation électrique	61
Butée élastique de course de crémaillère	36
Canalisations de graissage	45
Caractéristiques	227
Coffre à batterie	62
Collecteurs	21
Compteur d'entretien	37
Coussinets de vilebrequin	28
Culasses	22
Démarreur électrique	51
Entraînements secondaires	34
Filtre à air	18
Filtre à air (indicateur de colmatage)	17
Filtre à carburant diesel	39
Filtre à huile de graissage	45
Groupe d'injection de carburant	42
Instructions sur décalcomanies	224
Jeux de joints	28
Limiteur d'injection	36
Manomètre de pression de carburant	43
Manomètre de pression d'huile	43
Pistons	29
Pompe à eau	13
Pompe à eau (engrenage intermédiaire)	12
Pompe à huile de graissage	49
Pompe à huile (entraînement)	50
Pompe d'alimentation de carburant	38
Pompe d'amorçage	39
Pompe d'injection	41
Préfiltre à carburant et canalisations	37
Prise de force arrière (carter)	31
Prise de force arrière (entraînement)	30
Protège-radiateur	12
Radiateur	10
Réfrigérant d'huile de graissage (moteur)	44
Réfrigérant d'huile du convertisseur de couple	44
Régulateur	34
Régulateur (commande)	32
Reniflard	17
Soupapes et train de commande	22
Support moteur	16
Thermomètre (eau)	43
Tubulure de remplissage d'huile	17
Turbocompresseur	20
Tuyau d'échappement	21
Tuyauterie d'eau	14
Ventilateur (entraînement)	15
Ventilateur soufflant et grille de protection	16
Vilebrequin	27
Volant	29

Bâti et organes de transmission

(Page 63)

Désignation	Page
Barre d'attelage	97
Bâti arrière	95
Bâti du tracteur	68
Boîte de vitesses à trains planétaires	76
Boîte de vitesses (graissage)	79
Boîte de vitesses principale	67
Canalisations de carburant	113
Capot et tablier	109
Chaînes de roulement	107
Châssis porteurs	104
Châssis porteurs (tôlerie de protection)	105
Coffre à outils	108
Convertisseur (tuyauterie du réfrigérant)	66
Coupleur différentiel	64
Démultiplicateur du couple conique	78
Embrayages de direction	90

Désignation	Page
Embrayages de direction (graissage)	79
Embrayages de direction (servo-hydraulique)	88
Freins	92
Galets inférieurs	106
Galets supérieurs	105
Garde-boue	110
Manomètre du circuit de transmission	86
Mécanisme de transmission	63
Réducteurs latéraux	98
Réducteurs latéraux (graissage)	96
Réservoir de combustible	112
Roues avant	100
Servo hydraulique de frein	91
Siège et bâti de siège	107
Traverse de suspension	97
Tringlerie de commande des vitesses	70
Vitesses (commande hydraulique)	69

Accessoires

(Page 114)

Alternateur	140
Barbotin pour neige	222
Barre d'attelage oscillante	209
Bâti de protection du conducteur	181
Cabine	186
Capot	176
Carter (acier) de réducteur	209
Chaînes de roulement	218
Châssis en U (pousseur tandem)	165
Châssis porteurs	215
Châssis porteurs et support	210
Contrepoids	203
Couvercles de protection	169
Crochet avant	168
Dégivreur	200
Dispositif de vidange et remplissage rapide (huile)	208
Éclairage électrique	152
Éjecteur automatique de poussière	178
Émetteur de signalisation lumineuse	202
Essuie-glace	201
Grille AR et barre pare-branches	180
Grille de protection de tableau de bord	172
Grille de radiateur renforcée	174
Grille (protection du faisceau de radiateur)	175
Injection d'éther	204
Moteur de lancement à essence	114
Outillage	223
Plateau de poussée	162
Prise de batteries auxiliaires de démarrage	161
Protège-carter moteur	167
Protège-galets	216
Protège-radiateur sur charnière	173
Radiateur de chauffage cabine	196
Réservoir de combustible (dispositif de remplissage rapide)	205
Silencieux d'échappement	177
Tampon de poussée	163
Toit	179
Tôle pare-broussailles	166
Traverse de suspension	210
Ventilateur à pales réversibles	178

INDICE

Motor Diesel

(Página 10)

Nombre	Página
Alternador	54
Arbol de Levas	30
Arranque Eléctrico	51
Batería y Alambrado	56
Bielas	29
Bloque del Motor y Tapas	24
Bomba de Cebado del Combustible	39
Bomba de Transferencia del Combustible	38
Bomba del Aceite	49
Bomba del Agua	13

Nombre	Página
Bujías Incandescentes y Alambrado	61
Caja de la Batería	62
Caja de las Bombas del Combustible	41
Caja de Toma de Fuerza Trasera	31
Calcomanías	224
Cigüeñal	27
Cojinetes de Bancada	28
Control de Relación de Presión	36
Control del Regulador	32
Culata	22
Enfriador del Aceite del Convertidor de Par	44
Enfriador del Aceite del Motor	44
Engranaje Loco de la Bomba del Agua	12
Especificaciones	228
Filtro de Aire	18
Filtro del Aceite	45
Filtro del Combustible	39
Filtro Primario del Combustible y Tuberias	37
Indicador de Servicio del Filtro de Aire	17
Indicador de Temperatura	43
Juegos de Empaquetaduras	28
Mando de Accesorios	34
Mando del Ventilador	15
Mando de la Bomba del Aceite	50
Manómetro del Aceite	43
Manómetro del Combustible	43
Mecanismo de las Válvulas	22
Medidor de Servicio	37
Múltiples	21
Pistón	29
Protección del Radiador	12
Protección del Ventilador Insuflador	16
Radiador	10
Regulador	34
Respiradero	17
Sistema de Inyección del Combustible	42
Soporte del Motor	16
Toma de Fuerza Trasera	30
Tope de la Cremallera	36
Tuberías del Aceite	45
Tuberías del Agua	14
Tubo de Escape	21
Tubo de Llenado del Aceite	17
Turboalimentador	20
Volante	29

Transmisión y Chasís

(Página 63)

Nombre	Página
Barra de Tiro	97
Barra Compensadora y Suspensión	97
Bastidor de los Rodillos	104
Caja de Herramientas	108
Caja de la Corona y Tapas	95
Caja y Tapas de la Transmisión	68
Capota y Tablero	109
Carril	107
Cojín del Asiento y Bastidor	107
Control Hidráulico de Embragues de Dirección	88
Control Hidráulico de la Transmisión	69
Divisor de Par	64
Embragues de Dirección	90
Engranajes de Transferencia	78
Frenos	92
Mando Final	98
Manómetro de la Transmisión	86
Mecanismo Hidráulico de Frenos	91
Protecciones del Bastidor de los Rodillos	105
Rodillos Inferiores	106
Rodillos Superiores	105
Ruedas Guías	100
Sistema de Lubricación de la Transmisión	79
Sistema de Lubricación de los Mandos Finales	96
Tanque del Combustible	112
Tapabarros	110
Transmisión de Velocidades	67
Transmisión Planetaria	76
Tren de Potencia	63
Tuberías del Combustible	113
Tuberías del Enfriador del Fluido del Convertidor de Par	66
Varillaje de Control de la Transmisión	70

Accesorios

(Página 114)

Nombre	Página
Alternador	140
Barra Compensadora	210
Barra de Tiro Giratoria	209
Bastidor "C" — Empujador Tándem	165
Bastidor de los Rodillos	215
Bastidor de los Rodillos y Soporte	210
Bloque de Empuje	162
Cabina	186
Caja de Acero de Mando Final	209
Calentador de la Cabina	196
Cambio de Aceite de Alta Velocidad	208
Carril	218
Conjunto de Protección contra Vuelcos	181
Contrapeso	203
Cubierta del Motor	176
Eyector de Polvo	178
Gancho Delantero	168
Herramientas	223
Inyector de Eter	204
Limpia Parabrisas	201
Motor de Arranque — Gasolina	114
Plancha de Empuje	162
Plancha del Radiador	174
Protección Contra Maleza	166
Protección de los Rodillos	216
Protección del Cárter	167
Protección Engoznada del Radiador	173
Receptáculo para Arranque de Emergencia	161
Reja Protectora del Radiador	175
Rejilla y Protección Delantera	180
Rueda Dentada para Nieve	222
Silenciador	177
Sistema de Luces	152
Tanque de Combustible de Llenado Rápido	205
Tapas Protectoras	169
Tapa Protectora del Tablero de Instrumentos	172
Toldo	179
Transmisor de Luz de Señal	202
Ventilador de Paletas Reversibles	178
Ventilador Descongelador	200

ÍNDICE

Motor Diesel

(Página 10)

Designação	Página
Arrefecedor do óleo	44
Arrefecedor do óleo do conversor de torque	44
Árvore de comando das válvulas	30
Árvore de manivelas (virabrequim)	27
Batente da cremalheira do combustível	36
Bateria e instalação elétrica	56
Biela	29
Bloco do motor e tampas	24
Bocal de enchimento de óleo	17
Bomba d'água	13
Bomba de óleo	49
Bomba de purgação do combustível	39
Bomba de transferência do combustível	38
Cabeçote	22
Caixa da tomada de fôrça traseira	31
Caixa das baterias	62
Caixa das bombas injetoras	41
Coletores	21
Comando da bomba de óleo	50
Comando da tomada de fôrça traseira	30
Comando de acessórios	34
Comando do ventilador	15
Contrôle do regulador de velocidade (acelerador manual)	32
Decalcomanias	224
Engrenagem intermediária da bomba d'água	12
Especificações	229
Filtro de óleo	45
Filtro principal do combustível	39

Designação	Página
Gerador alternador	54
Indicador de limpeza do purificador	17
Indicador de temperatura (termômetro)	43
Jogos de juntas	28
Limitador do combustível	36
Mancais principais do motor	28
Manômetro do combustível	43
Manômetro do óleo	43
Marcador de horas de serviços	37
Mecanismo das válvulas	22
Motor de arranque elétrico	51
Pistão	29
Protetor do radiador	12
Purificador de ar	18
Radiador	14
Regulador de velocidade	34
Respiro	17
Sistema de injeção do combustível	42
Suporte do motor	16
Tubo de descarga	21
Tubos d'água	14
Tubulações de óleo	45
Turbocompressor	20
Vela de aquecimento e instalação	61
Ventilador de sôpro e protetor	16
Volante do motor	29

Sistema de Transmissão e Chassi

(Página 63)

Armação do assento e almofadas	107
Armações dos rolêtes	104
Barra de suspensão e estabilizadora	97
Barra de tração	97
Caixa da coroa e tampas	95
Caixa das ferramentas	108
Caixa planetária de mudanças	76
Capô e painel	109
Carcassa da caixa de mudanças	68
Comando final	98
Comando hidráulico da caixa de mudanças	69
Comando hidráulico das embreagens de direção	88
Divisor de Torque	64
Embreagem de direção	90
Engrenagens de transferência	78
Esteira	107
Freios	92
Indicadores do sistema de transmissão	86
Ligações de contrôle das marchas	70
Paralamas	110
Protetor das armações dos rolêtes	105
Reforçador hidráulico dos freios	91
Roda-guia das esteiras	100
Rolête inferior	106
Rolête superior	105
Sistema de lubrificação da caixa de mudanças	79
Sistema de lubrificação das embreagens de direção	79
Sistema de lubrificação dos comandos finais	96
Sistema de transmissão	63
Tanque de combustível	112
Tubulações do arrefecedor de óleo do conversor de torque	66
Tubulações do combustível	113

Acessórios

(Página 114)

Aquecedor da cabine	196
Armação "C" para empuxo em tandem	165
Armação e suporte dos rolêtes de esteira	210
Barra de tração oscilável	209
Bloco de empuxo	163
Cabine	186
Caixa de aço dos comandos finais	209
Capô e tampas laterais	176
Chapa de empuxo	162
Conexão de abastecimento rápido de combustível	205
Contrapêso	203
Descongelador do parabrisa	200

Designação	Página
Dobradiças para o grade do radiador	173
Ejetor de pó	178
Emissor de sinalização de carga do scraper	202
Esteira	218
Estrutura de proteção contra capotagem	181
Ferramentas	223
Gancho dianteiro	168
Gerador alternador	140
Grade articulada do radiador	174
Grelha de proteção do radiador	175
Guarda-mato	166
Injetor de éter	204
Limpador do parabrisa	201
Motor de partida a gasolina	114
Protetor do cárter	167
Protetor do painel de instrumentos	172
Protetor dos rolêtes inferiores	216
Roda motriz para neve ou lama	222
Silenciador	177
Sistema de iluminação	152
Tampas com trava (radiador, cárter e tanque de combustível	169
Tôldo	179
Tomada para baterias auxiliares	161
Ventilador de pás reversíveis	178

INHALTSVERZEICHNIS

Dieselmotor

(Seite 10)

Bezeichnung	Seite
Abziehbilder	224
Anlasser, elektrisch	51
Auspuffrohr	21
Batterie und Verdrahtung	56
Batteriekasten	62
Dichtungssätze	28
Drehstromlichtmaschine	54
Drucklüfter	16
Einspritzanlage	42
Entlüfter	17
Gasgestänge	32
Glühkerzen und Verdrahtung	61
Kolben	29
Kraftstoffanzeige	43
Kraftstoffentlüftungspumpe	39
Kraftstoffilter	39
Kraftstofförderpumpe	38
Kraftstoffgemischregler	36
Kraftstoffpumpengehäuse	41
Kraftstoffvorfilter und -leitungen	37
Krümmer	21
Kühlernetz	10
Kühlerverkleidung	12
Kurbellager	28
Kurbelwelle	27
Lüfterantrieb	15
Luftreiniger	18
Luftfilter-Wartungsanzeige	17
Motoraufhängung	16
Motorblock und Deckel	24
Motorölkühler	44
Nockenwelle	30
Öldruckanzeige	43
Öleinfüllstutzen	17
Ölleitungen	45
Pleuel	29
Regler	34
Schmierfilter	45
Schmierpumpe	49
Schmierpumpenantrieb	50
Schwungscheibe	29
Steuerantrieb	34
Technische Daten	230
Temperaturanzeige	43
Turbolader	20
Ventilsteuerung	22
Wandlerölkühler	44
Wartungsmesser	37
Wasserleitungen	14
Wasserpumpe	13
Zahnstangenanschlag	36
Zapfwellenantrieb, hinten	30
Zapfwellengehäuse, hinten	31
Zwischenrad — Wasserpumpe	12
Zylinderkopf	22

Getriebe und Laufwerk

(Seite 63)

Bezeichnung	Seite	Bezeichnung	Seite
Bremsen	92	Lenkkupplungshydraulik	88
Bremshydraulik	91	Motorhaube und Armaturenbrett	109
Differentialwandler	64	Planeten-Lastschaltgetriebe	76
Getriebegehäuse und Deckel	68	Quertraverse und Auflager	97
Getriebehydraulik	69	Schmiersystem und Auflager	96
Getriebeschaltgestänge	70	Schmiersystem der Lenkkupplung	79
Getriebeschmiersystem	79	Schutzbleche	110
Kraftstoffleitungen	113	Seitenantrieb	98
Kraftstofftank	112	Sitzkissen und -rahmen	107
Kraftübertragung	63	Stufengetriebe	67
Laufkette	107	Stützrolle	105
Laufrolle	106	Tellerradgehäuse und Deckel	95
Laufrollenschutz	105	Vorgelege	78
Laufwerksrahmen	104	Wandlerölkühlerleitungen	66
Leitrad	100	Werkzeugkasten	108
Lenkkupplung	90	Zughaken	97

Zubehör

(Seite 114)

Ätherstarthilfe	204	Ölschnellwechselanschluß	208
Beleuchtungsanlage	152	Panzerwanne	167
Benzinstartermotor	114	Quertraverse	210
Drehstromlichtmaschine	140	Schalldämpfer	177
Entfrostergebläse	200	Scheibenwischer	201
Fahrerhaus	186	Schneeantriebsrad	222
Fahrerhausheizung	196	Schnelltankanschluß	205
Frontzughaken	168	Schubblock	163
Gegengewicht	203	Schubplatte	162
Instrumentenabdecke	172	Schutzdach	181
Kühlergrill	174	Schutzgitter und -bügel	180
Kühlerschutz	175	Schutzverkleidung	169
Kühlerschutz mit Scharnieren	173	Schwenkzugbalken	209
Laufkette	218	Seitenantriebsgehäuse	209
Laufrollenverkleidung	216	Sender der Signalanlage	202
Laufwerksrahmen	215	Staubauswerfer	178
Laufwerksrahmen und Aufhängung	210	U-Heckschubrahmen	165
Motorseitenverkleidung	166	Umkehrlüfter	178
Motorverkleidung	176	Werkzeuge	223
Notstartanschluß	161	Wetterdach	179

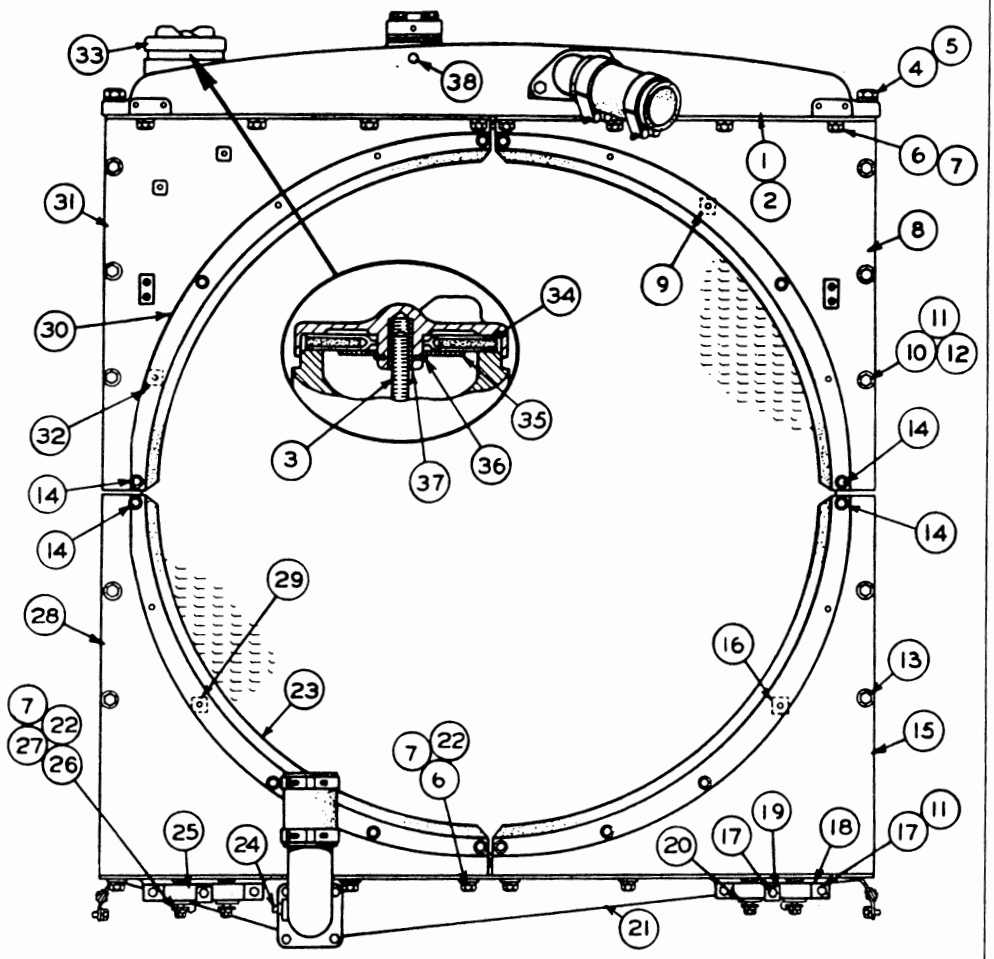

REF NO.	PART NUMBER	DESCRIPTION	QTY
1	2S8723	TANK ASSEM.	1
2	5M6214	PLUG	1
3	1S286	STUD	1
		(Parts of 2S8723 Tank Assem.)	
4	2A1538	BOLT	2
5	3B4512	LOCKWASHER	2
6	S 1621	BOLT	12
7	3B4508	LOCKWASHER	16
8	7S5069	SHIELD ASSEM. (Right Hand-Upper)	1
9	9F2978	NUT-----(Weld)-----	4
		(Part of 7S5069 Shield Assem.)	
10	S 1594	BOLT	10
11	3B4506	LOCKWASHER	14
12	4B4278	WASHER	10
13	1P3380	SCREW	10
14	9S2087	SCREW	4
15	7S5067	SHIELD ASSEM. (Right Hand-Lower)	1
16	9F2978	NUT-----(Weld)-----	4
		(Part of 7S5067 Shield Assem.)	
17	S 1571	BOLT	6
18	5S575	BRACKET	2
19	9S1333	LOCK	2

REF NO	PART NUMBER	DESCRIPTION	QTY
20	3H8726	BLOCK	4
21	2S8732	TANK	1
22	4B4280	WASHER	12
23	2S6935	BAFFLE	4
24	2B7457	PLUG	1
25	7H2988	CAP	2
26	L 1329	BOLT	4
27	1D4719	NUT	4
28	7S5068	SHIELD ASSEM. (Left Hand-Lower)	1
29	9F2978	NUT-----(Weld)-----	4
		(Part of 7S5068 Shield Assem.)	
30	2S6934	STRIP	4
31	7S5070	SHIELD ASSEM. (Left Hand-Upper)	1
32	9F2978	NUT-----(Weld)-----	4
		(Part of 7S5070 Shield Assem.)	
33	7S7809	CAP ASSEM.	1
34	2S5200	GASKET ASSEM.	1
35	2S2846	RETAINER	1
36	9S9979	RING	1
37	7S7807	INSERT	1
		(Parts of 7S7809 Assem.)	
38	8B2540	CORK	1

111192

RADIATOR (4S7833 N/S)—Rear View
Serial No. 46A24433 to 46A29251 inclusive
Refer also to Pages 171, 174 and 175 for special parts

REF NO	PART NUMBER	DESCRIPTION	QTY
1	7B3235	BOLT	2
2	3B4508	LOCKWASHER	2
3	4H7380	GASKET	1
4	5S4629	GASKET	2
5	5S1218	VALVE ASSEM.	1
6	3S7712	HOSE	1
7	5S5080	BOLT	5
8	3B4505	LOCKWASHER	5
9	5S1211	COVER	1
10	5S1213	PLATE	1
11	2S8730	GASKET	2
12	2S8729	STRIP	4
13	5M7393	STRIP	4
	2S6948	BAFFLE ASSEM.	4
		Each consisting of:	
14	2S6951	BAFFLE	1
15	6B4594	RIVET	7
16	2S6949	PLATE	1
17	2S6950	STRIP	1
18	3S6339	BRACKET	2
19	2S1216	BOLT	2
20	2B1940	NUT	2
21	3B4509	LOCKWASHER	2
22	2S1212	BUSHING ASSEM.	2
23	1S5360	CLAMP ASSEM.	2
24	T 573	BOLT	2
25	3B4506	LOCKWASHER	106
26	3S7737	ELBOW	1
27	9S2087	SCREW	20
28	3S6338	BRACKET	2
29	S 1590	BOLT	6
	1D4717	NUT	6
	4B4278	WASHER	12
30	1A2029	BOLT	80
	2S6953	BAFFLE ASSEM.	2
		Each consisting of:	
31	2S6955	BAFFLE	1
32	2S6956	STRIP	1
33	6B4594	RIVET	3
34	2S6954	PLATE	1
35	8H2063	CLAMP	2
36	T102	BOLT	4
37	4B7739	PLUG	1
38	8H9819	ADAPTER	1
39	S 1588	BOLT	6
40	8H9818	GASKET	1
41	2H5572	GASKET	1
	5S662	BAFFLE ASSEM.	1
		Consisting of:	
42	5S641	PLATE	1
43	2S8859	STRIP	1
44	6B4594	RIVET	12
45	5S652	BAFFLE	1
46	2S6939	ELBOW	1
47	5H4454	CLAMP	2
48	2S884	HOSE	1
49	5S584	STRIP	1
50	8S2645	CORE ASSEM.	1

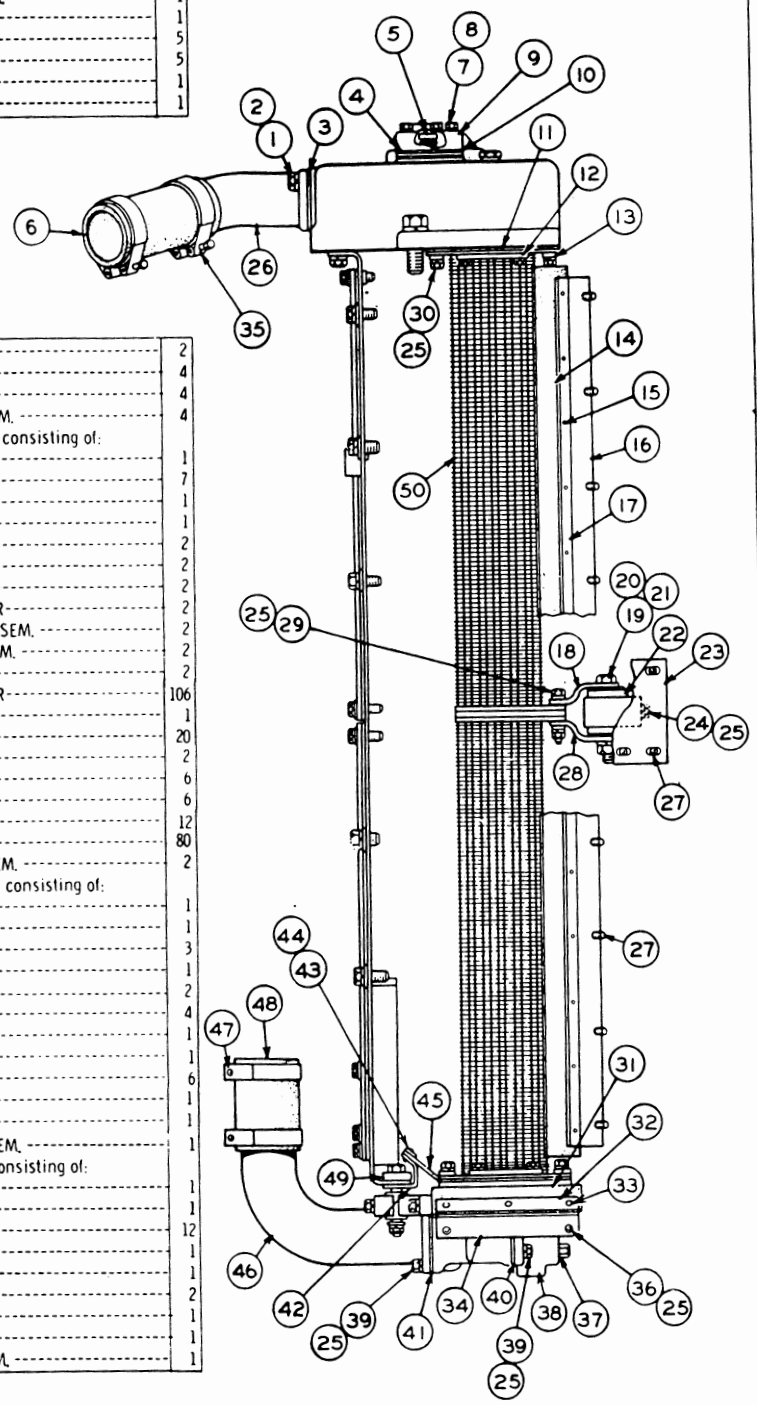

RADIATOR (4S7833 N/S)—Side View
Serial No. 46A24433 to 46A29251 inclusive
Note: 6F6041 Rust Inhibitor is available

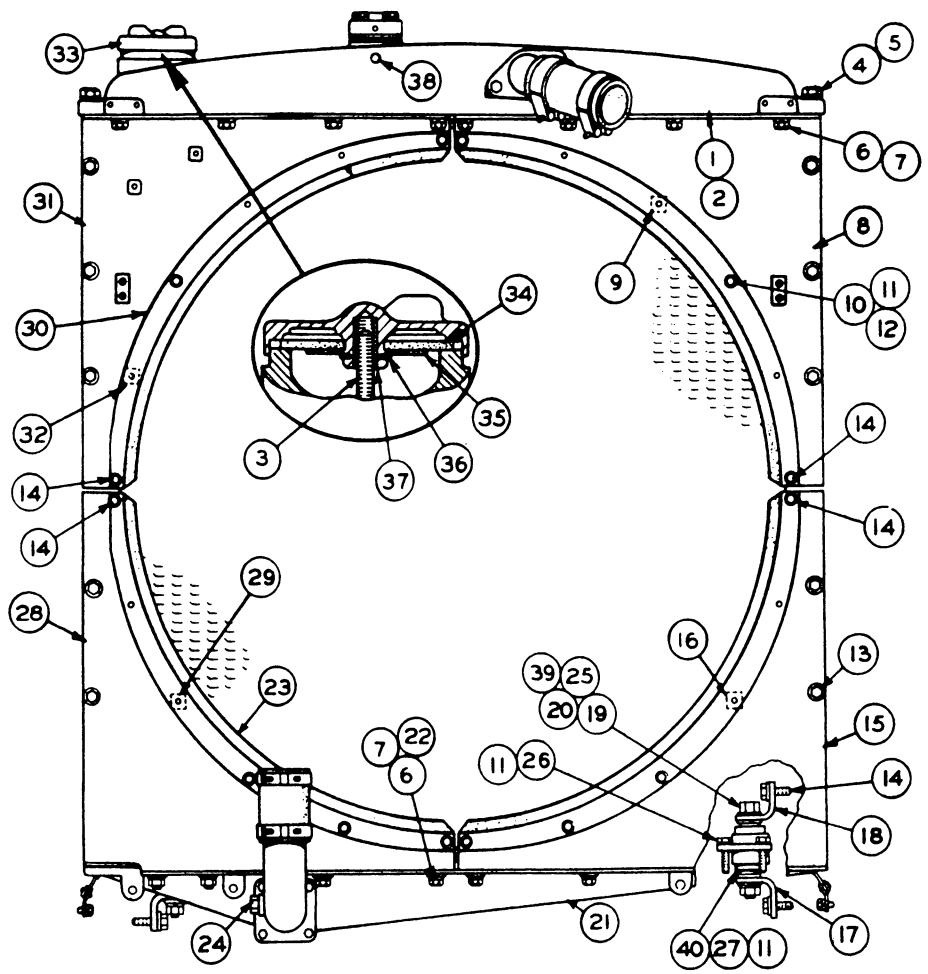

REF. NO.	PART NUMBER	DESCRIPTION	QTY
1	2S8723	TANK ASSEM.	1
2	5M6214	PLUG	1
3	1S286	STUD	1
4	2A1538	BOLT	2
5	3B4512	LOCKWASHER	2
6	S1621	BOLT	12
C 7	3B4508	LOCKWASHER	12
8	7S5069	SHIELD ASSEM. ---(R.H. -Upper)---	1
9	9F2978	NUT---------(Weld)----------	4
10	S1594	BOLT	10
11	3B4506	LOCKWASHER	16
12	4B4278	WASHER	10
13	1P3380	SCREW	10
C 14	9S2087	SCREW	12
15	7S5067	SHIELD ASSEM. ---(R.H. -Lower)---	1
16	9F2978	NUT---------(Weld)----------	4
C 17	4N5605	BRACKET	2
C 18	4N5606	BRACKET	2
C 19	2S1212	BUSHING ASSEM.	2
C 20	8S4749	BOLT	2
21	2S8732	TANK	1
C 22	4B4280	WASHER	4
23	2S6935	BAFFLE	4
C 24	3J5390	PLUG	1
C 25	4B5273	WASHER	8
C 26	S1591	BOLT	4
C 27	L2070	BOLT	2
28	7S5068	SHIELD ASSEM. ----(L.H. -Lower)--	1
29	9F2978	NUT----------(Weld)----------	4
30	2S6934	STRIP	4
31	7S5070	SHIELD ASSEM. ----(L.H. -Upper)--	1
32	9F2978	NUT---------(Weld)----------	4
33	7S7809	CAP ASSEM.	1
C 34	2P3230	GASKET	1
35	2S2846	RETAINER	1
36	9S9979	RING	1
37	7S7807	INSERT	1
38	8B2540	CORK	1
C 39	2B1940	NUT	2
	3B4509	LOCKWASHER	2
C 40	2P2793	CLAMP ASSEM.	2

C INDICATES CHANGE 142827

RADIATOR (4S7833 N/S)—Rear View
Serial No. 46A29252 to 46A31259 inclusive
Refer also to Pages 171, 174 and 175 for special parts

REF NO	PART NUMBER	DESCRIPTION	QTY
1	7B3235	BOLT	2
C 2	3B4508	LOCKWASHER	6
3	4H7380	GASKET	1
4	5S4629	GASKET	2
5	5S1218	VALVE ASSEM.	1
6	3S7712	HOSE	1
7	5S5080	BOLT	5
8	3B4505	LOCKWASHER	5
9	5S1211	COVER	1
10	5S1213	PLATE	1
11	2S8730	GASKET	2
12	2S8729	STRIP	4
13	5M7393	STRIP	4
14	2S6948	BAFFLE ASSEM.	4
	2S6951	BAFFLE	1
15	6B4594	RIVET	7
16	2S6949	PLATE	1
17	2S6950	STRIP	1
18	3S6339	BRACKET	2
19	2S1216	BOLT	2
20	2B1940	NUT	2
21	3B4509	LOCKWASHER	2
22	2S1212	BUSHING ASSEM.	2
23	1S5360	CLAMP ASSEM.	2
24	T573	BOLT	2
C 25	3B4506	LOCKWASHER	94
26	3S7737	ELBOW	1
27	9S2087	SCREW	20
28	3S6338	BRACKET	2
29	S1590	BOLT	6
	1D4717	NUT	6
	4B4278	WASHER	12
C 30	1A2029	BOLT	76
31	2S6953	BAFFLE ASSEM.	2
	2S6955	BAFFLE	1
32	2S6956	STRIP	1
33	6B4594	RIVET	3
34	2S6954	PLATE	1
35	8H2063	CLAMP	2
36	T102	BOLT	4
37	4B7739	PLUG	1
38	8H9819	ADAPTER	1
39	S1588	BOLT	6
40	8H9818	GASKET	1
41	2H5572	GASKET	1
42	5S662	BAFFLE ASSEM.	1
	5S641	PLATE	1
43	2S8859	STRIP	1
44	6B4594	RIVET	12
45	5S652	BAFFLE	1
46	2S6939	ELBOW	1
47	5H4454	CLAMP	2
48	2S884	HOSE	1
49	5S584	STRIP	1
50	8S2645	CORE ASSEM.	1
C 51	8F7242	WASHER	5
C 52	S1595	BOLT	4
	1D4719	NUT	4
	4B4280	WASHER	8

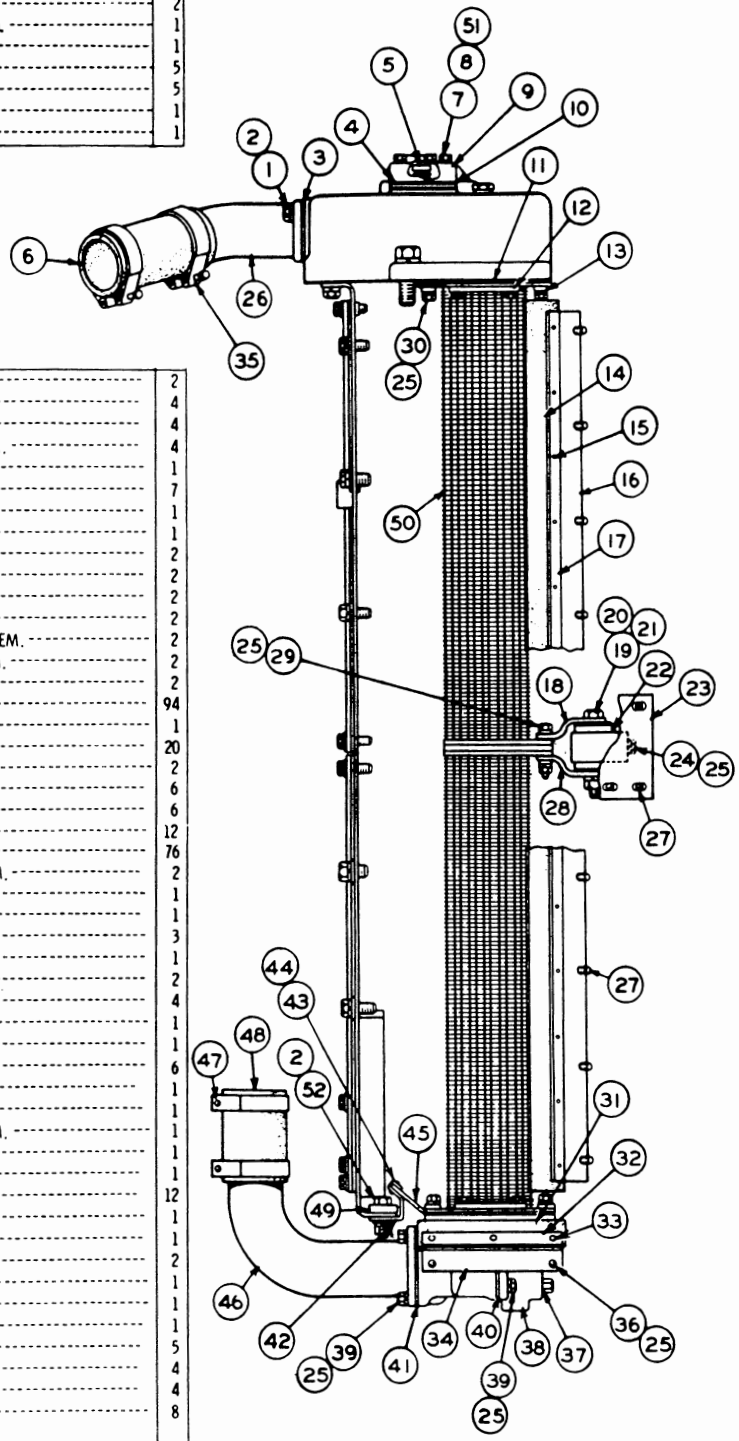

C INDICATES CHANGE 142828

RADIATOR (4S7833 N/S)—Side View
Serial No. 46A29252 to 46A31259 inclusive
Note: 6F6041 Rust Inhibitor is available

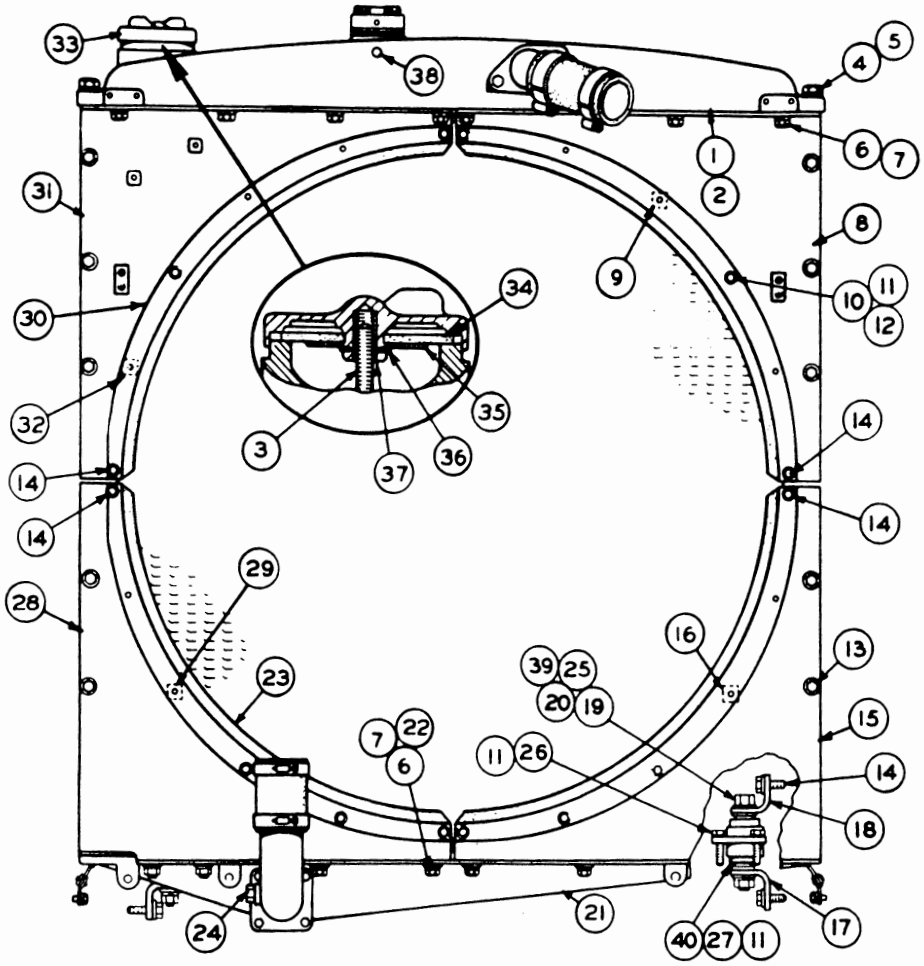

REF. NO.	PART NUMBER	DESCRIPTION	QTY
1	2S8723	TANK ASSEM. ---------- (Includes)	1
2	5M6214	PLUG----------	1
3	1S286	STUD----------	1
4	2A1538	BOLT----------	2
5	3B4512	LOCKWASHER----------	2
6	S1621	BOLT----------	12
7	3B4508	LOCKWASHER----------	12
8	7S5069	SHIELD ASSEM. ---(R. H. -Upper)--- (Includes)	1
9	9F2978	NUT---------(weld)----------	4
10	S1594	BOLT----------	10
11	3B4506	LOCKWASHER----------	16
12	4B4278	WASHER----------	10
13	1P3380	SCREW----------	10
14	9S2087	SCREW----------	12
15	7S5067	SHIELD ASSEM. ---(R. H. -Lower)--- (Includes)	1
16	9F2978	NUT---------(weld)----------	4
17	4N7425	BRACKET----------	2
18	4N7426	BRACKET----------	2
19	2S1212	BUSHING ASSEM. ----------	2
20	8S4749	BOLT----------	2
21	2S8732	TANK----------	1
22	4B4280	WASHER----------	4
23	2S6935	BAFFLE----------	4
24	3J5390	PLUG----------	1
25	4B5273	WASHER----------	8
26	S1591	BOLT----------	4
27	L2070	BOLT----------	2
28	7S5068	SHIELD ASSEM. ---(L. H. -Lower)--- (Includes)	1
29	9F2978	NUT---------(weld)----------	4
30	2S6934	STRIP----------	4
31	7S5070	SHIELD ASSEM. ---(L. H. -Upper)--- (Includes)	1
32	9F2978	NUT---------(weld)----------	4
33	7S7809	CAP ASSEM. ---------- (Includes)	1
34	2P3230	GASKET----------	1
35	2S2846	RETAINER----------	1
36	9S9979	RING----------	1
37	7S7807	INSERT----------	1
38	8B2540	CORK----------	1
39	2B1940	NUT----------	2
	3B4509	LOCKWASHER----------	2
C 40	4N7422	CLAMP ASSEM. ----------	2

C INDICATES CHANGE 147347

RADIATOR (4S7833 N/S)—Rear View
Serial No. 46A31260—Up
Refer also to Pages 171, 174 and 175 for special parts

REF. NO.	PART NUMBER	DESCRIPTION	QTY
1	7B3235	BOLT	2
2	3B4508	LOCKWASHER	6
3	4H7380	GASKET	1
4	5S4629	GASKET	2
5	5S1218	VALVE ASSEM.	1
CA 6	2S6658	HOSE----------9 in.	
7	5S5080	BOLT	5
8	3B4505	LOCKWASHER	5
9	5S1211	COVER	1
10	5S1213	PLATE	1
11	2S8730	GASKET	2
12	2S8729	STRIP	4
13	5M7393	STRIP	4
14	2S6948	BAFFLE ASSEM.	4
	2S6951	BAFFLE	1
15	6B4594	RIVET	7
16	2S6949	PLATE	1
17	2S6950	STRIP	1
18	3S6339	BRACKET	2
19	2S1216	BOLT	2
20	2B1940	NUT	2
21	3B4509	LOCKWASHER	2
22	2S1212	BUSHING ASSEM.	2
23	1S5360	CLAMP ASSEM.	2
24	T573	BOLT	2
25	3B4506	LOCKWASHER	94
26	3S7737	ELBOW	1
27	9S2087	SCREW	20
28	3S6338	BRACKET	2
29	S1590	BOLT	6
	1D4717	NUT	6
	4B4278	WASHER	12
30	1A2029	BOLT	76
31	2S6953	BAFFLE ASSEM.	2
	2S6955	BAFFLE	1
32	2S6956	STRIP	1
33	6B4594	RIVET	3
34	2S6954	PLATE	1
C 35	5P598	CLAMP	4
36	T102	BOLT	4
37	4B7739	PLUG	1
38	8H9819	ADAPTER	1
39	S1588	BOLT	6
40	8H9818	GASKET	1
— 41	2H5572	GASKET	1
42	5S662	BAFFLE ASSEM.	1
	5S641	PLATE	1
43	2S8859	STRIP	1
44	6B4594	RIVET	12
45	5S652	BAFFLE	1
46	2S6939	ELBOW	1
48	2S884	HOSE	1
49	5S584	STRIP	1
50	8S2645	CORE ASSEM	1
51	8F7242	WASHER	5
C	S1587	BOLT	4
52	1D4719	NUT	4
	4B4280	WASHER	8

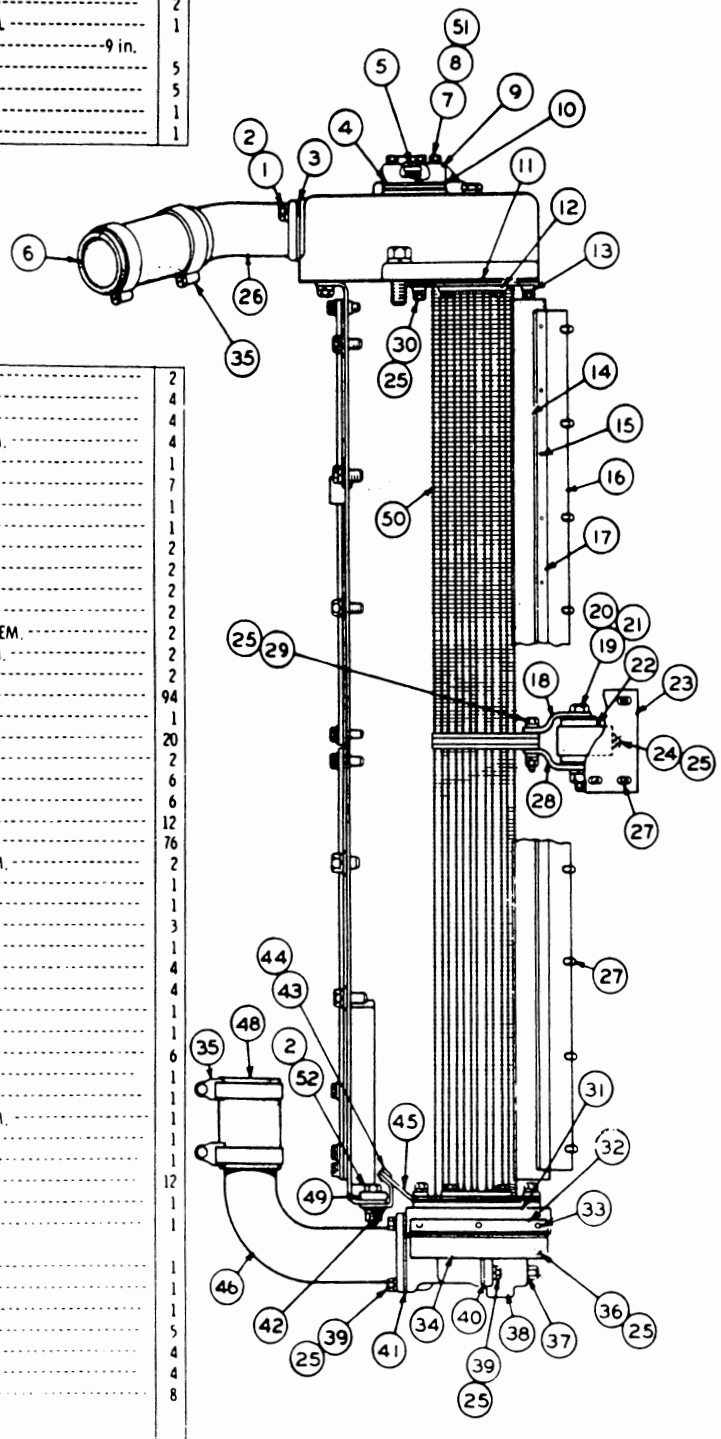

▲ ORDER BY THE INCH
C INDICATES CHANGE

147348

RADIATOR (4S7833 N/S)—Side View
Serial No. 46A31260—Up
Note: 6F6041 Rust Inhibitor is available

	REF NO	PART NUMBER	DESCRIPTION	QTY
	1	S1566	BOLT	10
	2	3B4510	LOCKWASHER	10
	3	4D3704	WASHER	10
	4	7S9524	PLATE ASSEM.	1
	5	7S9523	PLATE ASSEM.	1
	6	1A458	BOLT	8
	7	3B4512	LOCKWASHER	8
	8	4B5276	WASHER	4
	9	7S4019	GUARD ASSEM.	1
C	10	1D4643	BOLT	14
C	11	2J3507	NUT	14
C	12	5F6562	WASHER	14
	13	5S871	GUARD ASSEM.	1
	14	7S3332	BAFFLE ASSEM.	1
	15	9F2978	NUT-----(Weld)-----	4
	16	7S3281	BAFFLE-----(End)-----	2
		7S3289	BAFFLE-----(Center)-----	1
	17	6B4594	RIVET	13
	18	S1588	BOLT	4
		3B4506	LOCKWASHER	4

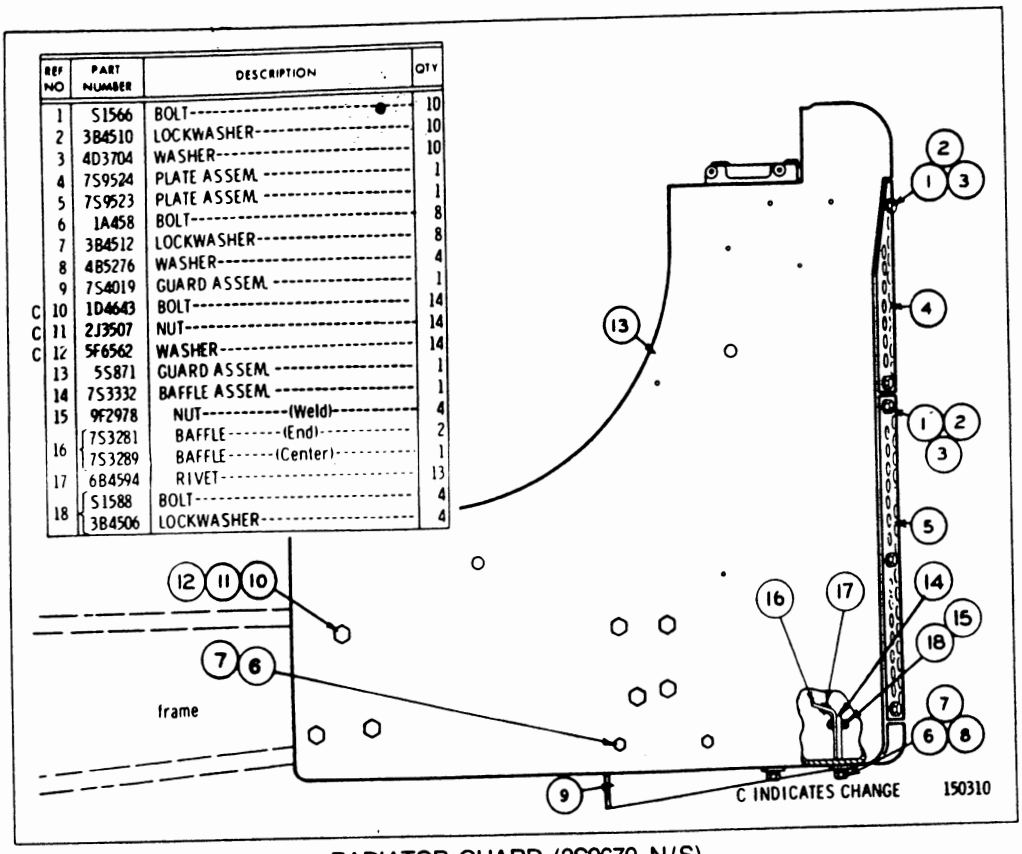

RADIATOR GUARD (2S9670 N/S)
Serial No. 46A24433 to 46A32802 inclusive
Note: 9M4518 Deflector and Guard Assembly is available
Refer also to Pages 173, 174 and 175 for special parts

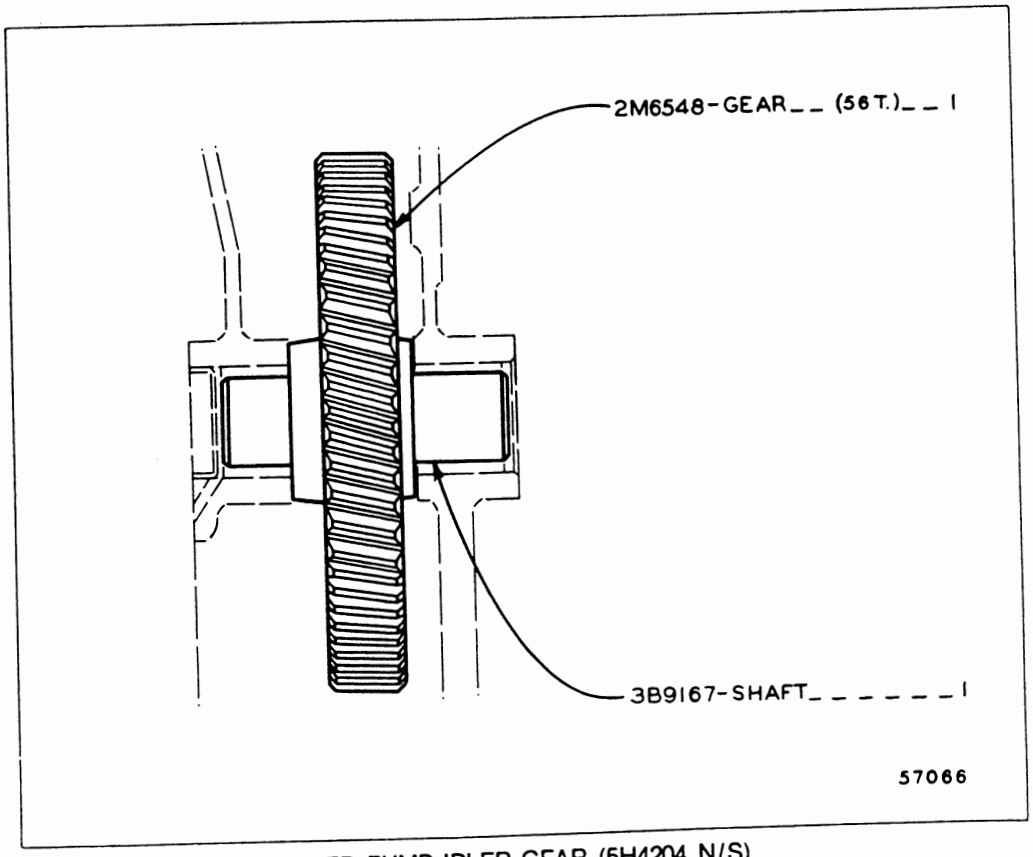

WATER PUMP IDLER GEAR (5H4204 N/S)

REF NO	PART NUMBER	DESCRIPTION	QTY
1	S1566	BOLT	10
2	3B4510	LOCKWASHER	10
3	4D3704	WASHER	10
4	7S9524	PLATE ASSEM.	1
5	7S9523	PLATE ASSEM.	1
6	1A458	BOLT	8
7	3B4512	LOCKWASHER	8
8	4B5276	WASHER	4
9	7S4019	GUARD ASSEM.	1
10	1D4643	BOLT	14
11	2J3507	NUT	14
12	5F6562	LOCKWASHER	14
13	6P1252	GUARD ASSEM.	1
14	7S3332	BAFFLE ASSEM.	1
15	9F2978	NUT (Weld)	4
16	7S3281	BAFFLE (End)	2
	7S3289	BAFFLE (Center)	1
17	6B4594	RIVET	13
18	S1588	BOLT	4
	3B4506	LOCKWASHER	4

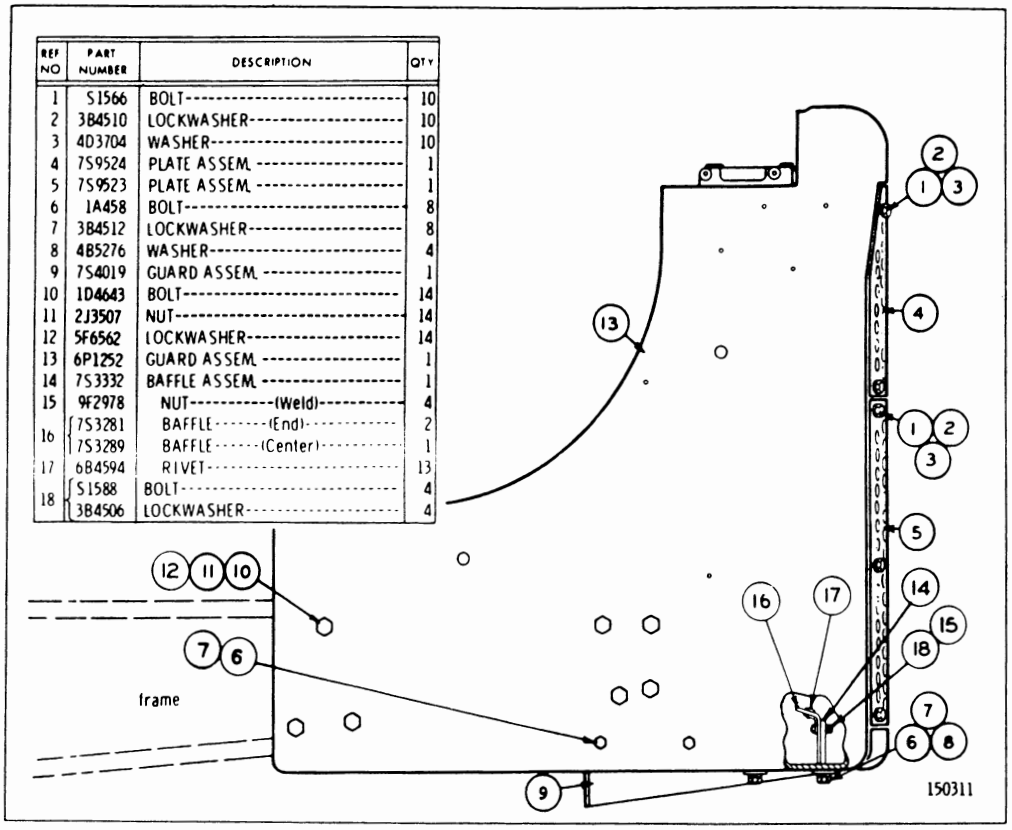

RADIATOR GUARD (6P1163 N/S)
Serial No. 46A32803—Up. Note: 9M4518 Deflector and Guard Assembly is available. Refer also to Pages 173, 174 and 175 for special parts

551911 WATER PUMP ASSEMBLY (4S7757 N/S)

Serial No. 46A24433 to 27715, 27717 to 27724, and 46A27726 to 46A27728 inclusive

See Page 28 for Gasket Kits

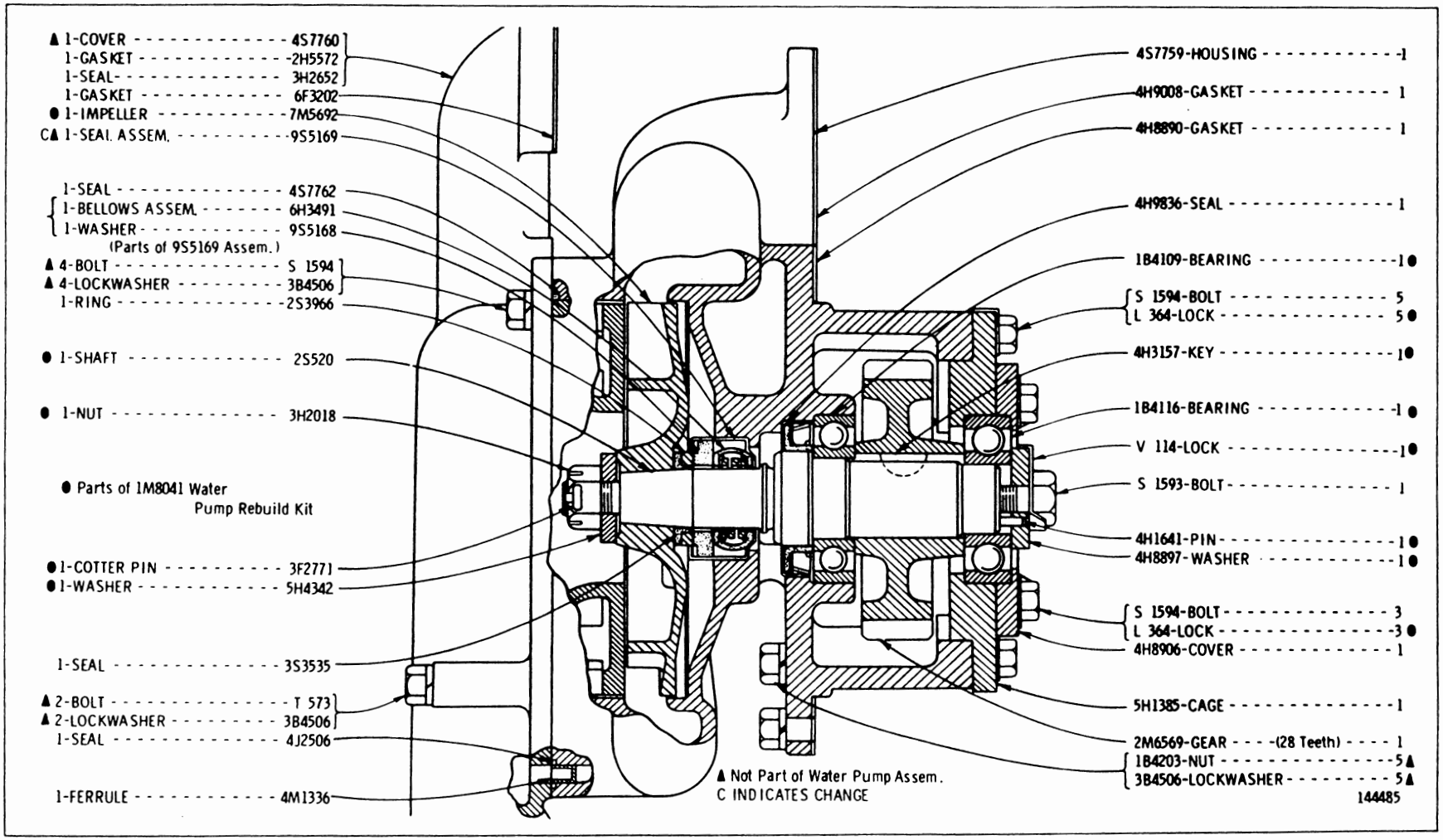

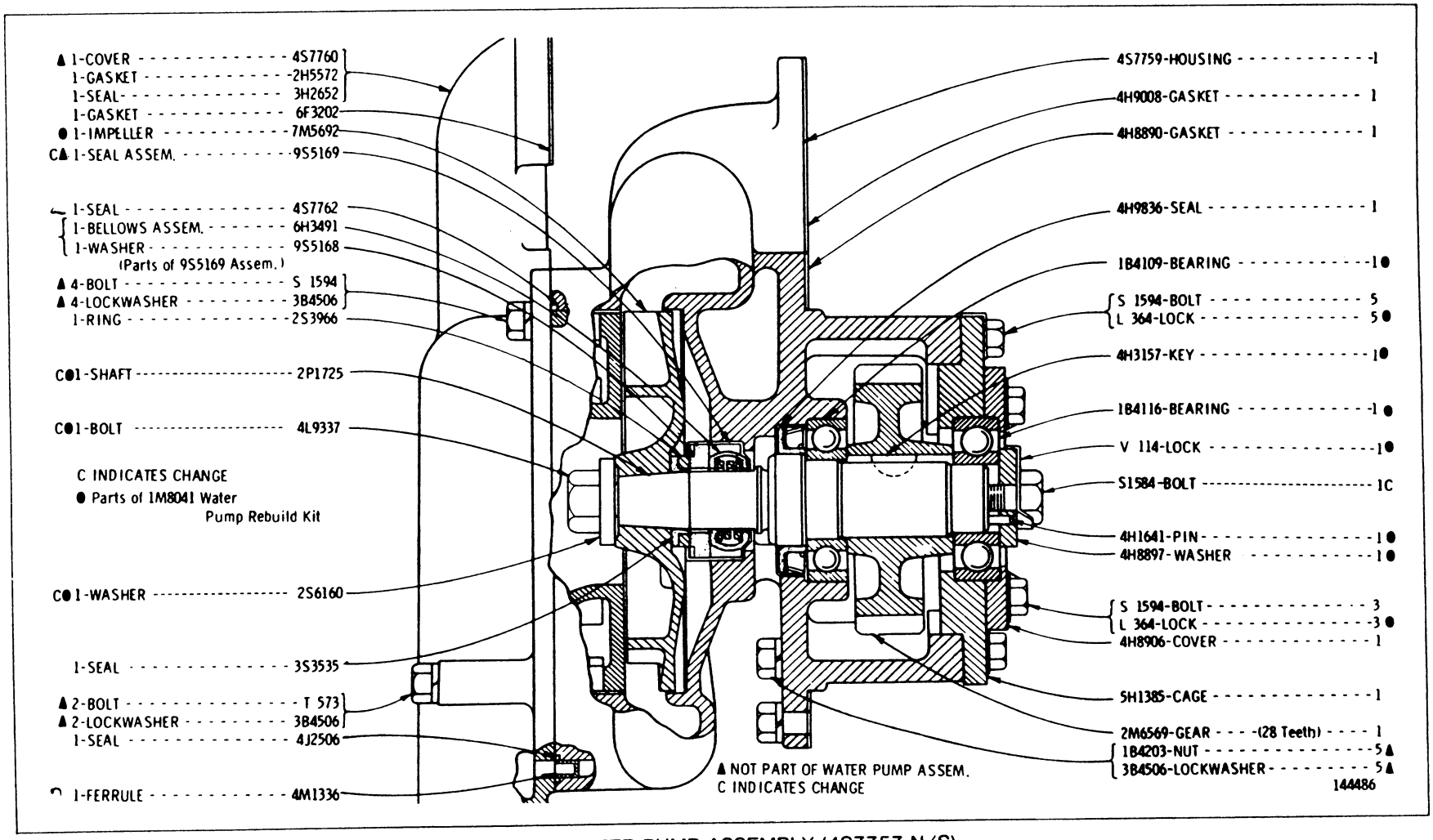

5S1911 WATER PUMP ASSEMBLY (4S7757 N/S)
Serial No. 46A27716, 46A27725 and 46A27729—Up
See Page 28 for Gasket Kits

WATER LINES (5S486 N/S)
Serial No. 46A24433 to 46A29658 inclusive

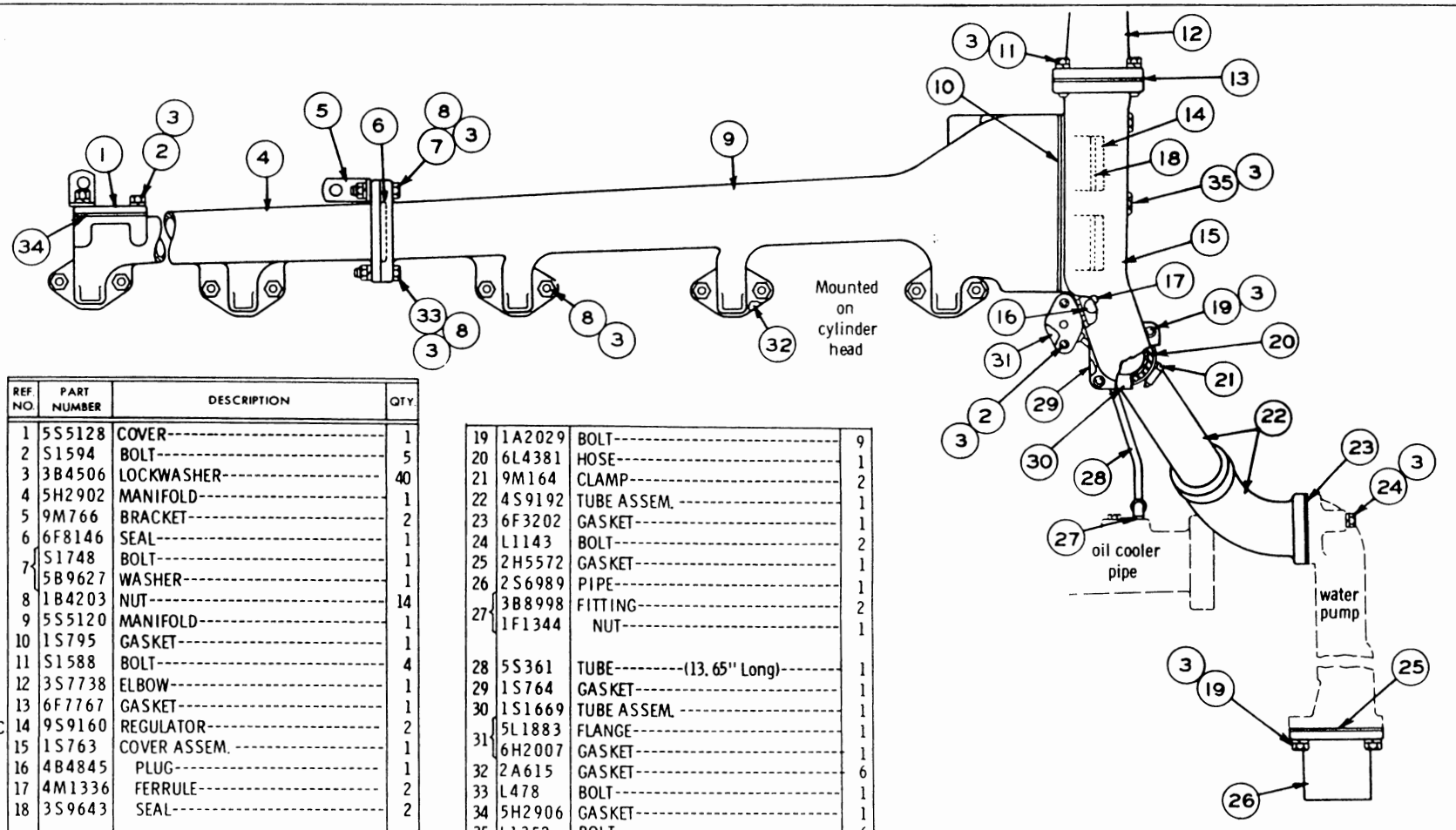

REF NO.	PART NUMBER	DESCRIPTION	QTY.
1	5S5128	COVER	1
2	S1594	BOLT	5
3	3B4506	LOCKWASHER	40
4	5H2902	MANIFOLD	1
5	9M766	BRACKET	2
6	6F8146	SEAL	1
7	S1748	BOLT	1
	5B9627	WASHER	1
8	1B4203	NUT	14
9	5S5120	MANIFOLD	1
10	1S795	GASKET	1
11	S1588	BOLT	4
12	3S7738	ELBOW	1
13	6F7767	GASKET	1
C 14	9S9160	REGULATOR	2
15	1S763	COVER ASSEM.	1
16	4B4845	PLUG	1
17	4M1336	FERRULE	2
18	3S9643	SEAL	2

19	1A2029	BOLT	9
20	6L4381	HOSE	1
21	9M164	CLAMP	2
22	4S9192	TUBE ASSEM.	1
23	6F3202	GASKET	1
24	L1143	BOLT	2
25	2H5572	GASKET	1
26	2S6989	PIPE	1
27	3B8998	FITTING	2
	1F1344	NUT	1
28	5S361	TUBE---------(13.65" Long)	1
29	1S764	GASKET	1
30	1S1669	TUBE ASSEM.	1
31	5L1883	FLANGE	1
	6H2007	GASKET	1
32	2A615	GASKET	6
33	L478	BOLT	1
34	5H2906	GASKET	1
35	L1352	BOLT	6

C INDICATES CHANGE

113835

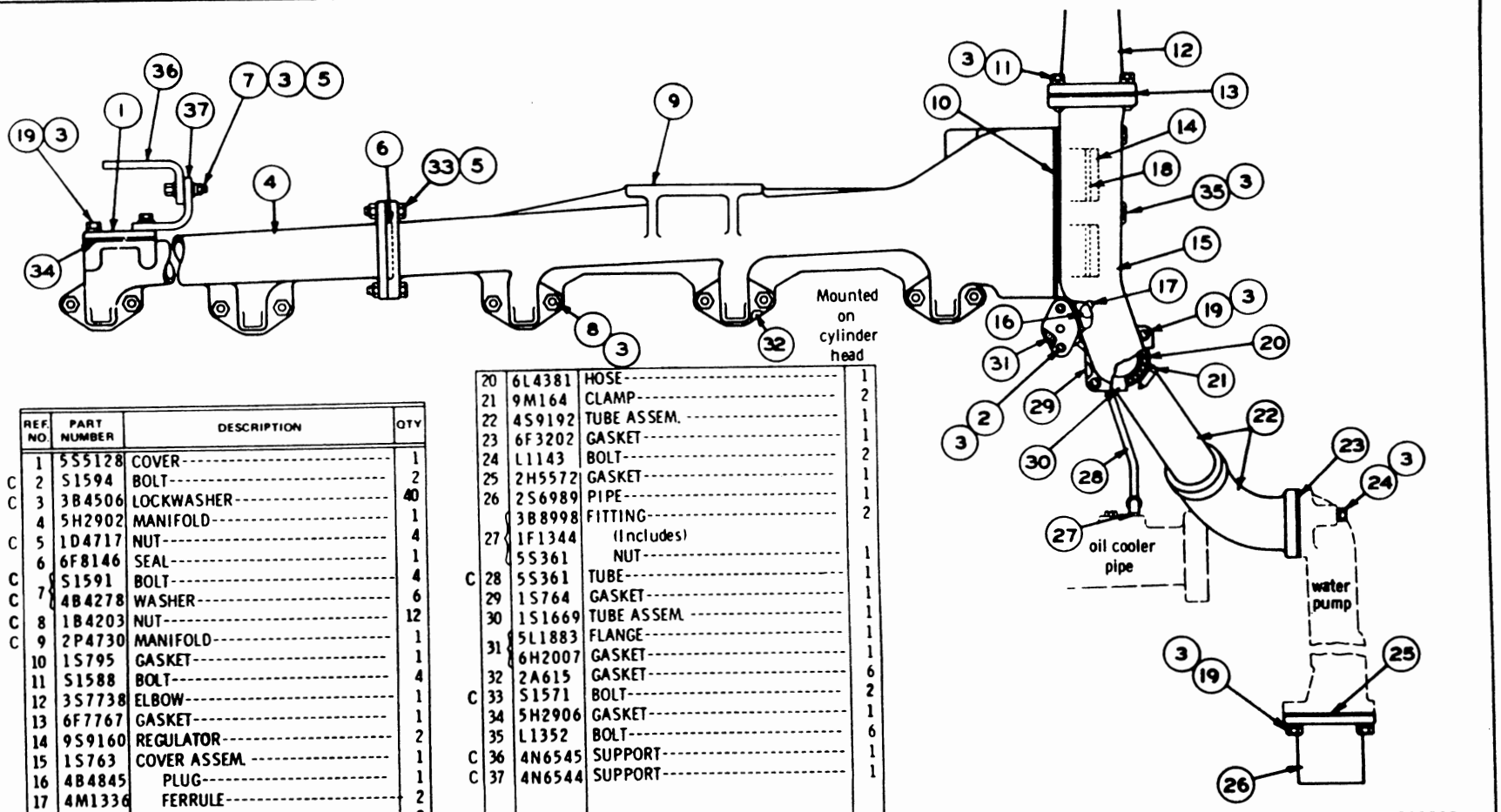

	REF. NO.	PART NUMBER	DESCRIPTION	QTY
	1	5S5128	COVER	1
C	2	S1594	BOLT	2
C	3	3B4506	LOCKWASHER	40
	4	5H2902	MANIFOLD	1
C	5	1D4717	NUT	4
	6	6F8146	SEAL	1
C	7	S1591	BOLT	4
C		4B4278	WASHER	6
C	8	1B4203	NUT	12
C	9	2P4730	MANIFOLD	1
	10	1S795	GASKET	1
	11	S1588	BOLT	4
	12	3S7738	ELBOW	1
	13	6F7767	GASKET	1
	14	9S9160	REGULATOR	2
	15	1S763	COVER ASSEM.	1
	16	4B4845	PLUG	1
	17	4M1336	FERRULE	2
	18	3S9643	SEAL	2
	19	1A2029	BOLT	10
	20	6L4381	HOSE	1
	21	9M164	CLAMP	2
	22	4S9192	TUBE ASSEM.	1
	23	6F3202	GASKET	1
	24	L1143	BOLT	2
	25	2H5572	GASKET	1
	26	2S6989	PIPE	1
	27	3B8998	FITTING	2
		1F1344	(Includes) NUT	1
		5S361		
C	28	5S361	TUBE	1
	29	1S764	GASKET	1
	30	1S1669	TUBE ASSEM.	1
	31	5L1883	FLANGE	1
		6H2007	GASKET	1
	32	2A615	GASKET	6
C	33	S1571	BOLT	2
	34	5H2906	GASKET	1
	35	L1352	BOLT	6
C	36	4N6545	SUPPORT	1
C	37	4N6544	SUPPORT	1

5S486 WATER LINES GROUP
Serial No. 46A29659—Up

FAN DRIVE (9S3132 N/S)
Serial No. 46A24433 to 24809, 24812, 24813, 24815 to 24817, 24822, 24823, 24827 and 46A24834 inclusive

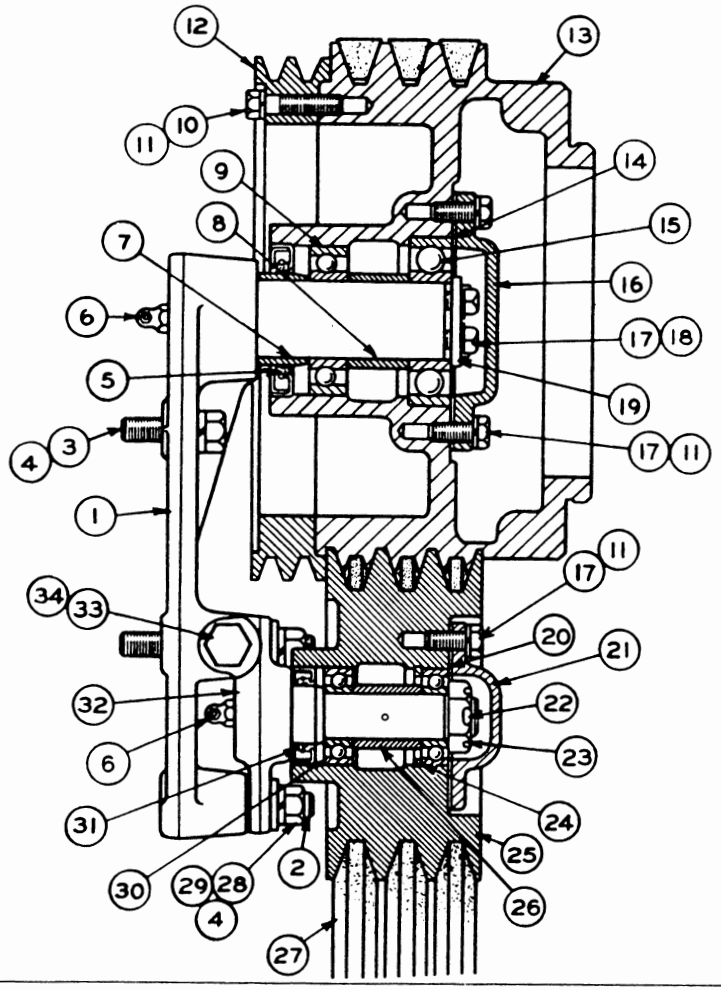

REF NO.	PART NUMBER	DESCRIPTION	QTY.
1	8S5142	BRACKET ASSEM.	1
2	1M6422	STUD (Part of Bracket Assem. 8S5142)	3
3	S 1587	BOLT	3
4	3B4508	LOCKWASHER	6
5	5M9739	SEAL	1
6	3B8488	FITTING	2
7	4H1566	SPACER	1
8	1S4242	SPACER	1
9	6H3957	BEARING	1
10	S1591	BOLT	4
11	3B4506	LOCKWASHER	13
12	9S3065	PULLEY	1
13	2S8892	PULLEY	1
14	2S8869	GASKET	1
15	2H3712	BEARING	1
16	2S8868	COVER	1
17	S1594	BOLT	11
18	9M909	LOCK	2
19	7S1175	WASHER	1
20	8H5027	GASKET	1
21	8H5026	COVER	1
22	3B4628	COTTER PIN	1
23	5F8913	NUT	1
24	8B2327	RING	1
25	3S7517	PULLEY	1
26	9M4241	SPACER	1
27	3S7520	VEE BELT SET (Consists of 3 Belts)	1
28	1B4205	NUT	3
29	1F7960	WASHER	3
30	6B1124	BEARING	2
31	5M9735	SEAL	1
32	2S8880	BRACKET ASSEM.	1
33	9M4571	BOLT	1
34	1D5118	NUT	1

130955

C INDICATES CHANGE

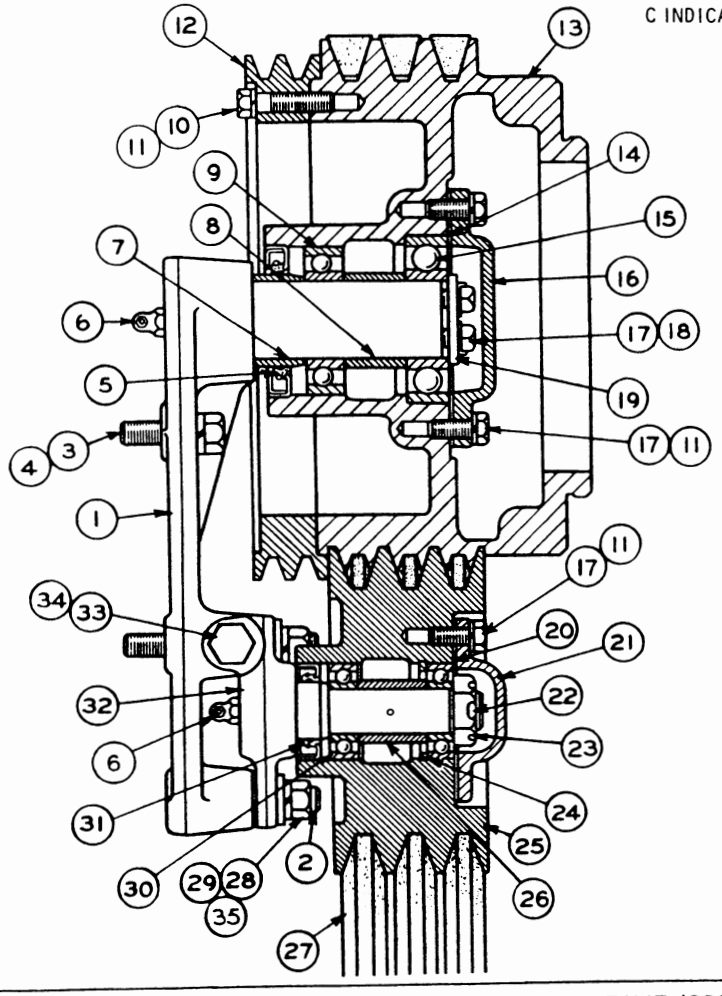

REF. NO.	PART NUMBER	DESCRIPTION	QTY
C 1	1P4357	BRACKET ASSEM.	1
	5B5812	DOWEL	1
2	1M6422	STUD	3
C 3	S1589	BOLT	3
C 4	3B4510	LOCKWASHER	3
5	5M9739	SEAL	1
6	3B8488	FITTING	2
7	4H1566	SPACER	1
8	1S4242	SPACER	1
9	6H3957	BEARING	1
10	S1591	BOLT	4
11	3B4506	LOCKWASHER	13
12	9S3065	PULLEY	1
13	2S8892	PULLEY	1
14	2S8869	GASKET	1
15	2H3712	BEARING	1
16	2S8868	COVER	1
17	S1594	BOLT	11
18	9M909	LOCK	2
19	7S1175	WASHER	1
20	8H5027	GASKET	1
21	8H5026	COVER	1
22	3B4628	COTTER PIN	1
23	5F8913	NUT	1
24	8B2327	RING	1
25	3S7517	PULLEY	1
26	9M4241	SPACER	1
27	3S7520	VEE BELT SET (Consists of 3 Belts)	1
28	1B4205	NUT	3
29	1F7960	WASHER	3
30	6B1124	BEARING	2
31	5M9735	SEAL	1
32	2S8880	BRACKET ASSEM.	1
33	9M4571	BOLT	1
34	1D5118	NUT	1
C 35	3B4508	LOCKWASHER	3

137370

FAN DRIVE (9S3132 N/S)

Serial No. 46A24810, 24811, 24814, 24818 to 24821, 24824 to 24826, 24828 to 24833, 24835 to 27800, and 46A27802 to 46A28136 inclusive

FAN DRIVE (9S3132 N/S)
Serial No. 46A27801 and 46A28137—Up

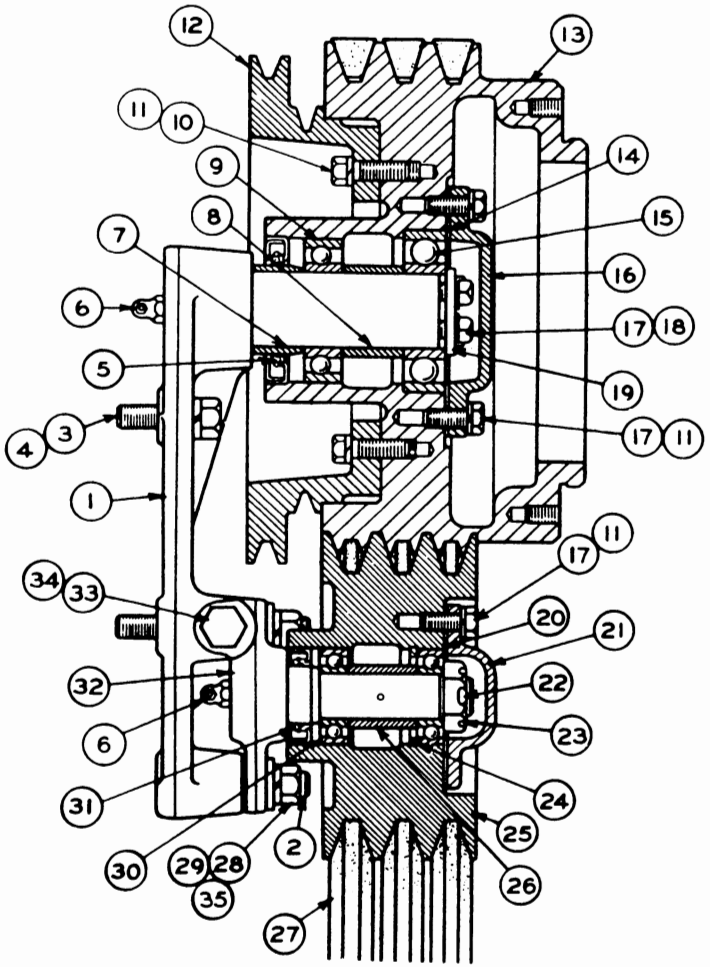

	REF. NO.	PART NUMBER	DESCRIPTION	QTY
	1	1P4357	BRACKET ASSEM.	1
		5B5812	DOWEL	1
	2	1M6422	STUD	3
	3	S1589	BOLT	3
	4	3B4510	LOCKWASHER	3
	5	5M9739	SEAL	1
	6	3B8488	FITTING	2
	7	4H1566	SPACER	1
	8	1S4242	SPACER	1
	9	6H3957	BEARING	1
C	10	S1588	BOLT	4
	11	3B4506	LOCKWASHER	13
C	12	3P23	PULLEY	1
C	13	3P163	PULLEY	1
	14	2S8869	GASKET	1
	15	2H3712	BEARING	1
	16	2S8868	COVER	1
	17	S1594	BOLT	11
	18	9M909	LOCK	2
	19	7S1175	WASHER	1
	20	8H5027	GASKET	1
	21	8H5026	COVER	1
	22	3B4628	COTTER PIN	1
	23	5F8913	NUT	1
	24	8B2327	RING	1
	25	3S7517	PULLEY	1
	26	9M4241	SPACER	1
	27	3S7520	VEE BELT SET (Consists of 3 Belts)	1
	28	1B4205	NUT	3
	29	1F7960	WASHER	3
	30	6B1124	BEARING	2
	31	5M9735	SEAL	1
	32	2S8880	BRACKET ASSEM.	1
	33	9M4571	BOLT	1
	34	1D5118	NUT	1
	35	3B4508	LOCKWASHER	3

C INDICATES CHANGE

116272

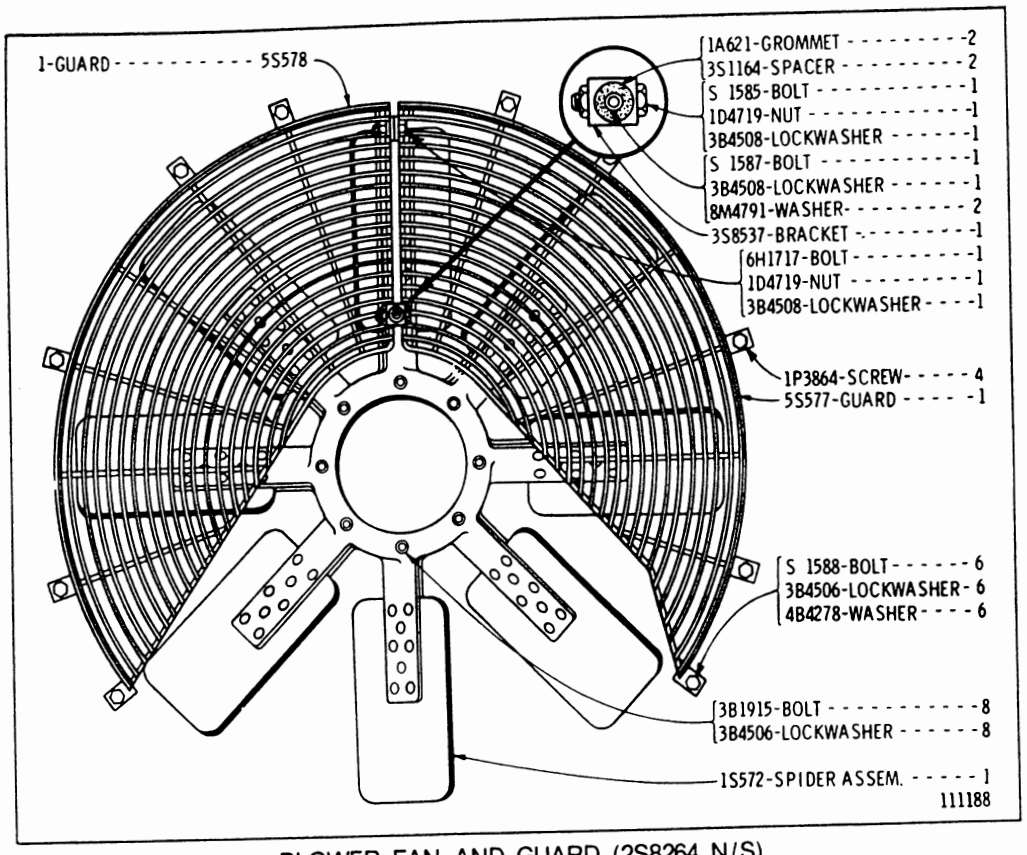

BLOWER FAN AND GUARD (2S8264 N/S)
Refer also to Page 178 for special parts

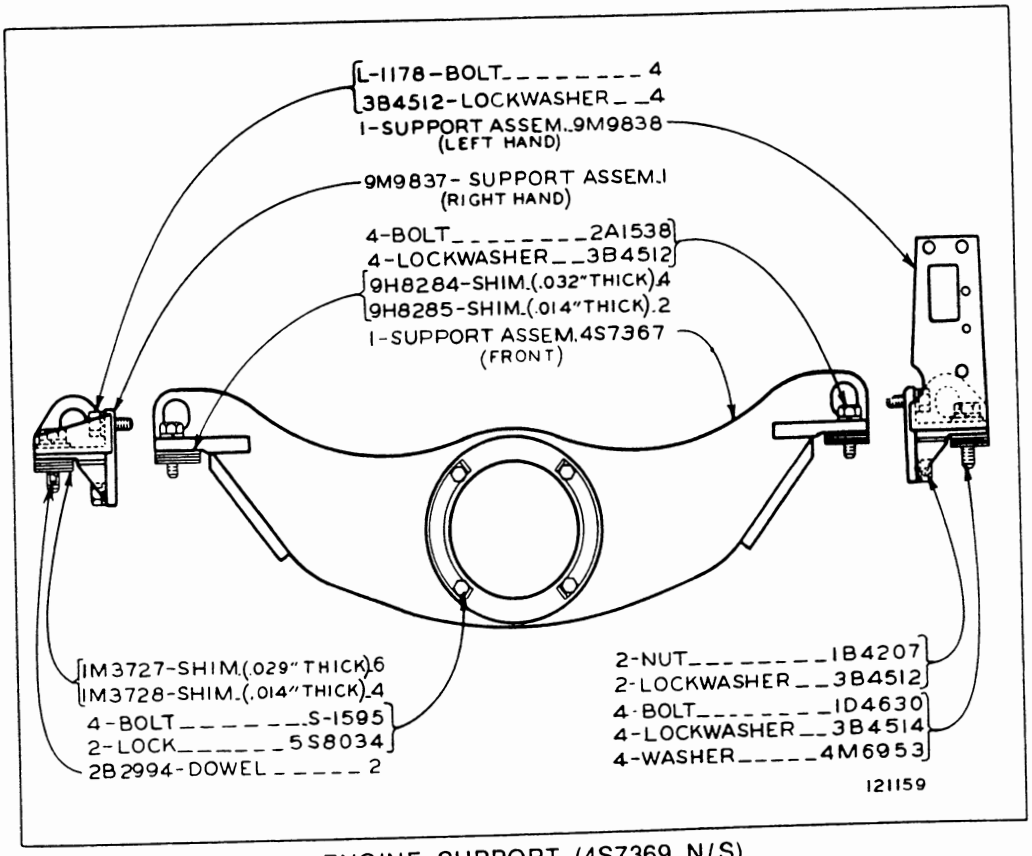

ENGINE SUPPORT (4S7369 N/S)
Serial No. 46A24433 to 46A33172 inclusive

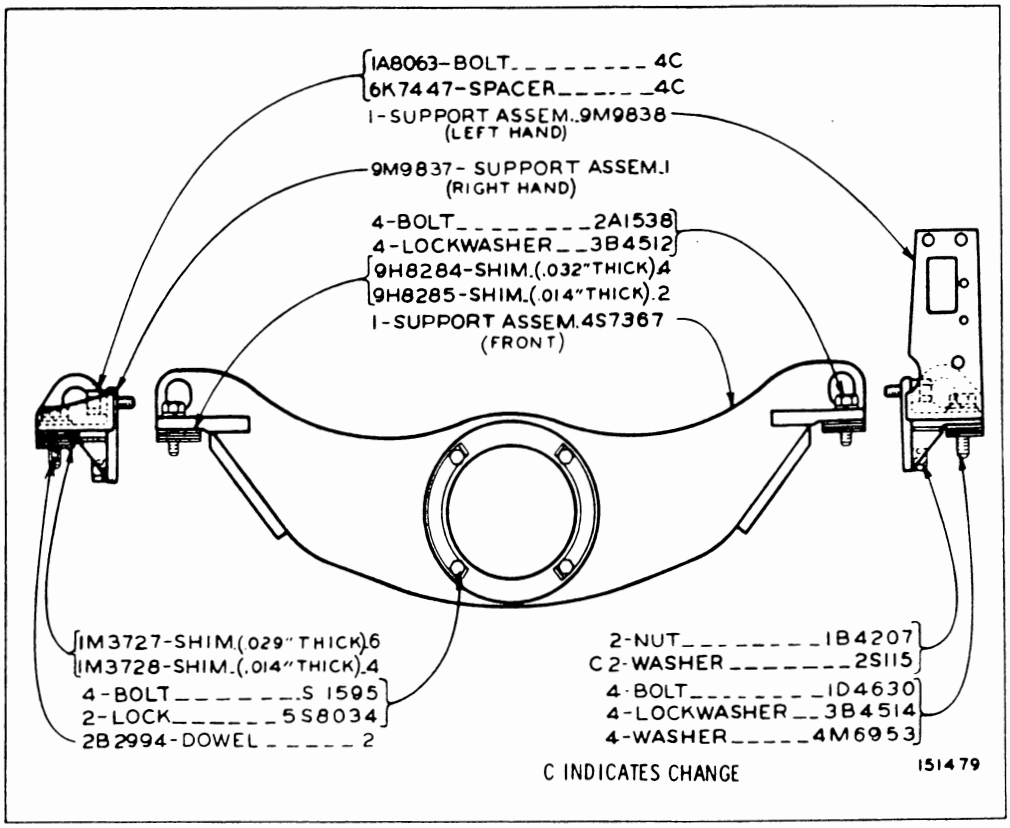

ENGINE SUPPORT (4S7369 N/S)
Serial No. 46A33173—Up

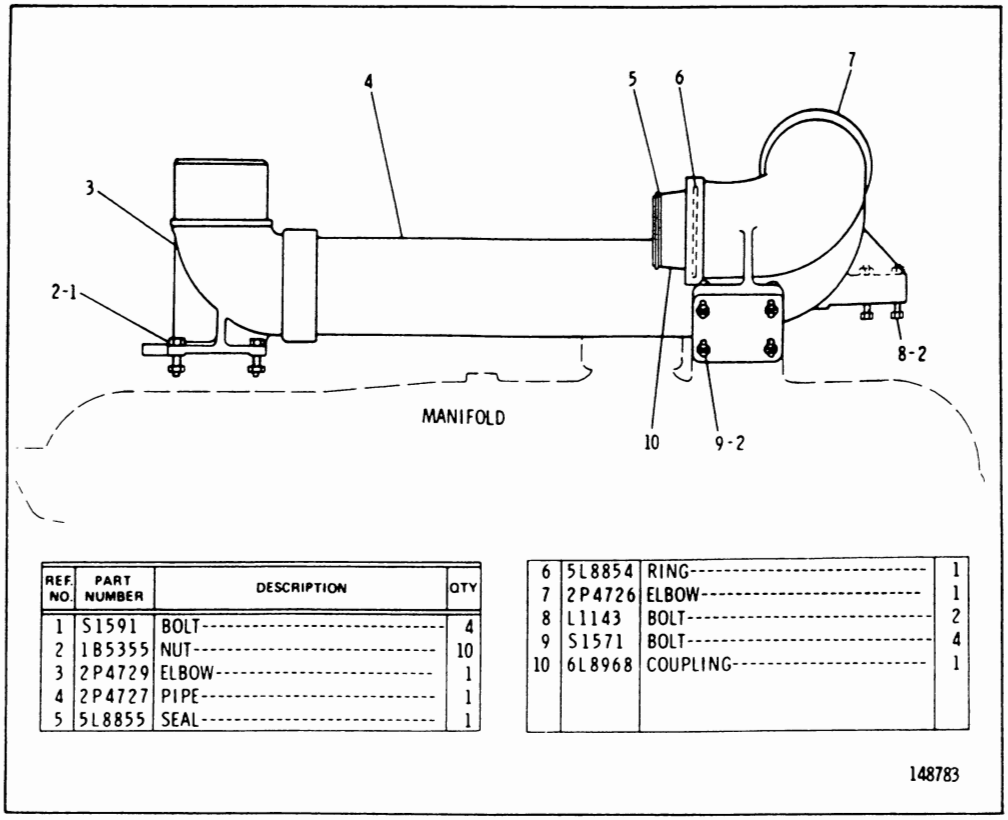

REF. NO.	PART NUMBER	DESCRIPTION	QTY
1	S1591	BOLT	4
2	1B5355	NUT	10
3	2P4729	ELBOW	1
4	2P4727	PIPE	1
5	5L8855	SEAL	1
6	5L8854	RING	1
7	2P4726	ELBOW	1
8	L1143	BOLT	2
9	S1571	BOLT	4
10	6L8968	COUPLING	1

148783

4N7536 AIR LINES GROUP
Serial No. 46A31761, 31766, 31768 to 32241, 32243 to 32392, 32394 to 32415, 32417 to 32490 & 46A32492 to 46A32706 inclusive

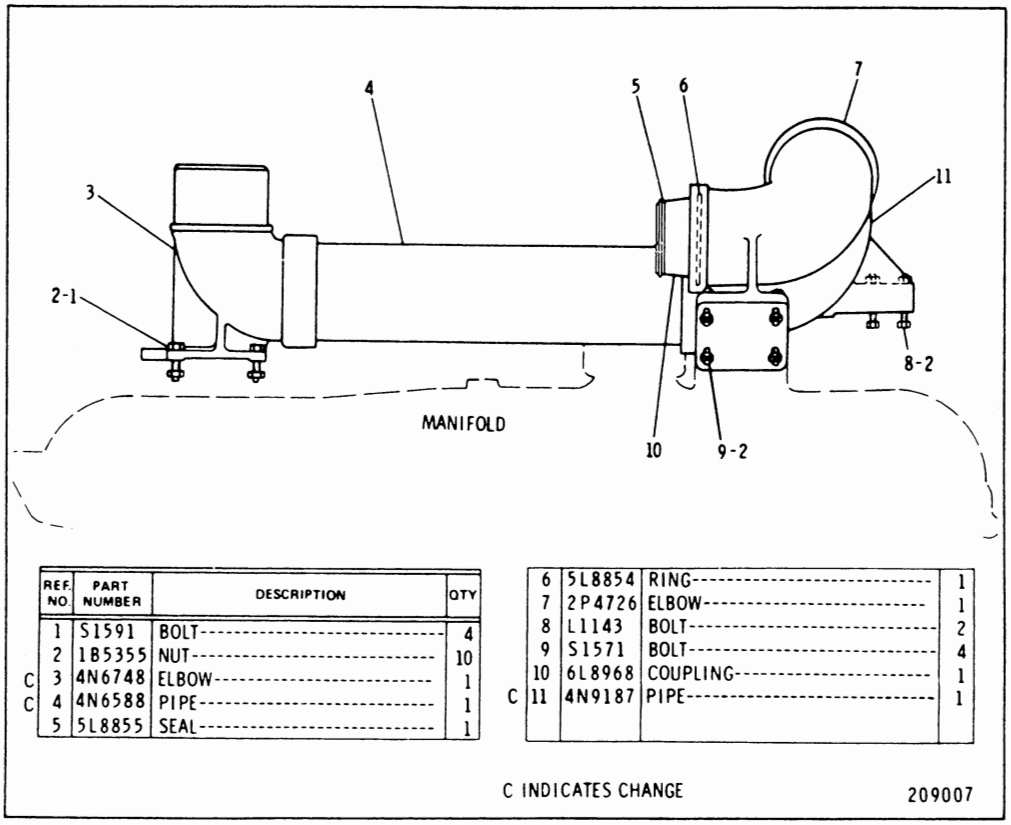

	REF. NO.	PART NUMBER	DESCRIPTION	QTY
	1	S1591	BOLT	4
	2	1B5355	NUT	10
C	3	4N6748	ELBOW	1
C	4	4N6588	PIPE	1
	5	5L8855	SEAL	1
	6	5L8854	RING	1
	7	2P4726	ELBOW	1
	8	L1143	BOLT	2
	9	S1571	BOLT	4
	10	6L8968	COUPLING	1
C	11	4N9187	PIPE	1

C INDICATES CHANGE

209007

4N7536 AIR LINES GROUP
Serial No. 46A31762 to 31765, 31767, 32242, 32393, 32416, 32491 & 46A32707—Up

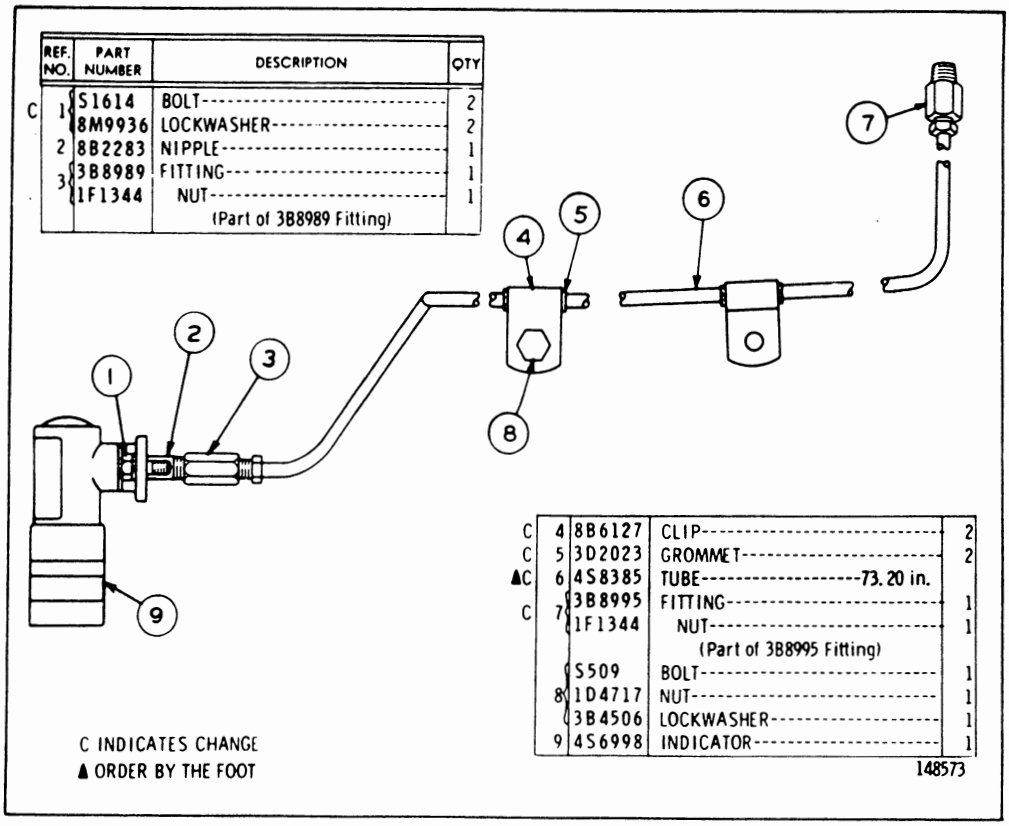

REF. NO.	PART NUMBER	DESCRIPTION	QTY
C 1	S1614	BOLT	2
	8M9936	LOCKWASHER	2
2	8B2283	NIPPLE	1
3	3B8989	FITTING	1
	1F1344	NUT	1
		(Part of 3B8989 Fitting)	
C 4	8B6127	CLIP	2
C 5	3D2023	GROMMET	2
▲C 6	4S8385	TUBE--73.20 in.	
C 7	3B8995	FITTING	1
	1F1344	NUT	1
		(Part of 3B8995 Fitting)	
	S509	BOLT	1
8	1D4717	NUT	1
	3B4506	LOCKWASHER	1
9	4S6998	INDICATOR	1

C INDICATES CHANGE
▲ ORDER BY THE FOOT

148573

4S8493 AIR FILTER SERVICE INDICATOR GROUP
Serial No. 46A24433 to 46A27172 inclusive

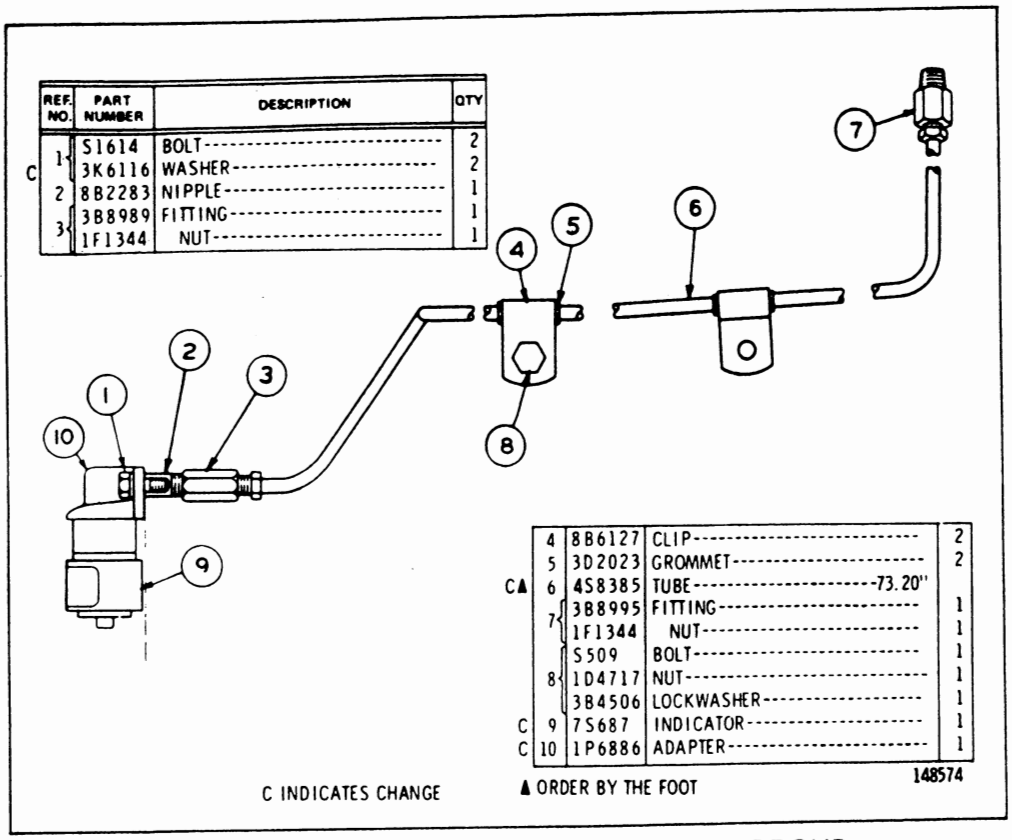

4S8493 AIR FILTER SERVICE INDICATOR GROUP
Serial No. 46A27173 to 46A31634 inclusive

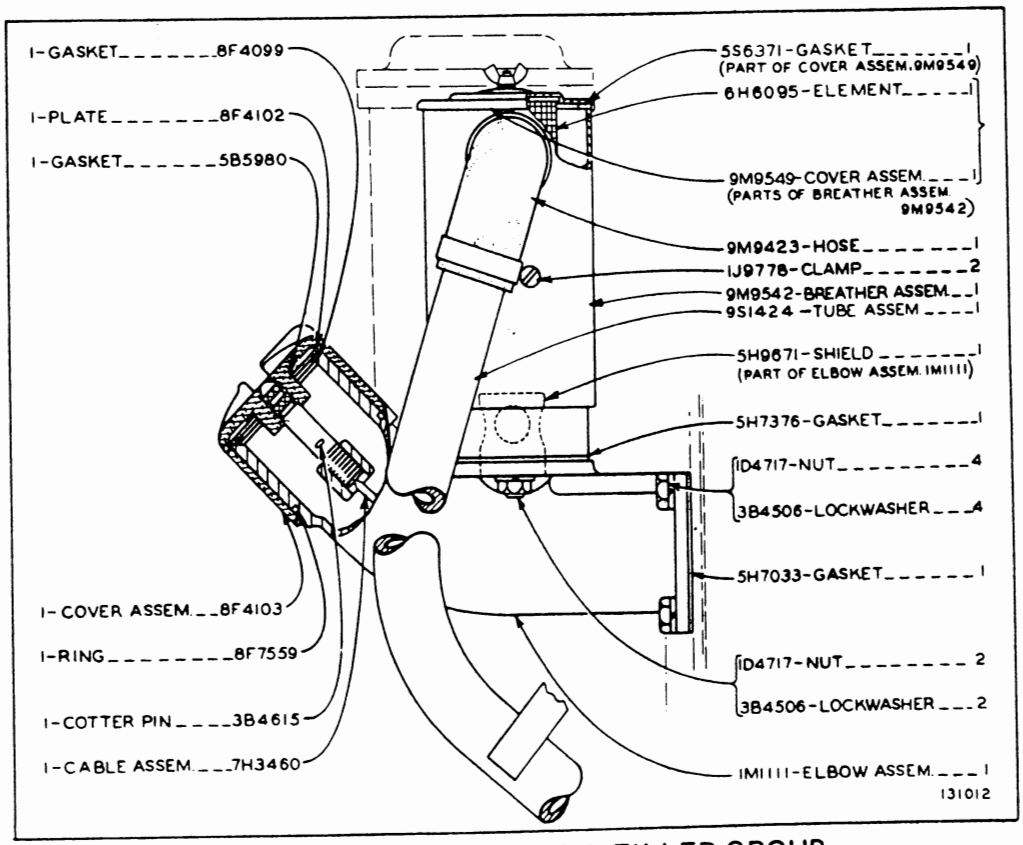

1M1123 BREATHER AND OIL FILLER GROUP
Serial No. 46A24433 to 46A27800 & 46A27802 to 46A28136 inclusive
Refer also to Page 170 for special parts

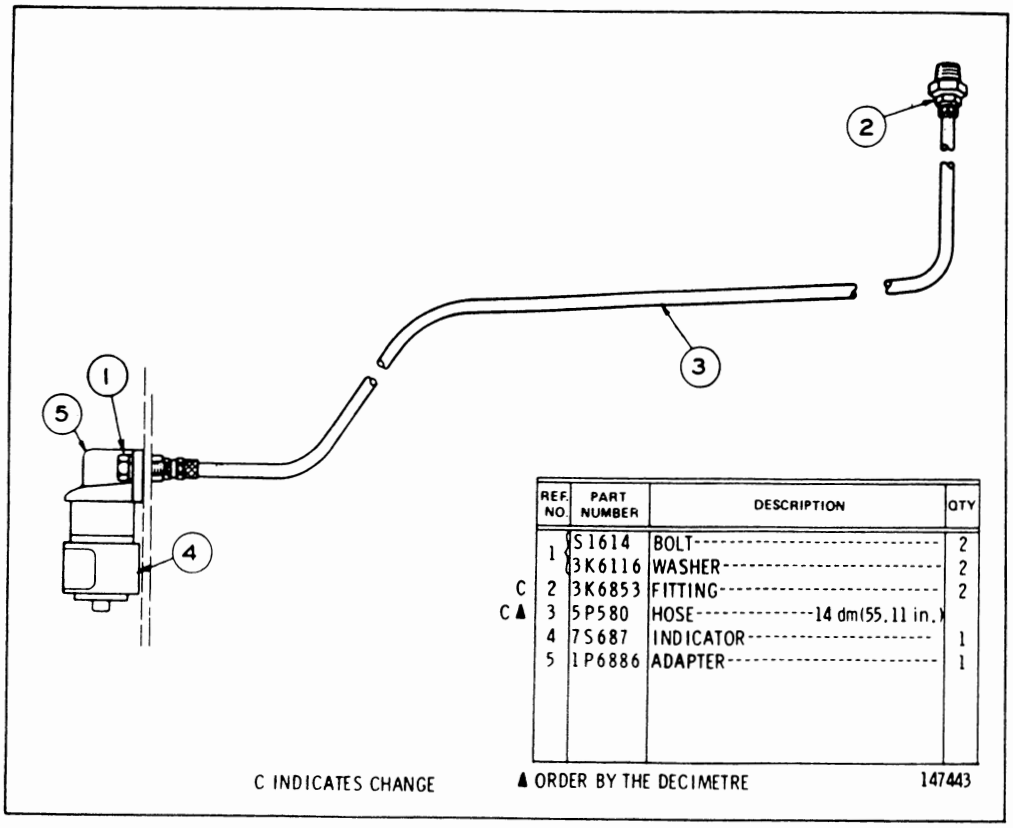

	REF. NO.	PART NUMBER	DESCRIPTION	QTY
	1	1S1614	BOLT	2
		3K6116	WASHER	2
C	2	3K6853	FITTING	2
C▲	3	5P580	HOSE----------14 dm(55.11 in.)	
	4	7S687	INDICATOR	1
	5	1P6886	ADAPTER	1

C INDICATES CHANGE ▲ ORDER BY THE DECIMETRE 147443

4S8493 AIR FILTER SERVICE INDICATOR GROUP
Serial No. 46A31635—Up

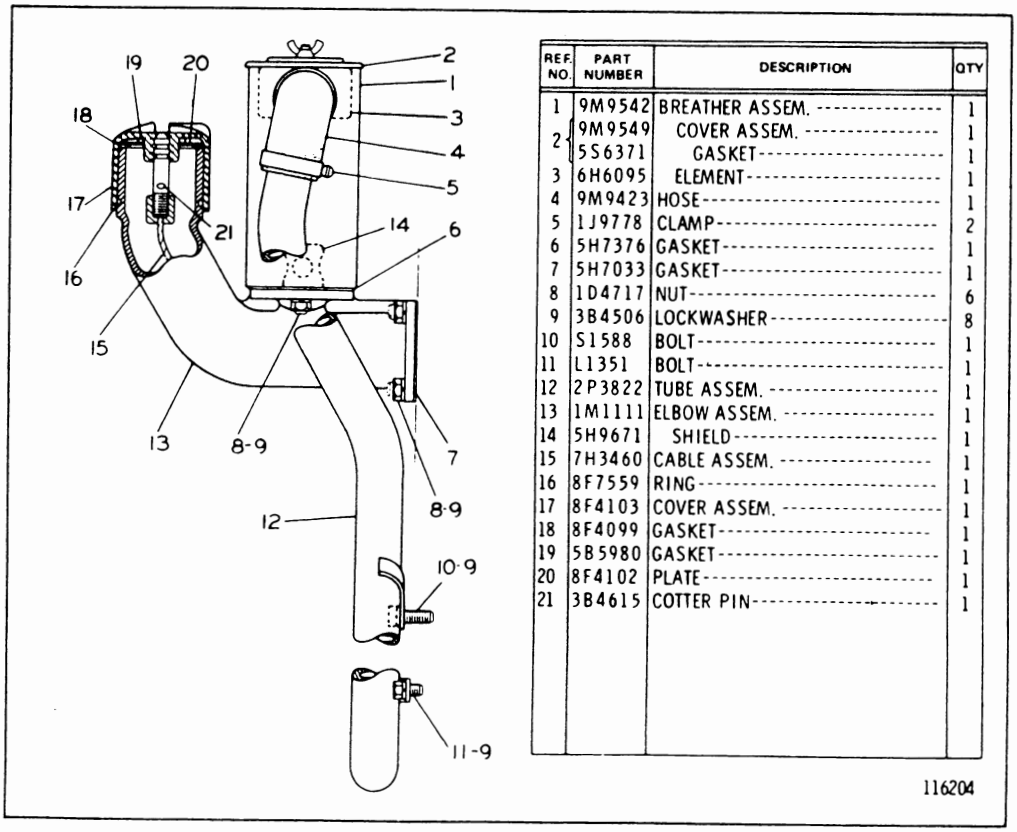

REF. NO.	PART NUMBER	DESCRIPTION	QTY
1	9M9542	BREATHER ASSEM.	1
2	9M9549	COVER ASSEM.	1
	5S6371	GASKET	1
3	6H6095	ELEMENT	1
4	9M9423	HOSE	1
5	1J9778	CLAMP	2
6	5H7376	GASKET	1
7	5H7033	GASKET	1
8	1D4717	NUT	6
9	3B4506	LOCKWASHER	8
10	S1588	BOLT	1
11	L1351	BOLT	1
12	2P3822	TUBE ASSEM.	1
13	1M1111	ELBOW ASSEM.	1
14	5H9671	SHIELD	1
15	7H3460	CABLE ASSEM.	1
16	8F7559	RING	1
17	8F4103	COVER ASSEM.	1
18	8F4099	GASKET	1
19	5B5980	GASKET	1
20	8F4102	PLATE	1
21	3B4615	COTTER PIN	1

116204

2P2538 BREATHER AND OIL FILLER GROUP
Serial No. 46A27801 & 46A28137—Up
Refer also to Page 170 for special parts

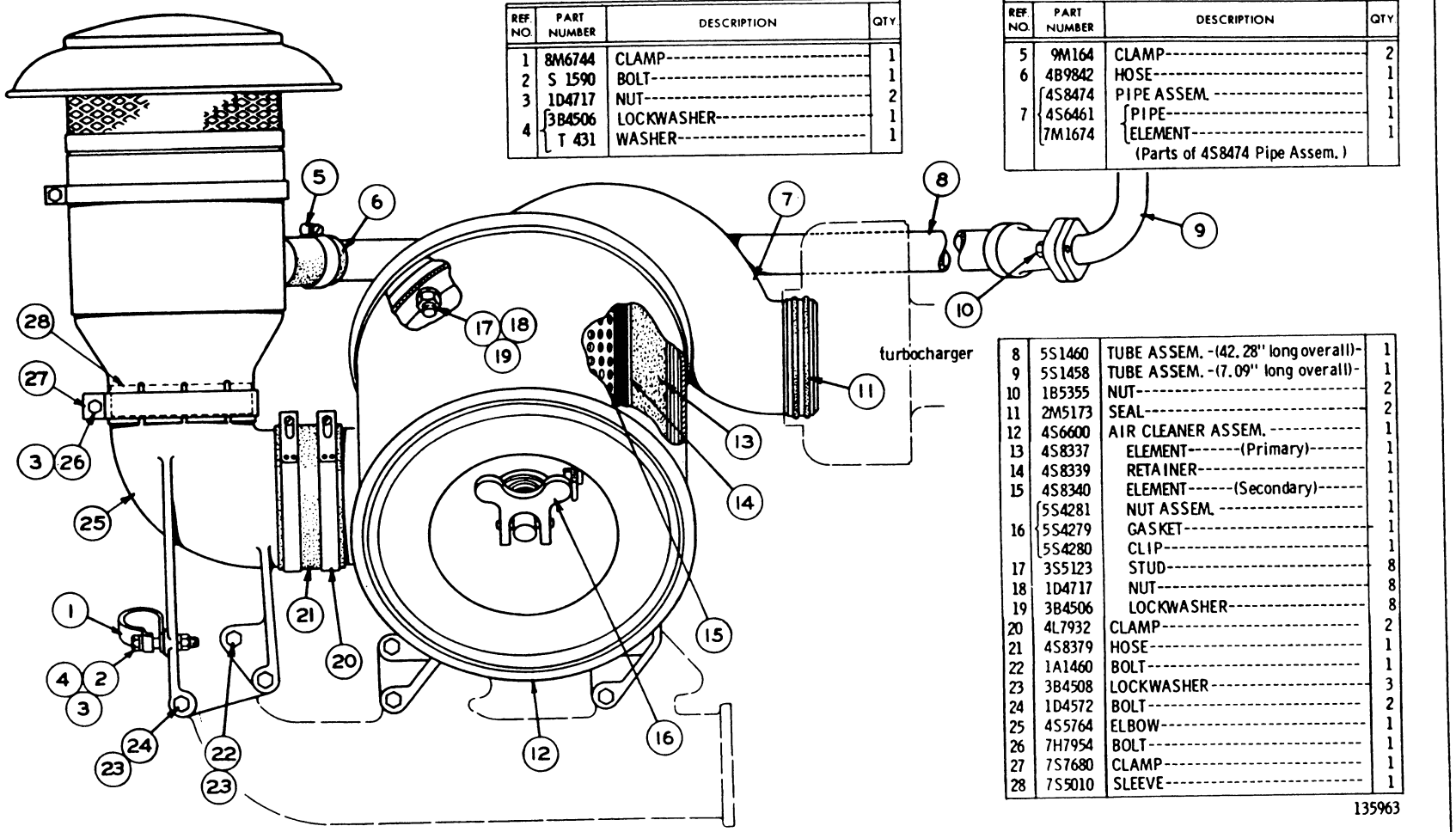

REF. NO.	PART NUMBER	DESCRIPTION	QTY.
1	8M6744	CLAMP	1
2	S 1590	BOLT	1
3	1D4717	NUT	2
4	3B4506	LOCKWASHER	1
	T 431	WASHER	1

REF. NO.	PART NUMBER	DESCRIPTION	QTY.
5	9M164	CLAMP	2
6	4B9842	HOSE	1
7	4S8474	PIPE ASSEM.	1
	4S6461	PIPE	1
	7M1674	ELEMENT	1
		(Parts of 4S8474 Pipe Assem.)	

REF. NO.	PART NUMBER	DESCRIPTION	QTY.
8	5S1460	TUBE ASSEM. -(42.28" long overall)-	1
9	5S1458	TUBE ASSEM. -(7.09" long overall)-	1
10	1B5355	NUT	2
11	2M5173	SEAL	2
12	4S6600	AIR CLEANER ASSEM.	1
13	4S8337	ELEMENT-(Primary)	1
14	4S8339	RETAINER	1
15	4S8340	ELEMENT-(Secondary)	1
16	5S4281	NUT ASSEM.	1
	5S4279	GASKET	1
	5S4280	CLIP	1
17	3S5123	STUD	8
18	1D4717	NUT	8
19	3B4506	LOCKWASHER	8
20	4L7932	CLAMP	2
21	4S8379	HOSE	1
22	1A1460	BOLT	1
23	3B4508	LOCKWASHER	3
24	1D4572	BOLT	2
25	4S5764	ELBOW	1
26	7H7954	BOLT	1
27	7S7680	CLAMP	1
28	7S5010	SLEEVE	1

AIR CLEANER (4S8508 N/S)—Side View
Serial No. 46A24433 to 25737, 25741, 25742, 25744 and 46A25745 inclusive
Note: 7S9396 Prescreener and 8S2384 Intake Air Stack Assembly are available
Refer also to Page 178 for special parts

AIR CLEANER (4S8508 N/S)—End View
Serial No. 46A24433 to 25737, 25741, 25742, 25744 and 46A25745 inclusive

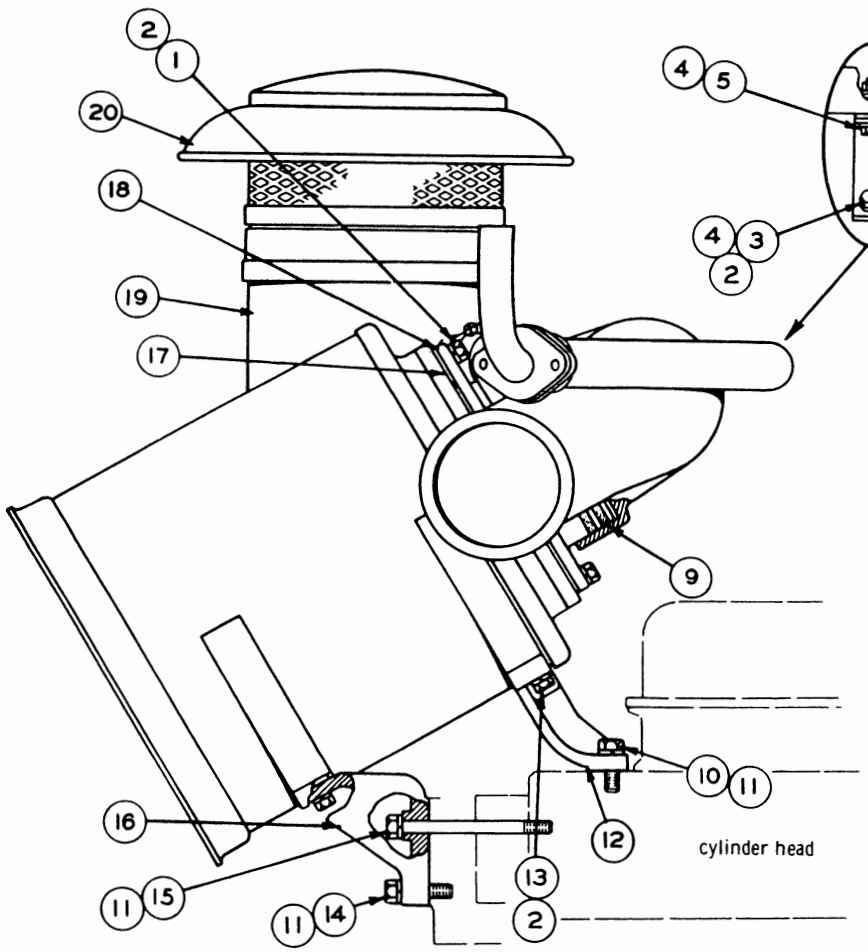

REF NO	PART NUMBER	DESCRIPTION	QTY
1	1A2029	BOLT	7
2	3B4506	LOCKWASHER	13
3	S-1588	BOLT	1
4	4B4278	WASHER	2
5	S-1571	BOLT	1
6	1D4717	NUT	1
7	4S8793	CLAMP	1
8	4S8796	BRACKET ASSEM.	1
9	7M6952	SEAL	2
10	S-1585	BOLT	2
11	3B4508	LOCKWASHER	6
12	4S8450	BRACKET	1
13	3B1915	BOLT	4
14	1A1460	BOLT	2
15	1D4572	BOLT	2
16	4S6444	BRACKET	2
17	3S2317	GASKET	1
18	3S1588	FLANGE	1
19	4S7455	PRECLEANER ASSEM.	1
	4S8473	BODY ASSEM.	1
	S-1591	BOLT	2
	1D4717	NUT	2
20	4S8472	HOOD ASSEM.	1
		(Parts of 4S7455 Precleaner Assem.)	

97807

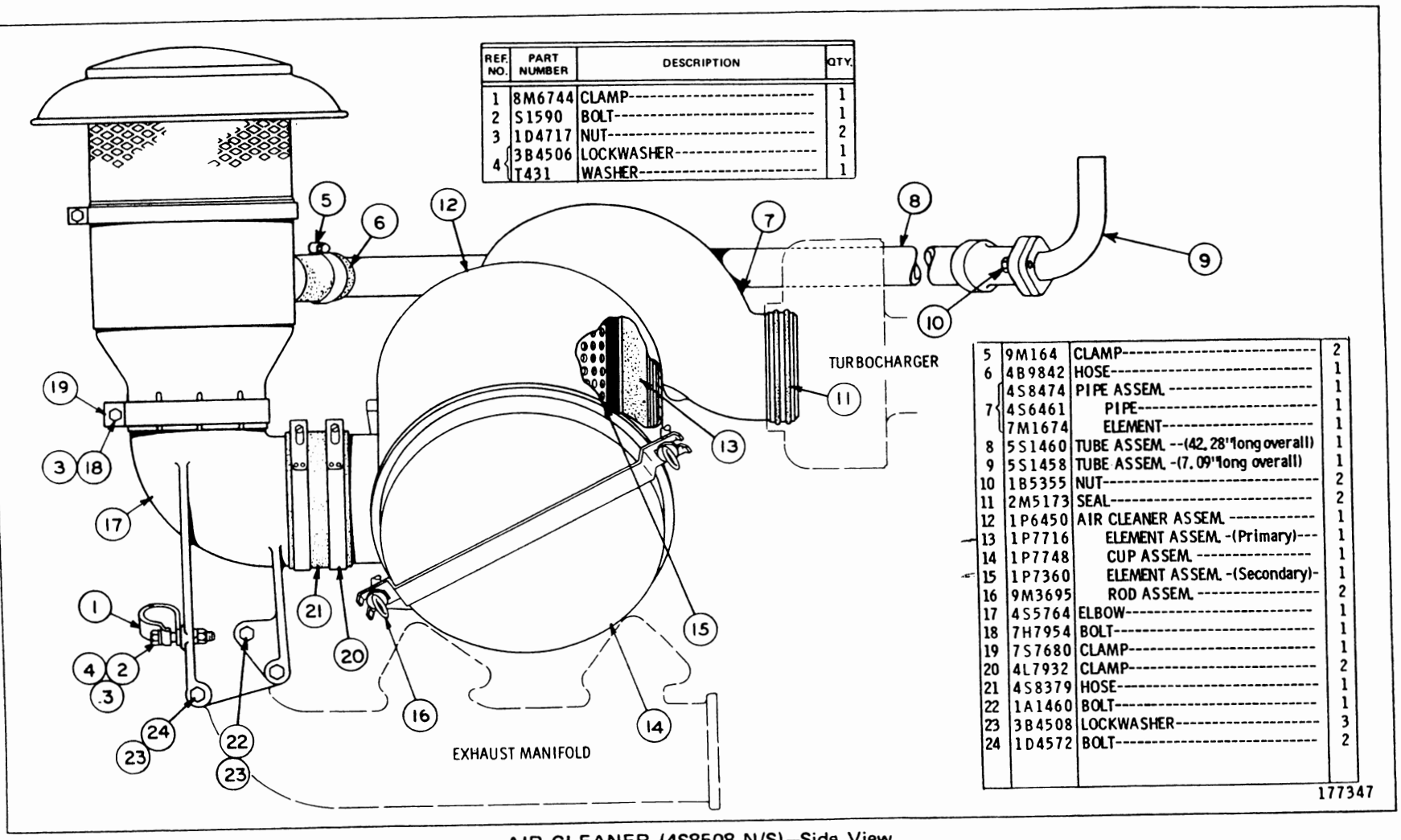

REF. NO.	PART NUMBER	DESCRIPTION	QTY.
1	8M6744	CLAMP	1
2	S1590	BOLT	1
3	1D4717	NUT	2
4	3B4506	LOCKWASHER	1
	T431	WASHER	1

5	9M164	CLAMP	2
6	4B9842	HOSE	1
	4S8474	PIPE ASSEM.	1
7	4S6461	PIPE	1
	7M1674	ELEMENT	1
8	5S1460	TUBE ASSEM. --(42.28"long overall)	1
9	5S1458	TUBE ASSEM. -(7.09"long overall)	1
10	1B5355	NUT	2
11	2M5173	SEAL	2
12	1P6450	AIR CLEANER ASSEM.	1
13	1P7716	ELEMENT ASSEM. -(Primary)-	1
14	1P7748	CUP ASSEM.	1
15	1P7360	ELEMENT ASSEM. -(Secondary)-	1
16	9M3695	ROD ASSEM.	2
17	4S5764	ELBOW	1
18	7H7954	BOLT	1
19	7S7680	CLAMP	1
20	4L7932	CLAMP	2
21	4S8379	HOSE	1
22	1A1460	BOLT	1
23	3B4508	LOCKWASHER	3
24	1D4572	BOLT	2

AIR CLEANER (4S8508 N/S)—Side View

Serial No. 46A25738 to 46A25740, 46A25743 and 46A25746 to 46A28817 inclusive

Note: 7S9396 Prescreener and 8S2384 Intake Air Stack Assembly are available

AIR CLEANER (4S8508 N/S)—End View
Serial No. 46A25738 to 46A25740, 46A25743 and 46A25746 to 46A28817 inclusive

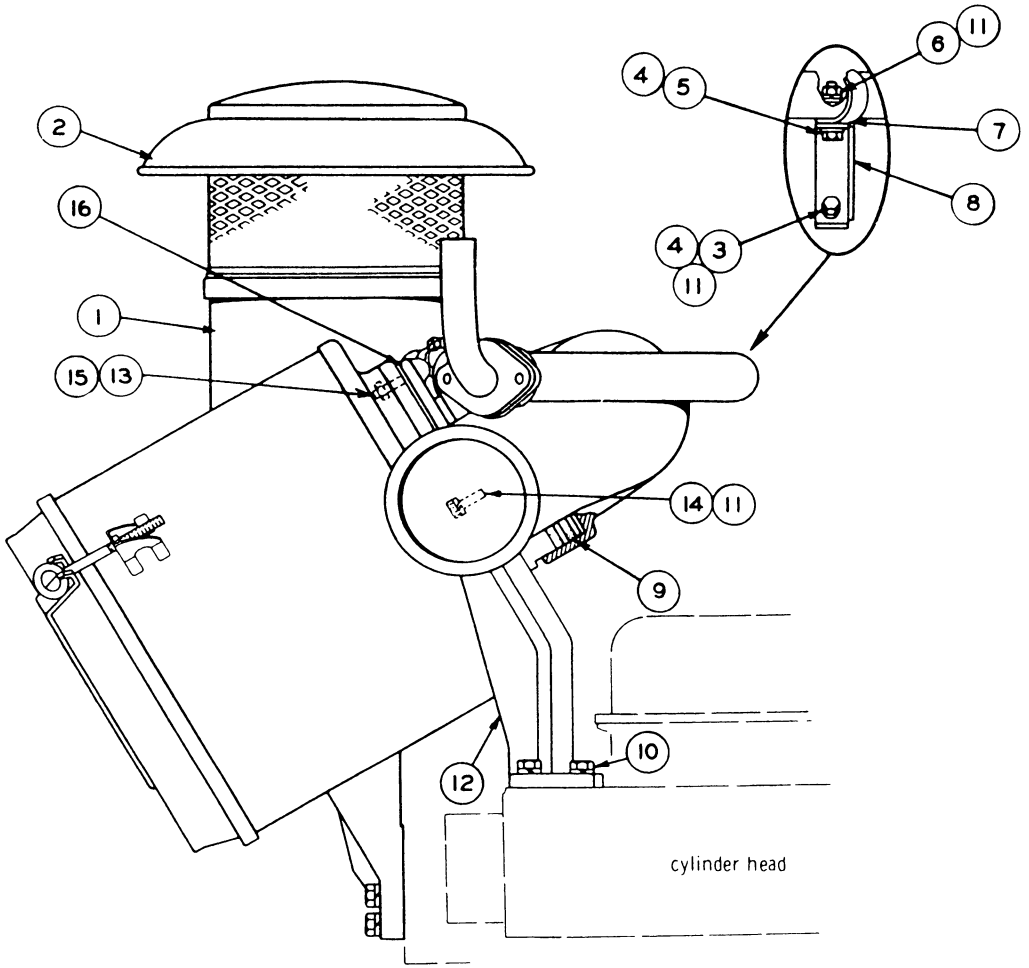

REF. NO.	PART NUMBER	DESCRIPTION	QTY
1	4S7455	PRECLEANER ASSEM.	1
	4S8473	BODY ASSEM.	1
	S1591	BOLT	2
	1D4717	NUT	2
2	4S8472	HOOD ASSEM.	1
3	L1351	BOLT	1
4	4B4278	WASHER	2
5	S1571	BOLT	1
6	1D4717	NUT	1
7	4S8793	CLAMP	1
8	1P7750	BRACKET ASSEM.	1
9	7M6952	SEAL	2
10	7B3235	BOLT	4
	3B4508	LOCKWASHER	4
11	3B4506	LOCKWASHER	4
12	1P6834	ADAPTER ASSEM.	1
13	9M2151	STUD	8
14	1T822	BOLT	2
15	2K4973	LOCKNUT	8
16	1P6832	GASKET	1

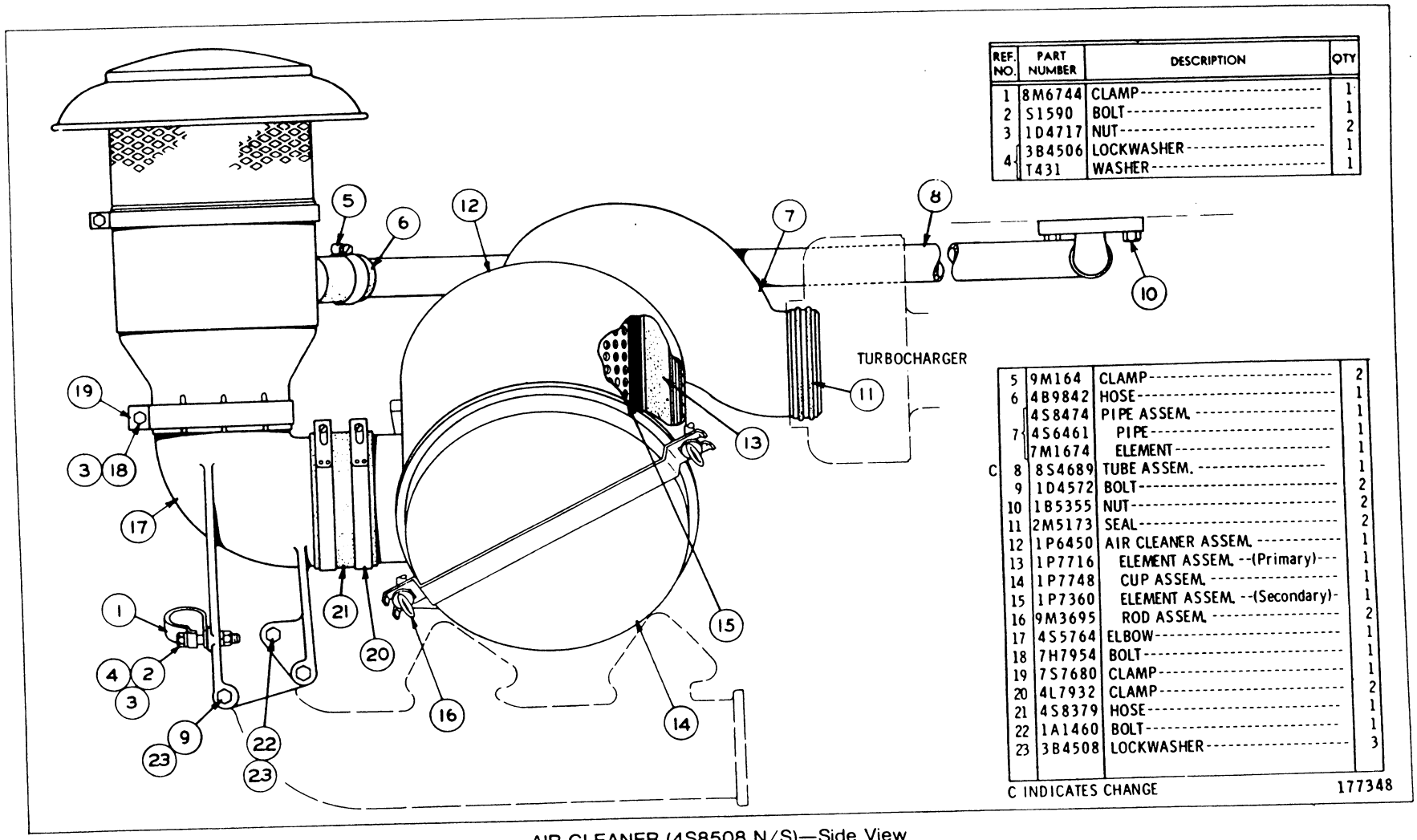

REF. NO.	PART NUMBER	DESCRIPTION	QTY
1	8M6744	CLAMP	1
2	S1590	BOLT	1
3	1D4717	NUT	2
4	3B4506	LOCKWASHER	1
	T431	WASHER	1
5	9M164	CLAMP	2
6	4B9842	HOSE	1
7	4S8474	PIPE ASSEM.	1
	4S6461	PIPE	1
	7M1674	ELEMENT	1
C 8	8S4689	TUBE ASSEM.	1
9	1D4572	BOLT	2
10	1B5355	NUT	2
11	2M5173	SEAL	2
12	1P6450	AIR CLEANER ASSEM.	1
13	1P7716	ELEMENT ASSEM. --(Primary)---	1
14	1P7748	CUP ASSEM.	1
15	1P7360	ELEMENT ASSEM. --(Secondary)-	1
16	9M3695	ROD ASSEM.	2
17	4S5764	ELBOW	1
18	7H7954	BOLT	1
19	7S7680	CLAMP	1
20	4L7932	CLAMP	2
21	4S8379	HOSE	1
22	1A1460	BOLT	1
23	3B4508	LOCKWASHER	3

C INDICATES CHANGE

177348

AIR CLEANER (4S8508 N/S)—Side View
Serial No. 46A28818 to 46A29658 inclusive
Note: 7S9396 Prescreener and 8S2384 Intake Air Stack Assembly are available

AIR CLEANER (4S8508 N/S)—End View
Serial No. 46A28818 to 46A29658 inclusive

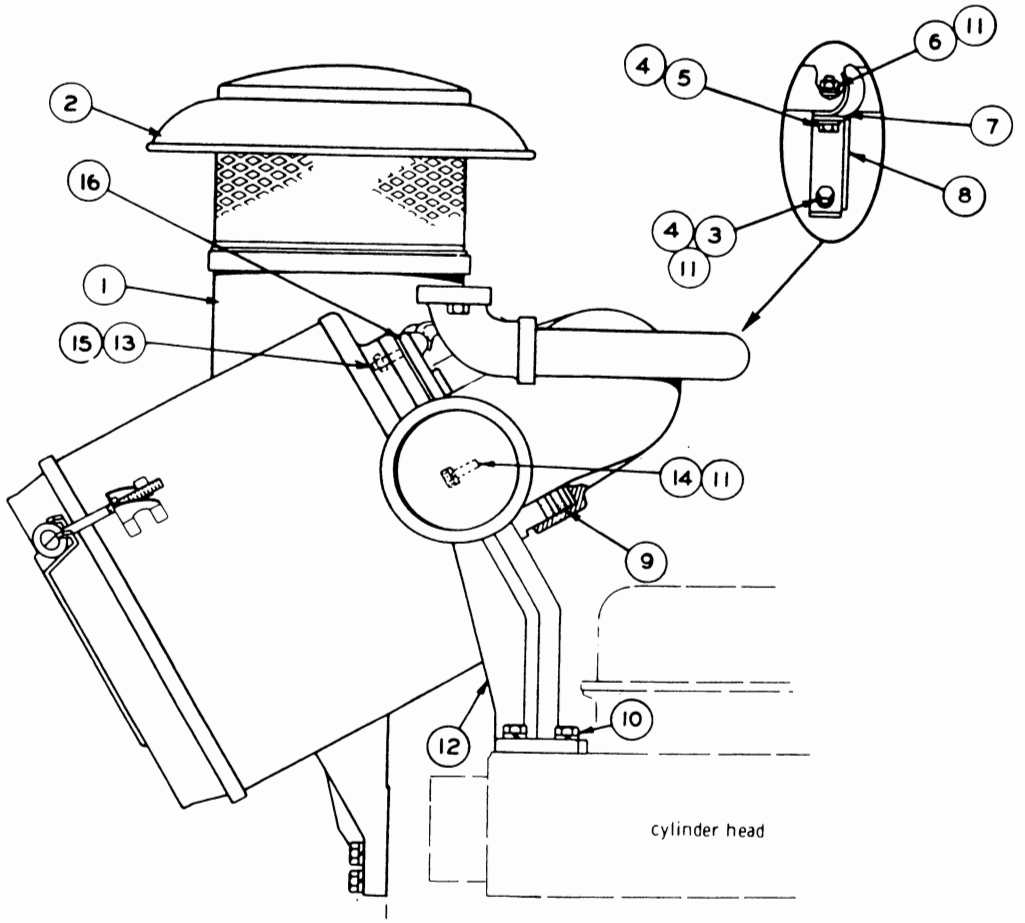

REF. NO.	PART NUMBER	DESCRIPTION	QTY
1	4S7455	PRECLEANER ASSEM.	1
	4S8473	BODY ASSEM.	1
	S1591	BOLT	2
	1D4717	NUT	2
2	4S8472	HOOD ASSEM.	1
3	L1351	BOLT	1
4	4B4278	WASHER	2
5	S1571	BOLT	1
6	1D4717	NUT	1
7	4S8793	CLAMP	1
8	1P7750	BRACKET ASSEM.	1
9	7M6952	SEAL	2
10	7B3235	BOLT	4
	3B4508	LOCKWASHER	4
11	3B4506	LOCKWASHER	4
12	1P6834	ADAPTER ASSEM.	1
13	9M2151	STUD	8
14	1T822	BOLT	2
15	2K4973	LOCKNUT	8
16	1P6832	GASKET	1

141753

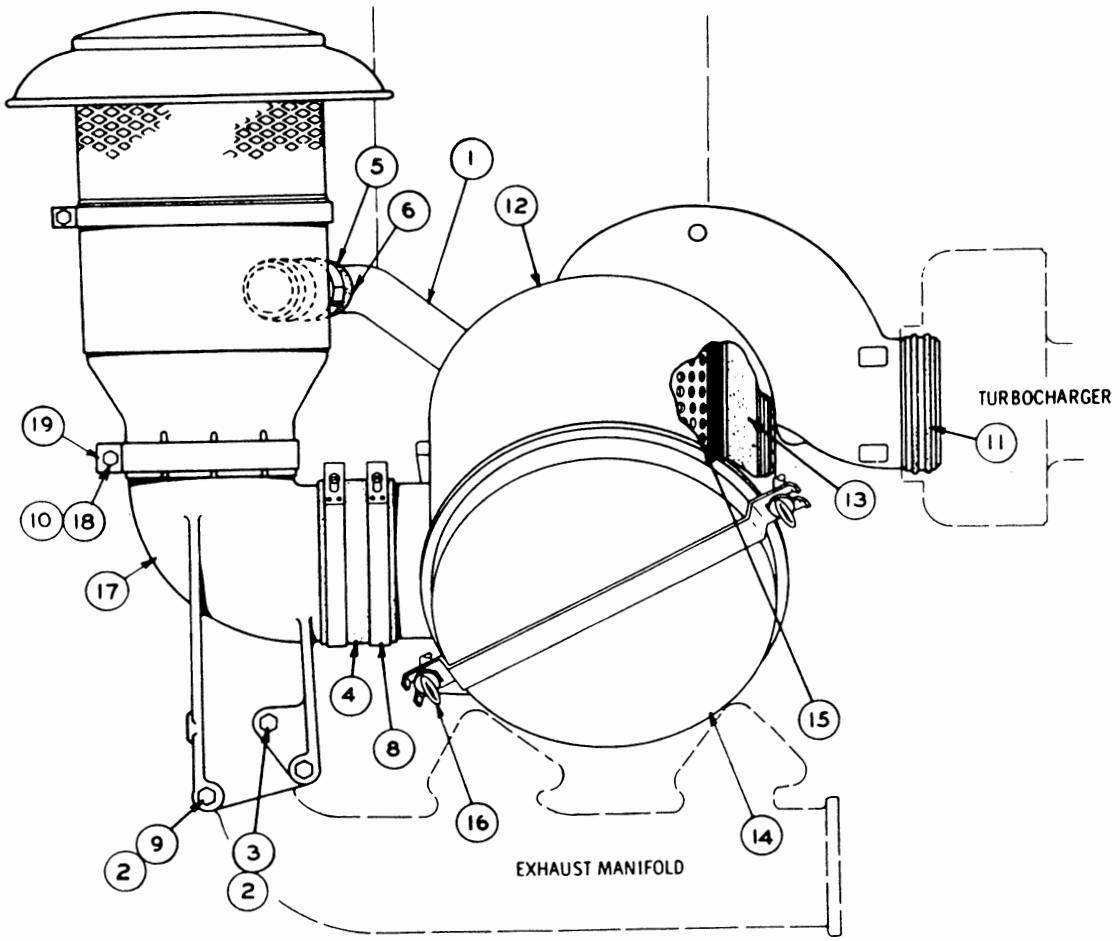

	REF. NO.	PART NUMBER	DESCRIPTION	QTY
C	1	4N3460	TUBE ASSEM.	1
	2	3B4508	LOCKWASHER	3
	3	1A1460	BOLT	1
	4	4S8379	HOSE	1
	5	9M164	CLAMP	2
	6	4B9842	HOSE	1
	7	3B4506	LOCKWASHER	2
C	8	4L7932	CLAMP	2
	9	1D4572	BOLT	2
C	10	1D4717	NUT	1
	11	2M5173	SEAL	2
	12	1P6450	AIR CLEANER ASSEM. (Includes)	1
	13	1P7716	ELEMENT ASSEM. -----(primary)	1
	14	1P7748	CUP ASSEM.	1
	15	1P7360	ELEMENT ASSEM. --(secondary)-	1
	16	9M3695	ROD ASSEM.	2
	17	4S5764	ELBOW	1
	18	7H7954	BOLT	1
	19	7S7680	CLAMP	1

C INDICATES CHANGE

213124

4S8508 AIR CLEANER GROUP—Side View

Serial No. 46A29659 to 32241, 32243 to 32392, 32394 to 32415, 32417 to 32490 and 46A32492 to 46A32706 inclusive

Note: 7S9396 Prescreener and 8S2384 Intake Air Stack Assemblies are available

4S8508 AIR CLEANER GROUP—End View

Serial No. 46A29659 to 32241, 32243 to 32392, 32394 to 32415, 32417 to 32490 and 46A32492 to 46A32706 inclusive

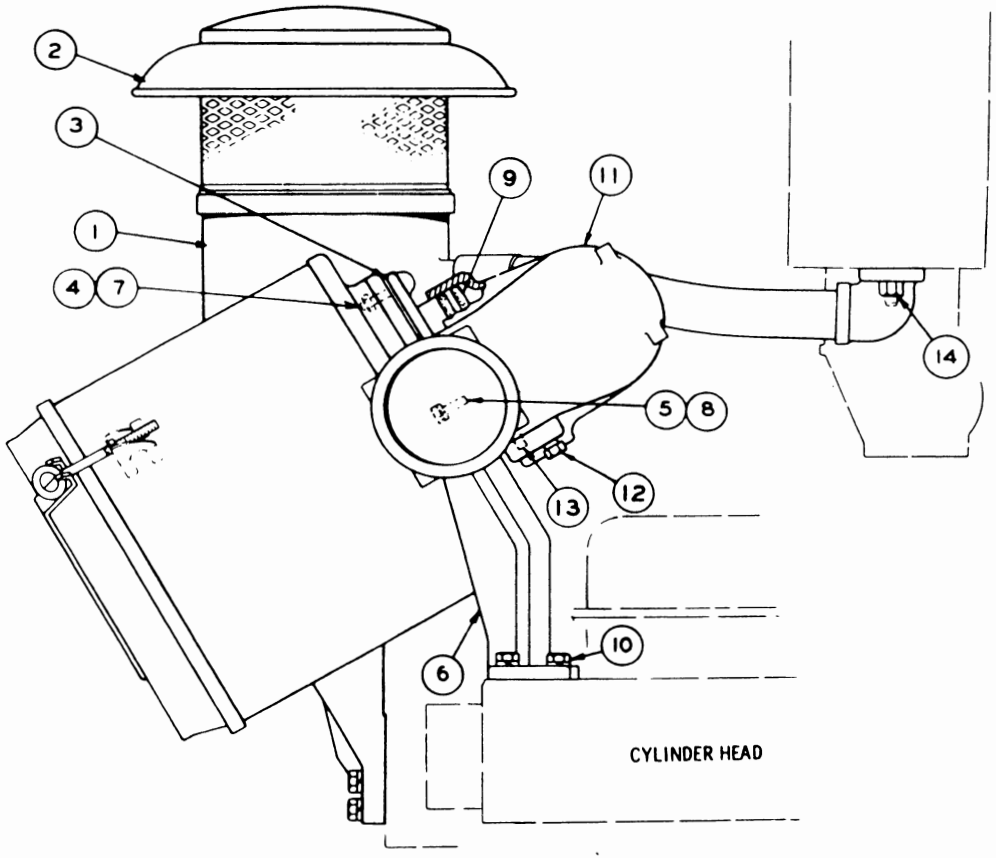

	REF. NO.	PART NUMBER	DESCRIPTION	QTY
	1	4S7455	PRECLEANER ASSEM.	1
		4S8473	BODY ASSEM.	1
		S1591	BOLT	2
		1D4717	NUT	2
	2	4S8472	HOOD ASSEM.	1
	3	1P6832	GASKET	1
	4	2K4973	LOCKNUT	8
	5	1T822	BOLT	2
	6	1P6834	ADAPTER ASSEM.	1
	7	9M2151	STUD	8
	8	3B4506	LOCKWASHER	2
	9	7M6952	SEAL	2
	10	7B3235	BOLT	4
		3B4508	LOCKWASHER	4
C	11	4S8474	PIPE ASSEM. (Includes)	1
	12	5M6214	PLUG	1
	13	7M1674	ELEMENT	1
	14	1B5355	NUT	2

C INDICATES CHANGE

213125

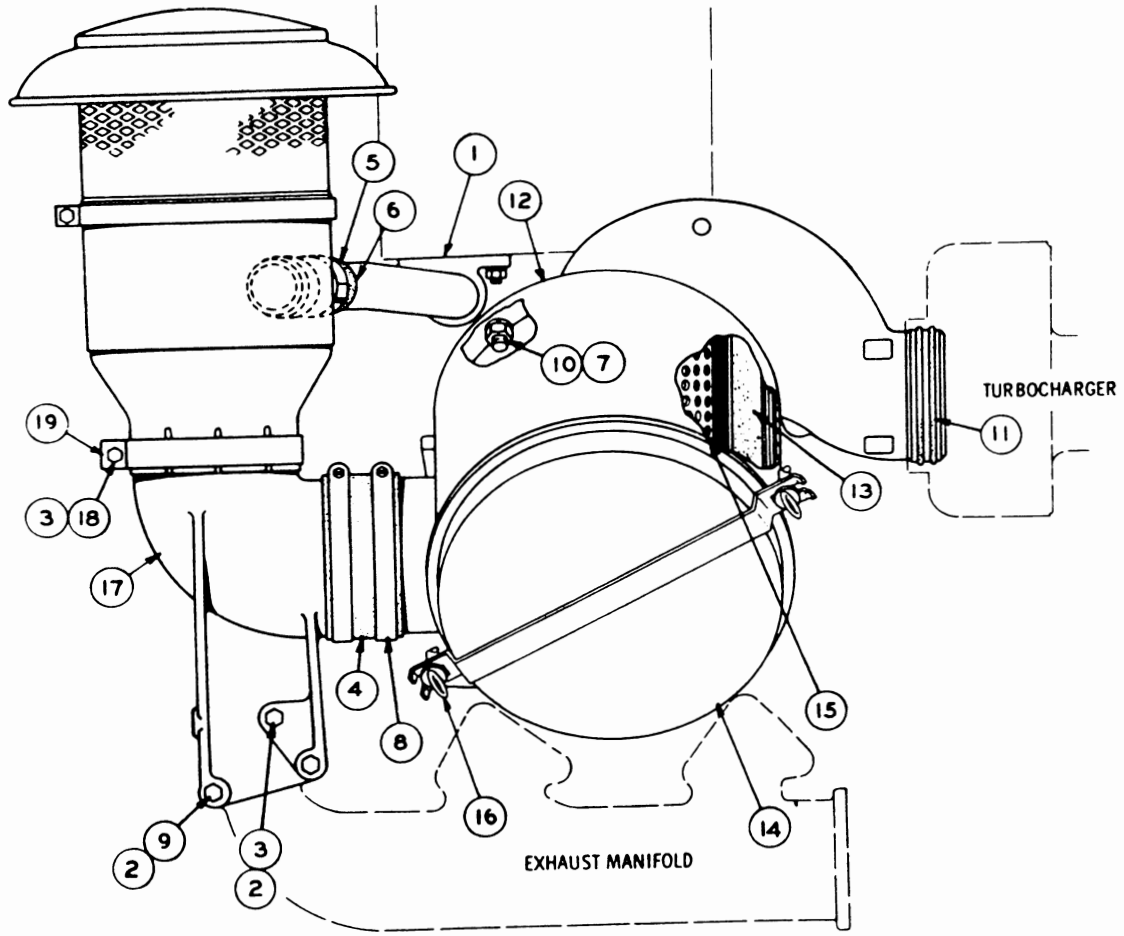

	REF. NO.	PART NUMBER	DESCRIPTION	QTY
C	1	4N9244	TUBE ASSEM.	1
	2	3B4508	LOCKWASHER	3
	3	1A1460	BOLT	1
	4	4S8379	HOSE	1
	5	9M164	CLAMP	2
	6	4B9842	HOSE	1
	7	3B4506	LOCKWASHER	2
C	8	5P3860	CLAMP	2
	9	1D4572	BOLT	2
	10	1B5355	NUT	2
	11	2M5173	SEAL	2
	12	1P6450	AIR CLEANER ASSEM. (Includes)	1
	13	1P7716	ELEMENT ASSEM. -(primary)	1
	14	1P7748	CUP ASSEM.	1
	15	1P7360	ELEMENT ASSEM. -(secondary)	1
	16	9M3695	ROD ASSEM.	2
	17	4S5764	ELBOW	1
	18	7H7954	BOLT	1
	19	7S7680	CLAMP	1

C INDICATES CHANGE 213123

4S8508 AIR CLEANER GROUP—Side View
Serial No. 46A32242, 32393, 32416, 32491 and 46A32707—Up
Note: 7S9396 Prescreener and 8S2384 Intake Air Stack Assemblies are available

4S8508 AIR CLEANER GROUP—End View
Serial No. 46A32242, 32393, 32416, 32491 and 46A32707—Up

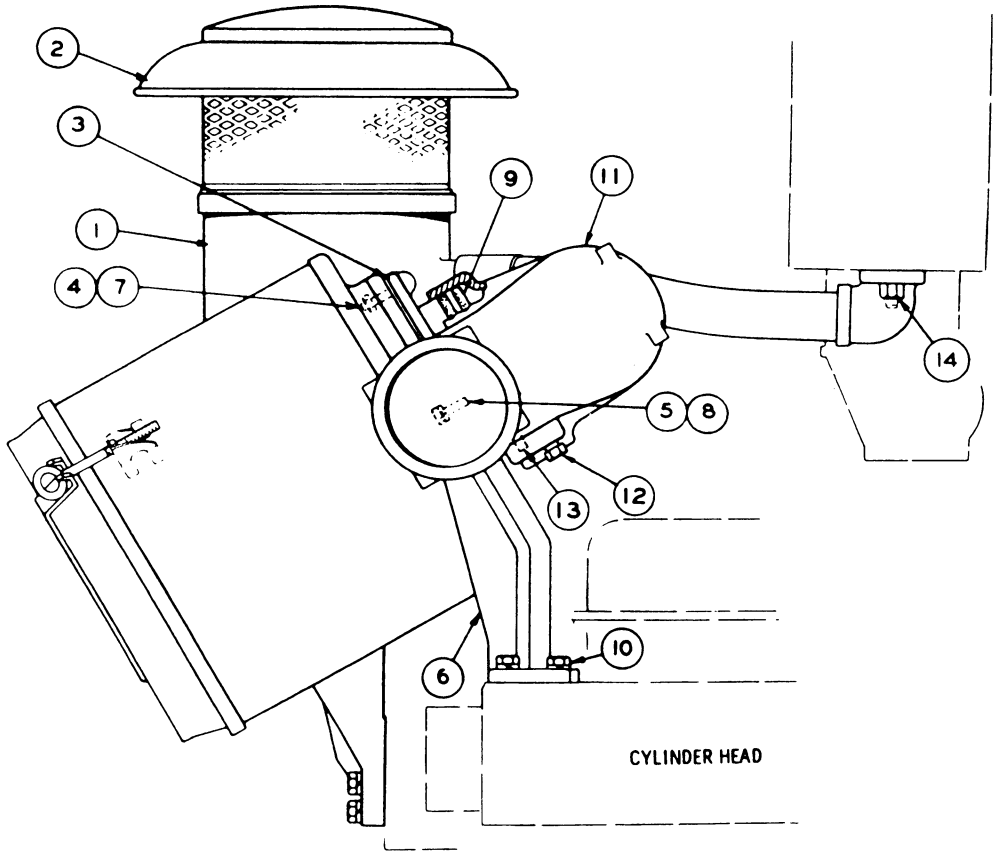

	REF. NO.	PART NUMBER	DESCRIPTION	QTY
	1	4S7455	PRECLEANER ASSEM.	1
		4S8473	BODY ASSEM.	1
		S1591	BOLT	2
		1D4717	NUT	2
	2	4S8472	HOOD ASSEM.	1
	3	1P6832	GASKET	1
	4	2K4973	LOCKNUT	8
	5	1T822	BOLT	2
	6	1P6834	ADAPTER ASSEM.	1
	7	9M2151	STUD	8
	8	3B4506	LOCKWASHER	2
	9	7M6952	SEAL	2
	10	7B3235	BOLT	4
		3B4508	LOCKWASHER	4
C	11	4S8474	PIPE ASSEM. (Includes)	1
	12	5M6214	PLUG	1
	13	7M1674	ELEMENT	1
	14	1B5355	NUT	2

C INDICATES CHANGE

213125

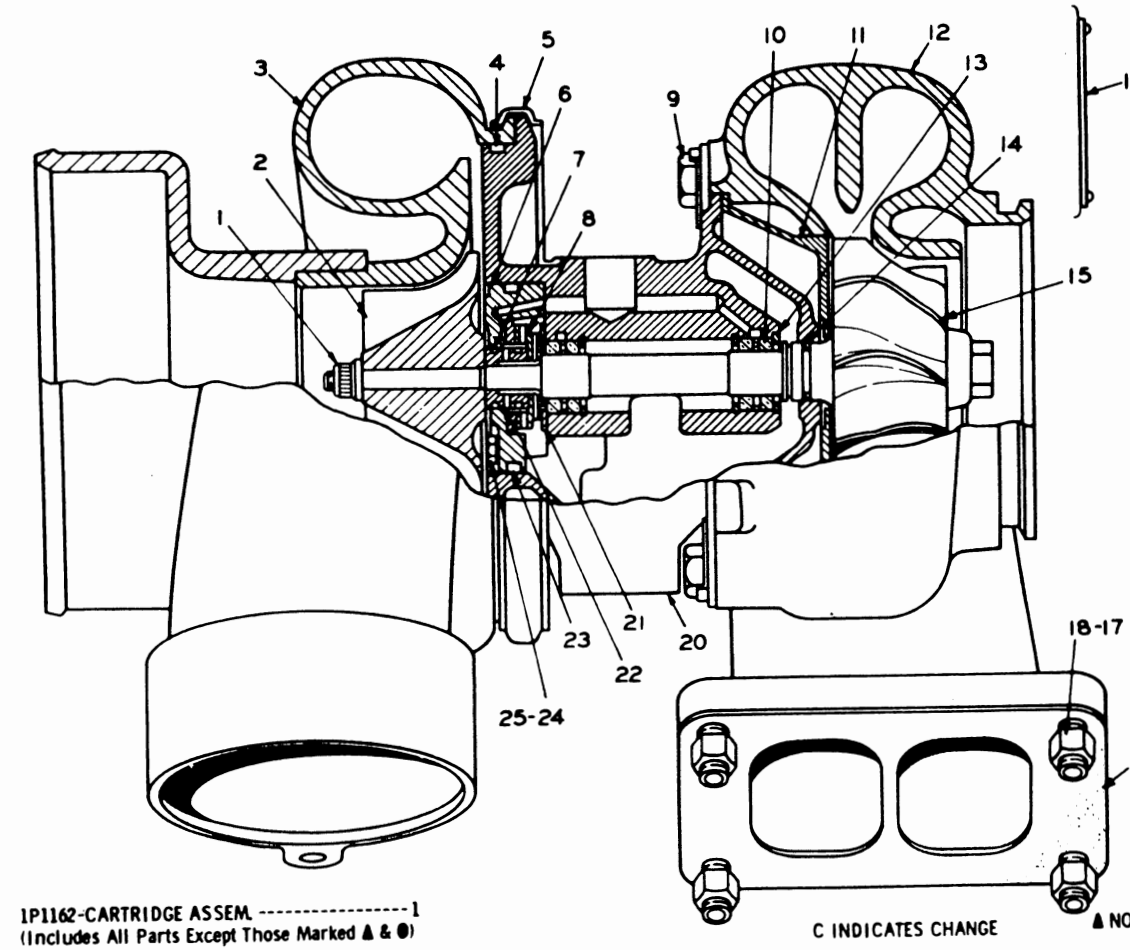

REF. NO.	PART NUMBER	DESCRIPTION	QTY
■	1	3S4484	NUT	1
	2	1P1161	WHEEL	1
●	3	9S2609	HOUSING ASSEM. --(compressor)--	1
■	4	3S5135	SEAL	1
●	5	3S5129	CLAMP	1
	6	8S5169	PLATE ASSEM.	1
■	7	9M8919	RING	2
	8	8S8042	COLLAR	1
●		3S5126	BOLT	6
●	9	3S5127	PLATE---(clamp)	3
●		3S5128	PLATE---(lock)	3
C	10	9M8916	BEARING	2
	11	9S9327	SHROUD	1
●	12	9S2608	HOUSING---(turbine)	1
■	13	9M8915	RING	3
	14	9S8012	RING	1
	15	8S5167	SHAFT AND WHEEL ASSEM.	1
●		8S8097	NAMEPLATE	1
	16	8S8096	NAMEPLATE	1
		2F808	SCREW	2
▲	17	9L2295	BOLT	4
▲	18	8M2296	NUT	4
▲	19	1S4295	GASKET	1
		4S9702	HOUSING ASSEM. ---(center)---	1
	20		(Includes)	
C		4M6646	PIN	2
C■	21	6N5004	BEARING	1
■	22	8S8043	SPACER	1
	23	3S4489	SEAL	1
■	24	3S4488	SCREW	3
■	25	3S4487	PLATE	3
		THE FOLLOWING REPAIR KITS ARE AVAILABLE:		
C		6N7239	KIT---(cartridge)	1
			(Includes parts marked ■)	
■		9N2041	KIT---(bearing)	1
■		SMHS6771	FORM---(Installing Turbocharger Repair Kit)	1

1P1162-CARTRIDGE ASSEM. ---------- 1
(Includes All Parts Except Those Marked ▲ & ●)

C INDICATES CHANGE

▲ NOT PART OF 1P1163 TURBOCHARGER ASSEM.

221603

1P1163 TURBOCHARGER ASSEMBLY (3S2341 N/S)—Type 1
Serial No. 46A24433 to 28403, 28407, 28410, 28413, and 46A28420 to 46A28424 inclusive

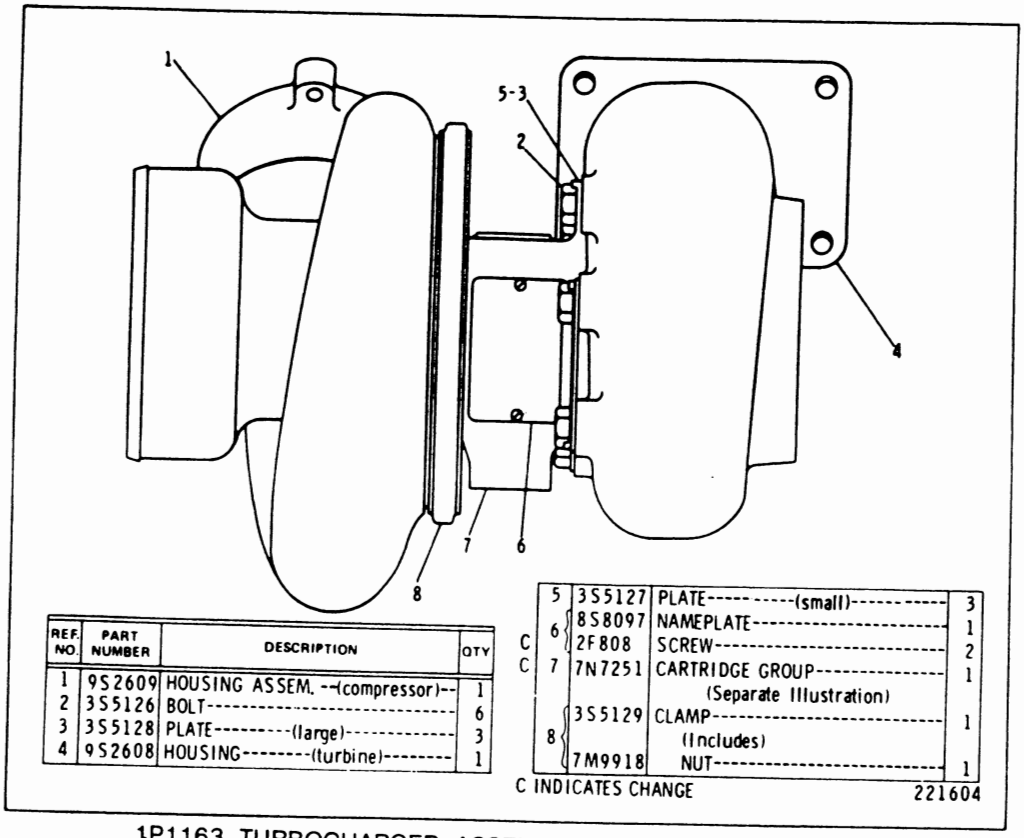

REF. NO.	PART NUMBER	DESCRIPTION	QTY
1	9S2609	HOUSING ASSEM. --(compressor)--	1
2	3S5126	BOLT----------	6
3	3S5128	PLATE---------(large)----------	3
4	9S2608	HOUSING--------(turbine)--------	1

	5	3S5127	PLATE----------(small)----------	3
C	6	8S8097	NAMEPLATE----------	1
C		2F808	SCREW----------	2
C	7	7N7251	CARTRIDGE GROUP----------	1
			(Separate Illustration)	
	8	3S5129	CLAMP----------	1
			(Includes)	
		7M9918	NUT----------	1

C INDICATES CHANGE 221604

1P1163 TURBOCHARGER ASSEMBLY (3S2341 N/S)—Type 2
Serial No. 46A24433 to28403, 28407, 28410, 28413 and 46A28420 to 46A28424 inclusive
7N7251 Cartridge parts are shown on Page 20A-2

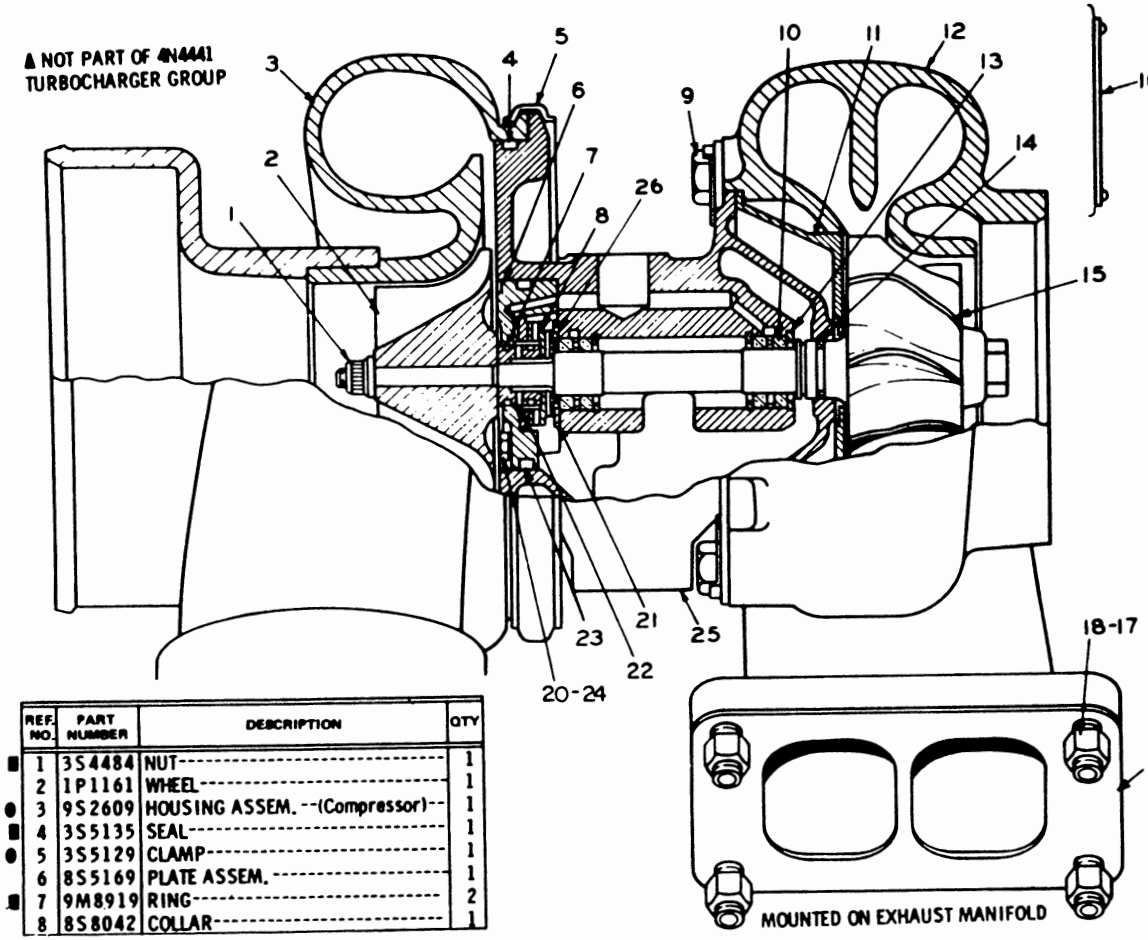

REF. NO.	PART NUMBER	DESCRIPTION	QTY
■	1 3S4484	NUT	1
	2 1P1161	WHEEL	1
●	3 9S2609	HOUSING ASSEM. --(Compressor)--	1
■	4 3S5135	SEAL	1
●	5 3S5129	CLAMP	1
	6 8S5169	PLATE ASSEM.	1
■	7 9M8919	RING	2
	8 8S8042	COLLAR	1

1-CARTRIDGE ASSEM. ---------- 1P1162
(Consists of all parts shown except those marked ▲ and ●)

	REF. NO.	PART NUMBER	DESCRIPTION	QTY
●	9	3S5126	BOLT	6
●		3S5127	PLATE --------( )--------	3
●		3S5128	PLATE --------( )--------	3
	10	9M8916	BEARING	2
	11	9S9327	SHROUD	1
●	12	8S5165	HOUSING ----------(turbine)-----	1
■	13	9M8915	RING	3
	14	9S8012	RING	1
	15	8S5167	SHAFT AND WHEEL ASSEM.	1
●	16	8S8097	NAMEPLATE	1
		8S9096	NAMEPLATE	1
		2F808	SCREW	2
▲	17	9L2295	BOLT	4
▲	18	8M2296	NUT	4
▲	19	1S4295	GASKET	1
■	20	3S4487	PLATE	3
C ■	21	6N5004	BEARING	1
■	22	8S8043	SPACER	1
	23	3S4489	SEAL	1
■	24	3S4488	SCREW	3
	25	4S9702	HOUSING ASSEM. (Includes)	1
C	26	4M6646	PIN	2
			THE FOLLOWING REPAIR KITS ARE AVAILABLE:	
C		6N7239	KIT ---------(cartridge)--------- (Includes Parts Marked ■)	1
■		9N2041	KIT -------(bearing)----------	1
■		SMHS6771	FORM (Installing Turbocharger Repair Kit)	1

C INDICATES CHANGE 221601

4N4441 TURBOCHARGER GROUP (3S2341 N/S)—Type 1
Serial No. 46A28404 to 28406, 28408, 28409, 28411, 28412, 28414 to 28419 and 46A28425—Up

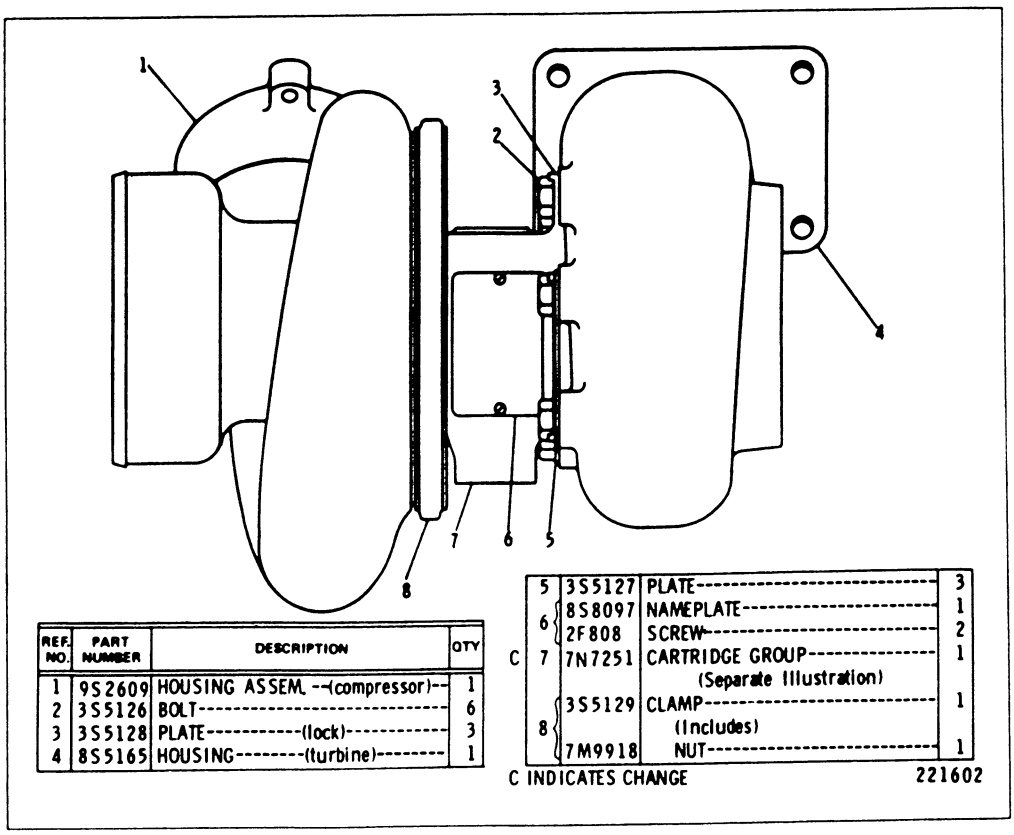

REF. NO.	PART NUMBER	DESCRIPTION	QTY
1	9S2609	HOUSING ASSEM. --(compressor)--	1
2	3S5126	BOLT----------	6
3	3S5128	PLATE----------(lock)----------	3
4	8S5165	HOUSING--------(turbine)--------	1

	REF. NO.	PART NUMBER	DESCRIPTION	QTY
	5	3S5127	PLATE----------	3
	6	8S8097	NAMEPLATE----------	1
		2F808	SCREW----------	2
C	7	7N7251	CARTRIDGE GROUP----------	1
			(Separate Illustration)	
	8	3S5129	CLAMP----------	1
			(Includes)	
		7M9918	NUT----------	1

C INDICATES CHANGE 221602

4N4441 TURBOCHARGER GROUP (3S2341 N/S)—Type 2
Serial No. 46A28404 to 28406, 28408, 28409, 28411, 28412, 28414 to 28419 and 46A28425—Up 7N7251 Cartridge parts are shown on Page 20A-2

7N7251 CARTRIDGE GROUP

Part of 1P1163 and 4N4441 Turbocharger Groups shown on Pages 20-1 and 20A

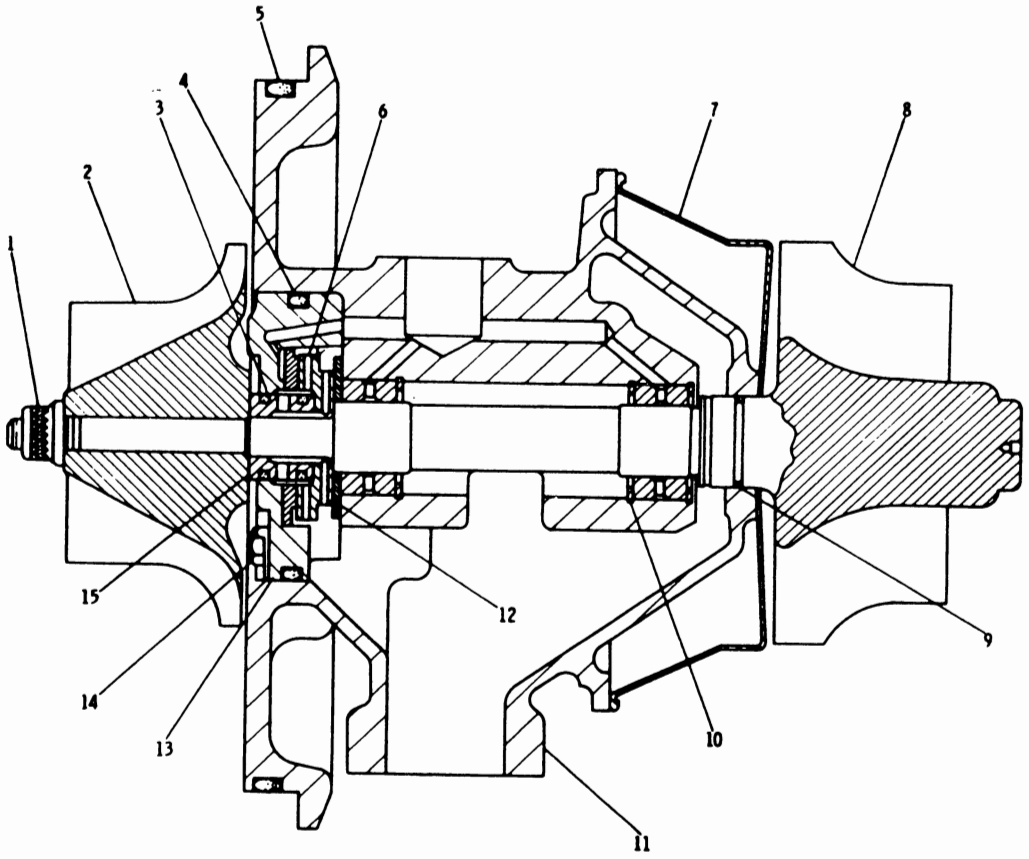

▲ NOT SHOWN-MOUNTED ON CARTRIDGE ASSEM.

	REF. NO.	PART NUMBER	DESCRIPTION	QTY
●	1	3S4484	NUT	1
	2	1P1161	WHEEL	1
●	3	9M8919	RING	2
●	4	5P5756	SEAL	1
●	5	3S5135	SEAL	1
	6	8S8042	COLLAR	1
	7	7N3760	SHROUD	1
	8	8S5167	SHAFT AND WHEEL ASSEM.	1
●	9	7N3759	RING	1
	10	9M8915	RING	3
	11	7N7252	HOUSING ASSEM. (Includes)	1
		4M6646	PIN	2
●	12	6N5004	BEARING	1
	13	8S5169	PLATE ASSEM.	1
●	14	3S4488	SCREW	3
●		3S4487	PLATE	3
	15	8S8043	SPACER	1
▲		8S8096	PLATE---(name)	1
▲		2F808	SCREW	2

THE FOLLOWING REPAIR KITS ARE AVAILABLE:

	6N7239	KIT---(cartridge) (Includes Parts Marked ●)	1
●	9N2041	KIT---(bearing)	1
●	SMHS6771	FORM (Installing Turbocharger Repair Kit)	1

221605

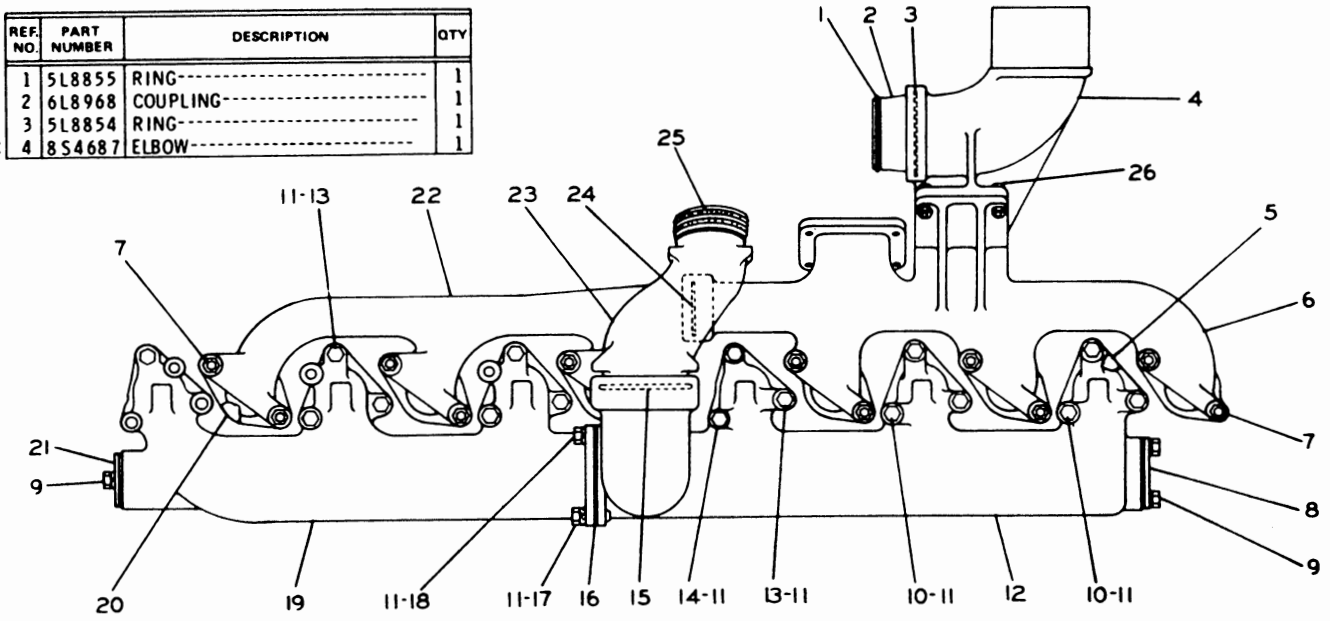

REF. NO.	PART NUMBER	DESCRIPTION	QTY
1	5L8855	RING	1
2	6L8968	COUPLING	1
3	5L8854	RING	1
C 4	8S4687	ELBOW	1
5	8H5324	GASKET	6
6	3S2252	MANIFOLD	1
7	1B5357	NUT	12
8	5H2711	COVER	1
	5H2712	GASKET	1
9	S1594	BOLT	4
	3B4506	LOCKWASHER	4
10	8S9089	BOLT	2
C 11	3B4508	LOCKWASHER	20
12	1M6034	MANIFOLD	1
C 13	1A5822	BOLT	11
C 14	1D4569	BOLT	3
15	6H1871	SEAL	2
16	3H3301	GASKET	1
17	S1585	BOLT-------(1.50 in. long)-------	1
18	S1595	BOLT-------(1.25 in. long)-------	3
19	4S6454	MANIFOLD	1
20	8H3190	GASKET	6
21	6H5852	COVER	1
	4M5469	GASKET	1
22	2S7268	MANIFOLD	1
23	5S1236	PIPE ASSEM.	1
	5M6214	PLUG	2
24	2S9874	RING	2
25	4L8337	SEAL	2
26	S1571	BOLT	4
	1B5355	NUT	4

C INDICATES CHANGE 141742

MANIFOLDS (9S2370 N/S)
Serial No. 46A28818 to 46A29658 inclusive
Note: 7S5003 Rain Cap Assembly is available. Refer also to Page 177 for special parts

MANIFOLDS (9S2370 N/S)
Serial No. 46A29659 to 46A31760, 31762 to 31765 and 46A31767 inclusive
Note: 7S5003 Rain Cap Assembly is available. Refer also to Page 177 for special parts

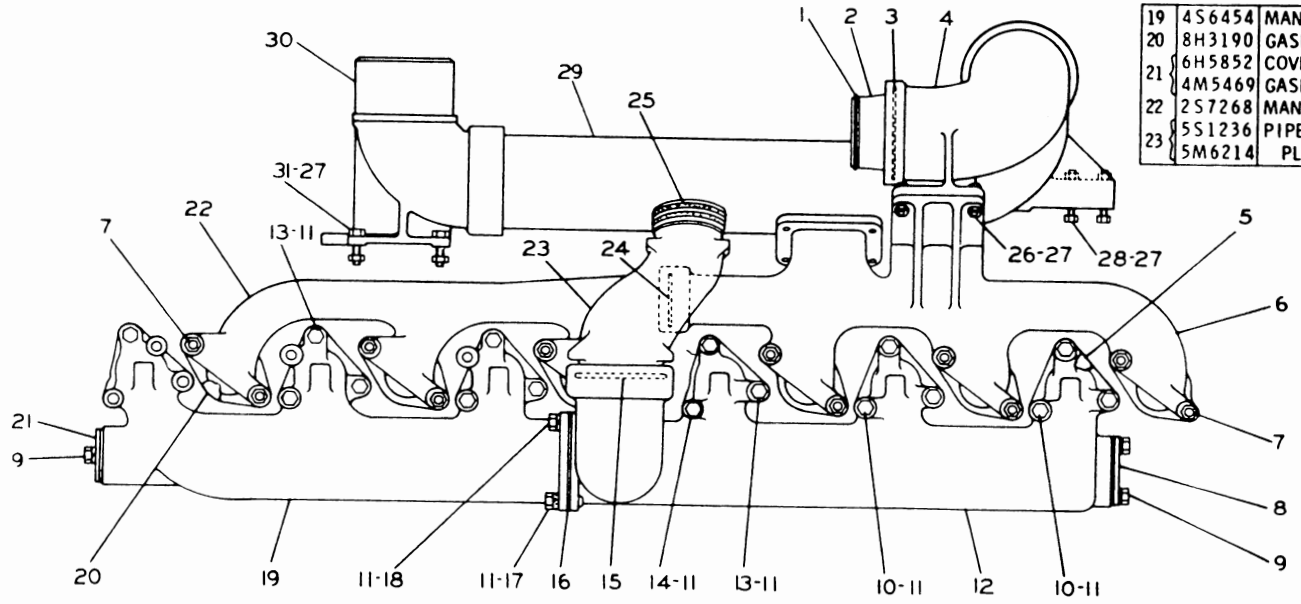

REF. NO.	PART NUMBER	DESCRIPTION	QTY
1	5L8855	RING	1
2	6L8968	COUPLING	1
3	5L8854	RING	1
C 4	2P4726	ELBOW	1
5	8H5324	GASKET	6
6	3S2252	MANIFOLD	1
7	1B5357	NUT	12
8	5H2711	COVER	1
	5H2712	GASKET	1
9	S1594	BOLT	4
	3B4506	LOCKWASHER	4
10	8S9089	BOLT	2
C 11	3B4508	LOCKWASHER	20
12	1M6034	MANIFOLD	1
13	1A5822	BOLT	11
C 14	1D4569	BOLT	3
15	6H1871	SEAL	2
16	3H3301	GASKET	1
17	S1585	BOLT--------(1.50 in. long)--------	1
18	S1595	BOLT--------(1.25 in. long)--------	3
19	4S6454	MANIFOLD	1
20	8H3190	GASKET	6
21	6H5852	COVER	1
	4M5469	GASKET	1
22	2S7268	MANIFOLD	1
23	5S1236	PIPE ASSEM.	1
	5M6214	PLUG	2
24	2S9874	RING	2
25	4L8337	SEAL	2
26	S1571	BOLT	4
C 27	1B5355	NUT	10
C 28	L1143	BOLT	2
C 29	2P4727	PIPE	1
C 30	2P4729	ELBOW	1
C 31	S1591	BOLT	4

C INDICATES CHANGE

143947

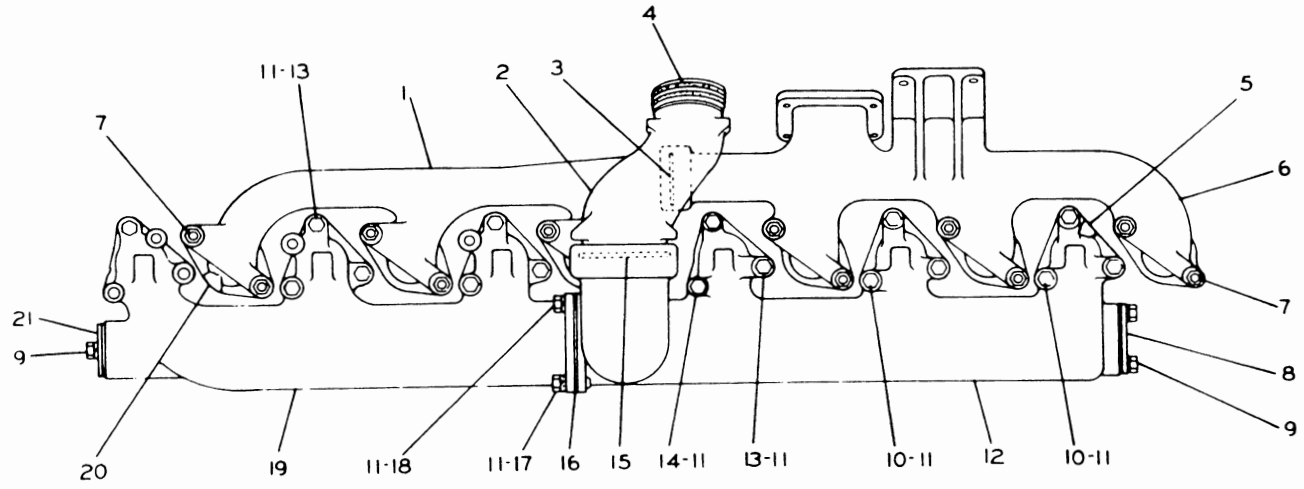

REF NO	PART NUMBER	DESCRIPTION	QTY
1	2S7268	MANIFOLD	1
2	5S1236	PIPE ASSEM. (Includes)	1
	5M6214	PLUG	2
3	2S9874	RING	2
4	4L8337	SEAL	2
5	8H5324	GASKET	6
6	3S2252	MANIFOLD	1
7	1B5357	NUT	12
8	5H2711	COVER	1
	5H2712	GASKET	1
9	S1594	BOLT	4
	3B4506	LOCKWASHER	4
10	8S9089	BOLT	2
11	3B4508	LOCKWASHER	20
12	1M6034	MANIFOLD	1
13	1A5822	BOLT	11
14	1D4569	BOLT	3
15	6H1871	SEAL	2
16	3H3301	GASKET	1
17	S1585	BOLT---------(1.50 in. long)	1
18	S1595	BOLT---------(1.25 in. long)	3
19	4S6454	MANIFOLD	1
20	8H3190	GASKET	6
21	6H5852	COVER	1
	4M5469	GASKET	1

202508

MANIFOLDS (9S2370 N/S)
Serial No. 46A31761, 46A31766 and 46A31768 to 46A33756 inclusive
Note: 7S5003 Rain Cap Assembly is available. Refer also to Page 177 for special parts

MANIFOLDS (9S2370 N/S)

Serial No. 46A33757—Up

Note: 7S5003 Rain Cap Assembly is available. Refer also to Page 177 for special parts

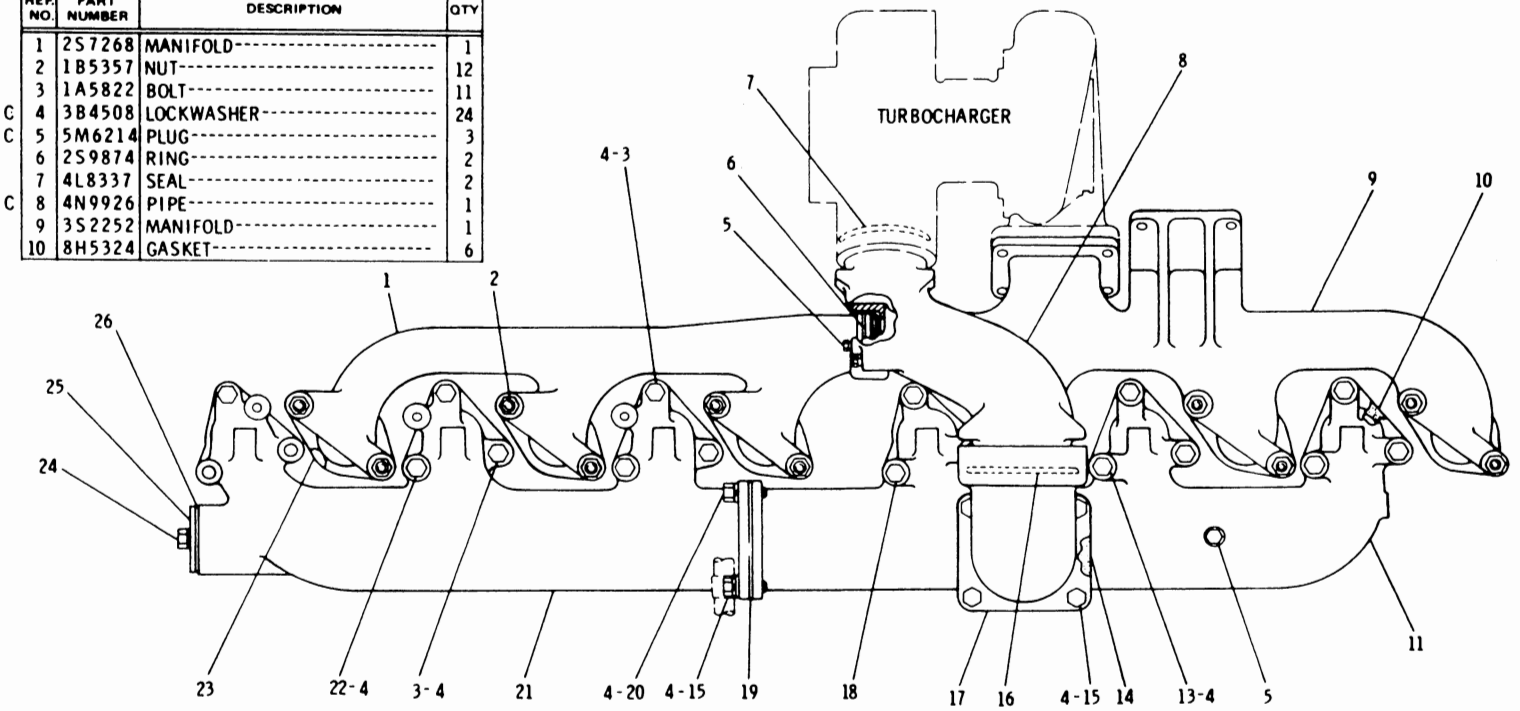

C	REF. NO.	PART NUMBER	DESCRIPTION	QTY
	1	2S7268	MANIFOLD	1
	2	1B5357	NUT	12
	3	1A5822	BOLT	11
C	4	3B4508	LOCKWASHER	24
C	5	5M6214	PLUG	3
	6	2S9874	RING	2
	7	4L8337	SEAL	2
C	8	4N9926	PIPE	1
	9	3S2252	MANIFOLD	1
	10	8H5324	GASKET	6
C	11	4N9928	MANIFOLD	1
	13	8S9089	BOLT	2
C	14	8H8754	GASKET	1
C	15	S1585	BOLT	5
	16	6H1871	SEAL	2
C	17	4N9927	ELBOW	1
C	18	2B2006	BOLT	1
	19	3H3301	GASKET	1
	20	S1595	BOLT	3
	21	4S6454	MANIFOLD	1
	22	1D4569	BOLT	2
	23	8H3190	GASKET	6
	24	S1594	BOLT	2
		3B4506	LOCKWASHER	2
	25	6H5852	COVER	1
	26	4M5469	GASKET	1

C INDICATES CHANGE

151186

MANIFOLDS AND EXHAUST PIPE (9S2370 N/S & 4S8519 N/S)

Serial No. 46A24433 to 46A28817 inclusive

Note: 7S5003 Rain Cap Assembly is available

Refer also to Page 177 for special parts

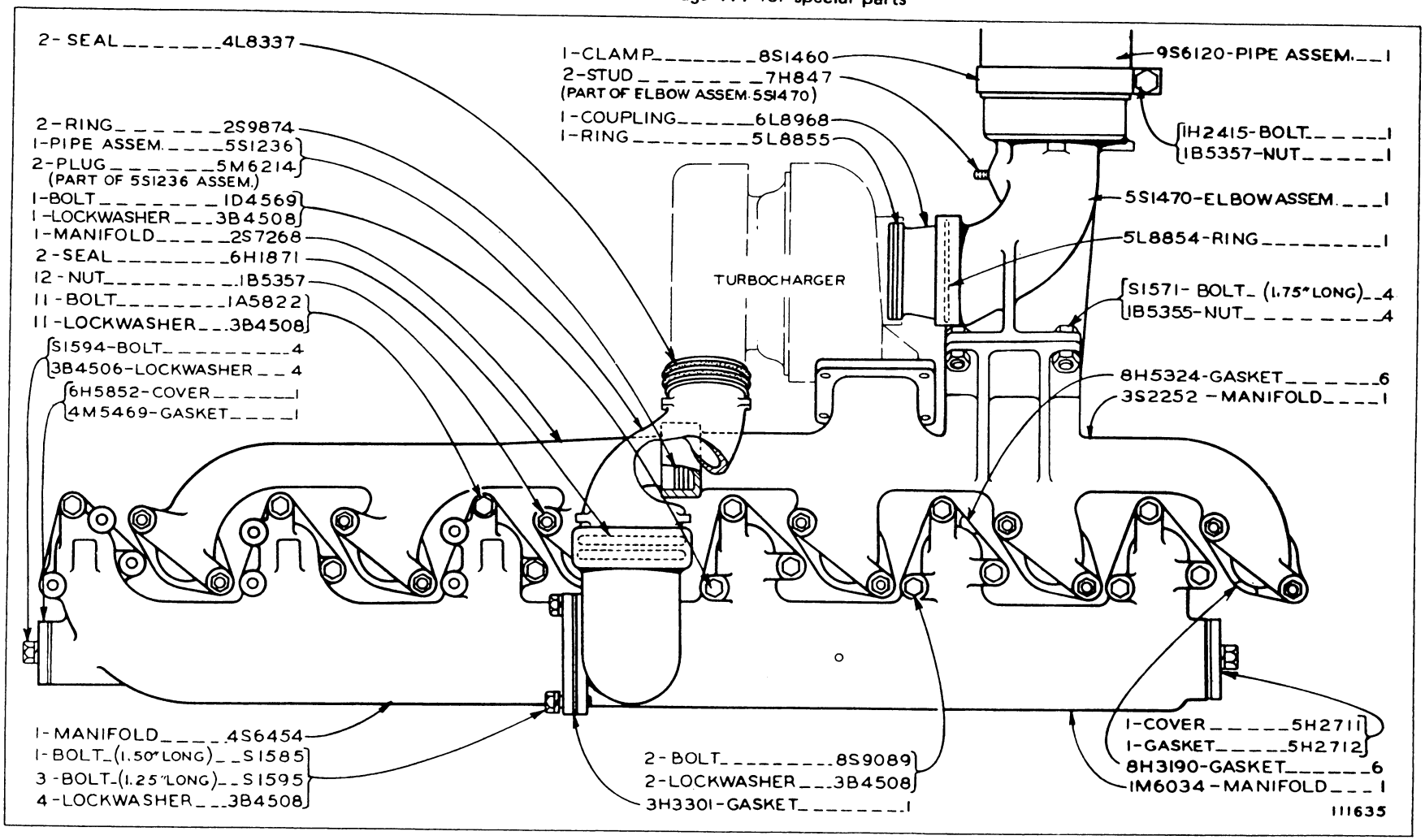

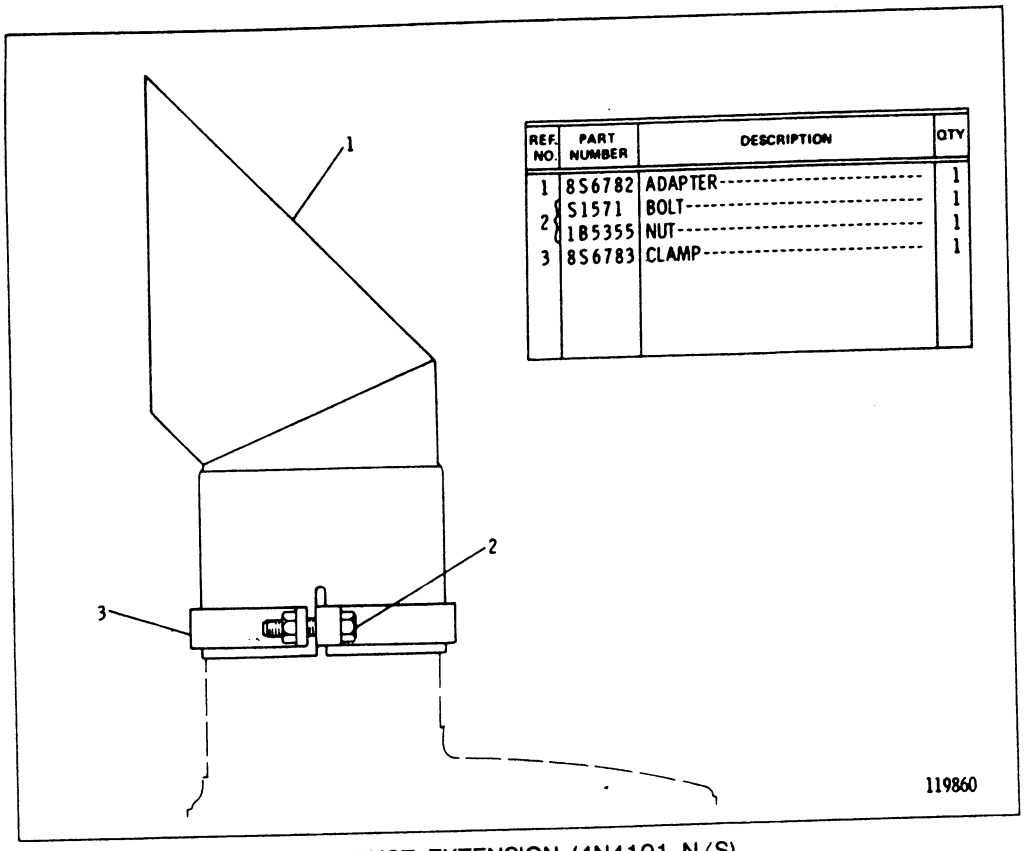

REF. NO.	PART NUMBER	DESCRIPTION	QTY
1	8S6782	ADAPTER	1
2	S1571	BOLT	1
	1B5355	NUT	1
3	8S6783	CLAMP	1

EXHAUST EXTENSION (4N4101 N/S)
Serial No. 46A29659—Up

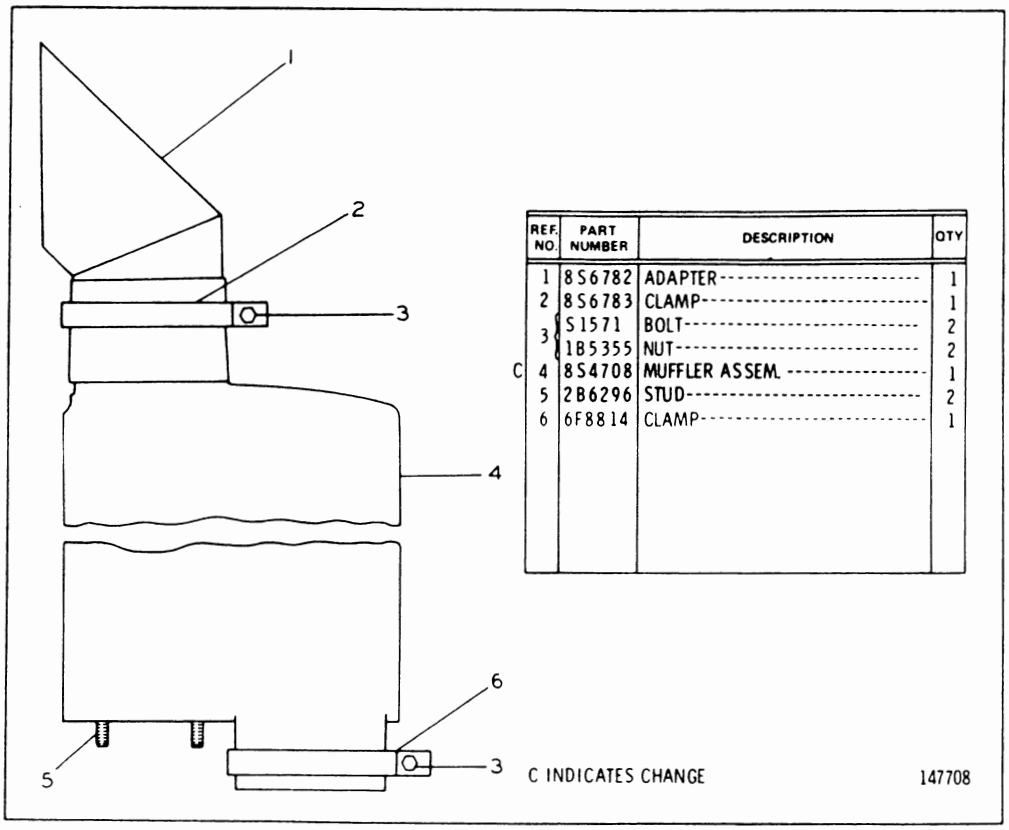

REF. NO.	PART NUMBER	DESCRIPTION	QTY
1	8S6782	ADAPTER	1
2	8S6783	CLAMP	1
3	S1571	BOLT	2
	1B5355	NUT	2
C 4	8S4708	MUFFLER ASSEM.	1
5	2B6296	STUD	2
6	6F8814	CLAMP	1

MUFFLER (4N3573 N/S)
Serial No. 46A28818 to 46A29658 inclusive

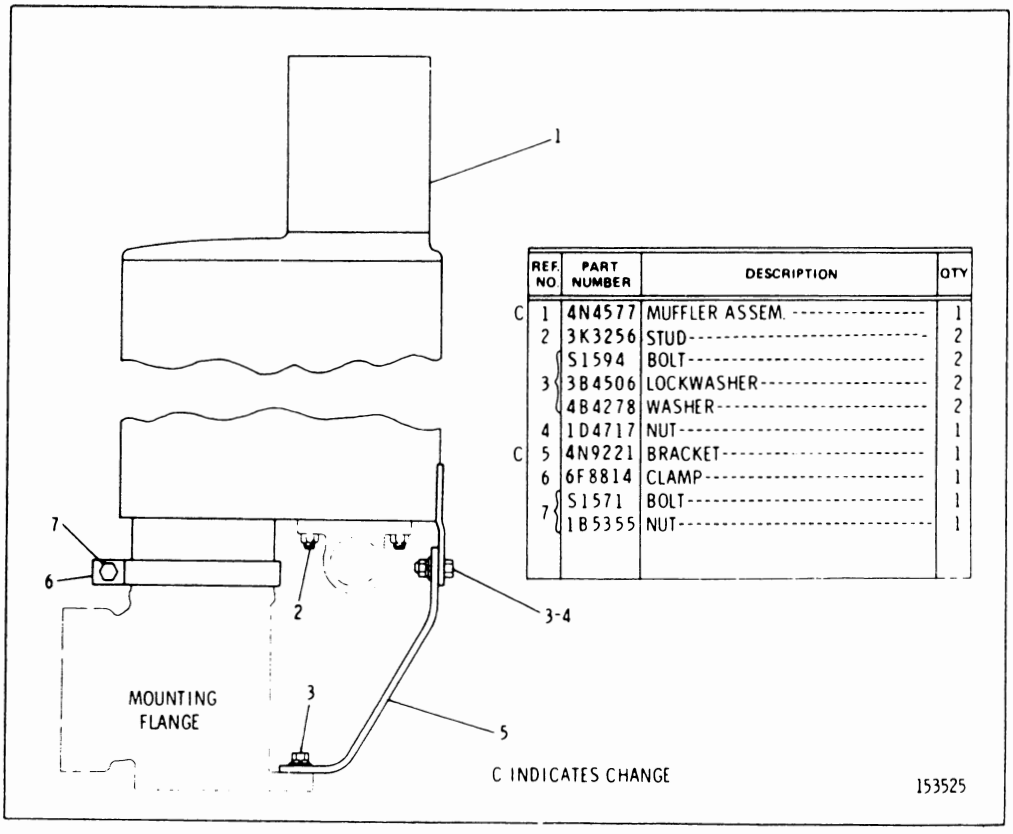

REF. NO.	PART NUMBER	DESCRIPTION	QTY
C 1	4N4577	MUFFLER ASSEM.	1
2	3K3256	STUD	2
3	S1594	BOLT	2
	3B4506	LOCKWASHER	2
	4B4278	WASHER	2
4	1D4717	NUT	1
C 5	4N9221	BRACKET	1
6	6F8814	CLAMP	1
7	S1571	BOLT	1
	1B5355	NUT	1

MUFFLER (4N4102 N/S)
Serial No. 46A29659—Up

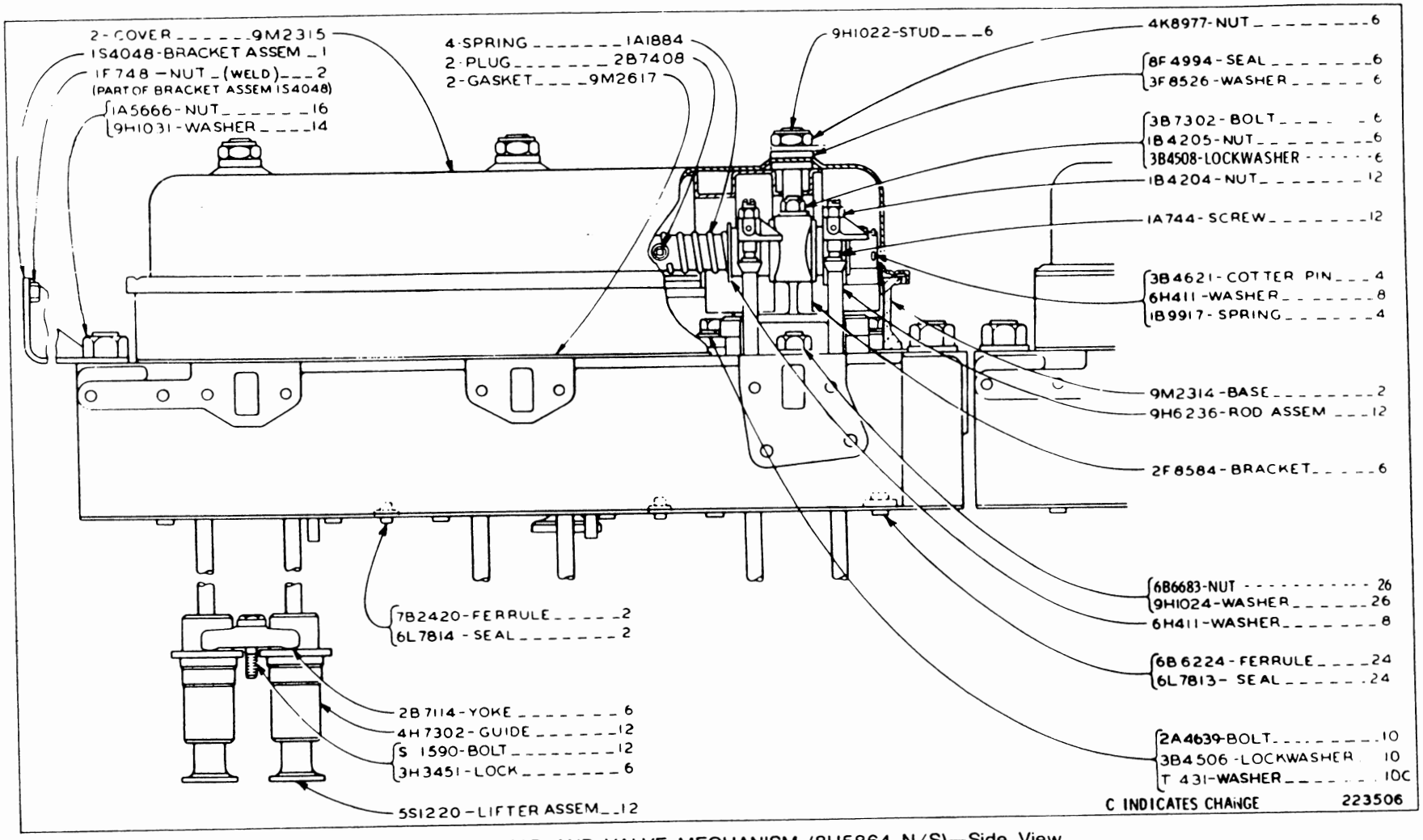

CYLINDER HEAD AND VALVE MECHANISM (8H5864 N/S)—Side View
Serial No. 46A24433 to 46A30378 and 46A30391 inclusive
See Page 28 for Gasket Kits

CYLINDER HEAD AND VALVE MECHANISM (8H5864 N/S)—End View
Serial No. 46A24433 to 46A30378 and 46A30391 inclusive

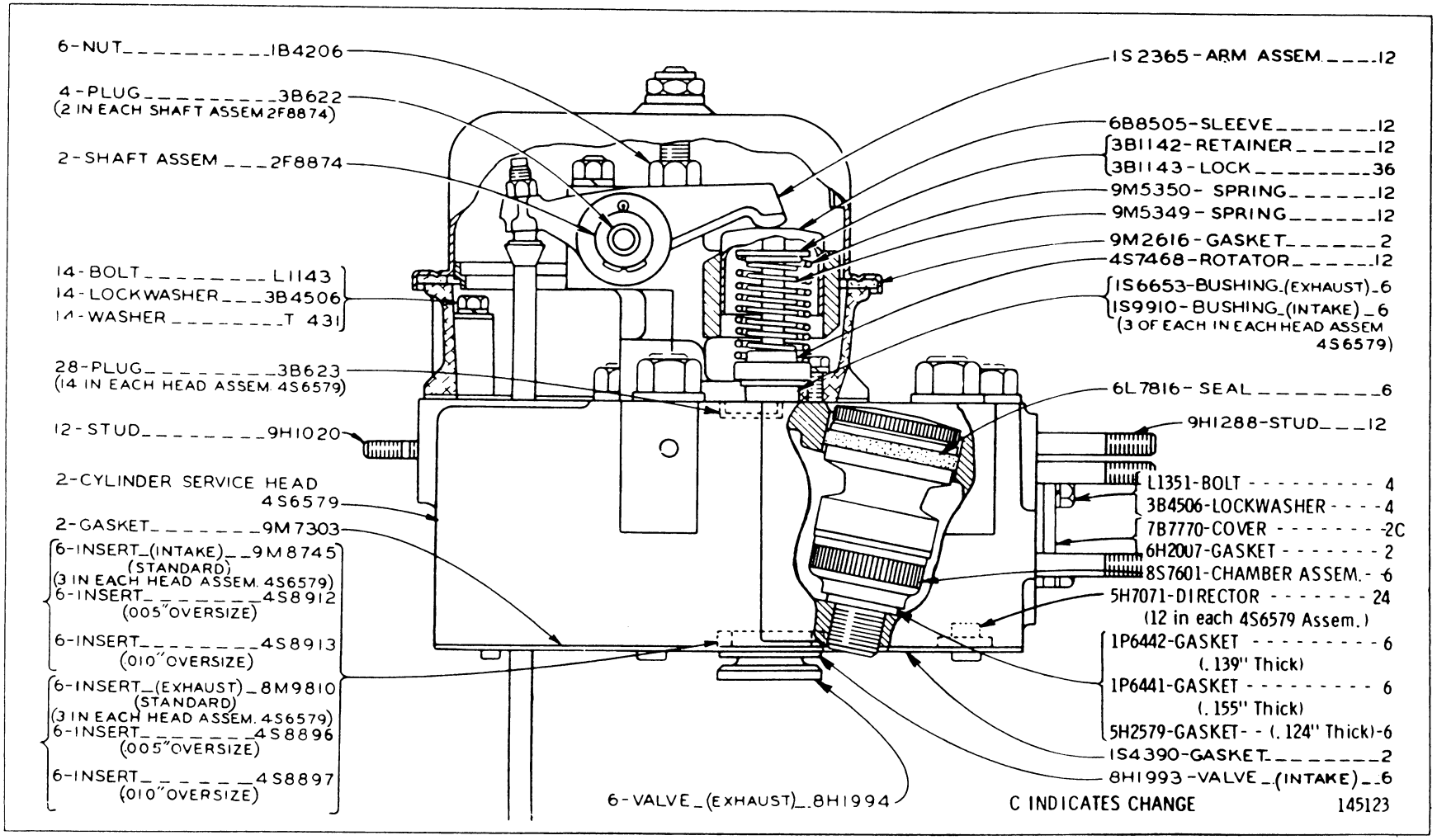

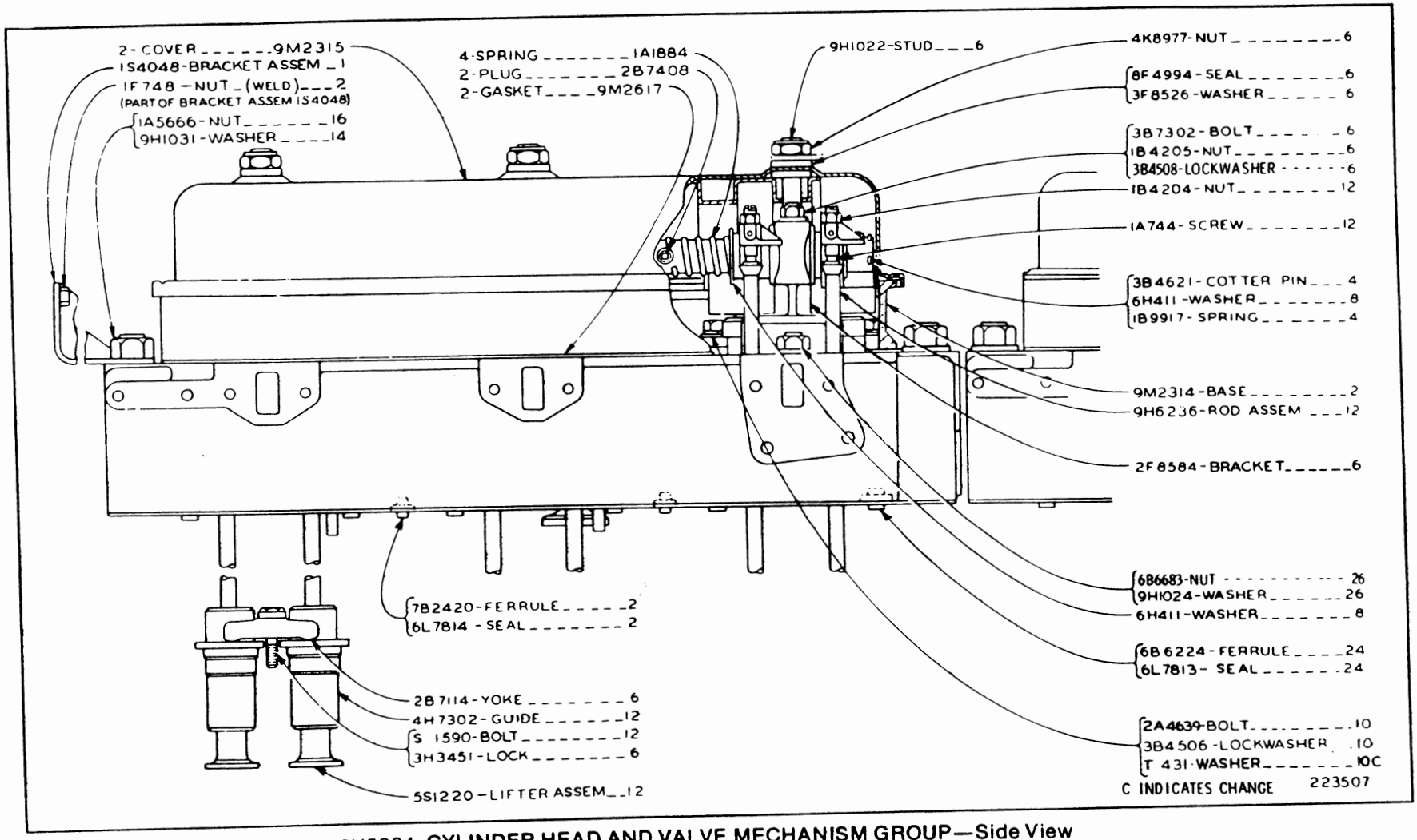

8H5864 CYLINDER HEAD AND VALVE MECHANISM GROUP—Side View
Serial No. 46A30379 to 46A30390 and 46A30392—Up
See Page 28 for Gasket Kits

8H5864 CYLINDER HEAD AND VALVE MECHANISM GROUP—End View
Serial No. 46A30379 to 46A30390 and 46A30392—Up

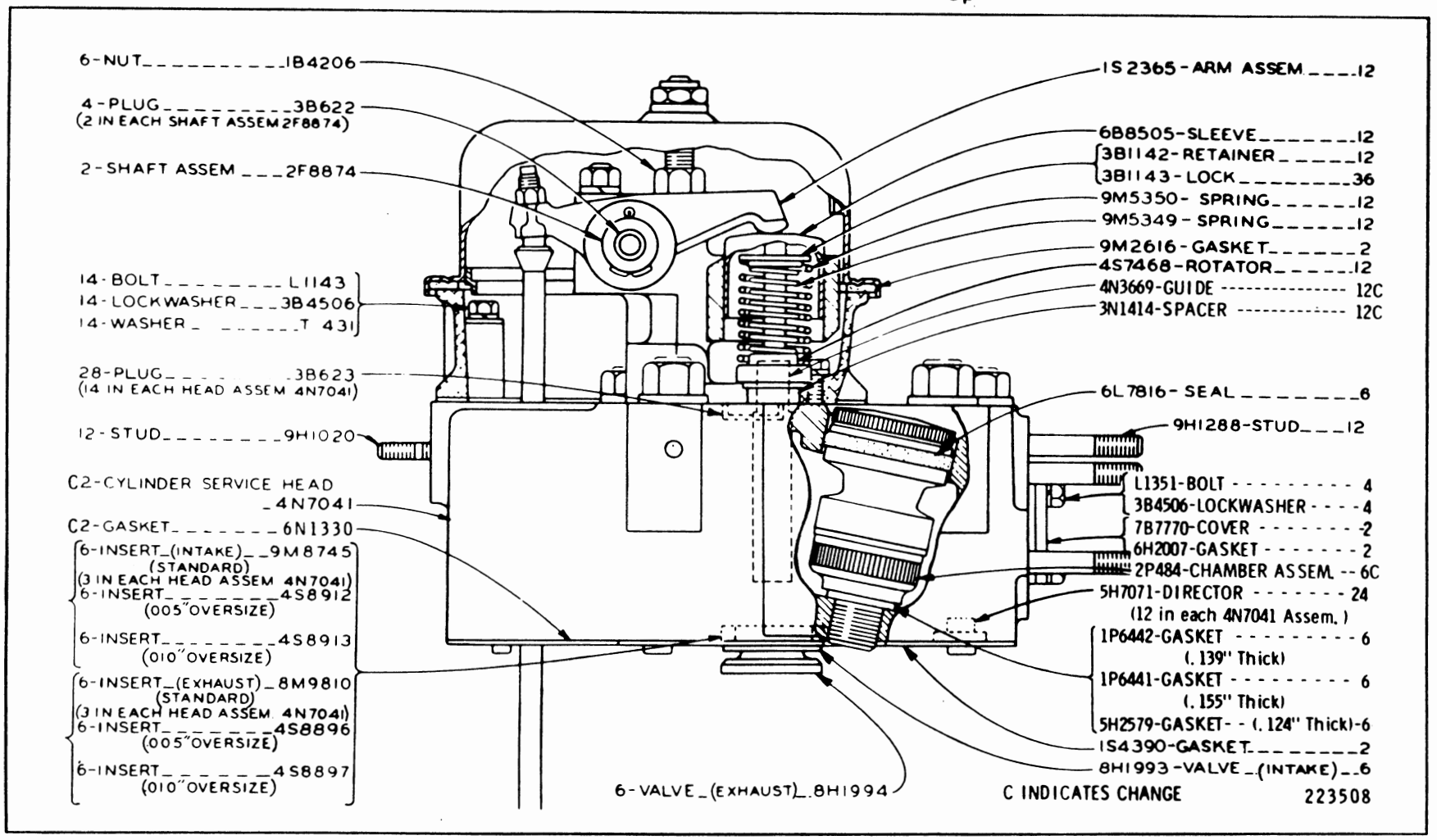

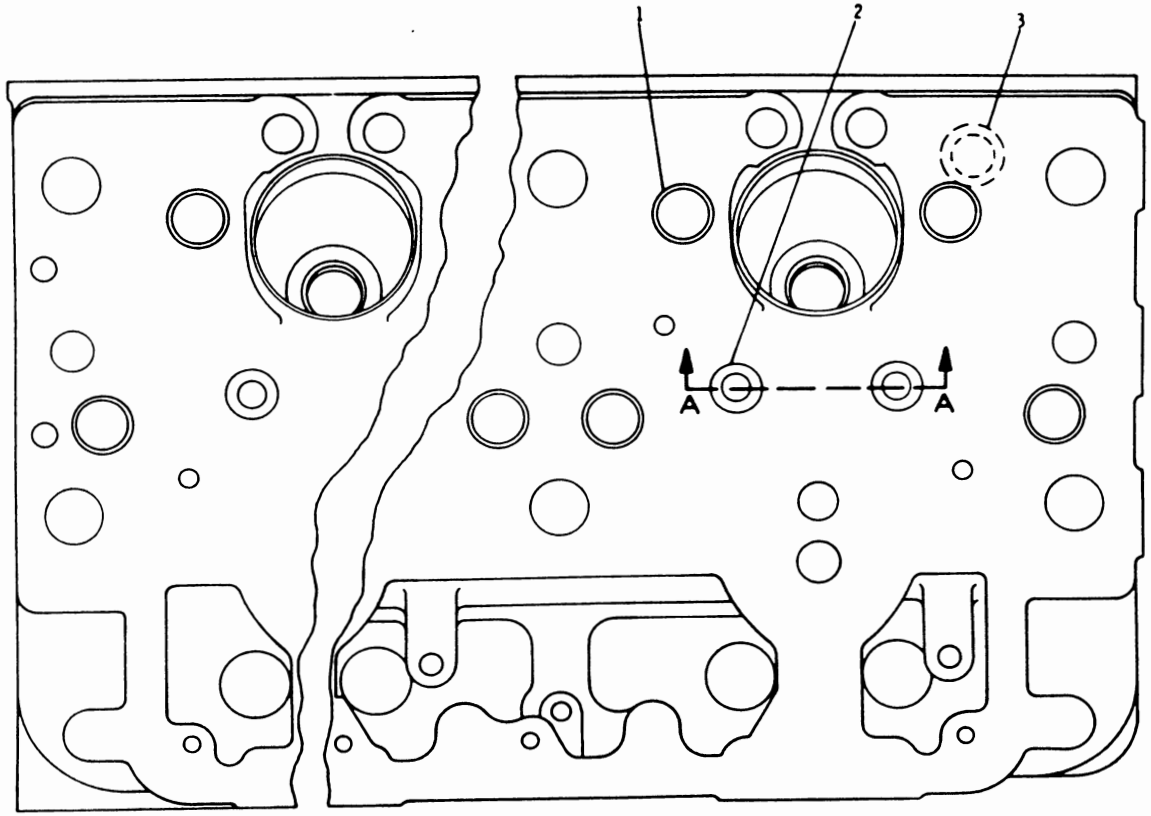

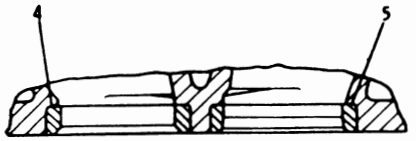

SECTION A-A

REF. NO.	PART NUMBER	DESCRIPTION	QTY
1	3B623	PLUG	16
2	7N2051	GUIDE	6
3	5H7071	DIRECTORS	12
	8M9810	INSERT---(exhaust)---(STANDARD)	3
▲ 4	4S8896	INSERT---0.13 mm(.005 in.) oversize	3
▲	4S8897	INSERT---0.26 mm(.010 in.) oversize	3
	9M8745	INSERT---(intake)---(STANDARD)	3
▲ 5	4S8912	INSERT---0.13 mm(.005 in.) oversize	3
▲	4S8913	INSERT---0.26 mm(.010 in.) oversize	3

▲ NOT PART OF 8N6004 CYLINDER HEAD ASSEM.

226230

8N6004 CYLINDER HEAD SERVICE GROUP—Field Installation
Replaces 4N7041 shown on Page 23A-1
Serial No. 46A30379 to 46A30390 and 46A30392—Up

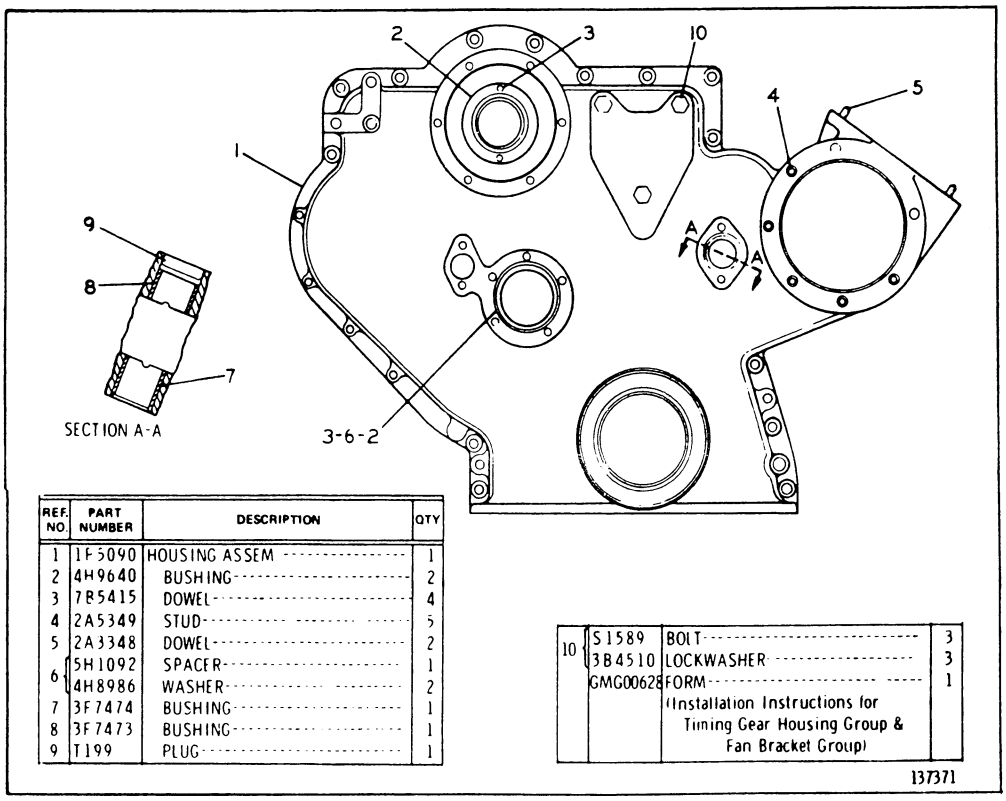

REF. NO.	PART NUMBER	DESCRIPTION	QTY
1	1P5090	HOUSING ASSEM	1
2	4H9640	BUSHING	2
3	7B5415	DOWEL	4
4	2A5349	STUD	5
5	2A3348	DOWEL	2
6	5H1092	SPACER	1
	4H8986	WASHER	2
7	3F7474	BUSHING	1
8	3F7473	BUSHING	1
9	T199	PLUG	1
10	S1589	BOLT	3
	3B4510	LOCKWASHER	3
	GMG00628	FORM (Installation Instructions for Timing Gear Housing Group & Fan Bracket Group)	1

137371

1P7923 TIMING GEAR HOUSING SERVICE GROUP
Serial No. 46A24433 to 24809, 24812, 24813, 24815 to 24817, 24822, 24823, 24827 & 46A24834 inclusive. Provides field replacement for 4S6812 Timing Gear Housing Assembly shown on Page 24A

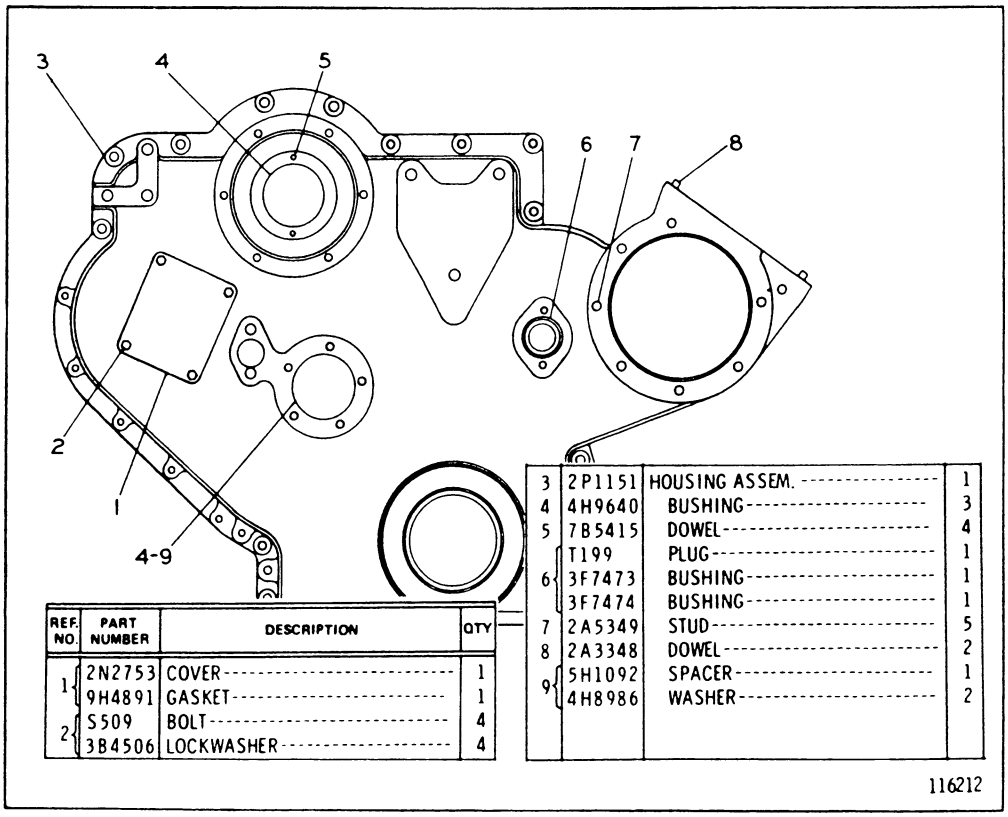

REF. NO.	PART NUMBER	DESCRIPTION	QTY
1	2N2753	COVER	1
	9H4891	GASKET	1
2	S509	BOLT	4
	3B4506	LOCKWASHER	4
3	2P1151	HOUSING ASSEM.	1
4	4H9640	BUSHING	3
5	7B5415	DOWEL	4
6	T199	PLUG	1
	3F7473	BUSHING	1
	3F7474	BUSHING	1
7	2A5349	STUD	5
8	2A3348	DOWEL	2
9	5H1092	SPACER	1
	4H8986	WASHER	2

116212

2P6858 TIMING GEAR HOUSING SERVICE GROUP
Serial No. 46A24810, 24811, 24814, 24818 to 24821, 24824 to 24826, 24828 to 24833, 24835 to 27800 and 46A27802 to 46A28136 inclusive. For field replacement of 1P5090 Housing Assembly shown on Page 24C. Only separate parts serviced

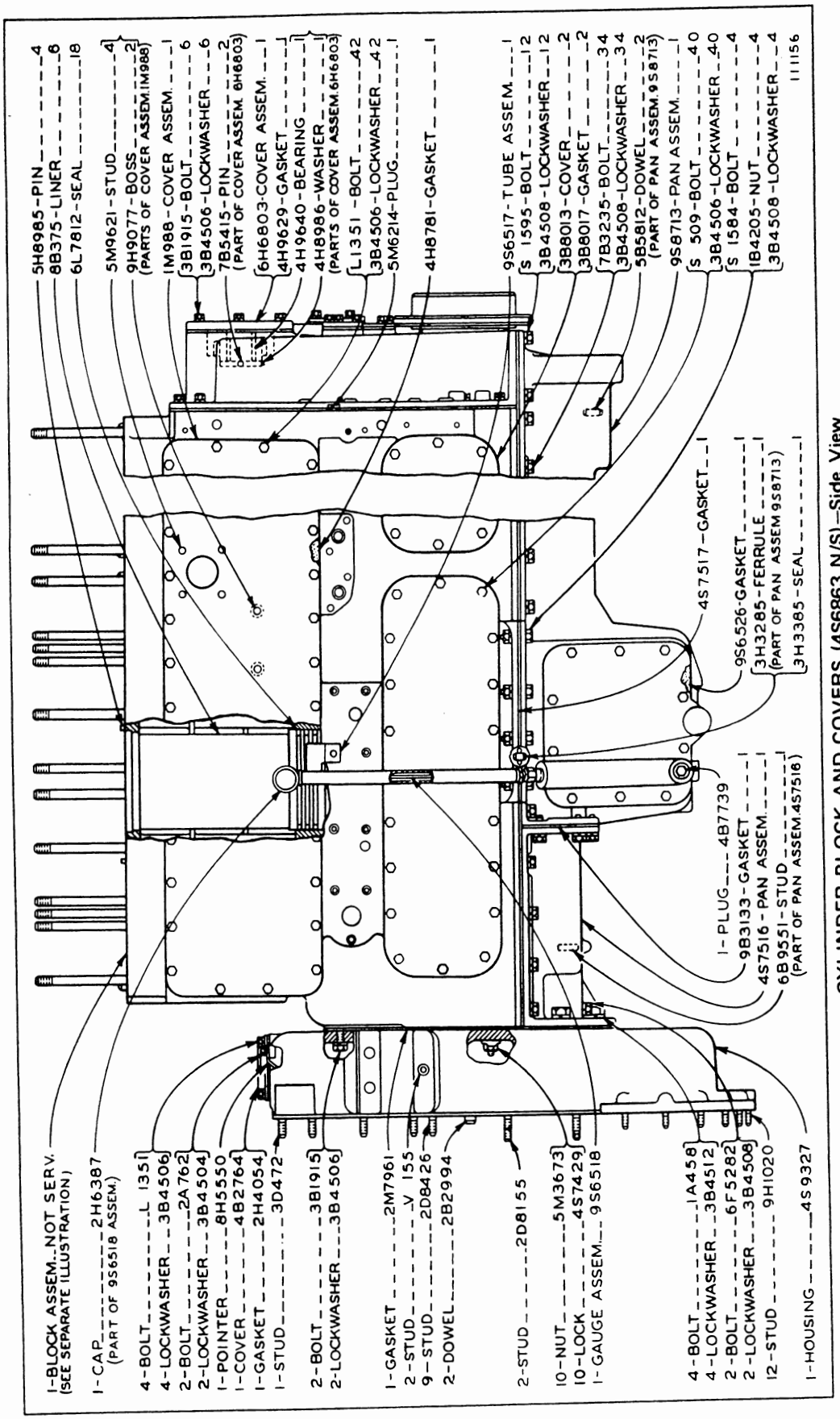

CYLINDER BLOCK AND COVERS (4S6863 N/S)—Side View

Serial No. **46A24433** to **24809, 24812, 24813, 24815** to **24817, 24822, 24823, 24827** and **46A24834** inclusive

Cylinder Block parts are shown on Page 26. Note: 3S4032 Piston & Liner Group, consisting of:

1—Piston Assembly, 1—Liner & 3—Seal, is available

CYLINDER BLOCK AND COVERS (4S6863 N/S)—End View

Serial No. 46A24433 to 24809, 24812, 24813, 24815 to 24817, 24822, 24823, 24827 and 46A24834 inclusive

Refer also to Page 116B for special parts. See Page 28 for Gasket Kits

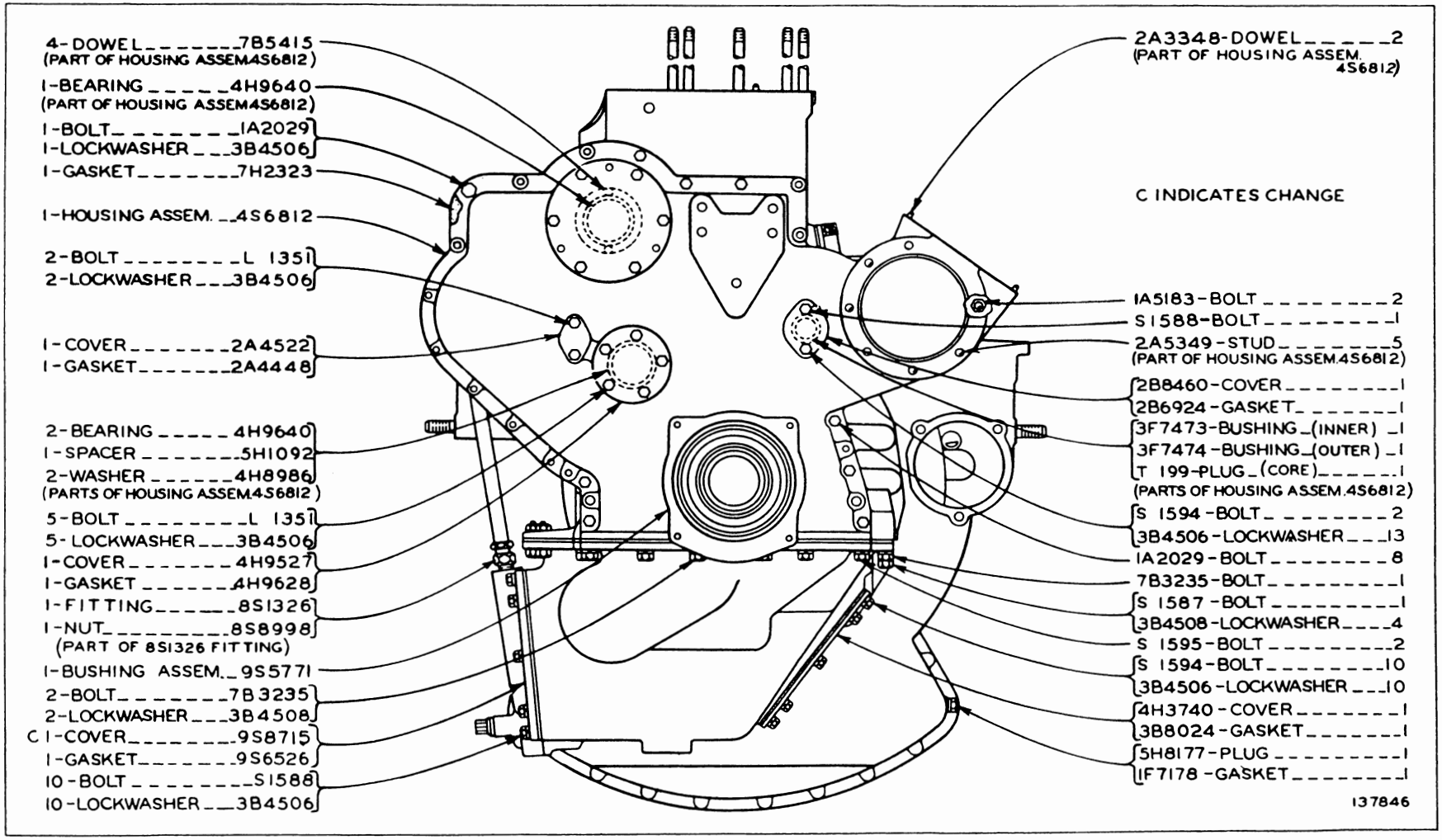

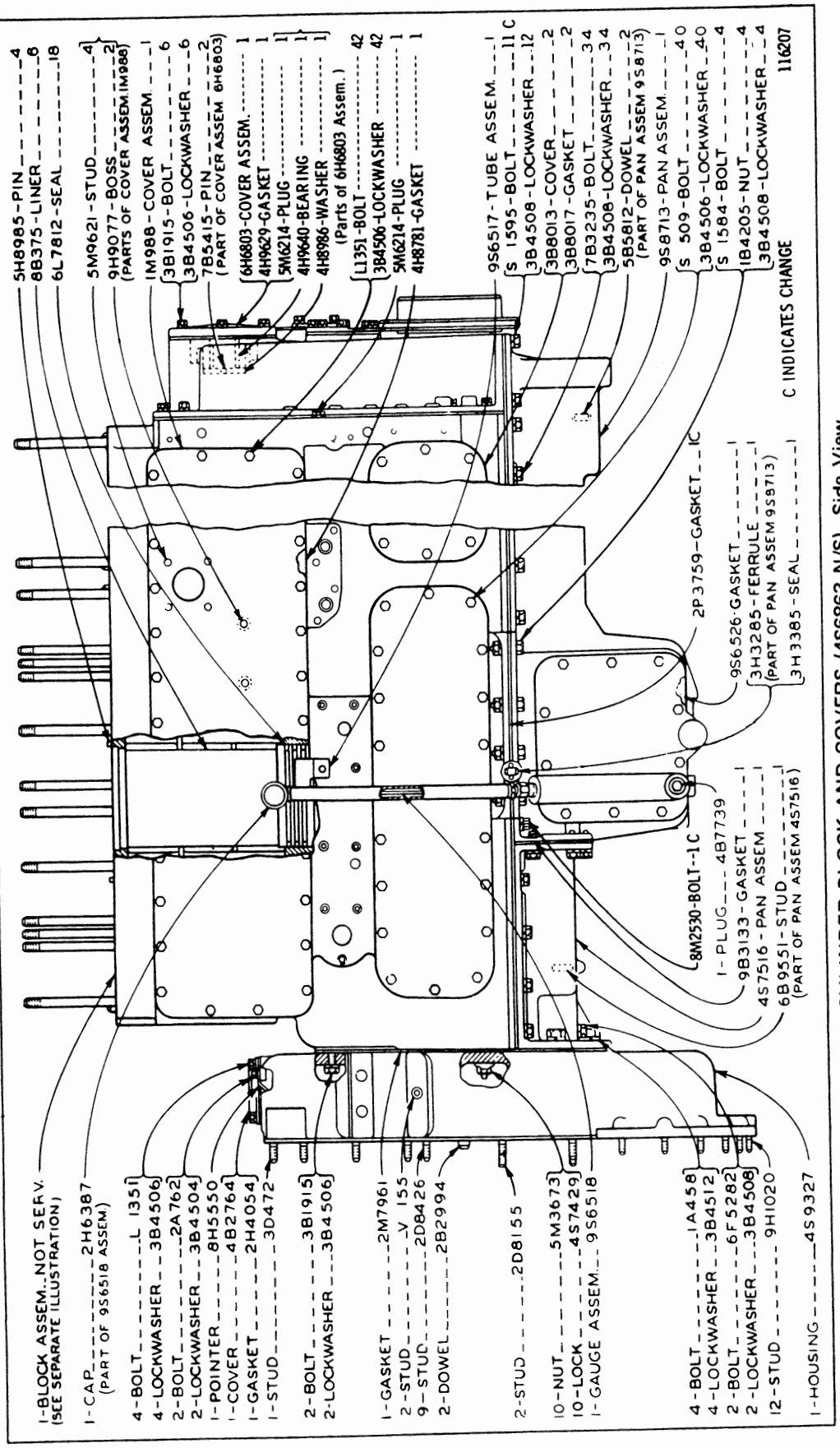

CYLINDER BLOCK AND COVERS (4S6863 N/S)—Side View

Serial No. 46A24810, 24811, 24818 to 24821, 24824 to 24826, 24828 to 24833, 24835 to 27800 and 46A27802 to 46A28136 inclusive. Cylinder Block parts are shown on Page 26A. Note: 3S4032 Piston and Liner Group consisting of: 1—Piston Assembly, 1—Liner and 3—Seal, is available. See Page 28 for Gasket Kits

CYLINDER BLOCK AND COVERS (4S6863 N/S)—End View

Serial No. 46A24810, 24811, 24814, 24818 to 24821, 24824 to 24826, 24828 to 24833, 24835 to 27800 and 46A27802 to 46A28136 inclusive. Refer also to Page 116B for special parts

See Page 28 for Gasket Kits

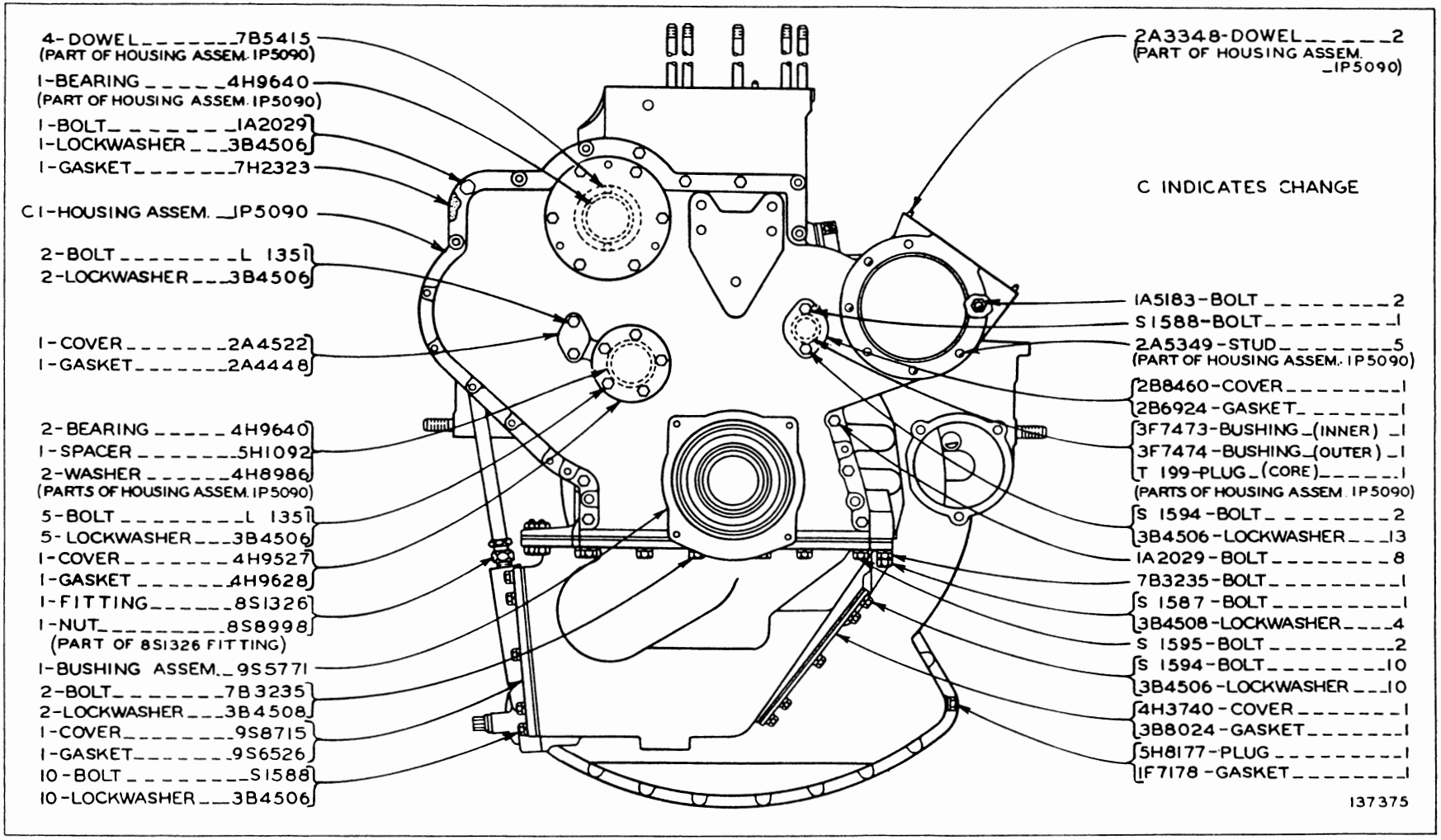

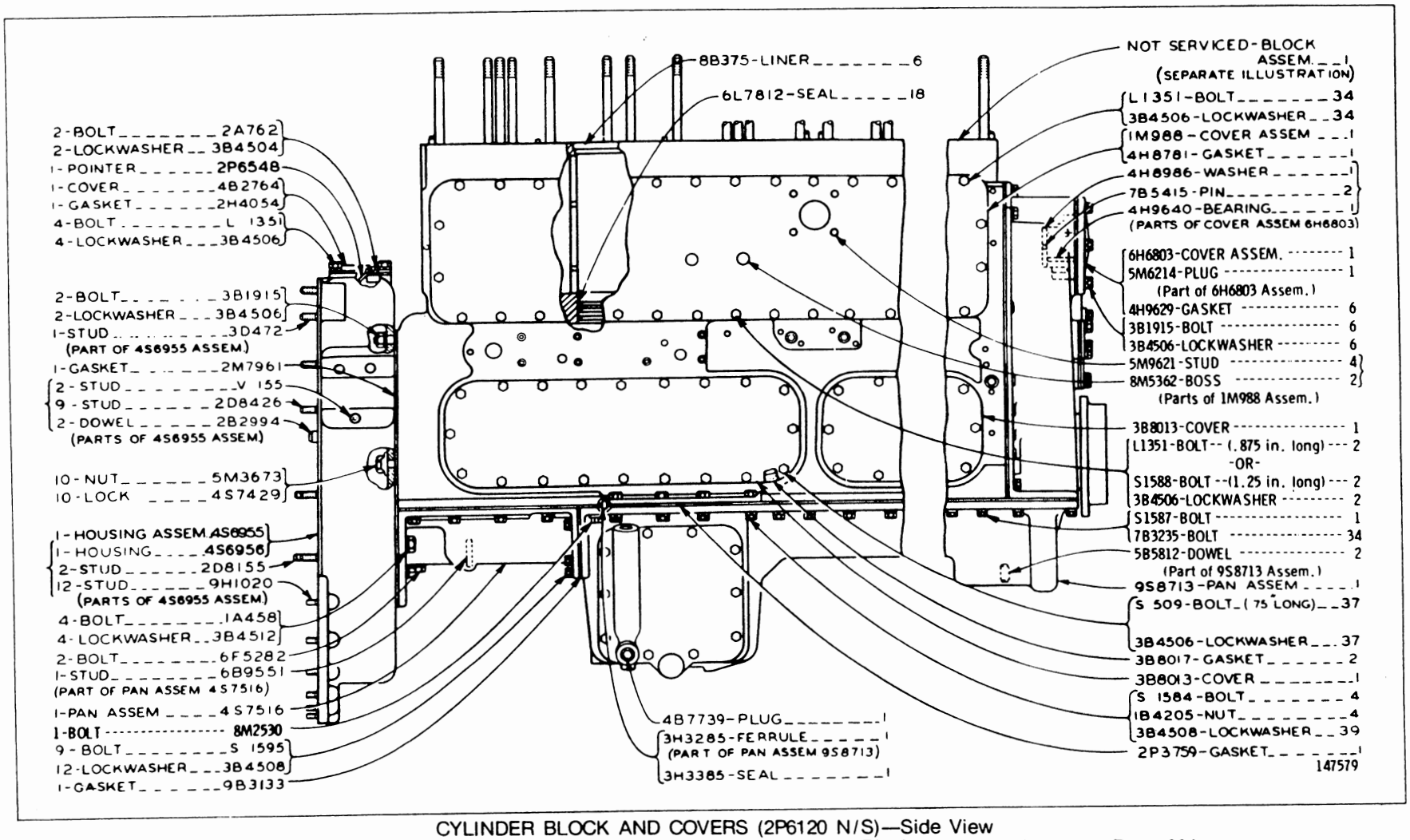

CYLINDER BLOCK AND COVERS (2P6120 N/S)—Side View

Serial No. 46A27801 and 46A28137 to 46A30576 inclusive. Cylinder Block parts are shown on Page 26A

Note: 3S4032 Piston and Liner Group consisting of: 1—Piston Assembly, 1—Liner and 3—Seal is available. See Page 28 for Gasket Kits

CYLINDER BLOCK AND COVERS (2P6120 N/S)—End View
Serial No. 46A27801 and 46A28137 to 46A30576 inclusive
See Page 28 for Gasket Kits

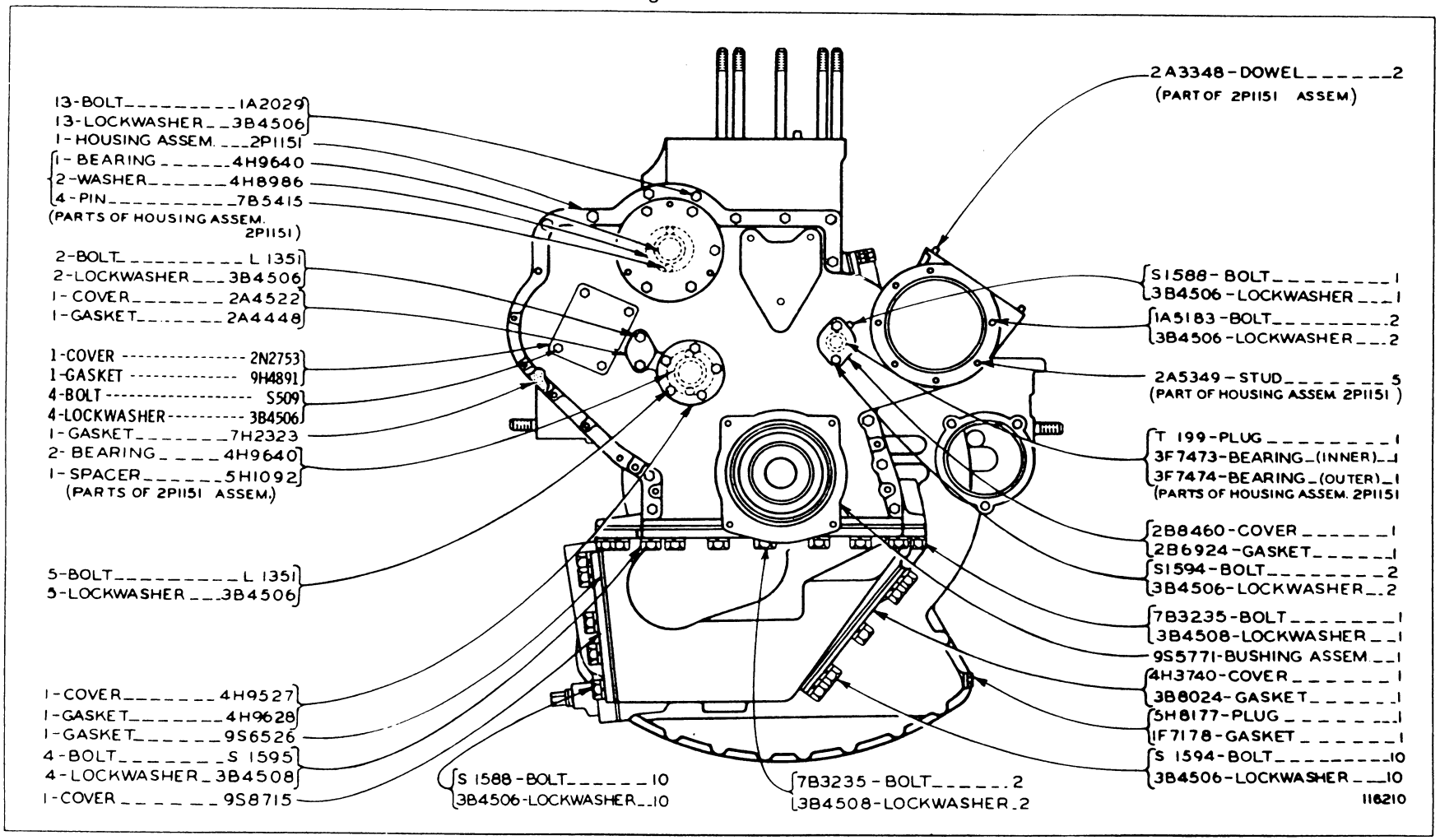

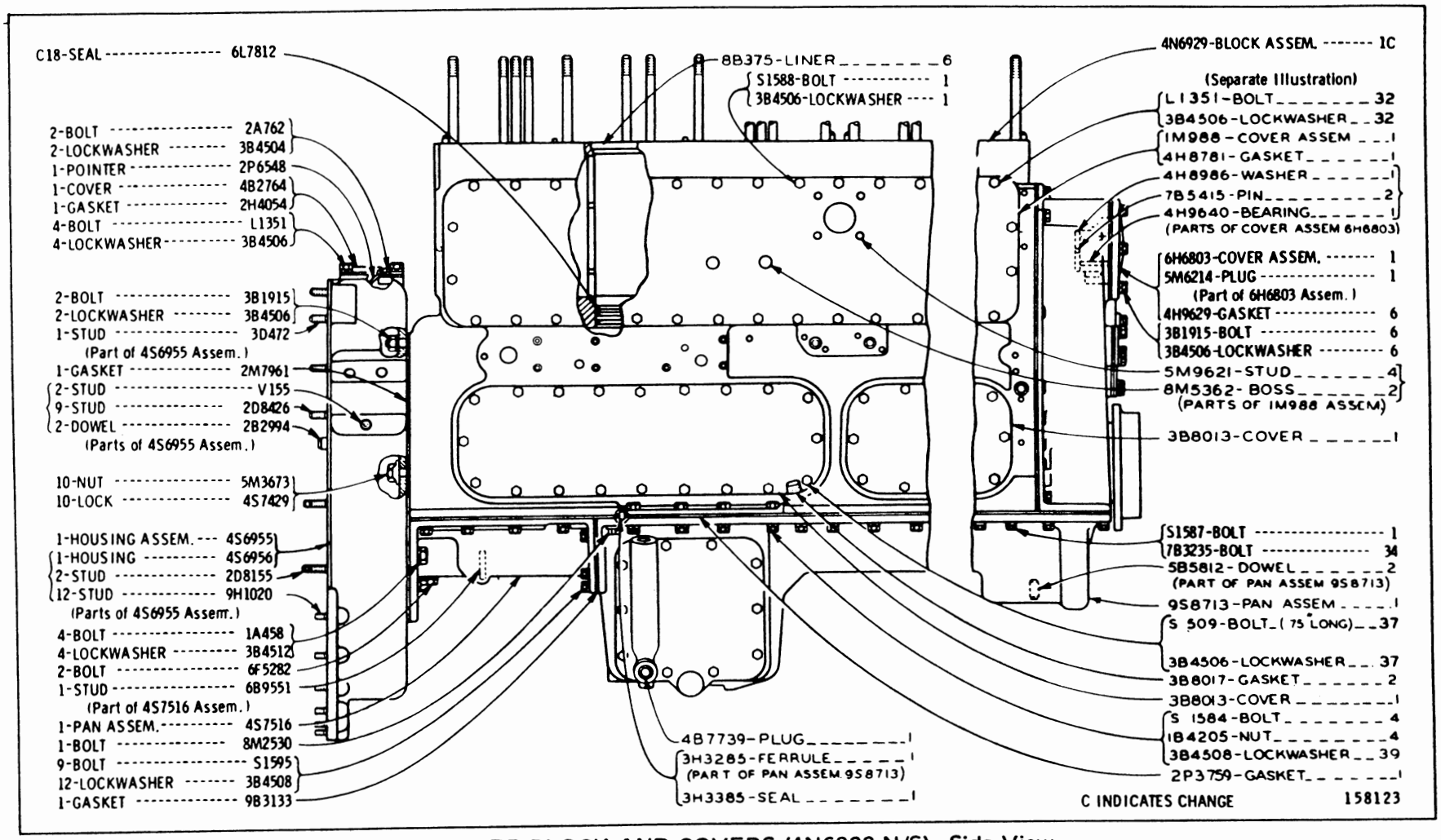

CYLINDER BLOCK AND COVERS (4N6928 N/S)—Side View
Serial No. 46A30577 to 46A32744 & 46A32746 to 46A32761 inclusive
4N6929 Cylinder Block parts are shown on Page 26B. See Page 28 for Gasket Kits

CYLINDER BLOCK AND COVERS (4N6928 N/S)—End View
Serial No. 46A30577 to 46A32744 and 46A32746 to 46A32761 inclusive
See Page 28 for Gasket Kits

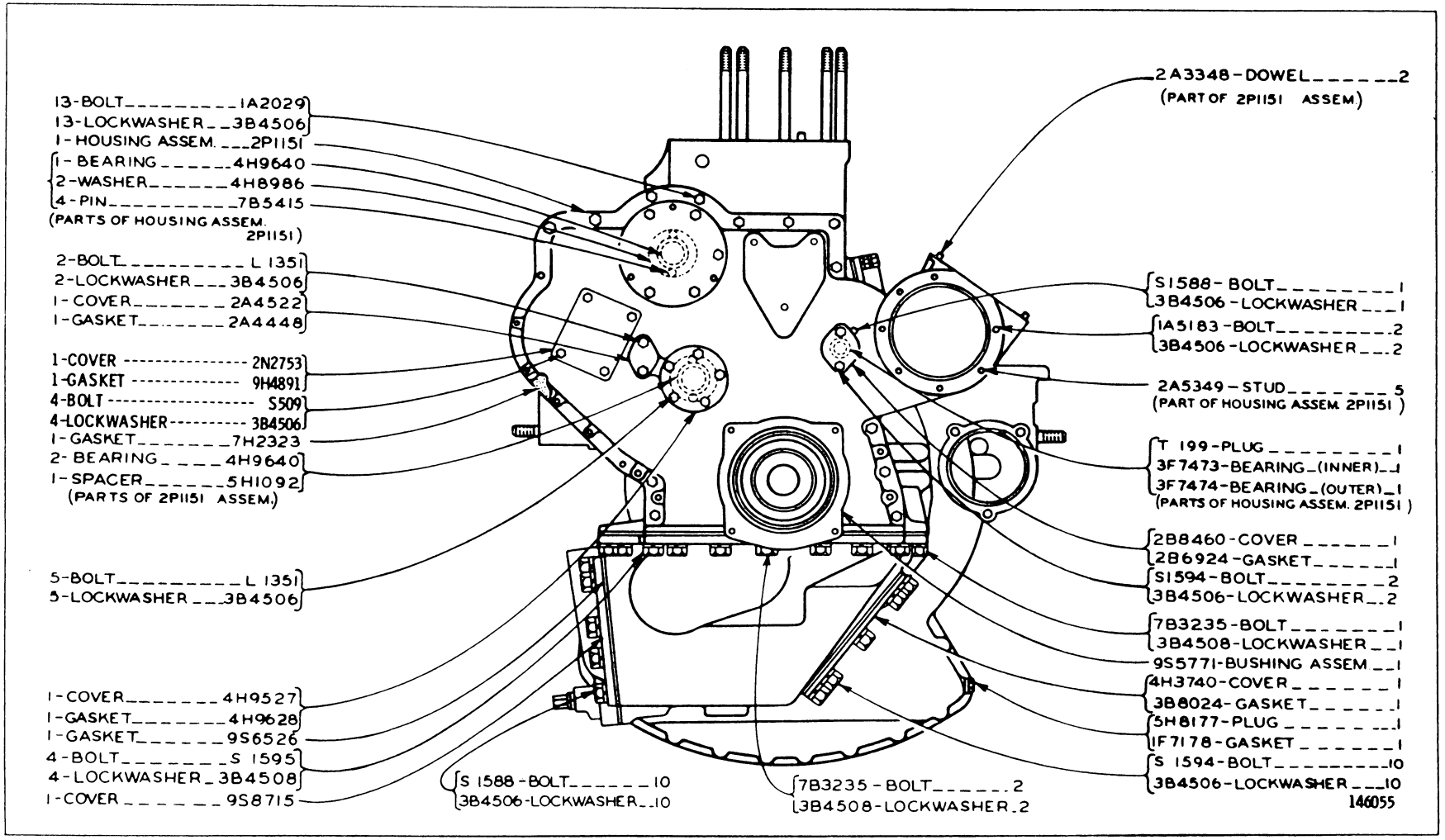

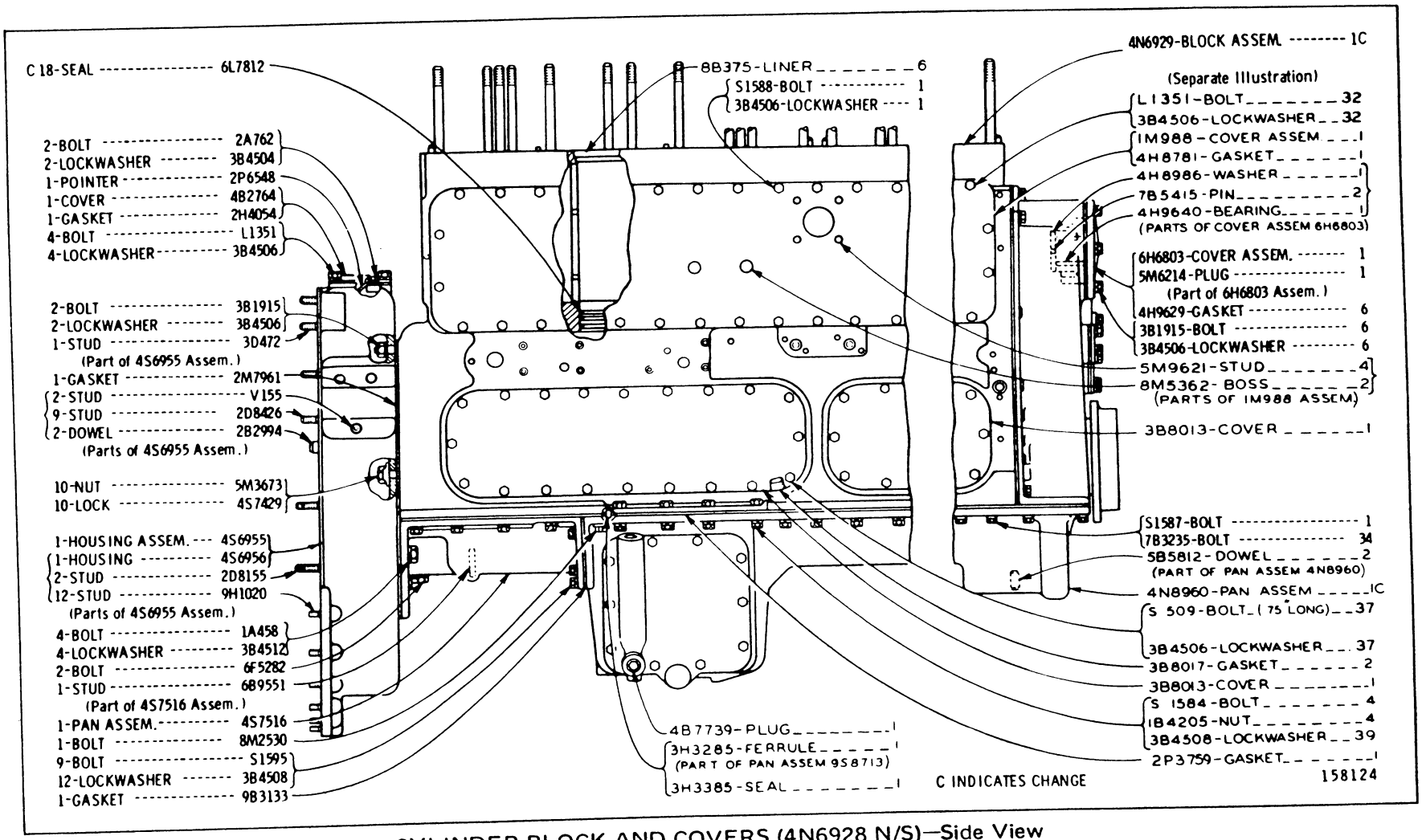

CYLINDER BLOCK AND COVERS (4N6928 N/S)—Side View
Serial No. 46A32745 & 46A32762—Up
4N6929 Cylinder Block parts are shown on Pages 26B & 26-1. See Page 28 for Gasket Kits

CYLINDER BLOCK AND COVERS (4N6928 N/S)—End View
Serial No. 46A32745 and 46A32762—Up
See Page 28 for Gasket Kits

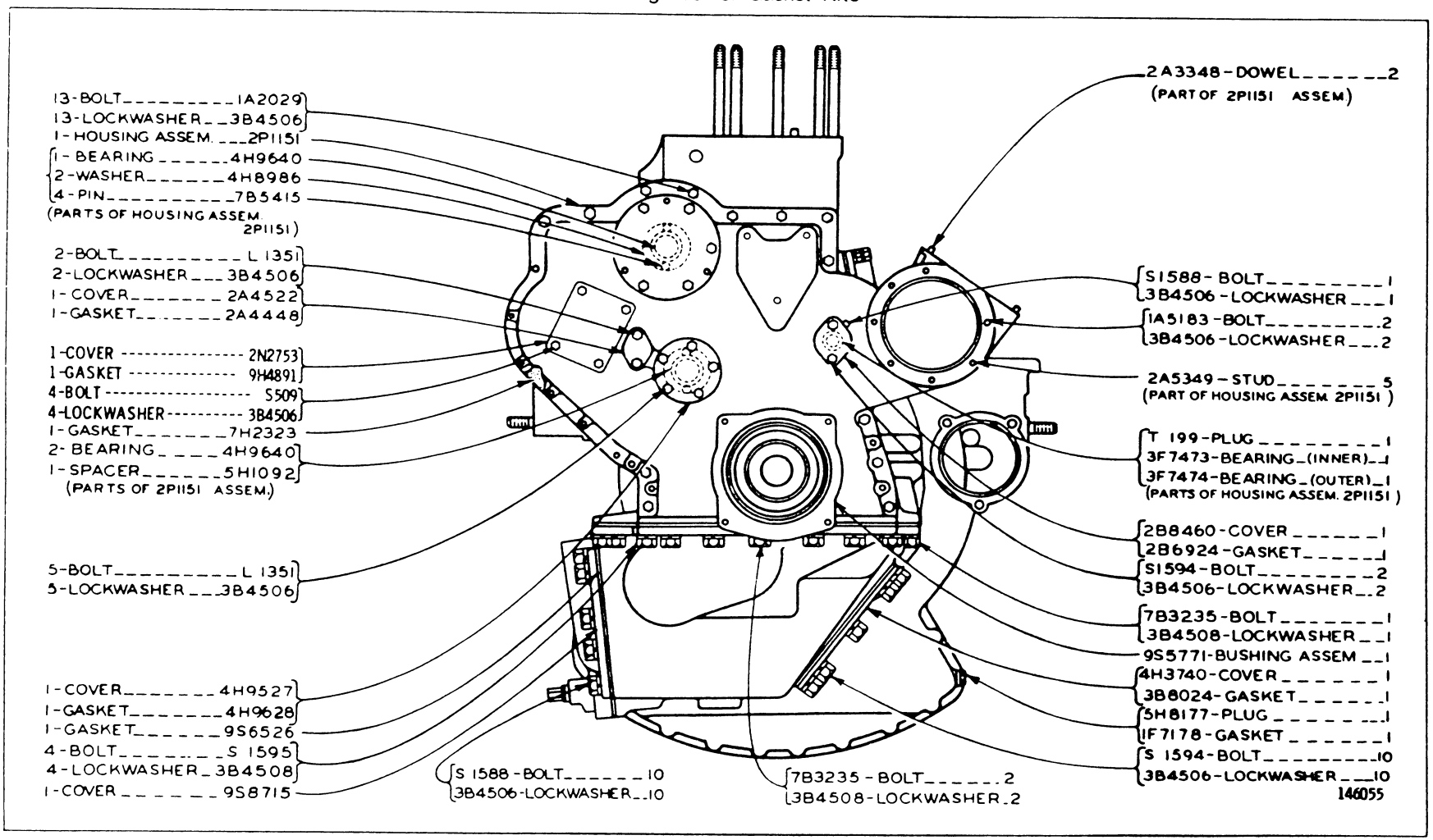

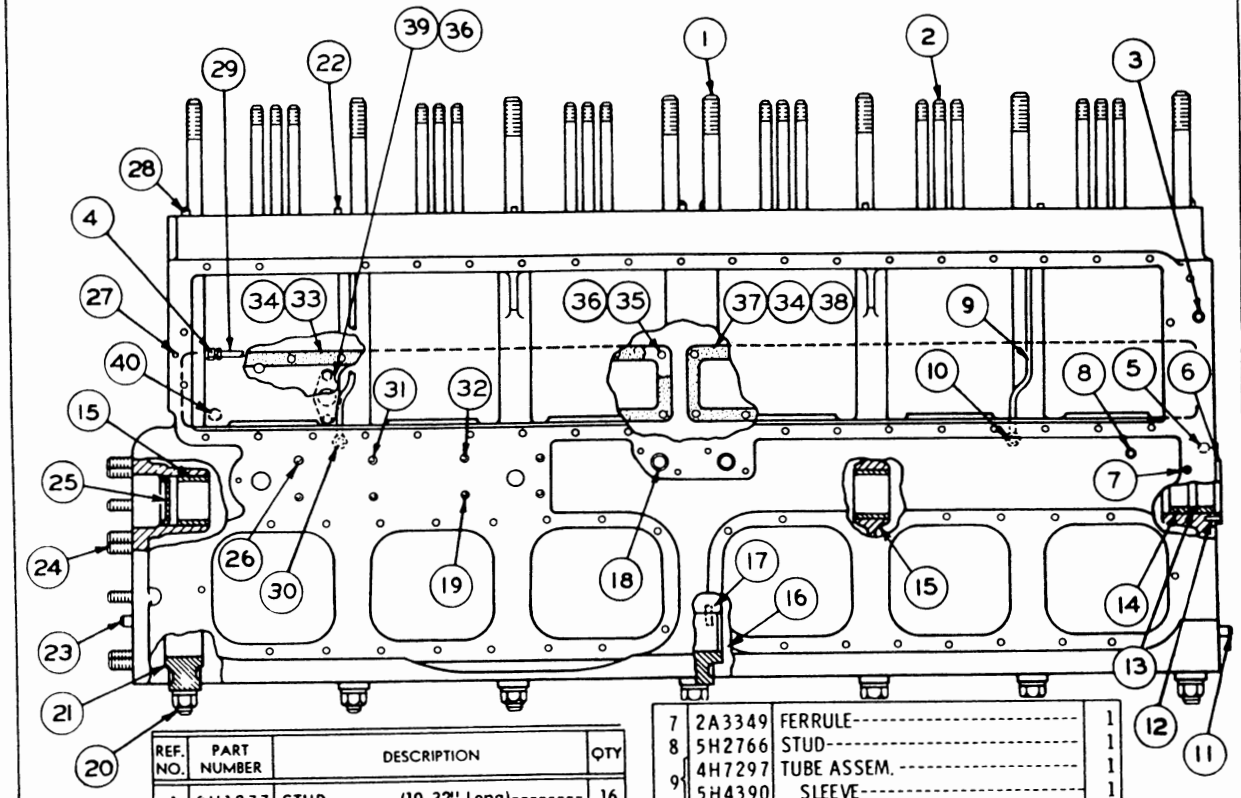

REF. NO.	PART NUMBER	DESCRIPTION	QTY
1	9H1077	STUD--------(10.32" Long)--------	16
2	9M488	STUD---------(8" Long)----------	26
3	2A3798	DOWEL----------	2
4	3B8995	FITTING----------	1
	1F1344	NUT----------	1
		(Part of 3B8995 Fitting)	
5	5M6214	PLUG----------	1
6	4H8986	WASHER----------	1
7	2A3349	FERRULE----------	1
8	5H2766	STUD----------	1
9	4H7297	TUBE ASSEM.----------	1
	5H4390	SLEEVE----------	1
		(Part of 4H7297 Assem.)	
10	L1547	NUT----------	1
11	1A5919	DOWEL----------	2
12	7B5415	DOWEL----------	2
13	5H1092	SPACER----------	1
14	4H9640	BEARING----------	2
15	8F8523	BEARING----------	3
16	4S9346	CAP GROUP-------(Center)--------	1
	4S9350	SHIM----------(Long)---------	1
	4S9349	SHIM---------(Short)----------	6
		(Parts of 4S9346 Group)	
17	5B5812	DOWEL----------	1
18	5H2786	TUBE----------	2
19	1H4004	STUD--------(2.6875" long)-------	5
20	1P667	STUD----------	14
	1A5666	NUT----------	14
	4M6953	WASHER----------	14
21	4S9360	CAP GROUP----(Intermediate)-----	6
	4S9362	SHIM----------(Long)----------	12
	4S9363	SHIM---------(Short)----------	36
	7F1826	STUD----------	12
		(one-sixth each in 4S9360 Group)	
22	5H8985	PIN----------	4
23	2B2994	DOWEL----------	2
24	4B3251	STUD----------	10
25	S519	PLUG----------	1
26	V113	STUD---------(5.50" Long)--------	1
27	4F6024	DOWEL----------	1
28	L2061	DOWEL----------	4
29	4H8795	TUBE ASSEM.----------	1
30	L1547	NUT----------	1
	5H4390	SLEEVE----------	1
		(Parts of 4H8795 Assem.)	
31	5B1229	STUD--------(7.125" Long)--------	1
32	1F3391	STUD---------(6.50" Long)--------	1
33	5S384	COVER----------	1
34	4H9576	GASKET----------	2
35	1A2029	BOLT--------(1.125" Long)---------	38
	S1591	BOLT--------(1.50" Long)----------	2
36	3B4506	LOCKWASHER----------	42
37	4H5360	COVER----------	1
38	2H8829	PLUG----------	1
	4F9325	GASKET----------	1
39	9F5830	COVER----------	1
	7F7590	GASKET----------	1
	L1351	BOLT----------	2
40	3J5390	PLUG----------	1
	FM030102	FORM--(Bearing Cap Installation)--	1

CYLINDER BLOCK (8S4631 N/S)

Serial No. 46A24433 to 46A27800 and 46A27802 to 46A28136 inclusive

Part of Cylinder Block and Covers shown on Page 24

Note: For field replacement order 5S1691 plus 1—9S4928 Hardware Kit

2P903 CYLINDER BLOCK ASSEMBLY

Serial No. 46A27801 & 46A28137 to 46A30576 inclusive

Part of 4S6863 & 2P6120 Cylinder Block & Covers Group shown on Pages 24B & 24D

Note: For field replacement order 2P6490 Service Block Group plus 1—9S4928 Hardware Kit

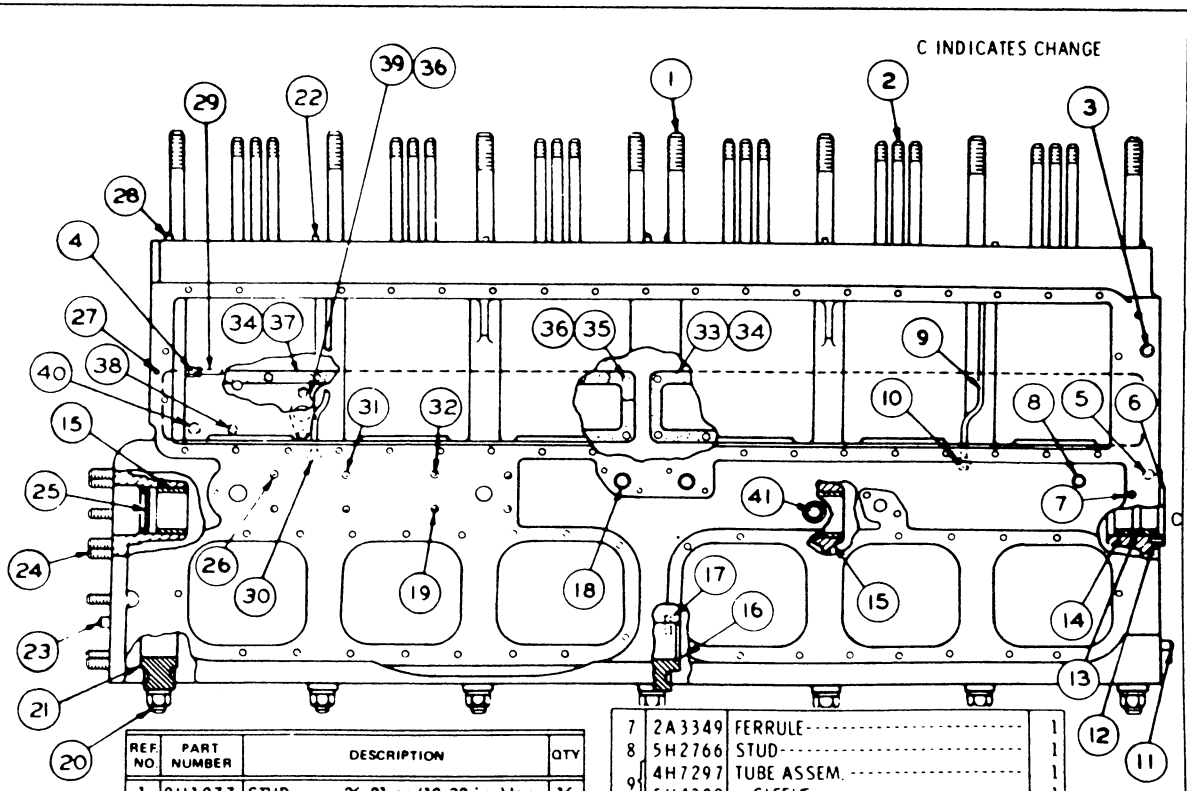

REF. NO.	PART NUMBER	DESCRIPTION	QTY
1	9H1077	STUD------26. 21 cm(10. 32 in.) long	16
2	9M488	STUD-----20. 32 cm(8 in.) long	26
3	2A3798	DOWEL----------	2
4	3B8995	FITTING----------	1
		(Includes)	
	1F1344	NUT----------	1
5	5M6214	PLUG----------	1
6	4H8986	WASHER----------	1
7	2A3349	FERRULE----------	1
8	5H2766	STUD----------	1
9	4H7297	TUBE ASSEM. ----------	1
	5H4390	SLEEVE----------	1
10	L1547	NUT----------	1
11	1A5919	DOWEL----------	2
12	7B5415	DOWEL----------	2
13	5H1092	SPACER----------	1
14	4H9640	BEARING----------	2
15	8F8523	BEARING----------	3
16	1P4275	CAP----------(Center)----------	1
17	5B5812	DOWEL----------	1
18	5H2786	TUBE----------	2
19	1H4004	STUD------6. 83 cm(2. 688 in.) long	5
	1P667	STUD----------	14
20	1A5666	NUT----------	14
	4M6953	WASHER----------	14
21	1P4273	CAP----------(Intermediate)----------	6
22	5H8985	PIN----------	4
23	2B2994	DOWEL----------	2
24	4B3251	STUD----------	10
25	S519	PLUG----------	1
26	V113	STUD------13. 97 cm(5. 50 in.) long	1
27	4F6024	DOWEL----------	1
28	L2061	DOWEL----------	4
29	4H8795	TUBE ASSEM. ----------	1
30	L1547	NUT----------	1
	5H4390	SLEEVE----------	1
31	5B1229	STUD-----18. 10 cm(7. 125 in.) long	1
32	1F3392	STUD-----16. 51 cm(6. 50 in.) long	1
33	5S384	COVER----------	1
34	6L5503	GASKET----------	2
35	1A2029	BOLT-----2. 86 cm(1. 125 in.) long	38
	S1591	BOLT-----3. 81 cm(1. 50 in.) long	2
36	3B4506	LOCKWASHER----------	42
37	4H5360	COVER----------	1
38	2H8829	PLUG----------	1
	4F9325	GASKET----------	1
	9F5830	COVER----------	1
39	7F7590	GASKET----------	1
	L1351	BOLT----------	2
40	3J5390	PLUG----------	1
41	L1521	PLUG----------	1

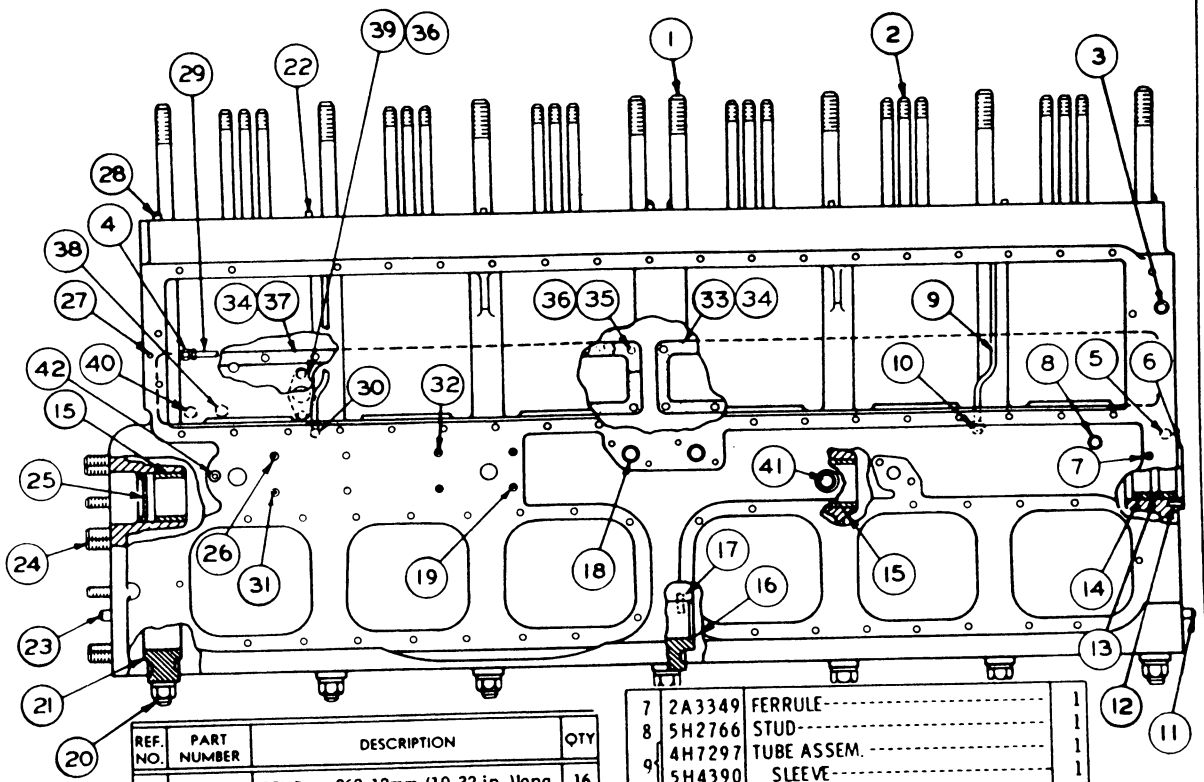

REF. NO.	PART NUMBER	DESCRIPTION	QTY
1	9H1077	STUD---262.12mm (10.32 in.)long	16
2	9M488	STUD-----203.20mm (8 in.) long	26
3	^A3798	DOWEL	2
4	3B8995	FITTING	1
	1F1344	NUT	1
5	5M6214	PLUG	1
6	4H8986	WASHER	1
7	2A3349	FERRULE	1
8	5H2766	STUD	1
9	4H7297	TUBE ASSEM.	1
	5H4390	SLEEVE	1
10	L1547	NUT	1
11	1A5919	DOWEL	2
12	7B5415	DOWEL	2
13	5H1092	SPACER	1
14	4H9640	BEARING	2
15	8F8523	BEARING	3
16	1P4275	CAP----------(Center)----------	1
17	5B5812	DOWEL	1
18	5H2786	TUBE	2
19	2A5365	STUD---71.12mm (2.8 in.)long	2
	1P667	STUD	14
20	1A5666	NUT	14
	4M6953	WASHER	14
21	1P4273	CAP---------(Intermediate)-------	6
22	5H8985	PIN	4
23	2B2994	DOWEL	2
24	4B3251	STUD	10
25	S519	PLUG	1
26	2A4791	STUD---103.12mm(4.06 in.)long	1
27	4F6024	DOWEL	1
28	L2061	DOWEL	4
29	4H8795	TUBE ASSEM.	1
30	L1547	NUT	1
	5H4390	SLEEVE	1
31	2A4492	STUD-----52.32mm(2.06 in.) long	1
32	4F1450	STUD-----42.92mm(1.69 in.) long	2
33	6N84	COVER	1
34	6L5503	GASKET	2
35	1A2029	BOLT-----28.58mm(1.125 in.) long	30
	S1591	BOLT-----38.10mm (1.50 in.) long	2
36	3B4506	LOCKWASHER	32
37	4H5360	COVER	1
38	2H8829	PLUG	1
	4F9325	GASKET	1
	9F5830	COVER	1
39	7F7590	GASKET	1
	L1351	BOLT	2
40	3J5390	PLUG	1
41	L1521	PLUG	1
42	6B6489	STUD----82.55mm(3.25 in.) long	1

234303

CYLINDER BLOCK ASSEMBLY (4N6929 N/S)
Serial No. 46A30577 to 46A33594 inclusive
Part of Cylinder Block and Covers shown on Page 24F & 25-1
Note: For field replacement order 2P6489 plus 1—9S4928 Hardware Kit

CYLINDER BLOCK ASSEMBLY (4N6929 N/S)

Serial No. 46A33595—Up

Part of Cylinder Block and Covers shown on Page 25-1

Note: For Field Replacement order 2P6489 plus 1—9S4928 Hardware Kit

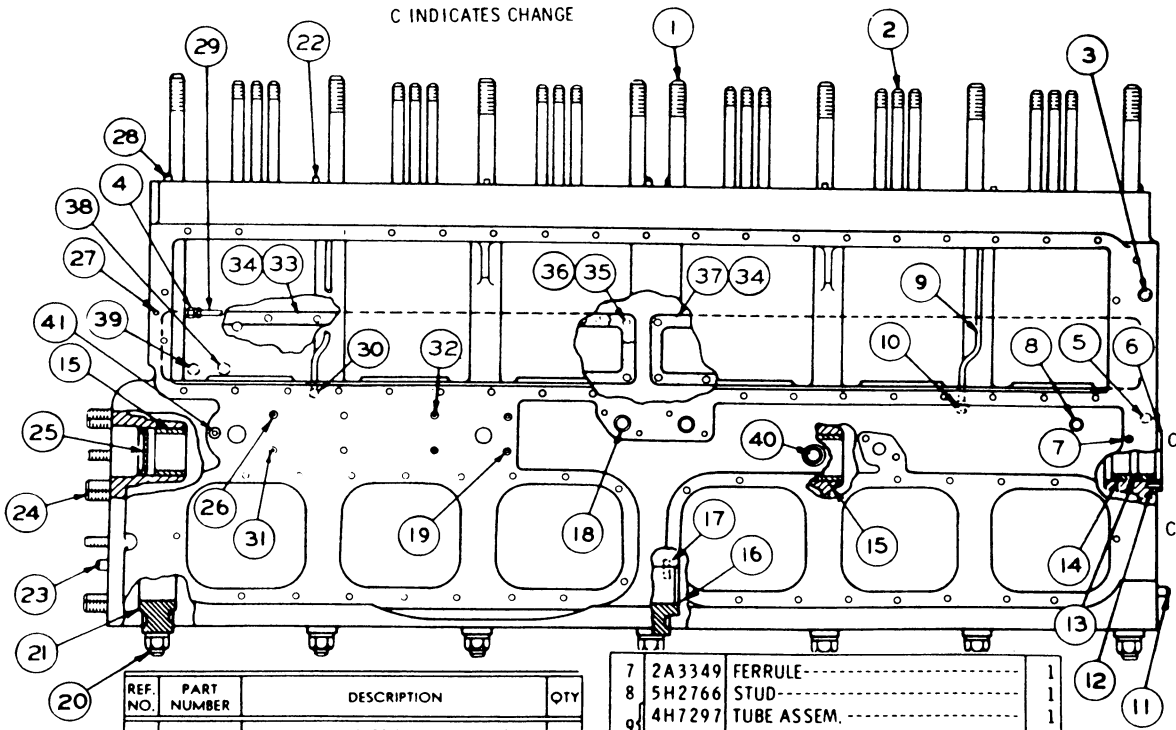

REF. NO.	PART NUMBER	DESCRIPTION	QTY
1	9H1077	STUD------10.32 in. (2.62 dm) long	16
2	9M488	STUD------8 in. (2.03 dm) long	26
3	2A3798	DOWEL	2
4	3B8995	FITTING	1
	1F1344	NUT	1
5	5M6214	PLUG	1
6	4H8986	WASHER	1
7	2A3349	FERRULE	1
8	5H2766	STUD	1
9	4H7297	TUBE ASSEM.	1
	5H4390	SLEEVE	1
10	L1547	NUT	1
11	1A5919	DOWEL	2
12	7B5415	DOWEL	2
13	5H1092	SPACER	1
14	4H9640	BEARING	2
15	8F8523	BEARING	3
16	1P4275	CAP----------(Center)----------	1
17	5B5812	DOWEL	1
18	5H2786	TUBE	2
19	2A5365	STUD-------2.8 in. (.71 dm) long	2
20	1P667	STUD	14
	1A5666	NUT	14
	4M6953	WASHER	14
21	1P4273	CAP--------(Intermediate)-------	6
22	5H8985	PIN	4
23	2B2994	DOWEL	2
24	4B3251	STUD	10
25	S519	PLUG	1
26	2A4791	STUD-------4.06 in. (1.03 dm) long	1
27	4F6024	DOWEL	1
28	L2061	DOWEL	4
29	4H8795	TUBE ASSEM.	1
30	L1547	NUT	1
	5H4390	SLEEVE	1
31	2A4492	STUD------2.06 in. (.52 dm) long	1
32	4F1450	STUD------1.69 in. (.43 dm) long	2
C 33	4N5053	COVER	1
34	6L5503	GASKET	2
35	1A2029	BOLT------1.125 in. (.28 dm) long	30
	S1591	BOLT------1.5 in. (.38 dm) long	2
C 36	3B4506	LOCKWASHER	30
37	6N84	COVER	1
38	2H8829	PLUG	1
	4F9325	GASKET	1
39	3J5390	PLUG	1
40	L1521	PLUG	1
41	6B6489	STUD-------3.25 in. (.83 dm) long	1

		CONSISTS OF:	PAGE
1	7N3035	CYLINDER BLOCK ASSEMBLY	26B-4
	- OR -		
1	8N4312	CYLINDER BLOCK ASSEMBLY	26B-3B
2	7N3503	CYLINDER HEAD ASSEMBLY	26B-3
	- OR -		
2	8N6000	CYLINDER HEAD ASSEMBLY	26B-3A
2	8N4810	CYLINDER HEAD GASKET	
2	6L7814	SEAL	
2	7B2420	FERRULE	
16	9H1031	WASHER	
26	9H1024	WASHER	
12	1A7669	BOLT	
12	2M849	WASHER	
2	2B2391	BOLT	
2	1D4600	BOLT	
6	6L2387	STRAP	
1	7N5379	LIFTING EYE	
24	7N6243	SEAL	
1	7N3841	COUPLING ASSEMBLY	
6	7N3863	ROD	
2	7N8131	SPACER PLATE	
16	1D6260	BOLT	
26	1D4599	BOLT	

7N3803 CYLINDER BLOCK GROUP—Field Installation
Note: Converts counterbored cylinder block to spacer plate cylinder block

7N3503 CYLINDER HEAD ASSEMBLY—Replaced by 8N6000 shown on Page 26B-3a
Part of 7N3803 Cylinder Block Group listed on Page 26B-2

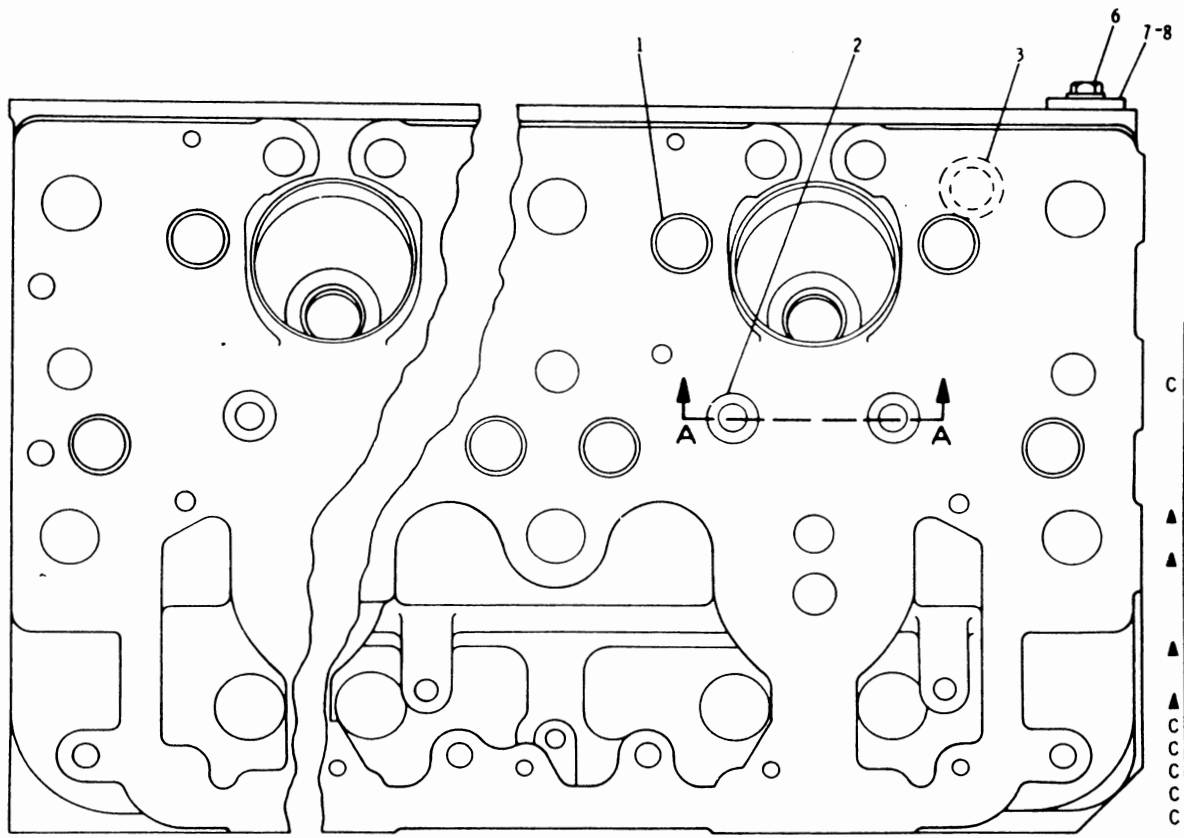

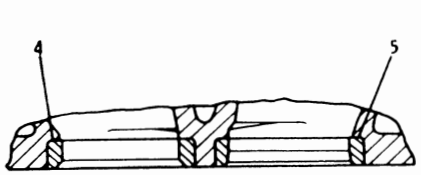

SECTION A-A

	REF. NO.	PART NUMBER	DESCRIPTION	QTY
C	1	3B623	PLUG	15
	2	7N2051	GUIDE	6
	3	5H7071	DIRECTORS	12
	4	8M9810	INSERT—(exhaust) (STANDARD)	3
▲		4S8896	INSERT 0.13 mm(.005 in.) oversize	3
▲		4S8897	INSERT 0.26 mm(.010 in.) oversize	3
		9M8745	INSERT—(intake) (STANDARD)	3
▲	5	4S8912	INSERT 0.13 mm(.005 in.) oversize	3
▲		4S8913	INSERT 0.26 mm(.010 in.) oversize	3
C	6	S1594	BOLT	2
C		5M2894	WASHER	2
C	7	5L1883	FLANGE	1
C		6H2007	GASKET	1
C	8	5M6214	PLUG	1

C INDICATES CHANGE ▲ NOT PART OF 7N3503 CYLINDER HEAD ASSEM.

226227

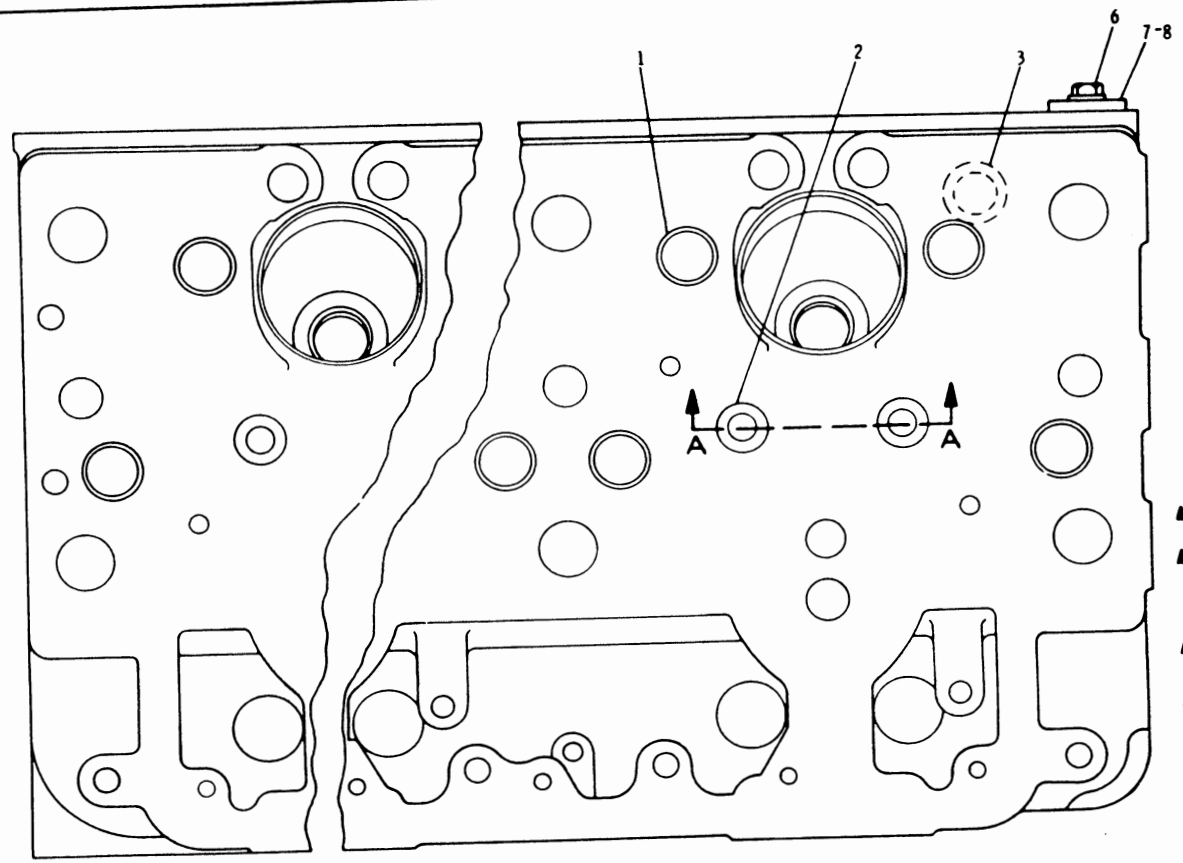

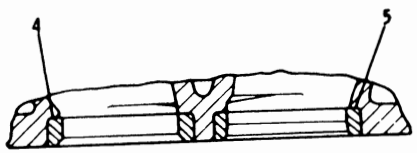

SECTION A-A

REF. NO.	PART NUMBER	DESCRIPTION	QTY
1	3B623	PLUG	14
2	7N2051	GUIDE	6
3	5H7071	DIRECTOR	12
▲ 4	8M9810	INSERT (exhaust) (STANDARD)	3
▲ 4	4S8896	INSERT 0.13 mm(.005 in.) oversize	3
▲ 4	4S8897	INSERT 0.26 mm(.010 in.) oversize	3
▲ 5	9M8745	INSERT (intake) (STANDARD)	3
▲ 5	4S8912	INSERT 0.13 mm(.005 in.) oversize	3
▲ 5	4S8913	INSERT 0.26 mm(.010 in.) oversize	3
6	S1594	BOLT	2
6	5M2894	WASHER	2
7	5L1883	FLANGE	1
7	6H2007	GASKET	1
8	5M6214	PLUG	1

▲ NOT PART OF 8N6000 CYLINDER HEAD ASSEM.

226228

8N6000 CYLINDER HEAD ASSEMBLY
Part of 7N3803 Cylinder Block Group listed on Page 26B-2

8N4312 CYLINDER BLOCK ASSEMBLY
Part of 7N3803 Cylinder Block Group listed on Page 26B-2

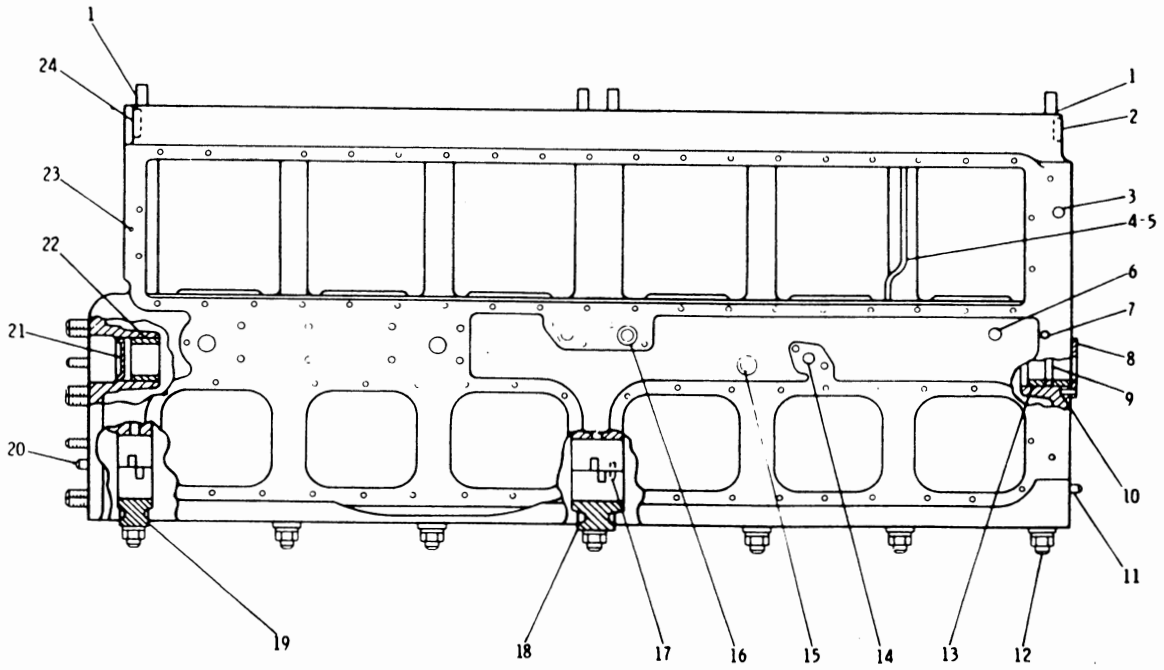

REF. NO.	PART NUMBER	DESCRIPTION	QTY
1	5F1914	DOWEL	4
2	3B622	PLUG	1
3	2A3798	DOWEL	1
4	7N3357	TUBE ASSEM. (Includes)	1
	5H4390	SLEEVE	1
5	L1547	NUT	1
6	2B6296	STUD	1
7	2A3349	FERRULE	1
8	4H8986	WASHER	1
9	5H1092	SPACER	1
10	7B5415	DOWEL	2
11	1A5919	DOWEL	2
12	1P667	STUD	14
	1A5666	NUT	14
	4M6953	WASHER	14
13	4H9640	BEARING	2
14	8F6575	PLUG	1
15	L1521	PLUG	1
16	5H2786	TUBE	2
17	5B5812	DOWEL	1
18	4S6836	CAP	1
19	4S6835	CAP	6
20	2B2994	DOWEL	2
21	S519	PLUG	1
22	8F8523	BEARING	3
23	4F6024	DOWEL	1
24	5H4279	PLUG	1

224459

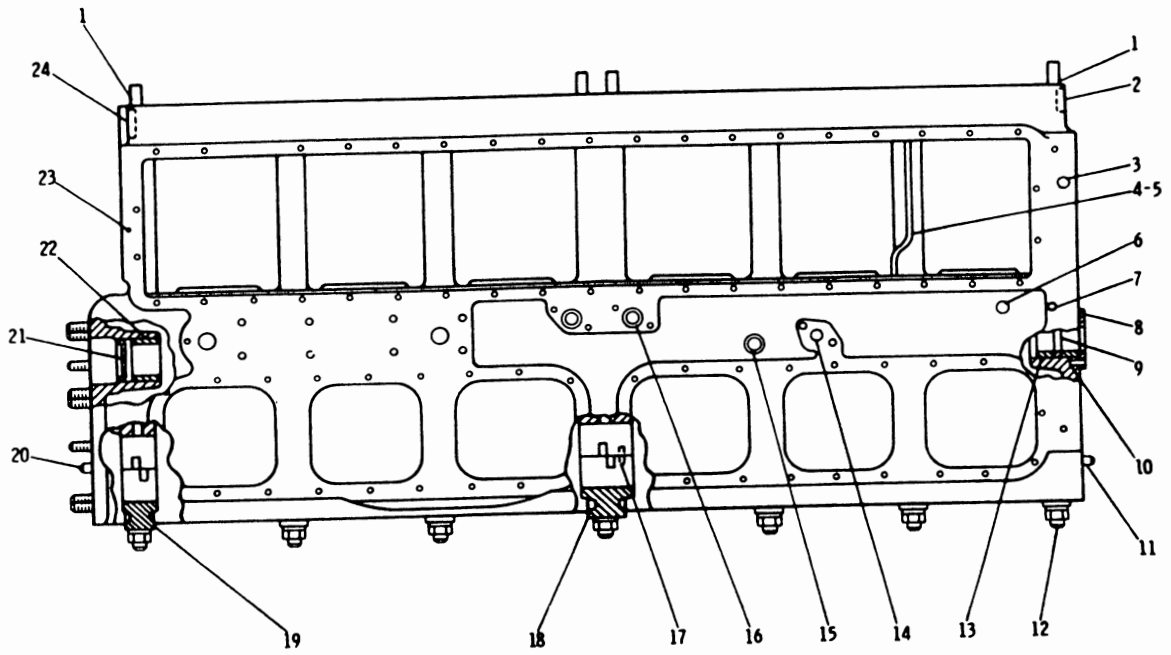

REF. NO.	PART NUMBER	DESCRIPTION	QTY
1	5F1914	DOWEL	4
2	3B622	PLUG	1
3	2A3798	DOWEL	2
4	7N3357	TUBE ASSEM.	1
		(Includes)	
	5H4390	SLEEVE	1
5	L1547	NUT	1
6	5H2766	STUD	1
7	2A3349	FERRULE	1
8	4H8986	WASHER	1
9	5H1092	SPACER	1
10	7B5415	DOWEL	2
11	1A5919	DOWEL	2
12	1P667	STUD	14
	1A5666	NUT	14
	4M6953	WASHER	14
13	4H9640	BEARING	2
14	8F6575	PLUG	1
15	L1521	PLUG	1
16	5H2786	TUBE	2
17	5B5812	DOWEL	1
18	1P4275	CAP	1
19	1P4273	CAP	6
20	2B2994	DOWEL	2
21	S519	PLUG	1
22	8F8523	BEARING	3
23	4F6024	DOWEL	1
24	5H4279	PLUG	1

165904

7N3035 CYLINDER BLOCK ASSEMBLY—Replaced by 8N4312 shown on Page 26B-3b
Part of 7N3803 Cylinder Block Group listed on Page 26B-2

CRANKSHAFT (4S7408 N/S)

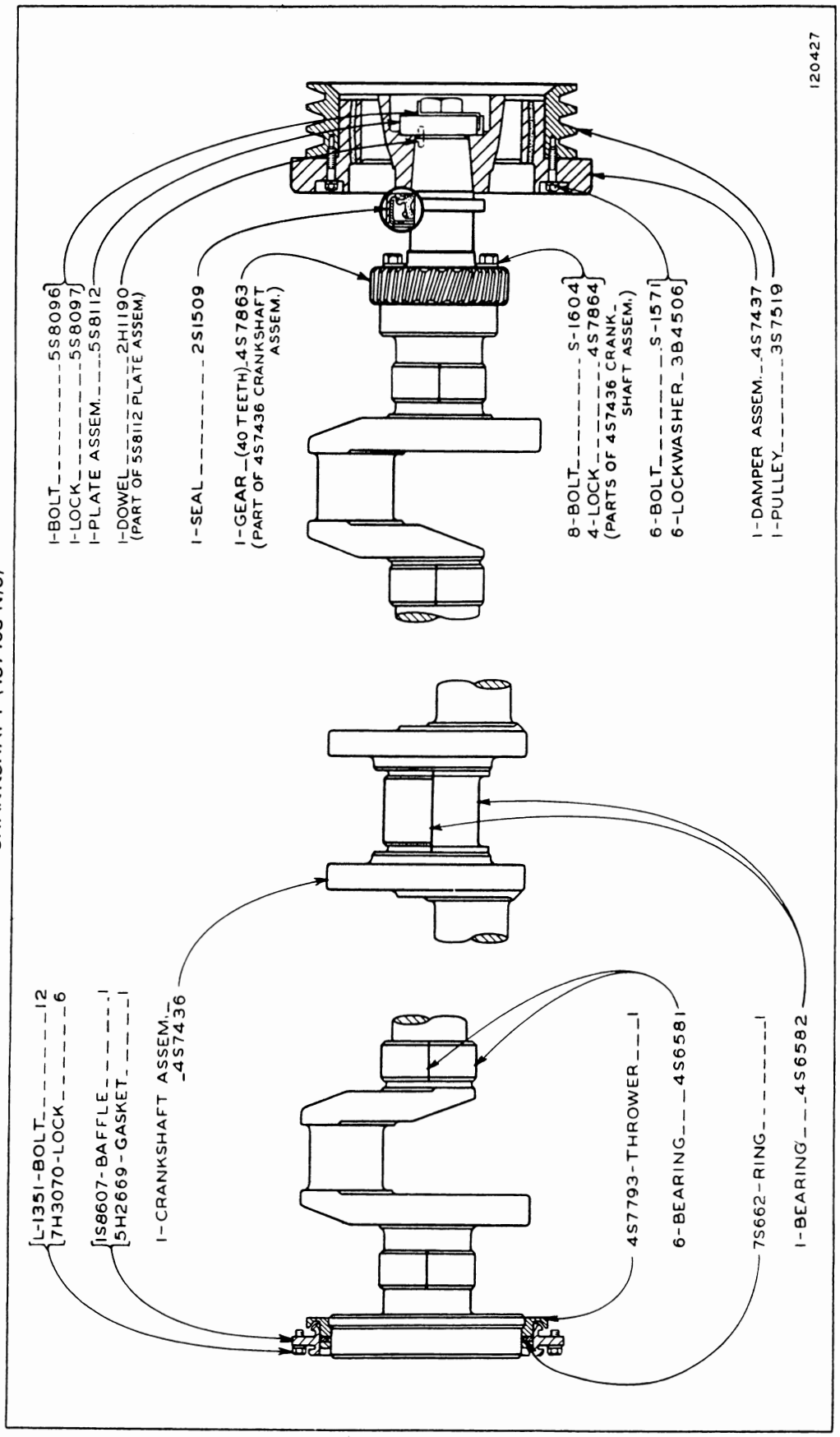

4S9387	FOR USE WITH STANDARD CRANKSHAFT	
	Consists of:	
	Complete set of bearing Assemblies as shown with Standard Crankshaft	
4S9388	FOR USE WITH .025 UNDERSIZE CRANKSHAFT	
	Consists of:	
6	4S9396	Bearing Assembly--Intermediate
1	4S9397	Bearing Assembly--Center
4S9389	FOR USE WITH .050 UNDERSIZE CRANKSHAFT	
	Consists of:	
6	4S9398	Bearing Assembly--Intermediate
1	4S9399	Bearing Assembly--Center

CRANKSHAFT BEARING REPLACEMENT GROUPS

5P9814	Valve Grinding Complete
5P9815	Valve Grinding--Single Head
5P9221	Single Cylinder Liner
5P9819	Front Structure
5P9817	Central & Lower Structure
5P9821	Rear Structure
5P9553	Water Pump
5P9824	Engine Oil Cooler & Lines
5P9826	Wet Manifold
5P9226	Dry Manifold
5P9829	Fan Drive
5P9830	Turbocharger Mounting
5P9555	Oil Pump
5P9834	Fuel System Serial No. 46A24433 to 46A28136 inclusive
5P9835	Fuel System Serial No. 46A28137--Up
5P9232	Rear Power Take-Off
2P4007	Transmission
2P4010	Transmission & Steering Clutch Oil System
1S1327	Torque Converter

GASKET KITS

.025 OVERSIZE BEARINGS FOR REBORED CYLINDER BLOCK

1	6N3739	BEARING--CENTER
6	6N3738	BEARING--INTERMEDIATE

.025 OVERSIZE AND .025 UNDERSIZE BEARINGS FOR REBORED CYLINDER BLOCK AND UNDERSIZE CRANK JOURNALS

1	6N3736	BEARING--CENTER
6	6N3737	BEARING--INTERMEDIATE

CRANKSHAFT BEARING REPLACEMENT

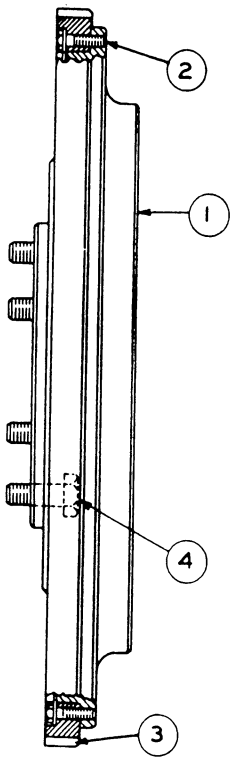

REF. NO.	PART NUMBER	DESCRIPTION	QTY
1	3S4462	FLYWHEEL ASSEM.	1
2	S1591	BOLT	12
	9S1333	LOCK	12
3	3S4461	GEAR--------(200 Teeth)--------	1
4	1A75	BOLT	6

115356

9S1807 FLYWHEEL GROUP
Serial No. 46A24433 to 46A32873, 46A32877 to 46A32880, 46A32882 to 46A32884, 46A32886, 46A32887, 46A32900 and 46A32908 inclusive

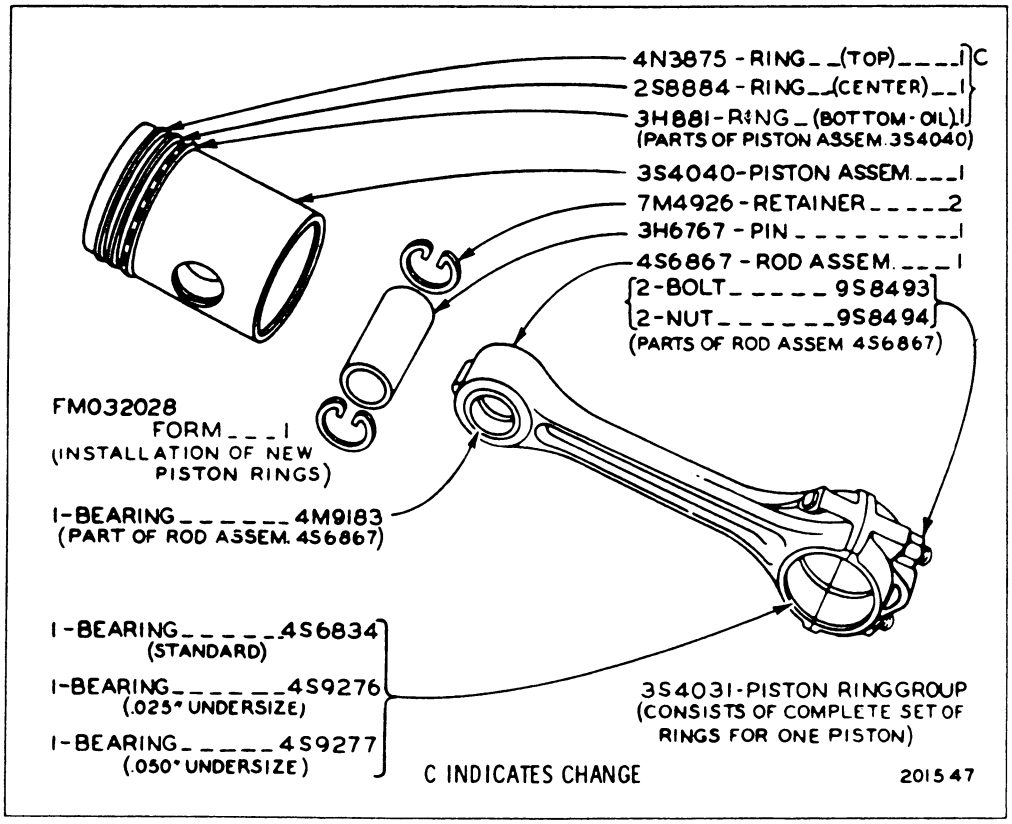

4S6868 CONNECTING ROD AND PISTON GROUP—6 Required

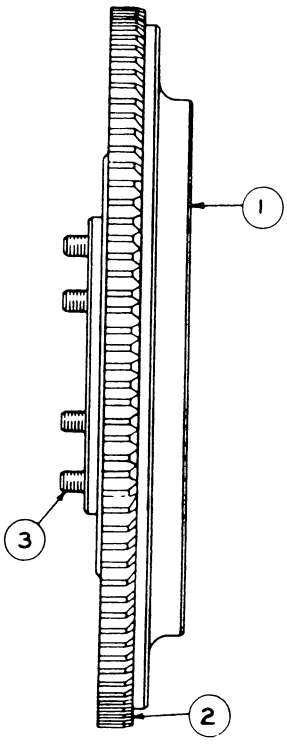

REF. NO.	PART NUMBER	DESCRIPTION	QTY
1	3S4462	FLYWHEEL ASSEM. ---------- (Includes)	1
2	3S4461	GEAR -------(200 teeth)--------	1
3	1A75	BOLT ----------	6

203264

9S1807 FLYWHEEL GROUP
Serial No. 46A32874 to 46A32876, 46A32881, 46A32885, 46A32888, 46A32889, 46A32901 to 46A32907 and 46A32909—Up

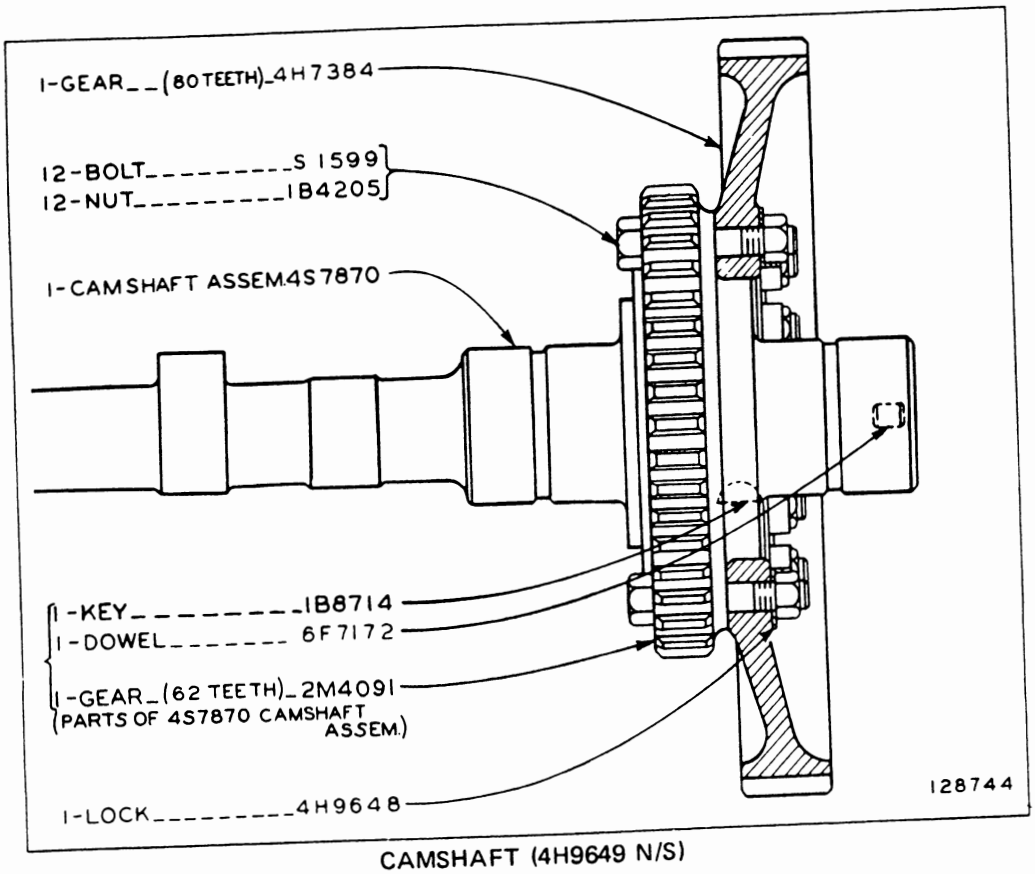

CAMSHAFT (4H9649 N/S)

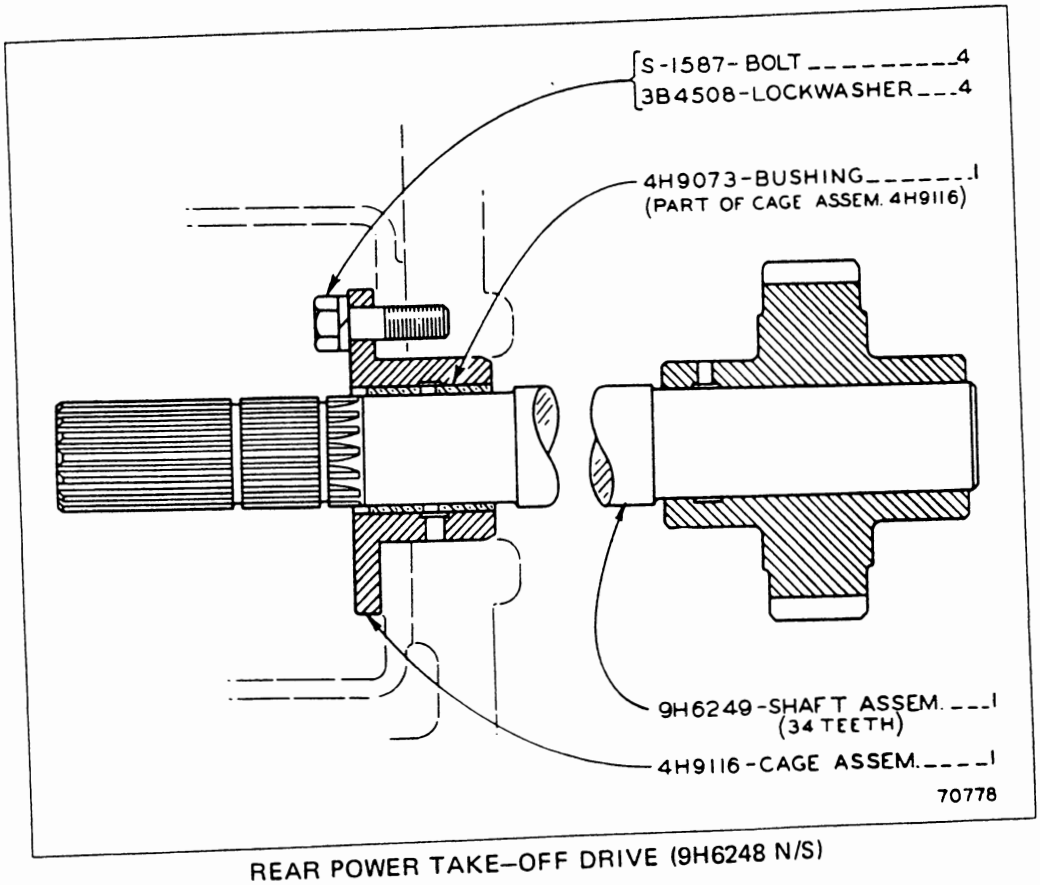

REAR POWER TAKE-OFF DRIVE (9H6248 N/S)

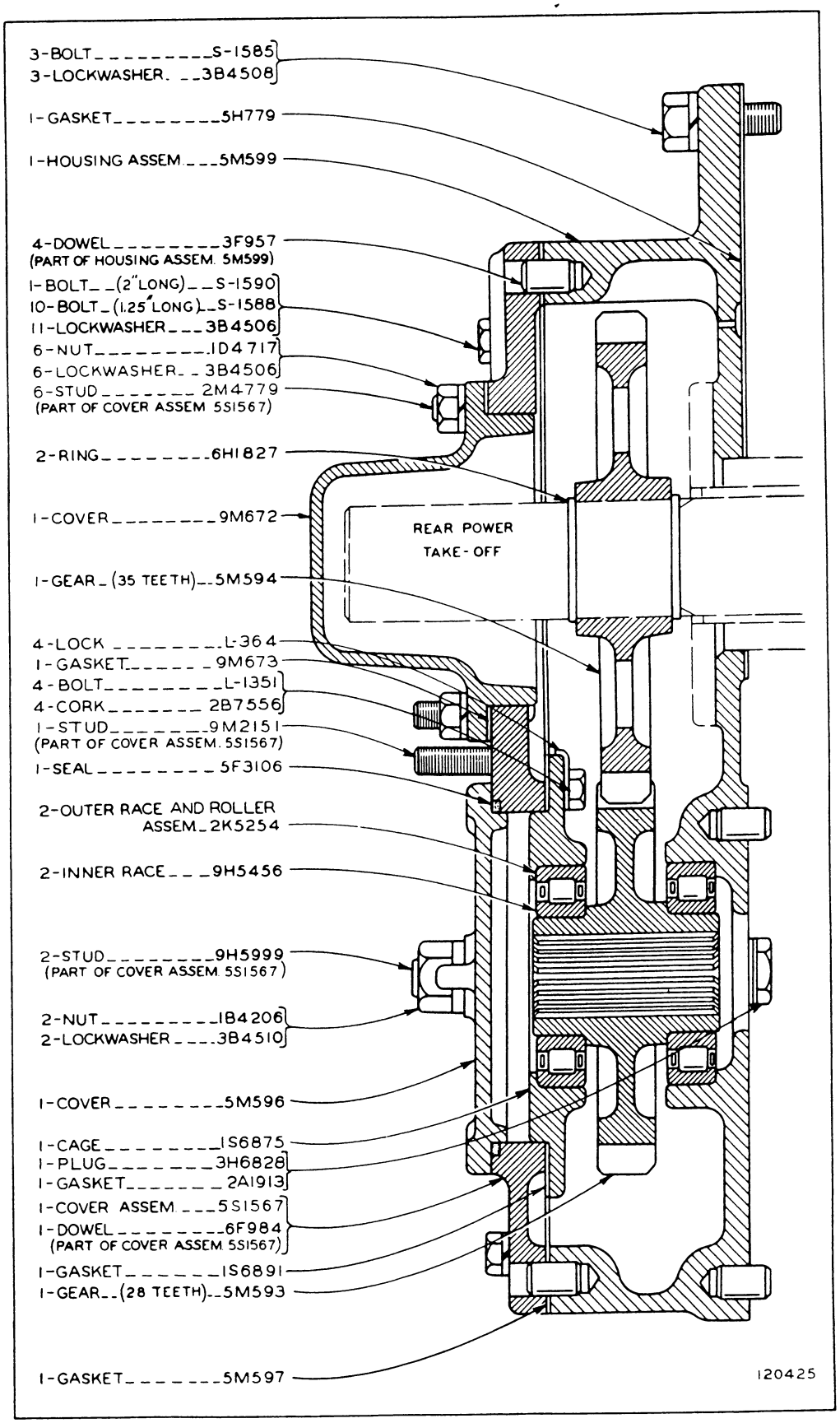

REAR POWER TAKE–OFF HOUSING (3S1660 N/S)

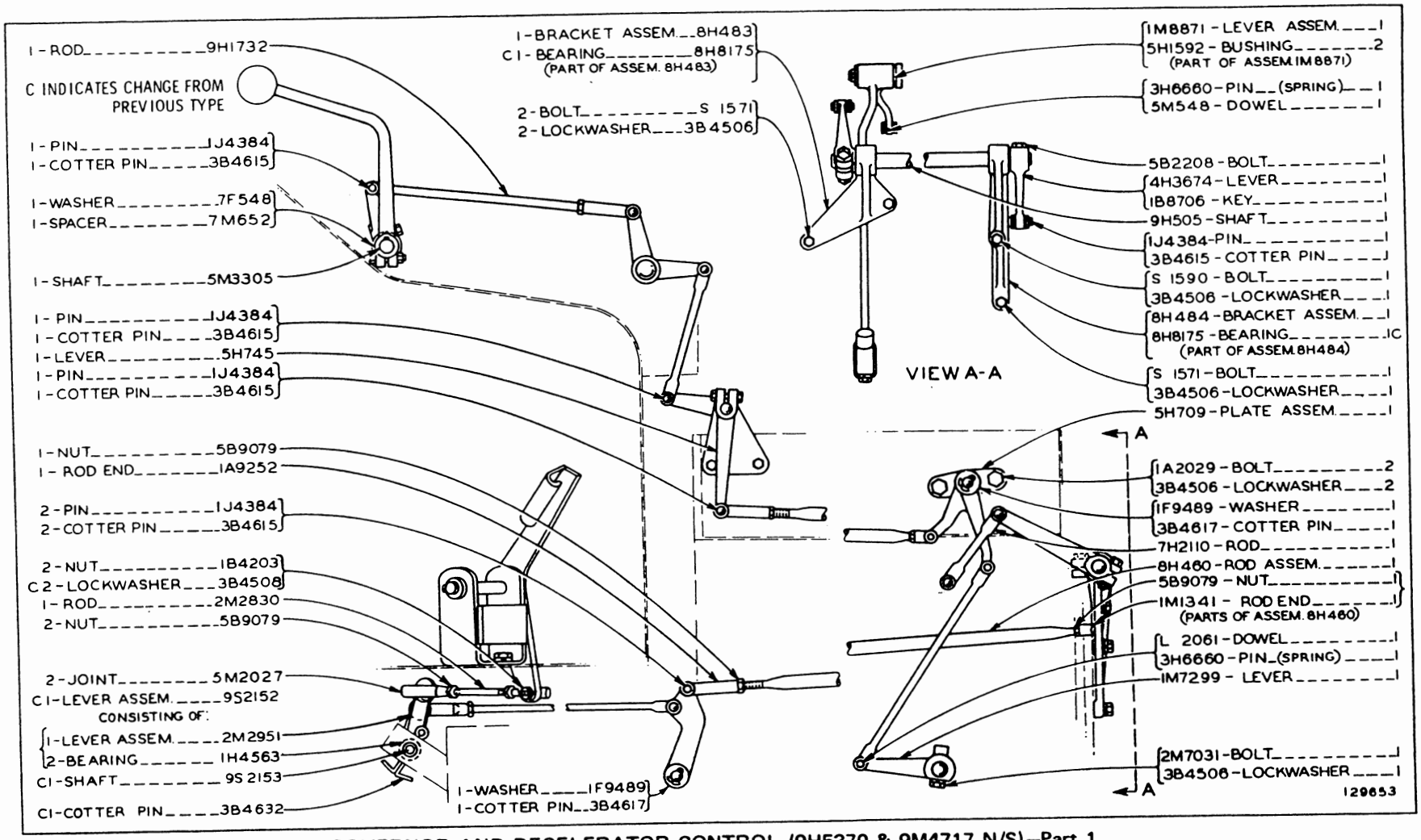

GOVERNOR AND DECELERATOR CONTROL (9H5370 & 9M4717 N/S)—Part 1
AS VIEWED FROM RIGHT HAND SIDE OF MACHINE
Serial No. 46A24433 to 46A27800 and 46A27802 to 46A28136 inclusive

GOVERNOR AND DECELERATOR CONTROL (9H5370 & 9M4717 N/S)—Part 2
AS VIEWED FROM RIGHT HAND SIDE OF MACHINE
Serial No. 46A24433 to 46A27800 and 46A27802 to 46A28136 inclusive

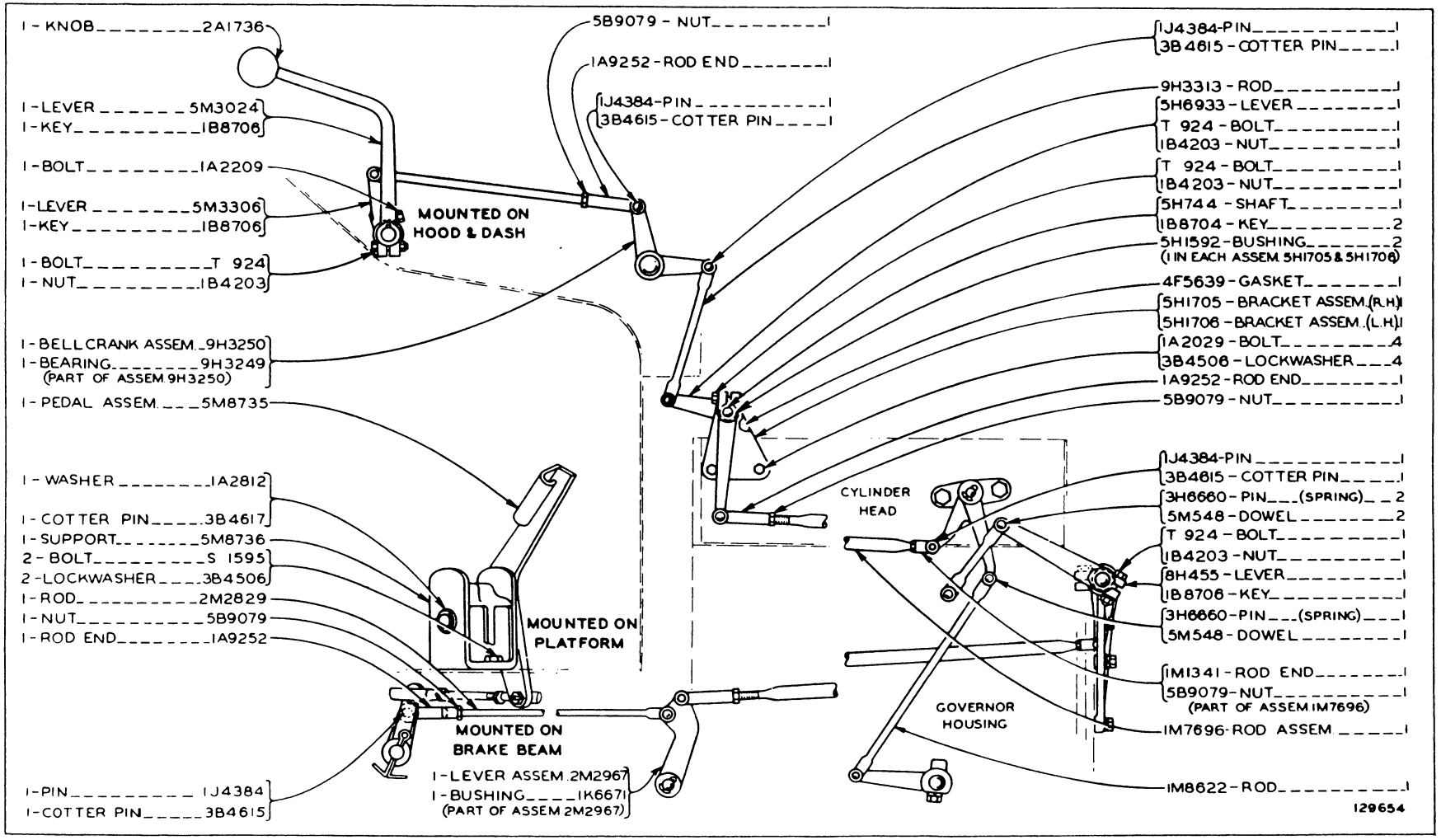

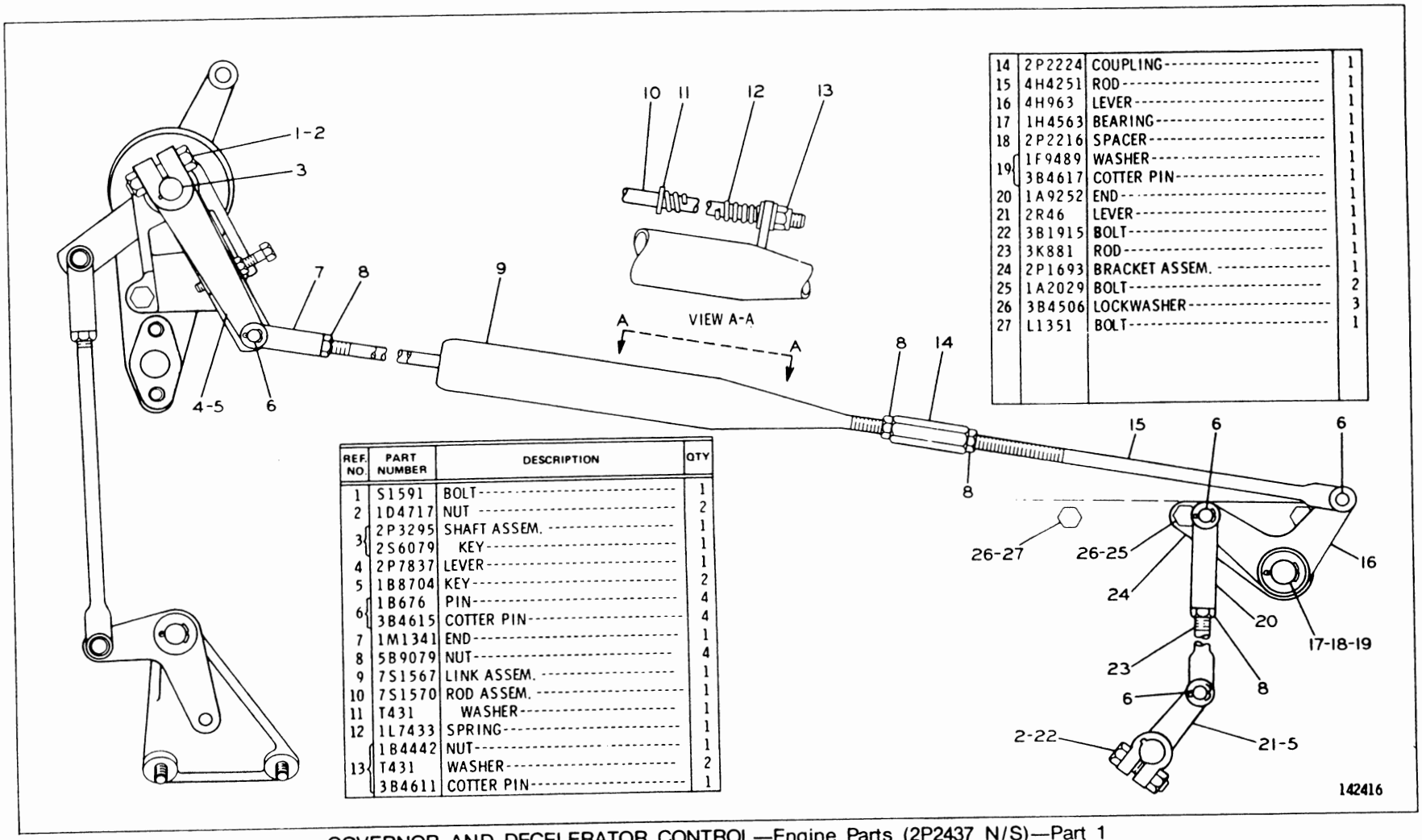

REF. NO.	PART NUMBER	DESCRIPTION	QTY
1	S1591	BOLT	1
2	1D4717	NUT	2
3	2P3295	SHAFT ASSEM.	1
	2S6079	KEY	1
4	2P7837	LEVER	1
5	1B8704	KEY	2
6	1B676	PIN	4
	3B4615	COTTER PIN	4
7	1M1341	END	1
8	5B9079	NUT	4
9	7S1567	LINK ASSEM.	1
10	7S1570	ROD ASSEM.	1
11	T431	WASHER	1
12	1L7433	SPRING	1
13	1B4442	NUT	1
	T431	WASHER	2
	3B4611	COTTER PIN	1
14	2P2224	COUPLING	1
15	4H4251	ROD	1
16	4H963	LEVER	1
17	1H4563	BEARING	1
18	2P2216	SPACER	1
19	1F9489	WASHER	1
	3B4617	COTTER PIN	1
20	1A9252	END	1
21	2R46	LEVER	1
22	3B1915	BOLT	1
23	3K881	ROD	1
24	2P1693	BRACKET ASSEM.	1
25	1A2029	BOLT	2
26	3B4506	LOCKWASHER	3
27	L1351	BOLT	1

GOVERNOR AND DECELERATOR CONTROL—Engine Parts (2P2437 N/S)—Part 1
Serial No. 46A27801 and 46A28137 to 46A33140 inclusive

GOVERNOR AND DECELERATOR CONTROL—Engine Parts (2P2437 N/S)—Part 2
Serial No. 46A27801 and 46A28137 to 46A33140 inclusive

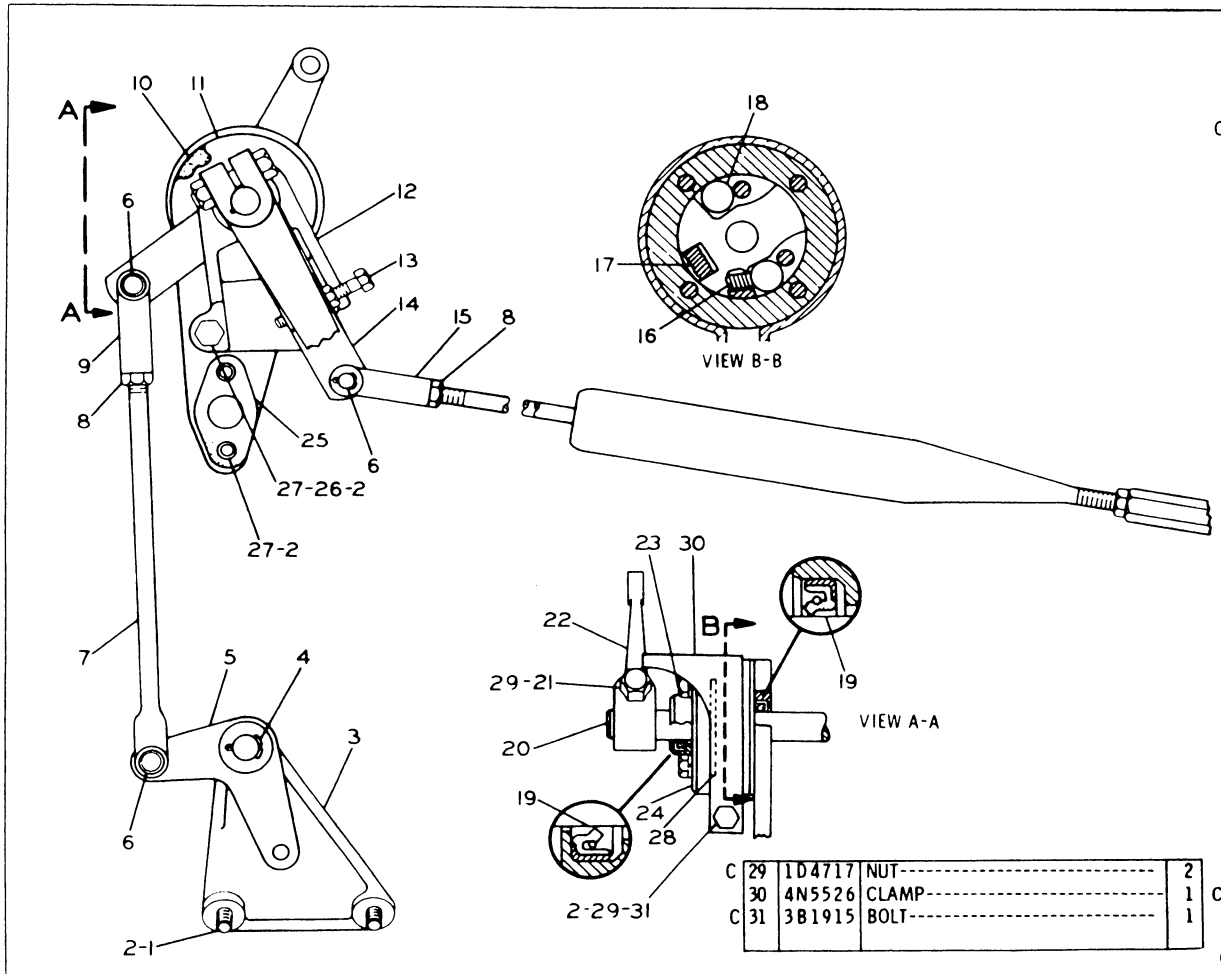

REF NO	PART NUMBER	DESCRIPTION	QTY
1	L2070	BOLT	2
C 2	3B4506	LOCKWASHER	7
3	2P1841	BRACKET ASSEM.	1
4	1F9489	WASHER	1
	3B4617	COTTER PIN	1
5	2P7441	LEVER ASSEM.	1
	1H4563	BEARING	1
6	1B676	PIN	3
	3B4615	COTTER PIN	3
7	4S477	ROD	1
8	5B9079	NUT	2
9	2K400	END	1
10	7M6955	GASKET	2
11	2P1450	BRACKET	1
12	2P1802	BRACKET ASSEM.	1
	5H1592	BUSHING	1
13	5B5620	BOLT	1
	1B5354	NUT	1
14	2P1746	BELLCRANK ASSEM.	1
	3K6662	BEARING	2
15	1A9252	END	1
16	8H9186	SPRING	2
17	5H7152	SPRING	1
18	8H9182	ROLLER	2
19	8H9180	SEAL	2
20	2P3291	SHAFT ASSEM.	1
21	S1591	BOLT	1
22	4D9466	LEVER	1
	1B8704	KEY	1
23	1B2713	BOLT	4
	3B4504	LOCKWASHER	4
24	9M3025	COVER ASSEM.	1
	2K2605	BEARING	1
25	4F5639	GASKET	1
26	T573	BOLT	1
C 27	1A2029	BOLT	3
28	9S2309	WASHER	1
C 29	1D4717	NUT	2
30	4N5526	CLAMP	1
C 31	3B1915	BOLT	1

C INDICATES CHANGE

202499

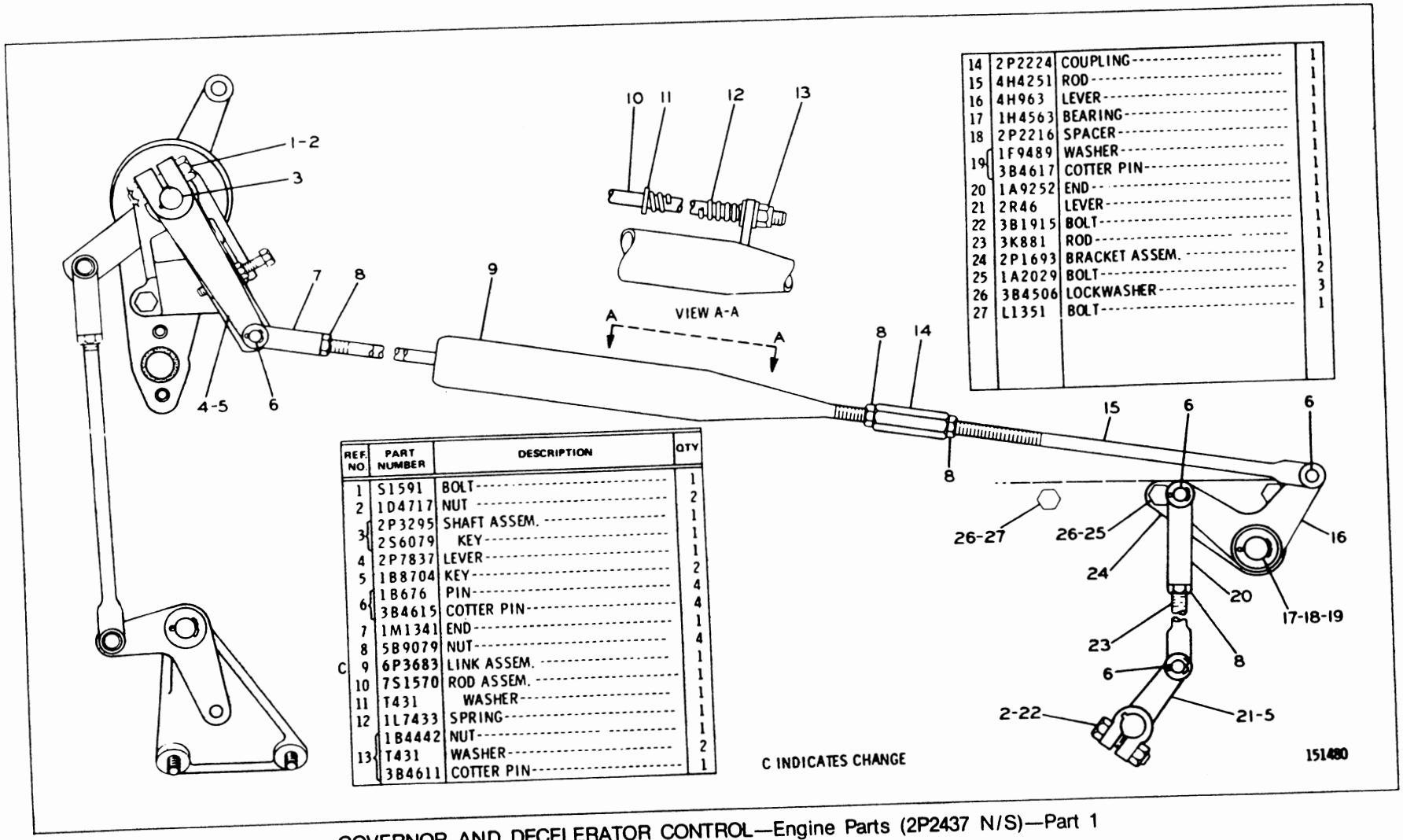

REF. NO.	PART NUMBER	DESCRIPTION	QTY
1	S1591	BOLT	1
2	1D4717	NUT	2
3	2P3295	SHAFT ASSEM.	1
	2S6079	KEY	1
4	2P7837	LEVER	1
5	1B8704	KEY	2
6	1B676	PIN	4
	3B4615	COTTER PIN	4
7	1M1341	END	1
8	5B9079	NUT	4
C 9	6P3683	LINK ASSEM.	1
10	7S1570	ROD ASSEM.	1
11	T431	WASHER	1
12	1L7433	SPRING	1
13	1B4442	NUT	2
	T431	WASHER	1
	3B4611	COTTER PIN	1

14	2P2224	COUPLING	1
15	4H4251	ROD	1
16	4H963	LEVER	1
17	1H4563	BEARING	1
18	2P2216	SPACER	1
19	1F9489	WASHER	1
	3B4617	COTTER PIN	1
20	1A9252	END	1
21	2R46	LEVER	1
22	3B1915	BOLT	2
23	3K881	ROD	3
24	2P1693	BRACKET ASSEM.	1
25	1A2029	BOLT	
26	3B4506	LOCKWASHER	
27	L1351	BOLT	

C INDICATES CHANGE

GOVERNOR AND DECELERATOR CONTROL—Engine Parts (2P2437 N/S)—Part 1
Serial No. 46A33141—Up

GOVERNOR AND DECELERATOR CONTROL—Engine Parts (2P2437 N/S)—Part 2
Serial No. 46A33141—Up

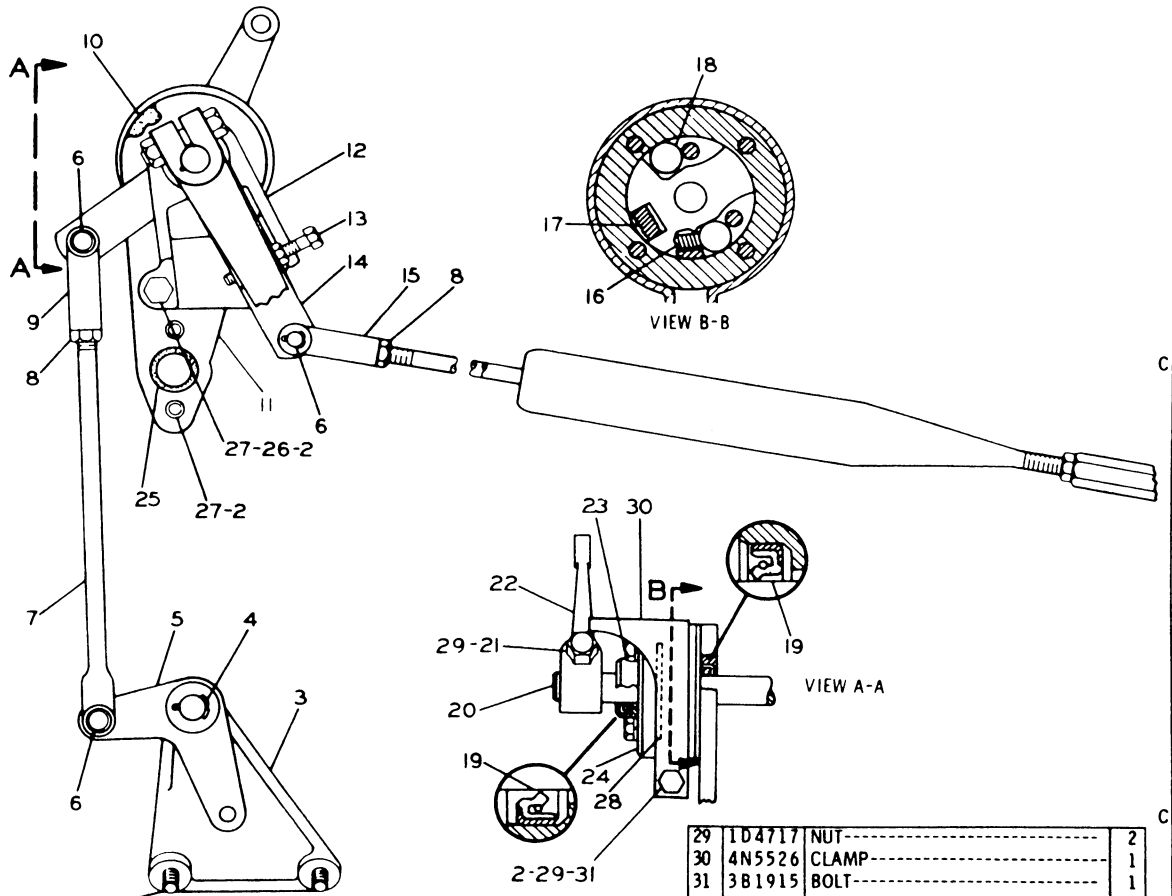

REF. NO.	PART NUMBER	DESCRIPTION	QTY
1	L2070	BOLT	2
2	3B4506	LOCKWASHER	7
3	2P1841	BRACKET ASSEM.	1
4	1F9489	WASHER	1
	3B4617	COTTER PIN	1
5	2P7441	LEVER ASSEM.	1
	1H4563	BEARING	1
6	1B676	PIN	3
	3B4615	COTTER PIN	3
7	4S477	ROD	1
8	5B9079	NUT	2
9	2K400	END	1
10	7M6955	GASKET	2
C 11	6N231	BRACKET	1
12	2P1802	BRACKET ASSEM.	1
	5H1592	BUSHING	1
13	5B5620	BOLT	1
	1B5354	NUT	1
14	2P1746	BELLCRANK ASSEM.	1
	3K6662	BEARING	2
15	1A9252	END	1
16	8H9186	SPRING	2
17	5H7152	SPRING	1
18	8H9182	ROLLER	2
19	8H9180	SEAL	2
20	2P3291	SHAFT ASSEM.	1
21	S1591	BOLT	1
22	4D9466	LEVER	1
	1B8704	KEY	1
23	1B2713	BOLT	4
	3B4504	LOCKWASHER	4
24	9M3025	COVER ASSEM.	1
	2K2605	BEARING	1
C 25	1S7462	SEAL	1
26	T573	BOLT	1
27	1A2029	BOLT	3
28	9S2309	WASHER	1
29	1D4717	NUT	2
30	4N5526	CLAMP	1
31	3B1915	BOLT	1

C INDICATES CHANGE

151481

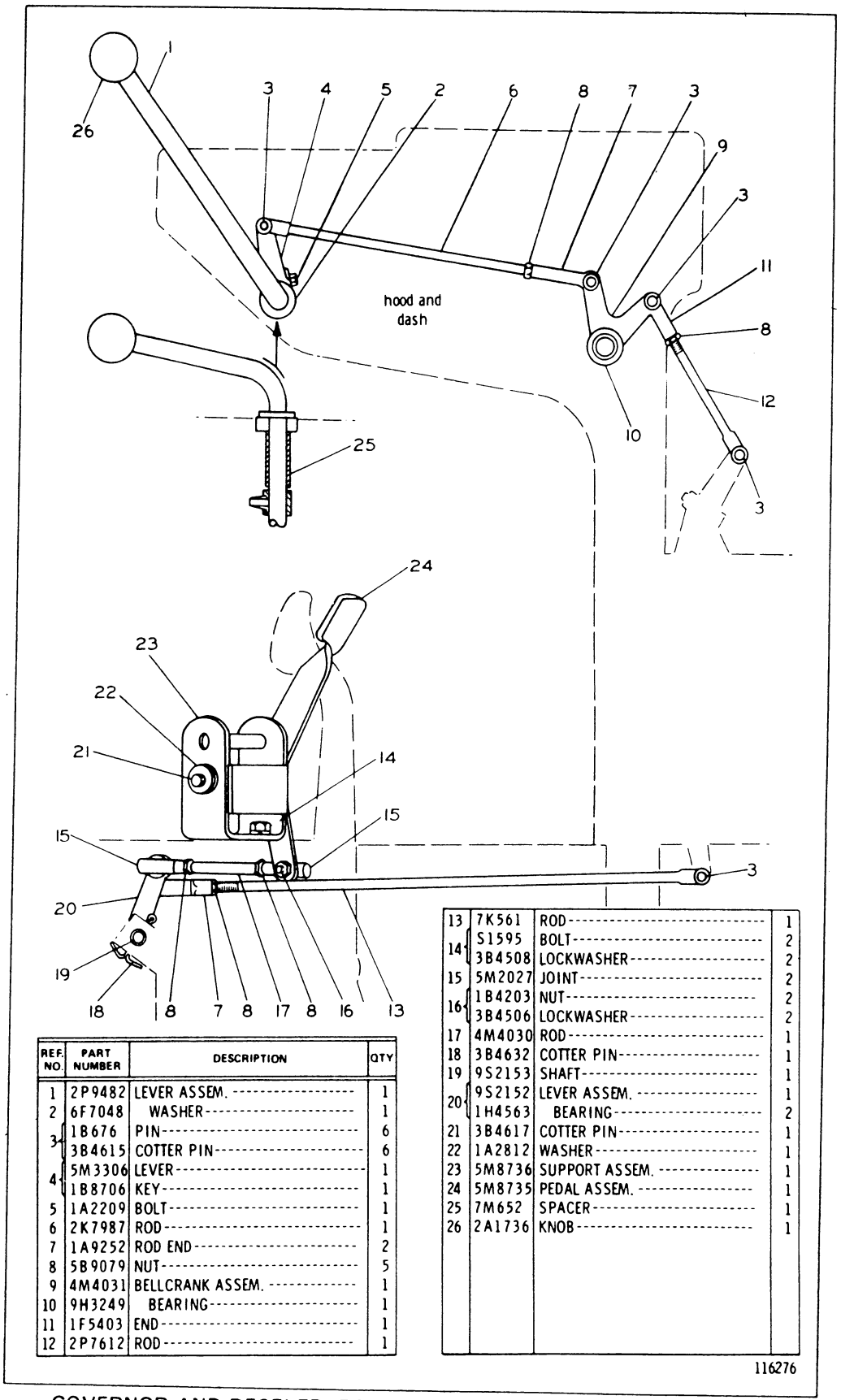

REF. NO.	PART NUMBER	DESCRIPTION	QTY
1	2P9482	LEVER ASSEM.	1
2	6F7048	WASHER	1
3	1B676	PIN	6
	3B4615	COTTER PIN	6
4	5M3306	LEVER	1
	1B8706	KEY	1
5	1A2209	BOLT	1
6	2K7987	ROD	1
7	1A9252	ROD END	2
8	5B9079	NUT	5
9	4M4031	BELLCRANK ASSEM.	1
10	9H3249	BEARING	1
11	1F5403	END	1
12	2P7612	ROD	1
13	7K561	ROD	1
14	S1595	BOLT	2
	3B4508	LOCKWASHER	2
15	5M2027	JOINT	2
16	1B4203	NUT	2
	3B4506	LOCKWASHER	2
17	4M4030	ROD	1
18	3B4632	COTTER PIN	1
19	9S2153	SHAFT	1
20	9S2152	LEVER ASSEM.	1
	1H4563	BEARING	2
21	3B4617	COTTER PIN	1
22	1A2812	WASHER	1
23	5M8736	SUPPORT ASSEM.	1
24	5M8735	PEDAL ASSEM.	1
25	7M652	SPACER	1
26	2A1736	KNOB	1

GOVERNOR AND DECELERATOR CONTROL—Tractor Parts (2P7613 N/S)
Serial No. 46A27801 and 46A28137—Up

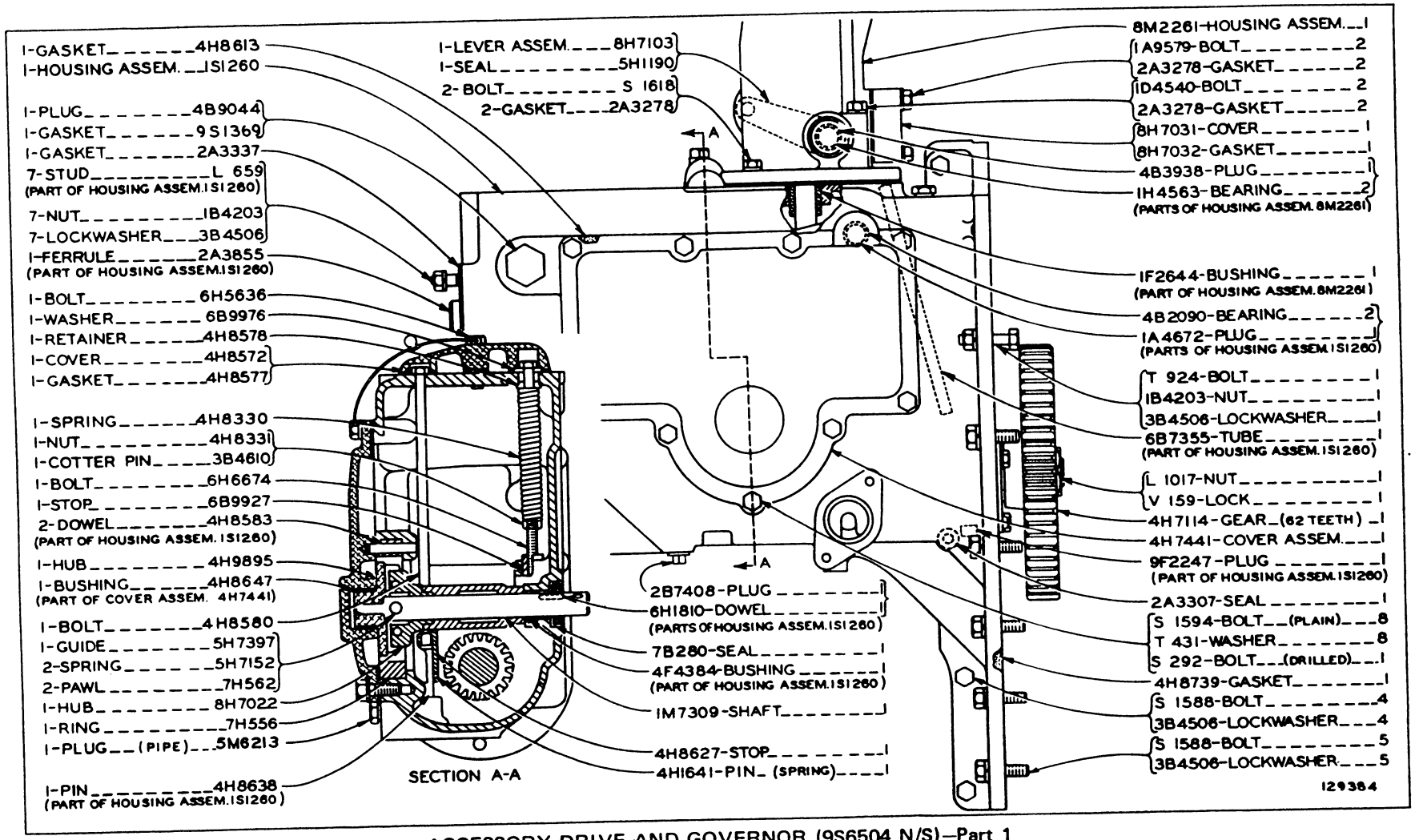

ACCESSORY DRIVE AND GOVERNOR (9S6504 N/S)—Part 1
Serial No. 46A24433 to 46A27800 and 46A27802 to 46A28136 inclusive

ACCESSORY DRIVE AND GOVERNOR (9S6504 N/S)—Part 2
Serial No. 46A24433 to 46A27800 and 46A27802 to 46A28136 inclusive

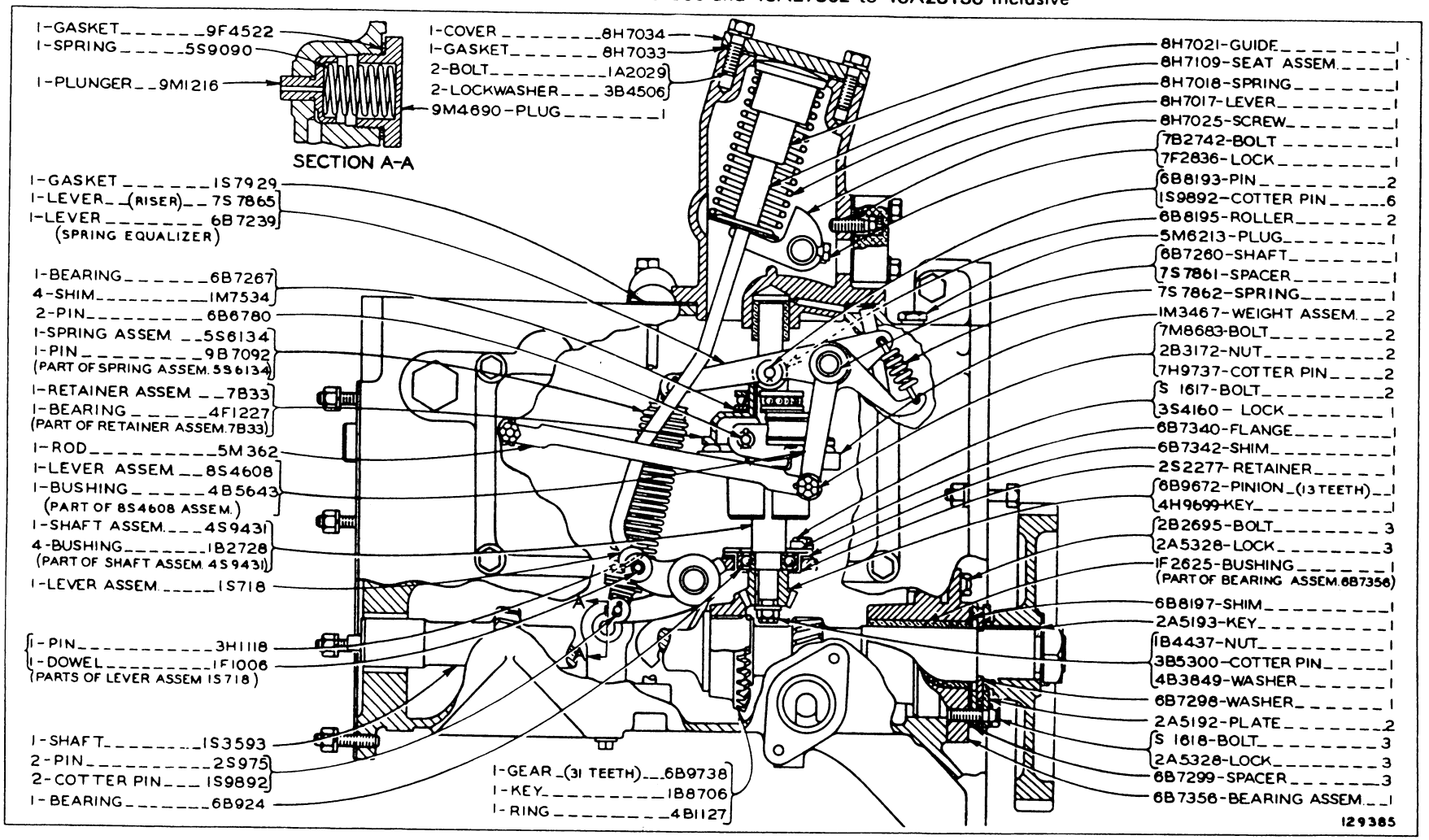

ACCESSORY DRIVE (2P5171 N/S)
Serial No. 46A27801 and 46A28137—Up

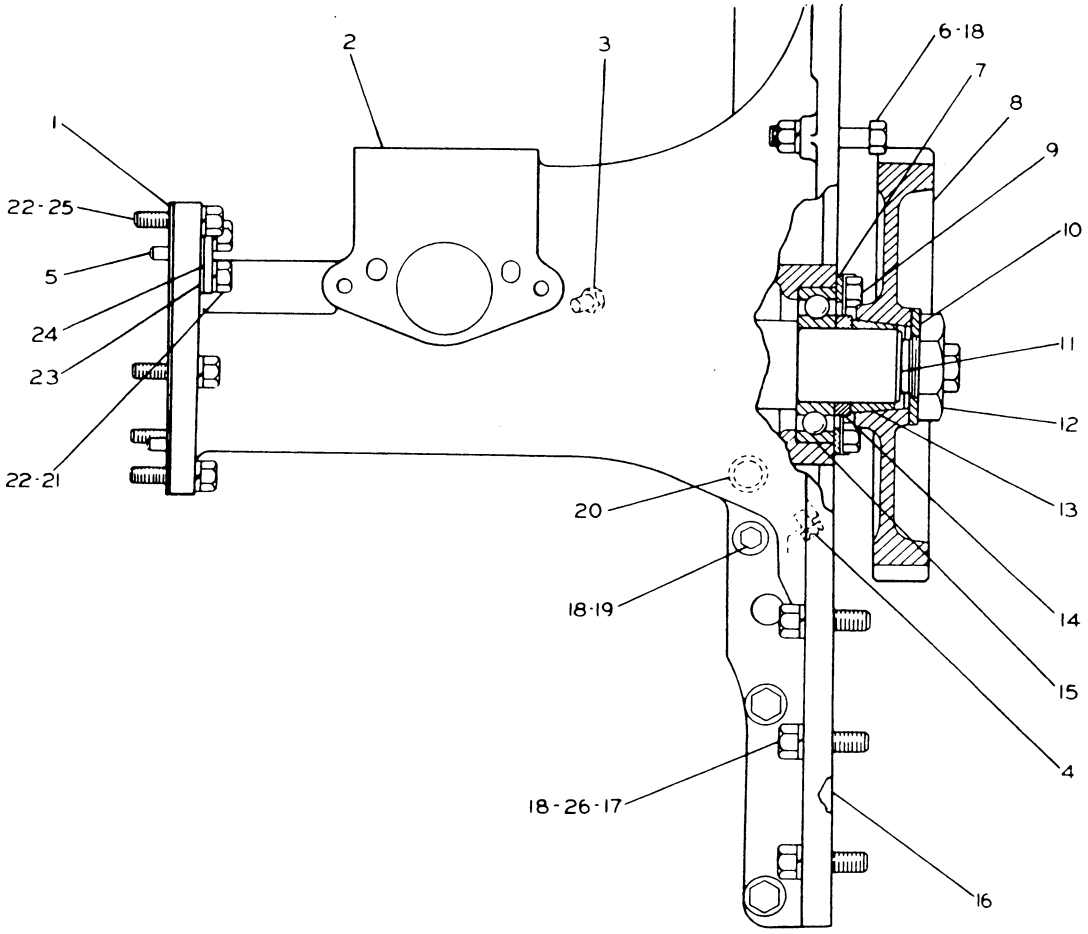

	REF. NO.	PART NUMBER	DESCRIPTION	QTY
	1	2S7472	GASKET	1
	2	2P5170	HOUSING ASSEM.	1
	3	5M6213	PLUG	1
	4	2S7905	PLUG	1
	5	2H1190	DOWEL	2
C	6	L478	BOLT	1
		1B4203	NUT	1
	7	8H9718	RETAINER	1
	8	1P7321	GEAR--------(62 Teeth)	1
C	9	S509	BOLT	4
		7M9763	LOCK	2
	10	7S9847	WASHER	1
	11	1P7295	SHAFT	1
	12	9S1313	NUT	1
	13	5S3828	SLEEVE	1
	14	1P9976	SPACER	1
	15	8H9789	BEARING	1
	16	4H8739	GASKET	1
C	17	S1588	BOLT-------1.25 in.(3.18 cm) long	7
	18	3B4506	LOCKWASHER	10
	19	1T720	BOLT	1
	20	2A3307	SEAL	1
	21	1A9136	BOLT	2
	22	3B4505	LOCKWASHER	8
	23	8H9788	GASKET	1
	24	8H9787	COVER	1
	25	1B7182	BOLT	6
C	26	S1591	BOLT-------1.5 in.(3.81 cm) long	1

C INDICATES CHANGE 204111

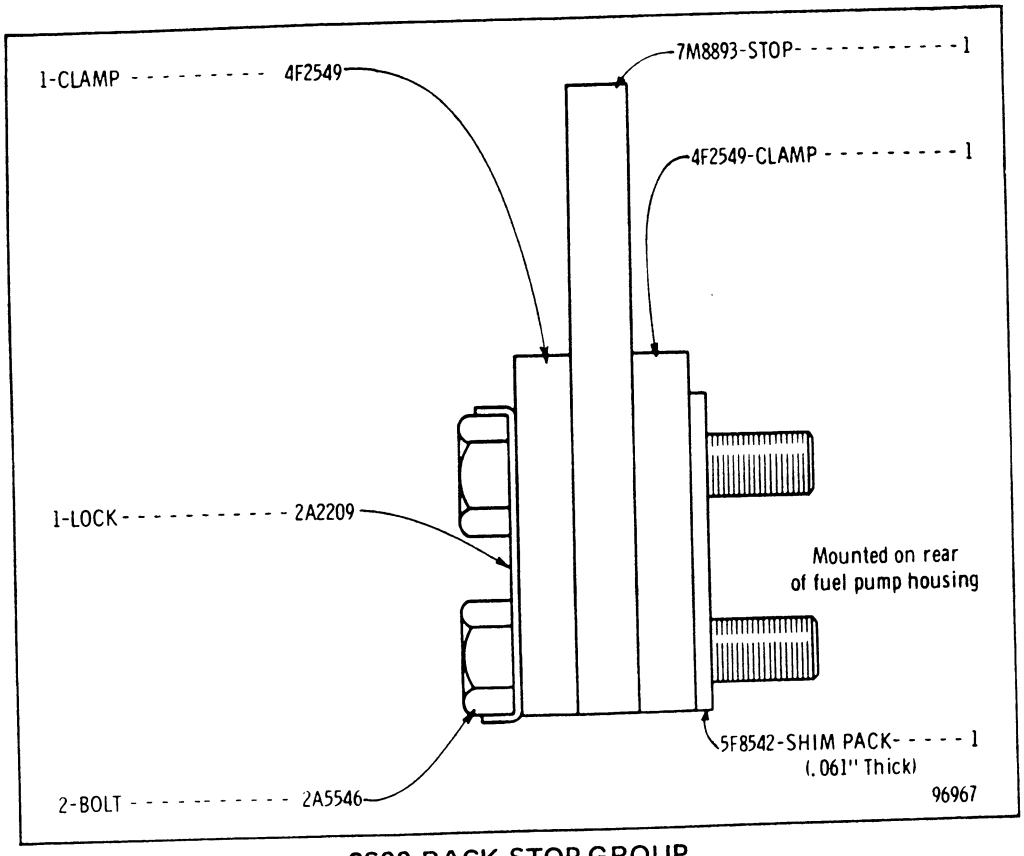

2S88 RACK STOP GROUP
Serial No. 46A24433 to 25135, 25159, 25160 & 46A25171 inclusive

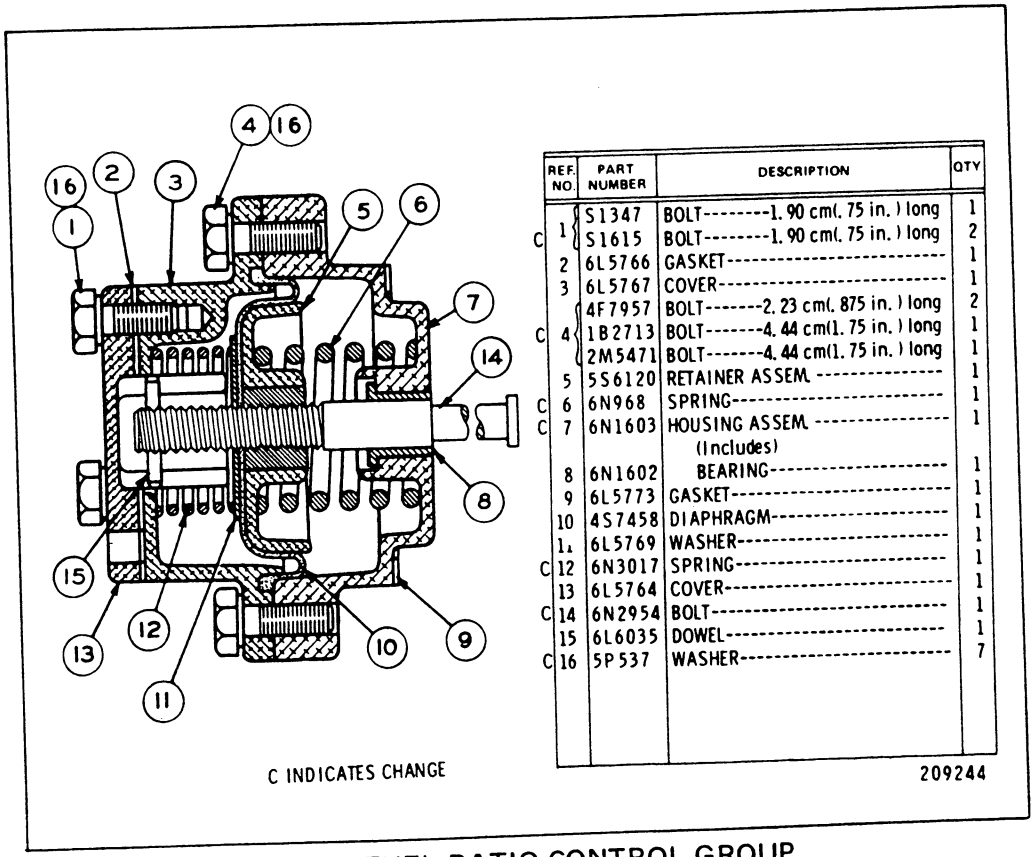

	REF. NO.	PART NUMBER	DESCRIPTION	QTY
	1	S1347	BOLT--------1. 90 cm(. 75 in.) long	1
C	1	S1615	BOLT--------1. 90 cm(. 75 in.) long	2
	2	6L5766	GASKET----------	1
	3	6L5767	COVER----------	1
	4	4F7957	BOLT-------2. 23 cm(. 875 in.) long	2
C	4	1B2713	BOLT-------4. 44 cm(1. 75 in.) long	1
	4	2M5471	BOLT-------4. 44 cm(1. 75 in.) long	1
	5	5S6120	RETAINER ASSEM. ----------	1
C	6	6N968	SPRING----------	1
C	7	6N1603	HOUSING ASSEM. ---------- (Includes)	1
	8	6N1602	BEARING----------	1
	9	6L5773	GASKET----------	1
	10	4S7458	DIAPHRAGM----------	1
	11	6L5769	WASHER----------	1
C	12	6N3017	SPRING----------	1
	13	6L5764	COVER----------	1
C	14	6N2954	BOLT----------	1
	15	6L6035	DOWEL----------	1
C	16	5P537	WASHER----------	7

C INDICATES CHANGE

209244

8S5095 FUEL RATIO CONTROL GROUP

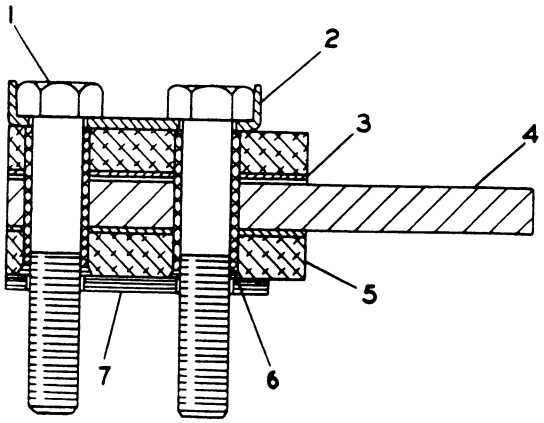

REF. NO.	PART NUMBER	DESCRIPTION	QTY
1	2A5546	BOLT	2
2	2A2209	LOCK	1
3	1P3883	SPACER	2
	1P3884	CONTACT	1
4	1P3885	BAR	1
5	1P3882	CLAMP	2
6	1P3886	INSULATOR	2
7	5F8542	SHIM	1

135309

RACK STOP (1P3888 N/S)
Serial No. 46A25136 to 25158, 25161 to 25170, 25172 to 27800 and 46A27802 to 46A28136 inclusive

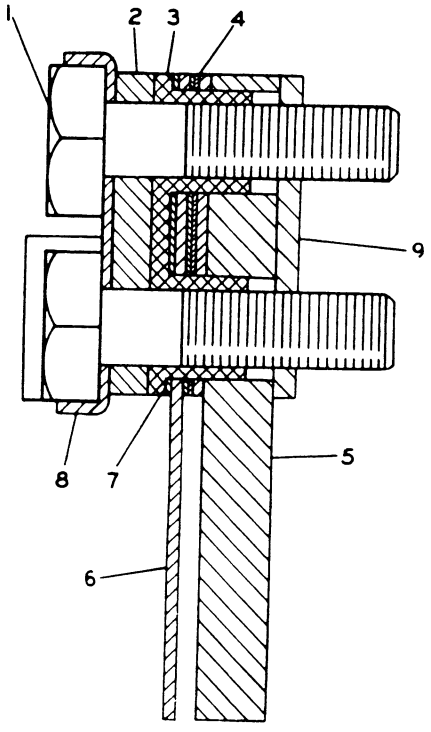

REF. NO.	PART NUMBER	DESCRIPTION	QTY
1	4F7957	BOLT	2
2	8M9062	RETAINER	1
3	1P6452	INSULATOR	1
4	8L8601	SPACER---.002 in. (0.06 mm) thick	2
	2S7390	SPACER---.032 in. (0.82 mm) thick	1
5	1P6453	BAR	1
6	9S9662	SPRING---.018 in. (0.46 mm) thick	1
7	8S4317	CONTACT	1
8	9M6292	LOCK	1
9	8M9064	SHIM	1

152083

TORQUE CONTROL (4N4851 N/S)
Serial No. 46A27801 and 46A28137 to 46A32138 and 46A32149 inclusive
Also part of Fuel Pump Housing and Governor at
Serial No. 46A32139 to 46A32148 and 46A32150—Up

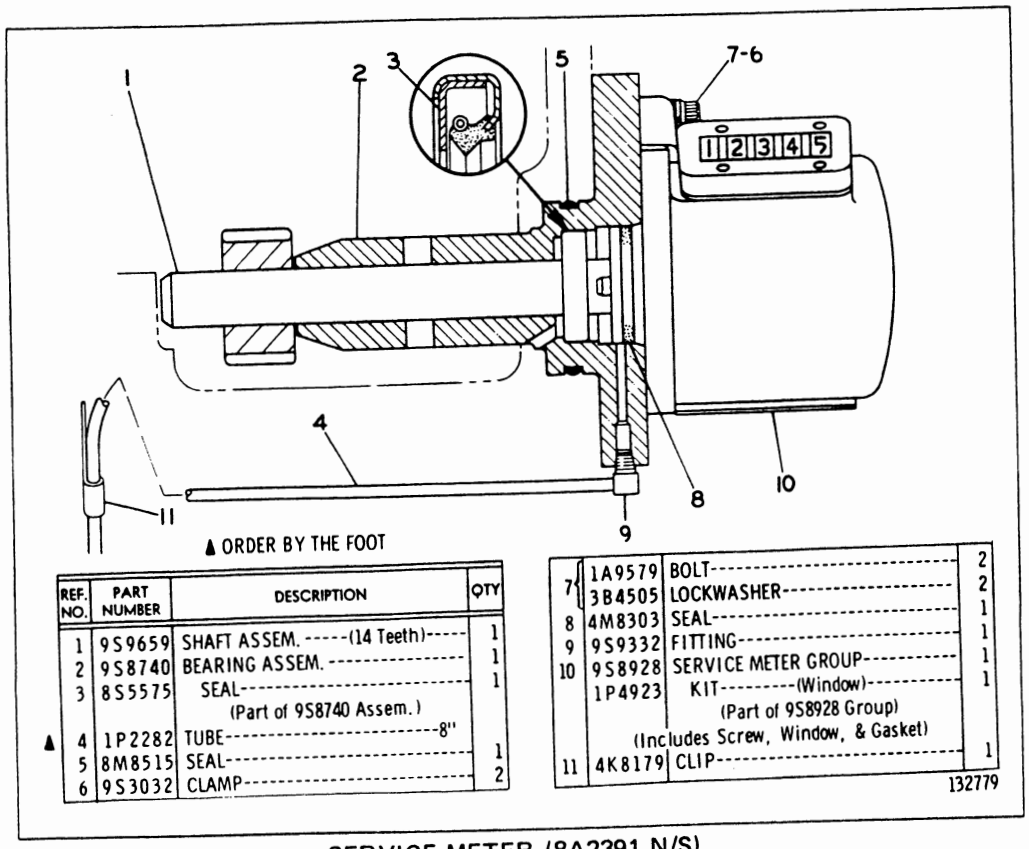

▲ ORDER BY THE FOOT

REF. NO.	PART NUMBER	DESCRIPTION	QTY
1	9S9659	SHAFT ASSEM. -----(14 Teeth)-----	1
2	9S8740	BEARING ASSEM. ----------	1
3	8S5575	SEAL---------- (Part of 9S8740 Assem.)	1
▲ 4	1P2282	TUBE----------8"	
5	8M8515	SEAL----------	1
6	9S3032	CLAMP----------	2
7	1A9579	BOLT----------	2
	3B4505	LOCKWASHER----------	2
8	4M8303	SEAL----------	1
9	9S9332	FITTING----------	1
10	9S8928	SERVICE METER GROUP----------	1
	1P4923	KIT---------(Window)---------- (Part of 9S8928 Group) (Includes Screw, Window, & Gasket)	1
11	4K8179	CLIP----------	1

132779

SERVICE METER (8A2391 N/S)
Serial No. 46A24433 to 46A27800 and 46A27802 to 46A28136 inclusive

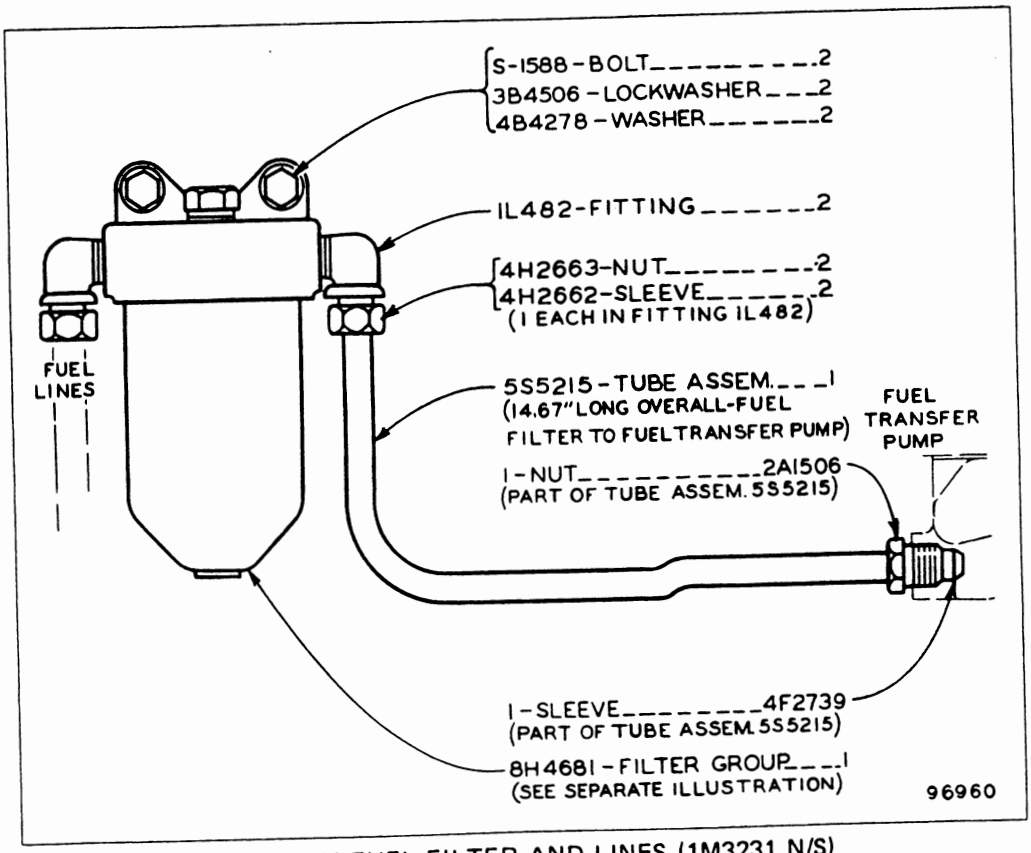

PRIMARY FUEL FILTER AND LINES (1M3231 N/S)
8H4681 Filter parts are shown on Page 38
Serial No. 46A24433 to 46A27800 and 46A27802 to 46A28136 inclusive

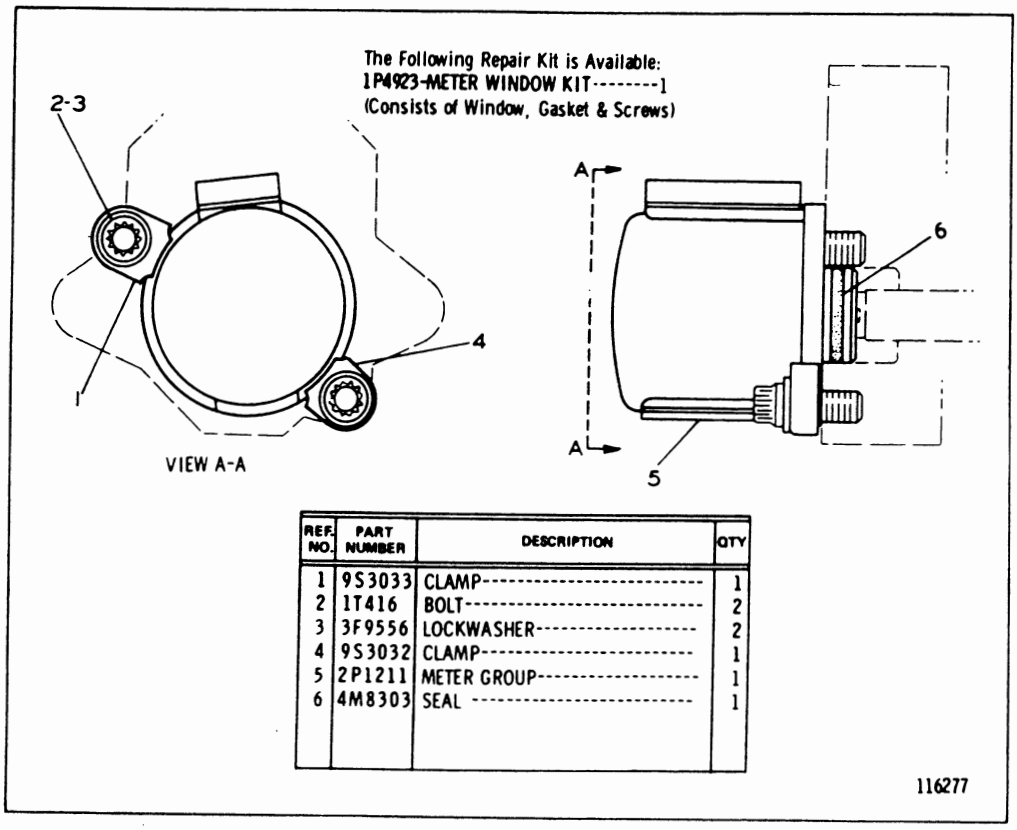

REF. NO.	PART NUMBER	DESCRIPTION	QTY
1	9S3033	CLAMP	1
2	1T416	BOLT	2
3	3F9556	LOCKWASHER	2
4	9S3032	CLAMP	1
5	2P1211	METER GROUP	1
6	4M8303	SEAL	1

SERVICE METER (2P1210 N/S)
Serial No. 46A27801 and 46A28137–Up

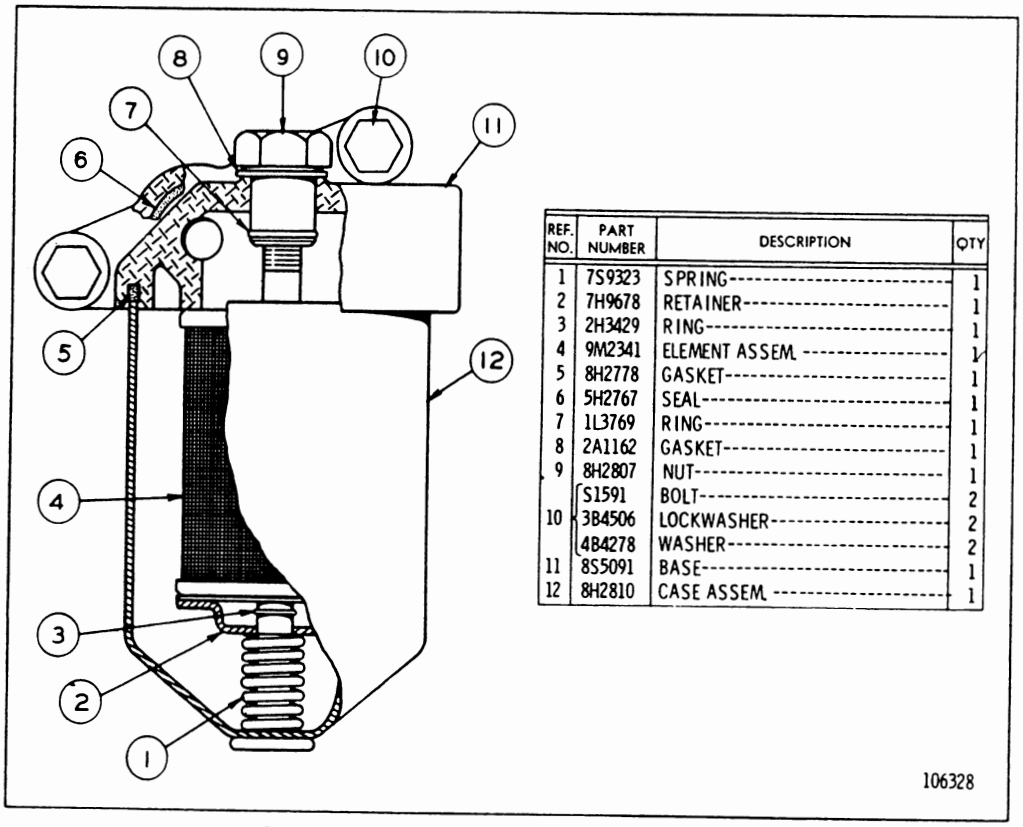

REF. NO.	PART NUMBER	DESCRIPTION	QTY
1	7S9323	SPRING	1
2	7H9678	RETAINER	1
3	2H3429	RING	1
4	9M2341	ELEMENT ASSEM.	1
5	8H2778	GASKET	1
6	5H2767	SEAL	1
7	1L3769	RING	1
8	2A1162	GASKET	1
9	8H2807	NUT	1
10	S1591	BOLT	2
	3B4506	LOCKWASHER	2
	4B4278	WASHER	2
11	8S5091	BASE	1
12	8H2810	CASE ASSEM.	1

8S7608 PRIMARY FUEL FILTER GROUP
Serial No. 46A27801 and 46A28137–Up

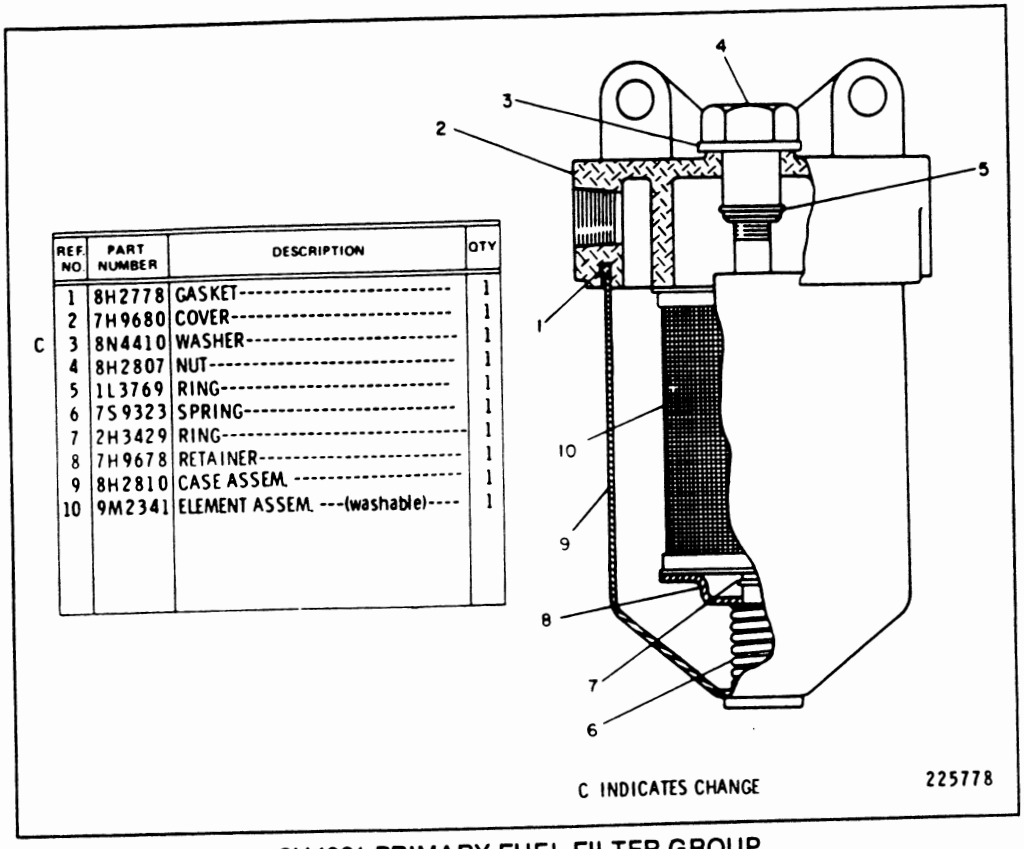

REF. NO.	PART NUMBER	DESCRIPTION	QTY
1	8H2778	GASKET	1
2	7H9680	COVER	1
C 3	8N4410	WASHER	1
4	8H2807	NUT	1
5	1L3769	RING	1
6	7S9323	SPRING	1
7	2H3429	RING	1
8	7H9678	RETAINER	1
9	8H2810	CASE ASSEM.	1
10	9M2341	ELEMENT ASSEM. ---(washable)----	1

8H4681 PRIMARY FUEL FILTER GROUP
Serial No. 46A24433 to 46A27800 & 46A27802 to 46A28136 inclusive
Part of 1M3231 Primary Fuel Filter and Lines Group shown on Page 36B

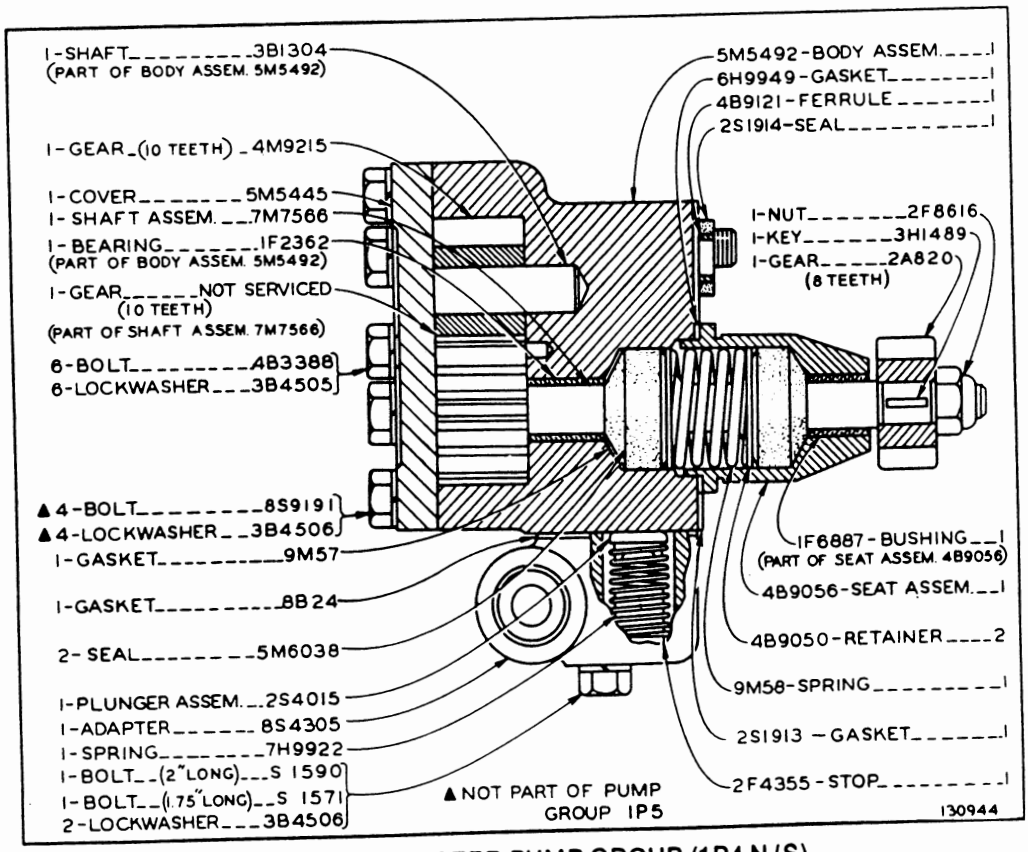

1P5 FUEL TRANSFER PUMP GROUP (1P4 N/S)
Serial No. 46A24433 to 46A27800 and 46A27802 to 46A28136 inclusive

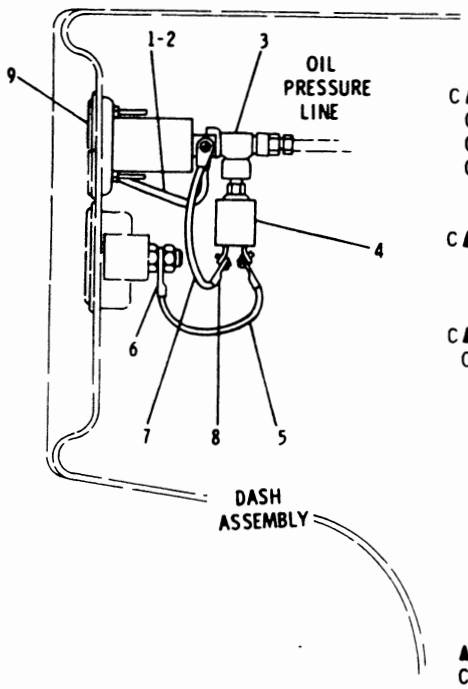

	REF. NO.	PART NUMBER	DESCRIPTION	QTY
	1	3L1454	WIRE ASSEM. (Includes)	1
C ▲		5P5629	WIRE----------10.10 m(4 in.)	
C	2	2L8076	TERMINAL	2
C	3	1F9369	TEE	1
C	4	2N7744	SWITCH	1
	5	5H8840	WIRE ASSEM. (Includes)	1
C ▲		5P5629	WIRE----------.17 m(7 in.)	
	6	2L8076	TERMINAL	2
	7	5D122	WIRE ASSEM. (Includes)	1
C ▲		5P5629	WIRE----------.26 m(10.23 in.)	
C	8	2L8076	TERMINAL	2
	9	4N3700	METER GROUP	1

▲ ORDER BY THE METRE
C INDICATES CHANGE

211679

3P4615 ELECTRIC HOUR METER GROUP
AN ATTACHMENT

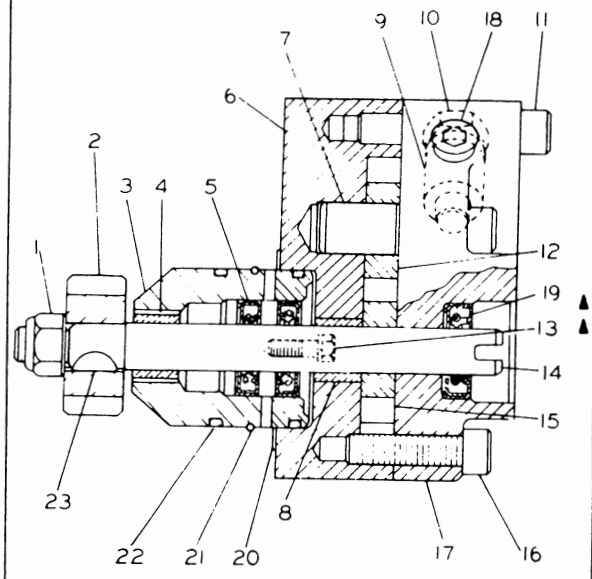

	REF. NO.	PART NUMBER	DESCRIPTION	QTY
	1	2F8616	NUT	1
	2	8H9806	GEAR----------(11 Teeth)	1
	3	8S4375	CAGE ASSEM.	1
	4	8F6058	BEARING	1
	5	4S7756	SEAL	2
	6	7S4434	BODY ASSEM.	1
	7	2S6838	SHAFT	1
	8	8F6058	BEARING	1
	9	8M874	PLUNGER ASSEM.	1
		2P4252	SPRING	1
	10	7S4440	BOLT	1
		2A1913	GASKET	1
	11	7S6701	SCREW	2
	12	8S4368	GEAR----------(10 Teeth)	1
▲	13	4B3388	BOLT	2
▲		3B4505	LOCKWASHER	2
	14	8S4373	SHAFT ASSEM.	1
	15	8S4368	GEAR----------(10 Teeth)	1
	16	9F6641	SCREW	4
	17	2P5196	COVER ASSEM.	1
		7S4433	FERRULE	2
	18	7H3171	PLUG	1
	19	8S5575	SEAL	1
	20	7S2374	GASKET	1
	21	7S4439	RING	1
	22	6J2419	SEAL	2
	23	3H1489	KEY	1

▲ NOT PART OF 2P5195 PUMP GROUP

116200

2P5195 FUEL TRANSFER PUMP GROUP (2P5194 N/S)
Serial No. 46A27801 and 46A28137 to 46A30599 inclusive

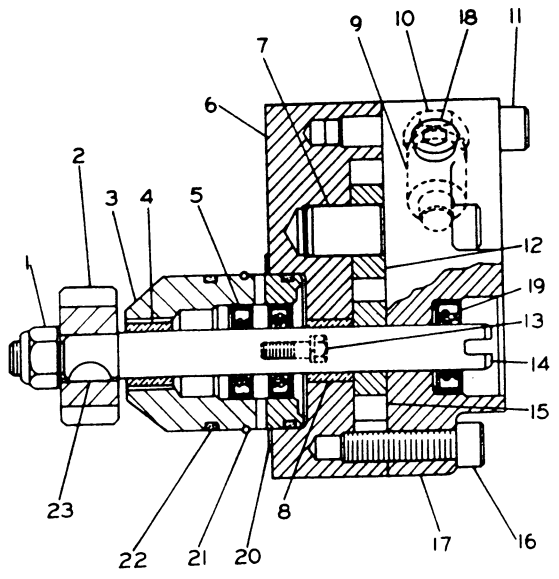

REF. NO.	PART NUMBER	DESCRIPTION	QTY
1	2F8616	NUT	1
2	8H9806	GEAR--(11 Teeth)	1
3	4N4865	CAGE ASSEM.	1
4	8F6058	BEARING	1
5	4N4248	SEAL	2
6	7S4434	BODY ASSEM.	1
7	4N3944	SHAFT	1
8	8F6058	BEARING	1
9	8M874	PLUNGER ASSEM.	1
	2P4252	SPRING	1
10	7S4440	BOLT	1
C	4N7465	GASKET	1
11	7S6701	SCREW	2
12	8S4368	GEAR--(10 Teeth)	1
▲ 13	4B3388	BOLT	2
▲	3B4505	LOCKWASHER	2
14	4N4870	SHAFT ASSEM.	1
15	8S4368	GEAR--(18 Teeth)	1
16	9F6641	SCREW	4
17	4N4960	COVER ASSEM.	1
	7S4433	FERRULE	2
18	7H3171	PLUG	1
19	4N4249	SEAL	1
20	7S2374	GASKET	1
21	7S4439	RING	1
22	6J2419	SEAL	2
23	3H1489	KEY	1

▲ NOT PART OF 4N4880 PUMP GROUP

C INDICATES CHANGE

204109

4N4880 FUEL TRANSFER PUMP GROUP (2P5194 N/S)
Serial No. 46A30600—Up

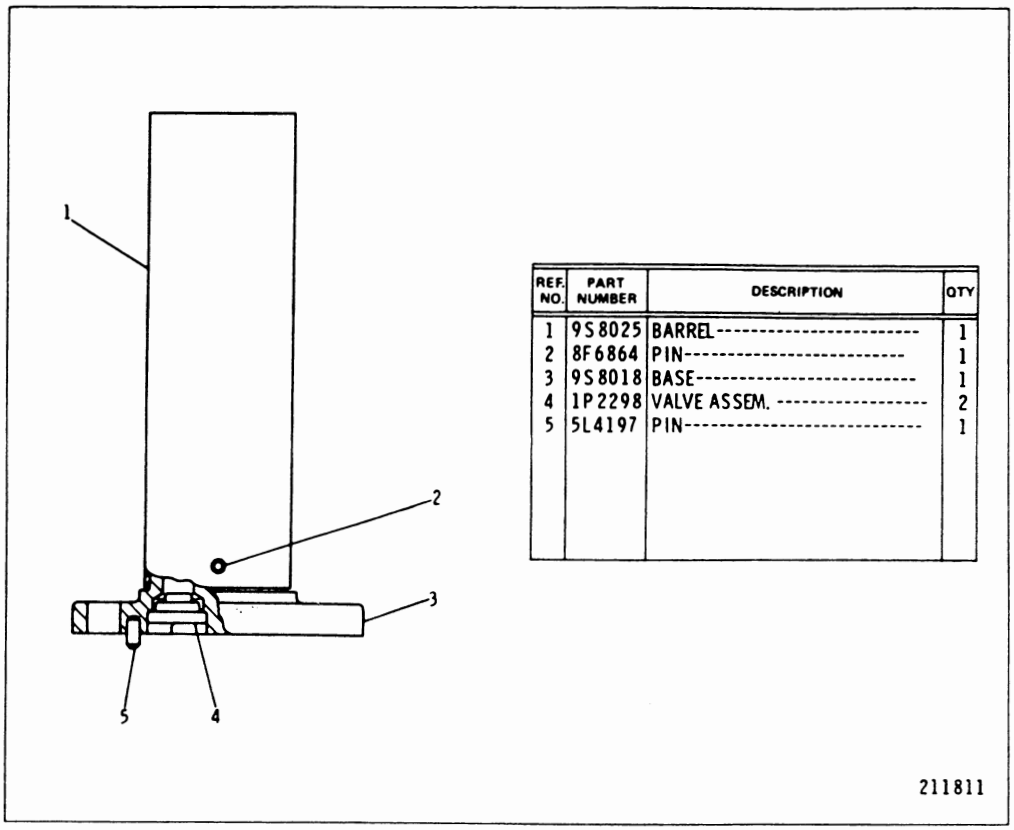

REF. NO.	PART NUMBER	DESCRIPTION	QTY
1	9S8025	BARREL	1
2	8F6864	PIN	1
3	9S8018	BASE	1
4	1P2298	VALVE ASSEM.	2
5	5L4197	PIN	1

6N9740 FUEL PRIMING PUMP BARREL ASSEMBLY
Serial No. 46A27801 and 46A28137—Up
Provides Field Replacement for 9S8020 Barrel Assembly shown on Page 40

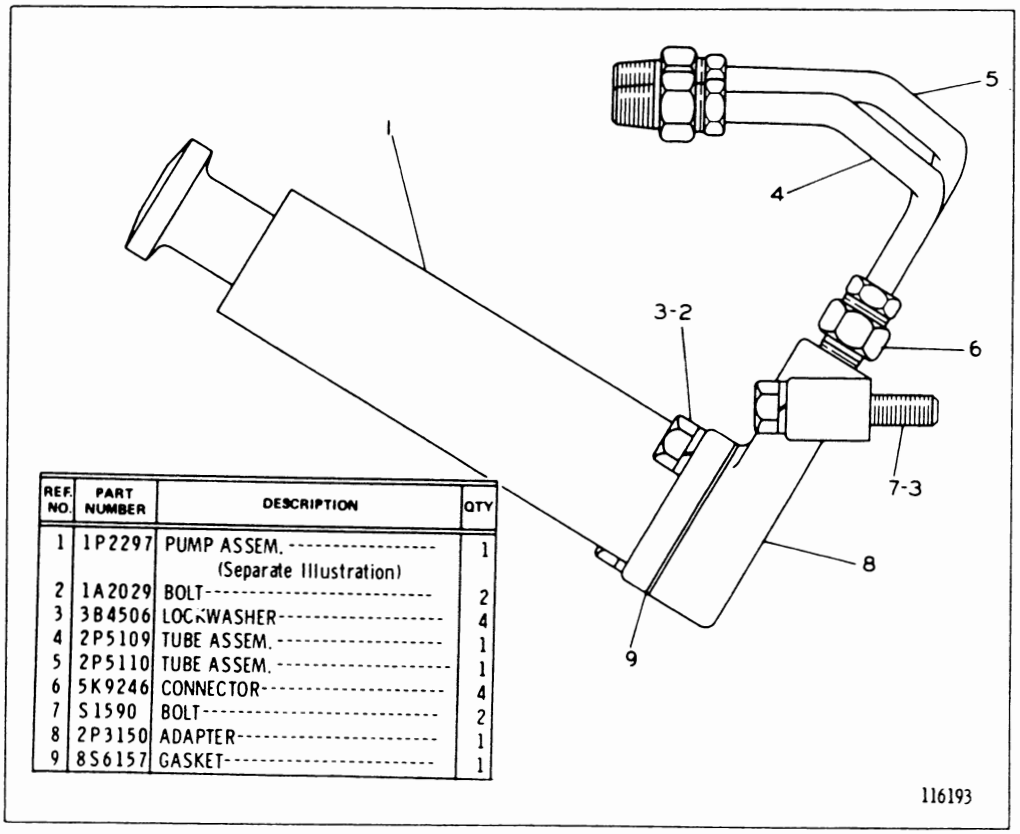

REF. NO.	PART NUMBER	DESCRIPTION	QTY
1	1P2297	PUMP ASSEM. (Separate Illustration)	1
2	1A2029	BOLT	2
3	3B4506	LOCKWASHER	4
4	2P5109	TUBE ASSEM.	1
5	2P5110	TUBE ASSEM.	1
6	5K9246	CONNECTOR	4
7	S1590	BOLT	2
8	2P3150	ADAPTER	1
9	8S6157	GASKET	1

2P5208 FUEL PRIMING PUMP GROUP
Serial No. 46A27801 and 46A28137—Up
1P2297 Pump parts are shown on Page 40

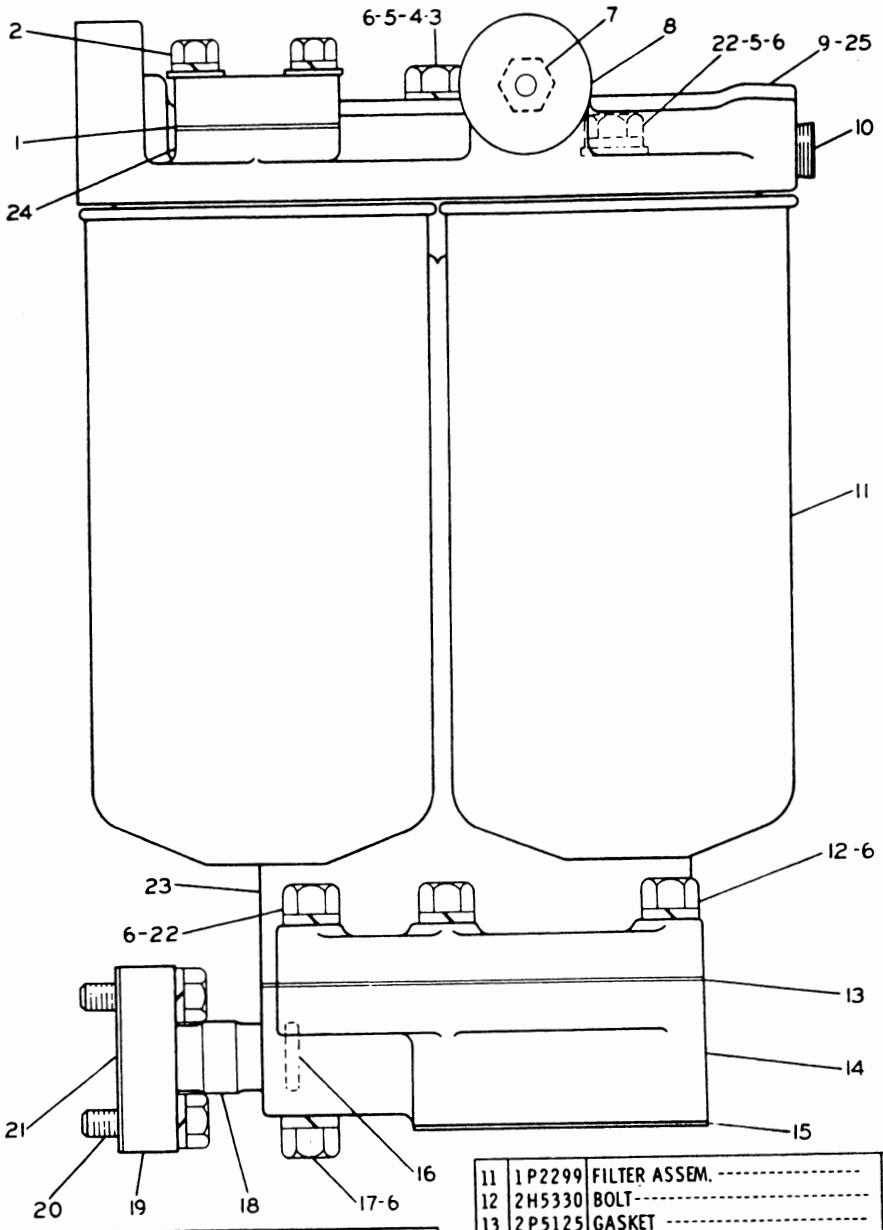

REF. NO.	PART NUMBER	DESCRIPTION	QTY
1	5S9611	GASKET	1
2	9F6580	BOLT	2
	3B4504	LOCKWASHER	2
	4B4276	WASHER	2
3	S1571	BOLT	3
4	1D4717	NUT	1
5	4B4278	WASHER	4
6	3B4506	LOCKWASHER	10
7	7F3901	SEAT	1
8	2A1927	NEEDLE ASSEM.	1
9	2P5168	BASE ASSEM.	1
	5M6213	PLUG	1
	9S4167	STUD	2
10	7H3171	PLUG	2
11	1P2299	FILTER ASSEM.	2
12	2H5330	BOLT	4
13	2P5125	GASKET	1
14	2P4679	ADAPTER	1
15	2P5124	GASKET	1
16	4J5268	SEAL	2
17	7H7954	BOLT	1
18	2P5123	SLEEVE	1
19	9S777	FLANGE	1
20	4B3388	BOLT	2
	3B4505	LOCKWASHER	2
21	9M6542	GASKET	1
22	S1588	BOLT	2
23	2P5051	HOUSING	1
24	5S9605	HOUSING	1
25	9S1269	GASKET	1

116205

FUEL FILTER (2P5144 N/S)
Serial No. 46A27801 and 46A28137—Up

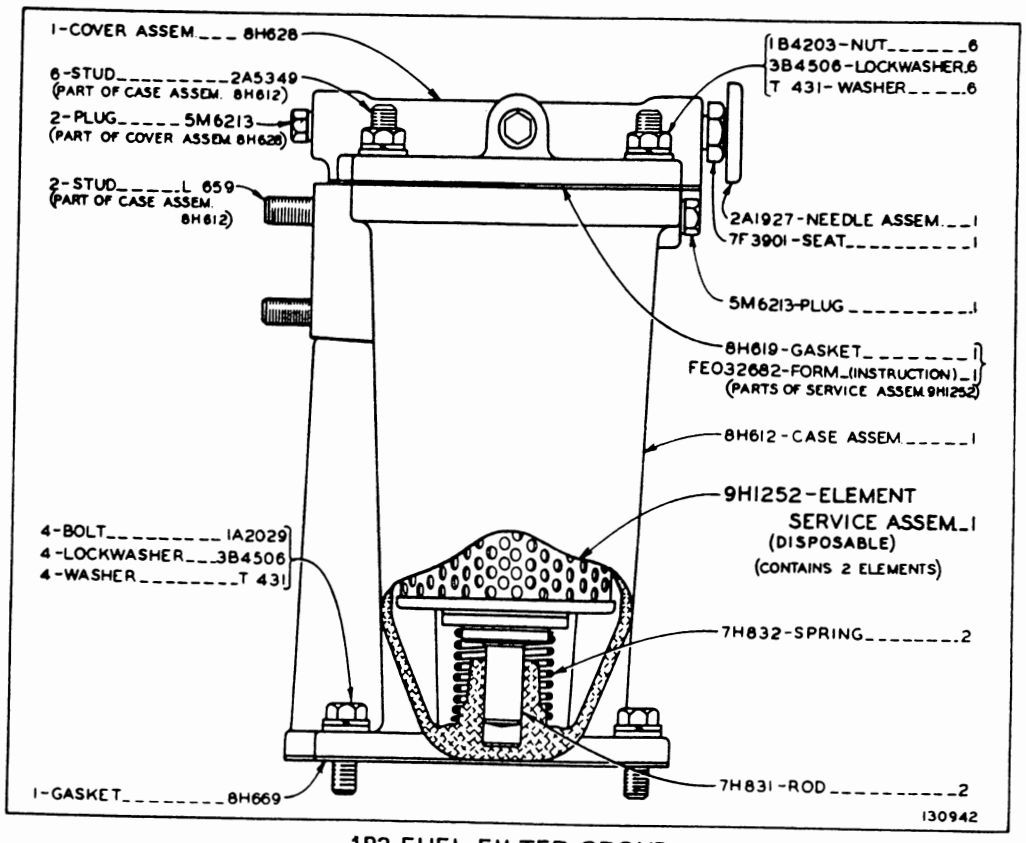

1P3 FUEL FILTER GROUP
Serial No. 46A24433 to 46A27800 and 46A27802 to 46A28136 inclusive

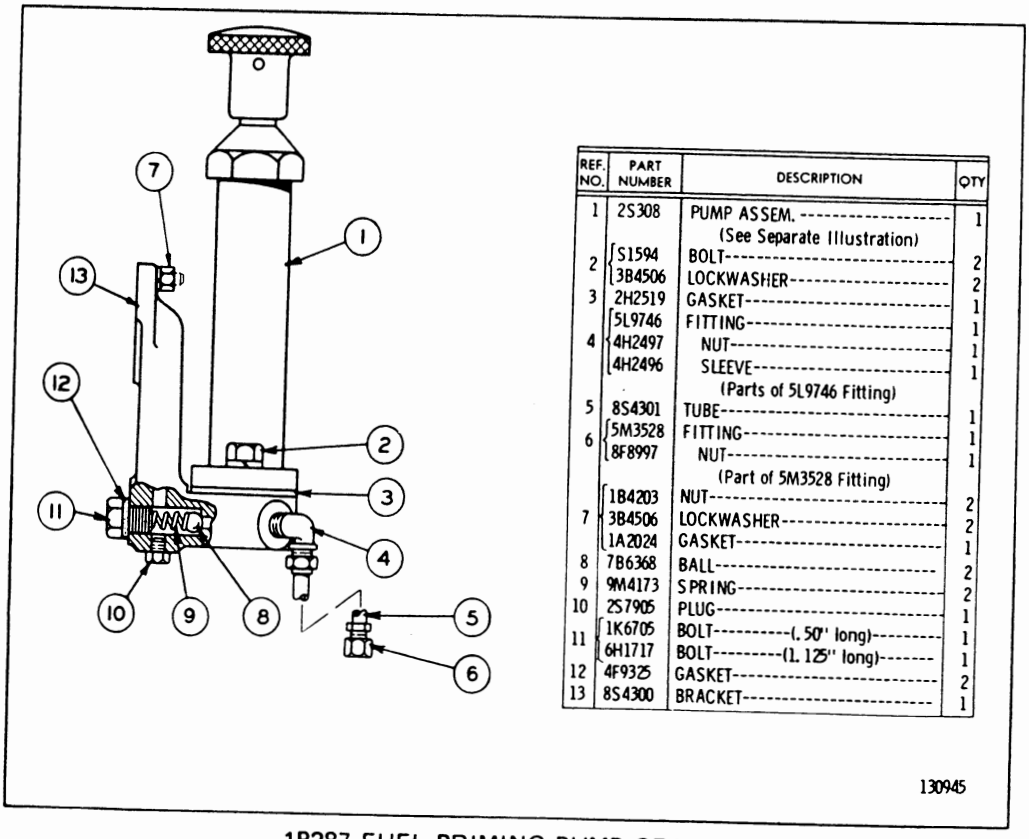

REF. NO.	PART NUMBER	DESCRIPTION	QTY
1	2S308	PUMP ASSEM. (See Separate Illustration)	1
2	S1594	BOLT	2
	3B4506	LOCKWASHER	2
3	2H2519	GASKET	1
4	5L9746	FITTING	1
	4H2497	NUT	1
	4H2496	SLEEVE	1
		(Parts of 5L9746 Fitting)	
5	8S4301	TUBE	1
6	5M3528	FITTING	1
	8F8997	NUT	1
		(Part of 5M3528 Fitting)	
7	1B4203	NUT	2
	3B4506	LOCKWASHER	2
	1A2024	GASKET	1
8	7B6368	BALL	2
9	9M4173	SPRING	2
10	2S7905	PLUG	1
11	1K6705	BOLT-(.50" long)	1
	6H1717	BOLT-(1.125" long)	1
12	4F9325	GASKET	2
13	8S4300	BRACKET	1

1P287 FUEL PRIMING PUMP GROUP
Serial No. 46A24433 to 46A27800 and 46A27802 to 46A28136 inclusive
2S308 Pump parts are shown on Page 40

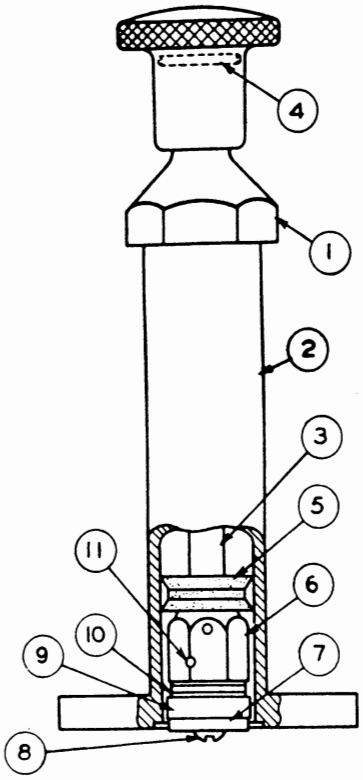

REF NO	PART NUMBER	DESCRIPTION	QTY
1	2S311	CAP	1
2	2S312	BARREL ASSEM.	1
3	2S309	ROD ASSEM.	1
	2S310	ROD	1
4	9F7882	PIN	1
		(Parts of 2S309 Rod Assem.)	
5	2S315	SEAL	1
6	2S316	NUT	1
7	3S8427	WASHER	1
8	4B1236	SCREW	1
9	2S317	HOLDER	1
10	7M7219	BEARING	1
	7M7193	RACE	2
11	2L5894	PIN	2

110628

2S308 FUEL PRIMING PUMP ASSEMBLY
Serial No. 46A24433 to 46A27800 & 46A27802 to 46A28136 inclusive
Part of 1P287 Fuel Priming Pump Group shown on Page 39

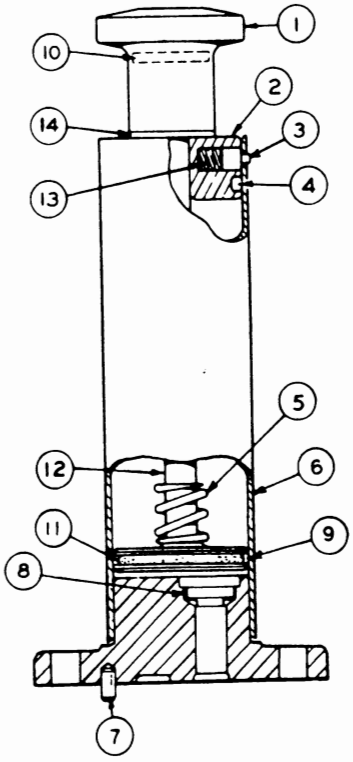

REF NO.	PART NUMBER	DESCRIPTION	QTY
1	7B8634	HANDLE	1
2	9S8017	CAP	1
3	9S8015	RETAINER	2
C 4	4F7391	SEAL	1
5	8M8210	SPRING	1
6	9S8020	BARREL ASSEM.	1
7	5L4197	PIN	1
8	1P2298	VALVE ASSEM.	2
9	1P2278	RING	1
10	9F7882	PIN	1
11	4F7391	SEAL	1
12	1P2280	ROD	1
13	9S4169	SPRING	2
14	9S8016	GASKET	1

C INDICATES CHANGE

209251

1P2297 FUEL PRIMING PUMP ASSEMBLY
Serial No. 46A27801 & 46A28137—Up
Part of 2P5208 Fuel Priming Pump Group shown on Page 38A

FUEL PUMP HOUSING (9S6502 N/S)
Serial No. 46A24433 to 46A25135 & 46A25160 inclusive

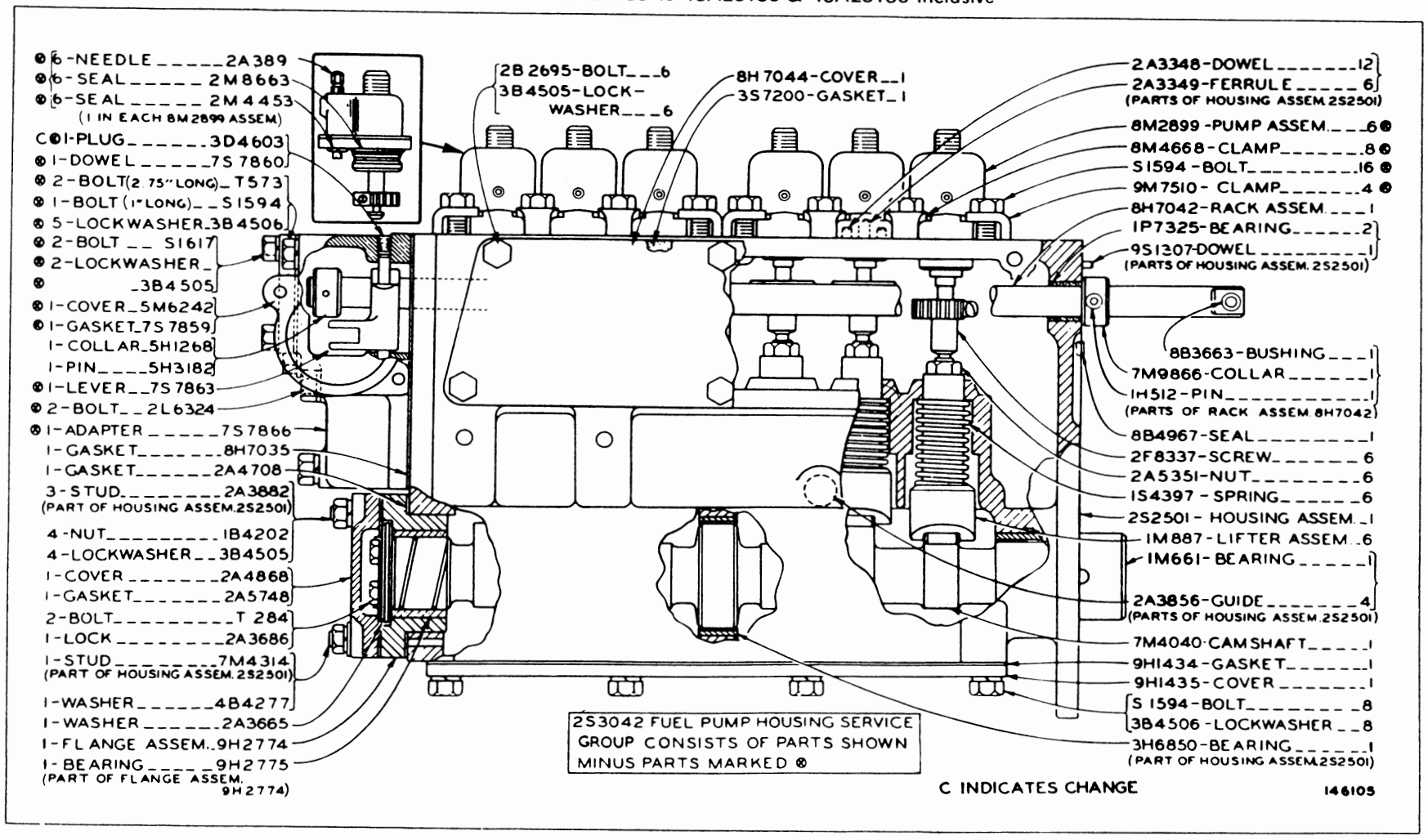

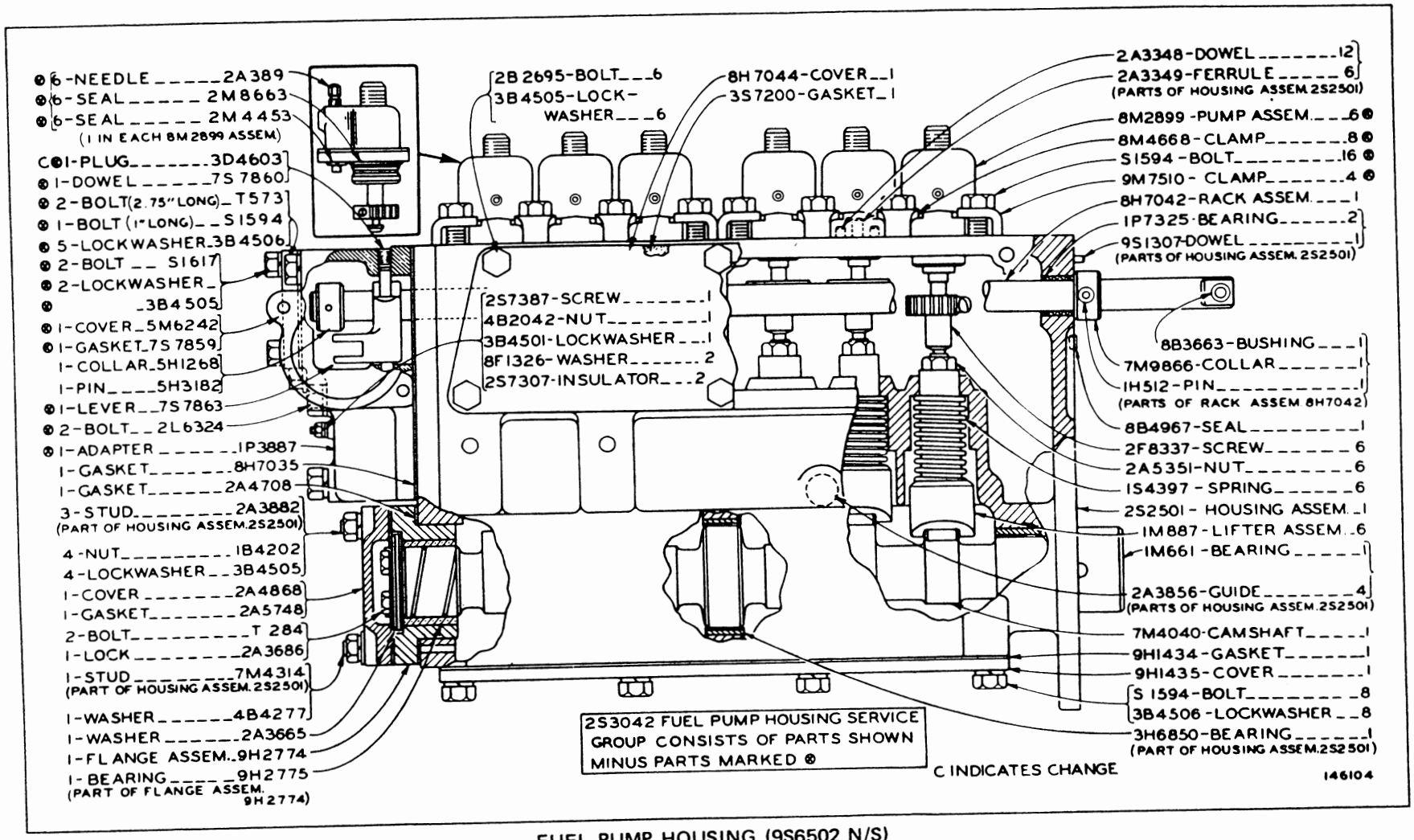

FUEL PUMP HOUSING (9S6502 N/S)

Serial No. 46A25136 to 25159, 25161 to 27800 and 46A27802 to 46A28136 inclusive

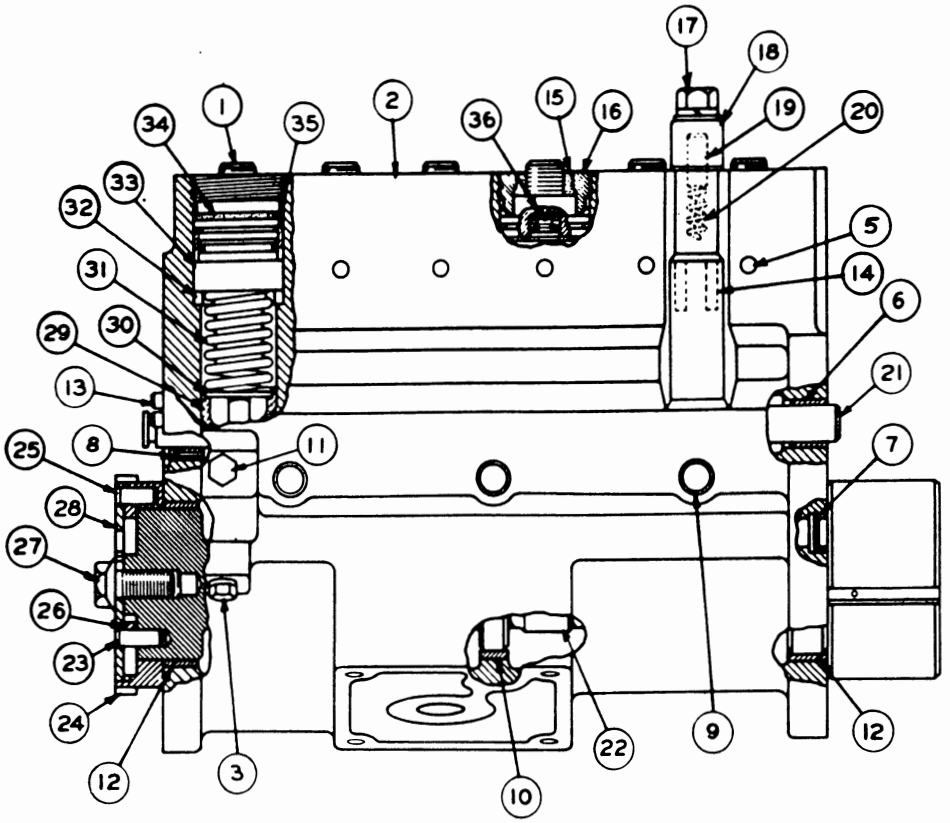

REF. NO.	PART NUMBER	DESCRIPTION	QTY
1	8S3653	BONNET	6
2	9S3902	HOUSING ASSEM.	1
3	9F2247	PLUG	1
5	1P232	BALL	6
	1P234	DOWEL	6
6	9S4160	BEARING	1
7	T200	PLUG	1
8	1S1953	BEARING	1
9	4M1474	PIN	3
10	1S7102	BEARING	1
11	5M6214	PLUG	2
12	1S7100	BEARING	2
13	4F6024	DOWEL	2
14	9S4197	BUSHING	1
15	8H9204	WASHER	6
16	2M4314	BUSHING	6
17	1B2790	BOLT	1
	3B4505	LOCKWASHER	1
	4B4277	WASHER	1
18	1S9481	COVER	1
	1S9546	GASKET	1
19	1S9480	PIN	1
20	8F394	SPRING	1
21	2P8616	RACK	1

22	1P9955	CAMSHAFT ASSEM.	1
	1M690	SLEEVE	1
23	2H2255	DOWEL	1
24	1P7959	GEAR ASSEM. (72 Teeth)	1
25	2H2255	DOWEL	1
26	3N2070	SPRING	1
27	L472	BOLT	1
	2H3504	LOCK	1
28	2S7461	PLATE	1
29	3S9736	LIFTER ASSEM.	6
30	8S3652	WASHER	6
31	1S7592	SPRING	6
32	5M2697	SPACER---4.32 mm(.170 in.) thick	6
	2M4208	SPACER---4.42 mm(.174 in.) thick	6
	2M4209	SPACER---4.53 mm(.178 in.) thick	6
	2M4210	SPACER---4.63 mm(.182 in.) thick	6
	2M4211	SPACER---4.73 mm(.186 in.) thick	6
	2M4212	SPACER---4.83 mm(.190 in.) thick	6
	5M2691	SPACER---4.93 mm(.194 in.) thick	6
	5S7189	SPACER---5.03 mm(.198 in.) thick	6
33	1P6400	PLUNGER AND BARREL ASSEM.	6
34	1M1077	SEAL	6
35	1M3506	RING	6
36	1S8634	SPRING	6
	2S1631	CHECK	6

216528

1P9988 FUEL PUMP HOUSING GROUP
Serial No. 46A27801 and 46A28137—Up
Part of 2P1650 Fuel Pump Housing and Governor Group shown on Page 41

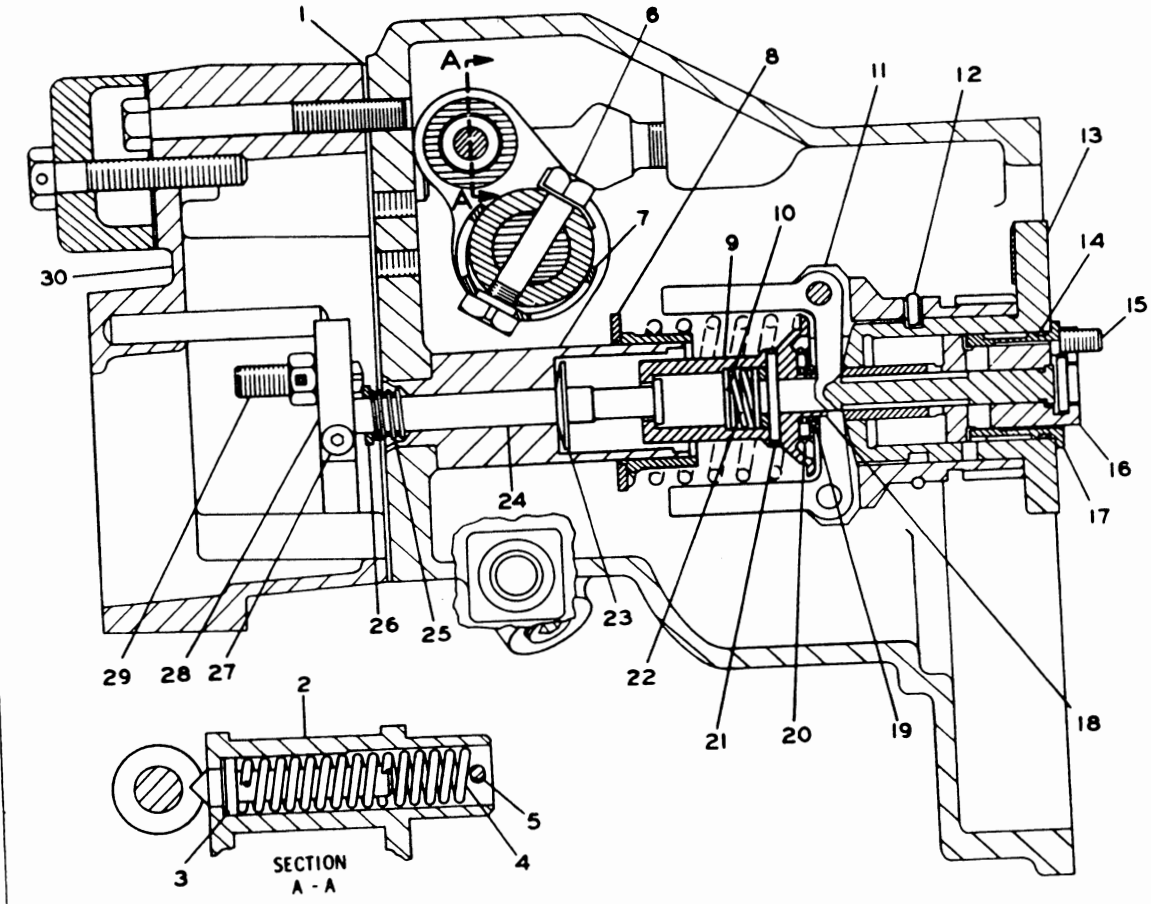

REF. NO.	PART NUMBER	DESCRIPTION	QTY
1	2S7314	GASKET	1
2	9S4466	LEVER ASSEM.	1
3	9M9788	PLUNGER	1
4	7M7316	SPRING	1
5	5H1351	PIN	1
6	9S4468	BOLT	1
	2F4159	LOCK	1
7	9S4673	BAND ASSEM.	1
8	3S9639	SEAT ASSEM.	1
9	2S8	SEAT	2
10	9M6302	WASHER	1
11	2P6116	WEIGHT ASSEM.	1
12	7B8105	LOCK	1
13	1S4741	CYLINDER	1
14	8M8997	SEAL	1
15	S1615	BOLT	3
	9M6293	LOCK	1
16	7S8447	PISTON ASSEM.	1
17	7L8777	SLEEVE	1
18	2S7	SLEEVE	1
19	3K810	RING	1
20	7M7219	BEARING	2
	7M7193	RACE	1
21	8M8726	DOWEL	1
	8M8993	RING	1
22	9M6303	SPRING	1
23	8H9181	SPRING	1
24	8M8739	BOLT	1
25	2S7235	SPRING	1
26	2S7289	COLLAR	1
27	9M4704	SCREW	1
28	8L4154	COLLAR	1
29	8L4155	SCREW	1
	5S9607	NUT	1
30	8S5061	COVER	1

153114

2P1499 GOVERNOR GROUP—Side View—Type 1
Serial No. 46A27801 and 46A28137—Up
Part of Fuel Pump Housing and Governor shown on Page 41

2P1499 GOVERNOR GROUP—End View—Type 1
Serial No. 46A27801 and 46A28137—Up
Part of Fuel Pump Housing and Governor shown on Page 41

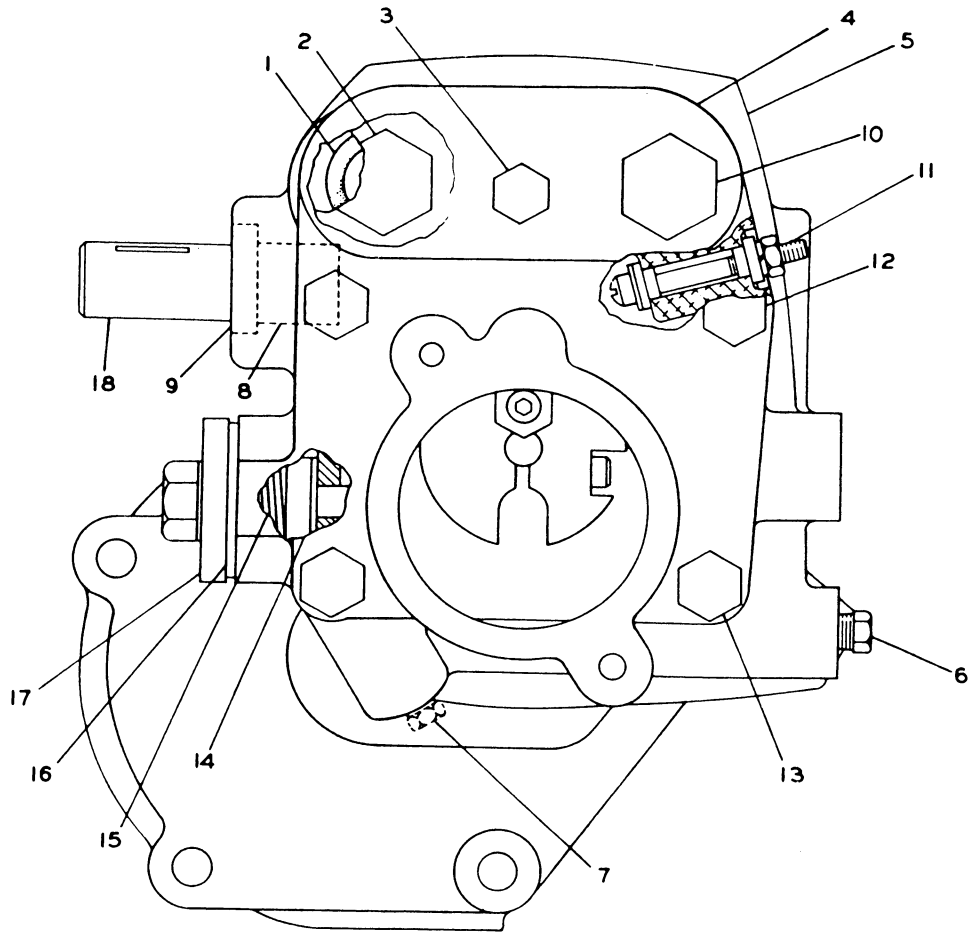

REF. NO.	PART NUMBER	DESCRIPTION	QTY
1	2J157	SEAL	2
2	5L8997	SCREW	1
3	6L1756	BOLT	1
4	5L8992	COVER	1
	5L8991	GASKET	1
5	2P189	HOUSING ASSEM.	1
	8S134	BEARING	1
	4F4585	PLUG	1
6	5M6214	PLUG	1
7	2S7905	PLUG	1
8	9S798	BEARING	1
9	9S4671	SEAL	1
10	8S8952	SCREW	1
C	2S7387	SCREW	1
	4B2042	NUT	1
11	3B4501	LOCKWASHER	1
	8F1326	WASHER	2
	2S7307	INSULATOR	2
12	9M8720	BOLT	1
13	2B2694	BOLT	4
14	9M9187	PLUNGER	1
15	1S9312	SPRING	1
16	9F4522	GASKET	1
17	9S5393	PLUG	1
C 18	9M4789	SHAFT	1

C INDICATES CHANGE

144484

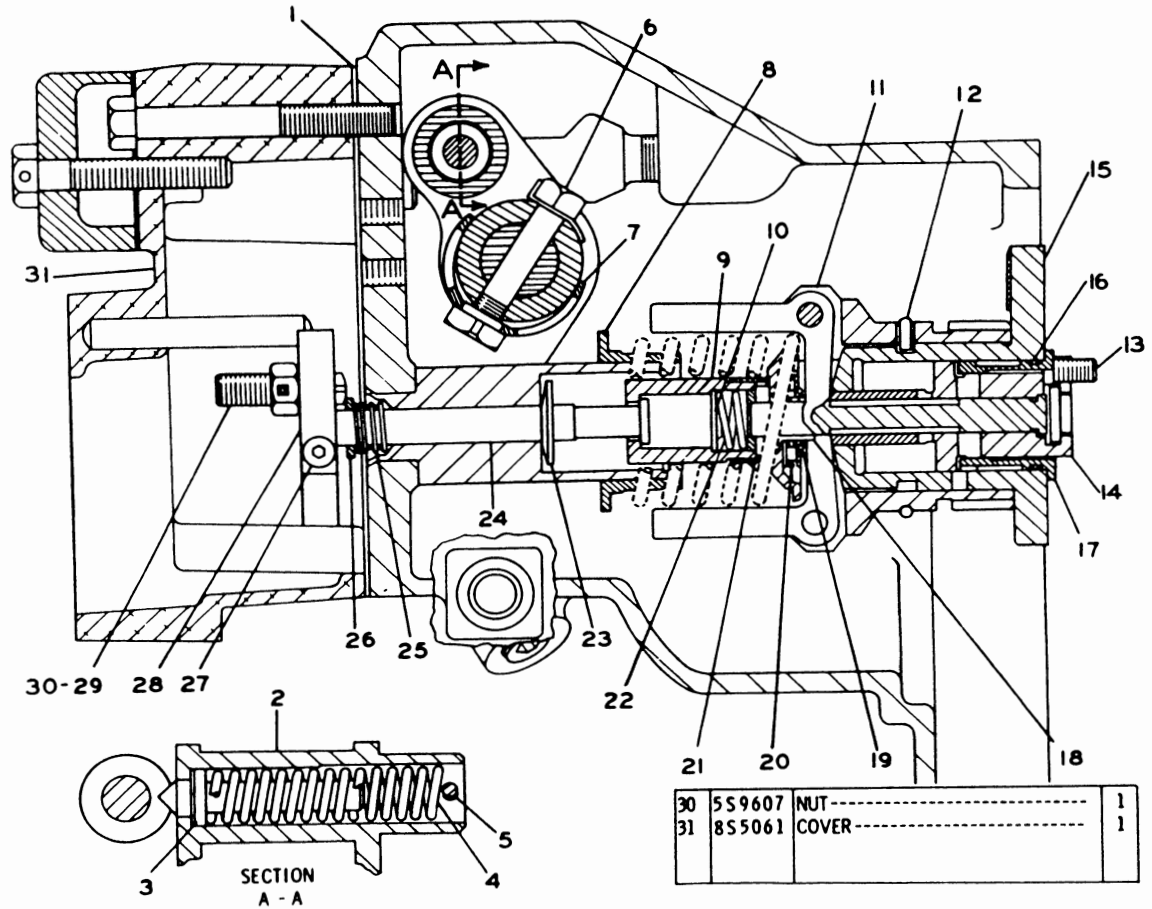

REF. NO.	PART NUMBER	DESCRIPTION	QTY
1	2S7314	GASKET	1
C	2P8686	LEVER ASSEM.	1
2		(Includes)	
	9S4466	LEVER ASSEM.	1
3	9M9788	PLUNGER	1
4	7M7316	SPRING	1
5	5H1351	PIN	1
6	9S4468	BOLT	1
	2F4159	LOCK	1
7	9S4673	BAND ASSEM.	1
C 8	6N3504	SEAT	1
9	2S8	SEAT	1
10	9M6302	WASHER	2
11	2P6116	WEIGHT ASSEM.	1
12	7B8105	LOCK	1
13	S1615	BOLT	3
	9M6293	LOCK	1
	2P8725	PISTON ASSEM.	1
C 14		(Includes)	
	7S8447	PISTON ASSEM.	1
15	1S4741	CYLINDER	1
16	8M8997	SEAL	1
17	7L8777	SLEEVE	1
18	2S7	SLEEVE	1
19	3K810	RING	1
20	7M7219	BEARING	1
	7M7193	RACE	2
21	8M8726	DOWEL	1
	8M8993	RING	1
22	9M6303	SPRING	1
C 23	8H9181	SPRING	1
24	8M8739	BOLT	1
25	2S7235	SPRING	1
26	2S7289	COLLAR	1
27	9M4704	SCREW	1
28	8L4154	COLLAR	1
29	8L4155	SCREW	1
30	5S9607	NUT	1
31	8S5061	COVER	1

C INDICATES CHANGE

166184

2P1499 GOVERNOR GROUP—Side View—Type 2
Serial No. 46A27801 & 46A28137—Up
Part of 2P1650 Fuel Pump Housing & Governor Group shown on Page 41

2P1499 GOVERNOR GROUP—End View—Type 2
Serial No. 46A27801 & 46A28137—Up
Part of 2P1650 Fuel Pump Housing & Governor Group shown on Page 41

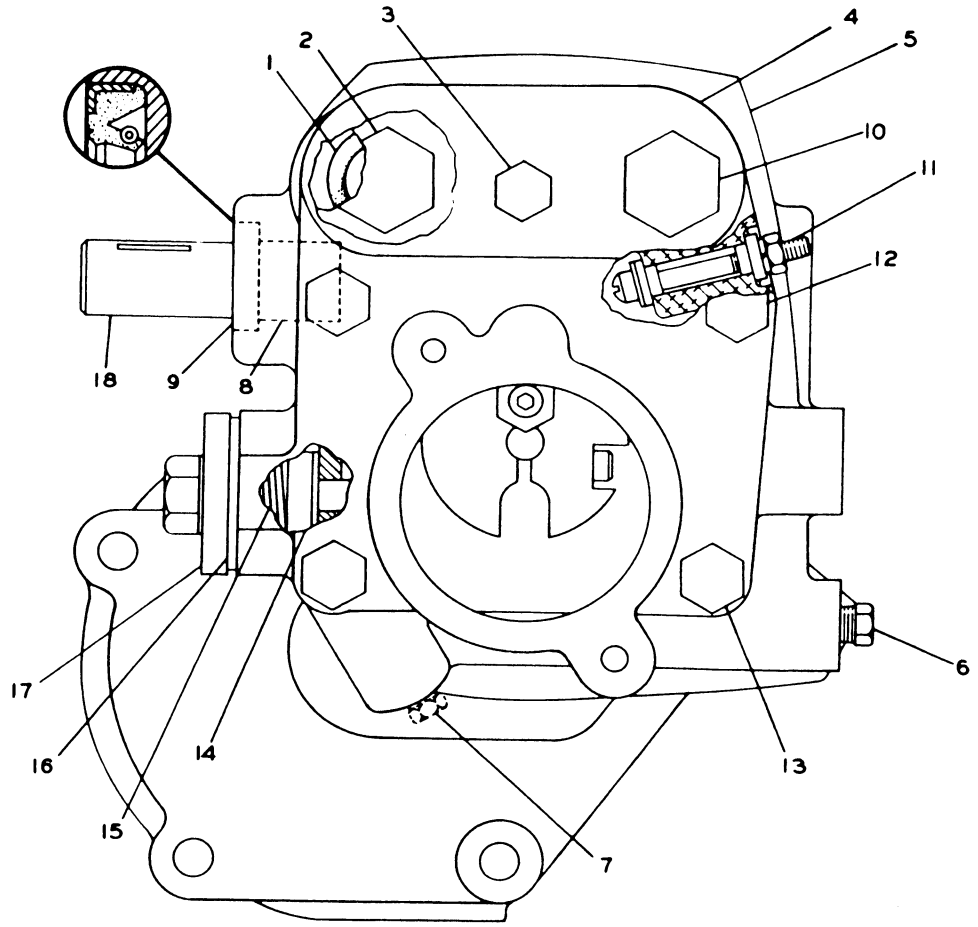

	REF. NO.	PART NUMBER	DESCRIPTION	QTY
	1	2J157	SEAL	2
C	2	9S7077	SCREW	1
	3	6L1756	BOLT	1
	4	5L8992	COVER	1
		5L8991	GASKET	1
	5	2P189	HOUSING ASSEM.	1
		8S134	BEARING	1
		4F4585	PLUG	1
	6	5M6214	PLUG	1
	7	2S7905	PLUG	1
	8	9S798	BEARING	1
	9	9S4671	SEAL	1
	10	8S8952	SCREW	1
	11	2S7387	SCREW	1
		4B2042	NUT	1
		3B4501	LOCKWASHER	1
		8F1326	WASHER	2
		2S7307	INSULATOR	2
	12	9M8720	BOLT	1
	13	2B2694	BOLT	4
	14	9M9187	PLUNGER	1
	15	1S9312	SPRING	1
C	16	2P8763	GASKET	1
	17	9S5393	PLUG	1
	18	9M4789	SHAFT	1

C INDICATES CHANGE

209249

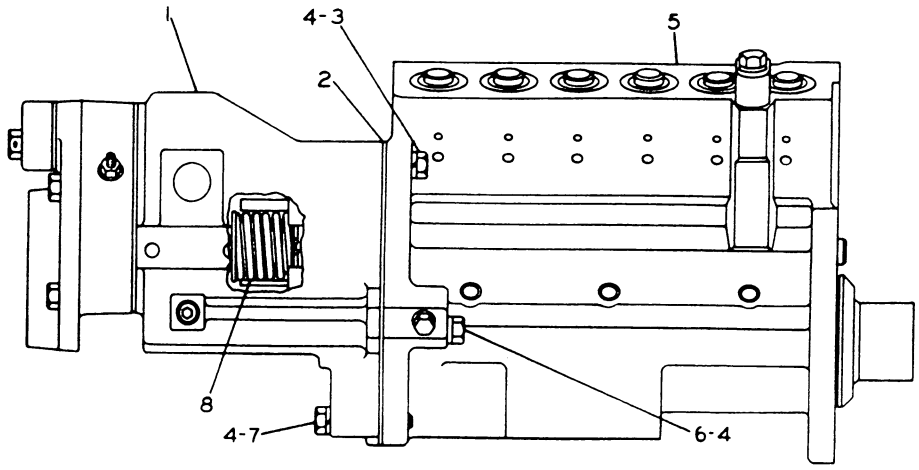

REF. NO.	PART NUMBER	DESCRIPTION	QTY
1	2P1499	GOVERNOR GROUP---------- (Separate Illustration)	1
2	3S9300	GASKET----------	1
3	1B7182	BOLT----------	2
4	3B4505	LOCKWASHER----------	6
5	1P9988	PUMP GROUP---------- (Separate Illustration)	1
6	2B2694	BOLT----------	1
7	1B9575	BOLT----------	3
C 8	4N5693	SPRING----------	1

C INDICATES CHANGE 144104

FUEL PUMP HOUSING AND GOVERNOR (2P1650 N/S)
Serial No. 46A27801 and 46A28137 to 46A32138 and 46A32149 inclusive
1P9988 Pump parts and 2P1499 Governor are shown on Pages
40C, 40D, 40E, 40F and 40G

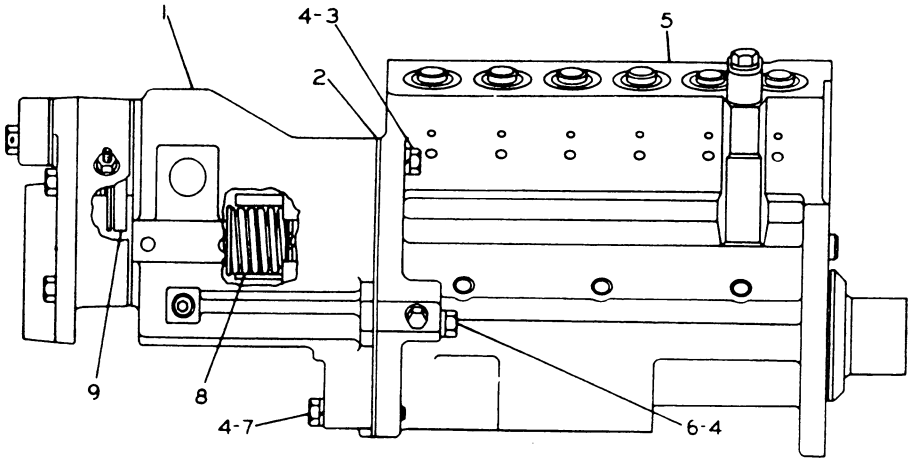

REF. NO.	PART NUMBER	DESCRIPTION	QTY
1	2P1499	GOVERNOR GROUP---------- (Separate Illustration)	1
2	3S9300	GASKET----------	1
3	1B7182	BOLT----------	2
4	3B4505	LOCKWASHER----------	6
5	1P9988	PUMP GROUP---------- (Separate Illustration)	1
6	2B2694	BOLT----------	1
7	1B9575	BOLT----------	3
8	4N5693	SPRING----------	1
C 9	Not Serv	TORQUE CONTROL---------- (Separate Illustration)	1

C INDICATES CHANGE 149297

FUEL PUMP HOUSING AND GOVERNOR (2P1650 N/S)
Serial No. 46A32139 to 46A32148 and 46A32150—Up. Torque Control, 1P9988
Pump and 2P1499 Governor parts are shown on Pages
36A, 40C, 40D, 40E, 40F and 40G

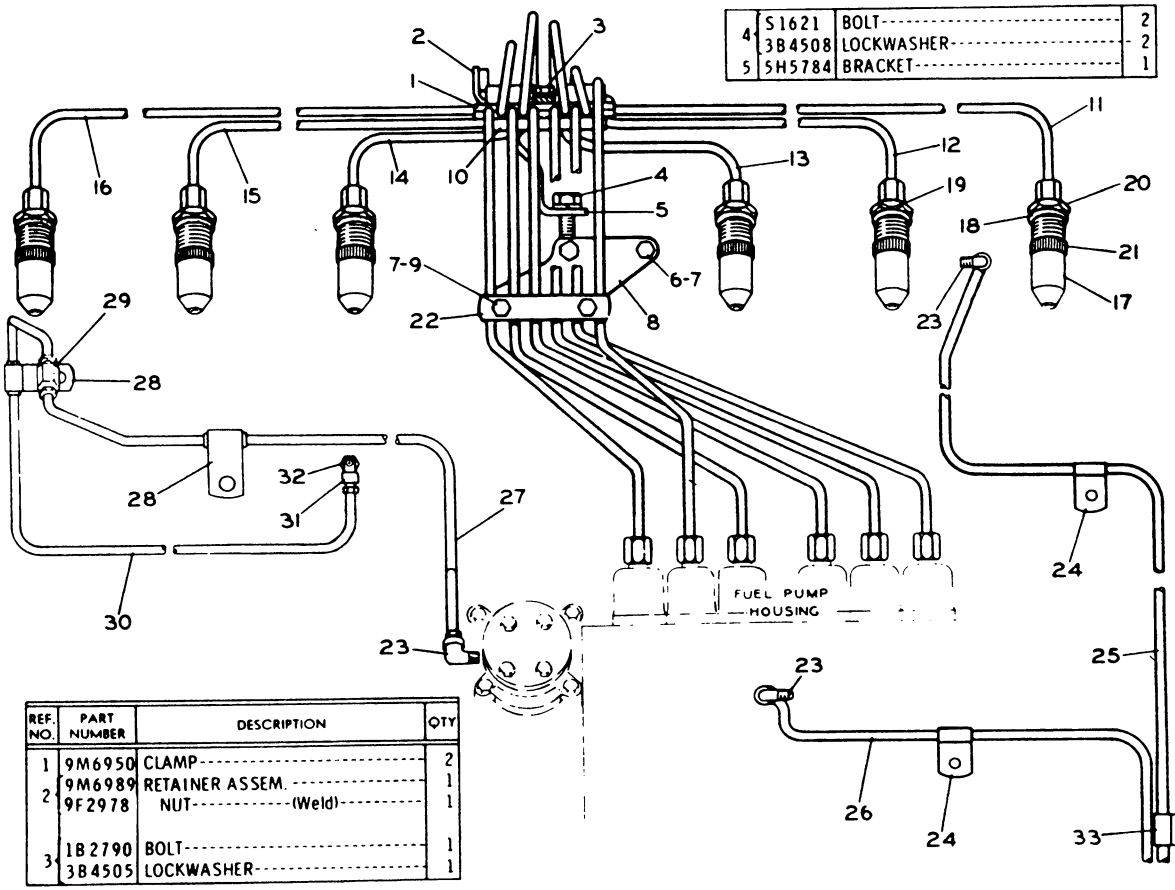

REF. NO.	PART NUMBER	DESCRIPTION	QTY
1	9M6950	CLAMP	2
2	9M6989	RETAINER ASSEM.	1
	9F2978	NUT----------(Weld)	1
3	1B2790	BOLT	1
	3B4505	LOCKWASHER	1
4	S1621	BOLT	2
	3B4508	LOCKWASHER	2
5	5H5784	BRACKET	1
6	L1351	BOLT	2
7	3B4506	LOCKWASHER	4
8	5H5714	BRACKET ASSEM.	1
	9F2978	NUT----------(Weld)	2
9	3B1915	BOLT	2
10	9M6987	RETAINER	1
11	4H9611	LINE ASSEM. ----(No. 1)	1
12	4H9612	LINE ASSEM. -----(No. 2)	1
13	4H9613	LINE ASSEM. ------(No. 3)	1
14	4H9614	LINE ASSEM. -------(No. 4)	1
15	4H9615	LINE ASSEM. --------(No. 5)	1
16	4H9616	LINE ASSEM. ---------(No. 6)	1
C 17	8M1584	VALVE SERVICE GROUP	6
18	5B3718	SEAL	1
19	6F1069	SEAL ASSEM.	1
20	5H7225	NUT	6
21	7M4603	BODY	6
22	2B4443	CLAMP	2
	2A2071	RETAINER	1
23	3B8998	FITTING---(To Fuel Filter)	3
	1F1344	NUT	1
24	L2072	CLIP-----(To Cylinder Block)	3
▲ 25	4S8385	TUBE----------41.00"	
▲ 26	4S8385	TUBE----------24.46"	
▲ 27	4S8385	TUBE----------45.06"	
28	8F1179	CLIP	3
	4B6029	GROMMET	3
29	3B8990	FITTING	1
	1F1344	NUT	1
▲ 30	4S8385	TUBE----------43.23"	
31	1L9873	FITTING	1
	1F1344	NUT	1
32	5M6214	PLUG	1
33	2B2404	CLIP	1

C INDICATES CHANGE
▲ ORDER BY THE FOOT

149375

FUEL INJECTION VALVES AND LINES (9S6501 N/S)
Serial No. 46A24433 to 25737, 25741, 25742, 25744 & 46A25745 inclusive

FUEL INJECTION VALVES AND LINES (9S6501 N/S)

Serial No. 46A25738 to 25740, 25743, 25746 to 27800 and 46A27802 to 46A28136 inclusive

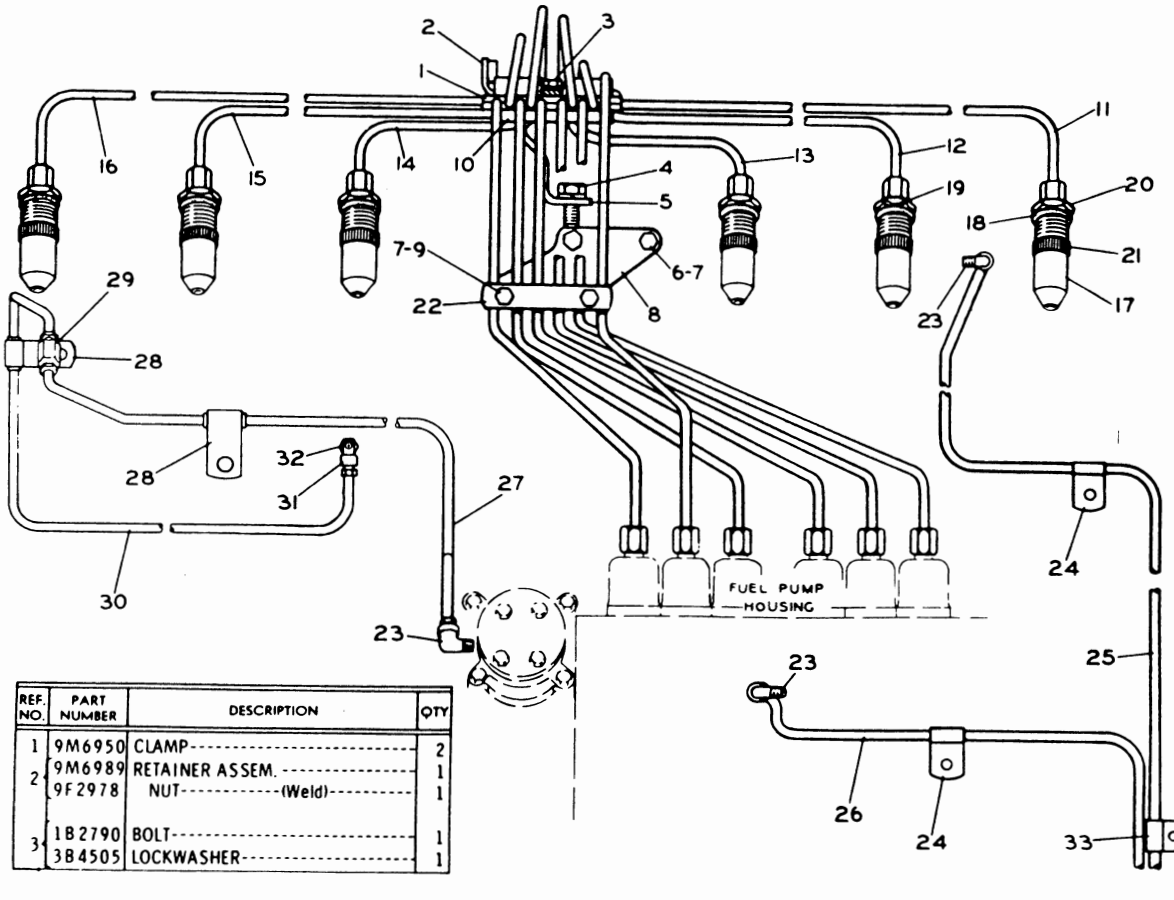

REF. NO.	PART NUMBER	DESCRIPTION	QTY
1	9M6950	CLAMP	2
2	9M6989	RETAINER ASSEM.	1
	9F2978	NUT-----(Weld)-----	1
3	1B2790	BOLT	1
	3B4505	LOCKWASHER	1
4	S1621	BOLT	2
	3B4508	LOCKWASHER	2
5	5H5784	BRACKET	1
6	L1351	BOLT	2
7	3B4506	LOCKWASHER	4
8	5H5714	BRACKET ASSEM.	1
	9F2978	NUT-----(Weld)-----	2
9	3B1915	BOLT	2
10	9M6987	RETAINER	1
11	1P6830	LINE ASSEM. ----(No. 1)-----	1
12	1P6831	LINE ASSEM. -----(No. 2)-----	1
13	4H9613	LINE ASSEM. ------(No. 3)------	1
14	4H9614	LINE ASSEM. -------(No. 4)------	1
15	4H9615	LINE ASSEM. --------(No. 5)------	1
16	4H9616	LINE ASSEM. ---------(No. 6)-----	1
C 17	8M1584	VALVE SERVICE GROUP	6
18	5B3718	SEAL	1
19	6F1069	SEAL ASSEM.	1
20	5H7225	NUT	6
21	7M4603	BODY	6
22	2B4443	CLAMP	2
	2A2071	RETAINER	1
23	3B8998	FITTING---(To Fuel Filter)-----	3
	1F1344	NUT	1
24	L2072	CLIP-----(To Cylinder Block)-----	3
▲ 25	4S8385	TUBE----------41.00"	
▲ 26	4S8385	TUBE----------24.46"	
▲ 27	4S8385	TUBE----------45.06"	
28	8F1179	CLIP	3
	4B6029	GROMMET	3
29	3B8990	FITTING	1
	1F1344	NUT	1
▲ 30	4S8385	TUBE----------43.23"	
31	1L9873	FITTING	1
	1F1344	NUT	1
32	5M6214	PLUG	1
33	2B2404	CLIP	1

▲ ORDER BY THE FOOT
C INDICATES CHANGE

145501

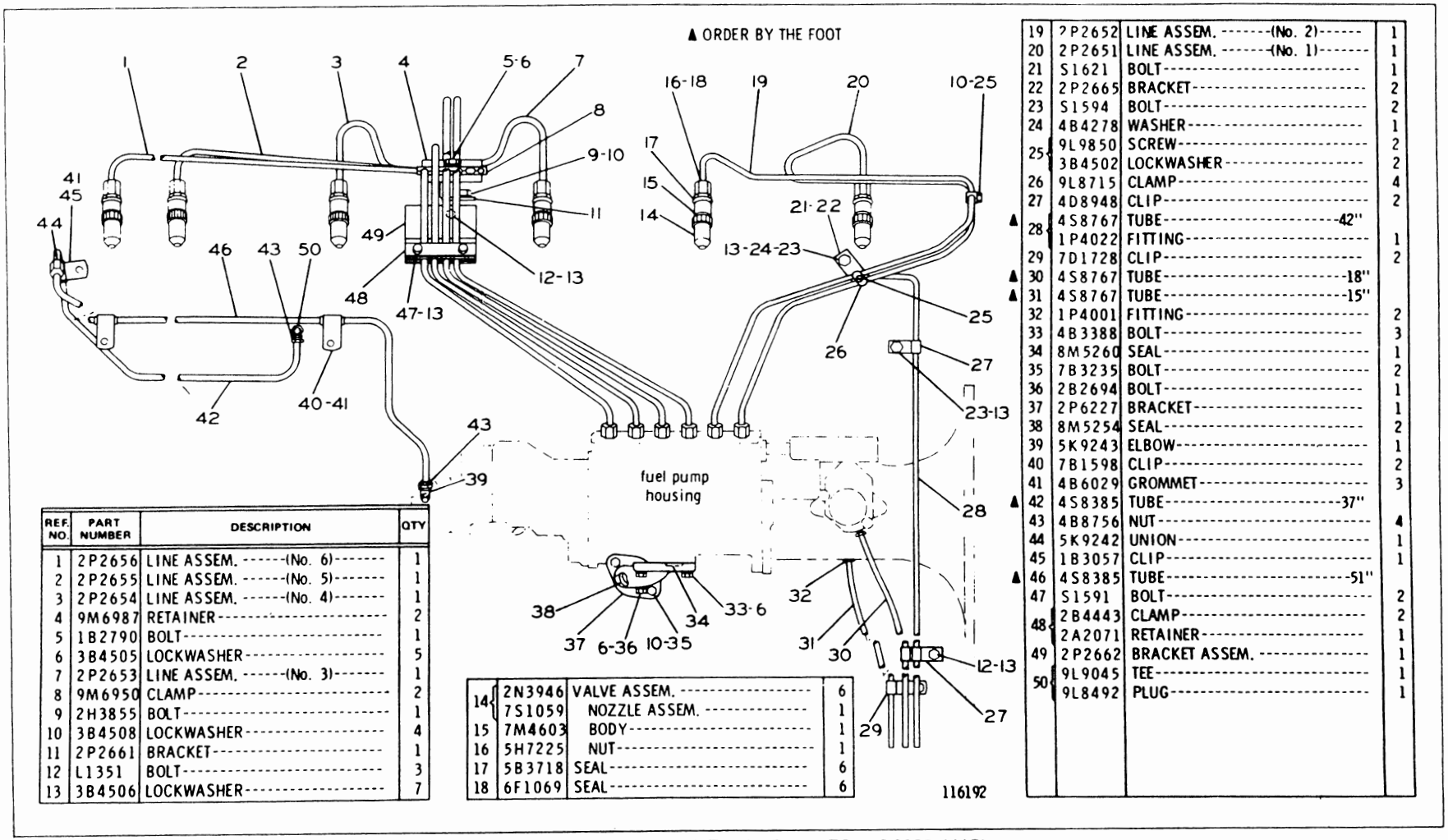

REF. NO.	PART NUMBER	DESCRIPTION	QTY
1	2P2656	LINE ASSEM. ------(No. 6)-------	1
2	2P2655	LINE ASSEM. ------(No. 5)-------	1
3	2P2654	LINE ASSEM. ------(No. 4)-------	1
4	9M6987	RETAINER----------	2
5	1B2790	BOLT----------	1
6	3B4505	LOCKWASHER----------	5
7	2P2653	LINE ASSEM. ------(No. 3)-------	1
8	9M6950	CLAMP----------	2
9	2H3855	BOLT----------	1
10	3B4508	LOCKWASHER----------	4
11	2P2661	BRACKET----------	1
12	L1351	BOLT----------	3
13	3B4506	LOCKWASHER----------	7
14	2N3946	VALVE ASSEM. ----------	6
	7S1059	NOZZLE ASSEM. ----------	1
15	7M4603	BODY----------	1
16	5H7225	NUT----------	1
17	5B3718	SEAL----------	6
18	6F1069	SEAL----------	6
19	7P2652	LINE ASSEM. -------(No. 2)------	1
20	2P2651	LINE ASSEM. -------(No. 1)-------	1
21	S1621	BOLT----------	1
22	2P2665	BRACKET----------	2
23	S1594	BOLT----------	2
24	4B4278	WASHER----------	1
25	9L9850	SCREW----------	2
	3B4502	LOCKWASHER----------	2
26	9L8715	CLAMP----------	4
27	4D8948	CLIP----------	2
▲ 28	4S8767	TUBE----------42"	
	1P4022	FITTING----------	1
29	7D1728	CLIP----------	2
▲ 30	4S8767	TUBE----------18"	
▲ 31	4S8767	TUBE----------15"	
32	1P4001	FITTING----------	2
33	4B3388	BOLT----------	3
34	8M5260	SEAL----------	1
35	7B3235	BOLT----------	2
36	2B2694	BOLT----------	1
37	2P6227	BRACKET----------	1
38	8M5254	SEAL----------	2
39	5K9243	ELBOW----------	1
40	7B1598	CLIP----------	2
41	4B6029	GROMMET----------	3
▲ 42	4S8385	TUBE----------37"	
43	4B8756	NUT----------	4
44	5K9242	UNION----------	1
45	1B3057	CLIP----------	1
▲ 46	4S8385	TUBE----------51"	
47	S1591	BOLT----------	2
48	2B4443	CLAMP----------	2
	2A2071	RETAINER----------	1
49	2P2662	BRACKET ASSEM. ----------	1
50	9L9045	TEE----------	1
	9L8492	PLUG----------	1

FUEL INJECTION VALVES AND LINES (2P2660 N/S)

Serial No. 46A27801 and 46A28137 to 46A31956, 46A31958 to 46A31960, 31963, 31966, 31970 to 46A31973 inclusive

FUEL INJECTION VALVES AND LINES (2P2660 N/S)

Serial No. 46A31957, 31961, 31962, 31964, 31965, 31967 to 31969 and 46A31974—Up

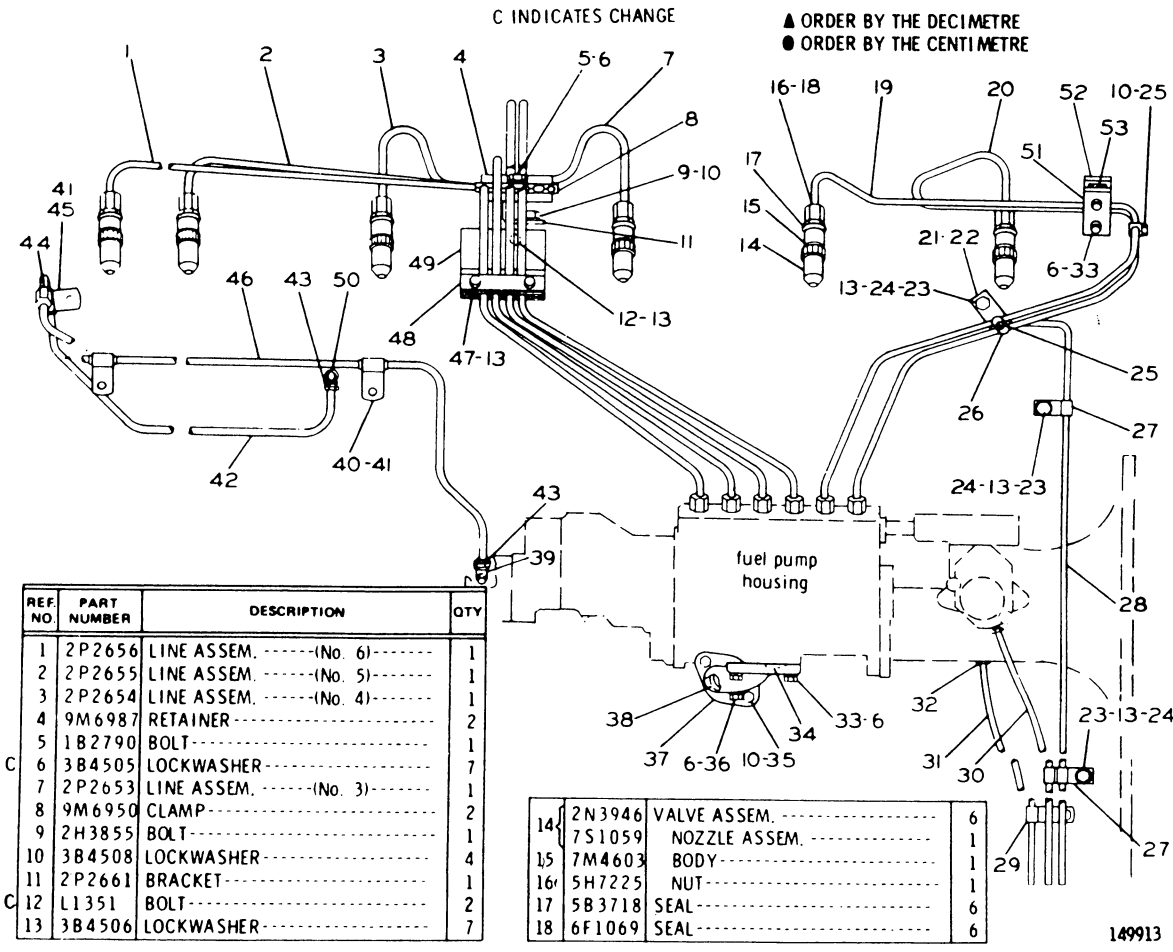

REF. NO.	PART NUMBER	DESCRIPTION	QTY
1	2P2656	LINE ASSEM. ------(No. 6)------	1
2	2P2655	LINE ASSEM. ------(No. 5)------	1
3	2P2654	LINE ASSEM. ------(No. 4)------	1
4	9M6987	RETAINER	2
5	1B2790	BOLT	1
C 6	3B4505	LOCKWASHER	7
7	2P2653	LINE ASSEM. ------(No. 3)------	1
8	9M6950	CLAMP	2
9	2H3855	BOLT	1
10	3B4508	LOCKWASHER	4
11	2P2661	BRACKET	1
C 12	L1351	BOLT	2
13	3B4506	LOCKWASHER	7
14	2N3946	VALVE ASSEM.	6
	7S1059	NOZZLE ASSEM.	1
15	7M4603	BODY	1
16	5H7225	NUT	1
17	5B3718	SEAL	6
18	6F1069	SEAL	6
19	2P2652	LINE ASSEM. ------(No. 2)------	1
20	2P2651	LINE ASSEM. ------(No. 1)------	1
21	S1621	BOLT	1
22	2P2665	BRACKET	2
C 23	S1594	BOLT	3
C 24	4B4278	WASHER	3
25	9L9850	SCREW	2
	3B4502	LOCKWASHER	2
26	9L8715	CLAMP	4
27	4D8948	CLIP	2
▲ 28	5P756	TUBE----------10.67 dm(42 in.)	
	1P4022	FITTING	1
29	7D1728	CLIP	2
▲ 30	5P756	TUBE----------4.57 dm(18 in.)	
▲ 31	5P756	TUBE----------3.81 dm(15 in.)	
32	1P4001	FITTING	2
C 33	4B3388	BOLT	5
34	8M5260	SEAL	1
35	7B3235	BOLT	2
36	2B2694	BOLT	1
37	2P6227	BRACKET	1
38	8M5254	SEAL	2
39	5K9243	ELBOW	1
40	7B1598	CLIP	2
41	4B6029	GROMMET	3
● 42	5P1198	TUBE----------93.98 cm(37 in.)	
43	4B8756	NUT	4
44	5K9242	UNION	1
45	1B3057	CLIP	1
● 46	5P1198	TUBE----------128.54 cm(51 in.)	
47	S1591	BOLT	2
48	2B4443	CLAMP	2
	2A2071	RETAINER	1
49	2P2662	BRACKET ASSEM.	1
50	9L9045	TEE	1
	9L8492	PLUG	1
C 51	8S4006	CLIP	1
C 52	8S4001	CLAMP	1
C 53	8S4215	DAMPER	2

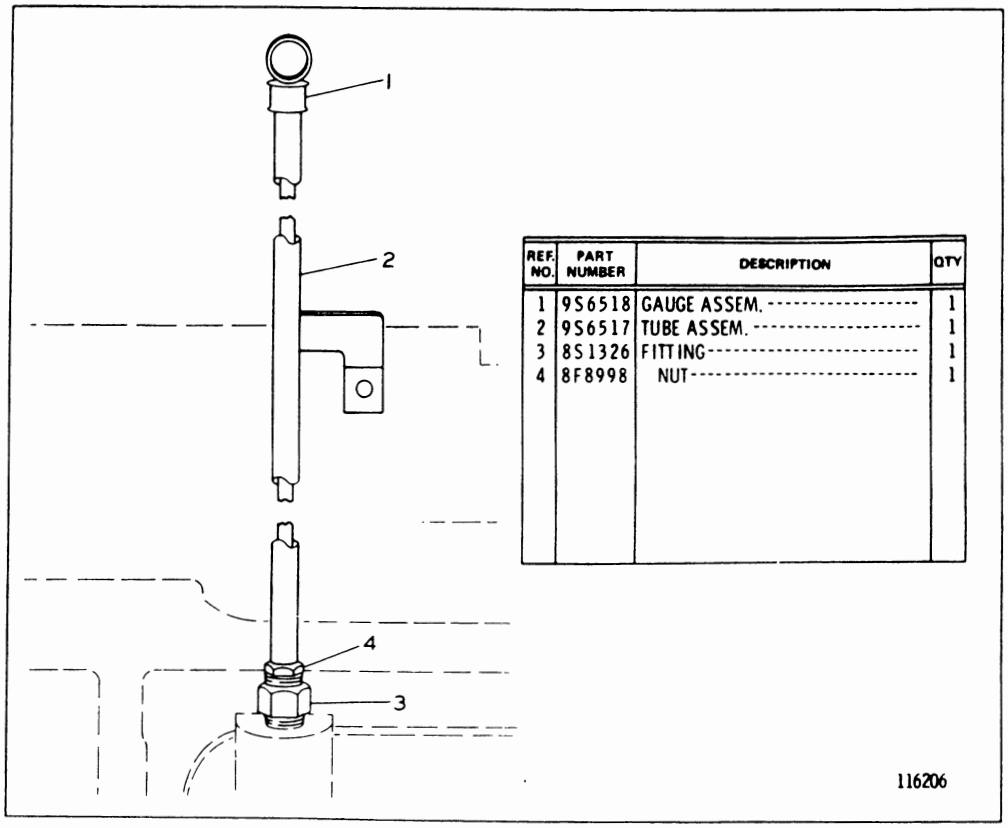

REF. NO.	PART NUMBER	DESCRIPTION	QTY
1	9S6518	GAUGE ASSEM.	1
2	9S6517	TUBE ASSEM.	1
3	8S1326	FITTING	1
4	8F8998	NUT	1

OIL LEVEL GAUGE (2P6551 N/S)
Serial No. 46A27801 and 46A28137 to 46A29449 inclusive

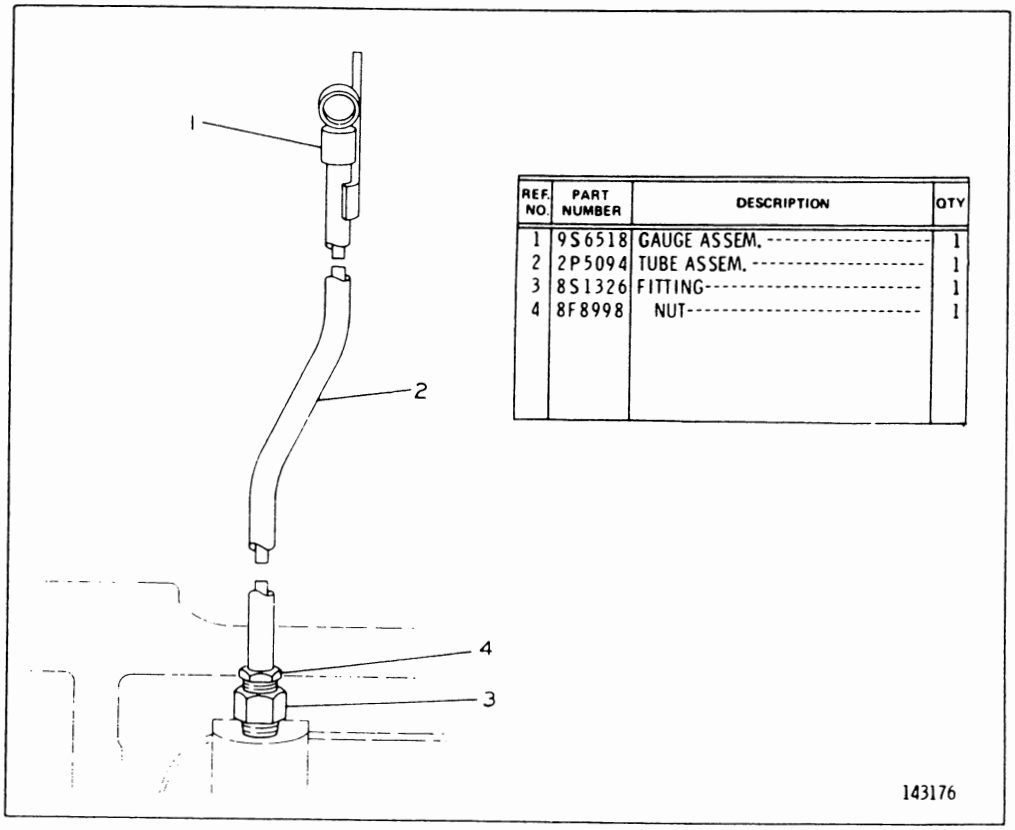

REF. NO.	PART NUMBER	DESCRIPTION	QTY
1	9S6518	GAUGE ASSEM.	1
2	2P5094	TUBE ASSEM.	1
3	8S1326	FITTING	1
4	8F8998	NUT	1

OIL LEVEL GAUGE (4N3291 N/S)
Serial No. 46A29450—Up

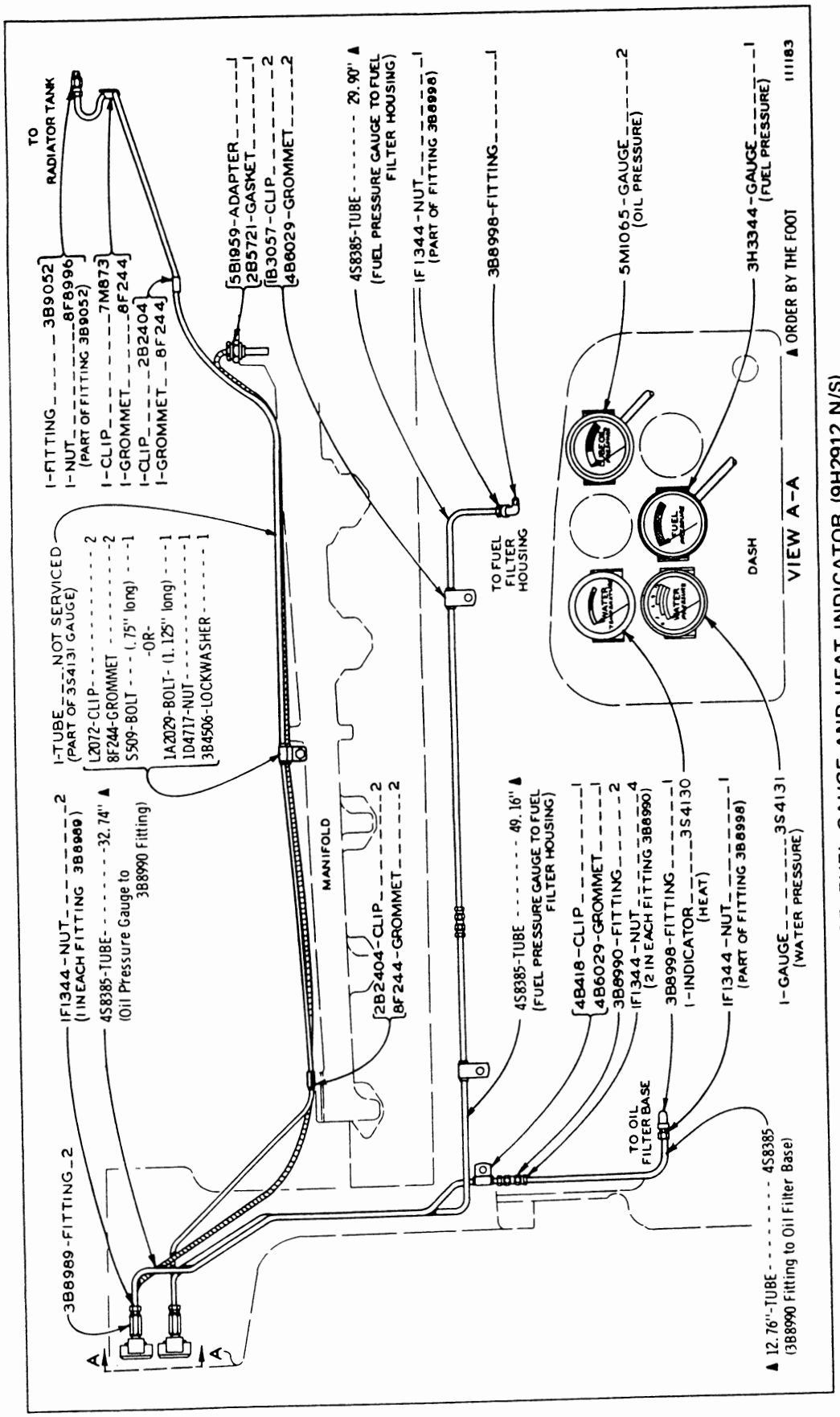

OIL GUAGE, FUEL GAUGE AND HEAT INDICATOR (9H2912 N/S)
Serial No. 46A24433 to 46A27800 and 46A27802 to 46A28136 inclusive

OIL GAUGE, FUEL GAUGE AND HEAT INDICATOR (9H2912 N/S)
Serial No. 46A 27801 and 46A28137 to 46A29449 inclusive

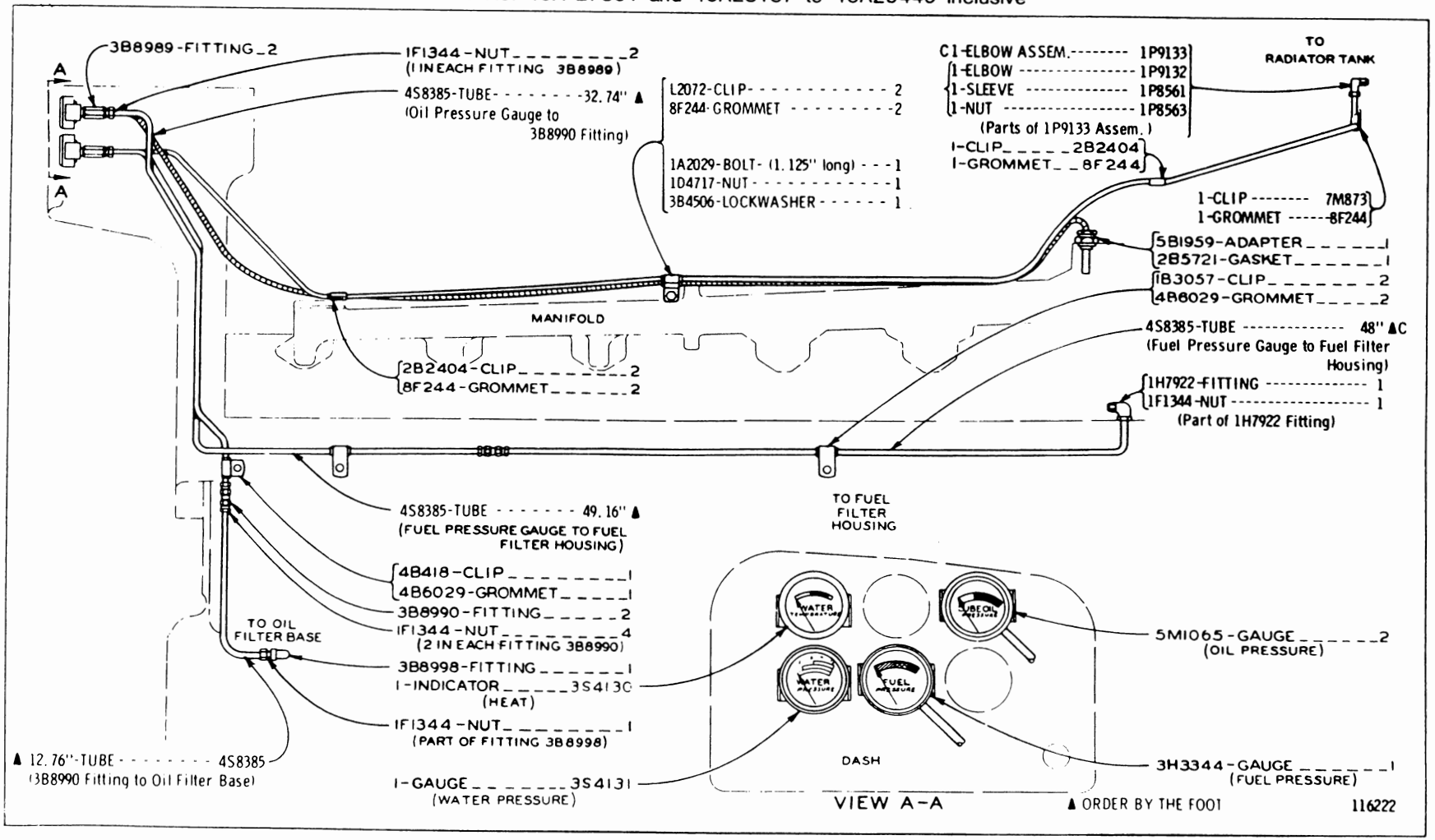

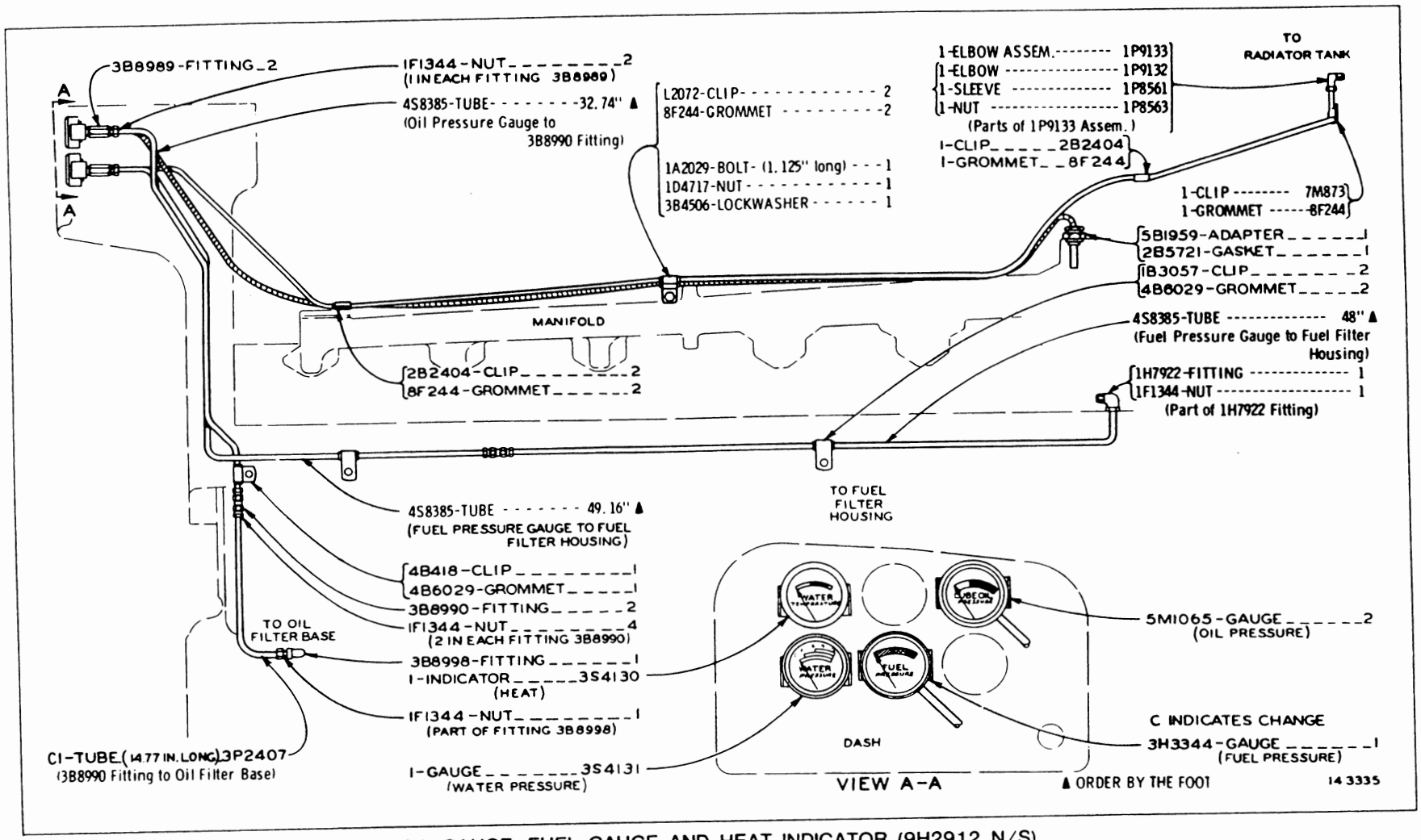

OIL GAUGE, FUEL GAUGE AND HEAT INDICATOR (9H2912 N/S)
Serial No. 46A29450 to 46A29658 inclusive

OIL GAUGE, FUEL GAUGE AND HEAT INDICATOR (9H2912 N/S)
Serial No. 46A29659—Up

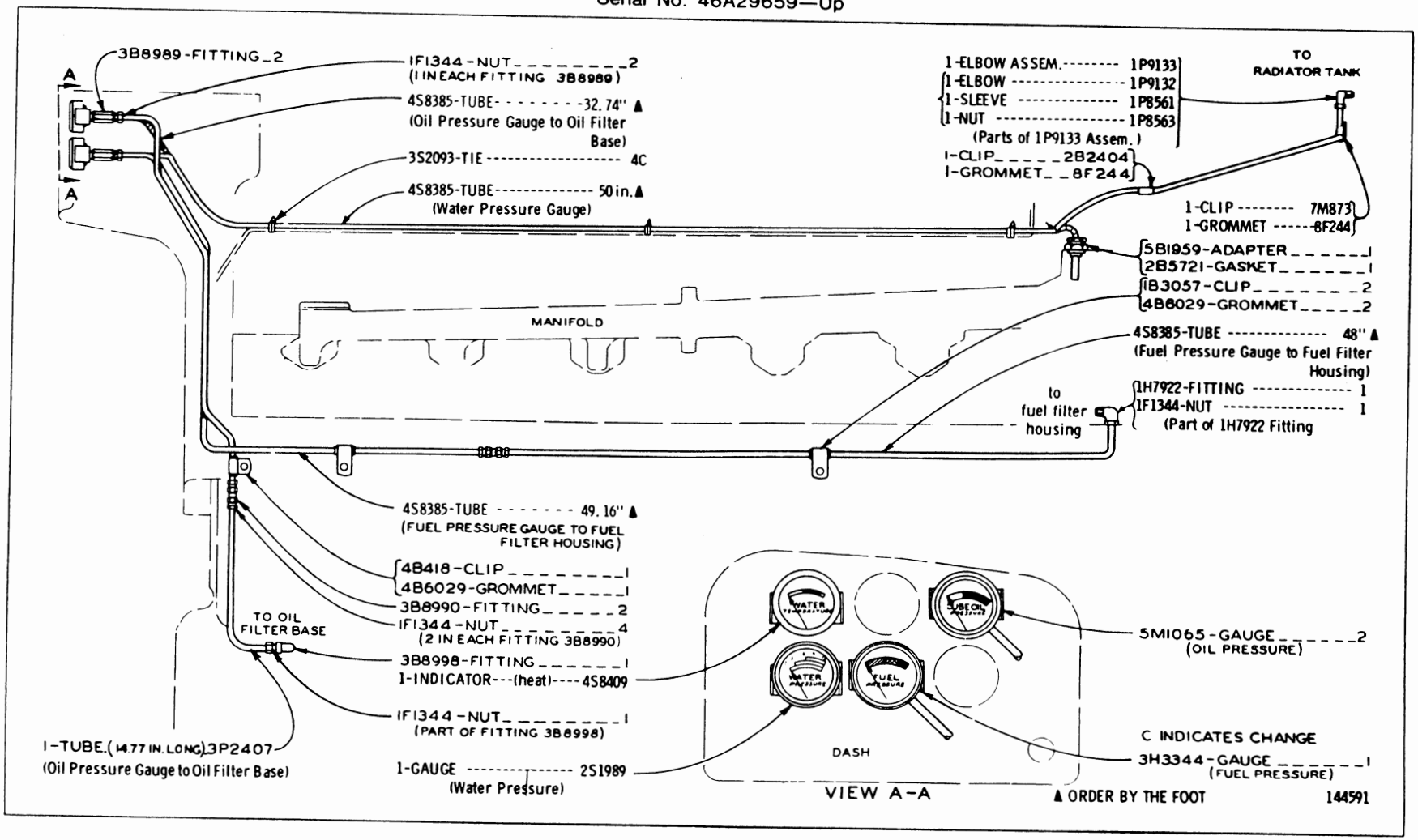

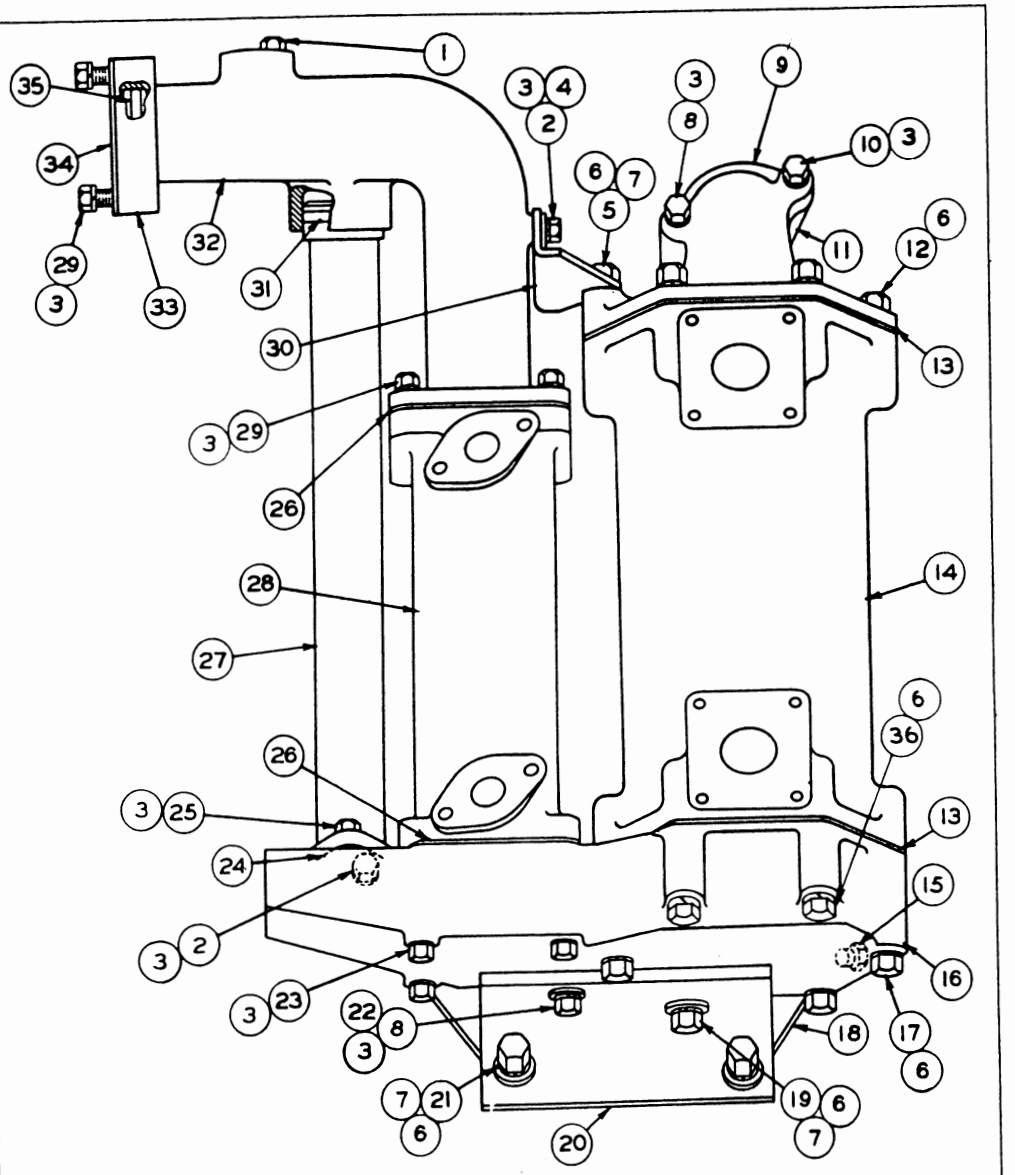

REF. NO.	PART NUMBER	DESCRIPTION	QTY
1	5M6214	PLUG	1
2	S 1594	BOLT	6
3	3B4506	LOCKWASHER	20
4	4B4278	WASHER	2
5	9S1366	BOLT	1
6	3B4508	LOCKWASHER	14
7	4B4280	WASHER	4
8	8S9191	BOLT	2
9	5S294	BONNET	1
10	S 1590	BOLT	1
11	2H5571	GASKET	1
12	7B3235	BOLT	5
13	2S795	GASKET	2
14	5S264	CORE ASSEM. -----(Oil Cooler)-----	1
15	2H8829	PLUG	1
	6F7062	GASKET	1
16	5S8153	BONNET	1
17	1D4566	BOLT	3
18	5S345	PLATE	1
19	S 1573	BOLT	1
20	5S344	BRACKET	1
21	S 1593	BOLT	2
22	8M7145	WASHER	1
23	L1352	BOLT	3
24	8S5543	GASKET	1
25	1A2029	BOLT	2
26	2M5414	GASKET	2
27	5S353	TUBE ASSEM.	1
28	9M8041	COOLER ASSEM. ---(Engine Oil)----	1
29	S 1588	BOLT	6
30	5S372	BRACKET	1
31	4F8824	SEAL	1
32	5S295	PIPE	1
33	1S2093	FLANGE	1
34	4H9008	GASKET	1
35	3H2652	SEAL	1
36	L1329	BOLT	2

111194

ENGINE AND TORQUE CONVERTER OIL COOLER (5S483 N/S)
Serial No. 46A24433 to 46A24904, 46A24908 and 46A24909 inclusive

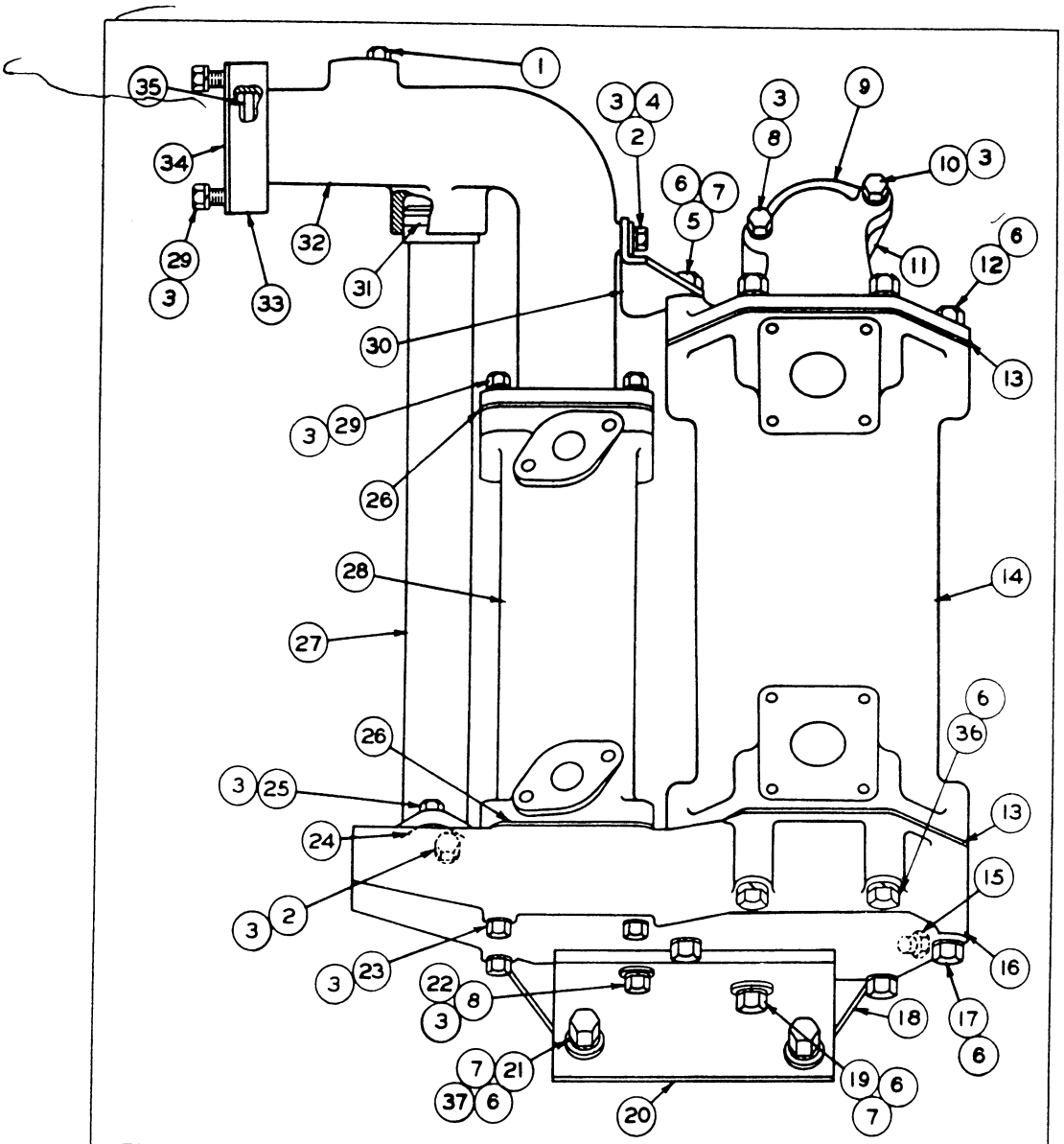

REF. NO.	PART NUMBER	DESCRIPTION	QTY
1	5M6214	PLUG	1
2	S 1594	BOLT	6
3	3B4506	LOCKWASHER	20
4	4B4278	WASHER	2
5	9S1366	BOLT	1
6	3B4508	LOCKWASHER	14
7	4B4280	WASHER	4
8	8S9191	BOLT	2
9	5S294	BONNET	1
10	S 1590	BOLT	1
11	2H5571	GASKET	1
12	7B3235	BOLT	5
13	2S795	GASKET	2
14	5S264	CORE ASSEM. -----(Oil Cooler)----	1
15	2H8829	PLUG	1
	6F7062	GASKET	1
16	5S8153	BONNET	1
17	1D4566	BOLT	3
18	1P8432	PLATE	1
19	S1573	BOLT	1
20	5S344	BRACKET	1
21	S1585	BOLT	2
22	8M7145	WASHER	1
23	L1352	BOLT	3
24	8S5543	GASKET	1
25	1A2029	BOLT	2
26	2M5414	GASKET	2
27	5S353	TUBE ASSEM.	1
28	9M8041	COOLER ASSEM. ---(Engine Oil)----	1
29	S 1588	BOLT	6
30	5S372	BRACKET	1
31	4F8824	SEAL	1
32	5S295	PIPE	1
33	1S2093	FLANGE	1
34	4H9008	GASKET	1
35	3H2652	SEAL	1
36	L1329	BOLT	2
37	1D4719	NUT	2

134444

ENGINE AND TORQUE CONVERTER OIL COOLER (5S483 N/S)
Serial No. 46A24905 to 46A24907 and 46A24910—Up

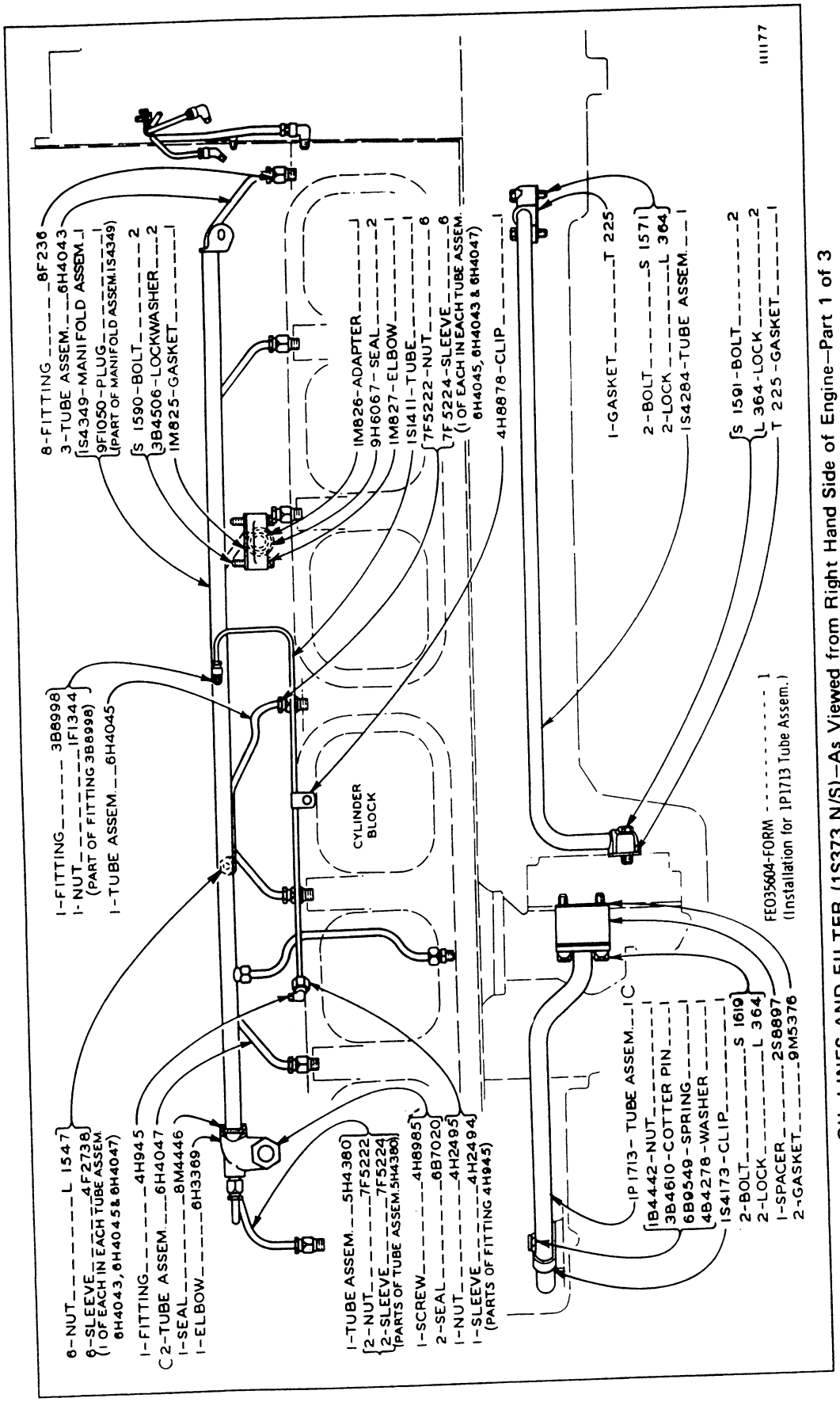

OIL LINES AND FILTER (1S373 N/S)—As Viewed from Right Hand Side of Engine—Part 1 of 3
Serial No. 46A24433 to 46A27800 and 46A27802 to 46A28136 inclusive

OIL LINES AND FILTER (1S373 N/S)—As Viewed from Front of Engine—Part 2 of 3

Serial No. 46A24433 to 46A27800 and 46A27802 to 46A28136 inclusive

2S8877 Oil Filter parts are shown on Page 48

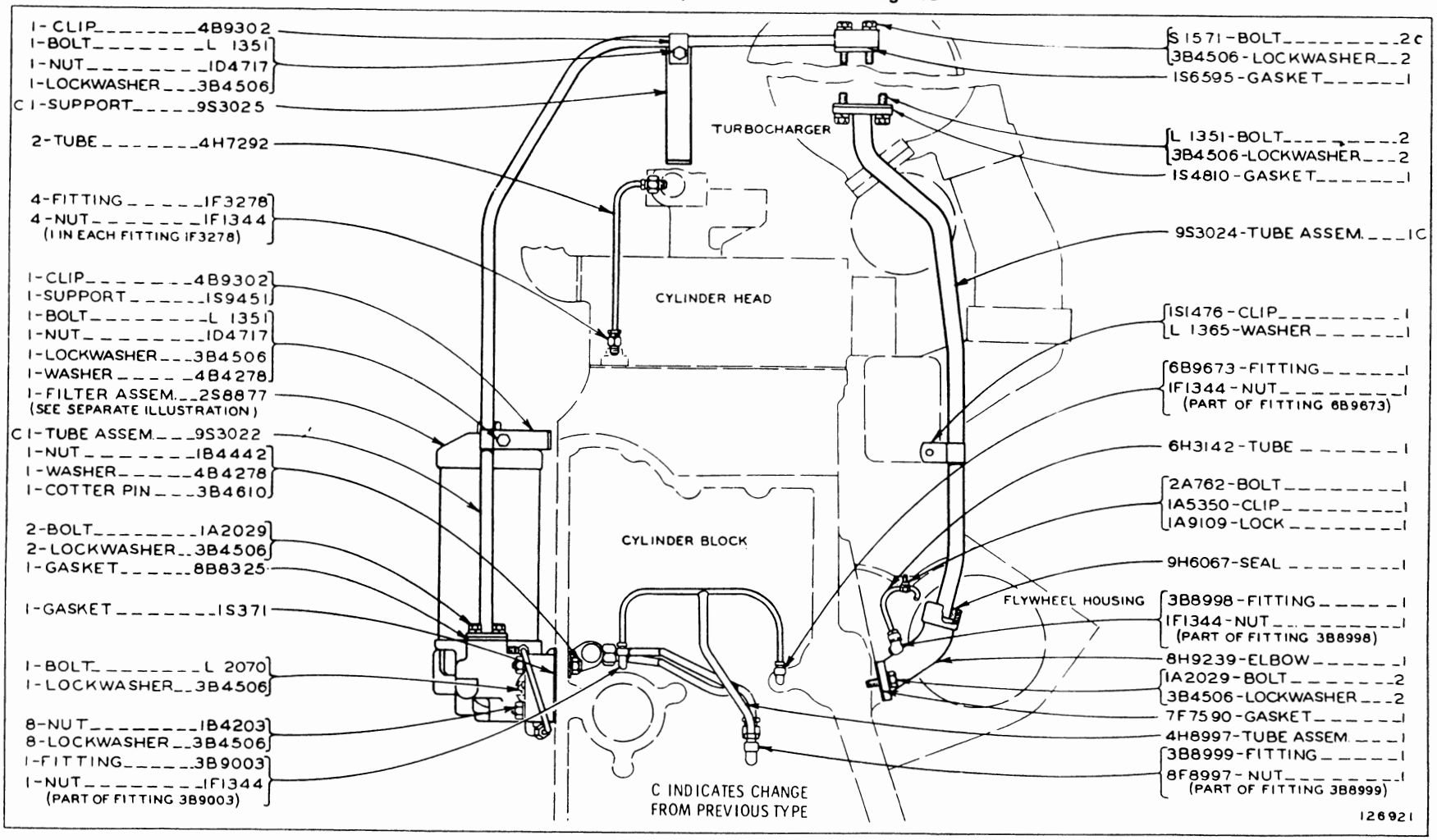

REF NO.	PART NUMBER	DESCRIPTION	QTY
1	1A2029	BOLT----------(1" Long)----------	13
2	3B4506	LOCKWASHER----------	19
3	5S347	TUBE ASSEM. ----------	1
	9F2978	NUT----------	1
		(Part of 5S347 Tube Assem.)	
4	9H6067	SEAL----------	4
5	5S355	TUBE ASSEM. -(8.78" Long Overall)-	1
6	9H8217	GASKET----------	4
7	S-1571	BOLT---------(1.75" Long)---------	1
8	S-1588	BOLT---------(1.25" Long)---------	4
9	1S735	TUBE ASSEM. ----------	1
10	2M1028	ELBOW----------	1
		(Part of 1S735 Tube Assem.)	
11	7B7129	GASKET----------	1
12	8M5521	GASKET----------	1
13	1S733	ELBOW----------	1

REF NO.	PART NUMBER	DESCRIPTION	QTY
14	L-2070	BOLT---------(2.25" Long)---------	1
15	5S351	TUBE ASSEM. ----------	1
16	1D4717	NUT----------	1
17	5K3118	CLAMP----------	2
18	2H8829	PLUG----------	1
19	6F7062	GASKET----------	1
20	5S337	TUBE ASSEM. (18.77" Long Overall)	1
	9F2978	NUT----------	1
		(Part of 5S337 Tube Assem.)	
21	5S265	ELBOW----------	1
22	4H5952	GASKET----------	1
23	5H8177	PLUG----------	1
24	6F7062	WASHER----------	1
25	5S269	ELBOW----------	1
26	4H5952	GASKET----------	1

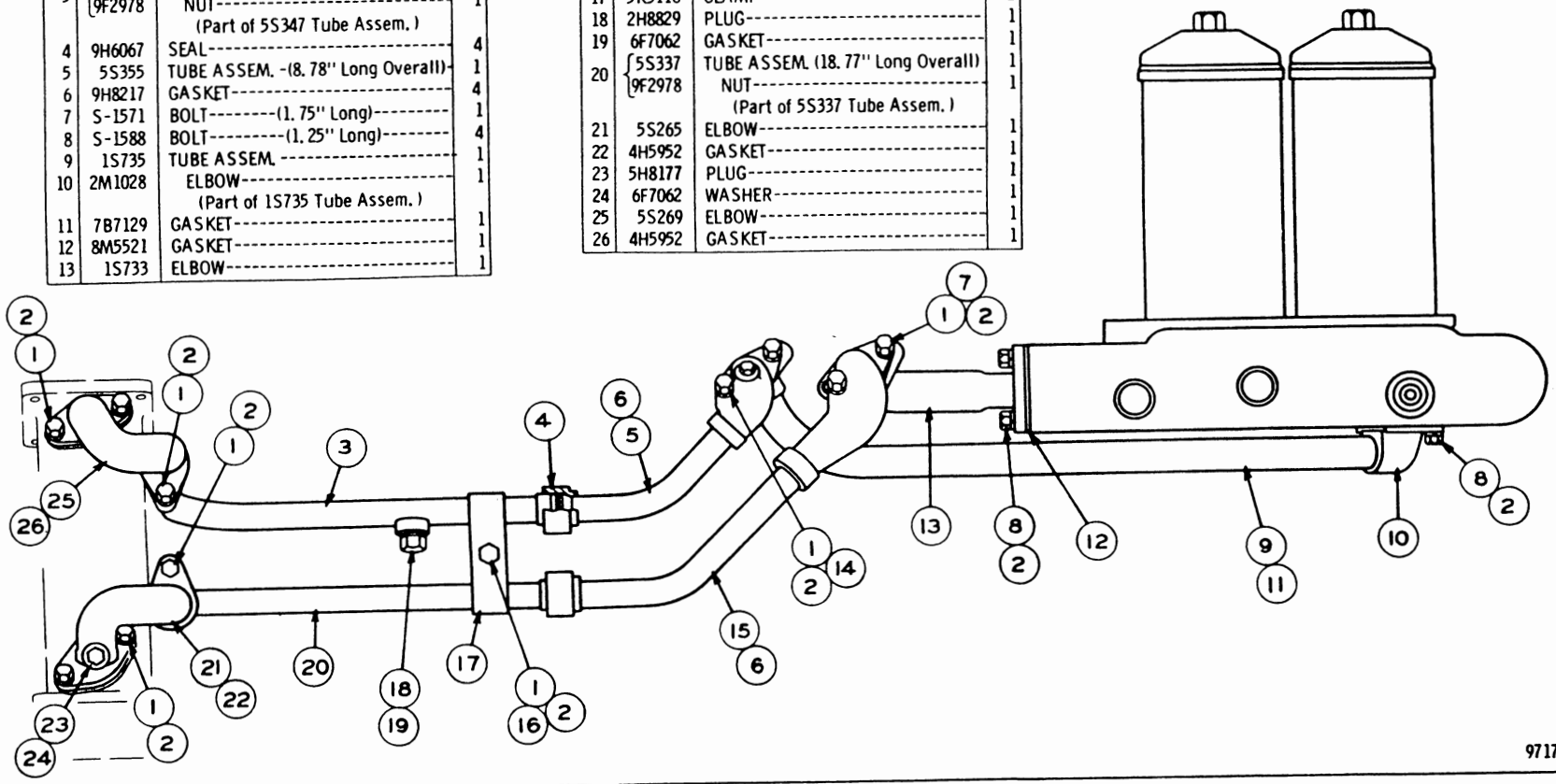

OIL LINES AND FILTER (1S373 N/S)—As Viewed from Right Hand Side of Engine—Part 3 of 3
Serial No. 46A24433 to 46A27800 and 46A27802 to 46A28136 inclusive

OIL LINES AND FILTER (2P900 N/S)—As Viewed from Right Hand Side of Engine — Part 1 of 3
Serial No. 46A27801 and 46A28137 to 46A29449 inclusive

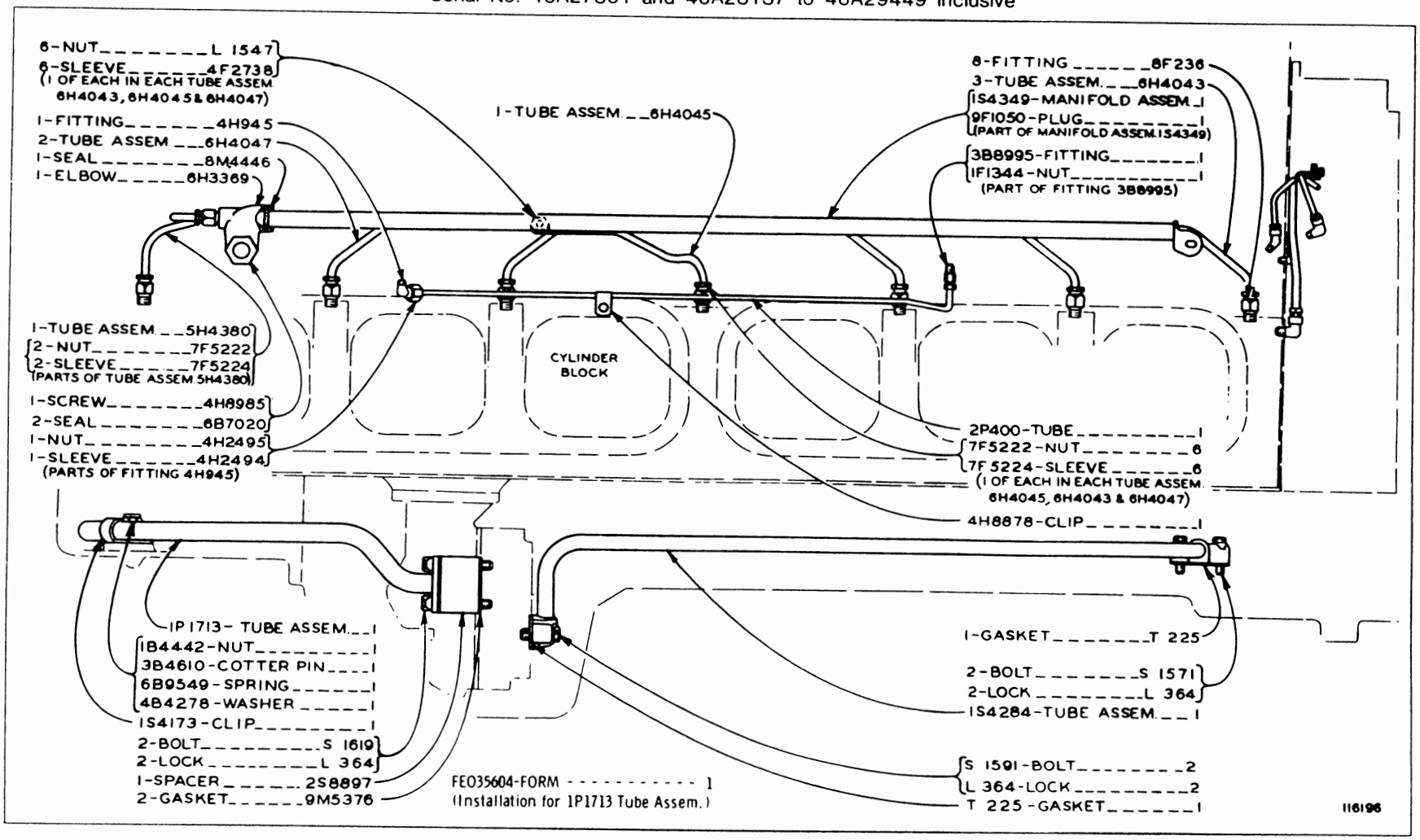

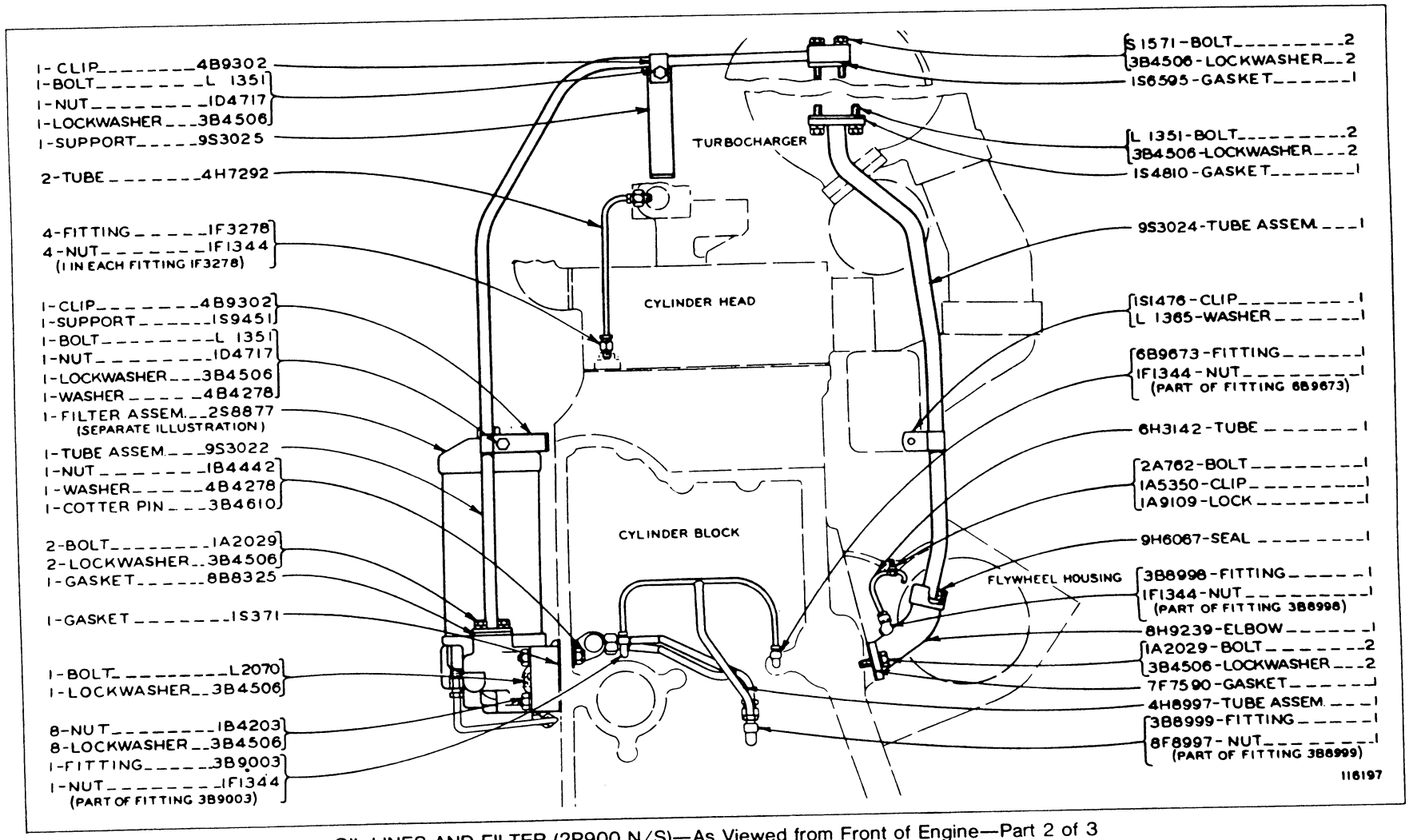

OIL LINES AND FILTER (2P900 N/S)—As Viewed from Front of Engine—Part 2 of 3
Serial No. 46A27801 and 46A28137 to 46A29449 inclusive
2S8877 Oil Filter parts are shown on Page 48

OIL LINES AND FILTER (2P900 N/S)—As Viewed from Right Hand Side of Engine—Part 3 of 3
Serial No. 46A27801 and 46A28137 to 46A29449 inclusive

REF. NO.	PART NUMBER	DESCRIPTION	QTY
1	1A2029	BOLT---------(1" long)---------	13
2	3B4506	LOCKWASHER----------	19
3	5S347	TUBE ASSEM.----------	1
	9F2978	NUT----------	1
4	9H6067	SEAL----------	4
5	5S355	TUBE ASSEM.-(8.78" long overall)-	1
6	5M6214	PLUG----------	1
7	S1571	BOLT---------(1.75" long)--------	1
8	S1588	BOLT---------(1.25" long)--------	4
9	1S735	TUBE ASSEM.----------	1
10	2M1028	ELBOW----------	1
11	7B7129	GASKET----------	1
12	8M5521	GASKET----------	1
13	1S733	ELBOW----------	1
14	L2070	BOLT---------(2.25" long)--------	1
15	5S351	TUBE ASSEM.----------	1
16	1D4717	NUT----------	1
17	5K3118	CLAMP----------	2
18	2H8829	PLUG----------	1
19	6F7062	GASKET----------	1
20	5S337	TUBE ASSEM.-(18.77" long overall)-	1
	9F2978	NUT----------	1
21	5S265	ELBOW----------	1
22	4H5952	GASKET----------	1
23	5H8177	PLUG----------	1
24	6F7062	WASHER----------	1
25	5S269	ELBOW----------	1
26	4H5952	GASKET----------	1
27	9H8217	GASKET----------	4

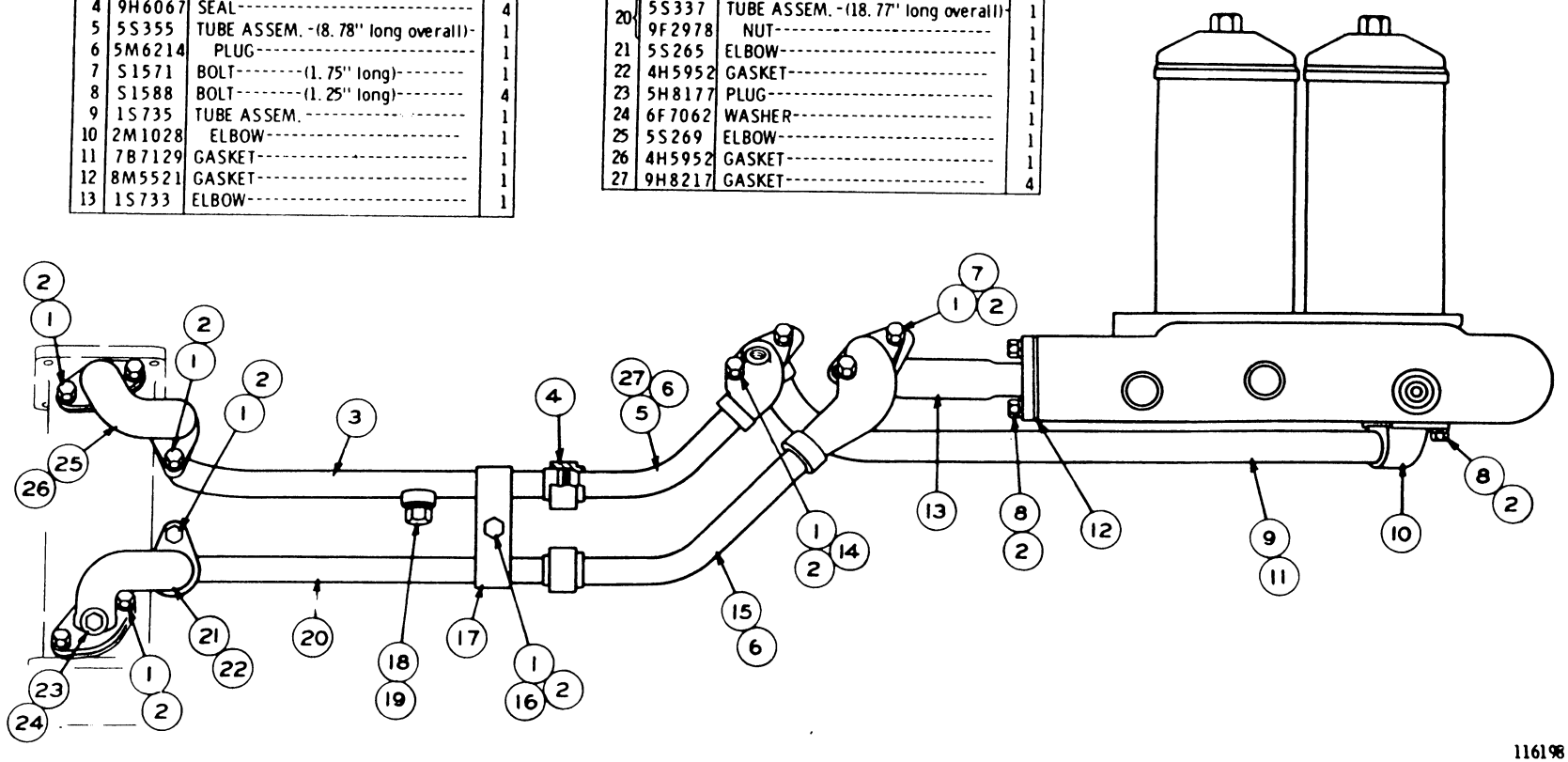

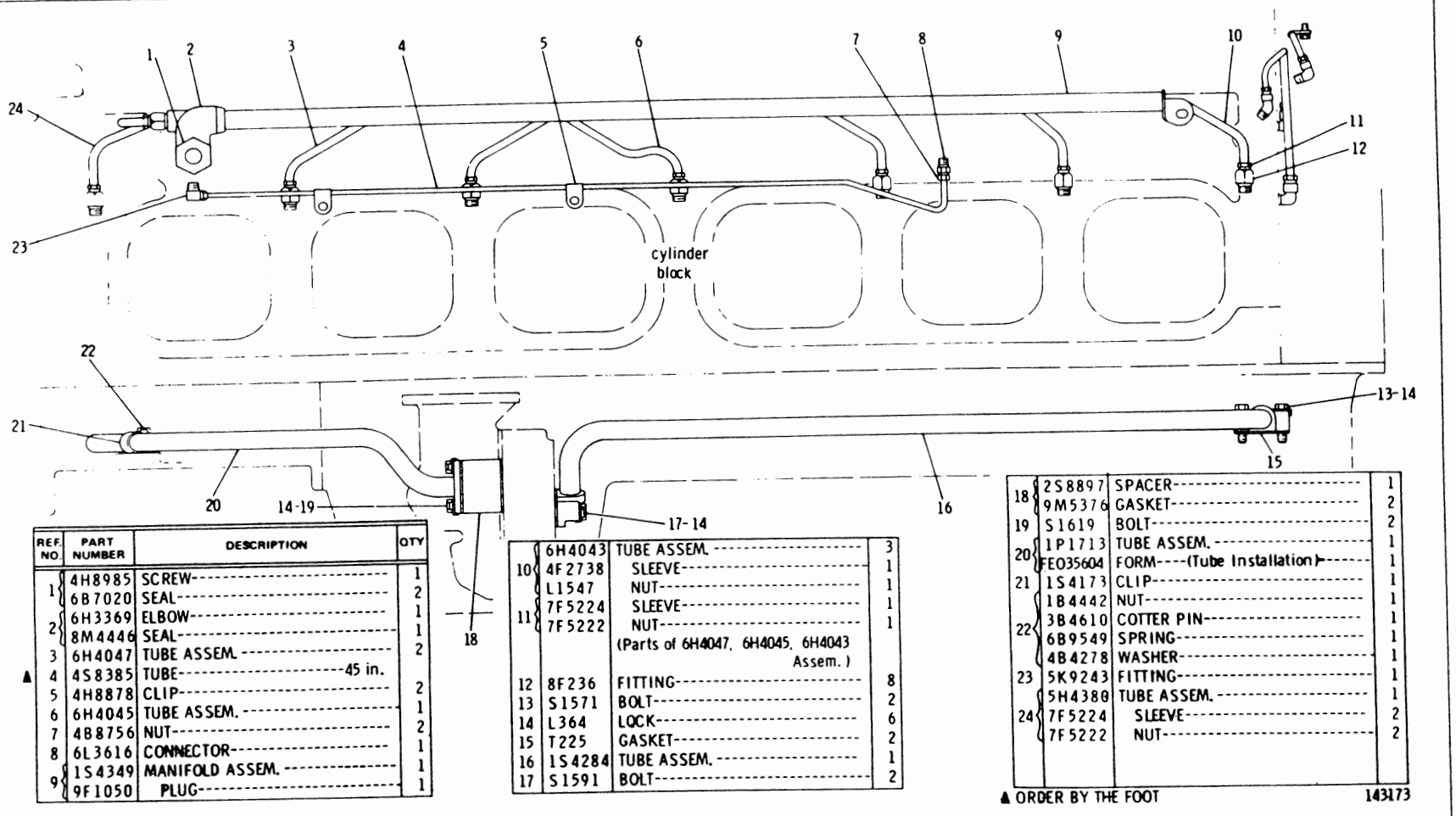

REF. NO.	PART NUMBER	DESCRIPTION	QTY
1	4H8985	SCREW	1
	6B7020	SEAL	2
2	6H3369	ELBOW	1
	8M4446	SEAL	1
3	6H4047	TUBE ASSEM.	2
▲ 4	4S8385	TUBE---45 in.	
5	4H8878	CLIP	2
6	6H4045	TUBE ASSEM.	1
7	4B8756	NUT	2
8	6L3616	CONNECTOR	1
9	1S4349	MANIFOLD ASSEM.	1
	9F1050	PLUG	1
	6H4043	TUBE ASSEM.	3
10	4F2738	SLEEVE	1
	L1547	NUT	1
11	7F5224	SLEEVE	1
	7F5222	NUT	1
		(Parts of 6H4047, 6H4045, 6H4043 Assem.)	
12	8F236	FITTING	8
13	S1571	BOLT	2
14	L364	LOCK	6
15	T225	GASKET	2
16	1S4284	TUBE ASSEM.	1
17	S1591	BOLT	2
18	2S8897	SPACER	1
	9M5376	GASKET	2
19	S1619	BOLT	2
20	1P1713	TUBE ASSEM.	1
	FE035604	FORM----(Tube Installation)	1
21	1S4173	CLIP	1
	1B4442	NUT	1
22	3B4610	COTTER PIN	1
	6B9549	SPRING	1
	4B4278	WASHER	1
23	5K9243	FITTING	1
	5H4380	TUBE ASSEM.	1
24	7F5224	SLEEVE	2
	7F5222	NUT	2

▲ ORDER BY THE FOOT

143173

OIL LINES (2P5104 N/S)—As Viewed from R.H. Side of Engine—Part 1 of 3
Serial No. 46A29450—Up

OIL LINES (2P5104 N/S)—As Viewed from Front of Engine—Part 2 of 3
Serial No. 46A29450—Up

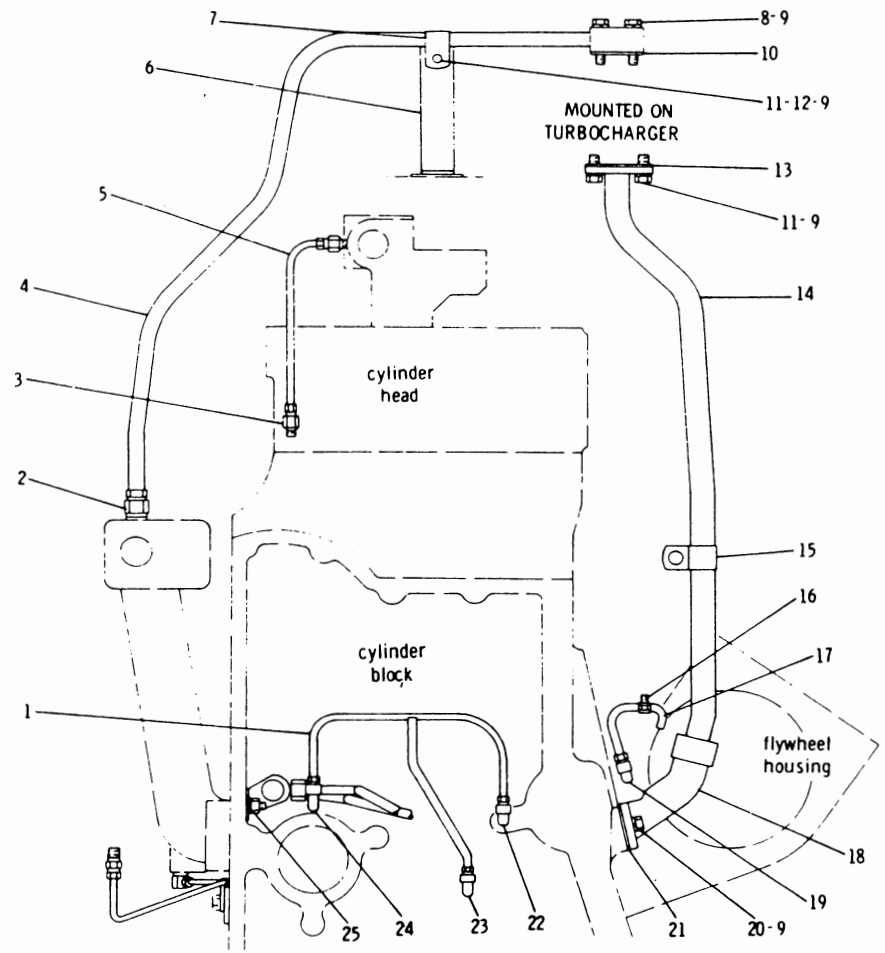

REF. NO.	PART NUMBER	DESCRIPTION	QTY
1	4H8997	TUBE ASSEM.	1
2	1F6068	FITTING	1
	8F9362	NUT	1
3	1F3278	FITTING	4
	1F1344	NUT	1
4	4N4362	TUBE ASSEM. (Oil Supply)	1
5	4H7292	TUBE	2
6	9S3025	SUPPORT	1
7	4B9302	CLIP	1
8	S1571	BOLT	2
9	3B4506	LOCKWASHER	7
10	1S6595	GASKET	1
11	L1351	BOLT	3
12	1D4717	NUT	1
13	1S4810	GASKET	1
14	9S3024	TUBE ASSEM. (Oil Drain)	1
15	1S1476	CLIP	1
	L1365	WASHER	1
	2A762	BOLT	1
16	1A9109	LOCK	1
	1A5350	CLIP	1
17	6H3142	TUBE	1
18	8H9239	ELBOW	1
	9H6067	SEAL	1
19	3B8998	FITTING	1
	1F1344	NUT	1
20	1A2029	BOLT	2
21	7F7590	GASKET	1
22	6B9673	FITTING	1
	1F1344	NUT	1
23	3B8999	FITTING	1
	8F8997	NUT	1
24	3B9003	FITTING	1
	1F1344	NUT	1
	1B4442	NUT	1
25	4B4278	WASHER	1
	3B4610	COTTER PIN	1

143174

REF. NO.	PART NUMBER	DESCRIPTION	QTY
1	1A2029	BOLT------(1 in. Long)----------	14
2	3B4506	LOCKWASHER----------	21
3	5S265	ELBOW----------	1
4	4H5952	GASKET----------	2
5	5S269	ELBOW----------	1
6	5S347	TUBE ASSEM.----------	1
	9F2978	NUT----------	1
7	9H6067	SEAL----------	4
8	5K3118	CLAMP----------	2
9	5S355	TUBE ASSEM.----------	1
10	5M6214	PLUG----------	1
11	L2070	BOLT------(2.25 in. Long)--------	1
12	S1571	BOLT------(1.75 in. Long)--------	1
	T573	BOLT----------	1
13	2P5100	TUBE ASSEM.----------	1
14	9H8217	GASKET----------	4
15	5H7370	SEAL----------	3
16	S1594	BOLT----------	2
17	2P5097	TUBE ASSEM.----------	1
18	8M904	GASKET----------	1
19	T102	BOLT----------	2
	4B5167	WASHER----------	2

20	2P5089	VALVE ASSEM.----------	1
21	8S6814	DOWEL----------	1
22	6B830	COVER----------	1
23	S1617	BOLT----------	2
	3B4505	LOCKWASHER----------	2
24	7S6744	GASKET----------	1
25	8M3182	SPRING----------	1
26	1P1367	PLUNGER----------	1
27	2P5102	TUBE ASSEM.----------	1
28	5S351	TUBE ASSEM.----------	1
29	1D4717	NUT----------	1
30	2H8829	PLUG----------	1
31	6F7062	WASHER----------	2
32	5S337	TUBE ASSEM.----------	1
	9F2978	NUT----------	1
33	5H8177	PLUG----------	1
34	2P5086	GASKET----------	1
35	L1143	BOLT----------	2

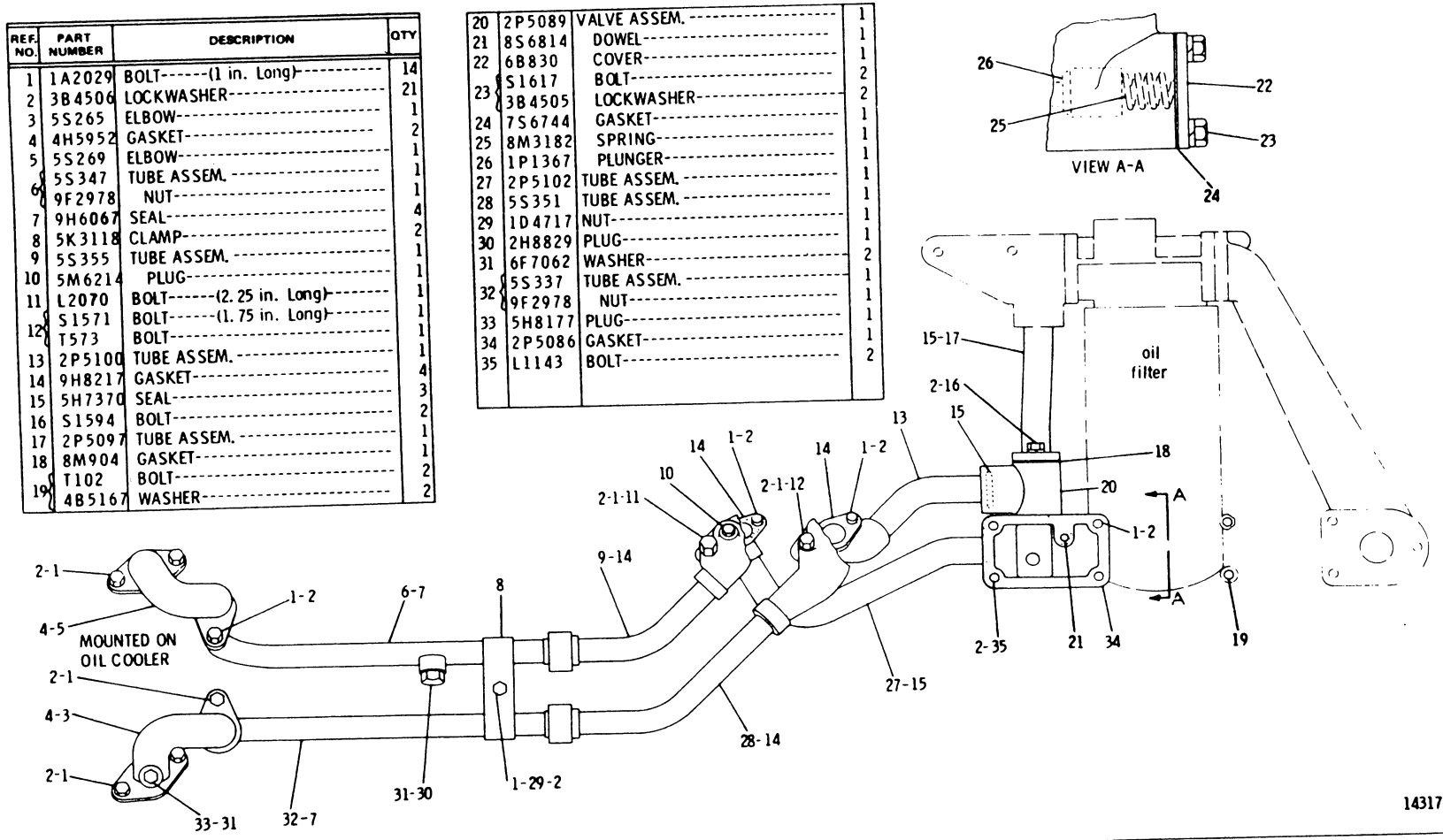

OIL LINES (2P5104 N/S)—As Viewed from R.H. Side of Engine—Part 3 of 3
Serial No. 46A29450—Up

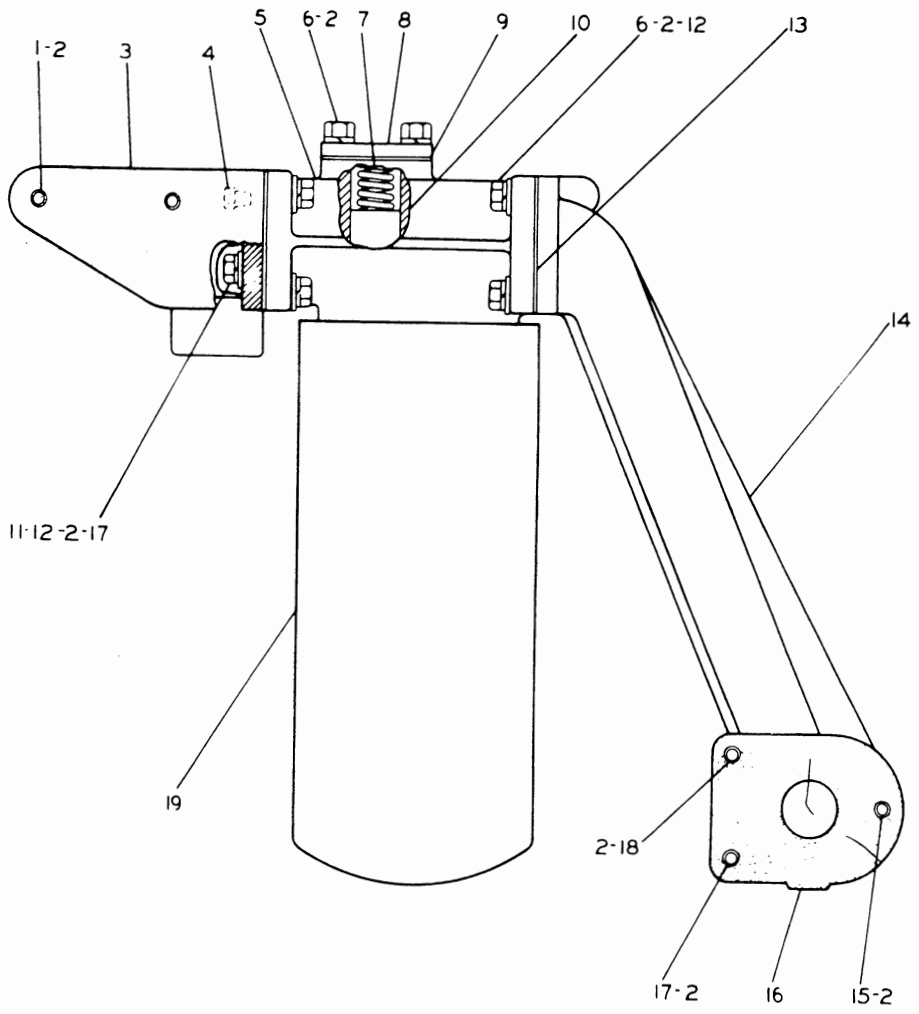

REF. NO.	PART NUMBER	DESCRIPTION	QTY
1	S1571	BOLT	2
2	3B4506	LOCKWASHER	15
3	2P5084	SUPPORT	1
4	5M6214	PLUG	2
5	2P4301	BASE ASSEM.	1
	2P4304	STUD	1
6	S1588	BOLT	8
7	8M3182	SPRING	1
8	2P3761	COVER	1
9	2P3760	GASKET	1
10	9M853	PLUNGER	1
11	1D4717	NUT	2
12	4B4278	WASHER	8
13	2P4305	GASKET	2
14	2P5085	SUPPORT	1
15	T573	BOLT	1
16	2P5155	GASKET	1
17	2A4639	BOLT	3
18	S1608	BOLT	1
19	2P4005	FILTER ASSEM.	1

143172

OIL FILTER (2P5103 N/S)
Serial No. 46A29450 to 46A32813 inclusive

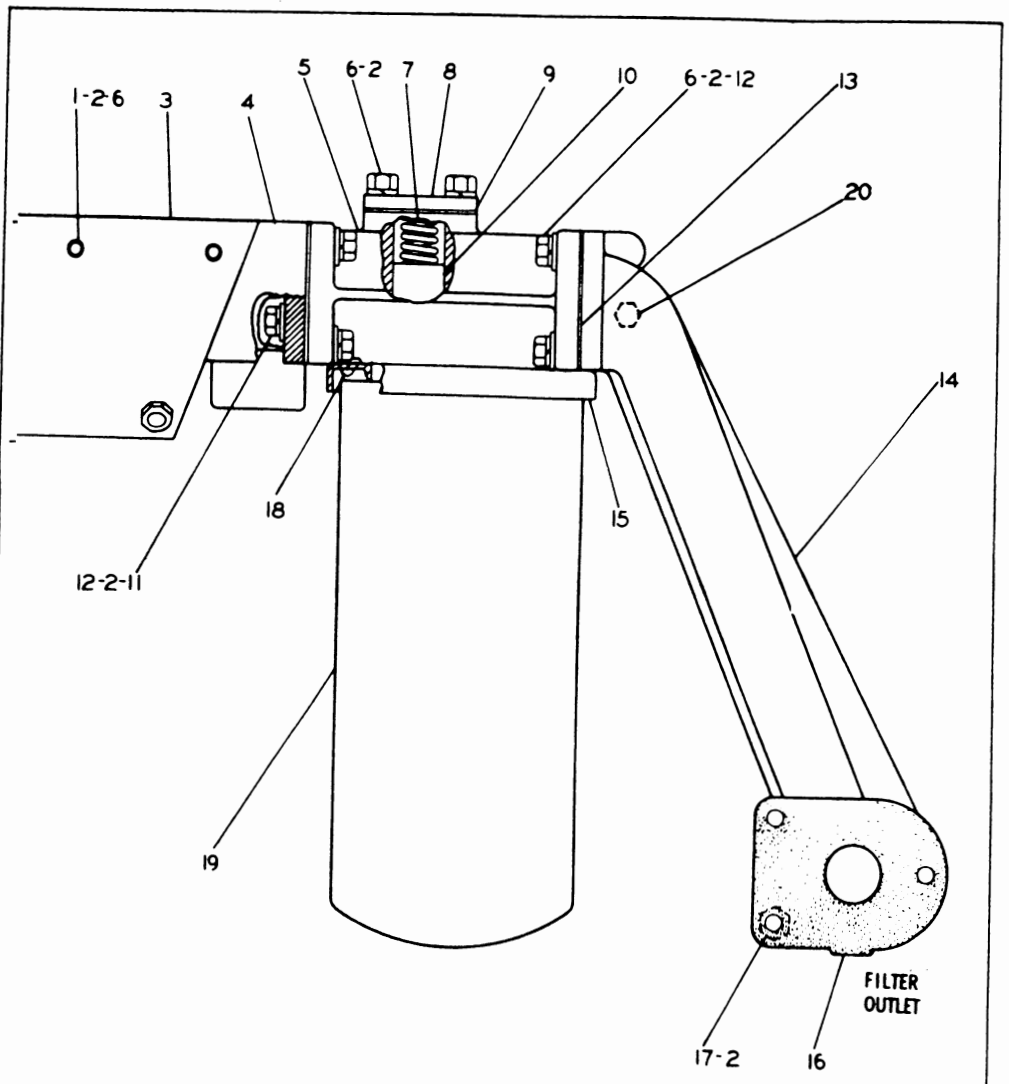

	REF. NO.	PART NUMBER	DESCRIPTION	QTY
	1	S1571	BOLT------4.45 cm(1.75 in.) long	2
C	2	3B4506	LOCKWASHER----------	16
C	3	4N7570	PLATE ASSEM. ----------	1
	4	2P5084	SUPPORT----------	1
	5	2P4301	BASE ASSEM. ----------	1
			(Includes)	
		2P4304	STUD----------	1
C	6	S1588	BOLT------3.18 cm(1.25 in.) long	9
	7	8M3182	SPRING----------	1
	8	2P3761	COVER----------	1
	9	2P3760	GASKET----------	1
	10	9M853	PLUNGER----------	1
C	11	2A4639	BOLT----------	2
		1D4717	NUT----------	2
	12	4B4278	WASHER----------	8
	13	2P4305	GASKET----------	2
	14	2P5085	SUPPORT----------	1
C	15	4N7082	SHIELD----------	1
	16	2P5155	GASKET----------	1
C	17	1B4203	NUT----------	3
C	18	7F9090	SCREW----------	2
	19	2P4005	FILTER ASSEM. ----------	1
C	20	5M6214	PLUG----------	1

C INDICATES CHANGE 211588

2P5103 OIL FILTER GROUP
Serial No. 46A32814—Up

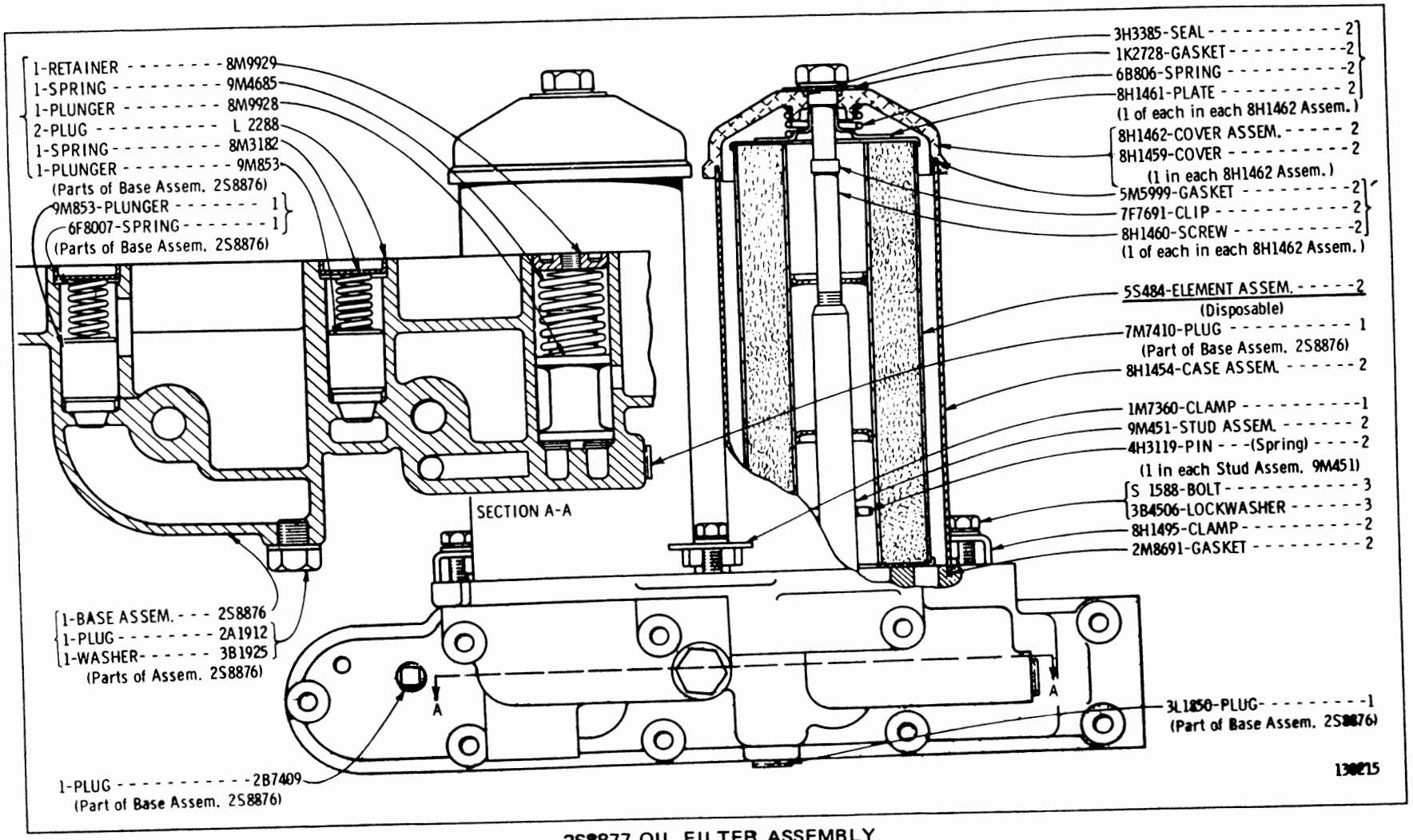

2S8877 OIL FILTER ASSEMBLY

Part of Oil Lines and Filter shown on Pages 45 and 46B

1S4381 OIL PUMP ASSEMBLY (3H3093 N/S)

Serial No. 46A24433 to 26286, 26288 to 26290, 26292, 26293, 26296 and 46A26300 inclusive

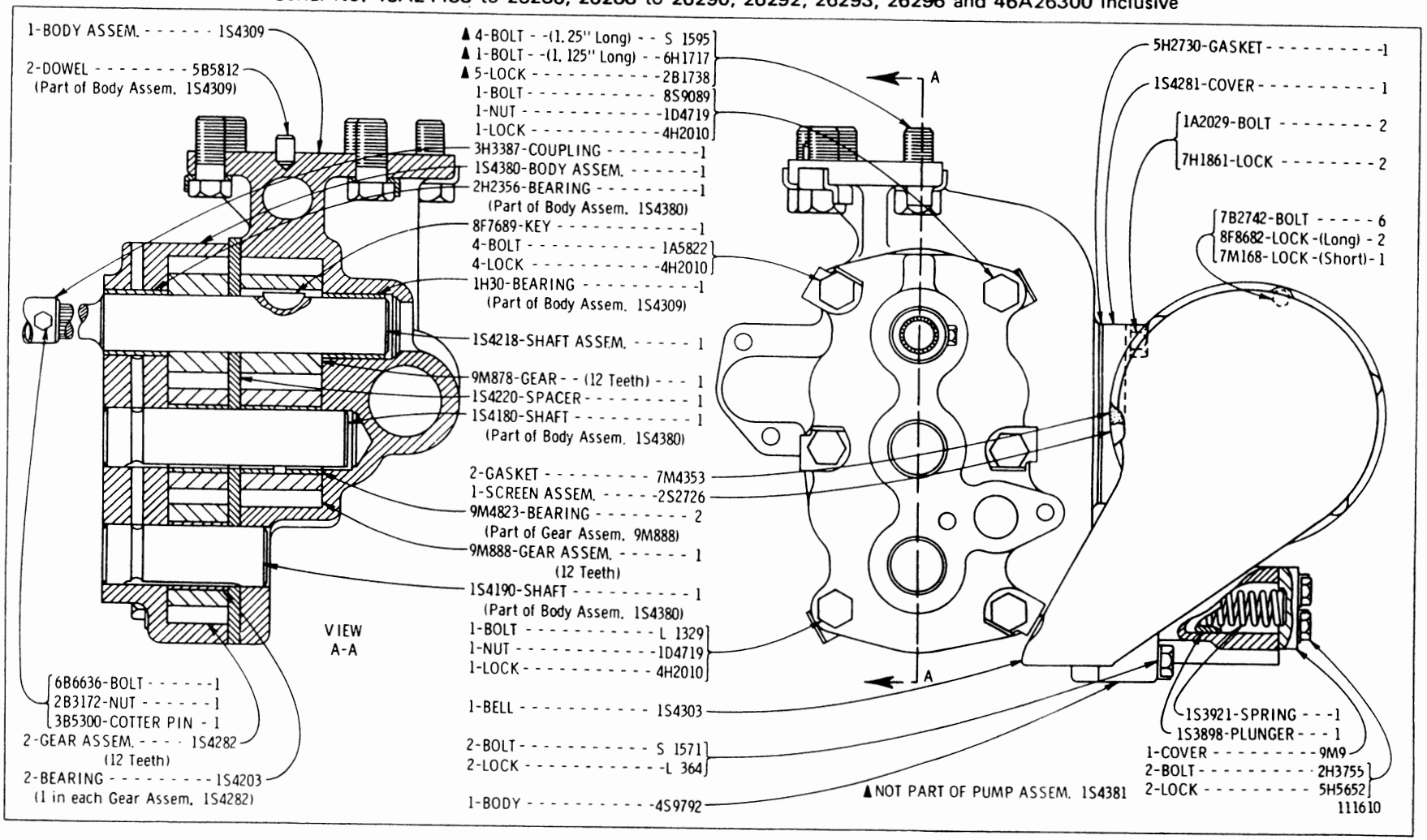

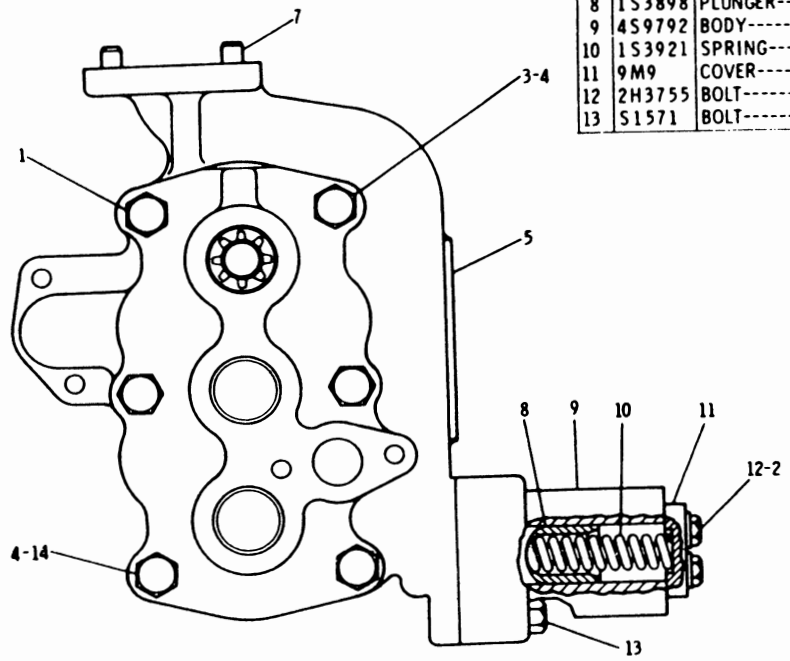

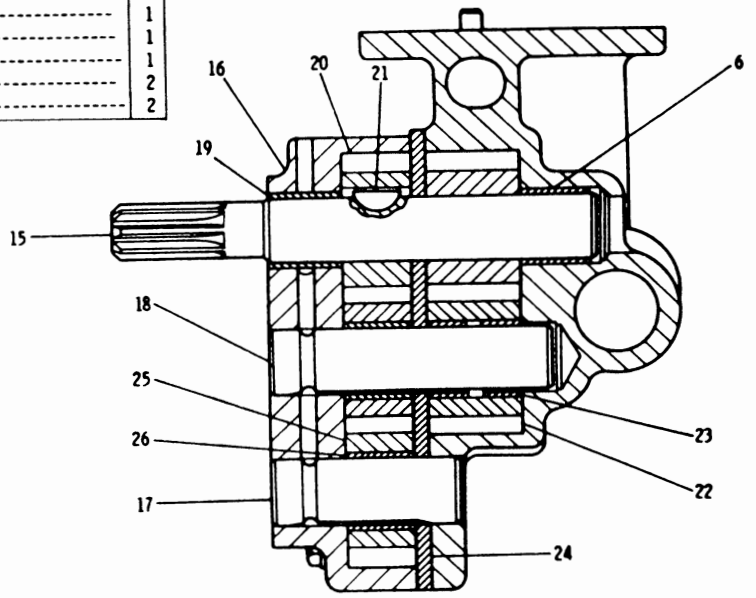

REF. NO.	PART NUMBER	DESCRIPTION	QTY
1	1A5822	BOLT	4
C 2	9M1974	WASHER	2
3	8S9089	BOLT	1
4	1D4719	NUT	2
5	1S4309	BODY ASSEM. (Includes)	1
6	1H30	BEARING	1
7	5B5812	DOWEL	2
8	1S3898	PLUNGER	1
9	4S9792	BODY	1
10	1S3921	SPRING	1
11	9M9	COVER	1
12	2H3755	BOLT	2
13	S1571	BOLT	2
14	L1329	BOLT	1
15	1P9304	SHAFT ASSEM.	1
16	1S4380	BODY ASSEM. (Includes)	1
17	1S4190	SHAFT	1
18	1S4180	SHAFT	1
19	2H2356	BEARING	1
20	1P9301	GEAR (12 teeth)	1
21	8F7689	KEY	1
22	9M888	GEAR ASSEM. (12 teeth) (Includes)	1
23	9M4823	BEARING	2
24	1S4220	SPACER	1
25	1S4282	GEAR ASSEM. (12 teeth) (Each Includes)	2
26	1S4203	BEARING	1

C INDICATES CHANGE

209250

6N2463 OIL PUMP GROUP
Serial No. 46A26287, 26291, 26294, 26295, 26297 to 26299 and 46A26301—Up
Part of 1P9340 Oil Pump Group shown on Page 49

1P9340 OIL PUMP GROUP (3H3093 N/S)
Serial No. 46A26287, 26291, 26294, 26295, 26297 to 26299 and 46A26301—Up
6N2463 Pump parts are shown on Page 48B

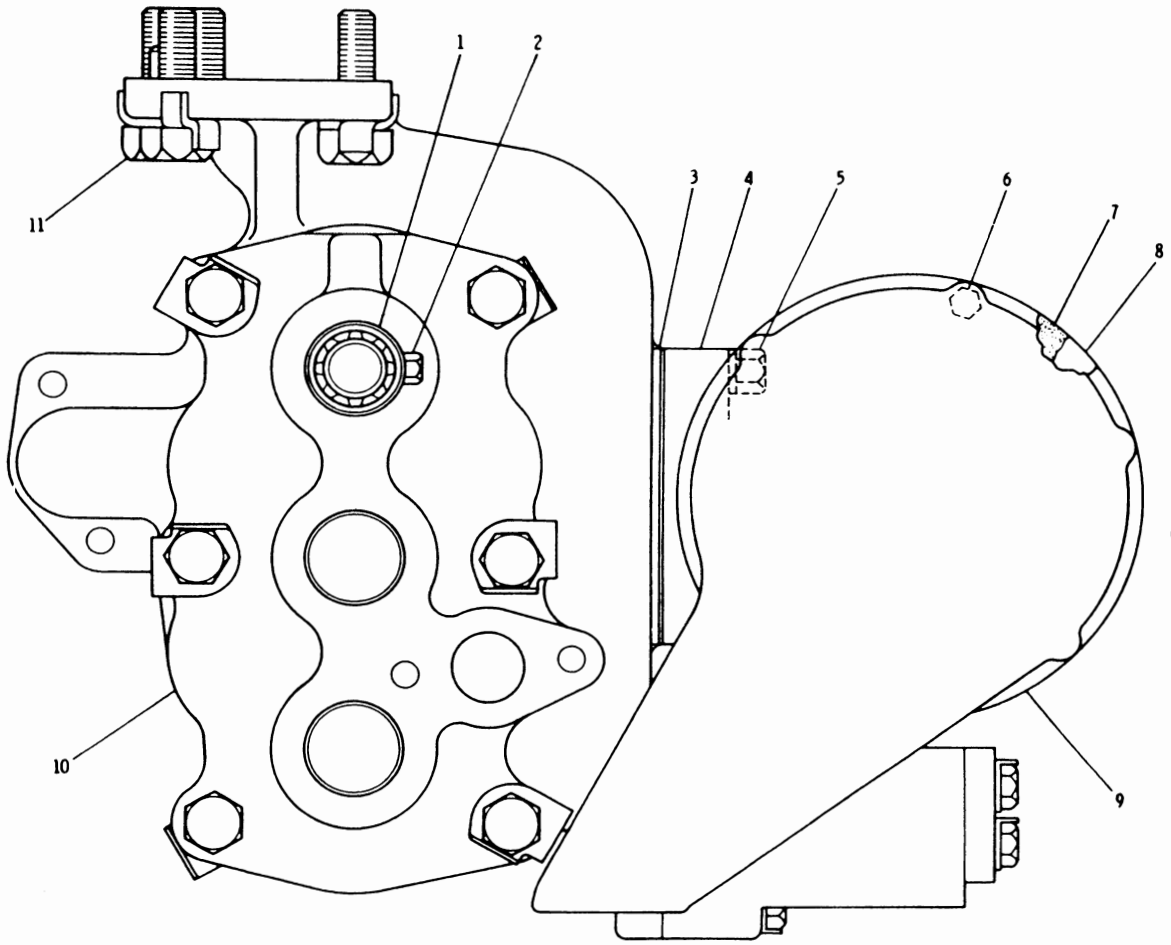

	REF. NO.	PART NUMBER	DESCRIPTION	QTY
	1	3H3387	COUPLING	1
	2	6B6636	BOLT	1
		2B3172	NUT	1
		3B5300	COTTER PIN	1
	3	5H2730	GASKET	1
	4	1S4281	COVER	1
	5	1A2029	BOLT	2
		7H1861	LOCK	2
	6	7B2742	BOLT	6
		8F8682	LOCK (long)	2
		7M168	LOCK (short)	1
	7	7M4353	GASKET	2
	8	2S2726	SCREEN ASSEM.	1
	9	1S4303	BELL	1
C	10	6N2463	PUMP GROUP (Separate Illustration)	1
▲	11	6H1717	BOLT	5
		2B1738	LOCK	5

▲ NOT PART OF 1P9340 OIL PUMP GROUP
C INDICATES CHANGE 151643

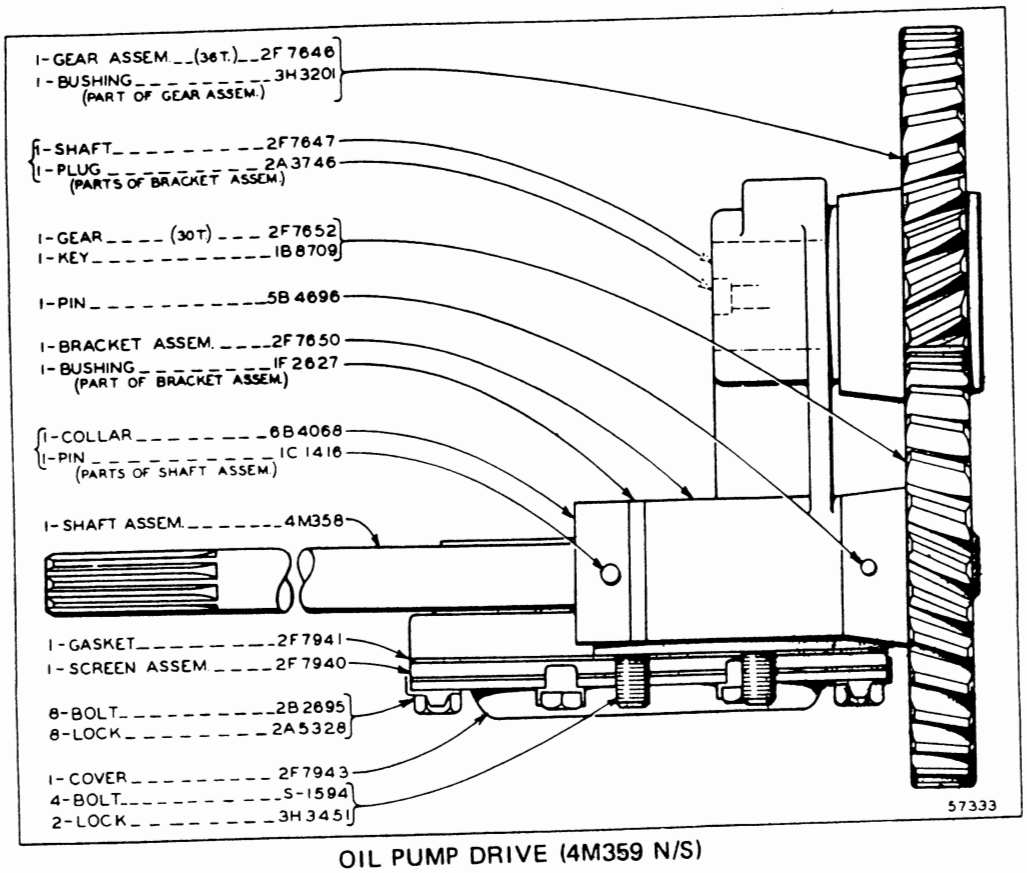

OIL PUMP DRIVE (4M359 N/S)

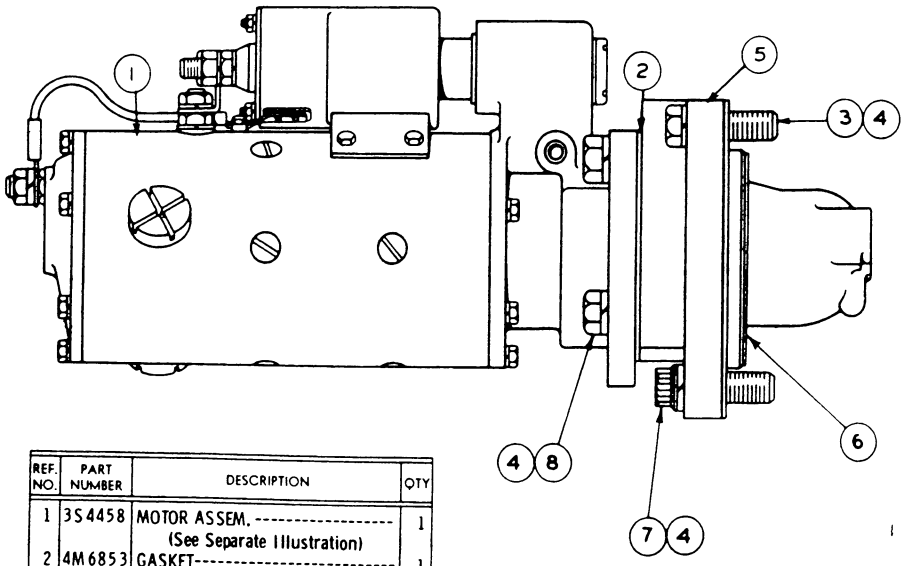

REF. NO.	PART NUMBER	DESCRIPTION	QTY
1	3S4458	MOTOR ASSEM. (See Separate Illustration)	1
2	4M6853	GASKET	1
3	1A1135	BOLT	2
4	3B4510	LOCKWASHER	6
5	8S2325	ADAPTER	1
6	3S4459	GASKET	1
7	8S2331	BOLT	1
8	S1589	BOLT	3

3S4463 ELECTRIC STARTING GROUP—24 Volt
Serial No. 46A24433 to 46A24864 & 46A24867 inclusive
3S4458 Motor parts are shown on Pages 52 and 52A
Refer also to Page 114 for special parts

	REF. NO.	PART NUMBER	DESCRIPTION	QTY
C	1	7N1269	TERMINAL ASSEM.	1
		4M1834	PLATE	1
	2	7F4907	STRIP	1
	3	3H3681	NUT	2
	4	3B4508	LOCKWASHER	4
	5	3H3680	NUT	2
	6	7F3494	WASHER	2
	7	4M1836	INSULATOR	2
	8	4M1837	BUSHING	2
	9	7F4906	STUD	1
	10	4M2800	TERMINAL	1
	11	7N1271	TERMINAL ASSEM.	1
	12	4M5274	SCREW—(hex head)	1
			- OR -	
C		5P9132	SCREW—(truss head)	1
	13	1P3879	LEAD ASSEM.	1
	14	4M3217	SCREW	2
C	15	9G6770	CONTACT ASSEM.	1
	16	4M1813	CASE ASSEM.	1
	17	1F73	CLIP	2
	18	4M1815	SPRING	1
	19	9M7657	NUT	4
			- OR -	
		9S4489	SCREW ASSEM.	4
	20	9S4490	GASKET	4

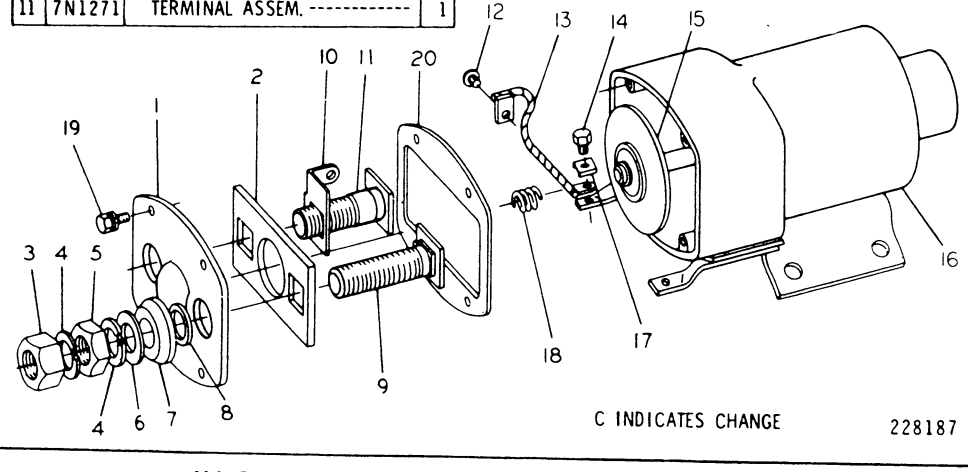

4M1812 SOLENOID SWITCH ASSEMBLY—24 Volt
Serial No. 46A24433 to 46A24864 & 46A24867 inclusive
Part of 3S4458 Motor Assembly shown on Page 52A

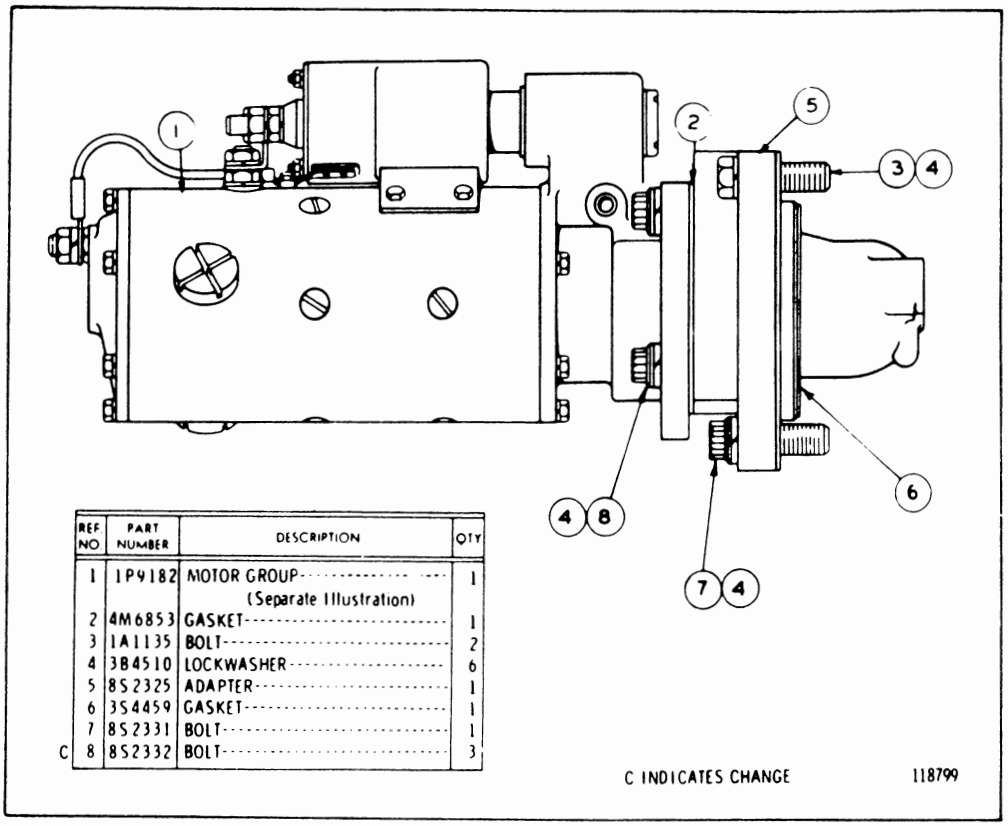

REF NO.	PART NUMBER	DESCRIPTION	QTY
1	1P9182	MOTOR GROUP (Separate Illustration)	1
2	4M6853	GASKET	1
3	1A1135	BOLT	2
4	3B4510	LOCKWASHER	6
5	8S2325	ADAPTER	1
6	3S4459	GASKET	1
7	8S2331	BOLT	1
C 8	8S2332	BOLT	3

C INDICATES CHANGE 118799

3S4463 ELECTRIC STARTING GROUP—24 Volt
Serial No. 46A24865, 46A24866 & 46A24868—Up
1P9182 Motor parts are shown on Pages 52B & 53
Refer also to Page 114 for special parts

REF. NO.	PART NUMBER	DESCRIPTION	QTY
C 1	7N908	TERMINAL ASSEM. (Includes)	1
	4M1834	PLATE	1
2	7F4907	STRIP	1
3	3H3681	NUT	2
4	3B4508	LOCKWASHER	4
5	3H3680	NUT	2
6	7F3494	WASHER	2
7	4M1836	INSULATOR	2
8	4M1837	BUSHING	2
C 9	7F4906	STUD	1
10	7N909	TERMINAL ASSEM.	1
11	9S4490	GASKET	1
12	4M5274	SCREW---------(large)	1
		- OR -	
C	5P9132	SCREW---------(small)	1
13	9S4489	SCREW ASSEM.	4
14	4M3217	SCREW	2
15	4M1814	CONTACT ASSEM.	1
16	3P72	CASE ASSEM.	1
17	1F73	CLIP	2
18	4M1815	SPRING	1

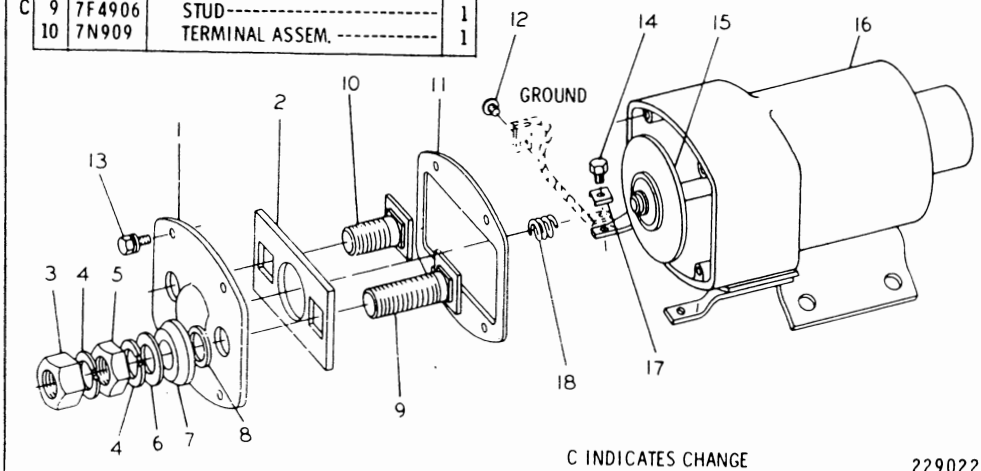

C INDICATES CHANGE 229022

6N5123 SOLENOID SWITCH ASSEMBLY—24 Volt
Serial No. 46A24865, 46A24866 & 46A24868—Up
Part of 1P9182 Motor Group shown on Page 53

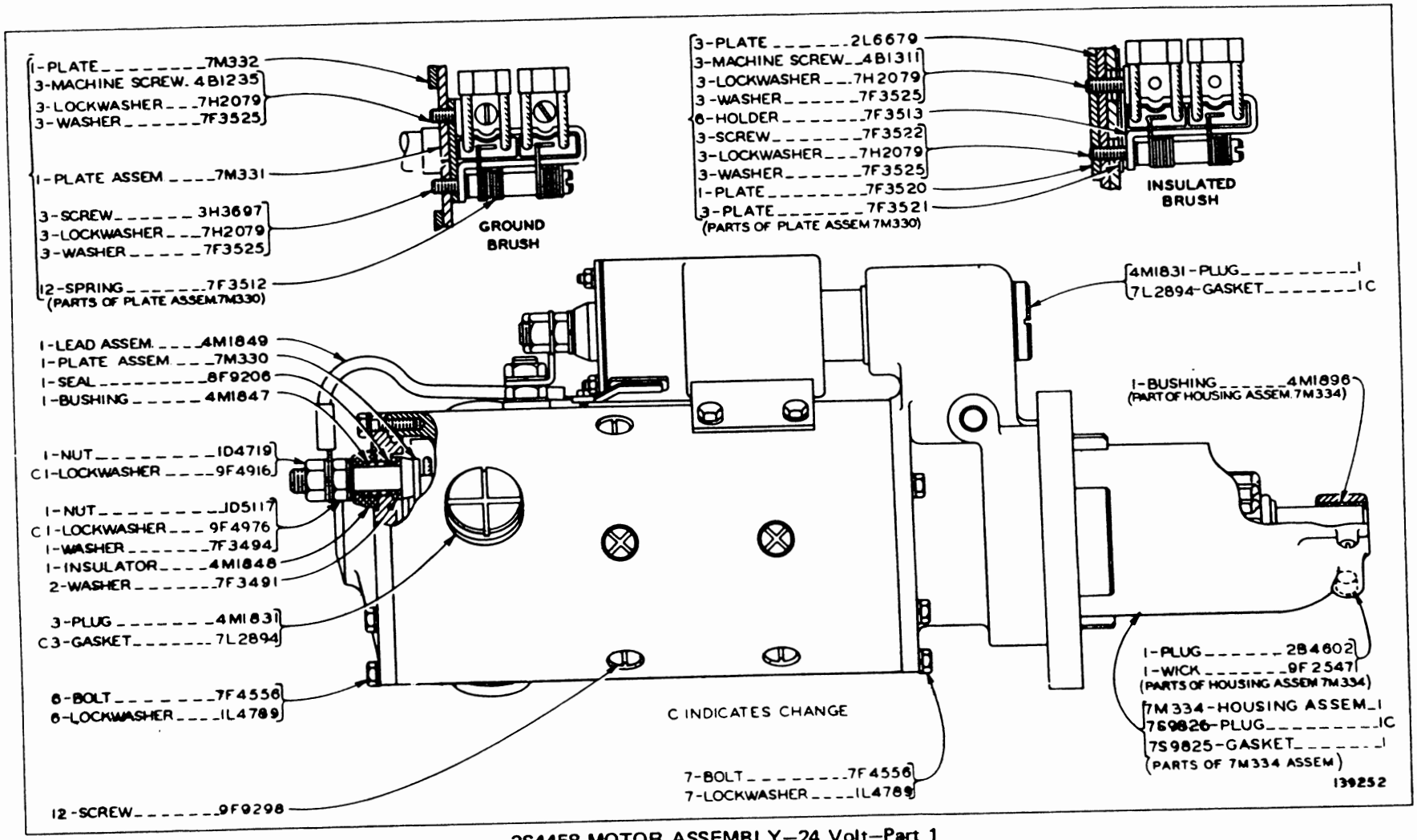

3S4458 MOTOR ASSEMBLY—24 Volt—Part 1
Serial No. 46A24433 to 46A24864 and 46A24867 inclusive
Part of 3S4463 Electric Starting Group shown on Page 51

3S4458 MOTOR ASSEMBLY—24 Volt—Part 2

Serial No. 46A24433 to 46A24864 and 46A24867 inclusive
Part of 3S4463 Electric Starting Group shown on Page 51
4M1812 Switch parts are shown on Page 51

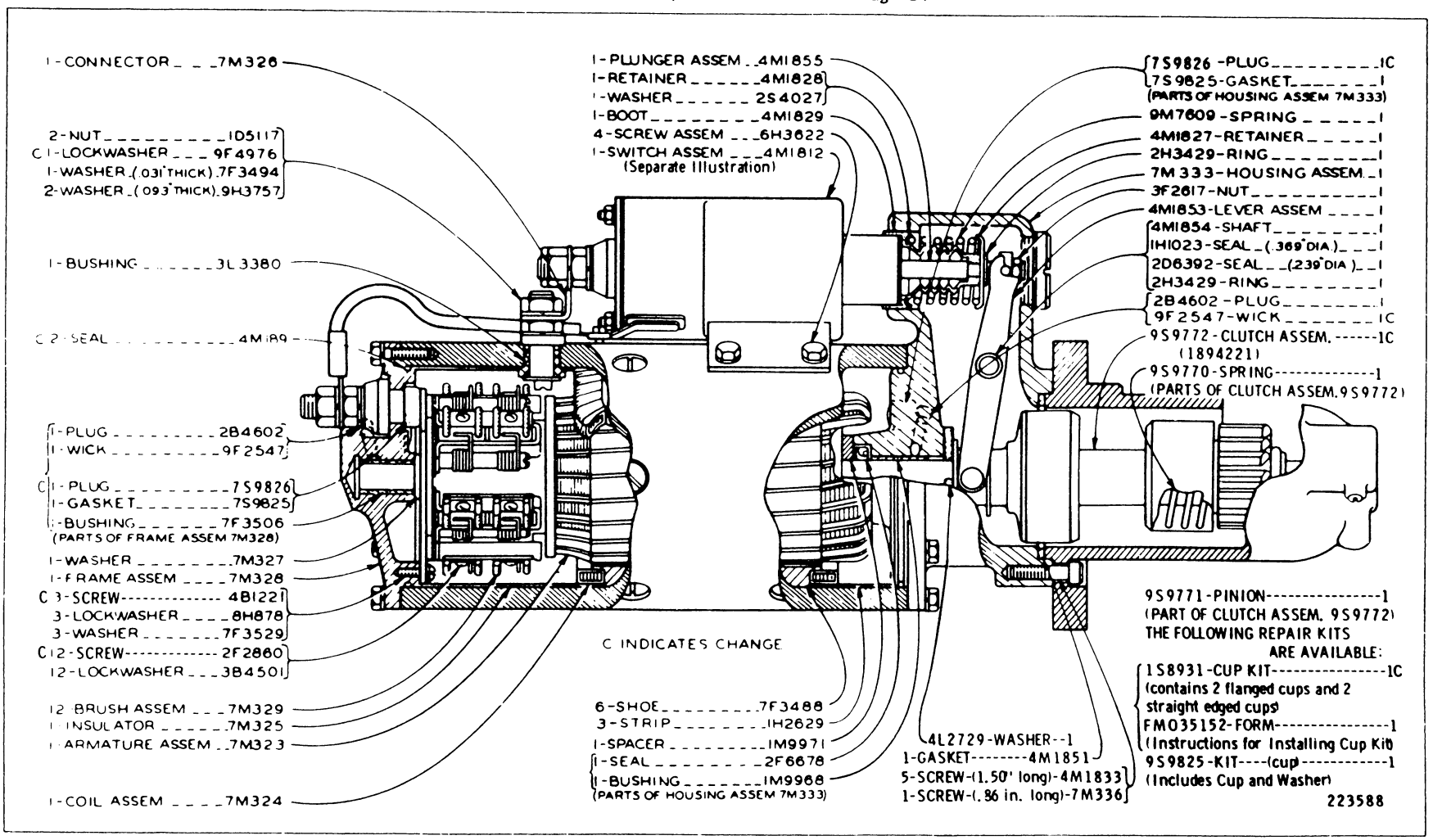

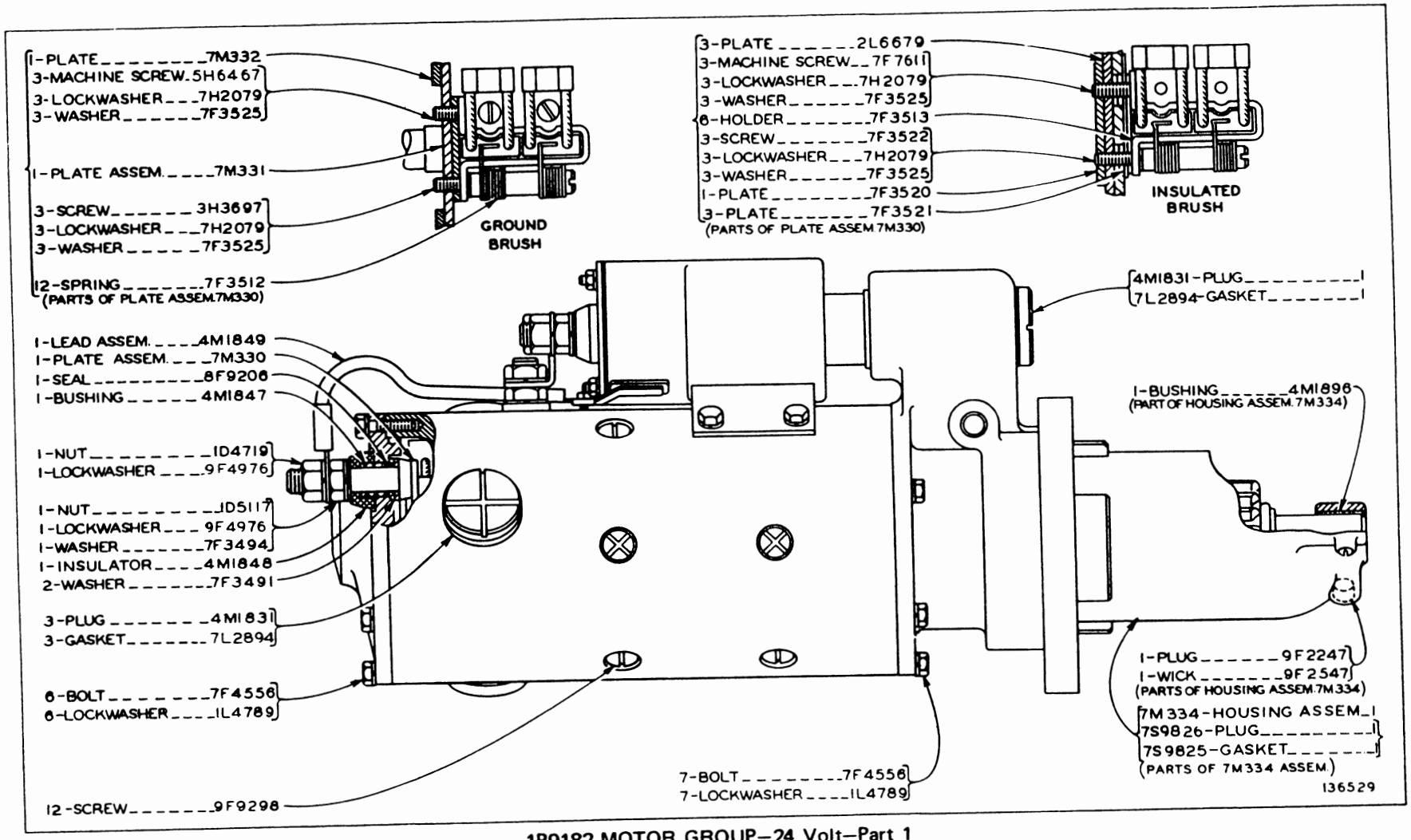

1P9182 MOTOR GROUP—24 Volt—Part 1
Serial No. 46A24865, 46A24866 and 46A24868—Up
Part of 3S4463 Electric Starting Group shown on Page 51B

1P9182 MOTOR GROUP—24 Volt—Part 2
Serial No. 46A24865, 46A24866 & 46A24868—Up
Part of 3S4463 Electric Starting Group shown on Page 51B. 6N5123 Switch parts are shown on Page 51B

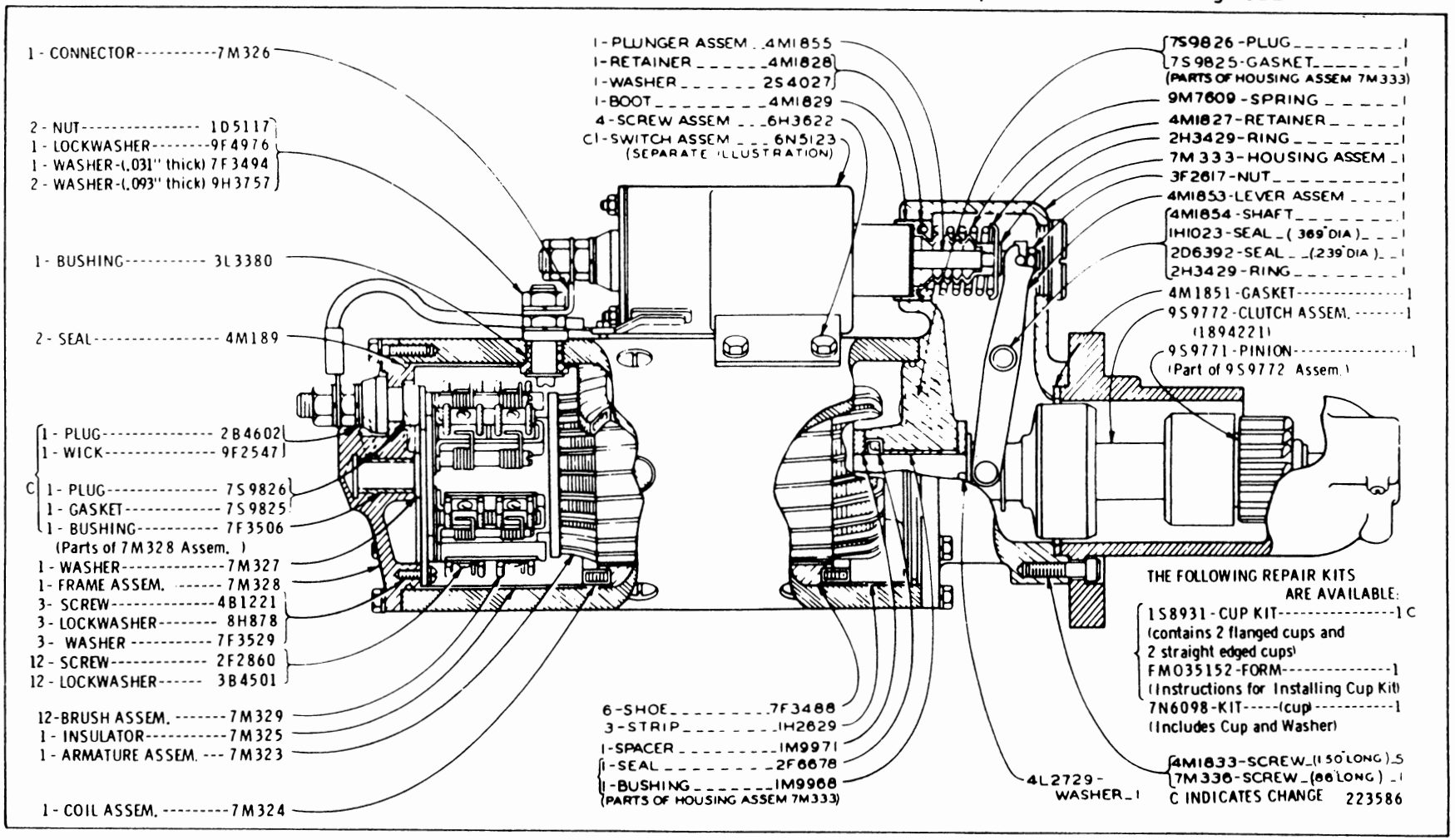

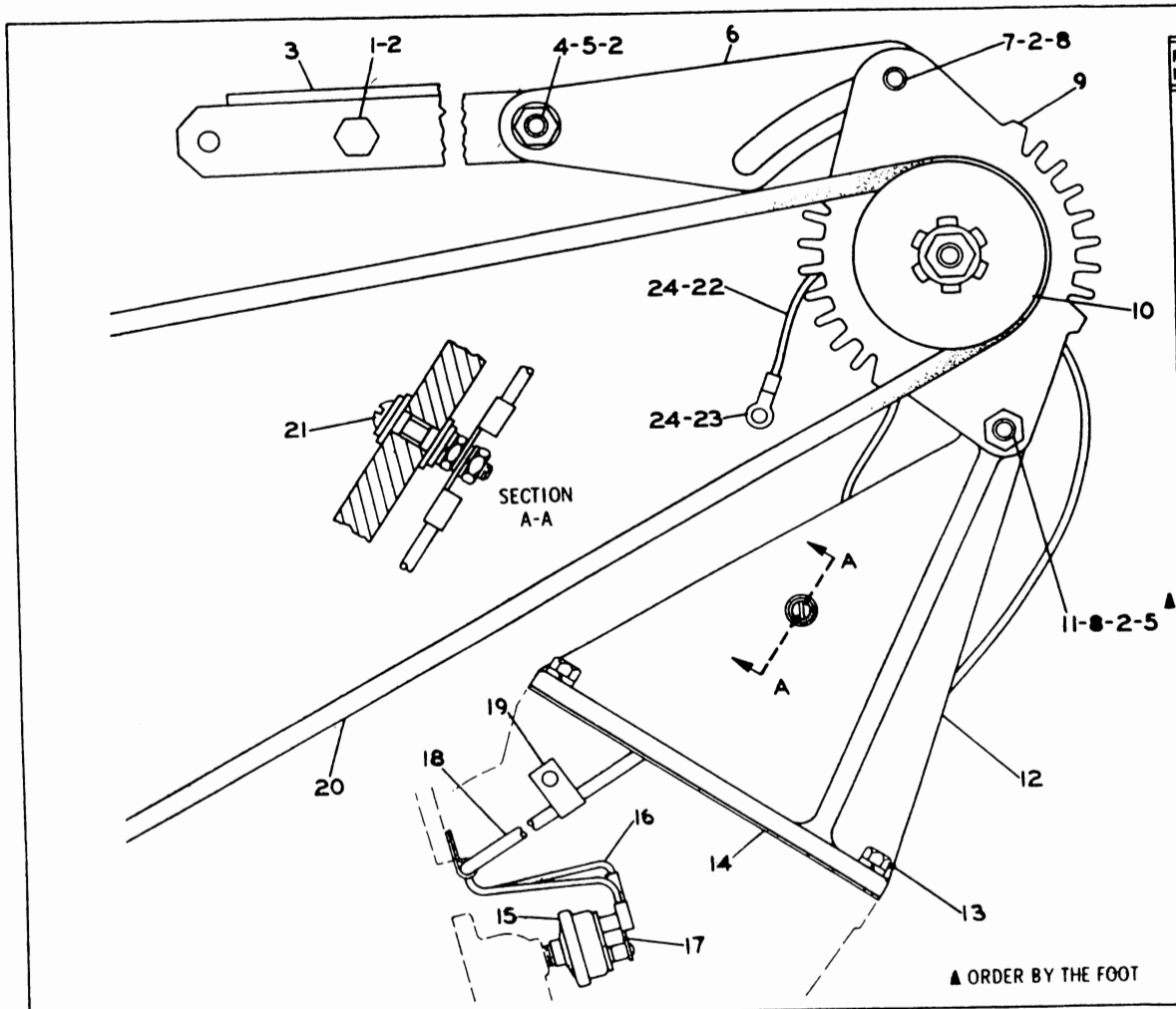

REF. NO.	PART NUMBER	DESCRIPTION	QTY
1	7B3235	BOLT	1
2	3B4508	LOCKWASHER	4
3	2S2319	BRACKET ASSEM.	1
4	S1585	BOLT	1
5	1D4719	NUT	2
6	8S4191	STRAP	1
7	1A1460	BOLT	1
	8S4223	SPACER	1
8	8M4791	WASHER	3
9	9S4070	ALTERNATOR ASSEM. (See Separate Illustration)	1
10	1P3957	PULLEY--------(Drive)	1
11	9H8260	BOLT	1
12	8S4186	BRACKET	1
13	1A2029	BOLT	5
	3B4506	LOCKWASHER	5
14	9H1416	GASKET	1
15	4D4785	SWITCH	1
16	1P4323	WIRE ASSEM.	1
	3S2093	TIE	2
17	2L8076	TERMINAL	4
18	4S8759	TUBE----------33"	
19	8M2772	CLIP	4
20	8M8335	VEE BELT	1
21	2F7888	SCREW	1
	4B2049	NUT	2
	3B4502	LOCKWASHER	2
	4B4274	WASHER	2
	5L4282	BUSHING	2
22	4H8185	WIRE ASSEM.	1
	9F5321	TERMINAL	1
23	9F9353	TERMINAL	1
24	8B653	INSULATOR	2

136977

▲ ORDER BY THE FOOT

ALTERNATOR (1P4343 N/S)—24 Volt, 19 Ampere
Serial No. 46A24433 to 26722, 26724, 26725 and 46A26737 inclusive
9S4070 Alternator Assembly is shown on Page 55
Refer also to Page 140 for special parts

ALTERNATOR (1P4343 N/S)—24 Volt, 19 Ampere

Serial No. 46A26723, 26726 to 26736, 26738 to 27800 and 46A27802 to 46A28136 inclusive

2P1204 Alternator parts are shown on Page 54C. Refer also to Page 140 for special parts

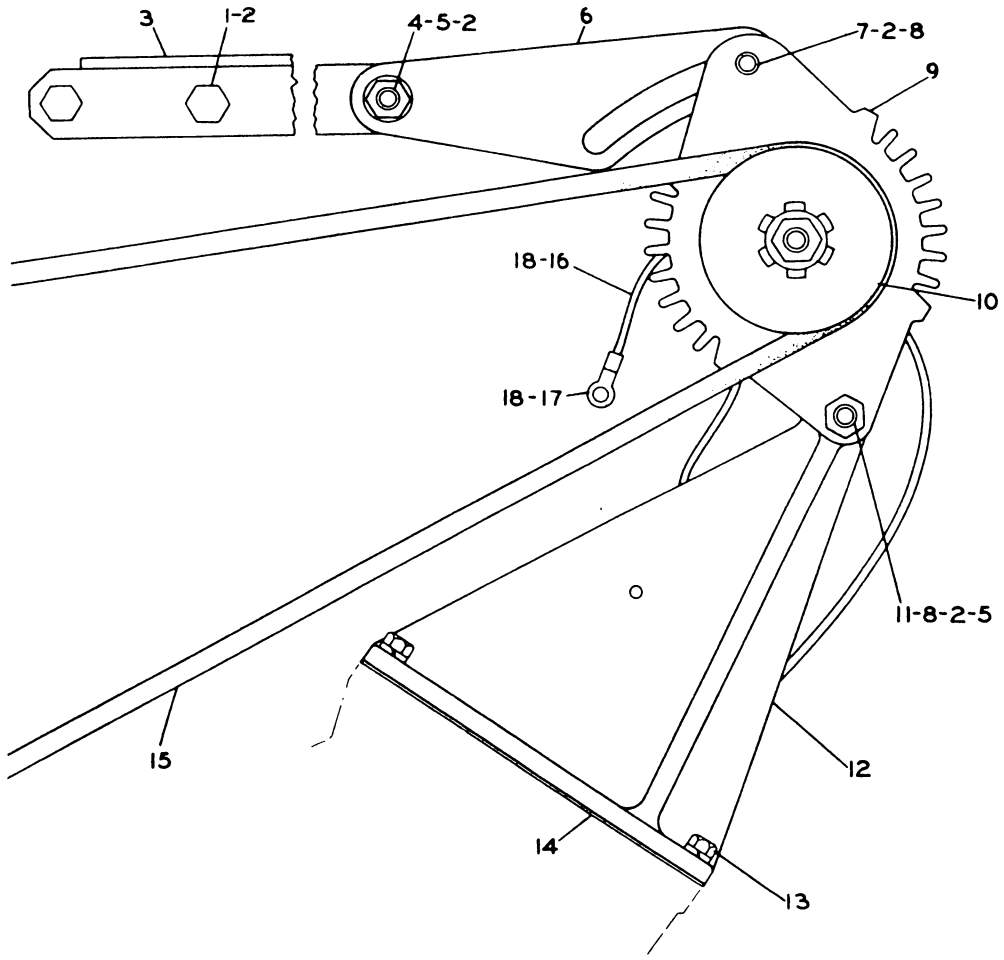

REF. NO.	PART NUMBER	DESCRIPTION	QTY
1	7B3235	BOLT	1
2	3B4508	LOCKWASHER	4
3	2S2319	BRACKET ASSEM.	1
4	S1585	BOLT	1
5	1D4719	NUT	2
6	8S4191	STRAP	1
7	1A1460	BOLT	1
	8S4223	SPACER	1
8	8M4791	WASHER	3
9	2P1204	ALTERNATOR GROUP (See Separate Illustration)	1
10	1P3957	PULLEY—(Drive)	1
11	9H8260	BOLT	1
12	8S4186	BRACKET	1
13	1A2029	BOLT	5
	3B4506	LOCKWASHER	5
14	9H1416	GASKET	1
15	8M8335	VEE BELT	1
C 16	4D674	WIRE ASSEM.	1
	1F7240	TERMINAL	1
17	6B2759	TERMINAL	1
18	7B4826	INSULATOR	2

C INDICATES CHANGE

138049

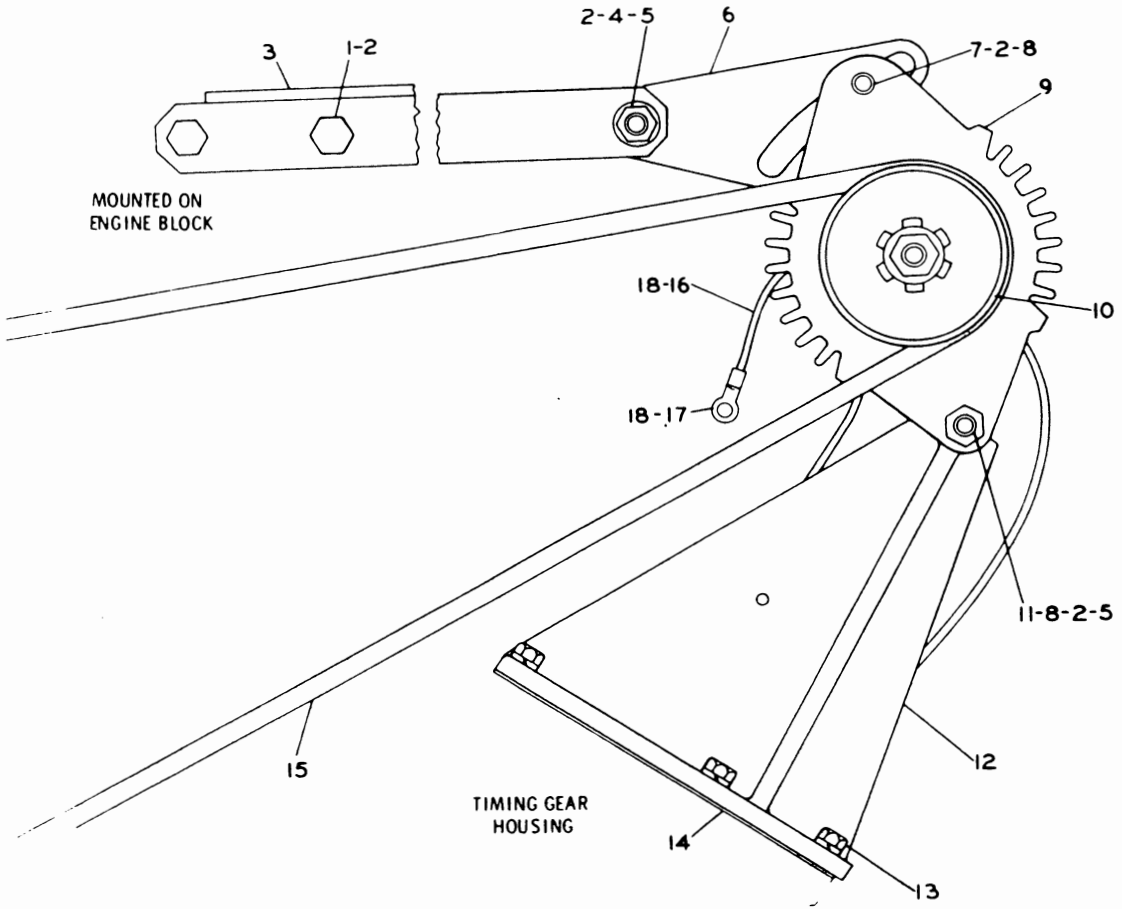

	REF. NO.	PART NUMBER	DESCRIPTION	QTY
	1	7B3235	BOLT	1
	2	3B4508	LOCKWASHER	4
	3	2S2319	BRACKET ASSEM.	1
	4	S1585	BOLT	1
	5	1D4719	NUT	2
C	6	8S4191	STRAP	1
	7	1A1460	BOLT	1
		8S4223	SPACER	1
	8	8M4791	WASHER	3
	9	2P1204	ALTERNATOR GROUP (Separate Illustration)	1
C	10	3P24	PULLEY--------(Drive)	1
	11	9H8260	BOLT	1
C	12	8S4186	BRACKET	1
	13	1A2029	BOLT	5
		3B4506	LOCKWASHER	5
	14	9H1416	GASKET	1
C	15	1P2421	VEE BELT	1
	16	4D674	WIRE ASSEM.	1
		1F7240	TERMINAL	1
	17	6B2759	TERMINAL	1
	18	7B4826	INSULATOR	2

C INDICATES CHANGE

ALTERNATOR (1P4343 N/S)—24 Volt, 19 Ampere
Serial No. 46A27801 and 46A28137 to 46A30904 inclusive
2P1204 Alternator parts are shown on Page 54C
Refer also to Pages 140A and 141 for special parts

ALTERNATOR (1P4343 N/S)—24 Volt, 19 Ampere
Serial No. 46A30905 to 46A31953 inclusive
2P1204 Alternator parts are shown on Page 54C
Refer also to Page 140 for special parts

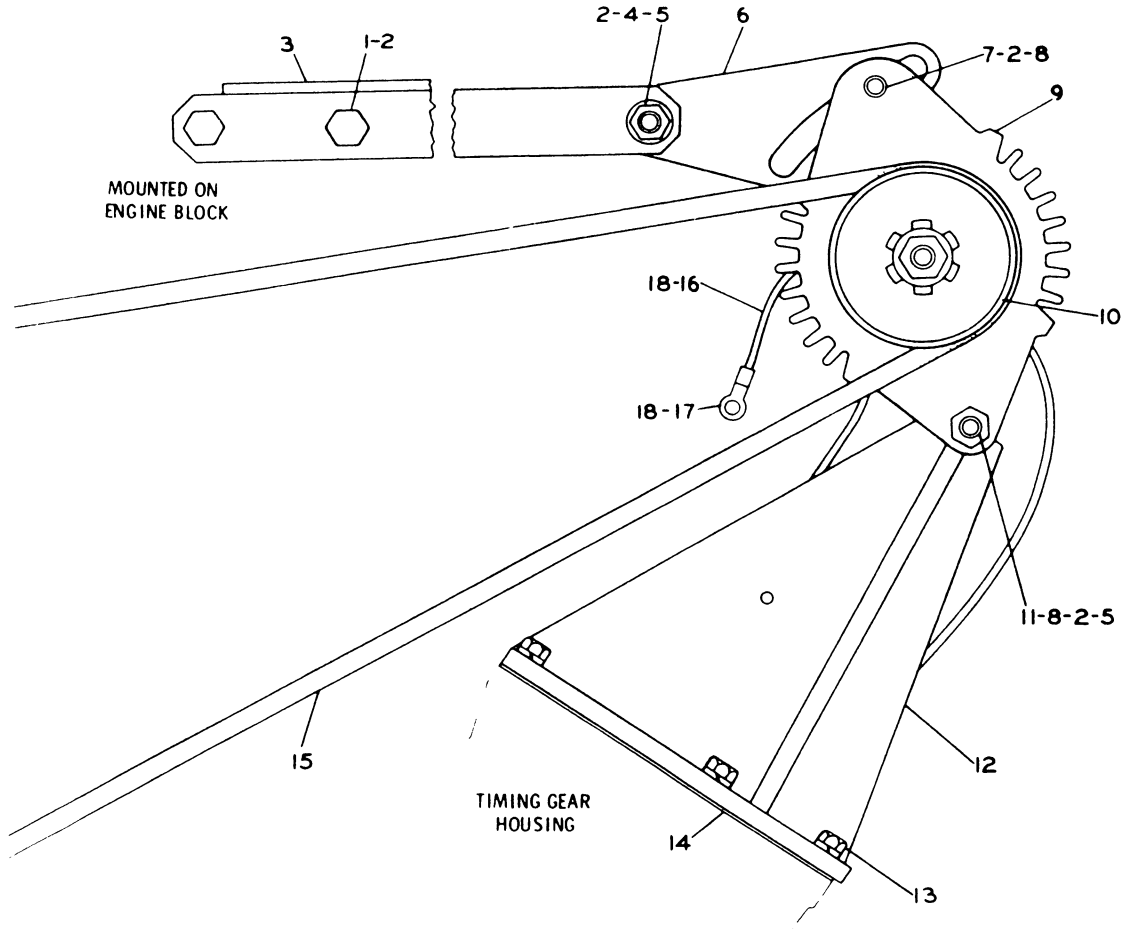

	REF. NO.	PART NUMBER	DESCRIPTION	QTY
	1	7B3235	BOLT	1
	2	3B4508	LOCKWASHER	4
	3	2S2319	BRACKET ASSEM.	1
	4	S1585	BOLT	1
	5	1D4719	NUT	2
C	6	2P5590	STRAP	1
	7	1A1460	BOLT	1
		8S4223	SPACER	1
	8	8M4791	WASHER	3
	9	2P1204	ALTERNATOR GROUP (Separate Illustration)	1
C	10	4N6885	PULLEY--------(Drive)	1
	11	9H8260	BOLT	1
C	12	2P5065	BRACKET ASSEM.	1
	13	1A2029	BOLT	5
		3B4506	LOCKWASHER	5
	14	9H1416	GASKET	1
C	15	3P25	VEE BELT	1
	16	4D674	WIRE ASSEM.	1
		1F7240	TERMINAL	1
	17	6B2759	TERMINAL	1
	18	7B4826	INSULATOR	2

C INDICATES CHANGE

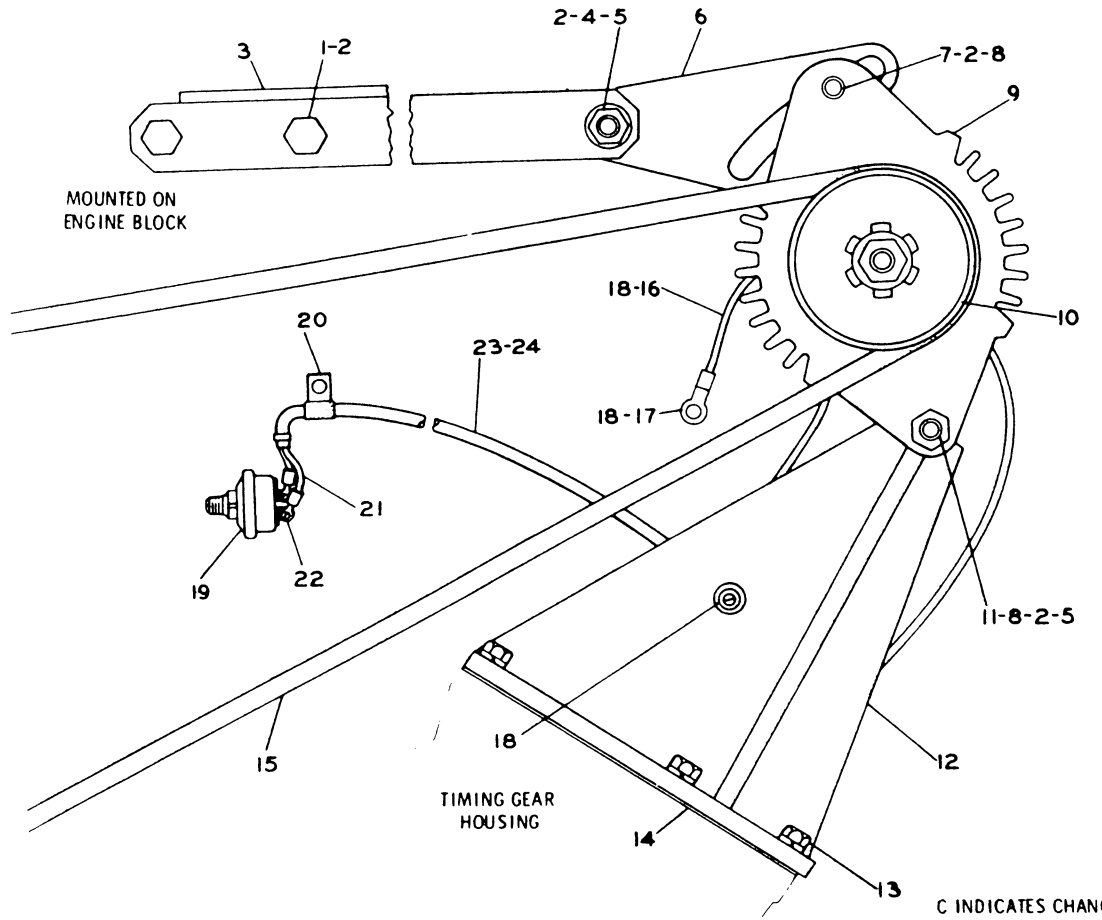

	REF. NO.	PART NUMBER	DESCRIPTION	QTY
	1	7B3235	BOLT	2
	2	3B4508	LOCKWASHER	5
	3	2S2319	BRACKET ASSEM.	1
	4	S1585	BOLT	1
	5	1D4719	NUT	2
	6	2P5590	STRAP	1
	7	1A1460	BOLT	1
		8S4223	SPACER	1
	8	8M4791	WASHER	3
C	9	9S4070	ALTERNATOR GROUP (Separate Illustration)	1
	10	4N6885	PULLEY (drive)	1
	11	9H8260	BOLT	1
	12	2P5065	BRACKET ASSEM.	1
C	13	S1594	BOLT	5
		3B4506	LOCKWASHER	5
	14	9H1416	GASKET	1
	15	3P25	VEE BELT	1
C	16	4H8185	WIRE ASSEM. (Includes)	1
▲		5P611	WIRE 4.06 dm(16 in.)	
		9F9353	TERMINAL	1
C	17	9F5321	TERMINAL	1
	18	2F7888	SCREW	1
		4B2049	NUT	2
C		3B4502	LOCKWASHER	2
		4B4274	WASHER	2
		5L4282	BUSHING	2
C	19	4D4785	SWITCH ASSEM. (pressure)	1
C	20	8M2772	CLIP	4
C	21	1P4323	WIRE ASSEM. (Includes)	1
▲		5P603	WIRE 23.36 dm(92 in.)	
C	22	2L8076	TERMINAL	4
C▲	23	5P688	TUBE 8.38 dm(33 in.)	
C	24	3S2093	TIE	2

▲ ORDER BY THE DECIMETRE

149294

ALTERNATOR (1P4343 N/S)—24 Volt, 19 Ampere

Serial No. 46A31954 to 46A32842 inclusive. 9S4070 Alternator parts are shown on Page 55

Refer also to Pages 140A and 141 for special parts

ALTERNATOR (1P4343 N/S)—24 Volt, 19 Ampere
Serial No. 46A32843 to 46A33270 inclusive
2P1204 Alternator parts are shown on Page 54C. Refer also to Page 140 for special parts

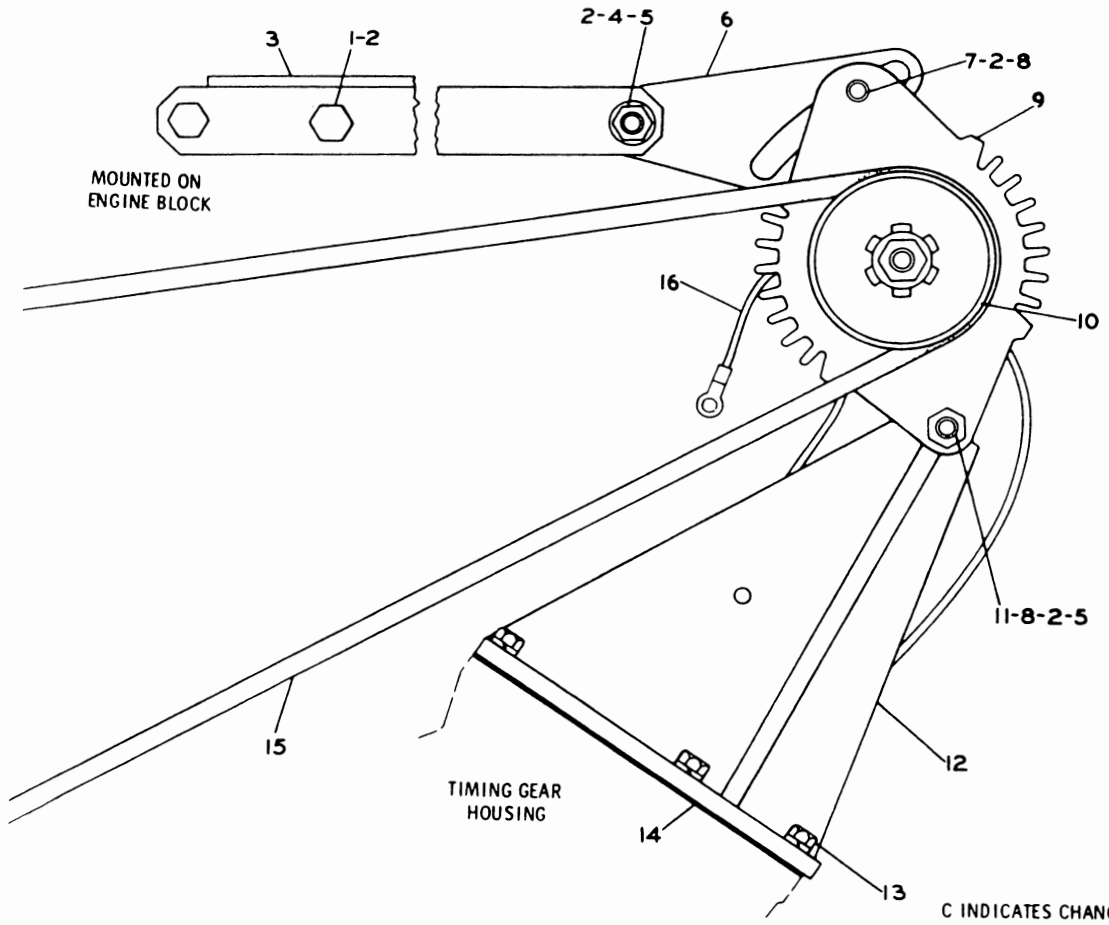

	REF. NO.	PART NUMBER	DESCRIPTION	QTY
	1	7B3235	BOLT	2
	2	3B4508	LOCKWASHER	5
	3	2S2319	BRACKET ASSEM.	1
	4	S1585	BOLT	1
	5	1D4719	NUT	2
	6	2P5590	STRAP	1
	7	1A1460	BOLT	1
		8S4223	SPACER	1
	8	8M4791	WASHER	3
C	9	2P1204	ALTERNATOR GROUP (Separate Illustration)	1
	10	4N6885	PULLEY—(drive)	1
	11	9H8260	BOLT	1
	12	2P5065	BRACKET ASSEM.	1
	13	S1594	BOLT	5
		3B4506	LOCKWASHER	5
	14	9H1416	GASKET	1
	15	3P25	VEE BELT	1
C		4D674	WIRE ASSEM. (Includes)	1
▲	16	5P616	WIRE—4.06 dm(16 in.)	
		1F7240	TERMINAL—(No. 8 Screw)	1
		6B2759	TERMINAL—(13/32 in. hole)	1

C INDICATES CHANGE

▲ ORDER BY THE DECIMETRE

152090

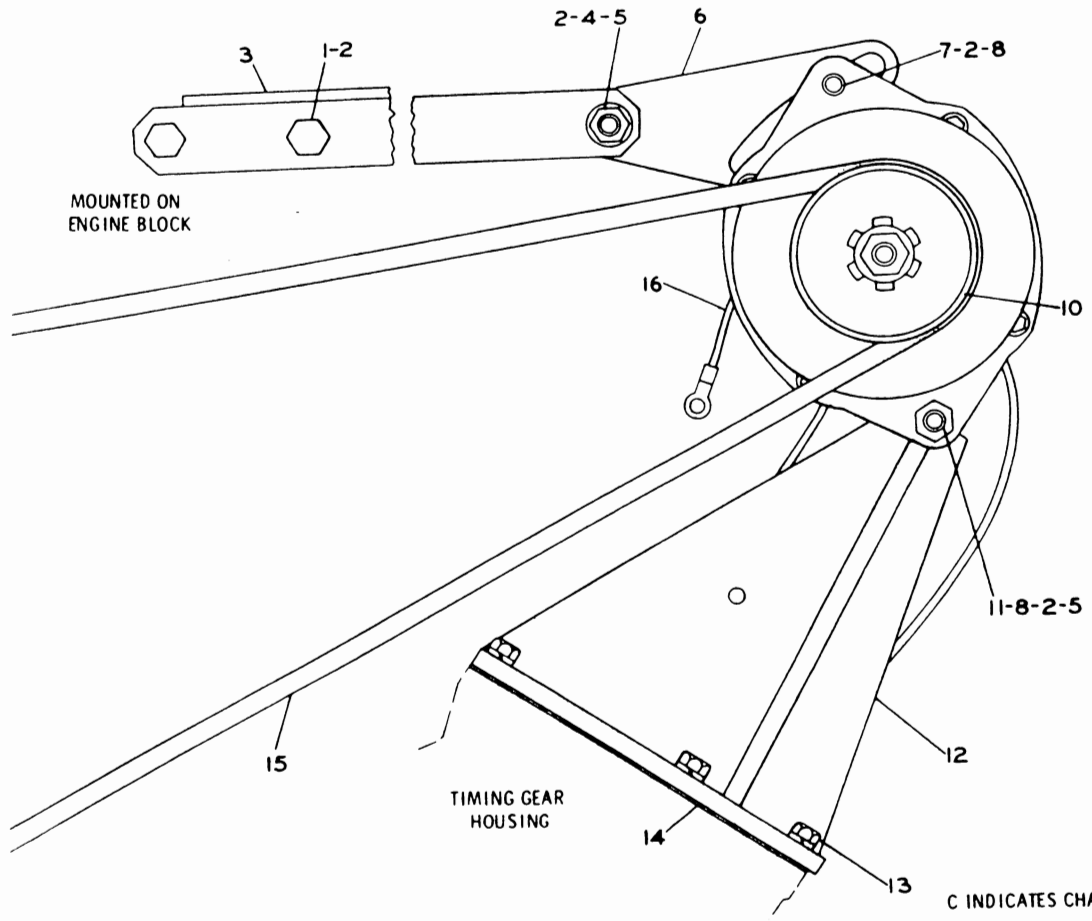

	REF. NO.	PART NUMBER	DESCRIPTION	QTY
	1	7B3235	BOLT	2
	2	3B4508	LOCKWASHER	5
	3	2S2319	BRACKET ASSEM.	1
	4	S1585	BOLT	1
	5	1D4719	NUT	2
	6	2P5590	STRAP	1
	7	1A1460	BOLT	1
		8S4223	SPACER	1
	8	8M4791	WASHER	3
C	9	5S9088	ALTERNATOR GROUP (Separate Illustration)	1
	10	4N6885	PULLEY-(drive)	1
	11	9H8260	BOLT	1
	12	2P5065	BRACKET ASSEM.	1
	13	S1594	BOLT	5
		3B4506	LOCKWASHER	5
	14	9H1416	GASKET	1
	15	3P25	VEE BELT	1
C		5H4822	WIRE ASSEM. (Includes)	1
▲		5P616	WIRE-4.06 dm(16 in.)	
	16	9F9353	TERMINAL .375 in.(0.96 mm) Screw	1
		2L8058	TERMINAL .25 in.(6.35 mm) Screw	1

C INDICATES CHANGE

▲ ORDER BY THE DECIMETER

152091

ALTERNATOR (1P4343 N/S)—24 Volt, 19 Ampere
Serial No. 46A33271 to 46A33786 inclusive
5S9088 Alternator parts are shown on Pages 146 and 147
Refer also to Page 140 for special parts

ALTERNATOR (1P4343 N/S)—24 Volt, 19 Ampere
Serial No. 46A33787—Up
2P1204 Alternator parts are shown on Page 54C
Refer also to Page 140 for special parts

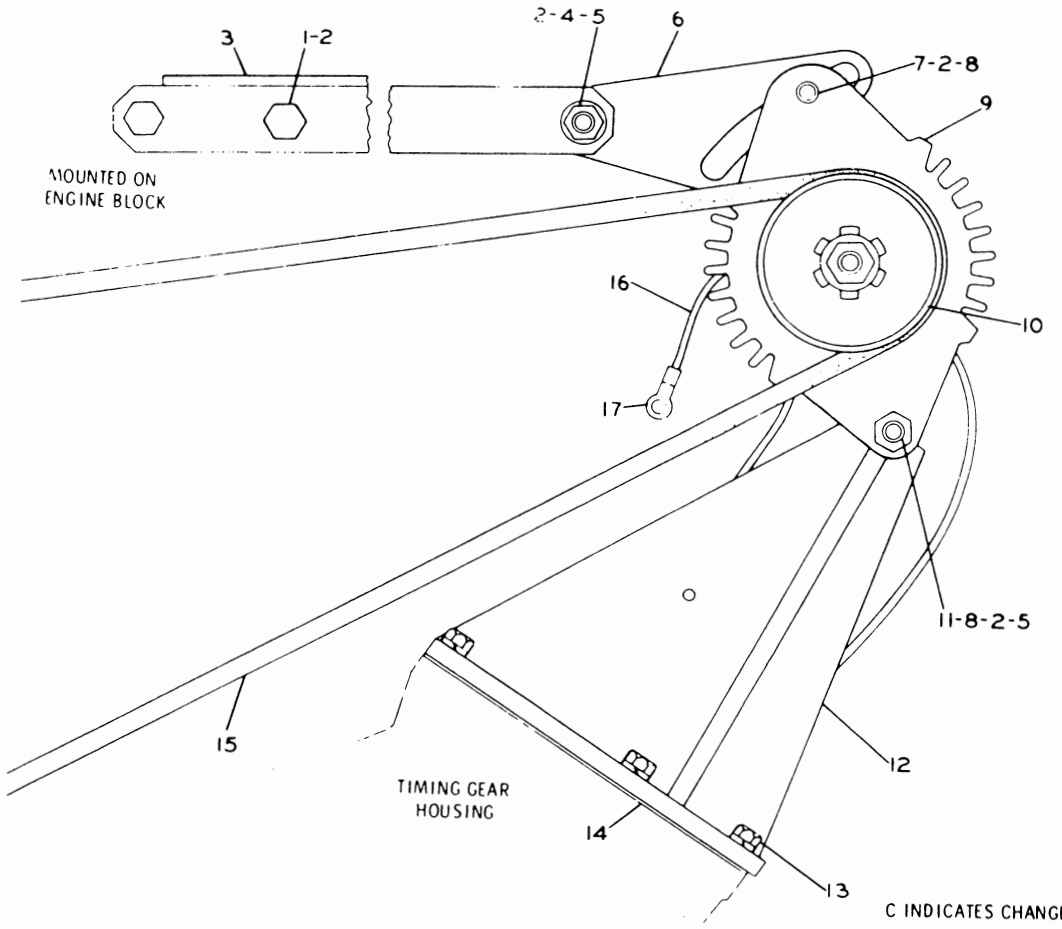

	REF. NO.	PART NUMBER	DESCRIPTION	QTY
	1	7B3235	BOLT	1
	2	3B4508	LOCKWASHER	4
	3	2S2319	BRACKET ASSEM.	1
	4	S1585	BOLT	1
	5	1D4719	NUT	2
	6	2P5590	STRAP	1
	7	1A1460	BOLT	1
		8S4223	SPACER	1
	8	8M4791	WASHER	3
C	9	2P1204	ALTERNATOR GROUP (Separate Illustration)	1
	10	4N6885	PULLEY---(drive)	1
	11	9H8260	BOLT	1
	12	2P5065	BRACKET ASSEM.	1
	13	S1594	BOLT	5
		3B4506	LOCKWASHER	5
	14	9H1416	GASKET	1
	15	3P25	VEE BELT	1
C	16	4D674	WIRE ASSEM. (Includes)	1
▲		5P616	WIRE---4.07 dm(16 in.)	
		2L8066	TERMINAL	1
	17	6B2759	TERMINAL	1

C INDICATES CHANGE ▲ ORDER BY THE DECIMETRE 154010

2P1204 ALTERNATOR GROUP—24 Volt, 19 Ampere

Serial No. 46A26723, 26726 to 26736, 26738 to 31953 & 46A32843 to 46A33270 inclusive & 46A33787—Up

Part of 1P4343 Alternator Group shown on Pages 54A, 54B, 54B-1, 54B-3 & 54B-5

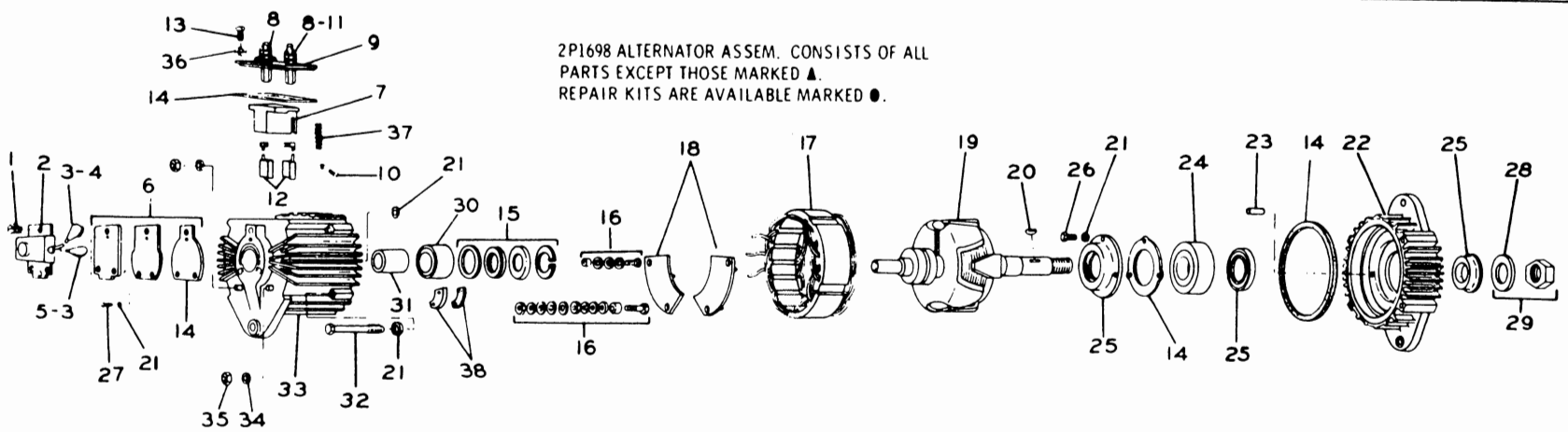

	REF. NO.	PART NUMBER	DESCRIPTION	QTY
	1	310243	SCREW	3
C▲		6N3821	REGULATOR ASSEM.	1
	2	3K6234	SCREW	1
		4B4863	WASHER	1
	3	98708	BOOT	2
	4	2L8076	TERMINAL	1
	5	2L8077	TERMINAL	1
●	6	1P1091	KIT-(Reg. Mounting Plate & Gasket)	
	7	1P1145	HOLDER ASSEM.	1
		1P1137	HOLDER	1
	8	4B2049	NUT	4
		3B4502	LOCKWASHER	4
	9	1P1138	FIELD TERMINAL & PLATE ASSEM.	1
	10	5S4245	SCREW	2
		6B4542	LOCKWASHER	2
	11	4B4274	WASHER	1

●	12	1P1130	KIT-(2 Brushes)	1
	13	324000	SCREW	4
●	14	2P1714	KIT-(4 Gaskets)	1
●	15	1P1080	KIT-(Retainer and Seals)	1
C●	16	6N6717	KIT- (insulator) (Terminal Stud)	1
	17	2P1709	RECTIFIER & STATOR ASSEM.	1
	18	2P1719	PLATE & RECTIFIER ASSEM. (Positive)	1
		2P1720	PLATE & RECTIFIER ASSEM. (Negative)	1
C	19	6N1226	ROTOR ASSEM.	1
	20	1B8705	KEY	1
	21	3B4502	LOCKWASHER	10
C	22	6N5255	HEAD ASSEM.	1
	23	6D9953	PIN	2
C	24	1B5387	BEARING	1

GMG00844-FORM(Alternator Installation)--1

●	25	2P1713	KIT-(Retainer and Seal) (Retainer, Seal, Spacer, Washer)	1
	26	172311	SCREW	3
	27	9M5520	SCREW	1
	28	3B4511	LOCKWASHER	1
●	29	1P1131	KIT-(Shaft Parts-Nut & Lockwasher)	1
	30	2L611	BEARING	1
	31	1P1134	RACE	1
C●	32	6N5257	KIT- (frame screw-12 bolts)	1
C	33	6N5254	HEAD ASSEM.	1
	34	3B4507	LOCKWASHER-11mm(.437 in.)I.D.	2
		3B4504	LOCKWASHER-6.35mm(.25 in.)I.D.	2
	35	1D4718	NUT-11mm(.437 in.)I.D.	2
		9M1311	NUT-6.35mm(.25 in.)I.D.	2
	36	2H6139	LOCKWASHER	4
●	37	1P1088	KIT-(2 Brush Springs)	1
C	38	2P6261	INSULATOR	2

C INDICATES CHANGE

207038

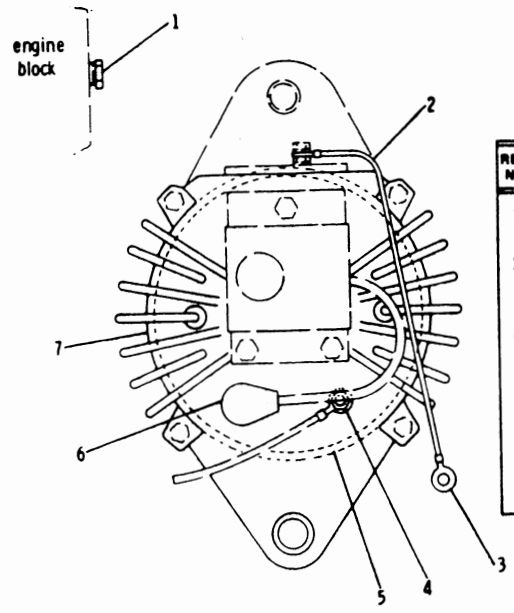

REF. NO.	PART NUMBER	DESCRIPTION	QTY
1	5M6213	PLUG----(Use As Required)-------	1
	5M6214	PLUG----(Use As Required)-------	1
2	4D674	WIRE ASSEM.----------	1
	1F7240	TERMINAL----------	1
3	6B2759	TERMINAL----------	1
4	4B2049	NUT----------	1
	2L8071	TERMINAL----------	1
5	2P1714	KIT---------(4 Gaskets)----------	1
6	7S7182	BOOT----------	1
	2L8077	TERMINAL----------	1
7	2P1723	HEAD ASSEM.----------	1
	GMG02097	FORM---------- (Installation Instructions)	1

117518

2P9575 ALTERNATOR HEAD GROUP
Serial No. 46A24433 to 46A26722 inclusive
For Field Replacement of 1P1079 Head Assembly shown on Page 55

9S4070 ALTERNATOR ASSEMBLY—24 Volt, 19 Ampere

Serial No. 46A24433 to 46A26722, 26724, 26725, 26737 and 46A31954 to 46A32842 inclusive

Part of Alternator shown on Pages 54 and 54B-2

7S5897 ALTERNATOR ASSEM. CONSISTS OF ALL PARTS EXCEPT THOSE MARKED BY ▲.
REPAIR KITS ARE AVAILABLE MARKED ●

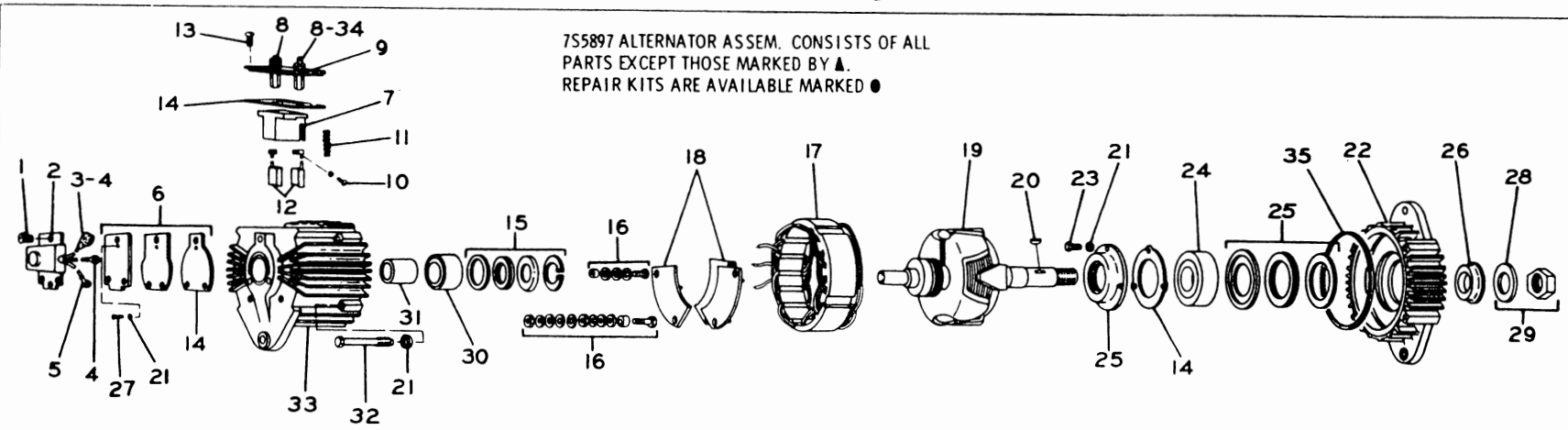

REF. NO.	PART NUMBER	DESCRIPTION	QTY
1	1P1135	SCREW	3
▲	9S2329	REGULATOR ASSEM.	1
2	3K6234	SCREW	1
	4B4863	WASHER	1
3	7S7182	BOOT	1
4	2L8076	TERMINAL	2
5	2L8077	TERMINAL	1
● 6	1P1091	KIT (Reg. Mounting Plate & Gasket)	1
7	1P1145	HOLDER ASSEM.	1
	1P1137	HOLDER	1
8	4B2049	NUT	3
	3B4502	LOCKWASHER	3
9	1P1138	FIELD TERMINAL & PLATE ASSEM.	1
10	5S4245	SCREW	2
	6B4542	LOCKWASHER	2

● 11	1P1088	KIT—(2 Brush Springs)	1
● 12	1P1130	KIT—(2 Brushes)	1
13	5H8548	SCREW ASSEM.	4
● 14	1P1090	KIT—(3 Gaskets)	1
● 15	1P1080	KIT—(Retainer and Seals)	1
● 16	2P5111	KIT—(Terminal Stud and Hardware)	1
17	1P1078	RECTIFIER & STATOR ASSEM.	1
18	1P1076	PLATE & RECTIFIER ASSEM. (Positive)	1
	1P1077	PLATE & RECTIFIER ASSEM. (Negative)	1
	2P6262	INSULATOR	1
19	1P1185	ROTOR ASSEM.	1
20	1B8705	KEY	1
21	3B4502	LOCKWASHER	8

22	1P1223	HEAD ASSEM.	1
	6D9953	PIN	1
23	5M6755	SCREW	3
24	1B5387	BEARING	1
● 25	1P1084	KIT—(Retainer and Seal) (Seal and 3 Retainers)	1
26	1P1082	SPACER	1
27	5H6467	SCREW	1
28	3B4511	LOCKWASHER	1
● 29	1P1131	KIT (Shaft Parts-Nut & Lockwasher)	1
30	2L611	BEARING	1
31	1P1134	RACE	1
● 32	1P1086	KIT—(Frame Screw-4 Screws)	1
33	1P1079	HEAD ASSEM.	1
34	4B4274	WASHER	1
35	2P2232	GASKET	1

137941

REF. NO.	PART NUMBER	DESCRIPTION	QTY
1	8B6678	GROMMET	2
2	5S8580	WIRE ASSEM.	1
	2L8066	TERMINAL (Part of 5S8580 Assem.)	2
3	5M6668	SCREW	2
4	5M2555	CIRCUIT BREAKER	1
5	7S6402	SWITCH ASSEM. --(three position)-	1
	7S5432	KNOB (Part of 7S6402 Assem.)	1
6	8S9683	HARNESS ASSEM. (See Separate Illustration)	1
7	1F7307	AMMETER	1
8	S509	BOLT	6
9	3B4506	LOCKWASHER	6
10	4S6336	BUTTON	1

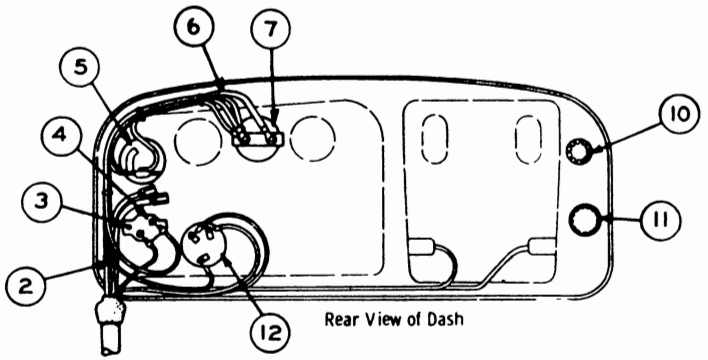

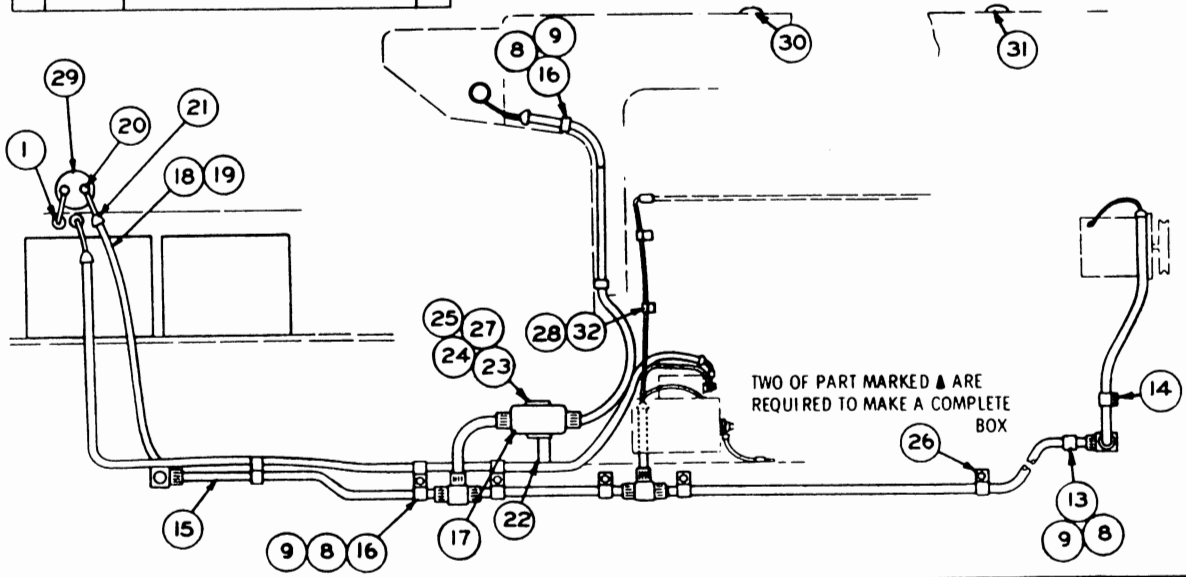

11	5K3546	BUTTON	1
12	8S7713	SWITCH ASSEM.	1
	8F3437	LEVER	1
	5L7200	SCREW	1
	3B4501	LOCKWASHER (Parts of 8S7713 Assem.)	1
13	1S994	CLIP	1
14	8M2773	CLIP	1
15	8S9682	HARNESS ASSEM. (See Separate Illustration)	1
16	9M9738	CLIP	7
17	1S7786	BOX	2
18	9S5633	CABLE ASSEM.	1
19	4S8732	CONDUIT--3 Feet	
20	1S7252	TERMINAL	2
21	1S2244	BOOT	2
	1S4915	LINER	2
	3S2093	TIE (Parts of 9S5633 Assem.)	2
22	2S3162	BRACKET	1
23	2S3196	BRACKET	1
24	S1615	BOLT	2
	1B4330	NUT	2
25	3B4504	LOCKWASHER	2
26	8S948	CLIP	2
27	4B4276	WASHER	2
28	3D2023	GROMMET	2
29	7H7290	SWITCH ASSEM. (See Separate Illustration)	1
	8H8648	PLATE	1
30	1L6377	BUTTON	1
31	3L8852	BUTTON	1
32	7B9919	CLIP	2

111162

BATTERY AND WIRING (1P4881 N/S)–24 Volt–Part 1
Serial No. 46A24433 to 46A29029 inclusive
8S9682, 8S9683 Harness and 7H7290 Switch parts are shown on Pages 59, 60 and 61
See Page 58 for Wiring Diagram

BATTERY AND WIRING (1P4881 N/S)- 24 Volt—Part 2
Serial No. 46A24433 to 46A29029 inclusive
See Page 58 for Wiring Diagram

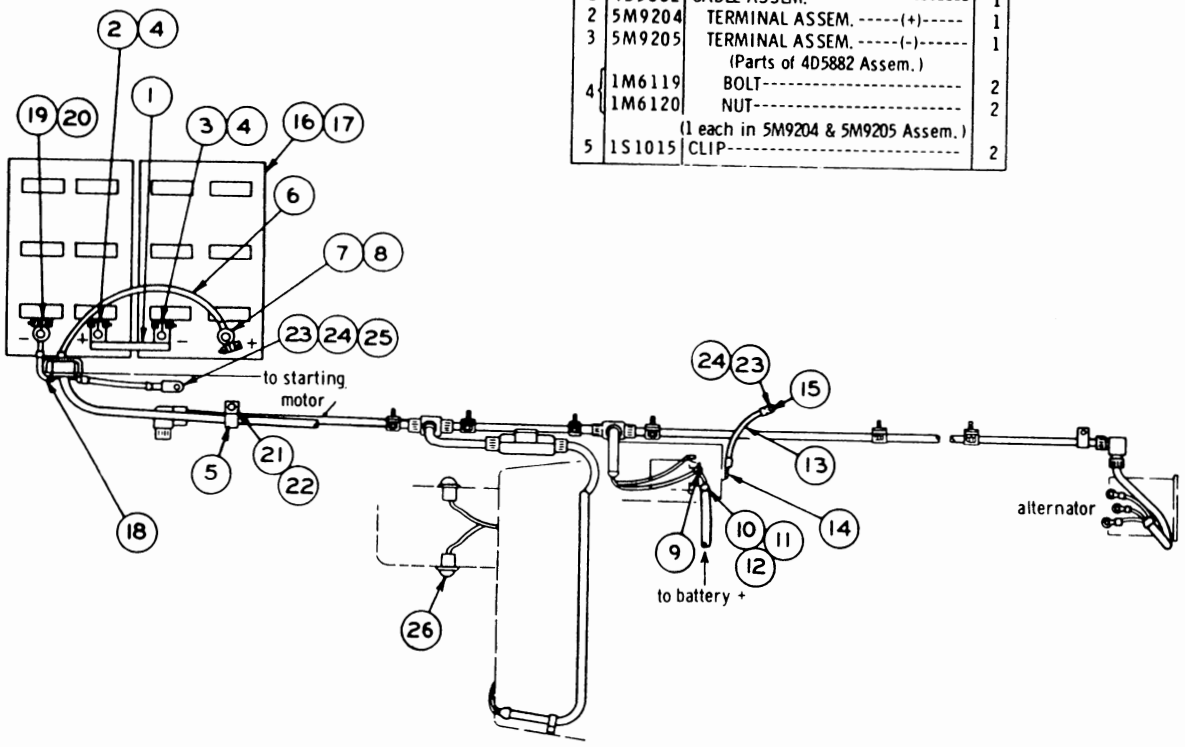

REF. NO.	PART NUMBER	DESCRIPTION	QTY
1	4D5882	CABLE ASSEM.	1
2	5M9204	TERMINAL ASSEM. -----(+)-----	1
3	5M9205	TERMINAL ASSEM. -----(-)-----	1
		(Parts of 4D5882 Assem.)	
4	1M6119	BOLT	2
	1M6120	NUT	2
		(1 each in 5M9204 & 5M9205 Assem.)	
5	1S1015	CLIP	2
6	9S4613	CABLE ASSEM.	1
	4S8732	CONDUIT----------8 Feet	
7	3S6049	TERMINAL ASSEM. -----(+)-----	1
8	2D8788	BOLT	1
	2D8787	NUT	1
		(Parts of 3S6049 Assem.)	
9	1S7251	TERMINAL--(to starting motor)---	1
10	1S2244	BOOT	2
11	3S2093	TIE	2
12	1S4915	LINER	2
		(Parts of 9S4613 Assem.)	
13	3S8624	CABLE ASSEM.	1
14	1S7252	TERMINAL	1
15	1S7251	TERMINAL	1
		(Parts of 3S8624 Assem.)	
16	4S9219	BATTERY	2
	5S8405	PLUG	12
		(6 in 4S9219 Battery)	
17	9M5775	MAT	2
18	9S4611	CABLE ASSEM.	1
	1S7252	TERMINAL	1
19	3S6050	TERMINAL ASSEM. -----(-)-----	1
		(Parts of 9S4611 Assem.)	
20	2D8788	BOLT	1
	2D8787	NUT	1
		(Parts of 3S6050 Assem.)	
21	S1587	BOLT	1
	3B4508	LOCKWASHER	1
22	8B2133	BOSS	1
23	S509	BOLT	2
24	3B4506	LOCKWASHER	2
25	4B4278	WASHER	1
26	3S8642	LAMP ASSEM.	2
	2D1959	BULB	2
		(1 in each 3S8642 Assem.)	

111163

REF. NO.	PART NUMBER	DESCRIPTION	QTY
1	8B6678	GROMMET	2
2	5S8580	WIRE ASSEM.	1
	2L8066	TERMINAL	2
3	5M6668	SCREW	2
4	5M2555	CIRCUIT BREAKER	1
5	7S6402	SWITCH ASSEM. --(three position)-	1
	7S5432	KNOB	1
6	8S9683	HARNESS ASSEM. (Separate Illustration)	1
7	1F7307	AMMETER	1
8	S509	BOLT	6
9	3B4506	LOCKWASHER	6
10	4S6336	BUTTON	1

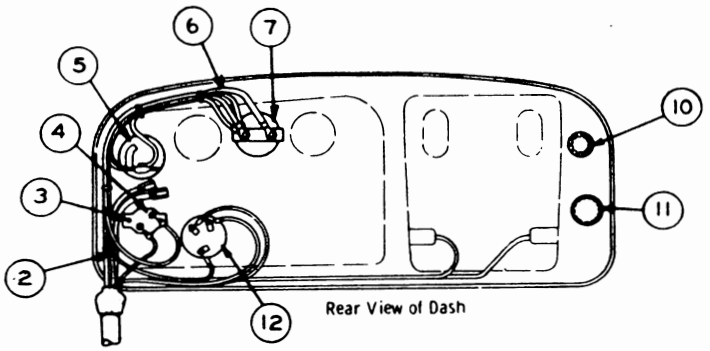

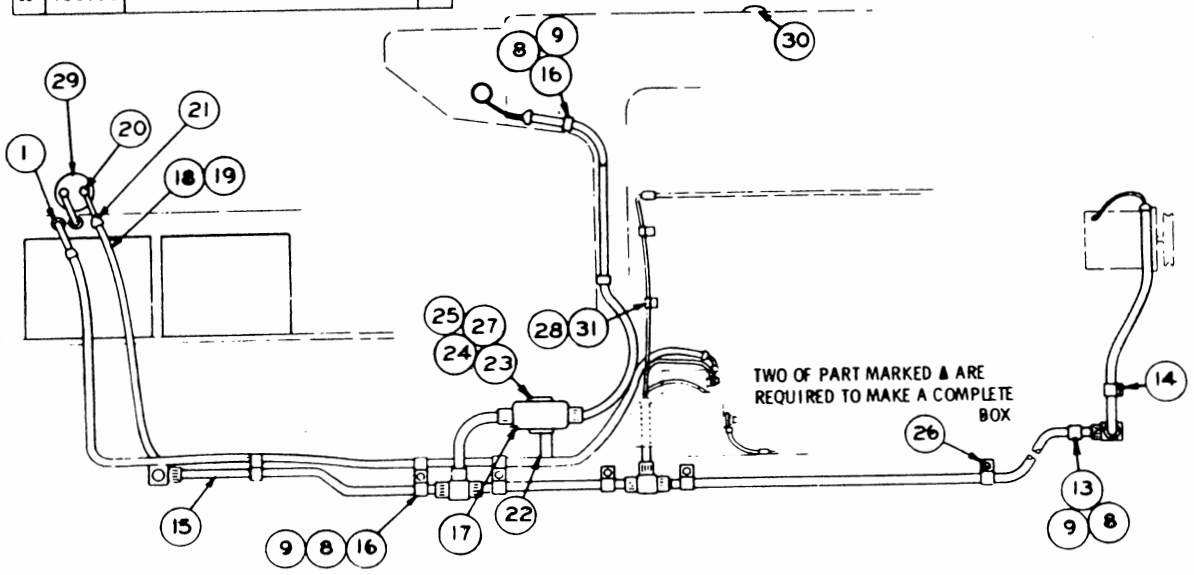

REF. NO.	PART NUMBER	DESCRIPTION	QTY
11	5K3546	BUTTON	1
12	8S7713	SWITCH ASSEM.	1
	8F3437	LEVER	1
	5L7200	SCREW	1
	3B4501	LOCKWASHER	1
13	1S994	CLIP	1
14	8M2773	CLIP	1
15	8S9682	HARNESS ASSEM. (Separate Illustration)	1
16	9M9738	CLIP	7
▲ 17	1S7786	BOX	2
18	9S5633	CABLE ASSEM.	1
● 19	4S8732	CONDUIT----------31 in.	
20	1S7252	TERMINAL	2
21	1S2244	BOOT	2
	1S4915	LINER	2
	3S2093	TIE	2
22	2S3162	BRACKET	1
23	2S3196	BRACKET	1
24	S1615	BOLT	2
	1B4330	NUT	2
25	3B4504	LOCKWASHER	2
26	8S948	CLIP	2
27	4B4276	WASHER	2
28	3D2023	GROMMET	2
29	7H7290	SWITCH ASSEM. (Separate Illustration)	1
	8H8648	PLATE	1
30	1L6377	BUTTON	1
31	7B9919	CLIP	2

BATTERY AND WIRING (1P4881 N/S)—24 Volt—Part 1

Serial No. 46A29030 to 46A33270 inclusive. 8S9682, 8S9683 Harness and 7H7290 Switch parts are shown on Pages 59, 60 and 61

Wiring Diagram is shown on Page 58A

BATTERY AND WIRING (1P4881 N/S)—24 Volt—Part 2
Serial No. 46A29030 to 46A33270 inclusive
Wiring Diagram is shown on Page 58A

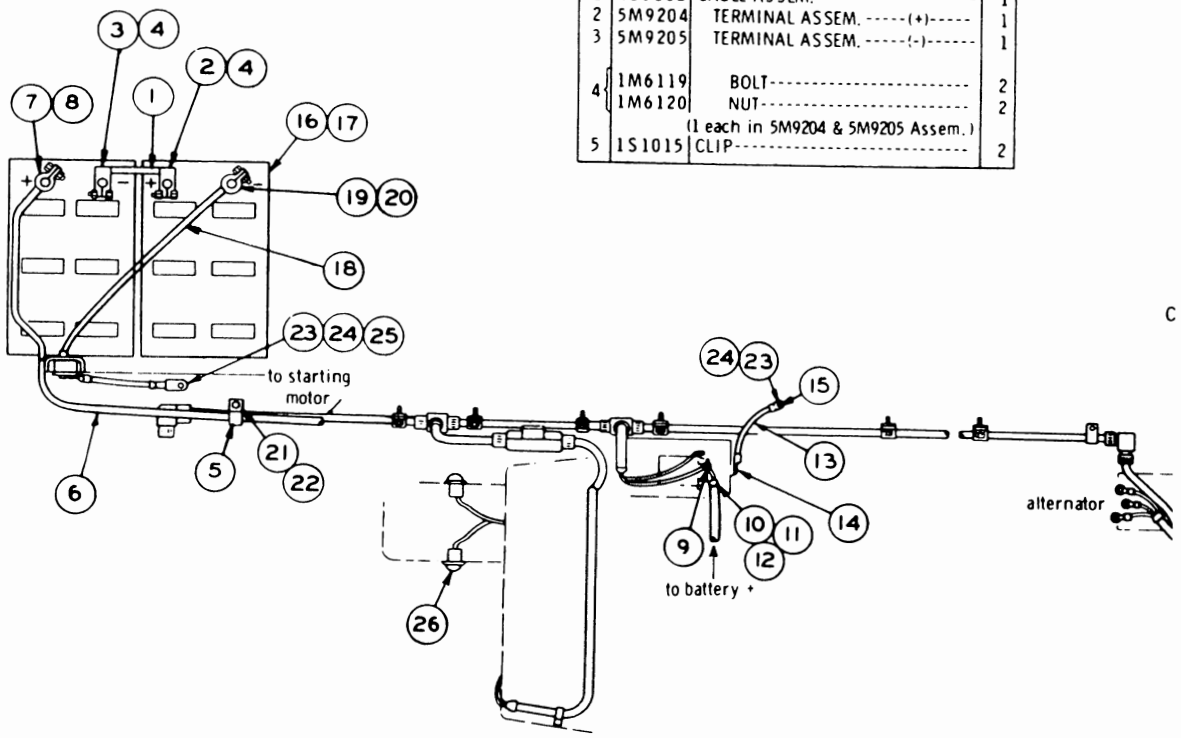

REF. NO.	PART NUMBER	DESCRIPTION	QTY
1	4D5882	CABLE ASSEM.	1
2	5M9204	TERMINAL ASSEM. -----(+)-----	1
3	5M9205	TERMINAL ASSEM. -----(-)-----	1
4	1M6119	BOLT	2
	1M6120	NUT	2
		(1 each in 5M9204 & 5M9205 Assem.)	
5	1S1015	CLIP	2

	REF. NO.	PART NUMBER	DESCRIPTION	QTY
●	6	9S4613	CABLE ASSEM.	1
		4S8732	CONDUIT----------88 in.	
	7	3S6049	TERMINAL ASSEM. -----(+)----	1
	8	2D8788	BOLT	1
		2D8787	NUT	1
	9	1S7251	TERMINAL--(to Starting Motor)--	1
	10	1S2244	BOOT	2
	11	3S2093	TIE	2
	12	1S4915	LINER	2
	13	3S8624	CABLE ASSEM.	1
	14	1S7252	TERMINAL	1
	15	1S7251	TERMINAL	1
	16	4S9219	BATTERY	2
		5S8405	PLUG	6
	17	9M5775	MAT	2
		3P3702	CABLE ASSEM.	1
C ●	18	4S8783	CABLE----------32 in.	
		1S7252	TERMINAL	1
	19	3S6050	TERMINAL ASSEM. -----(-)----	1
	20	2D8788	BOLT	1
		2D8787	NUT	1
	21	S1587	BOLT	1
		3B4508	LOCKWASHER	1
	22	8B2133	BOSS	1
	23	S509	BOLT	2
	24	3B4506	LOCKWASHER	2
	25	4B4278	WASHER	1
	26	3S8642	LAMP ASSEM.	2
		2D1959	BULB	1

C INDICATES CHANGE

● ORDER BY THE FOOT

142166

REF. NO.	PART NUMBER	DESCRIPTION	QTY
1	8B6678	GROMMET	2
2	5S8580	WIRE ASSEM.	1
	2L8066	TERMINAL	2
3	5M6668	SCREW	2
C 4	9S173	CIRCUIT BREAKER	1
5	7S6402	SWITCH ASSEM. --(three position)-	1
	7S5432	KNOB	1
6	8S9683	HARNESS ASSEM. (Separate Illustration)	1
C 7	8M7892	AMMETER	1
8	S509	BOLT	6
9	3B4506	LOCKWASHER	6
10	4S6336	BUTTON	1
11	5K3546	BUTTON	1
12	8S7713	SWITCH ASSEM.	1
	8F3437	LEVER	1
	5L7200	SCREW	1
	3B4501	LOCKWASHER	1
13	1S994	CLIP	1
14	8M2773	CLIP	1
15	8S9682	HARNESS ASSEM. (Separate Illustration)	1
16	9M9738	CLIP	7
▲ 17	1S7786	BOX	2
18	9S5633	CABLE ASSEM.	1
C● 19	5P694	CONDUIT--------78.7 cm(31 in.)	
20	1S7252	TERMINAL	2
	1S2244	BOOT	2
21	1S4915	LINER	2
	3S2093	TIE	2
22	2S3162	BRACKET	1
23	2S3196	BRACKET	1
24	S1615	BOLT	2
	1B4330	NUT	2
25	3B4504	LOCKWASHER	2
26	8S948	CLIP	2
27	4B4276	WASHER	2
28	3D2023	GROMMET	2
29	7H7290	SWITCH ASSEM. (Separate Illustration)	1
	8H8648	PLATE	1
30	1L6377	BUTTON	1
31	7B9919	CLIP	2

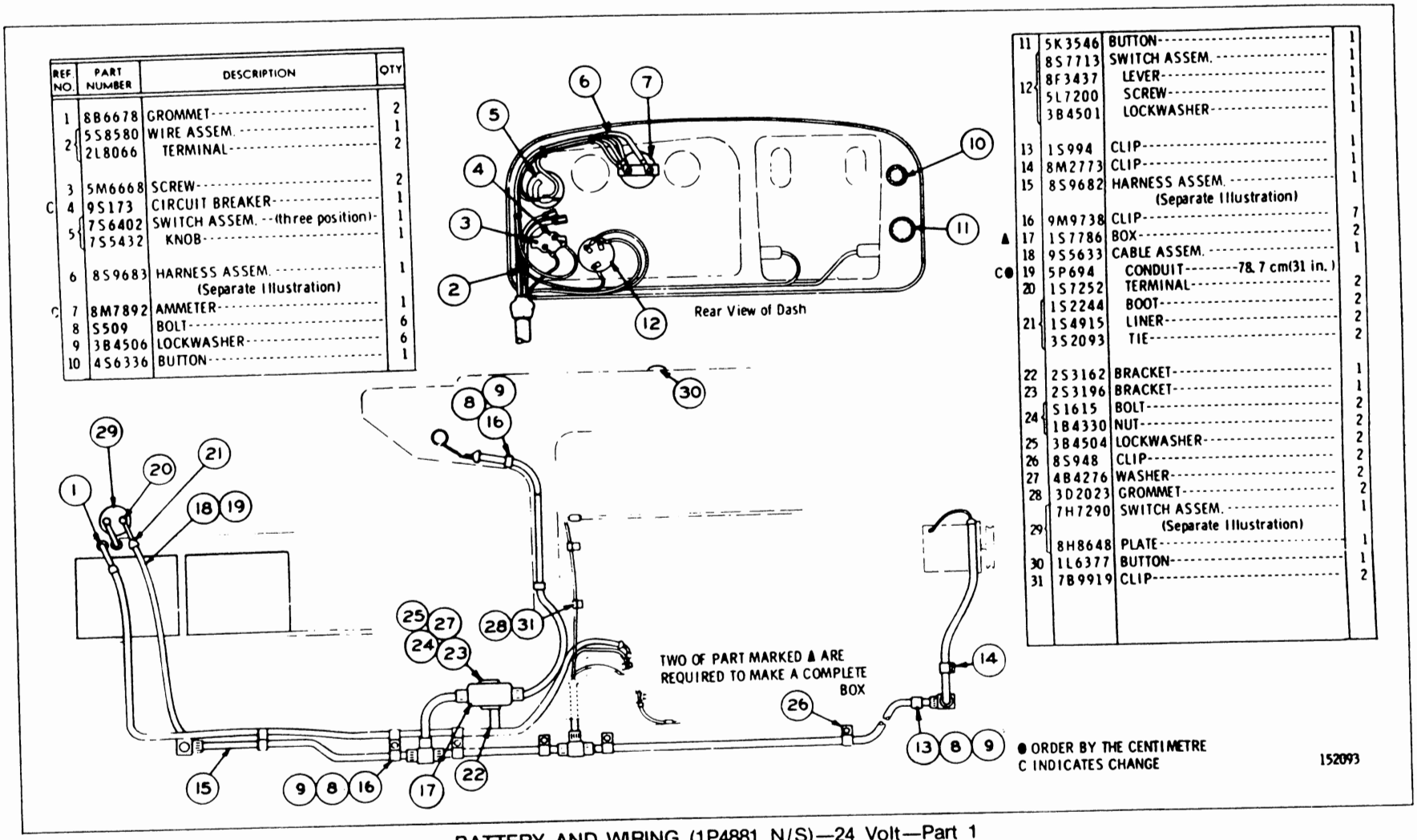

BATTERY AND WIRING (1P4881 N/S)—24 Volt—Part 1
Serial No. 46A33271 to 46A33786 inclusive
8S9682, 8S9683 Harness and 7H7290 Switch parts are shown on Pages 59, 60 and 61
See Page 58A for Wiring Diagram

BATTERY AND WIRING (1P4881 N/S)—24 Volt—Part 2
Serial No. 46A33271 to 46A33786 inclusive
See Page 58A for Wiring Diagram

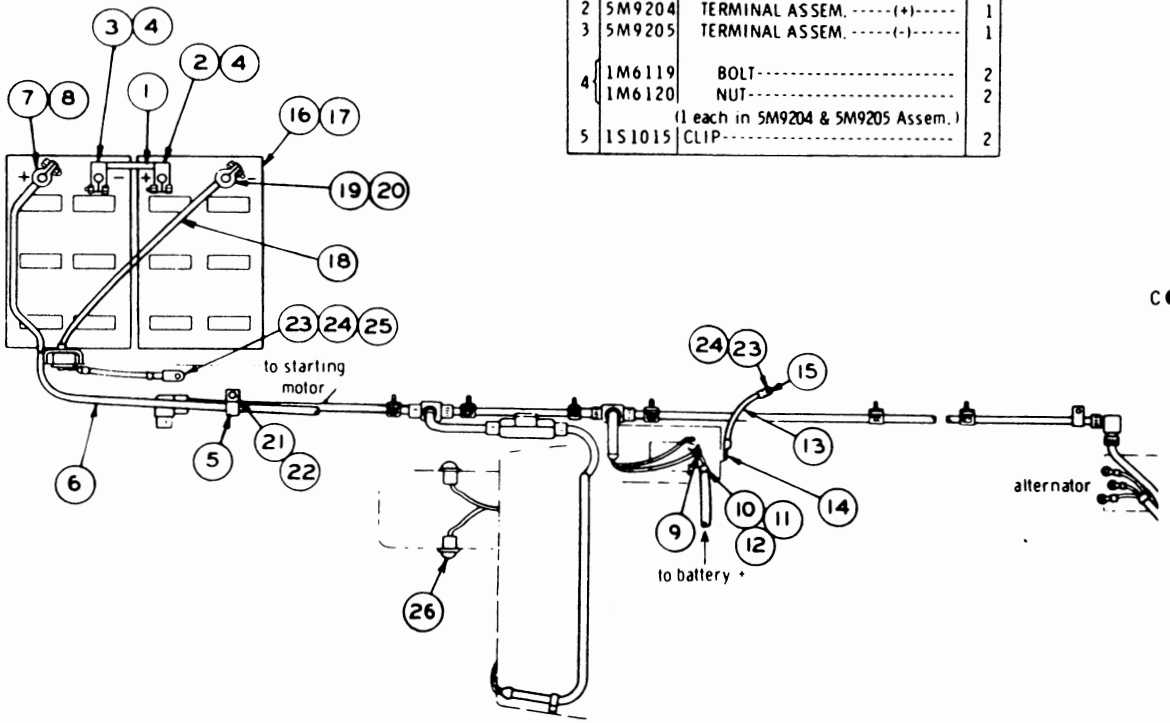

REF. NO.	PART NUMBER	DESCRIPTION	QTY
1	4D5882	CABLE ASSEM.	1
2	5M9204	TERMINAL ASSEM. -----(+)-----	1
3	5M9205	TERMINAL ASSEM. -----(-)-----	1
4	1M6119	BOLT	2
	1M6120	NUT	2
		(1 each in 5M9204 & 5M9205 Assem.)	
5	1S1015	CLIP	2

	REF. NO.	PART NUMBER	DESCRIPTION	QTY
C●	6	9S4613	CABLE ASSEM.	1
		5P694	CONDUIT------223.5 cm(88 in.)	
	7	3S6049	TERMINAL ASSEM. -----(+)----	1
	8	2D8788	BOLT	1
		2D8787	NUT	1
	9	1S7251	TERMINAL--(to Starting Motor)--	1
	10	1S2244	BOOT	2
	11	3S2093	TIE	2
	12	1S4915	LINER	2
	13	3S8624	CABLE ASSEM.	1
	14	1S7252	TERMINAL	1
	15	1S7251	TERMINAL	1
	16	4S9219	BATTERY	2
		5S8405	PLUG	6
	17	9M5775	MAT	2
		3P3702	CABLE ASSEM.	1
C●	18	5P747	CABLE--------81.2 (32 in.)	
		1S7252	TERMINAL	1
	19	3S6050	TERMINAL ASSEM. -----(-)-----	1
	20	2D8788	BOLT	1
		2D8787	NUT	1
	21	S1587	BOLT	1
		3B4508	LOCKWASHER	1
	22	8B2133	BOSS	1
	23	S509	BOLT	2
	24	3B4506	LOCKWASHER	2
	25	4B4278	WASHER	1
	26	3S8642	LAMP ASSEM.	2
		2D1959	BULB	1

C INDICATES CHANGE

● ORDER BY THE CENTIMETRE

152094

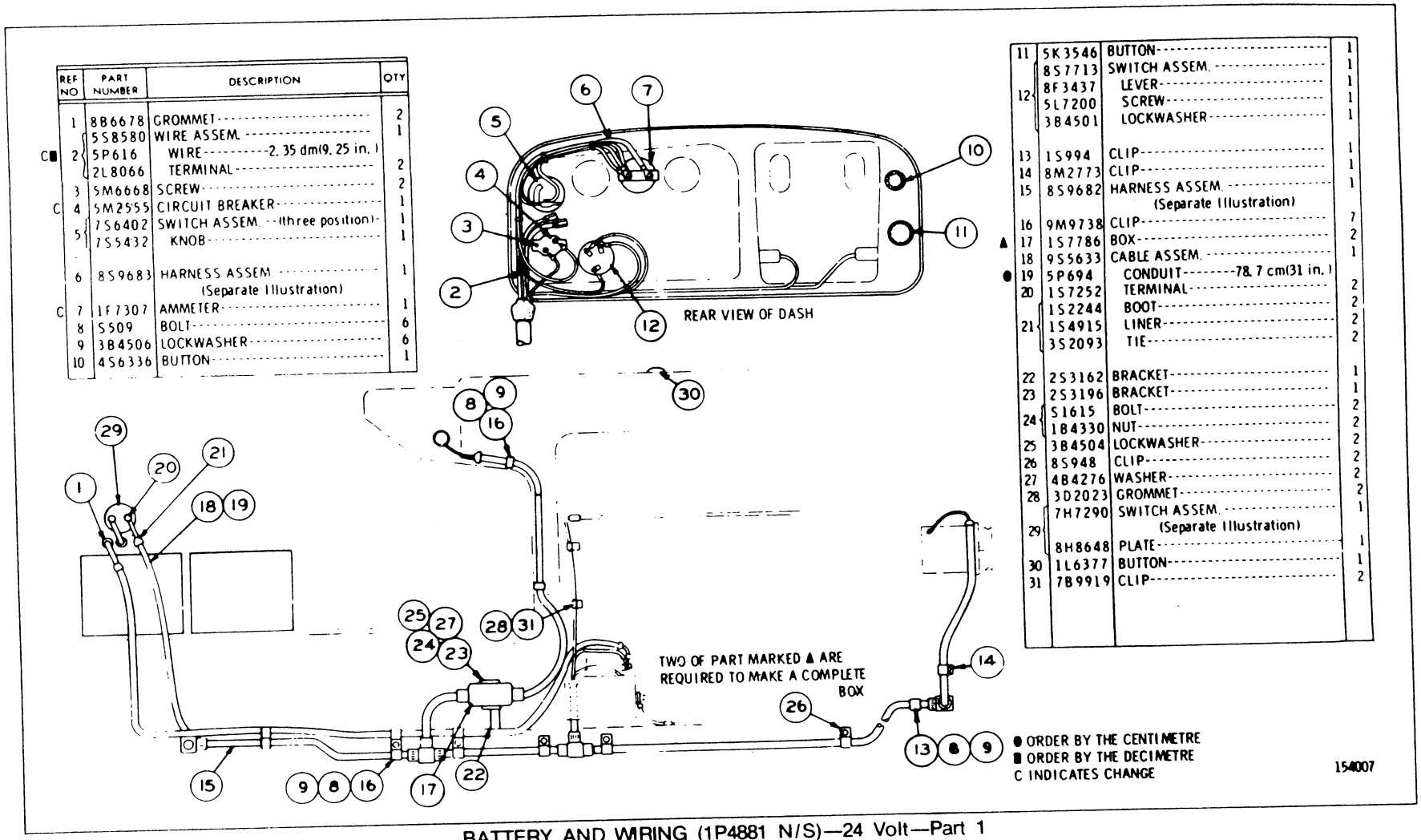

REF NO	PART NUMBER	DESCRIPTION	QTY
1	8B6678	GROMMET	2
C■ 2	5S8580	WIRE ASSEM.	1
	5P616	WIRE----------2.35 dm(9.25 in.)	
	2L8066	TERMINAL	2
3	5M6668	SCREW	2
C 4	5M2555	CIRCUIT BREAKER	1
5	7S6402	SWITCH ASSEM. ---(three position)-	1
	7S5432	KNOB	1
6	8S9683	HARNESS ASSEM. (Separate Illustration)	1
C 7	1F7307	AMMETER	1
8	S509	BOLT	6
9	3B4506	LOCKWASHER	6
10	4S6336	BUTTON	1
11	5K3546	BUTTON	1
12	8S7713	SWITCH ASSEM.	1
	8F3437	LEVER	1
	5L7200	SCREW	1
	3B4501	LOCKWASHER	1
13	1S994	CLIP	1
14	8M2773	CLIP	1
15	8S9682	HARNESS ASSEM. (Separate Illustration)	1
16	9M9738	CLIP	7
▲ 17	1S7786	BOX	2
18	9S5633	CABLE ASSEM.	1
● 19	5P694	CONDUIT--------78.7 cm(31 in.)	
20	1S7252	TERMINAL	2
21	1S2244	BOOT	2
	1S4915	LINER	2
	3S2093	TIE	2
22	2S3162	BRACKET	1
23	2S3196	BRACKET	1
24	S1615	BOLT	2
	1B4330	NUT	2
25	3B4504	LOCKWASHER	2
26	8S948	CLIP	2
27	4B4276	WASHER	2
28	3D2023	GROMMET	2
29	7H7290	SWITCH ASSEM. (Separate Illustration)	1
	8H8648	PLATE	1
30	1L6377	BUTTON	1
31	7B9919	CLIP	2

BATTERY AND WIRING (1P4881 N/S)—24 Volt—Part 1
Serial No. 46A33787—Up
8S9682, 8S9683 Harness and 7H7290 Switch parts are shown on Pages 59, 60 and 61
See Page 58A for Wiring Diagram

BATTERY AND WIRING (1P4881 N/S)—24 Volt—Part 2

Serial No. 46A33787—Up

See Page 58A for Wiring Diagram

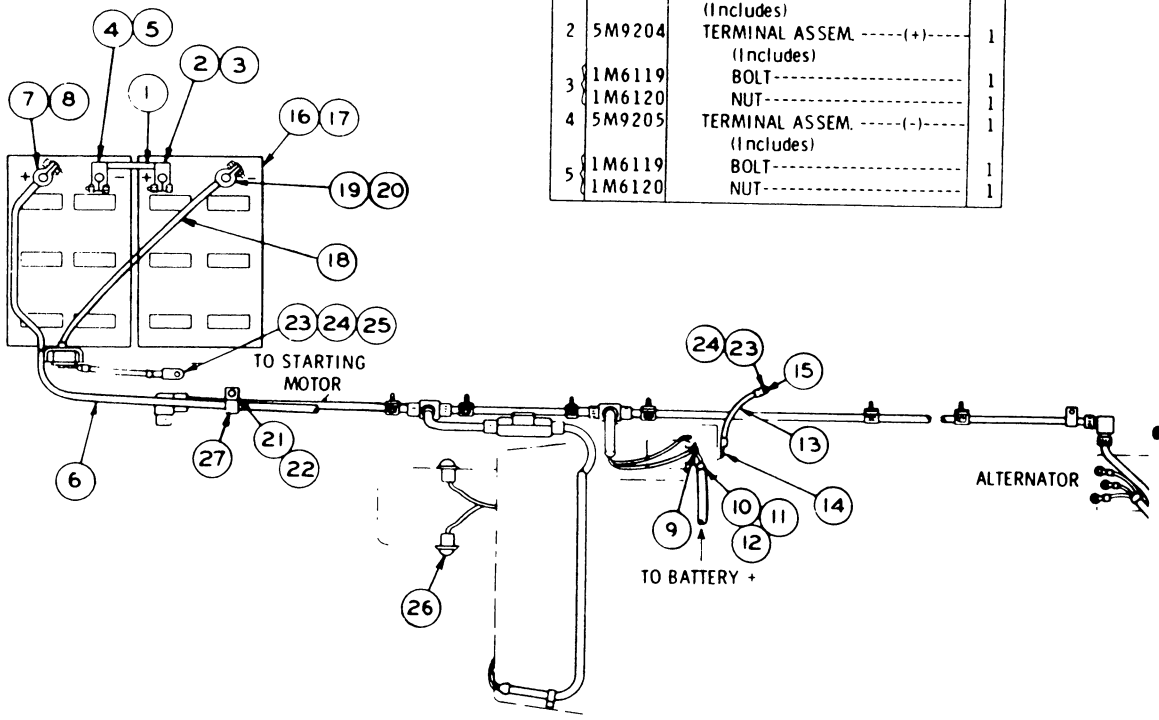

REF. NO.	PART NUMBER	DESCRIPTION	QTY
1	4D5882	CABLE ASSEM. (Includes)	1
2	5M9204	TERMINAL ASSEM. -----(+)----- (Includes)	1
3	1M6119	BOLT	1
	1M6120	NUT	1
4	5M9205	TERMINAL ASSEM. -----(-)----- (Includes)	1
5	1M6119	BOLT	1
	1M6120	NUT	1
6	9S4613	CABLE ASSEM. (Includes)	1
●	5P694	CONDUIT------223.5 cm(88 in.)	
7	3S6049	TERMINAL ASSEM. -----(+)----- (Includes)	1
8	2D8788	BOLT	1
	2D8787	NUT	1
9	1S7251	TERMINAL--(to starting motor)--	1
10	1S2244	BOOT	2
11	3S2093	TIE	2
12	1S4915	LINER	2
13	3S8624	CABLE ASSEM. (Includes)	1
●	5P747	CABLE -----26.03 cm(10.25 in.)	
14	1S7252	TERMINAL	1
15	1S7251	TERMINAL	1
16	4S9219	BATTERY (Includes)	2
	5S8405	PLUG	6
17	9M5775	MAT	2
18	3P3702	CABLE ASSEM. (Includes)	1
●	5P747	CABLE ---------81.2 cm(32 in.)	
	1S7252	TERMINAL	1
19	3S6050	TERMINAL ASSEM. -----(-)----- (Includes)	1
20	2D8788	BOLT	1
	2D8787	NUT	1
21	S1587	BOLT	1
	3B4508	LOCKWASHER	1
22	8B2133	BOSS	1
23	S509	BOLT	2
24	3B4506	LOCKWASHER	2
25	4B4278	WASHER	1
26	3S8642	LAMP ASSEM. (Includes)	2
	2D1959	BULB	1
27	1S1015	CLIP	2

C INDICATES CHANGE

● ORDER BY THE CENTIMETRE

154008

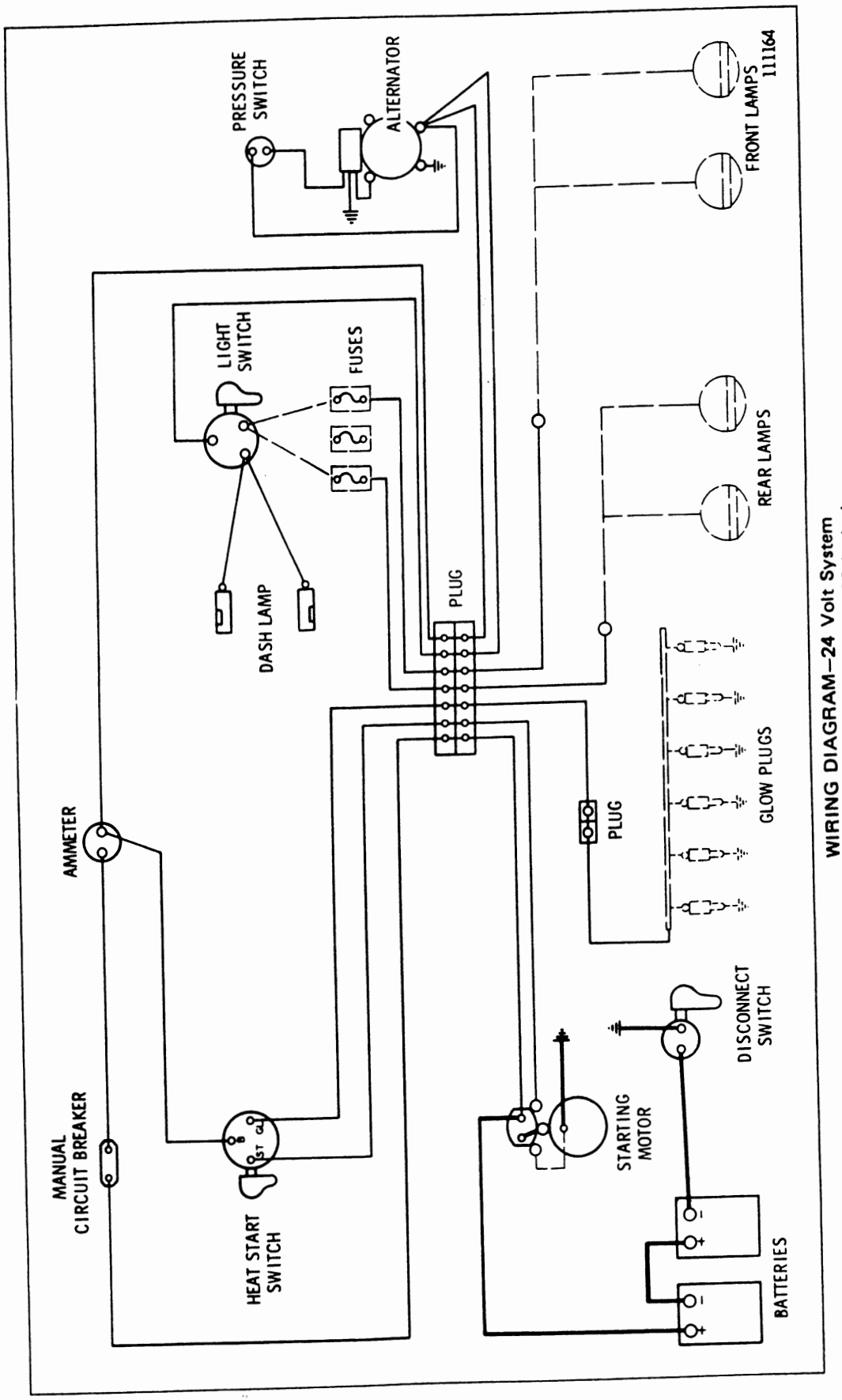

WIRING DIAGRAM—24 Volt System
Serial No. 46A24433 to 46A29029 inclusive

WIRING DIAGRAM—24 Volt System
Serial No. 46A29030—Up

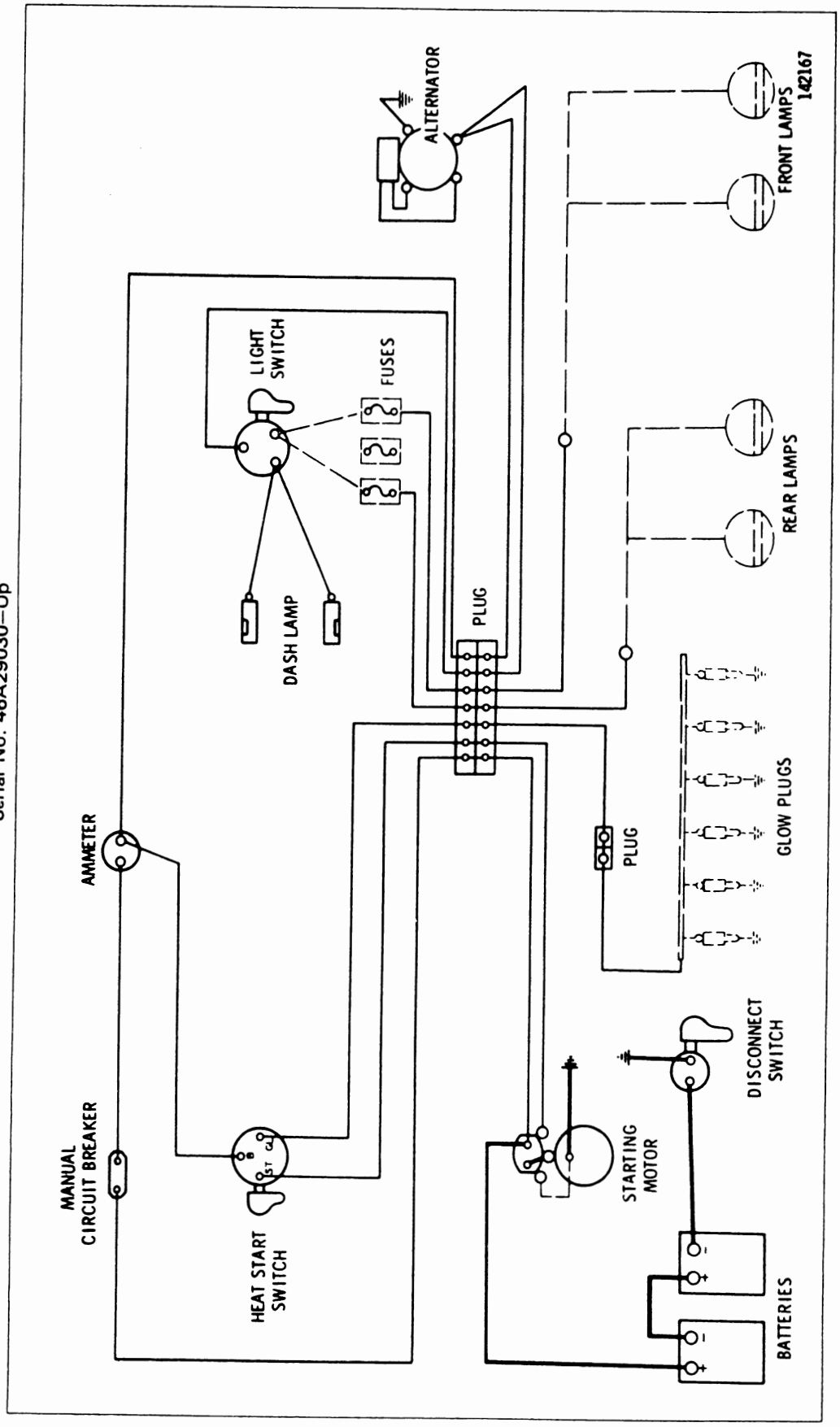

8S9682 WIRING HARNESS—24 Volt

Part of Battery and Wiring shown on Page 56

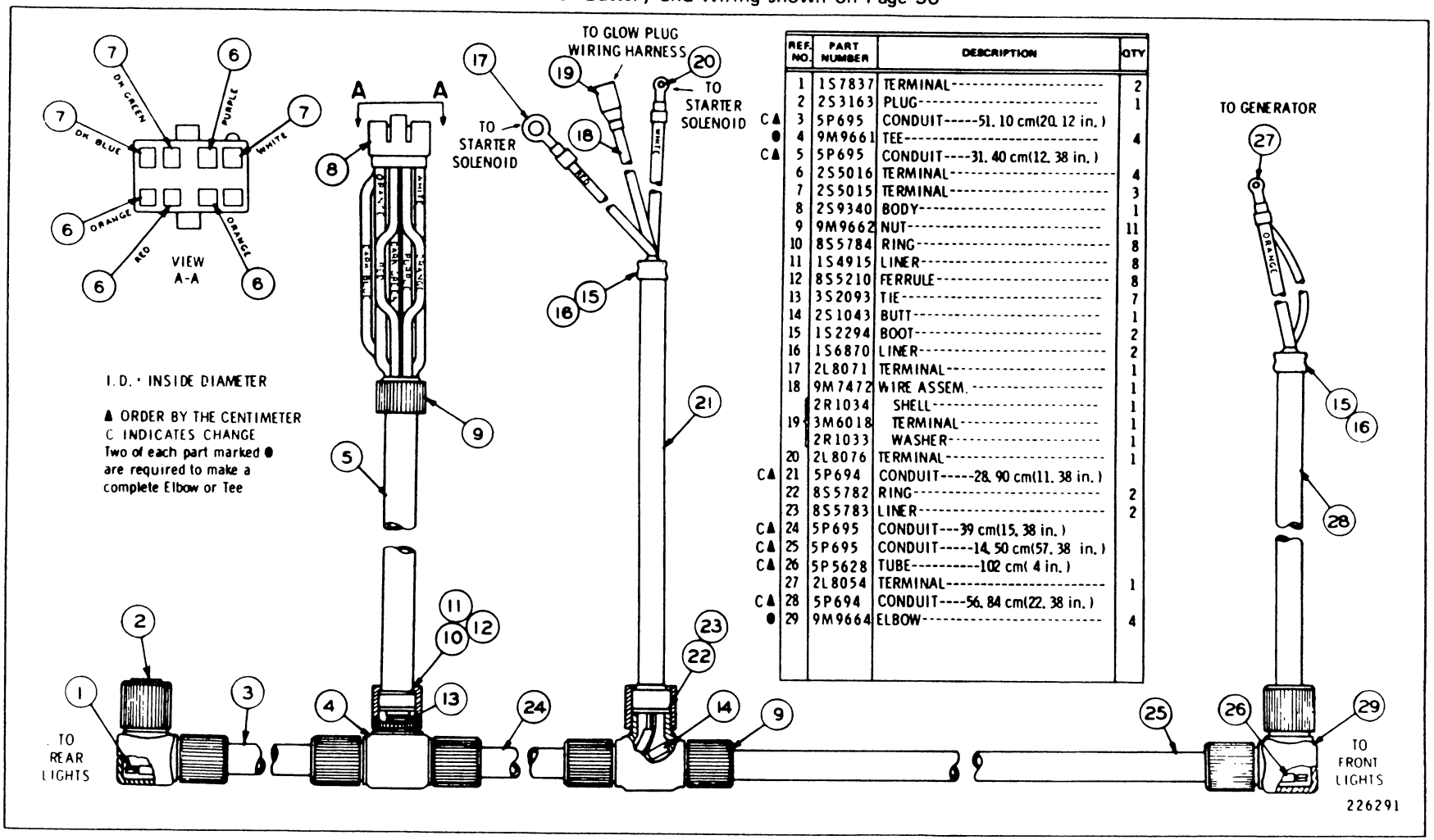

	REF. NO.	PART NUMBER	DESCRIPTION	QTY
	1	1S7837	TERMINAL	2
	2	2S3163	PLUG	1
C▲	3	5P695	CONDUIT-----51.10 cm(20.12 in.)	
●	4	9M9661	TEE	4
C▲	5	5P695	CONDUIT----31.40 cm(12.38 in.)	
	6	2S5016	TERMINAL	4
	7	2S5015	TERMINAL	3
	8	2S9340	BODY	1
	9	9M9662	NUT	11
	10	8S5784	RING	8
	11	1S4915	LINER	8
	12	8S5210	FERRULE	8
	13	3S2093	TIE	7
	14	2S1043	BUTT	1
	15	1S2294	BOOT	2
	16	1S6870	LINER	2
	17	2L8071	TERMINAL	1
	18	9M7472	WIRE ASSEM.	1
		2R1034	SHELL	1
	19	3M6018	TERMINAL	1
		2R1033	WASHER	1
	20	2L8076	TERMINAL	1
C▲	21	5P694	CONDUIT-----28.90 cm(11.38 in.)	
	22	8S5782	RING	2
	23	8S5783	LINER	2
C▲	24	5P695	CONDUIT---39 cm(15.38 in.)	
C▲	25	5P695	CONDUIT-----14.50 cm(57.38 in.)	
C▲	26	5P5628	TUBE----------102 cm(4 in.)	
	27	2L8054	TERMINAL	1
C▲	28	5P694	CONDUIT----56.84 cm(22.38 in.)	
●	29	9M9664	ELBOW	4

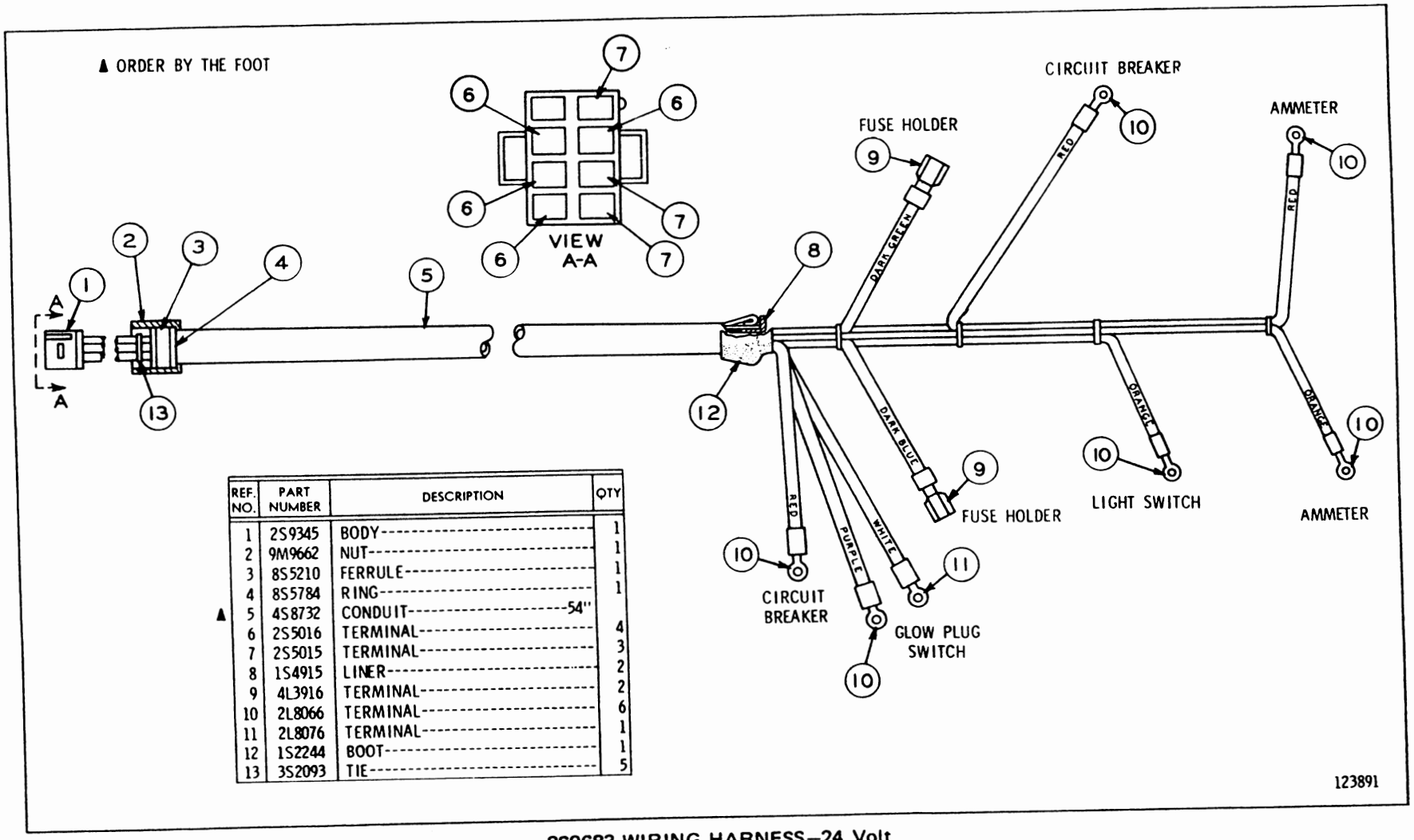

REF. NO.	PART NUMBER	DESCRIPTION	QTY
1	2S9345	BODY	1
2	9M9662	NUT	1
3	8S5210	FERRULE	1
4	8S5784	RING	1
▲ 5	4S8732	CONDUIT--54"	
6	2S5016	TERMINAL	4
7	2S5015	TERMINAL	3
8	1S4915	LINER	2
9	4L3916	TERMINAL	2
10	2L8066	TERMINAL	6
11	2L8076	TERMINAL	1
12	1S2244	BOOT	1
13	3S2093	TIE	5

8S9683 WIRING HARNESS—24 Volt

Part of Battery and Wiring shown on Page 56

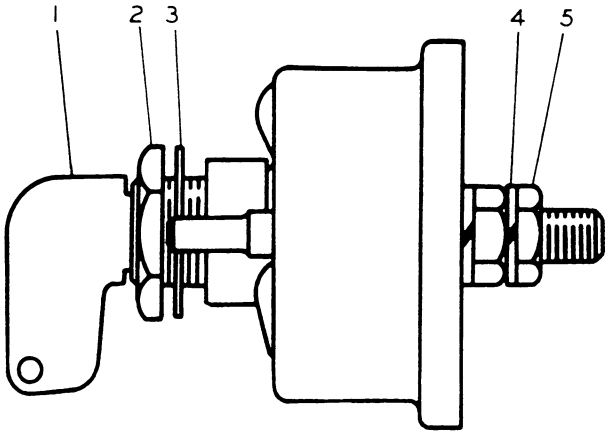

REF. NO.	PART NUMBER	DESCRIPTION	QTY
1	8H5306	KEY	1
2	8H5303	NUT	1
3	2H3922	LOCKWASHER	1
4	7F7259	LOCKWASHER	4
5	6F7045	NUT	4

112435

7H7290 DISCONNECT SWITCH ASSEMBLY
Part of 1P4881 & 1P93 Battery and Wiring shown on Pages 56, 56B, 57A, 57C and 133

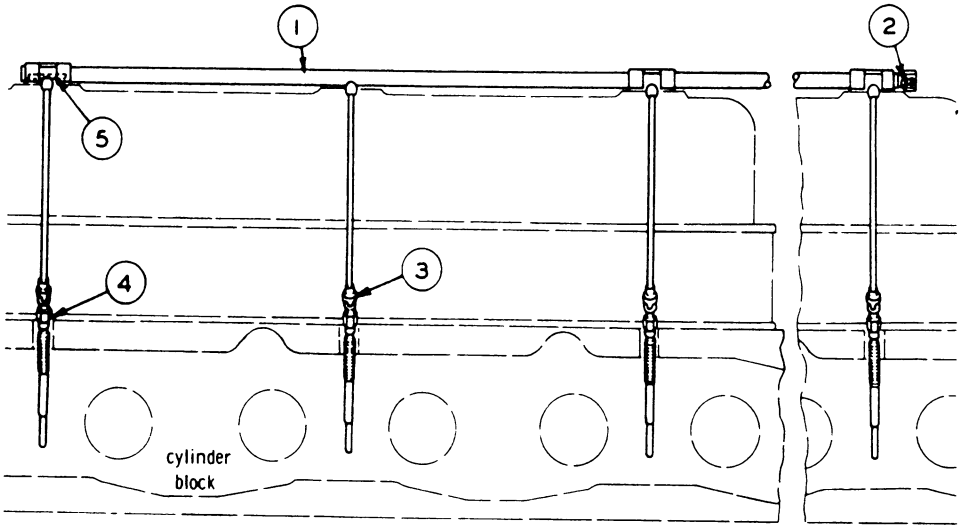

REF NO	PART NUMBER	DESCRIPTION	QTY
1	3S5159	LEAD ASSEM.	1
2	2R1023	TERMINAL	1
3	2M5301	TERMINAL	6
		(Parts of 3S5159 Lead Assem.)	
4	1P7324	GLOW PLUG	6
5	4B4281	WASHER	3

111546

3S5160 GLOW PLUG AND WIRING GROUP

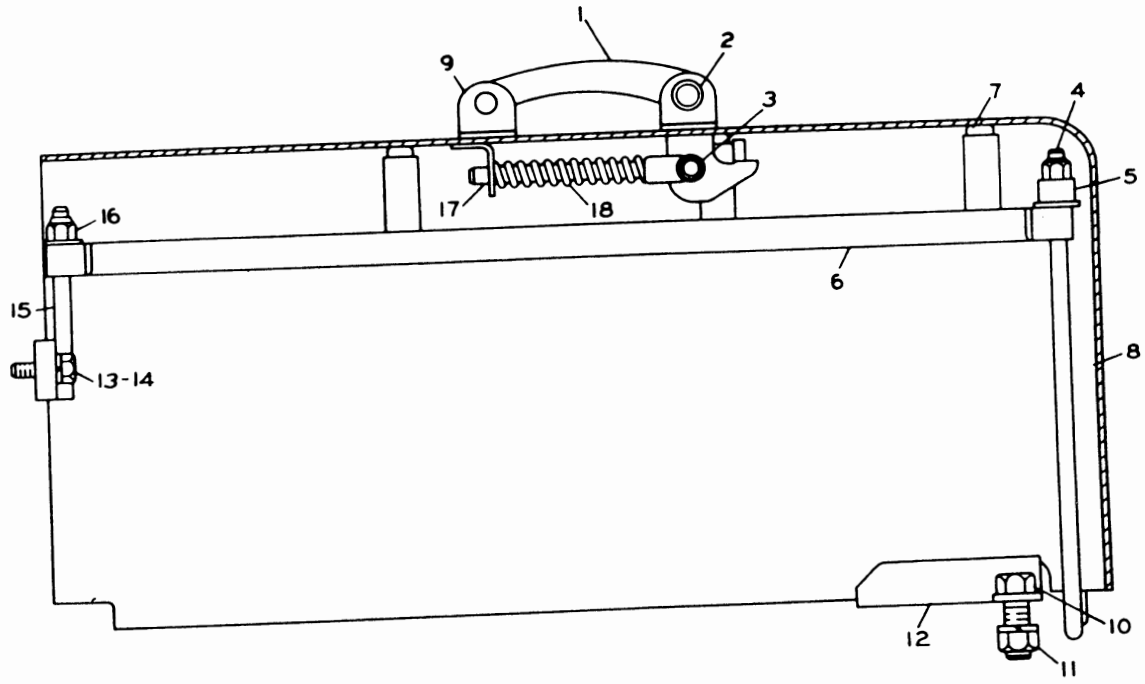

REF. NO.	PART NUMBER	DESCRIPTION	QTY
1	1H7365	HANDLE	1
2	2B2938	PIN	1
	3B4617	COTTER PIN	1
3	1J4384	PIN	1
	3B4615	COTTER PIN	1
4	9S5086	BOLT	2
5	9M4136	SPACER	4
6	9S2539	HOLD DOWN ASSEM.	1
7	9M5617	GROMMET	12
		(Part of 9S2539 Assem.)	
8	9S4944	COVER ASSEM.	1
	9S5323	PIN	2
9	1S6385	LUG	4
		(Parts of 9S4944 Assem.)	
10	7B3235	BOLT	2
11	1D4719	NUT	2
	3B4508	LOCKWASHER	2
12	9S5061	BRACKET ASSEM.	1
13	S1594	BOLT	6
C 14	3B4506	LOCKWASHER	6
15	9S6862	ROD ASSEM.	3
16	9H8524	NUT	7
	4B5271	WASHER	7
17	1H7366	ROD	1
18	1B9920	SPRING	1

C INDICATES CHANGE

203465

9S5327 BATTERY BOX GROUP

See Page 62B for Serial No. marked ▲

9S5327 BATTERY BOX GROUP

See Page 62B for Serial No. marked ●

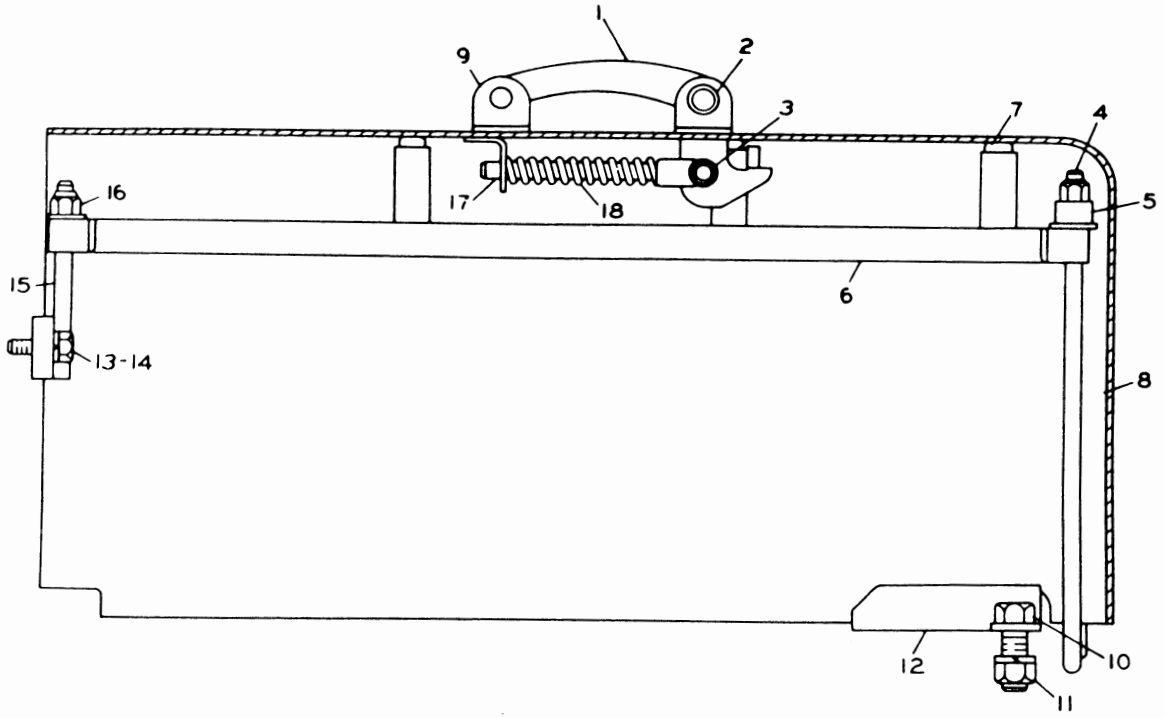

REF. NO.	PART NUMBER	DESCRIPTION	QTY
1	1H7365	HANDLE	1
2	2B2938	PIN	1
	3B4617	COTTER PIN	1
3	1J4384	PIN	1
	3B4615	COTTER PIN	1
4	9S5086	BOLT	2
C 5	340912	TUBE	4
6	9S2539	HOLD DOWN ASSEM.	1
7	9M5617	GROMMET	12
		(Part of 9S2539 Assem.)	
8	9S4944	COVER ASSEM.	1
	9S5323	PIN	2
9	1S6385	LUG	4
		(Parts of 9S4944 Assem.)	
10	7B3235	BOLT	2
11	1D4719	NUT	2
	3B4508	LOCKWASHER	2
12	9S5061	BRACKET ASSEM.	1
13	S1594	BOLT	6
14	3B4506	LOCKWASHER	6
15	9S6862	ROD ASSEM.	3
16	9H8524	NUT	7
	4B5271	WASHER	7
17	1H7366	ROD	1
18	1B9920	SPRING	1

C INDICATES CHANGE

204225

▲ 46A24433 TO 33236, 33239 TO 33411, 33413 TO 33427, 33429 TO 33459, 33461 TO 33526, 33528 TO 33651, 33653 TO 33704, 33706 TO 33783, 33785 TO 33797, 33799 TO 33820, 33822 TO 33843, 33846 TO 33859, 33863, 33865 TO 33868, 33870 TO 33874, 33876, 33878 TO 33883, 33887, 33889 TO 33894, 33896, 33897, 33899 TO 33904, 33907 TO 33909, 33911 TO 33915, 33917, 33920 TO 33926, 33929 TO 33932, 33934 TO 33956, 33959 TO 33963, 33966 TO 33971, 33974 TO 33993, 33995 TO 34002, 34004, 34005, 34007 TO 34009, 34013, 34017 TO 34020, 34022, 34023, 34028, 34030, 34031, 34033, 34036, 34037, 34042, 34044, 34045, 34047, 34048, 34052 TO 34054, 34056, 34059 TO 34061, 34063 TO 34065 AND 46A34076 INCLUSIVE

▲ SERIAL NO. FOR 9S5327 BATTERY BOX GROUP SHOWN ON PAGE 62

● 46A33237, 33238, 33412, 33428, 33460, 33527, 33652, 33705, 33784, 33798, 33821, 33844, 33845, 33860 TO 33862, 33864, 33869, 33875, 33877, 33884 TO 33886, 33888, 33895, 33898, 33905, 33906, 33910, 33916, 33918, 33919, 33927, 33928, 33933, 33957, 33958, 33964, 33965, 33972, 33973, 33994, 34003, 34006, 34010 TO 34012, 34014 TO 34016, 34021, 34024 TO 34027, 34029, 34032, 34034, 34035, 34038 TO 34041, 34043, 34046, 34049 TO 34051, 34055, 34057, 34058, 34062, 34066 TO 34075 AND 46A34077-UP

● SERIAL NO. FOR 9S5327 BATTERY BOX GROUP SHOWN ON PAGE 62A

POWER TRAIN ARRANGEMENT

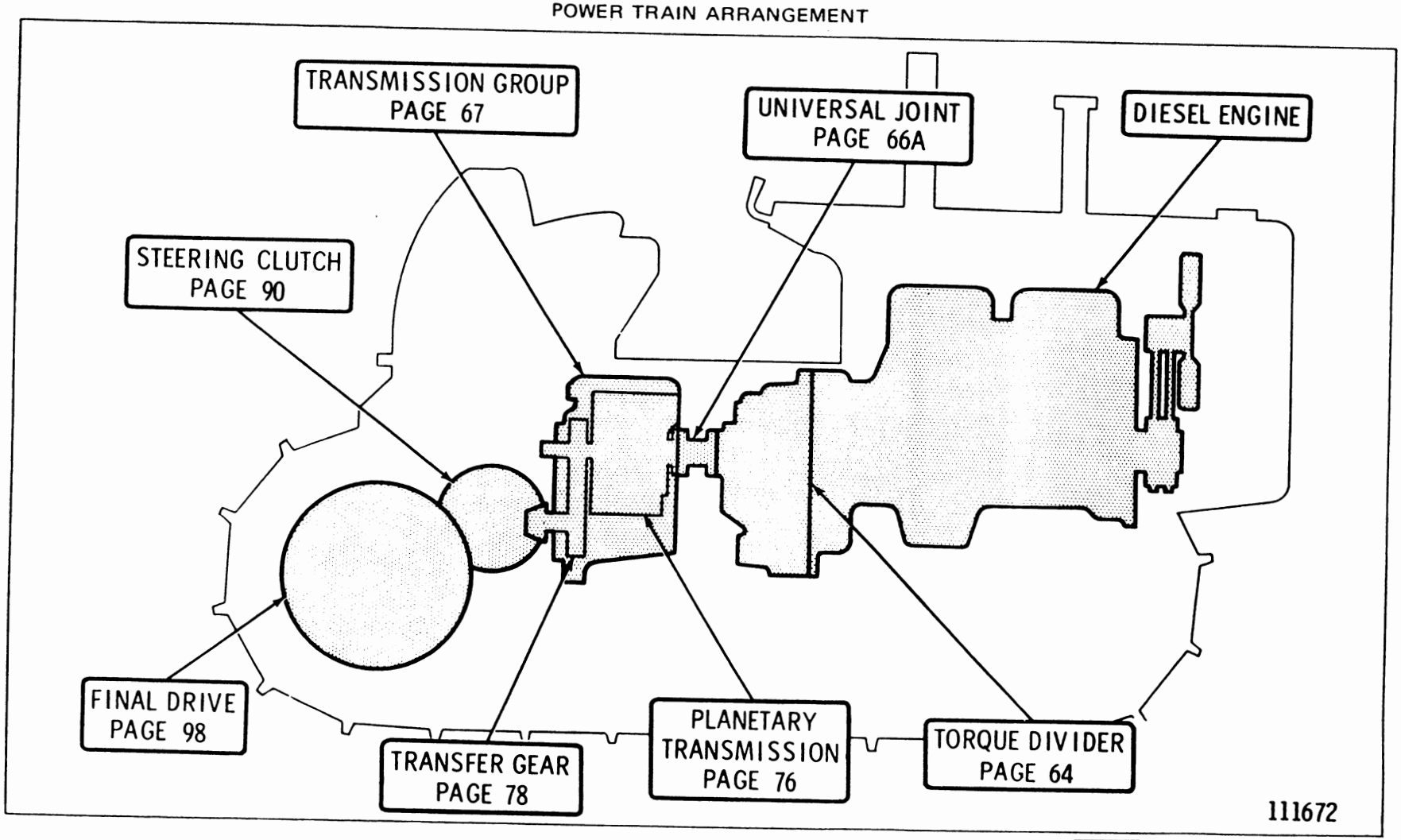

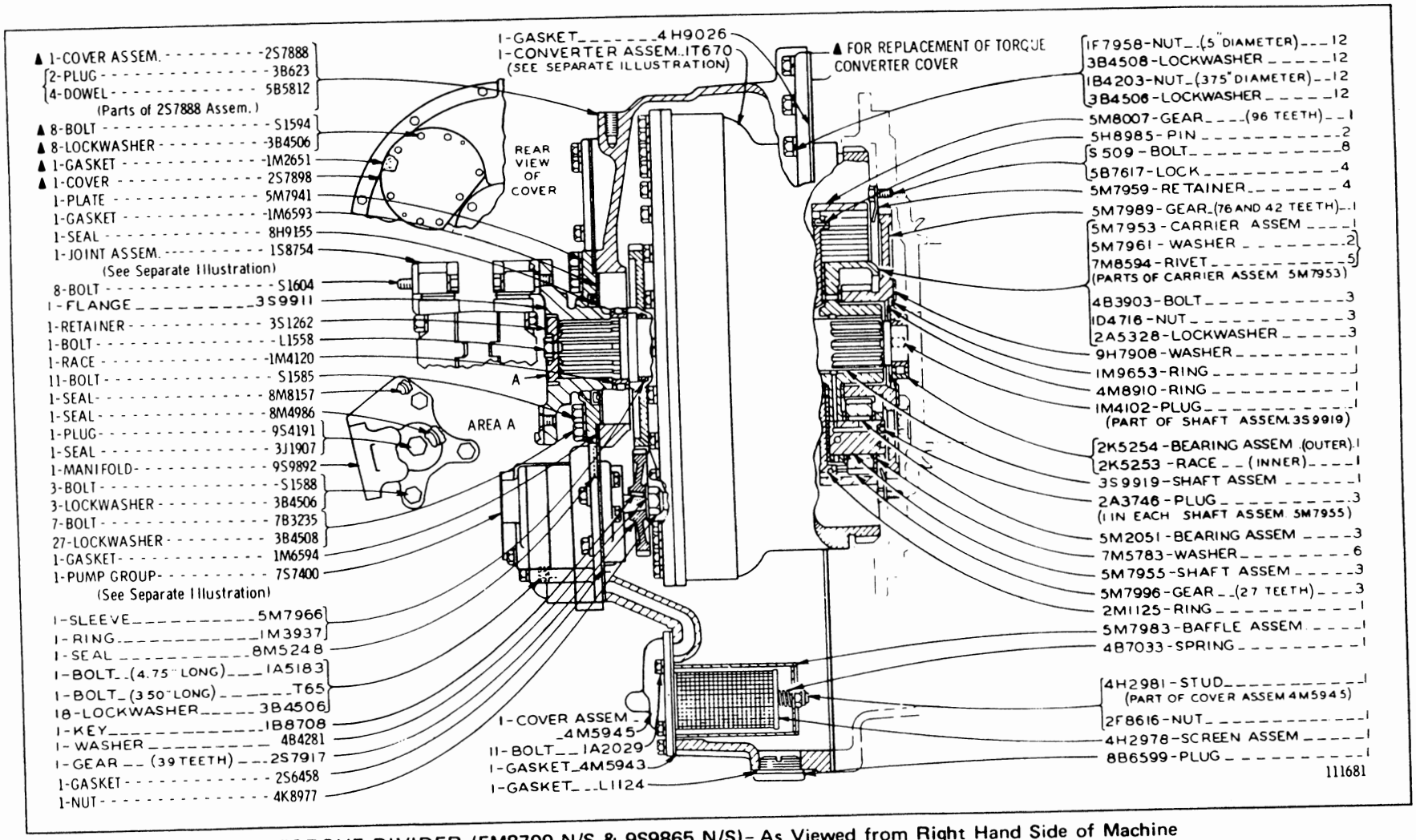

TORQUE DIVIDER (5M8700 N/S & 9S9865 N/S)- As Viewed from Right Hand Side of Machine
Serial No. 46A24433 to 46A28213 inclusive. 1T670 Converter, 1S8754 Joint and 7S7400 Pump parts
are shown on Pages 65, 66A and 67. See Page 28 for Gasket Kit

TORQUE DIVIDER (5M8700 N/S & 9S9865 N/S)—As Viewed from R.H. Side of Machine
Serial No. 46A28214 to 46A32802 inclusive. 7M1220 Valve, 1T670 Converter, 1S8754 Joint and 7S7400 Pump parts are shown on Pages 64B, 65, 66A and 67. See Page 28 for Gasket Kit

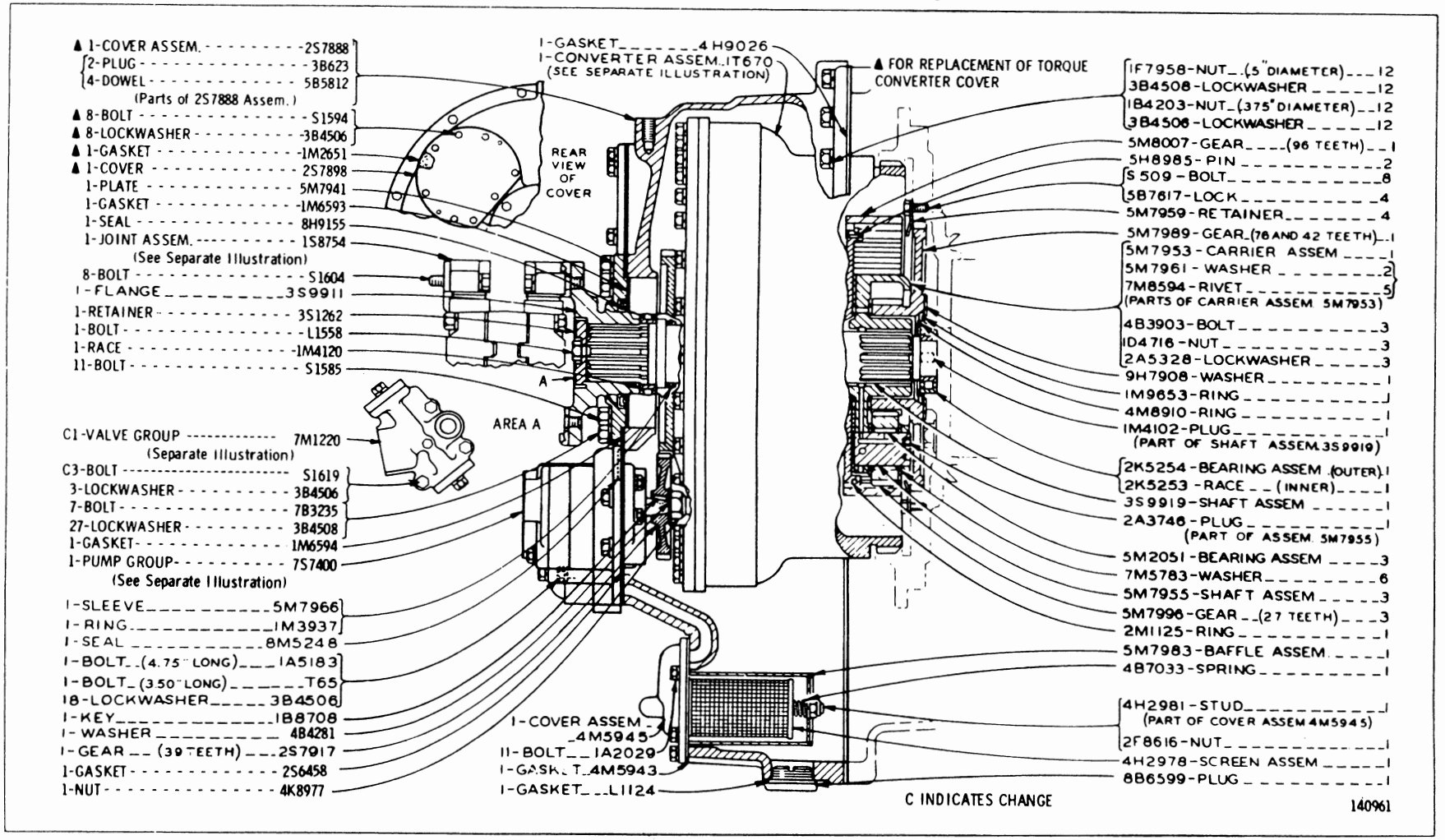

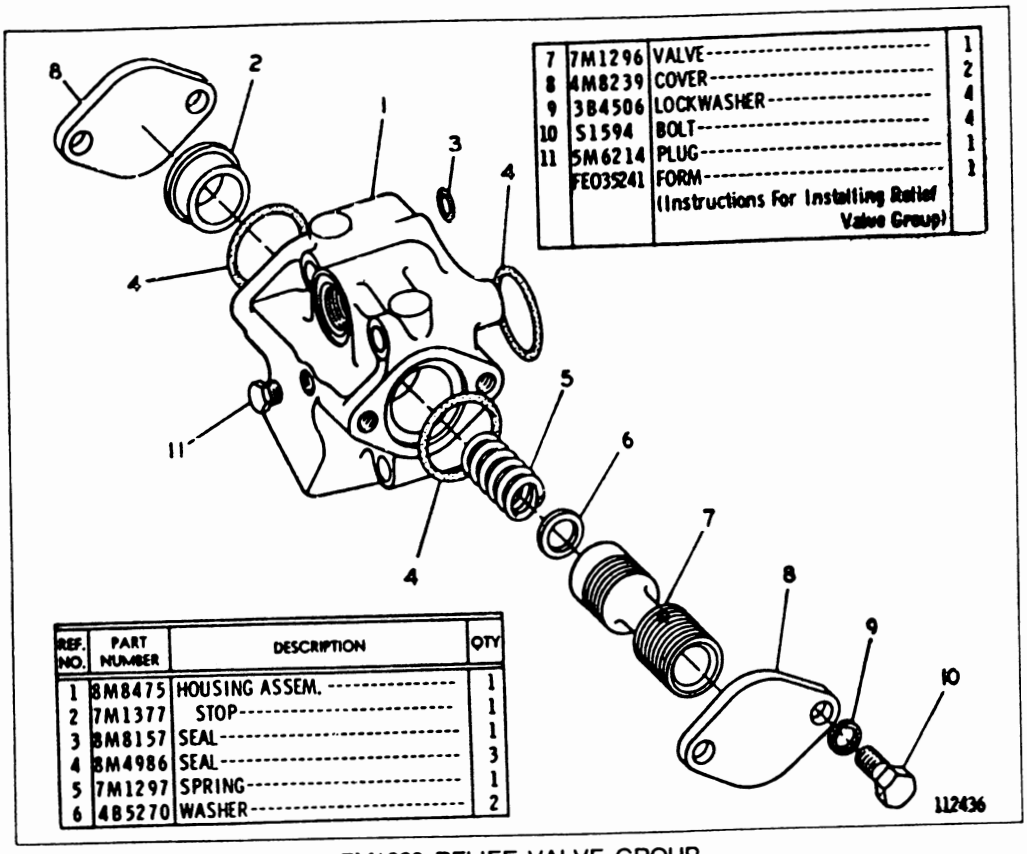

7M1220 RELIEF VALVE GROUP
Serial No. 46A28214 to 46A32802 inclusive
Part of Torque Divider shown on Page 64A

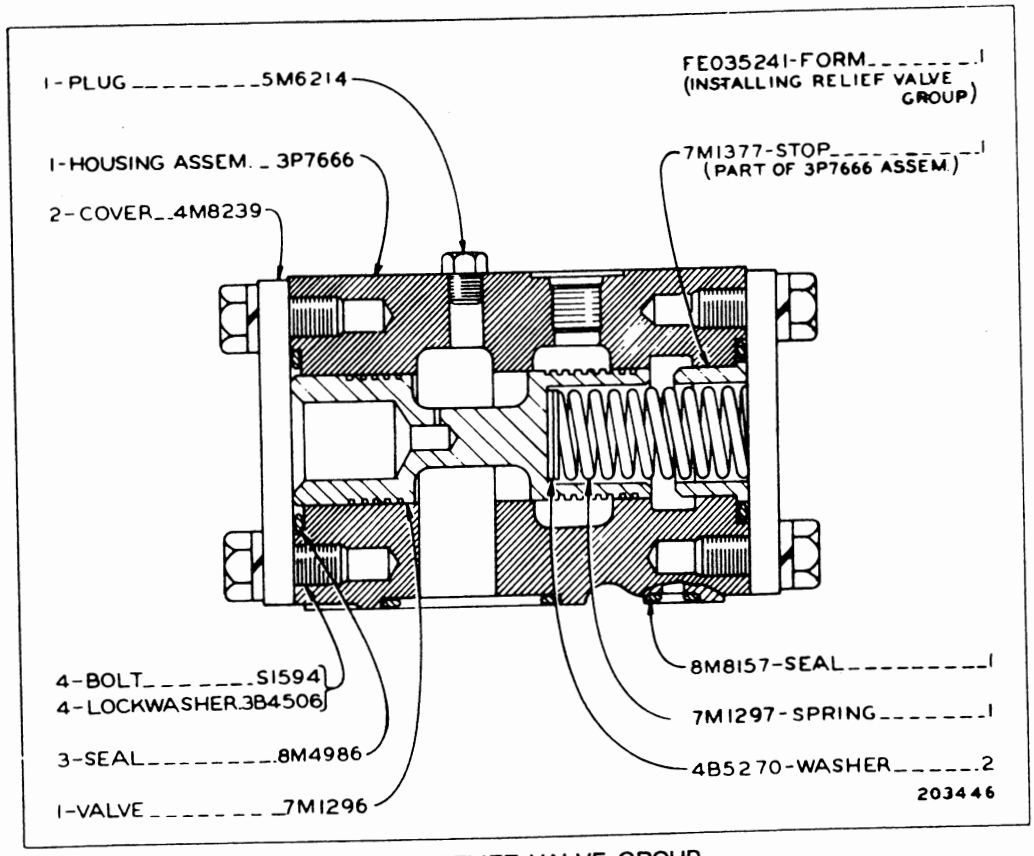

3P7665 RELIEF VALVE GROUP
Serial No. 46A32803—Up
Part of Torque Divider shown on Page 64C

TORQUE DIVIDER (5M8700 N/S)—As Viewed from R.H. Side of Machine
Serial No. 46A32803—Up. 3P7665 Valve, 1T670 Converter, 1S8754 Joint and 7S7400 Pump parts are shown on Pages 64B, 65, 66A and 67. See Page 28 for Gasket Kit

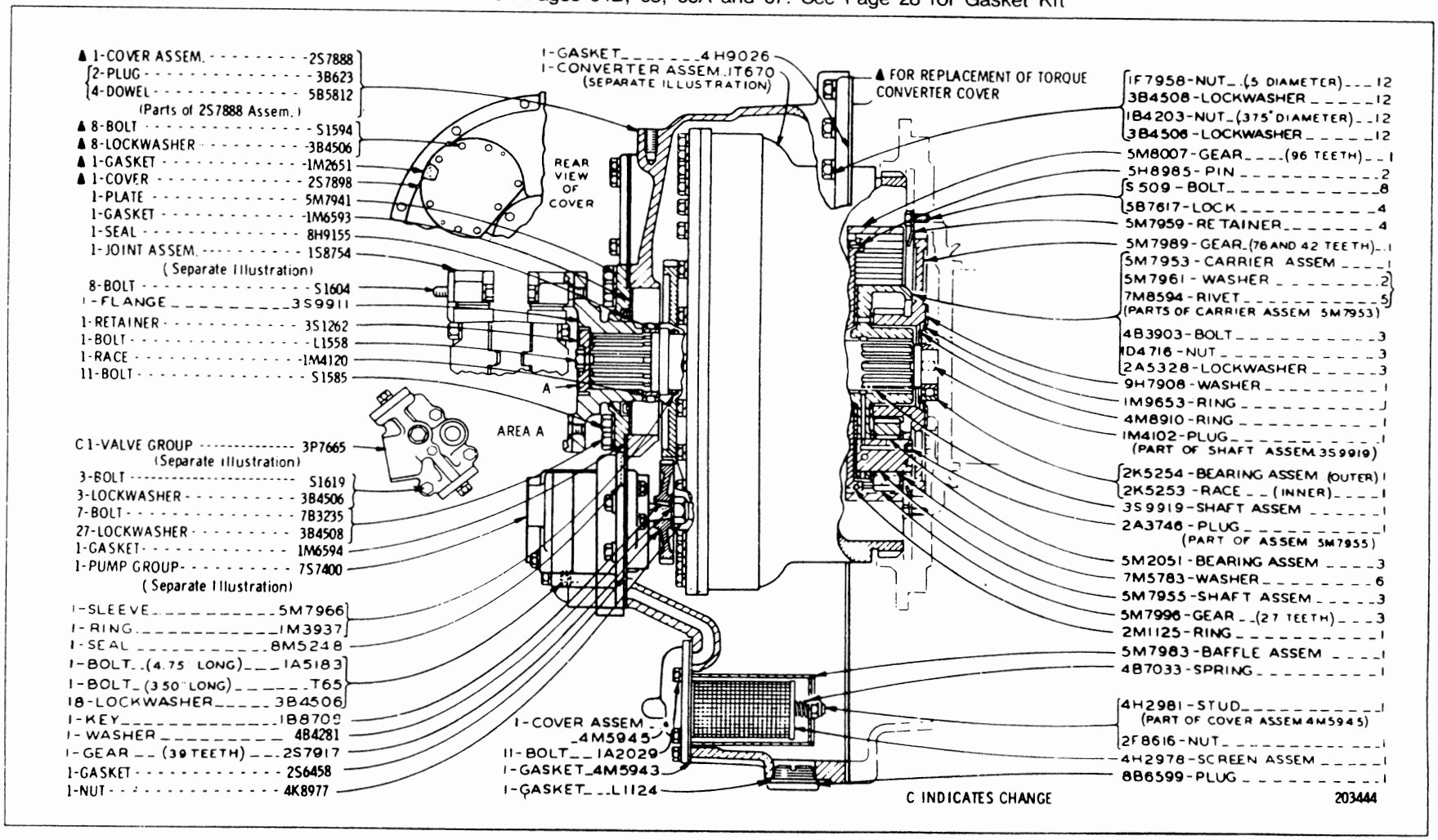

1T670 HYDRAULIC TORQUE CONVERTER ASSEMBLY
Effective with Torque Converter Serial No. 30T1—Up
Part of Torque Divider

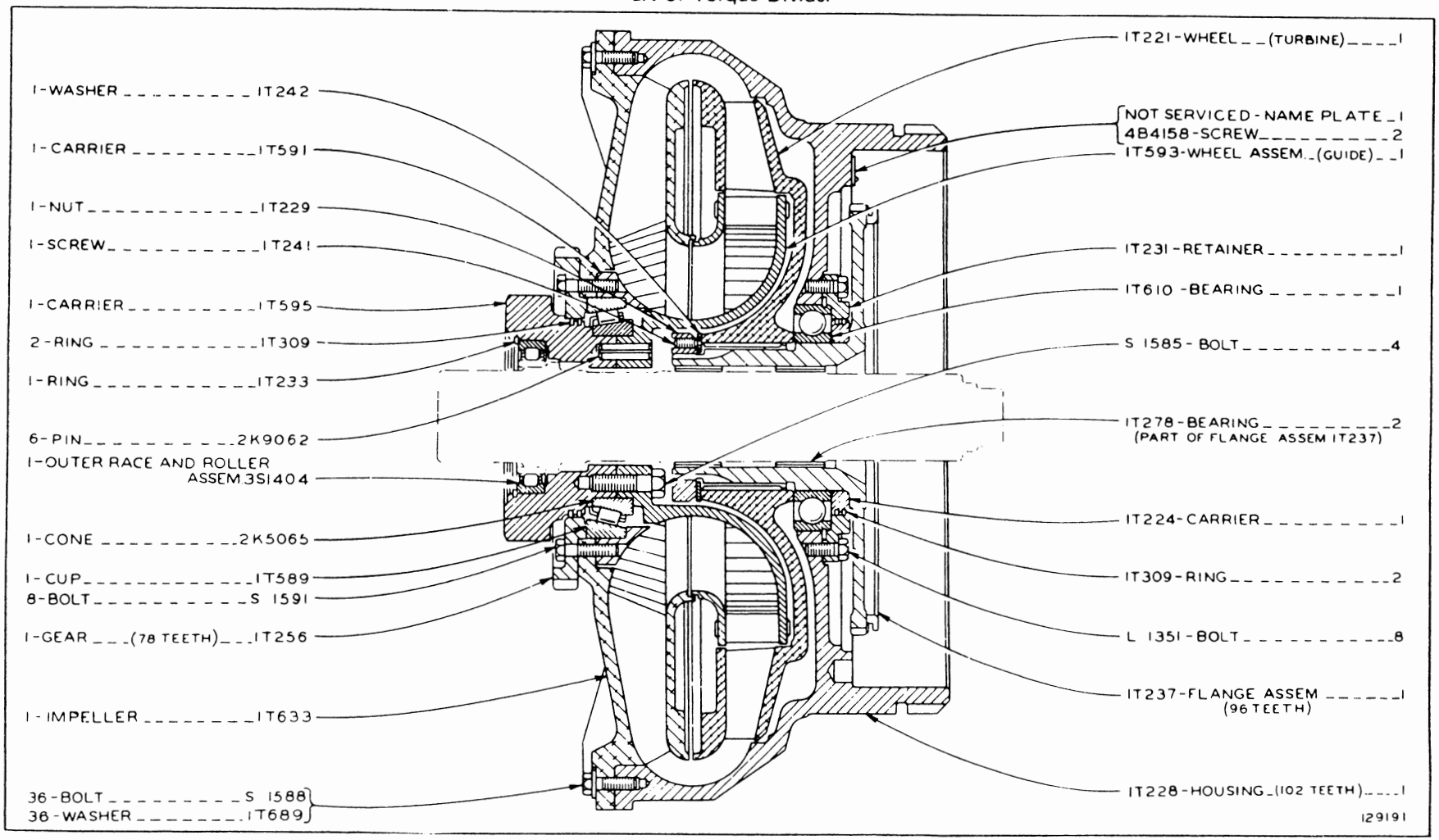

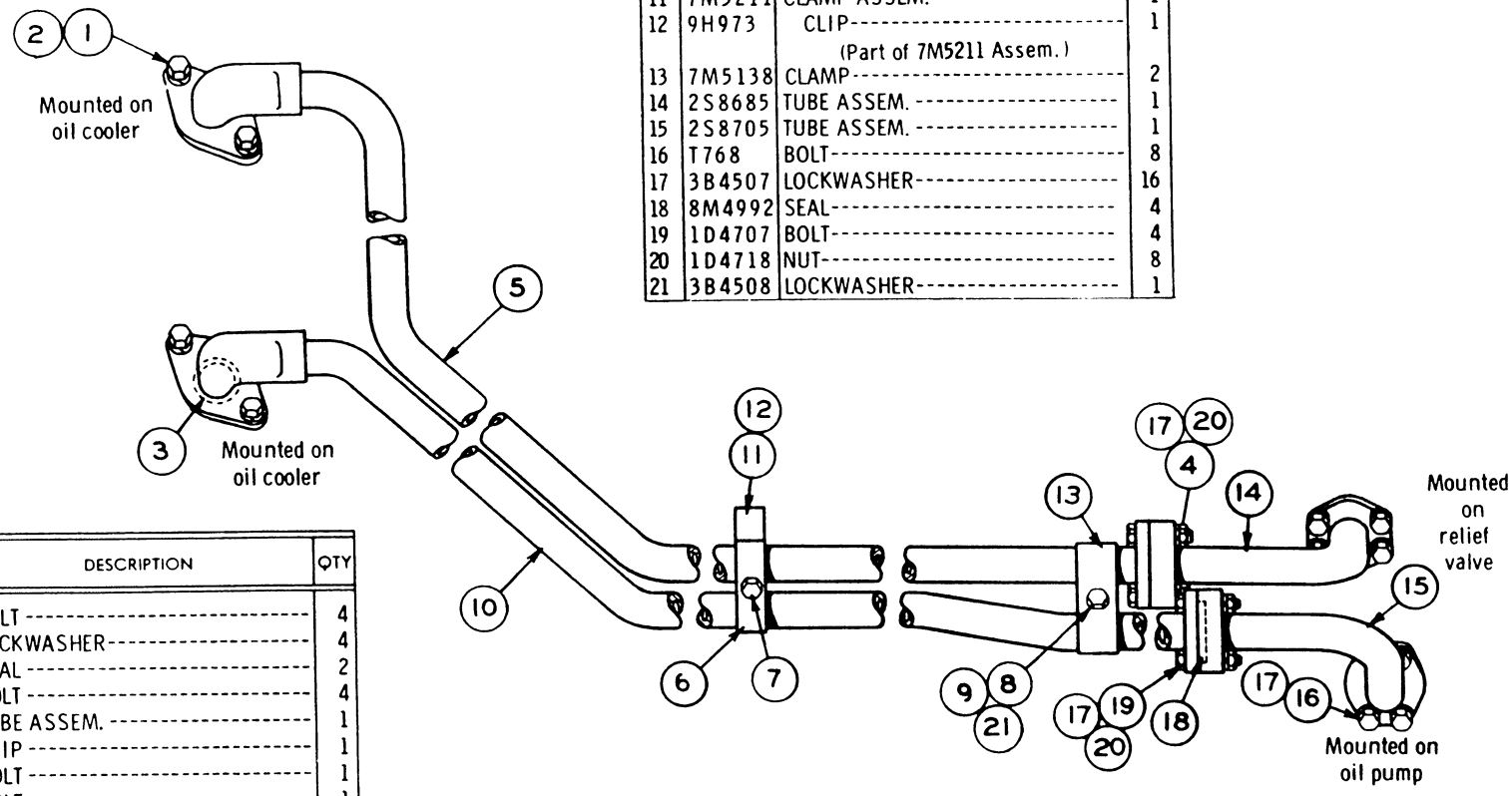

REF. NO.	PART NUMBER	DESCRIPTION	QTY
9	1D4719	NUT	1
10	4S7992	TUBE ASSEM.	1
11	7M5211	CLAMP ASSEM.	1
12	9H973	CLIP (Part of 7M5211 Assem.)	1
13	7M5138	CLAMP	2
14	2S8685	TUBE ASSEM.	1
15	2S8705	TUBE ASSEM.	1
16	T768	BOLT	8
17	3B4507	LOCKWASHER	16
18	8M4992	SEAL	4
19	1D4707	BOLT	4
20	1D4718	NUT	8
21	3B4508	LOCKWASHER	1

REF. NO.	PART NUMBER	DESCRIPTION	QTY
1	1A2029	BOLT	4
2	3B4506	LOCKWASHER	4
3	8M5010	SEAL	2
4	1D4556	BOLT	4
5	1P5888	TUBE ASSEM.	1
6	9H973	CLIP	1
7	S1590	BOLT	1
8	S1621	BOLT	1

TORQUE CONVERTER FLUID COOLER LINES (2S8405 N/S)
Serial No. 46A24443 to 46A32802 inclusive

POWER TRAIN COOLER LINES (6P1044 N/S)
Serial No. 46A32803—Up

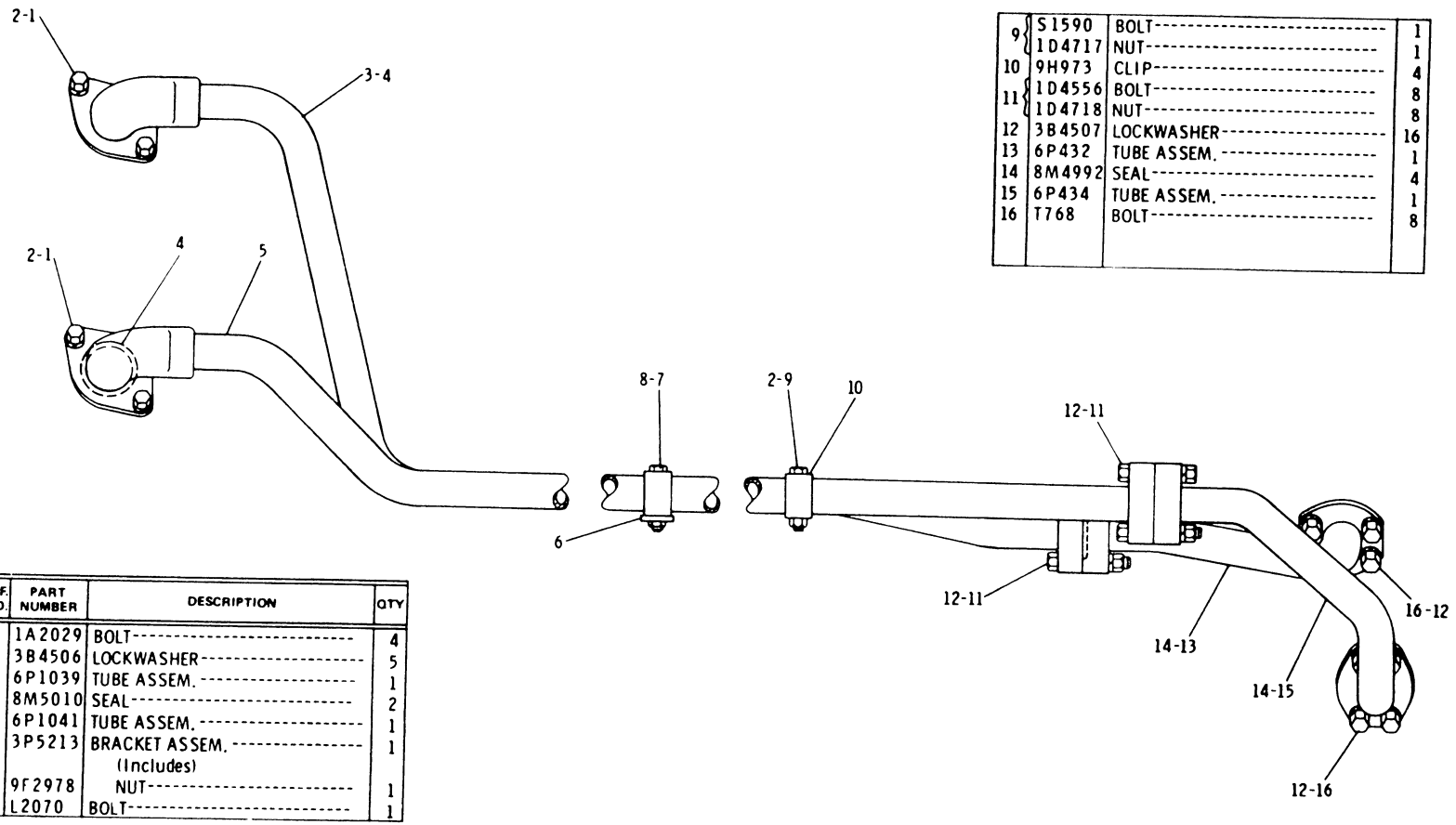

REF. NO.	PART NUMBER	DESCRIPTION	QTY
1	1A2029	BOLT	4
2	3B4506	LOCKWASHER	5
3	6P1039	TUBE ASSEM.	1
4	8M5010	SEAL	2
5	6P1041	TUBE ASSEM.	1
6	3P5213	BRACKET ASSEM. (Includes)	1
7	9F2978	NUT	1
8	L2070	BOLT	1
9	S1590	BOLT	1
	1D4717	NUT	1
10	9H973	CLIP	4
11	1D4556	BOLT	8
	1D4718	NUT	8
12	3B4507	LOCKWASHER	16
13	6P432	TUBE ASSEM.	1
14	8M4992	SEAL	4
15	6P434	TUBE ASSEM.	1
16	T768	BOLT	8

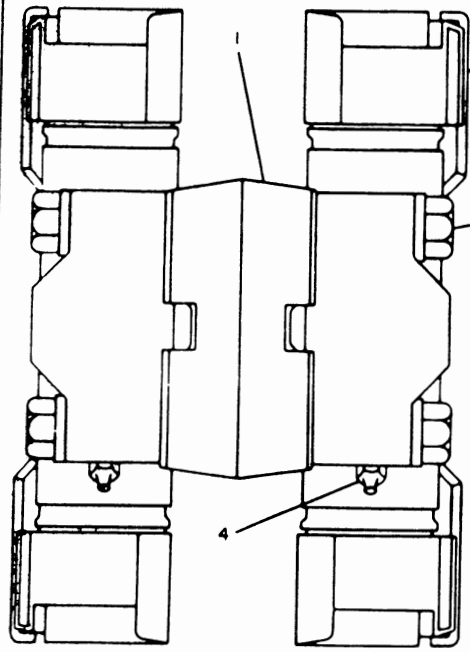

	REF. NO.	PART NUMBER	DESCRIPTION	QTY
	1	1S8753	PLATE	1
	2	7H3958	SPIDER AND BEARING ASSEM.	2
C	3	S1604	BOLT---6.35 cm(2.5 in.) long	8
		3B4508	LOCKWASHER	8
			- OR -	
C	3	1A6306	BOLT---5.88 cm(2.31 in.) long	8
C		5P7213	WASHER	8
	4	3H122	FITTING	2

C INDICATES CHANGE 223511

1S8754 UNIVERSAL JOINT ASSEMBLY

Part of Torque Divider shown on Page 64

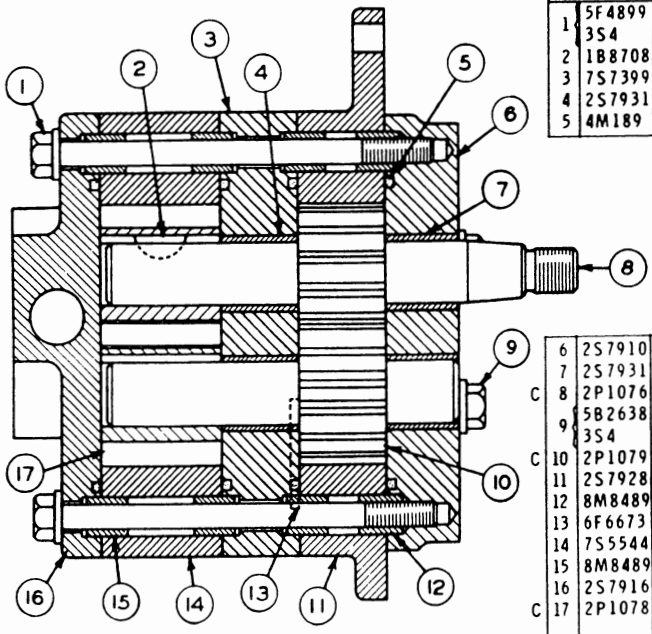

REF. NO.	PART NUMBER	DESCRIPTION	QTY
1	5F4899	BOLT	2
	3S4	WASHER	2
2	1B8708	KEY	1
3	7S7399	COVER ASSEM.	1
4	2S7931	BEARING	2
5	4M189	SEAL	4
6	2S7910	COVER ASSEM.	1
7	2S7931	BEARING	2
C 8	2P1076	GEAR-----(10 Teeth-Drive)------	1
9	5B2638	BOLT	4
	3S4	WASHER	4
C 10	2P1079	GEAR-------(10 Teeth-Idler)------	1
11	2S7928	BODY ASSEM.	1
12	8M8489	DOWEL	4
13	6F6673	SEAL	2
14	7S5544	BODY ASSEM.	1
15	8M8489	DOWEL	4
16	2S7916	COVER	1
C 17	2P1078	GEAR--------(10 Teeth)---------	2

C INDICATES CHANGE

146839

7S7400 SCAVENGE AND CIRCULATING PUMP GROUP
Part of Torque Divider shown on Pages 64, 64A and 64C

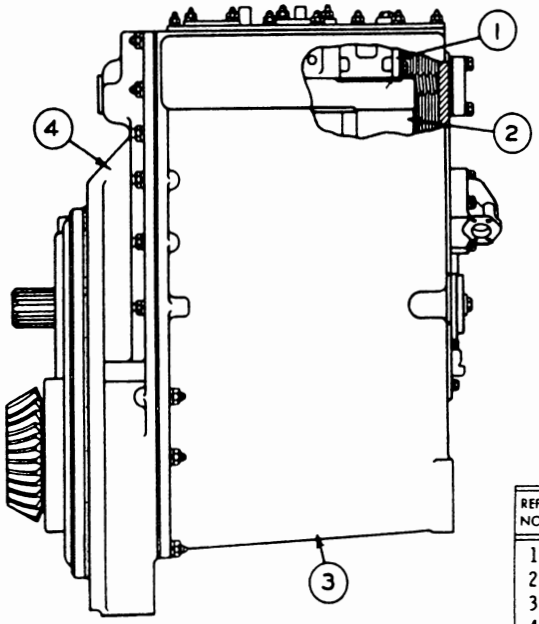

REF NO	PART NUMBER	DESCRIPTION	QTY
1	Not Serv.	TRANSMISSION HYD. CONTROL--	1
2	Not Serv.	PLANETARY TRANSMISSION-----	1
3	Not Serv.	TRANSMISSION CASE & COVERS-	1
4	Not Serv.	TRANSFER GEARS----------	1
		(See Separate Illustration)	

96145

2S7901 TRANSMISSION ARRANGEMENT—As Viewed from R.H. Side of Machine Serial No. 46A24433 to 30184, 30186, 30189, 30190, 30192 to 30197, 30200, 30202 to 30204, 30210, 30211, 30214, 30215, 30219 and 46A30223 inclusive. Test No. 13458 to 36689 inclusive. Transmission Case and Covers, Transmission Hydraulic Control, Planetary Transmission and Transfer Gear parts are shown on Pages 68, 68A, 69, 76. 77 and 78

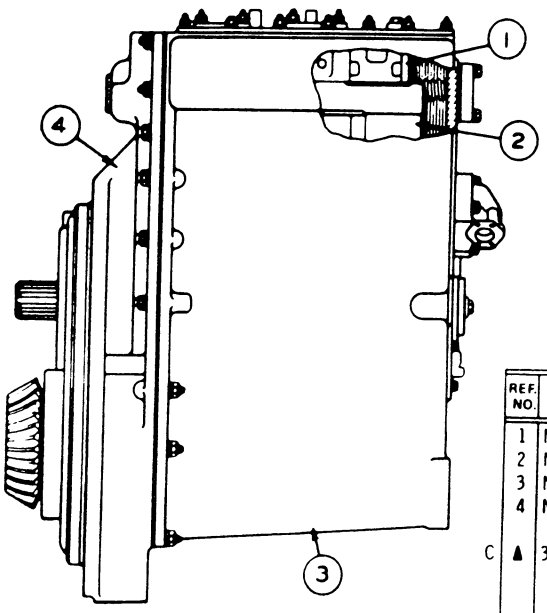

REF. NO.		PART NUMBER	DESCRIPTION	QTY
1		Not Serv.	TRANSMISSION HYD. CONTROL---	1
2		Not Serv.	PLANETARY TRANSMISSION------	1
3		Not Serv.	TRANSMISSION CASE & COVERS-	1
4		Not Serv.	TRANSFER GEARS---------- (Separate Illustration)	1
C	▲	3P6922	COVERS GROUP---------- (Includes Covers, Gaskets and Hardware)	1

▲ NOT SHOWN-Shipping & Storage 145355

2S7901 RANGE TRANSMISSION ARRANGEMENT—As Viewed from R.H. Side of Machine—Serial No. 46A30185, 30187, 30188, 30191, 30198, 30199, 30201, 30205 to 30209, 30212, 30213, 30216 to 30218, 30220 to 30222, 30224 to 31254, 31260 and 46A31261 inclusive and Test No. 36690 to 38039 inclusive. Transmission Case and Covers, Transmission Hydraulic Control, Planetary Transmission and Transfer Gear parts are shown on Pages 68B, 76, 77 and 78A

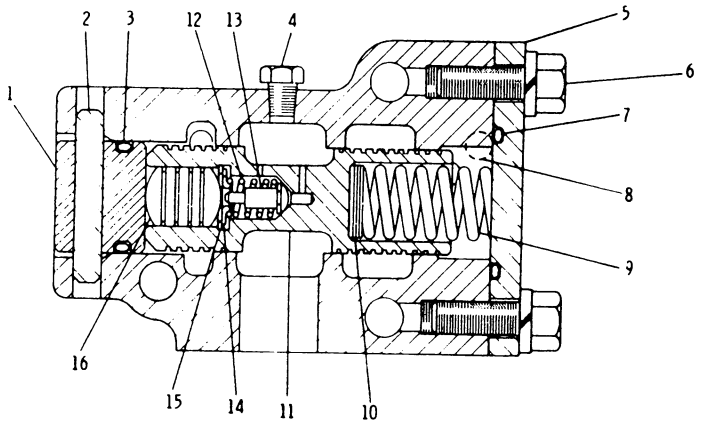

REF. NO	PART NUMBER	DESCRIPTION	QTY
1	1P9699	STOP----------	1
2	8H9513	DOWEL----------	1
3	8M4446	SEAL----------	1
4	5M6214	PLUG----------	2
5	2S9750	COVER----------	1
6	1S1594	BOLT----------	2
	3B4506	LOCKWASHER----------	2
7	8M5249	SEAL----------	1
8	4B9880	BALL----------	2
9	3P4053	SPRING----------	1
10	5M9624	SPACER----------	6
11	5S4437	SPOOL ASSEM.---------- (Includes)	1
12	4M2381	SPRING----------	1
13	1S2121	PLUNGER----------	1
14	8M1013	RETAINER----------	1
15	3D8317	RING----------	1
16	2M7041	SLUG----------	1

146928

1P9694 PRIORITY VALVE GROUP
Serial No. 46A31255 to 46A31259 and 46A31262 to 46A31841 inclusive
Part of 3P4004 Range Transmission Arrangement shown on Page 66D

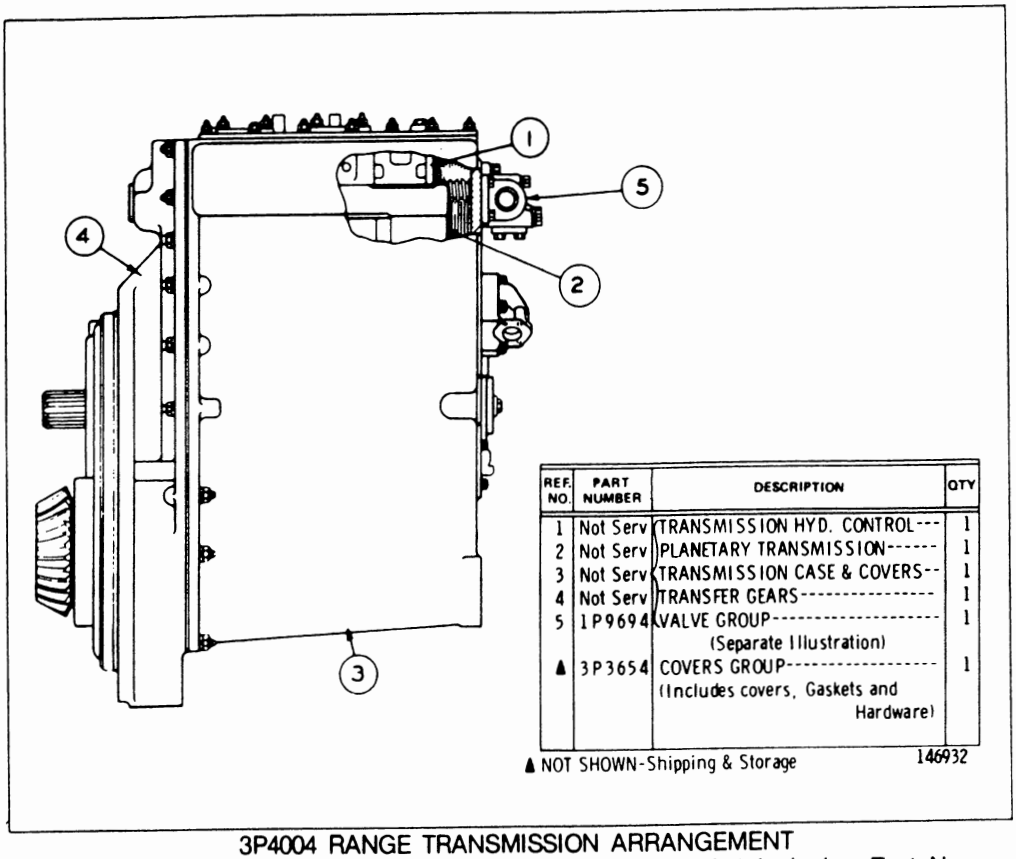

REF. NO.	PART NUMBER	DESCRIPTION	QTY
1	Not Serv	TRANSMISSION HYD. CONTROL---	1
2	Not Serv	PLANETARY TRANSMISSION------	1
3	Not Serv	TRANSMISSION CASE & COVERS--	1
4	Not Serv	TRANSFER GEARS----------	1
5	1P9694	VALVE GROUP---------- (Separate Illustration)	1
▲	3P3654	COVERS GROUP---------- (Includes covers, Gaskets and Hardware)	1

▲ NOT SHOWN-Shipping & Storage 146932

3P4004 RANGE TRANSMISSION ARRANGEMENT
Serial No. 46A31255 to 46A31259 and 46A31262 to 46A31841 inclusive. Test No. 38040 to 38907 inclusive. 1P9694 Valve, Transmission Case and Covers, Transmission Hydraulic Control, Planetary Transmission and Transfer Gear parts are shown on Pages 66C, 68B, 68C, 68D, 76, 77 and 78A

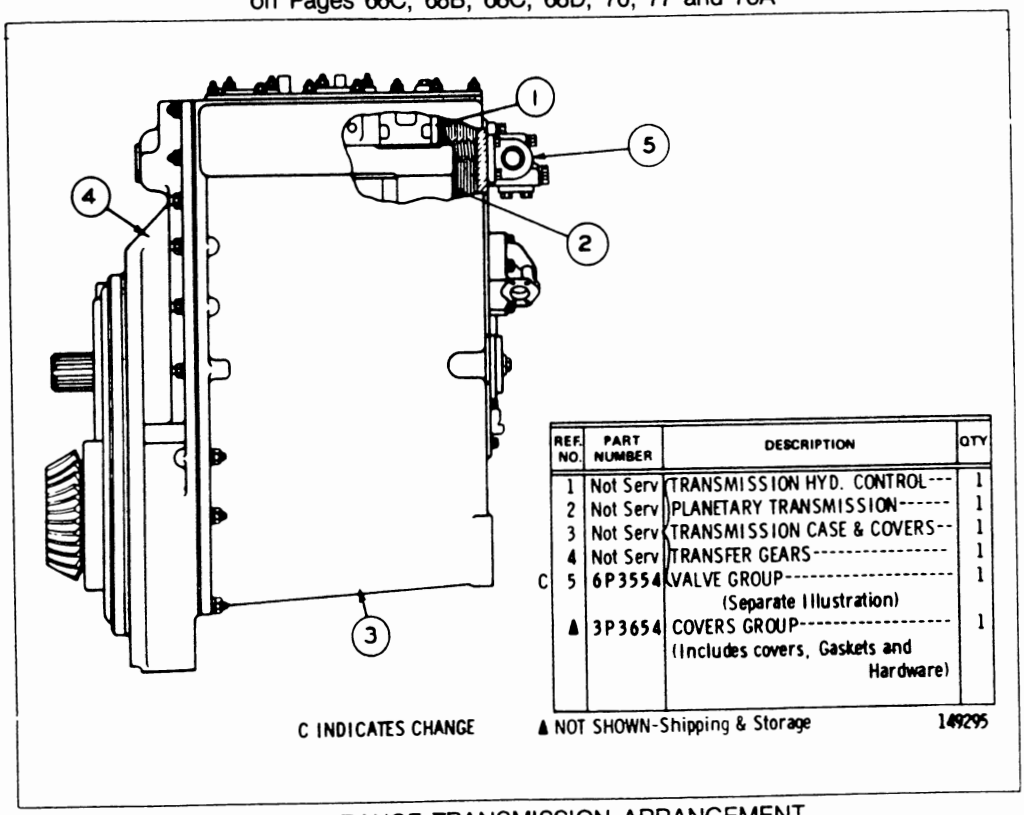

REF. NO.	PART NUMBER	DESCRIPTION	QTY
1	Not Serv	TRANSMISSION HYD. CONTROL---	1
2	Not Serv	PLANETARY TRANSMISSION------	1
3	Not Serv	TRANSMISSION CASE & COVERS--	1
4	Not Serv	TRANSFER GEARS----------	1
C 5	6P3554	VALVE GROUP---------- (Separate Illustration)	1
▲	3P3654	COVERS GROUP---------- (Includes covers, Gaskets and Hardware)	1

C INDICATES CHANGE

▲ NOT SHOWN-Shipping & Storage 149295

3P4004 RANGE TRANSMISSION ARRANGEMENT
Serial No. 46A31842—Up and Test No. 38908—Up. 6P3554 Valve, Transmission Case and Covers, Transmission Hydraulic Control, Planetary Transmission and Transfer Gear parts are shown on Pages 67, 68C, 68D, 76, 77 and 78A

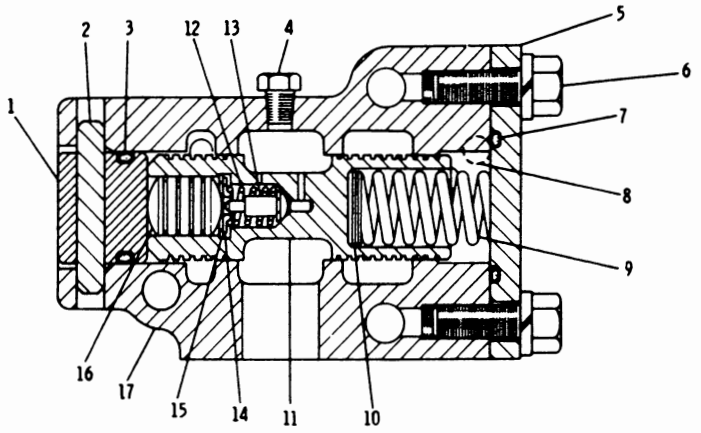

REF. NO.	PART NUMBER	DESCRIPTION	QTY
1	1P9699	STOP	1
2	8H9513	DOWEL	1
3	8M4446	SEAL	1
4	5M6214	PLUG	2
5	2S9750	COVER	1
6	5L1594	BOLT	2
	3B4506	LOCKWASHER	2
7	8M5249	SEAL	1
8	4B9880	BALL	2
9	3P4053	SPRING	1
10	5M9624	SPACER	6
11	5S4437	SPOOL ASSEM. (Includes)	1
12	4M2381	SPRING	1
13	1S2121	PLUNGER	1
14	8M1013	RETAINER	1
15	3D8317	RING	1
16	2M7041	SLUG	1
17	6P3553	BODY	1

148522

6P3554 PRIORITY VALVE GROUP
Serial No. 46A31842—Up. Part of 3P4004 Range
Transmission Arrangement shown on Page 66D

C INDICATES CHANGE FROM PREVIOUS TYPE

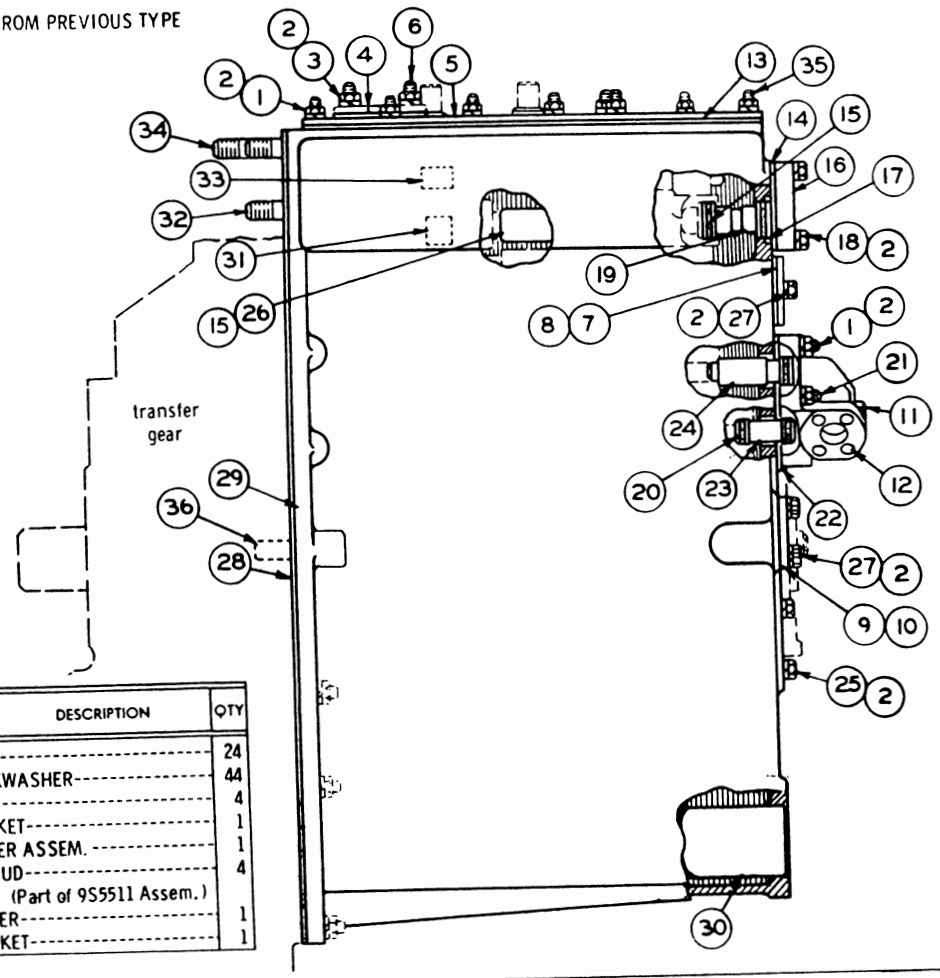

REF. NO.	PART NUMBER	DESCRIPTION	QTY
1	1B4203	NUT	24
2	3B4506	LOCKWASHER	44
3	1D4717	NUT	4
4	8B9777	GASKET	1
5	9S5511	COVER ASSEM.	1
6	5M9621	STUD (Part of 9S5511 Assem.)	4
7	2B8460	COVER	1
8	2S1439	GASKET	1

REF. NO.	PART NUMBER	DESCRIPTION	QTY
9	7M8543	COVER	1
10	2D92	GASKET	1
11	9S4191	PLUG	1
	3J1907	SEAL	1
12	4S8651	MANIFOLD	1
13	1M6420	GASKET	1
14	1M3847	GASKET	1
15	8M4432	SEAL	4
16	7M8486	COVER	1
17	8M4986	SEAL	2
18	1A2029	BOLT	2
19	2S4965	SLEEVE	1
20	8M4435	SEAL	3
21	7H3051	STUD	4
22	4S5881	GASKET	1
23	2S4958	SLEEVE	1
24	2S4954	SLEEVE	1
25	3B1915	BOLT	8
26	2S4959	SLEEVE	1
27	L1351	BOLT	6
28	1M6455	GASKET	1
C 29	9S8847	CASE ASSEM.	1
30	9S8833	TUBE	1
31	1F929	BUSHING	2
32	1M6422	STUD	10
33	9S2836	BUSHING	2
34	1M6423	STUD	2
35	9H2403	STUD-------(1.437" Long)------	4
	1M6421	STUD---------(1.32" Long)-----	16
36	4H9303	STUD	2
		(Parts of 9S8847 Assem.)	

TRANSMISSION CASE AND COVERS (2S7876 N/S)
Serial No. 46A24433 to 46A29644 inclusive and test No. 28138 to 35946 inclusive
Part of 2S7901 Transmission Arrangement shown on Page 67
See Page 28 for Gasket Kit

TRANSMISSION CASE AND COVERS (2S7876 N/S)

Serial No. 46A29645 to 30184, 30186, 30189, 30190 to 30197, 30200, 30202 to 30204, 30210, 30211, 30214, 30215, 30219 and 46A30223 inclusive. Test No. 35947 to 36689 inclusive. Part of 2S7901 Range Transmission Arrangement shown on Page 66B

See Page 28 for Gasket Kit

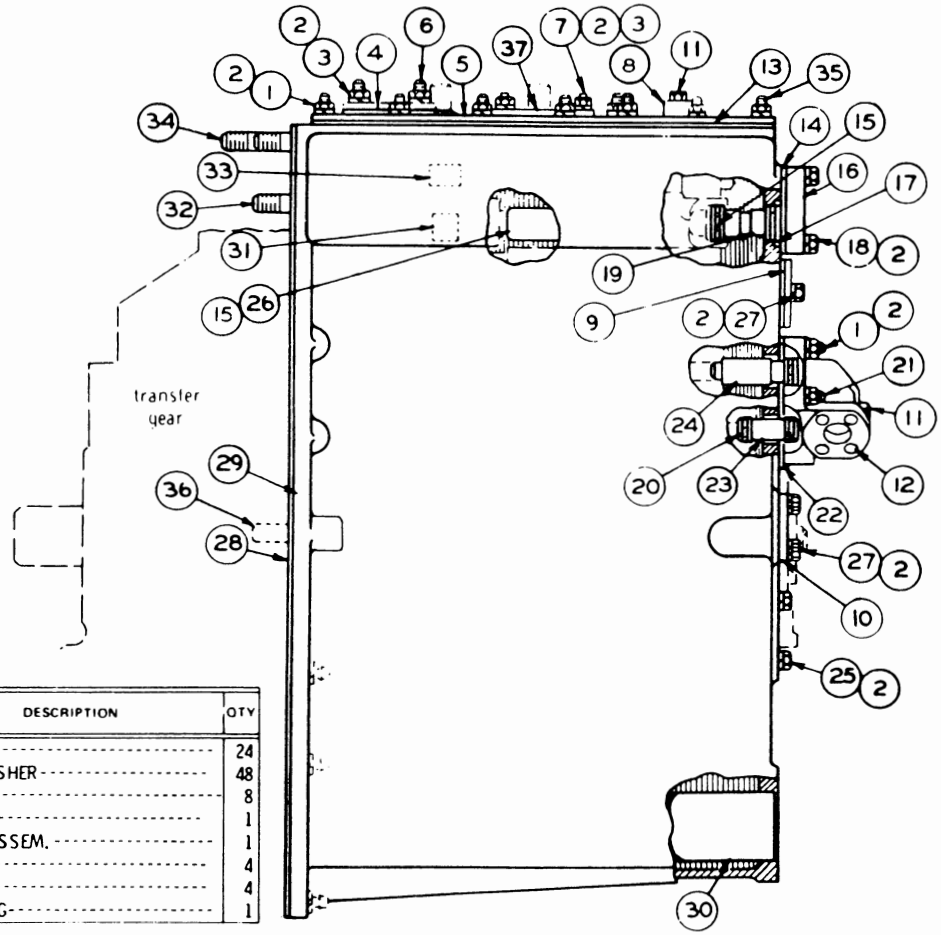

REF NO	PART NUMBER	DESCRIPTION	QTY
1	1B4203	NUT	24
C 2	3B4506	LOCKWASHER	48
C 3	1D4717	NUT	8
4	8B9777	GASKET	1
C 5	7M1151	COVER ASSEM.	1
6	5M9621	STUD	4
7	7M7794	STUD	4
8	2S6548	FITTING	1
9	2B8460	COVER	1
	2S1439	GASKET	1
10	7M8543	COVER	1
	2D92	GASKET	1
C 11	9S4191	PLUG	2
	3J1907	SEAL	2
12	4S8651	MANIFOLD	1
13	1M6420	GASKET	1
14	1M3847	GASKET	1
15	8M4432	SEAL	4
16	7M8486	COVER	1
17	8M4986	SEAL	2
18	1A2029	BOLT	2
19	2S4965	SLEEVE	1
20	8M4435	SEAL	3
21	7H3051	STUD	4
22	4S5881	GASKET	1
23	2S4958	SLEEVE	1
24	2S4954	SLEEVE	1
25	3B1915	BOLT	8
26	2S4959	SLEEVE	1
27	L1351	BOLT	6
28	1M6455	GASKET	1
29	9S8847	CASE ASSEM.	1
C 30	9S8833	TUBE	2
31	1F929	BUSHING	2
32	1M6422	STUD	10
33	9S2836	BUSHING	2
34	1M6423	STUD	2
35	9H2403	STUD-------(1. 437 in. Long)----	4
	1M6421	STUD-------(1. 32 in. Long)----	16
36	4H9303	STUD	2
C 37	5M9653	COVER	1
	5M9654	GASKET	1

C INDICATES CHANGE

148118

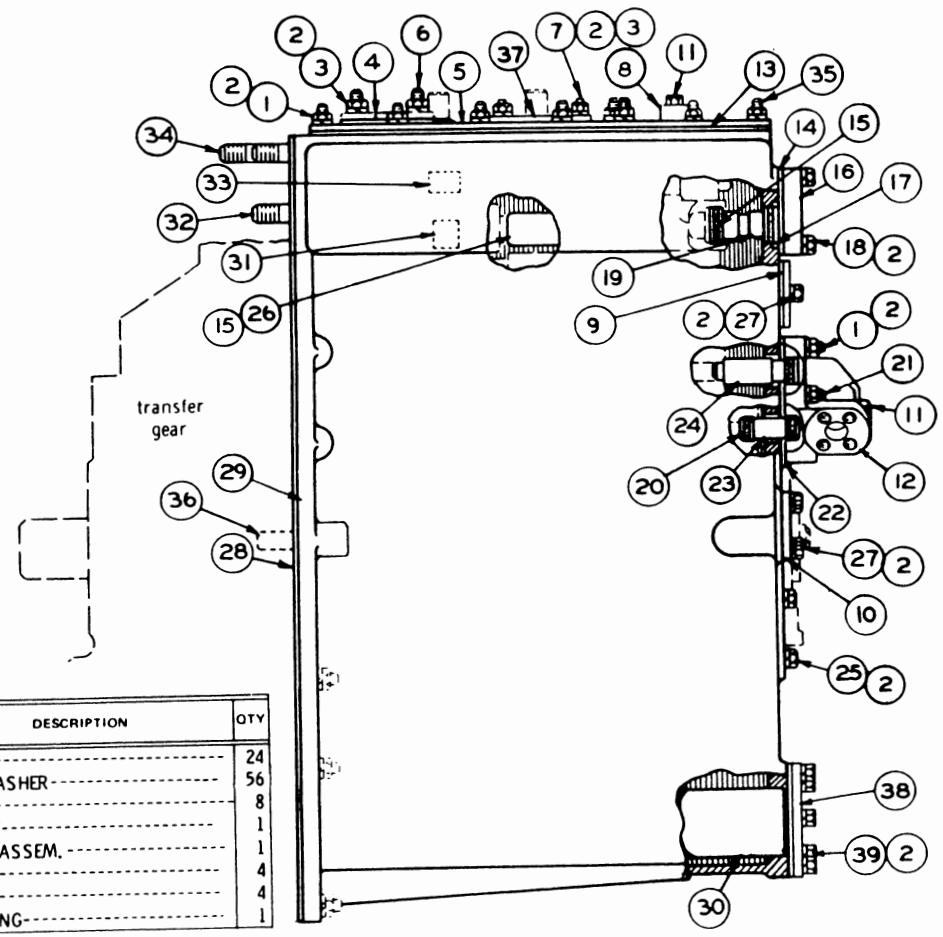

REF. NO.	PART NUMBER	DESCRIPTION	QTY
1	1B4203	NUT	24
2	3B4506	LOCKWASHER	56
3	1D4717	NUT	8
4	8B9777	GASKET	1
5	7M1151	COVER ASSEM.	1
6	5M9621	STUD	4
7	7M7794	STUD	4
8	2S6548	FITTING	1
9	2B8460	COVER	1
	2S1439	GASKET	1
10	7M8543	COVER	1
	2D92	GASKET	1
11	9S4191	PLUG	2
	3J1907	SEAL	2
12	4S8651	MANIFOLD	1
13	1M6420	GASKET	1
14	1M3847	GASKET	1
15	8M4432	SEAL	4
16	7M8486	COVER	1
17	8M4986	SEAL	2
18	1A2029	BOLT	2
19	2S4965	SLEEVE	1
20	8M4435	SEAL	3
21	7H3051	STUD	4
22	4S5881	GASKET	1
23	2S4958	SLEEVE	1
24	2S4954	SLEEVE	1
25	3B1915	BOLT	8
26	2S4959	SLEEVE	1
27	L1351	BOLT	6
28	1M6455	GASKET	1
29	9S8847	CASE ASSEM.	1
30	9S8833	TUBE	2
31	1F929	BUSHING	2
32	1M6422	STUD	10
33	9S2836	BUSHING	2
34	1M6423	STUD	2
35	9H2403	STUD-------(1.437 in. Long)	4
	1M6421	STUD-------(1.32 in. Long)	16
36	4H9303	STUD	2
37	5M9653	COVER	1
	5M9654	GASKET	1
38	3P6581	COVER	2
	9S8848	GASKET	2
39	S1594	BOLT	8

TRANSMISSION CASE AND COVERS (3P6923 N/S)
Serial No. 46A30185, 30187, 30188, 30191, 30199, 30201, 30205 to 30209, 30212, 30213, 30216 to 30218, 30220 to 30222, 30224 to 31254, 31260 and 46A31261 inclusive and Test No. 36690 to 38039 inclusive. Part of 2S7901 Range
Transmission Arrangement shown on Page 66C. See Page 28 for Gasket Kits

TRANSMISSION CASE AND COVERS (3P2868 N/S)

Serial No. 46A31255 to 46A31259 and 46A31262—Up and Test No. 38040—Up

Part of 3P4004 Range Transmission Arrangement shown on Page 66D

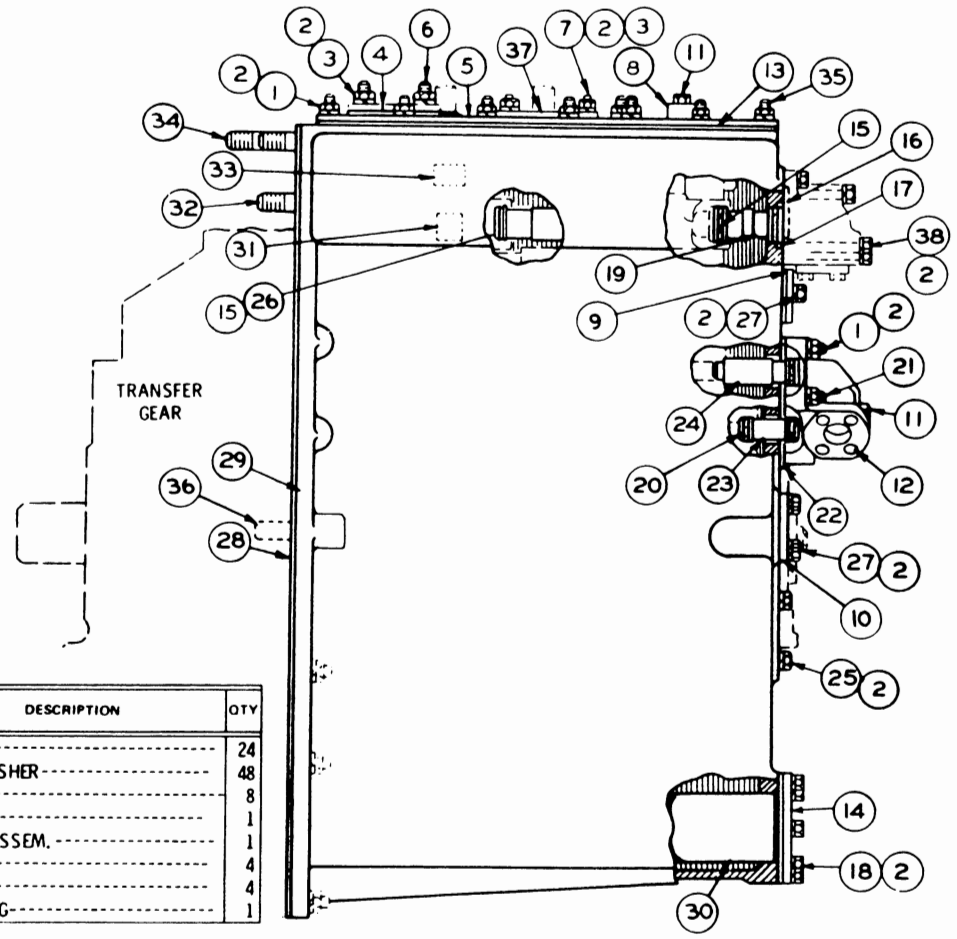

REF. NO.	PART NUMBER	DESCRIPTION	QTY
1	1B4203	NUT	24
2	3B4506	LOCKWASHER	48
3	1D4717	NUT	8
4	8B9777	GASKET	1
5	7M1151	COVER ASSEM.	1
6	5M9621	STUD	4
7	7M7794	STUD	4
8	2S6548	FITTING	1
9	2B8460	COVER	1
	2S1439	GASKET	1
10	7M8543	COVER	1
	2D92	GASKET	1
11	9S4191	PLUG	2
	3J1907	SEAL	2
12	4S8651	MANIFOLD	1
13	1M6420	GASKET	1
14	3P6581	COVER	2
	9S8848	GASKET	2
15	8M4432	SEAL	4
16	8M5661	SEAL	1
17	8M4986	SEAL	2
18	S1594	BOLT	8
19	2S4965	SLEEVE	1
20	8M4435	SEAL	3
21	7H3051	STUD	4
22	4S5881	GASKET	1
23	2S4958	SLEEVE	1
24	2S4954	SLEEVE	1
25	3B1915	BOLT	8
26	2S4959	SLEEVE	1
27	L1351	BOLT	6
28	1M6455	GASKET	1
29	9S8847	CASE ASSEM. (Includes)	1
30	9S8833	TUBE	1
31	1F929	BUSHING	2
32	1M6422	STUD	10
33	9S2836	BUSHING	2
34	1M6423	STUD	2
35	9H2403	STUD------(1.437 in. long)----	4
	1M6421	STUD------(1.32 in. long)-----	16
36	4H9303	STUD	2
37	5M9653	COVER	1
	5M9654	GASKET	1
38	S1608	BOLT-------(3.75 in. long)-------	2
	S1588	BOLT-------(1.25 in. long)-------	1
	S1619	BOLT-------(3 in. long)----------	1

146971

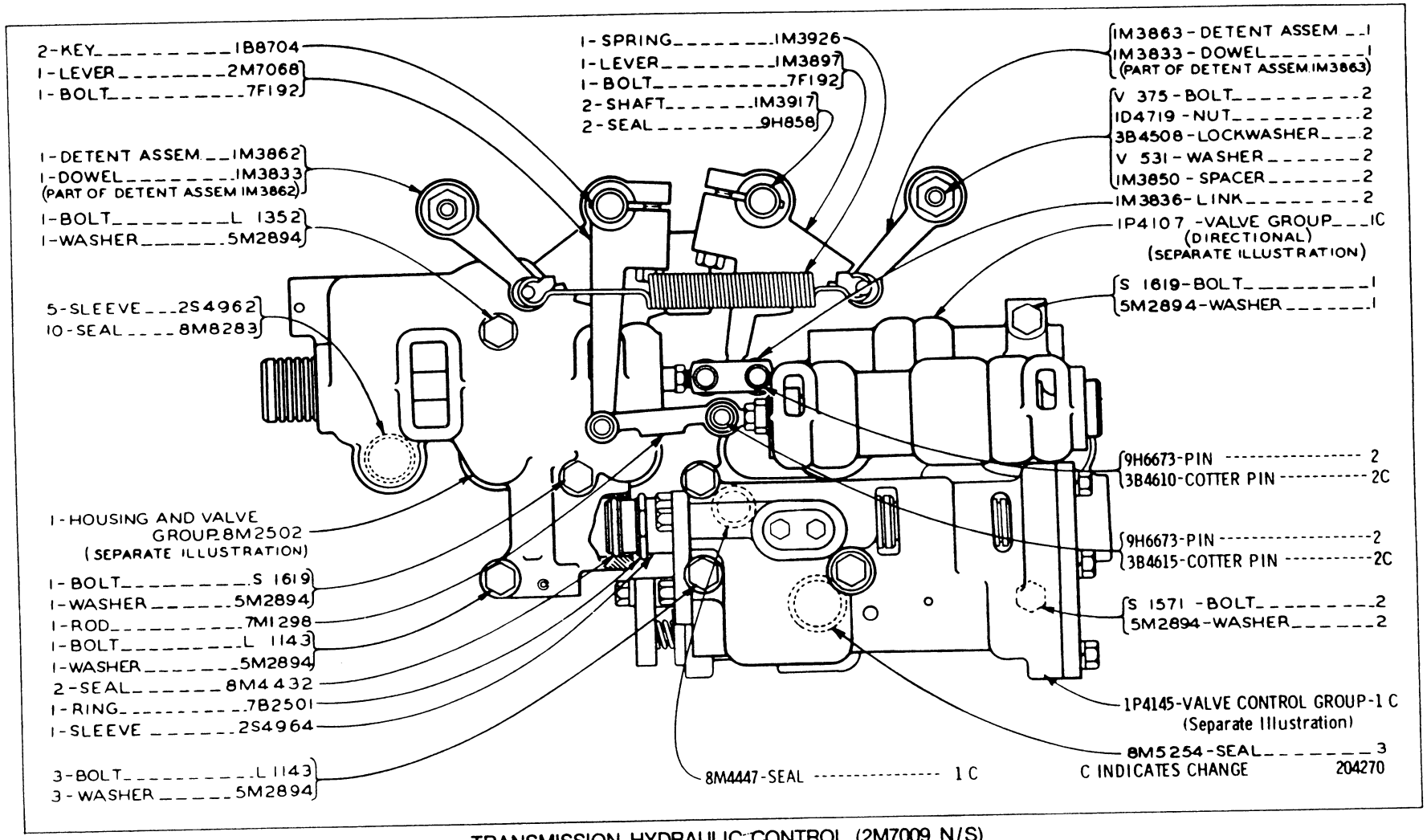

TRANSMISSION HYDRAULIC CONTROL (2M7009 N/S)
Serial No. 46A32155 to 46A31259 and 46A31262—Up and Test No. 38040
Part of 3P4004 Range Transmission Arrangement shown on Page 66D
8M2502, 1P4107 and 1P4145 Valve parts are shown on Pages 74, 74A, 74C and 74D

TRANSMISSION HYDRAULIC CONTROL (2M7009 N/S)
Serial No. 46A24433 to 31254, 31260 and 46A31261 inclusive and Test No. 25763 to 38039 inclusive
Part of 2S7901 Transmission Arrangement shown on Pages 66B and 66C
9S2787, 8M2502 Valves and 9S4380 Control parts are shown on Pages 74 and 75

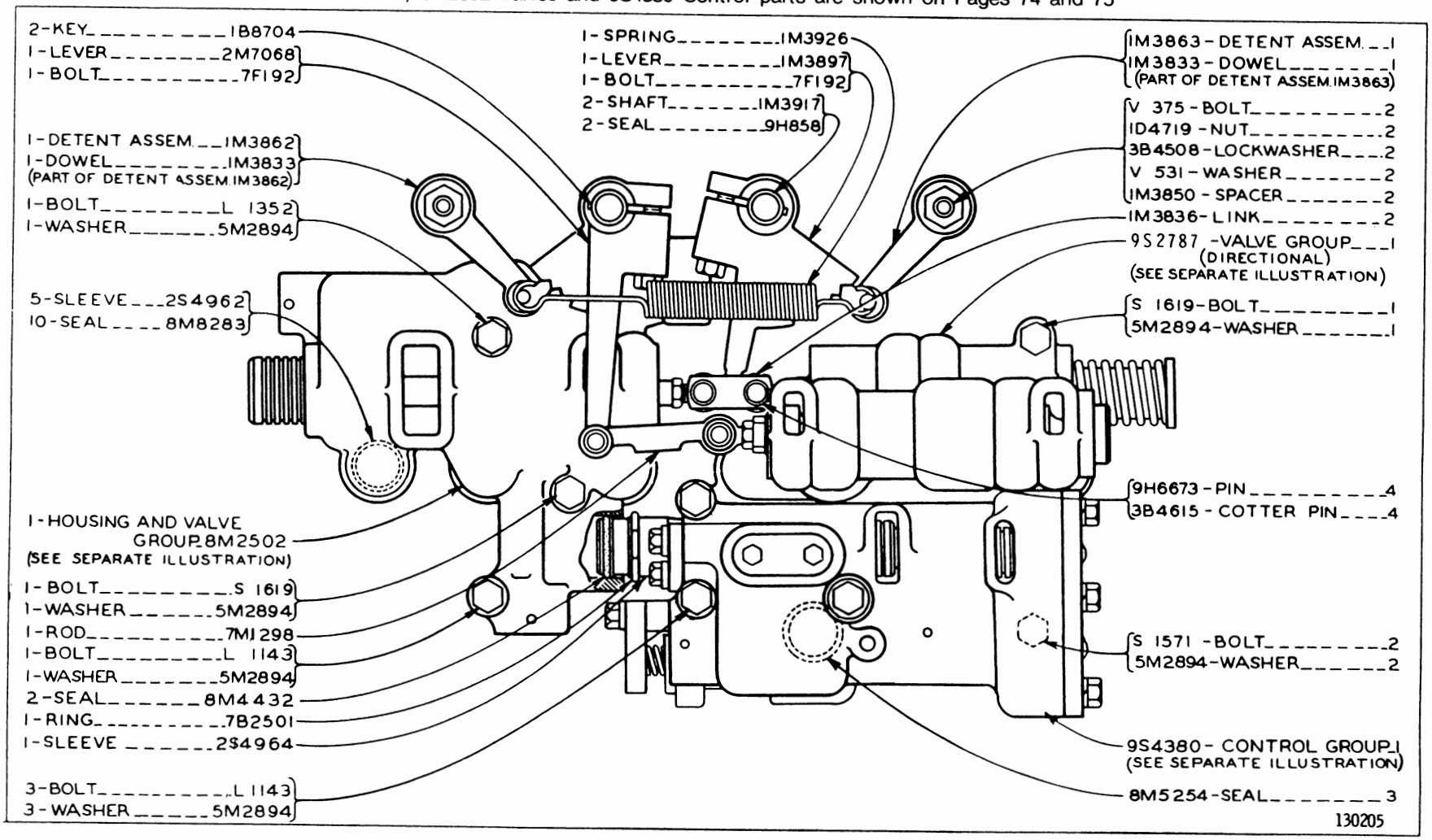

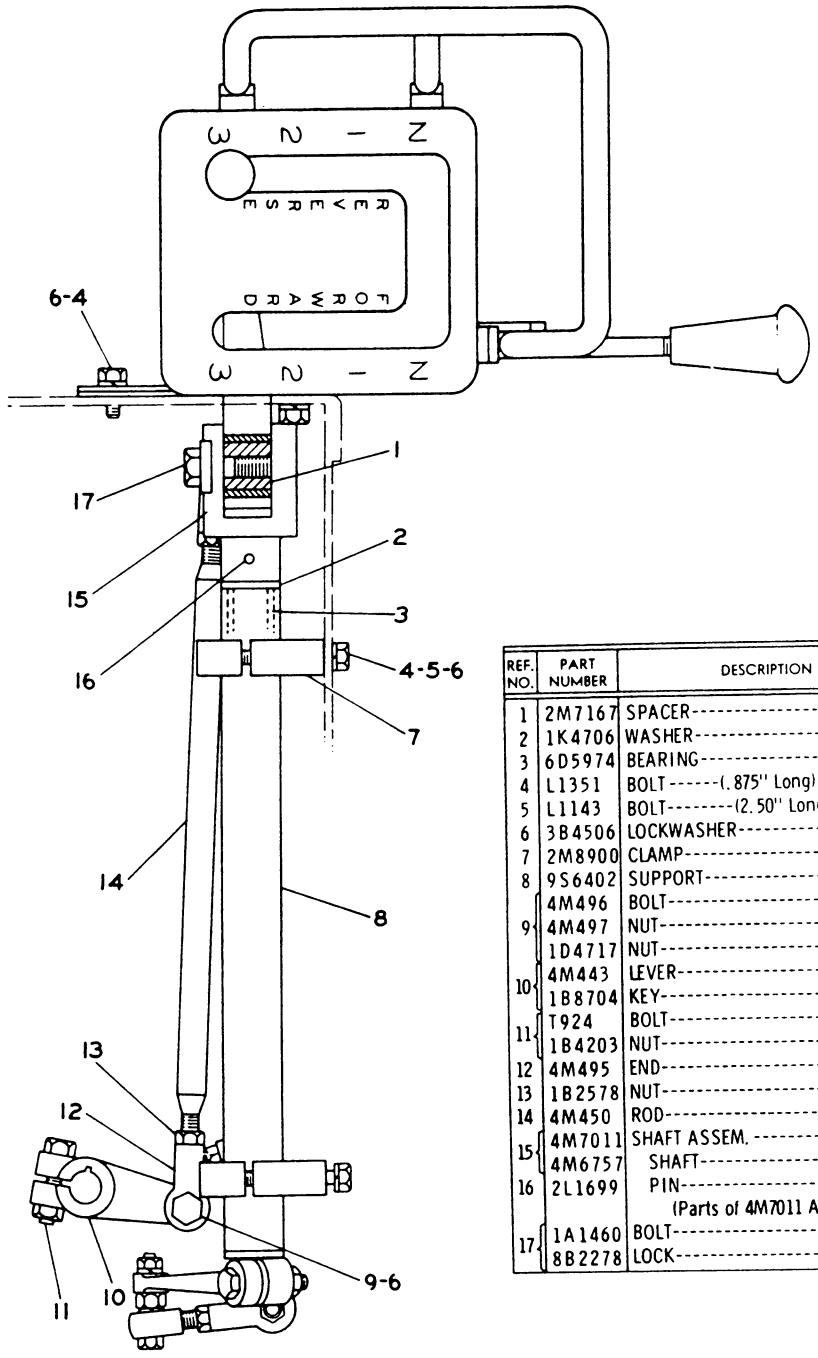

REF. NO.	PART NUMBER	DESCRIPTION	QTY
1	2M7167	SPACER	1
2	1K4706	WASHER	2
3	6D5974	BEARING	2
4	L1351	BOLT-(.875" Long)	6
5	L1143	BOLT-(2.50" Long)	2
6	3B4506	LOCKWASHER	10
7	2M8900	CLAMP	2
8	9S6402	SUPPORT	1
9	4M496	BOLT	2
	4M497	NUT	2
	1D4717	NUT	2
10	4M443	LEVER	1
	1B8704	KEY	1
11	T924	BOLT	2
	1B4203	NUT	2
12	4M495	END	2
13	1B2578	NUT	2
14	4M450	ROD	1
15	4M7011	SHAFT ASSEM.	1
	4M6757	SHAFT	1
16	2L1699	PIN	1
		(Parts of 4M7011 Assem.)	
17	1A1460	BOLT	1
	8B2278	LOCK	1

TRANSMISSION CONTROL LINKAGE (4M455 N/S)—Top View
Serial No. 46A24433 to 46A24712 inclusive

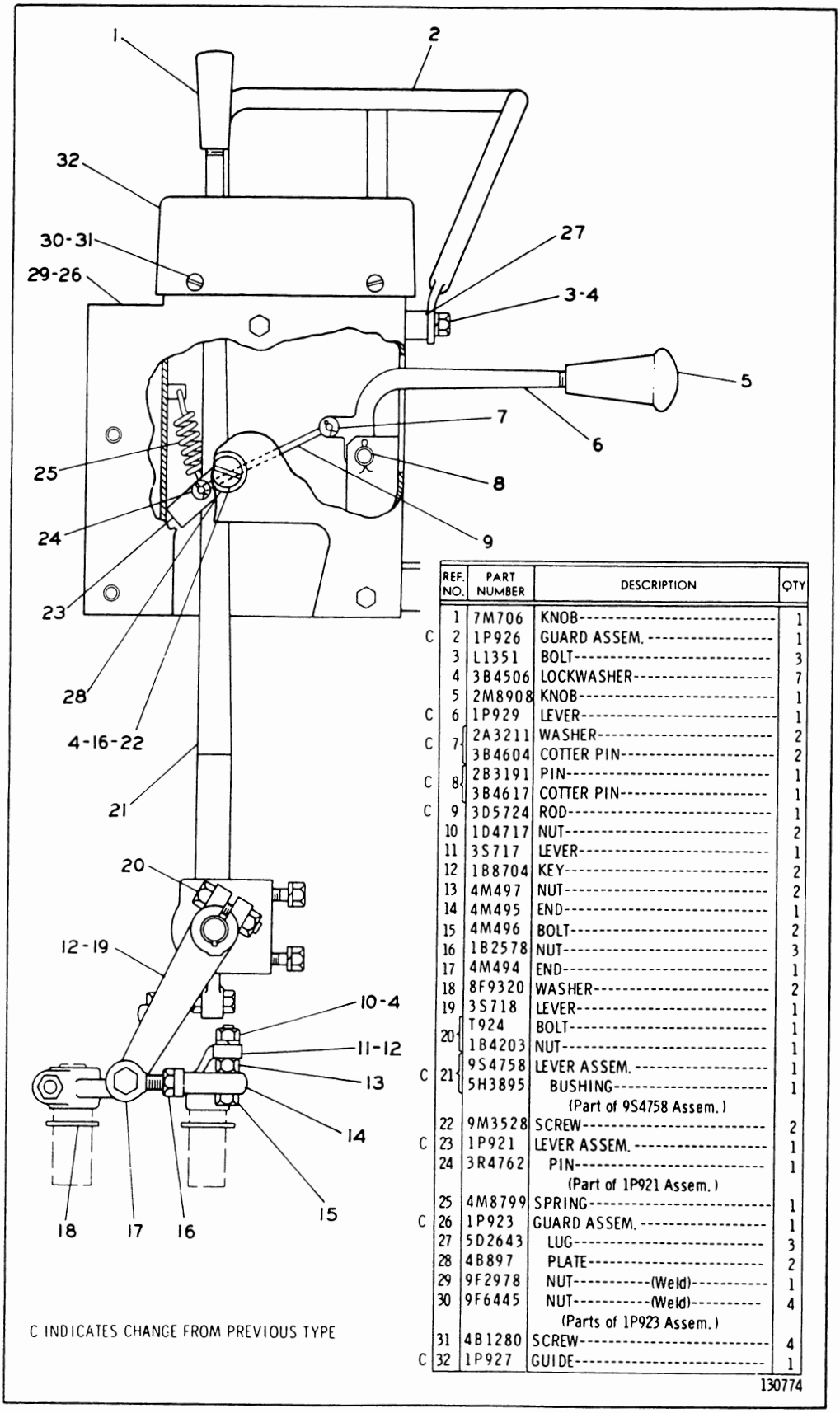

	REF. NO.	PART NUMBER	DESCRIPTION	QTY
	1	7M706	KNOB	1
C	2	1P926	GUARD ASSEM.	1
	3	L1351	BOLT	3
	4	3B4506	LOCKWASHER	7
	5	2M8908	KNOB	1
C	6	1P929	LEVER	1
C	7	2A3211	WASHER	2
		3B4604	COTTER PIN	2
C	8	2B3191	PIN	1
		3B4617	COTTER PIN	1
C	9	3D5724	ROD	1
	10	1D4717	NUT	2
	11	3S717	LEVER	1
	12	1B8704	KEY	2
	13	4M497	NUT	2
	14	4M495	END	1
	15	4M496	BOLT	2
	16	1B2578	NUT	3
	17	4M494	END	1
	18	8F9320	WASHER	2
	19	3S718	LEVER	1
	20	T924	BOLT	1
		1B4203	NUT	1
C	21	9S4758	LEVER ASSEM.	1
		5H3895	BUSHING	1
			(Part of 9S4758 Assem.)	
	22	9M3528	SCREW	2
C	23	1P921	LEVER ASSEM.	1
	24	3R4762	PIN	1
			(Part of 1P921 Assem.)	
	25	4M8799	SPRING	1
C	26	1P923	GUARD ASSEM.	1
	27	5D2643	LUG	3
	28	4B897	PLATE	2
	29	9F2978	NUT-(Weld)	1
	30	9F6445	NUT-(Weld)	4
			(Parts of 1P923 Assem.)	
	31	4B1280	SCREW	4
C	32	1P927	GUIDE	1

C INDICATES CHANGE FROM PREVIOUS TYPE

130774

TRANSMISSION CONTROL LINKAGE (4M455 N/S)—Side View
Serial No. 46A24433 to 46A24712 inclusive

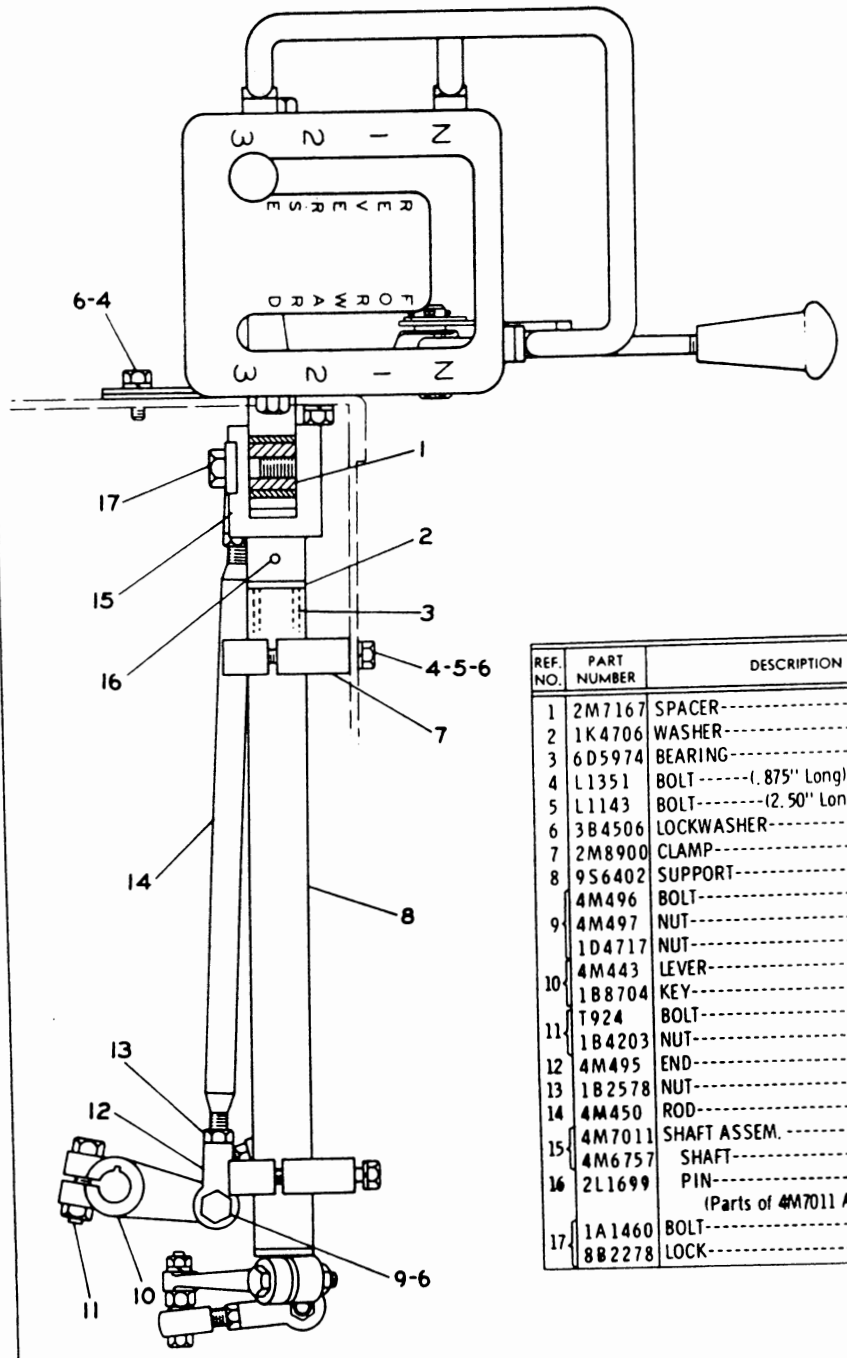

REF. NO.	PART NUMBER	DESCRIPTION	QTY
1	2M7167	SPACER	1
2	1K4706	WASHER	2
3	6D5974	BEARING	2
4	L1351	BOLT (.875" Long)	6
5	L1143	BOLT (2.50" Long)	2
6	3B4506	LOCKWASHER	10
7	2M8900	CLAMP	2
8	9S6402	SUPPORT	1
9	4M496	BOLT	2
	4M497	NUT	2
	1D4717	NUT	2
10	4M443	LEVER	1
	1B8704	KEY	1
11	T924	BOLT	2
	1B4203	NUT	2
12	4M495	END	2
13	1B2578	NUT	2
14	4M450	ROD	1
15	4M7011	SHAFT ASSEM.	1
	4M6757	SHAFT	1
16	2L1699	PIN	1
		(Parts of 4M7011 Assem.)	
17	1A1460	BOLT	1
	8B2278	LOCK	1

TRANSMISSION CONTROL LINKAGE (4M455 N/S)—Top View
Serial No. 46A24713 to 46A25959 inclusive

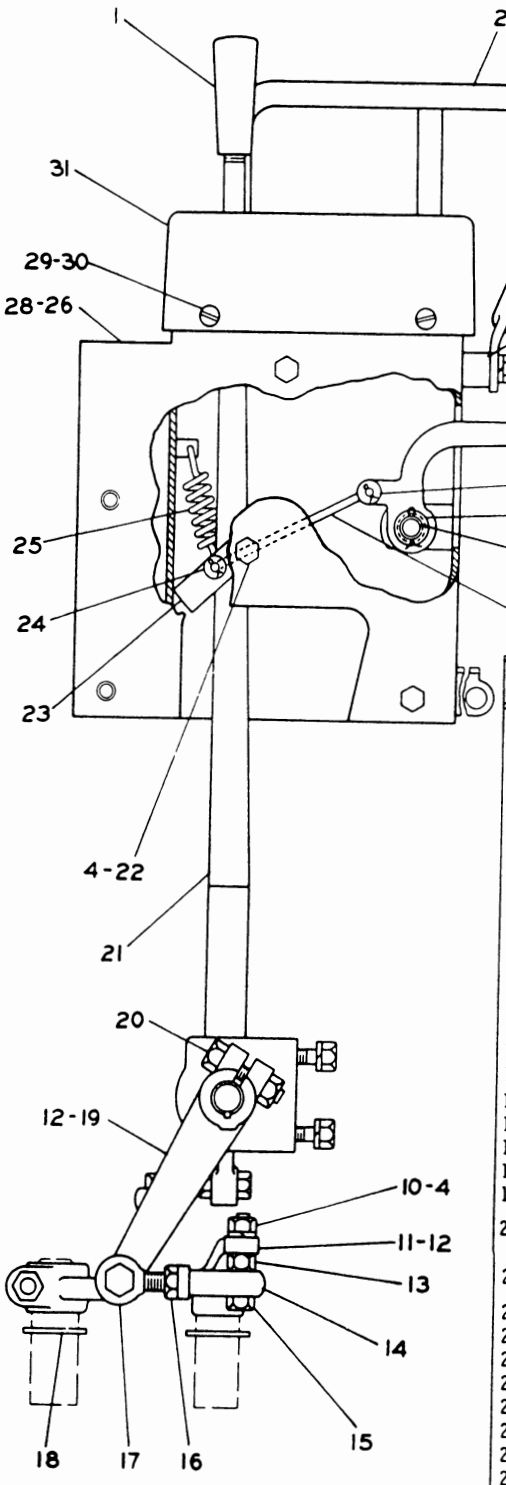

REF. NO.	PART NUMBER	DESCRIPTION	QTY
1	7M706	KNOB	1
2	1P926	GUARD ASSEM.	1
3	L1351	BOLT	3
4	3B4506	LOCKWASHER	7
5	2M8908	KNOB	1
6	1P929	LEVER	1
7	2A3211	WASHER	2
	3B4604	COTTER PIN	2
8	1J1971	PIN	1
	3B4617	COTTER PIN	1
9	3D5724	ROD	1
10	1D4717	NUT	2
11	3S717	LEVER	1
12	1B8704	KEY	2
13	4M497	NUT	2
14	4M495	END	1
15	4M496	BOLT	2
16	1B2578	NUT	1
17	4M494	END	1
18	8F9320	WASHER	2
19	3S718	LEVER	1
20	T924	BOLT	1
	1B4203	NUT	1
21	9S4758	LEVER ASSEM.	1
	5H3895	BUSHING	1
22	4D9483	SCREW	2
23	1P921	LEVER ASSEM.	1
24	3R4762	PIN	1
25	4M8799	SPRING	1
26	1P9092	GUARD ASSEM.	1
27	5D2643	LUG	3
28	9F2978	NUT (Weld)	1
29	9F6445	NUT (Weld)	4
30	4B1280	SCREW	4
31	1P927	GUIDE	1
32	4B4280	WASHER	1
	6L1698	SPACER	1

111173

TRANSMISSION CONTROL LINKAGE (4M455 N/S)—Side View
Serial No. 46A24713 to 46A25959 inclusive

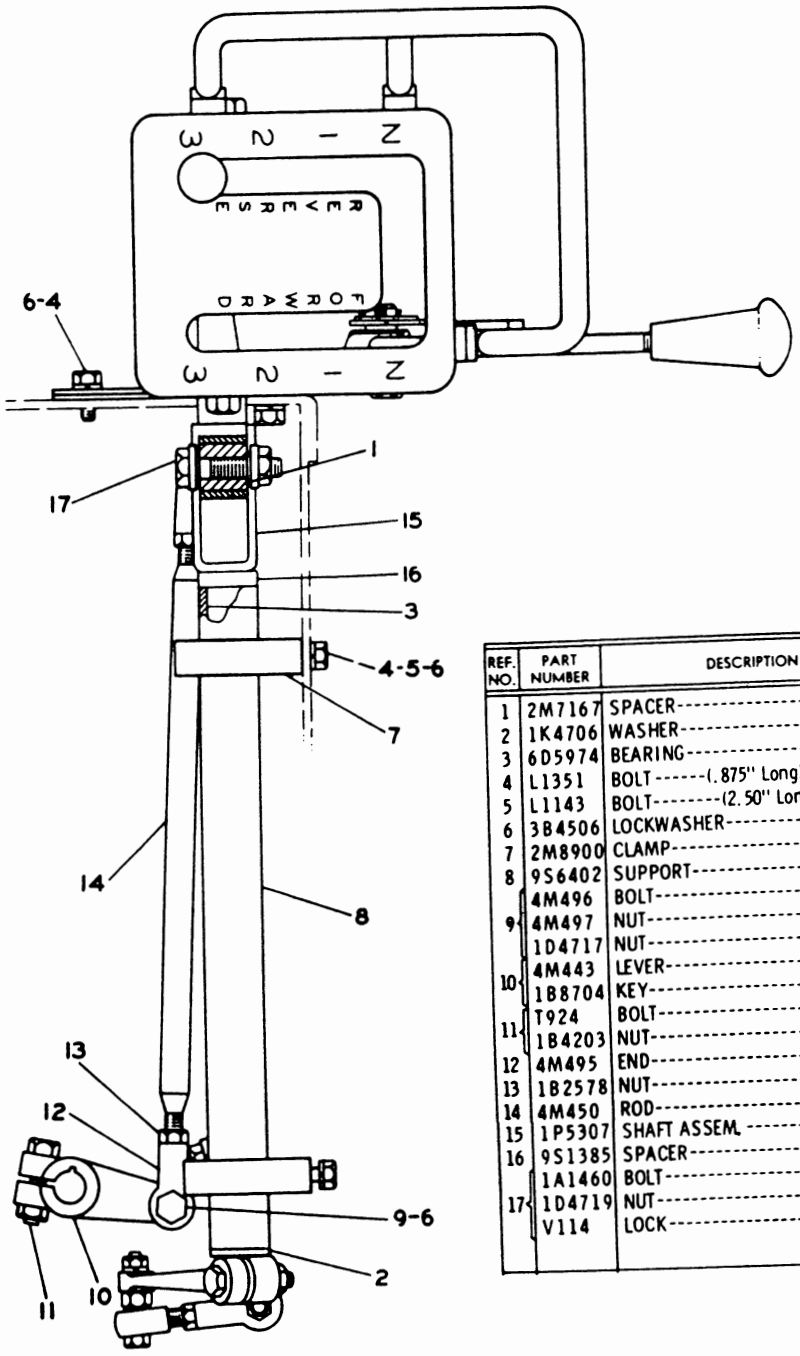

REF. NO.	PART NUMBER	DESCRIPTION	QTY
1	2M7167	SPACER	1
2	1K4706	WASHER	1
3	6D5974	BEARING	2
4	L1351	BOLT-------(.875" Long)	6
5	L1143	BOLT--------(2.50" Long)	2
6	3B4506	LOCKWASHER	10
7	2M8900	CLAMP	2
8	9S6402	SUPPORT	1
9	4M496	BOLT	2
	4M497	NUT	2
	1D4717	NUT	2
10	4M443	LEVER	1
	1B8704	KEY	1
11	T924	BOLT	2
	1B4203	NUT	2
12	4M495	END	2
13	1B2578	NUT	2
14	4M450	ROD	1
15	1P5307	SHAFT ASSEM.	1
16	9S1385	SPACER	1
17	1A1460	BOLT	1
	1D4719	NUT	1
	V114	LOCK	2

TRANSMISSION CONTROL LINKAGE (4M455 N/S)--Top View

See Page 73A for Serial Numbers

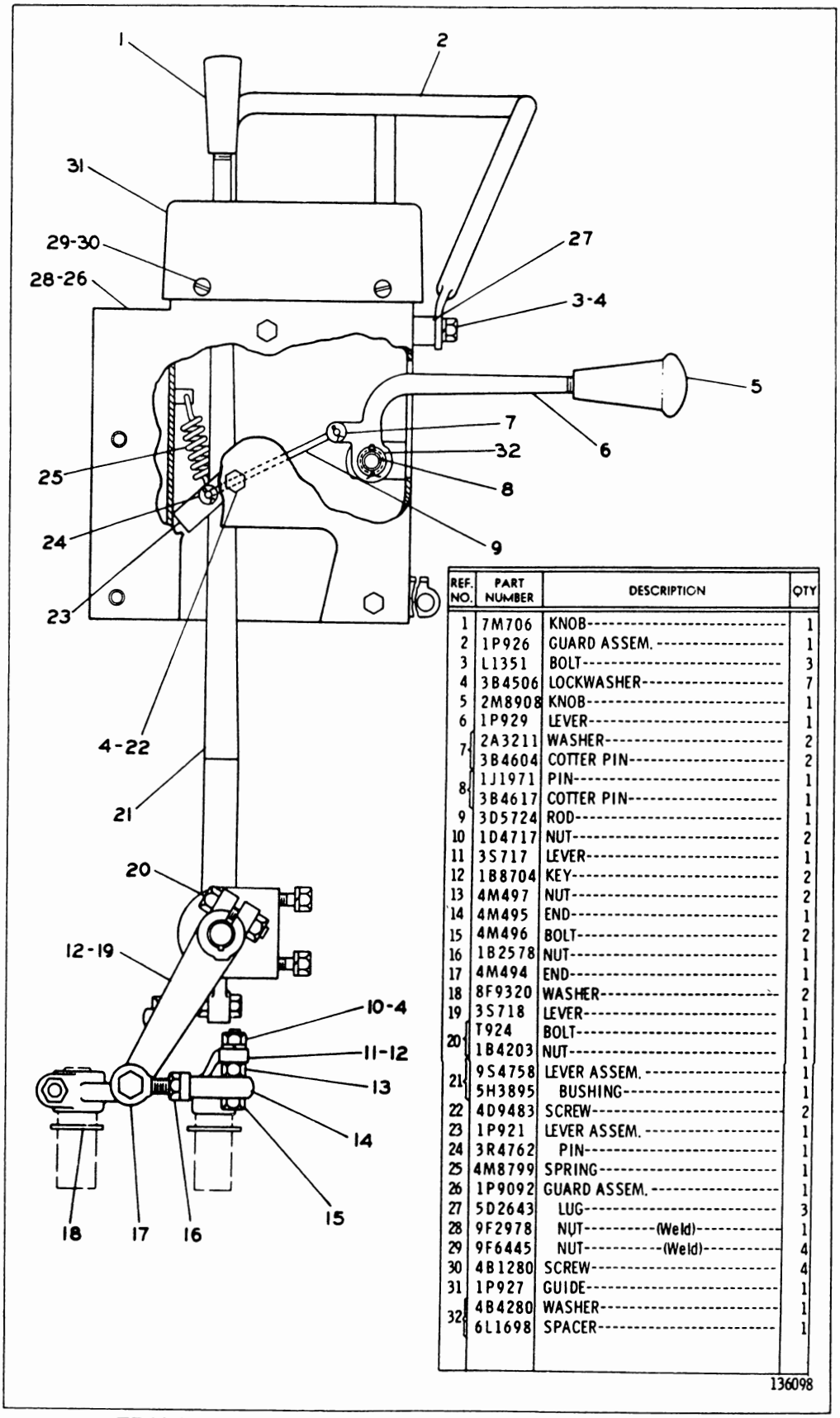

REF. NO.	PART NUMBER	DESCRIPTION	QTY
1	7M706	KNOB	1
2	1P926	GUARD ASSEM.	1
3	L1351	BOLT	3
4	3B4506	LOCKWASHER	7
5	2M8908	KNOB	1
6	1P929	LEVER	1
7	2A3211	WASHER	2
	3B4604	COTTER PIN	2
8	1J1971	PIN	1
	3B4617	COTTER PIN	1
9	3D5724	ROD	1
10	1D4717	NUT	2
11	3S717	LEVER	1
12	1B8704	KEY	2
13	4M497	NUT	2
14	4M495	END	1
15	4M496	BOLT	2
16	1B2578	NUT	1
17	4M494	END	1
18	8F9320	WASHER	2
19	3S718	LEVER	1
20	T924	BOLT	1
	1B4203	NUT	1
21	9S4758	LEVER ASSEM.	1
	5H3895	BUSHING	1
22	4D9483	SCREW	2
23	1P921	LEVER ASSEM.	1
24	3R4762	PIN	1
25	4M8799	SPRING	1
26	1P9092	GUARD ASSEM.	1
27	5D2643	LUG	3
28	9F2978	NUT-(Weld)	1
29	9F6445	NUT-(Weld)	4
30	4B1280	SCREW	4
31	1P927	GUIDE	1
32	4B4280	WASHER	1
	6L1698	SPACER	1

136098

TRANSMISSION CONTROL LINKAGE (4M455 N/S)–Side View

See Page 73A for Serial Numbers

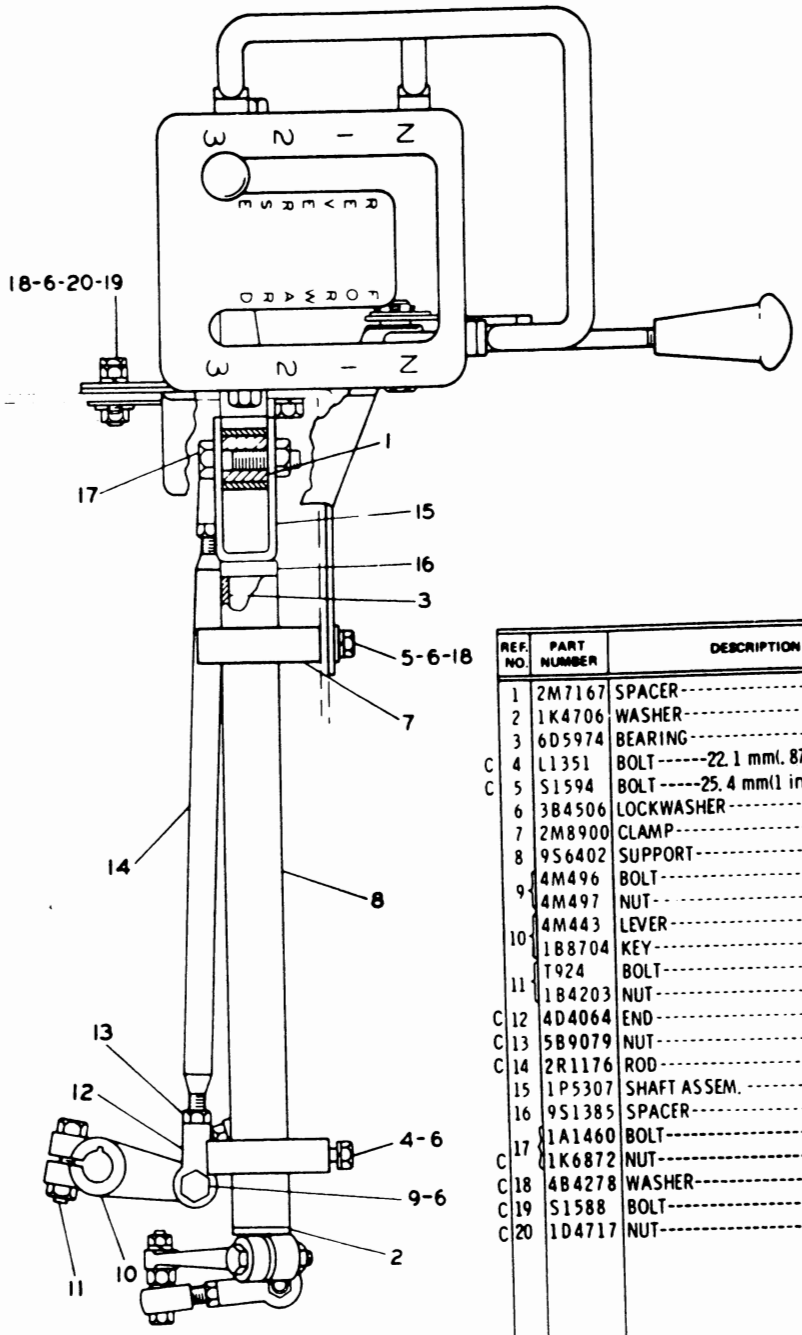

REF. NO.	PART NUMBER	DESCRIPTION	QTY
1	2M7167	SPACER	1
2	1K4706	WASHER	1
3	6D5974	BEARING	2
C 4	L1351	BOLT------22.1 mm(.875 in.)long--	1
C 5	S1594	BOLT-----25.4 mm(1 in.)long-----	1
6	3B4506	LOCKWASHER	10
7	2M8900	CLAMP	2
8	9S6402	SUPPORT	1
9	4M496	BOLT	2
	4M497	NUT	2
10	4M443	LEVER	1
	1B8704	KEY	1
11	T924	BOLT	2
	1B4203	NUT	2
C 12	4D4064	END	2
C 13	5B9079	NUT	2
C 14	2R1176	ROD	1
15	1P5307	SHAFT ASSEM.	1
16	9S1385	SPACER	1
17	1A1460	BOLT	1
C	1K6872	NUT	1
C 18	4B4278	WASHER	2
C 19	S1588	BOLT	1
C 20	1D4717	NUT	3

C INDICATES CHANGE

209261

TRANSMISSION CONTROL LINKAGE (4M455 N/S)- Top View

See Page 73A for Serial Numbers

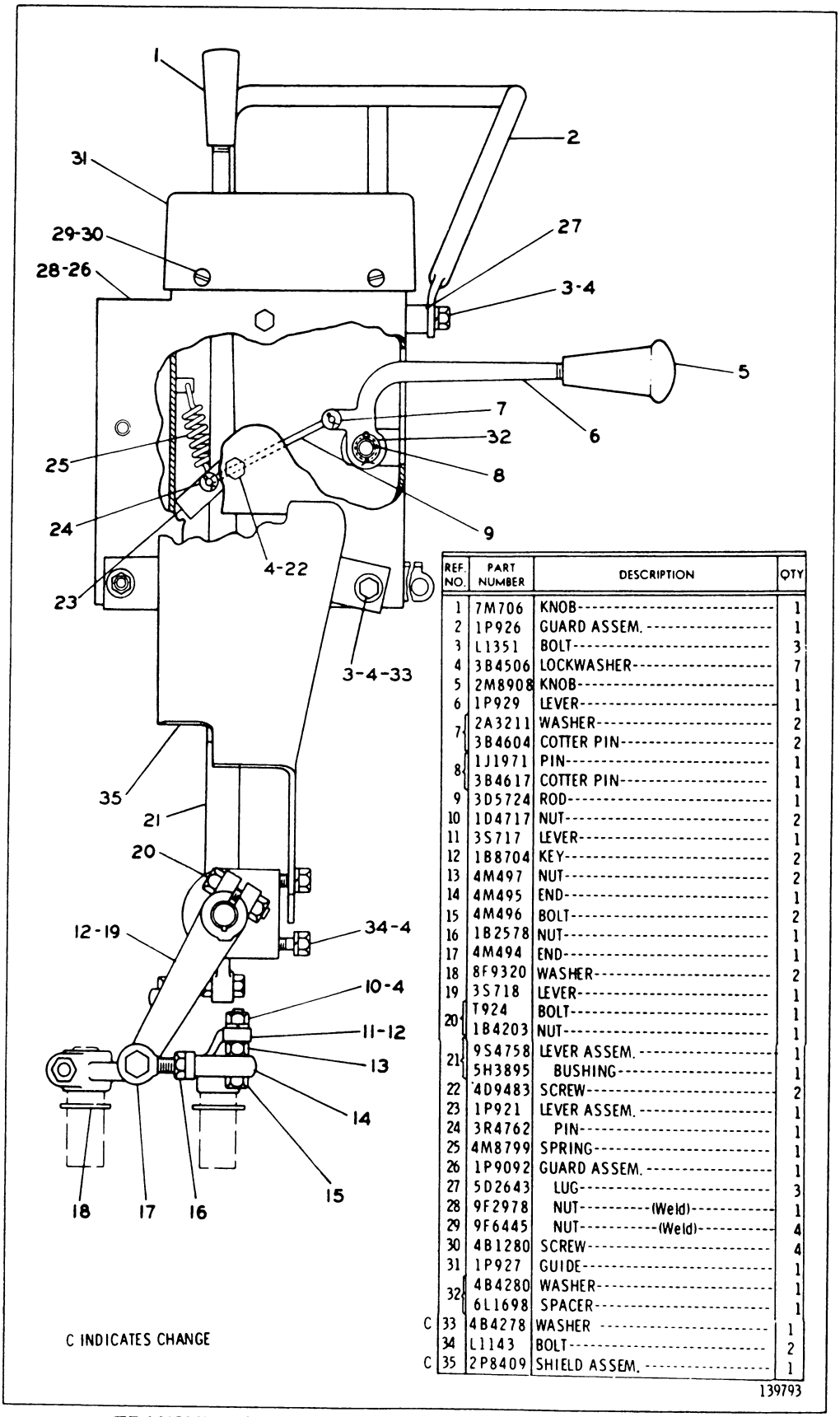

REF. NO.	PART NUMBER	DESCRIPTION	QTY
1	7M706	KNOB	1
2	1P926	GUARD ASSEM.	1
3	L1351	BOLT	3
4	3B4506	LOCKWASHER	7
5	2M8908	KNOB	1
6	1P929	LEVER	1
7	2A3211	WASHER	2
	3B4604	COTTER PIN	2
8	1J1971	PIN	1
	3B4617	COTTER PIN	1
9	3D5724	ROD	1
10	1D4717	NUT	2
11	3S717	LEVER	1
12	1B8704	KEY	2
13	4M497	NUT	2
14	4M495	END	1
15	4M496	BOLT	2
16	1B2578	NUT	1
17	4M494	END	1
18	8F9320	WASHER	2
19	3S718	LEVER	1
20	T924	BOLT	1
	1B4203	NUT	1
21	9S4758	LEVER ASSEM.	1
	5H3895	BUSHING	1
22	4D9483	SCREW	2
23	1P921	LEVER ASSEM.	1
24	3R4762	PIN	1
25	4M8799	SPRING	1
26	1P9092	GUARD ASSEM.	1
27	5D2643	LUG	3
28	9F2978	NUT (Weld)	1
29	9F6445	NUT (Weld)	4
30	4B1280	SCREW	4
31	1P927	GUIDE	1
32	4B4280	WASHER	1
	6L1698	SPACER	1
C 33	4B4278	WASHER	1
34	L1143	BOLT	2
C 35	2P8409	SHIELD ASSEM.	1

C INDICATES CHANGE

139793

TRANSMISSION CONTROL LINKAGE (4M455 N/S)–Side View

See Page 73A for Serial Numbers

46A25960 to 26132, 26134 to 26175, 26177 to 26817, 26819 to 26829, 26831 to 26834, 26837 to 26848, 26850 to 26854, 26856 to 26870, 26876 to 26880, 26884, 26888 to 26890, 26893, 26897 to 26904, 26906 to 26923, 26925 to 27347, 27349 to 27400, 27405 to 27490, 27492 to 27500, 27502 to 27532, 27534 to 27595, 27597, 27603 to 27605, 27612 to 27618, 27622, 27625 to 27627, 27632 to 27634, 27642 to 27648, 27651 to 27675, 27677, 27678, 27701 to 27707, 27709 to 27719, 27729, 27740 to 27742, 27750 to 27766, 27769 to 27773, 27775, 27781 and 46A27791 inclusive

SERIAL NO. FOR TRANSMISSION CONTROL LINKAGE SHOWN ON PAGES 72B AND 72C

46A26133, 26176, 26818, 26830, 26835, 26836, 26849, 26855, 26871 to 26875, 26881 to 26883, 26885 to 26887, 26891, 26892, 26894 to to 26896, 26905, 26924, 27348, 27401 to 27404, 27491, 27501, 27533, 27596, 27598 to 27602, 27606 to 27611, 27619 to 27621, 27623, 27624, 27628 to 27631, 27635 to 27641, 27649, 27650, 27676, 27679 to 27700, 27708, 27720 to 27728, 22730 to 27739, 27743 to 27749, 27767, 27768, 27774, 27776 to 27780, 27782 to 27790 and 46A27792–Up

SERIAL NUMBERS FOR TRANSMISSION CONTROL LINKAGE SHOWN ON PAGES 72D AND 73

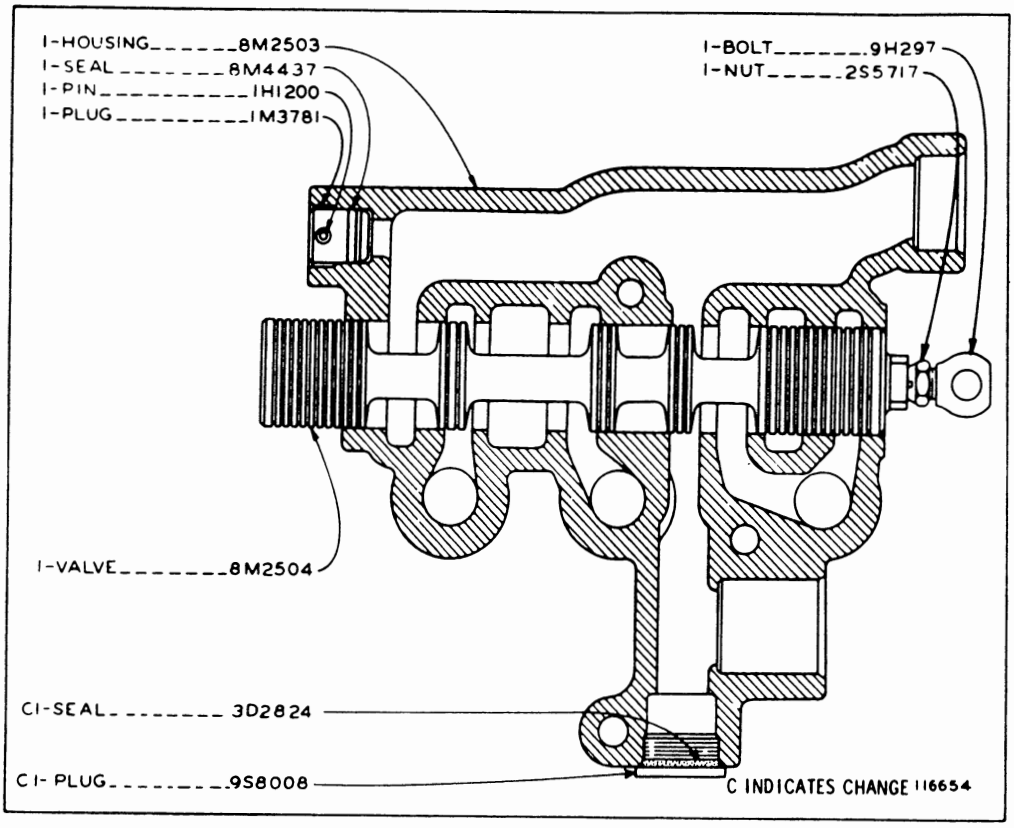

8M2502 SELECTOR VALVE GROUP
Serial No. 46A28430, 28431, 28437, 28445 to 38453 and 46A28458–Up. Part of Transmission Hydraulic Control shown on Page 69

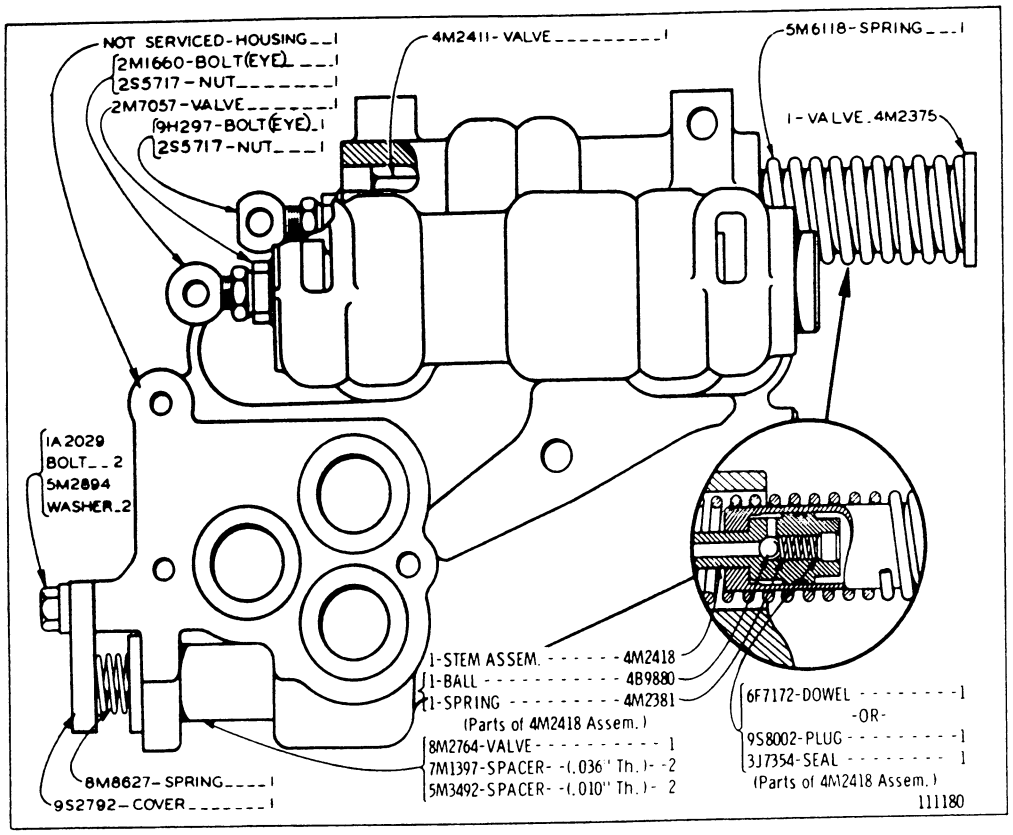

9S2787 DIRECTIONAL VALVE GROUP
Part of Transmission Hydraulic Control shown on Page 69

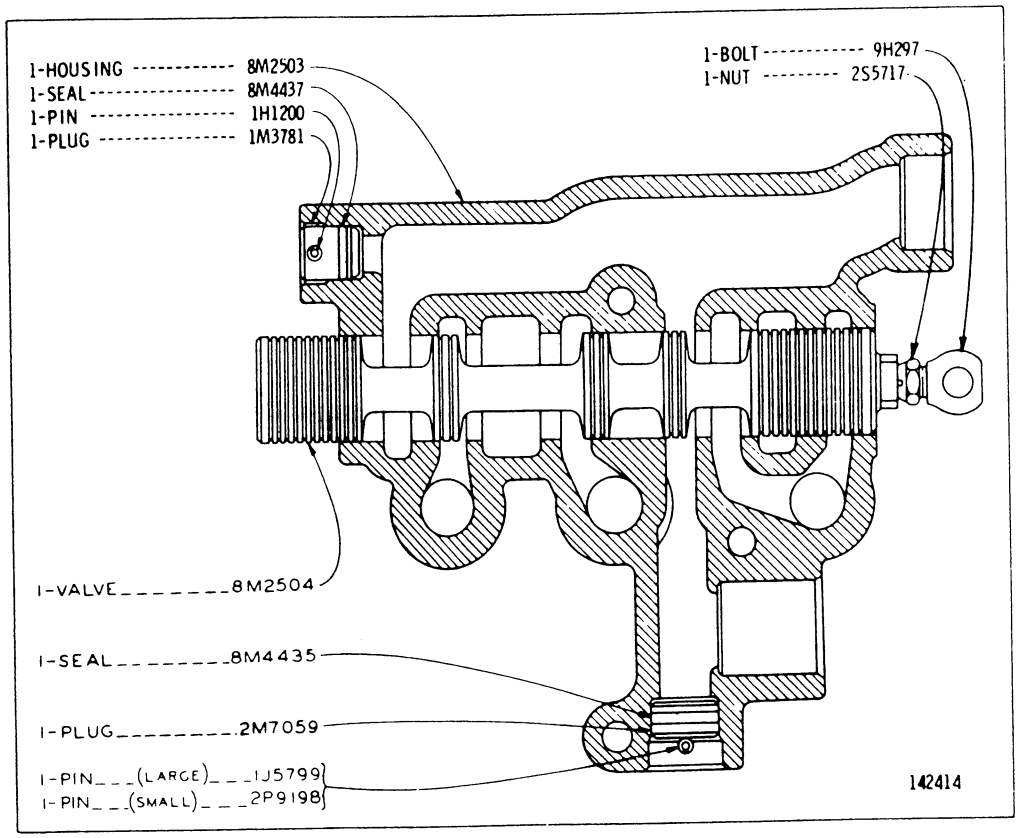

8M2502 SELECTOR VALVE GROUP
Part of Transmission Hydraulic Control shown on Page 69

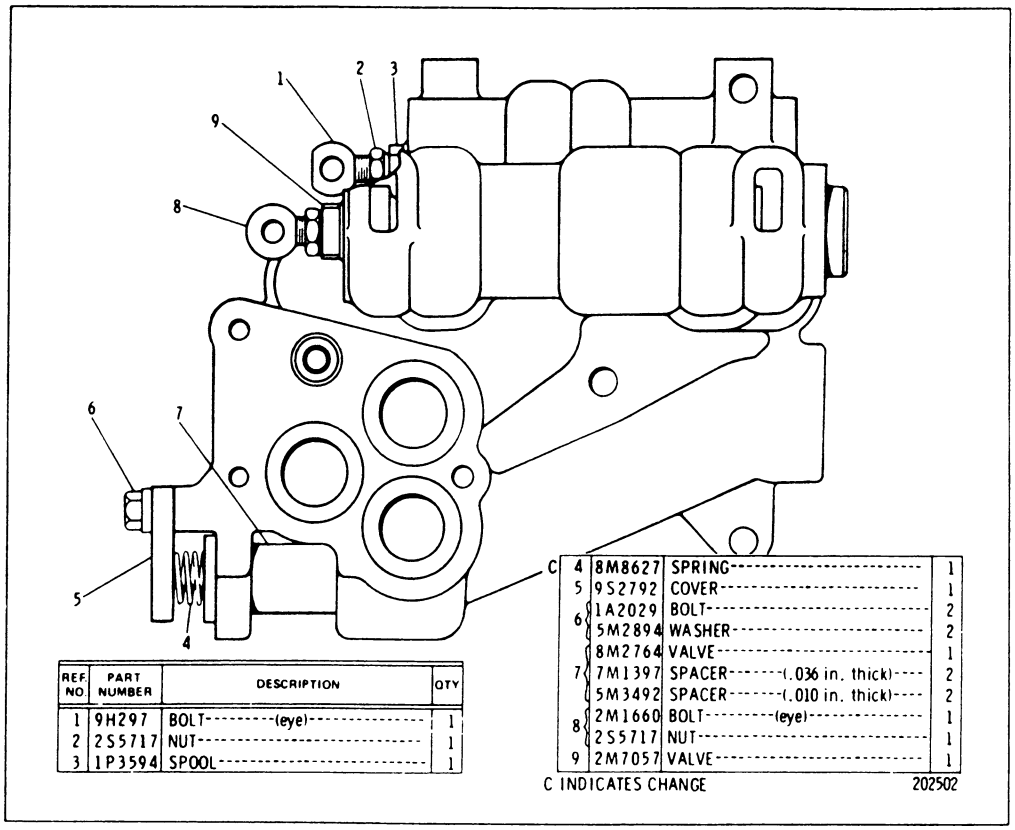

REF. NO.	PART NUMBER	DESCRIPTION	QTY
1	9H297	BOLT---------(eye)----------	1
2	2S5717	NUT----------	1
3	1P3594	SPOOL----------	1

C 4	8M8627	SPRING----------	1
5	9S2792	COVER----------	1
6	1A2029	BOLT----------	2
	5M2894	WASHER----------	2
	8M2764	VALVE----------	1
7	7M1397	SPACER-------(.036 in. thick)----	2
	5M3492	SPACER-------(.010 in. thick)----	2
8	2M1660	BOLT---------(eye)----------	1
	2S5717	NUT----------	1
9	2M7057	VALVE----------	1

C INDICATES CHANGE 202502

1P4107 SELECTOR VALVE GROUP
Serial No. 46A31255 to 46A31259 and 46A31262—Up
Part of Transmission Hydraulic Control shown on Page 68D

1P4145 PRESSURE CONTROL VALVE GROUP
Serial No. 46A32377—Up
Part of Transmission Hydraulic Control shown on Page 68D

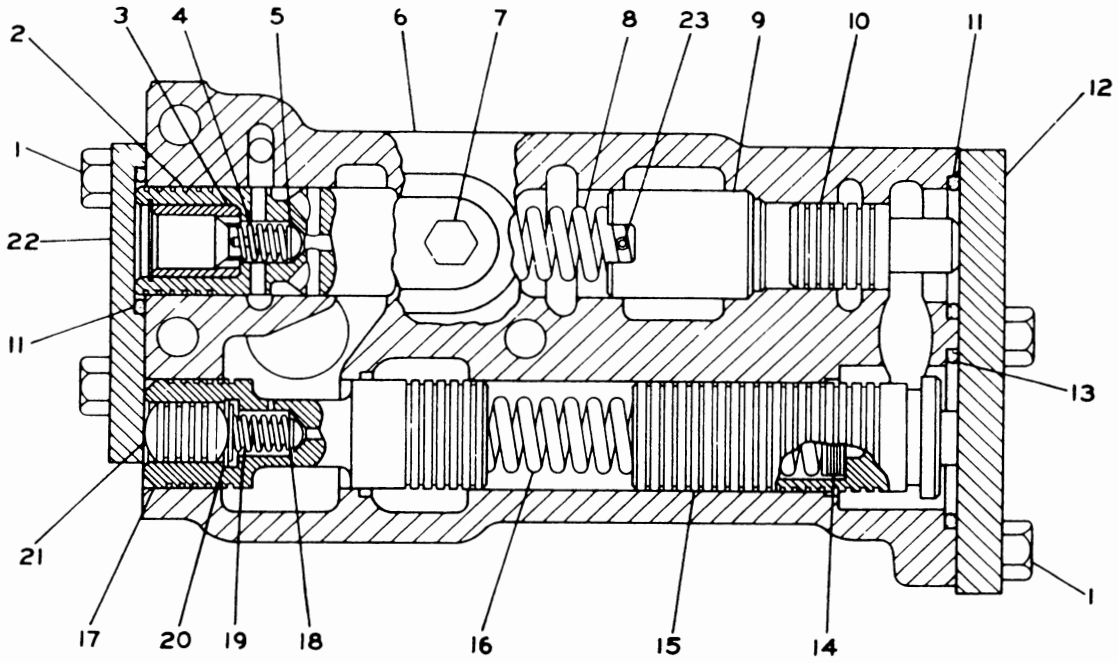

	REF. NO.	PART NUMBER	DESCRIPTION	QTY
	1	S1594	BOLT	7
C	2	6P4605	SPOOL ASSEM. (Includes)	1
		6P4606	SPOOL	1
	3	6P4604	SLEEVE	1
		1L3162	RING	1
	4	4M2381	SPRING	1
	5	1S2121	PLUNGER	1
	6	Not Serv	BODY	1
	7	5M6214	PLUG	2
	8	4M5923	SPRING	1
	9	1P8617	RETAINER	1
	10	8S9195	VALVE	1
	11	8M5254	SEAL	2
	12	8S9192	COVER	1
	13	8M4992	SEAL	1
	14	5M9622	SPACER--.062 in. (1.57 mm) thick	1
		5M9623	SPACER--.036 in. (.91 mm) thick	2
		5M9624	SPACER--.010 in. (.25 mm) thick	4
	15	9S2802	PISTON	1
	16	2M3469	SPRING	1
	17	5S4437	SPOOL ASSEM.	1
	18	1S2121	PLUNGER	1
	19	4M2381	SPRING	1
	20	8M1013	RETAINER	1
		3D8317	RING	1
			(Parts of 5S4437 Assem.)	
	21	2M7041	SLUG	1
	22	1P3593	COVER	1
	23	6H2948	DOWEL	2
		GMG00573	FORM	1
			(Instructions for installing Valve Group)	

C INDICATES CHANGE

203761

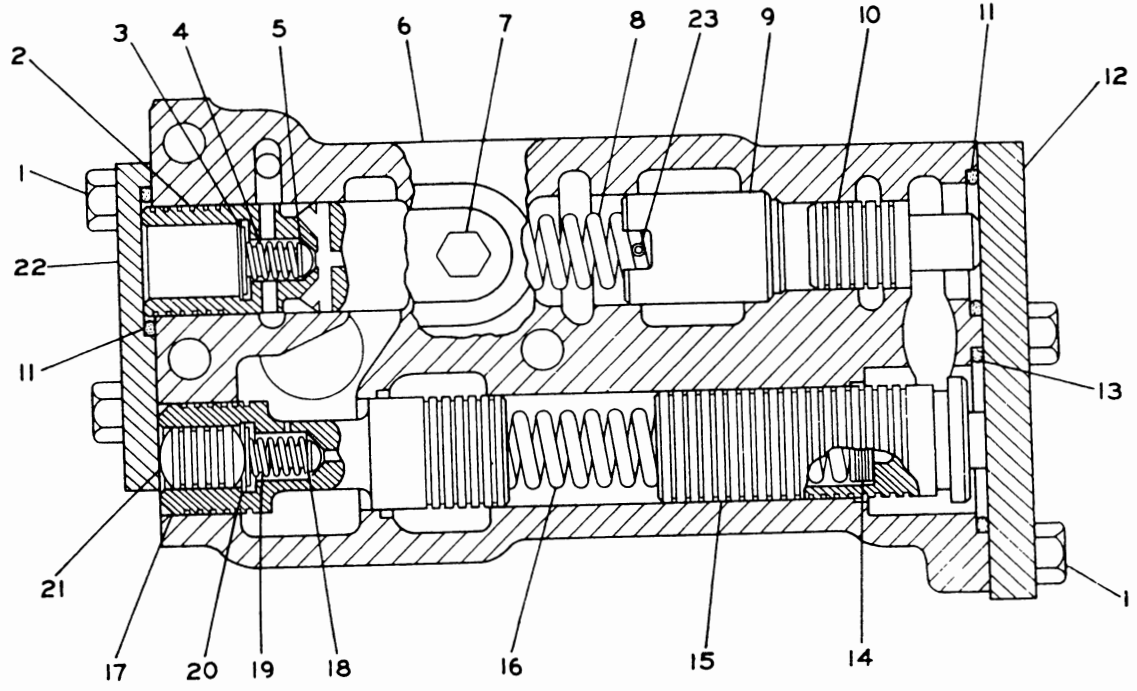

REF. NO.	PART NUMBER	DESCRIPTION	QTY
1	S1594	BOLT	7
2	1P4180	SPOOL ASSEM.	1
3	8S508	RETAINER	1
	2M8191	RING	1
4	4M2381	SPRING	1
5	1S2121	PLUNGER	1
		(Parts of 1P4180 Assem.)	
6	Not Serv	BODY	1
7	5M6214	PLUG	2
8	4M5923	SPRING	1
9	1P8617	RETAINER	1
10	8S9195	VALVE	1
11	8M5254	SEAL	2
12	8S9192	COVER	1
13	8M4992	SEAL	1
14	5M9622	SPACER------(.062" Thick)-------	1
	5M9623	SPACER-------(.036" Thick)------	2
	5M9624	SPACER--------(.010" Thick)-----	4
15	9S2802	PISTON	1
16	2M3469	SPRING	1
17	5S4437	SPOOL ASSEM.	1
18	1S2121	PLUNGER	1
19	4M2381	SPRING	1
20	8M1013	RETAINER	1
	3D8317	RING	1
		(Parts of 5S4437 Assem.)	
21	2M7041	SLUG	1
22	1P3593	COVER	1
23	6H2948	DOWEL	2
	GMG00573	FORM	1
		(Instructions for installing Valve Group)	

110771

1P4145 PRESSURE CONTROL VALVE GROUP
Serial No. 46A31255 to 46A31259 and 46A31262 to 46A32376 inclusive
Part of Transmission Hydraulic Control shown on Page 68D

9S4380 PRESSURE CONTROL GROUP
Serial No. 46A24433 to 46A31254, 46A31260 and 46A31261 inclusive
Part of Transmission Hydraulic Control shown on Page 69. Only separate parts serviced. When compiete Group is required order 6P3071 shown on Page 75B

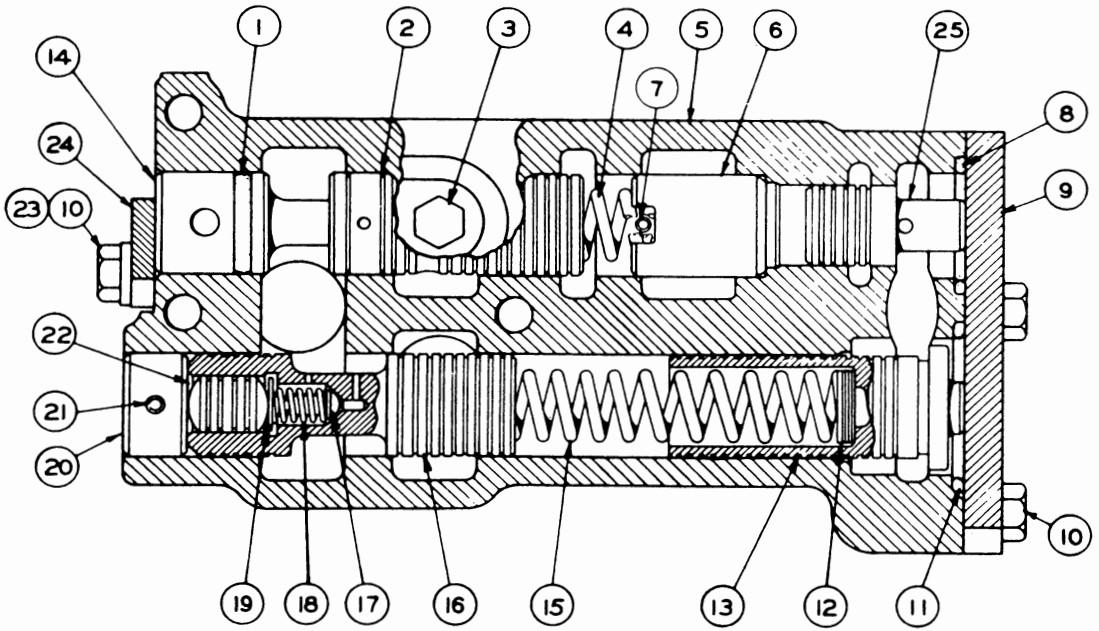

	REF. NO.	PART NUMBER	DESCRIPTION	QTY
	1	8M4445	SEAL	1
	2	2M7056	SPOOL	1
	3	5M6214	PLUG	2
	4	4M5923	SPRING	1
	5	Not Serv	BODY ASSEM.	1
C	6	1P8617	RETAINER	1
	7	6H2948	DOWEL	2
	8	8M5254	SEAL	1
	9	8S9192	COVER	1
	10	S1594	BOLT	6
	11	8M4992	SEAL	1
	12	5M9622	SPACER (.062" Thick)	1
		5M9623	SPACER (.036" Thick)	2
		5M9624	SPACER (.010" Thick)	4
	13	9S4394	PISTON	1
	14	7M8557	STOP	1
	15	2M3469	SPRING	1
	16	5S4437	SPOOL ASSEM.	1
	17	1S2121	PLUNGER	1
	18	4M2381	SPRING	1
	19	8M1013	RETAINER	1
		3D8317	RING	1
			(Parts of 5S4437 Assem.)	
	20	2M7062	STOP	1
	21	1J5799	PIN	1
	22	2M7041	SLUG	1
	23	5M2894	WASHER	2
	24	8M5172	PLATE	1
	25	8S9195	VALVE	1

C INDICATES CHANGE

149361

6P3071 PRESSURE CONTROL VALVE GROUP
Provides Field Replacement for 9S4380

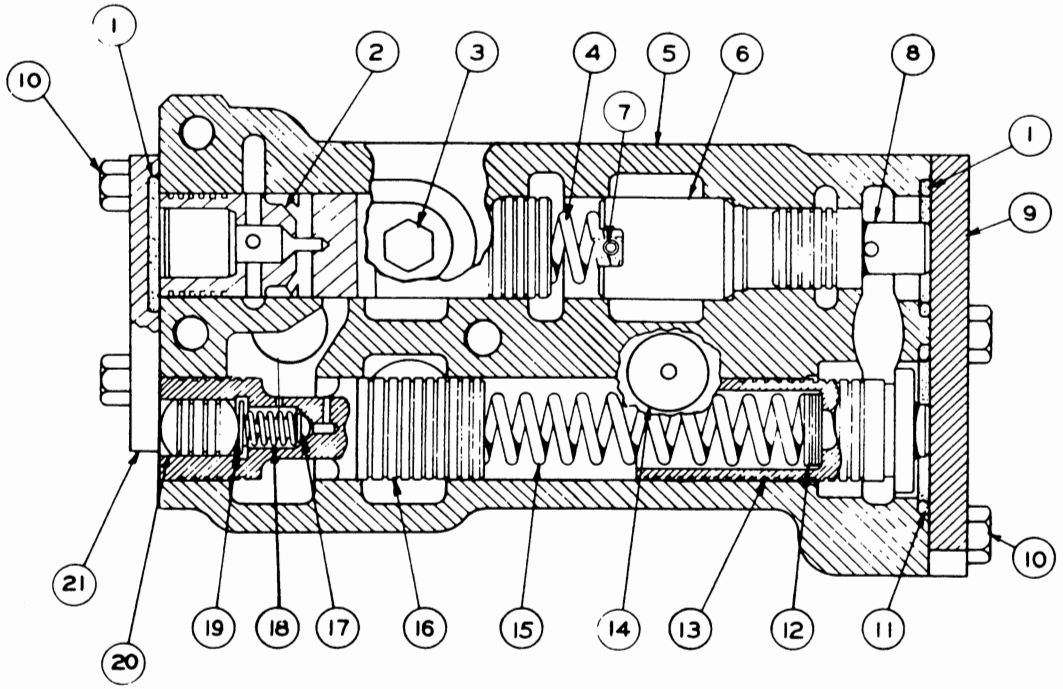

REF. NO.	PART NUMBER	DESCRIPTION	QTY
1	8M5254	SEAL	2
2	6P4606	SPOOL	1
3	5M6214	PLUG	2
4	4M5923	SPRING	1
5	6P3072	BODY	1
6	1P8617	RETAINER	1
7	6H2948	DOWEL	2
8	8S9195	VALVE	1
9	8S9192	COVER	1
10	S1594	BOLT	7
11	8M4992	SEAL	1
12	5M9622	SPACER-----.062 in. (1.58 mm)thick	1
	5M9623	SPACER----.036 in. (.914 mm) thick	2
	5M9624	SPACER----.010 in. (.254 mm) thick	4
13	9S2802	PISTON	1
14	6P3073	PLATE-------(identification)	1
	7B3028	SCREW	1
15	2M3469	SPRING	1
16	5S4437	SPOOL ASSEM. (Includes)	1
17	1S2121	PLUNGER	1
18	4M2381	SPRING	1
19	8M1013	RETAINER	1
	3D8317	RING	1
20	2M7041	SLUG	1
21	1P3593	COVER	1
	GMG00573	FORM-(Installing New Selector Valve Groups & Pressure Control Groups)	

C INDICATES CHANGE 151034

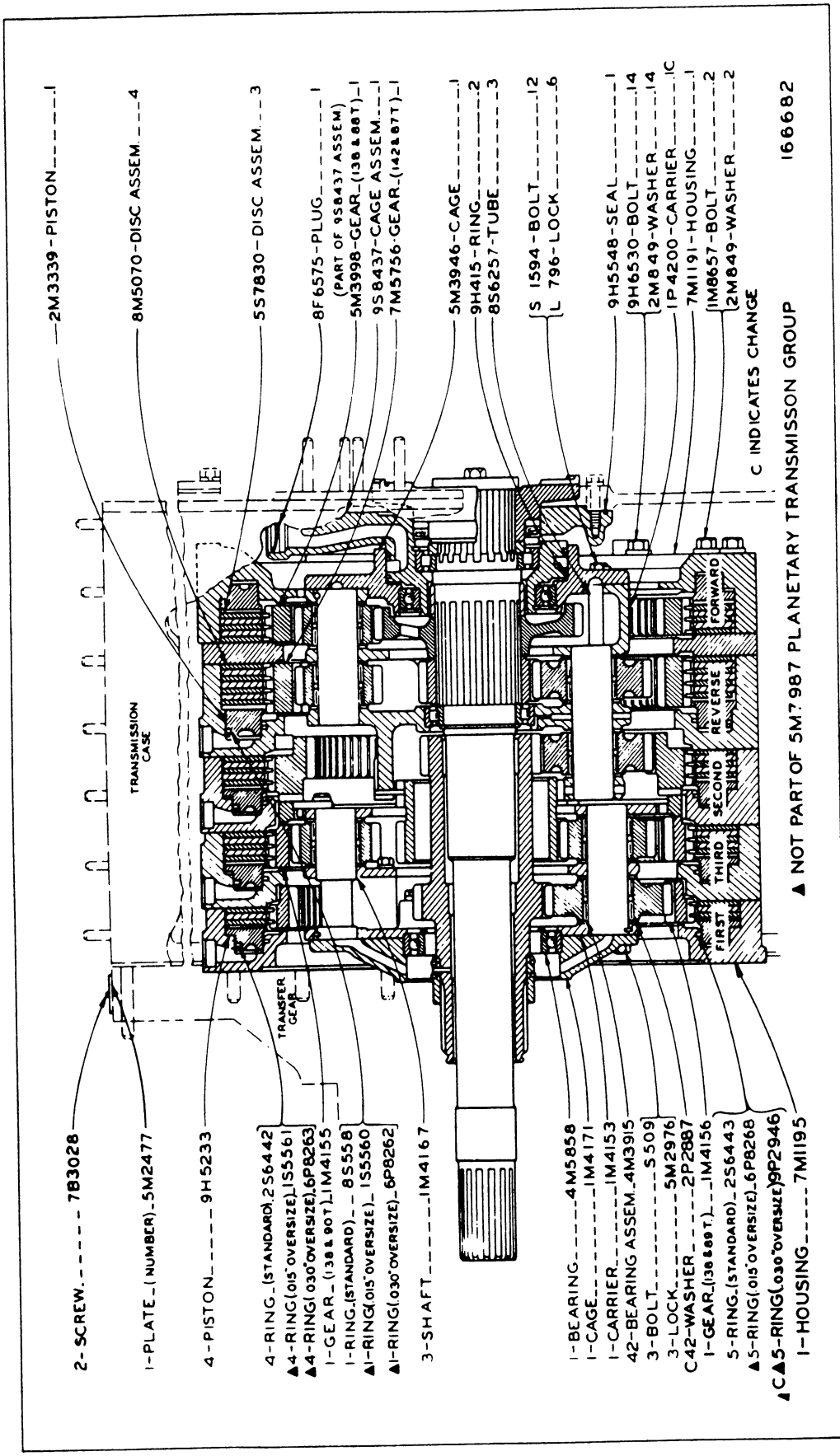

PLANETARY TRANSMISSION (5M7987 N/S)—Part 1
Test No. 28138—Up

Part of 2S7901 and 3P4004 Transmission Arrangements shown on Pages 66B, 66C and 66D

PLANETARY TRANSMISSION (5M7987 N/S)—Part 2
Effective with Test No. 28138
Part of 2S7901 and 3P4004 Transmission Arrangements shown on Pages 66B, 66C and 66D

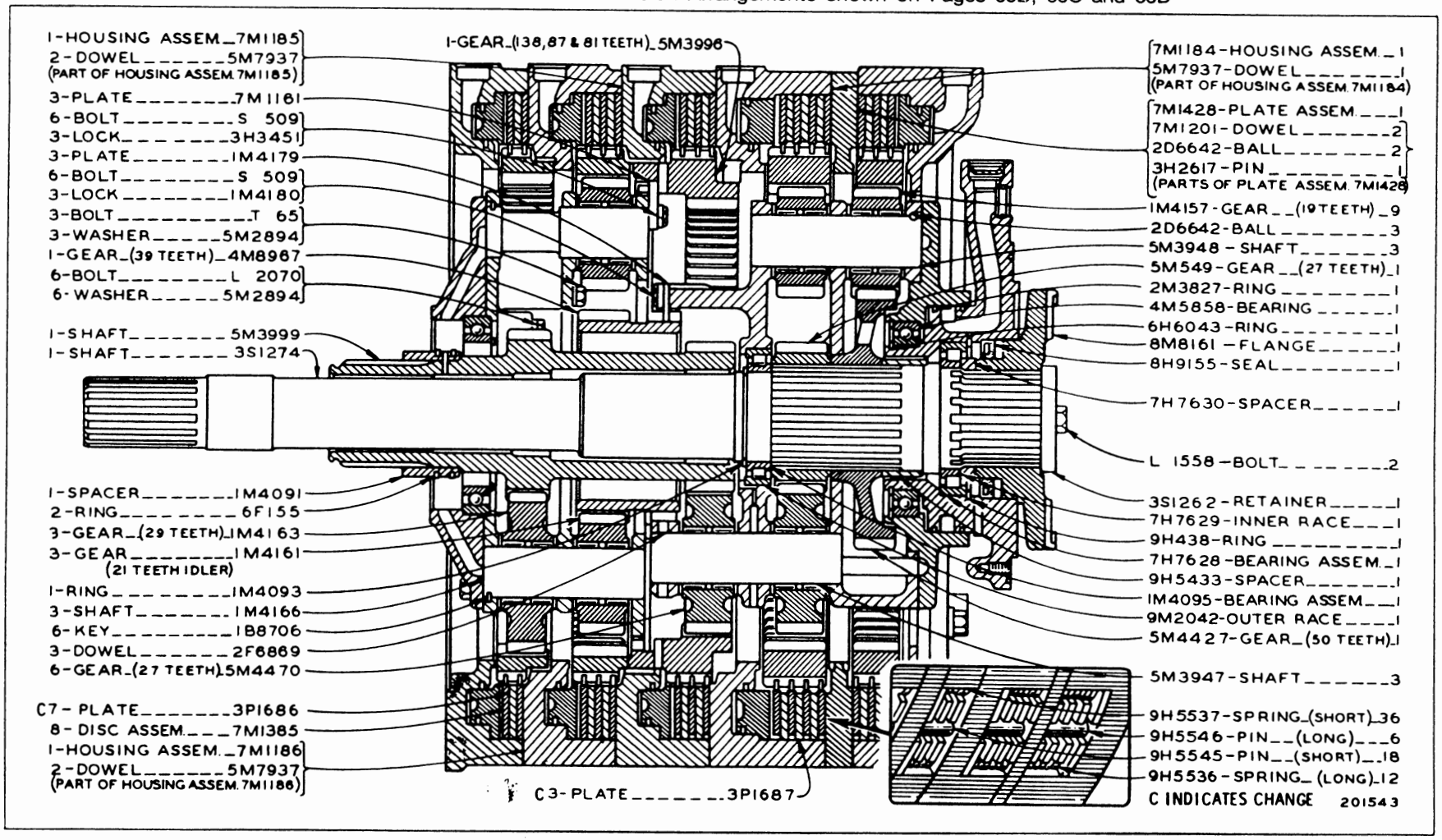

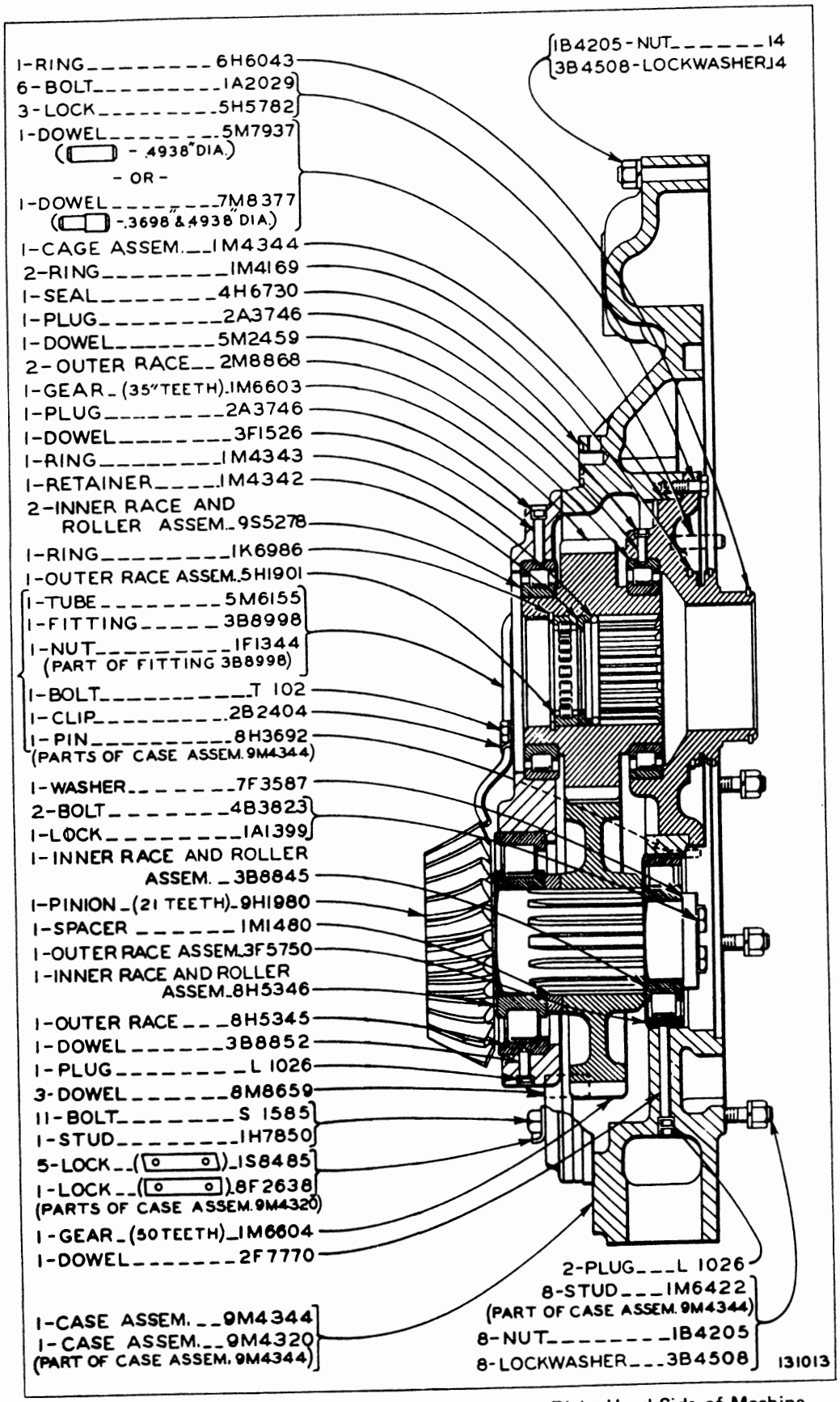

TRANSFER GEARS (5M7916 N/S)—As Viewed from Right Hand Side of Machine Serial No. 46A24433 to 46A25792 and 46A25794 inclusive and Test No. 28138 to 31276 inclusive. Part of 2S7901 Transmission Arrangement shown on Page 67

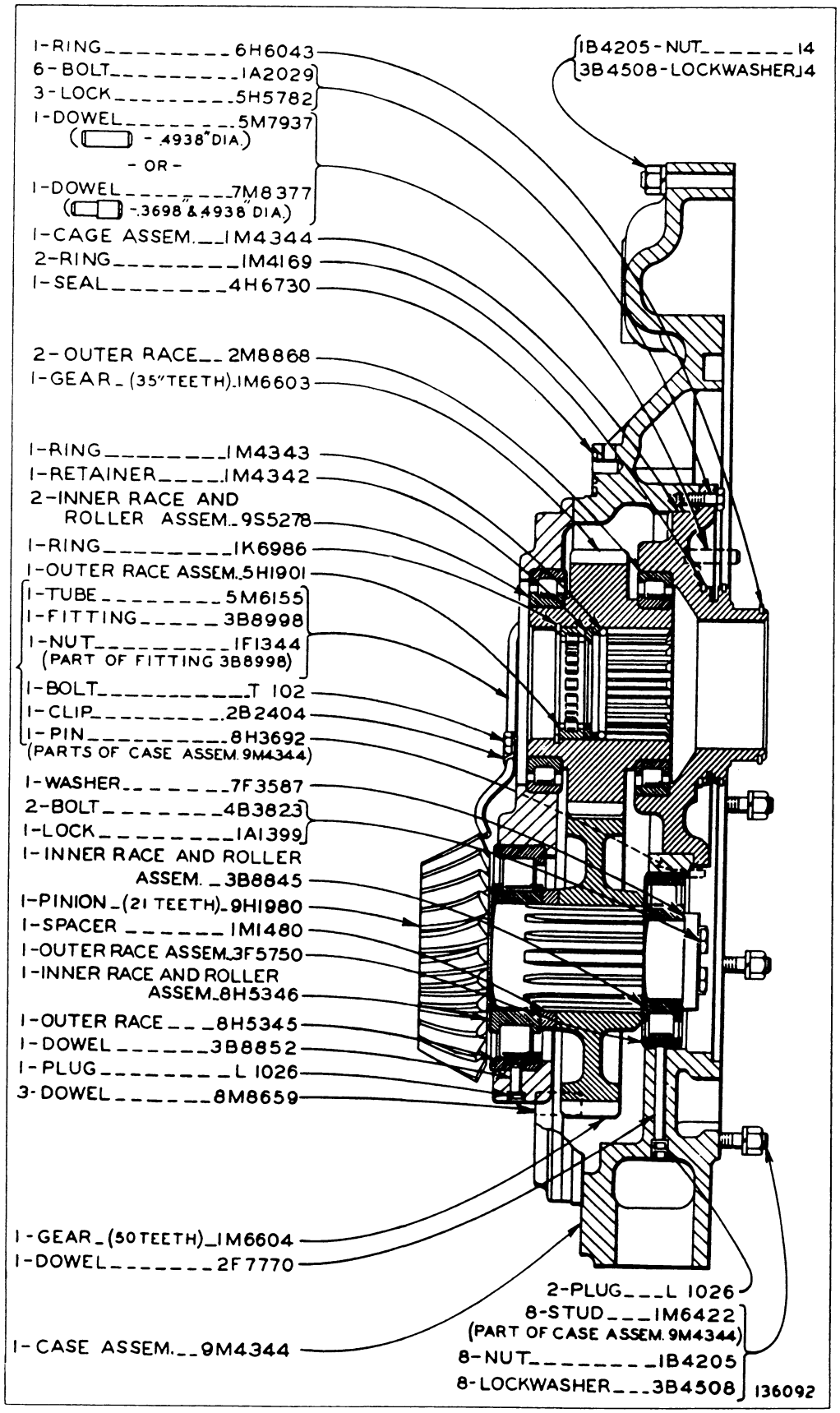

TRANSFER GEARS (5M7916 N/S)—As Viewed from Right Hand Side of Machine
Serial No. 46A25793 and 46A25795—Up and Test No. 31277—Up
Part of 2S7901 and 3P4004 Transmission Arrangements shown on
Pages 66B, 66C and 66D

TRANSMISSION AND STEERING CLUTCH LUBRICATION SYSTEM (2S8400 N/S)—Side View—Part 1 of 3

Serial No. 46A24433 to 46A24705 inclusive

See Page 28 for Gasket Kit

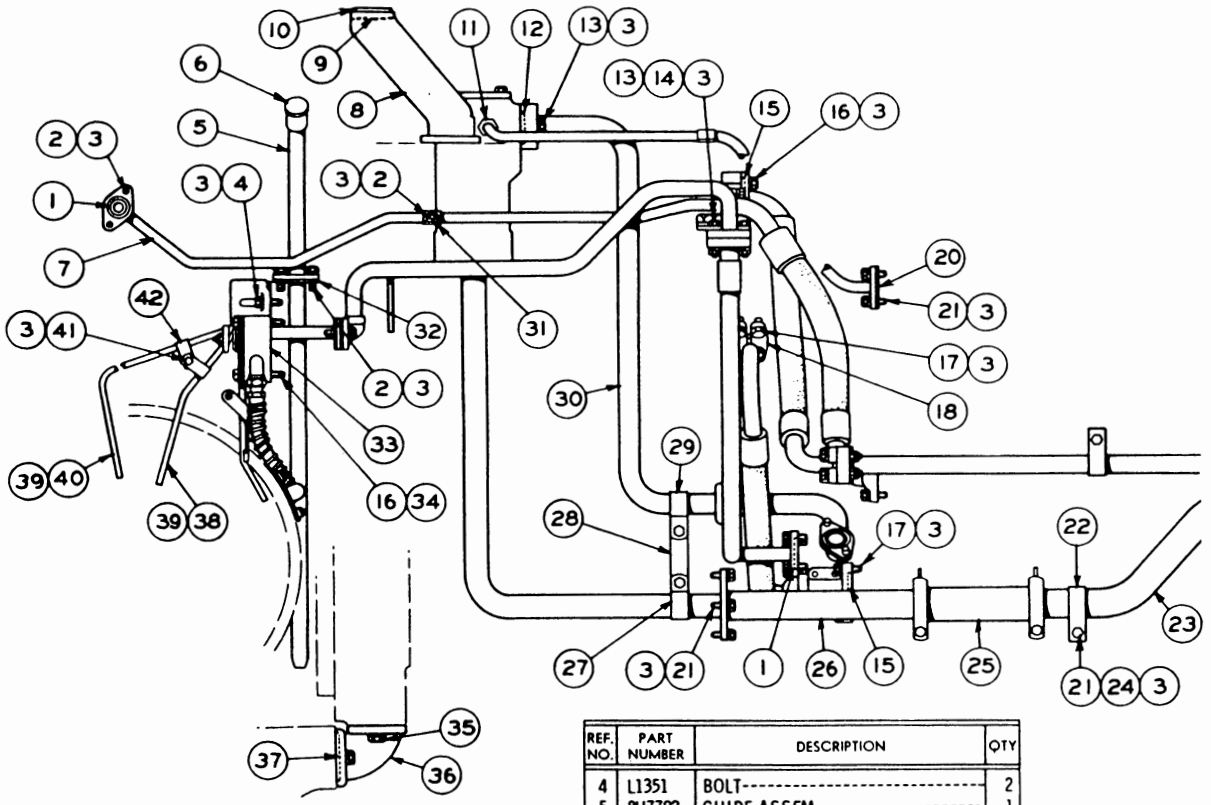

REF. NO.	PART NUMBER	DESCRIPTION	QTY
1	8M4988	SEAL	3
2	S1594	BOLT	5
3	3B4506	LOCKWASHER	31

REF. NO.	PART NUMBER	DESCRIPTION	QTY
4	L1351	BOLT	2
5	8H7702	GUIDE ASSEM.	1
6	7M381	PLUNGER ASSEM.	1
7	2S8316	TUBE ASSEM.	1
8	1S2254	SPOUT	1
9	L1124	GASKET	1
10	5M902	PLUG	1

REF. NO.	PART NUMBER	DESCRIPTION	QTY
11	1L909	FITTING	1
	6H3137	NUT	1
	6H3136	SLEEVE	1
		(Part of 1L909 Fitting)	
12	8M5010	SEAL	1
13	S1571	BOLT	4
14	1D4717	NUT	2
15	8M4987	SEAL	3
16	L1143	BOLT	4
17	S1588	BOLT	6
18	1H3305	FLANGE	2
19	7H7055	CLIP	2
20	4F5640	GASKET	1
21	1A2029	BOLT	7
22	8S9798	CLAMP	1
23	7S7241	TUBE ASSEM.	1
24	1A4784	WASHER	1
25	7S741	JOINT ASSEM.	1
26	7S6225	TUBE ASSEM.	1
27	2S2053	CLIP	1
28	7S7386	PLATE	1
29	1L8181	CLIP	1
30	7S7383	TUBE ASSEM.	1
31	8F8513	CLIP	1
32	9F5940	GASKET	1
33	7S7370	BLOCK ASSEM.	1
34	3S8744	LOCK	1
35	7B3235	BOLT	4
	3B4508	LOCKWASHER	4
36	1M2743	ELBOW	1
37	8M4989	SEAL	2
38	1M2675	TUBE—(Right Hand)	1
39	3B8996	FITTING	2
	8F8997	NUT	2
		(1 in each 3B8996 Fitting)	
40	1M2676	TUBE—(Left Hand)	1
41	T102	BOLT	3

110778

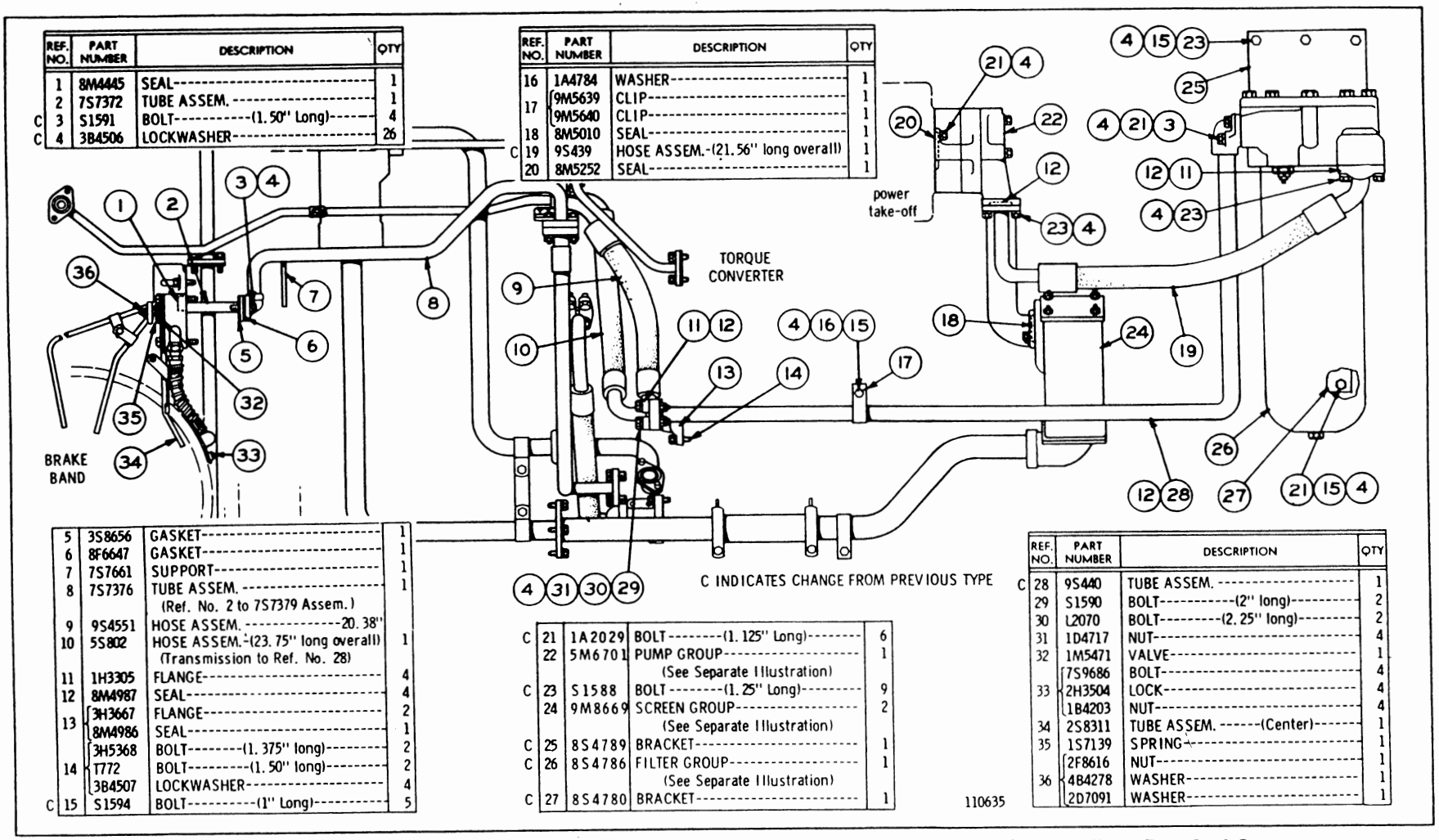

REF. NO.	PART NUMBER	DESCRIPTION	QTY
1	8M4445	SEAL	1
2	7S7372	TUBE ASSEM.	1
C 3	S1591	BOLT-(1.50" Long)	4
C 4	3B4506	LOCKWASHER	26

REF. NO.	PART NUMBER	DESCRIPTION	QTY
16	1A4784	WASHER	1
17	9M5639	CLIP	1
	9M5640	CLIP	1
18	8M5010	SEAL	1
C 19	9S439	HOSE ASSEM.-(21.56" long overall)	1
20	8M5252	SEAL	1

5	3S8656	GASKET	1
6	8F6647	GASKET	1
7	7S7661	SUPPORT	1
8	7S7376	TUBE ASSEM. (Ref. No. 2 to 7S7379 Assem.)	1
9	9S4551	HOSE ASSEM.-20.38"	
10	5S802	HOSE ASSEM.-(23.75" long overall) (Transmission to Ref. No. 28)	1
11	1H3305	FLANGE	4
12	8M4987	SEAL	4
13	3H3667	FLANGE	2
	8M4986	SEAL	1
14	3H5368	BOLT-(1.375" long)	2
	T772	BOLT-(1.50" long)	2
	3B4507	LOCKWASHER	4
C 15	S1594	BOLT-(1" Long)	5

C 21	1A2029	BOLT-(1.125" Long)	6
22	5M6701	PUMP GROUP (See Separate Illustration)	1
C 23	S1588	BOLT-(1.25" Long)	9
24	9M8669	SCREEN GROUP (See Separate Illustration)	2
C 25	8S4789	BRACKET	1
C 26	8S4786	FILTER GROUP (See Separate Illustration)	1
C 27	8S4780	BRACKET	1

REF. NO.	PART NUMBER	DESCRIPTION	QTY
C 28	9S440	TUBE ASSEM.	1
29	S1590	BOLT-(2" long)	2
30	L2070	BOLT-(2.25" long)	2
31	1D4717	NUT	4
32	1M5471	VALVE	1
	7S9686	BOLT	4
33	2H3504	LOCK	4
	1B4203	NUT	4
34	2S8311	TUBE ASSEM.-(Center)	1
35	1S7139	SPRING	1
	2F8616	NUT	1
36	4B4278	WASHER	1
	2D7091	WASHER	1

TRANSMISSION AND STEERING CLUTCH LUBRICATION SYSTEM (2S8400 N/S)—Side View—Part 2 of 3
Serial No. 46A24433 to 46A24705 inclusive
5M6701 Pump, 8S4786 Filter and 9M8669 Screen parts are shown on Pages 85 and 86

TRANSMISSION AND STEERING CLUTCH LUBRICATION SYSTEM (2S8400 N/S)—Rear View—Part 3 of 3

Serial No. 46A24433 to 46A24705 inclusive

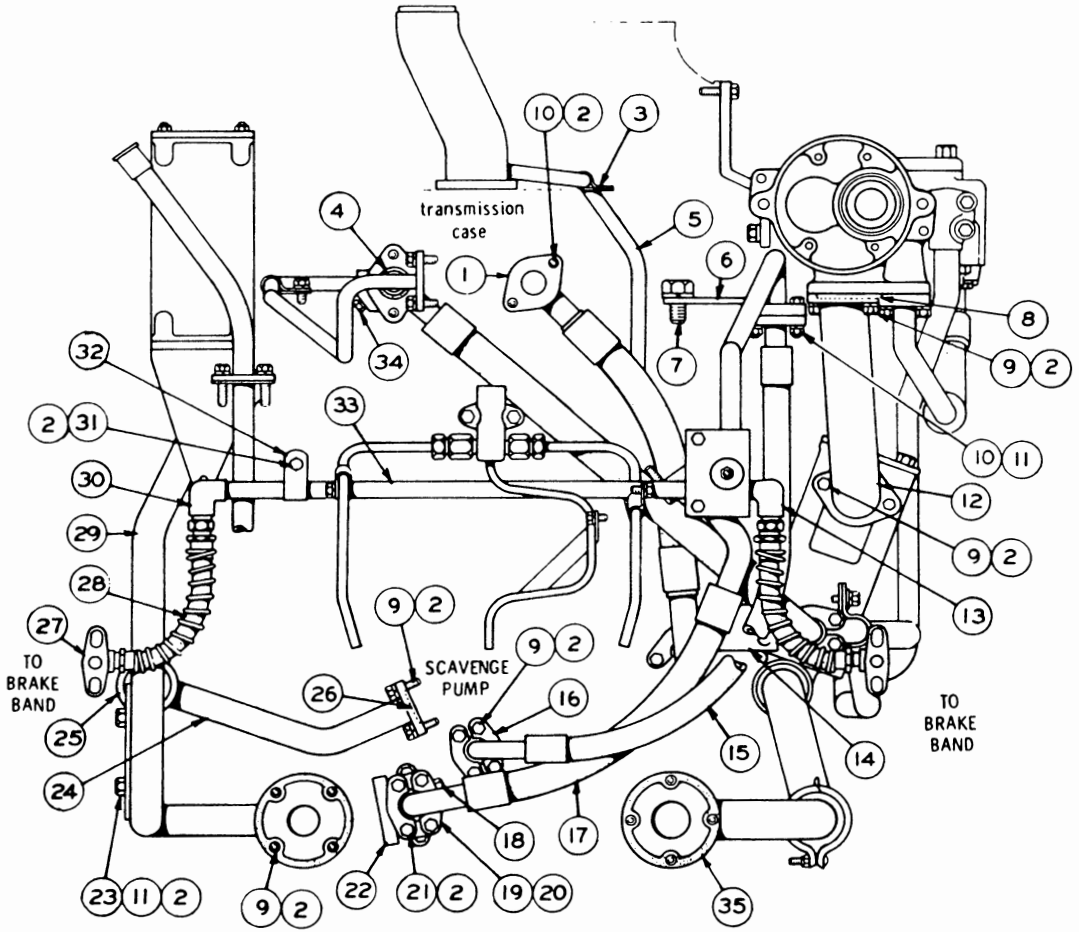

	REF. NO.	PART NUMBER	DESCRIPTION	QTY
	1	9S4569	FLANGE	1
	2	3B4506	LOCKWASHER	25
	3	4B9302	CLIP	1
	4	8M4986	SEAL	1
	5	3S8752	TUBE ASSEM. -(29.87" Long Overall)-	1
	6	7S7378	PLATE	1
	7	7H2069	BOLT	1
		3B4512	LOCKWASHER	1
	8	8M5010	SEAL	1
	9	1A2029	BOLT	14
	10	S1591	BOLT	4
	11	1D4717	NUT	4
	12	4S8015	ELBOW	1
	13	7S7369	FITTING	1
	14	4S7997	SUPPORT	1
	15	7S7379	HOSE ASSEM. -(28.38" Long Overall)-	1
	16	2K190	FLANGE	4
	17	5S808	HOSE ASSEM. -(21.69" Long Overall)-	1
	18	2H8829	PLUG	1
		6F7062	WASHER	1
	19	1H3305	FLANGE	2
	20	8M4987	SEAL	2
	21	S1588	BOLT	4
	22	7S7906	ADAPTER	1
	23	S1594	BOLT	2
		4B4278	WASHER	2
	24	7S7380	TUBE ASSEM. -(17.85" Long Overall)-	1
	25	4S503	JOINT ASSEM.	1
C		2P9543	SEAL	2
	26	8M5254	SEAL	1
	27	7S7367	FITTING	2
	28	7S7368	HOSE ASSEM. -(10.62" Long Overall)-	2
	29	7S7387	TUBE ASSEM. -(47.50" Long Overall)-	1
	30	7S7507	FITTING	1
	31	T102	BOLT	1
	32	1S3618	CLIP	1
	33	7S7375	TUBE ----------(20.75" Long)------	1
	34	5M6214	PLUG	1
C	35	9S8848	GASKET	2

C INDICATES CHANGE

140110

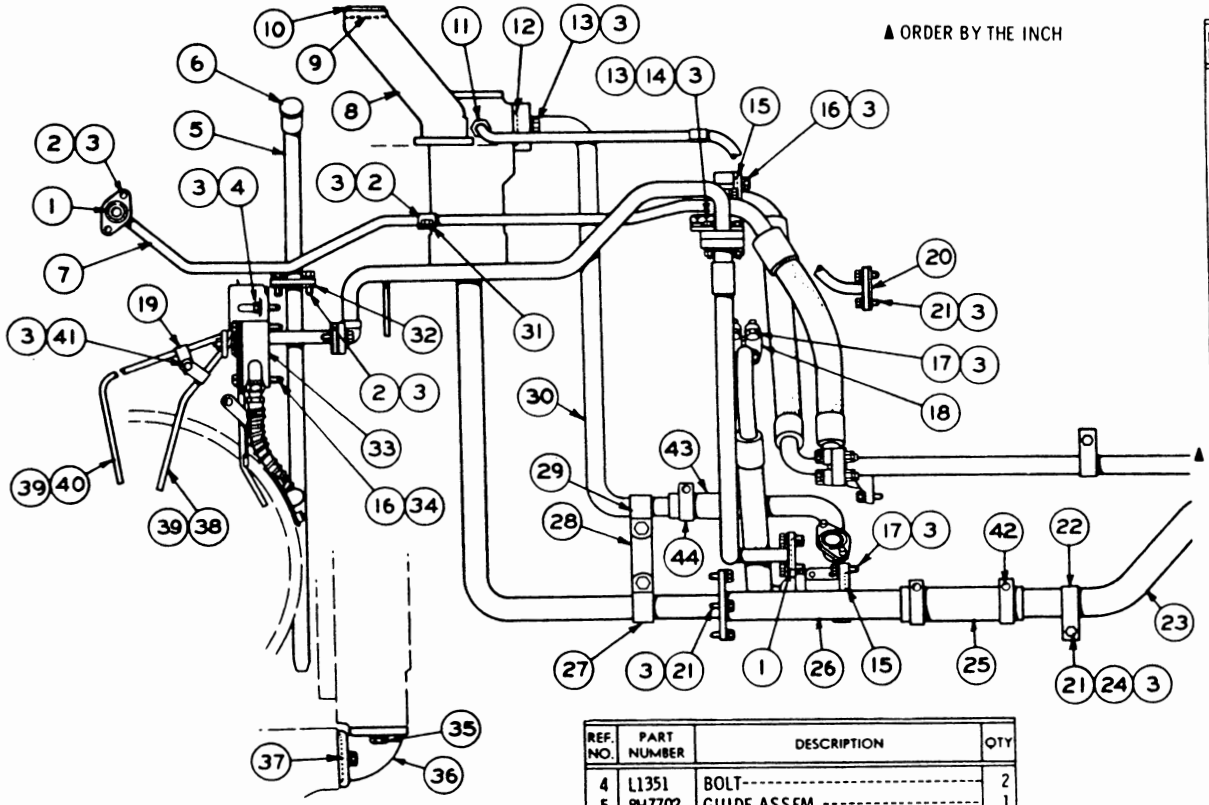

REF. NO.	PART NUMBER	DESCRIPTION	QTY
1	8M4988	SEAL	3
2	S1594	BOLT	5
3	3B4506	LOCKWASHER	31

REF. NO.	PART NUMBER	DESCRIPTION	QTY
4	L1351	BOLT	2
5	8H7702	GUIDE ASSEM.	1
6	7M381	PLUNGER ASSEM.	1
7	2S8316	TUBE ASSEM.	1
8	1S2254	SPOUT	1
9	L1124	GASKET	1
10	5M902	PLUG	1

REF. NO.	PART NUMBER	DESCRIPTION	QTY
11	1L909	FITTING	1
	6H3137	NUT	1
	6H3136	SLEEVE	1
		(Part of 1L909 Fitting)	
12	8M5010	SEAL	1
13	S1571	BOLT	4
14	1D4717	NUT	2
15	8M4987	SEAL	3
16	L1143	BOLT	4
17	S1588	BOLT	6
18	1H3305	FLANGE	2
19	7H7055	CLIP	2
20	4F5640	GASKET	1
21	1A2029	BOLT	7
22	8S9798	CLAMP	1
23	1P9760	TUBE ASSEM.	1
24	1A4784	WASHER	1
25	2S6684	HOSE	6"
26	1P9757	TUBE ASSEM.	1
27	2S2053	CLIP	1
28	7S7386	PLATE	1
29	1L8181	CLIP	1
30	1P9759	TUBE ASSEM.	1
31	8F8513	CLIP	1
32	9F5940	GASKET	1
33	7S7370	BLOCK ASSEM.	1
34	3S8744	LOCK	1
35	7B3235	BOLT	4
	3B4508	LOCKWASHER	4
36	1M2743	ELBOW	1
37	8M4989	SEAL	2
38	1M2675	TUBE (Right Hand)	1
39	3B8996	FITTING	2
	8F8997	NUT	1
40	1M2676	TUBE (L. H.)	1
41	T102	BOLT	3
42	1P6261	CLAMP	2
43	1P4566	HOSE	1
44	1P4826	CLAMP	2

111169

TRANSMISSION AND STEERING CLUTCH LUBRICATION SYSTEM (2S8400 N/S)—Side View—Part 1 of 3
Serial No. 46A24706 to 46A27643 inclusive
See Page 28 for Gasket Kit

TRANSMISSION AND STEERING CLUTCH LUBRICATION SYSTEM (2S8400 N/S)- Side View—Part 2 of 3

Serial No. 46A24706 to 46A27643 inclusive

5M6701 Pump, 8S4786 Filter and 9M8669 Screen parts are shown on Pages 85 and 86

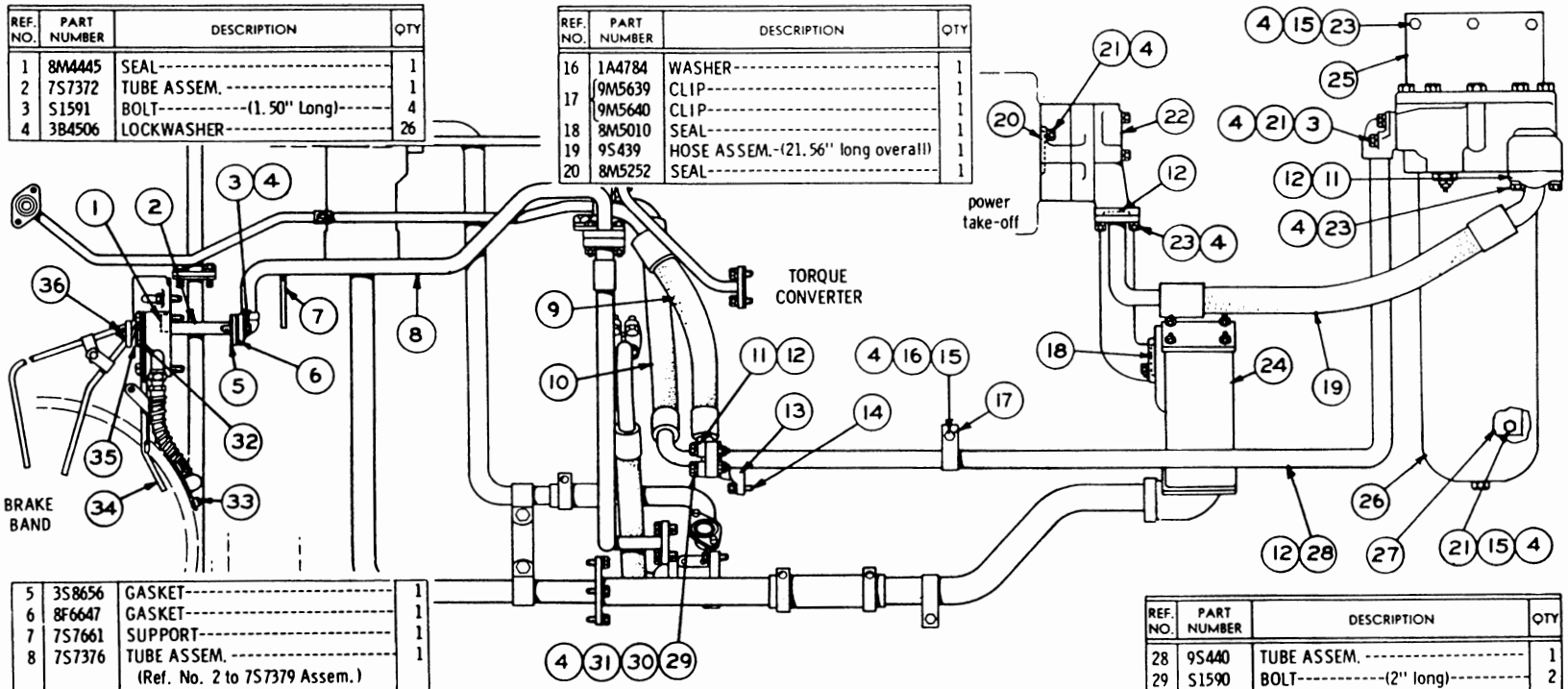

REF. NO.	PART NUMBER	DESCRIPTION	QTY
1	8M4445	SEAL	1
2	7S7372	TUBE ASSEM.	1
3	S1591	BOLT-----(1.50" Long)-----	4
4	3B4506	LOCKWASHER	26

REF. NO.	PART NUMBER	DESCRIPTION	QTY
16	1A4784	WASHER	1
17	9M5639	CLIP	1
	9M5640	CLIP	1
18	8M5010	SEAL	1
19	9S439	HOSE ASSEM.-(21.56" long overall)	1
20	8M5252	SEAL	1

5	3S8656	GASKET	1
6	8F6647	GASKET	1
7	7S7661	SUPPORT	1
8	7S7376	TUBE ASSEM. (Ref. No. 2 to 7S7379 Assem.)	1
9	9S4551	HOSE ASSEM.-----20.38"	
10	5S802	HOSE ASSEM.-(23.75" long overall) (Transmission to Ref. No. 28)	1
11	1H3305	FLANGE	4
12	8M4987	SEAL	4
13	3H3667	FLANGE	2
	8M4986	SEAL	1
14	3H5368	BOLT-----(1.375" long)-----	2
	T772	BOLT-----(1.50" long)-----	2
	3B4507	LOCKWASHER	4
15	S1594	BOLT-----(1" Long)-----	5

21	1A2029	BOLT-----(1.125" Long)-----	6
22	5M6701	PUMP GROUP (See Separate Illustration)	1
23	S1588	BOLT-----(1.25" Long)-----	9
24	9M8669	SCREEN GROUP (See Separate Illustration)	2
25	8S4789	BRACKET	1
26	8S4786	FILTER GROUP (See Separate Illustration)	1
27	8S4780	BRACKET	1

REF. NO.	PART NUMBER	DESCRIPTION	QTY
28	9S440	TUBE ASSEM.	1
29	S1590	BOLT-----(2" long)-----	2
30	L2070	BOLT-----(2.25" long)-----	2
31	1D4717	NUT	4
32	1M5471	VALVE	1
33	7S9686	BOLT	4
	2H3504	LOCK	4
	1B4203	NUT	4
34	2S8311	TUBE ASSEM. ------(Center)------	1
35	1S7139	SPRING	1
36	2F8616	NUT	1
	4B4278	WASHER	1
	2D7091	WASHER	1

111170

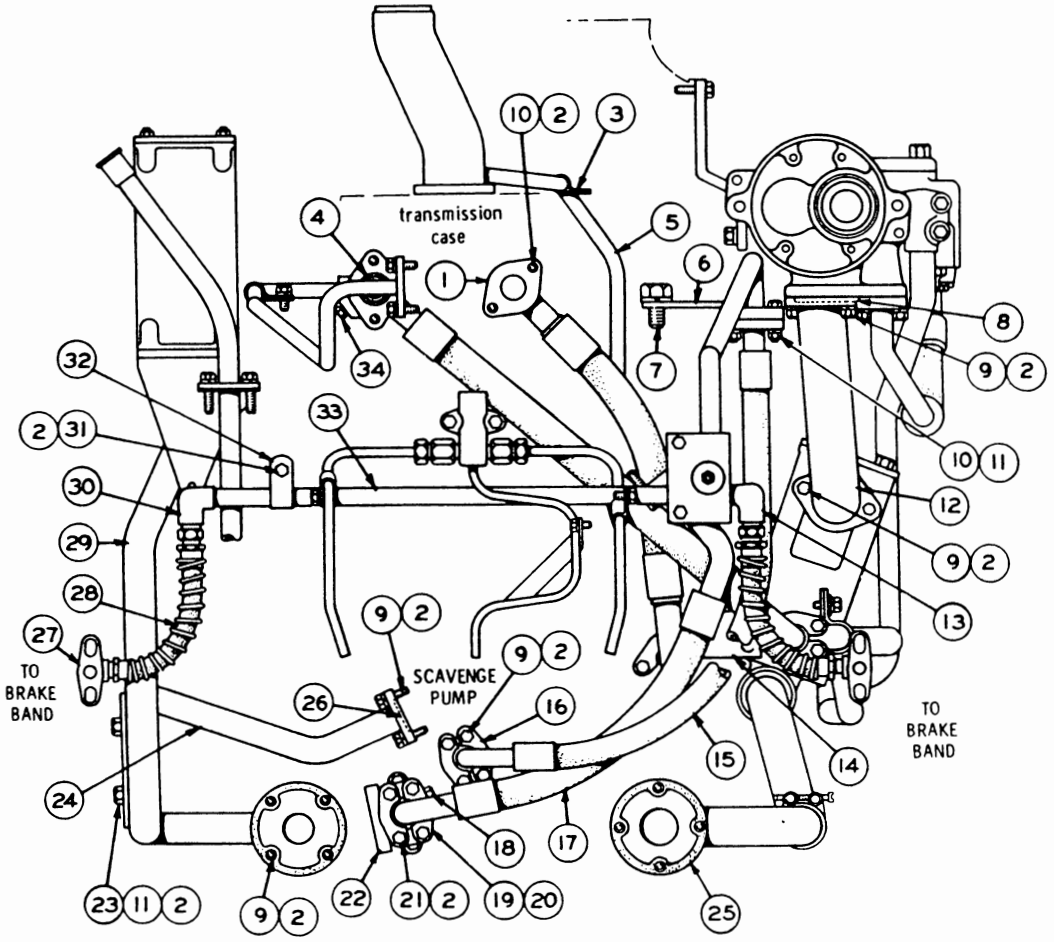

REF. NO.	PART NUMBER	DESCRIPTION	QTY
1	9S4569	FLANGE	1
2	3B4506	LOCKWASHER	25
3	4B9302	CLIP	1
4	8M4986	SEAL	1
5	3S8752	TUBE ASSEM. -(29. 87" long overall) (Torque Converter to Spout)	1
6	7S7378	PLATE	1
7	7H2069	BOLT	1
	3B4512	LOCKWASHER	1
8	8M5010	SEAL	1
9	1A2029	BOLT	14
10	S1591	BOLT	4
11	1D4717	NUT	4
12	4S8015	ELBOW	1
13	7S7369	FITTING	1
14	4S7997	SUPPORT	1
15	7S7379	HOSE ASSEM.-(28. 38" long overall)	1
16	2K190	FLANGE	4
17	5S808	HOSE ASSEM.-(21. 69" long overall) (Scavenge Pump to Transmission Lubrication Valve)	1
18	2H8829	PLUG	1
	6F7062	WASHER	1
19	1H3305	FLANGE	2
20	8M4987	SEAL	2
21	S1588	BOLT	4
22	7S7906	ADAPTER	1
23	S1594	BOLT	2
	4B4278	WASHER	2
24	1P9763	TUBE ASSEM.	1
25	9S8848	GASKET	2
26	8M5254	SEAL	1
27	7S7367	FITTING	2
28	7S7368	HOSE ASSEM.-(10. 62" long overall)	2
29	7S7387	TUBE ASSEM.-(47. 50" long overall)	1
30	7S7507	FITTING	1
31	T102	BOLT	1
32	1S3618	CLIP	1
33	7S7375	TUBE--------(20. 75" long)	1
34	5M6214	PLUG	1

TRANSMISSION AND STEERING CLUTCH LUBRICATION SYSTEM (2S8400 N/S) Rear View—Part 3 of 3
Serial No. 46A24706 to 46A27643 inclusive

TRANSMISSION AND STEERING CLUTCH LUBRICATION SYSTEM (2S8400 N/S) Side View—Part 1 of 3

Serial No. 46A27644 to 46A28224 inclusive

See Page 28 for Gasket Kit

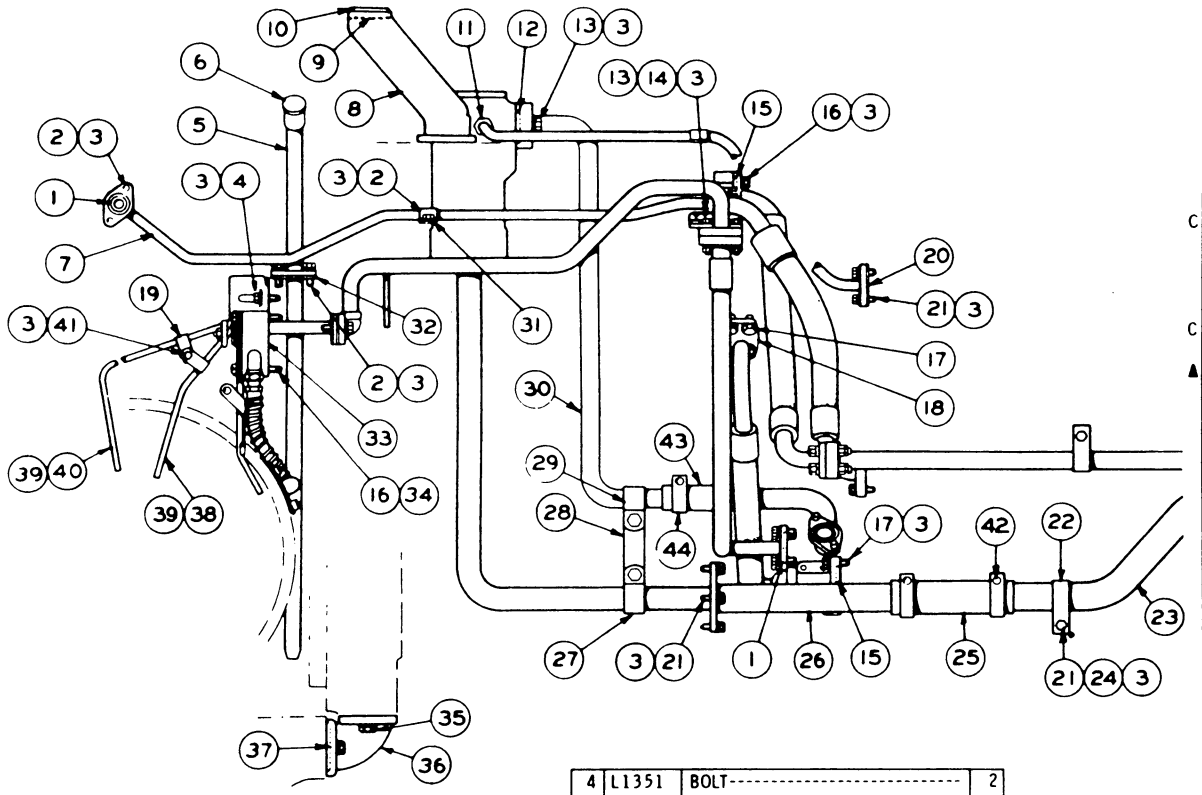

REF. NO.	PART NUMBER	DESCRIPTION	QTY
1	8M4988	SEAL	3
2	S1594	BOLT	5
C 3	3B4506	LOCKWASHER	27
4	L1351	BOLT	2
5	8H7702	GUIDE ASSEM.	1
6	7M381	PLUNGER ASSEM.	1
7	2S8316	TUBE ASSEM.	1
8	1S2254	SPOUT	1
9	L1124	GASKET	1
10	5M902	PLUG	1
	1L909	FITTING	1
11	6H3137	NUT	1
	6H3136	SLEEVE	1
12	8M5010	SEAL	1
13	S1571	BOLT	4
14	1D4717	NUT	2
15	8M4987	SEAL	3
16	L1143	BOLT	4
17	S1588	BOLT	6
C 18	1P4577	FLANGE	2
19	7H7055	CLIP	2
20	4F5640	GASKET	1
21	1A2029	BOLT	7
22	8S9798	CLAMP	1
C 23	1P9760	TUBE ASSEM.	1
24	1A4784	WASHER	1
▲ 25	2S6684	HOSE----------6 in.	
26	1P9757	TUBE ASSEM.	1
27	2S2053	CLIP	1
28	7S7386	PLATE	1
29	1L8181	CLIP	1
30	1P9759	TUBE ASSEM.	1
31	8F8513	CLIP	1
32	9F5940	GASKET	1
33	7S7370	BLOCK ASSEM.	1
34	3S8744	LOCK	1
35	7B3235	BOLT	4
	3B4508	LOCKWASHER	4
36	1M2743	ELBOW	1
37	8M4989	SEAL	2
38	1M2675	TUBE----------(R. H.)----------	1
39	3B8996	FITTING	2
	8F8997	NUT	1
40	1M2676	TUBE----------(L. H.)----------	1
41	T102	BOLT	3
42	1P6261	CLAMP	2
43	1P4566	HOSE	1
44	1P4826	CLAMP	2

▲ ORDER BY THE INCH
C INDICATES CHANGE

144990

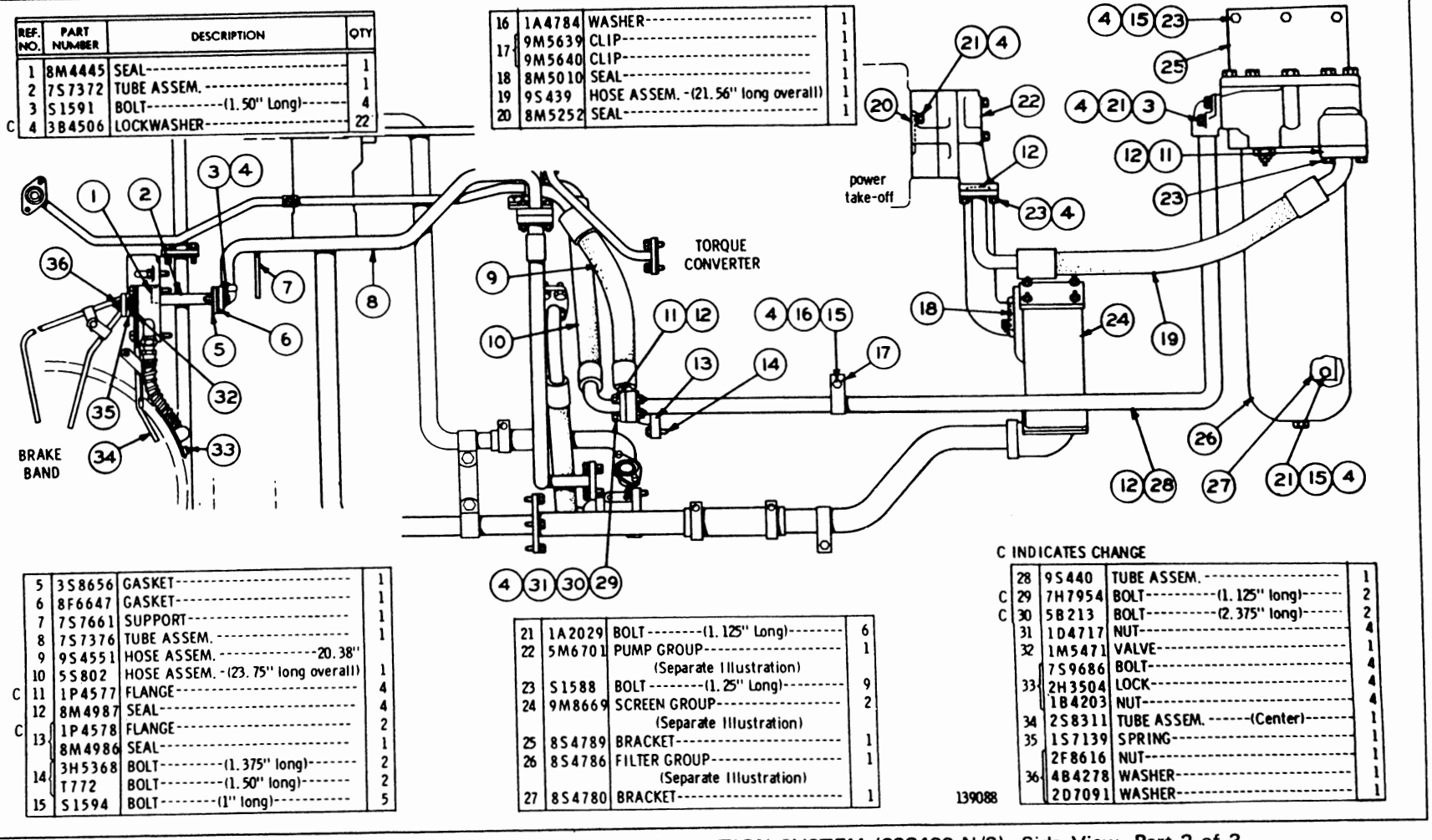

REF. NO.	PART NUMBER	DESCRIPTION	QTY
1	8M4445	SEAL	1
2	7S7372	TUBE ASSEM.	1
3	S1591	BOLT-(1.50" Long)	4
C 4	3B4506	LOCKWASHER	22
5	3S8656	GASKET	1
6	8F6647	GASKET	1
7	7S7661	SUPPORT	1
8	7S7376	TUBE ASSEM.	1
9	9S4551	HOSE ASSEM.-20.38"	
10	5S802	HOSE ASSEM.-(23.75" long overall)	1
C 11	1P4577	FLANGE	4
12	8M4987	SEAL	4
C 13	1P4578	FLANGE	2
	8M4986	SEAL	1
14	3H5368	BOLT-(1.375" long)	2
	T772	BOLT-(1.50" long)	2
15	S1594	BOLT-(1" long)	5
16	1A4784	WASHER	1
17	9M5639	CLIP	1
	9M5640	CLIP	1
18	8M5010	SEAL	1
19	9S439	HOSE ASSEM.-(21.56" long overall)	1
20	8M5252	SEAL	1
21	1A2029	BOLT-(1.125" Long)	6
22	5M6701	PUMP GROUP (Separate Illustration)	1
23	S1588	BOLT-(1.25" Long)	9
24	9M8669	SCREEN GROUP (Separate Illustration)	2
25	8S4789	BRACKET	1
26	8S4786	FILTER GROUP (Separate Illustration)	1
27	8S4780	BRACKET	1

C INDICATES CHANGE

28	9S440	TUBE ASSEM.	1
C 29	7H7954	BOLT-(1.125" long)	2
C 30	5B213	BOLT-(2.375" long)	2
31	1D4717	NUT	4
32	1M5471	VALVE	1
33	7S9686	BOLT	4
	2H3504	LOCK	4
	1B4203	NUT	4
34	2S8311	TUBE ASSEM.-(Center)	1
35	1S7139	SPRING	1
36	2F8616	NUT	1
	4B4278	WASHER	1
	2D7091	WASHER	1

139088

TRANSMISSION AND STEERING CLUTCH LUBRICATION SYSTEM (2S8400 N/S)-Side View—Part 2 of 3
Serial No. 46A27644 to 46A28224 inclusive
5M6701 Pump, 8S4786 Filter and 9M8669 Screen parts are shown on Pages 85 and 86

TRANSMISSION AND STEERING CLUTCH LUBRICATION SYSTEM (2S8400 N/S) Rear View—Part 3 of 3

Serial No. 46A27644 to 46A28224 inclusive

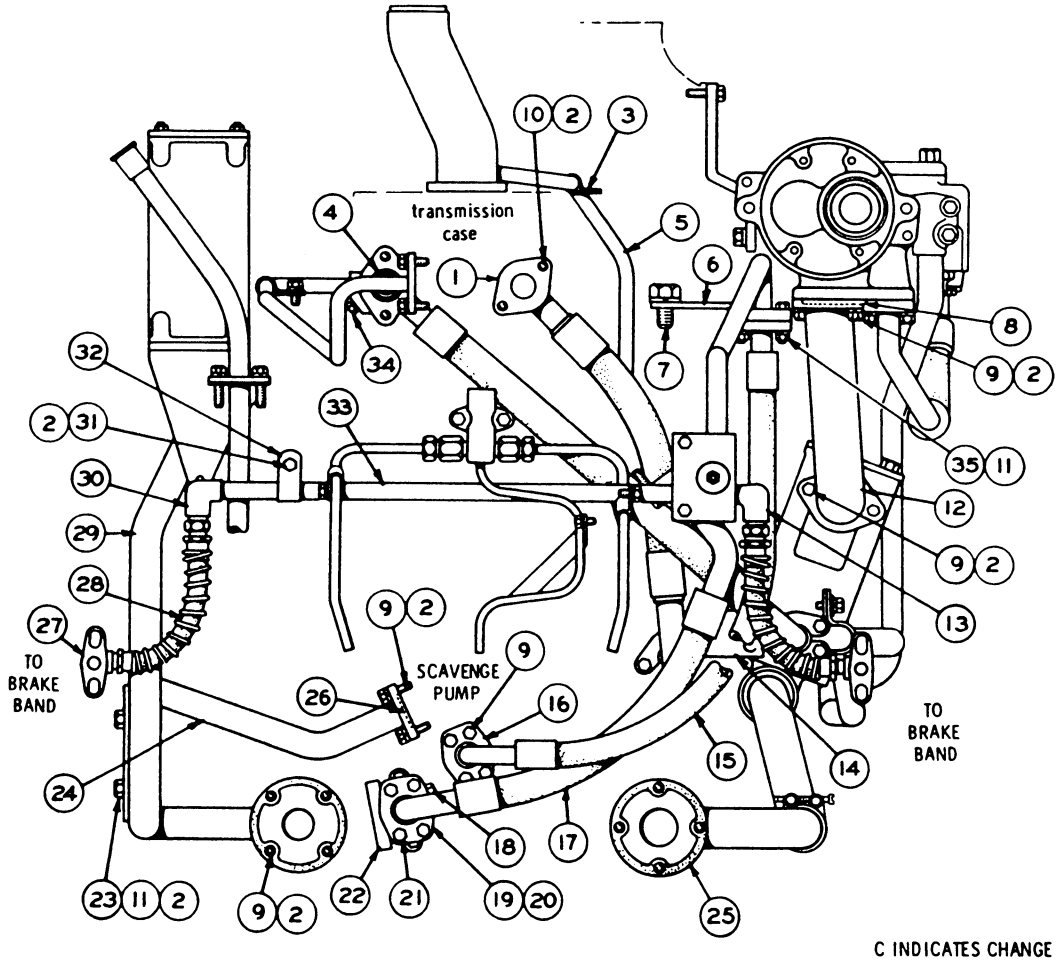

	REF. NO.	PART NUMBER	DESCRIPTION	QTY
	1	9S4569	FLANGE	1
C	2	3B4506	LOCKWASHER	17
	3	4B9302	CLIP	1
	4	8M4986	SEAL	1
	5	3S8752	TUBE ASSEM. -(29.87" long overall) (Torque Converter to Spout)	1
	6	7S7378	PLATE	1
	7	7H2069	BOLT	1
		3B4512	LOCKWASHER	1
	8	8M5010	SEAL	1
	9	1A2029	BOLT	14
C	10	S1591	BOLT	2
	11	1D4717	NUT	4
	12	4S8015	ELBOW	1
	13	7S7369	FITTING	1
	14	4S7997	SUPPORT	1
	15	7S7379	HOSE ASSEM. -(28.38" long overall)	1
C	16	1P4576	FLANGE	4
	17	5S808	HOSE ASSEM. -(21.69" long overall) (Scavenge Pump to Transmission Lubrication Valve)	1
	18	2H8829	PLUG	1
		6F7062	WASHER	1
C	19	1P4577	FLANGE	2
	20	8M4987	SEAL	2
	21	S1588	BOLT	4
	22	7S7906	ADAPTER	1
	23	S1594	BOLT	2
		4B4278	WASHER	2
	24	1P9763	TUBE ASSEM.	1
	25	9S8848	GASKET	2
	26	8M5254	SEAL	1
	27	7S7367	FITTING	2
	28	7S7368	HOSE ASSEM. -(10.62" long overall)	2
	29	7S7387	TUBE ASSEM. -(47.50" long overall)	1
	30	7S7507	FITTING	1
	31	T102	BOLT	1
	32	1S3618	CLIP	1
	33	7S7375	TUBE ---------(20.75" long)	1
	34	5M6214	PLUG	1
C	35	2A4639	BOLT	2

C INDICATES CHANGE

139089

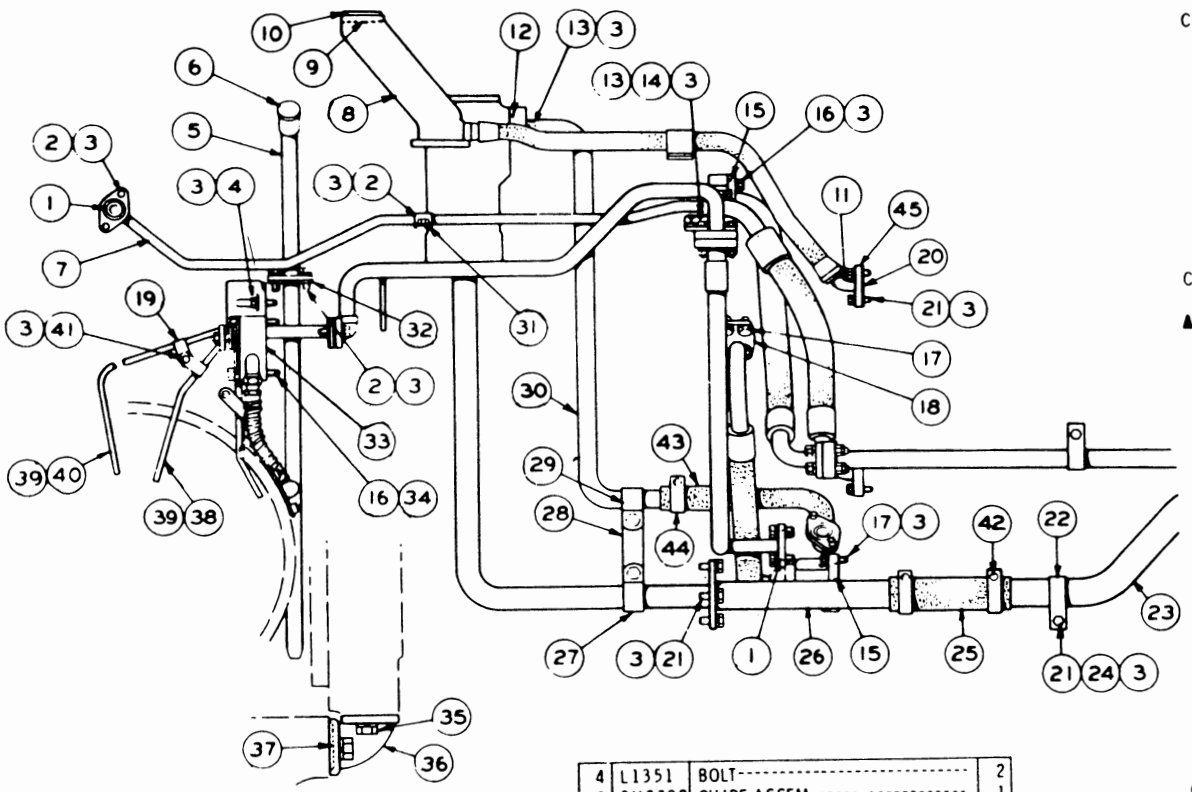

REF. NO.	PART NUMBER	DESCRIPTION	QTY
1	8M4988	SEAL	3
2	S1594	BOLT	5
3	3B4506	LOCKWASHER	27
4	L1351	BOLT	2
5	8H7702	GUIDE ASSEM.	1
6	7M381	PLUNGER ASSEM.	1
7	2S8316	TUBE ASSEM.	1
8	1S2254	SPOUT	1
9	L1124	GASKET	1
10	5M902	PLUG	1
C 11	7F6289	ELBOW	1
12	8M5010	SEAL	1
13	S1571	BOLT	4
14	1D4717	NUT	2
15	8M4987	SEAL	3
16	L1143	BOLT	4
17	S1588	BOLT	6
18	1P4577	FLANGE	2
19	7H7055	CLIP	2
20	4F5640	GASKET	1
21	1A2029	BOLT	7
22	8S9798	CLAMP	1
C 23	1P9760	TUBE ASSEM.	1
24	1A4784	WASHER	1
▲ 25	2S6684	HOSE----------6 in.	
26	1P9757	TUBE ASSEM.	1
27	2S2053	CLIP	1
28	7S7386	PLATE	1
29	1L8181	CLIP	1
30	1P9759	TUBE ASSEM.	1
31	8F8513	CLIP	1
32	9F5940	GASKET	1
33	7S7370	BLOCK ASSEM.	1
34	3S8744	LOCK	1
35	7B3235	BOLT	4
	3B4508	LOCKWASHER	4
36	1M2743	ELBOW	1
37	8M4989	SEAL	2
38	1M2675	TUBE--------(R.H.)	1
39	3B8996	FITTING	2
	8F8997	NUT	1
40	1M2676	TUBE----------(L.H.)	1
41	T102	BOLT	3
42	1P6261	CLAMP	2
43	1P4566	HOSE	1
44	1P4826	CLAMP	2
C 45	1S9353	COVER	1

▲ ORDER BY THE INCH

C INDICATES CHANGE

144989

TRANSMISSION AND STEERING CLUTCH LUBRICATION SYSTEM (2S8400 N/S)—Side View—Part 1 of 3
Serial No. 46A28225 to 46A29514 inclusive
See Page 38 for Gasket Kit

TRANSMISSION AND STEERING CLUTCH LUBRICATION SYSTEM (2S8400 N/S)—Side View Part 2 of 3
Serial No. 46A28225 to 46A29514 inclusive
5M6701 Pump, 8S4786 Filter and 9M8669 Screen parts are shown on pages 85 and 86

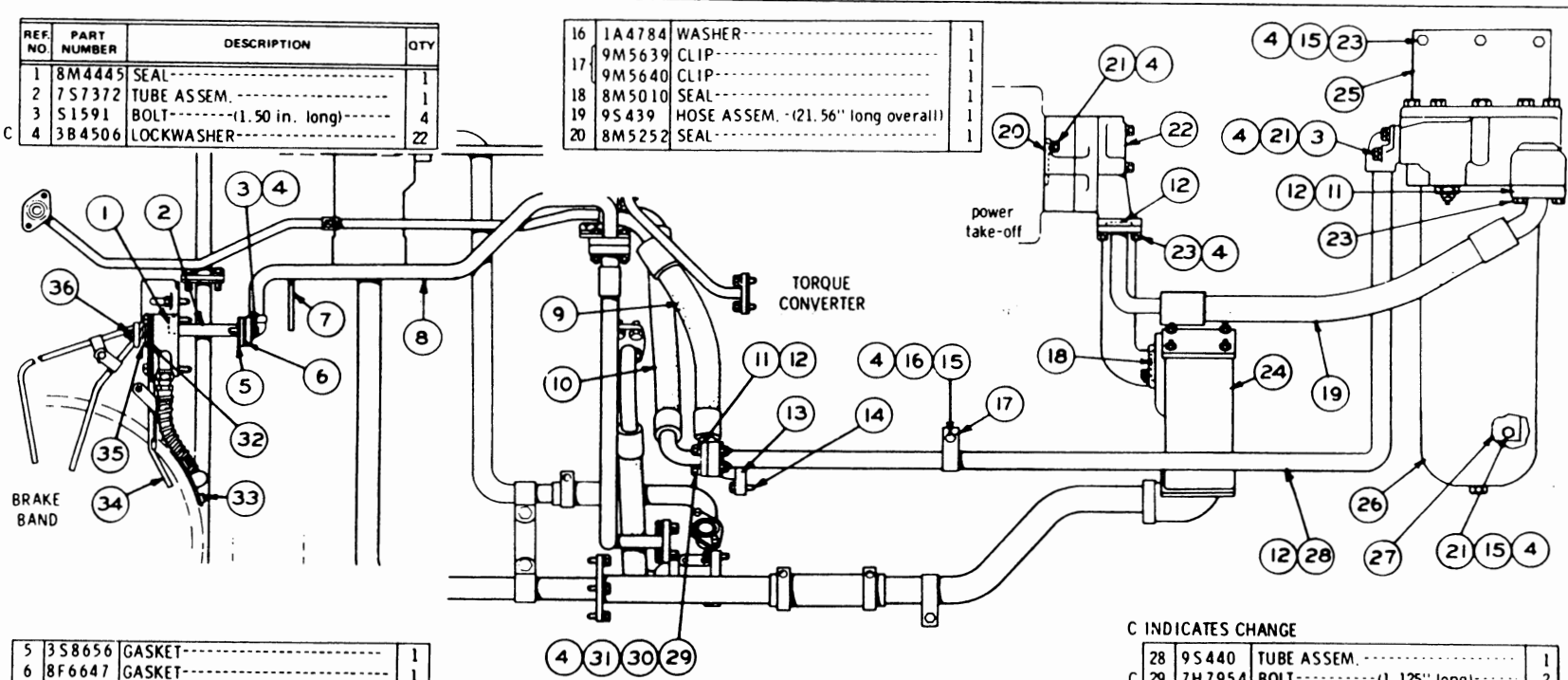

REF. NO.	PART NUMBER	DESCRIPTION	QTY
1	8M4445	SEAL	1
2	7S7372	TUBE ASSEM.	1
3	S1591	BOLT--------(1.50 in. long)------	4
C 4	3B4506	LOCKWASHER	22
5	3S8656	GASKET	1
6	8F6647	GASKET	1
7	7S7661	SUPPORT	1
8	7S7376	TUBE ASSEM.	1
9	9S4551	HOSE ASSEM. ----------20.38 in.	
10	5S802	HOSE ASSEM. --(23.75 in. long)----	1
C 11	1P4577	FLANGE	4
12	8M4987	SEAL	4
C 13	1P4578	FLANGE	2
	8M4986	SEAL	1
14	3H5368	BOLT-------(1.375 in. long)-------	2
	T772	BOLT-------(1.50 in. long)-------	2
15	S1594	BOLT---------(1 in. long)---------	5
16	1A4784	WASHER	1
17	9M5639	CLIP	1
	9M5640	CLIP	1
18	8M5010	SEAL	1
19	9S439	HOSE ASSEM. -(21.56" long overall)	1
20	8M5252	SEAL	1
21	1A2029	BOLT--------(1.125" Long)--------	6
22	5M6701	PUMP GROUP	1
		(Separate Illustration)	
23	S1588	BOLT--------(1.25" Long)---------	9
24	9M8669	SCREEN GROUP	2
		(Separate Illustration)	
25	8S4789	BRACKET	1
26	8S4786	FILTER GROUP	1
		(Separate Illustration)	
27	8S4780	BRACKET	1

C INDICATES CHANGE

28	9S440	TUBE ASSEM.	1
C 29	7H7954	BOLT----------(1.125" long)------	2
C 30	5B213	BOLT----------(2.375" long)------	2
31	1D4717	NUT	4
32	1M5471	VALVE	1
	7S9686	BOLT	4
33	2H3504	LOCK	4
	1B4203	NUT	4
34	2S8311	TUBE ASSEM. ------(Center)------	1
35	1S7139	SPRING	1
	2F8616	NUT	1
36	4B4278	WASHER	1
	2D7091	WASHER	1

139088

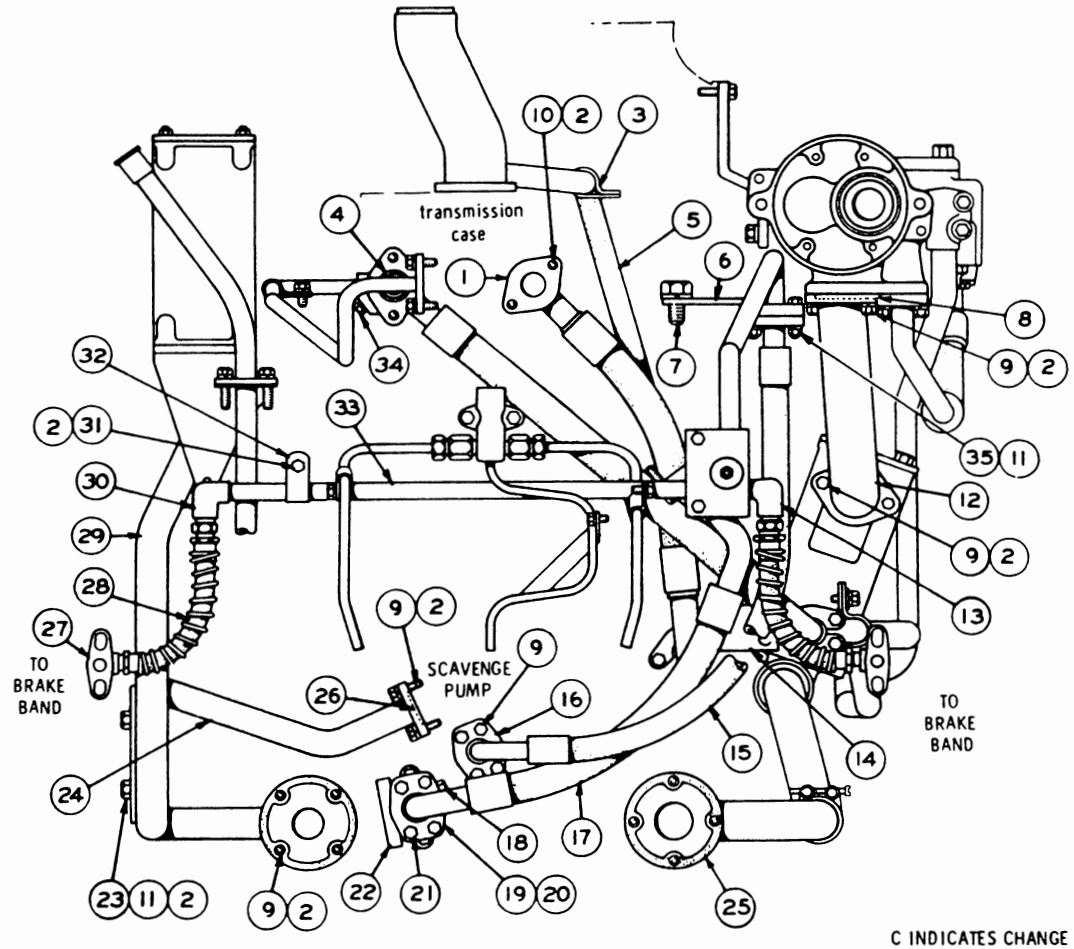

	REF. NO.	PART NUMBER	DESCRIPTION	QTY
	1	9S4569	FLANGE	1
	2	3B4506	LOCKWASHER	17
C	3	3S8665	CLIP	1
	4	8M4986	SEAL	1
C	5	6K6830	HOSE ASSEM.	1
	6	7S7378	PLATE	1
	7	7H2069	BOLT	1
		3B4512	LOCKWASHER	1
	8	8M5010	SEAL	1
	9	1A2029	BOLT	14
	10	S1591	BOLT	2
	11	1D4717	NUT	4
	12	4S8015	ELBOW	1
	13	7S7369	FITTING	1
	14	4S7997	SUPPORT	1
	15	7S7379	HOSE ASSEM. -(28.38" Long Overall)-	1
	16	1P4576	FLANGE	4
	17	5S808	HOSE ASSEM. -(21.60" Long Overall)-	1
	18	2H8829	PLUG	1
		6F7062	WASHER	1
	19	1P4577	FLANGE	2
	20	8M4987	SEAL	2
	21	S1588	BOLT	4
	22	7S7906	ADAPTER	1
	23	S1594	BOLT	2
		4B4278	WASHER	2
	24	1P9763	TUBE ASSEM.	1
	25	9S8848	GASKET	2
	26	8M5254	SEAL	1
	27	7S7367	FITTING	2
	28	7S7368	HOSE ASSEM. -(10.62" Long Overall)-	2
	29	7S7387	TUBE ASSEM.	1
	30	7S7507	FITTING	1
	31	T102	BOLT	1
	32	1S3618	CLIP	1
	33	7S7375	TUBE-(20.75" Long)-	1
	34	5M6214	PLUG	1
	35	2A4639	BOLT	2

TRANSMISSION AND STEERING CLUTCH LUBRICATION SYSTEM (2S8400 N/S)—Rear View—Part 3 of 3
Serial No. 46A28225 to 46A29514 inclusive

TRANSMISSION AND STEERING CLUTCH LUBRICATION SYSTEM (2S8400 N/S)—Side View—Part 1 of 3

Serial No. 46A29515 to 46A29949 inclusive

See Page 28 for Gasket Kit

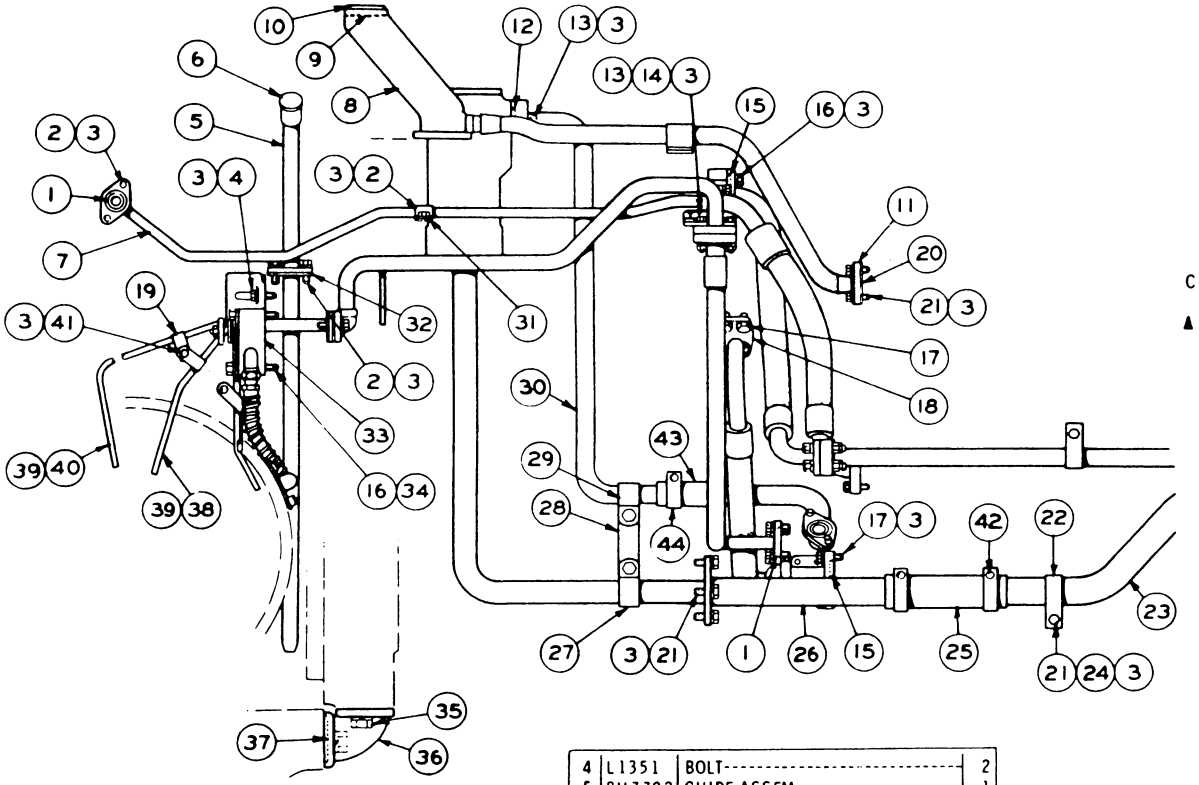

REF. NO.	PART NUMBER	DESCRIPTION	QTY
1	8M4988	SEAL	3
2	S1594	BOLT	5
3	3B4506	LOCKWASHER	27
4	L1351	BOLT	2
5	8H7702	GUIDE ASSEM.	1
6	7M381	PLUNGER ASSEM.	1
7	2S8316	TUBE ASSEM.	1
8	1S2254	SPOUT	1
9	L1124	GASKET	1
10	5M902	PLUG	1
11	1S9353	COVER	1
12	8M5010	SEAL	1
13	S1571	BOLT	4
14	1D4717	NUT	2
15	8M4987	SEAL	3
16	L1143	BOLT	4
17	S1588	BOLT	6
18	1P4577	FLANGE	2
19	7H7055	CLIP	2
20	4F5640	GASKET	1
21	1A2029	BOLT	7
22	8S9798	CLAMP	1
C 23	1P9760	TUBE ASSEM.	1
24	1A4784	WASHER	1
▲ 25	2S6684	HOSE----------6 in.	
26	1P9757	TUBE ASSEM.	1
27	2S2053	CLIP	1
28	7S7386	PLATE	1
29	1L8181	CLIP	1
30	1P9759	TUBE ASSEM.	1
31	8F8513	CLIP	1
32	9F5940	GASKET	1
33	7S7370	BLOCK ASSEM.	1
34	3S8744	LOCK	1
35	7B3235	BOLT	4
	3B4508	LOCKWASHER	4
36	1M2743	ELBOW	1
37	8M4989	SEAL	2
38	1M2675	TUBE----------(R.H.)	1
39	3B8996	FITTING	2
	8F8997	NUT	1
40	1M2676	TUBE---------(L.H.)	1
41	T102	BOLT	3
42	1P6261	CLAMP	2
43	1P4566	HOSE	1
44	1P4826	CLAMP	2

▲ ORDER BY THE INCH

C INDICATES CHANGE

144988

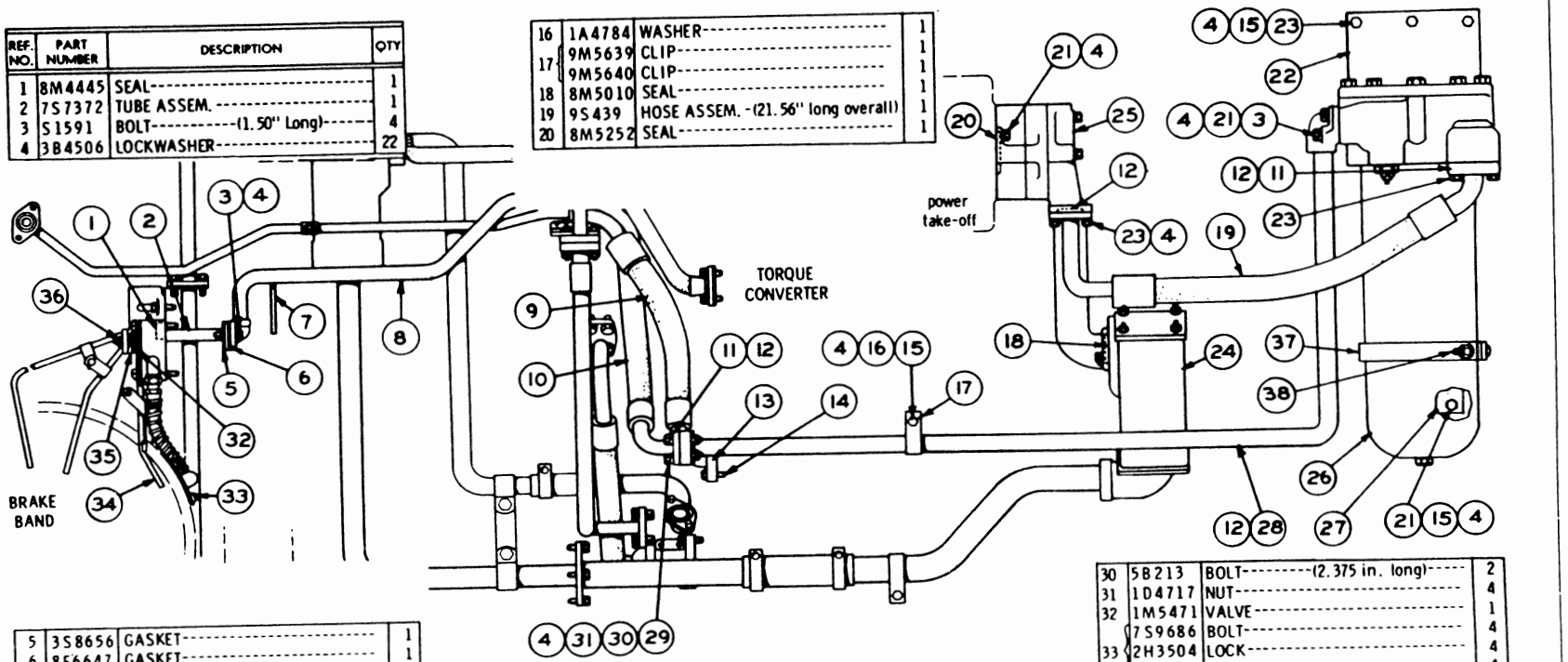

REF. NO.	PART NUMBER	DESCRIPTION	QTY
1	8M4445	SEAL	1
2	7S7372	TUBE ASSEM.	1
3	S1591	BOLT----------(1.50" Long)	4
4	3B4506	LOCKWASHER	22
5	3S8656	GASKET	1
6	8F6647	GASKET	1
7	7S7661	SUPPORT	1
8	7S7376	TUBE ASSEM.	1
9	9S4551	HOSE ASSEM.----------20.38"	
10	5S802	HOSE ASSEM. -(23.75" long overall)	1
11	1P4577	FLANGE	4
12	8M4987	SEAL	4
13	1P4578	FLANGE	2
	8M4986	SEAL	1
14	3H5368	BOLT---------(1.375" long)	2
	T772	BOLT---------(1.50" long)	2
15	S1594	BOLT--------(1" long)	5
16	1A4784	WASHER	1
17	9M5639	CLIP	1
	9M5640	CLIP	1
18	8M5010	SEAL	1
19	9S439	HOSE ASSEM. -(21.56" long overall)	1
20	8M5252	SEAL	1
21	1A2029	BOLT--------(1.125 in. long)	6
22	8S4789	BRACKET	1
23	S1588	BOLT--------(1.25 in. long)	9
24	9M8669	SCREEN GROUP	2
C 25	3P4002	PUMP GROUP	1
C 26	3P4243	FILTER GROUP (Separate Illustration)	1
27	8S4780	BRACKET	1
28	9S440	TUBE ASSEM.	1
29	7H7954	BOLT----------(1.125 in. long)	2
30	5B213	BOLT---------(2.375 in. long)	2
31	1D4717	NUT	4
32	1M5471	VALVE	1
33	7S9686	BOLT	4
	2H3504	LOCK	4
	1B4203	NUT	4
34	2S8311	TUBE ASSEM. -----(Center)	1
35	1S7139	SPRING	1
36	2F8616	NUT	1
	4B4278	WASHER	1
	2D7091	WASHER	1
C 37	3P4165	CLAMP ASSEM.	1
	S1595	BOLT	1
C 38	1D4719	NUT	1
	3B4508	LOCKWASHER	1

TRANSMISSION AND STEERING CLUTCH LUBRICATION SYSTEM (2S8400)—Side View—Part 2 of 3
Serial No. 46A29515 to 46A29949 inclusive
3P4002 Pump, 3P4243 Filter and 9M8669 Screen parts are shown on Pages 84G and 86

TRANSMISSION AND STEERING CLUTCH LUBRICATION SYSTEM (2S8400 N/S)—Rear View—Part 3 of 3
Serial No. 46A29515 to 46A29949 inclusive

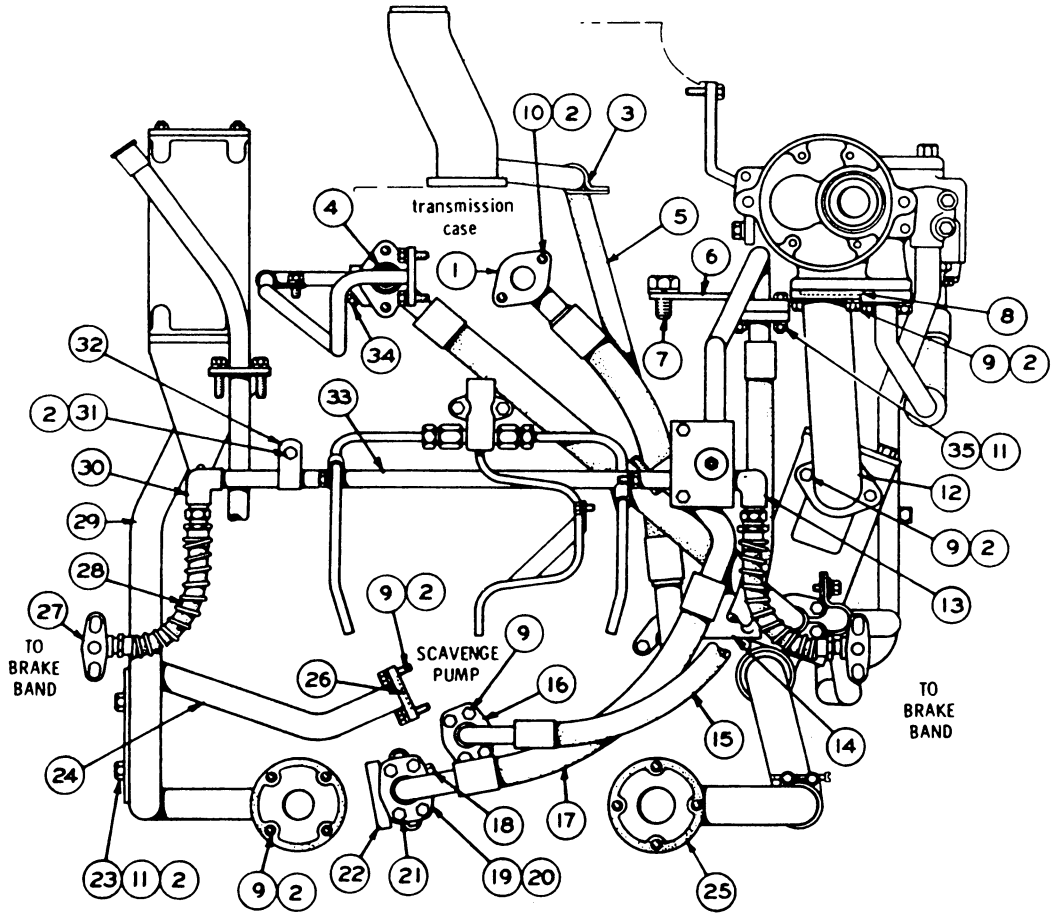

REF. NO.	PART NUMBER	DESCRIPTION	QTY
1	9S4569	FLANGE	1
2	3B4506	LOCKWASHER	17
3	3S8665	CLIP	1
4	8M4986	SEAL	1
5	6K6830	HOSE ASSEM.	1
6	7S7378	PLATE	1
7	7H2069	BOLT	1
	3B4512	LOCKWASHER	1
8	8M5010	SEAL	1
9	1A2029	BOLT	14
10	S1591	BOLT	2
11	1D4717	NUT	4
12	4S8015	ELBOW	1
13	7S7369	FITTING	1
14	4S7997	SUPPORT	1
15	7S7379	HOSE ASSEM. -(28.38" Long Overall)-	1
16	1P4576	FLANGE	4
17	5S808	HOSE ASSEM. -(21.60" Long Overall)-	1
18	2H8829	PLUG	1
	6F7062	WASHER	1
19	1P4577	FLANGE	2
20	8M4987	SEAL	2
21	S1588	BOLT	4
22	7S7906	ADAPTER	1
23	S1594	BOLT	2
	4B4278	WASHER	2
24	1P9763	TUBE ASSEM.	1
25	9S8848	GASKET	2
26	8M5254	SEAL	1
27	7S7367	FITTING	2
28	7S7368	HOSE ASSEM. -(10.62" Long Overall)-	2
29	7S7387	TUBE ASSEM.	1
30	7S7507	FITTING	1
31	T102	BOLT	1
32	1S3618	CLIP	1
33	7S7375	TUBE -(20.75" Long)-	1
34	5M6214	PLUG	1
35	2A4639	BOLT	2

143573

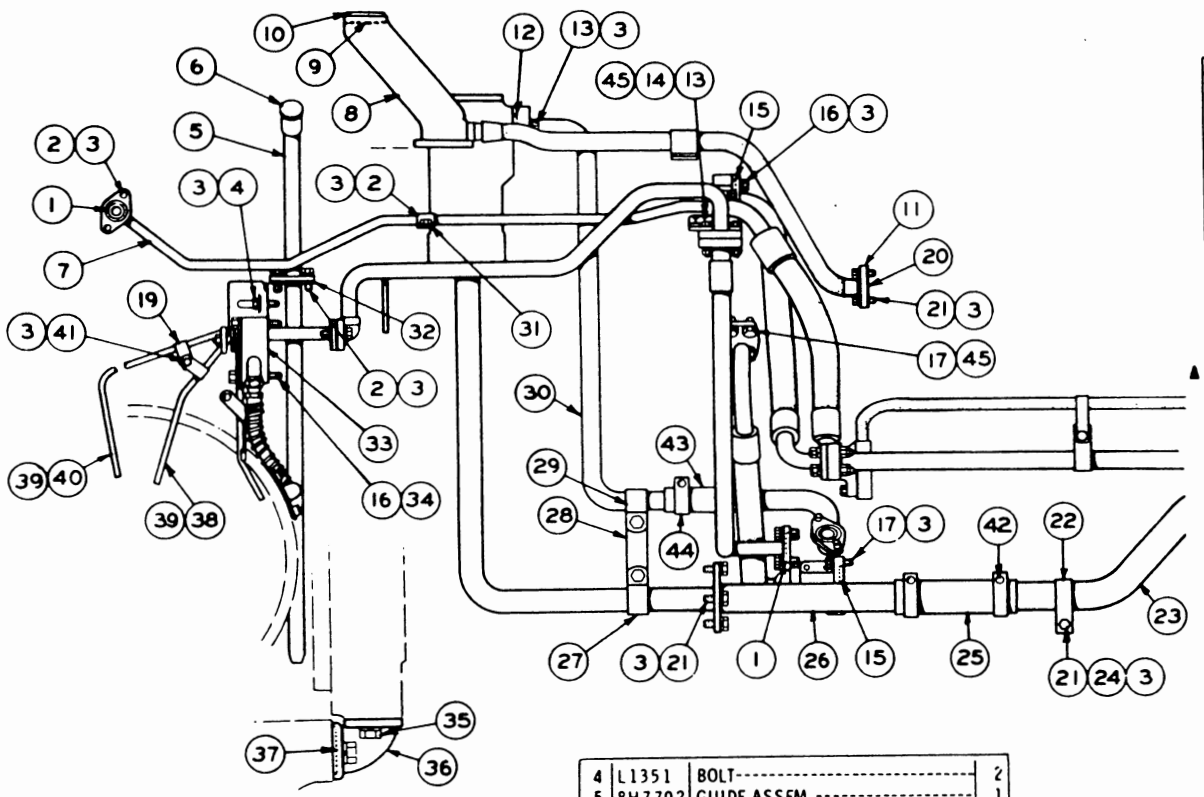

REF. NO.	PART NUMBER	DESCRIPTION	QTY
1	8M4988	SEAL	3
2	S1594	BOLT	5
C 3	3B4506	LOCKWASHER	25
4	L1351	BOLT	2
5	8H7702	GUIDE ASSEM.	1
6	7M381	PLUNGER ASSEM.	1
7	2S8316	TUBE ASSEM.	1
8	1S2254	SPOUT	1
9	L1124	GASKET	1
10	5M902	PLUG	1
11	1S9353	COVER	1
12	8M5010	SEAL	1
13	S1571	BOLT	4
14	1D4717	NUT	2
15	8M4987	SEAL	3
16	L1143	BOLT	4
17	S1588	BOLT	6
18	1P4577	FLANGE	2
19	7H7055	CLIP	2
20	4F5640	GASKET	1
21	1A2029	BOLT	7
22	8S9798	CLAMP	1
23	1P9760	TUBE ASSEM.	1
24	1A4784	WASHER	1
▲ 25	2S6684	HOSE-6 in.	
26	1P9757	TUBE ASSEM.	1
27	2S2053	CLIP	1
28	7S7386	PLATE	1
29	1L8181	CLIP	1
30	1P9759	TUBE ASSEM.	1
31	8F8513	CLIP	1
32	9F5940	GASKET	1
33	7S7370	BLOCK ASSEM.	1
34	3S8744	LOCK	1
35	7B3235	BOLT	4
	3B4508	LOCKWASHER	4
36	1M2743	ELBOW	1
37	8M4989	SEAL	2
38	1M2675	TUBE-(R. H.)	1
39	3B8996	FITTING	2
	8F8997	NUT	1
40	1M2676	TUBE-(L. H.)	1
41	T102	BOLT	3
42	1P6261	CLAMP	2
43	1P4566	HOSE	1
44	1P4826	CLAMP	2
C 45	4B4278	WASHER	6

▲ ORDER BY THE INCH C INDICATES CHANGE 146447

TRANSMISSION AND STEERING CLUTCH LUBRICATION SYSTEM (2S8400 N/S)—Side View—Part 1 of 3
Serial No. 46A29950 to 46A30123 inclusive
See Page 28 for Gasket Kit

TRANSMISSION AND STEERING CLUTCH LUBRICATION SYSTEM (2S8400 N/S)—Side View—Part 2 of 3

Serial No. 46A29950 to 46A30123 inclusive

3P4002 Pump, 3P4243 Filter and 9M8669 Screen parts are shown on Pages 84G and 86

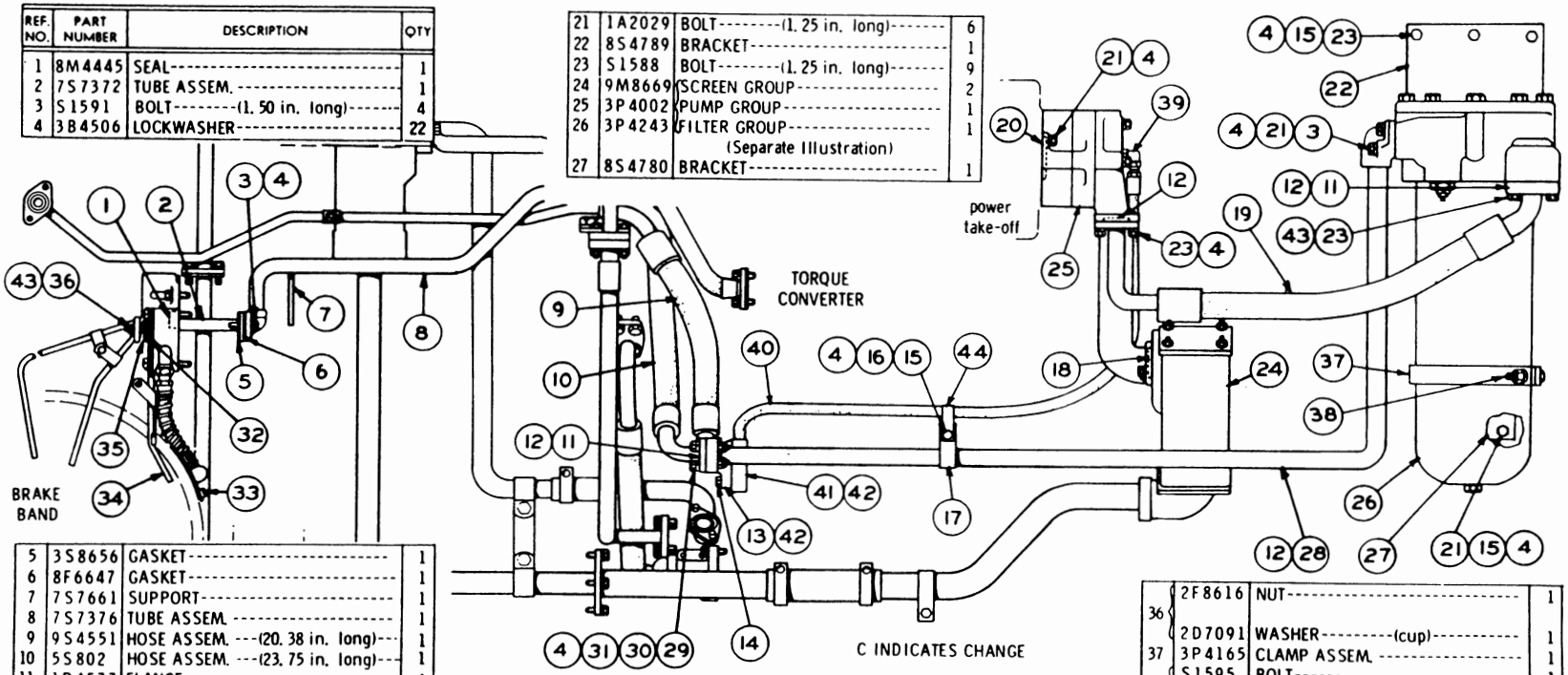

REF. NO.	PART NUMBER	DESCRIPTION	QTY
1	8M4445	SEAL	1
2	7S7372	TUBE ASSEM.	1
3	S1591	BOLT--------(1.50 in. long)--------	4
4	3B4506	LOCKWASHER	22

	5	3S8656	GASKET	1
	6	8F6647	GASKET	1
	7	7S7661	SUPPORT	1
	8	7S7376	TUBE ASSEM.	1
	9	9S4551	HOSE ASSEM. ---(20.38 in. long)---	1
	10	5S802	HOSE ASSEM. ---(23.75 in. long)---	1
	11	1P4577	FLANGE	4
	12	8M4987	SEAL	4
	13	1P4578	FLANGE	2
C	14	1D4703	BOLT	4
	15	S1594	BOLT---------(1 in. long)---------	5
	16	1A4784	WASHER	1
	17	9M5639	CLIP	1
		9M5640	CLIP	1
	18	8M5010	SEAL	1
	19	9S439	HOSE ASSEM. ---(21.56 in. long)---	1
	20	8M5252	SEAL	1

21	1A2029	BOLT--------(1.25 in. long)--------	6
22	8S4789	BRACKET	1
23	S1588	BOLT--------(1.25 in. long)--------	9
24	9M8669	SCREEN GROUP	2
25	3P4002	PUMP GROUP	1
26	3P4243	FILTER GROUP	1
		(Separate Illustration)	
27	8S4780	BRACKET	1

28	9S440	TUBE ASSEM.	1
29	7H7954	BOLT--------(1.125 in. long)--------	2
30	5B213	BOLT--------(2.375 in. long)--------	2
31	1D4717	NUT	4
32	1M5471	VALVE	1
33	7S9686	BOLT	4
	2H3504	LOCK	4
	1B4203	NUT	4
34	2S8311	TUBE ASSEM. ------(center)-------	1
35	1S7139	SPRING	1

	36	2F8616	NUT	1
		2D7091	WASHER---------(cup)----------	1
	37	3P4165	CLAMP ASSEM.	1
	38	S1595	BOLT	1
		1D4719	NUT	1
		3B4508	LOCKWASHER	1
C	39	307947	ELBOW	2
		336042	SEAL	2
C	40	3P6151	HOSE ASSEM.	1
C	41	3P6308	ADAPTER	1
C	42	8M4986	SEAL	2
C	43	4B4278	WASHER---------(steel)----------	5
C	44	5M8429	CLIP	1

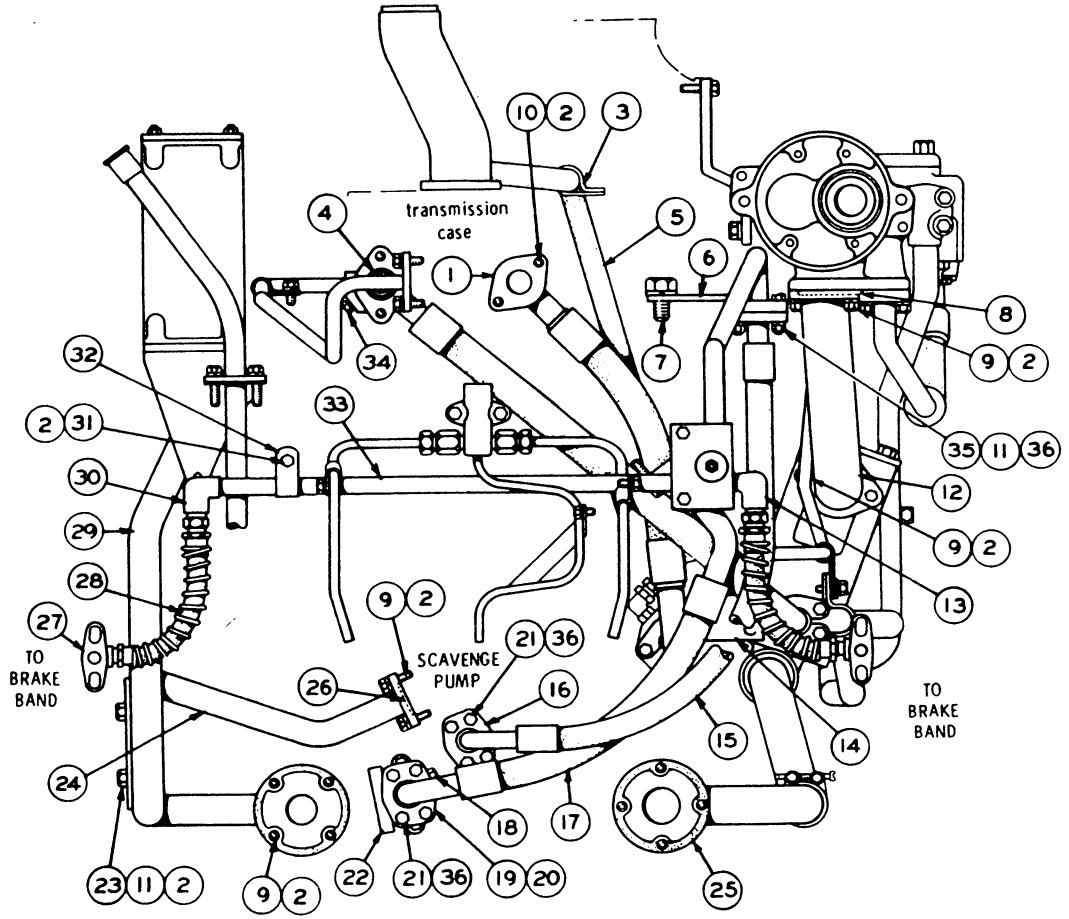

REF. NO.	PART NUMBER	DESCRIPTION	QTY
	9S4569	FLANGE	1
	3B4506	LOCKWASHER	17
	3S8665	CLIP	1
	8M4986	SEAL	1
	6K6830	HOSE ASSEM.	1
	7S7378	PLATE	1
7	7H2069	BOLT	1
7	3B4512	LOCKWASHER	1
	8M5010	SEAL	1
C	1A2029	BOLT	10
	S1591	BOLT	2
	1D4717	NUT	4
	4S8015	ELBOW	1
	7S7369	FITTING	1
C	3P7974	SUPPORT	1
	7S7379	HOSE ASSEM. -(28.38" Long Overall)-	1
	1P4576	FLANGE	4
	5S808	HOSE ASSEM. -(21.60" Long Overall)-	1
18	2H8829	PLUG	1
18	6F7062	WASHER	1
	1P4577	FLANGE	2
	8M4987	SEAL	2
C	S1588	BOLT	8
	7S7906	ADAPTER	1
23	S1594	BOLT	2
23	4B4278	WASHER	2
	1P9763	TUBE ASSEM.	1
	9S8848	GASKET	2
	8M5254	SEAL	1
	7S7367	FITTING	2
	7S7368	HOSE ASSEM. -(10.62" Long Overall)-	2
	7S7387	TUBE ASSEM.	1
	7S7507	FITTING	1
	T102	BOLT	1
	1S3618	CLIP	1
	7S7375	TUBE -(20.75" Long)-	1
	5M6214	PLUG	1
	2A4639	BOLT	2
C	4B4278	WASHER	10

C INDICATES CHANGE

145881

TRANSMISSION AND STEERING CLUTCH LUBRICATION SYSTEM (2S8400 N/S)—Rear View—Part 3 of 3
Serial No. 46A29950 to 46A30123 inclusive

TRANSMISSION AND STEERING CLUTCH LUBRICATION SYSTEM (2S8400 N/S)—Side View—Part 1 of 3
Serial No. 46A30124 to 31254, 31260 and 46A31261 inclusive
See Page 28 for Gasket Kit

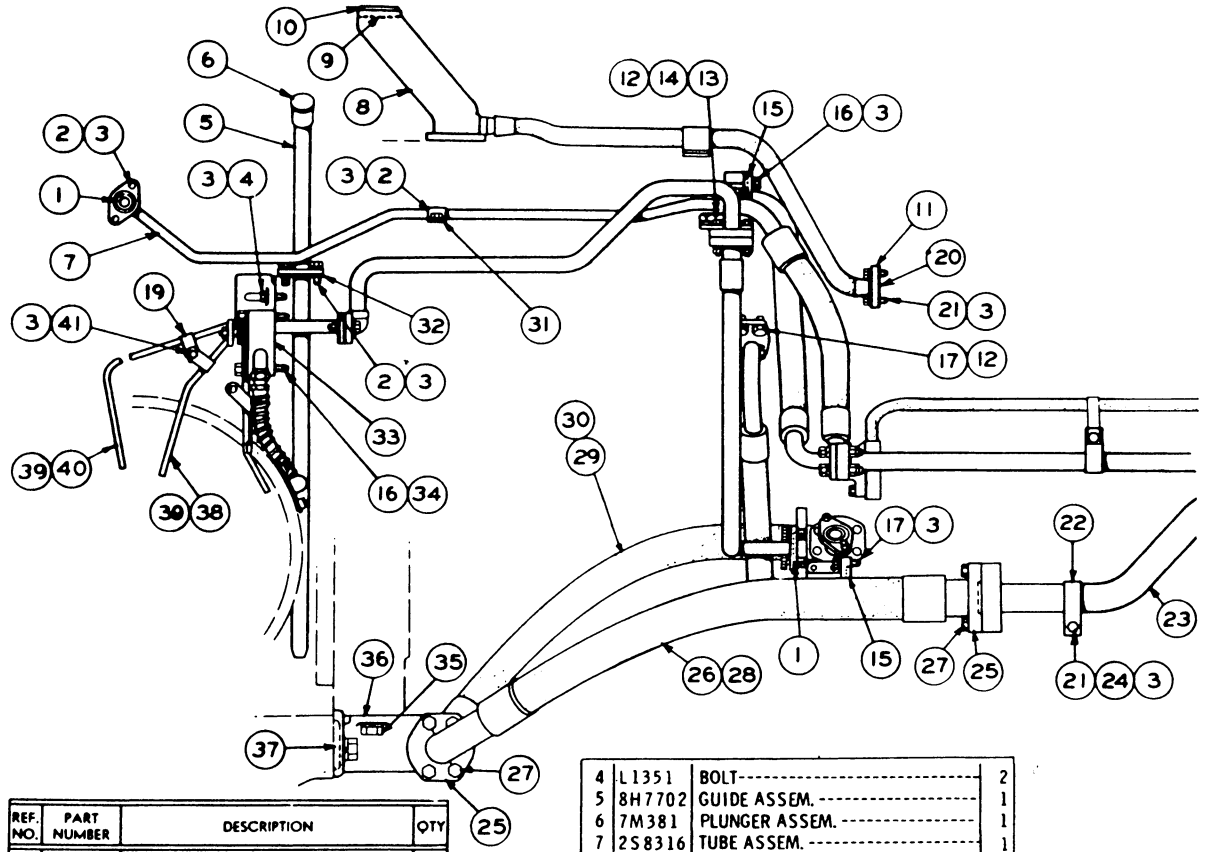

REF. NO.	PART NUMBER	DESCRIPTION	QTY
1	8M4988	SEAL	3
2	S1594	BOLT	5
C 3	3B4506	LOCKWASHER	19
4	L1351	BOLT	2
5	8H7702	GUIDE ASSEM.	1
6	7M381	PLUNGER ASSEM.	1
7	2S8316	TUBE ASSEM.	1
8	1S2254	SPOUT	1
9	L1124	GASKET	1
10	5M902	PLUG	1
11	1S9353	COVER	1
12	4B4278	WASHER	6
13	S1571	BOLT	2
14	1D4717	NUT	2
15	8M4987	SEAL	3
16	L1143	BOLT	4
17	S1588	BOLT	6
18	1P4577	FLANGE	2
19	7H7055	CLIP	2
20	4F5640	GASKET	1
21	1A2029	BOLT	3
22	8S9798	CLAMP	1
23	3P5752	TUBE ASSEM.	1
24	1A4784	WASHER	1
C 25	1P4582	FLANGE	4
C 26	3P5930	HOSE ASSEM. (37.50 in. long)	1
C 27	S1587	BOLT	8
C 28	8M4390	SEAL	2
C 29	3P5931	HOSE ASSEM. (34 in. long)	1
C 30	8M4986	SEAL	2
31	8F8513	CLIP	1
32	9F5940	GASKET	1
33	7S7370	BLOCK ASSEM.	1
34	3S8744	LOCK	1
35	7B3235	BOLT	4
	3B4508	LOCKWASHER	4
C 36	3P5929	MANIFOLD	1
37	8M4989	SEAL	2
38	1M2675	TUBE (R. H.)	1
39	3B8996	FITTING	2
	8F8997	NUT	1
40	1M2676	TUBE (L. H.)	1
41	T102	BOLT	3

C INDICATES CHANGE

144972

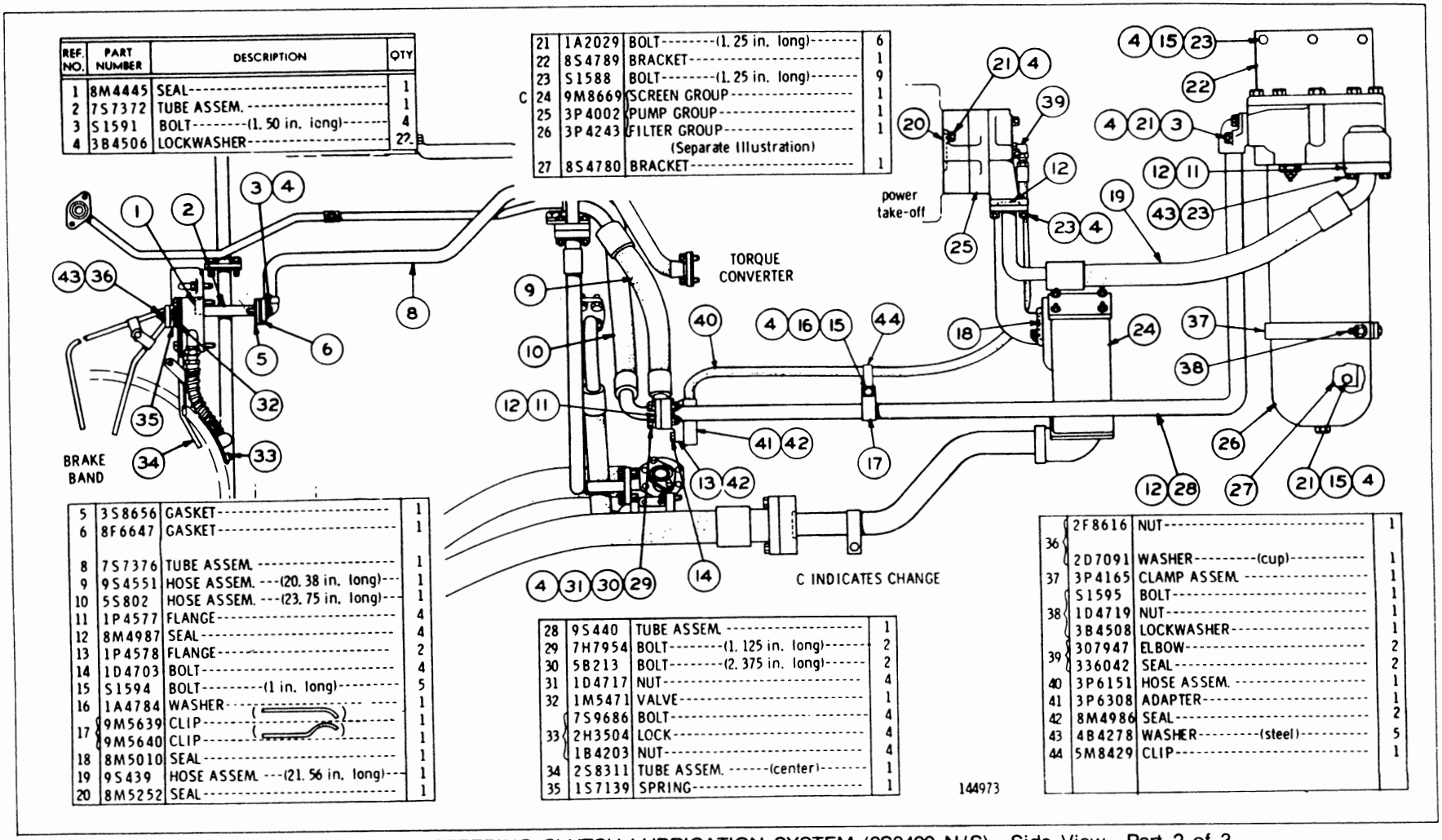

REF. NO.	PART NUMBER	DESCRIPTION	QTY
1	8M4445	SEAL	1
2	7S7372	TUBE ASSEM.	1
3	S1591	BOLT--------(1.50 in. long)------	4
4	3B4506	LOCKWASHER	22
5	3S8656	GASKET	1
6	8F6647	GASKET	1
8	7S7376	TUBE ASSEM.	1
9	9S4551	HOSE ASSEM. ---(20.38 in. long)---	1
10	5S802	HOSE ASSEM. ---(23.75 in. long)---	1
11	1P4577	FLANGE	4
12	8M4987	SEAL	4
13	1P4578	FLANGE	2
14	1D4703	BOLT	4
15	S1594	BOLT---------(1 in. long)---------	5
16	1A4784	WASHER	1
17	9M5639	CLIP	1
	9M5640	CLIP	1
18	8M5010	SEAL	1
19	9S439	HOSE ASSEM. ---(21.56 in. long)---	1
20	8M5252	SEAL	1
21	1A2029	BOLT--------(1.25 in. long)------	6
22	8S4789	BRACKET	1
23	S1588	BOLT--------(1.25 in. long)------	9
C 24	9M8669	SCREEN GROUP	1
25	3P4002	PUMP GROUP	1
26	3P4243	FILTER GROUP (Separate Illustration)	1
27	8S4780	BRACKET	1
28	9S440	TUBE ASSEM.	1
29	7H7954	BOLT--------(1.125 in. long)------	2
30	5B213	BOLT--------(2.375 in. long)------	2
31	1D4717	NUT	4
32	1M5471	VALVE	1
33	7S9686	BOLT	4
	2H3504	LOCK	4
	1B4203	NUT	4
34	2S8311	TUBE ASSEM. ------(center)------	1
35	1S7139	SPRING	1
36	2F8616	NUT	1
	2D7091	WASHER---------(cup)----------	1
37	3P4165	CLAMP ASSEM.	1
	S1595	BOLT	1
38	1D4719	NUT	1
	3B4508	LOCKWASHER	1
	307947	ELBOW	2
39	336042	SEAL	2
40	3P6151	HOSE ASSEM.	1
41	3P6308	ADAPTER	1
42	8M4986	SEAL	2
43	4B4278	WASHER---------(steel)----------	5
44	5M8429	CLIP	1

TRANSMISSION AND STEERING CLUTCH LUBRICATION SYSTEM (2S8400 N/S)—Side View—Part 2 of 3
Serial No. 46A30124 to 31254, 31260 and 46A31261 inclusive
3P4002 Pump, 3P4243 Filter and 9M8669 Screen parts are shown on Pages 84G and 86

TRANSMISSION AND STEERING CLUTCH LUBRICATION SYSTEM (2S8400 N/S)—Rear View—Part 3 of 3
Serial No. 46A30124 to 31254, 31260 and 46A31261 inclusive

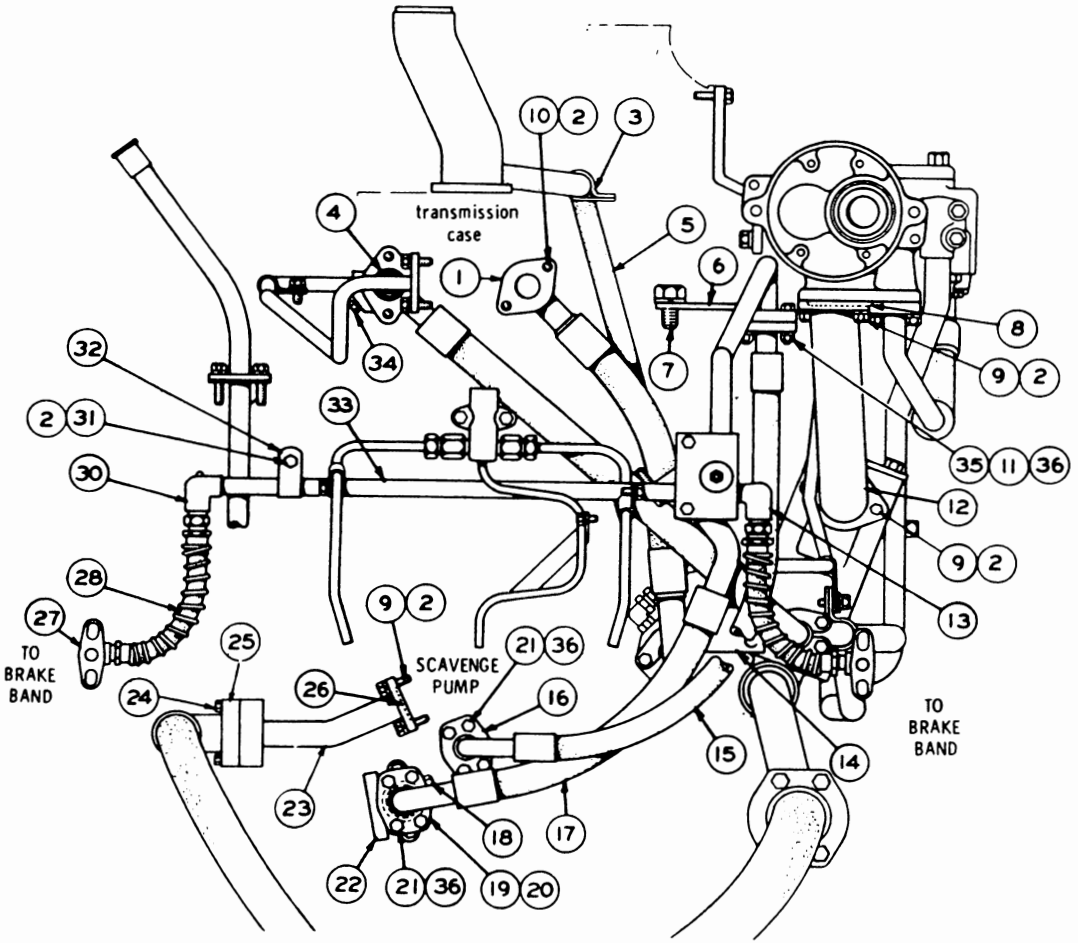

	REF. NO.	PART NUMBER	DESCRIPTION	QTY
	1	9S4569	FLANGE	1
C	2	3B4506	LOCKWASHER	11
	3	3S8665	CLIP	1
	4	8M4986	SEAL	1
	5	6K6830	HOSE ASSEM.	1
	6	7S7378	PLATE	1
	7	7H2069	BOLT	1
		3B4512	LOCKWASHER	1
	8	8M5010	SEAL	1
C	9	1A2029	BOLT	6
	10	S1591	BOLT	2
C	11	1D4717	NUT	2
	12	4S8015	ELBOW	1
	13	7S7369	FITTING	1
	14	3P7974	SUPPORT	1
	15	7S7379	HOSE ASSEM. -(28.38" Long Overall)-	1
	16	1P4576	FLANGE	4
	17	5S808	HOSE ASSEM. -(21.60" Long Overall)-	1
	18	2H8829	PLUG	1
		6F7062	WASHER	1
	19	1P4577	FLANGE	2
	20	8M4987	SEAL	2
	21	S1588	BOLT	8
	22	7S7906	ADAPTER	1
C	23	3P5828	TUBE ASSEM.	1
C	24	T768	BOLT	8
C	25	1P4578	FLANGE	4
	26	8M5254	SEAL	1
	27	7S7367	FITTING	2
	28	7S7368	HOSE ASSEM. -(10.62" Long Overall)-	2
	30	7S7507	FITTING	1
	31	T102	BOLT	1
	32	1S3618	CLIP	1
	33	7S7375	TUBE -(20.75" Long)-	1
	34	5M6214	PLUG	1
	35	2A4639	BOLT	2
C	36	4B4278	WASHER	10

C INDICATES CHANGE 144974

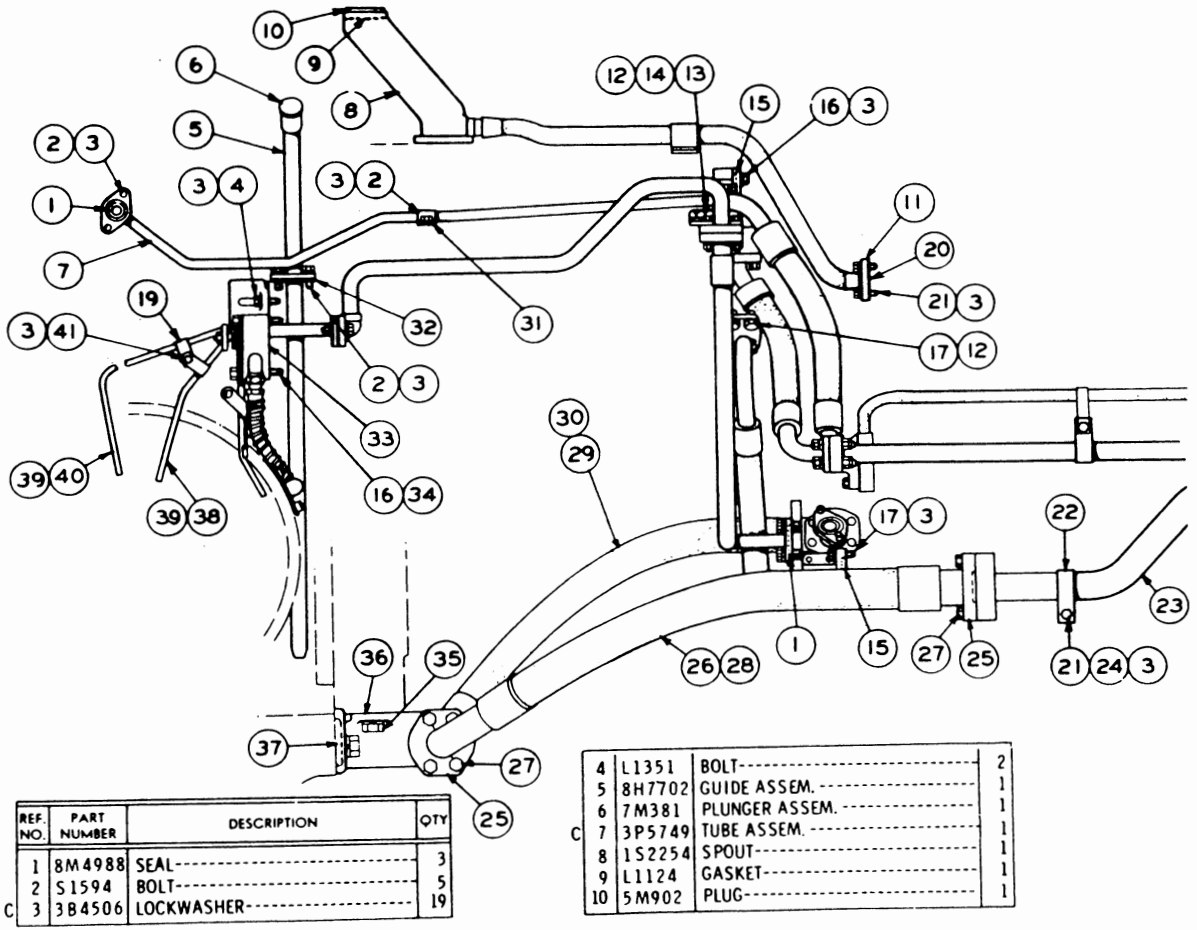

REF. NO.	PART NUMBER	DESCRIPTION	QTY
1	8M4988	SEAL	3
2	S1594	BOLT	5
C 3	3B4506	LOCKWASHER	19
4	L1351	BOLT	2
5	8H7702	GUIDE ASSEM.	1
6	7M381	PLUNGER ASSEM.	1
C 7	3P5749	TUBE ASSEM.	1
8	1S2254	SPOUT	1
9	L1124	GASKET	1
10	5M902	PLUG	1
11	1S9353	COVER	1
12	4B4278	WASHER	6
13	S1571	BOLT	2
14	1D4717	NUT	2
15	8M4987	SEAL	3
16	L1143	BOLT	4
17	S1588	BOLT	6
18	1P4577	FLANGE	2
19	7H7055	CLIP	2
20	4F5640	GASKET	1
21	1A2029	BOLT	3
22	8S9798	CLAMP	1
23	3P5752	TUBE ASSEM.	1
24	1A4784	WASHER	1
25	1P4582	FLANGE	4
26	3P5930	HOSE ASSEM. (37.50 in. long)	1
27	S1587	BOLT	8
28	8M4390	SEAL	2
29	3P5931	HOSE ASSEM. (34 in. long)	1
30	8M4986	SEAL	2
31	8F8513	CLIP	1
32	9F5940	GASKET	1
33	7S7370	BLOCK ASSEM.	1
34	3S8744	LOCK	1
35	7B3235	BOLT	4
	3B4508	LOCKWASHER	4
36	3P5929	MANIFOLD	1
37	8M4989	SEAL	2
38	1M2675	TUBE (R. H.)	1
39	3B8996	FITTING	2
	8F8997	NUT	1
40	1M2676	TUBE (L. H.)	1
41	T102	BOLT	3

C INDICATES CHANGE

146934

TRANSMISSION AND STEERING CLUTCH LUBRICATION SYSTEM (2S8400 N/S)—Side View—Part 1 of 3
Serial No. 46A31255 to 46A31259 and 46A31262 to 46A32802 inclusive
See Page 28 for Gasket Kit

TRANSMISSION AND STEERING CLUTCH LUBRICATION SYSTEM (2S8400 N/S)—Side View—Part 2 of 3
Serial No. 46A31255 to 46A31259 and 46A31262 to 46A32802 inclusive
3P4855 Pump, 3P4243 Filter and 9M8669 Screen parts are shown on Pages 84F-11, 84G and 86

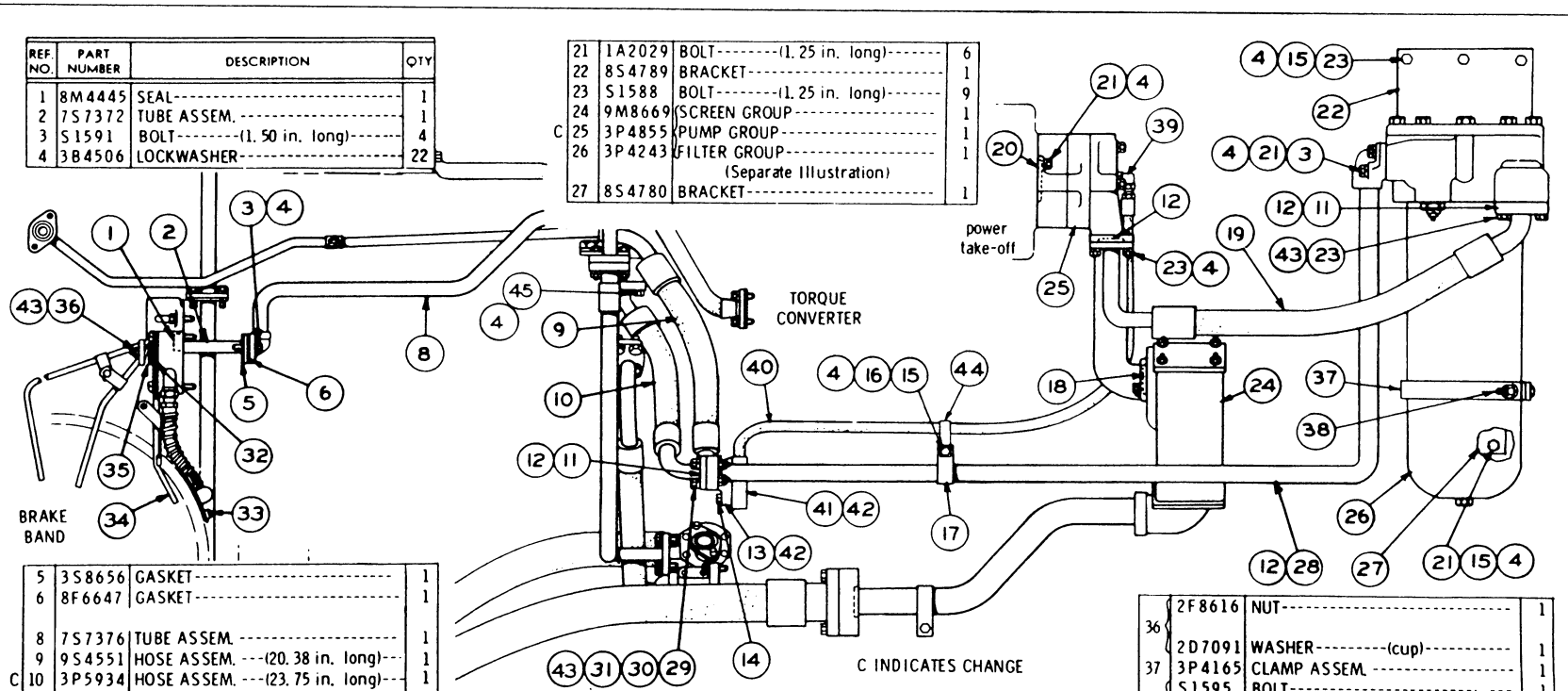

REF. NO.	PART NUMBER	DESCRIPTION	QTY
1	8M4445	SEAL	1
2	7S7372	TUBE ASSEM.	1
3	S1591	BOLT--------(1.50 in. long)-------	4
4	3B4506	LOCKWASHER	22

	21	1A2029	BOLT--------(1.25 in. long)-------	6
	22	8S4789	BRACKET	1
	23	S1588	BOLT--------(1.25 in. long)-------	9
	24	9M8669	SCREEN GROUP	1
C	25	3P4855	PUMP GROUP	1
	26	3P4243	FILTER GROUP (Separate Illustration)	1
	27	8S4780	BRACKET	1

	5	3S8656	GASKET	1
	6	8F6647	GASKET	1
	8	7S7376	TUBE ASSEM.	1
	9	9S4551	HOSE ASSEM. ---(20.38 in. long)---	1
C	10	3P5934	HOSE ASSEM. ---(23.75 in. long)---	1
C	11	1P4577	FLANGE	6
	12	8M4987	SEAL	4
	13	1P4578	FLANGE	2
	14	1D4703	BOLT	4
	15	S1594	BOLT---------(1 in. long)---------	5
	16	1A4784	WASHER	1
	17	9M5639	CLIP	1
		9M5640	CLIP	1
	18	8M5010	SEAL	1
C	19	3P5933	HOSE ASSEM. ---(21.56 in. long)---	1
	20	8M5252	SEAL	1

	28	9S440	TUBE ASSEM.	1
	29	7H7954	BOLT--------(1.125 in. long)-------	2
	30	5B213	BOLT--------(2.375 in. long)-------	2
	31	1D4717	NUT	4
	32	1M5471	VALVE	1
		7S9686	BOLT	4
	33	2H3504	LOCK	4
		1B4203	NUT	4
	34	2S8311	TUBE ASSEM. ------(center)-------	1
	35	1S7139	SPRING	1

	36	2F8616	NUT	1
		2D7091	WASHER---------(cup)----------	1
	37	3P4165	CLAMP ASSEM.	1
		S1595	BOLT	1
	38	1D4719	NUT	1
		3B4508	LOCKWASHER	1
	39	307947	ELBOW	2
		336042	SEAL	2
	40	3P6151	HOSE ASSEM.	1
	41	3P6308	ADAPTER	1
	42	8M4986	SEAL	2
C	43	4B4278	WASHER---------(steel)----------	13
	44	5M8429	CLIP	1
C	45	L1143	BOLT	4

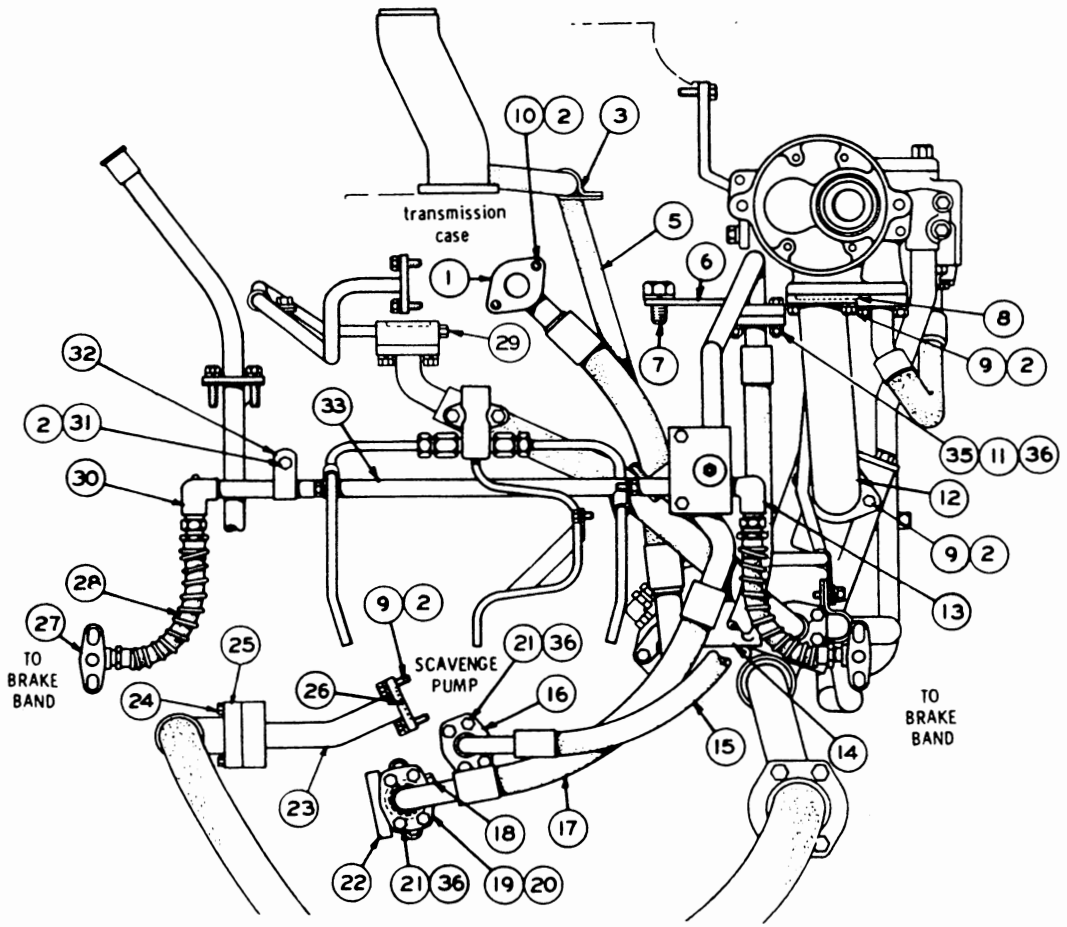

REF. NO.	PART NUMBER	DESCRIPTION	QTY
1	9S4569	FLANGE	1
2	3B4506	LOCKWASHER	11
3	3S8665	CLIP	1
5	6K6830	HOSE ASSEM.	1
6	7S7378	PLATE	1
7	7H2069	BOLT	1
	3B4512	LOCKWASHER	1
8	8M5010	SEAL	1
9	1A2029	BOLT	6
10	S1591	BOLT	2
11	1D4717	NUT	2
12	4S8015	ELBOW	1
13	7S7369	FITTING	1
14	3P7974	SUPPORT	1
15	7S7379	HOSE ASSEM. -(28.38" Long Overall)-	1
16	1P4576	FLANGE	4
17	5S808	HOSE ASSEM. -(21.60" Long Overall)-	1
18	2H8829	PLUG	1
	6F7062	WASHER	1
19	1P4577	FLANGE	2
20	8M4987	SEAL	2
21	S1588	BOLT	8
22	7S7906	ADAPTER	1
23	3P5828	TUBE ASSEM.	1
24	T768	BOLT	8
25	1P4578	FLANGE	4
26	8M5254	SEAL	1
27	7S7367	FITTING	2
28	7S7368	HOSE ASSEM. ---(10.62 in. long)--	2
C 29	9S4182	PLUG	1
	3J7354	SEAL	1
30	7S7507	FITTING	1
31	T102	BOLT	1
32	1S3618	CLIP	1
33	7S7375	TUBE ---------(20.75 in. long)-----	1
35	2A4639	BOLT	2
36	4B42/8	WASHER	10

C INDICATES CHANGE

146936

TRANSMISSION AND STEERING CLUTCH LUBRICATION SYSTEM (2S8400 N/S)—Rear View—Part 3 of 3
Serial No. 46A31255 to 46A31259 and 46A31262 to 46A32802 inclusive

TRANSMISSION AND STEERING CLUTCH LUBRICATION SYSTEM (2S8400 N/S)—Part 1 of 3—Type 2

Serial No. 46A31255 to 46A31259 and 46A31262 to 46A32802 inclusive

See Page 28 for Gasket Kits

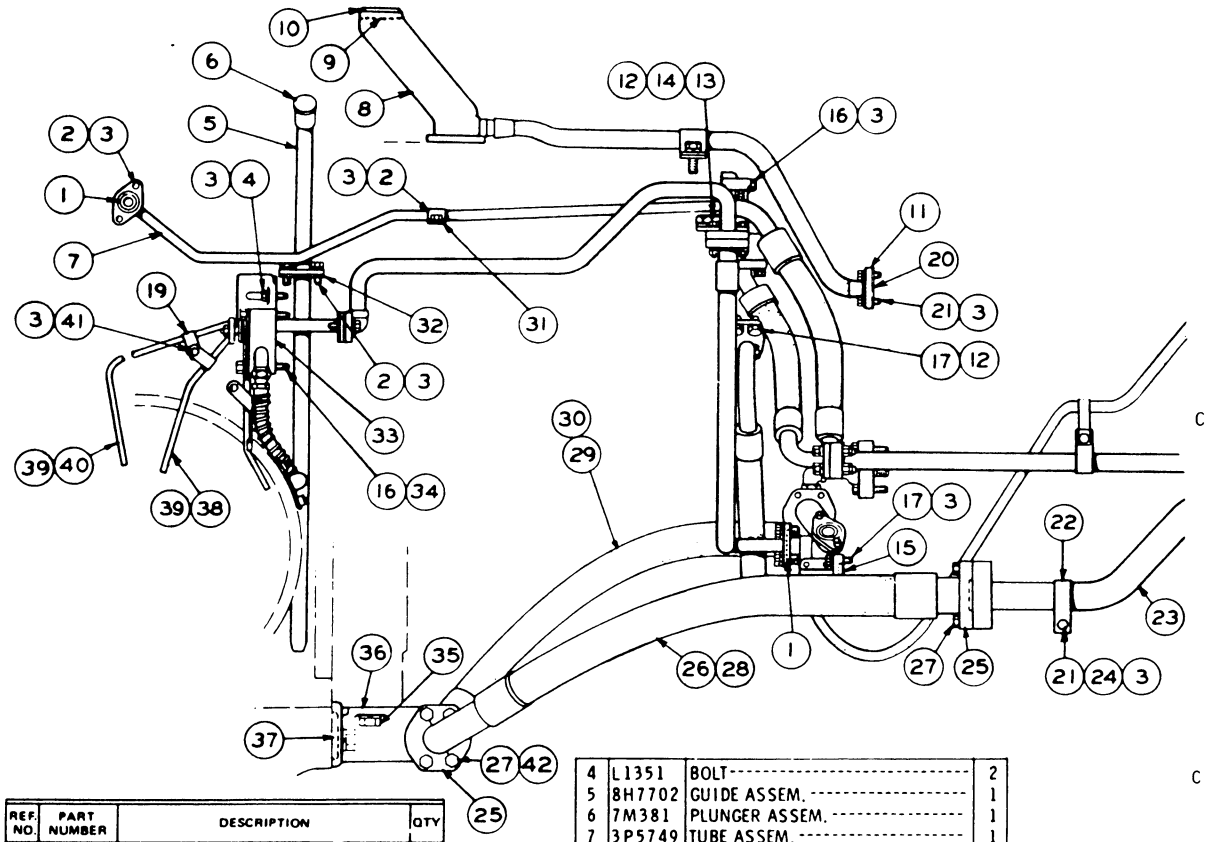

REF. NO.	PART NUMBER	DESCRIPTION	QTY
1	8M4988	SEAL	3
2	S1594	BOLT	5
3	3B4506	LOCKWASHER	19
4	L1351	BOLT	2
5	8H7702	GUIDE ASSEM.	1
6	7M381	PLUNGER ASSEM.	1
7	3P5749	TUBE ASSEM.	1
8	1S2254	SPOUT	1
9	L1124	GASKET	1
10	5M902	PLUG	1
11	1S9353	COVER	1
12	4B4278	WASHER	6
13	S1571	BOLT	2
14	1D4717	NUT	2
15	8M4987	SEAL	3
16	L1143	BOLT	4
17	S1588	BOLT	6
18	1P4577	FLANGE	2
19	7H7055	CLIP	2
20	4F5640	GASKET	1
21	1A2029	BOLT	3
22	8S9798	CLAMP	1
23	3P5752	TUBE ASSEM.	1
24	1A4784	WASHER	1
25	1P4582	FLANGE	4
26	3P5930	HOSE ASSEM. --37.5 in. (9.53 dm)	
C 27	S1585	BOLT	8
28	8M4390	SEAL	2
29	3P5931	HOSE ASSEM. ---34 in. (8.64 dm)	1
30	8M4986	SEAL	2
31	8F8513	CLIP	1
32	9F5940	GASKET	1
33	7S7370	BLOCK ASSEM.	1
34	3S8744	LOCK	1
35	7B3235	BOLT	4
	3B4508	LOCKWASHER	4
36	3P5929	MANIFOLD	1
37	8M4989	SEAL	2
38	1M2675	TUBE ----------(R. H.)----------	1
39	3B8996	FITTING	2
	8F8997	NUT	1
40	1M2676	TUBE ----------(L. H.)----------	1
41	T102	BOLT	3
C 42	4B4280	WASHER	8

C INDICATES CHANGE

153867

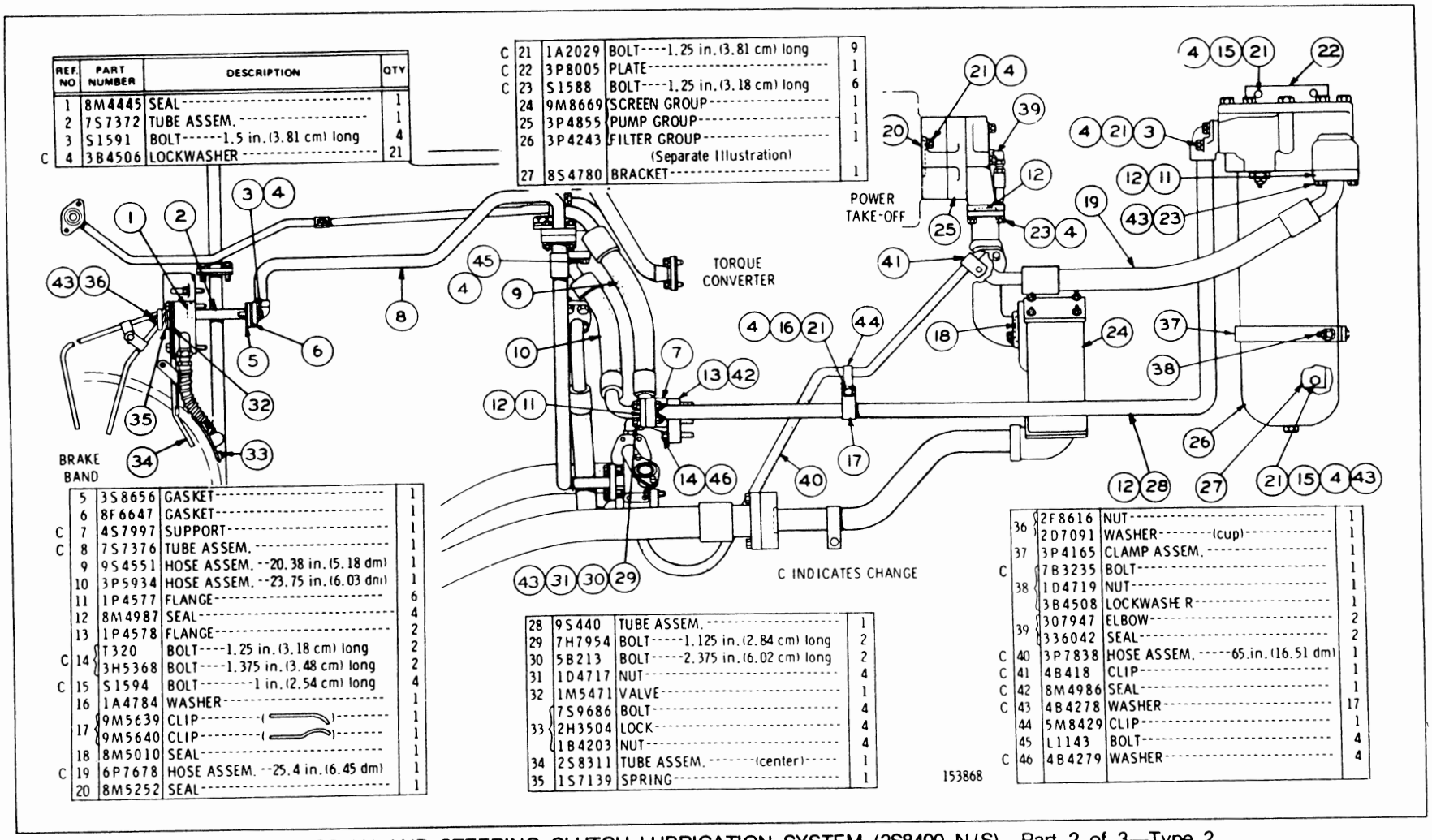

REF. NO	PART NUMBER	DESCRIPTION	QTY
1	8M4445	SEAL	1
2	7S7372	TUBE ASSEM.	1
3	S1591	BOLT---1.5 in. (3.81 cm) long	4
C 4	3B4506	LOCKWASHER	21
5	3S8656	GASKET	1
6	8F6647	GASKET	1
C 7	4S7997	SUPPORT	1
C 8	7S7376	TUBE ASSEM.	1
9	9S4551	HOSE ASSEM. --20.38 in. (5.18 dm)	1
10	3P5934	HOSE ASSEM. --23.75 in. (6.03 dm)	1
11	1P4577	FLANGE	6
12	8M4987	SEAL	4
13	1P4578	FLANGE	2
C 14	T320	BOLT---1.25 in. (3.18 cm) long	2
	3H5368	BOLT---1.375 in. (3.48 cm) long	2
C 15	S1594	BOLT---1 in. (2.54 cm) long	4
16	1A4784	WASHER	1
17	9M5639	CLIP	1
	9M5640	CLIP	1
18	8M5010	SEAL	1
C 19	6P7678	HOSE ASSEM. --25.4 in. (6.45 dm)	1
20	8M5252	SEAL	1
C 21	1A2029	BOLT---1.25 in. (3.81 cm) long	9
C 22	3P8005	PLATE	1
C 23	S1588	BOLT---1.25 in. (3.18 cm) long	6
24	9M8669	SCREEN GROUP	1
25	3P4855	PUMP GROUP	1
26	3P4243	FILTER GROUP (Separate Illustration)	1
27	8S4780	BRACKET	1
28	9S440	TUBE ASSEM.	1
29	7H7954	BOLT---1.125 in. (2.84 cm) long	2
30	5B213	BOLT---2.375 in. (6.02 cm) long	2
31	1D4717	NUT	4
32	1M5471	VALVE	1
33	7S9686	BOLT	4
	2H3504	LOCK	4
	1B4203	NUT	4
34	2S8311	TUBE ASSEM. (center)	1
35	1S7139	SPRING	1
36	2F8616	NUT	1
	2D7091	WASHER (cup)	1
37	3P4165	CLAMP ASSEM.	1
C	7B3235	BOLT	1
38	1D4719	NUT	1
	3B4508	LOCKWASHER	1
39	307947	ELBOW	2
	336042	SEAL	2
C 40	3P7838	HOSE ASSEM. ---65.in. (16.51 dm)	1
C 41	4B418	CLIP	1
C 42	8M4986	SEAL	1
C 43	4B4278	WASHER	17
44	5M8429	CLIP	1
45	L1143	BOLT	4
C 46	4B4279	WASHER	4

TRANSMISSION AND STEERING CLUTCH LUBRICATION SYSTEM (2S8400 N/S)—Part 2 of 3—Type 2
Serial No. 46A31255 to 46A31259 and 46A31262 to 46A32802 inclusive
3P4855 Pump, 3P4243 Filter and 9M8669 Screen parts are shown on Pages 84F-11, 84G and 86

TRANSMISSION AND STEERING CLUTCH LUBRICATION SYSTEM (2S8400 N/S)—Part 3 of 3—Type 2
Serial No. 46A31255 to 46A31259 and 46A31262 to 46A32802 inclusive

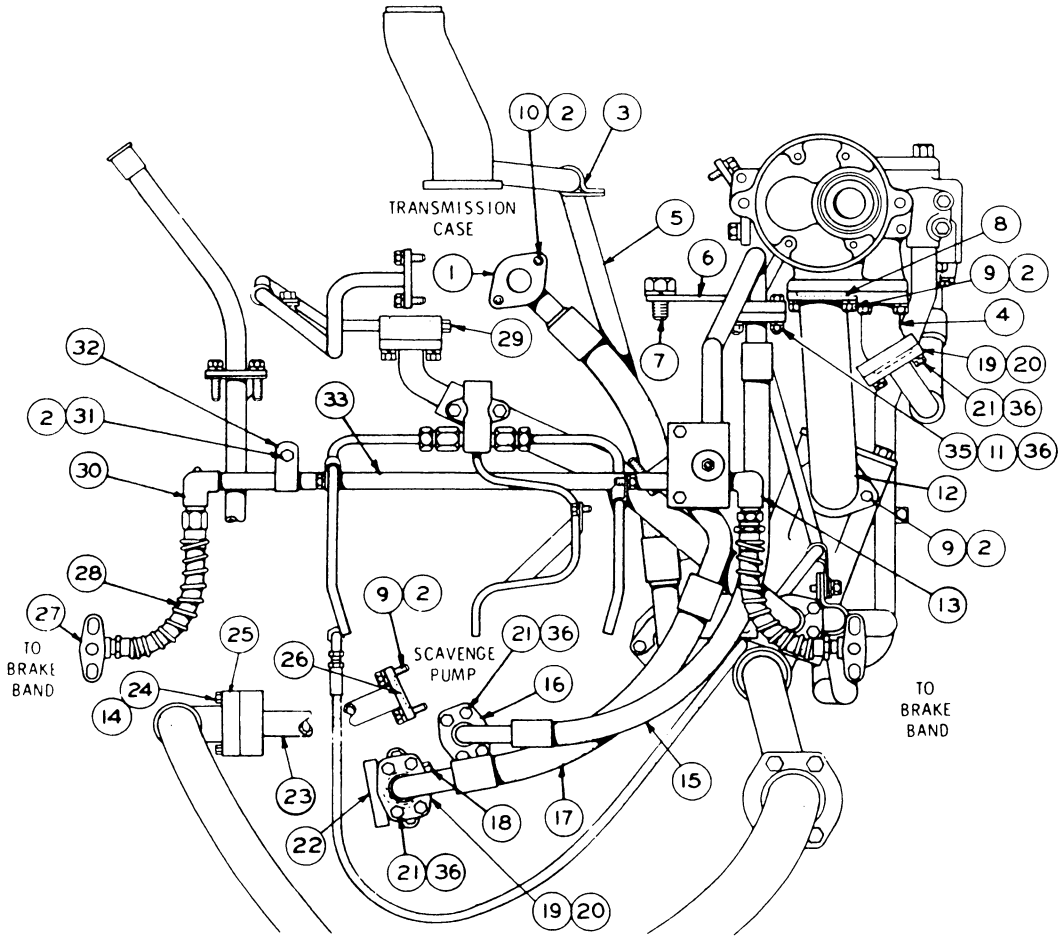

	REF NO	PART NUMBER	DESCRIPTION	QTY
	1	9S4569	FLANGE	1
	2	3B4506	LOCKWASHER	11
	3	3S8665	CLIP	1
C	4	6P7679	ELBOW	1
	5	6K6830	HOSE ASSEM.	1
	6	7S7378	PLATE	1
	7	7H2069	BOLT	1
		3B4512	LOCKWASHER	1
	8	8M5010	SEAL	1
	9	1A2029	BOLT	6
	10	S1591	BOLT	2
	11	1D4717	NUT	2
	12	4S8015	ELBOW	1
	13	7S7369	FITTING	1
C	14	4B4279	WASHER	8
	15	7S7379	HOSE ASSEM. --28.38 in. (7.21 dm)	1
	16	1P4576	FLANGE	4
	17	5S808	HOSE ASSEM. --21.6 in. (5.49 dm)	1
	18	2H8829	PLUG	1
		3F7062	WASHER	1
C	19	1P4577	FLANGE	4
C	20	8M4987	SEAL	3
C	21	S1588	BOLT	12
	22	7S7906	ADAPTER	1
	23	3P5828	TUBE ASSEM.	1
C	24	3H5368	BOLT	8
	25	1P4578	FLANGE	4
	26	8M5254	SEAL	1
	27	7S7367	FITTING	2
	28	7S7368	HOSE ASSEM. --10.62 in. (2.7 dm)	2
	29	9S4182	PLUG	1
		3J7354	SEAL	1
	30	7S7507	FITTING	1
	31	T102	BOLT	1
	32	1S3618	CLIP	1
	33	7S7375	TUBE ---------20.75 in. (5.27 dm)	1
	35	2A4639	BOLT	2
C	36	4B4278	WASHER	14

C INDICATES CHANGE

153869

POWER TRAIN OIL LINES (3P4046 N/S)—Part 1 of 3
Serial No. 46A32803—Up
See Page 28 for Gasket Kits

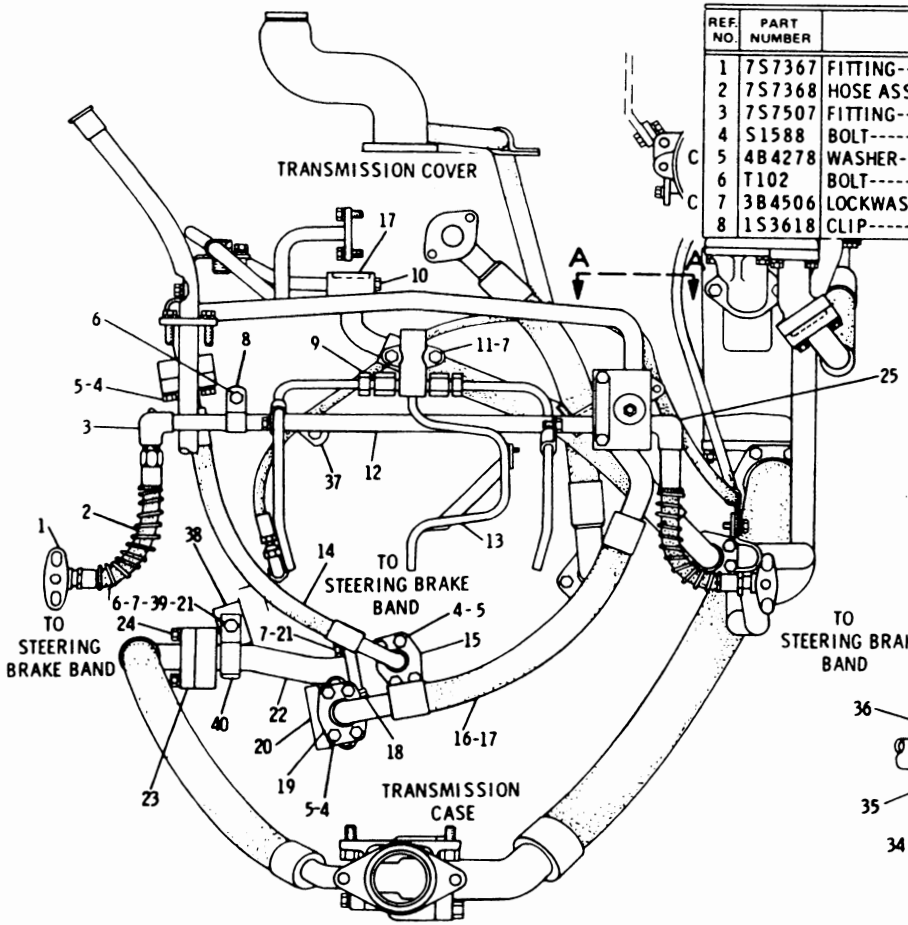

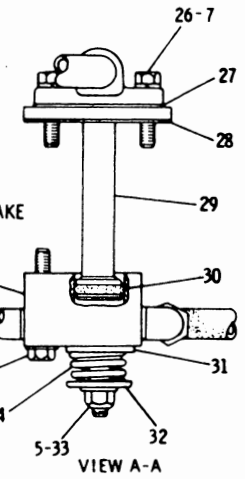

REF. NO.	PART NUMBER	DESCRIPTION	QTY
1	7S7367	FITTING	2
2	7S7368	HOSE ASSEM. ---10.62 in. (2.70 dm)	2
3	7S7507	FITTING	1
4	S1588	BOLT	16
C 5	4B4278	WASHER	15
6	T102	BOLT	1
C 7	3B4506	LOCKWASHER	8
8	1S3618	CLIP	1
9	3B8996	FITTING (Each Includes)	2
	8F8997	NUT	1
10	9S4182	PLUG	1
	3J7354	SEAL	1
11	L1351	BOLT	2
12	7S7375	TUBE	1
13	2S8311	TUBE ASSEM.	1
14	3P8230	HOSE ASSEM. ----18.81 in. (4.77dm)	1
15	1P4576	FLANGE	4
16	5S808	HOSE ASSEM. ----21.60 in. (5.49dm)	1
17	8M4987	SEAL	3
18	2H8829	PLUG	1
	6F7062	WASHER	1
19	1P4577	FLANGE	4
20	7S7906	ADAPTER	1
C 21	1A2029	BOLT	3
22	3P5828	TUBE ASSEM.	1
	8M5254	SEAL	1
23	1P4578	FLANGE	4
24	3H5368	BOLT	8
	4B4279	LOCKWASHER	8
25	7S7369	FITTING	1
26	S1591	BOLT	2
27	8F6647	GASKET	1
28	3S8656	GASKET	1
29	7S7372	TUBE ASSEM.	1
30	8M4445	SEAL	1
31	1M5471	VALVE	1
32	2D7091	WASHER-------(cup)	1
33	2F8616	NUT	1
34	1S7139	SPRING	1
35	L1143	BOLT	2
	3S8744	LOCK	1
36	7S7370	BLOCK ASSEM.	1
C 37	1B8471	CLIP	1
C 38	8P400	BRACKET	1
C 39	1D4717	NUT	1
C 40	8S23	CLIP----------( )--------	1
	8S24	CLIP----------( )--------	1

C INDICATES CHANGE

153398

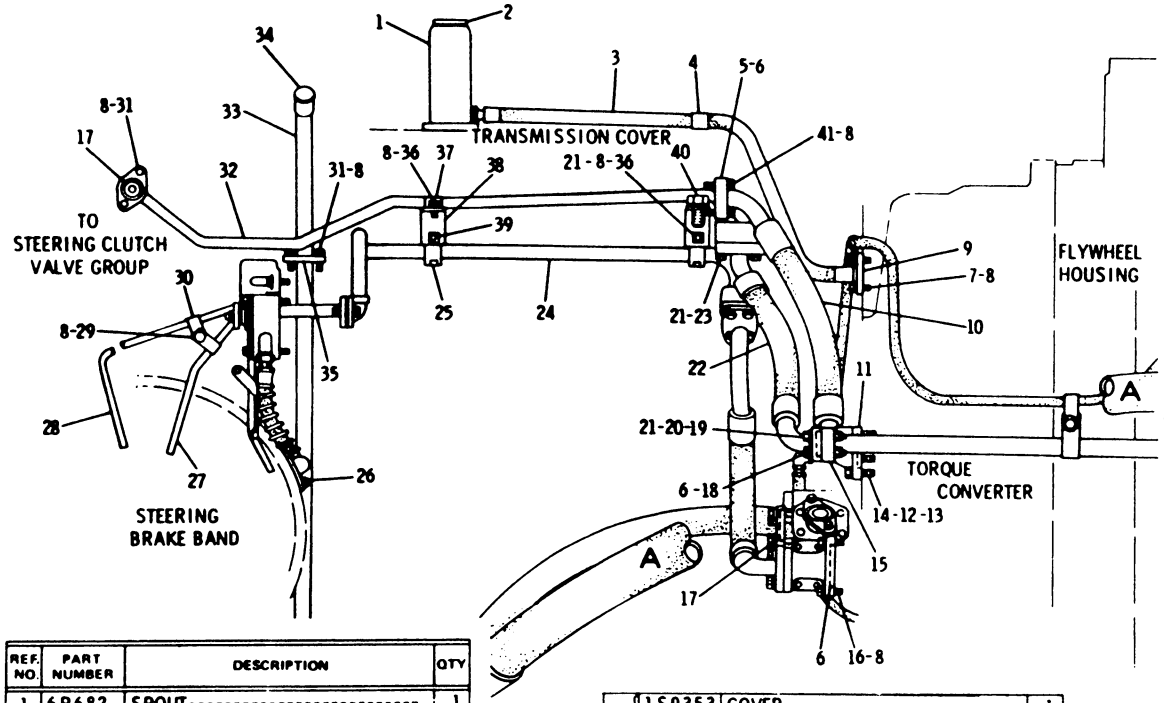

REF. NO.	PART NUMBER	DESCRIPTION	QTY
1	6P682	SPOUT	1
2	4B2363	PLUG	1
	6F4868	GASKET	1
3	6K6830	HOSE ASSEM. -----31 in. (7.87 dm)	1
4	3S8665	CLIP	1
5	9S4569	FLANGE	1
6	8M4987	SEAL	3
7	1A2029	BOLT	2
8	3B4506	LOCKWASHER	16
9	1S9353	COVER	1
	4F5640	GASKET	1
10	9S4551	HOSE ASSEM. ----20.38 in. (5.18dm)	1
11	1P4578	FLANGE	2
	8M4986	SEAL	1
12	T772	BOLT-------1.50 in. (3.81 cm) long	2
13	4B4279	WASHER	2
14	3H5368	BOLT-----1.375 in. (3.49 cm) long	2
15	4S7997	SUPPORT	1
16	S1588	BOLT	2
17	8M4988	SEAL	3
18	1P4577	FLANGE	4
19	5B213	BOLT-----2.375 in. (60.33 mm) long	2
	7H7954	BOLT-----1.125 in. (23.58 mm) long	2
20	1D4717	NUT	4
21	4B4278	WASHER	10
22	3P5934	HOSE ASSEM. ----23.75 in. (6.03dm)	1
23	L1143	BOLT	4
24	6P7757	TUBE ASSEM.	1
25	7S3912	CLIP-------( )--------	2
	7S3913	CLIP-------( )--------	2
	7S9686	BOLT	4
26	2H3504	LOCK	4
	1B4203	NUT	4
27	1M2675	TUBE---------(R. H.)----------	1
▲ 28	5P1200	TUBE----(L. H.)--61 cm(24 in.)	
29	T102	BOLT	2
30	7B9919	CLIP	2
31	S1594	BOLT	4
C 32	3P5749	TUBE ASSEM.	1
33	8H7702	GUIDE ASSEM.	1
34	7M381	PLUNGER ASSEM.	1
35	9F5940	GASKET	1
36	L1351	BOLT	3
37	8F8513	CLIP	2
38	3P8319	BRACKET ASSEM. (Each Includes)	2
39	9F2978	NUT	1
40	S1583	BOLT	1
	3B4512	LOCKWASHER	1
41	S1591	BOLT	2

▲ ORDER BY THE CENTIMETRE

C INDICATES CHANGE

210582

POWER TRAIN OIL LINES (3P4046 N/S)—Part 2 of 3
Serial No. 46A32803—Up

POWER TRAIN OIL LINES (3P4046 N/S)—Part 3 of 3

Serial No. 46A32803—Up

3P4855 Pump, 3P4243 Filter and 9M8669 Screen parts are shown on Pages 84F-11, 84G and 86

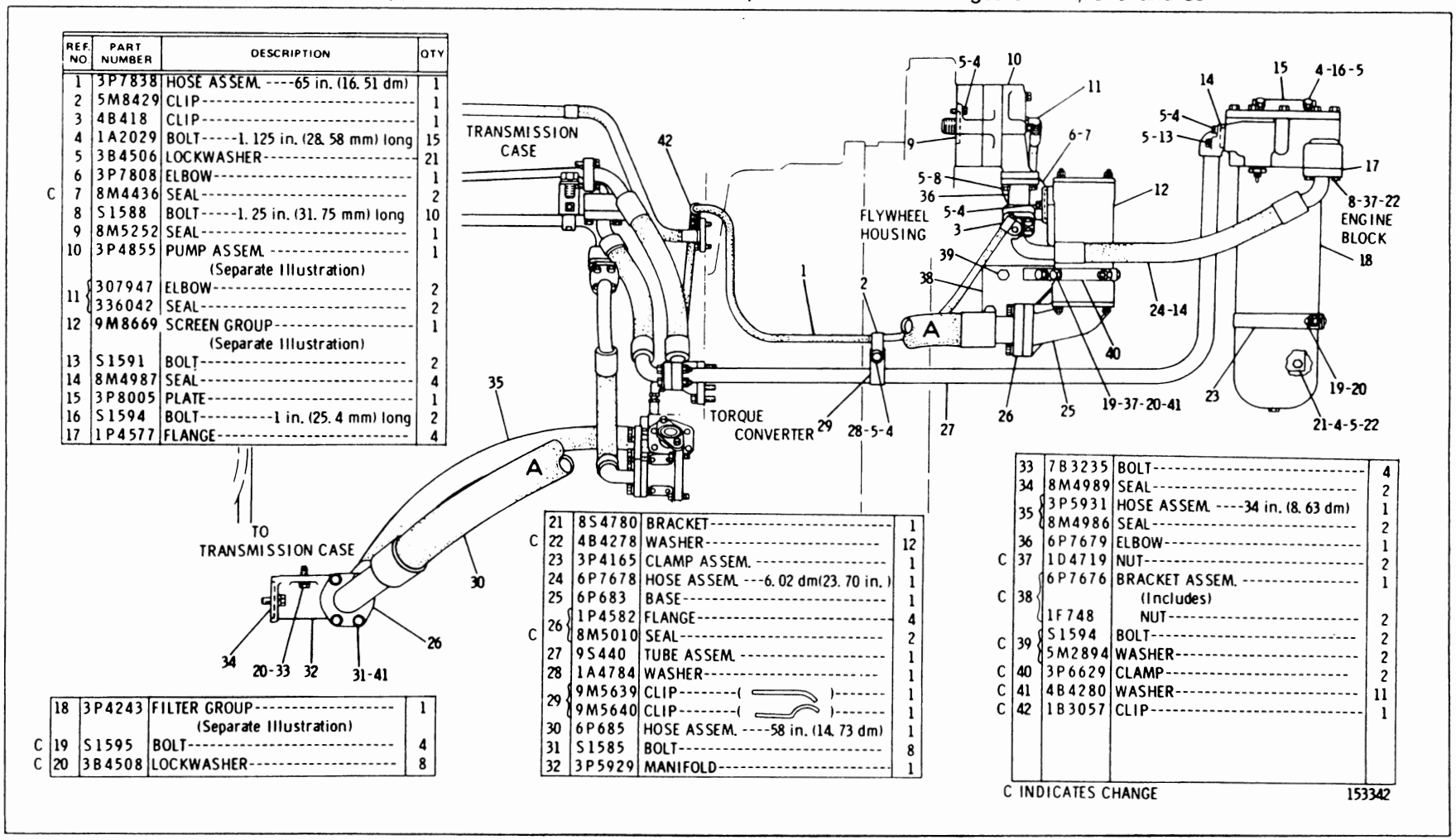

REF. NO	PART NUMBER	DESCRIPTION	QTY
1	3P7838	HOSE ASSEM. ----65 in. (16. 51 dm)	1
2	5M8429	CLIP----------	1
3	4B418	CLIP----------	1
4	1A2029	BOLT-----1. 125 in. (28. 58 mm) long	15
5	3B4506	LOCKWASHER----------	21
6	3P7808	ELBOW----------	1
C 7	8M4436	SEAL----------	2
8	S1588	BOLT-----1. 25 in. (31. 75 mm) long	10
9	8M5252	SEAL----------	1
10	3P4855	PUMP ASSEM. ---------- (Separate Illustration)	1
11	307947	ELBOW----------	2
	336042	SEAL----------	2
12	9M8669	SCREEN GROUP---------- (Separate Illustration)	1
13	S1591	BOLT----------	2
14	8M4987	SEAL----------	4
15	3P8005	PLATE----------	1
16	S1594	BOLT----------1 in. (25. 4 mm) long	2
17	1P4577	FLANGE----------	4

18	3P4243	FILTER GROUP---------- (Separate Illustration)	1
C 19	S1595	BOLT----------	4
C 20	3B4508	LOCKWASHER----------	8

21	8S4780	BRACKET----------	1
C 22	4B4278	WASHER----------	12
23	3P4165	CLAMP ASSEM. ----------	1
24	6P7678	HOSE ASSEM. ---6. 02 dm(23. 70 in.)	1
25	6P683	BASE----------	1
26	1P4582	FLANGE----------	4
C	8M5010	SEAL----------	2
27	9S440	TUBE ASSEM. ----------	1
28	1A4784	WASHER----------	1
29	9M5639	CLIP--------( )-------	1
	9M5640	CLIP--------( )-------	1
30	6P685	HOSE ASSEM. ----58 in. (14. 73 dm)	1
31	S1585	BOLT----------	8
32	3P5929	MANIFOLD----------	1

33	7B3235	BOLT----------	4
34	8M4989	SEAL----------	2
35	3P5931	HOSE ASSEM. ----34 in. (8. 63 dm)	1
	8M4986	SEAL----------	2
36	6P7679	ELBOW----------	1
C 37	1D4719	NUT----------	2
C 38	6P7676	BRACKET ASSEM. ---------- (Includes)	1
	1F748	NUT----------	2
C 39	S1594	BOLT----------	2
	5M2894	WASHER----------	2
C 40	3P6629	CLAMP----------	2
C 41	4B4280	WASHER----------	11
C 42	1B3057	CLIP----------	1

C INDICATES CHANGE

153342

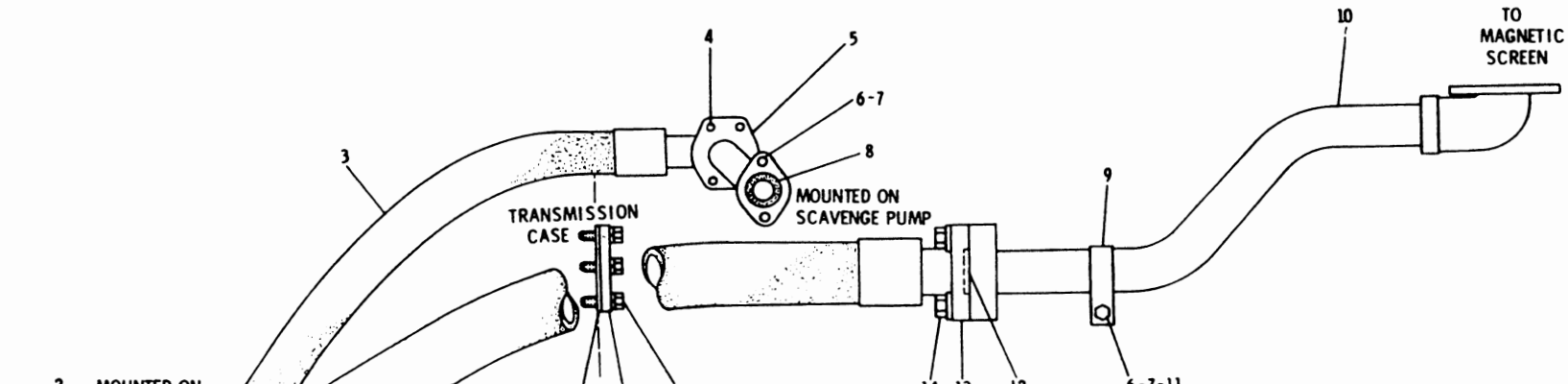

REF. NO.	PART NUMBER	DESCRIPTION	QTY
1	8M4989	SEAL	2
2	7B3235	BOLT	4
	3B4508	LOCKWASHER	4
3	3P5931	HOSE ASSEM. ----8 dm(31.5 in.)	1
	8M4986	SEAL	2
4	3H5368	BOLT	8
	4B4279	WASHER	8
	1P4578	FLANGE	4
5	3P5828	TUBE ASSEM.	1
6	1A2029	BOLT	3
7	3B4506	LOCKWASHER	11
8	8M5254	SEAL	1
9	8S9798	CLAMP	1
10	3P5752	TUBE ASSEM.	1
11	1A4784	WASHER	1
12	8M4390	SEAL	2
13	1P4582	FLANGE	4
14	S1585	BOLT	8
	4B4280	WASHER	8
15	S1594	BOLT	8
16	3P6581	COVER	2
17	9S8848	GASKET	2
18	3P5930	HOSE ASSEM. ----9.53 dm(37.5 in.)	1
19	3P5929	MANIFOLD	1
	GMG02490	FORM (Installing Transmission Suction line)	1

150790

6P3244 FIELD CHANGE OVER SERVICE GROUP
Serial No. 46A24433 to 46A30123 inclusive
FIELD CHANGE OVER FOR TRANSMISSION AND BRAKE SUCTION LINES. Only separate parts serviced

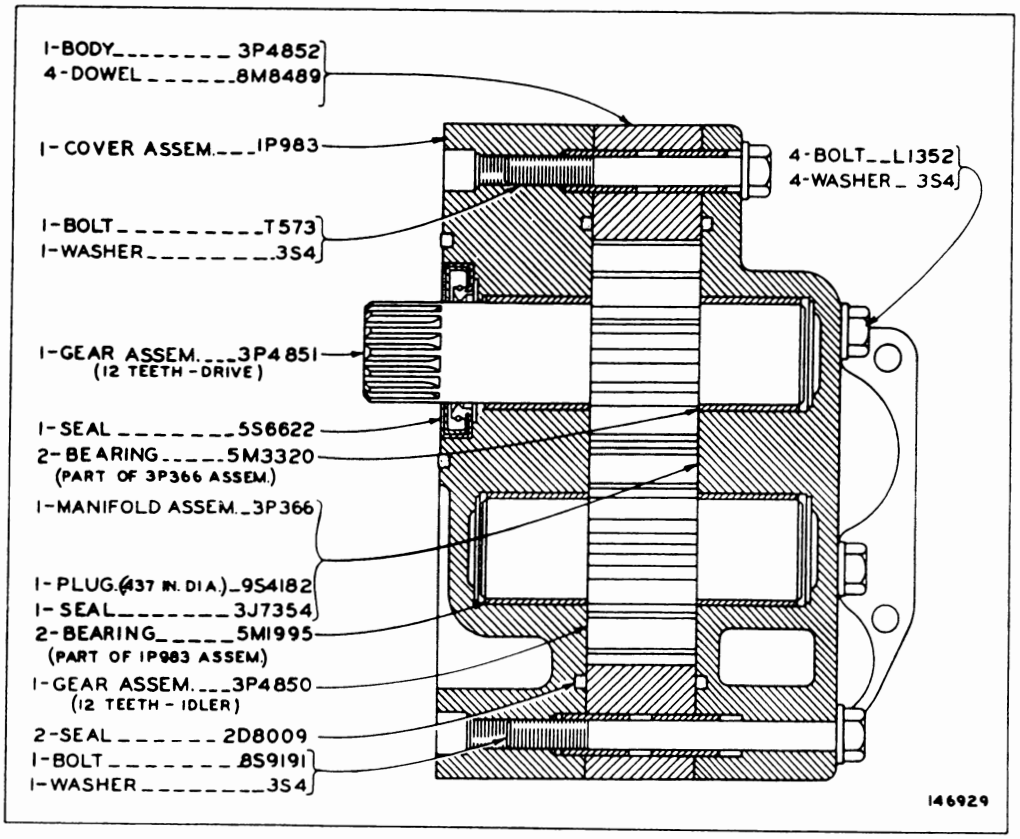

3P4855 GEAR PUMP GROUP
Serial No. 46A31255 to 46A31259 and 46A31262—Up. Part of Transmission and Steering Clutch Lubrication and Power Train Oil Lines shown on Pages 84F-5 and 84F-9

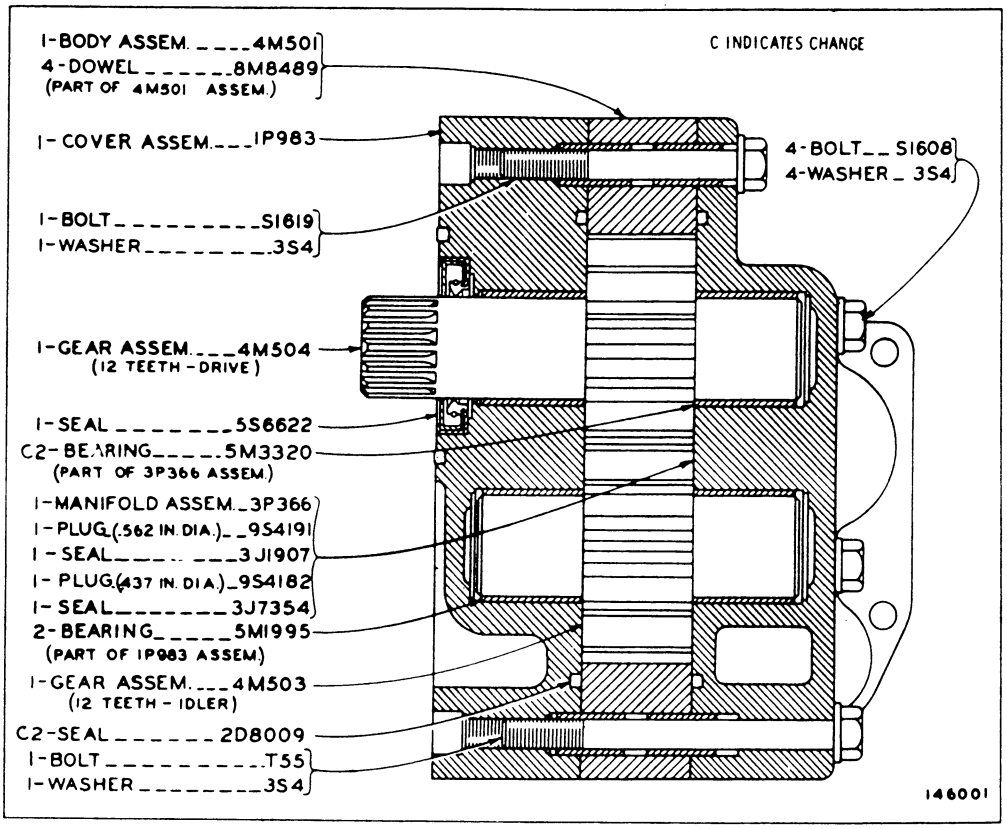

3P4002 GEAR PUMP GROUP
Serial No 46A29515 to 31254, 31260 and 46A31261 inclusive. Part of 2S8400 Transmission and Steering Clutch Lubrication System shown on Pages 84B, 84E and 84F-2

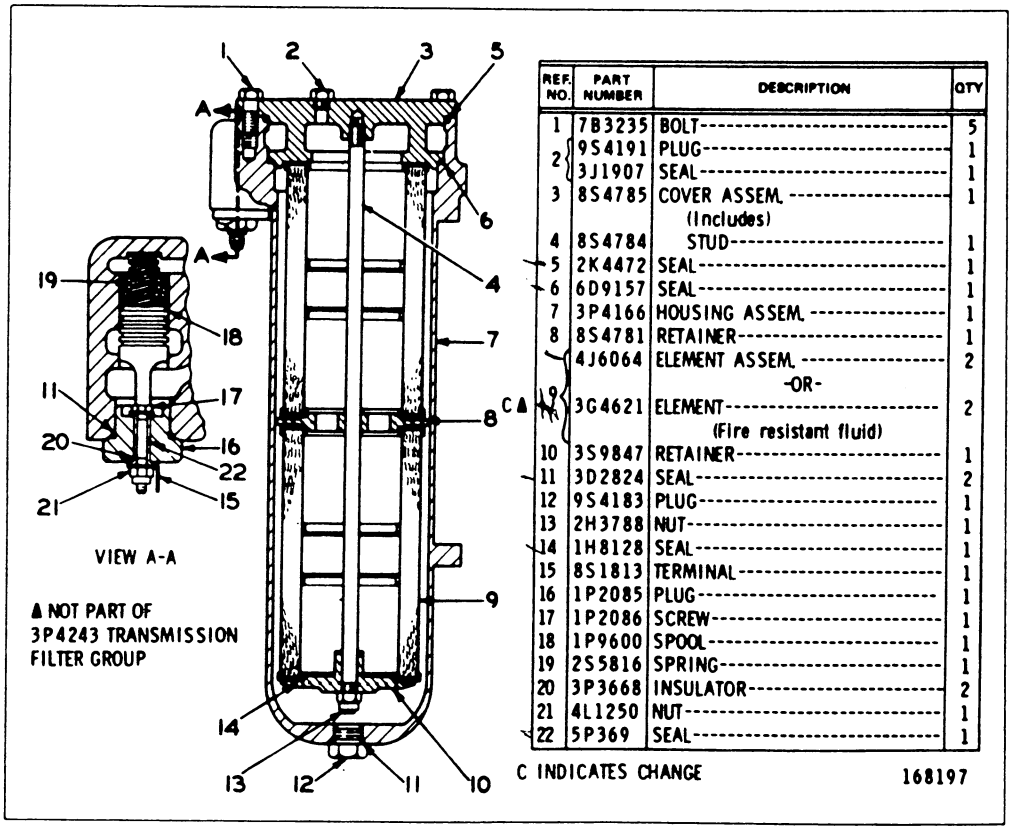

REF. NO.	PART NUMBER	DESCRIPTION	QTY
1	7B3235	BOLT	5
2	9S4191	PLUG	1
	3J1907	SEAL	1
3	8S4785	COVER ASSEM. (Includes)	1
4	8S4784	STUD	1
5	2K4472	SEAL	1
6	6D9157	SEAL	1
7	3P4166	HOUSING ASSEM.	1
8	8S4781	RETAINER	1
9	4J6064	ELEMENT ASSEM. -OR-	2
	3G4621	ELEMENT (Fire resistant fluid)	2
10	3S9847	RETAINER	1
11	3D2824	SEAL	2
12	9S4183	PLUG	1
13	2H3788	NUT	1
14	1H8128	SEAL	1
15	8S1813	TERMINAL	1
16	1P2085	PLUG	1
17	1P2086	SCREW	1
18	1P9600	SPOOL	1
19	2S5816	SPRING	1
20	3P3668	INSULATOR	2
21	4L1250	NUT	1
22	5P369	SEAL	1

C INDICATES CHANGE 168197

3P4243 TRANSMISSION FILTER GROUP
Serial No. 46A29515—Up. Part of 2S8400 Transmission and Steering Clutch Lubrication System and 3P4046 Power Train Oil Lines Group shown on Pages 84F-5, 84F-6b and 84F-9

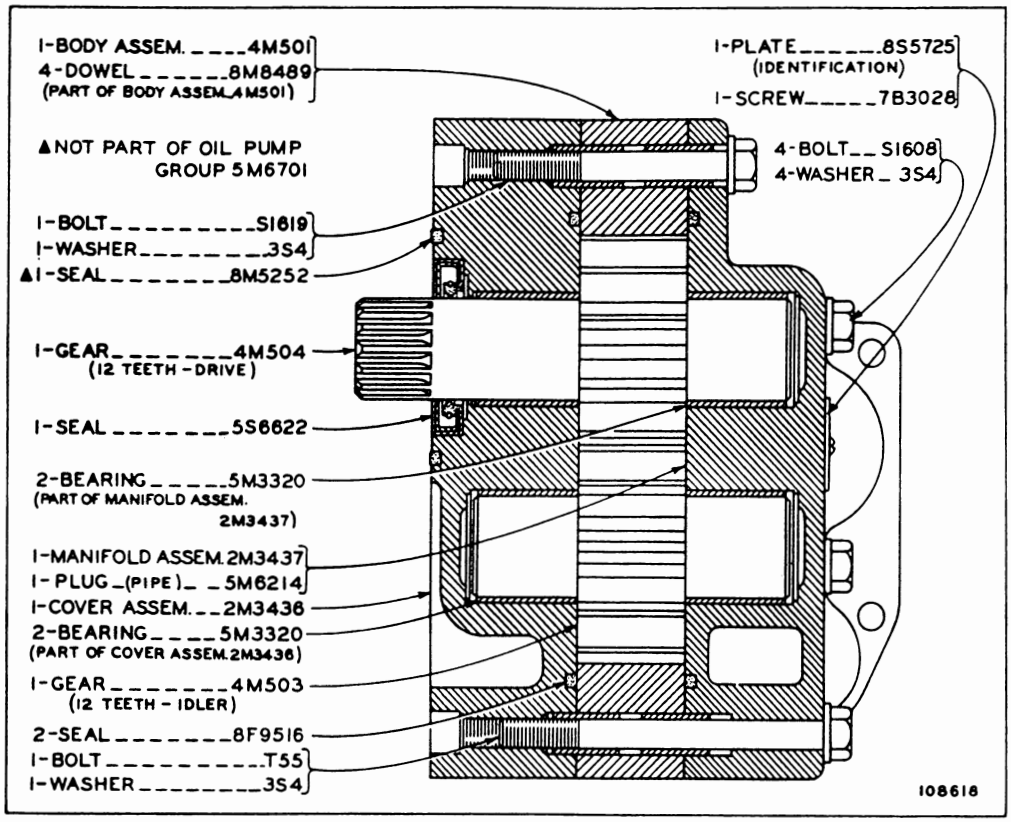

5M6701 OIL PUMP GROUP
Part of Transmission and Steering Clutch Lubricaton System
shown on Pages 82A, 82D and 83

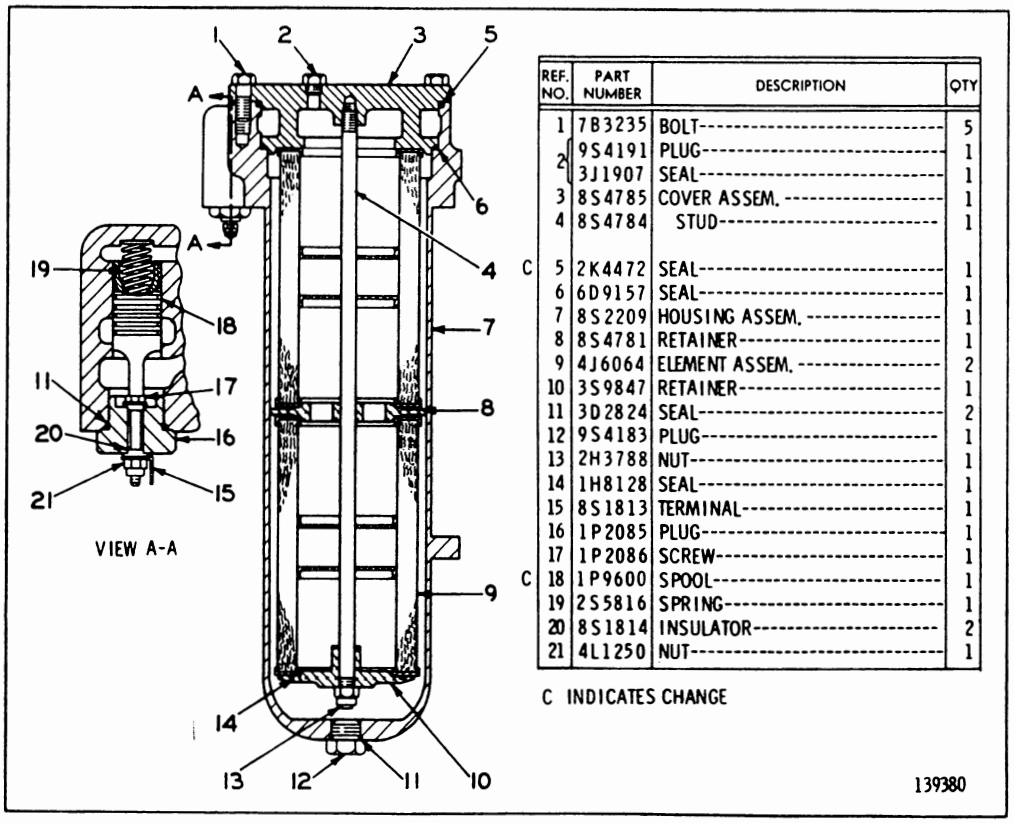

	REF. NO.	PART NUMBER	DESCRIPTION	QTY
	1	7B3235	BOLT	5
	2	9S4191	PLUG	1
		3J1907	SEAL	1
	3	8S4785	COVER ASSEM.	1
	4	8S4784	STUD	1
C	5	2K4472	SEAL	1
	6	6D9157	SEAL	1
	7	8S2209	HOUSING ASSEM.	1
	8	8S4781	RETAINER	1
	9	4J6064	ELEMENT ASSEM.	2
	10	3S9847	RETAINER	1
	11	3D2824	SEAL	2
	12	9S4183	PLUG	1
	13	2H3788	NUT	1
	14	1H8128	SEAL	1
	15	8S1813	TERMINAL	1
	16	1P2085	PLUG	1
	17	1P2086	SCREW	1
C	18	1P9600	SPOOL	1
	19	2S5816	SPRING	1
	20	8S1814	INSULATOR	2
	21	4L1250	NUT	1

C INDICATES CHANGE

8S4786 OIL FILTER GROUP
Part of Transmission and Steering Clutch Lubrication System
shown on Pages 82A, 82D and 83

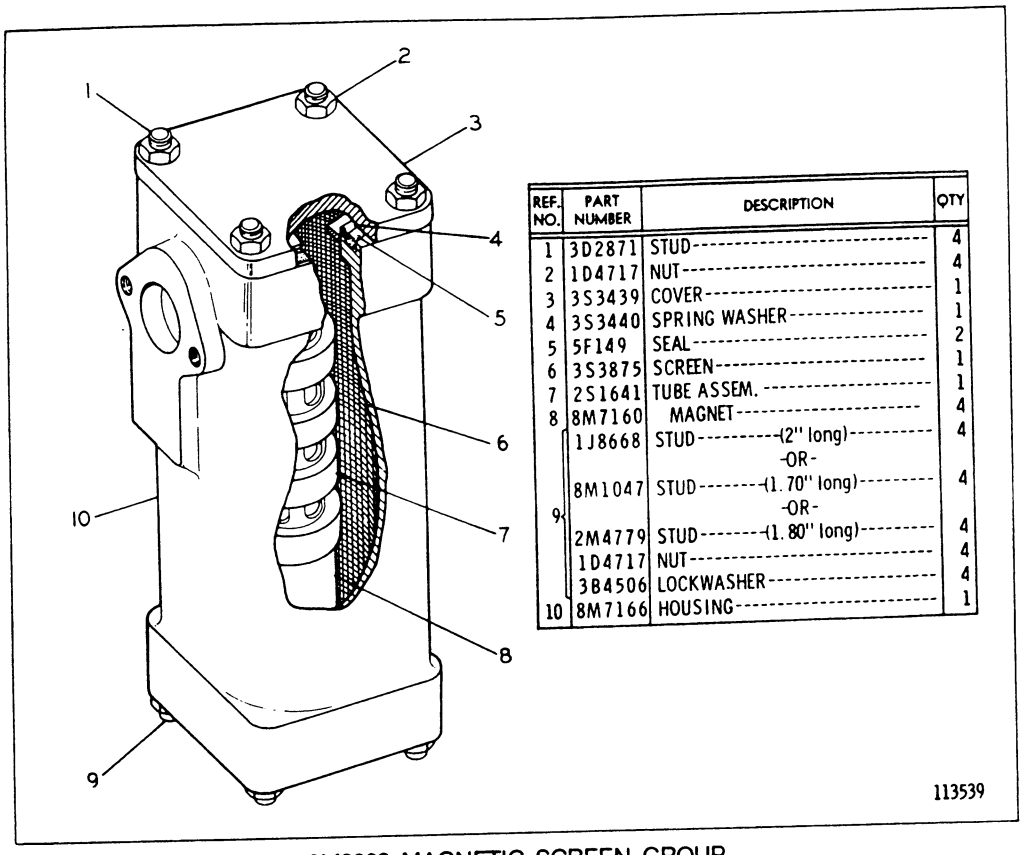

REF. NO.	PART NUMBER	DESCRIPTION	QTY
1	3D2871	STUD	4
2	1D4717	NUT	4
3	3S3439	COVER	1
4	3S3440	SPRING WASHER	1
5	5F149	SEAL	2
6	3S3875	SCREEN	1
7	2S1641	TUBE ASSEM.	1
8	8M7160	MAGNET	4
9	1J8668	STUD-(2" long)	4
		-OR-	
	8M1047	STUD-(1.70" long)	4
		-OR-	
	2M4779	STUD-(1.80" long)	4
	1D4717	NUT	4
	3B4506	LOCKWASHER	4
10	8M7166	HOUSING	1

9M8669 MAGNETIC SCREEN GROUP
Part of Transmission and Steering Clutch Lubrication System and Power Train Oil Lines shown on Pages 84F-5 and 84F-9

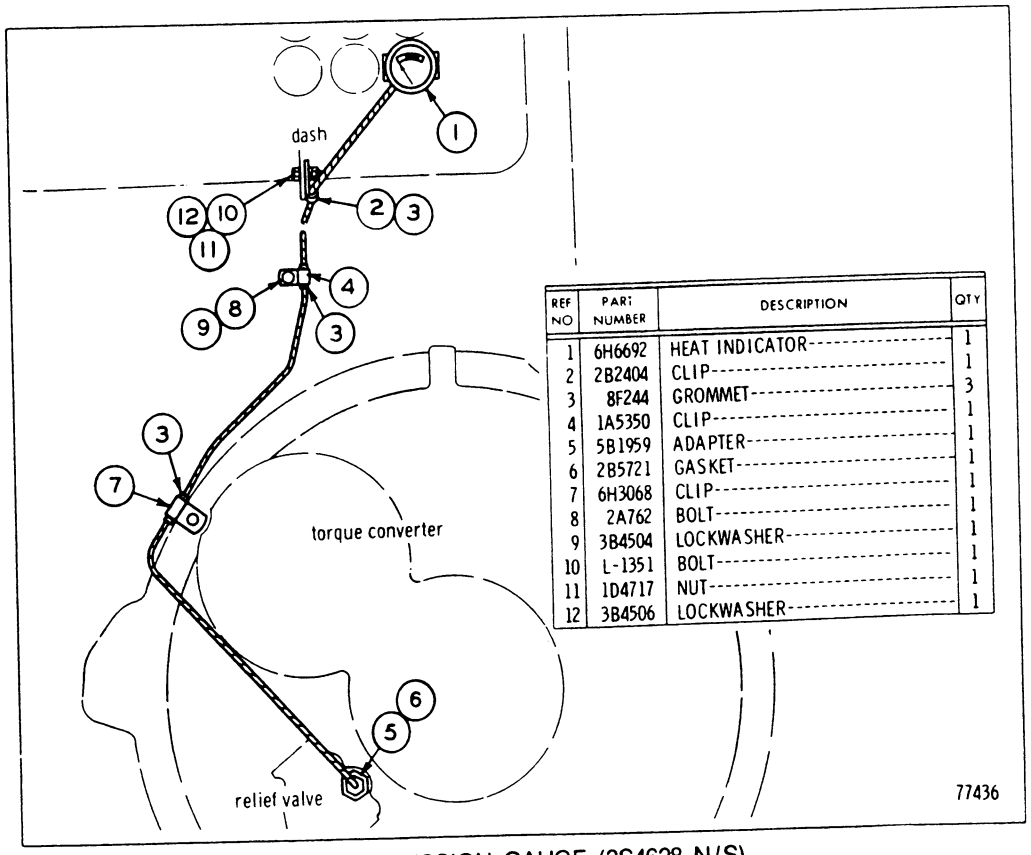

REF NO	PART NUMBER	DESCRIPTION	QTY
1	6H6692	HEAT INDICATOR	1
2	2B2404	CLIP	1
3	8F244	GROMMET	3
4	1A5350	CLIP	1
5	5B1959	ADAPTER	1
6	2B5721	GASKET	1
7	6H3068	CLIP	1
8	2A762	BOLT	1
9	3B4504	LOCKWASHER	1
10	L-1351	BOLT	1
11	1D4717	NUT	1
12	3B4506	LOCKWASHER	1

TRANSMISSION GAUGE (3S4628 N/S)

7S2788 STEERING CLUTCH HYDRAULIC VALVE GROUP

Part of Steering Clutch Hydraulic Control shown on Page 89

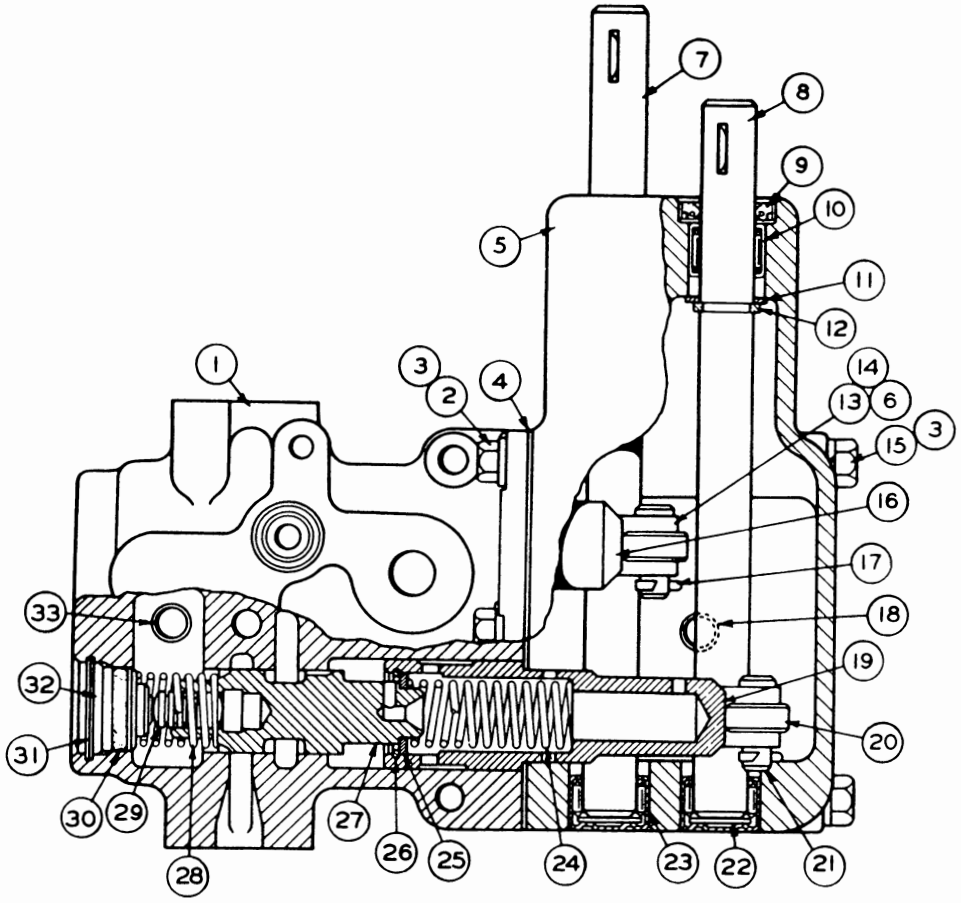

REF. NO.	PART NUMBER	DESCRIPTION	QTY.
1	5S5779	HOUSING	1
2	S-1594	BOLT	3
3	3B4506	LOCKWASHER	5
4	2S8414	GASKET	1
5	2S8307	HOUSING	1
6	1B8706	KEY	2
7	2S8380	SHAFT	1
8	2S8395	SHAFT	1
9	9H223	SEAL	2
10	7F7983	BEARING	2
11	3B9363	WASHER	2
12	3S7005	RING	2
13	2S8396	LEVER	2
14	S-1588	BOLT	2
15	1A5183	BOLT	2
16	5S5778	PLUNGER-------(Left Hand)------	1
17	3B4615	COTTER PIN	2
18	2S8413	STAND PIPE	1
19	5S5777	PLUNGER-------(Right Hand)------	1
20	2S8411	ROLLER	2
21	1J4384	PIN	2
22	5S6876	SPACER	2
23	3J7584	BEARING	2
24	2S8410	SPRING	2
25	2S8415	WASHER	2
26	3K6837	RING	2
27	2S8397	VALVE	2
28	2S8398	SPRING	2
29	5M2504	SLUG	2
30	8M4445	SEAL	2
31	8H1037	RING	2
32	4S6323	PLUG	2
33	2S8412	STAND PIPE	1

120269

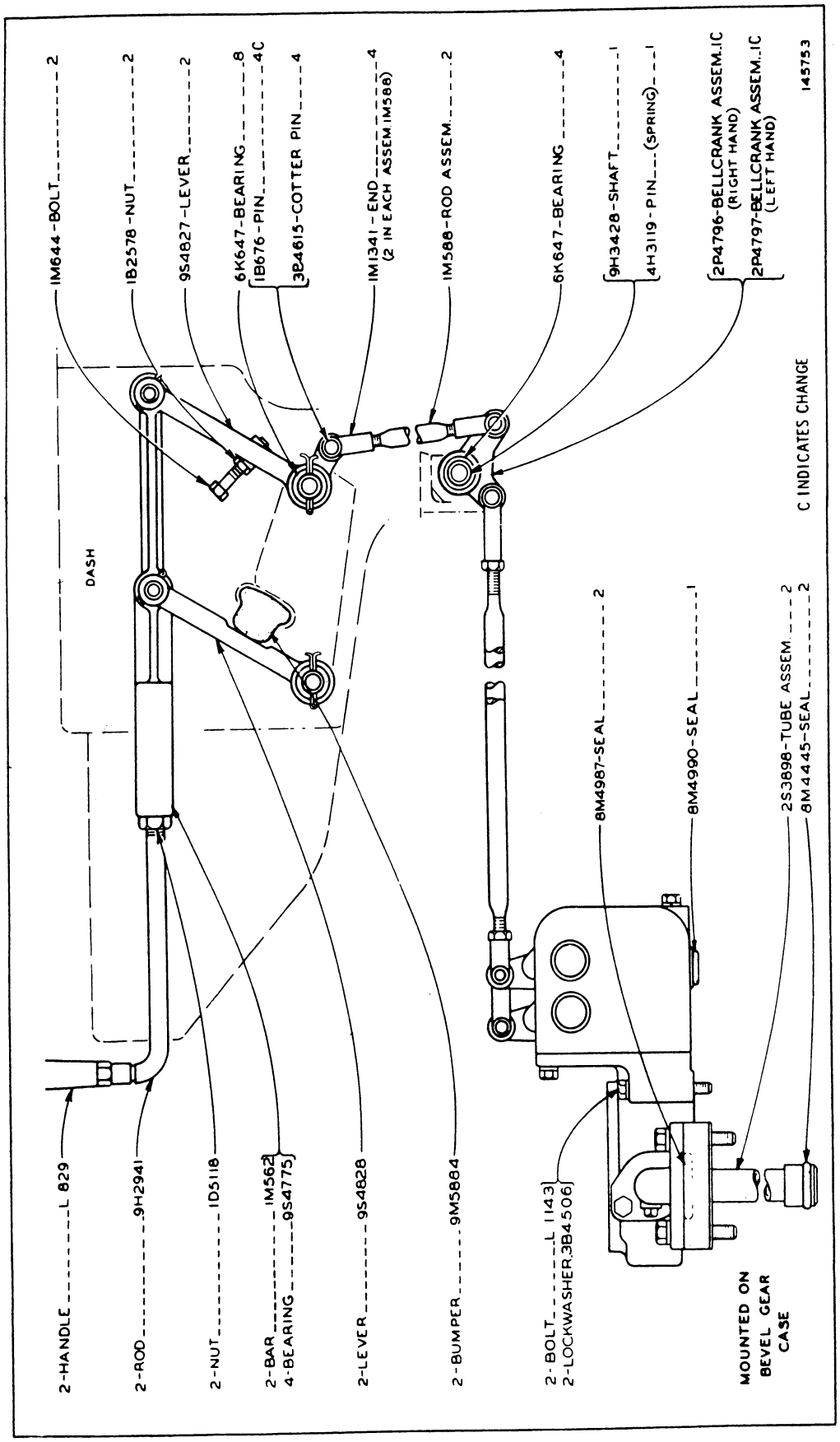

STEERING CLUTCH HYDRAULIC CONTROL (2S8581 N/S)—As Viewed from Right Hand Side of Machine

STEERING CLUTCH HYDRAULIC CONTROL (2S8581 N/S)—Top View

7S2788 Valve parts are shown on Page 87

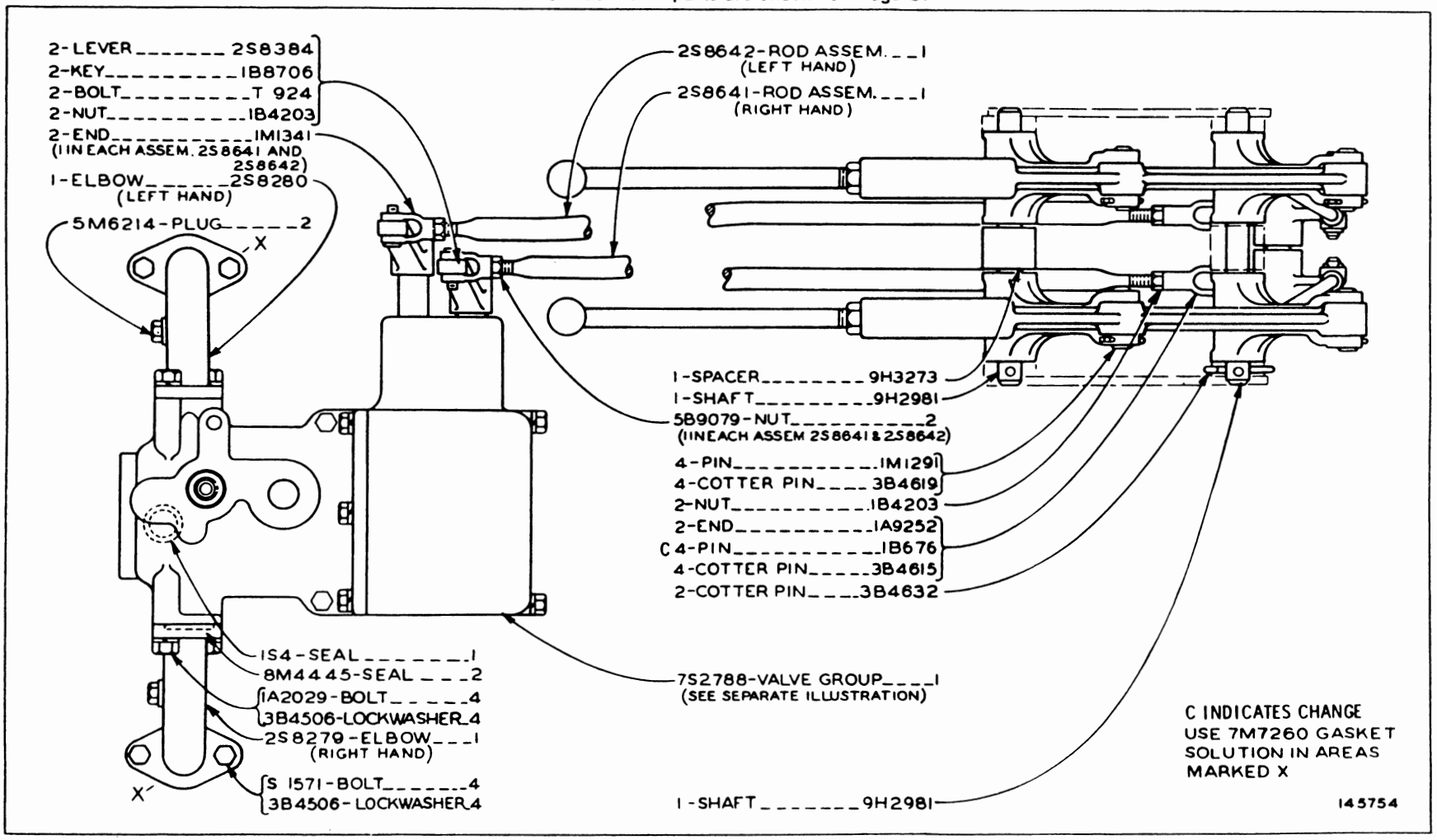

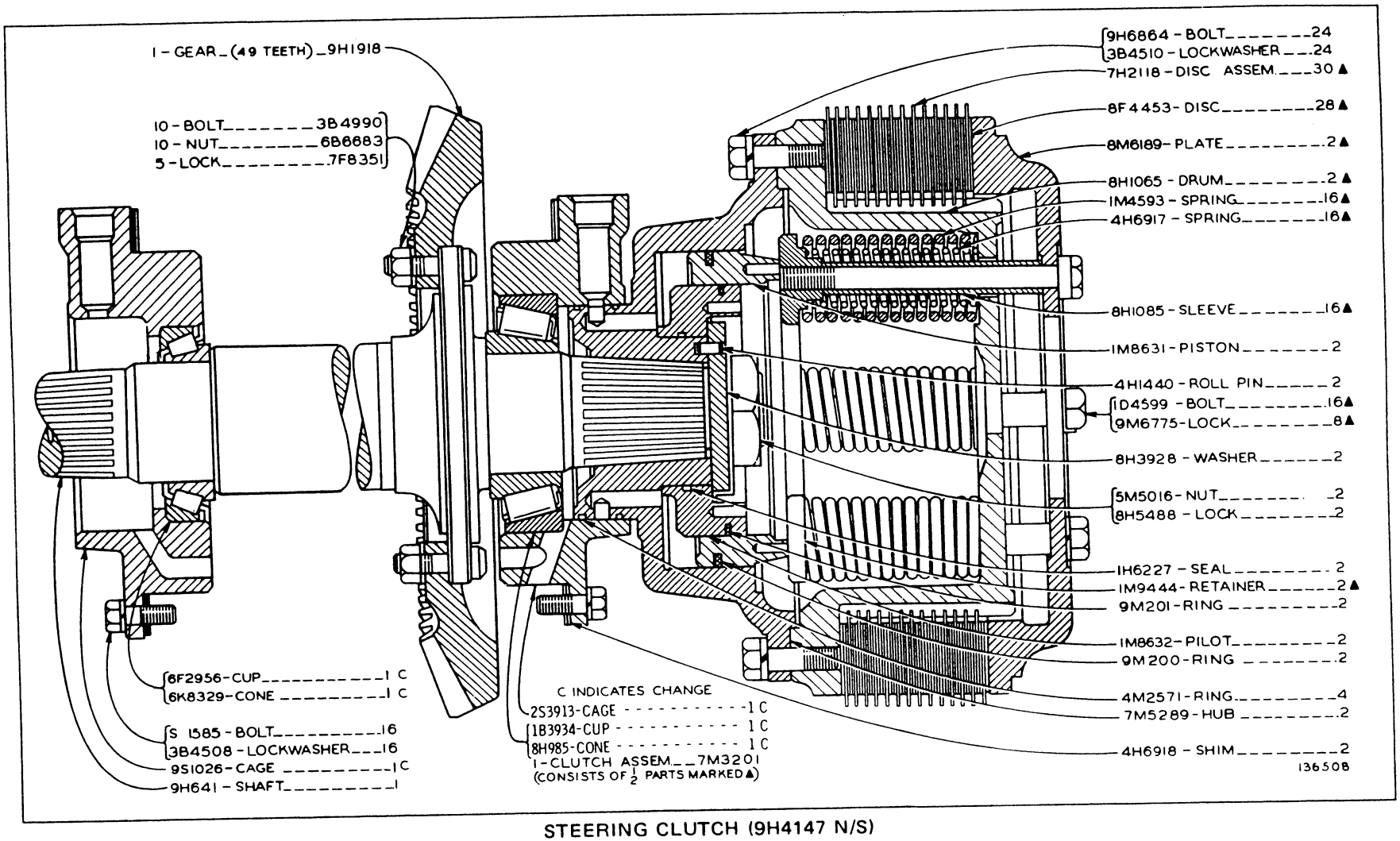

STEERING CLUTCH (9H4147 N/S)
Serial No. 46A24433 to 46A26923 inclusive

STEERING CLUTCH (9H4147 N/S)
Serial No. 46A26924—Up

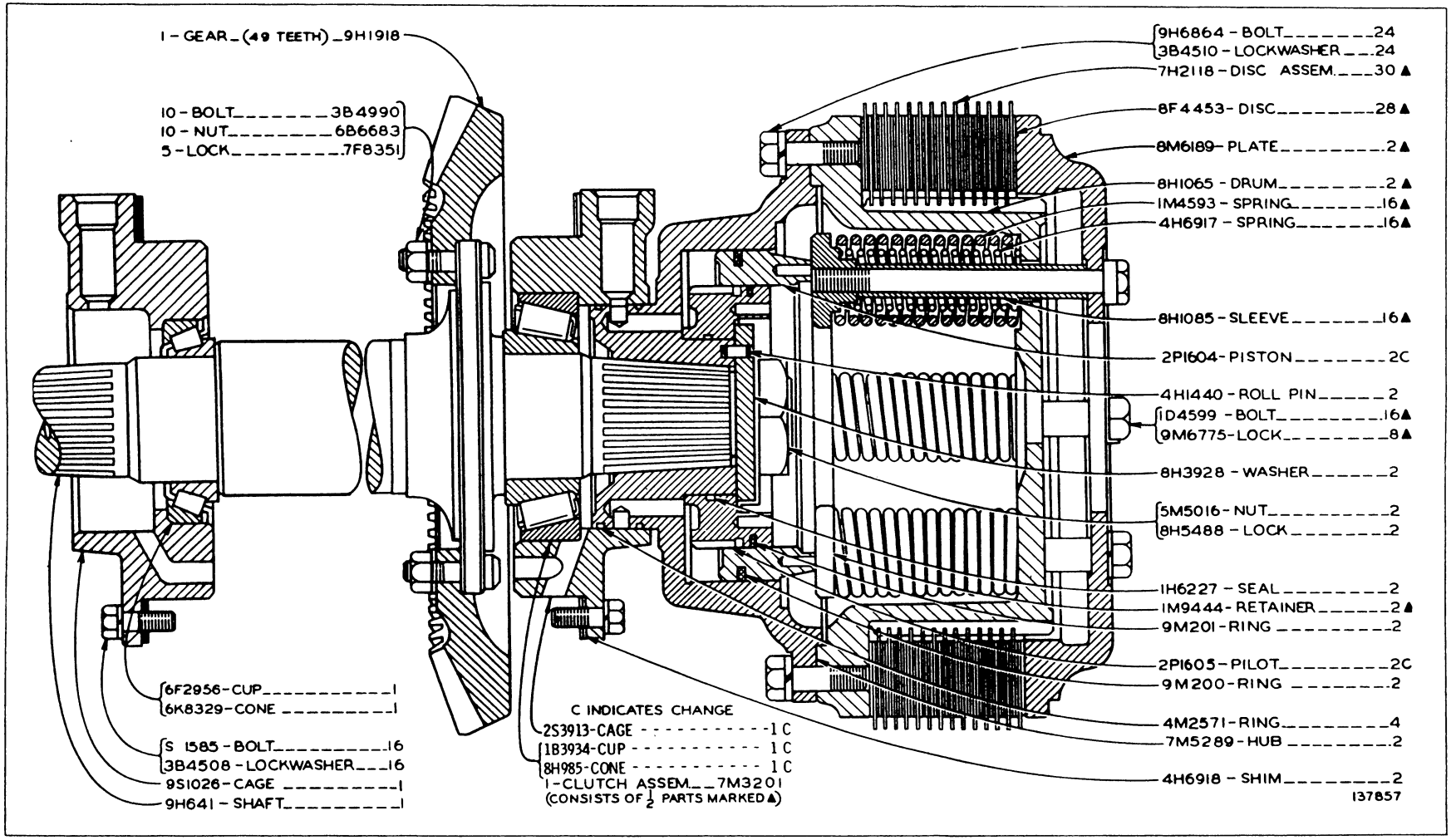

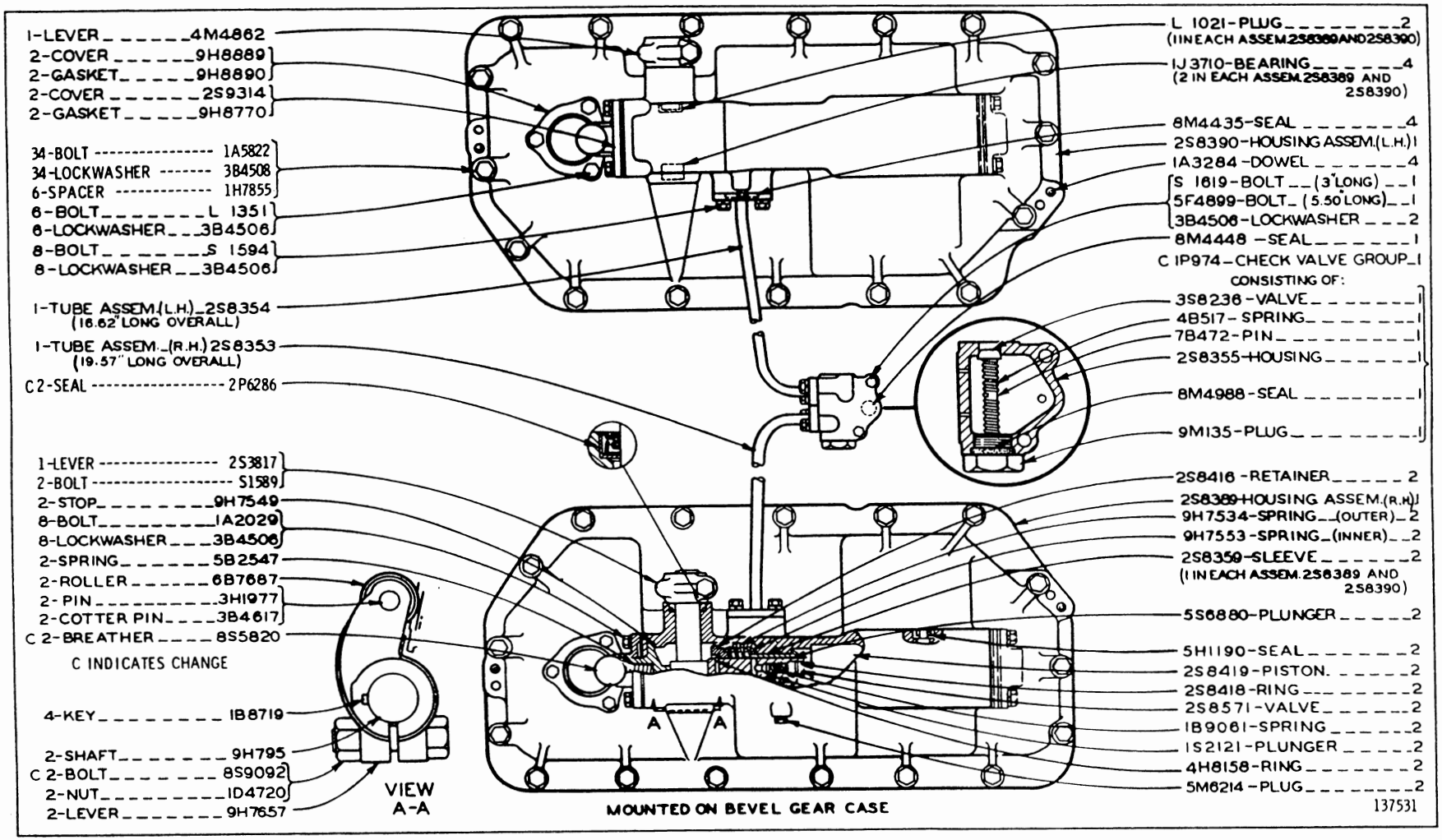

BRAKE HYDRAULIC MECHANISM (2S8401 N/S)
Serial No. 46A24433 to 46A28488 inclusive

BRAKE HYDRAULIC MECHANISM (2S8401 N/S)
Serial No. 46A28489—Up

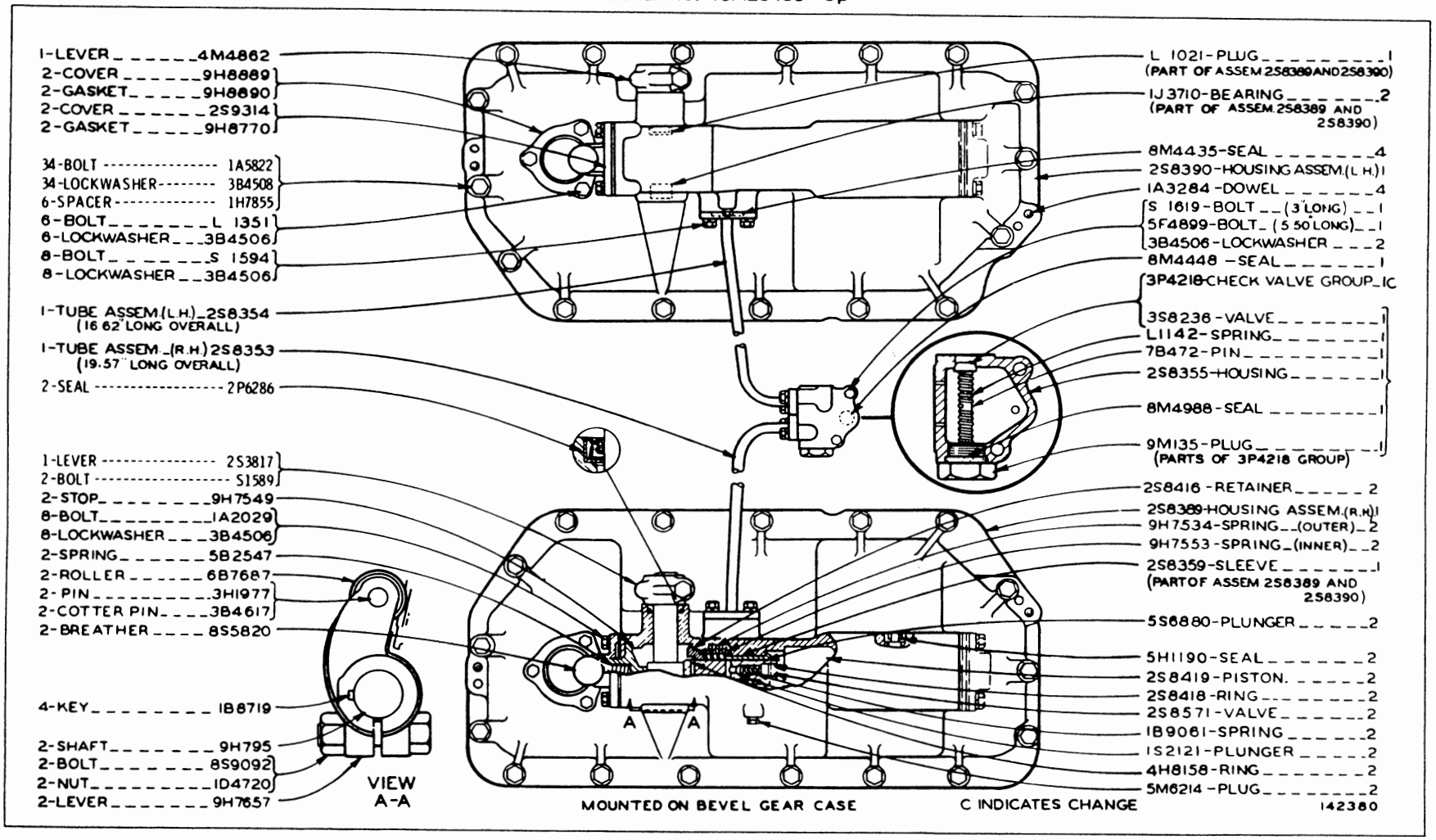

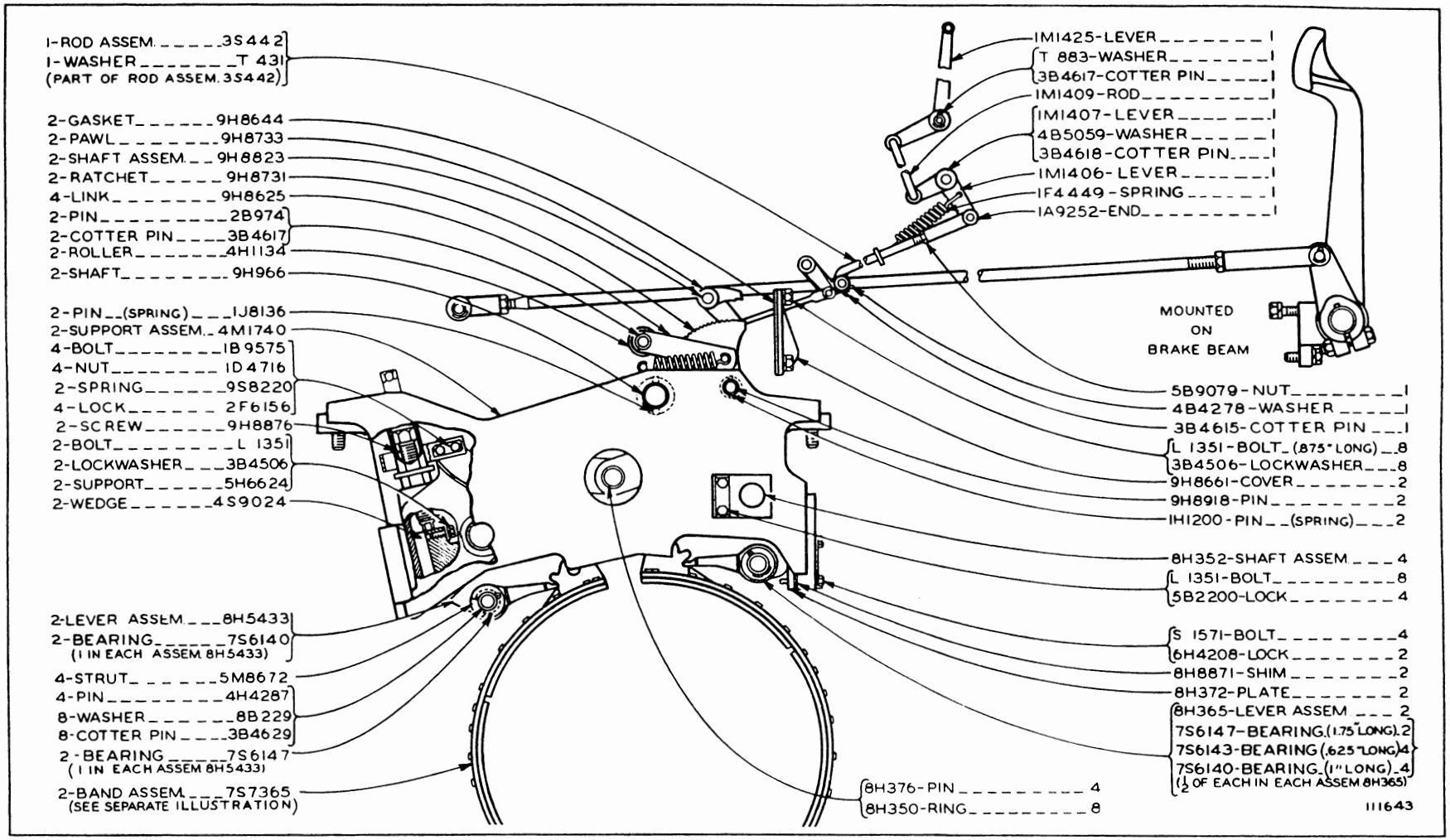

BRAKES (9H7600 N/S)—As Viewed from Right Hand Side of Machine

7S7365 Brake Band parts are shown on Page 94

BRAKES (9H7600 N/S)—Top View

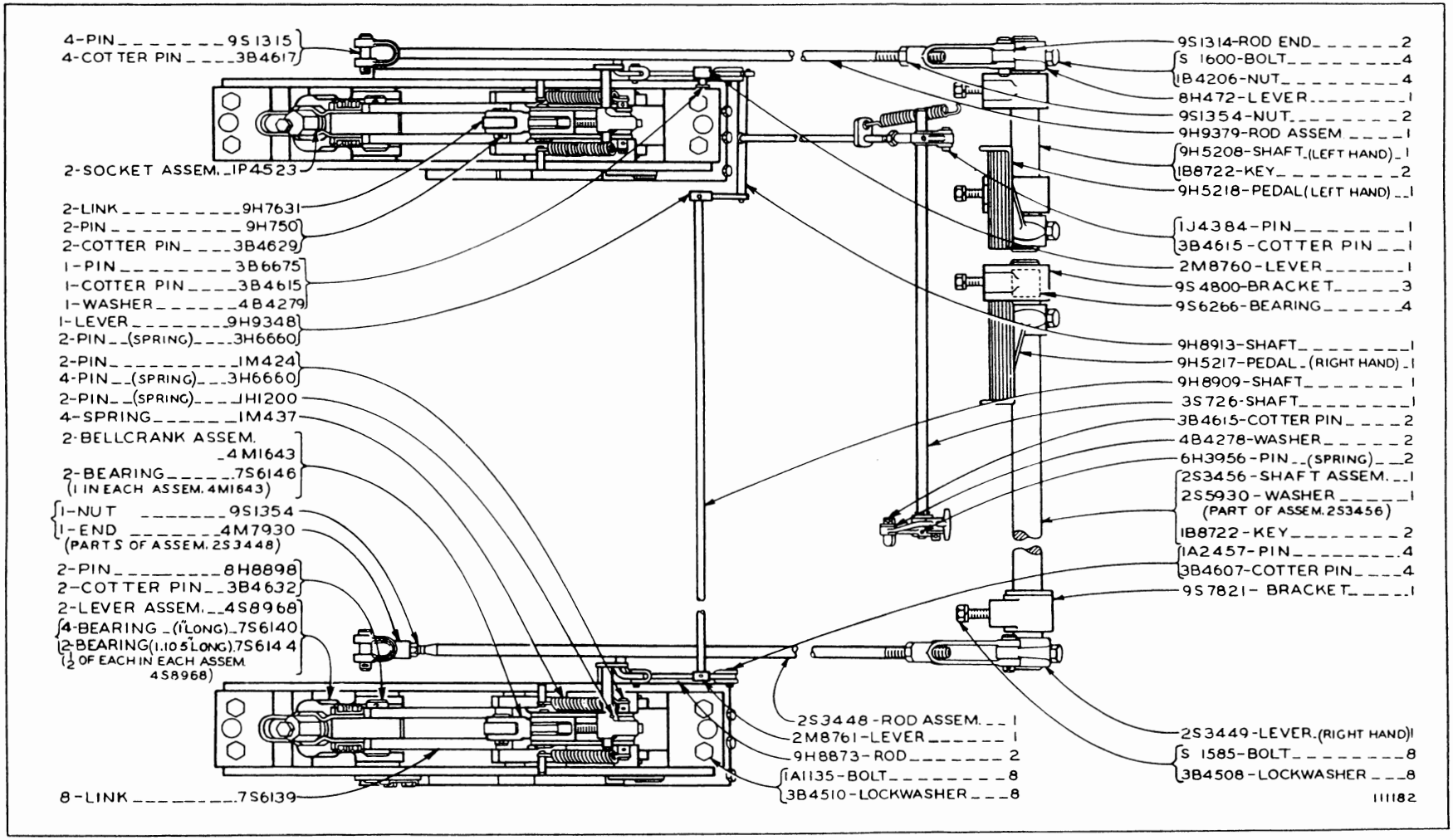

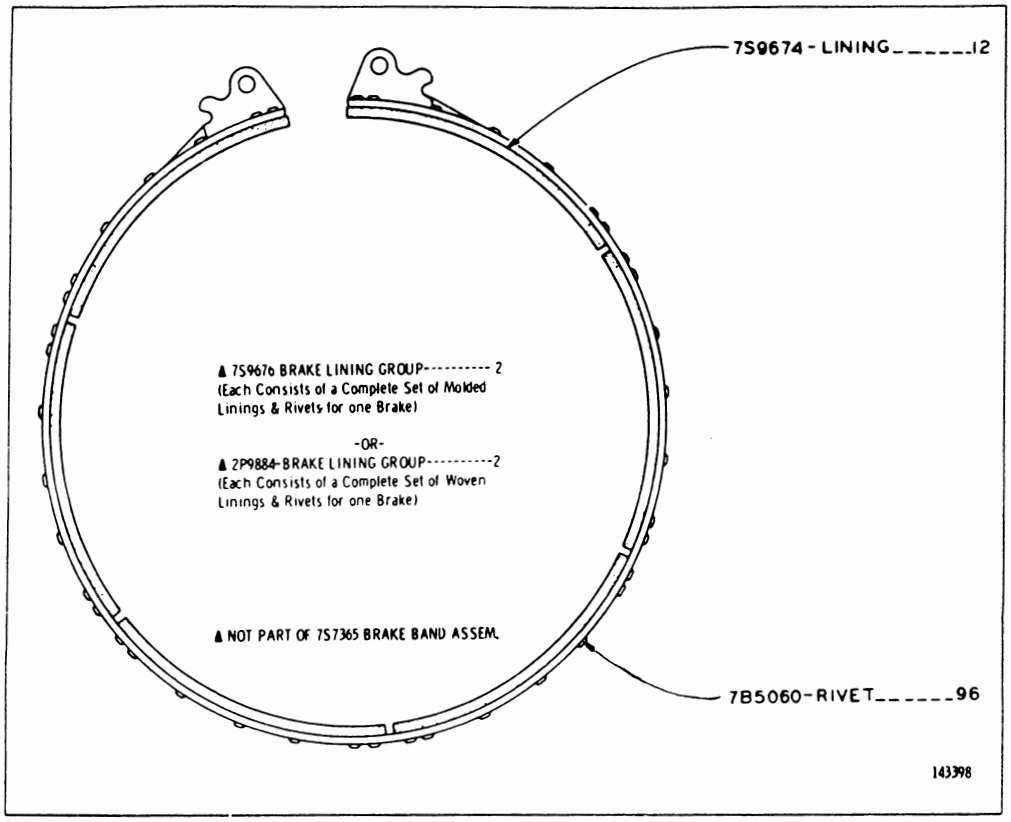

7S7365 BRAKE BAND ASSEMBLY—2 Required
Part of Brakes shown on Page 92

BEVEL GEAR CASE AND COVERS (9H5102 N/S)
Serial No. 46A24433 to 46A30380 inclusive

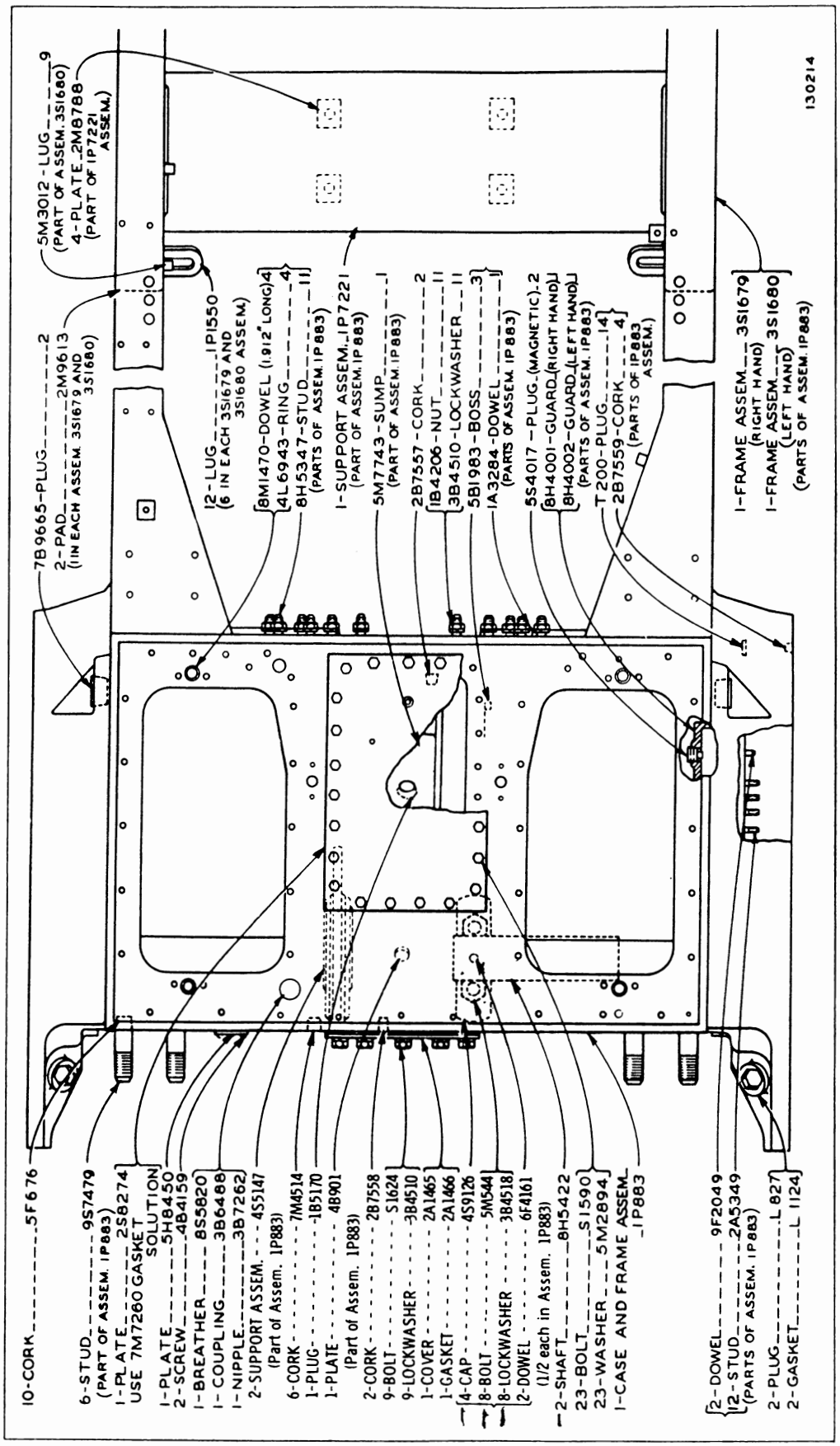

BEVEL GEAR CASE AND COVERS (9H5102 N/S)
Serial No. 46A30381 to 46A32802 inclusive

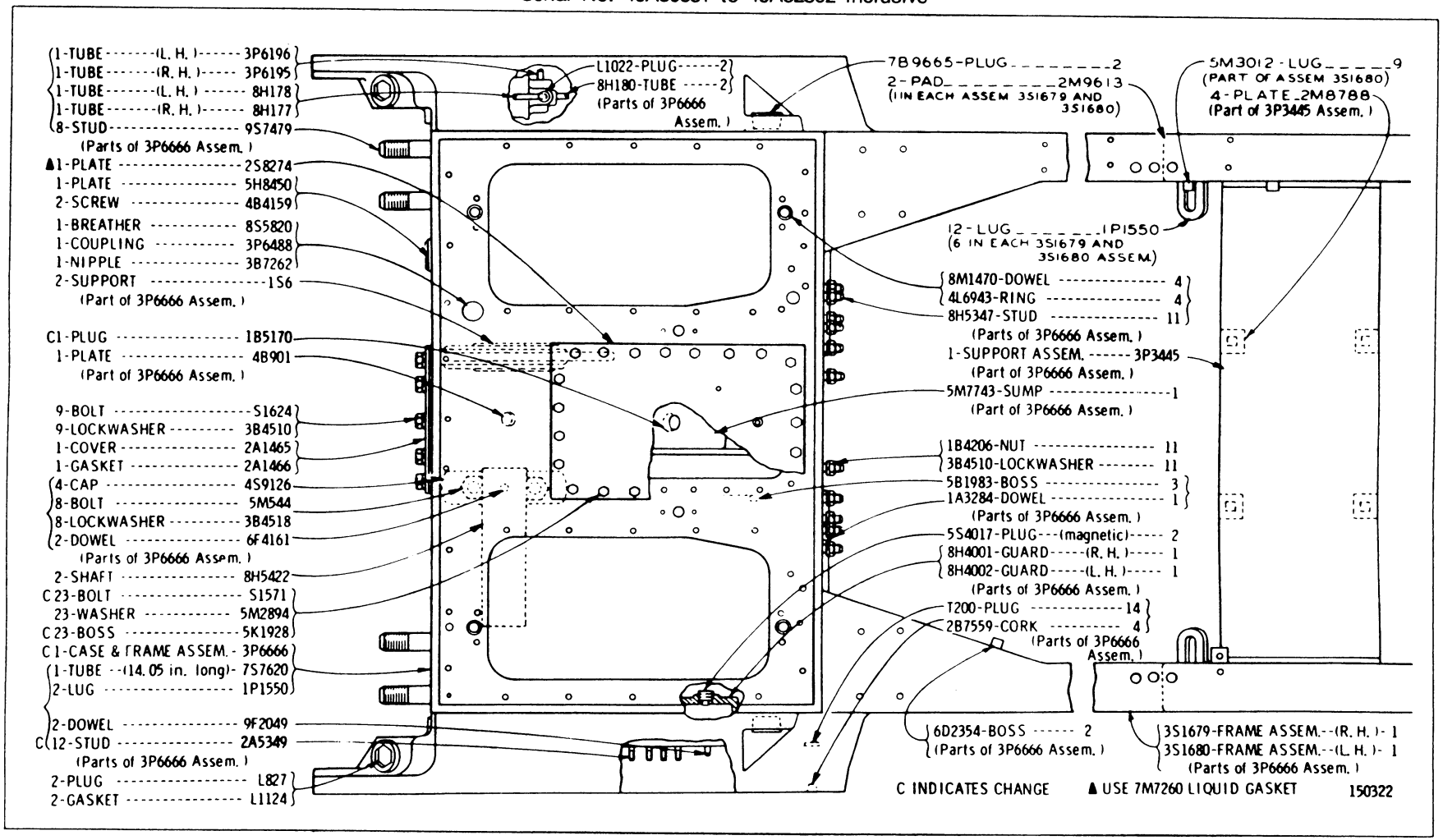

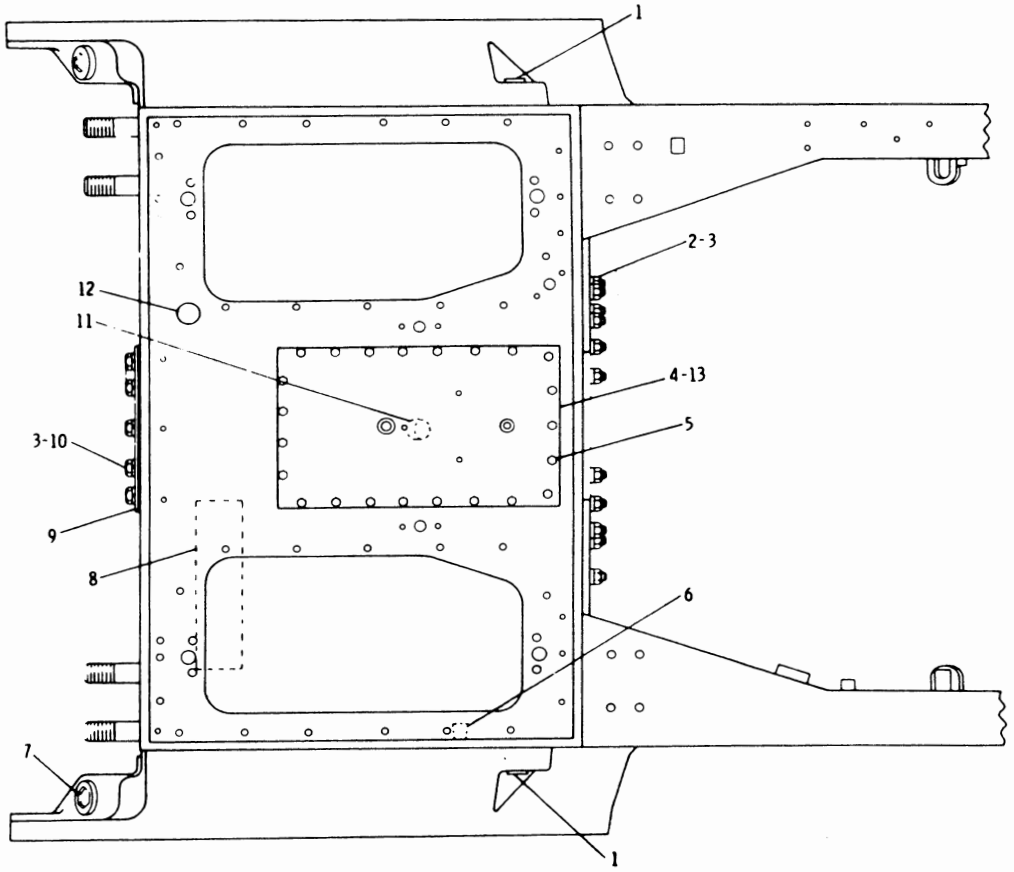

	REF NO	PART NUMBER	DESCRIPTION	QTY
	1	7B9665	PLUG	2
	2	1D4206	NUT	11
	3	3B4510	LOCKWASHER	19
C	4	2S8274	PLATE	1
	5	S1571	BOLT	23
		5M2894	WASHER	23
		5K1928	BOSS	23
	6	5S4017	PLUG	2
	7	L827	PLUG	2
		L1124	GASKET	2
	8	8H5422	SHAFT	2
	9	2A1465	COVER	1
		2A1466	GASKET	1
	10	S1624	BOLT	9
	11	1B5170	PLUG	1
	12	8S5820	BREATHER	1
		3B6488	COUPLING	1
		3B7262	NIPPLE	1
	13	7M7260	LIQUID GASKET	1

C INDICATES CHANGE

153870

FRAME AND CASE (3P1825 N/S)—Part 1
Serial No. 46A32803—Up

FRAME AND CASE (3P1825 N/S)—Part 2
Serial No. 46A32803—Up

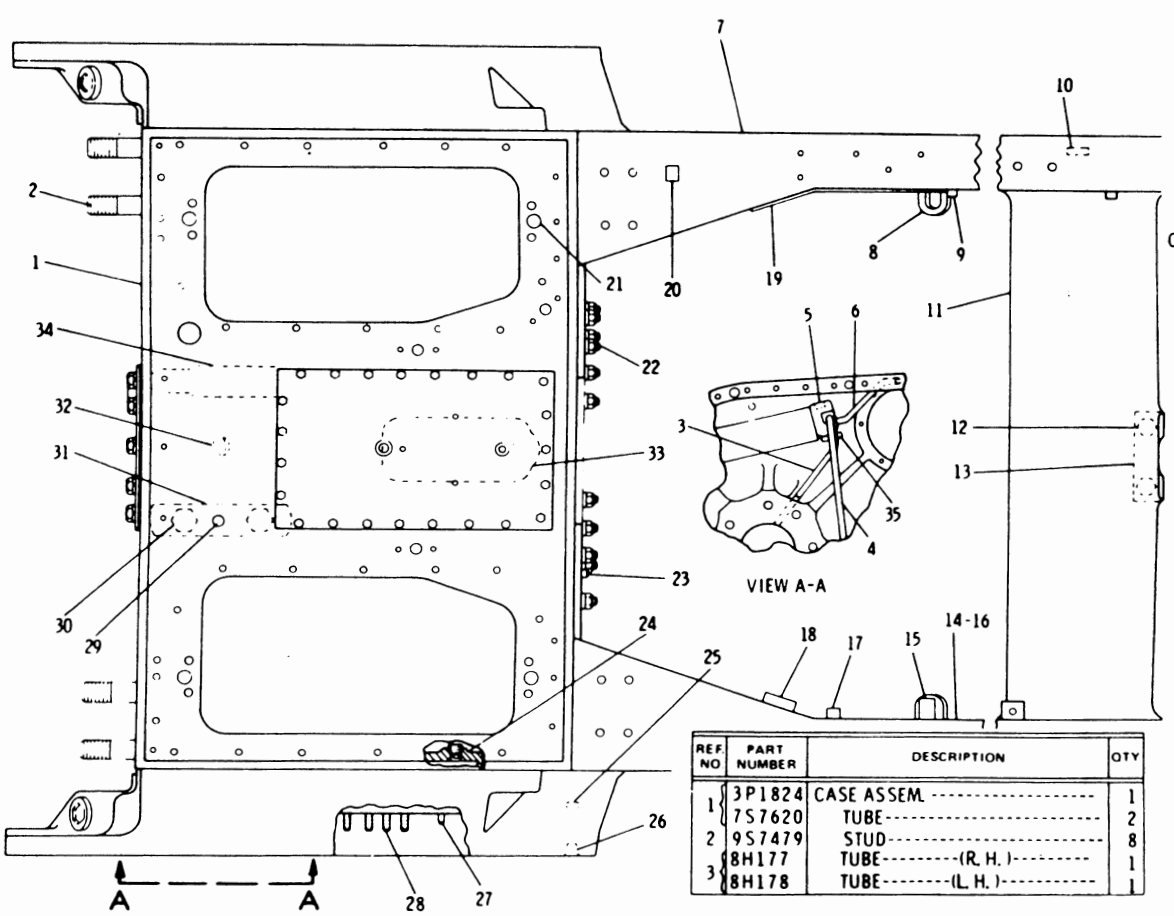

REF NO	PART NUMBER	DESCRIPTION	QTY
1	3P1824	CASE ASSEM.	1
	7S7620	TUBE	2
2	9S7479	STUD	8
3	8H177	TUBE—(R. H.)	1
	8H178	TUBE—(L. H.)	1
4	3P6195	TUBE—(R. H.)	1
	3P6196	TUBE—(L. H.)	1
5	L1022	PLUG	2
6	8H180	TUBE	2
7	3P1810	FRAME ASSEM.—(L. H.)	1
8	1P1550	LUG	7
9	5M3012	LUG	8
10	5K5659	BAR	3
11	3P1946	SUPPORT ASSEM.	1
12	8H5727	BOLT	4
	4J6580	WASHER	4
13	3P7457	BEARING	2
14	3P1809	FRAME ASSEM.—(R. H.)	1
15	1P1550	LUG	7
16	5K5659	BAR	3
17	6D2354	BOSS	2
18	3R4850	BLOCK	1
19	3P2445	REINFORCEMENT	1
	3P2444	REINFORCEMENT	1
20	8S1783	PLATE	2
21	8M1470	DOWEL	4
	4L6943	RING	4
22	8H5347	STUD	11
23	1A3284	DOWEL	1
24	8H4002	GUARD—(R. H.)	1
	8H4001	GUARD—(L. H.)	1
25	T200	PLUG	14
26	2B7559	CORK	4
27	9F2049	DOWEL	2
28	2A5349	STUD	12
29	6F4161	DOWEL	2
30	5M544	BOLT	8
	3B4518	LOCKWASHER	8
31	4S9126	CAP	4
32	4B901	PLATE	1
33	5M7443	SUMP	1
34	1S6	SUPPORT	2
35	3D2338	STRIP	2

C INDICATES CHANGE

206128

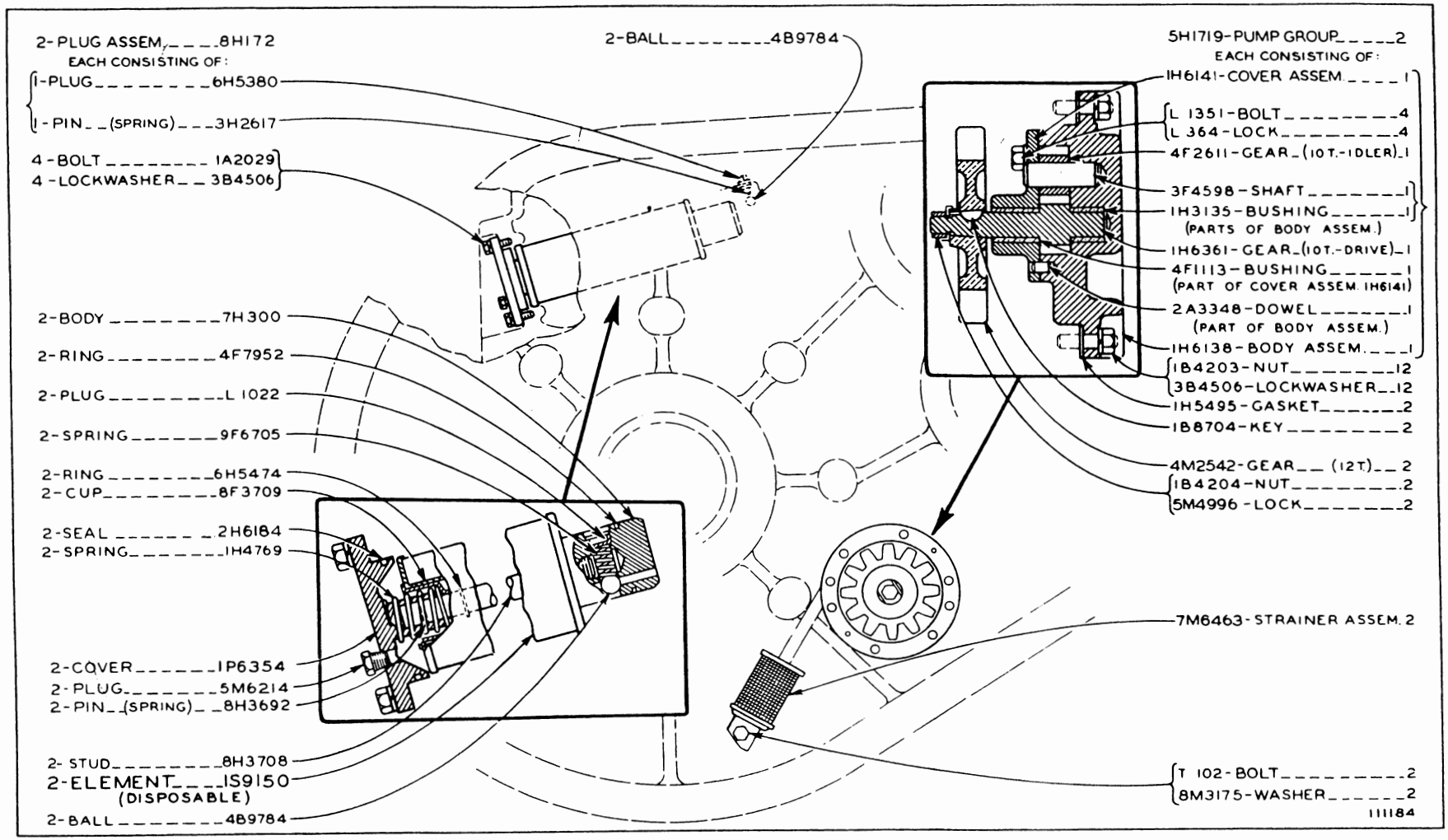

FINAL DRIVE LUBRICATION SYSTEM (8H3825 N/S)

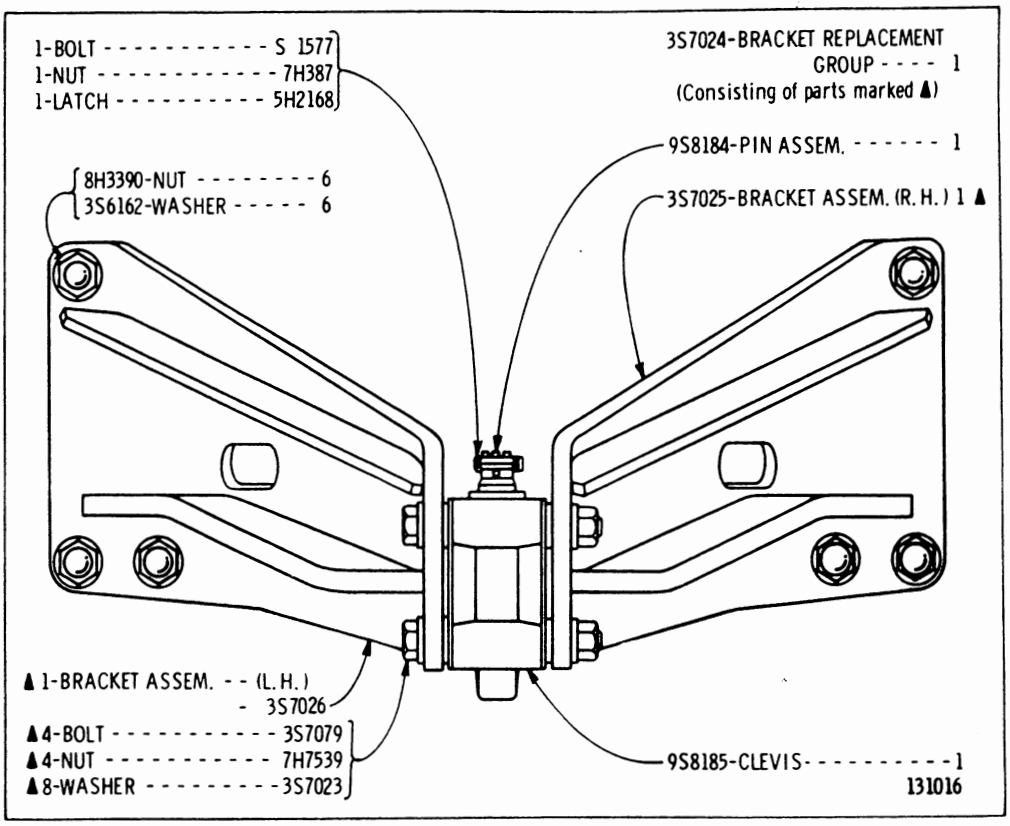

3S7384 DRAWBAR GROUP
Serial No. 46A24433 to 46A25671 inclusive
Refer also to Page 209 for special parts

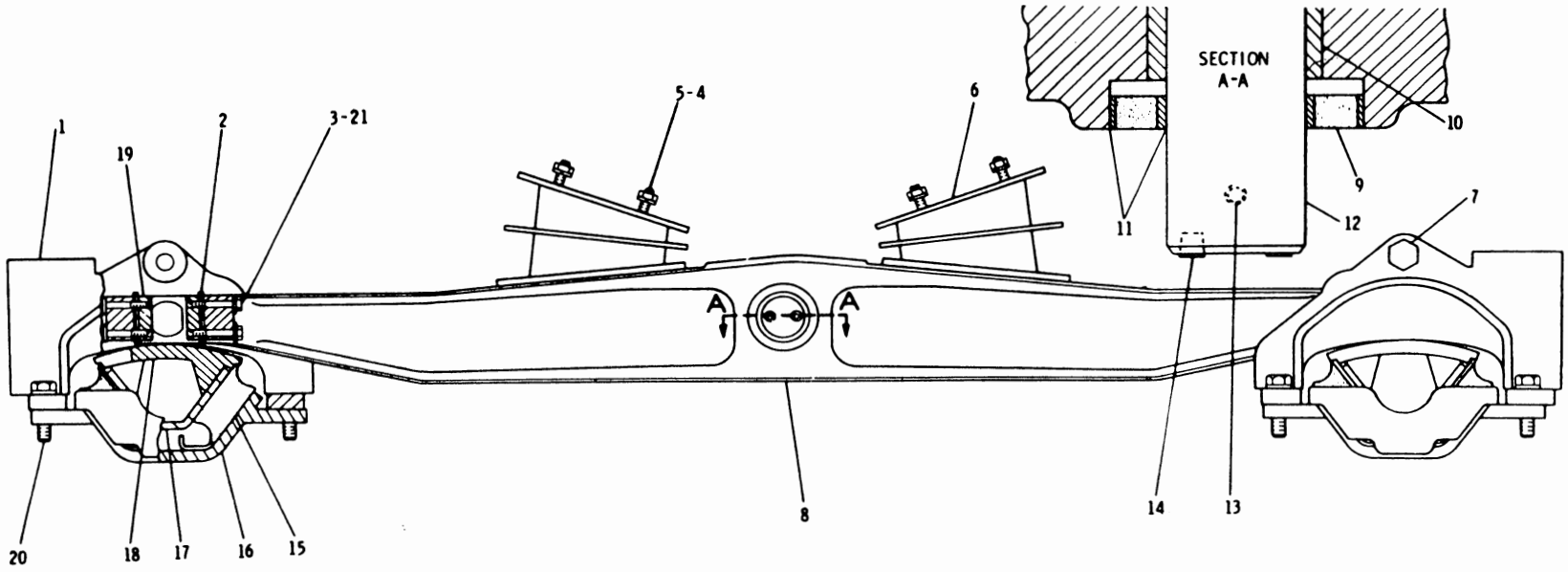

REF. NO.	PART NUMBER	DESCRIPTION	QTY
C 1	8P7782	SUPPORT ASSEM.	2
C 2	6P1404	SHIM-----.120 in. (3.05 mm) thick	12
C 2	6P1403	SHIM-----.060 in. (1.52 mm) thick	8
C 3	V375	BOLT	16
C 4	3B4508	LOCKWASHER	8
5	1D4719	NUT	8
6	3P2786	PAD	2
7	2H4010	BOLT	2
7	1B4333	NUT	2
7	3B4516	LOCKWASHER	2
7	3P7986	SLEEVE	2
8	3P2674	BAR ASSEM.	1
8		(Includes)	
8	6P1357	PIN	2
9	3P2778	SEAL	2
10	3P2429	BEARING	1
11	7M7260	GASKET SOLUTION	
12	3P2402	PIN	1
13	3F957	DOWEL	1
14	9F2247	PLUG	4
15	8H5416	PAD	4
16	3P2119	SUSPENSION ASSEM.	2
17	2S7157	PLATE ASSEM.	2
18	2S7154	PLATE ASSEM.	2
19	3P7957	PLATE	8
20	1D4630	BOLT	16
20	4D6419	WASHER	16
C 21	2M849	WASHER	16

C INDICATES CHANGE

159830

3P2118 EQUALIZER BAR GROUP
Serial No. 46A32803—Up
Refer also to Page 210 for special parts

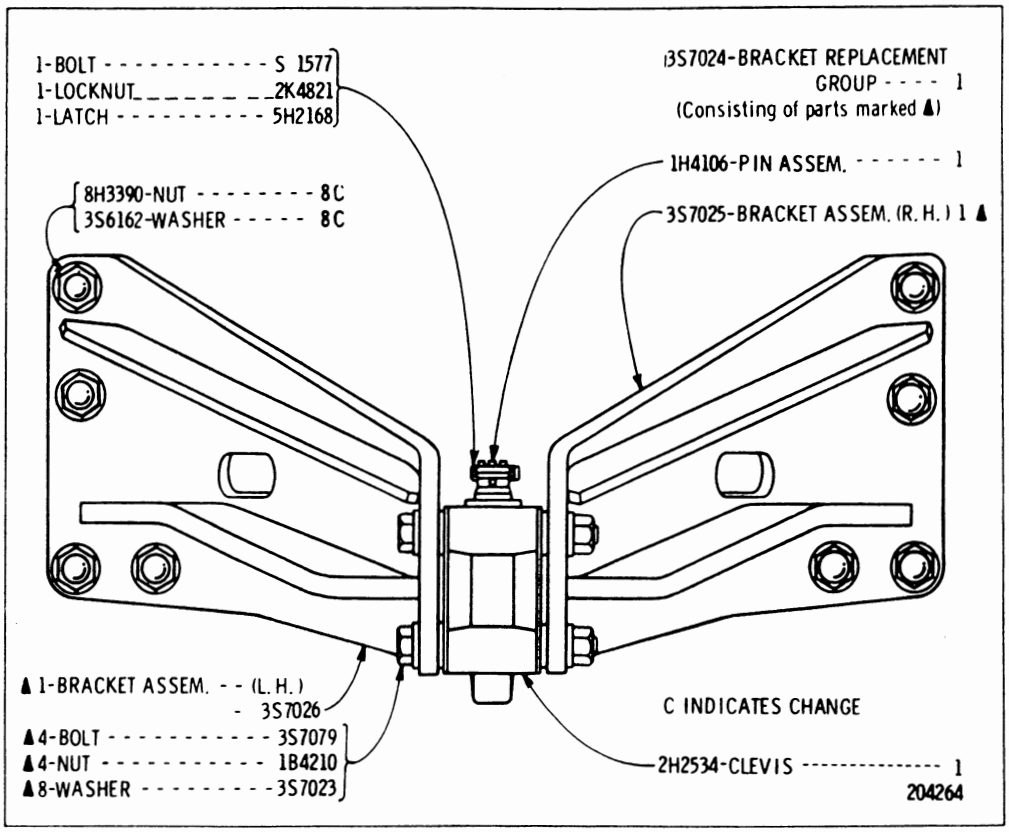

3S7384 DRAWBAR GROUP
Serial No. 46A25672—Up
Refer also to Page 209 for special parts

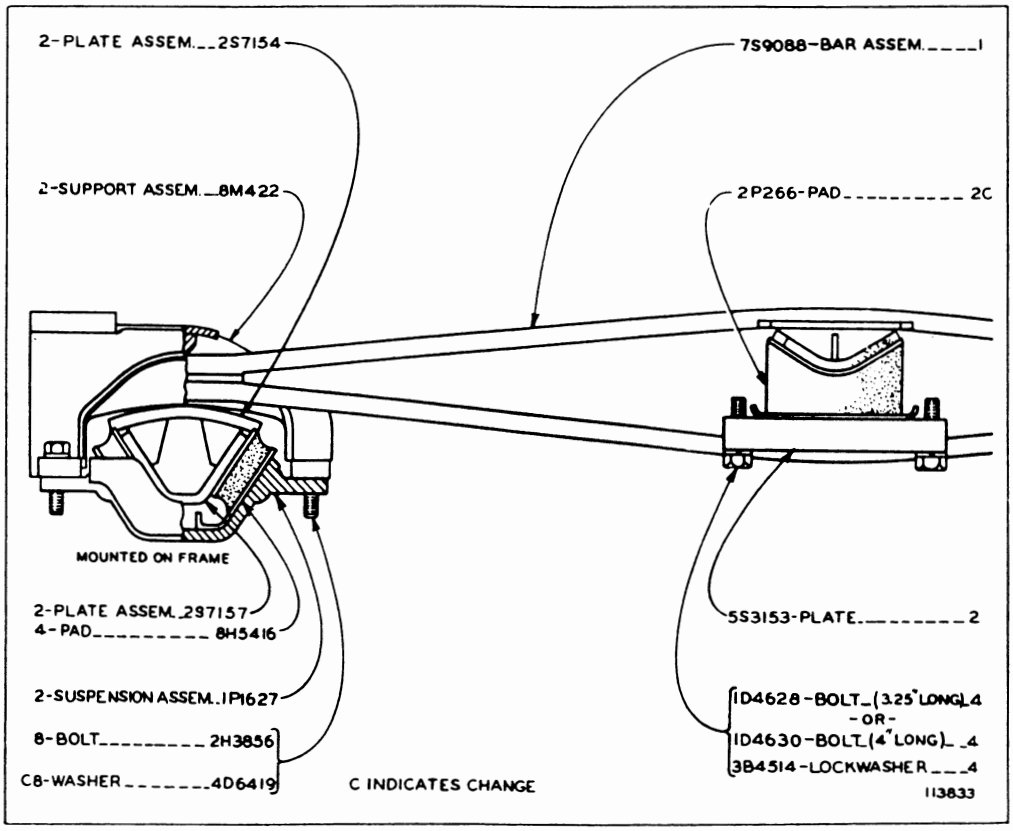

EQUALIZER AND SUSPENSION BAR (2M9617 N/S)
Serial No. 46A24433 to 46A32802 inclusive
Refer also to Page 210 for special parts

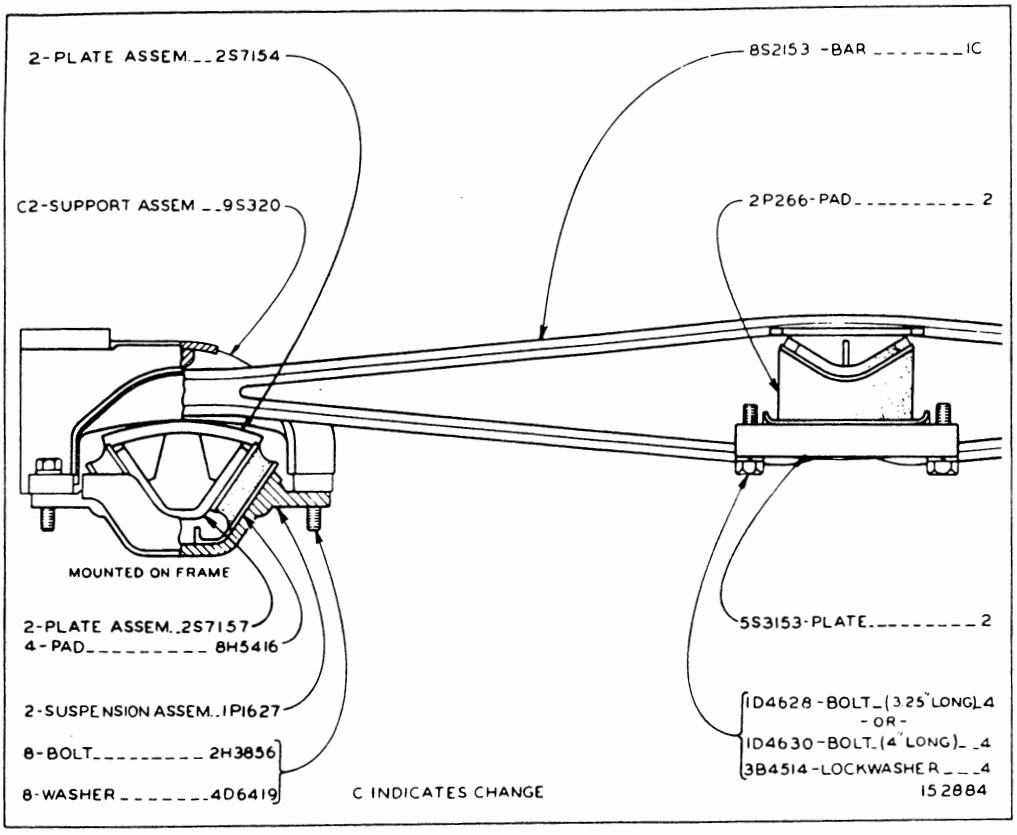

2M9617 EQUALIZER AND SUSPENSION BAR GROUP—Type 2
Serial No. 46A24433 to 46A32802 inclusive
Refer also to Page 210 for special parts

		CONSISTS OF:	PAGE
1	9J5274	TRUNNION GROUP	104D
4	8M380	TRACK CARRIER ROLLER GROUP	105
	- OR -		
4	8P6256	TRACK CARRIER ROLLER GROUP	104H
1	3P1758	FRONT IDLER GROUP	102F
1	3P2285	RECOIL MECHANISM GUARD GROUP	104E
	- OR -		
1	9P3088	RECOIL MECHANISM GUARD GROUP	104G
1	3P1758	FRONT IDLER GROUP	102F
1	6P3139	TRACK ROLLER FRAME GROUP	104C-1A
6	6P4897	SINGLE FLANGE ROLLER GROUP	106-2
8	6P4898	DOUBLE FLANGE ROLLER GROUP	106-2
1	6P9079	EQUALIZER BAR SUPPORT GROUP	97B

6P8619 EQUALIZER BAR SUPPORT AND TRACK ROLLER FRAME ARRANGEMENT
Serial No. 46A32803—Up

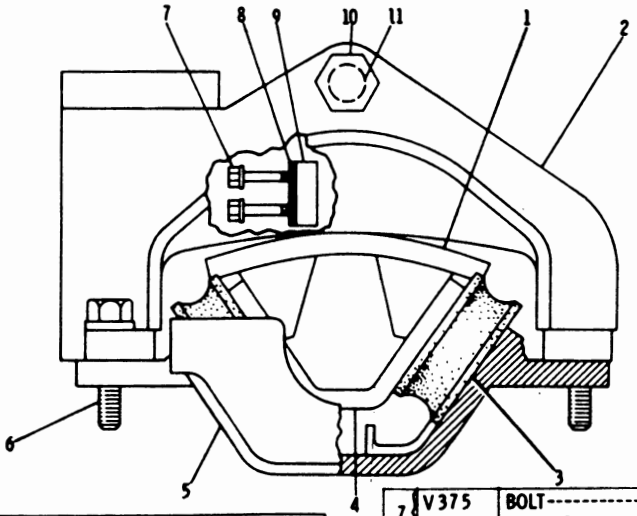

REF. NO.	PART NUMBER	DESCRIPTION	QTY
1	2S7154	PLATE ASSEM.	2
2	3P7983	SUPPORT ASSEM.	2
3	8H5416	PAD	4
4	2S7157	PLATE ASSEM.	2
5	3P2119	SUSPENSION ASSSEM.	2
6	1D4630	BOLT	16
	4D6419	WASHER	16
7	V375	BOLT	16
	2M849	WASHER	16
8	6P1403	SHIM-----1.52 mm(.060 in.) thick	8
	6P1404	SHIM-----3.05 mm(.12 in.) thick	12
	6P9022	SHIM-----.787 mm(.031 in.) thick	8
9	3P7957	PLATE	8
10	2H4010	BOLT	2
	1B4333	NUT	2
	3B4516	LOCKWASHER	2
11	3P7986	SLEEVE	2

210317

6P9079 EQUALIZER BAR SUPPORT GROUP
Serial No. 46A32803—Up
Part of 6P8619 Equalizer Bar Support & Track Roller Frame Arrangement

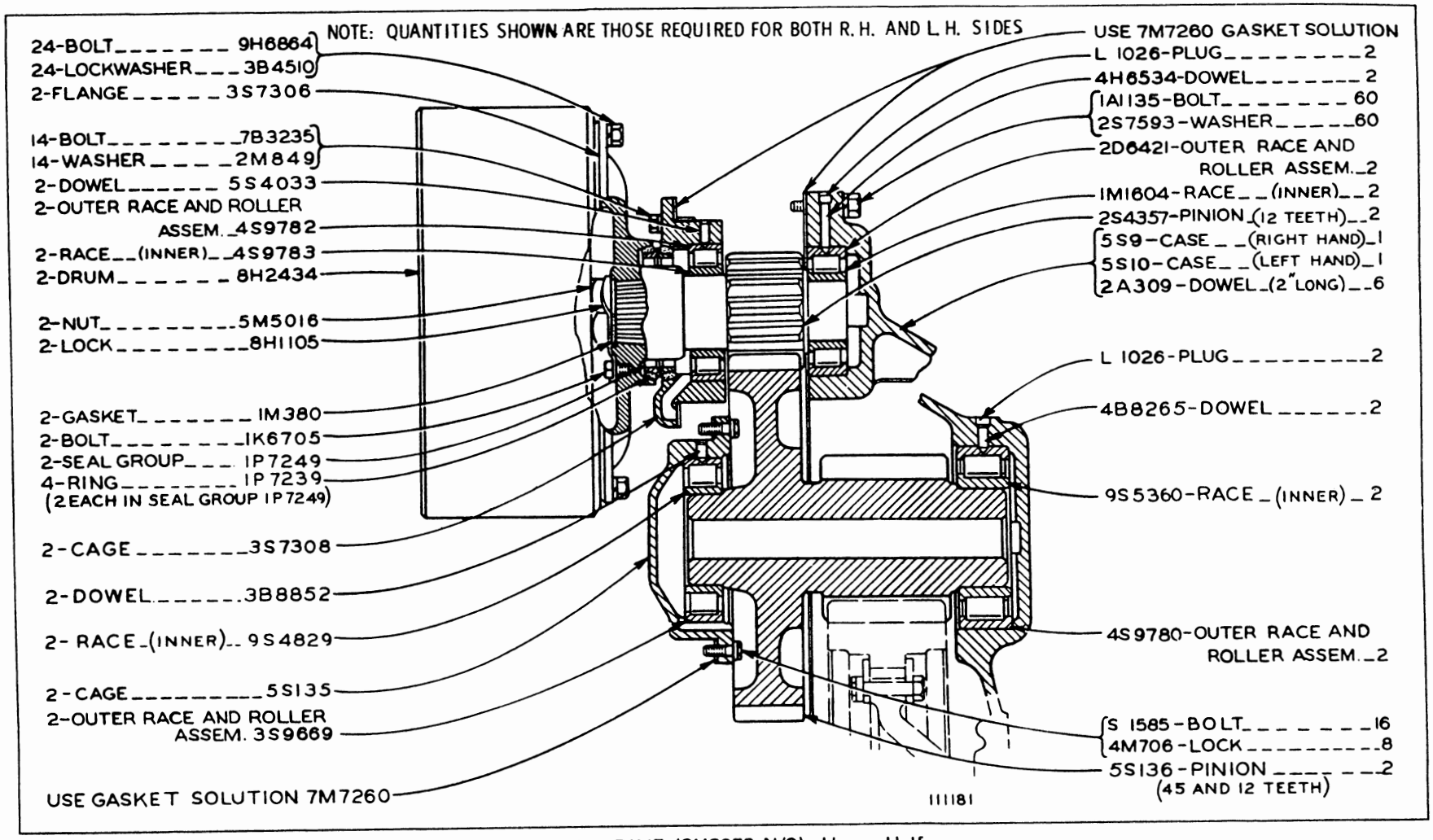

FINAL DRIVE (8H2059 N/S)—Upper Half
Serial No. 46A24433 to 46A28831 inclusive
Refer also to Page 209 for special parts

FINAL DRIVE (8H2059 N/S)—Lower Half
Serial No. 46A24433 to 46A28831 inclusive
Refer also to Pages 221B and 222 for special parts

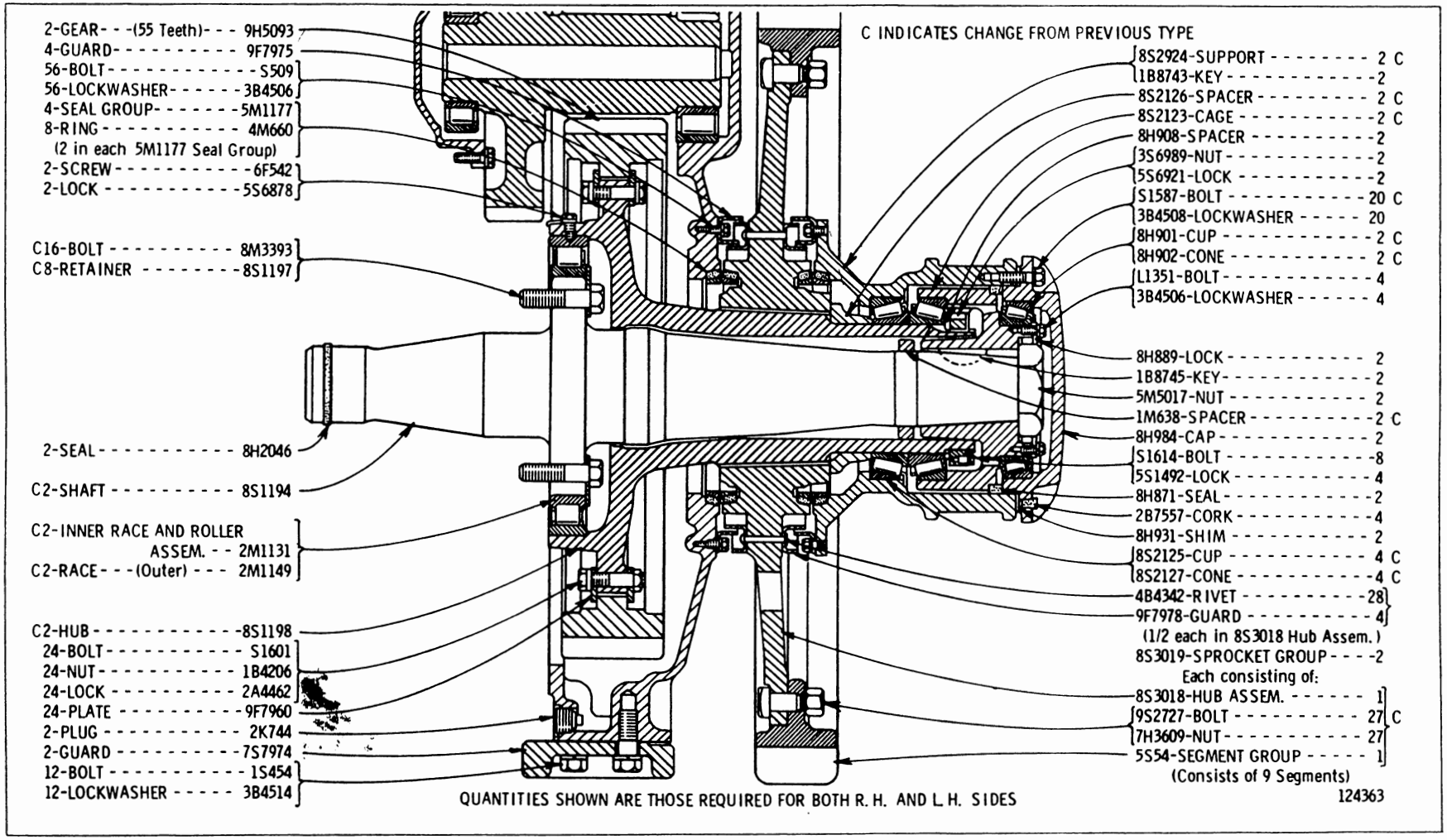

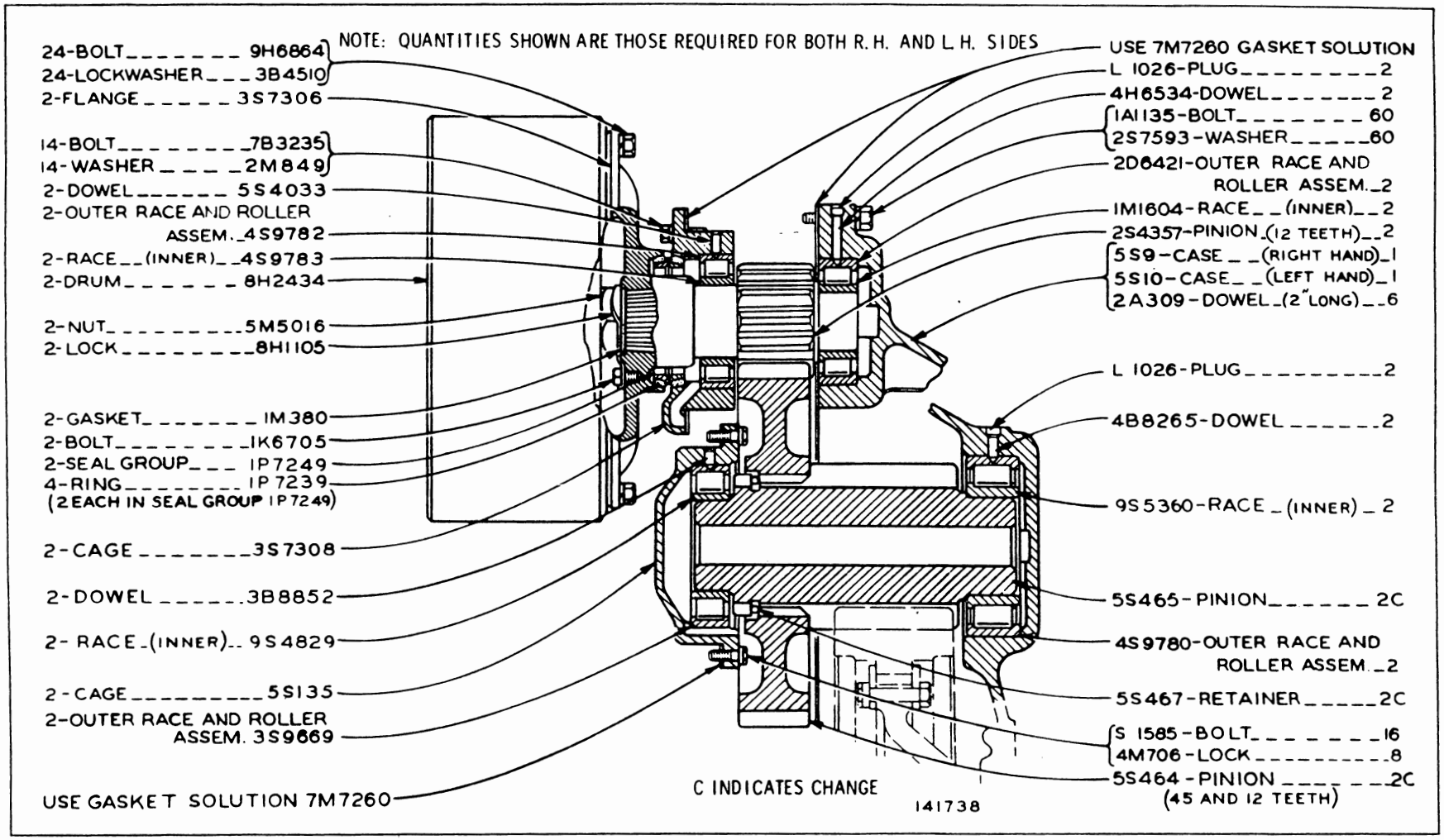

FINAL DRIVE (8H2059 N/S)—Upper Half
Serial No. 46A28832 to 46A28952 inclusive
Refer also to Page 209 for special parts

FINAL DRIVE (8H2059 N/S)—Lower Half
Serial No. 46A28832 to 46A28952 inclusive
Refer also to Pages 221B and 222 for special parts

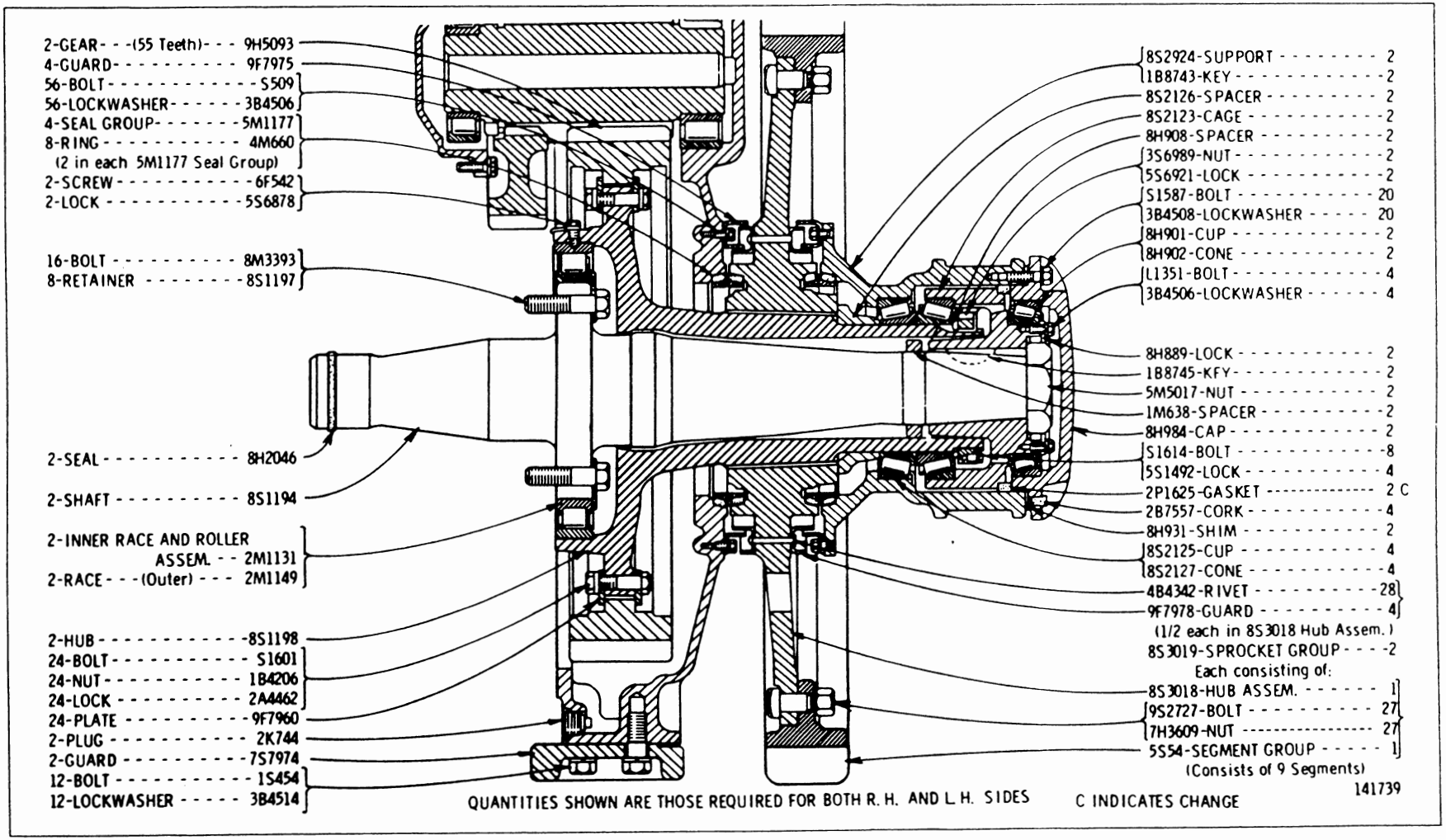

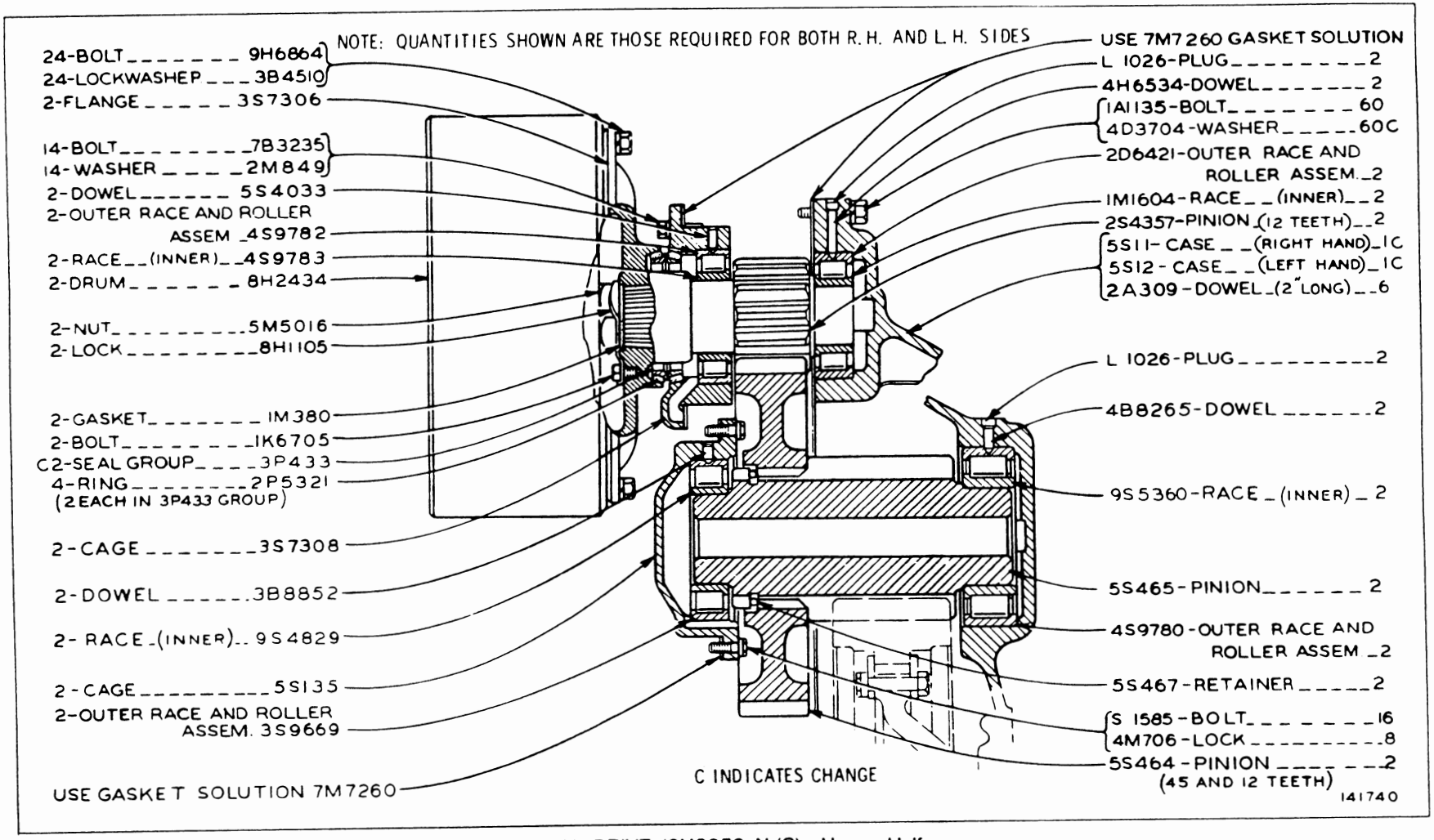

FINAL DRIVE (8H2059 N/S)—Upper Half
Serial No. 46A28953 to 46A30380 inclusive
Refer also to page 209 for special parts

FINAL DRIVE (8H2059 N./S)—Lower Half
Serial No. 46A28953 to 46A30380 inclusive
Refer also to Pages 221B and 222 for special parts

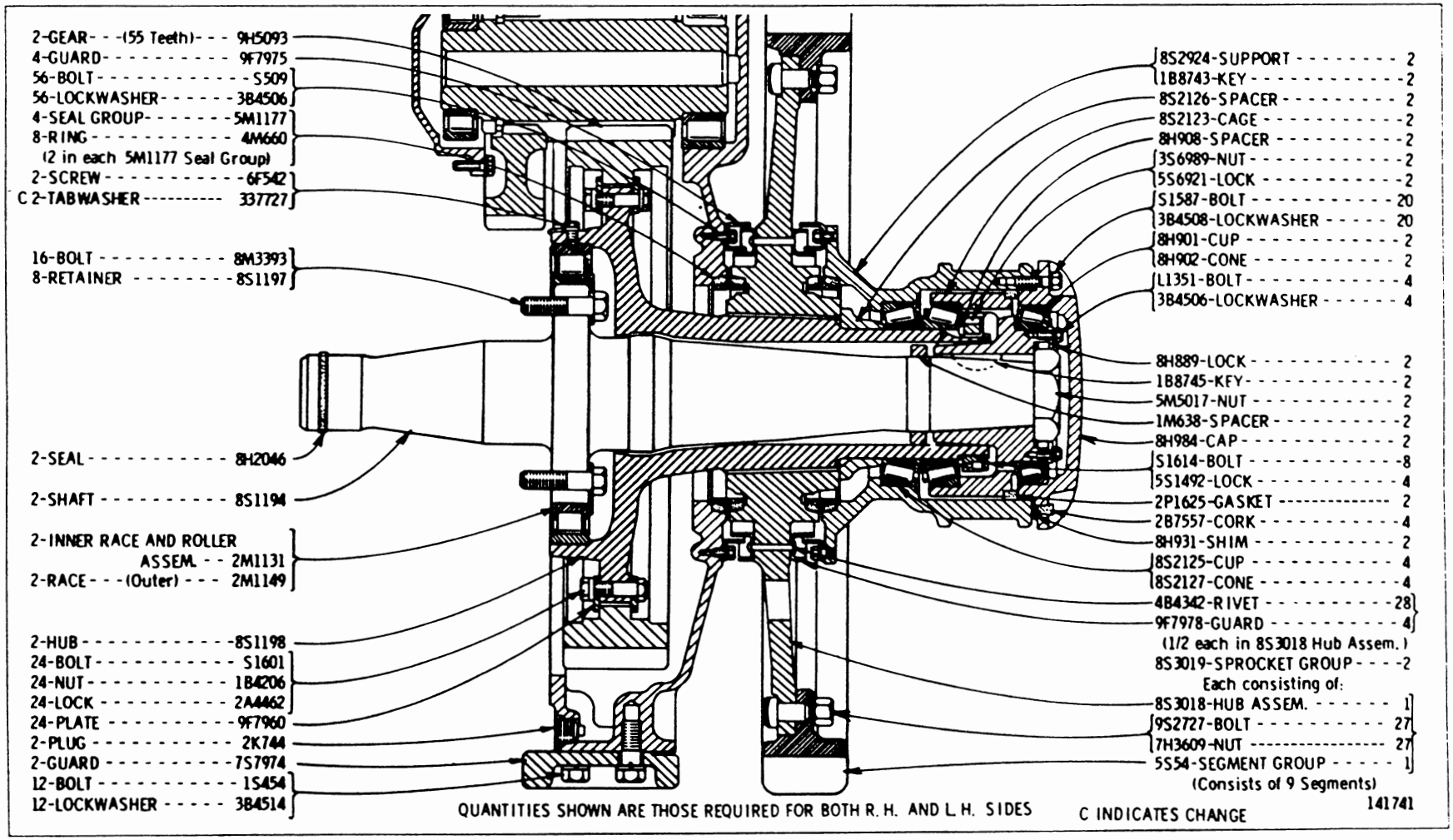

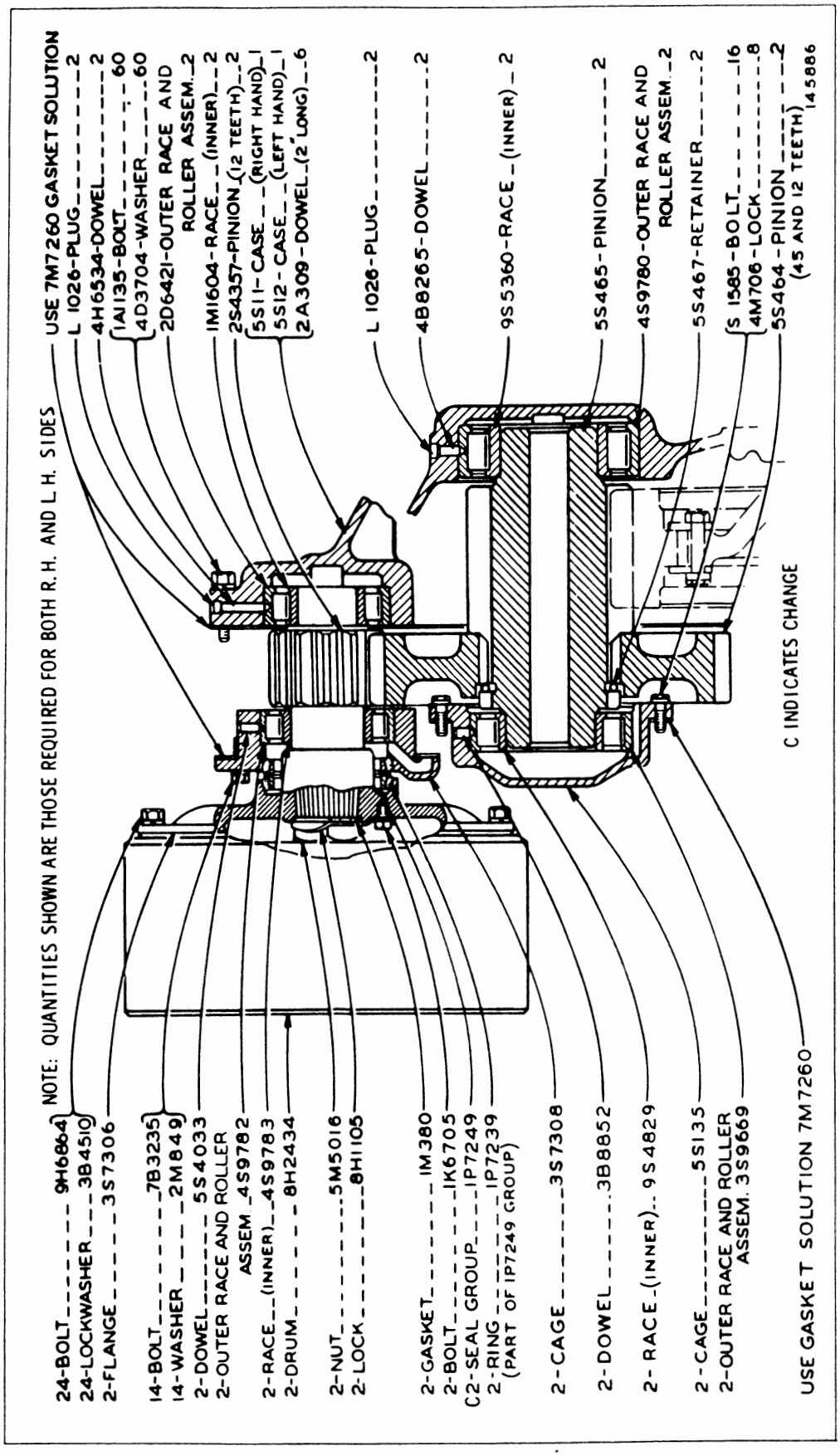

FINAL DRIVE (8H2059 N/S)—Upper Half
Serial No. 46A30381—Up

FINAL DRIVE (8H2059 N/S)—Lower Half
Serial No. 46A30381—Up

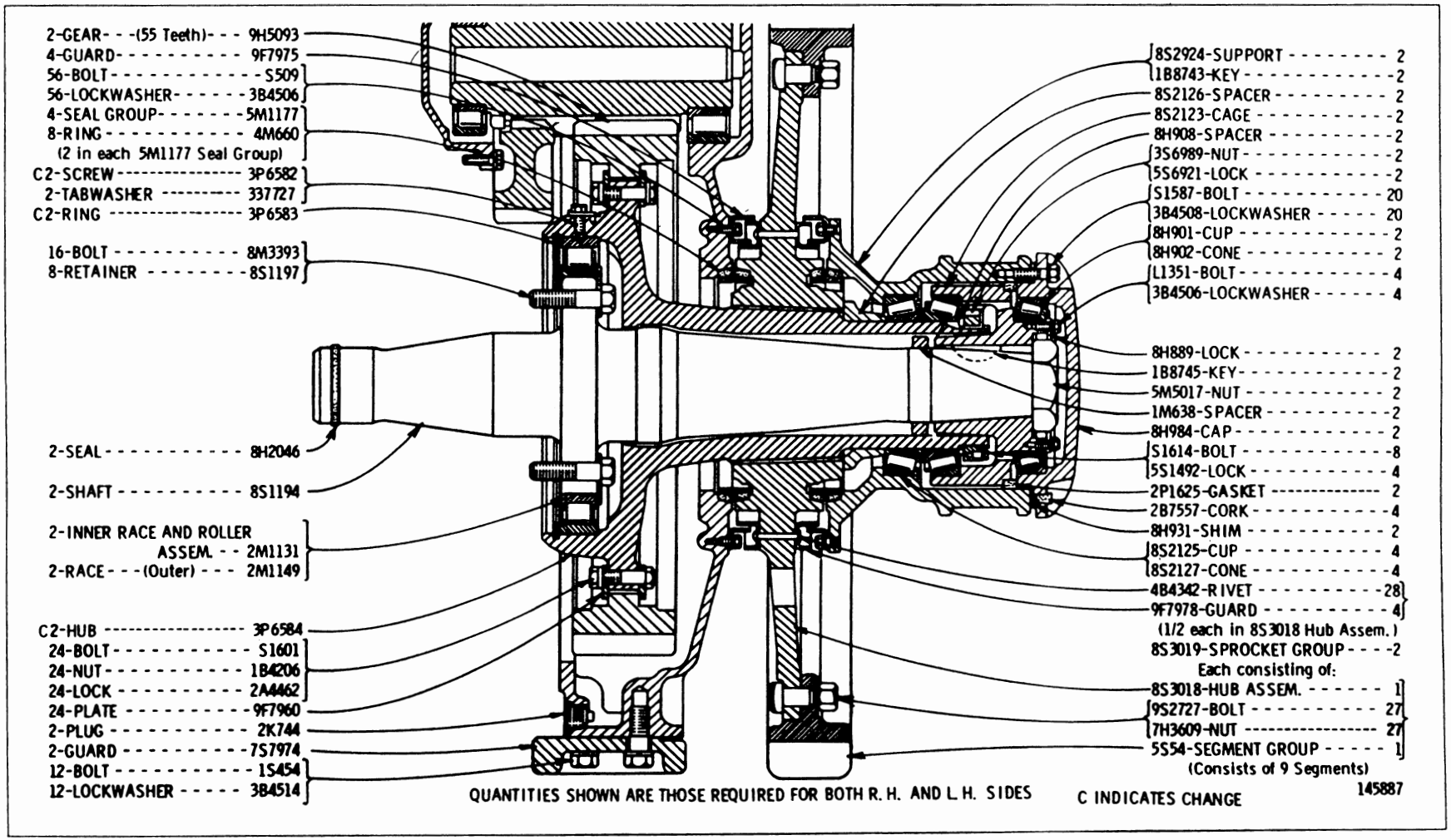

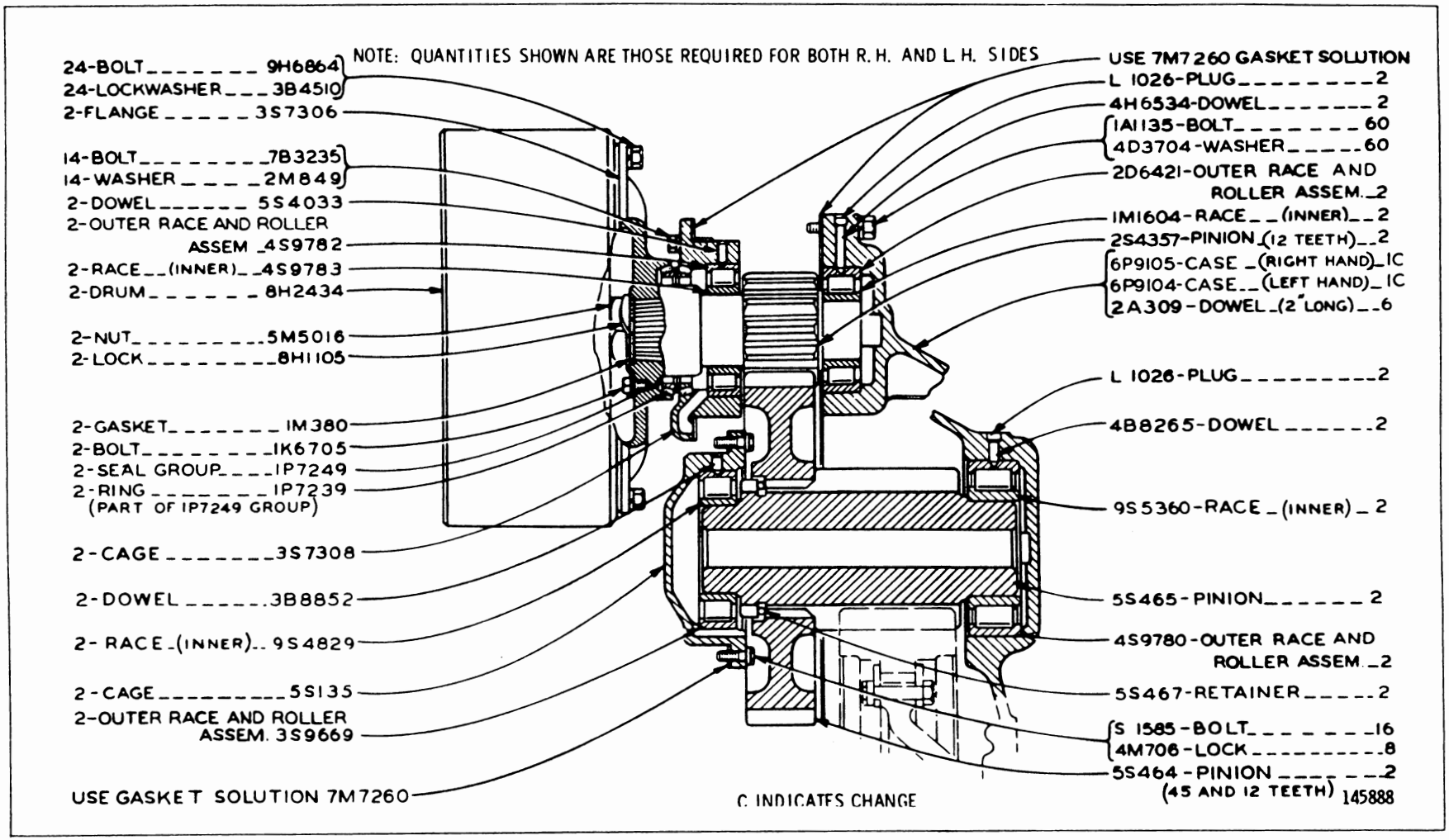

FINAL DRIVE (8H2059 N/S)—Upper Half—Field Installation—Type 2
Serial No. 46A30381—Up

FINAL DRIVE (8H2059 N/S)—Lower Half—Field Installation—Type 2
Serial No. 46A30381—Up
6P9170 Sprocket parts are shown on Page 99K

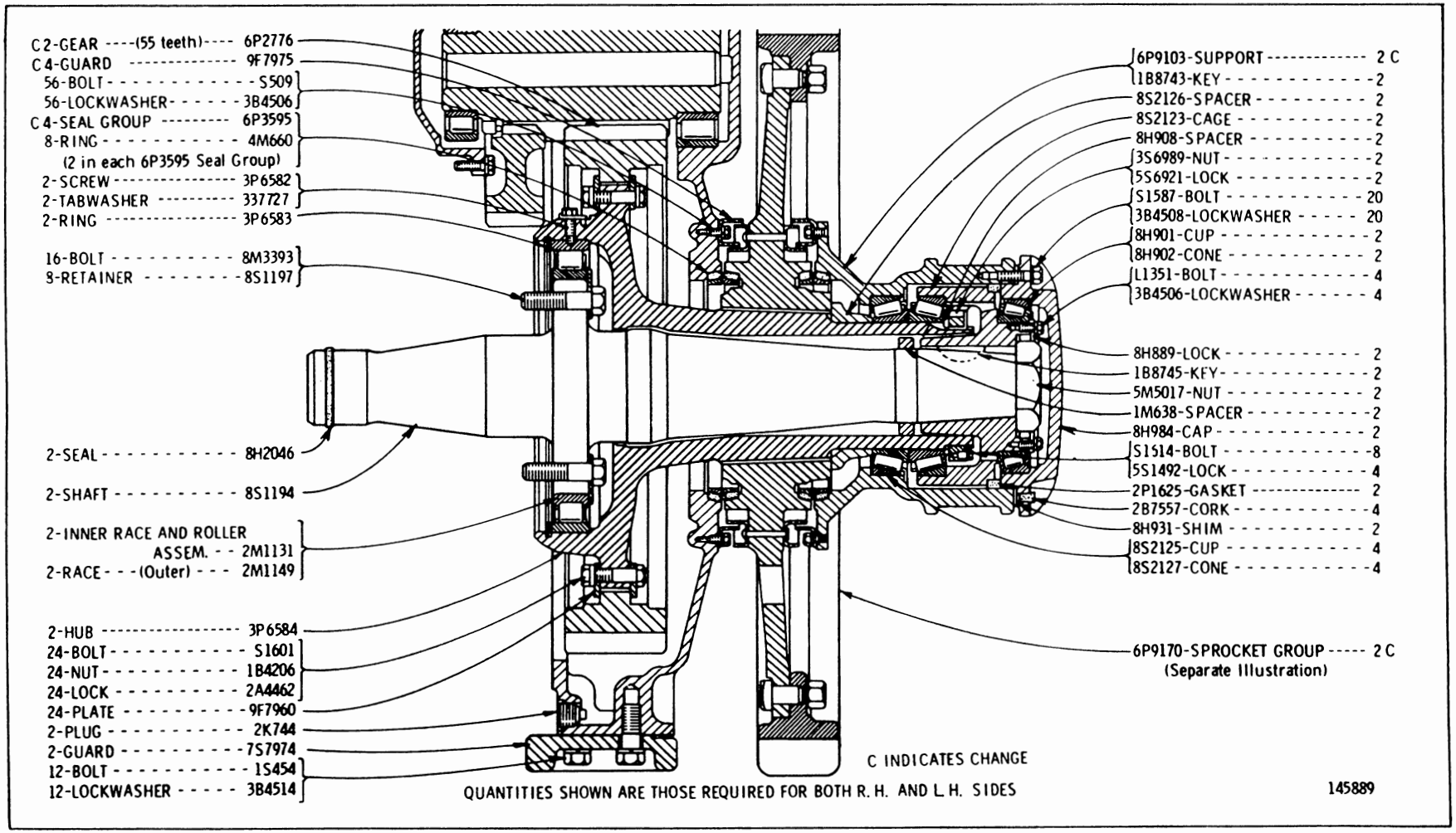

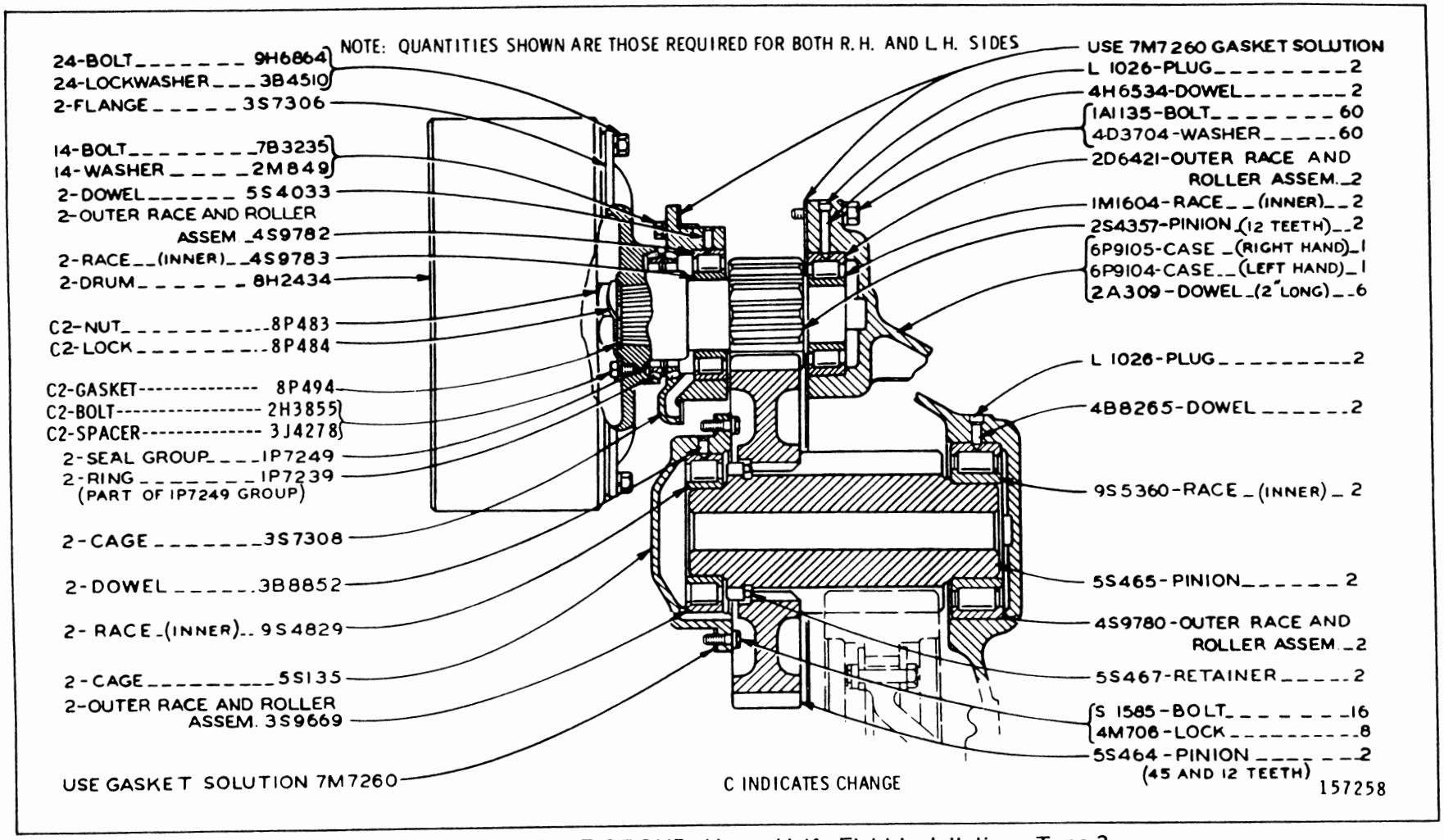

8H2059 FINAL DRIVE GROUP—Upper Half—Field Installation—Type 3
Serial No. 46A30381—Up

8H2059 FINAL DRIVE GROUP—Lower Half—Field Installation—Type 3
Serial No. 46A30381—Up
6P9170 Sprocket parts are shown on Page 99K

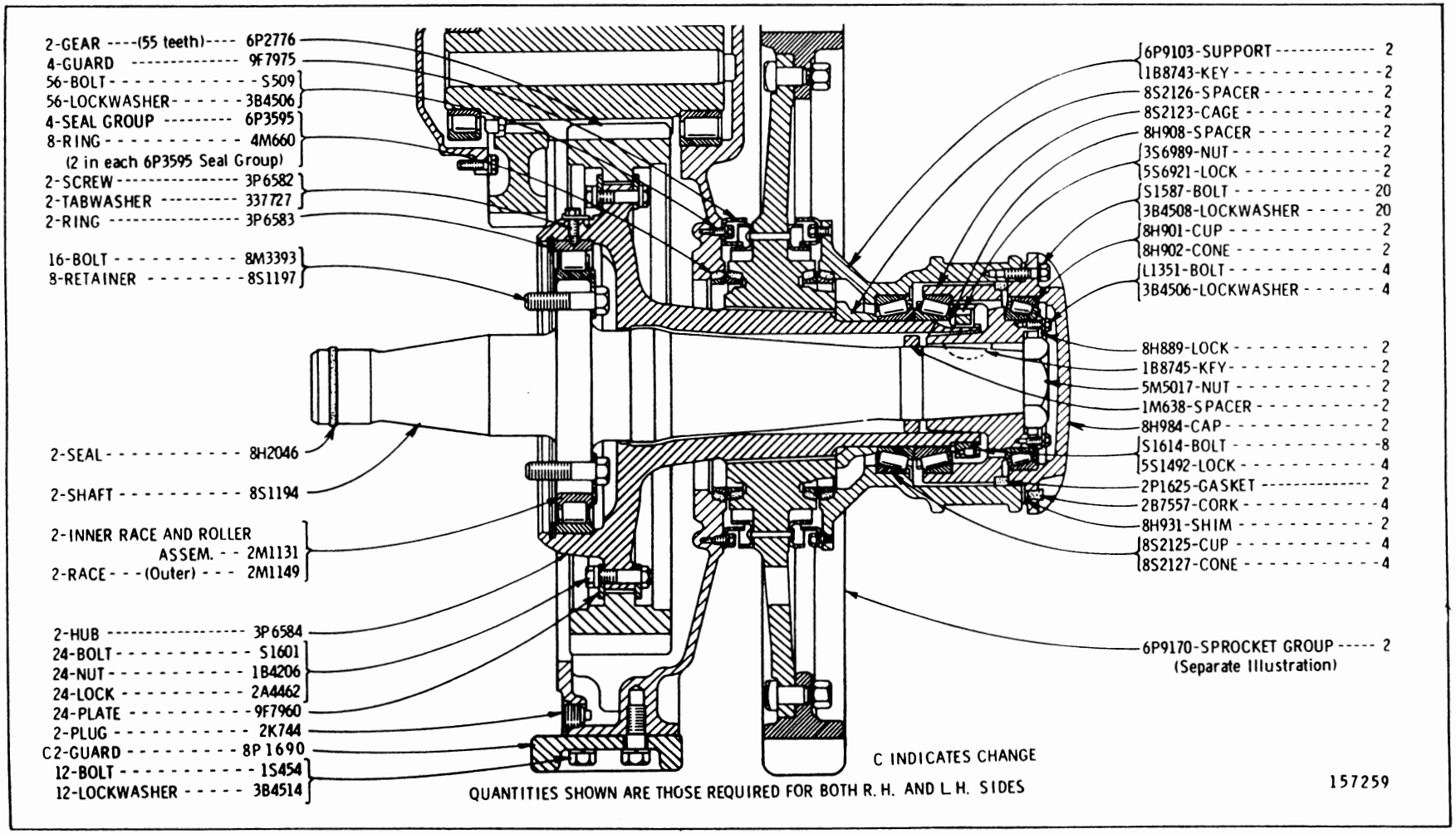

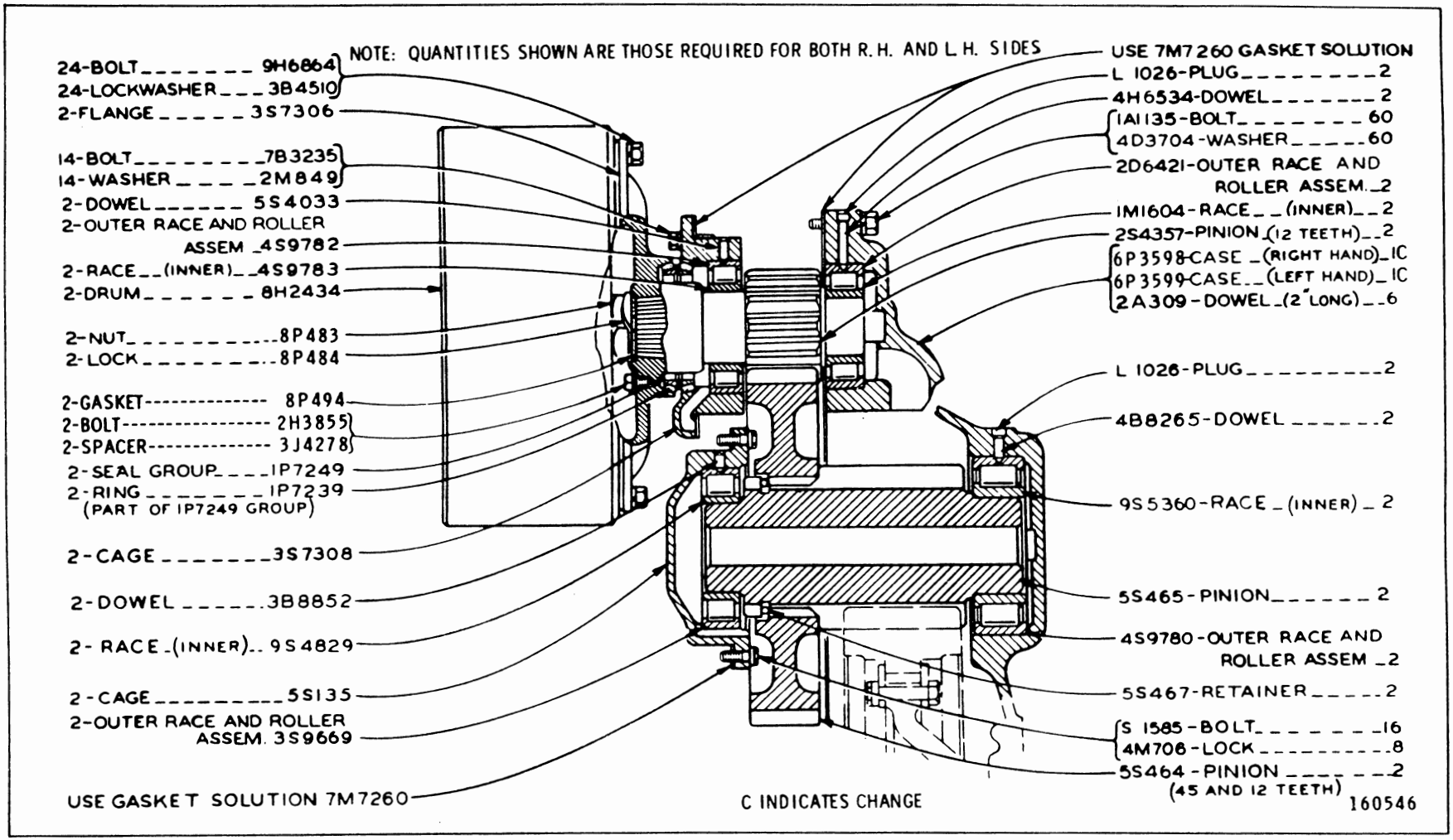

8H2059 FINAL DRIVE GROUP—Upper Half—Field Installation—Type 4
Serial No. 46A30381—Up

8H2059 FINAL DRIVE GROUP—Lower Half—Field Installation—Type 4
Serial No. 46A30381—Up
6P9170 Sprocket parts are shown on Page 99K

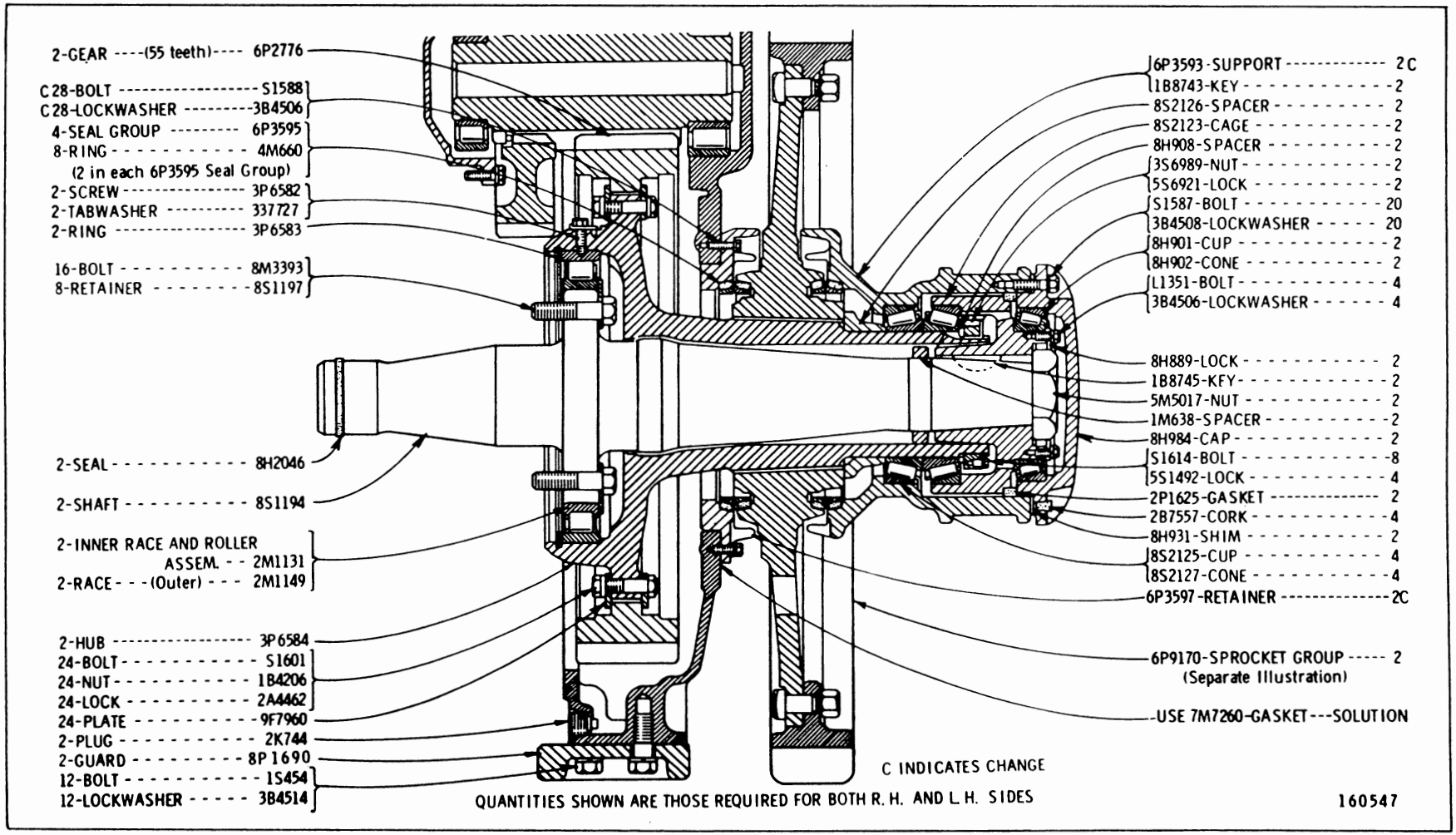

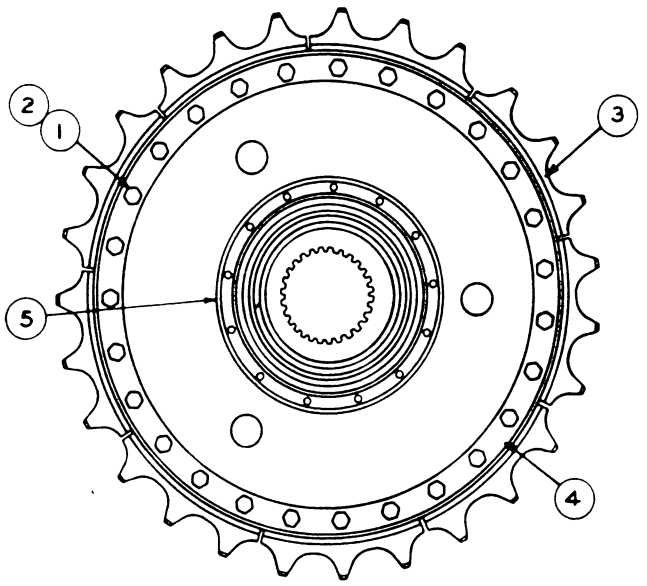

REF NO	PART NUMBER	DESCRIPTION	QTY
1	9S2727	BOLT	27
2	7H3609	NUT	27
3	3S7835	SEGMENT	9
4	6P9107	HUB ASSEM. (Includes)	1
5	9F7978	GUARD	2
	4B4342	RIVET	14

152878

6P9170 SEGMENTED SPROCKET GROUP
Serial No. 46A30381—Up
Part of 8H2059 Final Drive Group shown on Pages 99D, 99F & 99H

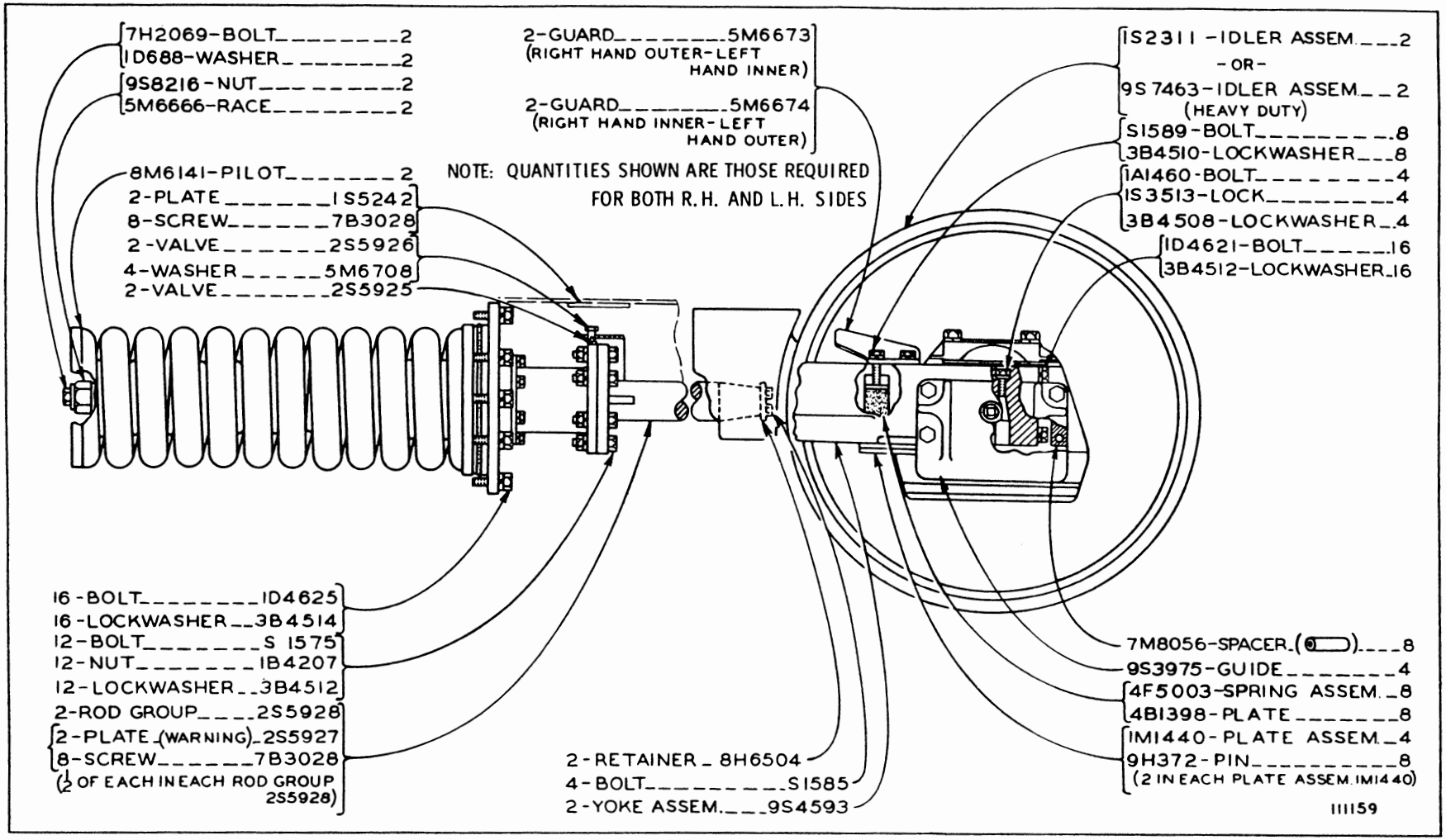

FRONT IDLER (9S4595 N/S)—Part 1
Serial No. 46A24433 to 46A24486 inclusive. Also part of 1P8316 Track Roller Frame and Support Arrangement listed on Page 210. Refer also to Page 211 for special parts

FRONT IDLER (9S4595 N/S)—Part 2
Serial No. 46A24433 to 46A24486 inclusive
Also part of 1P8316 Track Roller Frame and Support Arrangement listed on Page 210

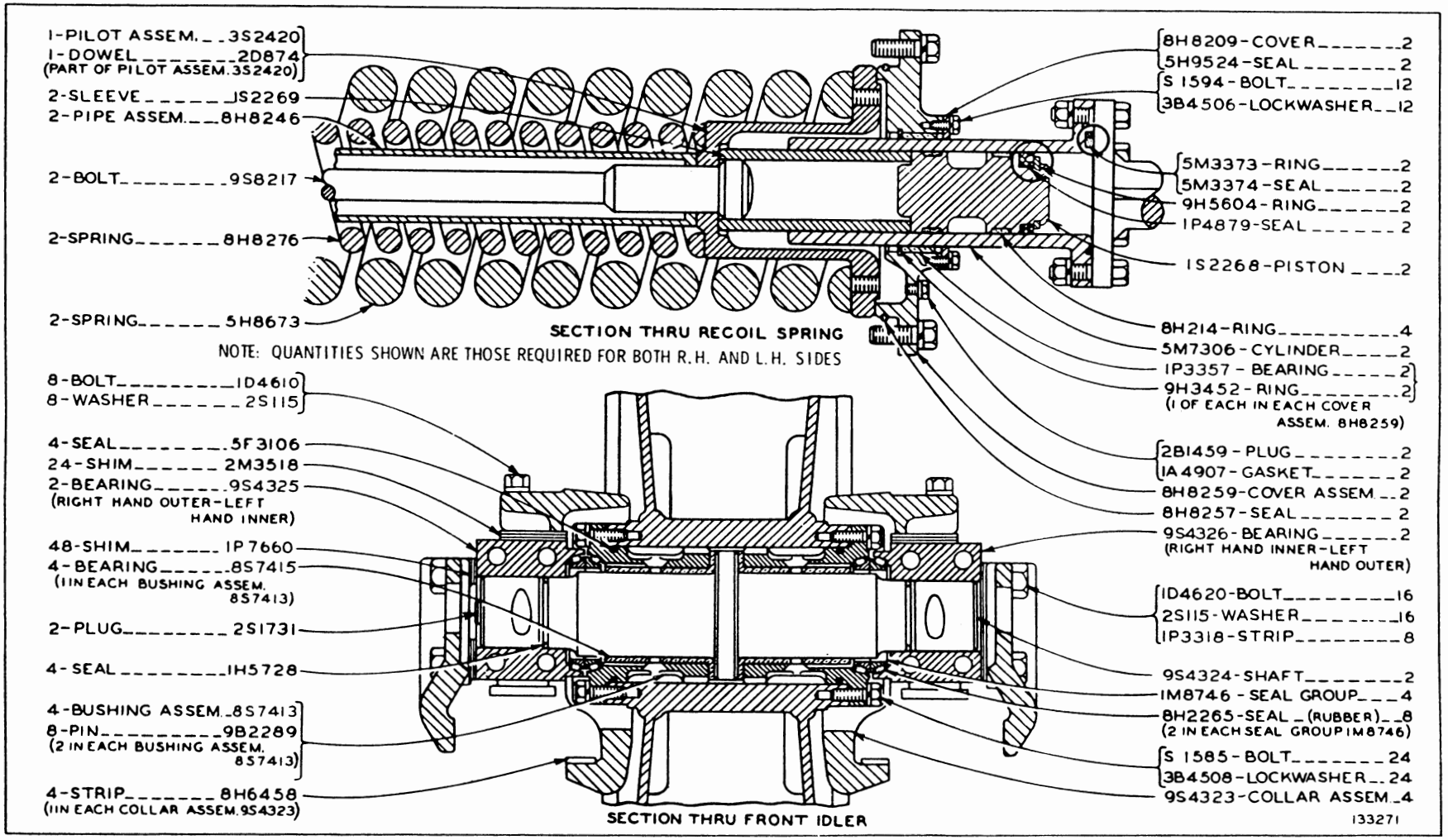

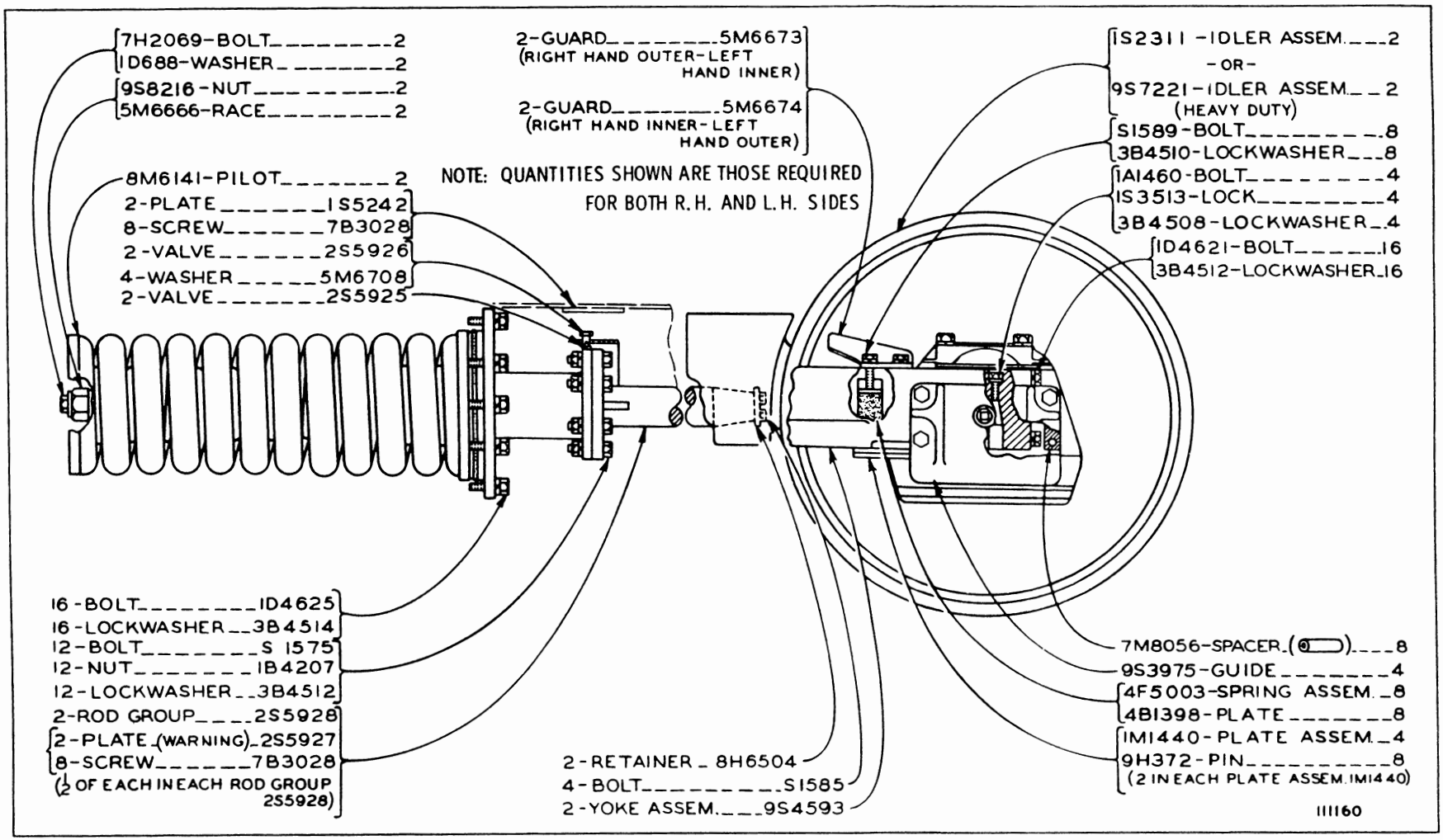

FRONT IDLER (9S4595 N/S)—Part 1
Serial No. 46A24487 to 46A28575 inclusive
Also part of 1P8316 Track Roller Frame and Support Arrangement listed on Page 210
Refer also to Page 211 for special parts

FRONT IDLER (9S4595 N/S)—Part 2
Serial No. 46A24487 to 46A28575 inclusive
Also part of 1P8316 Track Roller Frame and Support Arrangement listed on Page 210

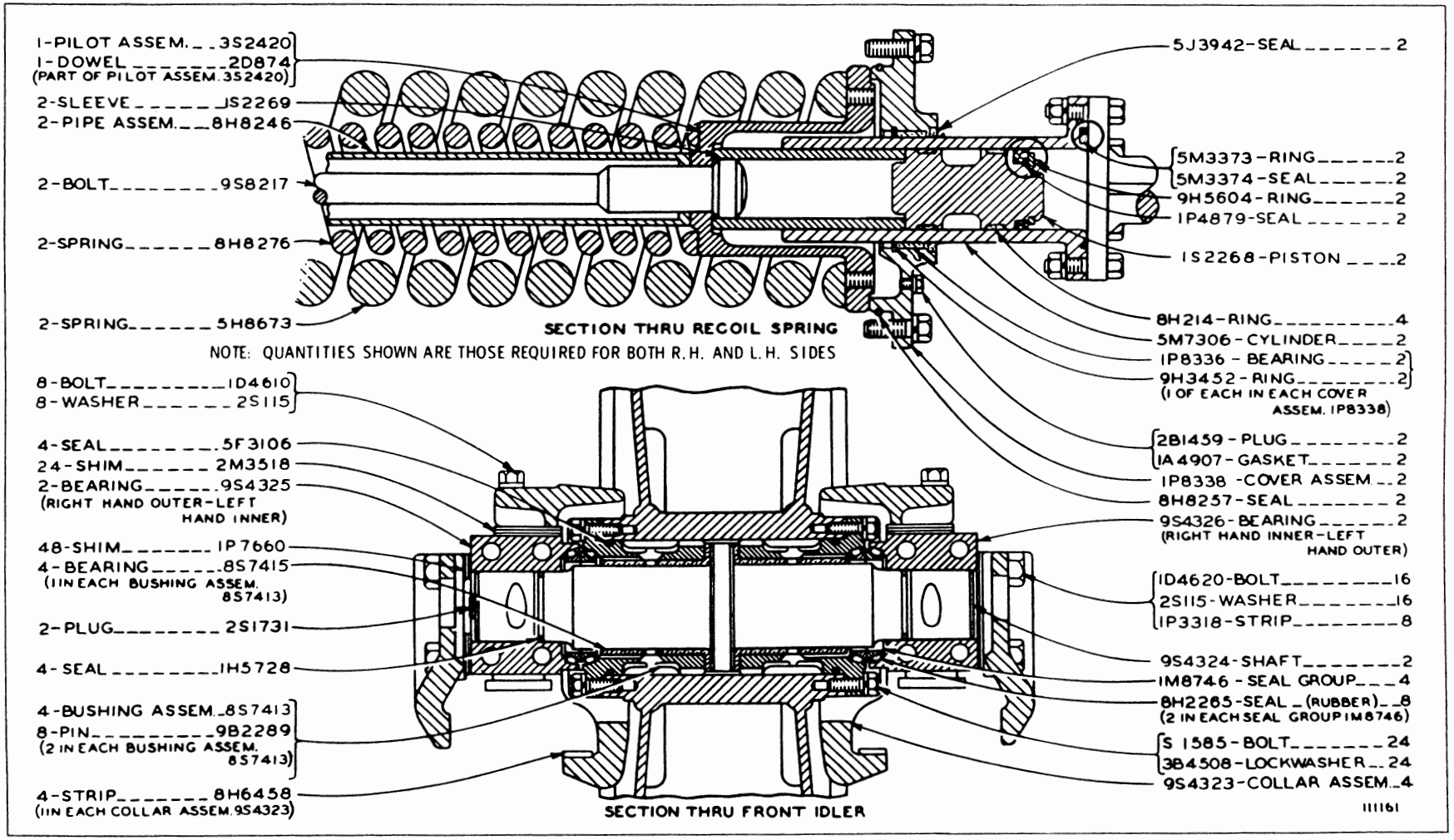

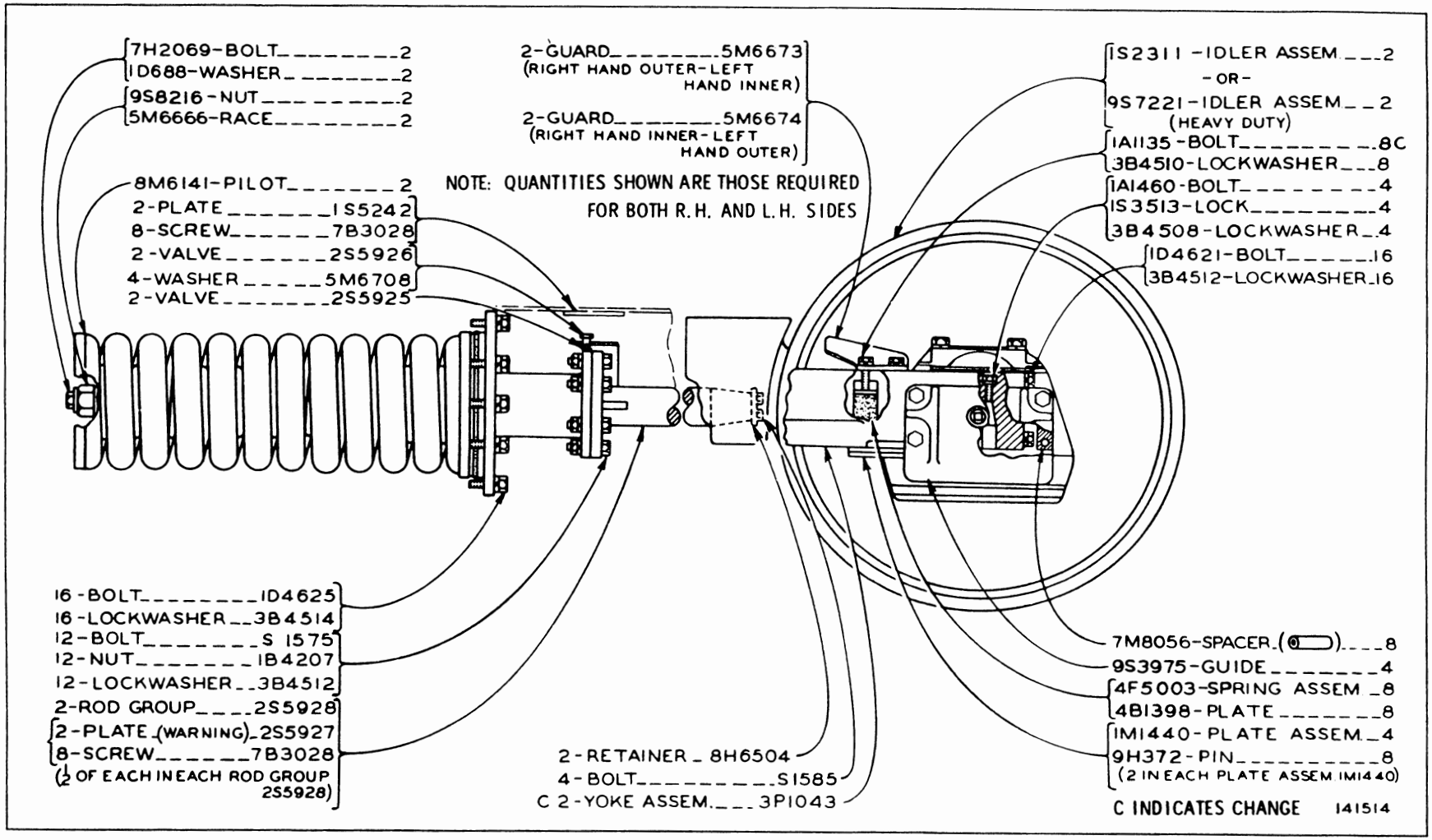

FRONT IDLER (9S4595 N/S)—Part 1

Serial No. 46A28576 to 46A28927 inclusive. Also part of 1P8316 Track Roller Frame and Support Arrangement listed on Page 210. Refer also to Page 211 for special parts

FRONT IDLER (9S4595 N/S)—Part 2
Serial No. 46A28576 to 46A28927 inclusive. Also part of 1P8316 Track Roller
Frame and Support Arrangement listed on Page 210

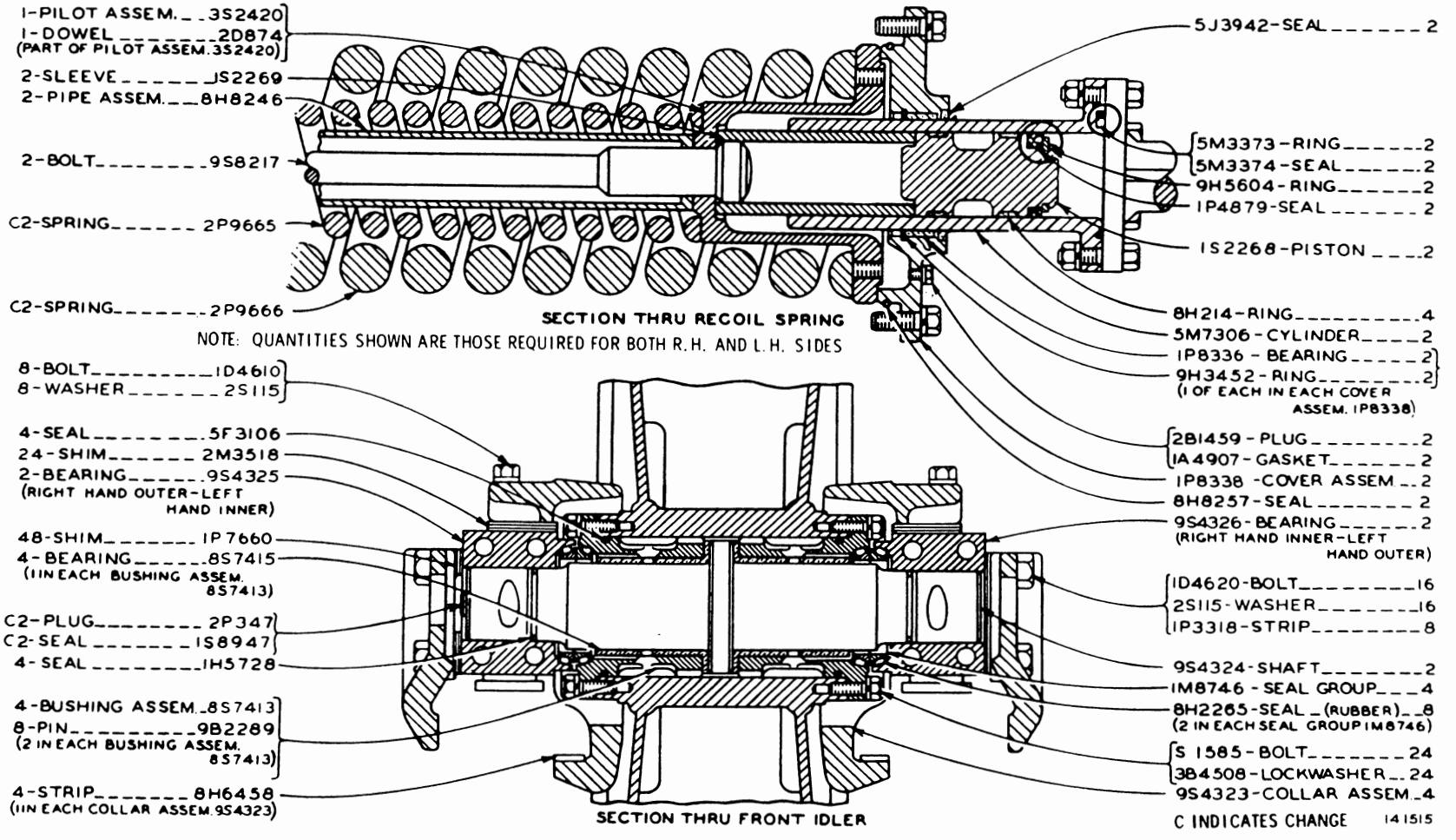

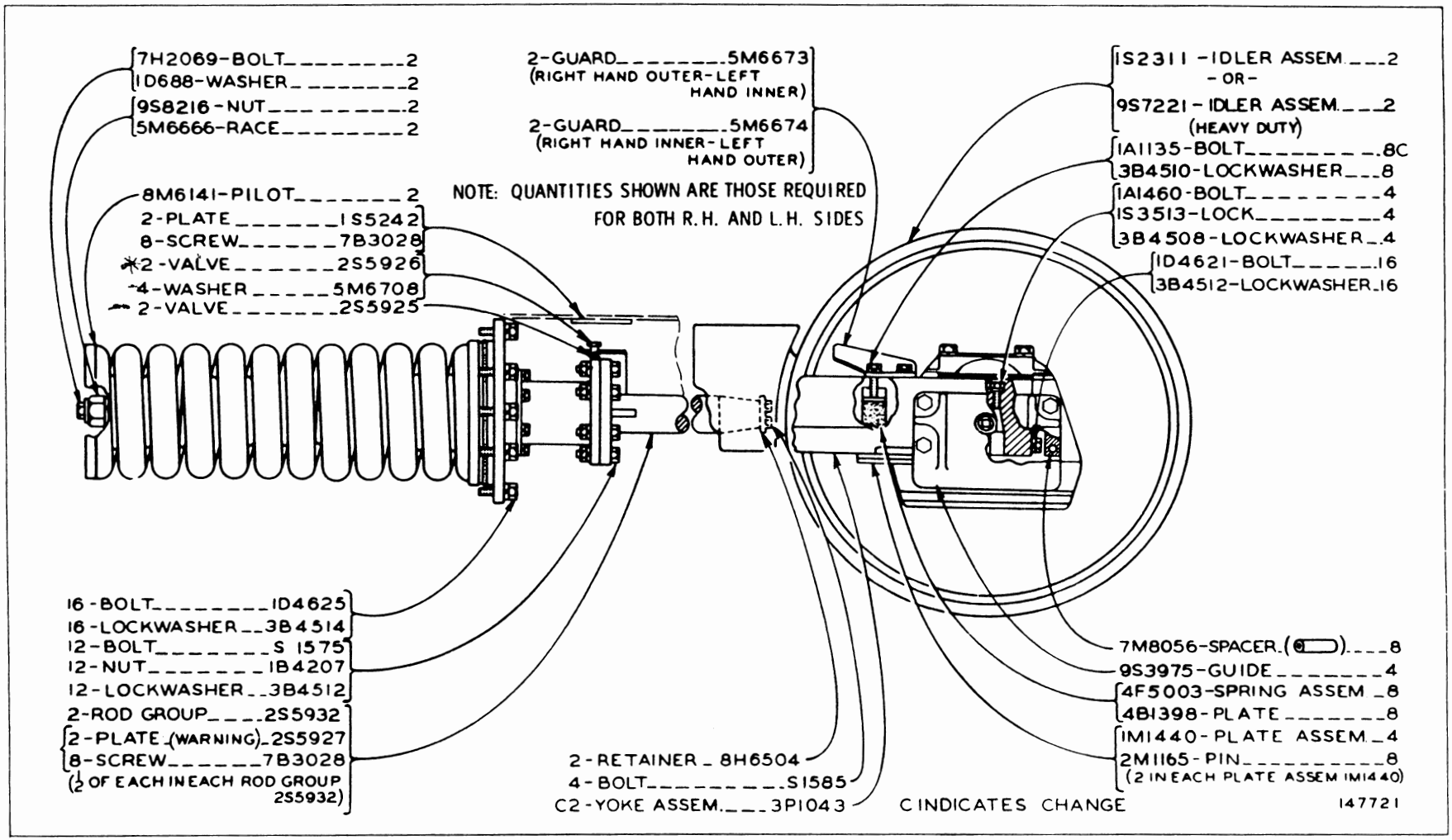

FRONT IDLER (7S2036 N/S)—Part 1
Serial No. 46A28928 to 46A32802 inclusive

FRONT IDLER (7S2036 N/S)—Part 2
Serial No. 46A28928 to 46A32802 inclusive

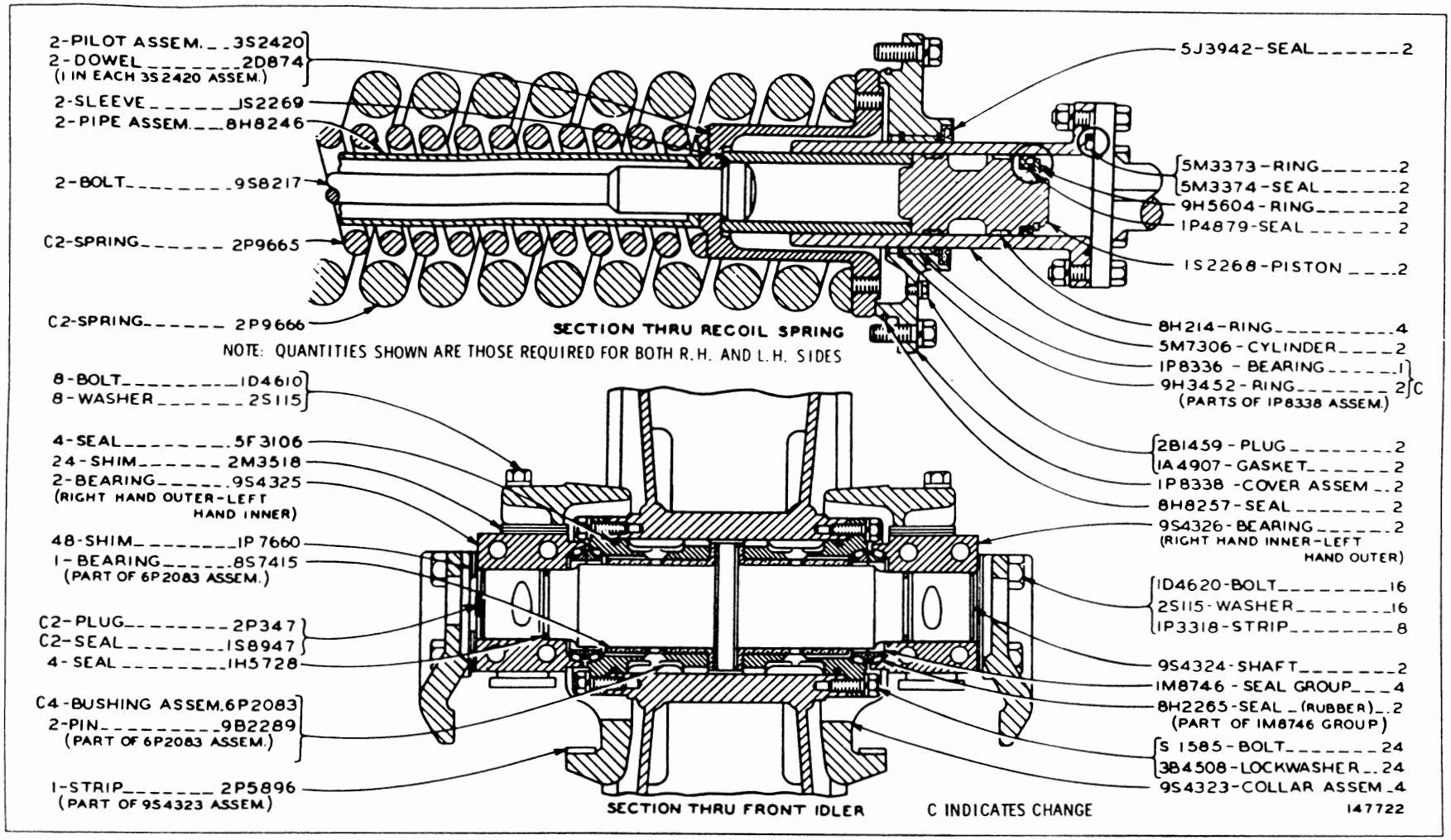

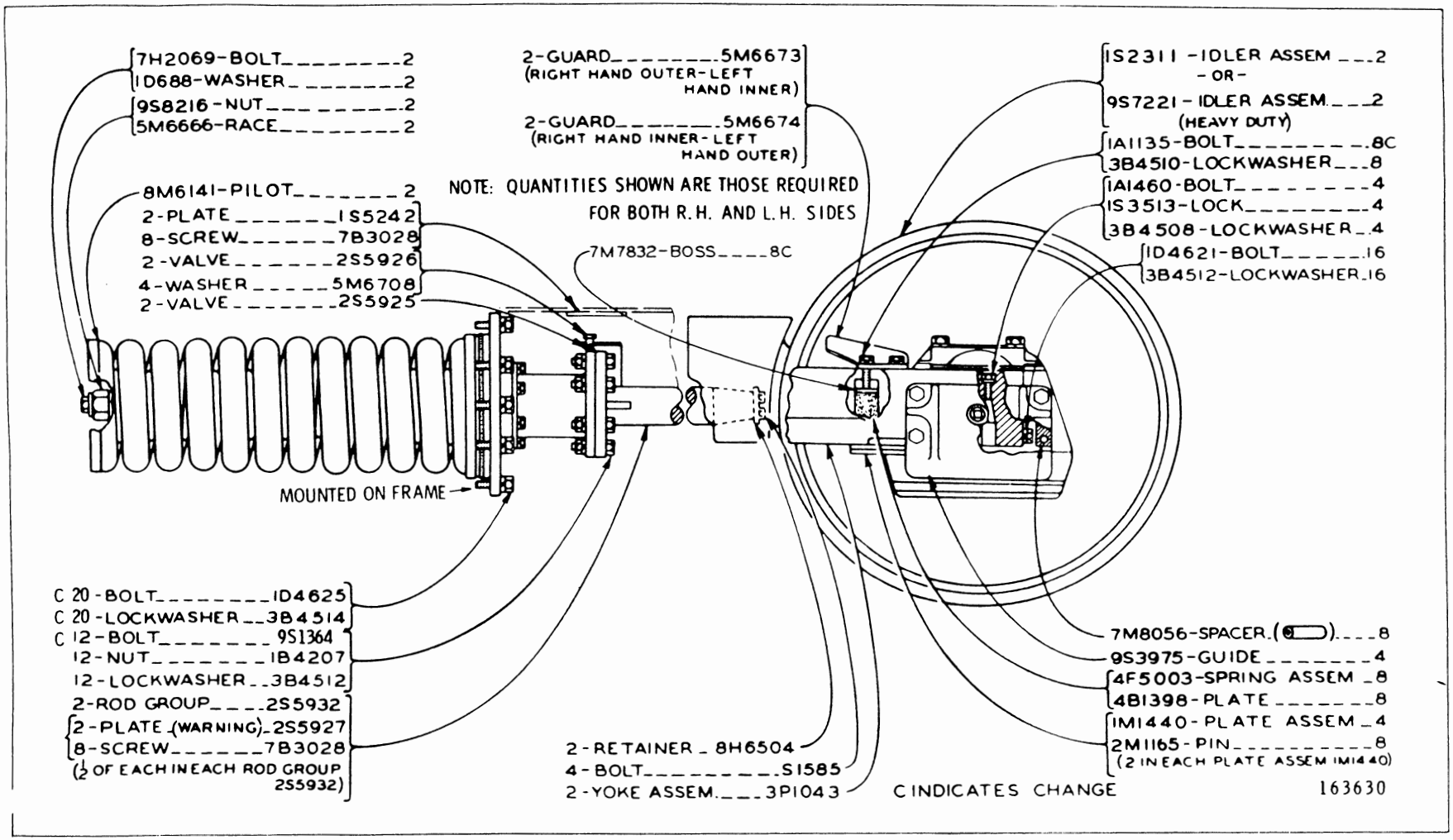

7S2036 FRONT IDLER GROUP—Part 1—Type 2
Serial No. 46A28928 to 46A32802 inclusive

7S2036 FRONT IDLER GROUP—Part 2—Type 2
Serial No. 46A28928 to 46A32802 inclusive

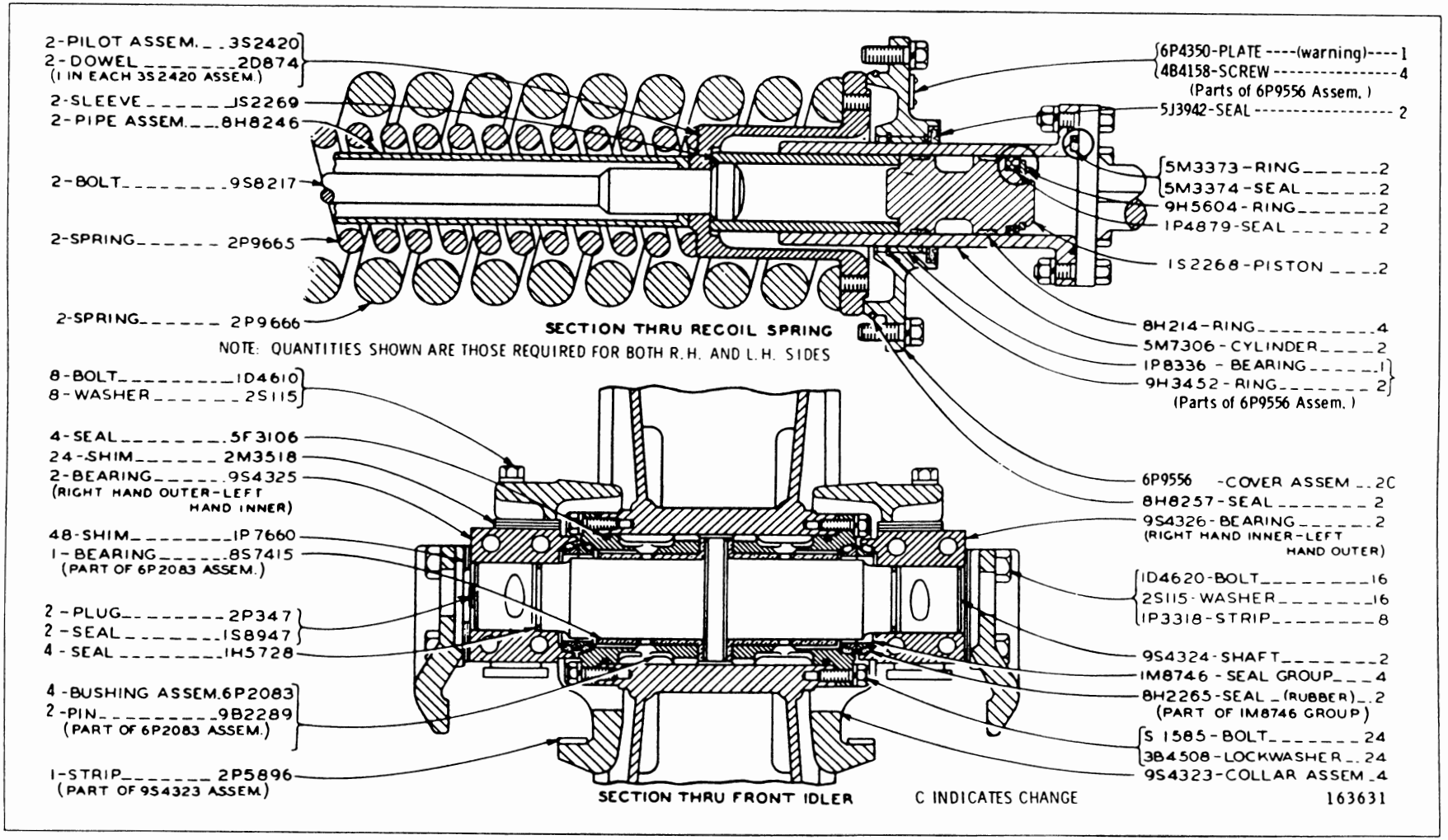

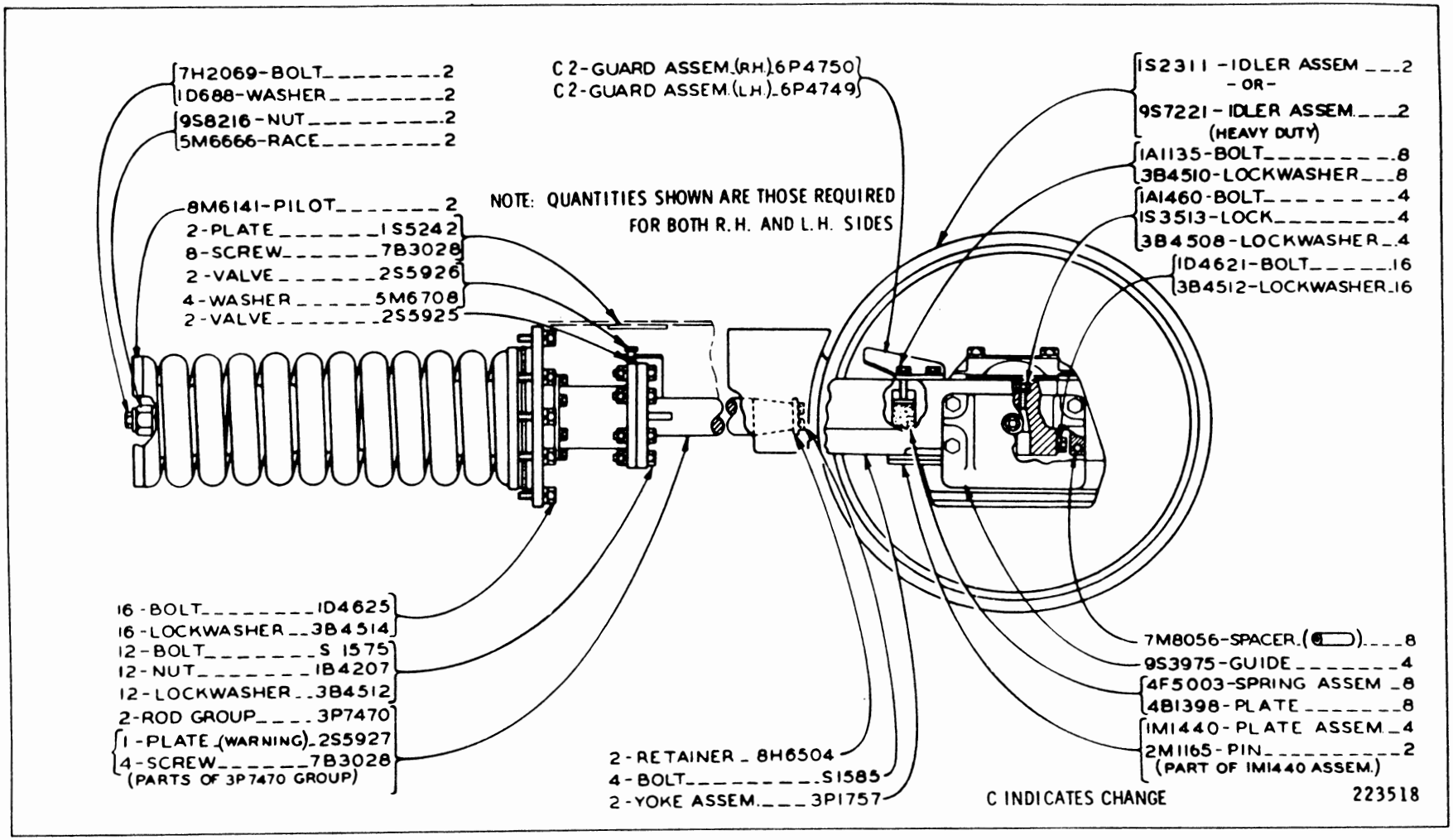

3P1758 FRONT IDLER GROUP—Part 1
Serial No. 46A32803—Up
Also part of 6P8619 Equalizer Bar Support & Track Roller Frame Arrangement listed on Page 97B

3P1758 FRONT IDLER GROUP—Part 2
Serial No. 46A32803—Up
Also part of 6P8619 Equalizer Bar Support & Track Roller Frame Arrangement listed on Page 97B

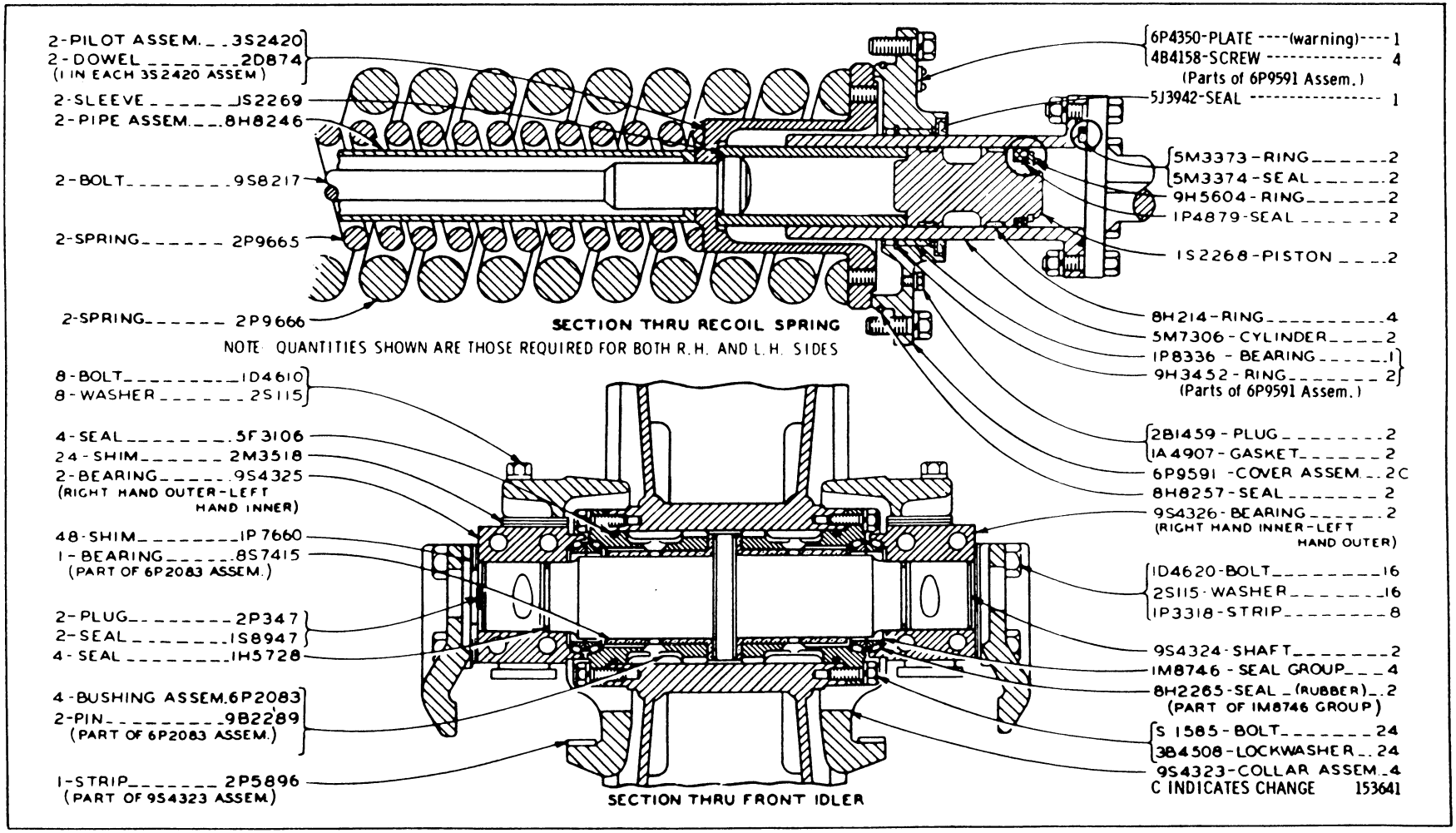

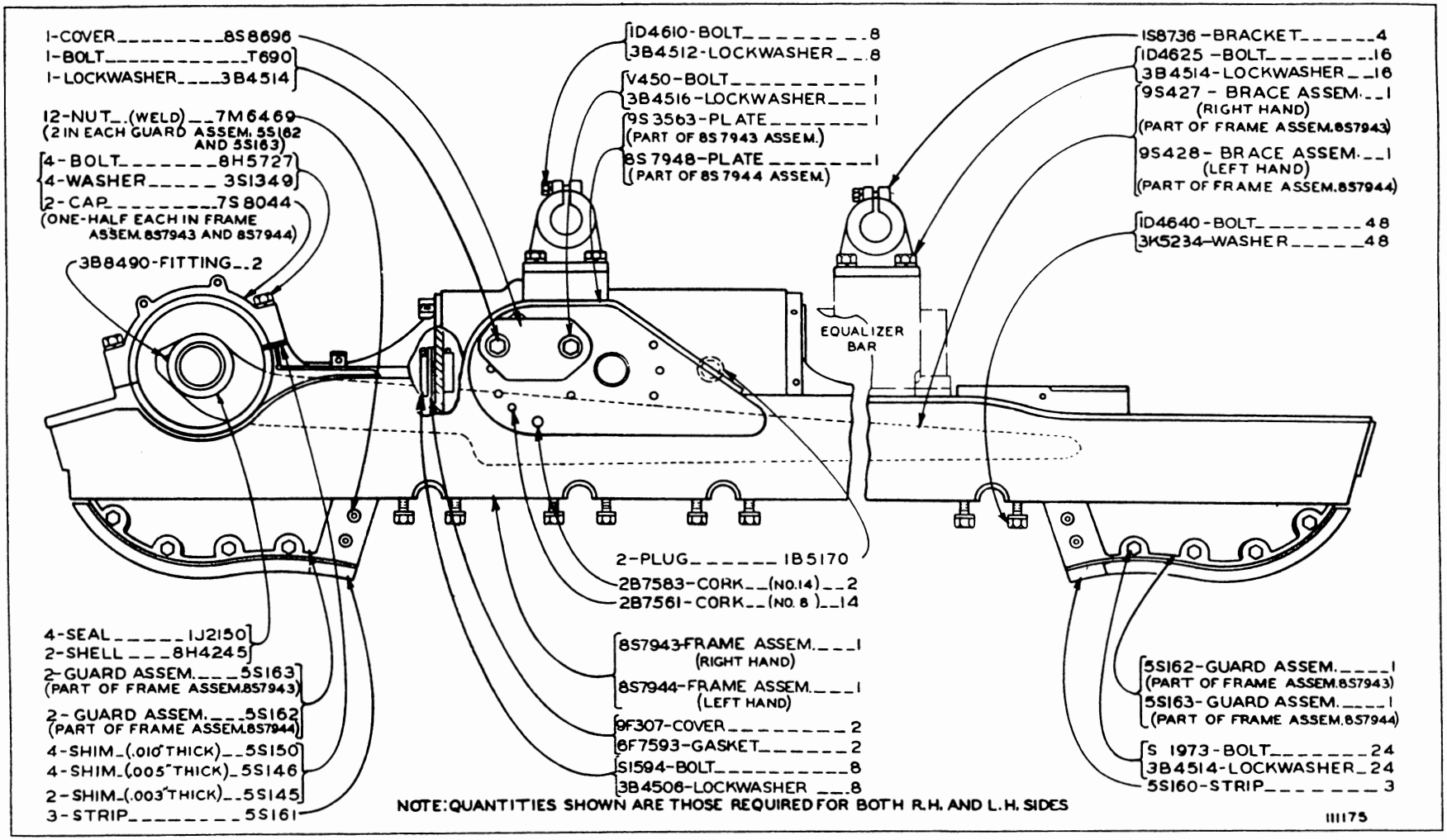

TRACK ROLLER FRAME (9H6492 N/S)
Serial No. 46A24433 to 46A24786 inclusive
Also part of 1P8316 Track Roller Frame and Support Arrangement listed on Page 210
Refer also to Pages 211 and 215 for special parts

TRACK ROLLER FRAME (9H6492 N/S)

Serial No. 46A24787 to 46A26779 inclusive. Also part of 1P8316 Track Roller Frame and Support

Arrangement listed on Page 210. Refer also to Pages 211 and 215 for special parts

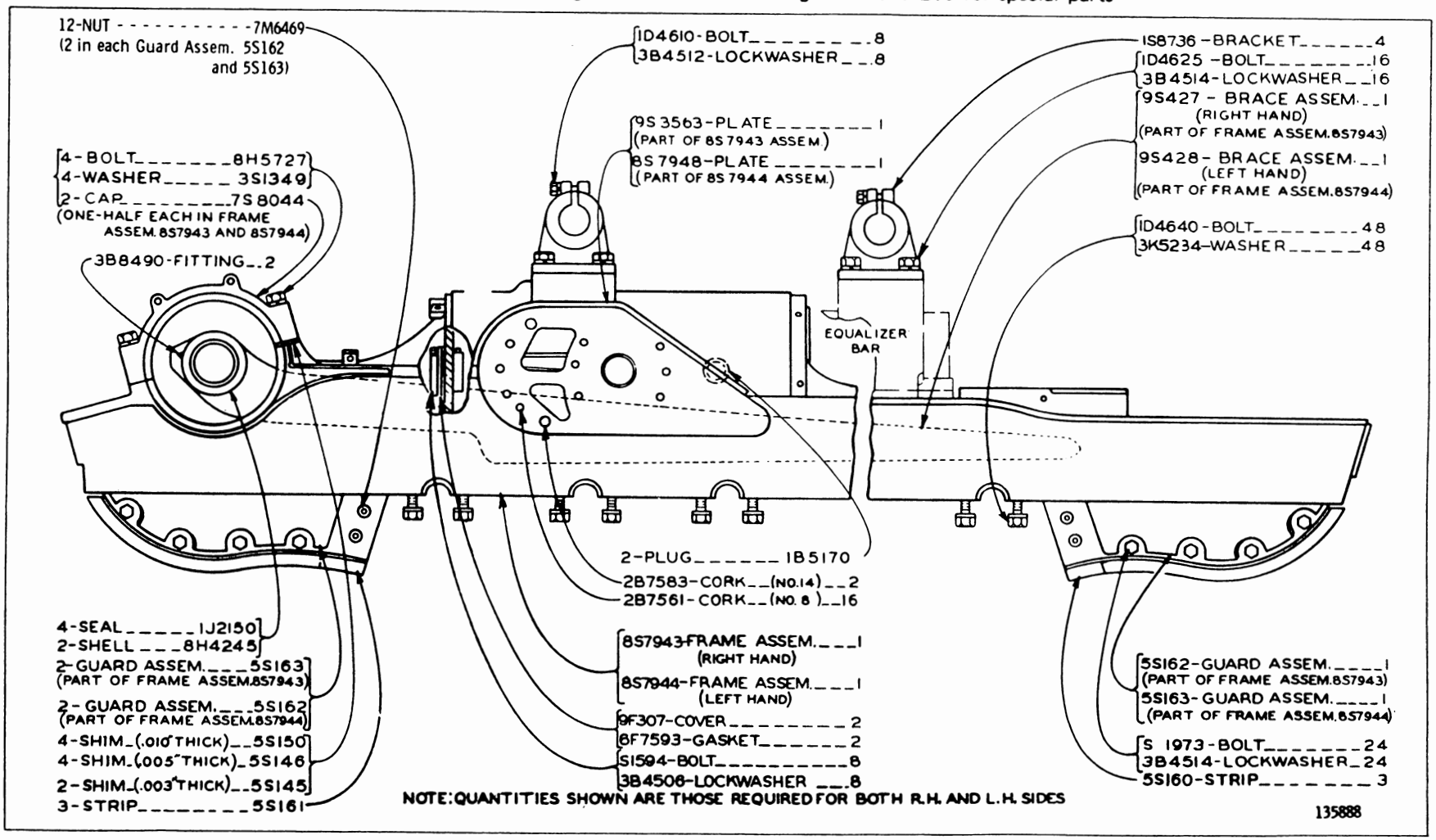

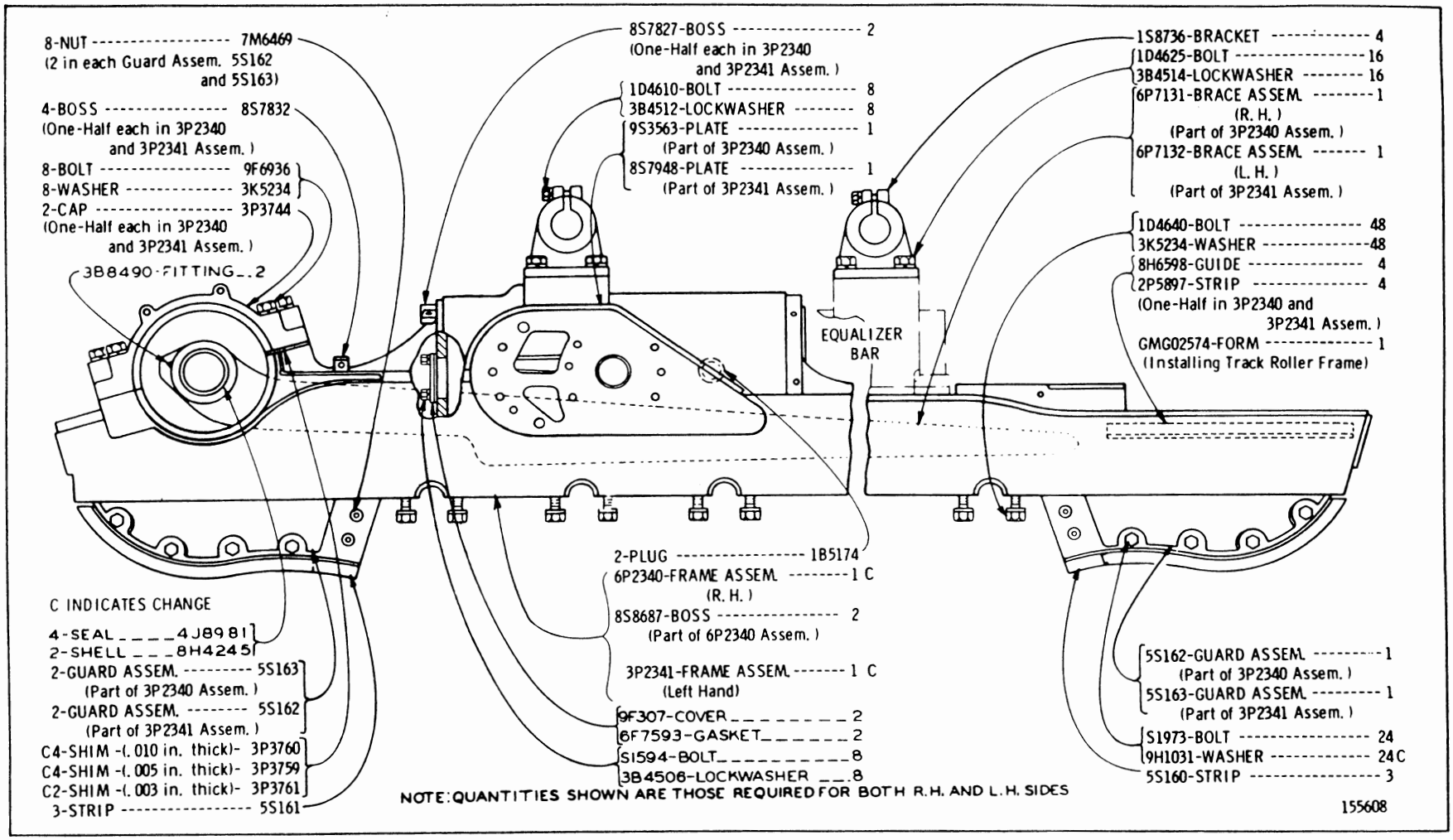

9H6492 TRACK ROLLER FRAME GROUP

Serial No. 46A26780 to 46A28927 inclusive. Also part of 1P8316 Track Roller Frame and Support Arrangement listed on Page 210. Refer also to Pages 211 through 216 for special parts

TRACK ROLLER FRAME (9S373 N/S)
Serial No. 46A28928 to 31575, 31579 to 46A31582 inclusive
Also part of 1P8317 Track Roller Frame and Support Arrangement listed on Page 211
Refer also to Page 215 for special parts. Only separate parts serviced

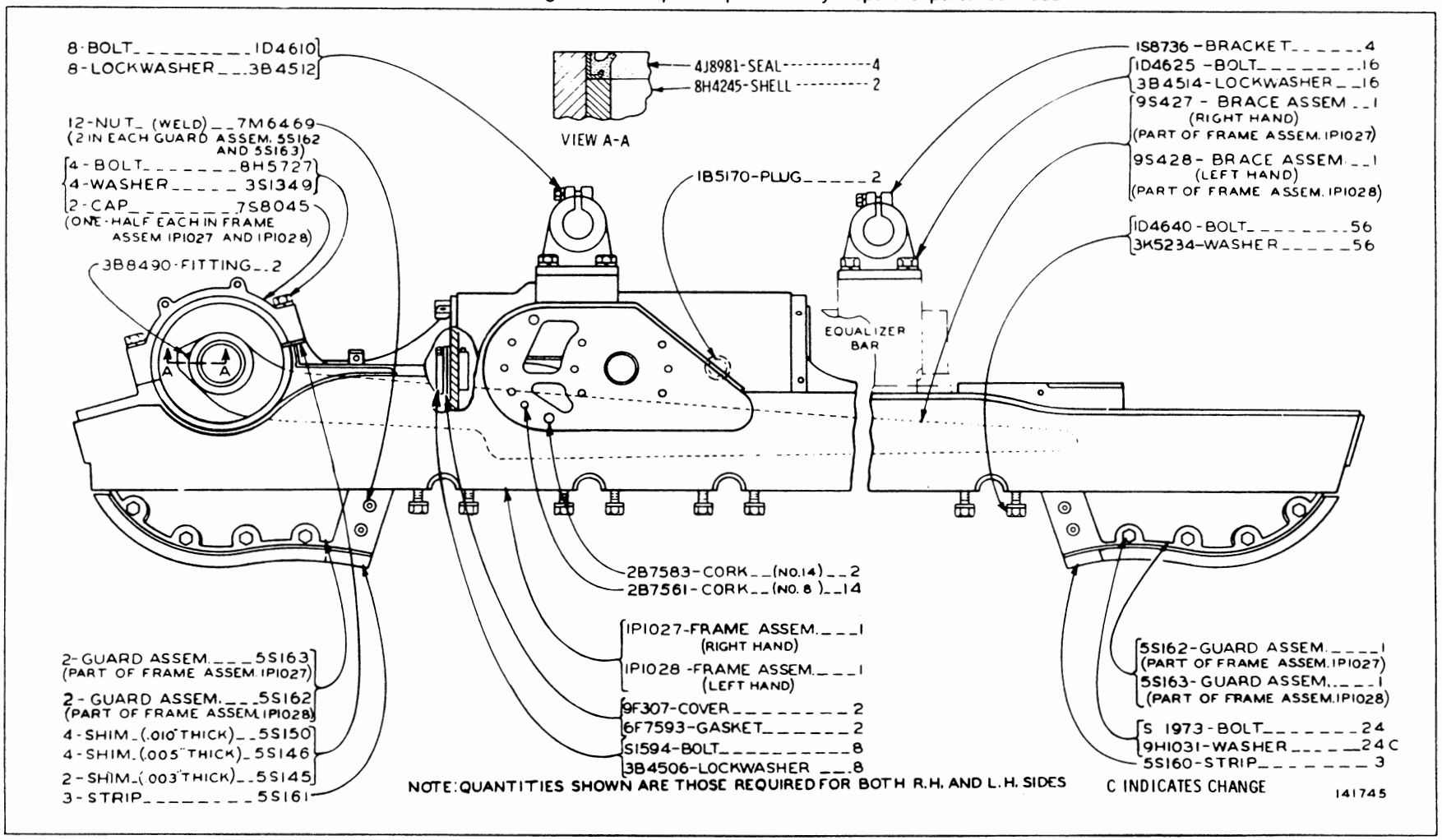

NOTE: QUANTITIES SHOWN ARE THOSE REQUIRED FOR BOTH R.H. AND L.H. SIDES

C INDICATES CHANGE

141745

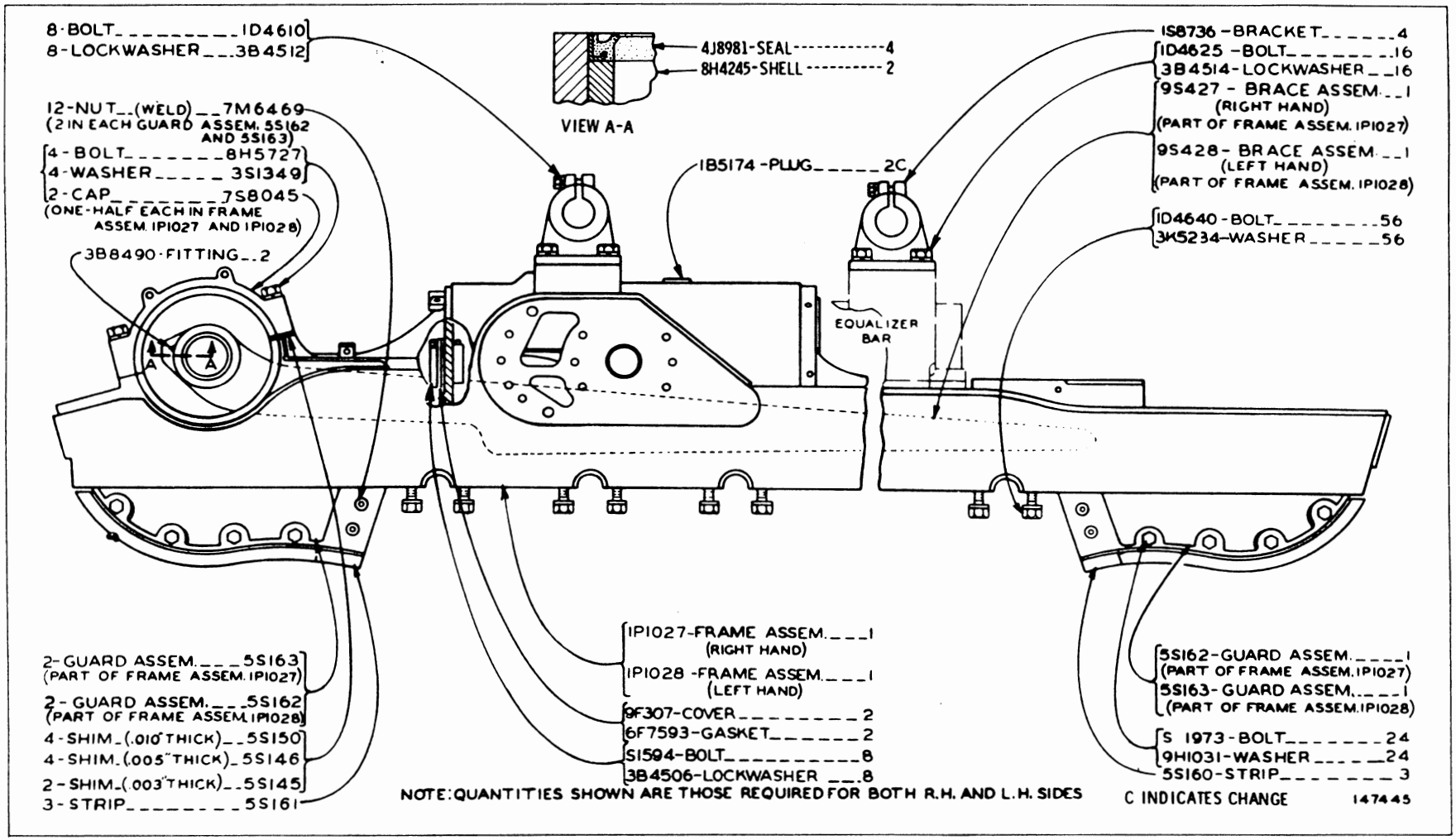

TRACK ROLLER FRAME (9S373 N/S)
Serial No. 46A31576 to 46A31578 and 46A31583 to 46A32802 inclusive
Also part of 1P8317 Track Roller Frame and Support Arrangement listed on Page 211
FOR USE WITH IN ARM HYDRAULIC LINES. Only separate parts serviced. Refer also to Page 215 for special parts

6P3139 TRACK ROLLER FRAME GROUP

Also part of 6P8619 & 1P8317 Track Roller Frame Arrangements listed on Pages 97B & 210A

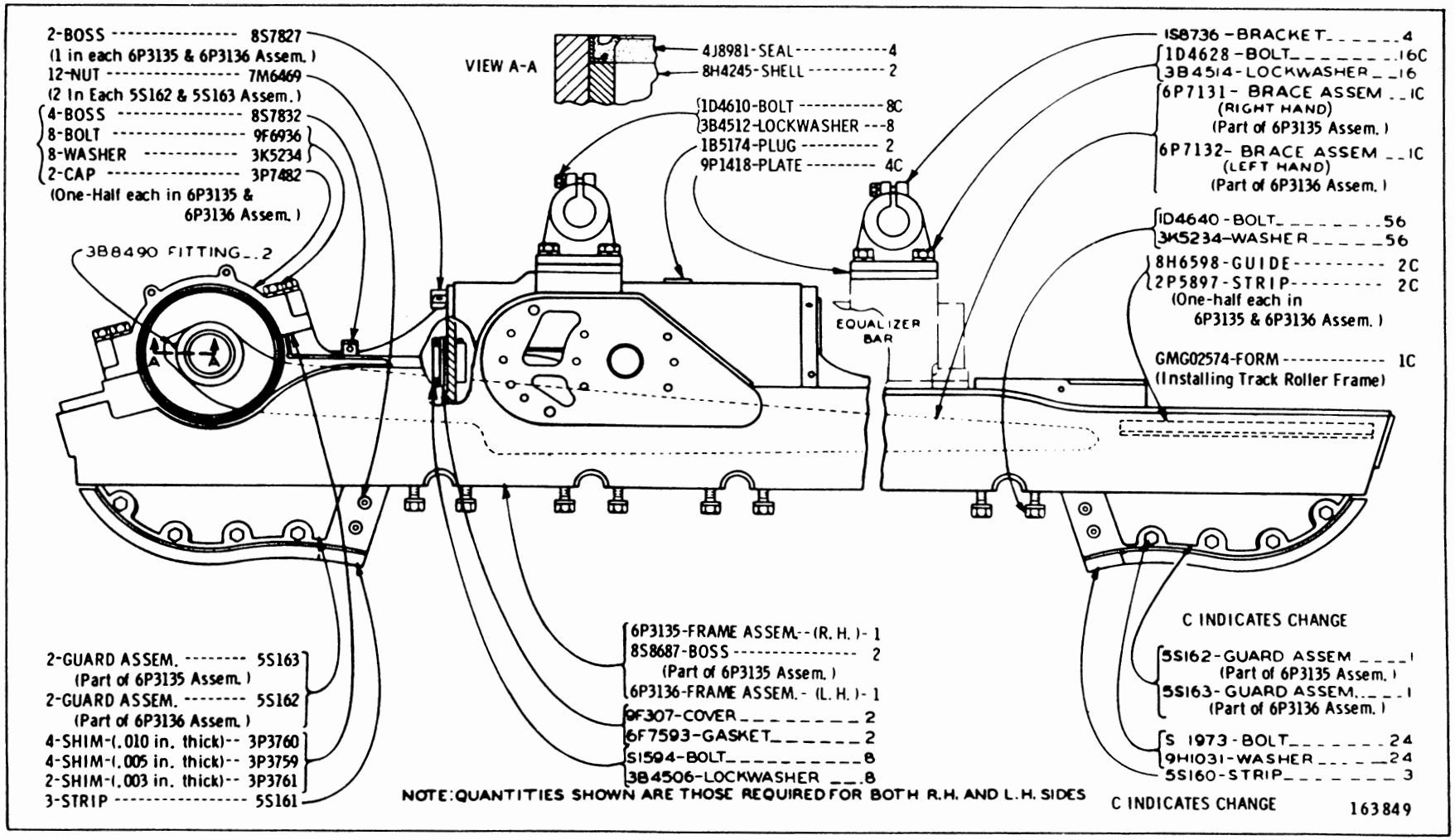

TRACK ROLLER FRAME (3P2364 N/S)
Serial No. 46A32803—Up
Refer also to Page 215 for special parts

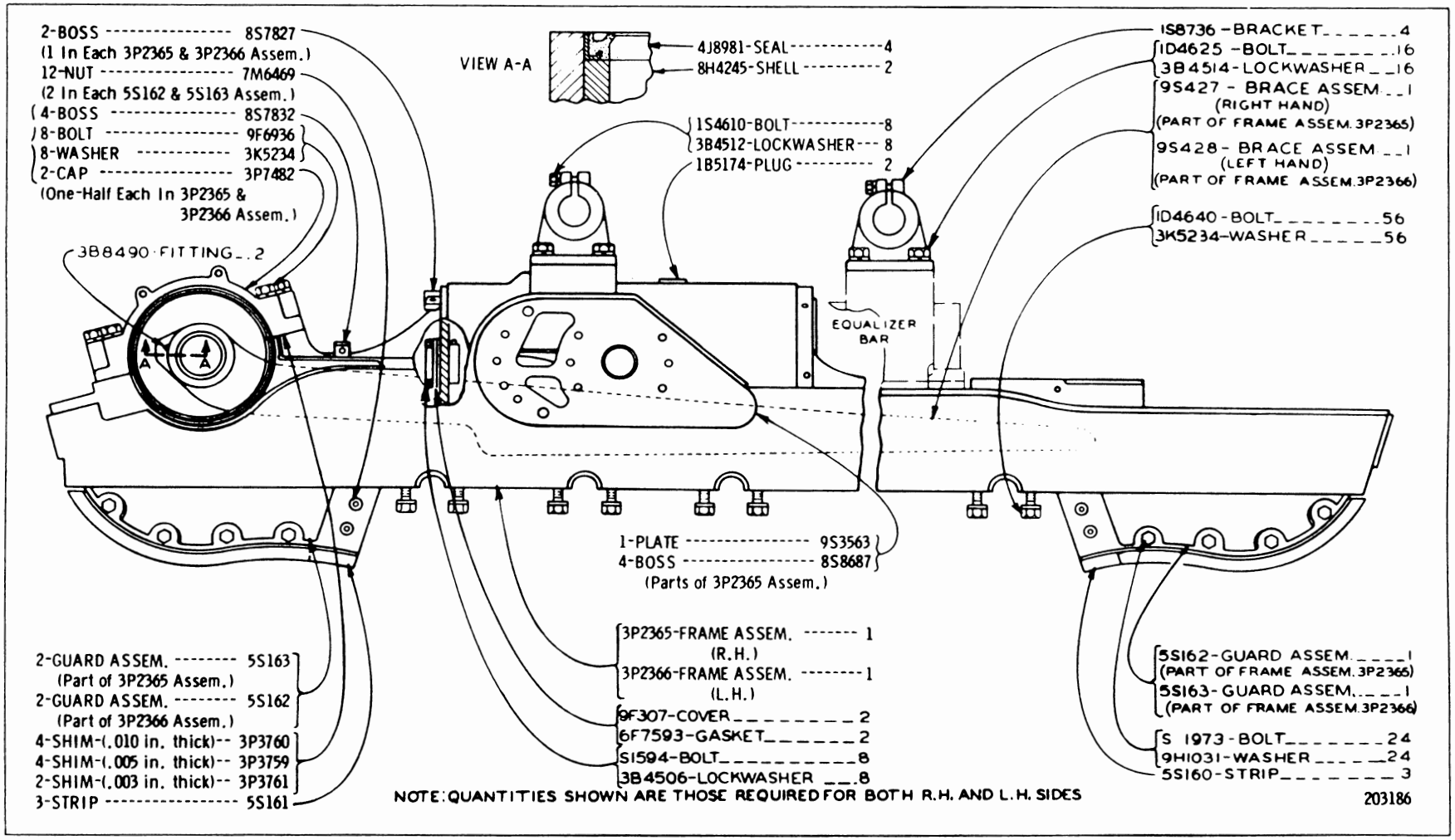

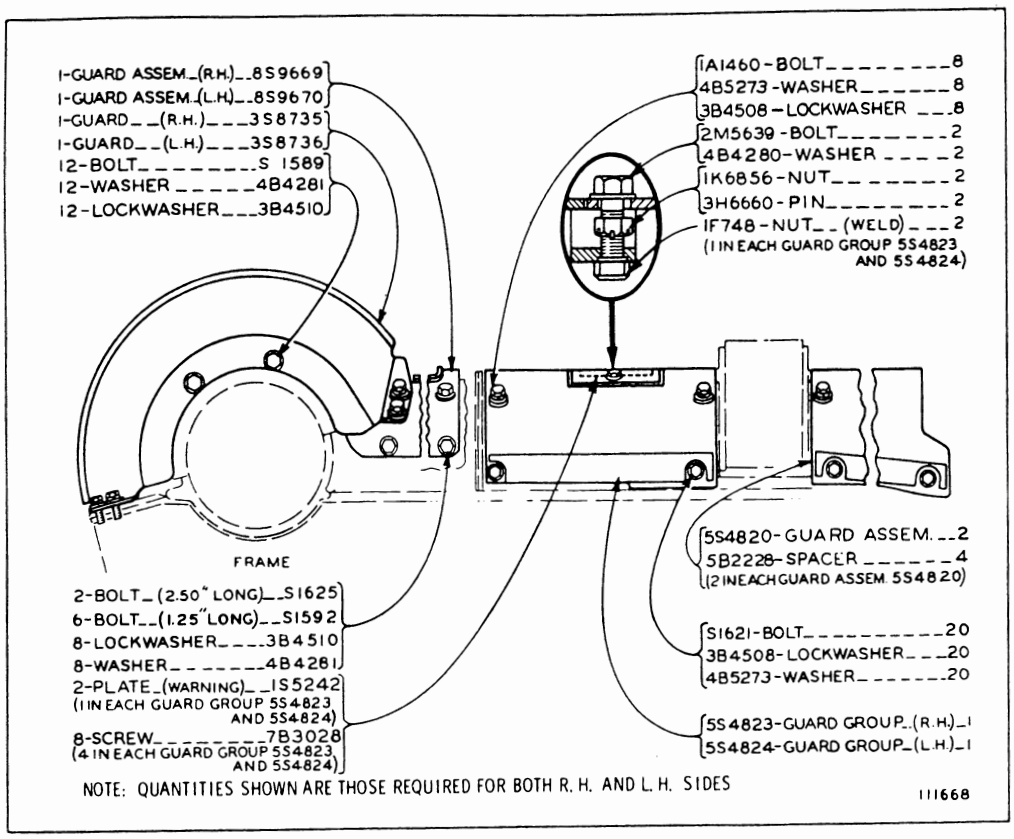

TRACK ROLLER FRAME GUARD (7S2035 N/S)
Serial No. 46A28928 to 46A32802 inclusive. Also part of 1P8317 Seven Roller Track Roller Frame and Support Arrangement listed on Page 210A

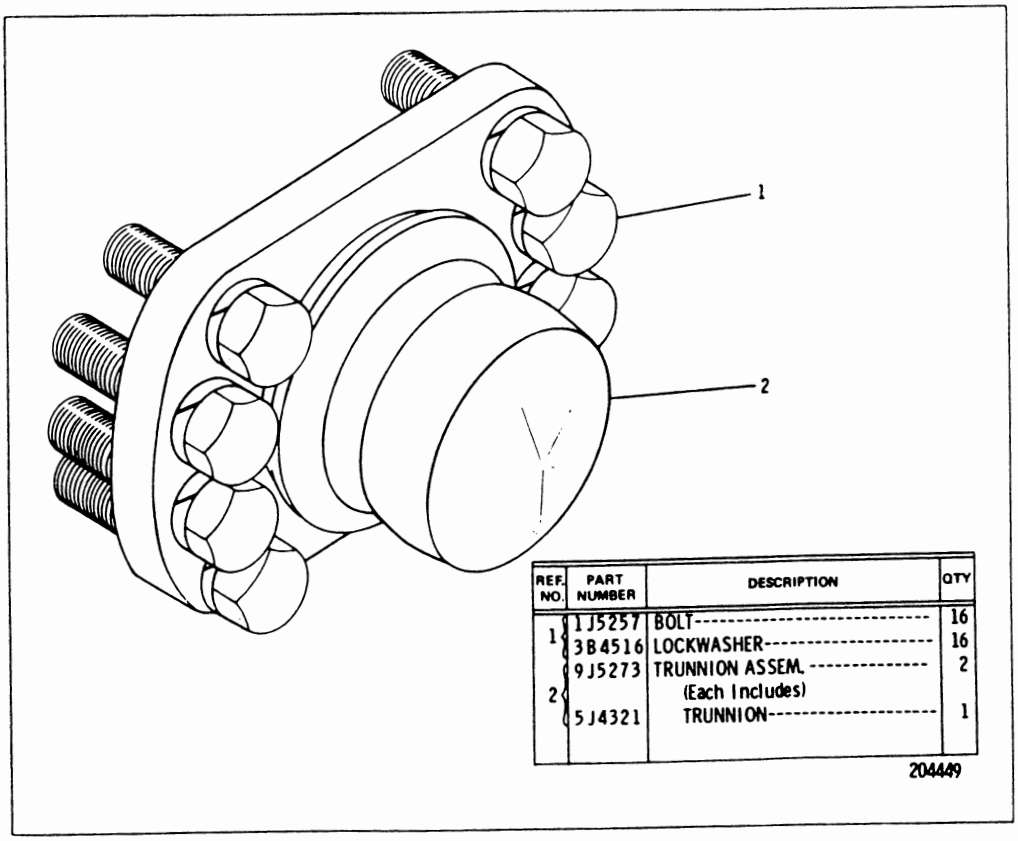

REF. NO.	PART NUMBER	DESCRIPTION	QTY
1	1J5257	BOLT	16
	3B4516	LOCKWASHER	16
	9J5273	TRUNNION ASSEM.	2
2		(Each Includes)	
	5J4321	TRUNNION	1

204449

TRUNNION (9J5274 N/S)
Also part of 1P8317 Seven Roller Track Roller Frame and Support Arrangement listed on Page 210A

3P2285 RECOIL MECHANISM GUARD GROUP
Serial No. 46A32803—Up
Also part of 6P8619 & 1P8317 Track Roller Frame & Support Arrangements listed on Pages 97B & 210A

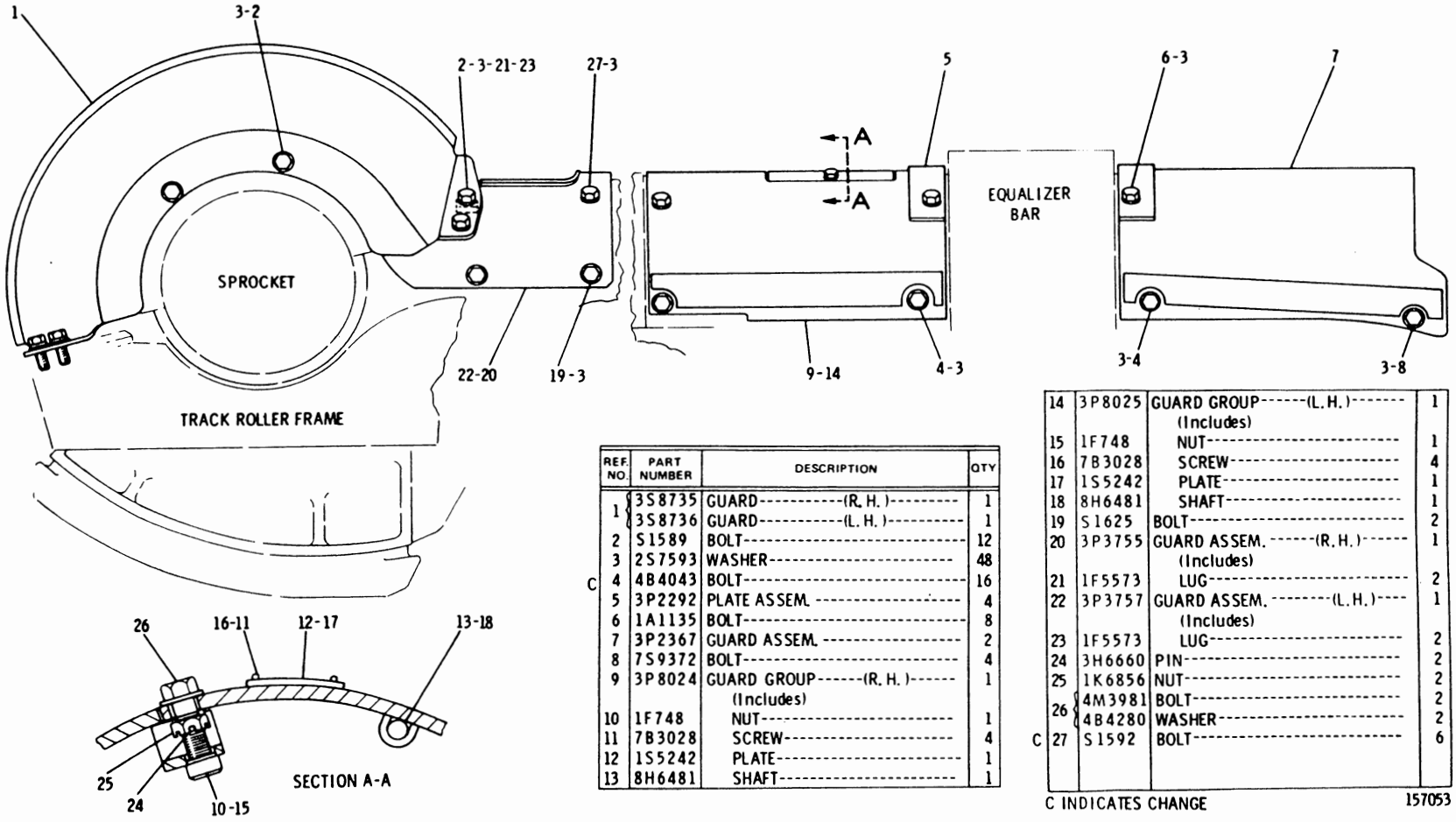

	REF. NO.	PART NUMBER	DESCRIPTION	QTY
	1	3S8735	GUARD----------(R. H.)----------	1
		3S8736	GUARD----------(L. H.)----------	1
	2	S1589	BOLT----------	12
	3	2S7593	WASHER----------	48
C	4	4B4043	BOLT----------	16
	5	3P2292	PLATE ASSEM. ----------	4
	6	1A1135	BOLT----------	8
	7	3P2367	GUARD ASSEM. ----------	2
	8	7S9372	BOLT----------	4
	9	3P8024	GUARD GROUP------(R. H.)------ (Includes)	1
	10	1F748	NUT----------	1
	11	7B3028	SCREW----------	4
	12	1S5242	PLATE----------	1
	13	8H6481	SHAFT----------	1
	14	3P8025	GUARD GROUP------(L. H.)------ (Includes)	1
	15	1F748	NUT----------	1
	16	7B3028	SCREW----------	4
	17	1S5242	PLATE----------	1
	18	8H6481	SHAFT----------	1
	19	S1625	BOLT----------	2
	20	3P3755	GUARD ASSEM. ------(R. H.)------ (Includes)	1
	21	1F5573	LUG----------	2
	22	3P3757	GUARD ASSEM. --------(L. H.)---- (Includes)	1
	23	1F5573	LUG----------	2
	24	3H6660	PIN----------	2
	25	1K6856	NUT----------	2
	26	4M3981	BOLT----------	2
		4B4280	WASHER----------	2
C	27	S1592	BOLT----------	6

C INDICATES CHANGE

157053

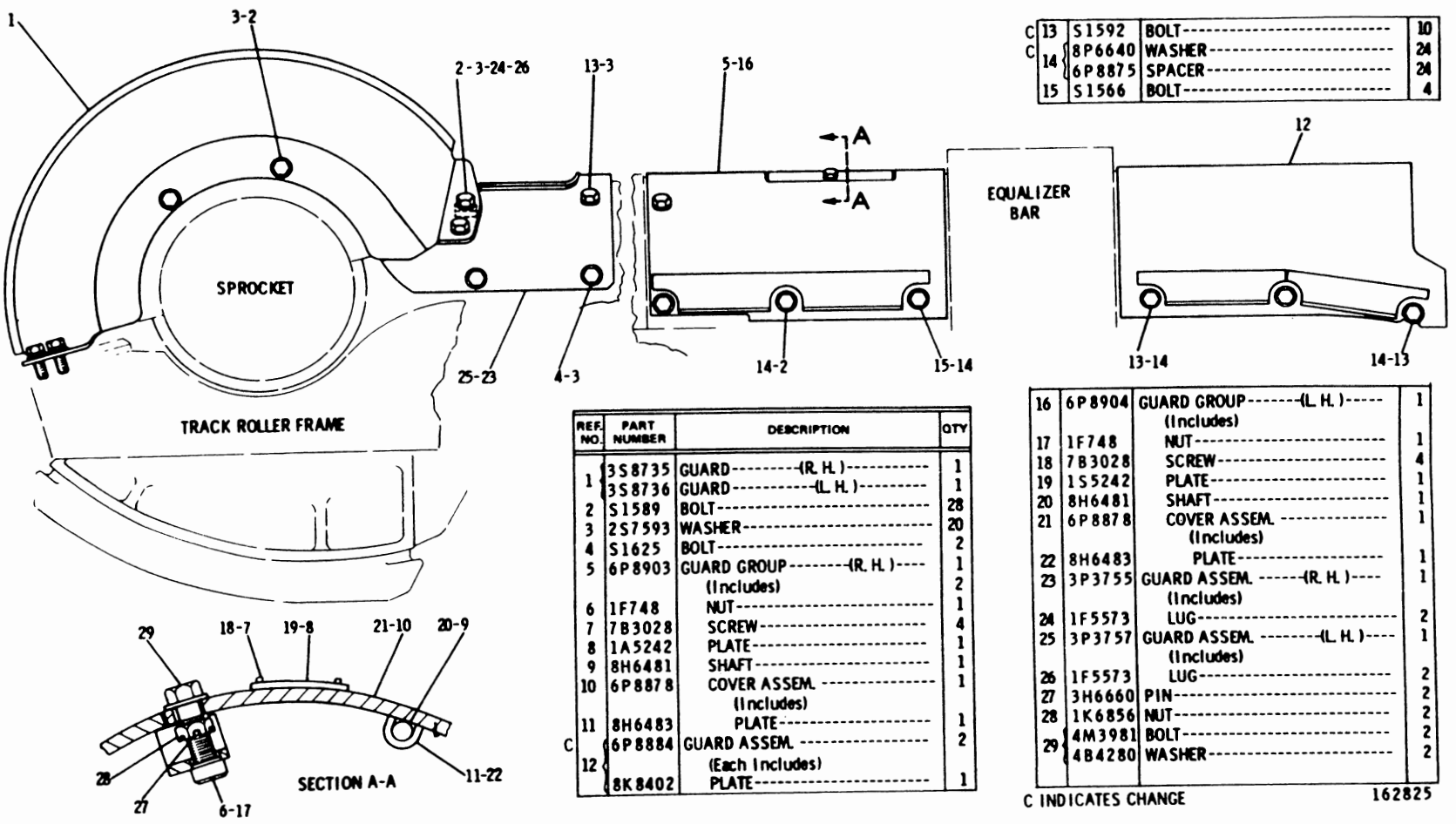

REF. NO.	PART NUMBER	DESCRIPTION	QTY
1	3S8735	GUARD---------(R. H.)----------	1
	3S8736	GUARD---------(L. H.)----------	1
2	S1589	BOLT----------	28
3	2S7593	WASHER----------	20
4	S1625	BOLT----------	2
5	6P8903	GUARD GROUP--------(R. H.)---- (Includes)	1
6	1F748	NUT----------	2
7	7B3028	SCREW----------	1
8	1A5242	PLATE----------	4
9	8H6481	SHAFT----------	1
10	6P8878	COVER ASSEM. ---------- (Includes)	1
11	8H6483	PLATE----------	1
C	6P8884	GUARD ASSEM. ----------	2
12		(Each Includes)	
	8K8402	PLATE----------	1
C	13 S1592	BOLT----------	10
C	14 8P6640	WASHER----------	24
	14 6P8875	SPACER----------	24
15	S1566	BOLT----------	4
16	6P8904	GUARD GROUP-------(L. H.)----- (Includes)	1
17	1F748	NUT----------	1
18	7B3028	SCREW----------	4
19	1S5242	PLATE----------	1
20	8H6481	SHAFT----------	1
21	6P8878	COVER ASSEM. ---------- (Includes)	1
22	8H6483	PLATE----------	1
23	3P3755	GUARD ASSEM. ------(R. H.)---- (Includes)	1
24	1F5573	LUG----------	2
25	3P3757	GUARD ASSEM. --------(L. H.)---- (Includes)	1
26	1F5573	LUG----------	2
27	3H6660	PIN----------	2
28	1K6856	NUT----------	2
29	4M3981	BOLT----------	2
	4B4280	WASHER----------	2

C INDICATES CHANGE

162825

6P8888 RECOIL MECHANISM GUARD GROUP—Replaced by 9P3088 shown on Page 104G
Serial No. 46A32803—Up. Part of 1P8317 Arrangement listed on Page 210A
Note: Quantities shown are those required for both R.H. and L.H. sides

9P3088 RECOIL MECHANISM GUARD GROUP

Serial No. 46A32803—Up. Part of 6P8619 Equalizer Bar Support and 1P8317 Seven Roller Track Arrangements listed on Pages 97B and 210A. Note: Quantities shown are those required for both R.H. and L.H. sides

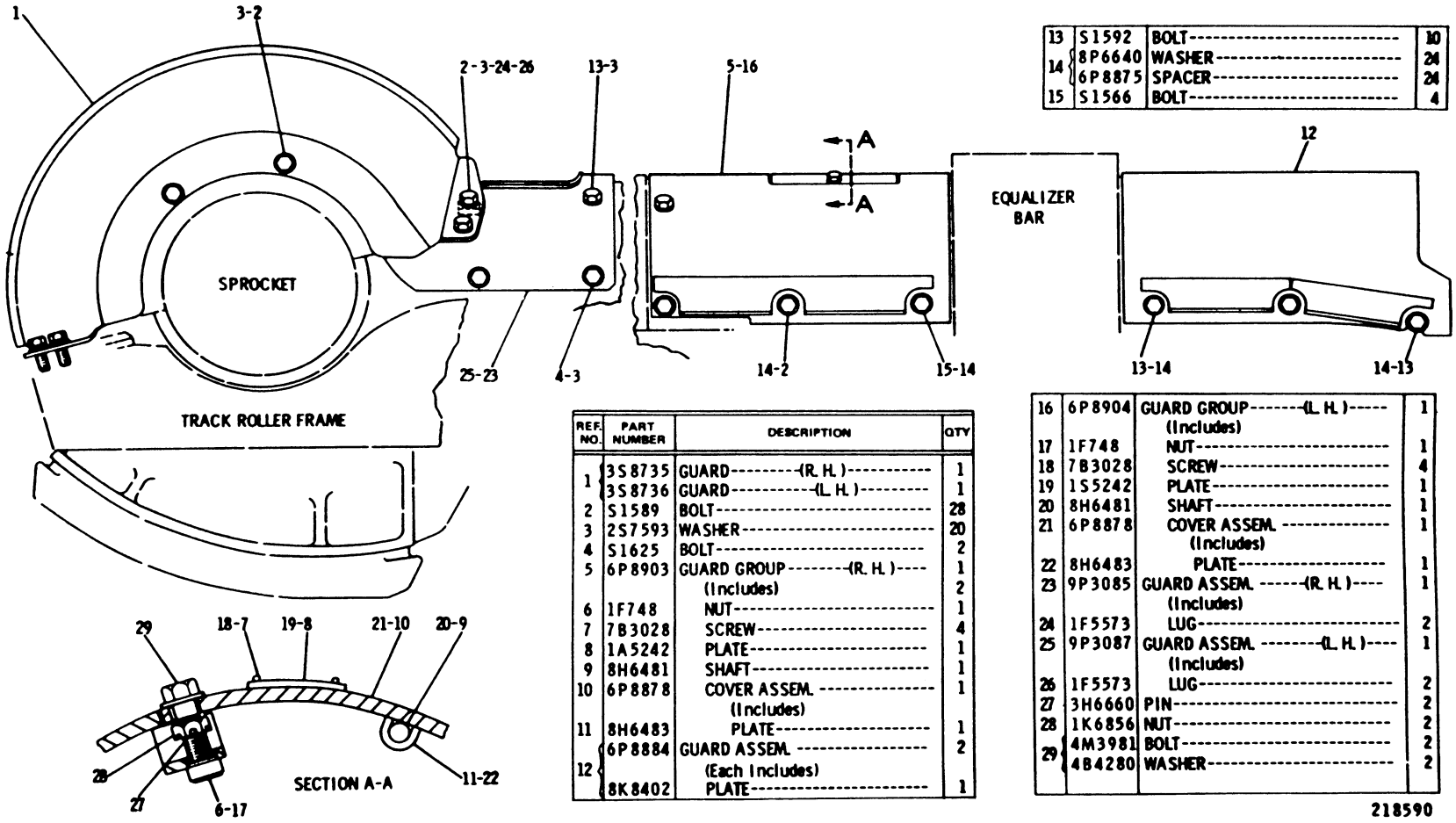

REF. NO.	PART NUMBER	DESCRIPTION	QTY
1	3S8735	GUARD---------(R. H.)----------	1
	3S8736	GUARD---------(L. H.)----------	1
2	S1589	BOLT----------	28
3	2S7593	WASHER----------	20
4	S1625	BOLT----------	2
5	6P8903	GUARD GROUP--------(R. H.)---- (Includes)	1 2
6	1F748	NUT----------	1
7	7B3028	SCREW----------	4
8	1A5242	PLATE----------	1
9	8H6481	SHAFT----------	1
10	6P8878	COVER ASSEM. ---------- (Includes)	1
11	8H6483	PLATE----------	1
12	6P8884	GUARD ASSEM. ---------- (Each Includes)	2
	8K8402	PLATE----------	1
13	S1592	BOLT----------	10
14	8P6640	WASHER----------	24
	6P8875	SPACER----------	24
15	S1566	BOLT----------	4
16	6P8904	GUARD GROUP-------(L. H.)----- (Includes)	1
17	1F748	NUT----------	1
18	7B3028	SCREW----------	4
19	1S5242	PLATE----------	1
20	8H6481	SHAFT----------	1
21	6P8878	COVER ASSEM. ---------- (Includes)	1
22	8H6483	PLATE----------	1
23	9P3085	GUARD ASSEM. ------(R. H.)---- (Includes)	1
24	1F5573	LUG----------	2
25	9P3087	GUARD ASSEM. --------(L. H.)---- (Includes)	1
26	1F5573	LUG----------	2
27	3H6660	PIN----------	2
28	1K6856	NUT----------	2
29	4M3981	BOLT----------	2
	4B4280	WASHER----------	2

218590

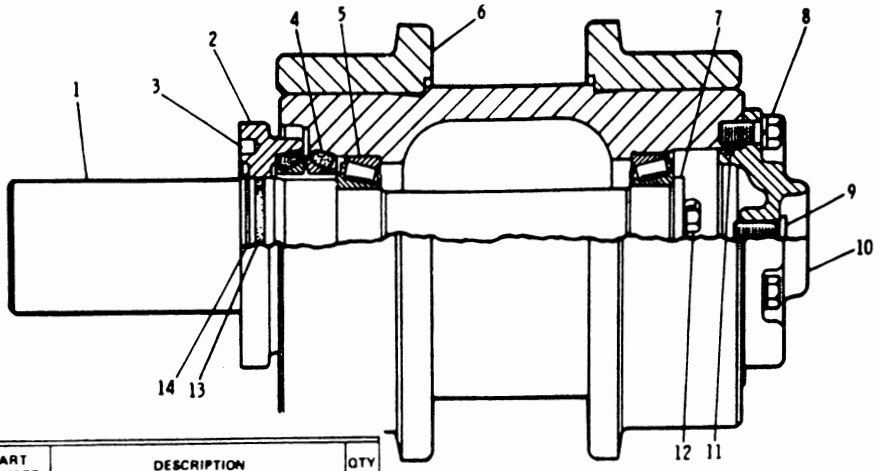

REF. NO.	PART NUMBER	DESCRIPTION	QTY
1	8P6255	SHAFT	1
2	9H9414	COLLAR ASSEM. (Includes)	1
3	6F2072	DOWEL	2
4	1M8747	SEAL GROUP (Includes)	1
	8H2262	RING	2
5	7K5448	CUP	2
	7K5449	CONE	2
6	8P6245	ROLLER ASSEM.	1
7	8P6188	PLATE	1
8	S1594	BOLT	3
	3B4506	LOCKWASHER	3
9	2P347	PLUG	1
	1S8947	SEAL	1
10	5M2043	COVER	1
11	2H6338	SEAL	1
12	T703	BOLT	2
	T329	LOCK	1
13	1H5728	SEAL	1
14	9H7759	RING	1

217208

8P6256 TRACK CARRIER ROLLER GROUP—4 Required
Part of 6P8619 Equalizer Bar Support, 1P8316 and 1P8317 Track Roller Frame and Support Arrangements listed on Pages 97B, 210 and 210A

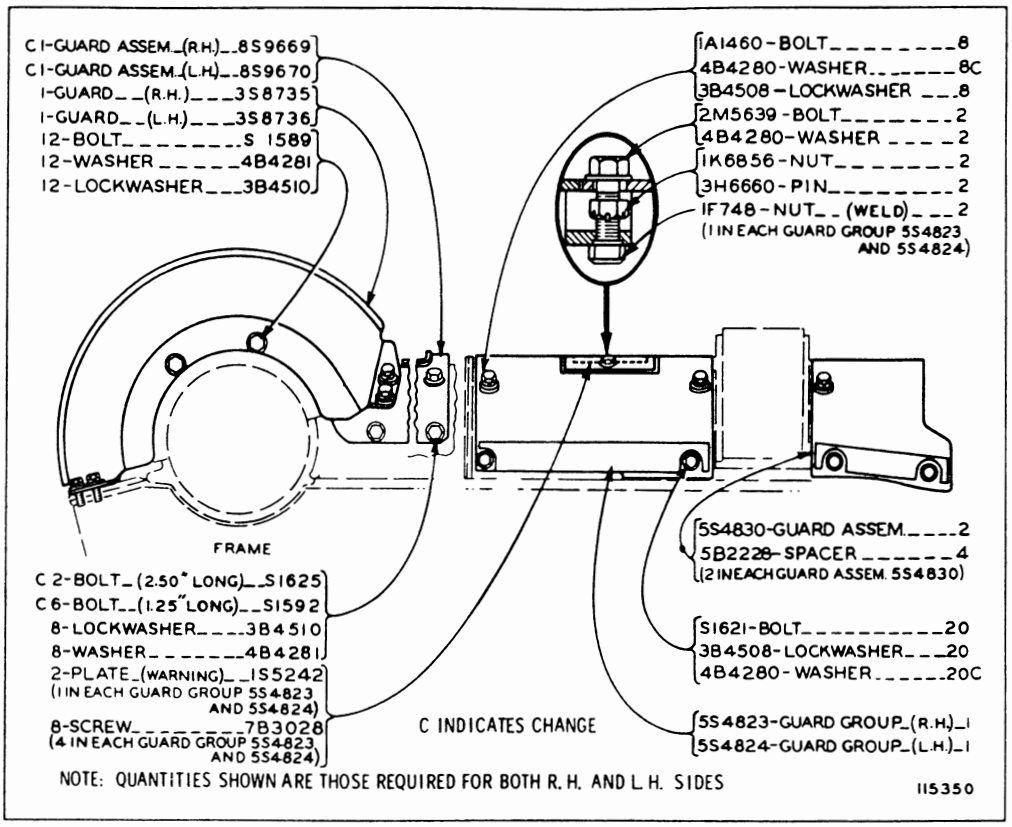

9H6505 TRACK ROLLER FRAME GUARDS GROUP
Serial No. 46A24433 to 46A28927 inclusive. Also part of 1P8316 Track Roller Frame and Support Arrangement listed on Page 210. Refer also to Page 211 for special parts

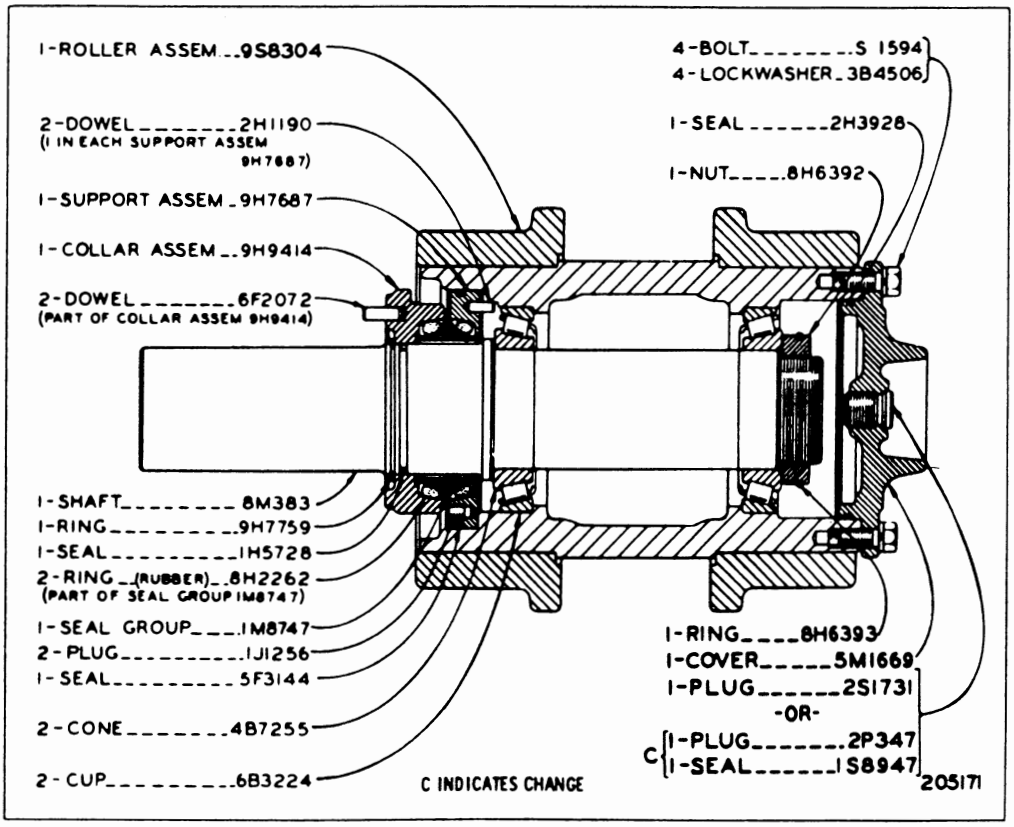

8M380 TRACK CARRIER ROLLER GROUP—4 Required—Replaced by 8P6256
Also part of 1P8316, 1P8317 Track Roller Frame and Support and 6P8619 Equalizer Bar Support and Track Roller Frame Arrangements listed on Pages 97B, 210 & 210A

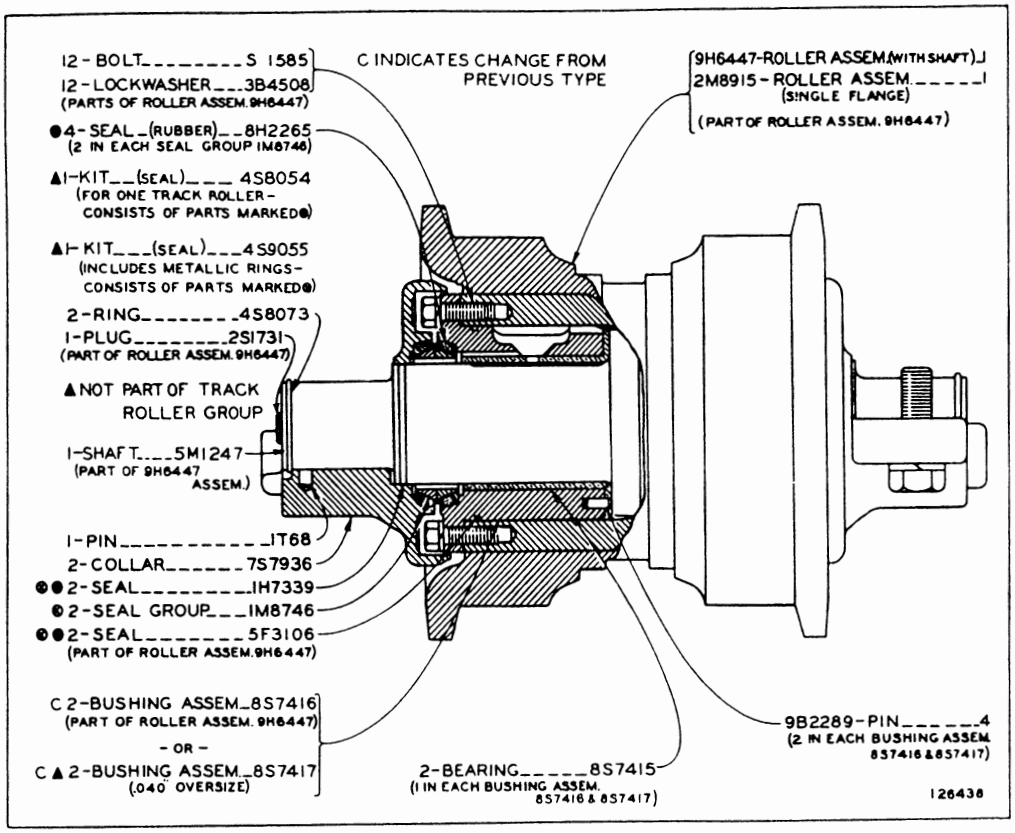

7S9041 TRACK ROLLER GROUP—Single Flange—6 Required
Serial No. 46A24433 to 46A27535 inclusive. Also part of 1P8316 and 1P8317
Track Roller Frame and Support Arrangements listed on Pages 210 and 210A

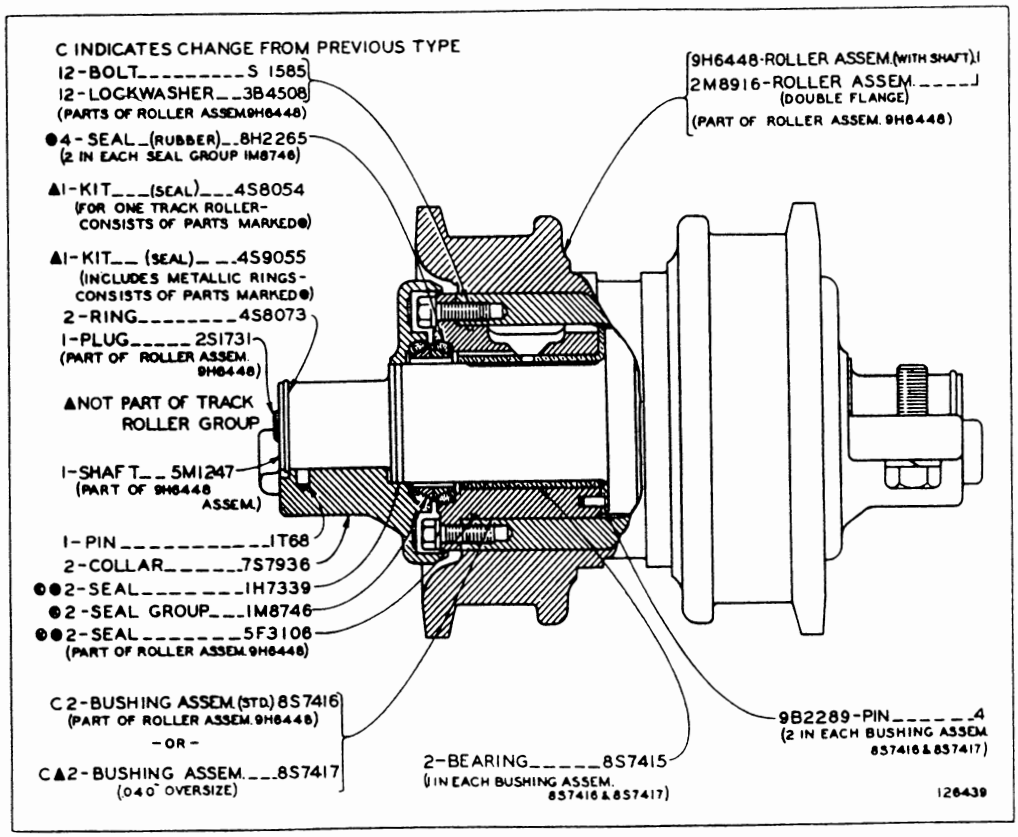

7S9042 TRACK ROLLER GROUP—Double Flange—8 Required
Serial No. 46A24433 to 46A27535 inclusive. Also part of 1P8316 and 1P8317
Arrangements and 8M432 Track Roller Group shown on Pages 210, 210A & 215

7S9041 TRACK ROLLER GROUP—Single Flange—6 Required—Replaced by 6P4897 Shown on Page 106-3
Serial No. 46A27536—Up
Also part of 1P8316 and 1P8317 Track Roller Frame and Support Arrangements listed on Pages 210 and 210A

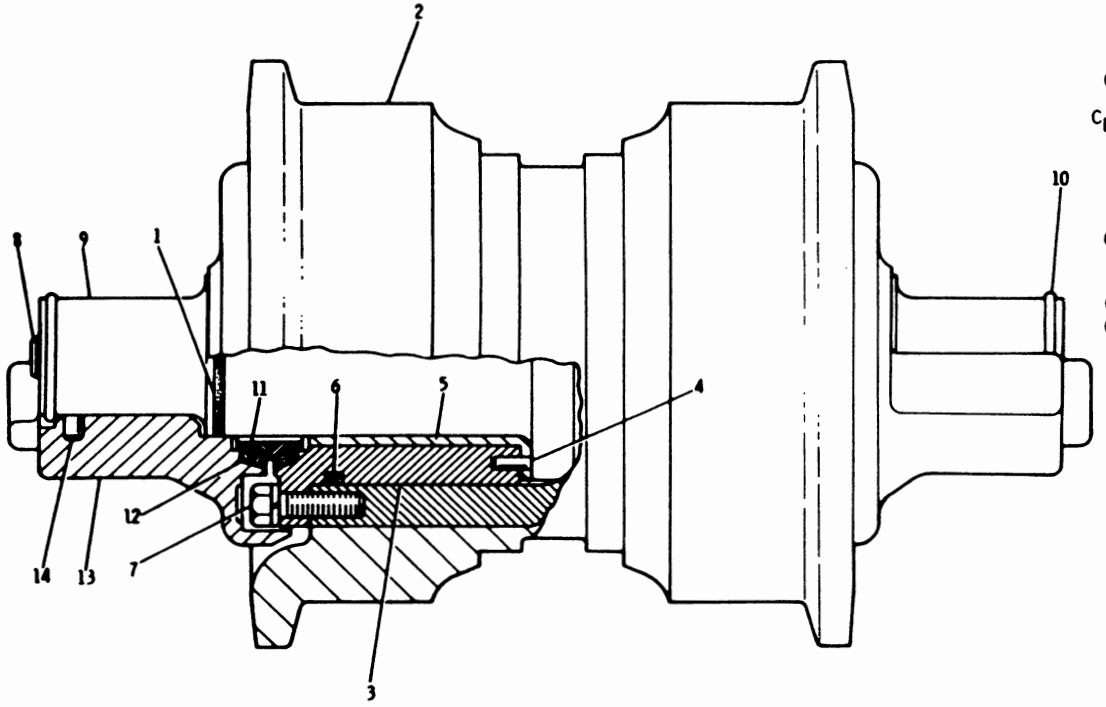

	REF. NO.	PART NUMBER	DESCRIPTION	QTY
	1	1H7339	SEAL	2
	2	9H6447	ROLLER & SHAFT ASSEM. (Includes)	1
		2M8915	ROLLER ASSEM. (Single flange)	1
C	3	2P8052	BUSHING ASSEM. --(standard)- -OR-	2
C■		9P4956	BUSHING ASSEM. 1.02 mm (.04 in.) oversize (Each Includes)	2
	4	9B2289	PIN	2
	5	8P6650	BEARING ASSEM.	1
C	6	5F3106	SEAL	2
	7	S1585	BOLT	12
		3B4508	LOCKWASHER	12
C	8	2P347	PLUG	1
C		1S8947	SEAL	1
	9	5M1247	SHAFT	1
	10	4S8073	RING	2
	11	1M8746	SEAL GROUP (Each Includes)	2
	12	8H2265	RING	2
	13	7S7936	COLLAR	2
	14	1T68	PIN	1

■NOT PART OF TRACK ROLLER GROUP

C INDICATES CHANGE

215596

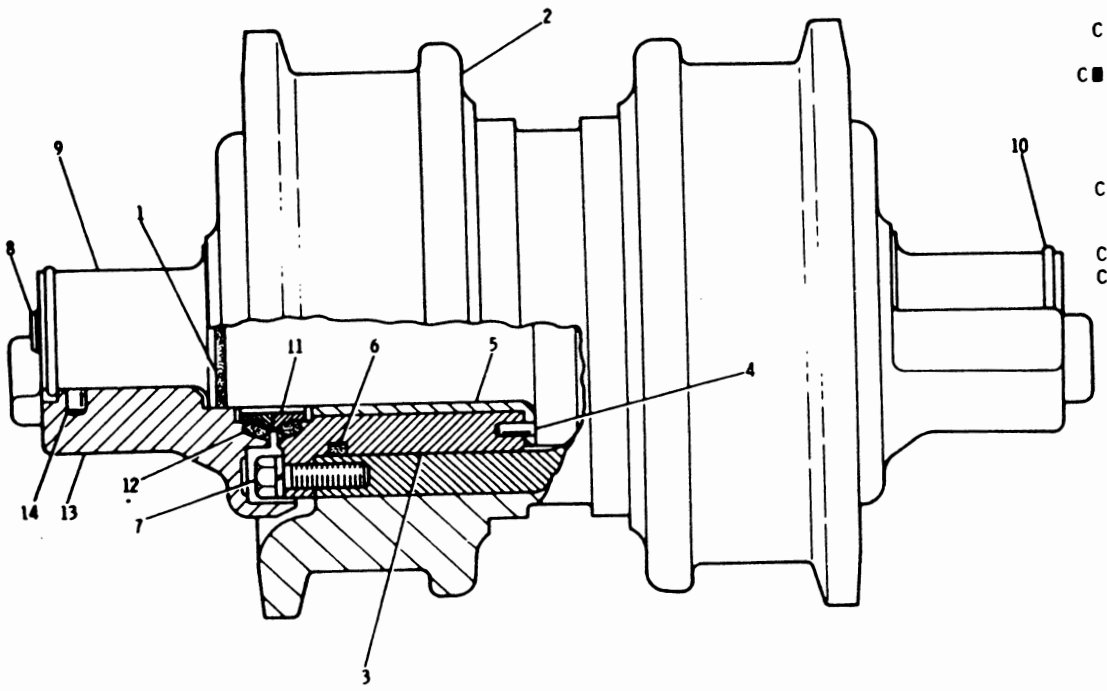

	REF. NO.	PART NUMBER	DESCRIPTION	QTY
	1	1H7339	SEAL	2
	2	9H6448	ROLLER & SHAFT ASSEM. (Includes)	1
		2M8916	ROLLER ASSEM. (Double Flange)	1
C	3	2P8052	BUSHING ASSEM. --(standard)- -OR-	2
C■		9P4956	BUSHING ASSEM. (1.02 mm (.04 in.) oversize (Each Includes)	2
	4	9B2289	PIN	2
	5	8P6650	BEARING ASSEM.	1
C	6	5F3106	SEAL	2
	7	S1585	BOLT	12
		3B4508	LOCKWASHER	12
C	8	2P347	PLUG	1
C		1S8947	SEAL	1
	9	5M1247	SHAFT	1
	10	4S8073	RING	2
	11	1M8746	SEAL GROUP (Each Includes)	2
	12	8H2265	RING	2
	13	7S7936	COLLAR	2
	14	1T68	PIN	1

■NOT PART OF TRACK ROLLER GROUP

C INDICATES CHANGE

166800

7S9042 TRACK ROLLER GROUP—Double Flange—8 Required—Replaced by 6P4897 shown on Page 106-3
Serial No. 46A27537—Up
Also part of 1P8316 and 1P8317 Arrangements and 8M432 Track Roller Group shown on Pages 210, 210A and 215

6P4897 TRACK ROLLER GROUP—Single Flange—6 Required
Part of 6P8619 Equalizer Bar Support & Track Roller Frame and 1P8316 and 1P8317 Track Roller Frame & Support Arrangements listed on Pages 97B, 210 and 210A

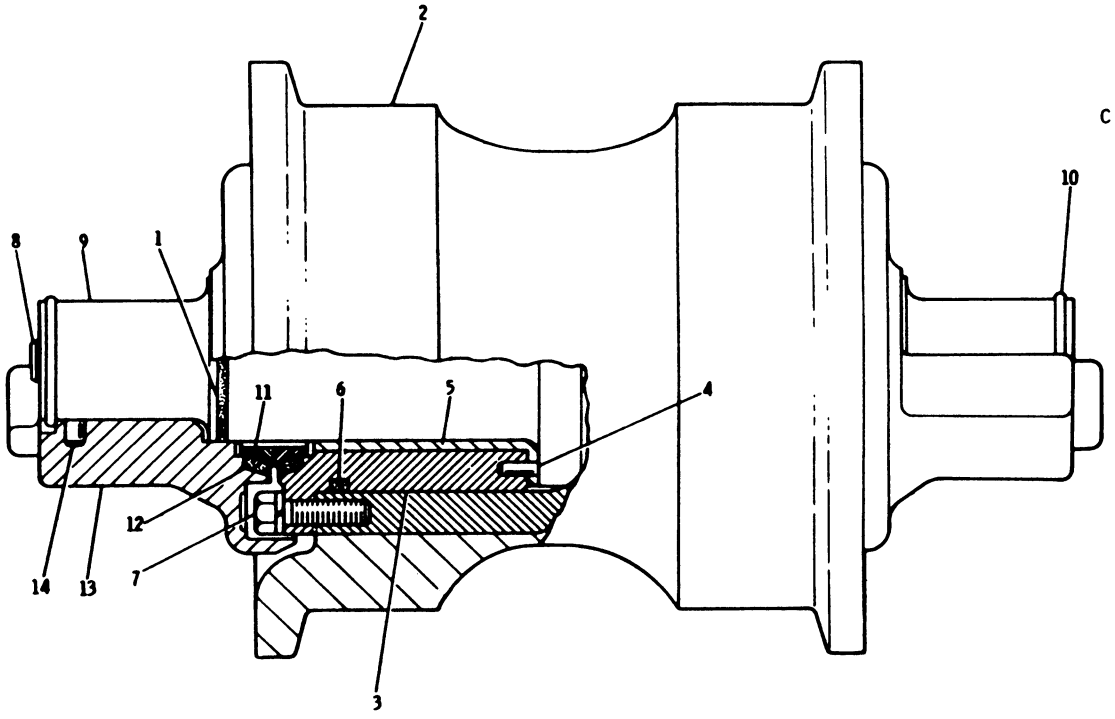

REF. NO.	PART NUMBER	DESCRIPTION	QTY
1	1H7339	SEAL	2
2	6P4899	ROLLER & SHAFT ASSEM. (Includes)	1
	6P3303	ROLLER ASSEM. (Single Flange)	1
3	2P8052	BUSHING ASSEM.--(standard)-- -OR-	2
C ■	9P4956	BUSHING ASSEM. 1.02 mm (.04 in.) oversize (Each Includes)	2
4	9B2289	PIN	2
5	8P6650	BEARING ASSEM.	1
6	5F3106	SEAL	2
7	S1585	BOLT	12
	3B4508	LOCKWASHER	12
8	2P347	PLUG	1
	1S8947	SEAL	1
9	5M1247	SHAFT	1
10	4S8073	RING	2
11	1M8746	SEAL GROUP (Each Includes)	2
12	8H2265	RING	2
13	7S7936	COLLAR	2
14	1T68	PIN	1

■NOT PART OF TRACK ROLLER GROUP

C INDICATES CHANGE

215597

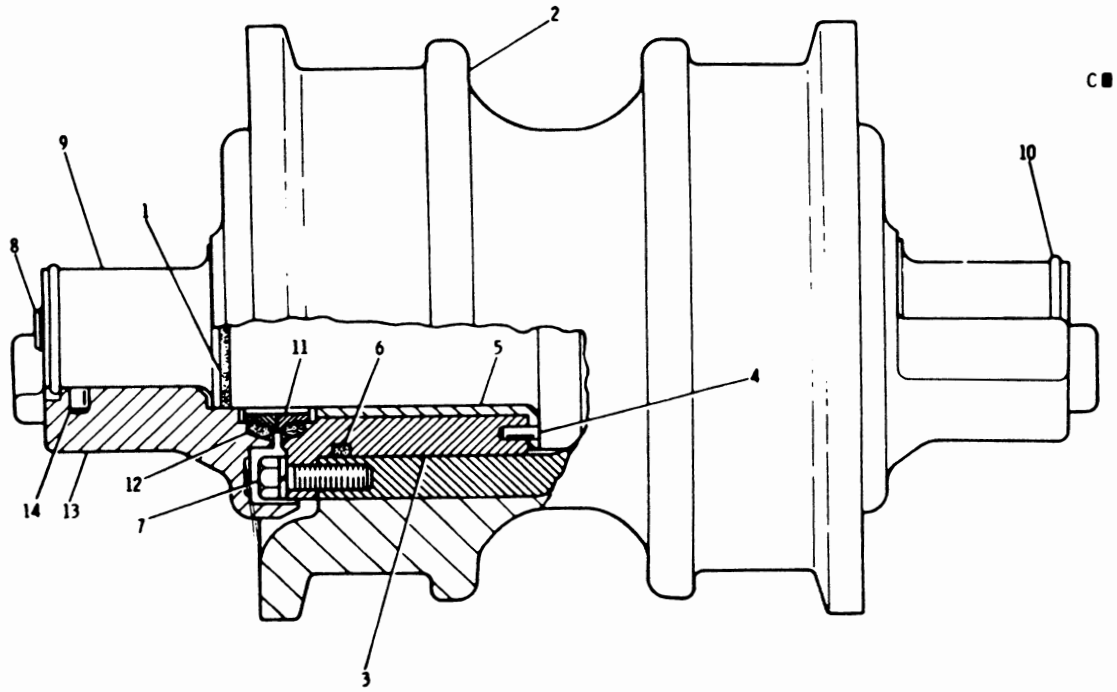

	REF. NO.	PART NUMBER	DESCRIPTION	QTY
	1	1H7339	SEAL	2
	2	6P4900	ROLLER & SHAFT ASSEM. (Includes)	1
C	2	6P3307	ROLLER ASSEM. (Double Flange)	1
	3	2P8052	BUSHING ASSEM. --(standard)- -OR-	2
C■	3	9P4956	BUSHING ASSEM. 1.02 mm (.04 in.) oversize (Each Includes)	2
	4	9B2289	PIN	2
	5	8P6650	BEARING ASSEM.	1
	6	5F3106	SEAL	2
	7	S1585	BOLT	12
	7	3B4508	LOCKWASHER	12
	8	2P347	PLUG	1
	8	1S8947	SEAL	1
	9	5M1247	SHAFT	1
	10	4S8073	RING	2
	11	1M8746	SEAL GROUP (Each Includes)	2
	12	8H2265	RING	2
	13	7S7936	COLLAR	2
	14	1T68	PIN	1

■NOT PART OF TRACK ROLLER GROUP

C INDICATES CHANGE

226315

6P4898 TRACK ROLLER GROUP—Double Flange—8 Required
Part of 6P8619 Equalizer Bar Support & Track Roller Frame, 1P8316 and 1P8317 Track Roller Frame & Support Arrangements listed on Pages 97B, 210 and 210A

7G8810 TRACK ROLLER GROUP—Single Flange—6 Required—Field Installation
FOR USE IN EXTREME COLD TEMPERATURES

REF. NO.	PART NUMBER	DESCRIPTION	QTY
1	5M3038	SEAL----------	2
2	7S7936	COLLAR----------	2

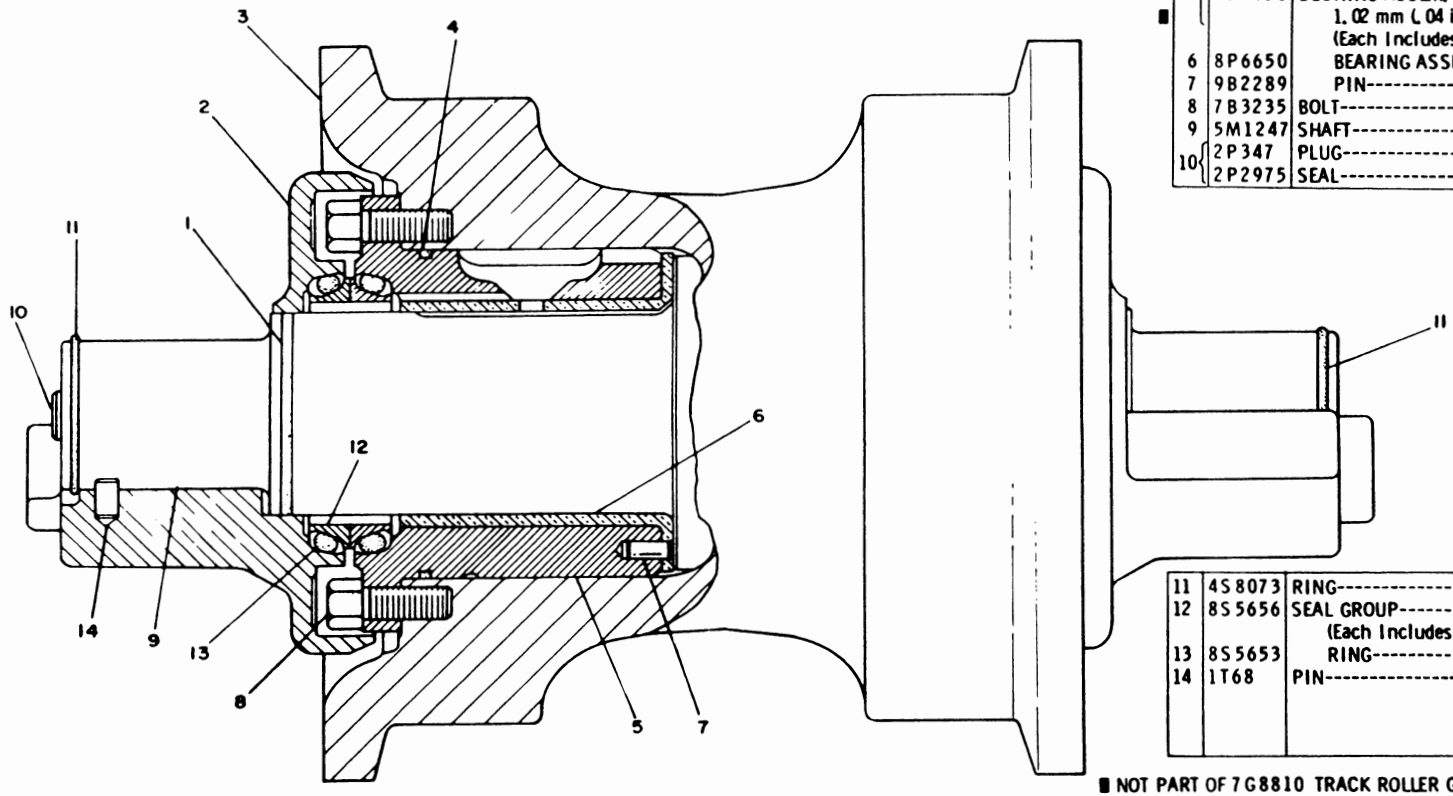

3	6P3303	ROLLER ASSEM. --(single flange)--	1
4	4S5898	SEAL----------	2
5	2P8052	BUSHING ASSEM. --(standard)----	2
		- OR -	
	9P4956	BUSHING ASSEM. ----------	2
		1.02 mm (.04 in.) oversize (Each Includes)	
6	8P6650	BEARING ASSEM. ----------	1
7	9B2289	PIN----------	2
8	7B3235	BOLT----------	12
9	5M1247	SHAFT----------	1
10	2P347	PLUG----------	1
	2P2975	SEAL----------	1

11	4S8073	RING----------	2
12	8S5656	SEAL GROUP----------	2
		(Each Includes)	
13	8S5653	RING----------	2
14	1T68	PIN----------	1

■ NOT PART OF 7G8810 TRACK ROLLER GROUP 224453

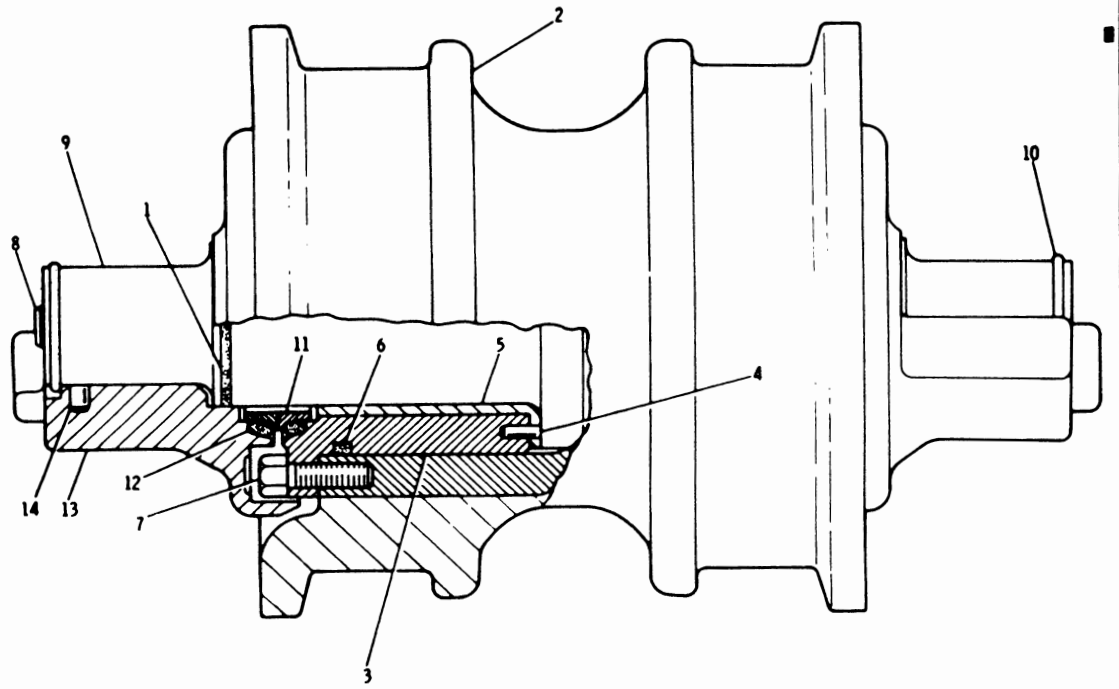

REF. NO.	PART NUMBER	DESCRIPTION	QTY
1	5M3038	SEAL	2
2	6P3307	ROLLER ASSEM. --(double flange)-	1
3	2P8052	BUSHING ASSEM. --(standard)---	2
		- OR -	
	9P4956	BUSHING ASSEM. ---------- 1.02 m (.04 in.) oversize (Each Includes)	2
4	9B2289	PIN	2
5	8P6650	BEARING ASSEM.	1
6	4S5898	SEAL	2
7	7B3235	BOLT	12
8	2P347	PLUG	1
	2P2975	SEAL	1
9	5M1247	SHAFT	1
10	4S8073	RING	2
11	8S5656	SEAL GROUP (Each Includes)	2
12	8S5653	RING	2
13	7S7936	COLLAR	2
14	1T68	PIN	1

■ NOT PART OF 7G8809 TRACK ROLLER GROUP

224454

7G8809 TRACK ROLLER GROUP—Double Flange—8 Required—Field Installation FOR USE IN EXTREME COLD TEMPERATURES

8S402 TRACK GROUP—22" Grouser Shoe—2 Required
Serial No. 46A26652 to 46A28927 inclusive. Note: 2P6026 Track Pin & Bushing Group, consisting of a complete set of Pins & Bushings for one Track, is availabe. Refer also to Pages 218 through 221 for special parts

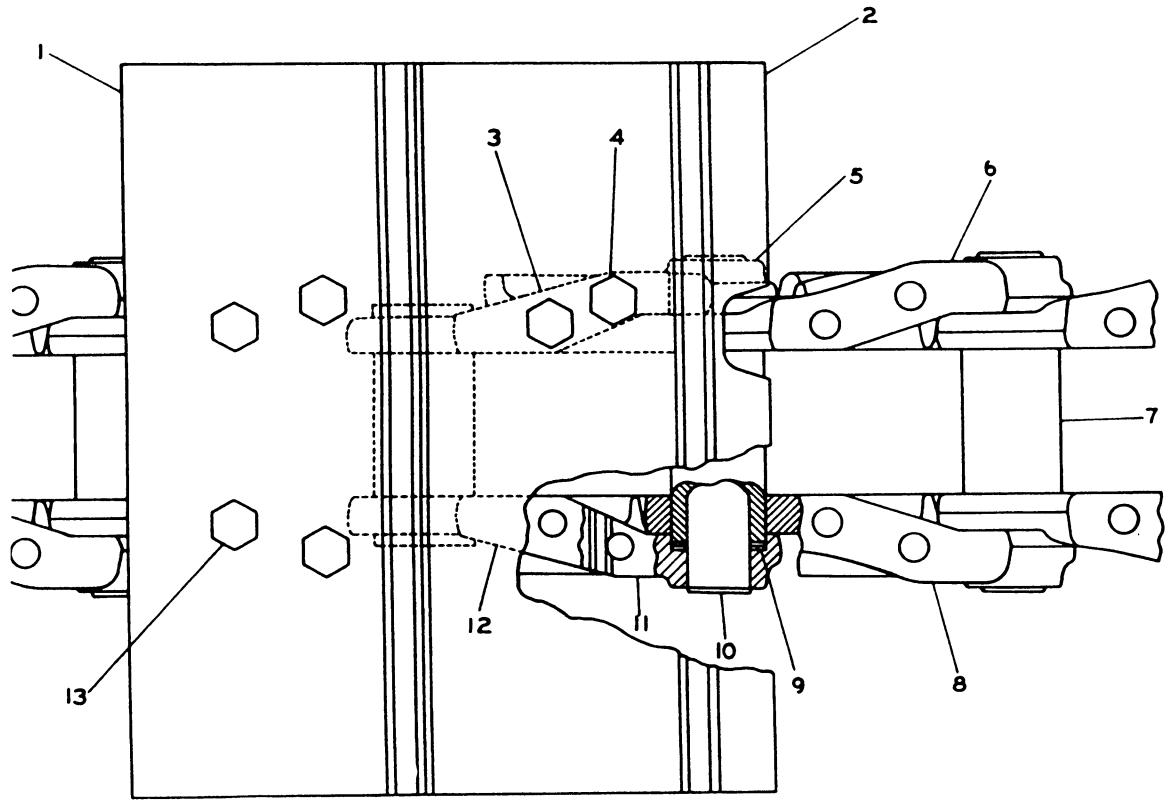

REF. NO.	PART NUMBER	DESCRIPTION	QTY
1	2S6345	SHOE	38
2	8S385	SHOE--(Master)	1
3	8S398	LINK ASSEM.	1
	7S9604	HALF LINK--(Master) (L.H. - Bushing End)	1
4	8S395	BOLT	4
5	7S9602	HALF LINK--(Master) (L.H. - Pin End)	1
6	7S9182	LINK--(L.H.)	38
7	8M2619	BUSHING	39
8	7S9181	LINK--(R.H.)	38
9	8M2620	SEAL	156
10	1M1455	PIN	39
11	7S9601	HALF LINK--(Master) (R.H. - Pin End)	1
12	7S9603	HALF LINK--(Master) (R.H. - Bushing End)	1
13	7H3599	BOLT	152
	2S2140	NUT	152

137904

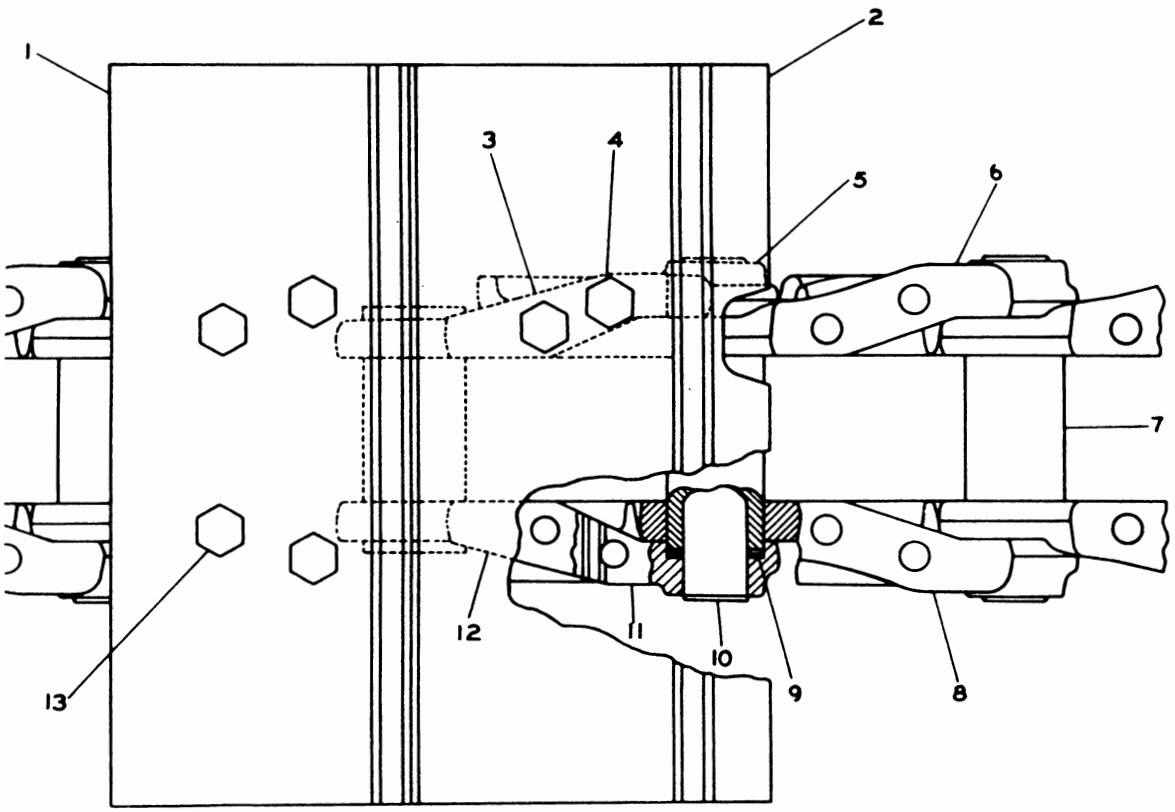

REF. NO.	PART NUMBER	DESCRIPTION	QTY
1	2S6345	SHOE	40
2	8S385	SHOE (Master)	1
3	8S396	LINK ASSEM.	1
	7S9604	HALF LINK (Master) (L.H. - Bushing End)	1
4	8S395	BOLT	4
5	7S9602	HALF LINK (Master) (L.H. - Pin End)	1
6	7S9182	LINK (L.H.)	40
7	8M2619	BUSHING	41
8	7S9181	LINK (R.H.)	40
9	8M2620	SEAL	164
10	1M1455	PIN	41
11	7S9601	HALF LINK (Master) (R.H. - Pin End)	1
12	7S9603	HALF LINK (Master) (R.H. - Bushing End)	1
13	7H3599	BOLT	160
	2S2140	NUT	160

141746

8S404 TRACK GROUP—22" Grouser Shoe—2 Required
Serial No. 46A28928—Up. Note: 2P6026 Track Pin & Bushing Group, consisting of a complete set of Pins & Bushings for one Track, is available. Refer also to Pages 218 through 221 for special parts

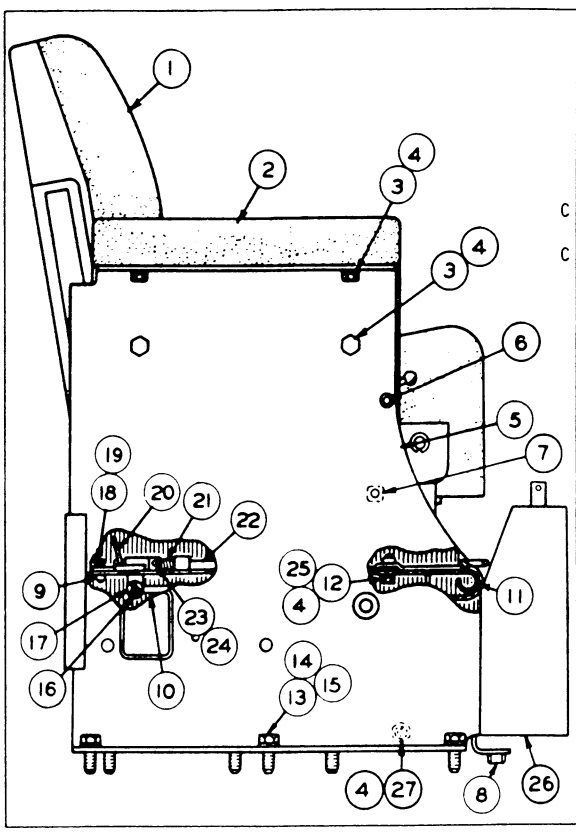

REF. NO.	PART NUMBER	DESCRIPTION	QTY
1	5S45	SEAT ASSEM. (Separate Illustration)	1
2	8H9167	CUSHION ASSEM.	2
3	6F7030	BOLT	8
4	3B4506	LOCKWASHER	15
C 5	1P1031	SEAT ASSEM.	1
6	2B3191	PIN	1
C 7	9F2978	NUT-(Weld)	12
8	1F748	NUT-(Weld)	4
9	9F6445	NUT-(Weld)	2
10	2S1715	ROD	1
11	9S4801	HINGE ASSEM.	1
12	S509	BOLT	4
13	S1595	BOLT	6
14	3B4508	LOCKWASHER	6
15	4B4280	WASHER	6
16	3B4607	COTTER PIN	2
17	4B4276	WASHER	2
18	2A762	BOLT	2
19	3B4504	LOCKWASHER	2
20	3S1682	LATCH	1
21	8B3090	SPRING	1
22	3S1684	ROD	1
23	7M5182	BLOCK	1
24	9F7882	PIN	1
25	4B4278	WASHER	4
26	9S4781	PLATE ASSEM.	1
	9F2978	NUT	3
27	L1351	BOLT	3

C INDICATES CHANGE 117768

SEAT CUSHION AND FRAME (9S5310 N/S)

Serial No. 46A24433-31060, 31062-31141, 31143-31276, 31278-31332, 31334-31369, 31371-31640, 31642-31692, 31694-31697, 31699-31726, 31728-31751, 31753-31761, 31763-31772, 31774-31776, 31780-31783, 31787, 31788, 31791, 31792, 31794-31812, 31815, 31817-31821, 31823-31844, 31846-31852, 31854, 31855, 31857-31861, 31863-31868, 31871, 31873-31878, 31880-31883, 31888-31891, 31893, 31895-31897, 31899-31902, 31911 inclusive. 5S45 Seat parts are shown on Page 108

Note: 6D4709 Seat Belt is available

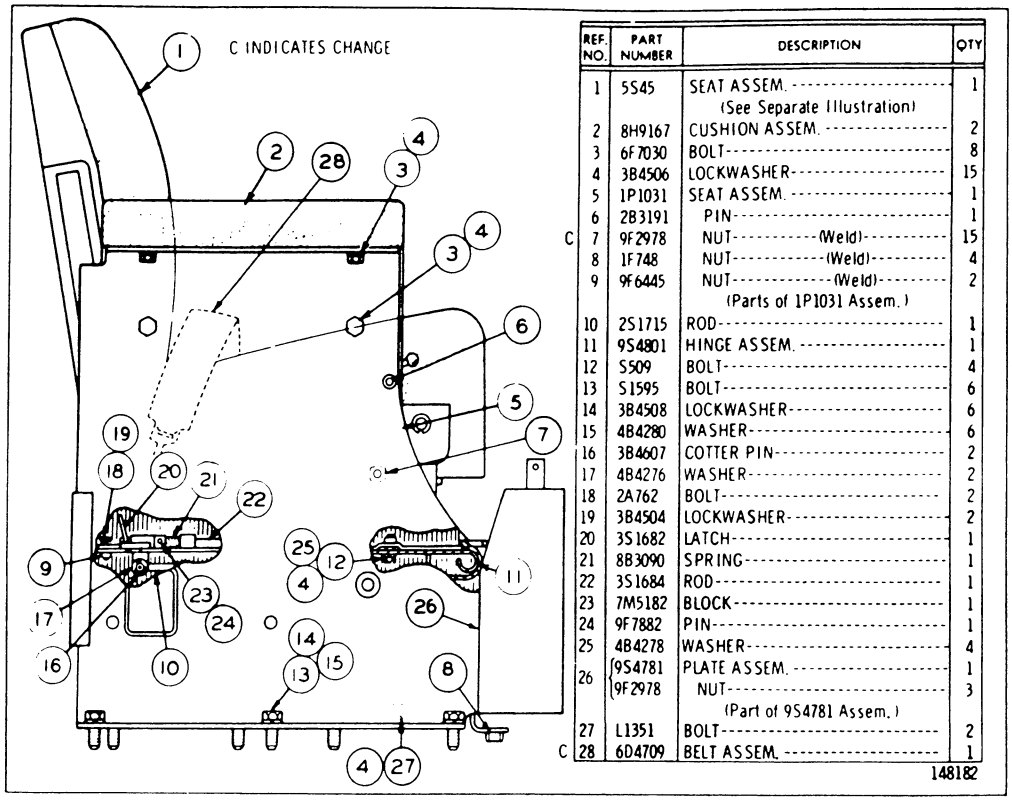

REF. NO.	PART NUMBER	DESCRIPTION	QTY
1	5S45	SEAT ASSEM. (See Separate Illustration)	1
2	8H9167	CUSHION ASSEM.	2
3	6F7030	BOLT	8
4	3B4506	LOCKWASHER	15
5	1P1031	SEAT ASSEM.	1
6	2B3191	PIN	1
C 7	9F2978	NUT (Weld)	15
8	1F748	NUT (Weld)	4
9	9F6445	NUT (Weld) (Parts of 1P1031 Assem.)	2
10	2S1715	ROD	1
11	9S4801	HINGE ASSEM.	1
12	S509	BOLT	4
13	S1595	BOLT	6
14	3B4508	LOCKWASHER	6
15	4B4280	WASHER	6
16	3B4607	COTTER PIN	2
17	4B4276	WASHER	2
18	2A762	BOLT	2
19	3B4504	LOCKWASHER	2
20	3S1682	LATCH	1
21	8B3090	SPRING	1
22	3S1684	ROD	1
23	7M5182	BLOCK	1
24	9F7882	PIN	1
25	4B4278	WASHER	4
26	9S4781	PLATE ASSEM.	1
	9F2978	NUT (Part of 9S4781 Assem.)	3
27	L1351	BOLT	2
C 28	6D4709	BELT ASSEM.	1

9S5310 SEAT CUSHION AND FRAME GROUP

Serial No. 46A31061, 31142, 31277, 31333, 31370, 31641, 31693, 31698, 31727, 31752, 31762, 31773, 31777 to 31779, 31784 to 31786, 31789, 31790, 31793, 31813, 31814, 31816, 31822, 31845, 31853, 31856, 31862, 31869, 31870, 31872, 31879, 31884 to 31887, 31892, 31894, 31898, 31903 to 31910 and 46A31912—Up. 5S45 Seat parts are shown on Page 108

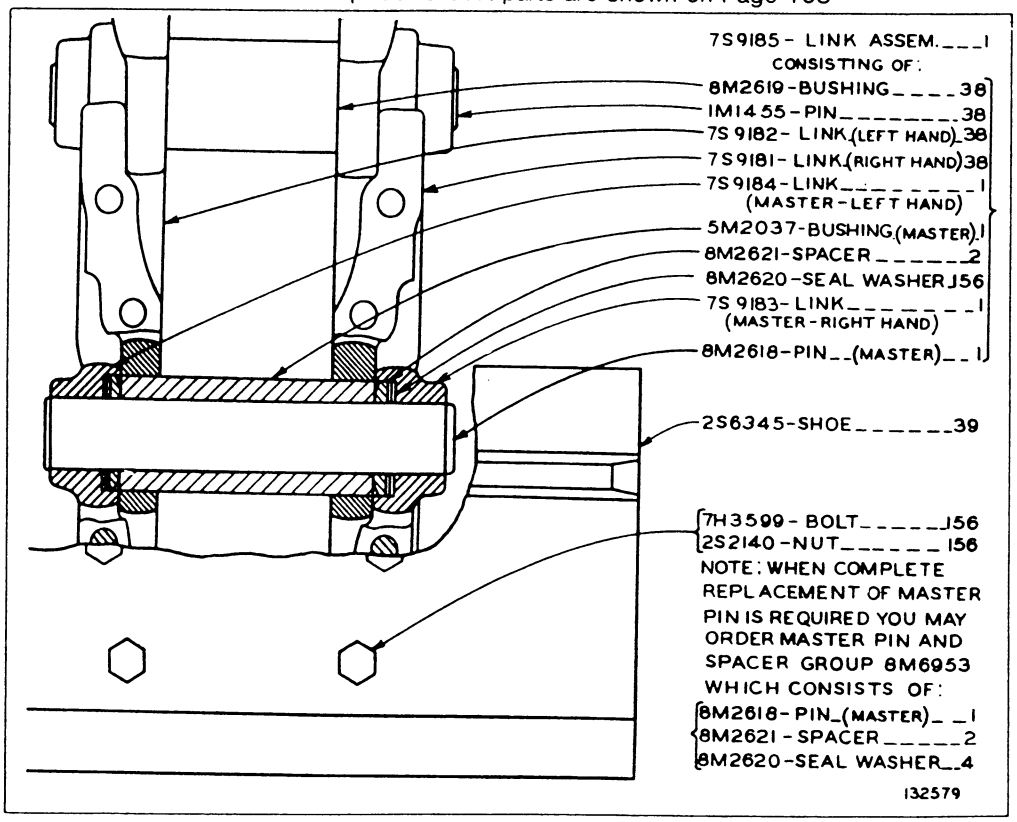

7S9189 TRACK GROUP—22" Grouser Shoe—2 Required

Note: 1P1917 Track Pin and Bushing Group, consisting of a complete set of Pins and Bushings for one Track, is available. Refer also to Pages 218 through 221 for special parts

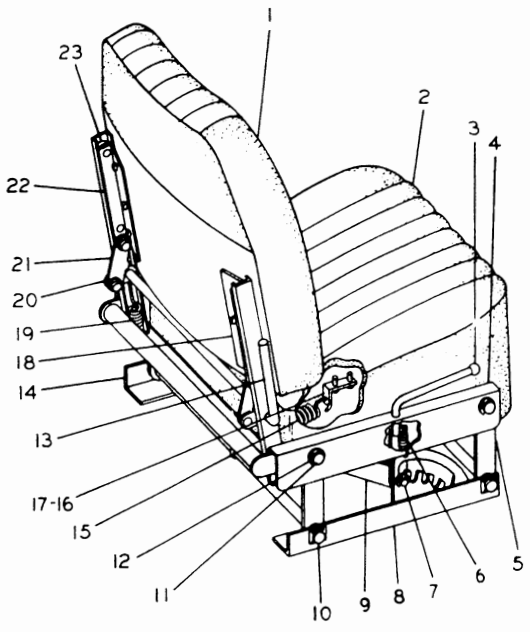

REF. NO.	PART NUMBER	DESCRIPTION	QTY
1	7S5387	CUSHION ASSEM.	1
2	7S5390	CUSHION ASSEM.	1
3	7S5380	KNOB	1
4	7S5391	FRAME ASSEM.	1
	7S5750	FRAME ASSEM.	1
5	7S5753	LEVER ASSEM.	2
6	7S5758	SPRING	1
7	T883	WASHER	2
	7S5757	RING	2
8	7S5751	ANGLE ASSEM. -----(R.H.)-----	1
9	7S5754	LEVER ASSEM.	1
10	7S5759	NUT	4
11	7S5755	PIN	4
12	2R364	RING	8
13	7S5385	LINK ASSEM.	1
14	7S5752	ANGLE ASSEM. ------(L.H.)----	1
15	7S5388	SPRING	1
16	7S5389	BRACKET	1
17	2K7115	SCREW	12
	4F2293	LOCKWASHER	12
18	7S5381	BRACKET ASSEM. -----(R.H.)-----	1
19	7S5383	SPRING	2
20	7S5757	RING	4
21	7S5384	LINK	2
22	7S5382	BRACKET ASSEM. -----(L.H.)-----	1
23	7S5386	ROLLER	4
	7F3494	WASHER	2

113556

5S45 SEAT ASSEMBLY
Part of Seat Cushion and Frame shown on Pages 106C and 106D
Refer also to Page 178 for special parts

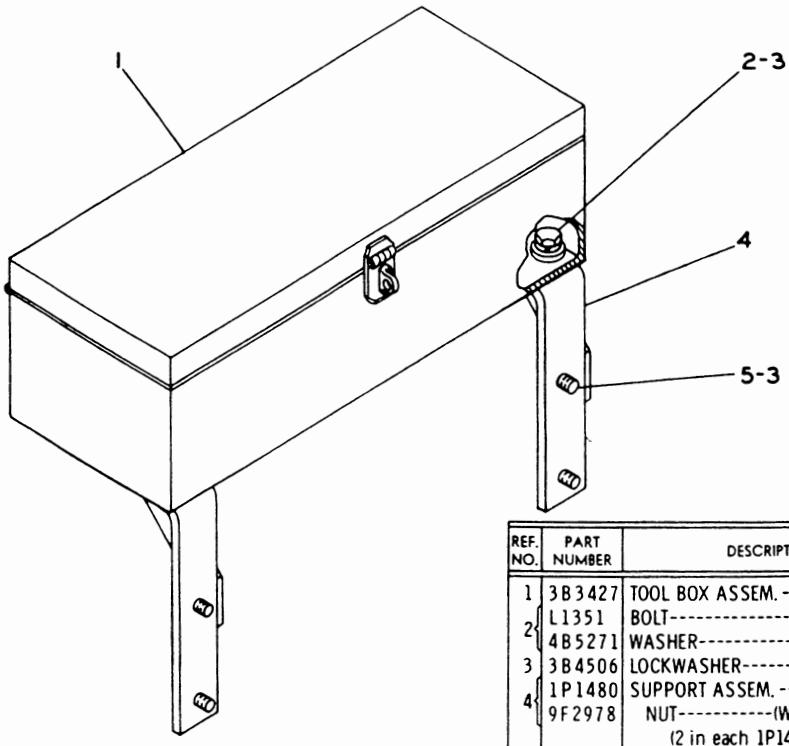

REF. NO.	PART NUMBER	DESCRIPTION	QTY
1	3B3427	TOOL BOX ASSEM.	1
2	L1351	BOLT	4
	4B5271	WASHER	4
3	3B4506	LOCKWASHER	8
4	1P1480	SUPPORT ASSEM.	2
	9F2978	NUT----------(Weld)----------	4
		(2 in each 1P1480 Assem.)	
5	S1594	BOLT	4

131770

1P1037 TOOL BOX GROUP

HOOD AND DASH (2M353 N/S)

Serial No. 46A24433 to 46A27800 and 46A27802 to 46A28136 inclusive

Refer also to Pages 172, 172A and 176 for special parts

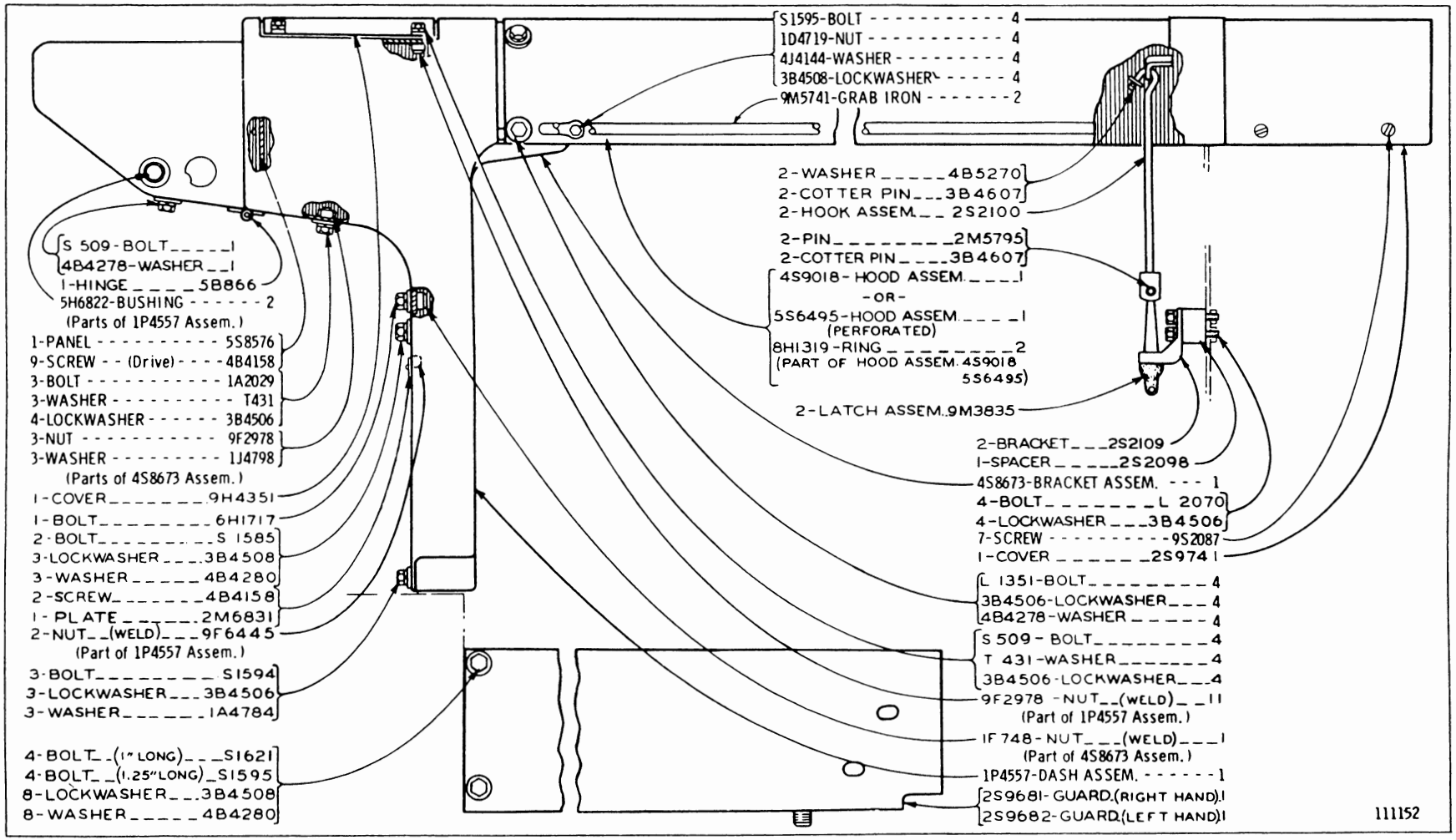

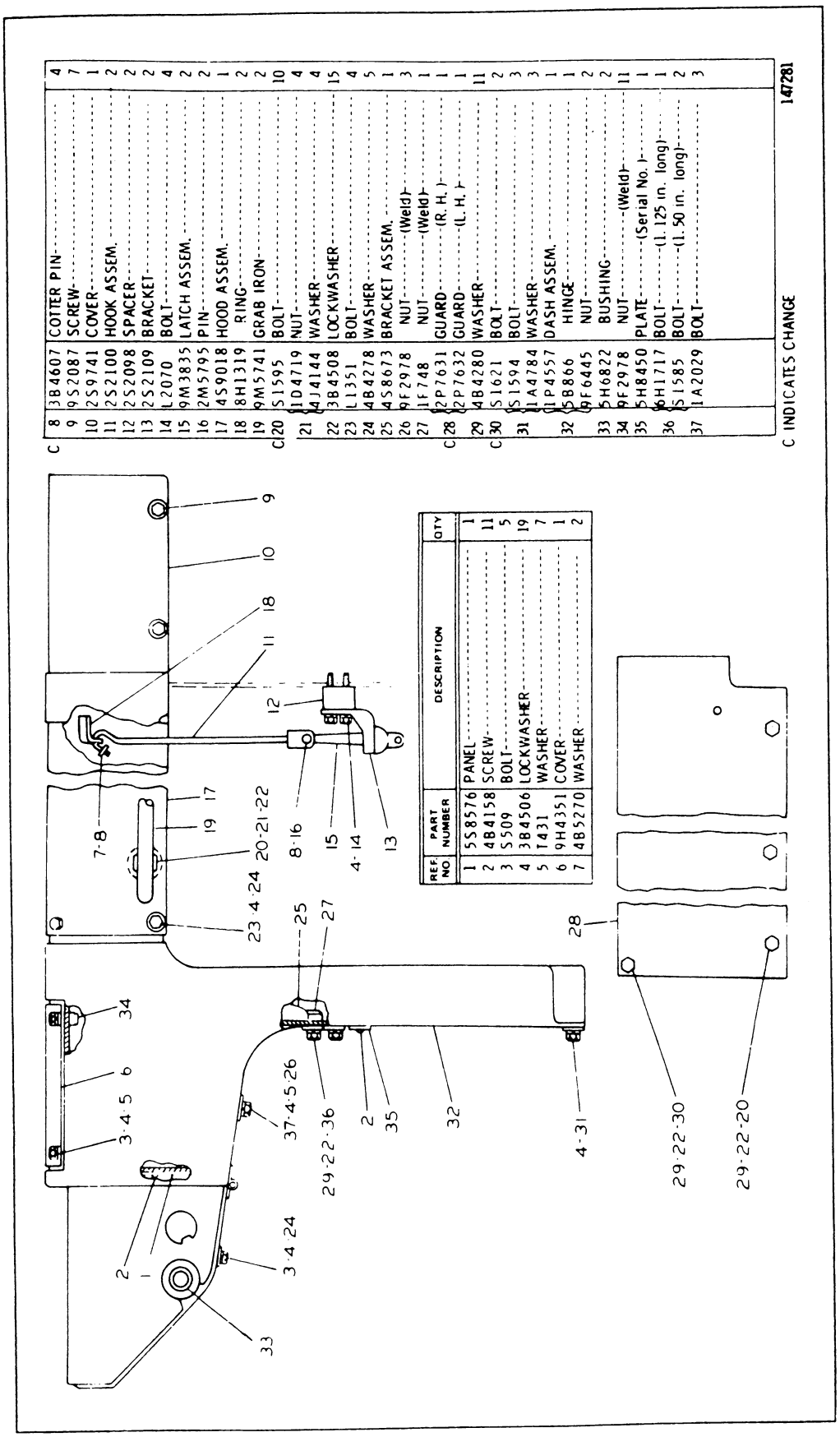

C	8	3B4607	COTTER PIN
	9	9S2087	SCREW
	10	2S9741	COVER
	11	2S2100	HOOK ASSEM.
	12	2S2098	SPACER
	13	2S2109	BRACKET
	14	L2070	BOLT
	15	9M3835	LATCH ASSEM.
	16	2M5795	PIN
	17	4S9018	HOOD ASSEM.
	18	8H1319	RING
	19	9M5741	GRAB IRON
C	20	S1595	BOLT
	21	1D4719	NUT
		4J4144	WASHER
	22	3B4508	LOCKWASHER
	23	L1351	BOLT
	24	4B4278	WASHER
	25	4S8673	BRACKET ASSEM.
	26	9F2978	NUT (Weld)
	27	1F748	NUT (Weld)
C	28	2P7631	GUARD (R. H.)
		2P7632	GUARD (L. H.)
	29	4B4280	WASHER
C	30	S1621	BOLT
		S1594	BOLT
	31	1A4784	WASHER
		1P4557	DASH ASSEM.
	32	5B866	HINGE
		9F6445	NUT
	33	5H6822	BUSHING (Weld)
	34	9F2978	NUT (Weld)
	35	5H8450	PLATE (Serial No.)
	36	6H1717	BOLT (1.125 in. long)
		S1585	BOLT (1.50 in. long)
	37	1A2029	BOLT

C INDICATES CHANGE

147281

REF. NO	PART NUMBER	DESCRIPTION	QTY
1	5S8576	PANEL	1
2	4B4158	SCREW	11
3	S509	BOLT	5
4	3B4506	LOCKWASHER	19
5	1431	WASHER	7
6	9H4351	COVER	1
7	4B5270	WASHER	2

HOOD AND DASH (2M353 N/S)
Serial No. 46A27801 and 46A28137 to 46A28817 inclusive
Refer also to Pages 172, 172A and 176 for specia parts

HOOD AND DASH (2M353 N/S)

Serial No. 46A28818 to 46A29658 inclusive

Refer also to Pages 172, 172A and 176 for special parts

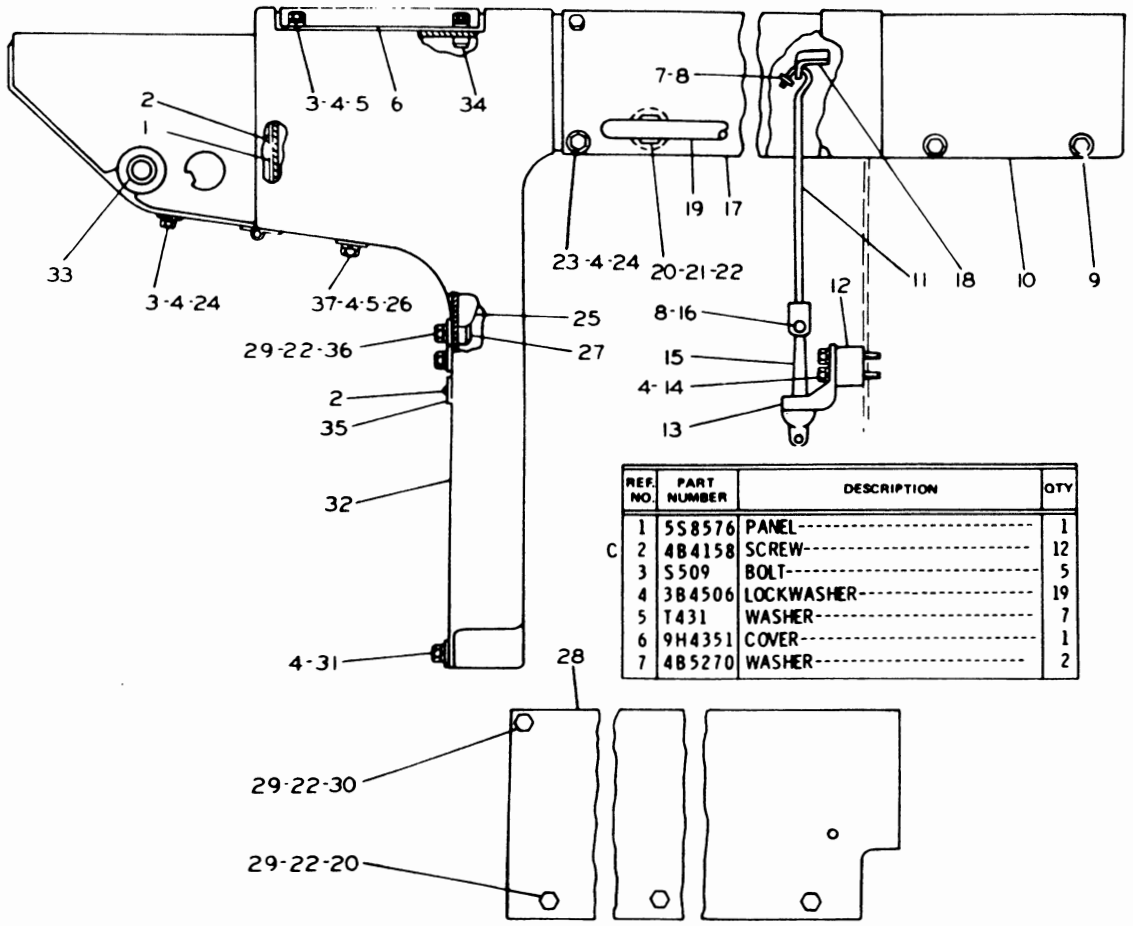

REF. NO.	PART NUMBER	DESCRIPTION	QTY
1	5S8576	PANEL	1
C 2	4B4158	SCREW	12
3	S509	BOLT	5
4	3B4506	LOCKWASHER	19
5	T431	WASHER	7
6	9H4351	COVER	1
7	4B5270	WASHER	2

C	8	3B4607	COTTER PIN	4
	9	9S2087	SCREW	7
	10	2S9741	COVER	1
	11	2S2100	HOOK ASSEM.	2
	12	2S2098	SPACER	2
	13	2S2109	BRACKET	2
	14	L2070	BOLT	4
	15	9M3835	LATCH ASSEM.	2
	16	2M5795	PIN	2
C	17	8S5196	HOOD ASSEM.	1
	18	8H1319	RING	2
	19	9M5741	GRAB IRON	2
	20	S1595	BOLT	10
	21	1D4719	NUT	4
		4J4144	WASHER	4
	22	3B4508	LOCKWASHER	15
	23	L1351	BOLT	4
	24	4B4278	WASHER	5
	25	4S8673	BRACKET ASSEM.	1
	26	9F2978	NUT-(Weld)	3
	27	1F748	NUT-(Weld)	1
	28	2P7631	GUARD-(R. H.)	1
		2P7632	GUARD-(L. H.)	1
	29	4B4280	WASHER	11
	30	S1621	BOLT	2
	31	S1594	BOLT	3
		1A4784	WASHER	3
	32	1P4557	DASH ASSEM.	1
		5B866	HINGE	1
		9F6445	NUT	2
	33	5H6822	BUSHING	2
	34	9F2978	NUT-(Weld)	11
	35	5H8450	PLATE-(Serial No.)	1
	36	6H1717	BOLT-(1.125 in. long)	1
		S1585	BOLT-(1.50 in. long)	2
	37	1A2029	BOLT	3

C INDICATES CHANGE

147280

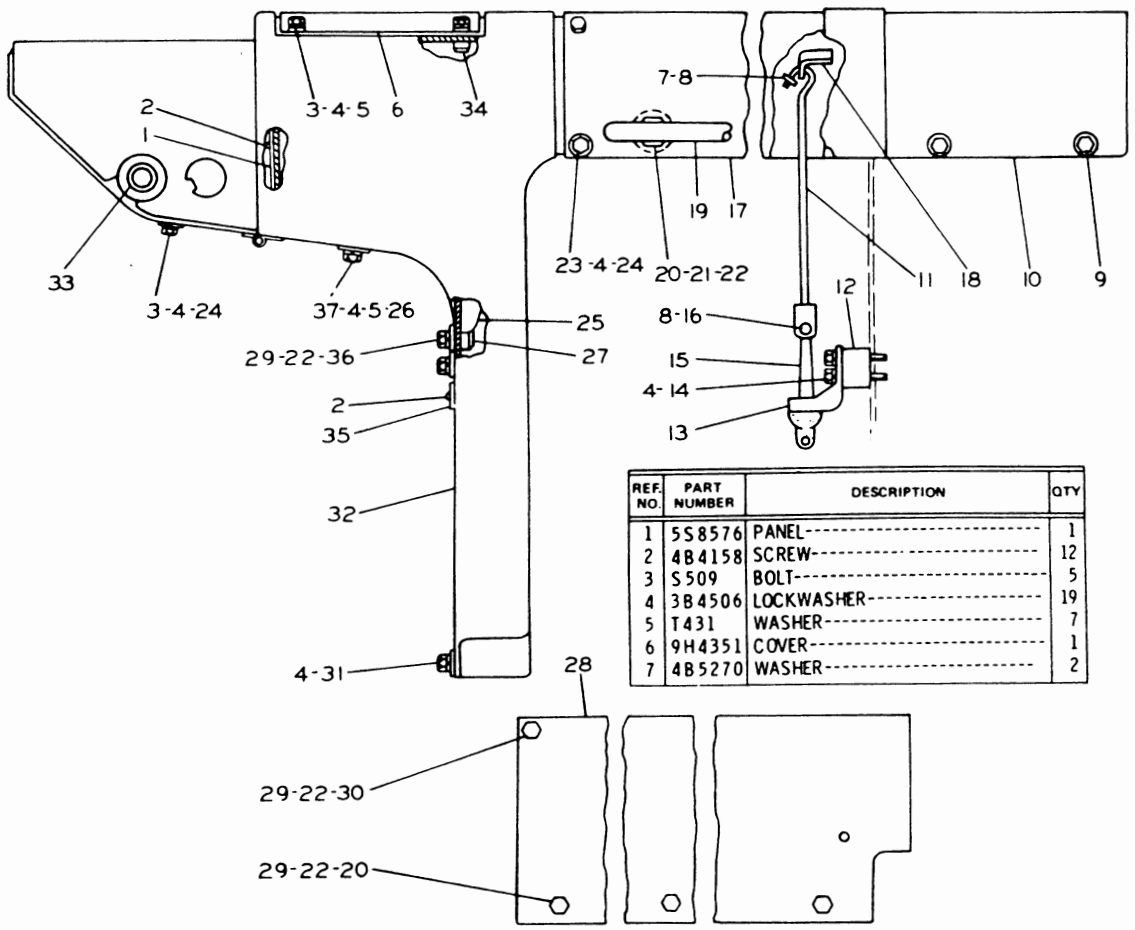

REF. NO.	PART NUMBER	DESCRIPTION	QTY
1	5S8576	PANEL	1
2	4B4158	SCREW	12
3	S509	BOLT	5
4	3B4506	LOCKWASHER	19
5	T431	WASHER	7
6	9H4351	COVER	1
7	4B5270	WASHER	2

C	8	3B4607	COTTER PIN	4
	9	9S2087	SCREW	7
	10	2S9741	COVER	1
	11	2S2100	HOOK ASSEM.	2
	12	2S2098	SPACER	2
	13	2S2109	BRACKET	2
	14	L2070	BOLT	4
	15	9M3835	LATCH ASSEM.	2
	16	2M5795	PIN	2
C	17	3P1816	HOOD ASSEM.	1
	18	8H1319	RING	2
	19	9M5741	GRAB IRON	2
	20	S1595	BOLT	10
	21	1D4719	NUT	4
		4J4144	WASHER	4
	22	3B4508	LOCKWASHER	15
	23	L1351	BOLT	4
	24	4B4278	WASHER	5
	25	4S8673	BRACKET ASSEM.	1
	26	9F2978	NUT (Weld)	3
	27	1F748	NUT (Weld)	1
	28	2P7631	GUARD (R. H.)	1
		2P7632	GUARD (L. H.)	1
	29	4B4280	WASHER	11
	30	S1621	BOLT	2
	31	S1594	BOLT	3
		1A4784	WASHER	3
	32	1P4557	DASH ASSEM.	1
		5B866	HINGE	1
		9F6445	NUT	2
	33	5H6822	BUSHING	2
	34	9F2978	NUT (Weld)	11
	35	5H8450	PLATE (Serial No.)	1
	36	6H1717	BOLT (1.125 in. long)	1
		S1585	BOLT (1.50 in. long)	2
	37	1A2029	BOLT	3

C INDICATES CHANGE 147279

HOOD AND DASH (2M353 N/S)

Serial No. 46A29659 to 32763, 32765 to 32816, 32818 to 32825, 32827 to 32836, 32838 to 32849, 32851 to 32890, 32892 to 32895, 32897 to 32899 and 46A32906 inclusive. Refer also to Pages 172 and 176 for special parts

HOOD AND DASH (2M353 N/S)

Serial No. 46A32764, 32817, 32826, 32837, 32850, 32891, 32896, 32900 to 32905 and 46A32907—Up

Refer also to Pages 172 and 176 for special parts

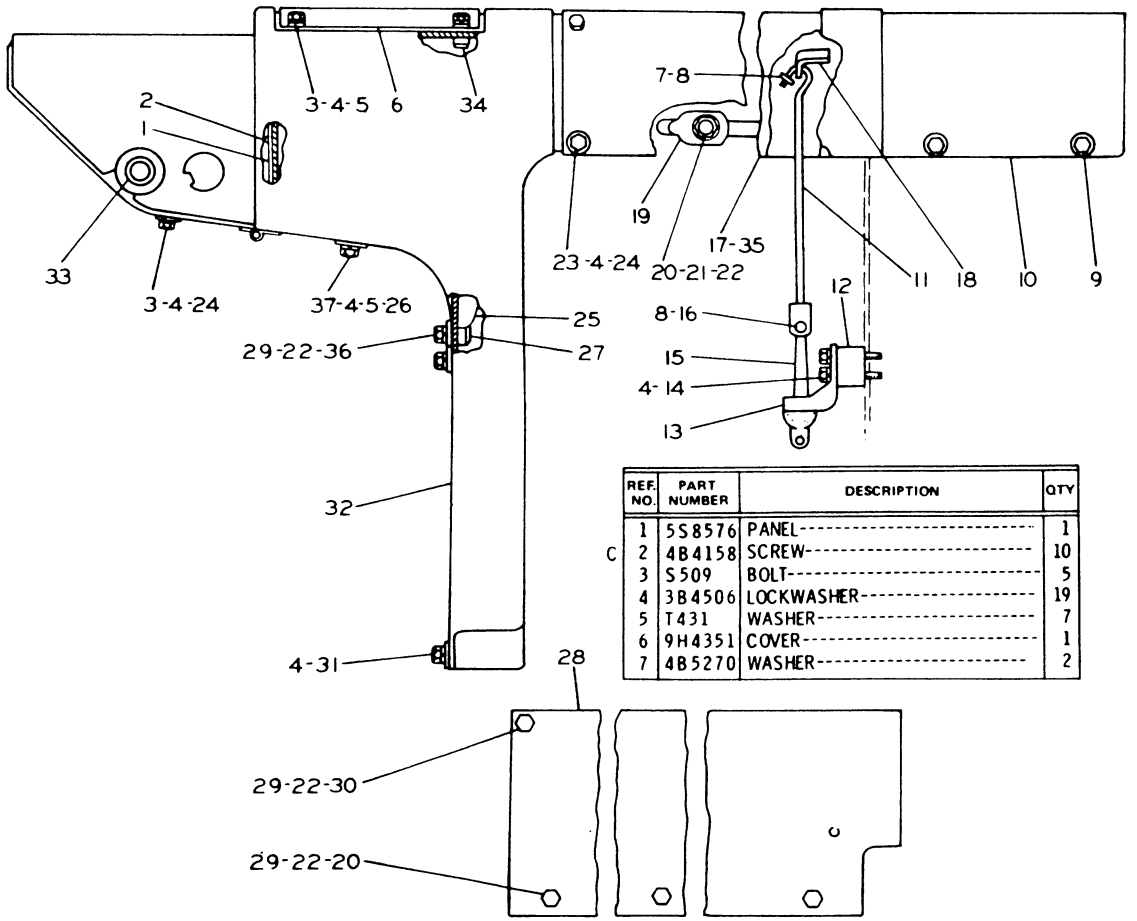

REF. NO.	PART NUMBER	DESCRIPTION	QTY
1	5S8576	PANEL	1
C 2	4B4158	SCREW	10
3	S509	BOLT	5
4	3B4506	LOCKWASHER	19
5	T431	WASHER	7
6	9H4351	COVER	1
7	4B5270	WASHER	2

8	3B4607	COTTER PIN	4
9	9S2087	SCREW	7
10	2S9741	COVER	1
11	2S2100	HOOK ASSEM.	2
12	2S2098	SPACER	2
13	2S2109	BRACKET	2
14	L2070	BOLT	4
15	9M3835	LATCH ASSEM.	2
16	2M5795	PIN	2
17	3P1816	HOOD ASSEM.	1
18	8H1319	RING	2
C 19	9M5742	GRAB IRON	1
20	S1595	BOLT	10
21	1D4719	NUT	4
	4J4144	WASHER	4
22	3B4508	LOCKWASHER	15
23	L1351	BOLT	4
24	4B4278	WASHER	5
25	4S8673	BRACKET ASSEM.	1
26	9F2978	NUT—(Weld)	3
27	1F748	NUT—(Weld)	1
28	2P7631	GUARD—(R. H.)	1
	2P7632	GUARD—(L. H.)	1
29	4B4280	WASHER	11
30	S1621	BOLT	2
31	S1594	BOLT	3
	1A4784	WASHER	3
	1P4557	DASH ASSEM.	1
32	5B866	HINGE	1
	9F6445	NUT	2
33	5H6822	BUSHING	2
34	9F2978	NUT—(Weld)	11
C 35	8S8782	GRAB IRON	1
36	6H1717	BOLT—(1.125 in. long)	1
	S1585	BOLT—(1.50 in. long)	2
37	1A2029	BOLT	3

C INDICATES CHANGE

153797

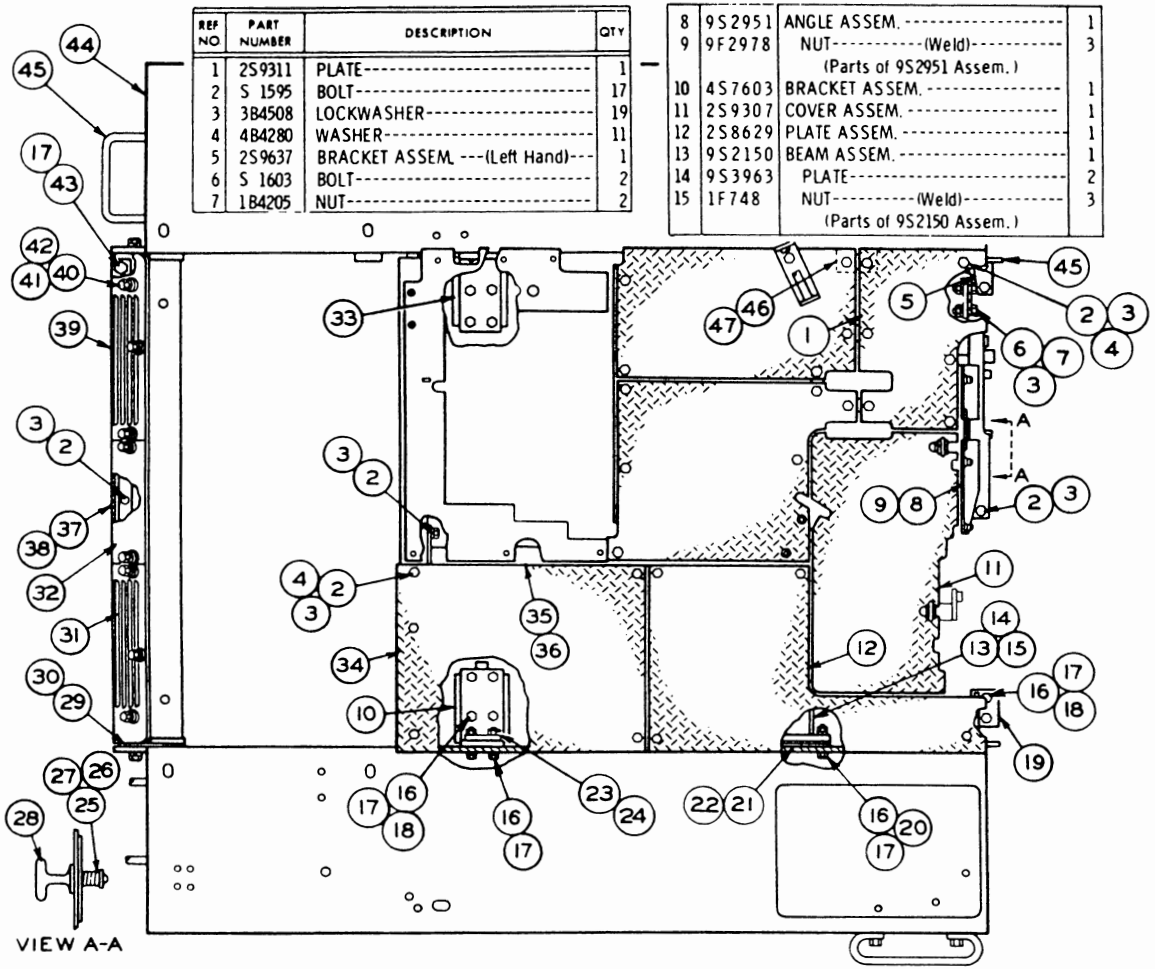

REF NO	PART NUMBER	DESCRIPTION	QTY
1	2S9311	PLATE	1
2	S 1595	BOLT	17
3	3B4508	LOCKWASHER	19
4	4B4280	WASHER	11
5	2S9637	BRACKET ASSEM. ---(Left Hand)---	1
6	S 1603	BOLT	2
7	1B4205	NUT	2
8	9S2951	ANGLE ASSEM.	1
9	9F2978	NUT----------(Weld)---------- (Parts of 9S2951 Assem.)	3
10	4S7603	BRACKET ASSEM.	1
11	2S9307	COVER ASSEM.	1
12	2S8629	PLATE ASSEM.	1
13	9S2150	BEAM ASSEM.	1
14	9S3963	PLATE	2
15	1F748	NUT----------(Weld)---------- (Parts of 9S2150 Assem.)	3
16	1A1135	BOLT	35
17	3B4510	LOCKWASHER	40
18	L 2119	WASHER	16
19	2S9441	BRACKET ASSEM. --(Right Hand)---	1
20	1D4720	NUT	6
21	5M7386	SHIM--------(.060" Thick)--------	2
22	5M7387	SHIM--------(.036" Thick)--------	2
23	4S8025	STRIP ASSEM.	4
24	3J5169	NUT----------(Weld)---------- (2 in each 4S8025 Assem.)	8
25	4B7033	SPRING	2
26	1A4784	WASHER	2
27	3B4623	COTTER PIN	2
28	9B1783	FASTENER	2
29	2S7613	SHIM--------(.030" Thick)--------	2
30	2S7628	SHIM--------(.060" Thick)--------	2
31	2S8361	DOOR	1
32	2S8363	DOOR	1
33	2S7663	BRACKET ASSEM.	1
34	8S3091	PLATE	1
35	2S9302	ANGLE ASSEM.	1
36	1F748	NUT----------(Weld)---------- (Part of 2S9302 Assem.)	3
37	2S8382	SUPPORT ASSEM.	1
38	3J5169	NUT----------(Weld)---------- (Part of 2S8382 Assem.)	8
39	2S8362	DOOR	1
40	S 509	BOLT	9
41	3B4506	LOCKWASHER	9
42	4B4278	WASHER	9
43	1D4586	BOLT	2
44	1P890	FENDER ASSEM.----(Left Hand)----	1
45	9S5356	GRAB IRON	1
46	3F5016	LUG	1
	2H2882	ANGLE ASSEM. (Parts of 1P890 Assem.)	1
47	1F748	NUT----------(Weld)---------- (Part of 2H2882 Assem.)	2

FENDERS (2S8592 N/S)—Part 1
Serial No. 46A24433 to 46A27285 inclusive

FENDERS (2S8592 N/S)—Part 2
Serial No. 46A24433 to 46A27285 inclusive

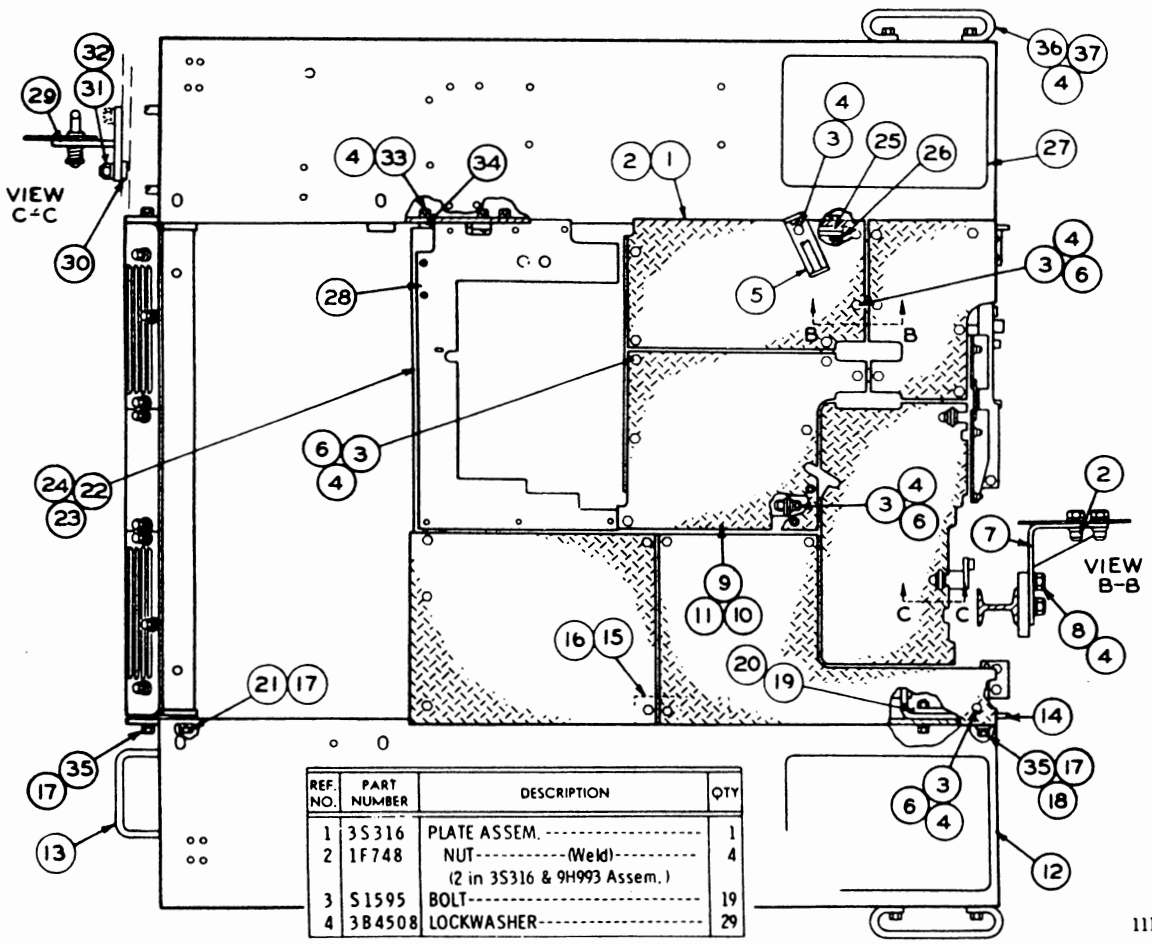

REF. NO.	PART NUMBER	DESCRIPTION	QTY
1	3S316	PLATE ASSEM.	1
2	1F748	NUT-----(Weld)----- (2 in 3S316 & 9H993 Assem.)	4
3	S1595	BOLT	19
4	3B4508	LOCKWASHER	29
5	5H156	SUPPORT	1
6	4B4280	WASHER	17
7	9H993	SUPPORT ASSEM.	1
8	S1621	BOLT	2
9	2S9746	PLATE ASSEM.	1
10	1F748	NUT-----(Weld)----- (Part of 2S9746 Assem.)	1
11	1M526	LUG	2
12	1P889	FENDER ASSEM.---(Right Hand)----	1
13	9S5356	GRAB IRON	1
14	3F5016	LUG	2
15	9S3385	ANGLE ASSEM. (Parts of 1P889 Assem.)	1
16	1M526	LUG (Part of 9S3385 Assem.)	1
17	3B4510	LOCKWASHER	23
18	L2119	WASHER	1
19	4S8023	STRIP ASSEM.	4
20	3J5169	NUT (2 in each 4S8023 Assem.)	8
21	S1566	BOLT	14
22	5S9817	CHANNEL ASSEM.	1
23	9F2978	NUT-----(Weld)-----	4
24	1F748	NUT-----(Weld)----- (Parts of 5S9817 Assem.)	7
25	9S3963	PLATE	1
26	S1625	BOLT	3
	1D4720	NUT	3
	3B4510	LOCKWASHER	3
27	9S3968	TREAD	2
28	3S3478	PLATE ASSEM.	1
29	5S1574	SUPPORT ASSEM.	1
30	6B2882	SPACER (Part of 5S1574 Assem.)	1
31	1D4717	NUT	1
32	3B4506	LOCKWASHER	1
33	7B3235	BOLT	4
34	9H742	BRACKET	1
35	1A1135	BOLT	9
36	7B4488	GRAB IRON	2
37	S1585	BOLT	4
	1D4719	NUT	4

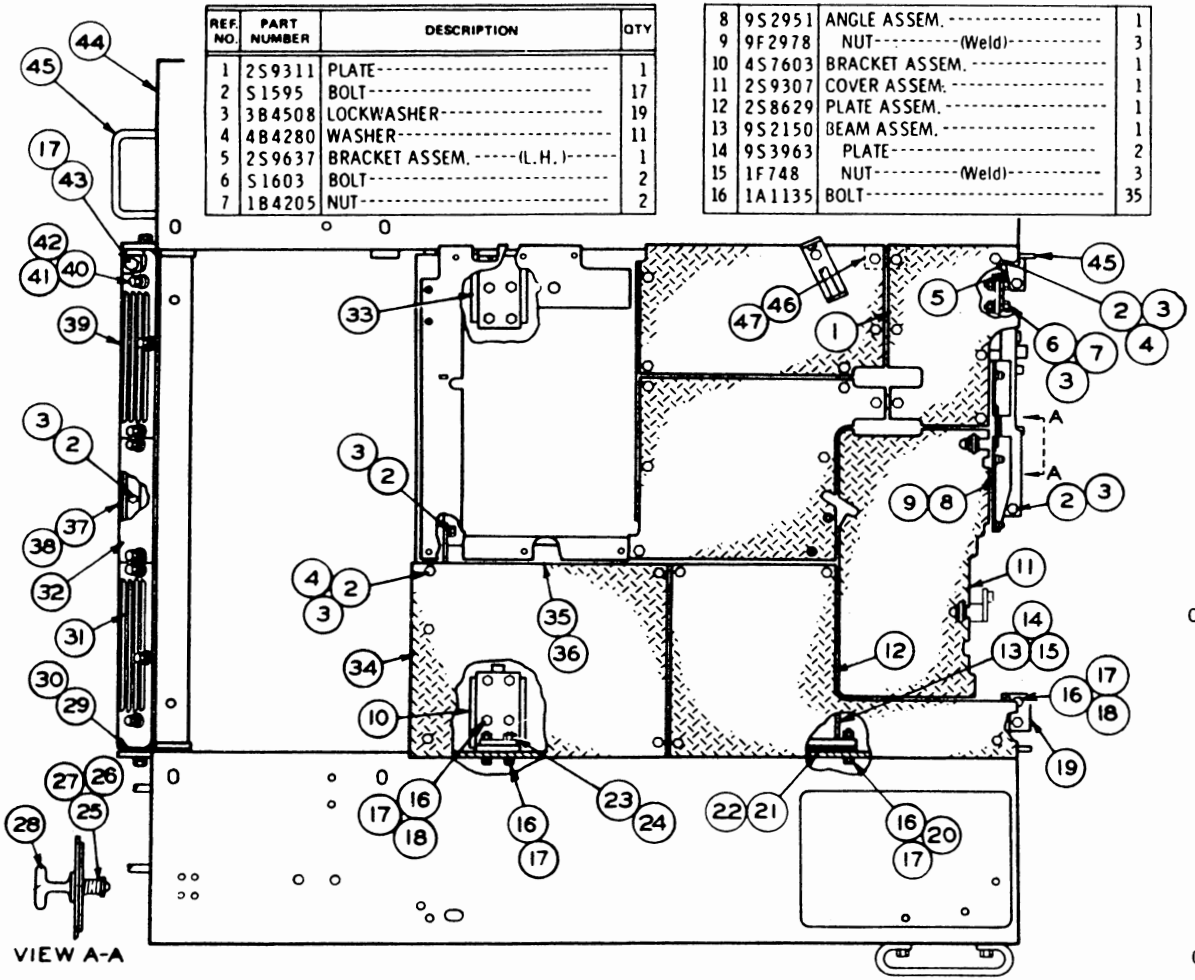

REF. NO.	PART NUMBER	DESCRIPTION	QTY
1	2S9311	PLATE	1
2	S1595	BOLT	17
3	3B4508	LOCKWASHER	19
4	4B4280	WASHER	11
5	2S9637	BRACKET ASSEM. -----(L.H.)-----	1
6	S1603	BOLT	2
7	1B4205	NUT	2
8	9S2951	ANGLE ASSEM.	1
9	9F2978	NUT----------(Weld)----------	3
10	4S7603	BRACKET ASSEM.	1
11	2S9307	COVER ASSEM.	1
12	2S8629	PLATE ASSEM.	1
13	9S2150	BEAM ASSEM.	1
14	9S3963	PLATE	2
15	1F748	NUT----------(Weld)----------	3
16	1A1135	BOLT	35
17	3B4510	LOCKWASHER	40
18	L2119	WASHER	16
19	2S9441	BRACKET ASSEM. ----(R.H.)-----	1
20	1D4720	NUT	6
21	5M7386	SHIM---------(.060" Thick)-------	2
22	5M7387	SHIM---------(.036" Thick)-------	2
23	4S8025	STRIP ASSEM.	4
24	3J5169	NUT----------(Weld)----------	2
25	4B7033	SPRING	2
26	1A4784	WASHER	2
27	3B4623	COTTER PIN	2
28	9B1783	FASTENER	2
29	2S7613	SHIM---------(.030" Thick)-------	2
30	2S7628	SHIM---------(.060" Thick)-------	2
31	2S8361	DOOR	1
32	2S8363	DOOR	1
33	2S7663	BRACKET ASSEM.	1
34	8S3091	PLATE	1
35	2S9302	ANGLE ASSEM.	1
36	1F748	NUT----------(Weld)----------	3
37	2S8382	SUPPORT ASSEM.	1
38	3J5169	NUT----------(Weld)----------	8
39	2S8362	DOOR	1
40	S509	BOLT	9
41	3B4506	LOCKWASHER	9
42	4B4278	WASHER	9
43	1D4586	BOLT	2
C 44	2P8994	FENDER ASSEM. -------(L.H.)------	1
	3S6721	SUPPORT	3
45	9S5356	GRAB IRON	1
46	3F5016	LUG	1
	1P6296	ANGLE ASSEM.	1
47	1F748	NUT	2

C INDICATES CHANGE

138941

FENDERS (2S8592 N/S)—Part 1
Serial No. 46A27286 to 46A28557 inclusive

FENDERS (2S8592 N/S)—Part 2
Serial No. 46A27286 to 46A28557 inclusive

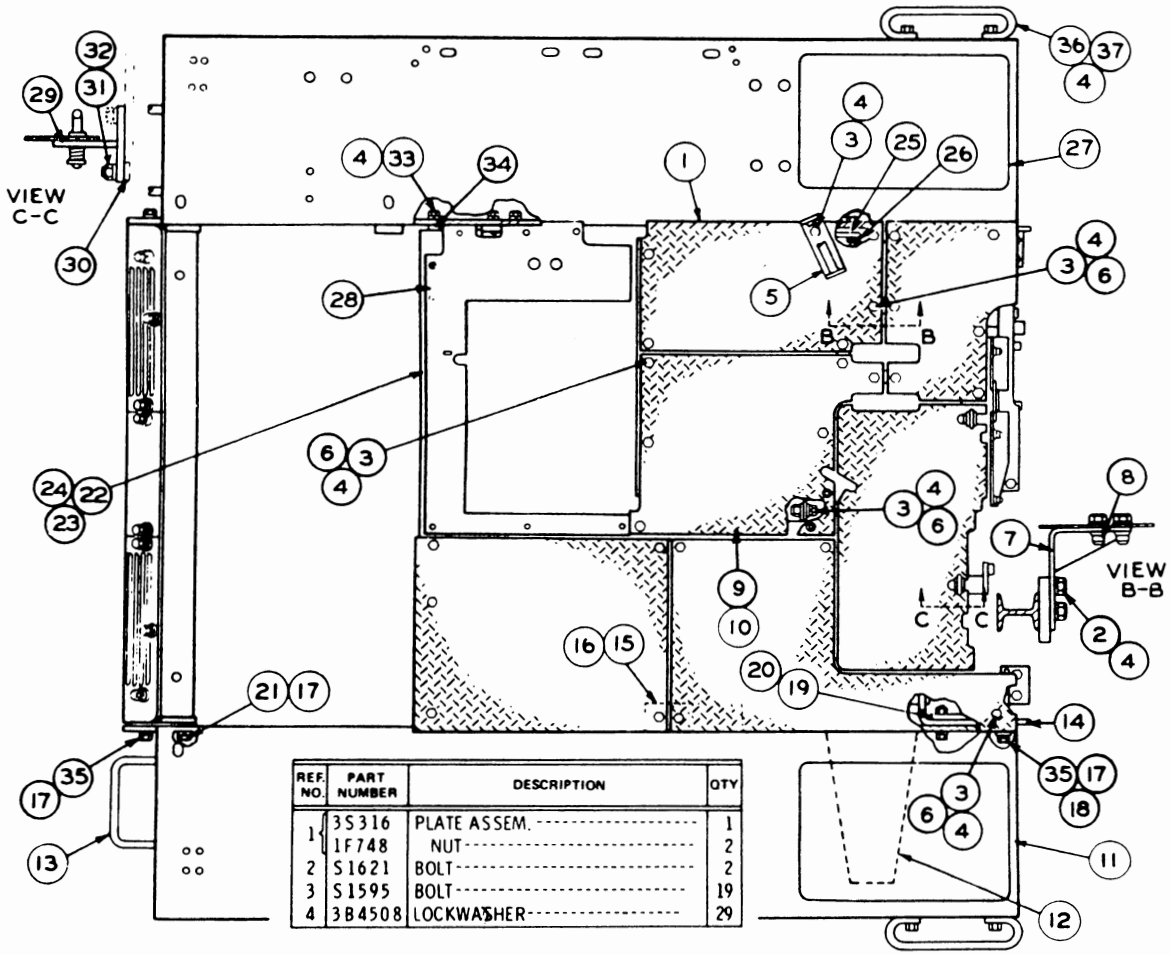

REF. NO.	PART NUMBER	DESCRIPTION	QTY
1	3S316	PLATE ASSEM.	1
	1F748	NUT	2
2	S1621	BOLT	2
3	S1595	BOLT	19
4	3B4508	LOCKWASHER	29

	5	5H156	SUPPORT	1
	6	4B4280	WASHER	17
	7	9H993	SUPPORT ASSEM.	1
	8	1F748	NUT	2
	9	2S9746	PLATE ASSEM.	1
		1F748	NUT	1
	10	1M526	LUG	2
C	11	2P8993	FENDER ASSEM. (R.H.)	1
	12	3S6721	SUPPORT	3
	13	9S5356	GRAB IRON	1
	14	3F5016	LUG	2
	15	9S3385	ANGLE ASSEM.	1
	16	1M526	LUG	1
C	17	3B4510	LOCKWASHER	22
C	18	L2119	WASHER	2
	19	4S8023	STRIP ASSEM.	4
	20	3J5169	NUT	2
	21	S1566	BOLT	14
	22	5S9817	CHANNEL ASSEM.	1
	23	9F2978	NUT (Weld)	4
	24	1F748	NUT (Weld)	7
	25	9S3963	PLATE	1
	26	S1625	BOLT	3
		1D4720	NUT	3
		3B4510	LOCKWASHER	3
	27	9S3968	TREAD	2
	28	3S3478	PLATE ASSEM.	1
	29	5S1574	SUPPORT ASSEM.	1
	30	6B2882	SPACER	1
	31	1D4717	NUT	1
	32	3B4506	LOCKWASHER	1
	33	7B3235	BOLT	4
	34	9H742	BRACKET	1
C	35	1A1134	BOLT	8
	36	7B4488	GRAB IRON	2
	37	S1585	BOLT	4
		1D4719	NUT	4

C INDICATES CHANGE

138942

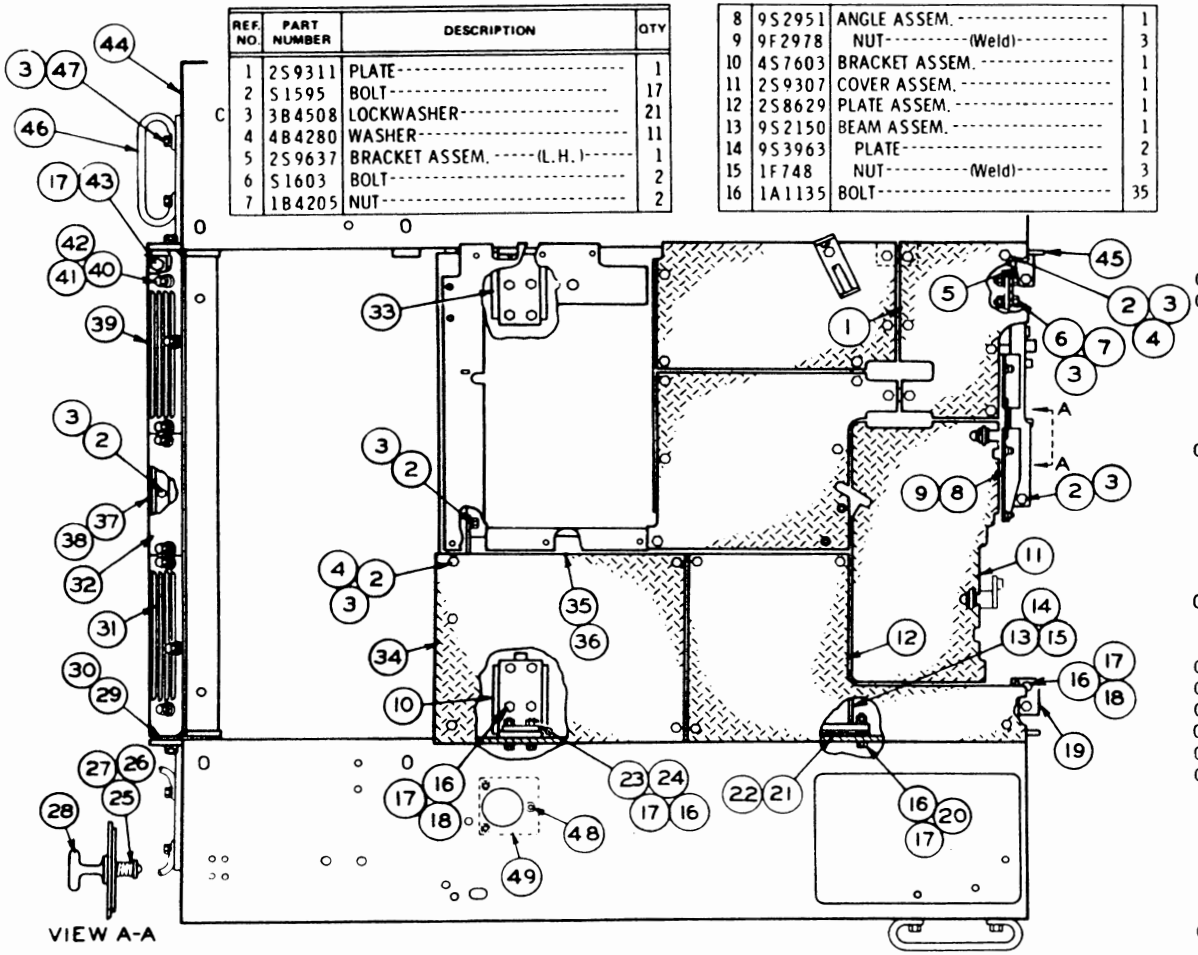

REF. NO.	PART NUMBER	DESCRIPTION	QTY
1	2S9311	PLATE	1
2	S1595	BOLT	17
C 3	3B4508	LOCKWASHER	21
4	4B4280	WASHER	11
5	2S9637	BRACKET ASSEM. (L.H.)	1
6	S1603	BOLT	2
7	1B4205	NUT	2
8	9S2951	ANGLE ASSEM.	1
9	9F2978	NUT (Weld)	3
10	4S7603	BRACKET ASSEM.	1
11	2S9307	COVER ASSEM.	1
12	2S8629	PLATE ASSEM.	1
13	9S2150	BEAM ASSEM.	1
14	9S3963	PLATE	2
15	1F748	NUT (Weld)	3
16	1A1135	BOLT	35
17	3B4510	LOCKWASHER	40
18	L2119	WASHER	16
19	2S9441	BRACKET ASSEM. (R.H.)	1
20	1D4720	NUT	6
21	5M7386	SHIM (.060" Thick)	2
22	5M7387	SHIM (.036" Thick)	2
23	4S8025	STRIP ASSEM.	4
24	3J5169	NUT (Weld)	2
25	4B7033	SPRING	2
26	1A4784	WASHER	2
27	3B4623	COTTER PIN	2
28	9B1783	FASTENER	2
C 29	3P1475	SHIM (.030" Thick)	2
C 30	3P1474	SHIM (.060" Thick)	2
31	2S8361	DOOR	1
32	2S8363	DOOR	1
33	2S7663	BRACKET ASSEM.	1
34	8S3091	PLATE	1
35	2S9302	ANGLE ASSEM.	1
36	1F748	NUT (Weld)	3
C 37	3P1349	SUPPORT ASSEM.	1
38	3J5169	NUT (Weld)	6
39	2S8362	DOOR	1
40	S509	BOLT	9
41	3B4506	LOCKWASHER	9
42	4B4278	WASHER	9
43	1D4586	BOLT	2
C 44	3P1293	FENDER ASSEM. (L.H.)	1
	1F748	NUT (Weld)	2
45	3F5016	LUG	1
C 46	1D4164	GRAB IRON	1
C 47	1A1460	BOLT	2
C	1D4719	NUT	2
C 48	1A2029	BOLT	3
C	5M2894	WASHER	3
C 49	3P2676	COVER	1

C INDICATES CHANGE 141756

FENDERS (2S8592 N/S)—Part 1
Serial No. 46A28558 to 46A30380 inclusive

FENDERS (2S8592 N/S)—Part 2
Serial No. 46A28558 to 46A30380 inclusive

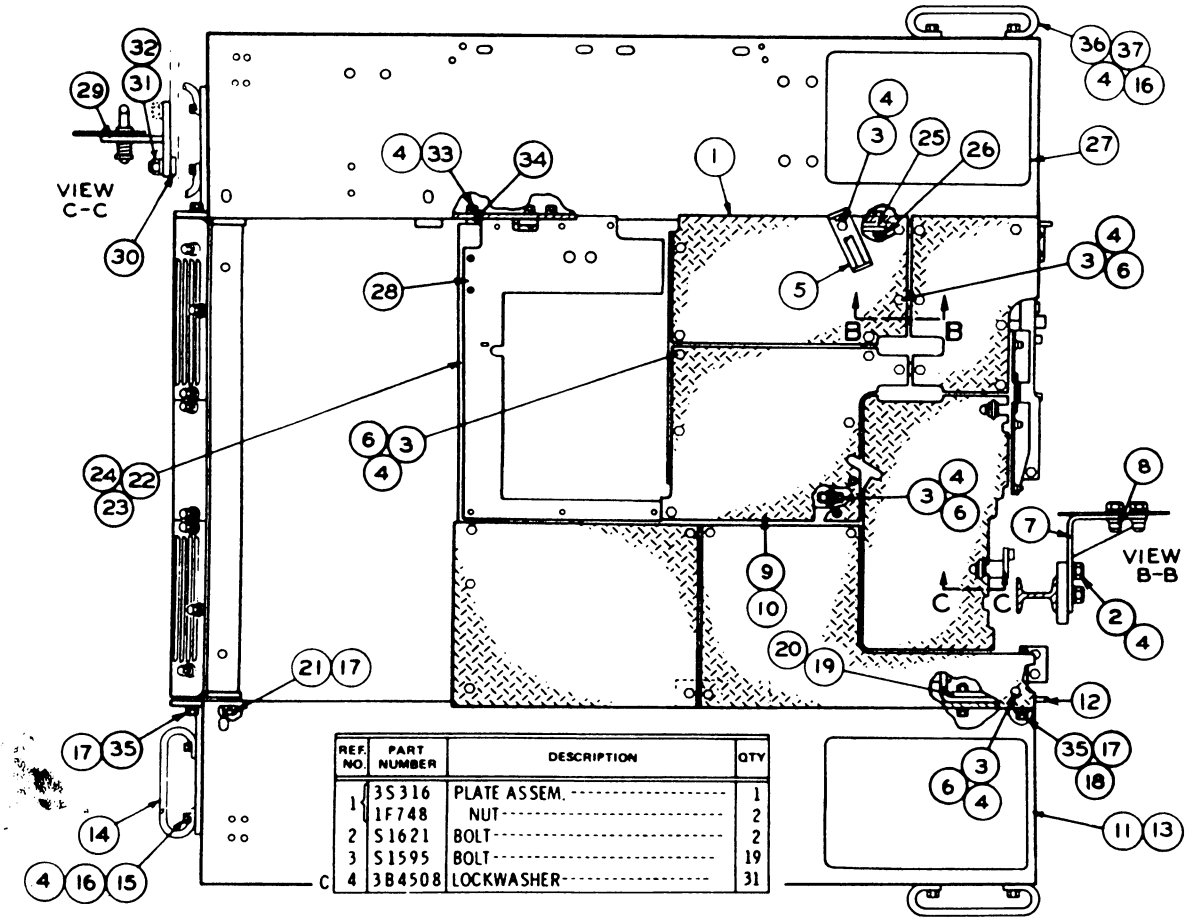

REF. NO.	PART NUMBER	DESCRIPTION	QTY
1	3S316	PLATE ASSEM.	1
	1F748	NUT	2
2	S1621	BOLT	2
3	S1595	BOLT	19
C 4	3B4508	LOCKWASHER	31

	5	5H156	SUPPORT	1
	6	4B4280	WASHER	17
	7	9H993	SUPPORT ASSEM.	1
	8	1F748	NUT	2
	9	2S9746	PLATE ASSEM.	1
		1F748	NUT	1
	10	1M526	LUG	2
C	11	3P1295	FENDER ASSEM. (R.H.)	1
		9F2978	NUT (Weld)	3
	12	3F5016	LUG	1
	13	1M526	LUG	1
	14	1D4167	GRAB IRON	1
C	15	1A1460	BOLT	2
C	16	1D4719	NUT	6
	17	3B4510	LOCKWASHER	22
	18	L2119	WASHER	2
	19	4S8023	STRIP ASSEM.	4
	20	3J5169	NUT	2
	21	S1566	BOLT	14
	22	5S9817	CHANNEL ASSEM.	1
	23	9F2978	NUT (Weld)	4
	24	1F748	NUT (Weld)	7
	25	9S3963	PLATE	1
		S1625	BOLT	3
	26	1D4720	NUT	3
		3B4510	LOCKWASHER	3
	27	9S3968	TREAD	2
	28	3S3478	PLATE ASSEM.	1
	29	5S1574	SUPPORT ASSEM.	1
	30	6B2882	SPACER	1
	31	1D4717	NUT	1
	32	3B4506	LOCKWASHER	1
	33	7B3235	BOLT	4
	34	9H742	BRACKET	1
	35	1A1134	BOLT	8
	36	7B4488	GRAB IRON	2
	37	S1585	BOLT	4

C INDICATES CHANGE

157398

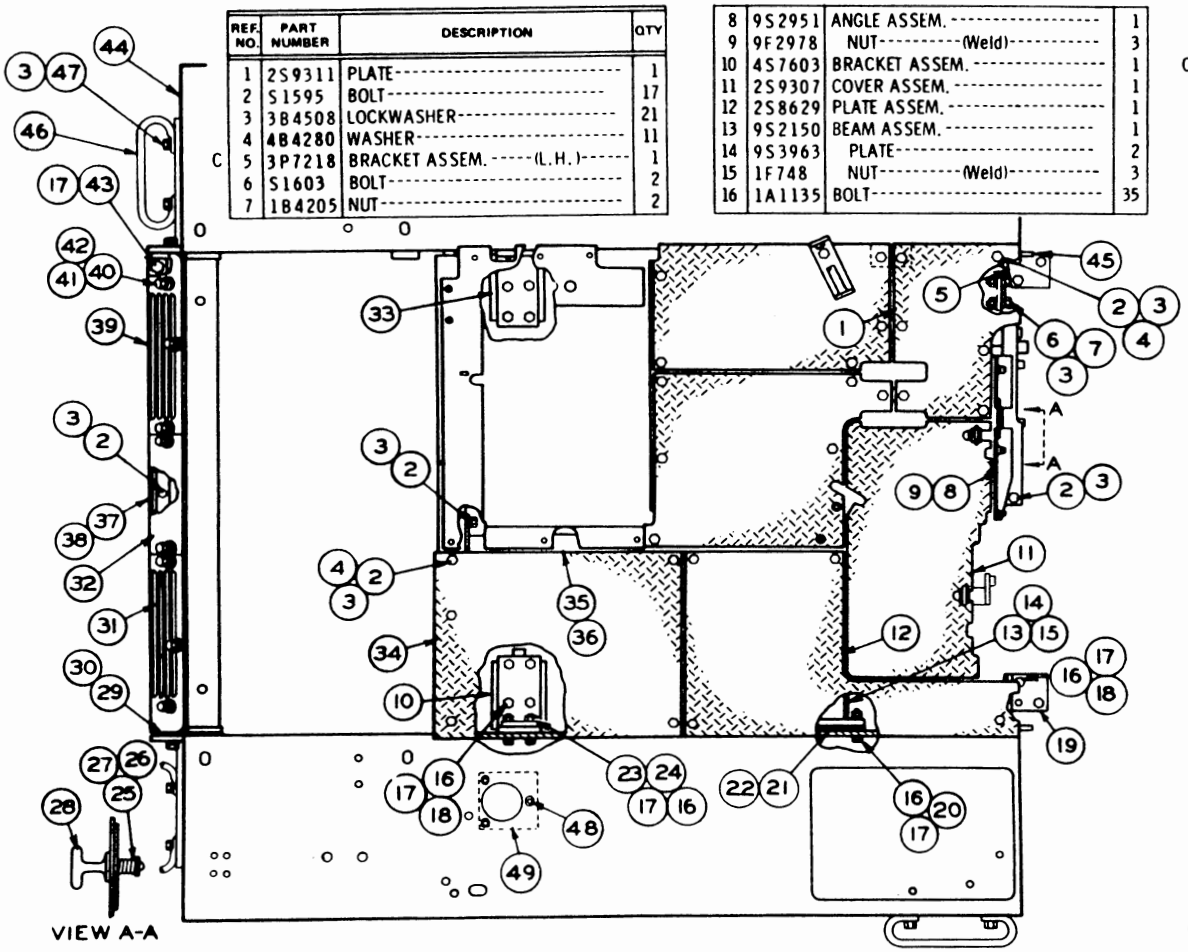

REF. NO.	PART NUMBER	DESCRIPTION	QTY
1	2S9311	PLATE	1
2	S1595	BOLT	17
3	3B4508	LOCKWASHER	21
4	4B4280	WASHER	11
C 5	3P7218	BRACKET ASSEM. -----(L.H.)-----	1
6	S1603	BOLT	2
7	1B4205	NUT	2
8	9S2951	ANGLE ASSEM.	1
9	9F2978	NUT----------(Weld)----------	3
10	4S7603	BRACKET ASSEM.	1
11	2S9307	COVER ASSEM.	1
12	2S8629	PLATE ASSEM.	1
13	9S2150	BEAM ASSEM.	1
14	9S3963	PLATE	2
15	1F748	NUT----------(Weld)----------	3
16	1A1135	BOLT	35
17	3B4510	LOCKWASHER	40
18	L2119	WASHER	16
C 19	3P7217	BRACKET ASSEM. ----(R.H.)-----	1
20	1D4720	NUT	6
21	5M7386	SHIM---------(.060" Thick)-------	2
22	5M7387	SHIM---------(.036" Thick)-------	2
23	4S8025	STRIP ASSEM.	4
24	3J5169	NUT----------(Weld)----------	2
25	4B7033	SPRING	2
26	1A4784	WASHER	2
27	3B4623	COTTER PIN	2
28	9B1783	FASTENER	2
29	3P1475	SHIM---------(.030" Thick)-------	2
30	3P1474	SHIM---------(.060" Thick)-------	2
31	2S8361	DOOR	1
32	2S8363	DOOR	1
33	2S7663	BRACKET ASSEM.	1
34	8S3091	PLATE	1
35	2S9302	ANGLE ASSEM.	1
36	1F748	NUT----------(Weld)----------	3
37	3P1349	SUPPORT ASSEM.	1
38	3J5169	NUT----------(Weld)----------	6
39	2S8362	DOOR	1
40	S509	BOLT	9
41	3B4506	LOCKWASHER	9
42	4B4278	WASHER	9
43	1D4586	BOLT	2
44	3P1293	FENDER ASSEM. ------(L.H.)-----	1
	1F748	NUT---------(Weld)----------	2
45	3F5016	LUG	1
46	1D4164	GRAB IRON	1
47	1A1460	BOLT	2
	1D4719	NUT	2
48	1A2029	BOLT	3
	5M2894	WASHER	3
49	3P2676	COVER	1

C INDICATES CHANGE 203440

FENDERS (2S8592 N/S)—Part 1
Serial No. 46A30381 to 46A32802 inclusive

FENDERS (2S8592 N/S)—Part 2
Serial No. 46A30381 to 46A32802 inclusive

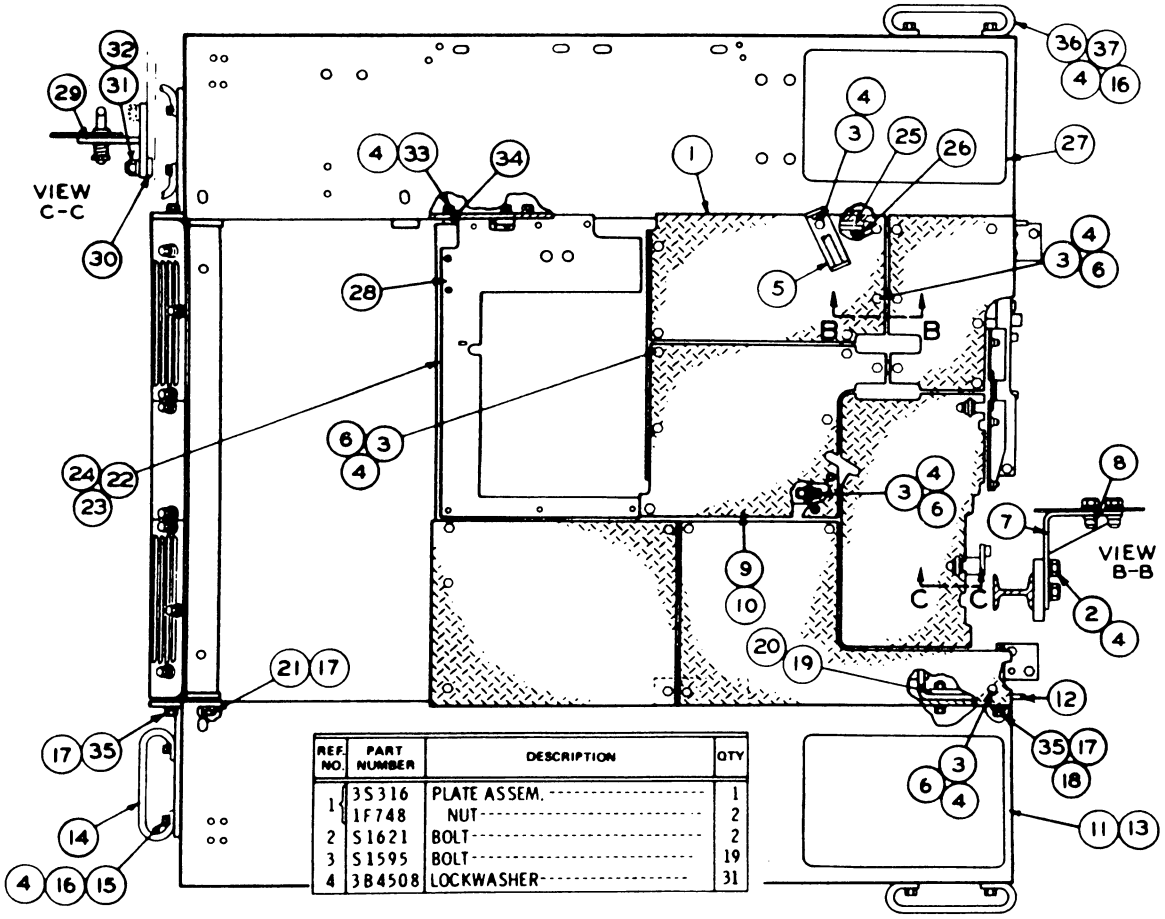

REF. NO.	PART NUMBER	DESCRIPTION	QTY
1	3S316	PLATE ASSEM.	1
	1F748	NUT	2
2	S1621	BOLT	2
3	S1595	BOLT	19
4	3B4508	LOCKWASHER	31

5	5H156	SUPPORT	1
6	4B4280	WASHER	17
7	9H993	SUPPORT ASSEM.	1
8	1F748	NUT	2
9	2S9746	PLATE ASSEM.	1
	1F748	NUT	1
10	1M526	LUG	2
11	3P1295	FENDER ASSEM. (R.H.)	1
	9F2978	NUT (Weld)	3
12	3F5016	LUG	1
13	1M526	LUG	1
14	1D4167	GRAB IRON	1
15	1A1460	BOLT	2
16	1D4719	NUT	6
17	3B4510	LOCKWASHER	22
18	L2119	WASHER	2
19	4S8023	STRIP ASSEM.	4
20	3J5169	NUT	2
21	S1566	BOLT	14
22	5S9817	CHANNEL ASSEM.	1
23	9F2978	NUT (Weld)	4
24	1F748	NUT (Weld)	7
25	9S3963	PLATE	1
	S1625	BOLT	3
26	1D4720	NUT	3
	3B4510	LOCKWASHER	3
27	9S3968	TREAD	2
28	3S3478	PLATE ASSEM.	1
29	5S1574	SUPPORT ASSEM.	1
30	6B2882	SPACER	1
31	1D4717	NUT	1
32	3B4506	LOCKWASHER	1
33	7B3235	BOLT	4
34	9H742	BRACKET	1
35	1A1134	BOLT	8
36	7B4488	GRAB IRON	2
37	S1585	BOLT	4

157399

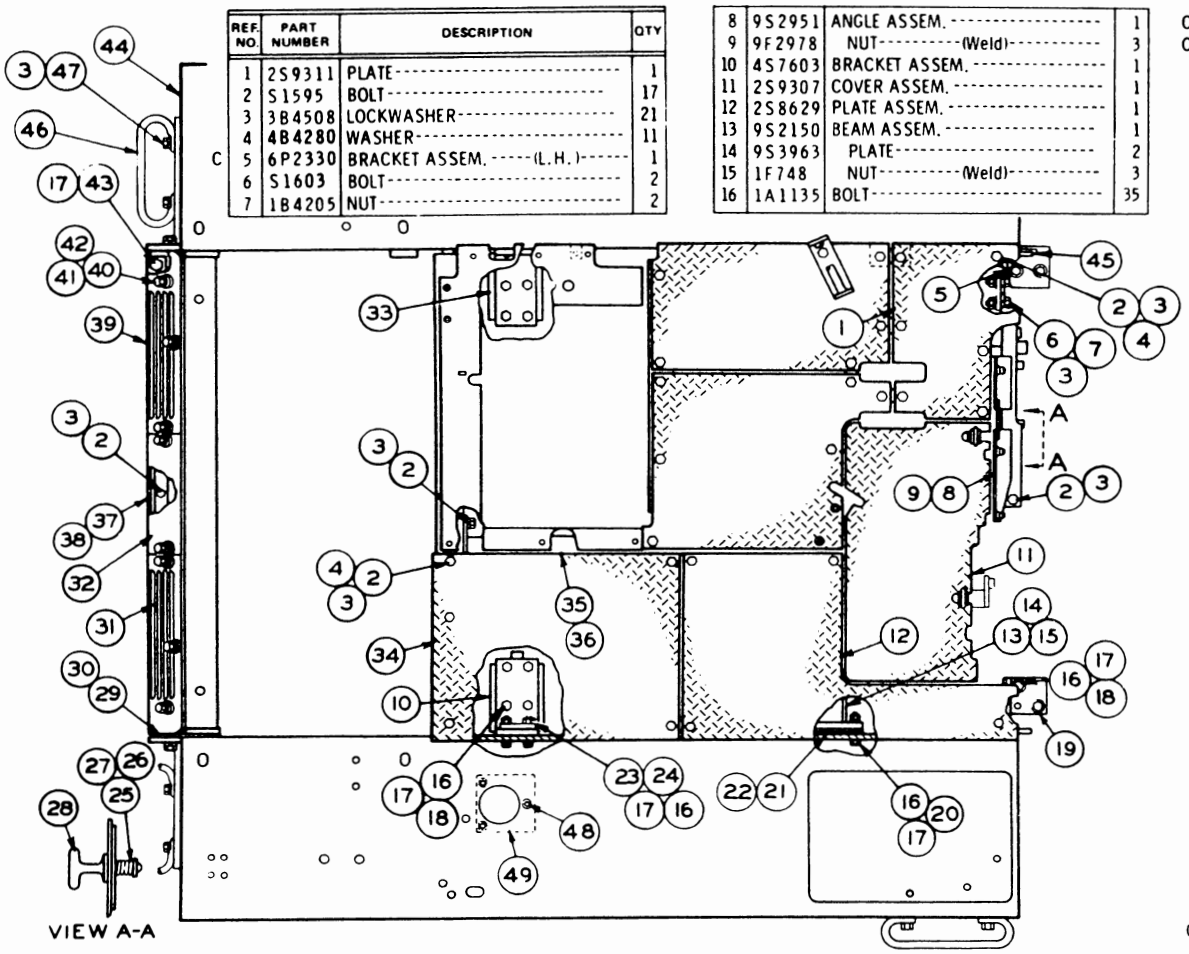

REF. NO.	PART NUMBER	DESCRIPTION	QTY
1	2S9311	PLATE	1
2	S1595	BOLT	17
3	3B4508	LOCKWASHER	21
4	4B4280	WASHER	11
C 5	6P2330	BRACKET ASSEM. -----(L.H.)-----	1
6	S1603	BOLT	2
7	1B4205	NUT	2
8	9S2951	ANGLE ASSEM.	1
9	9F2978	NUT----------(Weld)----------	3
10	4S7603	BRACKET ASSEM.	1
11	2S9307	COVER ASSEM.	1
12	2S8629	PLATE ASSEM.	1
13	9S2150	BEAM ASSEM.	1
14	9S3963	PLATE	2
15	1F748	NUT----------(Weld)----------	3
16	1A1135	BOLT	35
C 17	3B4510	LOCKWASHER	37
C 18	L2119	WASHER	16
19	3P7217	BRACKET ASSEM. ----(R.H.)-----	1
20	1D4720	NUT	6
21	5M7386	SHIM-----1.52 mm(.036 in.) thick	2
22	5M7387	SHIM-----.914 mm(.036 in.)thick	2
23	4S8025	STRIP ASSEM.	4
24	3J5169	NUT---------(weld)----------	2
25	4B7033	SPRING	2
26	1A4784	WASHER	2
27	3B4623	COTTER PIN	2
28	9B1783	FASTENER	2
29	3P1475	SHIM-----.762 mm(.030 in.) thick	2
30	3P1474	SHIM-----1.52 mm(.060 in.) thick	2
31	2S8361	DOOR	1
32	2S8363	DOOR	1
33	2S7663	BRACKET ASSEM.	1
34	8S3091	PLATE	1
35	2S9302	ANGLE ASSEM.	1
36	1F748	NUT----------(Weld)----------	3
37	3P1349	SUPPORT ASSEM.	1
38	3J5169	NUT----------(Weld)----------	6
39	2S8362	DOOR	1
40	S509	BOLT	9
41	3B4506	LOCKWASHER	9
42	4B4278	WASHER	9
43	1D4586	BOLT	2
44	3P1293	FENDER ASSEM. ------(L.H.)-----	1
	1F748	NUT----------(Weld)----------	2
45	3F5016	LUG	1
46	1D4164	GRAB IRON	1
47	1A1460	BOLT	2
	1D4719	NUT	2
48	1A2029	BOLT	3
	5M2894	WASHER	3
49	3P2676	COVER	1

C INDICATES CHANGE

203442

FENDERS (2S8592 N/S)—Part 1
Serial No. 46A32803—Up

FENDERS (2S8592 N/S)—Part 2
Serial No. 46A32803—Up

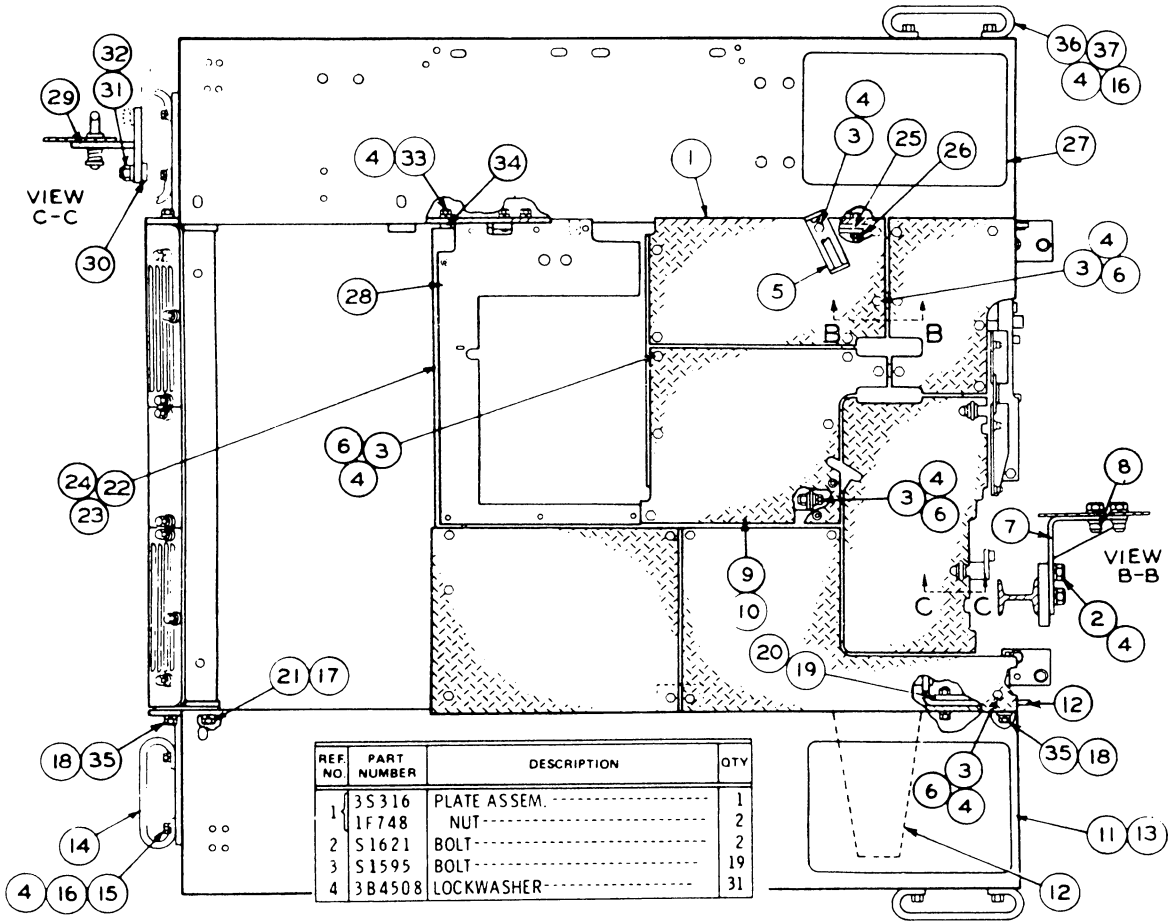

REF. NO.	PART NUMBER	DESCRIPTION	QTY
1	3S316	PLATE ASSEM.	1
	1F748	NUT	2
2	S1621	BOLT	2
3	S1595	BOLT	19
4	3B4508	LOCKWASHER	31

	REF. NO.	PART NUMBER	DESCRIPTION	QTY
	5	5H155	SUPPORT	1
	6	4B4280	WASHER	17
	7	9H993	SUPPORT ASSEM.	1
	8	1F748	NUT	2
	9	2S9746	PLATE ASSEM.	1
		1F748	NUT	1
	10	1M526	LUG	2
	11	3P1295	FENDER ASSEM. (R.H.)	1
		9F2978	NUT (Weld)	3
	12	3F5016	LUG	1
	13	1M526	LUG	1
	14	1D4167	GRAB IRON	1
	15	1A1460	BOLT	2
	16	1D4719	NUT	6
C	18	L2119	WASHER	22
	19	4S8023	STRIP ASSEM.	4
	20	3J5169	NUT	2
	21	S1566	BOLT	14
	22	5S9817	CHANNEL ASSEM.	1
	23	9F2978	NUT (Weld)	4
	24	1F748	NUT (Weld)	7
	25	9S3963	PLATE	1
		S1625	BOLT	3
	26	1D4720	NUT	3
		3B4510	LOCKWASHER	3
	27	9S3968	TREAD	2
	28	3S3478	PLATE ASSEM.	1
	29	5S1574	SUPPORT ASSEM.	1
	30	6B2882	SPACER	1
	31	1D4717	NUT	1
	32	3B4506	LOCKWASHER	1
	33	7B3235	BOLT	4
	34	9H742	BRACKET	1
C	35	1A1135	BOLT	8
	36	7B4488	GRAB IRON	2
	37	S1585	BOLT	4

C INDICATES CHANGE

203443

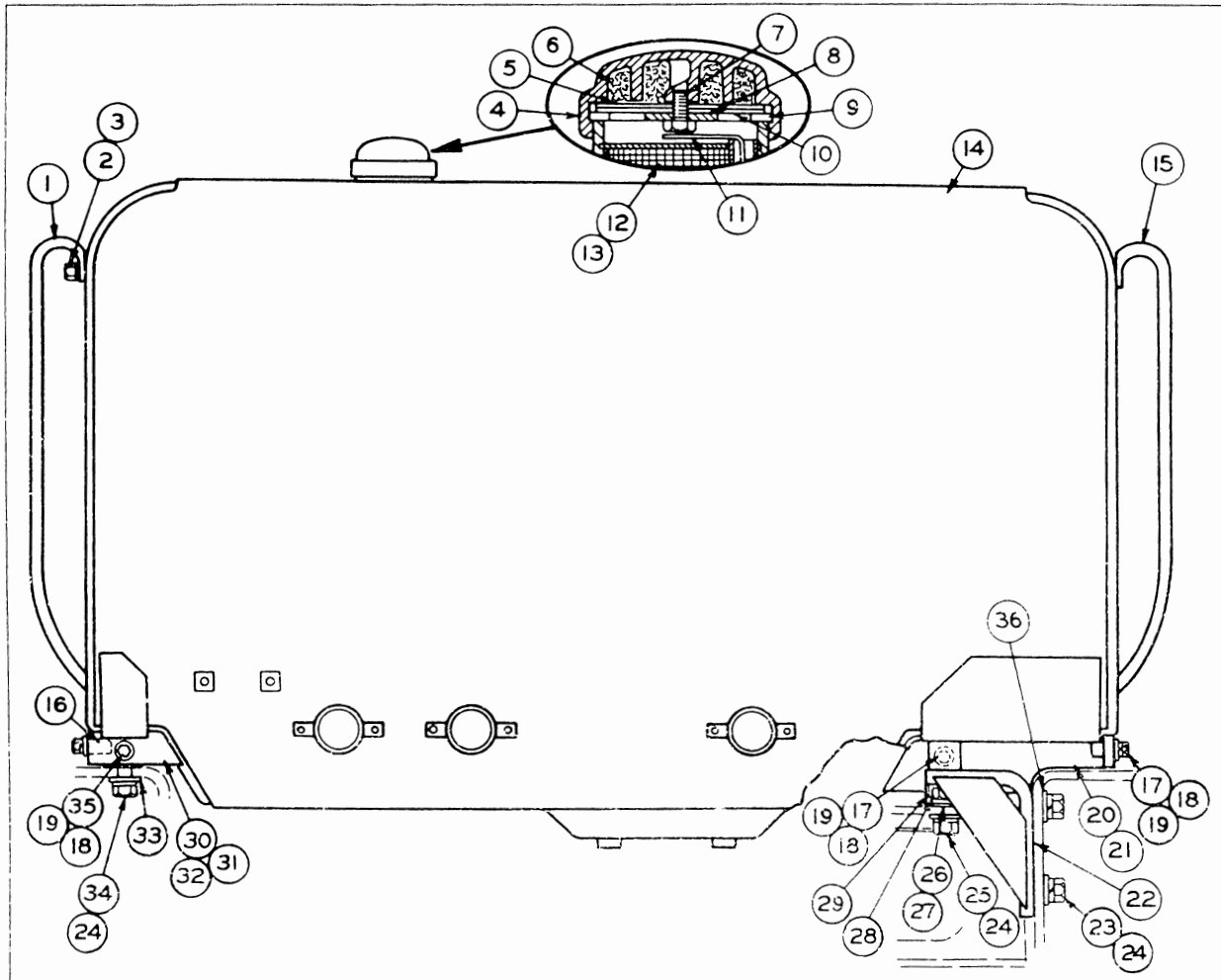

REF. NO.	PART NUMBER	DESCRIPTION	QTY
1	2S8653	GRAB IRON	1
2	2H3855	BOLT	2
3	3B4508	LOCKWASHER	2
4	4B5441	CAP ASSEM.	1
5	4B5423	GASKET	1
6	4B5949	ELEMENT	2
7	3H8389	BOLT	1
8	7B2002	WASHER	1
9	2A1763	GASKET	1
10	3F4134	BAFFLE	1
11	2S9391	PLUNGER	1
12	8H3498	STRAINER ASSEM.	1
13	8H3497	RING	1
14	1P2735	TANK ASSEM.	1
15	2S8654	GRAB IRON (L. H.)	1
16	5M3012	LUG	2
17	L1351	BOLT	6
18	3B4506	LOCKWASHER	7
19	4B4278	WASHER	7
20	3S6688	COVER ASSEM.	1
21	9B1006	WASHER	1
22	2S9386	SUPPORT ASSEM.	1
23	1A458	BOLT	2
24	3B4512	LOCKWASHER	7
25	3B2968	BOLT	1
26	3S438	SHIM (.060" Thick)	4
27	2A2523	SHIM (.0320" Thick)	2
28	S1626	BOLT	2
	2S9389	LOCK	1
29	2S7612	SPACER	1
30	3S6687	COVER ASSEM.	1
31	5B5840	SPACER	1
32	9B1006	WASHER	1
33	6F7048	WASHER	3
34	L1178	BOLT	2
35	S1588	BOLT	1
36	4B4283	WASHER	2

111649

FUEL TANK (2S7168 N/S)—134 U.S. Gallon
Serial No. 46A24433 to 46A25761 inclusive
Refer also to Pages 169 and 205 through 207 for special parts

FUEL TANK (2S7168 N/S)—134 U.S. Gallon
Effective with Serial No. 46A25762
Refer also to Pages 169 and 205 through 207 for special parts

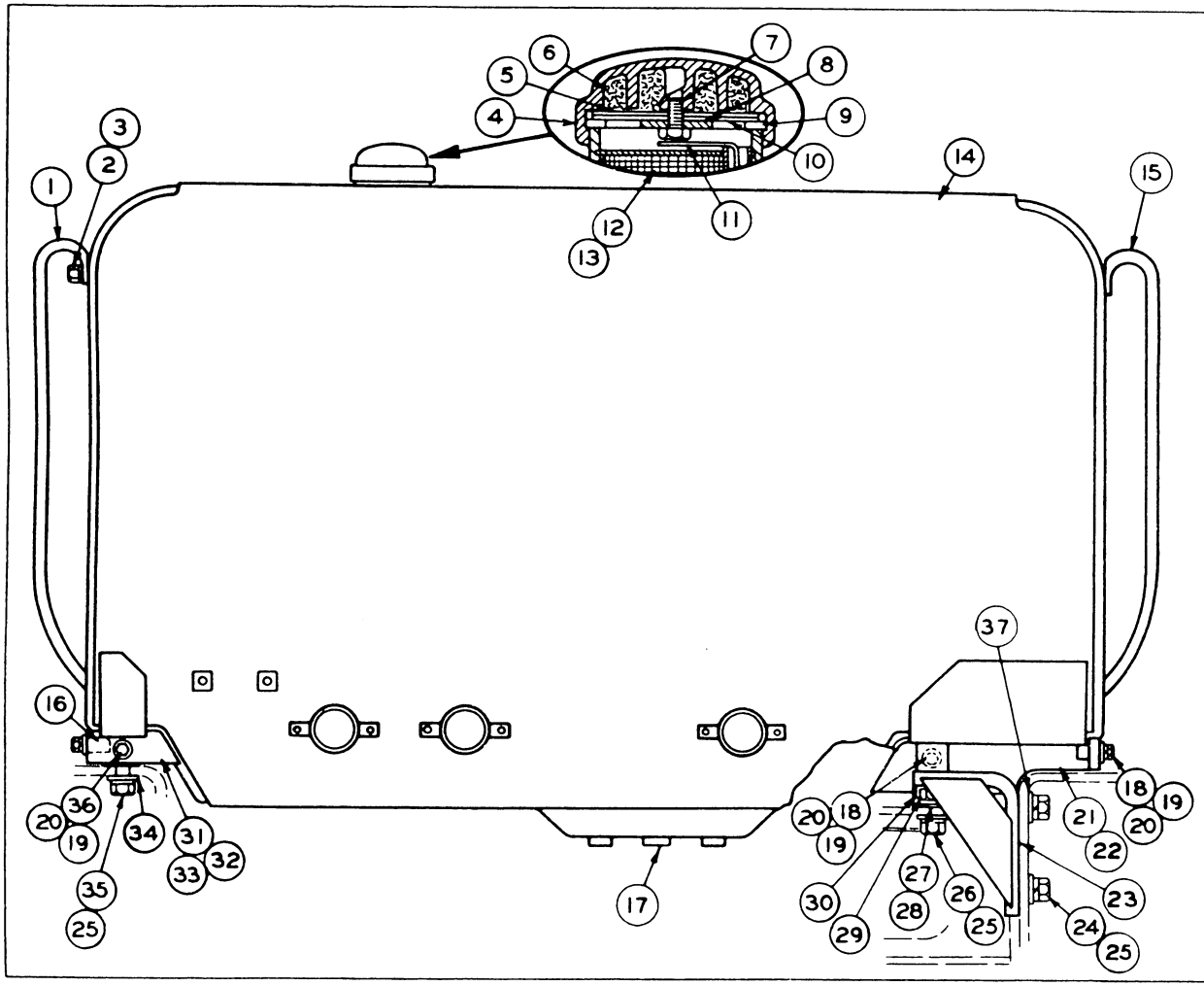

REF. NO.	PART NUMBER	DESCRIPTION	QTY
1	2S8653	GRAB IRON	1
2	2H3855	BOLT	2
3	3B4508	LOCKWASHER	2
4	4B5441	CAP ASSEM.	1
5	4B5423	GASKET	1
6	4B5949	ELEMENT	2
7	3H8389	BOLT	1
8	7B2002	WASHER	1
9	2A1763	GASKET	1
10	3F4134	BAFFLE	1
11	2S9391	PLUNGER	1
12	8H3498	STRAINER ASSEM.	1
13	8H3497	RING	1
14	2P2627	TANK ASSEM.	1
15	2S8654	GRAB IRON (L.H.)	1
16	5M3012	LUG	2
17	7M5007	FITTING	1
18	L1351	BOLT	6
19	3B4506	LOCKWASHER	7
20	4B4278	WASHER	7
21	3S6688	COVER ASSEM.	1
22	9B1006	WASHER	1
23	2S9386	SUPPORT ASSEM.	1
24	1A458	BOLT	2
25	3B4512	LOCKWASHER	7
26	3B2968	BOLT	1
27	3S438	SHIM (.060" Thick)	4
28	2A2523	SHIM (.0320" Thick)	2
29	S1626	BOLT	2
	2S9389	LOCK	1
30	2S7612	SPACER	1
31	3S6687	COVER ASSEM.	1
32	5B5840	SPACER	1
33	9B1006	WASHER	1
34	6F7048	WASHER	3
35	L1178	BOLT	2
36	S1588	BOLT	1
37	4B4283	WASHER	2

135917

REF. NO.	PART NUMBER	DESCRIPTION	QTY
1	2S5110	VALVE ASSEM.	1
2	2S5100	VALVE ASSEM.	1
3	2S5103	SCREEN	1
4	2S5100	VALVE ASSEM.	1
5	3L3446	FITTING	1
6	4H2663	NUT	1
7	4H2662	SLEEVE	1
▲ 8	4S8458	TUBE---41.67" (Fuel Tank to Ref. No. 12)	
9	1L480	FITTING	1
	4H2663	NUT	2
	4H2662	SLEEVE	2
10	L2119	WASHER	1
11	3H7550	CLIP	1
▲ 12	4S8458	TUBE---99.07" (Ref. No. 8 to Primary Fuel Filter)	
13	1B3057	CLIP	1
14	T102	BOLT	1
15	3B4506	LOCKWASHER	1
16	1B8471	CLIP	1
17	2B7410	PLUG	1

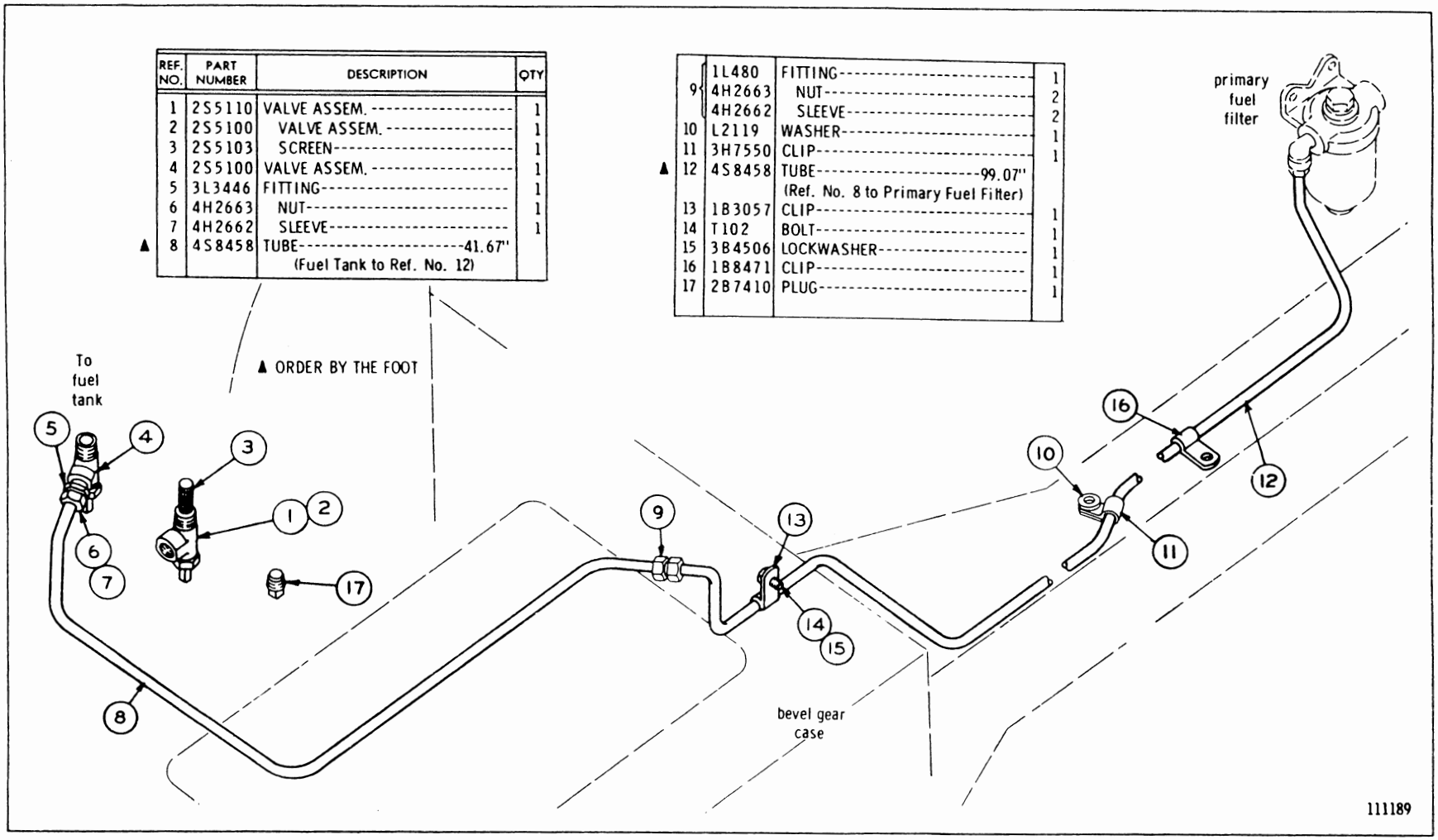

FUEL LINES (2S8591 N/S)—As Viewed from Right Hand of Machine
Serial No. 46A24433 to 46A27800 and 46A27802 to 46A28136 inclusive

FUEL LINES (2P8591 N/S)—As Viewed from Right Hand of Machine
Serial No. 46A27801 and 46A28137—Up

REF. NO.	PART NUMBER	DESCRIPTION	QTY
1	2S5110	VALVE ASSEM.	1
2	2S5100	VALVE ASSEM.	1
3	2S5103	SCREEN	1
4	2S5100	VALVE ASSEM.	1
5	3L3446	FITTING	1
6	4H2663	NUT	1
7	4H2662	SLEEVE	1
▲ 8	4S8458	TUBE----------41.67" (Fuel Tank to Ref. No. 12)	1

C		1L480	FITTING	2
	9	4H2663	NUT	2
		4H2662	SLEEVE	1
C	10	5B9631	WASHER	1
▲	12	4S8458	TUBE----------39.20 in. (Ref. No. 8 to Primary Fuel Filter)	
C	13	1B3057	CLIP	3
C	14	T102	BOLT	2
C	15	3B4506	LOCKWASHER	3
C		L1351	BOLT	1
C	16	1D4717	NUT	1
C		4B4278	WASHER	1
	17	2B7410	PLUG	1
C▲	18	4S8458	TUBE----------87.68 in.	
C	19	4M5942	CLIP	1
C	20	2M849	WASHER	1
C		1L482	FITTING	1
	21	4H2663	NUT	1
		4H2662	SLEEVE	1

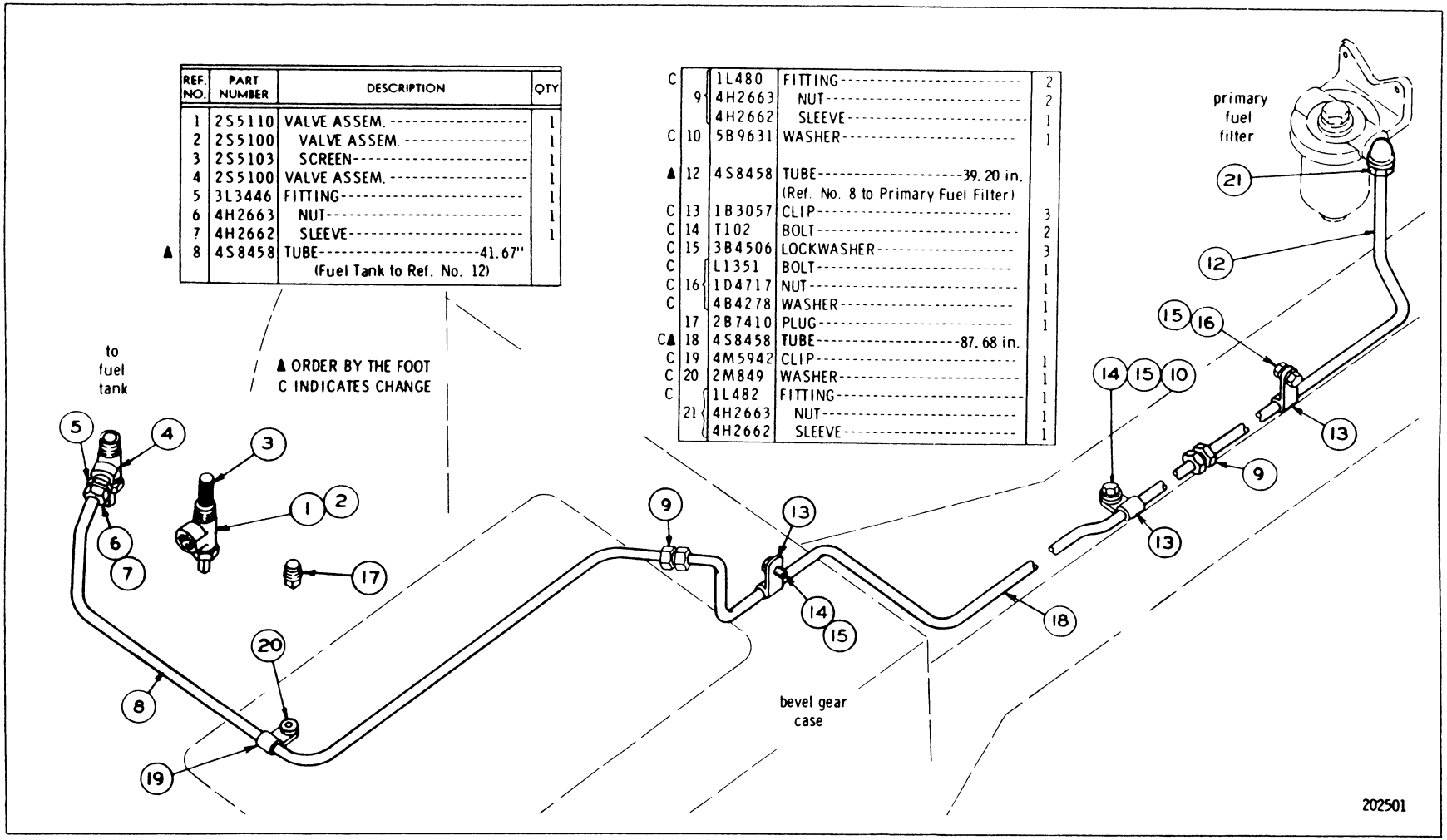

		Consists of:	Page
1	.....	Battery & Wiring	132
1	.....	Battery Box	137
1	.....	Compression Release Control	115
1	.....	Cylinder Block	119
1	.....	Fan Drive	116
1	9H3414	Clutch & Pinion Control Group	126
1	9H4437	Fuel System	130
1	1S4427	Choke & Throttle Control Group	125
1	2S9802	Generator Group	138
1	7S6280	Starting Engine Arrangement	114
1	L364	Lock--Screw to Block	
1	1A2024	Gasket--Cover to Filter Case	
6	2A1278	End--Rod	
2	1B4203	Nut--Filter Case	
6	1B4203	Nut--Rod Adjustment	
2	3B4506	Lockwasher--3/8"--Filter Case	
6	6B4040	Rod--Push	
1	7B280	Seal--Shaft to Block	
1	7B290	Screw--Shaft Retainer	
1	7B7770	Cover--Filter Case	
3	1F6618	Bracket--Shaft	
1	4H7316	Shaft--Compression Release	
1	2M3384	Plate--To console Top	
1	5M6214	Plug--Priming Pump Adapter	
1	5M6214	Plug--To Engine Oil Cooler Tube Assembly	
6	2P483	Chamber Assembly	
1	2S2665	Angle Assembly	
1	2S4639	Panel--To Dash	
1	2S8300	Shaft--To Steering Clutch Control	
1	3S1813	Pipe--Air Induction	
1	3S6836	Bracket Assembly	
1	4S7419	Flywheel Assembly	

7S6280 STARTING ENGINE ARRANGEMENT
Part of 1P3966 Complete Gasoline Starting Engine Arrangement
Consists of:

1	.....	Camshaft & Governor	117
2	.....	Connecting Rod & Piston	121
1	.....	Crankshaft	121
1	.....	Cylinder Block, Cylinder Head & Valve Mechanism	118
1	9H4926	Clutch Group	127
1	9H6203	Ignition System	123
1	7M7793	Electric Starter Group	131
1	9M9229	Transmission & Starter Pinion Group	128
1	9M9239	Water Lines Group	115
1	9M9241	Manifold, Carburetor & Air Cleaner Group	122
1	3S2364	Oil Pump Group	127
1	7S6239	Support Group	138

1P3966 COMPLETE GASOLINE STARTING ENGINE ARRANGEMENT—12 Volt
Effective with Starting Engine Block No. K2390