D8K-8A-58

TM 5-2410-234-34P

RUTHZIL TRATOR COMERCIAL DE PEÇAS LTDA 11 97083-6812 ROLANDO CITRANGULO

TECHNICAL MANUAL

DIRECT SUPPORT
AND
GENERAL SUPPORT
MAINTENANCE REPAIR PARTS AND SPECIAL TOOLS LIST (INCLUDING DEPOT MAINTENANCE REPAIR PARTS AND SPECIAL TOOLS LIST)

TRACTOR, FULL TRACKED, LOW SPEED, HEAVY DRAWBAR PULL, (SIZE T-11) W/ANGLE DOZER, WINCH AND ROPS

CATERPILLAR MODEL D8K-8A-58 (CCE)

NSN 2410-00-574-7597

AND

W/BULLDOZER (SEMI-U-TILT), RIPPER AND ROPS

CATERPILLAR MODEL D8K-8S-8 (CCE)

NSN 2410-00-574-7598

This manual Supersedes TM 5-2410-234-34P, 27 Jun 1988

Approved for public release; distribution is unlimited.

HEADQUARTERS, DEPARTMENT OF THE ARMY
21 AUGUST 2001

INSERT LATEST UPDATED PAGES / WORK PACKAGES. DESTROY SUPERSEDED DATA

LIST OF EFFECTIVE PAGES / WORK PACKAGES

Note: The portion of text or illustration effected by the updates is indicated by a vertical line in the outer margins of the page. Updates to wiring diagrams are indicated by shaded areas.

Dates of issue for original and updated pages / work packages are:

Original	0	01 Dec 88
Revision	1	22 Sep 89
Revision	2	21 Aug 01

TOTAL NUMBER OF PAGES FOR FRONT AND REAR MATTER IS 16AND TOTAL NUMBER OF WORK PACKAGES IS 876 CONSISTING OF THE FOLLOWING:

Page / WP No.	*Revision No.	Page / WP No.	*Revision No.	Page / WP No.	*Revision No.
i - vii	2	Fig.27	2	Fig.59	2
1 – 5	2	Fig.28		Fig.60	2
Fig.1	2	Fig.29	2	Fig.61	2
Fig.2	2	Fig.29A	2	Fig.62	2
Fig.3	2	Fig.30	2	Fig.63	2
Fig.4	2	Fig.31	2	Fig.64	2
Fig.4A	2	Fig.32	2	Fig.60A	2
Fig.4B	2	Fig.33	2	Fig.64B	
Fig.5	2	Fig.34	2	Fig.64C	2
Fig.5A		Fig.35	2	Fig.64D	
Fig.6	2	Fig.36		Fig.64E	2
Fig.7	2	Fig.37	2	Fig.64F	2
Fig.8	2	Fig.38	2	Fig.65	2
Fig.9	2	Fig.39	2	Fig.66	2
Fig.10	2	Fig.39A	2	Fig.67	2
Fig.11	2	Fig.40	2	Fig.68	2
Fig.12	2	Fig.40A	2	Fig.69	2
Fig.13	2	Fig.40B	2	Fig.70	2
Fig.14	2	Fig.41	2	Fig.71	2
Fig. 14A		Fig.42		Fig.71A	
Fig.15	2	Fig.43	2	Fig.71B	2
Fig.16	2	Fig.44	2	Fig.71C	2
Fig.17	2	Fig.45	2	Fig.72	1
Fig. 17A		Fig.46		Fig.73	
Fig. 17B		Fig.47		Fig.74	
Fig.18	2	Fig.48	2	Fig.74A	1
Fig.19	2	Fig.49	2	Fig.74B	1
Fig.20	2	Fig.50	2	Fig.75	1
Fig.21	2	Fig.51	2	Fig.76	1
Fig.22	2	Fig.52	2	Fig.77	1
Fig.23	2	Fig.53	2	Fig.78	2
Fig.24	2	Fig.54	2	Fig.79	2
Fig.25	2	Fig.55	2	Fig.80	2
Fig.25A	2	Fig.56	1	Fig.81	2
Fig26	2	Fig.57	2	Fig.82	2
Fig.26A	2	Fig.58	2	Fig.83	1

Page / WP No.	*Revision No.	Page / WP No.	*Revision No.	Page / WP No.	*Revision No.
Fig.84	2	Fig.126A	1	Fig.184	1
Fig.85	2	Fig.127	1	Fig.185	1
Fig.86	2	Fig.128	1	Fig.186	1
Fig.87	2	Fig.139	1	Fig.187	1
Fig.88	1	Fig.130	1	Fig.188	1
Fig.89	2	Fig.131	1	Fig.189	1
Fig.90	2	Fig.132	1	Fig.190	1
Fig.91	2	Fig.133	1	Fig.191	1
Fig.92	2	Fig.134	1	Fig.192	1
Fig.93	2	Fig.135	1	Fig.193	1
Fig.94	2	Fig.136	1	Fig.194	1
Fig.95	1	Fig.137	1	Fig.195	1
Fig.96	1	Fig.138	1	Fig.196	1
Fig.97	1	Fig.139	1	Fig.197	1
Fig.98		Fig.140	1	Fig.198	1
Fig.95	1	Fig.141	1	Fig.199	1
Fig.96	1	Fig.142	1	Fig.200	1
Fig.97	1	Fig.143	1	Fig.201	1
Fig.98	1	Fig.144	1	Fig.202	1
Fig.99	1	Fig.145	1	Fig.203	1
Fig.100	2	Fig.146	1	Fig.204	2
Fig.101	1	Fig.147	1	Fig.205	2
Fig.102	1	Fig.148	1	Fig.206	2
Fig.103	1	Fig.149	1	Fig.207	2
Fig.104	1	Fig.150	1	Fig.208	2
Fig.105	1	Fig.151	1	Fig.209	1
Fig.106	1	Fig.152	1	Fig.210	1
Fig.107	1	Fig.153	1	Fig.211	1
Fig.108	1	Fig.154	1	Fig.212	1
Fig.109	1	Fig.155	1	Fig.213	1
Fig.109A	1	Fig.156	1	Fig.214	1
Fig.110	1	Fig.157	1	Fig.215	1
Fig.111	1	Fig.158	1	Fig.216	1
Fig.112	1	Fig.159	1	Fig.217	1
Fig.113	1	Fig.160	1	Fig.218	1
Fig.114	1	Fig.161	1	Fig.219	1
Fig.115	1	Fig.162	1	Fig.220	1
Fig.116	1	Fig.163	1	Fig.221	1
Fig.117	1	Fig.164	1	Fig.222	1
Fig.118	1	Fig.165	1	Fig.223	1
Fig.119	1	Fig.166	1	Fig.224	1
Fig.120	1	Fig.167	1	Fig.225	1
Fig.121	1	Fig.168	1	Fig.226	1
Fig.122	1	Fig.169	1	Fig.227	1
Fig.123	1	Fig.170	1	Fig.228	1
Fig.124	1	Fig.171	2	Fig.229	1
Fig.125	1	Fig.172	2	Fig.230	1
Fig.126	1	Fig.173	1	Fig.231	1

Page / WP No.	*Revision No.	Page / WP No.	*Revision No.	Page / WP No.	*Revision No.
Fig.232	1	Fig.245	1	Fig.258	1
Fig.233	1	Fig.246	1	Fig.259	1
Fig.234	1	Fig.247	1	Fig.260	1
Fig.235	1	Fig.248	1	Fig.261	1
Fig.236	1	Fig.249	1	Fig.262	1
Fig.237	1	Fig.250	1	Fig.263	1
Fig.238	1	Fig.251	1	Fig.264	1
Fig.239	1	Fig.252	1	Fig.265	1
Fig.240	1	Fig.253	1	KIT-1	1
Fig.241	1	Fig.254	1	KIT-2	1
Fig.242	1	Fig.255	1	KIT-3	1
Fig.243	1	Fig.256	1	KIT-4	1
Fig.244	1	Fig.257	1	KIT-5	1
				KIT-6	
				BULK-1	
				I	

Technical Manual
*TM 5-2410-234-34P

TM-5-2410-234-34P
HEADQUARTERS,
DEPARTMENT OF THE ARMY
Washington, DC, *21 AUGUST 2001*

DIRECT SUPPORT AND GENERAL SUPPORT MAINTENANCE REPAIR PARTS AND SPECIAL TOOLS LIST (INCLUDING DEPOT MAINTENANCE REPAIR PARTS AND SPECIAL TOOLS LISTS) FOR TRACTOR, FULL-TRACKED, LOW SPEED, HEAVY DRAW BAR PULL, (SIZE T-11) W/ANGLE DOZER, WINCH AND ROPS NSN 2410-00-574-79057 CATERPILLAR MODEL D8K-8A-58 (CCE) AND W/BULLDOZER (SEMI-U-TILT), RIPPER NSN 2410-00-574-7598

CATERPILLAR MODEL D8K-8S-8 (CCE)

CURRENT AS OF: 5 MAY 2000

REPORTING ERRORS AND RECOMMENDING IMPROVEMENTS

You can help improve this publication. If you find any mistakes or if you know of a way to improve the procedures, please let us know. Submit your DA Form 2028-2 (Recommended Changes to Equipment Technical Publications), through the Internet, on the Army Electronic Product Support (AEPS) website. The Internet address is http://aeps.ria.army.mil. If you need a password, scroll down and click on "ACCESS REQUEST FORM". The DA Form 2028 is located in the ONLINE FORMS PROCESSING section of the AEPS. Fill out the form and click on SUBMIT. Using this form on the AEPS will enable us to respond quicker to your comments and better manage the DA Form 2028 program. You may also mail, fax or email your letter, DA Form 2028, or DA Form 2028-2 direct to: Commander, U.S. Army Tank-automotive and Armaments Command, ATTN: AMSTA-LC-CI, Rock Island, IL 61299-7630. The email address is AMSTA-LC-CI@ria.army.mil. The fax number is DSN 793-0726 or Commercial (309) 782-0726.

Approved for public release: distribution is unlimited.

TABLE OF CONTENTS

	ILLUS PAGE	FIG
SECTION I. INTRODUCTION	1	
SECTION II REPAIR PARTS LIST	1-1	
GROUP 01 ENGINE		
0100- ENGINE ASSEMBLY	1-1	
ENGINE ASSEMBLY	1-1	1
ENGINE BRACES	2-1	2
ENGINE SUPPORTS	3-1	3

***THIS PUBLICATION SUPERSEDES TM 5-2410-234-34P, DATED 27 JUNE 1988 AND ALL CHANGES.**

TABLE OF CONTENTS

		ILLUS PAGE	FIG
0101-	CRANKCASE, BLOCK, CYLINDER HEAD	4-1	
	CYLINDER BLOCK AND RELATED PARTS, 4N4445 ENGINE	4-1	4
	CYLINDER BLOCK AND RELATED PARTS, 7N3491 AND 5R8866 ENGINES	4A-1	4A
	CYLINDER BLOCK SERVICE PARTS, 4N3491 AND 5R8866 ENGINES	4B-1	4B
	CYLINDR HEAD AND RELATED PARTS, 4N4445 ENGINE	5-1	5
	CYLINDR HEAD AND RELATED PARTS, 7N3491 AND 5R8866 ENGINES	5A-1	5A
	CYLINDER BLOCK COVER	6-1	6
0102-	CRANKSHAFT	7-1	
	CRANKSHAFT	7-1	7
	CRANKSHAFT PULLEY AND DAMPER	8-1	8
0103-	FLYWHEEL ASSEMBLY	9-1	
	FLYWHEEL ASSEMBLY	9-1	9
	FLYWHEEL HOUSING	10-1	10
0104-	PISTONS, CONNECTING RODS	11-1	
	PISTONS AND CONNECTING RODS	11-1	11
0105-	VALVES, CAMSHAFTS AND TIMING SYSTEMS	12-1	
	TIMING GEAR HOUSING	12-1	12
	CAMSHAFT ASSEMBLY	13-1	13
	INTAKE AND EXHAUST VALVES, 4N4445 ENGINE	14-1	14
	INTAKE AND EXHAUST VALVES, 7N3491, 5R7757 AND 5R8866 ENGINES	14A-1	14A
	ROCKER ARMS, LIFTERS AND PUSH RODS	15-1	15
	ROCKERARM COVER	16-1	16
0106-	ENGINE LUBRICATION SYSTEM	17-1	
	OIL FILTER, BASE AND BRACKET, 4N4445 AND 7N3491 ENGINES	17-1	17
	OIL FILTER, BASE AND BRACKET 5R8866 ENGINE	18-1	18
	OIL SAMPLING 5R8866 ENGINES	17B-1	17B
	OIL FILLER ANDBREATHING ASSEMBLY	18-1	18
	OIL LEVEL GAUGE	19	19
	FRONT AND REAR OIL PAN	20-1	20
	OIL PUMP COVER SCREEN AND BELL	21-1	21
	OIL PUMP	22-1	22
	OIL PUMP DRIVE	23-1	23
	ENGINE OIL COOLER	24-1	24
	ENGINE OIL COOLER LINES	25-1	25
	OIL MANIFOLD LINES	26-1	26
	OIL LINES	27-1	27
0108-	MANIFOLDS	28-1	
	EXHAUST MANIFOLD	28-1	28
	INLET MANIFO LD 4N4455 ENGINE	29-1	29
	INLET MANIFOLD 7N3491 AND 5R8866 ENGINES5 ENGINES	29A-1	29A
0109-	ACCESSORY DRIVING MECHANISMS	30-1	
	ACCESSORY DRIVE	30-1	30
GROUP 03	FUEL SYSTEM		
0301-	CARBURATOR, FUEL INJECTION	31-1	
	FUEL INJECTORS, AND LINE S	31-1	31
0302-	FUEL PUMPS	32-1	
	FUEL PUMP LINES	32-1	32
	FUEL INJECTION PUMP	33-1	33
	FUEL INJECTION PUMP HARDWARE	34-1	34
	FUEL TRANSFER PUMP	35-1	35
	THROTTLE DELAY	36-1	36
0304-	AIR CLEANER	37-1	
	AIR CLEANER	37-1	37
	AIR CLEANER AND RELATED PARTS	38-1	38

TABLE OF CONTENTS

		ILLUS PAGE	FIG
0305-	SUPERCHARGER, BLOWER, TURBOCHARGER OR ALTITUDE COMPENSATOROR	39-1	
	MANIFOLD AIR LINES	39-1	39
	MANIFOLD LINES	39A-1	39A
	TURBOCHARGER 4N4445 ENGINE	40-1	40
	TURBOCHARGER 7N3491 AND 5R8866 ENGINES	40A-1	40A
	TURBOCHARGER CARTRIDGE ASSEMBLY, 7N3491AND 5R8866 ENGINES	40B-1	40B
0306-	TANKS, LINES, FITTINGS AND HEADERS	41-1	
	FUEL TANK AND CAP	41-1	41
	FUEL LINES	42-1	42
	FUEL LINES (FOR USE WITH SERIAL RANGE 77V9411 THRU 77V9475)	43-1	43
0308-	ENGINE SPEED GOVERNOR AND CONTROLS	44-1	
	GOVERNOR SIDE VIEW	44-1	44
	GOVERNOR END VIEW	45-1	45
	TORQUE CONTROL	46-1	46
	GOVERNOR CONTROL LEVER AN D RELATED PARTS	47-1	47
	GOVERNOR CONTROL BELL CRANK AND RELATED PARTS	48-1	48
	GOVERNOR CONTROLS LINK AND RELATED PARTS	49-1	49
0309-	FUEL FILTERS	50-1	
	PRIMARY FUEL FILTER	50-1	50
	FUEL FILTER	51-1	51
0311-	ENGINE STARTING AIDS	52-1	
	FUEL PRIMING PUMP (USE WITH ENGINE SERIAL RANGE 17S5088 THRU 17S5307)	52-1	52
	FUEL PRIMING PUMP	53-1	53
	GLOW PLUG AND LEAD (USE WITH ENGINE SERIAL RANGE 17S5088 AND UP)	54-1	54
GROUP 04	EXHAUST SYSTEM		
0401-	MUFFLER AN D PIPES	55-1	
	EXHAUST MUFFLER	55-1	55
	MUFFLER	56-1	56
GROUP 05	COOLING SYSTEM		
0501-	RADIATOR, EVAPORATIVE COOLER, OR HEAT EXCHANGER	57-1	
	RADIATOR (REAR VIEW, USE WITH SERIAL NUMBER RANGE 77V5006 THRU 77V5953	57-1	57
	RADIATOR (S IDE VIEW USE WITH SERIAL RANGE 77V5006 THRU 77V5953	58-1	58
	RADIATOR (REAR VIEW)	59-1	59
	RADIATOR (SIDE VIEW)	60-1	60
	RADIATOR CAP PROTECTIVE COVER	61-1	61
0502-	COWLING, DEFLECTORS, AIR DUCTS, SHROUDS	62-1	
	RADIATOR GUARDS	62-1	62
0503-	WATER MANIFOLD HEADERS, THERMOSTAT AND HOUSING GASKET	63-1	
	WATER MANIFOLD	63-1	63
	WATER MANIFOLD LINES AND RELATED PARTS	64-1	64
	WATER LINES, TURBO, 7N3491ENGINE	64A-1	64A
	WATER LINES, TURBO, 7N3491ENGINE	64B-1	64B
	WATER LI NES, TURBO, 5R8866 ENGINE	64C-1	64C
	WATER LINES, TURBO, 5R8866 ENGINE	64D-1	64D
	WATER LINES, AFTER COOLER, 7N3491 AND 5R8866 ENGINES	64E-1	64E
	WATER LINES, AFTER COOLER, 7N3491 AND 5R8866 ENGINES	64F-1	64F
0504-	WATER PUMP	65-1	
	WATER PUMP	65-1	65
	WATER PUMP IDLER GEAR	66-1	66

TABLE OF CONTENTS

		ILLUS PAGE	FIG
0505-	FAN ASSEMBLY	67-1	
	FAN GUARD AND BELT	67-1	67
	FAN DRIVE	68-1	68
GROUP 06	ELECTRICAL SYSTEM		
0601-	ALTERNATOR	69-1	
	ALTERNATOR ,BRACKET AND PULLEY	69-1	69
	PRESTOLITE ALTERNATOR	70-1	70
	DELCO REMY ALTERNATOR	71-1	71
	DELCO REMY ALTERNATOR	71A-1	71A
	BOSCH ALTERNATOR	71B-1	71B
	NIPPONDENSO ALTERNATOR	71C-1	71C
0603-	STARTING MOTOR	72-1	
	STARTER (USE WITH ENGINE SERIAL RANGE 17S5088 THRU 17S10786	72-1	72
	STARTER AND RELATED PARTS (USE WITH ENGINE SERIAL RANGE 17S5088 THRU 17S10786	73-1	73
	SOLENOID SWITCH ASSEMBLY(USE WITH ENGINE SERIAL RANGE 17S5088 THRU 17S10786	74-1	74
	DELCO REMY STARTER	74A-1	74A
	SOLENOID	74B-1	74B
	STARTER AND RELATED PARTS	75-1	75
	STARTER, EXPLODED VIEW (USE WITH ENGINE SERIAL RANGE 17S10787 AND UP	76-1	76
	STARTER HOUSING (USE WITH ENGINE SERIAL RANGE 17S10787 AND UP)	77-1	77
	SOLENOID SWITCH (USE WITH ENGINE SERIAL RANGE 17S10787 AND UP	78-1	78
0607-	INSTRUMENT PANEL	79-1	
	INSTRUMENT PANEL AND VANDALISM GUARD	79-1	79
	INSTRUMENT CONTROL PANEL SWITCHES AND CIRCUIT BREAKERS	80-1	80
	IGNITION LOCK SWITCH	81-1	81
	ELECTRIC HOURMETER	82-1	82
	BACKUP WARNING ALARM HARNESS	83-1	83
	INSTRUMENT PANEL WIRING HARNESS	84-1	84
0609-	LIGHTS	85-1	
	LIGHT ASSEMBLY	85-1	85
	LAMP GUARDS AND BRACKETS (USE WITH SERIAL RANGE 77V8516 THR U 77V9475	86-1	86
0610-	SENDING UNITS AND WARNING SWITCHES	87-1	
	BACKUP WARNING ALARM (FOR USE WITH ROPS)	87-1	87
	BACKUP WARNING ALARM	88-1	88
	COOLENT FLOW WARNING ALARM (USE WITH SERIAL RANGE 17S5966 THRU 17S9688	89-1	89
0611-	HORN SIREN	90-1	
	ELECTRIC HORN AND ATTACHING PARTS (USE WITH SERIAL RANGE 77V8516 THRU 77V9475	90-1	90
	DUEL ELECTRIC HORNS (USE WITH SERIAL RANGE 77V9163 THRU 77V9475	91-1	91
	CENTER MOUNTED ELECTRIC HORN	92-1	92
	ELECTRIC HORN	93-1	93
0612-	BATTERIES, STORAGE	94-1	
	BATTERY AND CABLES	94-1	94
	BATTERY BOX	95-1	95
	BATTERY BOX STRAP	96-1	96
0613-	HULL OR CHASIS WIRING HARNESS	97-1	
	MAIN WIRING HARNESS (USE WITH SERIAL RANGE 77V5006 THRU 77V8515)	97-1	97
	MAIN WIRING HARNESS (USE WITH SERIAL RANGE 17S5966 THRU 17S9688)	98-1	98

TABLE OF CONTENTS

		ILLUS PAGE	FIG
	MAIN ELECTRICAL WIRING HARNESS (USE WITH SERIAL RANGE 77V85166 THRU 77V9475)	99-1	99
	HEADLIGHT WIRING HARNESS	100-1	100
	RIPPER LIGHT WIRING	101-1	101
GROUP 07	TRANSMISSION		
0705-	TRANSMISSION SHIFTING COMPONENTS	102-1	
	TRANSMISSION AND LINKAGE (SIDE VIEW)	102-1	102
	TRANSMISSION SHIFTER COMPONENTS (SIDE VIEW, USE WITH SERIAL RANGE 77V8516 THRU 77V9475	103-1	103
	TRANSMISSION SHIFTER LINKAGE (TOP VIEW)	104-1	104
	TRANSMISSION HYDRAULIC CONTROLS	105-1	105
0708-	TORQUE CONVERTER OR FLUID COUPLING	106-1	
	TORQUE CONVERTER ASSEMBLY	106-1	106
	TORQUE CONVERTER CARRIER, COV ER AND SHAFT	107-1	107
	TORQUE CONVERTER ASSOCIATED PARTS	108-1	108
	TORQUE CONVERTER COOLER LINES (USE WITH SERIAL RANGE 77V5006 THRU 77V9475	109-1	109
0710-	TRANSMISSION ASSEMBLY	109A-1	
	TRANSMISSION ARRANGEMENT	109A-1	109A
	TRANSMISSION C ASE AND COVERS	110-1	110
	PLANETARY TRANSMISSION SHAFT AND RELATED PARTS	111-1	111
	PLANETARY TRANSMISSION FIRST, SECOND AND THIRD GEARS	112-1	112
	PLANETARY TRANSMISSION FORWARD AND REVERSE CLUTCH PLATES	113-1	113
0721-	COOLERS, PUMPS AND MOTORS	114-1	
	TRANSMISSION OIL COOLER	114-1	114
	OIL COOLER	115-1	115
	TRANSMISSION OIL PUMP	116-1	116
	TORQUE CONVERTER OIL PUMP	117-1	117
	TRANSMISSION OIL FILTER	118-1	118
	TRANSMISSION FLUID FILTER (MAGNETIC)	119-1	119
	TRANSMISSION OIL LINES	120-1	120
	POWER TRAIN OIL LINES	121-1	121
	TRANSMISSION OIL LINES AND MOUNTING PARTS	122-1	122
	TRANSMISSION RELEIF VALVE	123-1	123
	TRANSMISSION PRESURE CONTROL VALVE	124-1	124
	TRANSMISSION PRIORITY VALVE	125-1	125
	SELECTOR VALVE	126-1	126
	SELECTOR VALVE	126-1A	126A
GROUP 08	TRANSFER AND OIL DRIVE ASSEMBLIES		
0801-	POWER TRANFER AND FINAL DRIVE ASSEMBLIES	127-1	
	TRANSFER GEAR	127-1	127
	FINAL DRIVE (UPPER HALF)	128-1	128
	FINAL DRIVE (LOWER HALF)	129-1	129
0804-	LUBRICATION, COOLING OR HYDRAULIC COMPONENTS AND SERVO UNITS	130-1	
	FINAL DRIVE LUBRICATION SYSTEM	130-1	130
GROUP 09	PROPELLER, PROPELLER SHAFTS, UNIVERSAL JOINTS, COU[PLER AND CLAMP ASSEMBLY		
0900-	PROPELLER SHAFTS	131-1	
	UNIVERSAL JOINT ASSEMBLY	131-1	131
GROUP 13	WHEELS AND TRACKS		
1301-	SUSPENSION ASSEMBLY	132-1	
	TRACK ROLLER FRAME	132-1	132
	EQUALIZER BAR	133-1	133
1302-	TRACK SUPPORT ROLLERS AND BRACKETS	134-1	

TABLE OF CONTENTS

		ILLUS PAGE	FIG
	TRACK CARRIER ROLLER (USE WITH SERIAL RANGE 77V5006 THRU 77V9190)	134-1	134
	TRACK CARRIER ROLLER (USE WITH SERIAL RANGE 77V9191 THRU 77V9475)	135-1	135
	CARRIER ROLLER (USE WITH SERIAL RANGE 77V5006 THRU 77V6053	136-1	136
	TRACK CARRIER ROLLER (USE WITH SERIAL RANGE 77V5006 THRU 77V60053	137-1	137
	TRACK CARRIER ROLLER (USE WITH SERIAL RANGE 77V6054 THRU 77V9475	138-1	138
	TRACK ROLLER GUARD	139-1	139
	RECOIL MECHANISM GUARD	140-1	140
1303-	TRACK IDLER AND BRACKETS	141-1	
	FRONT IDLER (EXTERNAL VIEW)	141-1	141
	TRACK IDLER (INTERNAL VIEW)	142-1	141
1304-	TRACK DRIVE SPROCKETS	143-1	
	HUB AND SPROCKET SEGMENTS	143-1	143
1305-	TRACK ASEMBLY	144-1	
	TRACK (SEALED AND LUBRICATED)	144-1	144
	TRACK (SEALED AND NONLUBRICATED)	145-1	145
GROUP 14	STEERING		
1403-	STEERING BRAKES	146-1	
	STEERING BRAKE LINKAGE (TOP VIEW)	146-1	146
	STEERING BRAKE LINKAGE (SIDE VIEW)	147-1	147
	BRAKE BAND AND LINING	148-1	148
	STEERING CLUTCH	149-1	149
	STEERING CLUTCH CONTROL LINKAGE (TOP VIEW)	150-1	150
	STEERING CLUTCH CONTROL LINKAGE (SIDE VIEW)	151-1	151
	STEERING BRAKE HYDRAULIC MECHANISM	152-1	152
1411-	HOSES, LINES, FITTINGS	153-1	
	STEERING BRAKE HYDRAULIC MECHANISM LINES AND FITTINGS	153-1	153
1414-	STEERING SYSTEM VALVES	154-1	
	STEERING CLUTCH CONTROL VALVE	154-1	154
GROUP 15	FRAME, TOWING ATTACHMENTS, DRAWSARS, AND ARTICULATION SYSTEMS		
1501-	FRAME ASS EMBLY	155-1	
	FRAME AND CASE	155-1	155
	FRAME AND CASE ATTACHING HARDWARE	156-1	156
1503-	PINTLES AND TOWING ATTACHMENTS	157-1	
	FRONT PULL HOOK AND DRAWBAR	157-1	157
	SWINGING DRAWBAR	158-1	158
GROUP 18	BODY, CAB HOOD AND HULL		
1801-	BODY, CAB HOOD AND HULL ASSEMBLIES	159-1	
	BRUSH GUARD	159-1	159
	HEAVY DUTY CRANKCASE GUARD	160	160
	CRANKCASE GUARD	161-1	161
	ROLLOVER PROTECTION STRUCTURE	162-1	162
	PROTECTIVE SCREEN	163-1	163
	ROLLOVER PROTECTION STRUCTURE M OUNTING	164-1	164
	ROLLOVER PROTECTION STRUCTURE MOUNTING (FOR USE WITH SERIAL RANGE 77V7830)	165-1	165
	HOOD AND DASH	166-1	166
	HOOD AND DASH (FOR USE WITH SERIAL RANGE THRU 77V5953)	167-1	167
1802-	FENDERS, RUNNING BOARDS WITH MOUN TING AND ATTACHING PARTS, OUTRIGGERS, WINDSHIELD, GLASS, ETC.	168-1	
	RIGHT HAND FENDER	168-1	168
	LEFT HAND FENDER	169-1	169
170			

TABLE OF CONTENTS

		ILLUS PAGE	FIG
1804-	FLOORS, SUBFLOORS, AND RELATED COMPONENTS	170-1	
	FLOOR PLATE	170-1	
1806-	UPHOLSSTERY SEATS AND CARPETS	171-1	
	ADJUSTABLE SEAT	171-1	171
	SEAT BASE	172-1	172
1808-	STOWAGE RACKS, BOXES, STRAPS, CARRYING CASE, CABLE REELS, HOSE REELS, ETC.	173-1	
	TOOL BOX	173-1	173
GROUP 20	HOIST, WINCH, CAPSTAN, WINDLASS, POWER CONTROL UNIT AND POWER TAKEOFF		
2001-	HOIST, CAPSTAN, WINDLASS, CRANE OR WINCH ASSEMBLY	174-1	
	WINCH CARRIER ASSEMBLY	174-1	174
	WINCH DRUM AND RELATED PARTS	175-1	175
	WINCH HUB AND SHAFT	176-1	176
	WINCH DRIVE SHAFT	177-1	177
	WINCH CASE ASSEMBLY (SIDE VIEW)	178-1	178
	WINCH CASE ASSEMBLY (TOP VIEW)	179-1	179
	WINCH CABLE GUIDE	180-1	180
	WINCH CABLE GUIDE TUBE ASSEMBLIES	181-1	181
	WINCH COUPLING DISK AND RELATED PARTS (FOR U SE WITH WINCH SERIAL RANGE 33U196 AND UP AND 34U1 AND UP)	182-1	182
	WINCH COVER (FOR USE WITH WINCH SERIAL RANGE 33U1 AND UP AND 34U1 AND UP	183-1	183
	SHEAVE CABLE AND HITCH	184-1	184
	WINCH SCREEN AND OIL FILTER	185-1	185
	WINCH FILTER AND RELATED PARTS	186-1	186
	WINCH PUMP	187-1	187
	WINCH CONTROLS (FRONT VIEW)	188-1	188
	WINCH CONTROLS (SIDE VIEW)	189-1	189
2004-	POWER TAKE -OFF ASSEMBLY	190-1	
	POWER TAKE -OFF	190-1	190
	POWER TAKE -OFF DRIVE	191-1	191
2006-	BULLDOZER TRIPOD, MAIN FRAME, JACK AND MOUNTING	192-1	
	WINCH VALVE	192-1	191
	WINCH SELECTOR VALVE	193-1	193
	WINCH PRESSURE CONTROL VALVE	194-1	194
	WINCH PRESSURE CONTROL VALVE (USE WITH WINCH SERIAL RANGE 33U290 AND 34U194 AND UP)	195-1	195
	WINCH FAIRLEADS (USE WITH LOW SPEED AND STANDARD WINCH)	196-1	196
	WINCH PUMP LINES	197-1	197
2007-	CHAIN HOIST ASSEMBLY	198-1	
	WINCH MOUNTING	198-1	198
GROUP 22	ACCESSORY ITEMS		
2210-	DATA PLATES	199-1	
	DATA PLATES	199-1	199
GROUP 24	HYDRAULIC AND FLUID SYSTEMS		
2401-	PUMP AND MOTOR	200-1	
	HYDRAULIC PUMP	200-1	200
2402-	MANIFOLD AND CONTROL VALVE	201-1	
	RIPPER SELECTOR VALVE	201-1	201
	RIPPER SELECTOR VALVE LEVER HOUSING	202-1	202
	PIN PULLER CON TROL VALVE	203-1	203
	DUAL VALVE FOR RIPPER	204-1	204

TABLE OF CONTENTS

		ILLUS PAGE	FIG
	PILOT VALVE FOR RIPPER	205-1	205
	SELECTOR VALVE (TYPE 1 AND 2)	206-1	206
	RIPPER ANDTILT CYLINDER VALVE	207-1	207
	ADJUSTABLE RIPPER AND TILT BLADE CYLINDER VALVE	208-1	208
	RIPPER VALVE	209-1	209
	ADJUSTABLE RIPPER VALVE	210-1	210
	RIPPER CONTROL VALVE	211-1	211
	ADJUSTABLE RIPPER CONTROL VALVE	212-1	212
	HYDRAULIC CONTROL VALVE HARDWARE	213-1	213
	HYDRAULIC CONTROL VALVE SPRINGS, SEALS AND PLUGS	214-1	214
	HYDRAULIC CONTROL VALVE SUBORDINATE VALVES	215-1	215
	BLADE TILT CYLINDER VALVE	216-1	216
	BLADE TILT CYLINDER PILOT VALVE	217-1	217
	PRESSURE CONTROL VALVE	218-1	218
	HYDRAULIC TANK ATTACHING PARTS	219-1	219
2403-	HYDRAULIC CONTROLS AND MANUAL CONTROLS	220-1	
	IMPLEMENT LINKAGE USE (USE ON 8A BULLDOZERS)	220-1	220
	IMPLEMENT LINKAGE USE (USE ON 8S BULLDOZERS)	221-1	221
	IMPLEMENT LINKAGE USE (USE WITH RIPPER)	222-1	222
	LEVER HOUSING	223-1	223
2404-	TILT CYLINDERS AND TILT CRANK	224-1	
	TILT CYLINDERS AND TILT CRANK	224-1	224
2406-	STRAINERS, FILTERS, LINES AND FITTINGS ETC	225-1	
	PUMP LINES, TYPE 2 (USE ON 8A BULLDOZER WITH SINGLE VALVE)	225-1	225
	PUMP LINES, TYPE 3 (USE ON 8A BULLDOZER WITH SINGLE VALVE)	226-1	226
	PUMP HOSES, TYPE 1, 2 AND 3 (USE WITH DOUBLE VALVE)	227-1	227
	PUMP LINES, TYPE 1 AND 3 2 (USE WITH DOUBLE VALVE)	228-1	228
	PUMP LINES, TYPE 2 (USE WITH DOUBLE VALVE)	229-1	229
	RIPPER PIN PULLER LINES, TYPE 1, 2 AND3	230-1	230
	PIN PULLER LINES	231-1	231
	RIPPER LINES, LEFT AND RIGHT	232-1	232
	BULLDOZER LINES	233-1	233
	BULLDOZER LINES AND FITTINGS	234-1	234
	TILT CYLINDER HYDRAULIC LINES	235-1	235
	TILT CYLINDER LINES	236-1	236
	HYDRAULIC FILTER	237-1	237
2407-	HYDRAULIC CYLINDERS	238-1	
	LIFT CYLINDERS MOUNTING HARDWARE, LEFT HAND	238-1	238
	LIFT CYLINDERS MOUNTING HARDWARE, RIGHT HAND	239-1	239
	RIPPER CYLINDER, LEFT AND RIGHT	240-1	240
	RIPPER CYLINDER, CENTER	241-1	241
	HYDRAULIC RIPPER CYLINDER	242-1	242
2408-	LIQUID TANKS OR RESERVOIRS	243-1	
	HYDRAULIC TANK ASSEMBLY	243-1	243
	HYDRAULIC TANK COVER AND PLATES	244-1	244
	HYDRAULIC TANK CAP PROTECTION COVER	245-1	245
GROUP 47	GAGES, WEIGHING AND MEASURING DEVICES		
4702-	GAGES, MOUNTINGS, LINES AND FITTINMGS	246-1	
	PRESSURE GAGES	246-1	246
	SERVICE METER, 4N4445 ENGINE	247-1	247
	PRESSURE GAGES LINES AND FITTINGS	248-1	248
GROUP 60	STEAM BOILERS, WATER HEATERS, HEATING UNITS BURNERS		
6015-	WATER HEATER ASSEMBLY	249-1	
	WATER HEATER JACKET	249-1	249
PILOT VALVE FOR RIPPER		205-1	205
	SELECTOR VALVE (TYPE 1 AND 2)	206-1	206

TABLE OF CONTENTS

		ILLUS PAGE	FIG
	PILOT VALVE FOR RIPPER	205-1	205
	SELECTOR VALVE (TYPE 1 AND 2)	206-1	206
7435-	MOLDBOARD ASSEMBLY	251-1	
	STRAIGHT BULLDOZER BLADE	251-1	251
7436-	LIFT ARMS AND PIVOT ASSEMBLIES	253-1	
	BULLDOZER PUSH ARM	253-1	253
	ARM AND BRACE	254-1	254
	BLADE CYLINDER MOUNTING	255-1	255
	TRUNNION	256-1	256
7443-	MAIN FRAME ASSEMBLY	257-1	
	BULLDOZER C -FRAME	257-1	257
7465-	ROOTERS, RIPPERS, PLOWS AND HARROWS	258-1	
	RIPPER TOOTH	258-1	258
	RIPPER LINK	259-1	259
	RIPPER FRAME	260-1	260
	RIPPER LINES	261-1	261
	PIN PULLER	262-1	262
	RIPPER CYLINDER LINES	263-1	263
	ADJUSTABLE RIPPER LINES (TYPE 1)	264-1	264
	ADJUSTABLE RIPPER LINES (TYPE 2)	265-1	265
GROUP 94	REPAIR KITS		
9401-	KITS	KIT-1	
	KITS	KIT-1	KIT
GROUP 95	GENERAL USE STANDARDIZED PARTS		
9501-	BULK MATERIAL	BULK-1	
	BULK MATERIAL	BULK-1	BULK

SECTION III. SPECIAL TOOLS LIST (NOT APPLICABLE)

SECTION IV. CROSS REFERENCE INDEX I-1
NATIONAL STOCK NUMBER TO FIGURE AND ITEM NUMBER INDEX I-1
PART NUMBER TO ITEM NUMBER INDEX I-53

DIRECT SUPPORT AND GENERAL SUPPORT MAINTENANCE REPAIR PARTS AND SPECIAL TOOLS LISTS (INCLUDING DEPOT MAINTENANCE REPAIR PARTS AND SPECIAL TOOLS LIST)

SECTION I. INTRODUCTION

1. Scope.

This RPSTL lists and authorizes spares and repair parts, special tools; special test, measurement, and diagnostic equipment (TMDE); and other special support equipment required for performance of Direct Support and General Support Maintenance of the Tractor. It authorizes the requisitioning, issue, and disposition of spares, repair parts and special tools as indicated by the source, maintenance and recoverability (SMR) codes.

2. General.

In addition to Section I. Introduction, this Repair Parts and Special Tools List is divided into the following sections:

a. Section II. Repair Parts List. A list of spares and repair parts authorized by this RPSTL for use in the performance of maintenance. The list also includes parts which must be removed for replacement of the authorized parts. Parts lists are composed of functional groups in ascending alphanumeric sequence, with the parts in each group listed in ascending figure and Item number sequence. Bulk materials are listed in item name sequence. Repair kits are listed separately in their own functional group within Section II. Repair parts for repairable special tools are also listed in the section. Items listed are shown on the associated illustration(s)/figure(s).

b. Section III. Special Tools List. A list of special tools, special TMDE, and other special support equipment authorized by this RPSTL (as Indicated by Basis of Issue (BOI) information in DESCRIPTION AND USABLE ON CODE column) for the performance of maintenance.

c. Cross-reference Indexes. A list, in National Item Identification Number (NIIN) sequence, of all National stock numbered items appearing in the listing, followed by a list in alphanumeric sequence of all part numbers appearing in the listings. National stock numbers and part numbers are cross-referenced to each illustration, figure and item number appearance. The figure and item number index lists figure and item numbers in alphanumeric sequence and cross-references NSN, CAGE and part numbers.

3. Explanation of Columns (Sections II and III).

a. *ITEM NO.* (Column (1)). Indicates the number used to identify items called out in the illustration.

b. *SMR CODE* (Column (2)). The Source, Maintenance, and Recoverability (SMR) code is a 5-position code containing supply/requisitioning information, maintenance category authorization criteria and disposition instructions, as shown in the following breakout:

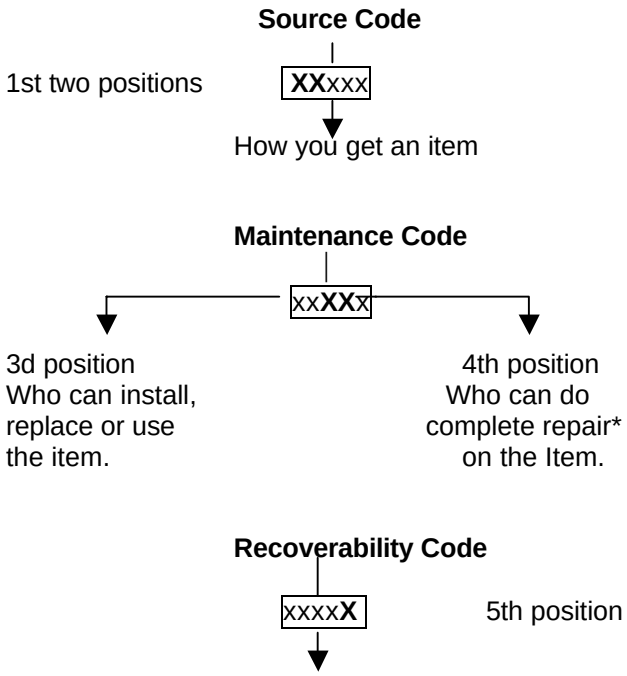

*Complete Repair. Maintenance capacity, capability, and authority to perform all corrective maintenance tasks of the "Repair" function in a use/user environment in order to restore serviceability to a failed item.

(1) Source Code The source code tells you how to get an item needed for maintenance, repair or overhaul of an end item/equipment. Explanations of source codes follows:

Code	Application/Explanation
PA PB PC** PD PE PF PG	Stocked Items; use the applicable NSN to request requisition Items with these source codes. They are authorized to the category Indicated by the code entered In 3d position of the SMR code **Items coded PC are subject to deterioration.
KD KF KB	Items with these codes are not to be requested/requisitioned Individually. They are part of a kit which is authorized to the maintenance category indicated in the 3d position of the SMR code. The complete kit must be requisitioned and applied.
MO-(Made at UM AVUM Level)	Items with these codes are not to be requested
MF- (Made at DS/ AVUM Level)	requisitioned Individually. They must be made from bulk material which is identified by the part number in the DESCRIPTION AND USABLE ON CODE (UOC) column and listed In the Bulk Material group
ML-(Made at Specialized Repair Act (SRA))	of the repair parts list in this RPSTL If the item is authorized to you by the 3d position code of the SMR code, but if the source code
MD-(Made at Depot)	Indicates it is made at a higher level, order the Item from the higher level of maintenance.
AO-(Assembled by UM/AVUM	Items with these codes are not to be requested/requisitioned individually.
AF-(Assembled by DS/AVIM Level)	The parts that make up the assembled item must be Requisitioned or fabricated and assembled at the level
AH-(Assembled by GS Category)	of maintenance indicated by the source Code. If the 3d position code of
AL-(Assembled by SRA)	the SMR code authorizes you to replace the item, but the source code
AD-(Assembled by Depot)	indicates the item is assembled at a higher level, order the item from the higher level of maintenance.
XA -	Do not requisition an "XA"-coded Item. Order it's next higher assembly. (Also, refer to the NOTE below).
XB-	If an "XB" Item is not available from salvage order it using the CAGE and part number given.
XC-	Installation drawing, diagram, instruction sheet, field service drawing, that is identified by the manufacturer's part number.
XD-	Item is not stocked. Order an "XD"- Coded item through normal supply Channels using the CAGE and part Number given, if no NSN is available.

NOTE: Cannibalization or controlled exchange, when authorized, may be used as source of supply for items with the above source codes, except for those source coded "XA" or those aircraft support items restricted by requirements of AR 700-42.

(2) *Maintenance Code*. Maintenance codes tell you the level(s) of maintenance authorized to USE and REPAIR support items. The maintenance codes are entered in the third and fourth positions of the SMR Code as follows:

(a) The maintenance code entered in the third position tells you the lowest maintenance level authorized to remove, replace and use an item. The maintenance code entered in the third position will indicate authorization to one of the following levels of maintenance.

Code	Application/Explanation
C -	Crew or operator maintenance done within unit or aviation unit maintenance.
O -	Unit maintenance or aviation unit category can remove, replace, and use the item.
F -	Direct support or aviation inter-Mediate level can remove, replace, and use the item.
H -	General support level can remove , Replace and us the item.

L - Specialized repair activity can remove, replace and use the item.

D - Depot level can remove, replace, and use the item.

(b) The maintenance code entered in the fourth position tells whether or not the item is to be repaired and identifies the lowest maintenance level with the capability to do complete repair (i e., perform all authorized repair functions) (NOTE: Some limited repair may be done on the item at a lower level of maintenance, if authorized by the Maintenance Allocation Chart (MAC) and SMR codes.) This position will contain one of the following maintenance codes.

Code Application/Explanation

O - Unit maintenance or Aviation unit is The lowest level that can do complete repair of the item.
F - Direct support or aviation intermediate is the lowest level that can do complete repair of the item.
H - General support is the lowest level that can do complete repair of the item.
L - Specialized repair activity is the lowest level that can do complete repair of the item.
D - Depot is the lowest level that can do complete repair of the item.
Z - Nonreparable No repair is authorized
B - No repair is authorized (No parts or Special tools are authorized for the maintenance of a "B" coded item). However, the item may be reconditioned by adjusting, lubrication, etc., at the user level.

(3) *Recoverability Code.* Recoverability codes are assigned to items to indicate the disposition action on unserviceable tems. The recoverability code is entered in the fifth position of the SMR Code as follows:

Code Application/Explanation

Z - Nonreparable item. When unserviceable, condemn and dispose of the item at the level of maintenance shown in 3d position of the SMR code.

O - Reparable item. When Uneconomically reparable, condemn and dispose of the Item at unit maintenance or aviation unit level.

F - Reparable item. When uneconomically reparable, condemn and dispose of the item at the direct support or aviation intermediate level.

H - Reparable item. When uneconomically reparable, condemn and dispose of the item at the general support level.

D - Reparable item. When beyond lower level repair capability, return to depot. Condemnation and disposal of item Not authorized below depot level.

L - Reparable item. Condemnation and disposal of item not authorized below specialized repair activity (SRA).

A - Item requires special handling or condemnation procedures because of specific reasons (e g, precious metal content, high dollar value, critical material, or hazardous material). Refer to appropriate manuals, directives for specific instructions.

c. *NSN* (Column (3)). Lists the National Stock Number (NSN) assigned to the item. use the NSN to request/requisition.

d. *CAGEC* (Column (4)). The Commercial And Government Entity (CAGE) Code (C) is a 5-digit alphanumeric code which is used to identify the manufacturer, distributor or Government agency, etc., that supplies the item.

e. *PART NUMBER* (Column (5)). Indicates the primary number used by the manufacturer (individual, company, firm, corporation or Government activity), which controls the design and characteristics of the item by means of Its engineering drawings, specifications standards and inspection requirements to identify an Item or range of Items.

f. *DESCRIPTION AND USABLE ON CODE (UOC)* Column (6)) This column includes the following information:

(1) The Federal Item name and, when required, a minimum description to Identify the Item.

(2) Physical security classification. Not applicable.

(3) Items that are included in kits and sets are listed
below the name of the kit or set on Figure KIT.

(4) Spare repair parts that make up an assembled item are listed immediately following the assembled item line entry.

(5) Part numbers for bulk materials are referenced in this column in the line item entry for the item to be manufactured/fabricated.

(6) When the item is not used with all serial numbers of the same model, the effective serial numbers are shown on the last line(s) of the description (before UOC). Not applicable.

(7) The usable on code, when applicable (see paragraph 5, Special information).

(8) In the Special Tools List section, the basis of issue (BOI) appears as the last line(s) in the entry for each special tool, special TMDE and other special support equipment. When density of equipments supported exceeds density spread indicated in the basis of issue, the total authorization is increased proportionately.

(9) The statement 'END OF FIGURE" appears just below the last item description in Column 6 for a given figure in both Section II and Section III.

f. QTY (Column (7)). The QTY (quantity per figure column) indicates the quantity of the item used in the breakout shown on the illustration figure, which is prepared for a functional group, subfunctional group or an assembly. A "V" appearing in this column in lieu of a quantity indicates that the quantity is variable and the quantity may vary from application to application.

4. Explanation of Columns (Section IV).

a. NATIONAL STOCK NUMBER (NSN) INDEX

(1) STOCK NUMBER column. This column lists the NSN by National item identification number (NIIN) sequence. The NIIN consists of the last nine digits of the NSN (i e, 5305-01-674-1467) When using this column to locate an item, ignore the first 4 digits of the NSN however, the complete NSN should be used when ordering items by stock number.

(2) FIG. Column. This column lists the number of the figure where the item is identified, located. The figures are in numerical order in Section II and Section Ill.

(3) ITEM column The item number identifies the item associated with the figure listed in the adjacent FIG. column. This item is also Identified by the NSN listed on the same line.

b. PART NUMBER INDEX Part numbers in this index are listed by part number in ascending alphanumeric sequence (i e, vertical arrangement of letter and number combination which places the first letter or digit of each group in order A through Z, followed by the numbers 0 through 9 and each following letter or digit in like order).

(1) **CAGEC** column The Commercial And Government Entity (CAGE) Code (C) Is a 5 digit alphanumeric code used to Identify the manufacturer, distributor or Government agency, etc., that supplies the item.

(2) **PART NUMBER** column Indicates the primary number used by the manufacturer (individual, firm, corporation or Government activity), which controls the design and characteristics of the Item by means of Its engineering drawings, specifications standards, and Inspection requirements to Identify an item or range of Items.

(3) **STOCK NUMBER** column This column lists the NSN for the associated part number and manufacturer Identified In the PART NUMBER and CAGEC columns to the left.

(4) **FIG.** column. This column lists the number of the figure where the item is identified located in Section II and III.

5. Special Information.

Use the following subparagraphs as applicable:

a. *USABLE ON CODE*:

Code Used On

END ITEM APPLICATIONS

T24 MODEL D8K-8A-58 (CCE)

T25 MODEL D8K-8S-8 (CCE)

b. *ASSEMBLY INSTRUCTIONS*. Detailed assembly instructions for items source coded to be assembled from component spare/repair parts are found in TM 5-2410-233-20 and TM 5-2410-233-34. Items that make up the assembly are listed immediately following the assembly item entry or reference is made to an applicable figure.

c. *KITS.* Line item entries for repair parts kits appear in group 9401 in Section II.

d. *INDEX NUMBERS.* Items which have the word BULK in the figure column will have an index number shown in the item number column. This index number is a cross-reference between the National Stock Number/Part Number Index and the bulk material list in Section II.

e. ASSOCIATED PUBLICATIONS. The publications listed below pertain to the Tractor, Full Tracked and its components:

Publication	Short Title
TM 5-2410-234-14&P-1	Tractor
TM 5-2410-234-14&P-2	Tractor
TM 5-2410-234-20P	Tractor

6. How to Locate Repair Parts.

a. *When National Stock Number or Part Number is Not Known.*

(1) *First*. Using the table of contents, determine the assembly group or subassembly group to which the item belongs. This is necessary since figures are prepared for assembly groups and subassembly groups, and listings are divided into the same groups.

(2) *Second*. Find the figure covering the assembly group or subassembly group to which the item belongs.

(3) *Third*. Identify the item on the figure and use the Figure and Item Number Index to find the NSN.

b. *When National Stock Number or Part Number is known.*

(1) *First*. Using the National Stock Number or the Part Number Index, find the pertinent National Stock Number or Part Number. The NSN index is in National Item Identification Number (NIIN) sequence (see 4.a(1)). The part numbers in the Part Number index are listed in ascending alphanumeric sequence (see 4.b). Both indexes cross-reference you to the illustration/figure and item number of the item you are looking for.

(2) *Second*. Turn to the figure and item number, verify that the item is the one you're looking for, then locate the item number in the repair parts list for the figure.

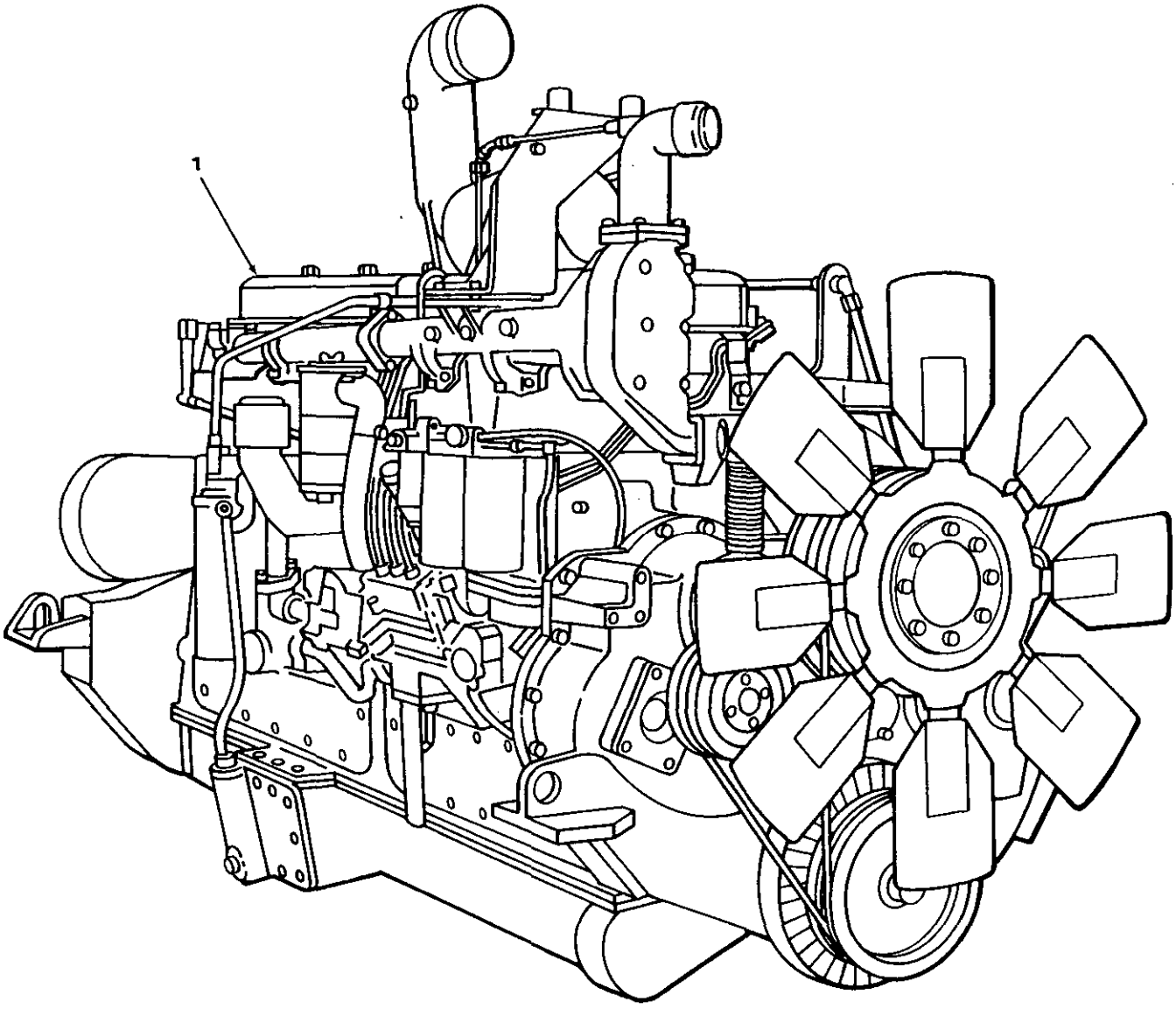

FIGURE 1. ENGINE ASSEMBLY.

(1) ITEM NO	(2) SMR CODE	(3) NSN	(4) CAGEC	(5) PART NUMBER	(6) DESCRIPTION AND USABLE ON CODES(UOC)	(7) QTY
					GROUP 01 ENGINE	
					GROUP 0100 ENGINE ASSEMBLY	
					FIG. 1 ENGINE ASSEMBLY	
1	PAFHZ	2815013776937	11083	7N3491	ENGINE AR-BASIC.....	1
1	PAFHD	2815013177613	11083	5R8866	ENGINE,DIESEL.....	1

END OF FIGURE

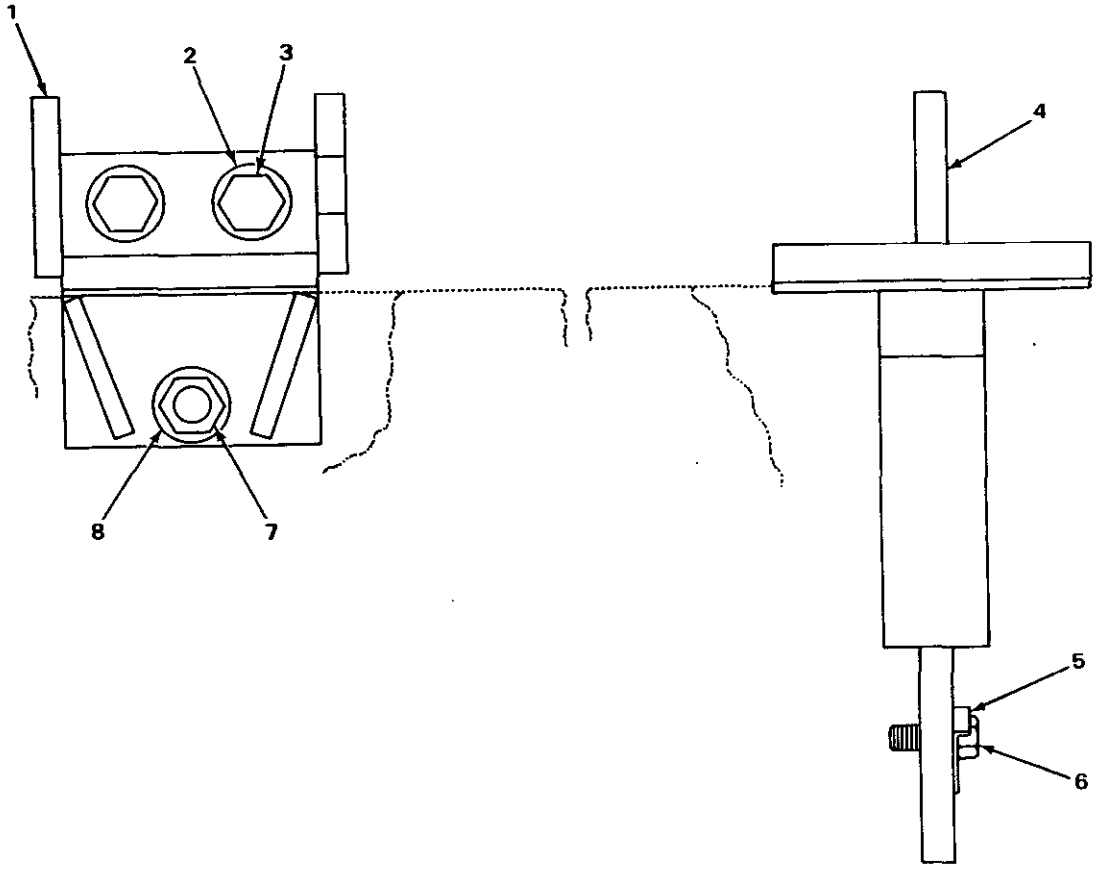

TA235199

FIGURE 2. ENGINE BRACES.

(1) ITEM NO	(2) SMR CODE	(3) NSN	(4) CAGEC	(5) PART NUMBER	(6) DESCRIPTION AND USABLE ON CODES(UOC)	(7) QTY
					GROUP 0100 ENGINE ASSEMBLY	
					FIG. 2 ENGINE BRACES	
1	XDFZZ		11083	4N5704	SUPPORT ASSEMBLY REAR.....	2
2	XDFZZ		11083	6K7447	SPACER.....	4
3	PFFZZ	5306004263139	11083	1A8063	BOLT,MACHINE.....	4
4	XDFZZ		11083	4N9884	SUPPORT ASSEMBLY FRONT.....	1
5	XDFZZ		11083	5S8034	LOCKING PLATE,NUT A PART OF KIT P/N 5P-9552.....	2
6	PFFZZ	5306004238117	11083	S1595	BOLT,MACHINE.....	4
7	PFFZZ	5310000761504	11083	1B4207	NUT,PLAIN,HEXAGON.....	2
8	PFFZZ	5310004191363	11083	2S0115	WASHER,FLAT.....	2

END OF FIGURE

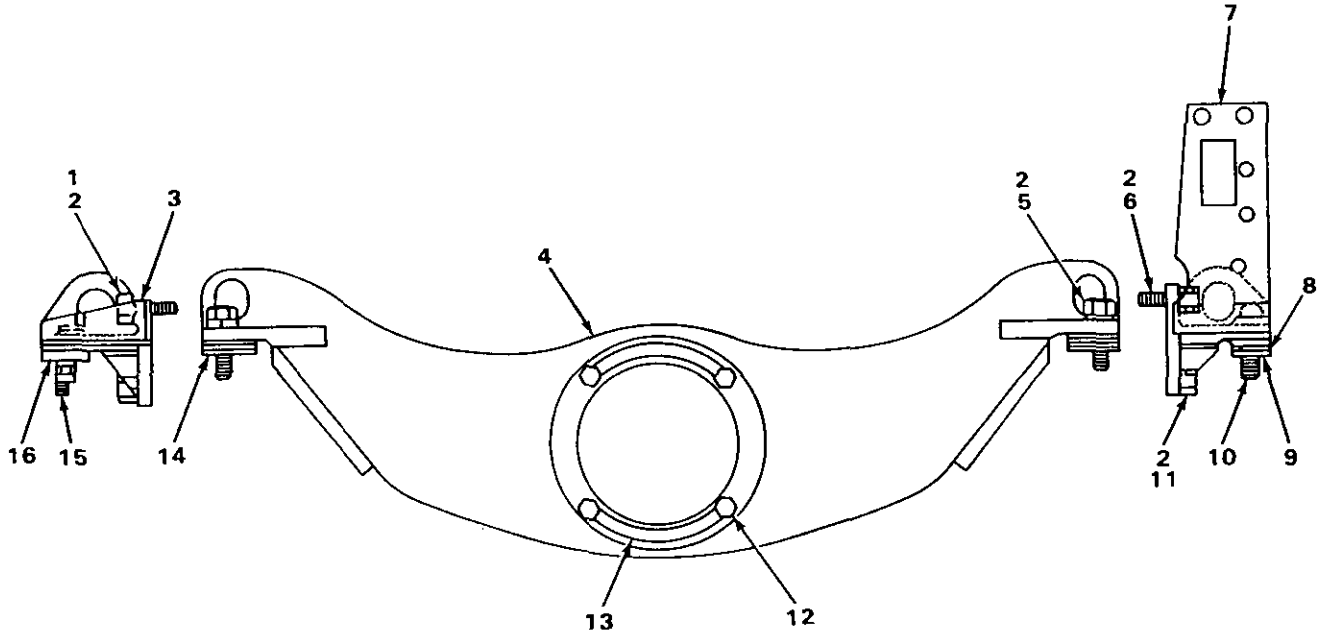

FIGURE 3. ENGINE SUPPORTS.

(1) ITEM NO	(2) SMR CODE	(3) NSN	(4) CAGEC	(5) PART NUMBER	(6) DESCRIPTION AND USABLE ON CODES(UOC)	(7) QTY
					GROUP 0100 ENGINE ASSEMBLY	
					FIG. 3 ENGINE SUPPORTS	
1	PFFZZ	5306004263139	11083	1A8063	BOLT,MACHINE.....	2
2	PFFZZ	5310005847888	96906	MS35338-51	WASHER,LOCK.....	10
3	XDFZZ		11083	9M9837	SUPPORT ASSEMBLY RIGHT HAND.....	1
4	XDFZZ		11083	4S7367	SUPPORT ASSEMBLY FRONT.....	1
5	PFFZZ	5306004263605	11083	2A1538	BOLT,MACHINE.....	4
6	PFFZZ	5306004238069	11083	L1178	BOLT,MACHINE.....	2
7	XDFZZ		11083	9M9838	SUPPORT ASSEMBLY LEFT HAND.....	1
8	PFFZZ	5310007542005	96906	MS35338-52	WASHER,LOCK.....	4
9	PFFZZ	5310001918297	11083	4M6953	WASHER,FLAT.....	4
10	PFFZZ	5306004263409	11083	1D4630	BOLT,MACHINE.....	4
11	PFFZZ	5310000761504	11083	1B4207	NUT,PLAIN,HEXAGON.....	2
12	PFFZZ	5306004238117	11083	S1595	BOLT,MACHINE.....	4
13	XDFZZ		11083	5S8034	LOCKING PLATE,NUT A.....	2
14	PFFZZ	5365012645975	11083	9H8284	SPACER,PLATE 0.032 INCHES.....	4
14	PFFZZ	5365012638844	11083	9H8285	SHIM 0.014 INCHES.....	2
15	XDFZZ		11083	2M2994	DOWEL.....	2
16	PFFZZ	5365010660699	11083	1M3727	SHIM 0.0299 INCHES.....	4
16	PFFZZ	5365010660700	11083	1M3728	SHIM 0.014 INCHES.....	4

END OF FIGURE

1 — 2 THRU 26
2 — 3 THRU 7
55 — 56

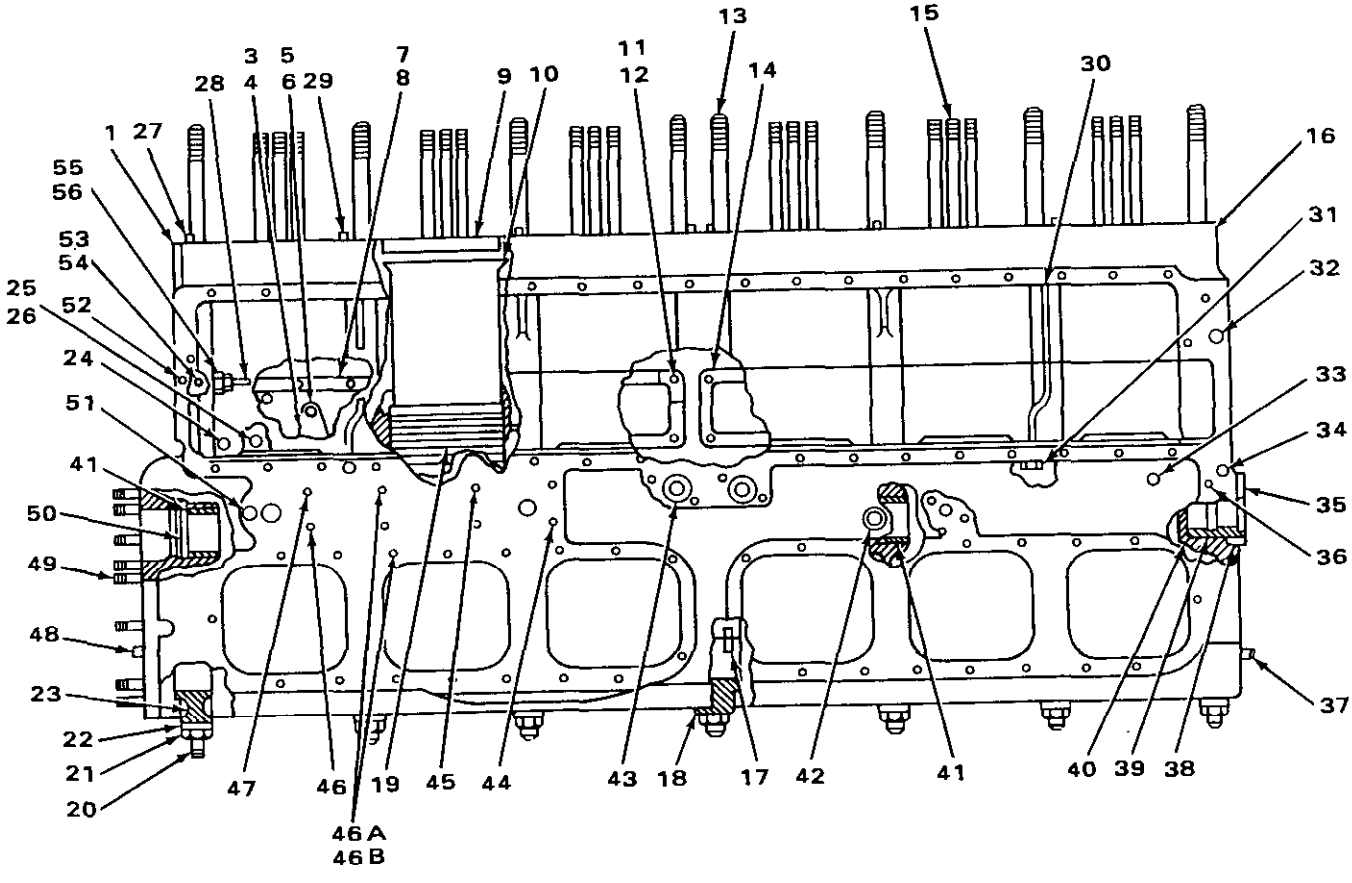

FIGURE 4. CYLINDER BLOCK AND RELATED PARTS, 4N4445 ENGINE.

(1) ITEM NO	(2) SMR CODE	(3) NSN	(4) CAGEC	(5) PART NUMBER	(6) DESCRIPTION AND USABLE ON CODES(UOC)	(7) QTY
					GROUP 0101 CRANKCASE, BLOCK, CYLINDER HEAD	
					FIG. 4 CYLINDER BLOCK AND RELATED PARTS, 4N4445 ENGINE	
1	AHHHH		11083	7N1766	BLOCK ASSY,CYLINDER	1
2	AHHHH		11083	4N5053	.COVER ASSEMBLY	1
3	PFHZZ	5340013772466	11083	9F5830	..COVER,ACCESS	1
4	PAHZZ	5330002977228	11083	7F7590	..GASKET	1
5	PFHZZ	5306002637301	11083	L1351	..BOLT,MACHINE	2
6	PFHZZ	5310001174788	11083	5M2894	..WASHER,FLAT	2
7	PFHZZ	5340013772465	11083	4H5360	..COVER,ACCESS	1
8	PFHZZ	5330001258035	11083	6L5503	.GASKET	2
9	PFHZZ	5331012172016	11083	8N4638	.O-RING	6
10	PFHZZ	2815012031047	11083	8N5676	.CYLINDER SLEEVE	6
11	PFHZZ	5306004238194	11083	1A2029	.BOLT,MACHINE	30
12	PFHZZ	5310001174788	11083	5M2894	.WASHER,FLAT PART OF KIT P/N 7N3802.	30
13	PFHZZ	5307007626352	11083	9H1077	.STUD,PLAIN	16
14	XDHZZ		11083	6N84	.COVER	1
15	PFHZZ	5307007626354	11083	9M488	.STUD,PLAIN	26
16	XAHZZ		11083	6N5387	.BLOCK,CYLINDER	1
17	PFHZZ	5315003627367	11083	5B5812	.PIN,STRAIGHT,HEADLE	1
18	PFHZZ	2815010687266	11083	1P4275	.CAP CENTER	1
19	PFHZZ	5331001232733	11083	6L7812	.O-RING	18
20	XDHZZ		11083	1P667	.STUD	14
21	PFHZZ	5310004238260	11083	1A5666	.NUT,PLAIN,HEXAGON	14
22	PFFZZ	5310001918297	11083	4M6953	.WASHER,FLAT	14
23	PFHZZ	2815010687265	11083	1P4273	.CAP INTERMEDIATE	6
24	PAHZZ	4730004275121	01276	2082-68	.PLUG,PIPE	1
25	PFHZZ	5365009385568	11083	8M9307	.PLUG,MACHINE THREAD	1
26	PFHZZ	5330010333438	11083	4F9325	.GASKET PART OF KIT P/N 2P-3988	1
27	PFHZZ	5315004238085	11083	L2061	PIN,STRAIGHT,HEADLE	4
28	XBHZZ		11083	4H8795	TUBE	1
29	PFHZZ	5315010690755	11083	5H8985	PIN	4
30	PFHZZ	2815003411448	11083	4H7297	TUBE ASSY,OIL LINE	1
31	XDHZZ		11083	0L1547	NUT,TUBE COUPLING	1
32	PFHZZ	5315002522959	11083	2A3798	PIN,STRAIGHT,HEADLE	1
33	PFHZZ	5307010690842	11083	5H2766	STUD,PLAIN	1
34	PFHZZ	4730009247886	11083	5M6214	PLUG,PIPE	1
35	PFHZZ	5310009995524	11083	4H8986	WASHER,CAMSHAFT BEA	1
36	PFHZZ	4730004238591	11083	2A3349	SLEEVE,COMPRESSION,	1
37	XDHZZ		11083	1A5919	PIN,STRAIGHT,HEADLE	2
38	PFHZZ	5315006633672	11083	7B5415	PIN,STRAIGHT,HEADLE	2
39	PFHZZ	5365008865163	11083	5H1092	SPACER,RING	1
40	PFHZZ	3120008950661	11083	4H9640	BEARING,SLEEVE	2
41	PFHZZ	3120006628989	11083	8F8523	BEARING,SLEEVE	3
42	PFHZZ	4730009247977	11083	L1521	PLUG,PIPE	1
43	PFHZZ	4710013330044	11083	5H2786	TUBE,METALLIC	2
44	PFHZZ	5307003583527	61510	010024	STUD,PLAIN	2
45	PFHZZ	5307002727047	11083	4F1450	STUD,PLAIN	2
46	PFHZZ	5307002065455	29510	46200D	STUD,PLAIN	1

(1) ITEM NO	(2) SMR CODE	(3) NSN	(4) CAGEC	(5) PART NUMBER	(6) DESCRIPTION AND USABLE ON CODES(UOC)	(7) QTY
46A	PFHZZ	5305007215492	80204	B1821BH038C063N	SCREW,CAP,HEXAGON H.....	2
46B	PFHZZ	5310002702108	11083	4B5167	WASHER,FLAT.....	2
47	XDHZZ		11083	2A4791	STUD,PLAIN.....	1
48	PFHZZ	5315002550996	11083	2B2994	PIN,STRAIGHT,HEADLE.....	2
49	PFHZZ	5307002755698	11083	4B3251	STUD,PLAIN.....	10
50	PFHZZ	5340002237093	11083	S519	PLUG,EXPANSION.....	1
51	PFHZZ	5307004239854	11083	6B6489	STUD,PLAIN.....	1
52	PFHZA	5315003639248	11083	4F6024	PIN,STRAIGHT,HEADLE.....	1
53	PFHZZ	5306004238194	11083	1A2029	BOLT,MACHINE.....	2
54	PFHZZ	5310001174788	11083	5M2894	WASHER,FLAT.....	2
55	PFHHZ	4730002891242	30327	9975928	ADAPTER,STRAIGHT,PI.....	1
56	PFHZZ	4730002788368	11083	1F1344	.INVERTED NUT,TUBE C.....	1

END OF FIGURE

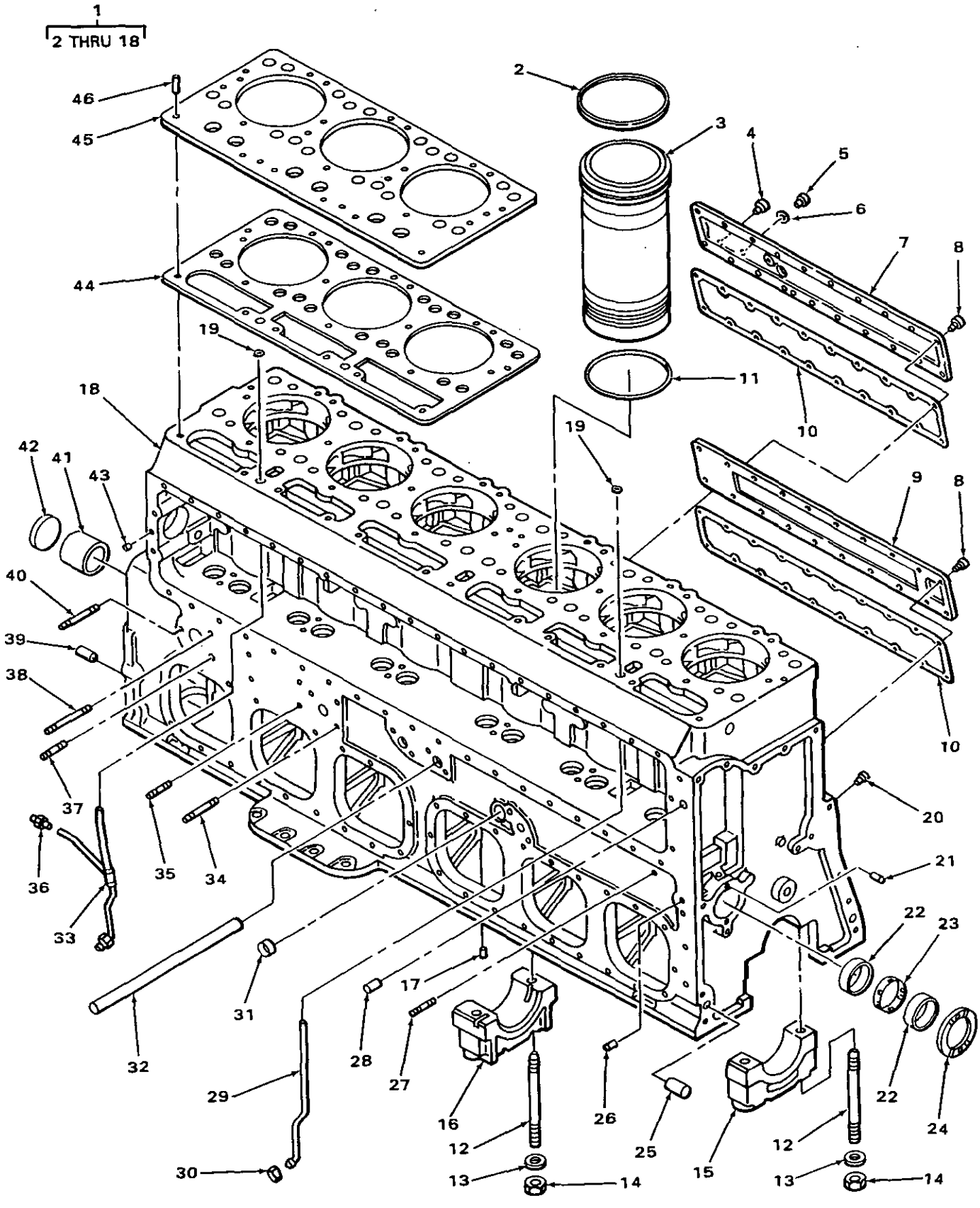

FIGURE 4A. CYLINDER BLOCK AND RELATED PARTS, 7N3491 AND 5R8866 ENGINES.

(1) ITEM NO	(2) SMR CODE	(3) NSN	(4) CAGEC	(5) PART NUMBER	(6) DESCRIPTION AND USABLE ON CODES(UOC)	(7) QTY
					GROUP 0101 CRANKCASE, BLOCK, CYLINDER HEAD	
					FIG. 4A CYLINDER BLOCK AND RELATED PARTS, 7N3491 AND 5R8866 ENGINES	
1	PFHHH	2815012031071	11083	8N4312	ENGINE BLOCK,DIESEL.....	1
2	PFHZZ	5331012172016	11083	8N4638	.O-RING.....	6
3	PFHZZ	2815012031047	11083	8N5676	.CYLINDER SLEEVE.....	6
4	PFHZZ	4730004275121	01276	2082-6B	.PLUG,PIPE.....	1
5	PFHZZ	5365006185440	11083	2H8829	.PLUG,MACHINE THREAD.....	1
6	PAHZZ	5330010333438	11083	4F9325	.GASKET PART OF KIT P/N 5P-9552.....	1
7	PFHZZ	5340013772465	11083	4H5360	.COVER,ACCESS.....	1
8	PFHZZ	5306002604508	11083	S1594	.BOLT,MACHINE.....	32
9	XBHZZ		11083	6N84	.COVER.....	1
10	PAHZZ	5330001258035	11083	6L5503	.GASKET PART OF KIT P/N 2P-3988 PART OF KIT P/N 5P-9552.....	2
11	PAHZZ	5331001232733	11083	6L7812	.O-RING PART OF KIT P/N 2P-3988.....	18
12	XBHZZ		11083	1P667	.STUD.....	14
13	PFHZZ	5310001918297	11083	4M6953	.WASHER,FLAT.....	14
14	PFHZZ	5310004238260	11083	1A5666	.NUT,PLAIN,HEXAGON.....	14
15	PFHZZ	2815010687265	11083	1P4273	.CAP.....	6
16	PFHZZ	2815010687266	11083	1P4275	.CAP.....	1
17	PFHZZ	5315003627367	11083	5B5812	.PIN,STRAIGHT,HEADLE.....	1
18	XAHZZ		11083	8N4305	.BLOCK.....	1
19	PAHZZ	5330001012561	11083	8M5127	SEAL,OIL PART OF KIT P/N 6V-3710 PART OF KIT P/N 7N3802.....	2
20	PFHZZ	4730009247886	11083	5M6214	PLUG,PIPE.....	1
21	PFHZZ	5315006633672	11083	7B5415	PIN,STRAIGHT,HEADLE.....	2
22	PFHZZ	3120008950661	11083	4H9640	BEARING,SLEEVE.....	2
23	PFHZZ	5365008865163	11083	5H1092	SPACER,RING.....	1
24	PFHZZ	5310009995524	11083	4H8986	WASHER,CAMSHAFT BEA.....	1
25	XDHZZ		11083	1A5919	PIN,STRAIGHT,HEADLE.....	2
26	PFHZZ	4730004238591	11083	2A3349	SLEEVE,COMPRESSION,.....	1
27	XDHZZ		11083	2B6296	STUD,PLAIN.....	1
28	PFHZZ	5315002522959	11083	2A3798	PIN,STRAIGHT,HEADLE.....	1
29	PFHZZ	4710013781986	11083	7N3357	TUBE ASSEMBLY,METAL PART OF KIT P/N 7N3802.....	1
30	XDHZZ		11083	0L1547	NUT,TUBE COUPLING PART OF KIT P/N 7N3802.....	1
31	PFHZZ	4730009247977	11083	0L1521	PLUG,PIPE.....	1
32	PFHZZ	4710013330044	11083	5H2786	TUBE,METALLIC.....	2
33	PFHZZ	4710013781583	11083	5N8218	TUBE ASSEMBLY,METAL PART OF KIT P/N 7N3802.....	1
34	PFHZZ	5307003583527	61510	010024	STUD,PLAIN PART OF KIT P/N 7N3802...	2
35	PFHZZ	5307002727047	11083	4F1450	STUD,PLAIN PART OF KIT P/N 7N3802...	2
36	PFHZZ	4730002891242	30327	9975928	ADAPTER,STRAIGHT,PI PART OF KIT P/N 7N3802.....	1
37	PFHZZ	5307002065455	29510	46200D	STUD,PLAIN PART OF KIT P/N 7N3802...	1
38	XDHZZ		11083	2A4791	STUD,PLAIN PART OF KIT P/N 7N3802...	1
39	PFHZZ	5315002550996	11083	2B2994	PIN,STRAIGHT,HEADLE.....	2
40	PFHZZ	5307004239854	11083	6B6489	STUD,PLAIN PART OF KIT P/N 7N3802...	1

(1) ITEM NO	(2) SMR CODE	(3) NSN	(4) CAGEC	(5) PART NUMBER	(6) DESCRIPTION AND USABLE ON CODES(UOC)	(7) QTY
41	PFHZZ	3120006628989	11083	8F8523	BEARING,SLEEVE.....	3
42	PFHZZ	5340002237093	11083	S519	PLUG,EXPANSION.....	1
43	XBHZA	5315003639248	11083	4F6024	PIN,STRAIGHT,HEADLE.....	1
44	PAHZZ	5330013772719	11083	7N3353	GASKET PART OF KIT P/N 6V-3710 PART OF KIT P/N 7N3802.....	2
45	XDHZZ		11083	7N3352	SPACER,PLATE.....	2
46	PFHZZ	5315013783862	11083	5F1914	PIN,STRAIGHT,HEADLE.....	4

END OF FIGURE

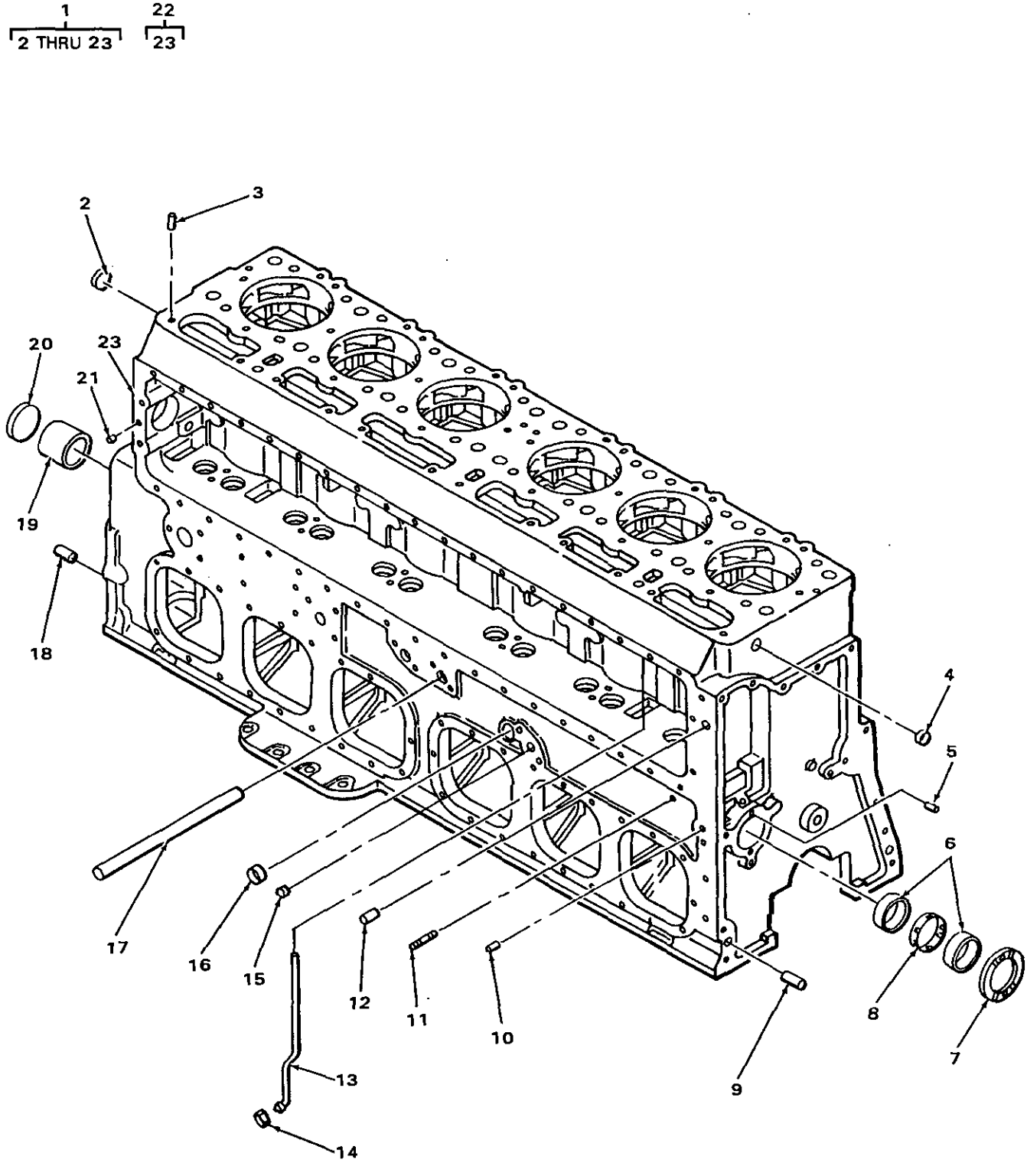

FIGURE 4B. CYLINDER BLOCK SERVICE PARTS, 7N3491 AND 5R8866 ENGINES.

(1) ITEM NO	(2) SMR CODE	(3) NSN	(4) CAGEC	(5) PART NUMBER	(6) DESCRIPTION AND USABLE ON CODES(UOC)	(7) QTY
					GROUP 0101 CRANKCASE, BLOCK, CYLINDER HEAD	
					FIG. 4B CYLINDER BLOCK SERVICE PARTS, 7N3491 AND 5R8866 ENGINES	
1	PAHHZ	2815012031071	11083	8N4312	ENGINE BLOCK,DIESEL.....	1
2	PFHZZ	5340008192027	11083	5H4279	.PLUG,EXPANSION.....	1
3	PFHZZ	5315013783862	11083	5F1914	.PIN,STRAIGHT,HEADLE.....	4
4	PFHZZ	5340002237091	11083	3B0622	.PLUG,EXPANSION.....	1
5	PFHZZ	5315006633672	11083	7B5415	.PIN,STRAIGHT,HEADLE.....	2
6	PFHZZ	3120008950661	11083	4H9640	.BEARING,SLEEVE.....	2
7	PFHZZ	5310009995524	11083	4H8986	.WASHER,CAMSHAFT BEA.....	1
8	PFHZZ	5365008865163	11083	5H1092	.SPACER,RING.....	1
9	XDHZZ		11083	1A5919	.PIN,STRAIGHT,HEADLE.....	2
10	PFHZZ	4730004238591	11083	2A3349	.SLEEVE,COMPRESSION,.....	1
11	XDHZZ		11083	2B6296	.STUD,PLAIN.....	1
12	PFHZZ	5315002522959	11083	2A3798	.PIN,STRAIGHT,HEADLE.....	1
13	PFHZZ	4710013781986	11083	7N3357	.TUBE ASSEMBLY,METAL PART OF KIT P/N 7N3802.....	1
14	XDHZZ		11083	0L1547	.NUT,TUBE COUPLING PART OF KIT P/N 7N3802.....	1
15	PFHZZ	5340010870682	15434	213394	.PLUG,EXPANSION.....	1
16	PFHZZ	4730009247977	11083	0L1521	.PLUG,PIPE.....	1
17	PFHZZ	4710013330044	11083	5H2786	.TUBE,METALLIC.....	2
18	PFHZZ	5315002550996	11083	2B2994	.PIN,STRAIGHT,HEADLE.....	2
19	PFHZZ	3120006628989	11083	8F8523	.BEARING,SLEEVE.....	3
20	PFHZZ	5340002237093	11083	S519	.PLUG,EXPANSION.....	1
21	XBHZA	5315003639248	11083	4F6024	.PIN,STRAIGHT,HEADLE.....	1
22	XAHZZ		11083	8N4311	.BLOCK ASSY.....	1
23	XAHZZ		11083	8N4310	..BLOCK.....	1

END OF FIGURE

1	2	18	24
2 THRU 6	3 THRU 5	19 AND 20	25 AND 26

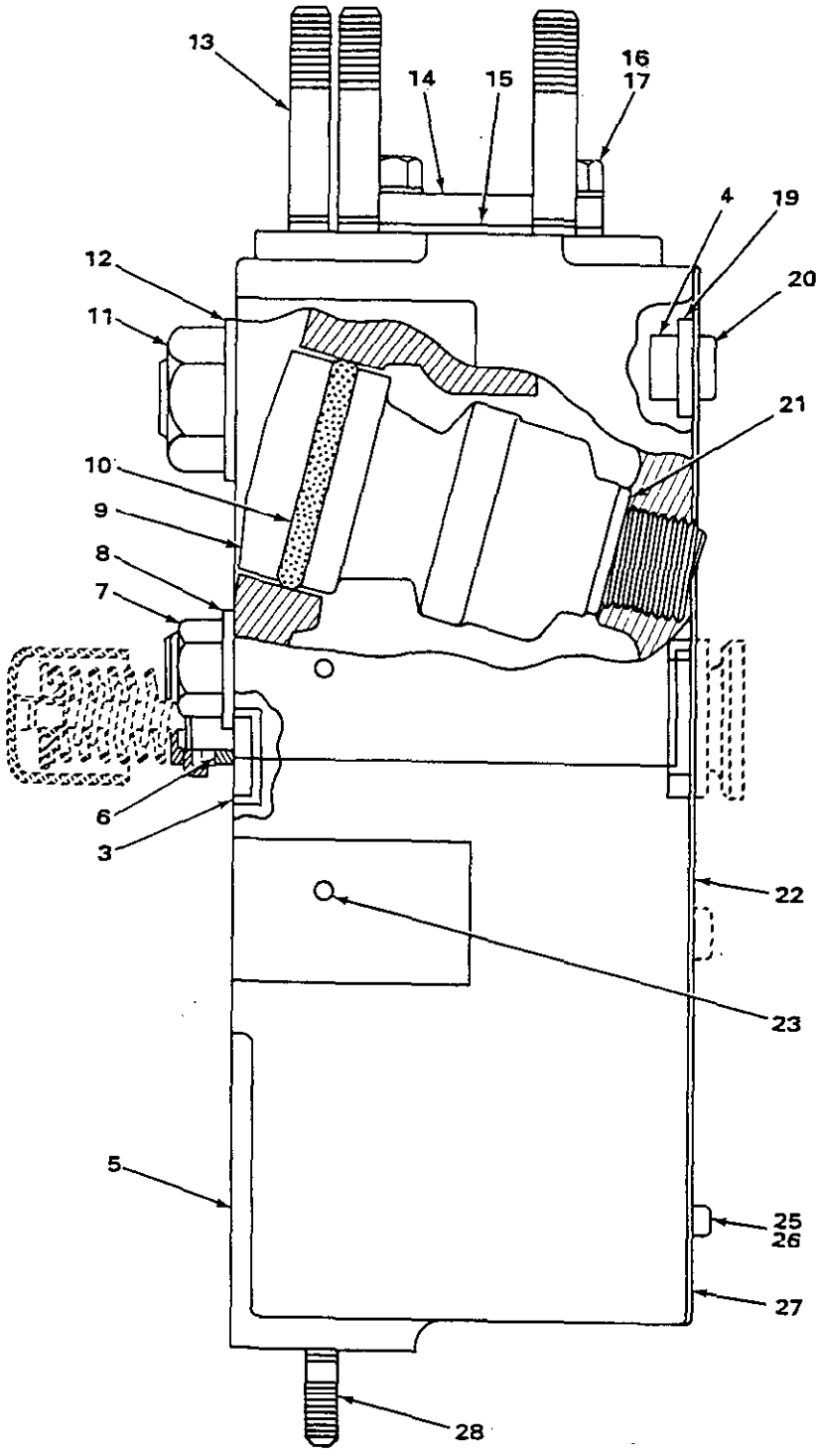

FIGURE 5. CYLINDER HEAD AND RELATED PARTS, 4N4445 ENGINE.

(1) ITEM NO	(2) SMR CODE	(3) NSN	(4) CAGEC	(5) PART NUMBER	(6) DESCRIPTION AND USABLE ON CODES(UOC)	(7) QTY
					GROUP 0101 CRANKCASE, BLOCK, CYLINDER HEAD	
					FIG. 5 CYLINDER HEAD AND RELATED PARTS, 4N4445 ENGINE	
1	PFFHH		11083	0R2663	CYLINDER HEAD,DIESE.....	2
2	PFFHH	2815002621080	11083	8N6004	.CYLINDER HEAD,DIESE COMPLETE WITH 7N2051 GUIDE SET.....	2
3	PFHZZ	5340002299294	11083	3B0623	..PLUG,EXPANSION.....	16
4	PFHZZ	2815003411504	11083	5H7071	..DIRECTOR,WATER.....	12
5	XAHZZ		11083	8H5980	..HEAD-CYL.....	1
6	PFHZZ	5365001488015	11083	3N1414	.SPACER,SLEEVE.....	12
7	PFFZZ	5310003474441	11083	6B6683	NUT,PLAIN,HEXAGON.....	26
8	PFFZZ	5310001397030	11083	4D3704	WASHER,FLAT.....	26
9	PFHZZ	2815010687268	11083	2P0484	CHAMBER A.....	6
10	PFHZZ	5331002387413	11083	6L7816	O-RING PART OF KIT P/N 2P-3988.....	6
11	PFHZZ	5310004238260	11083	1A5666	NUT,PLAIN,HEXAGON.....	16
12	PFFZZ	5310009499296	78500	1229T1554	WASHER,FLAT.....	16
13	PFHZZ	5307002320823	11083	9H1288	STUD,TRACTOR.....	12
14	XDHZZ		11083	7B7770	COVER,ACCESS.....	2
15	PFHZZ	5330005853186	11083	6H2007	GASKET PART OF KIT P/N 2P-3988.....	2
16	PFHZZ	5306002637301	11083	L1351	BOLT,MACHINE.....	4
17	PFHZZ	5310001174788	11083	5M2894	WASHER,FLAT.....	4
18	XAHZZ		11083	3N9631	SEAL ASSY.....	24
19	PFHZZ	5330001249159	11083	6L7813	.SEAL,PLAIN.....	1
20	PFHZZ	2930003528085	11083	6B6224	.FERRULE,WATER DIREC.....	1
21	PFHZZ	5330010669258	11083	1P6442	GASKET 0.139 INCHES THICK.....	6
21	PAHZZ	5330010669257	11083	1P6441	GASKET 0.155 INCHES THICK.....	6
21	PFHZZ	5330005809905	11083	5H2579	BEARING,WASHER,THRU 0.124 INCHES THICK.....	6
22	PFHZZ	5330007885579	11083	1S4390	GASKET.....	2
23	PFHZZ	9390011673646	11083	2B7557	CORK.....	3
24	XAHZZ		11083	3N9632	SEAL ASSY.....	2
25	PFHZZ	5340003528292	11083	7B2420	.FERRULE,GROOVED CLA.....	1
26	PFHZZ	5330002320351	11083	6L7814	.SEAL,PLAIN PART OF KIT P/N 2P-3988 PART OF KIT P/N 6V-3710.....	1
27	PFHZZ	5330011037105	11083	7N4407	GASKET.....	2
28	PFHZZ	5307004064557	11083	9H1020	STUD,PLAIN.....	6

END OF FIGURE

1 (2 THRU 7) 2 (3 THRU 6) 3 (4 THRU 6) 25 (26 AND 27)

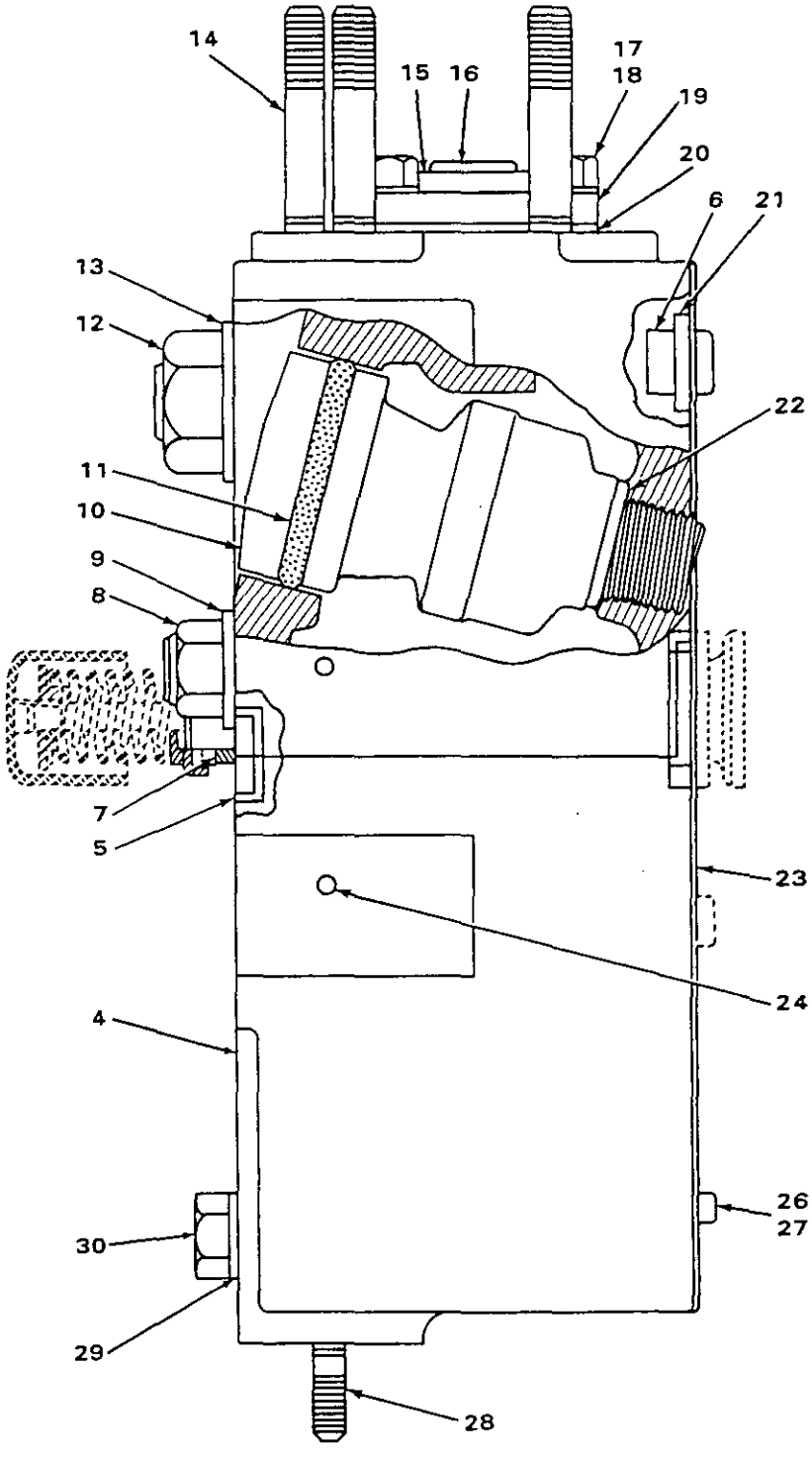

FIGURE 5A. CYLINDER HEAD AND RELATED PARTS, 7N3491 AND 5R8866 ENGINES.

(1) ITEM NO	(2) SMR CODE	(3) NSN	(4) CAGEC	(5) PART NUMBER	(6) DESCRIPTION AND USABLE ON CODES(UOC)	(7) QTY
					GROUP 0101 CRANKCASE, BLOCK, CYLINDER HEAD	
					FIG. 5A CYLINDER HEAD AND RELATED PARTS, 7N3491 AND 5R8866 ENGINES	
1	PFHHH	2815012114624	11083	5N8522	CYLINDER HEAD,DIESE.....	2
2	PFHHZ	2815013776778	11083	5N8521	.CYLINDER HEAD,DIESE.....	1
3	XAHZZ		11083	5N8520	..HEAD ASSY.....	1
4	XAHZZ		11083	8N4674	...HEAD,CYL.....	1
5	PFHZZ	5340002299294	11083	3B0623	...PLUG,EXPANSION.....	14
6	PFHZZ	2815003411504	11083	5H7071	...DIRECTOR,WATER.....	12
7	PFHZZ	5365001488015	11083	3N1414	.SPACER,SLEEVE.....	6
8	PFHZZ	5305010629897	11083	1D4599	SCREW,CAP,HEXAGON H.....	26
9	PFHZZ	5310001397030	11083	4D3704	WASHER,FLAT.....	26
10	PFHZZ	2815010687268	11083	2P0484	CHAMBER A.....	6
11	PAHZZ	5331002387413	11083	6L7816	O-RING.....	6
12	XDHZZ		11083	1D6260	BOLT.....	16
13	PFHZZ	5310009499296	78500	1229T1554	WASHER,FLAT.....	16
14	PFHZZ	2815013616881	11083	6L4088	STUD,TAPERLOCK.....	24
15	PFHZZ	5340002299294	11083	3B0623	PLUG,EXPANSION.....	2
16	PFHZZ	4730009247886	11083	5M6214	PLUG,PIPE.....	1
17	PFHZZ	5306002604508	11083	S1594	BOLT,MACHINE.....	2
18	PFHZZ	5310001174788	11083	5M2894	WASHER,FLAT.....	2
19	PFHZZ	4730013776781	11083	5L1883	FLANGE,PIPE.....	1
20	PAHZZ	5330005853186	11083	6H2007	GASKET PART OF KIT P/N 6V-3710 PART OF KIT P/N 6V-6360.....	1
21	PAHZA	5330010264217	11083	8S4275	SEAL.....	24
22	PAHZZ	5330010669258	11083	1P6442	GASKET .140 THICK.....	6
22	PAHZZ	5330005809905	11083	5H2579	BEARING,WASHER,THRU .125 THICK.....	6
22	PAHZZ	5330010669257	11083	1P6441	GASKET .156 THICK.....	6
22	PAHZZ	5330013779918	11083	7N6758	GASKET .114 THICK.....	6
23	PAHZZ	5330013772721	11083	8N4810	GASKET PART OF KIT P/N 6V-3710.....	2
24	PFHZZ	9390011673646	11083	2B7557	CORK.....	3
25	AHHHH		11083	7N8852	SEAL ASSY.....	2
26	PFHZZ	5340013773286	11083	7N8851	.FERRULE,GROOVED CLA.....	1
27	PAHZZ	5330002320351	11083	6L7814	.SEAL,PLAIN.....	1
28	PFHZZ	5307004064557	11083	9K1020	STUD,PLAIN.....	12
29	PFHZZ	5310004317239	11083	2M0849	WASHER,FLAT.....	12
30	PFHZZ	5305012983128	11083	1A7669	SCREW,CAP,HEXAGON H.....	12

END OF FIGURE

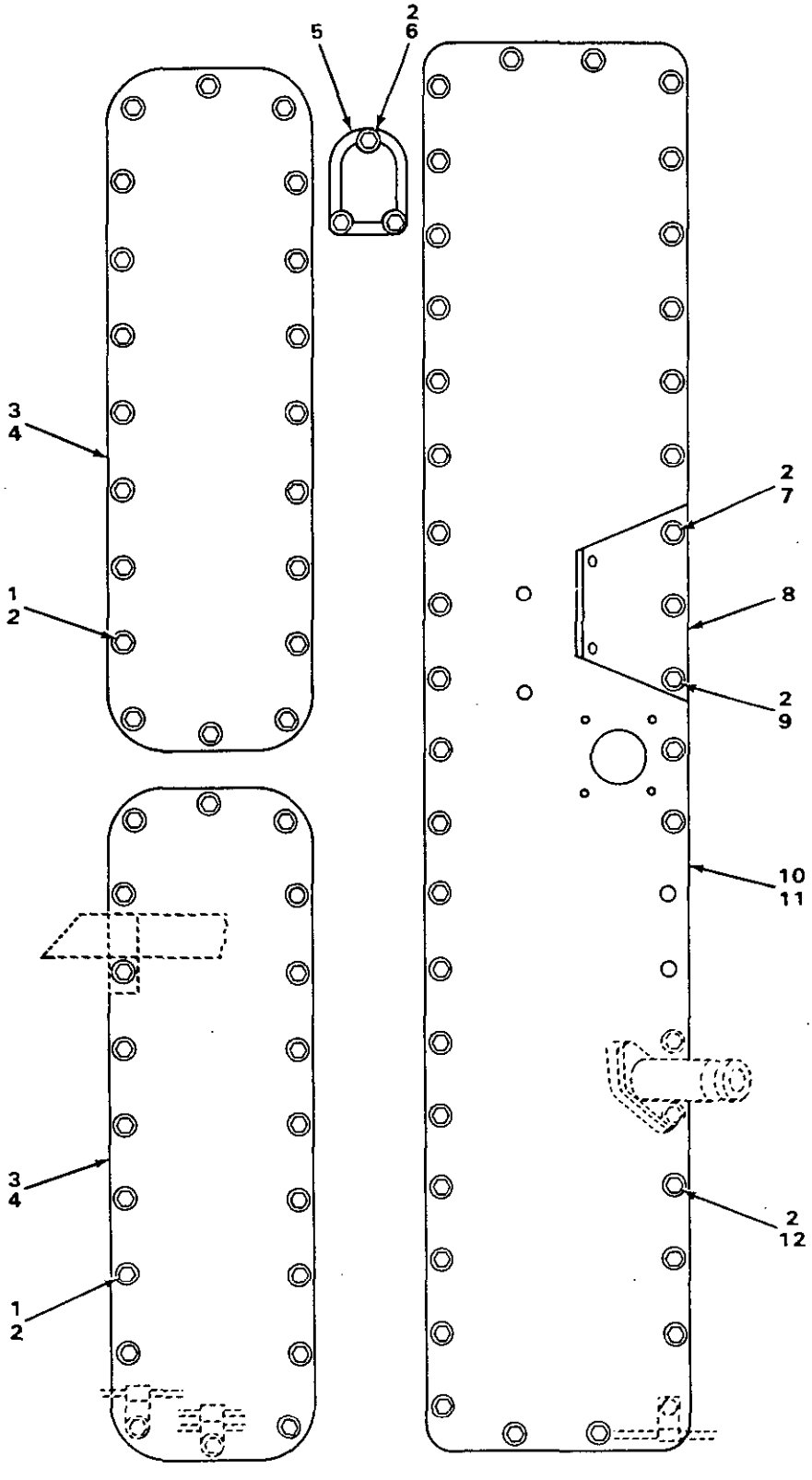

FIGURE 6. CYLINDER BLOCK COVER.

(1) ITEM NO	(2) SMR CODE	(3) NSN	(4) CAGEC	(5) PART NUMBER	(6) DESCRIPTION AND USABLE ON CODES(UOC)	(7) QTY
					GROUP 0101 CRANKCASE, BLOCK, CYLINDER HEAD	
					FIG. 6 CYLINDER BLOCK COVER	
1	PFFZZ	5305002528919	11083	0S0509	SCREW,CAP,HEXAGON H.....	37
2	PFFZZ	5310001174788	11083	5M2894	WASHER,FLAT.....	77
3	PFFZZ	5340012852705	11083	3B8013	COVER,ACCESS.....	2
4	PAFZZ	5330001220633	11083	6L5465	GASKET PART OF KIT P/N 5P-9552.....	2
5	PFFZZ	5330010689829	11083	2P5155	GASKET PART OF KIT P/N 5P-9552.....	1
6	PFFZZ	5310007257382	96906	MS35690-624	NUT,PLAIN,HEXAGON.....	3
7	PFFZZ	5305010269518	11083	0S1571	SCREW,CAP,HEXAGON H.....	2
8	PFFZZ	5340013772893	11083	4N7570	BRACKET,ANGLE.....	1
9	PFFZZ	5305000680511	80204	B1821BH038C125N	SCREW,CAP,HEXAGON H.....	1
10	XDFZZ		11083	1M0988	COVER.....	1
11	PFFZZ	5330008958970	11083	4H8781	GASKET PART OF KIT P/N 5P-9552.....	1
12	PFFZZ	5306002637301	11083	L1351	BOLT,MACHINE.....	34

END OF FIGURE

4
5 THRU 7

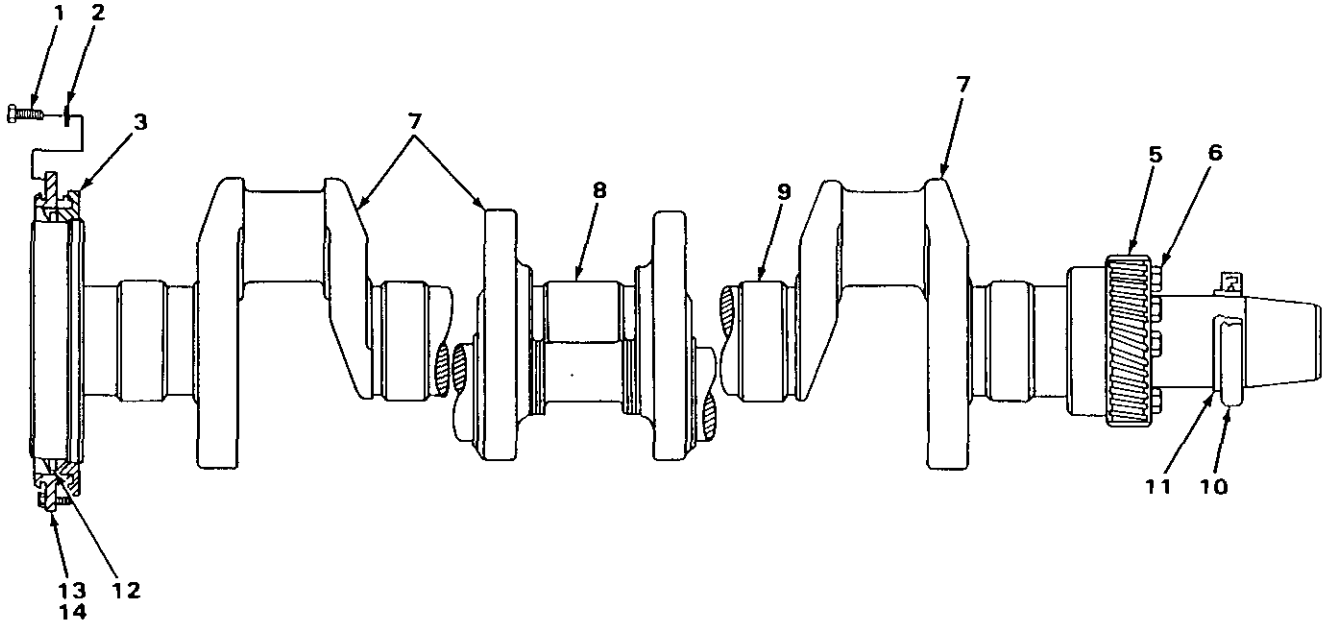

FIGURE 7. CRANKSHAFT.

(1) ITEM NO	(2) SMR CODE	(3) NSN	(4) CAGEC	(5) PART NUMBER	(6) DESCRIPTION AND USABLE ON CODES(UOC)	(7) QTY
					GROUP 0102 CRANKSHAFT	
					FIG. 7 CRANKSHAFT	
1	PFHZZ	5306002637301	11083	L1351	BOLT,MACHINE.....	12
2	PFHZZ	5340002474419	11083	7H3070	LOCKING PLATE,NUT A.....	6
3	PFHZZ	2815004054165	11083	4S7793	DEFLECTOR,DIRT AND.....	1
4	PFHRR	2815010689717	11083	6N2823	CRANK SHAFT.....	1
5	XDHZZ		11083	4S7863	.GEAR,HELICAL.....	1
6	PFHZZ	5306002637314	11083	S1604	.BOLT,MACHINE.....	8
7	XAHZZ		11083	6N2822	.CRANKSHAFT.....	1
8	PFHZZ	3120007576349	11083	8N7928	BEARING,CRANKSHAFT.....	1
9	PFHZZ	3120004786645	11083	8N7923	BEARING,SLEEVE.....	6
10	PAHZZ	5330011893551	11083	9N2539	SEAL PART OF KIT P/N 5P-9222.....	1
11	PFHZZ	3120013064200	11083	9J0110	BEARING,SLEEVE.....	1
12	PAHZZ	5330001224372	11083	2W2191	SEAL RING,METAL.....	1
13	PFHZZ	2815002228522	11083	1S8607	BAFFLE,CAMSHAFT.....	1
14	PFHZZ	5330008935554	11083	5H2669	GASKET.....	1

END OF FIGURE

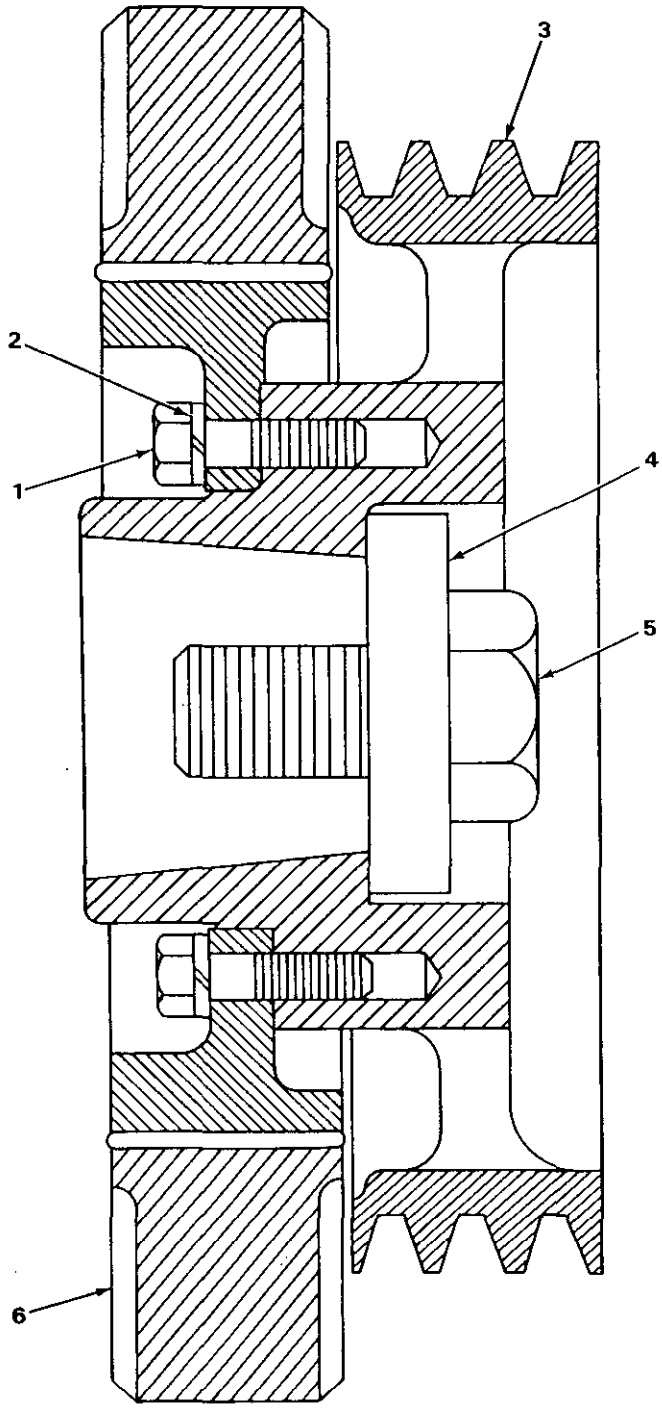

TA235205

FIGURE 8. CRANKSHAFT PULLEY AND DAMPER.

(1) ITEM NO	(2) SMR CODE	(3) NSN	(4) CAGEC	(5) PART NUMBER	(6) DESCRIPTION AND USABLE ON CODES(UOC)	(7) QTY
					GROUP 0102 CRANKSHAFT	
					FIG. 8 CRANKSHAFT PULLEY AND DAMPER	
1	PFHZZ	5306002638978	11083	0S1587	BOLT,MACHINE.....	12
2	PFHZZ	5310005845272	96906	MS35338-48	WASHER,LOCK.....	12
3	PFHZZ	3020010690881	11083	2P1126	PULLEY.....	1
4	PFHZZ	2510010669189	11083	5S8095	PLATE.....	1
5	XDHZZ		11083	5S8096	BOLT.....	1
6	PFHZZ	2815008768045	11083	6H9095	DAMPER CRANKSHAFT.....	1

END OF FIGURE

2
2A AND 3

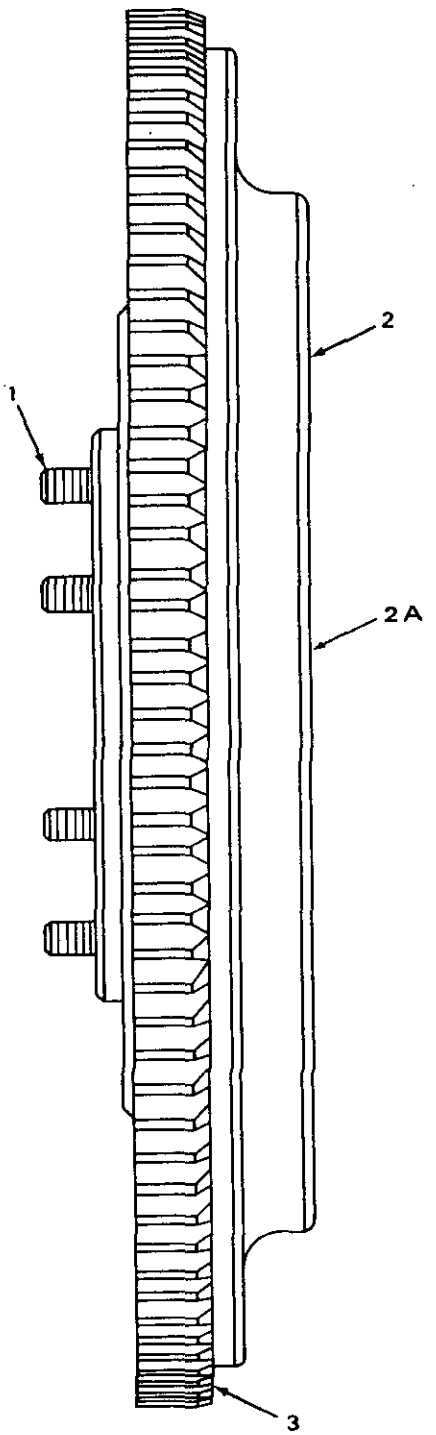

FIGURE 9. FLYWHEEL ASSEMBLY.

(1) ITEM NO	(2) SMR CODE	(3) NSN	(4) CAGEC	(5) PART NUMBER	(6) DESCRIPTION AND USABLE ON CODES(UOC)	(7) QTY
					GROUP 0103 FLYWHEEL ASSEMBLY	
					FIG. 9 FLYWHEEL ASSEMBLY	
1	PFHZZ	5305008368346	80204	B1821BH075C175N	SCREW,CAP,HEXAGON H USED ON 5R8866.	6
1	PFHZZ	5305000826821	96906	MS90727-186	SCREW,CAP,HEXAGON H USED ON 7N3491 AND 4N4445.....	6
2	PFHZZ	2815013776804	11083	8N0894	FLYWHEEL,ENGINE.....	1
2A	XAHZZ		11083	4S7772	.FLYWHEEL.....	1
3	PFHZZ	3020013790424	11083	7N9917	.GEAR,INTERNAL.....	1

END OF FIGURE

1
2 THRU 4

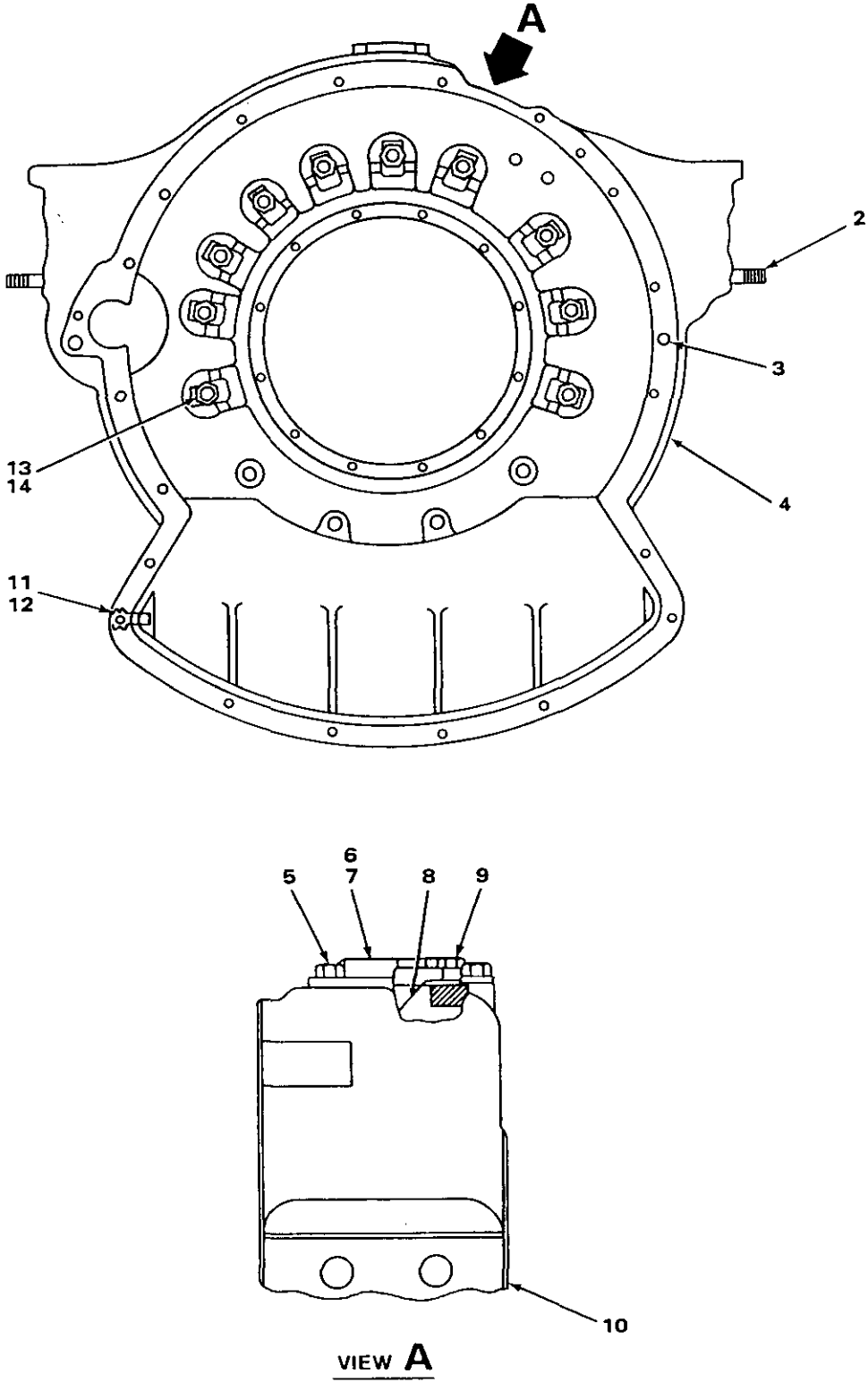

FIGURE 10. FLYWHEEL HOUSING.

(1) ITEM NO	(2) SMR CODE	(3) NSN	(4) CAGEC	(5) PART NUMBER	(6) DESCRIPTION AND USABLE ON CODES(UOC)	(7) QTY
					GROUP 0103 FLYWHEEL ASSEMBLY	
					FIG. 10 FLYWHEEL HOUSING	
1	XDHHH		11083	6N6415	HOUSING,FLYWHEEL.....	1
2	PFHZZ	5307004238167	11083	0V0155	.STUD,PLAIN.....	2
3	PFHZZ	5315002550996	11083	2B2994	.PIN,STRAIGHT,HEADLE.....	2
4	XAHZZ		11083	6N6032	.HOUSING.....	1
5	PFHZZ	5305002528919	11083	0S0509	SCREW,CAP,HEXAGON H.....	4
6	XDHZZ		11083	4B2764	COVER,ACCESS.....	1
7	PAHZZ	5330009318651	11083	2H4054	GASKET.....	1
8	PFHZZ	2815010687136	11083	2P6548	POINTER.....	1
9	PFHZZ	5305000712506	80204	B1821BH025C050N	SCREW,CAP,HEXAGON H.....	2
10	PAHZZ	5330010669255	11083	5N8691	GASKET PART OF KIT P/N 2P-3988.....	1
11	PFHZZ	2520010669163	11083	5H8177	PLUG.....	1
12	PFHZZ	5310007686822	00742	71112A	WASHER,FLAT.....	1
13	PFHZZ	5306004238069	11083	0L1178	BOLT,MACHINE.....	10
14	PFHZZ	5310011022477	11083	5P8248	WASHER,FLAT.....	10

END OF FIGURE

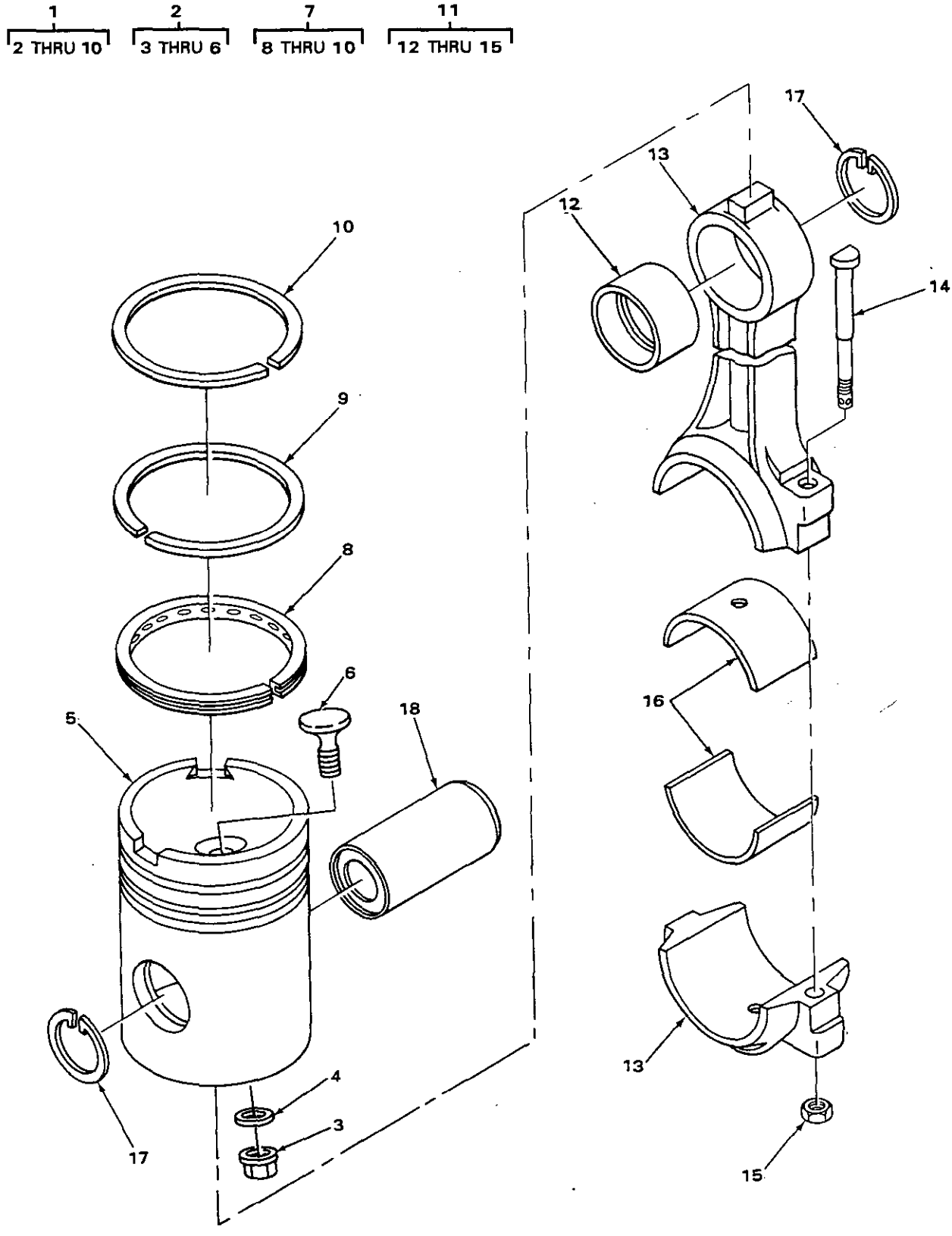

FIGURE 11. PISTONS AND CONNECTING RODS.

(1) ITEM NO	(2) SMR CODE	(3) NSN	(4) CAGEC	(5) PART NUMBER	(6) DESCRIPTION AND USABLE ON CODES(UOC)	(7) QTY
					GROUP 0104 PISTONS, CONNECTING RODS	
					FIG. 11 PISTONS AND CONNECTING RODS	
1	PFHHZ	2815009183569	11083	3S4040	PISTON,INTERNAL COM.....	6
2	PFHHZ	2815013776774	11083	7N1366	.PISTON,INTERNAL COM.....	1
3	XAHZZ		11083	1P7928	..NUT ASSY.....	1
4	PFHZZ		11083	1P1210	..WASHER,FLAT.....	1
5	XAHZZ		11083	7N1365	..BODY ASSY,PISTON.....	1
6	XDHZZ		11083	1H5581	..GLDW PLUG.....	1
7	PFHHZ	2815009231929	77220	S40429	.RING SET,PISTON.....	1
8	PFHZZ	2815006567023	11083	3H0881	..RING,PISTON.....	1
9	PFHZZ	2815004066590	11083	2S8884	..RING,PISTON.....	1
10	PFHZZ	2815007952438	11083	5M4281	..RING,PISTON.....	1
11	PFHHZ	2815009176947	11083	4S6867	CONNECTING ROD,PIST.....	1
12	PFHZZ	3120003790728	11083	2H1062	.BEARING,SLEEVE.....	1
13	XAHZZ		11083	4S6866	.ROD.....	1
14	PFHZZ	5306010675634	11083	9S8493	.BOLT.....	2
15	PFHZZ	5310010669191	11083	9S8494	.NUT.....	2
16	PFHZZ	3120013790739	11083	8N7934	BEARING,PLAIN,ROD E 0.025 UNDERSIZE	1
16	PFHZZ	3120013790738	11083	8N7935	BEARING,PLAIN,ROD E 0.050 UNDERSIZE	1
16	PFHZZ	3120009875561	11083	8N7933	BEARING,SLEEVE.....	1
17	PFHZZ	5325009905595	11083	7M4926	RING,RETAINING.....	2
18	PFHZZ	2815005078321	11083	3H6767	PIN,PISTON.....	1

END OF FIGURE

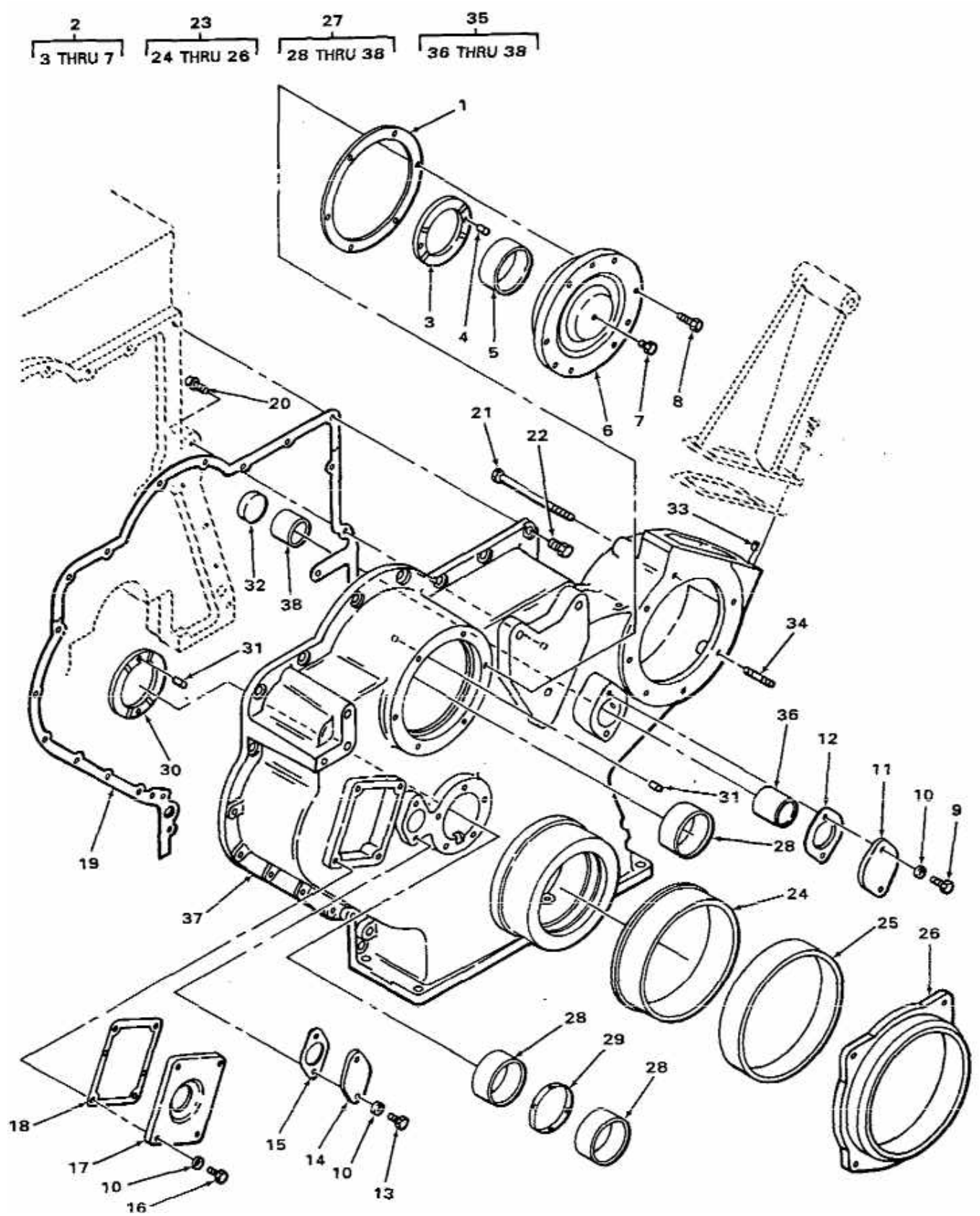

FIGURE 12. TIMING GEAR HOUSING

(1) ITEM NO	(2) SMR CODE	(3) NSN	(4) CAGEC	(5) PART NUMBER	(6) DESCRIPTION AND USABLE ON CODES(UOC)	(7) QTY
					GROUP 0105 VALVES, CAMSHAFTS, AND TIMING SYSTEM	
					FIG. 12 TIMING GEAR HOUSING	
1	PAHZZ	5330005153503	11083	4H9629	GASKET PART OF KIT P/N 5P-9222.....	1
2	PFHHZ	2510010690845	11083	6H6803	COVER A.....	1
3	PFHZZ	5310009995524	11083	4H8986	.WASHER,CAMSHAFT BEA.....	1
4	PFHZZ	5315006633672	11083	7B5415	.PIN,STRAIGHT,HEADLE.....	2
5	PFHZZ	3120008950661	11083	4H9640	.BEARING,SLEEVE.....	1
6	XAHZZ		11083	6H6802	.COVER.....	1
7	PFHZZ	4730009247886	11083	5M6214	.PLUG,PIPE.....	1
8	PFHZZ	5305002528919	11083	0S0509	SCREW,CAP,HEXAGON H.....	6
9	PFOZZ	5306002604508	96906	MS90728-8	SCREW,CAP,HEXAGON H.....	2
10	PFHZZ	5310001174788	11083	5M2894	WASHER,FLAT.....	8
11	PFHZZ	5340004238924	11083	2B8460	COVER,ACCESS.....	1
12	PAHZZ	5330003636135	11083	2B6924	GASKET PART OF KIT P/N 5P-9222.....	1
13	PFHZZ	5306002637301	11083	L1351	BOLT,MACHINE.....	2
14	XDHZZ		11083	2A4522	COVER,ACCESS.....	1
15	PAHZZ	5330006412212	11083	2A4448	GASKET PART OF KIT P/N 5P-9222.....	1
16	PFHZZ	5305002528919	11083	0S0509	SCREW,CAP,HEXAGON H.....	4
17	PFHZZ	2815010537203	11083	2N2753	COVER,TIMING GEAR.....	1
18	PAHZZ	5330008586182	11083	9H4891	GASKET PART OF KIT P/N 5P-9222.....	1
19	PAHZZ	5330006796231	11083	6L5498	GASKET PART OF KIT P/N 5P-9222.....	1
20	PFHZZ	5306011037039	11083	1T0720	BOLT,MACHINE.....	1
21	PFHZZ	5306006374927	11083	1A5183	BOLT,MACHINE.....	2
22	PFHZZ	5306002604508	11083	S1594	BOLT,MACHINE.....	13
23	PFHZZ	3130013332801	11083	9S5771	BEARING UNIT,PLAIN.....	1
24	XAHZZ		11083	9S5773	.RING,INNER.....	1
25	XAHZZ		11083	9S5772	.RING.....	1
26	XAHZZ		11083	9S5774	.SUPPORT,FRONT.....	1
27	XDHHH		11083	2P1151	HOUSING ASSEMBLY TIMING GEAR.....	1
28	PFHZZ	3120008950661	11083	4H9640	.BEARING,SLEEVE.....	3
29	PFHZZ	5365008865163	11083	5H1092	.SPACER,RING.....	1
30	PFHZZ	5310009995524	11083	4H8986	.WASHER,CAMSHAFT BEA.....	2
31	PFHZZ	5315006633672	11083	7B5415	.PIN,STRAIGHT,HEADLE.....	4
32	PFHZZ	2520010669192	11083	0T0199	.PLUG.....	1
33	PFHZZ	5315002412917	88044	AN122717	.PIN,STRAIGHT,HEADLE.....	2
34	PFHZZ	5307004263716	11083	2A5349	.STUD,PLAIN.....	5
35	XAHHH		11083	7N3176	.HOUSING ASSY.....	1
36	PFHZZ	3120006628991	11083	3F7474	..BEARING,SLEEVE LONG.....	1
37	XAHZZ		11083	2P1152	..HOUSING.....	1
38	PFHZZ	3120003636130	11083	3F7473	..BEARING,SLEEVE SHORT.....	1

END OF FIGURE

4
5 THRU 7A

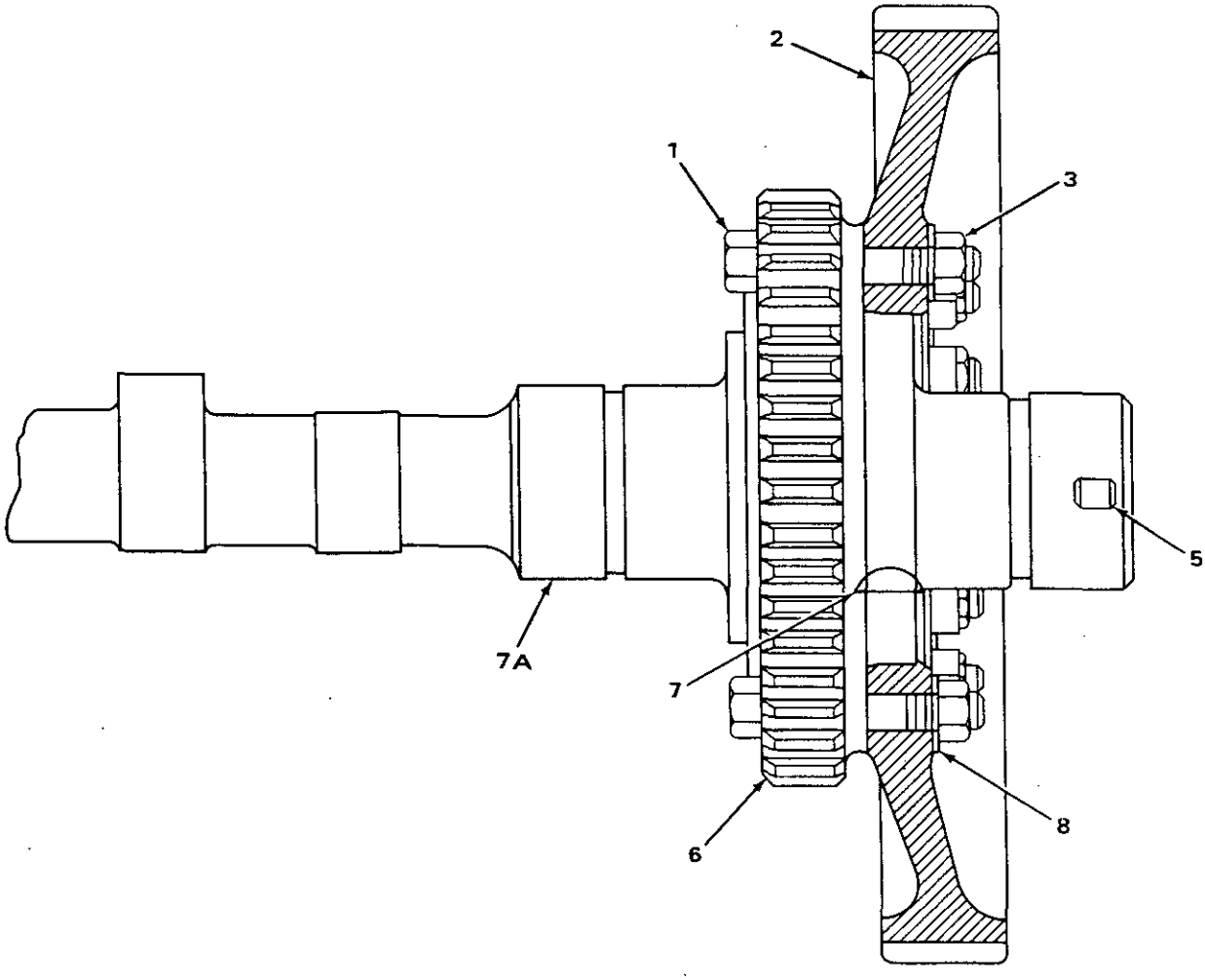

FIGURE 13. CAMSHAFT ASSEMBLY.

(1) ITEM NO	(2) SMR CODE	(3) NSN	(4) CAGEC	(5) PART NUMBER	(6) DESCRIPTION AND USABLE ON CODES(UOC)	(7) QTY
					GROUP 0105 VALVES, CAMSHAFTS, AND TIMING SYSTEM	
					FIG. 13 CAMSHAFT ASSEMBLY	
1	PFHZZ	5305007195241	96906	MS90727-118	SCREW,CAP,HEXAGON H.....	12
2	PFHZZ	3020007394847	11083	4H7384	GEAR,HELICAL.....	1
3	PFHZZ	5310003474123	11083	1B4205	NUT,PLAIN,HEXAGON.....	12
4	XAHZZ		11083	1W3176	CAMSHAFT ASSY PART OF KIT P/N 9Y3230	1
5	PFHZZ	5340007373635	19207	7373635	.PLUG,EXPANSION.....	1
6	PFHZZ	3020013776938	11083	1W3175	.GEAR,SPUR.....	1
7	PAHZZ	5315000124553	11083	1B8714	.KEY,WOODRUFF.....	1
7A	XAHZZ		11083	4S7869	.CAMSHAFT.....	1
8	PFHZZ	2815009482221	11083	4H9648	LOCK PLATE,CAMSHAFT PART OF KIT P/N 2P-3988.....	1

END OF FIGURE

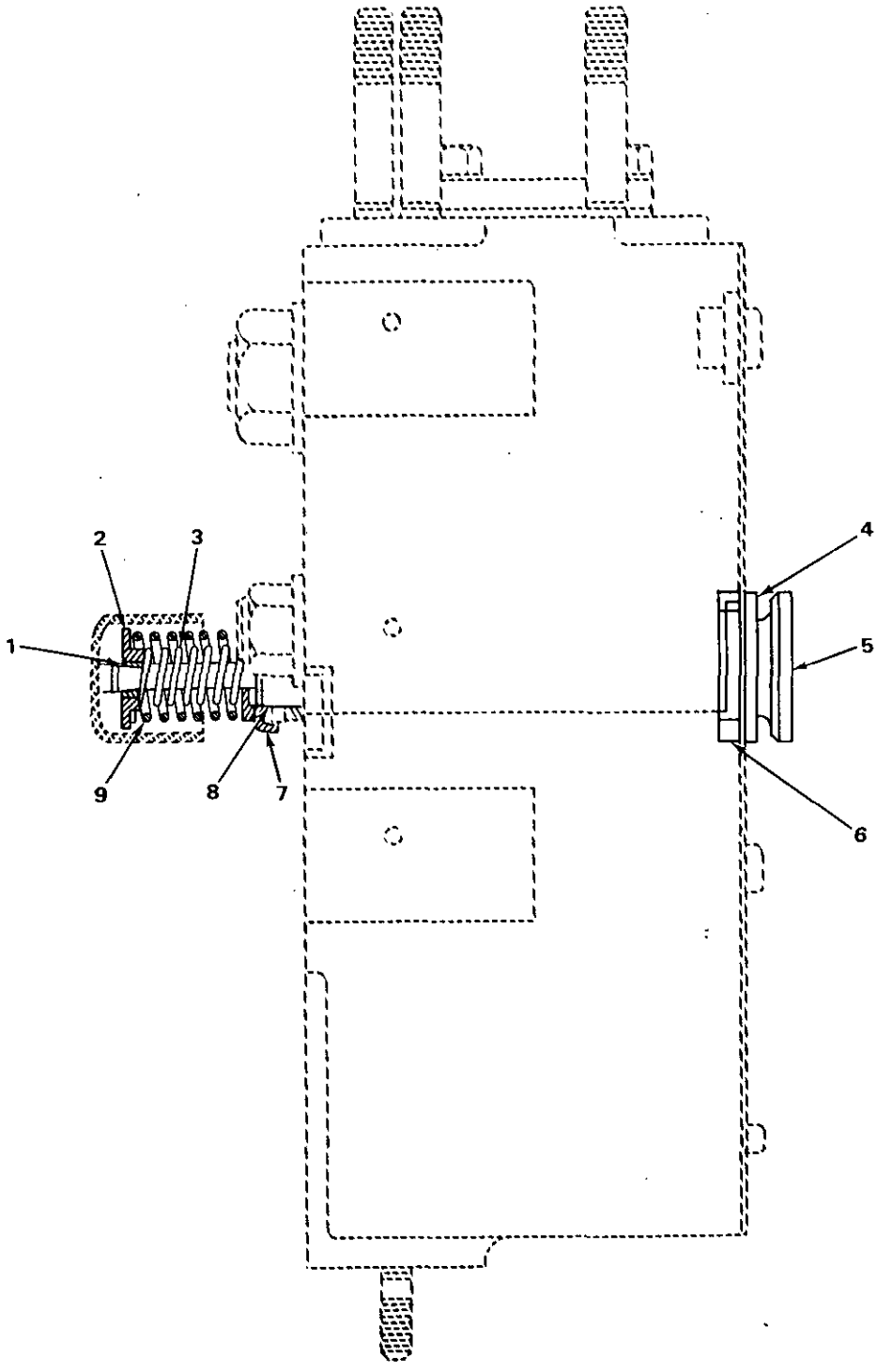

FIGURE 14. INTAKE AND EXHAUST VALVES, 4N4445 ENGINE.

(1) ITEM NO	(2) SMR CODE	(3) NSN	(4) CAGEC	(5) PART NUMBER	(6) DESCRIPTION AND USABLE ON CODES(UOC)	(7) QTY
					GROUP 0105 VALVES, CAMSHAFTS, AND TIMING SYSTEM	
					FIG. 14 INTAKE AND EXHAUST VALVES, 4N4445 ENGINE	
1	PAHZZ	2815003652275	11083	3B1143	LOCK,VALVE SPRING R.....	36
2	PFHZZ	5340003527480	11083	3B1142	SEAT,HELICAL COMPRE.....	12
3	PFHZZ	5360007885800	11083	9M5349	SPRING,HELICAL,COMP.....	12
4	PFHZZ	2815000651943	11083	8H1993	VALVE,POPPET,ENGINE.....	6
5	PFHZZ	2815000878266	11083	8H1994	VALVE,POPPET,ENGINE.....	6
6	PFHZZ	2815008389965	11083	9M8745	INSERT,ENGINE VALVE INTAKE.....	3
6	PFHZZ	2815009183568	11083	8M9810	INSERT,ENGINE VALVE EXHAUST.....	3
7	PFHZZ	2815009283531	11083	7N7639	ROTOR,ENGINE POPPET.....	12
8	PFHZZ	4820011036827	11083	7N2051	VALVE,GUIDE.....	6
9	PFHZZ	5360007885801	11083	9M5350	SPRING,HELICAL,COMP.....	12

END OF FIGURE

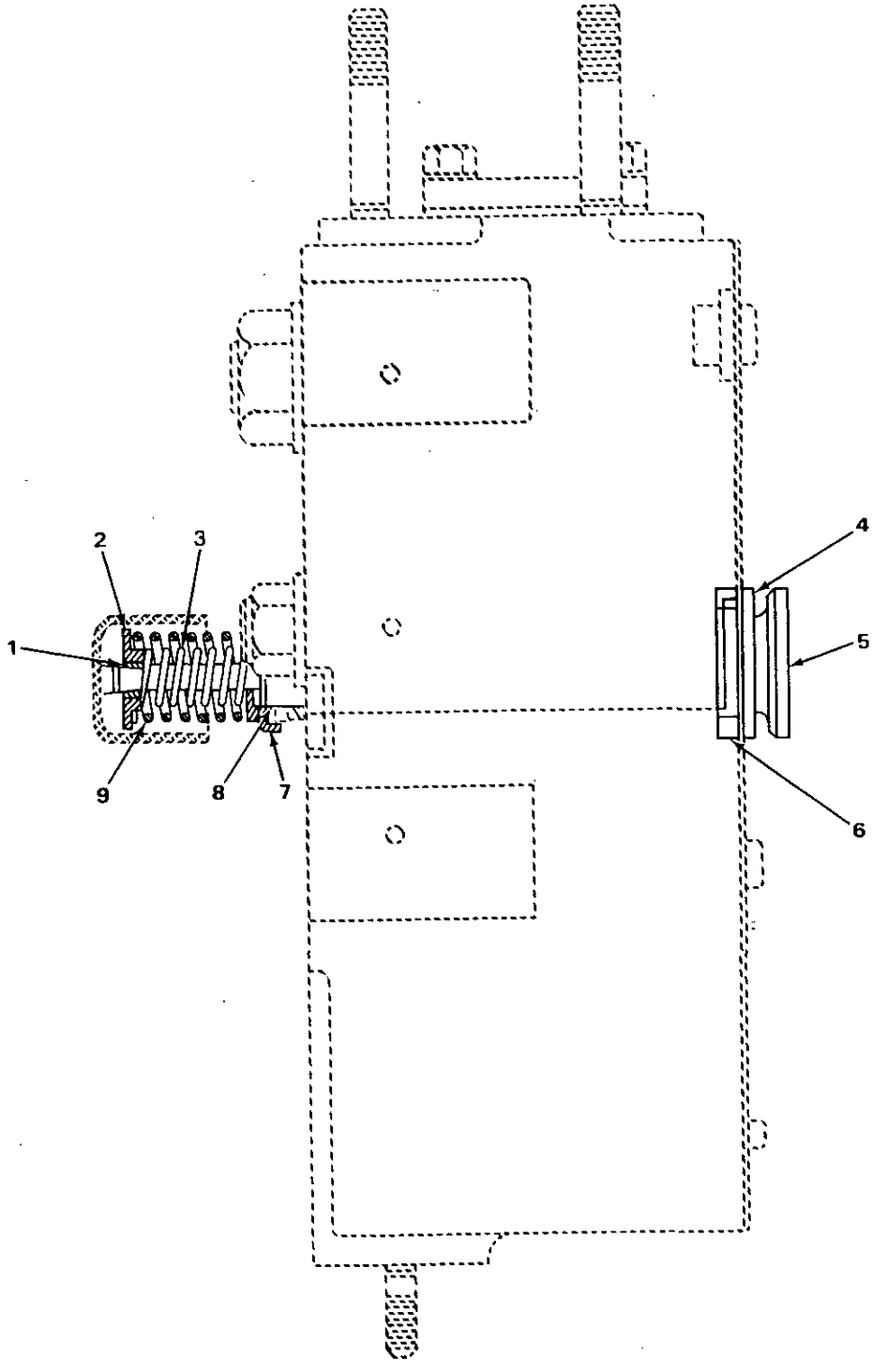

FIGURE 14A. INTAKE AND EXHAUST VALVES, 7N3491 AND 5R8866 ENGINES.

(1) ITEM NO	(2) SMR CODE	(3) NSN	(4) CAGEC	(5) PART NUMBER	(6) DESCRIPTION AND USABLE ON CODES (UOC)	(7) QTY
					GROUP 0105 VALVES, CAMSHAFTS, AND TIMING SYSTEM	
					FIG. 14A INTAKE AND EXHAUST VALVES, 7N3491 AND 5R8866 ENGINES	
1	PAHZZ	2805002883650	11083	2A4429	LOCK, VALVE SPRINGR	12
2	PFHZZ	5340012047163	11083	2N9297	SEAT, HELICALCOMPRE	6
3	PFHZZ	5360007885800	11083	9M5349	SPRING, HELICAL,COMP	6
4	PFHZZ	2815012114231	11083	1W1819	VALVE, POPPET,ENGINE	3
5	PFHZZ	2815012114230	11083	1W1818	VALVE, POPPET, ENGINE	3
6	PFHZZ	2815008389965	11083	9M8745	INSERT, ENGINE VALVE INTAKE	3
6	PFHZZ	2815DO9183568	11083	8M9810	INSERT, ENGINE VALVE EXHAUST	3
7	PFHZZ	2815009283531	11083	7N7639	ROTOR, ENGINE POPPET	6
8	PFHZZ	2815013776780	11083	1W1816	GUIDE, VALVE STEM	6
9	PFHZZ	5360007885801	11083	9M535O	SPRING, HELTCAL,COMP	6

END OF FIGURE

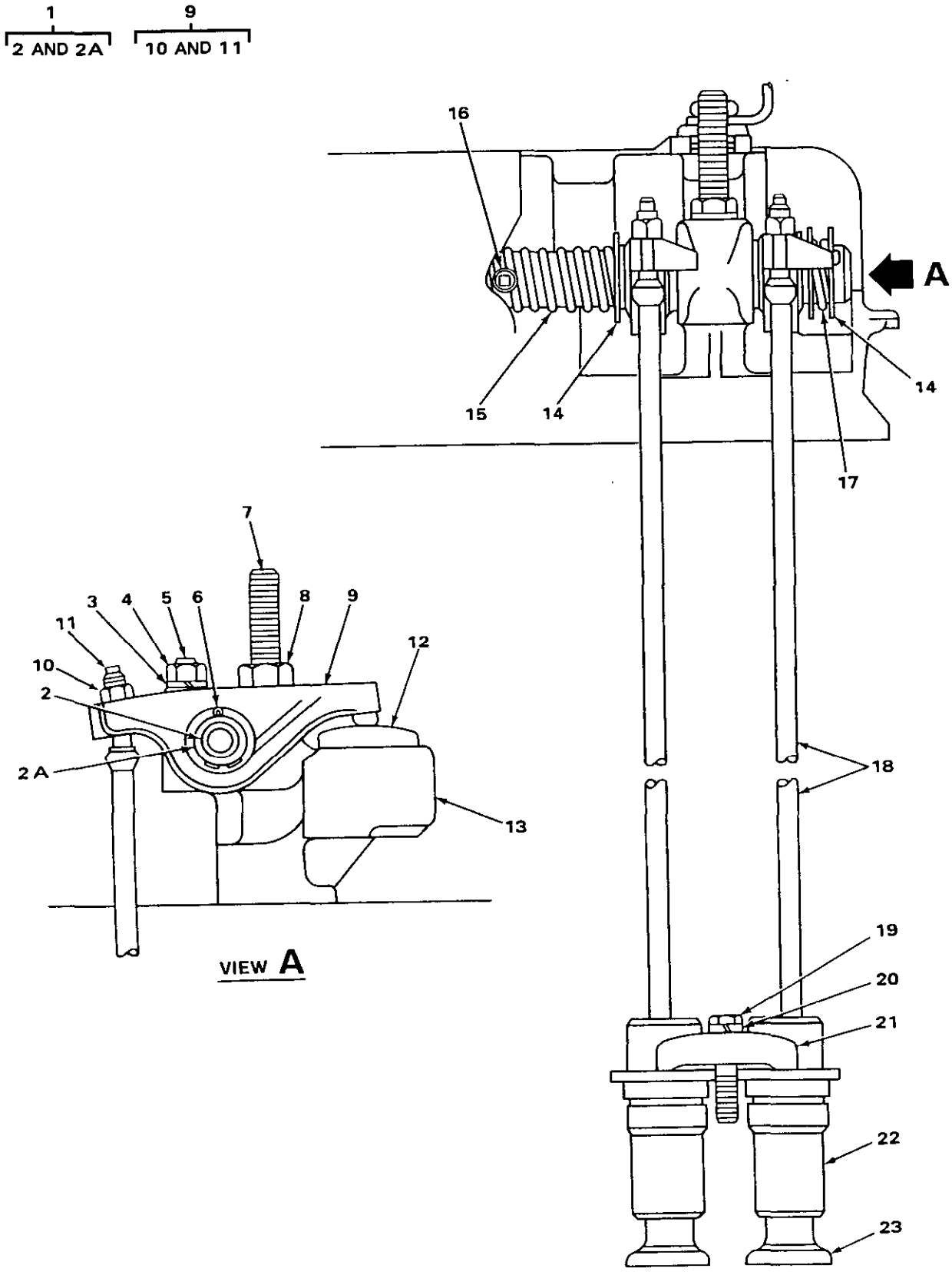

FIGURE 15. ROCKER ARMS, LIFTERS AND PUSH RODS.

(1) ITEM NO	(2) SMR CODE	(3) NSN	(4) CAGEC	(5) PART NUMBER	(6) DESCRIPTION AND USABLE ON CODES(UOC)	(7) QTY
					GROUP 0105 VALVES, CAMSHAFTS, AND TIMING SYSTEM	
					FIG. 15 ROCKER ARMS, LIFTERS AND PUSH RODS	
1	PFFFZ	2815003954835	11083	2F8874	SHAFT	2
2	PFFZZ	5340002237091	11083	3B622	.PLUG,EXPANSION	2
2A	XAFZZ		11083	2F8581	.SHAFT	1
3	PFFZZ	5310005845272	96906	MS35338-48	WASHER,LOCK	6
4	PFFZZ	5310003474123	11083	1B4205	NUT,PLAIN,HEXAGON	6
5	PFFZA	5340004239133	11083	3B7302	ROD END,THREADED	6
6	PAFZZ	5315002981499	96906	MS24665-360	PIN,COTTER	4
7	PFFZZ	5307002320822	11083	9H1022	STUD,TRACTOR	6
8	PFFZZ	5310007638905	96906	MS51968-20	NUT,PLAIN,HEXAGON	6
9	PFFFZ	2815013272926	11083	7C0703	ROCKER ARM,ENGINE P	12
10	PFFZZ	5310007638905	96906	MS51968-20	.NUT,PLAIN,HEXAGON	1
11	PFFZZ	5305003527292	11083	1A744	.SETSCREW	1
12	PFFZZ	2815003652160	11083	6B8505	SLEEVE,VALVE,ENGINE	12
13	PFFZZ	5342003411428	11083	2F8584	BRACKET,VALVE ROCKE	6
14	PFFZZ	5310002094771	11083	6H411	WASHER,FLAT	16
15	PFFZA	5360003636199	11083	1A1884	SPRING,HELICAL,COMP	4
16	PAFZZ	4730002888055	81348	WW-P-471AASBCA	PLUG,PIPE	2
17	PFFZZ	5360004238384	11083	1B9917	SPRING,HELICAL,COMP	4
18	PFFZZ	2815007076576	11083	9H6236	PUSH ROD,ENGINE POP	12
19	PFFZZ	5305007829489	80204	B1821BH038C200N	SCREW,CAP,HEXAGON H	12
20	PFFZZ	5310001174788	11083	5M2894	WASHER,FLAT	12
21	PFFZZ	2815004238899	11083	2B7114	YOKE,VALVE LIFT GUI	6
22	PFFZZ	2815003411449	11083	4H7302	GUIDE,ENGINE POPPET	12
23	PFFZZ	2815001137929	11083	5S1220	LIFTER,VALVE PART OF KIT P/N 9Y3230.	12

END OF FIGURE

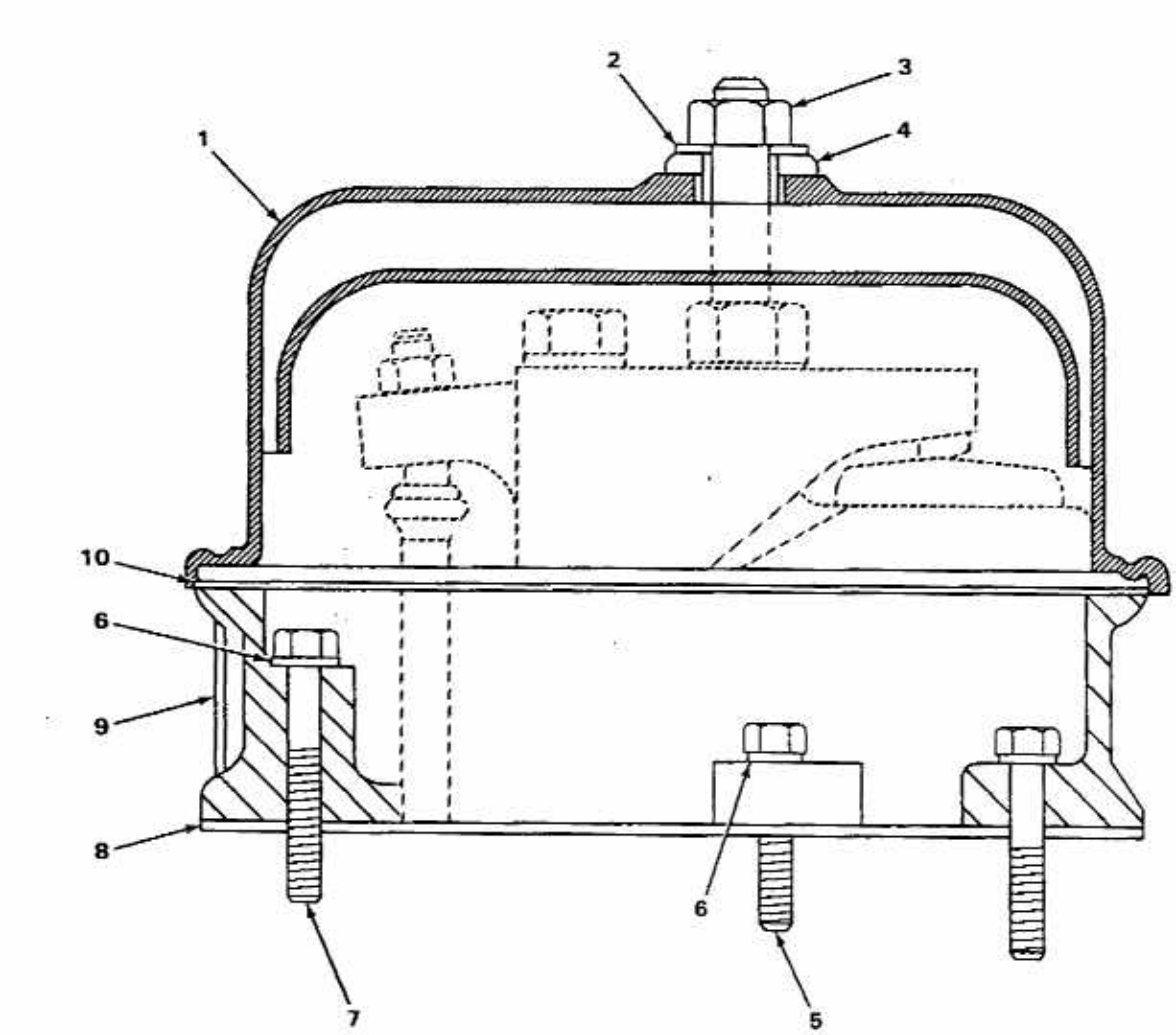

FIGURE 16. ROCKER ARM COVER.

(1) ITEM NO	(2) SMR CODE	(3) NSN	(4) CAGEC	(5) PART NUMBER	(6) DESCRIPTION AND USABLE ON CODES(UOC)	(7) QTY
					GROUP 0105 VALVES, CAMSHAFTS, AND TIMING SYSTEM	
					FIG. 16 ROCKER ARM COVER	
1	PFOZZ	2815012556243	11083	9M2315	COVER,ENGINE POPPET.....	2
2	PFOZZ	5310003652282	11083	3F8526	WASHER,SPECIAL.....	6
3	XDOZZ		11083	4K8977	NUT.....	6
4	PFOZZ	5331005992951	11083	8F4994	O-RING PART OF KIT P/N 2P-3988 PART OF KIT P/N 6V-3710.....	6
5	PFOZZ	5305010156841	11083	0S1591	SCREW.....	10
6	PFOZZ	5310001174788	11083	5M2894	WASHER,FLAT.....	24
7	PFOZZ	5306006852384	14351	13XX3958	BOLT,MACHINE.....	14
8	PAOZZ	5330003498341	11083	6L5556	GASKET PART OF KIT P/N 2P-3988 PART OF KIT P/N 6V-3710.....	2
9	XDOZZ		11083	9M2314	BASE.....	2
10	PAOZZ	5330013012084	11083	7N9352	GASKET PART OF KIT P/N 2P-3988.....	2

END OF FIGURE

2
3

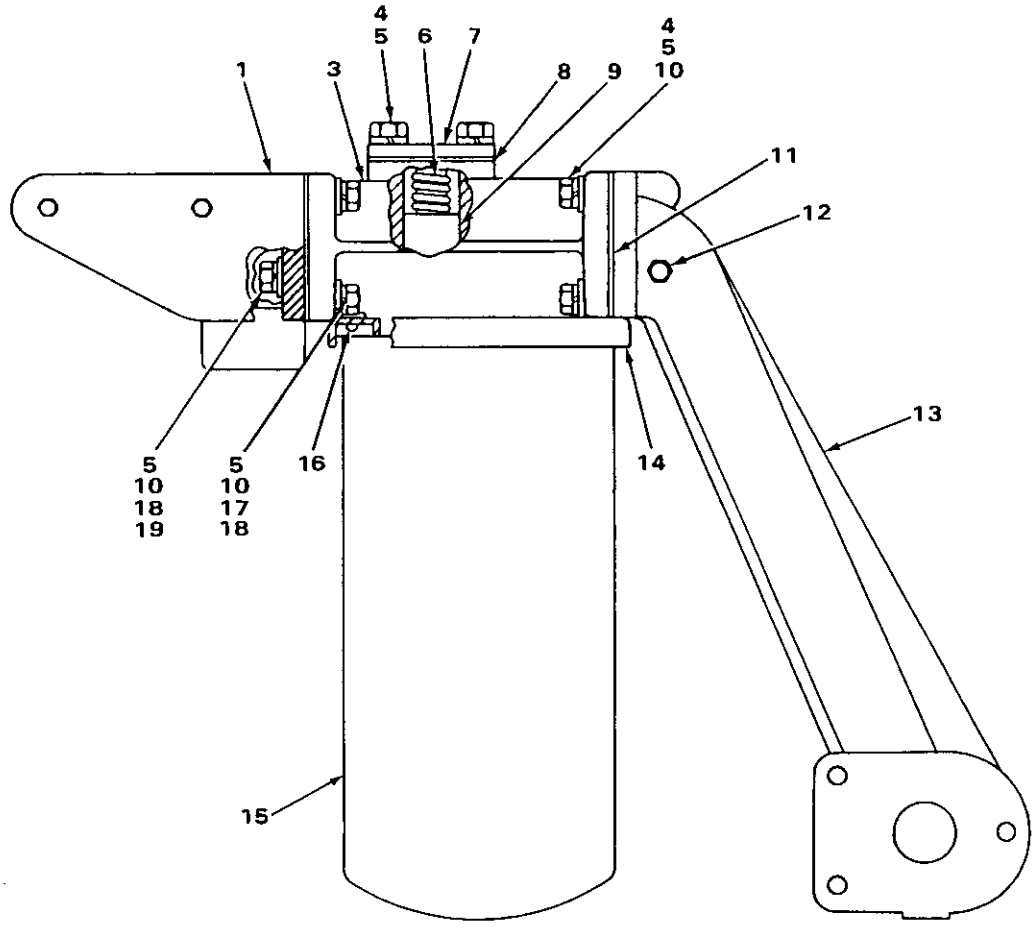

FIGURE 17. OIL FILTER, BASE AND BRACKET, 4N4445 AND 7N3491 ENGINES.

(1) ITEM NO	(2) SMR CODE	(3) NSN	(4) CAGEC	(5) PART NUMBER	(6) DESCRIPTION AND USABLE ON CODES(UOC)	(7) QTY
					GROUP 0106 ENGINE LUBRICATION SYSTEM	
					FIG. 17 OIL FILTER, BASE AND BRACKET 4N4445 AND 7N3491 ENGINES	
1	PFOZZ	5342013773693	11083	2P5084	BRACKET,ENGINE ACCE.....	1
2	PFOOZ	2815002049666	11083	2P4301	BASE ASSEMBLY.....	1
3	PFOZZ	4730010534540	11083	2P4304	.STUD.....	1
4	PFOZZ	5305000680511	80204	B1821BH038C125N	SCREW,CAP,HEXAGON H.....	8
5	PFOZZ	5310006379541	96906	MS35338-46	WASHER,LOCK.....	11
6	PFOZZ	5360009508251	11083	8M3182	SPRING,HELICAL,COMP.....	1
7	PFOZZ	5340002079110	11083	2P3761	COVER,ACCESS.....	1
8	PAOZZ	5330002220143	11083	2P3760	GASKET PART OF KIT P/N 5P-9233.....	1
9	PFOZZ	5340004999648	11083	1P1367	PLUNGER,DETENT.....	1
10	PFOZZ	5310012662481	11083	4B4278	WASHER,FLAT.....	8
11	PAOZZ	5330002168533	11083	2P4305	GASKET PART OF KIT P/N 5P-9233.....	2
12	PFOZZ	4730009247886	11083	5M6214	PLUG,PIPE.....	1
13	PFOZZ	5342013773694	11083	2P5085	BRACKET,ENGINE ACCE.....	1
14	PFOZZ	2940010534642	11083	4N7082	SHIELD.....	1
15	PFOZZ	2940001259544	11083	1R0716	FILTER ELEMENT,FLUI.....	1
16	PFOZZ	5305002535622	96906	MS21318-41	SCREW,DRIVE.....	1
17	PFOZZ	5305010269518	11083	0S1571	SCREW,CAP,HEXAGON H.....	1
18	PFOZZ	5310011945398	11083	1D4717	NUT,HEXAGON.....	2
19	PFOZZ	5306002634038	11083	2A4639	BOLT,MACHINE.....	1

END OF FIGURE

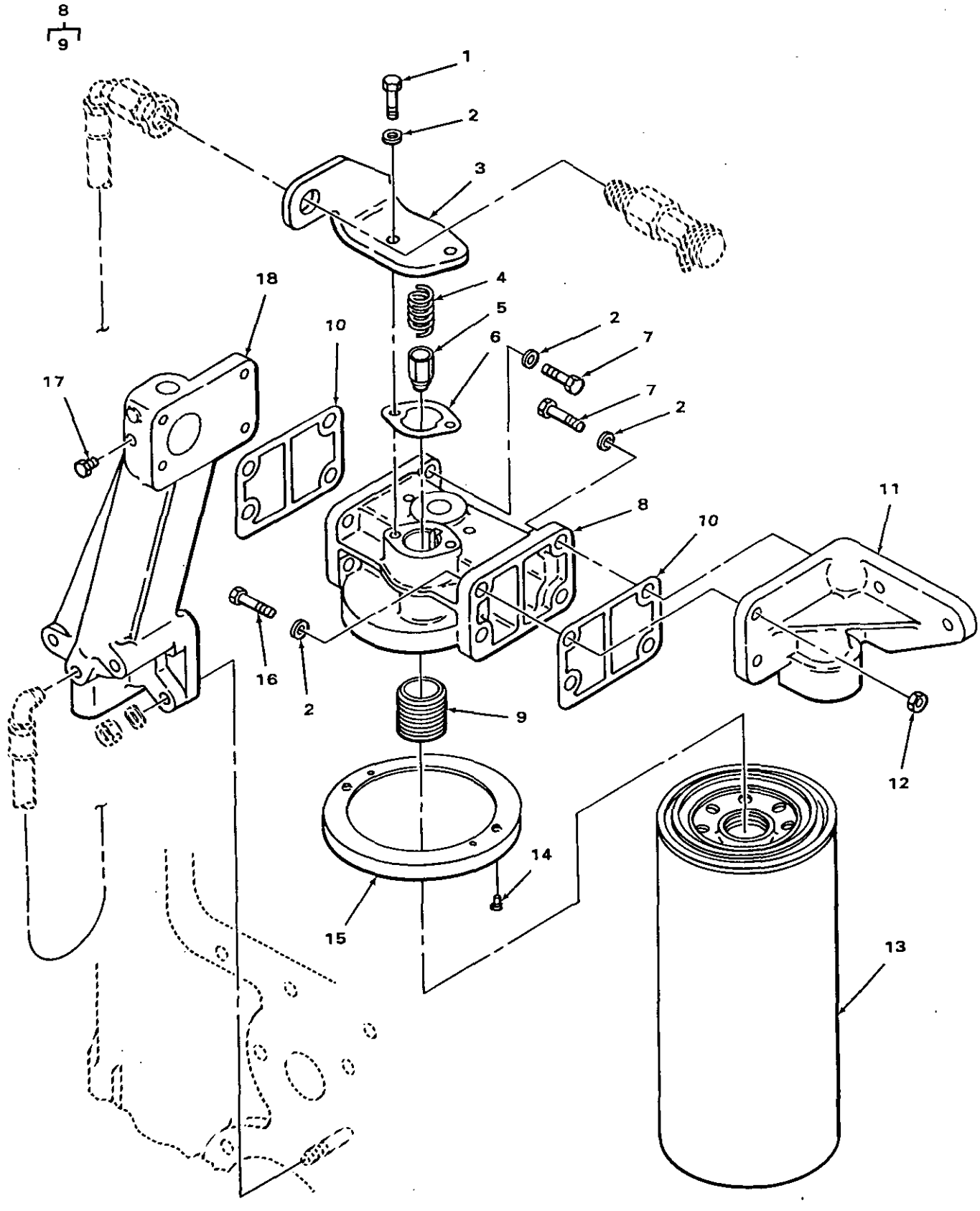

FIGURE 17A. OIL FILTER, BASE AND BRACKET, 5R8866 ENGINE.

(1) ITEM NO	(2) SMR CODE	(3) NSN	(4) CAGEC	(5) PART NUMBER	(6) DESCRIPTION AND USABLE ON CODES(UOC)	(7) QTY
					GROUP 0106 ENGINE LUBRICATION SYSTEM	
					FIG. 17A OIL FILTER, BASE AND BRACKET, 5R8866 ENGINE	
1	PFOZZ	5306004238194	11083	1A2029	BOLT,MACHINE	2
2	PFOZZ	5310001174788	11083	5M2894	WASHER,FLAT	12
3	XDOZZ		11083	5R8982	BRACKET	1
4	PFOZZ	5360009508251	11083	8M3182	SPRING,HELICAL,COMP	1
5	PFOZZ	5340004999648	11083	1P1367	PLUNGER,DETENT	1
6	PAOZZ	5330002220143	11083	2P3760	GASKET PART OF KIT P/N 5P-9233	1
7	PFOZZ	5305000680511	80204	B1821BH038C125N	SCREW,CAP,HEXAGON H	6
8	PFOOZ	2815002049666	11083	2P4301	BASE ASSEMBLY	1
9	PFOZZ	4730010534540	11083	2P4304	.STUD	1
10	PAOZZ	5330002168533	11083	2P4305	GASKET PART OF KIT P/N 5P-9233	2
11	PFOZZ	5342013773693	11083	2P5084	BRACKET,MOUNTING	1
12	PFOZZ	5310011945398	11083	1D4717	NUT,HEXAGON	22
13	PFOZZ	2940001259544	11083	1R0716	FILTER ELEMENT,FLUI	1
14	PFOZZ	5305002535622	96906	MS21318-41	SCREW,DRIVE	2
15	PFOZZ	2940010534642	11083	4N7082	SHIELD	1
16	PFOZZ	5306002634038	11083	2A4639	BOLT,MACHINE	2
17	PFOZZ	4730009247886	11083	5M6214	PLUG,PIPE	1
18	PFOZZ	5342013773694	11083	2P5085	BRACKET,MOUNTING	1

END OF FIGURE

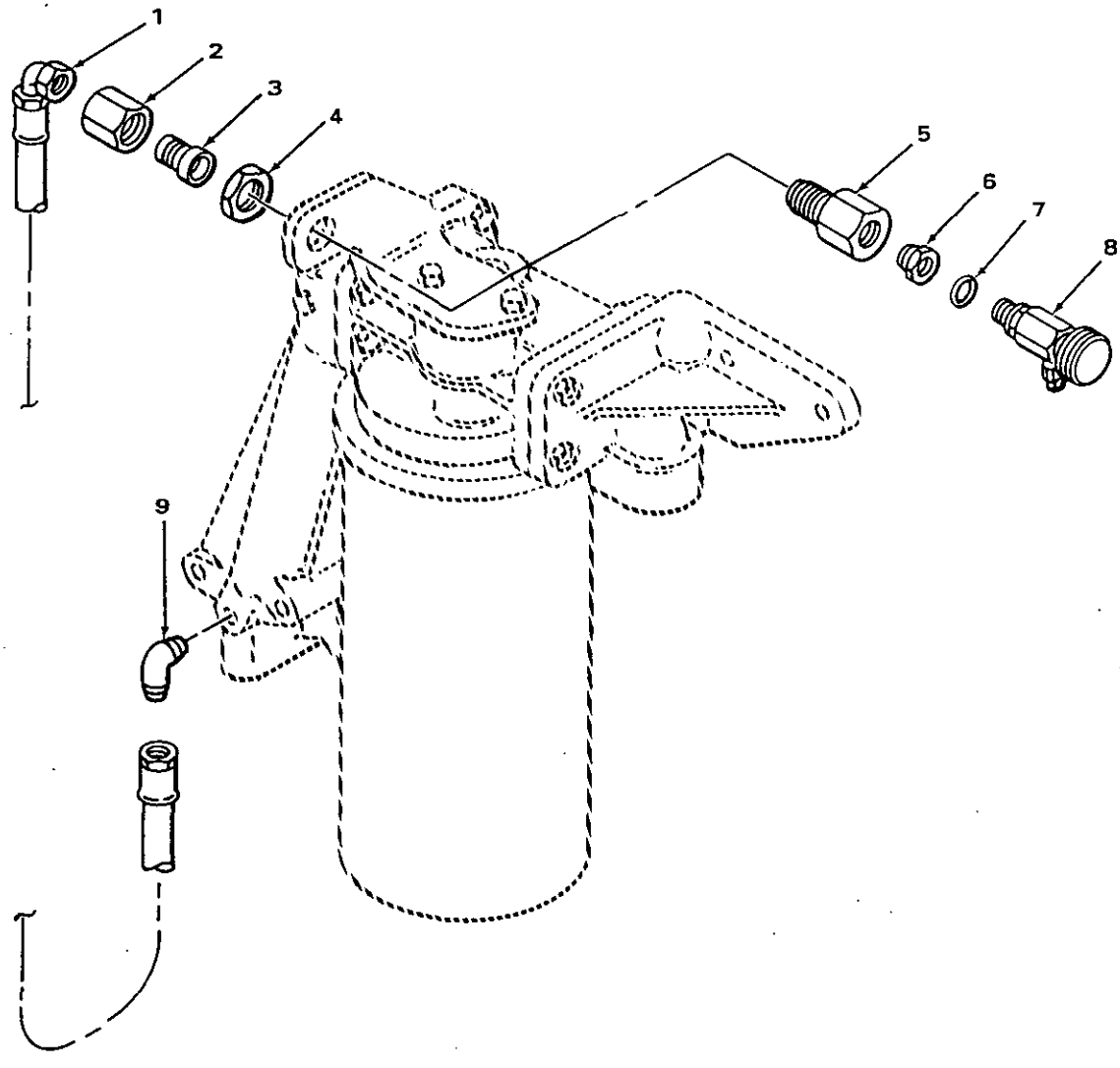

FIGURE 17B. OIL SAMPLING, 5R8866 ENGINE.

(1) ITEM NO	(2) SMR CODE	(3) NSN	(4) CAGEC	(5) PART NUMBER	(6) DESCRIPTION AND USABLE ON CODES(UOC)	(7) QTY
					GROUP 0106 ENGINE LUBRICATION SYSTEM	
					FIG. 17B OIL SAMPLING, 5R8866 ENGINE	
1	PFOZZ	4720011967180	11083	9G9501	HOSE ASSEMBLY,NONME.....	1
2	PFOZZ	4730007621239	11083	1P1441	NUT,TUBE COUPLING.....	1
3	PFOZZ	4730006473343	11083	7J5614	REDUCER,TUBE.....	1
4	PFOZZ	4730011439017	96906	MS51860-56Z	LOCKNUT,TUBE FITTIN.....	1
5	PFOZZ	4730011967172	11083	6V2376	ADAPTER,STRAIGHT,PI.....	1
6	PFOZZ	4730011522666	11083	5R5304	ADAPTER,STRAIGHT,PI.....	1
7	PFOZZ	5330010491292	02697	3-904N552-90	O-RING.....	1
8	PFOZZ	4820012029608	91816	HV50-2-R	VALVE,SAMPLING,HYDR.....	1
9	PFOZZ	4730006473207	11083	2N1287	ELBOW,PIPE TO TUBE.....	1

END OF FIGURE

3 (3A) 7 (8 THRU 10) 8 (9) 13 (13A AND 14)

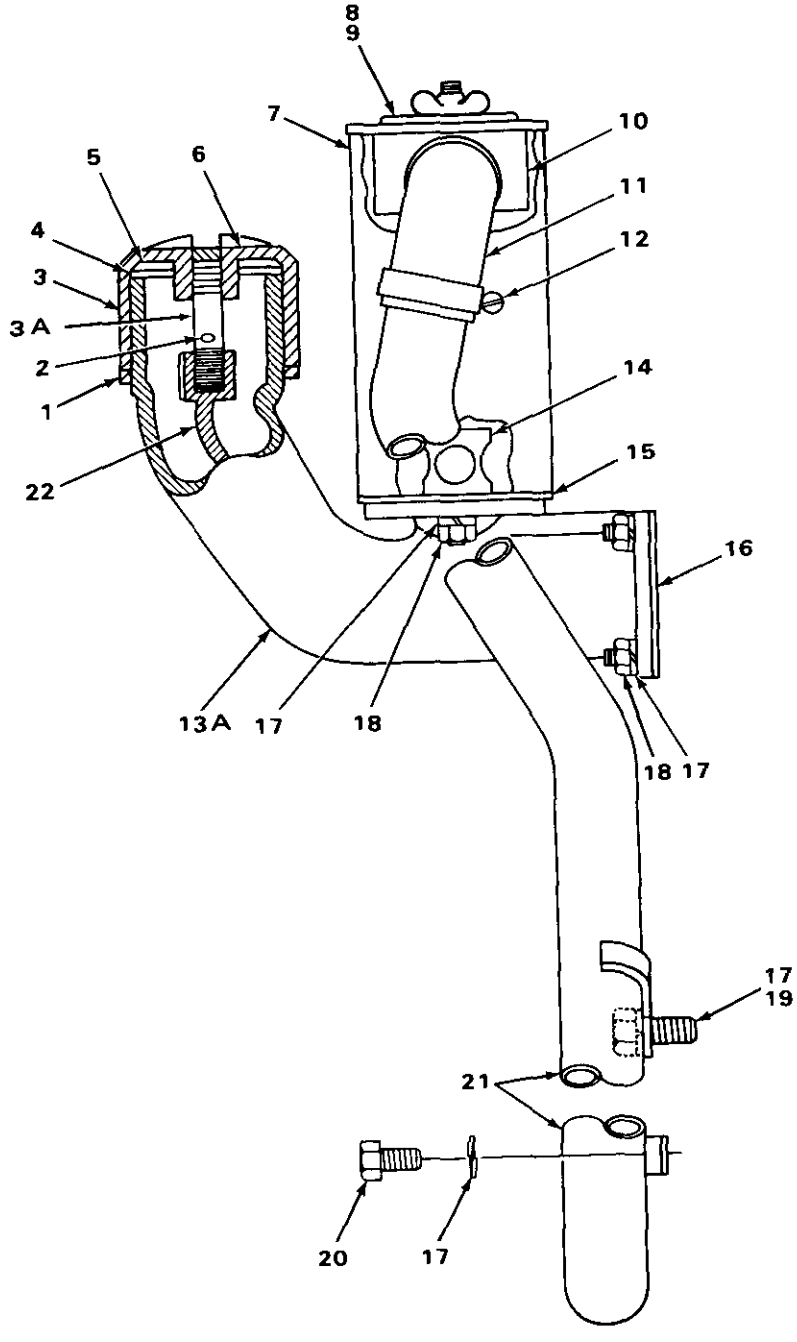

FIGURE 18. OIL FILLER AND BREATHER ASSEMBLY.

(1) ITEM NO	(2) SMR CODE	(3) NSN	(4) CAGEC	(5) PART NUMBER	(6) DESCRIPTION AND USABLE ON CODES (UOC)	(7) OTY
					GROUP 0104 ENGINE LUBRICATION SYSTEM	
					FIGS 18 OIL FILLER AND BREATHER ASSEMBLY	
1	PAOZZ	5330000908363	11083	817559	GASKET	1
2	PEOZZ	5315008395621	96906	MS24665-351	PIN, COTTER	1
3	PFOOZ	2590003411530	11083	8F4103	CAP, FILLER OPENING	1
3A	XAOZZ		11083	8F4107	STUD	1
4	PAOZZ	5330006417914	11083	8F4099	GASKET PART OF KIT P/N 5P9552	1
5	PAOZZ	5330013772722	11083	1S6827	SEAL, NONMETALLICRO	1
6	PFOZZ	2815003411529	11083	SF4102	PLATE, FILLER CAP	1
7	PFOOZ	28I5005221995	11083	9119542	BREATHER ASSEMBLY	I
8	PEOOZ	5340009317929	11083	9M9549	COVER, ACCESS	1
9	PAOZZ	5330008940653	11083	5S6371	GASKET	1
10	PFOZZ	2940008946406	11083	6H6095	JILTER ELEMENT, INTA	1
11	PFOZZ	4720009486037	11083	9M9423	HOSE, PREFORMED	1
12	PFOZZ	4730002043491	66295	C32P	CLAMP, HOSE	2
13	XAOZZ		11083	1M1111	ELBOW ASSY	1
13A	XDOZZ		11083	1M1078	ELBOW, BREATHER AND	I
14	PFOZZ	2815004706516	11083	5H9671	SHIELD, ELBOW	1
15	PAOZZ	5330007123241	11083	5H7376	GASKET	1
16	PAOZZ	5330006842974	11083	5H7033	GASKET PART OF KIT P/N 5P9552	1
17	PFOZZ	5310006379541	96906	MS35338-46	WASHER, LOCK	8
18	PFOZZ	5310011945398	11083	1D4717	NUT, HEXAGON	6
19	PFOZZ	5305000680511	80204	B1821BH038C125N	SCREW, CAP, HEXAGONU	I
20	PFDZZ	5306002637301	11083	L135I	BOLT, MACHINE	1
21	XDOZZ		11083	2P3822	TUBE ASSEMBLY	1
22	PFOZZ	5995005202334	11083	7H3460	CABLE ASSEMBLY	1

END OF FIGURE

3
4 THRU 6

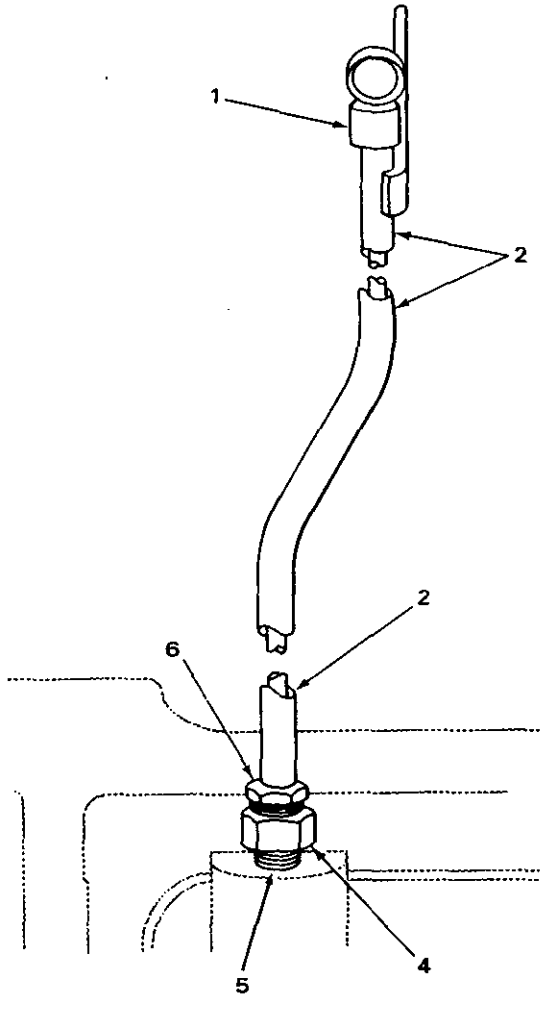

FIGURE 19. OIL LEVEL GAUGE.

(1) ITEM NO	(2) SMR CODE	(3) NSN	(4) CAGEC	(5) PART NUMBER	(6) DESCRIPTION AND USABLE ON CODES(UOC)	(7) QTY
					GROUP 0106 ENGINE LUBRICATION SYSTEM	
					FIG. 19 OIL LEVEL GAUGE	
1	PFOZZ	6680010687287	11083	9S6518	GAGE.....	1
2	XBOZZ		11083	2P5094	TUBE ASSEMBLY.....	1
3	PFOOZ	4730004018098	11083	8S1326	ADAPTER,STRAIGHT,PI.....	1
4	PFOZZ	4730010487874	11083	5P4448	.NUT,TUBE COUPLING.....	1
5	PFOZZ	4730011780773	11083	5P4443	.SLEEVE,COMPRESSION,.....	1
6	XDOZZ	4730012538588	11083	5P4908	.ADAPTER,STRAIGHT,PI.....	1

END OF FIGURE

7 20
7A THRU 9 20A AND 21

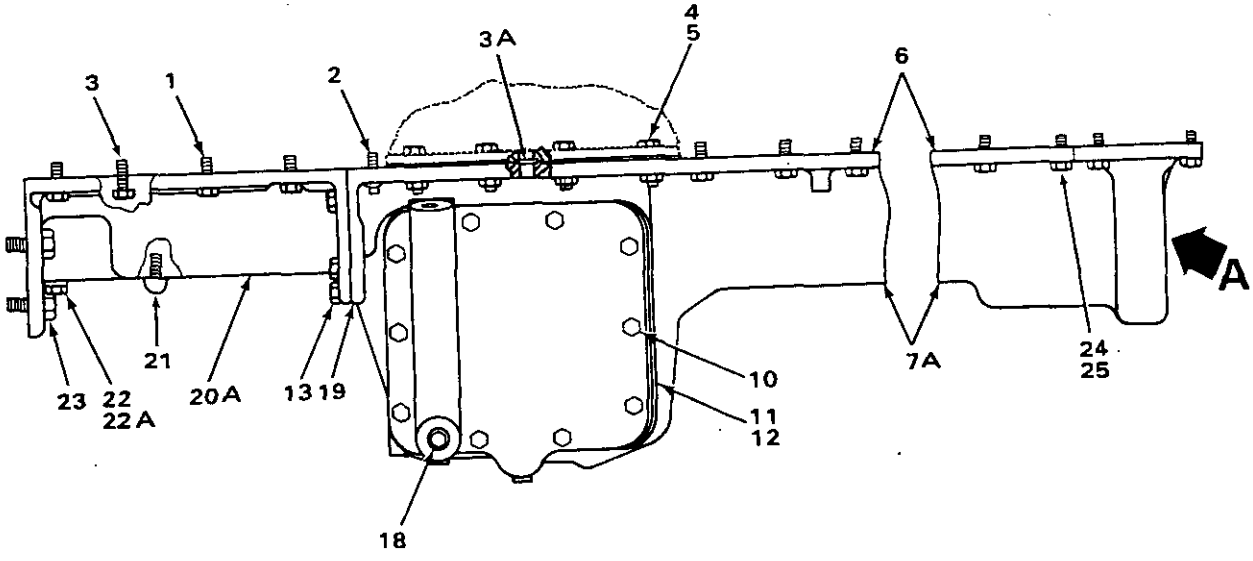

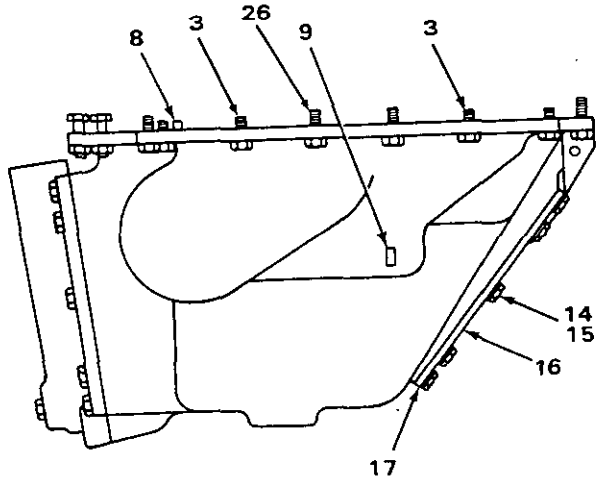

VIEW A

FIGURE 20. FRONT AND REAR OIL PAN.

(1) ITEM NO	(2) SMR CODE	(3) NSN	(4) CAGEC	(5) PART NUMBER	(6) DESCRIPTION AND USABLE ON CODES(UOC)	(7) QTY
					GROUP 0106 ENGINE LUBRICATION SYSTEM	
					FIG. 20 FRONT AND REAR OIL PAN	
1	PFFZZ	5306004238117	11083	S1595	BOLT,MACHINE.....	43
2	PFFZZ	5305011884766	11083	9M6590	SCREW,CAP,HEXAGON H.....	1
3	PFFZZ	5306011279361	11083	0S1585	BOLT,MACHINE.....	1
3A	PAFZZ	5331007102143	11083	3H3385	O-RING PART OF KIT P/N 5P-9552.....	1
4	PFFZZ	5306002638978	11083	0S1587	BOLT,MACHINE.....	4
5	PFFZZ	5310007680318	96906	MS51967-14	NUT,PLAIN,HEXAGON.....	4
6	PAFZZ	5330010669259	11083	2P3759	GASKET PART OF KIT P/N 2P-3988 PART OF KIT P/N 5P-9552.....	1
7	XDFZZ		11083	7N4311	PAN ASSY.....	1
7A	PFFZZ	2815013777409	11083	7N3098	.OIL PAN.....	1
8	PFFZZ	4730001220636	11083	3H3285	.SLEEVE,COMPRESSION,.....	1
9	PFFZZ	5315003627367	11083	5B5812	.PIN,STRAIGHT,HEADLE.....	2
10	PFFZZ	5306004238194	11083	1A2029	BOLT,MACHINE.....	10
11	XBFZZ		11083	9S8715	COVER.....	1
12	XBFZZ		11083	9S6526	GASKET PART OF KIT P/N 2P-3988 PART OF KIT P/N 5P-9552.....	1
13	PFFZZ	5306004262934	11083	0S1621	BOLT,MACHINE.....	2
14	PFFZZ	5306002604508	11083	S1594	BOLT,MACHINE.....	10
15	PFFZZ	5310001174788	11083	5M2894	WASHER,FLAT.....	10
16	XDFZZ		11083	4H3740	COVER.....	1
17	PAFZZ	5330004239147	11083	3B8024	GASKET PART OF KIT P/N 5P-9552.....	1
18	PFFZZ	5365003639900	11083	4B7739	PLUG,MACHINE THREAD.....	1
19	PAFZZ	5330013772720	11083	6L5311	GASKET PART OF KIT P/N 5P-9552.....	1
20	XDFFF		11083	4S7516	OIL PAN ASSEMBLY REAR.....	1
20A	XAFZZ		11083	4S7515	.PAN.....	1
21	XBFZZ		11083	6B9551	.STUD,PLAIN.....	1
22	XDFZZ		11083	6F5282	SCREW,CAP,HEXAGON H.....	2
22A	PFFZZ	5310002459841	11083	8M4791	WASHER,FLAT.....	2
23	PFFZZ	5306008146588	11083	0S1626	BOLT,MACHINE.....	4
24	PFFZZ	5307013776176	11083	6N5068	STUD,PLAIN.....	1
25	PFFZZ	5310003474123	11083	1B4205	NUT,PLAIN,HEXAGON.....	1
26	PFFZZ	5306008744001	11083	6H1717	BOLT,MACHINE.....	4

END OF FIGURE

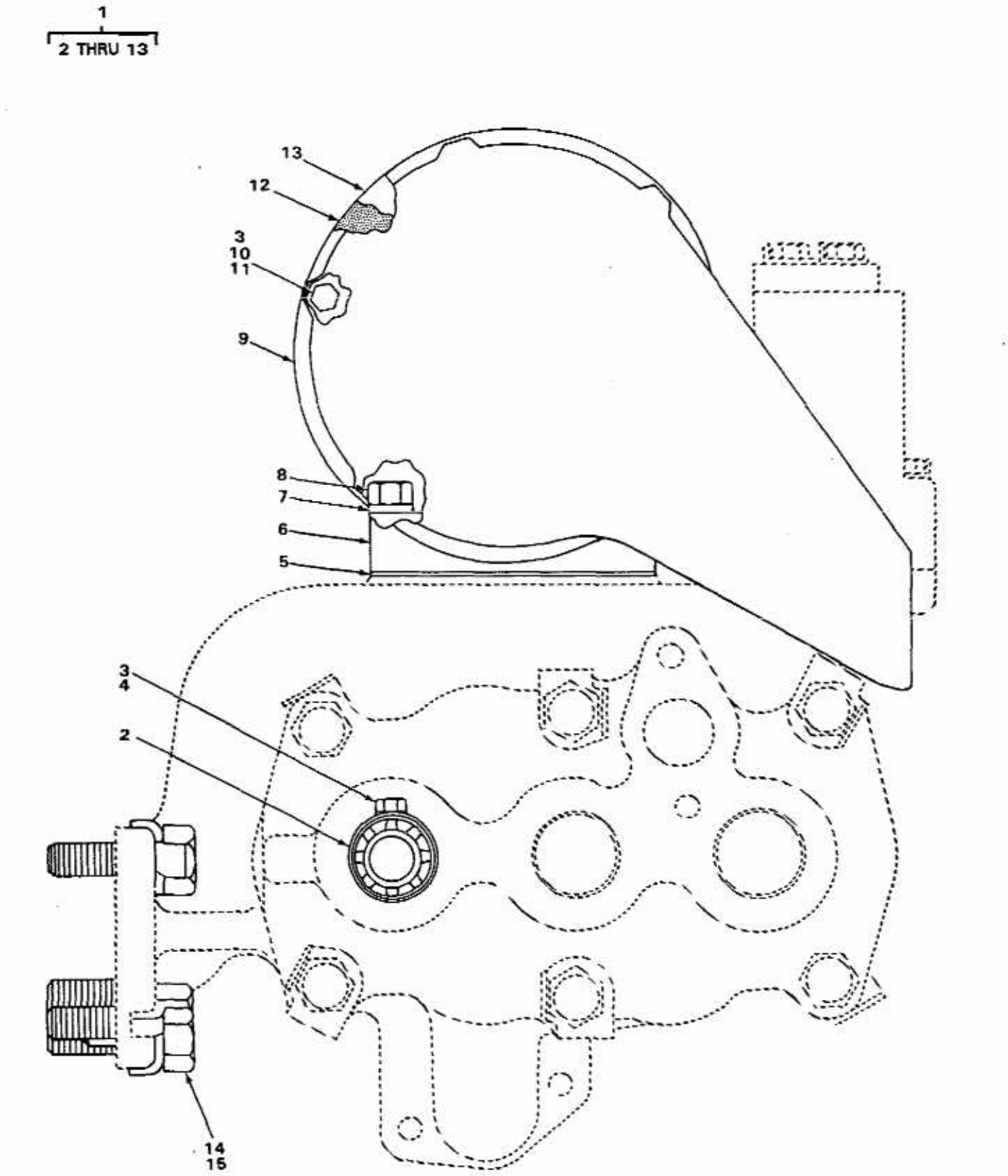

FIGURE 21. OIL PUMP COVER, SCREEN AND BELL

(1) ITEM NO	(2) SMR CODE	(3) NSN	(4) CAGEC	(5) PART NUMBER	(6) DESCRIPTION AND USABLE ON CODES(UOC)	(7) QTY
					GROUP 0106 ENGINE LUBRICATION SYSTEM	
					FIG. 21 OIL PUMP COVER, SCREEN AND BELL	
1	AFHHH		11083	1P9340	PUMP GP,ENG OIL.....	1
2	PFHZZ	3010001258037	11083	3H3387	.COUPLING,SHAFT,RIGI.....	1
3	PFHZZ	5306004238784	11083	7B2742	.BOLT,MACHINE.....	7
4	PFHZZ	5310011602034	11083	2D6235	.NUT,SELF-LOCKING,HE.....	1
5	PAHZZ	5330005301247	11083	5H2730	.GASKET PART OF KIT P/N 2P-3988.....	1
6	PFHZZ	2990011036815	11083	1S4281	.COVER.....	1
7	XBHZZ	5310009228691	11083	8M7587	.LOCK PART OF KIT P/N 2P-3988.....	2
8	PFHZZ	5306004238194	11083	1A2029	.BOLT,MACHINE.....	2
9	XDHZZ		11083	1S4303	.BELL.....	1
10	PAHZZ	5340003528560	11083	8F8682	.LOCKING PLATE,NUT A PART OF KIT P/N 2P-3988.....	2
11	XBHZZ		11083	7M168	.LOCK SHORT.....	1
12	PAHZA	5330002533224	11083	7M4353	.GASKET PART OF KIT P/N 2P-3988.....	2
13	XDHZZ		11083	2S2726	.SCREEN A.....	1
14	PFHZZ	5306008744001	11083	6H1717	BOLT,MACHINE.....	5
15	PFHZZ	5310005240260	11083	2B1738	WASHER,KEY PART OF KIT P/N 2P-3988..	5

END OF FIGURE

1	5	16	20	23
2 THRU 31	6 THRU 8	17 AND 18	21 AND 22	24 THRU 27

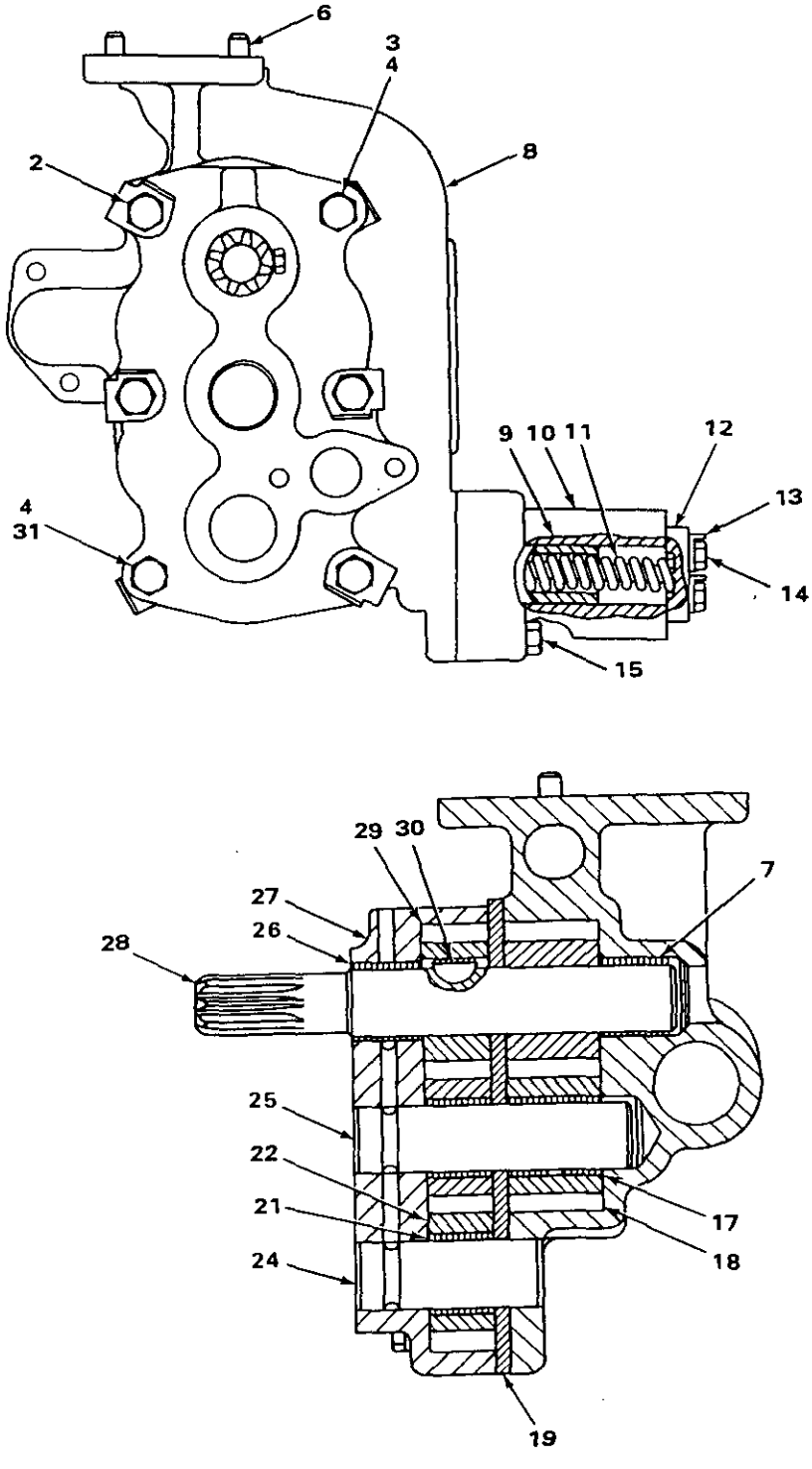

FIGURE 22. OIL PUMP.

(1) ITEM NO	(2) SMR CODE	(3) NSN	(4) CAGEC	(5) PART NUMBER	(6) DESCRIPTION AND USABLE ON CODES(UOC)	(7) QTY
					GROUP 0106 ENGINE LUBRICATION SYSTEM	
					FIG. 22 OIL PUMP	
1	PFHHZ	2990011057582	11083	7N4170	PUMP GROUP	1
2	PFHZZ	5306004263080	11083	1A5822	.BOLT,MACHINE	4
3	PFHZZ	5305000085971	11083	8S9089	.SCREW,CAP,HEXAGON H	1
4	PFHZZ	5310007680318	96906	MS51967-14	.NUT,PLAIN,HEXAGON	2
5	XDHZZ		11083	7N4169	.BODY ASSEMBLY	1
6	PFHZZ	5315003627367	11083	5B5812	..PIN,STRAIGHT,HEADLE	2
7	PFHZZ	3120008515554	11083	1H30	..BEARING,SLEEVE	1
8	XAHZZ		11083	7N4168	..BODY	1
9	PFHZZ	2530010698802	11083	1S3898	.PLUNGER	1
10	XAHZZ		11083	4S9792	.BODY	1
11	PFHZZ	5360004552793	11083	1S3921	.SPRING,HELICAL,COMP	1
12	PFHZZ	5340009214388	11083	9M0009	.COVER,ACCESS	1
13	PFHZZ	5310004324064	11083	9M1974	.WASHER,FLAT	2
14	PFHZZ	5306008148967	11083	2H3755	.BOLT,MACHINE	2
15	PFHZZ	5305010269518	11083	0S1571	.SCREW,CAP,HEXAGON H	2
16	PFHHZ	3020002303166	11083	7E0196	.GEAR ASSEMBLY	1
17	PFHZZ	3120002377342	11083	9M4823	..BEARING,SLEEVE	2
18	XAHZZ		11083	7E0179	..GEAR	1
19	XAHZZ		11083	1S4220	.SPACER	1
20	PFHHZ	3020010675630	11083	1S4282	.GEAR A	2
21	PFHZZ	3120002387429	11083	1S4203	..BEARING,SLEEVE	2
22	XDHZZ		11083	7E0178	..GEAR	1
23	PFHHZ	2910010687276	11083	1S4380	.BODY	1
24	PFHZZ	2530010675555	11083	1S4190	..SHAFT	1
25	PFHZZ	2530010675554	11083	1S4180	..SHAFT	1
26	PFHZZ	3120002968102	11083	2H2356	..BEARING,SLEEVE	1
27	XAHZZ		11083	1S4374	..BODY	1
28	PFHZZ	3040013776785	11083	7E5929	.SHAFT,STRAIGHT	1
29	PFHZZ	3020013776786	11083	7E0176	.GEAR,SPUR	1
30	PFHZZ	6645010686052	11083	8F7689	.KEY	1
31	PFHZZ	5306002685798	11083	0L1329	.BOLT,MACHINE	1

END OF FIGURE

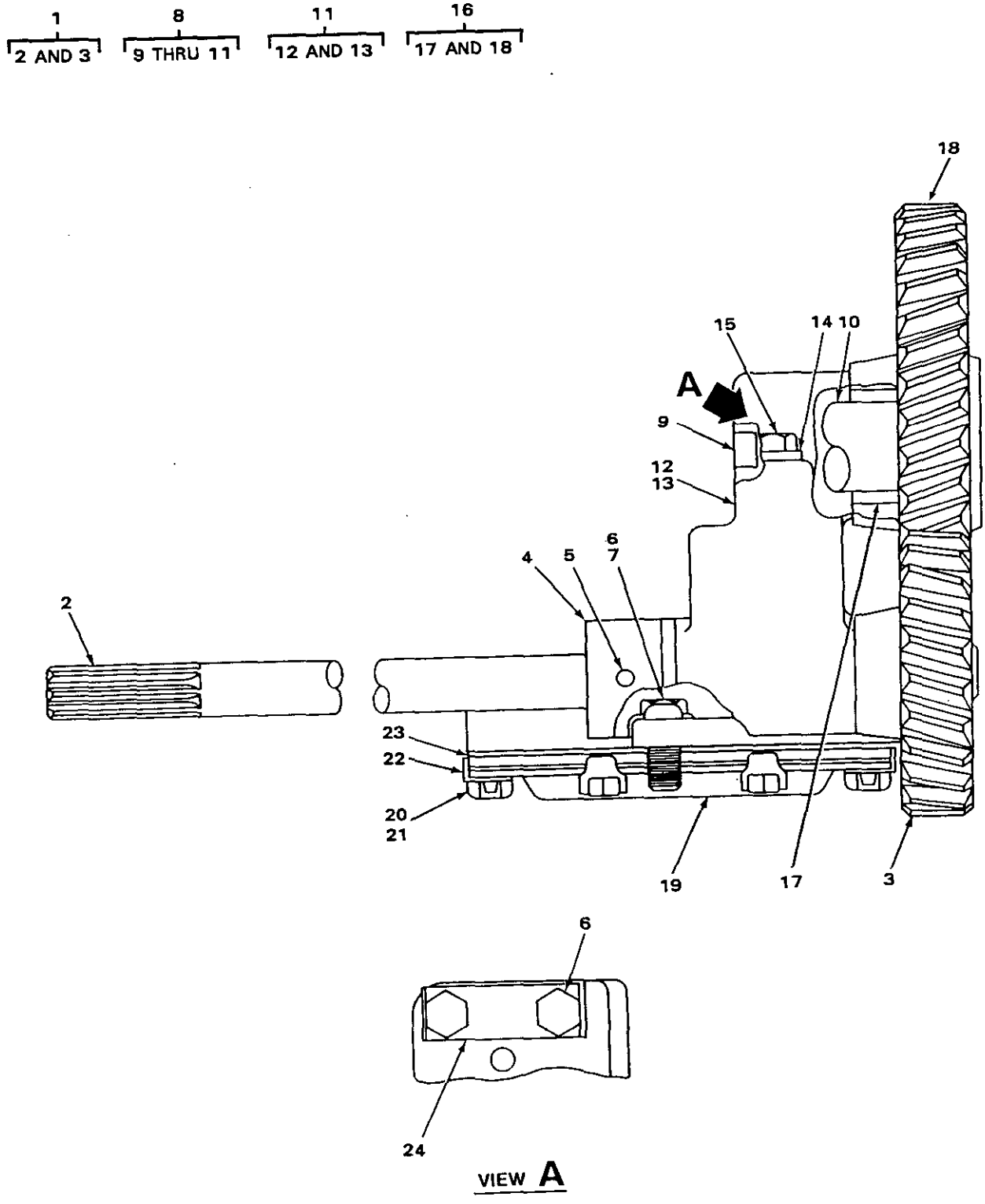

FIGURE 23. OIL PUMP DRIVE.

(1) ITEM NO	(2) SMR CODE	(3) NSN	(4) CAGEC	(5) PART NUMBER	(6) DESCRIPTION AND USABLE ON CODES(UOC)	(7) QTY
					GROUP 0106 ENGINE LUBRICATION SYSTEM	
					FIG. 23 OIL PUMP DRIVE	
1	PFHHZ	2990011036831	11083	7N3349	SHAFT ASSEMBLY.....	1
2	XAHZZ		11083	7N3347	.SHAFT.....	1
3	XAHZZ		11083	7N3351	.GEAR.....	1
4	PFHZZ	2990011036830	11083	7N3346	COLLAR.....	1
5	PFHZZ	5315010689640	11083	5B4696	PIN.....	1
6	PFHZZ	5306002604508	11083	S1594	BOLT,MACHINE.....	3
7	PAHZZ	2930003652152	11083	0L0364	LOCK PLATE PART OF KIT P/N 5P-9224..	1
8	XDHHH		11083	7N4188	BRACKET ASSEMBLY.....	1
9	PFHZZ	5340007373635	19207	7373635	.PLUG,EXPANSION.....	1
10	XDHZZ		11083	7N4186	.SHAFT.....	1
11	XDHHH		11083	7N4187	.BRACKET ASSY.....	1
12	XDHZZ		11083	1F2627	..BEARING,SLEEVE.....	1
13	XDHZZ		11083	7N4192	..BRACKET.....	1
14	PFHZZ	5310001174788	11083	5M2894	WASHER,FLAT.....	1
15	PFHZZ	5305004263085	58312	1A5964-00	SCREW,CAP,HEXAGON H.....	1
16	PFHHZ	3020011036832	11083	7N3350	GEAR ASSEMBLY.....	1
17	PFHZZ	3120008957062	11083	3H3201	.BEARING,SLEEVE.....	1
18	XAHZZ		11083	7N3348	.GEAR.....	1
19	XDHZZ		11083	2F7943	COVER.....	1
20	PFHZZ	5306002264826	80204	B1821BH031C088N	BOLT,MACHINE.....	8
21	PAHZZ	2815004238767	11083	2A5328	LOCK PLATE.....	8
22	PFHZZ	2815004096244	11083	2F7940	SCREEN ASSEMBLY,OIL.....	1
23	PAHZZ	5330008058771	11083	2F7941	GASKET PART OF KIT P/N 2P-3988.....	2
24	PFHZZ	5340008793056	11083	3H3451	LOCKING PLATE,NUT A PART OF KIT P/N 2P-3988 PART OF KIT P/N 5P-9552.....	1

END OF FIGURE

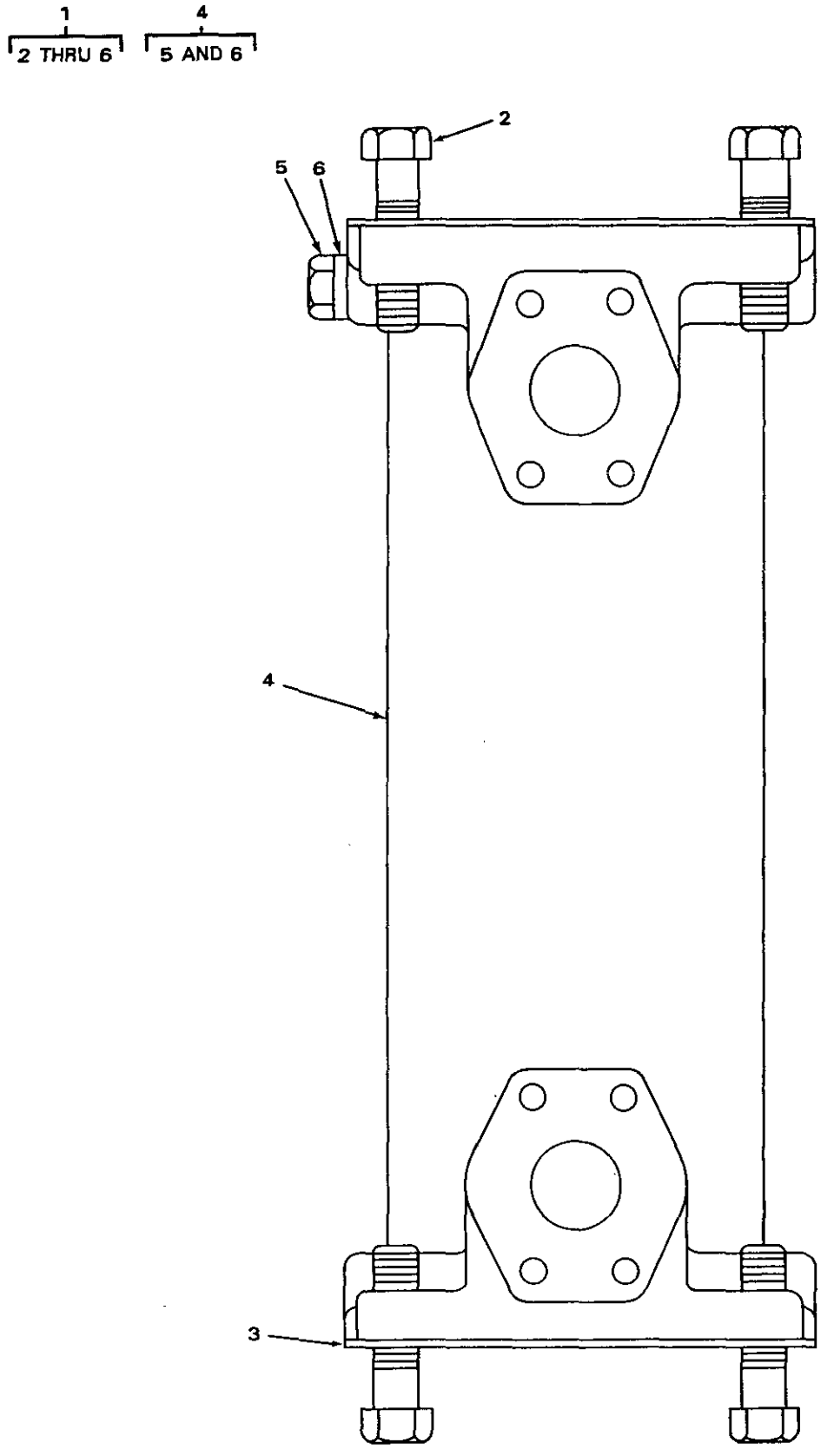

FIGURE 24. ENGINE OIL COOLER.

(1) ITEM NO	(2) SMR CODE	(3) NSN	(4) CAGEC	(5) PART NUMBER	(6) DESCRIPTION AND USABLE ON CODES(UOC)	(7) QTY
					GROUP 0106 ENGINE LUBRICATION SYSTEM	
					FIG. 24 ENGINE OIL COOLER	
1	XDFFF		11083	6N2676	COOLER,OIL.....	1
2	PFFZZ	5306004240086	11083	7B3235	.BOLT,MACHINE.....	8
3	PAFZZ	5330009490735	11083	5M2622	.GASKET PART OF KIT P/N 5P-9233.....	2
4	PFFZZ	2520010483938	11083	6N9653	.CORE ASSEMBLY,COOLE.....	1
5	PFFZZ	5306001332090	11083	1K6705	..BOLT,MACHINE.....	1
6	PFFZZ	5310003627988	11083	6F7062	..WASHER,FLAT.....	1

END OF FIGURE

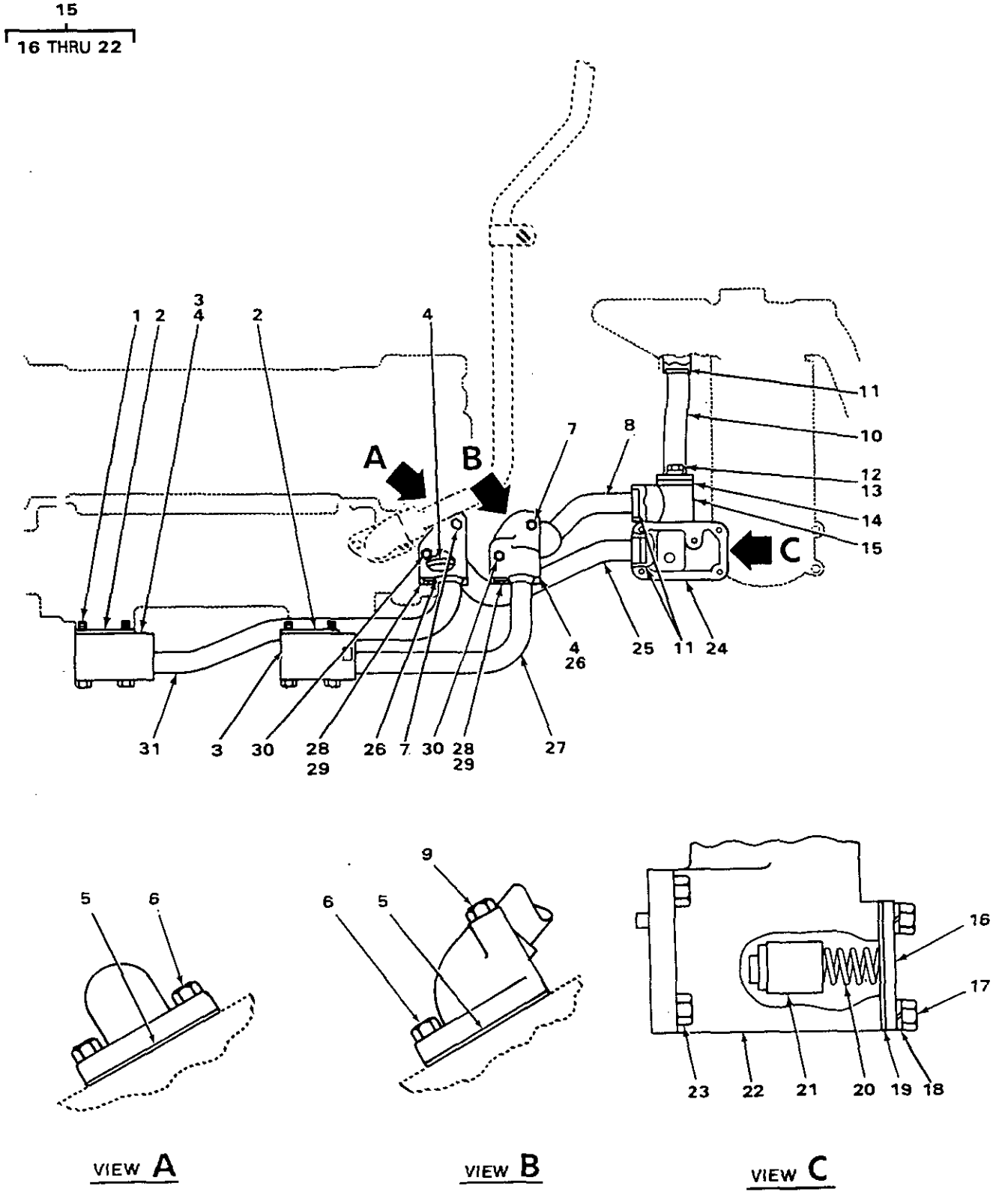

FIGURE 25. ENGINE OIL COOLER LINES.

(1) ITEM NO	(2) SMR CODE	(3) NSN	(4) CAGEC	(5) PART NUMBER	(6) DESCRIPTION AND USABLE ON CODES(UOC)	(7) QTY
					GROUP 0106 ENGINE LUBRICATION SYSTEM	
					FIG. 25 ENGINE OIL COOLER LINES	
1	PFOZZ	5306002638950	11083	3B8428	BOLT,MACHINE	8
2	PAOZZ	5330010689820	11083	5H4759	GASKET PART OF KIT P/N 5P-9233	2
3	XDOZZ		11083	6N0085	ELBOW	2
4	PFOZZ	5331009486068	11083	8M4991	O-RING	4
5	PAOZZ	5330005846161	11083	9H8217	GASKET PART OF KIT P/N 2P-3988 PART OF KIT P/N 5P-9233	4
6	PFOZZ	5306002604508	11083	S1594	BOLT,MACHINE	3
7	PFOZZ	5305010156841	11083	0S1591	SCREW	2
8	XDOZZ		11083	2P5100	TUBE ASSEMBLY	1
9	PFOZZ	2910003099473	11083	0T0573	CAPSCREW,FUEL PUMP	1
10	XDOZZ		11083	8N6674	TUBE ASSEMBLY	1
11	PAOZZ	5331005901064	11083	5H7370	O-RING PART OF KIT P/N 5P-9233	3
12	PFOZZ	5305000680511	80204	B1821BH038C125N	SCREW,CAP,HEXAGON H	2
13	PFOZZ	5310001174788	11083	5M2894	WASHER,FLAT	2
14	PAOZZ	5330004392716	58312	6L5305-00	GASKET PART OF KIT P/N 5P-9233	1
15	PFOOO	4820010687135	11083	2P5089	VALVE	1
16	PFOZZ	5340004239937	11083	6B830	.COVER,ACCESS	1
17	PFOZZ	5305000712506	80204	B1821BH025C050N	.SCREW,CAP,HEXAGON H	2
18	PFOZZ	5310004079566	96906	MS35338-45	.WASHER,LOCK	2
19	PAOZZ	5330005578514	11083	7S6744	.GASKET PART OF KIT P/N 5P-9233	1
20	PFOZZ	5360009508251	11083	8M3182	.SPRING,HELICAL,COMP	1
21	PFOZZ	5340004999648	11083	1P1367	.PLUNGER,DETENT	1
22	XAOZZ		11083	2P5087	.BODY	1
23	PFOZZ	5310007257382	96906	MS35690-624	NUT,PLAIN,HEXAGON	4
24	PAOZZ	5330010704701	11083	2P5086	GASKET PART OF KIT P/N 5P-9233	1
25	XDOZZ		11083	2P5102	TUBE ASSEMBLY	1
26	XDOZZ		11083	6N0082	ELBOW	2
27	XDOZZ		11083	6N0077	TUBE ASSEMBLY	1
28	PFOZZ	5305002528919	11083	0S0509	SCREW,CAP,HEXAGON H	2
29	PFOZZ	5310009054462	19207	8356699	WASHER,FLAT	2
30	PFOZZ	5306002851368	11083	L1143	BOLT,MACHINE	2
31	XDOZZ		11083	6N0079	TUBE ASSEMBLY	1

END OF FIGURE

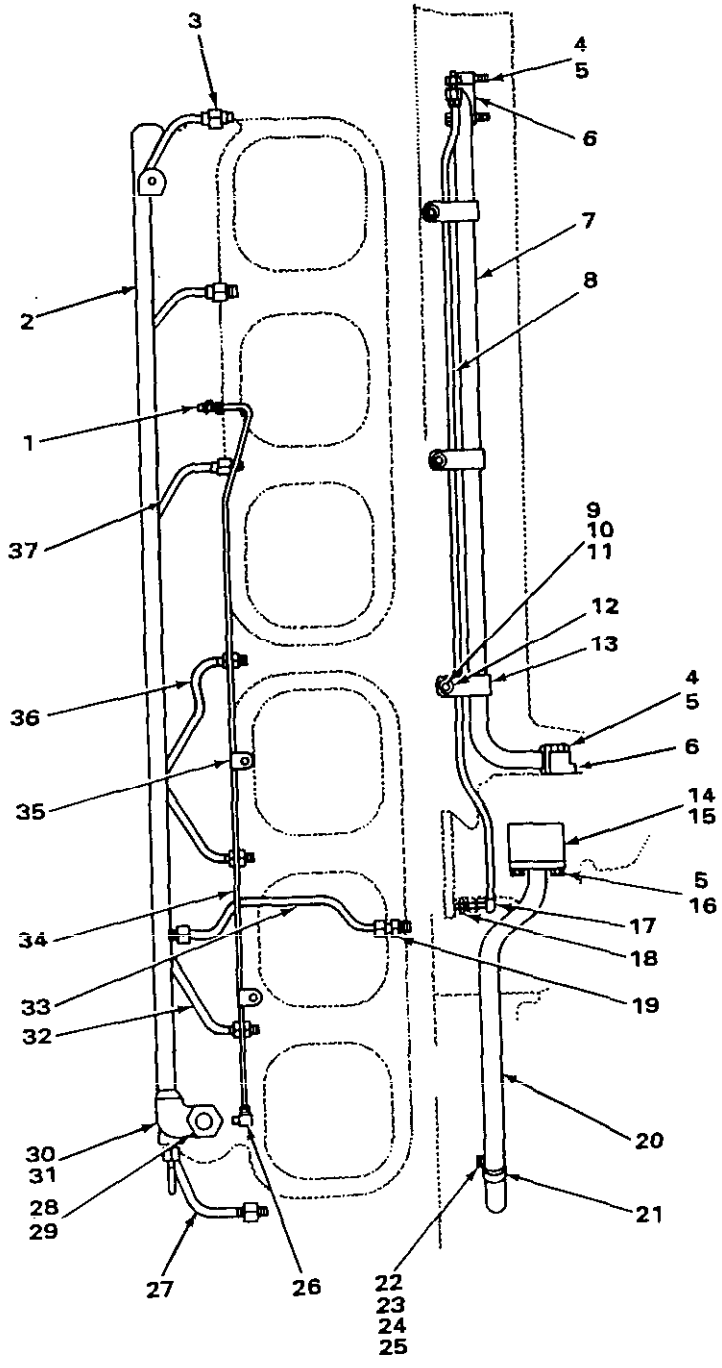

FIGURE 26. OIL MANIFOLD LINES.

(1) ITEM NO	(2) SMR CODE	(3) NSN	(4) CAGEC	(5) PART NUMBER	(6) DESCRIPTION AND USABLE ON CODES(UOC)	(7) QTY
					GROUP 01D6 ENGINE LUBRICATION SYSTEM	
					FIG. 26 OIL MANIFOLD LINES	
1	PFOZZ	4730010686081	11083	6L3616	FITTING	1
2	PFOZZ	2815001303691	11083	6H4050	MANIFOLD ASSEMBLY,O	1
3	PFOZZ	4730003528509	11083	8F0236	ADAPTER,STRAIGHT,TU	8
4	PFOZZ	5305010156841	11083	0S1591	SCREW	4
5	PAOZZ	2930003652152	11083	DL0364	LOCK PLATE PART OF KIT P/N 5P-9233 PART OF KIT P/N 5P-9552	6
6	PAOZZ	5330002975196	11083	T225	GASKET PART OF KIT P/N 5P-9233	2
7	XDOZZ		11083	1S4284	TUBE ASSEMBLY	1
8	PFOZZ		11083	7N4298	TUBE ASSY	1
9	PFOZZ	5305002528919	11083	0S0509	SCREW,CAP,HEXAGON H	3
10	PFOZZ	5310010588071	11083	2K4973	LOCKNUT PART OF KIT P/N 7N3802	3
11	PFOZZ	5310001174788	11083	5M2894	WASHER,FLAT	3
12	XDOZZ		11083	7M6425	CLIP	3
13	XDOZZ		11083	2L9653	CLAMP,LOOP	3
14	PFOZZ	5365010675631	11083	2S8897	SPACER	1
15	XDOZZ		11083	9M5376	GASKET PART OF KIT P/N 5P-9233 PART OF KIT P/N 5P-9552	2
16	PFOZZ	5306004262932	11083	0S1619	BOLT,MACHINE	2
17	PFOZZ	4730010518745	11083	6K9194	ELBOW,TUBE	1
18	PFOZZ	4730009951559	96906	MS51500A6	ADAPTER,STRAIGHT,PI	2
19	XDOZZ		11083	0L1546	ADAPTER,STRAIGHT,PI	1
20	XDOZZ		11083	1P1713	TUBE ASSEMBLY	1
21	PFOZZ	5340012387288	11083	3A3692	CLAMP,LOOP	1
22	PFOZZ	5360004239986	11083	6B9549	SPRING,HELICAL,COMP	1
23	PFOZZ	5310012662481	11083	4B4278	WASHER,FLAT	1
24	PFOZZ	5310002214696	11083	1B4442	NUT,PLAIN,CASTELLAT	1
25	PAOZZ	5315008161794	00198	PK379	PIN,COTTER	1
26	PFOZZ	4730010599435	11083	5K9243	ELBOW,PIPE TO TUBE	1
27	XDOZZ		11083	5H4380	TUBE ASSEMBLY	1
28	PFOZZ	4730010686055	11083	4H8985	FITTING	1
29	PAOZZ	5365002551231	11083	6B7020	SPACER,RING PART OF KIT P/N 5P-9552.	2
30	XDOZZ		11083	6H3369	ELBOW	1
31	PAOZZ	5331009995504	11083	8M4446	O-RING PART OF KIT P/N 5P-9552	1
32	XDOZZ		11083	6H4047	TUBE ASSEMBLY,METAL	2
33	XDOZZ		11083	6H3035	TUBE	1
34	PFOZZ	4710013784888	11083	4N3277	TUBE ASSEMBLY,METAL	1
35	PFOZZ	5340008755251	11083	4H8878	CLAMP,LOOP	2
36	PFOZZ	4710006579697	11083	6H4045	TUBE ASSEMBLY,METAL	2
37	PFOZZ	4710006579694	11083	6H4043	TUBE ASSEMBLY,METAL	3

END OF FIGURE

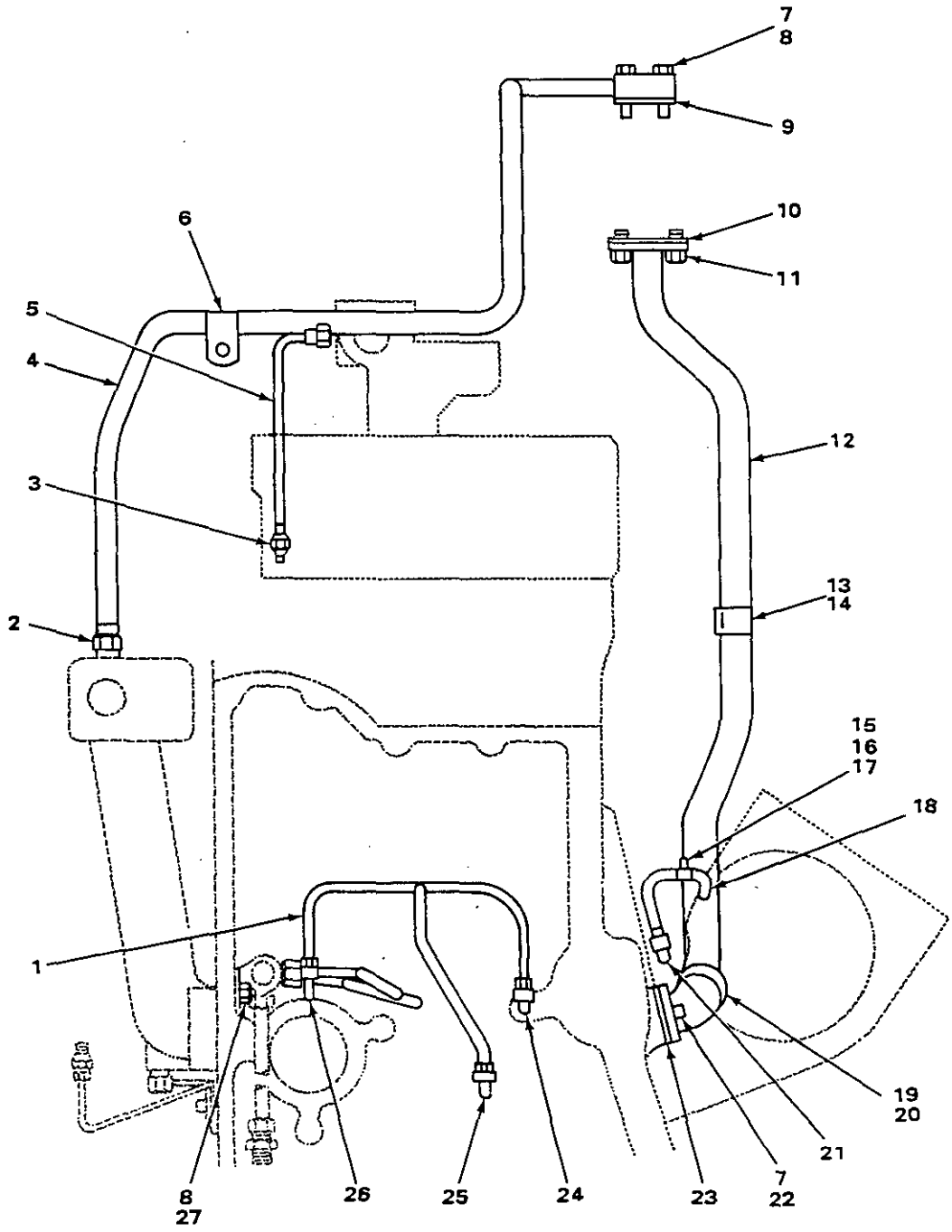

FIGURE 27. OIL LINES.

(1) ITEM NO	(2) SMR CODE	(3) NSN	(4) CAGEC	(5) PART NUMBER	(6) DESCRIPTION AND USABLE ON CODES(UOC)	(7) QTY
					GROUP 0106 ENGINE LUBRICATION SYSTEM	
					FIG. 27 OIL LINES	
1	PFOZZ	4710003411479	11083	5N8405	TUBE,BENT,METALLIC.....	1
2	PFOZZ	4730010534693	11083	6K8079	ADAPTER,STRAIGHT,PI.....	1
3	PFOZZ	4730003675013	11083	1F3278	ADAPTER,STRAIGHT,PI.....	4
4	PFOZZ	4710013785905	11083	8N1435	TUBE ASSEMBLY,METAL.....	1
5	PFOZZ	4710001311610	11083	4H7292	TUBE,BENT,METALLIC.....	2
6	PFOZZ	5340012553577	11083	2B3243	CLAMP,LOOP.....	1
7	PFOZZ	5306002604508	11083	S1594	BOLT,MACHINE.....	3
8	PFOZZ	5310001174788	11083	5M2894	WASHER,FLAT.....	2
9	PAOZZ	5330000743513	11083	4H9541	GASKET.....	1
10	XDOZZ		11083	7N7559	GASKET.....	1
11	PFOZZ	5305010156841	11083	0S1591	SCREW.....	2
12	XDOZZ		11083	5N6969	TUBE ASSEMBLY,METAL.....	1
13	PFOZZ	5342010689739	11083	1S1476	CLIP.....	1
14	PFOZZ	5310002213150	11083	0L1365	WASHER,FLAT.....	1
15	PFOZZ	5305000687837	80204	B1821BH025C063N	SCREW,CAP,HEXAGON H.....	1
16	PFOZZ	5310004238296	11083	1A9109	WASHER,FLAT.....	1
17	PFOZZ	5340002827519	96906	MS21333-34	CLAMP,LOOP.....	1
18	PFOZZ	4710003411518	11083	6H3142	TUBE,BENT,METALLIC.....	1
19	XDOZZ		11083	6N0076	ELBOW.....	1
20	PAOZZ	5330008474351	11083	9M4849	SEAL,RING PART OF KIT P/N 5P-9228 PART OF KIT P/N 6V-3710 PART OF KIT P/N 6V-3711.....	1
21	PFOZZ	4730012505861	11083	6B9673	ADAPTER,STRAIGHT,PI.....	1
22	PFOZZ	2910003099473	11083	0T0573	CAPSCREW,FUEL PUMP.....	1
23	PAOZZ	5330002977228	11083	7F7590	GASKET PART OF KIT P/N 5P-9552.....	1
24	PFOZZ	4730008828621	58312	3B8998-00	ELBOW,PIPE TO TUBE.....	1
25	PFOZZ	4730002032866	19207	10951182	ELBOW,PIPE TO TUBE.....	1
26	PFOZZ	4730004840558	11083	3B9003	ELBOW,PIPE TO TUBE.....	1
27	PAHZZ	5330014410462	11083	7N3802	GASKET SET PART OF KIT P/N 7N3802...	1

END OF FIGURE

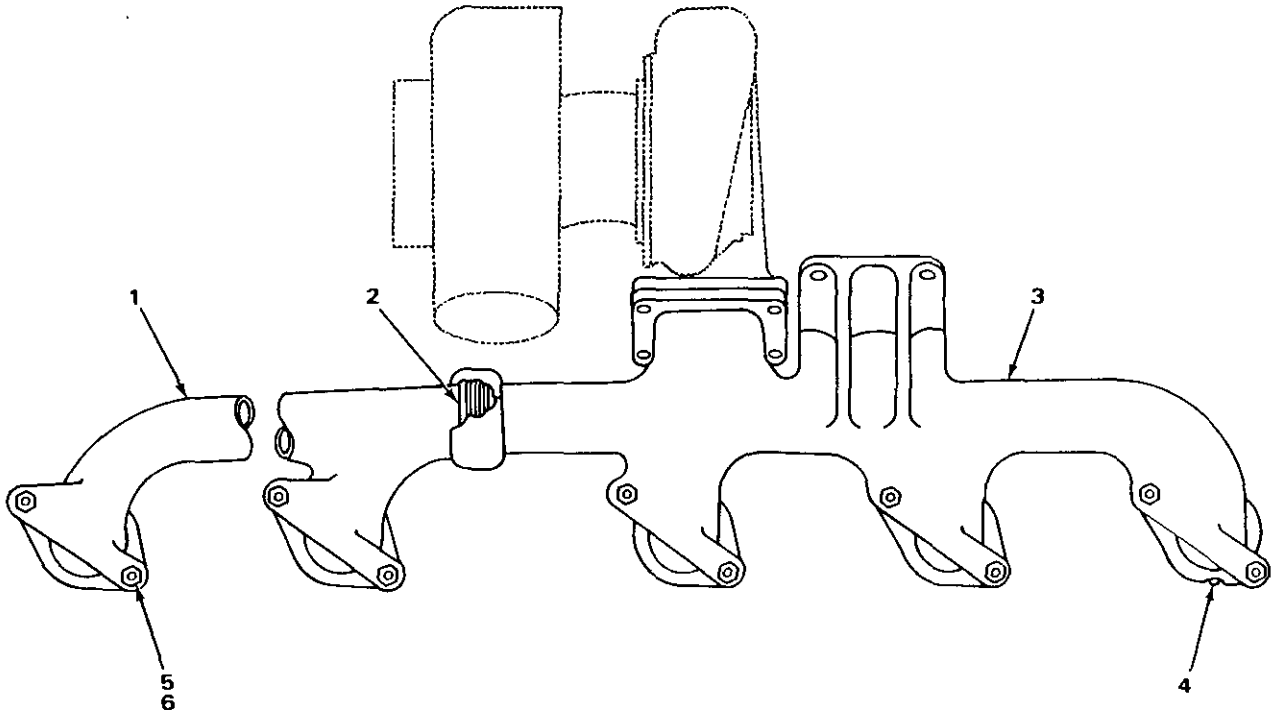

FIGURE 28. EXHAUST MANIFOLD.

(1) ITEM NO	(2) SMR CODE	(3) NSN	(4) CAGEC	(5) PART NUMBER	(6) DESCRIPTION AND USABLE ON CODES(UOC)	(7) QTY
					GROUP 0108 MANIFOLDS	
					FIG. 28 EXHAUST MANIFOLD	
1	PFFZZ	2815013613906	11083	5N8657	MANIFOLD,EXHAUST.....	1
2	PFFZZ	5365010687153	11083	2S9874	RING.....	2
3	PFFZZ	2815010687156	11083	3S2252	MANIFOLD.....	1
4	PAFZZ	5330008957037	11083	8H3190	GASKET PART OF KIT P/N 5P-9233 PART OF KIT P/N 6V-6360.....	6
5	PFFZZ	5310008287334	11083	1B5357	NUT,PLAIN,HEXAGON.....	12
6	PFFZZ	5310006299613	19207	6299613	WASHER,FLAT.....	12

END OF FIGURE

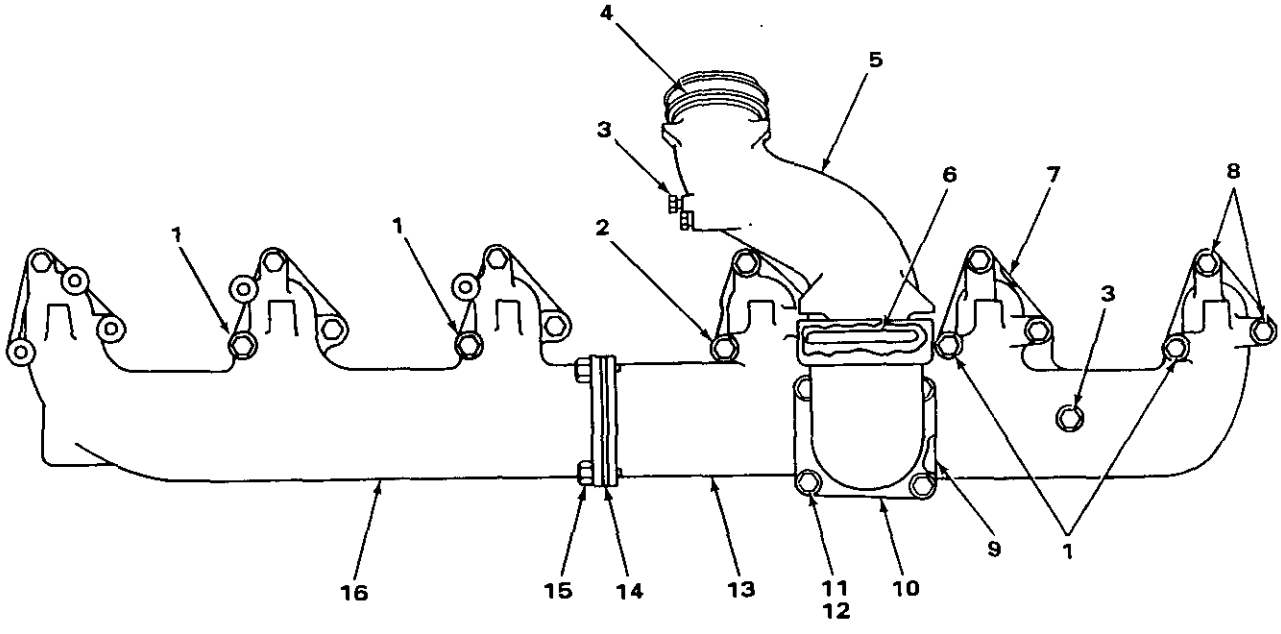

FIGURE 29. INLET MANIFOLD, 4N4445 ENGINE.

(1) ITEM NO	(2) SMR CODE	(3) NSN	(4) CAGEC	(5) PART NUMBER	(6) DESCRIPTION AND USABLE ON CODES(UOC)	(7) QTY
					GROUP 0108 MANIFOLDS	
					FIG. 29 INLET MANIFOLD, 4N4445 ENGINE	
1	PFFZZ	5306002724229	11083	1D4569	BOLT,MACHINE.....	4
2	PFFZZ	5306007662182	11083	2B2006	BOLT,MACHINE.....	1
3	PFFZZ	4730009247886	11083	5M6214	PLUG,PIPE.....	3
4	PAFZZ	5331000743773	11083	4L8337	O-RING PART OF KIT P/N 2P-3988 PART OF KIT P/N 5P-9228 PART OF KIT P/N 6V-3711.....	2
5	PFFZZ	2805012506496	11083	4N9926	PIPE,INTAKE.....	1
6	PAFZZ	5331007083815	11083	6H1871	O-RING PART OF KIT P/N 2P-3988 PART OF KIT P/N 6V-3711.....	2
7	PAFZZ	5330008957032	11083	8H5324	GASKET PART OF KIT P/N 2P-3988 PART OF KIT P/N 6V-6358.....	6
8	PFFZZ	5306004263080	11083	1A5822	BOLT,MACHINE.....	11
9	XDFZZ		11083	8H8754	GASKET PART OF KIT P/N 6V-6358 PART OF KIT P/N 6V-6360.....	1
10	PFFZZ	4730012507001	11083	4N9927	ELBOW,PIPE TO BOSS.....	1
11	PFFZZ	5306011279361	11083	0S1585	BOLT,MACHINE.....	4
12	PFFZZ	5310004317239	11083	2M0849	WASHER,FLAT.....	4
13	XDFZZ		11083	4N9928	MANIFOLD INLET (REAR) FOR PARTS SERVICE INCLUDE (1) 5M6214 PLUG.....	1
14	PAFZZ	5330005412114	11083	3H3301	GASKET PART OF KIT P/N 6V-6358 PART OF KIT P/N 6V-6360.....	1
15	PFFZZ	5306004238117	11083	S1595	BOLT,MACHINE.....	4
16	XDFZZ		11083	4S6454	MANIFOLD INLET (FRONT).....	1

END OF FIGURE

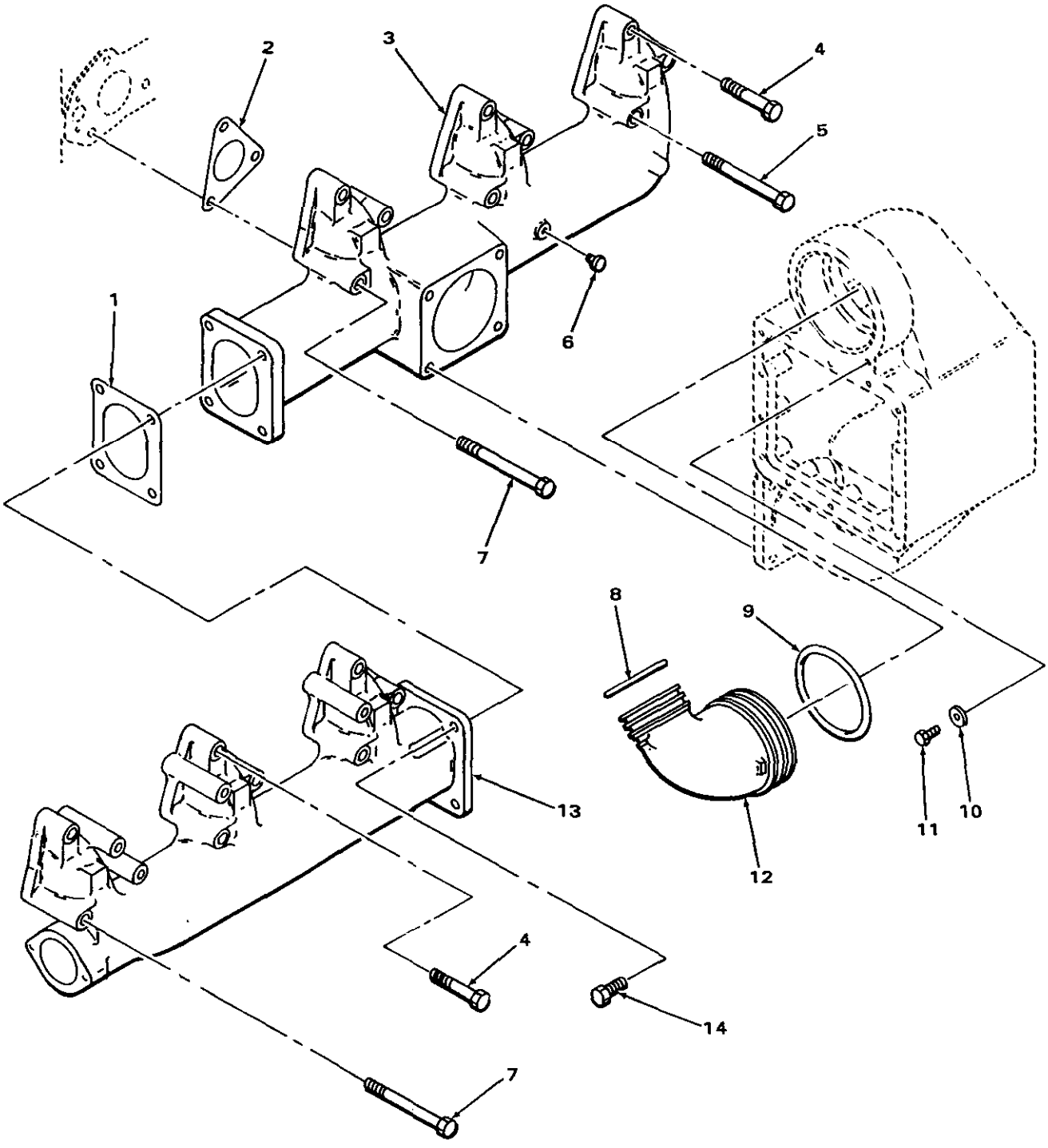

FIGURE 29A. INLET MANIFOLD, 7N3491 AND 5R8866 ENGINES.

(1) ITEM NO	(2) SMR CODE	(3) NSN	(4) CAGEC	(5) PART NUMBER	(6) DESCRIPTION AND USABLE ON CODES(UOC)	(7) QTY
					GROUP 0108 MANIFOLDS	
					FIG. 29A INLET MANIFOLD, 7N3491 AND 5R8866 ENGINES	
1	PAFZZ	5330005412114	11083	3H3301	GASKET PART OF KIT P/N 2P-3988 PART OF KIT P/N 6V-6358.....	1
2	PAFZZ	5330008957032	11083	8H5324	GASKET PART OF KIT P/N 2P-3988 PART OF KIT P/N 6V-6360.....	6
3	XDFZZ		11083	4N9928	MANIFOLD.....	1
4	PFFZZ	5306004263080	11083	1A5822	BOLT,MACHINE.....	11
5	PFFZZ	5306002724229	11083	1D4569	BOLT,MACHINE.....	6
6	PFFZZ	4730009247886	11083	5M6214	PLUG,PIPE.....	1
7	PFFZZ	5306007662182	11083	2B2006	BOLT,MACHINE.....	1
8	PAFZZ	5331000743773	11083	4L8337	O-RING PART OF KIT P/N 6V-3711.....	2
9	PAFZZ	5331007083815	11083	6H1871	O-RING PART OF KIT P/N 5P-9228 PART OF KIT P/N 6V-3711.....	2
10	XDFZZ		96906	MS25440-6A	WASHER,FLAT.....	2
11	PFFZZ	5305002528919	11083	0S0509	SCREW,CAP,HEXAGON H.....	2
12	XDFZZ		11083	6N1498	PIPE,METALLIC.....	1
13	XDFZZ		11083	4S6454	MANIFOLD.....	1
14	PFFZZ	5306004238117	11083	S1595	BOLT,MACHINE.....	4

END OF FIGURE

4
5 THRU 8

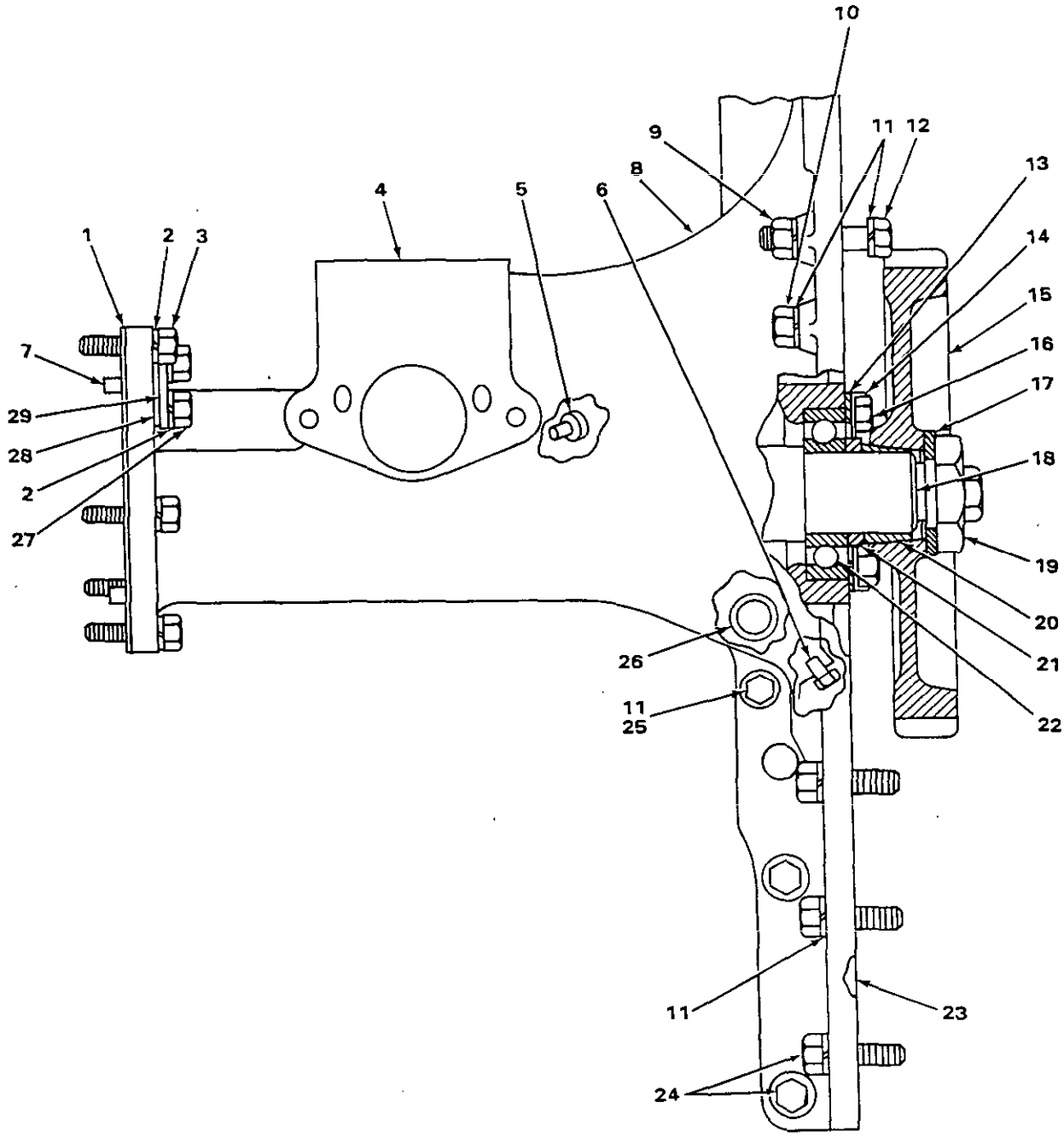

FIGURE 30. ACCESSORY DRIVE.

(1) ITEM NO	(2) SMR CODE	(3) NSN	(4) CAGEC	(5) PART NUMBER	(6) DESCRIPTION AND USABLE ON CODES(UOC)	(7) QTY
					GROUP 0109 ACCESSORY DRIVE MECHANISMS	
					FIG. 30 ACCESSORY DRIVE	
1	PAHZZ	5330000055889	11083	2S7472	GASKET PART OF KIT P/N 5P-9229 PART OF KIT P/N 5P-9556.....	1
2	PFHZZ	5310004079566	96906	MS35338-45	WASHER,LOCK.....	8
3	PFHZZ	5306002264829	80204	B1821BH031C125N	BOLT,MACHINE.....	6
4	PFHZZ	2990011036802	11083	2P5170	HOUSING ASSEMBLY.....	1
5	PFHZZ	5365004193254	11083	2S7905	.PLUG,MACHINE THREAD.....	1
6	PFHZZ	4730000892515	11083	5M6213	.PLUG,PIPE.....	1
7	PFHZZ	5315005141616	11083	2H1190	.PIN,STRAIGHT,HEADLE.....	1
8	XAHZZ		11083	2P4747	.HOUSING.....	1
9	PFHZZ	5310007257382	96906	MS35690-624	NUT,PLAIN,HEXAGON.....	1
10	PFHZZ	5305010156841	11083	0S1591	SCREW.....	1
11	PFHZZ	5310006379541	96906	MS35338-46	WASHER,LOCK USE WITH SERIAL RANGE 77V5006 THRU 77V5258.....	10
12	XDHZZ		11083	0L0478	BOLT.....	1
13	XDHZZ		11083	8H9718	PLATE,RETAINING,BEA.....	1
14	PFHZZ	5340009208201	11083	7M9763	LOCKING PLATE,NUT A.....	2
15	XDHZZ		11083	1W3174	GEAR,CLUSTER.....	1
16	PFHZZ	5305002528919	11083	0S0509	SCREW,CAP,HEXAGON H.....	4
17	XDHZZ		11083	7S9847	WASHER,SPRING TENSI.....	1
18	PFHZZ	2530010690793	11083	1P7295	SHAFT.....	1
19	PFHZZ	5310006197882	11083	9S1313	NUT,PLAIN,HEXAGON.....	1
20	PFHZZ	5365004495817	11083	5S3828	BUSHING,TAPERED.....	1
21	XDHZZ		11083	1P9976	SPACER.....	1
22	PFHZZ	3110005165490	11083	8H9789	BEARING,BALL,ANNULA.....	1
23	PFHZZ	5330008938122	11083	4H8739	CORK STRIP PART OF KIT P/N 2P-3988 PART OF KIT P/N 5P-9556.....	1
24	PFHZZ	5305000680511	80204	B1821BH038C125N	SCREW,CAP,HEXAGON H.....	7
25	PFHZZ	5306011037039	11083	1T0720	BOLT,MACHINE.....	1
26	PAHZZ	5331002919182	11083	2A3307	O-RING PART OF KIT P/N 2P-3988 PART OF KIT P/N 5P-9229.....	1
27	PFHZZ	5306002637298	11083	1A9136	BOLT,MACHINE.....	2
28	PFHZZ	5330000743605	11083	8H9788	GASKET PART OF KIT P/N 5P-9229 PART OF KIT P/N 5P-9556.....	1
29	PFHZZ	5340002511375	11083	8H9787	COVER,ACCESS.....	1

END OF FIGURE

14 15
15 THRU 19 16 THRU 18

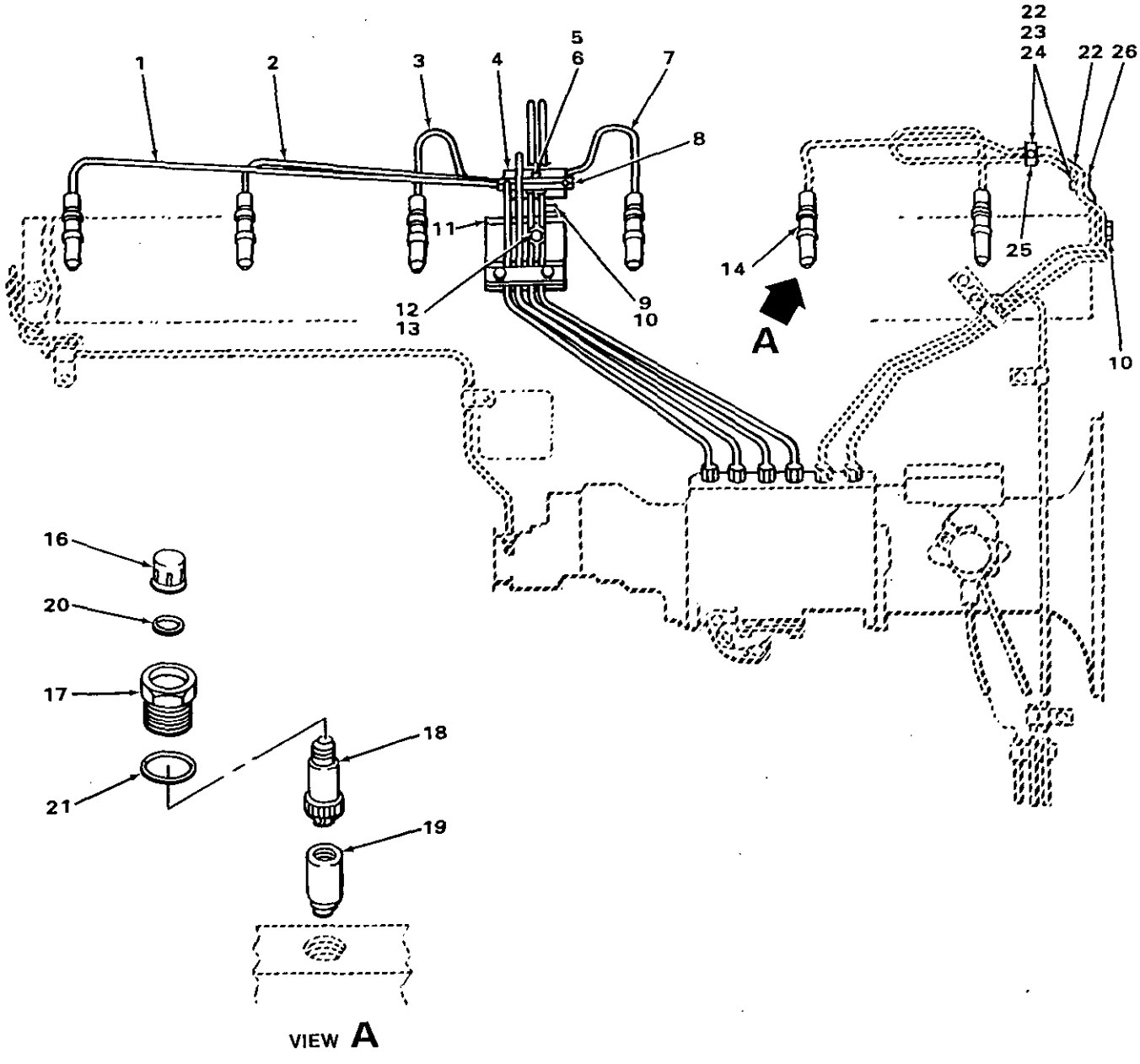

FIGURE 31. FUEL INJECTORS AND LINES.

(1) ITEM NO	(2) SMR CODE	(3) NSN	(4) CAGEC	(5) PART NUMBER	(6) DESCRIPTION AND USABLE ON CODES(UOC)	(7) QTY
					GROUP 03 FUEL SYSTEM	
					GROUP 0301 CARBURETOR, FUEL INJECTOR	
					FIG. 31 FUEL INJECTORS AND LINES	
1	PFOZZ	2910010173814	11083	2P2656	FUEL LINE ASSEMBLY NUMBER 6.....	1
2	PFOZZ	4710010181843	11083	2P2655	TUBE ASSEMBLY,METAL NUMBER 5.....	1
3	PFOZZ	4710010182413	11083	2P2654	TUBE ASSEMBLY,METAL NUMBER 4.....	1
4	PFOZZ	2910002136512	11083	9M6987	RETAINER,LINES,FUEL.....	2
5	PFOZZ	5306002721804	11083	1B2790	BOLT,MACHINE.....	1
6	PFOZZ	2520001497508	11083	6F0857	HOUSING.....	1
7	PFOZZ	2910010181842	11083	2P2653	FUEL LINE,INJECTOR NUMBER 3.....	1
8	PFOZZ	4730010678063	11083	9M6950	CLAMP,HOSE,SPECIAL-.....	2
9	PFOZZ	5306001384466	11083	2H3855	BOLT,MACHINE.....	1
10	PFOZZ	5310005845272	96906	MS35338-48	WASHER,LOCK.....	2
11	XDFZZ		11083	2P2661	BRACKET.....	1
12	PFOZZ	5306002637301	11083	0L1351	BOLT,MACHINE.....	1
13	PFOZZ	5310006379541	96906	MS35338-46	WASHER,LOCK.....	1
14	AFFFF		11083	8N1833	VALVE ASSY.....	6
15	XAOZZ		11083	7N2624	.BODY ASSY.....	1
16	PFOZZ	5340003927334	11083	5F2807	..CAP,PROTECTIVE,DUST.....	1
17	PFOZZ	4730003639320	11083	5H7225	..PACKING NUT.....	1
18	PFOZZ	2910009208213	11083	7M4603	..HOLDER,FUEL INJECTO.....	1
19	PFOZZ	2910011933648	11083	8N1831	.NOZZLE,FUEL INJECTI.....	1
20	PFOZZ	5331013062728	11083	5B3718	O-RING.....	6
21	PFOZZ	5330003335032	11083	6F1069	PACKING WITH RETAIN PART OF KIT P/N 2P-3988 PART OF KIT P/N 6V-3710.....	6
22	PFOZZ	4730010678059	11083	9L8715	CLAMP,HOSE,SPECIAL-.....	3
23	PFOZZ	5306010618635	11083	9L9850	BOLT.....	2
24	PFOZZ	5310008528266	11083	3B4502	WASHER,LOCK.....	2
25	PFOZZ	4730011117800	11083	9L8716	CLAMP,HOSE,SPECIAL-.....	1
26	PFOZZ	5340013773287	11083	7N7103	BRACKET,DOUBLE ANGL.....	1

END OF FIGURE

6
6A

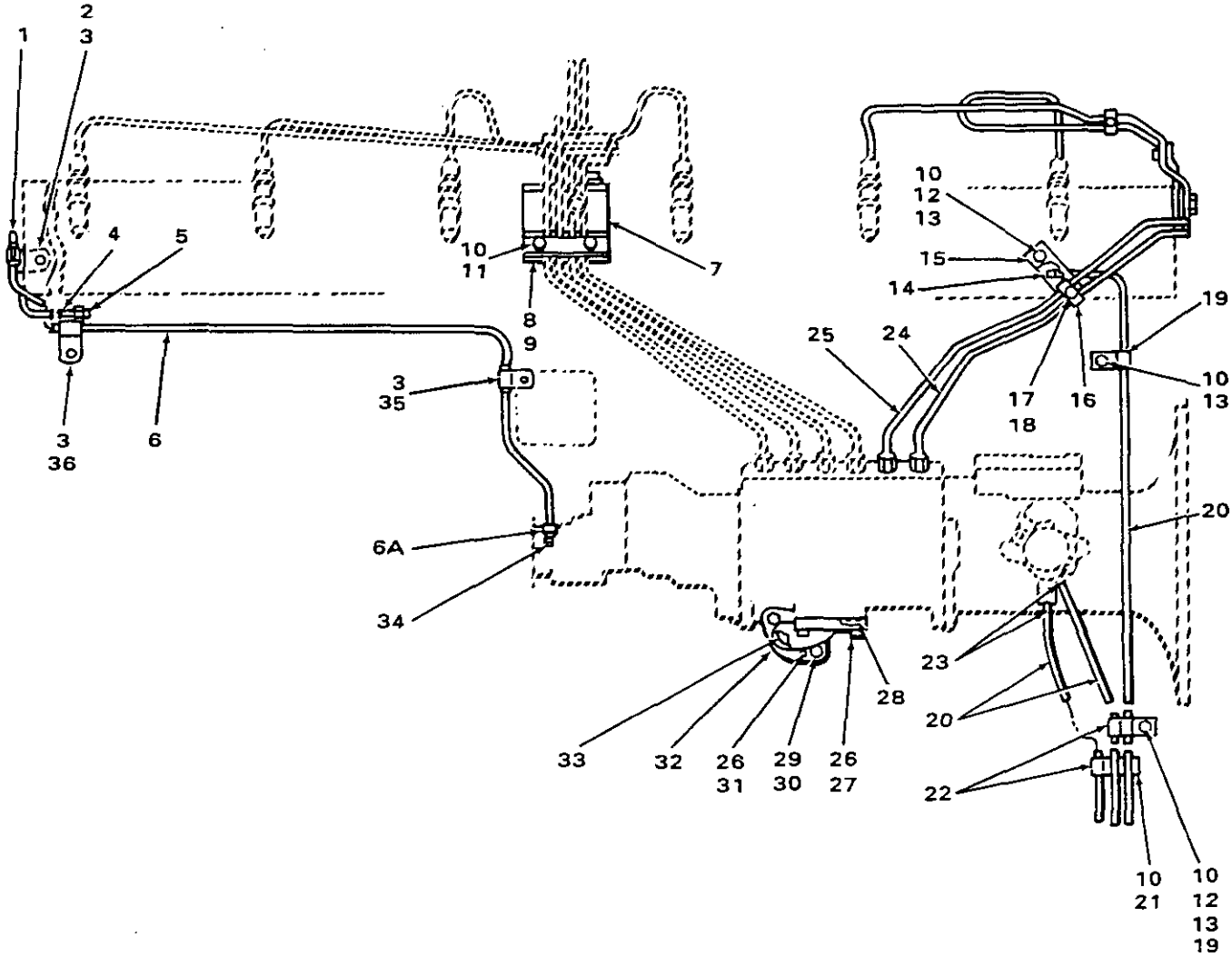

FIGURE 32. FUEL PUMP LINES.

(1) ITEM NO	(2) SMR CODE	(3) NSN	(4) CAGEC	(5) PART NUMBER	(6) DESCRIPTION AND USABLE ON CODES(UOC)	(7) QTY
					GROUP 0302 FUEL PUMPS	
					FIG. 32 FUEL PUMP LINES	
1	PFOZZ	4730010690769	11083	5K9242	COUPLING,TUBE	1
2	PFOZZ	5340004238320	11083	1B3057	CLIP,SPRING TENSION USE WITH SERIAL RANGE 77V5006 THRU 77V9410	1
3	PFOZZ	5365004239380	11083	4B6029	BUSHING,NONMETALLIC PART OF KIT P/N 2P-3988	3
4	PFOZZ	4710012511223	11083	6N1230	TUBE ASSEMBLY,METAL	1
5	PFOZZ	4730010686081	11083	6L3616	FITTING	1
6	XDFFF		11083	2P3892	TUBE ASSY	1
6A	PFOZZ	4730000137397	11083	4B8756	.INVERTED NUT,TUBE C	2
7	XDOZZ		11083	2P2662	BRACKET ASSEMBLY	1
8	PFOZZ	2910004238872	11083	2B4443	CLAMP,LINE,FUEL INJ	2
9	PFOZZ	2910004238550	11083	2A2071	RETAINER,FUEL LINES	1
10	PFOZZ	5310006379541	96906	MS35338-46	WASHER,LOCK	6
11	PFOZZ	5305010156841	96906	MS90728-64	SCREW	2
12	PFOZZ	5310012662481	11083	4B4278	WASHER,FLAT	3
13	PFOZZ	5306002604508	96906	MS90728-8	BOLT,MACHINE	3
14	PFOZZ	4730010690792	11083	1P4022	FITTING	1
15	XBOZZ		11083	2P2665	BRACKET	1
16	PFOZZ	4730010678059	11083	9L8715	CLAMP,HOSE,SPECIAL	2
17	PFFZZ	5306010618635	11083	9L9850	BOLT	1
18	PFOZZ	5310008528266	11083	3B4502	WASHER,LOCK	1
19	PFOZZ	5342009998389	11083	4D8948	CLIP,SPECIAL	2
20	MFFZZ		19207	0626121-42	TUBING NONMETALLIC	1
21	PFFZZ	5340012538964	11083	8S4006	CLAMP,LOOP	1
22	PFOZZ	5340011021789	11083	7D1728	CLIP,RETAINING	2
23	PFOZZ	4730010238633	11083	1P4001	ADAPTER,STRAIGHT,PI	2
24	PFOZZ	4710012505964	11083	7N7091	TUBE ASSEMBLY,METAL NUMBER 1	1
25	PFOZZ	4710012511222	11083	7N7092	TUBE ASSEMBLY,METAL NUMBER 2	1
26	PFOZZ	2520001497508	11083	6F0857	HOUSING	4
27	PFOZZ	5306002264828	11083	4B3388	BOLT,MACHINE	3
28	PFOZZ	5331004317140	11083	8M5260	O-RING PART OF KIT P/N 5P-9229	1
29	PFOZZ	5310005845272	96906	MS35338-48	WASHER,LOCK	2
30	PFOZZ	5306004240086	11083	7B3235	BOLT,MACHINE	2
31	PFOZZ	5306002264833	11083	2B2694	BOLT,MACHINE	1
32	XBOZZ		11083	2P6227	BRACKET	1
33	PAOZZ	5331009138120	58312	8M5254	O-RING PART OF KIT P/N 5P-9229 PART OF KIT P/N 5P-9556 PART OF KIT P/N 6V-6394	2
34	PFOZZ	4730010599435	11083	5K9243	ELBOW,PIPE TO TUBE	1
35	PFOZZ	5340011837009	11083	5D6523	CLAMP,LOOP	1
36	PFOZZ	5342010678043	11083	7B1598	CLIP	1

END OF FIGURE

1	2	10	11	35	39
2 THRU 48	3 THRU 9	11 THRU 24	12 THRU 18	36 THRU 38	40 AND 41

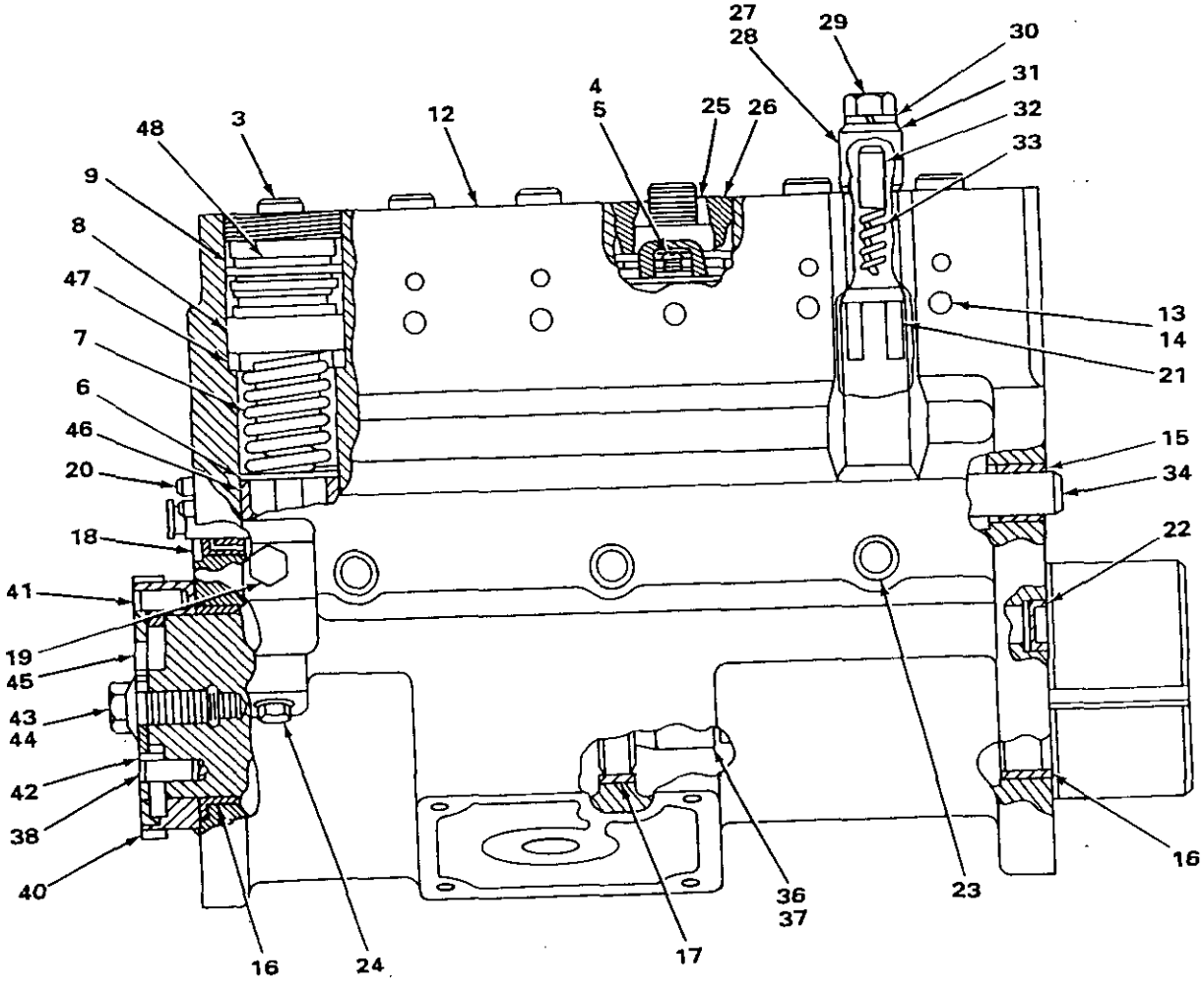

FIGURE 33. FUEL INJECTION PUMP.

(1) ITEM NO	(2) SMR CODE	(3) NSN	(4) CAGEC	(5) PART NUMBER	(6) DESCRIPTION AND USABLE ON CODES(UOC)	(7) QTY
					GROUP 0302 FUEL PUMPS	
					FIG. 33 FUEL INJECTION PUMP	
1	PFFFF	2910010174518	11083	1P9988	PUMP,FUEL,METERING.....	1
2	PFFFZ	2910013773145	11083	7N2868	.PUMP,FUEL,CAM ACTUA.....	6
3	PFFZA	2910001169598	11083	8S3653	..BONNET,DISCHARGE VA.....	1
4	PFFZZ	5360004347160	11083	1S8634	..SPRING,HELICAL,COMP.....	1
5	PFFZZ	4820009371073	11083	2S1631	..DISK,VALVE.....	1
6	PFFZZ	5310011179326	11083	7N1066	..WASHER,SHOULDERED.....	1
7	PFFZZ	5360001913255	11083	1S7592	..SPRING,HELICAL,COMP.....	1
8	PFFZZ	5340012550980	11083	1P6400	..PLUNGER,DETENT.....	1
9	PFFZZ	5325012574598	11083	7W1927	..RING,RETAINING.....	1
10	PFFFZ	2910012506492	11083	9S3902	.HOUSING,FUEL PUMP.....	1
11	PFFFF		11083	1W0488	..HOUSING ASSY.....	1
12	XAFZZ		11083	3S9437	...HOUSING.....	1
13	PFFZZ	5315004387015	11083	1P0234	...PIN,GROOVED,HEADLES.....	6
14	PFFZZ	3110001068848	11083	1P0232	...BALL,BEARING.....	6
15	PFFZZ	3120008541068	11083	9S4160	...BEARING,SLEEVE.....	1
16	PFFZZ	3120000036869	11083	1S7101	...BEARING,SLEEVE.....	2
17	PFFZZ	3120000036870	11083	1S7103	...BEARING,WASHER,THRU.....	1
18	PFFZZ	3120008514696	11083	1S1953	...BEARING,SLEEVE.....	1
19	PFFZZ	4730009247886	11083	5M6214	..PLUG,PIPE.....	1
20	PFFZA	5315003639248	11083	4F6024	..PIN,STRAIGHT,HEADLE.....	2
21	PFFZZ	3120002453219	11083	9S4197	..BUSHING,SLEEVE.....	1
22	PFFZZ	5340002765828	11083	0T0200	..PLUG,EXPANSION.....	1
23	PFFZZ	5315009427167	11083	4M1474	..PIN,SHOULDER,HEADLE.....	3
24	PFFZZ	4730000444688	11083	9F2247	..PLUG,PIPE.....	1
25	PFFZZ	5330008586277	11083	8H9204	.FELT,MECHANICAL,PRE PART OF KIT P/N 5P-9556.....	6
26	PFFZZ	5365008986703	11083	7E5085	.BUSHING,MACHINE THR.....	6
27	XDFZZ		11083	1S9481	.COVER,RACK PIN.....	1
28	PAFZZ	5330001050341	11083	1S9546	.GASKET.....	1
29	PFFZZ	5306002721804	11083	1B2790	.BOLT,MACHINE.....	1
30	PFFZZ	5310004079566	96906	MS35338-45	.WASHER,LOCK.....	1
31	PFFZZ	5310003628168	11083	4B4277	.WASHER,FLAT.....	1
32	PFFZZ	5315000050707	11083	1S9480	.PIN,SHOULDER,HEADED.....	1
33	PFFZZ	5360005979087	11083	8F0394	.SPRING,HELICAL,COMP.....	1
34	PFFZZ	3010010707008	11083	2P8616	.RACK.....	1
35	PFFFZ	2910012508598	11083	8N1122	.CAMSHAFT,METERING A.....	1
36	PFFZZ	5330013775328	11083	8N1121	..RETAINER SLEEVE,SEA.....	1
37	XAFZZ		11083	8N1120	..CAMSHAFT.....	1
38	PFFZZ	5315008937264	11083	2H2255	..PIN,STRAIGHT,HEADLE.....	1
39	PFFFZ	3020009371047	11083	1P7959	.GEAR,SPUR.....	1
40	XAFZZ		11083	5S5125	..GEAR.....	1
41	PFFZZ	5315008937264	11083	2H2255	..PIN,STRAIGHT,HEADLE.....	1
42	PFFZZ	5360010675617	11083	3N2070	.SPRING.....	1
43	PFFZZ	5306002611150	11083	0L0472	.BOLT,MACHINE.....	1
44	PFFZZ	5340006205730	11083	2H3504	.RETAINER,NUT AND BO PART OF KIT P/N 5P-9229 PART OF KIT P/N 5P-9556....	1
45	PFFZZ	2910001169599	11083	2S7461	.PLATE,SPRING RETAIN.....	1
46	PFFZZ	2815002440535	11083	3S9736	.TAPPET,ENGINE POPPE.....	6

(1) ITEM NO	(2) SMR CODE	(3) NSN	(4) CAGEC	(5) PART NUMBER	(6) DESCRIPTION AND USABLE ON CODES(UOC)	(7) QTY
47	XAFZZ		11083	8H9206	.SPACER FOR PTS SRVC FURNISH ANY OF THE FOLLOWING: 2M4208, 2M4209, 2M4210,2M4211,2M4212,5M2691,5M2697, 5S7189, 9N6495,9N6496.....	6
47	PFFZZ	5365004581931	11083	2M4208	.SPACER,RING SPACER - FUEL PUMP TIMING - .174.....	6
47	PFFZZ	5365001498673	11083	2M4209	.SPACER,RING SPACER - FUEL PUMP TIMING - .178.....	6
47	PFFZZ	5365001498640	11083	2M4210	.SPACER,RING SPACER - FUEL PUMP TIMING - .182.....	6
47	PFFZZ	5365001498639	11083	2M4211	.SPACER,RING SPACER - FUEL PUMP TIMING - .186.....	6
47	PFFZZ	5365009811614	11083	2M4212	.SPACER,PLATE SPACER - FUEL PUMP TIMING - .190.....	6
47	PFFZZ	5365001390096	11083	5M2691	.SPACER,RING SPACER - FUEL PUMP TIMING - .194.....	6
47	PFFZZ	5365004928851	11083	5M2697	.SPACER,RING SPACER - FUEL PUMP TIMING - .170.....	6
47	PFFZZ	5365001498683	11083	5S7189	.SPACER,RING SPACER - FUEL PUMP TIMING - .198.....	6
47	PFFZZ	5365011843672	11083	9N6495	.SPACER,RING SPACER - FUEL PUMP TIMING - .165.....	6
47	PFFZZ	5365011850935	11083	9N6496	.SPACER,RING SPACER - FUEL PUMP TIMING - .162.....	6
48	PFFZZ	5331003934054	11083	3D2992	.O-RING PART OF KIT P/N 5P-9229 PART OF KIT P/N 5P-9556..... UOC:T24	6

END OF FIGURE

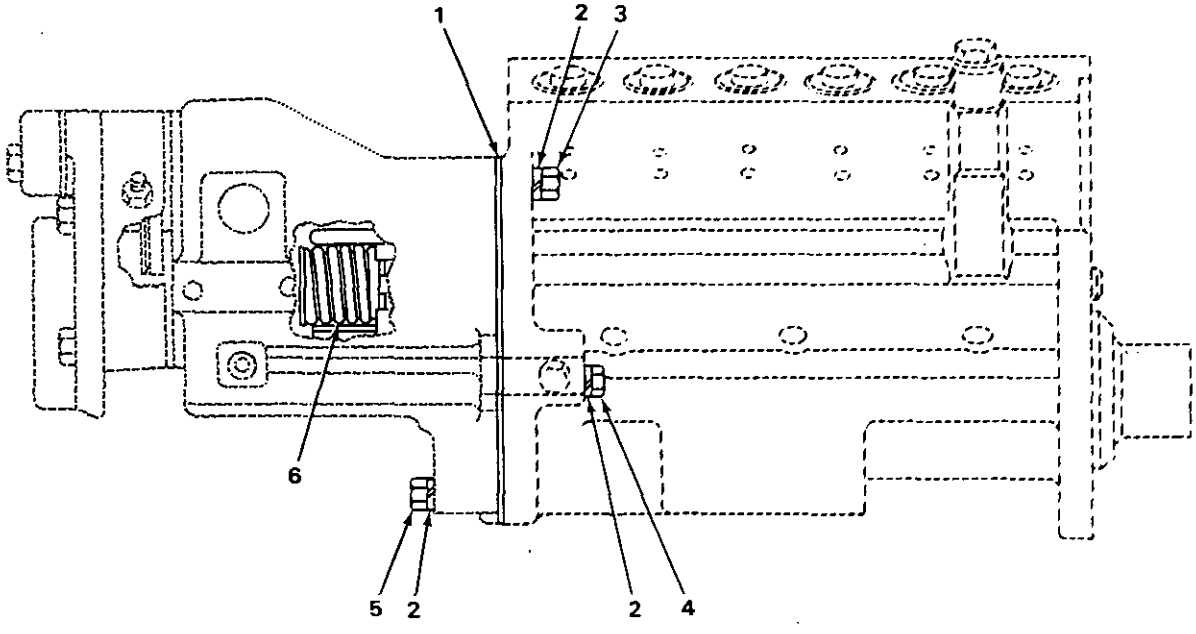

FIGURE 34. FUEL INJECTION PUMP HARDWARE.

(1) ITEM NO	(2) SMR CODE	NSN	(3) CAGEC	(4) PART NUMBER	(5) DESCRIPTION AND USABLE ON CODES (UOC)	(6) QTY	(7)
					GROUP 0302 FUEL PUMPS		
					FIG. 34 FUEL INJECTION PUMP		
					HARDWARE		
1	PAFZZ	5330001948388	11083	359300	GASKET PARTOF KIT P/N 5P-9229	1	
2	PFFZZ	5310004079566	96906	MS35338-45	WASHER, LOCK	6	
3	PFFZZ	5306002264829	11083	187182	BOLT, MACHINE	2	
4	PFFZZ	5306002264833	11083	2B2694	BOLT, MACHINE	I	
5	PFFZZ	5306002264832	11083	1B9575	BOLT, MACHINE	3	
6	PFFZZ	5360010678013	11083	4N5693	SPRING	1	
					END OF FIGURE		

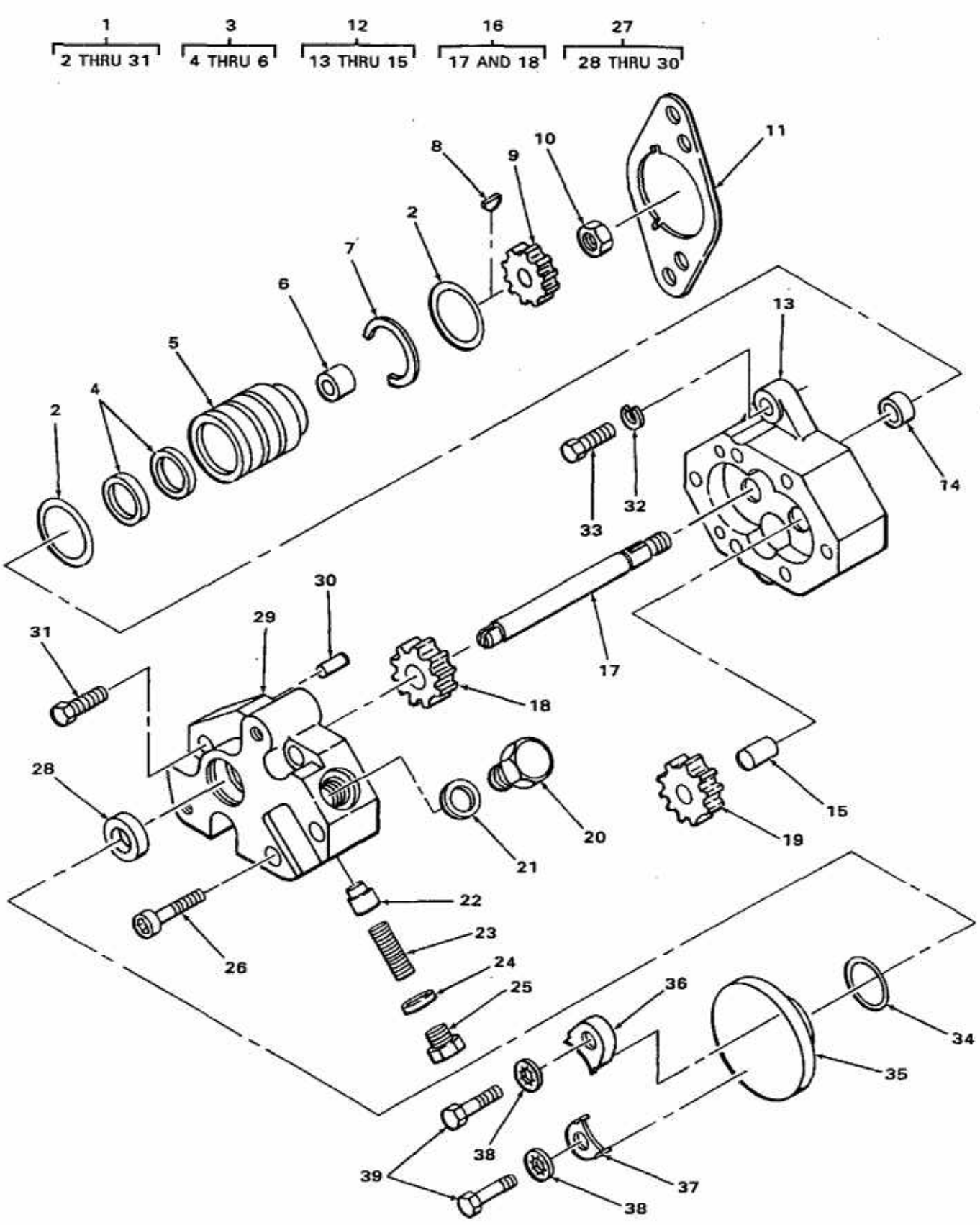

FIGURE 35. FUEL TRANSFER PUMP.

(1) ITEM NO	(2) SMR CODE	(3) NSN	(4) CAGEC	(5) PART NUMBER	(6) DESCRIPTION AND USABLE ON CODES(UOC)	(7) QTY
					GROUP 0302 FUEL PUMPS	
					FIG. 35 FUEL TRANSFER PUMP	
1	PFFFF	4320010176639	11083	4N4880	PUMP,ROTARY	1
2	PFFZZ	5331004942763	11083	6J2419	.O-RING PART OF KIT P/N 5P-9556	2
3	PFFZZ	3130004144394	11083	4N4865	.BEARING UNIT,PLAIN	1
4	PAFZZ	5330011023252	11083	5P9294	..SEAL,PLAIN ENCASED	2
5	XAFZZ		11083	8S4367	..CAGE	1
6	PFFZZ	3120007388651	11083	8F6058	..BEARING,SLEEVE	1
7	XDFZZ		11083	7S4439	.RING,RETAINING	1
8	PFFZZ	5315003935684	11083	3H1489	.KEY,WOODRUFF	1
9	PFFZZ	3020009217282	11083	8H9806	.GEAR,HELICAL	1
10	PFFZZ	5310009500039	96906	MS21044N6	.NUT,SELF-LOCKING,HE	1
11	PAFZZ	5330005578485	58312	7S2374-00	.GASKET PART OF KIT P/N 5P-9229	1
12	PFFFZ	2910004025539	11083	7S4434	.HOUSING,FUEL PUMP	1
13	XAFZZ		11083	7S4435	..BODY	2
14	PFFZZ	3120007388651	11083	8F6058	..BEARING,SLEEVE	1
15	XDFZZ		11083	1W6178	..SHAFT,STRAIGHT	1
16	PFFFZ	3040003995214	11083	4N4870	.GEARSHAFT,SPUR	1
17	XAFZZ		11083	4N4867	..SHAFT	1
18	PFFZZ	3020004606601	11083	8S4368	..GEAR,SPUR	1
19	PFFZZ	3020004606601	11083	8S4368	.GEAR,SPUR	1
20	PFFZZ	4730011033727	11083	3K8460	.PLUG,PIPE	1
21	PAFZZ	5330006136500	11083	1J9671	.PACKING,PREFORMED	1
22	PFFZZ	4820010668441	11083	8M0874	.DISK,VALVE	1
23	PFFZZ	5360010667695	11083	2P4252	.SPRING	1
24	PAFZZ	5330010490553	11083	4N7465	.GASKET PART OF KIT P/N 5P-9229 PART OF KIT P/N 5P-9556	1
25	PFFZZ	5365004341306	11083	7S4440	.PLUG,MACHINE THREAD	1
26	PAFZZ	5305001698390	11083	7S6701	.SCREW,CAP,SOCKET HE	2
27	PFFFZ	4320013776794	11083	7N6378	.COVER,HYDRAULIC,PUM	1
28	PAFZZ	5330004144406	11083	6V8977	..SEAL,PLAIN ENCASED PART OF KIT P/N 5P-9229 PART OF KIT P/N 5P-9556	1
29	XAFZZ		11083	2P5197	..COVER	1
30	PFFZZ	4030003517002	11083	7S4433	..SWAGING SLEEVE,WIRE	1
31	PFFZZ	5305009836622	11083	9F6641	.SCREW,CAP,SOCKET HE	4
32	PFFZZ	5310004079566	96906	MS35338-45	WASHER,LOCK	2
33	PFFZZ	5306002264828	80204	B1821BH031C113N	BOLT,MACHINE	2
34	PAFZZ	5331006136522	11083	4M8303	O-RING PART OF KIT P/N 5P-9229 PART OF KIT P/N 5P-9556	1
35	PFFZZ	5340013778455	11083	7N4076	COVER,ACCESS	1
36	PFFZZ	5340002614042	11083	9S3032	CLAMP,SYNCHRO	1
37	PFFZZ	5340002614066	11083	9S3033	CLAMP,SYNCHRO	1
38	PFFZZ	5310001670721	96906	MS35333-41	WASHER,LOCK	2
39	PFFZZ	5306002264825	80204	B1821BH031C075N	BOLT,MACHINE	2

END OF FIGURE

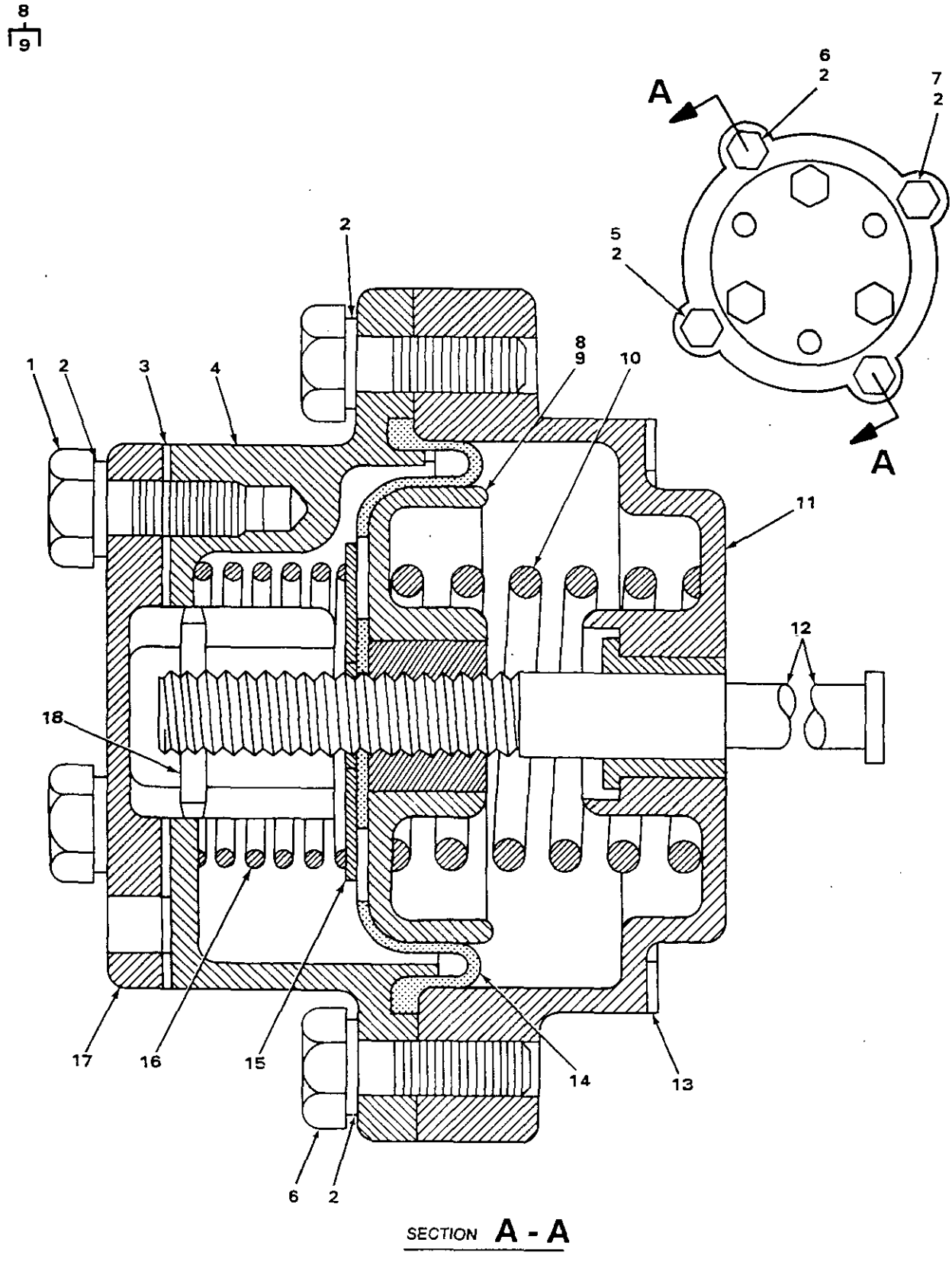

SECTION A - A

FIGURE 36. THROTTLE DELAY.

(1) ITEM NO	(2) SMR CODE	(3) NSN	(4) CAGEC	(5) PART NUMBER	(6) DESCRIPTION AND USABLE ON CODES(UOC)	(7) QTY
					GROUP 0302 FUEL PUMPS	
					FIG. 36 THROTTLE DELAY	
1	PFFZZ	5306004029168	11083	S1347	BOLT,SPECIAL.....	1
1	PFFZZ	5306002611153	11083	S1615	BOLT,MACHINE.....	2
2	PFFZZ	5310010512360	11083	5P537	WASHER.....	7
3	PAFZZ	5330001050356	11083	6L5766	GASKET PART OF KIT P/N 2P-3988 PART OF KIT P/N 5P-9229 PART OF KIT P/N 5P-9556.....	1
4	PFFZZ	4810001160446	11083	6L5767	COVER,DIAPHRAGM.....	1
5	PFFZZ	5306004238313	11083	1B2713	BOLT,MACHINE.....	1
6	PFFZZ	5305000712505	80204	B1821BH025C088N	SCREW,CAP,HEXAGON H.....	2
7	PFFZZ	5305000047245	58312	2M5471-00	SCREW,CAP,HEXAGON H.....	1
8	PFFFZ	2910004096549	11083	5S6120	RETAINER ASSEMBLY,D.....	1
9	XAFZZ		11083	5S6274	.INSERT.....	1
10	PFFZZ	5360011073892	11083	6N968	SPRING,HELICAL,COMP.....	1
11	PFFZZ	2990011033675	11083	6N1603	HOUSING ASSEMBLY.....	1
12	PFFZZ	5306000064758	11083	6N2954	BOLT,EXTERNALLY REL.....	1
13	PAFZZ	5330001050357	11083	6L5773	GASKET PART OF KIT P/N 5P-9229.....	1
14	PFFZZ	4820001163226	11083	4S7458	DIAPHRAGM,ACTUATOR PART OF KIT P/N 5P-9556.....	1
15	PFFZZ	5310001160447	11083	6L5769	WASHER,KEYWAY.....	1
16	PFFZZ	5360010675618	11083	6N1606	SPRING.....	1
17	PFFZZ	2910001160444	11083	6L5764	COVER,ADJUSTMENT.....	1
18	PFFZZ	5315009700153	11083	3H6660	PIN,SPRING.....	1

END OF FIGURE

4
5 THRU 8

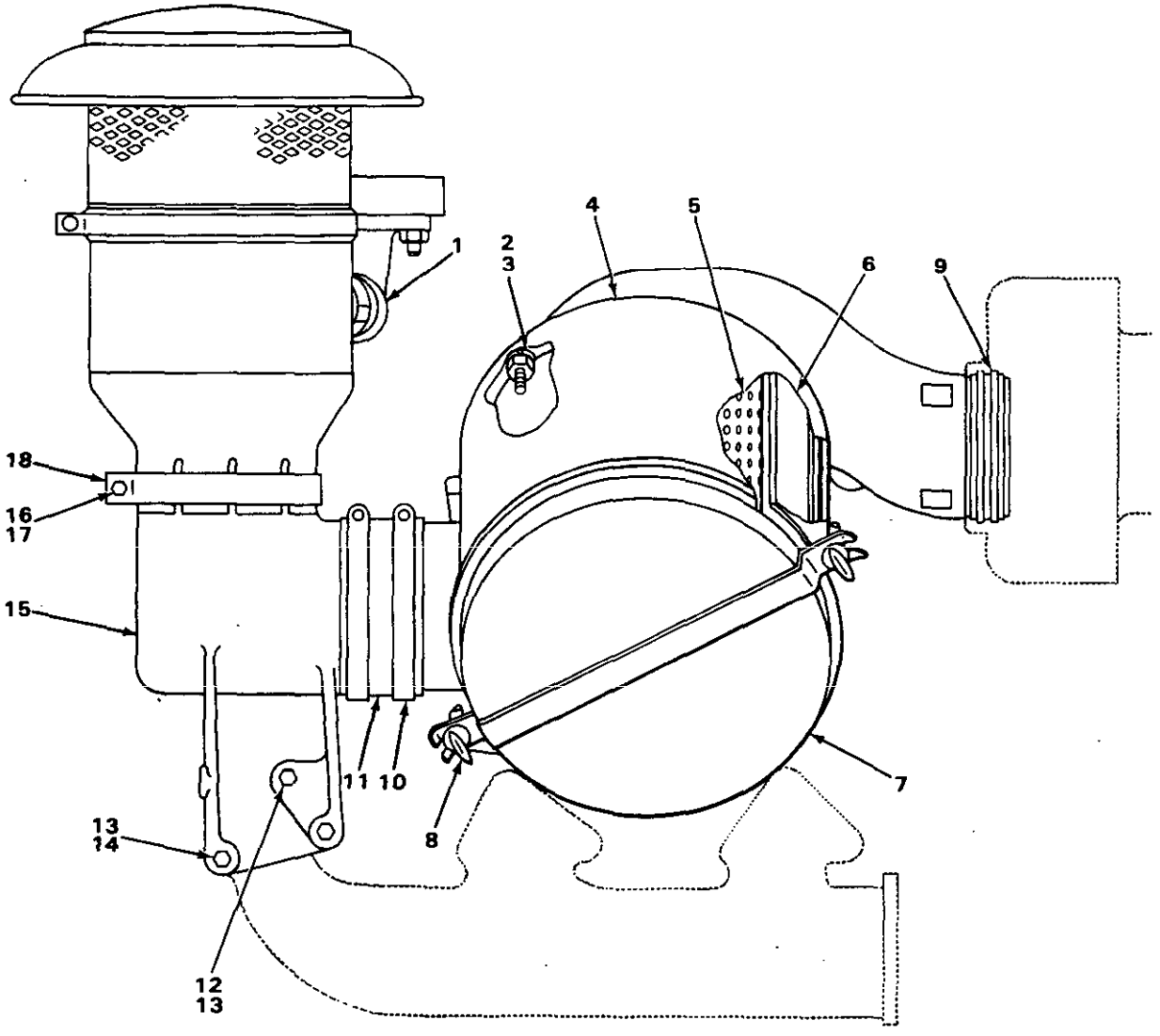

FIGURE 37. AIR CLEANER.

(1) ITEM NO	(2) SMR CODE	(3) NSN	(4) CAGEC	(5) PART NUMBER	(6) DESCRIPTION AND USABLE ON CODES(UOC)	(7) QTY
					GROUP 0304 AIR CLEANER.	
					FIG. 37 AIR CLEANER.	
1	PFOZZ	4710011033674	11083	4N9244	TUBE ASSEMBLY.....	1
2	PFOZZ	5310004988409	11083	1B5355	NUT,PLAIN,HEXAGON.....	2
3	PFOZZ	5310006379541	96906	MS35338-46	WASHER,LOCK.....	2
4	PFOZZ	2940010588068	11083	1P6450	AIR CLEANER ASSY.....	1
5	PAOBZ	2940010184873	11083	1P7360	.FILTER ELEMENT,INTA SECONDARY.....	1
6	PAOBZ	2940010184872	79396	42980	.FILTER ELEMENT,INTA PRIMARY.....	1
7	PFOZZ	2940010588069	11083	1P7748	.CUP ASSEMBLY.....	1
8	PFOZZ	2590010647492	11083	9M3695	.ROD ASSEMBLY.....	2
9	PFOZZ	5331008351189	11083	2M5173	O-RING.....	2
10	PFOZZ	4730010668597	11083	5P3860	CLAMP,HOSE.....	2
11	PFOZZ	4720010660619	11083	4S8379	HOSE.....	1
12	PFOZZ	5306002736357	11083	1A1460	BOLT,MACHINE.....	1
13	PFOZZ	5310005845272	96906	MS35338-48	WASHER,LOCK.....	3
14	PFOZZ	5305004110777	11083	1D4572	SCREW.....	2
15	PFOZZ	4730012505860	11083	6N5966	ELBOW,HOSE.....	1
16	PFOZZ	5310011945398	11083	1D4717	NUT,HEXAGON.....	1
17	PFOZZ	5305001380335	11083	7H7954	SCREW,CAP,HEXAGON H.....	1
18	PFOZZ	2940010588102	11083	7S7680	CLAMP.....	1

END OF FIGURE

2 (3 THRU 6) 11 (12 AND 13) 18 (19)

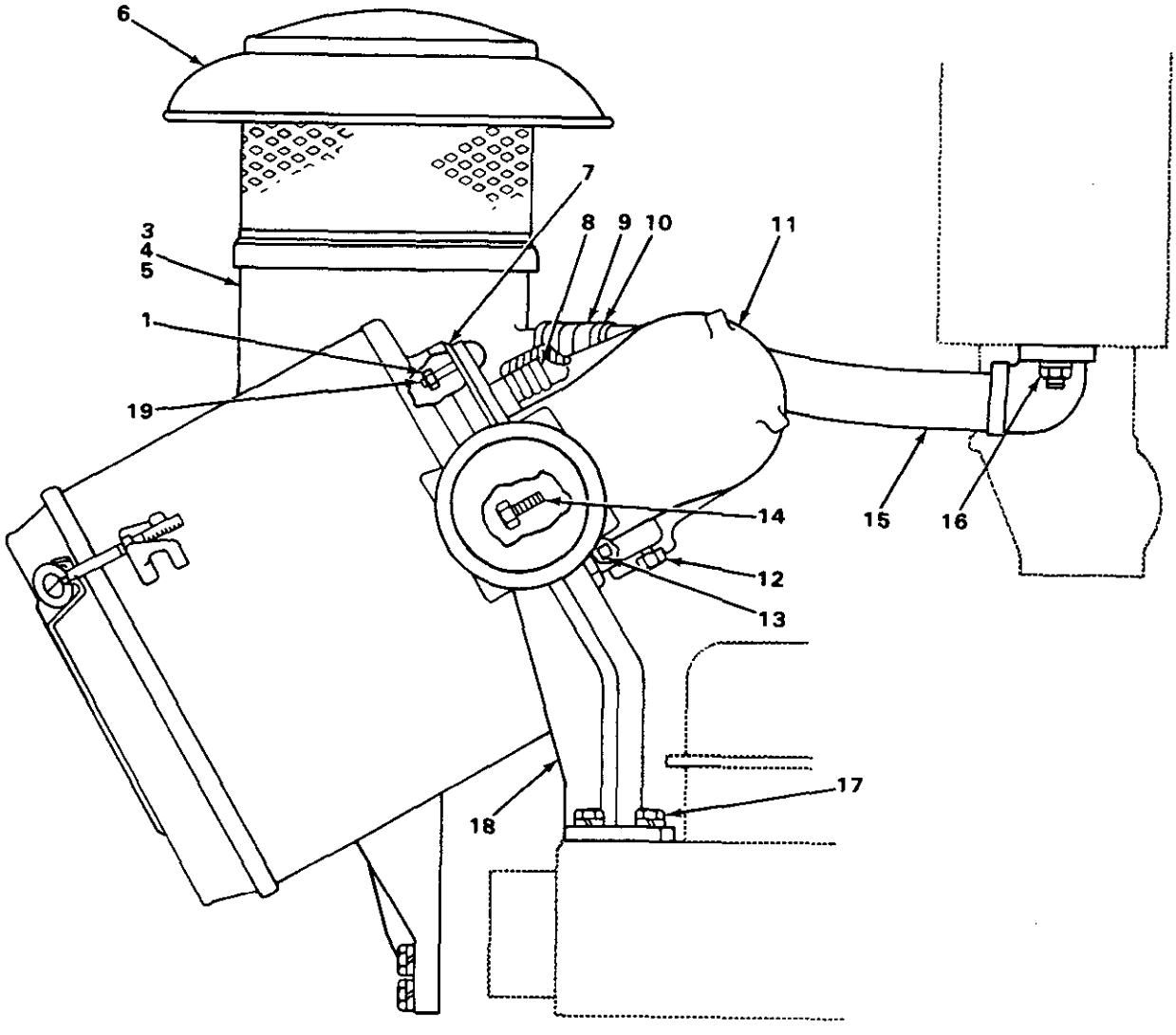

FIGURE 38. AIR CLEANER AND RELATED PARTS.

(1) ITEM NO	(2) SMR CODE	(3) NSN	(4) CAGEC	(5) PART NUMBER	(6) DESCRIPTION AND USABLE ON CODES(UOC)	(7) QTY
					GROUP 0304 AIR CLEANER.	
					FIG. 38 AIR CLEANER AND RELATED PARTS.	
1	PFOZZ	5310010588071	11083	2K4973	LOCKNUT	1
2	PFOZZ	2940010588094	11083	4S7455	PRECLEANER ASSEMBLY	1
3	PFOZZ	2940010588095	11083	4S8473	.BODY ASSEMBLY	1
4	PFOZZ	5305010156841	11083	0S1591	.SCREW	2
5	PFOZZ	5310011945398	11083	1D4717	.NUT,HEXAGON	2
6	PFOZZ	2940010634213	11083	4S8472	.HOOD ASSEMBLY	1
7	PFOZZ	5330010588264	11083	1P6832	GASKET	1
8	PFOZZ	5330002538182	11083	7M6952	PACKING,PREFORMED	2
9	PFOZZ	4730002043491	70210	211-020-9009	CLAMP,HOSE	2
10	MOOZZ		19207	1921369-11	HOSE MAKE FROM HOSE P/N 5P1257	1
11	PFOZZ	2940010660618	11083	4N9317	PIPE ASSEMBLY	1
12	PFOZZ	4730009247886	11083	5M6214	.PLUG,PIPE	1
13	PAOBZ	4730000847543	18265	P100128	.STRAINER ELEMENT,SE	1
14	PAOZZ	5306004521354	11083	1T822	BOLT,MACHINE	2
15	PFOZZ	4710012504558	11083	6N7094	PIPE ASSEMBLY	1
16	PFOZZ	5310011945398	11083	1D4717	NUT,HEXAGON	2
17	PFOZZ	5306004240086	11083	7B3235	BOLT, MACHINE BOLT, MACHINE	4
18	AOOOO		11083	1P6834	ADAPTER ASSEMBLY	1
19	PFOZZ	5307004097208	11083	9M2151	.STUD,CONTINUOUS THR	8

END OF FIGURE

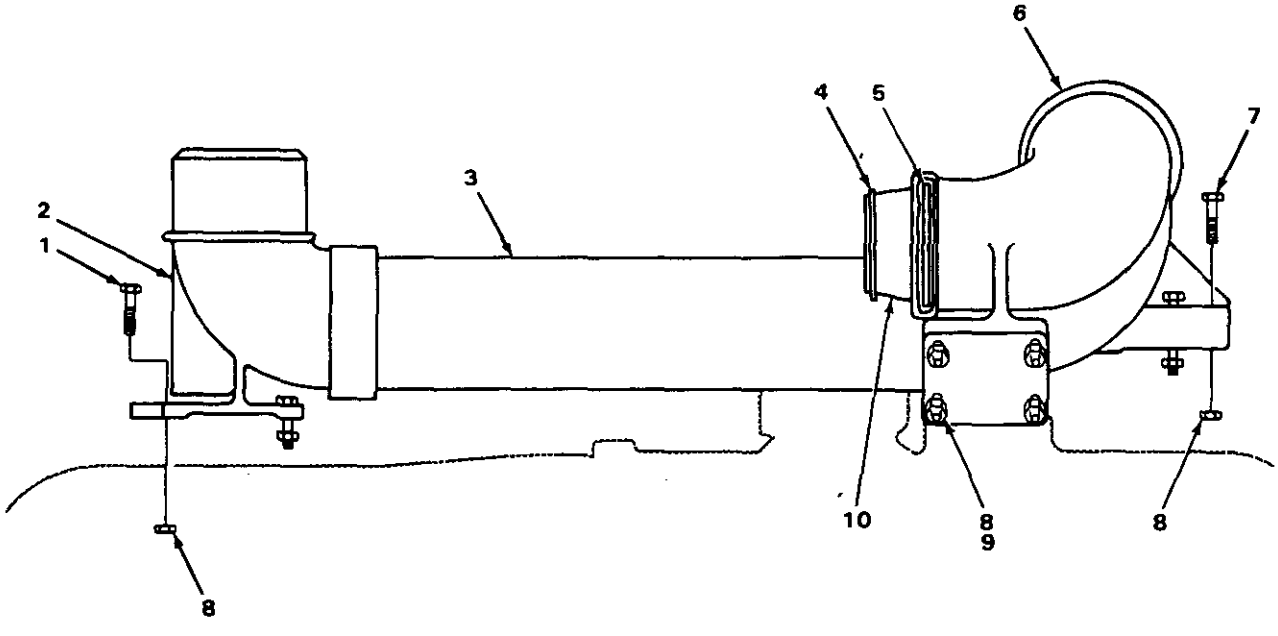

FIGURE 39. MANIFOLD AIR LINES.

(1) ITEM NO	(2) SMR CODE	(3) NSN	(4) CAGEC	(5) PART NUMBER	(6) DESCRIPTION AND USABLE ON CODES(UOC)	(7) QTY
					GROUP 0305 SUPERCHARGER, BLOWER, TURBOCHARGER OR ALTITUDE COMPENSATOR	
					FIG. 39 MANIFOLD AIR LINES.	
1	PFOZZ	5305010156841	11083	0S1591	SCREW	4
2	AOOZZ		11083	2P4729	ELBOW,PIPE	1
3	AOOOO		11083	2P4727	PIPE,METALLIC	1
3	XBOZZ		11083	4N6588	PIPE,METALLIC	1
3	XBOZZ		11083	4N9187	PIPE,METALLIC	1
4	PAOZZ	5330009947409	11083	5L8855	SEAL RING,METAL	1
5	PFOZZ	2815009947407	11083	5L8854	RING,PISTON	1
6	PFOZZ	4730012505907	11083	2P4726	ELBOW,HOSE	1
7	PFFZZ	5306004240086	11083	7B3235	BOLT,MACHINE	2
8	PFOZZ	5310004988409	11083	1B5355	NUT,PLAIN,HEXAGON	10
9	PFOZZ	5305010269518	11083	0S1571	SCREW,CAP,HEXAGON H	4
10	PFOZZ	2990001773449	58312	6L8968-00	COUPLING,TURBOCHARG	1

END OF FIGURE

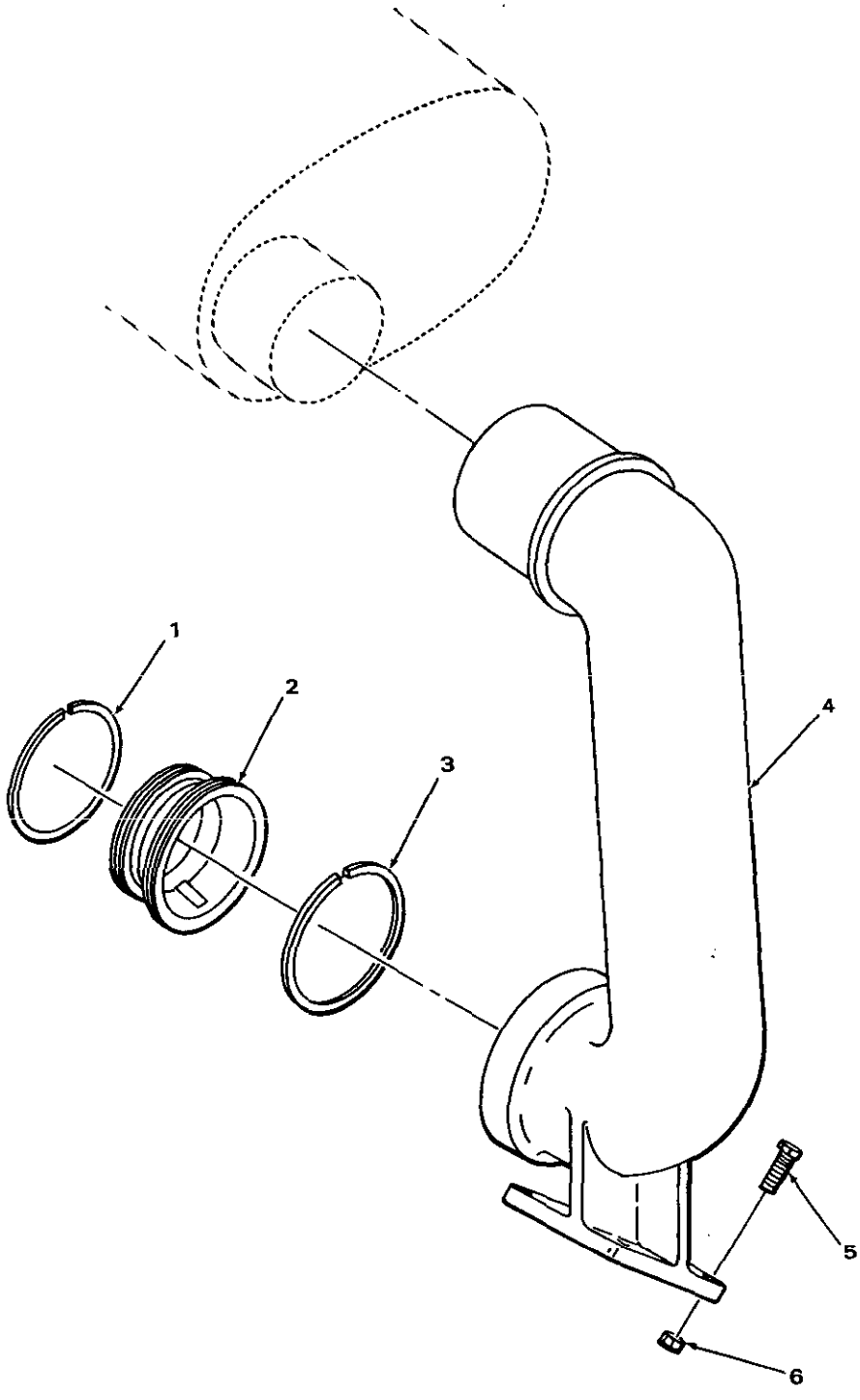

FIGURE 39A. MANIFOLD LINES.

(1) ITEM NO	(2) SMR CODE	(3) NSN	(4) CAGEC	(5) PART NUMBER	(6) DESCRIPTION AND USABLE ON CODES(UOC)	(7) QTY
					GROUP 0305 SUPERCHARGER, BLOWER, TURBOCHARGER OR ALTITUDE COMPENSATOR	
					FIG. 39A MANIFOLD LINES	
1	PAOZZ	5330009947409	11083	5L8855	SEAL RING,METAL.....	1
2	PFOZZ	4730013776792	11083	6N5978	COUPLING,PIPE.....	1
3	PFOZZ	2815009947407	11083	5L8854	RING,PISTON.....	1
4	PFOZZ	4730013776791	11083	6N5967	ELBOW,TUBE.....	1
5	PFOZZ	5305010269518	11083	0S1571	SCREW,CAP,HEXAGON H.....	4
6	PFOZZ	5310011945398	11083	1D4717	NUT,HEXAGON.....	4

END OF FIGURE

1	2	9	22
2 THRU 26B	3 THRU 20	10 AND 11	22A

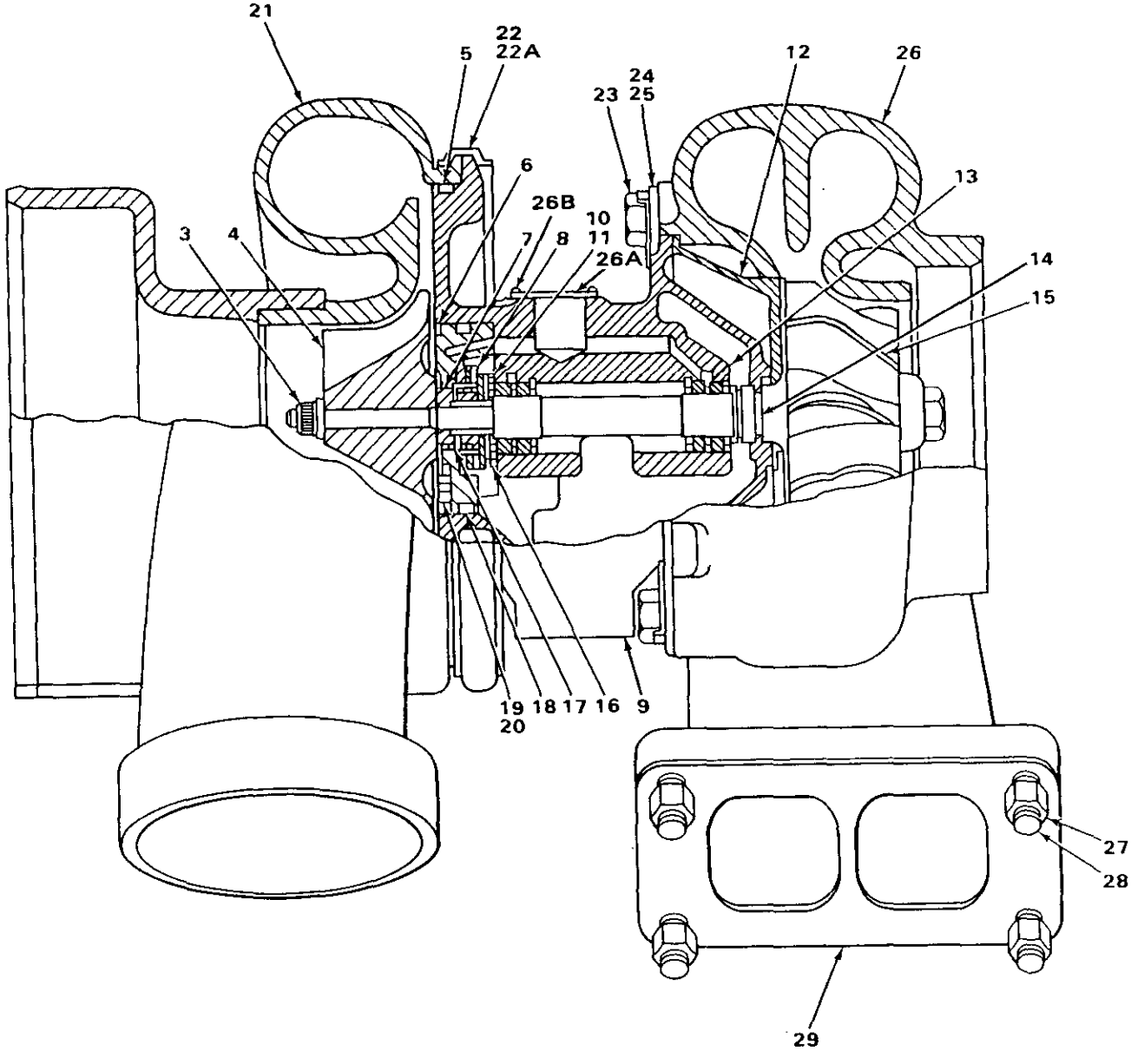

FIGURE 40. TURBOCHARGER, 4N4445 ENGINE.

(1) ITEM NO	(2) SMR CODE	(3) NSN	(4) CAGEC	(5) PART NUMBER	(6) DESCRIPTION AND USABLE ON CODES(UOC)	(7) QTY
					GROUP 0305 SUPERCHARGER, BLOWER, TURBOCHARGER OR ALTITUDE COMPENSATOR	
					FIG. 40 TURBOCHARGER, 4N4445 ENGINE	
1	PFFHH	2990010484494	11083	6N7203	TURBOCHARGER,DIESEL.....	1
2	PFHZZ	2990011036629	11083	6N7202	.CARTRIDGE ASSEMBLY.....	1
3	PFHZZ	5310002696797	11083	3S4484	..NUT,SELF-LOCKING,EX PART OF KIT P/N 6N7239.....	1
4	XDHZZ		08179	408178-11	..WHEEL,CARTRIDGE ASS.....	1
5	PAHZZ	5330009491451	11083	3S5135	..GASKET PART OF KIT P/N 6N7239 PART OF KIT P/N 2P-3988.....	1
6	XDHZZ		08179	406834-2	..PLATE ASSEMBLY,THRU.....	1
7	PFHZZ	5325009200222	11083	9M8919	..RING,RETAINING PART OF KIT P/N 6N7239.....	2
8	PFHZZ	2950005520197	08179	407484-1	..COLLAR,THRUST.....	1
9	PFHHZ	2815010534726	11083	9L6243	..HOUSING ASSEMBLY.....	1
10	PFHZZ	5315001738417	11083	4M6646	...PIN,GROOVED,HEADLES.....	2
11	PFHZZ		11083	7W2369	...RING.....	1
12	PFHZZ	6115011686142	11083	7N3760	..SHROUD.....	1
13	PFHZZ	5365006875158	79136	5008-100MD	..RING,RETAINING PART OF KIT P/N 6N7239.....	3
14	PFHZZ	2805011753881	11083	7N3759	..RING,PISTON PART OF KIT P/N 6N7239	1
15	PFHZZ	2950005518685	08179	406845-5	..SHAFT AND WHEEL ASS PART OF KIT P/N 6N7239.....	1
16	PAHZZ	3120010205814	08179	408593	..BEARING,WASHER,THRU PART OF KIT P/N 6N7239.....	1
17	PFHZZ	5365001817726	11083	8S8043	..SPACER,PLATE PART OF KIT P/N 6N7239.....	1
18	PAHZZ	5330011033701	11083	5P5756	..SEAL PART OF KIT P/N 6N7239.....	1
19	PFHZZ	2950009481771	11083	3S4487	..RETAINER,NUT BOLT PART OF KIT P/N 6N7239.....	3
20	PFHZZ	5305002456035	11083	3S4488	..SCREW,MACHINE PART OF KIT P/N 6N7239.....	3
21	PFHZZ	2990011036628	11083	6N7201	.HOUSING.....	1
22	PFHZZ	2950009502470	58312	3S5129-00	.CLAMP,TURBINE.....	1
22A	PFHZZ	5310000876875	53591	130665	..NUT,SELF-LOCKING,DO.....	1
23	PFHZZ	5305001918284	58312	3S5126-00	.SCREW,CAP,HEXAGON H.....	6
24	PFHZA	2950009481653	70210	406063	.PLATE,CLAMP.....	3
25	PFHZZ	2950009481611	70210	406064	.PLATE,LOCK.....	3
26	PFHZZ	2950002592943	08179	406482-23	.HOUSING,TURBOSUPERC.....	1
26A	PFHZZ	9905011757150	11083	1W4795	.PLATE,IDENTIFICATIO.....	1
26B	PFHZZ	5305001519899	11083	2F808	.SCREW.....	2
27	PFFZZ	5310008436947	11083	8M2296	NUT,PLAIN,HEXAGON.....	4
28	PFFZZ	5306001180108	11083	8M2295	BOLT,MACHINE.....	4
29	PAFZZ	5330009240048	11083	1S4295	GASKET PART OF KIT P/N 2P-3988 PART OF KIT P/N 5P-9228 PART OF KIT P/N 6V-3711.....	1

END OF FIGURE

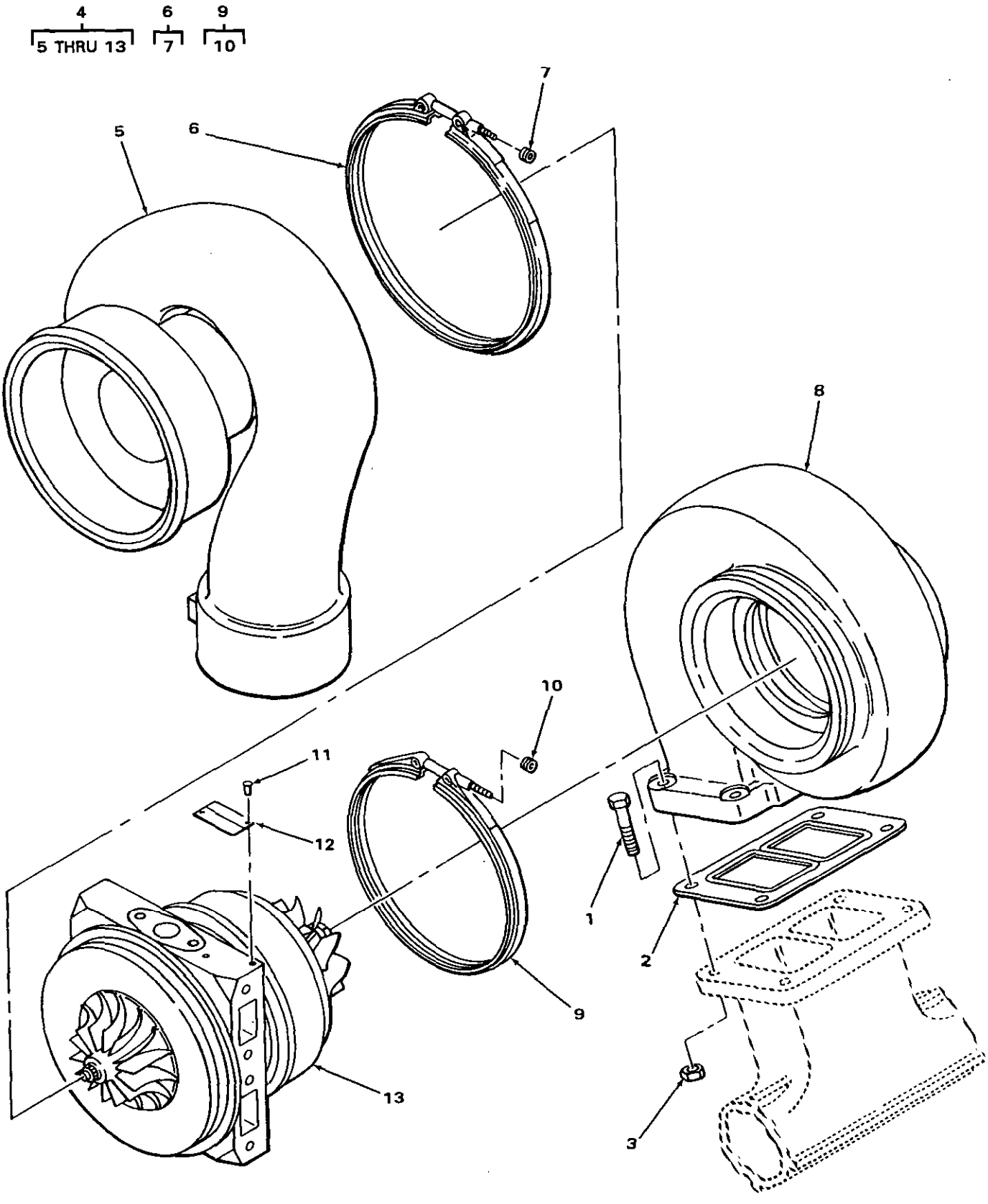

FIGURE 40A. TURBOCHARGER, 7N3491 AND 5R8866 ENGINES.

(1) ITEM NO	(2) SMR CODE	(3) NSN	(4) CAGEC	(5) PART NUMBER	(6) DESCRIPTION AND USABLE ON CODES(UOC)	(7) QTY
					GROUP 0305 SUPERCHARGER, BLOWER, TURBOCHARGER OR ALTITUDE COMPENSATOR	
					FIG. 40A TURBOCHARGER, 7N3491 AND 5R8866 ENGINES	
1	PFFZZ	5306001180108	11083	8M2295	BOLT,MACHINE.....	4
2	PAFZZ	5330009240048	11083	1S4295	GASKET.....	1
3	PFFZZ	5310008436947	11083	8M2296	NUT,PLAIN,HEXAGON.....	4
4	PFFHH		11083	1N4695	TURBOCHARGER GP.....	1
5	PFHZZ	2910013776796	08179	407009-139	.HOUSING ASSEMBLY.....	1
6	PFFZZ	2950009502470	58312	3S5129-00	.CLAMP,TURBINE.....	1
7	PFFZZ	5310000876875	53591	130665	..NUT,SELF-LOCKING,DO.....	1
8	PFHZZ		08179	408142-27	.HOUSING.....	1
9	PFHZZ	5340012973050	08179	400785-560	.COUPLING,CLAMP,GROO.....	1
10	PFHZZ	5310000876875	53591	130665	..NUT,SELF-LOCKING,DO.....	1
11	PFHZZ	5305001519899	11083	2F808	.SCREW.....	2
12	PFHZZ	9905011757150	11083	1W4795	.PLATE,IDENTIFICATIO.....	1
13	PFFZZ		08179	447364-1	.CARTRIDGE GP.....	1

END OF FIGURE

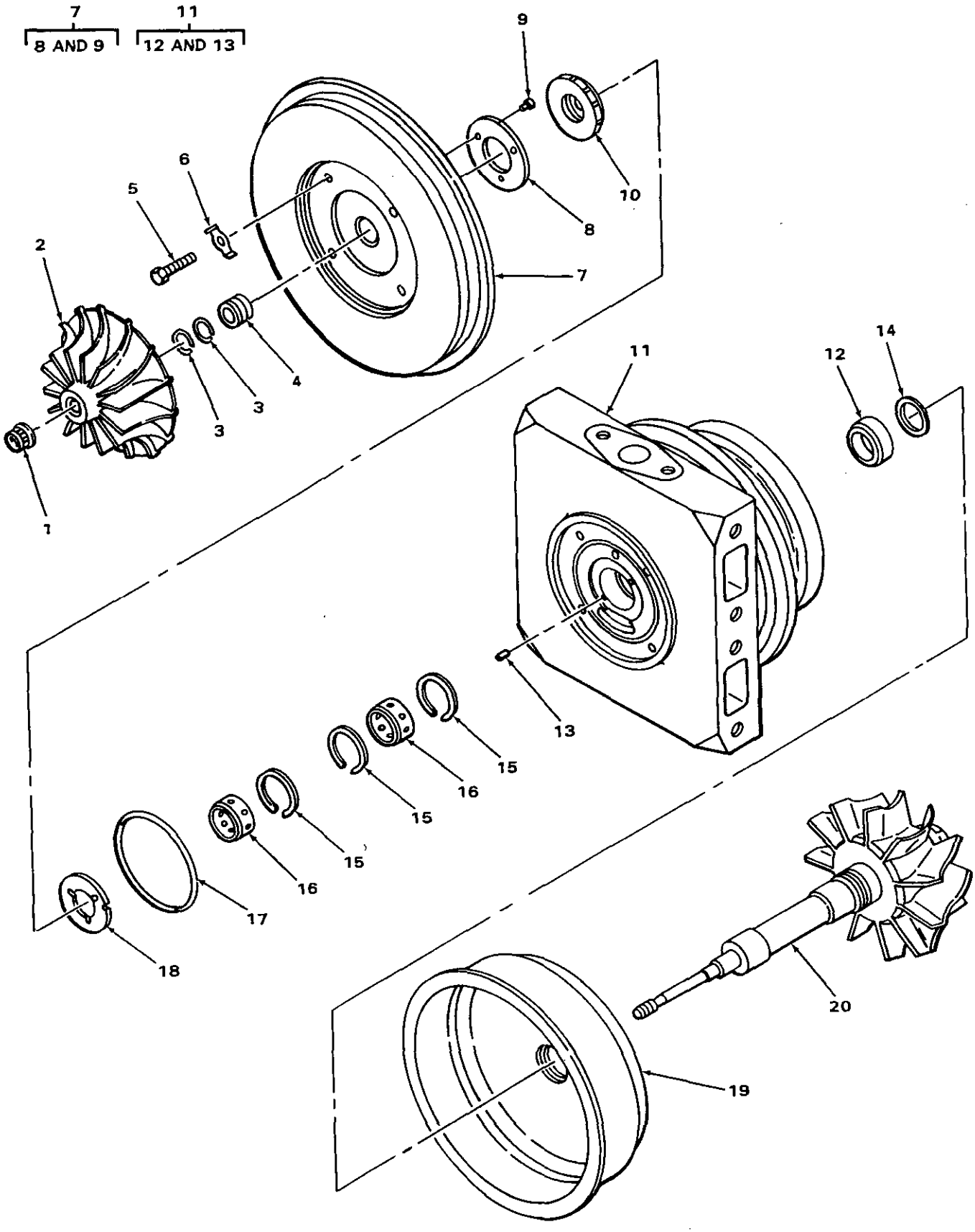

FIGURE 40B. TURBOCHARGER CARTRIDGE ASSEMBLY, 7N3491 AND 5R8866 ENGINES.

(1) ITEM NO	(2) SMR CODE	(3) NSN	(4) CAGEC	(5) PART NUMBER	(6) DESCRIPTION AND USABLE ON CODES(UOC)	(7) QTY
					GROUP 0305 SUPERCHARGER, BLOWER, TURBOCHARGER OR ALTITUDE COMPENSATOR	
					FIG. 40B TURBOCHARGER CARTRIDGE ASSEMBLY, 7N3491 AND 5R8866 ENGINES	
1	PFHZZ	5310002696797	11083	3S4484	..NUT,SELF-LOCKING,EX.....	1
2	PFHZZ		08179	409142-6	..WHEEL.....	1
3	PFHZZ	5325009200222	11083	9M8919	..RING,RETAINING.....	2
4	PFHZZ	5365011188822	08179	408768-1	..SPACER,SLEEVE.....	1
5	PFHZZ	5305002253843	80204	B1821BH025C100N	..SCREW,CAP,HEXAGON H.....	4
6	PFHZZ	5310011748765	08179	408597	..WASHER,KEY.....	4
7	PFHHH		08179	408480-16	..BACKPLATE ASSY.....	1
8	PFHZZ	2815009317856	11083	5S2884	..COLLAR,THRUST.....	1
9	PFHZZ		08179	400438-1	...STUD.....	3
10	PFHZZ		08179	406385	...BEARING.....	1
11	PFHHH		08179	447159-3	..HOUSING ASSY.....	1
12	PFHZZ	5330012967776	11083	7W2368	...SEAL RING,METAL.....	1
13	PFHZZ	5315001738417	11083	4M6646	...PIN,GROOVED,HEADLES.....	2
14	PFHZZ	2805011753881	08179	408049-4	..RING,PISTON.....	1
15	PFHZZ	5365006875158	79136	5008-100MD	..RING,RETAINING.....	3
16	PFHZZ	3120001880392	11083	9N2041	..BEARING,SLEEVE BEARING KIT.....	2
17	PFHZZ	5365010205721	08179	400424-0	..SPACER,RING.....	1
18	PAHZZ	3120010205814	08179	408593	..BEARING,WASHER,THRU.....	1
19	PFHZZ		08179	441094-1	..SHROUD.....	1
20	PFHZZ		08179	408493-16	..SHAFT & WHEEL ASSY.....	1

END OF FIGURE

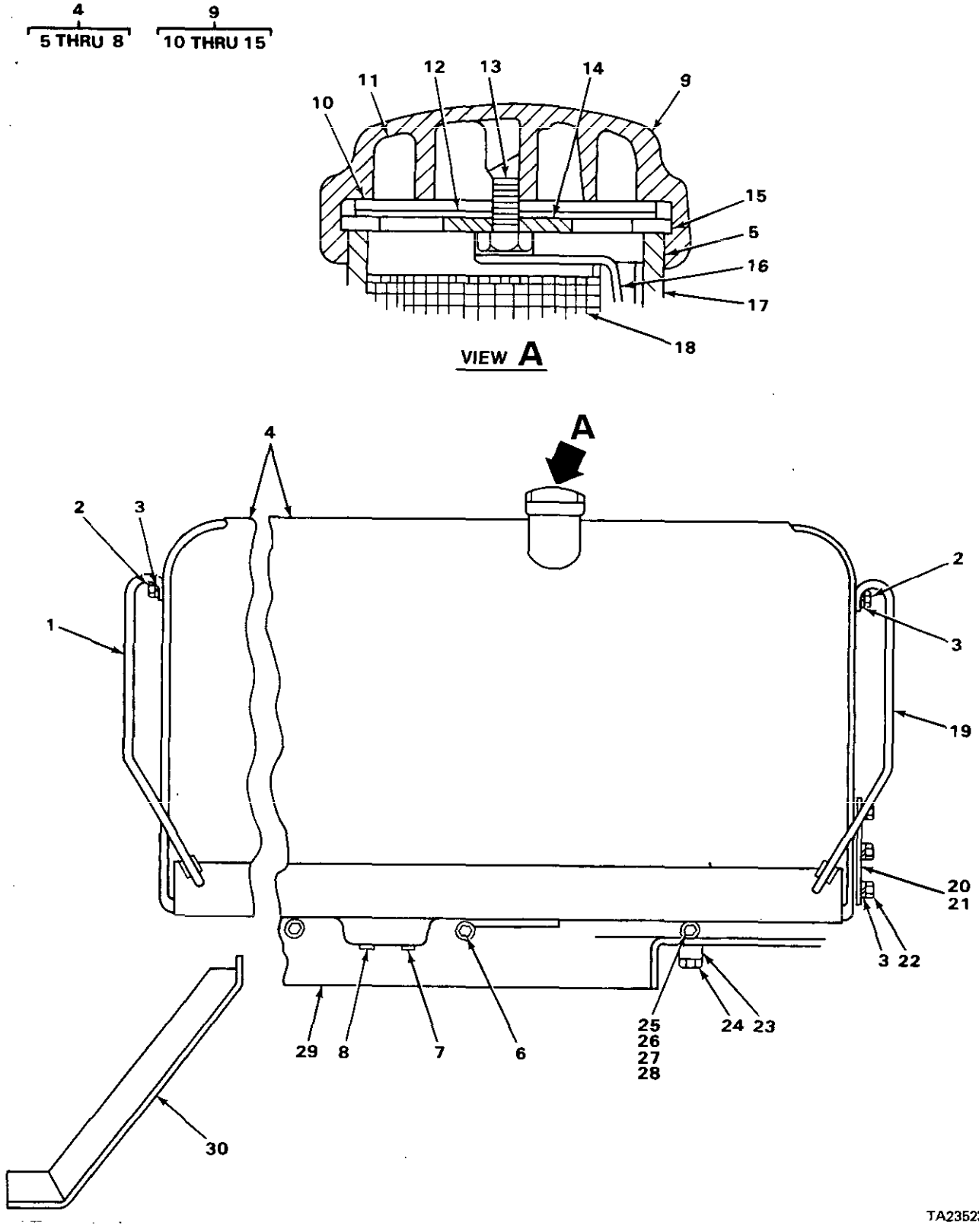

FIGURE 41. FUEL TANK AND CAP.

(1) ITEM NO	(2) SMR CODE	(3) NSN	(4) CAGEC	(5) PART NUMBER	(6) DESCRIPTION AND USABLE ON CODES(UOC)	(7) QTY
					GROUP 0306 TANKS, LINES, FITTINGS, HEADERS.	
					FIG. 41 FUEL TANK AND CAP.	
1	PFFZZ	5340012851663	11083	3P2070	HANDLE,BOW	1
2	PFOZZ	5306001384466	11083	2H3855	BOLT,MACHINE	4
3	PFFZZ	5310005845272	96906	MS35338-48	WASHER,LOCK	10
4	XBFFF		11083	3P4034	TANK,FUEL	1
5	PFFZZ	2590012511113	11083	4M2435	.TUBE,METALLIC	1
6	PFFZZ	5340012547167	11083	3S3352	.STUD	2
7	PFFZZ	4730010690748	11083	4B7844	.FITTING	1
8	PFFZZ	2990011033619	11083	7M5007	.FITTING,TANK	1
9	PFFZZ	2590003561863	11083	4B5441	CAP,FILLER OPENING	1
10	PFFZZ	5330001438713	11083	4B5423	.GASKET	1
11	PFFZZ	2910003675238	11083	4B5949	.FILTER ELEMENT,FLUI	2
12	PFFZZ	2910011595883	11083	3F4134	.BAFFLE,FUEL TANK CA	1
13	PFFZZ	5305004754440	11083	3H8389	.SCREW,FUEL TANK FIL	1
14	PFFZZ	5310000809422	60532	WAS125	.WASHER,FLAT	1
15	PFFZZ	5330003639866	11083	2A1763	.GASKET	1
16	PFFZZ	3805012136035	11083	3P2075	PLUNGER	1
17	PFFZZ	5325009508281	11083	8H3497	RING,RETAINING	1
18	PFFZZ	2910009489968	11083	8H3498	STRAINER ELEMENT,SE	1
19	PFFZZ	5340012849610	11083	3P2069	HANDLE,BOW	1
20	PFFZZ	5340012849639	11083	3P3344	COVER,ACCESS	1
21	PFFZZ	5330002344870	11083	3F5792	SEAL	1
22	PFFZZ	5306004240086	11083	7B3235	BOLT,MACHINE	6
23	PFFZZ	5310012536496	11083	3P4133	WASHER,FLAT	4
24	PFFZZ	5306004263139	11083	1A8063	BOLT,MACHINE	4
25	PFFZZ	5305002528919	11083	0S0509	SCREW,CAP,HEXAGON H	2
25	PFFZZ	5306011954681	11083	3B1915	BOLT	2
26	PFFZZ	5310006379541	96906	MS35338-46	WASHER,LOCK	4
27	PFFZZ	5310001174788	11083	5M2894	WASHER,FLAT	4
28	PFFZZ	5310011461218	11083	1L5081	WASHER,FLAT	2
29	PFFZZ	5340012849640	11083	3P2073	COVER,ACCESS	1
30	PFFZZ	5340012851664	11083	8A3022	BRACKET,MOUNTING	1

END OF FIGURE

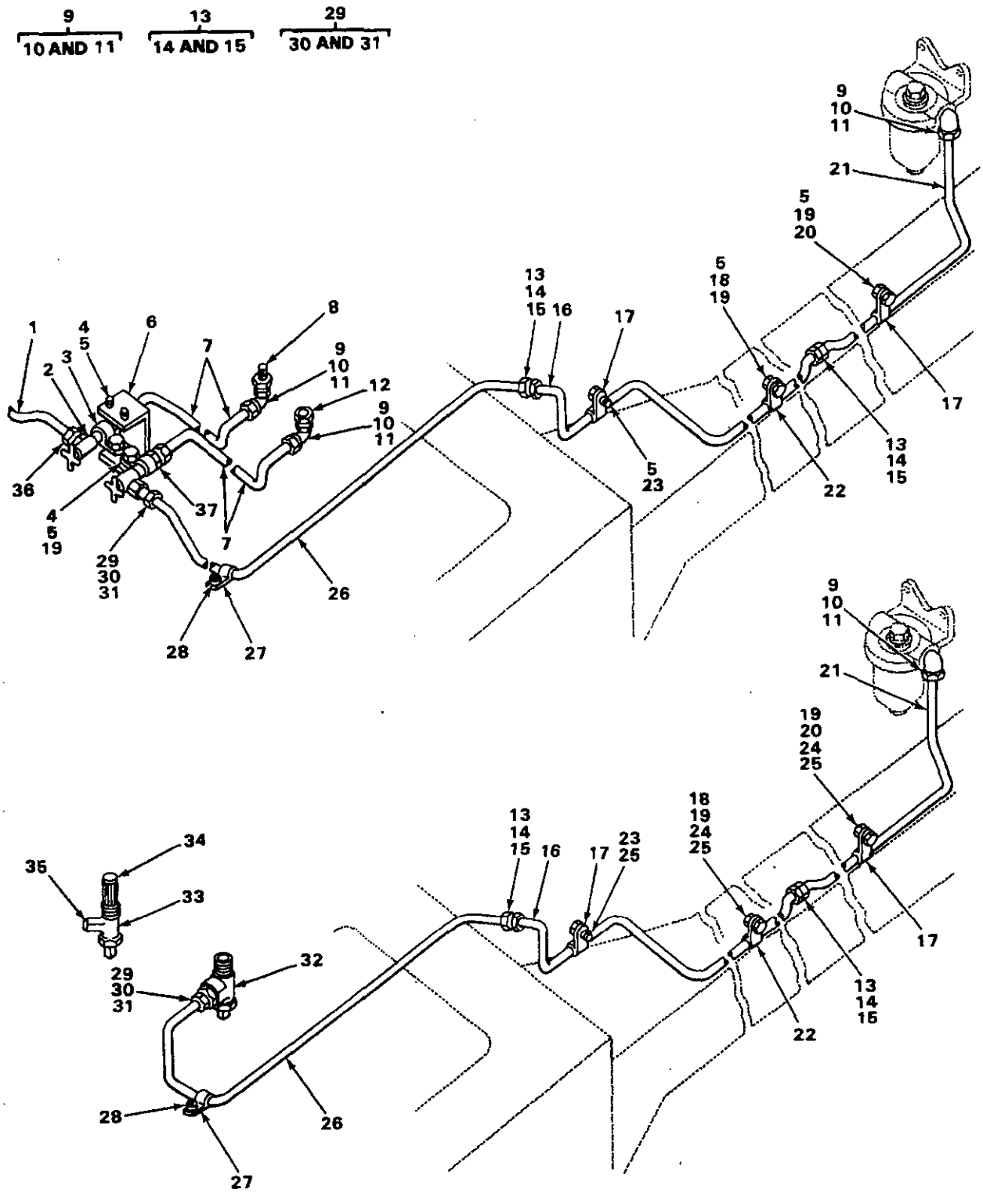

FIGURE 42. FUEL LINES.

(1) ITEM NO	(2) SMR CODE	(3) NSN	(4) CAGEC	(5) PART NUMBER	(6) DESCRIPTION AND USABLE ON CODES(UOC)	(7) QTY
					GROUP 0306 TANKS, LINES, FITTINGS, HEADERS.	
					FIG. 42 FUEL LINES.	
1	MOOZZ		19207	0937331-19	HOSE MAKE FROM HOSE P/N 5P1442.....	1
2	PAOZZ	4820009320819	11083	3R3837	COCK,SHUTOFF,SCREW.....	2
2A	PAOZZ	5340013157377	75833	4827-J	HANDLE,MANUAL CONTR.....	1
2B	PAOZZ	5305012983189	75833	4827-2-M	SCREW,ASSEMBLED WAS.....	1
3	PFOZZ	5342010690904	11083	7S3916	CLIP.....	2
4	PFOZZ	5306002604508	11083	S1594	BOLT,MACHINE.....	4
5	PFOZZ	5310012545351	11083	2M894	WASHER,FLAT.....	7
6	XBOZZ		11083	8P6144	BRACKET.....	1
7	PFOZZ	4710012505871	11083	8P5970	TUBE,BENT,METALLIC.....	2
8	PFOZZ	4730012852941	11083	8P4791	STRAINER,SEDIMENT.....	1
9	PFOZZ	4730008516273	11083	1L482	ELBOW,PIPE TO TUBE.....	4
10	PFOZZ	4730007373364	11083	4H2663	.NUT,TUBE COUPLING.....	1
11	PFOZZ	5365005985255	11083	4H2662	.BUSHING,NONMETALLIC.....	1
12	PFOZZ	4730001930871	14351	X5132	BUSHING,PIPE.....	1
13	PFOZZ	4730012501570	11083	1L480	COUPLING,TUBE.....	4
14	PFOZZ	4730007373364	11083	4H2663	.NUT,TUBE COUPLING.....	2
15	PFOZZ	5365005985255	11083	4H2662	.BUSHING,NONMETALLIC.....	1
16	MOOZZ		19207	5P1201-89	TUBE MAKE FROM TUBE P/N 5P1201 6 THRU77V9410.....	2
17	PFOZZ	5340004238320	11083	1B3057	CLIP,SPRING TENSION USE WITH SERIAL RANGE 77V5006 THRU 77V9410...	4
18	PFOZZ	5306004238194	11083	1A2029	BOLT,MACHINE.....	2
19	PFOZZ	5310011945398	11083	1D4717	NUT,HEXAGON.....	4
20	PFOZZ	5306002637301	11083	L1351	BOLT,MACHINE.....	2
21	MOOZZ		19207	5P1201-39	TUBE MAKE FROM TUBE P/N 5P1201 6 THRU77V9410.....	2
22	PFOZZ	5340007206213	96906	MS21333-59	CLAMP,LOOP.....	2
23	PFOZZ	5305007215492	80204	B1821BH038C063N	SCREW,CAP,HEXAGON H.....	2
24	PFOZZ	5310001174788	11083	5M2894	WASHER,FLAT.....	2
25	PFHZZ	5310006379541	96906	MS35338-46	WASHER,LOCK USE WITH SERIAL RANGE 77V5006 THRU 77V5258.....	3
26	MOOZZ		19207	5P1201-38	TUBE MAKE FROM TUBE P/N 5P1201.....	1
26	MOOZZ		11083	5P1201-49	TUBE MAKE FROM TUBE P/N 5P1201.....	1
27	PFOZZ	5340012550933	11083	1M3464	CLAMP,LOOP.....	2
28	PFOZZ	5310004317239	11083	2M849	WASHER,FLAT.....	2
29	PFOZZ	2910004937301	11083	3L3446	FITTING ASSEMBLY,FU.....	2
30	PFOZZ	4730007373364	11083	4H2663	.NUT,TUBE COUPLING.....	1
31	PFOZZ	5365005985255	11083	4H2662	.BUSHING,NONMETALLIC.....	1
32	PFOZZ	4820009489962	11083	2S5100	VALVE ASSEMBLY.....	1
33	PFOZZ	4820009489962	11083	2S5100	VALVE ASSEMBLY.....	1
34	PFOZZ	2990009489761	11083	2S5103	SCREEN.....	1
35	PFOZZ	4730012505867	11083	1K6776	PLUG,TUBE FITTING,T.....	1
36	PFOZZ	4730011656616	98441	322F-E	ADAPTER,STRAIGHT,PI.....	1
37	PFOZZ	4730010617178	11083	3B6489	COUPLING.....	2

END OF FIGURE

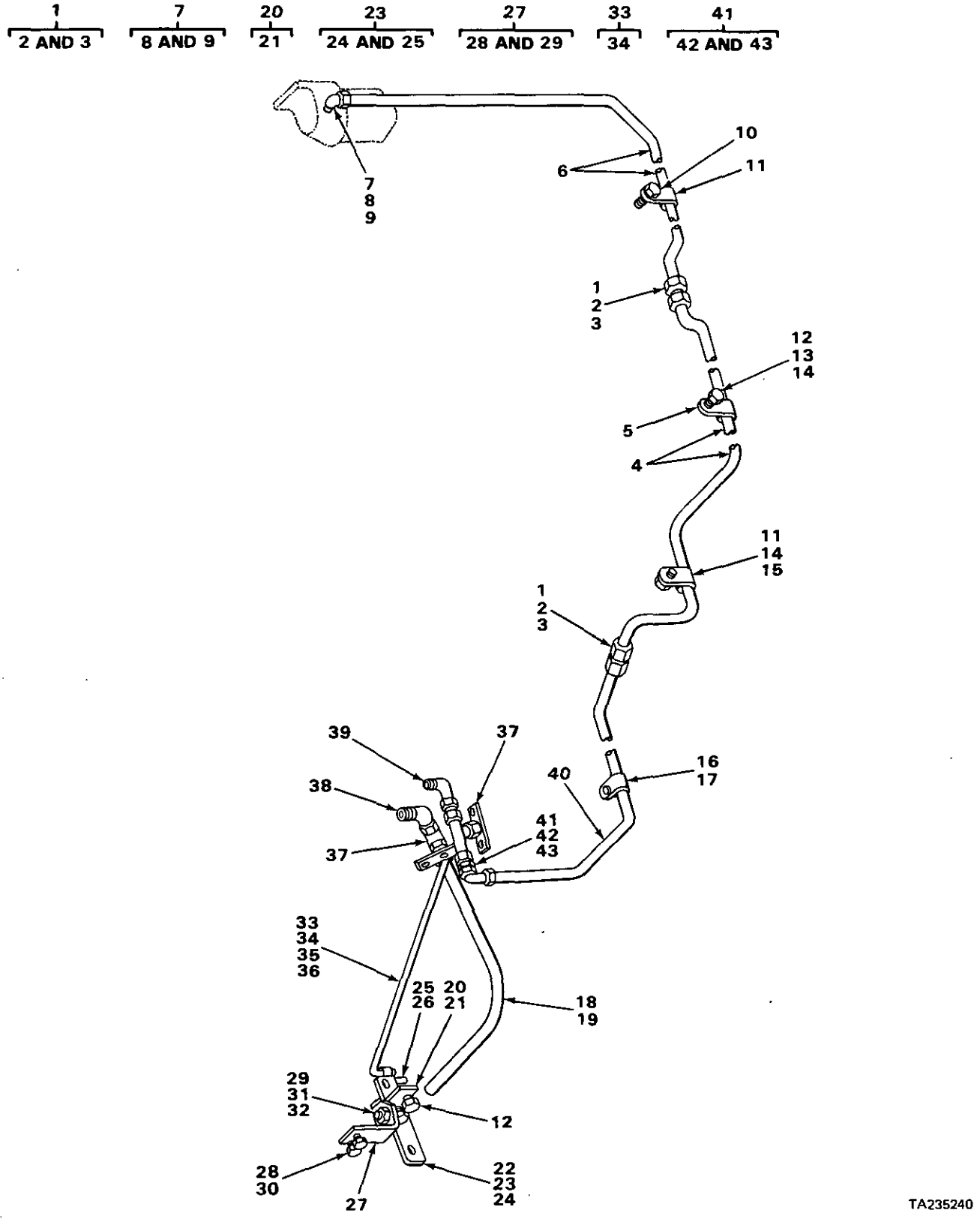

FIGURE 43. FUEL LINES (FOR USE WITH SERIAL RANGE 77V9411 THRU 77V9475).

(1) ITEM NO	(2) SMR CODE	(3) NSN	(4) CAGEC	(5) PART NUMBER	(6) DESCRIPTION AND USABLE ON CODES(UOC)	(7) QTY
					GROUP 0306 TANKS, LINES, FITTINGS, HEADERS.	
					FIG. 43 FUEL LINES (FOR USE WITH SERIAL RANGE 77V9411 THRU 77V9475).	
1	PFOZZ	4730012501570	11083	1L480	COUPLING,TUBE.....	2
2	PFOZZ	4730007373364	11083	4H2663	.NUT,TUBE COUPLING.....	1
3	PFOZZ	5365005985255	11083	4H2662	.BUSHING,NONMETALLIC.....	1
4	MOOZZ		19207	5P1201-97	TUBE MAKE FROM TUBE P/N 5P1201.....	1
5	PFOZZ	5340007206213	96906	MS21333-59	CLAMP,LOOP.....	1
6	MOOZZ		19207	5P1201-48	TUBE MAKE FROM TUBE P/N 5P1201.....	1
7	PFOZZ	4730008516273	11083	1L482	ELBOW,PIPE TO TUBE.....	1
8	PFOZZ	4730007373364	11083	4H2663	.NUT,TUBE COUPLING.....	1
9	PFOZZ	5365005985255	11083	4H2662	.BUSHING,NONMETALLIC.....	1
10	PFOZZ	5306002637301	11083	L1351	BOLT,MACHINE.....	1
11	PFOZZ	5340004238320	11083	1B3057	CLIP,SPRING TENSION.....	2
12	PFOZZ	5306004238194	11083	1A2029	BOLT,MACHINE.....	3
13	PFOZZ	5310011945398	11083	1D4717	NUT,HEXAGON.....	1
14	PFOZZ	5310001174788	11083	5M2894	WASHER,FLAT.....	7
15	PFOZZ	5305007215492	80204	B1821BH038C063N	SCREW,CAP,HEXAGON H.....	1
16	PFOZZ	5340012544303	11083	4M5942	CLAMP,LOOP.....	1
17	PFOZZ	5310004317239	11083	2M849	WASHER,FLAT.....	1
18	MOOZZ		19207	0937331-30	HOSE MAKE FROM HOSE P/N 5P1442.....	1
19	PFOZZ	4730011656616	98441	322F-E	ADAPTER,STRAIGHT,PI.....	1
20	PFOZZ	5340012849586	11083	9P5397	BRACKET,ANGLE.....	1
21	PFOZZ	5310000050781	11083	9F2978	.NUT,PLAIN,WELDING.....	2
22	PFOZZ	5365001362006	11083	2M7167	SPACER,SLEEVE.....	1
23	XBOZZ		11083	9P5400	LEVER ASSEMBLY.....	1
24	PFOZZ	3120008586240	11083	5H3895	.BUSHING,SLEEVE.....	1
25	PFOZZ	5315011794533	11083	2G2588	.PIN,STRAIGHT,HEADLE.....	1
26	PFOZZ	5360012547243	11083	2D2861	SPRING,FLAT.....	1
27	PFOZZ	5340012849585	11083	9P5398	BRACKET,ANGLE.....	1
28	PFOZZ	5310000050781	11083	9F2978	.NUT,PLAIN,WELDING.....	4
29	PFOZZ	5310004454632	11083	1F748	.NUT,PLAIN,WELDING.....	1
30	PFOZZ	5305000680511	80204	B1821BH038C125N	SCREW,CAP,HEXAGON H.....	2
31	PFOZZ	5306002736357	11083	1A1460	BOLT,MACHINE.....	1
32	PFOZZ	5310005956153	11083	1F7960	WASHER,FLAT.....	1
33	PFOZZ	3040012508624	11083	7G6085	CONNECTING LINK,RIG.....	1
34	PFOZZ	5310008094058	96906	MS27183-10	.WASHER,FLAT.....	2
35	PFOZZ	5315008161794	00198	PK379	PIN,COTTER.....	2
36	PFOZZ	5310008094058	96906	MS27183-10	WASHER,FLAT.....	2
37	PFOZZ	4820011637157	96795	30014300	VALVE,BALL.....	2
38	PFOZZ	4730012501566	78640	7244	ELBOW,PIPE.....	1
39	PFOZZ	4730002892357	01276	2089-8-8S	ELBOW,PIPE.....	1
40	MOOZZ		19207	5P1201-41	TUBE MAKE FROM TUBE P/N 5P1201.....	1
41	PFOZZ	2910004937301	11083	3L3446	FITTING ASSEMBLY,FU.....	1
42	PFOZZ	4730007373364	11083	4H2663	.NUT,TUBE COUPLING.....	1
43	PFOZZ	5365005985255	11083	4H2662	.BUSHING,NONMETALLIC.....	1

END OF FIGURE

1	9	11	14	27
2 THRU 37	9A THRU 9C	12 THRU 15	14A AND 14B	28 THRU 31

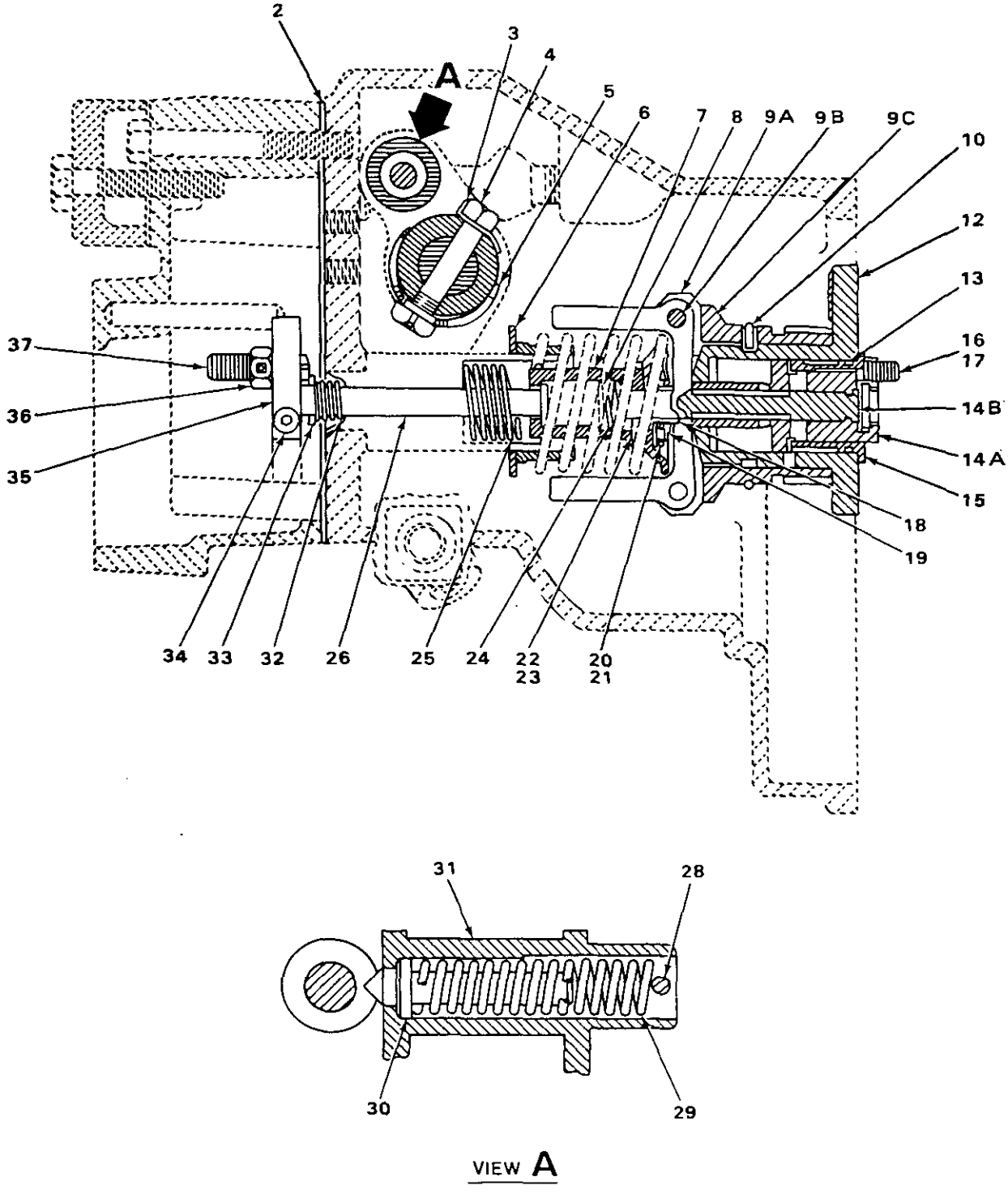

FIGURE 44. GOVERNOR (SIDE VIEW).

(1) ITEM NO	(2) SMR CODE	(3) NSN	(4) PART CAGEC NUMBER	(5)	(6) DESCRIPTION AND USABLE ON CODES (UDC)	(7) OTY
					GROUP 0308 ENGINE SPEED GOVERNOR AND CONTROLS	
					FIGS 44 GOVERNOR (SIDE VIEW)	
1	PEHHZ	2990012504503	11083 2P1499		GOVERNOR, GASOLINE E	1
2	PANZZ	5330001046312	11083 2S7314		GASKET PART OF KIT P/N 5P9556	1
3	PAHZZ	5310013774412	11083 1W4792		LOCKNUT .	1
4	PEHZZ	5306004029160	58312 994468-00		BOLT, MACHINE	1
5	PFUZZ	5340002513446	11083 954673		CLAMP, BRIDGE	1
6	PFHZZ	5340010664744	11083 6N35O4		SEAT, HELICAL COMPRE	1
7	PFHZZ	5340010712545	11083 6N8629		SEAT, HELICAL COMPRE	1
8	PFHZZ	5310004705568	11083 9146302		WASHER, FLAT	2
9	PEHHZ	2990013777852	11083 6N1311		WEIGHT	1
9A	PFHZZ	3040013848994	11083 6N1312		WEIGHT, CONTERBALAN	2
9B	PFHZZ	5315001183070	11083 155440		PIN, DOWEL	2
9C	XAHZZ		11083 5S5059		GEAR	1
10	PFHZZ	5325006503142	11083 788105		RING, RETAINING	1
11	PFHHZ	2815010687271	11083 2P8725		PISTON	1
12	PFHZZ	2990001160433	11083 1S4741		CYLINDER, GOVERNOR	1
13	PAHZZ	5331011024354	11083 5P9757		O-RING	1
14	PFHHZ	2990001160440	11083 8N6979		PISTON ASSEMBLY,GOV	1
14A	XAHZZ		11083 8N6980		PISTON	1
14B	XAHZZ		11083 758445		VALVE	1
15	PFHZZ	2990013762799	11083 8N6977		SLEEVE, GOVERNOR	1
16	PFHZZ	*5306002611153*	1t083 S1615		BOLT, MACHINE	3
17	PAHZZ	5340001160431	11083 9M6293		LOCKING PLATE,NUT A PART OF KIT P/N *5P-9229*	1
18	PEHZZ	3120001160434	11053 257		BUSING, SLEEVE	1
19	PFHZZ	5325007376724	11083 3KOB1O		RING, RETAINING	1
20	PFHZZ	3110006294111	11083 7M7219		RETAINER AND ROLLER	1
21	PFHZZ	3120001183007	11083 7M7I93		BEARING, WASHER, THRU	2
22	PFHZZ	5365010973237	11083 4143887		RING	1
23	PFHZZ	5315010672168	11083 2P5630		DOWEL	1
24	PFHZZ	5360001160432	11083 9M6303		SPRING, HELICAL, COMP	1
25	PFHZZ	2990009036938	11083 8H9181		SPRING, GOVERNOR	1
26	XDHZZ		17083 8M8739		PIN, GROOVED, HEADED	1
27	XDHZZ		11083 2W1493		LEVER ASSY	1
28	PFHZZ	5315005822466	11083 811984		PIN, SPRING	1
29	PFHZZ	5360000819031	58312 7M73I6-OO		SPRING, HELICAL, COMP	1
30	PFHZZ	*5315009527737*	11083 9M9788		PIN, SHOULDER, HEADLE	1
31	PFHZZ	3040011796553	11083 2W1491		LEVER,REMOTE CONTRO	1
32	PFHZZ	5360002319823	11083 257235		SPRING, HELICAL, COMP	1
33	PFHZZ	2990004225459	58312 2S7289-00		COLLAR, GOVERNOR GRO	I
34	PFHZZ	5305009789374	*96906* MS16997-36		SCREW, CAP, SOCKET HE	1
35	PFHZZ	2990002440235	11083 8L4154		COLLAR, FULL LOAD S	1
36	PFHZZ	5310006602649	96906 MS35690-424		NUT, PLAIN, HEXAGON	1
37	PFHZZ	5305004970372	11083 814i55		SCREW	1

END OF FIGURE

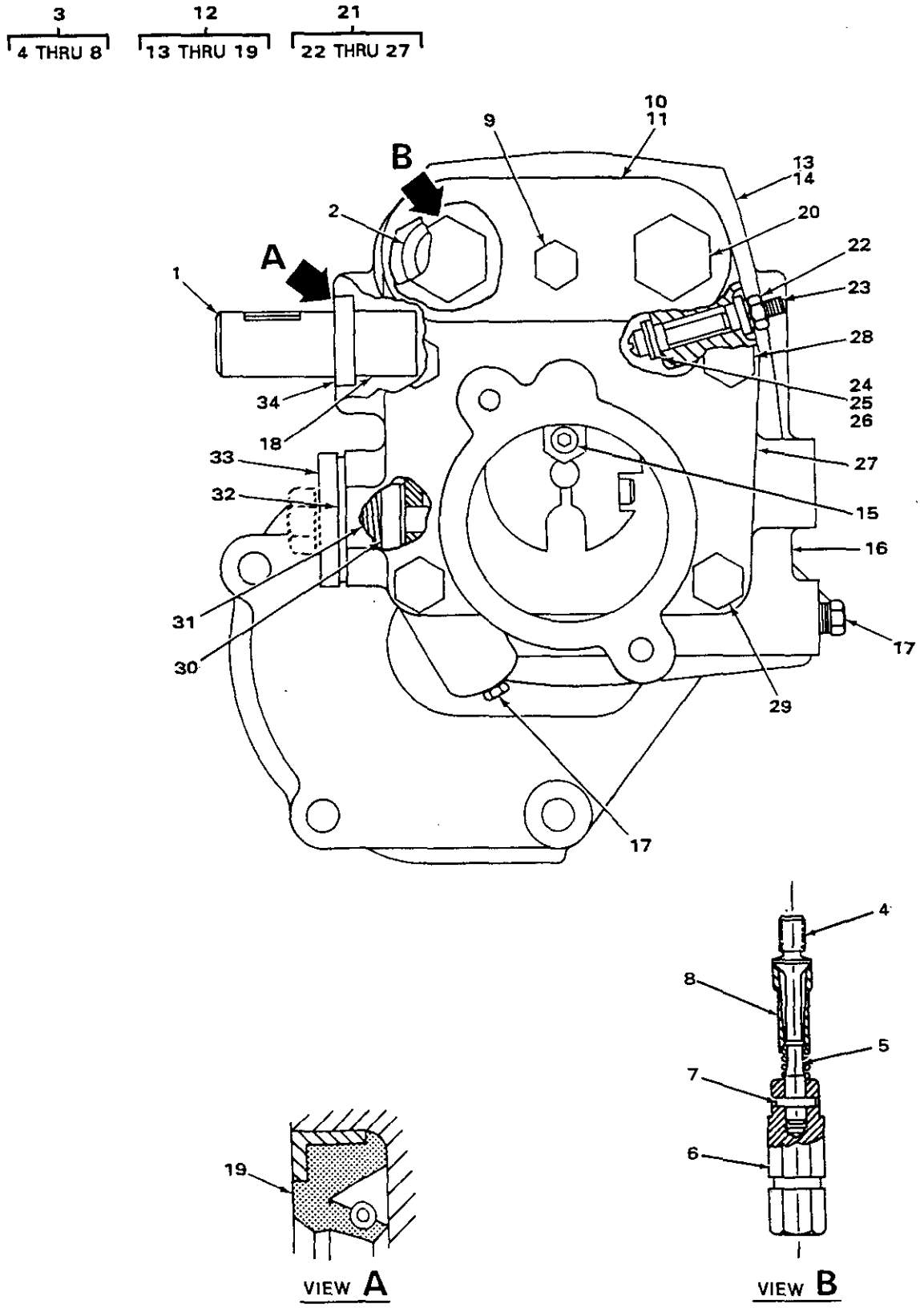

FIGURE 45. GOVERNOR (END VIEW).

(1) ITEM NO	(2) SMR CODE	(3) NSN	(4) CAGEC	(5) PART NUMBER	(6) DESCRIPTION AND USABLE ON CODES(UOC)	(7) QTY
					GROUP 0308 ENGINE SPEED GOVERNOR AND CONTROLS	
					FIG. 45 GOVERNOR (END VIEW)	
1	PFHZZ	2530010672166	11083	9M4789	.SHAFT	1
2	PAHZZ	5330008588224	11083	2J157	.PACKING,PREFORMED PART OF KIT P/N 5P-9229 PART OF KIT P/N 5P-9556	2
3	PFHHZ	5305004615427	11083	9S7077	.SCREW	1
4	PFHZZ	5305010682843	11083	9S4980	..SCREW	1
5	XDHZZ		11083	9S4982	..SPRING	1
6	PFHZZ	5342010686137	11083	9S7078	..END	1
7	PFHZZ	5315010689644	11083	4H1641	..PIN,SPRING	1
8	PFHZZ	4730010680042	11083	2W7498	..SLEEVE	1
9	PFHZZ	5305011582039	11083	5P6945	.SCREW,CAP,HEXAGON H	1
10	PFHZZ	5340001160497	11083	5L8992	.COVER,ACCESS	1
11	PAHZZ	5330001046565	11083	5L8991	.GASKET PART OF KIT P/N 5P-9229 PART OF KIT P/N 5P-9556	1
12	XAHZZ		11083	2P0189	.HOUSING ASSEMBLY	1
13	PFHZZ	3120002376956	11083	8S0134	..BEARING,SLEEVE	1
14	PFHZZ	5340004234804	11083	4F4585	..PLUG,EXPANSION	1
15	PFHZZ	2990013776798	11083	2P0190	..HOUSING,GOVERNOR,DI	1
16	PFHZZ	2990001160423	11083	8M8403	..GUIDE SPRING	1
17	PFHZZ	5365004193254	11083	2S7905	..PLUG,MACHINE THREAD	2
18	PFHZZ	3120004821419	11083	9S798	..BEARING,SLEEVE	1
19	PAHZZ	5330012701752	11083	8T2604	..SEAL,PLAIN	1
20	PFHZZ	5306004765309	11083	8S8952	.BOLT,SHOULDER	1
21	PFHHZ	2990013538420	11083	8N6158	.COVER,GOVERNOR	1
22	PFHZZ	5310007543384	18876	9024483	..NUT,PLAIN,HEXAGON	1
23	XDHZZ		58312	2S7387-00	..SCREW,MACHINE	1
24	PFHZZ	5310000453299	96906	MS35338-42	..WASHER,LOCK	1
25	XDHZZ		11083	8F1326	..WASHER,FLAT	2
26	PFHZZ	5970004447669	58312	2S7307-00	..INSULATOR,BUSHING	2
27	XDHZZ		11083	8N5889	..COVER	1
28	XDHZZ		11083	9M8720	.BOLT,MACHINE	1
29	PFHZZ	5306002264833	80204	B1821BH031C200N	.BOLT,MACHINE	4
30	PFHZZ	5340009318006	11083	9M9187	.PLUNGER,DETENT	1
31	PFHZZ	5360009206786	11083	1S9312	.SPRING,HELICAL,COMP	1
32	PAHZZ	5330002082207	11083	2P8763	.GASKET PART OF KIT P/N 5P-9229 PART OF KIT P/N 5P-9556	1
33	PFHZZ	5365000055825	11083	9S5393	.PLUG,MACHINE THREAD	1
34	PFHZZ	5365013772727	11083	3K6119	.SPACER,SLEEVE	1

END OF FIGURE

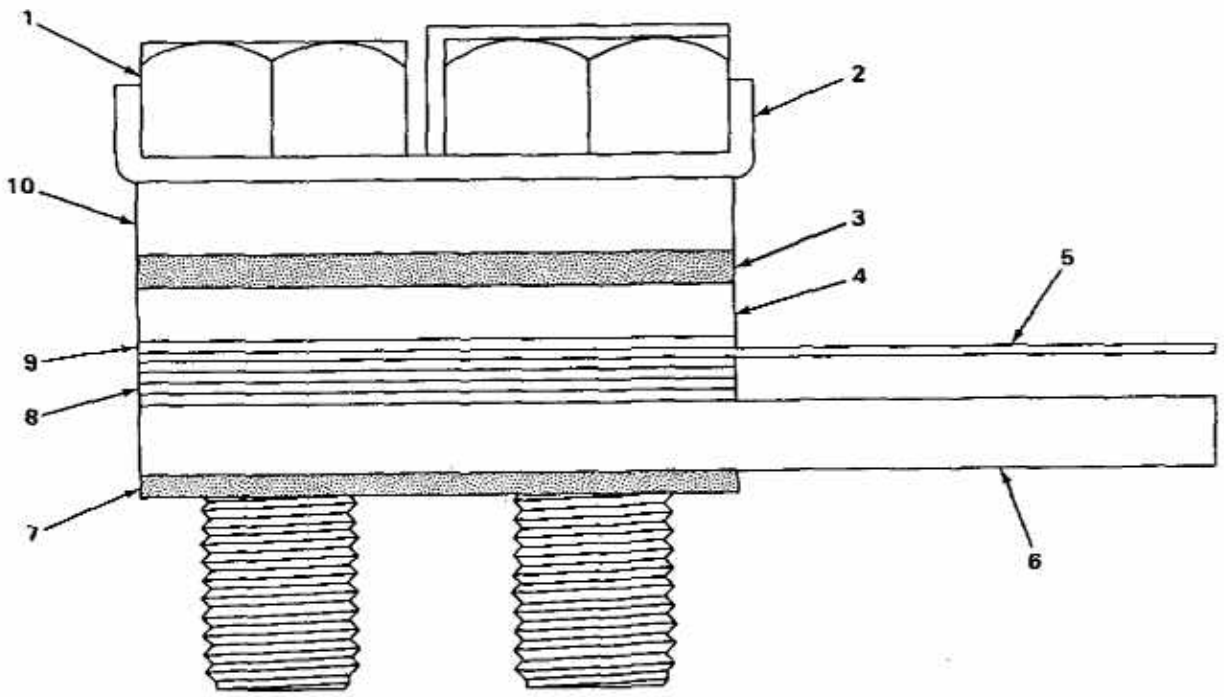

TA235243

FIGURE 46. TORQUE CONTROL

(1) ITEM NO	(2) SMR CODE	(3) NSN	(4) CAGEC	(5) PART NUMBER	(6) DESCRIPTION AND USABLE ON CODES(UOC)	(7) QTY
					GROUP 0308 ENGINE SPEED GOVERNOR AND CONTROLS	
					FIG. 46 TORQUE CONTROL	
1	PFFZZ	5305000712505	80204	B1821BH025C088N	SCREW,CAP,HEXAGON H.....	1
2	PAF2Z	5340001160412	11083	9M6292	LOCKING PLATE,NUT A PART OF KIT P/N 5P-9556.....	1
3	PFFZZ	5970002137747	58312	1P6452-00	INSULATOR,BUSHING.....	1
4	PFFZZ	5365010534689	11083	5S2620	SPACER.....	1
5	PFFZZ	5360010682840	11083	9S2612	SPRING.....	1
6	PFFZZ	2910001372004	11083	2S7391	BAR,RACK STOP,GOVER.....	1
7	PFFZZ	2990010708548	11083	1P9958	PAD,TORQUE,GOVERNOR.....	1
8	PFFZZ	5365012546423	11083	7N1796	SPACER,PLATE .060 THICK.....	1
8	PFFZZ	5365002053664	11083	8L8601	SHIM .002 THICK.....	1
8	PFFZZ	5365012546419	11083	7N4012	SHIM .012 THICK.....	1
9	PFFZZ	2910001388224	11083	8S4317	CONTACT,GOVERNOR.....	1
10	PFFZZ	2910001160407	11083	8M9062	RETAINER,TORQUE SPR.....	1

END OF FIGURE

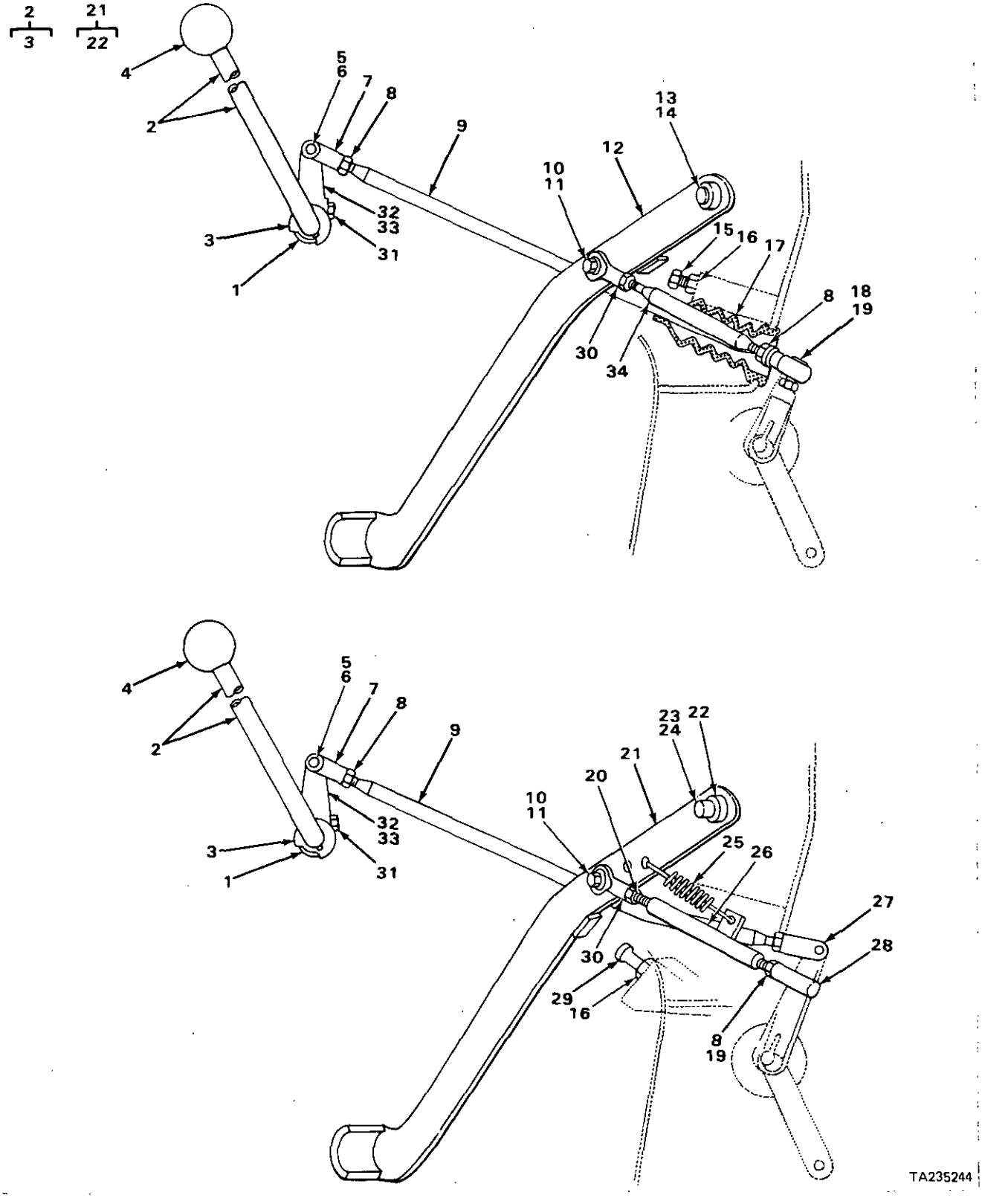

FIGURE 47. GOVERNOR CONTROL LEVERS AND RELATED PARTS.

(1) ITEM NO	(2) SMR CODE	(3) NSN	(4) CAGEC	(5) PART NUMBER	(6) DESCRIPTION AND USABLE ON CODES (UOC)	OTY
					GROUP 0308 ENGINE SPEED GOVERNOR AND CONTROLS	
					FIG. 47 GOVERNOR CONTROL LEVERS AND RELATED PARTS	
1	PFHZZ	5365012538979	11083	7M652	SPACER, PLATE	1
2	PFHZZ	3040012506495	11083	2P9482	LEVER, MANUAL CONTRO	1
3	PFH2Z	5310011065268	11083	6F7048	WASHER, FLAT	1
4	PFHZZ	5355003713370	11083	2A1736	KNOB	1
5	PFHZZ	5315002726760	11083	1B676	PIN, STRAIGHT, HEADED	2
6	PFUZZ	5315008395821	96906	MS24665-351	PIN, COTTER	2
7	PFHZZ	5340010533843	11083	1111341	CLEVIS, ROD END USE WITH SERIAL RANGE 77V5006 THRU 77V5230	1
7	PFHZZ	5340004113926	11083	1F5403	CLEVIS, ROD END USE WITH SERIAL RANGE 7?V5231 THRU 77V9475	1
8	PFFZZ	5310009752075	96906	MS35691-21	NUT, PLAIN, HEXACON	1
9	PFHZZ	5307012542495	11083	3P3186	STUD, PLAIN USE WITH SERIAL RANGE 77V5006 THRU 77V523O	1
9	PFHZZ	5307012542496	11053	6P9296	STUD, PLAIN USE WITH SERIAL RANGE 77V5231 THRU 77V9475.	1
10	PFHZZ	5306001402032	11083	4M496	BOLT, MACHINE	1
11	PFHZZ	5310011945398	11083	1D4717	NUT, HEXAGON	1
11	PFHZZ	5310001476143	11083	4M497	NUT, PLAIN, HEXAGON	1
12	PFHZZ	3040012506507	11083	3P3187	LEVER, REMOTE CONTRO USE WITH SERIAL RANGE 77V5006 THRU77V5230	I
13	PFHZZ	5315012546453	11083	7M2855	PIN, SHOULDERED HEAD USE WITH SERIAL RANGE 77V5006 THRU 77V5230.	1
14	PFHZZ	5315008395822	96906	MS24665-353	PIN, COTTER USE WITH SERIAL RANGE 77V5006 THRU 77V5230	1
15	PFHZZ	5305011850569	11083	4B3610	SETSCREW USE WITH SERIAL RANGE 77V5006 THRU 77V5231	1
16	PFHZZ	5310008512682	96906	MS35691-17	NUT, PLAIN, HEXAGON	2
17	XBHZZ		11083	6P382	BOOT, DUST AND MOIST USE WITH SERIAL RANGE 77V5006 THRU 77V5230	2
18	PFHZZ	2990011033652	11083	5J5315	BALL ROD END USE WITH SERIAL RANGE 77V5006 THRU 77V523O	I
19	PFHZZ	5310006379541	96906	MS35338-46	WASHER, LOCK	2
20	PEHZZ	5306012547170	11083	345535	ROD, THREADED END USE WITH SERIAL RANGE 77V5231 THRU 77V9475	1
21	PFHZZ	3040012506508	11083	8P5717	LEVER, REMOTE CONTRO USE WITH SERIAL RANGE 77V5231 THRU 77V9475	I
22	PFHZZ	3120011648629	11083	9H2400	BUSHING, SLEEVE	2
23	PFHZZ	5315012547407	11083	8P5715	PIN, SHOULDERED HEAD USE WITH SERIAL RANGE 77V5231 THRU 77V9475	1
24	PFHZZ	5315005865103	11083	6H3956	PIN, SPRING USE WITH SERIAL RANGE 77V5231 THRU 77V9475	1
25	PFHZZ	5360009845590	11083	7M9847	SPRING, HELICAL, EXTE USE WITH SERIAL RANGE 77V5231 THRU 77V9475	z
26	PFHZZ	5306012550930	11083	8P5716	ROD, THREADED END USE WITH SERIAL RANGE 77V5231 THRU 77V9475	1
27	PFHZZ	5340010533843	11083	1M1341	CLEVIS, ROD END USE WITH SERIAL	1

(1) ITEM NO	(2) SMR CODE	(3) NSN	(4) CAGEC	(5) PART NUMBER	(6) DESCRIPTION AND USABLE ON CODES(UOC)	(7) QTY
					RANGE 77V5231 THRU 77V9475.....	
28	PFHZZ	3040009498665	11083	3K4290	BALL JOINT USE WITH SERIAL RANGE 77V5231 THRU 77V9475.....	1
29	PFHZZ	5305012542277	11083	102461	SCREW,CAP,HEXAGON H USE WITH SERIAL RANGE 77V5231 THRU 77V9475...	1
30	PFHZZ	2910010588075	11083	4D4064	ROD END.....	1
31	PFHZZ	5306000635001	11083	1A2209	BOLT,MACHINE.....	1
32	PFHZZ	3040002479923	11083	5M3306	LEVER,REMOTE CONTRO.....	1
33	PFHZZ	5315006165524	64294	29620-3	KEY,WOODRUFF.....	1
34	PFHZZ	5307011556687	11083	8D2586	STUD,SHOULDERED USE WITH SERIAL RANGE 77V5006 THRU 77V5230.....	1

END OF FIGURE

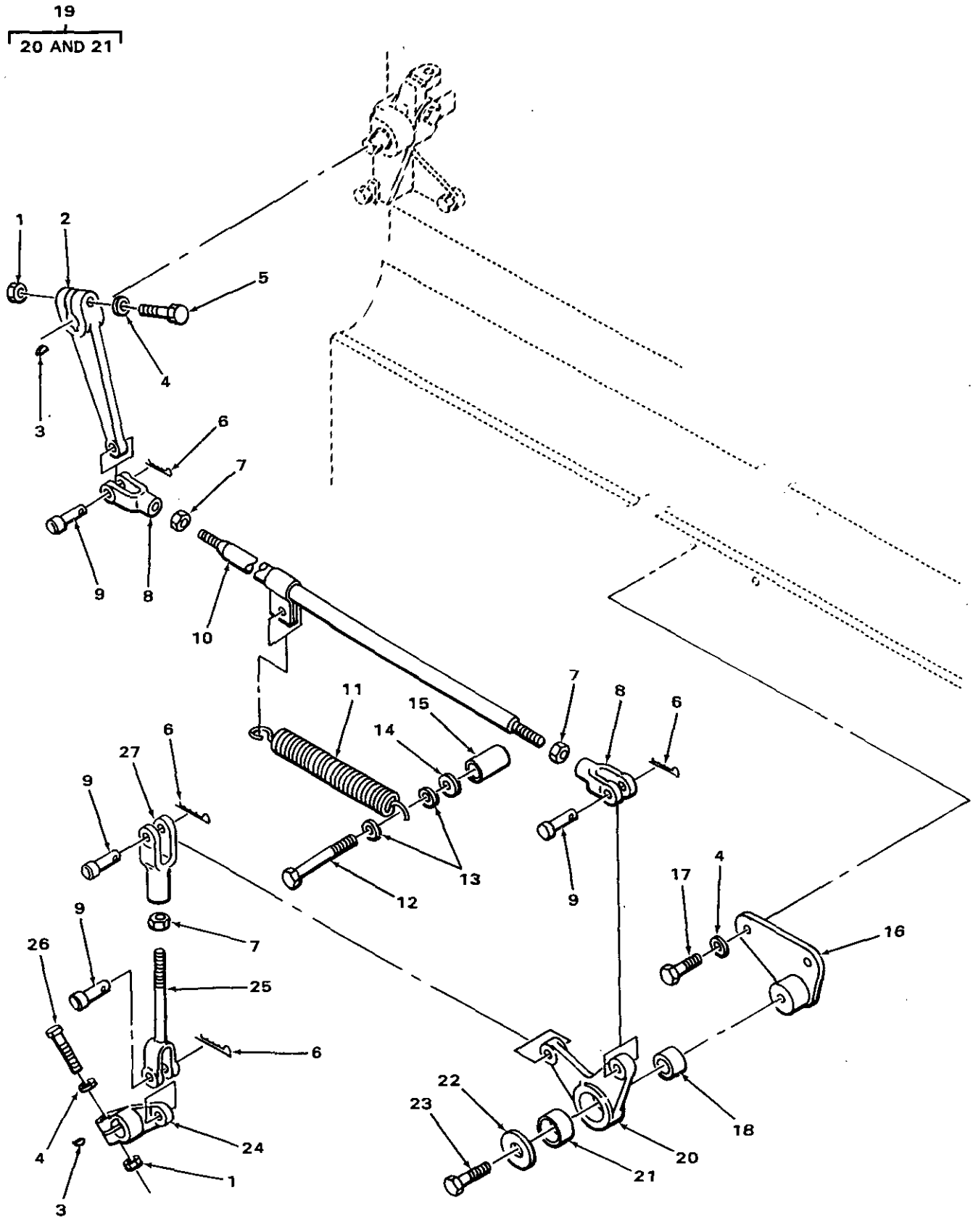

FIGURE 48. GOVERNOR CONTROLS BELLCRANK AND RELATED PARTS.

(1) ITEM NO	(2) SMR CODE	(3) NSN	(4) CAGEC	(5) PART NUMBER	(6) DESCRIPTION AND USABLE ON CODES(UOC)	(7) QTY
					GROUP 0308 ENGINE SPEED GOVERNOR AND CONTROLS	
					FIG. 48 GOVERNOR CONTROLS BELLCRANK AND RELATED PARTS	
1	PFFZZ	5310011945398	11083	1D4717	NUT,HEXAGON	2
2	PFFZZ	2910010513138	11083	2M0496	LEVER	1
3	PFFZZ	5315006165526	96906	MS35756-8	KEY,WOODRUFF	2
4	PFHZZ	5310001174788	11083	5M2894	WASHER,FLAT	2
5	PFFZZ	5305010269518	11083	0S1571	SCREW,CAP,HEXAGON H	1
6	PFFZZ	5315008395821	96906	MS24665-351	PIN,COTTER	4
7	PFOZZ	5310002094516	28298	M5839	WASHER,FLAT	2
8	PFFZZ	5340010533843	11083	1M1341	CLEVIS,ROD END	2
9	PFFZZ	5315002726760	11083	1B0676	PIN,STRAIGHT,HEADED	4
10	XDFZZ		11083	6P7164	ROD ASSEMBLY	1
11	PFFZZ	5360001499006	11083	4B6493	SPRING,HELICAL,EXTE	1
12	PFFZZ	5306006852384	14351	13XX3958	BOLT,MACHINE	1
13	PFFZZ	5310011022478	11083	9N1650	WASHER,FLAT	2
14	PFFZZ	5310013772725	11083	1K7091	WASHER,FLAT	1
15	PFFZZ	5365011854734	11083	7K3377	SPACER,SLEEVE	1
16	XDFZZ		11083	6P614	BRACKET	1
17	PFHZZ	5306004238194	11083	1A2029	BOLT,MACHINE	2
18	XDFZZ		11083	6P3343	SLEEVE	1
19	XDFFF		11083	6N5365	LEVER	1
20	XAFZZ		11083	6N5369	.LEVER	1
21	PFFZZ	3110011039158	11083	7P4190	.BEARING	1
22	PFFZZ	5310002858867	78286	S14-35-5017	WASHER,FLAT PART OF KIT P/N 1W7029	1
23	PFFZZ	5305010156841	11083	0S1591	SCREW	1
24	XDFZZ		11083	6N5363	LEVER	1
25	XDFZZ		11083	3K0881	ROD	1
26	PFFZZ	5306011954681	11083	3B1915	BOLT	1
27	PFFZZ	5340009850823	96906	MS35812-4	CLEVIS,ROD END	1

END OF FIGURE

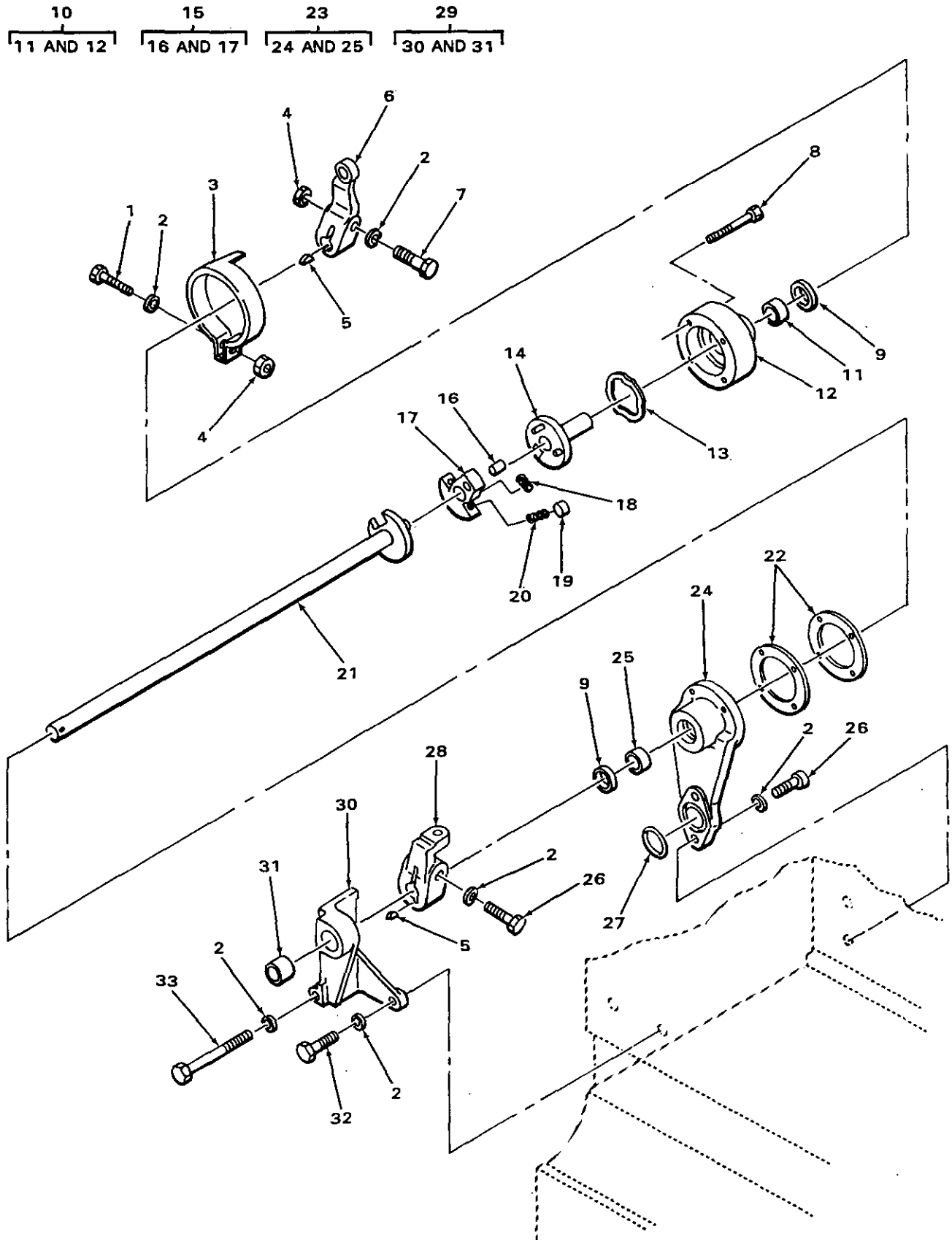

FIGURE 49. GOVERNOR CONTROLS LINK AND RELATED PARTS.

(1) ITEM NO	(2) SMR CODE	(3) NSN	(4) CAGEC	(5) PART NUMBER	(6) DESCRIPTION AND USABLE ON CODES(UOC)	(7) QTY
					GROUP 0308 ENGINE SPEED GOVERNOR AND CONTROLS	
					FIG. 49 GOVERNOR CONTROLS LINK AND RELATED PARTS	
1	PFFZZ	5306011954681	11083	3B1915	BOLT	1
2	PFHZZ	5310001174788	11083	5M2894	WASHER,FLAT	10
3	PFFZZ	4730010678065	11083	4N5526	CLAMP,HOSE	1
4	PFFZZ	5310011945398	11083	1D4717	NUT,HEXAGON	2
5	PFFZZ	5315006165526	96906	MS35756-8	KEY,WOODRUFF	2
6	XDFZZ		11083	6N5362	LEVER	1
7	PFFZZ	5305010269518	11083	0S1571	SCREW,CAP,HEXAGON H	1
8	PFFZZ	5306004238313	11083	1B2713	BOLT,MACHINE	4
9	PAFZZ	5330008586201	11083	8H9180	SEAL,PLAIN ENCASED	2
10	PFFFZ	2990011036623	11083	9M3025	COVER ASSEMBLY	1
11	PFFZZ	5365010664574	11083	2K2605	.BUSHING	1
12	PFFZZ	3040012540264	11083	9M3024	.HOUSING,MECHANICAL	1
13	PFFZZ	5310004982968	11083	9S2309	WASHER	1
14	XDFZZ		11083	7N1196	SHAFT ASSEMBLY	1
15	PFFFZ	2990002376137	11083	9S4971	PLATE ASSEMBLY, GOV	1
16	PFFZZ	2520010664723	11083	8M6521	.DOWEL	1
17	XAFZZ		11083	9S4972	.PLATE	1
18	PFFZZ	5360002372158	11083	5H7152	SPRING,HELICAL,COMP	1
19	PFFZZ	3110009241971	11083	8H9182	ROLLER,BEARING	2
20	PFFZZ	5360008986730	11083	8H9186	SPRING,HELICAL,COMP	2
21	XDFZZ		11083	6N5117	SHAFT ASSEMBLY	1
22	PAFZZ	5330009208186	58312	7M6955-00	GASKET	2
23	XDFFF		11083	6N5368	BRACKET ASSEMBLY	1
24	XAFZZ		11083	6N5370	.BRACKET	1
25	PFFZZ	5365010664574	11083	2K2605	.BUSHING	1
26	PFFZZ	5305000680511	80204	B1821BH038C125N	SCREW,CAP,HEXAGON H	3
27	PAFZZ	5331004293547	11083	1S7462	O-RING	1
28	XDFZZ		11083	6N5366	LEVER	1
29	PFFFZ	5342010680032	11083	4N4989	BRACKET A	1
30	XAFZZ		11083	4N4988	.BRACKET	1
31	PFFZZ	3120009491344	11083	5H1592	.BUSHING,SLEEVE	1
32	PFHZZ	5306004238194	11083	1A2029	BOLT,MACHINE	1
33	PFFZZ	2910003099473	11083	0T0573	CAPSCREW,FUEL PUMP	1

END OF FIGURE

1
2 THRU 15

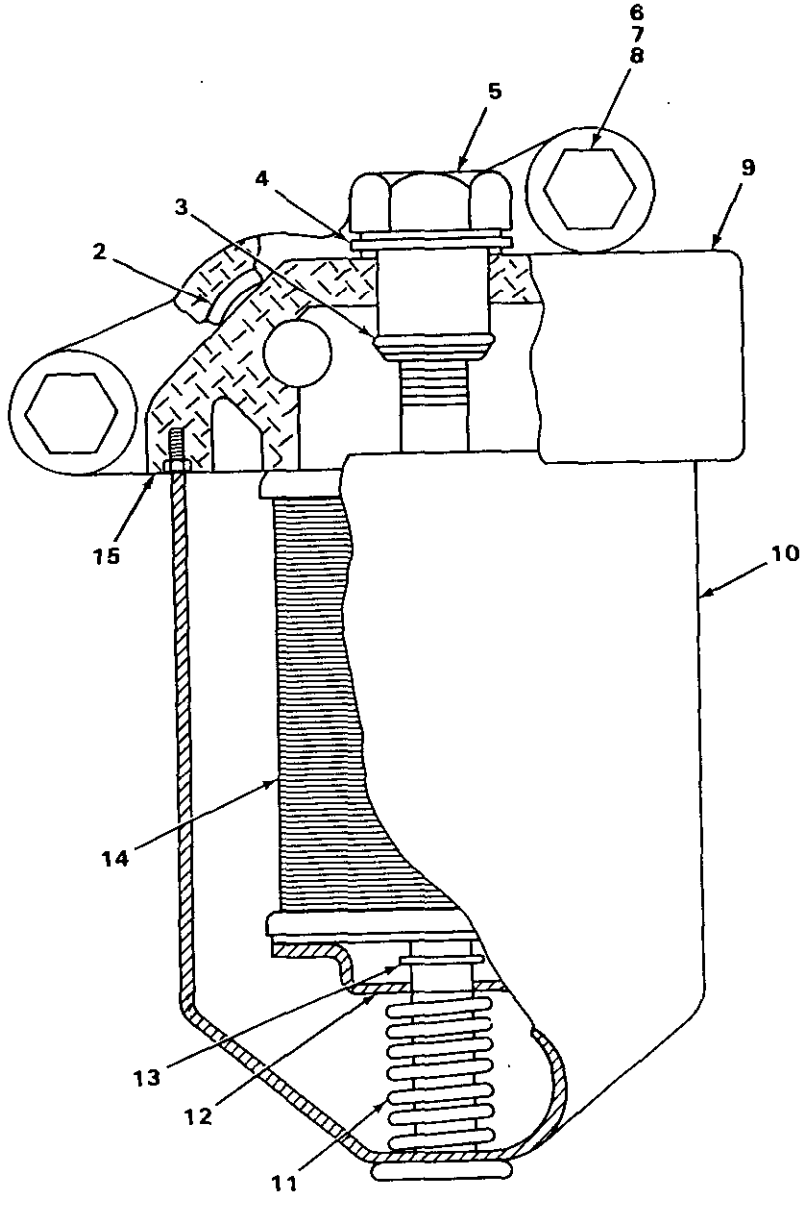

TA235247

FIGURE 50. PRIMARY FUEL FILTER.

(1) ITEM NO	(2) SMR CODE	(3) NSN	(4) CAGEC	(5) PART NUMBER	(6) DESCRIPTION AND USABLE ON CODES(UOC)	(7) QTY
					GROUP 0309 FUEL FILTERS	
					FIG. 50 PRIMARY FUEL FILTER	
1	PF00Z	2910013237372	11083	8S7608	FILTER,FLUID.....	1
2	PA0ZZ	5331008507586	11083	5H2767	.O-RING PART OF KIT P/N 5P-9556.....	1
3	PF0ZZ	2910010512299	11083	1L3769	.RING.....	1
4	PF0ZZ	5330006014934	83259	600-001-5-8	.PACKING WITH RETAIN.....	1
5	PF0ZZ	5310008828876	11083	8H2807	.NUT,SLEEVE.....	1
6	PF0ZZ	5305010156841	11083	0S1591	.SCREW.....	2
7	PF0ZZ	5310006379541	96906	MS35338-46	.WASHER,LOCK.....	2
8	PF0ZZ	5310012662481	11083	4B4278	.WASHER,FLAT.....	2
9	XD0ZZ		11083	8S5091	.BASE.....	1
10	PF0ZZ	2910001163227	11083	8H2810	.FILTER BODY,FLUID.....	1
11	PF0ZZ	5360001160448	11083	7S9323	.SPRING,HELICAL,COMP.....	1
12	PF0ZZ	5340009993230	11083	7H9678	.SEAT,HELICAL COMPRE.....	1
13	PF0ZZ	5325007151152	96906	MS16624-1037	.RING,RETAINING.....	1
14	PA0ZZ	2910009893388	11083	9M2341	.FILTER ELEMENT,FLUI.....	1
15	PA0ZZ	5330005854284	11083	8H2778	.GASKET PART OF KIT P/N 2P-3988.....	1

END OF FIGURE

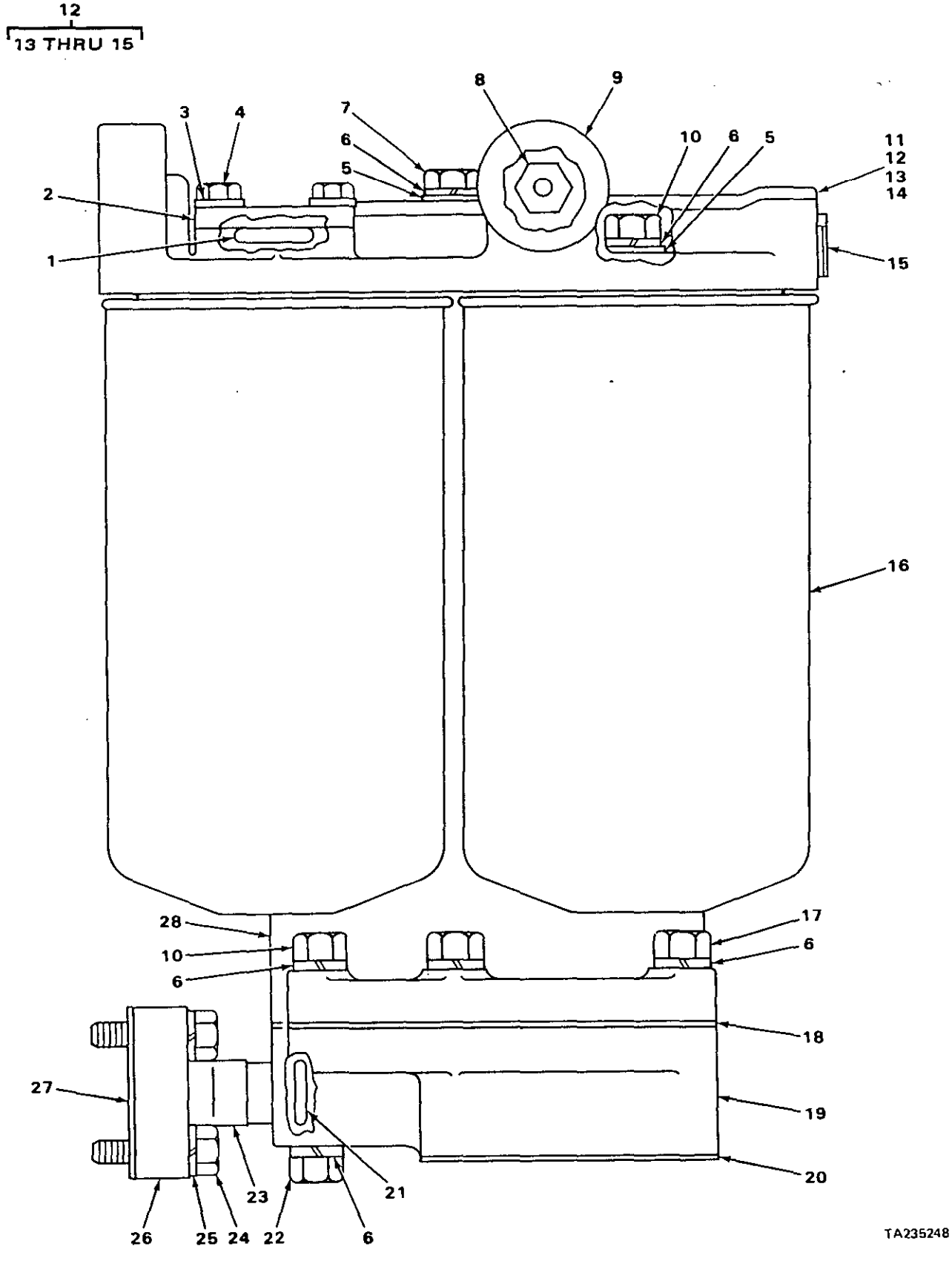

FIGURE 51. FUEL FILTER.

(1) ITEM NO	(2) SMR CODE	(3) NSN	(4) CAGEC	(5) PART NUMBER	(6) DESCRIPTION AND USABLE ON CODES(UOC)	(7) QTY
					GROUP 0309 FUEL FILTERS	
					FIG. 51 FUEL FILTER	
1	PAOZZ	5330000034137	11083	8S5011	O-RING PART OF KIT P/N 5P-9229 PART OF KIT P/N 5P-9556.....	1
2	PFOZZ	2990011033689	11083	6N7016	COVER,FILTER.....	1
3	PFOZZ	5310010512360	11083	5P0537	WASHER.....	2
4	PFOZZ	5305000712505	80204	B1821BH025C088N	SCREW,CAP,HEXAGON H.....	2
5	PFOZZ	5310012662481	11083	4B4278	WASHER,FLAT.....	4
6	PFOZZ	5310006379541	96906	MS35338-46	WASHER,LOCK.....	10
7	PFOZZ	5305010269518	11083	0S1571	SCREW,CAP,HEXAGON H.....	2
8	PFOZZ	2910006206887	11083	7F3901	SEAT,AIR VENT,VALVE.....	1
9	PFOZZ	4820003628071	11083	2A1927	NEEDLE,VALVE.....	1
10	PFOZZ	5305000680511	80204	B1821BH038C125N	SCREW,CAP,HEXAGON H.....	3
11	PAOZZ	5330000050607	11083	9S1269	GASKET.....	1
12	XDOZZ		11083	2P5168	BASE ASSEMBLY.....	1
13	PFOZZ	4730000892515	11083	5M6213	.PLUG,PIPE.....	1
14	PFOZZ	5307010512364	11083	9S4167	.STUD.....	1
15	PFOZZ	4730000428988	11083	7H3171	.PLUG,PIPE.....	2
16	PFOZZ	2910013466362	11083	1R0740	FILTER,FLUID.....	2
17	PFOZZ	5306008639890	11083	2H5330	BOLT,MACHINE.....	4
18	PAOZZ	5330010689828	11083	2P5125	GASKET PART OF KIT P/N 5P-9229.....	1
19	XDOZZ		11083	2P4679	ADAPTER.....	1
20	PAOZZ	5330010689827	11083	2P5124	GASKET PART OF KIT P/N 5P-9229 PART OF KIT P/N 5P-9556.....	1
21	PFOZZ	5331009145316	11083	4J5268	O-RING.....	2
22	PFOZZ	5305001380335	11083	7H7954	SCREW,CAP,HEXAGON H.....	1
23	PFOZZ	5365012546436	11083	2P5123	SPACER,SLEEVE.....	1
24	PFOZZ	5306002264828	80204	B1821BH031C113N	BOLT,MACHINE.....	2
25	PFOZZ	2520001497508	11083	6F0857	HOUSING.....	2
26	PFOZZ	4730012505939	11083	9S777	FLANGE,PIPE,BLIND.....	1
27	PAOZZ	5330000050606	11083	9M6542	GASKET PART OF KIT P/N 5P-9229 PART OF KIT P/N 5P-9556.....	1
28	XAOZZ		11083	2P5051	HOUSING.....	1

END OF FIGURE

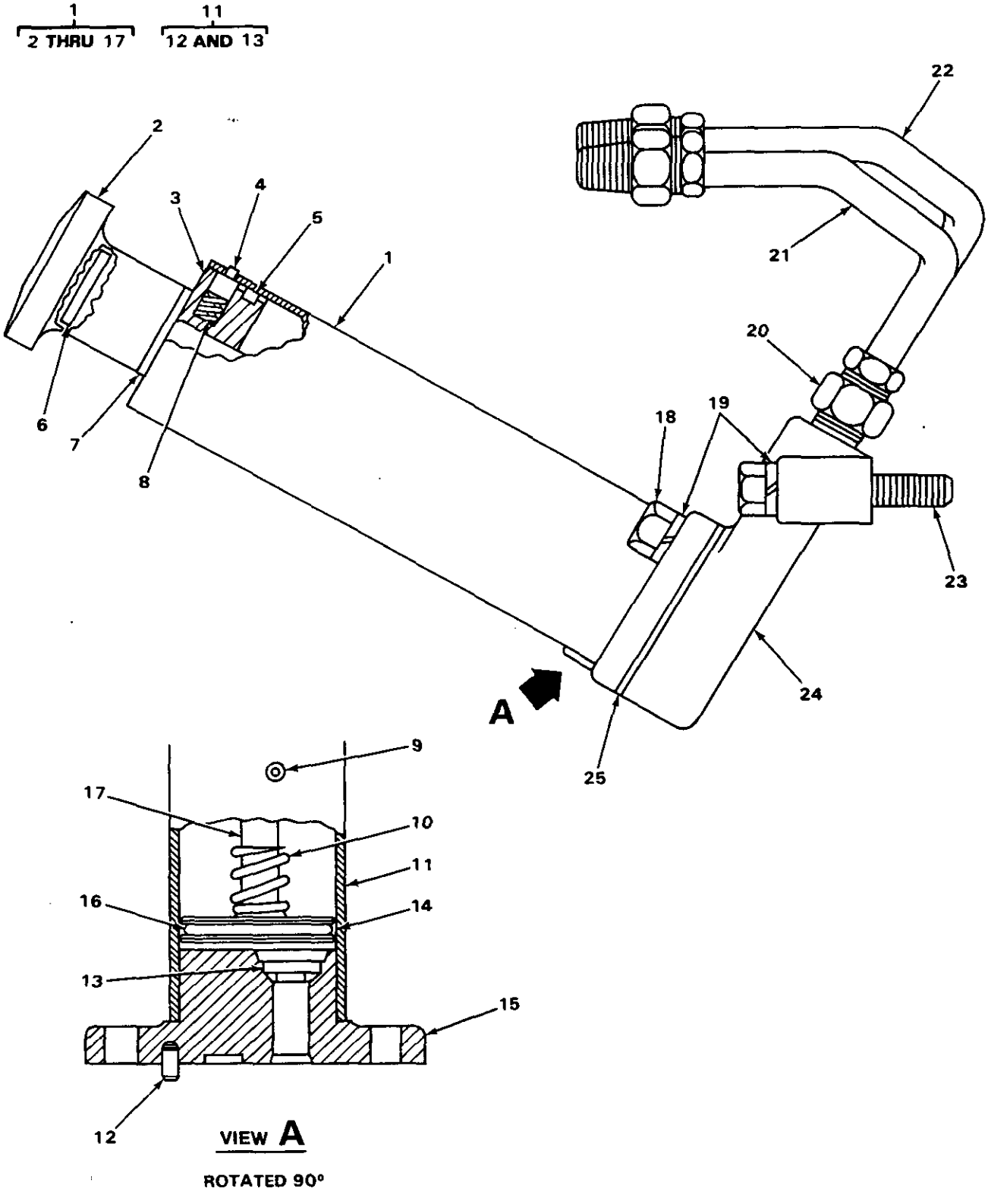

FIGURE 52. FUEL PRIMING PUMP (USE WITH ENGINE SERIAL RANGE 17S5088 THRU 17S5307).

(1) ITEM NO	(2) SMR CODE	(3) NSN	(4) CAGEC	(5) PART NUMBER	(6) DESCRIPTION AND USABLE ON CODES(UOC)	(7) QTY
					GROUP 0311 ENGINE STARTING AIDS	
					FIG. 52 FUEL PRIMING PUMP (USE WITH ENGINE SERIAL RANGE 17S5088 THRU 17S5307)	
1	PFFZZ	2910004217161	11083	1P2297	PUMP,ENGINE PRIMING.....	1
2	XBFZZ		11083	7B8634	.KNOB.....	1
3	PFFZZ	4320013130634	11083	9S8017	.CONNECTOR,FLUID,PUM.....	1
4	XDFZZ		11083	9S8015	.RETAINER.....	2
5	PFFZZ	5331005621073	11083	4F7391	.O-RING PART OF KIT P/N 5P-9556.....	1
5	PFFZZ	5331005931193	11083	3H1461	.O-RING.....	1
6	PFFZZ	5315010664707	11083	9F7882	.PIN.....	1
7	PFFZZ	5330005486119	11083	9S8016	.GASKET.....	1
8	XDFZZ		11083	9S4169	.SPRING.....	2
9	PFFZZ	5315012534346	11083	8F6864	.PIN,STRAIGHT,HEADED.....	1
10	PFFZZ	5360010682828	11083	8M8210	.SPRING.....	1
11	XBFFF		11083	9S8025	.BARREL ASSEMBLY.....	1
12	PFFZZ	5315010702810	11083	5L4197	..PIN.....	1
13	PFFZZ	2910000332200	70040	5622759	..VALVE ASSEMBLY,FUEL.....	2
14	PFFZZ	5365000034155	11083	1P2278	.RING,WIPER.....	1
15	XBFZZ		11083	9S8018	.BASE.....	1
16	PFFZZ	5331005621073	11083	4F7391	.O-RING.....	1
17	XBFZZ		11083	1P2280	.ROD.....	1
18	PFFZZ	5306004238194	11083	1A2029	BOLT,MACHINE.....	2
19	PFFZZ	5310006379541	96906	MS35338-46	WASHER,LOCK.....	4
20	PFFZZ	4730010599344	11083	5K9246	ADAPTER,STRAIGHT,PI.....	4
21	PFFZZ	4710012508631	11083	2P5109	TUBE ASSEMBLY,METAL.....	1
22	PFFZZ	4710012508632	11083	2P5110	TUBE ASSEMBLY,METAL.....	1
23	PFFZZ	5306010949106	11083	0S1590	BOLT,MACHINE.....	2
24	XBFZZ		11083	2P3150	ADAPTER.....	1
25	PFFZZ	5330004705683	11083	8S6157	GASKET.....	1

END OF FIGURE

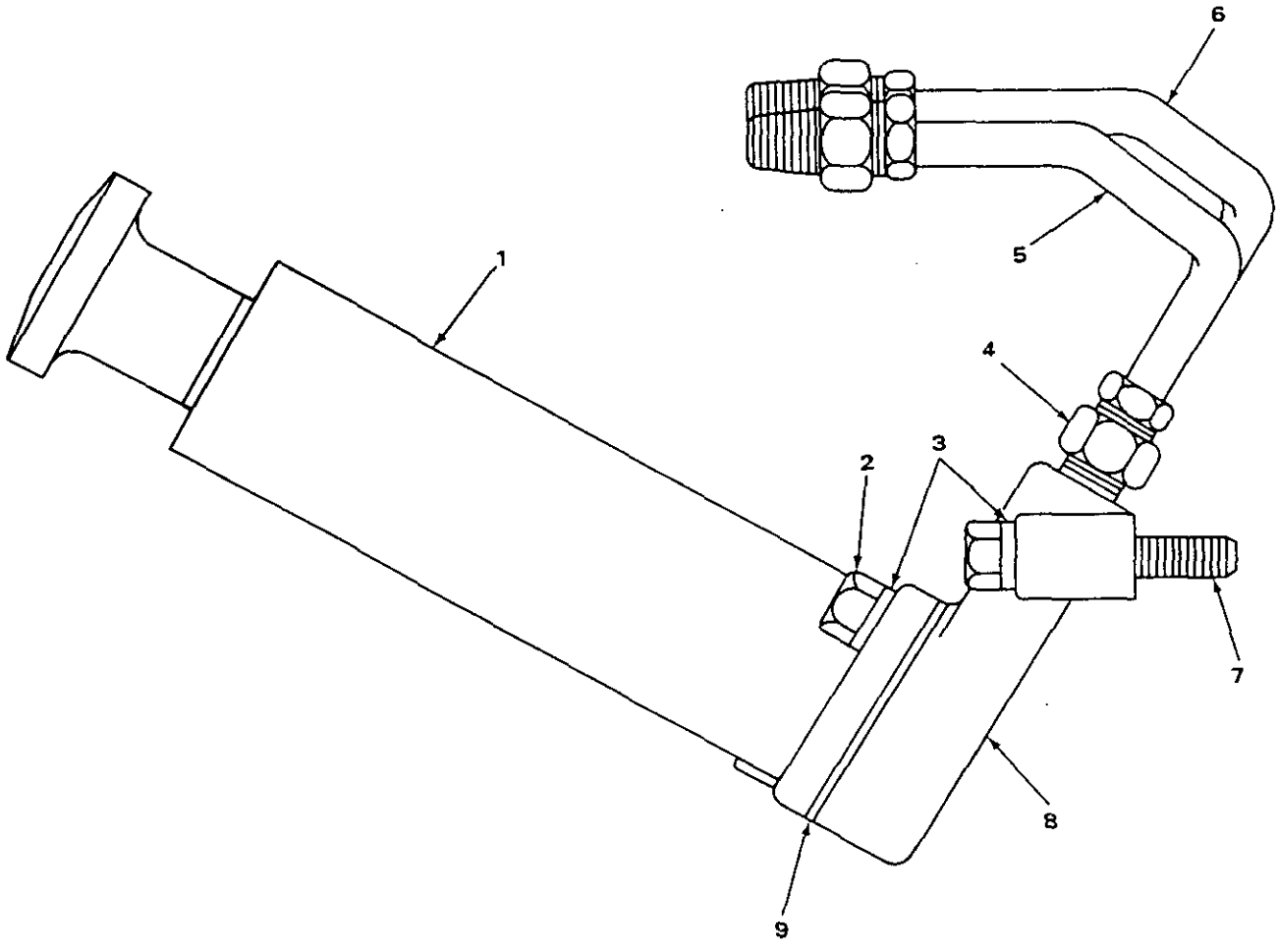

FIGURE 53. FUEL PRIMING PUMP.

(1) ITEM NO	(2) SMR CODE	(3) NSN	(4) CAGEC	(5) PART NUMBER	(6) DESCRIPTION AND USABLE ON CODES(UOC)	(7) QTY
					GROUP 0311 ENGINE STARTING AIDS	
					FIG. 53 FUEL PRIMING PUMP	
1	XDFZZ		11083	2W2604	PUMP,FUEL,CAM ACTUA.....	1
2	PFFZZ	5306004238194	11083	1A2029	BOLT,MACHINE.....	2
3	PFFZZ	5310001174788	11083	5M2894	WASHER,FLAT.....	2
4	PFFZZ	4730010599344	11083	5K9246	*ADAPTER,STRAIGHT,PI*.....	1
5	PFFZZ	4710012508631	11083	2P5109	TUBE ASSEMBLY,METAL.....	1
6	PFFZZ	4710012508632	11083	2P5110	TUBE ASSEMBLY,METAL.....	1
7	PFFZZ		11083	1S1571	BOLT,MACHINE..... UOC:TZ4	2
8	PFFZZ	4730012756167	11083	2P3150	ELBOW,FLANGE TO PIP.....	1
9	PFFZZ	5330010492022	11083	6N6830	GASKET PART OF KIT P/N 5P-9229.....	1

END OF FIGURE

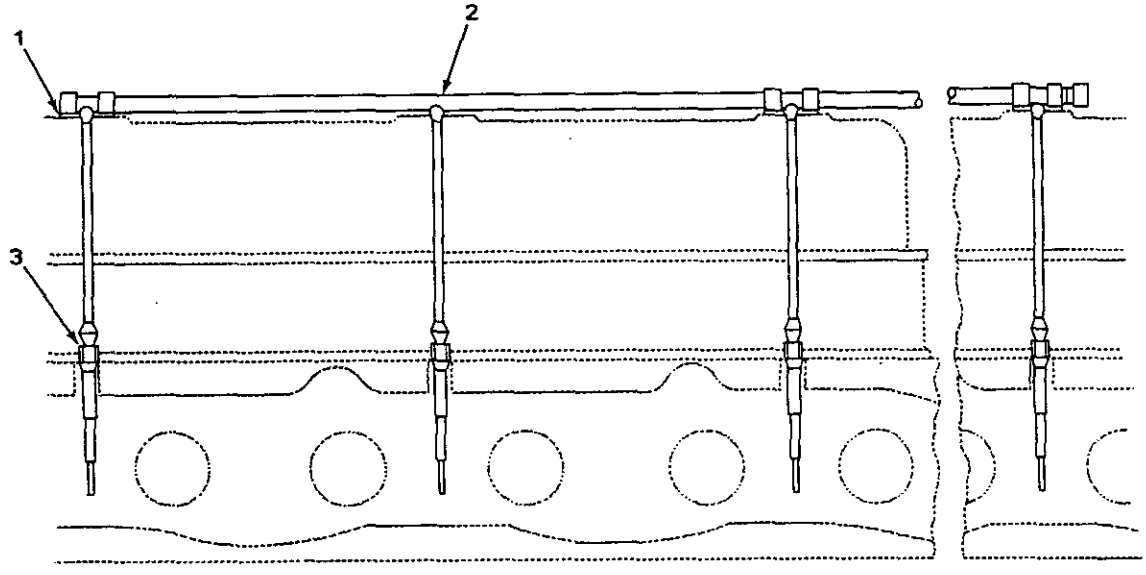

TA235251

FIGURE 54. GLOW PLUG AND LEAD.

(1) ITEM NO	(2) SMR CODE	(3) NSN	(4) CAGEC	(5) PART NUMBER	(6) DESCRIPTION AND USABLE ON CODES(UOC)	(7) QTY
					GROUP 0311 ENGINE STARTING AIDS	
					FIG. 54 GLOW PLUG AND LEAD (ENGINE SERIAL RANGE 17S5088 AND UP).	
1	PFOZZ	5310001097638	15434	S658	WASHER,FLAT.....	3
2	XDOZZ		11083	6N0652	LEAD ASSEMBLY.....	1
3	PFOZZ	2920009320829	11083	3T9562	GLOW PLUG.....	6

END OF FIGURE

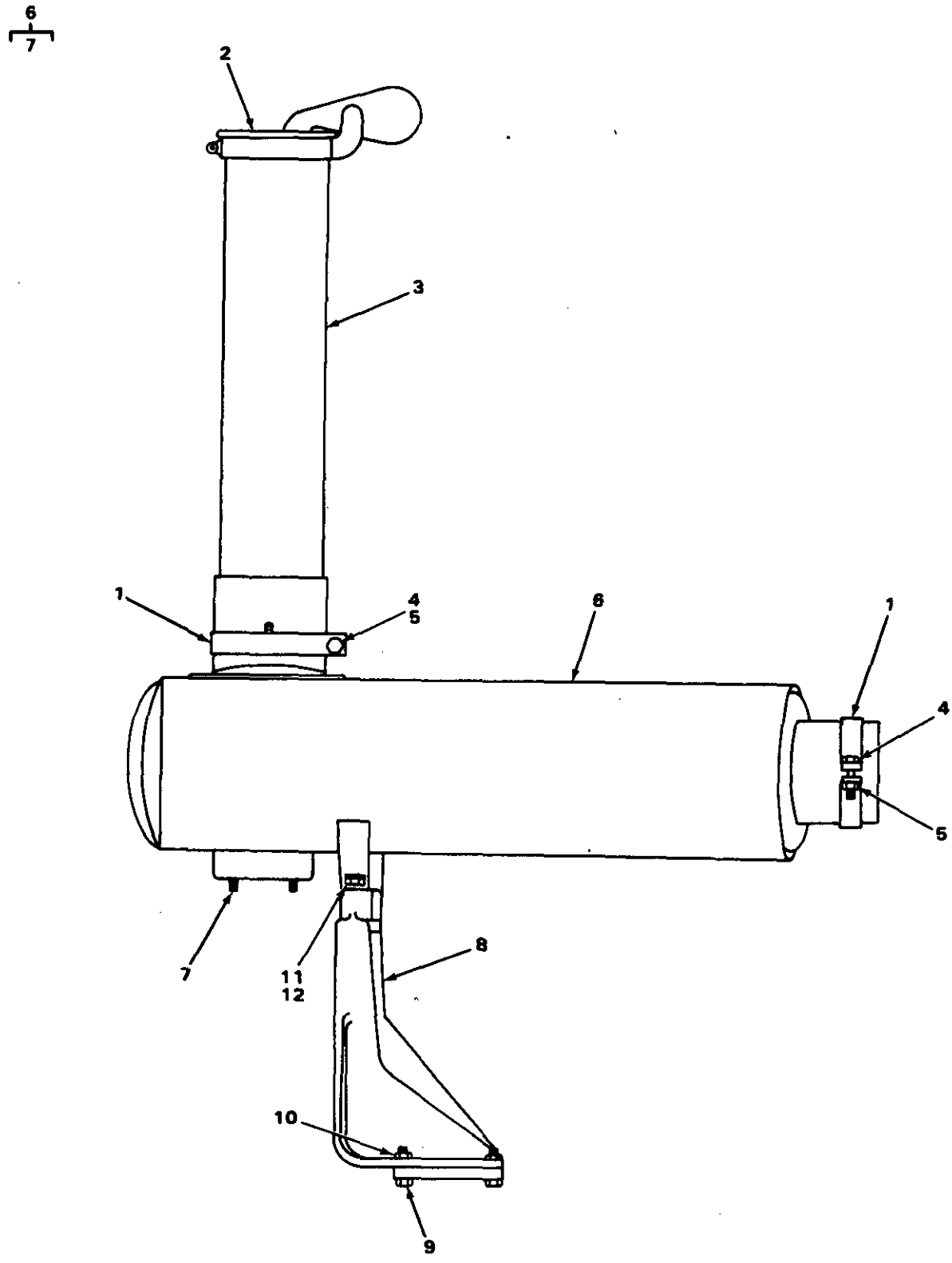

FIGURE 55. EXHAUST MUFFLER.

(1) ITEM NO	(2) SMR CODE	(3) NSN	(4) CAGEC	(5) PART NUMBER	(6) DESCRIPTION AND USABLE ON CODES(UOC)	(7) QTY
					GROUP 04 EXHAUST SYSTEM.	
					GROUP 0401 MUFFLER AND PIPES.	
					FIG. 55 EXHAUST MUFFLER.	
1	PFOZZ	5340010588097	11083	6F8814	CLAMP.....	2
2	PFOZZ	2990002513656	81859	11093	CAP ASSEMBLY,PROTEC.....	1
3	XBOZZ		11083	6N5435	EJECTOR ASSEMBLY.....	1
4	PFOZZ	5305010269518	11083	OS1571	SCREW,CAP,HEXAGON H.....	2
5	PFOZZ	5310004988409	11083	1B5355	NUT,PLAIN,HEXAGON.....	2
6	PFOZZ	2990010487804	11083	6N7212	MUFFLER,EXHAUST.....	1
7	PFOZZ	5307002748196	11083	S532	.STUD,PLAIN.....	2
8	XBOZZ		11083	6N5968	SUPPORT.....	1
9	PFOZZ	5305010156841	11083	OS1591	SCREW.....	4
10	PFOZZ	5310011945398	11083	1D4717	NUT,HEXAGON.....	4
11	PFOZZ	5305002528919	11083	OS0509	SCREW,CAP,HEXAGON H.....	2
12	PFOZZ	5310001174788	11083	5M2894	WASHER,FLAT.....	2

END OF FIGURE

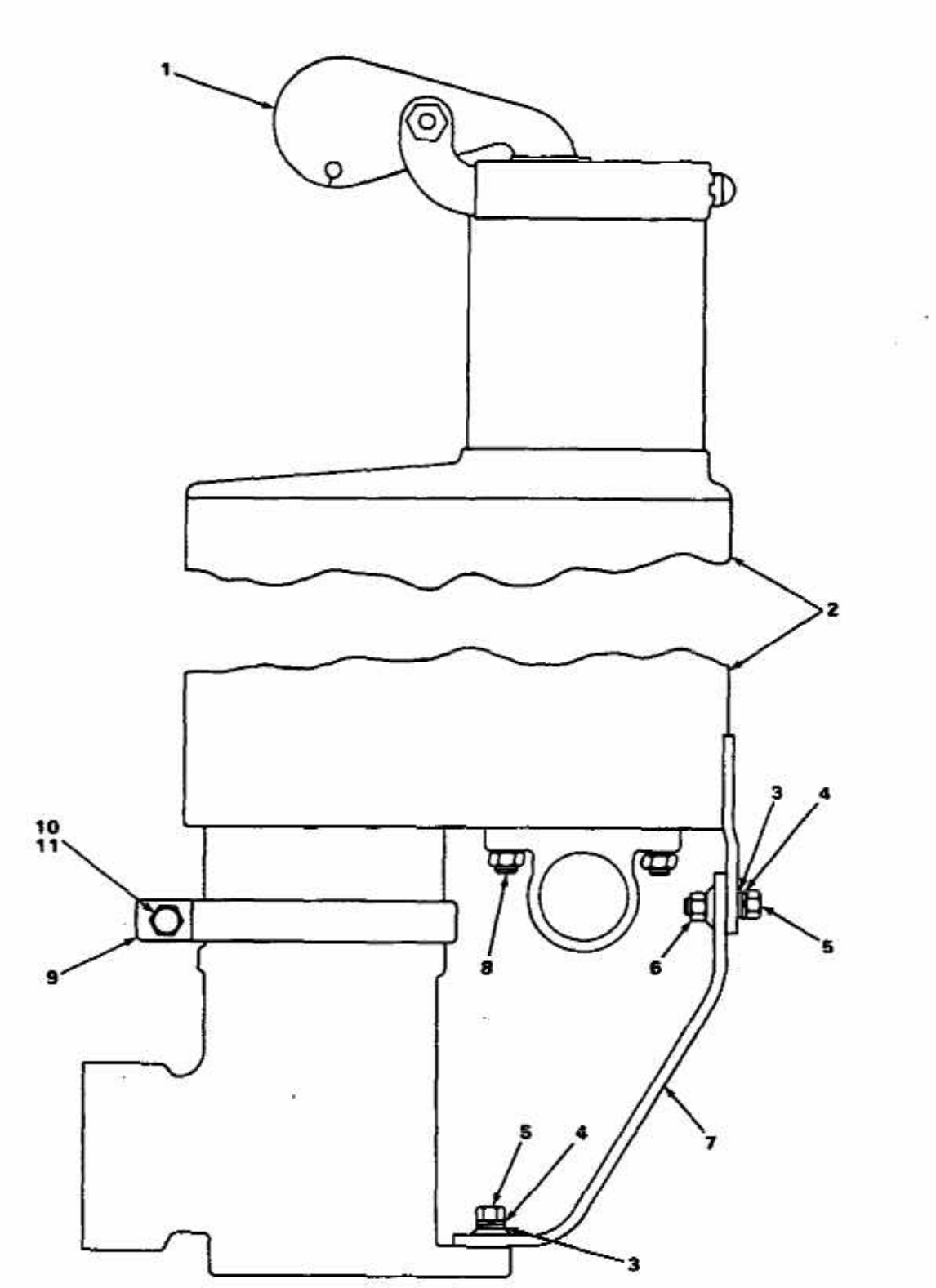

FIGURE 56. MUFFLER.

(1) ITEM NO	(2) SMR CODE	(3) NSN	(4) CAGEC	(5) PART NUMBER	(6) DESCRIPTION AND USABLE ON CODES(UOC)	(7) QTY
					GROUP 0401 MUFFLER AND PIPES.	
					FIG. 56. MUFFLER.	
1	PFOZZ	2990002513656	81859	11093	CAP ASSEMBLY,PROTEC.....	2
2	PFOZZ	2990010176452	11083	4N4577	MUFFLER,EXHAUST.....	1
3	PFOZZ	5310001174788	11083	5M2894	WASHER,FLAT.....	2
4	PFOZZ	5310006379541	96906	MS35338-46	WASHER,LOCK.....	2
5	PFOZZ	5306002604508	11083	S1594	BOLT,MACHINE.....	2
6	PFOZZ	5310011945398	11083	1D4717	NUT,HEXAGON.....	1
7	PFOZZ	5342010690790	11083	4N9221	BRACKET.....	1
8	PFOZZ	5307010630644	11083	3K3256	STUD,PLAIN.....	2
9	PFOZZ	5340010588097	11083	6F8814	CLAMP.....	1
10	PFOZZ	5305010269518	11083	0S1571	SCREW,CAP,HEXAGON H.....	1
11	PFOZZ	5310004988409	11083	185355	NUT,PLAIN,HEXAGON.....	1

END OF FIGURE

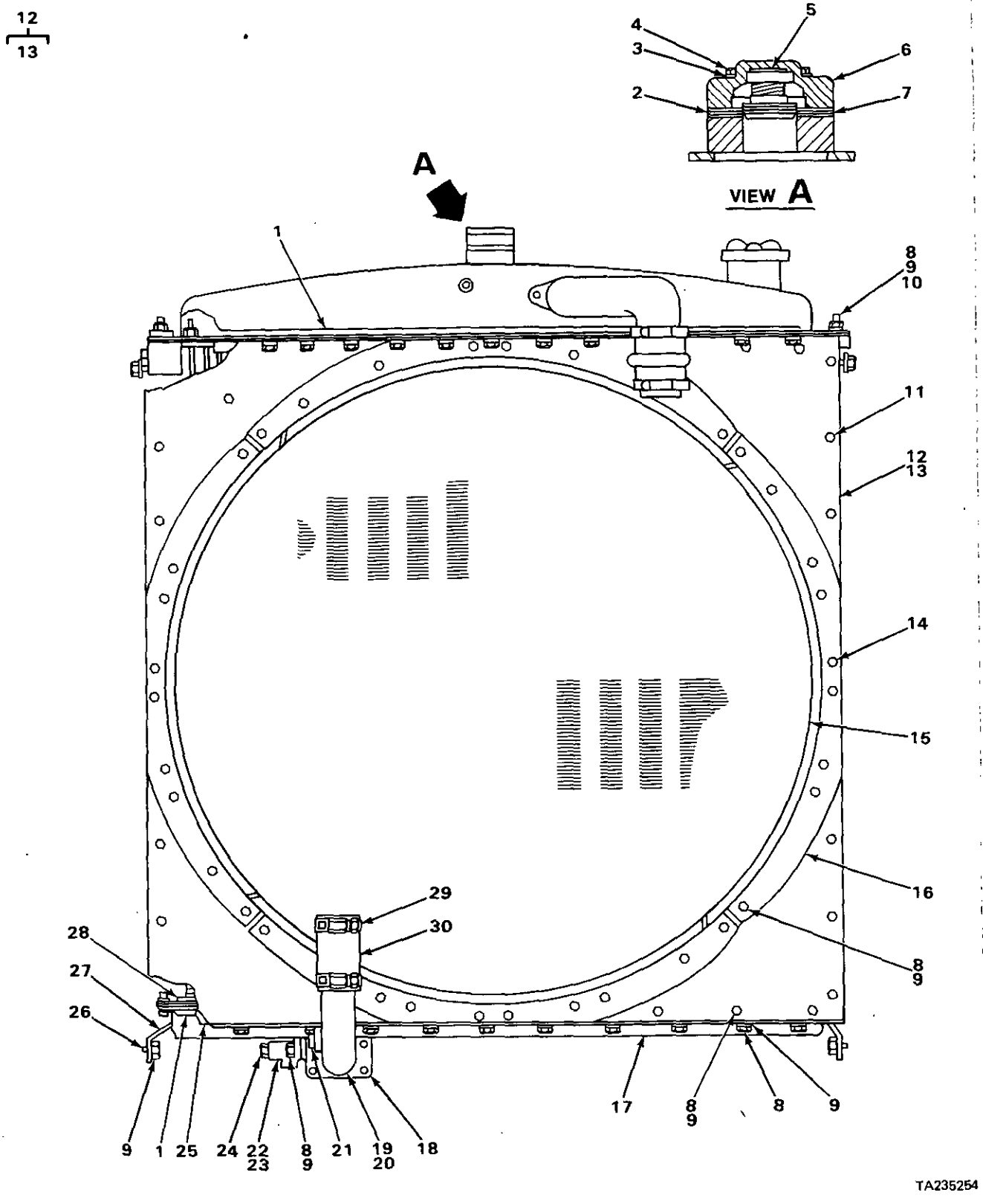

FIGURE 57. RADIATOR (REAR VIEW, USE WITH SERIAL RANGE 77V5006 THRU 77V5953).

(1) ITEM NO	(2) SMR CODE	(3) NSN	(4) CAGEC	(5) PART NUMBER	(6) DESCRIPTION AND USABLE ON CODES(UOC)	(7) QTY
					GROUP 05 COOLING SYSTEM.	
					GROUP 0501 RADIATOR, EVAPORATIVE COOLER, OR HEAT EXCHANGER.	
					FIG. 57 RADIATOR (REAR VIEW, USE WITH SERIAL RANGE 77V5006 THRU 77V5953).	
1	XBOZZ		11083	4N6197	STRIP	3
2	PFOZZ	5330009318011	11083	5S4629	GASKET	2
3	PFOZZ	5310000814219	96906	MS27183-12	WASHER,FLAT	5
4	PFOZZ	5306004581930	11083	5S5080	BOLT,MACHINE	5
5	PFOZZ	6620009129151	11083	5S1218	THERMOSTAT,FLOW CON	1
6	PFOZZ	5340002462746	11083	5S1211	COVER,ACCESS	1
7	PFOZZ	2930009309098	11083	5S1213	PLATE	1
8	PFOZZ	5306004238194	11083	1A2029	BOLT,MACHINE	41
9	PFOZZ	5310001174788	11083	5M2894	WASHER,FLAT	41
10	XBOZZ		11083	6N7517	STRIP	2
11	PFOZZ	5305012542516	11083	9S2087	SCREW,CAP,HEXAGON H	12
12	XBOOO		11083	6N799	SHIELD ASSEMBLY	4
13	PFOZZ	5310000050781	11083	9F2978	.NUT,PLAIN,WELDING	5
14	PFOZZ	5305012542517	11083	1P3864	SCREW,CAP,HEXAGON H	8
15	XBOZZ		11083	6N876	BAFFLE	4
16	XBOZZ		11083	6N877	STRIP	4
17	PFOZZ	2930012504319	11083	6N0812	TANK ASSEMBLY	1
18	PFOZZ	5306002604508	11083	S1594	BOLT,MACHINE	4
19	PFOZZ	4730012507157	11083	6N793	ELBOW,HOSE TO BOSS	1
20	PFOZZ	5330012536465	11083	6N875	GASKET	1
21	PFOZZ	4730004275121	01276	2082-6B	PLUG,PIPE	1
22	PFOZZ	3805009207472	11083	8H9819	ADAPTER,DRAIN PLUG	1
23	PFOZZ	5330008937274	11083	8H9818	GASKET	1
24	PFOZZ	5365003639900	11083	4B7739	PLUG,MACHINE THREAD	1
25	XBOZZ		11083	6N919	BAR	2
26	PFOZZ	5305002528919	11083	0S0509	SCREW,CAP,HEXAGON H	2
27	XBOZZ		11083	6N961	BAFFLE ASSEMBLY	2
28	XBOZZ		11083	6N7518	STRIP	2
29	PFOZZ	4730010595352	11083	5P598	CLAMP,HOSE	2
30	MOOZZ		19207	4213854-1	HOSE MAKE FROM HOSE P/N 5P1263	1

END OF FIGURE

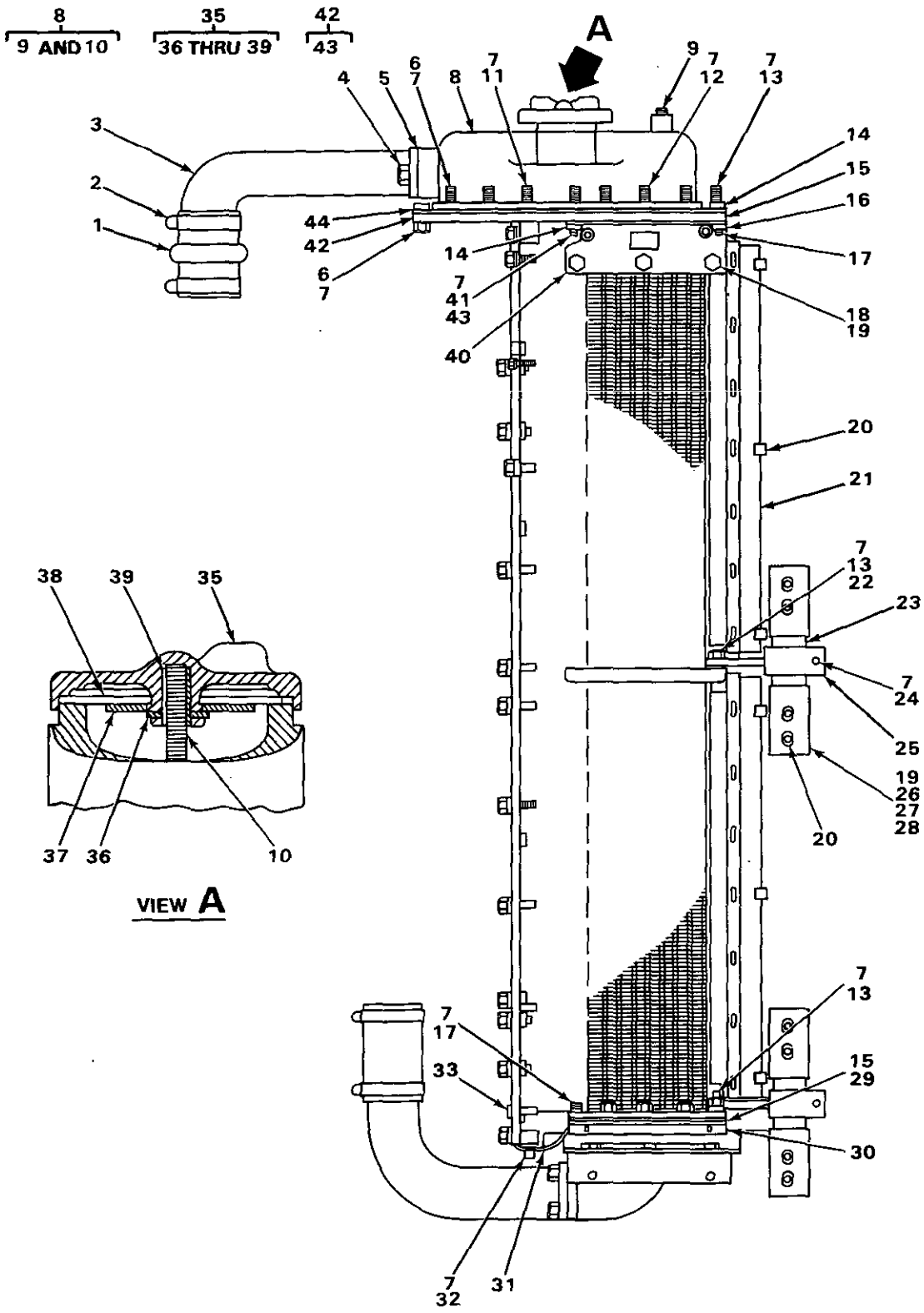

FIGURE 58. RADIATOR (SIDE VIEW, USE WITH SERIAL RANGE 77V5006 THRU 77V5953).

(1) ITEM NO	(2) SMR CODE	(3) NSN	(4) CAGEC	(5) PART NUMBER	(6) DESCRIPTION AND USABLE ON CODES(UOC)	(7) QTY
					GROUP 0501 RADIATOR, EVAPORATIVE COOLER, OR HEAT EXCHANGER.	
					FIG. 58 RADIATOR (SIDE VIEW, USE WITH SERIAL RANGE 77V5006 THRU 77V5953).	
1	PFOZZ	4720010660617	11083	4N6855	HOSE	1
2	PFOZZ	4730010595352	11083	5P598	CLAMP,HOSE	2
3	PFOZZ	4730012505865	11083	6N795	ELBOW,HOSE TO BOSS	1
4	PFOZZ	5306008744001	11083	6H1717	BOLT,MACHINE	2
5	PFOZZ	5330010697444	11083	1P6434	GASKET	1
6	PFFZZ	5306004238194	11083	1A2029	BOLT,MACHINE	17
7	PFFZZ	5310001174788	11083	5M2894	WASHER,FLAT	130
8	XDFFF		11083	6N0709	TANK ASSEMBLY	1
9	PFFZZ	4730009247886	11083	5M6214	.PLUG,PIPE	1
10	PFFZZ	5307004582364	11083	1S286	.STUD,CONTINUOUS THR	1
11	PFFZZ	5306004238393	11083	1C2251	BOLT,MACHINE	6
12	PFFZZ	5306002851368	11083	L1143	BOLT,MACHINE	6
13	PFFZZ	5305010269518	11083	0S1571	SCREW,CAP,HEXAGON H	22
14	XBFZZ		11083	6N7518	STRIP	2
15	PFFZZ	5330010177158	11083	4N5572	GASKET	3
16	XBFZZ		11083	4N6197	STRIP	1
17	PFFZZ	5305010156841	11083	0S1591	SCREW	38
18	PFFZZ	5306002736357	11083	1A1460	BOLT,MACHINE	6
19	PFFZZ	5310004317239	11083	2M849	WASHER,FLAT	14
20	PFFZZ	5305012542516	11083	9S2087	SCREW,CAP,HEXAGON H	28
21	XBFZZ		11083	2S6948	BAFFLE ASSEMBLY	4
22	PFFZZ	5310011945398	11083	1D4717	NUT,HEXAGON	4
23	PFFZZ	3120004926073	11083	2S1212	BUSHING,SLEEVE	4
24	PFFZZ	5306006982150	11083	L2070	BOLT,MACHINE	4
25	PFFZZ	5340012547147	11083	4N7422	PLATE,MENDING	4
26	PFFZZ	5340012547148	11083	6N907	BRACKET,MENDING	8
27	PFFZZ	5306004238316	11083	1B2886	BOLT,MACHINE	4
28	PFFZZ	5310007680318	96906	MS51967-14	NUT,PLAIN,HEXAGON	4
29	XBFZZ		11083	6N914	PLATE	1
30	XBFZZ		11083	4N6201	STRIP	2
31	XBFZZ		11083	6N910	BAFFLE ASSEMBLY	1
32	PFFZZ	5305002528919	11083	0S0509	SCREW,CAP,HEXAGON H	11
33	XBFZZ		11083	6N7515	STRIP	2
34	PFFFF	2930010186144	11083	6N957	CORE,RADIATOR	1
35	PFOZZ	2930008521174	11083	7S7809	CAP,FILLER OPENING	1
36	PFOZZ	2590010647493	11083	9S9979	.RING	1
37	PFOZZ	5310004134983	11083	2S2846	.WASHER,FLAT	1
38	PFOZZ	5330010589176	11083	2P3230	.GASKET	1
39	PFOZZ	5342010660526	11083	7S7807	.INSERT	1
40	XBFZZ		11083	6N908	SUPPORT	2
41	PFFZZ	5306002634038	11083	2A4639	BOLT,MACHINE	18
42	XBFZZ		11083	6N5737	PLATE ASSEMBLY	1
43	XAFZZ		11083	6K6179	.BOSS	18
44	PFFZZ	5330010177157	11083	6N854	GASKET	1

END OF FIGURE

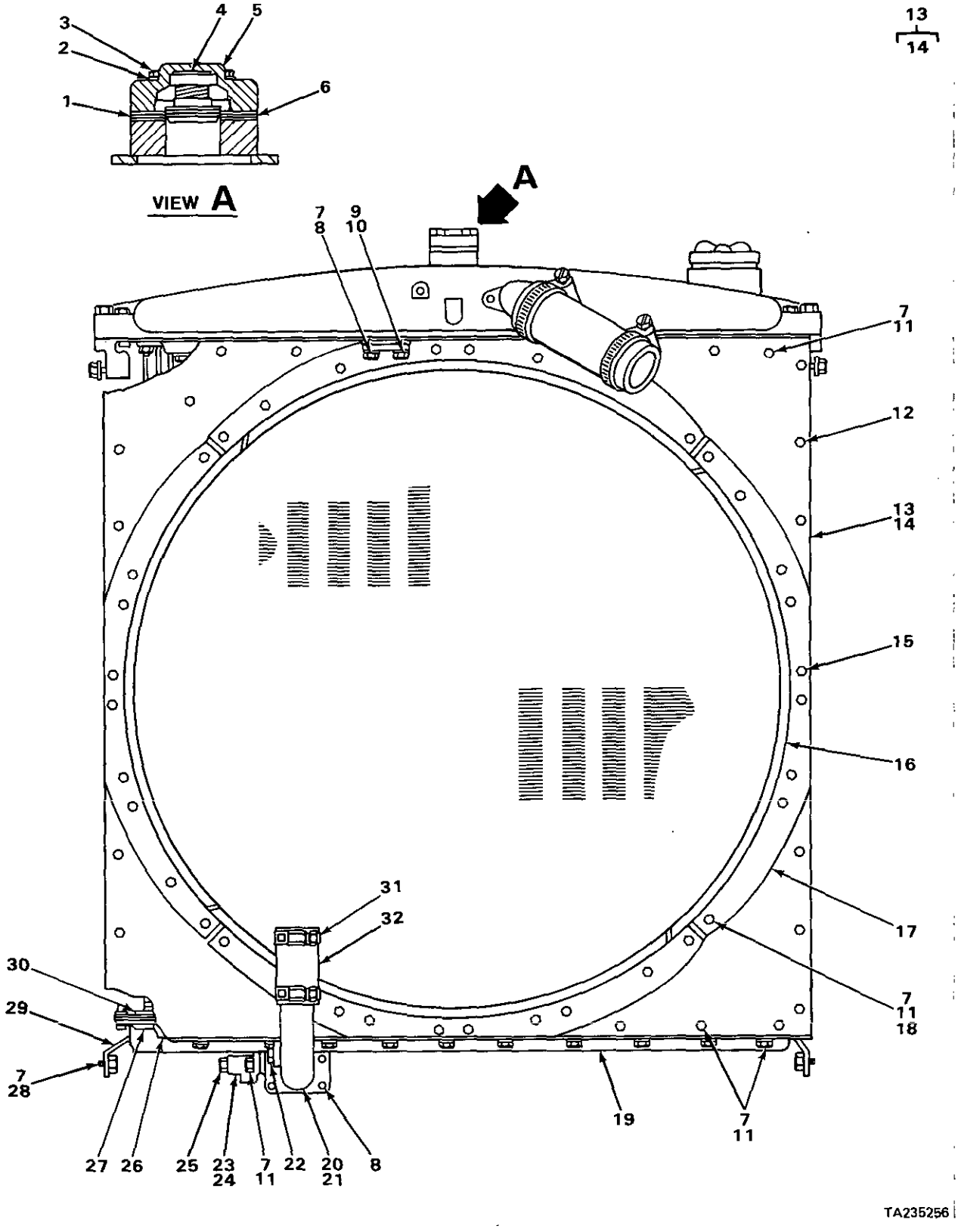

FIGURE 59. RADIATOR (REAR VIEW).

(1) ITEM NO	(2) SMR CODE	(3) NSN	(4) CAGEC	(5) PART NUMBER	(6) DESCRIPTION AND USABLE ON CODES(UOC)	(7) QTY
					GROUP 0501 RADIATOR, EVAPORATIVE COOLER, OR HEAT EXHANGER.	
					FIG. 59 RADIATOR (REAR VIEW).	
1	PFFZZ	5330009318011	11083	5S4629	GASKET USE WITH SERIAL RANGE 77V5954 THRU 77V9475.....	2
2	PFFZZ	5310000814219	96906	MS27183-12	WASHER,FLAT USE WITH SERIAL RANGE 77V5954 THRU 77V9475.....	5
3	PFFZZ	5306004581930	11083	5S5080	BOLT,MACHINE USE WITH SERIAL RANGE 77V5954 THRU 77V9475.....	5
4	PFFZZ	6620009129151	11083	5S1218	THERMOSTAT,FLOW CON USE WITH SERIAL RANGE 77V5954 THRU 77V9475...	1
5	PFFZZ	5340002462746	11083	5S1211	COVER,ACCESS USE WITH SERIAL RANGE 77V5954 THRU 77V9475.....	1
6	PFFZZ	2930009309098	11083	5S1213	PLATE USE WITH SERIAL RANGE 77V5954 THRU 77V9475.....	1
7	PFFZZ	5310001174788	11083	5M2894	WASHER,FLAT USE WITH SERIAL RANGE 77V5954 THRU 77V9475.....	41
8	PFFZZ	5306002604508	11083	S1594	BOLT,MACHINE USE WITH SERIAL RANGE 77V5954 THRU 77V9475.....	8
9	XBFZZ		11083	5H2830	COVER USE WITH SERIAL RANGE 77V5954 THRU 77V9475.....	2
10	PFFZZ	5330009286894	11083	5H2831	GASKET USE WITH SERIAL RANGE 77V5954 THRU 77V9475.....	2
11	PFFZZ	5306004238194	11083	1A2029	BOLT,MACHINE USE WITH SERIAL RANGE 77V5954 THRU 77V9475.....	14
12	PFFZZ	5305012542516	11083	9S2087	SCREW,CAP,HEXAGON H USE WITH SERIAL RANGE 77V5954 THRU 77V9475...	12
13	XBFFF		11083	6N799	SHIELD ASSEMBLY USE WITH SERIAL RANGE 77V5954 THRU 77V9475.....	4
14	PFFZZ	5310000050781	11083	9F2978	.NUT,PLAIN,WELDING USE WITH SERIAL RANGE 77V5954 THRU 77V9475.....	5
15	PFFZZ	5305012542517	11083	1P3864	SCREW,CAP,HEXAGON H USE WITH SERIAL RANGE 77V5954 THRU 77V9475...	8
16	XBFZZ		11083	6N876	BAFFLE USE WITH SERIAL RANGE 77V5954 THRU 77V9475.....	4
17	XBFZZ		11083	6N877	STRIP USE WITH SERIAL RANGE 77V5954 THRU 77V9475.....	4
18	PFFZZ	5305012542518	11083	5P7925	SCREW,CAP,HEXAGON H USE WITH SERIAL RANGE 77V5954 THRU 77V9475...	20
19	PFFZZ	2930012504319	11083	6N0812	TANK SECTION,FLUID USE WITH SERIAL RANGE 77V5954 THRU 77V9475.....	1
20	PFFZZ	4730012507157	11083	6N793	ELBOW,HOSE TO BOSS USE WITH SERIAL RANGE 77V5954 THRU 77V9475.....	1
21	PFFZZ	5330012536465	11083	6N875	GASKET USE WITH SERIAL RANGE 77V5954 THRU 77V9475.....	1
22	PFFZZ	4730004275121	01276	2082-68	PLUG,PIPE USE WITH SERIAL RANGE 77V5954 THRU 77V9475.....	1
23	PFFZZ	3805009207472	11083	8H9819	ADAPTER,DRAIN PLUG USE WITH SERIAL RANGE 77V5954 THRU 77V9475.....	1
24	PFFZZ	5330008937274	11083	8H9818	GASKET USE WITH SERIAL RANGE	1

(1) ITEM NO	(2) SMR CODE	(3) NSN	(4) CAGEC	(5) PART NUMBER	(6) DESCRIPTION AND USABLE ON CODES(UOC)	(7) QTY
					77V5954 THRU 77V9475.....	
25	PFFZZ	5365003639900	11083	4B7739	PLUG,MACHINE THREAD USE WITH SERIAL RANGE 77V5954 THRU 77V9475...	1
26	XBFZZ		11083	6N919	BAR USE WITH SERIAL RANGE 77V5954 THRU 77V9475.....	2
27	XBFZZ		11083	7N636	STRIP USE WITH SERIAL RANGE 77V7834 THRU 77V9475.....	2
27	XBFZZ		11083	4N6197	STRIP USE WITH SERIAL RANGE 77V5954 THRU 77V7833.....	2
28	PFFZZ	5305002528919	11083	0S0509	SCREW,CAP,HEXAGON H USE WITH SERIAL RANGE 77V5954 THRU 77V7833...	4
28	PFFZZ	5305007215492	80204	B1821BH038C063N	SCREW,CAP,HEXAGON H USE WITH SERIAL RANGE 77V7834 THRU 77V9475...	4
29	XBFZZ		11083	6N961	BAFFLE ASSEMBLY USE WITH SERIAL RANGE 77V5954 THRU 77V9475.....	2
30	XBFZZ		11083	7N0639	STRIP USE WITH SERIAL RANGE 77V7834 THRU 77V9475.....	2
30	XBFZZ		11083	6N7518	STRIP USE WITH SERIAL RANGE 77V5934 THRU 77V7833.....	2
31	PFFZZ	4730010595352	11083	5P598	CLAMP,HOSE USE WITH SERIAL RANGE 77V5954 THRU 77V9475.....	2
32	MFFZZ		19207	4213854-5	HOSE MAKE FROM HOSE P/N 5P1263,USE WITH SERIAL RANGE 77V5954 THRU77V9475.....	1

END OF FIGURE

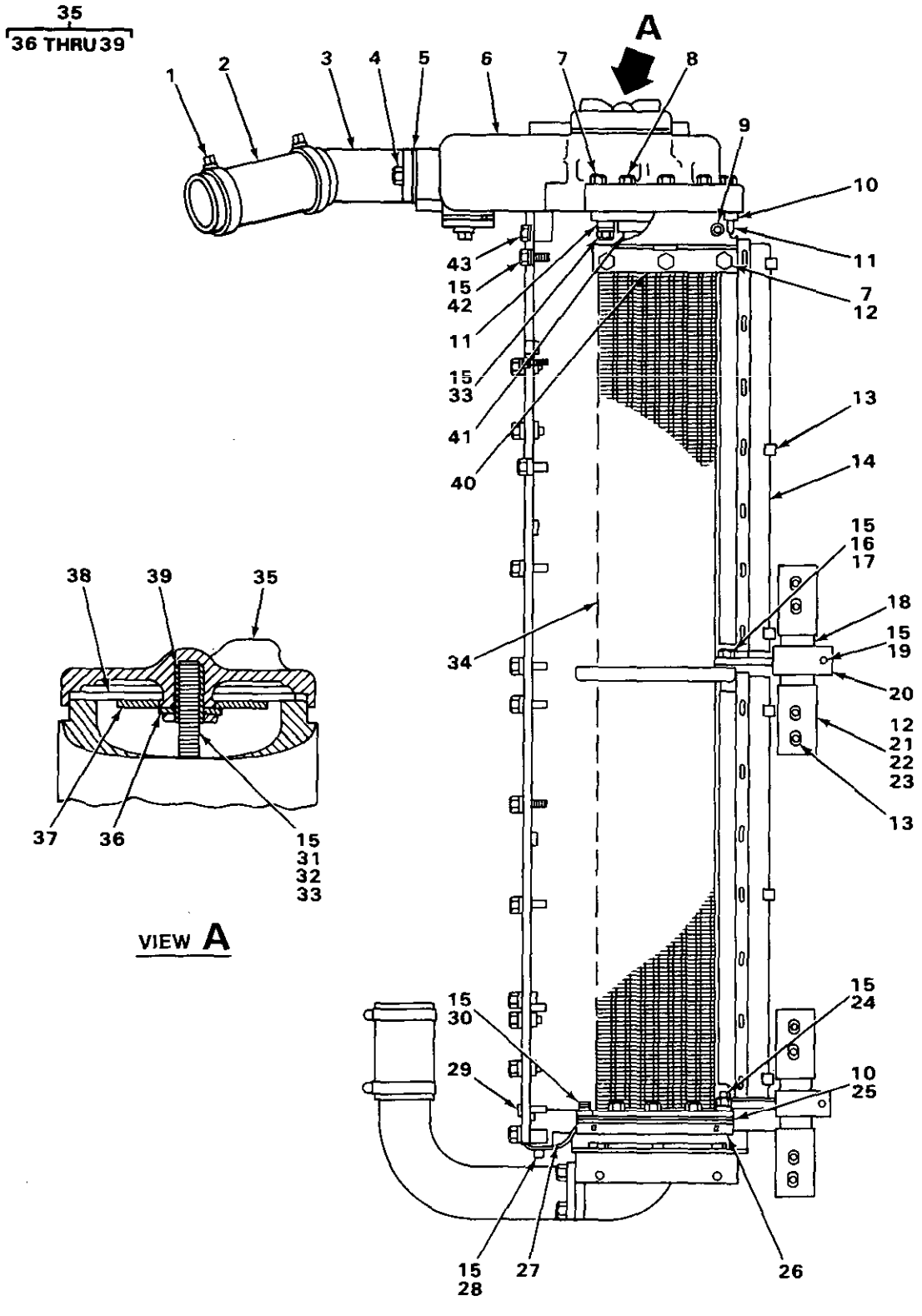

FIGURE 60. RADIATOR (SIDE VIEW).

(1) ITEM NO	(2) SMR CODE	(3) NSN	(4) CAGEC	(5) PART NUMBER	(6) DESCRIPTION AND USABLE ON CODES(UOC)	(7) QTY
					GROUP 0501 RADIATOR, EVAPORATIVE COOLER, OR HEAT EXCHANGER.	
					FIG 60 RADIATOR (SIDE VIEW).	
1	PFOZZ	4730010595352	11083	5P598	CLAMP,HOSE USE WITH SERIAL RANGE 77V 5954 THRU 77V9475.....	2
2	MOOZZ		19207	4213854-10	HOSE MAKE FROM HOSE P/N 5P1263,USE WITH SERIAL RANGE 77V5954 THRU77V9475.....	1
3	PFOZZ	4730012505865	11083	7N64	ELBOW,HOSE TO BOSS USE WITH SERIAL RANGE 77V5954 THRU 77V9475.....	1
4	PFOZZ	5306008744001	11083	6H1717	BOLT,MACHINE USE WITH SERIAL RANGE 77V5954 THRU 77V9475.....	2
5	PFOZZ	5330010697444	11083	1P6434	GASKET USE WITH SERIAL RANGE 77V5954 THRU 77V9475.....	1
6	XBFZZ		11083	7N0041	TANK USE WITH SERIAL RANGE 77V5954 THRU 77V9475.....	1
7	PFFZZ	5306002736357	11083	1A1460	BOLT,MACHINE USE WITH SERIAL RANGE 77V5954 THRU 77V9475.....	12
8	PFFZZ	5306006982150	11083	L2070	BOLT,MACHINE USE WITH SERIAL RANGE 77V5954 THRU 77V9475.....	24
9	PFFZZ	5306011954681	11083	3B1915	BOLT USE WITH SERIAL RANGE 77V7834 THRU 77V9475.....	2
10	PFFZZ	5330010177158	11083	4N5572	GASKET USE WITH SERIAL RANGE 77V5954 THRU 77V9475.....	3
11	XBFZZ		11083	7N0639	STRIP USE WITH SERIAL RANGE 77V5954 THRU 77V9475.....	2
12	PFFZZ	5310004317239	11083	2M849	WASHER,FLAT USE WITH SERIAL RANGE 77V5954 THRU 77V9475.....	22
13	PFFZZ	5305012542516	11083	9S2087	SCREW,CAP,HEXAGON H USE WITH SERIAL RANGE 77V5954 THRU 77V9475...	28
14	XBFZZ		11083	2S6948	BAFFLE ASSEMBLY USE WITH SERIAL RANGE 77V5954 THRU 77V9475.....	4
15	PFFZZ	5310001174788	11083	5M2894	WASHER,FLAT USE WITH SERIAL RANGE 77V5954 THRU 77V9475.....	94
16	PFFZZ	5310011945398	11083	1D4717	NUT,HEXAGON USE WITH SERIAL RANGE 77V5954 THRU 77V9475.....	4
17	PFFZZ	5305010269518	11083	0S1571	SCREW,CAP,HEXAGON H USE WITH SERIAL RANGE 77V5954 THRU 77V9475...	4
18	PFFZZ	3120004926073	11083	2S1212	BUSHING,SLEEVE USE WITH SERIAL RANGE 77V5954 THRU 77V9475.....	4
19	PFFZZ	5306006982150	11083	L2070	BOLT,MACHINE USE WITH SERIAL RANGE 77V5954 THRU 77V9475.....	4
19	PFFZZ	5306002851368	11083	L1143	BOLT,MACHINE USE WITH SERIAL RANGE 77V5954 THRU 77V9475.....	4
20	PFFZZ	5340012547147	11083	4N7422	PLATE,MENDING USE WITH SERIAL RANGE 77V5954 THRU 77V9475.....	4
21	PFFZZ	5340012547148	11083	6N907	BRACKET,MENDING USE WITH SERIAL RANGE 77V5954 THRU 77V9475.....	8
22	PFFZZ	5306002724229	11083	1D4569	BOLT,MACHINE USE WITH SERIAL RANGE 77V5954 THRU 77V9475.....	4

(1) ITEM NO	(2) SMR CODE	(3) NSN	(4) CAGEC	(5) PART NUMBER	(6) DESCRIPTION AND USABLE ON CODES(UOC)	(7) QTY
22	PFFZZ	5306004238316	11083	1B2886	BOLT,MACHINE USE WITH SERIAL RANGE 77V5954 THRU 77V9475.....	4
23	PFFZZ	5310007680318	96906	MS51967-14	NUT,PLAIN,HEXAGON USE WITH SERIAL RANGE 77V5954 THRU 77V9475.....	4
24	PFFZZ	5306004238393	11083	1C2251	BOLT,MACHINE USE WITH SERIAL RANGE 77V5954 THRU 77V9475.....	4
24	PFFZZ	5305010269518	11083	0S1571	SCREW,CAP,HEXAGON H USE WITH SERIAL RANGE 77V5954 THRU 77V9475...	4
25	XBFZZ		11083	6N914	PLATE USE WITH SERIAL RANGE 77V5954 THRU 77V9475.....	1
26	XBFZZ		11083	7N0637	STRIP USE WITH SERIAL RANGE 77V7834 THRU 77V9475.....	2
26	XBFZZ		11083	4N6201	STRIP USE WITH SERIAL RANGE 77V5954 THRU 77V7833.....	2
27	XBFZZ		11083	6N910	BAFFLE ASSEMBLY USE WITH SERIAL RANGE 77V5954 THRU 77V9475.....	1
28	PFFZZ	5305002528919	11083	0S0509	SCREW,CAP,HEXAGON H USE WITH SERIAL RANGE 77V5954 THRU 77V9475...	11
29	PFFZZ	2930012883981	11083	7N2939	STRIP USE WITH SERIAL RANGE 77V7834 THRU 77V9475.....	2
29	XBFZZ		11083	6N7515	STRIP USE WITH SERIAL RANGE 77V5954 THRU 77V7833.....	2
30	PFFZZ	5305010156841	11083	0S1591	SCREW USE WITH SERIAL RANGE 77V5954 THRU 77V7833.....	38
30	PFFZZ	5305010269518	11083	0S1571	SCREW,CAP,HEXAGON H USE WITH SERIAL RANGE 77V7834 THRU 77V9475...	10
31	XBFZZ		11083	7N716	BAR ASSEMBLY USE WITH SERIAL RANGE 77V5954 THRU 77V9475.....	1
32	PFFZZ	5307012542497	11083	5P7071	STUD,PLAIN USE WITH SERIAL RANGE 77V5954 THRU 77V9475.....	1
33	PFFZZ	5306011954681	11083	3B1915	BOLT USE WITH SERIAL RANGE 77V5954 THRU 77V9475.....	20
34	PFFFF	2930010186144	11083	6N957	CORE,RADIATOR USE WITH SERIAL RANGE 77V5954 THRU 77V9475.....	1
35	PFOZZ	2930008521174	11083	7S7809	CAP,FILLER OPENING USE WITH SERIAL RANGE 77V5954 THRU 77V9475.....	1
36	PFOZZ	2590010647493	11083	9S9979	.RING.....	1
37	PFOZZ	5310004134983	11083	2S2846	.WASHER,FLAT.....	1
38	PFOZZ	5330010589176	11083	2P3230	.GASKET.....	1
39	PFOZZ	5342010660526	11083	7S7807	.INSERT.....	1
40	XBFZZ		11083	7N0634	SUPPORT USE WITH SERIAL RANGE 77V5954 THRU 77V7833.....	2
40	XBFZZ		11083	7N2355	SUPPORT USE WITH SERIAL RANGE 77V7834 THRU 77V9475.....	2
41	XBFZZ		11083	7N0637	STRIP USE WITH SERIAL RANGE 77V5954 THRU 77V9475.....	2
42	PFFZZ	5306002634038	11083	2A4639	BOLT,MACHINE USE WITH SERIAL RANGE 77V5954 THRU 77V9475.....	8
43	XBFZZ		11083	7N0638	STRIP USE WITH SERIAL RANGE 77V5954 THRU 77V9475.....	1

END OF FIGURE

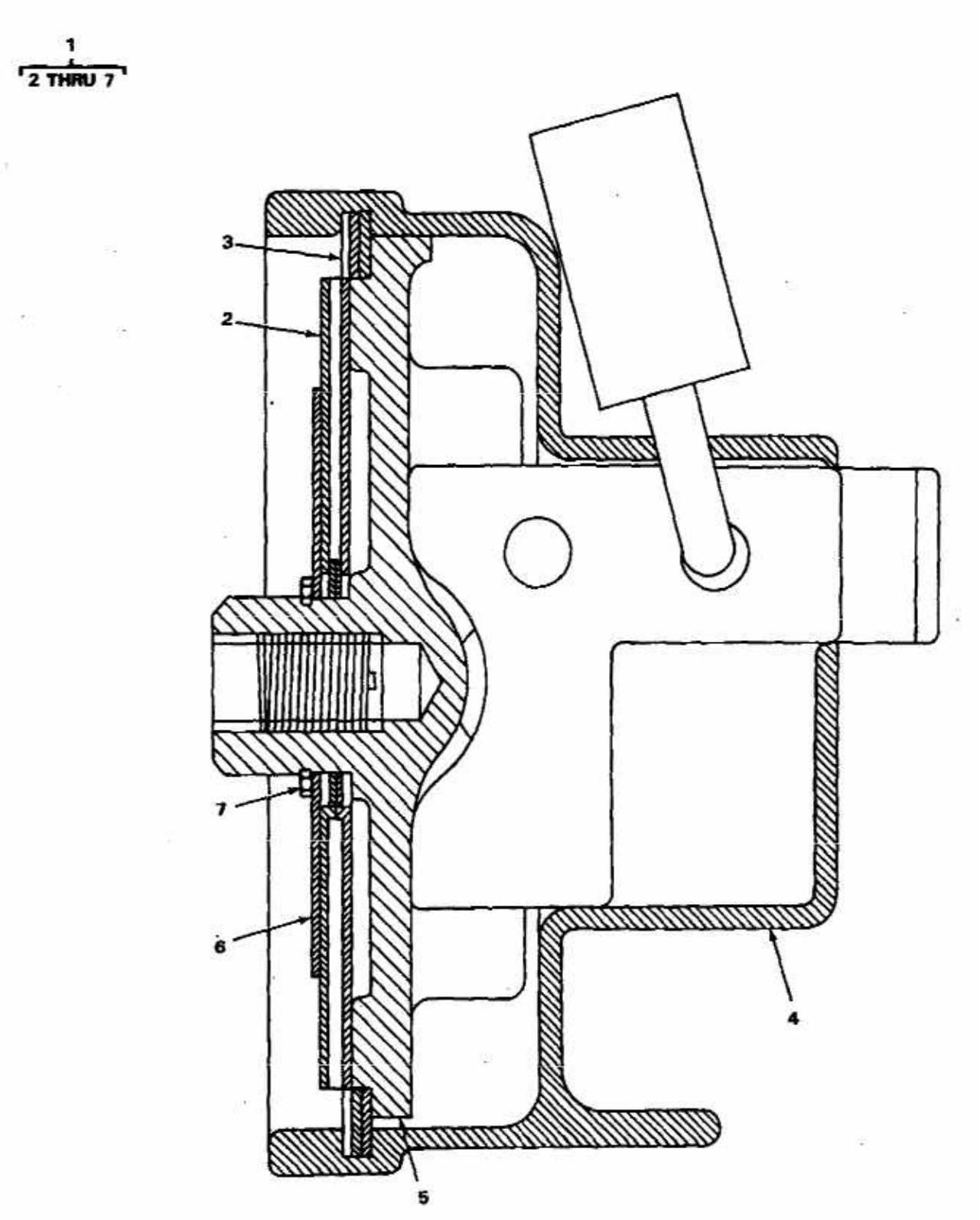

FIGURE 61. RADIATOR CAP PROTECTIVE COVER.

(1) ITEM NO	(2) SMR CODE	(3) NSN	(4) CAGEC	(5) PART NUMBER	(6) DESCRIPTION AND USABLE ON CODES(UOC)	(7) QTY
					GROUP 0501 RADIATOR, EVAPORATIVE COOLER, OR HEAT EXCHANGER.	
					FIG. 61 RADIATOR CAP PROTECTIVE COVER.	
1	PFOZZ	2930010590826	11083	2S6096	CAP,FILLER OPENING RADIATOR CAP....	1
2	PFOZZ	5330010589176	11083	2P3230	.GASKET.....	1
3	PFOZZ	2520009486065	11083	1M8649	.RING.....	1
4	PFOZZ	2930011430186	11083	7N2957	.COVER.....	1
5	PFOZZ	2930011272515	11083	7N5565	.CAP,FILLER OPENING.....	1
6	PFOZZ	5310004134983	11083	2S2846	.WASHER,FLAT.....	1
7	PFOZZ	2590010647493	11083	9S9979	.RING.....	1

END OF FIGURE

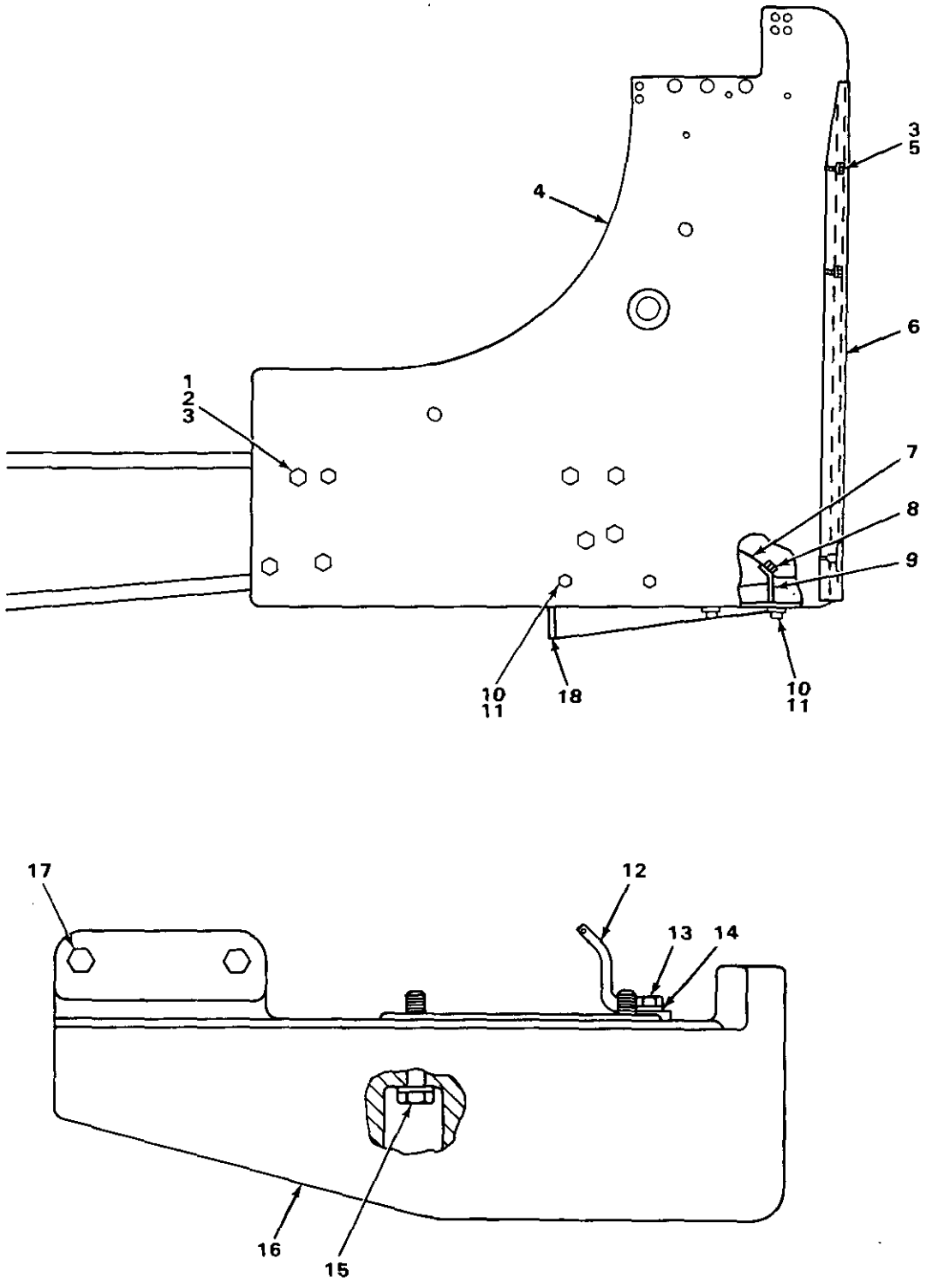

FIGURE 62. RADIATOR GUARDS.

(1) ITEM NO	(2) SMR CODE	(3) NSN	(4) CAGEC	(5) PART NUMBER	(6) DESCRIPTION AND USABLE ON CODES(UOC)	(7) QTY
					GROUP 0502 COWLING, DEFLECTORS, AIR DUCTS, SHROUDS.	
					FIG. 62 RADIATOR GUARDS.	
1	PFFZZ	5306004263412	11083	1D4643	BOLT,MACHINE.....	14
2	PAOZZ	5310004909859	11083	2J3507	NUT,PLAIN,HEXAGON.....	14
3	PFFZZ	5310004136522	11083	2S7593	WASHER,FLAT.....	20
4	XBFZZ		11083	9P2908	GUARD ASSEMBLY USE WITH SERIAL RANGE 77V8340 THRU 77V9475.....	1
4	XBFZZ		11083	6P2502	GUARD ASSEMBLY USE WITH SERIAL RANGE 77V5006 THRU 77V8339.....	1
5	PFFZZ	53D6D02755012	11083	S1566	BOLT,MACHINE.....	6
6	XBFZZ		11083	9P2909	SHROUD,FAN,RADIATOR USE WITH SERIAL RANGE 77V8340 THRU 77V9475...	1
6	PFFZZ	2590012235173	11083	6P2495	GUARD,MECHANICAL DR USE WITH SERIAL RANGE 77V5006 THRU 77V8339...	1
7	XBFZZ		11083	6P2488	BAFFLE ASSEMBLY.....	1
8	PFFZZ	5305012542516	11083	9S2087	SCREW,CAP,HEXAGON H.....	8
9	XBFZZ		11083	2M5833	STRIP.....	1
10	PFFZZ	5306002450953	11083	1A458	BOLT,MACHINE.....	8
11	PFFZZ	5310004191363	11083	2S0115	WASHER,FLAT.....	8
12	XBFZZ		11083	8P7308	ANGLE.....	1
13	PFFZZ	5306004238117	11083	S1595	BOLT,MACHINE.....	4
14	PFFZZ	5310004317239	11083	2M849	WASHER,FLAT.....	4
15	PFFZZ	5306004263405	11083	1D4612	BOLT,MACHINE.....	4
16	XBFZZ		11083	8P7215	GUARD.....	1
17	PFFZZ	5306004263139	11083	1A8063	BOLT,MACHINE.....	4
18	PFFZZ	2815012978391	11083	3P5064	GUARD,DIESEL ENGINE.....	1

END OF FIGURE

24
25 THRU 28

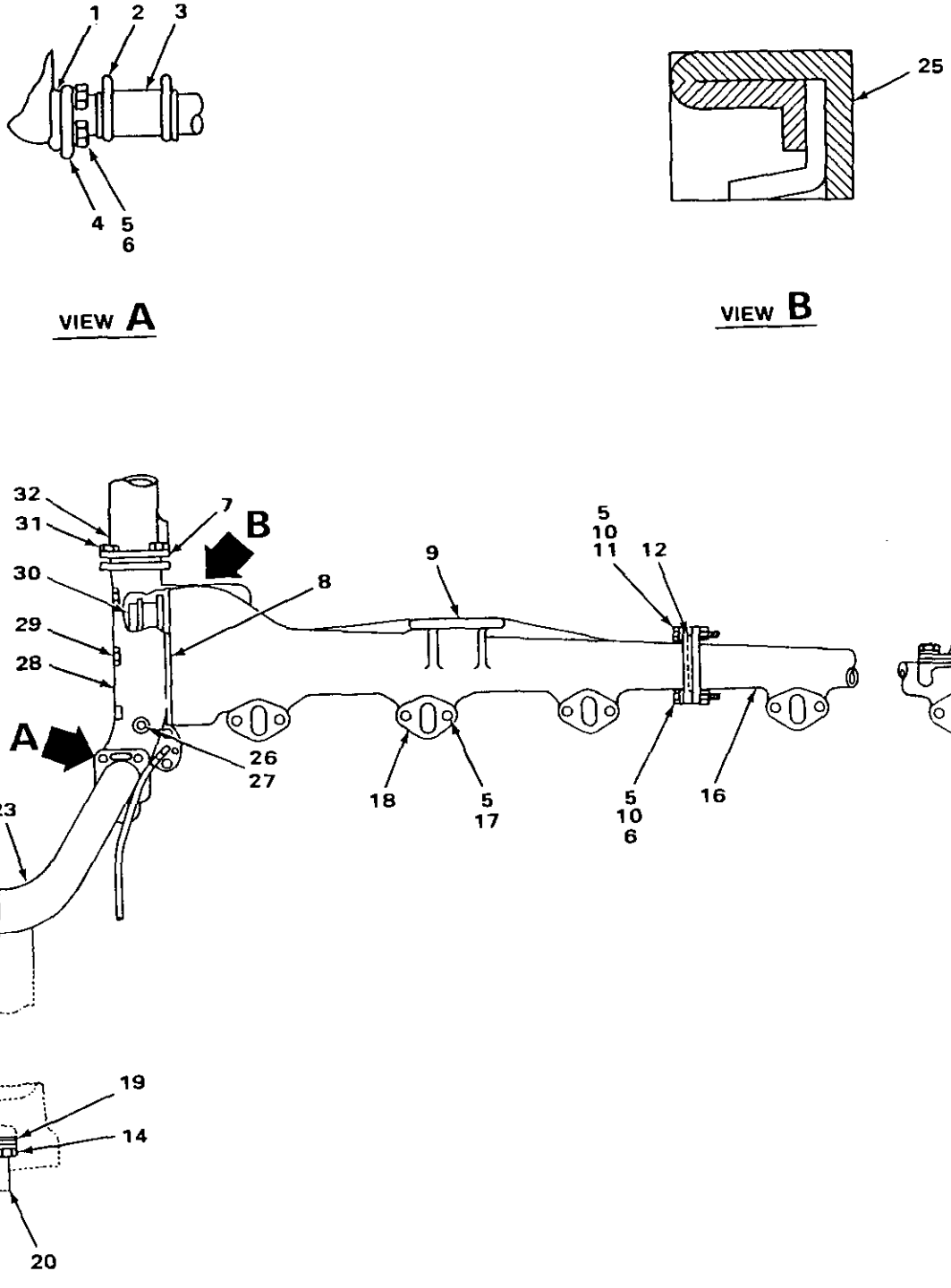

FIGURE 63. WATER MANIFOLD.

(1) ITEM NO	(2) SMR CODE	(3) NSN	(4) CAGEC	(5) PART NUMBER	(6) DESCRIPTION AND USABLE ON CODES(UOC)	(7) QTY
					GROUP 0503 WATER MANIFOLD, HEADERS, THERMOSTATS AND HOUSING GASKET	
					FIG. 63 WATER MANIFOLD	
1	PAOZZ	5330009482292	11083	1S0764	GASKET PART OF KIT P/N 6V-6360.....	1
2	PFOZZ	4730010534687	11083	5P0597	CLAMP,HOSE.....	2
3	MFOZZ		11083	5P1259-4	HOSE MAKE FROM HOSE P/N 5P1259.....	1
4	PFOZZ	4710012510918	11083	4N8724	TUBE,METALLIC.....	1
5	PFOZZ	5310001174788	11083	5M2894	WASHER,FLAT.....	30
6	PFOZZ	5305008213869	80204	B1821BH038C175N	SCREW,CAP,HEXAGON H.....	5
7	PAOZZ	5330003772750	11083	6F7767	GASKET PART OF KIT P/N 2P-3988 PART OF KIT P/N 6V-6358 PART OF KIT P/N 6V-6360.....	1
8	PAOZZ	5330009482288	11083	1S0795	GASKET PART OF KIT P/N 2P-3988 PART OF KIT P/N 6V-3710 PART OF KIT P/N 6V-6358.....	1
9	PFOZZ	2930013776789	11083	2P4730	MANIFOLD,FLUID COOL FOR SERVICE INCLUDE 5M6214 PLUG.....	1
10	PFOZZ	5310011945398	11083	1D4717	NUT,HEXAGON.....	4
11	PFOZZ	5306006982150	11083	0L2070	BOLT,MACHINE.....	1
12	PFOZZ	5331005992190	11083	6F8146	O-RING PART OF KIT P/N 6V-3710 PART OF KIT P/N 6V-6358 PART OF KIT P/N 6V-6360.....	1
13	PFOZZ	5340013772471	11083	5S5128	COVER,ACCESS.....	1
14	PFOZZ	5306004238194	11083	1A2029	BOLT,MACHINE.....	8
15	PAOZZ	5330006280558	11083	5H2906	GASKET PART OF KIT P/N 2P-3988 PART OF KIT P/N 6V-6358 PART OF KIT P/N 6V-6360.....	1
16	PFOZZ	2930012624950	11083	5H2902	MANIFOLD,FLUID COOL.....	1
17	PFOZZ	5310007257382	96906	MS35690-624	NUT,PLAIN,HEXAGON.....	12
18	PAOZZ	5330002975025	11083	2A0615	GASKET PART OF KIT P/N 6V-6358 PART OF KIT P/N 6V-6360.....	6
19	PAOZZ	5330005277706	11083	2H5572	GASKET PART OF KIT P/N 2P-3988 PART OF KIT P/N 5P-9224.....	1
20	PFOZZ	4710012510917	11083	2S6989	PIPE,METALLIC.....	1
21	PFOZZ	2910003099473	11083	0T0573	CAPSCREW,FUEL PUMP.....	2
22	PAOZZ	5330004265652	11083	6F3202	GASKET PART OF KIT P/N 5P-9224.....	1
23	PFOZZ	4710013779393	11083	8N2770	TUBE,BENT,METALLIC.....	1
24	XDOOO		11083	1S0763	COVER ASSEMBLY.....	1
25	PAOZZ	5330002466380	27418	M-34401	.SEAL,PLAIN ENCASED.....	2
26	PFOZZ	5365007342114	11083	4B4845	.PLUG,MACHINE THREAD.....	1
27	PFOZZ	4730009247125	11083	4M1336	.SLEEVE,COMPRESSION,.....	2
28	XAOZZ		11083	1S0746	.COVER.....	1
29	PFOZZ	5306004262932	11083	0S1619	BOLT,MACHINE.....	6
30	PFOZZ	4820012073687	11083	4W4794	VALVE,REGULATING,TE.....	2
31	PFOZZ	5305000680511	80204	B1821BH038C125N	SCREW,CAP,HEXAGON H.....	4
32	PFOZZ	2930013776790	11083	8N1850	WATER OUTLET,ENGINE.....	1

END OF FIGURE

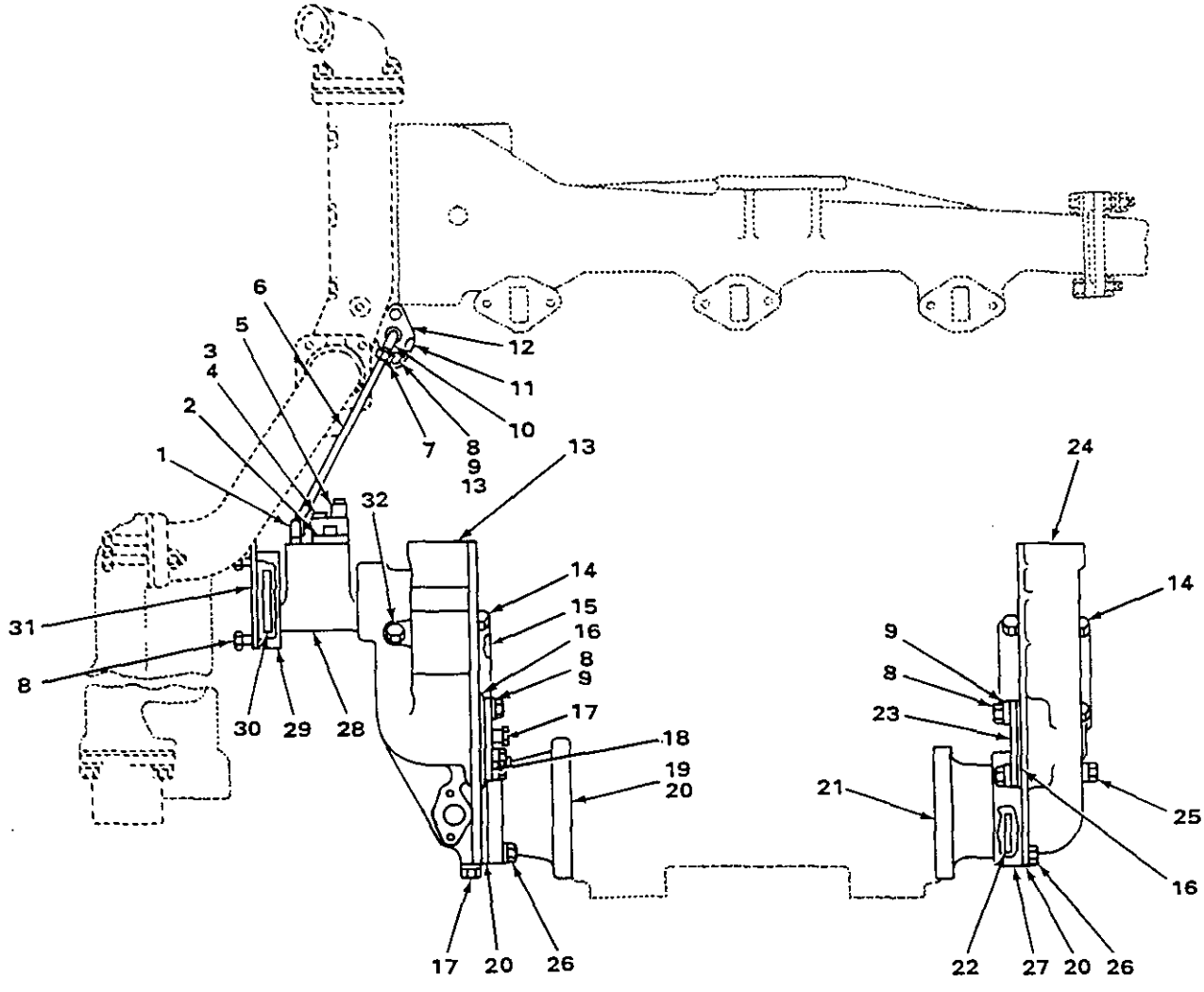

FIGURE 64. WATER MANIFOLD LINES AND RELATED PARTS.

(1) ITEM NO	(2) SMR CODE	(3) NSN	(4) CAGEC	(5) PART NUMBER	(6) DESCRIPTION AND USABLE ON CODES(UOC)	(7) QTY
					GROUP 0503 WATER MANIFOLD, HEADERS, THERMOSTATS AND HOUSING GASKET	
					FIG. 64 WATER MANIFOLD LINES AND RELATED PARTS	
1	PFOZZ	4730006473207	11083	2N1287	ELBOW,PIPE TO TUBE.....	1
2	PAOZZ	5330010639839	11083	4N3841	GASKET PART OF KIT P/N 6V-6360.....	1
3	PFOZZ	5306002264825	80204	B1821BH031C075N	BOLT,MACHINE.....	2
4	PFOZZ	5310004324064	11083	9M1974	WASHER,FLAT.....	2
5	PFOZZ	5930013425782	6V699	22229	SWITCH,FLOW.....	1
6	PFOZZ	4720012510992	11083	6N8434	HOSE ASSEMBLY,METAL.....	1
7	PFOZZ	4730002890383	96906	MS51500A4	ADAPTER,STRAIGHT,PI.....	1
8	PFOZZ	5306002604508	96906	MS90728-8	SCREW,CAP,HEXAGON H.....	8
9	PFOZZ	5310001174788	11083	5M2894	WASHER,FLAT.....	6
10	PFOZZ	4730010630817	11083	7K9197	ELBOW,TUBE.....	1
11	PFOZZ	5330005853186	11083	6H2007	GASKET PART OF KIT P/N 2P-3988 PART OF KIT P/N 6V-6360.....	1
12	PFOZZ	4730013776781	11083	5L1883	FLANGE,PIPE.....	1
13	XDOZZ		11083	6N0096	BONNET.....	1
14	PFOZZ	5306011954681	11083	3B1915	BOLT.....	8
15	PAOZZ		11083	7N1705	GASKET PART OF KIT P/N 5P-9233.....	1
16	XDOZZ		11083	7C0307	GASKET.....	2
17	PFOZZ	4730009247886	11083	5M6214	PLUG,PIPE.....	3
18	PFOZZ	5340013772472	11083	8N1474	COVER,ACCESS.....	1
19	PFOZZ	4730012505025	11083	6N4306	FLANGE,PIPE.....	1
20	PAOZZ	5330010176427	11083	2M5414	GASKET PART OF KIT P/N 2P-3988 PART OF KIT P/N 5P-9233 PART OF KIT P/N 6V-6360.....	2
21	PFOZZ	4730012507002	11083	6N4302	ADAPTER,STRAIGHT,FL.....	1
22	PFOZZ	5331008696562	11083	9M4217	O-RING PART OF KIT P/N 5P-9233.....	2
23	PFOZZ	2815010508003	11083	4N0794	COVER.....	1
24	PFOZZ	2590013777843	11083	6N7199	BONNET,OIL COOLER,V.....	1
25	PFOZZ	5306004262974	11083	0T0065	BOLT,MACHINE.....	2
26	PFOZZ	5306004238194	11083	1A2029	BOLT,MACHINE.....	6
27	XDOZZ		11083	6N0089	FLANGE.....	1
28	PFOZZ	4710012505172	11083	6N8433	TUBE ASSEMBLY,METAL.....	1
29	PFOZZ	4730013776788	11083	1S2093	FLANGE,PIPE.....	1
30	PFOZZ	5331006635075	11083	3H2652	O-RING PART OF KIT P/N 5P-9233.....	2
31	PAOZZ	5330005412701	11083	4H9008	GASKET PART OF KIT P/N 2P-3988 PART OF KIT P/N 5P-9224.....	1
32	PFOZZ	4730004275121	11083	3J5390	PLUG,PIPE.....	1

END OF FIGURE

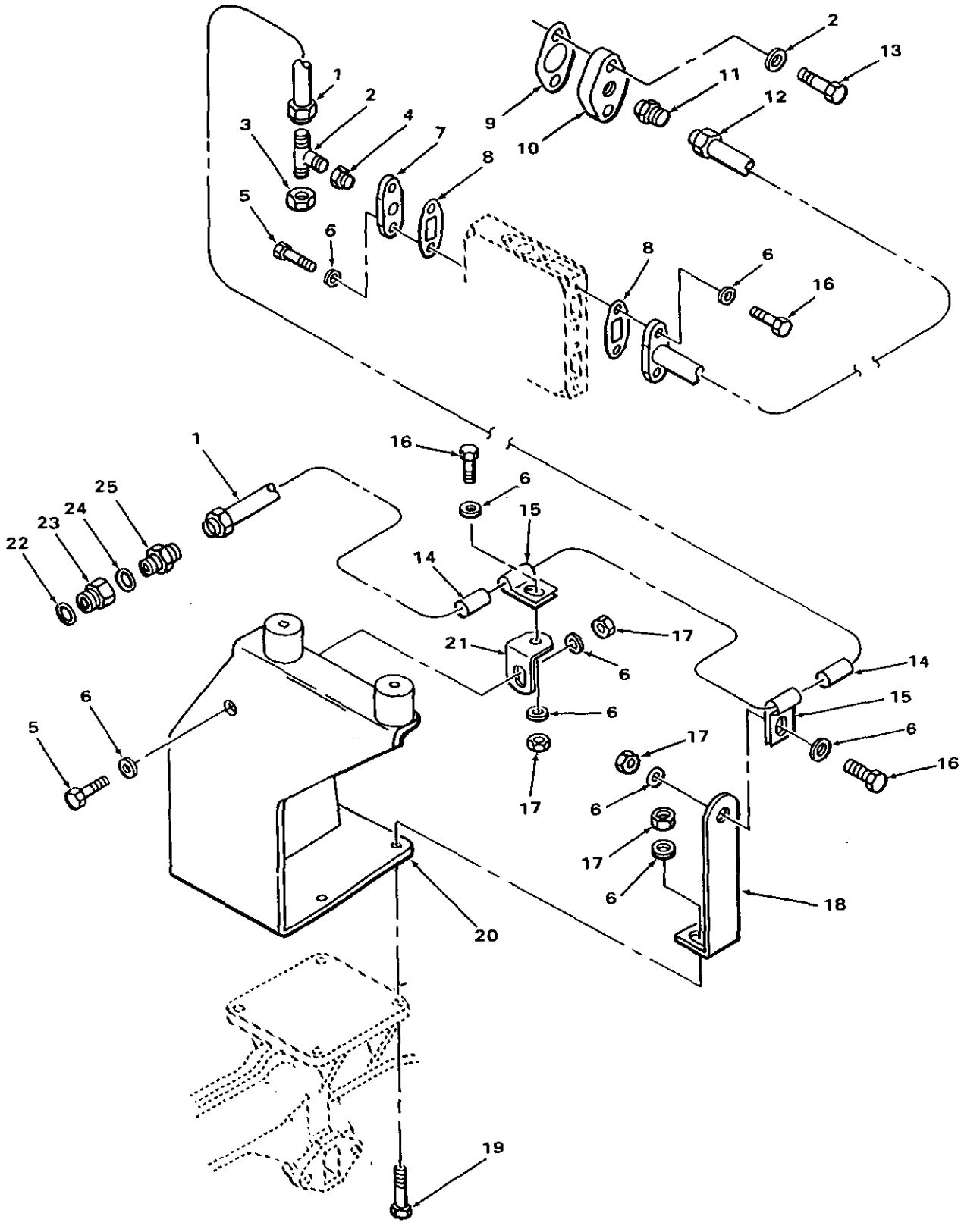

FIGURE 64A. WATER LINES, TURBO, 7N3491 ENGINE.

(1) ITEM NO	(2) SMR CODE	(3) NSN	(4) CAGEC	(5) PART NUMBER	(6) DESCRIPTION AND USABLE ON CODES(UOC)	(7) QTY
					GROUP 0503 WATER MANIFOLD, HEADERS, THERMOSTATS AND HOUSING GASKET	
					FIG. 64A WATER LINES, TURBO, 7N3491 ENGINE	
1	PFOZZ	4710013779300	11083	5N9248	TUBE ASSEMBLY,METAL.....	1
2	PFOZZ	4730005221909	96906	MS51512A4	TEE,PIPE TO TUBE.....	1
3	PFOZZ	4730008086848	30780	4FNTXS	CAP,TUBE.....	1
4	PFOZZ	3120011275376	11083	4M5317	BUSHING,REDUCER.....	1
5	PFOZZ	5306002604508	11083	S1594	BOLT,MACHINE.....	5
6	PFOZZ	5310001174788	11083	5M2894	WASHER,FLAT.....	16
7	PFOZZ	4730013846470	11083	8N1445	FERRULE,BRAZING,TUB.....	1
8	PFOZZ	5330013775327	11083	7N7628	GASKET PART OF KIT P/N 5P-9228 PART OF KIT P/N 6V-3710 PART OF KIT P/N 6V-3711.....	2
9	PFOZA	5330009769143	11083	4L8149	GASKET PART OF KIT P/N 6V-3710 PART OF KIT P/N 6V-3711.....	1
10	PFOZZ	4730013776793	11083	8N1466	FERRULE,BRAZING,TUB.....	1
11	PFOZZ	4730010664619	11083	8M0755	ADAPTER,STRAIGHT,PI.....	1
12	XDOZZ		11083	5N8247	TUBE ASSEMBLY,METAL.....	1
13	PFOZZ	5305000680511	80204	B1821BH038C125N	SCREW,CAP,HEXAGON H.....	2
14	PFOZZ	5365004239380	11083	4B6029	BUSHING,NONMETALLIC.....	2
15	PFOZZ	5340004238320	11083	1B3057	CLIP,SPRING TENSION.....	2
16	PFOZZ	5306002637301	11083	L1351	BOLT,MACHINE.....	2
17	PFOZZ	5310011945398	11083	1D4717	NUT,HEXAGON.....	7
18	PFOZZ	5340013772474	11083	5R0552	BRACKET,ANGLE.....	1
19	PFOZZ	5305010269518	11083	0S1571	SCREW,CAP,HEXAGON H.....	4
20	PFOZZ	2590013777851	11083	8N5909	SUPPORT ASSEMBLY.....	1
21	PFOZZ	5340013772473	11083	7L7327	BRACKET,ANGLE.....	1
22	PAOZZ	5331008013354	25184	906-737-70	O-RING.....	1
23	PFOZZ	4730009330727	30780	8-6-F5G5-S	REDUCER,BOSS.....	1
24	PAOZZ	5331009486482	11083	3K0360	O-RING PART OF KIT P/N 6V-3710 PART OF KIT P/N 6V-3711.....	1
25	PFOZZ	4730002581864	96906	MS51525B4-6	ADAPTER,STRAIGHT,TU.....	1

END OF FIGURE

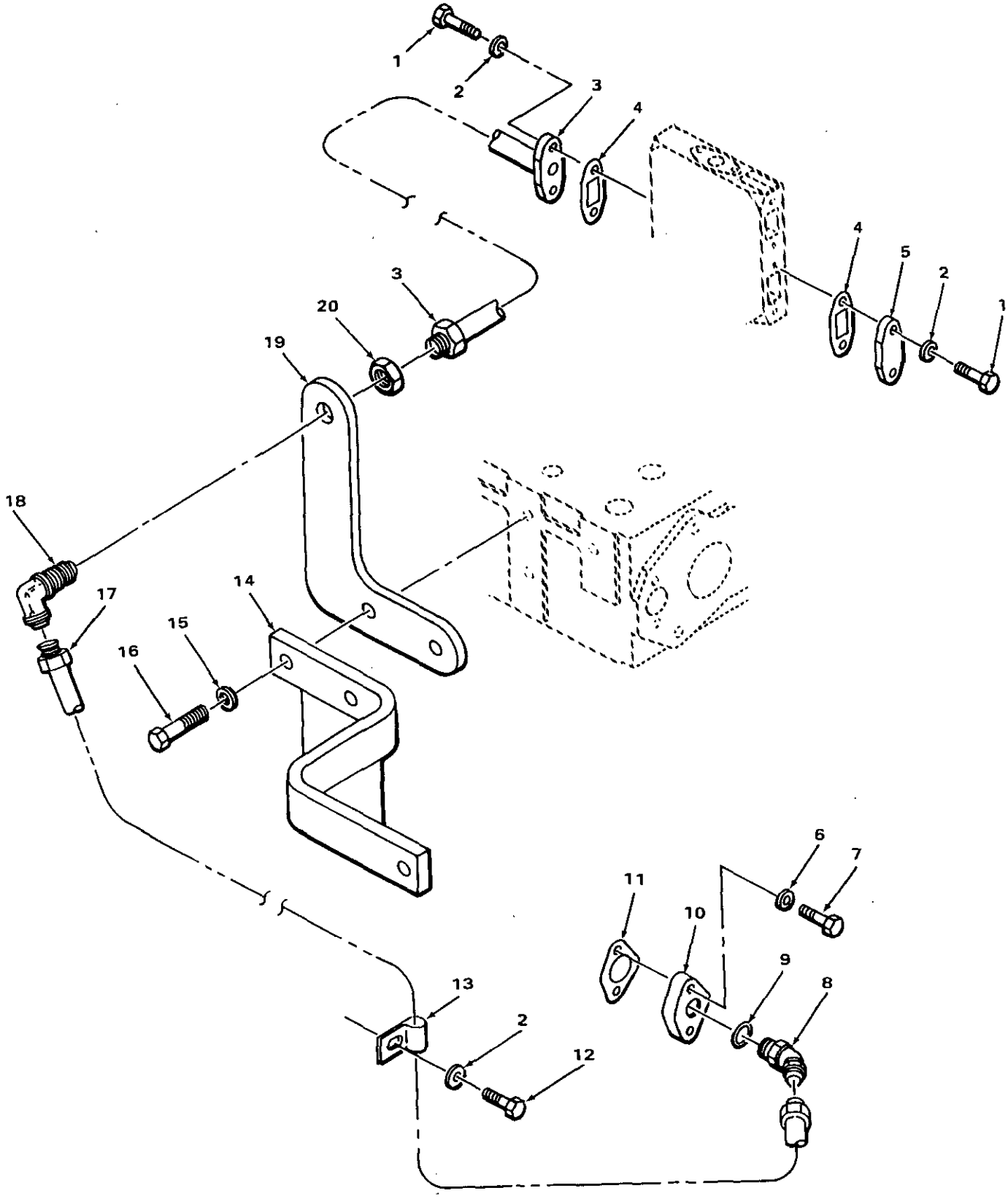

FIGURE 64B. WATER LINES, TURBO, 7N3491 ENGINE.

(1) ITEM NO	(2) SMR CODE	(3) NSN	(4) CAGEC	(5) PART NUMBER	(6) DESCRIPTION AND USABLE ON CODES(UOC)	(7) QTY
					GROUP 0503 WATER MANIFOLD, HEADERS, THERMOSTATS AND HOUSING GASKET	
					FIG. 64B WATER LINES, TURBO, 7N3491 ENGINE	
1	PFOZZ	5306002604508	11083	S1594	BOLT,MACHINE.....	4
2	PFOZZ	5310001174788	11083	5M2894	WASHER,FLAT.....	5
3	PFOZZ	4710013779280	11083	5N8149	TUBE ASSEMBLY,METAL.....	1
4	PAFZZ	5330012072900	11083	6V-3711	GASKET SET PART OF KIT P/N 5P-9228 PART OF KIT P/N 6V-3710 PART OF KIT P/N 6V-3711.....	2
5	XDOZZ		11083	7N7878	COVER,ACCESS.....	1
6	PFOZZ	5310004324064	11083	9M1974	WASHER,FLAT.....	2
7	PFOZZ	5306002264828	80204	B1821BH031C113N	BOLT,MACHINE.....	2
8	PFOZZ	4730011695830	11083	307943	ELBOW,TUBE TO BOSS.....	1
9	PAFZZ	5330012072900	11083	6V-3711	GASKET SET PART OF KIT P/N 6V-3710 PART OF KIT P/N 6V-3711.....	1
10	PFOZZ	4730013835137	11083	8N1469	FERRULE,BRAZING TUB.....	1
11	PAOZZ	5330010639839	11083	4N3841	GASKET PART OF KIT P/N 6V-6360.....	1
12	PFOZZ	5306004238194	11083	1A2029	BOLT,MACHINE.....	1
13	PFOZZ	5340012550933	11083	1M3464	CLAMP,LOOP.....	1
14	XDOZZ		11083	2S2319	BRACKET,DOUBLE ANGL.....	1
15	PFOZZ	5310010980624	11083	5P8245	WASHER,FLAT.....	2
16	PFOZZ	5306011279361	11083	0S1585	BOLT,MACHINE.....	2
17	PFOZZ	4710013779240	11083	5N8153	TUBE ASSEMBLY,METAL.....	1
18	PFOZZ	4730006846920	96906	MS24394J8	ELBOW,TUBE.....	1
19	PFOZZ	5340013787075	11083	5N8154	BRACKET,ANGLE.....	1
20	PFOZZ	4730011439017	96906	MS51860-56Z	LOCKNUT,TUBE FITTIN.....	1

END OF FIGURE

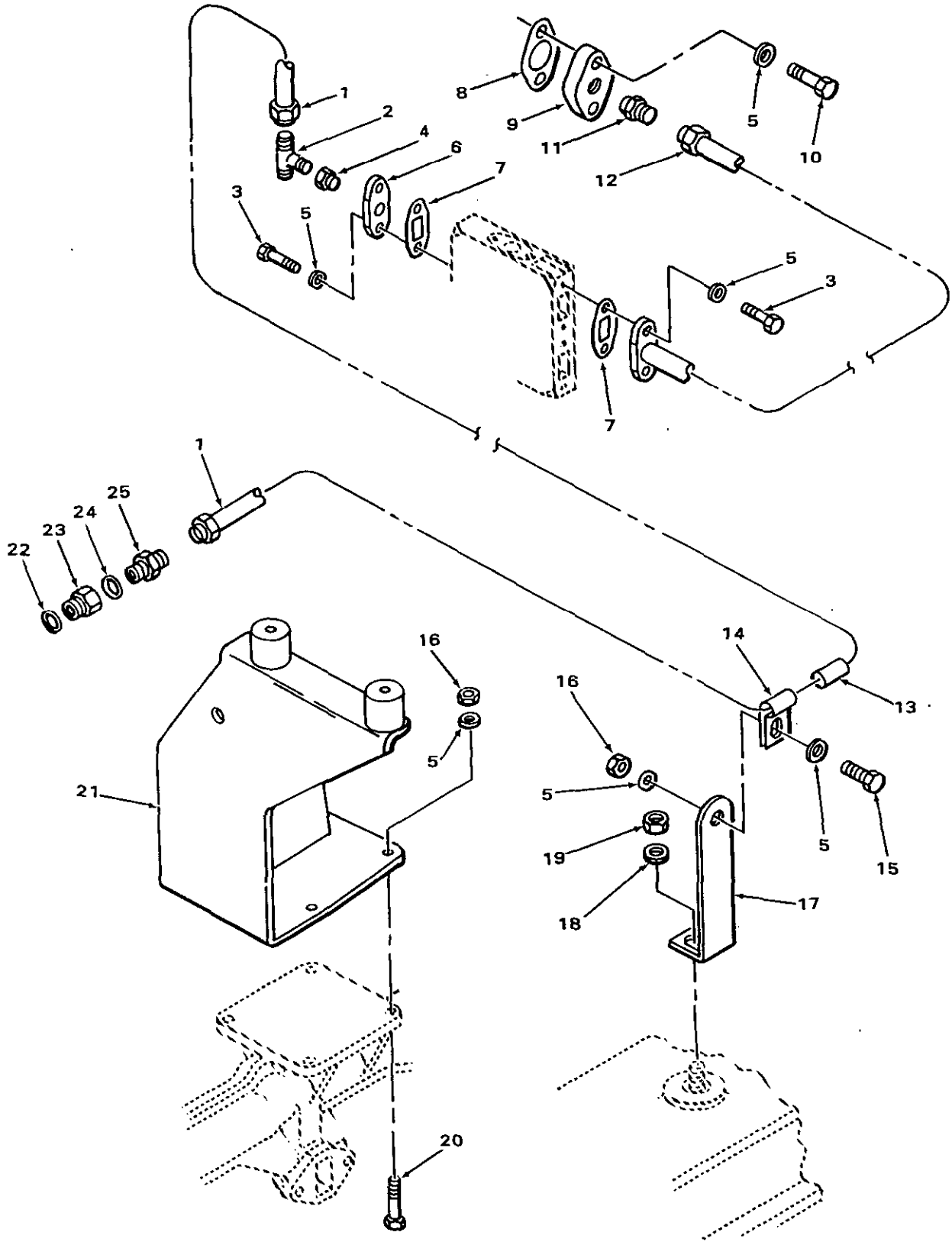

FIGURE 64C. WATER LINES, TURBO, 5R8866 ENGINE.

(1) ITEM NO	(2) SMR CODE	(3) NSN	(4) CAGEC	(5) PART NUMBER	(6) DESCRIPTION AND USABLE ON CODES(UOC)	(7) QTY
					GROUP 0503 WATER MANIFOLD, HEADERS, THERMOSTATS AND HOUSING GASKET	
					FIG. 64C WATER LINES, TURBO, 5R8866 ENGINE	
1	XDFZZ		11083	5R8975	TUBE ASSEMBLY,METAL.....	1
2	XDOZZ		11083	8D0071	TEE,TUBE.....	1
3	PFOZZ	5306002604508	96906	MS90728-8	BOLT,MACHINE.....	4
4	PFOZZ	3120011275376	11083	4M5317	BUSHING,REDUCER.....	1
5	PFOZZ	5310001174788	11083	5M2894	WASHER,FLAT.....	12
6	PFOZZ	4730013846470	11083	8N1445	FERRULE,BRAZING,TUB.....	1
7	PFOZZ	5330013775327	11083	7N7628	GASKET PART OF KIT P/N 5P-9228 PART OF KIT P/N 6V-3710 PART OF KIT P/N 6V-3711.....	2
8	PAOZA	5330009769143	11083	4L8149	GASKET PART OF KIT P/N 6V-3710.....	1
9	PFOZZ	4730013776793	11083	8N1466	FERRULE,BRAZING,TUB.....	1
10	PFOZZ	5305000680511	80204	B1821BH038C125N	SCREW,CAP,HEXAGON H.....	2
11	PFOZZ	4730010664619	11083	8M0755	ADAPTER,STRAIGHT,PI.....	1
12	XDOZZ		11083	5N8247	TUBE ASSEMBLY,METAL.....	1
13	PFOZZ	5365004239380	11083	4B6029	BUSHING,NONMETALLIC PART OF KIT P/N 2P-3988.....	1
14	PFOZZ	5340004238320	11083	1B3057	CLIP,SPRING TENSION.....	1
15	PFOZZ	5306002637301	11083	L1351	BOLT,MACHINE.....	1
16	PFOZZ	5310011945398	11083	1D4717	NUT,HEXAGON.....	5
17	PFOZZ	5340013779724	11083	5R8974	BRACKET,ANGLE.....	1
18	PFOZZ	5310010954631	11083	5P8247	WASHER,FLAT.....	1
19	PFOZZ	5310010669171	11083	4K8977	NUT.....	1
20	PFOZZ	5305010269518	11083	0S1571	SCREW,CAP,HEXAGON H.....	4
21	PFOZZ	2590013777851	11083	8N5909	SUPPORT ASSEMBLY.....	1
22	PAOZZ	5331008013354	25184	906-737-70	O-RING.....	1
23	PFOZZ	4730009330727	30780	8-6-F5G5-S	REDUCER,BOSS.....	1
24	PAOZZ	5331009486482	11083	3K0360	O-RING PART OF KIT P/N 6V-3711.....	1
25	PFOZZ	4730002581864	96906	MS51525B4-6	ADAPTER,STRAIGHT,TU.....	1

END OF FIGURE

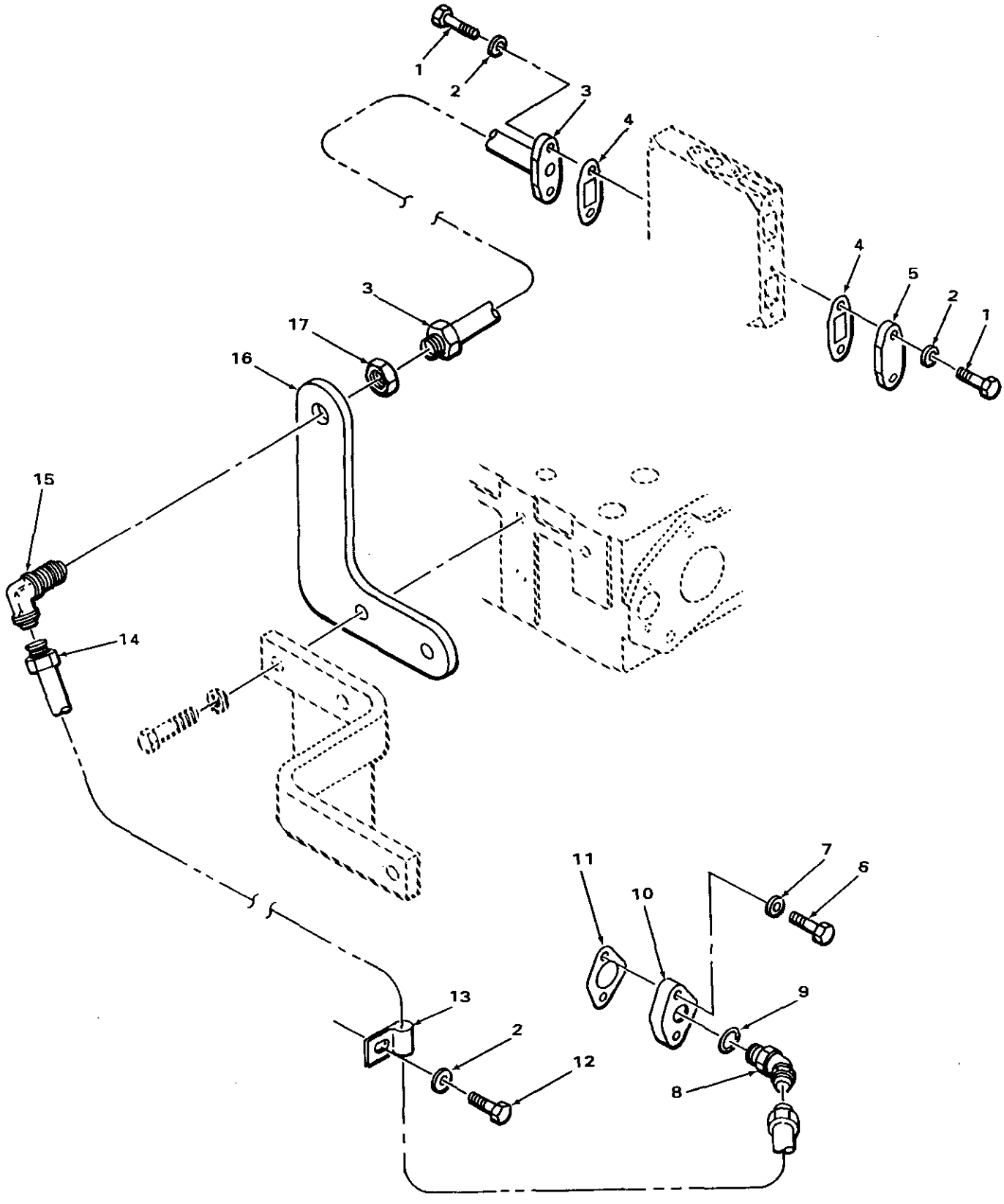

FIGURE 64D. WATER LINES, TURBO, 5R8866 ENGINE.

(1) ITEM NO	(2) SMR CODE	(3) NSN	(4) CAGEC	(5) PART NUMBER	(6) DESCRIPTION AND USABLE ON CODES(UOC)	(7) QTY
					GROUP 0503 WATER MANIFOLD, HEADERS, THERMOSTATS AND HOUSING GASKET	
					FIG. 64D WATER LINES, TURBO, 5R8866 ENGINE	
1	PFOZZ	5306002604508	96906	MS90728-8	BOLT,MACHINE.....	4
2	PFOZZ	5310001174788	11083	5M2894	WASHER,FLAT.....	5
3	PFOZZ	4710013779280	11083	5N8149	TUBE ASSEMBLY,METAL.....	1
4	PAFZZ	5330012072900	11083	6V-3711	GASKET SET PART OF KIT P/N 5P-9228 PART OF KIT P/N 6V-3710 PART OF KIT P/N 6V-3711.....	2
5	XDOZZ		11083	7N7878	COVER,ACCESS.....	1
6	PFOZZ	5306002264828	80204	B1821BH031C113N	BOLT,MACHINE.....	2
7	PFOZZ	5310004324064	11083	9M1974	WASHER,FLAT.....	2
8	PFOZZ	4730011695830	11083	307943	ELBOW,TUBE TO BOSS.....	1
9	PAFZZ	5330012072900	11083	6V-3711	GASKET SET PART OF KIT P/N 6V-3711..	1
10	PFOZZ	4730013835137	11083	8N1469	FERRULE,BRAZING TUB.....	1
11	PAOZZ	5330010639839	11083	4N3841	GASKET PART OF KIT P/N 5P-9233 PART OF KIT P/N 6V-6360.....	1
12	PFOZZ	5306004238194	11083	1A2029	BOLT,MACHINE.....	1
13	PFOZZ	5340012550933	11083	1M3464	CLAMP,LOOP.....	1
14	PFOZZ	4710013779240	11083	5N8153	TUBE ASSEMBLY,METAL.....	1
15	PFOZZ	4730006846920	96906	MS24394J8	ELBOW,TUBE.....	1
16	PFOZZ	5340013787075	11083	5N8154	BRACKET,ANGLE.....	1
17	PFOZZ	4730011439017	96906	MS51860-56Z	LOCKNUT,TUBE FITTIN.....	1

END OF FIGURE

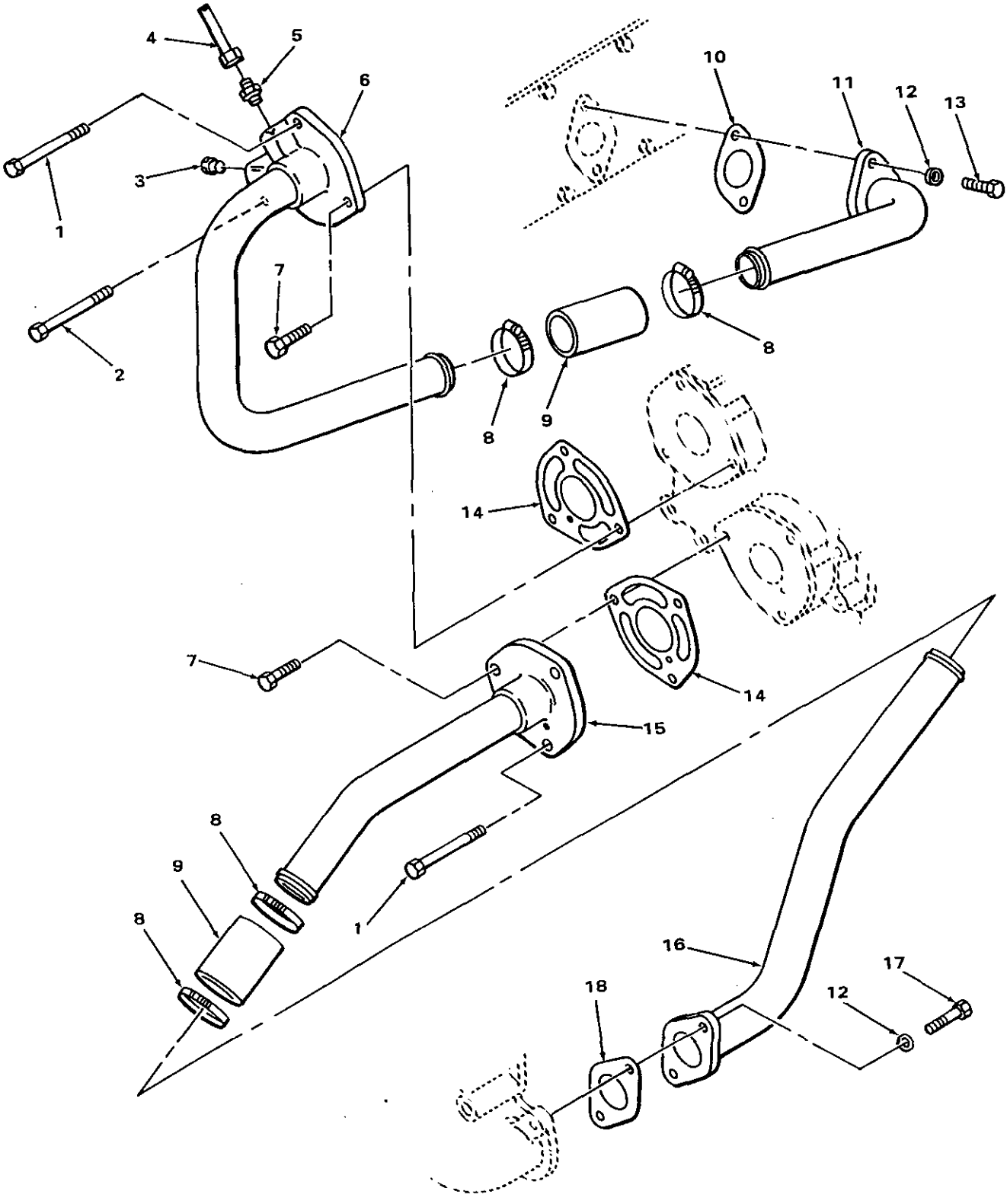

FIGURE 64E. WATER LINES, AFTERCOOLER, 7N3491 AND 5R8866 ENGINES.

(1) ITEM NO	(2) SMR CODE	(3) NSN	(4) CAGEC	(5) PART NUMBER	(6) DESCRIPTION AND USABLE ON CODES(UOC)	(7) QTY
					GROUP 0503 WATER MANIFOLD, HEADERS, THERMOSTATS AND HOUSING GASKET	
					FIG. 64E WATER LINES, AFTERCOOLER, 7N3491 AND 5R8866 ENGINES	
1	PFOZZ	5305002528906	11083	0T0065	SCREW.....	2
2	PFOZZ	5305001380335	11083	7H7954	SCREW,CAP,HEXAGON H.....	1
3	PFOZZ	4730004275121	01276	2082-6B	PLUG,PIPE.....	1
4	XDOZZ		11083	5N9219	TUBE ASSEMBLY,METAL.....	1
5	PFOZZ	4730002890383	96906	MS51500A4	ADAPTER,STRAIGHT,PI.....	1
6	PFOZZ	4710013779235	11083	5N6978	TUBE ASSEMBLY,METAL.....	1
7	PFOZZ	5305000680511	80204	B1821BH038C125N	SCREW,CAP,HEXAGON H.....	3
8	PFOZZ	4730002043491	66295	C32P	CLAMP,HOSE.....	4
9	MOOZZ		11083	5P0763-4.5	HOSE MAKE FROM P/N 5P0763.....	2
10	PFOZZ	5330002975029	11083	4F4947	GASKET.....	1
11	PFOZZ	4710013779629	11083	6N1583	TUBE ASSEMBLY,METAL.....	1
12	PFOZZ	5310001174788	11083	5M2894	WASHER,FLAT.....	4
13	PFOZZ	5306002637301	11083	L1351	BOLT,MACHINE.....	2
14	PAOZZ	5330013772724	11083	1S2616	GASKET PART OF KIT P/N 6V-5475.....	2
15	PFOZZ	4710013779795	11083	5N7006	TUBE ASSEMBLY,METAL.....	1
16	PFOZZ	4710013785611	11083	5N7004	TUBW ASSEMBLY,METAL.....	1
17	PFOZZ	5306002604508	11083	S1594	BOLT,MACHINE.....	2
18	PAOZA	5330000743560	11083	4L4661	GASKET PART OF KIT P/N 5P-9233.....	1

END OF FIGURE

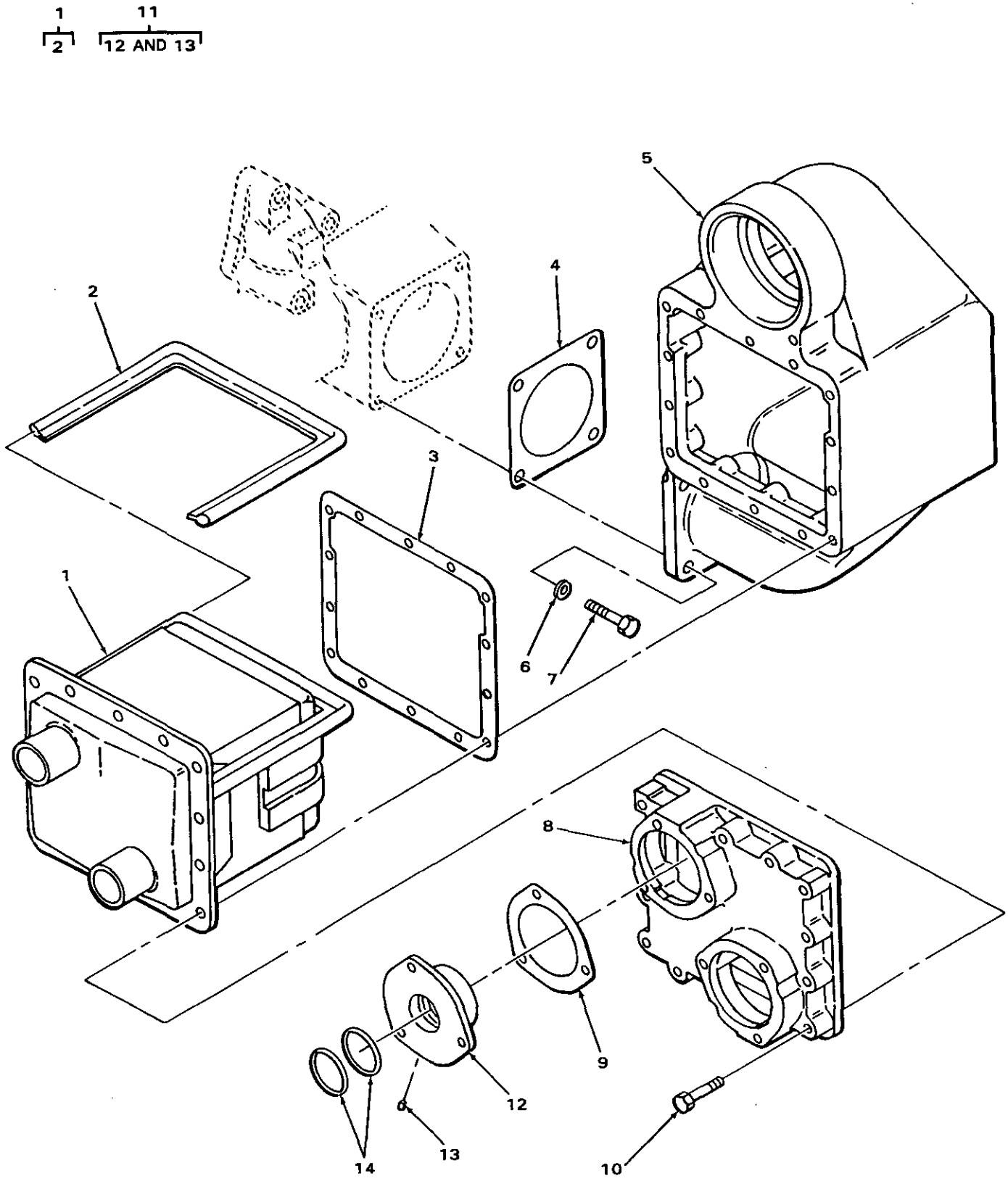

FIGURE 64F. WATER LINES, AFTERCOOLER, 7N3491 AND 5R8866 ENGINES.

(1) ITEM NO	(2) SMR CODE	(3) NSN	(4) CAGEC	(5) PART NUMBER	(6) DESCRIPTION AND USABLE ON CODES(UOC)	(7) QTY
					GROUP 0503 WATER MANIFOLD, HEADERS, THERMOSTATS AND HOUSING GASKET	
					FIG. 64F WATER LINES, AFTERCOOLER, 7N3491 AND 5R8866 ENGINES	
1	PFFFF		08179	464240-2	CORE ASSY PART OF KIT P/N 6V-5475...	1
2	XDFZZ		08179	464083-2	.SEAL,PLAIN.....	1
3	PAFZZ		11083	2M5202	GASKET PART OF KIT P/N 6V-5475.....	2
4	PFFZZ	5330010672307	11083	8H8754	GASKET PART OF KIT P/N 6V-5475 PART OF KIT P/N 6V-6360.....	1
5	PFFZZ	2930013777862	11083	6N1390	HOUSING,COOLANT PUM.....	1
6	PFFZZ	5310010980624	11083	5P8245	WASHER,FLAT.....	4
7	PFFZZ	5306011279361	11083	0S1585	BOLT,MACHINE.....	1
8	PFFZZ	5340013772487	11083	9M9624	COVER,ACCESS.....	1
9	PAFZZ	5330013772726	11083	9M9640	GASKET PART OF KIT P/N 6V-5475.....	4
10	PFFZZ	5306010949106	11083	0S1590	BOLT,MACHINE.....	12
11	PFFFZ	4730013777834	11083	9M9784	ADAPTER ASSEMBLY,AF.....	2
12	XAFZZ		11083	9M9646	.ADAPTER.....	1
13	PFFZZ	5315001380319	11083	2H5558	.PIN,STRAIGHT,HEADLE.....	1
14	PAFZZ	5331008696566	11083	9M9647	O-RING.....	4

END OF FIGURE

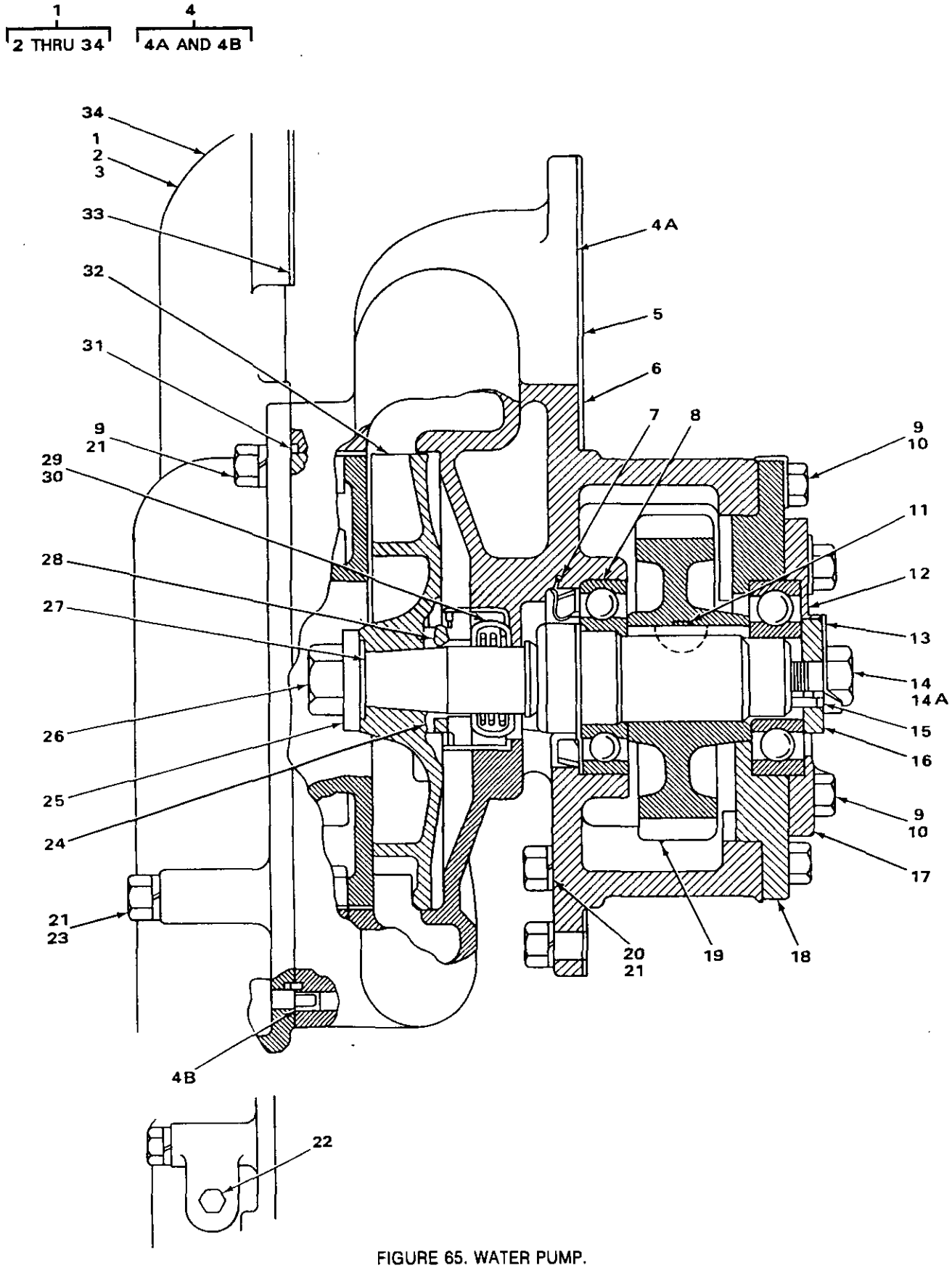

FIGURE 65. WATER PUMP.

(1) ITEM NO	(2) SMR CODE	(3) NSN	(4) CAGEC	(5) PART NUMBER	(6) DESCRIPTION AND USABLE ON CODES(UOC)	(7) QTY
					GROUP 0504 WATER PUMP	
					FIG. 65 WATER PUMP	
1	PFFFZ	2930002343033	11083	5S1911	PUMP,COOLING SYSTEM.....	1
1	PFFFF	2930010479321	11083	6N6015	PUMP,ENGINE COOLANT.....	1
2	PAFZZ	5330005277706	11083	2H5572	.GASKET USED ON 5S1911 PUMP PART OF KIT P/N 5P-9224.....	1
3	PAFZZ	5331006635075	11083	3H2652	.O-RING USED ON 5S1911 PUMP PART OF KIT P/N 2P-3988 PART OF KIT P/N 5P-9224.....	1
4	PFFZZ		11083	7N8260	.HOUSING.....	1
4A	XDFZZ		11083	7N8261	..HOUSING.....	1
4B	PFFZZ	4730009247125	11083	4M1336	..SLEEVE,COMPRESSION,.....	1
5	PAFZZ	5330005412701	11083	4H9008	.GASKET USED ON 5S1911 PUMP PART OF KIT P/N 5P-9224.....	1
6	PAFZZ	5330006280555	11083	4H8890	.GASKET PART OF KIT P/N 2P-3988 PART OF KIT P/N 5P-9224.....	1
7	PAFZZ	5330005808976	11083	4H9836	.SEAL,PLAIN ENCASED.....	1
8	PFFZZ	3110005165490	11083	8H9789	.BEARING,BALL,ANNULA USED ON 6N6015 PUMP PART OF KIT P/N 1W7029..	1
8	PFFZZ	3110005543184	11083	1B4109	.BEARING,BALL,ANNULA USED ON 5S1911 PUMP.....	1
9	PFFZZ	5306002604508	11083	S1594	.BOLT,MACHINE.....	12
10	PFFZZ	2930003652152	11083	L364	.LOCK PLATE USED ON 5S1911 PUMP....	8
11	PFFZZ	5315008509428	11083	4H3157	.KEY,WOODRUFF PART OF KIT P/N 1W7029	1
12	PFFZZ	3110002939302	11083	2L5271	.BEARING,BALL,ANNULA USED ON 6N6015 PUMP PART OF KIT P/N 1W7029..	1
12	PFFZZ	3110005546051	11083	1B4116	.BEARING,BALL,ANNULA USED ON 5S1911 PUMP.....	1
13	PAFZZ	2520004238166	11083	0V0114	.LOCK USED ON 5S1911 PUMP PART OF KIT P/N 1W7029 PART OF KIT P/N 2P-3988.....	1
14	PFFZZ	5306002638979	14544	3B4419	.BOLT,MACHINE PART OF KIT P/N 1W7029	1
14A	PFFZZ	5310010980624	11083	5P8245	.WASHER,FLAT USED ON 6N6015 PUMP...	1
15	PFFZZ	5315010689644	11083	4H1641	.PIN,SPRING PART OF KIT P/N 1W7029..	1
16	PFFZZ		11083	4H8897	.WASHER,FLAT PART OF KIT P/N 1W7029.	1
17	PFFZZ	5342010686984	11083	4H8906	.COVER PART OF KIT P/N 1W7029.....	1
18	XDFZZ		11083	5H1385	.PLATE,RETAINING,BEA.....	1
19	PFFZZ	3020008442318	11083	2M6569	.GEAR,HELICAL.....	1
20	PFFZZ	5310007257382	96906	MS35690-624	.NUT,PLAIN,HEXAGON USED ON 6N6015 PUMP.....	5
21	PFFZZ	5310006379541	96906	MS35338-46	.WASHER,LOCK.....	18
22	PFFZZ	4730009247886	11083	5M6214	.PLUG,PIPE USED ON 6N6015 PUMP.....	1
23	PFFZZ	2910003099473	11083	0T0573	.CAPSCREW,FUEL PUMP USED ON 6N6015 PUMP.....	1
24	PAFZZ	5330011036637	11083	6N9313	.SEAL GROUP USE WITH PUMP P/N 6N6015.....	1
25	PFFZZ	5310002858867	78286	S14-35-5017	.WASHER,FLAT PART OF KIT P/N 1W7029.	1
26	PFFZZ	5306004550462	11083	4L9337	.BOLT,MACHINE PART OF KIT P/N 1W7029	1
27	PFFZZ	3040011033685	11083	6N5987	.SHAFT,WATER PUMP PART OF KIT P/N 1W7029.....	1

(1) ITEM NO	(2) SMR CODE	(3) NSN	(4) CAGEC	(5) PART NUMBER	(6) DESCRIPTION AND USABLE ON CODES(UOC)	(7) QTY
28	PFFZZ	5365011450675	11083	6N5476	.RING.....	1
29	PAFZZ	5330011456023	11083	6N5475	.SEAL.....	1
30	PFFZZ	4730011944119	11083	6N4744	.REDUCER,TUBE.....	1
31	XDFZZ		11083	7N8259	.GASKET PART OF KIT P/N 5P-9224.....	1
32	PFFZZ	4320001038883	11083	88A51329-CH	.IMPELLER,PUMP,CENTR.....	1
33	PAFZZ	5330004265652	11083	6F3202	.GASKET USED ON 5S1911 PUMP PART OF KIT P/N 2P-3988 PART OF KIT P/N 5P-9224.....	1
34	PFFZZ	2930011033708	11083	4S7760	.COVER USED ON 6N6015 PUMP.....	1

END OF FIGURE

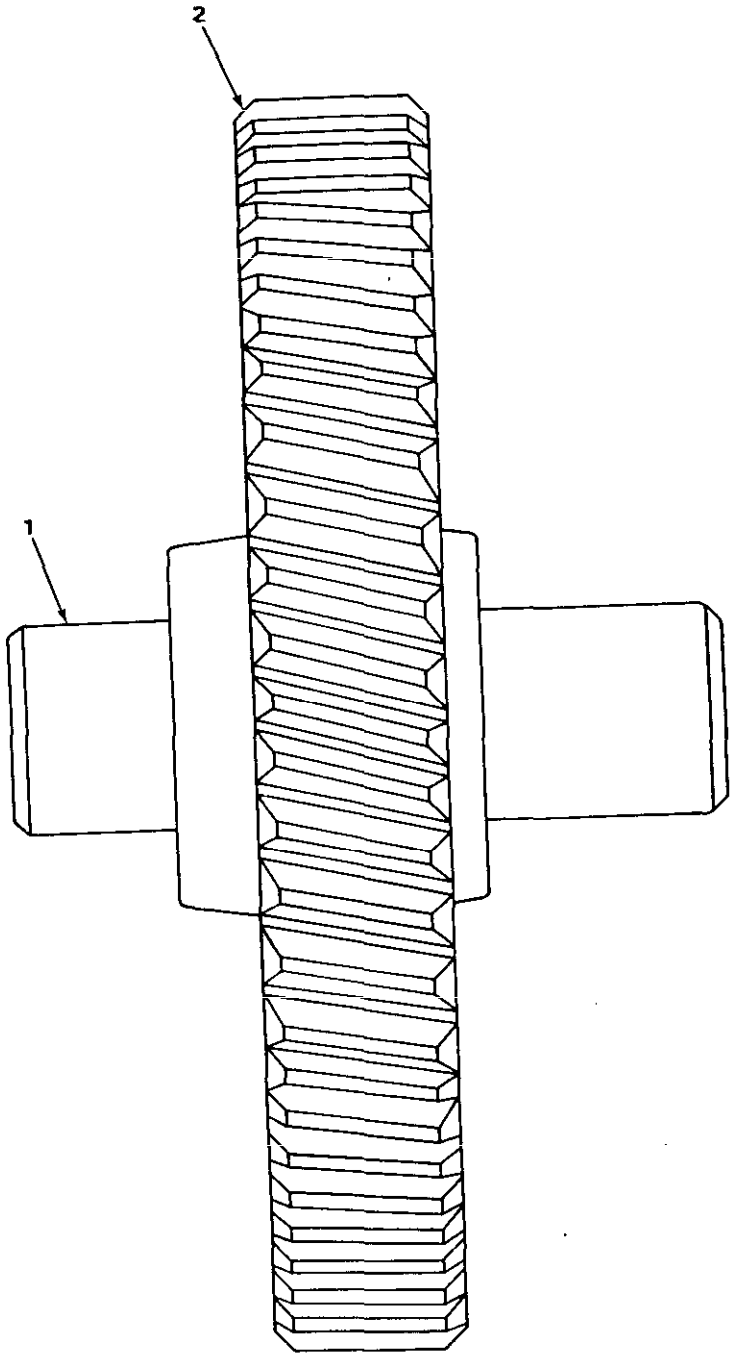

TA235263

FIGURE 66. WATER PUMP IDLER GEAR.

(1) ITEM NO	(2) SMR CODE	(3) NSN	(4) CAGEC	(5) PART NUMBER	(6) DESCRIPTION AND USABLE ON CODES(UOC)	(7) QTY
					GROUP 0504 WATER PUMP	
					FIG. 66 WATER PUMP IDLER GEAR	
1	PFHZZ	3040003636360	11083	3B9167	SHAFT,SHOULDERED.....	1
2	PFHZZ	3020002751031	11083	2M6548	GEAR,HELICAL.....	1

END OF FIGURE

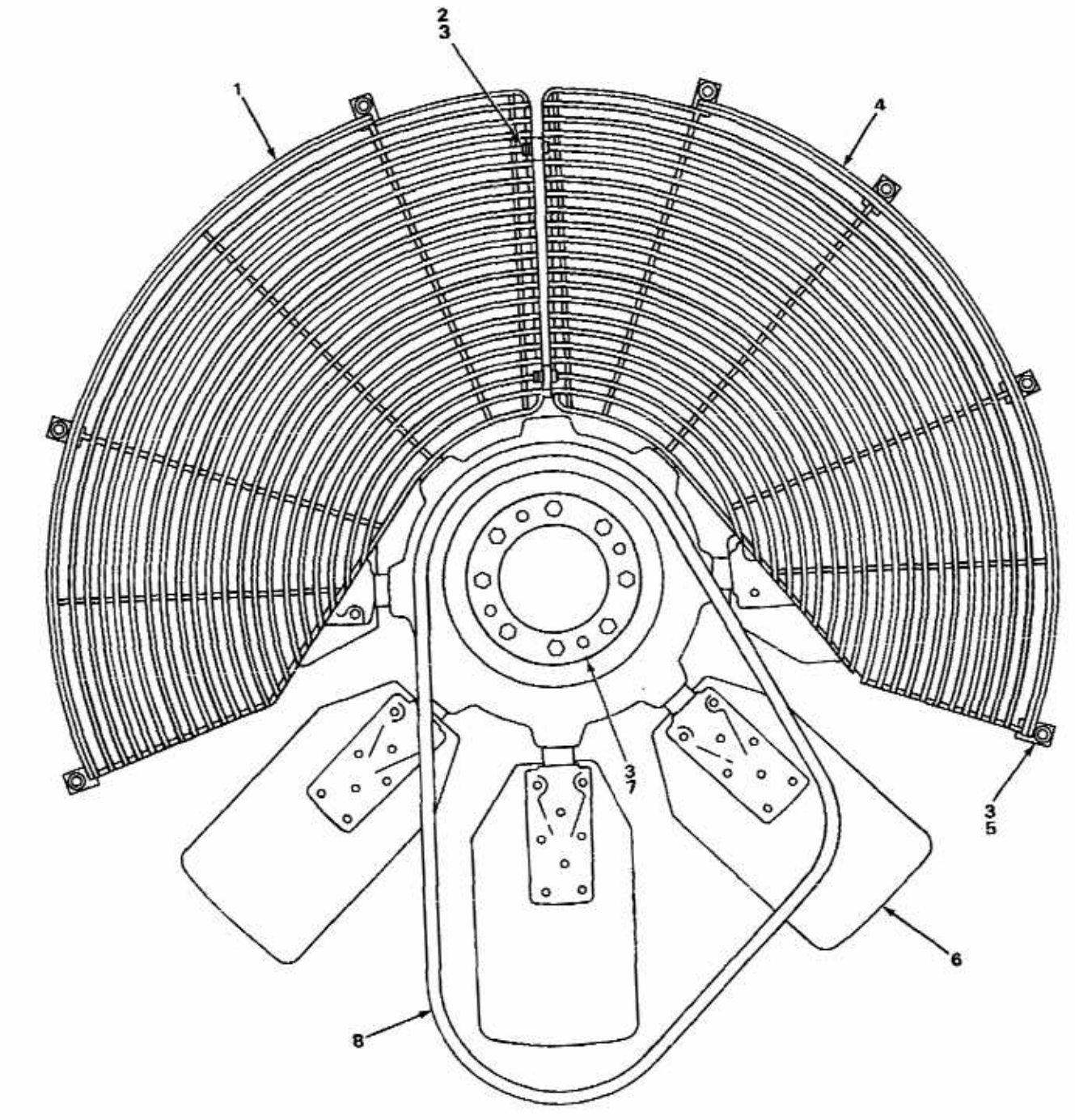

FIGURE 67. FAN GUARD AND BELT.

(1) ITEM NO	(2) SMR CODE	(3) NSN	(4) CAGEC	(5) PART NUMBER	(6) DESCRIPTION AND USABLE ON CODES(UOC)	(7) QTY
					GROUP 0505 FAN ASSEMBLY	
					FIG. 67 FAN GUARD AND BELT	
1	PFOZZ	4310012275985	11083	2P1117	GUARD,COMPRESSOR.....	1
2	PFOZZ	5306002637301	11083	L1351	BOLT,MACHINE.....	2
3	PFOZZ	5310001174788	11083	5M2894	WASHER,FLAT.....	18
4	XBOZZ		11083	6N0737	GUARD ASSEMBLY.....	1
5	PFOZZ	5306004238194	11083	1A2029	BOLT,MACHINE.....	8
6	PFOZZ	2930013150967	11083	6N874	IMPELLER,FAN,AXIAL.....	1
7	PFOZZ	5305010269518	11083	0S1571	SCREW,CAP,HEXAGON H.....	8
8	PAOZZ	3030010178320	11083	2S8268	BELTS,V,MATCHED SET.....	1

END OF FIGURE

7 (8 AND 9) 20 (21 THRU 24) 27 (28 THRU 30)

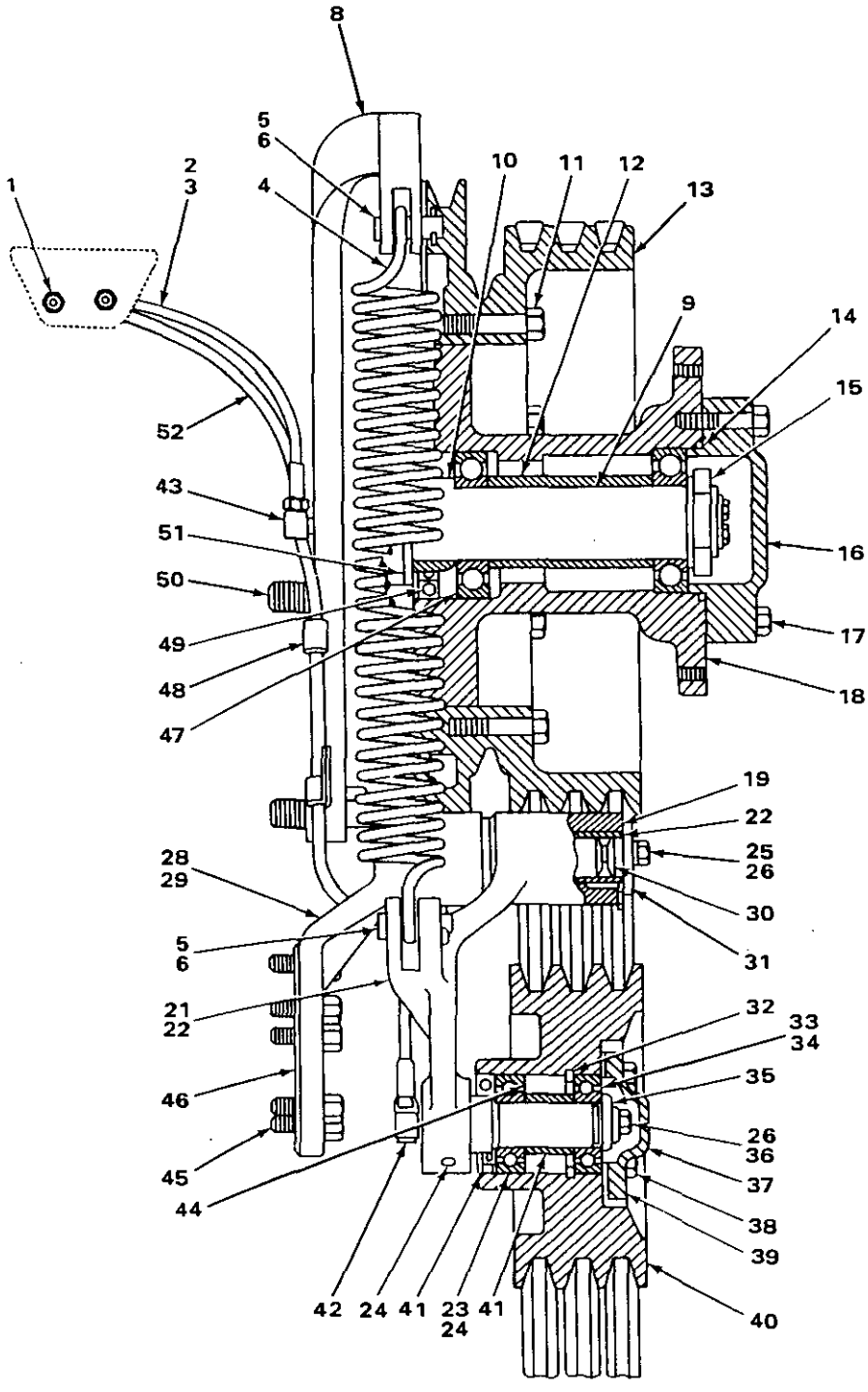

FIGURE 68. FAN DRIVE.

(1) ITEM NO	(2) SMR CODE	(3) NSN	(4) CAGEC	(5) PART NUMBER	(6) DESCRIPTION AND USABLE ON CODES(UOC)	(7) QTY
					GROUP 0505 FAN ASSEMBLY	
					FIG. 68 FAN DRIVE	
1	PFOZZ	4730000504208	96906	MS15003-1	FITTING,LUBRICATION	2
2	PFOZZ	4730009003296	30327	48F1-8 1-4	ADAPTER,STRAIGHT,PI	2
3	PFOZZ	4720010669190	11083	8S0203	HOSE A	1
4	PFOZZ	5360010508009	11083	7N5959	SPRING	1
5	PFOZZ	5315000171893	11083	8B1419	PIN,STRAIGHT,HEADED	2
6	PFOZZ	5315008395822	96906	MS24665-353	PIN,COTTER	2
7	XDOOO		11083	6N7678	BRACKET ASSEMBLY	1
8	XAOZZ		11083	6N0743	.BRACKET	1
9	PFOZZ	2990011036633	11083	6N7677	.SHAFT	1
10	XDOZZ		11083	6N4301	SPACER	1
11	PFOZZ	5306006982150	11083	0L2070	BOLT,MACHINE	6
12	PFOZZ	5365012550924	11083	7S585	SPACER,SLEEVE	1
13	XDOZZ		11083	6N0762	PULLEY	1
14	PFOZZ	5331003396220	11083	2H6184	O-RING	1
15	XDOZZ		11083	6N7591	NUT	2
16	XDOZZ		11083	6N0726	COVER	1
17	PFOZZ	5305010156841	11083	0S1591	SCREW	3
18	XDOZZ		11083	4N9742	HUB	1
19	PFOZZ	5365012534385	11083	3S1461	SHIM	1
20	XDOOO		11083	2P1131	ARM ASSEMBLY	1
21	XAOZZ		11083	2P1130	.ARM	1
22	PFOZZ	5365010675633	11083	3S9029	.BUSHING	1
23	XDOZZ		11083	2S6746	.SHAFT	1
24	PFOZZ	5315010674665	11083	3H0703	.DOWEL	1
25	PFOZZ	5306001829590	19207	8743903-5	BOLT,SELF-LOCKING	1
26	PFOZZ	5310001174788	11083	5M2894	WASHER,FLAT	4
27	XDOOO		11083	2P1132	BASE ASSEMBLY	1
28	XDOZZ		11083	2P1127	.BASE	1
29	PFOZZ	5315010674665	11083	3H0703	.DOWEL	1
30	XAOZZ		11083	5S8002	.SHAFT	1
31	XDOZZ		11083	4S7818	PLATE	1
32	PFOZZ	5325002054711	11083	8B2327	RING,RETAINING	1
33	XDOZZ		11083	6V8666	RETAINER AND ROLLER	2
34	XDOZZ		11083	6V7534	RING,BEARING,INNER	2
35	PFOZZ	5310002858867	78286	S14-35-5017	WASHER,FLAT PART OF KIT P/N 1W7029	1
36	PFOZZ	5306002637301	11083	L1351	BOLT,MACHINE	1
37	PFOZZ	2930004028215	11083	2S6150	PLATE,FAN BELT TIGH	1
38	PFOZZ	5306011169622	11083	0S1618	BOLT,MACHINE	4
39	PAOZZ	5330009482300	11083	2S6151	GASKET PART OF KIT P/N 5P-9227	1
40	PFOZZ	3020010675622	11083	2P1129	PULLEY	1
41	PFOZZ	5365007626121	11083	2S6105	SPACER,SLEEVE	1
42	PAOZZ	5330009508223	11083	5M9735	SEAL,PLAIN ENCASED PART OF KIT P/N 2P-3988 PART OF KIT P/N 5P-9227	1
43	PFOZZ	4730002784814	11083	2D1683	ELBOW,PIPE	1
44	XDOZZ		11083	7W5388	SPACER,RING	1
45	PFOZZ	5306004238194	11083	1A2029	BOLT,MACHINE	5
46	PAOZZ	5330005412111	11083	4N9628	GASKET PART OF KIT P/N 5P-9227	1
47	PFOZZ	3110005545302	12128	W55	BEARING,BALL,ANNULA	2

(1) ITEM NO	(2) SMR CODE	(3) NSN	(4) CAGEC	(5) PART NUMBER	(6) DESCRIPTION AND USABLE ON CODES(UOC)	(7) QTY
48	PFOZZ	5340004264656	11083	4D7794	CLAMP,LOOP.....	2
49	PAOZZ	5330001311649	11083	5M9739	SEAL,PLAIN ENCASED PART OF KIT P/N 2P-3988 PART OF KIT P/N 5P-9227.....	1
50	PFOZZ	5306002755012	11083	0S1566	BOLT,MACHINE.....	3
51	XDOZZ		11083	6N4307	SPACER.....	1
52	PFOZZ	4720009482315	11083	8S2388	HOSE ASSEMBLY,NONME.....	1

END OF FIGURE

9
10 THRU 12

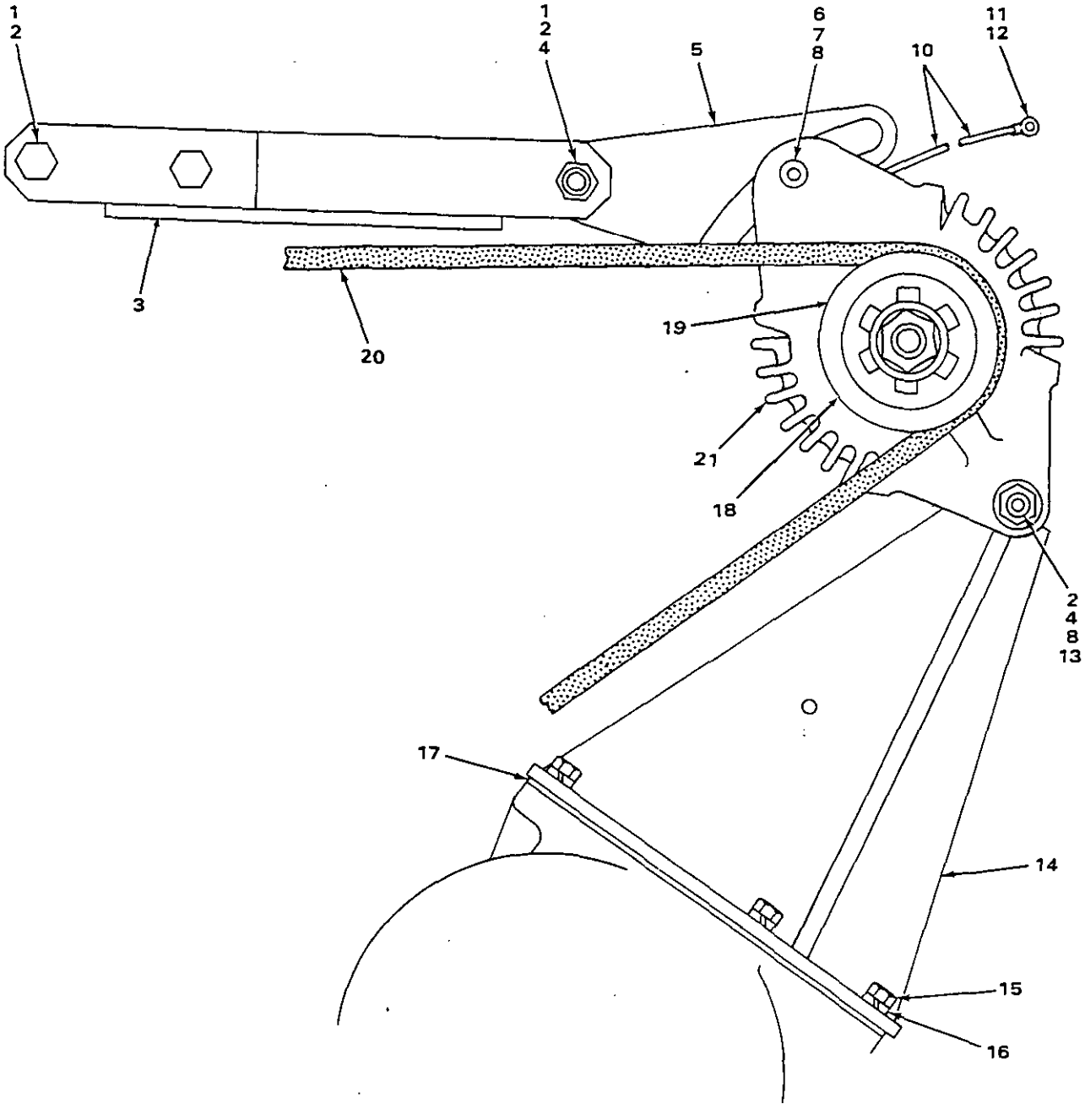

FIGURE 69. ALTERNATOR, BRACKET AND PULLEY.

(1) ITEM NO	(2) SMR CODE	(3) NSN	(4) CAGEC	(5) PART NUMBER	(6) DESCRIPTION AND USABLE ON CODES(UOC)	(7) QTY
					GROUP 06 ELECTRICAL SYSTEM	
					GROUP 0601 ALTERNATOR	
					FIG. 69 ALTERNATOR, BRACKET AND PULLEY	
1	PFOZZ	5305000712069	80204	B1821BH050C150N	SCREW,CAP,HEXAGON H.....	3
2	PFOZZ	5310010980624	11083	5P8245	WASHER,FLAT.....	4
3	XDOZZ		11083	2S2319	BRACKET,DOUBLE ANGL.....	1
4	PFOZZ	5310007680318	96906	MS51967-14	NUT,PLAIN,HEXAGON.....	2
5	XDOZZ		11083	2P5590	STRAP.....	1
6	PFOZZ	5306002736357	11083	1A1460	BOLT,MACHINE.....	1
7	PFOZZ		11083	8F0492	SPACER.....	1
8	PFOZZ	5310002459841	11083	8M4791	WASHER,FLAT.....	3
9	AOOOO		11083	4D0674	WIRE ASSY.....	1
10	MOOZZ		11083	5P5622-20	.WIRE MAKE FROM WIRE P/N 5P5622....	1
11	PFOZZ	5940001139826	11083	2L8069	.TERMINAL,LUG.....	1
12	PFOZZ	5940001434794	11083	2L8066	.TERMINAL,LUG.....	1
13	PFOZZ	5306000085943	11083	9H8260	BOLT,MACHINE.....	1
14	XDOZZ		11083	2P5065	BRACKET ASSEMBLY.....	1
15	PFOZZ	5306002604508	96906	MS90728-8	SCREW,CAP,HEXAGON H.....	5
16	PFFZZ	5310006379541	96906	MS35338-46	WASHER,LOCK.....	5
17	PAOZZ	5330001220632	11083	6L5464	GASKET PART OF KIT P/N 2P-3988 PART OF KIT P/N 5P-9222.....	1
18	PFOZZ	3020010690871	11083	4N5390	PULLEY.....	1
19	PFOZZ	3030012322453	11083	7S9859	BELT,V.....	1
20	PFOZZ	2920010269521	11083	6N9294	GENERATOR,ENGINE AC.....	1

END OF FIGURE

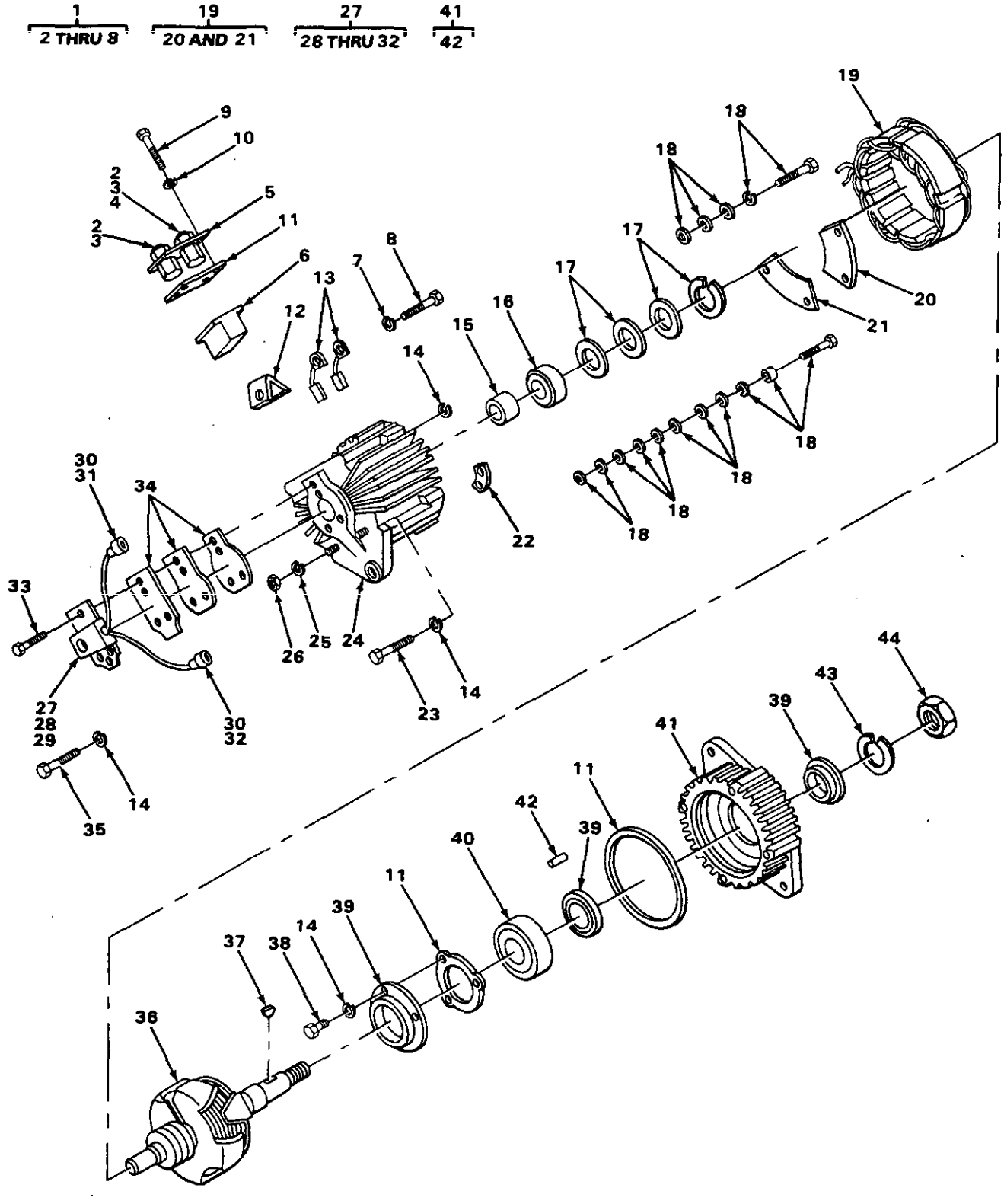

FIGURE 70. PRESTOLITE ALTERNATOR.

(1) ITEM NO	(2) SMR CODE	(3) NSN	(4) CAGEC	(5) PART NUMBER	(6) DESCRIPTION AND USABLE ON CODES(UOC)	(7) QTY
					GROUP 0601 ALTERNATOR.	
					FIG 70 PRESTOLITE ALTERNATOR.	
1	PFFZZ	2920010534514	11083	1P1145	.HOLDER ASSEMBLY	1
2	PFFZZ	5310006371058	66289	PD115	..NUT,PLAIN,HEXAGON	4
3	PFFZZ	5310008528266	11083	3B4502	..WASHER,LOCK	4
4	PFFZZ	5310001435722	04998	WA1248	..WASHER,FLAT	1
5	PFFZZ	2920010534513	11083	1P1138	..TERMINAL AND PLATE	1
6	PFFZZ	2920010534512	11083	1P1137	..HOLDER	1
7	PFFZZ	5310004341347	11083	6B4542	..WASHER,LOCK	2
8	PFFZZ	5305008892999	96906	MS35206-217	..SCREW,MACHINE	2
9	PFFZZ	5305010534554	11083	324000	.SCREW	4
10	XBFZZ		11083	2H6139	.WASHER,LOCK	4
11	PFFZZ	5330010534873	11083	2P1714	.GASKET ASSORTMENT	1
12	PFFZZ	2920000095213	68505	AMA19S	.PARTS KIT,BRUSH SPR	1
13	PFFZZ	5977000083338	11083	1P1130	.BRUSH SET,ELECTRICA	1
14	PFFZZ	5310008528266	11083	3B4502	.WASHER,LOCK	10
15	PFFZZ	3120004505433	11083	1P1134	.BEARING,SLEEVE	1
16	PFF2Z	3110002273236	96906	MS51961-2	.BEARING,ROLLER,NEED	1
17	PFFZZ	2920004333720	11083	1P1080	.PARTS KIT,RETAINER	1
18	PFFZZ	2920004106817	11083	2P1712	.PARTS KIT,TERMINAL,	1
19	XBFZZ		11083	2P1709	.RECTIFIER STATOR	1
20	PFFZZ	2920010534530	11083	2P1719	..PLATE AND RECTIFIER POSITIVE	1
21	PFFZZ	2920010534531	11083	2P1720	..PLATE AND RECTIFIER NEGATIVE	1
22	PFFZZ	5970010534543	11083	2P6261	.INSULATOR	1
23	XBFZZ		11083	1P1086	.KIT,FRAME SCREW	1
24	XBFZZ		11083	2P1711	.HEAD ASSEMBLY	1
25	PFFZZ	5310006559370	96906	MS35340-47	.WASHER,LOCK	2
25	PFFZZ	5310005825965	96906	MS35338-44	.WASHER,LOCK	2
26	PFFZZ	5310004317237	11083	1P1396	.NUT	2
26	PFFZZ	5310004454633	11083	9M1311	.NUT,PLAIN,HEXAGON	2
27	PFFZZ	2920004124148	11083	6N3821	.REGULATOR,ENGINE GE	1
28	PFFZZ	5305010534549	11083	3K6234	..SCREW	1
29	PFFZZ	5310004328001	11083	4B4863	..WASHER,FLAT	1
30	PAFZZ	5970011560688	77060	2984033	..INSULATOR,BOOT	2
31	PFFZZ	5940001434780	96906	MS25036-108	..TERMINAL,LUG	1
32	PFFZZ	5940010534521	11083	2L8077	..TERMINAL	1
33	PFFZZ	5305010534553	11083	310243	.SCREW,CAP,HEXAGON H	3
34	PFFZZ	2920004106815	11083	1P1091	.PARTS KIT,IGNITION	1
35	XDFZZ		11083	9M5520	.SCREW,TAPPING	1
36	XBFZZ		11083	6N1226	.ROTOR ASSEMBLY	1
37	PFFZZ	5315006165525	96906	MS35756-9	.KEY,WOODRUFF	1
38	PFFZZ	5305010534517	11083	172311	.SCREW	3
39	PFFZZ	5330010534529	11083	2P1713	.KIT,RETAINER-SEALS	1
40	PFFZZ	3110005545637	21760	1305MF	.BEARING,BALL,ANNULA	1
41	XBFZZ		11083	2P1710	.HEAD ASSEMBLY	1
42	PFFZZ	5315010534820	11083	6D9953	..PIN,SPRING	2
43	PFFZZ	5310010534864	11083	3B4511	.WASHER,LOCK	1
44	PFFZZ	5310004106816	11083	1P1131	.PARTS KIT,ALTERNATO	1

END OF FIGURE

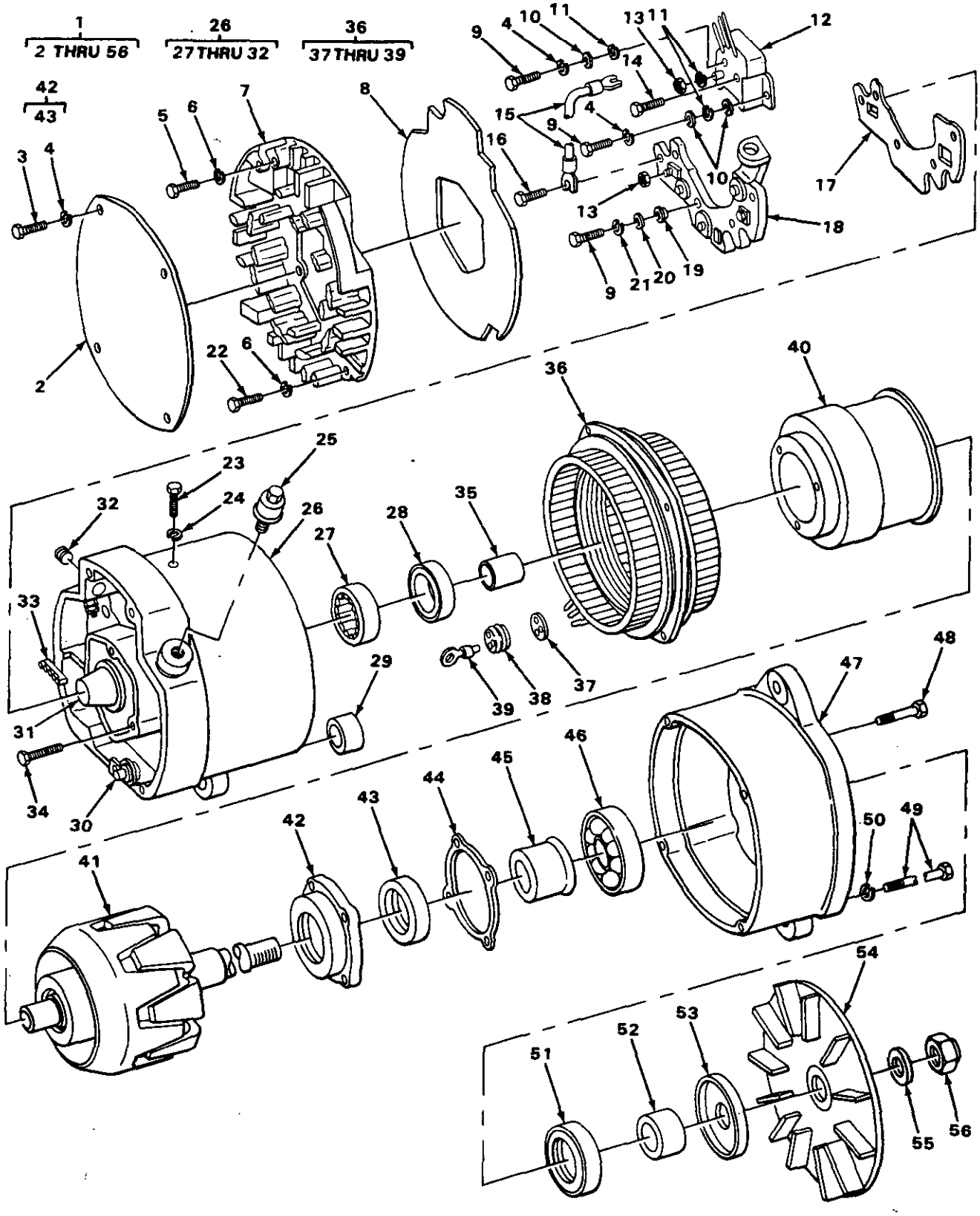

FIGURE 71. DELCO REMY ALTERNATOR.

(1) ITEM NO	(2) SMR CODE	(3) NSN	(4) CAGEC	(5) PART NUMBER	(6) DESCRIPTION AND USABLE ON CODES(UOC)	(7) QTY
					GROUP 0601 ALTERNATOR.	
					FIG.71 DELCO REMY ALTERNATOR.	
1	PFOFF	2920002317270	55883	IPD5S9088	GENERATOR,ENGINE AC.....	1
2	PFFZZ	2920010534745	11083	9S2260	.PLATE.....	1
3	PFFZZ	5305000904256	11083	9S2544	.SCREW.....	4
4	PFFZZ	5310004327976	11083	8H878	.WASHER,LOCK.....	6
5	PFFZZ	5305000904227	11083	9S2438	.SCREW.....	2
6	PFFZZ	5310008112861	11083	7H2079	.WASHER,LOCK.....	7
7	PFFZZ	2920010534744	11083	9S2255	.COVER.....	1
8	PFFZZ	5330004293570	11083	9S2262	.GASKET.....	1
9	PFFZZ	5305010534758	11083	9S9830	.SCREW.....	6
10	XDFZZ		11083	8F1326	.WASHER,FLAT.....	3
11	PFFZZ	5310005590070	96906	MS35333-38	.WASHER,LOCK.....	3
12	PFFZZ	2920002317266	11083	9S2259	.REGULATOR,ENGINE GE.....	1
13	PFFZZ	5310010455588	11568	M925A	.NUT,PLAIN,HEXAGON.....	4
14	XDFZZ		16764	1961571	.HOUSING,REGULATOR.....	1
15	PFFZZ	2920004842799	16764	1968988	.LEAD,IGNITION,ENGIN.....	1
16	PFFZZ	5305000904204	11083	9S2542	.SCREW.....	1
17	PFFZZ	5970000019382	16764	1968930	.INSULATOR,PLATE.....	1
18	PFFZZ	2920004276421	11083	9S2292	.PARTS KIT,ENGINE GE.....	1
19	PFFZZ	5970004035912	30076	154794	.INSULATOR,BUSHING.....	4
20	PFFZZ	5310004328001	11083	4B4863	.WASHER,FLAT.....	4
21	PFFZZ	5310009520561	16764	9419392	.WASHER,SPRING TENSI.....	4
22	PFFZZ	5305000904147	11083	9S2437	.SCREW.....	5
23	PFFZZ	5305010534742	11083	9S2011	.SCREW.....	1
24	PFFZZ	5310005825965	96906	MS35338-44	.WASHER,LOCK.....	1
25	PFFZZ	5325000263776	11083	9S2389	.STUD.....	1
26	PFFZZ	2920010534749	11083	9S2398	.HOUSING ASSEMBLY.....	1
27	PFFZZ	3120002376509	11083	9S2395	..BEARING,SLEEVE TRAC.....	1
28	PFFZZ	5330004324034	11083	9S2394	..SEAL,PLAIN ENCASED.....	1
29	PFFZZ	3120004328120	16764	1968990	..BUSHING,SLEEVE.....	1
30	PFFZZ	5961002323198	16764	1971671	..SEMICONDUCTOR DEVIC.....	3
31	PFFZZ	2920010534748	11083	9S2397	..COVER.....	1
32	XBFZZ		11083	9F2241	..PLUG.....	1
33	PFFZZ	5325000313336	11083	9S2250	.GROMMET,NONMETALLIC.....	1
34	PFFZZ	5305004500421	11083	9S2007	.SCREW,SELF-LOCKING.....	3
35	PFFZZ	5365004328184	11083	9S2242	.RING.....	1
36	PFFZZ	2920000107340	14082	1971465	.STATOR,ENGINE GENER.....	1
37	XBFZZ		11674	1968901	..INSULATOR.....	1
38	XDFZZ		11083	9S2005	..GROMMET.....	1
39	PFFZZ	5940003518080	16764	1969671	..TERMINAL,LUG.....	3
40	PFFZZ	5950007587793	11083	9S2248	.COIL,ELECTRICAL.....	1
41	XAFZZ		11083	9S2303	.ROTOR ASSEMBLY.....	1
42	PFFZZ	5330010534747	11083	9S2390	.KIT,HEAT SINK.....	1
43	PFFZZ	5330002376928	16764	1958509	..SEAL,PLAIN ENCASED.....	1
44	PFFZZ	5330010534844	11083	9S2256	.GASKET.....	1
45	PFFZZ	3040010534746	11083	9S2261	.COLLAR.....	1
46	PFFZZ	3110001448519	11083	2F5721	.BEARING,BALL,ANNULA.....	1
47	PFFZZ	2920010534541	11083	2P5616	.FRAME.....	1
48	PFFZZ	5305004500420	11083	9S2008	.SCREW,SELF-LOCKING.....	4

(1) ITEM NO	(2) SMR CODE	(3) NSN	(4) CAGEC	(5) PART NUMBER	(6) DESCRIPTION AND USABLE ON CODES(UOC)	(7) QTY
49	PFFZZ	5305004500422	11083	9S2009	.SCREW,SELF-LOCKING.....	4
50	PFFZZ	5310008528266	11083	3B4502	.WASHER,LOCK.....	4
51	PFFZZ	5330002376928	16764	1958509	.SEAL,PLAIN ENCASED.....	1
52	PFFZZ	2920010534782	11083	9S2254	.COLLAR.....	1
53	PFFZZ	2920010534743	11083	9S2252	.SLINGER.....	1
54	PFFZZ	2920004841671	11083	9S2258	.FAN AND BAFFLE ASSE.....	1
55	PFFZZ	5310002624712	19207	8328009	.WASHER,FLAT.....	1
56	PFFZZ	5310009445896	16764	9418881	.NUT,SELF-LOCKING,HE.....	1

END OF FIGURE

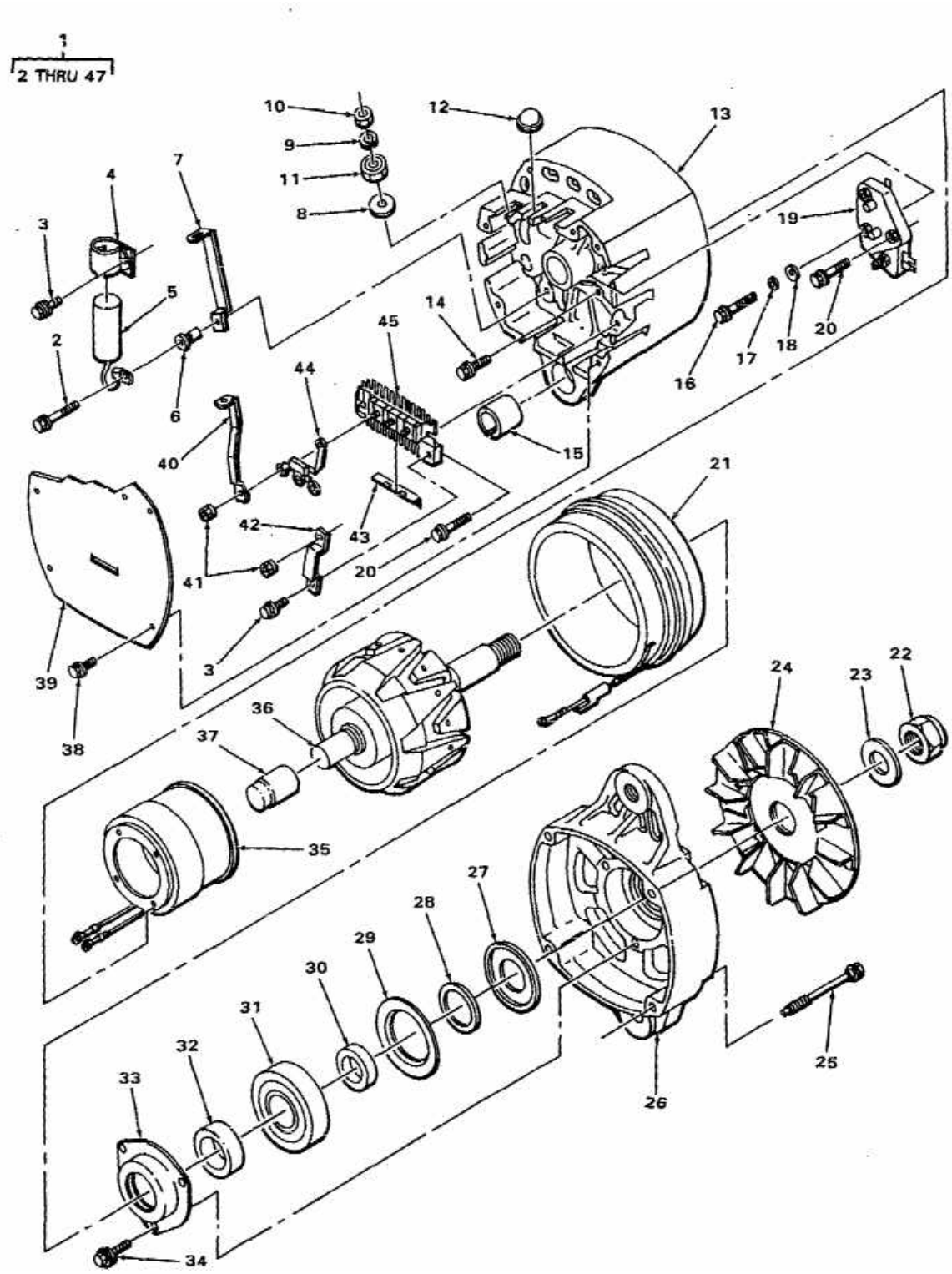

FIGURE 71A DELCO REMY ALTERNATOR

(1) ITEM NO	(2) SMR CODE	(3) NSN	(4) CAGEC	(5) PART NUMBER	(6) DESCRIPTION AND USABLE ON CODES(UOC)	(7) QTY
					GROUP 0601 ALTERNATOR	
					FIG. 71A DELCO REMY ALTERNATOR	
1	PAOFF	2920011448796	11083	3T6352	GENERATOR,ENGINE AC.....	1
2	PFFZZ	5306011667926	16764	830338	.BOLT,ASSEMBLED WASH.....	1
3	PFFZZ	5305012383071	16764	1846955	.SCREW,ASSEMBLED WAS.....	3
4	PFFZZ	5340008447921	16764	1869573	.CLAMP,LOOP.....	1
5	PFFZZ	5910011628299	16764	1985445	.CAPACITOR.....	1
6	PFFZZ	5365011711560	16764	1894463	.BUSHING,ALTERNATOR.....	1
7	PFFZZ	3040011616657	16764	1894464	.CONNECTING LINK,RIG.....	1
8	PFFZZ	5310011604543	11083	3P9901	.WASHER,FLAT.....	1
9	PFFZZ	5310005825965	96906	MS35338-44	.WASHER,LOCK.....	1
10	PFFZZ	5310007680319	11083	5L4426	.NUT,PLAIN,HEXAGON.....	1
11	PFFZZ		11083	7T9930	.NUT.....	1
12	PFFZZ	5999011040445	11862	1970227	.CAP,ELECTRICAL.....	1
13	PFFZZ	2920011626410	16764	1894465	.HOUSING,ELECTRICAL.....	1
14	PFFZZ	5305004500421	11083	9S2007	.SCREW,SELF-LOCKING.....	4
15	PFFZZ	3120011640994	16764	1892765	.BUSHING,SLEEVE.....	1
16	PFFZZ	5305011685422	16764	1976061	.SCREW.....	2
17	PFFZZ	5310011648539	16764	1913846	.WASHER,FLAT.....	2
18	PFFZZ	5310002815021	58275	A063947	.WASHER,FLAT.....	2
19	PFFZZ	2920012040263	16764	1987518	.REGULATOR,ENGINE GE.....	1
20	PFFZZ	5306011671084	16764	1894458	.BOLT,ASSEMBLED WASH.....	2
21	PFFZZ	2920011628999	16764	1894467	.STATOR,ENGINE GENER.....	1
22	PFFZZ	5310009445896	16764	9418881	.NUT,SELF-LOCKING,HE.....	1
23	PFFZZ	5310002624715	16764	1905406	.WASHER,FLAT.....	1
24	PFFZZ	4140011628967	16764	1970593	.IMPELLER,FAN,CENTRI.....	1
25	PFFZZ	5305011688928	16764	1894445	.SETSCREW.....	4
26	PFFZZ	2920011629006	16764	1894483	.END BELL,ELECTRICAL.....	1
27	PFFZZ	5310011641650	16764	1969070	.WASHER,RECESSED.....	1
28	PFFZZ	5330009289798	16764	1955660	.PACKING,PREFORMED.....	1
29	PFFZZ	2920002218856	16764	1955664	.PLATE,RETAINER.....	1
30	PFFZZ	2920010993085	16764	1969046	.COLLAR.....	1
31	PFFZZ	3110011296756	11083	5P9514	.BEARING,BALL,ANNULA.....	1
32	PFFZZ	3120011831341	16764	1957726	.BEARING,SLEEVE.....	1
33	PFFZZ	5330008517742	16764	1961867	.SEAL,PLAIN ENCASED.....	1
34	PFFZZ	5305011635667	16764	1846956	.SCREW,MACHINE.....	3
35	PFFZZ	2920011630758	16764	1894474	.COIL ASSEMBLY,FIELD.....	1
36	PFFZZ	2920011741278	16764	1894446	.ROTOR,GENERATOR.....	1
37	PFFZZ	3110010797024	60380	DB50430	.BEARING,ROLLER,NEED.....	1
38	PFFZZ	5306011651266	16764	1894641	.BOLT,SELF-LOCKING.....	5
39	XDFZZ		16764	1894444	.PLATE,RETAINING,ELE.....	1
40	PFFZZ	3040011616658	16764	1894473	.CONNECTING LINK,RIG.....	1
41	PFFZZ	5310010476064	16764	1851808	.NUT,PLAIN,ASSEMBLED.....	4
42	PFFZZ	3040011616659	16764	1894462	.CONNECTING LINK,RIG.....	1
43	XDFZZ		16764	1894472	.INSULATOR.....	1
44	PFFZZ	5961000999791	16764	1985348	.RECTIFIER,SEMICONDU.....	1
45	PFFZZ	5961003145166	16764	1875627	.RECTIFIER,SEMICONDU.....	1

END OF FIGURE

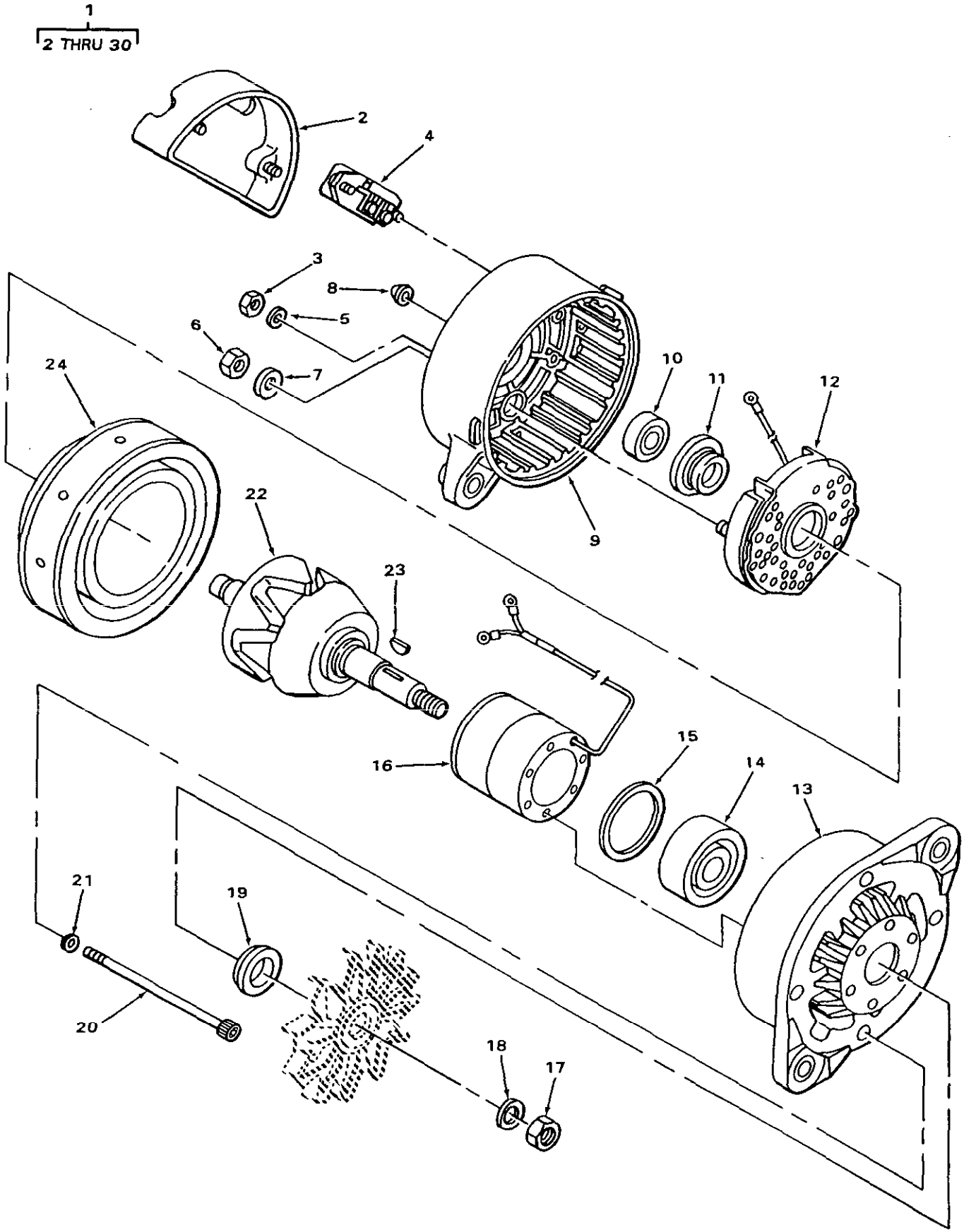

FIGURE 71B. BOSCH ALTERNATOR.

(1) ITEM NO	(2) SMR CODE	(3) NSN	(4) CAGEC	(5) PART NUMBER	(6) DESCRIPTION AND USABLE ON CODES(UOC)	(7) QTY
					GROUP 0601 ALTERNATOR	
					FIG. 71B BOSCH ALTERNATOR	
1	PAOFF	6115012792610	53867	0 122 469 001	GENERATOR,ALTERNATI.....	1
2	PFFZZ	2920011786536	53867	1 125 500 024	.COVER,ALTERNATOR.....	1
3	PFFZZ	5310013527725	11083	5C2874	.NUT,PLAIN,HEXAGON.....	1
4	PFFZZ	2920011778505	53867	1 197 011 000	.REGULATOR,ENGINE GE.....	1
5	PFFZZ	5310013527562	11083	7X0620	.WASHER,FLAT.....	1
6	PFFZZ	5310013533402	11083	1L9048	.NUT,PLAIN,HEXAGON.....	1
7	PFFZZ	5310010978955	11083	8T5360	.WASHER,FLAT.....	1
8	PFFZZ	5999011040445	11862	1970227	.CAP,ELECTRICAL.....	1
9	PFFZZ	2920011786574	53867	1 125 885 031	.END BELL,ELECTRICAL.....	1
10	PFFZZ	3110011795935	53867	1 900 910 024	.BEARING,ROLLER,CYLI.....	1
11	PFFZZ	5330011783728	53867	1 120 222 001	.RETAINER,PACKING.....	1
12	PFFZZ	5961011748652	53867	1 127 320 503	.RECTIFIER,SEMICONDU.....	1
13	PFFZZ	2920011778565	53867	1 125 825 021	.END BELL,ELECTRICAL.....	1
14	PFFZZ	3110011774667	01843	1129900009	.BEARING,BALL,ANNULA.....	1
15	PFFZZ	5365011748876	53867	1 120 200 023	.SPACER,RING.....	1
16	PFFZZ	5950012792818	53867	1 124 210 001	.COIL,ELECTRICAL.....	1
17	PFFZZ	5310009445896	16764	9418881	.NUT,SELF-LOCKING,HE.....	1
18	PFFZZ	5310010954631	11083	5P8247	.WASHER,FLAT.....	1
19	PFFZZ	5310011750630	53867	1 120 220 007	.WASHER,SHOULDERED.....	1
20	PFFZZ	5305013524223	11083	9X6001	.SCREW,CAP,SOCKET HE.....	4
21	PFFZZ	5310011161212	62983	471060	.WASHER,FLAT.....	4
22	PFFZZ	2920011780499	01843	1 124 035 017	.ROTOR,GENERATOR.....	1
23	PFFZZ	5315006165525	96906	MS35756-9	.KEY,WOODRUFF.....	1
24	PFFZZ	6105012792683	53867	1 125 045 115	.WINDING,MOTOR FIELD.....	1

END OF FIGURE

1
2 THRU 26

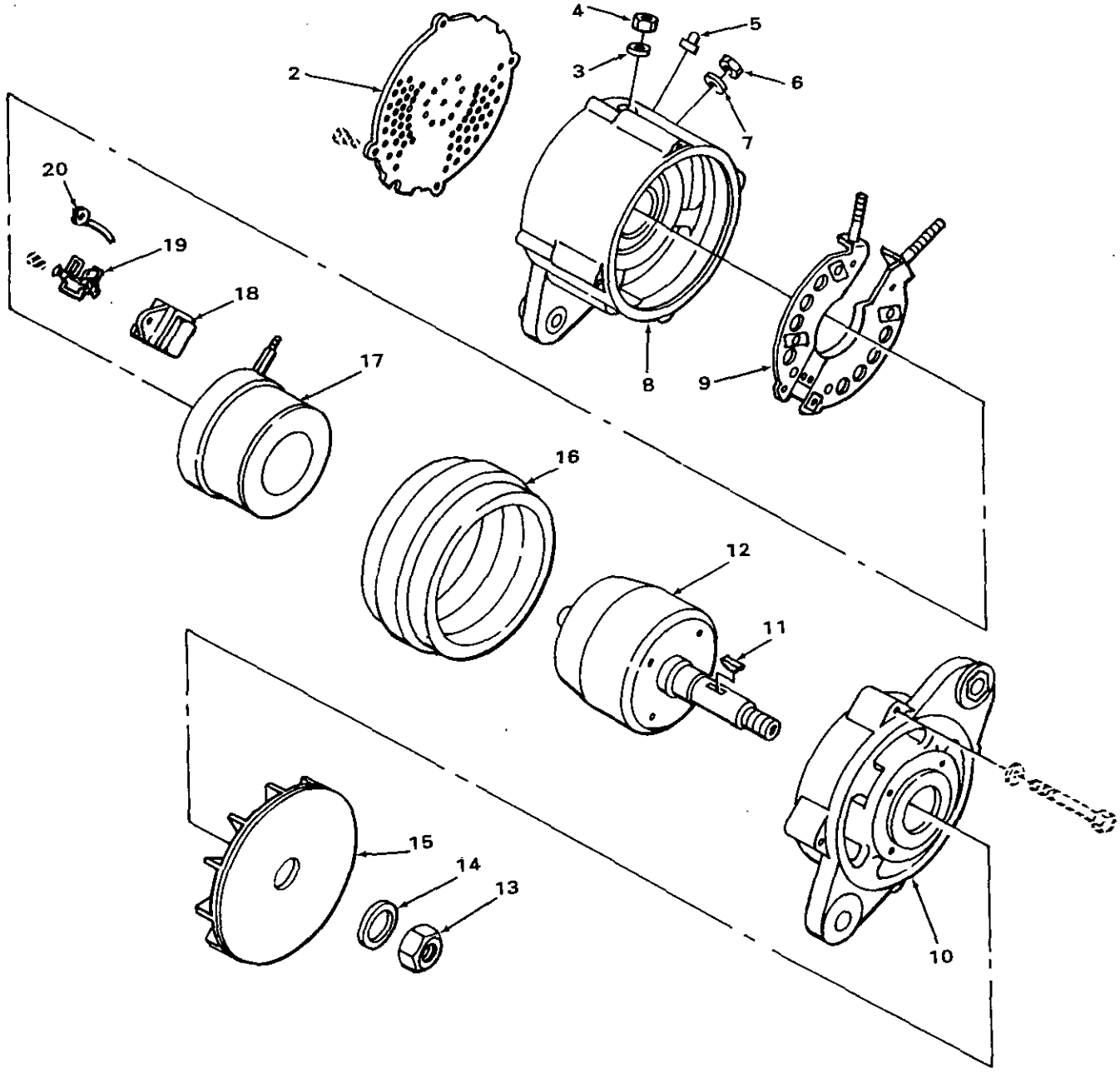

FIGURE 71C. NIPPONDENSO ALTERNATOR.

(1) ITEM NO	(2) SMR CODE	(3) NSN	(4) CAGEC	(5) PART NUMBER	(6) DESCRIPTION AND USABLE ON CODES(UOC)	(7) QTY
					GROUP 0601 ALTERNATOR	
					FIG. 71C NIPPONDENSO ALTERNATOR	
1	XDOFF		1CX05	100211-0860	GENERATOR,ALTERNATI.....	1
2	PFFZZ	2920013522855	11083	7T2797	.COVER,ELECTRICAL GE.....	1
3	PFFZZ	5310010629898	11083	1H3244	.LOCKWASHER.....	1
4	PFFZZ	5310009050762	96906	MS51967-3	.NUT,PLAIN,HEXAGON.....	1
5	PFFZZ	5999011040445	11862	1970227	.CAP,ELECTRICAL.....	1
6	PFFZZ	5310013533403	11083	7X0447	.NUT,PLAIN,HEXAGON.....	1
7	PFFZZ	5310006853228	96906	MS35333-43	.WASHER,LOCK.....	1
8	PFFZZ	2920013514543	11083	7T2795	.END BELL,ELECTRICAL.....	1
9	PFFZZ	6130013842879	1CX05	021580-2560	.HOLDER ASSEMBLY,ELE.....	1
10	PFFZZ	2920013514542	11083	7T2792	.END BELL,ELECTRICAL.....	1
11	PFFZZ	5315006165525	96906	MS35756-9	.KEY,WOODRUFF.....	1
12	PFFZZ	2920013514458	11083	7T2790	.ROTOR,GENERATOR.....	1
13	PFFZZ	5310009445896	16764	9418881	.NUT,SELF-LOCKING,HE.....	1
14	PFFZZ	5310010954631	11083	5P8247	.WASHER,FLAT.....	1
15	PFFZZ	4140013534765	11083	7T2793	.IMPELLER,FAN,AXIAL.....	1
16	PFFZZ	2920013848867	1CX05	021100-2530	.STATOR,ENGINE GENER.....	1
17	PFFZZ	2920013848893	1CX05	021250-1320	.COIL,ELECTRICAL.....	1
18	PFFZZ	2920012623072	11083	7T2798	.REGULATOR,ENGINE GE.....	1
19	PFFZZ	5910013199841	11083	7T2801	.CAPACITOR,FIXED,PAP.....	1
20	PFFZZ	6150013537755	11083	7T2802	.LEAD,ELECTRICAL.....	1
21	PFFZZ	3110012636786	1CX05	021997-3180	.BEARING,BALL,ANNULA.....	1
22	PFFZZ	2920013514017	11083	7T2800	.PARTS KIT,TERMINAL,.....	1
23	PFFZZ	5305013517844	1CX05	021997-3170	.SCREW,CAP,HEXAGON H.....	1
24	PFFZZ	2920013518198	11083	7T2804	.PARTS KIT,TERMINAL,.....	1
25	PFFZZ	2920013518199	11083	7T2805	.PARTS KIT,TERMINAL,.....	1
26	PFFZZ	2920013520028	11083	7T2816	.PARTS KIT,ENGINE GE.....	1

END OF FIGURE

1 (2 THRU 51) 8 (9 THRU 12) 22 (23) 39 (40 THRU 44)

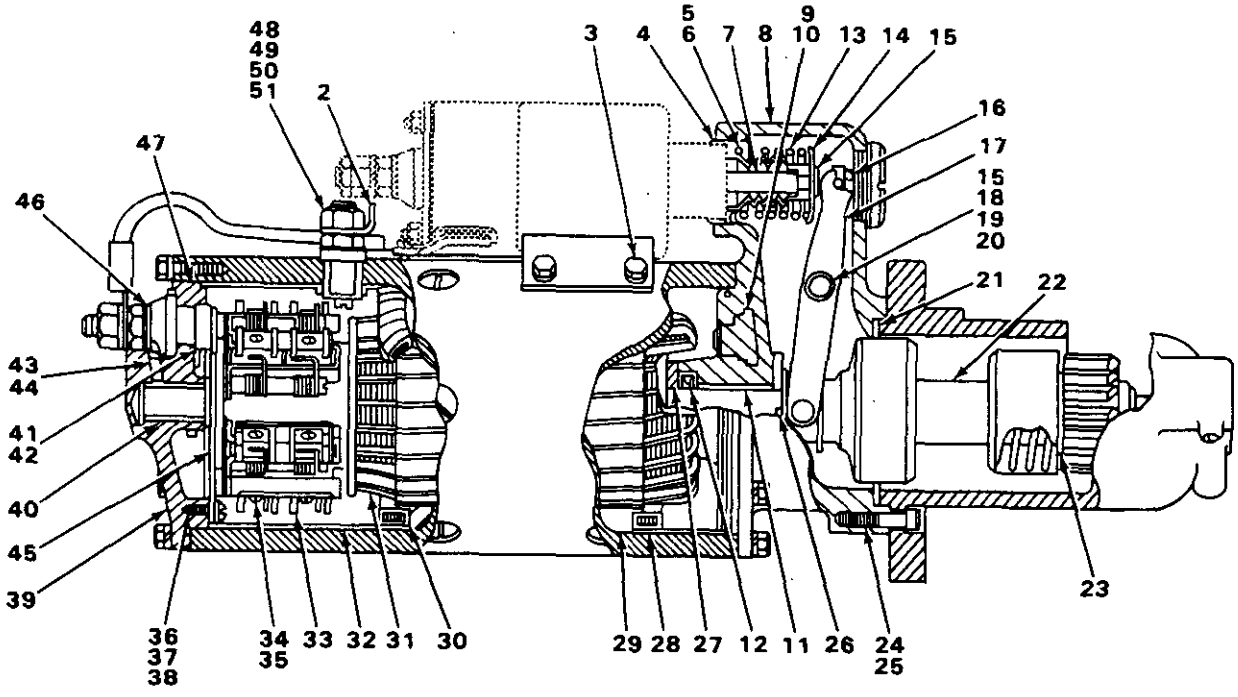

FIGURE 72. STARTER (USE WITH ENGINE SERIAL RANGE 17S5088 THRU 17S10786).

(1) ITEM NO	(2) SMR CODE	(3) NSN	(4) CAGEC	(5) PART NUMBER	(6) DESCRIPTION AND USABLE ON CODES(UOC)	(7) QTY
					GROUP 0603 STARTING MOTOR.	
					FIG. 72 STARTER	
1	PFOFF	2920013550530	16764	1990232	MOTOR,STARTING.....	1
2	PFFZZ	2990011033615	11083	7M326	.CONNECTOR.....	1
3	PFFZZ	5306005503023	16764	1930611	.BOLT,MACHINE.....	4
4	PFFZZ	9390008391864	16764	801077	.BELLOWS,PROTECTION.....	1
5	PAFZZ	5310008222236	16764	1948520	.WASHER,RECESSED.....	1
6	XDFZZ		16764	807736	.SHIM.....	1
7	PFFZZ	2920008222287	16764	1948522	.PLUNGER,SOLENOID.....	1
8	PFFZZ	2920009330790	16764	1945857	.HOUSING,ENGINE DRIV.....	1
9	PFFZZ	4730000979815	11083	7S9826	..CAP,PIPE.....	1
10	PFFZZ	5330008693369	16764	1933111	..GASKET.....	1
11	PFFZZ	3120011015089	16764	1894637	..BEARING,SLEEVE.....	1
12	PFFZZ	5330009727644	11083	2F6678	..SEAL,STARTER.....	1
13	PFFZZ	5360008120196	16764	1948521	.SPRING,HELICAL,COMP.....	1
14	PFFZZ	5340009801367	11083	4M1827	.RETAINER, HELICAL.....	1
15	PFFZZ	5325007151152	96906	MS16624-1037	.RING,RETAINING.....	2
16	PFFZZ	5310000880553	96906	MS21044N5	.NUT,SELF-LOCKING,HE.....	1
17	PFFZZ	2920010534562	11083	4M1853	.LEVER,REMOTE CONTRO.....	1
18	PFFZZ	5315010664722	11083	4M1854	.PIN,GROOVED,HEADLES.....	1
19	PFFZZ	5331009206924	11083	1H1023	.O-RING.....	1
20	PAFZZ	5330008437194	11083	2D6392	.GASKET.....	1
21	PAFZZ	5330009764695	16764	1945476	.PACKING,PREFORMED.....	1
22	PFFZZ	3020010176333	16764	800077	.DRIVE,ENGINE,ELECTR.....	1
23	XDFZZ		11083	9S9771	..GEAR,ANTIBACKLASH,B.....	1
24	PFFZZ	5305010534557	11083	4M1833	.SCREW.....	5
25	PFFZZ	5305010534713	11083	7M336	.SCREW.....	1
26	PFFZZ	5310002977319	16764	1911644	.WASHER,FLAT.....	1
27	PFFZZ	5310000812658	16764	1940006	.WASHER,FLAT.....	1
28	PFFZZ	2920007373225	16764	1914873	.PLATE,INSULATION.....	3
29	PFFZZ	2920008910928	11083	7F3488	.POLE SHOE,STARTER.....	6
30	PFFZZ	2920009934233	16764	1945853	.WINDING,MOTOR FIELD.....	1
31	PFFZZ	2920001434059	16764	1951254	.ARMATURE,MOTOR.....	1
32	PFFZZ	5970012878011	11083	7M325	.INSULATOR,PLATE.....	1
33	PFFZZ	5977008092517	11083	7M329	.BRUSH,ELECTRICAL CO.....	12
34	PFFZZ	5305009846192	96906	MS35206-244	.SCREW,MACHINE.....	12
35	PFFZZ	5310000453299	96906	MS35338-42	.WASHER,LOCK.....	12
36	PFFZZ	5305008631627	11083	4B1221	.SCREW,MACHINE.....	3
37	PFFZZ	5310004327976	11083	8H878	.WASHER,LOCK.....	3
38	PFFZZ	5310008057632	80205	NAS620-8	.WASHER,FLAT.....	3
39	PFFZZ	2990011033616	11083	7M328	.FRAME ASSEMBLY.....	1
40	PFFZZ	3120008947247	11083	7F3506	..BEARING,SLEEVE.....	1
41	PFFZZ	4730000979815	11083	7S9826	..CAP,PIPE.....	1
42	PFFZZ	5330008693369	16764	1933111	..GASKET.....	1
43	PFFZZ	4730002783397	38151	E-4850-1	..PLUG,PIPE.....	1
44	PFFZZ	9390008658270	16764	1916439	..WICK.....	1
45	PFFZZ	5310012538375	11083	7M327	.WASHER.....	1
46	PFFZZ	5331009040335	11083	4M189	.O-RING.....	2
47	PFFZZ	5365007158065	11083	3L3380	.BUSHING, STARTER MO.....	1
48	PFFZZ	5310002089476	11083	1D5117	.NUT,PLAIN,HEXAGON.....	2

(1) ITEM NO	(2) SMR CODE	(3) NSN	(4) CAGEC	(5) PART NUMBER	(6) DESCRIPTION AND USABLE ON CODES(UOC)	(7) QTY
49	PFFZZ	5310001780741	11083	9F4976	.WASHER,LOCK.....	1
50	PFFZZ	5310008093079	96906	MS27183-19	.WASHER,FLAT.....	1
51	PFFZZ	5310010534720	11083	9H3757	.WASHER.....	2

END OF FIGURE

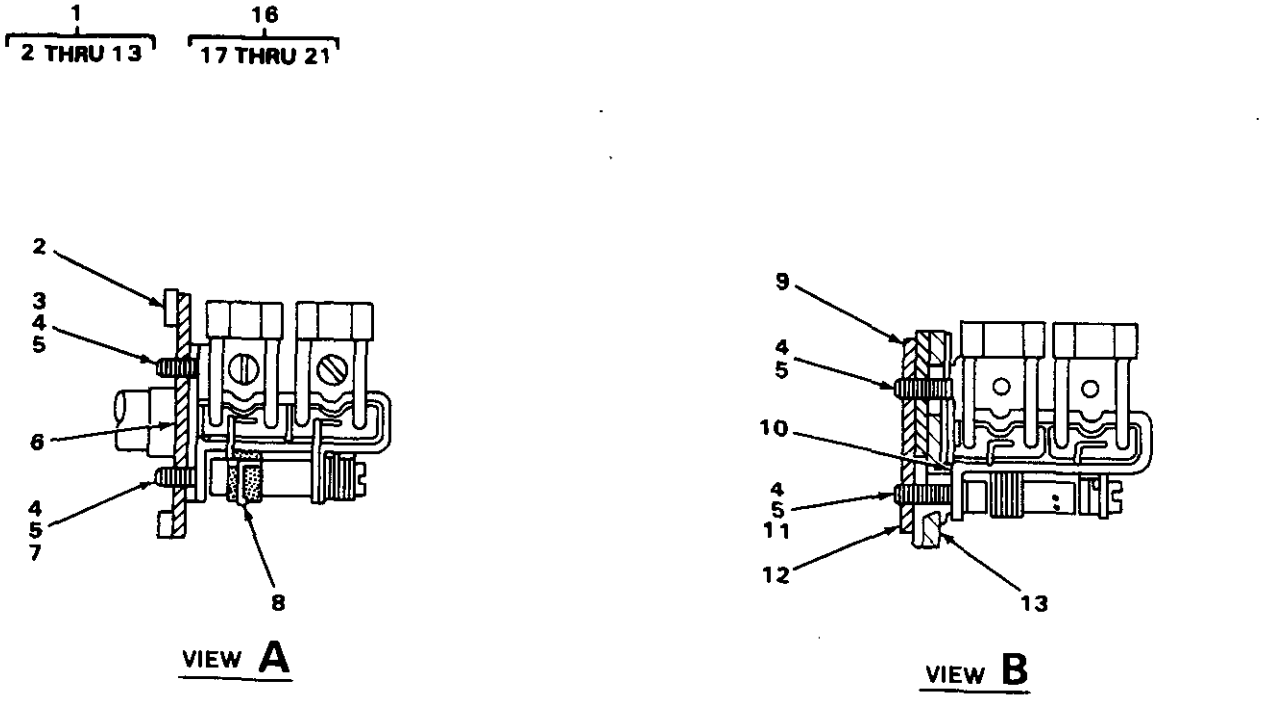

FIGURE 73. STARTER AND RELATED PARTS (USE WITH ENGINE SERIAL RANGE 17S5088 THRU 17S10786).

(1) ITEM NO	(2) SMR CODE	(3) NSN	(4) CAGEC	(5) PART NUMBER	(6) DESCRIPTION AND USABLE ON CODES(UOC)	(7) QTY
					GROUP 0603 STARTING MOTOR.	
					FIG. 73 STARTER AND RELATED PARTS (USE W/ENGINE SERIAL RANGE 17S5088 THRU 17S10786).	
1	PFFZZ	5977008289053	16764	1945849	.HOLDER ASSEMBLY,ELE.....	1
2	XAFZZ		11083	7M0332	..PLATE.....	1
3	PFFZZ	5305010534850	11083	5H6467	..SCREW,MACHINE.....	3
4	PFFZZ	5310008112861	11083	7H2079	..WASHER,LOCK.....	12
5	PFFZZ	5310002914498	16764	1913080	.WASHER,FLAT.....	15
6	PFFZZ	2920000212273	11083	7M0331	..PLATE AND STUD ASSE.....	1
7	XBFZZ		11083	3H3697	..PIN.....	3
8	PFFZZ	5360005973278	16764	1861785	..SPRING,HELICAL,TORS.....	12
9	PFFZZ	5970009185568	16764	1965093	..INSULATOR,PLATE.....	3
10	PFFZZ	5977002495758	24617	1905043	..HOLDER,ELECTRICAL C.....	6
11	PFFZZ	5305010534707	11083	7F3522	..SCREW.....	3
12	PFFZZ	5977003633568	16764	1869760	..HOLDER,ELECTRICAL C.....	1
13	XBFZZ		11083	3T4709	..PLATE.....	3
14	PFFZZ	5365007539528	16764	1945356	.PLUG,MACHINE THREAD.....	4
15	PFFZZ	5330009140703	16764	1964857	.GASKET.....	4
16	XBFZZ		16764	1951258	.HOUSING ASSEMBLY.....	1
17	PFFZZ	3120008286852	10988	R21561	..BUSHING,SLEEVE.....	1
18	PFFZZ	4730000444688	89346	50410DA	..PLUG,PIPE.....	1
19	PFFZZ	9390008658270	16764	1916439	..WICK.....	1
20	PFFZZ	4730000979815	11083	7S9826	..CAP,PIPE.....	1
21	PFFZZ	5330008693369	16764	1933111	..GASKET.....	1
22	PFFZZ	5306001625704	11083	7F4556	.BOLT,SPECIAL.....	13
23	PFFZZ	5310005825965	96906	MS35338-44	.WASHER,LOCK.....	13
24	XBFZZ		11083	9F9298	.SCREW,SELF-LOCKING.....	12
25	PFFZZ	5970010689787	11083	6N3279	.INSULATOR.....	1
26	PFFZZ	5310007348959	16764	1913084	.WASHER,FLAT.....	2
27	PFFZZ	5310001780741	11083	9F4976	.WASHER,LOCK.....	2
28	PFFZZ	5310008093079	96906	MS27183-19	.WASHER,FLAT.....	1
29	PFFZZ	5310002089476	11083	1D5117	.NUT,PLAIN,HEXAGON.....	1
30	PFFZZ	5310007680318	96906	MS51967-14	.NUT,PLAIN,HEXAGON.....	1
31	PFFZZ	5331005992938	11083	8F9206	.O-RING.....	1
32	PFFZZ	6150007580332	16764	1953236	.LEAD,ELECTRICAL.....	1

END OF FIGURE

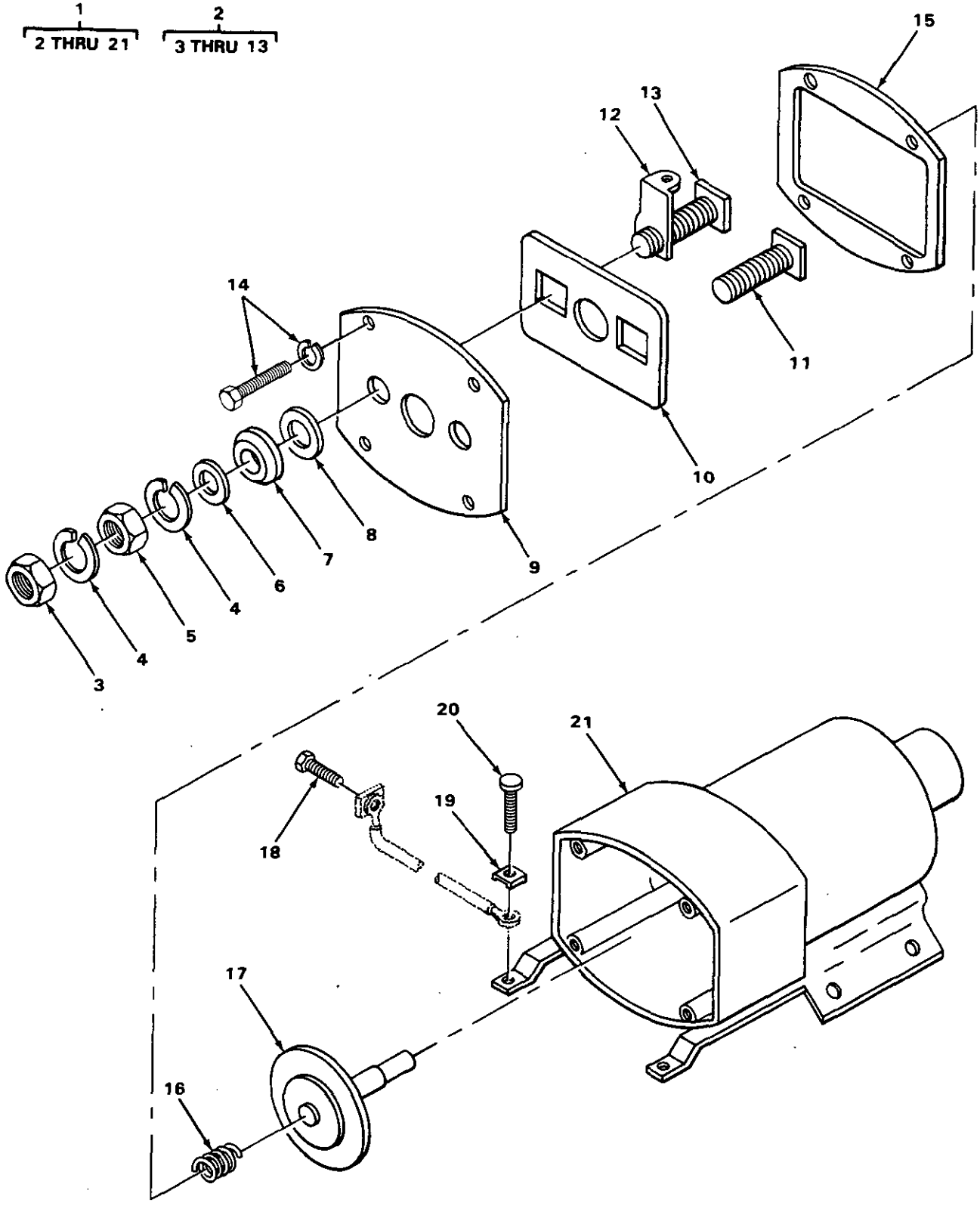

FIGURE 74. SOLENOID SWITCH ASSEMBLY (USE WITH ENGINE SERIAL RANGE 17S5088 THRU 17S10786).

(1) ITEM NO	(2) SMR CODE	(3) NSN	(4) CAGEC	(5) PART NUMBER	(6) DESCRIPTION AND USABLE ON CODES(UOC)	(7) QTY
					GROUP 0603 STARTING MOTOR.	
					FIG. 74 SOLENOID SWITCH ASSEMBLY (USE W/ENGINE SERIAL RANGE 17S5088 THRU 17S10786).	
1	PAFZZ	5945012873325	11083	7T8854	.SOLENOID,ELECTRICAL.....	1
2	PFFZZ	2920000212314	11083	4M1816	..TERMINAL PLATE,SOLE USE WITH P/N 1P9181.....	1
2	XAFZZ		11083	7N0908	..TERMINAL PLATE,SOLE USE WITH P/N 6N5123.....	1
3	PFFZZ	5310001780741	11083	9F4976	.WASHER,LOCK.....	3
4	PFFZZ	5310005845272	96906	MS35338-48	...WASHER,LOCK.....	4
5	PFFZZ	5310001787700	11083	3H3680	...NUT,PLAIN,HEXAGON.....	2
6	PFFZZ	5310008093079	96906	MS27183-19	...WASHER,FLAT.....	2
7	PFFZZ	5970010534559	11083	4M1836	...INSULATOR.....	2
8	PFFZZ	5365009992399	11083	4M1837	...BUSHING,STARTER.....	2
9	PFFZZ	2920010534558	11083	4M1834	...PLATE.....	1
10	PFFZZ	5970004114161	11083	7F4907	...INSULATION.....	1
11	PFFZZ	5307010513135	11083	7N1271	...STUD,PLAIN LEFT HAND.....	1
12	PFFZZ	5940010513136	11083	4M2800	...TERMINAL USE WITH P/N 4M1816....	1
12	PFFZZ	5940012369895	11083	7N909	...TERMINAL,STUD USE WITH P/N 7N908	1
13	XBFZZ		11083	7F4906	...STUD,SPECIAL.....	1
14	PFFZZ	5305010534751	11083	9S4489	..SCREW ASSEMBLY.....	4
15	PFFZZ	5330007607378	11083	9S4490	..GASKET.....	1
16	PFFZZ	5360009852253	11083	4M1815	..SPRING,HELICAL,COMP.....	1
17	PFFZZ	2920009725378	11083	4M1814	..PLUNGER,SOLENOID.....	1
18	PFFZZ	5305010534564	11083	4M5274	..SCREW.....	1
19	PFFZZ	5342009256897	11083	1F73	..CLAMP.....	2
20	PFFZZ	5305010529758	11083	4M3217	..SCREW.....	2
21	PFFZZ	2920010534551	11083	3P72	..CASE ASSEMBLY.....	1

END OF FIGURE

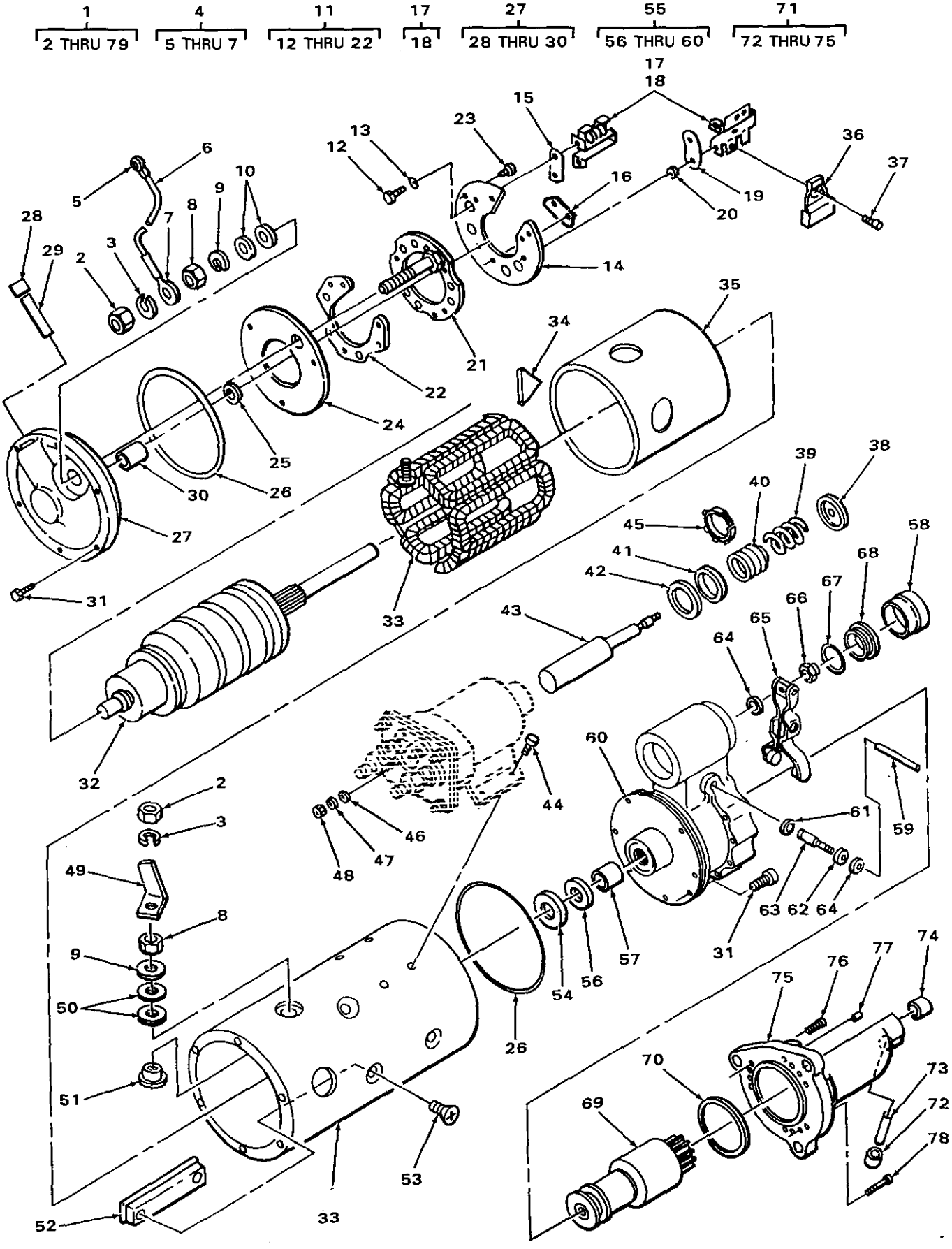

FIGURE 74A. DELCO REMY STARTER.

(1) ITEM NO	(2) SMR CODE	(3) NSN	(4) CAGEC	(5) PART NUMBER	(6) DESCRIPTION AND USABLE ON CODES(UOC)	(7) QTY
					GROUP 0603 STARTING MOTOR	
					FIG. 74A DELCO REMY STARTER	
1	PFOFF	2920013550530	16764	1990232	MOTOR,STARTING	1
2	PFFZZ	5310010534818	11083	3H3681	.NUT,PLAIN,HEXAGON	1
3	PFFZZ	5310001941483	96906	MS35333-44	.WASHER,LOCK	2
4	XDFFF		11083	3T3422	.LEAD,ELECTRICAL	1
5	PFFZZ	5940010590873	11083	2L8071	..TERMINAL,LUG	1
6	MFFZZ		11083	5P5621-12	..WIRE MAKE FROM WIRE P/N 5P5621	1
7	PFFZZ	5940001434794	96906	MS25036-112	..TERMINAL,LUG	1
8	PFFZZ	5310001787700	11083	3H3680	.NUT,PLAIN,HEXAGON	2
9	PFFZZ	5310001670839	88044	AN960-816L	.WASHER,FLAT	2
10	PFFZZ	5310007348959	16764	1913084	.WASHER,FLAT	2
11	PFFFZ	5977012535207	16764	1984974	.HOLDER ASSEMBLY,ELE	1
12	XDFZZ		11083	5P6298	..SCREW,CAP,HEXAGON H	12
13	PFFZZ	5310001880473	75377	56-941-45	..WASHER,LOCK	12
14	PFFZZ	5970011387044	16764	1984978	..PLATE,INSULATOR,STA	1
15	PFFZZ	5970011373420	16764	1979389	..PLATE,INSULATOR HOL	3
16	PFFZZ	5977011373421	16764	1979388	..PLATE,GROUND HOLDER	3
17	PFFFZ	5977011530322	16764	1984979	..HOLDER,ELECTRICAL C	6
18	PFFZZ	5360012940436	11083	3T9494	...SPRING,BRUS	1
19	PFFZZ	5970009185568	16764	1965093	..INSULATOR,PLATE	3
20	PFFZZ	5310002914498	16764	1913080	..WASHER,FLAT	6
21	XAFZZ		16764	1984975	..PLATE ASSY	1
22	PFFZZ	6105012542722	16764	1984981	..PLATE,STATOR,MOTOR	1
23	PFFZZ	5305002186387	16764	1847807	.SCREW,MACHINE	3
24	PFFZZ	5970010689787	11083	6N3279	.INSULATOR	1
25	PFFZZ	5310012538375	11083	7M327	.WASHER	1
26	PFFZZ	5331009508217	11083	2J8163	.O-RING	2
27	PFFFF	2920011387046	16764	1945848	.STARTER HOUSING,ENG	1
28	PFFZZ	5340011153548	16764	1978756	..CAP,PROTECTIVE,DUST	1
29	PFFZZ	9390011123500	16764	1978754	..WICK	1
30	PFFZZ	3120011015088	16764	1894638	..BEARING,SLEEVE	1
31	PFFZZ	5306005509129	16764	1914869	.BOLT,MACHINE	13
32	PFFZZ	2920001434059	16764	1951254	.ARMATURE,MOTOR	1
33	PFFZZ	2920009934233	16764	1945853	.WINDING,MOTOR FIELD	1
34	PFFZZ	2920007373225	16764	1914873	.PLATE,INSULATION	3
35	PFFZZ	5970012878011	11083	7M325	.INSULATOR,PLATE	1
36	PFFZZ	5977011530247	16764	1852888	.BRUSH,ELECTRICAL CO	6
37	PFFZZ	5305009846192	96906	MS35206-244	.SCREW,MACHINE	6
38	PFFZZ	5340009801367	11083	4M1827	.RETAINER,HELICAL CO	1
39	PFFZZ	5360008120196	16764	1948521	.SPRING,HELICAL,COMP	1
40	PFFZZ	9390008391864	16764	801077	.BELLOWS,PROTECTION	1
41	PAFZZ	5310008222236	16764	1948520	.WASHER,RECESSED	1
42	PFFZZ	5310000622051	16764	1948519	.WASHER,FLAT	1
43	PFFZZ	2920008222287	16764	1948522	.PLUNGER,SOLENOID	1
44	PFFZZ	5306005503023	16764	1930611	.BOLT,MACHINE	4
45	PFFZZ	4730002776320	16764	801078	.CLAMP,HOSE	1
46	PFFZZ	5310001435722	04998	WA1248	.WASHER,FLAT	1
47	PFFZZ	5310005765752	96906	MS35333-39	.WASHER,LOCK	1
48	PFFZZ	5310012124579	11083	6V8378	.NUT,PLAIN,HEXAGON	1

(1) ITEM NO	(2) SMR CODE	(3) NSN	(4) CAGEC	(5) PART NUMBER	(6) DESCRIPTION AND USABLE ON CODES(UOC)	(7) QTY
49	PFFZZ	2990011033615	11083	7M326	.CONNECTOR.....	1
50	PFFZZ	5310010534720	11083	9H3757	.WASHER.....	2
51	PFFZZ	5365007158065	11083	3L3380	.BUSHING,STARTER MOT.....	1
52	PFFZZ	2920008910928	16764	1869747	.POLE SHOE,STARTER.....	6
53	PFFZZ	5305004505937	16764	1968396	.SCREW,MACHINE.....	12
54	PFFZZ	5310009992527	16764	1936466	.WASHER.....	1
55	PFFFZ	2920012079671	16764	1979870	.HOUSING,LEVER.....	1
56	PAFZZ	5330009727644	11083	2F6678	..SEAL,STARTER PART OF KIT P/N 2P-3988.....	1
57	PFFZZ	3120011015089	16764	1894637	..BEARING,SLEEVE.....	1
58	PFFZZ	5340011153548	16764	1978756	..CAP,PROTECTIVE,DUST.....	1
59	PFFZZ	9390011123500	16764	1978754	..WICK.....	1
60	XAFZZ		19207	NPN-3	..HOUSING.....	1
61	PFFZZ	5331009206924	11083	1H1023	.O-RING.....	1
62	PAFZZ	5330008437194	11083	2D6392	.GASKET.....	1
63	PFFZZ	5315010664722	11083	4M1854	.PIN,GROOVED,HEADLES.....	1
64	PFFZZ	5325007151152	96906	MS16624-1037	.RING,RETAINING.....	2
65	PFFZZ	2920010534562	11083	4M1853	.LEVER,REMOTE CONTRO.....	1
66	PFFZZ	5310006603381	96906	MS21083N5	.NUT,SELF-LOCKING,HE.....	1
67	PAFZZ	5330009140703	16764	1964857	.GASKET.....	4
68	PFFZZ	5365007539528	16764	1945356	.PLUG,MACHINE THREAD.....	4
69	PFFZZ	3020010176333	11083	3T8754	.DRIVE,ENGINE,ELECTR.....	1
70	PAFZZ	5330009764695	16764	1945476	.PACKING,PREFORMED.....	1
71	XDFFF		16764	1951258	.HOUSING ASSEMBLY.....	1
72	PFFZZ	5340011153548	16764	1978756	..CAP,PROTECTIVE,DUST.....	1
73	PFFZZ	9390011123500	16764	1978754	..WICK.....	1
74	PFFZZ	3120008286852	16764	1894635	..BUSHING,SLEEVE.....	1
75	XAFZZ		19207	NPN-2	..HOUSING.....	1
76	PFFZZ	5305010534713	11083	7M336	.SCREW.....	1
77	PFFZZ	9390007577131	16764	1949619	.BELLOWS,PROTECTION.....	6
78	PFFZZ	5305010534557	11083	4M1833	.SCREW.....	5

END OF FIGURE

1 2 THRU 17 | 2 3 THRU 9

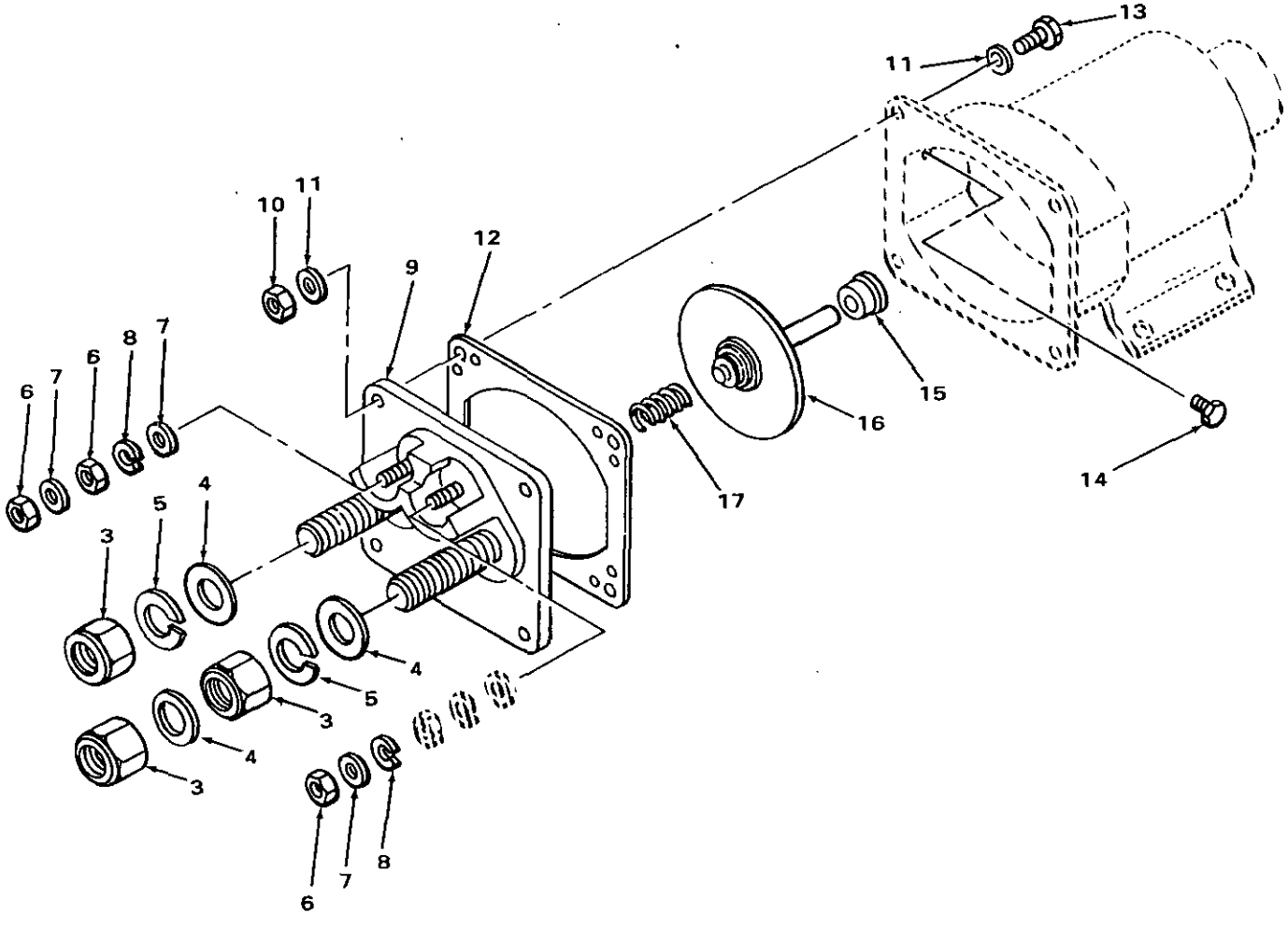

FIGURE 74B. SOLENOID.

(1) ITEM NO	(2) SMR CODE	(3) NSN	(4) CAGEC	(5) PART NUMBER	(6) DESCRIPTION AND USABLE ON CODES(UOC)	(7) QTY
					GROUP 0603 STARTING MOTOR	
					FIG. 74B SOLENOD	
1	PFFFZ	5945012873325	11083	7T8854	SOLENOID,ELECTRICAL.....	1
2	PFFFZ	5940011631435	16764	1979498	.TERMINAL,FEEDTHRU.....	1
3	PFFZZ	5310001787700	11083	3H3680	..NUT,PLAIN,HEXAGON.....	3
4	PFFZZ	5310009307013	11083	4B4280	..WASHER,FLAT.....	3
5	PFFZZ	5310001780741	11083	9F4976	..WASHER,LOCK.....	2
6	PFFZZ	5310006371058	66289	PD115	..NUT,PLAIN,HEXAGON.....	3
7	PFFZZ	5310001435722	04998	WA1248	..WASHER,FLAT.....	3
8	PFFZZ	5310008528266	11083	3B4502	..WASHER,LOCK.....	2
9	PFFZZ	5970011501446	16764	1984705	..INSULATOR,STANDOFF.....	1
10	PFFZZ	5310006371058	66289	PD115	.NUT,PLAIN,HEXAGON.....	4
11	PFFZZ	5310001435722	04998	WA1248	.WASHER,FLAT.....	8
12	PAFZZ	5330012573807	16764	10496037	.GASKET.....	1
13	PFFZZ	5305011870533	11083	454065	.SCREW,CAP,HEXAGON H.....	4
14	PFFZZ	5305010534564	11083	4M5274	.SCREW.....	3
15	PFFZZ	3120011668144	16764	1972716	.BEARING,SLEEVE.....	1
16	PFFZZ	2920011400116	16764	1977264	.CONTACT ASSEMBLY,EL.....	1
17	PFFZZ	5360009852253	11083	4M1815	.SPRING,HELICAL,COMP.....	1

END OF FIGURE

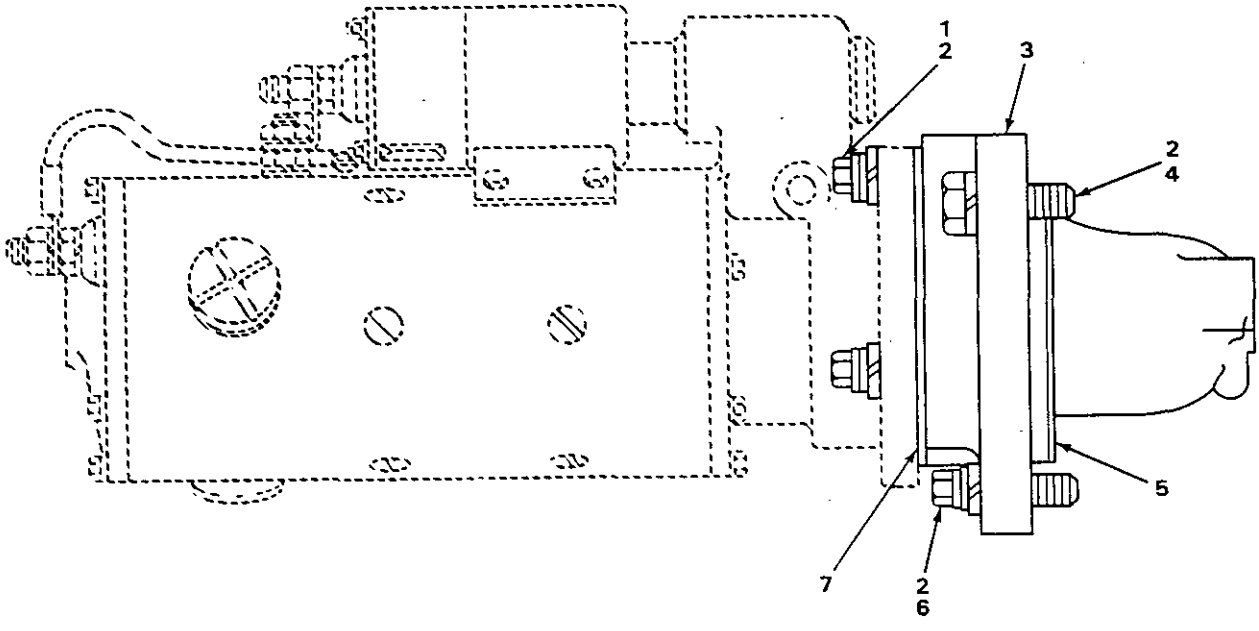

FIGURE 75. STARTER AND RELATED PARTS.

(1) ITEM NO	(2) SMR CODE	(3) NSN	(4) CAGEC	(5) PART NUMBER	(6) DESCRIPTION AND USABLE ON CODES(UOC)	(7) QTY
					GROUP 0603 STARTING MOTOR	
					FIG. 75 STARTER AND RELATED PARTS	
1	PFOZZ	5306004029244	11083	8S2332	BOLT,MACHINE.....	3
2	PFOZZ	5310000455001	96906	MS35340-50	WASHER,LOCK.....	6
3	PFOZZ	4730010689793	11083	8S2325	ADAPTOR.....	1
4	PFOZZ	5305007247222	80204	B1821BH063C200N	SCREW,CAP,HEXAGON H.....	2
5	PAOZZ	5330010672310	11083	3S4459	GASKET PART OF KIT P/N ZP-3988.....	1
6	PFOZZ	5306010618640	11083	8S2331	BOLT,MACHINE.....	1
7	PAOZZ	5330013324090	11083	4N1059	GASKET.....	1

END OF FIGURE

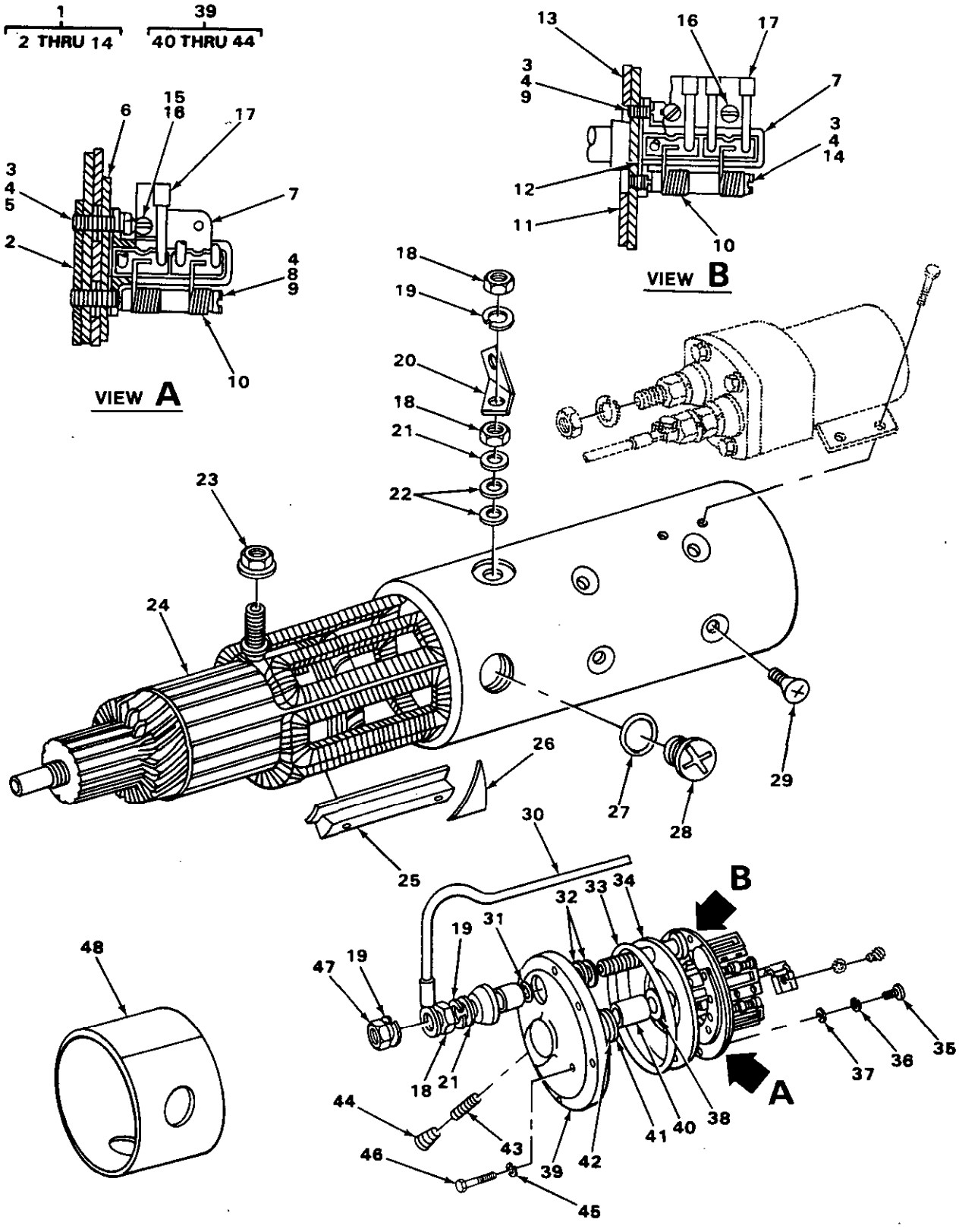

FIGURE 76. STARTER, EXPLODED VIEW (USE WITH ENGINE SERIAL RANGE 17S10787 AND UP).

(1) ITEM NO	(2) SMR CODE	(3) NSN	(4) CAGEC	(5) PART NUMBER	(6) DESCRIPTION AND USABLE ON CODES(UOC)	(7) QTY
					GROUP 0603 STARTING MOTOR.	
					FIG. 76 STARTER, EXPLODED VIEW (USE WITH ENGINE SERIAL RANGE 17S10787 AND UP).	
1	PFFZZ	5977008289053	16764	1945849	.HOLDER ASSEMBLY,ELE.....	1
2	PFFZZ	5977003633568	16764	1869760	..HOLDER,ELECTRICAL C.....	1
3	PFFZZ	5310002914498	11083	7F3525	..WASHER,FLAT.....	12
4	PFFZZ	5310008112861	11083	7H2079	..WASHER,LOCK.....	12
5	PFFZZ	5305010534850	11083	5H6467	..SCREW,MACHINE.....	3
6	PFFZZ	5970009185568	16764	1965093	..INSULATOR,PLATE.....	3
7	PFFZZ	5977002495758	24617	1905043	..HOLDER,ELECTRICAL C.....	6
8	PFFZZ	5305010534707	11083	7F3522	..SCREW.....	3
9	PFFZZ	5305001051207	16764	1914580	..SETSCREW.....	3
10	PFFZZ	5360005973278	16764	1861785	..SPRING,HELICAL,TORS.....	12
11	XBFZZ		11083	7M331	..PLATE ASSEMBLY.....	1
12	XBFZZ		11083	3T4709	..PLATE.....	3
13	XBFZZ		11083	7M332	..PLATE.....	1
14	XBFZZ		11083	3H3697	..PIN.....	3
15	PFFZZ	5310000453299	96906	MS35338-42	.WASHER,LOCK.....	12
16	PFFZZ	5305009846192	96906	MS35206-244	.SCREW,MACHINE.....	12
17	PFFZZ	5977008092517	11083	7M329	.BRUSH,ELECTRICAL CO.....	2
18	PFFZZ	5310002089476	11083	1D5117	.NUT,PLAIN,HEXAGON.....	3
19	PFFZZ	5310001780741	11083	9F4976	.WASHER,LOCK.....	3
20	PFFZZ	2990011033615	11083	7M326	.CONNECTOR.....	1
21	PFFZZ	5310008093079	96906	MS27183-19	.WASHER,FLAT.....	2
22	PFFZZ	5310010534720	11083	9H3757	.WASHER.....	2
23	PFFZZ	5365007158065	11083	3L3380	.BUSHING,STARTER MOT.....	1
24	PFFZZ	2920001434059	16764	1951254	.ARMATURE,MOTOR.....	1
25	PFFZZ	2920008910928	16764	1869747	.POLE SHOE,STARTER.....	6
26	PFFZZ	2920007373225	11083	1H2629	.PLATE,INSULATION.....	3
27	PFFZZ	5330009140703	16764	1964857	.GASKET.....	3
28	PFFZZ	5365007539528	16764	1945356	.PLUG,MACHINE THREAD.....	3
29	PFFZZ	5305004286527	23382	10A1913960	.SCREW,MACHINE.....	12
30	PFFZZ	6150007580332	16764	1953236	.LEAD,ELECTRICAL.....	1
31	PFFZZ	5331005992938	11083	8F9206	.O-RING.....	1
32	PFFZZ	5310007348959	16764	1913084	.WASHER,FLAT.....	2
33	PFFZZ	5331009040335	11083	4M189	.O-RING.....	1
34	PFFZZ	5970010689787	11083	6N3279	.INSULATOR.....	1
35	PFFZZ	5305008631627	11083	4B1221	.SCREW,MACHINE.....	3
36	PFFZZ	5310004327976	11083	8H878	.WASHER,LOCK.....	3
37	PFFZZ	5310008057632	80205	NAS620-8	.WASHER,FLAT.....	3
38	PFFZZ	5310012538375	11083	7M327	.WASHER.....	1
39	PFFZZ	2990011033616	11083	7M328	.FRAME ASSEMBLY.....	1
40	PFFZZ	3120008947247	11083	7F3506	..BEARING,SLEEVE.....	1
41	PFFZZ	5330008693369	16764	1933111	..GASKET.....	1
42	PFFZZ	4730000979815	11083	7S9826	..CAP,PIPE.....	1
43	PFFZZ	9390008658270	16764	1916439	..WICK.....	1
44	PFFZZ	4730000444688	89346	50410DA	..PLUG,PIPE.....	1
45	PFFZZ	5310005825965	96906	MS35338-44	.WASHER,LOCK.....	6
46	PFFZZ	5306001625704	11083	7F4556	.BOLT,SPECIAL.....	6

(1) ITEM NO	(2) SMR CODE	(3) NSN	(4) CAGEC	(5) PART NUMBER	(6) DESCRIPTION AND USABLE ON CODES(UOC)	(7) QTY
47	PFFZZ	5310007680318	96906	MS51967-14	.NUT,PLAIN,HEXAGON.....	1
48	PFFZZ	5970012878011	11083	7M325	.INSULATOR,PLATE.....	1

END OF FIGURE

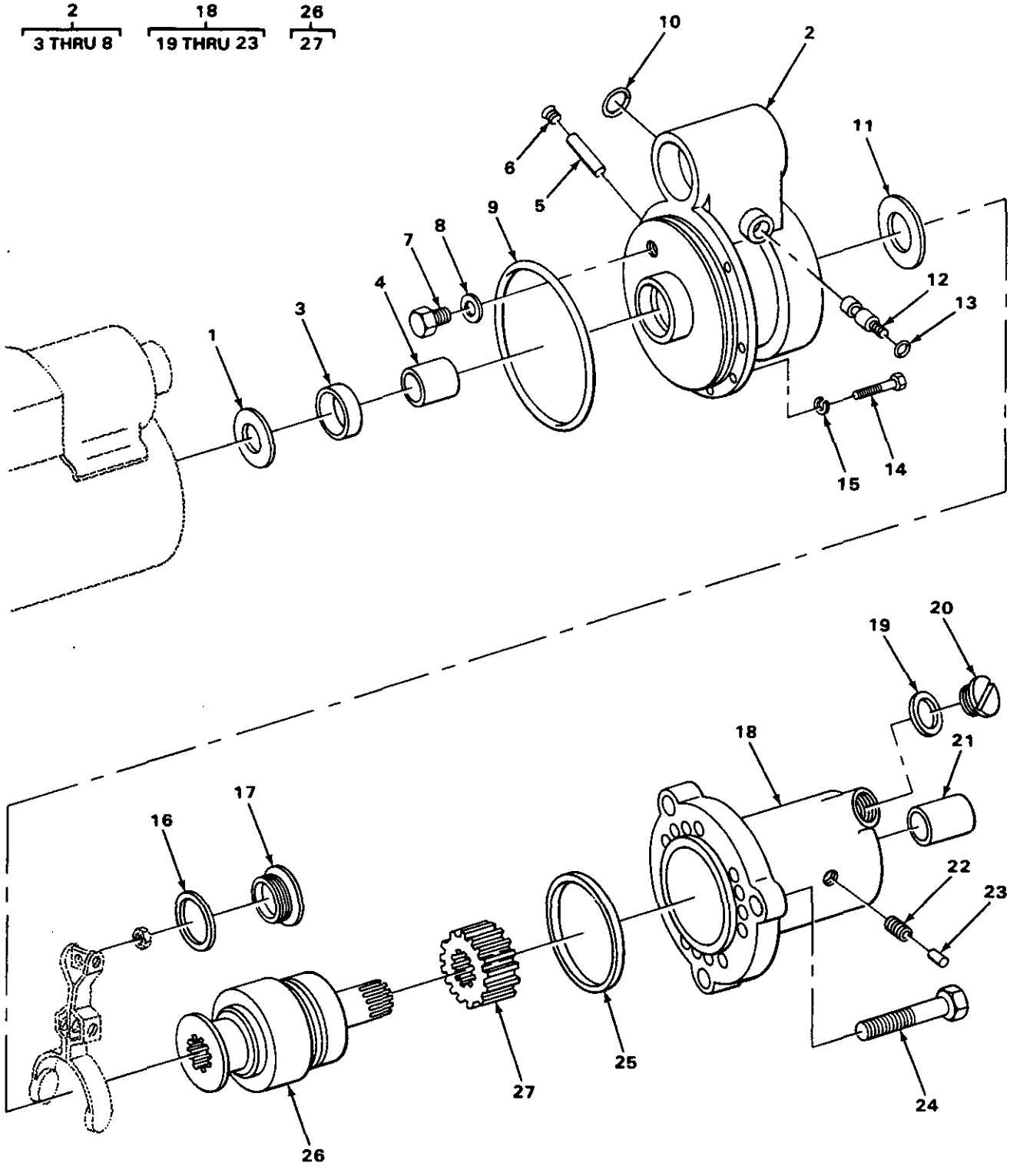

FIGURE 77. STARTER HOUSING (USE WITH ENGINE SERIAL RANGE 17S10787 AND UP).

(1) ITEM NO	(2) SMR CODE	(3) NSN	(4) CAGEC	(5) PART NUMBER	(6) DESCRIPTION AND USABLE ON CODES(UOC)	(7) QTY
					GROUP 0603 STARTING MOTOR.	
					FIG. 77 STARTER HOUSING (USE WITH ENGINE SERIAL RANGE 17S10787 AND UP)	
1	PFFZZ	5310000812658	16764	1940006	.WASHER,FLAT.....	1
2	PFFZZ	2920009330790	16764	1945857	.HOUSING,ENGINE DRIV.....	1
3	PFFZZ	5330009727644	11083	2F6678	..SEAL,STARTER.....	1
4	PFFZZ	3120011015089	16764	1894637	..BEARING,SLEEVE.....	1
5	PFFZZ	9390008658270	16764	1916439	..WICK.....	1
6	PFFZZ	4730000444688	89346	50410DA	..PLUG,PIPE.....	1
7	PFFZZ	4730000979815	11083	7S9826	..CAP,PIPE.....	1
8	PFFZZ	5330008693369	16764	1933111	..GASKET.....	1
9	PFFZZ	5331009040335	11083	4M189	.O-RING.....	1
10	PFFZZ	5331009206924	11083	1H1023	.O-RING.....	1
11	PFFZZ	5310002977319	16764	1911644	.WASHER,FLAT.....	1
12	PFFZZ	5315010664722	11083	4M1854	.PIN,GROOVED,HEADLES.....	1
13	PFFZZ	5330008437194	11083	2D6392	.GASKET.....	1
14	PFFZZ	5306001625704	11083	7F4556	.BOLT,SPECIAL.....	7
15	PFFZZ	5310005825965	96906	MS35338-44	.WASHER,LOCK.....	7
16	PFFZZ	5330009140703	16764	1964857	.GASKET.....	1
17	PFFZZ	5365007539528	16764	1945356	.PLUG,MACHINE THREAD.....	1
18	XDFFF		11083	7M334	.HOUSING ASSEMBLY.....	1
19	PFFZZ	5330008693369	16764	1933111	..GASKET.....	1
20	PFFZZ	4730000979815	11083	7S9826	..CAP,PIPE.....	1
21	PFFZZ	3120008286852	10988	R21561	..BUSHING,SLEEVE.....	1
22	PFFZZ	4730000444688	89346	50410DA	..PLUG,PIPE.....	1
23	PFFZZ	9390008658270	16764	1916439	..WICK.....	1
24	PFFZZ	5305010534557	11083	4M1833	.SCREW.....	5
24	PFFZZ	5305010534713	11083	7M336	.SCREW.....	1
25	PAFZZ	5330009764695	16764	1945476	.PACKING,PREFORMED.....	1
26	PFFZZ	3020010176333	16764	800077	.DRIVE,ENGINE,ELECTR.....	1
27	XDFZZ		11083	9S9771	..GEAR,ANTIBACKLASH,B.....	1

END OF FIGURE

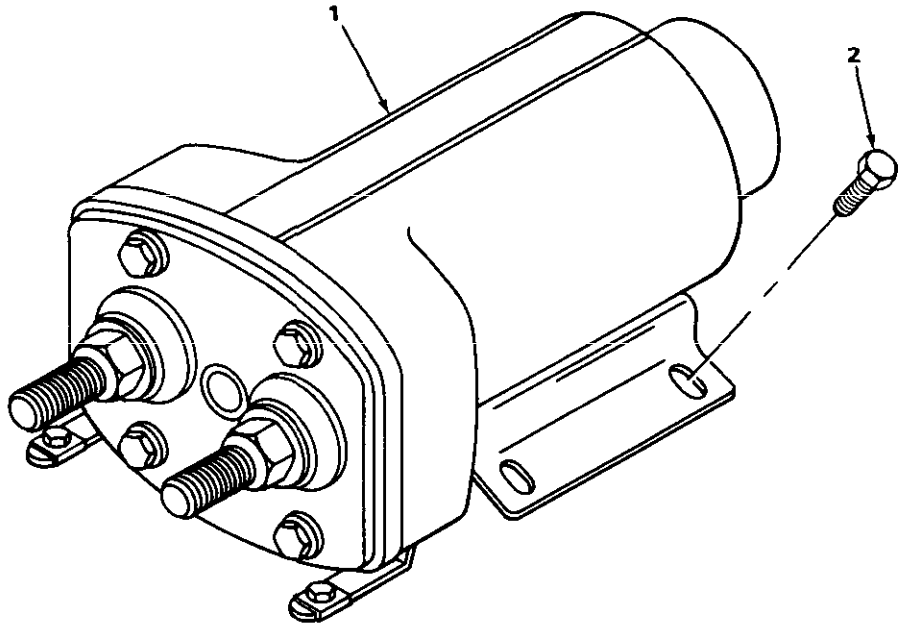

FIGURE 78. SOLENOID SWITCH (USE WITH ENGINE SERIAL RANGE 17S10787 AND UP).

(1) ITEM NO	(2) SMR CODE	(3) NSN	(4) CAGEC	(5) PART NUMBER	(6) DESCRIPTION AND USABLE ON CODES(UOC)	(7) QTY
					GROUP 0603 STARTING MOTOR.	
					FIG. 78 SOLENOID SWITCH (USE WITH ENGINE SERIAL RANGE 17S10787 AND UP)	
1	XAFZZ		11083	7N9236	.SWITCH ASSEMBLY SOLENOID.....	1
2	PFFZZ	5306005503023	16764	1930611	.BOLT,MACHINE.....	4

END OF FIGURE

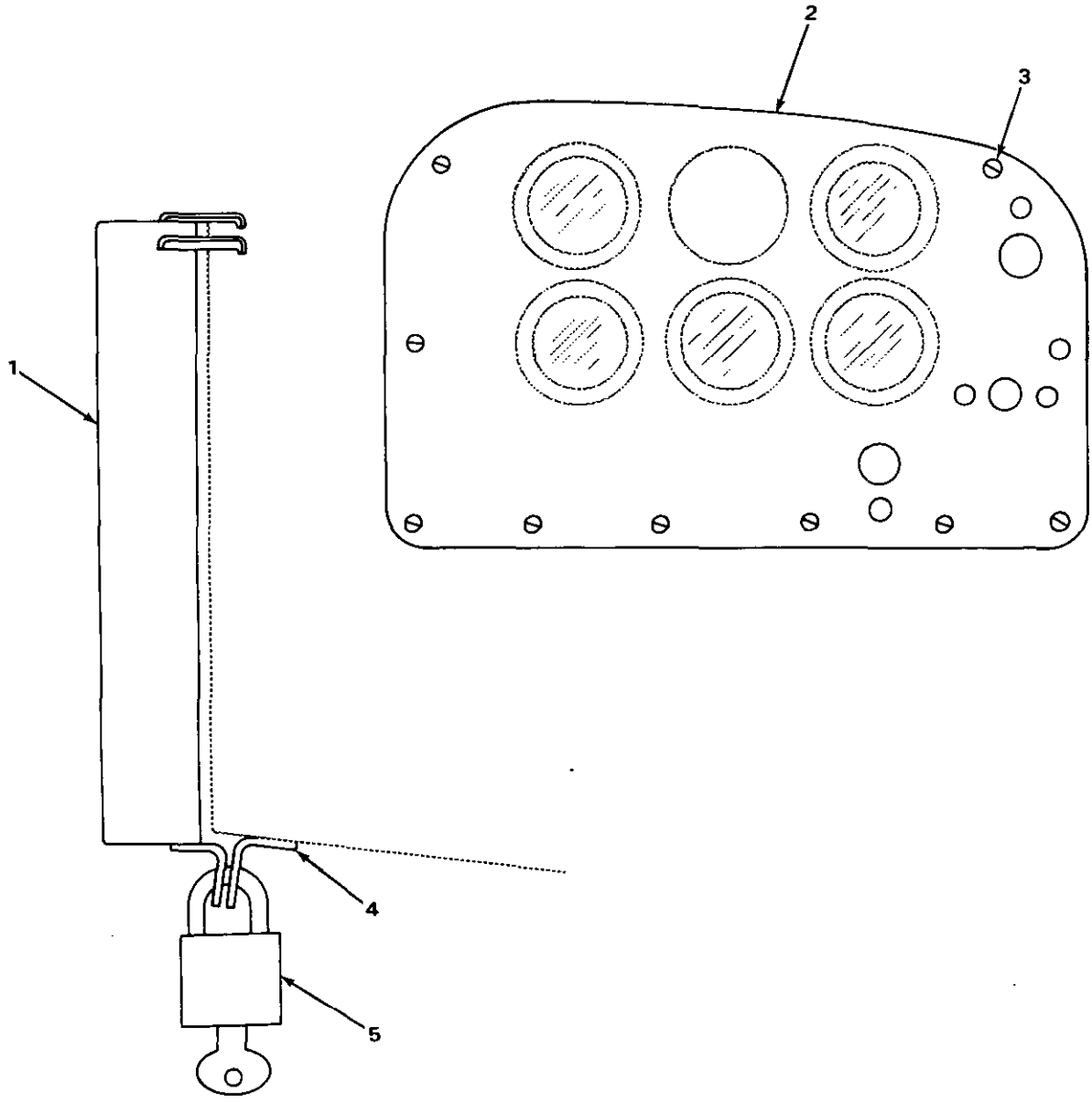

FIGURE 79. INSTRUMENT PANEL AND VANDALISM GUARD.

(1) ITEM NO	(2) SMR CODE	(3) NSN	(4) CAGEC	(5) PART NUMBER	(6) DESCRIPTION AND USABLE ON CODES(UOC)	(7) QTY
					GROUP 0607 INSTRUMENT PANEL.	
					FIG. 79 INSTRUMENT PANEL AND VANDALISM GUARD.	
1	PFOZZ	5340012740865	11083	2P9372	COVER,ACCESS.....	1
2	XBOZZ		11083	5S8576	PANEL.....	1
3	PFOZZ	5305002535615	96906	MS21318-21	SCREW,DRIVE.....	10
4	PFOZZ	5340012547175	11083	7M3222	EYE,PADLOCK.....	1

END OF FIGURE

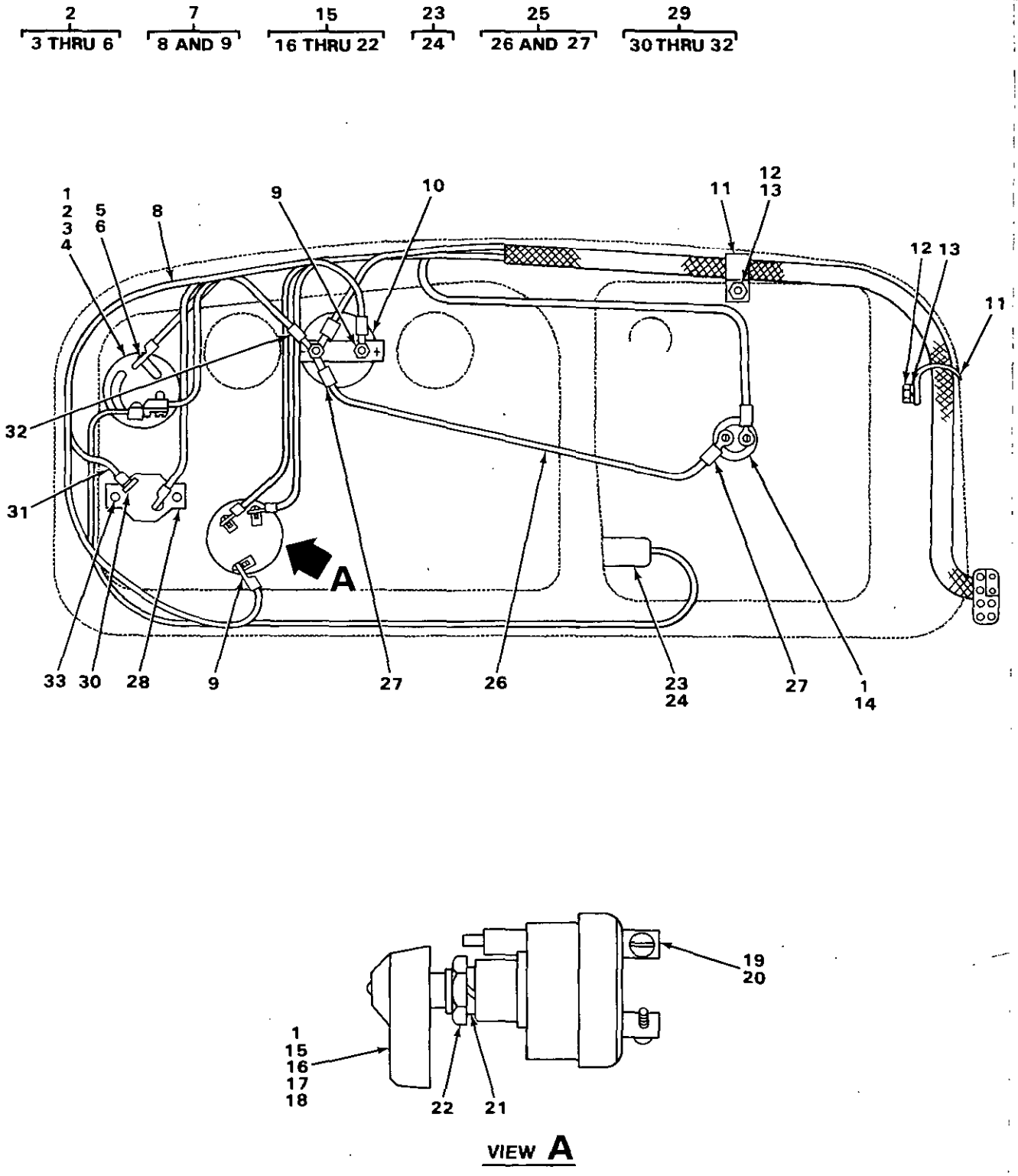

FIGURE 80. INSTRUMENT CONTROL PANEL SWITCHES AND CIRCUIT BREAKERS.

(1) ITEM NO	(2) SMR CODE	(3) NSN	(4) CAGEC	(5) PART NUMBER	(6) DESCRIPTION AND USABLE ON CODES(UOC)	(7) QTY
					GROUP 0607 INSTRUMENT PANEL.	
					FIG. 80 INSTRUMENT CONTROL PANEL SWITCHES AND CIRCUIT BREAKERS.	
1	PFOZZ	5310005434385	96906	MS35333-46	WASHER,LOCK.....	3
2	PFOZZ	5930004349121	11083	7S6402	SWITCH,ROTARY LIGHT.....	1
3	PFOZZ	5355000079980	11083	7S5432	.KNOB.....	1
4	PFOZZ	5310007576377	16764	1914379	.NUT,PLAIN,HEXAGON.....	1
5	PFOZZ	5310011701508	11083	1H4393	.WASHER,LOCK.....	3
6	PFOZZ	5305009846189	96906	MS35206-241	.SCREW,MACHINE.....	3
7	XDOZZ		11083	9P2717	WIRE ASSEMBLY USE WITH SERIAL RANGE 77V8516 THRU 77V9475.....	1
7	PFOZZ	6145010680017	11083	6K3934	WIRE A.....	1
8	MOOZZ		19207	7267275-11	.WIRE,ELECTRICAL MAKE FROM WIRE P/N 1879-0,USE WITH P/N 9P2717.....	1
8	MOOZZ		19207	0630776-11	.WIRE MAKE FROM WIRE P/N 5P616,USE WITH P/N 6K3934.....	1
9	PFOZZ	5940001434794	96906	MS25036-112	.TERMINAL,LUG.....	2
10	PFOZZ	6625003339243	78640	A2109	AMMETER.....	1
11	PFOZZ	5340005479875	11083	1H5165	PLATE,MENDING.....	2
12	PFOZZ	5306004265062	11083	4F4879	BOLT,MACHINE.....	2
13	PFOZZ	5310006379541	96906	MS35338-46	WASHER,LOCK.....	2
14	PFOZZ	2530012974592	11083	8P0230	HORN BUTTON,VEHICLE OIL PRESSURE, USE WITH SERIAL RANGE 77V8516 THRU 77V9475.....	1
15	PFOZZ	5930000847570	11083	282342	SWITCH,ROTARY HEAT START.....	1
15	PFOZZ	5930012022506	11083	7N4160	SWITCH,ROTARY HEAT START, USE WITH SERIAL RANGE 77V9443 THRU 77V9475...	1
16	PFOZZ	5355010643851	11083	8F3437	.KNOB.....	1
17	PFOZZ	5305010589146	11083	5L7200	.SCREW,MACHINE.....	1
18	PFOZZ	5310000453299	96906	MS35338-42	.WASHER,LOCK.....	1
19	PFOZZ	5310005967691	96906	MS35335-32	.WASHER,LOCK USE WITH P/N 7N4160...	3
20	PFOZZ	5305000050898	11083	9F9327	.SCREW,MACHINE USE WITH P/N 7N4160.	3
21	PFOZZ	5310005434385	96906	MS35333-46	.WASHER,LOCK USE WITH P/N 7N4160...	1
22	PFOZZ	5310007576377	16764	1914379	.NUT,PLAIN,HEXAGON USE WITH P/N 7N4160.....	1
23	PFOZZ	6210001912745	74400	M4233	LIGHT,PANEL USE WITH ENGINE SERIAL RANGE 77V8516 THRU 77V9475.....	1
24	PFOZZ	6240000193093	96906	MS15570-623	.LAMP,INCANDESCENT.....	1
25	PFOZZ	5995012089221	11083	9P2189	LEAD,ELECTRICAL USE WITH SERIAL RANGE 77V8516 THRU 77V9475.....	1
26	MOOZZ		19207	5P5624-25	.WIRE MAKE FROM WIRE P/N 5P5624....	1
27	PFOZZ	5940001434780	96906	MS25036-108	.TERMINAL,LUG.....	2
28	PFOZZ	5925001737651	82647	PDM-40	CIRCUIT BREAKER.....	1
29	XBOZZ		11083	6S4301	WIRE A.....	1
30	PFOZZ	5940001434775	96906	MS25036-156	.TERMINAL,LUG.....	1
31	MOOZZ		19207	0630776-20	.WIRE MAKE FROM WIRE P/N 5P616.....	1
31	MOOZZ		19207	1037036-20	.WIRE MAKE FROM WIRE P/N 5P5632....	1
32	PFOZZ	5940001434794	96906	MS25036-112	.TERMINAL,LUG.....	1
33	XDOZZ		11083	5L4507	SCREW.....	2
33	PFOZZ	5305000050896	11083	5M6668	SCREW,MACHINE USE WITH SERIAL	2

(1) ITEM NO	(2) SMR CODE	(3) NSN	(4) CAGEC	(5) PART NUMBER	(6) DESCRIPTION AND USABLE ON CODES(UOC)	(7) QTY
					RANGE 77V8516 THRU 77V9475.....	

END OF FIGURE

1
2 THRU 6

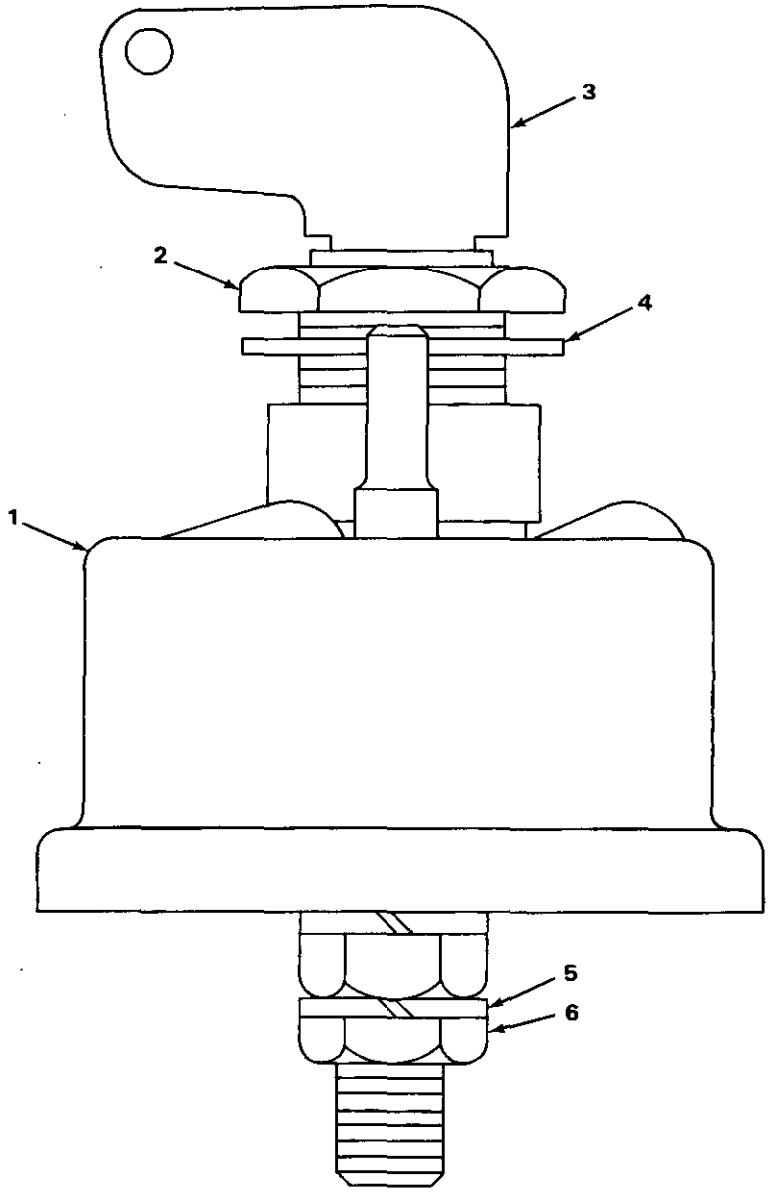

TA235278

FIGURE 81. IGNITION LOCK SWITCH.

(1) ITEM NO	(2) SMR CODE	(3) NSN	(4) CAGEC	(5) PART NUMBER	(6) DESCRIPTION AND USABLE ON CODES(UOC)	(7) QTY
					GROUP 0607 INSTRUMENT PANEL	
					FIG 81. IGNITION SWITCH	
1	XDOZZ		13445	75900-09	SWITCH,LOCK,IGNITIO.....	1
2	PFOZZ	5310010637852	11083	8H5303	.NUT.....	1
3	PFOZZ	5930007151939	13445	8398	.KEY,SWITCH.....	1
4	PFOZZ	5310005503714	96906	MS35333-47	.WASHER,LOCK.....	1
5	PFOZZ	5310010590992	11083	7F7259	.WASHER,LOCK.....	4
6	PFOZZ	5310008339298	93329	1403-57	.NUT,PLAIN,HEXAGON.....	4

END OF FIGURE

2 (3 AND 4) 7 (8 AND 9) 10 (11 AND 12)

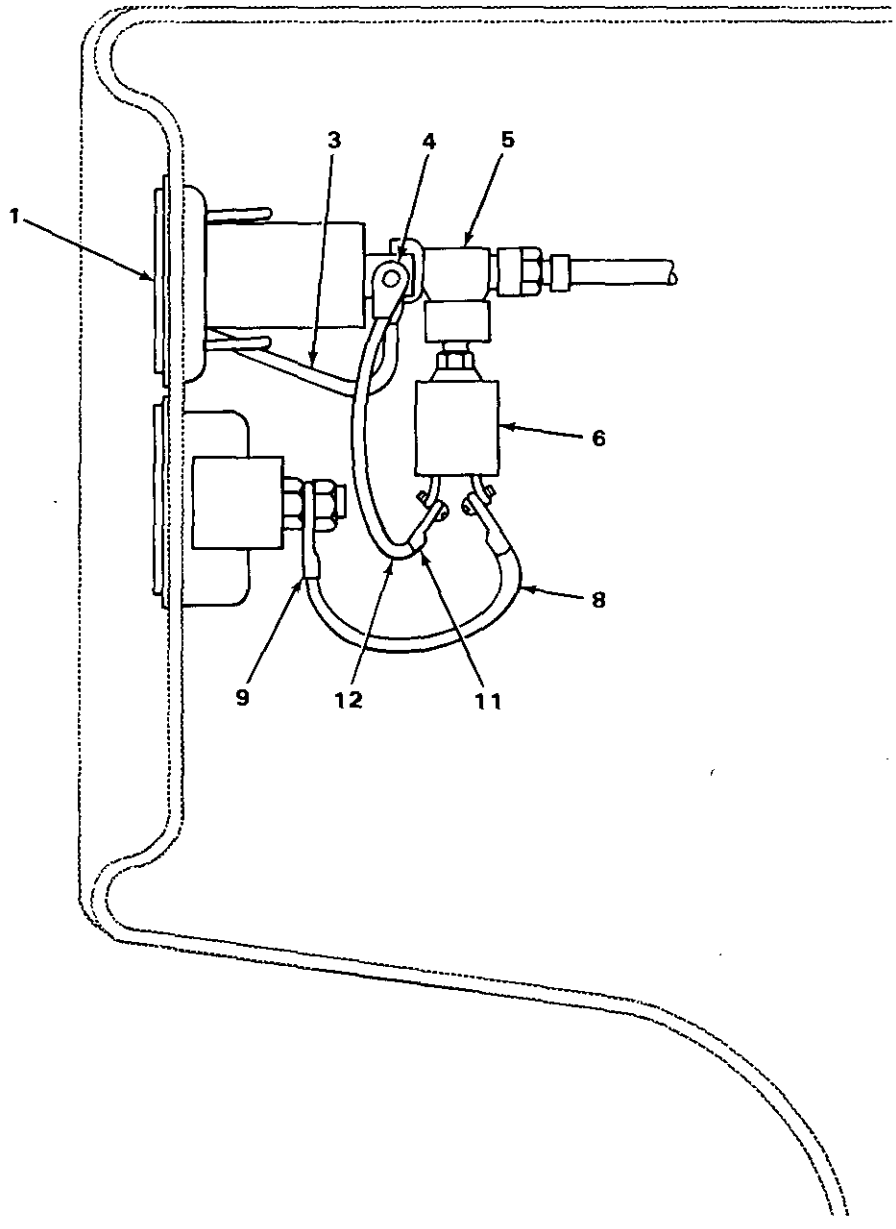

TA235279

FIGURE 82. ELECTRIC HOURMETER.

(1) ITEM NO	(2) SMR CODE	(3) NSN	(4) CAGEC	(5) PART NUMBER	(6) DESCRIPTION AND USABLE ON CODES(UOC)	(7) QTY
					GROUP 0607 INSTRUMENT PANEL	
					FIG 82. ELECTRIC HOURMETER	
1	XDOZZ	6645010245261	11083	4N3700	METER,TIME TOTALIZI.....	1
2	AOOOO		11083	3L1454	WIRE ASSEMBLY.....	1
3	MOOZZ		19207	7809108-4	.WIRE MAKE FROM WIRE P/N M16878/ 1BKEO.....	1
3	MOOZZ		19207	5P497-4	.WIRE MAKE FROM WIRE P/N 5P497.....	1
4	PFOZZ	5940001434780	96906	MS25036-108	.TERMINAL,LUG.....	2
5	XAOZZ		30708	1-8MR0B	TEE,PIPE.....	1
6	PFOZZ	5930010956194	11083	9G8010	SWITCH,PRESSURE.....	1
7	AOOOO		11083	5H8840	WIRE ASSEMBLY.....	1
8	MOOZZ		19207	7809108-7	.WIRE MAKE FROM WIRE P/N M16878/ 1BKEO.....	1
9	PFOZZ	5940001434780	96906	MS25036-108	.TERMINAL,LUG.....	2
10	AOOOO		11083	5D122	WIRE ASSEMBLY.....	1
11	PFOZZ	5940010589158	11083	7F9224	.TERMINAL.....	2
12	MOOZZ		19207	7809108-11	.WIRE MAKE FROM WIRE P/N M16878/ 1BKEO.....	1

END OF FIGURE

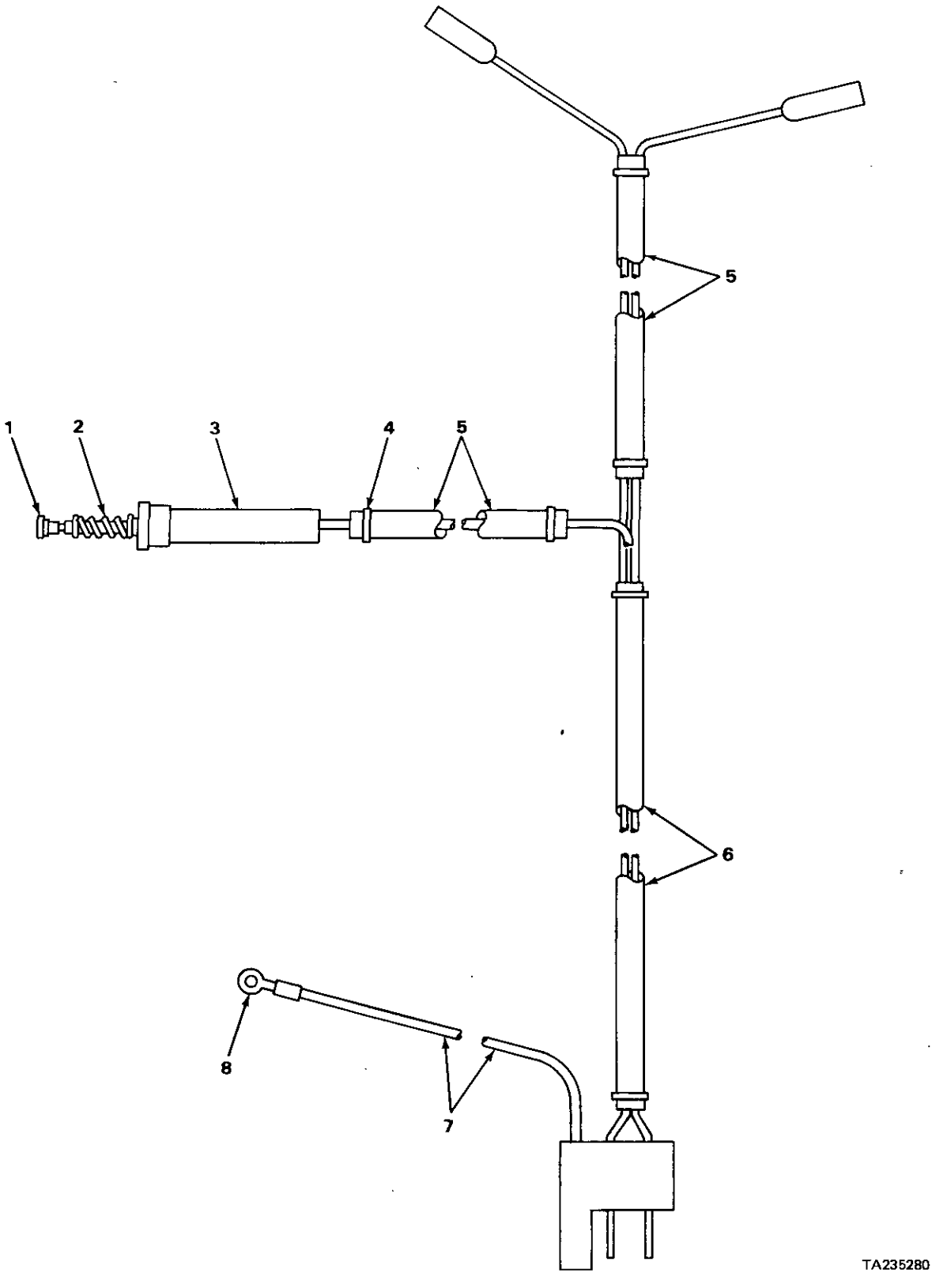

FIGURE 83. BACKUP WARNING ALARM HARNESS.

(1) ITEM NO	(2) SMR CODE	(3) NSN	(4) CAGEC	(5) PART NUMBER	(6) DESCRIPTION AND USABLE ON CODES(UOC)	(7) QTY
					GROUP 0607 INSTRUMENT PANEL	
					FIG 83. INSTRUMENT PANEL WIRING HARNESS	
1	PFOZA	5999010590884	79550	12871	CONTACT,ELECTRICAL.....	1
2	PFOZZ	5360010590883	11083	2S5013	SPRING.....	1
3	PFOZZ	5920010590881	11083	2S5011	BODY.....	1
4	PFOZZ	2920010589099	11083	3S2093	STRAP.....	6
5	MOOZZ		19207	5P384-5	TUBE MAKE FROM TUBE P/N 5P5996.....	2
6	MOOZZ		19207	5P384-15	TUBE MAKE FROM TUBE P/N 5P5996.....	1
7	MOOZZ		19207	5P497-1	WIRE MAKE FROM WIRE P/N 5P497.....	1
8	PFOZZ	5940001434793	96906	MS25036-110	TERMINAL,LUG.....	1

END OF FIGURE

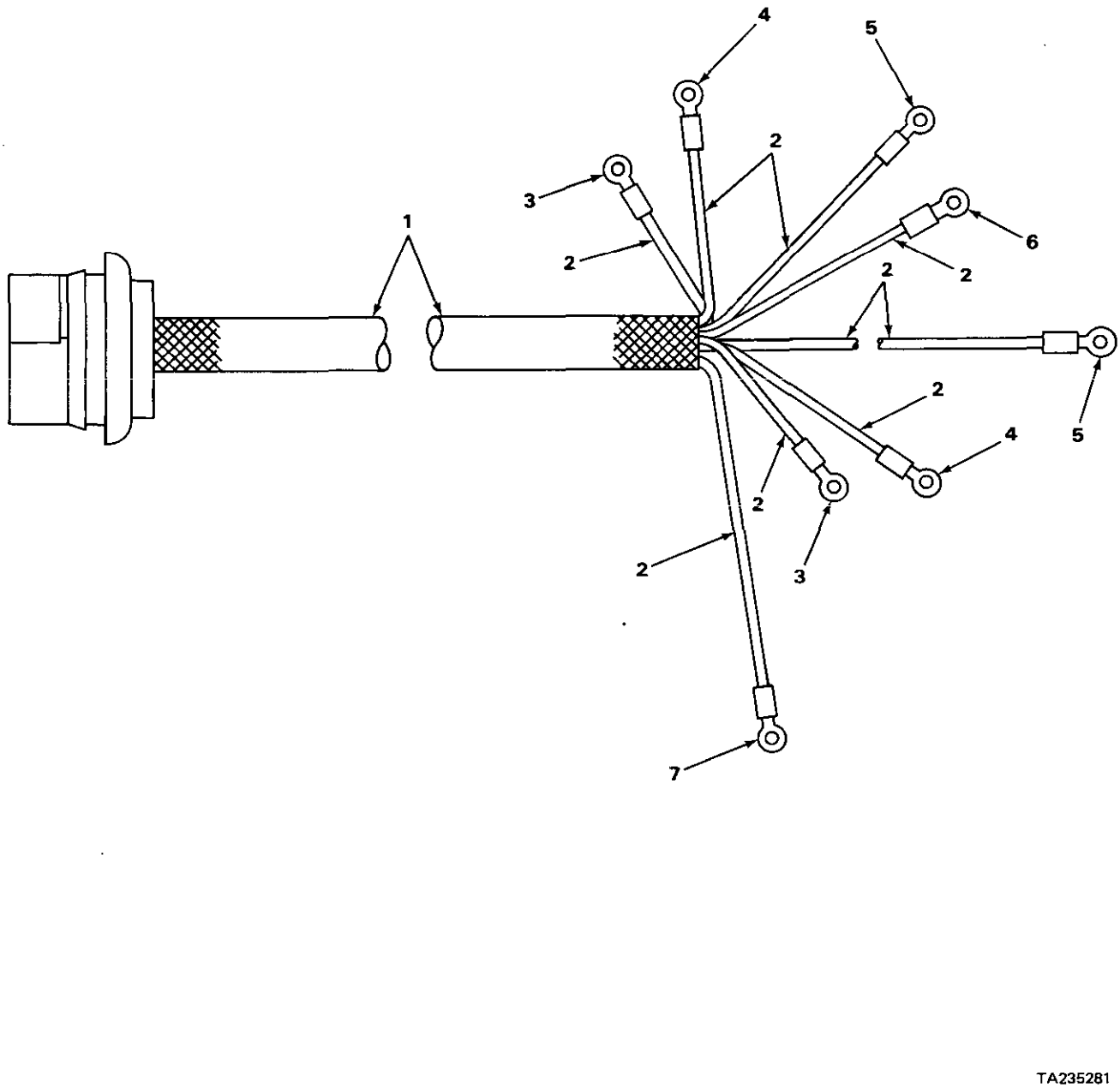

FIGURE 84. INSTRUMENT PANEL WIRING HARNESS.

(1) ITEM NO	(2) SMR CODE	(3) NSN	(4) CAGEC	(5) PART NUMBER	(6) DESCRIPTION AND USABLE ON CODES(UOC)	(7) QTY
					GROUP 0607 INSTRUMENT PANEL	
					FIG 84. INSTRUMENT PANEL WIRING HARNESS	
1	PFFZZ	2990011036805	11083	3P5885	HARNESS ASSEMBLY.....	1
2	MFFZZ		19207	0630776-1	.WIRE 10 GAGE MAKE FROM WIRE P/N 5P616.....	1
2	MFFZZ		19207	5P621-1	.WIRE 12 GAGE MAKE FROM WIRE P/N 5P5621.....	1
2	MFFZZ		19207	5P497-1	.WIRE 14 GAGE MAKE FROM WIRE P/N 5P497.....	1
3	PFFZZ	5940001434794	96906	MS25036-112	.TERMINAL,LUG.....	2
4	PFFZZ	5940001434780	96906	MS25036-108	.TERMINAL,LUG.....	2
5	PFFZZ	5940001434775	96906	MS25036-156	.TERMINAL,LUG.....	2
6	PFFZZ	5940001434774	96906	MS25036-153	.TERMINAL,LUG.....	1
7	PFFZZ	5940012511327	11083	2L8068	.TERMINAL,LUG.....	1

END OF FIGURE

1
2 THRU 6

3
4 THRU 6

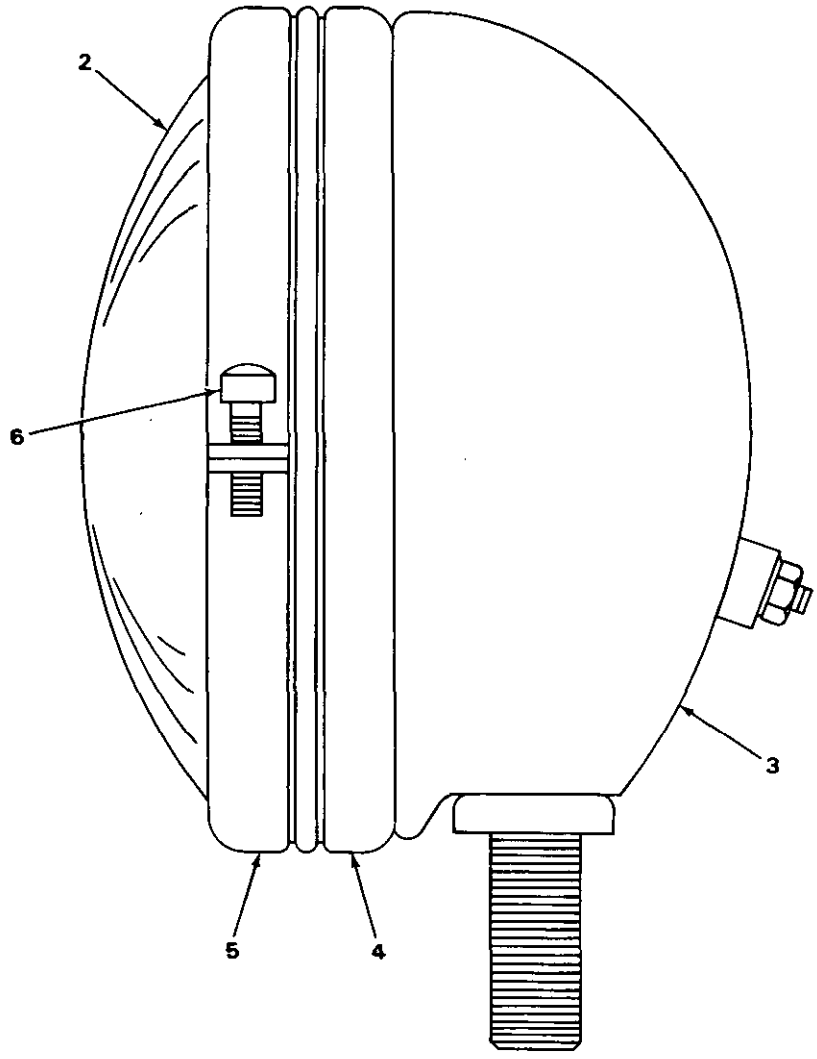

TA235282

FIGURE 85. LAMP ASSEMBLY.

(1) ITEM NO	(2) SMR CODE	(3) NSN	(4) CAGEC	(5) PART NUMBER	(6) DESCRIPTION AND USABLE ON CODES(UOC)	(7) QTY
					GROUP 0609 LIGHTS	
					FIG 85. LAMP ASSEMBLY	
1	PFOZZ	6220009534652	74400	M2875	FLOODLIGHT,ELECTRIC.....	4
2	PFOZZ	6240006430687	96906	MS17165-4578	.LAMP,INCANDESCENT.....	1
3	PFOZZ	6220010375622	11083	2P2541	.HOUSING,LIGHT.....	1
4	PFOZZ	6220007568787	11083	2M5282	..RETAINER,LENS.....	1
5	PFOZZ	6220010590874	11083	2M5284	..MOULDING ASSEMBLY.....	2
6	PFOZZ	5305000050896	11083	5M6668	..SCREW,MACHINE.....	2

END OF FIGURE

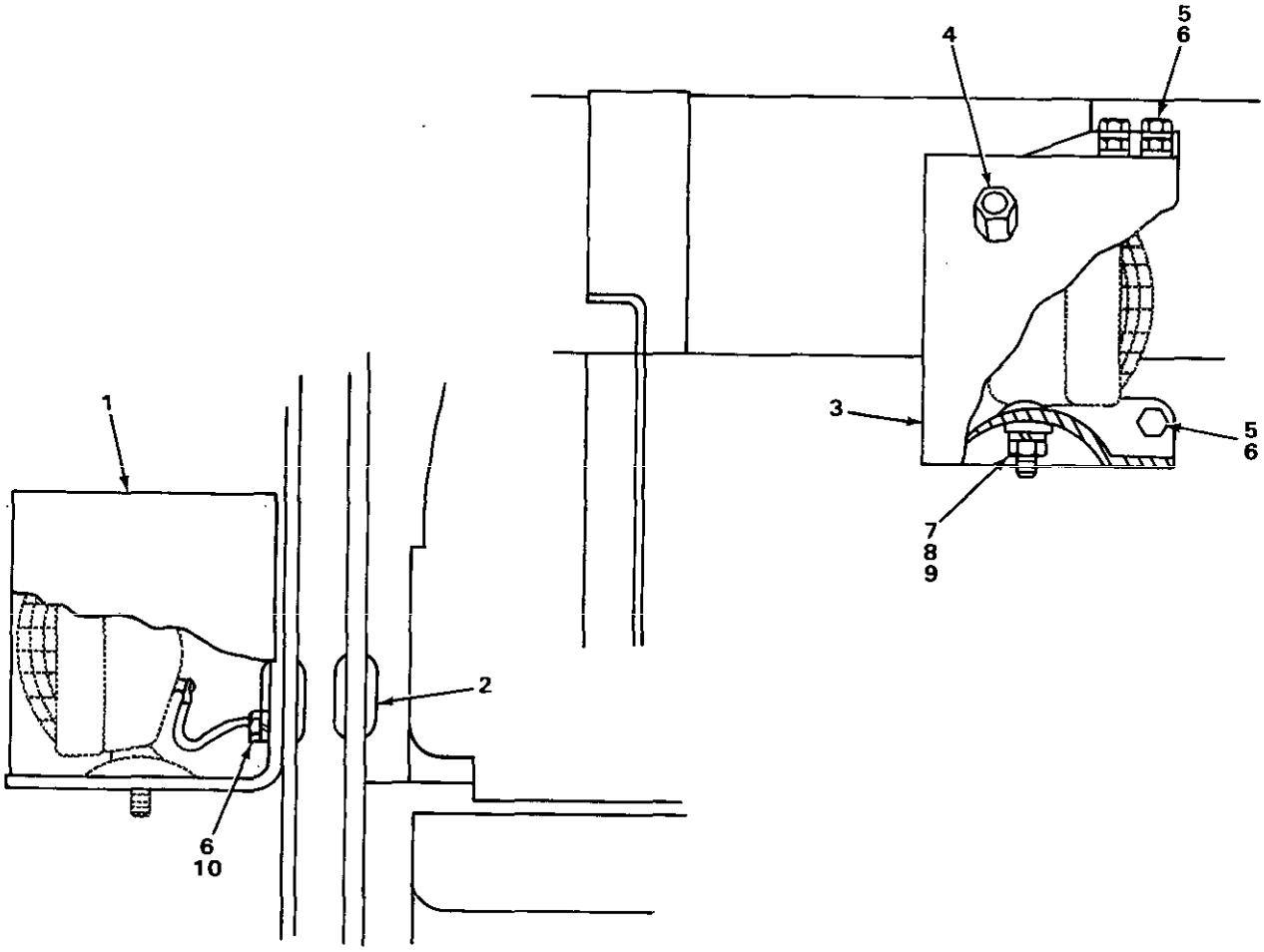

FIGURE 86. LAMP GUARDS AND BRACKETS (USE WITH SERIAL RANGE 77V8516 THRU 77V9475).

(1) ITEM NO	(2) SMR CODE	(3) NSN	(4) CAGEC	(5) PART NUMBER	(6) DESCRIPTION AND USABLE ON CODES(UOC)	(7) QTY
					GROUP 0609 LIGHTS	
					FIG 86. LAMP GUARDS AND BRACKETS (USE WITH SERIAL RANGE 77V8516 THRU 77V9475)	
1	PFOZZ	5340012280501	11083	6P5659	BRACKET,ANGLE.....	2
2	PFOZZ	5325012534416	11083	9K700	GROMMET,NONMETALLIC.....	4
3	PFOZZ	6220003508204	11083	1M3070	GUARD,LAMP LEFT HAND.....	1
3	PFOZZ	6220004335959	11083	1M3069	GUARD,LAMP RIGHT HAND.....	1
4	PFOZZ	5325008468434	11083	3F1240	GROMMET,NONMETALLIC.....	2
5	PFOZZ	5306004238194	11083	1A2029	BOLT,MACHINE.....	12
6	PFOZZ	5310006379541	96906	MS35338-46	WASHER,LOCK.....	20
7	PFOZZ	5310007638905	96906	MS51968-20	NUT,PLAIN,HEXAGON.....	4
8	PFOZZ	5310000455001	96906	MS35340-50	WASHER,LOCK.....	4
9	PFOZZ	5310005075727	11083	2B8352	WASHER,SPRING TENSI.....	8
10	PFOZZ	5306002604508	11083	S1594	BOLT,MACHINE.....	8

END OF FIGURE

6
7 THRU 11

27
28

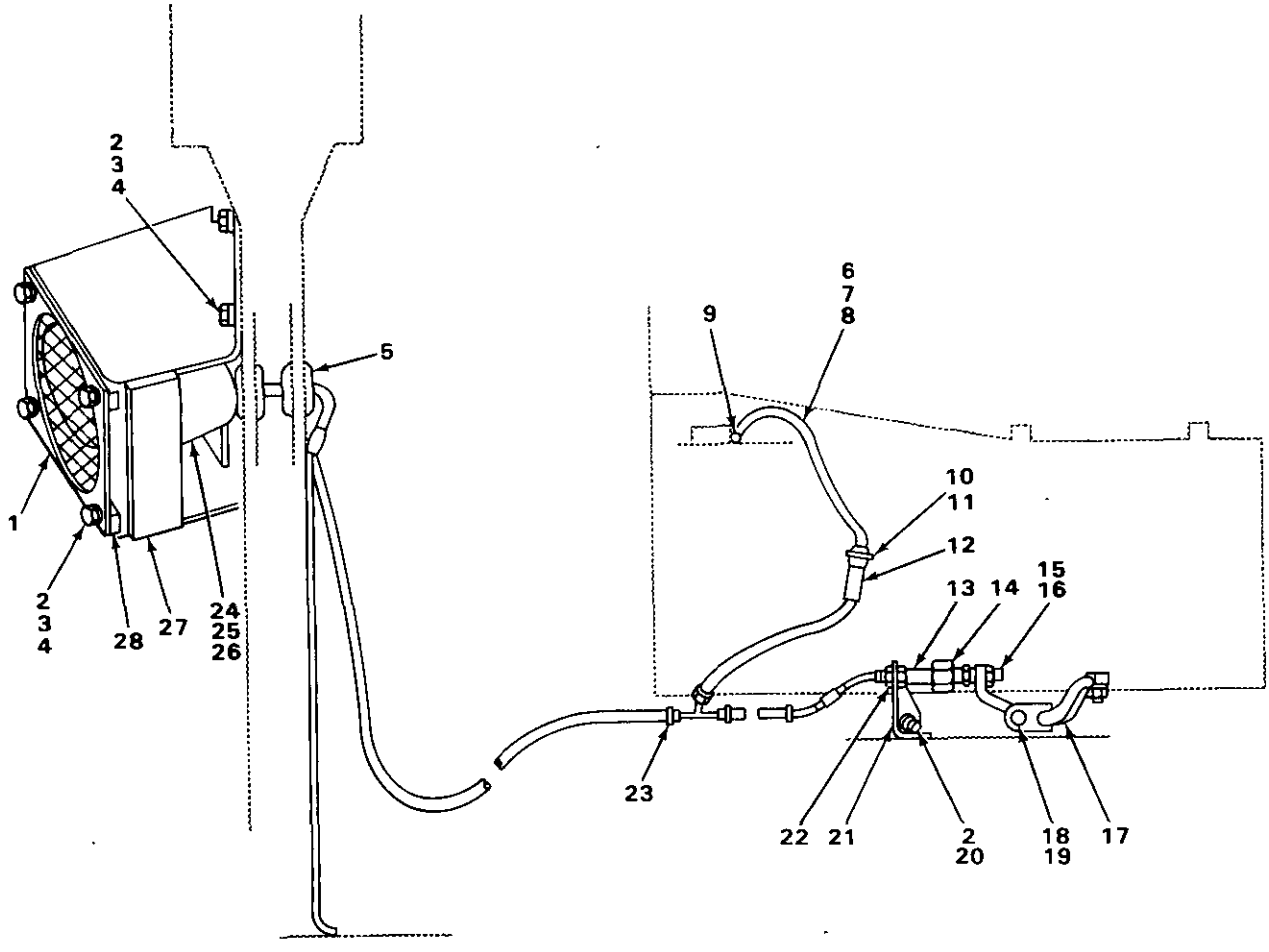

TA235284

FIGURE 87. BACKUP WARNING ALARM (FOR USE WITH ROPS).

(1) ITEM NO	(2) SMR CODE	(3) NSN	(4) CAGEC	(5) PART NUMBER	(6) DESCRIPTION AND USABLE ON CODES(UOC)	(7) QTY
					GROUP 0610 SENDING UNITS AND WARNING SWITCHES.	
					FIG 87. BACKUP WARNING ALARM (FOR USE WITH ROPS).	
1	XBOZZ		11083	3P9999	PLATE ASSEMBLY	1
2	PFOZZ	5310001174788	11083	5M2894	WASHER,FLAT	10
3	PFOZZ	5306002604508	11083	S1594	BOLT,MACHINE	8
4	PFOZZ	5310006379541	96906	MS35338-46	WASHER,LOCK	8
5	PFOZZ	5325012534416	11083	9K700	GROMMET,NONMETALLIC	2
6	AOOOO		11083	6P3896	WIRE ASSEMBLY	1
7	MOOZZ		19207	5P384-30	.TUBE MAKE FROM TUBE P/N 5P5996	1
8	MOOZZ		19207	5P497-29	.WIRE MAKE FROM WIRE P/N 5P497	1
9	PFOZZ	5940001434793	96906	MS25036-110	.TERMINAL,LUG	1
10	PFOZZ	5920010590882	11083	2S5012	.CAP	1
11	PFOZA	5999010590884	79550	12871	.CONTACT,ELECTRICAL	1
12	PFOZZ	5920010590894	11083	3P8989	FUSE	1
13	PFOZZ	5930010590930	11083	3P8990	SWITCH ASSEMBLY	1
14	PFOZZ	2920010637834	11083	8D5578	MAGNET ASSY	1
15	PFOZZ	5307001183133	11083	1J8668	STUD,CONTINUOUS THR	1
16	PFOZZ	5310008512682	96906	MS35691-17	NUT,PLAIN,HEXAGON	2
17	XBOZZ		11083	3P5035	LEVER	1
18	PFOZZ	5306002634038	11083	2A4639	BOLT,MACHINE	1
19	PFOZZ	5310011945398	11083	1D4717	NUT,HEXAGON	1
20	PFOZZ	5307012542498	11083	1M620	STUD,PLAIN	2
21	XBOZZ		11083	3P5058	BRACKET ASSEMBLY	1
22	PFOZZ	5310010523924	11083	5B2183	NUT	2
23	PFOZZ	4730010686077	11083	6K0806	TIE	10
24	XBOZZ		11083	6P2243	SPEAKER ASSEMBLY	1
25	PFOZZ	5306004262920	11083	S1570	BOLT,MACHINE	3
26	PFOZZ	5310005825965	96906	MS35338-44	WASHER,LOCK	3
27	XBOZZ		11083	3P5100	GUARD ASSEMBLY	1
28	PFOZZ	5365012545379	11083	4B4626	.SPACER	2

END OF FIGURE

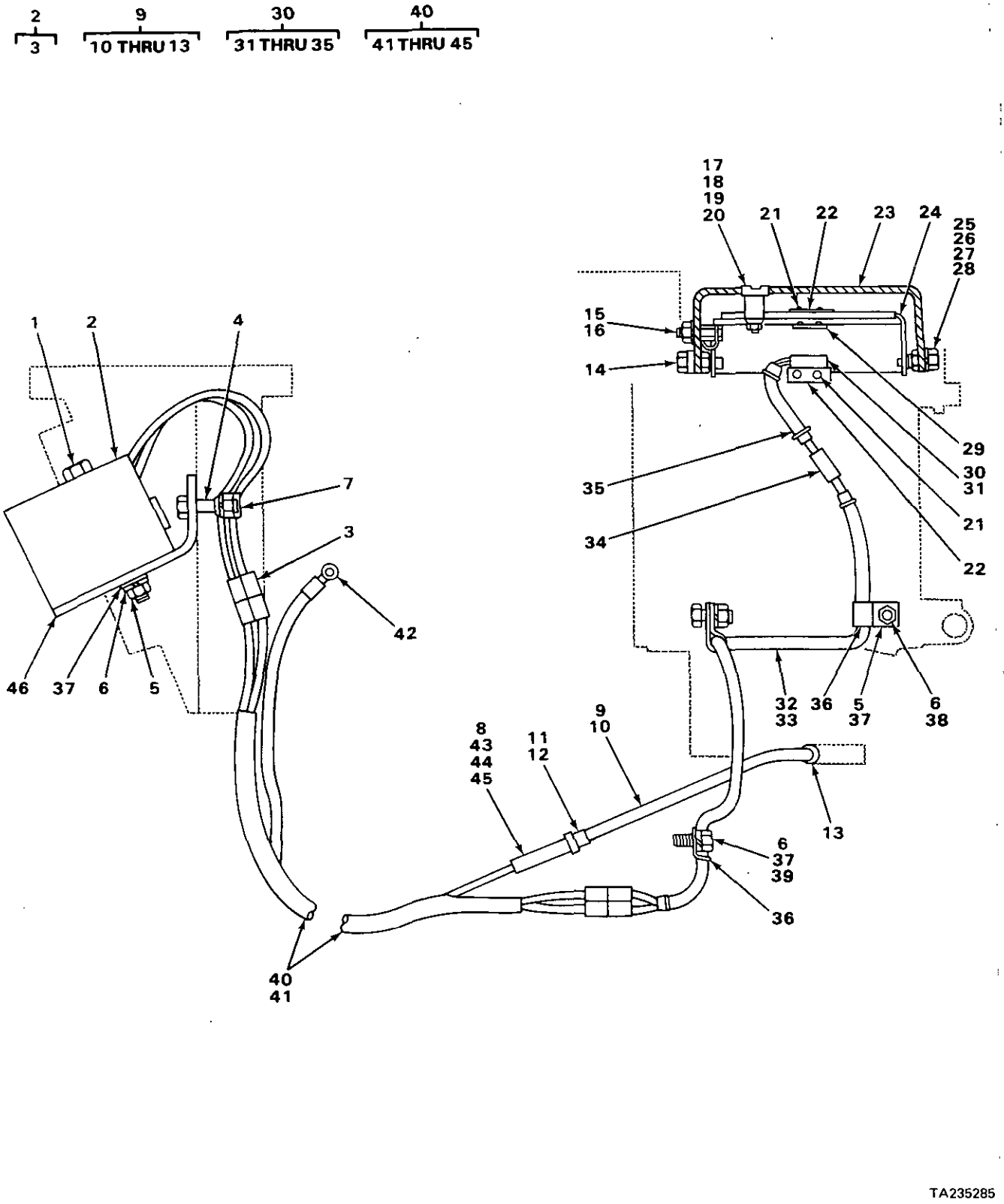

FIGURE 88. BACKUP WARNING ALARM.

(1) ITEM NO	(2) SMR CODE	(3) NSN	(4) CAGEC	(5) PART NUMBER	(6) DESCRIPTION AND USABLE ON CODES(UOC)	(7) QTY
					GROUP 0610 SENDING UNITS AND WARNING SWITCHES.	
					FIG 88. BACKUP WARNING ALARM.	
1	PFOZZ	5306004705543	11083	8S9191	BOLT,MACHINE.....	2
2	XBOZZ		57013	0-050026-0	HORN,ELECTRICAL.....	1
3	XBOZZ		11083	5P6725	.LEAD ASSEMBLY,ELECT.....	2
4	PFOZZ	5305000680511	80204	B1821BH038C125N	SCREW,CAP,HEXAGON H.....	2
5	PFOZZ	5310011945398	11083	1D4717	NUT,HEXAGON.....	6
6	PFOZZ	5310006379541	96906	MS35338-46	WASHER,LOCK.....	7
7	PFOZZ	6220007787213	11083	1H5166	RETAINER,WIRING HAR.....	1
8	PFOZZ	5920010590894	11083	3P8989	FUSE.....	1
9	AOOOO		11083	8P6216	WIRE ASSEMBLY.....	1
10	MOOZZ		19207	5P5624-6	.WIRE MAKE FROM WIRE P/N 5P5624....	1
11	PFOZZ	5920010590882	11083	2S5012	.CAP.....	1
12	PFOZA	5999010590884	79550	12871	.CONTACT,ELECTRICAL.....	1
13	PFOZZ	5940002835281	96906	MS25036-109	.TERMINAL,LUG.....	1
14	PFOZZ	5360012548890	11083	8P2290	SPRING,SPIRAL,TORSI.....	1
15	PFOZZ	5340012547173	11083	8P2289	RETAINER,NUT AND BO.....	1
16	PFOZZ	5310012098715	11083	7H8909	NUT,SELF-LOCKING,HE.....	1
17	PFOZZ	5305012098693	11083	5P5582	SCREW,MACHINE.....	1
18	PFOZZ	5310011059384	11083	310249	NUT,SELF-LOCKING,HE.....	1
19	PFOZZ	5310001435722	04998	WA1248	WASHER,FLAT.....	1
20	PFOZZ	5340012609030	11083	8P4029	BUMPER,NONMETALLIC.....	1
21	PFOZZ	5320012370685	11083	8M7758	RIVET,BLIND.....	4
22	XBOZZ		11083	8P2292	PLATE.....	3
23	PFOZZ	3040012533465	11083	8P4027	HOUSING,MECHANICAL.....	1
24	PFOZZ	3040012535583	11083	8P4925	LEVER,REMOTE CONTRO.....	1
25	PFOZZ	5305011604505	11083	4D9483	SETSCREW.....	2
26	PFOZZ	5310008512682	96906	MS35691-17	NUT,PLAIN,HEXAGON.....	2
27	PFOZZ	5310001174788	11083	5M2894	WASHER,FLAT.....	2
28	PFOZZ	3120012538946	11083	8P4923	BEARING,WASHER,THRU.....	2
29	XBOZZ		11083	6P9395	ACTUATOR.....	1
30	PFOZZ	5930011627313	11083	9P4608	SWITCH,PUSH.....	1
31	XBOZZ		11083	8P4115	.SWITCH.....	1
32	MOOZZ		19207	5P5996-25	.TUBE MAKE FROM TUBE P/N 5P5996....	1
33	MOOZZ		19207	5P5624-49	.WIRE MAKE FROM WIRE P/N 5P5624....	1
34	PFOZZ	5940010791375	81349	M7928/5-4	.SPLICE,CONDUCTOR.....	2
35	PFOZZ	2920010589099	11083	3S2093	.STRAP.....	4
36	PFOZZ	5340004264656	11083	4D7794	CLAMP,LOOP.....	3
37	PFOZZ	5310001174788	11083	5M2894	WASHER,FLAT.....	5
38	PFOZZ	5305002528919	11083	0S0509	SCREW,CAP,HEXAGON H.....	2
39	PFOZZ	5306002637301	11083	L1351	BOLT,MACHINE.....	1
40	AOOOO		11083	8P4108	HARNESS ASSEMBLY.....	1
41	MOOZZ		19207	5P5624-1	.WIRE MAKE FROM WIRE P/N 5P5624....	1
42	PFOZZ	5940001434793	96906	MS25036-110	.TERMINAL,LUG.....	1
43	PFOZZ	5920010590881	11083	2S5011	.BODY.....	1
44	PFOZZ	5360010590883	11083	2S5013	.SPRING.....	1
45	PFOZA	5999010590884	79550	12871	.CONTACT,ELECTRICAL.....	1
46	PFOZZ	5340012577755	11083	8P4028	BRACKET,ANGLE.....	1

END OF FIGURE

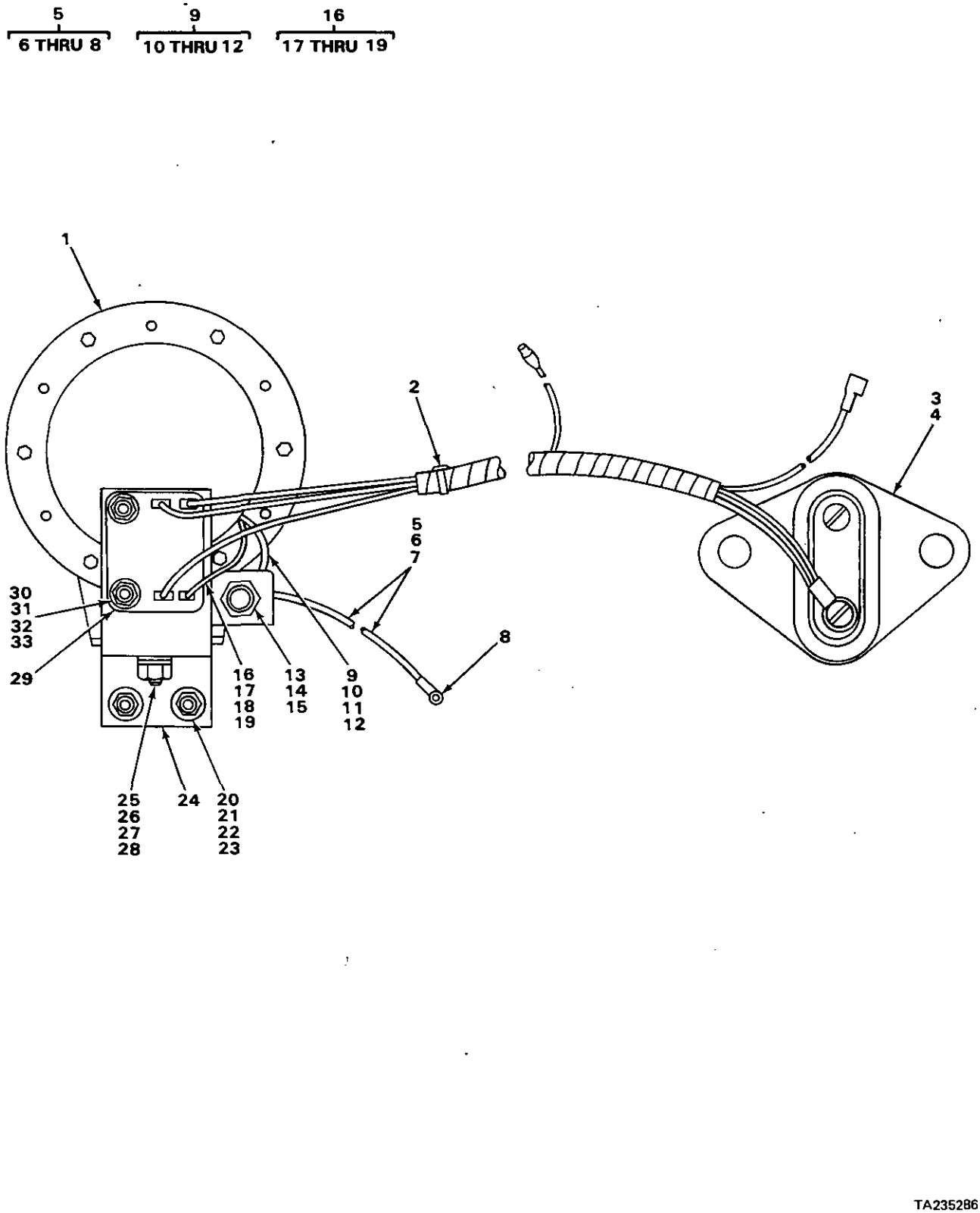

FIGURE 89. COOLANT FLOW WARNING ALARM (USE WITH ENGINE SERIAL RANGE 17S5966 THRU 17S9688).

(1) ITEM NO	(2) SMR CODE	(3) NSN	(4) CAGEC	(5) PART NUMBER	(6) DESCRIPTION AND USABLE ON CODES(UOC)	(7) QTY
					GROUP 0610 SENDING UNITS AND WARNING SWITCHES.	
					FIG 89. COOLANT FLOW WARNING ALARM (USE W/ENGINE SERIAL RANGE 17S5966 THRU 17S9688).	
1	PFOZZ	2590012222847	11083	9D4484	HORN,ELECTRICAL	1
2	PFOZZ	2920010589099	11083	3S2093	STRAP	8
3	PFOZZ	5930013425782	11083	6N8901	SWITCH ASSEMBLY COOLANT FLOW	1
4	PFOZZ	5330010639839	11083	4N3841	GASKET	1
5	AOOOO		11083	8P5878	WIRE ASSEMBLY	1
5	AOOOO		11083	8P5877	WIRE ASSEMBLY	1
6	PFOZZ	5940010589112	11083	4L3916	.TERMINAL,QUICK DISC	1
7	MOOZZ		19207	5P5624-45	.WIRE MAKE FROM WIRE P/N 5P5624, USE WITH P/N 8P5878	1
7	MOOZZ		19207	5P5624-25	.WIRE MAKE FROM WIRE P/N 5P5624, USE WITH P/N 8P5877	1
8	PFOZZ	5940002835281	96906	MS25036-109	.TERMINAL,LUG	1
9	AOOOO		11083	8P5875	WIRE ASSEMBLY	1
10	PFOZZ	5940010589112	11083	4L3916	.TERMINAL,QUICK DISC	1
11	MOOZZ		19207	5P5624-5	.WIRE MAKE FROM WIRE P/N 5P5624	1
12	PFOZZ	5940001434780	96906	MS25036-108	.TERMINAL,LUG	1
13	PFOZZ	5920001188195	71400	HKP-HH/15	FUSEHOLDER,EXTRACTO	1
14	XBOZZ		11083	7N2867	CAP	1
15	XDOZZ		81349	F02A250V5A	FUSE,CARTRIDGE FIVE AMPERE	1
16	AOOOO		11083	8P5876	WIRE ASSEMBLY	1
17	PFOZZ	5940001434780	96906	MS25036-108	.TERMINAL,LUG	1
18	MOOZZ		19207	5P5624-9	.WIRE MAKE FROM WIRE P/N 5P5624	1
19	PFOZZ	5940010589112	11083	4L3916	.TERMINAL,QUICK DISC	1
20	PFOZZ	5310011945398	11083	1D4717	NUT,HEXAGON	2
21	PFOZZ	5310001174788	11083	5M2894	WASHER,FLAT	4
22	PFOZZ	5306011954681	11083	3B1915	BOLT	2
22	PFOZZ	5306002604508	11083	S1594	BOLT,MACHINE	2
23	PFOZZ	5310006379541	96906	MS35338-46	WASHER,LOCK	2
24	PFOZZ	5340012538963	11083	8P5881	BRACKET,ANGLE	1
25	PFOZZ	5310008094058	96906	MS27183-10	WASHER,FLAT	4
26	PFOZZ	5310000426376	31159	JM56	NUT,PLAIN,HEXAGON	2
27	PFOZZ	5310005825965	96906	MS35338-44	WASHER,LOCK	2
28	PFOZZ	5305000712505	80204	B1821BH025C088N	SCREW,CAP,HEXAGON H	2
29	PFOZZ	5930012373843	11083	7N0214	SWITCH,SOLID STATE	1
30	PFOZZ	5310008807744	96906	MS51967-5	NUT,PLAIN,HEXAGON	2
31	PFOZZ	5310003628168	61208	M2048F	WASHER,FLAT	4
32	PFOZZ	5306002264833	80204	B1821BH031C200N	BOLT,MACHINE	2
33	PFOZZ	5310004079566	96906	MS35338-45	WASHER,LOCK	2

END OF FIGURE

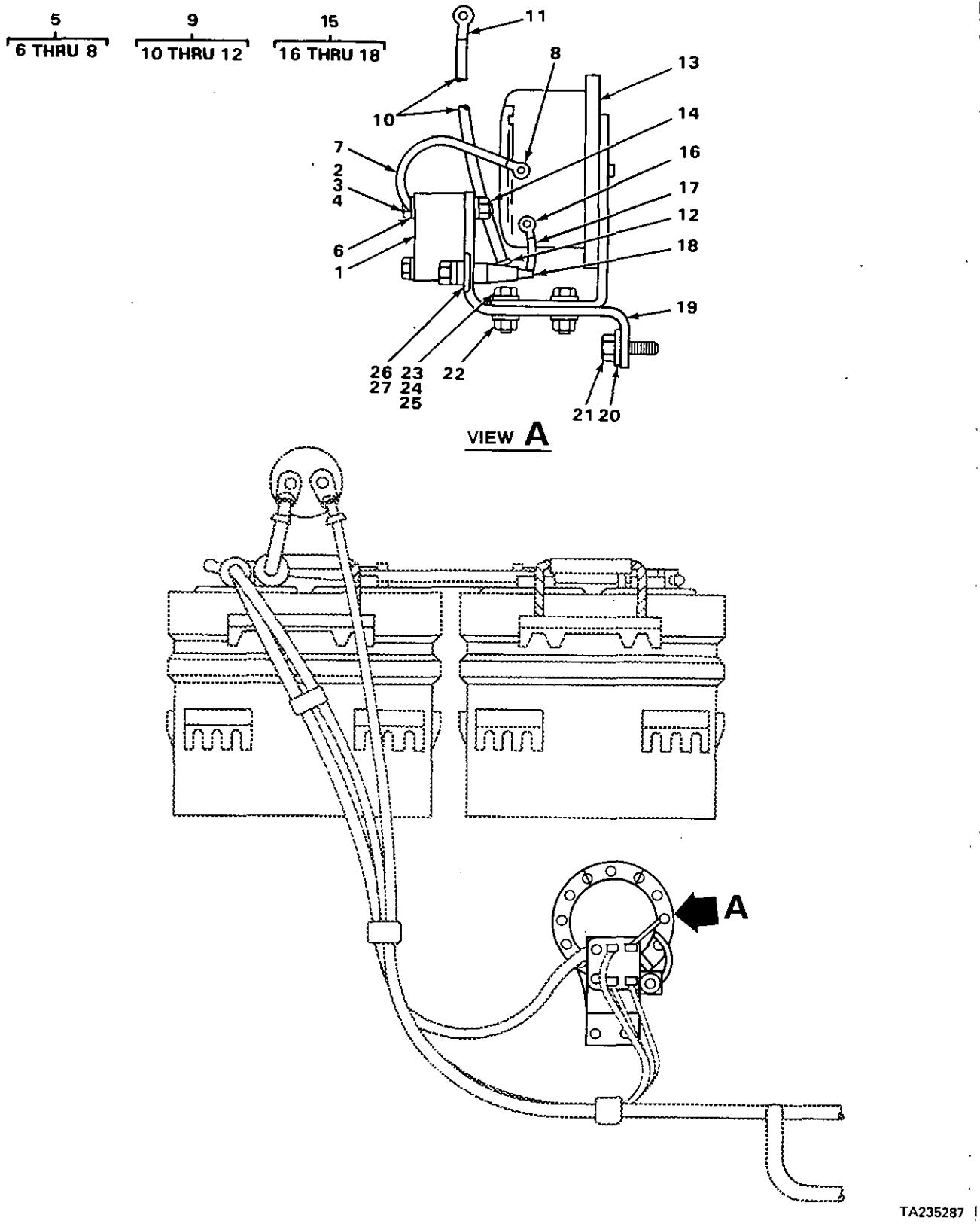

FIGURE 90. ELECTRIC HORN AND ATTACHING PARTS (USE WITH SERIAL RANGE 77V8516 THRU 77V9475).

(1) ITEM NO	(2) SMR CODE	(3) NSN	(4) CAGEC	(5) PART NUMBER	(6) DESCRIPTION AND USABLE ON CODES(UOC)	(7) QTY
					GROUP 0611 HORN, SIREN.	
					FIG 90. ELECTRIC HORN AND ATTACHING PARTS (USE WITH SERIAL RANGE 77V8516 THRU 77V9475).	
1	PFOZZ	5930012373843	11083	7N0214	SWITCH,SOLID STATE.....	1
2	PFOZZ	5306002264833	80204	B1821BH031C200N	BOLT,MACHINE.....	2
3	PFOZZ	5310004079566	96906	MS35338-45	WASHER,LOCK.....	2
4	PFOZZ	5310003628168	61208	M2048F	WASHER,FLAT.....	4
5	AOOOO		11083	8P5876	WIRE ASSEMBLY.....	1
6	PFOZZ	5940001434780	96906	MS25036-108	.TERMINAL,LUG.....	1
7	MOOZZ		19207	5P5624-9	.WIRE MAKE FROM WIRE P/N 5P5624....	1
8	PFOZZ	5940010589112	11083	4L3916	.TERMINAL,QUICK DISC.....	1
9	AOOOO		11083	8P5878	WIRE ASSEMBLY.....	1
10	MOOZZ		19207	5P5624-45	.WIRE MAKE FROM WIRE P/N 5P5624....	1
11	PFOZZ	5940002835281	96906	MS25036-109	.TERMINAL,LUG.....	1
12	PFOZZ	5940010589112	11083	4L3916	.TERMINAL,QUICK DISC.....	1
13	PFOZZ	2590012222847	11083	9D4484	HORN,ELECTRICAL.....	1
14	PFOZZ	5310008807744	96906	MS51967-5	NUT,PLAIN,HEXAGON.....	2
15	AOOOO		11083	8P5875	WIRE ASSEMBLY.....	1
16	PFOZZ	5940001434780	96906	MS25036-108	.TERMINAL,LUG.....	1
17	MOOZZ		19207	5P5624-5	.WIRE MAKE FROM WIRE P/N 5P5624....	1
18	PFOZZ	5940010589112	11083	4L3916	.TERMINAL,QUICK DISC.....	1
19	PFOZZ	5340012538963	11083	8P5881	BRACKET,ANGLE.....	1
20	PFOZZ	5310010948810	78189	3320-14-01	WASHER,SQUARE CONE.....	2
21	PFOZZ	5305000680511	80204	B1821BH038C125N	SCREW,CAP,HEXAGON H.....	2
22	PFOZZ	5310000426376	31159	JM56	NUT,PLAIN,HEXAGON.....	2
23	PFOZZ	5305000712505	80204	B1821BH025C088N	SCREW,CAP,HEXAGON H.....	2
24	PFOZZ	5310005825965	96906	MS35338-44	WASHER,LOCK.....	2
25	PFOZZ	5310008094058	96906	MS27183-10	WASHER,FLAT.....	4
26	PFOZZ	5920001188195	71400	HKP-HH/15	FUSEHOLDER,EXTRACTO.....	1
27	XDOZZ		81349	F02A250V5A	FUSE,CARTRIDGE.....	1

END OF FIGURE

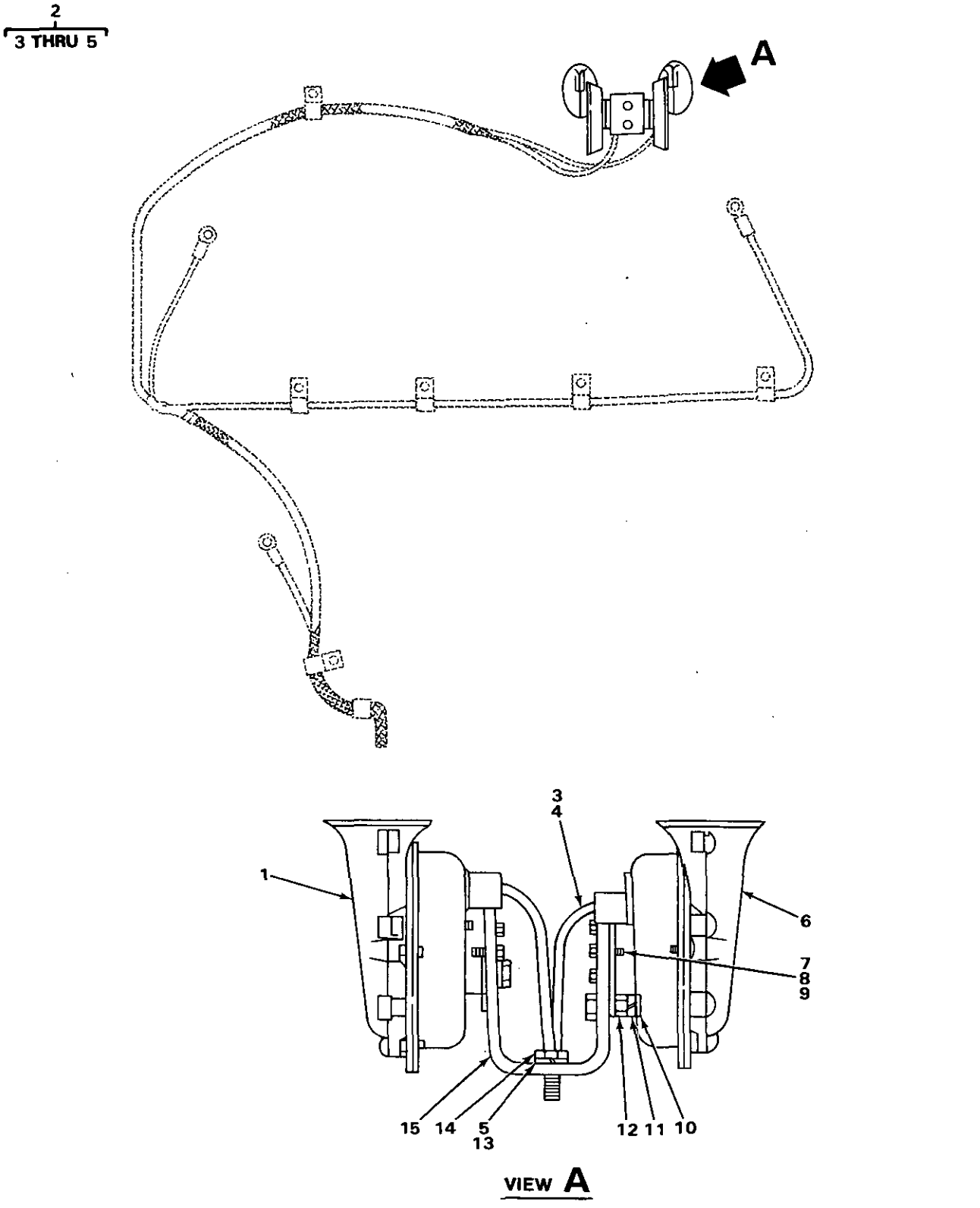

FIGURE 91. DUAL ELECTRIC HORNS (USE WITH SERIAL RANGE 77V9163 THRU 77V9475).

(1) ITEM NO	(2) SMR CODE	(3) NSN	(4) CAGEC	(5) PART NUMBER	(6) DESCRIPTION AND USABLE ON CODES(UOC)	(7) QTY
					GROUP 0611 HORN, SIREN.	
					FIG 91. DUAL ELECTRIC HORNS (USE WITH SERIAL RANGE 77V9163 THRU 77V9475).	
1	XBOZZ		11083	7N9356	HORN 24 VOLT.....	1
2	PFOZZ	5995011651843	11083	8P1342	LEAD,ELECTRICAL.....	2
3	MOOZZ		19207	5P5624-7	.WIRE MAKE FROM WIRE P/N 5P5624....	1
4	PFOZZ	5940010589112	11083	4L3916	.TERMINAL,QUICK DISC.....	1
5	PFOZZ	5940001434793	96906	MS25036-110	.TERMINAL,LUG.....	1
6	XBOZZ		11083	7N9357	HORN 24 VOLT.....	1
7	PFOZZ	5305012542462	11083	5P9614	SETSCREW.....	6
8	XBOZZ		11083	9S5937	NUT,SELF-LOCKING,HE.....	6
9	PFOZZ	5310005967691	96906	MS35335-32	WASHER,LOCK.....	6
10	PFOZZ	5310010512360	11083	5P537	WASHER.....	2
11	PFOZZ	5310011602034	11083	2D6235	NUT,SELF-LOCKING,HE.....	2
12	PFOZZ	5306002611153	11083	S1615	BOLT,MACHINE.....	2
13	PFOZZ	5310006379541	96906	MS35338-46	WASHER,LOCK.....	3
14	PFOZZ	5306004238194	11083	1A2029	BOLT,MACHINE.....	2
15	XBOZZ		11083	7G2570	BRACKET.....	1

END OF FIGURE

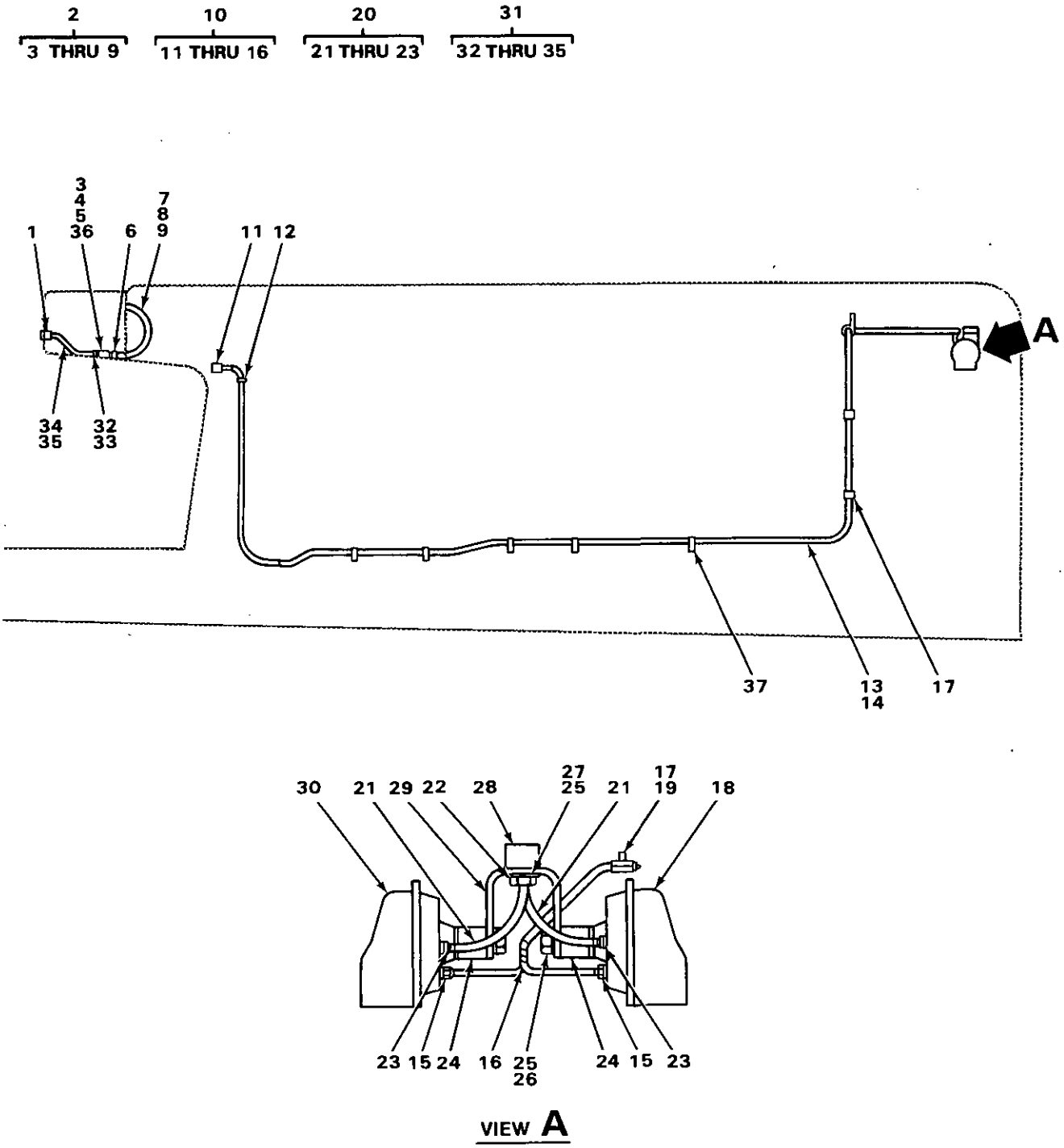

FIGURE 92. CENTER MOUNTED ELECTRIC HORN.

(1) ITEM NO	(2) SMR CODE	(3) NSN	(4) CAGEC	(5) PART NUMBER	(6) DESCRIPTION AND USABLE ON CODES(UOC)	(7) QTY
					GROUP 0611 HORN, SIREN.	
					FIG 92. CENTER MOUNTED ELECTRIC HORN	
1	PFOZZ	2530012974592	11083	8P0230	HORN BUTTON,VEHICLE.....	1
2	AOOOO		11083	8P1268	WIRE ASSEMBLY.....	1
3	PFOZZ	5920010590881	11083	2S5011	.BODY.....	1
4	PFOZZ	5360010590883	11083	2S5013	.SPRING.....	1
5	PFOZA	5999010590884	79550	12871	.CONTACT,ELECTRICAL.....	1
6	PFOZZ	2920010589099	11083	3S2093	.STRAP.....	2
7	MOOZZ		19207	1901021-14	.TUBE MAKE FROM TUBING P/N 5P0385..	1
8	MOOZZ		19207	6A3626-19	.WIRE MAKE FROM WIRE P/N 6A3626....	1
9	PFOZZ	5940001434780	96906	MS25036-108	.TERMINAL,LUG AMMETER.....	1
10	AOOOO		11083	8P1269	WIRE ASSEMBLY.....	1
11	PFOZZ	5940012508720	11083	1S7837	.TERMINAL,LUG.....	1
12	PFOZZ	2920010589099	11083	3S2093	.STRAP.....	2
13	MOOZZ		19207	1901021-172	.TUBE MAKE FROM TUBING P/N 5P0385..	1
14	MOOZZ		19207	6A3626-172	.WIRE MAKE FROM WIRE P/N 6A3626....	1
15	PFOZZ	5940010589112	11083	4L3916	.TERMINAL,QUICK DISC.....	2
16	PFOZZ	2540010630736	11083	2S1043	.BUTT.....	1
17	PFOZZ	6220007787213	11083	1H5166	RETAINER,WIRING HAR.....	4
18	PFOZZ	2590001263730	16764	1892243	HORN,ELECTRICAL.....	1
19	PFOZZ	5305012542516	11083	9S2087	SCREW,CAP,HEXAGON H.....	1
20	PFOZZ	5995011651843	11083	8P1342	LEAD,ELECTRICAL.....	2
21	MOOZZ		19207	6A3626-7	.WIRE MAKE FROM WIRE P/N 6A3626....	1
22	PFOZZ	5940001434793	96906	MS25036-110	.TERMINAL,LUG.....	1
23	PFOZZ	5940010589112	11083	4L3916	.TERMINAL,QUICK DISC.....	1
24	XBOZZ		11083	8P1382	MOUNT.....	2
25	PFOZZ	5310006379541	96906	MS35338-46	WASHER,LOCK.....	4
26	PFOZZ	5306002637301	11083	L1351	BOLT,MACHINE.....	2
27	PFOZZ	5305002528919	11083	0S0509	SCREW,CAP,HEXAGON H.....	2
28	PFOZZ	3040013573576	11083	3R4850	BRACKET,EYE,NONROTA.....	1
29	XBOZZ		11083	8P1270	BRACKET.....	1
30	PFOZZ	2590011496777	16764	1892242	HORN,FLUID OPERATED.....	1
31	AOOOO		11083	6P3222	WIRE ASSEMBLY.....	1
32	PFOZZ	5920010590882	11083	2S5012	.CAP.....	1
33	PFOZA	5999010590884	79550	12871	.CONTACT,ELECTRICAL.....	1
34	MOOZZ		19207	6A3626-7	.WIRE MAKE FROM WIRE P/N 6A3626....	1
35	PFOZZ	5940001434780	96906	MS25036-108	.TERMINAL,LUG.....	1
36	PFOZZ	5920000120151	81349	F02A32V15A	FUSE,CARTRIDGE.....	1
37	PFOZZ	2920010589099	11083	3S2093	STRAP.....	5

END OF FIGURE

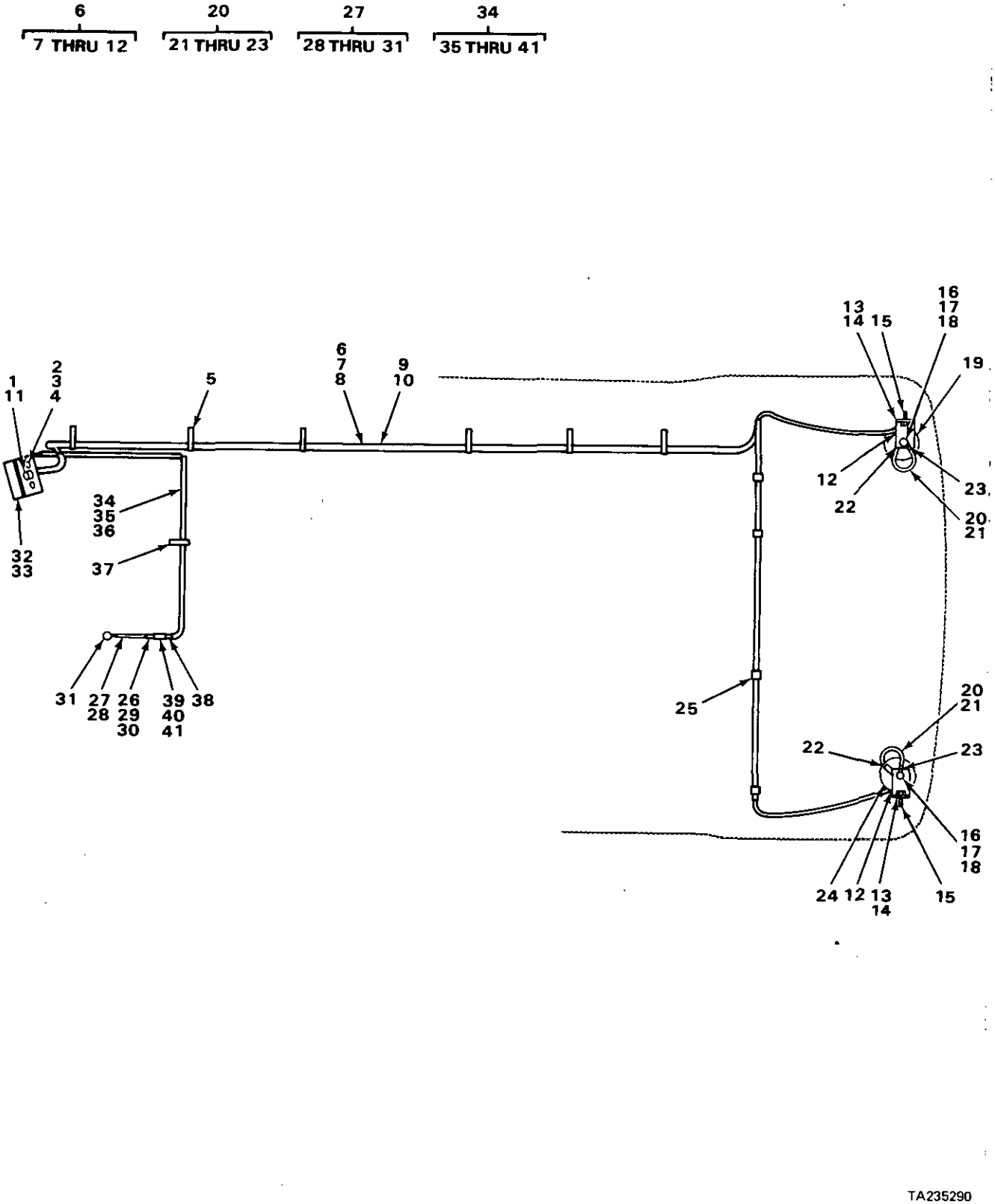

FIGURE 93. ELECTRIC HORN.

(1) ITEM NO	(2) SMR CODE	(3) NSN	(4) CAGEC	(5) PART NUMBER	(6) DESCRIPTION AND USABLE ON CODES(UOC)	(7) QTY
					GROUP 0611 HORN, SIREN.	
					FIG 93. ELECTRIC HORN.	
1	XBOZZ		11083	4K670	SWITCH	1
2	XBOZZ		11083	9F8088	SCREW	2
3	PFOZZ	5310002978836	06848	P16598	NUT,PLAIN,HEXAGON	2
4	PFOZZ	5310005825965	96906	MS35338-44	WASHER,LOCK	2
5	PFOZZ	2920010589099	11083	3S2093	STRAP	14
6	AOOOO		11083	6P1998	WIRE ASSEMBLY	1
7	MOOZZ		19207	5P1277-205	.TUBE MAKE FROM TUBE P/N 5P1277	1
8	MOOZZ		19207	5P497-268	.WIRE MAKE FROM WIRE P/N 5P497	1
9	PFOZZ	2920010589099	11083	3S2093	.STRAP	4
10	PFOZZ	2540010630736	11083	2S1043	.BUTT	1
11	PFOZZ	5940001434793	96906	MS25036-110	.TERMINAL,LUG	1
12	PFOZZ	5940010589112	11083	4L3916	.TERMINAL,QUICK DISC	2
13	XBOZZ		11083	6P3132	BRACKET	2
14	XBOZZ		11083	3P6984	MOUNT	2
15	PFOZZ	5305012542516	11083	9S2087	SCREW,CAP,HEXAGON H	4
16	PFOZZ	5306002637301	11083	L1351	BOLT,MACHINE	2
17	PFOZZ	5310006379541	96906	MS35338-46	WASHER,LOCK	2
18	PFOZZ	5310001174788	11083	5M2894	WASHER,FLAT	2
19	PFOZZ	2590001263730	16764	1892243	HORN,ELECTRICAL	1
20	AOOOO		11083	3S6159	WIRE ASSEMBLY	1
21	MOOZZ		19207	5P497-8	.WIRE MAKE FROM WIRE P/N 5P497	1
22	PFOZZ	5940001434793	96906	MS25036-110	.TERMINAL,LUG	1
23	PFOZZ	5940010589112	11083	4L3916	.TERMINAL,QUICK DISC	1
24	PFOZZ	2590011496777	16764	1892242	HORN,FLUID OPERATED	1
25	PFOZZ	6220007787213	11083	1H5166	RETAINER,WIRING HAR	5
26	PFOZZ	5920000120151	81349	F02A32V15A	FUSE,CARTRIDGE	1
27	AOOOO		11083	6P3222	WIRE ASSEMBLY	1
28	MOOZZ		19207	5P497-66	.WIRE MAKE FROM WIRE P/N 5P497	1
29	PFOZZ	5920010590882	11083	2S5012	.CAP	1
30	PFOZA	5999010590884	79550	12871	.CONTACT,ELECTRICAL	1
31	PFOZZ	5940001434780	96906	MS25036-108	.TERMINAL,LUG	1
32	XBOZZ		11083	2P1726	SUPPORT ASSEMBLY	1
33	XBOZZ		11083	618844	GROMMET	1
34	AOOOO		11083	6P3131	WIRE ASSEMBLY	1
35	MOOZZ		19207	1901021-76	.TUBE MAKE FROM TUBING P/N 5P0385	1
36	MOOZZ		19207	5P497-80	.WIRE MAKE FROM WIRE P/N WIRE P/N 5P497	1
37	PFOZZ	2920010589099	11083	3S2093	.STRAP	2
38	PFOZZ	5940001434793	96906	MS25036-110	.TERMINAL,LUG	1
39	PFOZZ	5920010590881	11083	2S5011	.BODY	1
40	PFOZZ	5360010590883	11083	2S5013	.SPRING	1
41	PFOZA	5999010590884	79550	12871	.CONTACT,ELECTRICAL	1

END OF FIGURE

1	8	11	12	16	17	27
2 THRU 10	9 AND 10	12 THRU 15	13 AND 14	17 THRU 21	18 AND 19	28 THRU 33

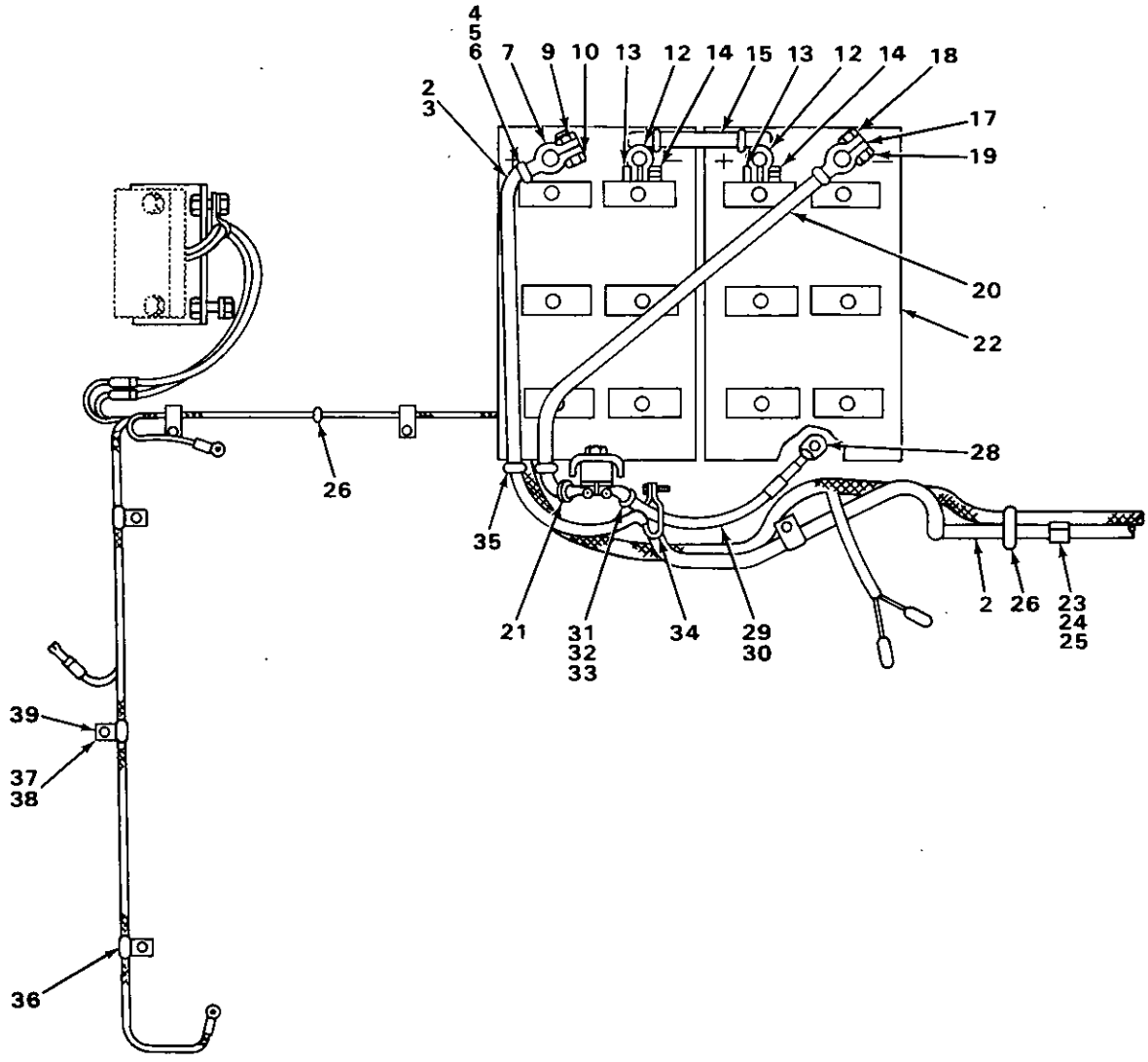

TA235291

FIGURE 94. BATTERY AND CABLES.

(1) ITEM NO	(2) SMR CODE	(3) NSN	(4) CAGEC	(5) PART NUMBER	(6) DESCRIPTION AND USABLE ON CODES(UOC)	(7) QTY
					GROUP 0612 BATTERIES, STORAGE.	
					FIG 94. BATTERY AND CABLES.	
1	XBOOO		11083	1S969	CABLE ASSEMBLY,POWE.....	1
1	PFOZZ	2590010668471	11083	9S4613	CABLE A USE WITH SERIAL RANGE 77V8516 THRU 77V9162.....	1
2	MOOZZ		19207	5P695-31	.CONDUIT MAKE FROM CONDUIT P/N 5P695,USE WITH P/N 1S969.....	1
2	MOOZZ		19207	5P695-88	.CONDUIT MAKE FROM CONDUIT P/N 5P695,USE WITH P/N 9S4613.....	1
3	MOOZZ		19207	5P747-110	.CABLE MAKE FROM CABLE P/N 5P 747, USE WITH P/N 1S969.....	1
3	MOOZZ		19207	5P747-36	.CABLE MAKE FROM CABLE P/N 5P 747, USE WITH P/N 9S4613.....	1
4	PFOZZ	2530010690802	11083	1S2244	.BOOT.....	2
5	PFOZZ	2540010687149	11083	1S4915	.LINER.....	2
6	PFOZZ	2920010589099	11083	3S2093	.STRAP.....	2
7	PFOZZ	5940010589090	11083	1S7251	.TERMINAL,LUG.....	1
8	PFOZZ	5940011693889	11083	3S6049	.TERMINAL,LUG.....	1
9	PFOZZ	5310004388604	11083	1M6120	..NUT,SLEEVE.....	1
10	PFOZZ	5306004388600	11083	1M6119	..BOLT,MACHINE.....	1
11	PFOZZ	5995010590829	11083	4D5882	CABLE ASSEMBLY USE WITH SERIAL RANGE 77V8516 THRU 77V9475.....	1
12	PFOZZ	5940005496581	96906	MS75004-1	.TERMINAL,LUG.....	2
13	PFOZZ	5306004388600	11083	1M6119	..BOLT,MACHINE.....	1
14	PFOZZ	5310004388604	11083	1M6120	..NUT,SLEEVE.....	1
15	MOOZZ		19207	5P747-8	.CABLE MAKE FROM CABLE P/N 5P 747..	1
16	PFOZZ	2590010668457	11083	3P3702	CABLE A USE WITH SERIAL RANGE 77V8516 THRU 77V9475.....	1
17	PFOZZ	5940002018938	11083	3S6050	.TERMINAL,LUG.....	1
18	PFOZZ	5306004388600	11083	1M6119	..BOLT,MACHINE.....	1
19	PFOZZ	5310004388604	11083	1M6120	..NUT,SLEEVE.....	1
20	MOOZZ		19207	5P747-31	.CABLE MAKE FROM CABLE P/N 5P 747..	1
21	PFOZZ	2920010660593	11083	1S7252	.TERMINAL.....	1
22	PAOFA	6140001909828	11083	4S9219	BATTERY,STORAGE USE WITH SERIAL RANGE 77V8516 THRU 77V9475.....	2
23	PFOZZ	5340011519308	11083	1S994	CLAMP,LOOP USE WITH SERIAL RANGE 77V8516 THRU 77V9475.....	4
24	PFOZZ	5305002528919	11083	0S0509	SCREW,CAP,HEXAGON H USE WITH SERIAL RANGE 77V8516 THRU 77V9475...	5
25	PFOZZ	5310006379541	96906	MS35338-46	WASHER,LOCK USE WITH SERIAL RANGE 77V8516 THRU 77V9475.....	5
26	PFOZZ	2920010589099	11083	3S2093	STRAP USE WITH SERIAL RANGE 77V8516 THRU 77V9475.....	10
27	PFOZZ	2590010668472	11083	9S5633	CABLE A USE WITH SERIAL RANGE 77V8516 THRU 77V9475.....	1
28	PFOZZ	2920010660593	11083	1S7252	.TERMINAL.....	2
29	MOOZZ		19207	5P695-31	.CONDUIT MAKE FROM CONDUIT P/N 5P695.....	1
30	MOOZZ		19207	5P747-36	.CABLE MAKE FROM CABLE P/N 5P 747..	1
31	PFOZZ	2530010690802	11083	1S2244	.BOOT.....	2

(1) ITEM NO	(2) SMR CODE	(3) NSN	(4) CAGEC	(5) PART NUMBER	(6) DESCRIPTION AND USABLE ON CODES(UOC)	(7) QTY
32	PFOZZ	2540010687149	11083	1S4915	.LINER.....	2
33	PFOZZ	2920010589099	11083	3S2093	.STRAP.....	2
34	PFOZZ	5342004982939	11083	1S3403	CLIP USE WITH SERIAL RANGE 77V8516 THRU 77V9475.....	1
35	PFOZZ	5325011036650	11083	6P699	GROMMET USE WITH SERIAL RANGE 77V8516 THRU 77V9475.....	2
36	PFOZZ	5340002537912	11083	2M287	CLIP,SPRING TENSION USE WITH SERIAL RANGE 77V8516 THRU 77V9475...	2
37	PFOZZ	5306001332090	11083	1K6705	BOLT,MACHINE USE WITH SERIAL RANGE 77V8516 THRU 77V9475.....	2
38	PFOZZ	5310008095997	96906	MS27183-17	WASHER,FLAT USE WITH SERIAL RANGE 77V8516 THRU 77V9475.....	2
39	PFOZZ	5340005479875	11083	1H5165	PLATE,MENDING USE WITH SERIAL RANGE 77V8516 THRU 77V9475.....	1

END OF FIGURE

5
6 AND 7

15
16

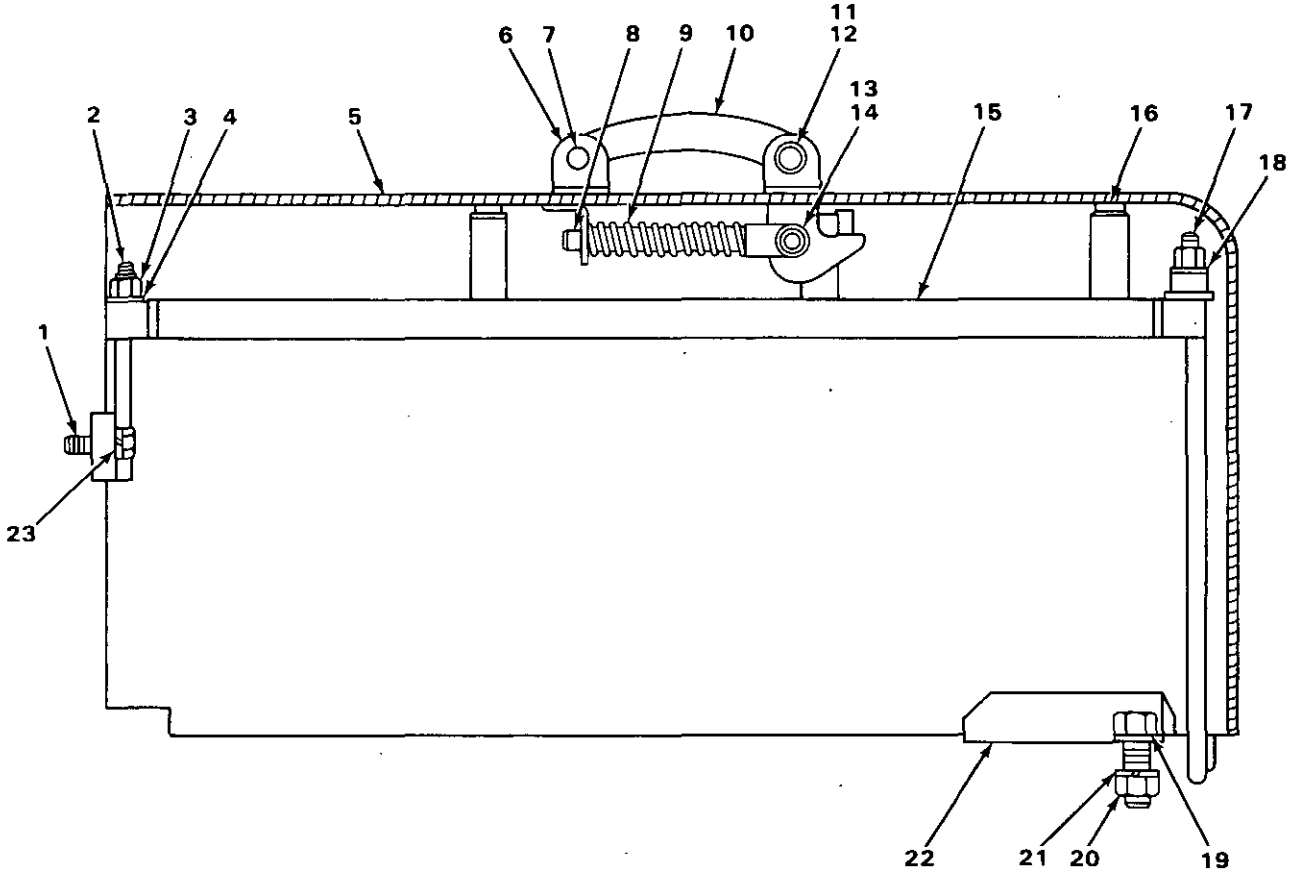

FIGURE 95. BATTERY BOX.

(1) ITEM NO	(2) SMR CODE	(3) NSN	(4) CAGEC	(5) PART NUMBER	(6) DESCRIPTION AND USABLE ON CODES(UOC)	(7) QTY
					GROUP 0612 BATTERIES, STORAGE.	
					FIG 95. BATTERY BOX.	
1	PFOZZ	5306002604508	11083	S1594	BOLT,MACHINE	6
2	XBOZZ		11083	9S6862	ROD ASSEMBLY	3
3	PFOZZ	5310012544256	11083	9H8524	NUT,PLAIN,HEXAGON	7
4	PFOZZ	5310008094061	96906	MS27183-15	WASHER,FLAT	7
5	XBOZZ		11083	9S4944	COVER ASSEMBLY	1
6	PFOZZ	5999011674779	11083	1S6385	.CLIP,ELECTRICAL	4
7	PFOZZ	5315012542278	11083	9S5323	.PIN	2
8	PFOZZ	2510010630636	11083	1H7366	ROD	1
9	PFOZZ	5360000761478	11083	1B9920	SPRING,HELICAL,COMP	1
10	PFOZZ	2510010630635	11083	1H7365	HANDLE	1
11	PFOZZ	5315003636577	11083	2B2938	PIN	1
12	PFOZZ	5315008395822	96906	MS24665-353	PIN,COTTER	1
13	PFOZZ	5315006192962	11083	1J4384	PIN,STRAIGHT,HEADED	1
14	PFOZZ	5315008395821	96906	MS24665-351	PIN,COTTER	1
15	PFOZZ	6140011994503	11083	9S2539	RETAINER,BATTERY	1
16	PFOZZ	5325012237105	11083	9M5617	.GROMMET,NONMETALLIC	12
17	PFOZZ	5306012667332	11083	9S5086	BOLT,U	2
18	PFOZZ	4710012510920	11083	340912	TUBE	4
19	PFOZZ	5306004240086	11083	7B3235	BOLT,MACHINE	2
20	PFOZZ	5310007680318	96906	MS51967-14	NUT,PLAIN,HEXAGON	2
21	PFOZZ	5310005845272	96906	MS35338-48	WASHER,LOCK	2
22	XBOZZ		11083	9S5061	BRACKET ASSEMBLY	1
23	PFOZZ	5310006379541	96906	MS35338-46	WASHER,LOCK	6

END OF FIGURE

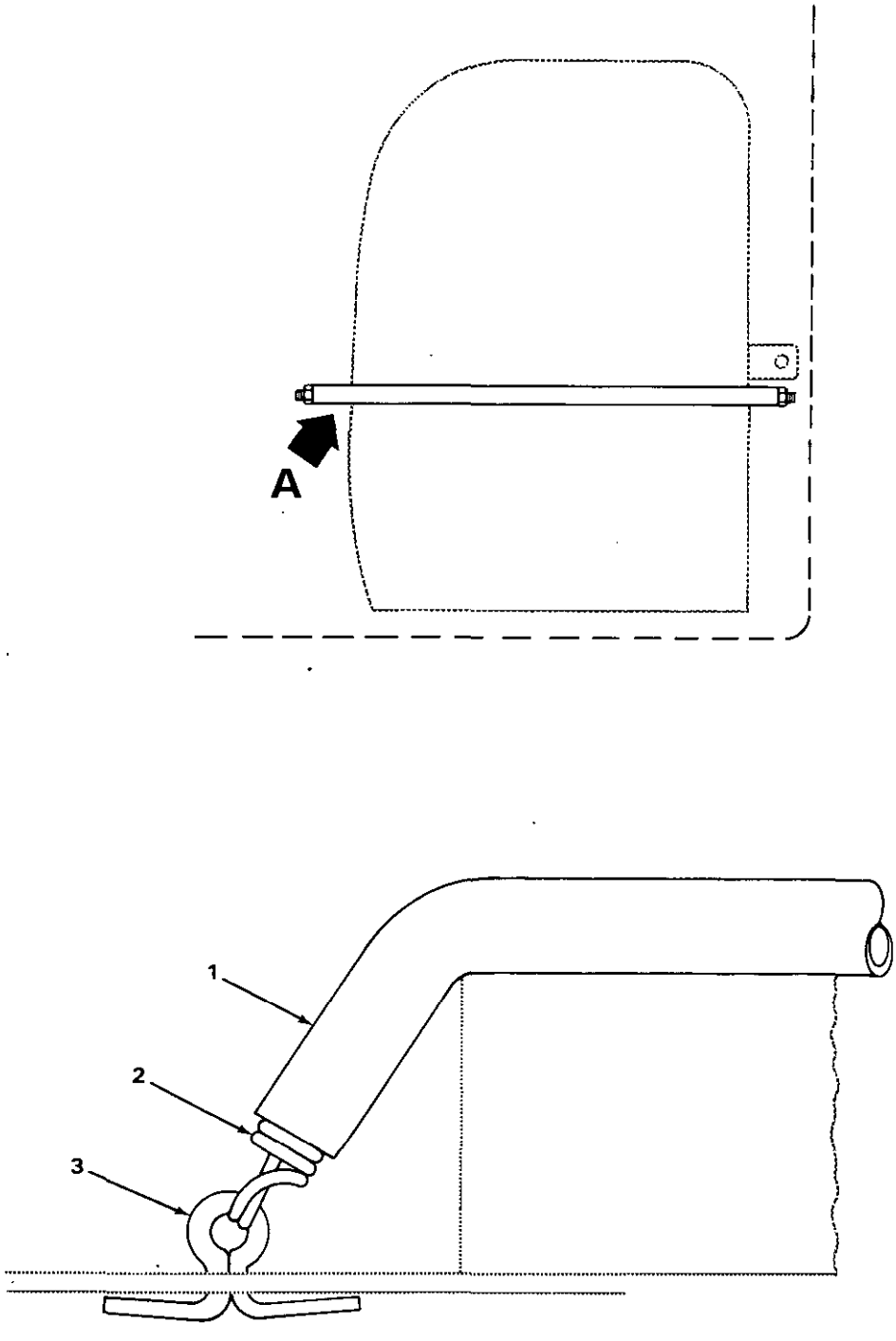

FIGURE 96. BATTERY BOX STRAP.

(1) ITEM NO	(2) SMR CODE	(3) NSN	(4) CAGEC	(5) PART NUMBER	(6) DESCRIPTION AND USABLE ON CODES(UOC)	(7) QTY
					GROUP 0612 BATTERIES, STORAGE.	
					FIG 96 BATTERY BOX STRAP.	
1	MOOZZ		19207	5P5633-12	TUBE MAKE FROM TUBE P/N 5P5633.....	1
2	PFOZZ	5360012542681	11083	9S5645	SPRING,HELICAL,EXTE.....	1
3	PFOZZ	5315000590205	96906	MS24665-490	PIN,COTTER.....	2

END OF FIGURE

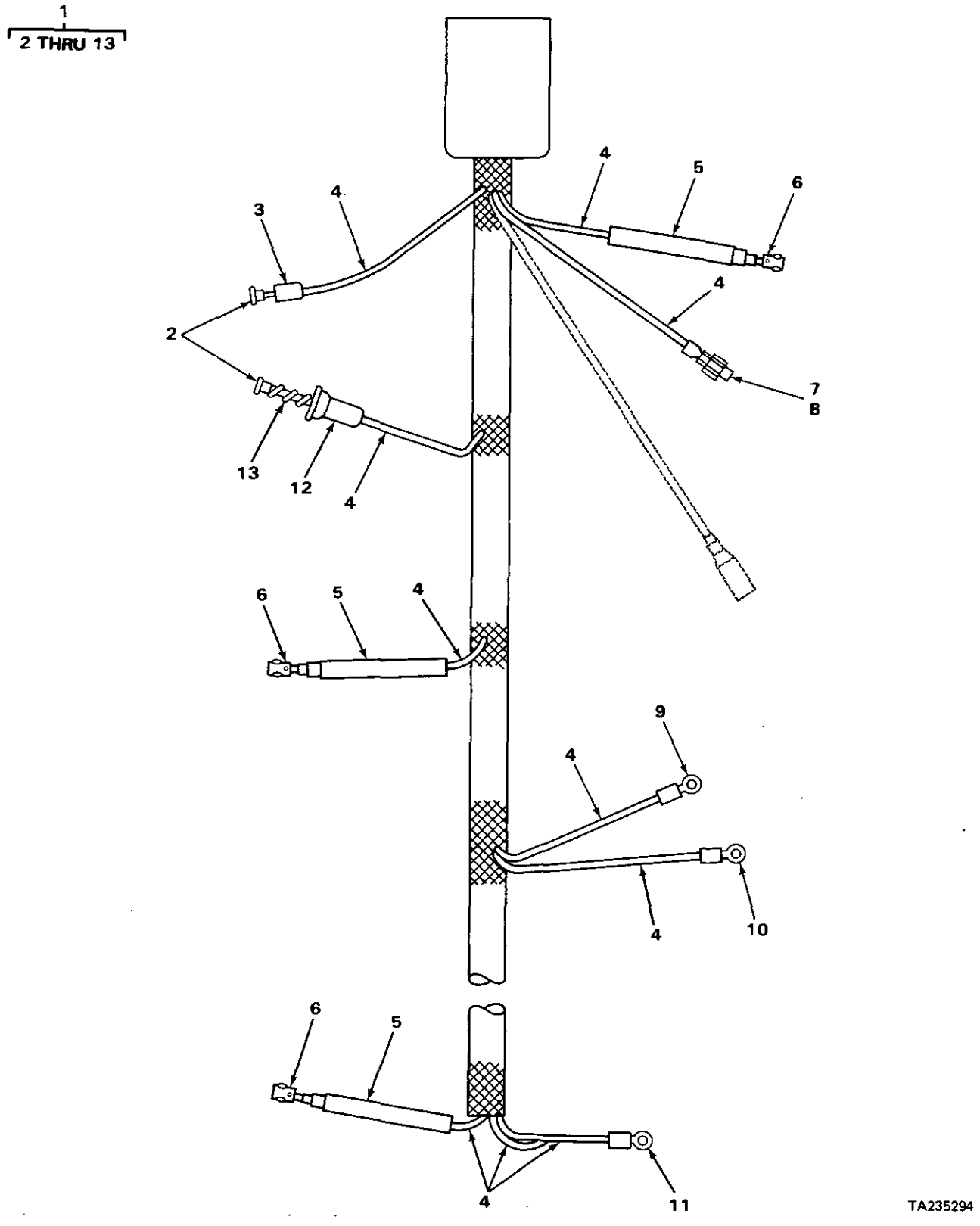

FIGURE 97. MAIN WIRING HARNESS (USE WITH SERIAL RANGE 77V5006 THRU 77V8515).

(1) ITEM NO	(2) SMR CODE	(3) NSN	(4) CAGEC	(5) PART NUMBER	(6) DESCRIPTION AND USABLE ON CODES(UOC)	(7) QTY
					GROUP 0613 HULL OR CHASSIS WIRING HARNESS.	
					FIG 97. MAIN WIRING HARNESS (USE WITH SERIAL RANGE 77V5006 THRU 77V8515).	
1	PFOZZ	2990011036806	11083	3P5886	HARNESS ASSEMBLY.....	1
2	PFOZA	5999010590884	79550	12871	.CONTACT,ELECTRICAL.....	2
3	PFOZZ	5920010590882	11083	2S5012	.CAP.....	1
4	MOOZZ		19207	1037036-1	.WIRE MAKE FROM WIRE P/N 5P5632....	V
4	MOOZZ		19207	5P6642-1	.WIRE MAKE FROM WIRE P/N 5P6642....	V
4	MOOZZ		19207	5P5629-1	.WIRE MAKE FROM WIRE P/N M16878/ 1BKE0.....	V
5	MOOZZ		19207	5P5628-1	.TUBE MAKE FROM TUBE P/N 5P5628....	3
6	PFOZZ	5940012508720	11083	1S7837	.TERMINAL,LUG.....	3
7	XDOZZ		11083	2S5016	.TERMINAL.....	1
8	PFOZZ	5935010627141	11083	3S8183	.CONNECTOR,RECEPTACL.....	1
9	PFOZZ	5940010590873	11083	2L8071	.TERMINAL,LUG.....	1
10	PFOZZ	5940001434794	96906	MS25036-112	.TERMINAL,LUG.....	1
11	PFOZZ	5940001188836	11083	2L8054	.TERMINAL,LUG.....	1
12	PFOZZ	5920010590881	11083	2S5011	.BODY.....	1
13	PFOZZ	5360010590883	11083	2S5013	.SPRING.....	1

END OF FIGURE

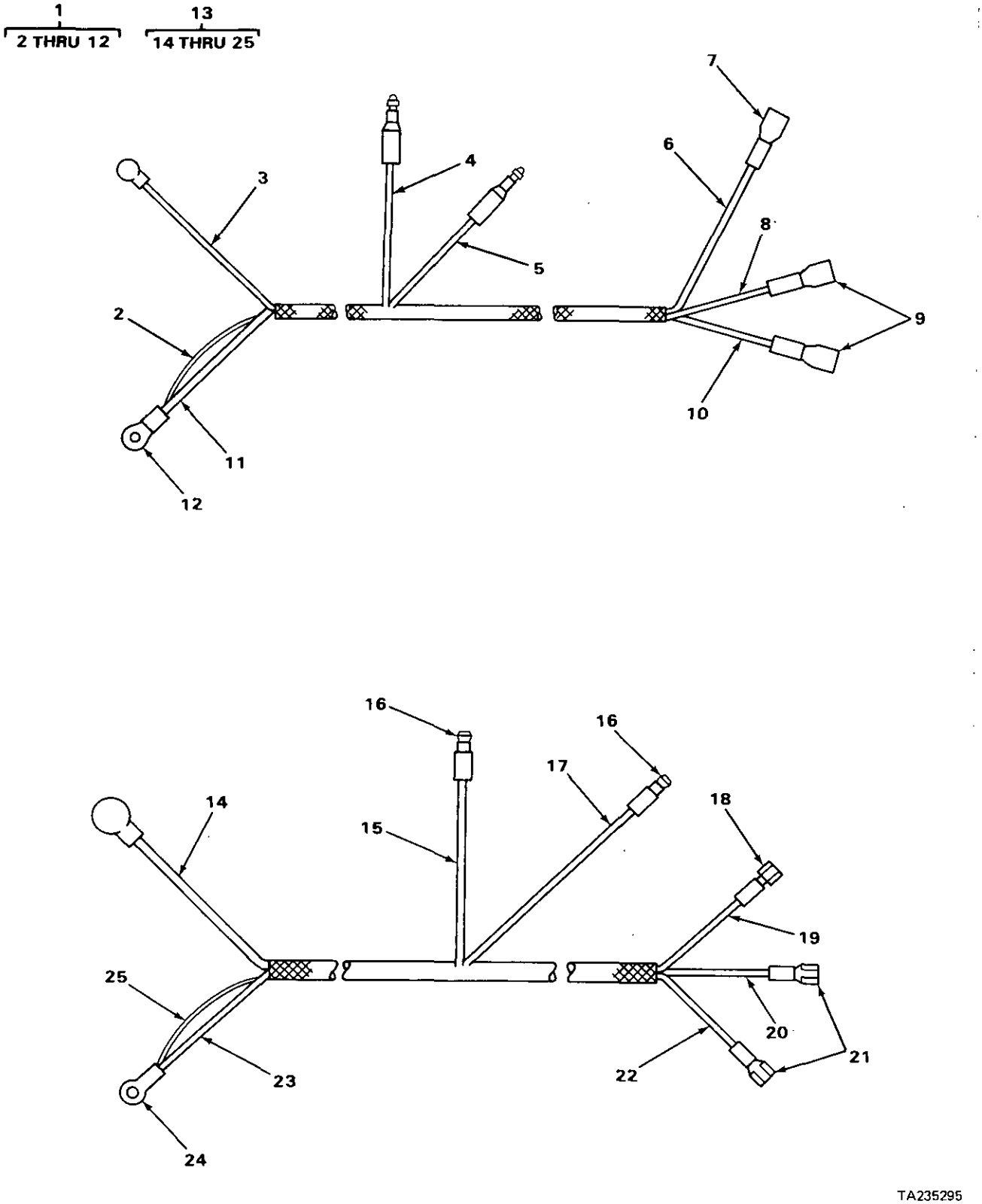

FIGURE 98. WIRING HARNESS (USE WITH ENGINE SERIAL RANGE 17S5966 THRU 17S9688).

(1) ITEM NO	(2) SMR CODE	(3) NSN	(4) CAGEC	(5) PART NUMBER	(6) DESCRIPTION AND USABLE ON CODES(UOC)	(7) QTY
					GROUP 0613 HULL OR CHASSIS WIRING HARNESS	
					FIG 98. WIRING HARNESS (USE WITH ENGINE SERIAL RANGE 17S5966 THRU 17S9688).	
1	AOOOO		11083	8P5883	WIRING HARNESS.....	1
2	MOOZZ		19207	5P5624-1	.WIRE MAKE FROM WIRE P/N 5P5624....	1
3	MOOZZ		19207	5P5624-2	.WIRE MAKE FROM WIRE P/N 5P5624....	1
4	MOOZZ		19207	5P5624-3	.WIRE MAKE FROM WIRE P/N 5P5624....	1
5	MOOZZ		19207	5P5624-4	.WIRE MAKE FROM WIRE P/N 5P5624....	1
6	MOOZZ		19207	5P5624-5	.WIRE MAKE FROM WIRE P/N 5P5624....	1
7	PFOZZ	5940010589112	11083	4L3916	.TERMINAL,QUICK DISC.....	1
8	MOOZZ		19207	5P5624-6	.WIRE MAKE FROM WIRE P/N 5P5624....	1
9	PFOZZ	5940012508721	11083	5P2957	.TERMINAL,QUICK DISC.....	2
10	MOOZZ		19207	5P5624-7	.WIRE MAKE FROM WIRE P/N 5P5624....	1
11	MOOZZ		19207	5P5624-8	.WIRE MAKE FROM WIRE P/N 5P5624....	1
12	PFOZZ	5940001434775	96906	MS25036-156	.TERMINAL,LUG.....	1
13	AOOOO		11083	8P5884	WIRING HARNESS.....	1
14	MOOZZ		19207	5P5624-9	.WIRE MAKE FROM WIRE P/N 5P5624....	1
15	MOOZZ		19207	5P5624-10	.WIRE MAKE FROM WIRE P/N 5P5624....	1
16	XBOZZ		11083	5P6725	.LEAD ASSEMBLY,ELECT.....	2
17	MOOZZ		19207	5P5624-11	.WIRE MAKE FROM WIRE P/N 5P5624....	1
18	PFOZZ	5940010589112	11083	4L3916	.TERMINAL,QUICK DISC.....	1
19	MOOZZ		19207	5P5624-12	.WIRE MAKE FROM WIRE P/N 5P5624....	1
20	MOOZZ		19207	5P5624-13	.WIRE MAKE FROM WIRE P/N 5P5624....	1
21	PFOZZ	5940012508721	11083	5P2957	.TERMINAL,LUG.....	2
22	MOOZZ		19207	5P5624-14	.WIRE MAKE FROM WIRE P/N 5P5624....	1
23	MOOZZ		19207	5P5624-15	.WIRE MAKE FROM WIRE P/N 5P5624....	1
24	PFOZZ	5940001434775	96906	MS25036-156	.TERMINAL,LUG.....	1
25	MOOZZ		19207	5P5624-16	.WIRE MAKE FROM WIRE P/N 5P5624....	1

END OF FIGURE

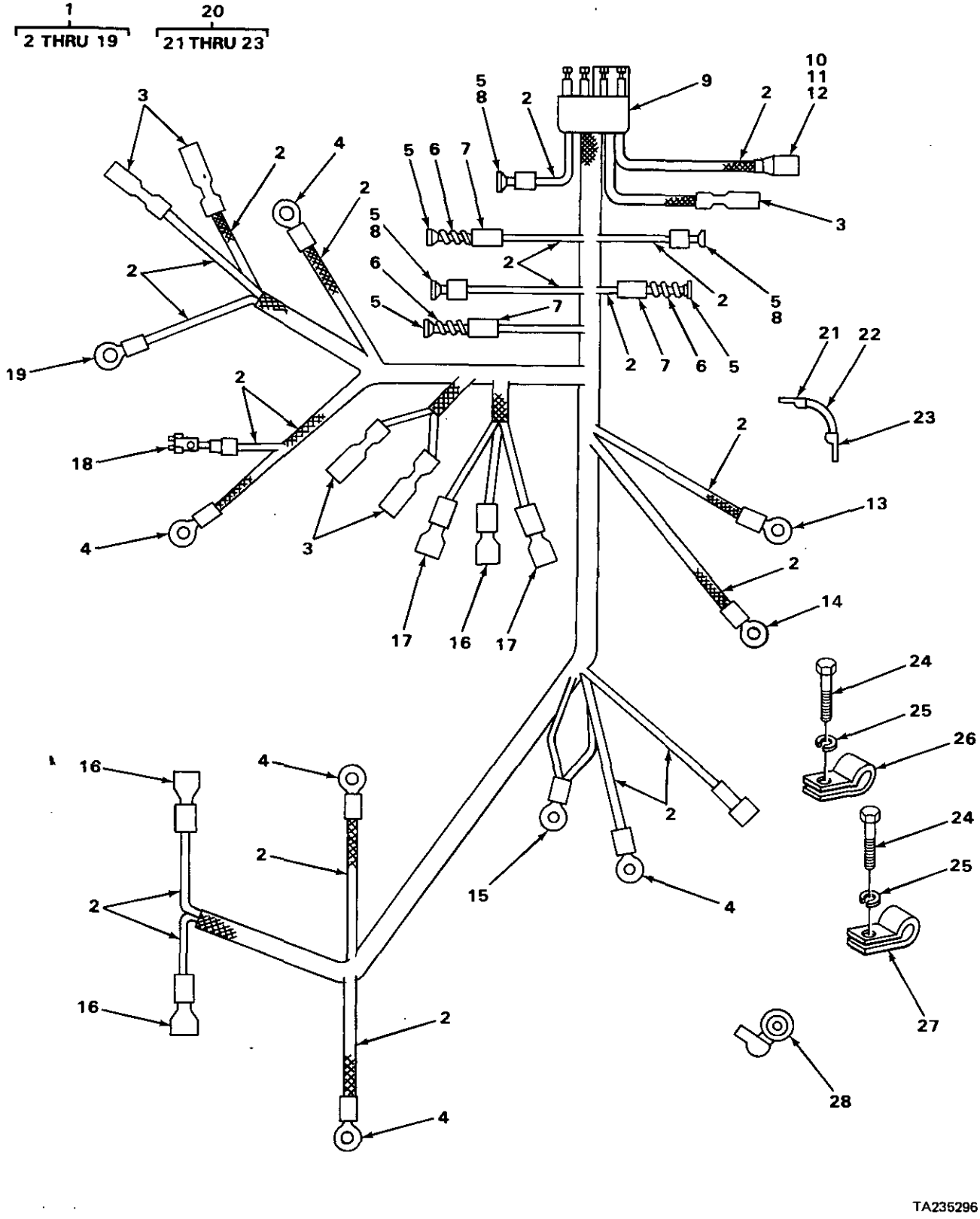

FIGURE 99. MAIN ELECTRIC WIRING HARNESS (USE WITH SERIAL RANGE 77V8516 THRU 77V9475).

(1) ITEM NO	(2) SMR CODE	(3) NSN	(4) CAGEC	(5) PART NUMBER	(6) DESCRIPTION AND USABLE ON CODES(UOC)	(7) QTY
					GROUP 0613 HULL OR CHASSIS WIRING HARNESS.	
					FIG 99. MAIN ELECTRIC WIRING HARNESS (USE WITH SERIAL RANGE 77V8516 THRU 77V9475).	
1	AOOOO		11083	8P7908	WIRING HARNESS.....	1
2	MOOZZ		19207	5P5622-1	.WIRE MAKE FROM WIRE P/N M16878/ 3BMGO.....	V
2	MOOZZ		19207	1913320-1	.WIRE MAKE FROM WIRE P/N 5P5621....	V
2	MOOZZ		19207	5P5624-1	.WIRE MAKE FROM WIRE P/N 5P5624....	V
3	PFOZZ	5940010973578	11083	6N9587	.TERMINAL,QUICK DISC.....	5
4	PFOZZ	5940001434774	96906	MS25036-153	.TERMINAL,LUG.....	5
5	PFOZA	5999010590884	79550	12871	.CONTACT,ELECTRICAL.....	6
6	PFOZZ	5360010590883	11083	2S5013	.SPRING.....	3
7	PFOZZ	5920010590881	11083	2S5011	.BODY.....	3
8	PFOZZ	5920010590882	11083	2S5012	.CAP.....	3
9	PFOZZ	5935011188884	11083	5P3160	.CONNECTOR,PLUG,ELEC.....	1
10	PFOZZ	2920010590878	11083	2R1034	.SHELL.....	1
11	PFOZZ	5940003996676	11083	3M6018	.TERMINAL ASSEMBLY.....	1
12	PFOZZ	5310002988903	19207	8338570	.WASHER,FLAT.....	1
13	PFOZZ	5940010590873	11083	2L8071	.TERMINAL,LUG.....	1
14	PFOZZ	5940001434780	96906	MS25036-108	.TERMINAL,LUG.....	1
15	PFOZZ	5940001188836	11083	2L8054	.TERMINAL,LUG.....	1
16	PFOZZ	5940010589112	11083	4L3916	.TERMINAL,QUICK DISC.....	3
17	PFOZZ	5940012508721	11083	5P2957	.TERMINAL,LUG.....	2
18	PFOZZ	5940012508720	11083	1S7837	.TERMINAL,LUG.....	1
19	PFOZZ	5940002835281	96906	MS25036-109	.TERMINAL,LUG.....	1
20	PFOZZ	6150004813708	11083	3S8624	LEAD,ELECTRICAL.....	1
21	PFOZZ	2920010660593	11083	1S7252	.TERMINAL.....	1
22	MOOZZ		19207	5P747-1	.CABLE MAKE FROM CABLE P/N 5P 747..	1
23	PFOZZ	5940010589090	11083	1S7251	.TERMINAL,LUG.....	1
24	PFOZZ	5306002604508	11083	S1594	BOLT,MACHINE.....	15
25	PFOZZ	5310006379541	96906	MS35338-46	WASHER,LOCK.....	15
26	PFOZZ	5340005479875	11083	1H5165	PLATE,MENDING.....	7
27	PFOZZ	6220007787213	11083	1H5166	RETAINER,WIRING HAR.....	8
28	PFOZZ	5935012690557	11083	8N1075	ADAPTER,CONNECTOR.....	1

END OF FIGURE

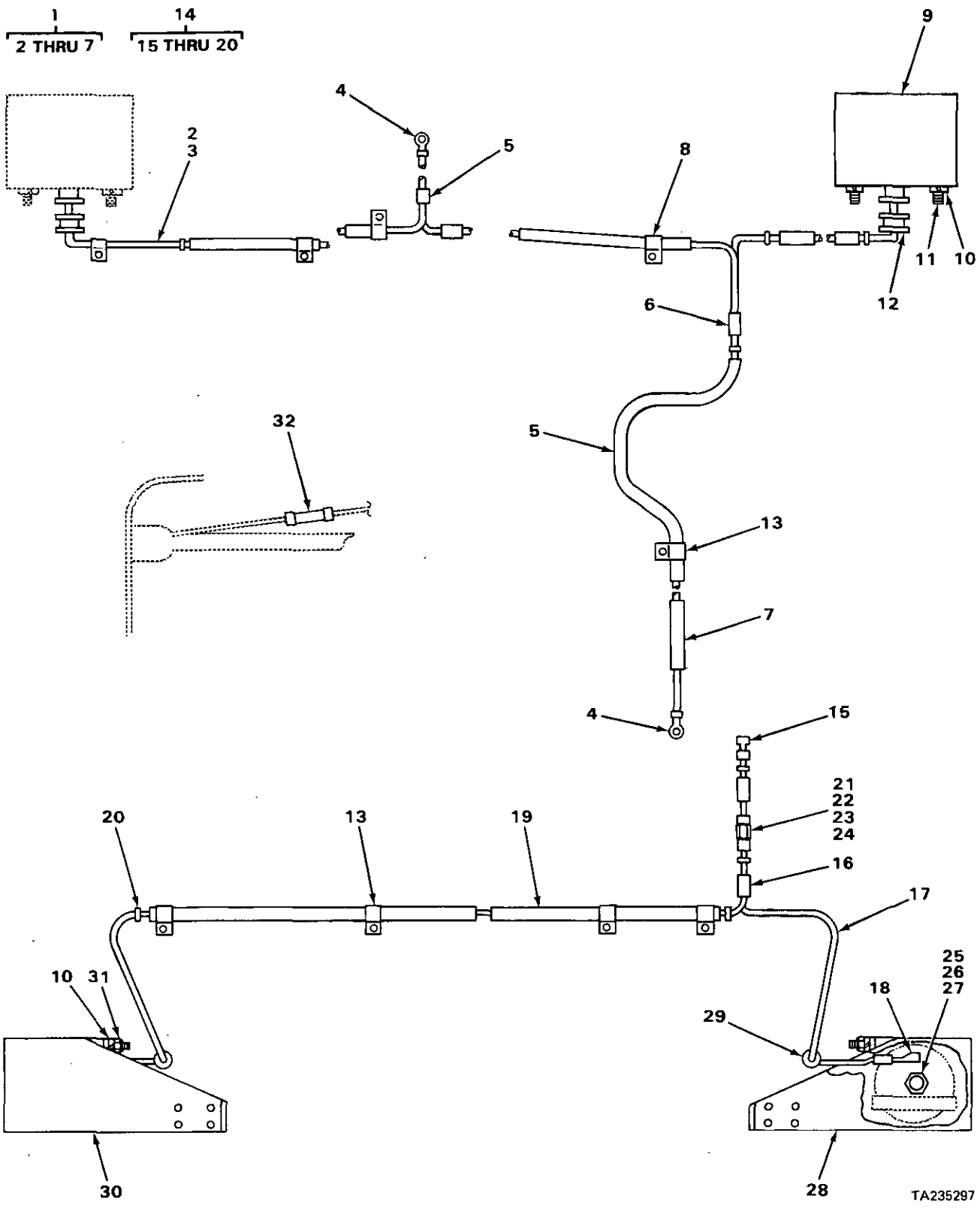

FIGURE 100. HEADLIGHT WIRING HARNESS.

(1) ITEM NO	(2) SMR CODE	(3) NSN	(4) CAGEC	(5) PART NUMBER	(6) DESCRIPTION AND USABLE ON CODES(UOC)	(7) QTY
					GROUP 0613 HULL OR CHASSIS WIRING HARNESS.	
					FIG 100. HEADLIGHT WIRING HARNESS.	
1	PFOZZ	2990011036647	11083	3P7234	WIRE	1
2	MOOZZ		19207	5P497-260	.WIRE MAKE FROM WIRE P/N 5P497	1
3	PFOZZ	5940001434774	96906	MS25036-153	.TERMINAL,LUG LAMPS	2
4	PFOZZ	5940012508720	11083	1S7837	.TERMINAL,QUICK DISC	2
5	MOOZZ		19207	1901021-162	.TUBING,NONMETAL MAKE FROM TUBING P/N 5P0385	1
6	PFOZZ	2540010630736	11083	2S1043	.BUTT	1
7	PFOZZ	2920010589099	11083	3S2093	.STRAP	8
8	PFOZZ	5340002537912	11083	2M287	CLIP,SPRING TENSION	2
9	PFOZZ	5340012280501	11083	6P5659	BRACKET,ANGLE	2
10	PFOZZ	5310006379541	96906	MS35338-46	WASHER,LOCK	20
11	PFOZZ	5306002604508	11083	S1594	BOLT,MACHINE	4
12	PFOZZ	5325012534416	11083	9K700	GROMMET,NONMETALLIC	4
13	PFOZZ	6220007787213	11083	1H5166	RETAINER,WIRING HAR	7
14	PFOZZ	2990011036646	11083	3P7233	WIRE ASSEMBLY	1
15	PFOZZ	5940012508720	11083	1S7837	.TERMINAL,LUG	1
16	PFOZZ	2540010630736	11083	2S1043	.BUTT	1
17	MOOZZ		19207	5P497-161	.WIRE MAKE FROM WIRE P/N 5P497	1
18	PFOZZ	5940001434774	96906	MS25036-153	.TERMINAL,LUG	2
19	MOOZZ		19207	1901021-130	.TUBING,NONMETAL MAKE FROM TUBING P/N 5P0385	1
20	PFOZZ	2920010589099	11083	3S2093	.STRAP	4
21	PFOZZ	5340005479875	11083	1H5165	PLATE,MENDING	2
22	PFOZZ	5306008744001	11083	6H1717	BOLT,MACHINE	1
23	PFOZZ	5310007680318	96906	MS51967-14	NUT,PLAIN,HEXAGON	1
24	PFOZZ	5310005845272	96906	MS35338-48	WASHER,LOCK	1
25	PFOZZ	5310007638905	96906	MS51968-20	NUT,PLAIN,HEXAGON	4
26	PFOZZ	5310000455001	96906	MS35340-50	WASHER,LOCK	4
27	PFOZZ	5310005075727	11083	2B8352	WASHER,SPRING TENSI	8
28	PFOZZ	6220003508204	11083	1M3070	GUARD,LAMP	1
29	PFOZZ	5325008468434	11083	3F1240	GROMMET,NONMETALLIC	2
30	PFOZZ	6220004335959	11083	1M3069	GUARD,LAMP	1
31	PFOZZ	5306004238194	11083	1A2029	BOLT,MACHINE	12
32	PFOZZ	5920011033655	11083	3K8781	FUSE	1

END OF FIGURE

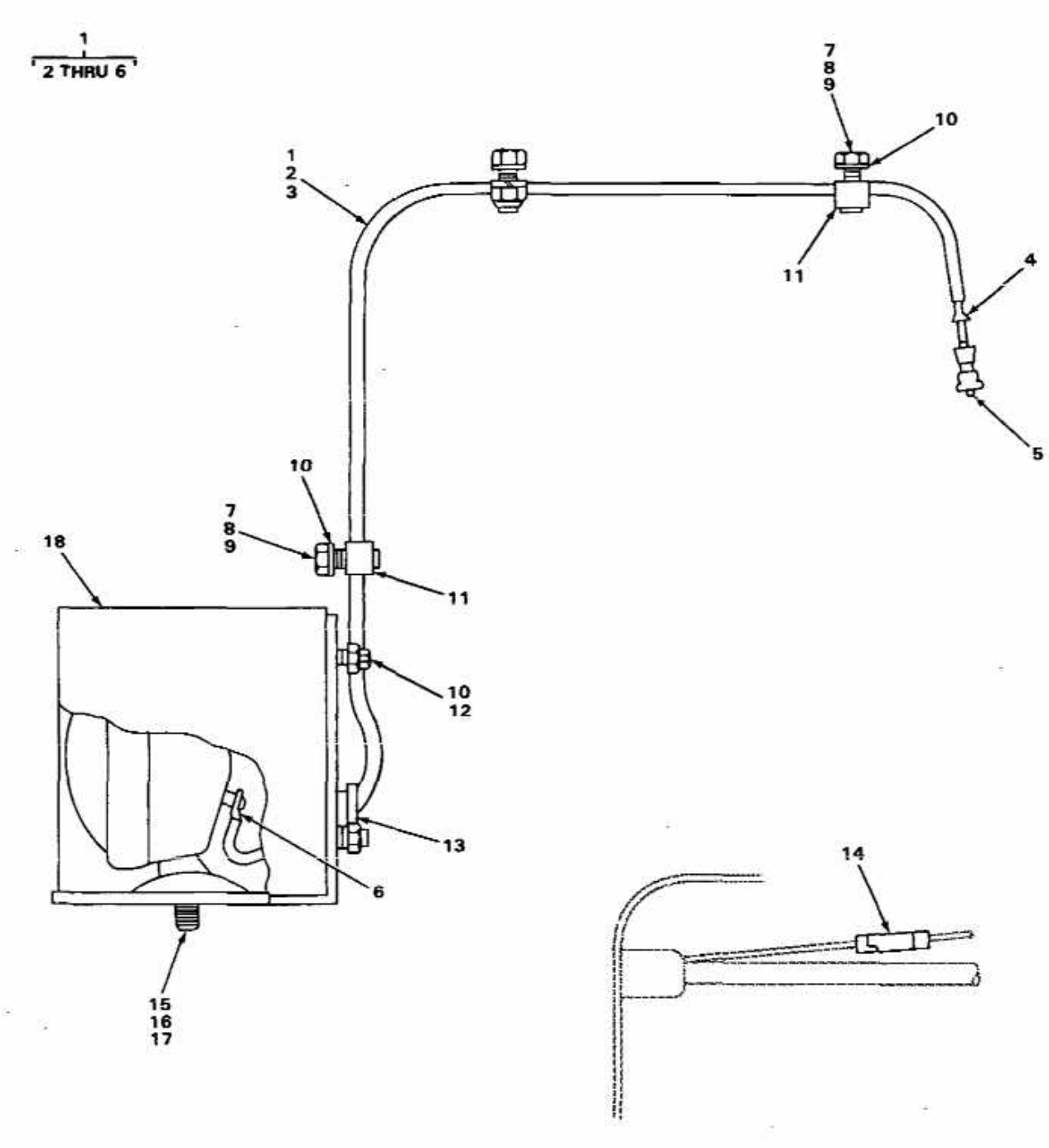

FIGURE 101 RIPPER LIGHT WIRING

(1) ITEM NO	(2) SMR CODE	(3) NSN	(4) CAGEC	(5) PART NUMBER	(6) DESCRIPTION AND USABLE ON CODES(UOC)	(7) QTY
					GROUP 0613 HULL OR CHASSIS WIRING HARNESS	
					FIG 101. RIPPER LIGHT WIRING.	
1	A0000		11083	6P6005	WIRE ASSEMBLY.....	1
2	M00ZZ		19207	5P5624-53	.WIRE MAKE FROM WIRE P/N 5P5624....	1
3	M00ZZ		19207	5P5628-52	.TUBE MAKE FROM TUBE P/N 5P5628....	1
4	PF0ZZ	2920010589099	11083	3S2093	.STRAP.....	2
5	PF0ZZ	5940012508720	11083	1S7837	.TERMINAL,LUG.....	1
6	PF0ZZ	5940001434774	96906	MS25036-153	.TERMINAL,LUG.....	1
7	PF0ZZ	5305002528919	11083	0S0509	SCREW,CAP,HEXAGON H.....	3
8	PF0ZZ	5310011945398	11083	1D4717	NUT,HEXAGON.....	3
9	PF0ZZ	5310012542279	11083	4D4278	WASHER.....	3
10	PF0ZZ	5310006379541	96906	MS35338-46	WASHER,LOCK.....	7
11	PF0ZZ	6220007787213	11083	1H5166	RETAINER,WIRING HAR.....	3
12	PF0ZZ	5306002604508	11083	S1594	BOLT,MACHINE.....	4
13	PF0ZZ	5325002495322	11083	6H4005	GROMMET,NONMETALLIC.....	1
14	PF0ZZ	5920011824738	11083	8M0456	FUSE,CARTRIDGE.....	1
15	PF0ZZ	5310007638905	96906	MS51968-20	NUT,PLAIN,HEXAGON.....	1
16	PF0ZZ	5310000455001	96906	MS35340-50	WASHER,LOCK.....	1
17	PF0ZZ	5310005075727	11083	2B8352	WASHER,SPRING TENSI.....	2
18	PF0ZZ	5340012280501	11083	6P5659	BRACKET,ANGLE.....	1

END OF FIGURE

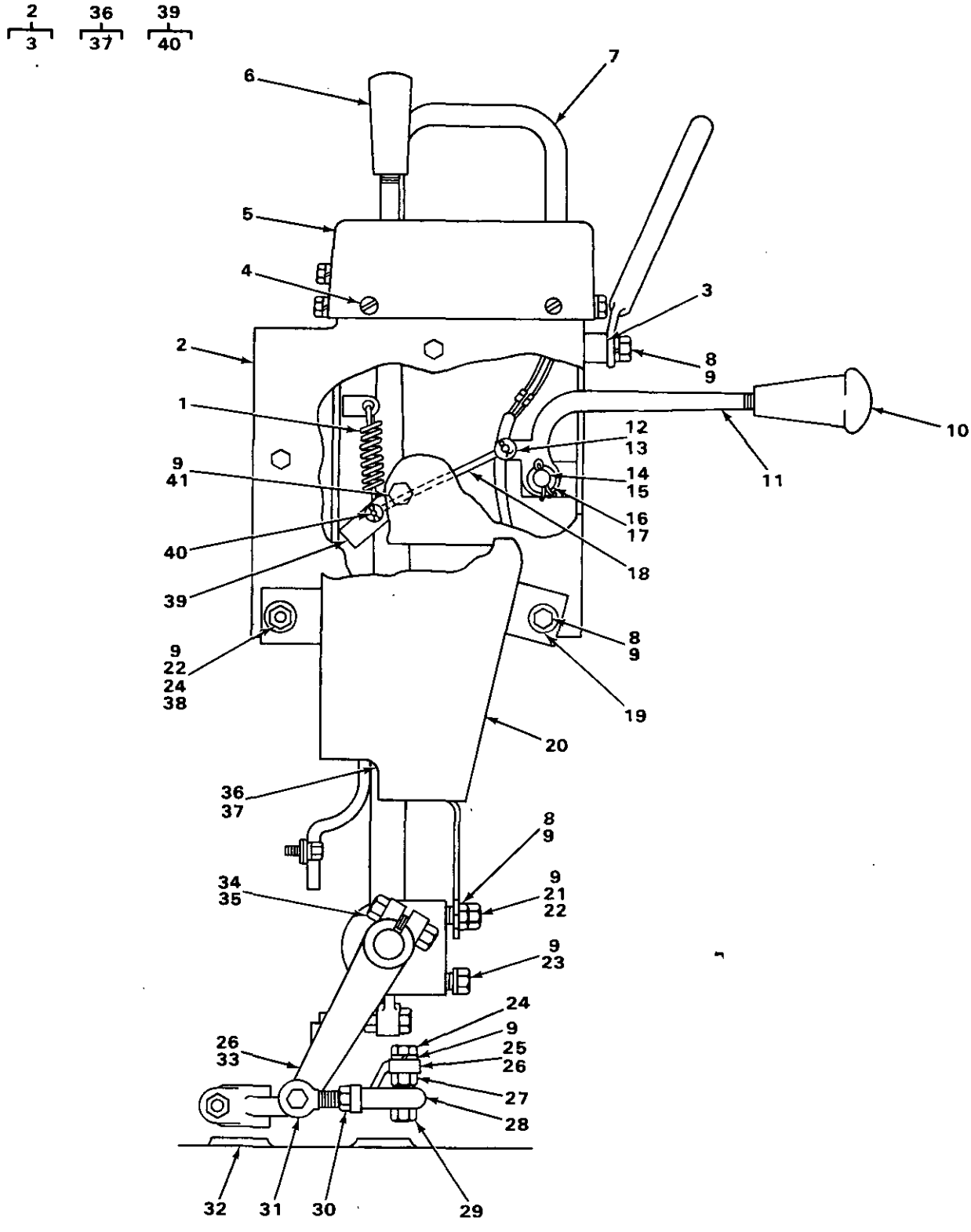

FIGURE 102. TRANSMISSION SHIFTER AND LINKAGE (SIDE VIEW).

(1) ITEM NO	(2) SMR CODE	(3) NSN	(4) CAGEC	(5) PART NUMBER	(6) DESCRIPTION AND USABLE ON CODES(UOC)	(7) QTY
					GROUP 07 TRANSMISSION	
					GROUP 0705 TRANSMISSION SHIFTING COMPONENTS.	
					FIG 102 TRANSMISSION SHIFTER AND LINKAGE (SIDE VIEW).	
1	PFFZZ	5360007572559	11083	4M8799	SPRING,HELICAL,EXTE.....	1
2	XBFFF		11083	1P9092	GUARD ASSEMBLY USE WITH SERIAL RANGE 77V5006 THRU 77V5491.....	1
2	XBFFF		11083	8P4966	GUARD ASSEMBLY USE WITH SERIAL RANGE 77V5492 THRU 77V9475.....	1
3	PFFZZ	5310011603967	11083	5D2643	.NUT,PLAIN,ROUND USE WITH SERIAL RANGE 77V5006 THRU 77V9475.....	3
4	PFFZZ	5305012373324	11083	4B1280	SCREW.....	4
5	PFFZZ	3040012533465	11083	8P4027	HOUSING,MECHANICAL USE WITH SERIAL RANGE 77V5006 THRU 77V9475.....	1
6	PFOZZ	5355008914401	11083	7M706	KNOB.....	1
7	PFFZZ	4710012536894	11083	3P2717	TUBE,BENT,METALLIC.....	1
8	PFFZZ	5306002637301	11083	L1351	BOLT,MACHINE.....	3
9	PFFZZ	5310006379541	96906	MS35338-46	WASHER,LOCK.....	7
10	PFOZZ	5355007308027	11083	2M8908	KNOB.....	1
11	PFFZZ	3040011505425	11083	1P929	LEVER,MANUAL CONTRO.....	1
12	PFFZZ	5310011518350	11083	2A3211	WASHER,FLAT.....	2
13	PFFZZ	5315008392325	96152	A82-1	PIN,COTTER.....	2
14	PFFZZ	5315011702228	11083	1J1971	PIN.....	1
15	PFFZZ	5315008395822	96906	MS24665-353	PIN,COTTER.....	1
16	PFFZZ	5365011612642	11083	6L1698	SPACER,SLEEVE.....	1
17	PFFZZ	5310009307013	11083	4B4280	WASHER,FLAT.....	1
18	PFFZZ	3040012541177	11083	3D5724	CONNECTING LINK,RIG.....	1
19	PFFZZ	5310001174788	11083	5M2894	WASHER,FLAT.....	1
20	XBFZZ		11083	2P8409	SHIELD.....	1
21	PFFZZ	5306002604508	11083	S1594	BOLT,MACHINE USE WITH SERIAL RANGE 77V8516 THRU 77V9475.....	1
22	PFFZZ	5310001174788	11083	5M2894	WASHER,FLAT USE WITH ENGINE SERIAL RANGE 77V8516 THRU 77V9475.....	2
23	PFFZZ	5306002851368	11083	L1143	BOLT,MACHINE.....	2
24	PFFZZ	5310011945398	11083	1D4717	NUT,HEXAGON.....	2
25	XBFZZ		11083	3S717	LEVER.....	1
26	PFFZZ	5315006165526	96906	MS35756-8	KEY,WOODRUFF.....	2
27	PFFZZ	5310001476143	11083	4M497	NUT,PLAIN,HEXAGON.....	2
28	PFFZZ	3120000143507	02695	FR6-15	BEARING,PLAIN,ROD E.....	1
29	PFFZZ	5306001402032	11083	4M496	BOLT,MACHINE.....	2
30	PFFZZ	5310008512682	96906	MS35691-17	NUT,PLAIN,HEXAGON.....	1
31	PFFZZ	3120009490780	62830	FRE6-15	BEARING,PLAIN,ROD E.....	1
32	PFFZZ	5310000257198	71867	C2U25	WASHER,FLAT.....	2
33	XBFZZ		11083	3S718	LEVER.....	1
34	PFFZZ	5306002637305	11083	T924	BOLT,MACHINE.....	1
35	PFFZZ	5310007257382	96906	MS35690-624	NUT,PLAIN,HEXAGON.....	1
36	PFFFF	3040012535581	11083	9S4758	LEVER,REMOTE CONTRO.....	1
37	PFFZZ	3120008586240	11083	5H3895	.BUSHING,SLEEVE.....	1

(1) ITEM NO	(2) SMR CODE	(3) NSN	(4) CAGEC	(5) PART NUMBER	(6) DESCRIPTION AND USABLE ON CODES(UOC)	(7) QTY
38	PFFZZ	5305000680511	80204	B1821BH038C125N	SCREW,CAP,HEXAGON H USE WITH SERIAL RANGE 77V8516 THRU 77V9475...	1
39	PFFFF	3040012529527	11083	1P921	LEVER,MANUAL CONTRO.....	1
40	PFFZZ	5315011604647	11083	3R4762	.PIN,STRAIGHT,HEADLE.....	1
41	PFFZZ	5305011604505	11083	4D9483	SETSCREW.....	2

END OF FIGURE

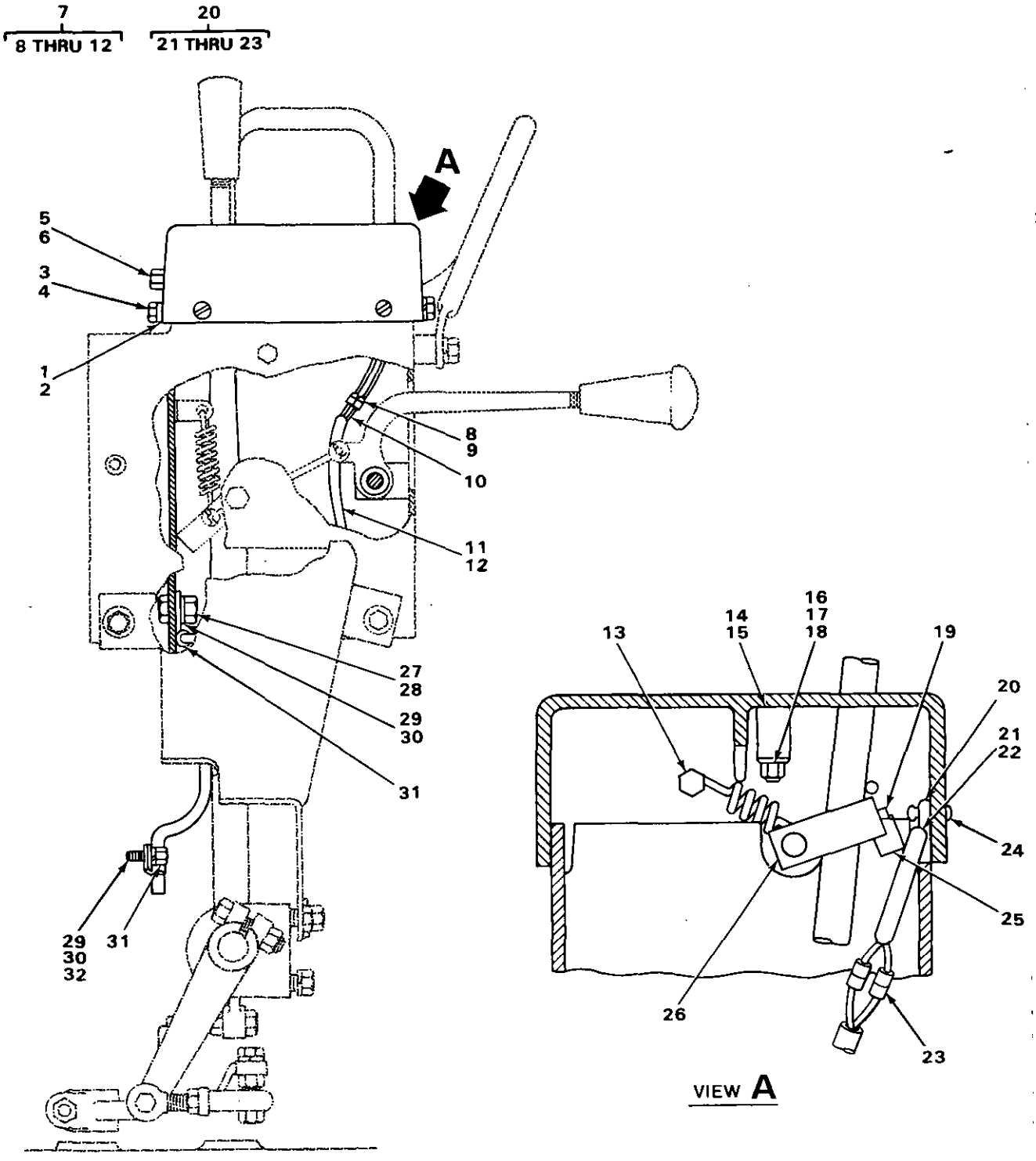

FIGURE 103. TRANSMISSION SHIFTER COMPONENTS (SIDE VIEW, USE WITH SERIAL RANGE 77V8516 THRU 77V9475).

(1) ITEM NO	(2) SMR CODE	(3) NSN	(4) CAGEC	(5) PART NUMBER	(6) DESCRIPTION AND USABLE ON CODES(UOC)	(7) QTY
					GROUP 0705 TRANSMISSION SHIFTING COMPONENTS.	
					FIG 103.TRANSMISSION SHIFTER COMPONENTS (SIDE VIEW, USE WITH SERIAL RANGE 77V8516 THRU 77V9475).	
1	PFFZZ	5310008512682	96906	MS35691-17	NUT,PLAIN,HEXAGON.....	2
2	PFFZZ	5310001174788	11083	5M2894	WASHER,FLAT.....	2
3	PFFZZ	5305011604505	11083	4D9483	SETSCREW.....	2
4	PFFZZ	3120012538946	11083	8P4923	BEARING,WASHER,THRU.....	2
5	PFFZZ	5340012547173	11083	8P2289	RETAINER,NUT AND BO.....	1
6	PFFZZ	5310012098715	11083	7H8909	NUT,SELF-LOCKING,HE.....	1
7	PFFZZ	5995012090426	11083	9P5253	WIRING HARNESS,BRAN.....	1
8	PFFZZ	5940002910085	79550	300-2863	.TERMINAL,QUICK DISC.....	2
9	PFFZZ	5940010973578	11083	6N9587	.TERMINAL,QUICK DISC.....	2
10	MFFZZ		19207	5P5624-49	.WIRE MAKE FROM WIRE P/N 5P5624....	1
11	MFFZZ		19207	5P5995-21	.TUBE MAKE FROM TUBE P/N 5P5995....	1
12	PFFZZ	2920010589099	11083	3S2093	.STRAP.....	2
13	PFFZZ	5360012548890	11083	8P2290	SPRING,SPIRAL,TORSI.....	1
14	PFFZZ	5340012609030	11083	8P4029	BUMPER,NONMETALLIC.....	1
15	PFFZZ	5365012668284	11083	8P7845	SPACER,SLEEVE.....	1
16	PFFZZ	5305012542280	11083	5P5583	SCREW.....	1
17	PFFZZ	5310011059384	11083	310249	NUT,SELF-LOCKING,HE.....	1
18	PFFZZ	5310001435722	04998	WA1248	WASHER,FLAT.....	1
19	PFFZZ	5320010232529	81349	M24243/1-A404	RIVET,BLIND.....	2
20	PFFZZ	5930011627313	11083	9P4608	SWITCH,PUSH.....	1
21	MFFZZ		19207	5P5628-5	.TUBE MAKE FROM TUBE P/N 5P5628....	1
22	PFFZZ	2920010589099	11083	3S2093	.STRAP.....	2
23	PFFZZ	5940002910085	79550	300-2863	.TERMINAL,QUICK DISC.....	2
24	PFFZZ	5320012370685	11083	8M7758	RIVET,BLIND.....	2
25	PFFZZ	5340011706336	11083	9P4609	BRACKET,ANGLE.....	1
26	PFFZZ	3040012535583	11083	8P4925	LEVER,REMOTE CONTRO.....	1
27	PFFZZ	5305002528919	11083	0S0509	SCREW,CAP,HEXAGON H.....	2
28	PFFZZ	5310011945398	11083	1D4717	NUT,HEXAGON.....	2
29	PFFZZ	5310006379541	96906	MS35338-46	WASHER,LOCK.....	3
30	PFFZZ	5310001174788	11083	5M2894	WASHER,FLAT.....	3
31	PFFZZ	5340004264656	11083	4D7794	CLAMP,LOOP.....	3
32	PFFZZ	5306002637301	11083	L1351	BOLT,MACHINE.....	1

END OF FIGURE

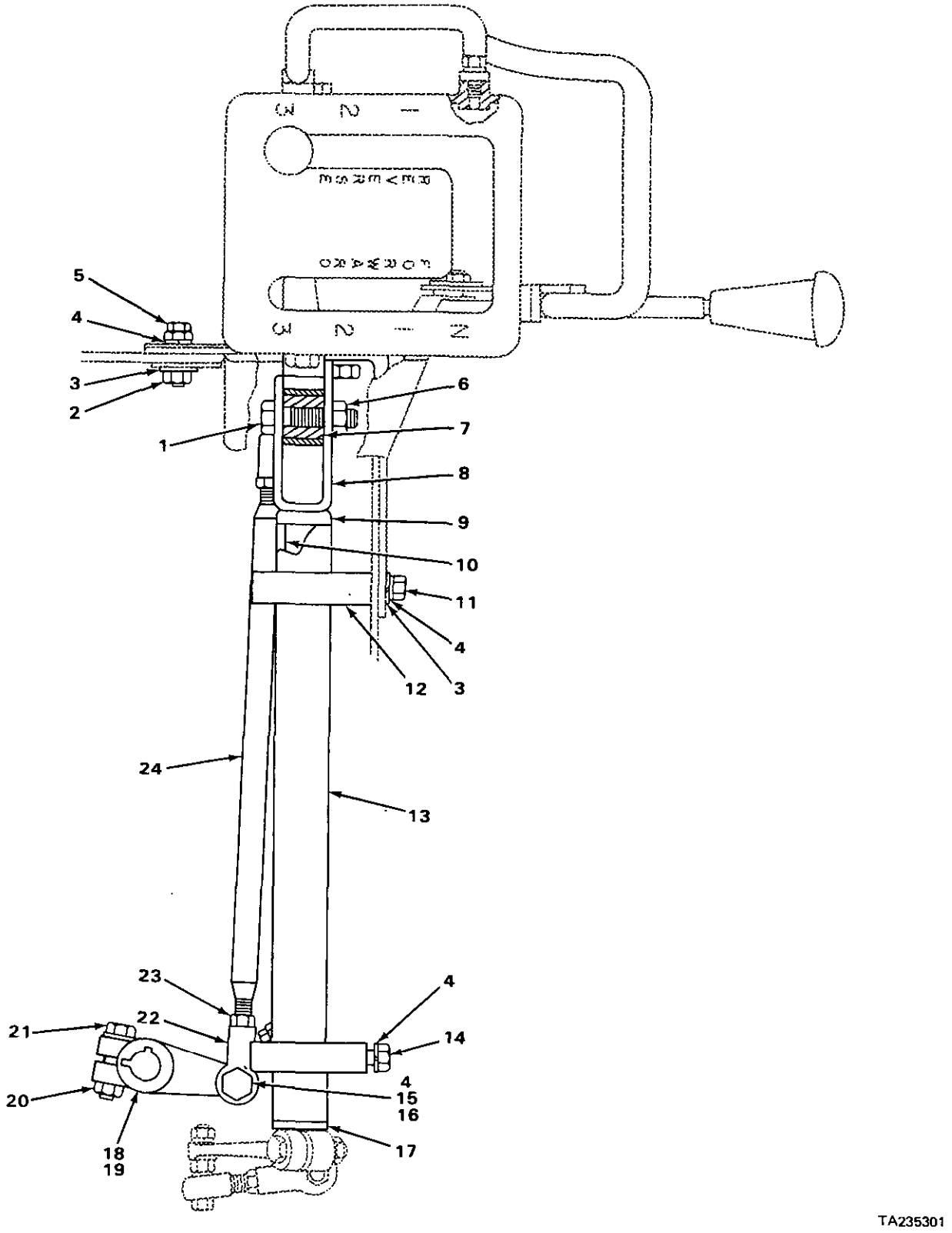

FIGURE 104. TRANSMISSION SHIFTER LINKAGE (TOP VIEW).

(1) ITEM NO	(2) SMR CODE	(3) NSN	(4) CAGEC	(5) PART NUMBER	(6) DESCRIPTION AND USABLE ON CODES(UOC)	(7) QTY
					GROUP 0705 TRANSMISSION SHIFTING COMPONENTS.	
					FIG 104. TRANSMISSION SHIFTER LINKAGE (TOP VIEW).	
1	PFFZZ	5306002736357	11083	1A1460	BOLT,MACHINE.....	1
2	PFFZZ	5310011945398	11083	1D4717	NUT,HEXAGON.....	3
3	PFFZZ	5310001174788	11083	5M2894	WASHER,FLAT.....	2
4	PFFZZ	5310006379541	96906	MS35338-46	WASHER,LOCK.....	10
5	PFFZZ	5305000680511	80204	B1821BH038C125N	SCREW,CAP,HEXAGON H.....	1
6	PFFZZ	5310000443339	19207	443339	NUT,SELF-LOCKING,HE.....	1
7	PFFZZ	5365001362006	11083	2M7167	SPACER,SLEEVE.....	1
8	PFFZZ	2520002511783	11083	1P5307	PROPELLER SHAFT.....	1
9	PFFZZ	5365011304159	11083	9S1385	SPACER,SLEEVE.....	1
10	PFFZZ	3110009306289	60380	JTT1211	BEARING,ROLLER,NEED.....	2
11	PFFZZ	5306002604508	11083	S1594	BOLT,MACHINE.....	1
12	PFFZZ	5342004022822	11083	2M8900	CLAMP SHIFTER SUPPO.....	2
13	XBFZZ		11083	9S6402	SUPPORT.....	1
14	PFFZZ	5306002637301	11083	L1351	BOLT,MACHINE.....	1
15	PFFZZ	5306001402032	11083	4M496	BOLT,MACHINE.....	2
16	PFFZZ	5310001476143	11083	4M497	NUT,PLAIN,HEXAGON.....	2
17	PFFZZ	5310003503243	65282	400536	WASHER,FLAT.....	1
18	XBFZZ		11083	4M443	LEVER.....	1
19	PFFZZ	5315006165526	96906	MS35756-8	KEY,WOODRUFF.....	1
20	PFFZZ	5310007257382	96906	MS35690-624	NUT,PLAIN,HEXAGON.....	2
21	PFFZZ	5306002637305	11083	T924	BOLT,MACHINE.....	2
22	PFFZZ	2910010588075	11083	4D4064	ROD END.....	2
23	PFFZZ	5310009752075	96906	MS35691-21	NUT,PLAIN,HEXAGON.....	2
24	XBFZZ		11083	2R1176	ROD.....	1

END OF FIGURE

1 10
1A AND 2 10A AND 11

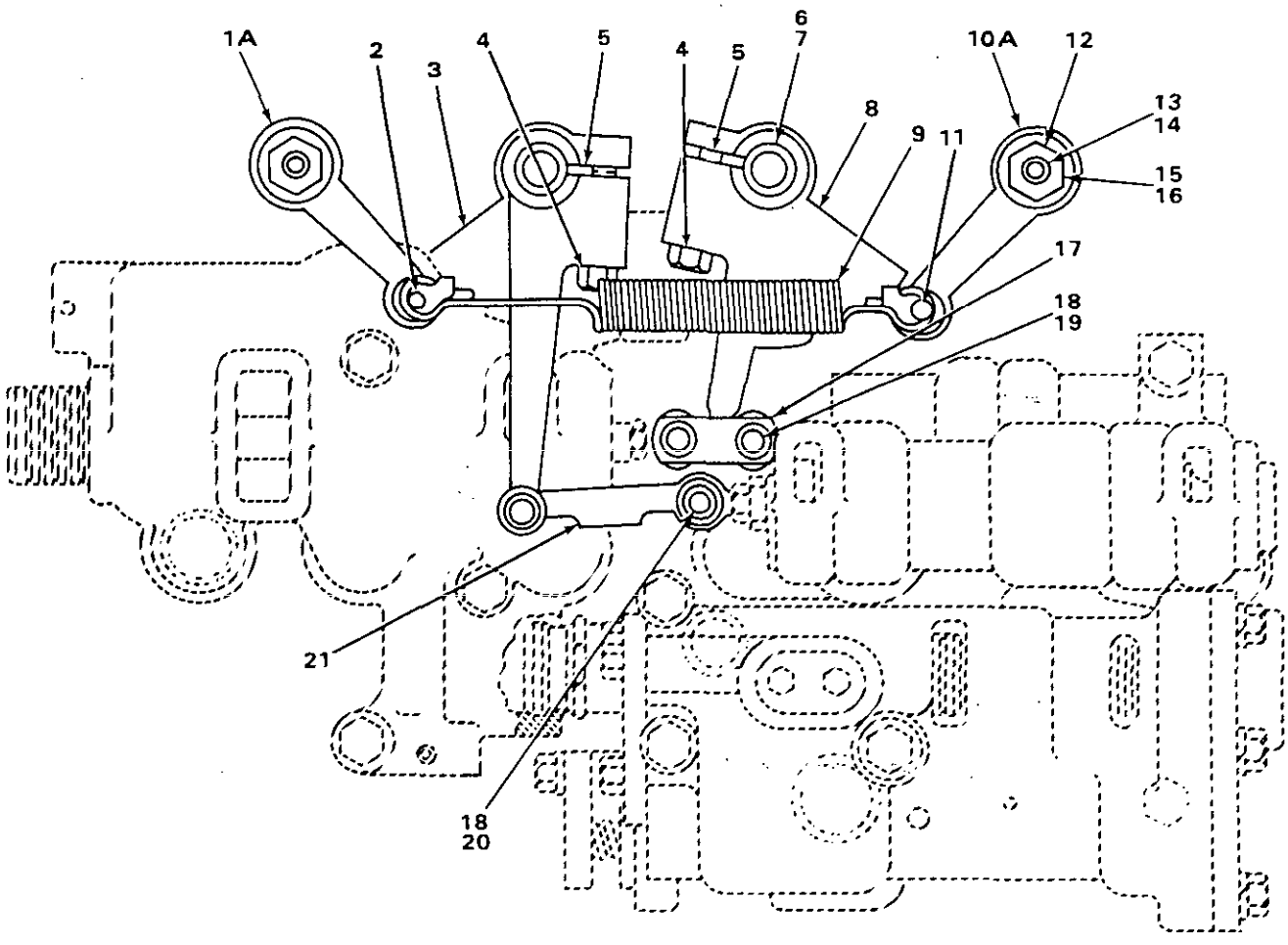

FIGURE 105. TRANSMISSION HYDRAULIC CONTROLS.

(1) ITEM NO	(2) SMR CODE	(3) NSN	(4) CAGEC	(5) PART NUMBER	(6) DESCRIPTION AND USABLE ON CODES(UOC)	(7) QTY
					GROUP 0705 TRANSMISSION SHIFTING COMPONENTS	
					FIG. 105 TRANSMISSION HYDRAULIC CONTROLS	
1	XDHHH		11083	1M3862	DETENT ASSEMBLY.....	1
1A	XDHZZ		11083	1M3148	.DETENT.....	1
2	PFHZZ	5315004093703	58312	1M3833-00	.PIN,GROOVED,HEADLES.....	1
3	PFHZZ	2520004090207	11083	2M7068	LEVER, DETENT.....	1
4	PFHZZ	5306010949106	11083	OS1590	BOLT,MACHINE.....	2
5	PFHZZ	5315006165526	96906	MS35756-8	KEY,WOODRUFF.....	2
6	PFHZZ	2520009601853	11083	1M3917	SHAFT,TRANSMISSION.....	2
7	PAHZZ	5330008953831	11083	9H858	PACKING,PREFORMED.....	2
8	PFHZZ	2520002374581	11083	1M3897	LEVER,DETENT.....	1
9	PFHZZ	5360007885807	11083	1M3926	SPRING,HELICAL,EXTE.....	1
10	PFHZZ	2520004496999	11083	1M3863	CAM CONTROL ASSEMBL.....	1
10A	PFHZZ	3040010687256	11083	1M3148	.DETENT.....	1
11	PFHZZ	5315004093703	58312	1M3833-00	.PIN,GROOVED,HEADLES.....	1
12	PFHZZ	5365010643788	11083	9S5222	SPACER.....	2
13	PFHZZ	5305000712076	80204	B1821BH050C325N	SCREW,CAP,HEXAGON H.....	2
14	PFHZZ	5310005845272	96906	MS35338-48	WASHER,LOCK.....	2
15	PFHZZ	5310007680318	96906	MS51967-14	NUT,PLAIN,HEXAGON.....	2
16	PFFZZ	5310004806100	11083	OV0531	WASHER,FLAT.....	2
17	PFHZZ	2520009489786	11083	1M3836	CONNECTING LEVER.....	2
18	PFHZZ	5315001930923	11083	9H6673	PIN,STRAIGHT,HEADED.....	4
19	PFHZZ	5315008161794	00198	PK379	PIN,COTTER.....	2
20	PFHZZ	5315008395821	96906	MS24665-351	PIN,COTTER.....	2
21	PFHZZ	2520001955817	11083	7M1298	ROD,CONTROL.....	1

END OF FIGURE

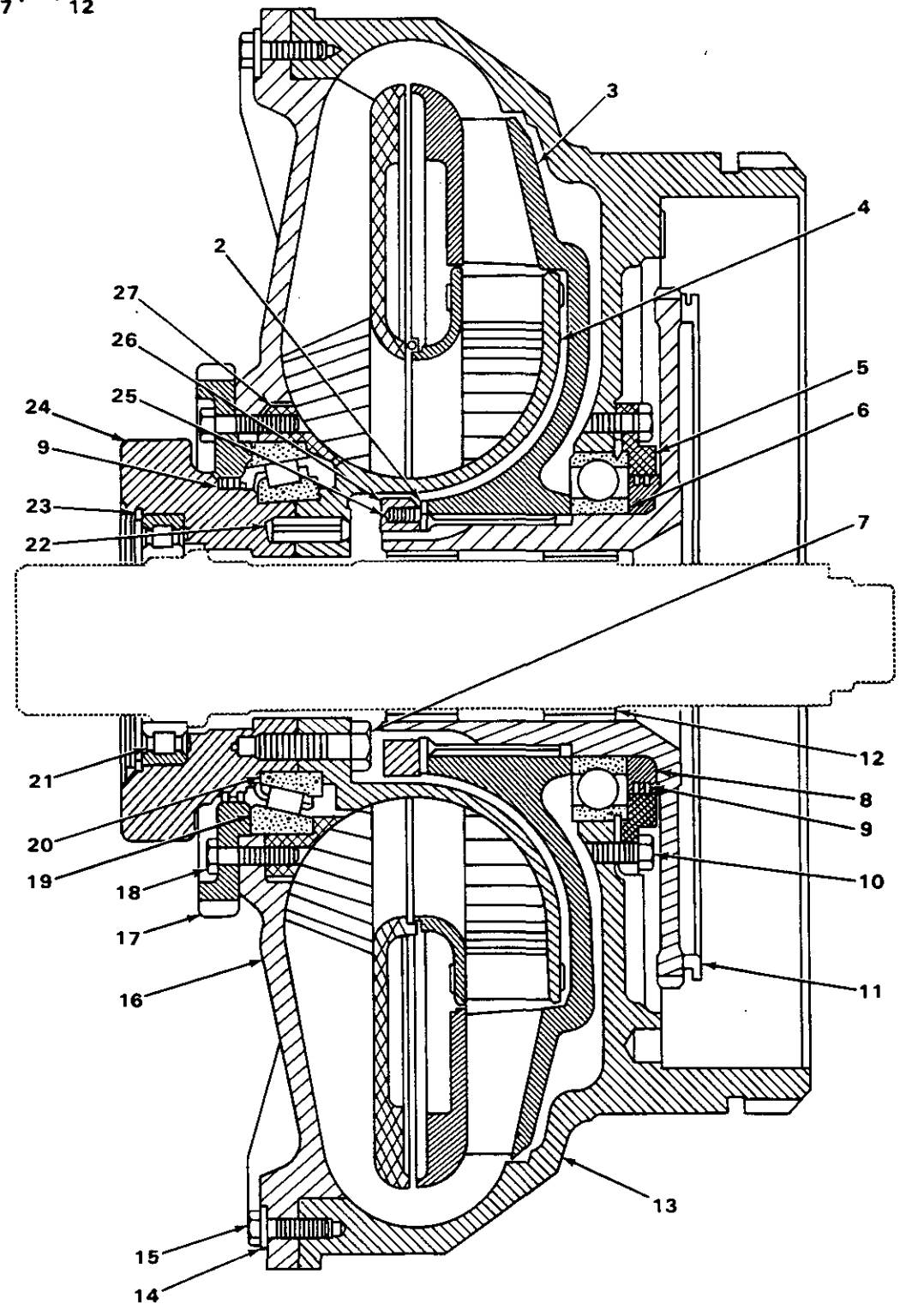

FIGURE 106. TORQUE CONVERTER ASSEMBLY.

(1) ITEM NO	(2) SMR CODE	(3) NSN	(4) CAGEC	(5) PART NUMBER	(6) DESCRIPTION AND USABLE ON CODES(UOC)	(7) QTY
					GROUP 0708 TORQUE CONVERTER OR FLUID COUPLING.	
					FIG 106. TORQUE CONVERTER ASSEMBLY.	
1	PFFHH	2520000978229	11083	1T0670	TORQUE CONVERTER ASSEMBLY,USE WITH SERIAL RANGE 77V5902 THRU 77V9475, AND CONVERTER NO. 30T18181 AND UP...	1
2	XBHZZ		11083	1T242	.WASHER.....	1
3	XDHZZ		11083	1T 221	.DISK,TURBINE,TURBIN.....	1
4	XDHZZ		11083	1T 593	.WHEEL ASSEMBLY GUIDE.....	1
5	XBHZZ		11083	1T231	.PLATE,RETAINING,BEA.....	1
6	XBHZZ		11083	1T610	.BEARING,BALL,ANNULA.....	1
7	PFHZZ	5306011279361	11083	0S1585	.BOLT,MACHINE.....	4
8	XDHZZ		11083	1T 224	.CARRIER,SEATING RIN.....	1
9	XAHZZ	5330007568273	11083	1T309	.PACKING,PREFORMED.....	4
10	PFHZZ	5306002637301	11083	L1351	.BOLT,MACHINE.....	8
11	XBHZZ		11083	1T0237	.FLANGE ASSEMBLY.....	1
12	PFHZZ	3120007885809	11083	1T278	..BEARING,SLEEVE.....	2
13	XAHZZ		11083	1T228	.HOUSING.....	1
14	PFHZZ	5310009542993	77445	107277	.WASHER,FLAT.....	36
15	PFHZZ	5305000680511	80204	B1821BH038C125N	.SCREW,CAP,HEXAGON H.....	36
16	XAHZZ		11083	1T633	.IMPELLER USE WITH P/N 1TD670.....	1
17	XAHZZ	3020009505732	11083	1T256	.GEAR,PUMP DRIVE.....	1
18	PFHZZ	5305010156841	11083	0S1591	.SCREW.....	8
19	XAHZZ		60038	68709	.CUP,TAPERED ROLLER.....	1
20	XAHZZ	3110001003651	11083	2K5065	.CONE AND ROLLERS,TA.....	1
21	PFHZZ	3110010687155	11083	3S1404	.RACE OUTER ASSEMBLY.....	1
22	XAHZZ	5315010669168	11083	2K9062	.PIN.....	6
23	XBHZZ		11083	1T233	.PACKING,PREFORMED.....	1
24	XDHZZ		11083	1T 595	.CARRIER.....	1
25	PFHZZ	5305011037112	11083	1T 241	.SCREW,MACHINE.....	1
26	PFHZZ	5310012538376	11083	1T229	.NUT.....	1
27	XDHZZ		11083	1T 591	.CARRIER.....	1

END OF FIGURE

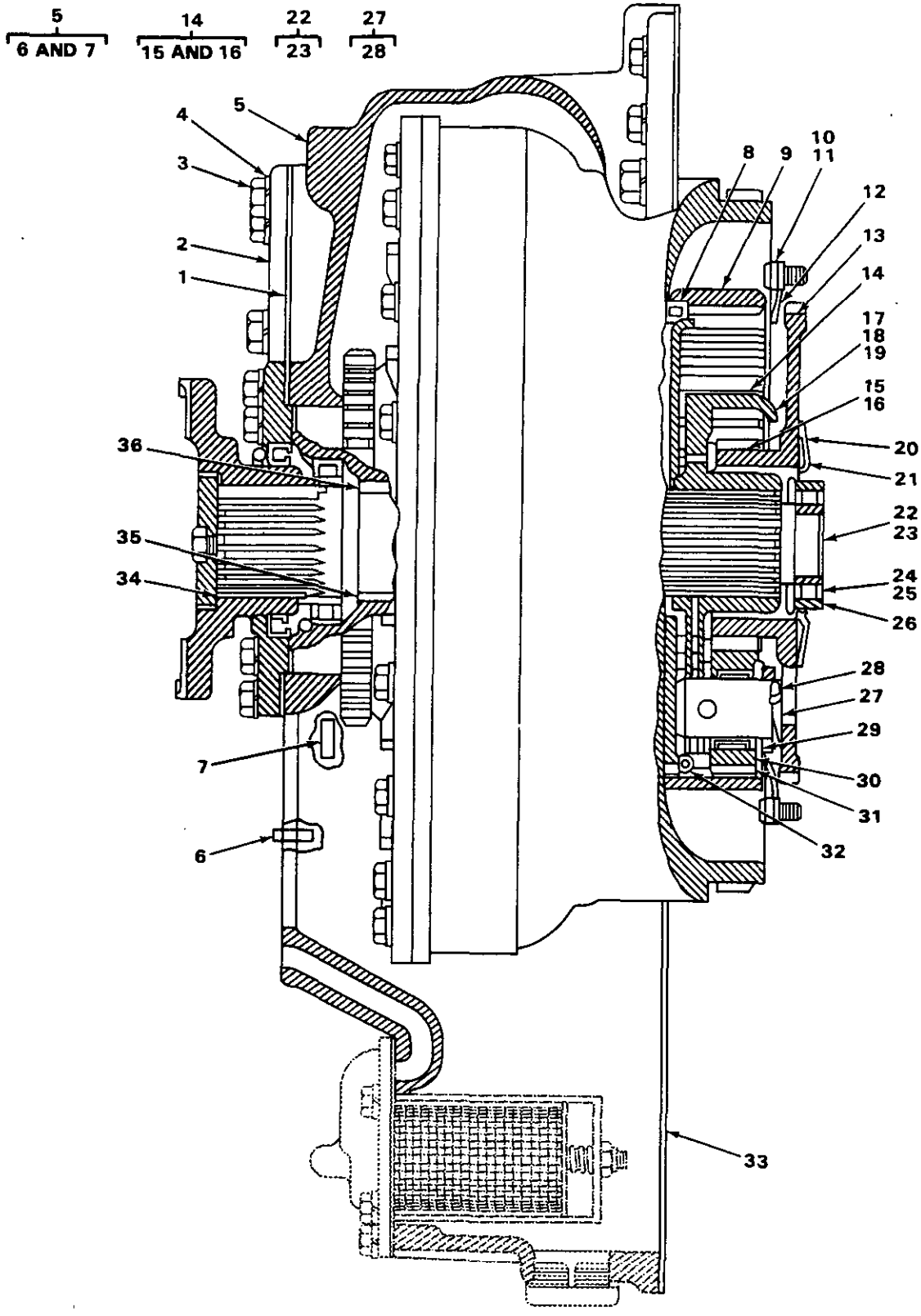

FIGURE 107. TORQUE CONVERTER CARRIER, COVER AND SHAFT.

(1) ITEM NO	(2) SMR CODE	(3) NSN	(4) CAGEC	(5) PART NUMBER	(6) DESCRIPTION AND USABLE ON CODES(UOC)	(7) QTY
					GROUP 0708 TORQUE CONVERTER OR FLUID COUPLING.	
					FIG 107. TORQUE CONVERTER CARRIER, COVER AND SHAFT.	
1	PFFZZ	5330012534355	11083	1M2651	GASKET	1
2	XBFZZ		11083	2S7898	COVER	1
3	PFFZZ	5306002604508	11083	S1594	BOLT,MACHINE	8
4	PFFZZ	5310006379541	96906	MS35338-46	WASHER,LOCK	8
5	XBFZZ		11083	2S7889	COVER ASSEMBLY	1
6	PFFZZ	5340002299294	11083	3B623	.PLUG,EXPANSION	2
7	PFFZZ	5315003627367	11083	5B5812	.PIN,STRAIGHT,HEADLE	2
8	PFFZZ	5315010690755	11083	5H8985	PIN	2
9	PFFZZ	3020010690786	11083	5M8007	GEAR,DRIVE MOTION	1
10	PFFZZ	5305002528919	11083	0S0509	SCREW,CAP,HEXAGON H	8
11	PFFZZ	5310003638828	11083	5B7617	WASHER,TAB LOCK	4
12	PFFZZ	5342010687112	11083	5M7959	RETAINER	4
13	PFFZZ	3020010690865	11083	5M7989	GEAR,DRIVE MOTION	1
14	PFFZZ	2520010687111	11083	5M7953	CARRIER	1
15	PFFZZ	5310010675661	11083	5M7961	.WASHER	2
15	XBFZZ		11083	8P1957	.BEARING,WASHER,THRU USE WITH SERIAL RANGE 77V5006 THRU 77V9475	2
16	PFFZZ	5320009490552	11083	7M8594	.RIVET USE WITH SERIAL RANGE 77V5006 THRU 77V5901	5
17	PFFZZ	5306002264841	80204	B1821BH031C400N	BOLT,MACHINE	3
18	PFFZZ	5310008807744	96906	MS51967-5	NUT,PLAIN,HEXAGON	3
19	PFFZZ	2815004238767	11083	2A5328	LOCK PLATE	3
20	PFFZZ	5310012598502	11083	9H7908	WASHER	1
21	PFFZZ	2520006328279	11083	1M9653	RING,TRANSMISSION	1
22	PFFZZ	2530010690805	11083	3S9919	SHAFT A	1
23	PFFZZ	5342009385530	11083	1M4102	.PLUG,SHAFT	1
24	PFFZZ	3110009138113	11083	2K5254	BEARING,ROLLER,CYLI ASSEMBLY OUTER.	1
25	PFFZZ	3110009166468	43334	A1209	RING,BEARING,INNER	1
26	PFFZZ	5365010711970	11083	4M8910	RING	1
27	PFFZZ	2530010690784	11083	5M7955	SHAFT A	3
28	PFFZZ	5340007373635	19207	7373635	.PLUG,EXPANSION	1
29	PFFZZ	2520007885571	11083	7M5783	WASHER TRANSMISSION	6
29	PFFZZ	5310010669181	11083	2P2887	WASHER USE WITH SERIAL RANGE 77V5006 THRU 77V9475	6
30	PFFZZ	3110002495244	11083	5M2051	BEARING,ROLLER,JOUR	3
31	XAFZZ		11083	5M7996	GEAR	3
32	XBFZZ		11083	2M1125	RING	1
33	PFFZZ	5330006280547	11083	4H9026	GASKET	1
34	XBFZZ		43334	A1015	RING,BEARING,INNER	1

END OF FIGURE

16
17

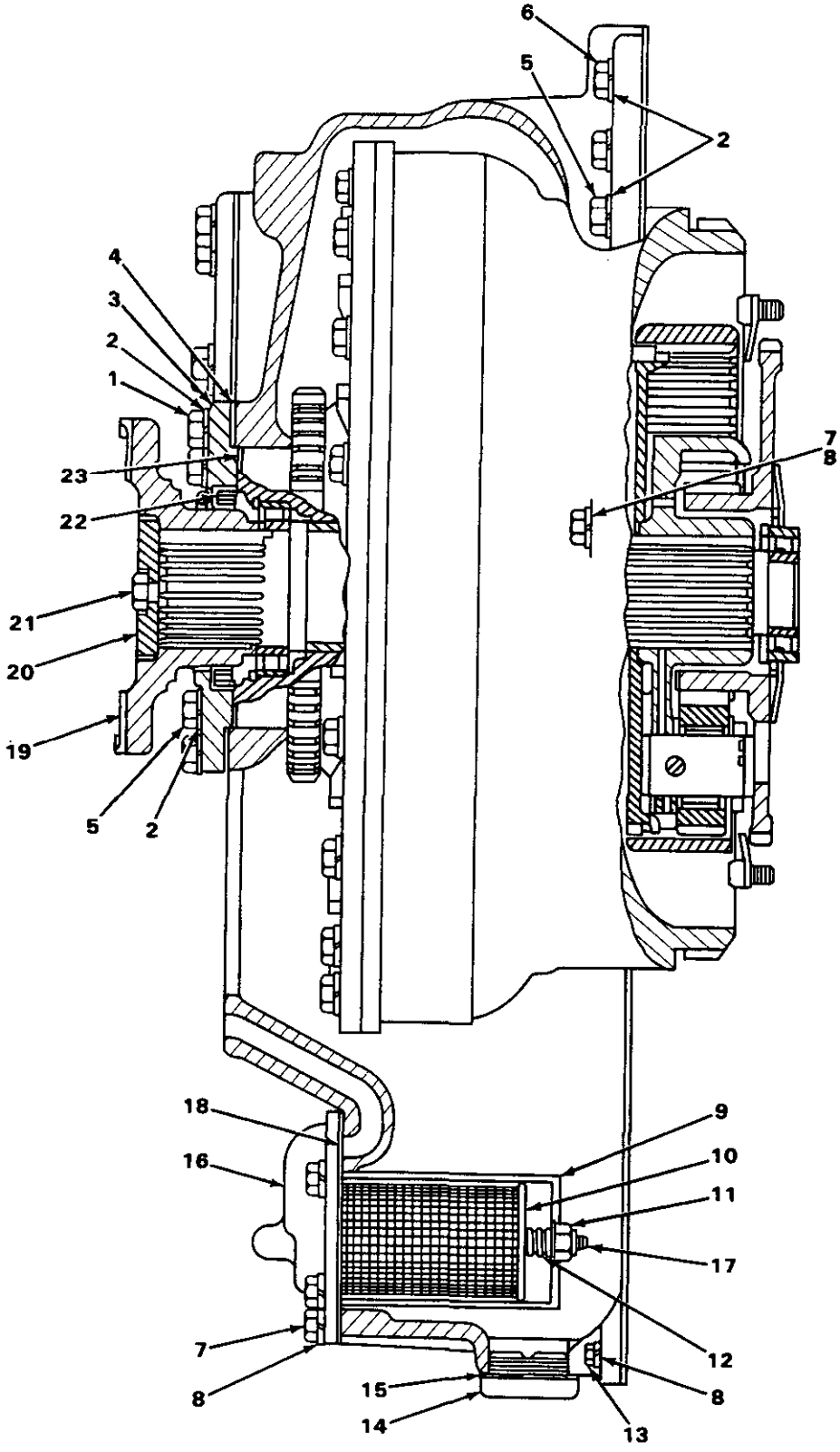

FIGURE 108. TORQUE CONVERTER ASSOCIATED PARTS.

(1) ITEM NO	(2) SMR CODE	(3) NSN	(4) CAGEC	(5) PART NUMBER	(6) DESCRIPTION AND USABLE ON CODES(UOC)	(7) QTY
					GROUP 0708 TORQUE CONVERTER OR FLUID COUPLING.	
					FIG 108. TORQUE CONVERTER ASSOCIATED PARTS.	
1	PFFZZ	5306004240086	11083	7B3235	BOLT,MACHINE.....	7
2	PFFZZ	5310005845272	96906	MS35338-48	WASHER,LOCK.....	30
3	XBFZZ		11083	5M7941	PLATE.....	1
4	PFFZZ	5330007612536	11083	1M6594	GASKET.....	1
5	PFFZZ	5306011279361	11083	0S1585	BOLT,MACHINE.....	11
6	PFFZZ	5310009720479	11083	1F7958	NUT,PLAIN,HEXAGON.....	12
7	PFFZZ	5306004238194	11083	1A2029	BOLT,MACHINE.....	6
8	PFFZZ	5310006379541	96906	MS35338-46	WASHER,LOCK.....	18
9	XBFZZ		11083	5M7983	BAFFLE A.....	1
10	PFFZZ	2520009749493	11083	4H2978	SCREEN ASSEMBLY,OIL.....	1
11	PFFZZ	5310009500039	96906	MS21044N6	NUT,SELF-LOCKING,HE.....	1
12	PFFZZ	5360002493505	11083	4B7033	SPRING,HELICAL,COMP.....	1
13	PFFZZ	5310007257382	96906	MS35690-624	NUT,PLAIN,HEXAGON.....	12
14	PFFZZ	5365005952836	11083	8B6599	PLUG,MACHINE THREAD.....	1
15	PFFZZ	5330001904255	11083	L1124	GASKET.....	1
16	XBFZZ		11083	4M5945	COVER ASSEMBLY.....	1
17	XBFZZ		11083	4H2981	.STUD,PLAIN.....	1
18	PFFZZ	5330009192846	11083	4M5943	GASKET.....	1
19	PFFZZ	3110010686118	11083	3S9911	FLANGE,BEARING.....	1
20	XBFZZ		11083	3S1262	RETAINER.....	1
21	PFFZZ	5306004262870	11083	L1558	BOLT,MACHINE.....	1
22	PFFZZ	5330000978231	11083	8H9155	SEAL,OIL.....	1
23	PFFZZ	5330009490070	11083	1M6593	GASKET.....	1

END OF FIGURE

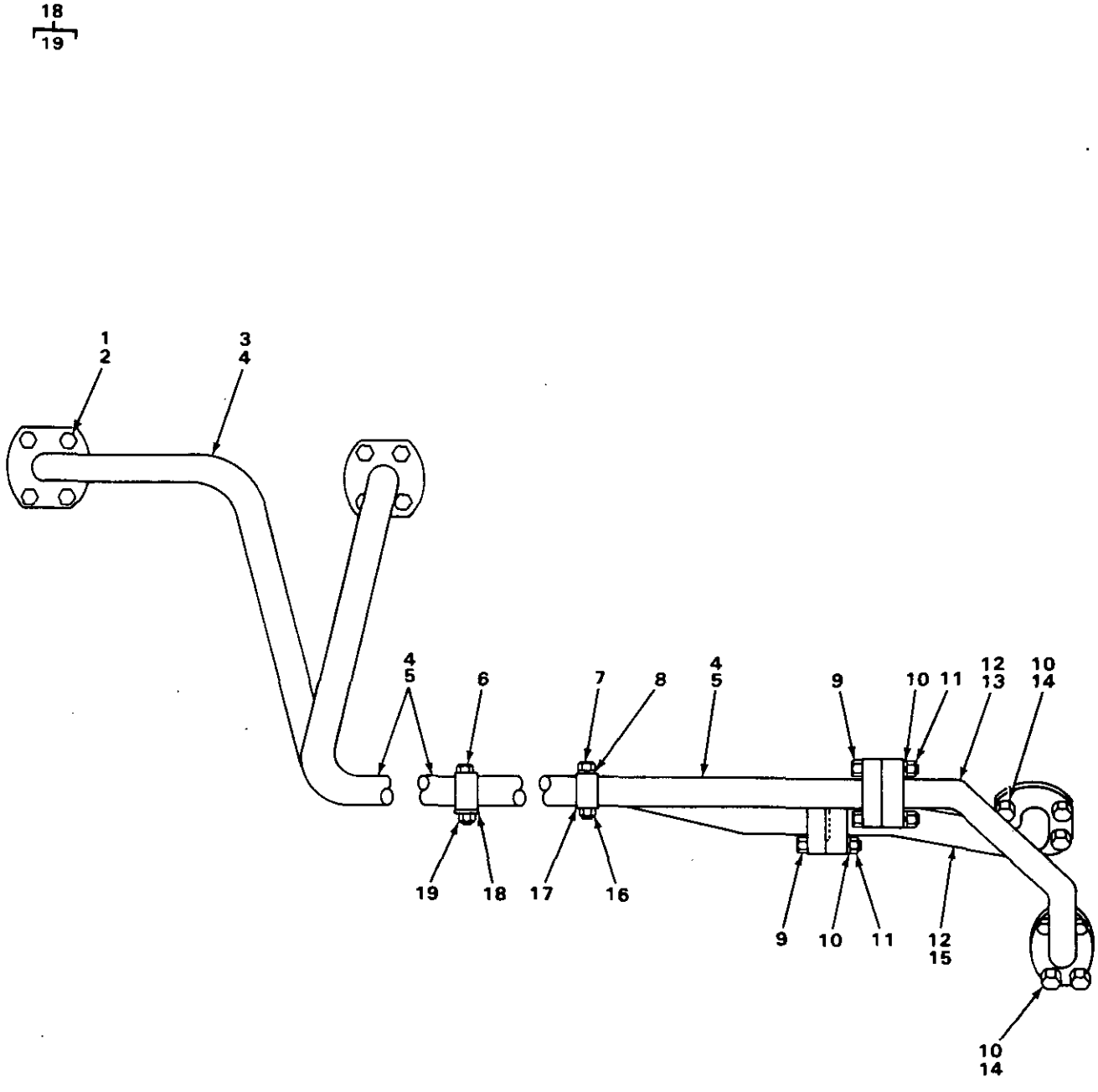

FIGURE 109. TORQUE CONVERTER COOLER LINES (USE WITH SERIAL RANGE 77V5006 THRU 77V9475).

(1) ITEM NO	(2) SMR CODE	(3) NSN	(4) CAGEC	(5) PART NUMBER	(6) DESCRIPTION AND USABLE ON CODES(UOC)	(7) QTY
					GROUP 0708 TORQUE CONVERTER OR FLUID COUPLING.	
					FIG. 109 TORQUE CONVERTER COOLER LINES (USE WITH SERIAL RANGE 77V5006 THRU 77V9475).	
1	PFHZZ	5306002736357	11083	1A1460	BOLT,MACHINE.....	8
2	PFFZZ	5310005845272	96906	MS35338-48	WASHER,LOCK.....	8
3	PFHZZ	4710012511225	11083	6P0821	TUBE ASSEMBLY,METAL.....	1
4	PFHZZ	5331009995502	11083	8M4390	O-RING.....	2
5	PFHZZ	4710012511226	11083	6P0819	TUBE ASSEMBLY,METAL.....	1
6	PFHZZ	5306006982150	11083	L2070	BOLT,MACHINE.....	1
7	PFHZZ	5306010949106	11083	0S1590	BOLT,MACHINE.....	1
8	PFHZZ	5310006379541	96906	MS35338-46	WASHER,LOCK.....	1
9	PFHZZ	5306006982177	11083	1D4556	BOLT,MACHINE.....	8
10	PFHZZ	5310006559370	96906	MS35340-47	WASHER,LOCK.....	16
11	PFHZZ	5310004317237	11083	1P1396	NUT.....	8
12	PFHZZ	5331009145773	09990	2-223S1032-70	O-RING.....	4
13	PFHZZ	4710012505174	11083	6P434	TUBE ASSEMBLY,METAL.....	1
14	PFHZZ	5306004262983	11083	T768	BOLT,MACHINE.....	8
15	PFHZZ	4710012505173	11083	6P432	TUBE ASSEMBLY,METAL.....	1
16	PFHZZ	5310011945398	11083	1D4717	NUT,HEXAGON.....	1
17	PFHZZ	5340012544342	11083	9H973	BRACKET,PIPE.....	4
18	XBHZZ		11083	3P5213	BRACKET ASSEMBLY.....	1
19	PFHZZ	5310000050781	11083	9F2978	.NUT,PLAIN,WELDING.....	1

END OF FIGURE

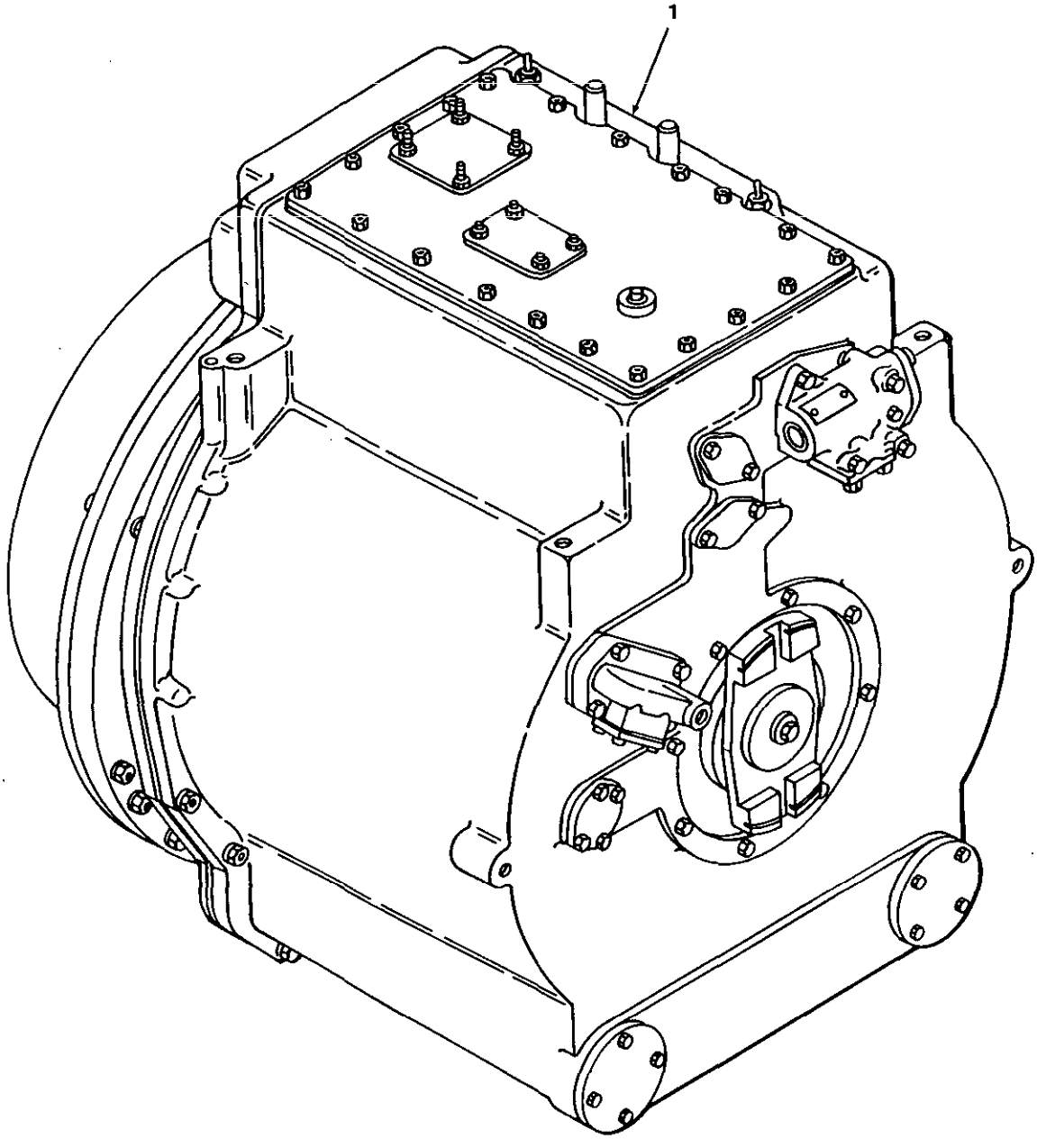

FIGURE 109A. TRANSMISSION ARRANGEMENT.

(1) ITEM NO	(2) SMR CODE	(3) NSN	(4) CAGEC	(5) PART NUMBER	(6) DESCRIPTION AND USABLE ON CODES(UOC)	(7) QTY
					GROUP 0710 TRANSMISSION ASSEMBLY	
					FIG. 109A TRANSMISSION ARRANGEMENT	
1	PAFHH	2520012213392	11083	9G6778	TRANSMISSION USED WITH 7N3491 AND 5R8866 ENGINES.....	1
1	XBFHH	2520006292205	11083	3P3022	TRANSMISSION AR USED WITH 4N4445 ENGINE.....	1

END OF FIGURE

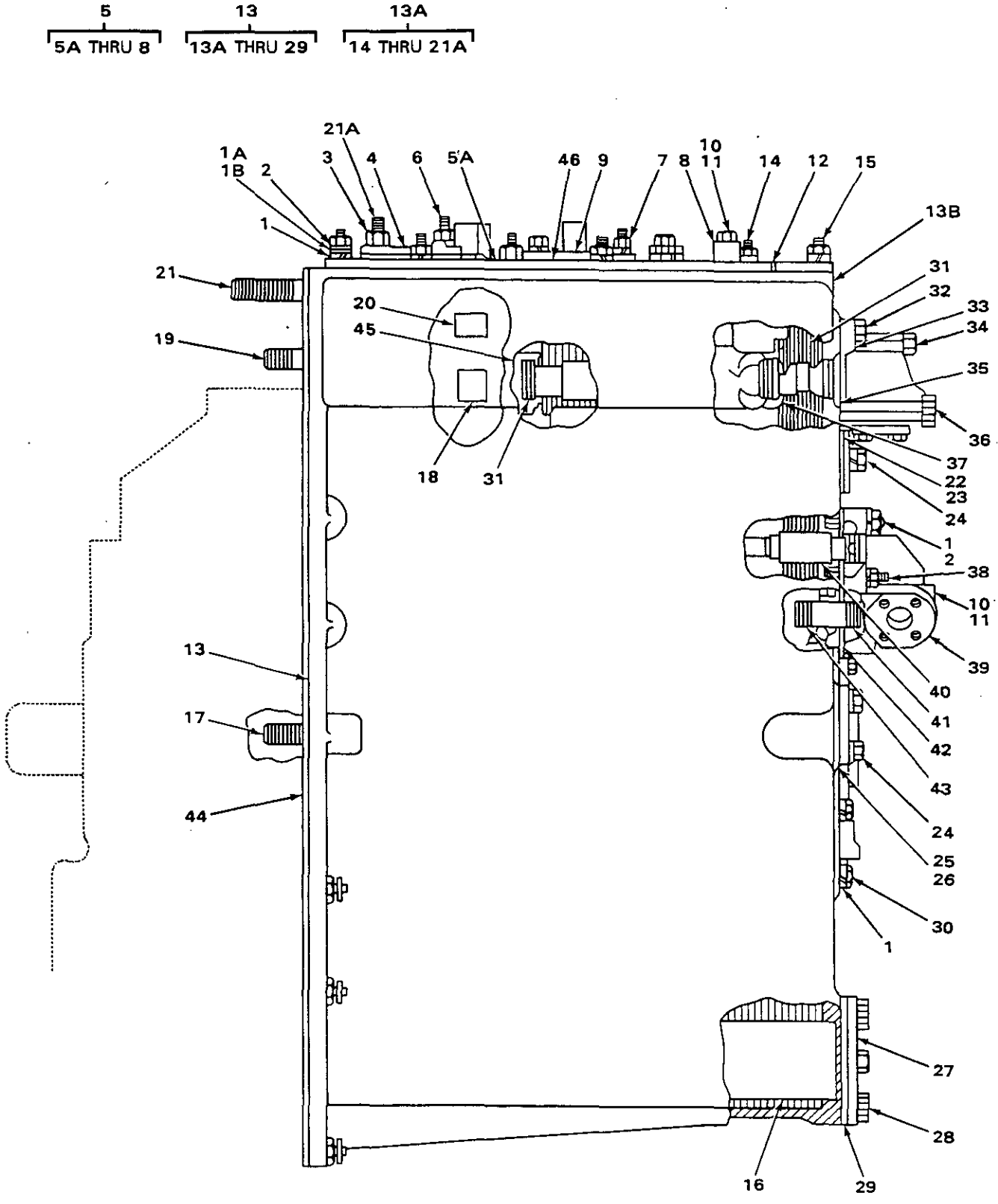

FIGURE 110. TRANSMISSION CASE AND COVERS.

(1) ITEM NO	(2) SMR CODE	(3) NSN	(4) CAGEC	(5) PART NUMBER	(6) DESCRIPTION AND USABLE ON CODES(UOC)	(7) QTY
					GROUP 0710 TRANSMISSION ASSEMBLY	
					FIG. 110 TRANSMISSION CASE AND COVERS	
1	PFHZZ	5310006379541	96906	MS35338-46	WASHER,LOCK	48
1A	PFHZZ	5310009871294	19200	10910174-16	WASHER,FLAT	2
1B	PFHZZ	5310001174788	11083	5M2894	WASHER,FLAT	2
2	PFHZZ	5310007257382	96906	MS35690-624	NUT,PLAIN,HEXAGON	24
3	PFHZZ	5310011945398	11083	1D4717	NUT,HEXAGON	8
4	PAHZZ	5330002482165	11083	8B9777	GASKET PART OF KIT P/N 6V-6394 PART OF KIT P/N 6V-6396	1
5	XBHHH		11083	7M1151	COVER ASSEMBLY	1
5A	XAHZZ		11083	7M1152	.COVER	1
6	PFHZZ	5307000041605	11083	5M9621	.STUD,WELDING	4
7	XDHZZ		11083	7M7794	.STUD,WELDING	4
8	PFHZZ	5342001931240	11083	2S6548	.INSERT	1
9	PFHZZ	5340012580185	11083	5M9653	COVER,ACCESS	1
10	PFHZZ	5365004114584	11083	9S4191	PLUG,MACHINE THREAD	2
11	PAHZZ	5331008013354	25184	906-737-70	O-RING PART OF KIT P/N 6V-6394	2
12	PAHZZ	5330007569800	11083	1M6420	GASKET PART OF KIT P/N 6V-6394 PART OF KIT P/N 6V-6396	1
13	AHHZZ		11083	8P7427	CASE ASSEMBLY	1
13A	XDHHH		11083	9S8847	.CASE ASSEMBLY	1
13B	XAHZZ		11083	1S2139	..CASE	1
14	PFHZZ	5307004194068	11083	1M6421	..STUD,PLAIN	13
15	PFHZZ	5307012542498	11083	1M620	..STUD,PLAIN	5
16	PFHZZ	4710012503985	11083	9S8833	..TUBE ASSEMBLY,METAL	2
17	PFHZZ	5307012542500	11083	4H9303	..STUD,PLAIN	2
18	PFHZZ	3120003627285	11083	1F0929	..BEARING,SLEEVE	2
19	PFHZZ	5307004194063	11083	1M6422	..STUD,PLAIN	10
20	PFHZZ	3120004219627	11083	9S2836	..BEARING,SLEEVE	2
21	PFHZZ	5307012542501	11083	1M6423	..STUD,PLAIN	2
21A	PFHZZ	5307000082233	11083	5M1091	..STUD,PLAIN	2
22	PFHZZ	5340004238924	11083	2B8460	.COVER,ACCESS	1
23	PAHZZ	5330007576470	11083	2S1439	.GASKET PART OF KIT P/N 6V-6396	1
24	PFHZZ	5306002637301	11083	L1351	.BOLT,MACHINE	6
25	XDHZZ		11083	7M8543	.COVER	1
26	PAHZZ	5330012638274	11083	2D92	.GASKET PART OF KIT P/N 6V-6396	1
27	XDHZZ		11083	3P6581	.COVER	2
28	PFHZZ	5306002604508	11083	S1594	.BOLT,MACHINE	8
29	PAHZZ	5330004093844	11083	9S8848	.GASKET	2
30	PFHZZ	5306011954681	11083	3B1915	BOLT	8
31	PFHZZ	5331009138878	11083	8M4432	O-RING	4
32	PFHZZ	5305000680511	80204	B1821BH038C125N	SCREW,CAP,HEXAGON H	1
33	PFHZZ	5331009486063	09990	2-225S1032-70	O-RING	1
34	PFHZZ	5306004262932	11083	0S1619	BOLT,MACHINE	1
35	PFHZZ	5331009305736	11083	8M4986	O-RING	2
36	PFHZZ	5306008146565	11083	0S1608	BOLT,MACHINE	2
37	PFHZZ	5365010668466	11083	2S4965	SLEEVE	1
38	PFHZZ	5307010374854	11083	7H3051	STUD,PLAIN	4
39	XDHZZ		11083	4S8651	MANIFOLD	1

(1) ITEM NO	(2) SMR CODE	(3) NSN	(4) CAGEC	(5) PART NUMBER	(6) DESCRIPTION AND USABLE ON CODES(UOC)	(7) QTY
40	XDHZZ		11083	2S4954	SPACER,SLEEVE.....	1
41	PFHZZ	5331009489767	11083	8M4435	O-RING.....	3
42	PAHZZ	5330009407930	11083	4S5881	GASKET.....	1
43	XDHZZ		11083	2S4958	SPACER,SLEEVE.....	1
44	PAHZZ	5330007569799	11083	9P5545	GASKET.....	1
45	PFHZZ	5365010668464	11083	2S4959	SLEEVE.....	1
46	PAHZZ	5330009138879	11083	5M9654	GASKET.....	1

END OF FIGURE

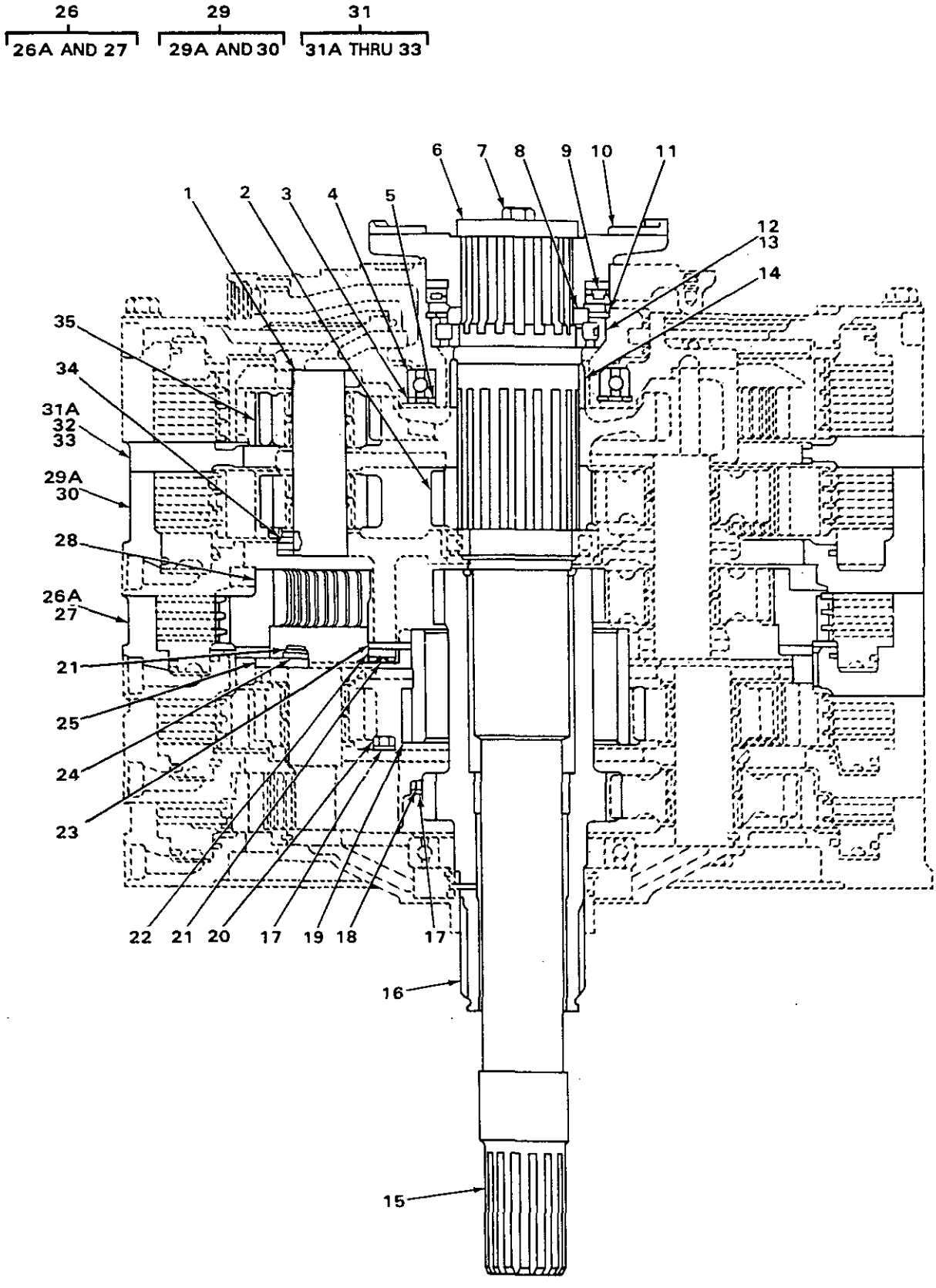

FIGURE 111. PLANETARY TRANSMISSION SHAFT AND RELATED PARTS.

(1) ITEM NO	(2) SMR CODE	(3) NSN	(4) CAGEC	(5) PART NUMBER	(6) DESCRIPTION AND USABLE ON CODES(UOC)	(7) QTY
					GROUP 0710 TRANSMISSION ASSEMBLY	
					FIG. 111 PLANETARY TRANSMISSION SHAFT AND RELATED PARTS	
1	PFHZZ	3040013776782	11083	6T4481	SHAFT,STRAIGHT	3
2	PFHZZ	3020007479850	11083	5M0549	GEAR,SPUR	1
3	PFHZZ	5365013614557	80756	RR-650	RING,RETAINING	1
4	PFHZZ	3110008966823	11083	4M5858	BEARING,BALL,ANNULA	1
5	PFHZZ	5365010687242	11083	6H6043	RING	1
6	PFHZZ	5340010687154	11083	3S1262	RETAINER	1
7	PFHZZ	5306004262870	11083	L1558	BOLT,MACHINE	1
8	PFHZZ	5365010689743	11083	4S5833	SPACER	1
9	PAHZZ	5330000978231	11083	8H9155	SEAL,OIL	1
10	XDHZZ		11083	8M8161	FLANGE	1
11	PFHZZ	5365010687244	11083	9H0438	RING	1
12	PFHZZ	3110008966825	11083	7H7628	BEARING,ROLLER,CYLI	1
13	PFHZZ	3110008966826	11083	7H7629	RING,BEARING,INNER	1
14	PFHZZ	5365010689650	11083	9H5433	SPACER	1
15	PFHZZ	2530010689742	11083	3S1274	SHAFT	1
16	PFHZZ	2530010689700	11083	5M3999	SHAFT	1
17	PFHZZ	5310001174788	11083	5M2894	WASHER,FLAT	9
18	PFHZZ	5306006982150	11083	0L2070	BOLT,MACHINE	6
19	PFHZZ	3020010689697	11083	4M8967	GEAR,DRIVE MOTION	1
20	PFHZZ	5305008798351	96906	MS35307-371	SCREW,CAP,HEXAGON H	3
21	PFHZZ	5305002528919	11083	0S0509	SCREW,CAP,HEXAGON H	42
22	PFHZZ	5310010687258	11083	1M4180	LOCK NUT	3
23	PFHZZ	2510010668438	11083	1M4179	PLATE	3
24	PFHZZ	5340008793056	11083	3H3451	LOCKING PLATE,NUT A	3
25	XDHZZ		11083	7M1161	PLATE	3
26	XDHHH		11083	7M1185	HOUSING ASSEMBLY	1
26A	XAHZZ		11083	7M1193	.HOUSING	1
27	PFHZZ	5315010625209	11083	5M7937	.PIN	1
28	PFHZZ	3020010689699	11083	5M3996	GEAR,DRIVE MOTION	1
29	XDHHH		11083	7M1184	HOUSING ASSEMBLY	1
29A	XAHZZ		11083	7M1192	.HOUSING	1
30	PFHZZ	5315010625209	11083	5M7937	.PIN	1
31	XDHHH		11083	8P5849	PLATE ASSEMBLY	1
31A	XDHZZ		11083	7M5716	.DISK,CLUTCH	1
32	PFHZZ	5315011602315	11083	7M1201	.PIN,STRAIGHT,HEADLE	2
33	PFHZZ	3110009921048	11083	2D6642	.BALL,BEARING	2
34	PFHZZ	5315004841695	96151	20835	PIN,SPRING	3
35	PFHZZ	3020011033705	11083	9P6592	GEAR,DRIVE MOTION	9

END OF FIGURE

8
8A AND 9

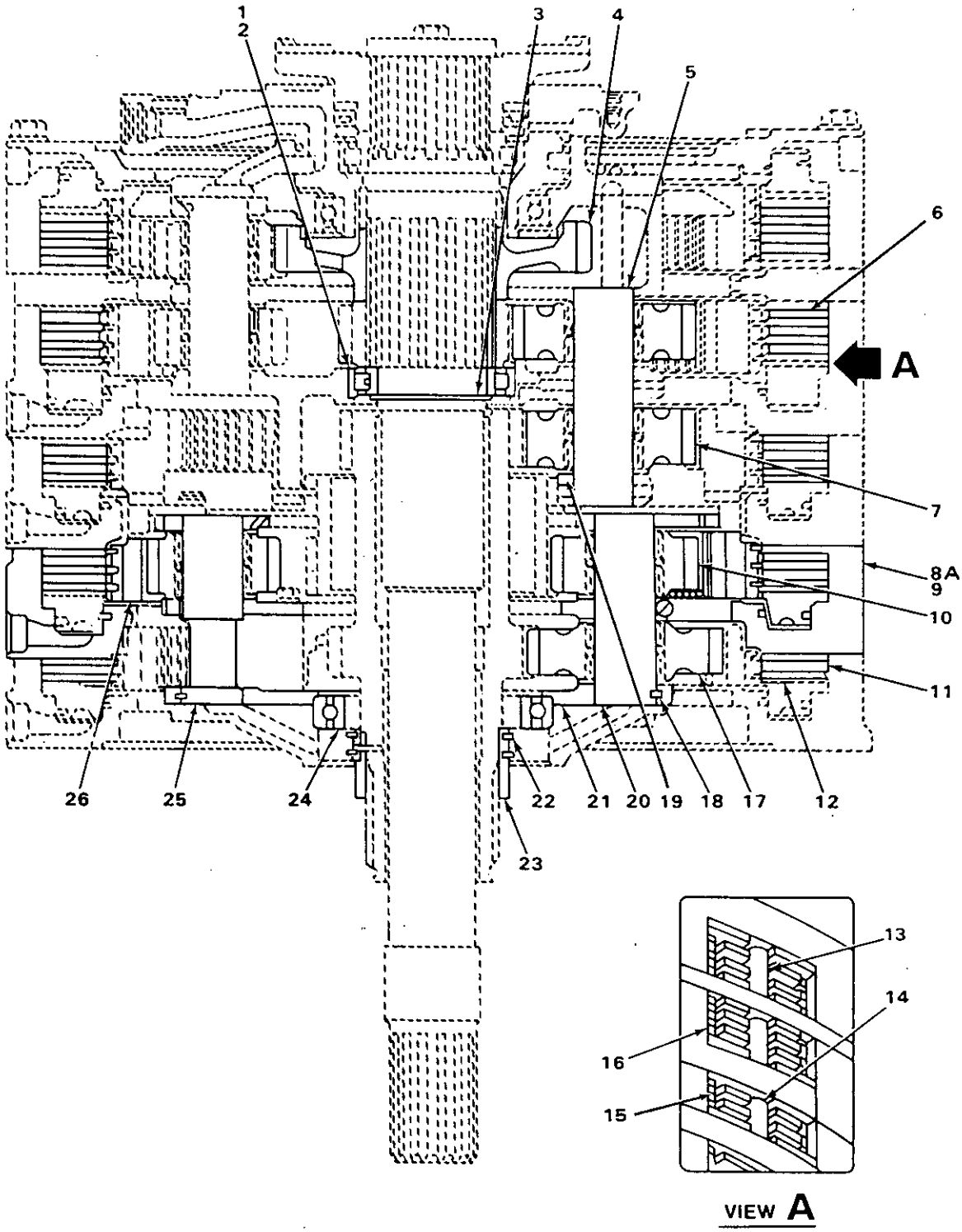

FIGURE 112. PLANETARY TRANSMISSION FIRST, SECOND AND THIRD GEARS.

(1) ITEM NO	(2) SMR CODE	(3) NSN	(4) CAGEC	(5) PART NUMBER	(6) DESCRIPTION AND USABLE ON CODES(UOC)	(7) QTY
					GROUP 0710 TRANSMISSION ASSEMBLY	
					FIG. 112 PLANETARY TRANSMISSION FIRST, SECOND AND THIRD GEARS	
1	PFHZZ	3110008950495	11083	1M4095	BEARING,ROLLER,CYLI.....	1
2	PFHZZ	3110007885814	11083	9M2042	RING,BEARING,OUTER.....	1
3	PFHZZ	5325009289630	80756	RST293	RING,RETAINING.....	1
4	PFHZZ	3020010689701	11083	5M4427	GEAR,DRIVE MOTION.....	1
5	PFHZZ	2530010704594	11083	5M3947	SHAFT.....	3
6	PFHZZ	2520001012575	11083	3P1687	DISK,CLUTCH.....	3
7	PFHZZ	3020011033706	11083	9P6593	GEAR.....	6
8	XDHZZ		11083	7M1186	HOUSING ASSEMBLY.....	1
8A	XAHZZ		11083	7M1194	.HOUSING.....	1
9	PFHZZ	5315010625209	11083	5M7937	.PIN.....	1
10	PFHZZ	3020011033707	11083	9P6594	GEAR.....	3
11	PFHZZ	2510010668454	11083	3P1686	PLATE.....	8
12	PFHZZ	2520007885812	11083	5S7830	DISK,CLUTCH.....	8
13	PFHZZ	5315010671727	11083	9H5546	PIN LONG.....	6
14	PFHZZ	5315010908540	11083	9H5545	PIN SHORT.....	18
15	PFHZZ	5360008947275	11083	9H5537	SPRING,HELICAL,COMP SHORT.....	36
16	PFHZZ	5360012548891	11083	7H7658	SPRING,FLAT LONG.....	12
17	PFHZZ	3020011036656	11083	9P6595	GEAR.....	3
18	PFHZZ	5315006165524	64294	29620-3	KEY,WOODRUFF.....	6
19	XDHZZ		11083	2F6869	PIN,STRAIGHT,HEADLE.....	3
20	PFHZZ	2520011036648	11083	3P9394	SHAFT.....	3
21	PFHZZ	3020010689692	11083	1M4153	GEAR,SPUR.....	1
22	PFHZZ	5325003097459	11083	6F0155	RING,RETAINING.....	2
23	PFHZZ	5365010689691	11083	1M4091	SPACER.....	1
24	PFHZZ	3110008966823	11083	4M5858	BEARING,BALL,ANNULA.....	1
25	PFHZZ	2530010668437	11083	1M4167	SHAFT.....	3
26	PFHZZ	3020007479854	11083	1M4155	GEAR,SPUR.....	1

END OF FIGURE

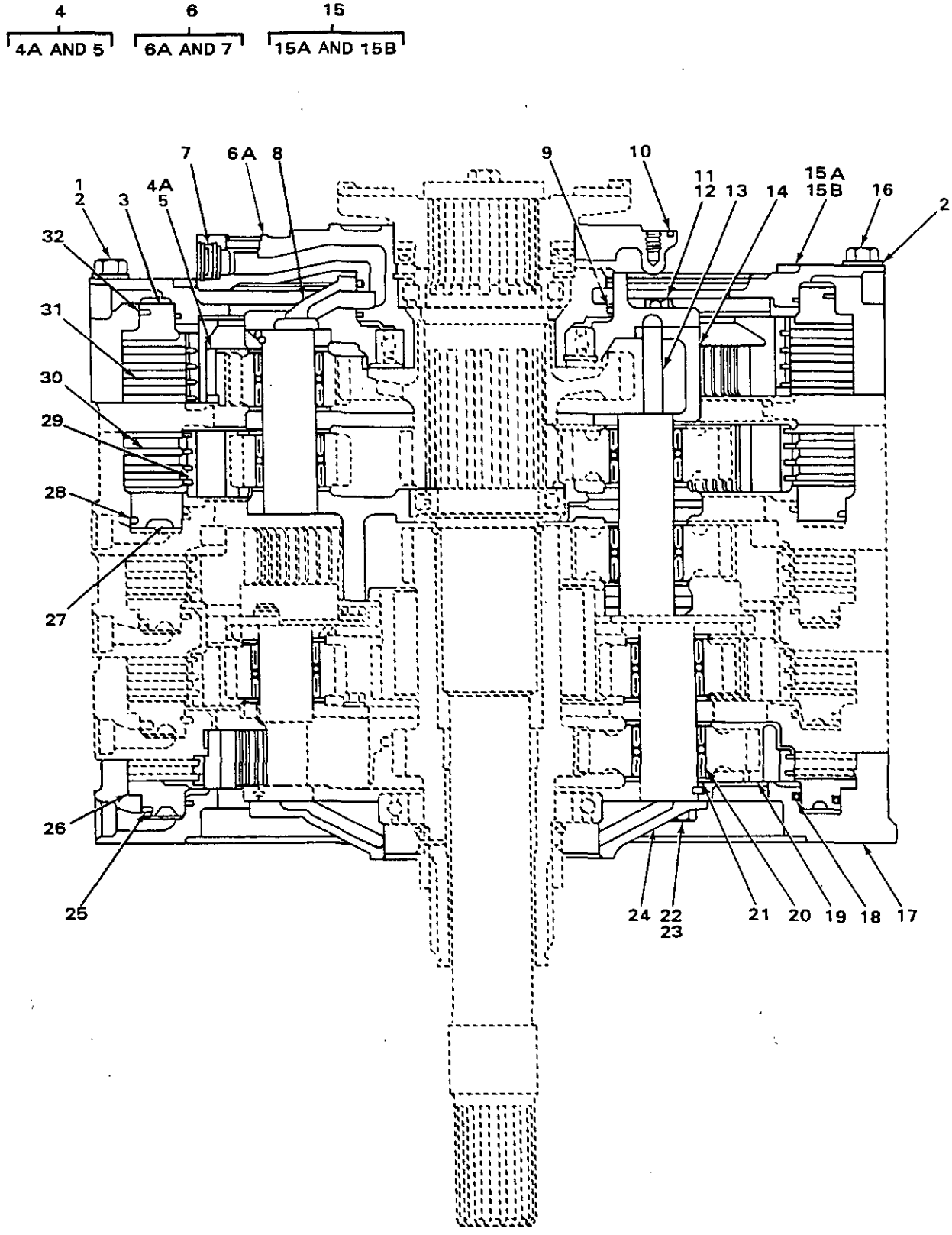

FIGURE 113. PLANETARY TRANSMISSION FORWARD AND REVERSE CLUTCH PLATES.

(1) ITEM NO	(2) SMR CODE	(3) NSN	(4) CAGEC	(5) PART NUMBER	(6) DESCRIPTION AND USABLE ON CODES(UOC)	(7) QTY
					GROUP 0710 TRANSMISSION ASSEMBLY	
					FIG. 113 PLANETARY TRANSMISSION FORWARD AND REVERSE CLUTCH PLATES	
1	PFHZZ	5306012668455	11083	5M1167	BOLT,MACHINE	14
2	PFHZZ	5310004317239	11083	2M0849	WASHER,FLAT	16
3	PFHZZ	2520011029606	11083	7M8395	PISTON	1
4	PFHHZ	3020010689754	11083	8S3487	GEAR A	1
4A	XAHZZ		11083	8S3486	.GEAR	1
5	PFHZZ	5340011023538	11083	3S6605	.CAP,PROTECTIVE,DUST	6
6	PFHHH	3110010686139	11083	9S8437	CAGE A	1
6A	XAHZZ		11083	9S8438	.CAGE	1
7	PFHZZ	5340010870682	15434	213394	.PLUG,EXPANSION	1
8	PFHZZ	2990011036642	11083	3P3259	CAGE	1
9	PFHZZ	5330008947280	11083	9H415	PACKING,PREFORMED	2
10	PAHZZ	5330008947291	11083	9H5548	PACKING,PREFORMED	1
11	PFHZZ	5306002604508	11083	S1594	BOLT,MACHINE	12
12	PAHZZ	5340010533841	11083	L796	LOCK	6
13	PFHZZ	4710012503986	11083	8S6257	TUBE	3
14	PFHZZ	2990011036655	11083	9P3663	CARRIER	1
15	XDHHH		11083	8S3491	HOUSING ASSEMBLY	1
15A	XAHZZ		11083	8S3482	.HOUSING	1
15B	PFHZZ	3110009921048	11083	2D6642	.BALL,BEARING	2
16	PFHZZ	5305012542563	11083	5M1168	BOLT,MACHINE	2
17	XDHZZ		11083	7M1195	HOUSING	1
18	PFHZZ	2520010269927	11083	2S6443	RING,SEALING,CLUTCH	5
19	PAHZZ	3020007479853	11083	1M4156	RING,SEALING,CLUTCH	1
20	PFHZZ	3110008966819	11083	4M3915	RETAINER AND ROLLER	42
21	PFHZZ	3120012574402	11083	7T3143	BEARING,WASHER,THRU	42
22	PFHZZ	5305002528919	11083	0S0509	SCREW,CAP,HEXAGON H	3
23	PFHZZ	2520009489854	11083	5M2976	RETAINER	3
24	PFHZZ	3110010686082	11083	1M4171	CAGE	1
25	PFHZZ	5365010687277	11083	2S6442	RING STANDARD	3
26	XBHZZ		11083	9H5233	PISTON	3
27	PFHZZ	3040010690863	11083	2M3339	PISTON	1
28	PFHZZ	2810012545335	11083	8S558	RING,RETAINING STANDARD	1
29	XBHZZ		11083	7M5756	RING,GEAR	1
30	PFHZZ	2520007885813	11083	8M5070	DISK,CLUTCH	4
31	PFHZZ	2520010479388	11083	8P4736	DISK,CLUTCH	4
32	PFHZZ	2810012545338	11083	8S557	RING,PISTON	1

END OF FIGURE

3
4 AND 5

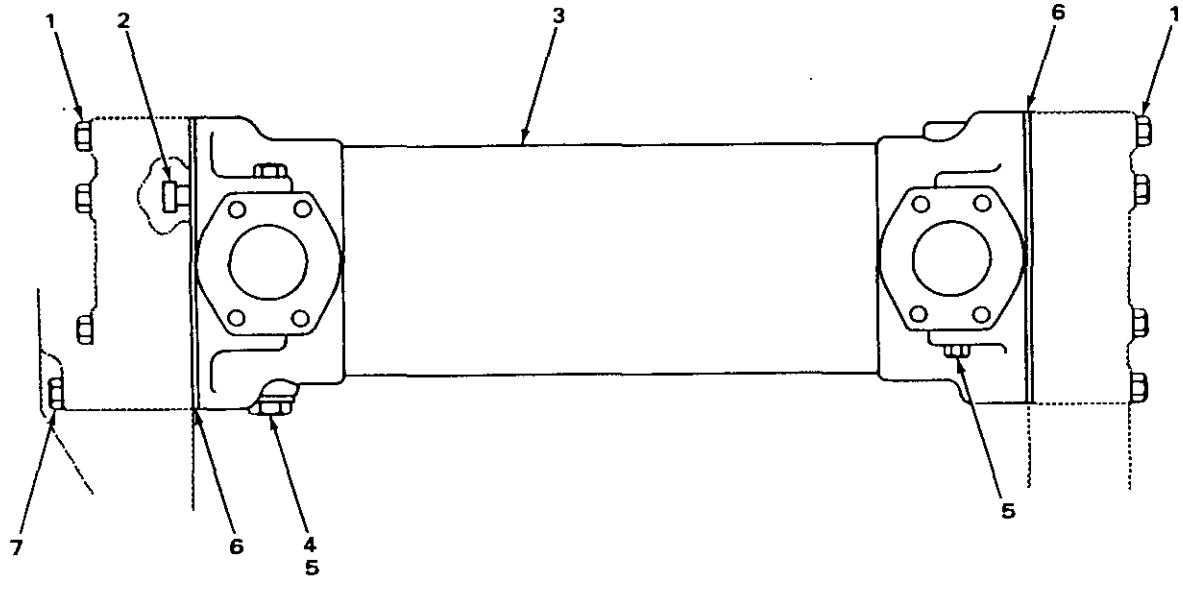

FIGURE 114. TRANSMISSION OIL COOLER.

(1) ITEM NO	(2) SMR CODE	(3) NSN	(4) CAGEC	(5) PART NUMBER	(6) DESCRIPTION AND USABLE ON CODES(UOC)	(7) QTY
					GROUP 0721 COOLERS, PUMPS, MOTORS	
					FIG. 114 TRANSMISSION OIL COOLER	
1	PFFZZ	5306004263397	11083	1D4566	BOLT,MACHINE.....	10
2	PFFZZ	5306004238117	11083	S1595	BOLT,MACHINE.....	1
3	PFFFZ	2520010476754	11083	7W0205	CORE ASSEMBLY,COOLE.....	1
4	PFFZZ	5365004114584	11083	9S4191	.PLUG,MACHINE THREAD.....	1
5	PAFZZ	5331008013354	25184	906-737-70	.O-RING.....	2
6	PAFZZ	5330009362162	11083	2S795	GASKET PART OF KIT P/N 5P-9233.....	2
7	PFFZZ	5305000085971	11083	8S9089	BOLT,SPECIAL.....	1

END OF FIGURE

1
2 THRU 4

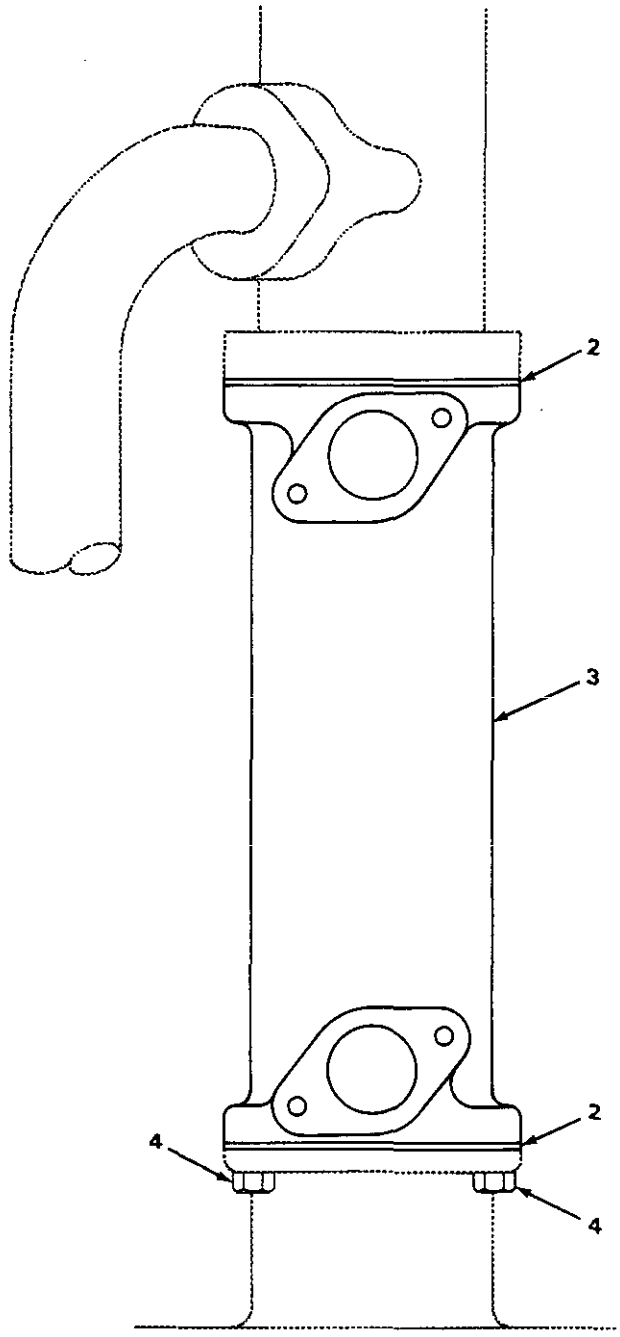

FIGURE 115. OIL COOLER.

(1) ITEM NO	(2) SMR CODE	(3) NSN	(4) CAGEC	(5) PART NUMBER	(6) DESCRIPTION AND USABLE ON CODES(UOC)	(7) QTY
					GROUP 0721 COOLERS, PUMPS, MOTORS.	
					FIG. 115 OIL COOLER.	
1	XBFZZ		11083	6N334	OIL COOLER TRANSMISSION.....	1
2	PFFZZ	5330010176427	11083	2M5414	.GASKET.....	2
3	XDFZA		11083	9M8041	.CORE ASSY,OIL COOLE.....	1
4	PFFZZ	5306002604508	11083	S1594	.BOLT,MACHINE.....	4

END OF FIGURE

1 (2 THRU 19) 3 (4) 6 (7) 18 (19)

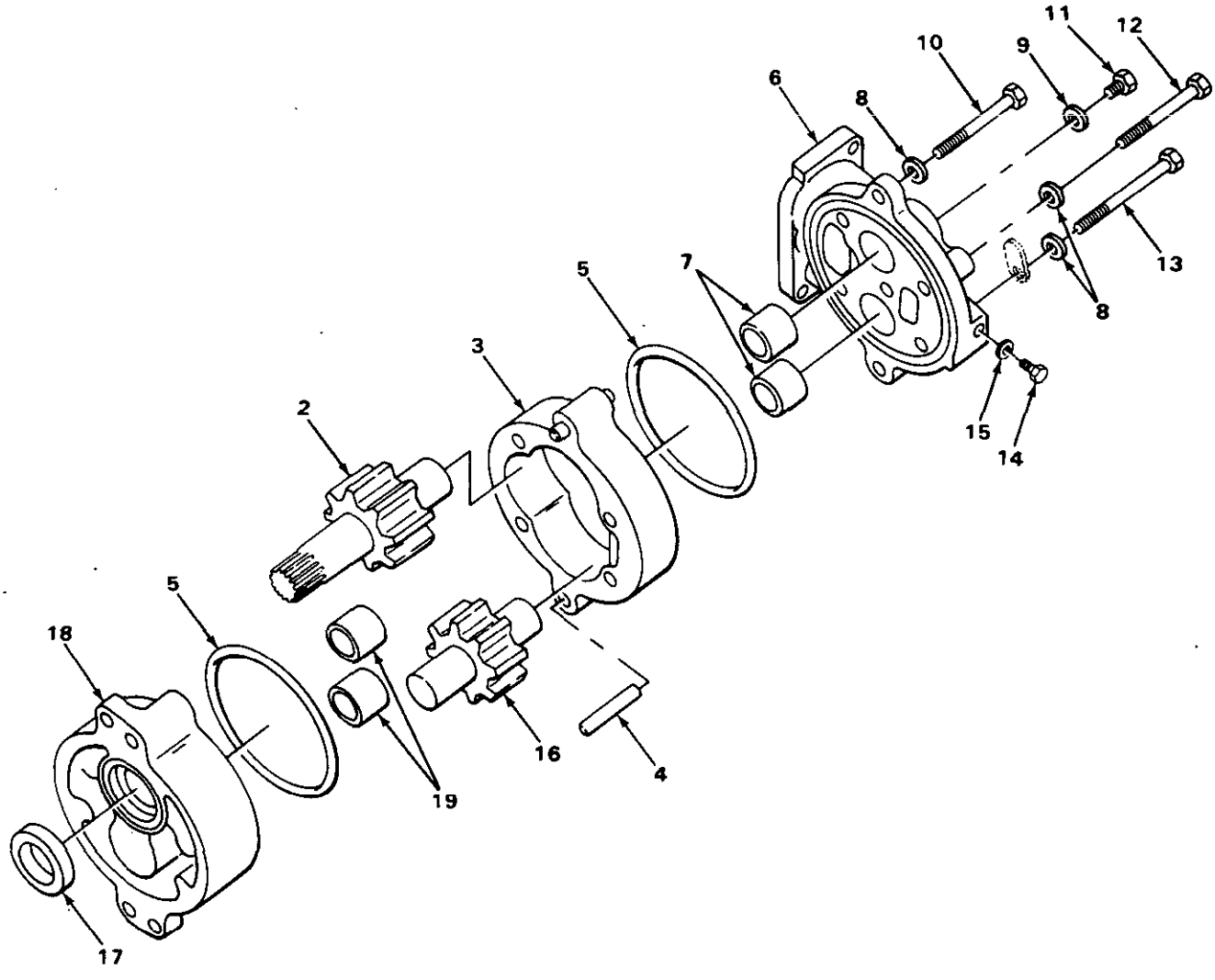

FIGURE 116. TRANSMISSION OIL PUMP.

(1) NO	(2) SMR CODE	(3) NSN	(4) CAGEC	(5) PART NUMBER	(6) DESCRIPTION AND USABLE ON CODES (UDC)	(7) QTY
					GROUP 0721 COOLERS, PUMPS, MOTORS.	
					FIG 116. TRANSMISSION OIL PUMP.	
1	PFFFF	4320011633546	11083	2P9239	PUMP, ROTARY USE WITH SERIAL RANGE 77V5006 THRU 77V7890 AND 77V8763 THRU 77V9475	1
2	PFFZZ	3040012672078	11083	8P4548	GEARSHAFT,MULTIPLE	1
3	XAFZF	4320012671375	11083	2P9237	HOUSING, LIQUID PUMP USE WITH P/N 2P9239	1
3	XAFZZ		11083	9P1831	BODY ASSEMBLY USE WITH P/N 9P1832.	1
4	PFFZZ	5315007607425	11053	8M8489	PIN, HOLLOW	4
5	PFFZZ	5331009829312	11083	2D8009	0-RING	2
6	PFFZZ	4730012676077	11083	3P366	MANIFOLD,HYDRAULIC	1
7	PFFZZ	3120009489964	11083	5M3320	BEARING, SLEEVE	2
8	PFFZZ	5310004135144	11083	354	WASHER, FLAT	6
9	PAFZZ	5331008013354	25184	906-737-70	O-RING	1
10	PFFZZ	2910003099473	11083	0T0573	CAPSCREW, FUELPUMP	1
11	PFFZZ	5365004114584	11083	954191	. PLUG, MACHINE THREAD	1
12	PFFZZ	5306004262974	11083	165	BOLT, MACHINE	4
13	PFFZZ	5306004705543	11083	859191	BOLT, MACHINE	1
14	PFFZZ	5365010911407	96906	MS51840-23SS	PLUG, MACHINETHREAD	1
15	XDFZZ	5330010491292	02697	3-904N552-90	0-RING	1
16	PFFZZ	3040012672077	11083	8P4547	GEARSHAFT, SPUR	1
17	PFFZZ	5330009295514	11083	5S6622	PACKING, PERFORMED	1
18	PFFZZ	5340012699284	11083	1P0983	COVER, ACCESS	1
10	PFF77	3120009489964	11083	5M3320	BEARING, SLEEVE	2

END OF FIGURE

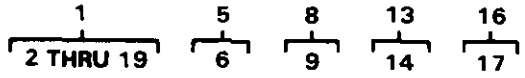

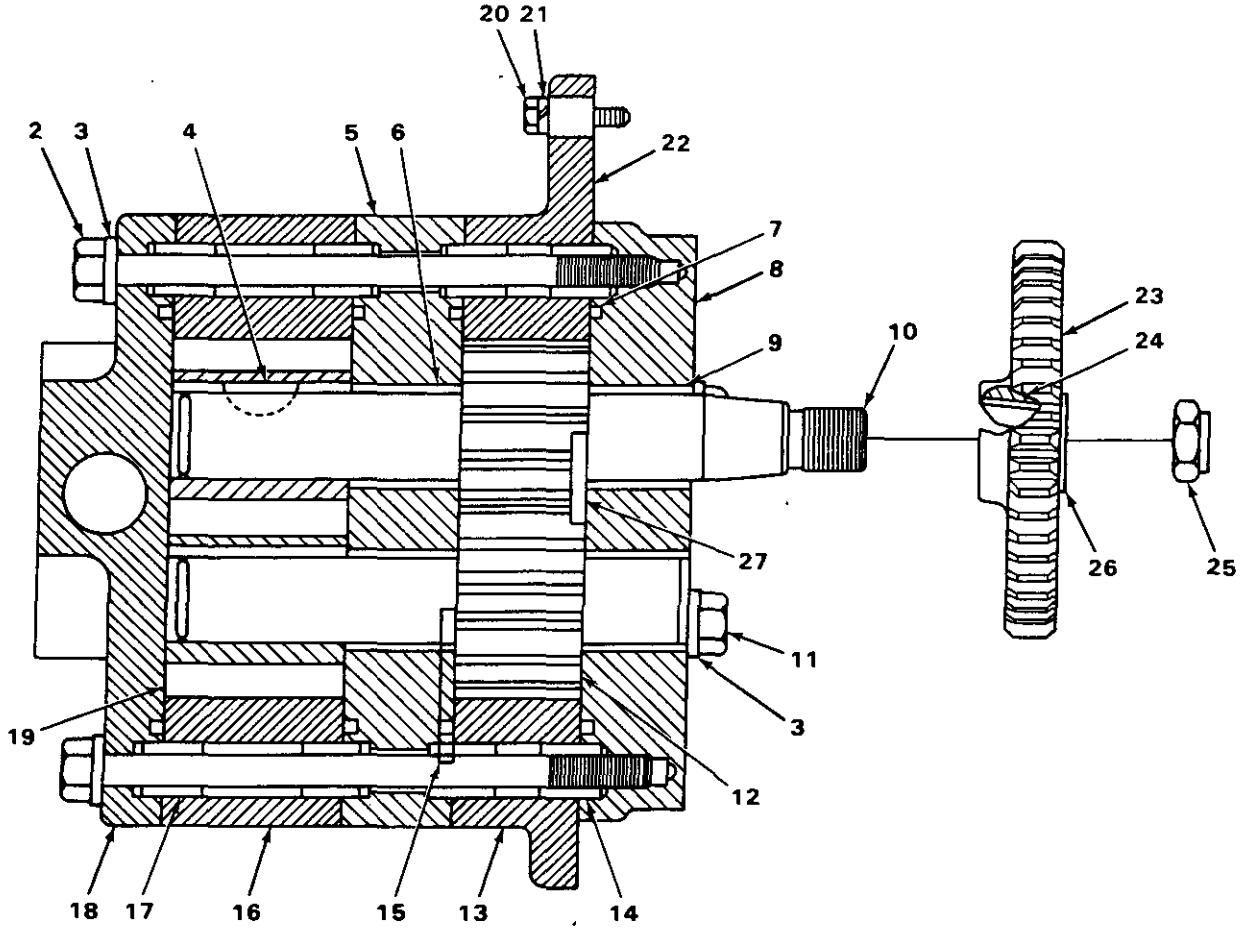

FIGURE 117. TORQUE CONVERTER OIL PUMP.

(1) ITEM NO	(2) SMR CODE	(3) NSN	(4) CAGEC	(5) PART NUMBER	(6) DESCRIPTION AND USABLE ON CODES(UOC)	(7) QTY
					GROUP 0721 COOLERS, PUMPS, MOTORS.	
					FIG 117.TORQUE CONVERTER OIL PUMP.	
1	PFFZZ	3020010687171	11083	7S7400	PUMP GEAR	1
2	PFFZZ	5306008979295	11083	5F4899	.BOLT,MACHINE	2
3	PFFZZ	5310004135144	11083	3S4	.WASHER,FLAT	6
4	PFFZZ	5315006165522	11083	1B8708	.KEY,WOODRUFF	1
5	XAFZZ		11083	7S7399	.COVER ASSEMBLY	1
6	PFFZZ	3120009140691	11083	2S7931	..BEARING,SLEEVE	2
7	PFFZZ	5331009040335	11083	4M189	.O-RING	4
8	XAFZZ		11083	2S7910	.COVER ASSEMBLY	1
9	PFFZZ	3120009140691	11083	2S7931	..BEARING,SLEEVE	2
10	XBFZZ		11083	2P1076	.GEAR A DRIVE	1
11	PFFZZ	5305003627336	11083	5B2638	.SCREW,CAP,HEXAGON H	4
12	XBFZZ		11083	2P1079	.GEAR A IDLER	1
13	XAFZZ		11083	2S7928	.BODY ASSEMBLY	1
14	PFFZZ	5315007607425	11083	8M8489	..PIN,HOLLOW	4
15	PFFZZ	5331008650404	62983	154022	.O-RING	2
16	XAFZZ		11083	7S5544	.BODY ASSEMBLY	1
17	PFFZZ	5315007607425	11083	8M8489	..PIN,HOLLOW	4
18	XAFZZ		11083	2S7916	.COVER	1
19	XBFZZ		11083	2P1078	.GEAR	2
20	PFFZZ	5306004238194	11083	1A2029	BOLT,MACHINE	5
20	PFFZZ	5306006374927	11083	1A5183	BOLT,MACHINE	1
20	PFFZZ	5306004262974	11083	T65	BOLT,MACHINE	1
21	PFFZZ	5310006379541	96906	MS35338-46	WASHER,LOCK	7
22	PFFZZ	5330009183599	11083	2S6458	GASKET	1
23	PFFZZ	3020009505746	11083	2S7917	GEAR,TORQUE DIVIDER	1
24	PFFZZ	5315006165522	11083	1B8708	KEY,WOODRUFF	1
25	XDFZZ		11083	4K8977	NUT	1
26	PFFZZ	5310001097638	15434	S658	WASHER,FLAT	1
27	PFFZZ	5331009138872	02697	2-216S1199-70	O-RING	1

END OF FIGURE

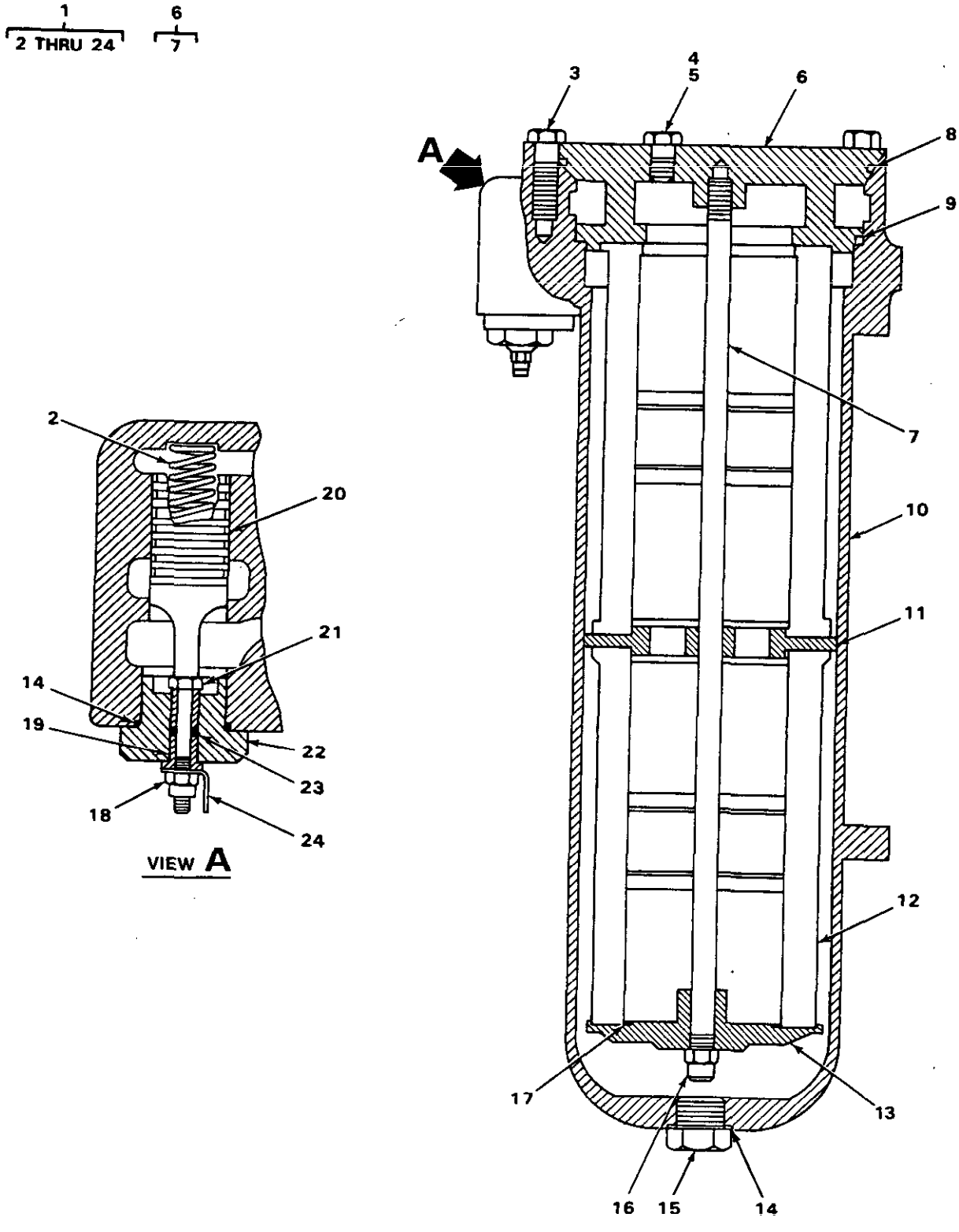

FIGURE 118. TRANSMISSION OIL FILTER.

(1) ITEM NO	(2) SMR CODE	(3) NSN	(4) CAGEC	(5) PART NUMBER	(6) DESCRIPTION AND USABLE ON CODES(UOC)	(7) QTY
					GROUP 0721 COOLERS, PUMPS, MOTORS.	
					FIG 118. TRANSMISSION OIL FILTER.	
1	PFOZZ		11083	3P4243	FILTER,ELEMENT FLUI.....	1
2	PFOZZ	5360010691433	11083	2S5816	.SPRING.....	1
3	PFOZZ	5306004240086	11083	7B3235	.BOLT,MACHINE.....	5
4	PFOZZ	5365004114584	11083	9S4191	.PLUG,MACHINE THREAD.....	1
5	PAOZZ	5331008013354	25184	906-737-70	.O-RING.....	1
6	XAOZZ		11083	8S4785	.COVER.....	1
7	PFOZZ	5307012542502	11083	8S4784	..STUD,PLAIN.....	1
8	PFOZZ	5331005061475	11083	2K4472	.O-RING.....	1
9	PFOZZ	5330010647416	11083	6D9157	.SEAL.....	1
10	XAOZZ		11083	3P4166	.HOUSING ASSEMBLY.....	1
11	PFOZZ	3040012505157	11083	8S4781	.RETAINER.....	1
12	PAOZZ	4330001681861	70040	6436205	.FILTER ELEMENT,FLUI.....	2
13	PFOZZ	3040012505158	11083	3S9847	.RETAINER.....	1
14	PFOZZ	5331009448281	11083	3D2824	.O-RING.....	2
15	PFOZZ	5365004782920	11083	9S4183	.PLUG,ASSEMBLY.....	1
16	PFOZZ	5310010597159	11083	2H3788	.NUT.....	1
17	PFOZZ	5331005553810	11083	1H8128	.O-RING.....	1
18	PFOZZ	5310012544257	11083	4L1250	.NUT,PLAIN,HEXAGON.....	1
19	PFOZZ	5970010689734	11083	3P3668	.INSULATOR.....	2
20	PFOZZ	5330010597141	11083	1P9600	.SEAL.....	1
21	PFOZZ	5305012542519	11083	1P2086	.SCREW,CAP,HEXAGON H.....	1
22	PFOZZ	5365012698552	11083	1P2085	.PLUG,MACHINE THREAD.....	1
23	XDOZZ		11083	5P9262	.PACKING,PREFORMED.....	1
24	PFOZZ	5940012508718	11083	8S1813	.TERMINAL,LUG.....	1

END OF FIGURE

1
2 THRU 12

8
9

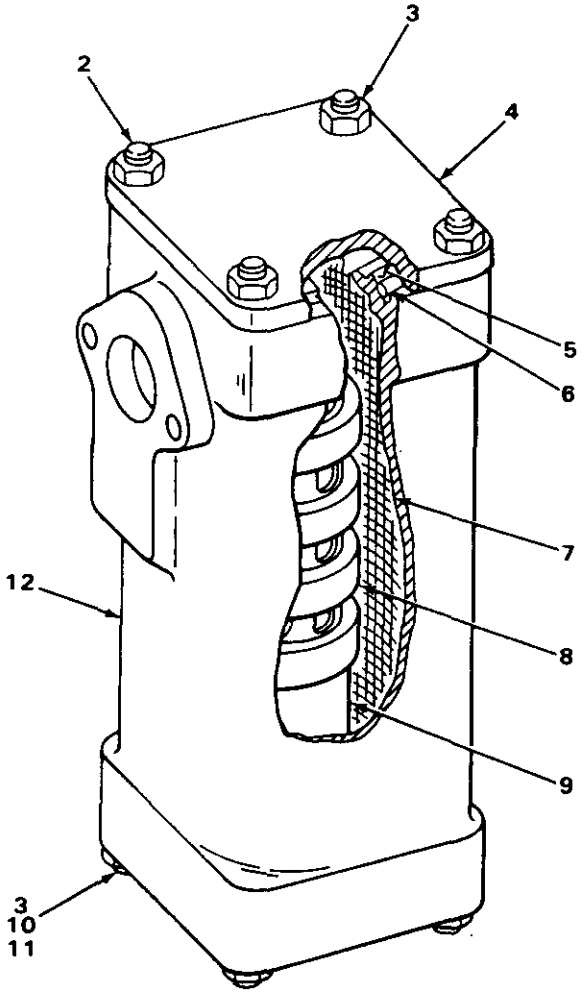

FIGURE 119. TRANSMISSION FLUID FILTER (MAGNETIC).

(1) ITEM NO	(2) SMR CODE	(3) NSN	(4) CAGEC	(5) PART NUMBER	(6) DESCRIPTION AND USABLE ON CODES(UOC)	(7) QTY
					GROUP 0721 COOLERS, PUMPS, MOTORS.	
					FIG 119. TRANSMISSION FLUID FILTER (MAGNETIC).	
1	PFOZZ	4330001035502	11083	9M8669	FILTER,FLUID.....	1
2	PFOZZ	5307004114501	11083	3D2871	.STUD.....	4
3	PFOZZ	5310011945398	11083	1D4717	.NUT,HEXAGON.....	8
4	PFOZZ	2520010690891	11083	3S3439	.COVER.....	1
5	PFOZZ	5310009506980	11083	3S3440	.WASHER,SPRING TENSI.....	1
6	PFOZZ	5331008635549	11083	5F149	.O-RING.....	2
7	PFOZZ	4330009490868	11083	3S3875	.FILTER ELEMENT,FLUI.....	1
8	PFOZZ	4710009490874	11083	2S1641	.TUBE ASSEMBLY.....	1
9	PFOZZ	2530009490666	11083	8M7160	..MAGNET.....	4
10	PFOZZ	5307001183133	11083	1J8668	.STUD,CONTINUOUS THR.....	4
10	PFOZZ	5307009239983	11083	8M1047	.STUD,CONTINUOUS THR.....	4
10	PFOZZ	5307004656789	11083	2M4779	.STUD,PLAIN.....	4
11	PFOZZ	5310006379541	96906	MS35338-46	.WASHER,LOCK.....	4
12	PFOZZ	2530002439486	11083	8M7166	.HOUSING,STRAINER.....	1

END OF FIGURE

5
6

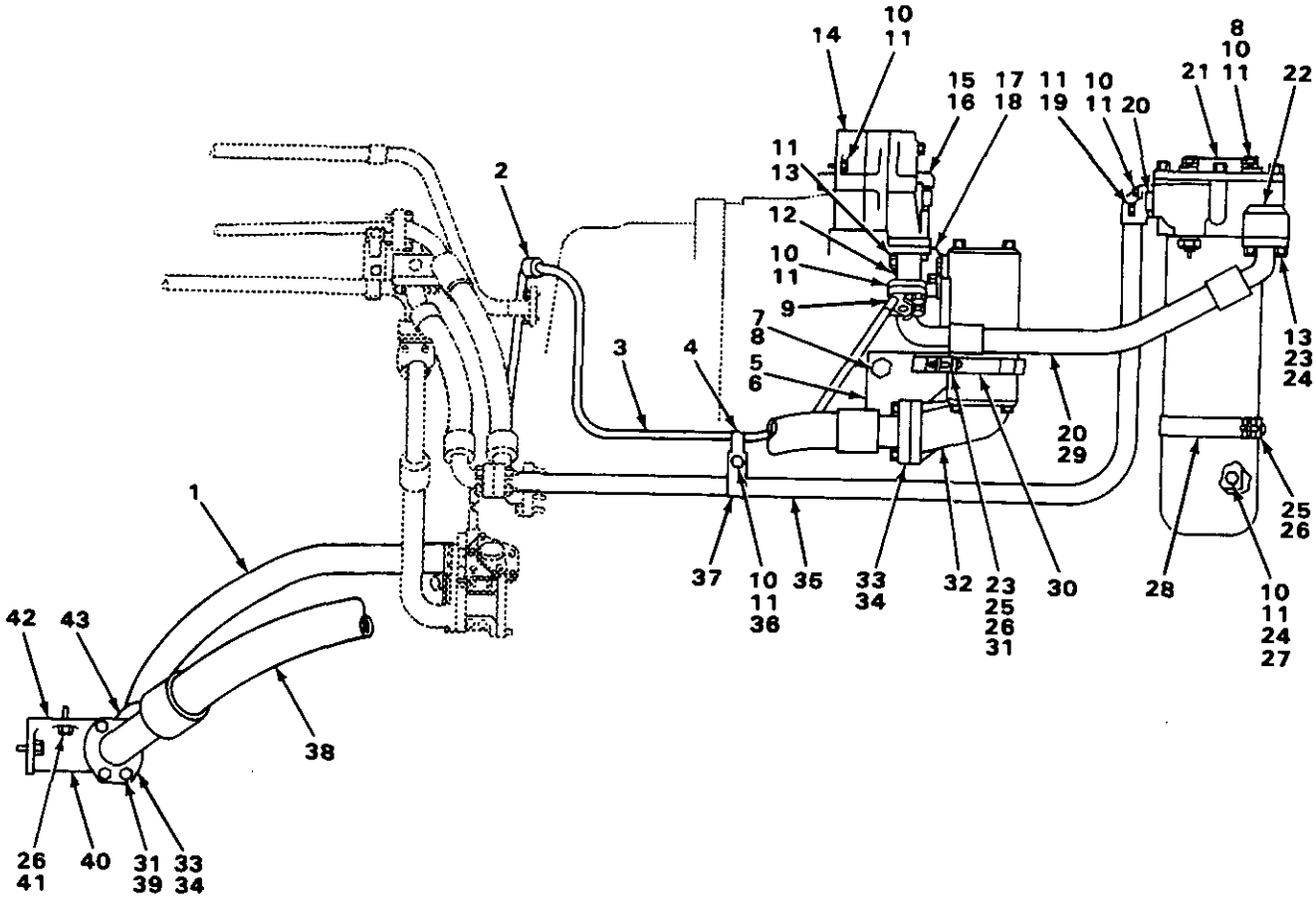

FIGURE 120. TRANSMISSION OIL LINES.

(1) ITEM NO	(2) SMR CODE	(3) NSN	(4) CAGEC	(5) PART NUMBER	(6) DESCRIPTION AND USABLE ON CODES(UOC)	(7) QTY
					GROUP 0721 COOLERS, PUMPS, MOTORS.	
					FIG 120. TRANSMISSION OIL LINES.	
1	PFOZZ	4720010671397	11083	3P5931	HOSE A	1
2	PFOZZ	5340004238320	11083	1B3057	CLIP,SPRING TENSION	1
3	PFOZZ	4720010671399	11083	3P7838	HOSE A	1
4	PFOZZ	5340008290483	11083	5M8429	CLAMP,LOOP	1
5	XBOZZ		11083	6P7676	BRACKET ASSEMBLY	1
6	PFOZZ	5310004454632	11083	1F748	.NUT,PLAIN,WELDING	2
7	PFOZZ	5310001174788	11083	5M2894	WASHER,FLAT	2
8	PFOZZ	5306002604508	11083	S1594	BOLT,MACHINE	6
9	PFOZZ	5340007206213	96906	MS21333-59	CLAMP,LOOP	1
10	PFOZZ	5306004238194	11083	1A2029	BOLT,MACHINE	15
11	PFOZZ	5310006379541	96906	MS35338-46	WASHER,LOCK	21
12	PFOZZ	4730012503961	11083	6P7679	ELBOW	1
13	PFOZZ	5305000680511	80204	B1821BH038C125N	SCREW,CAP,HEXAGON H	10
14	PFOZZ	5331009390871	09990	2-231S103-70	O-RING	1
15	PFOZZ	4730001433941	96906	MS51527A6	ELBOW,TUBE TO BOSS	2
16	PFOZZ	5330010689760	11083	336042	O-RING	2
17	PFOZZ	4730012503997	11083	3P7808	ELBOW	1
18	PFOZZ	5331009489768	11083	8M4436	O-RING	2
19	PFOZZ	5305010156841	11083	0S1591	SCREW	2
20	PFOZZ	5331009254778	09990	2-219S1032-70	O-RING	4
21	XBOZZ		11083	3P8005	PLATE	1
22	PFOZZ	4730010515256	11083	1P4577	FLANGE,PIPE	4
23	PFOZZ	5310007680318	96906	MS51967-14	NUT,PLAIN,HEXAGON	2
24	PFOZZ	5310001174788	11083	5M2894	WASHER,FLAT	12
25	PFOZZ	5306004238117	11083	S1595	BOLT,MACHINE	4
26	PFOZZ	5310005845272	96906	MS35338-48	WASHER,LOCK	8
27	XBOZZ		11083	8S4780	BRACKET	1
28	PFOZZ	5340012545362	11083	3P4165	CLAMP,LOOP	1
29	PFOZZ	4720011036814	11083	8P4110	HOSE ASSEMBLY	1
30	PFOZZ	5340012624885	11083	3P6629	CLAMP,LOOP	2
31	PFOZZ	5310009307013	11083	4B4280	WASHER,FLAT	11
32	XBOZZ		11083	6P0683	BASE	1
33	PFOZZ	4730010532692	11083	1P4582	FLANGE	4
34	PFOZZ	5331009390610	11083	8M5010	O-RING	2
35	PFOZZ	4710012533527	11083	9S0440	TUBE ASSEMBLY,METAL	1
36	PFOZZ	5310004862505	15434	108330	WASHER,FLAT	1
37	PFOZZ	5340012550934	11083	9M5639	CLAMP,LOOP	1
37	PFOZZ	5340012550935	11083	9M5640	CLAMP,LOOP	1
38	PFOZZ	4720010671401	11083	6P0685	HOSE A	1
39	PFOZZ	5306011279361	11083	0S1585	BOLT,MACHINE	8
40	XBOZZ		11083	3P5929	MANIFOLD	1
41	PFOZZ	5306004240086	11083	7B3235	BOLT,MACHINE	4
42	PFOZZ	5331009747169	09990	2-335S1032-70	O-RING	2
43	PFOZZ	5331009305736	11083	8M4986	O-RING	2

END OF FIGURE

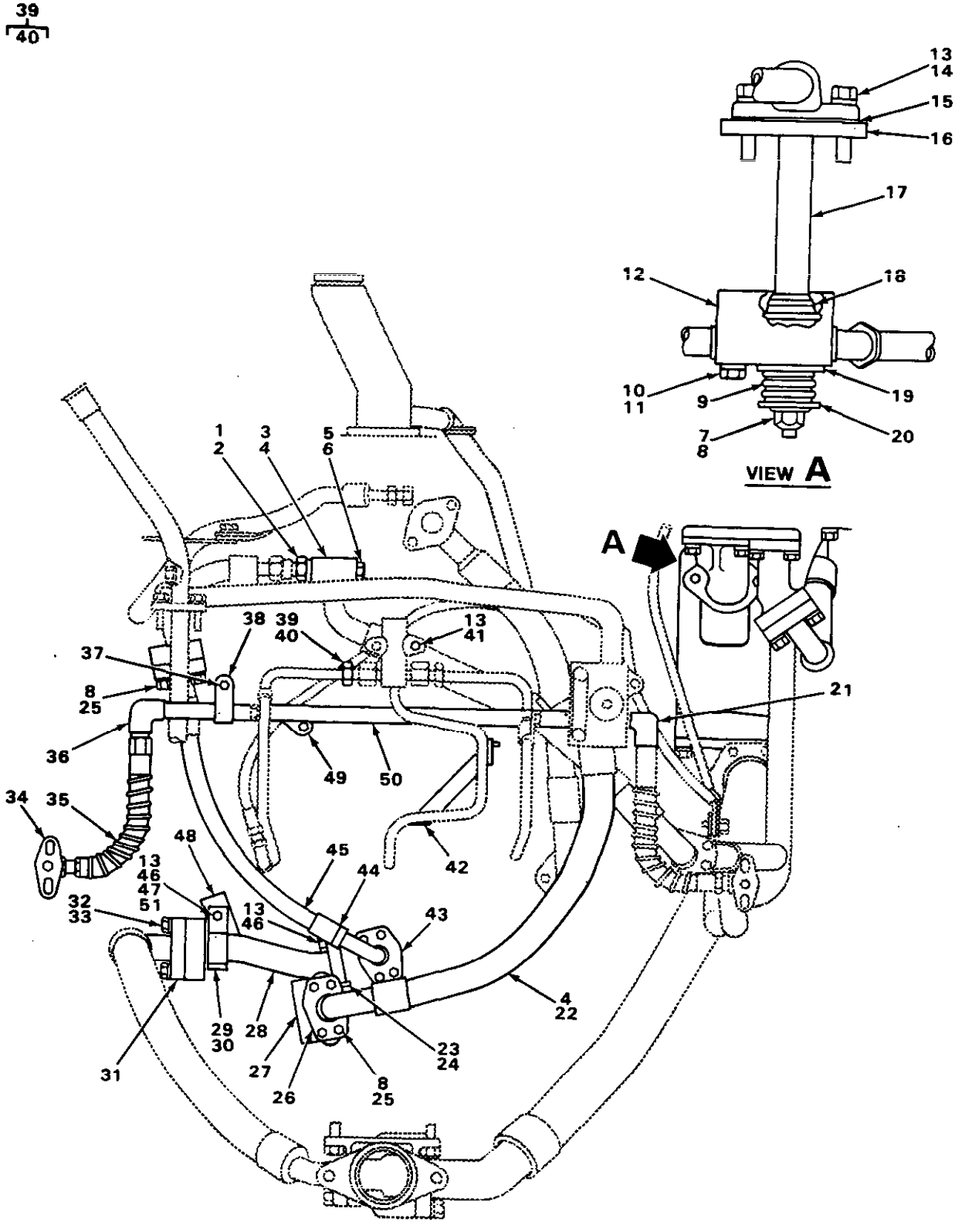

FIGURE 121. POWER TRAIN OIL LINES.

(1) ITEM NO	(2) SMR CODE	(3) NSN	(4) CAGEC	(5) PART NUMBER	(6) DESCRIPTION AND USABLE ON CODES(UOC)	(7) QTY
					GROUP 0721 COOLERS, PUMPS, MOTORS.	
					FIG 121. POWER TRAIN OIL LINES.	
1	PFOZZ	4730011564835	46717	AC-1-310	ADAPTER,STRAIGHT,TU USE WITH SERIAL RANGE 77V6524 THRU 77V9475...	1
2	PFOZZ	5331009486482	11083	3K360	O-RING USE WITH SERIAL RANGE 77V6524 THRU 77V9475.....	1
3	XBOZZ		11083	9P2390	BLOCK USE WITH SERIAL RANGE 77V6524 THRU 77V9475.....	1
4	PFOZZ	5331009254778	09990	2-219S1032-70	O-RING.....	3
5	PFOZZ	5365010911407	96906	MS51840-23SS	PLUG,MACHINE THREAD.....	1
6	XDOZZ	5330010491292	02697	3-904N552-90	O-RING.....	1
7	PFOZZ	5310009500039	96906	MS21044N6	NUT,SELF-LOCKING,HE.....	1
8	PFOZZ	5310001174788	11083	5M2894	WASHER,FLAT.....	19
9	PFOZZ	5360012542385	11083	1S7139	SPRING,HELICAL,COMP.....	1
10	PFOZZ	5306002851368	11083	L1143	BOLT,MACHINE.....	2
11	PFOZZ	5310012542486	11083	3S8744	WASHER,LOCK.....	1
12	PFOZZ	3040012539494	11083	7S7370	BLOCK ASSEMBLY.....	1
13	PFOZZ	5310006379541	96906	MS35338-46	WASHER,LOCK.....	8
14	PFOZZ	5305010156841	11083	0S1591	SCREW.....	2
15	PFOZZ	5330007143704	11083	8F6647	GASKET.....	1
16	PAOZZ	5330010671489	11083	3S8656	GASKET.....	1
17	PFOZZ	4710012533528	11083	7S7372	TUBE ASSEMBLY,METAL.....	1
18	PFOZZ	5331009145821	11083	8M4445	O-RING.....	1
19	XDOZZ		11083	1M5471	VALVE,CHECK.....	1
20	PFOZZ	5310012559345	11083	2D7091	WASHER,FLAT.....	1
21	PFOZZ	4730009213245	11083	7S7369	ELBOW,PIPE.....	1
22	PFOZZ	4720012532811	11083	8P1454	HOSE ASSEMBLY,NONME.....	1
23	PFOZZ	5365006185440	11083	2H8829	PLUG,MACHINE THREAD.....	1
24	PFOZZ	5310003627988	11083	6F7062	WASHER,FLAT.....	1
25	PFOZZ	5305000680511	80204	B1821BH038C125N	SCREW,CAP,HEXAGON H.....	16
26	PFOZZ	4730010515256	11083	1P4577	FLANGE,PIPE.....	4
27	PFOZZ	4730012530501	11083	2S7922	TEE,FLANGE.....	1
28	PFOZZ	4710012533529	11083	3P5828	TUBE ASSEMBLY,METAL.....	1
29	PFOZZ	5340011697516	11083	8S23	CLIP.....	1
30	PFOZZ	5340012707426	11083	8S24	STRAP,RETAINING.....	1
31	PFOZZ	4730010515257	11083	1P4578	FLANGE,PIPE.....	4
32	PFOZZ	5306004003518	63005	427564	BOLT,MACHINE.....	8
33	PFOZZ	5310001183035	11083	4B4279	WASHER,FLAT.....	8
34	PFOZZ	4730012530500	11083	7S7367	ELBOW,FLANGE TO HOS.....	2
35	PFOZZ	4720010671405	11083	7S7368	HOSE A.....	2
36	PFOZZ	4730012527837	11083	7S7507	ELBOW,PIPE TO TUBE.....	1
37	PFOZZ	5305007215492	80204	B1821BH038C063N	SCREW,CAP,HEXAGON H.....	1
38	PFOZZ	5340006180246	11083	1S3618	CLIP,SPRING TENSION.....	1
39	PFOZZ	4730002784596	11083	3B8996	ADAPTER,STRAIGHT,PI.....	2
40	PFOZZ	4730002889391	11083	8F8997	.INVERTED NUT,TUBE C.....	1
41	PFOZZ	5306002637301	11083	L1351	BOLT,MACHINE.....	2
42	PFOZZ	4710012533530	11083	2S8311	TUBE ASSEMBLY,METAL.....	1
43	PFOZZ	4730010513134	11083	1P4576	FLANGE,PIPE.....	4
44	PAOZZ	5331009138120	58312	8M5254-00	O-RING.....	1
45	PFOZZ	4720010671400	11083	3P8230	HOSE A.....	1

(1) ITEM NO	(2) SMR CODE	(3) NSN	(4) CAGEC	(5) PART NUMBER	(6) DESCRIPTION AND USABLE ON CODES(UOC)	(7) QTY
46	PFOZZ	5306004238194	11083	1A2029	BOLT,MACHINE.....	3
47	PFOZZ	5310011945398	11083	1D4717	NUT,HEXAGON.....	1
48	XBOZZ		11083	8P400	BRACKET.....	1
49	PFOZZ	5340007206213	96906	MS21333-59	CLAMP,LOOP.....	1
50	PFOZZ	4710012532746	11083	7S7375	TUBE,METALLIC.....	1

END OF FIGURE

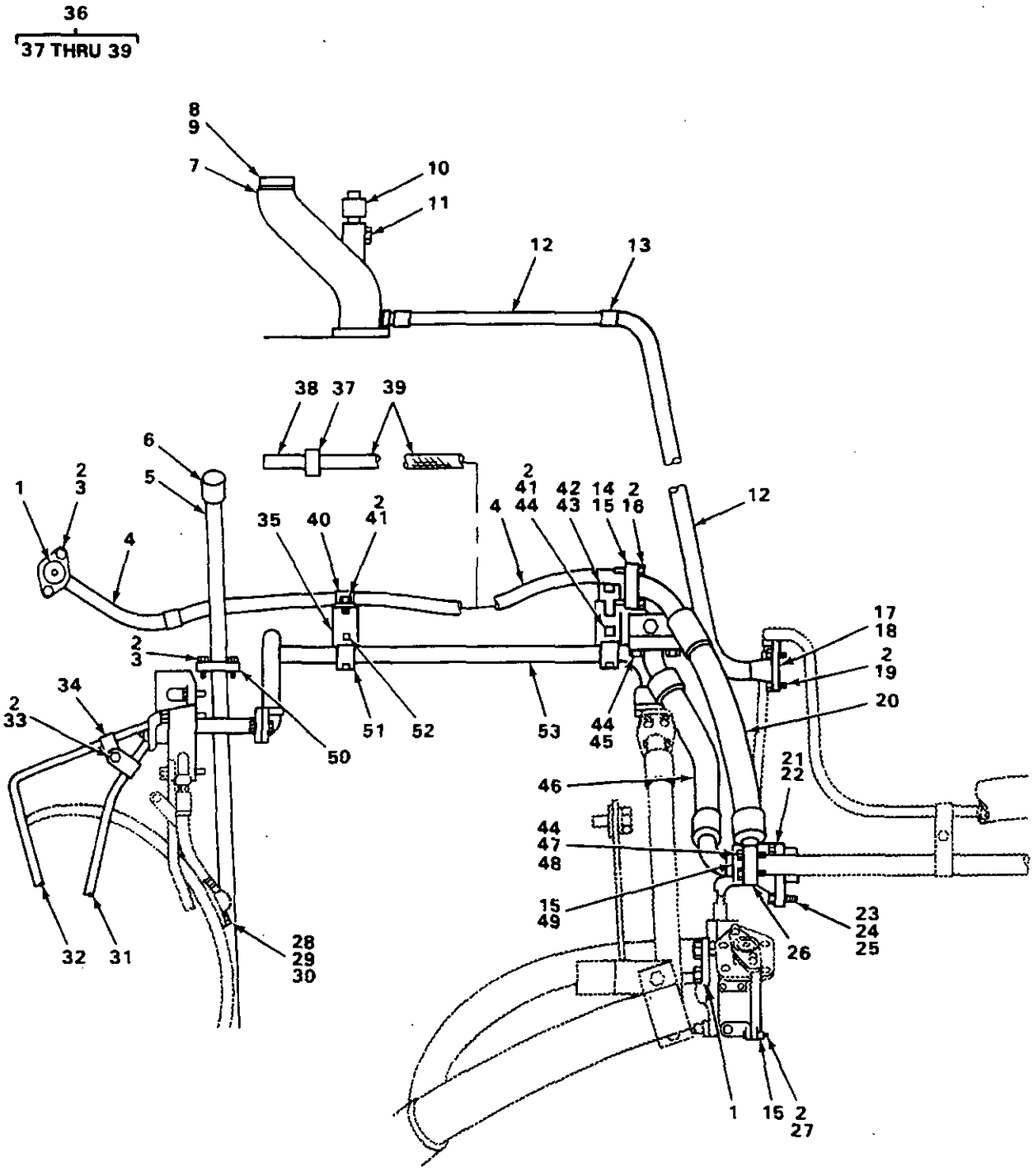

FIGURE 122. TRANSMISSION OIL LINES AND MOUNTING PARTS.

(1) ITEM NO	(2) SMR CODE	(3) NSN	(4) CAGEC	(5) PART NUMBER	(6) DESCRIPTION AND USABLE ON CODES(UOC)	(7) QTY
					GROUP 0721 COOLERS, PUMPS, MOTORS.	
					FIG 122. TRANSMISSION OIL LINES AND MOUNTING PARTS.	
1	PAOZZ	5331009977230	96906	MS9068-214	O-RING	2
2	PFOZZ	5310006379541	96906	MS35338-46	WASHER,LOCK	14
3	PFOZZ	5306002604508	11083	S1594	BOLT,MACHINE	2
4	PFOZZ	4710012534714	11083	3P5749	TUBE ASSEMBLY,METAL USE WITH SERIAL RANGE 77V5006 THRU 77V6523	1
5	XBOZZ		11083	8H7702	GUIDE ASSEMBLY	1
6	XBOZZ		11083	7M0381	PLUNGER ASSEMBLY	1
7	PFOZZ	2520012685376	11083	1S2254	FILLER NECK	1
8	PFOZZ	4730012498409	11083	5M902	PLUG,PIPE	1
9	PFOZZ	5330001904255	11083	L1124	GASKET	1
10	PFOZZ	2520001135509	55355	1577AL	BREATHER USE WITH SERIAL RANGE 77V6524 THRU 77V9475	1
11	PFOZZ	5365004193254	11083	2S7905	PLUG,MACHINE THREAD USE WITH SERIAL RANGE 77V8763 THRU 77V9475	1
12	PFOZZ	4720010671395	11083	6K6830	HOSE A	1
13	PFOZZ	5340010986683	11083	3S8665	CLAMP,LOOP	1
14	XBOZZ		11083	9S4569	FLANGE	1
15	PFOZZ	5331009254778	09990	2-219S1032-70	O-RING	3
16	PFOZZ	5305010156841	11083	0S1591	SCREW	2
17	PFOZZ	4730012675992	11083	1S9353	FLANGE,PIPE	1
18	PFOZZ	5330002975397	11083	4F5640	GASKET	1
19	PFOZZ	5306004238194	11083	1A2029	BOLT,MACHINE	2
20	PFOZZ	4720010671407	11083	9S4551	HOSE A	1
21	PFOZZ	4730010515257	11083	1P4578	FLANGE,PIPE	1
22	PFOZZ	5331009305736	11083	8M4986	O-RING	1
23	PFOZZ	5305000712055	80204	B1821BH044C150N	SCREW,CAP,HEXAGON H	2
24	PFOZZ	5310001183035	11083	4B4279	WASHER,FLAT	2
25	PFOZZ	5306004003518	63005	427564	BOLT,MACHINE	2
26	XBOZZ		11083	4S7997	SUPPORT	1
27	PFOZZ	5305000680511	80204	B1821BH038C125N	SCREW,CAP,HEXAGON H	2
28	PFOZZ	5306012097883	11083	7S9686	BOLT,SHOULDER	4
29	PFOZZ	5340006205730	11083	2H3504	RETAINER,NUT AND BO	4
30	PFOZZ	5310007257382	96906	MS35690-624	NUT,PLAIN,HEXAGON	4
31	PFOZZ	4710012532752	11083	1M2675	TUBE,BENT,METALLIC RIGHT HAND	1
32	MOOZZ		19207	5P1200-24	TUBE MAKE FROM TUBE P/N 5P1200	1
33	PFOZZ	5305007215492	80204	B1821BH038C063N	SCREW,CAP,HEXAGON H	2
34	PFOZZ	5340002827505	96906	MS21333-57	CLAMP,LOOP	2
35	XBOZZ		11083	3P8319	BRACKET ASSEMBLY	2
36	XDOZZ		11083	6S7230	HOSE USE WITH SERIAL RANGE 77V6524 THRU 77V9475	1
37	PFOZZ	4720010517602	11083	3S8606	.SLEEVE	2
38	PFOZZ	4730010517605	11083	8S4055	.COUPLING ASSEMBLY STRAIGHT	1
39	MOOZZ		19207	0625930-44	.HOSE MAKE FROM HOSE P/N 5P182	1
40	PFOZZ	5340003516992	11083	8F8513	CLAMP,LOOP SPRING TENSION	4
41	PFOZZ	5306002637301	11083	L1351	BOLT,MACHINE	3
42	PFOZZ	5306004262926	11083	S1583	BOLT,MACHINE	1
43	PFOZZ	5310005847888	96906	MS35338-51	WASHER,LOCK	1

(1) ITEM NO	(2) SMR CODE	(3) NSN	(4) CAGEC	(5) PART NUMBER	(6) DESCRIPTION AND USABLE ON CODES(UOC)	(7) QTY
44	PFOZZ	5310001174788	11083	5M2894	WASHER,FLAT	10
45	PFOZZ	5306002851368	11083	L1143	BOLT,MACHINE	4
46	PFOZZ	4720010671398	11083	3P5934	HOSE A	1
47	PFOZZ	5306006852384	14351	13XX3958	BOLT,MACHINE	2
47	PFOZZ	5305001380335	11083	7H7954	SCREW,CAP,HEXAGON H	2
48	PFOZZ	5310011945398	11083	1D4717	NUT,HEXAGON	4
49	PFOZZ	4730010515256	11083	1P4577	FLANGE,PIPE	4
50	PFOZZ	5330005302525	11083	9F5940	GASKET	1
51	PFOZZ	5340004029175	11083	7S3913	CLIP,SPRING TENSION	4
52	PFOZZ	5310000050781	11083	9F2978	NUT,PLAIN,WELDING	1
53	PFOZZ	4710012532877	11083	6P7757	TUBE ASSEMBLY,METAL	1

END OF FIGURE

1
2 THRU 12
3
4

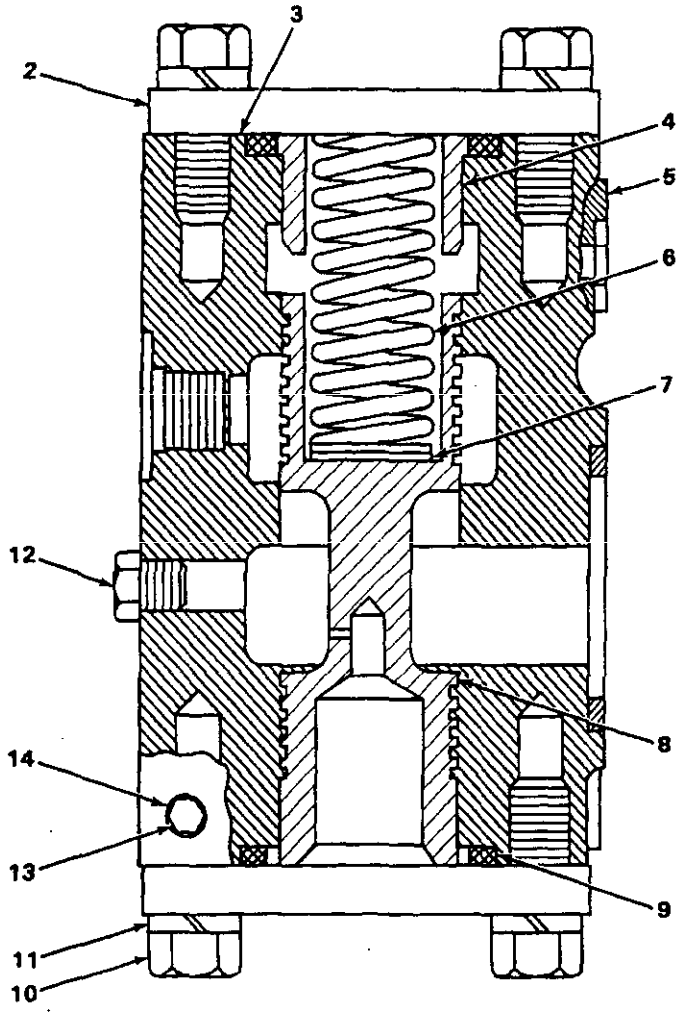

FIGURE 123. TRANSMISSION RELIEF VALVE.

(1) ITEM NO	(2) SMR CODE	(3) NSN	(4) CAGEC	(5) PART NUMBER	(6) DESCRIPTION AND USABLE ON CODES(UOC)	(7) QTY
					GROUP 0721 COOLERS, PUMPS, MOTORS.	
					FIG 123. TRANSMISSION RELIEF VALVE.	
1	PFFHH	4820010411571	11083	3P7665	VALVE,BODY ASSEMBLY.....	1
2	PFHZZ	5340011602240	11083	4M8239	.COVER,ACCESS.....	2
3	XAHHH		11083	3P7666	.HOUSING ASSEMBLY.....	1
4	XDHZZ		11083	7M1377	..STOP,RELIEF VALVE.....	1
5	PFHZZ	5331009995505	11083	8M8157	.O-RING.....	1
6	PFHZZ	5360009503397	11083	7M1297	.SPRING,VALVE,RELIEF.....	1
7	PFHZZ	5310005847762	43999	2W1-24-28-63	.WASHER,FLAT.....	2
8	PFHZZ	4820011034037	11083	7M1296	.VALVE,RELIEF,PRESSU.....	1
9	PFHZZ	5331009305736	11083	8M4986	.O-RING.....	3
10	PFHZZ	5306002604508	11083	S1594	.BOLT,MACHINE.....	4
11	PFHZZ	5310006379541	96906	MS35338-46	.WASHER,LOCK.....	4
12	PFHZZ	4730009247886	11083	5M6214	.PLUG,PIPE.....	1
13	PFFZZ	5306004262932	11083	S1619	BOLT,MACHINE.....	3
14	PFFZZ	5310006379541	96906	MS35338-46	WASHER,LOCK.....	3

END OF FIGURE

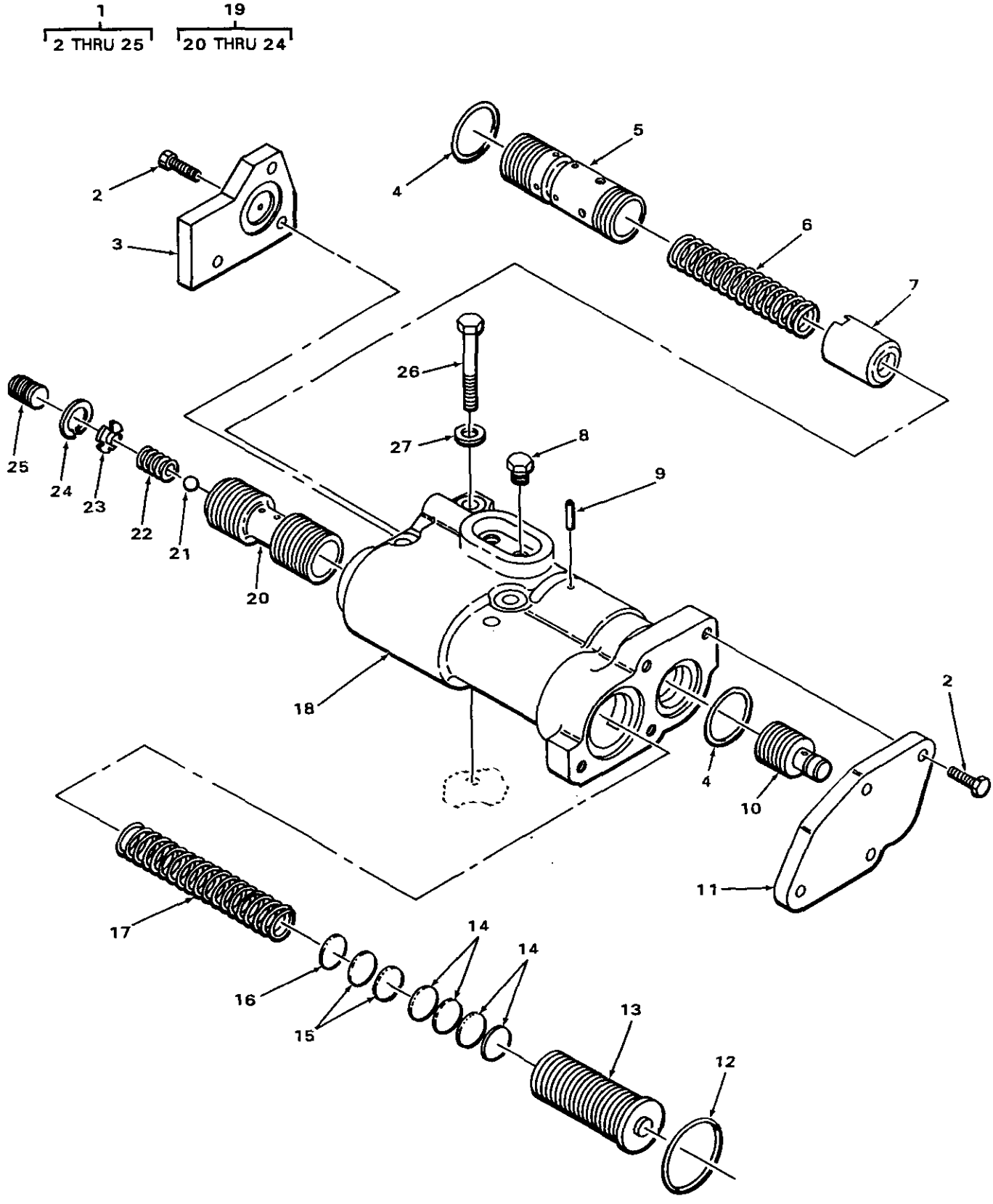

FIGURE 124. TRANSMISSION PRESSURE CONTROL VALVE.

(1) ITEM NO	(2) SMR CODE	(3) NSN	(4) CAGEC	(5) PART NUMBER	(6) DESCRIPTION AND USABLE ON CODES(UOC)	(7) QTY
					GROUP 0721 COOLERS, PUMPS, MOTORS	
					FIG. 124 TRANSMISSION PRESSURE CONTROL VALVE	
1	PFHHZ	4820010178081	11083	1P4145	VALVE,REGULATING,FL.....	1
2	PFHZZ	5306002604508	11083	S1594	.BOLT,MACHINE.....	7
3	XDHZZ		11083	1P3593	.COVER.....	1
4	PAHZZ	5331009138120	58312	8M5254-00	.O-RING.....	2
5	PFHZZ	2590013777858	11083	8P7279	.SPOOL.....	1
6	PFHZZ	5360009502093	11083	4M5923	.SPRING,HELICAL,COMP.....	1
7	PFHZZ	5342010690795	11083	1P8617	.RETAINER.....	1
8	PFHZZ	4730009247886	11083	5M6214	.PLUG,PIPE.....	2
9	PFHZZ	5315005296952	11083	6H2948	.PIN.....	2
10	PFHZZ	4820002374604	11083	8S9195	.PISTON,VALVE.....	1
11	XDHZZ		11083	8S9192	.COVER.....	1
12	PAHZZ	5331009145773	11083	8M4992	.O-RING PART OF KIT P/N 6V-6394.....	1
13	XDHZZ		11083	9S2802	.PISTON.....	1
14	PFHZZ	5365009491439	11083	5M9624	.SPACER 0.010 INCHES THICK.....	4
15	PFHZZ	5310009483280	11083	5M9623	.WASHER BLANK 0.036 INCHES THICK...	2
16	PFHZZ	5365007626106	11083	5M9622	.SPACER,PLATE 0.062 INCHES THICK...	1
17	PFHZZ	5360007308043	11083	2M3469	.SPRING,HELICAL,COMP.....	1
18	PFHZZ	4820013776776	11083	1P4119	.BODY,VALVE.....	1
19	PFHHZ	4730010690898	11083	5S4437	.SPOOL A.....	1
20	XAHZZ		11083	5S4361	..SPOOL.....	1
21	PFHZZ	3110009491438	11083	4B9880	..BALL,BEARING.....	1
22	PFHZZ	5360009508041	11083	4M2381	..SPRING,SPECIAL.....	1
23	PFHZZ	5342010690788	11083	8M1013	..RETAINER.....	1
24	PFHZZ	5325006873379	96906	MS16625-1062	..RING,RETAINING.....	1
25	PFHZZ	4730010687106	11083	2M7041	.SLUG.....	1
26	PFHZZ	5306002851368	11083	L1143	BOLT,MACHINE.....	3
27	PFHZZ	5310001174788	11083	5M2894	WASHER,FLAT.....	3

END OF FIGURE

1 — 2 THRU 20

15 — 16 THRU 20

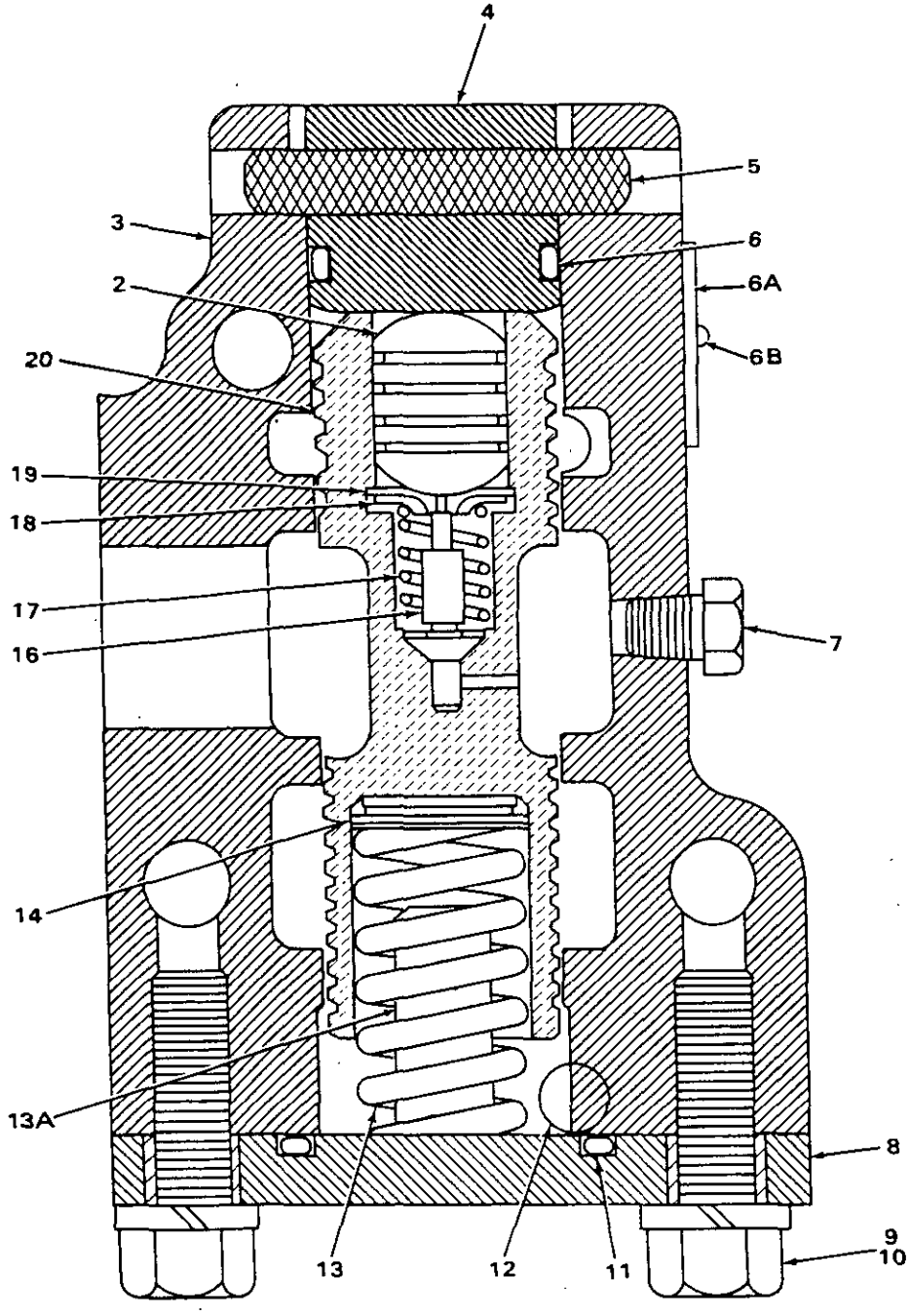

FIGURE 125. TRANSMISSION PRIORITY VALVE.

(1) ITEM NO	(2) SMR CODE	(3) NSN	(4) CAGEC	(5) PART NUMBER	(6) DESCRIPTION AND USABLE ON CODES(UOC)	(7) QTY
					GROUP 0721 COOLERS, PUMPS, MOTORS	
					FIG. 125 TRANSMISSION PRIORITY VALVE	
1	PFHHH	2520010181838	11083	6P3554	VALVE,PRIORITY.....	1
2	PFHZZ	4730010687106	11083	2M7041	.SLUG.....	1
3	XDHZZ		11083	6P3553	.BODY.....	1
4	XDHZZ		11083	1P9699	.STOP.....	1
5	PFHZZ	5315012549668	11083	8H9513	.DOWEL.....	1
6	PFHZZ	5331009995504	11083	8M4446	.O-RING PART OF KIT P/N 2P-3988.....	1
6A	XAHZZ		11083	9G7397	.PLATE.....	1
6B	PFHZZ	5305007083823	11083	7B3028	.SCREW,DRIVE.....	1
7	PFHZZ	4730009247886	11083	5M6214	.PLUG,PIPE.....	2
8	PFHZZ	5340013772467	11083	2S9750	.COVER,ACCESS.....	1
9	PFHZZ	5306002604508	11083	S1594	.BOLT,MACHINE.....	2
10	PFHZZ	5310006379541	96906	MS35338-46	.WASHER,LOCK.....	2
11	PFHZZ	5331009486062	11083	8M5249	.O-RING.....	1
12	PFHZZ	3110009491438	11083	4B9880	.BALL,BEARING.....	2
13	PFHZZ	5360010691425	11083	3P4053	.SPRING.....	1
13A	PFHZZ	5315013783067	11083	1D0158	.PIN,STRAIGHT,HEADLE.....	1
14	PFHZZ	5365009491439	11083	5M9624	.SPACER.....	6
15	PFHHZ	4730010690898	11083	5S4437	.SPOOL A.....	1
16	PFHZZ	3110009491438	11083	4B9880	..BALL,BEARING.....	1
17	PFHZZ	5360009508041	11083	4M2381	..SPRING,SPECIAL.....	1
18	PFHZZ	5342010690788	11083	8M1013	..RETAINER.....	1
19	PFHZZ	5325006873379	96906	MS16625-1062	..RING,RETAINING.....	1
20	XAHZZ		11083	5S4361	..SPOOL.....	1

END OF FIGURE

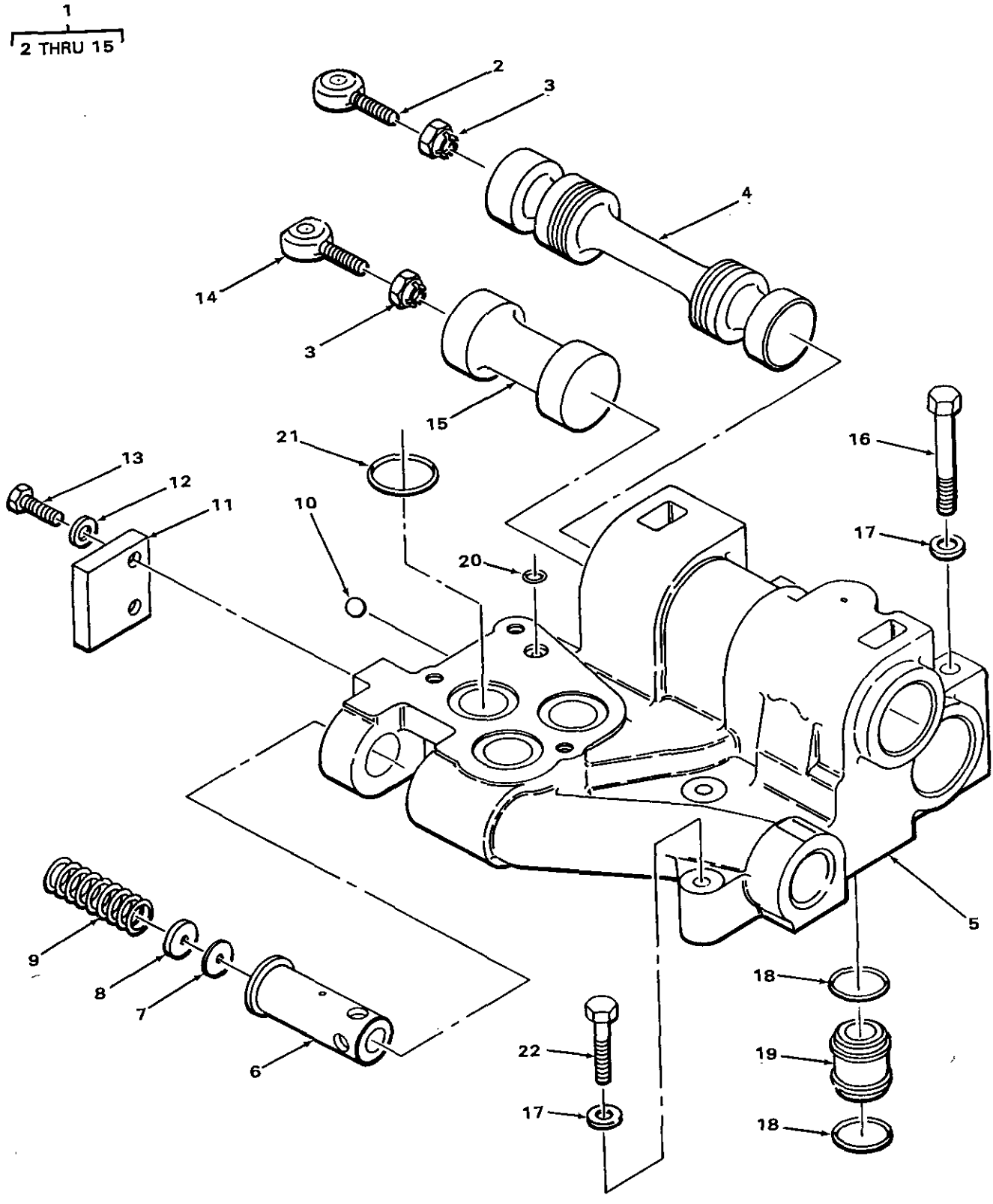

FIGURE 126. SELECTOR VALVE.

(1) ITEM NO	(2) SMR CODE	(3) NSN	(4) CAGEC	(5) PART NUMBER	(6) DESCRIPTION AND USABLE ON CODES(UOC)	(7) QTY
					GROUP 0721 COOLERS, PUMPS, MOTORS	
					FIG. 126 SELECTOR VALVE	
1	PFHHH	2520010180464	11083	1P4107	VALVE ASSEMBLY,SELE.....	1
2	PFHZZ	5306012556398	11083	2M1660	.BOLT,EYE.....	1
3	PFHZZ	5310009502660	11083	2S5717	.NUT,PLAIN,CASTELLAT.....	2
4	PFHZZ	2530010687107	11083	2M7057	.VALVE.....	1
5	PFHZZ	4820013776777	11083	1P4101	.BODY,VALVE.....	1
6	PFHZZ	2520009502643	11083	8M2764	.VALVE,RELIEF.....	1
7	PFHZZ	5310007653237	73734	97410	.WASHER,FLAT.....	2
8	PFHZZ	5365009481600	11083	5M3492	.SPACER 0.010 INCHES THICK.....	2
9	PFHZZ	5360009502471	11083	8M8627	.SPRING,HELICAL,COMP.....	1
10	PFHZZ	3110000119935	11083	4B9782	.BALL,BEARING.....	1
11	XDHZZ		11083	9S2792	.COVER.....	1
12	PFFZZ	5310001174788	11083	5M2894	.WASHER,FLAT.....	2
13	PFHZZ	5306004238194	11083	1A2029	.BOLT,MACHINE.....	2
14	PFHZZ	5306012556399	11083	9H297	.BOLT,EYE.....	1
15	PFHZZ	4730010690876	11083	1P3594	.SPOOL.....	1
16	PFHZZ	5306004262932	11083	0S1619	BOLT,MACHINE.....	1
17	PFHZZ	5310001174788	11083	5M2894	WASHER,FLAT.....	3
18	PAHZZ	5330010619378	11083	8M8283	SEAL PART OF KIT P/N 6V-6394.....	4
19	PFHZZ	3120012632717	11083	2S4962	CYLINDER SLEEVE.....	2
20	PAHZZ	5331009852219	11083	8M4447	O-RING PART OF KIT P/N 6V-6394.....	1
21	PAHZZ	5331009138120	58312	8M5254-00	O-RING.....	3
22	PFHZZ	5305010269518	11083	0S1571	SCREW,CAP,HEXAGON H.....	2

END OF FIGURE

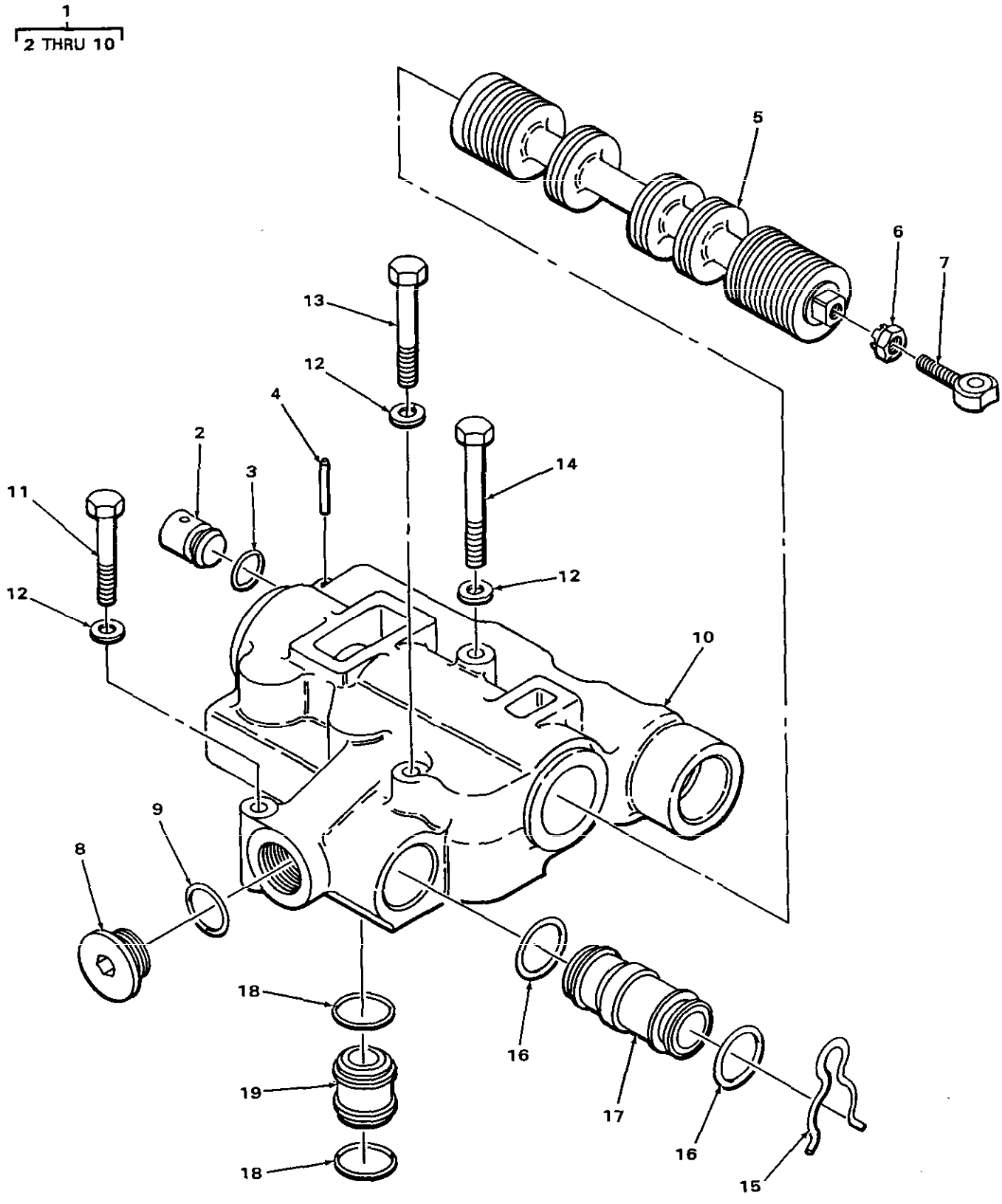

FIGURE 126A. SELECTOR VALVE.

(1) ITEM NO	(2) SMR CODE	(3) NSN	(4) CAGEC	(5) PART NUMBER	(6) DESCRIPTION AND USABLE ON CODES(UOC)	(7) QTY
					GROUP 0721 COOLERS, PUMPS, MOTORS	
					FIG. 126A SELECTOR VALVE	
1	PFHHZ	4820010176495	11083	8M2502	VALVE,LINEAR,DIRECT.....	1
2	PFHZZ	5365008691581	11083	1M3781	.PLUG,MACHINE THREAD.....	1
3	PAHZZ	5331009425114	11083	8M4437	.O-RING PART OF KIT P/N 6V-6394.....	1
4	PFHZZ	5315007102087	11083	1H1200	.PIN,SPRING.....	1
5	PFHZZ	2530010687261	11083	8M2504	.VALVE.....	1
6	PFHZZ	5310009502660	11083	2S5717	.NUT,PLAIN,CASTELLAT.....	1
7	PFHZZ	5306012556399	11083	9H297	.BOLT,EYE.....	1
8	PFHZZ	4730010643790	11083	9S8008	.PLUG.....	1
9	PAHZZ	5331009448281	11083	302824	.O-RING.....	1
10	XDHZZ		11083	8M2503	.HOUSING.....	1
11	PFHZZ	5306002851368	11083	L1143	BOLT,MACHINE.....	1
12	PFHZZ	5310001174788	11083	5M2894	WASHER,FLAT.....	3
13	PFHZZ	5306004262932	11083	0S1619	BOLT,MACHINE.....	1
14	PFHZZ	5305008798351	96906	MS35307-371	SCREW,CAP,HEXAGON H.....	1
15	PFHZZ	5340004265759	11083	7B2501	CLIP,RETAINING.....	1
16	PFHZZ	5331009138878	11083	8M4432	O-RING.....	2
17	PFHZZ	5365010668465	11083	2S4964	SLEEVE.....	1
18	PAHZZ	5330014410429	11083	6V-6394	GASKET SET PART OF KIT P/N 6V-6394..	6
19	PFHZZ	3120012632717	11083	2S4962	CYLINDER SLEEVE.....	3

END OF FIGURE

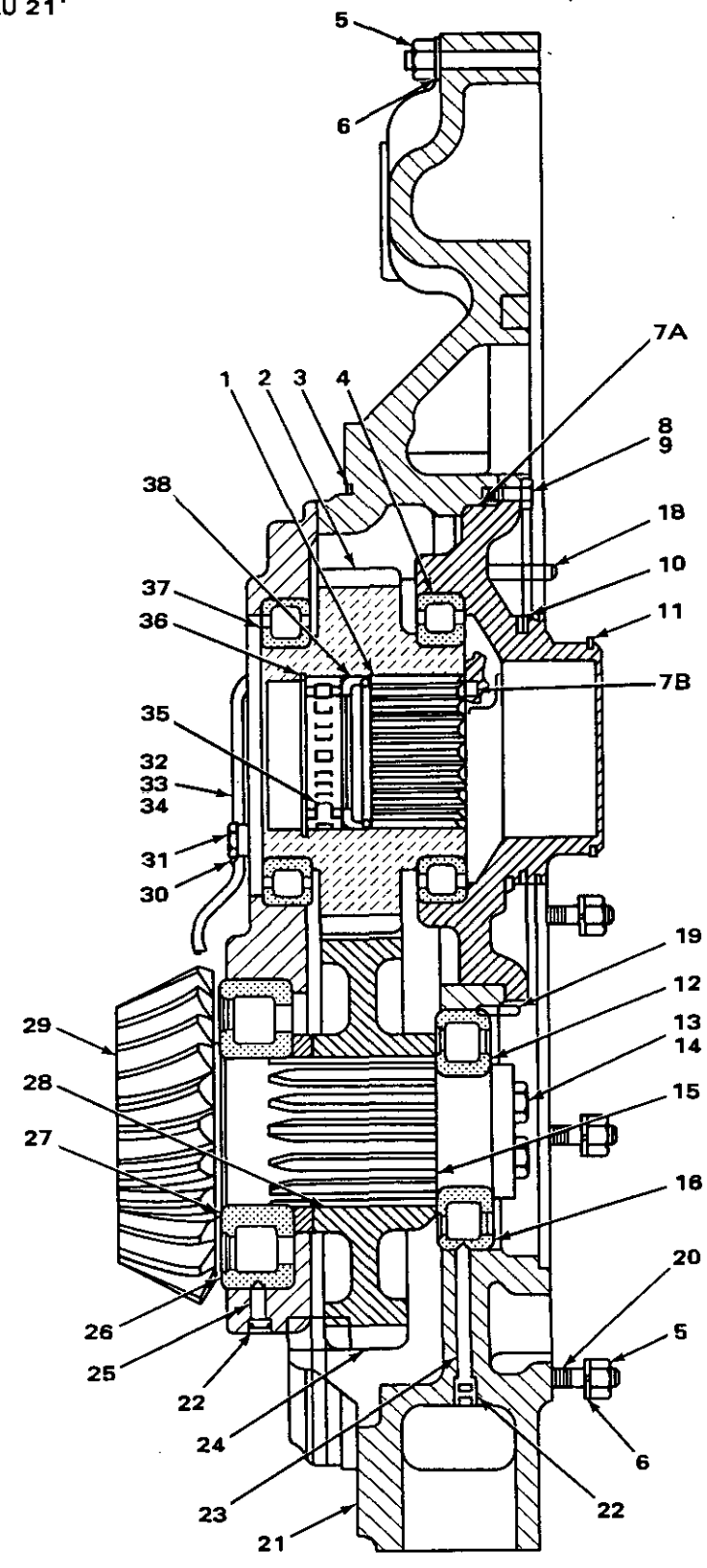

FIGURE 127. TRANSFER GEAR.

(1) ITEM NO	(2) SMR CODE	(3) NSN	(4) CAGEC	(5) PART NUMBER	(6) DESCRIPTION AND USABLE ON CODES(UOC)	(7) QTY
					GROUP 08 TRANSFER AND FINAL DRIVE ASSEMBLIES	
					GROUP 0801 POWER TRANSFER AND FINAL DRIVE ASSEMBLIES	
					FIG. 127 TRANSFER GEAR	
1	PFHZZ	3110007569780	11083	1M4343	RING,BEARING,INNER.....	1
2	PFHZZ	3020010689693	11083	1M6603	GEAR,DRIVE MOTION.....	1
3	PAHZZ	5331008811402	11083	4H6730	O-RING PART OF KIT P/N 6V-6396.....	1
4	PFHZZ	3110008966817	11083	2M8868	RING,BEARING,OUTER.....	2
5	PFHZZ	5310003474123	11083	1B4205	NUT,PLAIN,HEXAGON.....	22
6	PFHZZ	5310005845272	96906	MS35338-48	WASHER,LOCK.....	22
7	PFHHZ	3040013777420	11083	1M4344	HOUSING PART,MECHAN.....	1
7A	XAHZZ		11083	1M4173	.CAGE.....	1
7B	PFHZZ	5340007373635	19207	7373635	.PLUG,EXPANSION.....	1
8	PFHZZ	5306004238194	11083	1A2029	BOLT,MACHINE.....	6
9	PAHZZ	2540010687068	11083	5H5782	LOCK PART OF KIT P/N 6V-6396.....	3
10	PFHZZ	2520010599288	11083	1M4169	RING.....	2
11	PFHZZ	5365010687242	11083	6H6043	RING.....	1
12	XDHZZ		11083	7F3587	WASHER.....	1
13	PFHZZ	5305004550463	11083	4B3823	SCREW,CAP,HEXAGON H.....	2
14	PFHZZ	5340001478390	11083	1A1399	LOCKING PLATE,NUT A PART OF KIT P/N 6V-6396.....	1
15	PFHZZ	3110001518302	11083	3B8845	BEARING,ROLLER,CYLI INNER.....	1
16	XDHZZ		11083	3F5750	RING,BEARING,OUTER.....	1
17	AHHHH		11083	9G6772	CASE ASSY USED ON 9G6778.....	1
17	AHHHH		11083	9P5223	CASE ASSY USED ON 3P3022.....	1
18	PFHZZ	5315010625209	11083	5M7937	.PIN.....	1
19	PFHZZ	5315010671394	11083	8H3692	.PIN.....	1
20	PFHZZ	5307004194063	11083	1M6422	.STUD,PLAIN.....	8
21	PFHZZ	3040013776939	11083	9G6771	.HOUSING,MECHANICAL.....	1
22	PFHZZ	5365012577793	11083	9N1433	PLUG,MACHINE THREAD.....	3
22	PFHZZ	5340002299287	11083	0L1026	PLUG,EXPANSION.....	3
23	XDHZZ		11083	2F7770	DOWEL.....	1
24	PFHZZ	3020010689694	11083	1M6604	GEAR,DRIVE MOTION.....	1
25	XDHZZ		11083	3B8852	PIN,STRAIGHT,HEADLE.....	1
26	XDHZZ		11083	5P0090	RING,BEARING,INNER.....	1
27	PFHZZ	3110011891968	11083	5P89	BEARING,ROLLER,TAPE INNER.....	1
28	XDHZZ		11083	1M1480	SPACER.....	1
29	PFHZZ	3020010687245	11083	9H1980	PINION.....	1
30	PFHZZ	5999003636240	11083	2B2404	CLIP,ELECTRICAL.....	1
31	PFHZZ	5305007215492	80204	B1821BH038C063N	SCREW,CAP,HEXAGON H.....	1
32	PFHZZ	4730008828621	58312	3B8998-00	ELBOW,PIPE TO TUBE.....	1
33	PFHZZ	4730002788368	11083	1F1344	INVERTED NUT,TUBE C.....	1
34	PFHZZ	4710012534569	11083	5M6155	TUBE,BENT,METALLIC.....	1
35	PFHZZ	3110001170696	11083	5H1901	BEARING,ROLLER,CYLI.....	1
36	PFHZZ	2520007569728	11083	1K6986	RING,LOCK.....	1
37	PFHZZ	3110010689757	11083	9S5278	RACE AND ROLLER ASS INNER.....	2
38	PFHZZ	5342010668439	11083	1M4342	RETAINER.....	1

END OF FIGURE

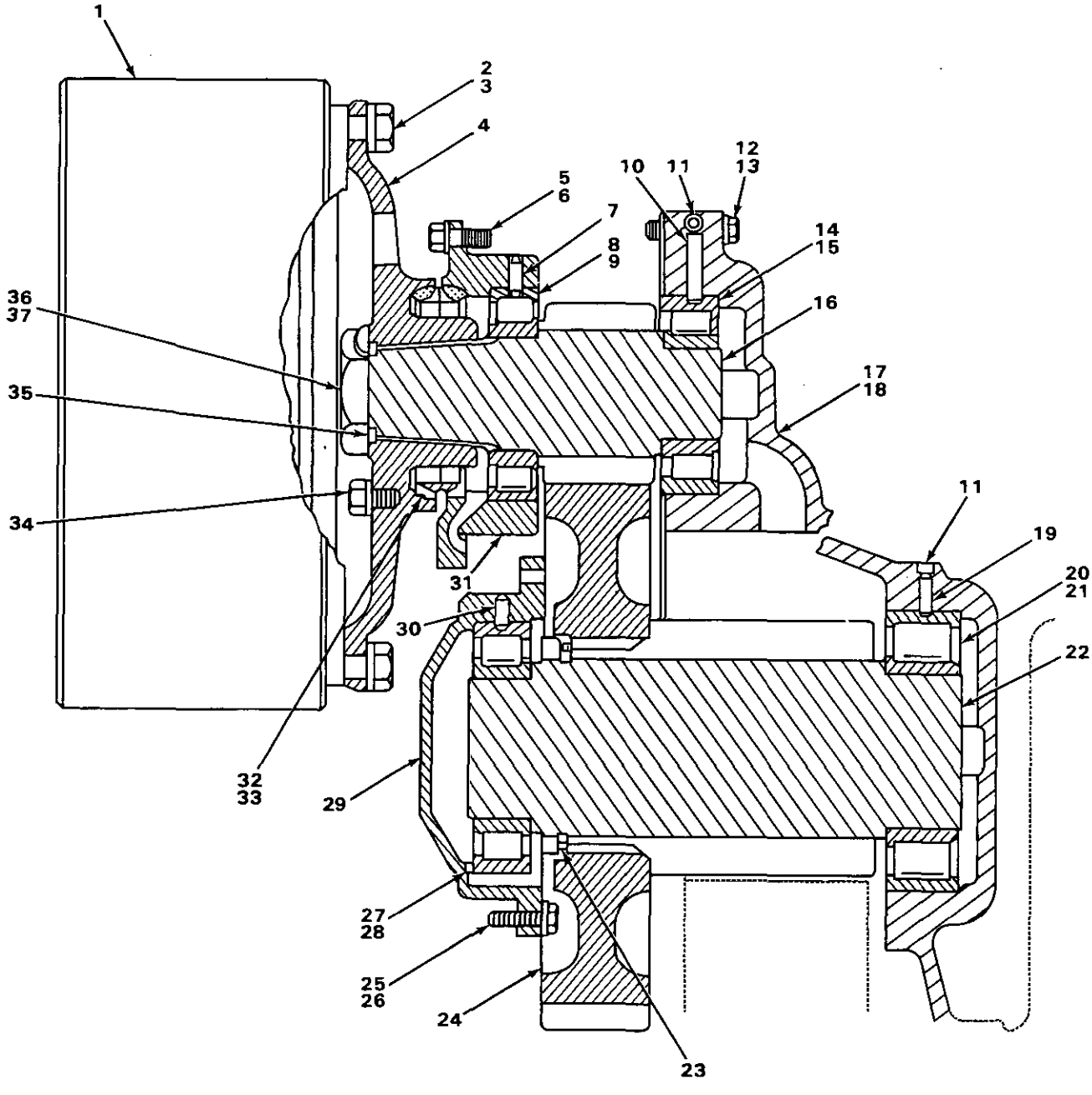

FIGURE 128. FINAL DRIVE (UPPER HALF).

(1) ITEM NO	(2) SMR CODE	(3) NSN	(4) CAGEC	(5) PART NUMBER	(6) DESCRIPTION AND USABLE ON CODES(UOC)	(7) QTY
					GROUP 0801 POWER TRANSFER AND FINAL DRIVE ASSEMBLIES.	
					FIG 128. FINAL DRIVE (UPPER HALF).	
1	PFHZZ	2530013000190	11083	2P9038	BRAKE DRUM	2
2	PFHZZ	5306009877112	11083	9H6864	BOLT,FLANGE,GEAR	24
3	PFHZZ	5310000455001	96906	MS35340-50	WASHER,LOCK	24
4	PFHZZ	4730010690892	11083	3S7306	FLANGE,PIPE	2
5	PFHZZ	5306004240086	11083	7B3235	BOLT,MACHINE	14
6	PFHZZ	5310004317239	11083	2M849	WASHER,FLAT	14
7	XBHZZ		11083	5S4033	DOWEL	2
8	PFHZZ	3110001024568	11083	4S9782	BEARING,ROLLER,CYLI OUTER	2
9	PFHZZ	3110001018589	11083	4S9783	RING,BEARING,INNER	2
10	XBHZZ		11083	4H6534	PIN	2
11	PFHZZ	5340002299287	11083	L1026	PLUG,EXPANSION	4
12	PFHZZ	5305007247222	80204	B1821BH063C200N	SCREW,CAP,HEXAGON H	60
13	PFHZZ	5310001397030	11083	4D3704	WASHER,FLAT	60
14	XBHZZ		11083	2D6421	BEARING,ROLLER,CYLI OUTER	2
15	PFHZZ	3110007406782	11083	1M1604	RING,BEARING,INNER INNER	2
16	PFHZZ	3020009161949	11083	2S4357	GEAR,DRIVE MOTION	2
17	XBHZZ		11083	6P3598	CASE RIGHT HAND	1
17	XBHZZ		11083	6P3599	CASE LEFT HAND	1
18	XDHZZ		11083	2A309	PIN,STRAIGHT,HEADLE	6
19	XBHZZ		11083	4B8265	DOWEL	2
20	PFHZZ	3110001024569	08162	W62222EAHX	BEARING,ROLLER,CYLI OUTER	2
21	XBHZZ		11083	9S5360	CUP,TAPERED ROLLER INNER	2
22	XBHZZ		11083	5S0465	PINION	2
23	PFHZZ	5325012552603	11083	5S467	RETAINER,ASSEMBLED	2
24	XBHZZ		11083	5S0464	PINION	2
25	PFHZZ	5306011279361	11083	0S1585	BOLT,MACHINE	16
26	XBHZZ		11083	4M706	LOCK	8
27	PFHZZ	3110009138114	11083	3S9669	BEARING,ROLLER,CYLI	2
28	PFHZZ	3110009138895	11083	9S4829	RING,BEARING,INNER	2
29	XBHZZ		11083	5S135	CAGE	2
30	XBHZZ		11083	3B8852	PIN,STRAIGHT,HEADLE	2
31	PFHZZ	3110010687157	11083	3S7308	CAGE	2
32	PFHZZ	5330010178608	11083	9W7228	SEAL ASSY	2
33	PFHZZ	2815010537307	11083	1-5P7148	RING-TORIC SEALING	2
34	PFHZZ	5306001384466	11083	2H3855	BOLT,MACHINE	2
35	PFHZZ	5330002344799	11083	1M380	GASKET	2
36	PFHZZ	5310010671396	11083	5M5016	NUT	2
37	PFHZZ	2540010687072	11083	8H1105	LOCK	2

END OF FIGURE

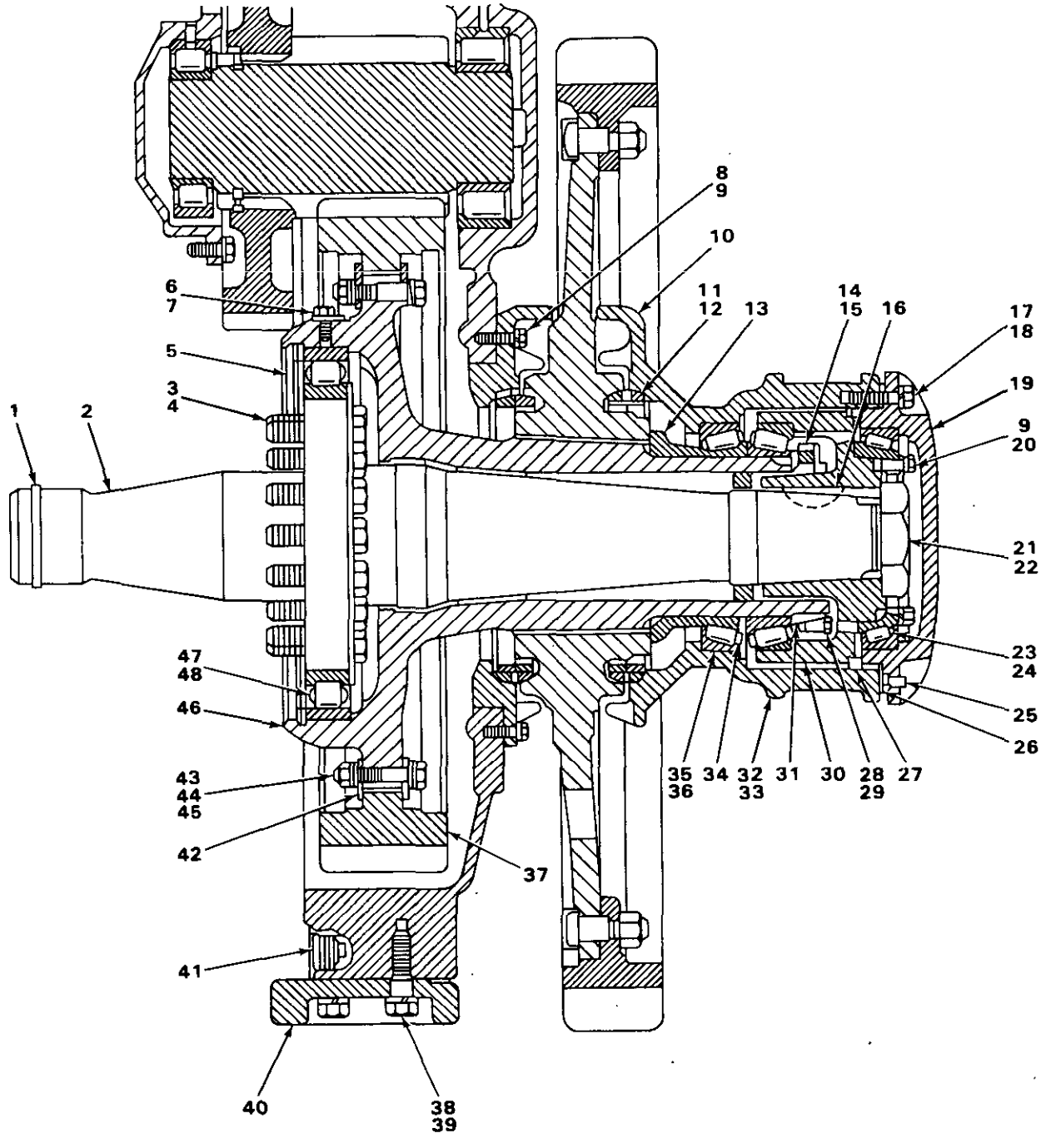

FIGURE 129. FINAL DRIVE (LOWER HALF).

(1) ITEM NO	(2) SMR CODE	(3) NSN	(4) CAGEC	(5) PART NUMBER	(6) DESCRIPTION AND USABLE ON CODES(UOC)	(7) QTY
					GROUP 0801 POWER TRANSFER AND FINAL DRIVE ASSEMBLIES.	
					FIG 129. FINAL DRIVE (LOWER HALF).	
1	PFHZZ	5330002328818	11083	8H2046	SEAL,OIL	2
2	PFHZZ	2520002316166	11083	8S1194	SHAFT,TRACTOR	2
3	PFHZZ	5305012559376	11083	8M3393	SCREW,CAP,HEXAGON H	16
4	PFHZZ	5342010671406	11083	8S1197	RETAINER	8
5	XBHZZ		11083	3P6583	RING	2
6	XDHZZ		11083	3P6582	SETSCREW	2
7	PFHZZ	5310010689761	11083	337727	TABWASHER	2
8	PFHZZ	5305002528919	11083	0S0509	SCREW,CAP,HEXAGON H	56
9	PFOZZ	5310006379541	96906	MS35338-46	WASHER,LOCK	60
10	PFHZZ	3020010691386	11083	9F7975	GUARD	4
11	PFHZZ	2520007568551	11083	5M1177	SEAL KIT,SPROCKET D	4
12	PFHZZ	5330007885810	11083	4M660	PACKING,PREFORMED	2
13	XBHZZ		11083	8S2126	SPACER	2
14	PFHZZ	5310010671402	11083	3S6989	NUT	2
15	PFHZZ	2540010687165	11083	5S6921	LOCK	2
16	PFHZZ	5315010690838	11083	1B8745	KEY	2
17	PFHZZ	5306002638978	11083	S1587	BOLT,MACHINE	20
18	PFHZZ	5310005845272	96906	MS35338-48	WASHER,LOCK	20
19	PFHZZ	2530010918399	11083	8H984	CAP,TRACK SPRING	2
20	PFFZZ	5306002637301	11083	L1351	BOLT,MACHINE	4
21	PFHZZ	5310004364328	11083	5M5017	NUT,PLAIN,HEXAGON	2
22	PFHZZ	5365012542467	11083	8H889	RING,EXTERNALLY THR	2
23	PFHZZ	3110002770636	29690	V1635	CUP,TAPERED ROLLER	2
24	PFHZZ	3110002770637	29690	V1636	CONE AND ROLLERS,TA	2
25	PFHZZ	9390011673646	11083	2B7557	CORK	4
26	PFHZZ	5365012542529	11083	8H931	SHIM	2
27	PFHZZ	5330010176431	11083	2P1625	GASKET	2
28	PFHZZ	5305000712506	80204	B1821BH025C050N	SCREW,CAP,HEXAGON H	8
29	PFHZZ	2540010687163	11083	5S1492	LOCK	4
30	XDHZZ		11083	8S2123	CAGE	2
31	XBHZZ		11083	8H908	SPACER	2
32	PFHZZ	3040013188494	11083	6P3593	HOUSING,MECHANICAL	2
33	PFHZZ	5315010690837	11083	1B8743	KEY	2
34	XBHZZ		11083	1M638	SPACER	2
35	PFHZZ	3110002376949	11083	8S2125	CUP,TAPERED ROLLER	4
36	PFHZZ	3110004214804	11083	8S2127	CONE AND ROLLERS,TA	4
37	PFHZZ	3020008947279	11083	6P2776	GEAR,SPUR,FINAL DRI	2
38	PFHZZ	5306012556448	11083	1S454	BOLT,EXTERNALLY REL	12
39	PFHZZ	5310007542005	96906	MS35338-52	WASHER,LOCK	12
40	XBHZZ		11083	8P1690	GUARD	2
41	PFHZZ	4730012530509	11083	2K744	PLUG,TUBE FITTING,T	2
42	XDHZZ		11083	9F7960	PLATE	24
43	PFHZZ	5305002604511	11083	S1601	SCREW,CAP,HEXAGON H	24
44	PFHZZ	5310007638905	96906	MS51968-20	NUT,PLAIN,HEXAGON	24
45	PFHZZ	2815004238703	11083	2A4462	LOCK,FLYWHEEL HOUSI	24
46	PFHZZ	3040010690885	11083	3P6584	HUB	2
47	PFHZZ	3110004702994	08162	MUB1956V	BEARING,ROLLER,CYLI	2

(1) ITEM NO	(2) SMR CODE	(3) NSN	(4) CAGEC	(5) PART NUMBER	(6) DESCRIPTION AND USABLE ON CODES(UOC)	(7) QTY
48	PFHZZ	3110004703005	08162	M1956CHE	RING,BEARING,OUTER.....	2

END OF FIGURE

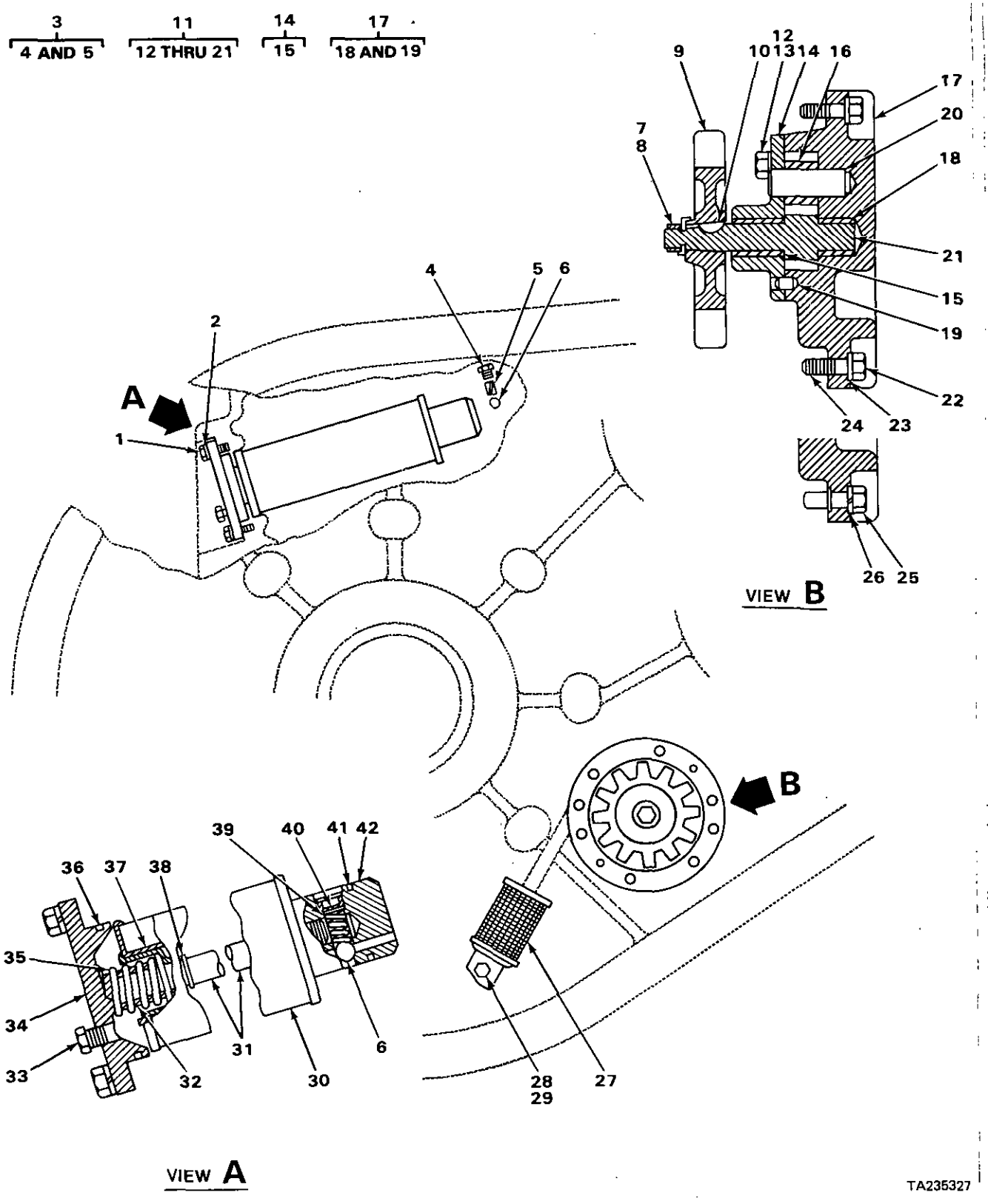

FIGURE 130. FINAL DRIVE LUBRICATION SYSTEM.

(1) ITEM NO	(2) SMR CODE	(3) NSN	(4) CAGEC	(5) PART NUMBER	(6) DESCRIPTION AND USABLE ON CODES(UOC)	(7) QTY
					GROUP 0804 LUBRICATION, COOLING OR HYDRAULIC COMPONENTS AND SERVO UNITS	
					FIG 130 FINAL DRIVE LUBRICATION SYSTEM.	
1	PFHZZ	5306004238194	11083	1A2029	BOLT,MACHINE.....	4
2	PFHZZ	5310006379541	96906	MS35338-46	WASHER,LOCK.....	4
3	PFHZZ	4730012532819	11083	1-6H5380/1-3H2617	PLUG,PIPE.....	2
4	PFHZZ	2520010671392	11083	6H5380	.PLUG.....	1
5	PFHZZ	5315002819478	80205	NAS561P8-10	.PIN,SPRING.....	1
6	PFHZZ	3110000119931	11083	4B9784	BALL,BEARING.....	4
7	PFHZZ	5310008807745	96906	MS51968-11	NUT,PLAIN,HEXAGON.....	2
8	XBHZZ		11083	5M4996	LOCK.....	2
9	PFHZZ	3020010690864	11083	4M2542	GEAR,DRIVE MOTION.....	2
10	PFHZZ	5315006165526	96906	MS35756-8	KEY,WOODRUFF.....	2
11	XDHZZ		11083	5H1719	PUMP ASSEMBLY,FINAL.....	2
12	PFHZZ	5306002637301	11083	L1351	.BOLT,MACHINE.....	4
13	PFHZZ	2930003652152	11083	L364	.LOCK PLATE.....	4
14	XBHZZ		11083	1H6141	.COVER ASSEMBLY.....	1
15	XBHZZ		11083	4F1113	..BEARING,SLEEVE.....	1
16	XBHZZ		11D83	4F2611	.GEAR,SPUR IDLER.....	1
17	XBHZZ		11083	1H6138	.BODY ASSEMBLY.....	1
18	XDHZZ		11083	1H3135	..BEARING,SLEEVE.....	1
19	PFHZZ	5315002412917	88044	AN122717	..PIN,STRAIGHT,HEADLE.....	1
20	PFHZZ	2520003527531	11083	3F4598	.SHAFT.....	1
21	PFHZZ	3020007388634	11083	1H6361	.GEAR,SPUR DRIVE.....	1
22	PFHZZ	5305000680511	80204	B1821BH038C125N	SCREW,CAP,HEXAGON H.....	12
23	PFHZZ	5310004135144	11083	3S4	WASHER,FLAT.....	12
24	PAHZZ	5330010671487	11083	1H5495	GASKET.....	2
25	PFHZZ	5310007257382	96906	MS35690-624	NUT,PLAIN,HEXAGON USE WITH SERIAL RANGE 77V1139 THRU 77V1379.....	12
26	PFHZZ	5310006379541	96906	MS35338-46	WASHER,LOCK USE WITH SERIAL RANGE 77V1139 THRU 77V1379.....	12
27	PFHZZ	4730001052593	11083	7M6463	STRAINER ELEMENT,SE ASSEMBLY.....	2
28	PFHZZ	5305007215492	80204	B1821BH038C063N	SCREW,CAP,HEXAGON H.....	2
29	PFHZZ	5310001413099	43999	2W2SP25-20-125	WASHER,FLAT.....	2
30	PFHZZ	2940004138521	11083	1S9150	FILTER ELEMENT,FLUI.....	2
31	PFHZZ	5307010690846	11083	8H3708	STUD,PLAIN.....	2
32	PFHZZ	5315010671394	11083	8H3692	PIN.....	2
33	PFHZZ	4730009247886	11083	5M6214	PLUG,PIPE.....	2
34	PFHZZ	5340012376915	11083	1P6354	COVER,ACCESS.....	2
35	PFHZZ	5360010690841	11083	1H4769	SPRING.....	2
36	PFHZZ	5331003396220	11083	2H6184	O-RING.....	2
37	PFHZZ	2520010671391	11083	8F3709	CUP.....	2
38	PFHZZ	5365010689646	11083	6H5474	RING.....	2
39	PFHZZ	5360006644194	11083	9F6705	SPRING,HELICAL,COMP.....	2
40	PFHZZ	5340002325747	11083	L1022	PLUG,EXPANSION.....	2
41	PFHZZ	5331005277748	11083	4F7952	O-RING.....	2
42	XBHZZ		11083	7H300	BODY.....	2

END OF FIGURE

1 2 THRU 7 2 3

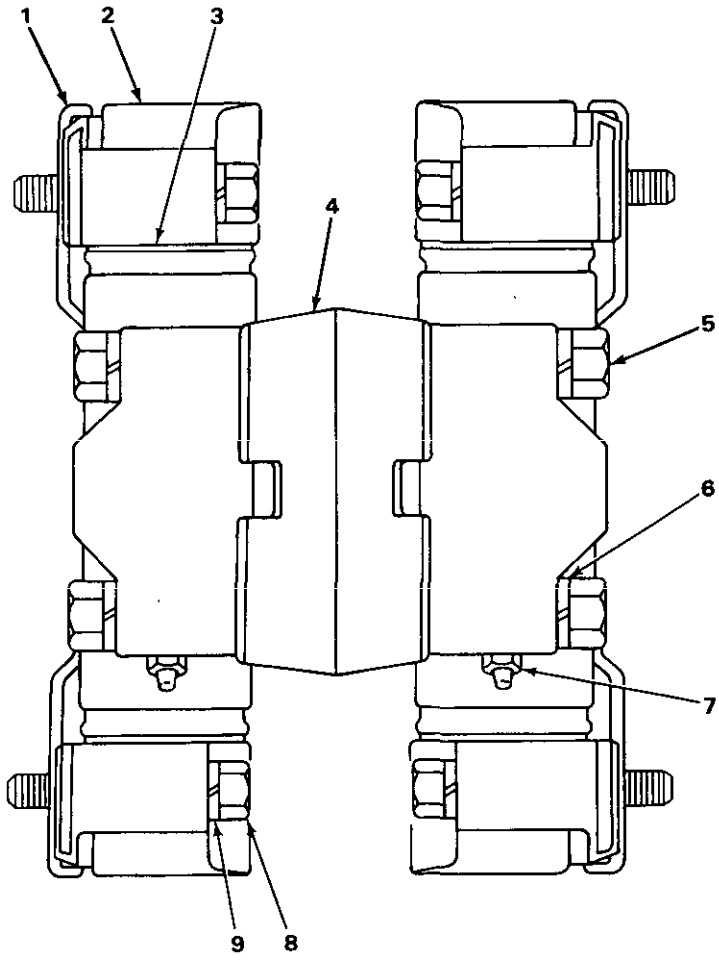

TA235328

FIGURE 131. UNIVERSAL JOINT ASSEMBLY.

(1) ITEM NO	(2) SMR CODE	(3) NSN	(4) CAGEC	(5) PART NUMBER	(6) DESCRIPTION AND USABLE ON CODES(UOC)	(7) QTY
					GROUP 09 PROPELLER, PROPELLER SHAFTS UNIVERSAL JOINTS, COUPLER AND CLAMP ASSEMBLY	
					GROUP 0900 PROPELLER SHAFTS.	
					FIG 131. UNIVERSAL JOINT ASSEMBLY.	
1	PFFZZ	2520004109576	11083	1S8754	UNIVERSAL JOINT ASS.....	1
2	PFFZZ	2520007388662	78500	CP92NHWD	.PARTS KIT,UNIVERSAL.....	2
3	PFFZZ	2520000978230	11083	1S7294	..PARTS KIT,SPIDER.....	1
4	XAFZZ		11083	1S8753	.PLATE.....	1
5	PFFZZ	5306002637314	11083	S1604	.BOLT,MACHINE.....	4
5	PFFZZ	5305007195239	96906	MS90727-116	.SCREW,CAP,HEXAGON H.....	4
6	PFFZZ	5310005845272	96906	MS35338-48	.WASHER,LOCK.....	4
6	PFFZZ	5310011029866	11083	5P7213	.WASHER,FLAT.....	4
7	PFOZZ	4730001720049	96906	MS15006-1	.FITTING,LUBRICATION.....	2
8	PFFZZ	5306002637314	11083	S1604	BOLT,MACHINE.....	4
9	PFFZZ	5310005845272	96906	MS35338-48	WASHER,LOCK.....	4

END OF FIGURE

2 (3 THRU 14) 10 (11 AND 12) 13 (14)

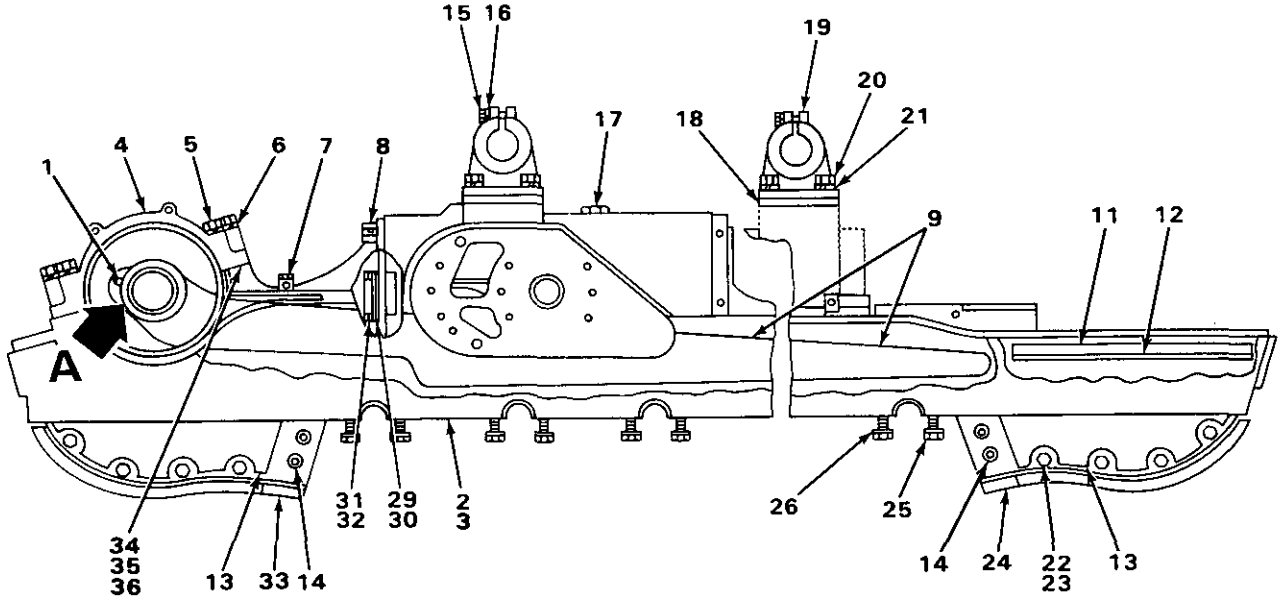

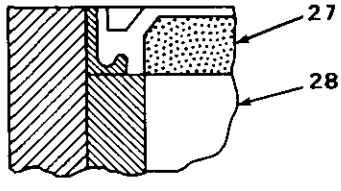

VIEW A

TA235329

FIGURE 132. TRACK ROLLER FRAME.

(1) ITEM NO	(2) SMR CODE	(3) NSN	(4) CAGEC	(5) PART NUMBER	(6) DESCRIPTION AND USABLE ON CODES(UOC)	(7) QTY
					GROUP 13 WHEELS AND TRACKS.	
					GROUP 1301 SUSPENSION ASSEMBLY.	
					FIG 132. TRACK ROLLER FRAME.	
1	PFOZZ	4730000481788	11083	3B8490	FITTING,LUBRICATION.....	2
2	XBHHH		11083	9P3089	FRAME ASSEMBLY RH,USE WITH SERIAL RANGE 77V8632 THRU 77V9475, THE SAME P/N 9P3090 EXCEPT WHERE INDIVIDUAL COMPONENTS ARE ANNOTATED.	1
2	XBHHH		11083	6P9598	FRAME ASSEMBLY RH,USE WITH SERIAL RANGE 77V5006 THRU 77V8631.....	1
2	XBHHH		11083	6P3135	FRAME ASSEMBLY RH.....	1
2	XBHHH		11083	9P3090	FRAME ASSEMBLY LH,USE WITH SERIAL RANGE 77V8632 THRU 77V9475.....	1
2	XBHHH		11083	6P9599	FRAME ASSEMBLY LH,USE WITH SERIAL RANGE 77V5006 THRU 77V8631.....	1
2	XBHHH		11083	6P3136	FRAME ASSEMBLY LH,THE SAME AS P/N 6P3135 EXCEPT WHERE INDIVIDUAL COMPONENTSARE ANNOTATED.....	1
3	XBHZZ		11083	8SB687	.BOSS USE ON RH FRAME ASSEMBLY ONLY	2
4	XBHZZ		11083	3P7482	.CAP.....	1
5	PFHZZ	5305012559377	11083	9F6936	.SCREW,CAP,HEXAGON H.....	4
6	PFHZZ	5310004709833	11083	3K5234	.WASHER,FLAT.....	4
7	XBHZZ		11083	8S7832	.BOSS.....	4
8	XBHZZ		11083	8S7827	.BOSS.....	2
9	XBHZZ		11083	6P7131	.BRACE ASSEMBLY RH USE ON P/N 9P3089,6P9598.....	1
9	XBHZZ		11083	9S427	.BRACE ASSEMBLY RH,USE WITH P/N 6P3135.....	1
9	XBHZZ		11083	6P7132	.BRACE ASSEMBLY LH USE ON P/N 9P3090,6P9599.....	1
9	XBHZZ		11083	9S0428	.BRACE ASSEMBLY LH,USE WITH P/N 6P3136.....	1
10	XBHZZ		11083	8M468	.GUIDE ASSEMBLY USE WITH SERIAL RANGE 77V5006 THRU 77V9475.....	2
11	XBHZZ		11083	8H6598	..GUIDE.....	2
12	XBHZZ		11083	2P5897	..STRIP.....	2
13	PFHZZ	2590011901092	11083	5S163	.GUARD,MECHANICAL DR USE WITH P/N 9P3090,6P9599,6P3136.....	1
13	PFHZZ	2590011901092	11083	5S163	.GUARD,MECHANICAL DR USE WITH P/N 9P3089,6P9598,6P3135.....	2
13	PFHHH	2530012224613	11083	5S0162	.GUARD,MECHANICAL DR USE WITH P/N 9P3089,6P3135,6P9598.....	1
13	PFHHH	2530012224613	11083	5S0162	.GUARD,MECHANICAL DR USE WITH P/N 9P3090,6P9599,6P3136.....	2
14	PFHZZ	5310012542490	11083	7M6469	..NUT,PLAIN,ROUND.....	2
15	PFHZZ	5306004263404	11083	1D4610	BOLT,MACHINE.....	8
16	PFHZZ	5310005847888	96906	MS35338-51	WASHER,LOCK.....	8
17	PFHZZ	4730001223969	11083	1B5174	PLUG,PIPE.....	2
18	XBHZZ		11083	9P1418	PLATE USE WITH SERIAL RANGE	4

(1) ITEM NO	(2) SMR CODE	(3) NSN	(4) CAGEC	(5) PART NUMBER	(6) DESCRIPTION AND USABLE ON CODES(UOC)	(7) QTY
					77V5006 THRU 77V9475.....	
19	XBHZZ		11083	1S8736	BRACKET.....	4
20	PFHZZ	5306004263408	11083	1D4628	BOLT,MACHINE USE WITH SERIAL RANGE 77V5006 THRU 77V9475.....	16
20	XBHZZ		11083	1D4625	SCREW,CAP,HEXAGON H.....	16
21	PFHZZ	5310007542005	96906	MS35338-52	WASHER,LOCK.....	16
22	PFHZZ	5306004262945	11083	S1973	BOLT,MACHINE.....	24
23	PFHZZ	5310009499296	78500	1229T1554	WASHER,FLAT.....	24
24	PFHZZ	2530013053950	11083	5S160	WEAR PLATE.....	3
25	PFHZZ	5306012375637	11083	1D4640	SCREW,CAP,HEXAGON H.....	56
26	PFHZZ	5310004709833	11083	3K5234	WASHER,FLAT.....	56
27	PFHZZ	5330009192240	11083	4J8981	SEAL,PLAIN ENCASED.....	4
28	XBHZZ		11083	8H4245	SHELL.....	2
29	XBHZZ		11083	9F307	COVER.....	2
30	PFHZZ	5330002924350	11083	6F7593	GASKET.....	2
31	PFHZZ	5306002604508	11083	S1594	BOLT,MACHINE.....	8
32	PFHZZ	5310006379541	96906	MS35338-46	WASHER,LOCK.....	8
33	PFHZZ	3830012382541	11083	5S161	STRIP,TRACK.....	3
34	XBHZZ		11083	3P3760	SHIM 0.010 IN THICK.....	4
35	XBHZZ		11083	3P3759	SHIM 0.005 IN THICK.....	4
36	XBHZZ		11083	3P3761	SHIM 0.003 IN THICK.....	2

END OF FIGURE

13
14 THRU 19

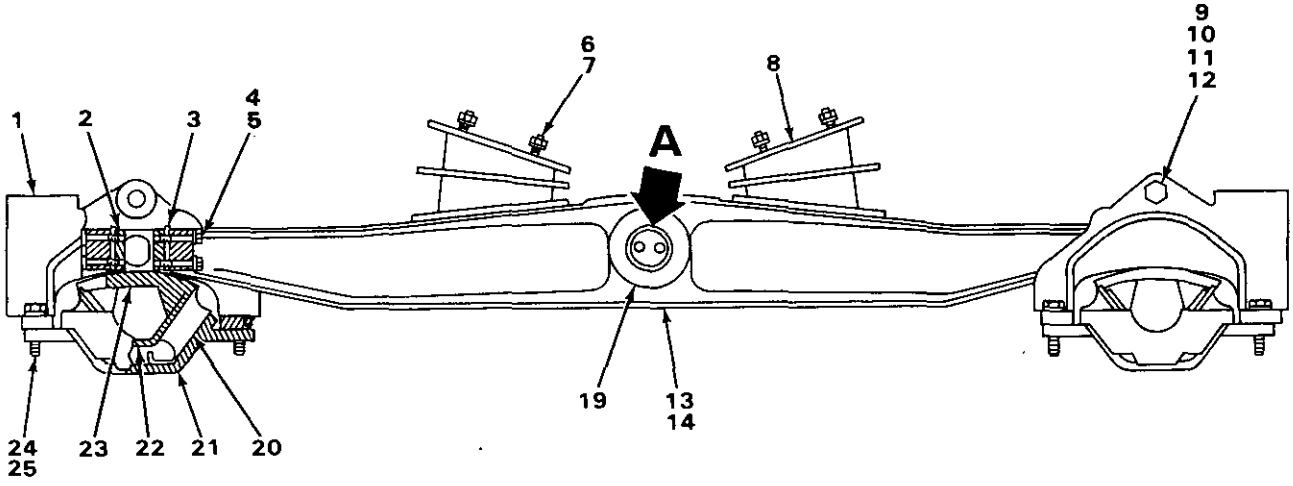

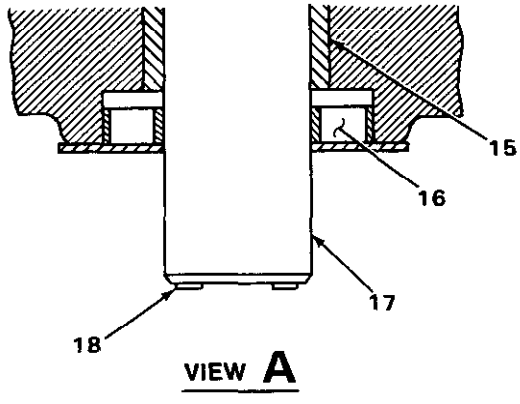

TA235330

FIGURE 133. EQUALIZER BAR.

(1) ITEM NO	(2) SMR CODE	(3) NSN	(4) CAGEC	(5) PART NUMBER	(6) DESCRIPTION AND USABLE ON CODES(UOC)	(7) QTY
					GROUP 1301 SUSPENSION ASSEMBLY.	
					FIG 133. EQUALIZER BAR.	
1	XBFZZ		11083	8P7782	SUPPORT ASSEMBLY	2
2	PFFZZ	2510010685899	11083	3P7957	PLATE	8
3	PFFZZ	5365010702911	11083	6P1404	SHIM 0.120 INCH THICK	12
3	XBFZZ		11083	6P1403	SHIM 0.060 INCH THICK	8
3	PFFZZ	5365012552721	11083	6P9022	SHIM 0.031 INCH THICK	8
4	PFFZZ	5305000712076	80204	B1821BH050C325N	SCREW,CAP,HEXAGON H	16
5	PFFZZ	5310004317239	11083	2M849	WASHER,FLAT	16
6	PFFZZ	5310005845272	96906	MS35338-48	WASHER,LOCK	8
7	PFFZZ	5310007680318	96906	MS51967-14	NUT,PLAIN,HEXAGON	8
8	PFFZZ	2540010687272	11083	3P2786	PAD	2
9	PFFZZ	5306011333502	11083	2H4010	BOLT	2
10	PFFZZ	5310009307454	11083	1B4333	NUT,SPECIAL	2
11	PFFZZ	5310005847889	96906	MS35338-53	WASHER,LOCK	2
12	PFFZZ	5365010668458	11083	3P7986	SLEEVE	2
13	XBFFF		11083	3P2674	BAR ASSEMBLY	1
14	PFFZZ	5315010668459	11083	6P1357	.PIN	2
15	PFFZZ	3110010668456	11083	3P2429	.BEARING	1
16	PFFZZ	5330010691423	11083	3P2778	.SEAL	2
17	XBFZZ		11083	3P2402	.PIN	1
18	PFFZZ	4730000444688	89346	50410DA	.PLUG,PIPE	4
19	PFFZZ	5315008250082	11083	3F0957	.PIN,STRAIGHT,HEADLE	1
20	PFFZZ	2540010687243	11083	8H5416	PAD	4
21	XBFZZ		11083	3P2119	SUSPENSION ASSEMBLY	2
22	XBFZZ		11083	2S7157	PLATE ASSEMBLY	2
23	XBFZZ		11083	2S7154	PLATE ASSEMBLY	2
24	PFFZZ	5306004263409	11083	1D4630	BOLT,MACHINE	16
25	PFFZZ	5310011708530	11083	4D6419	WASHER,FLAT	16

END OF FIGURE

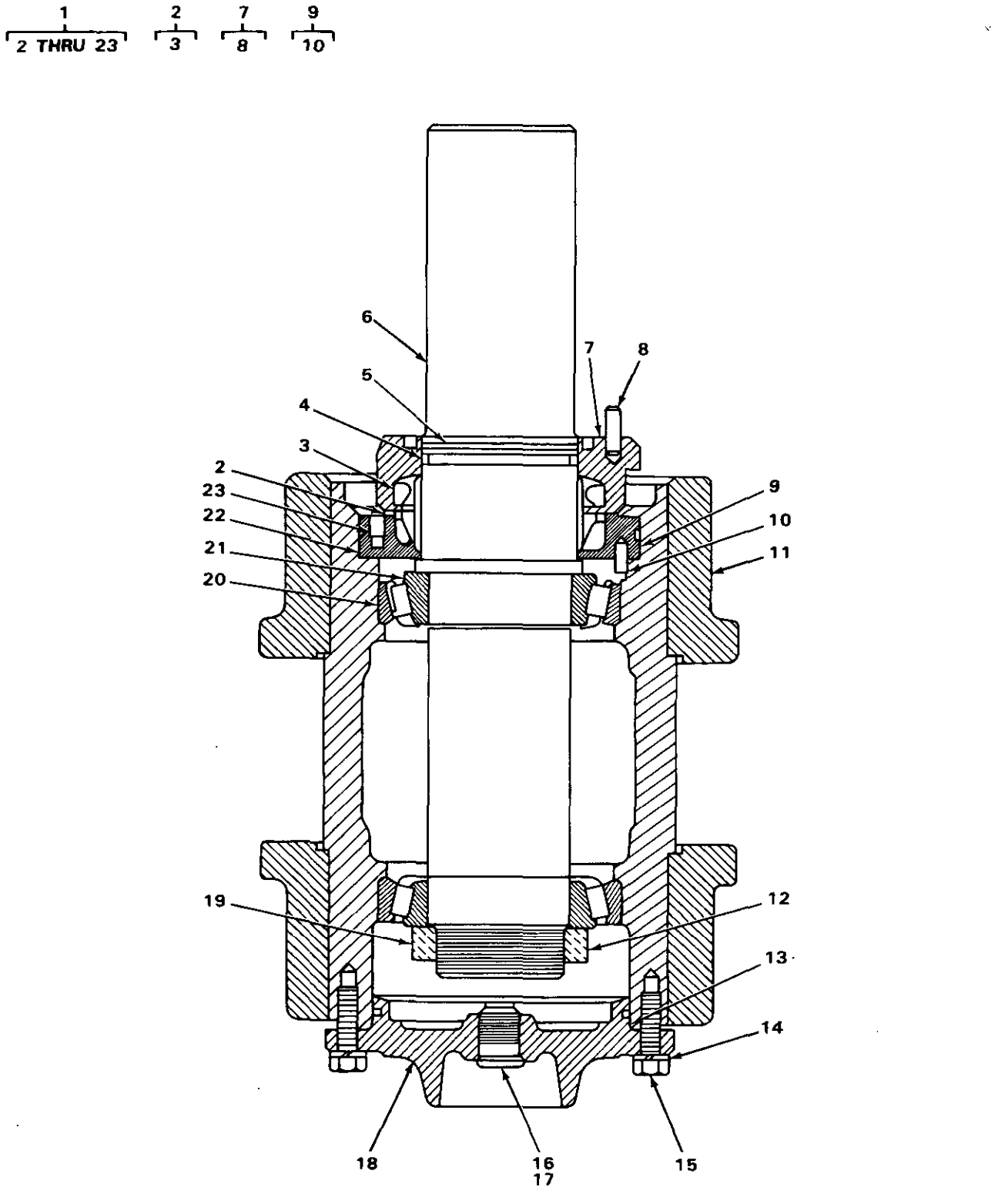

FIGURE 134. TRACK CARRIER ROLLER (USE WITH SERIAL RANGE 77V5006 THRU 77V9190).

(1) ITEM NO	(2) SMR CODE	(3) NSN	(4) CAGEC	(5) PART NUMBER	(6) DESCRIPTION AND USABLE ON CODES(UOC)	(7) QTY
					GROUP 1302 TRACK SUPPORT ROLLERS AND BRACKETS.	
					FIG 134. TRACK CARRIER ROLLER (USE WITH SERIAL RANGE 77V5006 THRU 77V9190).	
1	PFFHH	2530010176340	11083	8P6256	ROLLER ASSEMBLY,TRA.....	4
2	PFFZZ	5330007388639	11083	9W6647	.PACKING WITH RETAIN.....	1
3	PFFZZ	5331008486108	11083	8H2262	..O-RING.....	2
4	PFFZZ	5331003334384	11083	1H5728	.O-RING.....	1
5	PFFZZ	5365010687075	11083	9H7759	.RING.....	1
6	XBFZZ		11083	8M0383	.SHAFT.....	1
7	XDFZZ		11083	9H9414	.COLLAR A.....	1
8	PFFZZ	5315002744256	11083	6F2072	..PIN,STRAIGHT,HEADLE.....	2
9	PFFZZ	2530009505758	11083	9H7687	.SUPPORT,ROLLER,TRAC.....	1
10	PFHZZ	5315005141616	11083	2H1190	.PIN,STRAIGHT,HEADLE.....	2
11	PFFZZ	2530010668473	11083	9S8304	.ROLLER A.....	1
12	XBFZZ		11083	8H6392	.NUT.....	1
13	PFFZZ	5331009413599	02697	2-244C873-70	.O-RING.....	1
14	PFFZZ	5310006379541	96906	MS35338-46	.WASHER,LOCK.....	4
15	PFHZZ	5306002604508	11083	S1594	.BOLT,MACHINE.....	4
16	PFFZZ	5365009247056	11083	2S1731	.PLUG,MACHINE THREAD.....	1
16	PFFZZ	5365000324357	11083	2P347	.PLUG,MACHINE THREAD.....	1
17	PFFZZ	5331000312558	11083	1S8947	.O-RING.....	1
18	PFFZZ	5340012362475	11083	5M1669	.COVER,ACCESS.....	1
19	PFFZZ	5365010687073	11083	8H6393	.RING.....	1
20	PFFZZ	3110001000305	11083	6B3224	.CUP,TAPERED ROLLER.....	2
21	PFFZZ	3110001000233	11083	4B7255	.CONE AND ROLLERS,TA.....	2
22	PFFZZ	5331002985837	11083	5F3144	.O-RING.....	1
23	PFHZZ	2520010668434	11083	1J0245	.PLUG.....	2

END OF FIGURE

4 6
5 7

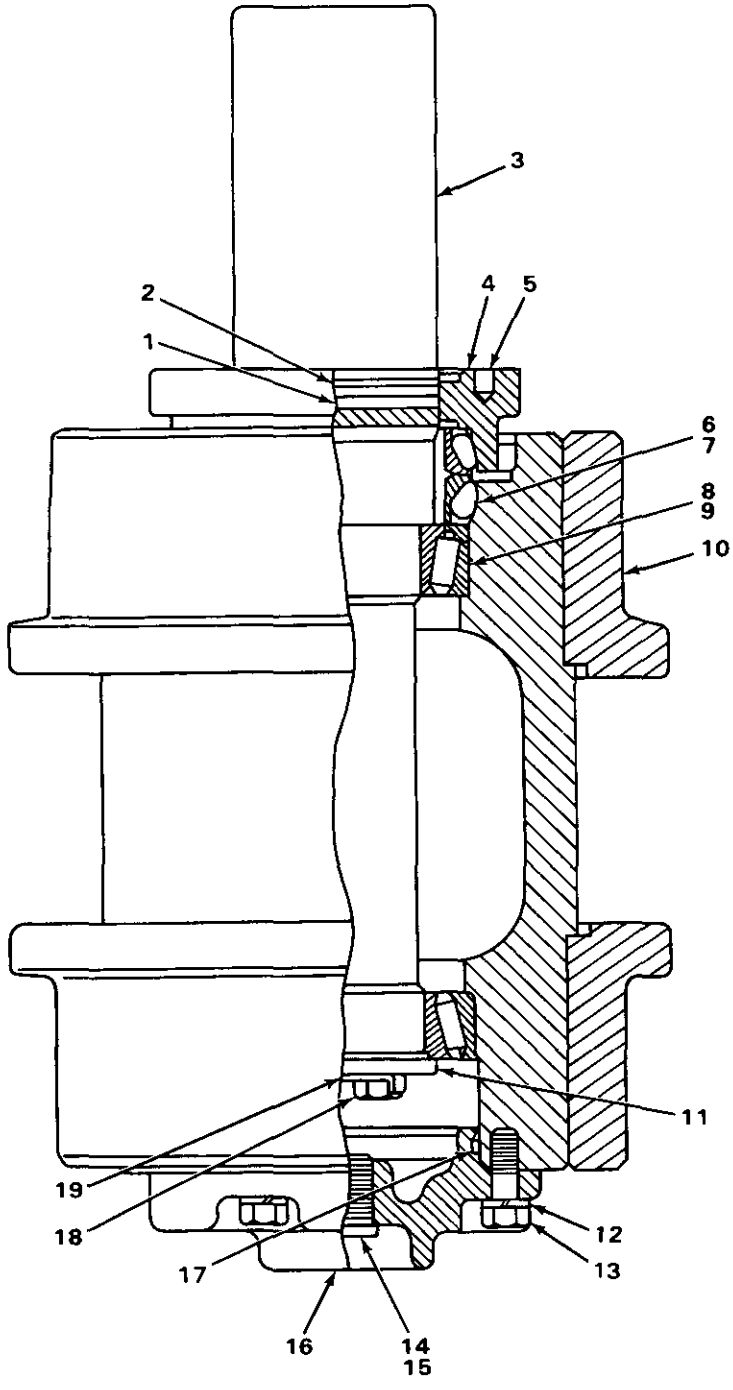

TA235332

FIGURE 135. TRACK CARRIER ROLLER (USE WITH SERIAL RANGE 77V9191 THRU 77V9475).

(1) ITEM NO	(2) SMR CODE	(3) NSN	(4) CAGEC	(5) PART NUMBER	(6) DESCRIPTION AND USABLE ON CODES(UOC)	(7) QTY
					GROUP 1302 TRACK SUPPORT ROLLERS AND BRACKETS.	
					FIG 135. TRACK CARRIER ROLLER (USE WITH SERIAL RANGE 77V9191 THRU 77V9475).	
1	PFFZZ	5331003334384	11083	1H5728	O-RING	4
2	PFHZZ	5365010687075	11083	9H7759	RING	4
3	XBHZZ		11083	8P6255	SHAFT	4
4	XDFZZ		11083	9H9414	COLLAR A	4
5	PFFZZ	5315002744256	11083	6F2072	.PIN,STRAIGHT,HEADLE	2
6	PFFZZ	5330007388639	11083	9W6647	PACKING WITH RETAIN	4
7	PFFZZ	5331008486108	11083	8H2262	.O-RING	2
8	PFFZZ	2520010669173	11083	7K5448	CUP	8
9	PFFZZ	2520010669174	11083	7K5449	CONE	8
10	XBFZZ		11083	8P6245	ROLLER ASSEMBLY	4
11	PFFZZ	3110011604714	11083	8P6188	PLATE,RETAINING,BEA	4
12	PFFZZ	5310006379541	96906	MS35338-46	WASHER,LOCK	12
13	PFFZZ	5306002604508	11083	S1594	BOLT,MACHINE	12
14	PFFZZ	5365000324357	11083	2P347	PLUG,MACHINE THREAD	4
15	PFFZZ	5331000312558	11083	1S8947	O-RING	4
16	PFFZZ	5340011624077	11083	5M2043	COVER,ACCESS	4
17	PFFZZ	5331003256310	52788	5660799	O-RING	4
18	PFFZZ	5305002693235	96906	MS90727-59	SCREW,CAP,HEXAGON H	8
19	PFHZZ	5340004238146	11083	OTO329	LOCKING PLATE,NUT A	4

END OF FIGURE

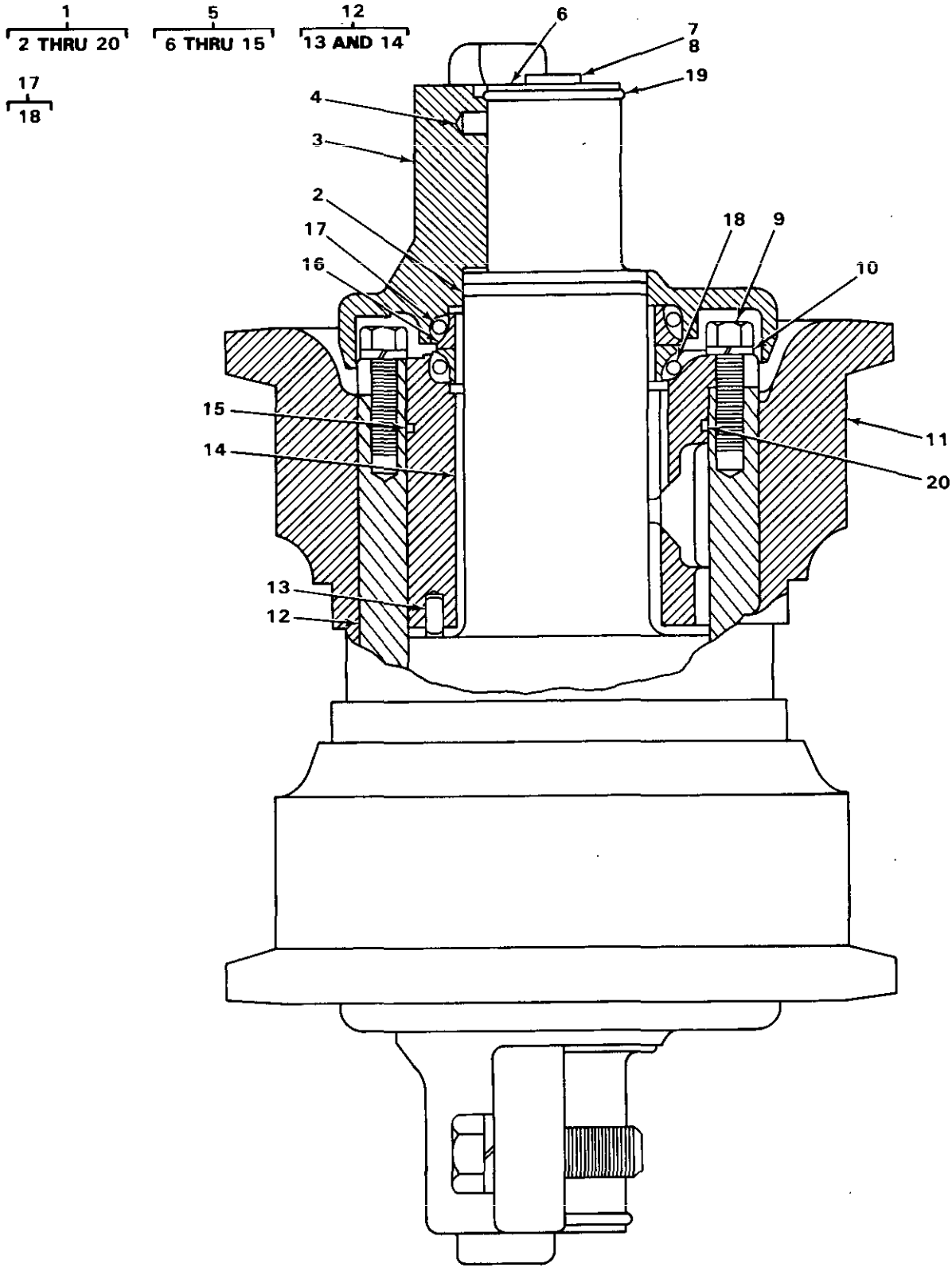

FIGURE 136. TRACK ROLLER (USE WITH SERIAL RANGE 77V5006 THRU 77V6053.

(1) ITEM NO	(2) SMR CODE	(3) NSN	(4) CAGEC	(5) PART NUMBER	(6) DESCRIPTION AND USABLE ON CODES(UOC)	(7) QTY
					GROUP 1302 TRACK SUPPORT ROLLERS AND BRACKETS.	
					FIG 136 TRACKROLLER	
1	PFFZZ	2530010483937	11083	6P4897	ROLLER ASSEMBLY,TRA.....	6
2	PFFZZ	5331005931141	11083	1H7339	.O-RING PART OF KIT P/N 4S8054.....	2
3	XBFZZ		11083	7S7936	.COLLAR.....	2
4	XBFZZ		11083	1T68	.PIN,SPRING.....	1
5	PFFHH	2530006884757	11083	9P3308	.ROLLER ASSEMBLY,TRA WITH SHAFT....	1
6	PFFZZ	2530010690783	11083	5M1247	..SHAFT.....	1
7	PFFZZ	5365000324357	11083	2P347	..PLUG,MACHINE THREAD.....	1
8	PFFZZ	5331000312558	11083	1S8947	..O-RING.....	1
9	PFHZZ	5306011279361	11083	0S1585	..BOLT,MACHINE.....	12
10	PFHZZ	5310005845272	96906	MS35338-48	..WASHER,LOCK.....	12
11	PFFZZ	2530007388715	11083	6P3303	..ROLLER ASSEMBLY,TRA SINGLE FLANGE	1
12	XDHZZ		11083	2P8052	..BUSHING A.....	2
12	PFFZZ	3120012666423	11083	9P4956	..BUSHING,SLEEVE OVERSIZE .04 INCH.	2
13	PFFZZ	5315002672268	11083	9B2289	...PIN,STRAIGHT,HEADLE.....	2
14	PFFZZ	3120012542470	11083	896650	...BEARING,SLEEVE.....	1
15	PFFZZ	5331006635709	11083	5F3106	..O-RING PART OF KIT P/N 4S8054.....	2
16	PFFZZ	5330012549054	11083	8S5653	.RETAINER,PACKING.....	2
17	PFFZZ	2530007388714	11083	1M8746	.SEAL ASSEMBLY PART OF KIT P/N 4S9055.....	2
18	PFFZZ	5331008486109	11083	8H2265	..O-RING.....	2
19	PFFZZ	5365010687159	11083	4S8073	.RING.....	2
20	PFFZZ	5331009295507	11083	4S5898	.O-RING.....	2

END OF FIGURE

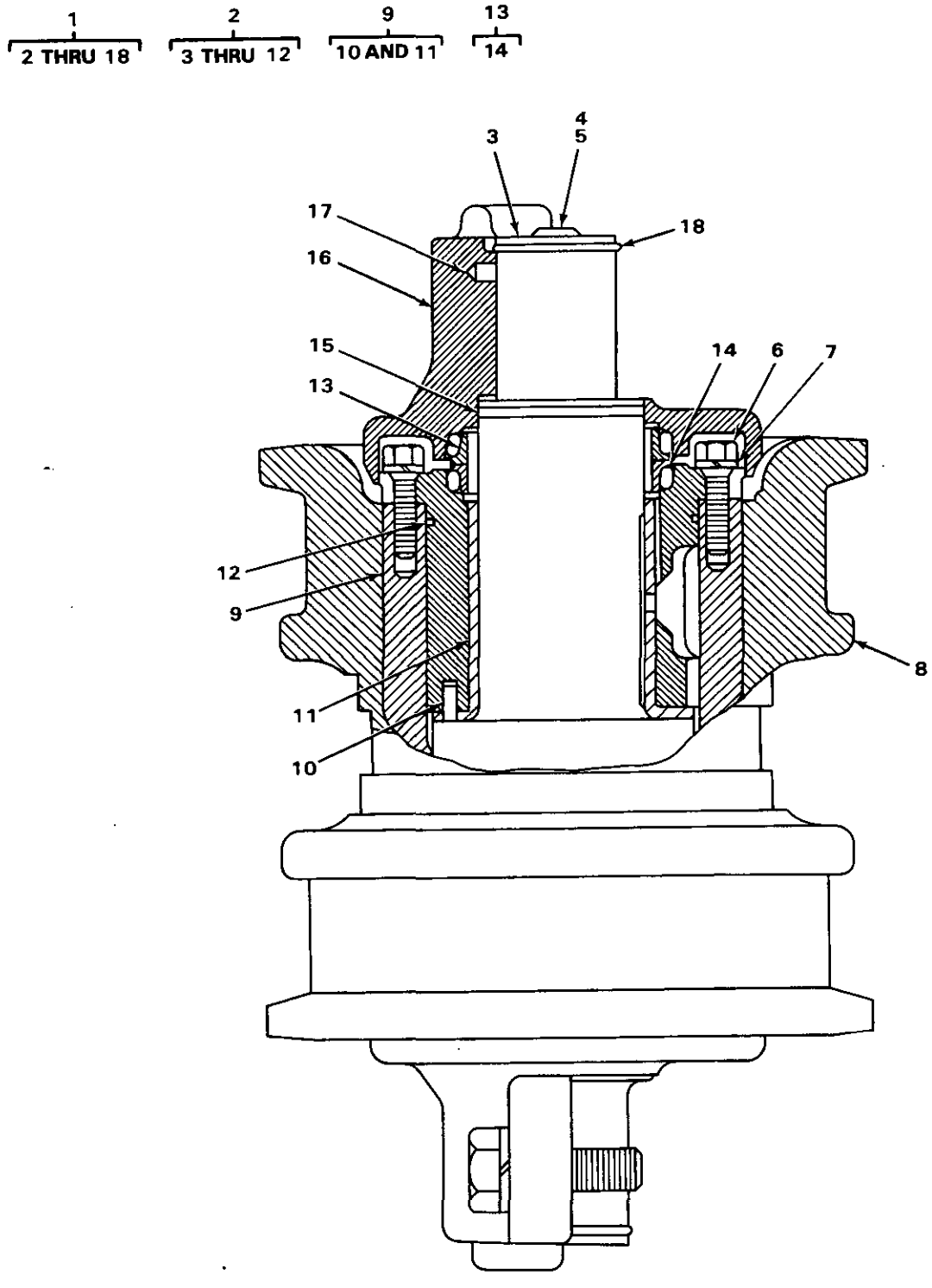

FIGURE 137. TRACK DOUBLE FLANGE (USE WITH SERIAL RANGE 77V5006 THRU 77V6053).

(1) ITEM NO	(2) SMR CODE	(3) NSN	(4) CAGEC	(5) PART NUMBER	(6) DESCRIPTION AND USABLE ON CODES(UOC)	(7) QTY
					GROUP 1302 TRACK SUPPORT ROLLERS AND BRACKETS.	
					FIG 137. TRACK DOUBLE FLANGE (USE WITH SERIAL RANGE 77V5006 THRU 77V6053).	
1	PFFHH	2530010503277	11083	6P4898	ROLLER ASSEMBLY,TRA.....	8
2	PFFHH	2530006884849	11083	9P3309	.ROLLER ASSEMBLY,TRA.....	1
3	PFFZZ	2530010690783	11083	5M1247	..SHAFT.....	1
4	PFFZZ	5365000324357	11083	2P347	..PLUG,MACHINE THREAD.....	1
5	PFFZZ	5331000312558	11083	1S8947	..O-RING.....	1
6	PFFZZ	5306011279361	11083	0S1585	..BOLT,MACHINE.....	12
7	PFFZZ	5310005845272	96906	MS35338-48	..WASHER,LOCK.....	12
8	PFFZZ	2530007388716	11083	2M8916	..ROLLER ASSEMBLY,TRA DOUBLE FLANGE	1
9	XDFZZ		11083	2P8052	..BUSHING A.....	2
9	PFFZZ	3120012666423	11083	9P4956	..BUSHING,SLEEVE OVERSIZE .04 IN...	2
10	PFFZZ	5315002672268	11083	9B2289	...PIN,STRAIGHT,HEADLE.....	2
11	PFFZZ	3110011033702	11083	8P6650	...BEARING ASSEMBLY.....	1
12	PFFZZ	5331006635709	11083	5F3106	..O-RING PART OF KIT P/N 4S8054.....	2
13	PFFZZ	2530007388714	11083	1M8746	.SEAL ASSEMBLY PART OF KIT P/N 4S9055.....	2
14	PFFZZ	5331008486109	11083	8H2265	..O-RING.....	2
15	PFFZZ	5331005931141	11083	1H7339	.O-RING PART OF KIT P/N 4S8054.....	2
16	XBFZZ		11083	7S7936	.COLLAR.....	2
17	XBFZZ		11083	1T68	.PIN,SPRING.....	1
18	PFFZZ	5365010687159	11083	4S8073	.RING.....	2

END OF FIGURE

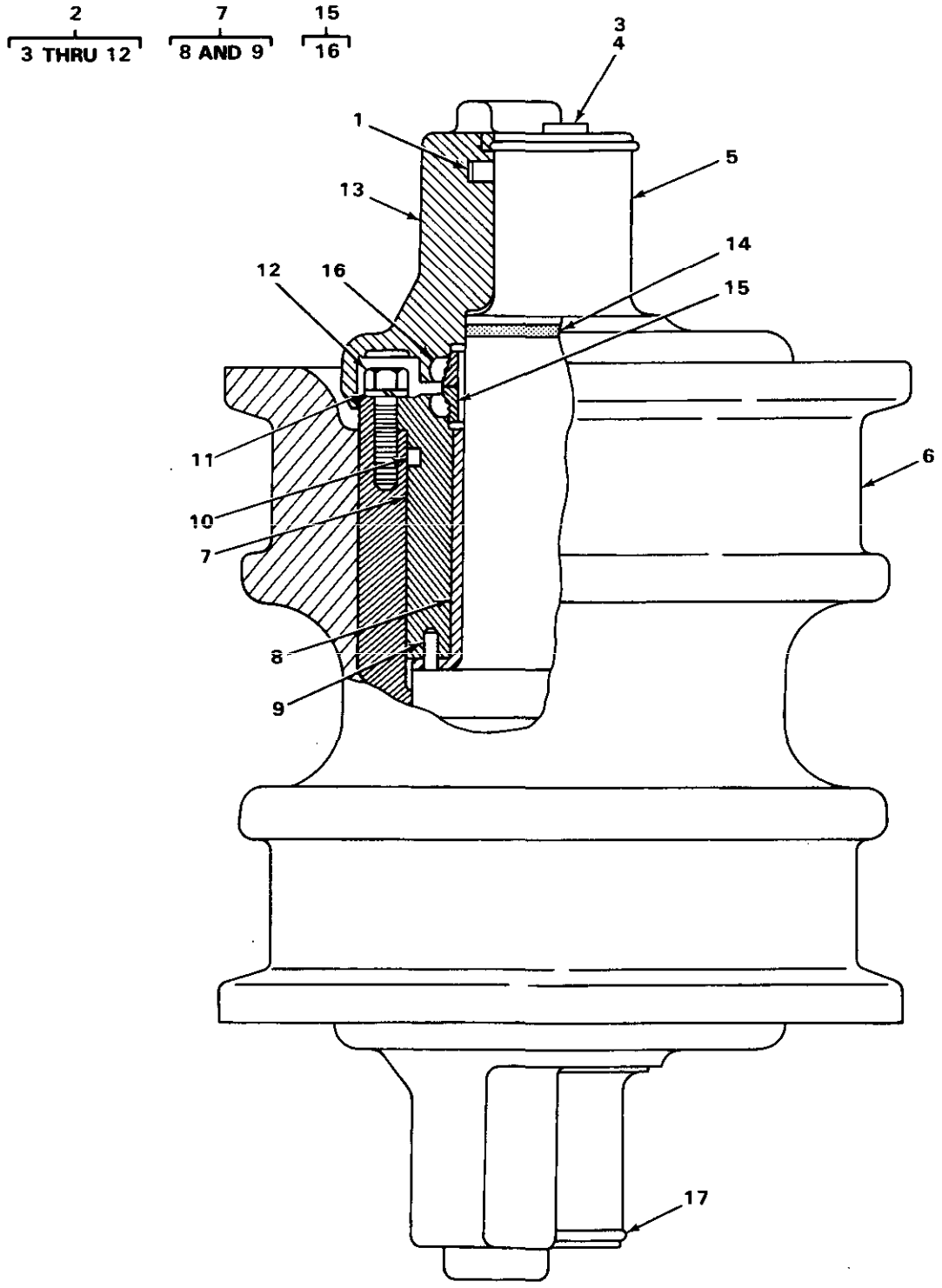

FIGURE 138. TRACK ROLLER (USE WITH SERIAL RANGE 77V6054 THRU 77V9475).

(1) ITEM NO	(2) SMR CODE	(3) NSN	(4) CAGEC	(5) PART NUMBER	(6) DESCRIPTION AND USABLE ON CODES(UOC)	(7) QTY
					GROUP 1302 TRACK SUPPORT ROLLERS AND BRACKETS.	
					FIG 138. TRACK ROLLER (USE WITH SERIAL RANGE 77V6054 THRU 77V9475).	
1	XBHZZ		11083	1T68	PIN,SPRING.....	6
2	XBFZZ		11083	6P4899	ROLLER AND SHAFT ASSEMBLY,USE ON SINGLE FLANGE ROLLER.....	6
2	PFFZZ	2530012970335	11083	6P4900	LINK,TRACK SHOE,CON ASSEMBLY,USE ON DOUBLE FLANGE ROLLER.....	6
3	PFFZZ	5365000324357	11083	2P347	.PLUG,MACHINE THREAD.....	1
4	PFFZZ	5331000312558	11083	1S8947	.O-RING.....	1
5	PFFZZ	2530010690783	11083	5M1247	.SHAFT.....	1
6	PFFZZ	2530007388715	11083	6P3303	.ROLLER ASSEMBLY,TRA USE WITH P/N 6P4899.....	1
6	PFHZZ	2530010853736	11083	6P3307	.ROLLER ASSEMBLY,TRA USE WITH P/N 6P4900.....	1
7	XDFZZ		11083	2P8052	.BUSHING A STANDARD.....	2
8	PFFZZ	3110011033702	11083	8P6650	..BEARING ASSEMBLY.....	1
9	PFFZZ	5315002672268	11083	9B2289	..PIN,STRAIGHT,HEADLE.....	2
10	PFFZZ	5331006635709	11083	5F3106	.O-RING.....	2
11	PFFZZ	5310005845272	96906	MS35338-48	.WASHER,LOCK.....	12
12	PFFZZ	5306011279361	11083	0S1585	.BOLT,MACHINE.....	12
13	XBFZZ		11083	7S7936	COLLAR.....	12
14	PFFZZ	5331005931141	11083	1H7339	O-RING.....	12
15	PFFZZ	2530007388714	11083	1M8746	SEAL ASSEMBLY.....	12
16	PFFZZ	5331008486109	11083	8H2265	.O-RING.....	2
17	PFFZZ	5365010687159	11083	4S8073	RING.....	2

END OF FIGURE

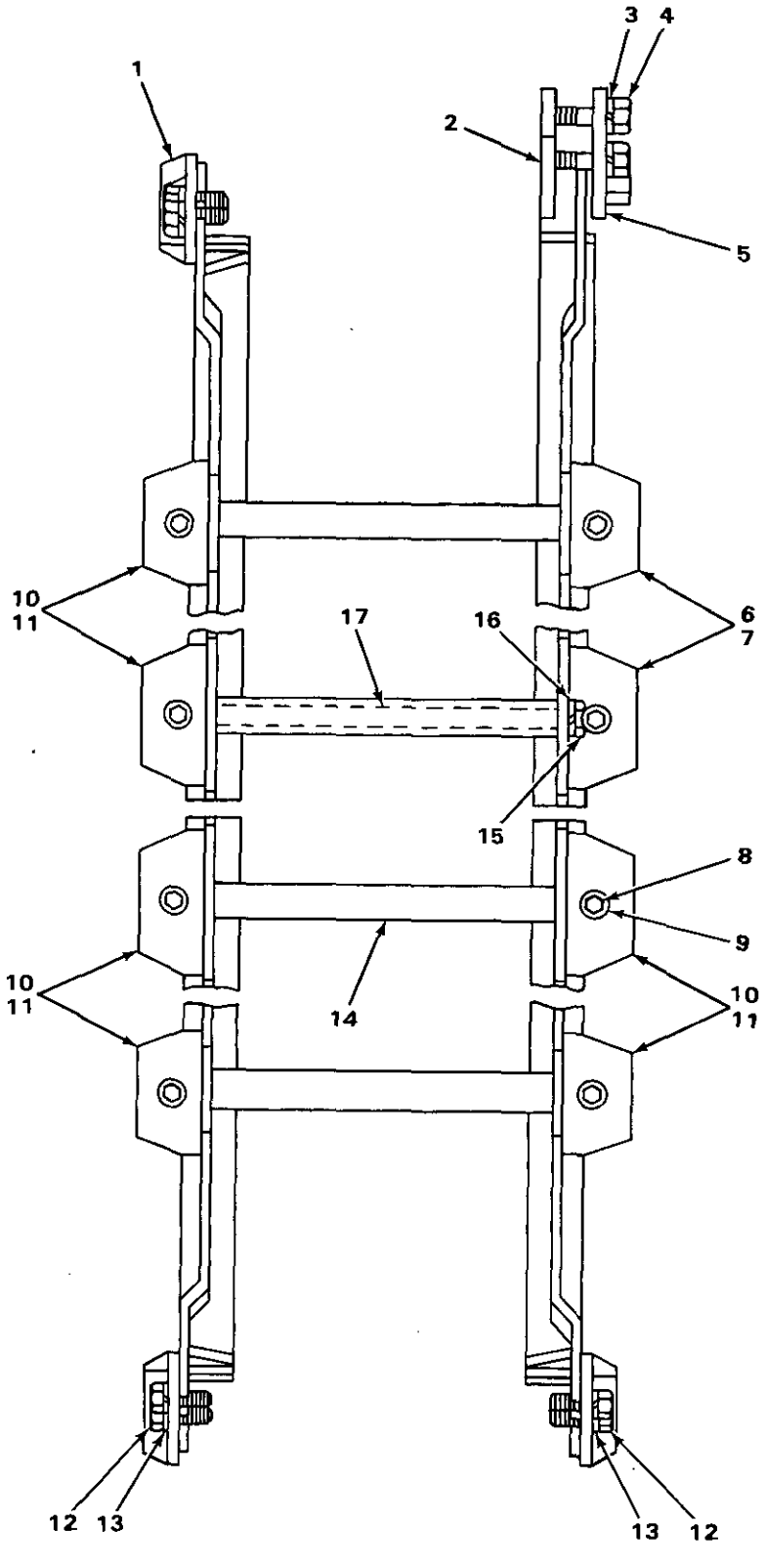

FIGURE 139. TRACK ROLLER GUARD.

(1) ITEM NO	(2) SMR CODE	(3) NSN	(4) CAGEC	(5) PART NUMBER	(6) DESCRIPTION AND USABLE ON CODES(UOC)	(7) QTY
					GROUP 1302 TRACK SUPPORT ROLLERS AND BRACKETS.	
					FIG 139. TRACK ROLLER GUARD.	
1	XBFZZ		11083	5S5746	RETAINER	6
2	PFFZZ	5310012918879	11083	7M6774	PLATE,METAL	2
3	PFFZZ	5310001397030	11083	4D3704	WASHER,FLAT	4
4	PFFZZ	5305004262936	11083	S1625	SCREW,CAP,HEXAGON H	4
5	XBFZZ		11083	7S8035	PLATE ASSEMBLY RH	1
5	XBFZZ		11083	7S8036	PLATE ASSEMBLY LH	1
6	XBFZZ		11083	6P7691	GUARD ASSEMBLY REAR RH,INNER	1
7	XBFZZ		11083	6P7694	GUARD ASSEMBLY REAR LH,INNER	1
8	PFFZZ	5305001362009	11083	8H5772	BOLT,SPECIAL	24
9	PFFZZ	5365011036645	11083	3P6600	SPACER	24
10	XBFZZ		11083	6P7693	GUARD ASSEMBLY FRONT RH INNER, FRONT LH OUTER AND REAR RH OUTER	3
11	XBFZZ		11083	6P7692	GUARD ASSEMBLY FRONT LH INNER, FRONT RH OUTER AND REAR LH OUTER	3
12	PFFZZ	5306004238807	11083	2H3757	BOLT,MACHINE	12
13	PFFZZ	5310009499296	78500	1229T1554	WASHER,FLAT	12
14	PFFZZ	4710011033693	11083	1P1014	PIPE,METALLIC	12
15	PFFZZ	5310000761505	11083	1B4208	NUT,PLAIN,HEXAGON	24
16	PFFZZ	5310007542005	96906	MS35338-52	WASHER,LOCK	24
17	PFFZZ	2530011033692	11083	1P1013	TIE ROD	12

END OF FIGURE

4 6
5 7 THRU 10

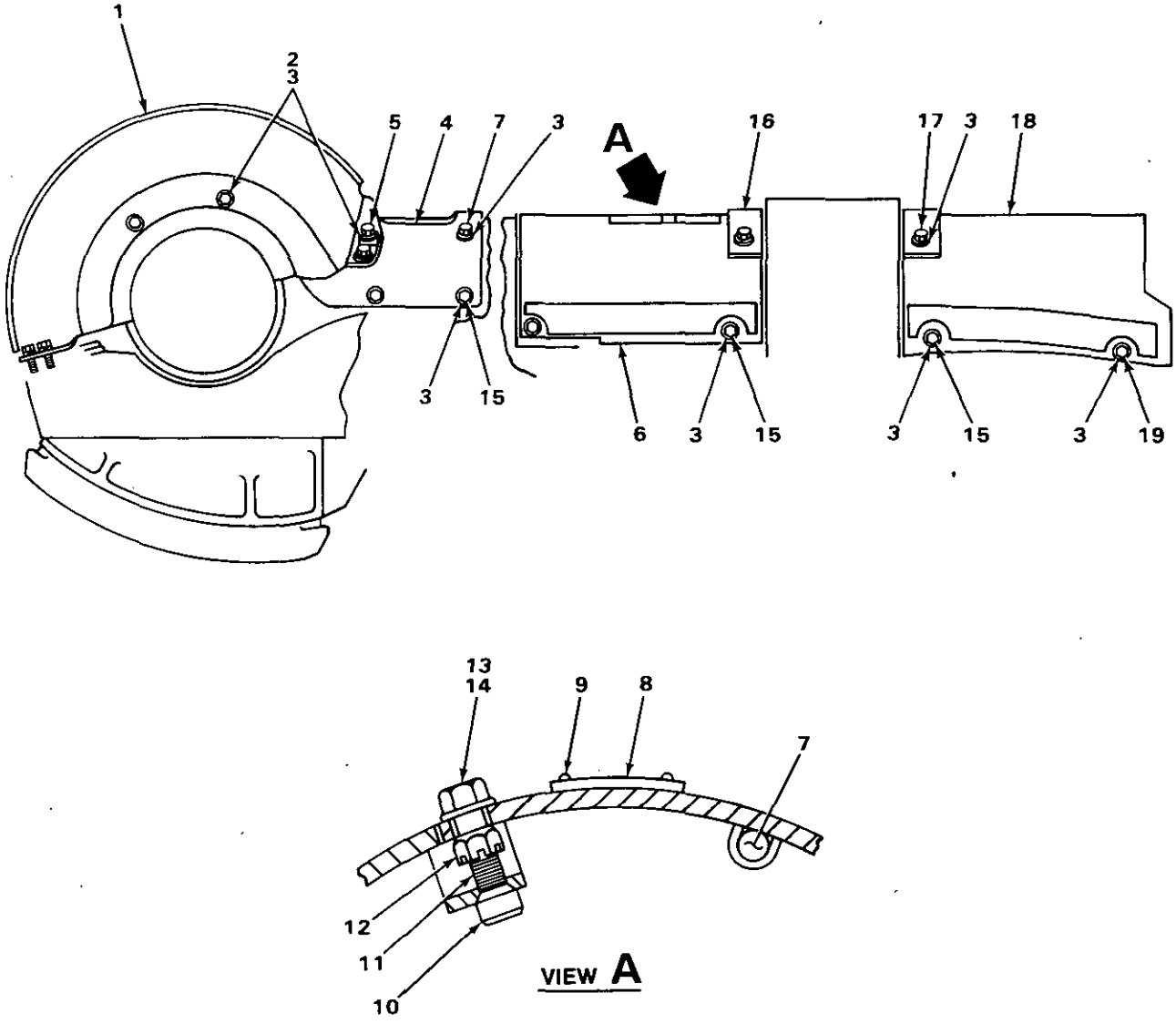

TA235337

FIGURE 140. RECOIL MECHANISM GUARD.

(1) ITEM NO	(2) SMR CODE	(3) NSN	(4) CAGEC	(5) PART NUMBER	(6) DESCRIPTION AND USABLE ON CODES(UOC)	(7) QTY
					GROUP 1302 TRACK SUPPORT ROLLERS AND BRACKETS.	
					FIG 140. RECOIL MECHANISM GUARD.	
1	XBFZZ		11083	3S8735	GUARD RH	1
1	XBFZZ		11083	3S8736	GUARD LH	1
2	PFFZZ	5305007247221	80204	B1821BH063C175N	SCREW,CAP,HEXAGON H	12
3	PFFZZ	5310004136522	11083	2S7593	WASHER,FLAT	48
4	XBFZZ		11083	3P3755	GUARD,ROLLER,TRACK RH	1
4	XBFZZ		11083	3P3757	GUARD ASSEMBLY LH	1
5	PFFZZ	5310012542505	11083	1F5573	.LUG	2
6	XBFZZ		11083	3P8024	GUARD RH	1
6	XBFZZ		11083	3P8025	GUARD LH	1
7	XBFZZ		11083	8H6481	.SHAFT	1
8	PFFZZ	9905013455300	11083	1S5242	.PLATE,INSTRUCTION	1
9	PFFZZ	5305007083823	11083	7B3028	.SCREW,DRIVE	4
10	PFFZZ	5310004454632	11083	1F748	.NUT,PLAIN,WELDING	1
11	PFFZZ	5315009700153	11083	3H6660	PIN,SPRING	2
12	PFFZZ	5310010630719	11083	1K6856	NUT	2
13	PFFZZ	5306012544226	11083	4M3981	BOLT	2
14	PFFZZ	5310009307013	11083	4B4280	WASHER,FLAT	2
15	PFFZZ	5306004239325	11083	4B4043	BOLT,MACHINE	22
16	XBFZZ		11083	3P2292	PLATE ASSEMBLY	4
17	PFFZZ	5305007247222	80204	B1821BH063C200N	SCREW,CAP,HEXAGON H	8
18	XBFZZ		11083	3P2367	GUARD ASSEMBLY	2
19	PFFZZ	5306012373300	11083	7S9372	BOLT	4

END OF FIGURE

24
25

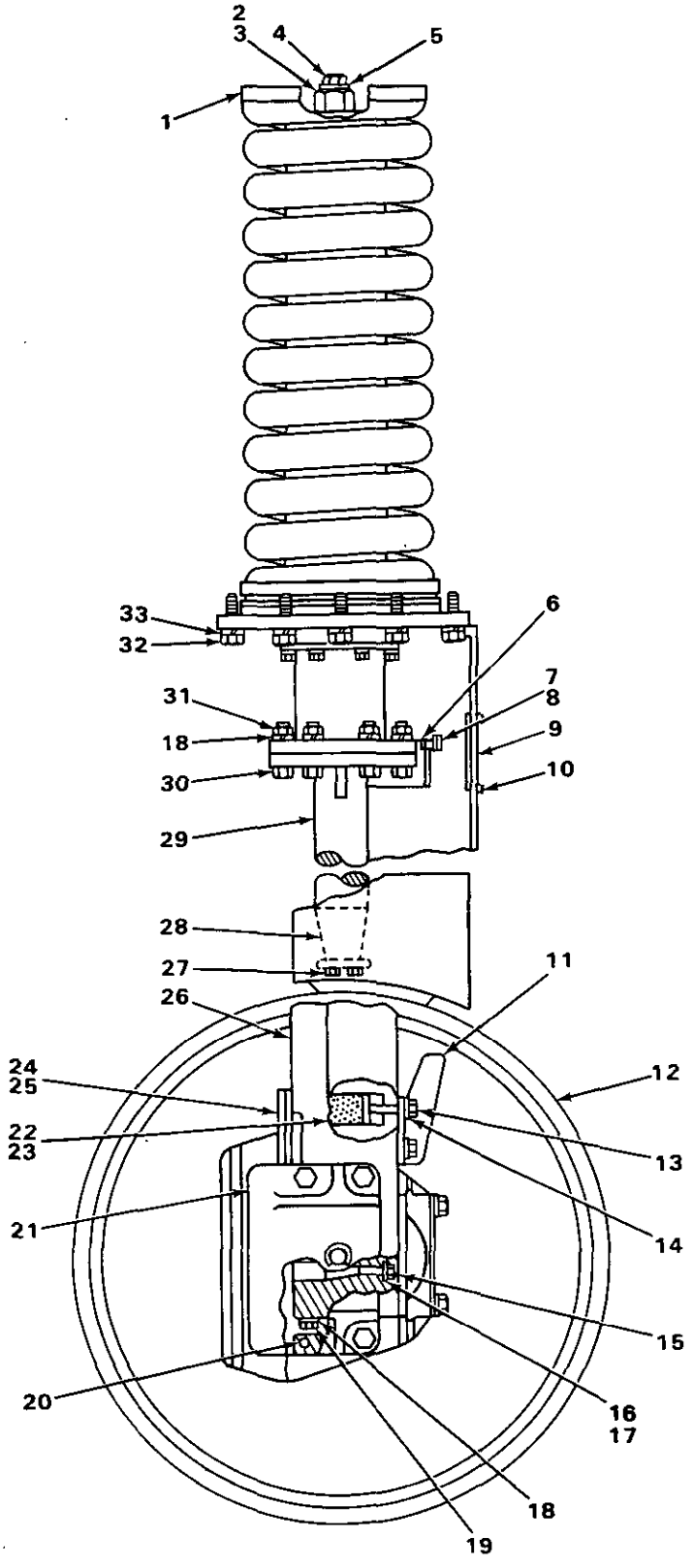

FIGURE 141. FRONT IDLER (EXTERNAL VIEW).

(1) ITEM NO	(2) SMR CODE	(3) NSN	(4) CAGEC	(5) PART NUMBER	(6) DESCRIPTION AND USABLE ON CODES(UOC)	(7) QTY
					GROUP 1303 TRACK IDLERS AND BRACKETS	
					FIG 141. FRONT IDLER (EXTERNAL VIEW)	
1	XBHZZ		11083	8M6141	PILOT	2
2	PFHZZ	5310010687288	11083	9S8216	NUT-FULL	2
3	PFHZZ	3110008751983	60380	TRF2435	SEAT,BEARING	2
4	PFHZZ	5305011857113	11083	7H2069	SCREW,CAP,HEXAGON H	2
5	PFHZZ	5310012548900	11083	1D688	WASHER	2
6	PFOZZ	4730009119226	11083	2S5925	FITTING,LUBRICATION	6
7	PFHZZ	4820009119224	11083	2S5926	VALVE,RELIEF	2
8	PFHZZ	5310007399977	11083	5M6708	WASHER,SHOULDERED	4
9	PFHZZ	9905013455300	11083	1S5242	PLATE,INSTRUCTION	2
10	PFHZZ	5305007083823	11083	7B3028	SCREW,DRIVE	8
11	XBHZZ		11083	6P4750	GUARD RH	2
11	XBHZZ		11083	6P4749	GUARD LH	2
12	PFHZZ	2910010686112	11083	1S2311	IDLER A	2
13	PFHZZ	5305011520589	11083	8H6508	SCREW,CAP,HEXAGON H USE WITH SERIAL RANGE 77V5241 THRU 77V9475	8
13	PFHZZ	5305007247222	80204	B1821BH063C200N	SCREW,CAP,HEXAGON H	8
14	PFHZZ	5310000455001	96906	MS35340-50	WASHER,LOCK	8
15	PFHZZ	5306002736357	11083	1A1460	BOLT,MACHINE	4
16	PFHZZ	2540010698801	11083	1S3513	LOCK	4
17	PFHZZ	5310005845272	96906	MS35338-48	WASHER,LOCK	4
18	PFHZZ	5310005847888	96906	MS35338-51	WASHER,LOCK	28
19	PFHZZ	5306012556396	11083	1D4621	BOLT,MACHINE	16
20	PFHZZ	5365011029605	11083	7M8056	SPACER	8
21	PFHZZ	2520010686135	11083	9S3975	GUIDE	4
22	PFHZZ	2530001498899	11083	4F5003	SPRING ASSEMBLY,FRO	8
23	PFHZZ	2520001499205	11083	4B1398	PLATE	8
24	PFHZZ	3040010689690	11083	1M1440	PLATE	4
25	XDHZZ		11083	2M1165	.PIN,STRAIGHT,HEADED	1
26	XBHZZ		11083	3P1757	YOKE ASSEMBLY	2
27	PFHZZ	5306011279361	11083	0S1585	BOLT,MACHINE	4
28	PFHZZ	5342010669164	11083	8H6504	RETAINER	2
29	XBHZZ		11083	8P5117	ROD USE WITH SERIAL RANGE 77V5241 THRU 77V9475	2
29	XBHZZ		11083	3P7470	ROD	2
30	PFHZZ	5306001161531	11083	9S1364	BOLT,MACHINE	12
31	PFHZZ	5310000761504	11083	1B4207	NUT,PLAIN,HEXAGON	12
32	XBHZZ		11083	1D4625	SCREW,CAP,HEXAGON H	20
33	PFHZZ	5310009499296	78500	1229T1554	WASHER,FLAT USE WITH SERIAL RANGE 77V5241 THRU 77V9475	20
33	PFHZZ	5310007542005	96906	MS35338-52	WASHER,LOCK	16

END OF FIGURE

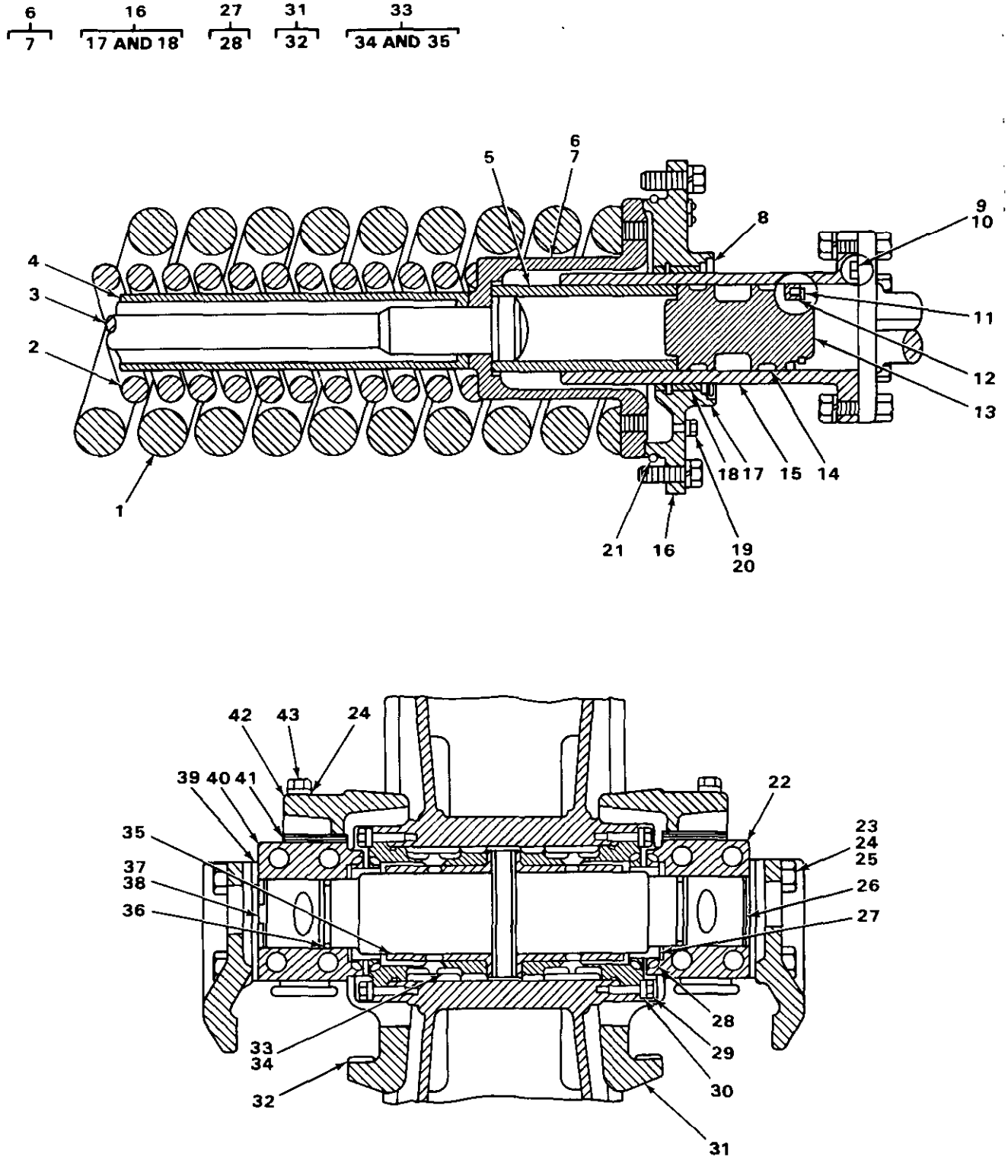

FIGURE 142. FRONT IDLER (INTERNAL VIEW).

(1) ITEM NO	(2) SMR CODE	(3) NSN	(4) CAGEC	(5) PART NUMBER	(6) DESCRIPTION AND USABLE ON CODES(UOC)	(7) QTY
					GROUP 1303 TRACK IDLERS AND BRACKETS	
					FIG 142. FRONT IDLER (INTERNAL VIEW)	
1	XDHZZ		11083	2P9666	SPRING	2
2	PFHZZ	5360010691421	11083	2P9665	SPRING	2
3	PFHZZ	5306010686138	11083	9S8217	BOLT RECOIL	2
4	PFHZZ	3040012530548	11083	8H8246	SHAFT,HOUSING	2
5	PFHZZ	5365010668463	11083	1S2269	SLEEVE	2
6	XBHZZ		11083	3S2420	PILOT	2
7	PFHZZ	5315012659212	11083	2D874	.DOWEL	1
8	PFHZZ	5330010668435	11083	5J3942	SEAL	2
9	PFHZZ	2530004823587	11083	5M3373	RING,IDLER,EXTRUSIO	2
10	PFHZZ	5330007885829	11083	5M3374	GASKET	2
11	PFHZZ	5325004900573	11083	9H5604	RING,RETAINING	2
12	PFHZZ	5330010175578	11083	1P4879	SEAL	2
13	PFHZZ	3040010685973	11083	1S2268	PISTON	2
14	PFHZZ	5325012564631	11083	8H214	RING,RETAINING	4
15	XBHZZ		11083	5M7306	CYLINDER	2
16	XBHZZ		11083	6P9556	COVER ASSEMBLY	2
17	PFHZZ	3110010689721	11083	1P8336	.BEARING	1
18	PFHZZ	2520010682763	11083	9H3452	.RING	2
19	PFHZZ	5305000120784	11083	2B1459	CAPSCREW	2
20	PFHZZ	5310002090243	11083	1A4907	WASHER,FLAT	2
21	PFHZZ	5331008939220	11083	8H8257	O-RING	2
22	PFHZZ	3130012542545	11083	9S4326	BEARING UNIT,PLAIN RH INNER,LH OUTER	2
23	PFHZZ	5306004238409	11083	1D4620	BOLT,MACHINE	16
24	PFHZZ	5310004191363	11083	2S0115	WASHER,FLAT	24
25	PFHZZ	3805010689720	11083	1P3318	STRIP	8
26	XBHZZ		11083	9S4324	SHAFT,STRAIGHT	2
27	PFHZZ	2530007388714	11083	1M8746	SEAL ASSEMBLY	4
28	PFHZZ	5331008486109	11083	8H2265	.O-RING RUBBER	2
29	PFHZZ	5306011279361	11083	0S1585	BOLT,MACHINE	24
30	PFHZZ	5310005845272	96906	MS35338-48	WASHER,LOCK	24
31	PFHZZ	3110010686136	11083	6T1933	COLLAR A	4
32	PFHZZ	3805010687270	11083	2P5896	.STRIP	1
33	PFHZZ	3120010691430	11083	6P2083	BUSHING	4
34	PFHZZ	5315002672268	11083	9B2289	.PIN,STRAIGHT,HEADLE	1
35	PFHZZ	3110011033702	11083	8P6650	.BEARING ASSEMBLY	1
36	PFHZZ	5331003334384	11083	1H5728	O-RING	4
37	PFHZZ	5365000324357	11083	2P347	PLUG,MACHINE THREAD	2
38	PFHZZ	5331000312558	11083	1S8947	O-RING	2
39	PFHZZ	5365010702910	11083	1P7660	SHIM	48
40	PFHZZ	3130012542546	11083	9S4325	BEARING UNIT,PLAIN RH OUTER,LH INNER	2
41	PFHZZ	5365010691504	11083	2M3518	SHIM	24
42	PFHZZ	5331006635709	11083	5F3106	O-RING	4
43	PFHZZ	5306004263404	11083	1D4610	BOLT,MACHINE	8

END OF FIGURE

1
2 THRU 5

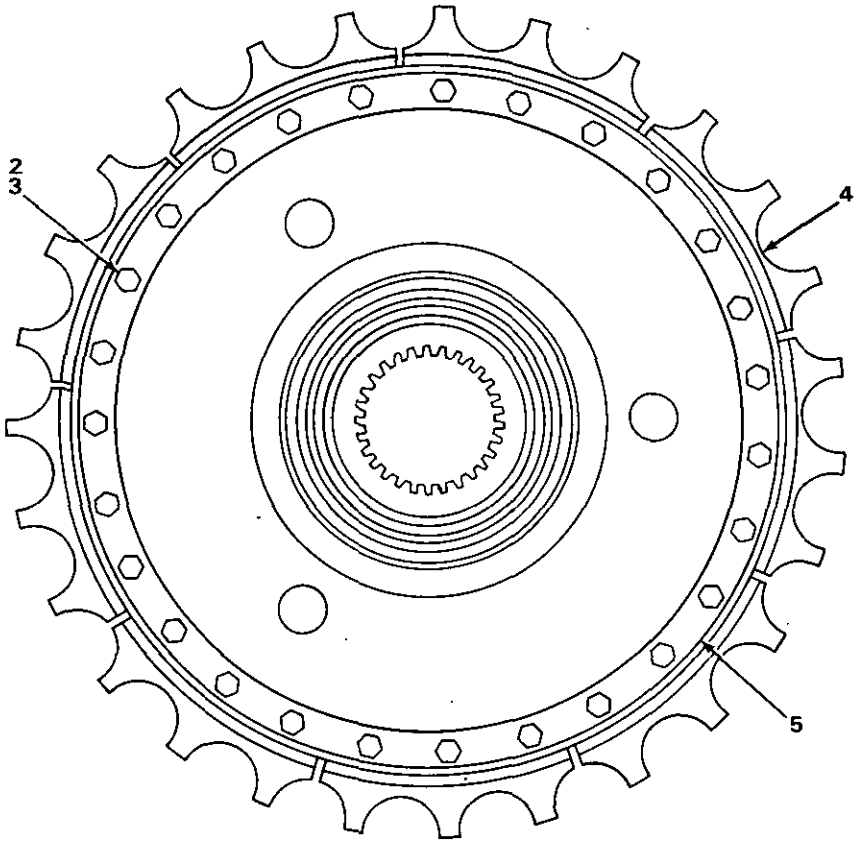

TA235340

FIGURE 143. HUB AND SPROCKET SEGMENTS.

(1) ITEM NO	(2) SMR CODE	(3) NSN	(4) CAGEC	(5) PART NUMBER	(6) DESCRIPTION AND USABLE ON CODES(UOC)	(7) QTY
					GROUP 1304 TRACK DRIVE SPROCKETS.	
					FIG. 143 HUB AND SPROCKET SEGMENTS.	
1	XBOZZ		11083	8P8120	SEGMENT SPROCKET USE WITH SERIAL RANGE 77V7008 THRU 77V9475.....	1
1	XBOZZ		11083	6P4132	SEGMENT SPROCKET USE WITH SERIAL RANGE 77V5006 THRU 77V7007.....	1
2	PFFZZ	5306010691440	11083	9S2727	.BOLT.....	27
3	PFFZZ	5310010671393	11083	7H3609	.NUT.....	27
4	PFFZZ	2990011033703	11083	6T6782	.SEGMENT,SPROCKET USE WITH P/N 8P8120.....	9
4	PFFZZ	2920010686997	11083	2P9490	.SEGMENT USE WITH P/N 6P4132.....	9
5	XAFZZ		11083	6P3596	.HUB.....	1

END OF FIGURE

1 2 THRU 19 6 7 THRU 19

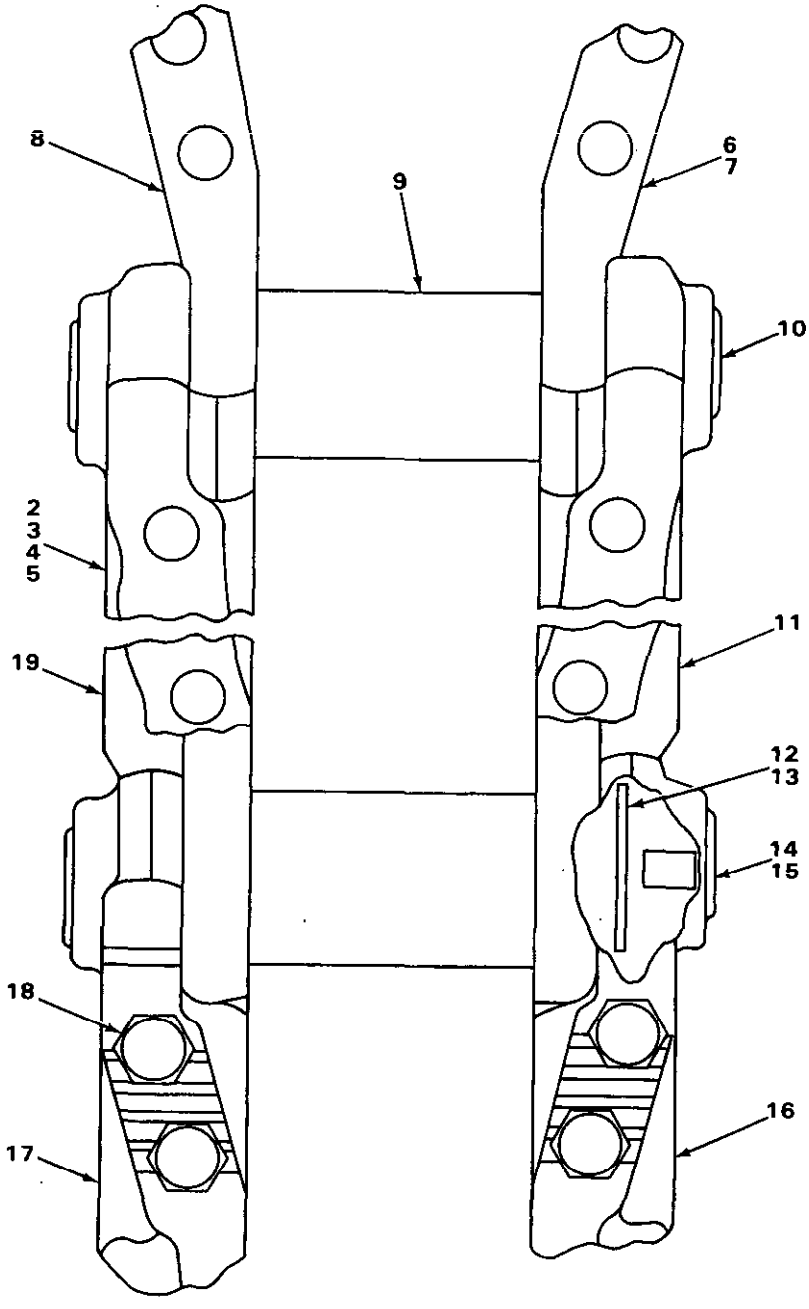

TA235341

FIGURE 144. TRACK (SEALED AND LUBRICATED).

(1) ITEM NO	(2) SMR CODE	(3) NSN	(4) CAGEC	(5) PART NUMBER	(6) DESCRIPTION AND USABLE ON CODES (UOC)	(7) QTY
					GROUP 1305 TRACK ASSEMBLY.	
					FIG 144 TRACK (SEALED AND LUBRICATED).	
1	XBOZZ		11083	2P9512	TRACK 24 INCH GROUSER SHOE, EXTREME SERVICE, USE WITH P/N 6P4132	2
1	XBOZZ		11083	2P9514	TRACK 20 INCH GROUSER SHOE, EXTREME SERVICE, USE WITH P/N 6P4132	2
1	PFFZZ	2530012627616	11083	6Y2330	TRACK SHOE ASSEMBLY 22 INCH GROUSER SHOE, EXTREME SERVICE, USE WITH P/N 6P4132	2
1	XBOZZ		11083	2P9518	TRACK 24 INCH GROUSER SHOE, USE WITH P/N 6P4132	2
1	XBOZZ		11083	2P9517	TRACK 26 INCH GROUSER SHOE, USE WITH P/N 6P4132	2
1	XBOZZ		11053	2P9516	TRACK 28 INCH GROUSER SHOE, USE WITH P/N 6P4132	2
I	XBOZZ		11083	2P9519	TRACK 22 INCH GROUSER SHOE, USE WITH P/N 6P4132	2
2	XBHZZ		11083	759094	TRACK SHOE, VEHICULA USE WITH P/N 2P9512	40
2	XBHZZ		11083	759096	TRACK SHOE, VEHICULA USE WITH P/N 2P9514	40
2	PEHZZ	2530010480813	11083	759093	TRACK SHOE, VEHICULA USE WITH P/N 2P9513	40
2	XBHZZ		11083	256346	TRACK SHOE USE WITH P/N 2P9518	40
2	XBHZZ		11083	256347	TRACK SHOE USE WITH P/N 2P9517	40
2	XBHZZ		11083	256364	TRACK SHOE USE WITH P/N 2P9516	40
2	PFHZZ	2530000978237	11083	256345	TRACK SHOE, VEHICULA USE WITH P/N 2P9519	40
3	XBHZZ		11083	8S392	TRACK SHOE, MASTER USE WITH P/N 759094	1
3	PFOZZ		11083	850390	MASTER LINK, TRACK USE WITH P/N 759096	1
3	PFHZZ	2530010484166	11083	8S391	TRACK SHOE, VEHICULA USE WITH P/N 759093	1
3	PFHZZ	2530012035463	11083	850386	TRACK SHOE, VEHICULA USE WITH P/N 2S6346	1
3	XBHZZ		11083	8S387	TRACK SHOE, MASTER USE WITH P/N 2S6347	1
3	PFHZZ	2530013218329	11083	850388	TRACK SHOE, VEHICULA USE WITH P/N 2S6364	1
3	PFHZZ	2530010176667	11083	85385	TRACK SHOE, VEHICULA USE WITH P/N 256345	1
4	PFFZZ	5306008953775	11083	7H3599	BOLT, TRACK SHOE	160
5	PFFZZ	5310000976494	11083	252140	NUT, PLAIN, SQUARE	160
6	PFHHH	3020010689730	11083	2P9492	LINK ASSEMBLY	1
7	PFHZZ	2530010483940	11083	759603	LINK, TRACK SHOE, CON RIGHT HANDBUSHING END	1
8	PFHZZ	2530010489734	11083	759604	TRACK SHOE, VEHICULA MASTER, LEFTHAND BUSHING END	1

(1) ITEM NO	(2) SMR CODE	(3) NSN	(4) CAGEC	(5) PART NUMBER	(6) DESCRIPTION AND USABLE ON CODES(UOC)	(7) QTY
9	XBHZZ		11083	2P9484	..BUSHING.....	1
10	PFHZZ	5315010668453	11083	2P9486	..PIN.....	1
11	PFHZZ	2530012111035	11083	7S9181	..LINK,TRACK SHOE,CON RIGHT HAND...	1
12	PFHZZ	5330010486000	11083	9P1445	..SEAL ASSEMBLY.....	2
13	PFHZZ	5365010687142	11083	9W3563	..RING LOAD.....	2
14	PFHZZ	3805010687273	11083	3P7662	..STOPPER.....	1
15	PFHZZ	4730010687143	11083	3P3080	..PLUG.....	1
16	PFHZZ	2530010483939	11083	7S9601	..LINK,TRACK SHOE,CON RIGHT HAND PIN END.....	1
17	PFHZZ	2530010484917	11083	7S9602	..TRACK SHOE,VEHICULA MASTER,LEFT HAND PIN END.....	1
18	PFHZZ	5306012559253	11083	8S395	..BOLT.....	4
19	PFHZZ	2530012111036	11083	7S9182	..LINK,TRACK SHOE,CON LEFT HAND....	1

END OF FIGURE

1
2 THRU 16

6
7 THRU 16

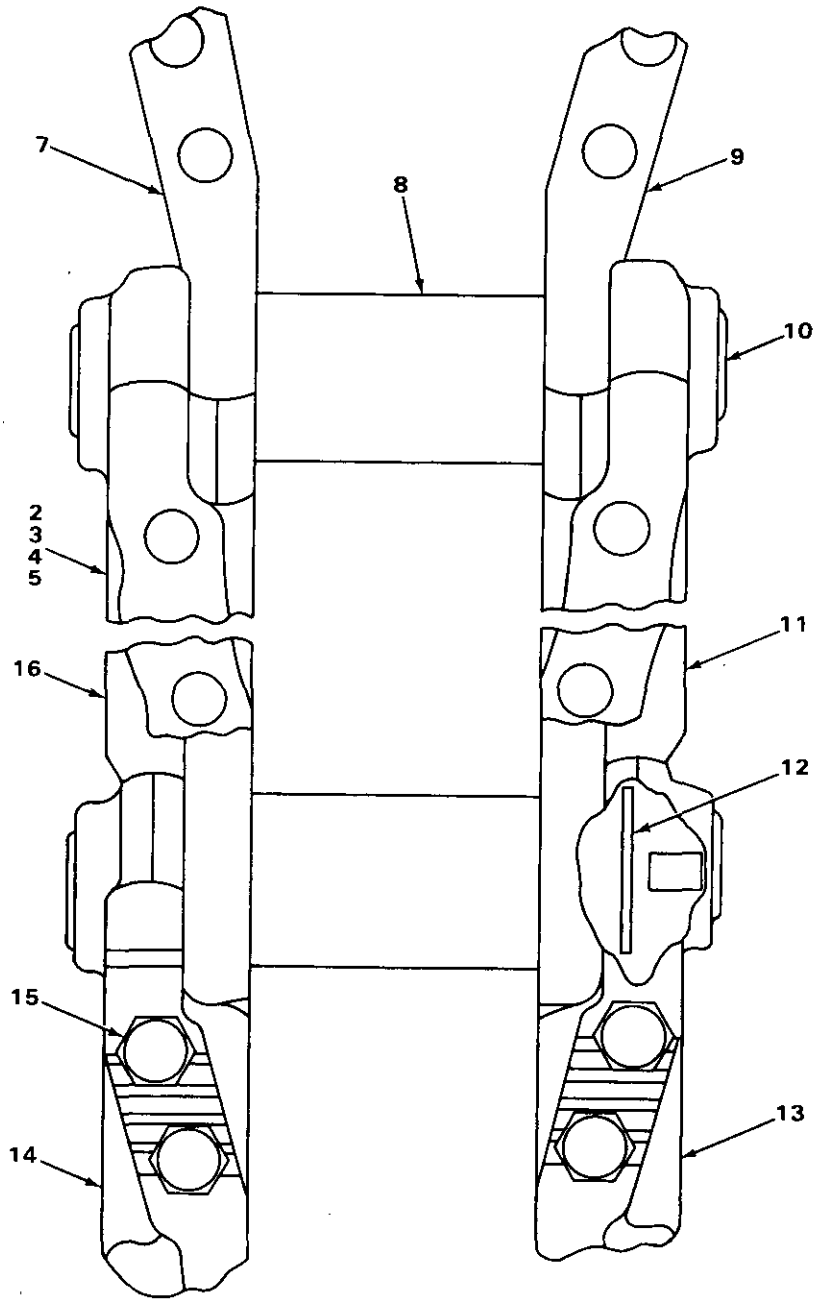

FIGURE 145. TRACK (SEALED AND NONLUBRICATED).

(1) ITEM NO	(2) SMR CODE	(3) NSN	(4) CAGEC	(5) PART NUMBER	(6) DESCRIPTION AND USABLE ON CODES(UOC)	(7) QTY
					GROUP 1305 TRACK ASSEMBLY.	
					FIG. 145 TRACK (SEALED AND NONLUBRICATED).	
1	XBOFH		11083	8S0404	TRACK 22 INCH GROUSER SHOE.....	2
1	XBOFH		11083	8S0405	TRACK 24 INCH GROUSER SHOE.....	2
1	XBOFH		11083	8S0406	TRACK 26 INCH GROUSER SHOE.....	2
1	XBOFH		11083	8S0407	TRACK 28 INCH GROUSER SHOE.....	2
1	XBOFH		11083	8S0410	TRACK 20 INCH GROUSER SHOE EXTREME SERVICE.....	2
1	XBOFH		11083	8S0411	TRACK 22 INCH GROUSER SHOE EXTREME SERVICE.....	2
1	XBOFH		11083	8S0412	TRACK 24 INCH GROUSER SHOE EXTREME SERVICE.....	2
2	PFFZZ	2530000978237	11083	2S6345	.TRACK SHOE,VEHICULA USE WITH P/N 8S404.....	40
2	XBOZZ		11083	2S6346	.TRACK SHOE USE WITH P/N 8S405.....	40
2	XBOZZ		11083	2S6347	.TRACK SHOE USE WITH P/N 8S406.....	40
2	XBOZZ		11083	2S6364	.TRACK SHOE USE WITH P/N 8S407.....	40
2	XBOZZ		11083	7S9096	.TRACK SHOE,VEHICULA USE WITH P/N 8S410.....	40
2	PFFZZ	2530010480813	11083	7S9093	.TRACK SHOE,VEHICULA USE WITH P/N 8S411.....	40
2	XBOZZ		11083	7S9094	.TRACK SHOE,VEHICULA USE WITH P/N 8S412.....	40
3	PFHZZ	2530010176667	11083	8S385	.TRACK SHOE,VEHICULA USE WTIH P/N 8S404.....	1
3	PFHZZ	2530012035463	11083	8S0386	.TRACK SHOE,VEHICULA USE WITH P/N 8S405.....	1
3	XBHZZ		11083	8S387	.TRACK SHOE,MASTER USE WITH P/N 8S406.....	1
3	PFOZZ	2530013218329	11083	8S0388	.TRACK SHOE ASSEMBLY USE WITH P/N 8S407.....	1
3	PFOZZ		11083	8S0390	.MASTER LINK,TRACK S USE WITH P/N 8S410.....	1
3	PFHZZ	2530010484166	11083	8S391	.TRACK SHOE,VEHICULA USE WITH P/N 8S411.....	1
3	XBOZZ		11083	8S392	.TRACK SHOE,MASTER USE WITH P/N 8S412.....	1
4	PFFZZ	5306008953775	11083	7H3599	.BOLT,TRACK.....	160
5	PFFZZ	5310000976494	11083	2S2140	.NUT,PLAIN,SQUARE.....	160
6	PFOFH		11083	8S0396	.LINK ASSEMBLY,TRACK.....	41
7	PFHZZ	2530010489734	11083	7S9604	..TRACK SHOE,VEHICULA LEFT HAND BUSHING END.....	1
8	XDHZZ		11083	8M2619	..BUSHING,SLEEVE.....	41
9	PFHZZ	2530010483940	11083	7S9603	..LINK,TRACK SHOE,CON RIGHT HAND BUSHING END.....	1
10	PFHZZ	5315008953774	11083	1M1455	..PIN,TRACK LINK.....	41
11	PFHZZ	2530012111035	11083	7S9181	..LINK,TRACK SHOE,CON RIGHT HAND...	40
12	PFHZZ	5330007885830	11083	8M2620	..SEAL,TRACK PIN.....	4
13	PFHZZ	2530010483939	11083	7S9601	..LINK,TRACK SHOE,CON RIGHT HAND	1

(1) ITEM NO	(2) SMR CODE	(3) NSN	(4) CAGEC	(5) PART NUMBER	(6) DESCRIPTION AND USABLE ON CODES(UOC)	(7) QTY
					PIN END.....	
14	PFOZZ	2530010484917	11083	7S9602	..TRACK SHOE,VEHICULA MASTER LEFT HAND PIN END.....	1
15	PFHZZ	5306012559253	11083	8S395	..BOLT.....	1
16	PFHZZ	2530012111036	11083	7S9182	..LINK,TRACK SHOE,CON.....	1

END OF FIGURE

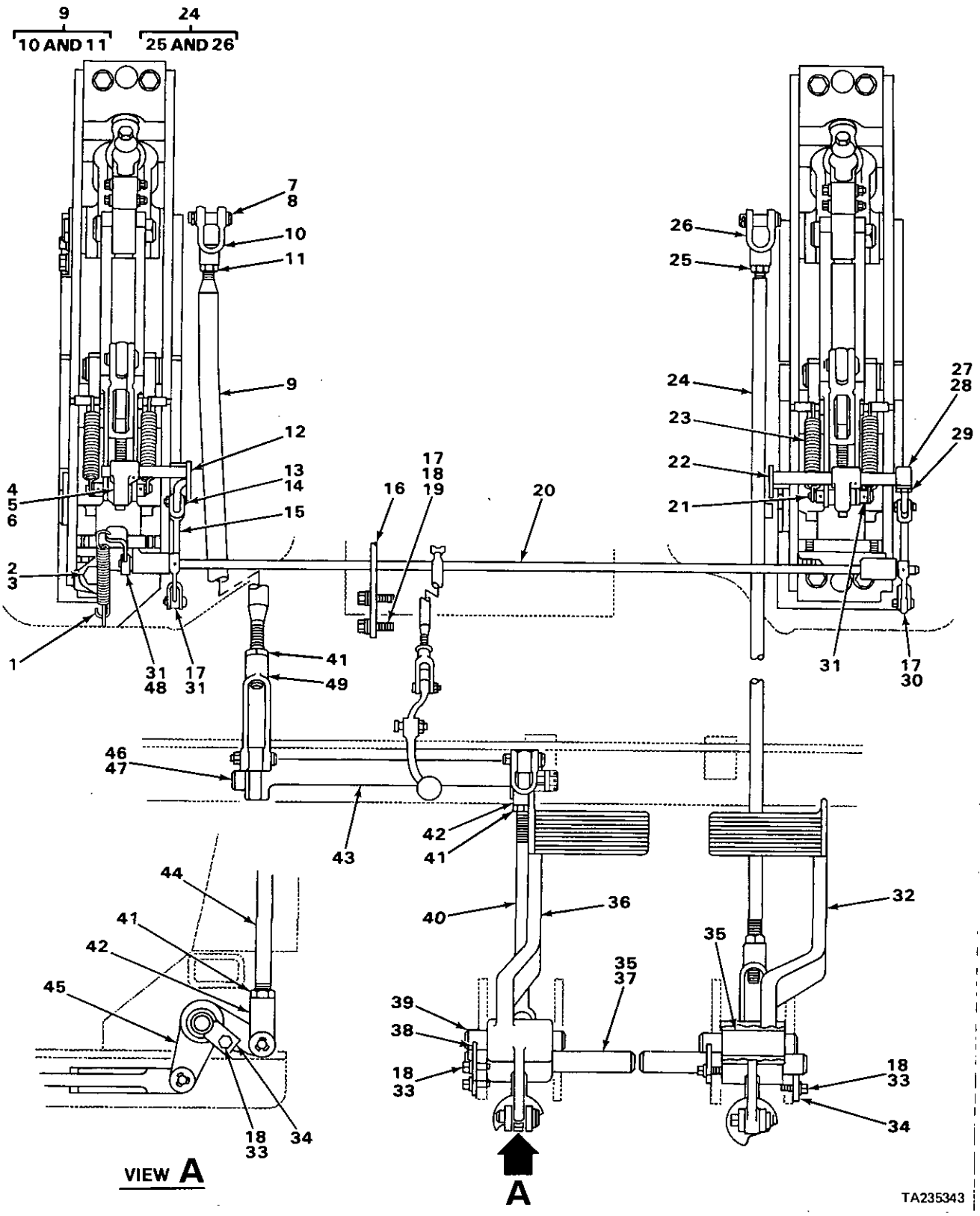

FIGURE 146. STEERING BRAKE LINKAGE (TOP VIEW).

(1) ITEM NO	(2) SMR CODE	(3) NSN	(4) CAGEC	(5) PART NUMBER	(6) DESCRIPTION AND USABLE ON CODES (UOC)	(7) QTY
					GROUP 14 STEERING. GROUP 1403 STEERING BRAKES. FIG. 146 STEERING BRAKE LINKAGE (TOP VIEW).	
1	PFHZZ	5360010689641	11083	1D1313	SPRING USE WITH SERIAL RANGE 77V5D06 THRU 77V8D46	1
1	PFHZZ	5360011673642	11083	8D8456	SPRING USE WITH SERIAL RANGE 77V8D47 THRU 77V9475	1
2	PFHZZ	5305007247222	80204	B1821BH063C200N	SCREW, CAP, HEXAGON H	8
3	PFHZZ	5310000455001	96906	MS35340-50	WASHER, LOCK	8
4	PFHZZ	3040011673669	11083	3P52O6	PAWL	2
5	XBFZZ		11083	3P52O7	RATCHET	2
6	PFHZZ	5315007102087	11083	1H1200	PIN, SPRING	2
7	PFHZZ	5315010668470	11083	9S1315	PIN, STRAIGHT HEADED	10
8	PFHZZ	5315008395822	96906	MS24665-353	PIN, COTTER	10
9	XBFZZ		11083	3P3663	ROD ASSEMBLY	1
10	PFHZZ	5340011604084	11083	4M793O	CLEVIS, ROD END	1
11	PFHZZ	5310000451079	24617	145036	NUT, SELF-LOCKING, HE	1
12	YRF77		11083	9H8823	SHAFT ASSEMBLY	1
13	PFHZZ	5315007540848	96906	MS35810-3	PIN, STRAIGHT, HEADED	4
14	PFHZZ	5315008392326	96906	M524665-281	PIN, COTTER	4
15	XBFZZ		11083	9H8873	ROD	2
16	XBHZZ		11D83	8P6O2	PLATE	1
17	XBFZZ		11D83	9P1425	LEVER USE WITH SERIAL RANGE 77V8047 THRU 77V9475	2
18	PFHZZ	5310006379541	96906	MS35338-46	WASHER,LOCK	7
19	PFHZZ	5310001174788	11083	5M2894	WASHER, FLAT	2
20	XBHZZ		11083	3P5434	SHAFT USE WITH SERIAL RANGE 77V5006 THRU 77V8046	1
21	PFHZZ	5315012102959	11083	1M0424	PIN, GROOVED, HEADLES	2
22	XBFZZ		11083	3P5113	LEVER ASSEMBLY	1
23	PFHKZ	5360008486107	11083	1M437	SPRING, HELICAL, EXTE	4
24	XBFHH		11083	3P3665	ROD ASSEMBLY	1
25	PFHZZ	5310000451079	24617	145036	NUT, SELF-LOCKING, HE	1
26	PFHZZ	5340011604084	11083	4M7930	CLEVIS, ROD END	1
27	XBFZZ		11083	253732	LEVER	1
28	PFHZZ	5315006165524	64294	29620-3	KEY, WOODRUFF	1
29	PFHZZ	5305000680511	80204	B1821BHO38C125N	SCREW, CAP, HEXAGON H	3
30	PFHZZ	5315009700153	11083	3H6660	PIN, SPRING USE WITH SERIAL RANGE 77V5006 THRU 77V8046	2
30	PFHZZ	5315008443966	96906	MS16562-49	PIN, SPRING USE WITH SERIAL RANGE 77V8047 THRU 77V9475	2
31	PFHZZ	5315009700153	11083	3H6660	PIN, SPRING USE WITH SERIAL RANGE 77V5006 THRU 77V9475	4
32	PFFZZ	2540012534705	11083	3P3655	PEDAL, CONTROL	1
33	PFHZZ	5306002637301	11083	L1351	BOLT, MACHINE	5
34	PFHZZ	25200D4238058	11080	L1032	LOCK PLATE, SHAFT	3
35	PFHZZ	3110010669172	11083	6K8088	BEARING	8
36	PFFZZ	2540012535589	11083	3P3656	PEDAL, CONTROL	1

(1) ITEM NO	(2) SMR CODE	(3) NSN	(4) CAGEC	(5) PART NUMBER	(6) DESCRIPTION AND USABLE ON CODES(UOC)	(7) QTY
37	PFFZZ	3040012537346	11083	3P3658	SHAFT,STRAIGHT.....	2
38	PFHZZ	2530012530440	11083	6P6253	LOCK,SHAFT.....	2
39	PFFZZ	3040012537347	11083	3P3657	SHAFT,STRAIGHT.....	2
40	XBFZZ		11083	5H6308	ROD.....	1
41	PFHZZ	5310000451079	24617	145036	NUT,SELF-LOCKING,HE.....	7
42	PFHZZ	5340011604084	11083	4M7930	CLEVIS,ROD END.....	5
43	XBHZZ		11083	3P3661	BELLCRANK.....	1
44	PFHZZ	5306012573316	11083	3P3660	ROD,THREADED END.....	2
45	PFHZZ	3040012649331	11083	3P3659	BELL CRANK.....	2
46	XBHZZ		11083	3P3662	SHAFT.....	1
47	XBHZZ		60380	JTT1614	BEARING,ROLLER,NEED.....	2
48	XBHZZ		11083	9P1424	LEVER ASSEMBLY USE WITH SERIAL RANGE 77V8047 THRU 77V9475.....	1
49	PFHZZ	5342010687178	11083	9S1314	ROD END.....	2

END OF FIGURE

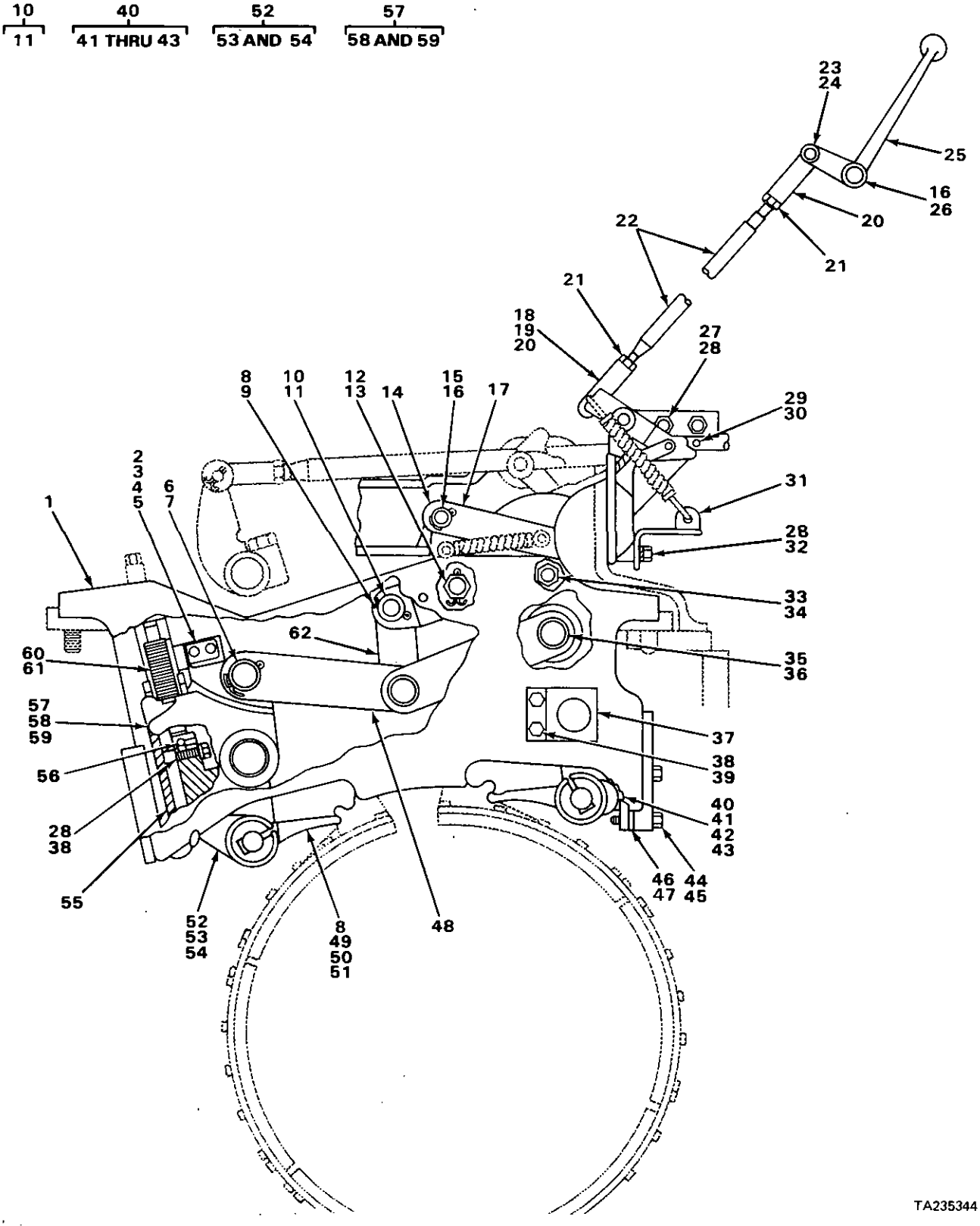

FIGURE 147. STEERING BRAKE LINKAGE (SIDE VIEW).

(1) ITEM NO	(2) SMR CODE	(3) NSN	(4) CAGEC	(5) PART NUMBER	(6) DESCRIPTION AND USABLE ON CODES(UOC)	(7) QTY
					GROUP 1403 STEERING BRAKES.	
					FIG. 147 STEERING BRAKE LINKAGE (SIDE VIEW).	
1	XBFZZ		11083	4M1740	SUPPORT ASSEMBLY	2
2	PFFZZ	5340003308289	11083	2F6156	LOCKING PLATE,NUT A	4
3	PFFZZ	5360002460489	11083	9S8220	SPRING,FLAT	2
4	PFFZZ	5306002264832	80204	B1821BH031C175N	BOLT,MACHINE	4
5	PFFZZ	5310008807744	96906	MS51967-5	NUT,PLAIN,HEXAGON	4
6	PFFZZ	5315002458844	11083	8H8898	PIN,STRAIGHT,HEADED	2
7	PFFZZ	5315000137258	96906	MS24665-497	PIN,COTTER	2
8	PFFZZ	5315010523942	11083	3B4629	PIN,COTTER	10
9	PFFZZ	5315012541307	11083	9H750	PIN	2
10	XBFZZ		11083	4M1643	BELLCRANK ASSEMBLY	2
11	PFFZZ	3110010668467	11083	7S6146	.BEARING	1
12	XBFZZ		11083	9H966	SHAFT	2
13	PFFZZ	5315012541308	11083	1J8136	PIN	2
14	XBFZZ		11083	4H1134	ROLLER	2
15	PFFZZ	5315002726764	11083	2B974	PIN,STRAIGHT,HEADED	2
16	PFFZZ	5315008395822	96906	MS24665-353	PIN,COTTER	3
17	XBFZZ		11083	9H8625	LINK	4
18	XBFZZ		11083	6P5705	LEVER USE WITH SERIAL RANGE 77V5006 THRU 77V8046	1
19	PFFZZ	5315009700153	11083	3H6660	PIN,SPRING	1
20	PFFZZ	5340009850823	96906	MS35812-4	CLEVIS,ROD END	2
21	PFFZZ	5310009752075	96906	MS35691-21	NUT,PLAIN,HEXAGON	1
22	XBFZZ		11083	6P5726	CONNECTING LINK,RIG	1
23	PFFZZ	5315002726760	11083	1B676	PIN,STRAIGHT,HEADED	2
24	PFFZZ	5315008395821	96906	MS24665-351	PIN,COTTER	2
25	XBFZZ		11083	3P5208	LEVER	1
26	PFFZZ	5310004042422	52788	265079	WASHER,FLAT	1
27	PFFZZ	5306004238194	11083	1A2029	BOLT,MACHINE	4
28	PFFZZ	5310006379541	96906	MS35338-46	WASHER,LOCK	10
29	XBFZZ		11083	6P5904	COVER	2
30	PAFZZ	5330010668585	11083	9H8644	GASKET	2
31	XBFZZ		11083	6P5906	BRACKET	1
32	PFFZZ	5306010949106	11083	0S1590	BOLT,MACHINE	4
33	PFFZZ	5315012542376	11083	9H8918	PIN,STRAIGHT,HEADLE	2
34	PFFZZ	5315007102087	11083	1H1200	PIN,SPRING	2
35	PFFZZ	5315009486454	11083	8H376	PIN,GROOVED,HEADLES	4
36	PFFZZ	5325009516973	11083	8H350	RING,RETAINING	8
37	PFFZZ	3040009610649	11083	8H0352	SHAFT,BRAKE	4
38	PFFZZ	5306002637301	11083	L1351	BOLT,MACHINE	10
39	PFFZZ	5340012584854	11083	5B2200	LOCKING PLATE,NUT A	4
40	XBFFF		11083	8H0365	LEVER ASSEMBLY	2
41	PFFZZ	3120002390939	11083	7S6140	.BEARING,SLEEVE	2
42	PFFZZ	3120004219629	11083	7S6143	.BEARING,SLEEVE	2
43	PFFZZ	3110010668468	11083	7S6147	.BEARING	1
44	PFFZZ	5305010269518	11083	0S1571	SCREW,CAP,HEXAGON H	4
45	PFFZZ	5342009486464	11083	6H4208	LOCKPLATE	2
46	PFFZZ	2530001955822	11083	8H372	PLATE,WEAR,BRAKE SH	2

(1) ITEM NO	(2) SMR CODE	(3) NSN	(4) CAGEC	(5) PART NUMBER	(6) DESCRIPTION AND USABLE ON CODES(UOC)	(7) QTY
47	PFFZZ	5365009486452	11083	8H8871	SHIM	2
48	PFFZZ	3040012540310	11083	7S6139	CONNECTING LINK,RIG	8
49	XBFZZ		11083	5M8672	STRUT	4
50	XBFZZ		11083	4H4287	PIN,STRAIGHT,HEADLE	4
51	XDFZZ		72447	S997	WASHER,FLAT	8
52	XBFZZ		11083	8H5433	LEVER ASSEMBLY	2
53	PFFZZ	3120002390939	11083	7S6140	.BEARING,SLEEVE	1
54	PFFZZ	3110010668468	11083	7S6147	.BEARING	1
55	XBFZZ		11083	4S9024	WEDGE	2
56	PFFZZ	2590001955824	11083	5H6624	BRACKET,VEHICULAR C	2
57	XBFZZ		11083	4S8968	LEVER ASSEMBLY	2
58	PFFZZ	3120002390939	11083	7S6140	.BEARING,SLEEVE 1 INCH THICK	2
59	PFFZZ	3110010668468	11083	7S6147	.BEARING 1.75 INCH THICK	1
60	XBFZZ		11083	1P4523	SOCKET	2
61	XBFZZ		11083	9H8876	SCREW,YOKE,TRACTOR	2
62	XBFZZ		11083	9H7631	LINK	2

END OF FIGURE

2
3 AND 4

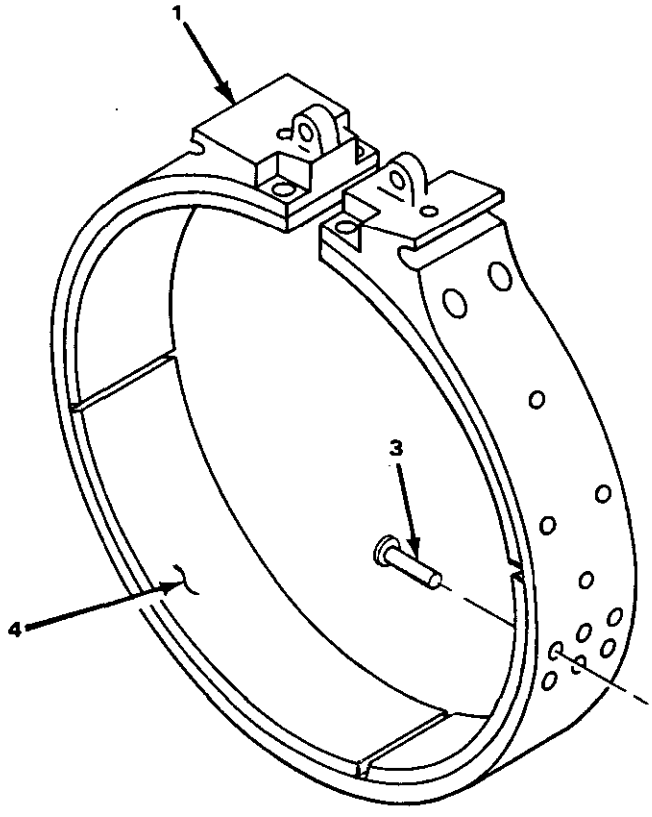

FIGURE 148. BRAKE BAND AND LINING.

(1) ITEM NO	(2) SMR CODE	(3) NSN	(4) CAGEC	(5) PART NUMBER	(6) DESCRIPTION AND USABLE ON CODES(UOC)	(7) QTY
					GROUP 1403 STEERING BRAKES.	
					FIG. 148 BRAKE BAND AND LINING.	
1	PFOFF	2530010689752	11083	7S7365	BRAKE BAND AND LINI.....	2
2	PFFZZ	2530002309963	11083	7S9676	BRAKE LINING KIT MOLDED.....	2
2	PFFZZ	2530012952499	11083	2P9884	BRAKE BAND AND LINI WOVEN.....	2
3	PFFZZ	5320001640917	11083	7B5060	.RIVET,LINNING.....	96
4	PFFZZ	2530010689753	11083	7S9674	.LINING,FRICTION.....	12

END OF FIGURE

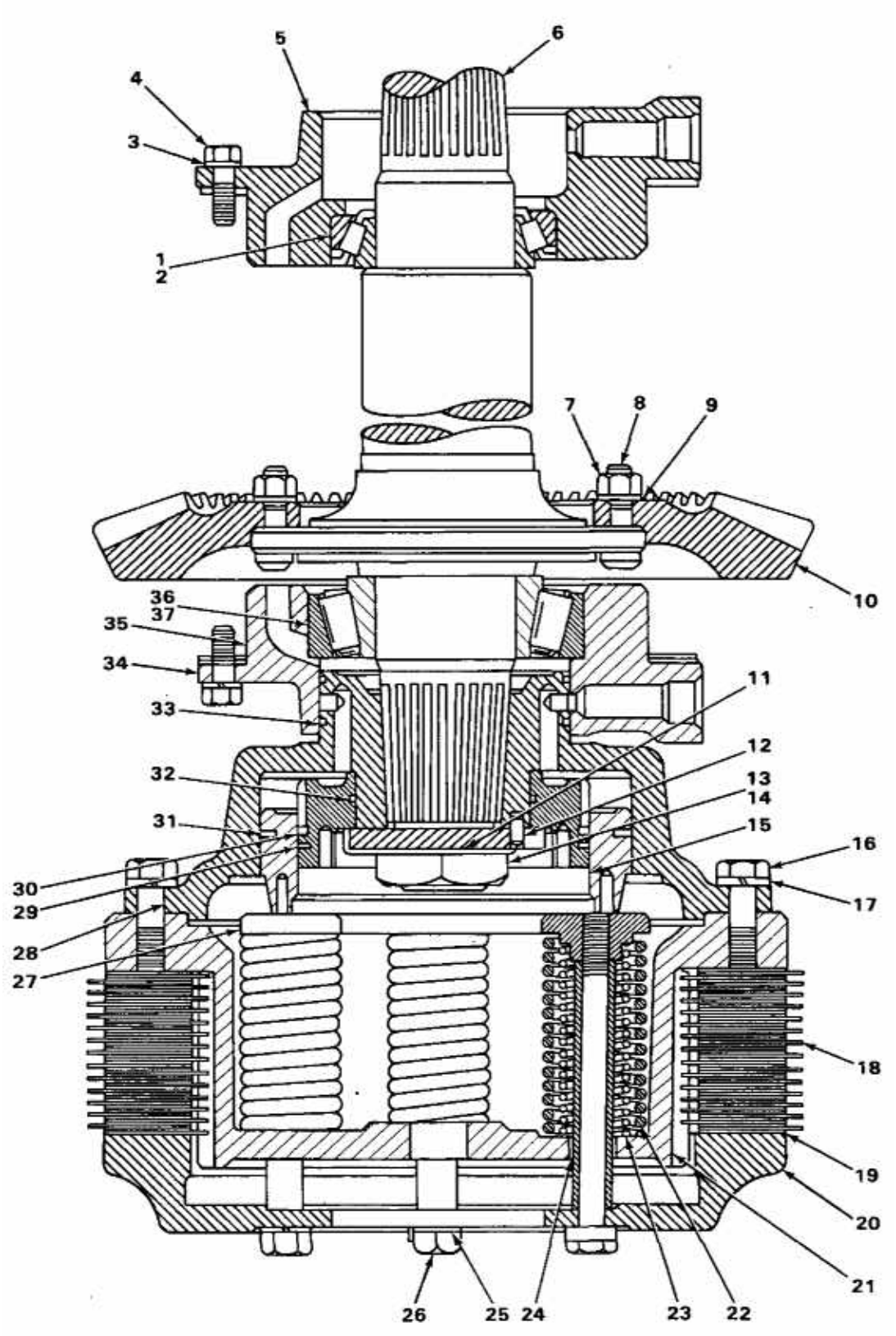

FIGURE 149. STEERING CLUTCH

(1) ITEM NO	(2) SMR CODE	(3) NSN	(4) CAGEC	(5) PART NUMBER	(6) DESCRIPTION AND USABLE ON CODES(UOC)	(7) QTY
					GROUP 1403 STEERING BRAKES.	
					FIG. 149 STEERING CLUTCH.	
1	PFHZZ	3110001000321	11083	6F2956	CUP,TAPERED ROLLER	1
2	PFHZZ	3010010690776	11083	6K8329	CONE	1
3	PFHZZ	5310005845272	96906	MS35338-48	WASHER,LOCK	16
4	PFHZZ	5306011279361	11083	0S1585	BOLT,MACHINE	16
5	XBHZZ		11083	9S1026	CAGE	1
6	XBHZZ		11083	9H0641	SHAFT	1
7	PFHZZ	5310003474441	11083	6B6683	NUT,PLAIN,HEXAGON	10
8	PFHZZ	5306004239054	11083	3B4990	BOLT	10
9	PFHZZ	5340003638827	11083	7F8351	LOCKING PLATE,NUT A	5
10	XDHZZ		11083	9H1918	GEAR,BEVEL	1
11	PFHZZ	5310010918410	11083	8H3928	WASHER,RET	2
12	PFHZZ	5315005849792	10001	1592919	PIN,STRAIGHT,HEADLE	2
13	PFHZZ	5310010671396	11083	5M5016	NUT	2
14	PFHZZ	5310012549008	11083	8H5488	NUT,SELF-LOCKING,HE	2
15	XBHZZ		11083	2P1604	PISTON	2
16	PFHZZ	5306009877112	11083	9H6864	BOLT,FLANGE,GEAR	24
17	PFHZZ	5310000455001	96906	MS35340-50	WASHER,LOCK	24
18	PFHZZ	2520010181582	11083	1P6996	DISK,CLUTCH	32
19	PFHZZ	2520006404345	11083	6T8886	DISK,CLUTCH	30
20	PFHZZ	2510010690798	11083	3P2279	PLATE	2
21	PFHZZ	2530010686106	11083	2P9037	DRUM	2
22	PFHZZ	5360008450943	11083	1M4593	SPRING,HELICAL,COMP	16
23	PFHZZ	5360007394845	11083	4H6917	SPRING,HELICAL,COMP	16
24	XBHZZ		11083	8H1085	SLEEVE	6
25	PFHZZ	2530009489748	11083	9M6775	LOCK PLATE	8
26	PFHZZ	5305010629897	11083	1D4599	BOLT	16
27	PFHZZ	2530009490817	11083	1M9444	RETAINER	2
28	PFHZZ	3040010686107	11083	2P9039	HUB	2
29	PFHZZ	2520007569796	11083	9M201	RING,STEEL CLUTCH	2
30	XBHZZ		11083	2P1605	PILOT	2
31	PFHZZ	2530007568498	11083	9M200	RING,BRAKE DISK	2
32	PFHZZ	5331002909386	88044	AN123902	O-RING	2
33	PFHZZ	2530007568501	11083	4M2571	RING,STEERING BRAKE	4
34	XDHZZ		11083	4H6918	SHIM	2
35	PFHZZ	3120002309962	11083	2S3913	CAGE,BEARING,BRAKE	1
36	PFHZZ	3110001000338	11083	1B3934	CUP,TAPERED ROLLER	1
37	PFHZZ	3110001000686	11083	8H985	CONE AND ROLLERS,TA	1

END OF FIGURE

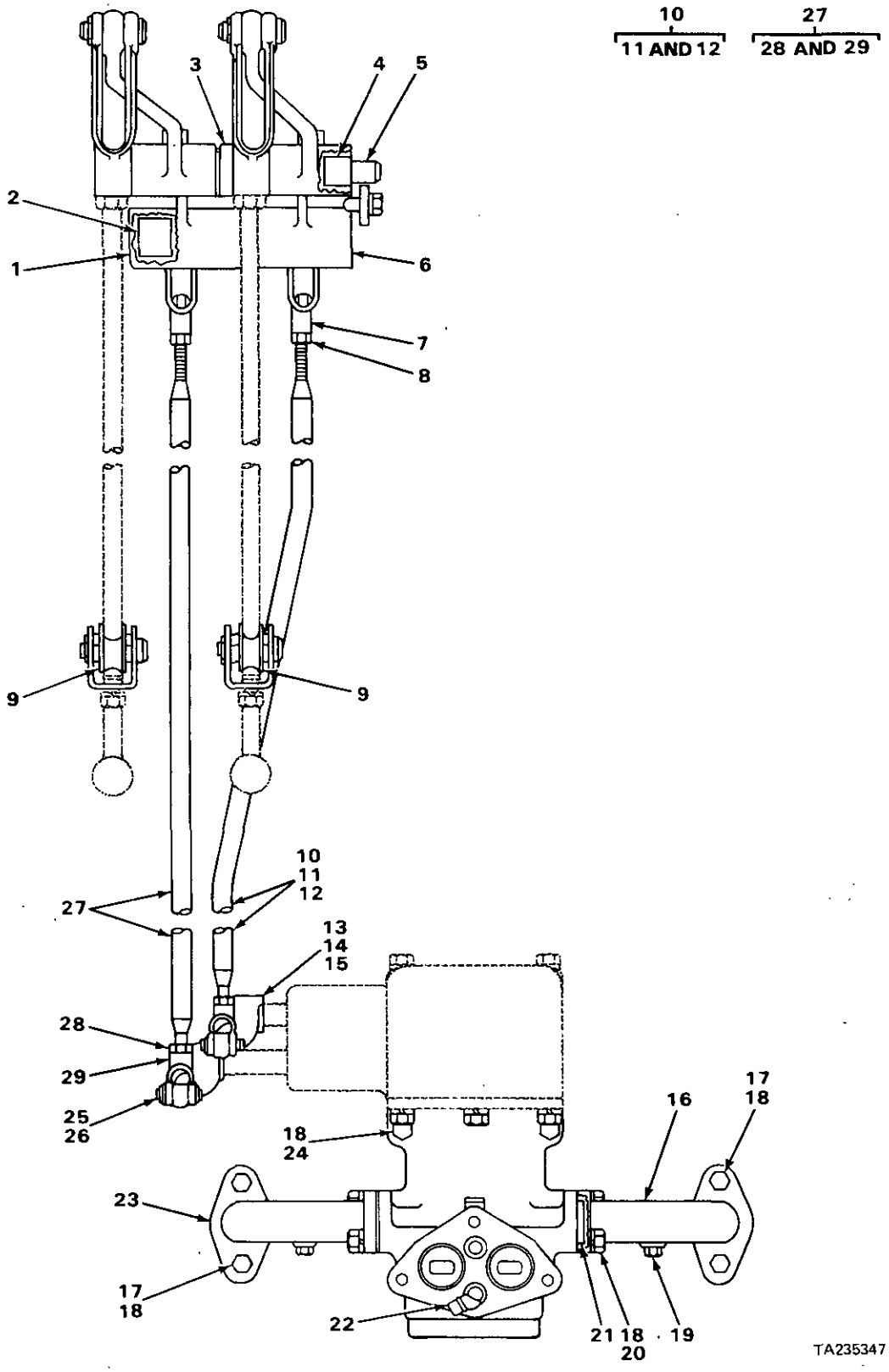

FIGURE 150. STEERING CLUTCH CONTROL LINKAGE (TOP VIEW).

(1) ITEM NO	(2) SMR CODE	(3) NSN	(4) CAGEC	(5) PART NUMBER	(6) DESCRIPTION AND USABLE ON CODES(UOC)	(7) QTY
					GROUP 1403 STEERING BRAKES.	
					FIG. 150 STEERING CLUTCH CONTROL LINKAGE (TOP VIEW).	
1	PFFZZ	3040012541280	11083	3P3528	BELL CRANK	1
2	PFFZZ	3110010669172	11083	6K8088	BEARING	4
3	PFFZZ	5365009486480	11083	9H3273	SPACER,SLEEVE	1
4	PFFZZ	3110009306289	60380	JTT1211	BEARING,ROLLER,NEED	4
5	PFFZZ	2530010690799	11083	3P3952	SHAFT	1
6	PFHZZ	3040012535578	11083	3P3527	BELL CRANK	1
7	PFFZZ	5340009850823	96906	MS35812-4	CLEVIS,ROD END	2
8	PFFZZ	5310009752075	96906	MS35691-21	NUT,PLAIN,HEXAGON	2
9	PFFZZ	2530010690791	11083	1P2878	ROLLER	4
10	XBFZZ		11083	3P3529	ROD ASSEMBLY	1
11	PFFZZ	5340010533843	11083	1M1341	.CLEVIS,ROD END	1
12	PFFZZ	5310009752075	96906	MS35691-21	.NUT,PLAIN,HEXAGON	1
13	PFFZZ	3040012541173	11083	3D8525	LEVER,REMOTE CONTRO	2
14	PFFZZ	5315006165522	11083	1B8708	KEY,WOODRUFF	2
15	PFFZZ	5305000680511	80204	B1821BH038C125N	SCREW,CAP,HEXAGON H	2
16	PFFZZ	4730012540175	11083	7G7023	ELBOW,FLANGE	1
17	PFFZZ	5305010269518	11083	0S1571	SCREW,CAP,HEXAGON H	4
18	PFFZZ	5310006379541	96906	MS35338-46	WASHER,LOCK	10
19	PFFZZ	4730009247886	11083	5M6214	PLUG,PIPE	2
20	PFHZZ	5306004238194	11083	1A2029	BOLT,MACHINE	4
21	PFFZZ	5331009145821	11083	8M4445	O-RING	2
22	PFFZZ	5331009454395	11083	1S4	O-RING	1
23	PFFZZ	4730012540175	11083	7G7023	ELBOW,FLANGE	1
24	PFFZZ	5306002851368	11083	L1143	BOLT,MACHINE	2
25	PFHZZ	5315008395821	96906	MS24665-351	PIN,COTTER	2
26	PFFZZ	5315002726760	11083	1B676	PIN,STRAIGHT,HEADED	2
27	XBFZZ		11083	3P3531	ROD ASSEMBLY	1
28	PFFZZ	5310009752075	96906	MS35691-21	.NUT,PLAIN,HEXAGON	1
29	PFFZZ	5340010533843	11083	1M1341	.CLEVIS,ROD END	1

END OF FIGURE

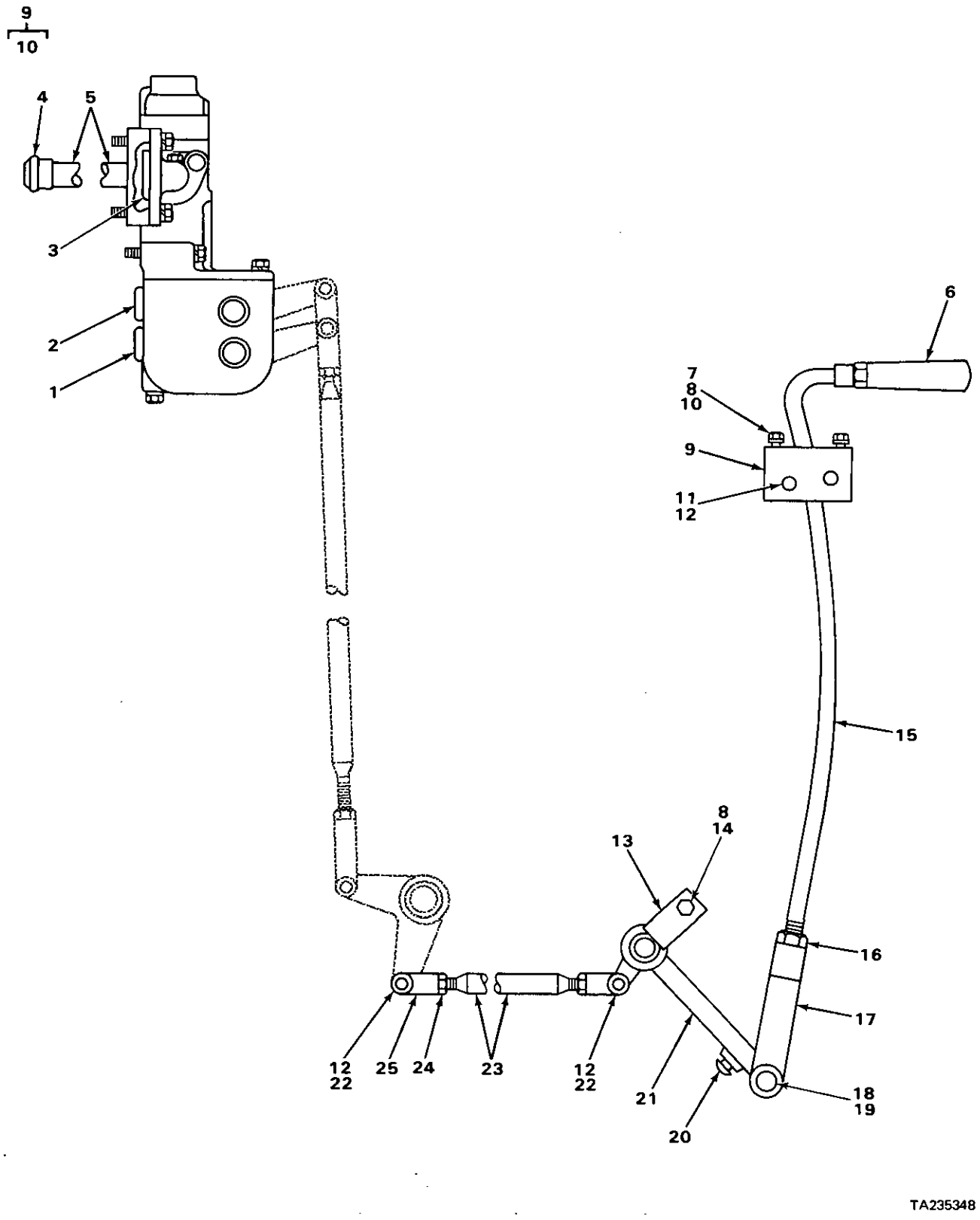

FIGURE 151. STEERING CLUTCH CONTROL LINKAGE (SIDE VIEW).

(1) ITEM NO	(2) SMR CODE	(3) NSN	(4) CAGEC	(5) PART NUMBER	(6) DESCRIPTION AND USABLE ON CODES(UOC)	(7) QTY
					GROUP 1403 STEERING BRAKES.	
					FIG. 151 STEERING CLUTCH CONTROL LINKAGE (SIDE VIEW).	
1	PFFZZ	5331009143320	09990	2-312S1032-70	O-RING	1
2	PFFZZ	5331009454395	11083	1S4	O-RING	1
3	PFFZZ	5331009254778	09990	2-219S1032-70	O-RING	2
4	PFFZZ	5331009145821	11083	8M4445	O-RING	2
5	PFFZZ	4710012532878	11083	2S3898	TUBE ASSEMBLY,METAL	2
6	PFOZZ	2520003627883	11083	0L0829	HANDLE,CLUTCH LEVER	1
7	PFFZZ	5305001918284	58312	3S5126-00	SCREW,CAP,HEXAGON H	4
8	PFFZZ	5310006379541	96906	MS35338-46	WASHER,LOCK	5
9	PFHZZ	5340012580150	11083	3P3525	BRACKET,ANGLE	2
10	PFFZZ	5310000050781	11083	9F2978	.NUT,PLAIN,WELDING	2
11	PFFZZ	5315011647583	11083	1A8827	PIN,STRAIGHT,HEADED	4
12	PFFZZ	5315008395821	96906	MS24665-351	PIN,COTTER	10
13	PFFZZ	2530012530440	11083	6P6253	LOCK,SHAFT	1
14	PFFZZ	5306002637301	11083	L1351	BOLT,MACHINE	1
15	PFFZZ	3040012528488	11083	3P2695	LEVER,MANUAL CONTRO	2
16	PFFZZ	5310000451079	24617	145036	NUT,SELF-LOCKING,HE	2
17	PFFZZ	5342010687178	11083	9S1314	ROD END	2
18	PFFZZ	5315010668470	11083	9S1315	PIN,STRAIGHT,HEADED	2
19	PFFZZ	5315008395822	96906	MS24665-353	PIN,COTTER	2
20	PFFZZ	5340004933997	11083	9M5884	BUMPER,NONMETALLIC	2
21	PFFZZ	3040012674365	11083	3P2399	BELL CRANK	2
22	PFFZZ	5315002726760	11083	1B676	PIN,STRAIGHT,HEADED	6
23	PFFZZ	5306012593716	11083	4D8991	ROD,THREADED END	2
24	PFFZZ	5310009752075	96906	MS35691-21	NUT,PLAIN,HEXAGON	2
25	PFHZZ	5340010533843	11083	1M1341	CLEVIS,ROD END	4

END OF FIGURE

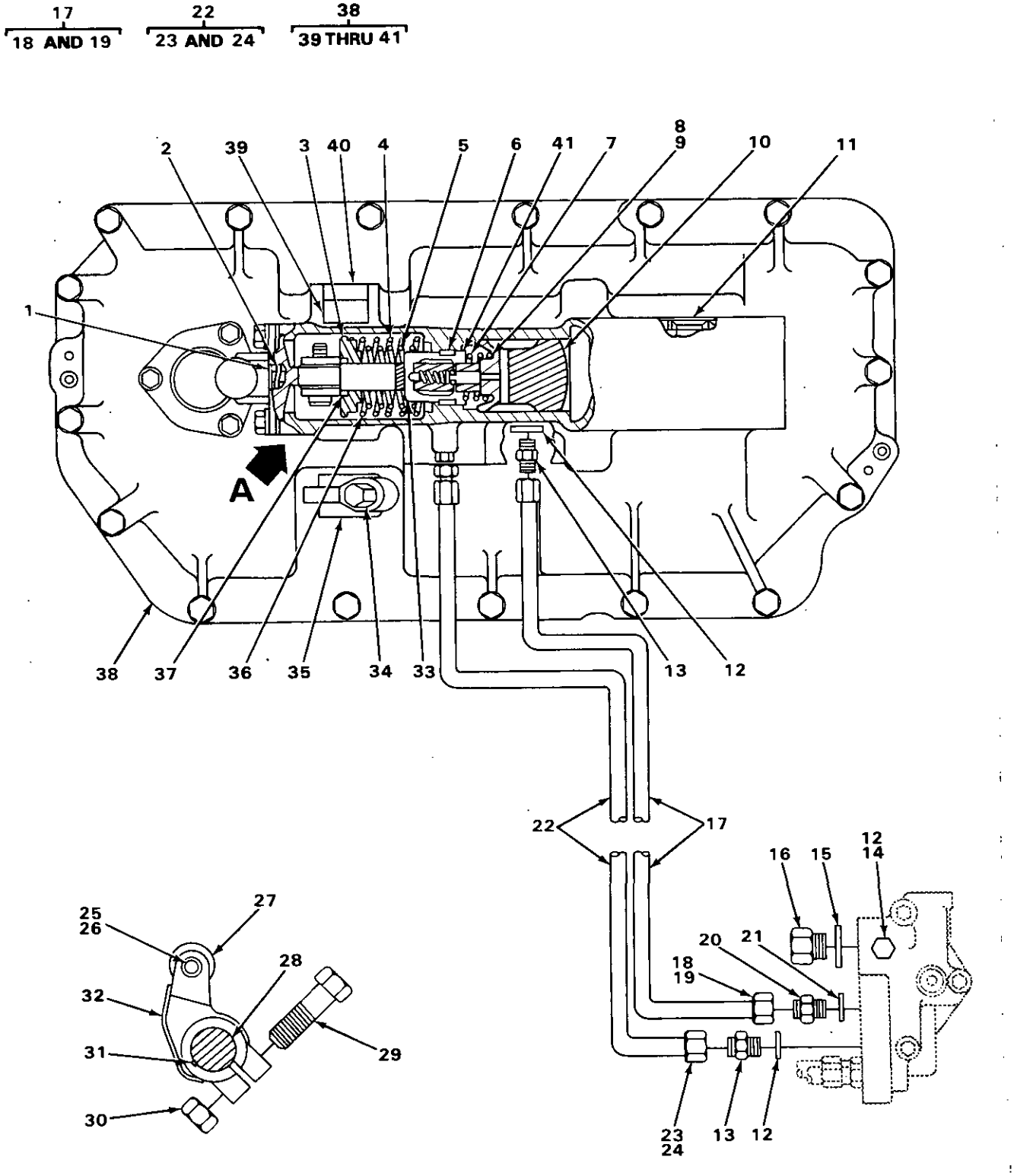

FIGURE 152. STEERING BRAKE HYDRAULIC MECHANISM.

(1) ITEM NO	(2) SMR CODE	(3) NSN	(4) CAGEC	(5) PART NUMBER	(6) DESCRIPTION AND USABLE ON CODES(UOC)	(7) QTY
					GROUP 1304 STEERING BRAKES.	
					FIG. 152 STEERING BRAKE HYDRAULIC MECHANISM.	
1	PFFZZ	2530010906863	11083	9H7549	STOP,BRAKE LEVER	2
2	PFFZZ	5360003675891	11083	5B2547	SPRING,HELICAL,COMP	2
3	PFFZZ	5340011622864	11083	2S8416	RETAINER,HELICAL CO	2
4	PFFZZ	5360010691390	11083	9H7534	SPRING	2
5	PFFZZ	5360001373464	11083	9H7553	SPRING,HELICAL,COMP INNER	2
6	PFFZZ	5360012542386	11083	1B9061	SPRING,HELICAL,COMP	2
7	PFFZZ	5360010690852	11083	7J2025	SPRING	2
8	PFFZZ	5325011652606	78553	NAN50	RING,RETAINING	2
8	PFFZZ	5325010796760	11083	2S8418	RING,RETAINING	2
9	PFFZZ	4820011595909	11083	2S8571	SLIDE,DIRECTIONAL C	2
10	XBFZZ		11083	8S1047	PISTON	2
11	PFFZZ	5330001547528	11083	5H1190	SEAL,PLAIN ENCASED	2
12	PAFZZ	5331008013354	25184	906-737-70	O-RING	2
13	PFFZZ	4730004919576	96906	MS51525A6	ADAPTER,STRAIGHT,TU	3
14	PFHZZ	5365004114584	11083	9S4191	PLUG,MACHINE THREAD	1
15	PAFZZ	5331009977230	96906	MS9068-214	O-RING	1
16	PFFZZ	5365012542380	11083	8S6928	PLUG,MACHINE THREAD	1
17	PFFZZ	4710012532879	11083	3P3331	TUBE ASSEMBLY,METAL	1
18	PFFZZ	4730002033831	88044	AN818-6	.NUT,TUBE COUPLING	2
19	PFFZZ	4730008168558	79470	C5165X6	.SLEEVE,FLARED,TUBE	2
20	PFFZZ	4730000807040	96906	MS51525A6-8	ADAPTER,STRAIGHT,TU	1
21	PFFZZ	5331009486482	11083	3K360	O-RING	1
22	PFFZZ	4710012532880	11083	3P3332	TUBE ASSEMBLY,METAL	1
23	PFFZZ	4730002033831	88044	AN818-6	.NUT,TUBE COUPLING	2
24	PFHZZ	4730008168558	79470	C5165X6	.SLEEVE,FLARED,TUBE	2
25	XDFZZ		11083	3H1977	PIN,TRACTOR	2
26	PFFZZ	5315008395822	96906	MS24665-353	PIN,COTTER	2
27	PFFZZ	3120001765546	11083	6B7687	ROLLER,LINEAR-ROTAR	2
28	XBFZZ		11083	3P7157	SHAFT	1
29	PFFZZ	5306004550460	11083	8S9092	BOLT,MACHINE	2
30	PFFZZ	5310007638920	96906	MS51967-20	NUT,PLAIN,HEXAGON	2
31	PFFZZ	5315006165499	96906	MS35756-22	KEY,WOODRUFF	4
32	XBFZZ		11083	9H7657	LEVER	2
33	PFFZZ	2520002374603	11083	1S2121	PLUNGER,RETARDER CO	2
34	PFFZZ	5305007247221	80204	B1821BH063C175N	SCREW,CAP,HEXAGON H	1
35	XBFZZ		11083	3P7551	LEVER	1
36	PFFZZ	2530011681038	11083	5S6880	PLUNGER	2
37	PFFZZ	5325008487439	11083	4H8158	RING,RETAINING	2
38	XBFZZ		11083	3P3070	HOUSING ASSEMBLY	1
39	PFFZZ	3110002274431	21335	B2012-0H	.BEARING,ROLLER,NEED	2
40	PFFZZ	5340011489609	59556	K-500-EN-0156	.PLUG	1
41	PFFZZ	3120011604604	11083	2S8359	.BUSHING,SLEEVE	1

END OF FIGURE

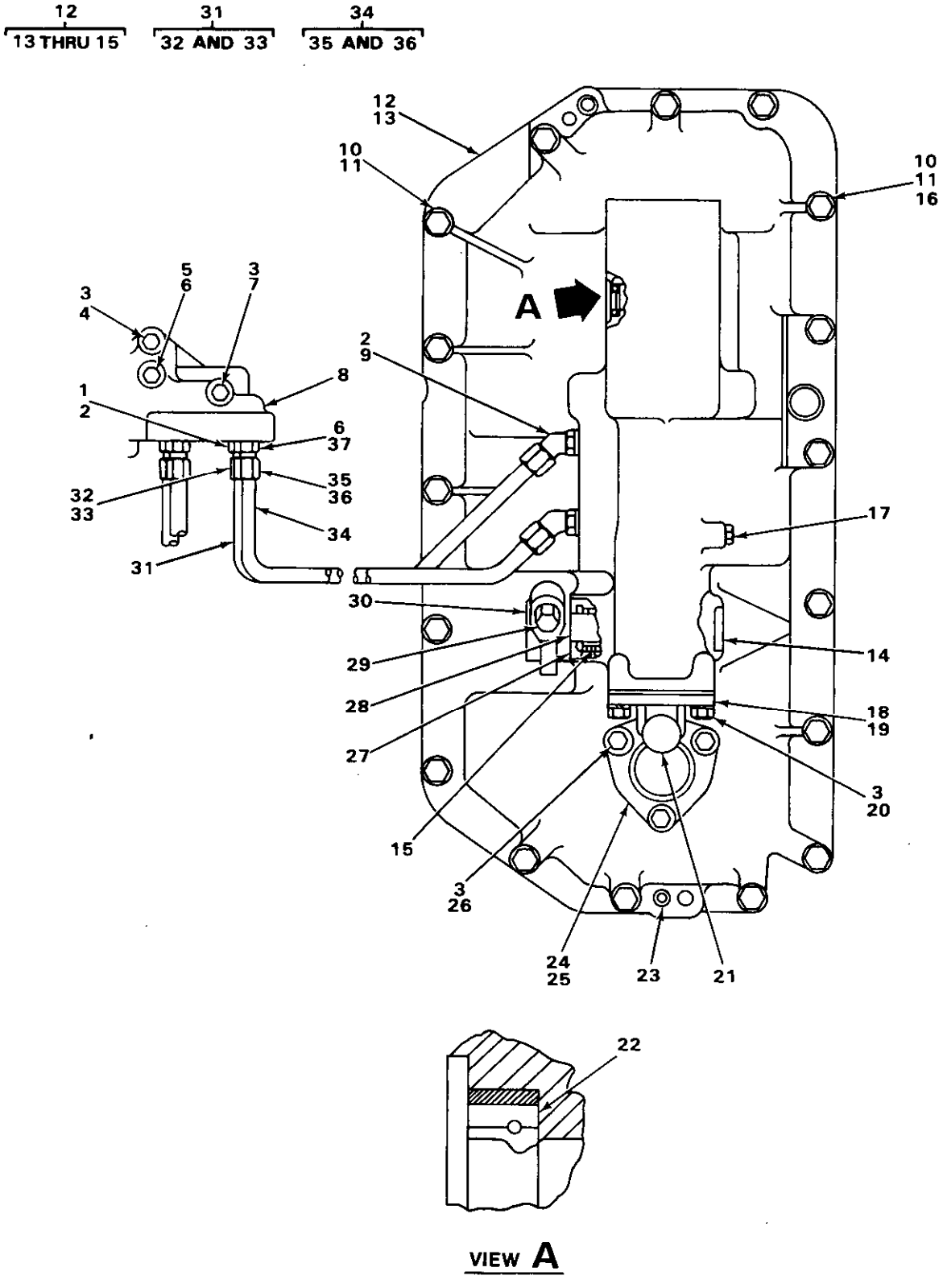

FIGURE 153. STEERING BRAKE HYDRAULIC MECHANISM LINES AND FITTINGS.

(1) ITEM NO	(2) SMR CODE	(3) NSN	(4) CAGEC	(5) PART NUMBER	(6) DESCRIPTION AND USABLE ON CODES(UOC)	(7) QTY
					GROUP 1411 HOSES, LINES, FITTINGS.	
					FIG. 153 STEERING BRAKE HYDRAULIC MECHANISM LINES AND FITTINGS.	
1	PFFZZ	4730004919576	96906	MS51525A6	ADAPTER,STRAIGHT,TU.....	1
2	PAFZZ	5331008013354	25184	906-737-70	O-RING.....	5
3	PFFZZ	5310006379541	96906	MS35338-46	WASHER,LOCK.....	17
4	PFFZZ	5305008798351	96906	MS35307-371	SCREW,CAP,HEXAGON H.....	1
5	PFFZZ	5365010318183	30780	8HP5N-S	PLUG,MACHINE THREAD.....	2
6	PFFZZ	5331009486482	11083	3K360	O-RING.....	3
7	PFFZZ	5305010953292	11083	7F3425	SCREW,CAP,HEXAGON H.....	2
8	XAFZZ		11083	3P2756	HOUSING.....	1
9	PFHZZ	4730010512312	78640	307942	ELBOW,TUBE TO BOSS.....	2
10	PFFZZ	5306004263080	11083	1A5822	BOLT,MACHINE.....	34
11	PFFZZ	5310005845272	96906	MS35338-48	WASHER,LOCK.....	34
12	XBFZZ		11083	3P3069	HOUSING.....	1
13	PFFZZ	3120011604604	11083	2S8359	.BUSHING,SLEEVE.....	1
14	PFFZZ	5340011489609	59556	K-500-EN-0.156	.PLUG.....	1
15	PFFZZ	3110002274431	21335	B2012-0H	.BEARING,ROLLER,NEED.....	2
16	PFFZZ	5365011708781	11083	1H7855	SPACER,SLEEVE.....	6
17	PFFZZ	4730009247886	11083	5M6214	PLUG,PIPE.....	2
18	XBFZZ		11083	2S9314	COVER.....	2
19	PFFZZ	5330010682908	11083	9H8770	GASKET.....	2
20	PFFZZ	5306004238194	11083	1A2029	BOLT,MACHINE.....	8
21	PFFZZ	2520004559263	11083	8S5820	BREATHER.....	2
22	PFFZZ	5330001547528	11083	5H1190	SEAL,PLAIN ENCASED.....	1
23	PFFZZ	5315008706121	11083	1A3284	PIN TRANSMISSION.....	4
24	PFFZZ	5340012701303	11083	9H8889	COVER,ACCESS.....	2
25	PFHZZ	5330009138117	11083	9H8890	GASKET.....	2
26	PFFZZ	5306002637301	11083	L1351	BOLT,MACHINE.....	6
27	PFFZZ	5330010486001	11083	2P6286	SEAL ASSEMBLY.....	2
28	PFFZZ	2530010906851	11083	9H795	SHAFT.....	1
29	PFFZZ	5305007247221	80204	B1821BH063C175N	SCREW,CAP,HEXAGON H.....	1
30	PFFZZ	2530010902283	11083	4M4862	LEVER.....	1
31	PFFZZ	4710012537054	11083	3P3330	TUBE ASSEMBLY,METAL.....	1
32	PFFZZ	4730002033831	88044	AN818-6	.NUT,TUBE COUPLING.....	2
33	PFFZZ	4730008168558	79470	C5165X6	.SLEEVE,FLARED,TUBE.....	2
34	PFFZZ	4710012537055	11083	3P3329	TUBE ASSEMBLY,METAL.....	1
35	PFFZZ	4730002033831	88044	AN818-6	.NUT,TUBE COUPLING.....	2
36	PFFZZ	4730008168558	79470	C5165X6	.SLEEVE,FLARED,TUBE.....	2
37	PFFZZ	4730000807040	96906	MS51525A6-8	ADAPTER,STRAIGHT,TU.....	1

END OF FIGURE

1
2 THRU 45

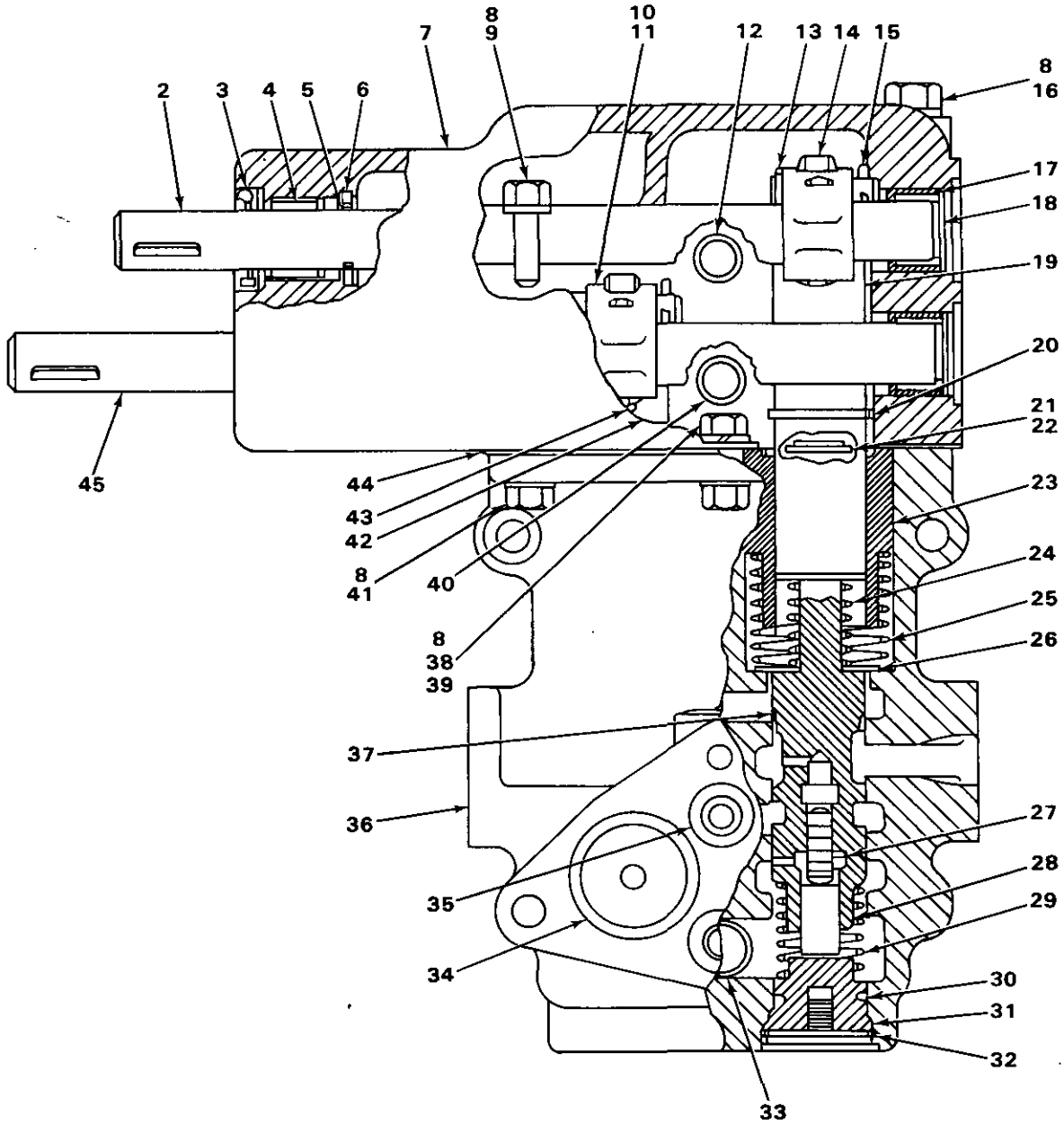

FIGURE 154. STEERING CLUTCH CONTROL VALVE.

(1) ITEM NO	(2) SMR CODE	(3) NSN	(4) CAGEC	(5) PART NUMBER	(6) DESCRIPTION AND USABLE ON CODES(UOC)	(7) QTY
					GROUP 1414 STEERING SYSTEM VALVES.	
					FIG. 154 STEERING CLUTCH CONTROL VALVE.	
1	PFFFF	4820010180108	11083	3P3564	VALVE,REGULATING,FL.....	1
2	XBFZZ		11083	2S8395	.SHAFT,STRAIGHT.....	1
3	PFFZZ	5330009192249	11083	9H223	.SEAL,PLAIN ENCASED.....	2
4	PFFZZ	3110001836730	96906	MS17131-23	.BEARING,ROLLER,NEED.....	2
5	PFFZZ	5310002096512	19207	8392184	.WASHER,FLAT.....	2
6	PFFZZ	2530009494505	11083	3S7005	.RING.....	2
7	XAFZZ		11083	8S1042	.HOUSING.....	1
8	PFFZZ	5310006379541	96906	MS35338-46	.WASHER,LOCK.....	6
9	PFFZZ	5306004262974	11083	T65	.BOLT,MACHINE.....	1
10	XBFZZ		11083	2S8396	.LEVER,REMOTE CONTRO.....	2
11	PFFZZ	5315006165524	64294	29620-3	.KEY,WOODRUFF.....	2
12	PFFZZ	4710004057327	11083	2S8413	.TUBE,METALLIC.....	1
13	PFFZZ	5315002726760	11083	18676	.PIN,STRAIGHT,HEADED.....	2
14	PFFZZ	3120009486453	11083	2S8411	.ROLLER,LINEAR-ROTAR.....	2
15	PFFZZ	5315008395821	96906	MS24665-351	.PIN,COTTER.....	2
16	PFFZZ	5306006374927	11083	1A5183	.BOLT,MACHINE.....	1
17	PFFZZ	3110001836784	11083	3J7584	.BEARING,ROLLER,NEED.....	2
18	PFFZZ	5365012541309	11083	5S6876	.SPACER.....	2
19	PFFZZ	2530010690809	11083	8S1015	.PLUNGER.....	1
20	PFFZZ	5325002825047	11083	1H4148	.RING,RETAINING.....	2
21	PFFZZ	5325002562846	96906	MS16632-1050	.RING,RETAINING.....	2
22	PFFZZ	5310002213150	11083	0L1365	.WASHER,FLAT.....	2
23	XBFZZ		11083	8S1043	.BUSHING.....	2
24	PFFZZ	5360011702229	11083	5J4698	.SPRING.....	2
25	PFFZZ	5360010690812	11083	8S5753	.SPRING.....	2
26	PFFZZ	5310010850881	11083	2H1730	.WASHER.....	2
27	PFFZZ	4820011600852	11083	3P3716	.SLIDE,DIRECTIONAL C.....	2
28	XBFZZ		11083	3P3717	.PISTON.....	2
29	PFFZZ	5360009502045	11083	2S8398	.SPRING,HELICAL,COMP.....	2
30	PFFZZ	5331009145821	11083	8M4445	.O-RING.....	2
31	PFFZZ	5365012542381	11083	2S8399	.PLUG.....	2
32	PFFZZ	5342008947258	11083	8H1037	.RING,RETAINING,SLEE.....	2
33	PFFZZ	4710004057326	11083	2S8412	.TUBE,METALLIC.....	1
34	PFFZZ	5331009254778	09990	2-219S1032-70	.O-RING.....	2
35	PFFZZ	5330010262850	11083	8M8282	.SEAL.....	2
36	XAFZZ		11083	8S1039	.HOUSING.....	1
37	PFFZZ	4820011036644	11083	3P3774	.VALVE,FLOW CONTROL.....	2
38	PFFZZ	5305002528919	11083	0S0509	.SCREW,CAP,HEXAGON H.....	1
39	PFFZZ	5310004135060	11083	3K925	.WASHER,FLAT.....	1
40	PFFZZ	4710011709234	11083	8S5716	.TUBE METALLIC,PRECU.....	1
41	PFFZZ	5306002604508	11083	S1594	.BOLT,MACHINE.....	3
42	PFFZZ	2530010690810	11083	8S1016	.PLUNGER.....	1
43	PFFZZ	5305000680511	80204	B1821BH038C125N	.SCREW,CAP,HEXAGON H.....	2
44	PFFZZ	5330009121586	11083	2S8414	.GASKET.....	1
45	PFFZZ	3040009507343	11083	2S8380	.SHAFT,STRAIGHT.....	1

END OF FIGURE

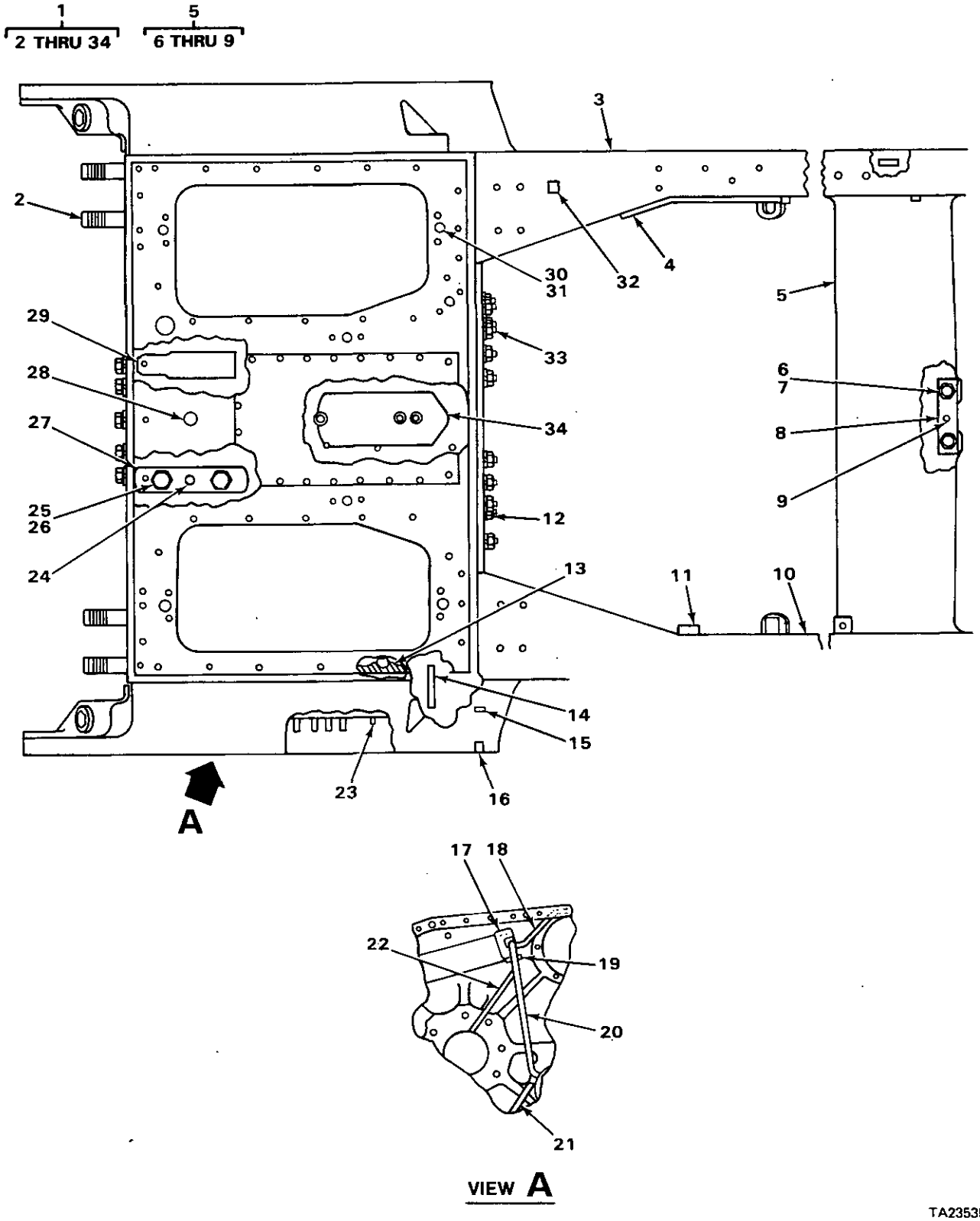

FIGURE 155. FRAME AND CASE.

(1) ITEM NO	(2) SMR CODE	(3) NSN	(4) CAGEC	(5) PART NUMBER	(6) DESCRIPTION AND USABLE ON CODES(UOC)	(7) QTY
					GROUP 15 FRAME. TOWING ATTACHMENTS, DRAWBARS, AND ARTICULATION SYSTEMS.	
					GROUP 1501 FRAME ASSEMBLY.	
					FIG. 155 FRAME AND CASE.	
1	XBFFF		11083	3P1824	CASE ASSEMBLY.....	1
2	PFFZZ	5307012542506	11083	9S7479	.STUD,PLAIN.....	8
3	XBFFF		11083	8P6373	.FRAME ASSEMBLY LH.....	1
4	XBFZZ		11083	3P2445	.REINFORCEMENT.....	1
4	XBFZZ		11083	3P2444	.REINFORCEMENT.....	1
5	XBFFF		11083	3P1946	.SUPPORT ASSEMBLY.....	1
6	PFFZZ	5306012544254	11083	8H5727	..BOLT,MACHINE.....	4
7	PFFZZ	5310010660503	11083	4J6580	..WASHER.....	4
8	XBFZZ		11083	8P3219	..CAP.....	2
9	PFFZZ	5315001930919	11083	9M4007	..PIN,STRAIGHT,HEADLE.....	2
10	XBFZZ		11083	8P6374	.FRAME ASSEMBLY RH.....	1
11	PFFZZ	3040013573576	11083	3R4850	.BRACKET,EYE,NONROTA.....	1
12	PFFZZ	5315008706121	11083	1A3284	.PIN TRANSMISSION.....	1
13	XBFZZ		11083	8H4002	.GUARD RH.....	1
13	XBFZZ		11083	8H4001	.GUARD LH.....	1
14	PFFZZ	4710012534567	11083	7S7620	.TUBE.....	2
15	PFFZZ	5340002765828	11083	T200	.PLUG,EXPANSION.....	14
16	XBFZZ		11083	2B7559	.CORK.....	4
17	PFFZZ	5340002325747	11083	L1022	.PLUG,EXPANSION.....	2
18	PFFZZ	4710012532755	11083	8H180	.TUBE.....	2
19	XBFZZ		11083	3D2338	.STRIP.....	2
20	PFFZZ	4710012532756	11083	3P6195	.TUBE RH.....	1
20	PFFZZ	4710012534570	11083	3P6196	.TUBE LH.....	1
21	PFFZZ	4710012534568	11083	8H175	.TUBE,BENT METALLIC.....	1
22	PFFZZ	4710012532753	11083	8H177	.TUBE,BENT,METALLIC RH.....	1
22	PFFZZ	4710012532754	11083	8H178	.TUBE,BENT,METALLIC LH.....	1
23	PFFZZ	5315012544264	11083	9F2049	.PIN,STRAIGHT,HEADLE.....	2
24	PFFZZ	5315012542377	11083	6F4161	.PIN,STRAIGHT,HEADLE.....	2
25	PFFZZ	5305012556489	11083	5M544	.SCREW,CAP,HEXAGON H.....	8
26	PFFZZ	5310010951537	11083	3S1349	.WASHER,FLAT.....	8
27	XBFZZ		11083	4S9126	.CAP.....	4
28	PFFZZ	4730002212140	96906	MS20913-6S	.PLUG,PIPE.....	1
29	XBFZZ		11083	1S6	.SUPPORT.....	2
30	PFFZZ	5315012656967	11083	8M1470	.PIN,STRAIGHT,HEADLE.....	4
31	PFFZZ	5325005593901	11083	4L6943	.RING,RETAINING.....	4
32	PFFZZ	5310011603978	11083	8S1783	.WASHER,FLAT.....	2
33	PFFZZ	5307012542507	11083	8H5347	.STUD,PLAIN.....	11
34	XBFZZ		11083	5M7743	.SUMP.....	1

END OF FIGURE

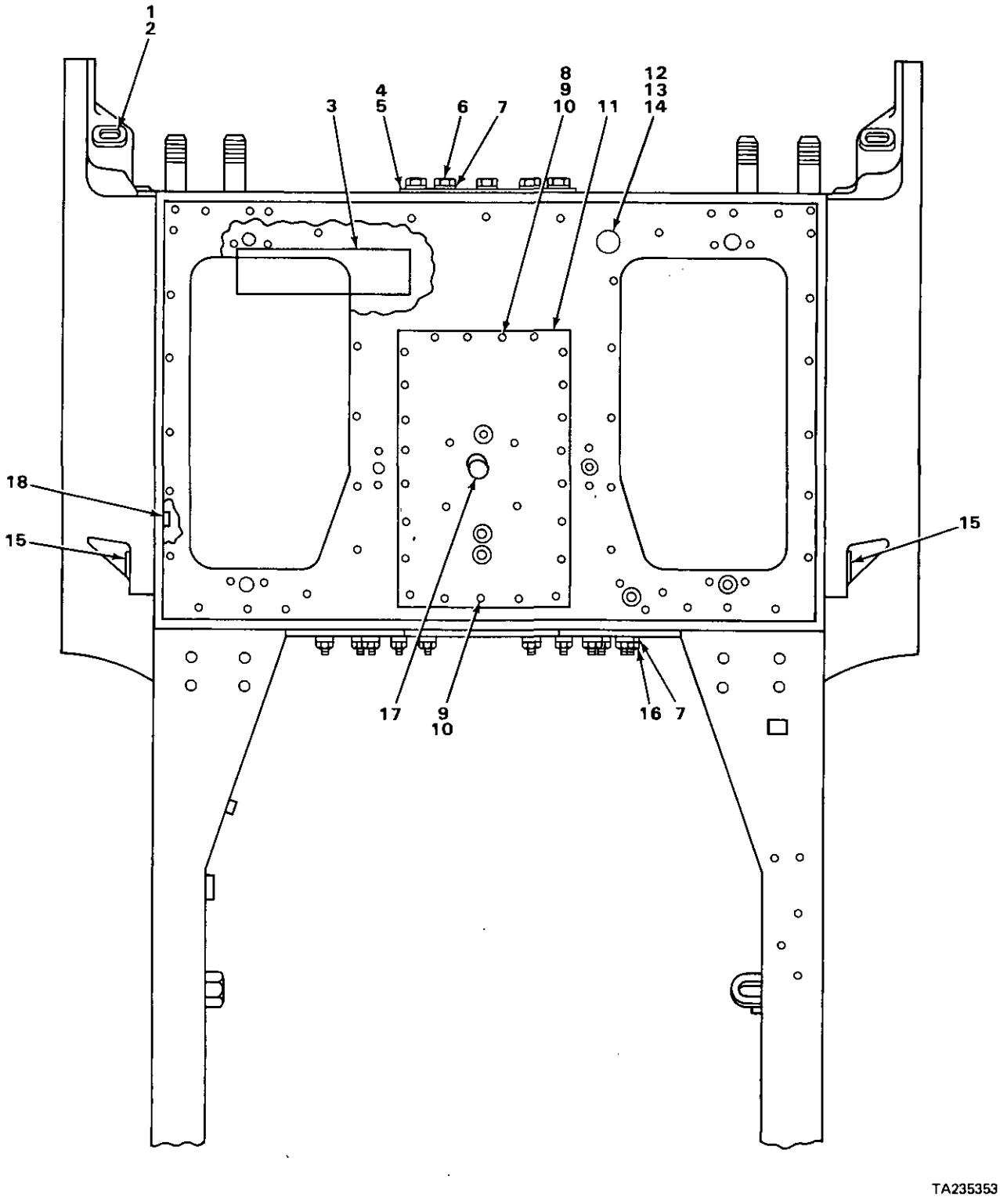

FIGURE 156. FRAME AND CASE ATTACHING HARDWARE.

(1) ITEM NO	(2) SMR CODE	(3) NSN	(4) CAGEC	(5) PART NUMBER	(6) DESCRIPTION AND USABLE ON CODES(UOC)	(7) QTY
					GROUP FRAME ASSEMBLY.	
					FIG. 156 FRAME AND CASE ATTACHING HARDWARE.	
1	PFFZZ	5365004238098	11083	L827	PLUG,MACHINE THREAD.....	2
2	PFFZZ	5330001904255	11083	L1124	GASKET.....	2
3	XBFZZ		11083	8H5422	SHAFT.....	2
4	PFFZZ	2520005693839	11083	2A1465	COVER,TRANSMISSION.....	1
5	PFFZZ	5330001497248	11083	2A1466	GASKET.....	1
6	PFFZZ	5305007247218	80204	B1821BH063C100N	SCREW,CAP,HEXAGON H.....	9
7	PFFZZ	5310000455001	96906	MS35340-50	WASHER,LOCK.....	20
8	PFFZZ	5365008165830	72582	5159347	SPACER,SLEEVE.....	19
9	PFFZZ	5305010269518	11083	0S1571	SCREW,CAP,HEXAGON H.....	23
10	PFFZZ	5310001174788	11083	5M2894	WASHER,FLAT.....	23
11	XBFZZ		11083	3P2950	PLATE.....	1
12	PFFZZ	2520004559263	11083	8S5820	BREATHER USE WITH SERIAL RANGE 77V5006 THRU 77V8290.....	1
13	PFFZZ	4730006399167	29510	105409	COUPLING,PIPE USE WITH SERIAL RANGE 77V5006 THRU 77V8290.....	1
14	PFFZZ	4730001881854	96906	MS51953-29B	NIPPLE,PIPE USE WITH SERIAL RANGE 77V5006 THRU 77V8290.....	1
15	PFFZZ	4730011711981	11083	7B9665	PLUG,PIPE.....	2
16	PFFZZ	5310007638905	96906	MS51968-20	NUT,PLAIN,HEXAGON.....	11
17	PFFZZ	4730010226066	11083	1B5170	PLUG,PIPE.....	1
18	PFFZZ	4730004078330	11083	5S4017	DISK,VALVE.....	2

END OF FIGURE

7
8 THRU 12

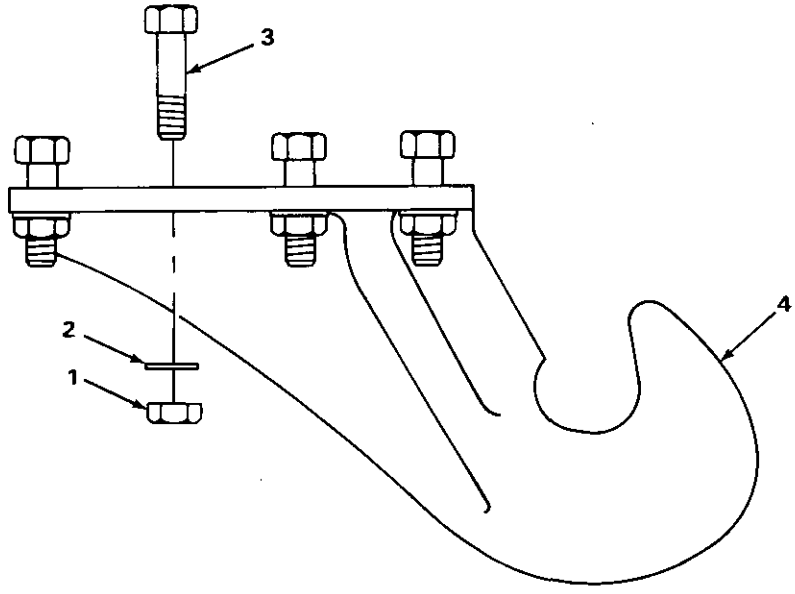

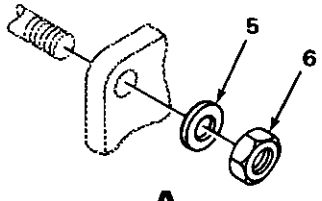

VIEW A

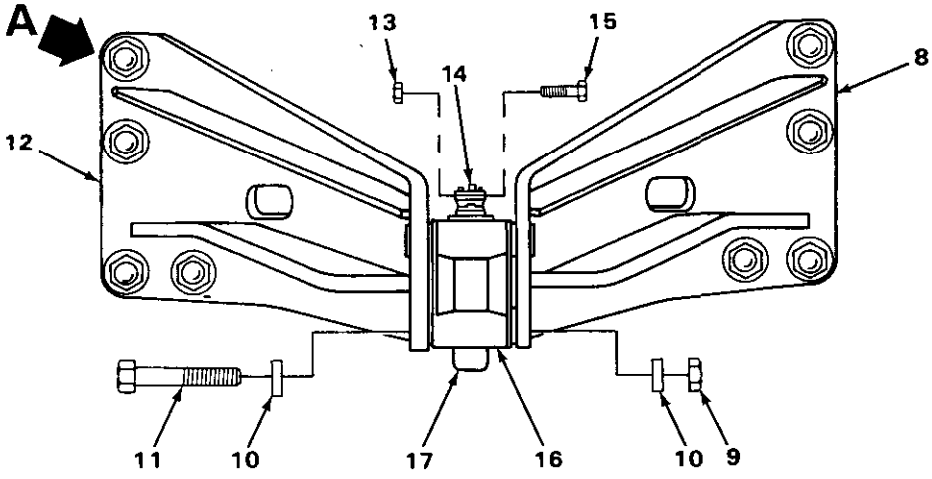

TA235354

FIGURE 157. FRONT PULL HOOK AND DRAWBAR.

(1) ITEM NO	(2) SMR CODE	(3) NSN	(4) CAGEC	(5) PART NUMBER	(6) DESCRIPTION AND USABLE ON CODES(UOC)	(7) QTY
					GROUP 1503 PINTLES AND TOWING ATTACHMENTS.	
					FIG. 157 FRONT PULL HOOK AND DRAWBAR.	
1	PFOZZ	5310000761504	11083	1B4207	NUT,PLAIN,HEXAGON.....	8
2	PFOZZ	5310004191363	11083	2S0115	WASHER,FLAT.....	8
3	PFOZZ	5306004262923	11083	S1575	BOLT,MACHINE.....	8
4	XBOZZ		11083	2H9476	HOOK.....	1
5	PFOZZ	5310012550110	11083	3S6162	WASHER,FLAT.....	8
6	PFOZZ	5310004043784	11083	8H3390	NUT,PLAIN,HEXAGON.....	8
7	XBOZZ		11083	3S7024	BRACKET ASSEMBLY.....	1
8	XBOZZ		11083	3S7025	.BRACKET RH.....	1
9	XDOZZ		11083	1B4210	.NUT,PLAIN,HEXAGON.....	4
10	PFOZZ	5310012550111	11083	3S7023	.WASHER,FLAT.....	8
11	PFOZZ	5305012556490	11083	3S7079	.SCREW,CAP,HEXAGON H.....	4
12	XBOZZ		11083	3S7026	.BRACKET LH.....	1
13	PFOZZ	5310009445896	16764	9418881	NUT,SELF-LOCKING,HE.....	1
14	PFOZZ	2540001014738	11083	5H2168	LATCH,DRAWBAR PIN.....	1
15	XDOZZ		11083	S1577	BOLT,MACHINE.....	1
16	PFOZZ	5342012553516	11083	2H2534	CLEVIS,SPECIAL.....	1
17	PFOZZ	2530010668430	11083	1H4106	PIN A.....	1

END OF FIGURE

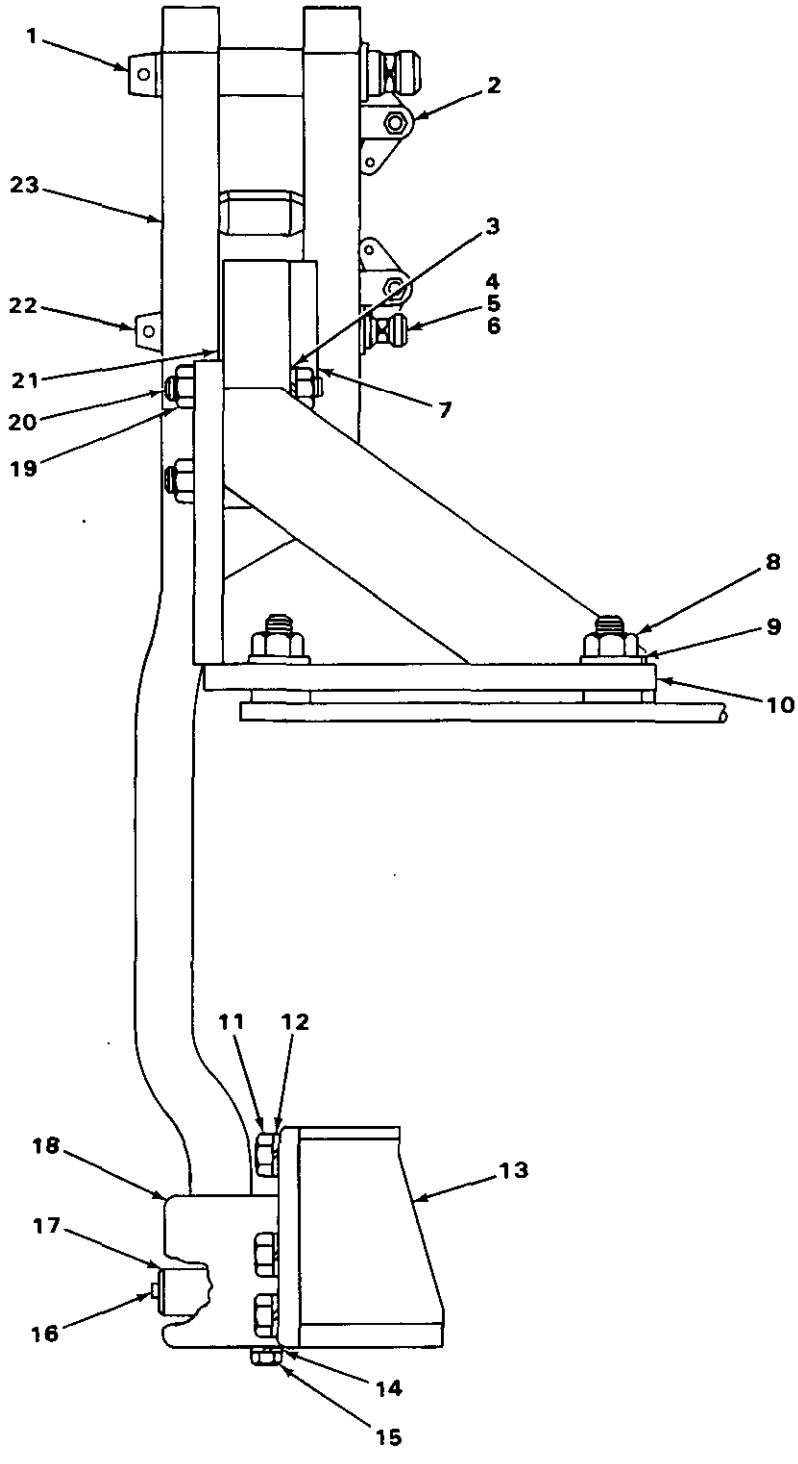

FIGURE 158. SWINGING DRAWBAR.

(1) ITEM NO	(2) SMR CODE	(3) NSN	(4) CAGEC	(5) PART NUMBER	(6) DESCRIPTION AND USABLE ON CODES(UOC)	(7) QTY
					GROUP 1503 PINTLES AND TOWING ATTACHMENTS.	
					FIG. 158 SWINGING DRAWBAR.	
1	PFOZZ	2530010668430	11083	1H4106	PIN A	1
2	XBOZZ		11083	5H8803	SUPPORT	4
3	PFOZZ	5310004043788	11083	3B4520	WASHER,LOCK	4
4	PFOZZ	2540001014738	11083	5H2168	LATCH,DRAWBAR PIN	2
5	XDOZZ		11083	S1577	BOLT,MACHINE	2
6	PFOZZ	5310009445896	16764	9418881	NUT,SELF-LOCKING,HE	2
7	PFOZZ	5340013427873	11083	5H3327	BAR,METAL	4
8	PFOZZ	5310004043784	11083	8H3390	NUT,PLAIN,HEXAGON	6
9	PFOZZ	5310012550110	11083	3S6162	WASHER,FLAT	6
10	XBOZZ		11083	8H4217	BRACE ASSEMBLY RIGHT HAND	1
10	XBOZZ		11083	8H4218	BRACE ASSEMBLY LEFT HAND	1
11	PFOZZ	5306011701338	11083	8S9093	BOLT,MACHINE	6
12	PFOZZ	5310005847889	96906	MS35338-53	WASHER,LOCK	6
13	XBOZZ		11083	7M3331	BRACKET RIGHT HAND	1
13	XBOZZ		11083	7M3332	BRACKET LEFT HAND	1
14	PFOZZ	5310000455001	96906	MS35340-50	WASHER,LOCK	2
15	PFOZZ	5305001498345	11083	3B9805	SETSCREW	2
16	PFOZZ	9390011855087	11083	2B7558	CORK	1
17	PFOZZ	5315012541310	11083	1M1495	PIN	1
18	XBOZZ		11083	8H4213	BRACKET	1
19	XDOZZ		11083	1B4210	NUT,PLAIN,HEXAGON	4
20	PFOZZ	5306012542463	11083	5H3328	BOLT,EXTERNALLY REL	4
21	XBOZZ		11083	5H3329	PLATE	1
22	PFOZZ	5315012542374	11083	5H8812	PIN ASSEMBLY	1
23	XBOZZ		11083	5M8732	DRAWBAR ASSEMBLY	1

END OF FIGURE

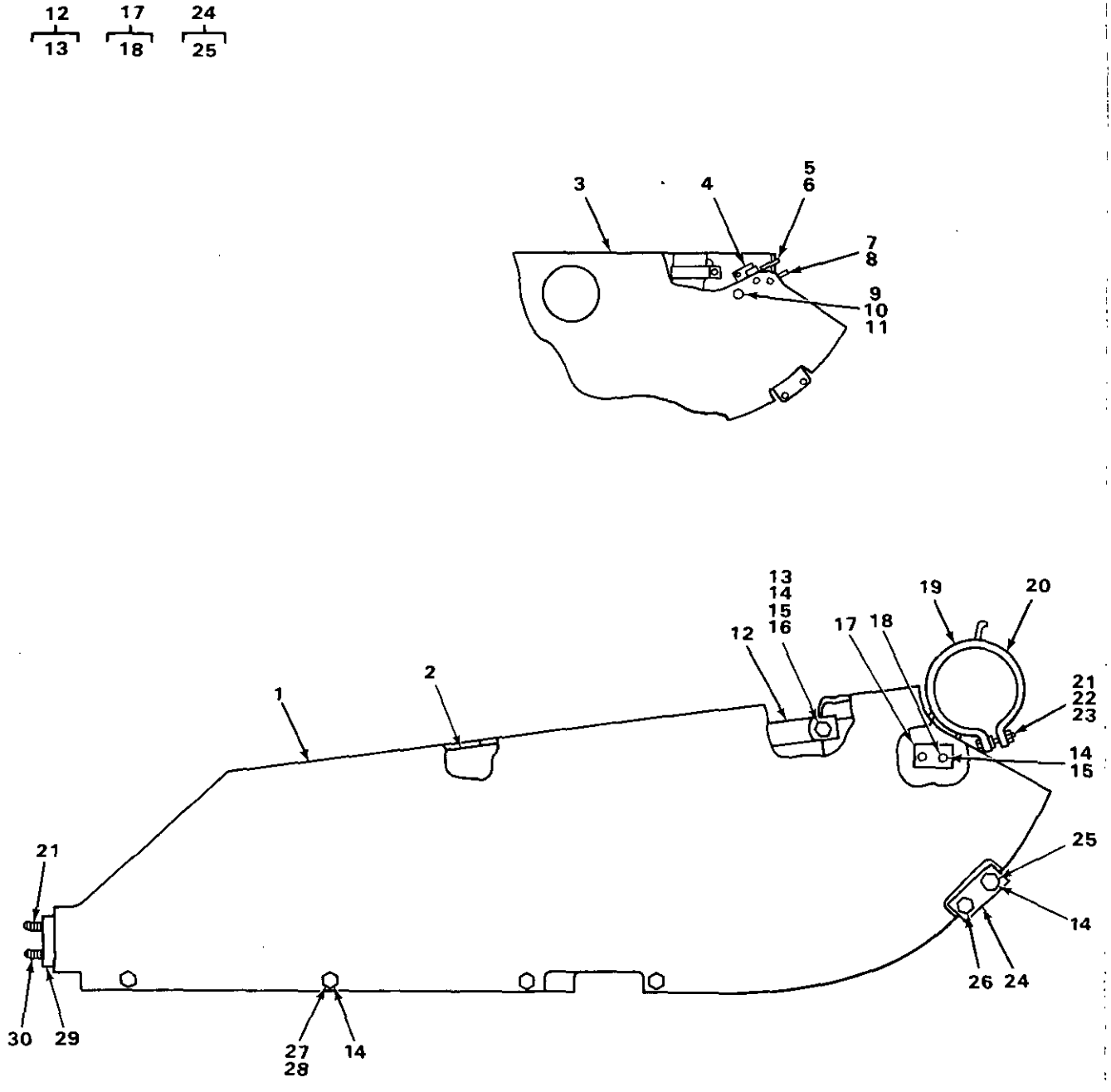

FIGURE 159. BRUSH GUARD.

(1) ITEM NO	(2) SMR CODE	(3) NSN	(4) CAGEC	(5) PART NUMBER	(6) DESCRIPTION AND USABLE ON CODES(UOC)	(7) QTY
					GROUP 18 BODY, CAB, HOOD AND HULL.	
					GROUP 1801 BODY, CAB, HOOD AND HULL ASSEMBLIES.	
					FIG. 159 BRUSH GUARD.	
1	XBOZZ		11083	3S2467	GUARD RH.....	1
2	XBOZZ		11083	5S476	GUARD ASSEMBLY LH.....	1
3	XBOZZ		11083	9P1549	GUARD RH,TYPE 2.....	1
4	XBOZZ		11083	6H7353	BRACKET USE WITH TYPE 2.....	4
5	XBOZZ		11083	7G2144	BRACKET RH,USE WITH TYPE 2.....	1
6	XBOZZ		11083	7G2145	BRACKET LH,USE WITH TYPE 2.....	1
7	PFOZZ	5305007247221	80204	B1821BH063C175N	SCREW,CAP,HEXAGON H USE WITH TYPE 2	4
8	PFOZZ	5310010954631	11083	5P8247	WASHER,FLAT USE WITH TYPE 2.....	4
9	PFOZZ	5310011945398	11083	1D4717	NUT,HEXAGON USE WITH TYPE 2.....	16
10	PFOZZ	5310010948810	78189	3320-14-01	WASHER,SQUARE CONE USE WITH TYPE 2.	18
11	PFOZZ	5305000680511	80204	B1821BH038C125N	SCREW,CAP,HEXAGON H USE WITH TYPE 2	8
12	XBOOO		11083	5S478	DOOR ASSEMBLY.....	1
13	PFOZZ	5310000050781	11083	9F2978	.NUT,PLAIN,WELDING.....	2
14	PFOZZ	5310006379541	96906	MS35338-46	WASHER,LOCK.....	18
14	PFOZZ	5310010948810	78189	3320-14-01	WASHER,SQUARE CONE USE WITH TYPE 2.	18
15	PFOZZ	5306002637301	11083	L1351	BOLT,MACHINE.....	2
16	PFOZZ	5310008094061	96906	MS27183-15	WASHER,FLAT.....	2
17	XBOOO		11083	1S9691	BRACKET ASSEMBLY RH.....	1
17	XBOOO		11083	1S9692	BRACKET ASSEMBLY LH.....	1
18	PFOZZ	5310000050781	11083	9F2978	.NUT,PLAIN,WELDING.....	2
19	PFOZZ	5340012573341	11083	3S7336	CLAMP,LOOP.....	2
20	PFOZZ	5340012552756	11083	3S7334	CLAMP,LOOP.....	2
21	PFOZZ	5310005845272	96906	MS35338-48	WASHER,LOCK.....	6
21	PFOZZ	5310010976720	11083	5P1076	WASHER,SHOULDERED A.....	4
22	PFOZZ	5305007195238	80204	B1821BH050F200L	SCREW,CAP,HEXAGON H.....	2
23	PFOZZ	5310003474123	11083	1B4205	NUT,PLAIN,HEXAGON.....	2
24	XBOOO		11083	6H7354	BRACKET ASSEMBLY.....	2
25	PFOZZ	5310000050781	11083	9F2978	.NUT,PLAIN,WELDING.....	2
26	PFOZZ	5305010156841	11083	0S1591	SCREW.....	4
27	PFOZZ	5306002604508	11083	S1594	BOLT,MACHINE.....	8
28	PFOZZ	5310011945398	11083	1D4717	NUT,HEXAGON.....	8
29	XBOZZ		11083	3S2469	PLATE.....	2
30	PFOZZ	5306004262934	11083	S1621	BOLT,MACHINE.....	4

END OF FIGURE

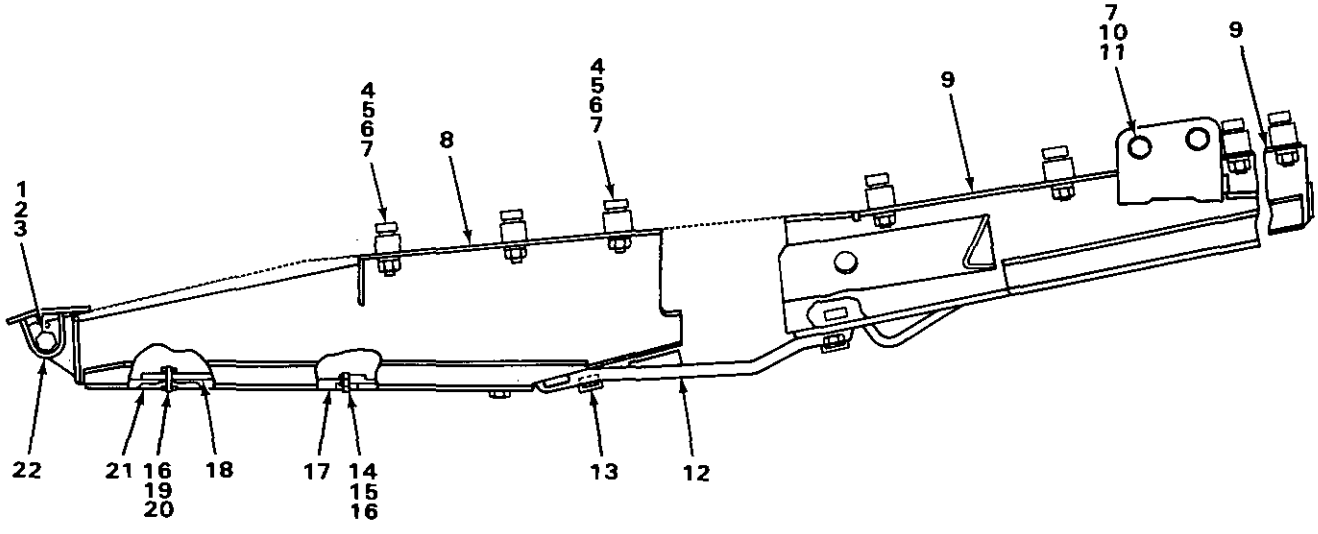

TA235357

FIGURE 160. HEAVY DUTY CRANKCASE GUARD.

(1) ITEM NO	(2) SMR CODE	(3) NSN	(4) CAGEC	(5) PART NUMBER	(6) DESCRIPTION AND USABLE ON CODES(UOC)	(7) QTY
					GROUP 1801 BODY, CAB, HOOD AND HULL ASSEMBLIES.	
					FIG. 160 HEAVY DUTY CRANKCASE GUARD.	
1	PFOZZ	5306004238069	11083	L1178	BOLT,MACHINE.....	2
2	PFOZZ	5310005847888	96906	MS35338-51	WASHER,LOCK.....	2
3	PFOZZ	5365004087606	11083	1S7771	SPACER,SLEEVE.....	2
4	PFOZZ	2590011235946	11083	6P8829	RETAINER.....	14
5	PFOZZ	5306004263410	11083	1D4639	BOLT,MACHINE.....	14
6	PFOZZ	5310004909859	11083	2J3507	NUT,PLAIN,HEXAGON.....	14
7	PFOZZ	5310004709833	11083	3K5234	WASHER,FLAT.....	16
8	XBOFF		11083	3P3384	GUARD ASSEMBLY.....	1
9	XBOFF		11083	3P3382	GUARD ASSEMBLY.....	1
10	PFOZZ	5306012234346	11083	7F4283	BOLT,SELF-LOCKING.....	2
11	PFOZZ	5310011231417	11083	1B4209	NUT,PLAIN,HEXAGON.....	2
12	PFOFF	3020011901091	11083	8P3061	GUARD,MECHANICAL DR.....	1
13	PFOZZ	5310010538076	11083	7M8659	WASHER USE ON HEAVY DUTY.....	3
14	PFOZZ	5306011279361	11083	0S1585	BOLT,MACHINE.....	4
15	PFOZZ	5310004317239	11083	2M849	WASHER,FLAT.....	4
16	PFOZZ	5310005845272	96906	MS35338-48	WASHER,LOCK.....	5
17	PFOZZ	2590012297379	11083	2S9437	DOOR,ASSEMBLY.....	1
18	PFOZZ	5310002240529	11083	2S9434	NUT STRIP.....	1
19	PFOZZ	5305002537629	11083	2S9732	SCREW,CAP,HEXAGON H.....	1
20	PFOZZ	5315009245894	11083	4H5128	PIN,STRAIGHT,HEADLE.....	1
21	PFOZZ	5340001958288	11083	8S8673	COVER,ACCESS.....	1
22	XBOZZ		11083	2S9436	BRACKET.....	2

END OF FIGURE

1
2

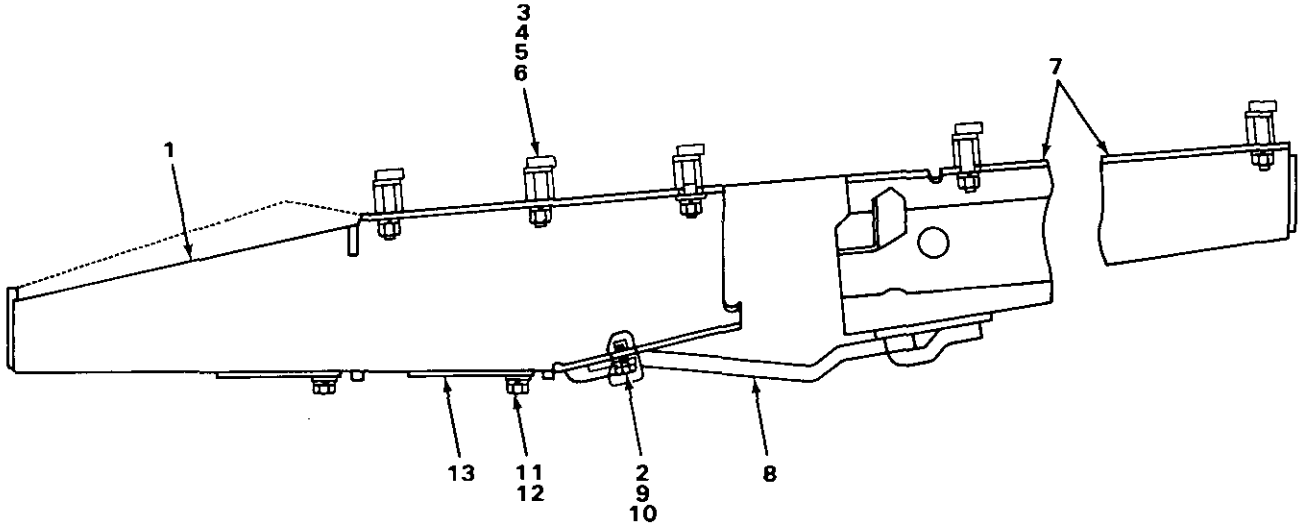

TA235358

FIGURE 161. CRANKCASE GUARD.

(1) ITEM NO	(2) SMR CODE	(3) NSN	(4) CAGEC	(5) PART NUMBER	(6) DESCRIPTION AND USABLE ON CODES(UOC)	(7) QTY
					GROUP 1801 BODY, CAB, HOOD AND HULL ASSEMBLIES.	
					FIG. 161 CRANKCASE GUARD.	
1	XBOFF		11083	3P3388	GUARD ASSEMBLY.....	1
2	XBOZZ		11083	8P3057	.PLATE.....	1
3	PFOZZ	5306004263410	11083	1D4639	BOLT,MACHINE.....	14
4	PFOZZ	5310004909859	11083	2J3507	NUT,PLAIN,HEXAGON.....	14
5	PFOZZ	5310004709833	11083	3K5234	WASHER,FLAT.....	14
6	PFOZZ	2590011235946	11083	6P8829	RETAINER.....	14
7	XBOFF		11083	3P3387	GUARD ASSEMBLY.....	1
8	PFOFF	3020011901091	11083	8P3061	GUARD,MECHANICAL DR.....	3
9	PFOZZ	5306004262945	11083	S1973	BOLT,MACHINE.....	2
10	PFOZZ	5310010538076	11083	7M8659	WASHER.....	5
11	PFOZZ	5306004240086	11083	7B3235	BOLT,MACHINE.....	4
12	PFOZZ	5310004317239	11083	2M849	WASHER,FLAT.....	4
13	PFOZZ	2590012297379	11083	2S9437	DOOR,ASSEMBLY.....	1

END OF FIGURE

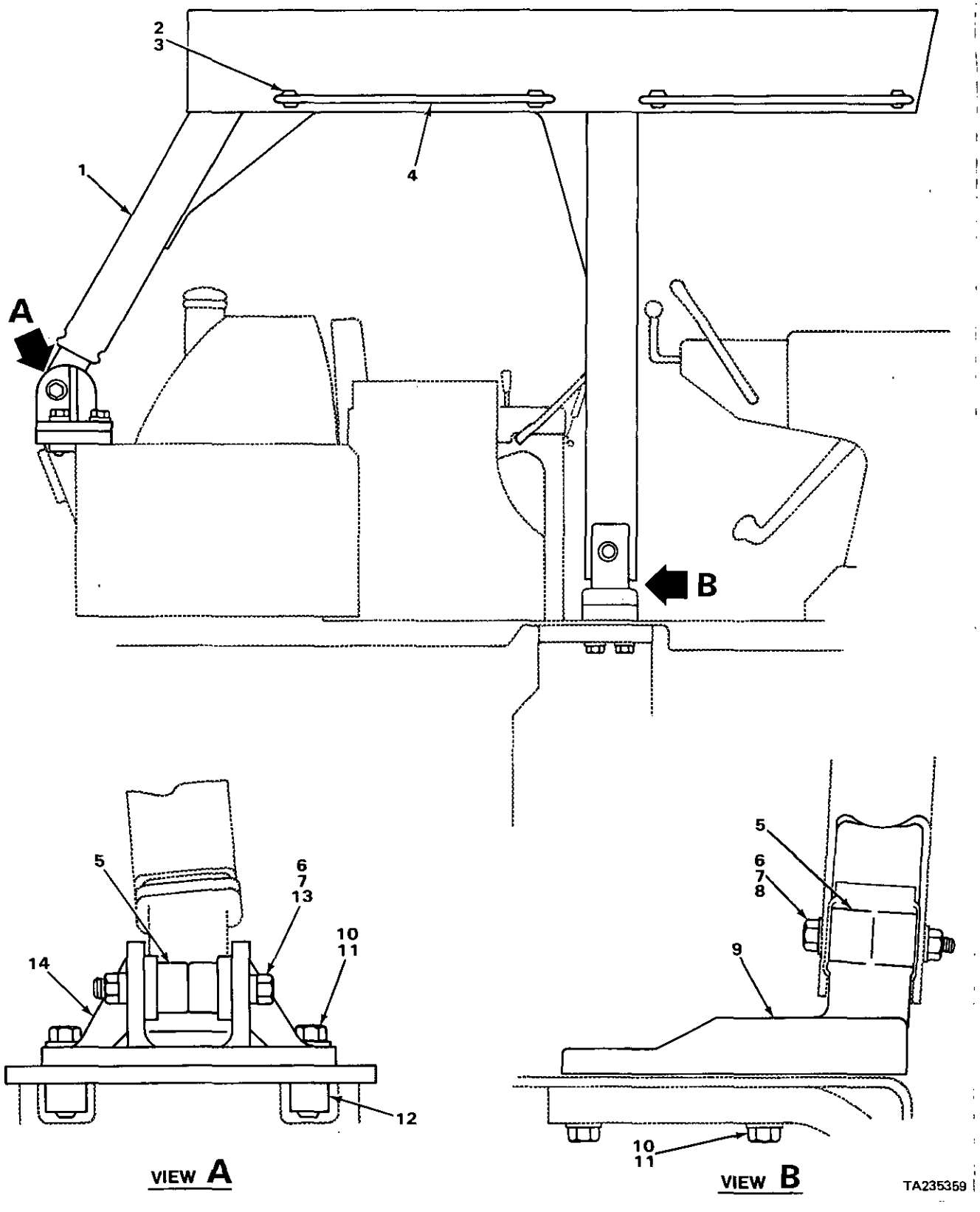

FIGURE 162. ROLLOVER PROTECTION STRUCTURE.

(1) ITEM NO	(2) SMR CODE	(3) NSN	(4) CAGEC	(5) PART NUMBER	(6) DESCRIPTION AND USABLE ON CODES(UOC)	(7) QTY
					GROUP 1801 BODY, CAB, HOOD AND HULL ASSEMBLIES.	
					FIG. 162 ROLLOVER PROTECTION STRUCTURE.	
1	PFFZZ	2510012385457	11083	6P5213	FRAME,STRUCTURAL,VE ROLL-OVER PROTECTIVE.....	1
2	PFFZZ	5306004262934	11083	S1621	BOLT,MACHINE.....	8
3	PFFZZ	5310005845272	96906	MS35338-48	WASHER,LOCK.....	8
4	PFFZZ	5340011652584	11083	8S8782	HANDLE,BOW.....	4
5	PFFZZ	3120012326641	11083	8P3729	BUSHING,SLEEVE.....	8
6	PFFZZ	5310004909859	11083	2J3507	NUT,PLAIN,HEXAGON.....	4
7	PFFZZ	5310010660506	11083	8J7415	WASHER.....	8
8	PFFZZ	5306002755014	11083	5B5473	.BOLT,MACHINE..... UOC:T25	2
9	XBFZZ		11083	8P3733	PAD RIGHT HAND.....	1
9	XBFZZ		11083	8P3732	PAD LEFT HAND.....	1
10	PFFZZ	5305001362009	11083	8H5772	BOLT,SPECIAL.....	16
11	PFFZZ	5310004709833	11083	3K5234	WASHER,FLAT.....	16
12	PFFZZ	5310012573232	11083	2P8515	NUT STRIP.....	4
13	PFFZZ	5306011939181	11083	2B7218	BOLT.....	2
14	PFFZZ	3040012539590	11083	8P4211	BRACKET,EYE,NONROTA.....	2

END OF FIGURE

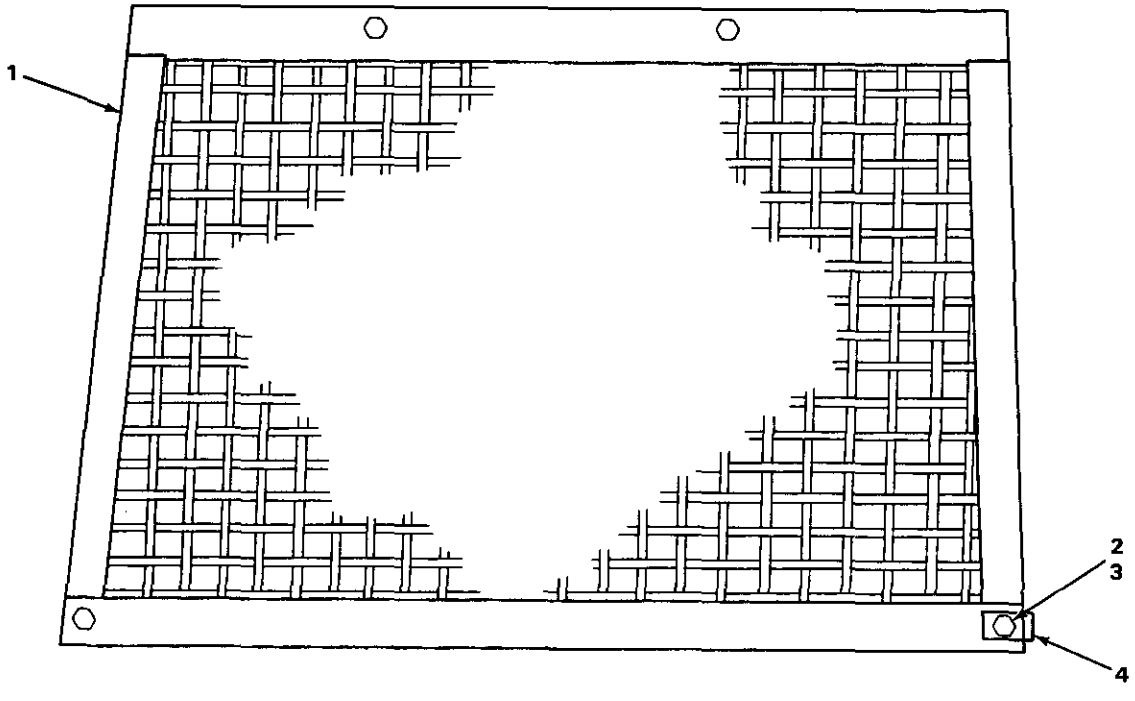

TA235360

FIGURE 163. PROTECTIVE SCREEN.

(1) ITEM NO	(2) SMR CODE	(3) NSN	(4) CAGEC	(5) PART NUMBER	(6) DESCRIPTION AND USABLE ON CODES (UOC)	(7) QTY
					GROUP 1801 BODY. CAB, HOOD AND HULL ASSEMBLIES FIG. 163 PROTECTIVE SCREEN	
1	PFFZZ	2510011840786	11083	6P6496	SCREEN ASSEMBLY	1
2	PFFZZ	5306004240086	11083	7B3235	BOLT, MACHINE	4
3	PFFZZ	5310005845272	96906	MS35338-48	WASHER, LOCK	4
4	PFFZZ	5340012580141	11083	6P6502	BRACKET, ANGLE	4

END OF FIGURE

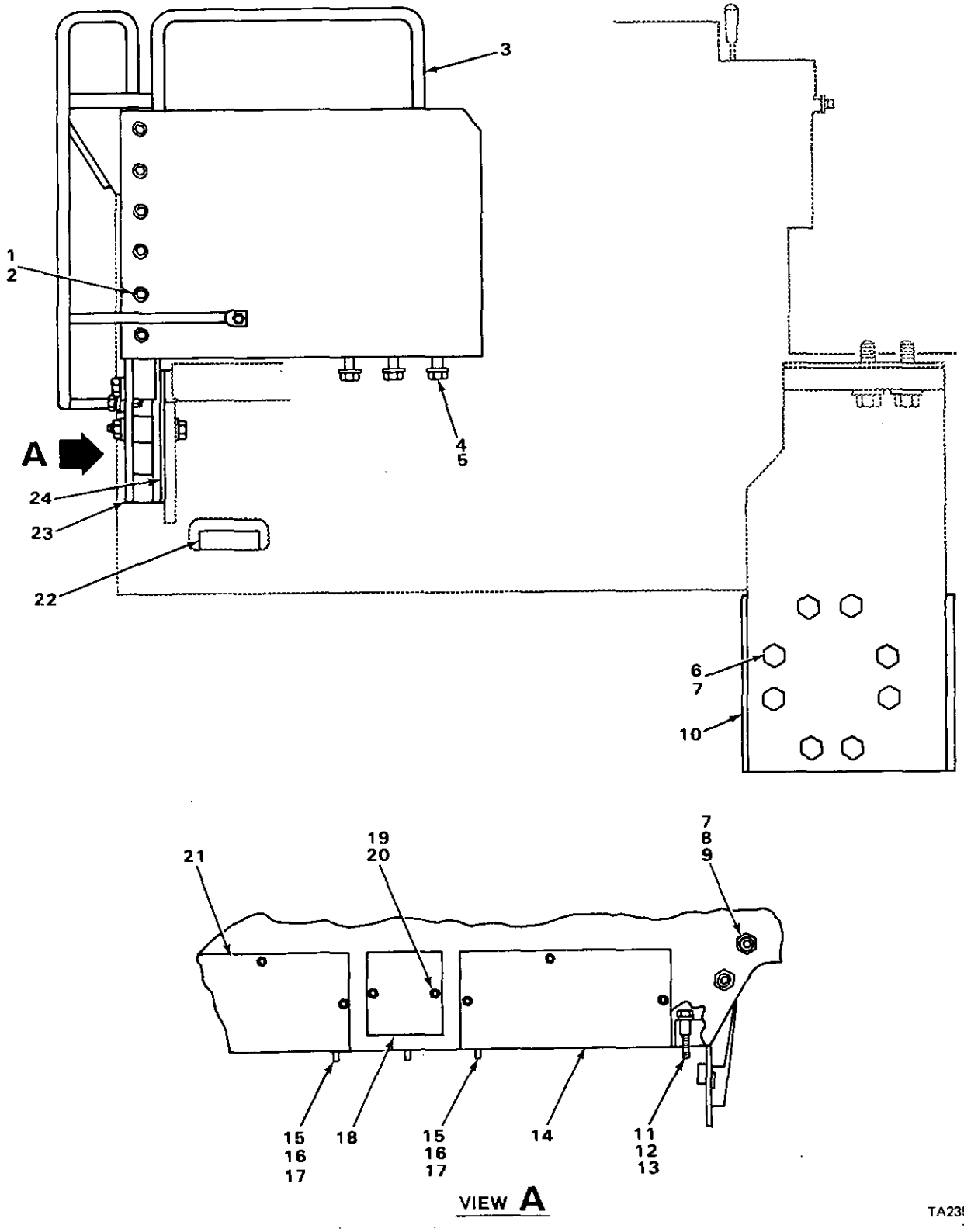

FIGURE 164. ROLLOVER PROTECTION STRUCTURE MOUNTING.

(1) ITEM NO	(2) SMR CODE	(3) NSN	(4) CACEC	(5) PART NUMBER	(6) DESCRIPTION AND USABLE ON CODES (UOC)	(7) QTY
					GROUP 1801 BODY, CAB, HOOD AND HULL ASSEMBLIES. FIG. 164 ROLLOVER PROTECTION STRUCTURE MOUNTING.	
1	PFFZZ	5306004238116	90940	0035392-0	BOLT, MACHINE USE WITH SERIAL RANGE 77V7831 THRU 77V9475	12
2	PFFZZ	5310001397030	11083	4D3704	WASHER, FLAT USE WITH SERIAL RANGE 77V7831 THRU 77V9410	12
2	PEFZZ	5310004136522	11083	2S7593	WASHER, FLAT USE WITH SERIAL RANGE 77V9411 THRU 77V9475	12
3	XBFZZ		11083	6P5625	PLATE ASSEMBLY	1
3	XBFZZ		11083	6P5624	PLATE ASSEMBLY	1
4	PFFZZ	5306002450953	11083	1A458	BOLT, MACHINE USE WITH SERIAL RANGE 77V7831 THRU 77V9475	6
5	PFFZZ	5310004191363	11083	2S0115	WASHER, FLAT USE WITH SERIAL RANGE 77V7831 THRU 77V9475	6
6	PFFZZ	5306010533837	11083	1D4709	BOLT, MACHINE USE WITH SERIAL RANGE 77V7831 THRU 77V9475	16
7	PFFZZ	5310004709833	11083	3K5234	WASHER, FLAT USE WITH SERIAL RANGE 77V7831 THRU 77V9475	28
8	PFFZZ	5305004941906	11083	1D4642	BOLT, SPECIAL USE WITH SERIAL RANGE 77V7831 THRU 77V9475	6
9	PFFZZ	5310004909859	11083	2J3507	NUT, PLAIN, HEXAGON USE WITH SERIAIRANGE 77V7831 THRU 77V9475	6
10	XBFZZ		11083	2P8509	SUPPORT ASSEMBLY RIGHT HAND USE WITH SERIAL RANGE 77V7831 THRU 77V9475	1
10	XBFZZ		11083	2P8510	SUPPORT ASSEMBLY LEFT HAND USE WITH SERIAL RANGE 77V7831 THRU 77V9475	1
11	PFFZZ	5310001397030	11083	4D3704	WASHER, FLAT USE WITH SERIAL RANGE 77V7531 THRU 77V9475	2
12	PFFZZ	5306011083740	11083	&J3913	BOLT, MACHINE USE WITH SERIAL RANGE 77V783I THRU 77V9475	2
13	PFFZZ	5365012574347	11083	8P3293	SPACER, PLATE USE WITH SERIAL RANGE 77V9411 THRU 77V9475	4
14	PFFZZ	2510012230623	11083	1P0132	PLATE, MOUNTING, FRAM USE WITH SERIAL RANGE 77V783I THRU 77V9475	2
15	PFFZZ	5310004317239	11083	2M849	WASHER, FLAT USE WITH SERIAL RANGE 77V7831 THRU 77V9475	3
16	PFFZZ	5306011279361	11083	081585	BOLT, MACHINE USE WITH SERIAL RANGE 77V7831 THRU 77V9475	3
17	PFFZZ	5310005845272	96906	MS35338-48	WASNER, LOCK USE WITH SERIAL RANGE 77V7831 THRU 77V9475	3
18	XBFZZ		11083	1PO13O	PLATE USE WITH SERIAL RANGE 77V7831 THRU 77V9475	1
19	PFFZZ	5305002528919	11083	050509	SCREW, CAP, HEXAGON H USE WITH SERIAL RANGE 77V7831 THRU 77V9475.	8
20	PFFZZ	5310006379541	96906	MS35338-46	WASHER, LOCK USE WITH SERIAL RANGE 77V783l THRU 77V9475	8

(1) ITEM NO	(2) SMR CODE	(3) NSN	(4) CAGEC	(5) PART NUMBER	(6) DESCRIPTION AND USABLE ON CODES(UOC)	(7) QTY
21	PFFZZ	2510012855064	11083	9P5406	PLATE,METAL USE WITH SERIAL RANGE 77V9411 THRU 77V9475.....	1
22	PFFZZ	5365012573282	11083	7L0631	SPACER,PLATE USE WITH SERIAL RANGE 77V7831 THRU 77V9475.....	2
23	XBFZZ		11083	6P5638	SUPPORT ASSEMBLY USE WITH SERIAL RANGE 77V7831 THRU 77V9475.....	1
24	XBFZZ		11083	1P0129	SHIM USE WITH SERIAL RANGE 77V7831 THRU 77V9475.....	8

END OF FIGURE

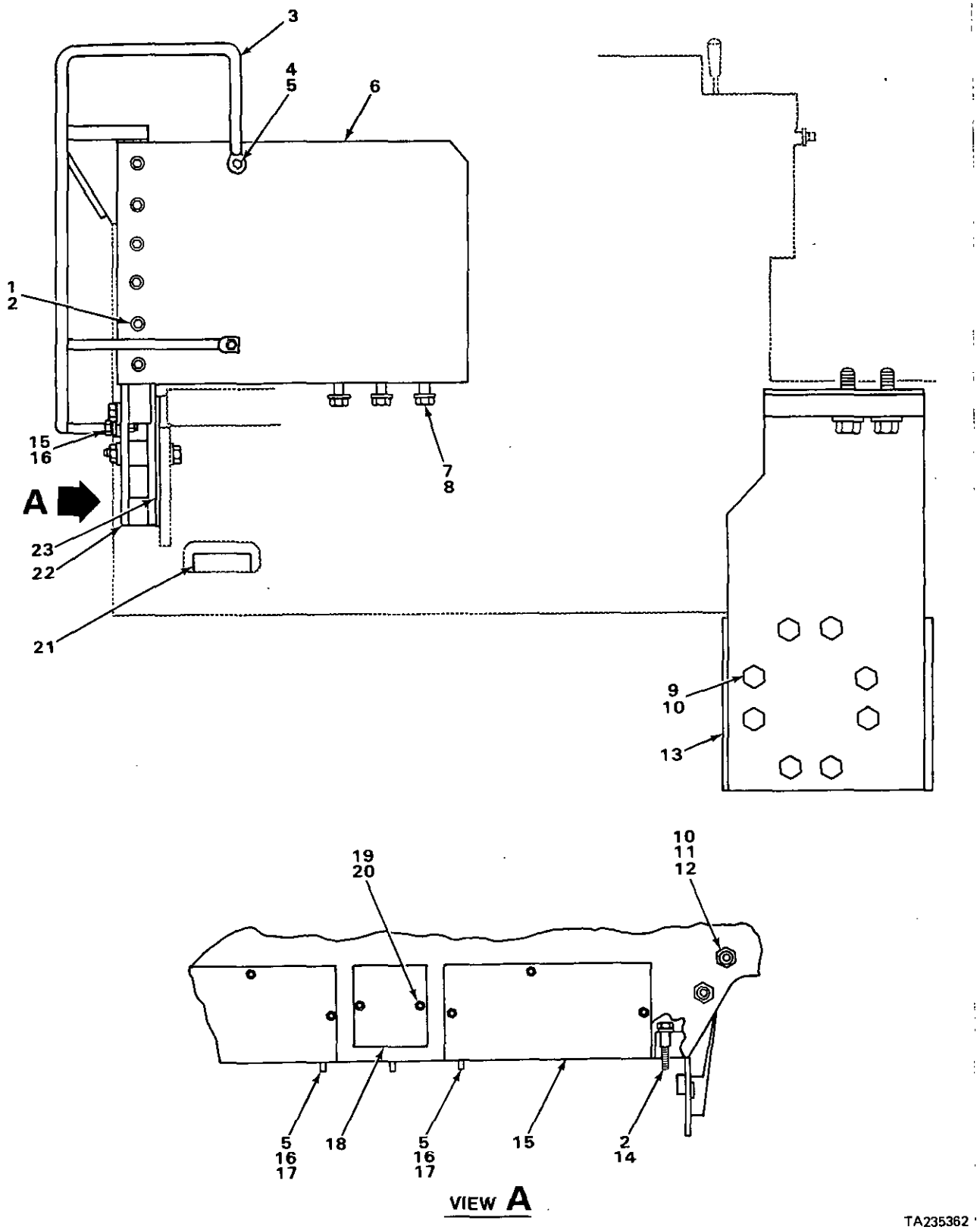

FIGURE 165. ROLLOVER PROTECTION STRUCTURE MOUNTING (FOR USE WITH SERIAL RANGE 77V7830).

(1) ITEM NO	(2) SMR CODE	(3) NSN	(4) CAGEC	(5) PART NUMBER	(6) DESCRIPTION AND USABLE ON CODES(UOC)	(7) QTY
					GROUP 1801 BODY, CAB, HOOD AND HULL ASSEMBLIES.	
					FIG. 165 ROLLOVER PROTECTION STRUCTURE MOUNTING (FOR USE WITH SERIAL 77V7830).	
1	PFFZZ	5306004238116	90940	0035392-0	BOLT,MACHINE.....	12
2	PFFZZ	5310001397030	11083	4D3704	WASHER,FLAT.....	14
3	PFFZZ	2510012179361	11083	6P1703	GRABIRON RIGHT HAND.....	1
3	PFFZZ	5340012166831	11083	6P1705	GRABIRON LEFT HAND.....	1
4	PFFZZ	5306004240086	11083	7B3235	BOLT,MACHINE.....	4
5	PFFZZ	5310004317239	11083	2M849	WASHER,FLAT.....	9
6	XBFZZ		11083	6P5625	PLATE ASSEMBLY RIGHT HAND.....	1
6	XBFZZ		11083	6P5624	PLATE ASSEMBLY LEFT HAND.....	1
7	PFFZZ	5306002450953	11083	1A458	BOLT,MACHINE.....	6
8	PFFZZ	5310004191363	11083	2S0115	WASHER,FLAT.....	6
9	PFFZZ	5306010533837	11083	1D4709	BOLT,MACHINE.....	16
10	PFFZZ	5310004709833	11083	3K5234	WASHER,FLAT.....	28
11	PFFZZ	5305004941906	11083	1D4642	BOLT,SPECIAL.....	6
12	PFFZZ	5310004909859	11083	2J3507	NUT,PLAIN,HEXAGON.....	6
13	XBFZZ		11083	2P8509	SUPPORT ASSEMBLY RIGHT HAND.....	1
13	XBFZZ		11083	2P8510	SUPPORT ASSEMBLY LEFT HAND.....	1
14	PFFZZ	5306011083740	11083	6J3913	BOLT,MACHINE.....	2
15	PFFZZ	2510012230623	11083	1P0132	PLATE,MOUNTING,FRAM.....	2
16	PFFZZ	5306011279361	11083	0S1585	BOLT,MACHINE.....	5
17	PFFZZ	5310005845272	96906	MS35338-48	WASHER,LOCK.....	3
18	XBFZZ		11083	1P0130	PLATE.....	1
19	PFFZZ	5310006379541	96906	MS35338-46	WASHER,LOCK.....	10
20	PFFZZ	5305002528919	11083	0S0509	SCREW,CAP,HEXAGON H.....	8
21	PFFZZ	5365012573282	11083	7L0631	SPACER,PLATE.....	2
22	XBFZZ		11083	6P5638	SUPPORT ASSEMBLY.....	1
23	XBFZZ		11083	1P0129	SHIM.....	8

END OF FIGURE

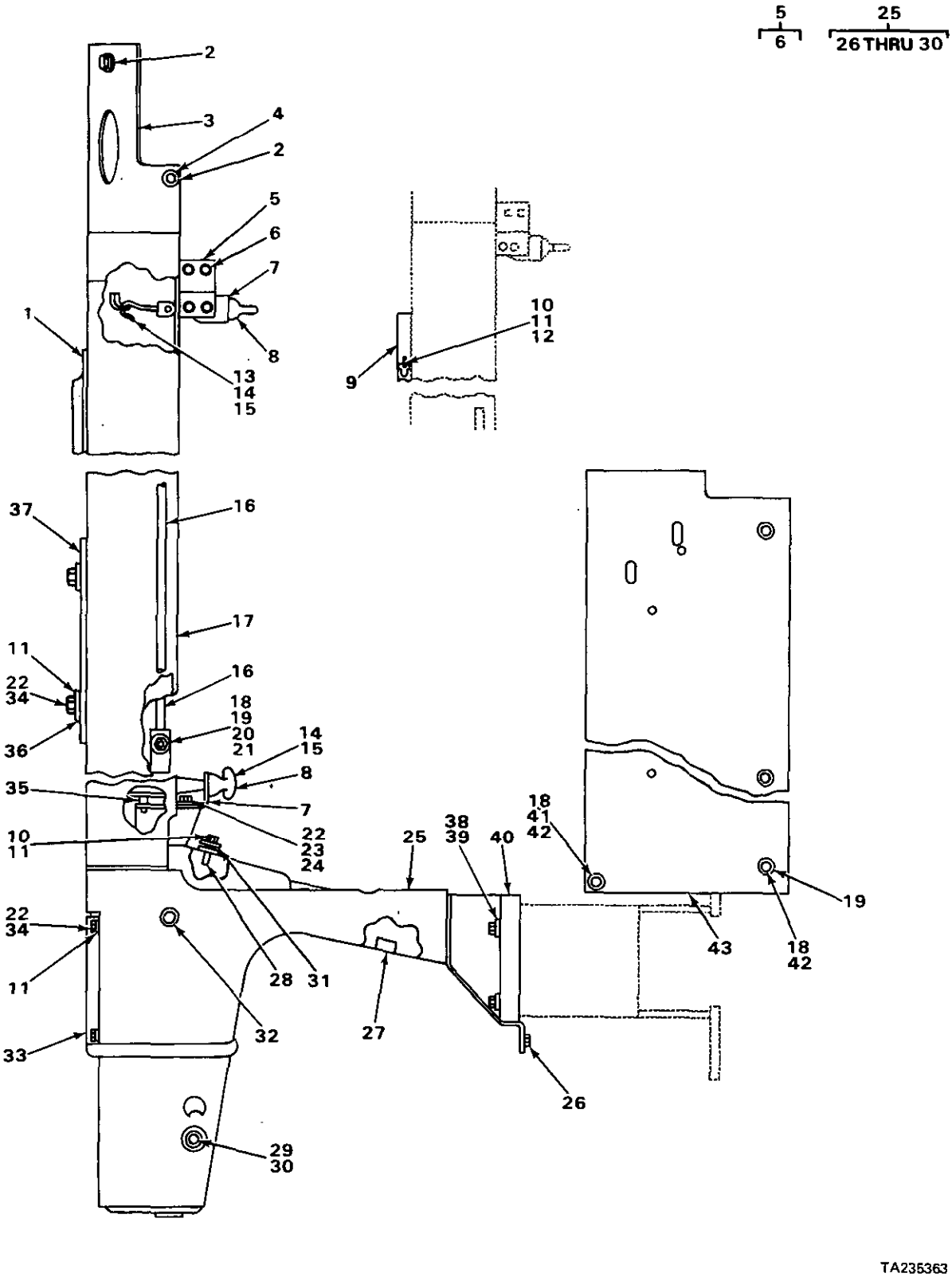

FIGURE 166. HOOD AND DASH.

(1) ITEM No	(2) SMR CODE	(3) NSN	(4) CAGEC	(5) PART NUMBER	(6) DESCRIPTION AND USABLE ON CODES (UOC)	(7) QTY
					GROUP 1801 BODY, CAB, HOOD AND HULL ASSEMBLIES. FIG. 166 HOOD AND DASH.	
1	PFOZZ	5330012652129	11083	8K4889	GASKET USE WITH SERIAL RANGE 77V751I, 7512, 7514 TO 7520, 7522 TO 7531, 7534 TO 7537, 7553 TO 7583, 7618 TO 7620, 7622, 7624 TO 634, 76360, 7637, 7639 TO 7645	1
2	PFOZZ	5305012542516	11083	952087	SCREW, CAP, HEXAGON H USE WITH SERIAL RANGE 77V5954 THRU 77V947[illegible]	5
3	PFOZZ	5340012894395	11083	8P8673	COVER, ACCESS USE WITH SERIAL RANGE 77V5954 THRU 77V9475	1
4	PFOZZ	5310011022478	11083	9N1650	WASHER, FLAT USE WITH SERIAL RANGE 77V7511, 7512j514 TO7520, 7522 TO 7531, 7534 TO 7537, 7553 TO 7583, 7618 TO 7620,7622, 7624 TO 7634,76360, 7637, 7639 TO 7645	2
5	PFOZZ	2510012224513	11083	2P4938	BRACKET ASSEMBLY, HO USE WITH SERIAL RANGE 77V5954 THRU 77V9475.	2
6	PFOZZ	5310000050781	11083	9F2978	NUT, PLAIN, WELDING	4
7	PFOZZ	5340004909869	11083	2S2109	BRACKETJANGLE USE WITH SERIAL RANGE 77V5954 THRU 77V9475	4
8	PFOZZ	5342004101903	11083	9M3835	LATCH, HOOD USE WITH SER1AL RANGE 77V5954 THRU 77V9475	4
9	PFOZZ	5330012652129	11083	8R4557	GASKET	1
10	PFOZZ	5306002637301	11083	L1351	BOLT, MACHINE USE WITH SERIAL RANGE 77V5954 TO 7510, 7513, 7521, 7532, 7533, 7538 TO 7552,7584 TO 7617, 7621, 7623, 7635, 7638, 7646, 7656, 7660, 7664, 7665, 7672, 7674	3
10	PEOZZ	5306002637301	11083	L1351	BOLT, MACHINE USE WITH SERIAL RANGE 77V7511, 7512,7514 TO 7520,7522 TO 7531, 7534 TO 7537, 7553 TO 7583, 7618 TO 7620, 7622, 7624 TO 7634,76360, 7637, 7639 TO 7645	2
11	PFOZZ	5310006379541	96906	MS35338-46	WASHER, LOCK	9
12	PFOZZ	5310011945398	11083	1D4717	NUT, HEXAGON USE WITH SERIAL RANGE 77V5954 THRU 77V9475	I
13	PFOZZ	2510010690804	11083	357881	HOOK A USE WITH SERIAL RANGE 77V5954 THRU 77V9475	2
14	PFOZZ	5315007161056	19204	7161056	PIN, STRAIGHT HEADED USE WITH SERIAL RANGE 77V5954 THRU 77V9475	4
15	PFOZZ	5315008392326	96906	MS24665-281	PIN, COTTER USE WITH SERIAL RANGE 77V5954 THRU 77V9475	4
16	PFOZZ	5340012580340	11083	8P9834	HANDLE, BOW ASSEMBLY, USE WITH SERIAL RANGE 77V7511, 7512, 7514 TO 7520, 7522 TO 7531, 7534 TO 7537, 7553 TO 7583, 7618 TO 7620, 7622, 7624 TO 7634, 7636	2
16	XI3OZZ		11083	9M5742	GRAB IRON USE WITH SERIAL RANGE	2

(1) ITEM NO	(2) SMR CODE	(3) NSN	(4) CAGEC	(5) PART NUMBER	(6) DESCRIPTION AND USABLE ON CODES(UOC)	(7) QTY
					77V5954 TO 7510,7513,7521,7532,7533, 7538 TO 7552,7584 TO 7617,7621,7623, 7635,7638,7646,7656,7660,7664,7665, 7672,7674.....	
17	XBOZZ		11083	8P4503	HOOD ASSEMBLY USE WITH SERIAL RANGE 77V5954 THRU 77V9475.....	1
18	PFOZZ	5310005845272	96906	MS35338-48	WASHER,LOCK USE WITH SERIAL RANGE 77V5954 THRU 77V9475.....	12
19	PFOZZ	5306004238117	11083	S1595	BOLT,MACHINE USE WITH SERIAL RANGE 77V5954 THRU 77V9475.....	10
20	PFOZZ	5310007680318	96906	MS51967-14	NUT,PLAIN,HEXAGON USE WITH SERIAL RANGE 77V5954 THRU 77V9475.....	4
21	PFOZZ	5310012167387	11083	4J4144	WASHER,FLAT.....	8
22	PFOZZ	5305002528919	11083	OS0509	SCREW,CAP,HEXAGON H USE WITH SERIAL RANGE 77V5954 THRU 77V9475...	10
23	PFOZZ	5310001174788	11083	5M2894	WASHER,FLAT USE WITH SERIAL RANGE 77V5954 THRU 77V9475.....	4
24	PFOZZ	5310006379541	96906	MS35338-46	WASHER,LOCK USE WITH SERIAL RANGE 77V5954 THRU 77V9475.....	12
25	XBOOO		11083	8P5954	DASH ASSEMBLY USE WITH SERIAL RANGE 77V5954 THRU 77V9475.....	1
26	PFOZZ	5310004454632	11083	1F748	.NUT,PLAIN,WELDING.....	6
27	PFOZZ	5310000503477	19207	503477	.NUT,PLAIN,WELDING.....	2
28	PFOZZ	5310000050781	11083	9F2978	.NUT,PLAIN,WELDING.....	12
29	PFOZZ	3120004788919	11083	5H6822	.BEARING,SLEEVE.....	2
30	XAOZZ		11083	5F6182	.BOSS.....	2
31	XBOZZ		11083	6S7113	PLATE USE WITH SERIAL RANGE 77V5954 THRU 77V9475.....	2
32	PFOZZ	5340012598962	11083	5P4935	CAP,PROTECTIVE,DUST USE WITH SERIAL RANGE 77V5954 THRU 77V9475...	2
33	PFOZZ	2540004070417	11083	9H4351	COVER,DASH USE WITH SERIAL RANGE 77V5954 THRU 77V9475.....	1
34	PFOZZ	5310002094516	28298	M5839	WASHER,FLAT USE WITH SERIAL RANGE 77V5954 THRU 77V9475.....	6
35	XBOZZ		11083	9K4939	BUMPER USE WITH SERIAL RANGE 77V5954 THRU 77V9475.....	2
36	XBOZZ		11083	314433	WASHER USE WITH SERIAL RANGE 77V5954 THRU 77V9475.....	2
37	XBOZZ		11083	8P4501	COLLAR ASSEMBLY USE WITH SERIAL RANGE 77V5954 THRU 77V9475.....	1
38	PFOZZ	5306002638978	11083	S1587	BOLT,MACHINE USE WITH SERIAL RANGE 77V5954 THRU 77V9475.....	6
39	PFOZZ	5310010951249	11083	7D1649	WASHER,FLAT USE WITH SERIAL RANGE 77V5954 THRU 77V9475.....	6
40	PFFZZ	5310005845272	96906	MS35338-48	WASHER,LOCK..... UOC:T25	1
41	PFOZZ	5306004262934	11083	S1621	BOLT,MACHINE USE WITH SERIAL RANGE 77V5954 THRU 77V9475.....	2
42	PFOZZ	5310009307013	11083	4B4280	WASHER,FLAT USE WITH SERIAL RANGE 77V5954 THRU 77V9475.....	8
43	XBOZZ		11083	2P7631	GUARD RH USE WITH SERIAL RANGE 77V5954 THRU 77V9475.....	1

(1) ITEM NO	(2) SMR CODE	(3) NSN	(4) CAGEC	(5) PART NUMBER	(6) DESCRIPTION AND USABLE ON CODES(UOC)	(7) QTY
43	XBOZZ		11083	2P7632	GUARD LH USE WITH SERIAL RANGE 77V5954 THRU 77V9475.....	1

END OF FIGURE

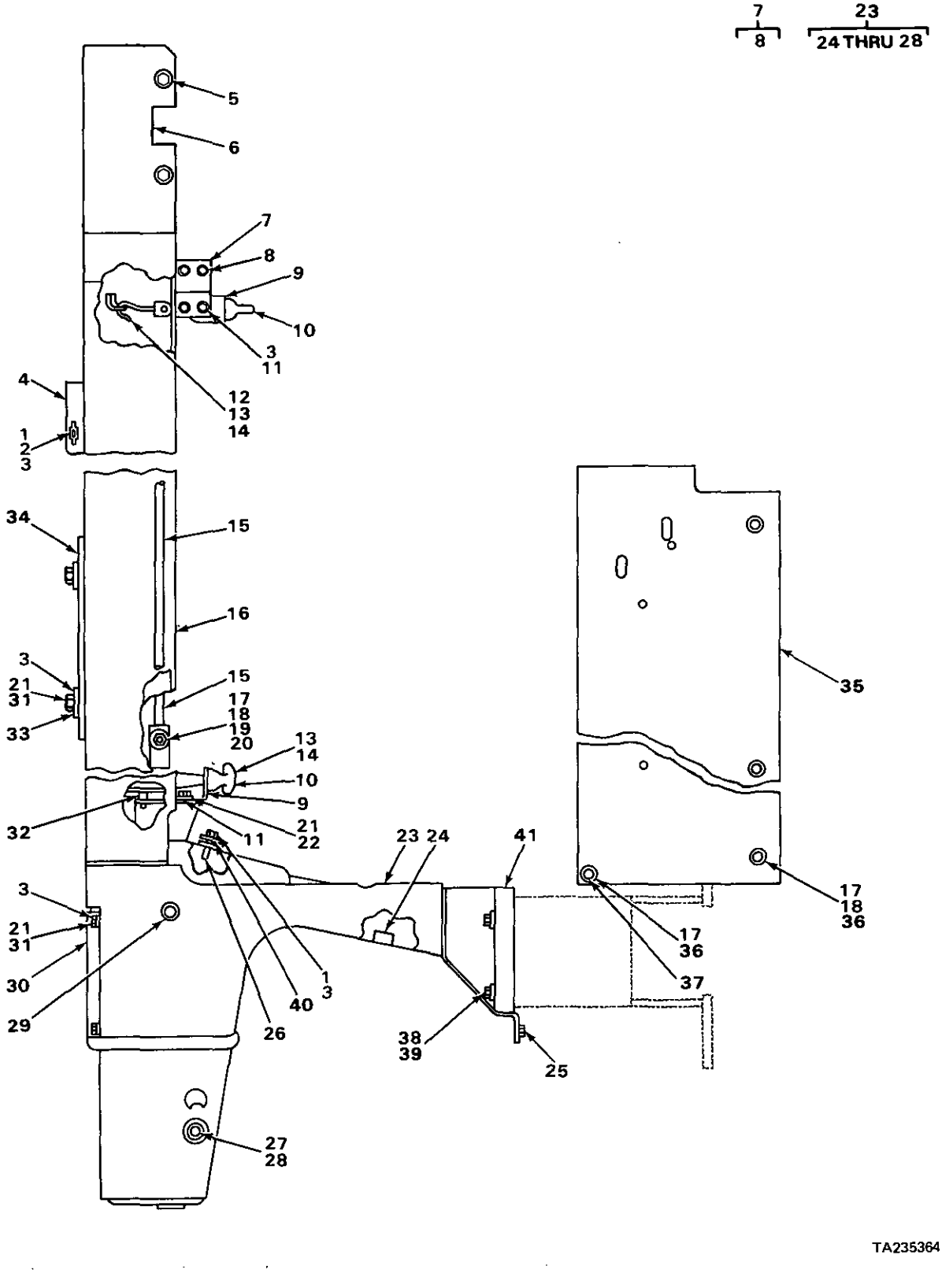

FIGURE 167. HOOD AND DASH (FOR USE WITH SERIAL RANGE THRU 77V5953).

(1) ITEM NO	(2) SMR CODE	(3) NSN	(4) CAGEC	(5) PART NUMBER	(6) DESCRIPTION AND USABLE ON CODES(UDC)	(7) QTY
			.		GROUP 1801 BODY, CARE HOOD AND Hill 1 ASSEMBLIES. FIG. 167 HOOD AND DASH (FOR USE WITH SERIAL RANGE THRU 77V5953).	
1	PFOZZ	5306002637301	11083	L135I	BOLT, MACHINE	3
2	PFOZZ	5310011945398	11083	ID4717	NUTHEXAGON	1
3	PFOZZ	5310006379541	96906	MS35338-46	WASHER, LOCK	21
4	PFOZZ	5330012652129	11083	8P4557	GASKET	1
5	PFOZZ	5305012542516	11083	9s2087	SCREW, CAP, HEXAGON H	7
6	XBOZZ		11083	6P2506	COVER	1
7	PFOZZ	2510012224513	11083	2P4938	BRACKET ASSEMBLY, HO	2
8	PFOZZ	5310000050781	11083	912978	NUT, PLAIN, WELDING	4
9	PFOZZ	5340004909869	11083	252109	BRACKET, ANGLE	4
10	PFOZZ	5342004101903	11083	9M3835	LATCH, HOOD	40
11	PFOZZ	5306002604508	11083	51594	BOLT, MACHINE	8
12	PFOZZ	2510010690804	11083	357881	HOOK A	2
13	PFOZZ	5315007161056	19204	7161056	PIN, STRAIGHT, HEADED	4
14	PFOZZ	5315008392326	96906	MS24665-281	PIN, COTTER	4
15	XBOZZ		11083	9M5742	GRAB IRON	2
16	XBOZZ		11083	8P4503	HOOD ASSEMBLY	1
17	PFOZZ	5310005845272	96906	MS35338-48	WASHER, LOCK	12
18	PFOZZ	5306004238117	11083	51595	BOLT, MACHINE	10
19	PFOZZ	5310007680318	96906	MS51967-14	NUT, PLAIN, HEXAGON	4
20	PFOZZ	5310012167387	11083	4J4144	WASHER, FLAT	4
21	PFOZZ	5305002528919	11083	0S0509	SCREW, CAP, HEXAGON H	10
22	PFOZZ	5310001174788	11083	5M2894	WASHER, FLAT	4
23	XB000		11083	8P5954	DASH ASSEMBLY	1
24	PFOZZ	5310000503477	19207	503477	NUT, PLAIN, WELDING	2
25	PFOZZ	5310004454632	11083	1F748	NUT, PLAIN, WELDING	6
26	PFOZZ	5310000050781	11083	9F2978	NUT, PLAIN, WELDING	12
27	PFOZZ	3120004788919	11083	5H6822	BEARING, SLEEVE	2
28	XAOZZ		11083	5F6182	BOSS	2
29	PFOZZ	5340012598962	11083	5P4935	CAP, PROTECTIVE, DUST	2
30	PFOZZ	2540004070417	11083	9H4351	COVER, DASH	1
31	PFOZZ	5310002094516	28298	M5839	WASHER, FLAT	6
32	XBOZZ		11083	9K4939	BUMPER	2
33	XBOZZ		110B3	314433	WASHER	2
34	XBOZZ		11083	8P4501	COLLAR ASSEMBLY	I
35	XBOZZ		11083	2P7631	GUARD RH	i
35	XBOZZ		11083	2P7632	GUARD	1
36	PEOZZ	5310009307013	11083	4B4280	WASHER, FLAT	8
37	PFOZZ	5306004262934	11083	S1621	BOLT, MACHINE	2
38	PFOZZ	5306002638978	110B3	S1587	BOLT, MACHINE	6
39	PFOZZ	5310010951249	11083	7D1649	WASHER, FLAT	6
40	XBOZ2		11083	6S7113	PLATE	2
41	XBOZZ		11083	3P9374	COVER RH	1
41	XBOZZ		11083	3P9373	COVER LH	1

END OF FIGURE

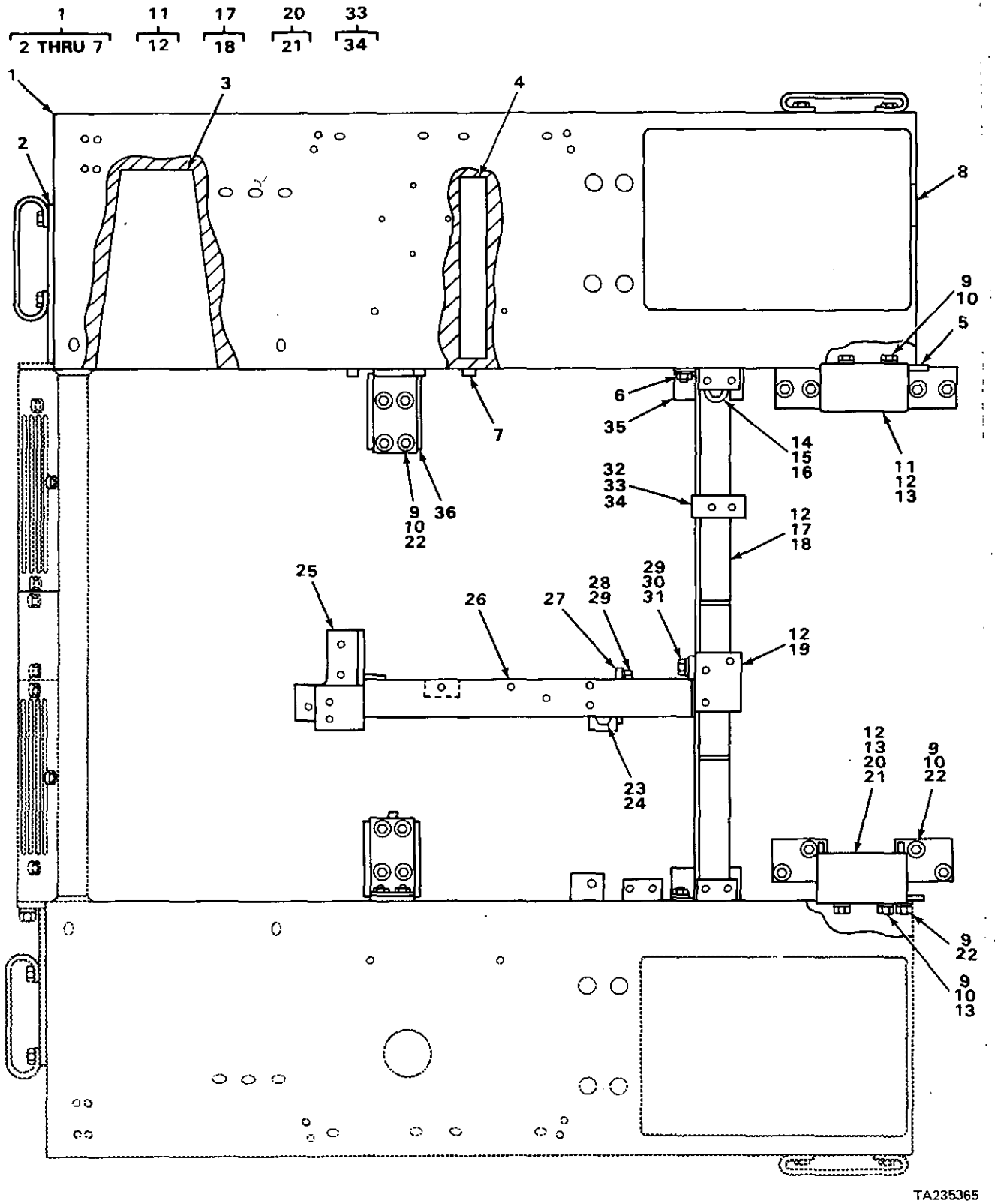

FIGURE 168. RIGHT HAND FENDER.

(1) ITEM NO	(2) SMR CODE	(3) NSN	(4) CAGEC	(5) PART NUMBER	(6) DESCRIPTION AND USABLE ON CODES(UOC)	(7) QTY
					GROUP 1802 FENDERS, RUNNING BOARDS WITH MOUNTING AND ATTACHING PARTS, OUTRIGGERS, WINDSHIELD, GLASS ETC.	
					FIG. 168 RIGHT HAND FENDER.	
1	XBOOO		11083	3P3976	FENDER ASSEMBLY.....	1
2	XBOZZ		11083	1P6411	.BLOCK.....	1
3	XBOZZ		11083	3S6721	.SUPPORT.....	2
4	XBOZZ		11083	3P0573	.SUPPORT.....	1
5	XBOZZ		11083	3F5016	.LUG.....	1
6	PFOZZ	5310004454632	11083	1F748	.NUT,PLAIN,WELDING USE WITH SERIAL RANGE 77V7875 THRU 77V9475.....	2
7	PFOZZ	5310000050781	11083	9F2978	.NUT,PLAIN,WELDING USE WITH SERIAL RANGE 77V7875 THRU 77V9475.....	2
8	PFOZZ	2510011760750	11083	9S3968	TREAD,ANTI SKID.....	2
9	PFOZZ	5305007247221	80204	B1821BH063C175N	SCREW,CAP,HEXAGON H.....	26
10	PFOZZ	5310000455001	96906	MS35340-50	WASHER,LOCK.....	26
11	XBOZZ		11083	3P2336	BRACKET ASSEMBLY LH.....	1
12	PFOZZ	5310004454632	11083	1F748	.NUT,PLAIN,WELDING.....	3
13	PFOZZ	5310007638905	96906	MS51968-20	NUT,PLAIN,HEXAGON.....	8
14	PFOZZ	5306004262945	11083	S1973	BOLT,MACHINE.....	1
15	PFOZZ	5310008808186	96906	MS51967-26	NUT,PLAIN,HEXAGON.....	1
16	PFOZZ	5310009499296	78500	1229T1554	WASHER,FLAT.....	1
17	XBOZZ		11083	3P3981	SUPPORT ASSEMBLY USE WITH SERIAL RANGE 77V5006 THRU 77V5845.....	1
17	XBOZZ		11083	8P4902	SUPPORT ASSEMBLY USE WITH SERIAL RANGE 77V5846 THRU 77V9475.....	1
18	PFOZZ	5310004454632	11083	1F748	.NUT,PLAIN,WELDING.....	2
19	XBOZZ		11083	8P0859	BRACKET ASSEMBLY USE WITH SERIAL RANGE 77V5006 THRU 77V6293 AND 77V6295 THRU 77V6374.....	1
19	XBOZZ		11083	8P5502	ANGLE ASSEMBLY USE WITH SERIAL RANGE 77V6294 AND 77V6375 THRU 77V9475.....	1
20	XBOZZ		11083	3P2335	BRACKET ASSEMBLY RH.....	1
21	PFOZZ	5310004454632	11083	1F748	.NUT,PLAIN,WELDING.....	3
22	PFOZA	5365003652281	11083	0L2119	SPACER,RING.....	18
23	PFOZZ	5306004238069	11083	L1178	BOLT,MACHINE.....	1
24	PFOZZ	5310004191363	11083	2S0115	WASHER,FLAT.....	1
25	XBOZZ		11083	6P6332	SUPPORT ASSEMBLY.....	1
26	XBOZZ		11083	8P0773	ANGLE ASSEMBLY USE WITH SERIAL RANGE 77V5006 THRU 77V6293 AND 77V6295 THRU 77V6374.....	1
26	XBOZZ		11083	8P5443	ANGLE ASSEMBLY USE WITH SERIAL RANGE 77V6294 AND 77V6375 THRU 77V9475.....	1
27	XBOZZ		11083	6P6335	PLATE ASSEMBLY.....	1
28	PFOZZ	5306004238117	11083	S1595	BOLT,MACHINE.....	4
29	PFOZZ	5310004317239	11083	2M849	WASHER,FLAT.....	6
30	PFOZZ	5306002638978	11083	S1587	BOLT,MACHINE.....	2
31	PFOZZ	5310007680318	96906	MS51967-14	NUT,PLAIN,HEXAGON.....	2

(1) ITEM NO	(2) SMR CODE	(3) NSN	(4) CAGEC	(5) PART NUMBER	(6) DESCRIPTION AND USABLE ON CODES(UOC)	(7) QTY
32	PFOZZ	5306011279361	11083	OS1585	BOLT,MACHINE USE WITH SERIAL RANGE 77V5846 THRU 77V9475.....	2
33	XBOZZ		11083	8P4804	BRACKET ASSEMBLY USE WITH SERIAL RANGE 77V5846 THRU 77V9475.....	1
34	PFOZZ	5310004454632	11083	1F748	.NUT,PLAIN,WELDING.....	2
35	XBOZZ		11083	3P9032	ANGLE.....	1
36	XBOZZ		11083	2S7663	BRACKET ASSEMBLY.....	1

END OF FIGURE

4
5 THRU 9

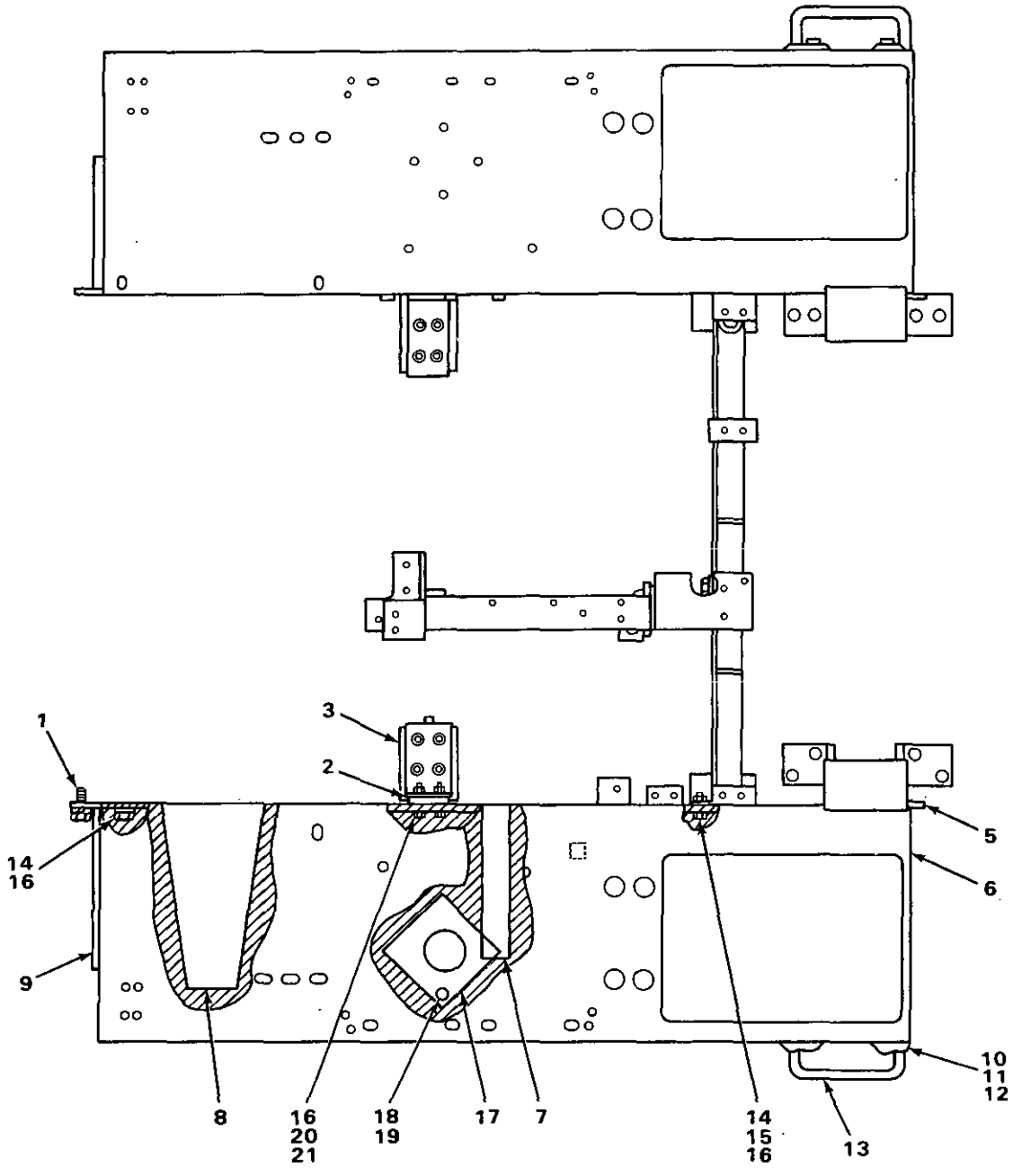

TA235366

FIGURE 169. LEFT HAND FENDER.

(1) ITEM NO	(2) SMR CODE	(3) NSN	(4) CAGEC	(5) PART NUMBER	(6) DESCRIPTION AND USABLE ON CODES(UOC)	(7) QTY
					GROUP 1802 FENDERS, RUNNING BOARDS WITH MOUNTING AND ATTACHING PARTS, OUTRIGGERS,WINDSHIELD, GLASS, ETC.	
					FIG 169 LEFT HAND FENDER.	
1	PFOZZ	5310000455001	96906	MS35340-50	WASHER,LOCK.....	14
2	XBOZZ		11083	4S8025	STRIP ASSEMBLY.....	4
3	XBOZZ		11083	4S7603	BRACKET ASSEMBLY.....	1
4	XBOOO		11083	3P3985	FENDER ASSEMBLY.....	1
5	XBOZZ		11083	3F5016	.LUG.....	1
6	PFOZZ	5310004454632	11083	1F748	.NUT,PLAIN,WELDING.....	3
7	XBOZZ		11083	3P0573	.SUPPORT USE WITH SERIAL RANGE 77V5006 THRU 77V7874.....	1
8	XBOZZ		11083	3S6721	.SUPPORT.....	2
9	XBOZZ		11083	1P6411	.BLOCK.....	1
10	PFOZZ	5306011279361	11083	0S1585	BOLT,MACHINE USE WITH SERIAL RANGE 77V5006 THRU 77V7874.....	4
11	PFOZZ	5310007680318	96906	MS51967-14	NUT,PLAIN,HEXAGON USE WITH SERIAL RANGE 77V5006 THRU 77V7874.....	4
12	PFOZZ	5310004317239	11083	2M849	WASHER,FLAT USE WITH SERIAL RANGE 77V5006 THRU 77V7874.....	4
13	PFOZZ	5340007356100	11083	7B44B8	HANDLE,BOW USE WITH SERIAL RANGE 77V5006 THRU 77V7478.....	2
13	PFOZZ	5340011501348	11083	8P9830	HANDLE,BOW USE WITH SERIAL RANGE 77V7831 THRU 77V7874.....	2
14	PFOZZ	5305007247221	80204	B1821BH063C175N	SCREW,CAP,HEXAGON H.....	4
15	PFOZZ	5310007638920	96906	MS51967-20	NUT,PLAIN,HEXAGON.....	4
16	PFOZZ	5310001397030	11083	4D3704	WASHER,FLAT.....	26
17	PFOZZ	5340012596427	11083	3P4333	COVER,ACCESS.....	1
18	PFOZZ	5306004238194	11083	1A2029	BOLT,MACHINE.....	4
19	PFOZZ	5310006379541	96906	MS35338-46	WASHER,LOCK.....	13
20	PFOZZ	5310007638920	96906	MS51967-20	NUT,PLAIN,HEXAGON.....	2
21	PFOZZ	5305007247221	80204	B1821BH063C175N	SCREW,CAP,HEXAGON H USE WITH SERIAL RANGE 77V5006 THRU 77V6293, 77V6295 THRU 77V6374 AND 77V7875 THRU 77V9475.....	8

END OF FIGURE

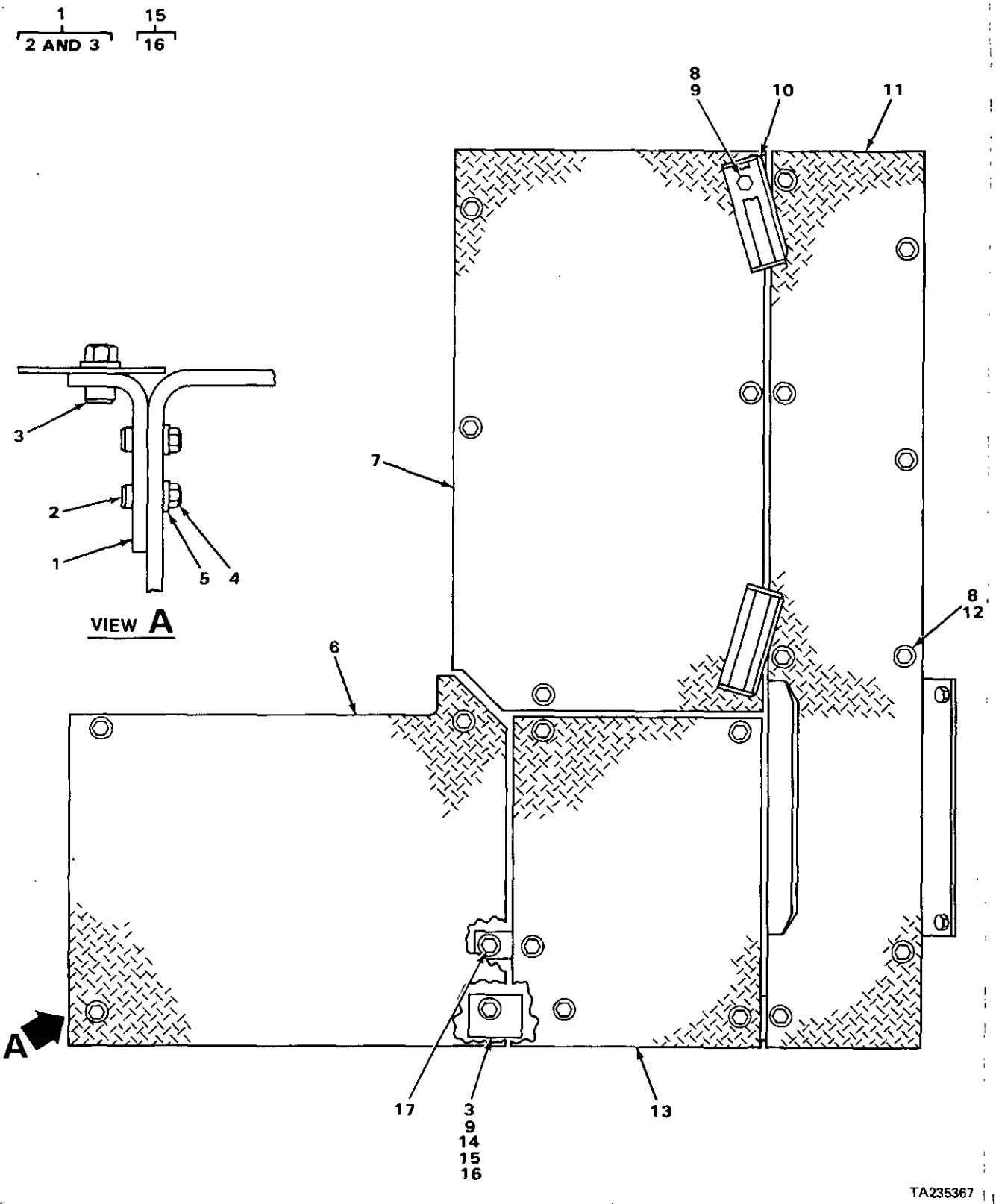

FIGURE 170. FLOOR PLATE.

(1) ITEM NO	(2) SMR CODE	(3) NSN	(4) CAGEC	(5) PART NUMBER	(6) DESCRIPTION AND USABLE ON CODES(UOC)	(7) QTY
					GROUP 1805 FLOORS, SUBFLOORS AND RELATED COMPONENTS.	
					FIG. 170 FLOOR PLATE.	
1	XB000		11083	3P9566	BRACKET ASSEMBLY	1
2	PF0ZZ	5310000050781	11083	9F2978	.NUT,PLAIN,WELDING	2
3	PF0ZZ	5310004454632	11083	1F748	.NUT,PLAIN,WELDING	2
4	PF0ZZ	5306011954681	11083	3B1915	BOLT	2
5	PF0ZZ	5310001174788	11083	5M2894	WASHER,FLAT	2
6	XB0ZZ		11083	3P3966	PLATE	1
7	PF0ZZ	5340013666634	11083	3P3968	PLATE,METAL,FLOOR	1
8	PF0ZZ	5306004238117	11083	S1595	BOLT,MACHINE	28
9	PF0ZZ	5310005845272	96906	MS35338-48	WASHER,LOCK	5
10	PF0ZZ	5342011603902	11083	5H156	SUPPORT	2
11	XB0ZZ		11083	3P3972	PLATE ASSEMBLY	1
12	PF0ZZ	5310004317239	11083	2M849	WASHER,FLAT	24
13	XB0ZZ		11083	6P6383	PLATE	1
14	PF0ZZ	5306011279361	11083	0S1585	BOLT,MACHINE	1
15	XB000		11083	3P9577	ANGLE ASSEMBLY	1
16	PF0ZZ	5310004454632	11083	1F748	.NUT,PLAIN,WELDING	1
17	XB0ZZ		11083	3P5157	LUG	1

END OF FIGURE

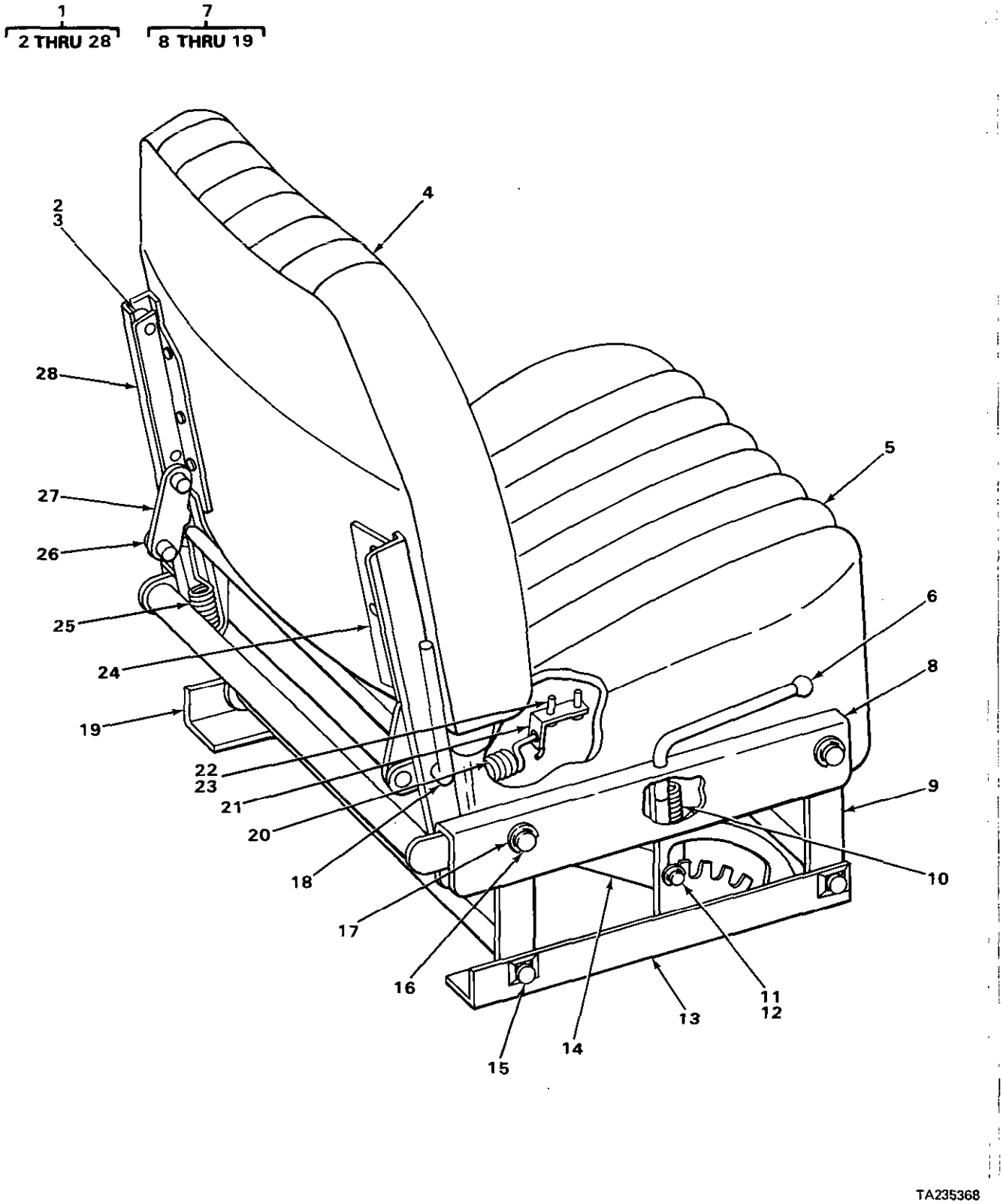

FIGURE 171. ADJUSTABLE SEAT.

(1) ITEM NO	(2) SMR CODE	(3) NSN	(4) CAGEC	(5) PART NUMBER	(6) DESCRIPTION AND USABLE ON CODES(UOC)	(7) QTY
					GROUP 1806 UPHOLSTERY SEATS AND CARPETS.	
					FIG. 171 ADJUSTABLE SEAT.	
1	PF000	2540011762987	91024	1155701	SEAT,VEHICULAR.....	1
2	PFFZZ	3120011655662	91024	1267300	.ROLLER,LINEAR-ROTAR.....	4
3	PFFZZ	5310008093079	96906	MS27183-19	.WASHER,FLAT.....	2
4	PFFZZ	2540004497378	11083	7K5413	.CUSHION,SEAT BACK,V.....	1
5	PFFZZ	2540001371914	11083	7S5390	.CUSHION,SEAT,VEHICU.....	1
6	PFFZZ	5355013215693	11083	7S5380	.KNOB.....	1
7	PFFZZ	2540011637235	11083	7S5391	.FRAME,SEAT,VEHICULA.....	1
8	PFFZZ	2540011637236	91024	1264100	..FRAME,SEAT,VEHICULA.....	1
9	PFFZZ	2540011647840	91024	1264700	..LEVER ASSEMBLY.....	2
10	PFFZZ	5360011653682	91024	1265500	..SPRING,HELICAL,EXTE.....	1
11	PFFZZ	5310004042422	52788	265079	..WASHER,FLAT.....	2
12	XBFZZ		11083	7S5757	..RING.....	2
13	PFFZZ	2540011637237	91024	1265801	..ANGLE,SUPPORT RH.....	1
14	PFFZZ	3040011628995	91024	1265000	..LEVER,MANUAL CONTRO.....	1
15	PFFZZ	5310011653342	91024	1266100	..PUSH ON NUT.....	4
16	PFFZZ	5315011673452	91024	1265600	..PIN,GROOVED,HEADLES.....	4
17	PFFZZ	2510010626107	11083	2R0364	..RING.....	8
18	PFFZZ	2540011654934	91024	1266200	..LINK ASSEMBLY,BACK.....	1
19	PFFZZ	2540011640033	91024	1265802	..ANGLE,SUPPORT LH.....	1
20	PFFZZ	5360010690808	91024	1267700	.SPRING,HELICAL,EXTE.....	1
21	PFFZZ	5340011678357	91024	1267600	.BRACKET,ANGLE.....	1
22	PFFZZ	5310004079566	96906	MS35338-45	.WASHER,LOCK.....	12
23	PFFZZ	5305009845678	96906	MS35206-298	.SCREW,MACHINE.....	12
24	PFFZZ	2540011762910	91024	1267001	.BRACKET,SEAT,SUPPOR RH.....	1
25	PFFZZ	5360010691437	11083	7S5383	.SPRING.....	2
26	XBFZZ		11083	7S5757	.RING.....	4
27	PFFZZ	3040011627641	91024	1267400	.CONNECTING LINK,RIG.....	2
28	PFFZZ	5340011606800	91024	1267002	.BRACKET,ANGLE LH.....	1

END OF FIGURE

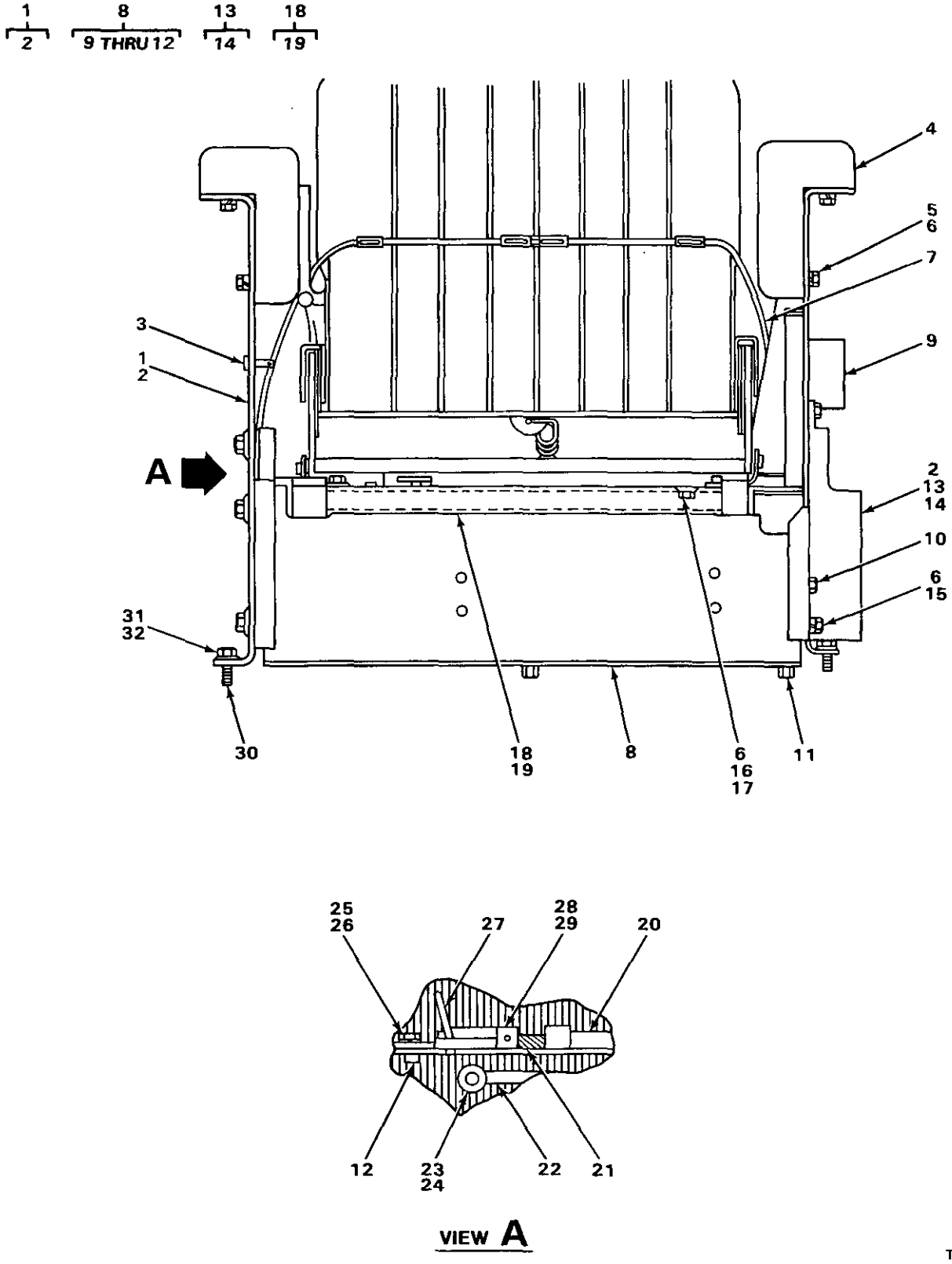

FIGURE 172. SEAT BASE.

(1) ITEM NO	(2) SMR CODE	(3) NSN	(4) CAGEC	(5) PART NUMBER	(6) DESCRIPTION AND USABLE ON CODES(UOC)	(7) QTY
					GROUP 1806 UPHOLSTERY SEATS AND CARPETS.	
					FIG. 172 SEAT BASE.	
1	XBFFF		11083	3P5549	PLATE	1
2	PFFZZ	5310000050781	11083	9F2978	.NUT,PLAIN,WELDING	5
3	XDFZA		11083	2B3191	PIN,STRAIGHT,HEADED	1
4	PFFZZ	2540012090463	11083	3T1981	CUSHION,SEAT,VEHICU	2
5	PFFZZ	5306002724223	11083	6F7030	BOLT,MACHINE	8
6	PFFZZ	5310006379541	96906	MS35338-46	WASHER,LOCK	15
7	PFOZZ	2540010434053	11083	7V9507	BELT,VEHICULAR SAFE	1
8	XBOFF		11083	3P2959	SEAT ASSEMBLY	1
9	XBFZZ		11083	9S5307	.BRACKET	1
10	PFFZZ	5310000050781	11083	9F2978	.NUT,PLAIN,WELDING	17
11	PFFZZ	5310004454632	11083	1F748	.NUT,PLAIN,WELDING	8
12	PFFZZ	5310000503477	19207	503477	.NUT,PLAIN,WELDING	2
13	XBFFF		11083	9S4781	PLATE ASSEMBLY	1
14	PFFZZ	5310000050781	11083	9F2978	.NUT,PLAIN,WELDING	3
15	PFFZZ	5306002637301	11083	L1351	BOLT,MACHINE	3
16	PFFZZ	5305002528919	11083	0S0509	SCREW,CAP,HEXAGON H	4
17	PFFZZ	5310001174788	11083	5M2894	WASHER,FLAT	4
18	XBFZZ		11083	9S4801	HINGE ASSEMBLY	1
19	XBFZZ		11083	5S4905	.LUG	1
20	PFFZZ	3040012725375	11083	3S1684	CONNECTING LINK,RIG	1
21	PFFZZ	5360004655447	11083	8B3090	SPRING,HELICAL,COMP	1
22	PFFZZ	2510001364380	11083	2S1715	ROD,SEAT TILTING	1
23	PFFZZ	5310008094058	96906	MS27183-10	WASHER,FLAT	2
24	PFFZZ	5315008392326	96906	MS24665-281	PIN,COTTER	2
25	PFFZZ	5305000687837	80204	B1821BH025C063N	SCREW,CAP,HEXAGON H	2
26	PFFZZ	5310005825965	96906	MS35338-44	WASHER,LOCK	2
27	XBFZZ		11083	3S1682	LATCH,SEAT CUSHION	1
28	PFFZZ	2540002376245	11083	7M5182	BLOCK, LOCKING, SEA	1
29	PFFZZ	5315010664707	11083	9F7882	PIN	1
30	PFFZZ	5306004238117	11083	S1595	BOLT,MACHINE	10
31	PFFZZ	5310005845272	96906	MS35338-48	WASHER,LOCK	10
32	PFFZZ	5310009307013	11083	4B4280	WASHER,FLAT	10

END OF FIGURE

5 8
6 9

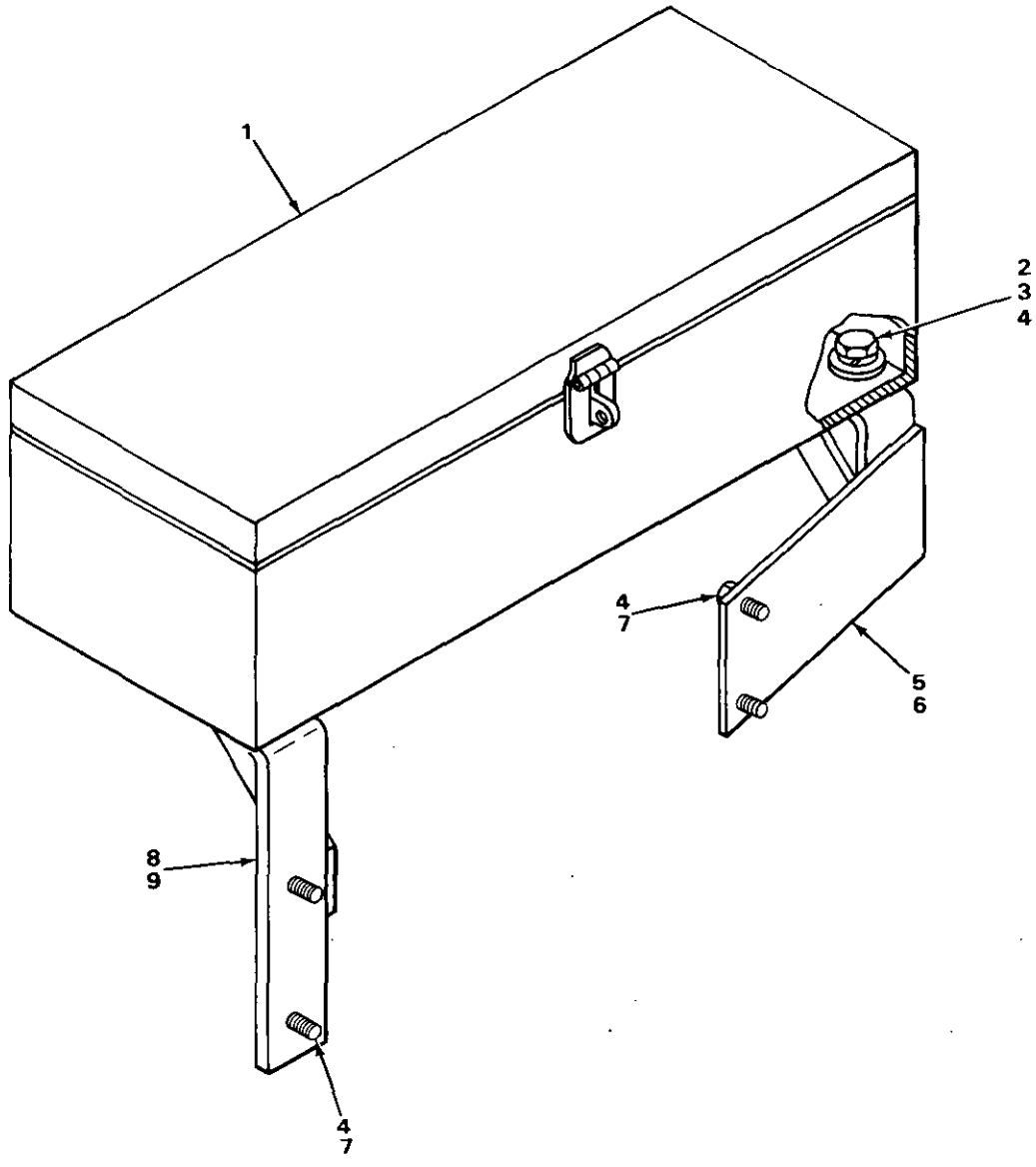

TA235370

FIGURE 173. TOOL BOX.

(1) ITEM NO	(2) SMR CODE	(3) NSN	(4) CAGEC	(5) PART NUMBER	(6) DESCRIPTION AND USABLE ON CODES(UOC)	(7) QTY
					GROUP 1808 STOWAGE RACKS, BOXES, STRAPS, CARRYING CASES, CABLE REELS, HOSE REELS, ETC..	
					FIG. 173 TOOL BOX.	
1	PFFZZ	5140004264193	11083	3B3427	TOOL BOX.....	1
2	PFFZZ	5306002637301	11083	L1351	BOLT,MACHINE.....	4
3	PFFZZ	5310008094061	96906	MS27183-15	WASHER,FLAT.....	4
4	PFFZZ	5310006379541	96906	MS35338-46	WASHER,LOCK.....	16
5	XBFFF		11083	8P5596	SUPPORT ASSEMBLY.....	1
6	PFFZZ	5310000050781	11083	9F2978	.NUT,PLAIN,WELDING.....	2
7	PFFZZ	5306002604508	11083	S1594	BOLT,MACHINE.....	4
8	XBFFF		11083	1P1480	SUPPORT ASSEMBLY.....	2
9	PFFZZ	5310000050781	11083	9F2978	.NUT,PLAIN,WELDING.....	2

END OF FIGURE

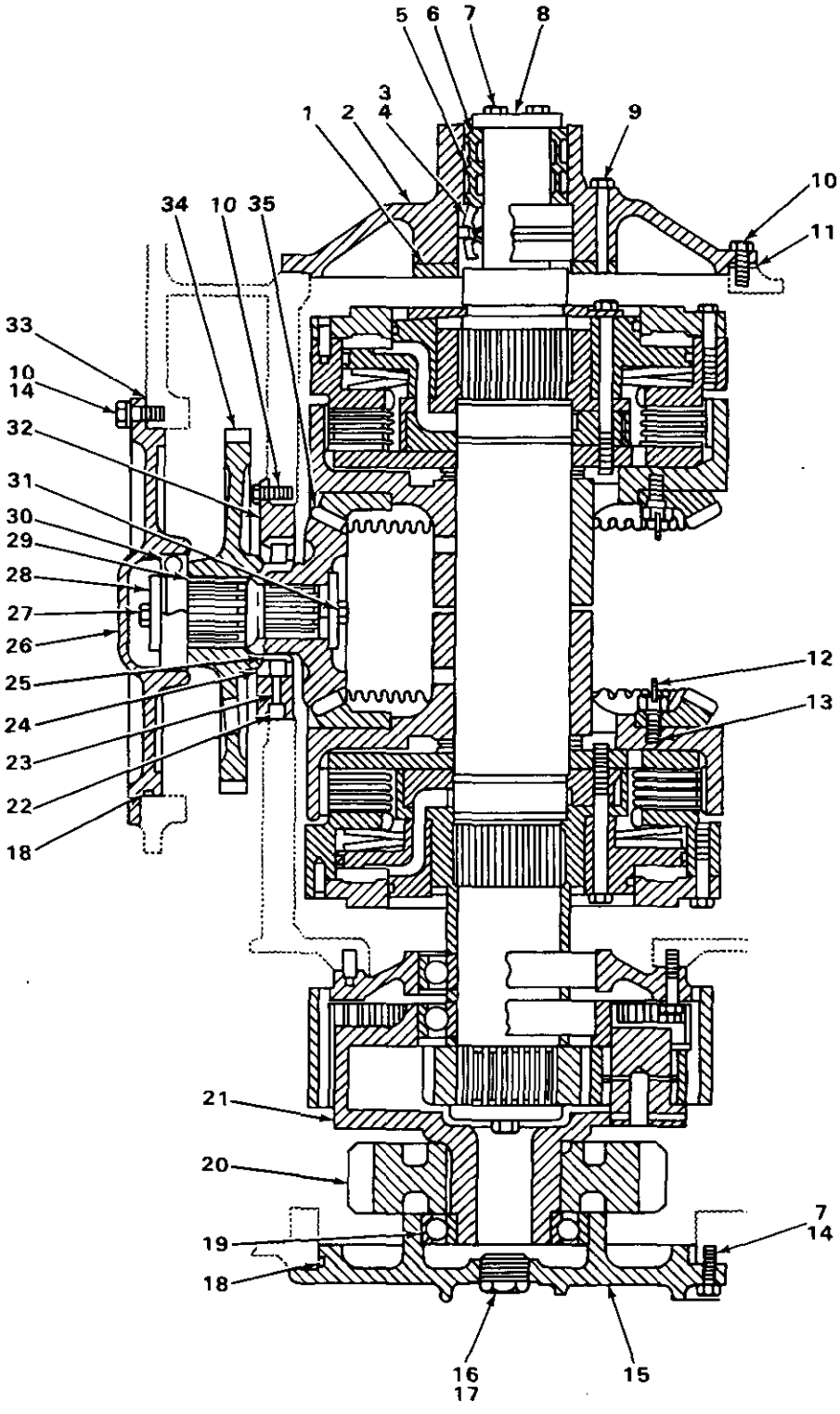

FIGURE 174. WINCH CARRIER ASSEMBLY.

(1) ITEM NO	(2) SMR CODE	(3) NSN	(4) CAGEC	(5) PART NUMBER	(6) DESCRIPTION AND USABLE ON CODES(UOC)	(7) QTY
					GROUP 20 HOIST, WINCH, CAPSTAN, WINDLASS, POWER CONTROL UNIT, AND POWER TAKE OFF.	
					GROUP 2001 HOIST, CAPSTAN, WINDLASS, CRANE OR WINCH ASSEMBLY.	
					FIG. 174 WINCH CARRIER ASSEMBLY.	
1	PFFZZ	5365011646623	11083	1P4232	SPACER,PLATE USE WITH SERIAL RANGE 33U1 AND UP AND 34U1 AND UP..... UOC:T24	1
2	XDFZZ		11083	1P5290	HUB,BODY USE WITH SERIAL RANGE 33U1 AND UP AND 34U1 AND UP..... UOC:T24	1
3	PFFZZ	3110001913923	08162	JLM104910	CUP,TAPERED ROLLER USE WITH SERIAL RANGE 33U1 AND UP AND 34U1 AND UP... UOC:T24	2
4	PFFZZ	3110009385084	08162	JLM104948	CONE AND ROLLERS,TA USE WITH SERIAL RANGE 33U1 AND UP AND 34U1 AND UP..... UOC:T24	2
5	PFFZZ	5365001314761	11083	9P7378	RING,SEAL USE WITH SERIAL RANGE 33U1 AND UP AND 34U1 AND UP..... UOC:T24	3
6	PFFZZ	5365011619161	11083	1P6172	RING,SPECIAL USE WITH SERIAL RANGE 33U1 AND UP AND 34U1 AND UP..... UOC:T24	1
7	PFFZZ	5305000680511	80204	B1821BH038C125N	SCREW,CAP,HEXAGON H USE WITH SERIAL RANGE 33U1 AND UP AND 34U1 AND UP..... UOC:T24	10
8	PFFZZ	3110011648765	11083	1P6180	PLATE,RETAINING,BEA USE WITH SERIAL RANGE 33U1 AND UP AND 34U1 AND UP..... UOC:T24	1
9	PFFZZ	5306002851368	11083	L1143	BOLT,MACHINE USE WITH SERIAL RANGE 33U1 AND UP AND 34U1 AND UP..... UOC:T24	4
10	PFFZZ	5306002604508	11083	S1594	BOLT,MACHINE USE WITH SERIAL RANGE 33U1 AND UP AND 34U1 AND UP..... UOC:T24	19
11	PFFZZ	5365011648702	11083	1P6178	SHIM SET USE WITH SERIAL RANGE 33U1 AND UP AND 34U1 AND UP..... UOC:T24	2
12	MFFZZ		19207	1402378-1	WIRE,LOCK MAKE FROM WIRE P/N 4S8743,USE WITH SERIAL RANGE 33U1 AND UP..... UOC:T24	1
13	PFFZZ	5306010634264	11083	9S1308	BOLT USE WITH SERIAL RANGE 33U1 AND UP..... UOC:T24	12

(1) ITEM NO	(2) SMR CODE	(3) NSN	(4) CAGEC	(5) PART NUMBER	(6) DESCRIPTION AND USABLE ON CODES(UOC)	(7) QTY
14	PFFZZ	5310006379541	96906	MS35338-46	WASHER,LOCK USE WITH SERIAL RANGE 33U1 AND UP AND 34U1 AND UP..... UOC:T24	14
15	PFFZZ	3130012577787	11083	1P5286	HOUSING,BEARING UNI USE WITH SERIAL RANGE 33U1 AND UP AND 34U1 AND UP..... UOC:T24	1
16	PFFZZ	6680011605291	11083	4J4742	INDICATOR,SIGHT,LIQ USE WITH SERIAL RANGE 33U1 AND UP AND 34U1 AND UP..... UOC:T24	1
17	PFFZZ	5330009309407	11083	7M8485	SEAL,ADAPTER,MOTOR USE WITH SERIAL RANGE 33U1 AND UP AND 34U1 AND UP... UOC:T24	1
18	PFFZZ	5330007388622	11083	5H4909	SEAL,TORQUE CONVERT USE WITH SERIAL RANGE 33U1 AND UP AND 34U1 AND UP..... UOC:T24	2
19	PFFZZ	3110002896803	11083	1B4102	BEARING,BALL,ANNULA USE WITH SERIAL RANGE 33U1 AND UP AND 34U1 AND UP..... UOC:T24	1
20	XBFZZ		11083	1P4233	GEAR USE WITH SERIAL RANGE 33U1 AND UP AND 34U1 AND UP..... UOC:T24	1
21	PFFZZ	3040012541028	11083	2P1984	CARRIER ASSEMBLY USE WITH SERIAL RANGE 33U1 AND UP AND 34U1 AND UP... UOC:T24	1
22	PFFZZ	5340002299287	11083	L1026	PLUG,EXPANSION USE WITH SERIAL RANGE 33U1 AND UP AND 34U1 AND UP... UOC:T24	1
23	PFFZZ	5315012584780	11083	4M1712	PIN,STRAIGHT,HEADLE USE WITH SERIAL RANGE 33U1 AND UP AND 34U1 AND UP..... UOC:T24	1
24	XBFZZ		11083	2D3335	RACE USE WITH SERIAL RANGE 33U1 THRU 33U195..... UOC:T24	1
24	PFFZZ	5310004134757	11083	3S4388	WASHER,FLAT USE WITH SERIAL RANGE 33U196 AND UP,34U1 AND UP..... UOC:T24	1
25	PFFZZ	3110011647536	11083	2K1738	BEARING,ROLLER,CYLI ASSEMBLY,USE WITH SERIAL RANGE 33U1 THRU 33U195.. UOC:T24	1
25	PFFZZ	3110007406784	11083	1J9227	BEARING,ROLLER,CYLI ASSEMBLY,USE WITH SERIAL RANGE 33U196 AND UP, 34U1 AND UP..... UOC:T24	1
26	PFFZZ	3130011660810	11083	1P6174	HOUSING,BEARING UNI USE WITH SERIAL RANGE 33U1 AND UP AND 34U1 AND UP..... UOC:T24	1

(1) ITEM NO	(2) SMR CODE	(3) NSN	(4) CAGEC	(5) PART NUMBER	(6) DESCRIPTION AND USABLE ON CODES(UOC)	(7) QTY
27	PFFZZ	5306000635001	11083	1A2209	BOLT,MACHINE USE WITH SERIAL RANGE 33U1 AND UP AND 34U1 AND UP..... UOC:T24	1
28	PFFZZ	5310012574300	11083	5S3552	WASHER,FLAT USE WITH SERIAL RANGE 33U1 THRU 33U195..... UOC:T24	2
28	PFFZZ	5310012574300	11083	5S3552	WASHER,FLAT USE WITH SERIAL RANGE 33U196 AND UP,34U1 AND UP..... UOC:T24	1
29	XBFZZ		11083	1P6185	SHAFT USE WITH SERIAL RANGE 33U1 THRU 33U195..... UOC:T24	1
29	PFFZZ	3040012549895	11083	3P7238	SHAFT,SHOULDERED USE WITH SERIAL RANGE 33U196 AND UP,34U1 AND UP..... UOC:T24	1
30	PFFZZ	3110001982292	11083	1T43	BEARING,BALL,ANNULA USE WITH SERIAL RANGE 33U1 AND UP AND 34U1 AND UP..... UOC:T24	1
31	PFFZZ	5306004262866	11083	L139	BOLT,MACHINE USE WITH SERIAL RANGE 33U1 AND UP AND 34U1 AND UP..... UOC:T24	1
32	PFFZZ	3130012573836	11083	1P6173	HOUSING,BEARING UNI USE WITH SERIAL RANGE 33U1 AND UP AND 34U1 AND UP..... UOC:T24	1
33	PFFZZ	5365011649962	11083	1P6175	SHIM USE WITH SERIAL RANGE 33U1 AND UP AND 34U1 AND UP..... UOC:T24	4
34	XBFZZ		11083	1P2532	GEAR USE WITH SERIAL RANGE 33U1 AND UP..... UOC:T24	1
34	XBFZZ		11083	1P2550	GEAR USE WITH SERIAL RANGE 34U1 AND UP..... UOC:T24	1
35	XBFZZ		11083	1P5270	PINION USE WITH SERIAL RANGE 33U1 THRU 33U195..... UOC:T24	1
35	XBFZZ		11083	3P7237	PINION USE WITH SERIAL RANGE 33U196 AND UP,34U1 AND UP..... UOC:T24	1

END OF FIGURE

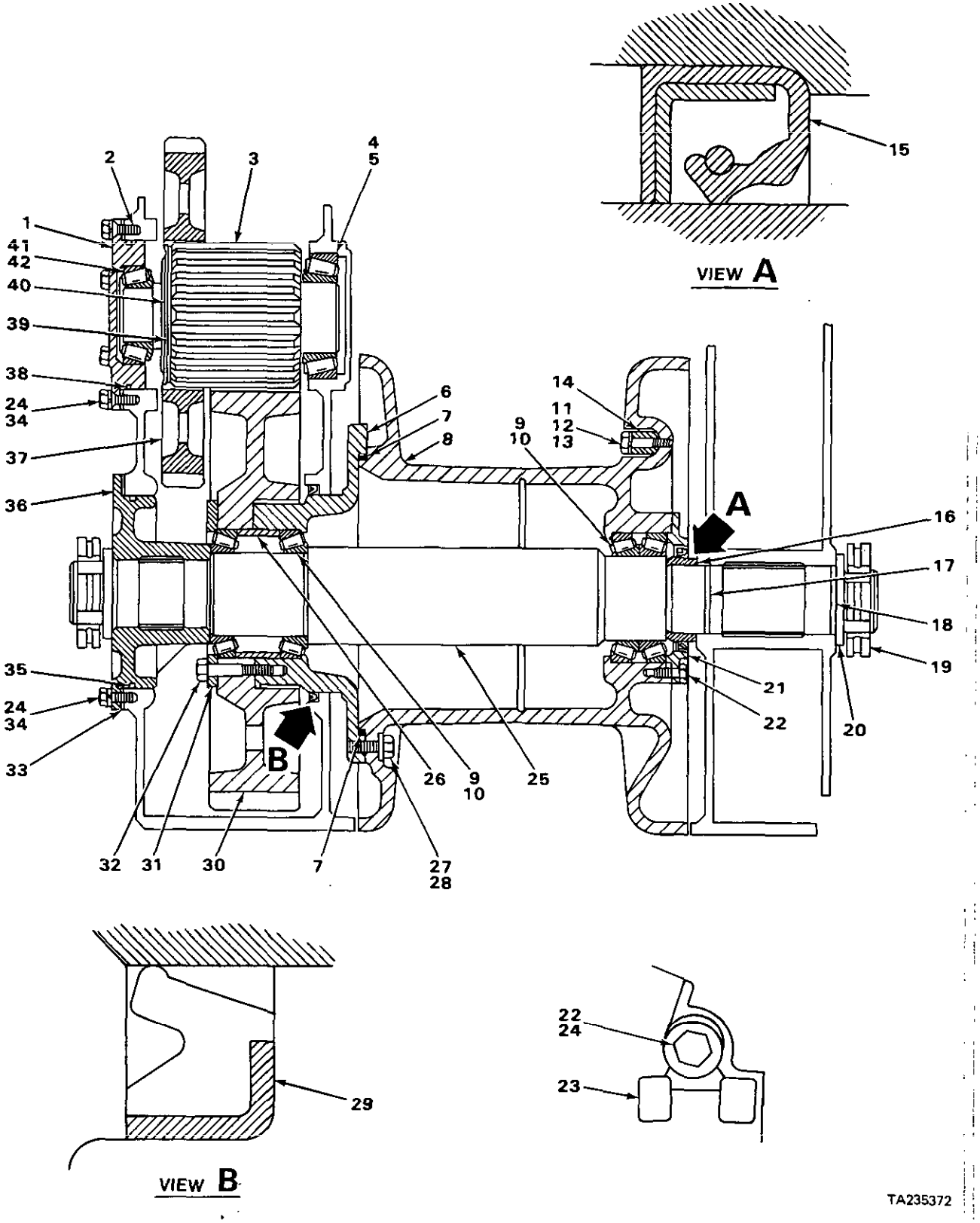

FIGURE 175. WINCH DRUM AND RELATED PARTS.

(1) ITEM NO	(2) SMR CODE	(3) NSN	(4) CAGEC	(5) PART NUMBER	(6) DESCRIPTION AND USABLE ON CODES(UOC)	(7) QTY
					GROUP 2001 HOIST, CAPSTAN, WINDLASS, CRANE OR WINCH ASSEMBLY	
					FIG. 175 WINCH DRUM AND RELATED PARTS.	
1	XBFZZ		11083	1P2171	CAGE USE WITH SERIAL RANGE 33U1 AND UP AND 34U1 AND UP..... UOC:T24	1
2	XBFZZ		11083	1P6211	SHIM PACK USE WITH SERIAL RANGE 33U1 AND UP AND 34U1 AND UP..... UOC:T24	2
3	XBFZZ		11083	2P1993	GEAR USE WITH SERIAL RANGE 33U1 AND UP AND 34U1 AND UP..... UOC:T24	1
4	XBFZZ		11083	1P5420	CUP USE WITH SERIAL RANGE 33U1 AND UP AND 34U1 AND UP..... UOC:T24	1
5	XBFZZ		11083	1P5419	CONE USE WITH SERIAL RANGE 33U1 AND UP AND 34U1 AND UP..... UOC:T24	1
6	PFFZZ	3020012555401	11083	1P2581	HUB,BODY USE WITH SERIAL RANGE 33U1 AND UP AND 34U1 AND UP..... UOC:T24	1
7	PFFZZ	5331009998364	09990	2-279N951-75	O-RING USE WITH SERIAL RANGE 33U1 AND UP AND 34U1 AND UP..... UOC:T24	1
8	XBFZZ		11083	1P2553	DRUM ASSEMBLY USE WITH SERIAL RANGE 33U1 THRU 33U195..... UOC:T24	1
8	XBFZZ		11083	1P9670	DRUM ASSEMBLY USE WITH SERIAL RANGE 34U1 AND UP..... UOC:T24	1
9	PFFZZ	2520010634240	08162	JM 822049CONE	CONE USE WITH SERIAL RANGE 33U1 AND UP AND 34U1 AND UP..... UOC:T24	4
10	PFFZZ	2520010634241	08162	JM 822010 CUP	CUP USE WITH SERIAL RANGE 33U1 AND UP AND 34U1 AND UP..... UOC:T24	4
11	PFFZZ	5306006982150	11083	L2070	BOLT,MACHINE USE WITH SERIAL RANGE 33U1 THRU 33U195..... UOC:T24	1
12	PFFZZ	5305000680511	80204	B1821BH038C125N	SCREW,CAP,HEXAGON H USE WITH SERIAL RANGE 33U1 THRU 33U195..... UOC:T24	1
13	PFFZZ	5310006379541	96906	MS35338-46	WASHER,LOCK USE WITH SERIAL RANGE 33U1 THRU 33U195..... UOC:T24	2
14	XBFZZ		11083	1P4106	CLAMP USE WITH SERIAL RANGE 33U1 THRU 33U195..... UOC:T24	1
15	PFFZZ	5330001611882	11083	3F1395	SEAL,PLAIN ENCASED USE WITH SERIAL	1

(1) ITEM NO	(2) SMR CODE	(3) NSN	(4) CAGEC	(5) PART NUMBER	(6) DESCRIPTION AND USABLE ON CODES(UOC)	(7) QTY
					RANGE 33U1 AND UP AND 34U1 AND UP... UOC:T24	
16	PFFZZ	5365012589188	11083	1P6754	SPACER,SLEEVE USE WITH SERIAL RANGE 33U1 AND UP AND 34U1 AND UP... UOC:T24	1
17	PFFZZ	5331003396220	11083	2H6184	O-RING USE WITH SERIAL RANGE 33U1 AND UP AND 34U1 AND UP..... UOC:T24	1
18	PFFZZ	5331000743764	11083	7H2444	O-RING USE WITH SERIAL RANGE 33U1 AND UP AND 34U1 AND UP..... UOC:T24	2
19	PFFZZ	5310006098042	11083	8H3325	NUT USE WITH SERIAL RANGE 33U1 AND UP AND 34U1 AND UP..... UOC:T24	2
20	PFFZZ	5310012574299	11083	3P0719	WASHER,FLAT USE WITH SERIAL RANGE 33U1 AND UP AND 34U1 AND UP..... UOC:T24	2
21	PFFZZ	5330012577744	11083	1P4105	RETAINER,OIL SEAL USE WITH SERIAL RANGE 33U1 AND UP AND 34U1 AND UP... UOC:T24	1
22	PFFZZ	5306004238117	11083	S1595	BOLT,MACHINE USE WITH SERIAL RANGE 33U1 THRU 33U195..... UOC:T24	6
22	PFFZZ	5306004238117	11083	S1595	BOLT,MACHINE USE WITH SERIAL RANGE 34U1 AND UP..... UOC:T24	7
23	PFFZZ	4030011962310	11083	1P8952	CLAMP USE WITH SERIAL RANGE 34U1 AND UP..... UOC:T24	1
24	PFFZZ	5310005845272	96906	MS35338-48	WASHER,LOCK USE WITH SERIAL RANGE 33U1 THRU 33U195..... UOC:T24	18
24	PFFZZ	5310005845272	96906	MS35338-48	WASHER,LOCK USE WITH SERIAL RANGE 34U1 AND UP..... UOC:T24	19
25	XBFZZ		11083	2P1991	SHAFT ASSEMBLY USE WITH SERIAL RANGE 33U1 AND UP AND 34U1 AND UP... UOC:T24	1
26	XBFZZ		11083	1P3276	SPACER USE WITH SERIAL RANGE 33U1 AND UP AND 34U1 AND UP..... UOC:T24	1
27	PFFZZ	5305007247221	80204	B1821BH063C175N	SCREW,CAP,HEXAGON H USE WITH SERIAL RANGE 33U1 AND UP AND 34U1 AND UP..... UOC:T24	18
28	PFFZZ	5310001397030	11083	4D3704	WASHER,FLAT USE WITH SERIAL RANGE 33U1 AND UP AND 34U1 AND UP..... UOC:T24	18
29	PFFZZ	5330012098719	11083	1S5347	SEAL,PLAIN ENCASED USE WITH SERIAL RANGE 33U1 AND UP AND 34U1 AND UP... UOC:T24	1
30	XBFZZ		11083	2P1992	GEAR USE WITH SERIAL RANGE 33U1	1

(1) ITEM NO	(2) SMR CODE	(3) NSN	(4) CAGEC	(5) PART NUMBER	(6) DESCRIPTION AND USABLE ON CODES(UOC)	(7) QTY
					AND UP AND 34U1 AND UP..... UOC:T24	
31	XBFZZ		11083	1P3240	RING USE WITH SERIAL RANGE 33U1 AND UP AND 34U1 AND UP..... UOC:T24	1
32	PFFZZ	5305007247236	80204	B1821BH063C325N	SCREW,CAP,HEXAGON H USE WITH SERIAL RANGE 33U1 AND UP AND 34U1 AND UP..... UOC:T24	8
33	PFFZZ	5365012580113	11083	1P6181	SHIM USE WITH SERIAL RANGE 33U1 AND UP AND 34U1 AND UP..... UOC:T24	2
34	PFFZZ	5306011279361	11083	0S1585	BOLT,MACHINE USE WITH SERIAL RANGE 33U1 AND UP AND 34U1 AND UP..... UOC:T24	18
35	PFFZZ	5330011893550	11083	1J2890	SEAL USE WITH SERIAL RANGE 33U1 AND UP AND 34U1 AND UP..... UOC:T24	1
36	XBFZZ		11083	2P5272	FLANGE USE WITH SERIAL RANGE 33U1 AND UP AND 34U1 AND UP..... UOC:T24	1
37	XBFZZ		11083	1P5273	GEAR USE WITH SERIAL RANGE 33U1 AND UP AND 34U1 AND UP..... UOC:T24	1
38	PFFZZ	5331007142330	09990	2-261N951-75	O-RING USE WITH SERIAL RANGE 33U1 AND UP AND 34U1 AND UP..... UOC:T24	1
39	XBFZZ		11083	2P1994	PLATE USE WITH SERIAL RANGE 33U1 AND UP AND 34U1 AND UP..... UOC:T24	2
40	XDFZZ		80756	RR-650	RING,RETAINING USE WITH SERIAL RANGE 33U1 AND UP AND 34U1 AND UP... UOC:T24	1
41	PFFZZ	3110010133083	11083	6S2828	CUP,TAPERED ROLLER USE WITH SERIAL RANGE 33U1 AND UP AND 34U1 AND UP... UOC:T24	1
42	PFFZZ	3110010134036	11083	6S2829	CONE AND ROLLERS,TA USE WITH SERIAL RANGE 33U1 AND UP AND 34U1 AND UP..... UOC:T24	1

END OF FIGURE

2
3

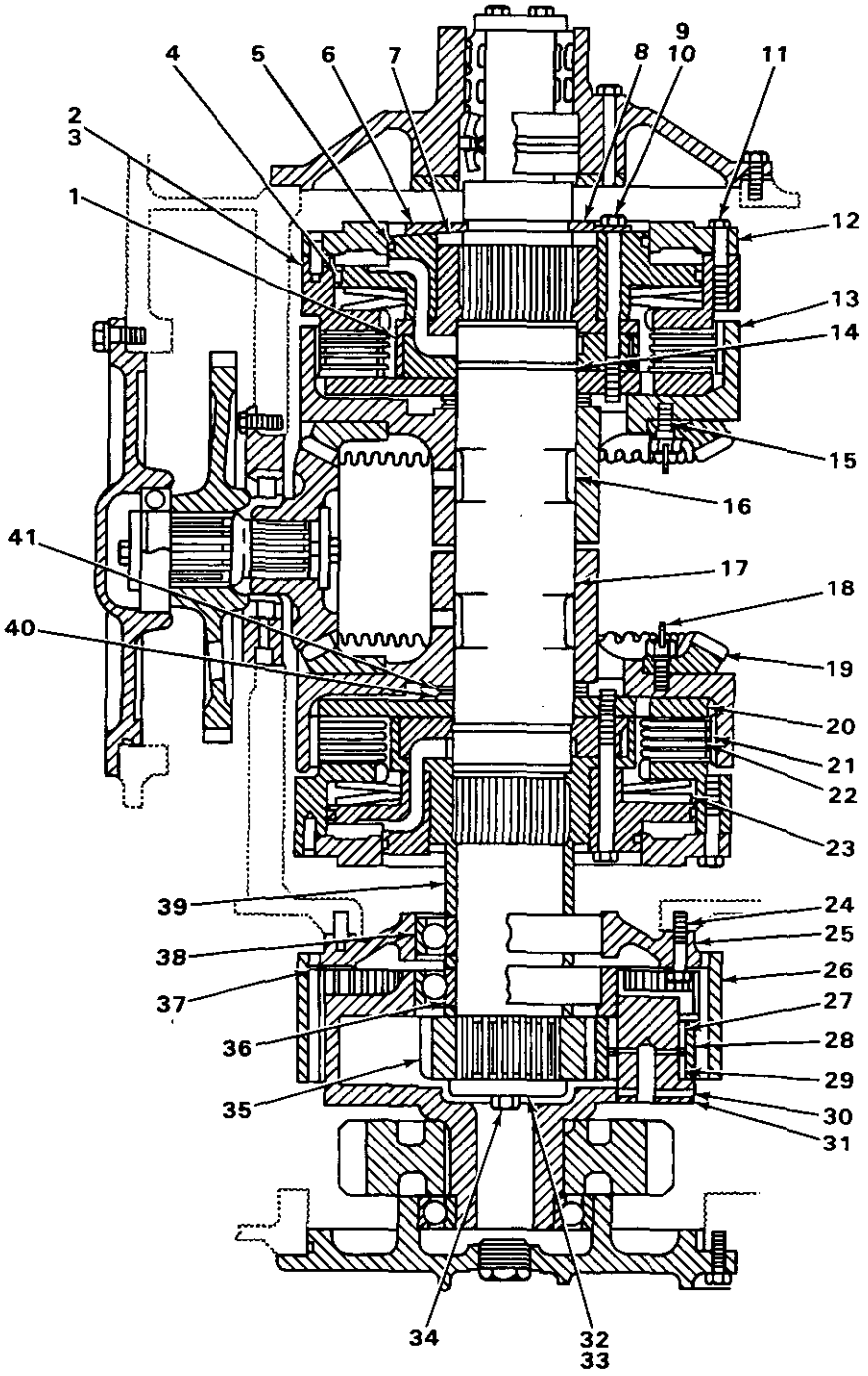

TA235373

FIGURE 176. WINCH HUB AND SHAFT.

(1) ITEM NO	(2) SMR CODE	(3) NSN	(4) CAGEC	(5) PART NUMBER	(6) DESCRIPTION AND USABLE ON CODES(UOC)	(7) QTY
					GROUP 2001 HOIST, CAPSTAN, WINDLASS, CRANE, OR WINCH ASSEMBLY.	
					FIG. 176 WINCH HUB AND SHAFT.	
1	XBFZZ		11083	1P5294	MANIFOLD USE WITH SERIAL RANGE 33U1 AND UP AND 34U1 AND UP..... UOC:T24	2
2	PFFZZ	3040011844026	11083	1P6179	HUB,BODY USE WITH SERIAL RANGE 33U1 AND UP AND 34U1 AND UP..... UOC:T24	2
3	PFFZZ	5315002459995	11083	8B1312	.PIN,STRAIGHT,HEADLE USE WITH SERIAL RANGE 33U1 AND UP AND 34U1 AND UP..... UOC:T24	2
4	PFFZZ	5310004513384	11083	8S3371	WASHER USE WITH SERIAL RANGE 33U1 AND UP AND 34U1 AND UP..... UOC:T24	2
5	PFFZZ	5330011648576	11083	1S9497	RETAINER,PACKING USE WITH SERIAL RANGE 33U1 AND UP AND 34U1 AND UP... UOC:T24	2
6	PFFZZ	3040011633240	11083	1P6158	COLLAR,SHAFT USE WITH SERIAL RANGE 33U1 AND UP AND 34U1 AND UP..... UOC:T24	2
7	XBFZZ		11083	1P6155	HUB USE WITH SERIAL RANGE 33U1 AND UP AND 34U1 AND UP..... UOC:T24	2
8	PFFZZ	3110011653725	11083	1P6176	PLATE,RETAINING,BEA USE WITH SERIAL RANGE 33U1 AND UP AND 34U1 AND UP..... UOC:T24	1
9	PFFZZ	5305003627336	11083	5B2638	SCREW,CAP,HEXAGON H USE WITH SERIAL RANGE 33U1 AND UP AND 34U1 AND UP..... UOC:T24	6
10	PFFZZ	5305009640503	80204	B1821BH038C500N	SCREW,CAP,HEXAGON H USE WITH SERIAL RANGE 33U1 AND UP AND 34U1 AND UP..... UOC:T24	10
11	PFFZZ	5306010949106	11083	0S1590	BOLT,MACHINE USE WITH SERIAL RANGE 33U1 AND UP AND 34U1 AND UP..... UOC:T24	16
12	PFFZZ	3040011624303	11083	1P6153	PLATE,RETAINING,SHA USE WITH SERIAL RANGE 33U1 AND UP AND 34U1 AND UP..... UOC:T24	2
13	XBFZZ		11083	1P5292	HOUSING USE WITH SERIAL RANGE 33U1 AND UP AND 34U1 AND UP..... UOC:T24	2
14	PFFZZ	5331007412096	11083	6H3977	O-RING USE WITH SERIAL RANGE 33U1 AND UP AND 34U1 AND UP..... UOC:T24	4

(1) ITEM NO	(2) SMR CODE	(3) NSN	(4) CAGEC	(5) PART NUMBER	(6) DESCRIPTION AND USABLE ON CODES(UOC)	(7) QTY
15	PFFZZ	5306010634264	11083	9S1308	BOLT USE WITH SERIAL RANGE 34U1 AND UP.... UOC:T24	12
16	XBFZZ		11083	2P2005	SHAFT ASSEMBLY USE WITH SERIAL RANGE 33U1 AND UP AND 34U1 AND UP... UOC:T24	1
17	PFFZZ	3120011648623	11083	2P1005	BEARING,SLEEVE USE WITH SERIAL RANGE 33U1 AND UP AND 34U1 AND UP... UOC:T24	4
18	MFFZZ		19207	1402378-1	WIRE,LOCK MAKE FROM WIRE P/N 4S8743,USE WITH SERIAL RANGE 34U1 AND UP.... UOC:T24	1
19	XBFZZ		11083	1P5269	GEAR USE WITH SERIAL RANGE 33U1 AND UP AND 34U1 AND UP..... UOC:T24	2
20	PFFZZ	2520011617796	11083	1P6167	DISK,CLUTCH,VEHICUL USE WITH SERIAL RANGE 33U1 AND UP AND 34U1 AND UP.... UOC:T24	2
21	XDFZZ		11083	2P4371	DISK,CLUTCH USE WITH SERIAL RANGE 33U1 AND UP AND 34U1 AND UP..... UOC:T24	14
22	PFFZZ	2520011619658	11083	2P4370	DISK,CLUTCH,VEHICUL USE WITH SERIAL RANGE 33U1 AND UP AND 34U1 AND UP.... UOC:T24	12
23	XBFZZ		11083	1P5206	SPRING USE WITH SERIAL RANGE 33U1 AND UP AND 34U1 AND UP..... UOC:T24	4
24	PFFZZ	5306002634038	11083	2A4639	BOLT,MACHINE USE WITH SERIAL RANGE 33U1 AND UP AND 34U1 AND UP..... UOC:T24	8
25	PFFZZ	3130012599600	11083	1P6209	HOUSING,BEARING UNI USE WITH SERIAL RANGE 33U1 AND UP AND 34U1 AND UP.... UOC:T24	1
26	PFFZZ	3020012544803	11083	2P1981	GEAR,INTERNAL USE WITH SERIAL RANGE 33U1 AND UP AND 34U1 AND UP... UOC:T24	1
27	PFFZZ	3110008966819	11083	4M3915	RETAINER AND ROLLER USE WITH SERIAL RANGE 33U1 AND UP AND 34U1 AND UP.... UOC:T24	8
28	PFFZZ	3020010590869	11083	1S9936	GEAR USE WITH SERIAL RANGE 33U1 AND UP AND 34U1 AND UP..... UOC:T24	4
29	PFFZZ	2520007885571	11083	7M5783	WASHER TRANSMISSION USE WITH SERIAL RANGE 33U1 AND UP AND 34U1 AND UP.... UOC:T24	8
30	PFFZZ	5315010597198	11083	3S2708	PIN USE WITH SERIAL RANGE 33U1 AND	4

(1) ITEM NO	(2) SMR CODE	(3) NSN	(4) CAGEC	(5) PART NUMBER	(6) DESCRIPTION AND USABLE ON CODES(UOC)	(7) QTY
					UP AND 34U1 AND UP..... UOC:T24	
31	PFFZZ	3040012541006	11083	1P4056	SHAFT,STRAIGHT USE WITH SERIAL RANGE 33U1 AND UP AND 34U1 AND UP... UOC:T24	4
32	PFFZZ	5310011540708	11083	2S6408	WASHER,FLAT USE WITH SERIAL RANGE 33U1 AND UP AND 34U1 AND UP..... UOC:T24	1
33	PFFZZ	5365012556668	11083	2P1985	SHIM SET USE WITH SERIAL RANGE 33U1 AND UP AND 34U1 AND UP..... UOC:T24	1
34	PFFZZ	5305011075161	11083	L2315	SCREW,CAP,HEXAGON H USE WITH SERIAL RANGE 33U1 AND UP AND 34U1 AND UP..... UOC:T24	1
35	PFFZZ	3020012544807	11083	1P6182	GEAR,SPUR USE WITH SERIAL RANGE 33U1 AND UP AND 34U1 AND UP..... UOC:T24	1
36	PFFZZ	5365012593960	11083	2P1990	SPACER,RING USE WITH SERIAL RANGE 33U1 AND UP AND 34U1 AND UP..... UOC:T24	2
37	PFFZZ	5365012663314	11083	1P6188	SPACER,PLATE USE WITH SERIAL RANGE 33U1 AND UP AND 34U1 AND UP..... UOC:T24	4
38	XBFZZ		11083	888439	BEARING USE WITH SERIAL RANGE 33U1 AND UP AND 34U1 AND UP..... UOC:T24	2
39	PFFZZ	5365012573303	11083	2P2046	SPACER,SLEEVE USE WITH SERIAL RANGE 33U1 AND UP AND 34U1 AND UP... UOC:T24	1
40	PFFZZ	3110010249817	60380	NTA-5266	RETAINER AND ROLLER USE WITH SERIAL RANGE 33U1 AND UP AND 34U1 AND UP..... UOC:T24	2
41	PFFZZ	3120011639375	11083	1P6071	BEARING,WASHER,THRU USE WITH SERIAL RANGE 33U1 AND UP AND 34U1 AND UP..... UOC:T24	4

END OF FIGURE

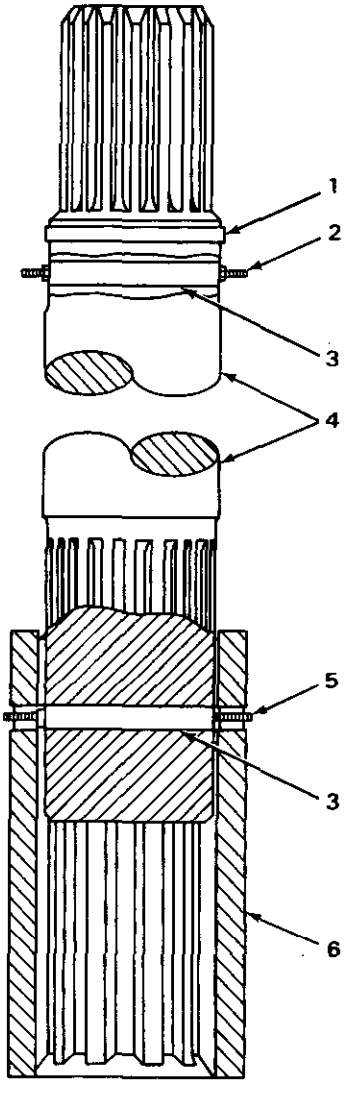

TA235374

FIGURE 177. WINCH DRIVE SHAFT.

(1) ITEM NO	(2) SMR CODE	(3) NSN	(4) CAGEC	(5) PART NUMBER	(6) DESCRIPTION AND USABLE ON CODES (UOC)	(7) QTY
					GROUP 2001 HOIST: CAPSTAN: WINDLASS CRANE, OR WINCH ASSEMBLY.	
					FIG. 177 WINCH DRIVE SHAFTS	
1	PFFZZ	5331005598786	09990	2-227N951-75	0-RING	1
					UOC: T24	
2	PFFZZ	2520010597148	11053	11649	RING	1
					UOC: T24	
3	XBFZZ		11083	1B2522	PIN	2
					UOC: T24	
4	XBFZZ		11083	2P2931	SHAFT	1
					UOC: T24	
5	PFFZZ	5325004962235	11083	8F737	RING, RETAINING	1
					UOC: T24	
6	XBEZZ		30076	6327	COUPLING DRUM SHAFT	1
					UOC: T24	

END OF FIGURE

14
15 THRU 23

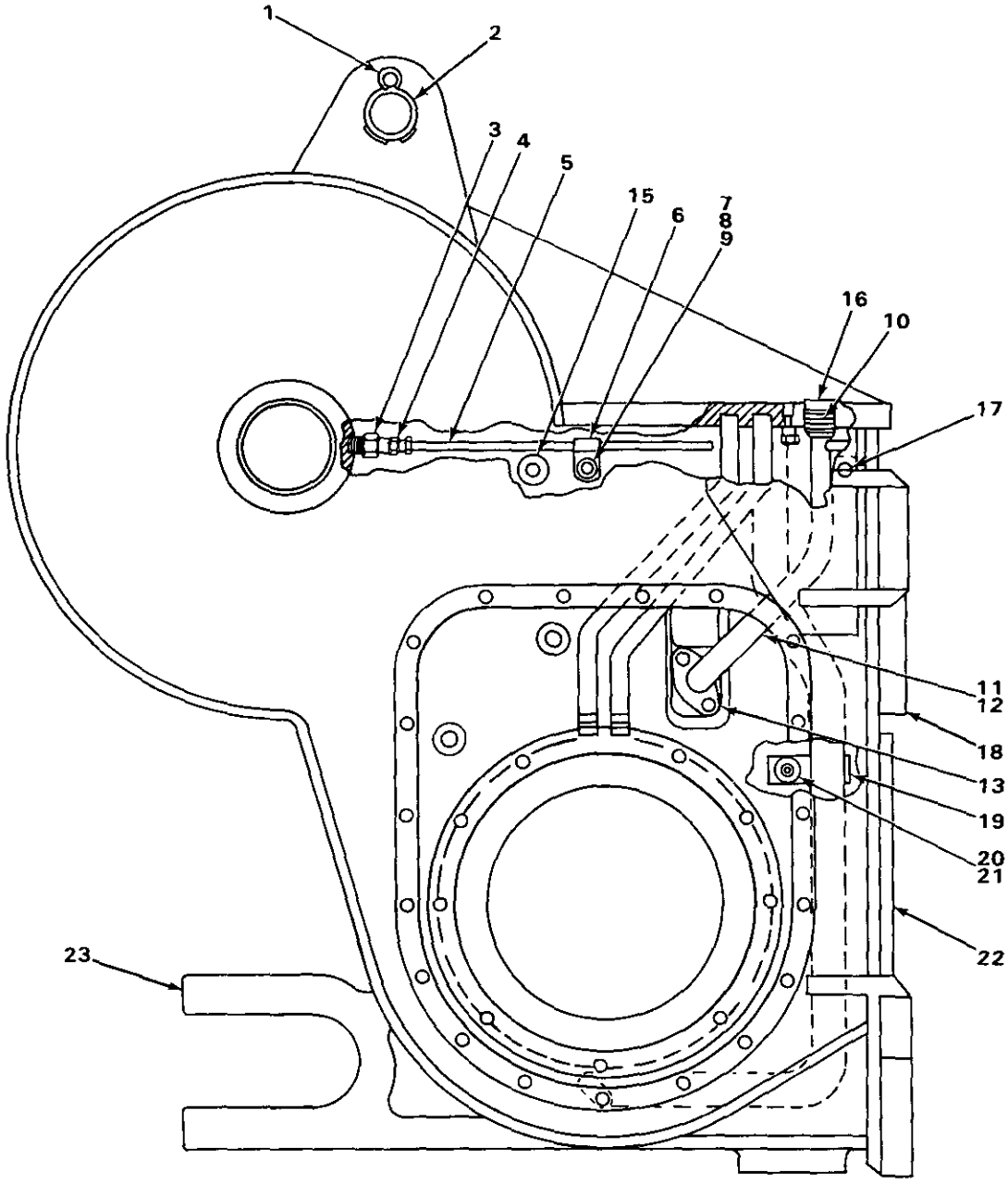

TA235375

FIGURE 178. WINCH CASE ASSEMBLY (SIDE VIEW).

(1) ITEM NO	(2) SMR CODE	(3) NSN	(4) CAGEC	(5) PART NUMBER	(6) DESCRIPTION AND USABLE ON CODES(UOC)	(7) QTY
					GROUP 2001 HOIST, CAPSTAN, WINDLASS, CRANE, OR WINCH ASSEMBLY.	
					FIG. 178 WINCH CASE ASSEMBLY (SIDE VIEW).	
1	PFFZZ	5315000189396	11083	3B5325	PIN,COTTER..... UOC:T24	2
2	PFFZZ	3040012541007	11083	1P2593	SHAFT,STRAIGHT..... UOC:T24	1
3	PFFZZ	4730011610160	11083	2P4439	REDUCER,PIPE..... UOC:T24	1
4	PFFZZ	4730010599344	11083	5K9246	ADAPTER,STRAIGHT,PI..... UOC:T24	1
5	XBFZZ		11083	2P2008	TUBE ASSEMBLY..... UOC:T24	1
6	PFFZZ	5340002827505	96906	MS21333-57	CLAMP,LOOP..... UOC:T24	1
7	PFFZZ	5306002637301	11083	L1351	BOLT,MACHINE..... UOC:T24	1
8	PFFZZ	5310008512682	96906	MS35691-17	NUT,PLAIN,HEXAGON..... UOC:T24	1
9	PFFZZ	5310001174788	11083	5M2894	WASHER,FLAT..... UOC:T24	1
10	PFFZZ	5331005917543	11083	7F8607	O-RING..... UOC:T24	1
11	XBFZZ		11083	3P3247	TUBE ASSEMBLY..... UOC:T24	1
12	PAFZZ	5331009138120	58312	8M5254-00	O-RING..... UOC:T24	1
13	PFFZZ	5306002604508	11083	S1594	BOLT,MACHINE..... UOC:T24	2
14	XBFFF		11083	1P2545	CASE ASSEMBLY..... UOC:T24	1
15	XBFZZ		11083	1P9283	.BOSS..... UOC:T24	1
16	XBFZZ		11083	3P3307	.SLEEVE..... UOC:T24	1
17	PFFZZ	2520010515278	11083	8F9836	.LUG..... UOC:T24	2
18	XBFZZ		11083	1P2156	.RING..... UOC:T24	1
19	PFFZZ	5340011628857	11083	2P3572	.STRAP,RETAINING..... UOC:T24	1
20	PFFZZ	5305007215492	80204	B1821BH038C063N	.SCREW,CAP,HEXAGON H..... UOC:T24	1
21	PFFZZ	5310001174788	11083	5M2894	.WASHER,FLAT..... UOC:T24	1
22	XBFZZ		11083	1P5210	.SUPPORT..... UOC:T24	2
23	XBFZZ		11083	2P2893	.CLEVIS..... UOC:T24	1

END OF FIGURE

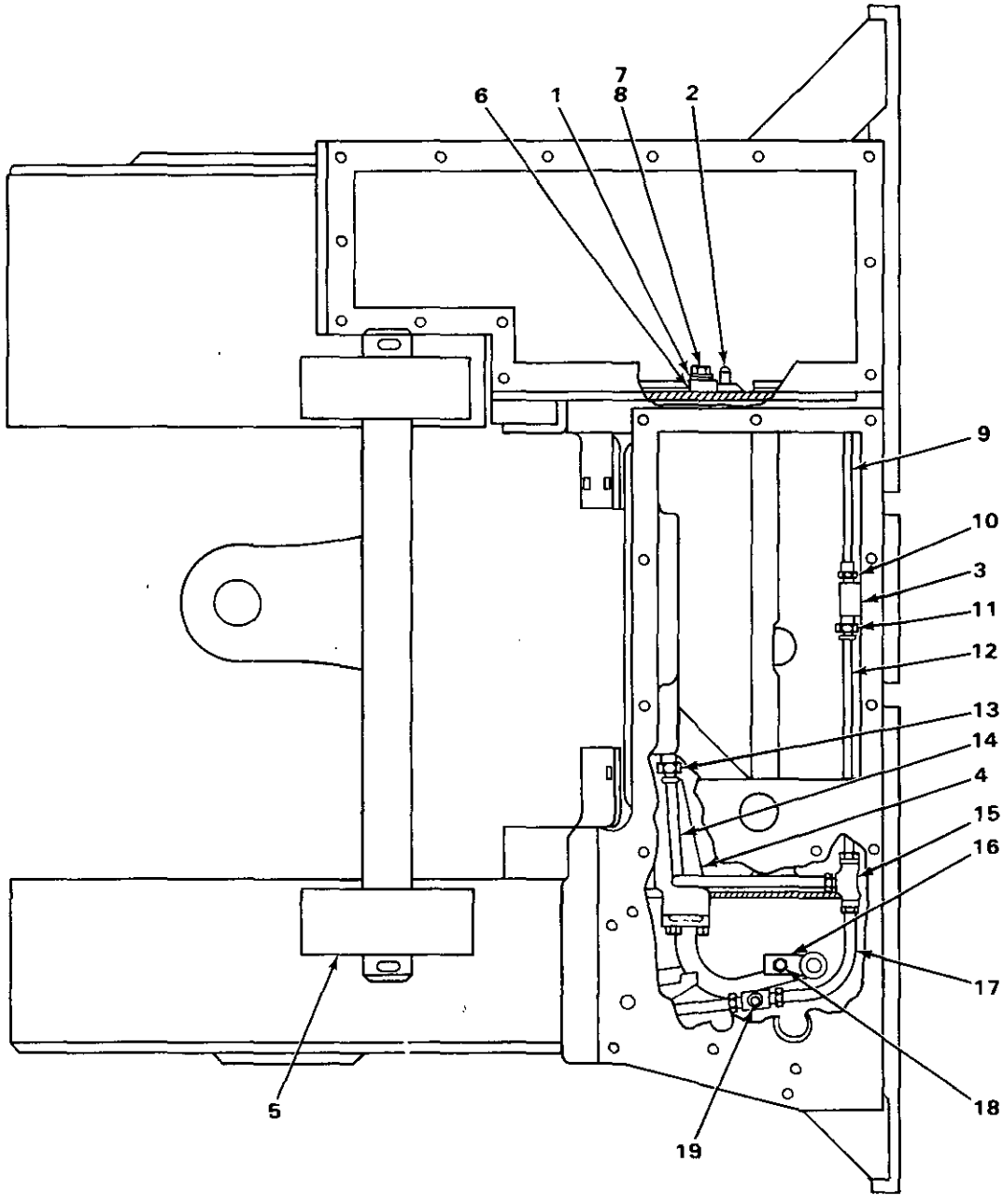

TA235376

FIGURE 179. WINCH CASE ASSEMBLY (TOP VIEW).

(1) ITEM NO	(2) SMR CODE	(3) NSN	(4) CAGEC	(5) PART NUMBER	(6) DESCRIPTION AND USABLE ON CODES(UOC)	(7) QTY
					GROUP 2001 HOIST, CAPSTAN, WINDLASS, CRANE, OR WINCH ASSEMBLY.	
					FIG. 179 WINCH CASE ASSEMBLY (TOP VIEW).	
1	PFFZZ	2420010625208	11083	4D9376	.BOSS..... UOC:T24	1
2	PFFZZ	5315002459995	11083	8B1312	.PIN,STRAIGHT,HEADLE..... UOC:T24	2
3	XBFZZ		11083	2P1061	.BLOCK..... UOC:T24	1
4	XBFZZ		11083	2P2894	.MANIFOLD..... UOC:T24	1
5	XBFZZ		11083	1P7518	.SUPPORT..... UOC:T24	2
6	PFFZZ	5999003636240	11083	2B2404	CLIP,ELECTRICAL..... UOC:T24	1
7	PFFZZ	5306004265062	11083	4F4879	BOLT,MACHINE..... UOC:T24	1
8	PFFZZ	5310001174788	11083	5M2894	WASHER,FLAT..... UOC:T24	1
9	XBFZZ		11083	2P2009	TUBE ASSEMBLY..... UOC:T24	1
10	PFFZZ	4730010686081	11083	6L3616	FITTING..... UOC:T24	1
11	PFFZZ	4730012023353	11083	7K1457	ADAPTER,STRAIGHT,PI..... UOC:T24	1
12	XBFZZ		11083	1P6724	TUBE ASSEMBLY..... UOC:T24	1
13	PFFZZ	4730010599344	11083	5K9246	ADAPTER,STRAIGHT,PI..... UOC:T24	1
14	XBFZZ		11083	3P8436	TUBE ASSEMBLY TYPE 2..... UOC:T24	1
14	XBFZZ		11083	1P6187	TUBE TYPE 1..... UOC:T24	1
15	PFFZZ	4730012574902	11083	5K9988	TEE,TUBE..... UOC:T24	1
16	PFFZZ	5340012646076	11083	3P3250	PLATE,RETAINING,SEA..... UOC:T24	1
17	XBFZZ		11083	2P5847	TUBE ASSEMBLY..... UOC:T24	1
18	PFFZZ	5305007215492	80204	B1821BH038C063N	SCREW,CAP,HEXAGON H..... UOC:T24	1
19	PFFZZ	4730012023356	11083	5K9989	TEE,PIPE TO TUBE..... UOC:T24	1

END OF FIGURE

3 20
4 21 THRU 29

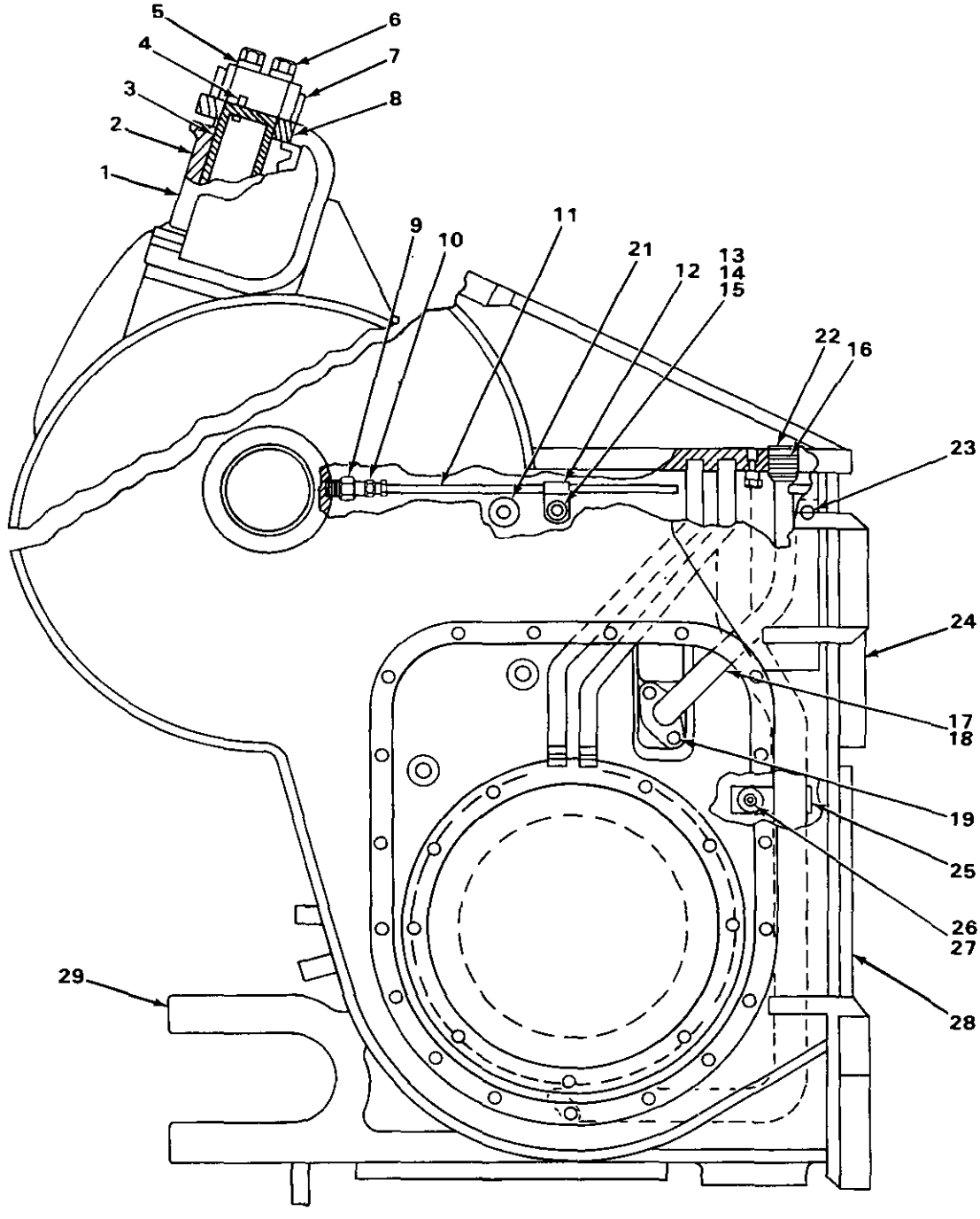

TA235377

FIGURE 180. WINCH CABLE GUIDE.

(1) ITEM NO	(2) SMR CODE	(3) NSN	(4) CAGEC	(5) PART NUMBER	(6) DESCRIPTION AND USABLE ON CODES(UOC)	(7) QTY
					GROUP 2001 HOIST, CAPSTAN, WINDLASS, CRANE, OR WINCH ASSEMBLY.	
					FIG. 180 WINCH CABLE GUIDE.	
1	XBFZZ		11083	2P2001	ROLLER..... UOC:T24	2
2	XBF2Z		11083	1P6732	BEARING..... UOC:T24	4
3	XBFZZ		11083	2P3559	SHAFT ASSEMBLY..... UOC:T24	2
4	XBFZZ		11083	9S1307	.DOWEL..... UOC:T24	1
5	PFFZZ	5310000455001	96906	MS35340-50	WASHER,LOCK..... UOC:T24	4
6	PFFZZ	5305004262936	11083	S1625	SCREW,CAP,HEXAGON H..... UOC:T24	4
7	XBFZZ		11083	2P2026	BAR ASSEMBLY..... UOC:T24	1
8	XBFZZ		11083	2P3558	SLEEVE..... UOC:T24	4
9	PFFZZ	4730011610160	11083	2P4439	REDUCER,PIPE..... UOC:T24	1
10	PFFZZ	4730010599344	11083	5K9246	ADAPTER,STRAIGHT,PI..... UOC:T24	1
11	XBFZZ		11083	2P2008	TUBE ASSEMBLY..... UOC:T24	1
12	PFFZZ	5340002827505	96906	MS21333-57	CLAMP,LOOP..... UOC:T24	1
13	PFFZZ	5306002637301	11083	L1351	BOLT,MACHINE..... UOC:T24	1
14	PFFZZ	5310008512682	96906	MS35691-17	NUT,PLAIN,HEXAGON..... UOC:T24	1
15	PFFZZ	5310001174788	11083	5M2894	WASHER,FLAT..... UOC:T24	1
16	PFFZZ	5331005917543	11083	7F8607	O-RING..... UOC:T24	1
17	XBFZZ		11083	3P3247	TUBE ASSEMBLY..... UOC:T24	1
18	PAFZZ	5331009138120	58312	8M5254-00	O-RING..... UOC:T24	1
19	PFFZZ	5306002604508	11083	S1594	BOLT,MACHINE..... UOC:T24	2
20	XBFZZ		11083	2P2010	CASE ASSEMBLY..... UOC:T24	1
21	XBFZZ		11083	1P9283	.BOSS..... UOC:T24	1
22	XBFZZ		11083	3P3307	.SLEEVE..... UOC:T24	1
23	PFFZZ	2520010515278	11083	8F9836	.LUG..... UOC:T24	2
24	XBFZZ		11083	1P2156	.RING.....	1

(1) ITEM NO	(2) SMR CODE	(3) NSN	(4) CAGEC	(5) PART NUMBER	(6) DESCRIPTION AND USABLE ON CODES(UOC)	(7) QTY
					UOC:T24	
25	PFFZZ	5340011628857	11083	2P3572	.STRAP,RETAINING.....	1
					UOC:T24	
26	PFFZZ	5305007215492	80204	B1821BH038C063N	.SCREW,CAP,HEXAGON H.....	1
					UOC:T24	
27	PFFZZ	5310001174788	11083	5M2894	.WASHER,FLAT.....	1
					UOC:T24	
28	XBFZZ		11083	1P5210	.SUPPORT.....	1
					UOC:T24	
29	XBFZZ		11083	2P2893	.CLEVIS.....	1
					UOC:T24	

END OF FIGURE

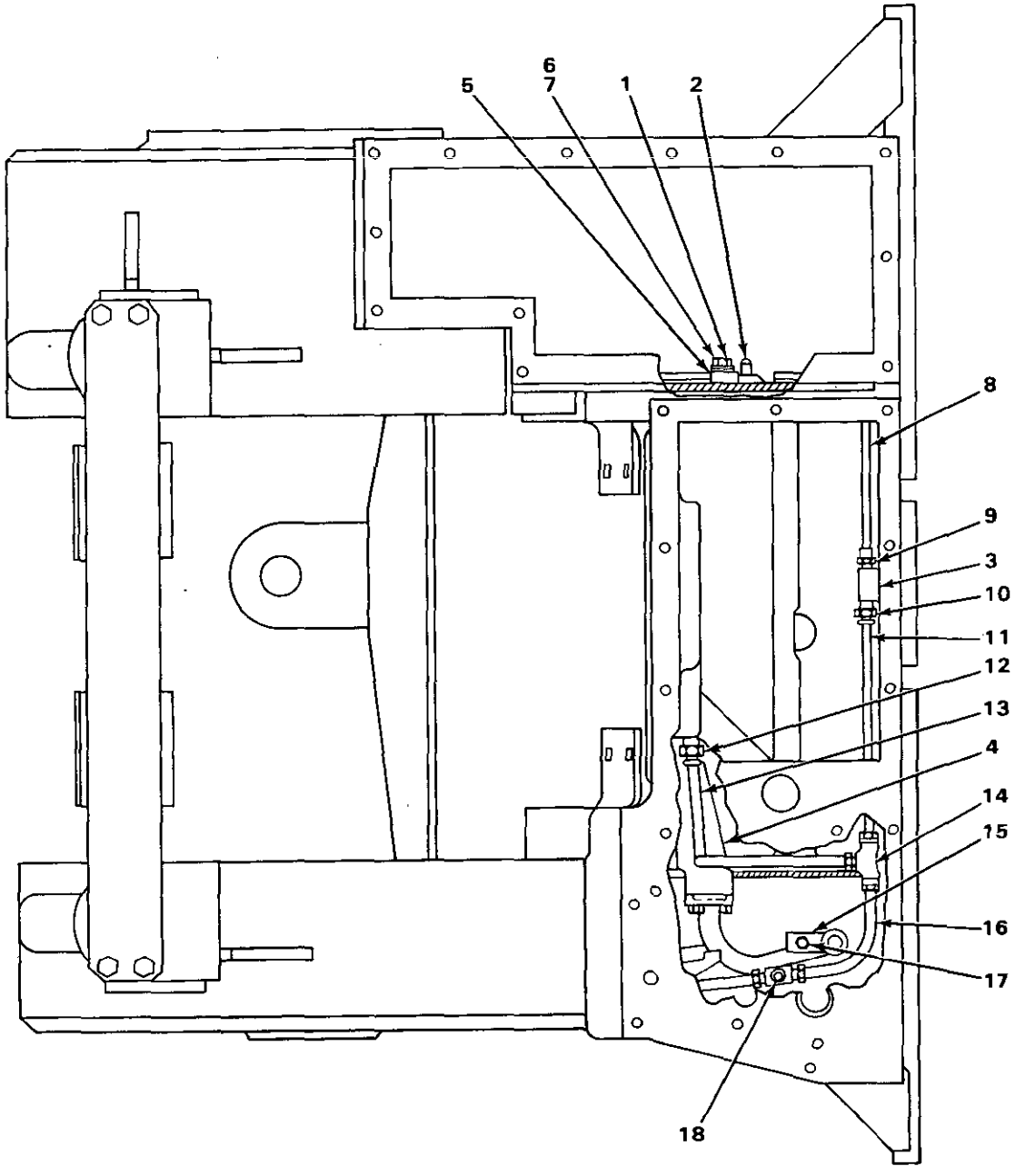

TA235378

FIGURE 181. WINCH CABLE GUIDE TUBE ASSEMBLIES.

(1) ITEM NO	(2) SMR CODE	(3) NSN	(4) CAGEC	(5) PART NUMBER	(6) DESCRIPTION AND USABLE ON CODES(UOC)	(7) QTY
					GROUP 2001 HOIST, CAPSTAN, WINDLASS, CRANE, OR WINCH ASSEMBLY.	
					FIG. 181 WINCH CABLE GUIDE TUBE ASSEMBLIES.	
1	PFFZZ	5325008108932	92755	S2190PT3	.RING,RETAINING..... UOC:T24	1
2	PFFZZ	5315002459995	11083	8B1312	.PIN,STRAIGHT,HEADLE..... UOC:T24	2
3	XBFZZ		11083	2P1061	.BLOCK..... UOC:T24	1
4	XBFZZ		11083	2P2894	.MANIFOLD..... UOC:T24	1
5	PFFZZ	5999003636240	11083	2B2404	CLIP,ELECTRICAL..... UOC:T24	1
6	PFFZZ	5306004265062	11083	4F4879	BOLT,MACHINE..... UOC:T24	1
7	PFFZZ	5310001174788	11083	5M2894	WASHER,FLAT..... UOC:T24	1
8	XBFZZ		11083	2P2009	TUBE ASSEMBLY..... UOC:T24	1
9	PFFZZ	4730010686081	11083	6L3616	FITTING..... UOC:T24	1
10	PFFZZ	4730012023353	11083	7K1457	ADAPTER,STRAIGHT,PI..... UOC:T24	1
11	XBFZZ		11083	1P6724	TUBE ASSEMBLY..... UOC:T24	1
12	PFFZZ	4730010599344	11083	5K9246	ADAPTER,STRAIGHT,PI..... UOC:T24	1
13	XBFZZ		11083	3P8436	TUBE ASSEMBLY TYPE 2..... UOC:T24	1
13	XBFZZ		11083	1P6187	TUBE TYPE 1..... UOC:T24	1
14	PFFZZ	4730012574902	11083	5K9988	TEE,TUBE..... UOC:T24	1
15	PFFZZ	5340012646076	11083	3P3250	PLATE,RETAINING,SEA..... UOC:T24	1
16	XBFZZ		11083	2P5847	TUBE ASSEMBLY..... UOC:T24	1
17	PFFZZ	5305007215492	80204	B1821BH038C063N	SCREW,CAP,HEXAGON H..... UOC:T24	1
18	PFFZZ	4730012023356	11083	5K9989	TEE,PIPE TO TUBE..... UOC:T24	1

END OF FIGURE

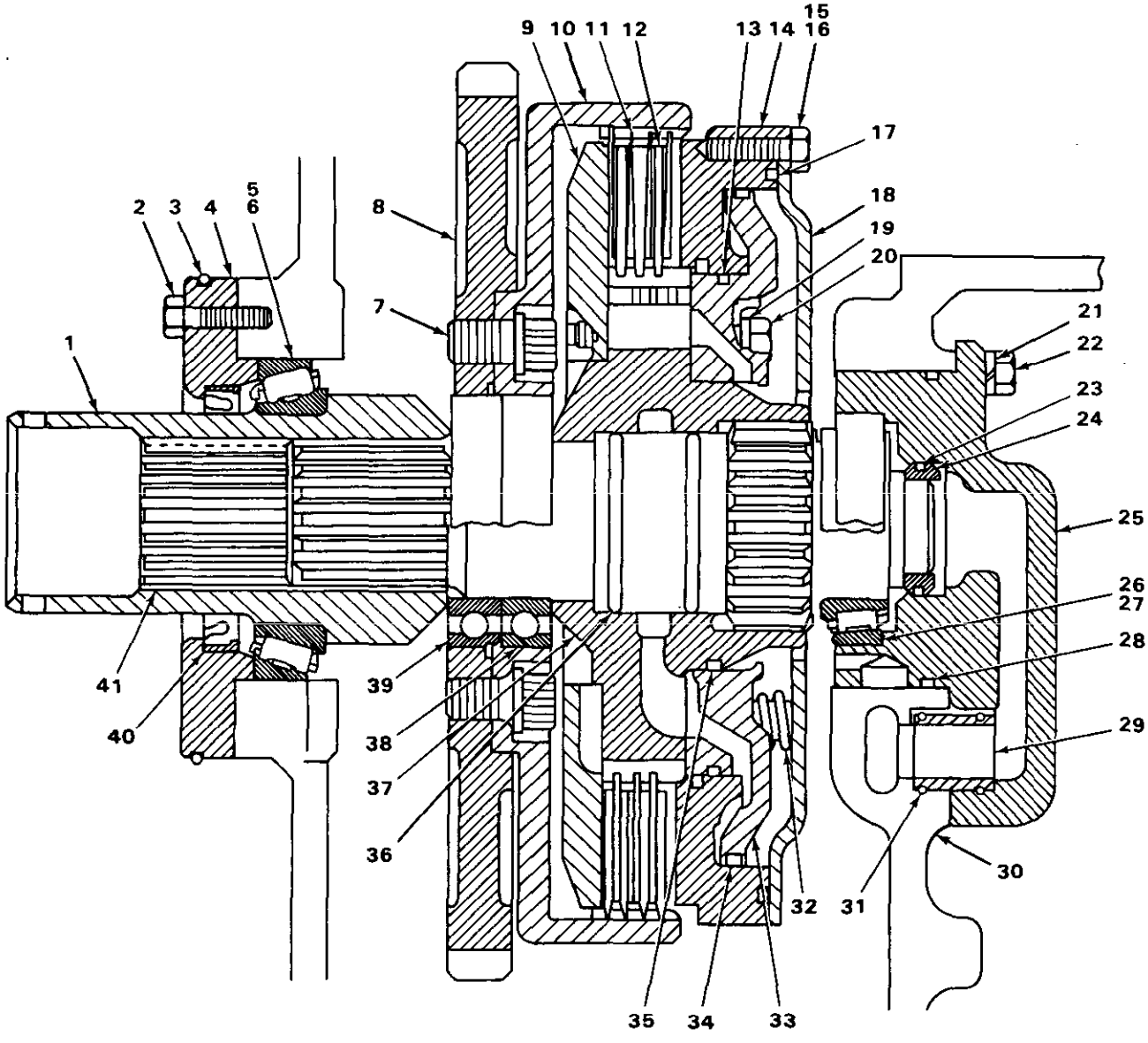

FIGURE 182. WINCH COUPLING DISK AND RELATED PARTS (FOR USE WITH WINCH SERIAL RANGE 33U196 AND UP AND 34U1 AND UP).

(1) ITEM NO	(2) SMR CODE	(3) NSN	(4) CAGEC	(5) PART NUMBER	(6) DESCRIPTION AND USABLE ON CODES(UOC)	(7) QTY
					GROUP 2001 HOIST, CAPSTAN, WINDLASS, CRANE, OR WINCH ASSEMBLY.	
					FIG. 182 WINCH COUPLING DISK AND RELATED PARTS (FOR USE WITH WINCH SERIAL RANGE 33U196 AND UP AND 34U1 AND UP).	
1	XBFZZ		11083	1P2180	COUPLING..... UOC:T24	1
2	PFFZZ	5305000680511	80204	B1821BH038C125N	SCREW,CAP,HEXAGON H..... UOC:T24	3
3	PFFZZ	5330010505024	96906	MS28775-260	O-RING..... UOC:T24	1
4	PFFZZ	5330012589166	11083	1P2597	RETAINER,PACKING..... UOC:T24	1
5	PFFZZ	2520010646625	11083	9S7949	CUP..... UOC:T24	1
6	PFFZZ	3010010647524	11083	9S7950	CONE..... UOC:T24	1
7	PFFZZ	5306012067167	11083	1S9808	BOLT,MACHINE..... UOC:T24	12
8	XBFZZ		11083	1P2179	GEAR..... UOC:T24	1
9	XBFZZ		11083	1P2178	PLATE..... UOC:T24	1
10	PFFZZ	3040012541027	11083	1P2176	HUB,OUTER CLUTCH..... UOC:T24	1
11	PFFZZ	3010012035604	11083	1-6Y7920	DISK,CLUTCH..... UOC:T24	4
12	PFFZZ	2520011619658	11083	2P4370	DISK,CLUTCH,VEHICUL..... UOC:T24	3
13	PFFZZ	5330011648576	11083	1S9497	RETAINER,PACKING..... UOC:T24	1
14	PFFZZ	2520012545579	11083	2P1976	PISTON,CLUTCH..... UOC:T24	1
15	PFFZZ	5305002528919	11083	0S0509	SCREW,CAP,HEXAGON H..... UOC:T24	12
16	PFFZZ	5340011827381	11083	5S3618	LOCKING PLATE,NUT A..... UOC:T24	6
17	PFFZZ	5331010600745	09990	2-178N951-75	O-RING..... UOC:T24	1
18	PFFZZ	2520012545580	11083	5S3664	PISTON,BALANCE..... UOC:T24	1
19	PFFZZ	5310001174788	11083	5M2894	WASHER,FLAT..... UOC:T24	6
20	PFFZZ	5306006852384	14351	13XX3958	BOLT,MACHINE..... UOC:T24	6
21	PFFZZ	5310006379541	96906	MS35338-46	WASHER,LOCK..... UOC:T24	6
22	PFFZZ	5306002604508	11083	S1594	BOLT,MACHINE..... UOC:T24	6

(1) ITEM NO	(2) SMR CODE	(3) NSN	(4) CAGEC	(5) PART NUMBER	(6) DESCRIPTION AND USABLE ON CODES(UOC)	(7) QTY
23	PFFZZ	5325008575703	11083	2K5957	RING,RETAINING..... UOC:T24	1
24	XBFZZ		11083	5S969	CARRIER..... UOC:T24	1
25	XBFZZ		11083	1P6692	CAGE..... UOC:T24	1
26	PFFZZ	3110001913923	08162	JLM104910	CUP,TAPERED ROLLER..... UOC:T24	1
27	PFFZZ	3110009385084	08162	JLM104948	CONE AND ROLLERS,TA..... UOC:T24	1
28	PFFZZ	5331002909386	88044	AN123902	O-RING..... UOC:T24	1
29	PFFZZ	3120012632717	11083	2S4962	CYLINDER SLEEVE..... UOC:T24	1
30	PFFZZ	5365012848204	11083	1P8597	SHIM SET..... UOC:T24	2
31	PFFZZ	5330010619378	11083	8M8283	SEAL..... UOC:T24	2
32	PFFZZ	5360012070690	11083	2P2934	SPRING,HELICAL,COMP..... UOC:T24	6
33	PFFZZ	4730012554468	11083	2P3566	MANIFOLD,HYDRAULIC..... UOC:T24	1
34	PFFZZ	5330012087592	11083	1S9498	GASKET..... UOC:T24	1
35	PFFZZ	5331005553810	11083	1H8128	O-RING..... UOC:T24	1
36	PFFZZ	5331005064457	11083	8F6711	O-RING..... UOC:T24	2
37	PFFZZ	3040012541098	11083	2P1986	HOUSING,MECHANICAL..... UOC:T24	1
38	PFFZZ	3110004469696	11083	9M1997	BEARING,BALL,ANNULA..... UOC:T24	1
39	PFFZZ	3110001981796	11083	3K526	BEARING,BALL,ANNULA..... UOC:T24	1
40	PFFZZ	5330003627470	11083	4B8024	SEAL,PLAIN ENCASED..... UOC:T24	1
41	PFFZZ	3040012544939	11083	1P2175	SHAFT,SHOULDERED..... UOC:T24	1

END OF FIGURE

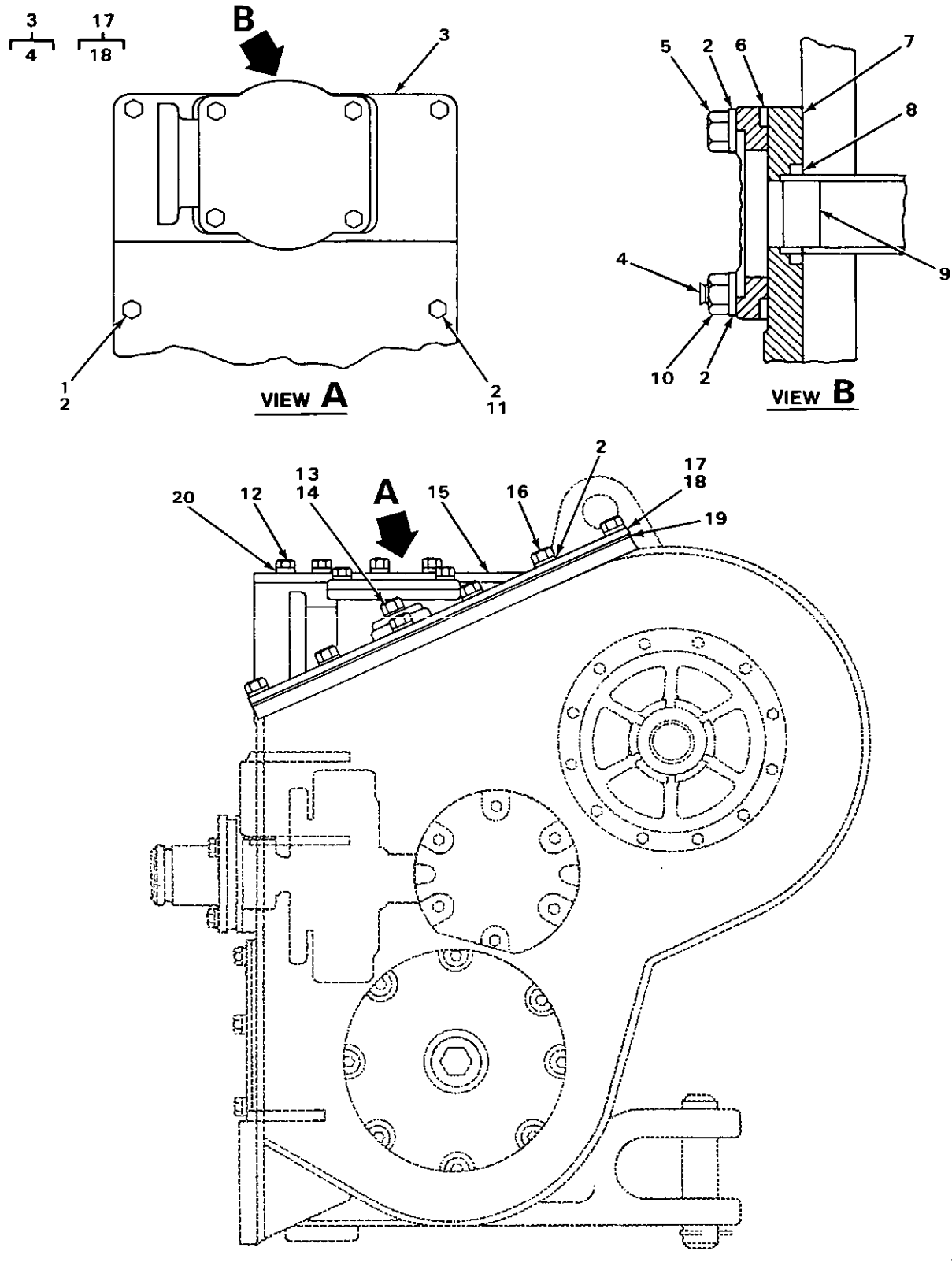

FIGURE 183. WINCH COVER (FOR USE WITH WINCH SERIAL RANGE 33U1 AND UP AND 34U1 AND UP).

(1) ITEM NO	(2) SMR CODE	(3) NSN	(4) CAGEC	(5) PART NUMBER	(6) DESCRIPTION AND USABLE ON CODES(UOC)	(7) QTY
					GROUP 2001 HOIST, CAPSTAN, WINDLASS, CRANE, OR WINCH ASSEMBLY.	
					FIG. 183 WINCH COVER (FOR USE WITH SERIAL RANGE 33U1 AND UP AND 34U1 AND UP).	
1	PFFZZ	5306011954681	11083	3B1915	BOLT..... UOC:T24	7
2	PFFZZ	5310001174788	11083	5M2894	WASHER,FLAT..... UOC:T24	13
3	XDFFF		11083	2P3561	COVER,ACCESS..... UOC:T24	1
4	PFFZZ	5307009239983	11083	8M1047	.STUD,CONTINUOUS THR..... UOC:T24	2
5	PFFZZ	5306004238393	11083	1C2251	BOLT,MACHINE..... UOC:T24	2
6	PFFZZ	5331003396220	11083	2H6184	O-RING..... UOC:T24	1
7	PFFZZ	5330012116977	11083	1P8235	GASKET..... UOC:T24	1
8	PFFZZ	5331000743776	11083	5M5860	O-RING..... UOC:T24	1
9	PFFZZ	5365012574394	11083	2P3560	SPACER,SLEEVE..... UOC:T24	1
10	PFFZZ	5310011945398	11083	1D4717	NUT,HEXAGON..... UOC:T24	2
11	PFFZZ	5306010977874	11083	1T0765	BOLT,MACHINE..... UOC:T24	2
12	PFFZZ	5306001183055	11083	6L3670	BOLT,SPECIAL..... UOC:T24	4
13	PFFZZ	4730010794374	11083	5H7110	PLUG,PIPE..... UOC:T24	1
14	PFFZZ	5330001904255	11083	L1124	GASKET..... UOC:T24	1
15	XBFZZ		11083	2P6902	COVER ASSEMBLY..... UOC:T24	1
16	PFFZZ	5306002604508	11083	S1594	BOLT,MACHINE..... UOC:T24	16
17	XBFZZ		11083	1P2615	COVER ASSEMBLY..... UOC:T24	1
18	XBFZZ		11083	6B9002	.BOSS..... UOC:T24	1
19	PFFZZ	5330012638275	11083	1P3206	GASKET..... UOC:T24	1
20	PFFZZ	5310006379541	96906	MS35338-46	WASHER,LOCK..... UOC:T24	20

END OF FIGURE

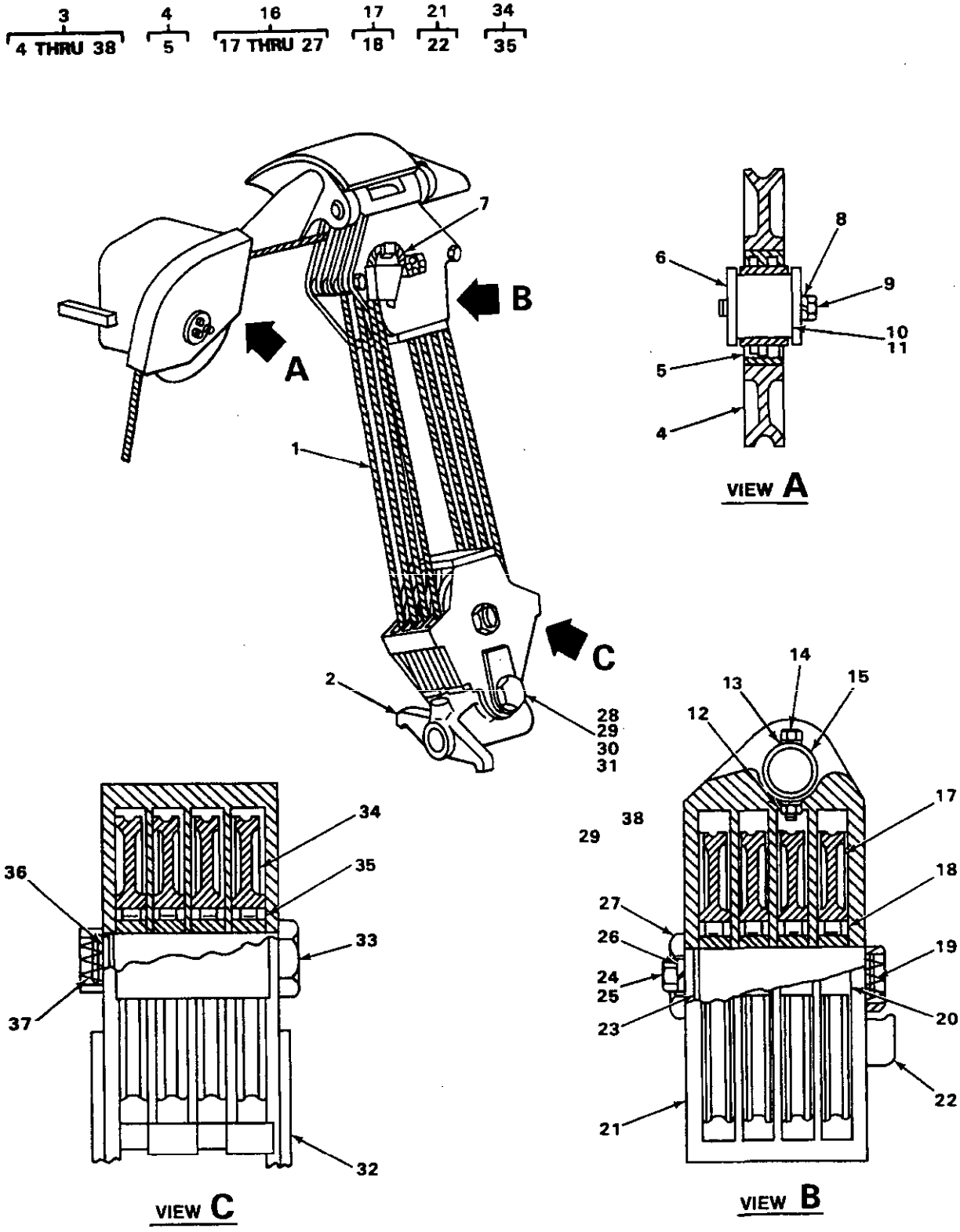

FIGURE 184. SHEAVE, CABLE AND HITCH.

(1) ITEM NO	(2) SMR CODE	(3) NSN	(4) CAGEC	(5) PART NUMBER	(6) DESCRIPTION AND USABLE ON CODES(UOC)	(7) QTY
					GROUP 2001 HOIST, CAPSTAN, WINDLASS CRANE, OR WINCH ASSEMBLY.	
					FIG. 184 SHEAVE, CABLE AND HITCH.	
1	XDOZZ		11083	5R7207	CABLE ASSY,WINCH 1.125 IN DIA 175 FT LONG..... UOC:T24	1
2	XBOZZ		11083	1J6503	HITCH..... UOC:T24	1
3	XBOZZ		11083	3J4039	SHEAVE..... UOC:T24	1
4	PFOZZ	3020008461923	11083	3J1881	.PULLEY,GROOVE..... UOC:T24	1
5	XDOZZ		11083	2J4624	..BEARING,ROLLER,NEED..... UOC:T24	1
6	XBOZZ		11083	3F6329	.RETAINER,PULLEY SHA..... UOC:T24	1
7	XDOZZ		11083	3F9401	.WEDGE ASSEMBLY..... UOC:T24	1
8	PFOZZ	5310005845272	96906	MS35338-48	.WASHER,LOCK..... UOC:T24	2
9	PFOZZ	5306002685798	11083	0L1329	.BOLT,MACHINE..... UOC:T24	2
10	XBOZZ		11083	3F4729	.SPOOL,LIFT WIRE PUL..... UOC:T24	1
11	PAOZZ	4730000504208	96906	MS15003-1	.FITTING,LUBRICATION..... UOC:T24	1
12	PFOZZ	5310007257382	96906	MS35690-624	.NUT,PLAIN,HEXAGON..... UOC:T24	1
13	PFOZZ	5310006379541	96906	MS35338-46	.WASHER,LOCK..... UOC:T24	1
14	PFOZZ	5305002693246	96906	MS90727-70	.SCREW,CAP,HEXAGON H..... UOC:T24	1
15	PFOZZ	5315012634544	11083	3H7224	.PIN,STRAIGHT,HEADLE..... UOC:T24	1
16	XBOZZ		11083	3J4038	.BLOCK..... UOC:T24	1
17	XBOZZ		11083	2J4628	..SHEAVE ASSEMBLY..... UOC:T24	4
18	PFOZZ	3110012645996	11083	2J4626	...BEARING,ROLLER,CYLI..... UOC:T24	1
19	PAOZZ	4730000504208	96906	MS15003-1	..FITTING,LUBRICATION..... UOC:T24	4
20	XBOZZ		11083	8F3556	..SPACER..... UOC:T24	8
21	XAOOO		11083	1J5835	..BLOCK ASSEMBLY..... UOC:T24	1
22	XBOZZ		11083	3F4897	...SOCKET..... UOC:T24	1
23	XBOZZ		11083	2J5668	..SHAFT..... UOC:T24	1

(1) ITEM NO	(2) SMR CODE	(3) NSN	(4) CAGEC	(5) PART NUMBER	(6) DESCRIPTION AND USABLE ON CODES(UOC)	(7) QTY
24	PFOZZ	5305004015270	11083	8F1635	..SCREW,CAP,HEXAGON H..... UOC:T24	2
25	PFOZZ	5310007638920	96906	MS51967-20	..NUT,PLAIN,HEXAGON..... UOC:T24	2
26	PFOZZ	5310000455001	96906	MS35340-50	..WASHER,LOCK..... UOC:T24	2
27	PFOZZ	5310002612631	11083	L2341	..NUT,PLAIN,HEXAGON..... UOC:T24	1
28	PFOZZ	5306012846721	11083	1J5926	.BOLT,MACHINE..... UOC:T24	1
29	XBOZZ		11083	1J5940	.SPACER..... UOC:T24	1
30	PFOZZ	5310012849697	11083	3F701	.NUT,PLAIN,CASTELLAT..... UOC:T24	1
31	PFOZZ	5315008460126	88044	AN380-8-12	.PIN,COTTER..... UOC:T24	1
32	XAOZZ		11083	1J5791	.BLOCK ASSEMBLY..... UOC:T24	1
33	PFOZZ	5310002612631	11083	L2341	.NUT,PLAIN,HEXAGON..... UOC:T24	1
34	XBOZZ		11083	2J4628	.SHEAVE ASSEMBLY..... UOC:T24	4
35	PFOZZ	3110012645996	11083	2J4626	..BEARING,ROLLER,CYLI..... UOC:T24	1
36	XBOZZ		11083	2J5668	.SHAFT..... UOC:T24	1
37	PAOZZ	4730000504208	96906	MS15003-1	.FITTING,LUBRICATION..... UOC:T24	4

END OF FIGURE

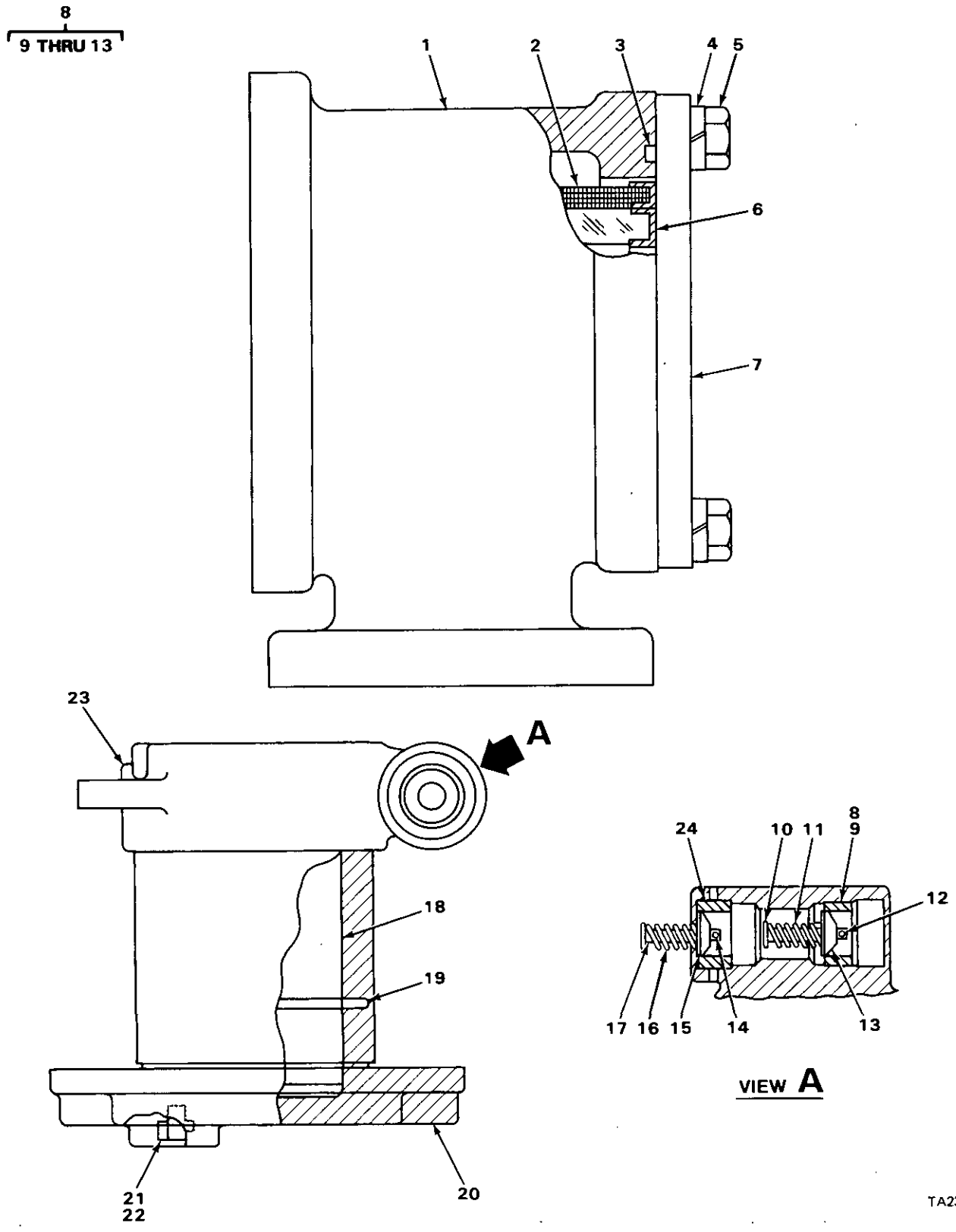

FIGURE 185. WINCH SCREEN AND OIL FILTER.

(1) ITEM NO	(2) SMR CODE	(3) NSN	(4) CAGEC	(5) PART NUMBER	(6) DESCRIPTION AND USABLE ON CODES(UOC)	(7) QTY
					GROUP 2001 HOIST, CAPSTAN, WINDLASS, CRANE, OR WINCH ASSEMBLY.	
					FIG. 185 WINCH SCREEN AND OIL FILTER	
1	PFFZZ	2940012537420	11083	2P1052	FILTER BODY,FLUID..... UOC:T24	1
2	PFFZZ	4730011597840	11083	8S9130	STRAINER ELEMENT,SE..... UOC:T24	1
3	PFFZZ	5331003256310	52788	5660799	O-RING..... UOC:T24	1
4	PFFZZ	5310006379541	96906	MS35338-46	WASHER,LOCK..... UOC:T24	4
5	PFFZZ	5306004238194	11083	1A2029	BOLT,MACHINE..... UOC:T24	4
6	PFFZZ	4330010667713	11083	8S9129	FILTER,FLUID..... UOC:T24	1
7	PFFZZ	5340011616223	11083	1P3262	COVER,ACCESS..... UOC:T24	1
8	PFFZZ	4820011586839	2J565	1P2195	VALVE,BY PASS..... UOC:T24	1
9	XAFZZ		11083	9L674	.COLLAR..... UOC:T24	1
10	PFFZZ	5315011552618	11083	1P5274	.PIN,STRAIGHT,HEADED..... UOC:T24	1
11	XAFZZ	5360002900851	11083	1K7041	.SPRING,HELICAL,COMP..... UOC:T24	1
12	PFFZZ	5315005324359	11083	3H3433	.PIN,OIL PUMP DRIVE,..... UOC:T24	1
13	XDFZZ		11083	9L672	.DISK,VALVE..... UOC:T24	1
14	XBFZZ		11083	7L820	PIN..... UOC:T24	1
15	XDFZZ		11083	9L672	DISK,VALVE..... UOC:T24	1
16	PFFZZ	5360011064246	11083	8F2621	SPRING,HELICAL,COMP..... UOC:T24	1
17	PFFZZ	5315011552618	11083	1P5274	PIN,STRAIGHT,HEADED..... UOC:T24	1
18	PFFZZ	4330001558240	33457	LF684	FILTER ELEMENT,FLUI..... UOC:T24	1
19	PFFZZ	5330006783369	11083	2H4145	RETAINER,PACKING..... UOC:T24	1
20	PFFZZ	2940011713389	11083	2P5818	HEAD,FLUID FILTER..... UOC:T24	1
21	PFFZZ	5365010672179	11083	9S4180	PLUG,MACHINE THREAD..... UOC:T24	1
22	PFFZZ	5330011485891	59556	K-500-EN-0431	SEAL..... UOC:T24	1
23	PFFZZ	4330011647973	11083	2P5832	HEAD,FLUID FILTER..... UOC:T24	1
24	XDFZZ		11083	6L4470	SEAT,VALVE.....	1

(1) ITEM NO	(2) SMR CODE	(3) NSN	(4) CAGEC	(5) PART NUMBER	(6) DESCRIPTION AND USABLE ON CODES(UOC)	(7) QTY

UOC:T24

END OF FIGURE

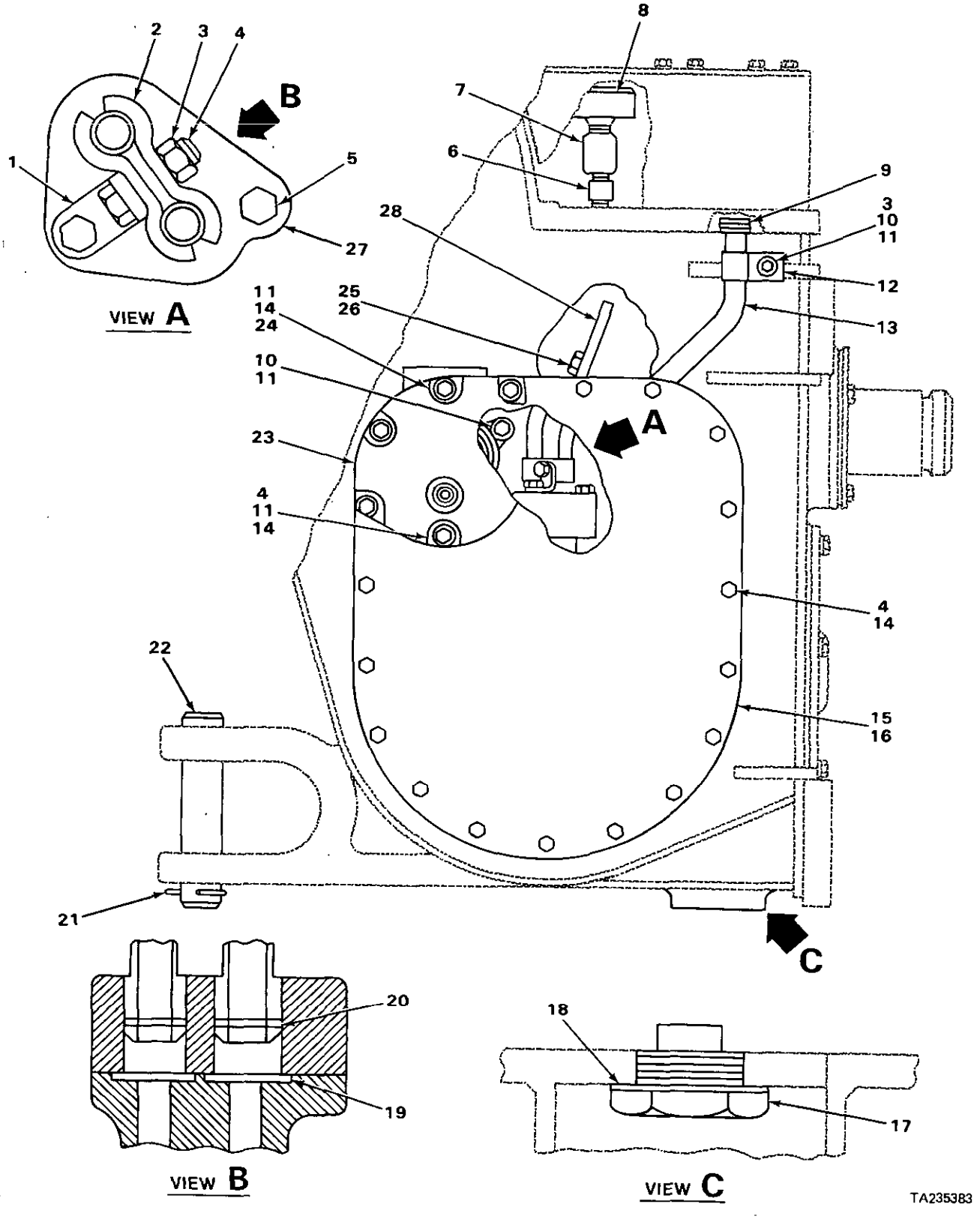

FIGURE 186. WINCH FILTER RELATED PARTS.

(1) ITEM NO	(2) SMR CODE	(3) NSN	(4) CAGEC	(5) PART NUMBER	(6) DESCRIPTION AND USABLE ON CODES(UOC)	(7) QTY
					GROUP 2001 HOIST, CAPSTAN, WINDLASS, CRANE, OR WINCHASSEMBLY	
					FIG. 186 WINCH FILTER RELATED PARTS.	
1	PFFZZ	5340011648621	11083	2P4438	BRACKET, ANGLE UOC: T24	1
2	PFFZZ	5340011648760	11083	2P4437	STRAP, RETAINING UOC: T24	2
3	PEFZZ	5310011945398	11083	1D4717	NUT, HEXAGON UOC: T24	2
4	PFFZZ	5305000680511	80204	B1821BH038C125N	SCREW, CAP, HEXAGON H UOC: T24	18
5	PEFZZ	5306010949106	11083	OS1590	BOLT, MACHINE UOC: T24	2
6	PFFZZ	4730001881854	96906	MS51953-29B	NIPPLE, PIPE UOC: T24	1
7	PFFZZ	4730006399167	29510	105409	COUPLING, PIPE UOC: T24	1
B	PFFZZ	2520004559263	11083	8S5820	BREATHER UOC: T24	1
9	PFFZZ	5331002456767	99193	S94I3-215	O-RING UOC: T24	2
10	PFFZZ	5306002604508	11083	S1594	BOLT, MACHINE UOC: T24	3
11	PFFZZ	5310001174788	11083	5M2894	WASHER, FLAT UOC: T24	10
12	XBFZZ		11083	8S8713	CLIP UOC: T24	1
13	XBFZZ		11083	2P5828	TUBE ASSEMBLY UOC: T24	1
14	PFFZZ	5310006379541	96906	MS35338-46	WASHER, LOCK UOC: T24	21
15	PFFZZ	5340011619146	11083	2P5738	COVER, ACCESS UOC: T24	1
16	PFFZZ	5330011648564	11053	2P3637	GASKET UOC: T24	1
17	PFFZZ	4730009247974	11083	2D839D	PLUG, PIPE, MAGNET1C UOC: T24	1
18	PFFZZ	5330002976548	11083	6F4868	GASKET UOC: T24	1
19	PFFZZ	5331008507586	11083	5H2767	0-RING UOC: T24	2
20	PFFZZ	5331004984556	11083	4J5351	0-RING UOC: T24	2
21	PFOZZ	5315012849505	11083	3B5324	PIN, COTTER UOC: T24	1
22	PFOZZ	5315011648693	11083	5J442	PIN, STRAIGHT,HEADED UOC: T24	1
23	PFFZZ	5331010192448	96906	MS28775-249	PACKING, PREFORMED UOC: T24	1
24	PFFZZ	5306002634038	11083	2A4639	BOLT, MACHINE	4

(1) ITEM NO	(2) SMR CODE	(3) NSN	(4) CAGEC	(5) PART NUMBER	(6) DESCRIPTION AND USABLE ON CODES(UOC)	(7) QTY
					UOC:T24	
25	PFFZZ	5306011279361	11083	0S1585	BOLT,MACHINE.....	4
					UOC:T24	
26	PFFZZ	5310005845272	96906	MS35338-48	WASHER,LOCK.....	4
					UOC:T24	
27	PFFZZ	2520011650354	11083	2P1053	FLANGE,COMPANION,UN.....	1
					UOC:T24	
28	XBFZZ		11083	1P6736	PLATE ASSEMBLY.....	1
					UOC:T24	

END OF FIGURE

3
4

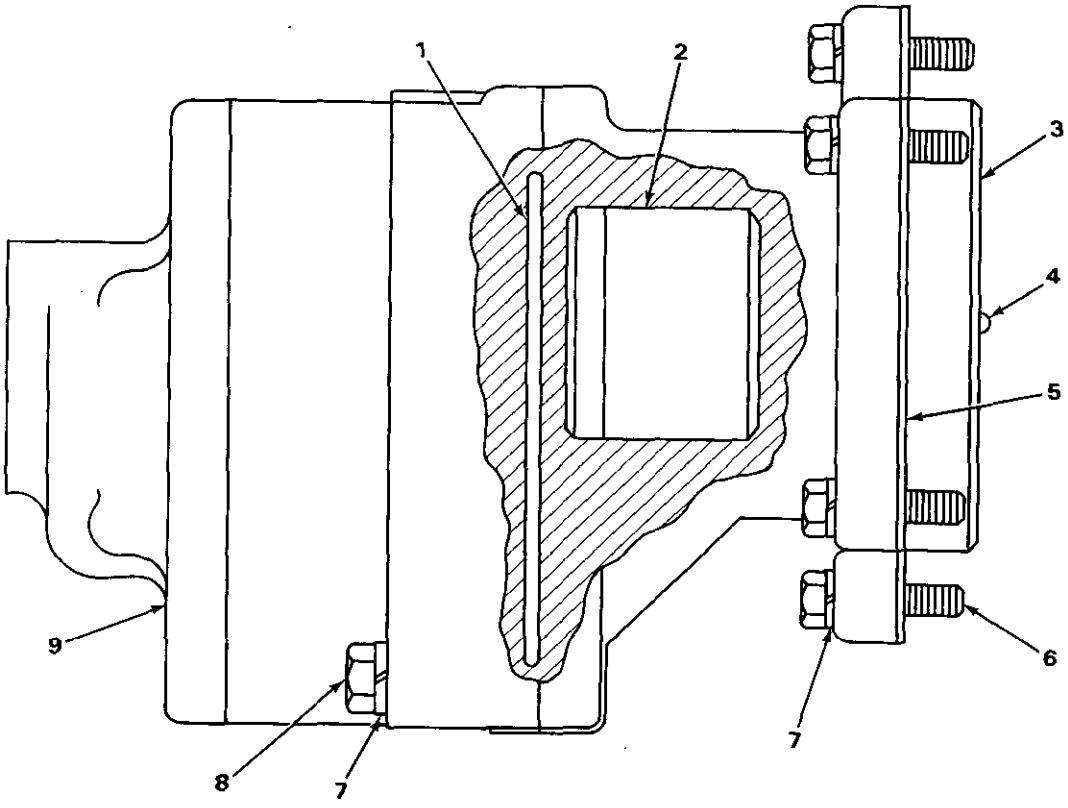

TA235382

FIGURE 187. WINCH PUMP.

(1) ITEM NO	(2) SMR CODE	(3) NSN	(4) CAGEC	(5) PART NUMBER	(6) DESCRIPTION AND USABLE ON CODES(UOC)	(7) QTY
					GROUP 2001 HOIST, CAPSTAND,WINDLASS, CRANE, OR WINCH ASSEMBLY.	
					FIG. 187 WINCH PUMP.	
1	PFFZZ	5331007819134	11083	4H9105	O-RING..... UOC:T24	1
2	PFFZZ	3010012554450	11083	3P5952	COUPLING,SHAFT,RIGI..... UOC:T24	1
3	PFFZZ	4730012545540	11083	3P5942	ADAPTER,STRAIGHT,FL..... UOC:T24	1
4	PFFZZ	3110009921048	11083	2D6642	.BALL,BEARING..... UOC:T24	1
5	PFFZZ	5330012852792	11083	9M673	GASKET..... UOC:T24	1
6	PFFZZ	5306011954681	11083	3B1915	BOLT..... UOC:T24	6
7	PFFZZ	5310006379541	96906	MS35338-46	WASHER,LOCK..... UOC:T24	8
8	PFFZZ	5306006982150	11083	L2070	BOLT,MACHINE..... UOC:T24	2
9	PFFZZ	4320012025616	11083	1P2187	PUMP,ROTARY..... UOC:T24	1

END OF FIGURE

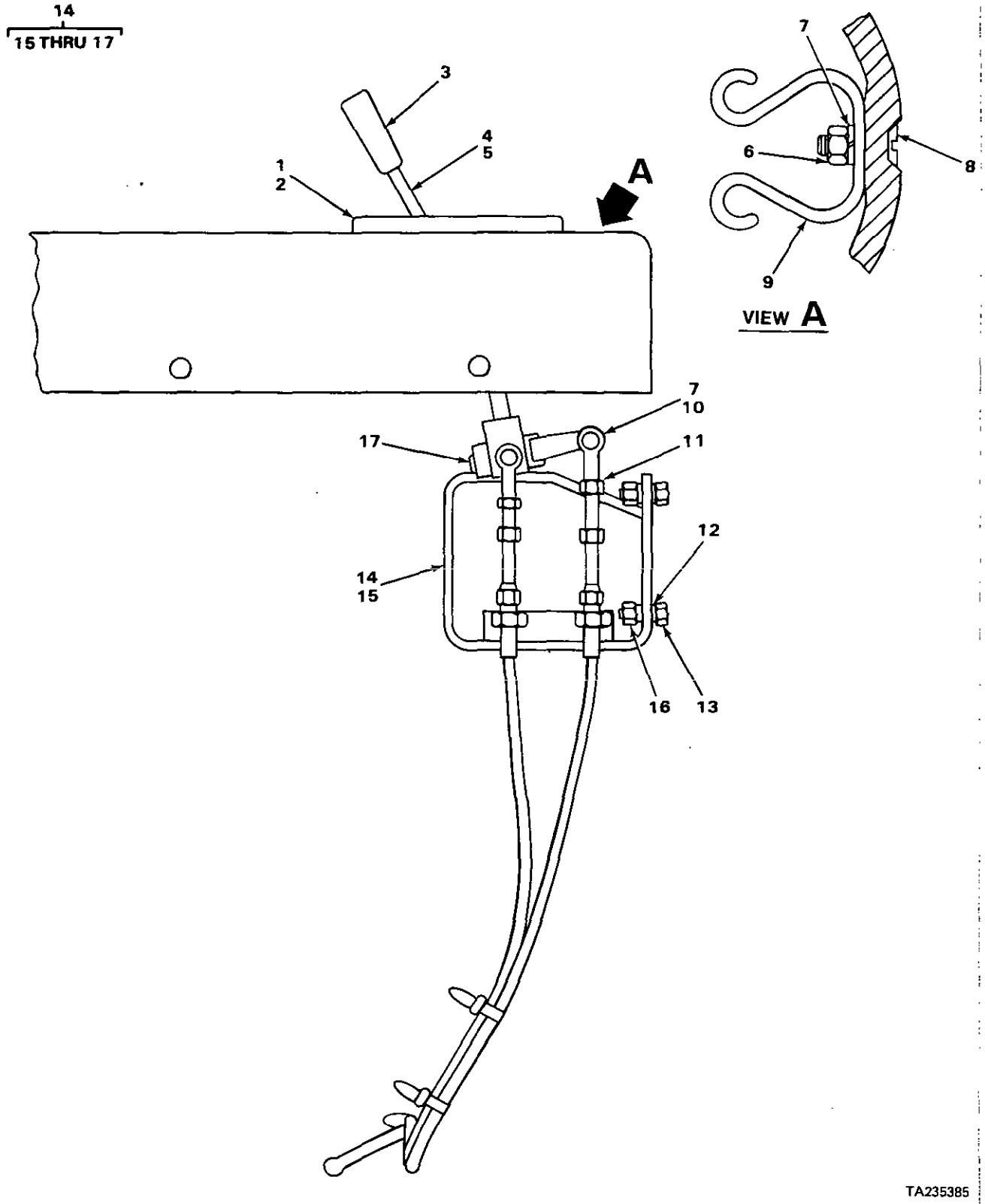

FIGURE 188. WINCH CONTROLS (FRONT VIEW).

(1) ITEM NO	(2) SMR CODE	(3) NSN	(4) CAGEC	(5) PART NUMBER	(6) DESCRIPTION AND USABLE ON CODES(UOC)	(7) QTY
					GROUP 2001 HOIST, CAPSTAN, WINDLASS, CRANE, OR WINCH ASSEMBLY.	
					FIG. 188 WINCH CONTROLS (FRONT VIEW).	
1	PFOZZ	3020011603640	11083	6P5661	GUARD,MECHANICAL DR..... UOC:T24	1
2	PFOZZ	5305009592723	96906	MS35190-319	SCREW,MACHINE..... UOC:T24	4
3	PFOZZ	5355008914401	11083	7M706	KNOB..... UOC:T24	1
4	PFOZZ	3040012541118	11083	6P6033	LEVER,MANUAL CONTRO..... UOC:T24	1
5	PFOZZ	5315008443966	96906	MS16562-49	PIN,SPRING..... UOC:T24	1
6	PFOZZ	5310000426376	31159	JM56	NUT,PLAIN,HEXAGON..... UOC:T24	1
7	PFOZZ	5310005825965	96906	MS35338-44	WASHER,LOCK..... UOC:T24	3
8	PFOZZ	5305010631423	11083	481282	SCREW..... UOC:T24	1
9	PFOZZ	5340011630918	11083	3P5938	CLIP,SPRING TENSION..... UOC:T24	1
10	PFOZZ	3120011663685	11083	8S7048	BEARING,PLAIN,ROD E..... UOC:T24	2
11	PFOZZ	5310002978836	06848	P16598	NUT,PLAIN,HEXAGON..... UOC:T24	2
12	PFOZZ	5310006379541	96906	MS35338-46	WASHER,LOCK..... UOC:T24	4
13	PFOZZ	5306002604508	11083	S1594	BOLT,MACHINE..... UOC:T24	4
14	PFOOO	5342012646075	11083	6P5204	BRACKET ASSEMBLY..... UOC:T24	1
15	PFOZZ	3120011648629	11083	9H2400	.BUSHING,SLEEVE..... UOC:T24	2
16	PFOZZ	5310000050781	11083	9F2978	.NUT,PLAIN,WELDING..... UOC:T24	4
17	PFOZZ	3040011589329	11083	2P6008	.SHAFT,STRAIGHT..... UOC:T24	1

END OF FIGURE

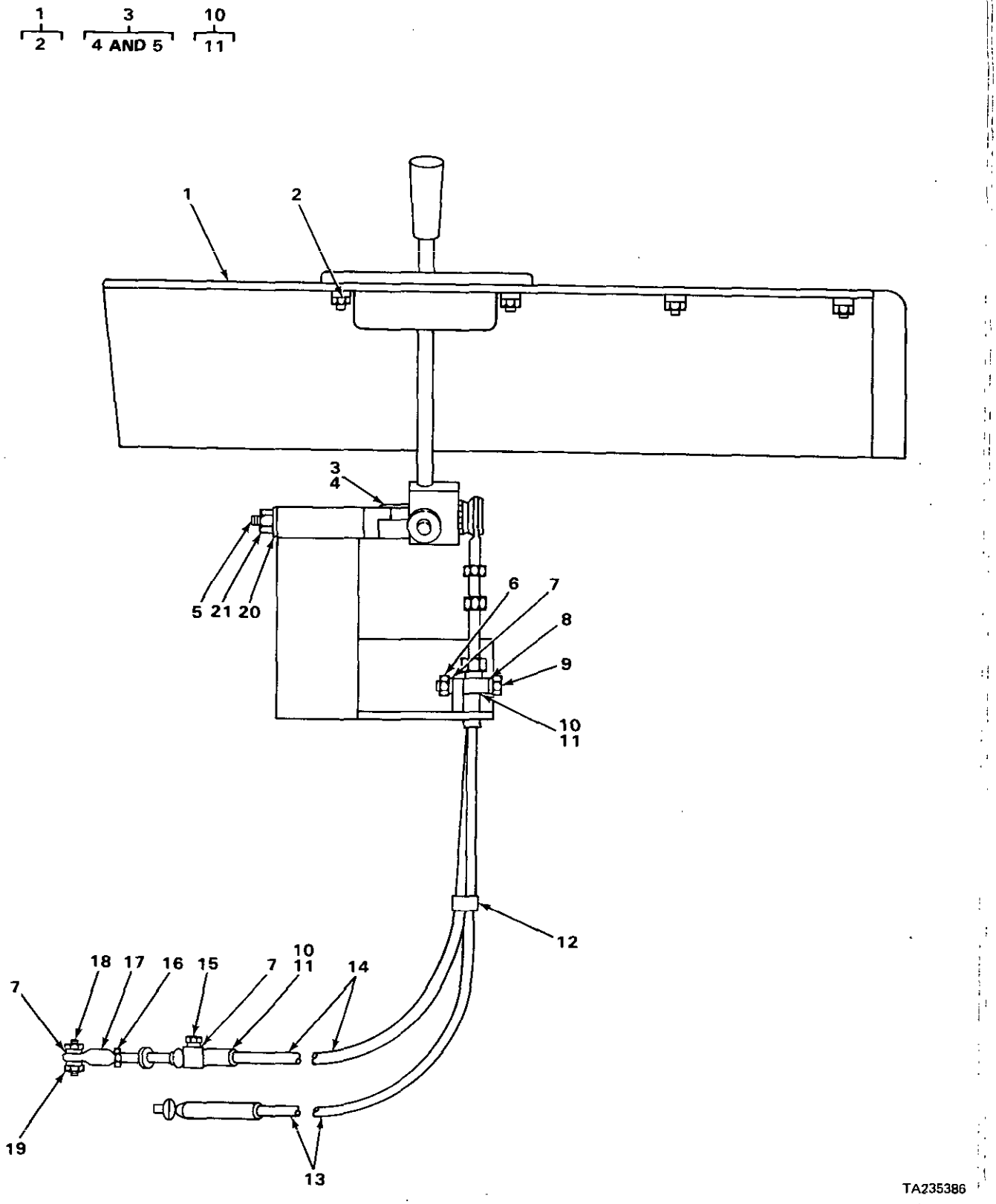

FIGURE 189. WINCH CONTROLS (SIDE VIEW).

(1) ITEM NO	(2) SMR CODE	(3) NSN	(4) CAGEC	(5) PART NUMBER	(6) DESCRIPTION AND USABLE ON CODES(UOC)	(7) QTY
					GROUP 2001 HOIST, CAPSTAN, WINDLASS, CRANE, OR WINCH ASSEMBLY.	
					FIG. 189 WINCH CONTROLS (SIDE VIEW).	
1	PFOZZ	5340012629742	11083	6P6031	COVER,ACCESS..... UOC:T24	1
2	PFOZZ	5310000050781	11083	9F2978	.NUT,PLAIN,WELDING..... UOC:T24	8
3	PFOZZ	3040011647841	11083	2P6001	BELL CRANK ASSEMBLY..... UOC:T24	1
4	PFOZZ	3120011648629	11083	9H2400	.BUSHING,SLEEVE..... UOC:T24	2
5	PFOZZ	3040011601057	11083	2P6009	.SHAFT,SHOULDERED..... UOC:T24	1
6	PFOZZ	5310008807744	96906	MS51967-5	NUT,PLAIN,HEXAGON..... UOC:T24	2
7	PFOZZ	5310000814219	96906	MS27183-12	WASHER,FLAT..... UOC:T24	3
8	PFOZZ	5310004079566	96906	MS35338-45	WASHER,LOCK..... UOC:T24	2
9	PFOZZ	5306009305643	11083	1A9579	BOLT,MACHINE..... UOC:T24	2
10	XBOOO		11083	2P6973	CLAMP ASSEMBLY..... UOC:T24	3
11	PFOZZ	5315005141616	11083	2H1190	.PIN,STRAIGHT,HEADLE..... UOC:T24	1
12	PFOZZ	5975001338687	96906	MS3367-5-0	STRAP,TIEDOWN,ELECT..... UOC:T24	3
13	PFOZZ	2590012852982	11083	3P4565	CONTROL ASSEMBLY,PU..... UOC:T24	1
14	PFOZZ	2590012852983	11083	3P4564	CONTROL ASSEMBLY,PU..... UOC:T24	1
15	PFOZZ	5306002264829	80204	B1821BH031C125N	BOLT,MACHINE..... UOC:T24	1
16	PFOZZ	5310002978836	06848	P16598	NUT,PLAIN,HEXAGON..... UOC:T24	1
17	PFOZZ	2520010660510	11083	6L7751	ROD,END..... UOC:T24	1
18	PFOZZ	5305002253843	80204	B1821BH025C100N	SCREW,CAP,HEXAGON H..... UOC:T24	1
19	PFOZZ	5310006852973	94135	12Z2007-260	NUT,SELF-LOCKING,HE..... UOC:T24	1
20	PFOZZ	5310011620412	11083	3L9689	WASHER,FLAT..... UOC:T24	1
21	PFOZZ	5310010588071	11083	2K4973	LOCKNUT..... UOC:T24	1

END OF FIGURE

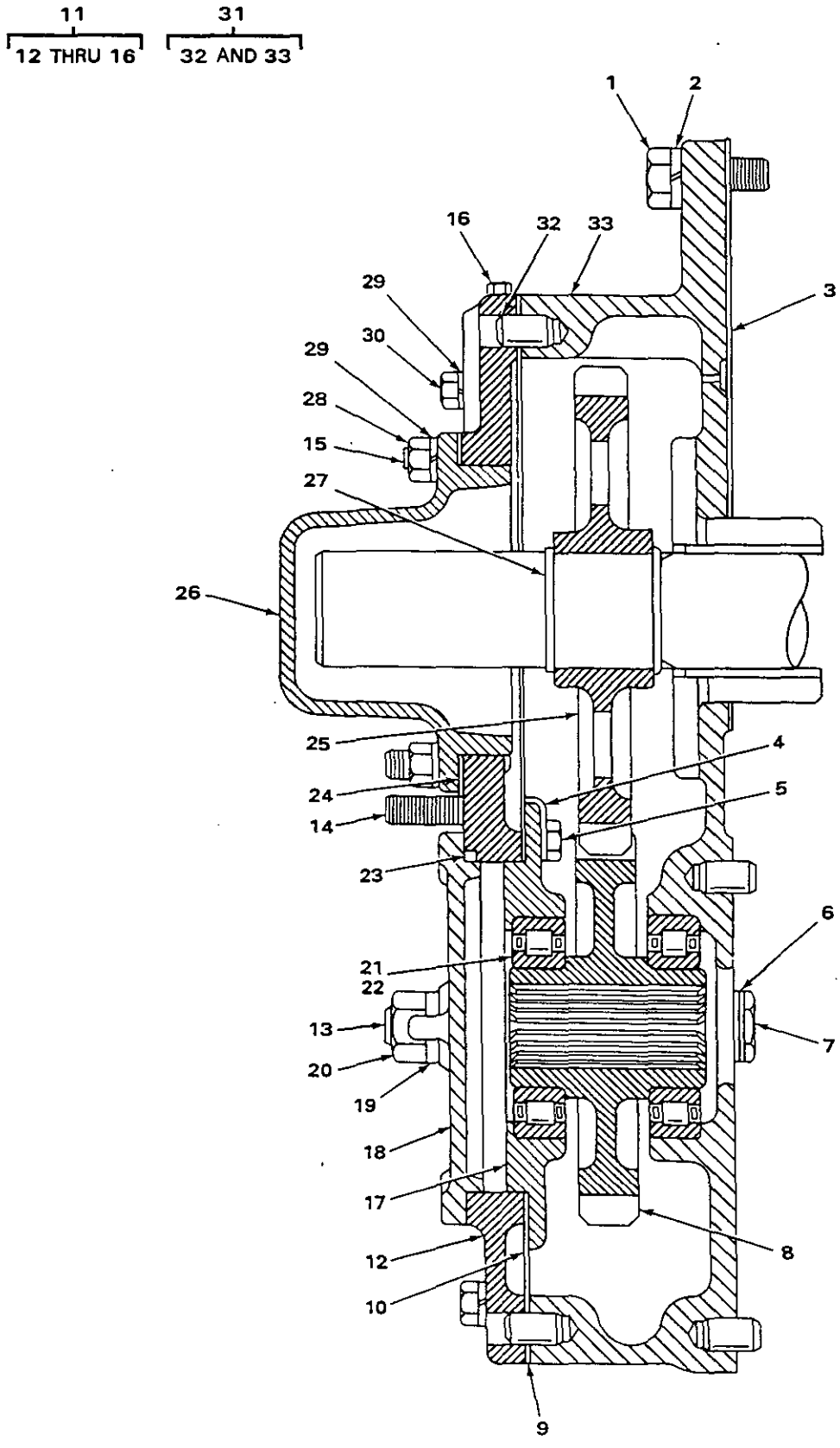

FIGURE 190. POWER TAKE-OFF.

(1) ITEM NO	(2) SMR CODE	(3) NSN	(4) CAGEC	(5) PART NUMBER	(6) DESCRIPTION AND USABLE ON CODES(UOC)	(7) QTY
					GROUP 2004 POWER TAKE-OFF ASSEMBLY.	
					FIG. 190 POWER TAKE-OFF.	
1	PFHZZ	5306011279361	11083	0S1585	BOLT,MACHINE	3
2	PFHZZ	5310005845272	96906	MS35338-48	WASHER,LOCK	3
3	PAHZZ	5330009238959	11083	5H0779	GASKET PART OF KIT P/N 5P-9232	1
4	PFHZZ	2930003652152	11083	L364	LOCK PLATE BOLT	4
5	PFHZZ	5306002637301	11083	L1351	BOLT,MACHINE CAGE	4
6	PFHZZ	5365001411595	11083	2A1913	SPACER,RING PART OF KIT P/N 5P-9232.	1
7	PFHZZ	5365002241304	11083	3H6828	PLUG,MACHINE THREAD	1
8	PFHZZ	3020010675659	11083	5M0593	GEAR	1
9	PAHZZ	5330009238958	11083	5M0597	GASKET PART OF KIT P/N 5P-9232	1
10	PAHZZ	5330009486836	11083	1S6891	GASKET PART OF KIT P/N 5P-9232	1
11	XDHHH		11083	5S1567	COVER ASSEMBLY	1
12	PFHZZ	2520013776783	11083	5M0603	.COVER,TRANSMISSION	1
13	PFHZZ	5307004097212	11083	9H5999	.STUD,PLAIN	2
14	PFHZZ	5307004097208	11083	9M2151	.STUD,CONTINUOUS THR	1
15	PFHZZ	5307004656789	11083	2M4779	.STUD	6
16	PFHZZ	5365004193254	11083	2S7905	.PLUG,MACHINE THREAD	1
17	XDHZZ		11083	1S6875	CAGE,BEARING PUMP DRIVE	1
18	PFHZZ	5340011509807	11083	7N8374	COVER,ACCESS	1
19	PFHZZ	5310010954631	11083	5P8247	WASHER,FLAT	2
20	PFHZZ	5310007638905	96906	MS51968-20	NUT,PLAIN,HEXAGON	2
21	PFHZZ	3110010794670	11083	5P6766	RING	2
22	PFHZZ	3110009138113	11083	2K5254	BEARING,ROLLER,CYLI	2
23	PFHZZ	5331006635709	11083	5F3106	O-RING PART OF KIT P/N 5P-9232	1
24	PFHZZ	5330012852792	11083	9M0673	GASKET PART OF KIT P/N 2P-3988 PART OF KIT P/N 5P-9232	1
25	PFHZZ	3020009491370	11083	5M594	GEAR,SPUR	1
26	PFHZZ	5340012646022	11083	9M0672	COVER,ACCESS	1
27	PFHZZ	5325009491343	11083	6H1827	RING,RETAINING	2
28	PFHZZ	5310011945398	11083	1D4717	NUT,HEXAGON	6
29	PFHZZ	5310006379541	96906	MS35338-46	WASHER,LOCK	17
30	PFHZZ	5305000680511	80204	B1821BH038C125N	SCREW,CAP,HEXAGON H	11
31	XDHHH		11083	5M0599	HOUSING ASSEMBLY	1
32	PFHZZ	5315008250082	11083	3F0957	.PIN,STRAIGHT,HEADLE	4
33	XAHZZ		11083	5M0598	.HOUSING	1

END OF FIGURE

3 — 4 AND 5

6 — 7 AND 8

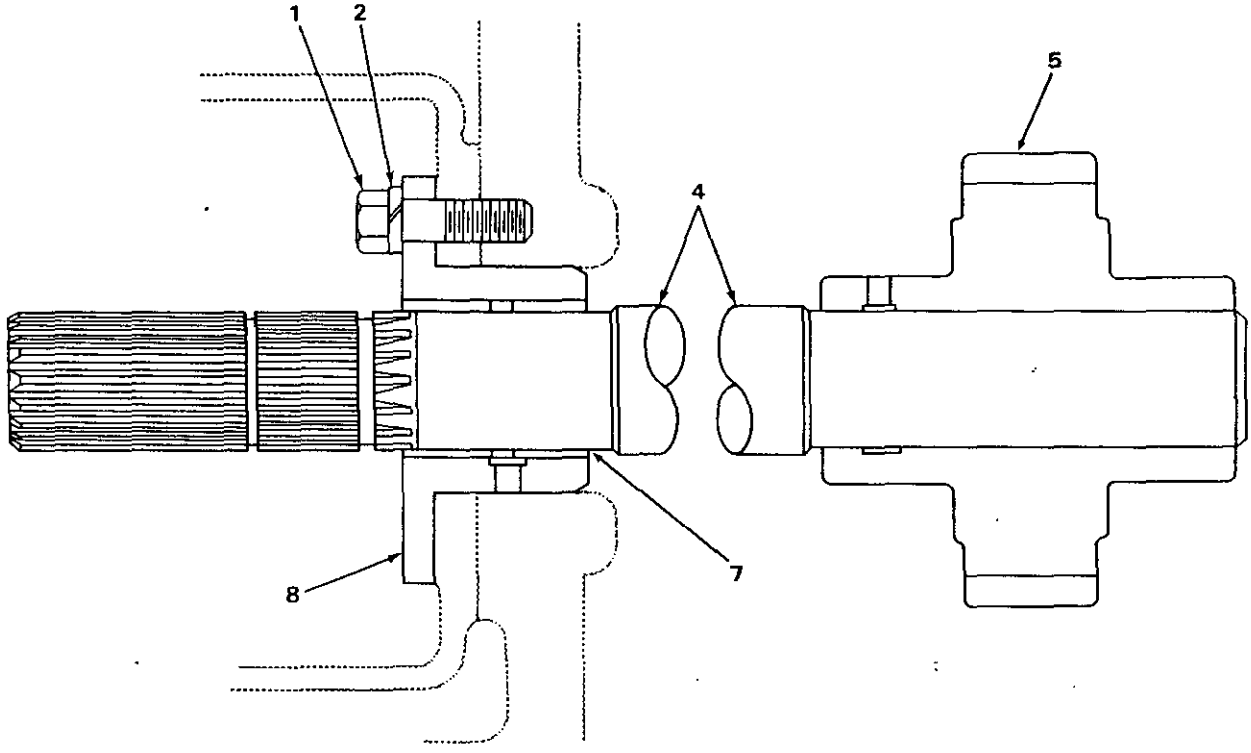

FIGURE 191. POWER TAKE-OFF DRIVE.

(1) ITEM NO	(2) SMR CODE	(3) NSN	(4) CAGEC	(5) PART NUMBER	(6) DESCRIPTION AND USABLE ON CODES(UOC)	(7) QTY
					GROUP 2004 POWER TAKE-OFF ASSEMBLY	
					FIG. 191 POWER TAKE-OFF DRIVE	
1	PFHZZ	5306002638978	11083	S1587	BOLT,MACHINE CAGE.....	4
2	PFHZZ	5310005845272	96906	MS35338-48	WASHER,LOCK CAGE.....	4
3	XDHZZ		11083	9H6249	SHAFT ASSEMBLY.....	1
4	XAHZZ		11083	9H6247	.SHAFT.....	1
5	XAHZZ		11083	4H9448	.GEAR.....	1
6	PFHHZ	3110010687241	11083	4H9116	CAGE.....	1
7	PFHZZ	3120009140263	11083	4H9073	.BEARING,SLEEVE CAGE.....	1
8	XAHZZ		11083	4H8502	.CAGE.....	1

END OF FIGURE

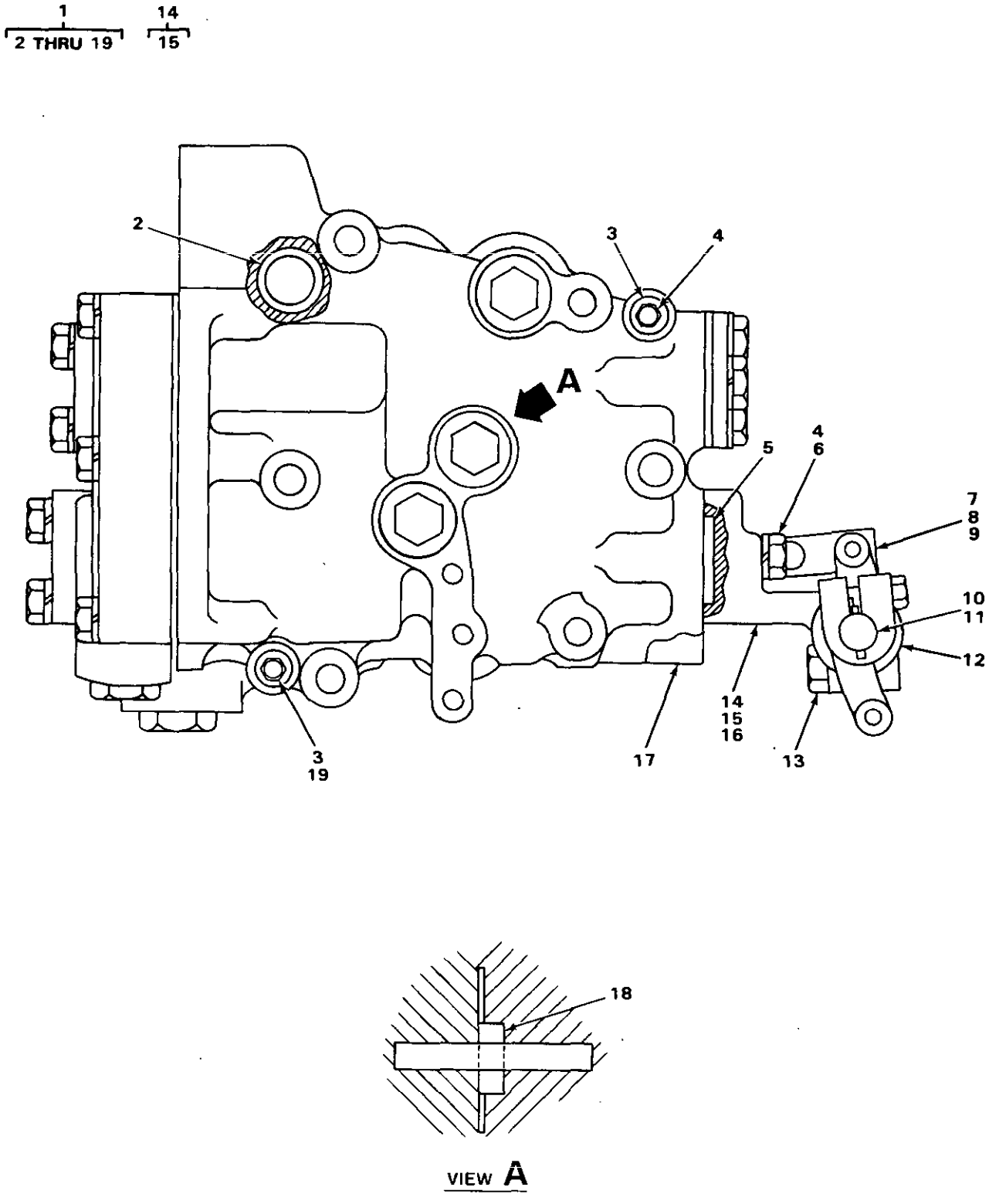

FIGURE 192. WINCH VALVE.

(1) ITEM NO	(2) SMR CODE	(3) NSN	(4) CAGEC	(5) PART NUMBER	(6) DESCRIPTION AND USABLE ON CODES(UOC)	(7) QTY
					GROUP 2006 BULLDOZER TRIPOD, MAIN FRAME, JACK AND MOUNTING.	
					FIG. 192 WINCH VALVE.	
1	PFFZZ	4820010176496	11083	2P3640	VALVE,LINEAR,DIRECT..... UOC:T24	1
2	PFFZZ	5331003396224	11083	5F7054	.O-RING..... UOC:T24	4
3	PFFZZ	5310000814219	96906	MS27183-12	.WASHER,FLAT..... UOC:T24	4
4	PFFZZ	5306002682449	11083	3S4346	.BOLT,MACHINE..... UOC:T24	1
6	PFFZZ	5306002264829	80204	B1821BH031C125N	.BOLT,MACHINE..... UOC:T24	2
7	XDFZZ		11083	1P5130	.CONNECTING LINK,RIG..... UOC:T24	2
8	PFFZZ	5315001698105	11083	9S1303	.PIN,STRAIGHT,HEADED..... UOC:T24	2
9	PFFZZ	5315008392326	96906	MS24665-281	.PIN,COTTER..... UOC:T24	2
10	XDFZZ		11083	2P6969	.SHAFT,STRAIGHT..... UOC:T24	1
11	PFFZZ	5315006165514	96906	MS35756-6	.KEY,WOODRUFF..... UOC:T24	2
12	XAFZZ		11083	5H6001	.LEVER..... UOC:T24	2
13	PFFZZ	5306002264826	80204	B1821BH031C088N	.BOLT,MACHINE..... UOC:T24	2
14	PFFZZ	5340011619923	11083	2P6971	.RETAINER,BEARING..... UOC:T24	1
15	PFFZZ	3120011648629	11083	9H2400	..BUSHING,SLEEVE..... UOC:T24	2
16	PFFZZ	5310009307013	11083	4B4280	.WASHER,FLAT..... UOC:T24	2
17	PFFZZ	5330011610895	11083	2P3650	.GASKET..... UOC:T24	1
18	PFFZZ	5331008588223	11083	2H5001	.O-RING..... UOC:T24	1
19	PFFZZ	5306010599566	11083	6L4783	.BOLT,MACHINE..... UOC:T24	1

END OF FIGURE

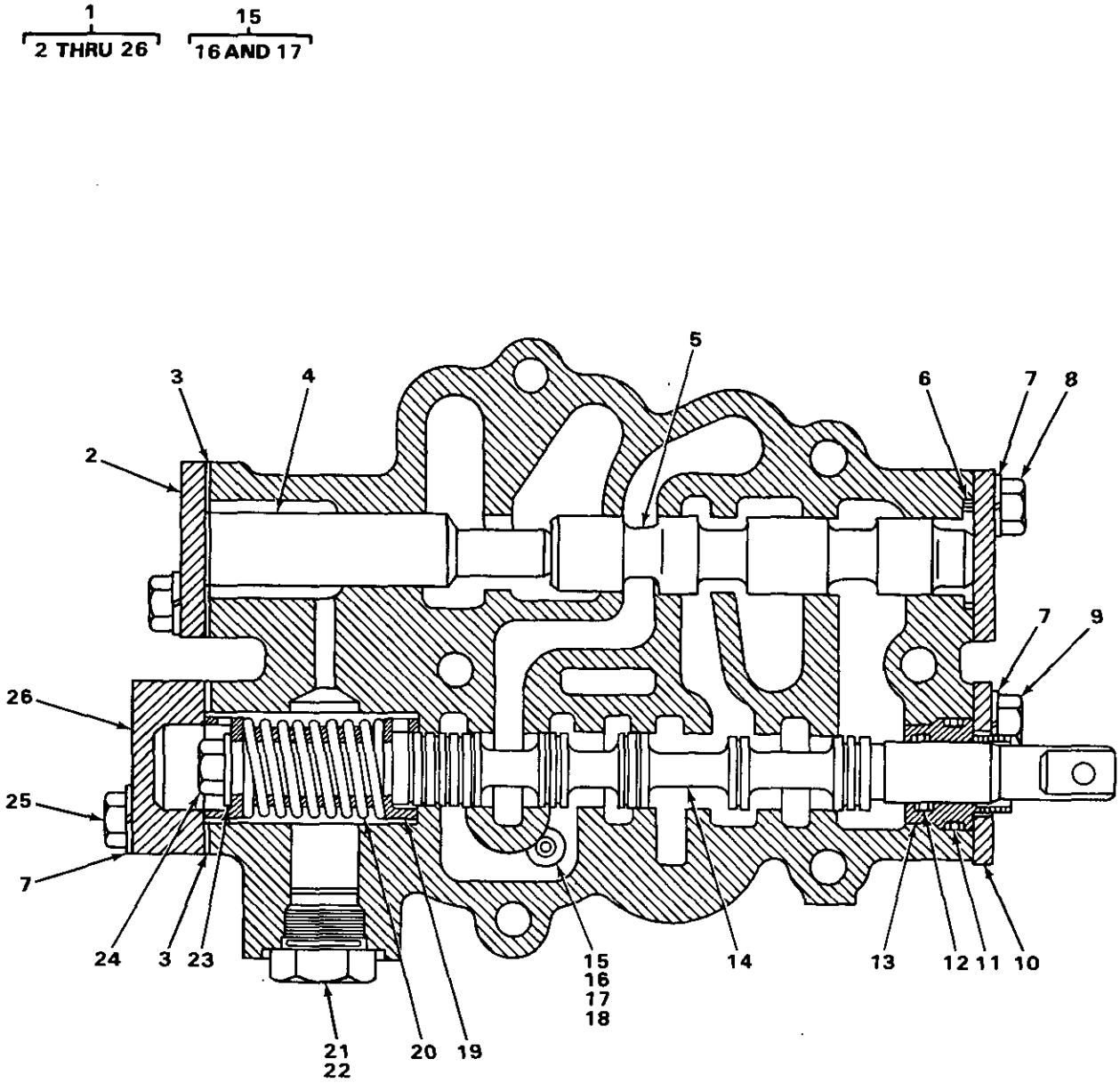

FIGURE 193. WINCH SELECTOR VALVE.

(1) ITEM NO	(2) SMR CODE	(3) NSN	(4) CAGEC	(5) PART NUMBER	(6) DESCRIPTION AND USABLE ON CODES(UOC)	(7) QTY
					GROUP 2006 BULLDOZER TRIPOD, MAIN FRAME, JACK AND MOUNTING.	
					FIG. 193 WINCH SELECTOR VALVE.	
1	PFFZZ	4820011628951	11083	3P4121	.VALVE,LINEAR,DIRECT..... UOC:T24	1
2	PFFZZ	5340004239937	11083	6B830	..COVER,ACCESS..... UOC:T24	2
3	PFFZZ	5330011612429	11083	3P218	..GASKET..... UOC:T24	2
4	PFFZZ	5315011649838	11083	2P3683	..PIN,SHOULDER,HEADLE..... UOC:T24	2
5	XDFZZ		11083	2P3639	..SLIDE,DIRECTIONAL C..... UOC:T24	1
6	PFFZZ	5331005931192	11083	3H107	..O-RING..... UOC:T24	1
7	PFFZZ	5310004079566	96906	MS35338-45	..WASHER,LOCK..... UOC:T24	8
8	PFFZZ	5306002264826	80204	B1821BH031C088N	..BOLT,MACHINE..... UOC:T24	4
9	PFFZZ	5305000712506	80204	B1821BH025C050N	..SCREW,CAP,HEXAGON H..... UOC:T24	2
10	XDFZZ		11083	1P6217	..FLANGE,PIPE..... UOC:T24	1
11	PFFZZ	5330004982906	58312	4D9986-00	..SEAL..... UOC:T24	1
12	PFFZZ	5331004317140	11083	8M5260	..O-RING..... UOC:T24	1
13	PFFZZ	3120011673402	11083	3S2682	..BUSHING,SLEEVE..... UOC:T24	1
14	XDFZZ		11083	2P3617	..SLIDE,DIRECTIONAL C..... UOC:T24	1
15	XDFZZ		11083	3P4117	..VALVE,CHECK..... UOC:T24	1
16	PFFZZ	5315004792833	11083	1L5316	...PIN..... UOC:T24	1
17	PFFZZ	3110001006149	19200	B271406C	...BALL,BEARING..... UOC:T24	1
18	PFFZZ	5331005913112	11083	5F9144	..O-RING..... UOC:T24	1
19	PAFZZ	5340011644596	11083	3P220	..RETAINER,HELICAL CO..... UOC:T24	2
20	PFFZZ	5360011653674	11083	3P3202	..SPRING,HELICAL,COMP..... UOC:T24	1
21	PFFZZ	5365007630120	11083	9S4185	..PLUG,MACHINE THREAD..... UOC:T24	1
22	PFFZZ	5331009486482	11083	3K360	..O-RING..... UOC:T24	1
23	PFFZZ	5310007251984	81205	BACW10P140S	..WASHER,FLAT..... UOC:T24	1
24	PFFZZ	5306011169622	11083	0S1618	..BOLT,MACHINE.....	1

(1) ITEM NO	(2) SMR CODE	(3) NSN	(4) CAGEC	(5) PART NUMBER	(6) DESCRIPTION AND USABLE ON CODES(UOC)	(7) QTY
					UOC:T24	
25	PFFZZ	5306002264828	80204	B1821BH031C113N	..BOLT,MACHINE.....	2
					UOC:T24	
26	XAFZZ		11083	3P219	..COVER.....	1
					UOC:T24	

END OF FIGURE

1
2 THRU 21

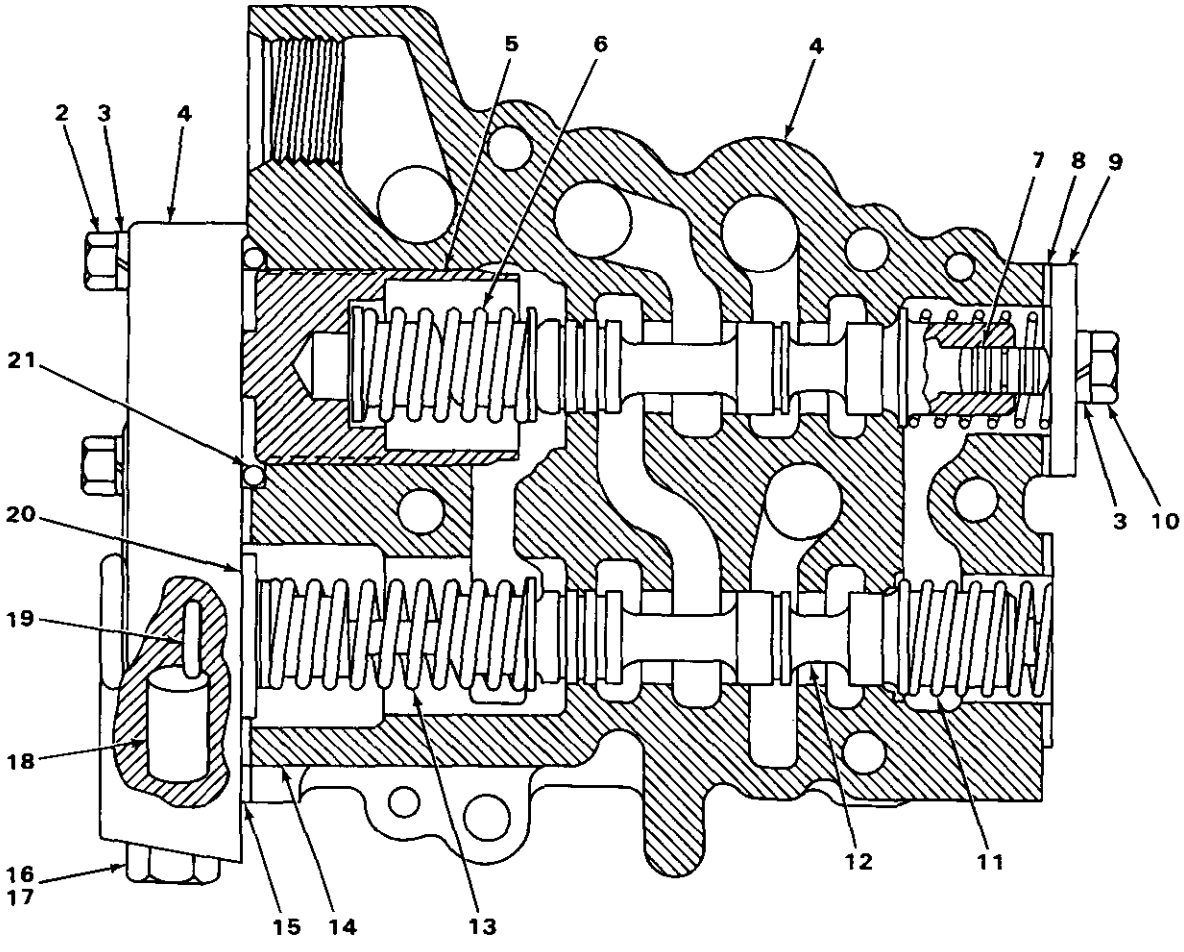

TA235391

FIGURE 194. WINCH PRESSURE CONTROL VALVE.

(1) ITEM NO	(2) SMR CODE	(3) NSN	(4) CAGEC	(5) PART NUMBER	(6) DESCRIPTION AND USABLE ON CODES (UOC)	(7) QTY
					GROUP 2006 BULLDOZER TRIPOD MAIN FRAME, JACK AND MOUNTING. FIG. 194 WINCH PREASURE CONTROL VALVE	
1	PFFFH	4820011628950	11083	3P4119	VALVE, REGULATING, FL PRESSURE CONTROL UOC: T24	1
2	PFFZZ	5306009305643	11083	1A9579	BOLT, MACHINE UOC: T24	5
3	PEFZZ	5310004079566	96906	MS35338-45	WASHER, LOCK UOC: T24	7
4	XBFZZ		11083	2P3648	COVER UOC: T24	1
5	XDFZZ		11083	2P3646	PISTON, LINEAR ACTUA UOC: T24	1
6	PFFZZ	5360012875723	11083	3P2831	SPRING, HELICAL, COM UOC: T24	1
7	PFFZZ	2520010599381	11083	2M1168	SLUG UOC: T24	2
8	PFFZZ	5330011612429	11083	3P218	GASKET UOC: T24	1
9	PFFZZ	5340004239937	11083	6B830	COVER, ACCESS UOC: T24	1
10	PFFZZ	5306002264826	80204	BI821BH0310088N	BOLT, MACHINE UOC: T24	2
11	PFFZZ	5360011622847	11083	1P32I6	SPRING, HELICAL, COMP UOC: T24	2
12	XDFZZ		11083	3P2767	SLIDE, DIRECTIONALC UOC: T24	2
13	XAFZZ		11083	3P2B29	SPR1NG ASSEMBLY UOC: T24	1
14	PFFZZ	5331005801215	11083	6F5559	0-RING UOC: T24	1
15	PFFZZ	5330011628587	11083	2P3644	GASKET UOC: T24	1
16	PFFZZ	5365004114584	11083	9S4191	PLUG, MACHINE THREAD UOC: T24	4
17	PAFZZ	5331008013354	25184	906-737-70	0-RING UOC: T24	4
18	XAFZZ		11083	2P3649	VALVE UOC: T24	1
19	PFFZZ	5330010686073	11083	4K2O39	0-RING UOC: T24	1
20	PFFZZ	5340011619175	11083	3P2847	RETAINER, HELICAL CO UOC: T24	1
21	PFFZZ	5331005801226	11083	1H9696	O-R1NG UOC: T24	1

END OF FIGURE

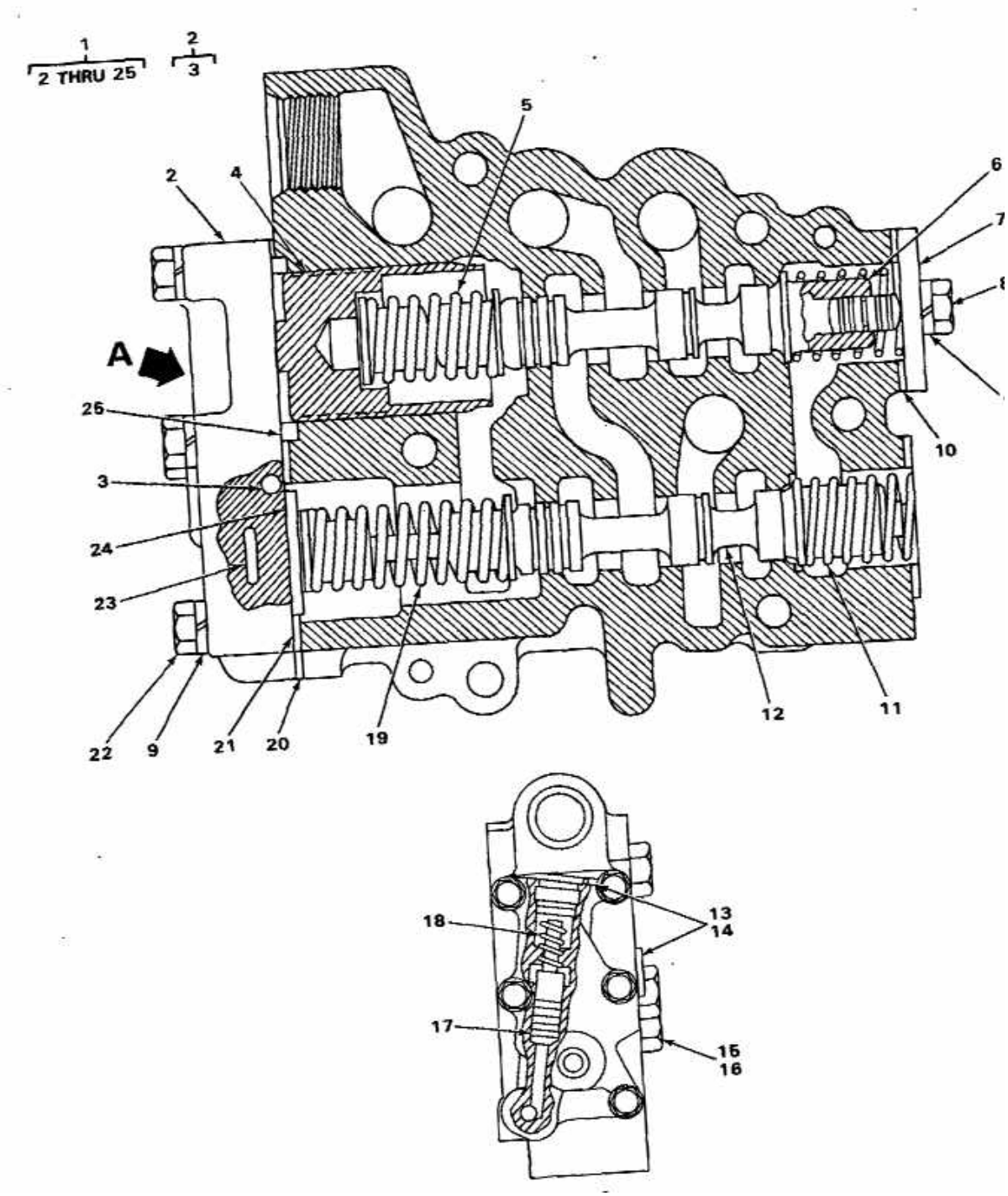

VIEW A

FIGURE 195. WINCH PRESSURE CONTROL VALVE (USE WITH WINCH SERIAL RANGE 33U290 AND UP AND 34U194 AND UP)

(1) ITEM NO	(2) SMR CODE	(3) NSN	(4) CAGEC	(5) PART NUMBER	(6) DESCRIPTION AND USABLE ON CODES(UOC)	(7) QTY
					GROUP 2006 BULLDOZER TRIPOD, MAIN FRAME, JACK AND MOUNTING.	
					FIG. 195 WINCH PREASURE CONTROL VALVE (USE WITH SERIAL RANGE 33U290 AND UP AND 34U194 AND UP).	
1	XBFFF		11083	2P3649	.VALVE,CONTROL PRESSURE..... UOC:T24	1
2	XBFZZ		11083	3P4659	..COVER ASSEMBLY..... UOC:T24	1
3	PFFZZ	3110009491438	11083	4B9880	...BALL,BEARING..... UOC:T24	1
4	XDFZZ		11083	2P3646	..PISTON,LINEAR ACTUA..... UOC:T24	1
5	PFFZZ	5342011628767	11083	3P5168	..RETAINER..... UOC:T24	1
6	PFFZZ	2520010599381	11083	2M1168	..SLUG..... UOC:T24	2
7	PFFZZ	5340004239937	11083	6B830	..COVER,ACCESS..... UOC:T24	1
8	PFFZZ	5306002264826	80204	B1821BH031C088N	..BOLT,MACHINE..... UOC:T24	2
9	PFFZZ	5310004079566	96906	MS35338-45	..WASHER,LOCK..... UOC:T24	7
10	PFFZZ	5330011612429	11083	3P218	..GASKET..... UOC:T24	1
11	PFFZZ	5360011622847	11083	1P3216	..SPRING,HELICAL,COMP..... UOC:T24	2
12	XDFZZ		11083	3P2767	..SLIDE,DIRECTIONAL C..... UOC:T24	2
13	PFFZZ	5365010318183	30780	8HP5N-S	..PLUG,MACHINE THREAD..... UOC:T24	2
14	PFFZZ	5331009486482	11083	3K360	..O-RING..... UOC:T24	2
15	PFFZZ	5365004114584	11083	9S4191	..PLUG,MACHINE THREAD..... UOC:T24	3
16	PAFZZ	5331008013354	25184	906-737-70	..O-RING..... UOC:T24	3
17	XDFZZ		11083	3P4660	..VALVE,LINEAR,DIRECT..... UOC:T24	1
18	XAFZZ		11083	8J245	..SPRING..... UOC:T24	1
19	PFFZZ	5342011628768	11083	3P5169	..RETAINER..... UOC:T24	1
20	PFFZZ	5330011628587	11083	2P3644	..GASKET..... UOC:T24	1
21	PFFZZ	5331005801215	11083	6F5559	..O-RING..... UOC:T24	1
22	PFFZZ	5306002264833	80204	B1821BH031C200N	..BOLT,MACHINE..... UOC:T24	5
23	PFFZZ	5330010686073	11083	4K2039	..O-RING.....	1

(1) ITEM NO	(2) SMR CODE	(3) NSN	(4) CAGEC	(5) PART NUMBER	(6) DESCRIPTION AND USABLE ON CODES(UOC)	(7) QTY
					UOC:T24	
24	PFFZZ	5340011619175	11083	3P2847	..RETAINER,HELICAL CO.....	1
					UOC:T24	
25	PFFZZ	5331005801226	11083	1H9696	.:O-RING.....	1
					UOC:T24	

END OF FIGURE

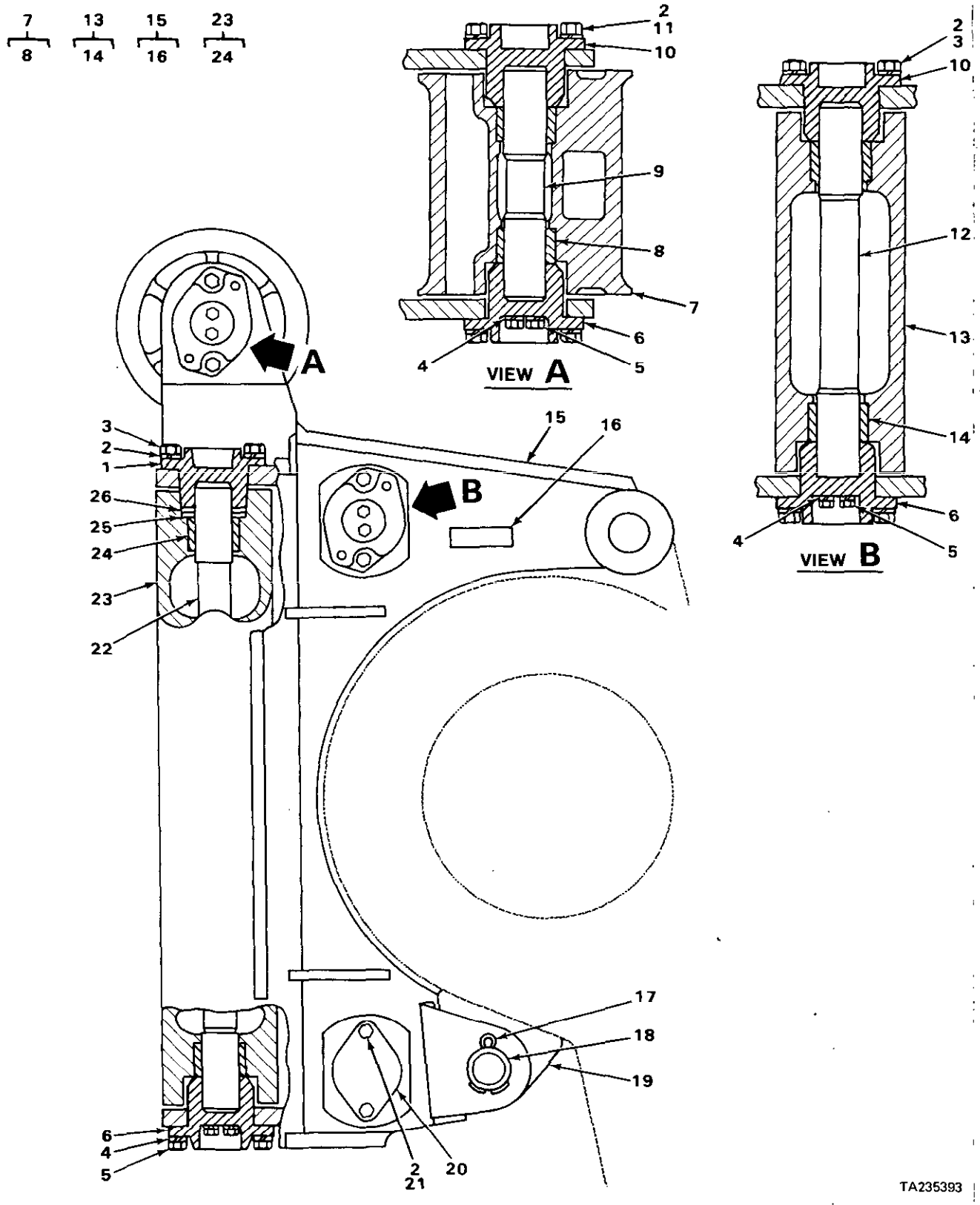

FIGURE 196. WINCH FAIRLEADS (USE WITH LOW SPEED AND STANDARD WINCH).

(1) ITEM NO	(2) SMR CODE	(3) NSN	(4) CAGEC	(5) PART NUMBER	(6) DESCRIPTION AND USABLE ON CODES(UOC)	(7) QTY
					GROUP 2006 BULLDOZER TRIPOD, MAIN FRAME, JACK AND MOUNTING.	
					FIG. 196 WINCH FAIRLEADS (USE WITH LOW SPEED AND STANDARD WINCH).	
1	XBOZZ		11083	2P3739	RETAINER..... UOC:T24	2
2	PFOZZ	5310005845272	96906	MS35338-48	WASHER,LOCK..... UOC:T24	20
3	PFOZZ	5306011279361	11083	OS1585	BOLT,MACHINE..... UOC:T24	12
4	PFOZZ	5310006379541	96906	MS35338-46	WASHER,LOCK..... UOC:T24	8
5	PFOZZ	5305000680511	80204	B1821BH038C125N	SCREW,CAP,HEXAGON H..... UOC:T24	8
6	XBOZZ		11083	2P3737	RETAINER..... UOC:T24	4
7	XBOOO		11083	2P9303	ROLLER ASSEMBLY..... UOC:T24	1
8	PFOZZ	3120011824176	11083	7J6250	.BUSHING,SLEEVE..... UOC:T24	2
9	XBOZZ		11083	2P3744	SHAFT..... UOC:T24	1
10	XBOZZ		11083	2P3742	RETAINER..... UOC:T24	2
11	PFOZZ	5306004238117	11083	S1595	BOLT,MACHINE..... UOC:T24	4
12	XBOZZ		11083	2P3738	SHAFT..... UOC:T24	1
13	XBOOO		11083	2P9302	ROLLER ASSEMBLY..... UOC:T24	1
14	PFOZZ	3120011824176	11083	7J6250	.BUSHING,SLEEVE..... UOC:T24	2
15	XBOOO		11083	2P3721	FRAME ASSEMBLY..... UOC:T24	1
16	XBOZZ		11083	2K3656	.BAR..... UOC:T24	1
17	PFOZZ	5315000189396	11083	3B5325	PIN,COTTER..... UOC:T24	2
18	XBOZZ		11083	1P7545	PIN..... UOC:T24	2
19	XBOZZ		11083	1P7558	SUPPORT..... UOC:T24	2
20	XBOZZ		11083	7K6413	COVER..... UOC:T24	2
21	PFOZZ	5306004240086	11083	7B3235	BOLT,MACHINE..... UOC:T24	4
22	XBOZZ		11083	2P3740	SHAFT..... UOC:T24	2
23	XBOOO		11083	2P9301	ROLLER ASSEMBLY..... UOC:T24	2

(1) ITEM NO	(2) SMR CODE	(3) NSN	(4) CAGEC	(5) PART NUMBER	(6) DESCRIPTION AND USABLE ON CODES(UOC)	(7) QTY
24	PFOZZ	3120011824176	11083	7J6250	.BUSHING,SLEEVE..... UOC:T24	2
25	PFOZZ	5310012849727	11083	8M6900	WASHER,FLAT..... UOC:T24	4
26	XBOZZ		11083	1P6704	SPACER..... UOC:T24	2

END OF FIGURE

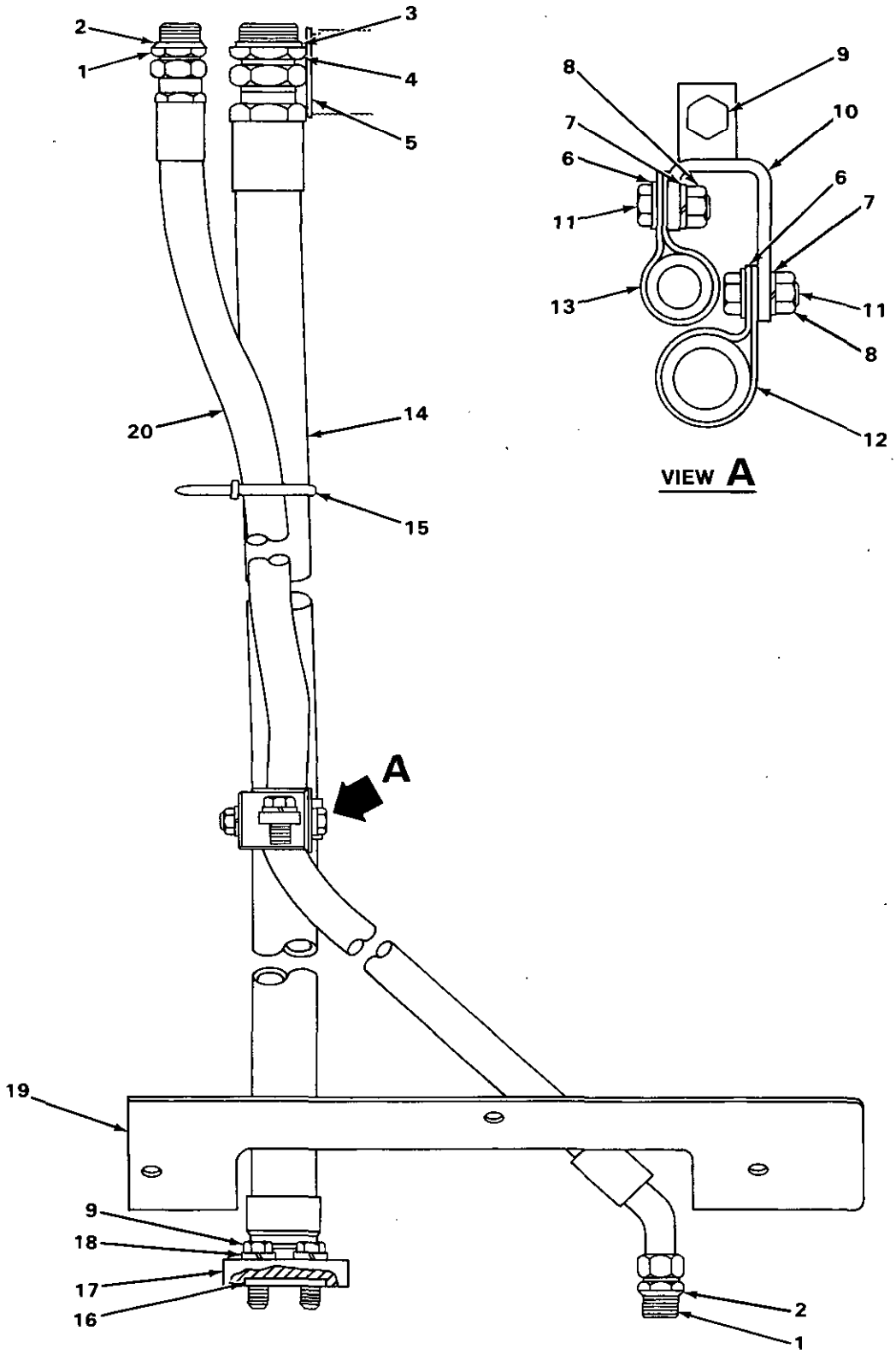

FIGURE 197. WINCH PUMP LINES.

(1) ITEM NO	(2) SMR CODE	(3) NSN	(4) CAGEC	(5) PART NUMBER	(6) DESCRIPTION AND USABLE ON CODES(UOC)	(7) QTY
					GROUP 2006 BULL DOZER TRIPOD, MAIN FRAME, JACK AND MOUNTING.	
					FIG. 197 WINCH PUMP LINES.	
1	PFOZZ	4730007105571	96906	MS51525A12	ADAPTER,STRAIGHT,TU..... UOC:T24	2
2	PFOZZ	5331009448281	11083	3D2824	O-RING..... UOC:T24	2
3	PFOZZ	5331010242512	81349	M83248/2-920	PACKING,PREFORMED..... UOC:T24	1
4	PFOZZ	4730011569977	11083	318759	ADAPTER,STRAIGHT,TU..... UOC:T24	1
5	PFOZZ	5310006397664	11083	1D6945	WASHER,FLAT..... UOC:T24	1
6	PFOZZ	5310001174788	11083	5M2894	WASHER,FLAT..... UOC:T24	3
7	PFOZZ	5310006379541	96906	MS35338-46	WASHER,LOCK..... UOC:T24	2
8	PFOZZ	5310011945398	11083	1D4717	NUT,HEXAGON..... UOC:T24	2
9	PFOZZ	5306011279361	11083	0S1585	BOLT,MACHINE..... UOC:T24	6
10	XBOZZ		11083	2P6437	BRACKET ASSEMBLY..... UOC:T24	1
11	PFOZZ	5306002637301	11083	L1351	BOLT,MACHINE..... UOC:T24	2
12	PFOZZ	5340012577789	11083	7L6326	CLIP,RETAINING..... UOC:T24	1
13	XBOZZ		11083	2P6591	HOSE ASSEMBLY..... UOC:T24	1
14	PFOZZ	5340000837727	11083	1S8808	CLAMP,LOOP..... UOC:T24	1
15	PFOZZ	2815010534712	11083	7K1181	STRAP..... UOC:T24	3
16	PFOZZ	5331009145846	11083	4J524	O-RING..... UOC:T24	1
17	PFOZZ	5340010600309	11083	1P4579	FLANGE..... UOC:T24	2
18	PFOZZ	5310005845272	96906	MS35338-48	WASHER,LOCK..... UOC:T24	4
19	XBOZZ		11083	2P6592	COVER..... UOC:T24	1
20	XBOZZ		11083	2P6590	HOSE ASSEMBLY..... UOC:T24	1

END OF FIGURE

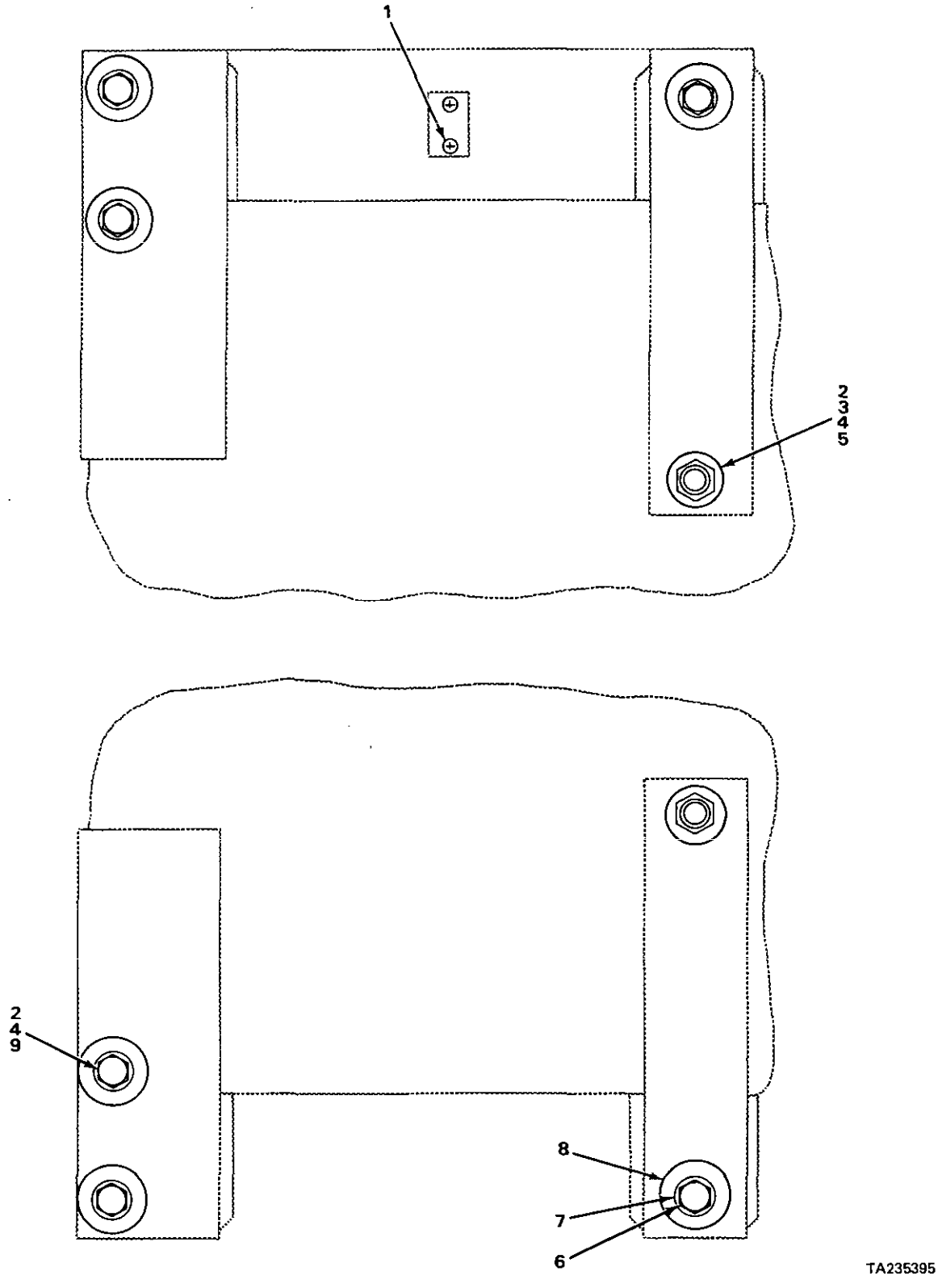

FIGURE 198. WINCH MOUNTING.

(1) ITEM NO	(2) SMR CODE	(3) NSN	(4) CAGEC	(5) PART NUMBER	(6) DESCRIPTION AND USABLE ON CODES(UOC)	(7) QTY
					GROUP 2007 CHAIN HOIST ASSEMBLY.	
					FIG. 198 WINCH MOUNTING.	
1	PFOZZ	5305002535615	96906	MS21318-21	SCREW,DRIVE..... UOC:T24	2
2	PFOZZ	5307011619140	11083	3S2113	STUD,PLAIN..... UOC:T24	6
3	PFOZZ	5331010938484	11083	5M7423	O-RING..... UOC:T24	2
4	PFOZZ	5310011626012	11083	4K684	WASHER,FLAT..... UOC:T24	6
5	PFOZZ	5310011604539	11083	2K7468	NUT,SELF-LOCKING,HE..... UOC:T24	2
6	XBOZZ		11083	1P6694	STUD..... UOC:T24	2
7	PFOZZ	5310004043784	11083	8H3390	NUT,PLAIN,HEXAGON..... UOC:T24	2
8	PFOZZ	5310012550110	11083	3S6162	WASHER,FLAT..... UOC:T24	2
9	PFOZZ	5310004043787	11083	7H7539	NUT,PLAIN,HEXAGON..... UOC:T24	4

END OF FIGURE

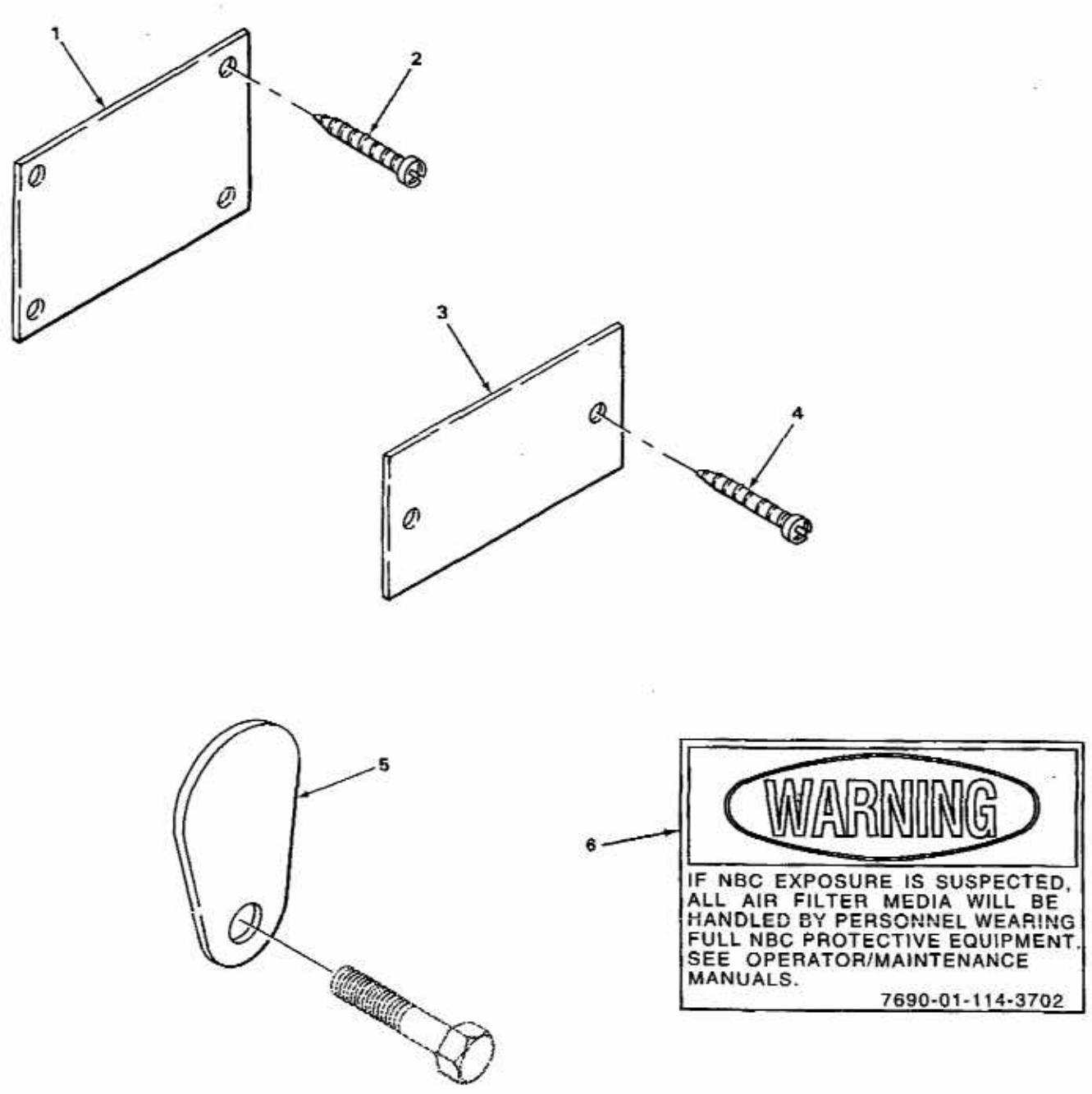

TA235396

FIGURE 199. DATA PLATES.

(1) ITEM NO	(2) SMR CODE	(3) NSN	(4) CAGEC	(5) PART NUMBER	(6) DESCRIPTION AND USABLE ON CODES(UOC)	(7) QTY
					GROUP 22 BODY, CHASSIS, AND HULL ACCESSORY ITEMS.	
					GROUP 2210 DATA PLATES.	
					FIG. 199 DATA PLATES.	
1	PFOZZ	9905011639191	11083	2S5927	PLATE,IDENTIFICATIO FRONT IDLER....	1
1	XBOZZ		11083	6P4350	PLATE,WARNING FRONT IDLER.....	1
2	PFOZZ	5305007083823	11083	7B3028	SCREW,DRIVE USE WITH P/N 2S5927....	4
2	PFOZZ	5305002535615	96906	MS21318-21	SCREW,DRIVE USE WITH P/N 6P4350....	4
3	XAHZZ	9905011517584	11083	6V1720	PLATE,IDENTIFICATIO.....	1
3	XBOZZ		11083	3N3790	SERIAL NO. PLATE.....	1
3	PFOZZ	9905010534809	11083	8S8097	PLATE,IDENTIFICATIO TURBOCHARGER...	1
3	PFOZZ	9905010534808	11083	8S8096	PLATE,IDENTIFICATIO TURBOCHARGER...	1
3	XBOZZ		11083	IT0094	PLATE,NAME TORQUE CONVERTER.....	1
3	PFOZZ	9905002504399	58312	5M2477-00	PLATE,IDENTIFICATIO TRANSMISSION...	1
3	XBOZZ		11083	9S1604	PLATE SERIAL NUMBER,RIPPER SHANK...	1
3	XBOZZ		11083	3Y747	PLATE SERIAL NUMBER,RIPPER SHANK...	1
4	PFHZZ	5305007083823	11083	7B3028	SCREW,DRIVE USED WITH P/N 6V1720...	2
4	PFOZZ	5305002535615	96906	MS21318-21	SCREW,DRIVE USED WITH P/N 3N3790...	2
4	PFOZZ	5305001519899	11083	2F808	SCREW.....	2
4	PFOZZ	5305002535615	96906	MS21318-21	SCREW,DRIVE USE WITH P/N IT94, 9S1604.....	2
4	PFOZZ	5305007083823	11083	7B3028	SCREW,DRIVE USE WITH P/N 5M2477-00, 3Y747.....	2
5	PFOZZ	9905012687576	11083	2P9238	TAG,MARKER TRANSMISSION OIL PUMP...	1
6	PAOZZ	7690011143702	19207	12296626	DECAL.....	1

END OF FIGURE

1
2 THRU 27

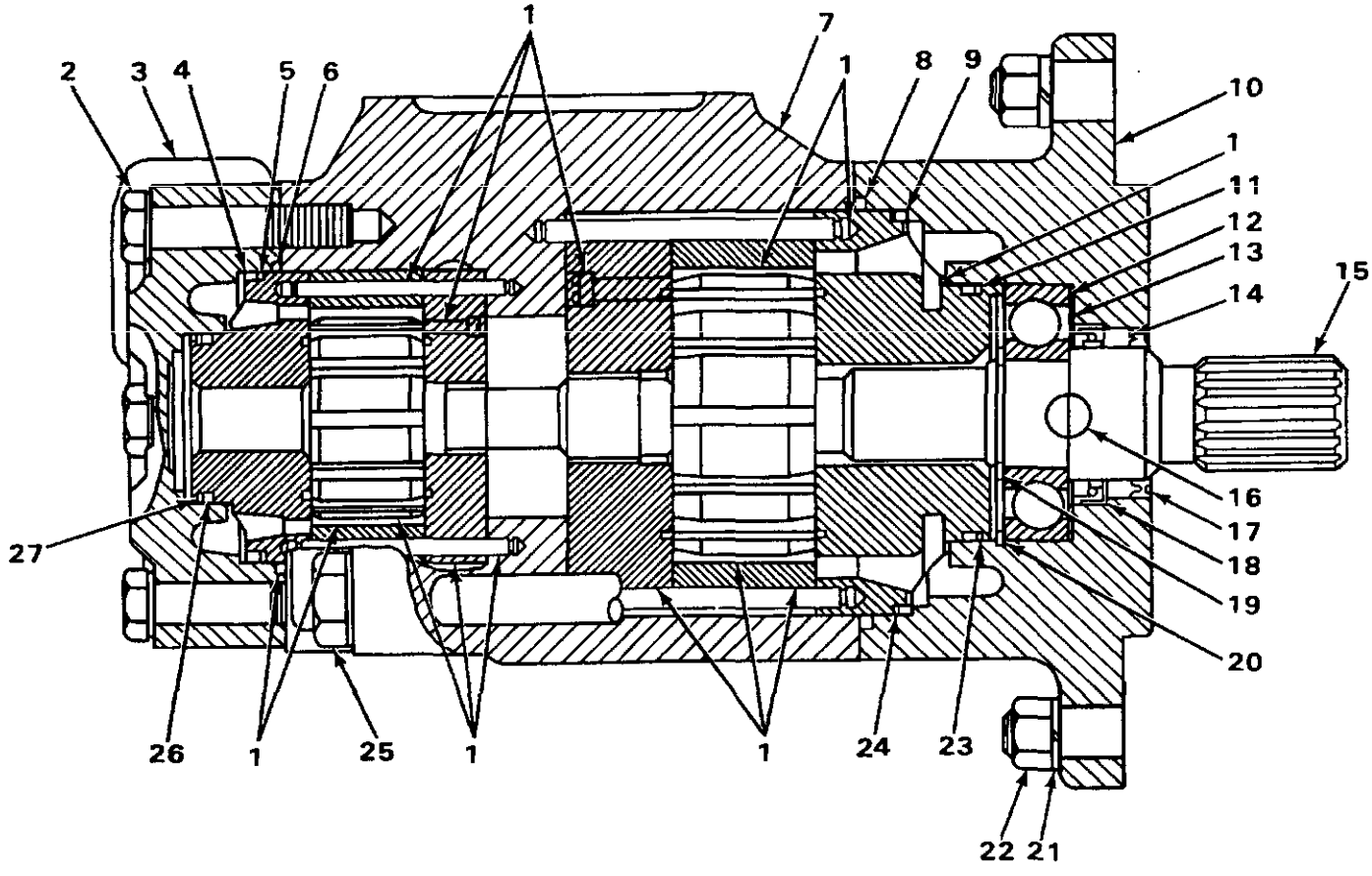

FIGURE 200. HYDRAULIC PUMP.

(1) ITEM NO	(2) SMR CODE	(3) NSN	(4) CAGEC	(5) PART NUMBER	(6) DESCRIPTION AND USABLE ON CODES(UOC)	(7) QTY
					GROUP 24 HYDRAULIC AND FLUID SYSTEMS	
					GROUP 2401 PUMP AND MOTOR.	
					FIG. 200 HYDRAULIC PUMP.	
1	PAFFF	4320013193981	11083	9J5050	PUMP,ROTARY ASSEMBLY..... UOC:T25	1
2	PFFZZ	5306002604512	11083	T319	.BOLT,MACHINE..... UOC:T25	4
3	XBFZZ		11083	4J1657	.COVER..... UOC:T25	1
4	PFFZZ	5331005931141	11083	1H7339	.O-RING PART OF KIT P/N 459285.....	1
5	PFFZZ	5330009531624	11083	1S668	.RETAINER,PACKING PART OF KIT P/N 459285.....	1
6	PFFZZ	5331005801216	11083	2H3931	.O-RING PART OF KIT P/N 459285.....	1
7	XBFZZ		11083	4J4670	.COVER..... UOC:T25	1
8	PFFZZ	5331009508217	11083	2J8163	.O-RING.....	1
9	PFFZZ	5331009413599	02697	2-244C873-70	.O-RING PART OF KIT P/N 459285.....	1
10	PFFZZ	2520010630677	11083	2J8165	.BODY..... UOC:T25	1
11	PFFZZ	5330001076455	11083	4J9225	.RETAINER,PACKING PART OF KIT P/N 459285.....	1
12	PFFZZ	3110002939302	11083	2L5271	.BEARING,BALL,ANNULA..... UOC:T25	1
13	XDFZZ		11083	2J8168	.WASHER,FLAT..... UOC:T25	1
14	PFFZZ	5330004596426	11083	2J8170	.PACKING,PREFORMED PART OF KIT P/N 459285.....	1
15	PFFZZ	3040009491427	11083	4J6353	.SHAFT,SHOULDERED..... UOC:T25	1
16	KFFZZ		11083	4H407	.PLUG..... UOC:T25	1
17	PFFZZ	5330010671729	11083	3G9194	SEAL..... UOC:T25	1
18	XDFZZ		11083	2J8169	.SEAL PART OF KIT P/N 459285.....	1
19	XBFZZ		11083	4M5285	.RING,RETAINING..... UOC:T25	1
20	PFFZZ	5325009487246	11083	2J8172	.RING,RETAINING..... UOC:T25	1
21	PFFZZ	5310000455001	96906	MS35340-50	WASHER,LOCK..... UOC:T25	2
22	PFFZZ	5310007638905	96906	MS51968-20	NUT,PLAIN,HEXAGON..... UOC:T25	2
23	PFFZZ	5331003334384	11083	1H5728	.O-RING PART OF KIT P/N 459285.....	1
24	XDFZZ		11083	4J9220	.SPACER,RING PART OF KIT P/N 459285.	1
24	PFFZZ	5331006635709	11083	5F3106	O-RING..... UOC:T25	1
25	PFFZZ	5306002709464	11083	1D4597	.BOLT,MACHINE..... UOC:T25	4
26	PFFZZ	5331005277748	11083	4F7952	.O-RING PART OF KIT P/N 459285.....	1

(1) ITEM NO	(2) SMR CODE	(3) NSN	(4) CAGEC	(5) PART NUMBER	(6) DESCRIPTION AND USABLE ON CODES(UOC)	(7) QTY
27	PFFZZ	5310009492554	11083	4J9222	.WASHER,PUMP,HYDRAUL PART OF KIT P/N 459285.....	1

END OF FIGURE

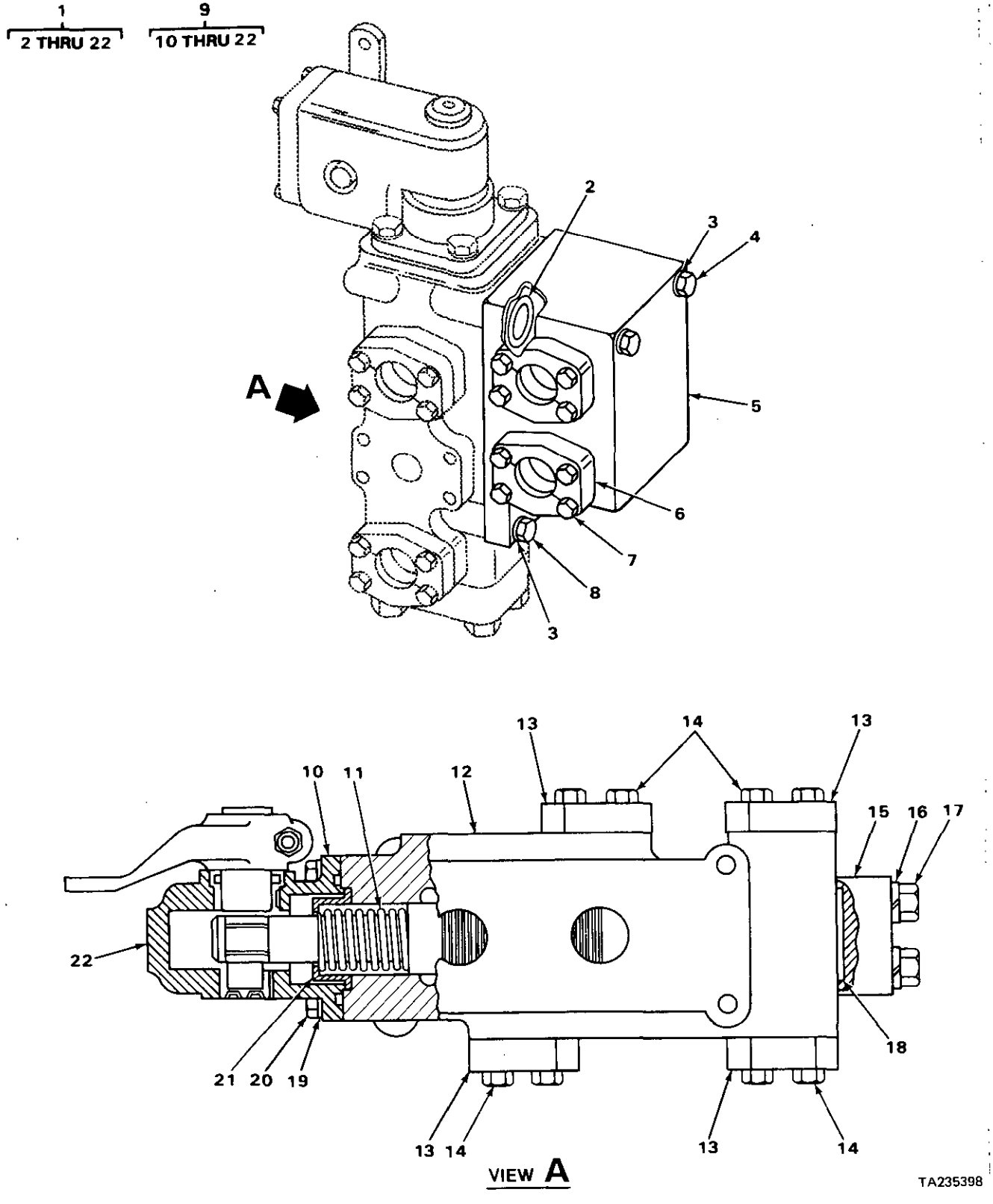

FIGURE 201. RIPPER SELECTOR VALVE.

(1) ITEM NO	(2) SMR CODE	(3) NSN	(4) CAGEC	(5) PART NUMBER	(6) DESCRIPTION AND USABLE ON CODES(UOC)	(7) QTY
					GROUP 2402 MANIFOLD AND CONTROL VALVES.	
					FIG. 201 RIPPER SELECTOR VALVE.	
1	PFOFF	4810013213232	11083	8J5398	BODY,VALVE..... UOC:T25	1
2	PFFZZ	5331009484063	11083	4J522	.O-RING..... UOC:T25	2
3	PFFZZ	5310006559370	96906	MS35340-47	.WASHER,LOCK..... UOC:T25	4
4	PFFZZ	5306010664572	11083	7H3472	.BOLT,MACHINE..... UOC:T25	2
5	XBFZZ		11083	7J8015	.BLOCK..... UOC:T25	1
6	PFFZZ	4730010515256	11083	1P4577	.FLANGE,PIPE..... UOC:T25	8
7	PFFZZ	5305000680511	80204	B1821BH038C125N	.SCREW,CAP,HEXAGON H..... UOC:T25	16
8	PFFZZ	5305000712055	80204	B1821BH044C150N	.SCREW,CAP,HEXAGON H..... UOC:T25	2
9	PFOFF	4810013220002	11083	8J3672	.ACTUATOR,HYDRAULIC-..... UOC:T25	1
10	PFFZZ	5331005553807	11083	1H8720	..O-RING..... UOC:T25	1
11	PFFZZ	5360009126674	11083	9M4685	..SPRING,HELICAL,COMP..... UOC:T25	1
12	PFFZZ	4820013214543	11083	8J3663	..HOUSING,MECHANICAL..... UOC:T25	1
13	PFFZZ	4730010515256	11083	1P4577	..FLANGE,PIPE..... UOC:T25	8
14	PFFZZ	5305000680511	80204	B1821BH038C125N	..SCREW,CAP,HEXAGON H..... UOC:T25	16
15	XBFZZ		11083	6J8210	..COVER..... UOC:T25	1
16	PFFZZ	5310005845272	96906	MS35338-48	..WASHER,LOCK..... UOC:T25	4
17	PFFZZ	5306002736357	11083	1A1460	..BOLT,MACHINE..... UOC:T25	4
18	PFFZZ	5331005801226	11083	1H9696	..O-RING..... UOC:T25	1
19	PFFZZ	5310006379541	96906	MS35338-46	..WASHER,LOCK..... UOC:T25	4
20	PFFZZ	5306004238194	11083	1A2029	..BOLT,MACHINE..... UOC:T25	4
21	PFFZZ	5365013238100	11083	8J3670	..RING,RETAINING..... UOC:T25	1
22	XAFZZ		11083	8J3671	..HOUSING..... UOC:T25	1

END OF FIGURE

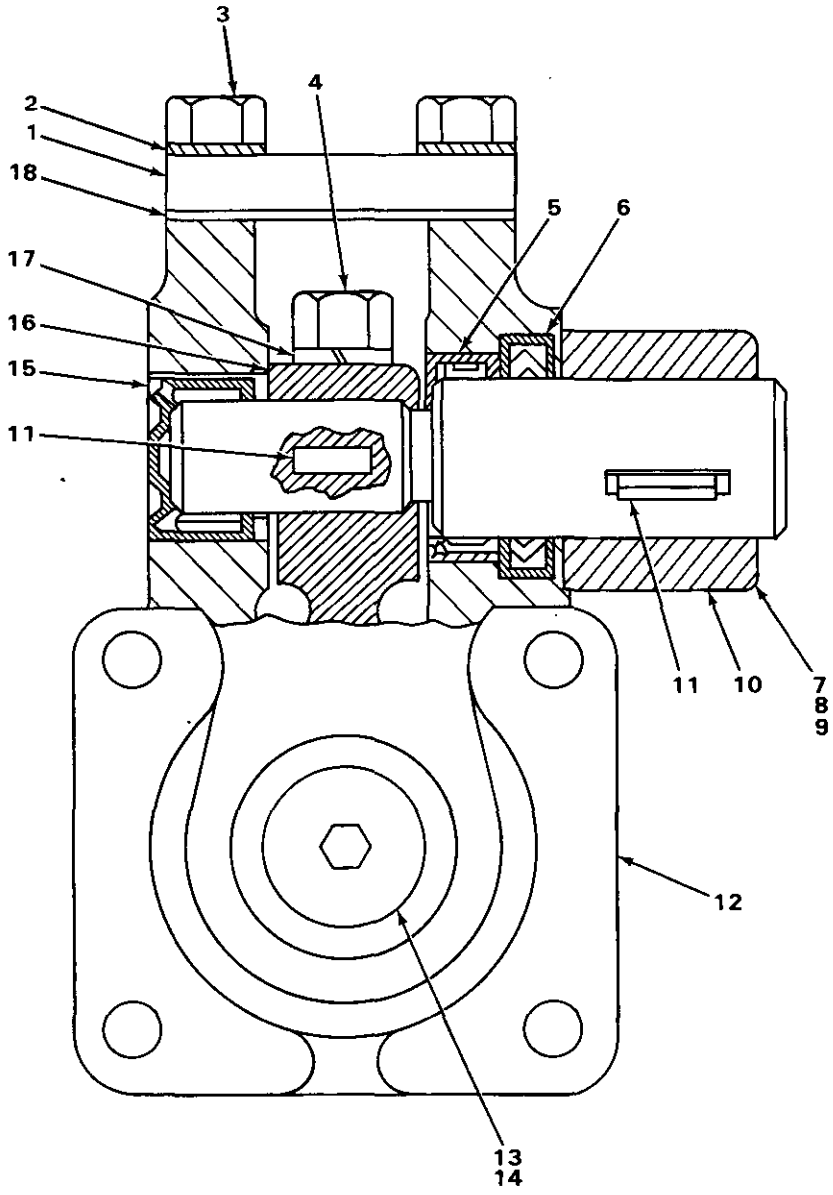

TA235399

FIGURE 202. RIPPER SELECTOR VALVE LEVER HOUSING.

(1) ITEM NO	(2) SMR CODE	(3) NSN	(4) CAGEC	(5) PART NUMBER	(6) DESCRIPTION AND USABLE ON CODES(UOC)	(7) QTY
					GROUP 2402 MANIFOLD AND CONTROL VALVES.	
					FIG. 202 RIPPER SELECTOR VALVE LEVER HOUSING.	
1	PFFZZ	5340012651164	11083	7J2596	...COVER,ACCESS..... UOC:T25	1
2	PFFZZ	5310005146674	96906	MS35335-34	...WASHER,LOCK..... UOC:T25	4
3	PFFZZ	5306002264828	80204	B1821BH031C113N	...BOLT,MACHINE..... UOC:T25	4
4	PFFZZ	5306002637299	11083	2A4996	...BOLT,MACHINE..... UOC:T25	1
5	PFFZZ	3110009024269	60380	B168XPS0H	...BEARING,ROLLER,NEED..... UOC:T25	1
6	XBFZA	5330008332350	11083	2J8333	...SEAL,PLAIN ENCASED..... UOC:T25	1
7	PFFZZ	3040013214673	11083	8J3870	...LEVER,REMOTE CONTRO..... UOC:T25	1
8	PFFZZ	5305010269518	11083	0S1571	...SCREW,CAP,HEXAGON H..... UOC:T25	1
9	PFFZZ	5310011945398	11083	1D4717	...NUT,HEXAGON..... UOC:T25	1
10	XBFZZ		11083	8J3669	...SHAFT..... UOC:T25	1
11	PFFZZ	5315006165523	96906	MS35756-11	...KEY,WOODRUFF..... UOC:T25	2
12	XAFZZ		11083	8J232	...HOUSING..... UOC:T25	1
13	PFFZZ	2530010625318	11083	9S8006	...PLUG..... UOC:T25	1
14	PAFZZ	5331001675174	81349	M83248/2-910	...O-RING..... UOC:T25	1
15	PFFZZ	3110010672160	11083	5J3241	...BEARING..... UOC:T25	1
16	XBFZZ		11083	5J3639	...LEVER..... UOC:T25	1
17	PFFZZ	5310006379541	96906	MS35338-46	...WASHER,LOCK..... UOC:T25	1
18	PFFZZ	5330001190794	11083	3J5552	...GASKET..... UOC:T25	1

END OF FIGURE

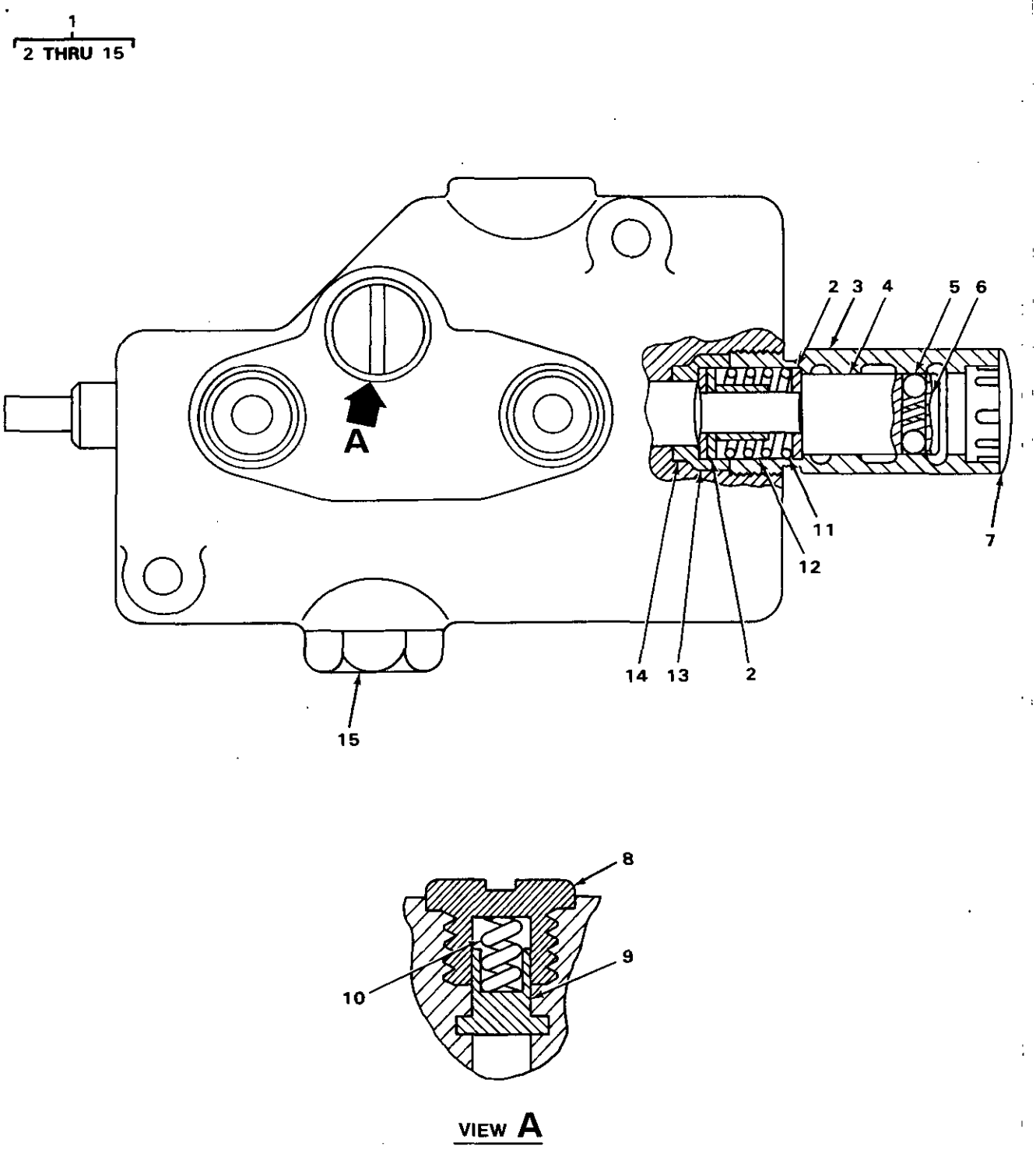

FIGURE 203. PIN PULLER CONTROL VALVE.

(1) ITEM NO	(2) SMR CODE	(3) NSN	(4) CAGEC	(5) PART NUMBER	(6) DESCRIPTION AND USABLE ON CODES(UOC)	(7) QTY
					GROUP 2402 MANIFOLD AND CONTROL VALVES.	
					FIG. 203 PIN PULLER CONTROL VALVE.	
1	PFOFF	4810013325464	11083	9T6405	VALVE,LINEAR,DIRECT USE WITH TYPE 3 LINES..... UOC:T25	1
2	PFFZZ	5310013222922	11083	9J5695	.WASHER,FLAT..... UOC:T25	2
3	PFFZZ	4810013219984	11083	9J5703	.CAP,VALVE..... UOC:T25	1
4	XBFZZ		11083	9J5707	.SCREW..... UOC:T25	1
5	PFFZZ	3110008475036	11083	1M6718	.BALL,BEARING USE WITH P/N 8J8744.. UOC:T25	4
6	XBFZZ		11083	9J5697	.SPRING USE WITH P/N 8J8744..... UOC:T25	2
7	PFFZZ	5340002904545	11083	9J5709	.BUTTON,PLUG..... UOC:T25	1
8	PFFZZ	5306013221385	11083	9T8610	.BOLT,TEE HEAD..... UOC:T25	1
9	XBFZZ		11083	9J5706	.PLUNGER..... UOC:T25	1
10	XBFZZ		11083	9J5696	.SPRING..... UOC:T25	1
11	XBFZZ		11083	9J5698	.SPRING..... UOC:T25	1
12	XBFZZ		11083	9J5699	.SPACER..... UOC:T25	1
13	XBFZZ		11083	9J5694	.WASHER..... UOC:T25	1
14	XBFZZ		11083	9J5702	.BUSHING..... UOC:T25	1
15	XBFZZ		11083	9J5704	.PLUG..... UOC:T25	1

END OF FIGURE

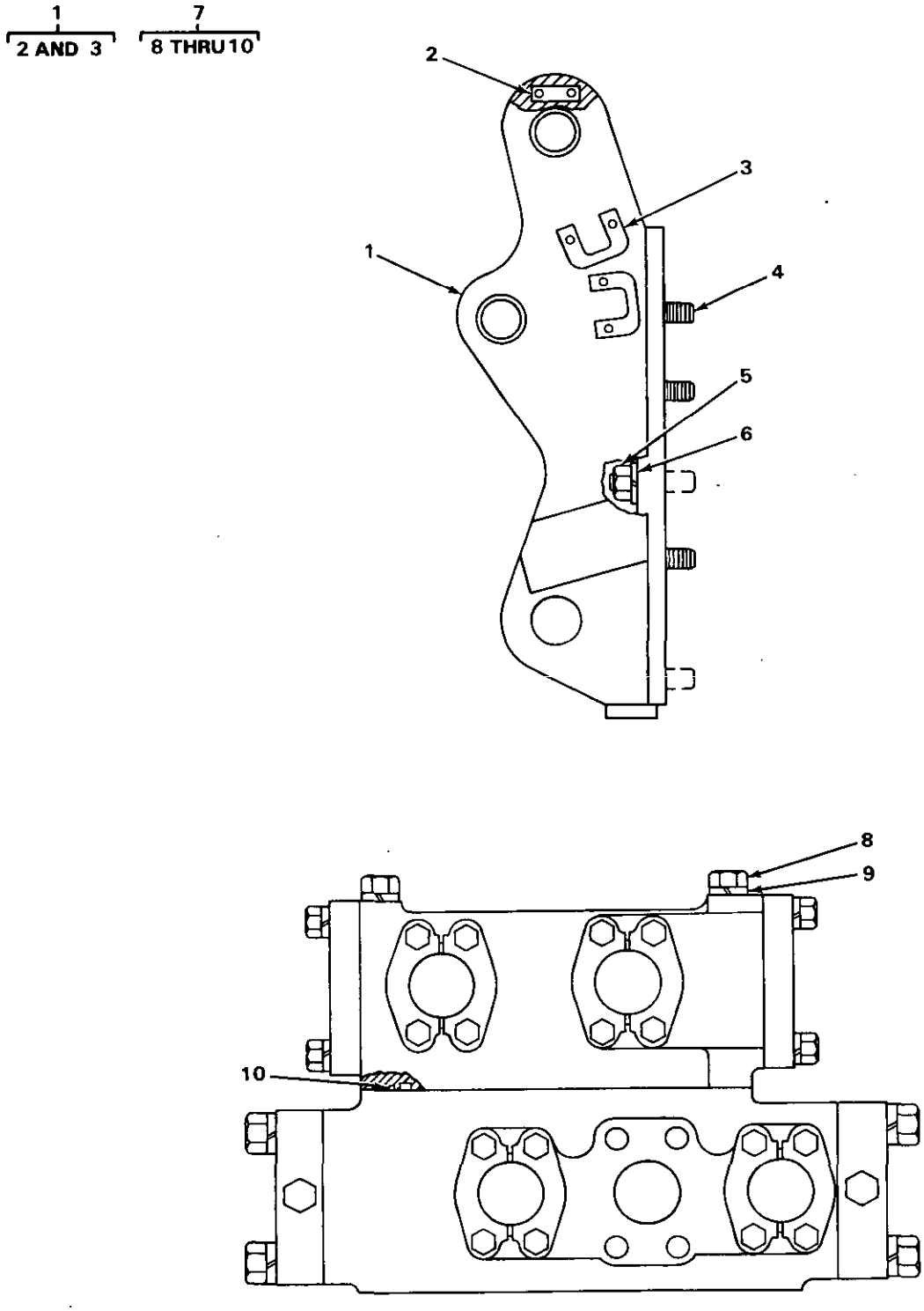

TA235401

FIGURE 204. DUAL VALVE FOR RIPPER.

(1) ITEM NO	(2) SMR CODE	(3) NSN	(4) CAGEC	(5) PART NUMBER	(6) DESCRIPTION AND USABLE ON CODES(UOC)	(7) QTY
					GROUP 2402 MANIFOLD AND CONTROL VALVE.	
					FIG. 204 DUAL VALVE FOR RIPPER.	
1	XB000		11083	7J43	BRACKET ASSEMBLY RIGHT HAND..... UOC:T25	1
1	XB000		11083	7J44	BRACKET ASSEMBLY LEFT HAND..... UOC:T25	1
2	PF0ZZ	5310013229622	11083	4K4221	.BAR,METAL..... UOC:T25	1
3	PF0ZZ	5340013238066	11083	2J1227	.BRACKET,DOUBLE ANGL..... UOC:T25	3
4	PF0ZZ	5307012542506	11083	9S7479	STUD,PLAIN..... UOC:T25	8
5	PF0ZZ	5310004043784	11083	8H3390	NUT,PLAIN,HEXAGON..... UOC:T25	14
6	PF0ZZ	5310012550110	11083	3S6162	WASHER,FLAT..... UOC:T25	14
7	PF0FF	4810013272934	11083	7J8016	VALVE,LINEAR,DIRECT FOR COMPLETE REPLACEMENT USE P/N 7J8016..... UOC:T25	1
8	PF0ZZ	5306010664572	11083	7H3472	.BOLT,MACHINE..... UOC:T25	4
9	PF0ZZ	5310006559370	96906	MS35340-47	.WASHER,LOCK..... UOC:T25	4
10	PF0ZZ	5331009484063	11083	4J522	.O-RING..... UOC:T25	4

END OF FIGURE

1
2 THRU 16

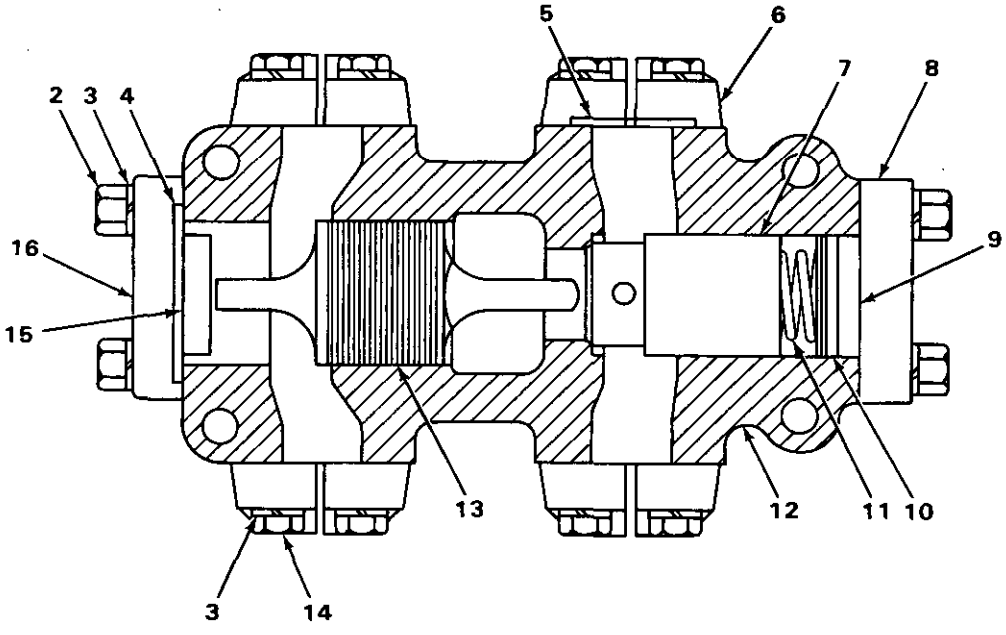

TA235402

FIGURE 205. PILOT VALVE FOR RIPPER.

(1) ITEM NO	(2) SMR CODE	(3) NSN	(4) CAGEC	(5) PART NUMBER	(6) DESCRIPTION AND USABLE ON CODES(UOC)	(7) QTY
					GROUP 2402 MANIFOLD AND CONTROL VALVES.	
					FIG. 205 PILOT VALVE FOR RIPPER.	
1	XBFZZ		11083	6J8006	.VALVE,PILOT..... UOC:T25	1
2	PFFZZ	5305000680511	80204	B1821BH038C125N	..SCREW,CAP,HEXAGON H..... UOC:T25	8
3	PFFZZ	5310006379541	96906	MS35338-46	..WASHER,LOCK..... UOC:T25	24
4	PFFZZ	5331009226275	11083	4J525	..O-RING..... UOC:T25	1
5	PFFZZ	5331008650404	11083	6F6673	..O-RING..... UOC:T25	4
6	PFFZZ	4730010515256	11083	1P4577	..FLANGE,PIPE..... UOC:T25	8
7	XBFZZ	4820009239991	11083	2J5436	..DISK,VALVE..... UOC:T25	1
8	XAFZZ		11083	6J8020	..COVER..... UOC:T25	1
9	XDFZZ		11083	2J5820	..PLUG..... UOC:T25	1
10	PFFZZ	5331009136143	11083	4J519	..O-RING..... UOC:T25	1
11	PFFZZ	5360009257048	11083	2J5845	..SPRING,HELICAL,COMP..... UOC:T25	1
12	XAFZZ		11083	6J8115	..BODY..... UOC:T25	1
13	XAFZZ		11083	6J8019	..PISTON..... UOC:T25	1
14	PFFZZ	5306004238194	11083	1A2029	..BOLT,MACHINE..... UOC:T25	16
15	XAFZZ		11083	2H2722	..LUG..... UOC:T25	1
16	XAFZZ		11083	6J8016	..COVER..... UOC:T25	1

END OF FIGURE

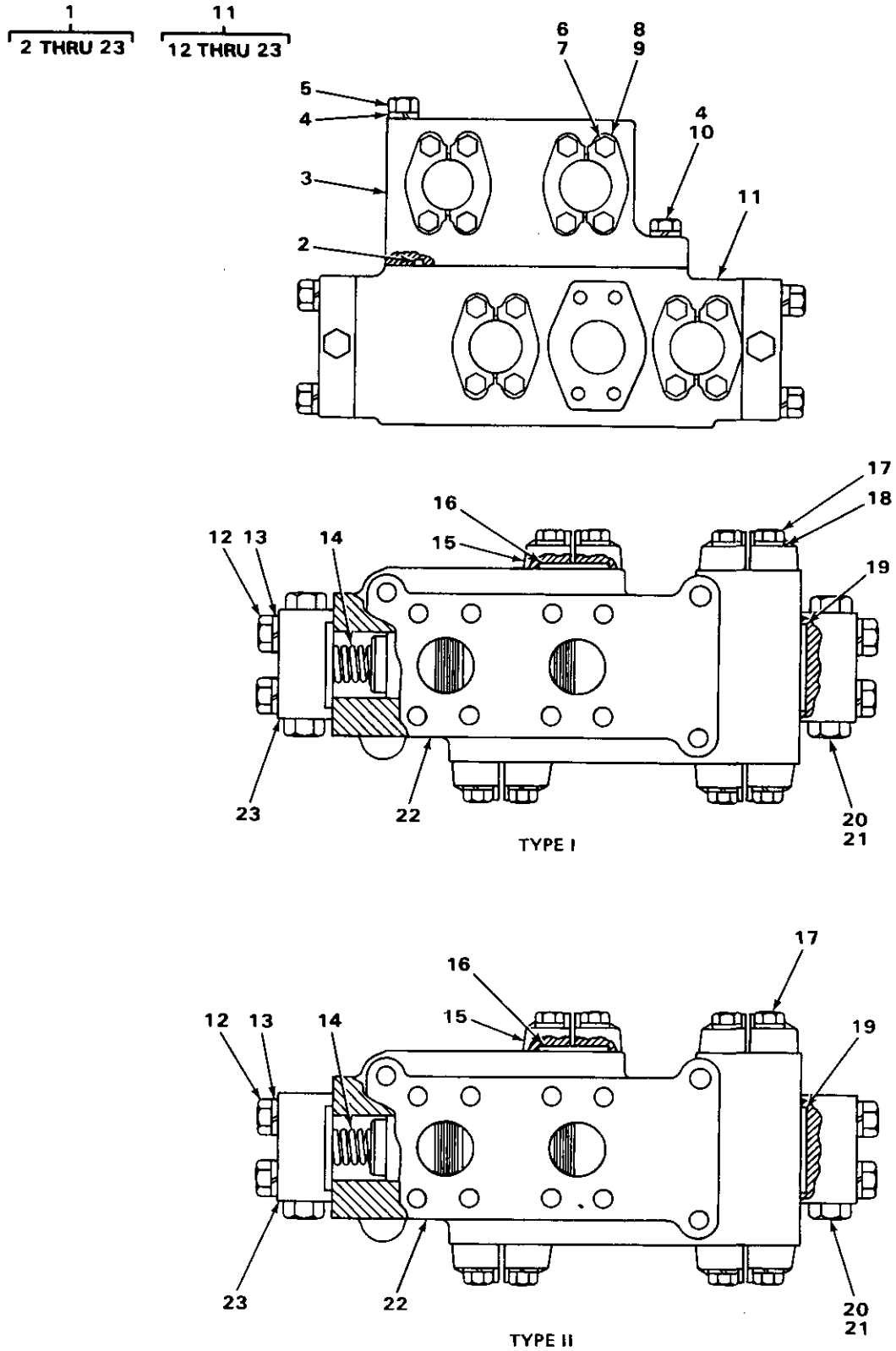

FIGURE 206. SELECTOR VALVE (TYPES 1 AND 2).

(1) ITEM NO	(2) SMR CODE	(3) NSN	(4) CAGEC	(5) PART NUMBER	(6) DESCRIPTION AND USABLE ON CODES(UOC)	(7) QTY
					GROUP 2402 MANIFOLD AND CONTROL VALVES.	
					FIG. 206 SELECTOR VALVE (TYPES 1 AND 2).	
1	PFOFF	4810013272934	11083	7J8016	VALVE,LINEAR,DIRECT..... UOC:T25	1
2	PFFZZ	5331009484063	11083	4J522	.O-RING..... UOC:T25	2
3	XBFZZ		11083	7J8015	.BLOCK..... UOC:T25	1
4	PFFZZ	5310006559370	96906	MS35340-47	.WASHER,LOCK..... UOC:T25	4
5	PFFZZ	5306010664572	11083	7H3472	.BOLT,MACHINE..... UOC:T25	2
6	PFFZZ	5306004238194	11083	1A2029	.BOLT,MACHINE..... UOC:T25	16
7	PFFZZ	5310006559370	96906	MS35340-47	.WASHER,LOCK..... UOC:T25	4
8	PFFZZ	4730010515256	11083	1P4577	.FLANGE,PIPE..... UOC:T25	8
9	PFFZZ	5331008650404	11083	6F6673	.O-RING..... UOC:T25	4
10	PFFZZ	5305000712055	80204	B1821BH044C150N	.SCREW,CAP,HEXAGON H..... UOC:T25	2
11	XBFFF		11083	6J8002	.VALVE,SELECTOR TYPE 1,USE WITH SERIAL RANGE 92M1 AND UP,93M1 AND UP UOC:T25	1
12	PFFZZ	5306002736357	11083	1A1460	..BOLT,MACHINE..... UOC:T25	8
13	PFFZZ	5310005845272	96906	MS35338-48	..WASHER,LOCK..... UOC:T25	8
14	PFFZZ	5360009503397	11083	7M1297	..SPRING,VALVE,RELIEF USE WITH TYPE 1..... UOC:T25	1
15	PFFZZ	4730010515256	11083	1P4577	..FLANGE,PIPE..... UOC:T25	8
16	PFFZZ	5331008650404	11083	6F6673	..O-RING..... UOC:T25	4
17	PFFZZ	5306004238194	11083	1A2029	..BOLT,MACHINE..... UOC:T25	16
18	PFFZZ	5310006379541	96906	MS35338-46	..WASHER,LOCK USE WITH TYPE 1 ONLY. UOC:T25	16
19	PFFZZ	5331005801226	11083	1H9696	..O-RING..... UOC:T25	2
20	PFFZZ	5365004114584	11083	5M7908	..PLUG ASSEMBLY USE WITH TYPE 1.... UOC:T25	4
20	PFFZZ	5365004114584	11083	9S4191	..PLUG,MACHINE THREAD USE WITH TYPE 2..... UOC:T25	2
21	PAFZZ	5331008013354	25184	906-737-70	..O-RING.....	2

(1) ITEM NO	(2) SMR CODE	(3) NSN	(4) CAGEC	(5) PART NUMBER	(6) DESCRIPTION AND USABLE ON CODES(UOC)	(7) QTY
					UOC:T25	
22	XBFZZ		11083	6J8013	..BODY.....	1
					UOC:T25	
23	XBFZZ		11083	6J8210	..COVER.....	2
					UOC:T25	

END OF FIGURE

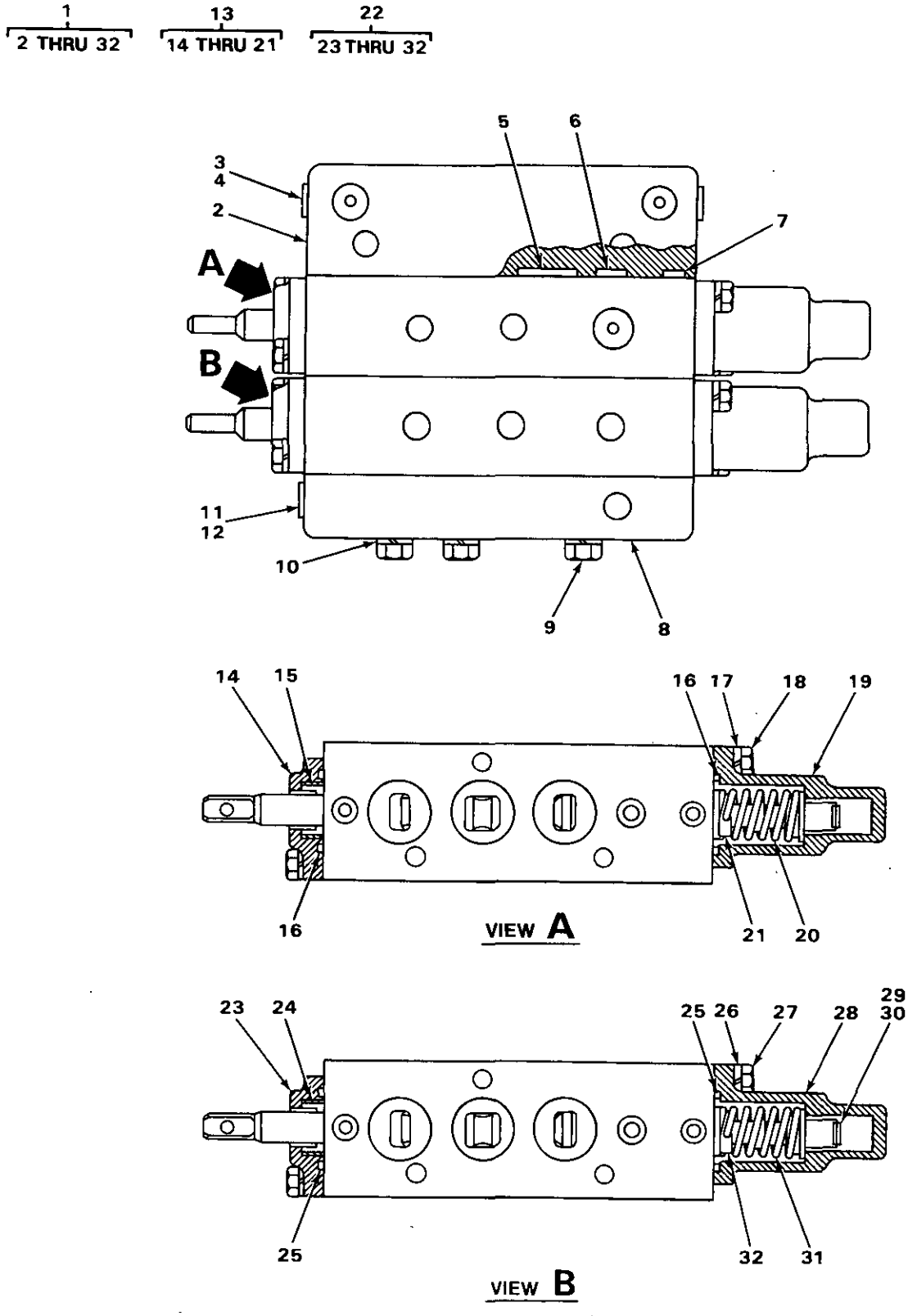

FIGURE 207. RIPPER AND TILT CYLINDER VALVE.

(1) ITEM NO	(2) SMR CODE	(3) NSN	(4) CAGEC	(5) PART NUMBER	(6) DESCRIPTION AND USABLE ON CODES(UOC)	(7) QTY
					GROUP 2402 MANIFOLD AND CONTROL VALVES.	
					FIG. 207 RIPPER AND TILT CYLINDER VALVE.	
1	PFFFF	4810012081802	11083	8J7489	VALVE ASSEMBLY,MANI BLADE TILT CYLINDER AND RIPPER..... UOC:T25	1
2	PFFZZ	4730012537484	11083	8J7497	.MANIFOLD,HYDRAULIC..... UOC:T25	1
3	PFFZZ	5365011242945	30780	2HP5N-S	.PLUG,MACHINE THREAD..... UOC:T25	4
4	PFFZZ	5330011485891	59556	K-500-EN-0431	.SEAL..... UOC:T25	4
5	PFFZZ	5330010690801	11083	5P3108	.SEAL-O-RING..... UOC:T25	9
6	PFFZZ	5330010648247	11083	6J3134	.SEAL..... UOC:T25	3
7	PFFZZ	5330010648276	11083	8J1699	.O-RING..... UOC:T25	6
8	PFFZZ	4730012537483	11083	8J7498	.MANIFOLD,HYDRAULIC..... UOC:T25	1
9	PFFZZ	5306002724222	11083	4F3508	.BOLT,MACHINE..... UOC:T25	3
10	PFFZZ	5310004079566	96906	MS35338-45	.WASHER,LOCK..... UOC:T25	3
11	PFFZZ	5365000786248	11083	9S8002	.PLUG,MACHINE THREAD..... UOC:T25	2
12	XDFZZ	5330010491292	02697	3-904N552-90	.O-RING..... UOC:T25	2
13	PFFFF	4820010488597	11083	8J7494	.VALVE,PILOT BLADE TILT CYLINDER... UOC:T25	1
14	XAFZZ		11083	9J4780	..HOUSING..... UOC:T25	1
15	PFFZZ	5330010486005	11083	8J8553	..SEAL..... UOC:T25	1
16	PFFZZ	5331009375155	11083	2K8199	..O-RING..... UOC:T25	2
17	PFFZZ	5310005825965	96906	MS35338-44	..WASHER,LOCK..... UOC:T25	4
18	PFFZZ	5306002611153	11083	S1615	..BOLT,MACHINE..... UOC:T25	4
19	XAFZZ		11083	9J4113	..HOUSING..... UOC:T25	1
20	PFFZZ	5360010671728	11083	9J4800	..SPRING..... UOC:T25	1
21	PFFZZ	5365012573304	11083	7J7844	..RING,RETAINING..... UOC:T25	4
22	PFFFF	3830010483942	11083	8J7499	.VALVE,PILOT,HYDRAUL RIPPER..... UOC:T25	1
23	XAFZZ		11083	9J4780	..HOUSING.....	1

(1) ITEM NO	(2) SMR CODE	(3) NSN	(4) CAGEC	(5) PART NUMBER	(6) DESCRIPTION AND USABLE ON CODES(UOC)	(7) QTY
					UOC:T25	
24	PFFZZ	5330010486005	11083	8J8553	..SEAL.....	1
					UOC:T25	
25	PFFZZ	5331009375155	11083	2K8199	..O-RING.....	2
					UOC:T25	
26	PFFZZ	5310005825965	96906	MS35338-44	..WASHER,LOCK.....	4
					UOC:T25	
27	PFFZZ	5306002611153	11083	S1615	..BOLT,MACHINE.....	4
					UOC:T25	
28	XAFZZ		11083	9J4113	..HOUSING.....	1
					UOC:T25	
29	PFFZZ	5365011242945	30780	2HP5N-S	..PLUG,MACHINE THREAD.....	1
					UOC:T25	
30	PFFZZ	5330011485891	59556	K-500-EN-0431	..SEAL.....	1
					UOC:T25	
31	PFFZZ	5360010671728	11083	9J4800	..SPRING.....	1
					UOC:T25	
32	PFFZZ	5365012573304	11083	7J7844	..RING,RETAINING.....	4
					UOC:T25	

END OF FIGURE

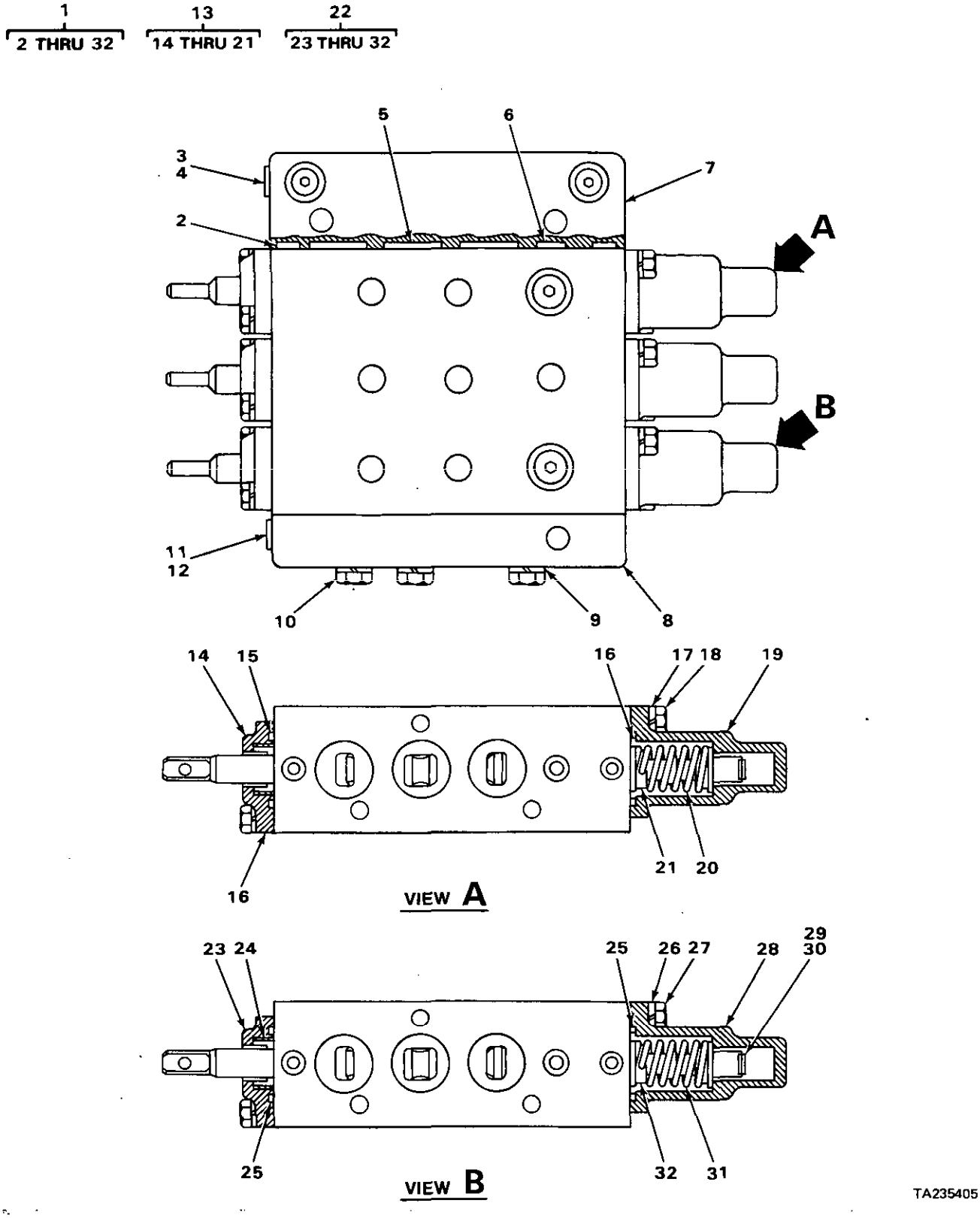

FIGURE 208. ADJUSTABLE RIPPER AND TILT BLADE CYLINDER VALVE.

(1) ITEM NO	(2) SMR CODE	(3) NSN	(4) CAGEC	(5) PART NUMBER	(6) DESCRIPTION AND USABLE ON CODES(UOC)	(7) QTY
					GROUP 2402 MANIFOLD AND CONTROL VALVES.	
					FIG. 208 ADJUSTABLE RIPPER AND TILT BLADE CYLINDER VALVE.	
1	XBFFF		11083	8J7487	VALVE BLADE TILT CYLINDER, ADJUSTABLE RIPPER AND RIPPER TIP.... UOC:T25	1
2	PFFZZ	5330010648276	11083	8J1699	.O-RING..... UOC:T25	8
3	PFFZZ	5365011242945	30780	2HP5N-S	.PLUG,MACHINE THREAD..... UOC:T25	4
4	PFFZZ	5330011485891	59556	K-500-EN-0431	.SEAL..... UOC:T25	4
5	PFFZZ	5330010690801	11083	5P3108	.SEAL-O-RING..... UOC:T25	12
6	PFFZZ	5330010648247	11083	6J3134	.SEAL..... UOC:T25	4
7	PFFZZ	4730012537484	11083	8J7497	.MANIFOLD,HYDRAULIC..... UOC:T25	1
8	PFFZZ	4730012537483	11083	8J7498	.MANIFOLD,HYDRAULIC..... UOC:T25	1
9	PFFZZ	5310004079566	96906	MS35338-45	.WASHER,LOCK..... UOC:T25	3
10	PFFZZ	5306002724222	11083	4F3508	.BOLT,MACHINE..... UOC:T25	3
11	PFFZZ	5365000786248	11083	9S8002	.PLUG,MACHINE THREAD..... UOC:T25	3
12	XDFZZ	5330010491292	02697	3-904N552-90	.O-RING..... UOC:T25	3
13	PFFFF	4820010488597	11083	8J7494	.VALVE,PILOT BLADE TILT CYLINDER... UOC:T25	1
14	XAFZZ		11083	9J4780	..HOUSING..... UOC:T25	1
15	PFFZZ	5330010486005	11083	8J8553	..SEAL..... UOC:T25	1
16	PFFZZ	5331009375155	11083	2K8199	..O-RING..... UOC:T25	2
17	PFFZZ	5310005825965	96906	MS35338-44	..WASHER,LOCK..... UOC:T25	4
18	PFFZZ	5306002611153	11083	S1615	..BOLT,MACHINE..... UOC:T25	4
19	XAFZZ		11083	9J4113	..HOUSING..... UOC:T25	1
20	PFFZZ	5360010671728	11083	9J4800	..SPRING..... UOC:T25	1
21	PFFZZ	5365012573304	11083	7J7844	..RING,RETAINING..... UOC:T25	4
22	PFFFF	3830010483942	11083	8J7499	.VALVE,PILOT,HYDRAUL RIPPER AND RIPPER TIP..... UOC:T25	1

(1) ITEM NO	(2) SMR CODE	(3) NSN	(4) CAGEC	(5) PART NUMBER	(6) DESCRIPTION AND USABLE ON CODES(UOC)	(7) QTY
23	XAFZ2		11083	9J4780	..HOUSING..... UOC:T25	1
24	PFFZZ	5330010486005	11083	8J8553	..SEAL..... UOC:T25	1
25	PFFZZ	5331009375155	11083	2K8199	..O-RING..... UOC:T25	2
26	PFFZZ	5310005825965	96906	MS35338-44	..WASHER,LOCK..... UOC:T25	4
27	PFFZZ	5306002611153	11083	S1615	..BOLT,MACHINE..... UOC:T25	4
28	XAFZZ		11083	9J4113	..HOUSING..... UOC:T25	1
29	PFFZZ	5365011242945	30780	2HP5N-S	..PLUG,MACHINE THREAD..... UOC:T25	1
30	PFFZZ	5330011485891	59556	K-500-EN-0431	..SEAL..... UOC:T25	1
31	PFFZZ	5360010671728	11083	9J4800	..SPRING..... UOC:T25	1
32	PFFZZ	5365012573304	11083	7J7844	..RING,RETAINING..... UOC:T25	4

END OF FIGURE

1 2 THRU 23 13 14 THRU 23

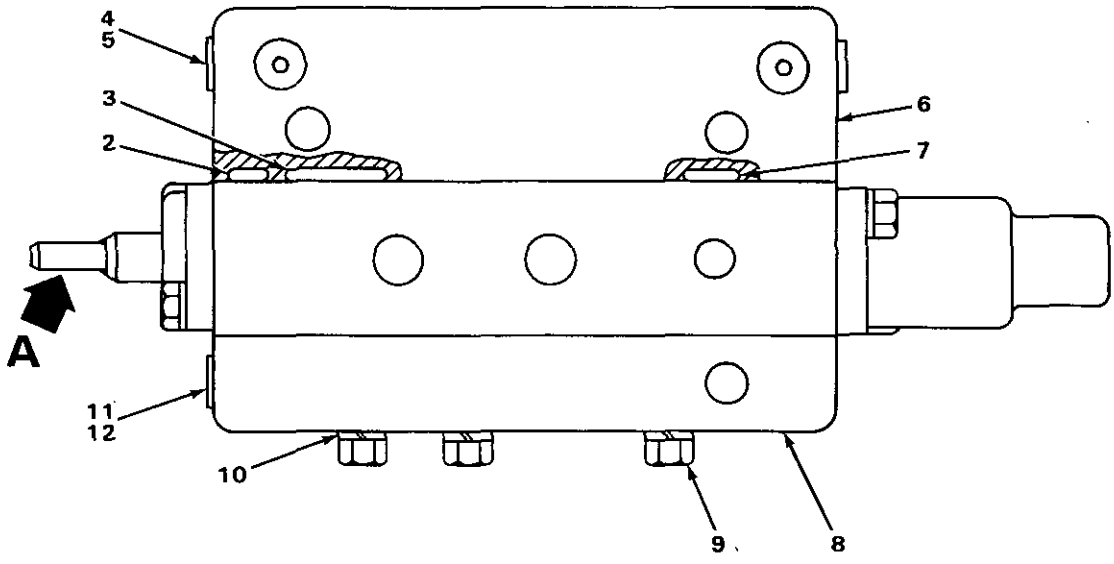

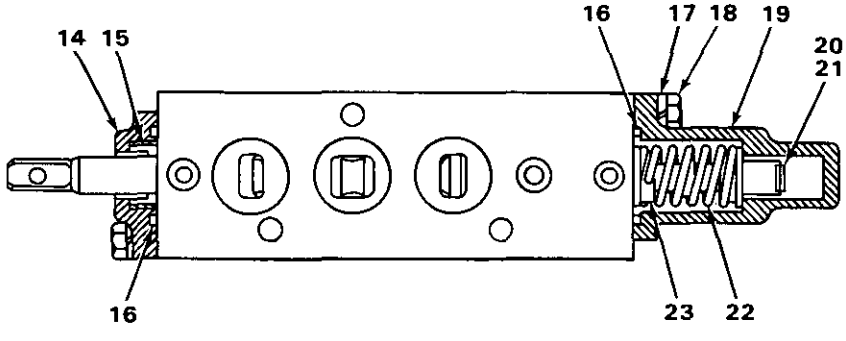

VIEW A

TA235406

FIGURE 209. RIPPER VALVE.

(1) ITEM NO	(2) SMR CODE	(3) NSN	(4) CAGEC	(5) PART NUMBER	(6) DESCRIPTION AND USABLE ON CODES(UOC)	(7) QTY
					GROUP 2402 MANIFOLD AND CONTROL VALVES.	
					FIG. 209 RIPPER VALVE.	
1	AFFFF		11083	8J8601	VALVE,LINEAR,DIRECT RIPPER..... UOC:T25	1
2	PFFZZ	5330010648276	11083	8J1699	.O-RING..... UOC:T25	4
3	PFFZZ	5330010690801	11083	5P3108	.SEAL-O-RING..... UOC:T25	6
4	PFFZZ	5365011242945	30780	2HP5N-S	.PLUG,MACHINE THREAD..... UOC:T25	4
5	PFFZZ	5330011485891	59556	K-500-EN-0431	.SEAL..... UOC:T25	4
6	PFFZZ	4730012537484	11083	8J7497	.MANIFOLD,HYDRAULIC..... UOC:T25	1
7	PFFZZ	5330010648247	11083	6J3134	.SEAL..... UOC:T25	2
8	PFFZZ	4730012537483	11083	8J7498	.MANIFOLD,HYDRAULIC..... UOC:T25	1
9	PFFZZ	5306000877178	11083	1F5842	.BOLT,MACHINE..... UOC:T25	3
10	PFFZZ	5310004079566	96906	MS35338-45	.WASHER,LOCK..... UOC:T25	3
11	PFFZZ	5365000786248	11083	9S8002	.PLUG,MACHINE THREAD..... UOC:T25	1
12	XDFZZ	5330010491292	02697	3-904N552-90	.O-RING..... UOC:T25	1
13	PFFFF	3830010483942	11083	8J7499	.VALVE,PILOT,HYDRAUL RIPPER..... UOC:T25	1
14	XAFZZ		11083	9J4780	..HOUSING..... UOC:T25	1
15	PFFZZ	5330010486005	11083	8J8553	..SEAL..... UOC:T25	1
16	PFFZZ	5331009375155	11083	2K8199	..O-RING..... UOC:T25	2
17	PFFZZ	5310005825965	96906	MS35338-44	..WASHER,LOCK..... UOC:T25	4
18	PFFZZ	5306002611153	11083	S1615	..BOLT,MACHINE..... UOC:T25	4
19	XAFZZ		11083	9J4113	..HOUSING..... UOC:T25	1
20	PFFZZ	5365011242945	30780	2HP5N-S	..PLUG,MACHINE THREAD..... UOC:T25	1
21	PFFZZ	5330011485891	59556	K-500-EN-0431	..SEAL..... UOC:T25	1
22	PFFZZ	5360010671728	11083	9J4800	..SPRING..... UOC:T25	1
23	PFFZZ	5365012573304	11083	7J7844	..RING,RETAINING..... UOC:T25	4

END OF FIGURE

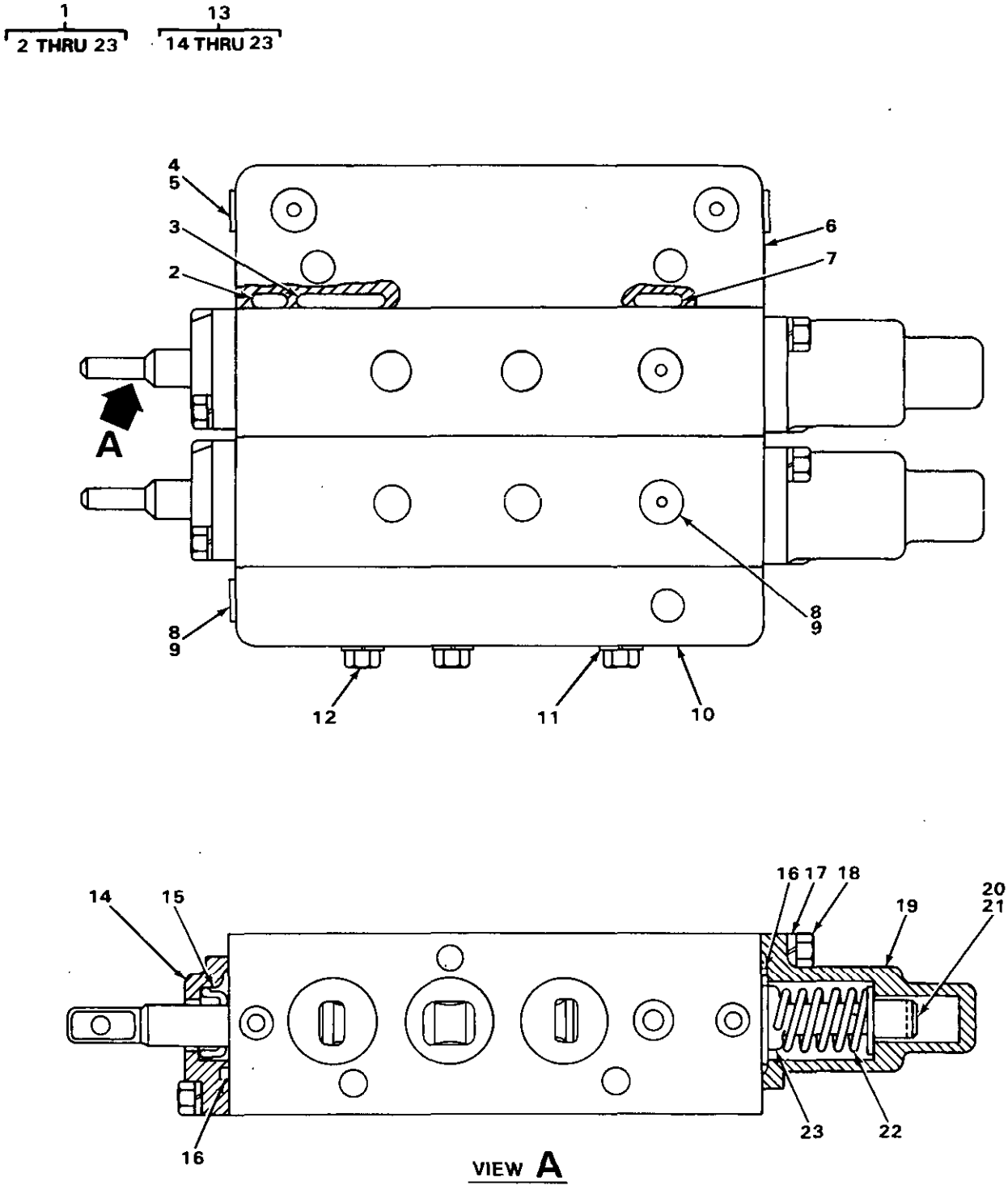

FIGURE 210. ADJUSTABLE RIPPER VALVE.

(1) ITEM NO	(2) SMR CODE	(3) NSN	(4) CAGEC	(5) PART NUMBER	(6) DESCRIPTION AND USABLE ON CODES(UOC)	(7) QTY
					GROUP 2402 MANIFOLD AND CONTROL VALVES.	
					FIG. 210 ADJUSTABLE RIPPER VALVE.	
1	PFFFF	4810013272935	11083	8J8602	VALVE,LINEAR,DIRECT ADJUSTABLE RIPPER..... UOC:T25	1
2	PFFZZ	5330010648276	11083	8J1699	.O-RING..... UOC:T25	6
3	PFFZZ	5330010690801	11083	5P3108	.SEAL-O-RING..... UOC:T25	9
4	PFFZZ	5365011242945	30780	2HP5N-S	.PLUG,MACHINE THREAD..... UOC:T25	4
5	PFFZZ	5330011485891	59556	K-500-EN-0431	.SEAL..... UOC:T25	4
6	PFFZZ	4730012537484	11083	8J7497	.MANIFOLD,HYDRAULIC..... UOC:T25	1
7	PFFZZ	5330010648247	11083	6J3134	.SEAL..... UOC:T25	3
8	PFFZZ	5365000786248	11083	9S8002	.PLUG,MACHINE THREAD..... UOC:T25	4
9	XDFZZ	5330010491292	02697	3-904N552-90	.O-RING..... UOC:T25	4
10	PFFZZ	4730012537483	11083	8J7498	.MANIFOLD,HYDRAULIC..... UOC:T25	1
11	PFFZZ	5310004079566	96906	MS3533B-45	.WASHER,LOCK..... UOC:T25	3
12	PFFZZ	5306004725282	11083	3H3243	.BOLT,MACHINE..... UOC:T25	3
13	PFFFF	3830010483942	11083	8J7499	.VALVE,PILOT,HYDRAUL RIPPER..... UOC:T25	1
14	XAFZZ		11083	9J4780	..HOUSING..... UOC:T25	1
15	PFFZZ	5330010486005	11083	8J8553	..SEAL..... UOC:T25	1
16	PFFZZ	5331009375155	11083	2K8199	..O-RING..... UOC:T25	2
17	PFFZZ	5310005825965	96906	MS35338-44	..WASHER,LOCK..... UOC:T25	4
18	PFFZZ	5306002611153	11083	S1615	..BOLT,MACHINE..... UOC:T25	4
19	XAFZZ		11083	9J4113	..HOUSING..... UOC:T25	1
20	PFFZZ	5365011242945	30780	2HP5N-S	..PLUG,MACHINE THREAD..... UOC:T25	1
21	PFFZZ	5330011485891	59556	K-500-EN-0431	..SEAL..... UOC:T25	1
22	PFFZZ	5360010671728	11083	9J4800	..SPRING..... UOC:T25	1
23	PFFZZ	5365012573304	11083	7J7844	..RING,RETAINING..... UOC:T25	4

END OF FIGURE

1
2 THRU 21

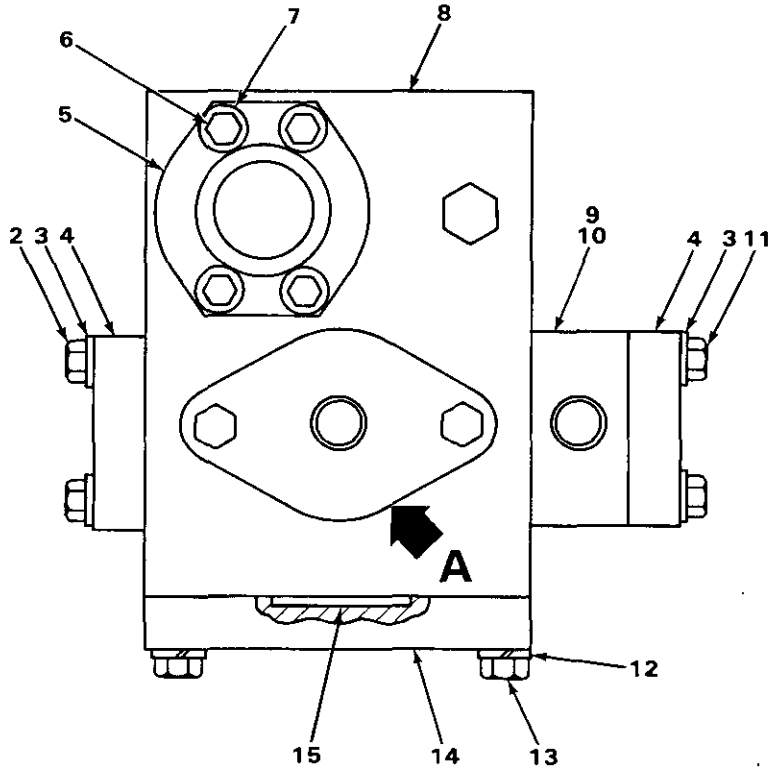

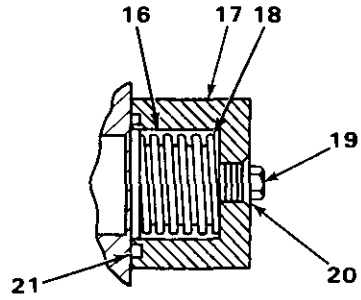

VIEW A

TA235408

FIGURE 211. RIPPER CONTROL VALVE.

(1) ITEM NO	(2) SMR CODE	(3) NSN	(4) CAGEC	(5) PART NUMBER	(6) DESCRIPTION AND USABLE ON CODES(UOC)	(7) QTY
					GROUP 2402 MANIFOLD AND CONTROL VALVES.	
					FIG. 211 RIPPER CONTROL VALVE.	
1	XBFZZ		11083	9J2918	VALVE,CONTROL RIPPER..... UOC:T25	1
2	PFFZZ	5305000680511	80204	B1821BH038C125N	.SCREW,CAP,HEXAGON H..... UOC:T25	12
3	PFFZZ	5310001174788	11083	5M2894	.WASHER,FLAT..... UOC:T25	16
4	PFFZZ	4730010515256	11083	1P4577	.FLANGE,PIPE..... UOC:T25	8
5	PFFZZ	4730010515257	11083	1P4578	.FLANGE,PIPE..... UOC:T25	2
6	PFFZZ	5306004003518	63005	427564	.BOLT,MACHINE..... UOC:T25	4
7	PFFZZ	5310001183035	11083	4B4279	.WASHER,FLAT..... UOC:T25	4
8	XBFZZ		11083	9J2917	.VALVE..... UOC:T25	1
9	PFFZZ	4810012578821	11083	9J3866	.ADAPTER PLATE..... UOC:T25	1
10	PFFZZ	5331009136144	11083	4J520	.O-RING..... UOC:T25	1
11	PFFZZ	5306002851368	11083	L1143	.BOLT,MACHINE..... UOC:T25	4
12	PFFZZ	5310006379541	96906	MS35338-46	.WASHER,LOCK..... UOC:T25	6
13	PFFZZ	5305010156841	11083	0S1591	.SCREW..... UOC:T25	6
14	PFFZZ	5340012580319	11083	8J8496	.PLATE,RETAINING,SEA..... UOC:T25	1
15	PFFZZ	5331009484063	11083	4J522	.O-RING..... UOC:T25	3
16	PFFZZ	3120012574386	11083	3G0596	.BUSHING,SLEEVE..... UOC:T25	2
17	PFFZZ	5340012646101	11083	9J2916	.RETAINER,HELICAL CO..... UOC:T25	2
18	PFFZZ	5360002098470	11083	7F9414	.SPRING,HELICAL,COMP..... UOC:T25	2
19	XBFZZ		11083	7H0696	.SCREW,CAP,HEXAGON H..... UOC:T25	4
20	PFFZZ	5310006559370	96906	MS35340-47	.WASHER,LOCK..... UOC:T25	4
21	PFFZZ	5331009226275	11083	4J525	.O-RING..... UOC:T25	2

END OF FIGURE

1
2 THRU 20

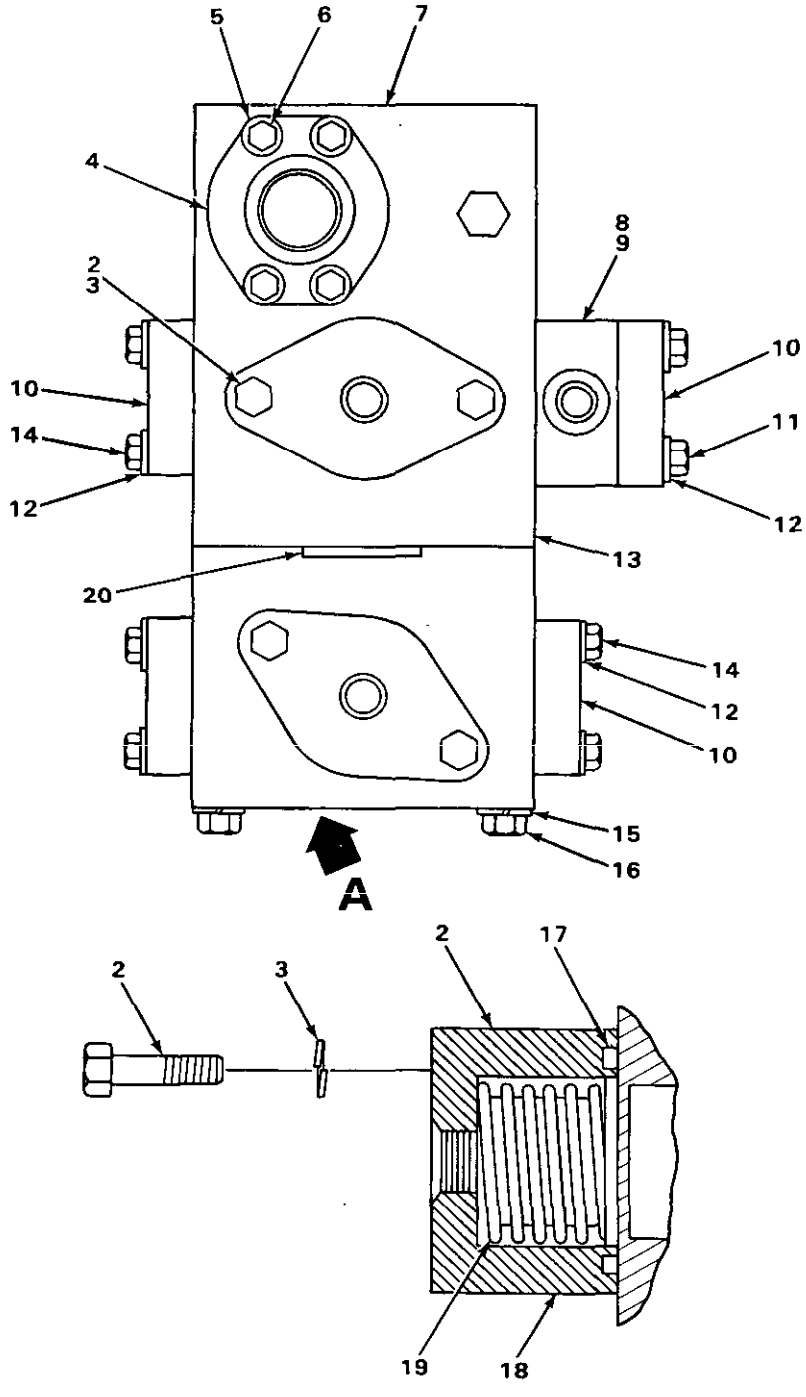

VIEW A

TA235409

FIGURE 212. ADJUSTABLE RIPPER CONTROL VALVE.

(1) ITEM NO	(2) SMR CODE	(3) NSN	(4) CAGEC	(5) PART NUMBER	(6) DESCRIPTION AND USABLE ON CODES(UOC)	(7) QTY
					GROUP 2402 MANIFOLD AND CONTROL VALVES.	
					FIG. 212 ADJUSTABLE RIPPER CONTROL VALVE.	
1	XBFZZ		11083	9J2919	VALVE,CONTROL ADJUSTABLE RIPPER.... UOC:T25	1
2	XBFZZ		11083	7H0696	.SCREW,CAP,HEXAGON H..... UOC:T25	16
3	PFFZZ	5310006559370	96906	MS35340-47	.WASHER,LOCK..... UOC:T25	8
4	PFFZZ	4730010515257	11083	1P4578	.FLANGE,PIPE..... UOC:T25	2
5	PFFZZ	5306004003518	63005	427564	.BOLT,MACHINE..... UOC:T25	4
6	PFFZZ	5310001183035	11083	4B4279	.WASHER,FLAT..... UOC:T25	4
7	XBFZZ		11083	9J2917	.VALVE..... UOC:T25	1
8	PFFZZ	4810012578821	11083	9J3866	.ADAPTER PLATE..... UOC:T25	1
9	PFFZZ	5331009136144	11083	4J520	.O-RING..... UOC:T25	1
10	PFFZZ	4730010515256	11083	1P4577	.FLANGE,PIPE..... UOC:T25	16
11	PFFZZ	5306002851368	11083	L1143	.BOLT,MACHINE..... UOC:T25	4
12	PFFZZ	5310001174788	11083	5M2894	.WASHER,FLAT..... UOC:T25	32
13	XBFZZ		11083	8J8548	.VALVE..... UOC:T25	1
14	PFFZZ	5305000680511	80204	B1821BH038C125N	.SCREW,CAP,HEXAGON H..... UOC:T25	28
15	PFFZZ	5310006379541	96906	MS35338-46	.WASHER,LOCK..... UOC:T25	6
16	PFFZZ	5305004263085	58312	1A5964-00	.SCREW,CAP,HEXAGON H..... UOC:T25	6
17	PFFZZ	5331008067027	82366	AM2003	.O-RING..... UOC:T25	4
18	PFF2Z	3120012574386	11083	3G0596	.BUSHING,SLEEVE..... UOC:T25	4
19	PFFZZ	5360002098470	11083	7F9414	.SPRING,HELICAL,COMP..... UOC:T25	4
20	PFFZZ	5331005277748	11083	4F7952	.O-RING..... UOC:T25	4

END OF FIGURE

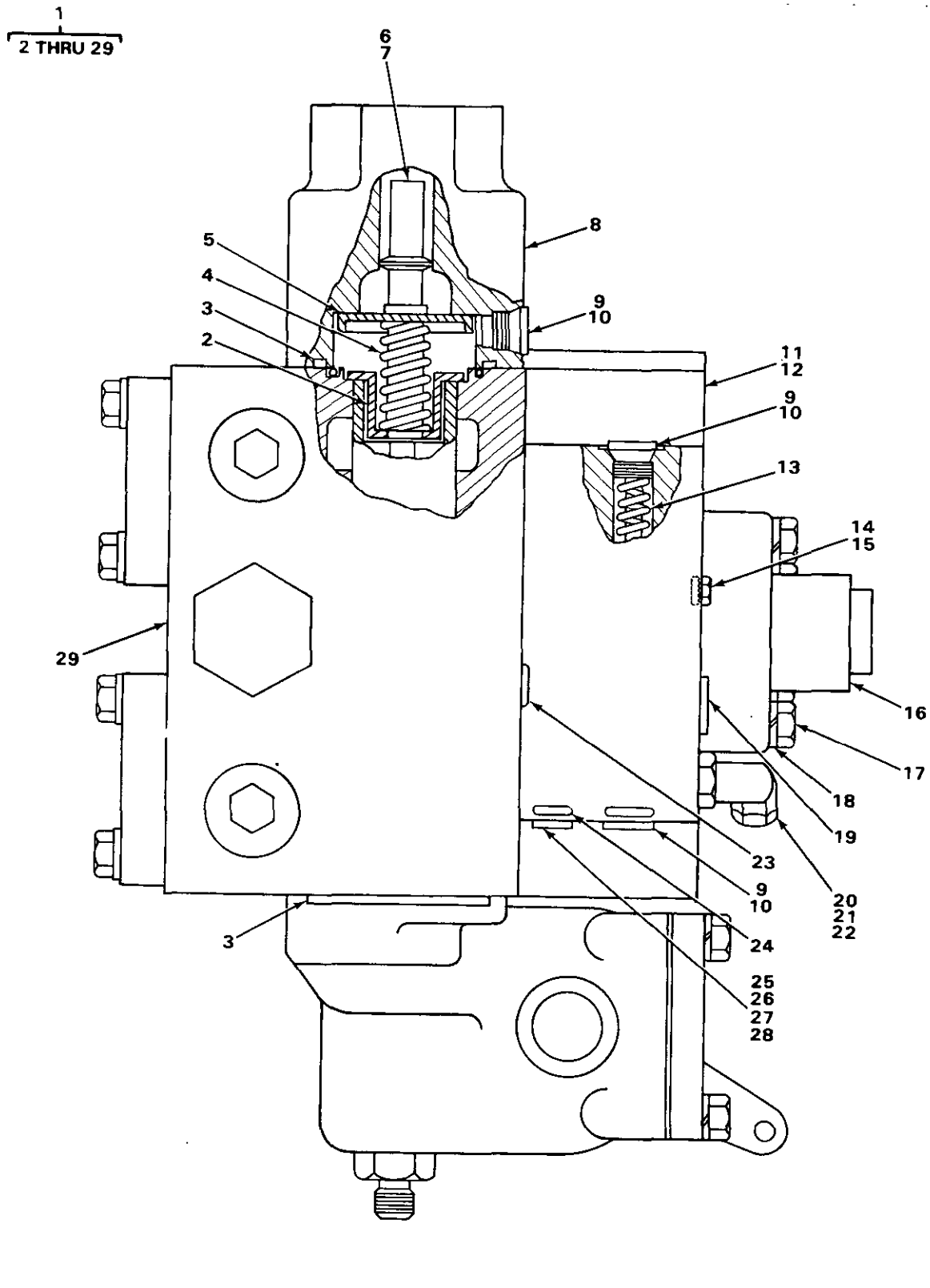

FIGURE 213. HYDRAULIC CONTROL VALVE HARDWARE.

(1) ITEM NO	(2) SMR CODE	(3) NSN	(4) CAGEC	(5) PART NUMBER	(6) DESCRIPTION AND USABLE ON CODES(UOC)	(7) QTY
					GROUP 2402 MANIFOLD AND CONTROL VALVES.	
					FIG. 213 HYDRAULIC CONTROL VALVE HARDWARE.	
1	PFFFF	3830010483941	11083	8J7435	VALVE,CONTROL.....	1
2	PFFZZ	5342010687083	11083	8J7343	.RETAINER.....	1
3	PFFZZ	5331005553807	11083	1H8720	.O-RING.....	2
4	PFFZZ	5360004015077	11083	4J4790	.SPRING,HELICAL,COMP.....	1
5	XAFZZ		11083	9K8555	.RETAINER HYDRAULIC CONTROL SERIAL RANGE 41V1 THRU 41V1292.....	1
5	PFFZZ	5342010687084	11083	8J7464	.RETAINER HYDRAULIC CONTROL SERIAL RANGE 41V1293 AND UP.....	1
6	XAFZZ		11083	8J7342	.BOLT.....	1
7	XAFZZ		11083	9J8583	.WASHER.....	1
8	XAFZZ	3040012539509	11083	8J7467	.HOUSING,MECHANICAL.....	1
9	PFFZZ	5365010360010	11083	9S8004	.PLUG,MACHINE THREAD.....	3
10	PAFZZ	5331008013354	25184	906-737-70	.O-RING.....	3
11	PFFZZ	4820010176344	11083	8J7501	.VALVE.....	1
12	PFFZZ	5330010661469	11083	6J1038	.O-RING.....	2
13	PFFZZ	5360010675614	11083	9J5756	.SPRING.....	1
14	PFFZZ	5365010672179	11083	9S4180	.PLUG,MACHINE THREAD.....	1
15	PFFZZ	5330011485891	59556	K-500-EN-0431	.SEAL.....	1
16	PFFZZ	4820012541017	11083	8J7317	.BODY,VALVE.....	1
17	PFFZZ	5306004262983	11083	T768	.BOLT,MACHINE.....	4
18	PFFZZ	5310006559370	96906	MS35340-47	.WASHER,LOCK.....	4
19	PFFZZ	5331000743768	11083	2M4453	.O-RING.....	1
20	PFFZZ	4730011849425	11083	5P2645	.ELBOW,TUBE TO BOSS.....	1
21	PFFZZ	4730005401525	96906	MS51532B6	.CAP,TUBE.....	1
22	XDFZZ	5330010491292	02697	3-904N552-90	.O-RING.....	1
23	PFFZZ	5330010690856	11083	9J6491	.SEAL-O-RING.....	3
24	PFFZZ	5331001651980	81349	M83248/2-905	.O-RING.....	1
25	PFFZZ	5365010354899	19207	11621436-1	.PLUG,MACHINE THREAD.....	1
26	PFFZZ	5342010687086	11083	9J3947	.RETAINER.....	1
27	XBFZZ		11083	8B7216	.SEAL HYDRAULIC CONTROL SERIAL RANGE 41V1 THRU 41V1292.....	1
27	PAFZZ	5330010690886	11083	5P4933	.SEAL-O-RING HYDRAULIC CONTROL SERIAL RANGE 41V1293 AND UP.....	1
28	PFFZZ	3110009921048	11083	2D6642	.BALL,BEARING.....	1
29	XBFZZ		11083	8J7436	.VALVE.....	1

END OF FIGURE

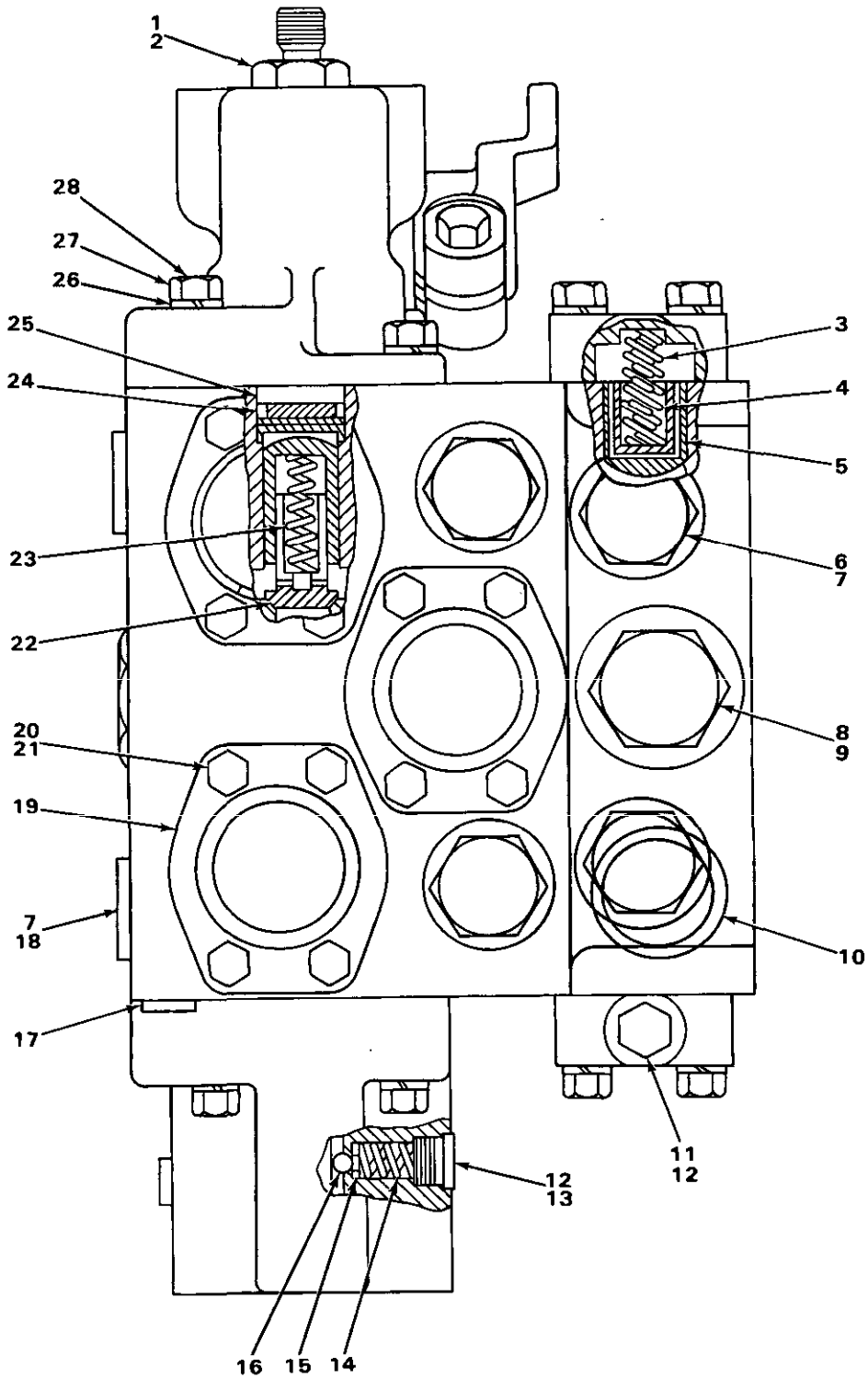

FIGURE 214. HYDRAULIC CONTROL VALVE SPRINGS, SEALS AND PLUGS.

(1) ITEM NO	(2) SMR CODE	(3) NSN	(4) CAGEC	(5) PART NUMBER	(6) DESCRIPTION AND USABLE ON CODES(UOC)	(7) QTY
					GROUP 2402 MANIFOLD AND CONTROL VALVES.	
					FIG. 214 HYDRAULIC CONTROL VALVE SPRINGS, SEALS AND PLUGS.	
1	PFFZZ	4730010740907	96906	MS51525A8-10	.ADAPTER,STRAIGHT,TU.....	1
2	PAFZZ	5331001675174	81349	M83248/2-910	.O-RING.....	1
3	XDFZZ		11083	9J5753	.SPRING INNER.....	2
4	XDFZZ		11083	9J5754	.SPRING OUTER.....	2
5	PFFZZ	5342010680011	11083	8J7465	.RETAINER.....	2
6	PFFZZ	5365004782920	11083	9S4183	.PLUG,ASSEMBLY.....	2
7	PFFZZ	5331009448281	11083	3D2824	.O-RING.....	4
8	PFFZZ	5365010269555	11083	9S4181	.PLUG,MACHINE THREAD.....	1
9	PFFZZ	5330009309407	11083	7M8485	.SEAL,ADAPTER,MOTOR.....	1
10	PFFZZ	5331008650404	11083	6F6673	.O-RING.....	2
11	PFFZZ	5365004114584	11083	9S4191	.PLUG,MACHINE THREAD.....	2
12	PAFZZ	5331008013354	25184	906-737-70	.O-RING.....	4
13	PFFZZ	5365010360010	11083	9S8004	.PLUG,MACHINE THREAD.....	2
14	XDFZZ		11083	5J1389	.SPRING.....	2
15	PFFZZ	2995010689670	11083	9J1999	.SEAT.....	2
16	PFFZZ	3110010515285	11083	3D2891	.BALL,BEARING.....	2
17	PFFZZ	5331005801227	11083	5H6005	.O-RING.....	2
18	PFFZZ	4730010643790	11083	9S8008	.PLUG.....	2
19	PFFZZ	4730010515257	11083	1P4578	.FLANGE,PIPE.....	6
20	PFFZZ	5306004003518	63005	427564	.BOLT,MACHINE.....	12
21	PFFZZ	5310001183035	11083	4B4279	.WASHER,FLAT.....	12
22	PFFZZ	4820010687249	11083	8J7349	.VALVE,FLOW CONTROL.....	2
23	PFFZZ	5360010700532	11083	2N7029	.SPRING.....	2
24	PFFZZ	5331009486924	11083	4J8996	.O-RING.....	2
25	PFFZZ	4820012535554	11083	8J7366	.VALVE,PLUG.....	2
26	PFFZZ	5310006379541	96906	MS35338-46	.WASHER,LOCK.....	4
27	PFFZZ	5305010269518	11083	0S1571	.SCREW,CAP,HEXAGON H.....	1
28	PFFZZ	5306004238194	11083	1A2029	.BOLT,MACHINE.....	3

END OF FIGURE

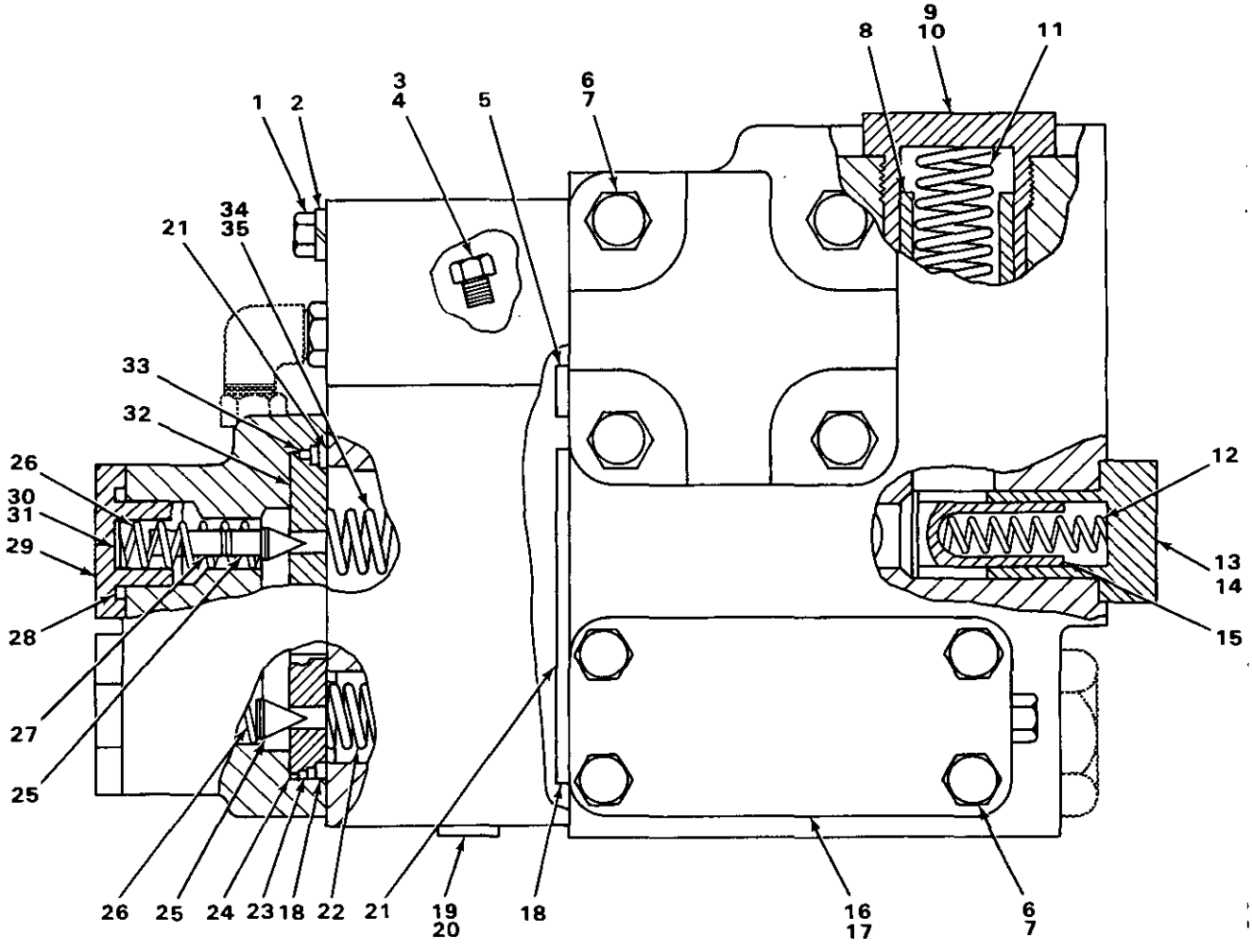

FIGURE 215. HYDRAULIC CONTROL VALVE SUBORDINATE VALVES.

(1) ITEM NO	(2) SMR CODE	(3) NSN	(4) CAGEC	(5) PART NUMBER	(6) DESCRIPTION AND USABLE ON CODES(UOC)	(7) QTY
					GROUP 2402 MANIFOLD AND CONTROL VALVES.	
					FIG. 215 HYDRAULIC CONTROL VALVE SUBORDINATE VALVES.	
1	PFFZZ	5306008532024	11083	7F8698	.BOLT,MACHINE.....	4
2	PFFZZ	5310006559370	96906	MS35340-47	.WASHER,LOCK.....	4
3	PFFZZ	5365010672179	11083	9S4180	.PLUG,MACHINE THREAD.....	1
4	PFFZZ	5330011485891	59556	K-500-EN-0431	.SEAL.....	1
5	PFFZZ	5330010690856	11083	9J6491	.SEAL-O-RING.....	1
6	PFFZZ	5305010269518	11083	0S1571	.SCREW,CAP,HEXAGON H.....	12
7	PFFZZ	5310006379541	96906	MS35338-46	.WASHER,LOCK.....	12
8	PFFZZ	4820010686068	11083	9J4029	.VALVE,FLOW CONTROL.....	1
9	PFFZZ	5365012599622	11083	8J7360	.PLUG,MACHINE THREAD.....	1
10	PFFZZ	5331010242512	81349	M83248/2-920	.PACKING,PREFORMED.....	1
11	PFFZZ	5360011555301	11083	1L4418	.SPRING,HELICAL,COMP.....	1
12	PFFZZ	5360010675607	11083	3B1926	.SPRING.....	2
13	PFFZZ	2520010672163	11083	8J7369	.PLUG.....	2
14	PFFZZ	5331009448281	11083	3D2824	.O-RING.....	2
15	XBFZZ		11083	8J8480	.VALVE.....	2
16	XBFZZ		11083	8J7431	.COVER.....	2
17	PFFZZ	5331009484063	11083	4J522	.O-RING.....	2
18	PFFZZ	5331006334535	11083	2H3932	.O-RING.....	2
19	PFFZZ	5365010360010	11083	9S8004	.PLUG,MACHINE THREAD.....	1
20	PAFZZ	5331008013354	25184	906-737-70	.O-RING.....	1
21	PFFZZ	5331005801226	11083	1H9696	.O-RING.....	2
22	PFFZZ	5360D5979087	11083	8F394	.SPRING,HELICAL,COMP.....	1
23	PFFZZ	5330002514436	11083	3S9233	.SEAL.....	1
24	XDFZZ		11083	8J7462	.SEAT.....	1
25	PFFZZ	4820009237042	11083	1J8497	.VALVE.....	2
26	XDFZZ		11083	2J6089	.SPRING,HELICAL,COMP.....	2
27	PFFZZ	5315002460998	11083	6J1311	.PIN,STRAIGHT,HEADLE.....	2
28	PFFZZ	5331007410674	11083	5F1678	.O-RING.....	2
29	PFFZZ	5365004255471	11083	3J3429	.PLUG,MACHINE THREAD.....	2
30	PFFZZ	5340009490311	11083	3J7470	.DISK,SOLID,PLAIN.....	4
31	PFFZZ	5365009440863	11083	3J7473	.SHIM.....	12
32	PFFZZ	2895010689667	11083	8J7466	.SEAT.....	1
33	PFFZZ	5330010480983	11083	7D9749	.SEAL,PACKING.....	1
34	PFFZZ	5360010702809	11083	9J5498	.SPRING OUTER.....	1
35	PFFZZ	5360010675611	11083	9J5499	.SPRING INNER.....	1

END OF FIGURE

1
2 THRU 12

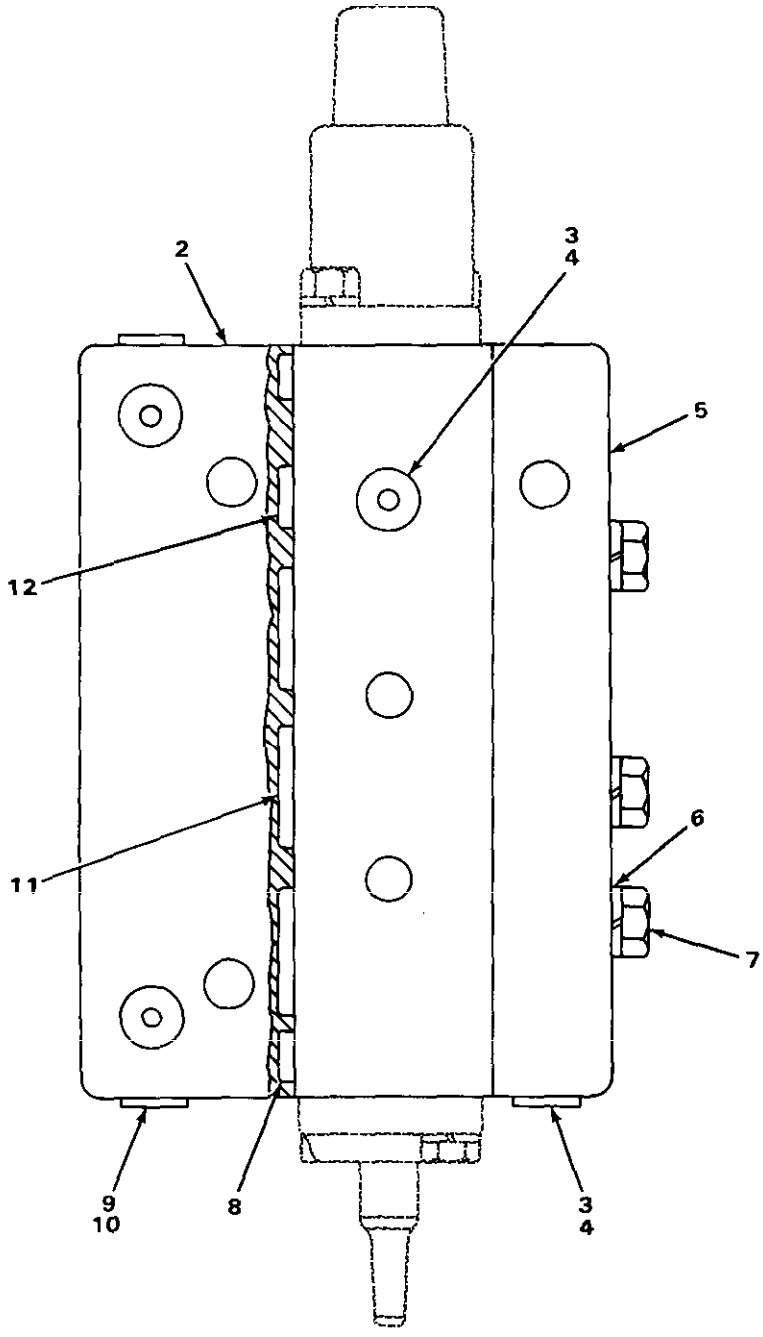

TA235413

FIGURE 216. BLADE TILT CYLINDER VALVE.

(1) ITEM NO	(2) SMR CODE	(3) NSN	(4) CAGEC	(5) PART NUMBER	(6) DESCRIPTION AND USABLE ON CODES(UOC)	(7) QTY
					GROUP 2402 MANIFOLD AND CONTROL VALVES.	
					FIG. 216 BLADE TILT CYLINDER VALVE.	
1	PFFFF	4820011801045	11083	8J7488	VALVE,LINEAR,DIRECT.....	1
2	PFFZZ	4730012537484	11083	8J7497	.MANIFOLD,HYDRAULIC.....	1
3	PFFZZ	5365000786248	11083	9S8002	.PLUG,MACHINE THREAD.....	2
4	XDFZZ	5330010491292	02697	3-904N552-90	.O-RING.....	2
5	PFFZZ	4730012537483	11083	8J7498	.MANIFOLD,HYDRAULIC.....	1
6	PFFZZ	5310004079566	96906	MS35338-45	.WASHER,LOCK.....	3
7	PFFZZ	5306000877178	11083	1F5842	.BOLT,MACHINE.....	3
8	PFFZZ	5330010648276	11083	8J1699	.O-RING.....	4
9	PFFZZ	5365011242945	30780	2HP5N-S	.PLUG,MACHINE THREAD.....	4
10	PFFZZ	5330011485891	59556	K-500-EN-0431	.SEAL.....	4
11	PFFZZ	5330010690801	11083	5P3108	.SEAL-O-RING.....	6
12	PFFZZ	5330010648247	11083	6J3134	.SEAL.....	2

END OF FIGURE

1
2 THRU 9

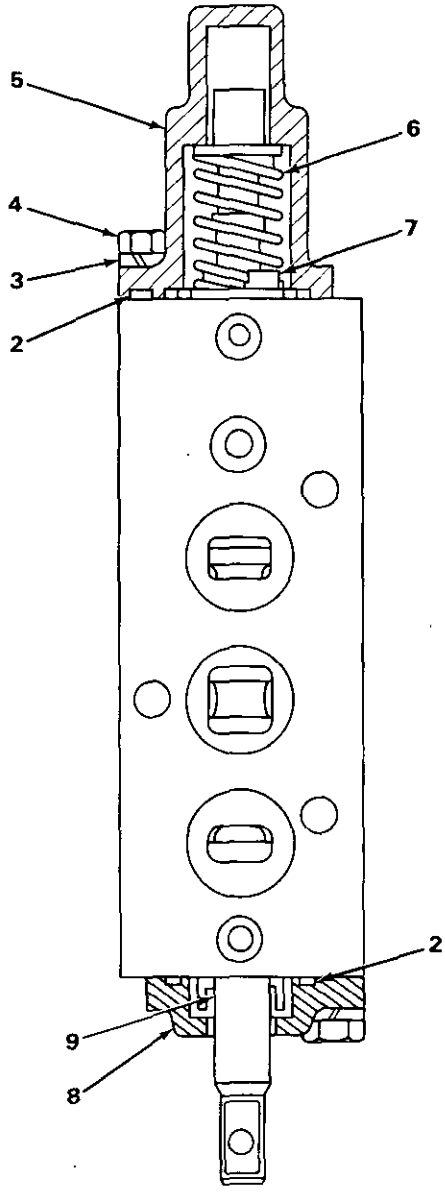

TA235414

FIGURE 217. BLADE TILT CYLINDER PILOT VALVE.

(1) ITEM NO	(2) SMR CODE	(3) NSN	(4) CAGEC	(5) PART NUMBER	(6) DESCRIPTION AND USABLE ON CODES(UOC)	(7) QTY
					GROUP 2402 MANIFOLD AND CONTROL VALVES.	
					FIG. 217 BLADE TILT CYLINDER PILOT VALVE.	
1	PFFFF	4820010488597	11083	8J7494	.VALVE,PILOT.....	1
2	PFFZZ	5331009375155	11083	2K8199	..O-RING.....	2
3	PFFZZ	5310005825965	96906	MS35338-44	..WASHER,LOCK.....	4
4	PFFZZ	5306002611153	11083	S1615	..BOLT,MACHINE.....	4
5	XAFZZ		11083	9J4113	..HOUSING.....	1
6	PFFZZ	5360010671728	11083	9J4800	..SPRING.....	1
7	PFFZZ	5365012573304	11083	7J7844	..RING,RETAINING.....	4
8	XAFZZ		11083	9J4780	..HOUSING.....	1
9	PFFZZ	5330010486005	11083	8J8553	..SEAL.....	1

END OF FIGURE

1
2 THRU 31

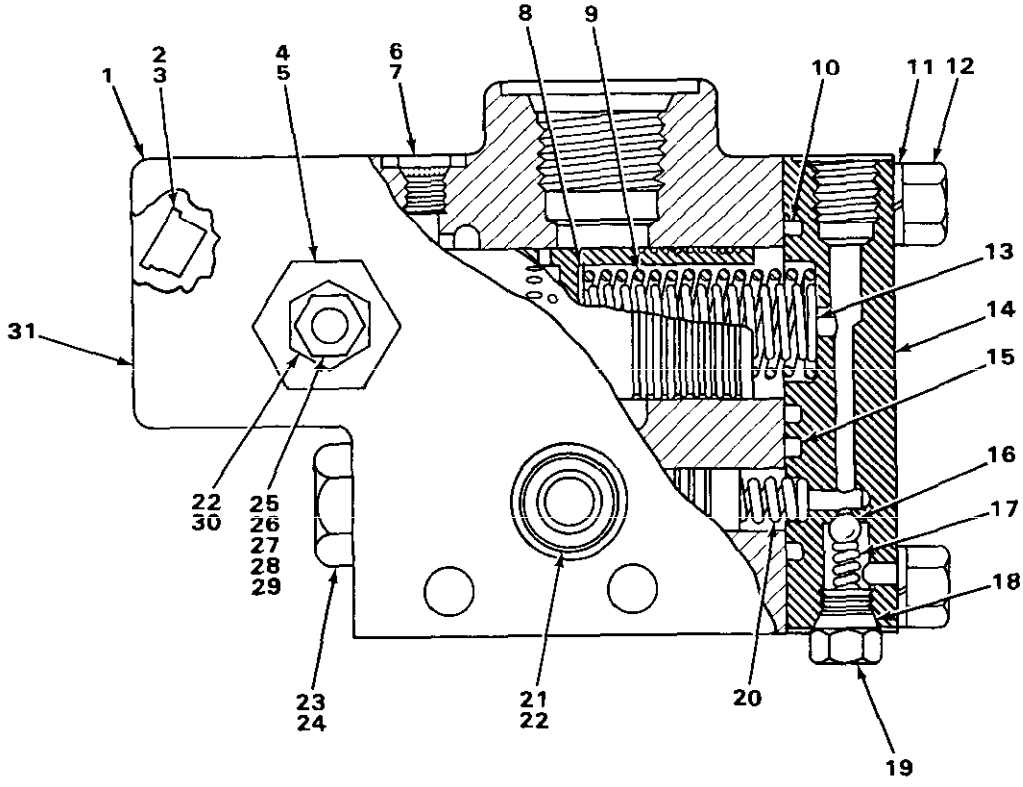

TA235415

FIGURE 218. PRESSURE CONTROL VALVE.

(1) ITEM NO	(2) SMR CODE	(3) NSN	(4) CAGEC	(5) PART NUMBER	(6) DESCRIPTION AND USABLE ON CODES(UOC)	(7) QTY
					GROUP 2402 MANIFOLD AND CONTROL VALVES.	
					FIG. 218 PRESSURE CONTROL VALVE.	
1	PFFZF	4820010487098	11083	9J5169	VALVE,CONTROL,PRESS	1
2	PFFZZ	5365012574480	11083	9S8007	.PLUG,MACHINE THREAD	1
3	PFFZZ	5330010960912	11083	7JZ04	.SEAL,SPECIAL	1
4	PFFZZ	2520010625198	11083	2P8421	.PLUG	1
5	PFFZZ	5331009448281	11083	3D2824	.O-RING	1
6	PFFZZ	5365011242945	30780	2HP5N-S	.PLUG,MACHINE THREAD	1
7	PFFZZ	5330011485891	59556	K-500-EN-0431	.SEAL	1
8	PFFZZ	5365010641030	11083	4J8224	.SHIM	6
9	PFFZZ	5360012577810	11083	9J5491	.SPRING,HELICAL,COMP OUTER	1
10	PFFZZ	5331002919572	11083	5F9657	.O-RING	1
11	PFFZZ	5310006379541	96906	MS35338-46	.WASHER,LOCK	4
12	PFFZZ	5305010156841	11083	0S1591	.SCREW	4
13	PFFZZ	5360012573419	11083	9J5490	.SPRING,HELICAL,COMP INNER	1
14	PFFZZ	4320012623317	11083	9J3578	.VALVE PLATE,HYDRAUL	1
15	PFFZZ	5331003396224	11083	5F7054	.O-RING	1
16	PFFZZ	3110009921048	11083	2D6642	.BALL,BEARING	1
17	PFFZZ	5360010671417	11083	5J1355	.SPRING	1
18	XDFZZ	5330010491292	02697	3-904N552-90	.O-RING	1
19	XBFZZ		11083	5P1526	.PLUG	1
20	PFFZZ	5360010671730	11083	9J7753	.SPRING	1
21	PFFZZ	5365010360010	11083	9S8004	.PLUG,MACHINE THREAD	1
22	PAFZZ	5331008013354	25184	906-737-70	.O-RING	2
23	PFFZZ	5365007630120	11083	9S4185	.PLUG,MACHINE THREAD	1
24	PFFZZ	5331009486482	11083	3K360	.O-RING	1
25	PFFZZ	5305011642318	11083	9S6155	.SETSCREW	1
26	PFFZZ	5315008915955	11083	4H8380	.PIN,STRAIGHT,HEADLE	1
27	PFFZZ	5331001651980	81349	M83248/2-905	.O-RING	1
28	PFFZZ	5360009508041	11083	4M2381	.SPRING,SPECIAL	1
29	PFFZZ	3110000119935	11083	4B9782	.BALL,BEARING	1
30	PFFZZ	5365004114584	11083	9S4191	.PLUG,MACHINE THREAD	1
31	XBFZZ		11083	9J3580	.VALVE	1

END OF FIGURE

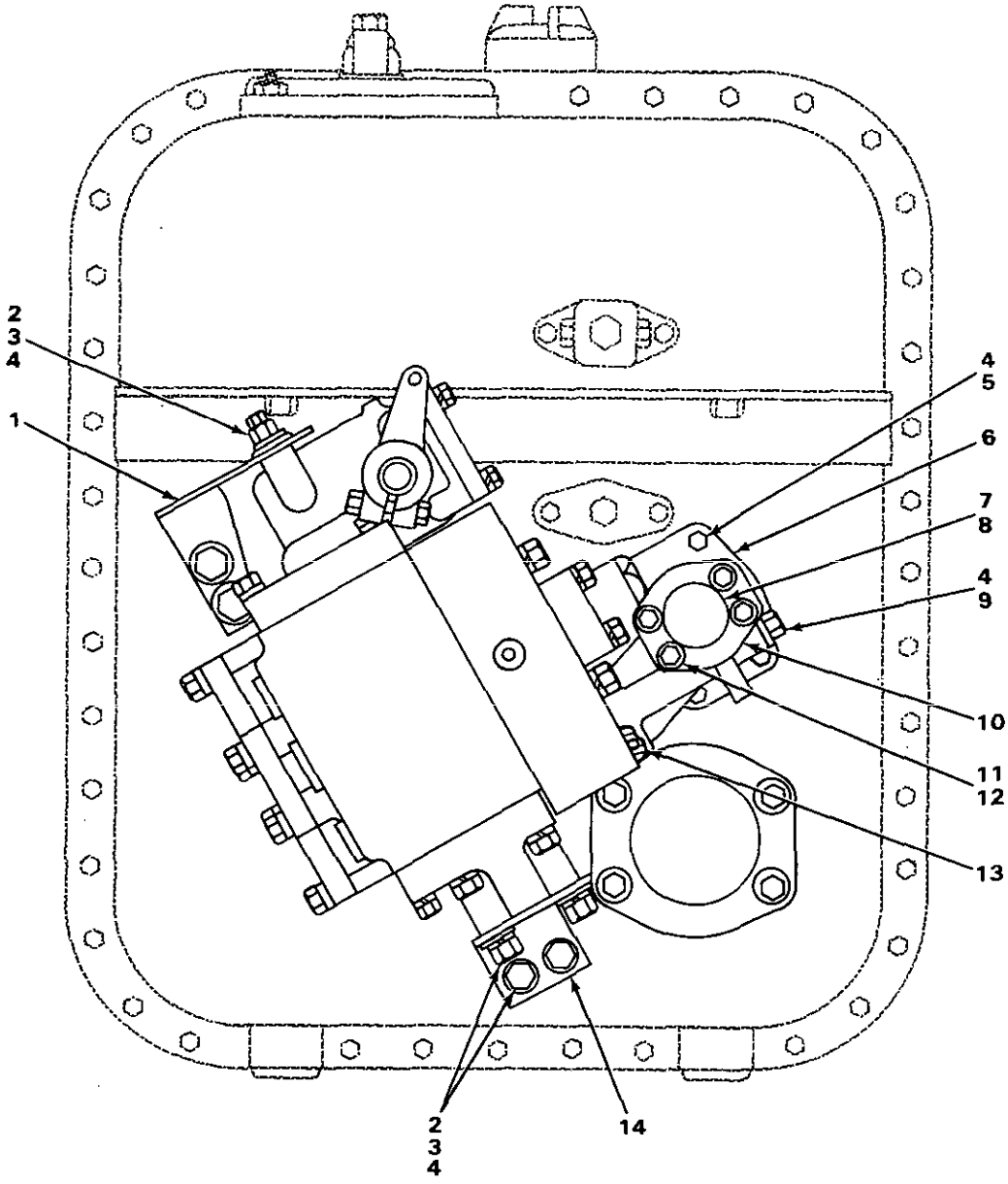

TA235416

FIGURE 219. HYDRAULIC TANK ATTACHING PARTS.

(1) ITEM NO	(2) SMR CODE	(3) NSN	(4) CAGEC	(5) PART NUMBER	(6) DESCRIPTION AND USABLE ON CODES(UOC)	(7) QTY
					GROUP 2402 MANIFOLD AND CONTROL VALVES.	
					FIG. 219 HYDRAULIC TANK ATTACHING PARTS.	
1	PFFZZ	5340012580147	11083	8J8634	BRACKET,ANGLE	1
2	PFFZZ	5306004262934	11083	S1621	BOLT,MACHINE	8
3	PFFZZ	5310009307013	11083	4B4280	WASHER,FLAT	8
4	PFFZZ	5310005845272	96906	MS35338-48	WASHER,LOCK	14
5	PFFZZ	5306002736357	11083	1A1460	BOLT,MACHINE	4
6	PFFZZ	2520010689665	11083	8J7461	MANIFOLD	1
7	PFFZZ	5340011692140	11083	5H4020	COVER,ACCESS	1
8	PFFZZ	5331009484063	11083	4J522	O-RING	1
9	PFFZZ	5305004110777	11083	1D4572	SCREW	2
10	PFFZZ	4730010515257	11083	1P4578	FLANGE,PIPE	2
11	PFFZZ	5305000712055	80204	B1821BH044C150N	SCREW,CAP,HEXAGON H	4
12	PFFZZ	5310001183035	11083	4B4279	WASHER,FLAT	4
13	PFFZZ	5330010534684	11083	5K5959	O-RING	2
14	PFFZZ	5340012580146	11083	8J8633	BRACKET,ANGLE	1

END OF FIGURE

22
23

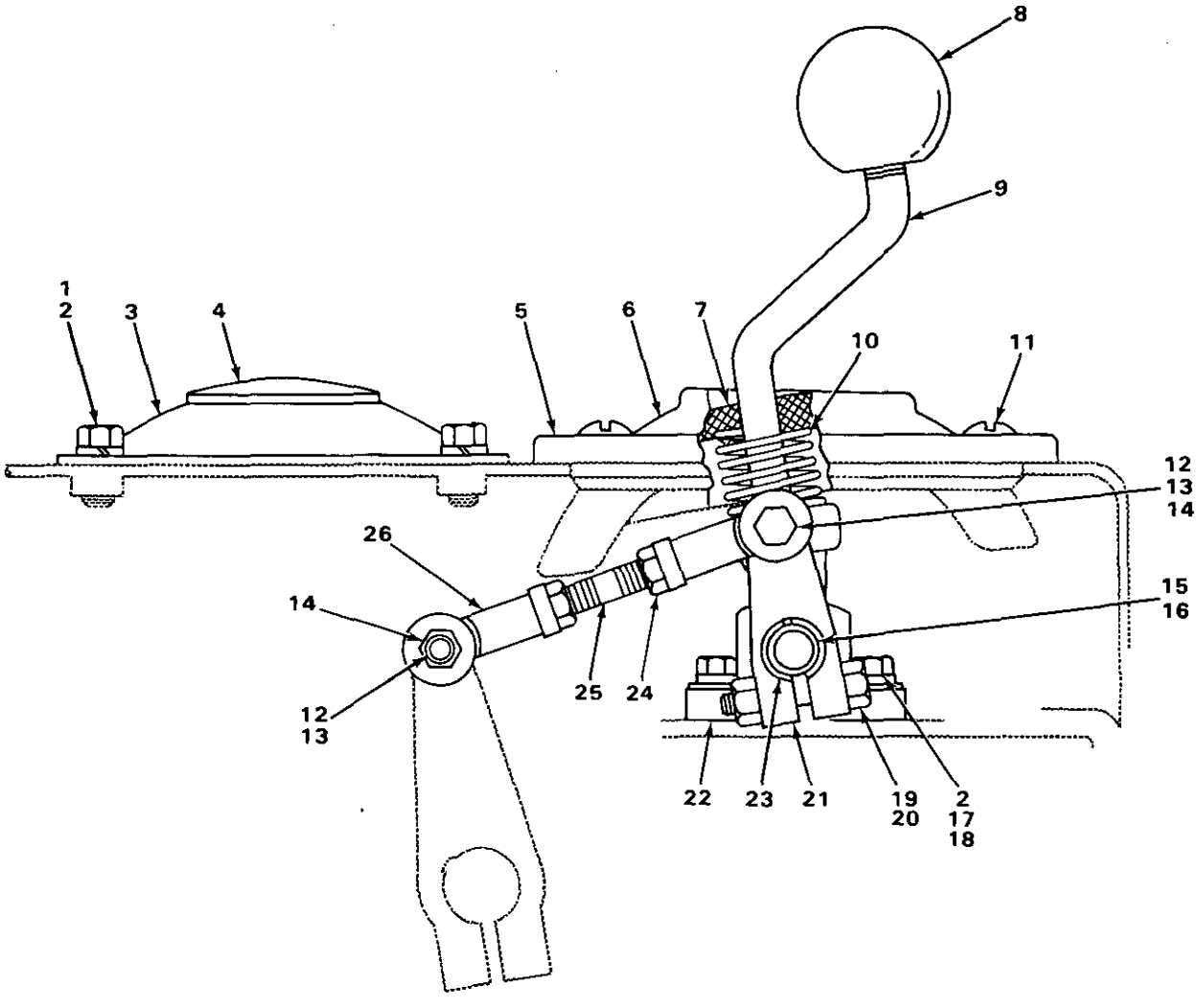

TA235417

FIGURE 220. IMPLEMENT LINKAGE (USE ON 8A BULLDOZER).

(1) ITEM NO	(2) SMR CODE	(3) NSN	(4) CAGEC	(5) PART NUMBER	(6) DESCRIPTION AND USABLE ON CODES(UOC)	(7) QTY
					GROUP 2403 HYDRAULIC CONTROLS AND MANUAL CONTROLS.	
					FIG. 220 IMPLEMENT LINKAGE (USE ON 8A BULLDOZER).	
1	PFFZZ	5305002528919	11083	0S0509	SCREW,CAP,HEXAGON H.....	4
2	PFFZZ	5310006379541	96906	MS35338-46	WASHER,LOCK.....	8
3	PFFZZ	5340012638737	11083	6P5386	COVER,ACCESS.....	1
4	PFFZZ	5340012594238	11083	3P4219	BUTTON,PLUG.....	1
5	PFFZZ	5340011635981	11083	6P5209	COVER,ACCESS.....	1
6	PFFZZ	3040011713357	11083	6P5208	GUIDE,LEVER.....	1
7	PFFZZ	5330010686110	11083	6P5207	SEAL.....	1
8	PFFZZ	5355003713370	11083	2A1736	KNOB.....	1
9	XBFZZ		11083	3P3941	LEVER.....	1
10	PFFZZ	5360011666940	11083	2J7295	SPRING,HELICAL,COMP.....	1
11	PFFZZ	5305009592723	96906	MS35190-319	SCREW,MACHINE.....	4
12	PFFZZ	5306001402032	11083	4M496	BOLT,MACHINE.....	2
13	PFFZZ	5310001476143	11083	4M497	NUT,PLAIN,HEXAGON.....	2
14	PFFZZ	5310010588071	11083	2K4973	LOCKNUT.....	2
15	PFFZZ	3040011615121	11083	3P3942	SHAFT,STRAIGHT.....	1
16	PFFZZ	5315006165526	96906	MS35756-8	KEY,WOODRUFF.....	2
17	PFFZZ	5306004238194	11083	1A2029	BOLT,MACHINE.....	4
18	PFFZZ	5310001174788	11083	5M2894	WASHER,FLAT.....	4
19	PFFZZ	5305010156841	11083	0S1591	SCREW.....	2
20	PFFZZ	5310011945398	11083	1D4717	NUT,HEXAGON.....	2
21	PFFZZ	3040012537456	11083	3P3938	LEVER,REMOTE CONTRO.....	1
22	AFFZZ		11083	6P5205	BRACKET.....	1
23	PFFZZ	3120000641275	11083	9F5647	.BUSHING,SLEEVE.....	2
24	PFFZZ	5310009752075	96906	MS35691-21	NUT,PLAIN,HEXAGON.....	2
25	PFFZZ	5307011519304	11083	4L7551	STUD,PLAIN.....	1
26	PFFZZ	2910010588075	11083	4D4064	ROD END.....	2

END OF FIGURE

9 27
10 28

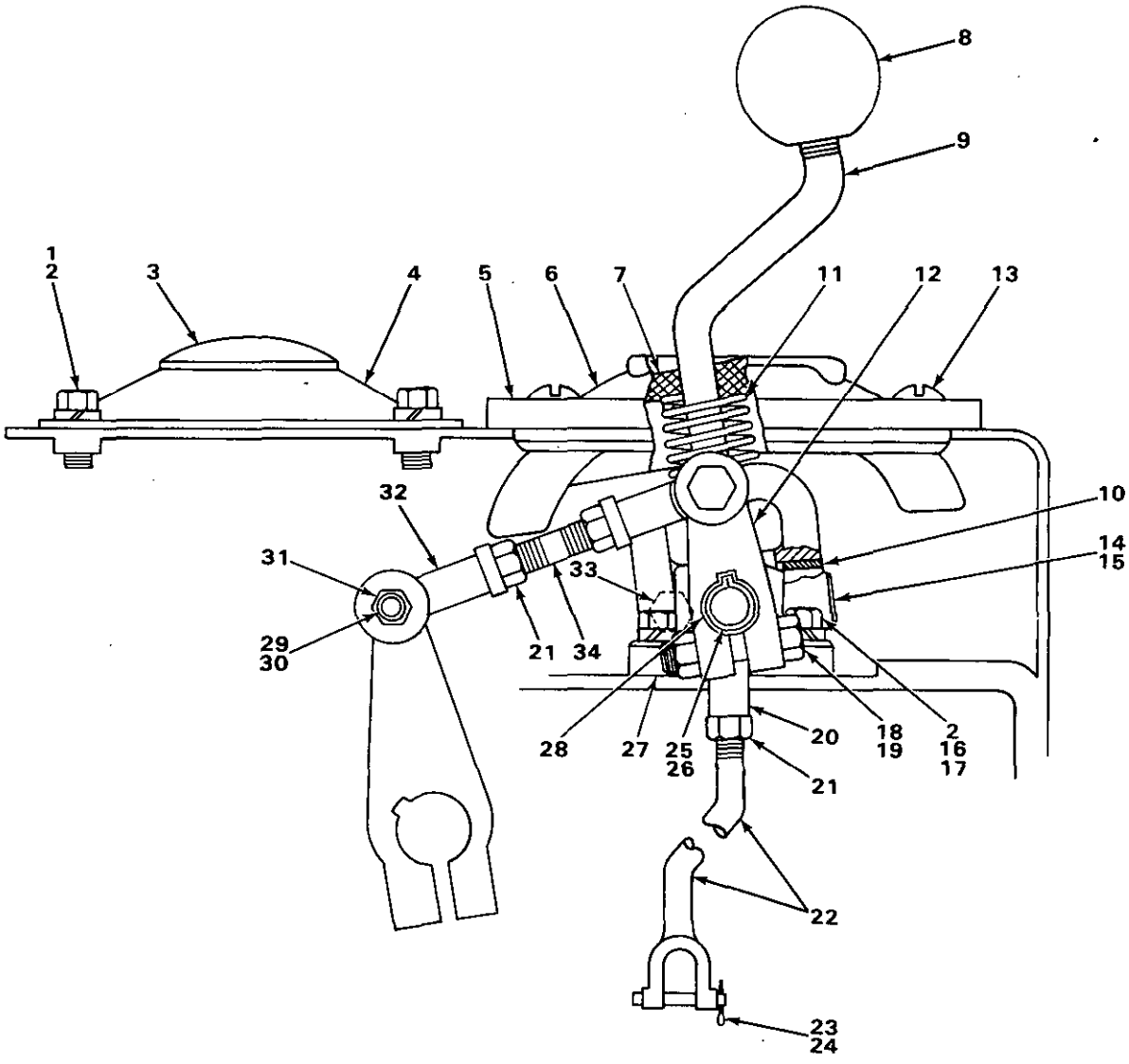

TA235418

FIGURE 221. IMPLEMENT LINKAGE (USE ON 8S BULLDOZER).

(1) ITEM NO	(2) SMR CODE	(3) NSN	(4) CAGEC	(5) PART NUMBER	(6) DESCRIPTION AND USABLE ON CODES(UOC)	(7) QTY
					GROUP 2403 HYDRAULIC CONTROLS AND MANUAL CONTROLS.	
					FIG. 221 IMPLEMENT LINKAGE (USE ON 8S BULLDOZER).	
1	PFFZZ	5305002528919	11083	0S0509	SCREW,CAP,HEXAGON H.....	4
2	PFFZZ	5310006379541	96906	MS35338-46	WASHER,LOCK.....	8
3	PFFZZ	5340012594238	11083	3P4219	BUTTON,PLUG.....	1
4	PFFZZ	5340012638737	11083	6P5386	COVER,ACCESS.....	1
5	PFFZZ	5340011635981	11083	6P5209	COVER,ACCESS.....	1
6	PFFZZ	3040011713357	11083	6P5208	GUIDE,LEVER.....	1
7	PFFZZ	5330010686110	11083	6P5207	SEAL.....	1
8	PFFZZ	5355003713370	11083	2A1736	KNOB.....	1
9	PFFZZ	3040012534662	11083	3P3931	LEVER,MANUAL CONTRO.....	1
10	PFFZZ	3120000641275	11083	9F5647	.BUSHING,SLEEVE.....	2
11	PFFZZ	5360011666940	11083	2J7295	SPRING,HELICAL,COMP.....	1
12	PFFZZ	3040012537456	11083	3P3938	LEVER,REMOTE CONTRO.....	1
13	PFFZZ	5305009592723	96906	MS35190-319	SCREW,MACHINE.....	4
14	PFFZZ	3040012537350	11083	3P3937	SHAFT,STRAIGHT.....	1
15	PFFZZ	5315011681052	11083	7L811	DOWEL.....	1
16	PFFZZ	5306004238194	11083	1A2029	BOLT,MACHINE.....	4
17	PFFZZ	5310001174788	11083	5M2894	WASHER,FLAT.....	4
18	PFFZZ	5305010156841	11083	0S1591	SCREW.....	1
19	PFFZZ	5310011945398	11083	1D4717	NUT,HEXAGON.....	1
20	PFFZZ	2990011033652	11083	5J5315	BALL ROD END.....	1
21	PFFZZ	5310009752075	96906	MS35691-21	NUT,PLAIN,HEXAGON.....	3
22	PFFZZ	5340012589225	11083	3P3945	CLEVIS,ROD END.....	1
23	PFFZZ	5315001698105	11083	9S1303	PIN,STRAIGHT,HEADED.....	1
24	PFFZZ	5315008392326	96906	MS24665-281	PIN,COTTER.....	1
25	PFFZZ	5315012669238	11083	3P3935	PIN,STRAIGHT,HEADED.....	1
26	PFFZZ	5315006165526	96906	MS35756-8	KEY,WOODRUFF.....	1
27	PFFZZ	5340011619162	11083	6P5206	BRACKET,DOUBLE ANGL.....	1
28	PFFZZ	3120000641275	11083	9F5647	.BUSHING,SLEEVE.....	2
29	PFFZZ	5306001402032	11083	4M496	BOLT,MACHINE.....	2
30	PFFZZ	5310001476143	11083	4M497	NUT,PLAIN,HEXAGON.....	2
31	PFFZZ	5310010588071	11083	2K4973	LOCKNUT.....	2
32	PFFZZ	2910010588075	11083	4D4064	ROD END.....	2
33	PFFZZ	5310010951246	11083	2L6267	NUT,SELF-LOCKING,HE.....	1
34	PFFZZ	5307011519304	11083	4L7551	STUD,PLAIN.....	1

END OF FIGURE

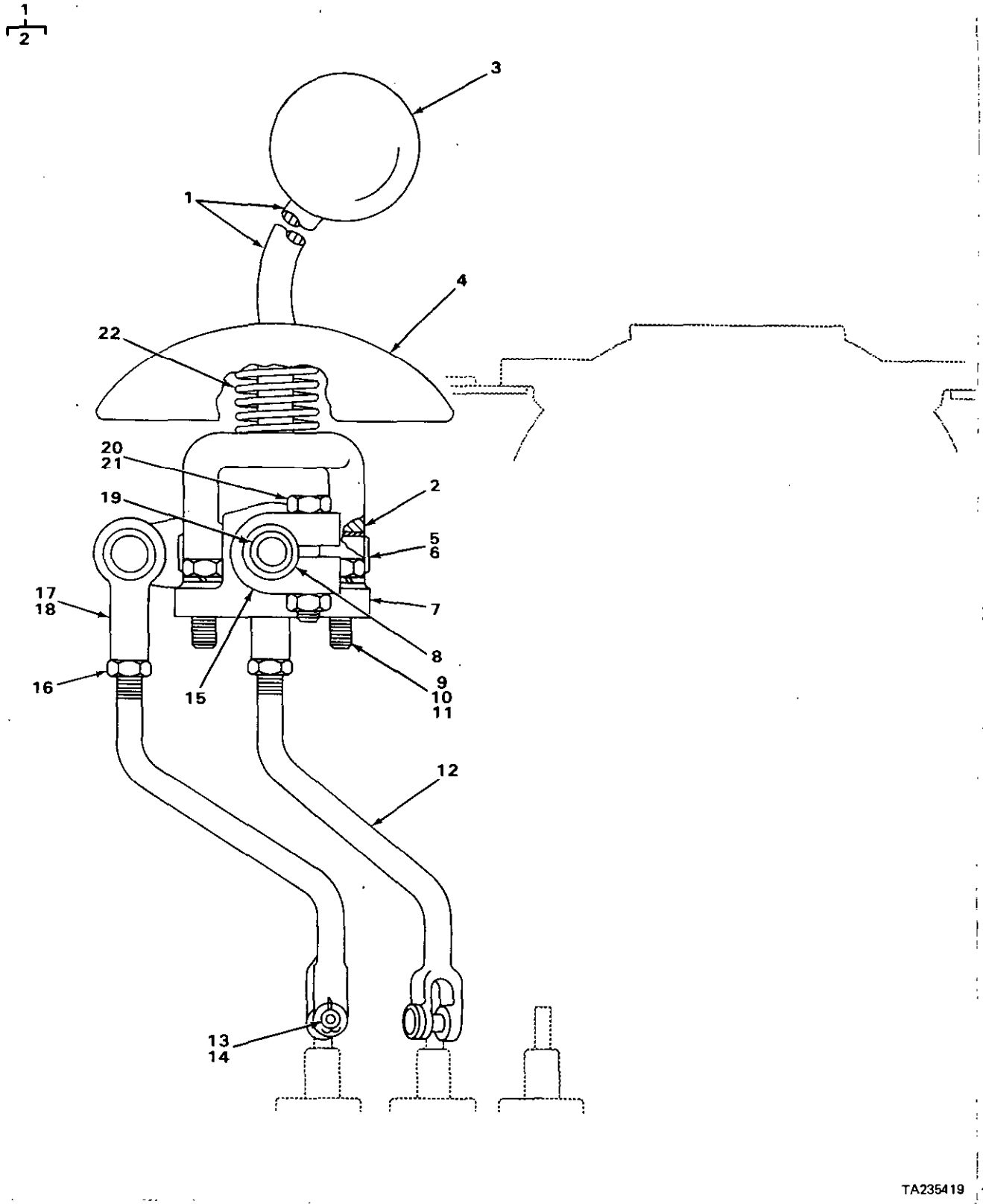

FIGURE 222. IMPLEMENT LINKAGE (USE WITH RIPPER).

(1) ITEM NO	(2) SMR CODE	(3) NSN	(4) CAGEC	(5) PART NUMBER	(6) DESCRIPTION AND USABLE ON CODES(UOC)	(7) QTY
					GROUP 2403 HYDRAULIC CONTROLS AND MANUAL CONTROLS.	
					FIG. 222 IMPLEMENT LINKAGE (USE WITH RIPPER).	
1	PFFZZ	3040012537454	11083	3P3943	LEVER,REMOTE CONTRO..... UOC:T25	1
2	PFFZZ	3120000641275	11083	9F5647	.BUSHING,SLEEVE..... UOC:T25	2
3	PFFZZ	5355003713370	11083	2A1736	KNOB..... UOC:T25	1
4	PFFZZ	5330010686110	11083	6P5207	SEAL DOMED..... UOC:T25	1
5	PFFZZ	3040012537350	11083	3P3937	SHAFT,STRAIGHT..... UOC:T25	1
6	PFFZZ	5315011681052	11083	7L811	DOWEL..... UOC:T25	1
7	XBFZZ		11083	3P3934	BRACKET..... UOC:T25	1
8	PFFZZ	3120000641275	11083	9F5647	BUSHING,SLEEVE..... UOC:T25	2
9	PFFZZ	5306004238194	11083	1A2029	BOLT,MACHINE..... UOC:T25	2
10	PFFZZ	5310006379541	96906	MS35338-46	WASHER,LOCK..... UOC:T25	2
11	PFFZZ	5310001174788	11083	5M2894	WASHER,FLAT..... UOC:T25	2
12	PFFZZ	5340012589225	11083	3P3945	CLEVIS,ROD END USE WITH ADJUSTABLE RIPPER..... UOC:T25	2
13	PFFZZ	5315001698105	11083	9S1303	PIN,STRAIGHT,HEADED..... UOC:T25	2
14	PFFZZ	5315008392326	96906	MS24665-281	PIN,COTTER..... UOC:T25	1
15	XBFZZ		11083	3P3676	CLAMP..... UOC:T25	1
16	PFFZZ	5310009752075	96906	MS35691-21	NUT,PLAIN,HEXAGON..... UOC:T25	1
17	PFFZZ	2990011033652	11083	5J5315	BALL ROD END..... UOC:T25	1
18	PFFZZ	5310010951246	11083	2L6267	NUT,SELF-LOCKING,HE..... UOC:T25	1
19	XBFZZ		11083	3P3949	SHAFT ASSEMBLY..... UOC:T25	1
20	PFFZZ	5305010156841	11083	0S1591	SCREW..... UOC:T25	1
21	PFFZZ	5310011945398	11083	1D4717	NUT,HEXAGON..... UOC:T25	1
22	PFFZZ	5360011666940	11083	2J7295	SPRING,HELICAL,COMP..... UOC:T25	1

END OF FIGURE

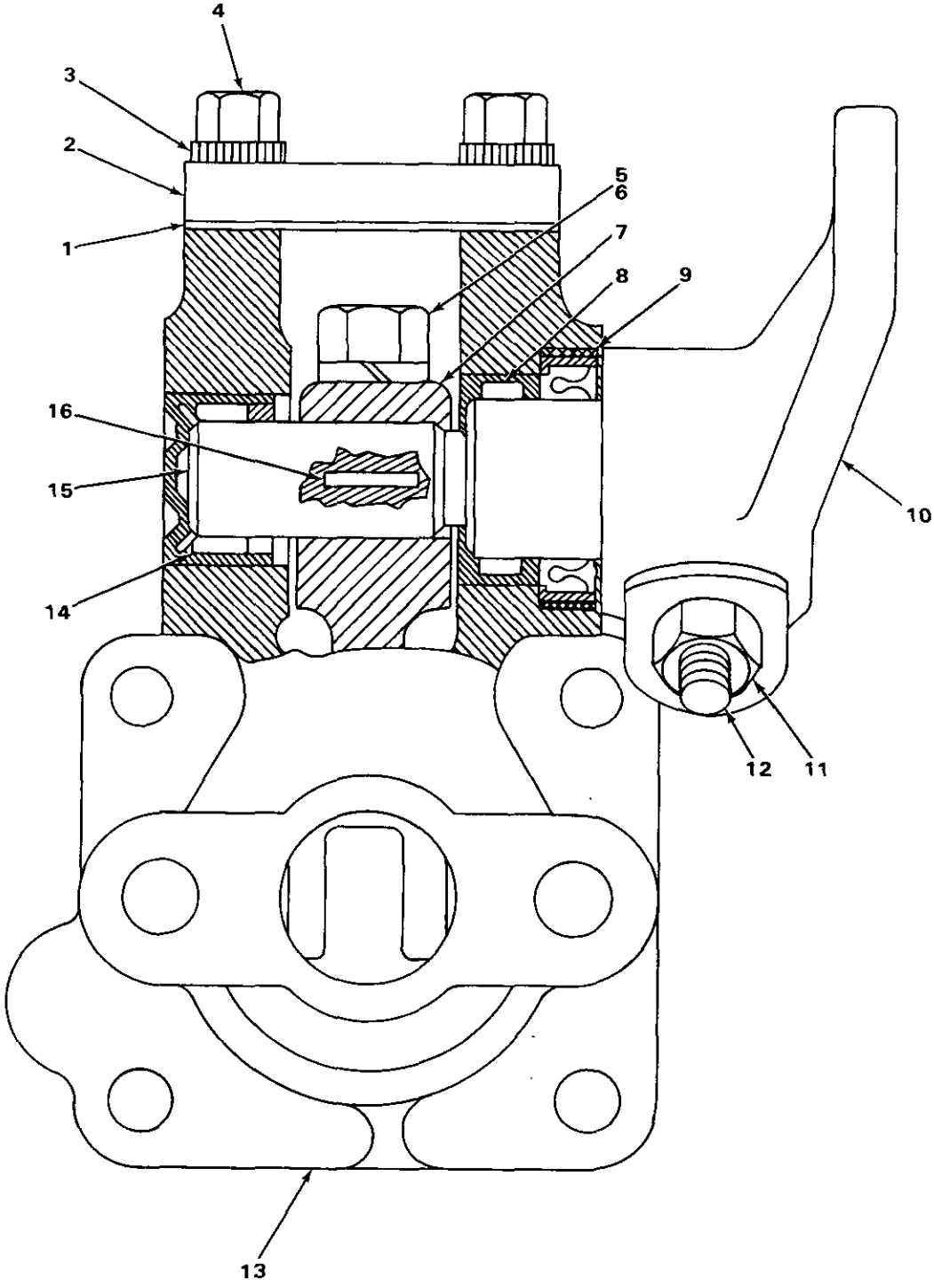

FIGURE 223. LEVER HOUSING.

(1) ITEM NO	(2) SMR CODE	(3) NSN	(4) CAGEC	(5) PART NUMBER	(6) DESCRIPTION AND USABLE ON CODES(UOC)	(7) QTY
					GROUP 2403 HYDRAULIC CONTROLS AND MANUAL CONTROLS.	
					FIG. 223 LEVER HOUSING.	
1	PFFZZ	5330001190794	11083	3J5552	GASKET	1
2	PFFZZ	5340012651164	11083	7J2596	COVER,ACCESS	1
3	PFFZZ	5310005146674	96906	MS35335-34	WASHER,LOCK	4
4	PFFZZ	5306002264828	80204	B1821BH031C113N	BOLT,MACHINE	4
5	PFFZZ	5306002637299	11083	2A4996	BOLT,MACHINE	1
6	PFFZZ	5310006379541	96906	MS35338-46	WASHER,LOCK	1
7	PFFZZ	2520004321627	11083	3J7582	LEVER,REMOTE CONTRO	1
8	PFFZZ	3110009024269	60380	B168XPS0H	BEARING,ROLLER,NEED	1
9	XBFZZ	5330008332350	11083	2J8333	SEAL,PLAIN ENCASED	1
10	XBFZZ		11083	3P2938	LEVER	1
11	PFFZZ	5310011945398	11083	1D4717	NUT,HEXAGON	1
12	PFFZZ	5306002736357	11083	1A1460	BOLT,MACHINE	1
13	XBFZZ		11083	9J791	HOUSING	1
14	PFFZZ	3110010672160	11083	5J3241	BEARING	1
15	PFFZZ	2530010672164	11083	9J1302	SHAFT	1
16	PFFZZ	5315006165523	96906	MS35756-11	KEY,WOODRUFF	2

END OF FIGURE

1
2 THRU 16
2
3

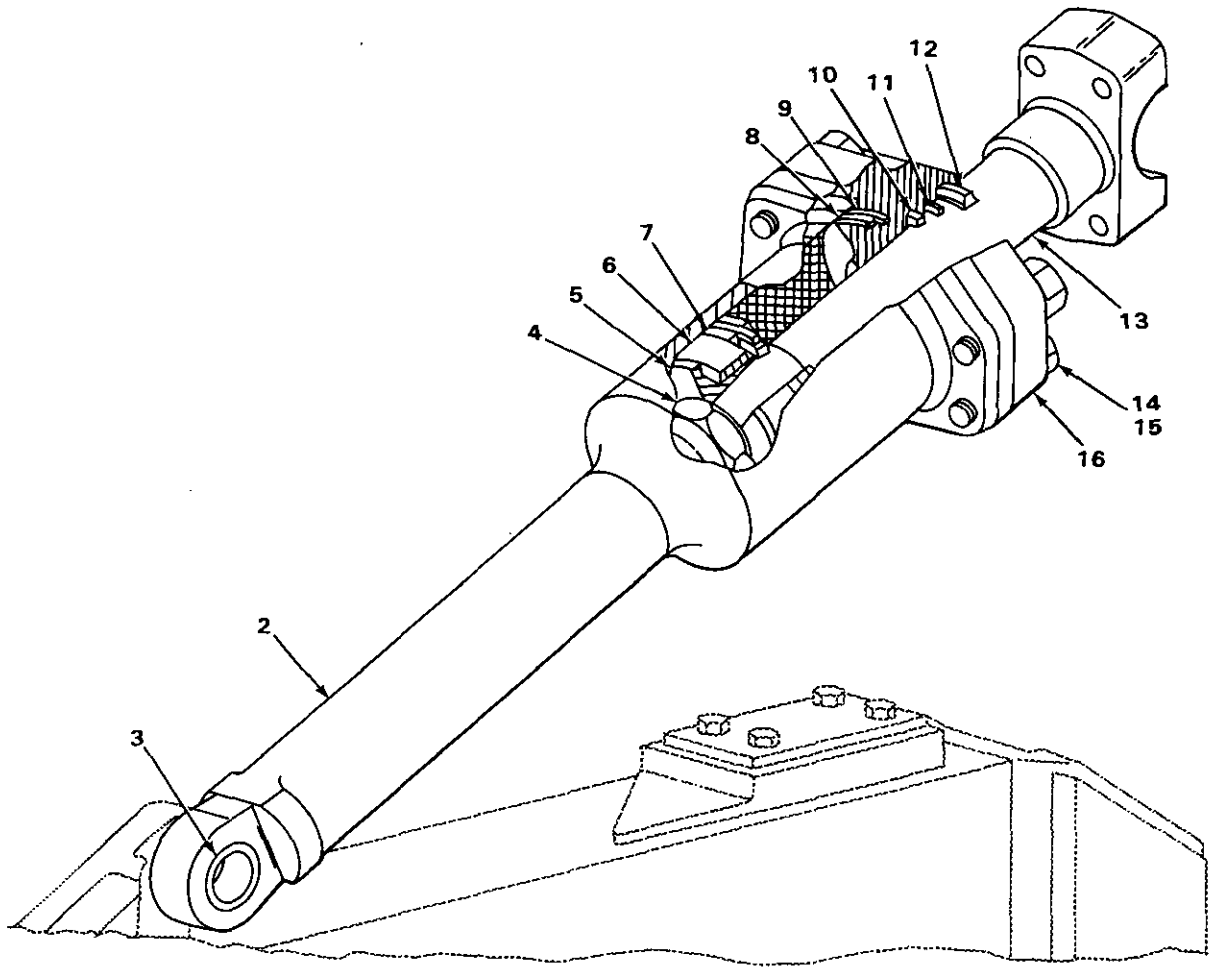

TA235421

FIGURE 224. TILT CYLINDERS AND TILT CRANK.

(1) ITEM NO	(2) SMR CODE	(3) NSN	(4) CAGEC	(5) PART NUMBER	(6) DESCRIPTION AND USABLE ON CODES(UOC)	(7) QTY
					GROUP 2404 TILT CYLINDER AND TILT CRANK.	
					FIG. 224 TILT CYLINDER AND TILT CRANK.	
1	PFOFF	3830010484588	11083	8J8682	CYLINDER ASSEMBLY,A..... UOC:T25	1
2	PFFZZ	3040010184836	11083	8J8683	.CYLINDER ASSEMBLY,A..... UOC:T25	1
3	XDFZZ		11083	6J2225	..BEARING..... UOC:T25	1
4	PFFZZ	5310010672157	11083	4J6888	.NUT..... UOC:T25	1
5	XAFZZ		11083	6J1553	.PISTON..... UOC:T25	1
6	PFFZZ	4320009995025	11083	4J7376	.RING,WEARING..... UOC:T25	1
7	PFFZZ	5330009485162	11083	5J5559	.PACKING WITH RETAIN..... UOC:T25	1
8	PFFZZ	5331009136137	11083	1J2176	.O-RING..... UOC:T25	1
9	PFFZZ	5330009486863	11083	2J744	.PACKING,PREFORMED..... UOC:T25	1
10	PFFZZ	5330010486003	11083	8C9127	.SEAL..... UOC:T25	1
11	PFFZZ	5330010487111	11083	5J8350	.SEAL..... UOC:T25	1
12	PFFZZ	5330009192240	11083	4J8981	.SEAL,PLAIN ENCASED..... UOC:T25	1
13	XAFZZ		11083	8J8687	.ROD..... UOC:T25	1
14	PFFZZ	5305012556489	11083	5M544	.SCREW,CAP,HEXAGON H..... UOC:T25	6
15	PFFZZ	5310010516863	11083	3B4518	.WASHER,LOCK..... UOC:T25	6
16	XAFZZ		11083	6J7890	.HEAD..... UOC:T25	1

END OF FIGURE

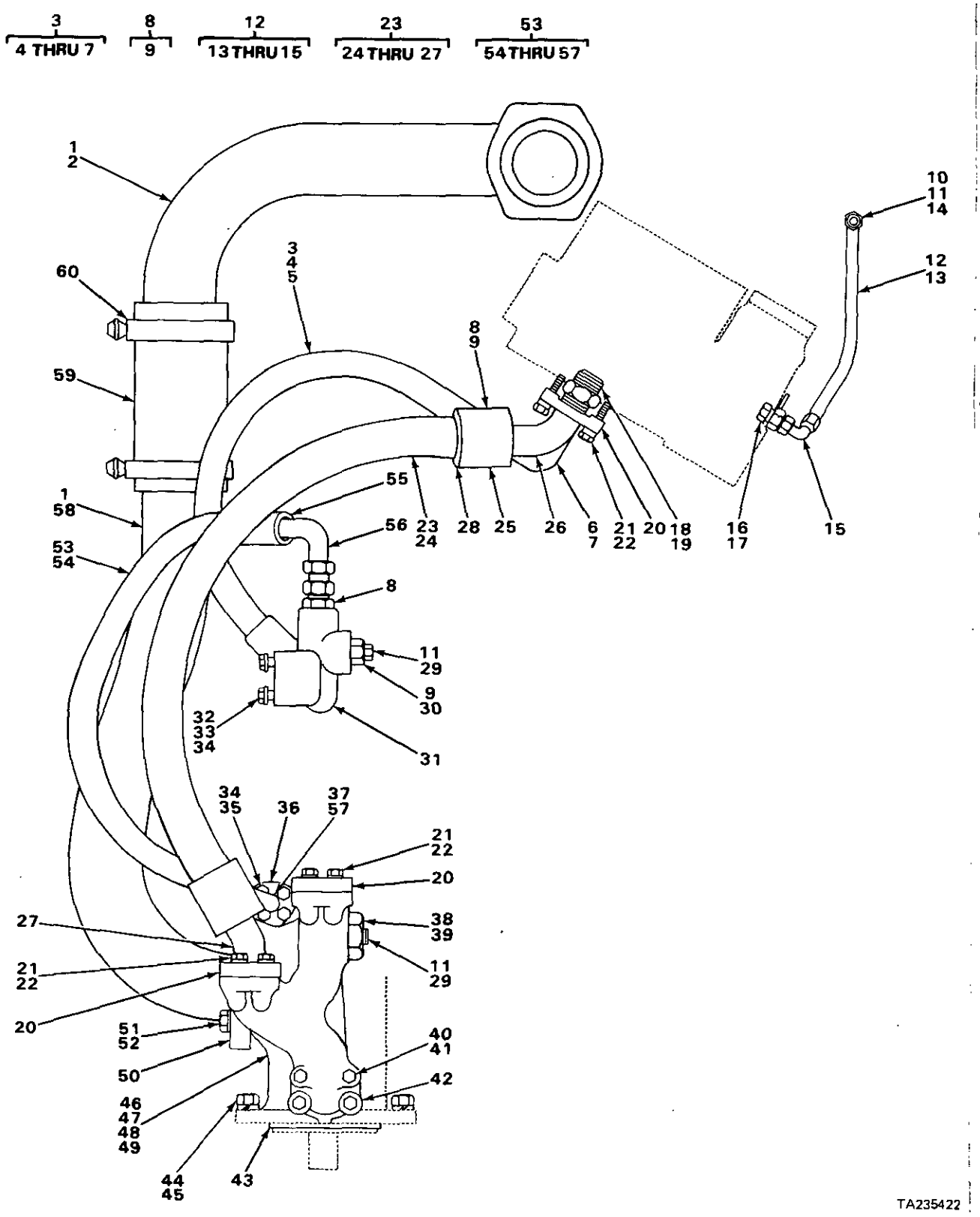

FIGURE 225. PUMP LINES, TYPE 2 (USE ON 8A BULLDOZER WITH SINGLE VALVE).

(1) ITEM NO	(2) SMR CODE	(3) NSN	(4) CAGEC	(5) PART NUMBER	(6) DESCRIPTION AND USABLE ON CODES(UOC)	(7) QTY
					GROUP 2406 STRAINERS, FILTERS, LINES AND FITTINGS ETC..	
					FIG. 225 PUMP LINES, TYPE 2 (USE ON 8A BULLDOZER WITH SINGLE VALVE).	
1	PFOZZ	5330008908104	11083	6L5359	SEAL,SPECIAL.....	2
2	XBOZZ		11083	8P1156	TUBE ASSEMBLY.....	1
3	AOOOO		11083	8P1248	HOSE ASSEMBLY.....	1
4	MOOZZ		19207	5P180-25	.HOSE MAKE FROM HOSE P/N 9S247.....	1
5	PFOZZ	4730012979328	11083	6V4678	.ELBOW,TUBE TO HOSE.....	2
6	XAOZZ		11083	1P1711	.COUPLING ASSEMBLY.....	1
7	PFOZZ	5340010516767	11083	3S7166	.PLUNGER,DETENT.....	2
8	PFOZZ	4730007105571	96906	MS51525A12	ADAPTER,STRAIGHT,TU.....	2
9	PFOZZ	5331009448281	11083	3D2824	.O-RING.....	3
10	PFOZZ	4730004919576	96906	MS51525A6	ADAPTER,STRAIGHT,TU.....	1
11	PAOZZ	5331008013354	25184	906-737-70	O-RING.....	3
12	PFOOO	4720012089237	11083	6P5159	HOSE ASSEMBLY,NONME.....	1
13	MOOZZ		19207	5P735-17	.HOSE MAKE FROM HOSE P/N 5P735.....	1
14	XAOZZ		11083	4N5560	.COUPLING.....	1
15	XAOZZ		11083	680556	.FITTING.....	1
16	PFOZZ	4730010589100	11083	308194	ADAPTER,STRAIGHT,TU.....	1
17	PAOZZ	5331001675174	81349	M83248/2-910	O-RING.....	1
18	XBOZZ	4730004418702	11083	4S6680	ADAPTER,STRAIGHT,TU.....	1
19	PFOZZ	5330009309407	11083	7M8485	SEAL,ADAPTER,MOTOR.....	1
20	PFOZZ	4730010515257	11083	1P4578	FLANGE,PIPE.....	6
21	PFOZZ	5306004003518	63005	427564	BOLT,MACHINE.....	12
22	PFOZZ	5310001183035	11083	4B4279	WASHER,FLAT.....	12
23	PFOZZ	4720012456605	11083	3P6956	HOSE ASSEMBLY,NONME.....	1
24	MOOZZ		19207	0625930-33	.HOSE MAKE FROM HOSE P/N 5P182.....	1
25	PFOZZ	5365010671426	11083	3S7116	.SLEEVE.....	2
26	PFOZZ	4730010625898	11083	3S8571	.STEM ASSEMBLY.....	1
27	PFOZZ	4730010626010	11083	3S8569	.ELBOW,FLANGE TO HOS.....	1
28	PFOZZ	5331009484063	11083	4J522	O-RING.....	2
29	PFOZZ	5365004114584	11083	9S4191	PLUG,MACHINE THREAD.....	2
30	PFOZZ	2520010625198	11083	2P8421	PLUG.....	1
31	XBOZZ		11083	3P6656	MANIFOLD.....	1
32	PFOZZ	5306002604508	11083	S1594	BOLT,MACHINE.....	2
33	PFOZZ	5310006379541	96906	MS35338-46	WASHER,LOCK.....	2
34	PFOZZ	5310001174788	11083	5M2894	WASHER,FLAT.....	6
35	PFOZZ	5306011954681	11083	3B1915	BOLT.....	4
36	PFOZZ	4730010513134	11083	1P4576	FLANGE,PIPE.....	2
37	PAOZZ	5331010176535	81349	M83248/2-214	O-RING.....	1
38	PFOZZ	5365011706440	11083	8J5914	PLUG,MACHINE THREAD.....	1
39	PFOZZ	5331010242512	81349	M83248/2-920	PACKING,PREFORMED.....	1
40	PFOZZ	5306008532024	11083	7F8698	BOLT,MACHINE.....	2
41	PFOZZ	5310006559370	96906	MS35340-47	WASHER,LOCK.....	4
42	PFOZZ	5305004454630	11083	4F5192	SCREW,CAP,HEXAGON H.....	2
43	PFOZZ	5331006635709	11083	5F3106	O-RING.....	1
44	PFOZZ	5310007638905	96906	MS51968-20	NUT,PLAIN,HEXAGON.....	2
45	PFOZZ	5310000455001	96906	MS35340-50	WASHER,LOCK.....	2
46	XBOZZ		11083	3P6657	MANIFOLD.....	1

(1) ITEM NO	(2) SMR CODE	(3) NSN	(4) CAGEC	(5) PART NUMBER	(6) DESCRIPTION AND USABLE ON CODES(UOC)	(7) QTY
47	PFOZZ	5331001384418	11083	4J5573	O-RING	1
48	XBOZZ		11083	6K3979	COVER	1
49	PFOZZ	5330010523917	11083	1P3704	SEAL	1
50	PFOZZ	4730011637270	11083	1P4585	FLANGE,PIPE	2
51	PFOZZ	5305007247222	80204	B1821BH063C200N	SCREW,CAP,HEXAGON H	4
52	PFOZZ	5310001097638	15434	S658	WASHER,FLAT	4
53	AOOOO		11083	3P2896	HOSE ASSEMBLY	1
54	MOOZZ		19207	5P180-29	.HOSE MAKE FROM HOSE P/N 9S247	1
55	PFOZZ	5340010516767	11083	3S7166	.PLUNGER,DETENT	2
56	PFOZZ	4730012979328	11083	6V4678	.ELBOW,TUBE TO HOSE	1
57	XBOZZ		11083	3S8360	.STEM	1
58	XBOZZ		11083	8P1154	TUBE ASSEMBLY	1
59	PFOZZ	4720010664554	11083	8D5381	HOSE	1
60	PFOZZ	4730010595352	11083	5P598	CLAMP,HOSE	2

END OF FIGURE

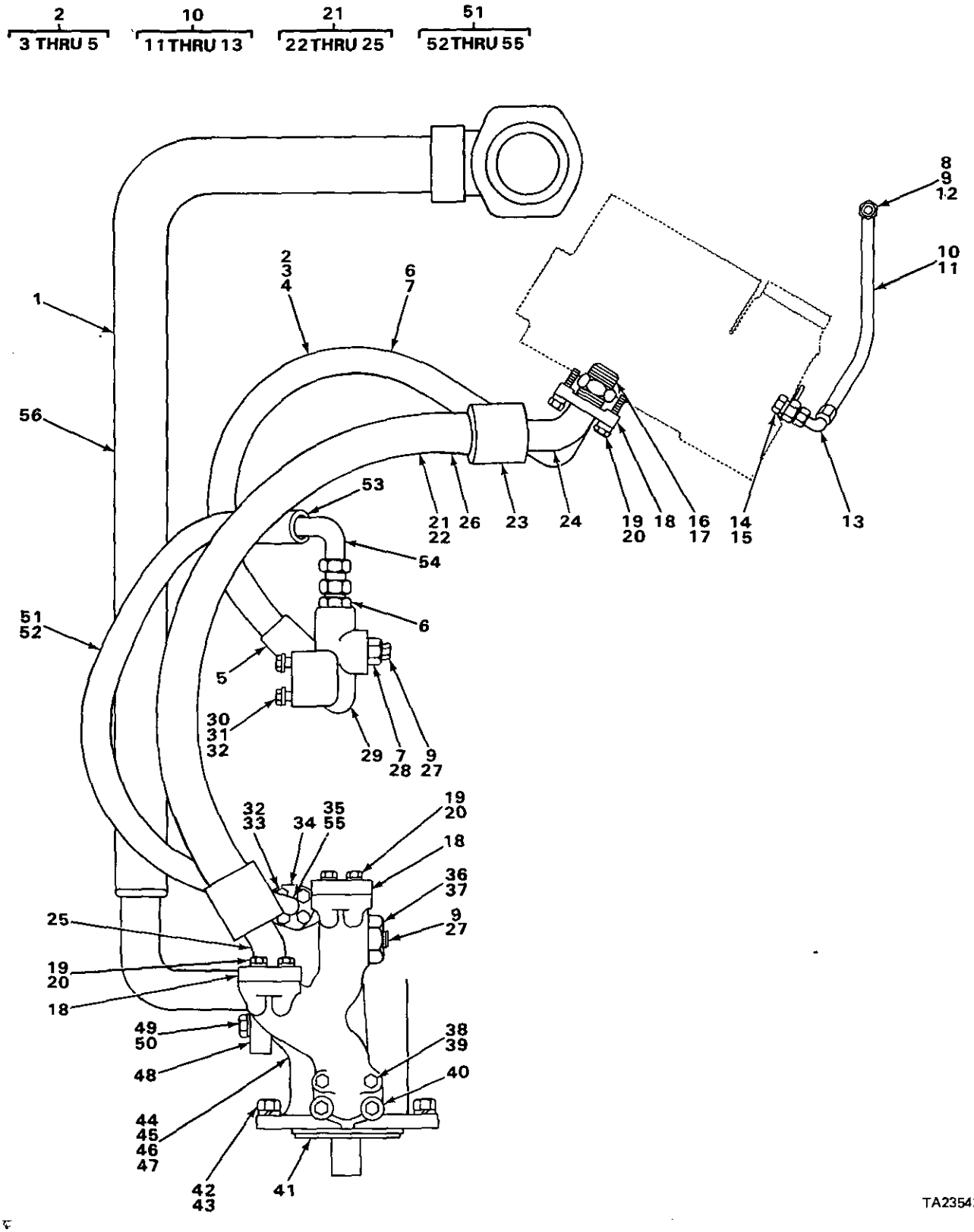

FIGURE 226. PUMP LINES, TYPE 3 (USE ON 8A BULLDOZER WITH SINGLE VALVE).

(1) ITEM NO	(2) SMR CODE	(3) NSN	(4) CAGEC	(5) PART NUMBER	(6) DESCRIPTION AND USABLE ON CODES(UOC)	(7) QTY
					GROUP 2406 STRAINERS, FILTERS, LINES AND FITTINGS ETC..	
					FIG. 226 PUMP LINES, TYPE 3 (USE ON 8A BULLDOZER WITH SINGLE VALVE).	
1	PFOZZ	4720012848183	11083	3P2895	HOSE ASSEMBLY,NONME.....	1
2	AOOOO		11083	3P2898	HOSE ASSEMBLY.....	1
3	MOOZZ		19207	5P180-29	.HOSE MAKE FROM HOSE P/N 9S247.....	1
4	PFOZZ	4730012979328	11083	6V4678	.ELBOW,TUBE TO HOSE.....	2
5	PFOZZ	5340010516767	11083	3S7166	.PLUNGER,DETENT.....	2
6	PFOZZ	4730007105571	96906	MS51525A12	ADAPTER,STRAIGHT,TU.....	2
7	PFOZZ	5331009448281	11083	3D2824	O-RING.....	3
8	PFOZZ	4730004919576	96906	MS51525A6	ADAPTER,STRAIGHT,TU.....	1
9	PAOZZ	5331008013354	25184	906-737-70	O-RING.....	3
10	PFOOO	4720012089237	11083	6P5159	HOSE ASSEMBLY,NONME.....	1
11	MOOZZ		19207	5P735-17	.HOSE MAKE FROM HOSE P/N 5P735.....	1
12	XAOZZ		11083	4N5560	.COUPLING.....	1
13	XAOZZ		11083	680556	.FITTING.....	1
14	PFOZZ	4730010589100	11083	308194	ADAPTER,STRAIGHT,TU.....	1
15	PAOZZ	5331001675174	81349	M83248/2-910	O-RING.....	1
16	XBOZZ	4730004418702	11083	4S6680	ADAPTER,STRAIGHT,TU.....	1
17	PFOZZ	5330009309407	11083	7M8485	SEAL,ADAPTER,MOTOR.....	1
18	PFOZZ	4730010515257	11083	1P4578	FLANGE,PIPE.....	6
19	PFOZZ	5306004003518	63005	427564	BOLT,MACHINE.....	12
20	PFOZZ	5310001183035	11083	4B4279	WASHER,FLAT.....	12
21	PFOZZ	4720012456605	11083	3P6956	HOSE ASSEMBLY,NONME.....	1
22	MOOZZ		19207	0625930-33	.HOSE MAKE FROM HOSE P/N 5P182.....	1
23	PFOZZ	5365010671426	11083	3S7116	.SLEEVE.....	2
24	PFOZZ	4730010625898	11083	3S8571	.STEM ASSEMBLY.....	1
25	PFOZZ	4730010626010	11083	3S8569	.ELBOW,FLANGE TO HOS.....	1
26	PFOZZ	5331009484063	11083	4J522	O-RING.....	2
27	PFOZZ	5365004114584	11083	9S4191	PLUG,MACHINE THREAD.....	2
28	PFOZZ	2520010625198	11083	2P8421	PLUG.....	1
29	XBOZZ		11083	3P6656	MANIFOLD.....	1
30	PFOZZ	5306002604508	11083	S1594	BOLT,MACHINE.....	2
31	PFOZZ	5310006379541	96906	MS35338-46	WASHER,LOCK.....	2
32	PFOZZ	5310001174788	11083	5M2894	WASHER,FLAT.....	6
33	PFOZZ	5306011954681	11083	3B1915	BOLT.....	4
34	PFOZZ	4730010513134	11083	1P4576	FLANGE,PIPE.....	2
35	PAOZZ	5331010176535	81349	M83248/2-214	O-RING.....	1
36	PFOZZ	5365011706440	11083	8J5914	PLUG,MACHINE THREAD.....	1
37	PFOZZ	5331010242512	81349	M83248/2-920	PACKING,PREFORMED.....	1
38	PFOZZ	5306008532024	11083	7F8698	BOLT,MACHINE.....	2
39	PFOZZ	5310006559370	96906	MS35340-47	WASHER,LOCK.....	4
40	PFOZZ	5305004454630	11083	4F5192	SCREW,CAP,HEXAGON H.....	2
41	PFOZZ	5331006635709	11083	5F3106	O-RING.....	1
42	PFOZZ	5310007638905	96906	MS51968-20	NUT,PLAIN,HEXAGON.....	2
43	PFOZZ	5310000455001	96906	MS35340-50	WASHER,LOCK.....	2
44	XBOZZ		11083	3P6657	MANIFOLD.....	1
45	PFOZZ	5331001384418	11083	4J5573	O-RING.....	1
46	XBOZZ		11083	6K3979	COVER.....	1

(1) ITEM NO	(2) SMR CODE	(3) NSN	(4) CAGEC	(5) PART NUMBER	(6) DESCRIPTION AND USABLE ON CODES(UOC)	(7) QTY
47	PFOZZ	5330010523917	11083	1P3704	SEAL.....	1
48	PFOZZ	4730011637270	11083	1P4585	FLANGE,PIPE.....	2
49	PFOZZ	5305007247222	80204	B1821BH063C200N	SCREW,CAP,HEXAGON H.....	4
50	PFOZZ	5310001097638	15434	S658	WASHER,FLAT.....	4
51	AOOOO		11083	3P2896	HOSE ASSEMBLY.....	1
52	MOOZZ		19207	5P180-29	.HOSE MAKE FROM HOSE P/N 9S247.....	1
53	PFOZZ	5340010516767	11083	3S7166	.PLUNGER,DETENT.....	2
54	PFOZZ	4730012979328	11083	6V4678	.ELBOW,TUBE TO HOSE.....	1
55	XBOZZ		11083	3S8360	.STEM.....	1
56	PFOZZ	5331005801216	11083	2H3931	O-RING.....	2

END OF FIGURE

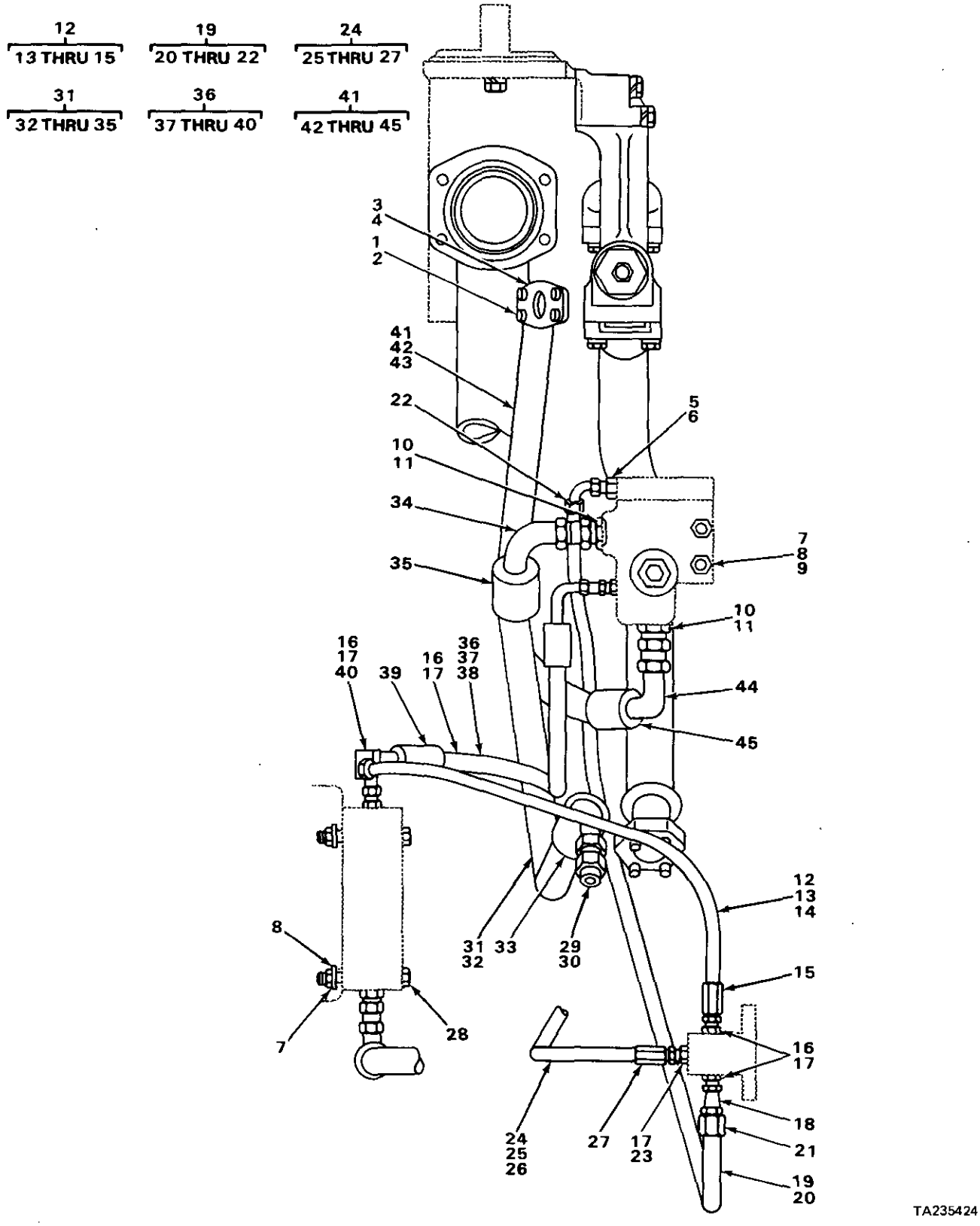

FIGURE 227. PUMP HOSES, TYPES 1, 2 AND 3 (USE WITH DOUBLE VALVE).

(1) ITEM NO	(2) SMR CODE	(3) NSN	(4) CAGEC	(5) PART NUMBER	(6) DESCRIPTION AND USABLE ON CODES(UOC)	(7) QTY
					GROUP 2406 STRAINERS, FILTERS, LINES AND FITTINGS ETC..	
					FIG. 227 PUMP HOSES, TYPE 1, 2, AND 3 (USE WITH DOUBLE VALVE).	
1	PFOZZ	5306011954681	11083	3B1915	BOLT	2
2	PFOZZ	5310001174788	11083	5M2894	WASHER,FLAT	4
3	PFOZZ	4730010513134	11083	1P4576	FLANGE,PIPE	2
4	PAOZZ	5331010176535	81349	M83248/2-214	O-RING	1
5	PFOZZ	4730010629906	11083	5P2618	ADAPTER,STRAIGHT,TU	2
6	PFOZZ	5331001651980	81349	M83248/2-905	O-RING	2
7	PFOZZ	5310011945398	11083	1D4717	NUT,HEXAGON	5
8	PFOZZ	5310001174788	11083	5M2894	WASHER,FLAT	5
9	PFOZZ	5306011591513	11083	0T0055	BOLT,MACHINE	2
10	PFOZZ	4730007105571	96906	MS51525A12	ADAPTER,STRAIGHT,TU	2
11	PFOZZ	5331009448281	11083	3D2824	O-RING	2
12	PFOOO	4720012087077	11083	6P5353	HOSE ASSEMBLY,NONME	1
13	MOOZZ		19207	5P734-24	.HOSE MAKE FROM HOSE P/N 5P734	1
14	PFOZZ	4730012849068	11083	680009	.ELBOW,HOSE	1
15	PFOZZ	4730012676972	13174	BT05-06NJ	.COUPLING,HOSE	1
16	PFOZZ	4730004919576	96906	MS51525A6	ADAPTER,STRAIGHT,TU	4
17	PAOZZ	5331008013354	25184	906-737-70	O-RING	5
18	PFOZZ	4730011637161	11083	307962	ELBOW,TUBE	1
19	PFOZZ	4720012731052	11083	6P5355	HOSE ASSEMBLY,NONME	1
20	MOOZZ		19207	5P734-46	.HOSE MAKE FROM HOSE P/N 5P734	1
21	PFOZZ	4730012676972	13174	BT05-06NJ	.COUPLING,HOSE	1
22	PFOZZ	4730012849068	11083	680009	.ELBOW,HOSE	1
23	PFOZZ	3805010532703	11083	8M506	CONNECTOR	1
24	PFOOO	4720012089237	11083	6P5159	HOSE ASSEMBLY,NONME	1
25	MOOZZ		19207	5P735-17	.HOSE MAKE FROM HOSE P/N 5P735	1
26	XAOZZ		11083	680556	.FITTING	1
27	XAOZZ		11083	4N5560	.COUPLING	1
28	PFOZZ	5305008798351	96906	MS35307-371	SCREW,CAP,HEXAGON H	3
29	XBOZZ	4730004418702	11083	4S6680	ADAPTER,STRAIGHT,TU	1
30	PFOZZ	5330009309407	11083	7M8485	SEAL,ADAPTER,MOTOR	1
31	AOOOO		11083	8P1248	HOSE ASSEMBLY USE ON TYPES 2 AND 3.	1
31	AOOOO		11083	3P2898	HOSE ASSEMBLY USE ON TYPE 1	1
32	MOOZZ		19207	5P180-25	.HOSE MAKE FROM HOSE P/N 9S247	1
33	XAOZZ		11083	1P1711	.COUPLING ASSEMBLY USE ON TYPES 2 AND 3	1
34	PFOZZ	4730012979328	11083	6V4678	.ELBOW,TUBE TO HOSE USE ON TYPE 2 AND 3	1
34	PFOZZ	4730012979328	11083	6V4678	.ELBOW,TUBE TO HOSE USE ON TYPE 1	2
35	PFOZZ	5340010516767	11083	3S7166	.PLUNGER,DETENT	2
36	AOOOO		11083	6P5354	HOSE ASSEMBLY	1
37	MOOZZ		11083	5P178-20	.HOSE MAKE FROM HOSE P/N 5P178	1
38	PFOZZ	4730010950833	11083	8S6393	.ELBOW,TUBE TO HOSE	1
39	PFOZZ	4730010950075	11083	4S5414	.SLEEVE,HOSE	2
40	XAOZZ		11083	5P3857	.COUPLING ASSEMBLY	1
41	AOOOO		11083	3P2896	HOSE ASSEMBLY	1
42	MOOZZ		19207	5P180-29	.HOSE MAKE FROM HOSE P/N 9S247	1

(1) ITEM NO	(2) SMR CODE	(3) NSN	(4) CAGEC	(5) PART NUMBER	(6) DESCRIPTION AND USABLE ON CODES(UOC)	(7) QTY
43	XBOZZ		11083	3S8360	.STEM.....	1
44	PFOZZ	4730012979328	11083	6V4678	.ELBOW,TUBE TO HOSE.....	1
45	PFOZZ	5340010516767	11083	3S7166	.PLUNGER,DETENT.....	2

END OF FIGURE

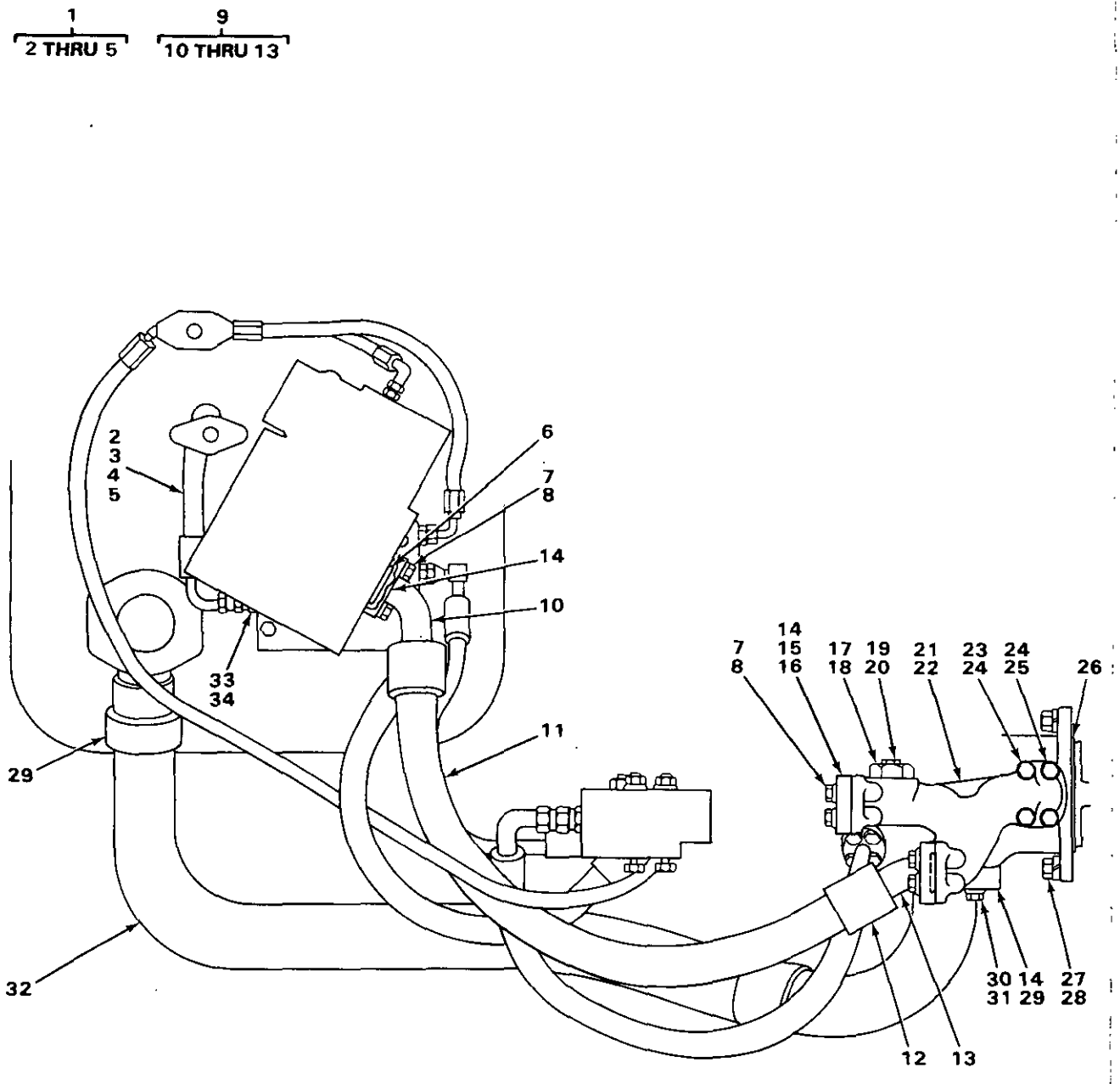

TA235425

FIGURE 228. PUMP LINES, TYPES 1 AND 3 (USE WITH DOUBLE VALVE).

(1) ITEM NO	(2) SMR CODE	(3) NSN	(4) CAGEC	(5) PART NUMBER	(6) DESCRIPTION AND USABLE ON CODES(UOC)	(7) QTY
					GROUP 2406 STRAINERS, FILTERS, LINES AND FITTINGS ETC..	
					FIG. 228 PUMP LINES, TYPES 1 AND 3 (USE WITH DOUBLE VALVE).	
1	PFOZZ	4720012087078	11083	8S4943	HOSE ASSEMBLY,NONME.....	1
2	MOOZZ		19207	1985808-19	.HOSE,NONMETALLIC MAKE FROM HOSE P/N 5P0179.....	1
3	PFOZZ	4730010517605	11083	8S4055	.COUPLING ASSEMBLY STRAIGHT.....	1
4	PFOZZ	4730010689756	11083	8S6391	.ELBOW,TUBE TO HOSE.....	1
5	PFOZZ	4720010517602	11083	3S8606	.SLEEVE.....	2
6	PFOZZ	5331009484063	11083	4J522	O-RING.....	2
7	PFOZZ	5306004003518	63005	427564	BOLT,MACHINE.....	12
8	PFOZZ	5310001183035	11083	4B4279	WASHER,FLAT.....	12
9	PFOZZ	4720012456605	11083	3P6956	HOSE ASSEMBLY,NONME.....	1
10	PFOZZ	4730010625898	11083	3S8571	.STEM ASSEMBLY.....	1
11	MOOZZ		19207	0625930-33	.HOSE MAKE FROM HOSE P/N 5P182.....	1
12	PFOZZ	5365010671426	11083	3S7116	.SLEEVE.....	2
13	PFOZZ	4730010626010	11083	3S8569	.ELBOW,FLANGE TO HOS 30 DEGREES....	1
14	PFOZZ	4730011637270	11083	1P4585	FLANGE,PIPE.....	6
15	XBOZZ		11083	6K3979	COVER.....	1
16	PFOZZ	5330010523917	11083	1P3704	SEAL.....	1
17	XBOZZ		11083	8S5914	PLUG.....	1
18	PFOZZ	5331004293542	11083	2S4078	PACKING,PREFORMED.....	1
19	PFOZZ	5365004114584	11083	9S4191	PLUG,MACHINE THREAD.....	1
20	PAOZZ	5331008013354	25184	906-737-70	O-RING.....	1
21	XBOZZ		11083	3P6657	MANIFOLD.....	1
22	PFOZZ	5331001384418	11083	4J5573	O-RING.....	1
23	PFOZZ	5306008532024	11083	7F8698	BOLT,MACHINE.....	2
24	PFOZZ	5310006559370	96906	MS35340-47	WASHER,LOCK.....	4
25	PFOZZ	5305004454630	11083	4F5192	SCREW,CAP,HEXAGON H.....	2
26	PFOZZ	5331006635709	11083	5F3106	O-RING.....	1
27	PFOZZ	5310007638905	96906	MS51968-20	NUT,PLAIN,HEXAGON.....	2
28	PFOZZ	5310000455001	96906	MS35340-50	WASHER,LOCK.....	2
29	PFOZZ	5331005801216	11083	2H3931	O-RING.....	2
30	PFOZZ	5305007247222	80204	B1821BH063C200N	SCREW,CAP,HEXAGON H.....	4
31	PFOZZ	5310001097638	15434	S658	WASHER,FLAT.....	4
32	PFOZZ	4720012848183	11083	3P2895	HOSE ASSEMBLY,METAL.....	1
33	PFOZZ	4730011564835	46717	AC-1-310	ADAPTER,STRAIGHT,TU.....	2
34	PFOZZ	5331009486482	11083	3K360	O-RING.....	2

END OF FIGURE

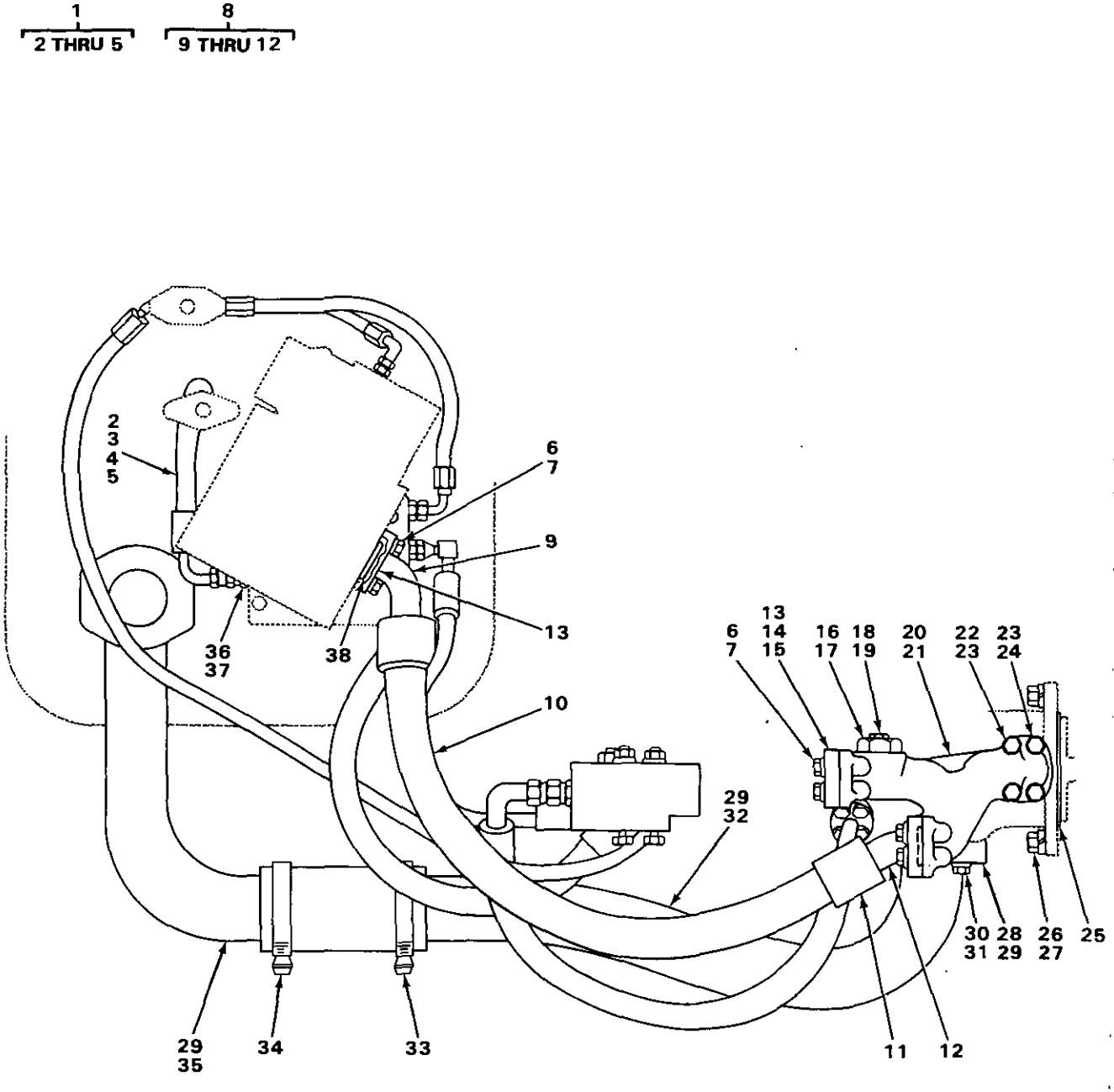

FIGURE 229. PUMP LINES, TYPE 2 (USE WITH DOUBLE VALVE).

(1) ITEM NO	(2) SMR CODE	(3) NSN	(4) CAGEC	(5) PART NUMBER	(6) DESCRIPTION AND USABLE ON CODES(UOC)	(7) QTY
					GROUP 2406 STRAINERS, FILTERS, LINES AND FITTINGS ETC..	
					FIG. 229 PUMP LINES, TYPE 2 (USE WITH DOUBLE VALVE).	
1	PFOZZ	4720012087078	11083	8S4943	HOSE ASSEMBLY,NONME.....	1
2	MOOZZ		19207	1985808-19	.HOSE,NONMETALLIC MAKE FROM HOSE P/N 5P0179.....	1
3	PFOZZ	4730010517605	11083	8S4055	.COUPLING ASSEMBLY STRAIGHT.....	1
4	PFOZZ	4730010689756	11083	8S6391	.ELBOW,TUBE TO HOSE 90 DEGREES.....	1
5	PFOZZ	4720010517602	11083	3S8606	.SLEEVE.....	2
6	PFOZZ	5306004003518	63D05	427564	BOLT,MACHINE.....	12
7	PFOZZ	5310001183035	11083	4B4279	WASHER,FLAT.....	12
8	PFOZZ	4720012456605	11083	3P6956	HOSE ASSEMBLY,NONME.....	1
9	PFOZZ	4730010625898	11083	3S8571	.STEM ASSEMBLY 60 DEGREES.....	1
10	MOOZZ		19207	0625930-33	.HOSE MAKE FROM HOSE P/N 5P182.....	1
11	PFOZZ	5365010671426	11083	3S7116	.SLEEVE.....	2
12	PFOZZ	4730010626010	11083	3S8569	.ELBOW,FLANGE TO HOS 30 DEGREES....	1
13	PFOZZ	4730010515257	11083	1P4578	FLANGE,PIPE.....	4
14	XBOZZ		11083	6K3979	COVER.....	1
15	PFOZZ	5330010523917	11083	1P3704	SEAL.....	1
16	XBOZZ		11083	8S5914	PLUG.....	1
17	PFOZZ	5331004293542	11083	2S4078	PACKING,PREFORMED.....	1
18	PFOZZ	5365004114584	11083	9S4191	PLUG,MACHINE THREAD.....	1
19	PAOZZ	5331008013354	25184	906-737-70	O-RING.....	1
20	XBOZZ		11083	3P6657	MANIFOLD.....	1
21	PFOZZ	5331001384418	11083	4J5573	O-RING.....	1
22	PFOZZ	5306008532024	11083	7F8698	BOLT,MACHINE.....	2
23	PFOZZ	5310006559370	96906	MS35340-47	WASHER,LOCK.....	4
24	PFOZZ	5305004454630	11083	4F5192	SCREW,CAP,HEXAGON H.....	2
25	PFOZZ	5331006635709	11083	5F3106	O-RING.....	1
26	PFOZZ	5310007638905	96906	MS51968-20	NUT,PLAIN,HEXAGON.....	2
27	PFOZZ	5310000455001	96906	MS35340-50	WASHER,LOCK.....	2
28	PFOZZ	4730011637270	11083	1P4585	FLANGE,PIPE.....	2
29	PFOZZ	5330008908104	11083	6L5359	SEAL,SPECIAL.....	2
30	PFOZZ	5305007247222	80204	B1821BH063C200N	SCREW,CAP,HEXAGON H.....	4
31	PFOZZ	5310001097638	15434	S658	WASHER,FLAT.....	4
32	XBOZZ		11083	8P1154	TUBE ASSEMBLY.....	1
33	PFOZZ	4730010595352	11083	5P598	CLAMP,HOSE.....	2
34	PFOZZ	4720010664554	11083	8D5381	HOSE.....	1
35	XBOZZ		11083	8P1156	TUBE ASSEMBLY.....	1
36	PFOZZ	4730011564835	46717	AC-1-310	ADAPTER,STRAIGHT,TU.....	2
37	PFOZZ	5331009486482	11083	3K360	O-RING.....	2
38	PFOZZ	5331009484063	11083	4J522	O-RING.....	2

END OF FIGURE

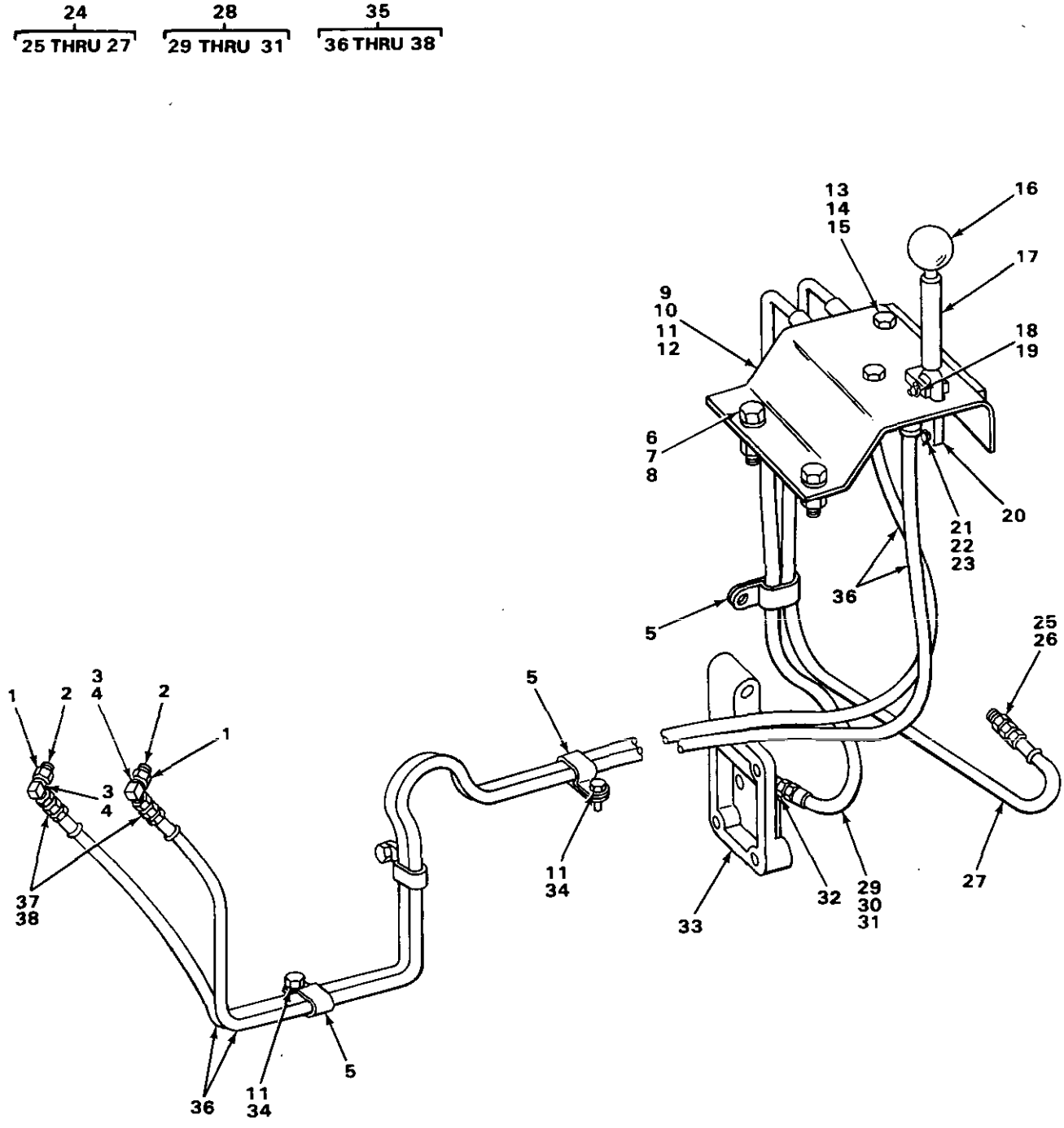

FIGURE 230. RIPPER PIN PULLER LINES, TYPES 1, 2 AND 3.

(1) ITEM NO	(2) SMR CODE	(3) NSN	(4) CAGEC	(5) PART NUMBER	(6) DESCRIPTION AND USABLE ON CODES(UOC)	(7) QTY
					GROUP 2406 STRAINERS, FILTERS, LINES AND FITTINGS ETC..	
					FIG. 230 RIPPER PIN PULLER LINES, TYPE 1, 2 AND 3.	
1	PFOZZ	4730010625206	11083	307946	ELBOW,TUBE TO BOSS..... UOC:T25	2
2	XDOZZ	5330010491292	02697	3-904N552-90	O-RING..... UOC:T25	2
3	XBOZZ		11083	3P1932	ADAPTER..... UOC:T25	2
4	PFOZZ	5331009486482	11083	3K360	O-RING..... UOC:T25	2
5	PFOZZ	5340004264644	11083	4D6466	CLAMP,LOOP..... UOC:T25	6
6	PFOZZ	5306004262934	11083	S1621	BOLT,MACHINE..... UOC:T25	2
7	PFOZZ	5310005845272	96906	MS35338-48	WASHER,LOCK..... UOC:T25	2
8	PFOZZ	5310004454632	11083	1F748	NUT,PLAIN,WELDING..... UOC:T25	2
9	XBOZZ		11083	6P6246	BRACKET ASSEMBLY..... UOC:T25	1
10	PFOZZ	5310000050781	11083	9F2978	NUT,PLAIN,WELDING..... UOC:T25	1
11	PFOZZ	5305002528919	11083	0S0509	SCREW,CAP,HEXAGON H..... UOC:T25	6
12	PFOZZ	5310006379541	96906	MS35338-46	WASHER,LOCK..... UOC:T25	1
13	PFOZZ	5306008575672	77445	466473	BOLT,MACHINE..... UOC:T25	2
14	PFOZZ	5310000426376	31159	JM56	NUT,PLAIN,HEXAGON..... UOC:T25	2
15	PFOZZ	5310005825965	96906	MS35338-44	WASHER,LOCK..... UOC:T25	2
16	PFOZZ	5355011891990	11083	6D0679	KNOB..... UOC:T25	1
17	XBOZZ		11083	3P5668	HANDLE..... UOC:T25	1
18	PFOZZ	5315009208200	11083	4B3057	PIN,STRAIGHT,HEADED..... UOC:T25	1
19	PFOZZ	5315008392326	96906	MS24665-281	PIN,COTTER..... UOC:T25	1
20	XBOZZ		11083	3P5669	LINK..... UOC:T25	2
21	PFOZZ	5315010990060	11083	1P3321	PIN,STRAIGHT,HEADED..... UOC:T25	2
22	PFOZZ	5315008392325	96152	A82-1	PIN,COTTER..... UOC:T25	2
23	PFOZZ	5310001435722	04998	WA1248	WASHER,FLAT..... UOC:T25	4

(1) ITEM NO	(2) SMR CODE	(3) NSN	(4) CAGEC	(5) PART NUMBER	(6) DESCRIPTION AND USABLE ON CODES(UOC)	(7) QTY
24	AOOOO		19207	3P6049-1	HOSE ASSEMBLY..... UOC:T25	1
25	PFOZZ	4730008345035	96906	MS51525A4S	.ADAPTER,STRAIGHT,TU..... UOC:T25	2
26	XDOZZ	5330010491292	02697	3-904N552-90	.O-RING..... UOC:T25	2
27	MOOZZ		19207	3P6049-68	.HOSE MAKE FROM HOSE P/N 3P6049.... UOC:T25	1
28	AOOOO		19207	1862341-1	HOSE ASSEMBLY..... UOC:T25	1
29	PFOZZ	4730002581864	96906	MS51525B4-6	.ADAPTER,STRAIGHT,TU..... UOC:T25	2
30	PAOZZ	5331008013354	25184	906-737-70	.O-RING..... UOC:T25	2
31	MOOZZ		19207	1862341-38	.HOSE MAKE FROM HOSE P/N 3P6048.... UOC:T25	1
32	PFOZZ	4730013042800	11083	5J7303	ELBOW,PIPE TO TUBE..... UOC:T25	1
33	XBOZZ		11083	6P5905	COVER USE ON TYPE 1..... UOC:T25	1
33	XBOZZ		11083	7GZ854	COVER USE ON TYPE 2 AND 3..... UOC:T25	1
34	PFOZZ	5310001174788	11083	5M2894	WASHER,FLAT..... UOC:T25	6
35	AOOOO		19207	3P6047-1	HOSE ASSEMBLY..... UOC:T25	2
36	MOOZZ		19207	3P6047-194	.HOSE MAKE FROM HOSE P/N 3P6047.... UOC:T25	1
37	PAOZZ	5331008013354	25184	906-737-70	.O-RING..... UOC:T25	2
38	PFOZZ	4730002581864	96906	MS51525B4-6	.ADAPTER,STRAIGHT,TU..... UOC:T25	2

END OF FIGURE

8 (9 THRU 11) 12 (13 THRU 15) 20 (21 THRU 23)

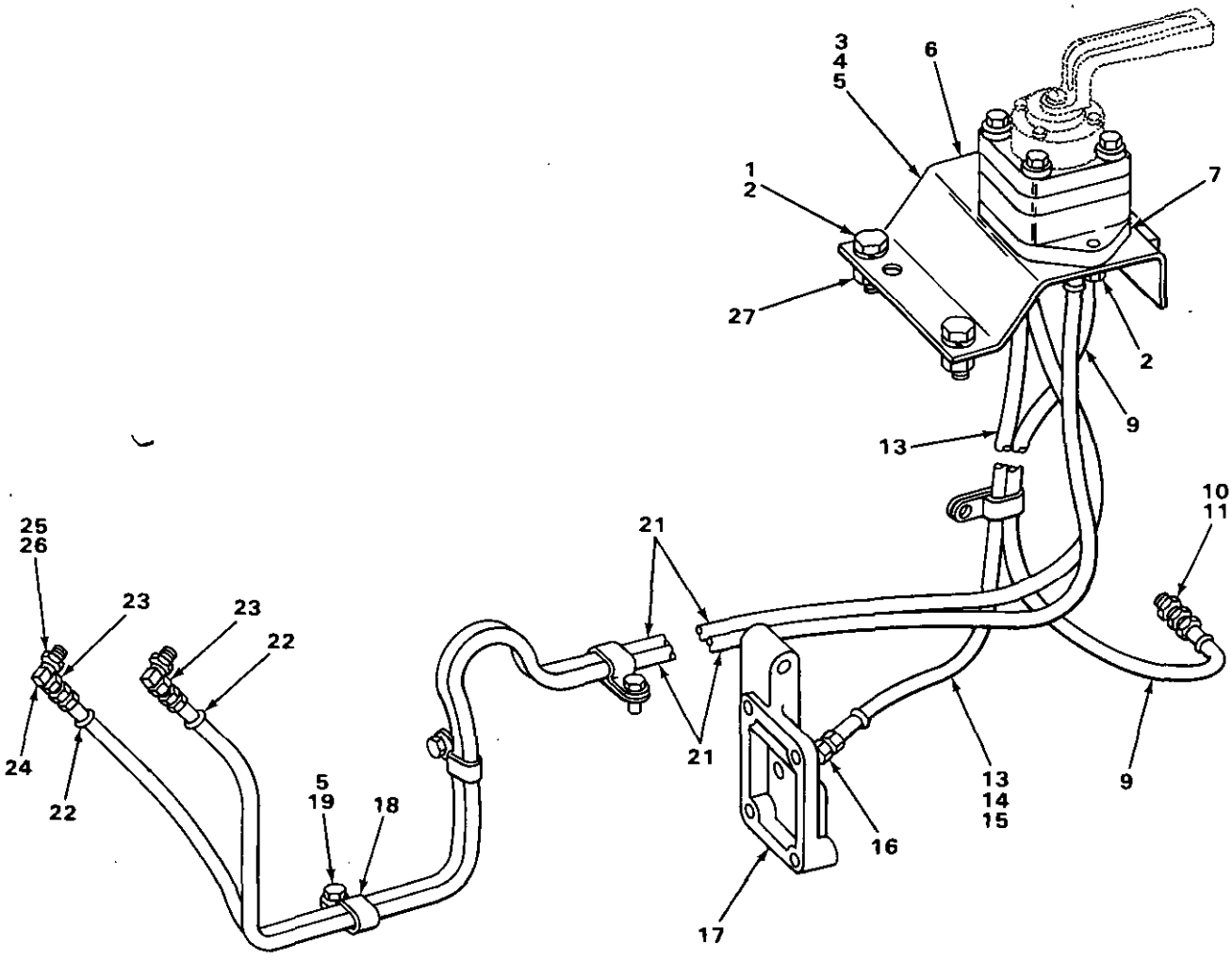

TA235428

FIGURE 231. PIN PULLER LINES.

(1) ITEM NO	(2) SMR CODE	(3) NSN	(4) CAGEC	(5) PART NUMBER	(6) DESCRIPTION AND USABLE ON CODES(UOC)	(7) QTY
					GROUP 2406 STRAINERS, FILTERS, LINES AND FITTINGS ETC..	
					FIG. 231 PIN PULLER LINES.	
1	PFOZZ	5306004262934	11083	S1621	BOLT,MACHINE.....	4
2	PFOZZ	5310005845272	96906	MS35338-48	WASHER,LOCK.....	4
3	PFOZZ	5310000050781	11083	9F2978	NUT,PLAIN,WELDING.....	1
4	PFOZZ	5310006379541	96906	MS35338-46	WASHER,LOCK.....	1
5	PFOZZ	5305002528919	11083	OS0509	SCREW,CAP,HEXAGON H.....	5
6	XBOZZ		11083	6P7948	BRACKET.....	1
7	XBOZZ		11083	5J4870	FLANGE.....	1
8	AOOOO		19207	3P6049-1	HOSE ASSEMBLY.....	1
9	MOOZZ		19207	3P6049-68	.HOSE MAKE FROM HOSE P/N 3P6049....	1
10	PFOZZ	4730008345035	96906	MS51525A4S	.ADAPTER,STRAIGHT,TU.....	2
11	XDOZZ	5330010491292	02697	3-904N552-90	.O-RING.....	2
12	AOOOO		19207	3P6048-1	HOSE ASSEMBLY.....	1
13	MOOZZ		19207	1862341-38	.HOSE MAKE FROM HOSE P/N 3P6048....	1
14	PFOZZ	4730008345035	96906	MS51525A4S	.ADAPTER,STRAIGHT,TU.....	2
15	XDOZZ	5330010491292	02697	3-904N552-90	.O-RING.....	2
16	PFOZZ	4730013042800	11083	5J7303	ELBOW,PIPE TO TUBE.....	1
17	XBOZZ		11083	6P5905	COVER.....	1
18	PFOZZ	5340004264644	11083	4D6466	CLAMP,LOOP.....	6
19	PFOZZ	5310001174788	11083	5M2894	WASHER,FLAT.....	4
20	AOOOO		19207	3P6047-1	HOSE ASSEMBLY.....	2
21	MOOZZ		19207	3P6047-194	.HOSE MAKE FROM HOSE P/N 3P6047....	1
22	PFOZZ	4730008345035	96906	MS51525A4S	.ADAPTER,STRAIGHT,TU.....	2
23	XDOZZ	5330010491292	02697	3-904N552-90	.O-RING.....	2
24	PFOZZ	4730010625206	11083	307946	ELBOW,TUBE TO BOSS.....	2
25	XBOZZ		11083	3P1932	ADAPTER.....	2
26	PFOZZ	5331009486482	11083	3K360	O-RING.....	2
27	PFOZZ	5310004454632	11083	1F748	NUT,PLAIN,WELDING.....	1

END OF FIGURE

9 — 10 THRU 13
15 — 16 THRU 19
20 — 21 THRU 24

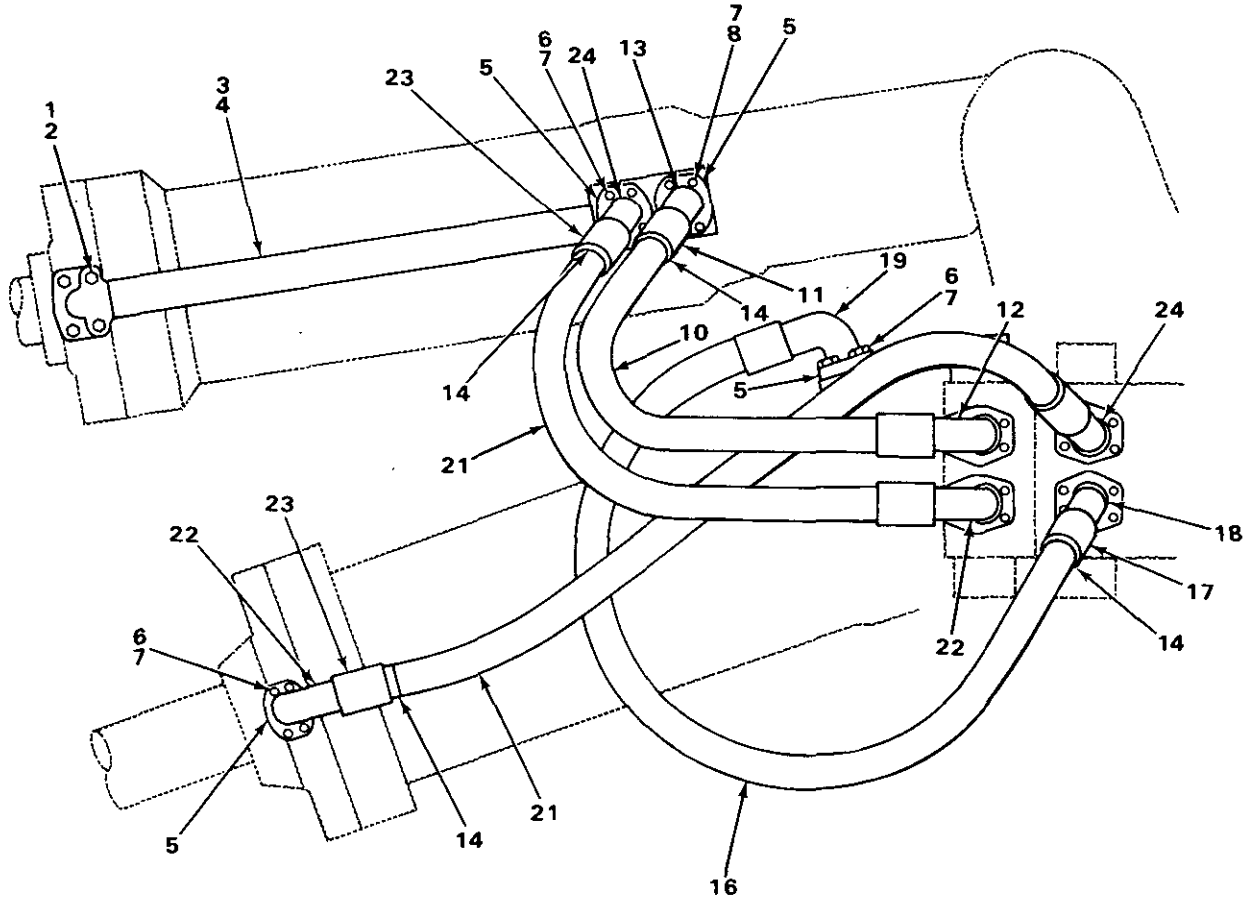

TA235429

FIGURE 232. RIPPER LINES, LEFT AND RIGHT.

(1) ITEM NO	(2) SMR CODE	(3) NSN	(4) CAGEC	(5) PART NUMBER	(6) DESCRIPTION AND USABLE ON CODES(UOC)	(7) QTY
					GROUP 2406 STRAINERS, FILTERS, LINES AND FITTINGS ETC..	
					FIG. 232 RIPPER LINES, LEFT AND RIGHT.	
1	PFOZZ	5365013221468	11083	1K4129	SPACER,RING 0.38 INCH THICK..... UOC:T25	2
1	XBOZZ		11083	8B5084	SPACER 1.25 INCHES THICK..... UOC:T25	2
2	PFOZZ	2910003099473	11083	0T0573	CAPSCREW,FUEL PUMP..... UOC:T25	4
3	PFOZZ	4710013218556	11083	7J107	TUBE ASSEMBLY,METAL..... UOC:T25	2
4	PFOZZ	5330010435565	11083	1P3703	PACKING,PREFORMED..... UOC:T25	4
5	PFOZZ	4730010515256	11083	1P4577	FLANGE,PIPE..... UOC:T25	16
6	PFOZZ	5305000680511	80204	B1821BH038C125N	SCREW,CAP,HEXAGON H..... UOC:T25	24
7	PFOZZ	5310001174788	11083	5M2894	WASHER,FLAT..... UOC:T25	32
8	PFOZZ	5306004262932	11083	S1619	BOLT,MACHINE..... UOC:T25	8
9	AOOOO		11083	8J9618	HOSE ASSEMBLY..... UOC:T25	2
10	MOOZZ		19207	5P180-35	.HOSE MAKE FROM HOSE P/N 9S247..... UOC:T25	1
11	PFOZZ	5340010516767	11083	3S7166	.PLUNGER,DETENT..... UOC:T25	2
12	PFOZZ	4730012540177	11083	6V4679	.ELBOW,FLANGE TO HOS..... UOC:T25	1
13	PFOZZ	4730012892345	11083	6V4669	.STEM,FLUID VALVE..... UOC:T25	1
14	PFOZZ	5331009136144	11083	4J520	O-RING..... UOC:T25	16
15	AOOOO		11083	9J6831	HOSE ASSEMBLY..... UOC:T25	2
16	MOOZZ		19207	5P180-35	.HOSE MAKE FROM HOSE P/N 9S247..... UOC:T25	1
17	PFOZZ	5340010516767	11083	3S7166	.PLUNGER,DETENT..... UOC:T25	2
18	PFOZZ	4730012892345	11083	6V4669	.STEM,FLUID VALVE..... UOC:T25	1
19	PFOZZ	4730012672634	11083	6V4676	.ELBOW,FLANGE TO HOS..... UOC:T25	1
20	PFOOZ	4720012548689	11083	8J9617	HOSE ASSEMBLY,NONME..... UOC:T25	4
21	MOOZZ		19207	5P180-41	.HOSE MAKE FROM HOSE P/N 9S247..... UOC:T25	1
22	PFOZZ	4730012540177	11083	6V4679	.ELBOW,FLANGE TO HOS..... UOC:T25	1

(1) ITEM NO	(2) SMR CODE	(3) NSN	(4) CAGEC	(5) PART NUMBER	(6) DESCRIPTION AND USABLE ON CODES(UOC)	(7) QTY
23	PFOZZ	5340010516767	11083	3S7166	.PLUNGER,DETENT..... UOC:T25	2
24	XBOZZ		11083	8S4591	.STEM ASSEMBLY..... UOC:T25	1

END OF FIGURE

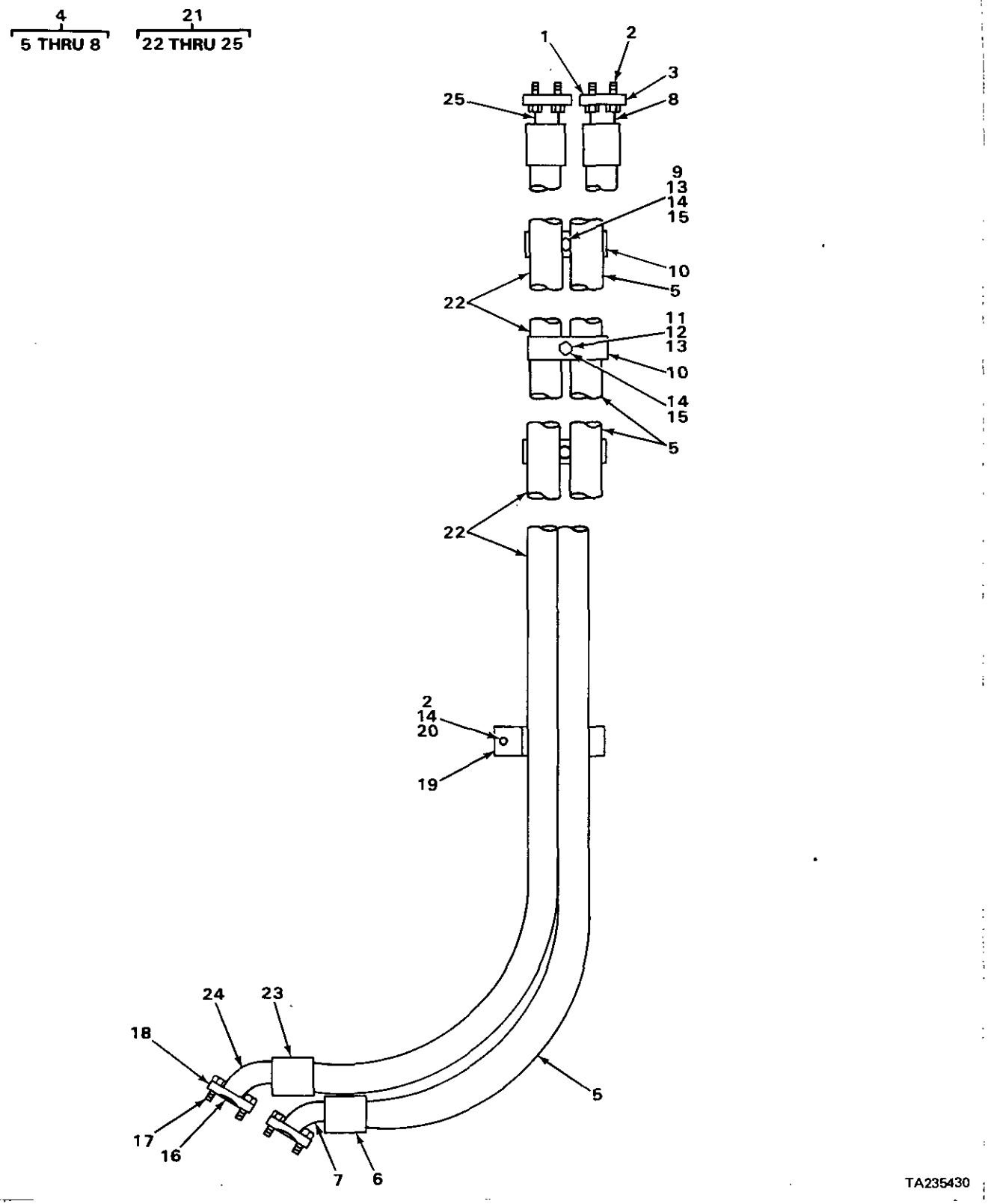

FIGURE 233. BULLDOZER LINES.

(1) ITEM NO	(2) SMR CODE	(3) NSN	(4) CAGEC	(5) PART NUMBER	(6) DESCRIPTION AND USABLE ON CODES(UOC)	(7) QTY
					GROUP 2406 STRAINERS, FILTERS, LINES AND FITTINGS ETC..	
					FIG. 233 BULLDOZER LINES.	
1	PFOZZ	5331009145846	11083	4J524	O-RING.....	2
2	PFOZZ	5306011279361	11083	0S1585	BOLT,MACHINE.....	9
3	PFOZZ	5340010600309	11083	1P4579	FLANGE.....	1
4	PFOZZ	4720010689733	11083	3P2886	HOSE ASSEMBLY.....	1
5	MOOZZ		19207	0625930-103	.HOSE MAKE FROM HOSE P/N 5P182.....	1
6	PFOZZ	5365010671426	11083	3S7116	.SLEEVE.....	2
7	PFOZZ	4730010625898	11083	3S8571	.STEM ASSEMBLY.....	1
8	PFOZZ	4730010625932	11083	5S3779	.ADAPTER,STRAIGHT,FL STRAIGHT.....	1
9	PFOZZ	5305000712076	80204	B1821BH050C325N	SCREW,CAP,HEXAGON H.....	2
10	XBOZZ		11083	3P5945	CLAMP.....	4
11	PFOZZ	5305010269518	11083	0S1571	SCREW,CAP,HEXAGON H.....	1
12	XBOZZ		11083	1D3480	SPACER SHORT.....	1
13	PFOZZ	5310007680318	96906	MS51967-14	NUT,PLAIN,HEXAGON.....	3
14	PFOZZ	5310005845272	96906	MS35338-48	WASHER,LOCK.....	4
15	XBOZZ		11083	679846	SPACER LONG.....	3
16	PFOZZ	5331009484063	11083	4J522	O-RING.....	1
17	PFOZZ	5306004003518	63005	427564	BOLT,MACHINE.....	8
18	PFOZZ	4730010515257	11083	1P4578	FLANGE,PIPE.....	4
19	XBOZZ		11083	3P8308	CLIP.....	1
20	PFOZZ	5310009307013	11083	4B4280	WASHER,FLAT.....	1
21	AOOOO		11083	3P2888	HOSE ASSEMBLY.....	1
22	MOOZZ		19207	0625930-99	.HOSE MAKE FROM HOSE P/N 5P182.....	1
23	PFOZZ	5365010671426	11083	3S7116	.SLEEVE.....	2
24	XBOZZ		11083	8S9872	.STEM ASSEMBLY.....	1
25	PFOZZ	4730010625932	11083	5S3779	.ADAPTER,STRAIGHT,FL STRAIGHT.....	1

END OF FIGURE

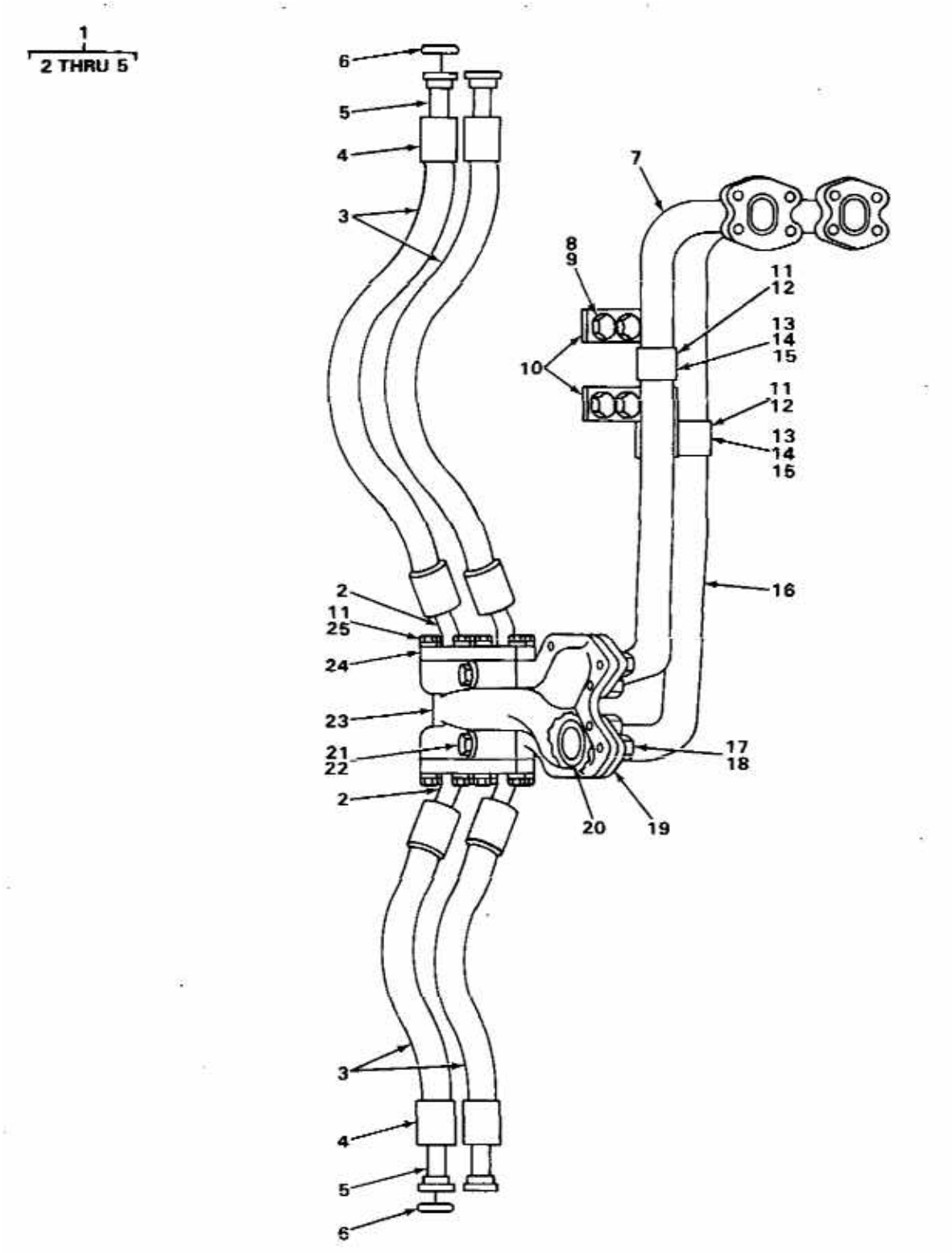

TA235431

FIGURE 234. BULLDOZER LINES AND FITTINGS

(1) ITEM NO	(2) SMR CODE	(3) NSN	(4) CAGEC	(5) PART NUMBER	(6) DESCRIPTION AND USABLE ON CODES(UOC)	(7) QTY
					GROUP 2406 STRAINERS, FILTERS, LINES AND FITTINGS ETC..	
					FIG. 234 BULLDOZER LINES AND FITTINGS.	
1	PFOZZ	4720010672180	11083	9S5682	HOSE A.....	4
2	PFOZZ	4730011624358	11083	6V4658	.ELBOW,FLANGE TO HOS.....	1
3	MOOZZ		19207	0516773-25	.HOSE MAKE FROM HOSE P/N 9S247.....	1
4	PFOZZ	5340010516767	11083	3S7166	.PLUNGER,DETENT.....	2
5	PFOZZ	4730010620292	11083	3S7165	.STEM ASSEMBLY STRAIGHT.....	1
6	PAOZZ	5331010176535	81349	M83248/2-214	O-RING.....	8
7	XBOZZ		11083	3P5550	TUBE ASSEMBLY.....	1
8	PFOZZ	5305007247221	80204	B1821BH063C175N	SCREW,CAP,HEXAGON H.....	4
9	PFOZZ	5310000455001	96906	MS35340-50	WASHER,LOCK.....	4
10	XBOZZ		11083	2P1566	BRACKET.....	2
11	PFOZZ	5310001174788	11083	5M2894	WASHER,FLAT.....	20
12	PFOZZ	5342012968891	11083	7S8920	CLAMP,UNIQUE SLOTTED.....	2
12	PFOZZ	5340012978910	11083	7S8921	CLIP,SPRING TENSION TABBED.....	2
13	PFOZZ	5306004238194	11083	1A2029	BOLT,MACHINE.....	2
14	PFOZZ	5310011945398	11083	1D4717	NUT,HEXAGON.....	2
15	PFOZZ	5310006379541	96906	MS35338-46	WASHER,LOCK.....	2
16	PFOZZ	4710012868825	11083	3P5552	TUBE ASSEMBLY,METAL.....	1
17	PFOZZ	5306011279361	11083	0S1585	BOLT,MACHINE.....	8
18	PFOZZ	5310009307013	11083	4B4280	WASHER,FLAT.....	8
19	PFOZZ	5340010600309	11083	1P4579	FLANGE.....	4
20	PFOZZ	5331009145846	11083	4J524	O-RING.....	2
21	PFOZZ	5310005845272	96906	MS35338-48	WASHER,LOCK.....	2
22	PFOZZ	5305000712076	80204	B1821BH050C325N	SCREW,CAP,HEXAGON H.....	2
23	XBOZZ		11083	2P6589	MANIFOLD.....	1
24	PFOZZ	4730010513134	11083	1P4576	FLANGE,PIPE.....	8
25	PFOZZ	5305000680511	80204	B1821BH038C125N	SCREW,CAP,HEXAGON H.....	16

END OF FIGURE

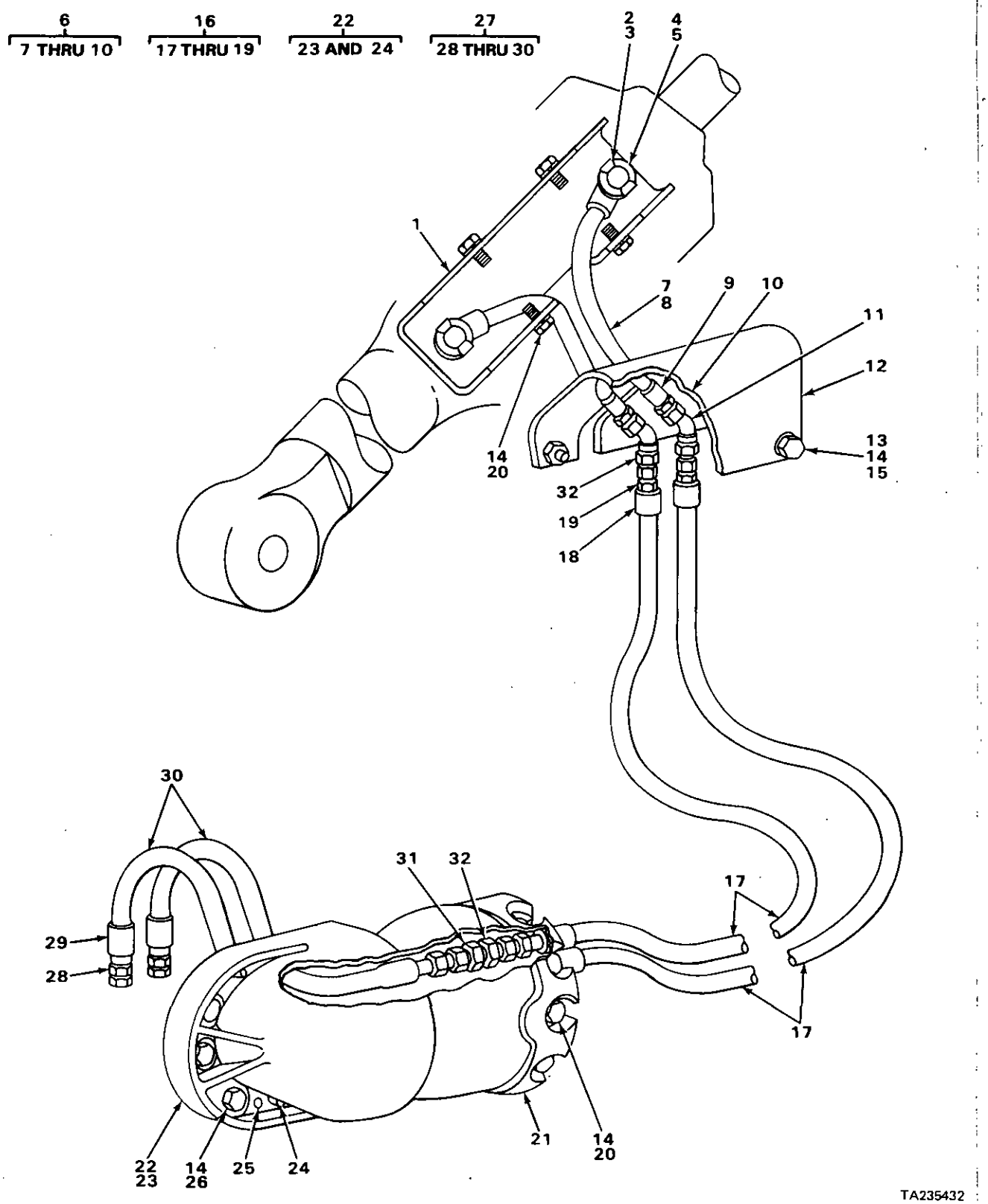

FIGURE 235. TILT CYLINDER HYDRAULIC LINES.

(1) ITEM NO	(2) SMR CODE	(3) NSN	(4) CAGEC	(5) PART NUMBER	(6) DESCRIPTION AND USABLE ON CODES(UOC)	(7) QTY
					GROUP 2406 STRAINERS, FILTERS, LINES AND FITTINGS ETC..	
					FIG. 235 TILT CYLINDER HYDRAULIC LINES.	
1	XBOZZ		11083	9J7548	GUARD	1
2	PFOZZ	5305000680511	80204	B1821BH038C125N	SCREW,CAP,HEXAGON H	8
3	PFOZZ	5310001174788	11083	5M2894	WASHER,FLAT	8
4	PFOZZ	4730010513134	11083	1P4576	FLANGE,PIPE	4
5	PAOZZ	5331010176535	81349	M83248/2-214	O-RING	2
6	PFOZZ	4720010682816	11083	9D5248	HOSE A	2
7	MOOZZ		19207	1985808-19	.HOSE,NONMETALLIC MAKE FROM HOSE P/N 5P0179	1
8	PFOZZ	4730012619432	11083	5S9593	.ELBOW,FLANGE TO HOS	1
9	PFOZZ	4720010517602	11083	3S8606	.SLEEVE	2
10	PFOZZ	4730010517605	11083	8S4055	.COUPLING ASSEMBLY	1
11	PFOZZ	4730012082036	11083	2P1325	ELBOW,TUBE	2
12	PFOZZ	2540012699369	11083	9J7550	GUARD ASSEMBLY,BLAD	1
13	PFOZZ	5306002815599	11083	1D6259	BOLT,MACHINE	4
14	PFOZZ	5310007542005	96906	MS35338-52	WASHER,LOCK	17
15	PFOZZ	5310008808186	96906	MS51967-26	NUT,PLAIN,HEXAGON	4
16	PFOZZ	4720010672177	11083	8S4936	HOSE A	2
17	MOOZZ		19207	1985808-140	.HOSE MAKE FROM HOSE P/N 5P0179	1
18	PFOZZ	4720010517602	11083	3S8606	.SLEEVE	1
19	PFOZZ	4730010517605	11083	8S4055	.COUPLING ASSEMBLY	1
20	PFOZZ	5306004238807	11083	2H3757	BOLT,MACHINE	9
21	PFOZZ	3040013012966	11083	6J9340	GUARD,CYLINDER LINE	1
22	XBOOO		11083	7J67	GUARD ASSEMBLY	1
23	PFOZZ	5310009192242	11083	2J3505	.NUT,PLAIN,HEXAGON	1
24	XBOZZ		11083	6J8711	.DOWEL	2
25	XBOZZ		11083	2B7560	CORK	2
26	PFOZZ	5306004262945	11083	S1973	BOLT,MACHINE	4
27	PFOZZ	4720010672178	11083	9S1690	HOSE A	2
28	PFOZZ	4730010517605	11083	8S4055	.COUPLING ASSEMBLY	1
29	PFOZZ	4720010517602	11083	3S8606	.SLEEVE	1
30	MOOZZ		19207	1985808-39	.HOSE MAKE FROM HOSE P/N 5P0179	1
31	PFOZZ	4730011795396	11083	2P1281	NIPPLE,TUBE	2
32	PFOZZ	4730011439017	96906	MS51860-56Z	LOCKNUT,TUBE FITTIN	4

END OF FIGURE

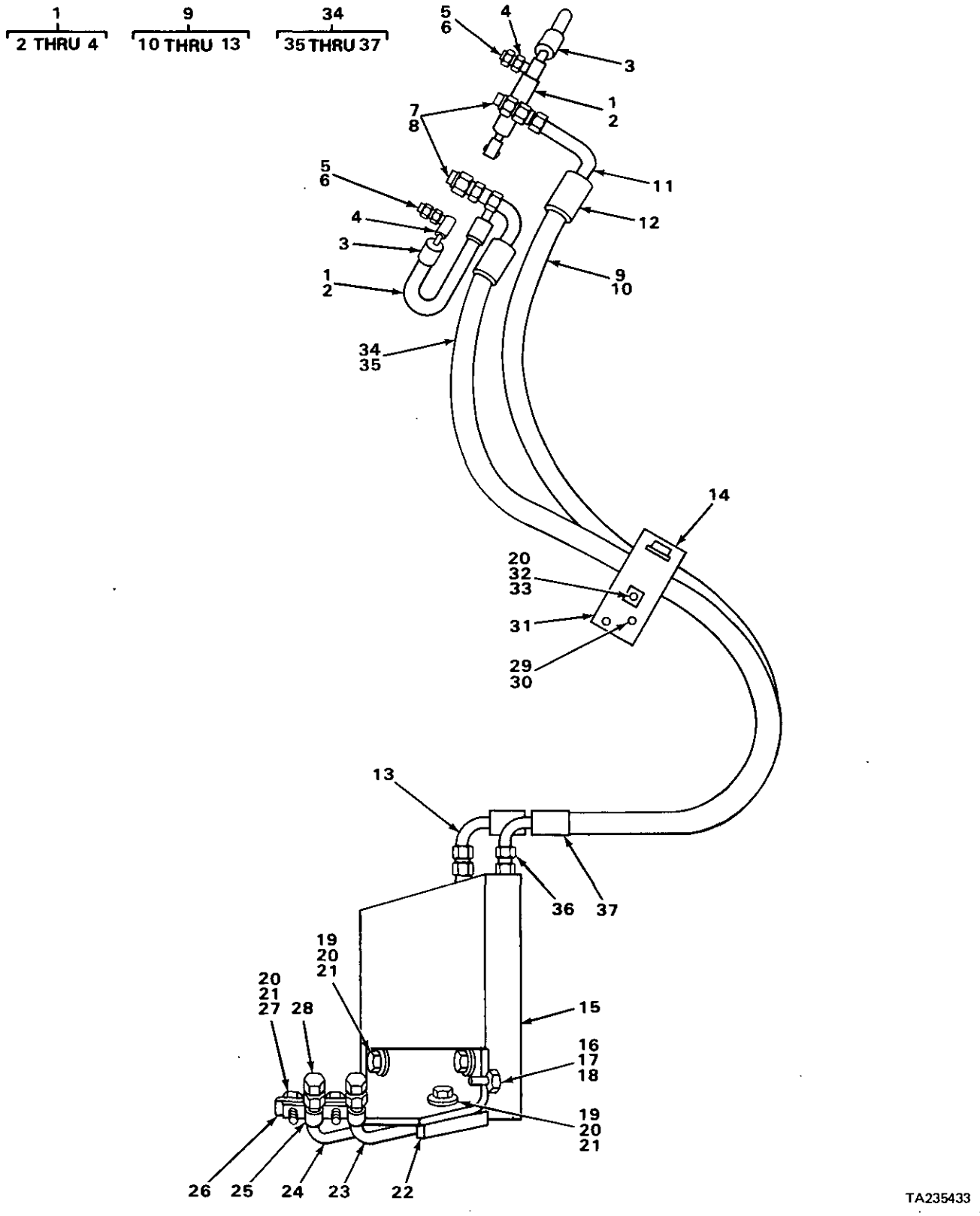

FIGURE 236. TILT CYLINDER LINES.

(1) ITEM NO	(2) SMR CODE	(3) NSN	(4) CAGEC	(5) PART NUMBER	(6) DESCRIPTION AND USABLE ON CODES(UOC)	(7) QTY
					GROUP 2406 STRAINERS, FILTERS, LINES AND FITTINGS ETC..	
					FIG. 236 TILT CYLINDER LINES.	
1	A0000		11083	6P6655	HOSE ASSEMBLY.....	2
2	M0OZZ		19207	5P178-13	.HOSE MAKE FROM HOSE P/N 5P178.....	1
3	PF0ZZ	4730010950075	11083	4S5414	.SLEEVE,HOSE.....	2
4	XA0ZZ		11083	5P3857	.COUPLING ASSEMBLY.....	2
5	PF0ZZ	4730004919576	96906	MS51525A6	ADAPTER,STRAIGHT,TU.....	4
6	PA0ZZ	5331008013354	25184	906-737-70	O-RING.....	4
7	PF0ZZ	4730010630685	11083	308189	CONNECTOR.....	2
8	PF0ZZ	5331009448281	11083	3D2824	O-RING.....	2
9	A0000		11083	3P2890	HOSE ASSEMBLY.....	1
10	M0OZZ		19207	1985808-55	.HOSE MAKE FROM HOSE P/N 5P0179....	1
11	PF0ZZ	4730010689722	11083	1P8408	.COUPLING A.....	1
12	PF0ZZ	4720010517602	11083	3S8606	.SLEEVE.....	2
13	PF0ZZ	4730010689756	11083	8S6391	.ELBOW,TUBE TO HOSE.....	1
14	PF0ZZ	5340012584867	11083	6P5327	STRAP,RETAINING.....	1
15	XB0ZZ		11083	9S9629	GUARD ASSEMBLY.....	1
16	PF0ZZ	5305007247221	80204	B1821BH063C175N	SCREW,CAP,HEXAGON H.....	2
17	PF0ZZ	5310000455001	96906	MS35340-50	WASHER,LOCK.....	2
18	PF0ZZ	5310001097638	15434	S658	WASHER,FLAT.....	2
19	PF0ZZ	5306004238117	11083	S1595	BOLT,MACHINE.....	4
20	PF0ZZ	5310005845272	96906	MS35338-48	WASHER,LOCK.....	7
21	PF0ZZ	5310009307013	11083	4B4280	WASHER,FLAT.....	6
22	XB0ZZ		11083	9S9632	GUARD ASSEMBLY.....	1
23	XB0ZZ		11083	8S8657	TUBE ASSEMBLY.....	1
24	XB0ZZ		11083	8S8656	TUBE ASSEMBLY.....	1
25	PF0ZZ	5999011935996	11083	4D9459	CLIP,ELECTRICAL.....	2
26	XB0ZZ		11083	9S3970	BAR.....	1
27	PF0ZZ	5306008744001	11083	6H1717	BOLT,MACHINE.....	2
28	PF0ZZ	4730005856565	30780	06CP-8	CAP,TUBE.....	2
29	PF0ZZ	5306002604508	11083	S1594	BOLT,MACHINE.....	2
30	PF0ZZ	5310006379541	96906	MS35338-46	WASHER,LOCK.....	2
31	XB0ZZ		11083	6P5588	PLATE ASSEMBLY.....	1
32	PF0ZZ	5310004454632	11083	1F748	NUT,PLAIN,WELDING.....	1
33	PF0ZZ	5306004262934	11083	S1621	BOLT,MACHINE.....	1
34	A0000		11083	3P2900	HOSE ASSEMBLY.....	1
35	M0OZZ		19207	1985808-50	.HOSE MAKE FROM HOSE P/N 5P0179....	1
36	PF0ZZ	4730010689756	11083	8S6391	.ELBOW,TUBE TO HOSE.....	2
37	PF0ZZ	4720010517602	11083	3S8606	.SLEEVE.....	2

END OF FIGURE

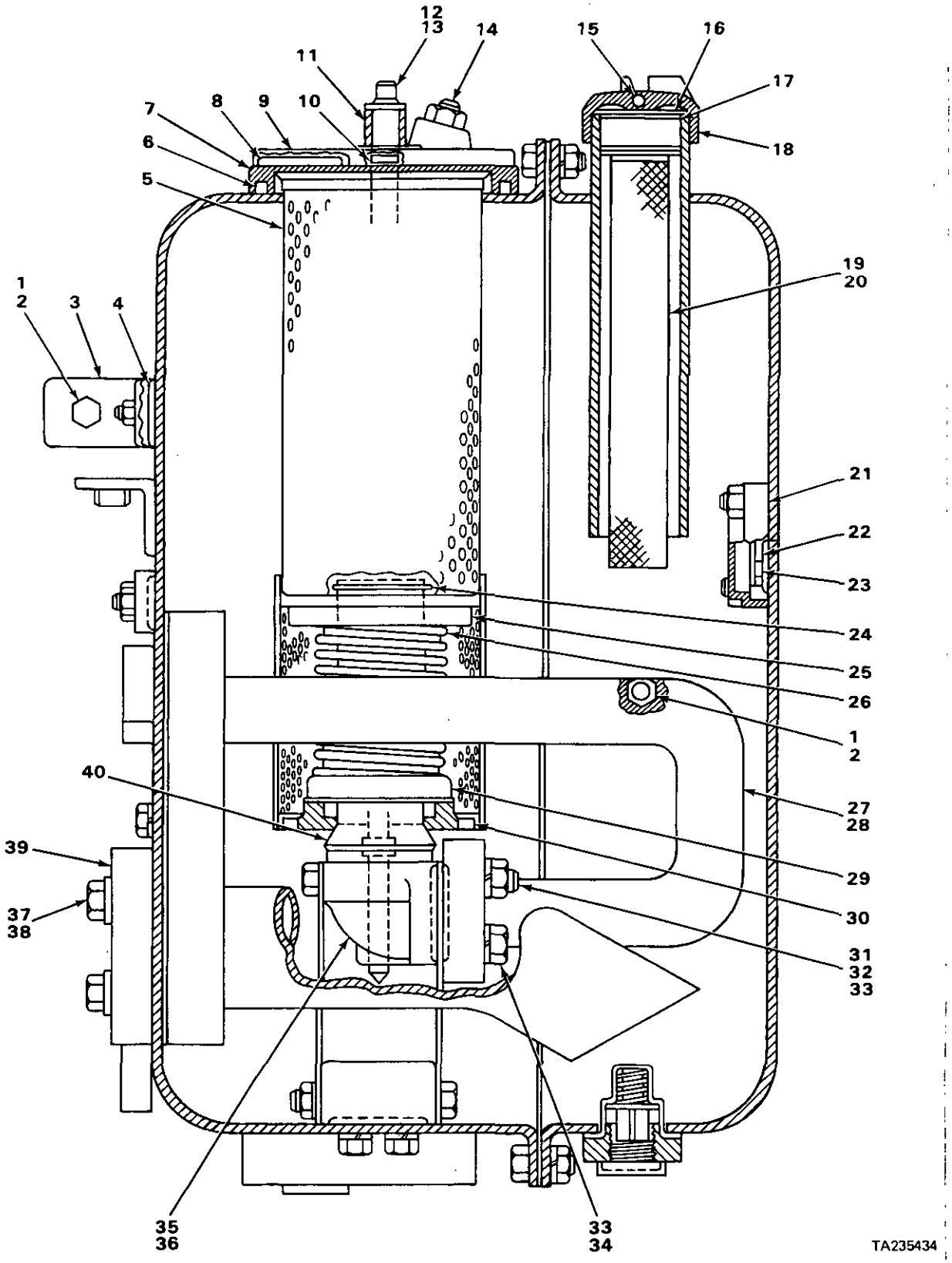

FIGURE 237. HYDRAULIC FILTER.

(1) ITEM NO	(2) SMR CODE	(3) NSN	(4) CAGEC	(5) PART NUMBER	(6) DESCRIPTION AND USABLE ON CODES(UOC)	(7) QTY
					GROUP 2406 STRAINERS, FILTERS, LINES AND FITTINGS ETC..	
					FIG. 237 HYDRAULIC FILTER.	
1	PFOZZ	5365004114584	11083	9S4191	PLUG,MACHINE THREAD.....	3
2	PAOZZ	5331008013354	25184	906-737-70	O-RING.....	3
3	XBOZZ		11083	6P3591	MANIFOLD.....	1
4	PFOZZ	5331005621073	11083	4F7391	O-RING.....	1
5	PFOZZ	3830010479395	11083	9J750	FILTER ELEMENT,FLUI.....	1
6	PFOZZ	5331000743771	11083	5L5032	O-RING.....	1
7	PFOZZ	5365012573281	11083	9J4994	SPACER,PLATE.....	1
8	PFOZZ	5331002979791	96906	MS29513-436	O-RING.....	1
9	XBOZZ		11083	8J8423	COVER.....	1
10	PFOZZ	5331005992938	11083	8F9206	O-RING.....	1
11	PFOZZ	5365012573305	11083	1J6309	SPACER,SLEEVE.....	1
12	PFOZZ	5306012101640	11083	8J8439	BOLT,SHOULDER.....	1
13	PFOZZ	5310007638920	96906	MS51967-20	NUT,PLAIN,HEXAGON.....	1
14	XBOZZ		81321	6676571	INDICATOR ASSEMBLY.....	1
15	PFOZZ	3110000119935	11083	4B9782	BALL,BEARING.....	1
16	PFOZZ	2520010288096	11083	6H5139	PLATE,PRESSURE.....	1
17	PFOZZ	5330008489950	11083	9H6454	GASKET.....	1
18	PFOZZ	2930006358296	11083	7H1447	CAP,FILLER OPENING.....	1
19	PFOZZ	4730011841145	11083	5D7927	STRAINER ELEMENT,SE.....	1
20	PFOZZ	2590010660613	11083	6H9361	RING.....	1
21	PFOZZ	2590011655746	11083	8J6913	RETAINER.....	1
22	PFOZZ	6680001384143	11083	4J8252	GLASS,LIQUID SIGHT.....	1
23	PFOZZ	5325010686227	11083	4J8251	GROMMET,NONMETALLIC.....	1
24	PFOZZ	5365010686063	11083	8J8322	RING.....	1
25	PFOZZ	5365012574621	11083	9J2914	SPACER,STEPPED.....	1
26	XDOZZ		11083	8J8443	SPRING.....	1
27	XBOZZ		11083	8J8428	TUBE ASSEMBLY.....	1
28	PFOZZ	5330010671491	11083	8J8424	GASKET.....	1
29	PFOZZ	4820010686064	11083	8J8468	VALVE,FLOW CONTROL.....	1
30	PFOZZ	5335010689671	11083	9J4862	SCREEN A.....	1
31	PFOZZ	5306000186649	72582	186649	BOLT,MACHINE.....	2
32	PFOZZ	5310007680318	96906	MS51967-14	NUT,PLAIN,HEXAGON.....	2
33	PFOZZ	5310005845272	96906	MS35338-48	WASHER,LOCK.....	4
34	PFOZZ	5306002736357	11083	1A1460	BOLT,MACHINE.....	2
35	PFOZZ	4730012541255	11083	8J8422	ELBOW,FLANGE TO HOS.....	1
36	PFOZZ	5330010532691	11083	1P3707	SEAL.....	2
37	PFOZZ	5305007247222	80204	B1821BH063C200N	SCREW,CAP,HEXAGON H.....	4
38	PFOZZ	5310001097638	15434	S658	WASHER,FLAT.....	4
39	PFOZZ	4730011637270	11083	1P4585	FLANGE,PIPE.....	2
40	PFOZZ	4710012532747	11083	8J8436	TUBE,METALLIC.....	1

END OF FIGURE

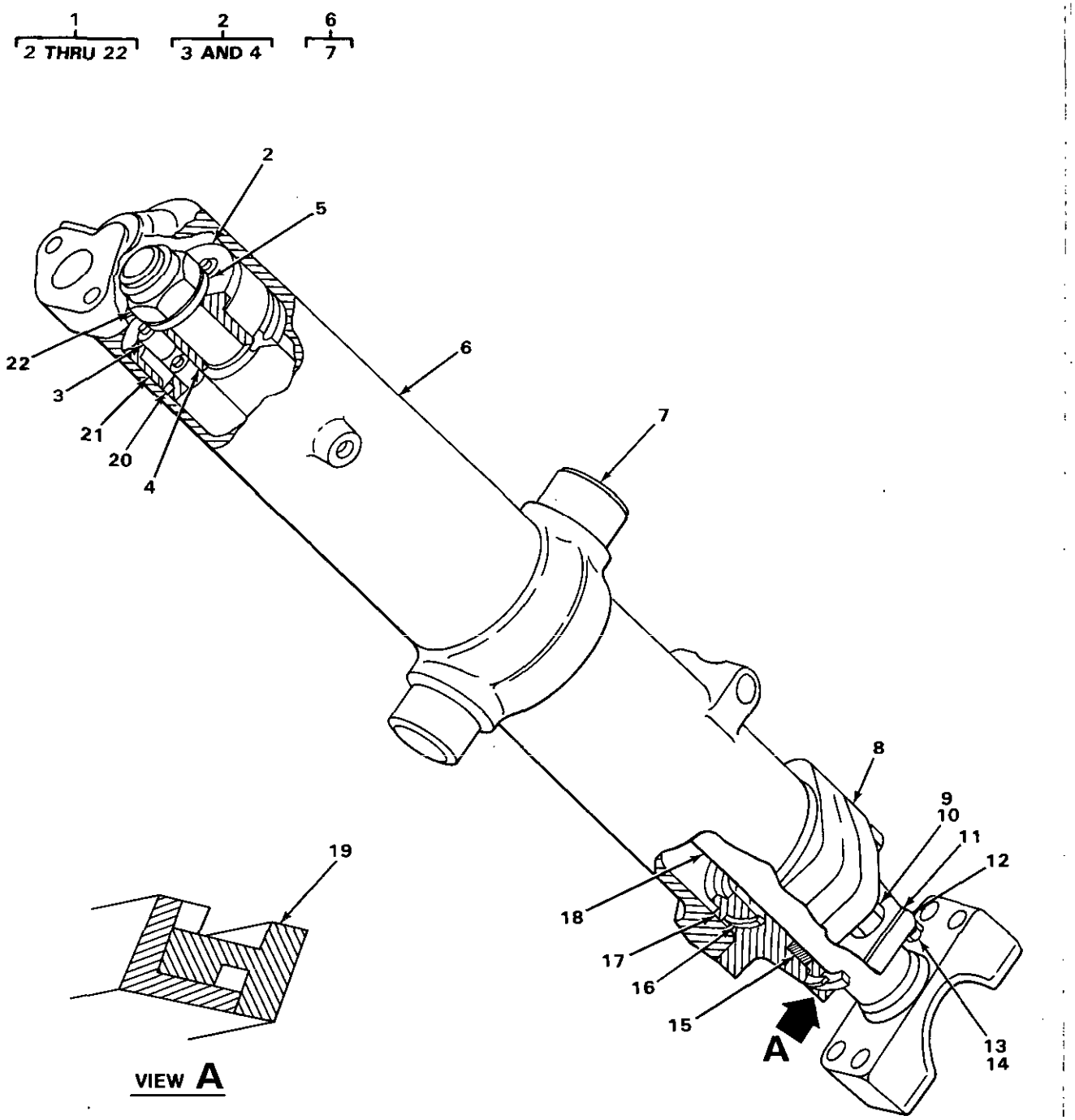

FIGURE 238. LIFT CYLINDERS, LEFT AND RIGHT HAND.

(1) ITEM NO	(2) SMR CODE	(3) NSN	(4) CAGEC	(5) PART NUMBER	(6) DESCRIPTION AND USABLE ON CODES(UOC)	(7) QTY
					GROUP 2407 HYDRAULIC CYLINDERS.	
					FIG. 238 LIFT CYLINDERS, LEFT AND RIGHT HAND.	
1	PFOFF	3830010484201	11083	3G8089	CYLINDER ASSEMBLY,A LH,RH.....	2
2	PFFZZ	2805010906871	11083	5J2531	.PISTON ASSEMBLY.....	1
3	PFFZZ	5342010687248	11083	5J2529	..INSERT.....	4
4	PFFZZ	2530010672159	11083	5J2528	..PLUNGER.....	2
5	PFFZZ	5310012849726	11083	5J2527	.WASHER,FLAT.....	1
6	XAFFF		11083	8J8583	.CYLINDER ASSEMBLY.....	1
7	PFFZZ	3110010672158	11083	5J1192	..BEARING.....	2
8	XAFZZ		11083	9J5645	.HEAD.....	1
9	PFFZZ	5306004263404	11083	1D4610	.BOLT,MACHINE.....	2
9	PFFZZ	5306004263139	11083	1A8063	.BOLT,MACHINE.....	2
10	PFFZZ	5310005847888	96906	MS35338-51	.WASHER,LOCK.....	4
11	PFFZZ	5365011037155	11083	5F3500	.SHIM.....	6
12	XBFZZ		11083	9J5646	.RETAINER.....	1
13	PFFZZ	5305010269518	11083	0S1571	.SCREW,CAP,HEXAGON H.....	4
14	PFFZZ	5310006379541	96906	MS35338-46	.WASHER,LOCK.....	4
15	PFFZZ	5330009134681	11083	5F3498	.PACKING ASSEMBLY.....	1
16	PFFZZ	5330005618286	11083	2K4096	.GASKET.....	1
17	PFFZZ	5331002985837	11083	5F3144	.O-RING.....	1
18	PFFZZ	3040013542808	11083	8J8582	.ROD,PISTON,LINEAR A.....	1
19	PFFZZ	5330007568632	73680	21785-2046	.SEAL,PLAIN ENCASED.....	1
20	PFFZZ	3830009298149	11083	5J5020	.RING,WIPER.....	1
21	PFFZZ	3830009293501	11083	4J3420	.RING,WIPER.....	1
22	PFFZZ	5310004608239	72962	53NTU7947-2812	.NUT,SELF-LOCKING,HE.....	1

END OF FIGURE

9
10

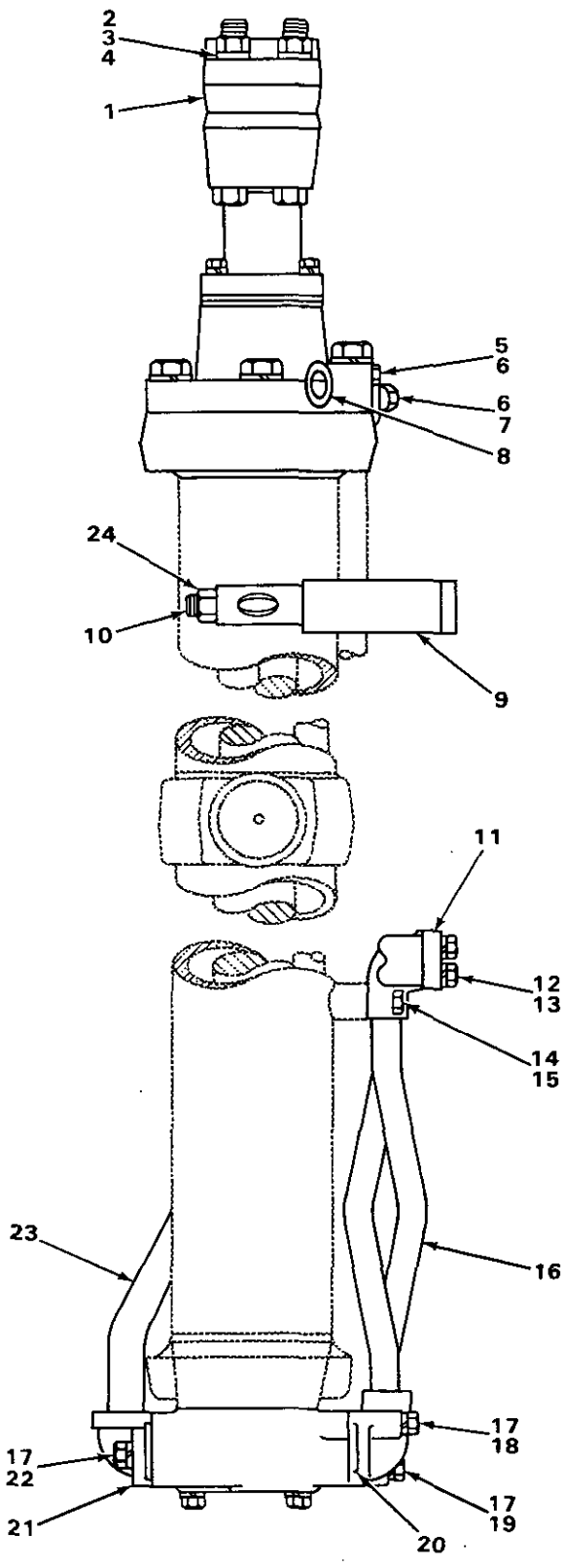

FIGURE 239. LIFT CYLINDERS MOUNTING HARDWARE, LEFT HAND.

(1) ITEM NO	(2) SMR CODE	(3) NSN	(4) CAGEC	(5) PART NUMBER	(6) DESCRIPTION AND USABLE ON CODES(UOC)	(7) QTY
					GROUP 2407 HYDRAULIC CYLINDERS.	
					FIG. 239 LIFT CYLINDER MOUNTING HARDWARE, LEFT HAND.	
1	XBFZZ		11083	8J9859	CAP	1
2	PFFZZ	5306000030681	11083	9S1322	BOLT,MACHINE	4
3	PFFZZ	5310009192242	11083	2J3505	NUT,PLAIN,HEXAGON	4
4	PFFZZ	5310007542005	96906	MS35338-52	WASHER,LOCK	4
5	PFFZZ	5305010156841	11083	0S1591	SCREW	2
6	PFFZZ	5310006379541	96906	MS35338-46	WASHER,LOCK	4
7	PFFZZ	5306002851368	11083	L1143	BOLT,MACHINE	2
8	PFFZZ	5331009136143	11083	4J519	O-RING	1
9	PFFZZ	2510011715018	11083	6P6251	LINK ASSEMBLY	1
10	PFFZZ	5315000596492	11083	3J4313	.PIN,STRAIGHT,THREAD	1
11	PFFZZ	4730010513134	11083	1P4576	FLANGE,PIPE	4
12	PFFZZ	5305000680511	80204	B1821BH038C125N	SCREW,CAP,HEXAGON H	8
13	PFFZZ	5310001174788	11083	5M2894	WASHER,FLAT	8
14	PFFZZ	5306002638978	11083	S1587	BOLT,MACHINE	1
15	PFFZZ	5310010951249	11083	7D1649	WASHER,FLAT	1
16	XBFZZ		11083	3P7749	TUBE ASSEMBLY	1
17	PFFZZ	5310005845272	96906	MS35338-48	WASHER,LOCK	7
18	PFFZZ	5306002736357	11083	1A1460	BOLT,MACHINE	3
19	PFFZZ	5306002736357	11083	1A1460	BOLT,MACHINE	2
20	PFFZZ	5331009484063	11083	4J522	O-RING	1
20	PAFZZ	5331010062129	11083	4J523	O-RING	1
21	PFFZZ	5331009145820	11083	4J527	O-RING	1
22	PFFZZ	5306011279361	11083	0S1585	BOLT,MACHINE	2
23	XBFZZ		11083	3P7744	TUBE ASSEMBLY	1
24	PFFZZ	5310011604538	11083	3F7673	NUT,SELF-LOCKING,HE	1

END OF FIGURE

5
6

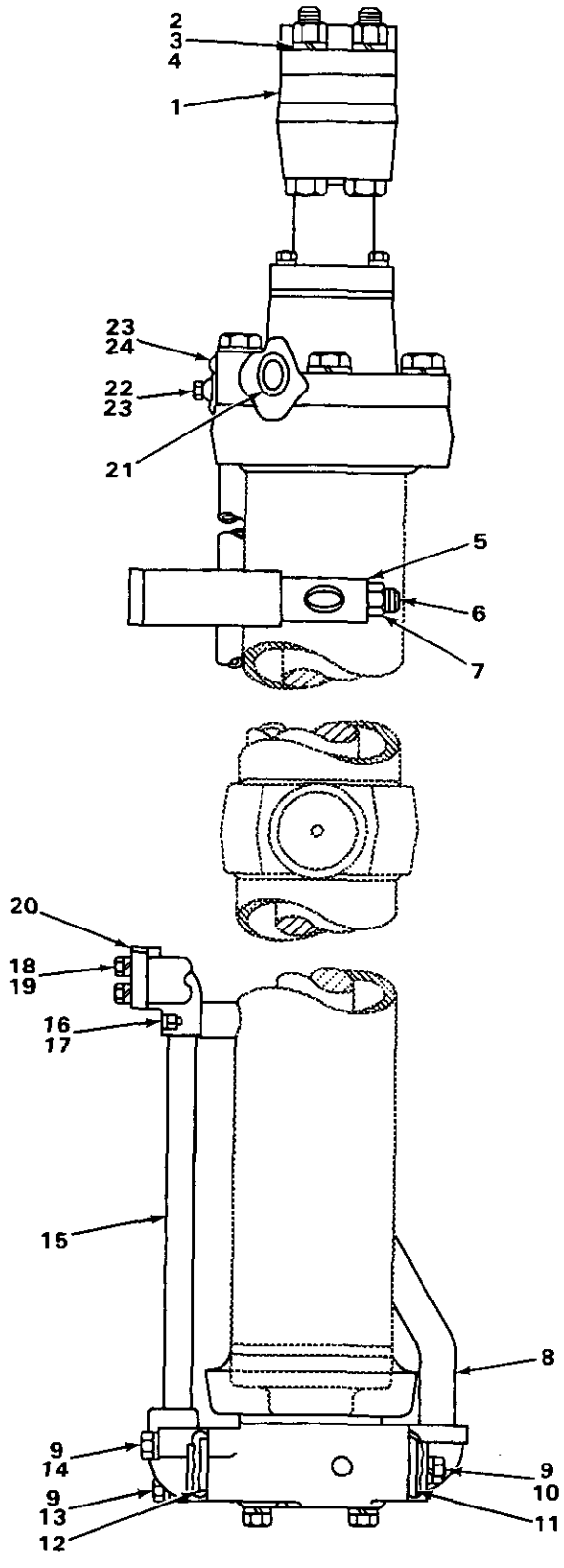

FIGURE 240. LIFT CYLINDERS MOUNTING HARDWARE, RIGHT HAND.

(1) ITEM NO	(2) SMR CODE	(3) NSN	(4) CAGEC	(5) PART NUMBER	(6) DESCRIPTION AND USABLE ON CODES(UOC)	(7) QTY
					GROUP 2407 HYDRAULIC CYLINDERS.	
					FIG. 24D LIFT CYLINDER MOUNTING HARDWARE, RIGHT HAND.	
1	XBFZZ		11083	8J9859	CAP	1
2	PFFZZ	5306000030681	11083	9S1322	BOLT,MACHINE	4
3	PFFZZ	5310009192242	11083	2J3505	NUT,PLAIN,HEXAGON	4
4	PFFZZ	5310007542005	96906	MS35338-52	WASHER,LOCK	4
5	PFFZZ	2510011715018	11083	6P6251	LINK ASSEMBLY	1
6	PFFZZ	5315000596492	11083	3J4313	.PIN,STRAIGHT,THREAD	1
7	PFFZZ	5310011604538	11083	3F7673	NUT,SELF-LOCKING,HE	1
8	PFFZZ	4710013151116	11083	7G5468	TUBE ASSEMBLY,METAL	1
9	PFFZZ	5310005845272	96906	MS35338-48	WASHER,LOCK	7
10	PFFZZ	5306011279361	11083	0S1585	BOLT,MACHINE	2
11	PFFZZ	5331009145820	11083	4J527	O-RING	1
12	PFFZZ	5331009484063	11083	4J522	O-RING	1
12	PAFZZ	5331010062129	11083	4J523	O-RING	1
13	PFFZZ	5306002736357	11083	1A1460	BOLT,MACHINE	2
14	PFFZZ	5306002685798	11083	L1329	BOLT,MACHINE	3
15	XBFZZ		11083	3P7750	TUBE ASSEMBLY	1
16	PFFZZ	5306002638978	11083	S1587	BOLT,MACHINE	1
17	PFFZZ	5310010951249	11083	7D1649	WASHER,FLAT	1
18	PFFZZ	5305000680511	80204	B1821BH038C125N	SCREW,CAP,HEXAGON H	8
19	PFFZZ	5310001174788	11083	5M2894	WASHER,FLAT	8
20	PFFZZ	4730010513134	11083	1P4576	FLANGE,PIPE	4
21	PFFZZ	5331009136143	11083	4J519	O-RING	1
22	PFFZZ	5306002851368	11083	L1143	BOLT,MACHINE	2
23	PFFZZ	5310006379541	96906	MS35338-46	WASHER,LOCK	4
24	PFFZZ	5305010156841	11083	0S1591	SCREW	2

END OF FIGURE

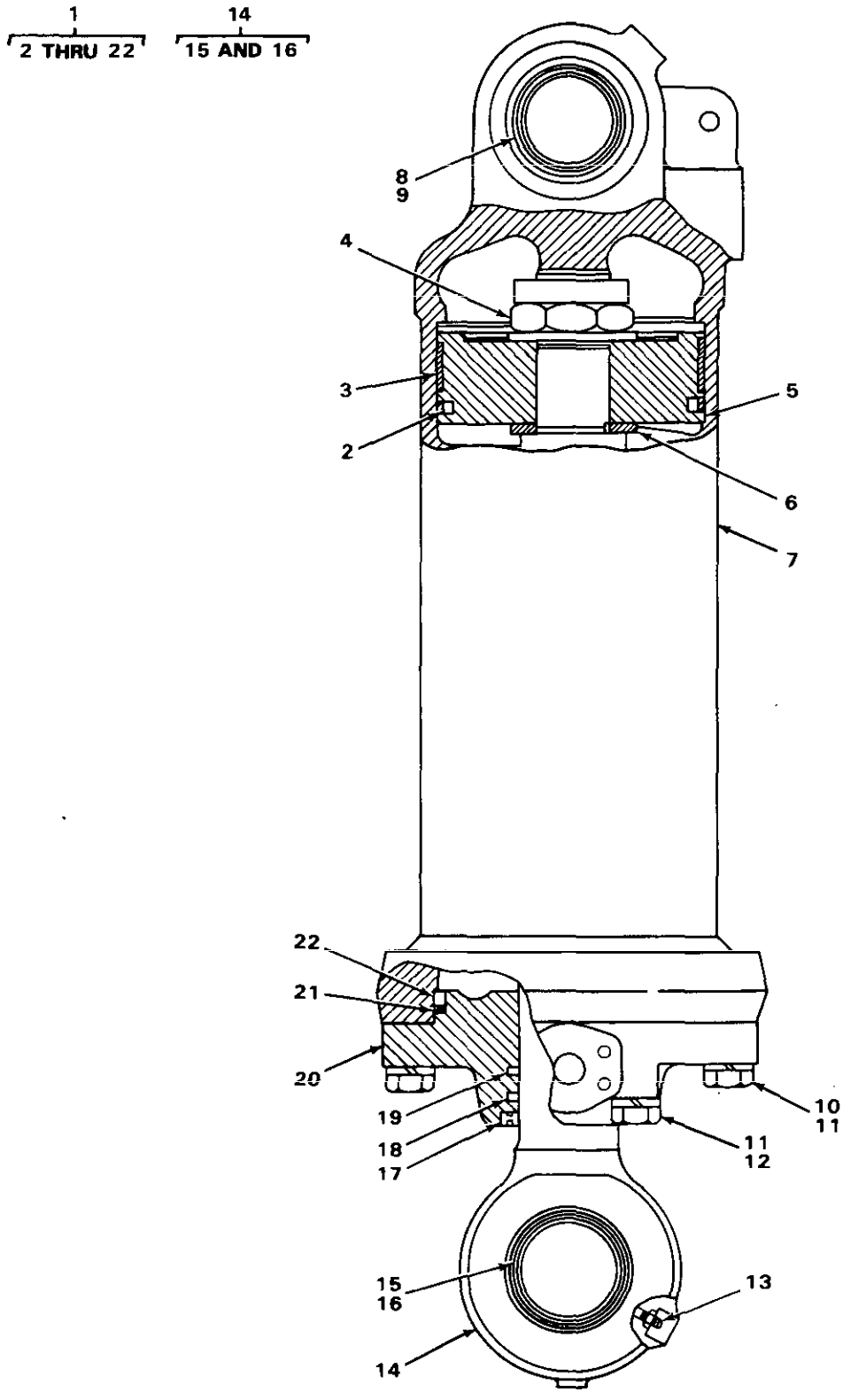

FIGURE 241. RIPPER CYLINDER, LEFT AND RIGHT.

(1) ITEM NO	(2) SMR CODE	(3) NSN	(4) CAGEC	(5) PART NUMBER	(6) DESCRIPTION AND USABLE ON CODES (UOC)	(7) QTY
					GROUP 2407 HYDRAULIC CYLINDERS. FIG. 241 RIPPER CYLINDER, LEFT AND RIGHT.	
1	PFOFF	3830010479319	11083	7J3221	CYLINDER ASSEMBLY RIGHT HAND UOC: T25	1
1	PFOFF	3830010484202	11083	7J3222	CYLINDER ASSEMBLY A LEFT HAND UOC: T25	1
2	PFFZZ	5330009485162	11083	5J5559	PACKING WITH RETAIN UOC: T25	1
3	PFFZZ	5331000290394	11083	3J8683	0-RING UOC: T25	1
4	PFFZZ	5310011676325	72962	X53NTU3612	NUT, SELF-LOCKING, CA UOC: T25	1
5	XBFZZ		11083	7J4D95	PISTON UOC: T25	1
6	XBFZZ		11083	7J1965	WASHER UOC: T25	2
7	XAFZZ		11083	6J8320	CYLINDER HOUSING UOC: T25	1
8	PFFZZ	3120012857125	11083	3J6484	BEARING, SLEEVE UOC: T25	2
9	PFFZZ	5365012787722	11083	4J4955	SPACER, RING UOC: T25	1
10	PFFZZ	5306007327714	11083	1D4627	BOLT, MACHINE UOC: T25	6
11	PFFZZ	5310007542005	96906	MS34338-52	WASHER LOCK UOC: T25	8
12	PFFZZ	5306012509937	11083	1D4631	BOLT, SHEAR UOC: T25	2
13	PAOZZ	4730000504208	96906	MS15003-1	FITTING, LUBRICATION UOC: T25	2
14	XBFZZ		11083	6J8318	ROD ASSEMBLY UOC: T25	1
15	PFFZZ	3120012857125	11083	3J6484	BEARING, SLEEVE UOC: T25	2
16	PFFZZ	5365012787722	11083	4J4955	SPACER, RING UOC: T25	1
17	PFFZZ	5330010487315	11083	6J4169	SEAL, PLAIN ENCASED UOC: T25	1
18	PFFZZ	5330010487317	11083	5J8325	SEAL, PLAIN UOC: T25	1
19	PFFZZ	5330010456002	11083	6J7167	SEAL UOC: T25	1
20	XAFZZ		11083	6J8319	HEAD UOC: T25	1
21	PFFZZ	5330009486863	11083	2J744	PACKING, PREFORMED UOC: T25	1
22	PFFZZ	5331009136137	11053	1J2176	0-RING UOC: T25	1

END OF FIGURE

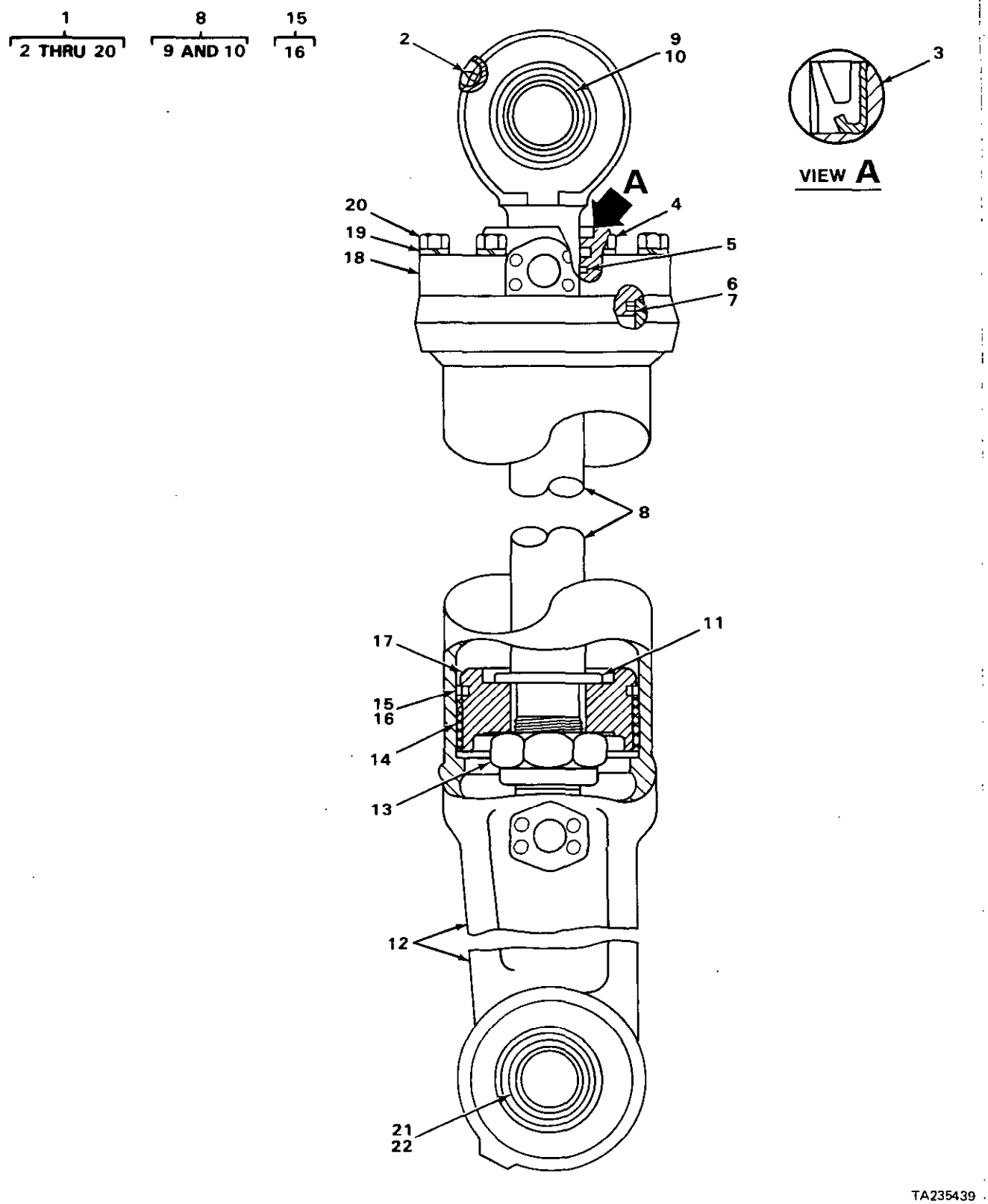

FIGURE 242. RIPPER CYLINDER, CENTER.

(1) ITEM NO	(2) SMR CODE	(3) NSN	(4) CAGEC	(5) PART NUMBER	(6) DESCRIPTION AND USABLE ON CODES(UOC)	(7) QTY
					GROUP 2407 HYDRAULIC CYLINDERS.	
					FIG. 242 RIPPER CYLINDER, CENTER.	
1	XBOZZ		11083	6J9129	CYLINDER ASSEMBLY..... UOC:T25	2
2	PAOZZ	4730000504208	96906	MS15003-1	.FITTING,LUBRICATION..... UOC:T25	2
3	PFFZZ	5330000312923	11083	2J1411	.SEAL..... UOC:T25	1
4	PFFZZ	5330010537368	11083	5J8300	.SEAL..... UOC:T25	1
5	PFFZZ	5330010538043	11083	8C9126	.SEAL,TILT CYLINDER..... UOC:T25	1
6	PFFZZ	5331008997672	11083	2K2939	.O-RING..... UOC:T25	1
7	PFFZZ	5310001479154	11083	2K2940	.WASHER,SPECIAL..... UOC:T25	1
8	XBFFF		11083	6J9124	.ROD ASSEMBLY..... UOC:T25	1
9	PFFZZ	3120012857125	11083	3J6484	..BEARING,SLEEVE..... UOC:T25	2
10	XBFZZ		11083	7J1539	..SPACER..... UOC:T25	1
11	XBFZZ		11083	6J9121	.WASHER..... UOC:T25	1
12	XAFZZ		11083	6J9128	.CYLINDER HOUSING..... UOC:T25	1
13	XBFZZ		11083	2J7686	.NUT..... UOC:T25	1
14	PFFZZ	2590011855363	11083	3J7848	.RING,WIPER..... UOC:T25	1
15	PFFZZ	3830009298148	11083	5J4993	.SEAL ASSEMBLY..... UOC:T25	1
16	PFFZZ	5330013228799	11083	5J4407	..SEAL,PLAIN..... UOC:T25	1
17	XBFZZ		11083	6J4337	.PISTON..... UOC:T25	1
18	XBFZZ		11083	6J9122	.HEAD..... UOC:T25	1
19	PFFZZ	5310005847888	96906	MS35338-51	.WASHER,LOCK..... UOC:T25	8
20	PFFZZ	5306004263404	11083	1D4610	.BOLT,MACHINE..... UOC:T25	8
21	PFFZZ	3120012857125	11083	3J6484	BEARING,SLEEVE..... UOC:T25	2
22	XBFZZ		11083	7J1539	SPACER..... UOC:T25	1

END OF FIGURE

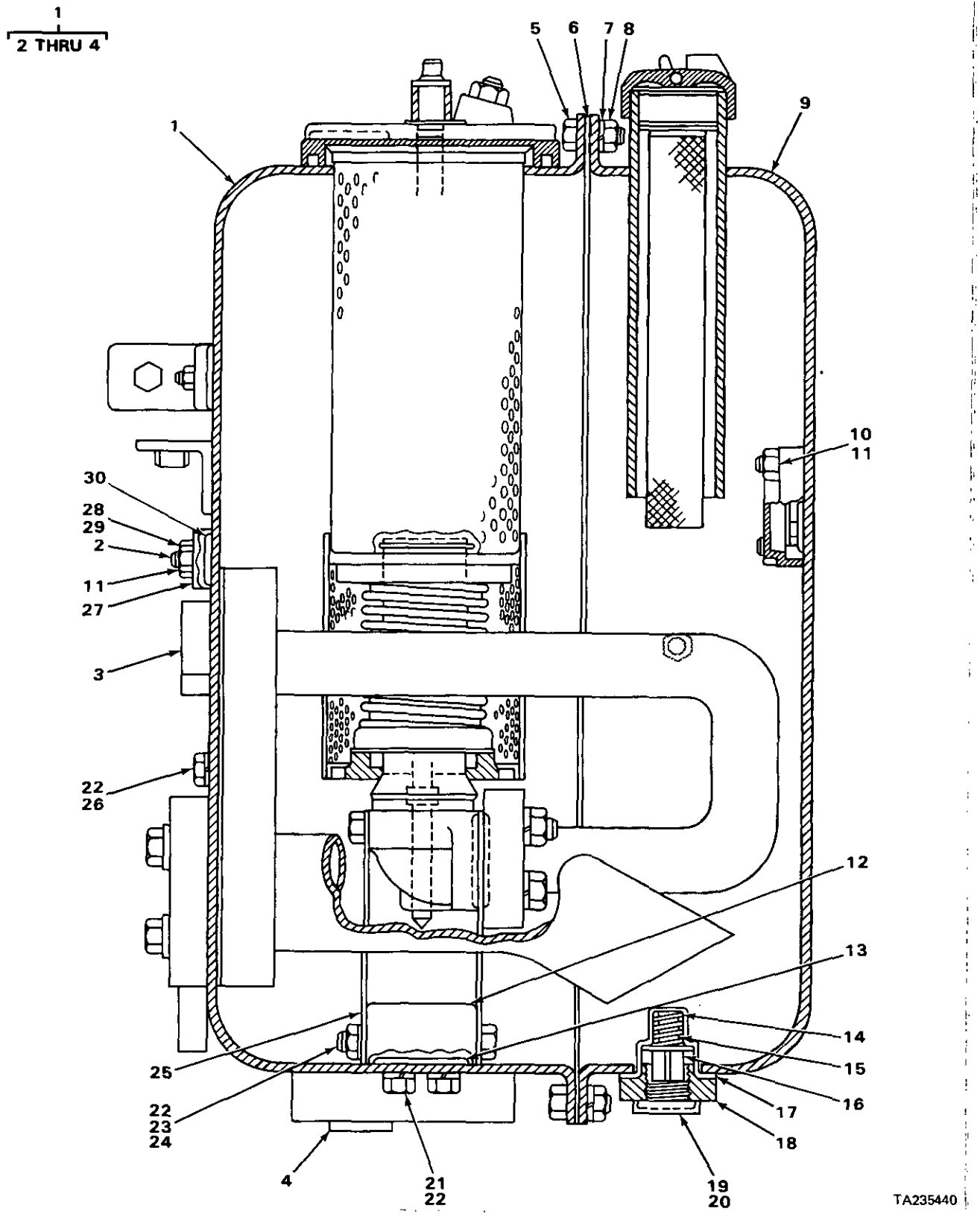

FIGURE 243. HYDRAULIC TANK ASSEMBLY.

(1) ITEM NO	(2) SMR CODE	(3) NSN	(4) CAGEC	(5) PART NUMBER	(6) DESCRIPTION AND USABLE ON CODES(UOC)	(7) QTY
					GROUP 2408 LIQUID TANKS OR RESERVOIRS.	
					FIG. 243 HYDRAULIC TANK ASSEMBLY.	
1	XBFHH		11083	8J8629	TANK ASSEMBLY HYDRAULIC.....	1
2	PFHZZ	5307012172253	11083	8J6910	.STUD,WELDING.....	6
3	XBHZZ		11083	4F8122	.LUG.....	1
4	XBHZZ		11083	4F8135	.WASHER.....	2
5	PFHZZ	5306002604508	11083	S1594	BOLT,MACHINE.....	44
6	PFHZZ	5330010671490	11083	8J7409	GASKET.....	1
7	PFHZZ	5310006379541	96906	MS35338-46	WASHER,LOCK.....	44
8	PFHZZ	5310011945398	11083	1D4717	NUT,HEXAGON.....	44
9	PFHZZ	5340012643675	11083	8J8626	COVER,ACCESS.....	1
10	PFHZZ	5307012172253	11083	8J6910	STUD,WELDING.....	6
11	PFHZZ	5310005579414	72962	24-NE-066	NUT,SPECIAL.....	12
12	PFHZZ	3040012534681	11083	8J8437	HEAD,LINEAR ACTUATI.....	1
13	PFHZZ	5331006919950	11083	4F7390	O-RING.....	1
14	PFHZZ	5360005978341	11083	7B3039	SPRING,HELICAL,COMP.....	1
15	PFHZZ	2990010689668	11083	8J8781	GUIDE,VALVE.....	1
16	PFHZZ	4820011633581	11083	8J8783	SLIDE,DIRECTIONAL C.....	1
17	PFHZZ	5331009489768	11083	8M4436	O-RING.....	1
18	PFHZZ	4730011647821	11083	8J8782	FLANGE,PIPE.....	1
19	PFFZZ	4730011659540	11083	9J7031	PLUG,PIPE.....	1
20	PFHZZ	5331008558047	11083	5M2057	O-RING.....	1
21	PFHZZ	5306011279361	11083	0S1585	BOLT,MACHINE.....	2
22	PFHZZ	5310005845272	96906	MS35338-48	WASHER,LOCK.....	5
23	PFHZZ	5306004262922	11083	S1573	BOLT,MACHINE.....	2
24	PFHZZ	5310007680318	96906	MS51967-14	NUT,PLAIN,HEXAGON.....	2
25	PFHZZ	5365012573277	11083	8J8438	SPACER,PLATE.....	2
26	PFHZZ	5306004238117	11083	S1595	BOLT,MACHINE.....	1
27	PFHZZ	4730012537353	11083	9J3473	FLANGE,PIPE.....	1
28	PFHZZ	5365007630120	11083	9S4185	PLUG,MACHINE THREAD.....	1
29	PFHZZ	5331009486482	11083	3K360	O-RING.....	1
30	PFHZZ	5331002456767	99193	S9413-215	O-RING.....	1

END OF FIGURE

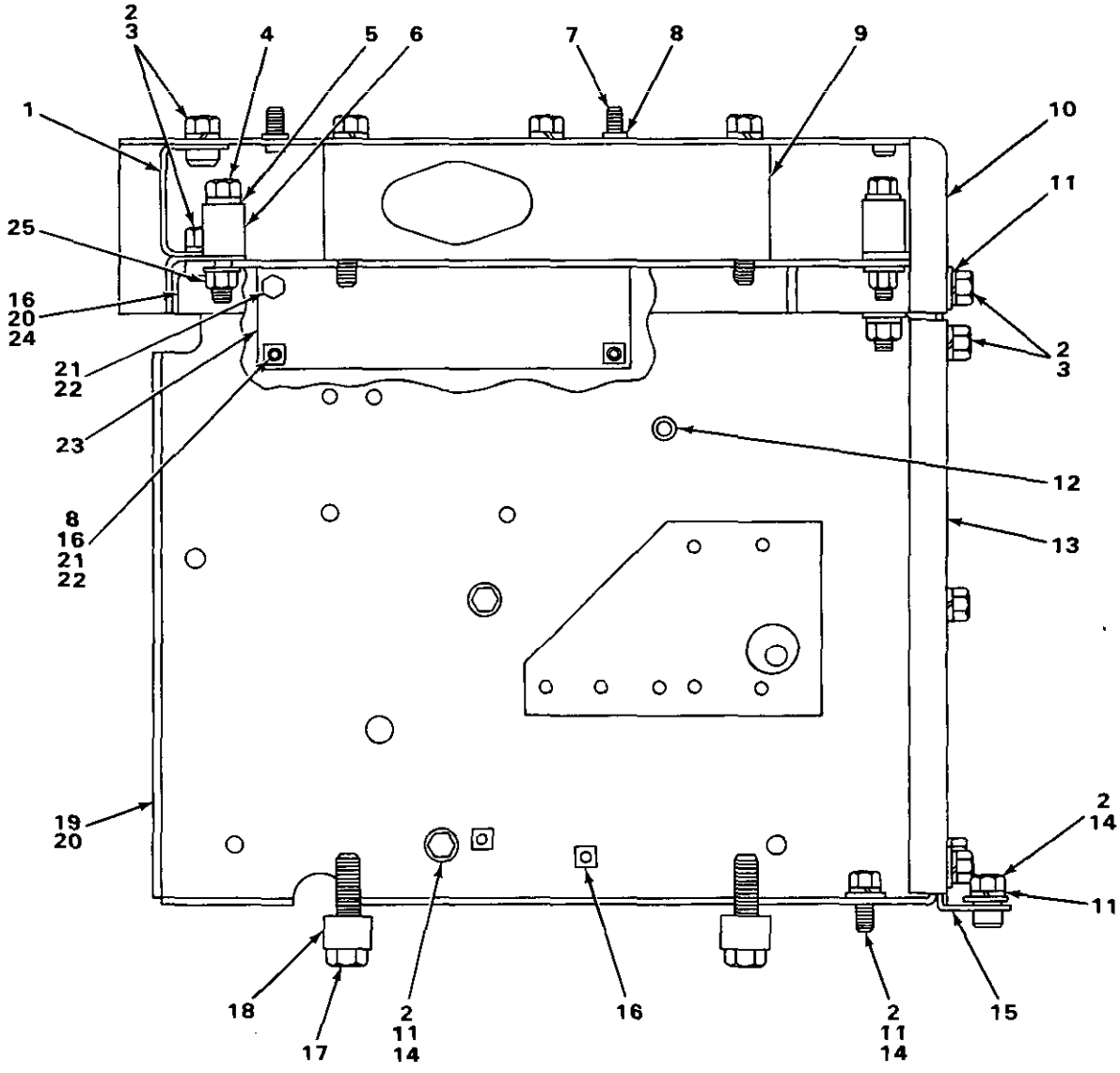

TA235441

FIGURE 244. HYDRAULIC TANK COVER AND PLATES.

(1) ITEM NO	(2) SMR CODE	(3) NSN	(4) CAGEC	(5) PART NUMBER	(6) DESCRIPTION AND USABLE ON CODES(UOC)	(7) QTY
					GROUP 2408 LIQUID TANKS OR RESERVOIRS.	
					FIG. 244 HYDRAULIC TANK COVER AND PLATES.	
1	PFFZZ	5340012584685	11083	6P5441	BRACKET,DOUBLE ANGL.....	1
2	PFFZZ	5310005845272	96906	MS35338-48	WASHER,LOCK.....	25
3	PFFZZ	5306004262934	11083	S1621	BOLT,MACHINE.....	21
4	PFFZZ	5305012145052	11083	138253	SCREW,CAP,SOCKET HE.....	4
5	PFFZZ	5310004317239	11083	2M849	WASHER,FLAT.....	8
6	XBFZZ		11083	3P2943	SPACER.....	4
7	PFFZZ	5305012145052	11083	138253	SCREW,CAP,SOCKET HE.....	2
8	PFFZZ	5310001174788	11083	5M2894	WASHER,FLAT.....	4
9	PFFZZ	5340012653359	11083	3P4124	BRACKET,DOUBLE ANGL.....	1
10	PFFZZ	5340012664674	11083	3P4126	COVER,ACCESS.....	1
11	PFFZZ	5310009307013	11083	484280	WASHER,FLAT.....	6
12	XDFZA		11083	2B3191	PIN,STRAIGHT,HEADED.....	1
13	PFFZZ	5340012586065	11083	3P5951	BRACKET,ANGLE.....	1
14	PFFZZ	5306004238117	11083	S1595	BOLT,MACHINE.....	4
15	PFFZZ	5340012580140	11083	6P5450	BRACKET,ANGLE.....	1
16	PFFZZ	5310000050781	11083	9F2978	NUT,PLAIN,WELDING.....	4
17	PFFZZ	5306004263150	11083	1A8537	BOLT,MACHINE.....	2
18	PFFZZ	5365010691426	11083	3P4134	SPACER.....	2
19	PFFZZ	5342012573847	11083	3P3178	PLATE,ASSEMBLY.....	1
20	PFFZZ	5310004454632	11083	1F748	NUT,PLAIN,WELDING.....	11
21	PFFZZ	5306002637301	11083	L1351	BOLT,MACHINE.....	4
21	PFFZZ	5306002724223	11083	6F7030	BOLT,MACHINE.....	4
22	PFFZZ	5310006379541	96906	MS35338-46	WASHER,LOCK.....	4
23	PFFZZ	5340012582681	11083	3P4122	PLATE,MENDING.....	1
24	PFFZZ	2510012598891	11083	3P2945	FRAME SECTION,STRUC.....	1
25	PFFZZ	5310007680318	96906	MS51967-14	NUT,PLAIN,HEXAGON.....	4

END OF FIGURE

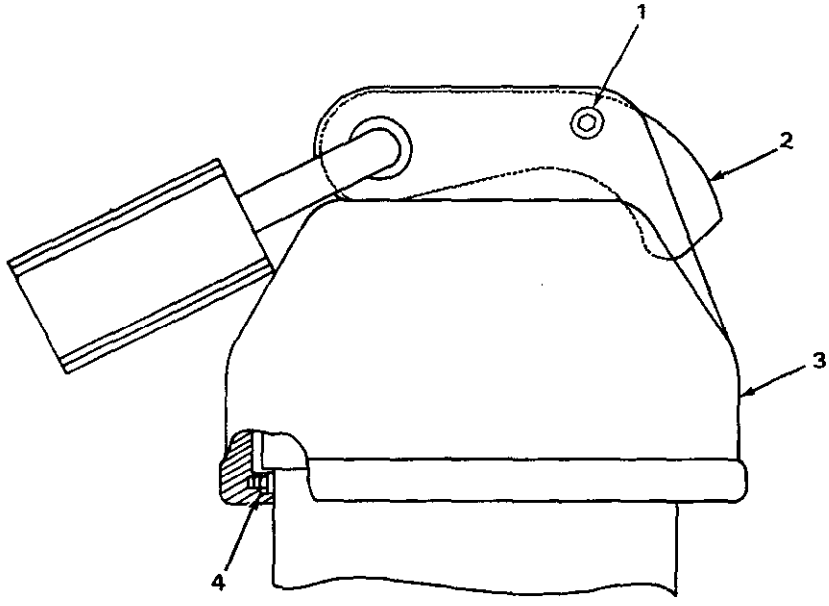

FIGURE 245. HYDRAULIC TANK CAP PROTECTION COVER.

(1) ITEM NO	(2) SMR CODE	(3) NSN	(4) CAGEC	(5) PART NUMBER	(6) DESCRIPTION AND USABLE ON CODES(UOC)	(7) QTY
					GROUP 2408 LIQUID TANKS OR RESERVOIRS.	
					FIG. 245 HYDRAULIC TANK CAP PROTECTION COVER.	
1	PFOZZ	5315005325746	11083	1L5072	PIN,STRAIGHT,HEADLE.....	1
2	PFOZZ	2540011810999	11083	9M7394	LEVER,REMOTE CONTRO.....	1
3	PFOZZ	2590011793017	11083	5D1911	COVER,HYDRAULIC CAP.....	1
4	XBOZZ		11083	2J7761	RING.....	1

END OF FIGURE

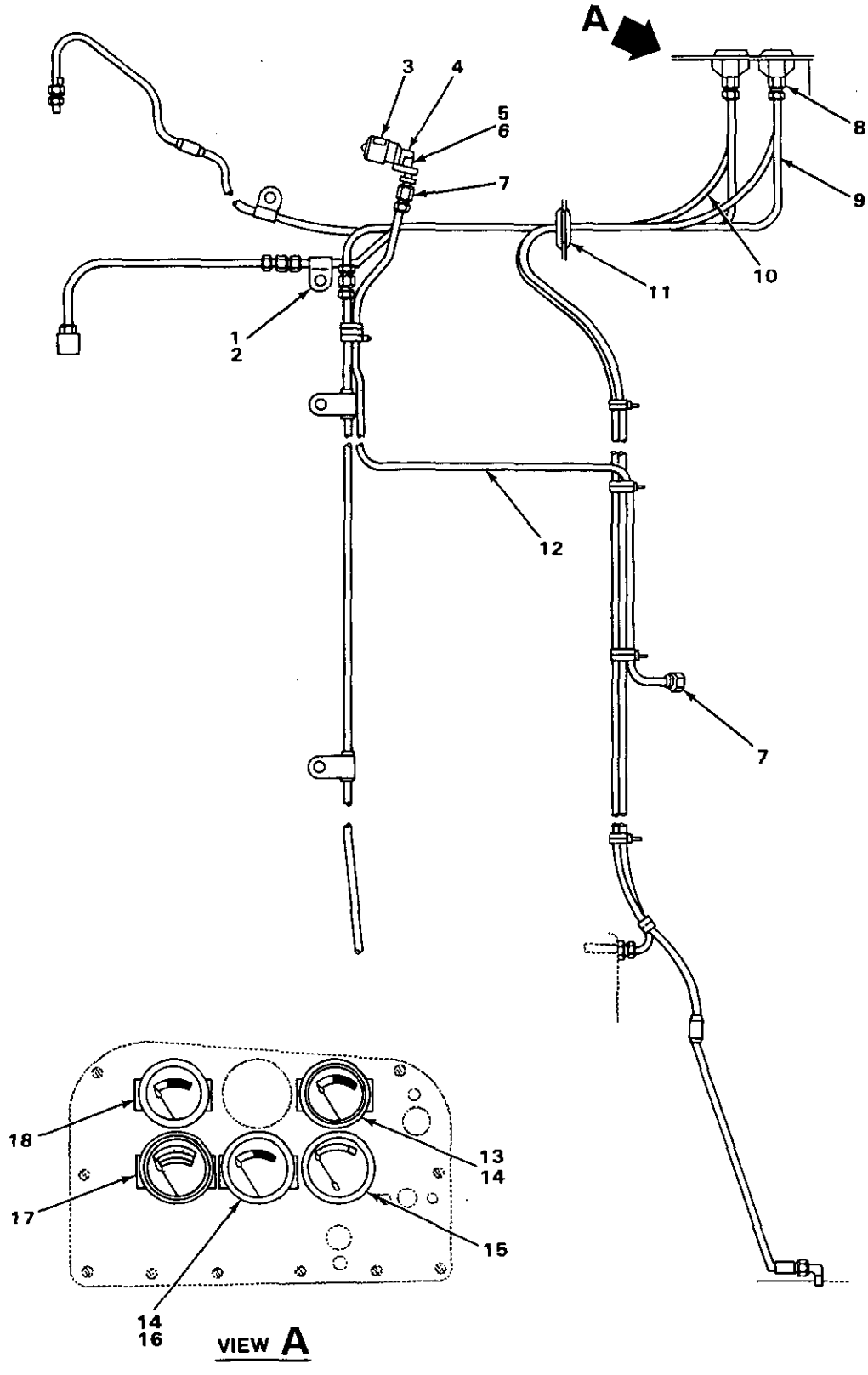

FIGURE 246. PRESSURE GAGES.

(1) ITEM NO	(2) SMR CODE	(3) NSN	(4) CAGEC	(5) PART NUMBER	(6) DESCRIPTION AND USABLE ON CODES(UOC)	(7) QTY
					GROUP 47 GAGES, WEIGHING AND MEASURING DEVICES.	
					GROUP 4702 GAGES, MOUNTINGS, LINES, AND FITTINGS.	
					FIG. 246 PRESSURE GAGES.	
1	PFOZZ	5340007206213	96906	MS21333-59	CLAMP,LOOP.....	1
2	PFOZZ	5365004239380	11083	4B6029	BUSHING,NONMETALLIC.....	1
3	PFOZZ	2940001927417	11083	7S0687	INDICATOR,FILTER WA.....	1
4	PFOZZ	4730010668443	11083	1P6886	ADAPTER.....	1
5	PFOZZ	5305000712506	80204	B1821BH025C050N	SCREW,CAP,HEXAGON H.....	2
6	PFOZZ	5310005794542	43999	2W1-16-15-32	WASHER,FLAT.....	2
7	PFOZZ	5935010687146	11083	5P2948	CONNECTOR.....	2
8	PFOZZ	4730000137397	11083	488756	INVERTED NUT,TUBE C.....	4
9	MOOZZ		19207	0687274-39	TUBE MAKE FROM TUBE P/N 5P1198.....	1
10	MOOZZ		19207	0687274-37	TUBE MAKE FROM TUBE P/N 5P1198.....	1
11	PFOZZ	5325010686229	11083	3P5334	GROMMET,NONMETALLIC.....	2
12	MOOZZ		19207	5P5630-65	TUBE MAKE FROM TUBING P/N 5P5630...	1
13	XBOZZ		11083	5M1065	GAGE,PRESSURE,DIAL OIL PRESSURE....	1
14	PFOZZ	4730010690770	11083	5K9979	ADAPTER,STRAIGHT,PI.....	2
15	PFOZZ	6620010293168	11083	1P5486	INDICATOR,ENGINE TE CONVERTER TEMPERATURE.....	1
16	PFOZZ	6620001117089	11083	5S9068	INDICATOR,FUEL PRES.....	1
17	PFOZZ	6620010484145	11083	8S4914	GAGE,PRESSURE,DIAL WATER PRESSURE..	1
18	PFOZZ	6685010482246	11083	8S4915	INDICATOR,TEMPERATU WATER TEMPERATURE.....	1

END OF FIGURE

5
6 AND 7

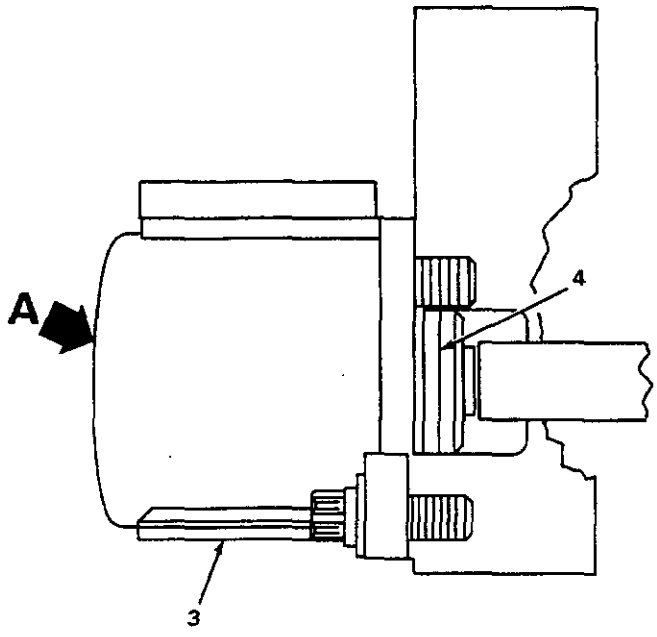

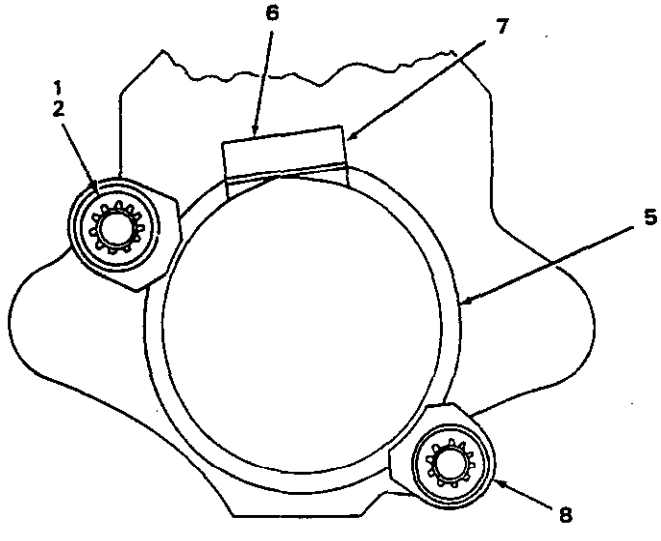

VIEW A

FIGURE 247. SERVICE METER, 4N4445 ENGINE.

(1) ITEM NO	(2) SMR CODE	(3) NSN	(4) CAGEC	(5) PART NUMBER	(6) DESCRIPTION AND USABLE ON CODES(UOC)	(7) QTY
					GROUP 4702 GAGES, MOUNTINGS, LINES, AND FITTINGS.	
					FIG. 247 SERVICE METER, 4N4445 ENGINE.	
1	PFOZZ	5331006136522	11083	4M8303	O-RING PART OF KIT P/N 2P-3988.....	1
2	PFOZZ	5340002614042	11083	9S3032	CLAMP,RIM CLENCHING.....	1
3	PFOZZ	5340002614066	11083	9S3033	CLAMP,RIM CLENCHING.....	1
4	PFOZZ	5306002537879	11083	1T0416	BOLT,MACHINE.....	2
5	PFOOZ	6645010484671	11083	2P1211	METER,TIME TOTALIZI.....	1
6	PFOZZ	6645004765511	11083	1P4923	.PARTS KIT,METER ASS.....	1
7	PAOZZ	6645011966277	11083	8N2112	.COVER,METER.....	1
8	PFOZZ	5310001670721	96906	MS35333-41	WASHER,LOCK.....	2

END OF FIGURE

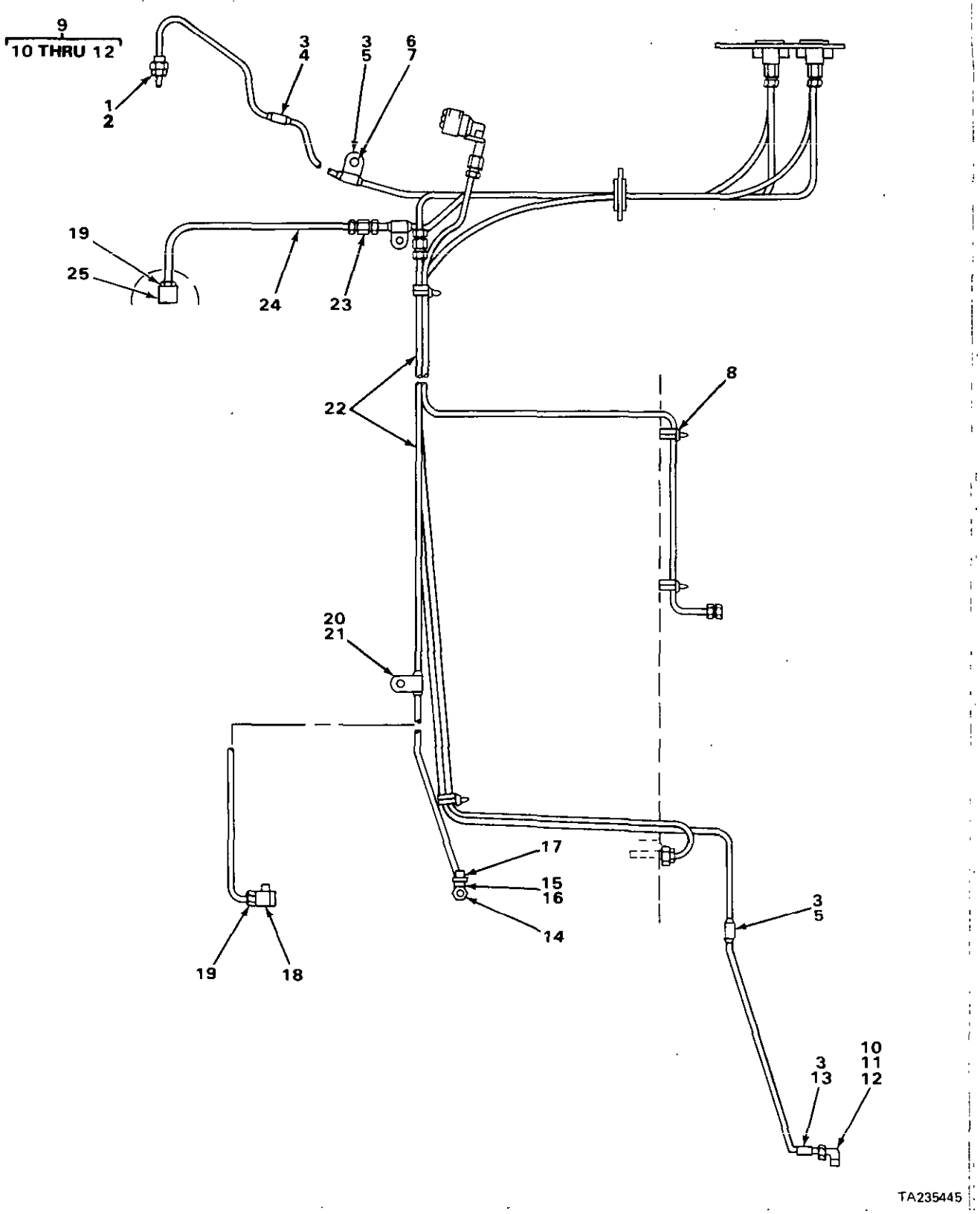

FIGURE 248. PRESSURE GAGES LINES AND FITTINGS.

(1) ITEM NO	(2) SMR CODE	(3) NSN	(4) CAGEC	(5) PART NUMBER	(6) DESCRIPTION AND USABLE ON CODES(UOC)	(7) QTY
					GROUP 4702 GAGES, MOUNTINGS, LINES, AND FITTINGS.	
					FIG. 248 PRESSURE GAGES LINES AND FITTINGS.	
1	PFOZZ	5310004239538	11083	5B1959	NUT,THERMOCOUPLE AD.....	2
2	PFOZZ	5365004238884	11083	2B5721	SPACER,RING.....	2
3	PFOZZ	5325009234575	11083	8F244	GROMMET.....	12
4	PFOZZ	5340009222596	11083	6H3068	CLAMP,LOOP.....	1
5	PFOZZ	5999003636240	11083	2B2404	CLIP,ELECTRICAL.....	2
6	PFOZZ	5305007215492	80204	B1821BH038C063N	SCREW,CAP,HEXAGON H.....	1
7	PFOZZ	5310006379541	96906	MS35338-46	WASHER,LOCK.....	1
8	PFOZZ	2920010589099	11083	3S2093	STRAP.....	6
9	A0000		11083	1P9133	ELBOW ASSEMBLY.....	1
10	PFOZZ	4730010690796	11083	1P9132	.ELBOW.....	1
11	PFOZZ	5365010668444	11083	1P8561	.SLEEVE.....	1
12	PFOZZ	5310010668445	11083	1P8563	.NUT.....	1
13	PFOZZ	5342011033617	11083	7M873	CLIP.....	1
14	PFOZZ	4730000892515	11083	5M6213	PLUG,PIPE USE WITH SERIAL RANGE 77V9232 THRU 77V9475.....	1
15	PFOZZ	4730011597677	11083	5K9239	ADAPTER,STRAIGHT,PI USE WITH SERIAL RANGE 77V9232 THRU 77V9475...	1
16	PFOZZ	4730002572117	58312	8B1261	TEE,PIPE USE WITH SERIAL RANGE 77V9232 THRU 77V9475.....	1
17	PFOZZ	4730001962055	04718	96-014	NIPPLE,PIPE USE WITH SERIAL RANGE 77V9232 THRU 77V9475.....	1
18	PFOZZ	4730010690768	11083	5K9241	FITTING USE WITH SERIAL RANGE THRU 77V9231.....	1
19	PFOZZ	4730000137397	11083	4B8756	INVERTED NUT,TUBE C USE WITH SERIAL RANGE THRU 77V9231.....	2
20	PFOZZ	5340004238320	11083	1B3057	CLIP,SPRING TENSION.....	1
21	PFOZZ	5365004239380	11083	4B6029	BUSHING,NONMETALLIC.....	1
22	MOOZZ		19207	0687274-60	TUBE MAKE FROM TUBE P/N 5P1198.....	1
23	PFOZZ	4730010690769	11083	5K9242	COUPLING,TUBE.....	2
24	MOOZZ		19207	0687274-16	TUBE MAKE FROM TUBE P/N 5P1198.....	1
25	PFOZZ	4730010599435	11083	5K9243	ELBOW,PIPE TO TUBE.....	1

END OF FIGURE

7
8 THRU 10

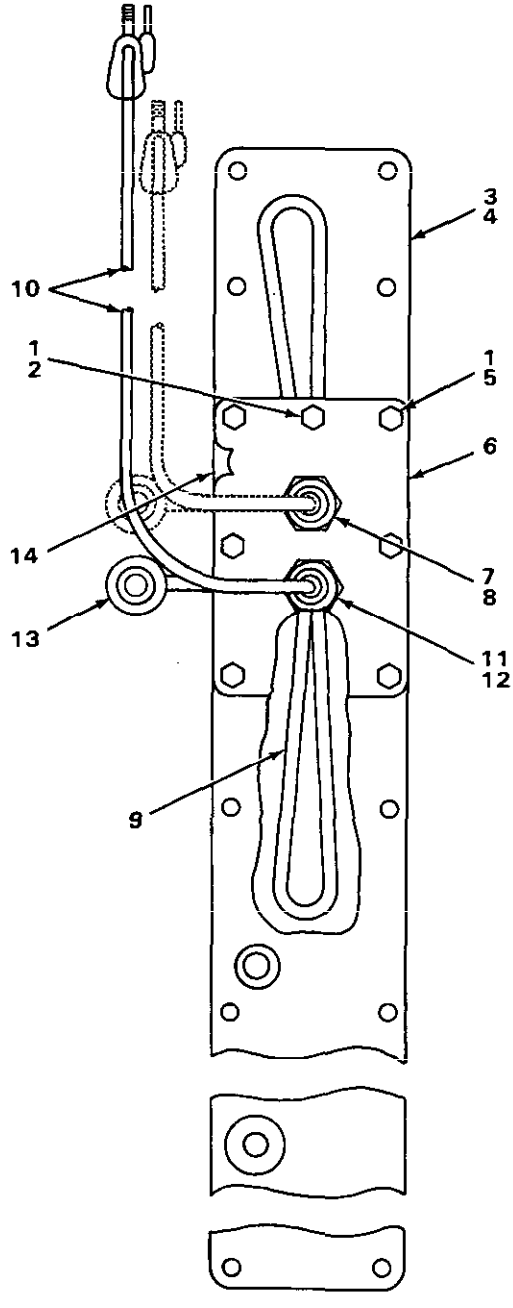

TA235446

FIGURE 249. WATER HEATER JACKET.

(1) ITEM NO	(2) SMR CODE	(3) NSN	(4) CAGEC	(5) PART NUMBER	(6) DESCRIPTION AND USABLE ON CODES(UOC)	(7) QTY
					GROUP 60 STEAM BOILERS, WATER HEATERS, HEATING UNITS, BURNERS.	
					GROUP 6015 WATER HEATER ASSEMBLY.	
					FIG. 249 WATER HEATER JACKET.	
1	PFOZZ	5310006379541	96906	MS35338-46	WASHER,LOCK.....	8
2	PFOZZ	5306002637301	11083	L1351	BOLT,MACHINE.....	2
3	XBOZZ		11083	6N83	COVER.....	1
4	PFOZZ	5330001258035	11083	6L5503	GASKET.....	1
5	PFOZZ	5306010949106	11083	0S1590	BOLT,MACHINE.....	6
6	XBOZZ		11083	2P4622	FLANGE.....	1
7	XBOFF		11083	2P4624	HEATER.....	2
8	XDFZZ		11083	2R1980	.NUT,PLAIN,HEXAGON.....	1
9	XBFZZ		11083	2P6240	.ELEMENT ASSEMBLY.....	1
10	XBFZZ		11083	2P7342	.CORD ASSEMBLY.....	1
11	XBOZZ		11083	2P4621	GASKET.....	2
12	XBOZZ		11083	1K4709	WASHER.....	4
13	XBOZZ		11083	6N1604	CAP ASSEMBLY.....	1
14	PFOZZ	5330012852058	11083	2P4620	GASKET.....	1

END OF FIGURE

1
2 THRU 10

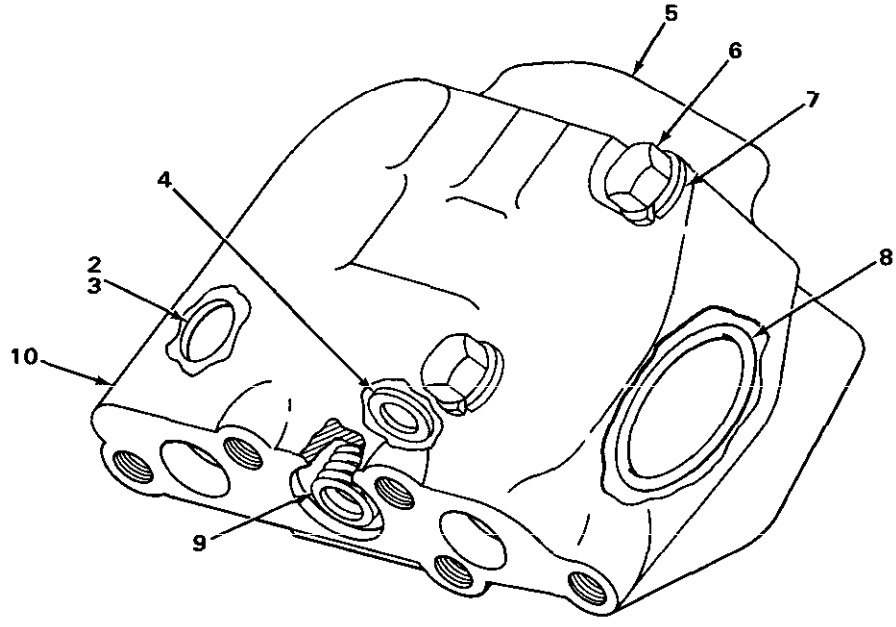

TA235447

FIGURE 250. EXTERNAL QUICK DROP VALVE.

(1) ITEM NO	(2) SMR CODE	(3) NSN	(4) CAGEC	(5) PART NUMBER	(6) DESCRIPTION AND USABLE ON CODES(UOC)	(7) QTY
					GROUP 74 CRANES, SHOVELS AND EARTH MOVING EQUIPMENT COMPONENTS.	
					GROUP 7427 MISCELLANEOUS VALVES.	
					FIG. 250 EXTERNAL QUICK DROP VALVE.	
1	PFOZZ	3830000441614	11083	6J0608	VALVE,QUICK DUMP.....	1
2	XBFZZ		11083	6J1085	.PLATE.....	1
3	PFFZZ	5305007083823	11083	7B3028	.SCREW,DRIVE.....	1
4	PFFZZ	5310004219603	11083	6B863	.WASHER,FLAT.....	1
5	PFFZZ	4320012670639	11083	4J7101	.CYLINDER SLEEVE.....	1
6	PFOZZ	5306010517598	20680	6028	.BOLT,MACHINE.....	2
7	PFOZZ	5310000455001	96906	MS35340-50	.WASHER,LOCK.....	2
8	PFFZZ	5331005598786	09990	2-227N951-75	.O-RING.....	1
9	PFFZZ	5360009503397	11083	7M1297	.SPRING,VALVE,RELIEF.....	1
10	PFFZZ	4820012670507	11083	5J3721	.VALVE,LINEAR,DIRECT INCLUDES BODY, PLUNGER AND INTERNAL VALVE.....	1

END OF FIGURE

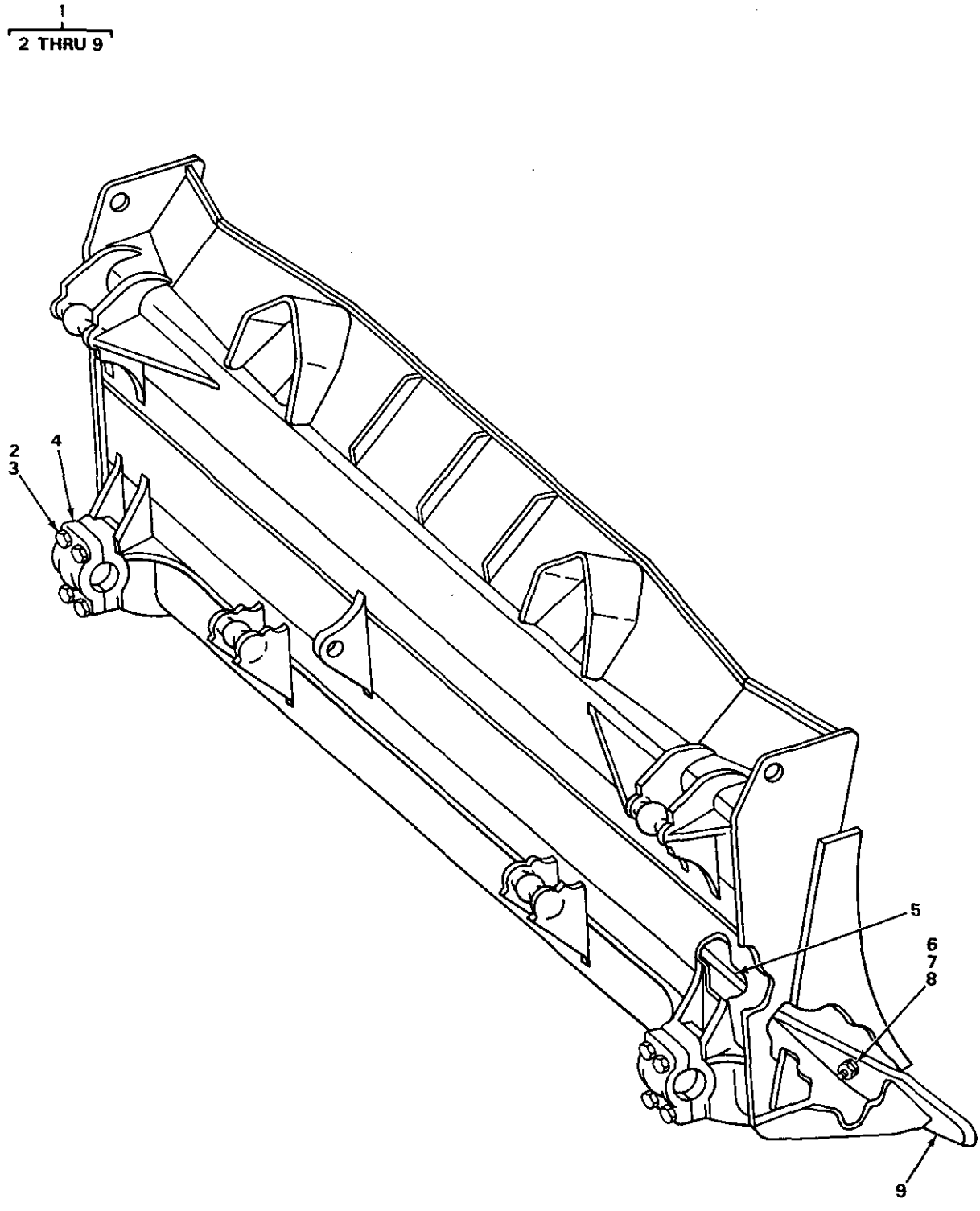

FIGURE 251. STRAIGHT BULLDOZER BLADE.

(1) ITEM NO	(2) SMR CODE	(3) NSN	(4) CAGEC	(5) PART NUMBER	(6) DESCRIPTION AND USABLE ON CODES(UOC)	(7) QTY
					GROUP 7435 MOLDBOARD ASSEMBLY.	
					FIG. 251 STRAIGHT BULLDOZER BLADE.	
1	PFOFF		11083	8J9027	BLADE,BULLDOZER,EAR..... UOC:T25	1
2	PFOZZ	5305012559377	11083	9F6936	.SCREW,CAP,HEXAGON H..... UOC:T25	8
3	PFOZZ	5342010687085	11083	9J3711	.RETAINER..... UOC:T25	4
4	PFOZZ	3040013034886	11083	8J9013	.CAP,LINEAR ACTUATIN..... UOC:T25	2
5	PAOZZ	3830010174041	11083	4T2988	.CUTTING EDGE,MOLDBO..... UOC:T25	3
5	PFOZZ	3830013216531	11083	4T6301	.PAD,CUSHIONING USE WITH BULLDOZER SERIAL RANGE 29V1 AND UP..... UOC:T25	1
6	PFOZZ	5306010178609	11083	4J9058	.BOLT,SQUARE NECK..... UOC:T25	35
6	PFOZZ	5306011855108	11083	4J9208	.BOLT..... UOC:T25	35
7	PFOZZ	5310004909859	11083	2J3507	.NUT,PLAIN,HEXAGON..... UOC:T25	35
8	PFOZZ	5310004709833	11083	3K5234	.WASHER,FLAT..... UOC:T25	35
9	PAOZZ	3830010184830	11083	9J1479	.CUTTING,EDGE RH RH..... UOC:T25	1
9	PAOZZ	3830010174036	11083	9J1480	.CUTTING,EDGE LH LH..... UOC:T25	1
9	PAOZZ	5133011036841	11083	3G8302	.BIT,LEFT HAND USE WITH BULLDOZER SERIAL RANGE 29V1 AND UP..... UOC:T25	1
9	PAOZZ	5133011036780	11083	3G8301	.BIT,RIGHT HAND USE WITH BULLDOZER SERIAL RANGE 29V1 AND UP..... UOC:T25	1
9	PFOZZ	3805013216783	11083	3G8280	.CUTTING EDGE,SCOOP, USE WITH BULLDOZER SERIAL RANGE 1 UP THUR 29V1..... UOC:T25	1
9	PFOZZ	3830013216784	11083	3G8279	.CUTTING EDGE,MOLDBO USE WITH BULLDOZER SERIAL RANGE 1 UP THUR 29V1..... UOC:T25	1

END OF FIGURE

1
2 THRU 10

3
4 THRU 7

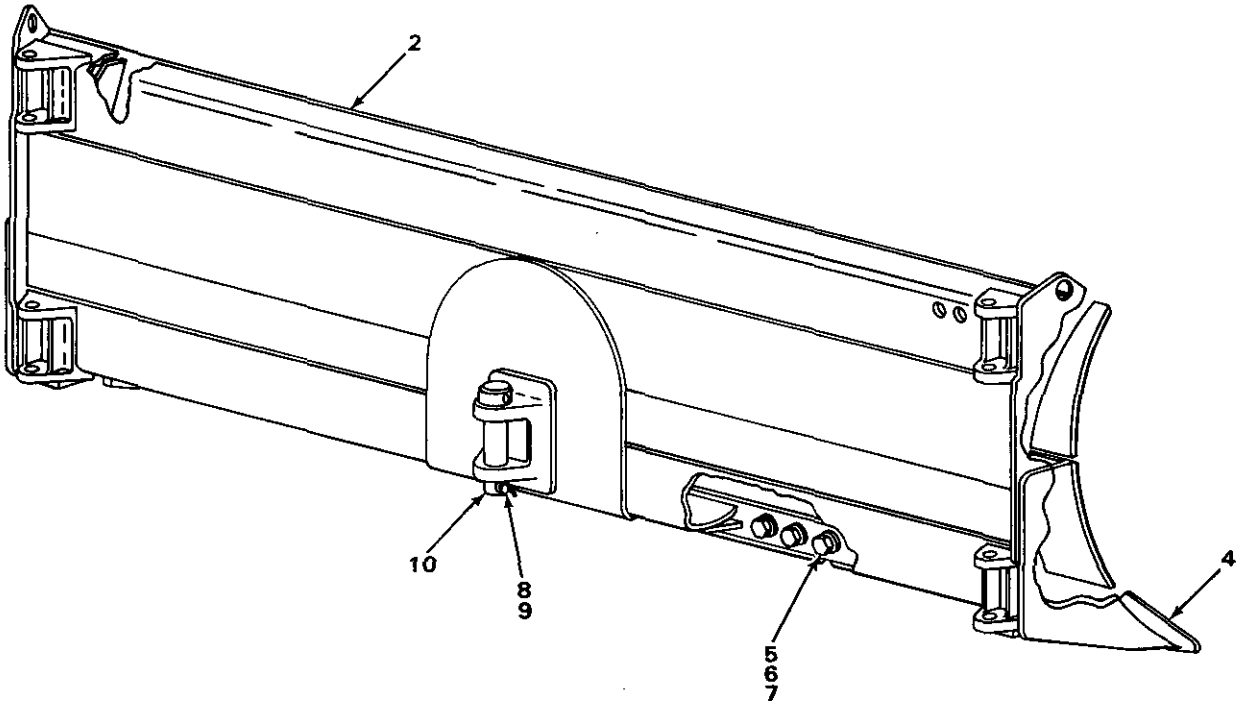

TA235449

FIGURE 252. ANGLE BULLDOZER BLADE.

(1) ITEM NO	(2) SMR CODE	(3) NSN	(4) CAGEC	(5) PART NUMBER	(6) DESCRIPTION AND USABLE ON CODES(UOC)	(7) QTY
					GROUP 7435 MOLDBOARD ASSEMBLY.	
					FIG. 252 ANGLE BULLDOZER BLADE.	
1	XBFHH		11083	8J9659	BLADE GROUP ANGLING..... UOC:T24	1
2	XBHZZ		11083	2J8403	.MOLD BOARD..... UOC:T24	1
3	PFHZH	3830013230999	11083	8J9667	.CUTTING EDGE,MOLDBO..... UOC:T24	1
4	PFHZZ	3805012114740	11083	9J1478	..END BIT,MOLDBOARD LEFT HAND..... UOC:T24	1
4	PFHZZ	3805012114739	11083	9J1477	..END BIT,MOLDBOARD RIGHT HAND..... UOC:T24	1
5	PFHZZ	5306010178609	11083	4J9058	..BOLT,SQUARE NECK..... UOC:T24	38
6	PFHZZ	5310004709833	11083	3K5234	..WASHER,FLAT..... UOC:T24	38
7	PFHZZ	5310004909859	11083	2J3507	..NUT,PLAIN,HEXAGON..... UOC:T24	38
8	XBHZZ		11083	9F4684	.PIN..... UOC:T24	1
9	PFHZZ	5315008395822	96906	MS24665-353	.PIN,COTTER..... UOC:T24	1
10	XBHZZ		11083	3H7161	.PIN..... UOC:T24	1

END OF FIGURE

1	4	15	24	29	35
2 THRU 43	5 AND 6	16	25	30 THRU 34	36 THRU 43

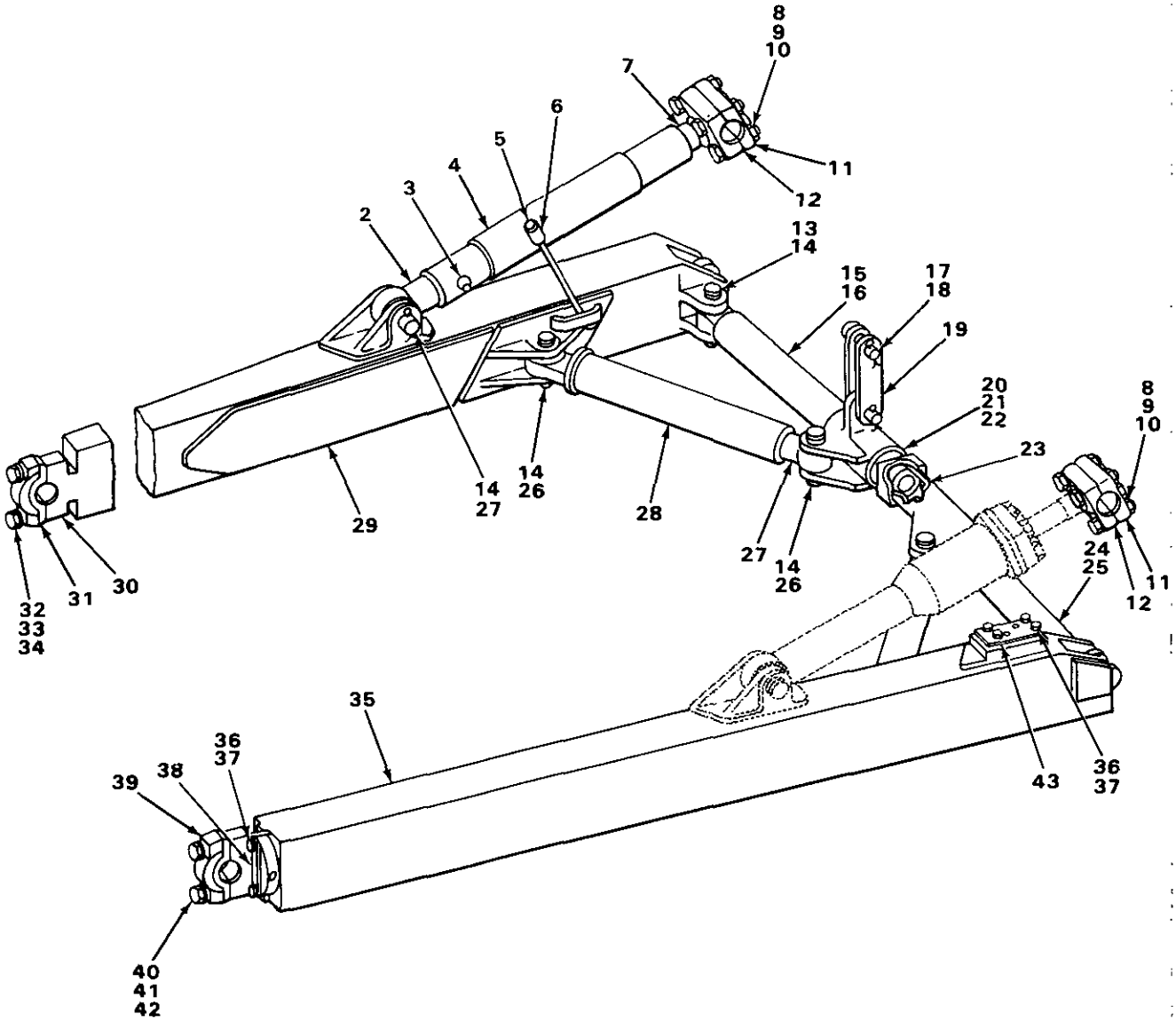

TA235450

FIGURE 253. BULLDOZER PUSH ARM.

(1) ITEM NO	(2) SMR CODE	(3) NSN	(4) CAGEC	(5) PART NUMBER	(6) DESCRIPTION AND USABLE ON CODES(UOC)	(7) QTY
					GROUP 7436 LIFT ARMS AND PIVOT ASSEMBLIES.	
					FIG. 253 BULLDOZER PUSH ARM.	
1	XCOFF		11083	8J9196	PUSH ARM GROUP..... UOC:T25	1
2	PFFZZ	5306013227299	11083	8J9034	.BOLT,RING..... UOC:T25	1
3	PAOZZ	4730000504208	96906	MS15003-1	.FITTING,LUBRICATION..... UOC:T25	2
4	XBFZZ		11083	9J6715	.BRACE ASSEMBLY..... UOC:T25	1
5	XBFZZ		11083	9J2272	..HANDLE..... UOC:T25	1
6	XBFZZ		11083	8J4867	..LUG..... UOC:T25	1
7	PFFZZ	5306013241549	11083	8J9152	.BOLT,SHOULDER..... UOC:T25	1
8	PFFZZ	5306002755014	11083	5B5473	.BOLT,MACHINE..... UOC:T25	8
9	PFFZZ	5310005847889	96906	MS35338-53	.WASHER,LOCK..... UOC:T25	8
10	PFFZZ	5310009307454	11083	1B4333	.NUT,SPECIAL..... UOC:T25	8
11	PFFZZ	3040013034886	11083	8J9013	.CAP,LINEAR ACTUATIN..... UOC:T25	2
12	PFFZZ	5365011063769	11083	8J9180	.SHIM..... UOC:T25	24
13	PFFZZ	5315002600807	11083	5F7993	.PIN,STRAIGHT,HEADED..... UOC:T25	2
14	PFFZZ	5315012098775	11083	3B5326	.PIN,COTTER..... UOC:T25	8
15	XBFZZ		11083	6J4804	.STRUT ASSEMBLY LH..... UOC:T25	1
16	PFFZZ	3110012701814	11083	9J3789	..BEARING,ROLLER,ROD..... UOC:T25	1
17	PFFZZ	5315002600806	11083	3F6185	.PIN,STRAIGHT,HEADED..... UOC:T25	2
17	PFFZZ	5315003527706	11083	4F255	.PIN,STRAIGHT,HEADED..... UOC:T25	2
18	PFFZZ	5315000590206	96906	MS24665-491	.PIN,COTTER..... UOC:T25	2
19	XBFZZ		11083	6J2474	.LINK..... UOC:T25	2
20	PFFZZ	5306004238807	11083	2H3757	.BOLT,MACHINE..... UOC:T25	4
21	PFFZZ	5310007542005	96906	MS35338-52	.WASHER,LOCK..... UOC:T25	4
22	PFFZZ	5342010739953	11083	5J8207	.RETAINER..... UOC:T25	1
23	XBFZZ		11083	8J7978	.BEARING.....	1

(1) ITEM NO	(2) SMR CODE	(3) NSN	(4) CAGEC	(5) PART NUMBER	(6) DESCRIPTION AND USABLE ON CODES(UOC)	(7) QTY
					UOC:T25	
24	XBFZZ		11083	8J2914	.STRUT ASSEMBLY RH.....	1
					UOC:T25	
25	PFFZZ	3110012701814	11083	9J3789	..BEARING,ROLLER,ROD.....	1
					UOC:T25	
26	PFFZZ	5315004910400	11083	1J6746	.PIN,STRAIGHT,HEADED.....	4
					UOC:T25	
27	PFFZZ	5306013239638	11083	1J6749	.BOLT,SHOULDER.....	2
					UOC:T25	
28	PFFZZ	3830013563583	11083	6J4793	.BRACE ASSEMBLY,TILT.....	2
					UOC:T25	
29	XBFFF		11083	8J9024	.ARM GROUP LH.....	1
					UOC:T25	
30	XBFZZ		11083	1J7478	..BEARING.....	1
					UOC:T25	
31	PFFZZ	3130001311832	11083	6F7523	..CAP,PILLOW BLOCK.....	1
					UOC:T25	
32	PFFZZ	5306001311660	11083	1J6775	..BOLT,MACHINE.....	2
					UOC:T25	
33	PFFZZ	5310001364398	11083	6F7522	..NUT,PLAIN,SQUARE.....	2
					UOC:T25	
34	PFFZZ	5310011626012	11083	4K684	..WASHER,FLAT.....	2
					UOC:T25	
35	XBFFF		11083	8J9023	.ARM GROUP RH.....	1
					UOC:T25	
36	PFFZZ	5306011756914	11083	T690	..BOLT,MACHINE.....	6
					UOC:T25	
37	PFFZZ	5310007542005	96906	MS35338-52	..WASHER,LOCK.....	6
					UOC:T25	
38	PAFZZ		11083	8S4954	..PLATE.....	1
					UOC:T25	
39	PFFZZ	3130001311832	11083	6F7523	..CAP,PILLOW BLOCK.....	1
					UOC:T25	
40	PFFZZ	5306001311660	11083	1J6775	..BOLT,MACHINE.....	2
					UOC:T25	
41	PFFZZ	5310001364398	11083	6F7522	..NUT,PLAIN,SQUARE.....	2
					UOC:T25	
42	PFFZZ	5310011626012	11083	4K684	..WASHER,FLAT.....	2
					UOC:T25	
43	XBFZZ		11083	9J7549	..PLATE.....	1
					UOC:T25	

END OF FIGURE

1	7	16	23
2 THRU 27	8 AND 9	17 THRU 19	24 THRU 26

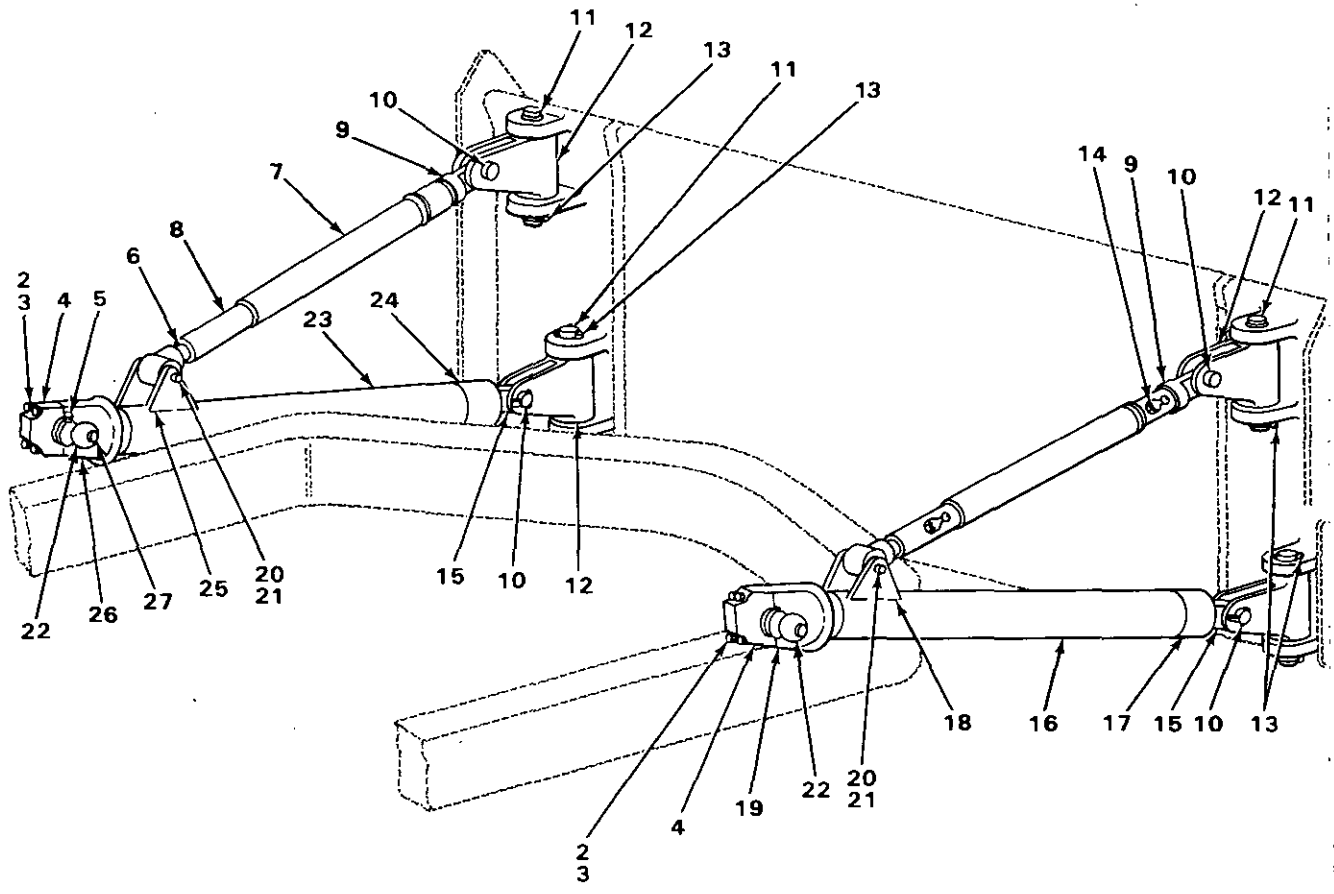

TA235451

FIGURE 254. ARM AND BRACE.

(1) ITEM NO	(2) SMR CODE	(3) NSN	(4) CAGEC	(5) PART NUMBER	(6) DESCRIPTION AND USABLE ON CODES(UOC)	(7) QTY
					GROUP 7436 LIFT ARMS AND PIVOT ASSEMBLIES.	
					FIG. 254 ARM AND BRACE.	
1	XBOFF		11083	4J218	ARM AND BRACE..... UOC:T24	1
2	PFFZZ	5306008628901	11083	L1169	.BOLT,MACHINE..... UOC:T24	8
3	PFFZZ	5310000455001	96906	MS35340-50	.WASHER,LOCK..... UOC:T24	8
4	PFFZZ	3130012584532	11083	3J5190	.CAP,PILLOW BLOCK..... UOC:T24	2
5	XBFZZ		11083	3J6588	.PIN..... UOC:T24	2
6	XBFZZ		11083	1J7611	.SCREW..... UOC:T24	2
7	XBFZZ		11083	3J3863	.BRACE ASSEMBLY..... UOC:T24	2
8	XBFZZ		11083	1J7613	..NUT..... UOC:T24	2
9	XBFZZ		11083	3J970	..BEARING ASSEMBLY..... UOC:T24	2
10	PFFZZ	5315012524967	11083	1J1738	.PIN..... UOC:T24	4
11	PFFZZ	5315012580234	11083	2J1506	.PIN,STRAIGHT,HEADLE..... UOC:T24	4
12	XBFZZ		11083	2J2622	.BRACKET..... UOC:T24	4
13	PFFZZ	5315001879573	96906	MS24665-622	.PIN,COTTER..... UOC:T24	8
14	PAOZZ	4730000504208	96906	MS15003-1	.FITTING,LUBRICATION..... UOC:T24	4
15	XBFZZ		11083	3J6497	.SCREW..... UOC:T24	2
16	XBFFF		11083	8J6649	.ARM SUPPORT,ANGLE B RH..... UOC:T24	1
17	XBFZZ		11083	8J6645	..NUT..... UOC:T24	1
18	XBFZZ		11083	8J6644	..SUPPORT..... UOC:T24	2
19	XBFZZ		11083	8J6647	..BEARING..... UOC:T24	1
20	PFFZZ	5315004910400	11083	1J6746	.PIN,STRAIGHT,HEADED..... UOC:T24	2
20	PFFZZ	5315003528035	11083	5F7994	.PIN,STRAIGHT,HEADED..... UOC:T24	2
21	PFFZZ	5315000590206	96906	MS24665-491	.PIN,COTTER..... UOC:T24	2
22	XBFZZ		11083	3J3493	.BALL STUD..... UOC:T24	2
23	XBFFF		11083	8J6650	.ARM ASSEMBLY LH.....	1

(1) ITEM NO	(2) SMR CODE	(3) NSN	(4) CAGEC	(5) PART NUMBER	(6) DESCRIPTION AND USABLE ON CODES(UOC)	(7) QTY
					UOC:T24	
24	XBFZZ		11083	8J6645	..NUT.....	1
					UOC:T24	
25	XBFZZ		11083	8J6644	..SUPPORT.....	2
					UOC:T24	
26	XBFZZ		11083	8J6647	..BEARING.....	1
					UOC:T24	
27	PFFZZ	5315009318963	11083	3J1770	.PIN,LOCK.....	4
					UOC:T24	

END OF FIGURE

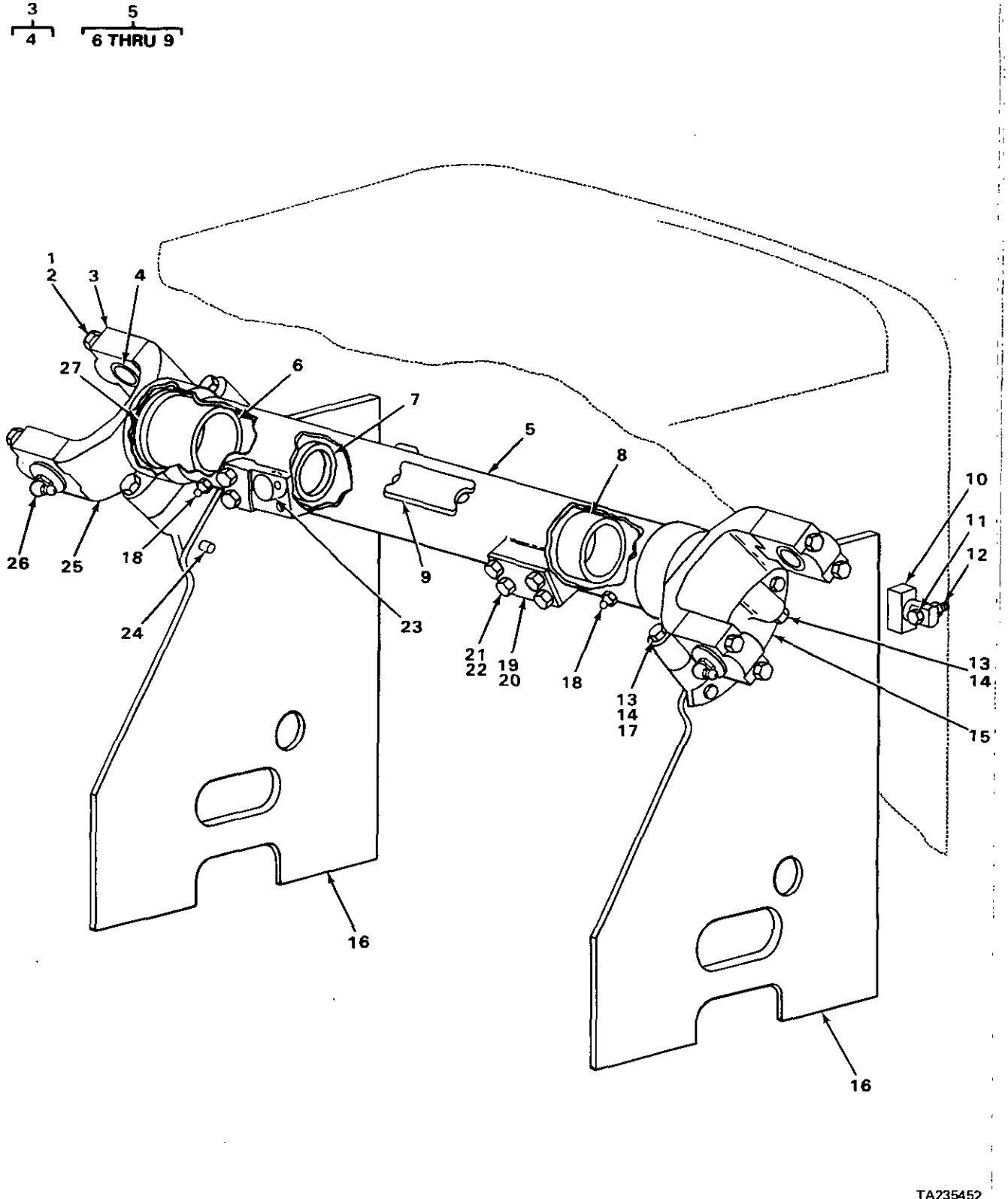

FIGURE 255. BLADE CYLINDER MOUNTING.

(1) ITEM NO	(2) SMR CODE	(3) NSN	(4) CAGEC	(5) PART NUMBER	(6) DESCRIPTION AND USABLE ON CODES(UOC)	(7) QTY
					GROUP 7436 LIFT ARMS AND PIVOT ASSEMBLIES.	
					FIG. 255 BLADE CYLINDER MOUNTING.	
1	PFOZZ	5305010690839	11083	1D4617	CAP SCREW	8
2	PFOZZ	5310005847888	96906	MS35338-51	WASHER,LOCK	8
3	PFOZZ	4730010695817	11083	9J5283	CAP ASSEMBLY	4
4	PFOZZ	3110010672165	11083	9J5284	.BEARING	1
5	AOOOO		11083	7J4583	TUBE ASSEMBLY	1
6	PFOZZ	3120012854961	11083	7J1335	.BEARING,SLEEVE	2
7	XDOZZ		11083	5F1474	.PLUG,EXPANSION	2
8	PFOZZ	3120013192169	11083	7J1336	.BEARING,SLEEVE	2
9	XAOZZ		11083	7J4582	.SUPPORT	1
10	PFOZZ	5315011626052	11083	2J3207	PIN,STRAIGHT,HEADED	2
11	PFOZ2	5305000712055	80204	B1821BH044C150N	SCREW,CAP,HEXAGON H	2
12	PFOZZ	5310004317237	11083	1P1396	NUT	2
13	PFOZZ	5306000030681	11083	9S1322	BOLT,MACHINE	8
14	PFOZZ	5310009499296	78500	1229T1554	WASHER,FLAT	12
15	XBOZZ		11083	4J5130	BRACKET	2
16	XBOZZ		11083	8J9827	PLATE	2
17	PFOZZ	5310009192242	11083	2J3505	NUT,PLAIN,HEXAGON	4
18	PFOZZ	4730001720031	96906	MS15003-5	FITTING,LUBRICATION	2
19	XBOZZ		11083	5J5118	PLATE	2
20	PAOZZ	5330010672308	11083	8J8004	GASKET	2
21	PFOZZ	5306002755012	11083	S1566	BOLT,MACHINE	8
22	PFOZZ	5310000455001	96906	MS35340-50	WASHER,LOCK	8
23	XBOZZ		11083	5J5120	PIN	2
24	PFOZZ	5305012542517	11083	1P3864	SCREW,CAP,HEXAGON H	4
25	XBOZZ		11083	9J5258	YOKE	2
26	PFOZZ	4730001720034	96906	MS15003-6	FITTING,LUBRICATION	4
27	XDOZZ		11083	3J1984	SEAL	2

END OF FIGURE

3
4

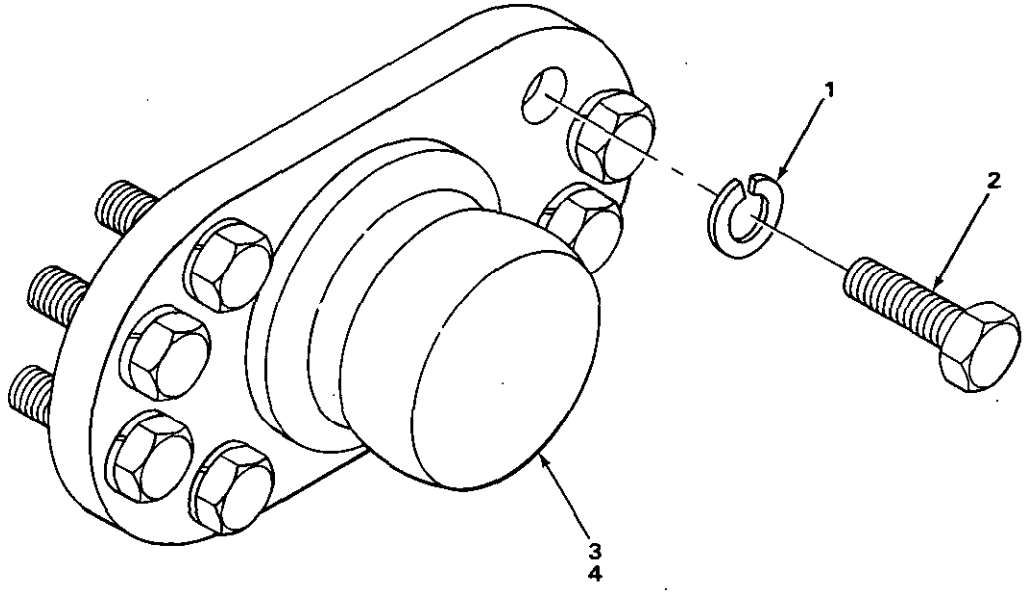

TA235453

FIGURE 256. TRUNNION.

(1) ITEM NO	(2) SMR CODE	(3) NSN	(4) CAGEC	(5) PART NUMBER	(6) DESCRIPTION AND USABLE ON CODES(UOC)	(7) QTY
					GROUP 7436 LIFT ARMS AND PIVOT ASSEMBLIES.	
					FIG. 256 TRUNNION.	
1	PFHZZ	5310005847889	96906	MS35338-53	WASHER,LOCK.....	16
2	PFHZZ	5306004369893	11083	1J5257	BOLT,MACHINE.....	16
3	PFHZZ	5315010686070	11083	9J5273	TRUNNIAN A.....	2
4	XAHZZ		11083	5J4321	.TRUNNION.....	1

END OF FIGURE

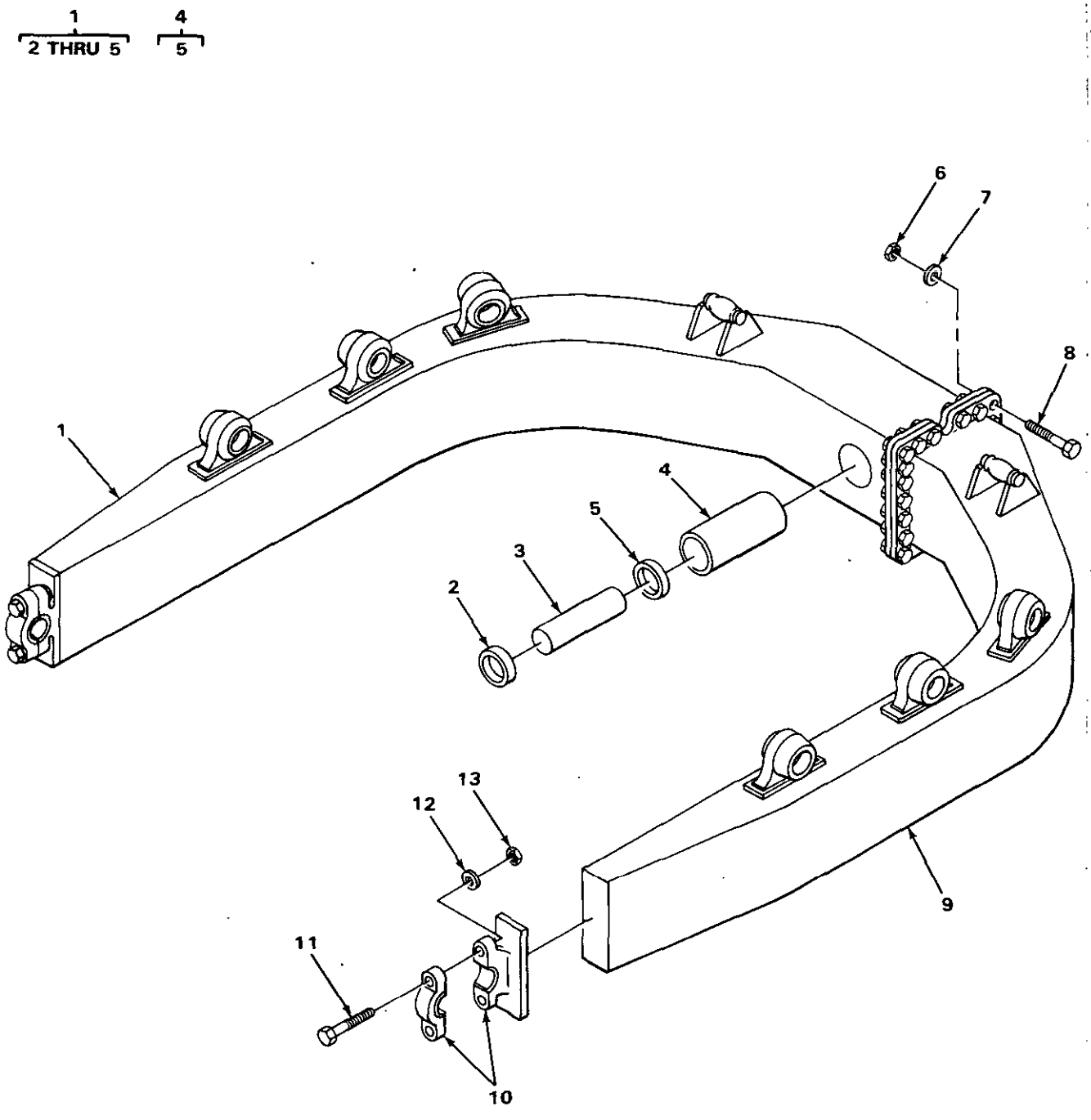

FIGURE 257. BULLDOZER C-FRAME.

(1) ITEM NO	(2) SMR CODE	(3) NSN	(4) CAGEC	(5) PART NUMBER	(6) DESCRIPTION AND USABLE ON CODES(UOC)	(7) QTY
					GROUP 7443 MAIN FRAME ASSEMBLY	
					FIG. 257 BULLDOZER C-FRAME.	
1	XBFFF		11083	8J9858	C-FRAME ASSEMBLY LH..... UOC:T24	1
2	XAFZZ		11083	3H7162	.COLLAR..... UOC:T24	1
3	XAFZZ		11083	3H7164	.PIN..... UOC:T24	1
4	XAFZZ		11083	2J5632	.TUBE ASSEMBLY..... UOC:T24	1
5	XAFZZ		11083	2J5630	..BUSHING..... UOC:T24	2
6	PFFZZ	5310004239635	11083	5B635	NUT,PLAIN,HEXAGON..... UOC:T24	27
7	XBFZZ		11083	5J7947	WASHER..... UOC:T24	54
8	PFFZZ	5305011027343	11083	1D3419	SCREW,CAP,HEXAGON H..... UOC:T24	27
9	XBFZZ		11083	8J9857	C-FRAME ASSEMBLY RH..... UOC:T24	1
10	PFFZZ	3130001311832	11083	6F7523	CAP,PILLOW BLOCK..... UOC:T24	2
11	PFFZZ	5306001311660	11083	1J6775	BOLT,MACHINE..... UOC:T24	4
12	PFFZZ	5310011626012	11083	4K684	WASHER,FLAT..... UOC:T24	4
13	PFFZZ	5310001364398	11083	6F7522	NUT,PLAIN,SQUARE..... UOC:T24	4

END OF FIGURE

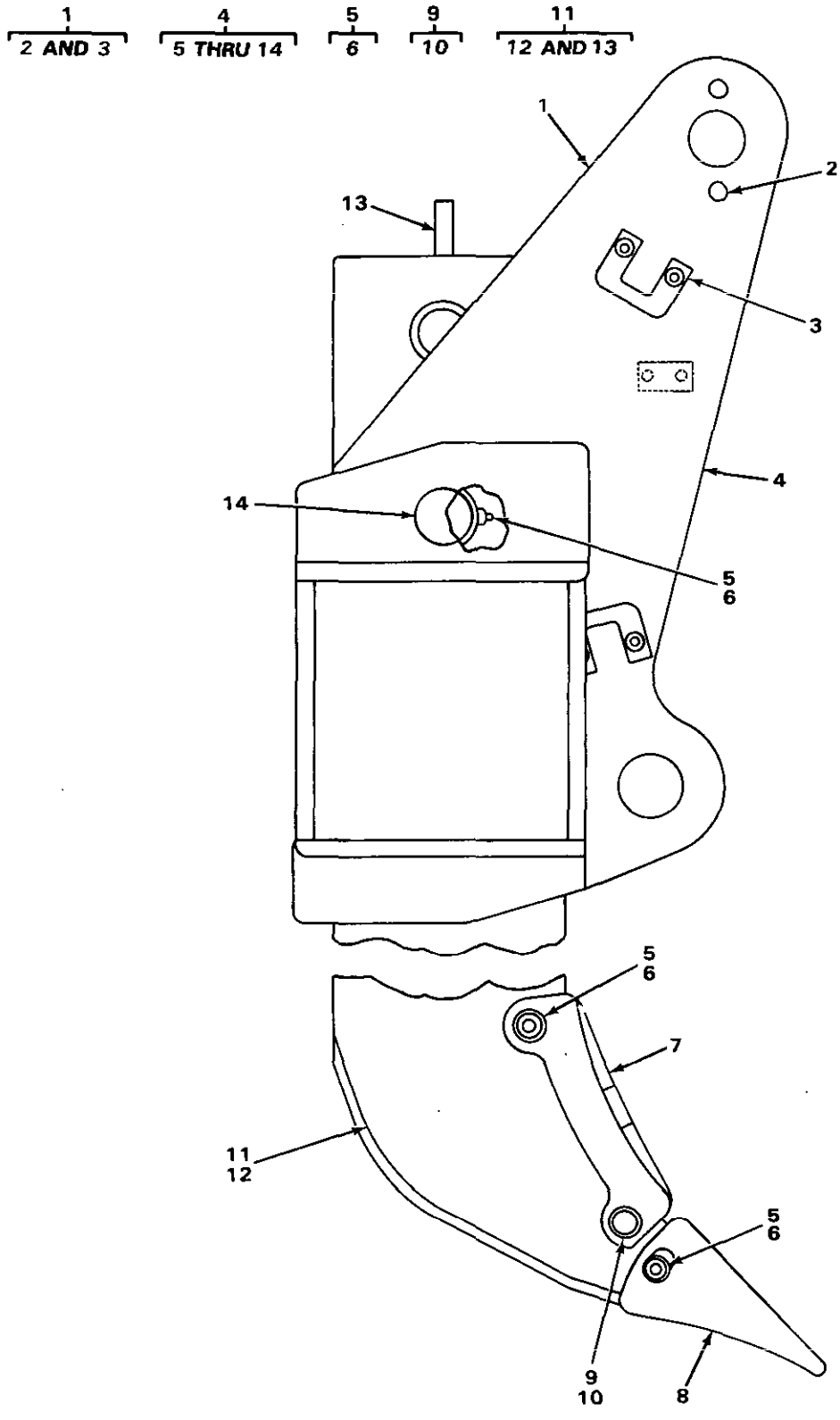

FIGURE 258. RIPPER TOOTH.

(1) ITEM NO	(2) SMR CODE	(3) NSN	(4) CAGEC	(5) PART NUMBER	(6) DESCRIPTION AND USABLE ON CODES(UOC)	(7) QTY
					GROUP 7465 ROOTERS, RIPPERS, PLOWS AND HARROWS.	
					FIG. 258 RIPPER TOOTH.	
1	XBFHH		11083	8J753	BEAM ASSEMBLY..... UOC:T25	1
2	XDHZZ		11083	3R0451	.BOSS..... UOC:T25	2
3	PFHZZ	5340013238066	11083	2J1227	.BRACKET,DOUBLE ANGL..... UOC:T25	4
4	PFFZZ	3830012720527	92839	HL-7J2054	SHANK-TOOTH,SURFACE..... UOC:T25	1
5	PAOZZ	3830011901047	11083	4T2479	.PIN ASSEMBLY..... UOC:T25	4
6	PFHZZ	5360011294814	11083	5J3576	..SPRING..... UOC:T25	1
7	PFHZZ	2590011235945	11083	6J8814	.PROTECTOR..... UOC:T25	1
8	PFHZZ	3830010483207	11083	6J8813	.TOOTH,SURFACE RIPPI 13.5 INCHES... UOC:T25	1
8	PAOZZ	2410011901048	11083	3G5451	.TIP,PENETRATION 13.6 INCHES..... UOC:T25	1
8	XBHZZ		11083	3G5452	.TIP 14.7 INCHES..... UOC:T25	1
9	PFHZZ	3830010480809	11083	6J8811	.PIN ASSEMBLY,RIPPER..... UOC:T25	1
10	PFHZZ	5340004043996	11083	6J8809	..STRAP,RETAINING..... UOC:T25	1
11	PFHZZ	3830010750018	11083	7J1795	.SHANK ASSEMBLY,TOOT..... UOC:T25	1
12	XBHZZ		11083	7J1769	..ADAPTER..... UOC:T25	1
13	PFHZZ	5340002681297	11083	8J3111	..PAD EYE..... UOC:T25	1
14	XBHZZ		11083	6J6680	.PIN..... UOC:T25	1

END OF FIGURE

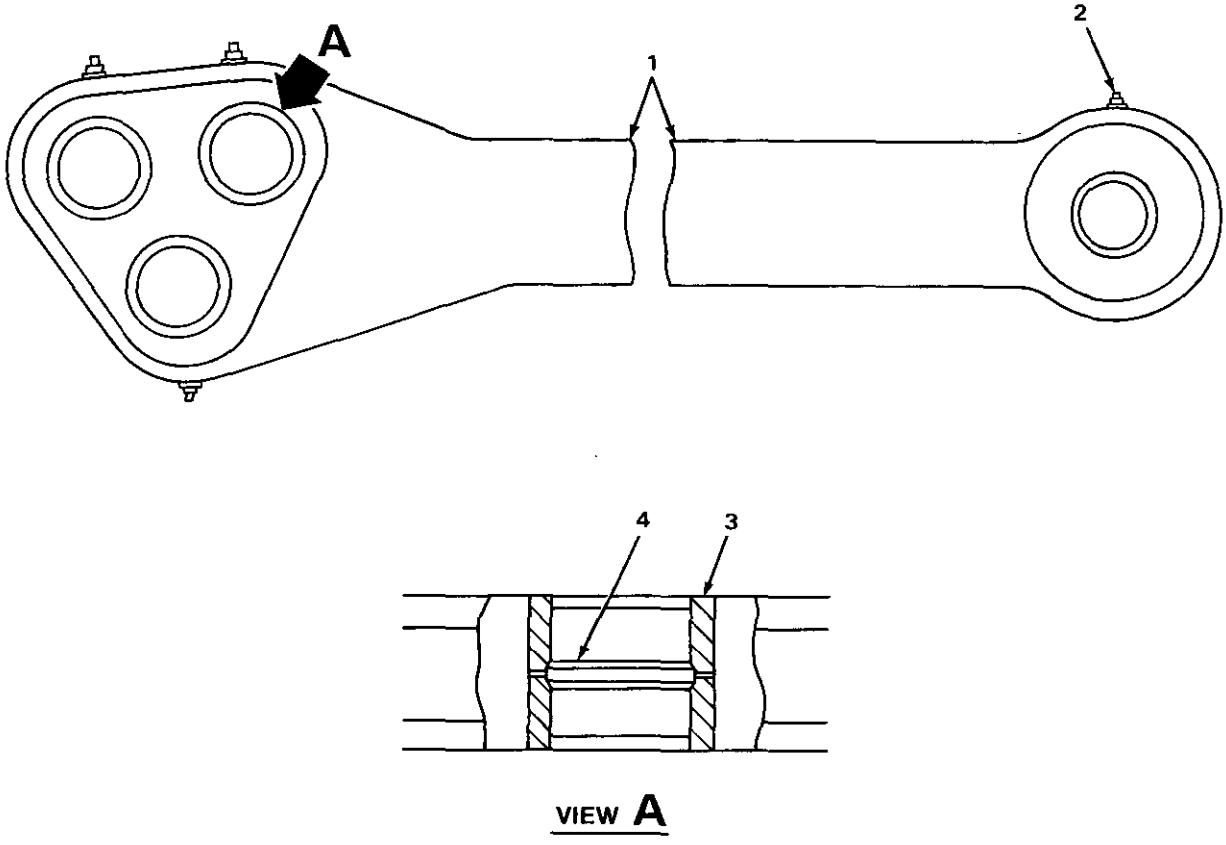

TA235456

FIGURE 259. RIPPER LINK.

(1) ITEM NO	(2) SMR CODE	(3) NSN	(4) CAGEC	(5) PART NUMBER	(6) DESCRIPTION AND USABLE ON CODES(UOC)	(7) QTY
					GROUP 7465 ROTERS, RIPPERS, PLOWS, AND HARROWS.	
					FIG. 259 RIPPER LINK.	
1	XBFZZ		11083	7J3029	LINK ASSEMBLY..... UOC:T25	1
2	PAOZZ	4730000504208	96906	MS15003-1	FITTING,LUBRICATION..... UOC:T25	4
3	PFFZZ	3120012857125	11083	3J6484	BEARING,SLEEVE..... UOC:T25	8
4	XBFZZ		11083	8J920	SPACER..... UOC:T25	4

END OF FIGURE

8
9 THRU 12

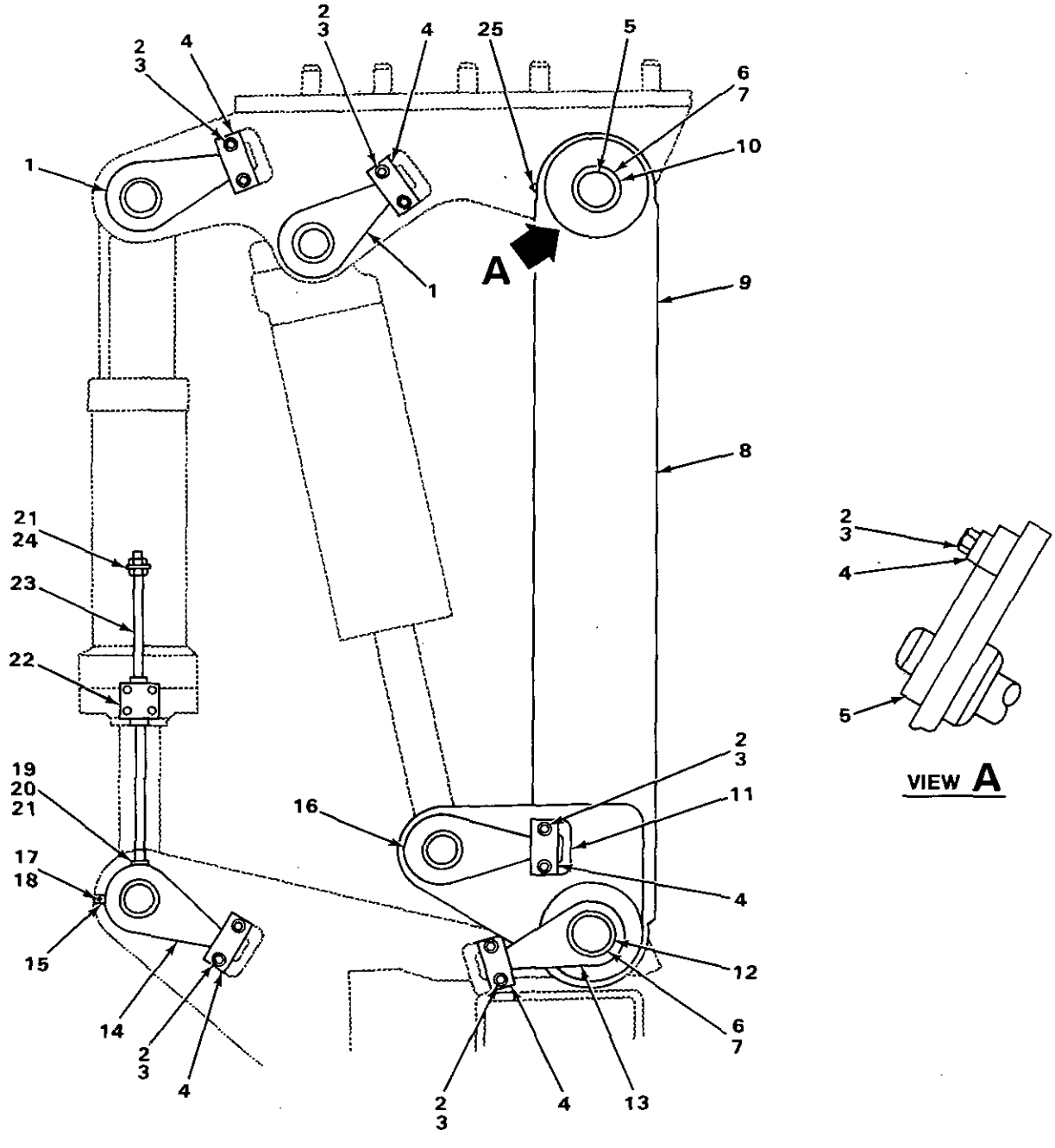

TA235457

FIGURE 260. RIPPER FRAME.

(1) ITEM NO	(2) SMR CODE	(3) NSN	(4) CAGEC	(5) PART NUMBER	(6) DESCRIPTION AND USABLE ON CODES(UOC)	(7) QTY
					GROUP 7465 ROOTERS, RIPPERS, PLOWS, AND HARROWS.	
					FIG. 260 RIPPER FRAME.	
1	XBHZZ		11083	5J1204	PIN ASSEMBLY..... UOC:T25	4
2	PFHZZ	5306008146588	11083	S1626	BOLT,MACHINE..... UOC:T25	24
3	PFHZZ	5310005847888	96906	MS35338-51	WASHER,LOCK..... UOC:T25	24
4	PFHZZ	5342012278610	11083	3J6034	LOCKING PLATE,NUT..... UOC:T25	12
5	XBHZZ		11083	6J8419	PIN ASSEMBLY..... UOC:T25	2
6	PFHZZ	5330009192240	11083	4J8981	SEAL,PLAIN ENCASED..... UOC:T25	8
7	PFHZZ	3120013222932	11083	9J4449	BEARING,WASHER,THRU..... UOC:T25	16
8	XBFHH		11083	9J4544	FRAME ASSEMBLY..... UOC:T25	1
9	XBHZZ		11083	5M3012	.LUG..... UOC:T25	3
10	XBHZZ		11083	9J4543	.BEARING..... UOC:T25	2
11	PFHZZ	5340013238066	11083	2J1227	.BRACKET,DOUBLE ANGL..... UOC:T25	2
12	XBHZZ		11083	9J5229	.BEARING..... UOC:T25	2
13	XBHZZ		11083	6J9482	PIN ASSEMBLY..... UOC:T25	2
14	XBHZZ		11083	6J9480	PIN ASSEMBLY..... UOC:T25	2
15	XBHZZ		11083	8J4162	BRACKET..... UOC:T25	1
16	XBHZZ		11083	6J9474	PIN ASSEMBLY..... UOC:T25	2
17	PFHZZ	5306004238194	11083	1A2029	BOLT,MACHINE..... UOC:T25	2
18	PFHZZ	5310006379541	96906	MS35338-46	WASHER,LOCK..... UOC:T25	2
19	PFHZZ	3120011547173	11083	5J0557	BEARING,PLAIN,ROD E..... UOC:T25	1
20	PFHZZ	5310010660508	11083	2K0564	NUT..... UOC:T25	1
21	PFHZZ	5310011674059	11083	3J9196	NUT,PLAIN,HEXAGON..... UOC:T25	3
22	XBHZZ		11083	9J3817	BRACKET ASSEMBLY..... UOC:T25	1
23	XBHZZ		11083	7B6296	ROD..... UOC:T25	1
24	XBHZZ		11083	7B462	WASHER.....	1

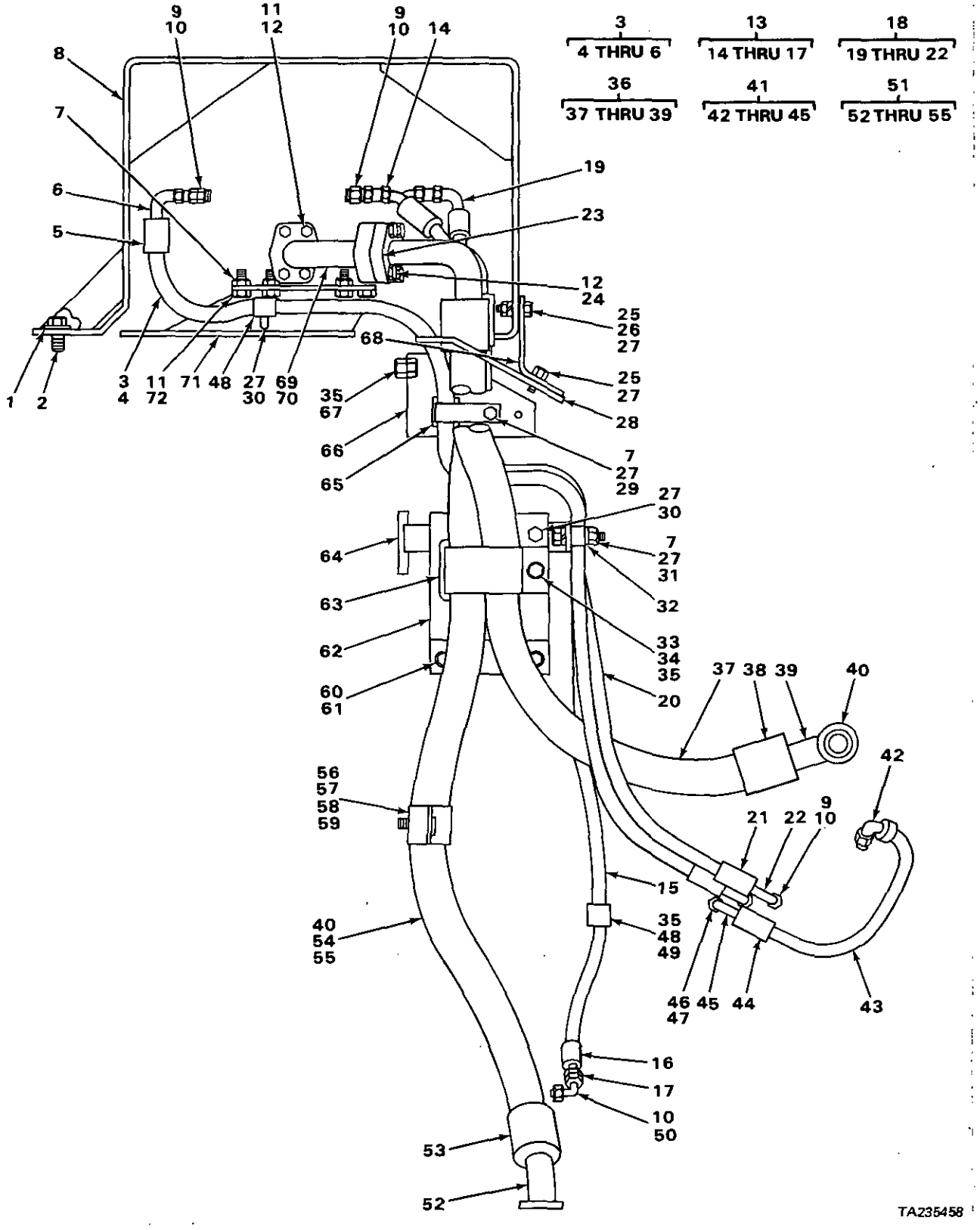

FIGURE 261. RIPPER LINES.

(1) ITEM NO	(2) SMR CODE	(3) NSN	(4) CAGEC	(5) PART NUMBER	(6) DESCRIPTION AND USABLE ON CODES(UOC)	(7) QTY
					GROUP 7465 ROOTERS, RIPPERS, PLOWS, AND HARROWS.	
					FIG. 261 RIPPER LINES.	
1	PFFZZ	5310001397030	11083	4D3704	WASHER,FLAT..... UOC:T25	2
2	PFFZZ	5306004238117	11083	S1595	BOLT,MACHINE..... UOC:T25	2
3	AFFFF		11083	6P7725	HOSE ASSEMBLY..... UOC:T25	1
4	MFFZZ		19207	5P178-70	.HOSE MAKE FROM HOSE P/N 5P178..... UOC:T25	1
5	PFFZZ	4730010950075	11083	4S5414	.SLEEVE,HOSE..... UOC:T25	2
6	PFFZZ	4730010950833	11083	8S6393	.ELBOW,TUBE TO HOSE..... UOC:T25	2
7	PFFZZ	5310000050781	11083	9F2978	NUT,PLAIN,WELDING..... UOC:T25	8
8	XBFZZ		11083	6P317	GUARD ASSEMBLY..... UOC:T25	1
9	PFFZZ	4730004919576	96906	MS51525A6	ADAPTER,STRAIGHT,TU..... UOC:T25	5
10	PAFZZ	5331008013354	25184	906-737-70	O-RING..... UOC:T25	6
11	PFFZZ	5310006559370	96906	MS35340-47	WASHER,LOCK..... UOC:T25	8
12	PFFZZ	5306004262983	11083	T768	BOLT,MACHINE..... UOC:T25	8
13	AFFFF		11083	6P318	HOSE ASSEMBLY..... UOC:T25	1
14	PFFZZ	4730010950834	11083	1P9919	.ELBOW,TUBE TO HOSE..... UOC:T25	1
15	MFFZZ		19207	5P178-74	.HOSE MAKE FROM HOSE P/N 5P178..... UOC:T25	1
16	PFFZZ	4730010950075	11083	4S5414	.SLEEVE,HOSE..... UOC:T25	2
17	PFFZZ	4730010947469	11083	8S6417	.ADAPTER,STRAIGHT,TU..... UOC:T25	1
18	AFFFF		11083	6P7726	HOSE ASSEMBLY..... UOC:T25	1
19	PFFZZ	4730010950833	11083	8S6393	.ELBOW,TUBE TO HOSE..... UOC:T25	1
20	MFFZZ		19207	5P178-56	.HOSE MAKE FROM HOSE P/N 5P178..... UOC:T25	1
21	PFFZZ	4730010950075	11083	4S5414	.SLEEVE,HOSE..... UOC:T25	2
22	PFFZZ	4730010950835	11083	8S6392	.ELBOW,TUBE TO HOSE..... UOC:T25	1
23	PFFZZ	4730010515257	11083	1P4578	FLANGE,PIPE..... UOC:T25	2
24	PFFZZ	5310001183035	11083	4B4279	WASHER,FLAT.....	4

(1) ITEM NO	(2) SMR CODE	(3) NSN	(4) CAGEC	(5) PART NUMBER	(6) DESCRIPTION AND USABLE ON CODES(UOC)	(7) QTY
					UOC:T25	
25	PFFZZ	5306002604508	11083	S1594	BOLT,MACHINE USE WITH RIPPER LINES TYPE 2.....	4
					UOC:T25	
25	PFFZZ	5306004238117	11083	S1595	BOLT,MACHINE USE WITH RIPPER LINES TYPE 1.....	2
					UOC:T25	
26	PFFZZ	5310011945398	11083	1D4717	NUT,HEXAGON.....	2
					UOC:T25	
27	PFFZZ	5310006379541	96906	MS35338-46	WASHER,LOCK USE WITH RIPPER LINES TYPE 2.....	10
					UOC:T25	
27	PFFZZ	5310006379541	96906	MS35338-46	WASHER,LOCK USE WITH RIPPER LINES TYPE 1.....	9
					UOC:T25	
28	XBFZZ		11083	6P313	DOOR.....	1
					UOC:T25	
29	PFFZZ	5305000680511	80204	B1821BH038C125N	SCREW,CAP,HEXAGON H USE WITH RIPPER LINES TYPE 2.....	1
					UOC:T25	
29	PFFZZ	5306002604508	11083	S1594	BOLT,MACHINE USE WITH RIPPER LINES TYPE 1.....	1
					UOC:T25	
30	PFFZZ	5306002637301	11083	L1351	BOLT,MACHINE.....	3
					UOC:T25	
31	PFFZZ	5305010269518	11083	0S1571	SCREW,CAP,HEXAGON H USE WITH RIPPER LINES TYPE 2.....	2
					UOC:T25	
31	PFFZZ	5306002604508	11083	S1594	BOLT,MACHINE USE WITH RIPPER LINES TYPE 1.....	1
					UOC:T25	
32	XBFZZ		11083	7S8077	PLATE ASSEMBLY USE WITH RIPPER LINES TYPE 2.....	1
					UOC:T25	
32	XBFZZ		11083	6P6728	BRACKET ASSEMBLY USE WITH RIPPER LINES TYPE 1.....	1
					UOC:T25	
33	PFFZZ	5310004454632	11083	1F748	NUT,PLAIN,WELDING USE WITH RIPPER LINES TYPE 2.....	3
					UOC:T25	
33	PFFZZ	5310000050781	11083	9F2978	NUT,PLAIN,WELDING USE WITH RIPPER LINES TYPE 1.....	3
					UOC:T25	
34	PFFZZ	5306011279361	11083	0S1585	BOLT,MACHINE USE WITH RIPPER LINES TYPE 2.....	1
					UOC:T25	
34	PFFZZ	5306004238117	11083	S1595	BOLT,MACHINE USE WITH RIPPER LINES TYPE 1.....	1
					UOC:T25	
35	PFFZZ	5310004317239	11083	2M849	WASHER,FLAT.....	6
					UOC:T25	
36	AFFFF		11083	3P3983	HOSE ASSEMBLY.....	1

(1) ITEM NO	(2) SMR CODE	(3) NSN	(4) CAGEC	(5) PART NUMBER	(6) DESCRIPTION AND USABLE ON CODES(UOC)	(7) QTY
					UOC:T25	
37	MFFZZ		19207	0625930-49	.HOSE MAKE FROM HOSE P/N 5P182.....	1
					UOC:T25	
38	PFFZZ	5365010671426	11083	3S7116	.SLEEVE.....	2
					UOC:T25	
39	PFFZZ	4730012846103	11083	5S3820	.ELBOW,FLANGE TO HOS.....	1
					UOC:T25	
40	PFFZZ	5331009484063	11083	4J522	O-RING.....	4
					UOC:T25	
41	AFFFF		11083	6P6705	HOSE ASSEMBLY.....	1
					UOC:T25	
42	PFFZZ	4730010947469	11083	8S6417	.ADAPTER,STRAIGHT,TU.....	1
					UOC:T25	
43	MFFZZ		19207	5P178-17	.HOSE MAKE FROM HOSE P/N 5P178.....	1
					UOC:T25	
44	PFFZZ	4730010950075	11083	4S5414	.SLEEVE,HOSE.....	2
					UOC:T25	
45	PFFZZ	4730010950833	11083	8S6393	.ELBOW,TUBE TO HOSE.....	1
					UOC:T25	
46	PFFZZ	4730010629928	11083	303978	ADAPTER,STRAIGHT,TU.....	1
					UOC:T25	
47	XDFZZ	5330010491292	02697	3-904N552-90	O-RING.....	1
					UOC:T25	
48	XBFZZ		11083	5R939	CLIP TAB.....	2
					UOC:T25	
48	XBFZZ		11083	5R940	CLIP SLOT.....	2
					UOC:T25	
49	PFFZZ	5306004238117	11083	S1595	BOLT,MACHINE.....	1
					UOC:T25	
50	PFFZZ	4730001433941	96906	MS51527A6	ELBOW,TUBE TO BOSS.....	1
					UOC:T25	
51	AFFFF		11083	3P6957	HOSE ASSEMBLY.....	1
					UOC:T25	
52	PFFZZ	4730010974728	11083	3S8570	.ELBOW,FLANGE TO HOS 45 DEGREES....	1
					UOC:T25	
53	PFFZZ	5365010671426	11083	3S7116	.SLEEVE.....	2
					UOC:T25	
54	MFFZZ		19207	0625930-71	.HOSE MAKE FROM HOSE P/N 5P182.....	1
					UOC:T25	
55	PFFZZ	4730012846103	11083	5S3820	.ELBOW,FLANGE TO HOS.....	1
					UOC:T25	
56	XBFZZ		11083	2P7506	CLIP TAB USE WITH RIPPER LINES TYPE 2.....	1
					UOC:T25	
56	XBFZZ		11083	2P7507	CLIP SLOT USE WITH RIPPER LINES TYPE 2.....	1
					UOC:T25	
57	PFFZZ	5310004135060	11083	3K925	WASHER,FLAT USE WITH RIPPER LINES TYPE 2.....	1
					UOC:T25	
58	PFFZZ	5306002604508	11083	S1594	BOLT,MACHINE USE WITH RIPPER LINES TYPE 2.....	1

(1) ITEM NO	(2) SMR CODE	(3) NSN	(4) CAGEC	(5) PART NUMBER	(6) DESCRIPTION AND USABLE ON CODES(UOC)	(7) QTY
					UOC:T25	
59	PFFZZ	5310006379541	96906	MS35338-46	WASHER,LOCK USE WITH RIPPER LINES TYPE 2.....	1
					UOC:T25	
60	PFFZZ	5310004317239	11083	2M849	WASHER,FLAT USE WITH RIPPER LINES TYPE 2.....	2
					UOC:T25	
61	PFFZZ	5306004238117	11083	S1595	BOLT,MACHINE USE WITH RIPPER LINES TYPE 2.....	2
					UOC:T25	
62	XBFZZ		11083	6P6726	BRACKET ASSEMBLY.....	1
					UOC:T25	
63	XBFZZ		11083	6P6729	CLIP.....	1
					UOC:T25	
64	XBFZZ		11083	6P9540	BRACKET ASSEMBLY USE WITH RIPPER LINES TYPE 2.....	1
					UOC:T25	
65	XBFZZ		11083	6P6733	CLIP.....	1
					UOC:T25	
66	XBFZZ		11083	6P6731	BRACKET ASSEMBLY.....	1
					UOC:T25	
67	PFFZZ	5306002736357	11083	1A1460	BOLT,MACHINE.....	2
					UOC:T25	
68	XBFZZ		11083	6P315	PLATE USE WITH RIPPER LINES TYPE 1.	1
					UOC:T25	
69	XBFZZ		11083	3P4020	TUBE ASSEMBLY USE WITH RIPPER LINES TYPE 1.....	1
					UOC:T25	
70	PAFZZ	5331010062129	11083	4J523	O-RING USE WITH RIPPER LINES TYPE 1	1
					UOC:T25	
71	XBFZZ		11083	3P4028	PLATE ASSEMBLY USE WITH RIPPER LINES TYPE 1.....	1
					UOC:T25	
72	PFFZZ	5306002604513	11083	T320	BOLT,MACHINE.....	4
					UOC:T25	

END OF FIGURE

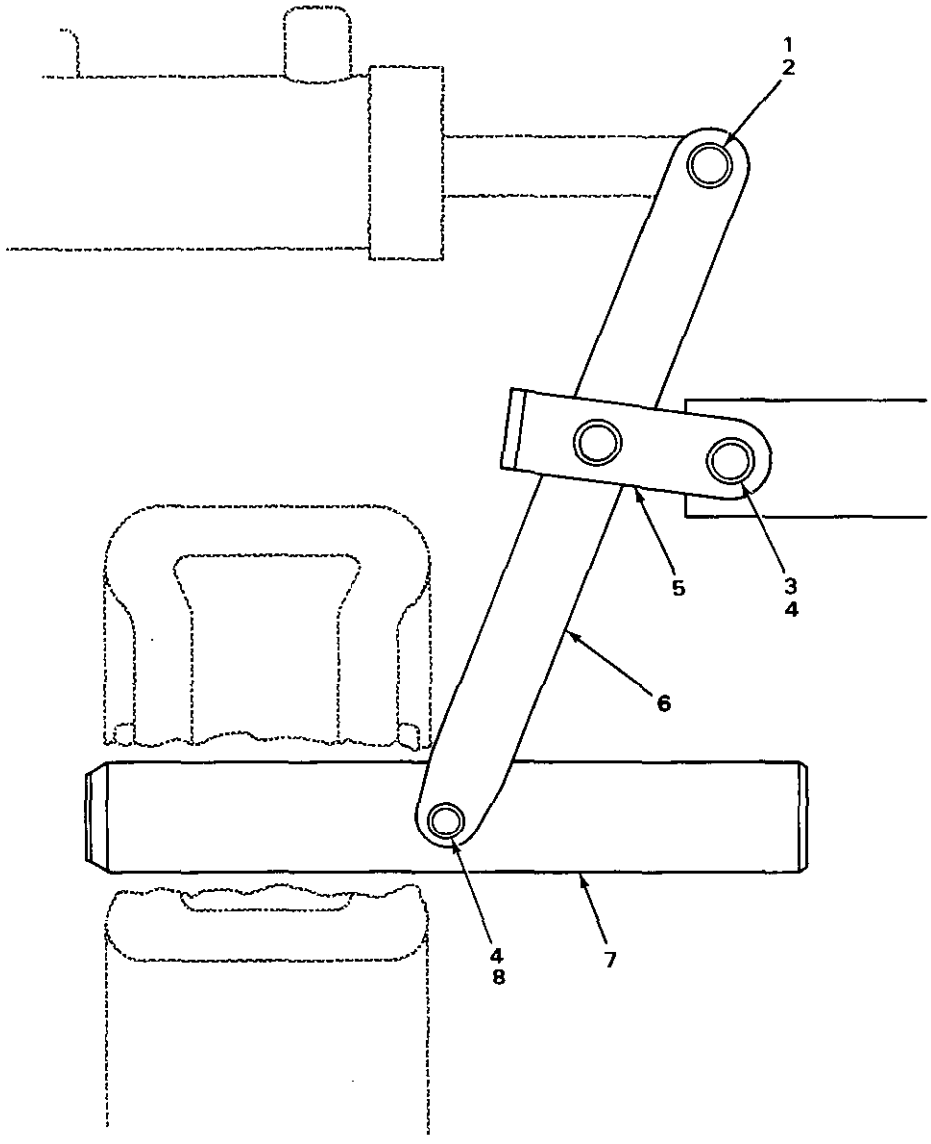

TA235459

FIGURE 262. PIN PULLER.

(1) ITEM NO	(2) SMR CODE	(3) NSN	(4) CAGEC	(5) PART NUMBER	(6) DESCRIPTION AND USABLE ON CODES (UOC)	(7) QTY
					GROUP 7465 ROOTERS, RIPPERS, PLOWS AND HARROWS.	
					FIG. 262 PIN PULLER.	
1	XBFZZ		11083	9F1720	PIN UOC: T25	2
2	PFFZZ	5315000590217	96906	MS24665-624	PIN, COTTER UOC: T25	2
3	XDFZZ		11083	7J251	PIN UOC: T25	2
4	PFFZZ	5315010523942	11083	3B4629	P1N, COTTER UOC: T25	3
5	PFFZZ	5420010794310	11083	7J26O	BRACKET ASSEMBLY	1
6	PFFZZ	2590011235955	11083	9J3777	BRACKET UOC: T25	1
7	XBFZZ		11083	9J3848	PIN UOC: T25	1
B	XDFZZ		11083	7J252	PIN UOC T25	1

END OF FIGURE

5 — 6 THRU 9

10 — 11 THRU 14

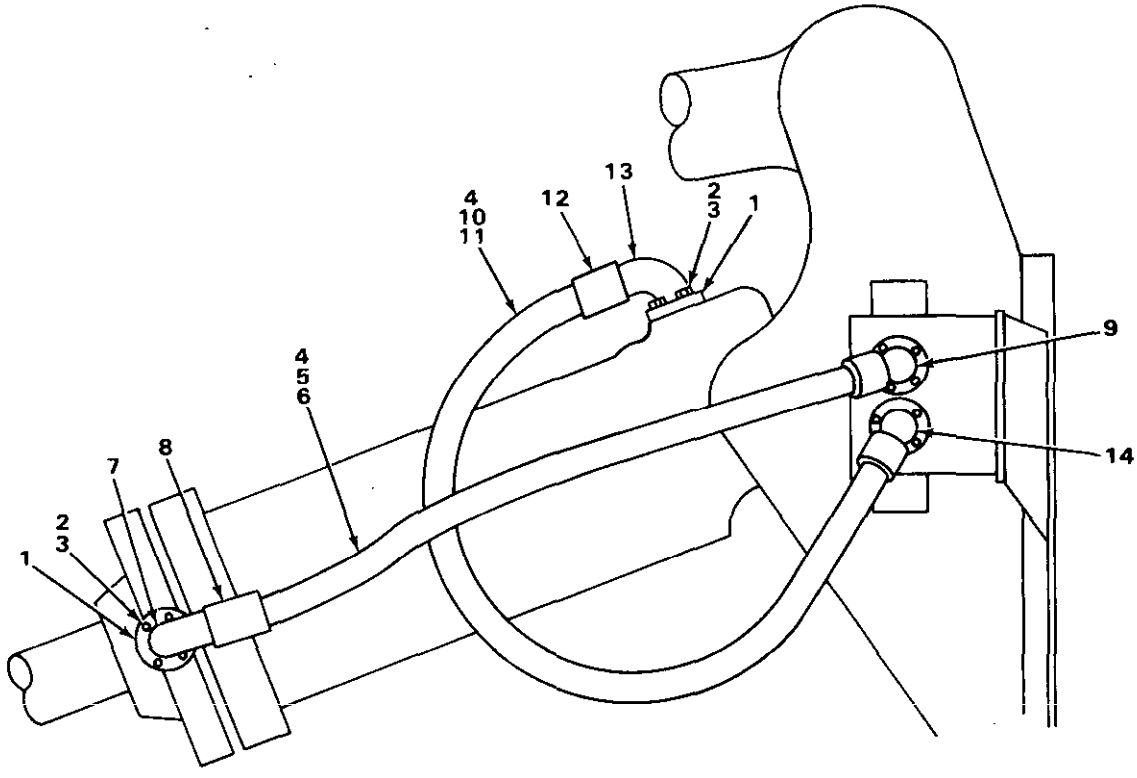

TA235460

FIGURE 263. RIPPER CYLINDER LINES.

(1) ITEM NO	(2) SMR CODE	(3) NSN	(4) CAGEC	(5) PART NUMBER	(6) DESCRIPTION AND USABLE ON CODES(UOC)	(7) QTY
					GROUP 7465 ROOTERS, RIPPERS, PLOWS, AND HARROWS.	
					FIG. 263 RIPPER CYLINDER LINES.	
1	PFFZZ	4730010515256	11083	1P4577	FLANGE,PIPE..... UOC:T25	8
2	PFFZZ	5305000680511	80204	B1821BH038C125N	SCREW,CAP,HEXAGON H..... UOC:T25	16
3	PFFZZ	5310001174788	11083	5M2894	WASHER,FLAT..... UOC:T25	16
4	PFFZZ	5331009136144	11083	4J520	O-RING..... UOC:T25	8
5	PFFFZ	4720012548689	11083	8J9617	HOSE ASSEMBLY,NONME..... UOC:T25	2
6	MFFZZ		19207	5P180-41	.HOSE MAKE FROM HOSE P/N 9S247..... UOC:T25	1
7	XBFZZ		11083	1P6908	.STEM ASSEMBLY 90 DEGREES..... UOC:T25	1
8	PFFZZ	5365012857772	11083	3J7166	.SPACER,SLEEVE..... UOC:T25	2
9	XBFZZ		11083	8S4591	.STEM ASSEMBLY 60 DEGREES..... UOC:T25	1
10	AFFFF		11083	8J9618	HOSE ASSEMBLY..... UOC:T25	2
11	MFFZZ		19207	5P180-35	.HOSE MAKE FROM HOSE P/N 9S247..... UOC:T25	1
12	PFFZZ	5340010516767	11083	3S7166	.PLUNGER,DETENT..... UOC:T25	2
13	XBFZZ		11083	1P6908	.STEM ASSEMBLY 90 DEGREES..... UOC:T25	1
14	XBFZZ		11083	8S4591	.STEM ASSEMBLY 60 DEGREES..... UOC:T25	1

END OF FIGURE

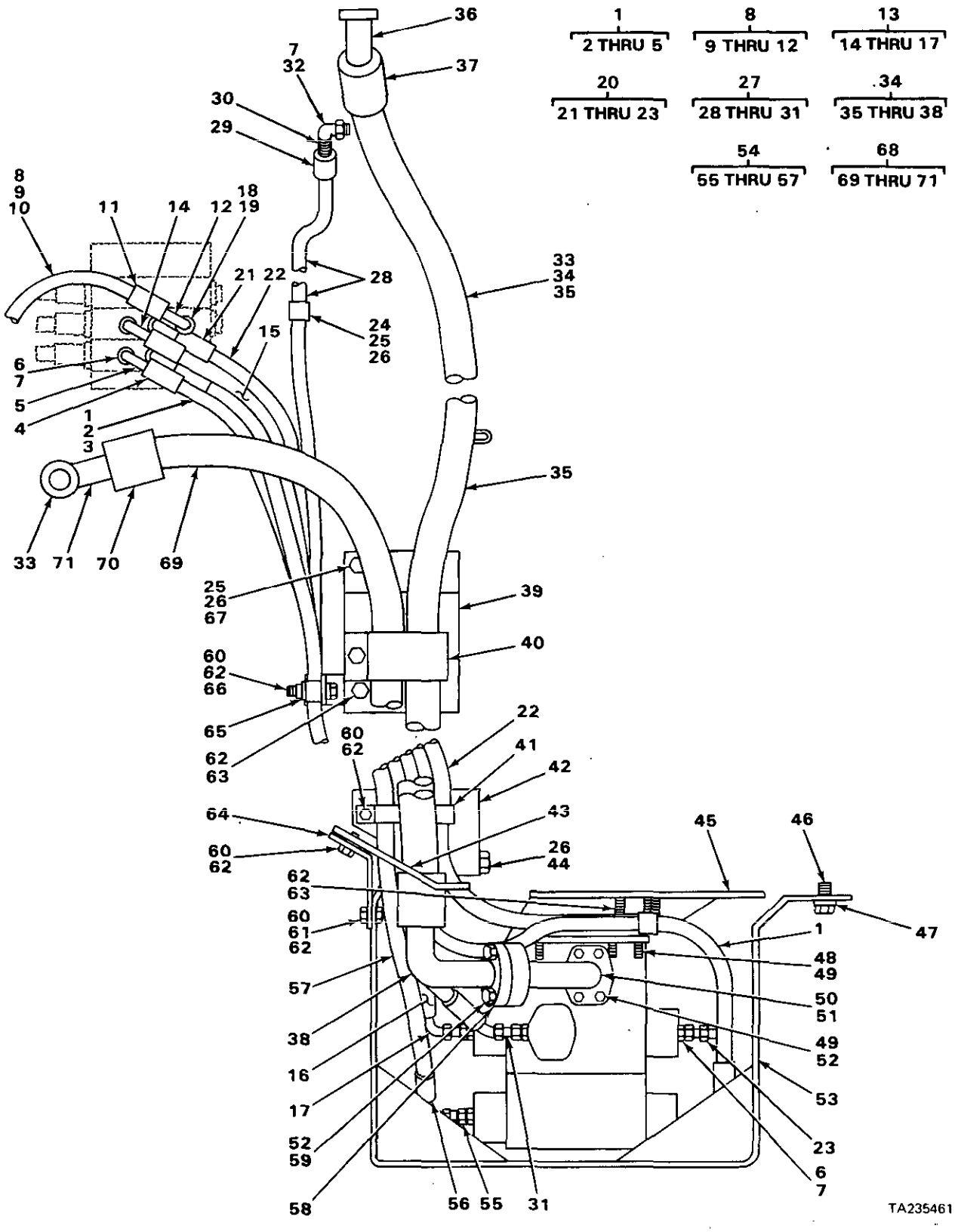

FIGURE 264. ADJUSTABLE RIPPER LINES (TYPE 1).

(1) ITEM NO	(2) SMR CODE	(3) NSN	(4) CAGEC	(5) PART NUMBER	(6) DESCRIPTION AND USABLE ON CODES(UOC)	(7) QTY
					GROUP 7465 ROOTERS, RIPPERS, PLOWS, AND HARROWS.	
					FIG. 264 ADJUSTABLE RIPPER LINES (TYPE 1).	
1	AFFFF		11083	3P4027	HOSE ASSEMBLY..... UOC:T25	1
2	MFFZZ		19207	5P178-70	.HOSE MAKE FROM HOSE P/N 5P178..... UOC:T25	1
3	PFFZZ	4730010950833	11083	8S6393	.ELBOW,TUBE TO HOSE..... UOC:T25	1
4	PFFZZ	4730010950075	11083	4S5414	.SLEEVE,HOSE..... UOC:T25	2
5	PFFZZ	4730010950835	11083	8S6392	.ELBOW,TUBE TO HOSE..... UOC:T25	1
6	PFFZZ	4730004919576	96906	MS51525A6	ADAPTER,STRAIGHT,TU..... UOC:T25	9
7	PAFZZ	5331008013354	25184	906-737-70	O-RING..... UOC:T25	10
8	AFFFF		11083	6P6705	HOSE ASSEMBLY..... UOC:T25	1
9	MFFZZ		19207	5P178-17	.HOSE MAKE FROM HOSE P/N 5P178..... UOC:T25	1
10	PFFZZ	4730010947469	11083	8S6417	.ADAPTER,STRAIGHT,TU..... UOC:T25	1
11	PFFZZ	4730010950075	11083	4S5414	.SLEEVE,HOSE..... UOC:T25	2
12	PFFZZ	4730010950833	11083	8S6393	.ELBOW,TUBE TO HOSE..... UOC:T25	1
13	AFFFF		11083	6P7726	HOSE ASSEMBLY..... UOC:T25	1
14	PFFZZ	4730010950835	11083	8S6392	.ELBOW,TUBE TO HOSE..... UOC:T25	1
15	MFFZZ		19207	5P178-56	.HOSE MAKE FROM HOSE P/N 5P178..... UOC:T25	1
16	PFFZZ	4730010950075	11083	4S5414	.SLEEVE,HOSE..... UOC:T25	2
17	PFFZZ	4730010950833	11083	8S6393	.ELBOW,TUBE TO HOSE..... UOC:T25	1
18	PFFZZ	4730010629928	11083	303978	ADAPTER,STRAIGHT,TU..... UOC:T25	1
19	XDFZZ	5330010491292	02697	3-904N552-90	O-RING..... UOC:T25	1
20	AFFFF		11083	6P7725	HOSE ASSEMBLY..... UOC:T25	1
21	PFFZZ	4730010950075	11083	4S5414	.SLEEVE,HOSE..... UOC:T25	2
22	MFFZZ		19207	5P178-70	.HOSE MAKE FROM HOSE P/N 5P178..... UOC:T25	1
23	PFFZZ	4730010950833	11083	8S6393	.ELBOW,TUBE TO HOSE..... UOC:T25	2

(1) ITEM NO	(2) SMR CODE	(3) NSN	(4) CAGEC	(5) PART NUMBER	(6) DESCRIPTION AND USABLE ON CODES(UOC)	(7) QTY
24	XBFZZ		11083	5R939	CLIP TAB..... UOC:T25	3
24	XBFZZ		11083	5R940	CLIP SLOT..... UOC:T25	3
25	PFFZZ	5306004238117	11083	S1595	BOLT,MACHINE..... UOC:T25	4
26	PFFZ2	5310004317239	11083	2M849	WASHER,FLAT..... UOC:T25	6
27	AFFFF		11083	6P318	HOSE ASSEMBLY..... UOC:T25	1
28	MFFZZ		19207	5P178-74	.HOSE MAKE FROM HOSE P/N 5P178..... UOC:T25	1
29	PFFZZ	4730010950075	11083	4S5414	.SLEEVE,HOSE..... UOC:T25	2
30	PFFZZ	4730010947469	11083	8S6417	.ADAPTER,STRAIGHT,TU..... UOC:T25	1
31	PFFZZ	4730010950834	11083	1P9919	.ELBOW,TUBE TO HOSE..... UOC:T25	1
32	PFFZZ	4730001433941	96906	MS51527A6	ELBOW,TUBE TO BOSS..... UOC:T25	1
33	PFFZZ	5331009484063	11083	4J522	O-RING..... UOC:T25	4
34	AFFFF		11083	3P6957	HOSE ASSEMBLY..... UOC:T25	1
35	MFFZZ		19207	0625930-71	.HOSE MAKE FROM HOSE P/N 5P182..... UOC:T25	1
36	PFFZZ	4730010974728	11083	3S8570	.ELBOW,FLANGE TO HOS..... UOC:T25	1
37	PFFZ2	5365010671426	11083	3S7116	.SLEEVE..... UOC:T25	2
38	PFFZZ	4730012846103	11083	5S3820	.ELBOW,FLANGE TO HOS 90 DEGREES.... UOC:T25	1
39	XBFZZ		11083	6P6726	BRACKET ASSEMBLY..... UOC:T25	1
40	XBFZZ		11083	6P6729	CLIP..... UOC:T25	1
41	XBFZZ		11083	6P6732	CLIP..... UOC:T25	2
42	XBFZZ		11083	6P6731	BRACKET ASSEMBLY..... UOC:T25	1
43	XBFZZ		11083	6P313	DOOR..... UOC:T25	1
44	PFFZZ	5306002736357	11083	1A1460	BOLT,MACHINE..... UOC:T25	2
45	XBFZZ		11083	3P4028	PLATE ASSEMBLY..... UOC:T25	1
46	PFFZZ	5306004238116	90940	0035392-0	BOLT,MACHINE..... UOC:T25	2
47	PFFZZ	5310001397030	11083	4D3704	WASHER,FLAT..... UOC:T25	2
48	PFFZZ	5306002604513	11083	T320	BOLT,MACHINE..... UOC:T25	4

(1) ITEM NO	(2) SMR CODE	(3) NSN	(4) CAGEC	(5) PART NUMBER	(6) DESCRIPTION AND USABLE ON CODES(UOC)	(7) QTY
49	PFFZZ	5310006559370	96906	MS35340-47	WASHER,LOCK..... UOC:T25	8
50	XBFZZ		11083	3P4020	TUBE ASSEMBLY..... UOC:T25	1
51	PAFZZ	5331010062129	11083	4J523	O-RING..... UOC:T25	1
52	PFFZZ	5306004262983	11083	T768	BOLT,MACHINE..... UOC:T25	8
53	XBFZZ		11083	6P317	GUARD ASSEMBLY..... UOC:T25	1
54	AFFFF		11083	3P4026	HOSE ASSEMBLY..... UOC:T25	1
55	PFFZZ	4730010950833	11083	8S6393	.ELBOW,TUBE TO HOSE..... UOC:T25	2
56	PFFZZ	4730010950075	11083	4S5414	.SLEEVE,HOSE..... UOC:T25	2
57	MFFZZ		19207	5P178-5	.HOSE MAKE FROM HOSE P/N 5P178..... UOC:T25	1
58	PFFZZ	4730010515257	11083	1P4578	FLANGE,PIPE..... UOC:T25	2
59	PFFZZ	5310001183035	11083	4B4279	WASHER,FLAT..... UOC:T25	4
60	PFFZZ	5306002604508	11083	S1594	BOLT,MACHINE..... UOC:T25	6
61	PFFZZ	5310011945398	11083	1D4717	NUT,HEXAGON..... UOC:T25	2
62	PFFZZ	5310006379541	96906	MS35338-46	WASHER,LOCK..... UOC:T25	10
63	PFFZZ	5306002637301	11083	L1351	BOLT,MACHINE..... UOC:T25	4
64	XBFZZ		11083	6P315	PLATE..... UOC:T25	1
65	XBFZZ		11083	6P6728	BRACKET ASSEMBLY..... UOC:T25	1
66	PFFZZ	5310000050781	11083	9F2978	NUT,PLAIN,WELDING..... UOC:T25	8
67	PFFZZ	5310004454632	11083	1F748	NUT,PLAIN,WELDING..... UOC:T25	3
68	AFFFF		11083	3P3983	HOSE ASSEMBLY..... UOC:T25	1
69	MFFZZ		19207	0625930-4	.HOSE MAKE FROM HOSE P/N 5P182..... UOC:T25	1
70	PFFZZ	5365010671426	11083	3S7116	.SLEEVE..... UOC:T25	2
71	PFFZZ	4730012846103	11083	5S3820	.ELBOW,FLANGE TO HOS..... UOC:T25	2

END OF FIGURE

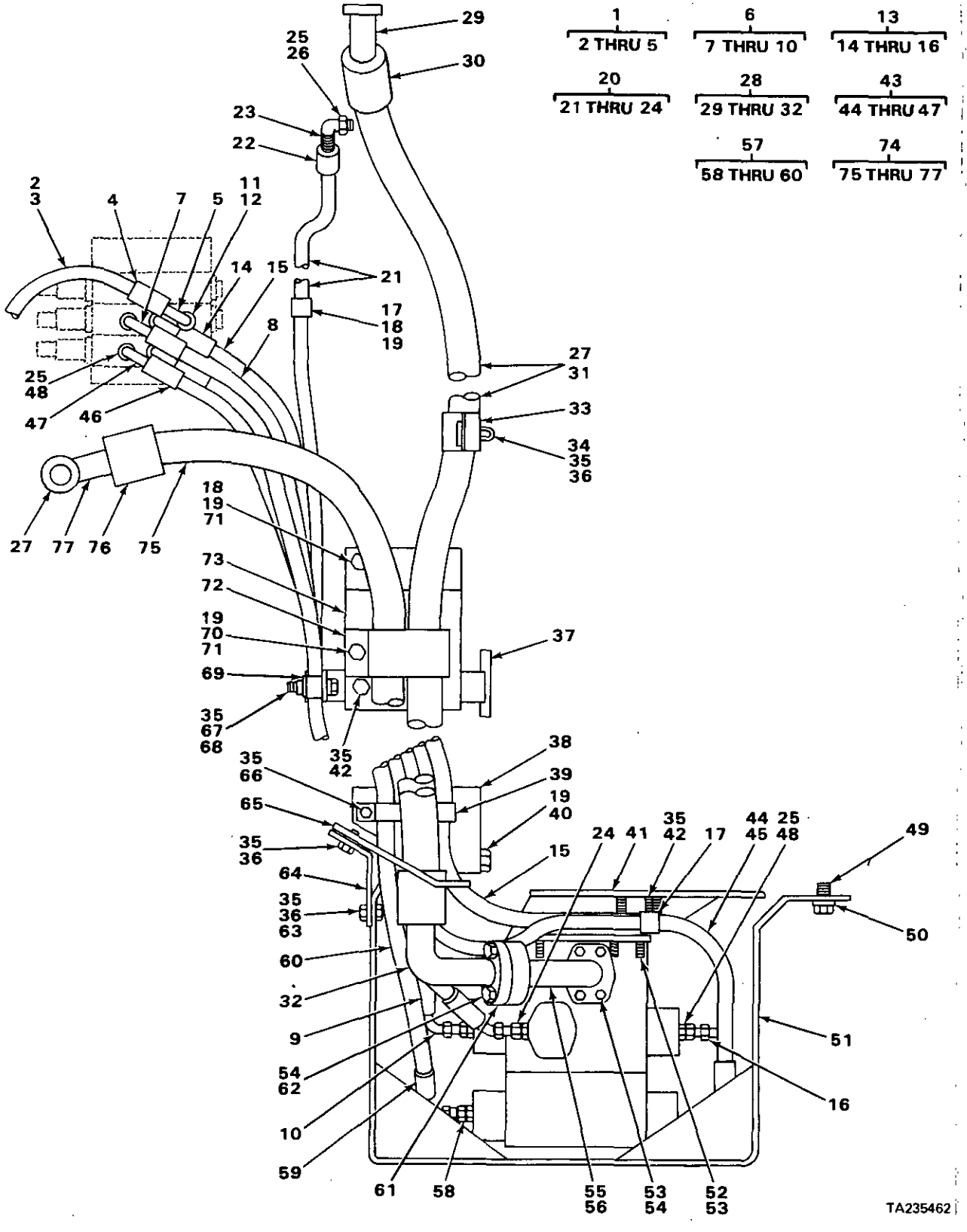

FIGURE 265. ADJUSTABLE RIPPER LINES (TYPE 2).

(1) ITEM NO	(2) SMR CODE	(3) NSN	(4) CAGEC	(5) PART NUMBER	(6) DESCRIPTION AND USABLE ON CODES(UOC)	(7) QTY
					GROUP 7465 ROOTERS, RIPPERS, PLOWS, AND HARROWS.	
					FIG. 265 ADJUSTABLE RIPPER LINES (TYPE 2).	
1	AFFFF		11083	6P6705	HOSE ASSEMBLY..... UOC:T25	1
2	MFFZZ		19207	5P178-17	.HOSE MAKE FROM HOSE P/N 5P178..... UOC:T25	1
3	PFFZZ	4730010947469	11083	8S6417	.ADAPTER,STRAIGHT,TU..... UOC:T25	1
4	PFFZZ	4730010950075	11083	4S5414	.SLEEVE,HOSE..... UOC:T25	2
5	PFFZZ	4730010950833	11083	8S6393	.ELBOW,TUBE TO HOSE..... UOC:T25	1
6	AFFFF		11083	6P7726	HOSE ASSEMBLY..... UOC:T25	1
7	PFFZZ	4730010950835	11083	8S6392	.ELBOW,TUBE TO HOSE..... UOC:T25	1
8	MFFZZ		19207	5P178-56	.HOSE MAKE FROM HOSE P/N 5P178..... UOC:T25	1
9	PFFZZ	4730010950075	11083	4S5414	.SLEEVE,HOSE..... UOC:T25	2
10	PFFZZ	4730010950833	11083	8S6393	.ELBOW,TUBE TO HOSE..... UOC:T25	1
11	PFFZZ	4730010629928	11083	303978	ADAPTER,STRAIGHT,TU..... UOC:T25	1
12	XDFZZ	5330010491292	02697	3-904N552-90	O-RING..... UOC:T25	1
13	AFFFF		11083	6P7725	HOSE ASSEMBLY..... UOC:T25	1
14	PFFZZ	4730010950075	11083	4S5414	.SLEEVE,HOSE..... UOC:T25	2
15	MFFZZ		19207	5P178-72	.HOSE MAKE FROM HOSE P/N 5P178..... UOC:T25	1
16	PFFZZ	4730010950833	11083	8S6393	.ELBOW,TUBE TO HOSE..... UOC:T25	2
17	XBFZZ		11083	5R939	CLIP TAB..... UOC:T25	3
17	XBFZZ		11083	5R940	CLIP SLOT..... UOC:T25	3
18	PFFZZ	5306004238117	11083	S1595	BOLT,MACHINE..... UOC:T25	3
19	PFFZZ	5310004317239	11083	2M849	WASHER,FLAT..... UOC:T25	6
20	AFFFF		11083	6P318	HOSE ASSEMBLY..... UOC:T25	1
21	MFFZZ		19207	5P178-73	.HOSE MAKE FROM HOSE P/N 5P178..... UOC:T25	1
22	PFFZZ	4730010950075	11083	4S5414	.SLEEVE,HOSE..... UOC:T25	2

(1) ITEM NO	(2) SMR CODE	(3) NSN	(4) CAGEC	(5) PART NUMBER	(6) DESCRIPTION AND USABLE ON CODES(UOC)	(7) QTY
23	PFFZZ	4730010947469	11083	8S6417	.ADAPTER,STRAIGHT,TU..... UOC:T25	1
24	PFFZZ	4730010950834	11083	1P9919	.ELBOW,TUBE TO HOSE..... UOC:T25	1
25	PAFZZ	5331008013354	25184	906-737-70	O-RING..... UOC:T25	10
26	PFFZZ	4730001433941	96906	MS51527A6	ELBOW,TUBE TO BOSS..... UOC:T25	1
27	PFFZZ	5331009484063	11083	4J522	O-RING..... UOC:T25	4
28	AFFFF		11083	3P6957	HOSE ASSEMBLY..... UOC:T25	1
29	PFFZZ	4730010974728	11083	3S8570	.ELBOW,FLANGE TO HOS..... UOC:T25	1
30	PFFZZ	5365010671426	11083	3S7116	.SLEEVE..... UOC:T25	2
31	MFFZZ		19207	0625930-6	.HOSE MAKE FROM HOSE P/N 5P182..... UOC:T25	1
32	PFFZZ	4730012846103	11083	5S3820	.ELBOW,FLANGE TO HOS..... UOC:T25	1
33	XBFZZ		11083	2P7506	CLIP TAB..... UOC:T25	1
33	XBFZZ		11083	2P7507	CLIP SLOT..... UOC:T25	1
34	PFFZZ	5310004135060	11083	3K925	WASHER,FLAT..... UOC:T25	1
35	PFFZZ	5310006379541	96906	MS35338-46	WASHER,LOCK..... UOC:T25	12
36	PFFZZ	5306002604508	11083	S1594	BOLT,MACHINE..... UOC:T25	5
37	XBFZZ		11083	6P9540	BRACKET ASSEMBLY..... UOC:T25	1
38	XBFZZ		11083	6P6731	BRACKET ASSEMBLY..... UOC:T25	1
39	XBFZZ		11083	6P6732	CLIP..... UOC:T25	1
40	PFFZZ	5306002736357	11083	1A1460	BOLT,MACHINE..... UOC:T25	2
41	XBFZZ		11083	3P4028	PLATE ASSEMBLY..... UOC:T25	1
42	PFFZZ	5306002637301	11083	L1351	BOLT,MACHINE..... UOC:T25	4
43	AFFFF		11083	3P4027	HOSE ASSEMBLY..... UOC:T25	1
44	MFFZZ		19207	5P178-70	.HOSE MAKE FROM HOSE P/N 5P178..... UOC:T25	1
45	PFFZZ	4730010950833	11083	8S6393	.ELBOW,TUBE TO HOSE..... UOC:T25	1
46	PFFZZ	4730010950075	11083	4S5414	.SLEEVE,HOSE..... UOC:T25	2
47	PFFZZ	4730010950835	11083	8S6392	.ELBOW,TUBE TO HOSE..... UOC:T25	1

(1) ITEM NO	(2) SMR CODE	(3) NSN	(4) CAGEC	(5) PART NUMBER	(6) DESCRIPTION AND USABLE ON CODES(UOC)	(7) QTY
48	PFFZZ	4730004919576	96906	MS51525A6	ADAPTER,STRAIGHT,TU..... UOC:T25	9
49	PFFZZ	5306004238116	90940	0035392-0	BOLT,MACHINE..... UOC:T25	2
50	PFFZZ	5310001397030	11083	4D3704	WASHER,FLAT..... UOC:T25	2
51	XBFZZ		11083	6P317	GUARD ASSEMBLY..... UOC:T25	1
52	PFFZZ	5306002604513	11083	T320	BOLT,MACHINE..... UOC:T25	4
53	PFFZZ	5310006559370	96906	MS35340-47	WASHER,LOCK..... UOC:T25	8
54	PFFZZ	5306004262983	11083	T768	BOLT,MACHINE..... UOC:T25	8
55	XBFZZ		11083	3P4020	TUBE ASSEMBLY..... UOC:T25	1
56	PAFZZ	5331010062129	11083	4J523	O-RING..... UOC:T25	1
57	AFFFF		11083	3P4026	HOSE ASSEMBLY..... UOC:T25	1
58	PFFZZ	4730010950833	11083	8S6393	.ELBOW,TUBE TO HOSE..... UOC:T25	2
59	PFFZZ	4730010950075	11083	4S5414	.SLEEVE,HOSE..... UOC:T25	2
60	MFFZZ		19207	5P178-56	.HOSE MAKE FROM HOSE P/N 5P178..... UOC:T25	1
61	PFFZZ	4730010515257	11083	1P4578	FLANGE,PIPE..... UOC:T25	2
62	PFFZZ	5310001174788	11083	5M2894	WASHER,FLAT..... UOC:T25	4
63	PFFZZ	5310011945398	11083	1D4717	NUT,HEXAGON..... UOC:T25	2
64	XBFZZ		11083	6P315	PLATE..... UOC:T25	1
65	XBFZZ		11083	6P313	DOOR..... UOC:T25	1
66	PFFZZ	5305000680511	80204	B1821BH038C125N	SCREW,CAP,HEXAGON H..... UOC:T25	1
67	PFFZZ	5305010269518	11083	0S1571	SCREW,CAP,HEXAGON H..... UOC:T25	2
68	PFFZZ	5310000050781	11083	9F2978	NUT,PLAIN,WELDING..... UOC:T25	8
69	XBFZZ		11083	7S8077	PLATE ASSEMBLY..... UOC:T25	1
70	PFFZZ	5306011279361	11083	0S1585	BOLT,MACHINE..... UOC:T25	1
71	PFFZZ	5310004454632	11083	1F748	NUT,PLAIN,WELDING..... UOC:T25	3
72	XBFZZ		11083	6P6729	CLIP..... UOC:T25	1
73	XBFZZ		11083	6P6726	BRACKET ASSEMBLY..... UOC:T25	1

(1) ITEM NO	(2) SMR CODE	(3) NSN	(4) CAGEC	(5) PART NUMBER	(6) DESCRIPTION AND USABLE ON CODES(UOC)	(7) QTY
74	AFFFF		11083	3P3983	HOSE ASSEMBLY..... UOC:T25	1
75	MFFZZ		19207	0625930-49	.HOSE MAKE FROM HOSE P/N 5P182..... UOC:T25	1
76	PFFZZ	5365010671426	11083	3S7116	.SLEEVE..... UOC:T25	2
77	PFFZZ	4730012846103	11083	5S3820	.ELBOW,FLANGE TO HOS..... UOC:T25	2

END OF FIGURE

(1) ITEM NO	(2) SMR CODE	(3) NSN	(4) CAGEC	(5) PART NUMBER	(6) DESCRIPTION AND USABLE ON CODES(UOC)	(7) QTY
					GROUP 94 REPAIR KITS	
					GROUP 9401 REPAIR KITS	
					FIG. KITS.	
	PAFZZ	2930007568542	11083	1W7029	PARTS KIT,ENGINE WA.....	1
					BEARING,BALL,ANNULA(1) 65-12	
					BEARING,BALL,ANNULA(1) 65-8	
					BOLT,MACHINE (1) 65-14	
					BOLT,MACHINE (1) 65-26	
					COVER (1) 65-17	
					KEY,WOODRUFF (1) 65-11	
					LOCK (1) 65-13	
					PIN,SPRING (1) 65-15	
					SHAFT,WATER PUMP (1) 65-27	
					WASHER,FLAT (1) 68-35	
					WASHER,FLAT (1) 65-25	
					WASHER,FLAT (1) 48-22	
					WASHER,FLAT (1) 65-16	
	PAHZZ	5330010177161	11083	2P-3988	GASKET.....	1
					BUSHING,NONMETALLIC(1) 64C-13	
					BUSHING,NONMETALLIC(3) 32-3	
					CORK STRIP (1) 30-23	
					GASKET (2) 4A-10	
					GASKET (2) 16-8	
					GASKET (2) 16-10	
					GASKET (1) 10-10	
					GASKET (1) 190-24	
					GASKET (2) 21-12	
					GASKET (4) 25-5	
					GASKET (1) 29A-1	
					GASKET (6) 29A-2	
					GASKET (1) 4-26	
					GASKET (2) 5-15	
					GASKET (1) 69-17	
					GASKET (1) 20-6	
					GASKET (1) 20-12	
					GASKET (1) 21-5	
					GASKET (2) 23-23	
					GASKET (6) 29-7	
					GASKET (1) 36-3	
					GASKET (1) 40-5	
					GASKET (1) 40-29	
					GASKET (1) 63-7	
					GASKET (1) 63-8	
					GASKET (1) 63-19	
					GASKET (1) 63-15	
					GASKET (1) 64-11	
					GASKET (2) 64-20	
					GASKET (1) 64-31	
					GASKET (1) 65-6	

(1) ITEM NO	(2) SMR CODE	(3) NSN	(4) CAGEC	(5) PART NUMBER	(6) DESCRIPTION AND USABLE ON CODES(UOC)	(7) QTY
					GASKET (1) 65-33	
					GASKET (1) 75-5	
					GASKET (1) 50-15	
					LOCK (1) 65-13	
					LOCK PLATE,CAMSHAFT(1) 13-8	
					LOCKING PLATE,NUT A(2) 21-10	
					LOCKING PLATE,NUT A(1) 23-24	
					LOCK (2) 21-7	
					O-RING (18) 4A-11	
					O-RING (6) 5-10	
					O-RING (6) 16-4	
					O-RING (2) 29-4	
					O-RING (2) 29-6	
					O-RING (1) 30-26	
					O-RING (1) 65-3	
					O-RING (1) 125-6	
					O-RING (1) 247-1	
					PACKING WITH RETAIN(6) 31-21	
					SEAL,PLAIN (1) 5-26	
					SEAL,PLAIN ENCASED (1) 68-42	
					SEAL,PLAIN ENCASED (1) 68-49	
					SEAL,STARTER (1) 74A-56	
					WASHER,KEY (5) 21-15	
	PAHZZ	5330010176311	11083	4S8054	SEAL.....	1
	PAHZZ	5330014409658	11083	5P-9222	GASKET SET.....	1
					GASKET (1) 12-19	
					GASKET (1) 12-1	
					GASKET (1) 69-17	
					GASKET (1) 12-12	
					GASKET (1) 12-15	
					GASKET (1) 12-18	
					O-RING (2) 136-15	
					O-RING (2) 136-2	
					O-RING (2) 137-12	
					O-RING (2) 137-15	
					SEAL (1) 7-10	
	PAOZZ		11083	5P-9224	GASKET SET.....	1
					GASKET (1) 65-31	
					GASKET (1) 63-19	
					GASKET (1) 63-22	
					GASKET (1) 64-31	
					GASKET (1) 65-6	
					GASKET (1) 65-5	
					GASKET (1) 65-2	
					GASKET (1) 65-33	
					LOCK PLATE (1) 23-7	
					O-RING (1) 65-3	
	KFHZZ		11083	4S9055	KIT,SEAL.....	1
	PAOZZ	5330014409664	11083	5P-9227	GASKET SET.....	1
					GASKET (1) 68-39	
					GASKET (1) 68-46	
					SEAL ASSEMBLY (2) 136-17	

(1) ITEM NO	(2) SMR CODE	(3) NSN	(4) CAGEC	(5) PART NUMBER	(6) DESCRIPTION AND USABLE ON CODES(UOC)	(7) QTY
					SEAL ASSEMBLY (2) 137-13	
					SEAL,PLAIN ENCASED (1) 68-42	
					SEAL,PLAIN ENCASED (1) 68-49	
	PAHZZ	5330014409666	11083	5P-9228	GASKET SET.....	1
					GASKET (2) 64A-8	
					GASKET (2) 64C-7	
					GASKET (1) 40-29	
					GASKET SET (2) 64B-4	
					GASKET SET (2) 64D-4	
					O-RING (2) 29A-9	
					O-RING (2) 29-4	
					SEAL,RING (1) 27-20	
	PAFZZ		11083	459285	PARTS KIT,SEAL REPL.....	1
					UOC:T25	
	PAFZZ	5330014410381	11083	5P-9229	GASKET SET.....	1
					GASKET (1) 30-1	
					GASKET (1) 30-28	
					GASKET (1) 35-24	
					GASKET (1) 36-3	
					GASKET (1) 36-13	
					GASKET (1) 45-11	
					GASKET (1) 45-32	
					GASKET (1) 51-18	
					GASKET (1) 51-20	
					GASKET (1) 51-27	
					GASKET (1) 53-9	
					GASKET (1) 35-11	
					GASKET (1) 34-1	
					LOCKING PLATE,NUT A(1) 44-17	
					O-RING (1) 35-34	
					O-RING (1) 30-26	
					O-RING (1) 32-28	
					O-RING (2) 32-33	
					O-RING (1) 51-1	
					O-RING (6) 33-48	
					O-RING (1) 200-4	
					O-RING (1) 200-6	
					O-RING (1) 200-9	
					O-RING (1) 200-23	
					O-RING (1) 200-26	
					PACKING,PREFORMED (2) 45-2	
					PACKING,PREFORMED (1) 200-14	
					RETAINER,NUT AND BO(1) 33-44	
					RETAINER,PACKING (1) 200-5	
					RETAINER,PACKING (1) 200-11	
					SEAL (1) 200-18	
					SEAL,PLAIN ENCASED (1) 35-28	
					SPACER,RING (1) 200-24	
					WASHER,PUMP,HYDRAUL(1) 200-27	
	PAHZZ	5330011923336	11083	5P-9232	GASKET SET.....	1
					GASKET (1) 190-24	
					GASKET (1) 190-10	

(1) ITEM NO	(2) SMR CODE	(3) NSN	(4) CAGEC	(5) PART NUMBER	(6) DESCRIPTION AND USABLE ON CODES (UOC)	(7) QTY
					GASKET (1) 1909	
					GASKET (1) 1903	
					0-RING (1) 1923	
					SPACER, RING (1) 19-6	
	PFHZZ	2990011036630	11083	6N7239	CARTRIDE REPAIR KIT……	1
	PAHZZ	5330014410384	11083	5P-9233	GASKET SET. ……	1
			.		BEARING, WASHERTHRU (1) 40-16	
					GASKET (1) 17A-6	
					GASKET (2) 17A10	
					GASKET (4) 25-5	
					GASKET (1) 64-15	
					GASKET (1) 64D-11	
					GASKET (1) 64E18	
					GASKET (1) 17-8	
					GASKET (2) 17-11	
					GASKET (2) 24-3	
					GASKET (2) 25-2	
					GASKET (1) 25-14	
					GASKET (1) 25-19	
					GASKET (1) 25-24	
					GASKET (2) 26-6	
					GASKET (2) 26-15	
					GASKET (6) 28-4	
					GASKET (1) 40-5	
					GASKET (2) 64-20	
					GASKET (2) 114-6	
					LOCK PLATE (6) 26-5	
					NUT SELF-LOCKING, EX (1) 40-3	
					0-RING (3) 25-11	
					0-RING (2) 64-22	
					0-RING (2) 64-30	
					RETAINER,NUT BOLT (3) 40-19	
					RING, PISTON (1) 40-14	
					RING, RETAINING (2) 40-7	
					RING, RETAINING (3) 40-13	
					SCREW, MACHINE (3) 40-20	
					SEAL (1) 40-18	
					SHAFT AND WHELLE ASS (1) 40-15	
					SPACER,PLATE (1) 40-17	
	PAFZZ	5330014410386	11083	SP-9552	GASKET SET ……	1
	PAHZZ	5330014410412	11083	5P-9556	GASKET SET ……	1
					CORK STRIP (1) 30-23	
					DIAPHRAGM, ACTUATOR (1) 36-14	
					FELT, MECHANICAL, PRE (6) 33-25	
.					GASKET (1) 4A6	
					GASKET (2) 4A-10	
					GASKET (1) 20-19	
					GASKET (1) 27-23	
					GASKET (1) 6-11	
					GASKET (2) 6-4	
					GASKET (1) 6-5	
					GASKET (1) 18-4	

(1) ITEM NO	(2) SMR CODE	(3) NSN	(4) CAGEC	(5) PART NUMBER	(6) DESCRIPTION AND USABLE ON CODES(UOC)	(7) QTY
					GASKET (1) 18-16	
					GASKET (1) 20-6	
					GASKET (1) 20-17	
					GASKET (1) 20-12	
					GASKET (2) 26-15	
					GASKET (1) 30-1	
					GASKET (1) 30-28	
					GASKET (1) 35-24	
					GASKET (1) 36-3	
					GASKET (1) 44-2	
					GASKET (1) 45-11	
					GASKET (1) 45-32	
					GASKET (1) 51-20	
					GASKET (1) 51-27	
					LOCK PLATE (6) 26-5	
					LOCKING PLATE,NUT A(1) 46-2	
					LOCKING PLATE,NUT A(2) 2-5	
					LOCKING PLATE,NUT A(1) 23-24	
					O-RING (1) 20-3A	
					O-RING (1) 35-34	
					O-RING (1) 50-2	
					O-RING (1) 26-31	
					O-RING (2) 35-2	
					O-RING (2) 32-33	
					O-RING (1) 51-1	
					O-RING (1) 52-5	
					O-RING (6) 33-48	
					PACKING,PREFORMED (2) 45-2	
					RETAINER,NUT AND BO(1) 33-44	
					SEAL,PLAIN ENCASED (1) 35-28	
					SPACER,RING (2) 26-29	
PAHZZ		5330014410424	11083	6V-3710	GASKET SET.....	1
					GASKET (2) 4A-44	
					GASKET (2) 16-8	
					GASKET (1) 5A-20	
					GASKET (2) 5A-23	
					GASKET (2) 64A-8	
					GASKET (1) 64A-9	
					GASKET (2) 64C-7	
					GASKET (1) 64C-8	
					GASKET (1) 63-8	
					GASKET SET (1) 64B-9	
					GASKET SET (2) 64B-4	
					GASKET SET (2) 64D-4	
					O-RING (1) 64A-24	
					O-RING (6) 16-4	
					O-RING (1) 63-12	
					PACKING WITH RETAIN(6) 31-21	
					SEAL,OIL (2) 4A-19	
					SEAL,PLAIN (1) 5-26	
					SEAL,RING (1) 27-20	
PFHZZ		3120001880392	11083	9N2041	BEARING,SLEEVE.....	1

(1) ITEM NO	(2) SMR CODE	(3) NSN	(4) CAGEC	(5) PART NUMBER	(6) DESCRIPTION AND USABLE ON CODES(UOC)	(7) QTY
	PAFZZ	5330012072900	11083	6V-3711	GASKET SET.....	1
					GASKET (2) 64A-8	
					GASKET (1) 64A-9	
					GASKET (2) 64C-7	
					GASKET (1) 40-29	
					GASKET SET (1) 64B-9	
					GASKET SET (2) 64B-4	
					GASKET SET (1) 64D-9	
					GASKET SET (2) 64D-4	
					O-RING (1) 64A-24	
					O-RING (1) 64C-24	
					O-RING (2) 29A-9	
					O-RING (2) 29A-8	
					O-RING (2) 29-4	
					O-RING (2) 29-6	
					SEAL,RING (1) 27-20	
	PAFZZ	5330014411791	11083	6V-5475	GASKET SET.....	1
					CORE ASSY (1) 64F-1	
					GASKET (2) 64E-14	
					GASKET (1) 64F-4	
					GASKET (2) 64F-3	
					GASKET (4) 64F-9	
	PAFZZ	5330014411790	11083	6V-6358	GASKET SET.....	1
					GASKET (1) 29A-1	
					GASKET (6) 29-7	
					GASKET (1) 29-9	
					GASKET (1) 29-14	
					GASKET (1) 63-7	
					GASKET (1) 63-8	
					GASKET (6) 63-18	
					GASKET (1) 63-15	
					O-RING (1) 63-12	
	PFFZZ	2920001003403	16764	1851632	PARTS KIT,ELECTRICA.....	1
	PAFZZ	5330014410426	11083	6V-6360	GASKET SET.....	1
					GASKET (1) 5A-20	
					GASKET (1) 64B-11	
					GASKET (1) 64D-11	
					GASKET (6) 29A-2	
					GASKET (1) 64F-4	
					GASKET (6) 28-4	
					GASKET (1) 29-9	
					GASKET (1) 29-14	
					GASKET (1) 63-1	
					GASKET (1) 63-7	
					GASKET (6) 63-18	
					GASKET (1) 63-15	
					GASKET (1) 64-11	
					GASKET (2) 64-20	
					GASKET (1) 64-2	
					O-RING (1) 63-12	
	PAHZZ	5330014410429	11083	6V-6394	GASKET SET.....	1
					GASKET (1) 110-4	

(1) ITEM NO	(2) SMR CODE	(3) NSN	(4) CAGEC	(5) PART NUMBER	(6) DESCRIPTION AND USABLE ON CODES(UOC)	(7) QTY
					GASKET (1) 110-12	
					GASKET SET (6)126A-18	
					O-RING (1) 124-12	
					O-RING (1) 126-20	
					O-RING (2) 110-11	
					O-RING (2) 32-33	
					O-RING (1)126A-3	
					SEAL (4) 126-18	
	PAHZZ	5330014410462	11083	6V-6396	GASKET SET.....	1
					GASKET (1) 110-4	
					GASKET (1) 110-12	
					GASKET (1) 110-23	
					GASKET (1) 110-26	
					LOCK (3) 127-9	
					LOCKING PLATE,NUT A(1) 127-14	
					O-RING (1) 127-3	
	PAHZZ	5330014410462	11083	7N3802	GASKET SET.....	1
					ADAPTER,STRAIGHT,PI(1) 4A-36	
					GASKET (2) 4A-44	
					GASKET SET (1) 27-27	
					LOCKNUT (3) 26-10	
					NUT,TUBE COUPLING (1) 4A-30	
					NUT,TUBE COUPLING (1) 4B-14	
					SEAL,OIL (2) 4A-19	
					STUD,PLAIN (2) 4A-34	
					STUD,PLAIN (2) 4A-35	
					STUD,PLAIN (1) 4A-37	
					STUD,PLAIN (1) 4A-40	
					STUD,PLAIN (1) 4A-38	
					TUBE ASSEMBLY,METAL(1) 4A-33	
					TUBE ASSEMBLY,METAL(1) 4A-29	
					TUBE ASSEMBLY,METAL(1) 4B-13	
					WASHER,FLAT (30) 4-12	
	PAHZZ	2815013776940	11083	9Y3230	CAMSHAFT,ENGINE.....	1
					CAMSHAFT ASSY (1) 13-4	
					LIFTER,VALVE (12) 15-23	

END OF FIGURE

(1) ITEM NO	(2) SMR CODE	(3) NSN	(4) CAGEC	(5) PART NUMBER	(6) DESCRIPTION AND USABLE ON CODES(UOC)	(7) QTY
					GROUP 95 GENERAL USE SRANDARDIZED PARTS.	
					GROUP 9501 BULK MATERIEL.	
					FIG. BULK	
1	PFFZZ	2990011033696	11083	5P 747	CABLE.....	V
2	PFOZZ	5975011033695	11083	5P 695	CONDUIT.....	V
3	PFOZZ	4720012513118	11083	5P734	HOSE.....	V
4	XDOZZ		11083	5P735	HOSE.....	V
5	PFOZZ	4720011862341	11083	3P6048	HOSE ASSEMBLY,NONME.....	V
6	PFOZZ	4720012572353	11083	3P6047	HOSE ASSEMBLY,NONME.....	V
7	PFOZZ	4720012572354	11083	3P6049	HOSE ASSEMBLY,NONME.....	V
8	PFOZZ	4720001985808	11083	5P0179	HOSE,NONMETALLIC.....	V
9	PAOZZ	4720004213854	11083	5P1263	HOSE,NONMETALLIC.....	V
10	PFOZZ	4720006878759	11083	8S9348	HOSE,NONMETALLIC.....	V
11	PFOZZ	4720010937331	11083	5P1442	HOSE,NONMETALLIC.....	V
12	PFOZZ	4720010664587	11083	5P178	HOSE,NONMETALLIC.....	V
13	PFOZZ	4720010516773	11083	9S247	HOSE,NONMETALLIC.....	V
14	PFOZZ	4720002937288	11083	5P1259	HOSE,NONMETALLIC.....	V
15	PFO2Z	4720011921369	11083	5P1257	HOSE,PREFORMED.....	V
16	PFOZZ	4710012511007	11083	5P5633	TUBE.....	V
17	PFFZZ	4720012536944	11083	5P5995	TUBE.....	V
18	PFOZZ	4710010687274	11083	5P1198	TUBE,METALLIC.....	V
19	PFOZZ	4710011697206	11083	5P1200	TUBE,METALLIC.....	V
20	PFOZZ	4710012571478	11083	5P1201	TUBE,METALLIC.....	V
21	PFOZZ	4710012162151	11083	5P5628	TUBE,METALLIC.....	V
22	PFOZZ		11083	5P5996	TUBE,METALLIC.....	V
23	MFFZZ		11083	5P1198-51	TUBING.....	1
24	PFFZZ	4720006046497	61424	NN-4-035	TUBING,NONMETALLIC.....	V
25	PFOZZ	4720011901021	11083	5P0385	TUBING,NONMETALLIC.....	V
26	PFOZZ	4720011033700	11083	5P5630	TUBING,NONMETALLIC.....	V
27	PFOZZ		11083	5P6016	TUBING,NONMETALLIC.....	V
28	PFOZZ	2920010589147	11083	5P497	WIRE.....	V
29	PFFZZ	9505001402378	11083	4S8743	WIRE, SPECIAL.....	V
30	XBOZZ		92194	1879-0	WIRE,ELECTRICAL.....	V
31	PFOZZ	6145006522954	81349	M16878/1BFE2	WIRE,ELECTRICAL.....	V
32	PFOZZ	6145011913320	11083	5P5621	WIRE,ELECTRICAL.....	V
33	PFOZZ	6145007267275	81349	M16878/3BMG0	WIRE,ELECTRICAL.....	V
34	PFOZA	6145008051719	11083	5P5624	WIRE,ELECTRICAL.....	V
35	XDOZZ		11083	5P5632	WIRE,ELECTRICAL.....	V
36	XBOZZ		81349	M16878/1BKE0	WIRE,ELECTRICAL.....	V
37	PFOZZ		11083	5P6642	WIRE,ELECTRICAL.....	V
38	PFOZZ	6145012292077	11083	6A3626	WIRE,ELECTRICAL.....	V

END OF FIGURE

CROSS-REFERENCE INDEXES

NATIONAL STOCK NUMBER INDEX

STOCK NUMBER	FIG.	ITEM	STOCK NUMBER	FIG.	ITEM
5970-00-001-9382	71	17	5307-00-008-2233	110	21A
5306-00-003-0681	239	2	5977-00-008-3338	70	13
	240	2	5306-00-008-5943	69	13
	255	13	5305-00-008-5971	22	3
5330-00-003-4137	51	1		114	7
5365-00-003-4155	52	14	2920-00-009-5213	70	12
3120-00-003-6869	33	16	2920-00-010-7340	71	36
3120-00-003-6870	33	17	3110-00-011-9931	130	6
5307-00-004-1605	110	6	3110-00-011-9935	126	10
5305-00-004-7245	36	7		218	29
5330-00-005-0606	51	27		237	15
5330-00-005-0607	51	11	5920-00-012-0151	92	36
5315-00-005-0707	33	32		93	26
5310-00-005-0781	43	21	5305-00-012-0784	142	19
	43	28	5315-00-012-4553	13	7
	57	13	5315-00-013-7258	147	7
	59	14	4730-00-013-7397	32	6A
	109	19		246	8
	122	52		248	19
	151	10	3120-00-014-3507	102	28
	159	13	5315-00-017-1893	68	5
	159	18	5306-00-018-6649	237	31
	159	25	5315-00-018-9396	178	1
	166	6		196	17
	166	28	6240-00-019-3093	80	24
	167	8	2920-00-021-2273	73	6
	167	26	2920-00-021-2314	74	2
	168	7	5310-00-025-7198	102	32
	170	2	5325-00-026-3776	71	25
	172	2	5331-00-029-0394	241	3
	172	10	5331-00-031-2558	134	17
	172	14		135	15
	173	6		136	8
	173	9		137	5
	188	16		138	4
	189	2		142	38
	230	10	5330-00-031-2923	242	3
	231	3	5325-00-031-3336	71	33
	244	16	5365-00-032-4357	134	16
	261	7		135	14
	261	33		136	7
	264	66		137	4
	265	68		138	3
5305-00-005-0896	80	33		142	37
	85	6	2910-00-033-2200	52	13
5305-00-005-0898	80	20	5310-00-042-6376	89	26
5365-00-005-5825	45	33		90	22
5330-00-005-5889	30	1		188	6
5306-00-006-4758	36	12		230	14
5355-00-007-9980	80	3	4730-00-042-8988	51	15

CROSS-REFERENCE INDEXES

NATIONAL STOCK NUMBER INDEX

STOCK NUMBER	FIG.	ITEM
3830-00-044-1614	250	1
5310-00-044-3339	104	6
4730-00-044-4688	33	24
	73	18
	76	44
	77	6
	77	22
	133	18
5310-00-045-1079	146	11
	146	25
	146	41
	151	16
5310-00-045-3299	45	24
	72	35
	76	15
	80	18
5310-00-045-5001	75	2
	86	8
	100	26
	101	16
	128	3
	141	14
	146	3
	149	17
	156	7
	158	14
	168	10
	169	1
	180	5
	184	26
	200	21
	225	45
	226	43
	228	28
	229	27
	234	9
	236	17
	250	7
	254	3
	255	22
4730-00-048-1788	132	1
5310-00-050-3477	166	27
	167	24
	172	12
4730-00-050-4208	68	1
	184	11
	184	19
	184	37
	241	13
	242	2
4730-00-050-4208	253	3
	254	14
	259	2
5315-00-059-0205	96	3
5315-00-059-0206	253	18
	254	21
5315-00-059-0217	262	2
5315-00-059-6492	239	10
	240	6
5310-00-062-2051	74A	42
5306-00-063-5001	47	31
	174	27
3120-00-064-1275	220	23
	221	10
	221	28
	222	2
	222	8
2815-00-065-1943	14	4
5305-00-068-0511	6	9
	17	4
	18	19
	25	12
	30	24
	43	30
	49	26
	51	10
	63	31
	88	4
	90	21
	102	38
	104	5
	106	15
	110	32
	120	13
	121	25
	122	27
	130	22
	146	29
	150	15
	154	43
	159	11
	17A	7
	174	7
	175	12
	182	2
	186	4
	190	30
	196	5
	201	7
	201	14

CROSS-REFERENCE INDEXES

NATIONAL STOCK NUMBER INDEX

STOCK NUMBER	FIG.	ITEM
5305-00-068-0511	205	2
	211	2
	212	14
	232	6
	234	25
	235	2
	239	12
	240	18
	261	29
	263	2
	265	66
	64A	13
	64C	10
	64E	7
5305-00-068-7837	27	15
	172	25
5305-00-071-2055	122	23
	201	8
	206	10
	219	11
	255	11
5305-00-071-2069	69	1
5305-00-071-2076	105	13
	133	4
	233	9
	234	22
5305-00-071-2505	36	6
	46	1
	51	4
	89	28
	90	23
5305-00-071-2506	10	9
	25	17
	129	28
	193	9
	246	5
5330-00-074-3513	27	9
5330-00-074-3560	64E	18
5330-00-074-3605	30	28
5331-00-074-3764	175	18
5331-00-074-3768	213	19
5331-00-074-3771	237	6
5331-00-074-3773	29	4
	29A	8
5331-00-074-3776	183	8
5360-00-076-1478	95	9
5310-00-076-1504	2	7
	3	11
	141	31
	157	1
5310-00-076-1505	139	15
5365-00-078-6248	207	11
	208	11
	209	11
	210	8
	216	3
4730-00-080-7040	152	20
	153	37
5310-00-080-9422	41	14
5310-00-081-2658	72	27
	77	1
5310-00-081-4219	57	3
	59	2
	189	7
	192	3
5360-00-081-9031	44	29
5305-00-082-6821	9	1
5340-00-083-7727	197	14
4730-00-084-7543	38	13
5930-00-084-7570	80	15
5310-00-087-6875	40	22A
	40A	7
	40A	10
5306-00-087-7178	209	9
	216	7
2815-00-087-8266	14	5
5310-00-088-0553	72	16
4730-00-089-2515	30	6
	51	13
	248	14
5305-00-090-4147	71	22
5305-00-090-4204	71	16
5305-00-090-4227	71	5
5305-00-090-4256	71	3
5330-00-090-8363	18	1
5310-00-097-6494	144	5
	145	5
2520-00-097-8229	106	1
2520-00-097-8230	131	3
5330-00-097-8231	108	22
	111	9
2530-00-097-8237	144	2
	145	2
4730-00-097-9815	72	9
	72	41
	73	20
	76	42
	77	7
	77	20
5961-00-099-9791	71A	44

CROSS-REFERENCE INDEXES

NATIONAL STOCK NUMBER INDEX

STOCK NUMBER	FIG.	ITEM	STOCK NUMBER	FIG.	ITEM
3110-00-100-0233	134	21	2910-00-116-3227	50	10
3110-00-100-0305	134	20	2910-00-116-9598	33	3
3110-00-100-0321	149	1	2910-00-116-9599	33	45
3110-00-100-0338	149	36	3110-00-117-0696	127	35
3110-00-100-0686	149	37	5310-00-117-4788	4	6
2920-00-100-3403	KIT			4	12
3110-00-100-6149	193	17		4	54
5330-00-101-2561	4A	19		5	17
2520-00-101-2575	112	6		6	2
2540-00-101-4738	157	14		12	10
	158	4		15	20
3110-00-101-8589	128	9		16	6
3110-00-102-4568	128	8		20	15
4330-00-103-5502	119	1		23	14
4320-00-103-8883	65	32		25	13
5330-00-104-6312	44	2		26	11
5330-00-104-6565	45	11		27	8
5330-00-105-0341	33	28		41	27
5330-00-105-0356	36	3		42	24
5330-00-105-0357	36	13		43	14
5305-00-105-1207	76	9		48	4
4730-00-105-2593	130	27		49	2
5330-00-107-6455	200	11		5A	18
5310-00-109-7638	54	1		53	3
	117	26		55	12
	225	52		56	3
	226	50		57	9
	228	31		58	7
	229	31		59	7
	236	18		60	15
	237	38		63	5
6620-00-111-7089	246	16		64	9
2520-00-113-5509	122	10		67	3
2815-00-113-7929	15	23		68	26
5940-00-113-9826	69	11		87	2
2910-00-116-0407	46	10		88	27
5340-00-116-0412	46	2		88	37
2990-00-116-0423	45	16		89	21
5340-00-116-0431	44	17		93	18
5360-00-116-0432	44	24		102	19
2990-00-116-0433	44	12		102	22
3120-00-116-0434	44	18		103	2
2990-00-116-0440	44	14		103	30
2910-00-116-0444	36	17		104	3
4810-00-116-0446	36	4		110	1B
5310-00-116-0447	36	15		111	17
5360-00-116-0448	50	11		120	7
5340-00-116-0497	45	10		120	24
5306-00-116-1531	141	30		121	8
4820-00-116-3226	36	14		122	44

CROSS-REFERENCE INDEXES

NATIONAL STOCK NUMBER INDEX

STOCK NUMBER	FIG.	ITEM	STOCK NUMBER	FIG.	ITEM
5310-00-117-4788	124	27	5310-00-118-3035	211	7
	126	12		212	6
	126	17		214	21
	146	19		219	12
	156	10		225	22
	166	23		226	20
	167	22		228	8
	17A	2		229	7
	170	5		261	24
	172	17		264	59
	178	9	5306-00-118-3055	183	12
	178	21	5315-00-118-3070	44	9B
	179	8	5307-00-118-3133	87	15
	180	15		119	10
	180	27	5920-00-118-8195	89	13
	181	7		90	26
	182	19	5940-00-118-8836	97	11
	183	2		99	15
	186	11	5330-00-119-0794	202	18
	197	6		223	1
	211	3	5330-00-122-0632	69	17
	212	12	5330-00-122-0633	6	4
	220	18	4730-00-122-0636	20	8
	221	17	4730-00-122-3969	132	17
	222	11	5330-00-122-4372	7	12
	225	34	5331-00-123-2733	4	19
	226	32		4A	11
	227	2	5330-00-124-9159	5	19
	227	8	5330-00-125-8035	4	8
	230	34		4A	10
	231	19		249	4
	232	7	3010-00-125-8037	21	2
	234	11	2940-00-125-9544	17	15
	235	3		17A	13
	239	13	2590-00-126-3730	92	18
	240	19		93	19
	244	8	2815-00-130-3691	26	2
	263	3	4710-00-131-1610	27	5
	265	62	5330-00-131-1649	68	49
	64A	6	5306-00-131-1660	253	32
	64B	2		253	40
	64C	5		257	11
	64D	2	3130-00-131-1832	253	31
	64E	12		253	39
	126A	12		257	10
5306-00-118-0108	40	28	5365-00-131-4761	174	5
	40A	1	5306-00-133-2090	24	5
3120-00-118-3007	44	21		94	37
5310-00-118-3035	121	33	5975-00-133-8687	189	12
	122	24	5365-00-136-2006	43	22

CROSS-REFERENCE INDEXES

NATIONAL STOCK NUMBER INDEX

STOCK NUMBER	FIG.	ITEM
5365-00-136-2006	104	7
5305-00-136-2009	139	8
	162	10
2510-00-136-4380	172	22
5310-00-136-4398	253	33
	253	41
	257	13
2540-00-137-1914	171	5
2910-00-137-2004	46	6
5360-00-137-3464	152	5
5315-00-138-0319	64F	13
5305-00-138-0335	37	17
	51	22
	122	47
	64E	2
6680-00-138-4143	237	22
5331-00-138-4418	225	47
	226	45
	228	22
	229	21
5306-00-138-4466	31	9
	41	2
	128	34
2910-00-138-8224	46	9
5365-00-139-0096	33	47
5310-00-139-7030	5	8
	5A	9
	128	13
	139	3
	164	2
	164	11
	165	2
	169	16
	175	28
	261	1
	264	47
	265	50
5306-00-140-2032	47	10
	102	29
	104	15
	220	12
	221	29
9505-00-140-2378	BULK	29
5365-00-141-1595	190	6
5310-00-141-3099	130	29
4730-00-143-3941	120	15
	261	50
	264	32
	265	26
2920-00-143-4059	72	31
2920-00-143-4059	76	24
	74A	32
5940-00-143-4774	84	6
	99	4
	100	3
	100	18
	101	6
5940-00-143-4775	80	30
	84	5
	98	12
	98	24
5940-00-143-4780	70	31
	80	27
	82	4
	82	9
	84	4
	89	12
	89	17
	90	6
	90	16
	92	9
	92	35
	93	31
	99	14
5940-00-143-4793	83	8
	87	9
	88	42
	91	5
	92	22
	93	11
	93	22
	93	38
5940-00-143-4794	69	12
	80	9
	80	32
	84	3
	97	10
	74A	7
5310-00-143-5722	70	4
	88	19
	103	18
	230	23
	74A	46
	74B	7
	74B	11
5330-00-143-8713	41	10
3110-00-144-8519	71	46
5310-00-147-6143	47	11
	102	27
	104	16

CROSS-REFERENCE INDEXES

NATIONAL STOCK NUMBER INDEX

STOCK NUMBER	FIG.	ITEM	STOCK NUMBER	FIG.	ITEM
5310-00-147-6143	220	13	5315-00-173-8417	40B	13
	221	30	3120-00-176-5546	152	27
5340-00-147-8390	127	14	2990-00-177-3449	39	10
5310-00-147-9154	242	7	5310-00-178-0741	72	49
5365-00-148-8015	5	6		73	27
	5A	7		74	3
5330-00-149-7248	156	5		76	19
2520-00-149-7508	31	6		74B	5
	32	26	5310-00-178-7700	74	5
	51	25		74A	8
5305-00-149-8345	158	15		74B	3
5365-00-149-8639	33	47	5365-00-181-7726	40	17
5365-00-149-8640	33	47	5306-00-182-9590	68	25
5365-00-149-8673	33	47	3110-00-183-6730	154	4
5365-00-149-8683	33	47	3110-00-183-6784	154	17
2530-00-149-8899	141	22	5315-00-187-9573	254	13
5360-00-149-9006	48	11	3120-00-188-0392	KIT	
2520-00-149-9205	141	23		40B	16
3110-00-151-8302	127	15	5310-00-188-0473	74A	13
5305-00-151-9899	40	26B	4730-00-188-1854	156	14
	199	4		186	6
	40A	11	5330-00-190-4255	108	15
5330-00-154-7528	152	11		122	9
	153	22		156	2
4330-00-155-8240	185	18		183	14
5330-00-161-1882	175	15	6140-00-190-9828	94	22
5306-00-162-5704	73	22	6210-00-191-2745	80	23
	76	46	5360-00-191-3255	33	7
	77	14	5305-00-191-8284	40	23
5320-00-164-0917	148	3		151	7
5331-00-165-1980	213	24	5310-00-191-8297	3	9
	218	27		4	22
	227	6		4A	13
5310-00-167-0721	35	38	2940-00-192-7417	246	3
	247	8	4730-00-193-0871	42	12
5310-00-167-0839	74A	9	5315-00-193-0919	155	9
5331-00-167-5174	202	14	5315-00-193-0923	105	18
	214	2	5342-00-193-1240	110	8
	225	17	5310-00-194-1483	74A	3
	226	15	5330-00-194-8388	34	1
4330-00-168-1861	118	12	2520-00-195-5817	105	21
5315-00-169-8105	192	8	2530-00-195-5822	147	46
	221	23	2590-00-195-5824	147	56
	222	13	5340-00-195-8288	160	21
5305-00-169-8390	35	26	4730-00-196-2055	248	17
4730-00-172-0031	255	18	3110-00-198-1796	182	39
4730-00-172-0034	255	26	3110-00-198-2292	174	30
4730-00-172-0049	131	7	4720-00-198-5808	BULK	8
5925-00-173-7651	80	28	5940-00-201-8938	94	17
5315-00-173-8417	40	10	4730-00-203-2866	27	25

CROSS-REFERENCE INDEXES

NATIONAL STOCK NUMBER INDEX

STOCK NUMBER	FIG.	ITEM	STOCK NUMBER	FIG.	ITEM
4730-00-203-3831	152	18	5305-00-225-3843	189	18
	152	23		40B	5
	153	32		64C	3
	153	35		64D	1
4730-00-204-3491	18	12	5306-00-226-4825	35	39
	38	9		64	3
	64E	8	5306-00-226-4826	23	20
2815-00-204-9666	17	2		192	13
	17A	8		193	8
5365-00-205-3664	46	8		194	10
5325-00-205-4711	68	32		195	8
5307-00-206-5455	4	46	5306-00-226-4828	35	33
	4A	37		51	24
5340-00-207-9110	17	7		193	25
5330-00-208-2207	45	32		202	3
5310-00-208-9476	72	48		223	4
	73	29		64B	7
	76	18		64D	6
5310-00-209-0243	142	20	5306-00-226-4829	30	3
5310-00-209-4516	48	7		189	15
	166	34		192	6
	167	31	5306-00-226-4832	147	4
5310-00-209-4771	15	14	5306-00-226-4833	45	29
5310-00-209-6512	154	5		89	32
5360-00-209-8470	211	18		90	2
	212	19		195	22
2910-00-213-6512	31	4	5306-00-226-4841	107	17
5970-00-213-7747	46	3	3110-00-227-3236	70	16
5330-00-216-8533	17	11	3110-00-227-4431	152	39
	17A	10		153	15
5305-00-218-6387	74A	23	5340-00-229-9287	127	22
4730-00-221-2140	155	28		128	11
5310-00-221-3150	27	14		174	22
	154	22	5340-00-229-9294	5	3
5310-00-221-4696	26	24		5A	5
2920-00-221-8856	71A	29		5A	15
5330-00-222-0143	17	8		107	6
	17A	6	3020-00-230-3166	22	16
2815-00-222-8522	7	13	3120-00-230-9962	149	35
5340-00-223-7091	15	2	2530-00-230-9963	148	2
	4B	4	2520-00-231-6166	129	2
5340-00-223-7093	4	50	2920-00-231-7266	71	12
	4A	42	2920-00-231-7270	71	1
	4B	20	5360-00-231-9823	44	32
5310-00-224-0529	160	18	5330-00-232-0351	5	26
5365-00-224-1304	190	7		5A	27
5305-00-225-3843	12	9	5307-00-232-0822	15	7
	32	13	5307-00-232-0823	5	13
	64	8	5961-00-232-3198	71	30
	69	15	5340-00-232-5747	130	40

CROSS-REFERENCE INDEXES

NATIONAL STOCK NUMBER INDEX

STOCK NUMBER	FIG.	ITEM	STOCK NUMBER	FIG.	ITEM
5340-00-232-5747	155	17	5325-00-249-5322	101	13
5330-00-232-8818	129	1	5977-00-249-5758	73	10
2930-00-234-3033	65	1		76	7
5330-00-234-4799	128	35	9905-00-250-4399	199	3
5330-00-234-4870	41	21	5340-00-251-1375	30	29
5360-00-237-2158	49	18	2520-00-251-1783	104	8
2520-00-237-4581	105	8	5340-00-251-3446	44	5
2520-00-237-4603	152	33	2990-00-251-3656	55	2
4820-00-237-4604	124	10		56	1
2990-00-237-6137	49	15	5330-00-251-4436	215	23
2540-00-237-6245	172	28	5315-00-252-2959	4	32
3120-00-237-6509	71	27		4A	28
5330-00-237-6928	71	43		4B	12
	71	51	5305-00-252-8906	64E	1
3110-00-237-6949	129	35	5305-00-252-8919	6	1
3120-00-237-6956	45	13		10	5
3120-00-237-7342	22	17		12	8
5331-00-238-7413	5	10		12	16
	5A	11		25	28
3120-00-238-7429	22	21		26	9
3120-00-239-0939	147	41		30	16
	147	53		41	25
	147	58		55	11
5315-00-241-2917	12	33		57	26
	130	19		58	32
2530-00-243-9486	119	12		59	28
2990-00-244-0235	44	35		60	28
2815-00-244-0535	33	46		88	38
5306-00-245-0953	62	10		92	27
	164	4		94	24
	165	7		101	7
3120-00-245-3219	33	21		103	27
5305-00-245-6035	40	20		107	10
5331-00-245-6767	186	9		111	21
	243	30		113	22
5315-00-245-8844	147	6		129	8
5310-00-245-9841	20	22A		154	38
	69	8		164	19
5315-00-245-9995	176	3		165	20
	179	2		166	22
	181	2		167	21
5360-00-246-0489	147	3		172	16
5315-00-246-0998	215	27		182	15
5340-00-246-2746	57	6		220	1
	59	5		221	1
5340-00-247-4419	7	2		230	11
3040-00-247-9923	47	32		231	5
5330-00-248-2165	110	4		29A	11
5360-00-249-3505	108	12	5330-00-253-3224	21	12
3110-00-249-5244	107	30	5305-00-253-5615	79	3

CROSS-REFERENCE INDEXES

NATIONAL STOCK NUMBER INDEX

STOCK NUMBER	FIG.	ITEM	STOCK NUMBER	FIG.	ITEM
5305-00-253-5615	198	1	5306-00-260-4508	120	8
	199	2		122	3
	199	4		123	10
	199	4		124	2
5305-00-253-5622	17	16		125	9
	17A	14		132	31
5305-00-253-7629	160	19		134	15
5306-00-253-7879	247	4		135	13
5340-00-253-7912	94	36		154	41
	100	8		159	27
5330-00-253-8182	38	8		167	11
5315-00-255-0996	4	48		173	7
	10	3		174	10
	4A	39		178	13
	4B	18		180	19
5365-00-255-1231	26	29		182	22
5325-00-256-2846	154	21		183	16
4730-00-257-2117	248	16		186	10
4730-00-258-1864	230	29		188	13
	230	38		225	32
	64A	25		226	30
	64C	25		236	29
2950-00-259-2943	40	26		243	5
5315-00-260-0806	253	17		261	25
5315-00-260-0807	253	13		261	29
5306-00-260-4508	12	22		261	31
	20	14		261	58
	23	6		264	60
	25	6		265	36
	27	7		64A	5
	4A	8		64B	1
	42	4		64E	17
	5A	17	5305-00-260-4511	129	43
	56	5	5306-00-260-4512	200	2
	57	18	5306-00-260-4513	261	72
	59	8		264	48
	65	9		265	52
	86	10	5306-00-261-1153	36	1
	87	3		44	16
	89	22		91	12
	95	1		207	18
	99	24		207	27
	100	11		208	18
	101	12		208	27
	102	21		209	18
	104	11		210	18
	107	3		217	4
	110	28	5310-00-261-2631	184	27
	113	11		184	33
	115	4	5340-00-261-4042	35	36

CROSS-REFERENCE INDEXES

NATIONAL STOCK NUMBER INDEX

STOCK NUMBER	FIG.	ITEM
5340-00-261-4042	247	2
5340-00-261-4066	35	37
	247	3
2815-00-262-1080	5	2
5310-00-262-4712	71	55
5310-00-262-4715	71A	23
5306-00-263-4038	17	19
	58	41
	60	42
	87	18
	17A	16
	176	24
	186	24
5306-00-263-7298	30	27
5306-00-263-7299	202	4
	223	5
5306-00-263-7301	4	5
	5	16
	6	12
	7	1
	12	13
	18	20
	31	12
	42	20
	43	10
	67	2
	68	36
	88	39
	92	26
	93	16
	102	8
	103	32
	104	14
	106	10
	110	24
	121	41
	122	41
	129	20
	130	12
	146	33
	147	38
	151	14
	153	26
	159	15
	166	10
	166	10
	167	1
	172	15
	173	2
	178	7
5306-00-263-7301	180	13
	190	5
	197	11
	244	21
	249	2
	261	30
	264	63
	265	42
	64A	16
	64C	15
	64E	13
5306-00-263-7305	102	34
	104	21
5306-00-263-7314	7	6
	131	5
	131	8
5306-00-263-8950	25	1
5306-00-263-8978	8	1
	20	4
	129	17
	166	38
	167	38
	168	30
	191	1
	239	14
	240	16
5306-00-263-8979	65	14
5315-00-267-2268	136	13
	137	10
	138	9
	142	34
5340-00-268-1297	258	13
5306-00-268-2449	192	4
5306-00-268-5798	22	31
	184	9
	240	14
5305-00-269-3235	135	18
5305-00-269-3246	184	14
5310-00-269-6797	40	3
	408	1
5310-00-270-2108	4	46B
5306-00-270-9464	200	25
5306-00-272-1804	31	5
	33	29
5306-00-272-4222	207	9
	208	10
5306-00-272-4223	172	5
	244	21
5306-00-272-4229	29	1
	60	22

CROSS-REFERENCE INDEXES

NATIONAL STOCK NUMBER INDEX

STOCK NUMBER	FIG.	ITEM
5306-00-272-4229	29A	5
5315-00-272-6760	47	5
	48	9
	147	23
	150	26
	151	22
	154	13
5315-00-272-6764	147	15
5307-00-272-7047	4	45
	4A	35
5306-00-273-6357	37	12
	43	31
	58	18
	60	7
	69	6
	104	1
	109	1
	141	15
	201	17
	206	12
	219	5
	223	12
	237	34
	239	18
	239	19
	240	13
	261	67
	264	44
	265	40
5315-00-274-4256	134	8
	135	5
5307-00-274-8196	55	7
3020-00-275-1031	66	2
5306-00-275-5012	62	5
	68	50
	255	21
5306-00-275-5014	162	8
	253	8
5307-00-275-5698	4	49
5340-00-276-5828	155	15
3110-00-277-0636	129	23
3110-00-277-0637	129	24
4730-00-277-6320	74A	45
4730-00-278-3397	72	43
4730-00-278-4596	121	39
4730-00-278-4814	68	43
4730-00-278-8368	4	56
	127	33
5310-00-281-5021	71A	18
5306-00-281-5599	235	13
5315-00-281-9478	130	5
5325-00-282-5047	154	20
5340-00-282-7505	122	34
	178	6
	180	12
5340-00-282-7519	27	17
5940-00-283-5281	88	13
	89	8
	90	11
	99	19
5306-00-285-1368	25	30
	58	12
	60	19
	102	23
	121	10
	122	45
	124	26
	150	24
	174	9
	211	11
	212	11
	239	7
	240	22
	126A	11
5310-00-285-8867	48	22
	65	25
	68	35
2805-00-288-3650	14A	1
4730-00-288-8055	15	16
4730-00-288-9391	121	40
4730-00-289-0383	64	7
	64E	5
4730-00-289-1242	4	55
	4A	36
4730-00-289-2357	43	39
3110-00-289-6803	174	19
5340-00-290-4545	203	7
5331-00-290-9386	149	32
	182	28
5940-00-291-0085	103	8
	103	23
5310-00-291-4498	73	5
	76	3
	74A	20
5331-00-291-9182	30	26
5331-00-291-9572	218	10
5330-00-292-4350	132	30
4720-00-293-7288	BULK	14
3110-00-293-9302	65	12
	200	12

CROSS-REFERENCE INDEXES

NATIONAL STOCK NUMBER INDEX

STOCK NUMBER	FIG.	ITEM	STOCK NUMBER	FIG.	ITEM
3120-00-296-8102	22	26	2590-00-341-1530	18	3
5330-00-297-5025	63	18	5310-00-347-4123	13	3
5330-00-297-5029	64E	10		15	4
5330-00-297-5196	26	6		20	25
5330-00-297-5397	122	18		127	5
5330-00-297-6548	186	18		159	23
5330-00-297-7228	4	4	5310-00-347-4441	5	7
	27	23		149	7
5310-00-297-7319	72	26	5330-00-349-8341	16	8
	77	11	5310-00-350-3243	104	17
5310-00-297-8836	93	3	6220-00-350-8204	86	3
	188	11		100	28
	189	16	5340-00-351-6992	122	40
5331-00-297-9791	237	8	4030-00-351-7002	35	30
5315-00-298-1499	15	6	5940-00-351-8080	71	39
5331-00-298-5837	134	22	5305-00-352-7292	15	11
	238	17	5340-00-352-7480	14	2
5310-00-298-8903	99	12	2520-00-352-7531	130	20
5325-00-309-7459	112	22	5315-00-352-7706	253	17
2910-00-309-9473	25	9	5315-00-352-8035	254	20
	27	22	2930-00-352-8085	5	20
	49	33	5340-00-352-8292	5	25
	63	21	4730-00-352-8509	26	3
	65	23	5340-00-352-8560	21	10
	116	10	2590-00-356-1863	41	9
	232	2	5307-00-358-3527	4	44
5961-00-314-5166	71A	45		4A	34
5331-00-325-6310	135	17	3120-00-362-7285	110	18
	185	3	5305-00-362-7336	117	11
5340-00-330-8289	147	2		176	9
5331-00-333-4384	134	4	5315-00-362-7367	4	17
	135	1		20	9
	142	36		22	6
	200	23		4A	17
5330-00-333-5032	31	21		107	7
6625-00-333-9243	80	10	5330-00-362-7470	182	40
5331-00-339-6220	68	14	2520-00-362-7883	151	6
	130	36	5310-00-362-7988	24	6
	175	17		121	24
	183	6	4820-00-362-8071	51	9
5331-00-339-6224	192	2	5310-00-362-8168	33	31
	218	15		89	31
5342-00-341-1428	15	13		90	4
2815-00-341-1448	4	30	5977-00-363-3568	73	12
2815-00-341-1449	15	22		76	2
4710-00-341-1479	27	1	3120-00-363-6130	12	38
2815-00-341-1504	5	4	5330-00-363-6135	12	12
	5A	6	5360-00-363-6199	15	15
4710-00-341-1518	27	18	5999-00-363-6240	127	30
2815-00-341-1529	18	6		179	6

CROSS-REFERENCE INDEXES

NATIONAL STOCK NUMBER INDEX

STOCK NUMBER	FIG.	ITEM	STOCK NUMBER	FIG.	ITEM
5999-00-363-6240	181	5	5342-00-402-2822	104	12
	248	5	2910-00-402-5539	35	12
3040-00-363-6360	66	1	2930-00-402-8215	68	37
5315-00-363-6577	95	11	5306-00-402-9160	44	4
5340-00-363-8827	149	9	5306-00-402-9168	36	1
5310-00-363-8828	107	11	5340-00-402-9175	122	51
5315-00-363-9248	4	52	5306-00-402-9244	75	1
	33	20	5970-00-403-5912	71	19
4730-00-363-9320	31	17	5310-00-404-2422	147	26
5330-00-363-9866	41	15		171	11
5365-00-363-9900	20	18	5310-00-404-3784	157	6
	57	24		158	8
	59	25		198	7
2930-00-365-2152	23	7		204	5
	26	5	5310-00-404-3787	198	9
	65	10	5310-00-404-3788	158	3
	130	13	5340-00-404-3996	258	10
	190	4	2815-00-405-4165	7	3
2815-00-365-2160	15	12	4710-00-405-7326	154	33
2815-00-365-2275	14	1	4710-00-405-7327	154	12
5365-00-365-2281	168	22	5307-00-406-4557	5	28
5310-00-365-2282	16	2		5A	28
4730-00-367-5013	27	3	2815-00-406-6590	11	9
2910-00-367-5238	41	11	2540-00-407-0417	166	33
5360-00-367-5891	152	2		167	30
5355-00-371-3370	47	4	4730-00-407-8330	156	18
	220	8	5310-00-407-9566	25	18
	221	8		30	2
	222	3		33	30
5330-00-377-2750	63	7		34	2
3120-00-379-0728	11	12		35	32
5340-00-392-7334	31	16		89	33
5331-00-393-4054	33	48		90	3
5315-00-393-5684	35	8		171	22
2815-00-395-4835	15	1		189	8
3040-00-399-5214	35	16		193	7
5940-00-399-6676	99	11		194	3
5306-00-400-3518	121	32		195	9
	122	25		207	10
	211	6		208	9
	212	5		209	10
	214	20		210	11
	225	21		216	6
	226	19	5365-00-408-7606	160	3
	228	7	2520-00-409-0207	105	3
	229	6	5315-00-409-3703	105	2
	233	17		105	11
5360-00-401-5077	213	4	5330-00-409-3844	110	29
5305-00-401-5270	184	24	2815-00-409-6244	23	22
4730-00-401-8098	19	3	2910-00-409-6549	36	8

CROSS-REFERENCE INDEXES

NATIONAL STOCK NUMBER INDEX

STOCK NUMBER	FIG.	ITEM
5307-00-409-7208	38	19
	190	14
5307-00-409-7212	190	13
5342-00-410-1903	166	8
	167	10
2920-00-410-6815	70	34
5310-00-410-6816	70	44
2920-00-410-6817	70	18
2520-00-410-9576	131	1
5305-00-411-0777	37	14
	219	9
5340-00-411-3926	47	7
5970-00-411-4161	74	10
5307-00-411-4501	119	2
5365-00-411-4584	110	10
	114	4
	116	11
	118	4
	152	14
	194	16
	195	15
	206	20
	206	20
	214	11
	218	30
	225	29
	226	27
	228	19
	229	18
	237	1
2920-00-412-4148	70	27
5310-00-413-4757	174	24
5310-00-413-4983	58	37
	60	37
	61	6
5310-00-413-5060	154	39
	261	57
	265	34
5310-00-413-5144	116	8
	117	3
	130	23
5310-00-413-6522	62	3
	140	3
	164	2
2940-00-413-8521	130	30
3130-00-414-4394	35	3
5330-00-414-4406	35	28
5310-00-419-1363	2	8
	62	11
	142	24
5310-00-419-1363	157	2
	164	5
	165	8
	168	24
5365-00-419-3254	30	5
	45	17
	122	11
	190	16
5307-00-419-4063	110	19
	127	20
5307-00-419-4068	110	14
4720-00-421-3854	BULK	9
3110-00-421-4804	129	36
2910-00-421-7161	52	1
5310-00-421-9603	250	4
3120-00-421-9627	110	20
3120-00-421-9629	147	42
2990-00-422-5459	44	33
5340-00-423-4804	45	14
2520-00-423-8058	146	34
5306-00-423-8069	3	6
	10	13
	160	1
	168	23
5315-00-423-8085	4	27
5365-00-423-8098	156	1
5306-00-423-8117	2	6
	3	12
	20	1
	29	15
	62	13
	114	2
	120	25
	166	19
	167	18
	168	28
	170	8
	172	30
	175	22
	175	22
	196	11
	236	19
	243	26
	244	14
	261	2
	261	25
	261	34
	261	49
	261	61
	264	25

CROSS-REFERENCE INDEXES

NATIONAL STOCK NUMBER INDEX

STOCK NUMBER	FIG.	ITEM	STOCK NUMBER	FIG.	ITEM
5306-00-423-8117	265	18	5306-00-423-8194	64D	12
	29A	14	5310-00-423-8260	4	21
5340-00-423-8146	135	19		5	11
2520-00-423-8166	65	13		4A	14
5307-00-423-8167	10	2	5310-00-423-8296	27	16
5306-00-423-8194	4	11	5306-00-423-8313	36	5
	4	53		49	8
	20	10	5306-00-423-8316	58	27
	21	8		60	22
	42	18	5340-00-423-8320	32	2
	43	12		42	17
	48	17		43	11
	49	32		120	2
	52	18		248	20
	53	2		64A	15
	57	8		64C	14
	58	6	5360-00-423-8384	15	17
	59	11	5306-00-423-8393	58	11
	63	14		60	24
	64	26		183	5
	67	5	5306-00-423-8409	142	23
	68	45	2910-00-423-8550	32	9
	86	5	4730-00-423-8591	4	36
	91	14		4A	26
	100	31		4B	10
	108	7	2815-00-423-8703	129	45
	117	20	2815-00-423-8767	23	21
	120	10		107	19
	121	46	5306-00-423-8784	21	3
	122	19	5306-00-423-8807	139	12
	126	13		235	20
	127	8		253	20
	130	1	2910-00-423-8872	32	8
	147	27	5365-00-423-8884	248	2
	150	20	2815-00-423-8899	15	21
	153	20	5340-00-423-8924	12	11
	169	18		110	22
	17A	1	5306-00-423-9054	149	8
	185	5	5340-00-423-9133	15	5
	201	20	5330-00-423-9147	20	17
	205	14	5306-00-423-9325	140	15
	206	6	5365-00-423-9380	32	3
	206	17		246	2
	214	28		248	21
	220	17		64A	14
	221	16		64C	13
	222	9	5310-00-423-9538	248	1
	234	13	5310-00-423-9635	257	6
	260	17	5307-00-423-9854	4	51
	64B	12		4A	40

CROSS-REFERENCE INDEXES

NATIONAL STOCK NUMBER INDEX

STOCK NUMBER	FIG.	ITEM
5340-00-423-9937	25	16
	193	2
	194	9
	195	7
5360-00-423-9986	26	22
5306-00-424-0086	24	2
	32	30
	38	17
	39	7
	41	22
	95	19
	108	1
	118	3
	120	41
	128	5
	161	11
	163	2
	165	4
	196	21
5365-00-425-5471	215	29
5306-00-426-2866	174	31
5306-00-426-2870	108	21
	111	7
5306-00-426-2920	87	25
5306-00-426-2922	243	23
5306-00-426-2923	157	3
5306-00-426-2926	122	42
5306-00-426-2932	26	16
	63	29
	110	34
	123	13
	126	16
	232	8
	126A	13
5306-00-426-2934	20	13
	159	30
	162	2
	166	41
	167	37
	219	2
	230	6
	231	1
	236	33
	244	3
5305-00-426-2936	139	4
	180	6
5306-00-426-2945	132	22
	161	9
	168	14
	235	26
5306-00-426-2974	116	12
	117	20
	154	9
5306-00-426-2983	109	14
	213	17
	261	12
	264	52
	265	54
5306-00-426-3080	22	2
	29	8
	153	10
	29A	4
5305-00-426-3085	23	15
	212	16
5306-00-426-3139	2	3
	3	1
	41	24
	62	17
	238	9
5306-00-426-3150	244	17
5306-00-426-3397	114	1
5306-00-426-3404	132	15
	142	43
	238	9
	242	20
5306-00-426-3405	62	15
5306-00-426-3408	132	20
5306-00-426-3409	3	10
	133	24
5306-00-426-3410	160	5
	161	3
5306-00-426-3412	62	1
5306-00-426-3605	3	5
5307-00-426-3716	12	34
5140-00-426-4193	173	1
5340-00-426-4644	230	5
	231	18
5340-00-426-4656	68	48
	88	36
	103	31
5306-00-426-5062	80	12
	179	7
	181	6
5330-00-426-5652	63	22
	65	33
5340-00-426-5759	126A	15
4730-00-427-5121	4	24
	4A	4
	57	21
	59	22

CROSS-REFERENCE INDEXES

NATIONAL STOCK NUMBER INDEX

STOCK NUMBER	FIG.	ITEM
4730-00-427-5121	64	32
	64E	3
2920-00-427-6421	71	18
5305-00-428-6527	76	29
5331-00-429-3542	228	18
	229	17
5331-00-429-3547	49	27
5330-00-429-3570	71	8
5331-00-431-7140	32	28
	193	12
5310-00-431-7237	70	26
	109	11
	255	12
5310-00-431-7239	29	12
	42	28
	43	17
	5A	29
	58	19
	60	12
	62	14
	113	2
	128	6
	133	5
	160	15
	161	12
	164	15
	165	5
	168	29
	169	12
	170	12
	244	5
	261	35
	261	60
	264	26
	265	19
2520-00-432-1627	223	7
5330-00-432-4034	71	28
5310-00-432-4064	22	13
	64	4
	64B	6
	64D	7
5310-00-432-7976	71	4
	72	37
	76	36
5310-00-432-8001	70	29
	71	20
3120-00-432-8120	71	29
5365-00-432-8184	71	35
2920-00-433-3720	70	17
6220-00-433-5959	86	3
6220-00-433-5959	100	30
5365-00-434-1306	35	25
5310-00-434-1347	70	7
5360-00-434-7160	33	4
5930-00-434-9121	80	2
5310-00-436-4328	129	21
5306-00-436-9893	256	2
5315-00-438-7015	33	13
5306-00-438-8600	94	10
	94	13
	94	18
5310-00-438-8604	94	9
	94	14
	94	19
5330-00-439-2716	25	14
5970-00-444-7669	45	26
5305-00-445-4630	225	42
	226	40
	228	25
	229	24
5310-00-445-4632	43	29
	120	6
	140	10
	166	26
	167	25
	168	6
	168	12
	168	18
	168	21
	168	34
	169	6
	170	3
	170	16
	172	11
	230	8
	231	27
	236	32
	244	20
	261	33
	264	67
	265	71
5310-00-445-4633	70	26
3110-00-446-9696	182	38
5365-00-449-5817	30	20
2520-00-449-6999	105	10
2540-00-449-7378	171	4
5305-00-450-0420	71	48
5305-00-450-0421	71	34
	71A	14
5305-00-450-0422	71	49

CROSS-REFERENCE INDEXES

NATIONAL STOCK NUMBER INDEX

STOCK NUMBER	FIG.	ITEM
3120-00-450-5433	70	15
5305-00-450-5937	74A	53
5310-00-451-3384	176	4
5306-00-452-1354	38	14
5306-00-455-0460	152	29
5306-00-455-0462	65	26
5305-00-455-0463	127	13
5360-00-455-2793	22	11
2520-00-455-9263	153	21
	156	12
	186	8
5306-00-458-1930	57	4
	59	3
5365-00-458-1931	33	47
5307-00-458-2364	58	10
4320-00-459-6426	200	14
3020-00-460-6601	35	18
	35	19
5310-00-460-8239	238	22
5305-00-461-5427	45	3
5360-00-465-5447	172	21
5307-00-465-6789	119	10
	190	15
5306-00-470-5543	88	1
	116	13
5310-00-470-5568	44	8
5330-00-470-5683	52	25
2815-00-470-6516	18	14
5310-00-470-9833	132	6
	132	26
	160	7
	161	5
	162	11
	164	7
	165	10
	251	8
	252	6
5306-00-472-5282	210	12
5305-00-475-4440	41	13
5306-00-476-5309	45	20
6645-00-476-5511	247	6
5365-00-478-2920	118	15
	214	6
3120-00-478-6645	7	9
3120-00-478-8919	166	29
	167	27
5315-00-479-2833	193	16
5310-00-480-6100	105	16
6150-00-481-3708	99	20
3120-00-482-1419	45	18
2530-00-482-3587	142	9
4730-00-484-0558	27	26
2920-00-484-1671	71	54
5315-00-484-1695	111	34
2920-00-484-2799	71	15
5310-00-486-2505	120	36
5325-00-490-0573	142	11
5310-00-490-9859	62	2
	160	6
	161	4
	162	6
	164	9
	165	12
	251	7
	252	7
5340-00-490-9869	166	7
	167	9
5315-00-491-0400	253	26
	254	20
4730-00-491-9576	152	13
	153	1
	225	10
	226	8
	227	16
	236	5
	261	9
	264	6
	265	48
3120-00-492-6073	58	23
	60	18
5365-00-492-8851	33	47
5340-00-493-3997	151	20
2910-00-493-7301	42	29
	43	41
5305-00-494-1906	164	8
	165	11
5331-00-494-2763	35	2
5325-00-496-2235	177	5
5305-00-497-0372	44	37
5330-00-498-2906	193	11
5342-00-498-2939	94	34
5310-00-498-2968	49	13
5331-00-498-4556	186	20
5310-00-498-8409	37	2
	39	8
	55	5
	56	11
5340-00-499-9648	17	9
	25	21
	17A	5

CROSS-REFERENCE INDEXES

NATIONAL STOCK NUMBER INDEX

STOCK NUMBER	FIG.	ITEM	STOCK NUMBER	FIG.	ITEM
5331-00-506-1475	118	8	3110-00-554-5302	68	47
5331-00-506-4457	182	36	3110-00-554-5637	70	40
5310-00-507-5727	86	9	3110-00-554-6051	65	12
	100	27	5331-00-555-3807	201	10
	101	17		213	3
2815-00-507-8321	11	18	5331-00-555-3810	118	17
5315-00-514-1616	30	7		182	35
	134	10	5330-00-557-8485	35	11
	189	11	5330-00-557-8514	25	19
5310-00-514-6674	202	2	5310-00-557-9414	243	11
	223	3	5310-00-559-0070	71	11
5330-00-515-3503	12	1	5325-00-559-3901	155	31
3110-00-516-5490	30	22	5331-00-559-8786	177	1
	65	8		250	8
5995-00-520-2334	18	22	5330-00-561-8286	238	16
4730-00-522-1909	64A	2	5331-00-562-1073	52	5
2815-00-522-1995	18	7		52	16
5310-00-524-0260	21	15		237	4
5330-00-527-7706	63	19	2520-00-569-3839	156	4
	65	2	5310-00-576-5752	74A	47
5331-00-527-7748	130	41	5310-00-579-4542	246	6
	200	26	5331-00-580-1215	194	14
	212	20		195	21
5315-00-529-6952	124	9	5331-00-580-1216	200	6
5330-00-530-1247	21	5		226	56
5330-00-530-2525	122	50		228	29
5315-00-532-4359	185	12	5331-00-580-1226	194	21
5315-00-532-5746	245	1		195	25
4730-00-540-1525	213	21		201	18
5330-00-541-2111	68	46		206	19
5330-00-541-2114	29	14		215	21
	29A	1	5331-00-580-1227	214	17
5330-00-541-2701	64	31	5330-00-580-8976	65	7
	65	5	5330-00-580-9905	5	21
5310-00-543-4385	80	1		5A	22
	80	21	5315-00-582-2466	44	28
5340-00-547-9875	80	11	5310-00-582-5965	70	25
	94	39		71	24
	99	26		73	23
	100	21		76	45
5330-00-548-6119	52	7		77	15
5940-00-549-6581	94	12		87	26
5306-00-550-3023	72	3		89	27
	78	2		90	24
	74A	44		93	4
5310-00-550-3714	81	4		172	26
5306-00-550-9129	74A	31		188	7
2950-00-551-8685	40	15		207	17
2950-00-552-0197	40	8		207	26
3110-00-554-3184	65	8		208	17

CROSS-REFERENCE INDEXES

NATIONAL STOCK NUMBER INDEX

STOCK NUMBER	FIG.	ITEM	STOCK NUMBER	FIG.	ITEM
5310-00-582-5965	208	26	5310-00-584-5272	201	16
	209	17		206	13
	210	17		219	4
	217	3		230	7
	230	15		231	2
	71A	9		233	14
5310-00-584-5272	8	2		234	21
	15	3		236	20
	31	10		237	33
	32	29		239	17
	37	13		240	9
	41	3		243	22
	74	4		244	2
	95	21	5330-00-584-6161	25	5
	100	24	5310-00-584-7762	123	7
	105	14	5310-00-584-7888	3	2
	108	2		122	43
	109	2		132	16
	120	26		141	18
	127	6		160	2
	129	18		238	10
	131	6		242	19
	131	9		255	2
	133	6		260	3
	136	10	5310-00-584-7889	133	11
	137	7		158	12
	138	11		253	9
	141	17		256	1
	142	30	5315-00-584-9792	149	12
	149	3	5330-00-585-3186	5	15
	153	11		5A	20
	159	21		64	11
	160	16	5330-00-585-4284	50	15
	162	3	4730-00-585-6565	236	28
	163	3	5315-00-586-5103	47	24
	164	17	5331-00-590-1064	25	11
	165	17	5331-00-591-3112	193	18
	166	18	5331-00-591-7543	178	10
	166	40		180	16
	167	17	5331-00-593-1141	136	2
	170	9		137	15
	172	31		138	14
	175	24		200	4
	175	24	5331-00-593-1192	193	6
	184	8	5331-00-593-1193	52	5
	186	26	5365-00-595-2836	108	14
	190	2	5310-00-595-6153	43	32
	191	2	5310-00-596-7691	80	19
	196	2		91	9
	197	18	5360-00-597-3278	73	8

CROSS-REFERENCE INDEXES

NATIONAL STOCK NUMBER INDEX

STOCK NUMBER	FIG.	ITEM
5360-00-597-3278	76	10
5360-00-597-8341	243	14
5360-00-597-9087	33	33
	215	22
5365-00-598-5255	42	11
	42	15
	42	31
	43	3
	43	9
	43	43
5331-00-599-2190	63	12
5331-00-599-2938	73	31
	76	31
	237	10
5331-00-599-2951	16	4
5330-00-601-4934	50	4
4720-00-604-6497	BULK	24
5310-00-609-8042	175	19
5330-00-613-6500	35	21
5331-00-613-6522	35	34
	247	1
5315-00-616-5499	152	31
5315-00-616-5514	192	11
5315-00-616-5522	117	4
	117	24
	150	14
5315-00-616-5523	202	11
	223	16
5315-00-616-5524	47	33
	112	18
	146	28
	154	11
5315-00-616-5525	70	37
	71B	23
	71C	11
5315-00-616-5526	48	3
	49	5
	102	26
	104	19
	105	5
	130	10
	220	16
	221	26
5340-00-618-0246	121	38
5365-00-618-5440	4A	5
	121	23
5315-00-619-2962	95	13
5310-00-619-7882	30	19
5340-00-620-5730	33	44
	122	29
2910-00-620-6887	51	8
5330-00-628-0547	107	33
5330-00-628-0555	65	6
5330-00-628-0558	63	15
3110-00-629-4111	44	20
5310-00-629-9613	28	6
2520-00-632-8279	107	21
5331-00-633-4535	215	18
2930-00-635-8296	237	18
5310-00-637-1058	70	2
	74B	6
	74B	10
5306-00-637-4927	12	21
	117	20
	154	16
5310-00-637-9541	17	5
	18	17
	30	11
	31	13
	32	10
	37	3
	41	26
	42	25
	47	19
	50	7
	51	6
	52	19
	56	4
	65	21
	69	16
	80	13
	86	6
	87	4
	88	6
	89	23
	91	13
	92	25
	93	17
	94	25
	95	23
	99	25
	100	10
	101	10
	102	9
	103	29
	104	4
	107	4
	108	8
	109	8
	110	1

CROSS-REFERENCE INDEXES

NATIONAL STOCK NUMBER INDEX

STOCK NUMBER	FIG.	ITEM	STOCK NUMBER	FIG.	ITEM
5310-00-637-9541	117	21	5310-00-637-9541	220	2
	119	11		221	2
	120	11		222	10
	121	13		223	6
	122	2		225	33
	123	11		226	31
	123	14		230	12
	125	10		231	4
	129	9		234	15
	130	2		236	30
	130	26		238	14
	132	32		239	6
	134	14		240	23
	135	12		243	7
	146	18		244	22
	147	28		248	7
	150	18		249	1
	151	8		260	18
	153	3		261	27
	154	8		261	27
	159	14		261	59
	164	20		264	62
	165	19		265	35
	166	11	5310-00-639-7664	197	5
	166	24	4730-00-639-9167	156	13
	167	3		186	7
	169	19	2520-00-640-4345	149	19
	172	6	5330-00-641-2212	12	15
	173	4	5330-00-641-7914	18	4
	174	14	6240-00-643-0687	85	2
	175	13	4730-00-647-3207	64	1
	182	21		17B	9
	183	20	4730-00-647-3343	17B	3
	184	13	5325-00-650-3142	44	10
	185	4	6145-00-652-2954	BULK	31
	186	14	5310-00-655-9370	70	25
	187	7		109	10
	188	12		201	3
	190	29		204	9
	196	4		206	4
	197	7		206	7
	201	19		211	20
	202	17		212	3
	205	3		213	18
	206	18		215	2
	211	12		225	41
	212	15		226	39
	214	26		228	24
	215	7		229	23
	218	11		261	11

CROSS-REFERENCE INDEXES

NATIONAL STOCK NUMBER INDEX

STOCK NUMBER	FIG.	ITEM
5310-00-655-9370	264	49
	265	53
2815-00-656-7023	11	8
4710-00-657-9694	26	37
4710-00-657-9697	26	36
5310-00-660-2649	44	36
5310-00-660-3381	74A	66
3120-00-662-8989	4	41
	4A	41
	4B	19
3120-00-662-8991	12	36
5315-00-663-3672	4	38
	12	4
	12	31
	4A	21
	4B	5
5331-00-663-5075	64	30
	65	3
5331-00-663-5709	136	15
	137	12
	138	10
	142	42
	190	23
	200	24
	225	43
	226	41
	228	26
	229	25
5360-00-664-4194	130	39
5330-00-678-3369	185	19
5330-00-679-6231	12	19
5330-00-684-2974	18	16
4730-00-684-6920	64B	18
	64D	15
5306-00-685-2384	16	7
	48	12
	122	47
	182	20
5310-00-685-2973	189	19
5310-00-685-3228	71C	7
5325-00-687-3379	124	24
	125	19
5365-00-687-5158	40	13
	40B	15
4720-00-687-8759	BULK	10
2530-00-688-4757	136	5
2530-00-688-4849	137	2
5331-00-691-9950	243	13
5306-00-698-2150	58	24
	60	8
5306-00-698-2150	60	19
	63	11
	68	11
	109	6
	111	18
	175	11
	187	8
5306-00-698-2177	109	9
2815-00-707-6576	15	18
5331-00-708-3815	29	6
	29A	9
5305-00-708-3823	125	6B
	140	9
	141	10
	199	2
	199	4
	199	4
	250	3
5315-00-710-2087	146	6
	147	34
	126A	4
5331-00-710-2143	20	3A
4730-00-710-5571	197	1
	225	8
	226	6
	227	10
5330-00-712-3241	18	15
5331-00-714-2330	175	38
5330-00-714-3704	121	15
5325-00-715-1152	50	13
	72	15
	74A	64
5930-00-715-1939	81	3
5365-00-715-8065	72	47
	76	23
	74A	51
5315-00-716-1056	166	14
	167	13
5305-00-719-5239	131	5
5305-00-719-5241	13	1
5340-00-720-6213	42	22
	43	5
	120	9
	121	49
	246	1
5305-00-721-5492	4	46A
	42	23
	43	15
	59	28
	121	37

CROSS-REFERENCE INDEXES

NATIONAL STOCK NUMBER INDEX

STOCK NUMBER	FIG.	ITEM
5305-00-721-5492	122	33
	127	31
	130	28
	178	20
	179	18
	180	26
	181	17
	248	6
5305-00-724-7218	156	6
5305-00-724-7221	140	2
	152	34
	153	29
	159	7
	168	9
	169	14
	169	21
	175	27
	234	8
	236	16
5305-00-724-7222	75	4
	128	12
	140	17
	141	13
	146	2
	225	51
	226	49
	228	30
	229	30
	237	37
5305-00-724-7236	175	32
5310-00-725-1984	193	23
5305-00-725-2317	32	11
5310-00-725-7382	6	6
	25	23
	30	9
	63	17
	65	20
	102	35
	104	20
	108	13
	110	2
	122	30
	130	25
	184	12
6145-00-726-7275	BULK	33
5355-00-730-8027	102	10
5360-00-730-8043	124	17
5306-00-732-7714	241	10
5365-00-734-2114	63	26
5310-00-734-8959	73	26
5310-00-734-8959	76	32
	74A	10
5340-00-735-6100	169	13
2920-00-737-3225	72	28
	76	26
	74A	34
4730-00-737-3364	42	10
	42	14
	42	30
	43	2
	43	8
	43	42
5340-00-737-3635	13	5
	23	9
	107	28
	127	78
5325-00-737-6724	44	19
5330-00-738-8622	174	18
3020-00-738-8634	130	21
5330-00-738-8639	134	2
	135	6
3120-00-738-8651	35	6
	35	14
2520-00-738-8662	131	2
2530-00-738-8714	136	17
	137	13
	138	15
	142	27
2530-00-738-8715	136	11
	138	6
2530-00-738-8716	137	8
5360-00-739-4845	149	23
3020-00-739-4847	13	2
5310-00-739-9977	141	8
3110-00-740-6782	128	15
3110-00-740-6784	174	25
5331-00-741-0674	215	28
5331-00-741-2096	176	14
3020-00-747-9850	111	2
3020-00-747-9853	113	19
3020-00-747-9854	112	26
5365-00-753-9528	73	14
	76	28
	77	17
	74A	68
5315-00-754-0848	146	13
5310-00-754-2005	3	8
	129	39
	132	21
	139	16

CROSS-REFERENCE INDEXES

NATIONAL STOCK NUMBER INDEX

STOCK NUMBER	FIG.	ITEM	STOCK NUMBER	FIG.	ITEM
5310-00-754-2005	141	33	5310-00-763-8905	200	22
	235	14		225	44
	239	4		226	42
	240	4		228	27
	241	11		229	26
	253	21	5310-00-763-8920	152	30
	253	37		169	15
5310-00-754-3384	45	22		169	20
2530-00-756-8498	149	31		184	25
2530-00-756-8501	149	33		237	13
2930-00-756-8542	KIT		5310-00-765-3237	126	7
2520-00-756-8551	129	11	5306-00-766-2182	29	2
5330-00-756-8632	238	19		29A	7
6220-00-756-8787	85	4	5310-00-768-0316	20	5
2520-00-756-9728	127	36		22	4
3110-00-756-9780	127	1		58	28
2520-00-756-9796	149	29		60	23
5330-00-756-9799	110	44		69	4
5330-00-756-9800	110	12		73	30
536O-00-757-2559	102	1		76	47
3120-00-757-6349	7	8		95	20
5310-00-757-6377	80	4		100	23
	80	22		105	15
5330-00-757-6470	110	23		120	23
9390-00-757-7131	74A	77		133	7
6150-00-758-0332	73	32		166	20
	76	30		167	19
5950-00-758-7793	71	40		168	31
5330-00-760-7378	74	15		169	11
5315-00-760-7425	116	4		233	13
	117	14		237	32
	117	17		243	24
5330-00-761-2536	108	4		244	25
4730-00-762-1239	178	2	5310-00-786-0319	71A	10
5365-00-762-6106	124	16	5310-00-768-6822	10	12
5365-00-762-6121	68	41	6220-00-778-7213	88	7
5307-00-762-6352	4	13		92	17
5307-00-762-6354	4	15		93	25
5365-00-763-0120	193	21		99	27
	218	23		100	13
	243	28		101	11
5310-00-763-8905	15	8	5331-00-781-9134	187	1
	15	10	5305-00-782-9489	15	19
	56	7	2520-00-788-5571	107	29
	100	25		176	29
	101	15	5330-00-788-5579	5	22
	129	44	5360-00-788-5800	14	3
	156	16		14A	3
	168	13	5360-00-788-5801	14	9
	190	20		14A	9

CROSS-REFERENCE INDEXES

NATIONAL STOCK NUMBER INDEX

STOCK NUMBER	FIG.	ITEM	STOCK NUMBER	FIG.	ITEM
5360-00-788-5807	105	9	5310-00-809-4058	43	36
3120-00-788-5809	106	12		89	25
5330-00-788-5810	129	12		90	25
2520-00-788-5812	112	12		172	23
2520-00-788-5813	113	30	5310-00-809-4061	95	4
3110-00-788-5814	112	2		159	16
5330-00-788-5829	142	10		173	3
5330-00-788-5830	145	12	5310-00-809-5997	94	38
2815-00-795-2438	11	10	5325-00-810-8932	181	1
5331-00-801-3354	110	11	5310-00-811-2861	71	6
	114	5		73	4
	116	9		76	4
	118	5	5360-00-812-0196	72	13
	152	12		74A	39
	153	2	5306-00-814-6565	110	36
	194	17	5306-00-814-6588	20	23
	195	16		260	2
	206	21	5306-00-814-8967	22	14
	213	10	5315-00-816-1794	26	25
	214	12		43	35
	215	20		105	19
	218	22	5365-00-816-5830	156	8
	225	11	4730-00-816-8558	152	19
	226	9		152	24
	227	17		153	33
	228	20		153	36
	229	19	5340-00-819-2027	4B	2
	230	30	5305-00-821-3869	63	6
	230	37	5310-00-822-2236	72	5
	236	6		74A	41
	237	2	2920-00-822-2287	72	7
	261	10		74A	43
	264	7	5315-00-825-0082	133	19
	265	25		190	32
	64A	22	3120-00-828-6852	73	17
	64C	22		77	21
6145-00-805-1719	BULK	34		74A	74
5310-00-805-7632	72	38	5310-00-828-7334	28	5
	76	37	5977-00-828-9053	73	1
5330-00-805-8771	23	23		76	1
5331-00-806-7027	212	17	5340-00-829-0483	120	4
4730-00-808-6848	64A	3	5310-00-833-9298	81	6
5977-00-809-2517	72	33	4730-00-834-5035	230	25
	76	17		231	10
5310-00-809-3079	72	50		231	14
	73	28		231	22
	74	6	5331-00-835-1189	37	9
	76	21	5305-00-836-8346	9	1
	171	3	2815-00-838-9965	14	6
5310-00-809-4058	43	34		14A	6

CROSS-REFERENCE INDEXES

NATIONAL STOCK NUMBER INDEX

STOCK NUMBER	FIG.	ITEM
9390-00-839-1864	72	4
	74A	40
5315-00-839-2325	102	13
	230	22
5315-00-839-2326	146	14
	166	15
	167	14
	172	24
	192	9
	221	24
	222	14
	230	19
5315-00-839-5821	18	2
	47	6
	48	6
	95	14
	105	20
	147	24
	150	25
	151	12
	154	15
5315-00-839-5822	47	14
	68	6
	95	12
	102	15
	146	8
	147	16
	151	19
	152	26
	252	9
5310-00-843-6947	40	27
	40A	3
5330-00-843-7194	72	20
	77	13
	74A	62
3020-00-844-2318	65	19
5315-00-844-3966	146	30
	188	5
5340-00-844-7921	71A	4
5360-00-845-0943	149	22
5315-00-846-0126	184	31
3020-00-846-1923	184	4
5325-00-846-8434	86	4
	100	29
5330-00-847-4351	27	20
3110-00-847-5036	203	5
5360-00-848-6107	146	23
5331-00-848-6108	134	3
	135	7
5331-00-848-6109	136	18
5331-00-848-6109	137	14
	138	16
	142	28
5325-00-848-7439	152	37
5330-00-848-9950	237	17
5331-00-850-7586	50	2
	186	19
5315-00-850-9428	65	11
5310-00-851-2682	47	16
	87	16
	88	26
	102	30
	103	1
	178	8
	180	14
3120-00-851-4696	33	18
3120-00-851-5554	22	7
4730-00-851-6273	42	9
	43	7
5330-00-851-7742	71A	33
2930-00-852-1174	58	35
	60	35
5310-00-852-8266	31	24
	32	18
	70	3
	70	14
	71	50
	74B	8
5306-00-853-2024	215	1
	225	40
	226	38
	228	23
	229	22
3120-00-854-1068	33	15
5331-00-855-8047	243	20
5306-00-857-5672	230	13
5325-00-857-5703	182	23
5330-00-858-6182	12	18
5330-00-858-6201	49	9
3120-00-858-6240	43	24
	102	37
5330-00-858-6277	33	25
5331-00-858-8223	192	18
5330-00-858-8224	45	2
5306-00-862-8901	254	2
5305-00-863-1627	72	36
	76	35
5331-00-863-5549	119	6
5306-00-863-9890	51	17
5331-00-865-0404	117	15

CROSS-REFERENCE INDEXES

NATIONAL STOCK NUMBER INDEX

STOCK NUMBER	FIG.	ITEM	STOCK NUMBER	FIG.	ITEM
5331-00-865-0404	205	5	5365-00-886-5163	4B	8
	206	9	5305-00-889-2999	70	8
	206	16	5330-00-890-8104	225	1
	214	10		229	29
9390-00-865-8270	72	44	2920-00-891-0928	72	29
	73	19		76	25
	76	43		74A	52
	77	5	5355-00-891-4401	102	6
	77	23		188	3
5365-00-869-1581	126A	2	5315-00-891-5955	218	26
5330-00-869-3369	72	10	5330-00-893-5554	7	14
	72	42	5315-00-893-7264	33	38
	73	21		33	41
	76	41	5330-00-893-7274	57	23
	77	8		59	24
	77	19	5330-00-893-8122	30	23
5331-00-869-6562	64	22	5331-00-893-9220	142	21
5331-00-869-6566	64F	14	5330-00-894-0653	18	9
5315-00-870-6121	153	23	2940-00-894-6406	18	10
	155	12	3120-00-894-7247	72	40
5306-00-874-4001	20	26		76	40
	21	14	5342-00-894-7258	154	32
	58	4	5360-00-894-7275	112	15
	60	4	3020-00-894-7279	129	37
	100	22	5330-00-894-7280	113	9
	236	27	5330-00-894-7291	113	10
3110-00-875-1983	141	3	3110-00-895-0495	112	1
5340-00-875-5251	26	35	3120-00-895-0661	4	40
2815-00-876-8045	8	6		12	5
5340-00-879-3056	23	24		12	28
	111	24		4A	22
5305-00-879-8351	111	20		4B	6
	153	4	5315-00-895-3774	145	10
	227	28	5306-00-895-3775	144	4
	126A	14		145	4
5310-00-880-7744	89	30	5330-00-895-3831	105	7
	90	14	5330-00-895-7032	29	7
	107	18		29A	2
	147	5	5330-00-895-7037	28	4
	189	6	3120-00-895-7062	23	17
5310-00-880-7745	130	7	5330-00-895-8970	6	11
5310-00-880-8186	168	15	3110-00-896-6817	127	4
	235	15	3110-00-896-6819	113	20
5331-00-881-1402	127	3		176	27
4730-00-882-8621	27	24	3110-00-896-6823	111	4
	127	32		112	24
5310-00-882-8876	50	5	3110-00-896-6825	111	12
5365-00-886-5163	4	39	3110-00-896-6826	111	13
	12	29	5306-00-897-9295	117	2
	4A	23	5365-00-898-6703	33	26

CROSS-REFERENCE INDEXES

NATIONAL STOCK NUMBER INDEX

STOCK NUMBER	FIG.	ITEM	STOCK NUMBER	FIG.	ITEM
5360-00-898-6730	49	20	5331-00-914-5316	51	21
5331-00-899-7672	242	6	5331-00-914-5773	109	12
4730-00-900-3296	68	2		124	12
3110-00-902-4269	202	5	5331-00-914-5820	239	21
	223	8		240	11
2990-00-903-6938	44	25	5331-00-914-5821	121	18
5331-00-904-0335	72	46		150	21
	76	33		151	4
	77	9		154	30
	117	7	5331-00-914-5846	197	16
5310-00-905-0762	71C	4		233	1
5310-00-905-4462	25	29		234	20
4820-00-911-9224	141	7	3020-00-916-1949	128	16
4730-00-911-9226	141	6	3110-00-916-6468	107	25
5330-00-912-1586	154	44	2815-00-917-6947	11	11
5360-00-912-6674	201	11	2815-00-918-3568	14	6
6620-00-912-9151	57	5		14A	6
	59	4	2815-00-918-3569	11	1
5330-00-913-4681	238	15	5330-00-918-3599	117	22
5331-00-913-6137	224	8	5970-00-918-5568	73	9
	241	22		76	6
5331-00-913-6143	205	10		74A	19
	239	8	5330-00-919-2240	132	27
	240	21		224	12
5331-00-913-6144	211	10		260	6
	212	9	5310-00-919-2242	235	23
	232	14		239	3
	263	4		240	3
3110-00-913-8113	107	24		255	17
	190	22	5330-00-919-2249	154	3
3110-00-913-8114	128	27	5330-00-919-2846	108	18
5330-00-913-8117	153	25	5325-00-920-0222	40	7
5331-00-913-8120	121	44		40B	3
	124	4	5360-00-920-6786	45	31
	126	21	5331-00-920-6924	72	19
	178	12		77	10
	180	18		74A	61
5331-00-913-8872	117	27	3805-00-920-7472	57	22
5331-00-913-8878	110	31		59	23
	126A	16	5330-00-920-8186	49	22
5330-00-913-8879	110	46	5315-00-920-8200	230	18
3110-00-913-8895	128	28	5340-00-920-8201	30	14
3120-00-914-0263	191	7	2910-00-920-8213	31	18
3120-00-914-0691	117	6	4730-00-921-3245	121	21
	117	9	5340-00-921-4388	22	12
5330-00-914-0703	73	15	3020-00-921-7282	35	9
	76	27	5340-00-922-2596	248	4
	77	16	5331-00-922-6275	205	4
	74A	67		211	21
5331-00-914-3320	151	1	2815-00-923-1929	11	7

CROSS-REFERENCE INDEXES

NATIONAL STOCK NUMBER INDEX

STOCK NUMBER	FIG.	ITEM
5325-00-923-4575	248	3
4820-00-923-7042	215	25
5330-00-923-8958	190	9
5330-00-923-8959	190	3
5307-00-923-9983	119	10
	183	4
5330-00-924-0048	40	29
	40A	2
3110-00-924-1971	49	19
5315-00-924-5894	160	20
5365-00-924-7056	134	16
4730-00-924-7125	63	27
	65	4B
4730-00-924-7886	4	34
	12	7
	17	12
	29	3
	33	19
	38	12
	4A	20
	5A	16
	58	9
	64	17
	65	22
	123	12
	124	8
	125	7
	130	33
	150	19
	153	17
	17A	17
	29A	6
4730-00-924-7974	186	17
4730-00-924-7977	4	42
	4A	31
	4B	16
5331-00-925-4778	120	20
	121	4
	122	15
	151	3
	154	34
5342-00-925-6897	74	19
5360-00-925-7048	205	11
2815-00-928-3531	14	7
	14A	7
5330-00-928-6894	59	10
5325-00-928-9630	112	3
5330-00-928-9798	71A	28
3830-00-929-3501	238	21
5331-00-929-5507	136	20
5330-00-929-5514	116	17
3830-00-929-8148	242	15
3830-00-929-8149	238	20
5306-00-930-5643	189	9
	194	2
5331-00-930-5736	110	35
	120	43
	122	22
	123	9
3110-00-930-6289	104	10
	150	4
5310-00-930-7013	102	17
	120	31
	140	14
	166	42
	167	36
	172	32
	192	16
	219	3
	233	20
	234	18
	236	21
	244	11
	74B	4
5310-00-930-7454	133	10
	253	10
2930-00-930-9098	57	7
	59	6
5330-00-930-9407	174	17
	214	9
	225	19
	226	17
	227	30
2815-00-931-7856	40B	8
5340-00-931-7929	18	8
5340-00-931-8006	45	30
5330-00-931-8011	57	2
	59	1
5330-00-931-8651	10	7
5315-00-931-8963	254	27
4820-00-932-0819	42	2
2920-00-932-0829	54	3
4730-00-933-0727	64A	23
	64C	23
2920-00-933-0790	72	8
	77	2
5330-00-936-2162	114	6
3020-00-937-1047	33	39
4820-00-937-1073	33	5
5331-00-937-5155	207	16

CROSS-REFERENCE INDEXES

NATIONAL STOCK NUMBER INDEX

STOCK NUMBER	FIG.	ITEM
5331-00-937-5155	207	25
	208	16
	208	25
	209	16
	210	16
	217	2
5342-00-938-5530	107	23
5365-00-938-5568	4	25
5331-00-939-0610	120	34
5331-00-939-0871	120	14
5330-00-940-7930	110	42
5331-00-941-3599	134	13
	200	9
5331-00-942-5114	126A	3
5315-00-942-7167	33	23
5365-00-944-0863	215	31
5310-00-944-5896	71	56
	157	13
	158	6
	71A	22
	71B	17
	71C	13
5331-00-944-8281	118	14
	197	2
	214	7
	215	14
	218	5
	225	9
	226	7
	227	11
	236	8
	126A	9
5331-00-945-4395	150	22
	151	2
5365-00-948-1600	126	8
2950-00-948-1611	40	25
2950-00-948-1653	40	24
2950-00-948-1771	40	19
2815-00-948-2221	13	8
5330-00-948-2288	63	8
5330-00-948-2292	63	1
5330-00-948-2300	68	39
4720-00-948-2315	68	52
5310-00-948-3280	124	15
5331-00-948-4063	201	2
	204	10
	206	2
	211	15
	215	17
	219	8
5331-00-948-4063	225	28
	226	26
	228	6
	229	38
	233	16
	239	20
	240	12
	261	40
	264	33
	265	27
5330-00-948-5162	224	7
	241	2
4720-00-948-6037	18	11
5331-00-948-6062	125	11
5331-00-948-6063	110	33
2520-00-948-6065	61	3
5331-00-948-6068	25	4
5365-00-948-6452	147	47
3120-00-948-6453	154	14
5315-00-948-6454	147	35
5342-00-948-6464	147	45
5365-00-948-6480	150	3
5331-00-948-6482	121	2
	152	21
	153	6
	193	22
	195	14
	218	24
	228	34
	229	37
	230	4
	231	26
	243	29
	64A	24
	64C	24
5330-00-948-6836	190	10
5330-00-948-6863	224	9
	241	21
5331-00-948-6924	214	24
5325-00-948-7246	200	20
2530-00-948-9748	149	25
2990-00-948-9761	42	34
5331-00-948-9767	110	41
5331-00-948-9768	120	18
	243	17
2520-00-948-9786	105	17
2520-00-948-9854	113	23
4820-00-948-9962	42	32
	42	33
3120-00-948-9964	116	7

CROSS-REFERENCE INDEXES

NATIONAL STOCK NUMBER INDEX

STOCK NUMBER	FIG.	ITEM
3120-00-948-9964	116	19
2910-00-948-9968	41	18
5330-00-949-0070	108	23
5340-00-949-0311	215	30
5320-00-949-0552	107	16
2530-00-949-0666	119	9
5330-00-949-0735	24	3
3120-00-949-0780	102	31
2530-00-949-0817	149	27
4330-00-949-0868	119	7
4710-00-949-0874	119	8
5325-00-949-1343	190	27
3120-00-949-1344	49	31
3020-00-949-1370	190	25
3040-00-949-1427	200	15
3110-00-949-1438	124	21
	125	12
	125	16
	195	3
5365-00-949-1439	124	14
	125	14
5330-00-949-1451	40	5
5310-00-949-2554	200	27
2530-00-949-4505	154	6
3040-00-949-8665	47	28
5310-00-949-9296	5	12
	5A	13
	132	23
	139	13
	141	33
	168	16
	255	14
5310-00-950-0039	35	10
	108	11
	121	7
5360-00-950-2045	154	29
5360-00-950-2093	124	6
2950-00-950-2470	40	22
	40A	6
5360-00-950-2471	126	9
2520-00-950-2643	126	6
5310-00-950-2660	126	3
	126A	6
5360-00-950-3397	123	6
	206	14
	250	9
3020-00-950-5746	117	23
2530-00-950-5758	134	9
5310-00-950-6980	119	5
3040-00-950-7343	154	45
5360-00-950-8041	124	22
	125	17
	218	28
5331-00-950-8217	200	8
	74A	26
5330-00-950-8223	68	42
5360-00-950-8251	17	6
	25	20
	17A	4
5325-00-950-8281	41	17
5325-00-951-6973	147	36
5310-00-952-0561	71	21
5315-00-952-7737	44	30
5330-00-953-1624	200	5
6220-00-953-4652	85	1
5310-00-954-2993	106	14
5305-00-959-2723	188	2
	220	11
	221	13
2520-00-960-1853	105	6
3040-00-961-0649	147	37
5305-00-964-0503	176	10
5315-00-970-0153	36	18
	140	11
	146	30
	146	31
	147	19
5310-00-972-0479	108	6
2920-00-972-5378	74	17
5330-00-972-7644	72	12
	77	3
	74A	56
5331-00-974-7169	120	42
2520-00-974-9493	108	10
5310-00-975-2075	47	8
	104	23
	147	21
	150	8
	150	12
	150	28
	151	24
	220	24
	221	21
	222	16
5330-00-976-4695	72	21
	77	25
	74A	70
5330-00-976-9143	64A	9
	64C	8
5305-00-978-9374	44	34

CROSS-REFERENCE INDEXES

NATIONAL STOCK NUMBER INDEX

STOCK NUMBER	FIG.	ITEM	STOCK NUMBER	FIG.	ITEM
5340-00-980-1367	72	14	5331-00-999-8364	175	7
	74A	38	5342-00-999-8389	32	19
5365-00-981-1614	33	47	5331-01-006-2129	239	20
5331-00-982-9312	116	5		240	12
5305-00-983-6622	35	31		261	70
5360-00-984-5590	47	25		264	51
5305-00-984-5678	171	23		265	56
5305-00-984-6189	80	6	3110-01-013-3083	175	41
5305-00-984-6192	72	34	3110-01-013-4036	175	42
	76	16	5305-01-015-6841	16	5
	74A	37		25	7
5340-00-985-0823	48	27		26	4
	147	20		27	11
	150	7		30	10
5331-00-985-2219	126	20		38	4
5360-00-985-2253	74	16		39	1
	74B	17		48	23
5310-00-987-1294	110	1A		50	6
3120-00-987-5561	11	16		55	9
5306-00-987-7112	128	2		58	17
	149	16		60	30
2910-00-989-3388	50	14		68	17
5325-00-990-5595	11	17		106	18
3110-00-992-1048	111	33		120	19
	113	15B		121	14
	187	4		122	16
	213	28		159	26
	218	16		211	13
2920-00-993-4233	72	30		218	12
	74A	33		220	19
2815-00-994-7407	39	5		221	18
	39A	3		222	20
5330-00-994-7409	39	4		239	5
	39A	1		240	24
4730-00-995-1559	26	18	2910-01-017-3814	31	1
5331-00-997-7230	122	1	3830-01-017-4036	251	9
	152	15	3830-01-017-4041	251	5
5365-00-999-2399	74	8	2910-01-017-4518	33	1
5310-00-999-2527	74A	54	5330-01-017-5578	142	12
5340-00-999-3230	50	12	5330-01-017-6311	KIT	
4320-00-999-5025	224	6	3020-01-017-6333	72	22
5331-00-999-5502	109	4		77	26
5331-00-999-5504	26	31		74A	69
	125	6	2530-01-017-6340	134	1
5331-00-999-5505	123	5	4820-01-017-6344	213	11
5310-00-999-5524	4	35	5330-01-017-6427	64	20
	12	3		115	2
	12	30	5330-01-017-6431	129	27
	4A	24	2990-01-017-6452	56	2
	4B	7	4820-01-017-6495	126A	1

CROSS-REFERENCE INDEXES

NATIONAL STOCK NUMBER INDEX

STOCK NUMBER	FIG.	ITEM
4820-01-017-6496	192	1
5331-01-017-6535	225	37
	226	35
	227	4
	234	6
	235	5
4320-01-017-6639	35	1
2530-01-017-6667	144	3
	145	3
5330-01-017-7157	58	44
5330-01-017-7158	58	15
	60	10
5330-01-017-7161	KIT	
4820-01-017-8081	124	1
3030-01-017-8320	67	8
5330-01-017-8608	128	32
5306-01-017-8609	251	6
	252	5
4820-01-018-0108	154	1
2520-01-018-0464	126	1
2520-01-018-1582	149	18
2520-01-018-1838	125	1
2910-01-018-1842	31	7
4710-01-018-1843	31	2
4710-01-018-2413	31	3
3830-01-018-4830	251	9
3040-01-018-4836	224	2
2940-01-018-4872	37	6
2940-01-018-4873	37	5
2930-01-018-6144	58	34
	60	34
5331-01-019-2448	186	23
5365-01-020-5721	40B	17
3120-01-020-5814	40	16
	40B	18
4730-01-022-6066	156	17
5320-01-023-2529	103	19
4730-01-023-8633	32	23
5331-01-024-2512	197	3
	215	10
	225	39
	226	37
3110-01-024-9817	176	40
5330-01-026-2850	154	35
5330-01-026-4217	5A	21
5305-01-026-9518	6	7
	17	17
	22	15
	39	9
	48	5
5305-01-026-9518	49	7
	51	7
	55	4
	56	10
	58	13
	60	17
	60	24
	60	30
	67	7
	126	22
	147	44
	150	17
	156	9
	202	8
	214	27
	215	6
	233	11
	238	13
	261	31
	265	67
	39A	5
	64A	19
	64C	20
2920-01-026-9521	69	20
5365-01-026-9555	214	8
2520-01-026-9927	113	18
2520-01-028-8096	237	16
6620-01-029-3168	246	15
5365-01-031-8183	153	5
	195	13
5330-01-033-3438	4	26
	4A	6
5365-01-035-4899	213	25
5365-01-036-0010	213	9
	214	13
	215	19
	218	21
5307-01-037-4854	110	38
6220-01-037-5622	85	3
4820-01-041-1571	123	1
2540-01-043-4053	172	7
5330-01-043-5565	232	4
5310-01-045-5588	71	13
5330-01-046-1976	63	25
5310-01-047-6064	71A	41
2520-01-047-6754	114	3
3830-01-047-9319	241	1
2930-01-047-9321	65	1
2520-01-047-9388	113	31
3830-01-047-9395	237	5

CROSS-REFERENCE INDEXES

NATIONAL STOCK NUMBER INDEX

STOCK NUMBER	FIG.	ITEM
3830-01-048-0809	258	9
2530-01-048-0813	144	2
	145	2
5330-01-048-0983	215	33
6685-01-048-2246	246	18
3830-01-048-3207	258	8
2530-01-048-3937	136	1
2520-01-048-3938	24	4
2530-01-048-3939	144	16
	145	13
2530-01-048-3940	144	7
	145	9
3830-01-048-3941	213	1
3830-01-048-3942	207	22
	208	22
	209	13
	210	13
6620-01-048-4145	246	17
2530-01-048-4166	144	3
	145	3
3830-01-048-4201	238	1
3830-01-048-4202	241	1
2990-01-048-4494	40	1
3830-01-048-4588	224	1
6645-01-048-4671	247	5
2530-01-048-4917	144	17
	145	14
5330-01-048-6000	144	12
5330-01-048-6001	153	27
5330-01-048-6002	241	19
5330-01-048-6003	224	10
5330-01-048-6005	207	15
	207	24
	208	15
	208	24
	209	15
	210	15
	217	9
4820-01-048-7098	218	1
5330-01-048-7111	224	11
5330-01-048-7315	241	17
5330-01-048-7317	241	18
2990-01-048-7804	55	6
4730-01-048-7874	19	4
4820-01-048-8597	207	13
	208	13
	217	1
2530-01-048-9734	144	8
	145	7
5330-01-049-0553	35	24
5330-01-049-1292	178	7
5330-01-049-2022	53	9
2530-01-050-3277	137	1
5330-01-050-5024	182	3
2815-01-050-8003	64	23
5360-01-050-8009	68	4
2910-01-051-2299	50	3
4730-01-051-2312	153	9
5310-01-051-2360	36	2
	51	3
	91	10
5307-01-051-2364	51	14
4730-01-051-3134	121	43
	225	36
	226	34
	227	3
	234	24
	235	4
	239	11
	240	20
5307-01-051-3135	74	11
5940-01-051-3136	74	12
2910-01-051-3138	48	2
4730-01-051-5256	120	22
	121	26
	122	49
	201	6
	201	13
	205	6
	206	8
	206	15
	211	4
	212	10
	232	5
	263	1
4730-01-051-5257	121	31
	122	21
	211	5
	212	4
	214	19
	219	10
	225	20
	226	18
	229	13
	233	18
	261	23
	264	58
	265	61
2520-01-051-5278	178	17
	180	23

CROSS-REFERENCE INDEXES

NATIONAL STOCK NUMBER INDEX

STOCK NUMBER	FIG.	ITEM	STOCK NUMBER	FIG.	ITEM
3110-01-051-5285	214	16	2920-01-053-4512	70	6
5340-01-051-6767	225	7	2920-01-053-4513	70	5
	225	55	2920-01-053-4514	70	1
	226	5	5305-01-053-4517	70	38
	226	53	5940-01-053-4521	70	32
	227	35	5330-01-053-4529	70	39
	227	45	2920-01-053-4530	70	20
	232	11	2920-01-053-4531	70	21
	232	17	4730-01-053-4540	17	3
	232	23		17A	9
	234	4	2920-01-053-4541	71	47
	263	12	5970-01-053-4543	70	22
4720-01-051-6773	BULK	13	5305-01-053-4549	70	28
5310-01-051-6863	224	15	2920-01-053-4551	74	21
5306-01-051-7598	250	6	5305-01-053-4553	70	33
4720-01-051-7602	122	37	5305-01-053-4554	70	9
	228	5	5305-01-053-4557	72	24
	229	5		77	24
	235	9		74A	78
	235	18	2920-01-053-4558	74	9
	235	29	5970-01-053-4559	74	7
	236	12	2920-01-053-4562	72	17
	236	37		74A	65
4730-01-051-7605	122	38	5305-01-053-4564	74	18
	228	3		74B	14
	229	3	2940-01-053-4642	17	14
	235	10		17A	15
	235	19	5330-01-053-4684	219	13
	235	28	4730-01-053-4687	63	2
4730-01-051-8745	26	17	5365-01-053-4689	46	4
5330-01-052-3917	225	49	4730-01-053-4693	27	2
	226	47	5305-01-053-4707	73	11
	228	16		76	8
	229	15	2815-01-053-4712	197	15
5310-01-052-3924	87	22	5305-01-053-4713	72	25
5315-01-052-3942	147	8		77	24
	262	4		74A	76
5305-01-052-9758	74	20	5310-01-053-4720	72	51
5330-01-053-2691	237	36		76	22
4730-01-053-2692	120	33		74A	50
3805-01-053-2703	227	23	2815-01-053-4726	40	9
5306-01-053-3837	164	6	5305-01-053-4742	71	23
	165	9	2920-01-053-4743	71	53
5340-01-053-3841	113	12	2920-01-053-4744	71	7
5340-01-053-3843	47	7	2920-01-053-4745	71	2
	47	27	3040-01-053-4746	71	45
	48	8	5330-01-053-4747	71	42
	150	11	2920-01-053-4748	71	31
	150	29	2920-01-053-4749	71	26
	151	25	5305-01-053-4751	74	14

CROSS-REFERENCE INDEXES

NATIONAL STOCK NUMBER INDEX

STOCK NUMBER	FIG.	ITEM	STOCK NUMBER	FIG.	ITEM
5305-01-053-4758	71	9	2920-01-058-9099	101	4
2920-01-053-4782	71	52		103	12
9905-01-053-4808	199	3		103	22
9905-01-053-4809	199	3		248	8
5310-01-053-4818	74A	2	4730-01-058-9100	225	16
5315-01-053-4820	70	42		226	14
5330-01-053-4844	71	44	5940-01-058-9112	89	6
5305-01-053-4850	73	3		89	10
	76	5		89	19
5310-01-053-4864	70	43		90	8
5330-01-053-4873	70	11		90	12
2815-01-053-7203	12	17		90	18
2815-01-053-7307	128	33		91	4
5330-01-053-7368	242	4		92	15
5330-01-053-8043	242	5		92	23
5310-01-053-8076	160	13		93	12
	161	10		93	23
2940-01-058-8068	37	4		98	7
2940-01-058-8069	37	7		98	18
5310-01-058-8071	26	10		99	16
	38	1	5305-01-058-9146	80	17
	189	21	2920-01-058-9147	BULK	28
	220	14	5940-01-058-9158	B2	11
	221	31	5330-01-058-9176	58	38
2910-01-058-8075	47	30		60	38
	104	22		61	2
	220	26	2930-01-059-0826	61	1
	221	32	5995-01-059-0829	94	11
2940-01-058-8094	38	2	3020-01-059-0869	176	28
2940-01-058-8095	38	3	5940-01-059-0873	97	9
5340-01-058-8097	55	1		99	13
	56	9		74A	5
2940-01-058-8102	37	18	6220-01-059-0874	85	5
5330-01-058-8264	38	7	2920-01-059-0878	99	10
5940-01-058-9090	94	7	5920-01-059-0881	83	3
	99	23		88	43
2920-01-058-9099	83	4		92	3
	88	35		93	39
	89	2		97	12
	92	6		99	7
	92	12	5920-01-059-0882	87	10
	92	37		88	11
	93	5		92	32
	93	9		93	29
	93	37		97	3
	94	6		99	8
	94	26	5360-01-059-0883	83	2
	94	33		88	44
	100	7		92	4
	100	20		93	40

CROSS-REFERENCE INDEXES

NATIONAL STOCK NUMBER INDEX

STOCK NUMBER	FIG.	ITEM	STOCK NUMBER	FIG.	ITEM
5360-01-059-0883	97	13	2520-01-062-5198	218	4
	99	6		225	30
5999-01-059-0884	83	1		226	28
	87	11	4730-01-062-5206	230	1
	88	12		231	24
	88	45	2420-01-062-5208	179	1
	92	5	5315-01-062-5209	111	27
	92	33		111	30
	93	30		112	9
	93	41		127	18
	97	2	2530-01-062-5318	202	13
	99	5	4730-01-062-5898	225	26
5920-01-059-0894	87	12		226	24
	88	8		228	10
5930-01-059-0930	87	13		229	9
5310-01-059-0992	81	5		233	7
4730-01-059-5352	57	29	4730-01-062-5932	233	8
	58	2		233	25
	59	31	4730-01-062-6010	225	27
	60	1		226	25
	225	60		228	13
	229	33		229	12
5330-01-059-7141	118	20	2510-01-062-6107	171	17
2520-01-059-7148	177	2	5935-01-062-7141	97	8
5310-01-059-7159	118	16	5305-01-062-9897	5A	8
5315-01-059-7198	176	30		149	26
2520-01-059-9288	127	10	5310-01-062-9898	71C	3
4730-01-059-9344	52	20	4730-01-062-9906	227	5
	53	4	4730-01-062-9928	261	46
	178	4		264	18
	179	13		265	11
	180	10	2510-01-063-0635	95	10
	181	12	2510-01-063-0636	95	8
2520-01-059-9381	194	7	5307-01-063-0644	56	8
	195	6	2520-01-063-0677	200	10
4730-01-059-9435	26	26	4730-01-063-0685	236	7
	32	34	5310-01-063-0719	140	12
	248	25	2540-01-063-0736	92	16
5306-01-059-9566	192	19		93	10
5340-01-060-0309	197	17		100	6
	233	3		100	16
	234	19	4730-01-063-0817	64	10
5331-01-060-0745	182	17	5305-01-063-1423	188	8
4730-01-061-7178	42	37	2940-01-063-4213	38	6
5306-01-061-8635	31	23	5306-01-063-4264	174	13
	32	17		176	15
5306-01-061-8640	75	6	2920-01-063-7834	87	14
5330-01-061-9378	126	18	5310-01-063-7852	81	2
	182	31	5330-01-063-9839	64	2
4730-01-062-0292	234	5		89	4

CROSS-REFERENCE INDEXES

NATIONAL STOCK NUMBER INDEX

STOCK NUMBER	FIG.	ITEM	STOCK NUMBER	FIG.	ITEM
5330-01-063-9839	64B	11	5315-01-066-4707	52	6
	64D	11		172	29
5365-01-064-1030	218	8	5315-01-066-4722	72	18
5365-01-064-3788	105	12		77	12
4730-01-064-3790	214	18		74A	63
	126A	8	2520-01-066-4723	49	16
5355-01-064-3851	80	16	5340-01-066-4744	44	6
2520-01-064-6625	182	5	2910-01-066-7693	33	14
5330-01-064-7416	118	9	5360-01-066-7695	35	23
2590-01-064-7492	37	8	4330-01-066-7713	185	6
2590-01-064-7493	58	36	2530-01-066-8430	157	17
	60	36		158	1
	61	7	2520-01-066-8434	134	23
3010-01-064-7524	182	6	5330-01-066-8435	142	8
5330-01-064-8247	207	6	2530-01-066-8437	112	25
	208	6	2510-01-066-8438	111	23
	209	7	5342-01-066-8439	127	38
	210	7	4820-01-066-8441	35	22
	216	12	4730-01-066-8443	246	4
5330-01-064-8276	207	7	5365-01-066-8444	248	11
	208	2	5310-01-066-8445	248	12
	209	2	5315-01-066-8453	144	10
	210	2	2510-01-066-8454	112	11
	216	8	3110-01-066-8456	133	15
5310-01-066-0503	155	7	2590-01-066-8457	94	16
5310-01-066-0506	162	7	5365-01-066-8458	133	12
5310-01-066-0508	260	20	5315-01-066-8459	133	14
2520-01-066-0510	189	17	5365-01-066-8463	142	5
5342-01-066-0526	58	39	5365-01-066-8464	110	45
	60	39	5365-01-066-8465	126A	17
2920-01-066-0593	94	21	5365-01-066-8466	110	37
	94	28	3110-01-066-8467	147	11
	99	21	3110-01-066-8468	147	43
2590-01-066-0613	237	20		147	54
4720-01-066-0617	58	1		147	59
2940-01-066-0618	38	11	5315-01-066-8470	146	7
4720-01-066-0619	37	11		151	18
5365-01-066-0699	3	16	2590-01-066-8471	94	1
5365-01-066-0700	3	16	2590-01-066-8472	94	27
5330-01-066-1469	213	12	2530-01-066-8473	134	11
4720-01-066-4554	225	59	5330-01-066-8585	147	30
	229	34	4730-01-066-8597	37	10
5306-01-066-4572	201	4	2520-01-066-9163	10	11
	204	8	5342-01-066-9164	141	28
	206	5	5310-01-066-9171	64C	19
5365-01-066-4574	49	11	3110-01-066-9172	146	35
	49	25		150	2
4720-01-066-4587	BULK	12	2520-01-066-9173	135	8
4730-01-066-4619	64A	11	2520-01-066-9174	135	9
	64C	11	5310-01-066-9181	107	29

CROSS-REFERENCE INDEXES

NATIONAL STOCK NUMBER INDEX

STOCK NUMBER	FIG.	ITEM	STOCK NUMBER	FIG.	ITEM
2510-01-066-9189	8	4	5360-01-067-1728	210	22
4720-01-066-9190	68	3		217	6
5310-01-066-9191	11	15	5330-01-067-1729	200	17
2520-01-066-9192	12	32	5360-01-067-1730	218	20
5330-01-066-9255	10	10	5310-01-067-2157	224	4
5330-01-066-9257	5	21	3110-01-067-2158	238	7
	5A	22	2530-01-067-2159	238	4
5330-01-066-9258	5	21	3110-01-067-2160	202	15
	5A	22		223	14
5330-01-066-9259	20	6	2520-01-067-2163	215	13
2520-01-067-1391	130	37	2530-01-067-2164	223	15
2520-01-067-1392	130	4	3110-01-067-2165	255	4
5310-01-067-1393	143	3	2530-01-067-2166	45	1
5315-01-067-1394	127	19	5315-01-067-2168	44	23
	130	32	4720-01-067-2177	235	16
4720-01-067-1395	122	12	4720-01-067-2178	235	27
5310-01-067-1396	128	36	5365-01-067-2179	185	21
	149	13		213	14
4720-01-067-1397	120	1		215	3
4720-01-067-1398	122	46	4720-01-067-2180	234	1
4720-01-067-1399	120	3	5330-01-067-2307	64F	4
4720-01-067-1400	121	45	5330-01-067-2308	255	20
4720-01-067-1401	120	38	5330-01-067-2310	75	5
5310-01-067-1402	129	14	5315-01-067-4665	68	24
4720-01-067-1405	121	35		68	29
5342-01-067-1406	129	4	2530-01-067-5554	22	25
4720-01-067-1407	122	20	2530-01-067-5555	22	24
5360-01-067-1417	218	17	5360-01-067-5607	215	12
5365-01-067-1426	225	25	5360-01-067-5611	215	35
	226	23	5360-01-067-5614	213	13
	228	12	5360-01-067-5617	33	42
	229	11	5360-01-067-5618	36	16
	233	6	3020-01-067-5622	68	40
	233	23	3020-01-067-5630	22	20
	261	38	5365-01-067-5631	26	14
	261	53	5365-01-067-5633	68	22
	264	37	5306-01-067-5634	11	14
	264	70	3020-01-067-5659	190	8
	265	30	5310-01-067-5661	107	15
	265	76	5360-01-067-8013	34	6
5330-01-067-1487	130	24	5342-01-067-8043	32	36
5330-01-067-1489	121	16	4730-01-067-8059	31	22
5330-01-067-1490	243	6		32	16
5330-01-067-1491	237	28	4730-01-067-8063	31	8
5315-01-067-1727	112	13	4730-01-067-8065	49	3
5360-01-067-1728	207	20	5342-01-068-0011	214	5
	207	31	6145-01-068-0017	80	7
	208	20	5342-01-068-0032	49	29
	208	31	4730-01-068-0042	45	8
	209	22	2520-01-068-2763	142	18

CROSS-REFERENCE INDEXES

NATIONAL STOCK NUMBER INDEX

STOCK NUMBER	FIG.	ITEM	STOCK NUMBER	FIG.	ITEM
4720-01-068-2816	235	6	5342-01-068-7112	107	12
5360-01-068-2828	52	10	4820-01-068-7135	25	15
5360-01-068-2840	46	5	2815-01-068-7136	10	8
5305-01-068-2843	45	4	5365-01-068-7142	144	13
5330-01-068-2908	153	19	4730-01-068-7143	144	15
2510-01-068-5899	133	2	5935-01-068-7146	246	7
3040-01-068-5973	142	13	2540-01-068-7149	94	5
6645-01-068-6052	22	30		94	32
4730-01-068-6055	26	28	5365-01-068-7153	28	2
5365-01-068-6063	237	24	5340-01-068-7154	111	6
4820-01-068-6064	237	29	3110-01-068-7155	106	21
4820-01-068-6068	215	8	2815-01-068-7156	28	3
5315-01-068-6070	256	3	3110-01-068-7157	128	31
5330-01-068-6073	194	19	5365-01-068-7159	136	19
	195	23		137	18
4730-01-068-6077	87	23		138	17
4730-01-068-6081	26	1	2540-01-068-7163	129	29
	32	5	2540-01-068-7165	129	15
	179	10	3020-01-068-7171	117	1
	181	9	5342-01-068-7178	146	49
3110-01-068-6082	113	24		151	17
2530-01-068-6106	149	21	3110-01-068-7241	191	6
3040-01-068-6107	149	28	5365-01-068-7242	111	5
5330-01-068-6110	220	7		127	11
	221	7	2540-01-068-7243	133	20
	222	4	5365-01-068-7244	111	11
2910-01-068-6112	141	12	3020-01-068-7245	127	29
3110-01-068-6118	108	19	5342-01-068-7248	238	3
2520-01-068-6135	141	21	4820-01-068-7249	214	22
3110-01-068-6136	142	31	3040-01-068-7256	105	10A
5342-01-068-6137	45	6	5310-01-068-7258	111	22
5306-01-068-6138	142	3	2530-01-068-7261	126A	5
3110-01-068-6139	113	6	2815-01-068-7265	4	23
5325-01-068-6227	237	23		4A	15
5325-01-068-6229	246	11	2815-01-068-7266	4	18
5342-01-068-6984	65	17		4A	16
2920-01-068-6997	143	4	2815-01-068-7268	5	9
2540-01-068-7068	127	9		5A	10
2540-01-068-7072	128	37	3805-01-068-7270	142	32
5365-01-068-7073	134	19	2815-01-068-7271	44	11
5365-01-068-7075	134	5	2540-01-068-7272	133	8
	135	2	3805-01-068-7273	144	14
5342-01-068-7083	213	2	4710-01-068-7274	BULK	18
5342-01-068-7084	213	5	2910-01-068-7276	22	23
5342-01-068-7085	251	3	5365-01-068-7277	113	25
5342-01-068-7086	213	26	6680-01-068-7287	19	1
4730-01-068-7106	124	25	5310-01-068-7288	141	2
	125	2	5315-01-068-9640	23	5
2530-01-068-7107	126	4	5360-01-068-9641	146	1
2520-01-068-7111	107	14	5315-01-068-9644	45	7

CROSS-REFERENCE INDEXES

NATIONAL STOCK NUMBER INDEX

STOCK NUMBER	FIG.	ITEM	STOCK NUMBER	FIG.	ITEM
5315-01-068-9644	65	15	4730-01-069-0769	248	23
5365-01-068-9646	130	38	4730-01-069-0770	246	14
5365-01-068-9650	111	14	3010-01-069-0776	149	2
2520-01-068-9665	219	6	2530-01-069-0783	136	6
2895-01-068-9667	215	32		137	3
2990-01-068-9668	243	15		138	5
2995-01-068-9670	214	15	2530-01-069-0784	107	27
5335-01-068-9671	237	30	3020-01-069-0786	107	9
3040-01-068-9690	141	24	5342-01-069-0788	124	23
5365-01-068-9691	112	23		125	18
3020-01-068-9692	112	21	5342-01-069-0790	56	7
3020-01-068-9693	127	2	2530-01-069-0791	150	9
3020-01-068-9694	127	24	4730-01-069-0792	32	14
3020-01-068-9697	111	19	2530-01-069-0793	30	18
3020-01-068-9699	111	28	5342-01-069-0795	124	7
2530-01-068-9700	111	16	4730-01-069-0796	248	10
3020-01-068-9701	112	4	2510-01-069-0798	149	20
2815-01-068-9717	7	4	2530-01-069-0799	150	5
3805-01-068-9720	142	25	5330-01-069-0801	207	5
3110-01-068-9721	142	17		208	5
4730-01-068-9722	236	11		209	3
3020-01-068-9730	144	6		210	3
4720-01-068-9733	233	4		216	11
5970-01-068-9734	118	19	2530-01-069-0802	94	4
5342-01-068-9739	27	13		94	31
2530-01-068-9742	111	15	2510-01-069-0804	166	13
5365-01-068-9743	111	8		167	12
2530-01-068-9752	148	1	2530-01-069-0805	107	22
2530-01-068-9753	148	4	5360-01-069-0808	171	20
3020-01-068-9754	113	4	2530-01-069-0809	154	19
4730-01-068-9756	228	4	2530-01-069-0810	154	42
	229	4	5360-01-069-0812	154	25
	236	13	5315-01-069-0837	129	33
	236	36	5315-01-069-0838	129	16
3110-01-068-9757	127	37	5305-01-069-0839	255	1
5330-01-068-9760	120	16	5360-01-069-0841	130	35
5310-01-068-9761	129	7	5307-01-069-0842	4	33
5970-01-068-9787	73	25	2510-01-069-0845	12	2
	76	34	5307-01-069-0846	130	31
	74A	24	5360-01-069-0852	152	7
4730-01-068-9793	75	3	5330-01-069-0856	213	23
5330-01-068-9820	25	2		215	5
5330-01-068-9827	51	20	3040-01-069-0863	113	27
5330-01-068-9828	51	18	3020-01-069-0864	130	9
5330-01-068-9829	6	5	3020-01-069-0865	107	13
4730-01-069-0748	41	7	3020-01-069-0871	69	18
5315-01-069-0755	4	29	4730-01-069-0876	126	15
	107	8	3020-01-069-0881	8	3
4730-01-069-0768	248	18	3040-01-069-0885	129	46
4730-01-069-0769	32	1	5330-01-069-0886	213	27

CROSS-REFERENCE INDEXES

NATIONAL STOCK NUMBER INDEX

STOCK NUMBER	FIG.	ITEM	STOCK NUMBER	FIG.	ITEM
2520-01-069-0891	119	4	5365-01-091-1407	116	14
4730-01-069-0892	128	4		121	5
4730-01-069-0898	124	19	2530-01-091-8399	129	19
	125	15	5310-01-091-8410	149	11
5342-01-069-0904	42	3	4720-01-093-7331	BULK	11
3020-01-069-1386	129	10	5331-01-093-8484	198	3
5360-01-069-1390	152	4	4730-01-094-7469	261	17
5360-01-069-1421	142	2		261	42
5330-01-069-1423	133	16		264	10
5360-01-069-1425	125	13		264	30
5365-01-069-1426	244	18		265	3
3120-01-069-1430	142	33		265	23
5360-01-069-1433	118	2	5310-01-094-8810	90	20
5360-01-069-1437	171	25		159	10
5306-01-069-1440	143	2		159	14
5365-01-069-1504	142	41	5306-01-094-9106	52	23
4730-01-069-5817	255	3		105	4
5330-01-069-7444	58	5		109	7
	60	5		147	32
2540-01-069-8801	141	16		176	11
2530-01-069-8802	22	9		186	5
5360-01-070-0532	214	23		249	5
5360-01-070-2809	215	34		64F	10
5315-01-070-2810	52	12	4730-01-095-0075	227	39
5365-01-070-2910	142	39		236	3
5365-01-070-2911	133	3		261	5
2530-01-070-4594	112	5		261	16
5330-01-070-4701	25	24		261	21
3010-01-070-7008	33	34		261	44
2990-01-070-8548	46	7		264	4
5365-01-071-1970	107	26		264	11
5340-01-071-2545	44	7		264	16
5342-01-073-9953	253	22		264	21
4730-01-074-0907	214	1		264	29
3830-01-075-0018	258	11		264	56
5940-01-079-1375	88	34		265	4
5420-01-079-4310	262	5		265	9
4730-01-079-4374	183	13		265	14
3110-01-079-4670	190	21		265	22
5325-01-079-6760	152	8		265	46
3110-01-079-7024	71A	37		265	59
5310-01-085-0881	154	26	4730-01-095-0833	227	38
2530-01-085-3736	138	6		261	6
5340-01-087-0682	4B	15		261	19
	113	7		261	45
2530-01-090-2283	153	30		264	3
2530-01-090-6851	153	28		264	12
2530-01-090-6863	152	1		264	17
2805-01-090-6871	238	2		264	23
5315-01-090-8540	112	14		264	55

CROSS-REFERENCE INDEXES

NATIONAL STOCK NUMBER INDEX

STOCK NUMBER	FIG.	ITEM	STOCK NUMBER	FIG.	ITEM
4730-01-095-0833	265	5	5310-01-102-2478	48	13
	265	10		166	4
	265	16	5330-01-102-3252	35	4
	265	45	5340-01-102-3538	113	5
	265	58	5331-01-102-4354	44	13
4730-01-095-0834	261	14	5305-01-102-7343	257	8
	264	31	5365-01-102-9605	141	20
	265	24	2520-01-102-9606	113	3
4730-01-095-0835	261	22	5310-01-102-9866	131	6
	264	5	2990-01-103-3615	72	2
	264	14		76	20
	265	7		74A	49
	265	47	2990-01-103-3616	72	39
5310-01-095-1246	221	33		76	39
	222	18	5342-01-103-3617	248	13
5310-01-095-1249	166	39	2990-01-103-3619	41	8
	167	39	2990-01-103-3652	47	18
	239	15		221	20
	240	17		222	17
5310-01-095-1537	155	26	5920-01-103-3655	100	32
5305-01-095-3292	153	7	4710-01-103-3674	37	1
5310-01-095-4631	159	8	2990-01-103-3675	36	11
	190	19	3040-01-103-3685	65	27
	64C	18	2990-01-103-3689	51	2
	71B	18	2530-01-103-3692	139	17
	71C	14	4710-01-103-3693	139	14
5930-01-095-6194	82	6	5975-01-103-3695	BULK	2
5330-01-096-0912	218	3	2990-01-103-3696	BULK	1
5365-01-097-3237	44	22	4720-01-103-3700	BULK	26
5940-01-097-3578	99	3	5330-01-103-3701	40	18
	103	9	3110-01-103-3702	137	11
4730-01-097-4728	261	52		138	8
	264	36		142	35
	265	29	2990-01-103-3703	143	4
5310-01-097-6720	159	21	3020-01-103-3705	111	35
5306-01-097-7874	183	11	3020-01-103-3706	112	7
5310-01-097-8955	71B	7	3020-01-103-3707	112	10
5310-01-098-0624	65	14A	2930-01-103-3708	65	34
	69	2	4730-01-103-3727	35	20
	64B	15	4820-01-103-4037	123	8
	64F	6	2990-01-103-6623	49	10
5340-01-098-6683	122	13	2990-01-103-6628	40	21
5315-01-099-0060	230	21	2990-01-103-6629	40	2
2920-01-099-3085	71A	30	2990-01-103-6630	KIT	
3120-01-101-5088	74A	30	2990-01-103-6633	68	9
3120-01-101-5089	72	11	5330-01-103-6637	65	24
	77	4	2990-01-103-6642	113	8
	74A	57	4820-01-103-6644	154	37
5340-01-102-1789	32	22	5365-01-103-6645	139	9
5310-01-102-2477	10	14	2990-01-103-6646	100	14

CROSS-REFERENCE INDEXES

NATIONAL STOCK NUMBER INDEX

STOCK NUMBER	FIG.	ITEM	STOCK NUMBER	FIG.	ITEM
2990-01-103-6647	100	1	2590-01-123-5945	258	7
2520-01-103-6648	112	20	2590-01-123-5946	160	4
5325-01-103-6650	94	35		161	6
2990-01-103-6655	113	14	2590-01-123-5955	262	6
3020-01-103-6656	112	17	5365-01-124-2945	207	3
5133-01-103-6780	251	9		207	29
2990-01-103-6802	30	4		208	3
2990-01-103-6805	84	1		208	29
2990-01-103-6806	97	1		209	4
4720-01-103-6814	120	29		209	20
2990-01-103-6815	21	6		210	4
4820-01-103-6827	14	8		210	20
2990-01-103-6830	23	4		216	9
2990-01-103-6831	23	1		218	6
3020-01-103-6832	23	16	2930-01-127-2515	61	5
5133-01-103-6841	251	9	3120-01-127-5376	64A	4
5306-01-103-7039	12	20		64C	4
	30	25	5306-01-127-9361	20	3
5330-01-103-7105	5	27		29	11
5305-01-103-7112	106	25		106	7
5365-01-103-7155	238	11		108	5
3110-01-103-9158	48	21		120	39
5999-01-104-0445	71A	12		128	25
	71B	8		136	9
	71C	5		137	6
2990-01-105-7582	22	1		138	12
5310-01-105-9384	88	18		141	27
	103	17		142	29
5365-01-106-3769	253	12		149	4
5360-01-106-4246	185	16		160	14
5310-01-106-5268	47	3		164	16
5360-01-107-3892	36	10		165	16
5305-01-107-5161	176	34		168	32
5306-01-108-3740	164	12		169	10
	165	14		170	14
4730-01-111-7800	31	25		175	34
9390-01-112-3500	74A	29		186	25
	74A	59		190	1
	74A	73		196	3
7690-01-114-3702	199	6		197	9
5340-01-115-3548	74A	28		233	2
	74A	58		234	17
	74A	72		239	22
5310-01-116-1212	71B	21		240	10
5306-01-116-9622	68	38		243	21
	193	24		261	34
5310-01-117-9326	33	6		265	70
5365-01-118-8822	40B	4		64B	16
5935-01-118-8884	99	9		64F	7
5310-01-123-1417	160	11	5360-01-129-4814	258	6

CROSS-REFERENCE INDEXES

NATIONAL STOCK NUMBER INDEX

STOCK NUMBER	FIG.	ITEM	STOCK NUMBER	FIG.	ITEM
3110-01-129-6756	71A	31	5360-01-155-5301	215	11
5365-01-130-4159	104	9	5307-01-155-6687	47	34
5306-01-133-3502	133	9	5970-01-156-0688	70	30
5970-01-137-3420	74A	15	4730-01-156-4835	121	1
5977-01-137-3421	74A	16		228	33
5970-01-138-7044	74A	14		229	36
2920-01-138-7046	74A	27	4730-01-156-9977	197	4
2920-01-140-0116	74B	16	5305-01-158-2039	45	9
2930-01-143-0186	61	4	4820-01-158-6839	185	8
4730-01-143-9017	17B	4	3040-01-158-9329	188	17
	235	32	5306-01-159-1513	227	9
	64B	20	2910-01-159-5883	41	12
	64D	17	4820-01-159-5909	152	9
2920-01-144-8796	71A	1	4730-01-159-7677	248	15
5365-01-145-0675	65	28	4730-01-159-7840	185	2
5330-01-145-6023	65	29	4820-01-160-0852	154	27
5310-01-146-1218	41	28	3040-01-160-1057	189	5
5330-01-148-5891	185	22	5310-01-160-2034	21	4
	207	4		91	11
	207	30	5340-01-160-2240	123	2
	208	4	5315-01-160-2315	111	32
	208	30	3020-01-160-3640	188	1
	209	5	5342-01-160-3902	170	10
	209	21	5310-01-160-3967	102	3
	210	5	5310-01-160-3978	155	32
	210	21	5340-01-160-4084	146	10
	213	15		146	26
	215	4		146	42
	216	10	5305-01-160-4505	88	25
	218	7		102	41
5340-01-148-9609	152	40		103	3
	153	14	5310-01-160-4538	239	24
2590-01-149-6777	92	30		240	7
	93	24	5310-01-160-4539	198	5
5340-01-150-1348	169	13	5310-01-160-4543	71A	8
5970-01-150-1446	74B	9	3120-01-160-4604	152	41
3040-01-150-5425	102	11		153	13
5340-01-150-9807	190	18	5315-01-160-4647	102	40
5310-01-151-8350	102	12	3110-01-160-4714	135	11
5307-01-151-9304	220	25	6680-01-160-5291	174	16
	221	34	5340-01-160-6800	171	28
5340-01-151-9308	94	23	4730-01-161-0160	178	3
5305-01-152-0589	141	13		180	9
4730-01-152-2666	17B	6	5330-01-161-0895	192	17
5977-01-153-0247	74A	36	5330-01-161-2429	193	3
5977-01-153-0322	74A	17		194	8
5310-01-154-0708	176	32		195	10
3120-01-154-7173	260	19	5365-01-161-2642	102	16
5315-01-155-2618	185	10	3040-01-161-5121	220	15
	185	17	5340-01-161-6223	185	7

CROSS-REFERENCE INDEXES

NATIONAL STOCK NUMBER INDEX

STOCK NUMBER	FIG.	ITEM	STOCK NUMBER	FIG.	ITEM
3040-01-161-6657	71A	7	5340-01-163-5981	221	5
3040-01-161-6658	71A	40	4820-01-163-7157	43	37
3040-01-161-6659	71A	42	4730-01-163-7161	227	18
2520-01-161-7796	176	20	2540-01-163-7235	171	7
5307-01-161-9140	198	2	2540-01-163-7236	171	8
5340-01-161-9146	186	15	2540-01-163-7237	171	13
5365-01-161-9161	174	6	4730-01-163-7270	225	50
5340-01-161-9162	221	27		226	48
5340-01-161-9175	194	20		228	14
	195	24		229	28
2520-01-161-9658	176	22		237	39
	182	12	9905-01-163-9191	199	1
5340-01-161-9923	192	14	3120-01-163-9375	176	41
5310-01-162-0412	189	20	2540-01-164-0033	171	19
5360-01-162-2847	194	11	3120-01-164-0994	71A	15
	195	11	5310-01-164-1650	71A	27
5340-01-162-2864	152	3	5305-01-164-2318	218	25
5340-01-162-4077	135	16	5340-01-164-4596	193	19
3040-01-162-4303	176	12	5365-01-164-6623	174	1
4730-01-162-4358	234	2	3110-01-164-7536	174	25
5310-01-162-6012	198	4	5315-01-164-7583	151	11
	253	34	4730-01-164-7821	243	18
	253	42	2540-01-164-7840	171	9
	257	12	3040-01-164-7841	189	3
5315-01-162-6052	255	10	4330-01-164-7973	185	23
2920-01-162-6410	71A	13	5310-01-164-8539	71A	17
5930-01-162-7313	88	30	5330-01-164-8564	186	16
	103	20	5330-01-164-8576	176	5
3040-01-162-7641	171	27		182	13
5910-01-162-8299	71A	5	5340-01-164-8621	186	1
5330-01-162-8587	194	15	3120-01-164-8623	176	17
	195	20	3120-01-164-8629	47	22
5342-01-162-8767	195	5		188	15
5342-01-162-8768	195	19		189	4
5340-01-162-8857	178	19		192	15
	180	25	5315-01-164-8693	186	22
4820-01-162-8950	194	1	5365-01-164-8702	174	11
4820-01-162-8951	193	1	5340-01-164-8760	186	2
4140-01-162-8967	71A	24	3110-01-164-8765	174	8
3040-01-162-8995	171	14	5315-01-164-9838	193	4
2920-01-162-8999	71A	21	5365-01-164-9962	174	33
2920-01-162-9006	71A	26	2520-01-165-0354	186	27
2920-01-163-0758	71A	35	5306-01-165-1266	71A	38
5340-01-163-0918	188	9	5995-01-165-1843	91	2
5940-01-163-1435	748	2		92	20
3040-01-163-3240	176	6	5340-01-165-2584	162	4
4320-01-163-3546	116	1	5325-01-165-2606	152	8
4820-01-163-3581	243	16	5310-01-165-3342	171	15
5305-01-163-5667	71A	34	5360-01-165-3674	193	20
5340-01-163-5981	220	5	5360-01-165-3682	171	10

CROSS-REFERENCE INDEXES

NATIONAL STOCK NUMBER INDEX

STOCK NUMBER	FIG.	ITEM	STOCK NUMBER	FIG.	ITEM
3110-01-165-3725	176	8	3040-01-171-3357	220	6
2540-01-165-4934	171	18		221	6
3120-01-165-5662	171	2	2940-01-171-3389	185	20
2590-01-165-5746	237	21	2510-01-171-5018	239	9
4730-01-165-6616	42	36		240	5
	43	19	2920-01-174-1278	71A	36
4730-01-165-9540	243	19	5961-01-174-8652	71B	12
3130-01-166-0810	174	26	5310-01-174-8765	40B	6
3120-01-166-3685	188	10	5365-01-174-8876	71B	15
5360-01-166-6940	220	10	5310-01-175-0630	71B	19
	221	11	2805-01-175-3881	40	14
	222	22		40B	14
5306-01-166-7926	71A	2	5306-01-175-6914	253	36
3120-01-166-8144	74B	15	9905-01-175-7150	40	26A
5306-01-167-1084	71A	20		40A	12
3120-01-167-3402	193	13	2510-01-176-0750	168	8
5315-01-167-3452	171	16	2540-01-176-2910	171	24
5360-01-167-3642	146	1	2540-01-176-2987	171	1
9390-01-167-3646	5	23	3110-01-177-4667	71B	14
	5A	24	2920-01-177-8505	71B	4
	129	25	2920-01-177-8565	71B	13
3040-01-167-3669	146	4	2920-01-178-0499	71B	22
5310-01-167-4059	260	21	4730-01-178-0773	19	5
5999-01-167-4779	95	6	5330-01-178-3728	71B	11
5310-01-167-6325	241	4	2920-01-178-6536	71B	2
5340-01-167-8357	171	21	2920-01-178-6574	71B	9
2530-01-168-1038	152	36	2590-01-179-3017	245	3
5315-01-168-1052	221	15	5315-01-179-4533	43	25
	222	6	4730-01-179-5396	235	31
5305-01-168-5422	71A	16	3110-01-179-5935	71B	10
6115-01-168-6142	40	12	3040-01-179-6553	44	31
5305-01-168-8928	71A	25	4820-01-180-1045	216	1
5340-01-169-2140	219	7	2540-01-181-0999	245	2
5940-01-169-3889	94	8	3120-01-182-4176	196	8
4730-01-169-5830	64B	8		196	14
	64D	8		196	24
4710-01-169-7206	BULK	19	5920-01-182-4738	101	14
5340-01-169-7516	121	29	5340-01-182-7381	182	16
5306-01-170-1338	158	11	3120-01-183-1341	71A	32
5310-01-170-1508	80	5	5340-01-183-7009	32	35
5315-01-170-2228	102	14	2510-01-184-0786	163	1
5360-01-170-2229	154	24	4730-01-184-1145	237	19
5340-01-170-6336	103	25	5365-01-184-3672	33	47
5365-01-170-6440	225	38	3040-01-184-4026	176	2
	226	36	4730-01-184-9425	213	20
5310-01-170-8530	133	25	5305-01-185-0569	47	15
5365-01-170-8781	153	16	5365-01-185-0935	33	47
4710-01-170-9234	154	40	5365-01-185-4734	48	15
5365-01-171-1560	71A	6	9390-01-185-5087	158	16
4730-01-171-1981	156	15	5306-01-185-5108	251	6

CROSS-REFERENCE INDEXES

NATIONAL STOCK NUMBER INDEX

STOCK NUMBER	FIG.	ITEM	STOCK NUMBER	FIG.	ITEM
2590-01-185-5363	242	14	5310-01-194-5398	159	9
5305-01-185-7113	141	4		159	28
4720-01-186-2341	BULK	5		166	12
5305-01-187-0533	74B	13		167	2
5305-01-188-4766	20	2		17A	12
3110-01-189-1968	127	27		183	10
5355-01-189-1990	230	16		186	3
5330-01-189-3550	175	35		190	28
5330-01-189-3551	7	10		197	8
4720-01-190-1021	BULK	25		202	9
3830-01-190-1047	258	5		220	20
2410-01-190-1048	258	8		221	19
3020-01-190-1091	160	12		222	21
	161	8		223	11
2590-01-190-1092	132	13		227	7
	132	13		234	14
6145-01-191-3320	BULK	32		243	8
4720-01-192-1369	BULK	15		261	26
5330-01-192-3336	KIT			264	61
2910-01-193-3648	31	19		265	63
5999-01-193-5996	236	25		39A	6
5306-01-193-9181	162	13		64A	17
4730-01-194-4119	65	30		64C	16
5310-01-194-5398	17	18	5306-01-195-4681	41	25
	18	18		48	26
	37	16		49	1
	38	5		60	9
	38	16		60	33
	42	19		64	14
	43	13		89	22
	47	11		110	30
	48	1		170	4
	49	4		183	1
	55	10		187	6
	56	6		225	35
	58	22		226	33
	60	16		227	1
	63	10	4030-01-196-2310	175	23
	87	19	6645-01-196-6277	247	7
	88	5	4730-01-196-7172	17B	5
	89	20	4720-01-196-7180	17B	1
	101	8	6140-01-199-4503	95	15
	102	24	5930-01-202-2506	80	15
	103	28	4730-01-202-3353	179	11
	104	2		181	10
	109	16	4730-01-202-3356	179	19
	110	3		181	18
	119	3	4320-01-202-5616	187	9
	121	47	4820-01-202-9608	17B	8
	122	48	2815-01-203-1047	4	10

CROSS-REFERENCE INDEXES

NATIONAL STOCK NUMBER INDEX

STOCK NUMBER	FIG.	ITEM
2815-01-203-1047	4A	3
2815-01-203-1071	4A	1
	4B	1
2530-01-203-5463	144	3
	145	3
3010-01-203-5604	182	11
2920-01-204-0263	71A	19
5340-01-204-7163	14A	2
5306-01-206-7167	182	7
5360-01-207-0690	182	32
5330-01-207-2900	KIT	
	64B	4
	64B	9
	64D	4
	64D	9
4820-01-207-3687	63	30
2920-01-207-9671	74A	55
4810-01-208-1802	207	1
4730-01-208-2036	235	11
4720-01-208-7077	227	12
4720-01-208-7078	228	1
	229	1
5330-01-208-7592	182	34
5995-01-208-9221	80	25
4720-01-208-9237	225	12
	226	10
	227	24
5995-01-209-0426	103	7
2540-01-209-0463	172	4
5306-01-209-7883	122	28
5305-01-209-8693	88	17
5310-01-209-8715	88	16
	103	6
5330-01-209-8719	175	29
5315-01-209-8775	253	14
5306-01-210-1640	237	12
5315-01-210-2959	146	21
2530-01-211-1035	144	11
	145	11
2530-01-211-1036	144	19
	145	16
2815-01-211-4230	14A	5
2815-01-211-4231	14A	4
2815-01-211-4624	5A	1
3805-01-211-4739	252	4
3805-01-211-4740	252	4
5330-01-211-6977	183	7
5310-01-212-4579	74A	48
3805-01-213-6035	41	16
5305-01-214-5052	244	4
5305-01-214-5052	244	7
4710-01-216-2151	BULK	21
5340-01-216-6831	165	3
5310-01-216-7387	166	21
	167	20
5331-01-217-2016	4	9
	4A	2
5307-01-217-2253	243	2
	243	10
2510-01-217-9361	165	3
2520-01-221-3392	109A	1
2590-01-222-2847	89	1
	90	13
2510-01-222-4513	166	5
	167	7
2530-01-222-4613	132	13
	132	13
2510-01-223-0623	164	14
	165	15
5306-01-223-4346	160	10
2590-01-223-5173	62	6
5325-01-223-7105	95	16
4310-01-227-5985	67	1
5342-01-227-8610	260	4
5340-01-228-0501	86	1
	100	9
	101	18
6145-01-229-2077	BULK	38
2590-01-229-7379	160	17
	161	13
3030-01-232-2453	69	19
3120-01-232-6641	162	5
5340-01-236-2475	134	18
5940-01-236-9895	74	12
5320-01-237-0685	88	21
	103	24
5306-01-237-3300	140	19
5305-01-237-3324	102	4
5930-01-237-3843	89	29
	90	1
5306-01-237-5637	132	25
5340-01-237-6915	130	34
3830-01-238-2541	132	33
5305-01-238-3071	71A	3
2510-01-238-5457	162	1
5340-01-238-7288	26	21
4720-01-245-6605	225	23
	226	21
	228	9
	229	8

CROSS-REFERENCE INDEXES

NATIONAL STOCK NUMBER INDEX

STOCK NUMBER	FIG.	ITEM	STOCK NUMBER	FIG.	ITEM
4730-01-249-8409	122	8	5940-01-250-8721	98	21
4730-01-250-1566	43	38		99	17
4730-01-250-1570	42	13	5306-01-250-9937	241	12
	43	1	4710-01-251-0917	63	20
4730-01-250-3961	120	12	4710-01-251-0918	63	4
4710-01-250-3985	110	16	4710-01-251-0920	95	18
4710-01-250-3986	113	13	4720-01-251-0992	64	6
4730-01-250-3997	120	17	4710-01-251-1007	BULK	16
2930-01-250-4319	57	17	2590-01-251-1113	41	5
	59	19	4710-01-251-1222	32	25
2990-01-250-4503	44	1	4710-01-251-1223	32	4
4710-01-250-4558	38	15	4710-01-251-1225	109	3
4730-01-250-5025	64	19	4710-01-251-1226	109	5
3040-01-250-5157	118	11	5940-01-251-1327	84	7
3040-01-250-5158	118	13	4720-01-251-3118	BULK	3
4710-01-250-5172	64	28	5315-01-252-4967	254	10
4710-01-250-5173	109	15	4730-01-252-7837	121	36
4710-01-250-5174	109	13	3040-01-252-8488	151	15
4730-01-250-5860	37	15	3040-01-252-9527	102	39
4730-01-250-5861	27	21	2530-01-253-0440	146	38
4730-01-250-5865	58	3		151	13
	60	3	4730-01-253-0500	121	34
4730-01-250-5867	42	35	4730-01-253-0501	121	27
4710-01-250-5871	42	7	4730-01-253-0509	129	41
4730-01-250-5907	39	6	3040-01-253-0548	142	4
4730-01-250-5939	51	26	4710-01-253-2746	121	50
4710-01-250-5964	32	24	4710-01-253-2747	237	40
2910-01-250-6492	33	10	4710-01-253-2752	122	31
3040-01-250-6495	47	2	4710-01-253-2753	155	22
2805-01-250-6496	29	5	4710-01-253-2754	155	22
3040-01-250-6507	47	12	4710-01-253-2755	155	18
3040-01-250-6508	47	21	4710-01-253-2756	155	20
4730-01-250-7001	29	10	4720-01-253-2811	121	22
4730-01-250-7002	64	21	4730-01-253-2819	130	3
4730-01-250-7157	57	19	4710-01-253-2877	122	53
	59	20	4710-01-253-2878	151	5
2910-01-250-8598	33	35	4710-01-253-2879	152	17
3040-01-250-8624	43	33	4710-01-253-2880	152	22
4710-01-250-8631	52	21	3040-01-253-3465	88	23
	53	5		102	5
4710-01-250-8632	52	22	4710-01-253-3527	120	35
	53	6	4710-01-253-3528	121	17
5940-01-250-8718	118	24	4710-01-253-3529	121	28
5940-01-250-8720	92	11	4710-01-253-3530	121	42
	97	6	5315-01-253-4346	52	9
	99	18	5330-01-253-4355	107	1
	100	4	5365-01-253-4385	68	19
	100	15	5325-01-253-4416	86	2
	101	5		87	5
5940-01-250-8721	98	9		100	12

CROSS-REFERENCE INDEXES

NATIONAL STOCK NUMBER INDEX

STOCK NUMBER	FIG.	ITEM	STOCK NUMBER	FIG.	ITEM
4710-01-253-4567	155	14	5365-01-253-8979	47	1
4710-01-253-4568	155	21	3040-01-253-9494	121	12
4710-01-253-4569	127	34	3040-01-253-9590	162	14
4710-01-253-4570	155	20	4730-01-254-0175	150	16
3040-01-253-4662	221	9		150	23
3040-01-253-4681	243	12	4730-01-254-0177	232	12
2540-01-253-4705	146	32		232	22
4710-01-253-4714	122	4	3040-01-254-0264	49	12
5977-01-253-5207	74A	11	3040-01-254-0310	147	48
4820-01-253-5554	214	25	3040-01-254-1006	176	31
3040-01-253-5578	150	6	3040-01-254-1007	178	2
3040-01-253-5581	102	36	4820-01-254-1017	213	16
3040-01-253-5583	88	24	3040-01-254-1027	182	10
	103	26	3040-01-254-1028	174	21
2540-01-253-5589	146	36	3040-01-254-1098	182	37
5330-01-253-6465	57	20	3040-01-254-1118	188	4
	59	21	3040-01-254-1173	150	13
5310-01-253-6496	41	23	3040-01-254-1177	102	18
4710-01-253-6894	102	7	4730-01-254-1255	237	35
4720-01-253-6944	BULK	17	3040-01-254-1280	150	1
4710-01-253-7054	153	31	5315-01-254-1307	147	9
4710-01-253-7055	153	34	5315-01-254-1308	147	13
3040-01-253-7346	146	37	5365-01-254-1309	154	18
3040-01-253-7347	146	39	5315-01-254-1310	158	17
3040-01-253-7350	221	14	5305-01-254-2277	47	29
	222	5	5315-01-254-2278	95	7
4730-01-253-7353	243	27	5310-01-254-2279	101	9
2940-01-253-7420	185	1	5305-01-254-2280	103	16
3040-01-253-7454	222	1	5315-01-254-2374	158	22
3040-01-253-7456	220	21	5315-01-254-2376	147	33
	221	12	5315-01-254-2377	155	24
4730-01-253-7483	207	8	5365-01-254-2380	152	16
	208	8	5365-01-254-2381	154	31
	209	8	5360-01-254-2385	121	9
	210	10	5360-01-254-2386	152	6
	216	5	5305-01-254-2462	91	7
4730-01-253-7484	207	2	5306-01-254-2463	158	20
	208	7	5365-01-254-2467	129	22
	209	6	3120-01-254-2470	136	14
	210	6	5310-01-254-2486	121	11
	216	2	5310-01-254-2490	132	14
5310-01-253-8375	72	45	5307-01-254-2495	47	9
	76	38	5307-01-254-2496	47	9
	74A	25	5307-01-254-2497	60	32
5310-01-253-8376	106	26	5307-01-254-2498	87	20
3120-01-253-8946	88	28		110	15
	103	4	5307-01-254-2500	110	17
5340-01-253-8963	89	24	5307-01-254-2501	110	21
	90	19	5307-01-254-2502	118	7
5340-01-253-8964	32	21	5310-01-254-2505	140	5

CROSS-REFERENCE INDEXES

NATIONAL STOCK NUMBER INDEX

STOCK NUMBER	FIG.	ITEM	STOCK NUMBER	FIG.	ITEM
5307-01-254-2506	155	2	5306-01-254-7170	47	20
	204	4	5340-01-254-7173	88	15
5307-01-254-2507	155	33		103	5
5305-01-254-2516	57	11	5340-01-254-7175	79	4
	58	20	5360-01-254-7243	43	26
	59	12	5315-01-254-7407	47	23
	60	13	4720-01-254-8689	232	20
	62	8		263	5
	92	19	5360-01-254-8890	88	14
	93	15		103	13
	166	2	5360-01-254-8891	112	16
	167	5	5310-01-254-8900	141	5
5305-01-254-2517	57	14	5310-01-254-9008	149	14
	59	15	5330-01-254-9054	136	16
	255	24	5315-01-254-9668	125	5
5305-01-254-2518	59	18	3040-01-254-9895	174	29
5305-01-254-2519	118	21	5310-01-255-0110	157	5
5365-01-254-2529	129	26		158	9
3130-01-254-2545	142	22		198	8
3130-01-254-2546	142	40		204	6
5305-01-254-2563	113	16	5310-01-255-0111	157	10
5360-01-254-2681	96	2	5365-01-255-0924	68	12
6105-01-254-2722	74A	22	5306-01-255-0930	47	26
5306-01-254-4226	140	13	5340-01-255-0933	42	27
5306-01-254-4254	155	6		64B	13
5310-01-254-4256	95	3		64D	13
5310-01-254-4257	118	18	5340-01-255-0934	120	37
5315-01-254-4264	155	23	5340-01-255-0935	120	37
5340-01-254-4303	43	16	5340-01-255-0980	33	8
5340-01-254-4342	109	17	5325-01-255-2603	128	23
3020-01-254-4803	176	26	5365-01-255-2721	133	3
3020-01-254-4807	176	35	5340-01-255-2756	159	20
3040-01-254-4939	182	41	5342-01-255-3516	157	16
2810-01-254-5335	113	28	5340-01-255-3577	27	6
2810-01-254-5338	113	32	3010-01-255-4450	187	2
5310-01-254-5351	42	5	4730-01-255-4468	182	33
5340-01-254-5362	120	28	3020-01-255-5401	175	6
5365-01-254-5379	87	28	2815-01-255-6243	16	1
4730-01-254-5540	187	3	5306-01-255-6396	141	19
2520-01-254-5579	182	14	5306-01-255-6398	126	2
2520-01-254-5580	182	18	5306-01-255-6399	126	14
5365-01-254-6419	46	8		126A	7
5365-01-254-6423	46	8	5306-01-255-6448	129	38
5365-01-254-6436	51	23	5305-01-255-6489	155	25
5315-01-254-6453	47	13		224	14
5340-01-254-7147	58	25	5305-01-255-6490	157	11
	60	20	5365-01-255-6668	176	33
5340-01-254-7148	58	26	5306-01-255-9253	144	18
	60	21		145	15
5340-01-254-7167	41	6	5310-01-255-9345	121	20

CROSS-REFERENCE INDEXES

NATIONAL STOCK NUMBER INDEX

STOCK NUMBER	FIG.	ITEM	STOCK NUMBER	FIG.	ITEM
5305-01-255-9376	129	3	5340-01-258-0141	163	4
5305-01-255-9377	132	5	5340-01-258-0146	219	14
	251	2	5340-01-258-0147	219	1
5325-01-256-4631	142	14	5340-01-258-0150	151	9
4710-01-257-1478	BULK	20	5340-01-258-0185	110	9
4720-01-257-2353	BULK	6	5315-01-258-0234	254	11
4720-01-257-2354	BULK	7	5340-01-258-0319	211	14
5310-01-257-3232	162	12	5340-01-258-0340	166	16
5365-01-257-3277	243	25	5340-01-258-2681	244	23
5365-01-257-3281	237	7	3130-01-258-4532	254	4
5365-01-257-3282	164	22	5340-01-258-4685	244	1
	165	21	5315-01-258-4780	174	23
5365-01-257-3303	176	39	5340-01-258-4854	147	39
5365-01-257-3304	207	21	5340-01-258-4867	236	14
	207	32	5340-01-258-6065	244	13
	208	21	5330-01-258-9166	182	4
	208	32	5365-01-258-9188	175	16
	209	23	5340-01-258-9225	221	22
	210	23		222	12
	217	7	5306-01-259-3716	151	23
5365-01-257-3305	237	11	5365-01-259-3960	176	36
5306-01-257-3316	146	44	5340-01-259-4238	220	4
5340-01-257-3341	159	19		221	3
5360-01-257-3419	218	13	5340-01-259-6427	169	17
5330-01-257-3807	74B	12	5310-01-259-8502	107	20
3130-01-257-3836	174	32	2510-01-259-8891	244	24
5342-01-257-3847	244	19	5340-01-259-8962	166	32
5310-01-257-4299	175	20		167	29
5310-01-257-4300	174	28	3130-01-259-9600	176	25
	174	28	5365-01-259-9622	215	9
5365-01-257-4347	164	13	5340-01-260-9030	88	20
3120-01-257-4386	211	16		103	14
	212	18	4730-01-261-9432	235	8
5365-01-257-4394	183	9	2920-01-262-3072	71C	18
3120-01-257-4402	113	21	4320-01-262-3317	218	14
5365-01-257-4480	218	2	5340-01-262-4885	120	30
5325-01-257-4598	33	9	2930-01-262-4950	63	16
5365-01-257-4621	237	25	2530-01-262-7616	144	1
4730-01-257-4902	179	15	5340-01-262-9742	189	1
	181	14	3120-01-263-2717	126	19
5330-01-257-7744	175	21		182	29
5340-01-257-7755	88	46		126A	19
3130-01-257-7787	174	15	5315-01-263-4544	184	15
5340-01-257-7789	197	12	5330-01-263-8274	110	26
5365-01-257-7793	127	22	5330-01-263-8275	183	19
5360-01-257-7810	218	9	5340-01-263-8737	220	3
4810-01-257-8821	211	9		221	4
	212	8	5365-01-263-8844	3	14
5365-01-258-0113	175	33	5340-01-264-3675	243	9
5340-01-258-0140	244	15	5365-01-264-5975	3	14

CROSS-REFERENCE INDEXES

NATIONAL STOCK NUMBER INDEX

STOCK NUMBER	FIG.	ITEM	STOCK NUMBER	FIG.	ITEM
3110-01-264-5996	184	18	3830-01-272-0527	258	4
	184	35	3040-01-272-5375	172	20
5340-01-264-6022	190	26	4720-01-273-1052	227	19
5342-01-264-6075	188	14	5340-01-274-0865	79	1
5340-01-264-6076	179	16	4730-01-275-6167	53	8
	181	15	5365-01-278-7722	241	9
5340-01-264-6101	211	17		241	16
3040-01-264-9331	146	45	6115-01-279-2610	71B	1
5340-01-265-1164	202	1	6105-01-279-2683	71B	24
	223	2	5950-01-279-2818	71B	16
5330-01-265-2129	166	1	4730-01-284-6103	261	39
	166	9		261	55
	167	4		264	38
5340-01-265-3359	244	9		264	71
5315-01-265-6967	155	30		265	32
5315-01-265-9212	142	7		265	77
5310-01-266-2481	17	10	5306-01-284-6721	184	28
	26	23	4720-01-284-8183	226	1
	32	12		228	32
	50	8	5365-01-284-8204	182	30
	51	5	4730-01-284-9068	227	14
5365-01-266-3314	176	37		227	22
5340-01-266-4674	244	10	5340-01-284-9585	43	27
3120-01-266-6423	136	12	5340-01-284-9586	43	20
	137	9	5340-01-284-9610	41	19
5306-01-266-7332	95	17	5340-01-284-9639	41	20
5365-01-266-8284	103	15	5340-01-284-9640	41	29
5306-01-266-8455	113	1	5310-01-284-9697	184	30
5315-01-266-9238	221	25	5310-01-284-9726	238	5
4820-01-267-0507	250	10	5310-01-284-9727	196	25
4320-01-267-0639	250	5	5315-01-284-9805	186	21
3040-01-267-2077	116	16	5340-01-285-1663	41	1
3040-01-267-2078	116	2	5340-01-285-1664	41	30
4730-01-267-2634	232	19	5330-01-285-2058	249	14
3040-01-267-4365	151	21	5340-01-285-2705	6	3
4730-01-267-5992	122	17	5330-01-285-2792	187	5
4730-01-267-6077	116	6		190	24
4730-01-267-6972	227	15	4730-01-285-2941	42	8
	227	21	2590-01-285-2982	189	13
2520-01-268-5376	122	7	2590-01-285-2983	189	14
9905-01-268-7576	199	5	3120-01-285-4961	255	6
5935-01-269-0557	99	28	2510-01-285-5064	164	21
5365-01-269-8552	118	22	3120-01-285-7125	241	8
5340-01-269-9284	116	18		241	15
2540-01-269-9369	235	12		242	9
5340-01-270-1303	153	24		242	21
5330-01-270-1752	45	19		259	3
3110-01-270-1814	253	16	5365-01-285-7772	263	8
	253	25	4710-01-286-8825	234	16
5340-01-270-7426	121	30	5945-01-287-3325	74	1

CROSS-REFERENCE INDEXES

NATIONAL STOCK NUMBER INDEX

STOCK NUMBER	FIG.	ITEM	STOCK NUMBER	FIG.	ITEM
5945-01-287-3325	74B	1	3040-01-321-4673	202	7
5360-01-287-5723	194	6	5355-01-321-5693	171	6
5970-01-287-8011	72	32	3830-01-321-6531	251	5
	76	48	3805-01-321-6783	251	9
	74A	35	3830-01-321-6784	251	9
2930-01-288-3981	60	29	2530-01-321-8329	144	3
4730-01-289-2345	232	13		145	3
	232	18	4710-01-321-8556	232	3
5340-01-289-4395	166	3	4810-01-321-9984	203	3
5310-01-291-8879	139	2	4810-01-322-0002	201	9
5360-01-294-0436	74A	18	5306-01-322-1385	203	8
2530-01-295-2499	148	2	5365-01-322-1468	232	1
5330-01-296-7776	40B	12	5310-01-322-2922	203	2
5342-01-296-8891	234	12	3120-01-322-2932	260	7
2530-01-297-0335	138	2	5306-01-322-7299	253	2
5340-01-297-3050	40A	9	5330-01-322-8799	242	16
2530-01-297-4592	80	14	5310-01-322-9622	204	2
	92	1	3830-01-323-0999	252	3
2815-01-297-8391	62	18	2910-01-323-7372	50	1
5340-01-297-8910	234	12	5340-01-323-8066	204	3
4730-01-297-9328	225	5		258	3
	225	56		260	11
	226	4	5365-01-323-8100	201	21
	226	54	5306-01-323-9638	253	27
	227	34	5306-01-324-1549	253	7
	227	34	2815-01-327-2926	15	9
	227	44	4810-01-327-2934	204	7
5305-01-298-3128	5A	30		206	1
5305-01-298-3189	42	2B	4810-01-327-2935	210	1
2530-01-300-0190	128	1	5330-01-332-4090	75	7
5330-01-301-2084	16	10	4810-01-332-5464	203	1
3040-01-301-2966	235	21	4710-01-333-0044	4	43
3040-01-303-4886	251	4		4A	32
	253	11		4B	17
4730-01-304-2800	230	32	3130-01-333-2801	12	23
	231	16	5930-01-342-5782	64	5
2530-01-305-3950	132	24		89	3
5331-01-306-2728	31	20	5340-01-342-7873	158	7
3120-01-306-4200	7	11	9905-01-345-5300	140	8
4320-01-313-0634	52	3		141	9
2930-01-315-0967	67	6	2910-01-346-6362	51	16
4710-01-315-1116	240	8	2920-01-351-4017	71C	22
5340-01-315-7377	42	2A	2920-01-351-4458	71C	12
2815-01-317-7613	1	1	2920-01-351-4542	71C	10
3040-01-318-8494	129	32	2920-01-351-4543	71C	8
3120-01-319-2169	255	8	2920-01-351-8198	71C	24
4320-01-319-3981	200	1	2920-01-351-8199	71C	25
5910-01-319-9841	71C	19	2920-01-352-0028	71C	26
4810-01-321-3232	201	1	2920-01-352-2855	71C	2
4820-01-321-4543	201	12	5305-01-352-4223	71B	20

CROSS-REFERENCE INDEXES

NATIONAL STOCK NUMBER INDEX

STOCK NUMBER	FIG.	ITEM	STOCK NUMBER	FIG.	ITEM
5310-01-352-7562	71B	5	4820-01-377-6777	126	5
5310-01-352-7725	71B	3	2815-01-377-6778	5A	2
5310-01-353-3402	71B	6	2815-01-377-6780	14A	8
5310-01-353-3403	71C	6	4730-01-377-6781	5A	19
4140-01-353-4765	71C	15		64	12
6150-01-353-7755	71C	20	3040-01-377-6782	111	1
2990-01-353-8420	45	21	2520-01-377-6783	190	12
3040-01-354-2808	238	18	3040-01-377-6785	22	28
2920-01-355-0530	72	1	3020-01-377-6786	22	29
	74A	1	4730-01-377-6788	64	29
3830-01-356-3583	253	28	2930-01-377-6789	63	9
3040-01-357-3576	92	28	2930-01-377-6790	63	32
	155	11	4730-01-377-6791	39A	4
2815-01-361-3906	28	1	4730-01-377-6792	39A	2
5365-01-361-4557	111	3	4730-01-377-6793	64A	10
2815-01-361-6881	5A	14		64C	9
5340-01-366-6634	170	7	4320-01-377-6794	35	27
2990-01-376-2799	44	15	2910-01-377-6796	40A	5
5340-01-377-2465	4	7	2990-01-377-6798	45	15
	4A	7	2815-01-377-6804	9	2
5340-01-377-2466	4	3	2815-01-377-6937	1	1
5340-01-377-2467	125	8	3020-01-377-6938	13	6
5340-01-377-2471	63	13	3040-01-377-6939	127	21
5340-01-377-2472	64	18	2815-01-377-6940	KIT	
5340-01-377-2473	64A	21	2815-01-377-7409	20	7A
5340-01-377-2474	64A	18	3040-01-377-7420	127	7
5340-01-377-2487	64F	8	4730-01-377-7834	64F	11
5330-01-377-2719	4A	44	2590-01-377-7843	64	24
5330-01-377-2720	20	19	2590-01-377-7851	64A	20
5330-01-377-2721	5A	23		64C	21
5330-01-377-2722	18	5	2990-01-377-7852	44	9
5330-01-377-2724	64E	14	2590-01-377-7858	124	5
5310-01-377-2725	48	14	2930-01-377-7862	64F	5
5330-01-377-2726	64F	9	5340-01-377-8455	35	35
5365-01-377-2727	45	34	4710-01-377-9235	64E	6
5340-01-377-2893	6	8	4710-01-377-9240	64B	17
2910-01-377-3145	33	2		64D	14
5340-01-377-3286	5A	26	4710-01-377-9280	64B	3
5340-01-377-3287	31	26		64D	3
5342-01-377-3693	17	1	4710-01-377-9300	64A	1
	17A	11	4710-01-377-9393	63	23
5342-01-377-3694	17	13	4710-01-377-9629	64E	11
	17A	18	5340-01-377-9724	64C	17
5310-01-377-4412	44	3	4710-01-377-9795	64E	15
5330-01-377-5327	64A	8	5330-01-377-9918	5A	22
	64C	7	4710-01-378-1583	4A	33
5330-01-377-5328	33	36	4710-01-378-1986	4A	29
5307-01-377-6176	20	24		4B	13
2815-01-377-6774	11	2	5315-01-378-3067	125	13A
4820-01-377-6776	124	18	5315-01-378-3862	4A	46

CROSS-REFERENCE INDEXES

NATIONAL STOCK NUMBER INDEX

STOCK NUMBER	FIG.	ITEM	STOCK NUMBER	FIG.	ITEM
5315-01-378-3862	4B	3			
4710-01-378-4888	26	34			
4710-01-378-5611	64E	16			
4710-01-378-5905	27	4			
5340-01-378-7075	64B	19			
	64D	16			
3020-01-379-0424	9	3			
3120-01-379-0738	11	16			
3120-01-379-0739	11	16			
4730-01-383-5137	64B	10			
	64D	10			
4730-01-384-6470	64A	7			
	64C	6			
3040-01-384-8994	44	9A			
5305-01-414-0503	159	22			
5330-01-440-9658	KIT				
5330-01-440-9664	KIT				
5330-01-440-9666	KIT				
5330-01-441-0381	KIT				
5330-01-441-0384	KIT				
5330-01-441-0386	KIT				
5330-01-441-0412	KIT				
5330-01-441-0424	KIT				
5330-01-441-0426	KIT				
5330-01-441-0429	KIT				
	126A	18			
5330-01-441-0462	KIT				
5330-01-441-1790	KIT				
5330-01-441-1791	KIT				

CROSS-REFERENCE INDEXES

PART NUMBER INDEX

CAGEC	PART NUMBER	STOCK NUMBER	FIG.	ITEM
46717	AC-1-310	4730-01-156-4835	121	1
			228	33
			229	36
68505	AMA19S	2920-00-009-5213	70	12
82366	AM2003	5331-00-806-7027	212	17
88044	AN122717	5315-00-241-2917	12	33
			130	19
88044	AN123902	5331-00-290-9386	149	32
			182	28
88044	AN380-8-12	5315-00-846-0126	184	31
88044	AN818-6	4730-00-203-3831	152	18
			152	23
			153	32
			153	35
88044	AN960-816L	5310-00-167-0839	74A	9
58275	A063947	5310-00-281-5021	71A	18
43334	A1015		107	34
43334	A1209	3110-00-916-6468	107	25
78640	A2109	6625-00-333-9243	80	10
96152	A82-1	5315-00-839-2325	102	13
			230	22
81205	BACW10P140S	5310-00-725-1984	193	23
13174	BT05-06NJ	4730-01-267-6972	227	15
			227	21
60380	B168XPS0H	3110-00-902-4269	202	5
			223	8
80204	B1821BH025C050N	5305-00-071-2506	10	9
			25	17
			129	28
			193	9
			246	5
80204	B1821BH025C063N	5305-00-068-7837	27	15
			172	25
80204	B1821BH025C088N	5305-00-071-2505	36	6
			46	1
			51	4
			89	28
			90	23
80204	B1821BH025C100N	5305-00-225-3843	189	18
			40B	5
80204	B1821BH031C075N	5306-00-226-4825	35	39
			64	3
80204	B1821BH031C088N	5306-00-226-4826	23	20
			192	13
			193	8
			194	10
			195	8
80204	B1821BH031C113N	5306-00-226-4828	35	33
			51	24
			193	25
			202	3

CROSS-REFERENCE INDEXES

PART NUMBER INDEX

CAGEC	PART NUMBER	STOCK NUMBER	FIG.	ITEM
80204	B1821BH031C113N	5306-00-226-4828	223	4
			64B	7
			64D	6
80204	B1821BH031C125N	5306-00-226-4829	30	3
			189	15
			192	6
80204	B1821BH031C175N	5306-00-226-4832	147	4
80204	B1821BH031C200N	5306-00-226-4833	45	29
			89	32
			90	2
			195	22
80204	B1821BH031C400N	5306-00-226-4841	107	17
80204	B1821BH038C063N	5305-00-721-5492	4	46A
			42	23
			43	15
			59	28
			121	37
			122	33
			127	31
			130	28
			178	20
			179	18
			180	26
			181	17
			248	6
80204	B1821BH038C125N	5305-00-068-0511	6	9
			17	4
			18	19
			25	12
			30	24
			43	30
			49	26
			51	10
			63	31
			88	4
			90	21
			102	38
			104	5
			106	15
			110	32
			120	13
			121	25
			122	27
			130	22
			146	29
			150	15
			154	43
			159	11
			17A	7
			174	7
			175	12

CROSS-REFERENCE INDEXES

PART NUMBER INDEX

CAGEC	PART NUMBER	STOCK NUMBER	FIG.	ITEM
80204	B1821BH038C125N	5305-00-068-0511	182	2
			186	4
			190	30
			196	5
			201	7
			201	14
			205	2
			211	2
			212	14
			232	6
			234	25
			235	2
			239	12
			240	18
			261	29
			263	2
			265	66
			64A	13
			64C	10
			64E	7
80204	B1821BH038C175N	5305-00-821-3869	63	6
80204	B1821BH038C200N	5305-00-782-9489	15	19
80204	B1821BH038C500N	5305-00-964-0503	176	10
80204	B1821BH044C150N	5305-00-071-2055	122	23
			201	8
			206	10
			219	11
			255	11
80204	B1821BH050C150N	5305-00-071-2069	69	1
80204	B1821BH050C325N	5305-00-071-2076	105	13
			133	4
			233	9
			234	22
80204	B1821BH050F200L	5305-01-414-0503	159	22
80204	B1821BH063C100N	5305-00-724-7218	156	6
80204	B1821BH063C175N	5305-00-724-7221	140	2
			152	34
			153	29
			159	7
			168	9
			169	14
			169	21
			175	27
			234	8
			236	16
80204	B1821BH063C200N	5305-00-724-7222	75	4
			128	12
			140	17
			141	13
			146	2
			225	51

CROSS-REFERENCE INDEXES

PART NUMBER INDEX

CAGEC	PART NUMBER	STOCK NUMBER	FIG.	ITEM
80204	B1821BH063C200N	5305-00-724-7222	226	49
			228	30
			229	30
			237	37
80204	B1821BH063C325N	5305-00-724-7236	175	32
80204	B1821BH075C175N	5305-00-836-8346	9	1
21335	B2012-0H	3110-00-227-4431	152	39
			153	15
19200	B271406C	3110-00-100-6149	193	17
78500	CP92NHWD	2520-00-738-8662	131	2
71867	C2U25	5310-00-025-7198	102	32
66295	C32P	4730-00-204-3491	18	12
			64E	8
79470	C5165X6	4730-00-816-8558	152	19
			152	24
			153	33
			153	36
60380	DB50430	3110-01-079-7024	71A	37
38151	E-4850-1	4730-00-278-3397	72	43
62830	FRE6-15	3120-00-949-0780	102	31
02695	FR6-15	3120-00-014-3507	102	28
81349	F02A250V5A		89	15
			90	27
81349	F02A32V15A	5920-00-012-0151	92	36
			93	26
71400	HKP-HH/15	5920-00-118-8195	89	13
			90	26
92839	HL-7J2054	3830-01-272-0527	258	4
91816	HV50-2-R	4820-01-202-9608	178	8
55883	IPD5S9088	2920-00-231-7270	71	1
11083	IT0094		199	3
08162	JLM104910		174	3
			182	26
08162	JLM104948		174	4
			182	27
08162	JM 822010 CUP		175	10
08162	JM 822049CONE		175	9
31159	JM56	5310-00-042-6376	89	26
			90	22
			188	6
			230	14
60380	JTT1211	3110-00-930-6289	104	10
			150	4
60380	JTT1614		146	47
59556	K-500-EN-0156	5340-01-148-9609	152	40
			153	14
59556	K-500-EN-0431	5330-01-148-5891	185	22
			207	4
			207	30
			208	4
			208	30

CROSS-REFERENCE INDEXES

PART NUMBER INDEX

CAGEC	PART NUMBER	STOCK NUMBER	FIG.	ITEM
59556	K-500-EN-0431	5330-01-148-5891	209	5
			209	21
			210	5
			210	21
			213	15
			215	4
			216	10
			218	7
33457	LF684	4330-00-155-8240	185	18
11083	L1022	5340-00-232-5747	130	40
			155	17
11083	L1026	5340-00-229-9287	128	11
			174	22
11080	L1032	2520-00-423-8058	146	34
11083	L1124	5330-00-190-4255	108	15
			122	9
			156	2
			183	14
11083	L1143	5306-00-285-1368	25	30
			58	12
			60	19
			102	23
			121	10
			122	45
			124	26
			150	24
			174	9
			211	11
			212	11
			239	7
			240	22
			126A	11
11083	L1169	5306-00-862-8901	254	2
11083	L1178	5306-00-423-8069	3	6
			160	1
			168	23
11083	L1329	5306-00-268-5798	240	14
11083	L1351	5306-00-263-7301	4	5
			5	16
			6	12
			7	1
			12	13
			18	20
			42	20
			43	10
			67	2
			68	36
			88	39
			92	26
			93	16
			102	8

CROSS-REFERENCE INDEXES

PART NUMBER INDEX

CAGEC	PART NUMBER	STOCK NUMBER	FIG.	ITEM
11083	L1351	5306-00-263-7301	103	32
			104	14
			106	10
			110	24
			121	41
			122	41
			129	20
			130	12
			146	33
			147	38
			151	14
			153	26
			159	15
			166	10
			166	10
			167	1
			172	15
			173	2
			178	7
			180	13
			190	5
			197	11
			244	21
			249	2
			261	30
			264	63
			265	42
			64A	16
			64C	15
			64E	13
11083	L139	5306-00-426-2866	174	31
11083	L1521	4730-00-924-7977	4	42
11083	L1558	5306-00-426-2870	108	21
			111	7
11083	L2061	5315-00-423-8085	4	27
11083	L2070	5306-00-698-2150	58	24
			60	8
			60	19
			109	6
			175	11
			187	8
11083	L2315	5305-01-107-5161	176	34
11083	L2341	5310-00-261-2631	184	27
			184	33
11083	L364	2930-00-365-2152	65	10
			130	13
			190	4
11083	L796	5340-01-053-3841	113	12
11083	L827	5365-00-423-8098	156	1
27418	M-34401	5330-01-046-1976	63	25
96906	MS15003-1	4730-00-050-4208	68	1

CROSS-REFERENCE INDEXES

PART NUMBER INDEX

CAGEC	PART NUMBER	STOCK NUMBER	FIG.	ITEM
96906	MS15003-1	4730-00-050-4208	184	11
			184	19
			184	37
			241	13
			242	2
			253	3
			254	14
			259	2
96906	MS15003-5	4730-00-172-0031	255	18
96906	MS15003-6	4730-00-172-0034	255	26
96906	MS15006-1	4730-00-172-0049	131	7
96906	MS15570-623	6240-00-019-3093	80	24
96906	MS16562-49	5315-00-844-3966	146	30
			188	5
96906	MS16624-1037	5325-00-715-1152	50	13
			72	15
			74A	64
96906	MS16625-1062	5325-00-687-3379	124	24
			125	19
96906	MS16632-1050	5325-00-256-2846	154	21
96906	MS16997-36	5305-00-978-9374	44	34
96906	MS17131-23	3110-00-183-6730	154	4
96906	MS17165-4578	6240-00-643-0687	85	2
96906	MS20913-6S	4730-00-221-2140	155	28
96906	MS21044N5	5310-00-088-0553	72	16
96906	MS21044N6	5310-00-950-0039	35	10
			108	11
			121	7
96906	MS21083N5	5310-00-660-3381	74A	66
96906	MS21318-21	5305-00-253-5615	79	3
			198	1
			199	2
			199	4
			199	4
96906	MS21318-41	5305-00-253-5622	17	16
			17A	14
96906	MS21333-34	5340-00-282-7519	27	17
96906	MS21333-57	5340-00-282-7505	122	34
			178	6
			180	12
96906	MS21333-59	5340-00-720-6213	42	22
			43	5
			120	9
			121	49
			246	1
96906	MS24394J8	4730-00-684-6920	64B	18
			64D	15
96906	MS24665-281	5315-00-839-2326	146	14
			166	15
			167	14
			172	24

CROSS-REFERENCE INDEXES

PART NUMBER INDEX

CAGEC	PART NUMBER	STOCK NUMBER	FIG.	ITEM
96906	MS24665-281	5315-00-839-2326	192	9
			221	24
			222	14
			230	19
96906	MS24665-351	5315-00-839-5821	18	2
			47	6
			48	6
			95	14
			105	20
			147	24
			150	25
			151	12
			154	15
96906	MS24665-353	5315-00-839-5822	47	14
			68	6
			95	12
			102	15
			146	8
			147	16
			151	19
			152	26
			252	9
96906	MS24665-360	5315-00-298-1499	15	6
96906	MS24665-490	5315-00-059-0205	96	3
96906	MS24665-491	5315-00-059-0206	253	18
			254	21
96906	MS24665-497	5315-00-013-7258	147	7
96906	MS24665-622	5315-00-187-9573	254	13
96906	MS24665-624	5315-00-059-0217	262	2
96906	MS25036-108	5940-00-143-4780	70	31
			80	27
			82	4
			82	9
			84	4
			89	12
			89	17
			90	6
			90	16
			92	9
			92	35
			93	31
			99	14
96906	MS25036-109	5940-00-283-5281	88	13
			89	8
			90	11
			99	19
96906	MS25036-110	5940-00-143-4793	83	8
			87	9
			88	42
			91	5
			92	22

CROSS-REFERENCE INDEXES

PART NUMBER INDEX

CAGEC	PART NUMBER	STOCK NUMBER	FIG.	ITEM
96906	MS25036-110	5940-00-143-4793	93	11
			93	22
			93	38
96906	MS25036-112	5940-00-143-4794	80	9
			80	32
			84	3
			97	10
			74A	7
96906	MS25036-153	5940-00-143-4774	84	6
			99	4
			100	3
			100	18
			101	6
96906	MS25036-156	5940-00-143-4775	80	30
			84	5
			98	12
			98	24
96906	MS25440-6A		29A	10
96906	MS27183-10	5310-00-809-4058	43	34
			43	36
			89	25
			90	25
			172	23
96906	MS27183-12	5310-00-081-4219	57	3
			59	2
			189	7
			192	3
96906	MS27183-15	5310-00-809-4061	95	4
			159	16
			173	3
96906	MS27183-17	5310-00-809-5997	94	38
96906	MS27183-19	5310-00-809-3079	72	50
			73	28
			74	6
			76	21
			171	3
96906	MS28775-249	5331-01-019-2448	186	23
96906	MS28775-260	5330-01-050-5024	182	3
96906	MS29513-436	5331-00-297-9791	237	8
96906	MS3367-5-0	5975-00-133-8687	189	12
96906	MS35190-319	5305-00-959-2723	188	2
			220	11
			221	13
96906	MS35206-217	5305-00-889-2999	70	8
96906	MS35206-241	5305-00-984-6189	80	6
96906	MS35206-244	5305-00-984-6192	72	34
			76	16
			74A	37
96906	MS35206-298	5305-00-984-5678	171	23
96906	MS35307-371	5305-00-879-8351	111	20
			153	4

CROSS-REFERENCE INDEXES

PART NUMBER INDEX

CAGEC	PART NUMBER	STOCK NUMBER	FIG.	ITEM
96906	MS35307-371	5305-00-879-8351	227	28
			126A	14
96906	MS35333-38	5310-00-559-0070	71	11
96906	MS35333-39	5310-00-576-5752	74A	47
96906	MS35333-41	5310-00-167-0721	35	38
			247	8
96906	MS35333-43	5310-00-685-3228	71C	7
96906	MS35333-44	5310-00-194-1483	74A	3
96906	MS35333-46	5310-00-543-4385	80	1
			80	21
96906	MS35333-47	5310-00-550-3714	81	4
96906	MS35335-32	5310-00-596-7691	80	19
			91	9
96906	MS35335-34	5310-00-514-6674	202	2
			223	3
96906	MS35338-42	5310-00-045-3299	45	24
			72	35
			76	15
			80	18
96906	MS35338-44	5310-00-582-5965	70	25
			71	24
			73	23
			76	45
			77	15
			87	26
			89	27
			90	24
			93	4
			172	26
			188	7
			207	17
			207	26
			208	17
			208	26
			209	17
			210	17
			217	3
			230	15
			71A	9
96906	MS35338-45	5310-00-407-9566	25	18
			30	2
			33	30
			34	2
			35	32
			89	33
			90	3
			171	22
			189	8
			193	7
			194	3
			195	9

CROSS-REFERENCE INDEXES

PART NUMBER INDEX

CAGEC	PART NUMBER	STOCK NUMBER	FIG.	ITEM
96906	MS35338-45	5310-00-407-9566	207	10
			208	9
			209	10
			210	11
			216	6
96906	MS35338-46	5310-00-637-9541	17	5
			18	17
			30	11
			31	13
			32	10
			37	3
			41	26
			42	25
			47	19
			50	7
			51	6
			52	19
			56	4
			65	21
			69	16
			80	13
			86	6
			87	4
			88	6
			89	23
			91	13
			92	25
			93	17
			94	25
			95	23
			99	25
			100	10
			101	10
			102	9
			103	29
			104	4
			107	4
			108	8
			109	8
			110	1
			117	21
			119	11
			120	11
			121	13
			122	2
			123	11
			123	14
			125	10
			129	9
			130	2
			130	26

CROSS-REFERENCE INDEXES

PART NUMBER INDEX

CAGEC	PART NUMBER	STOCK NUMBER	FIG.	ITEM
96906	MS35338-46	5310-00-637-9541	132	32
			134	14
			135	12
			146	18
			147	28
			150	18
			151	8
			153	3
			154	8
			159	14
			164	20
			165	19
			166	11
			166	24
			167	3
			169	19
			172	6
			173	4
			174	14
			175	13
			182	21
			183	20
			184	13
			185	4
			186	14
			187	7
			188	12
			190	29
			196	4
			197	7
			201	19
			202	17
			205	3
			206	18
			211	12
			212	15
			214	26
			215	7
			218	11
			220	2
			221	2
			222	10
			223	6
			225	33
			226	31
			230	12
			231	4
			234	15
			236	30
			238	14
			239	6

CROSS-REFERENCE INDEXES

PART NUMBER INDEX

CAGEC	PART NUMBER	STOCK NUMBER	FIG.	ITEM
96906	MS35338-46	5310-00-637-9541	240	23
			243	7
			244	22
			248	7
			249	1
			260	18
			261	27
		.	261	27
			261	59
			264	62
			265	35
96906	MS35338-48	5310-00-584-5272	8	2
				3
				10
			15	29
			31	13
			32	3
			37	4
			41	
			74	
	.		95	21
			100	24
			105	14
			108	2
			109	2
			120	26
			127	6
			129	18
			131	6
			131	9
			133	6
			136	10
			137	7
			138	11
			141	17
			142	30
			149	3
			153	11
			159	21
			160	16
			162	3
			163	3
			164	17
			165	17
			166	18
			166	40
			167	17
			170	9
			172	31
			175	24
			175	24
			184	8
			186	26

CROSS-REFERENCE INDEXES

PART NUMBER INDEX

CAGEC	PART NUMBER	STOCK NUMBER	FIG.	ITEM
96906	MS35338-48	5310-00-584-5272	190	2
			191	2
			196	2
			197	18
			201	16
			206	13
			219	4
			230	7
			231	2
			233	14
			234	21
			236	20
			237	33
			239	17
			240	9
			243	22
			244	2
96906	MS35338-51	5310-00-584-7888	3	2
			122	43
			132	16
			141	18
			160	2
			238	10
			242	19
			255	2
			260	3
96906	MS35338-52	5310-00-754-2005	3	8
			129	39
			132	21
			139	16
			141	33
			235	14
			239	4
			240	4
			241	11
			253	21
			253	37
96906	MS35338-53	5310-00-584-7889	133	11
			158	12
			253	9
			256	1
96906	MS35340-47	5310-00-655-9370	70	25
			109	10
			201	3
			204	9
			206	4
			206	7
			211	20
			212	3
			213	18
			215	2

CROSS-REFERENCE INDEXES

PART NUMBER INDEX

CAGEC	PART NUMBER	STOCK NUMBER	FIG.	ITEM
96906	MS35340-47	5310-00-655-9370	225	41
			226	39
			228	24
			229	23
			261	11
			264	49
			265	53
96906	MS35340-50	5310-00-045-5001	75	2
			86	8
			100	26
			101	16
			128	3
			141	14
			146	3
			149	17
			156	7
			158	14
			168	10
			169	1
			180	5
			184	26
			200	21
			225	45
			226	43
			228	28
			229	27
			234	9
			236	17
			250	7
			254	3
			255	22
96906	MS35690-424	5310-00-660-2649	44	36
96906	MS35690-624	5310-00-725-7382	6	6
			25	23
			30	9
			63	17
			65	20
			102	35
			104	20
			108	13
			110	2
			122	30
			130	25
			184	12
96906	MS35691-17	5310-00-851-2682	47	16
			87	16
			88	26
			102	30
			103	1
			178	8
			180	14

CROSS-REFERENCE INDEXES

PART NUMBER INDEX

CAGEC	PART NUMBER	STOCK NUMBER	FIG.	ITEM
96906	MS35691-21	5310-00-975-2075	47	8
			104	23
			147	21
			150	8
			150	12
			150	28
			151	24
			220	24
			221	21
			222	16
96906	MS35756-11	5315-00-616-5523	202	11
			223	16
96906	MS35756-22	5315-00-616-5499	152	31
96906	MS35756-6	5315-00-616-5514	192	11
96906	MS35756-8	5315-00-616-5526	48	3
			49	5
			102	26
			104	19
			105	5
			130	10
			220	16
			221	26
96906	MS35756-9	5315-00-616-5525	70	37
			71B	23
			71C	11
96906	MS35810-3	5315-00-754-0848	146	13
96906	MS35812-4	5340-00-985-0823	48	27
			147	20
			150	7
96906	MS51500A4	4730-00-289-0383	64	7
			64E	5
96906	MS51500A6	4730-00-995-1559	26	18
96906	MS51512A4	4730-00-522-1909	64A	2
96906	MS51525A12	4730-00-710-5571	197	1
			225	8
			226	6
			227	10
96906	MS51525A4S	4730-00-834-5035	230	25
			231	10
			231	14
			231	22
96906	MS51525A6	4730-00-491-9576	152	13
			153	1
			225	10
			226	8
			227	16
			236	5
			261	9
			264	6
			265	48
96906	MS51525A6-8	4730-00-080-7040	152	20

CROSS-REFERENCE INDEXES

PART NUMBER INDEX

CAGEC	PART NUMBER	STOCK NUMBER	FIG.	ITEM
96906	MS51525A6-8	4730-00-080-7040	153	37
96906	MS51525A8-10	4730-01-074-0907	214	1
96906	MS51525B4-6	4730-00-258-1864	230	29
			230	38
			64A	25
			64C	25
96906	MS51527A6	4730-00-143-3941	120	15
			261	50
			264	32
			265	26
96906	MS51532B6	4730-00-540-1525	213	21
96906	MS51840-23SS	5365-01-091-1407	116	14
			121	5
96906	MS51860-56Z	4730-01-143-9017	17B	4
			235	32
			64B	20
			64D	17
96906	MS51953-29B	4730-00-188-1854	156	14
			186	6
96906	MS51961-2	3110-00-227-3236	70	16
96906	MS51967-14	5310-00-768-0318	20	5
			22	4
			58	28
			60	23
			69	4
			73	30
			76	47
			95	20
			100	23
			105	15
			120	23
			133	7
			166	20
			167	19
			168	31
			169	11
			233	13
			237	32
			243	24
			244	25
96906	MS51967-20	5310-00-763-8920	152	30
			169	15
			169	20
			184	25
			237	13
96906	MS51967-26	5310-00-880-8186	168	15
			235	15
96906	MS51967-3	5310-00-905-0762	71C	4
96906	MS51967-5	5310-00-880-7744	89	30
			90	14
			107	18

CROSS-REFERENCE INDEXES

PART NUMBER INDEX

CAGEC	PART NUMBER	STOCK NUMBER	FIG.	ITEM
96906	MS51967-5	5310-00-880-7744	147	5
			189	6
96906	MS51968-11	5310-00-880-7745	130	7
96906	MS51968-20	5310-00-763-8905	15	8
			15	10
			86	7
			100	25
			101	15
			129	44
			156	16
			168	13
			190	20
			200	22
			225	44
			226	42
			228	27
			229	26
96906	MS75004-1	5940-00-549-6581	94	12
96906	MS9068-214	5331-00-997-7230	122	1
			152	15
96906	MS90727-116	5305-00-719-5239	131	5
96906	MS90727-118	5305-00-719-5241	13	1
96906	MS90727-186	5305-00-082-6821	9	1
96906	MS90727-59	5305-00-269-3235	135	18
96906	MS90727-70	5305-00-269-3246	184	14
96906	MS90728-64	5305-00-725-2317	32	11
96906	MS90728-8	5305-00-225-3843	12	9
			32	13
			64	8
			69	15
			64C	3
			64D	1
08162	MUB1956V		129	47
81349	M16878/1BFE2	6145-00-652-2954	BULK	31
81349	M16878/1BKE0		BULK	36
81349	M16878/3BMG0	6145-00-726-7275	BULK	33
08162	M1956CHE		129	48
61208	M2048F	5310-00-362-8168	89	31
			90	4
81349	M24243/1-A404	5320-01-023-2529	103	19
74400	M2875	6220-00-953-4652	85	1
74400	M4233	6210-00-191-2745	80	23
28298	M5839	5310-00-209-4516	48	7
			166	34
			167	31
81349	M7928/5-4	5940-01-079-1375	88	34
81349	M83248/2-214	5331-01-017-6535	225	37
			226	35
			227	4
			234	6
			235	5

CROSS-REFERENCE INDEXES

PART NUMBER INDEX

CAGEC	PART NUMBER	STOCK NUMBER	FIG.	ITEM
81349	M83248/2-905	5331-00-165-1980	213	24
			218	27
			227	6
81349	M83248/2-910	5331-00-167-5174	202	14
			214	2
			225	17
			226	15
81349	M83248/2-920	5331-01-024-2512	197	3
			215	10
			225	39
			226	37
11568	M925A	5310-01-045-5588	71	13
78553	NAN50	5325-01-165-2606	152	8
80205	NAS561P8-10	5315-00-281-9478	130	5
80205	NAS620-8	5310-00-805-7632	72	38
			76	37
61424	NN-4-035	4720-00-604-6497	BULK	24
19207	NPN-2		74A	75
19207	NPN-3		74A	60
60380	NTA-5266	3110-01-024-9817	176	40
11083	OTO329	5340-00-423-8146	135	19
82647	PDM-40	5925-00-173-7651	80	28
66289	PD115	5310-00-637-1058	70	2
			74B	6
			74B	10
00198	PK379	5315-00-816-1794	26	25
			43	35
			105	19
18265	P100128	4730-00-084-7543	38	13
06848	P16598	5310-00-297-8836	93	3
			188	11
			189	16
80756	RR-650	5365-01-361-4557	111	3
			175	40
80756	RST293	5325-00-928-9630	112	3
10988	R21561	3120-00-828-6852	73	17
			77	21
11083	S1347	5306-00-402-9168	36	1
78286	S14-35-5017	5310-00-285-8867	48	22
			65	25
			68	35
11083	S1566	5306-00-275-5012	62	5
			255	21
11083	S1570	5306-00-426-2920	87	25
11083	S1573	5306-00-426-2922	243	23
11083	S1575	5306-00-426-2923	157	3
11083	S1577		157	15
			158	5
11083	S1583	5306-00-426-2926	122	42
11083	S1587	5306-00-263-8978	129	17
			166	38

CROSS-REFERENCE INDEXES

PART NUMBER INDEX

CAGEC	PART NUMBER	STOCK NUMBER	FIG.	ITEM
11083	S1587	5306-00-263-8978	167	38
			168	30
			191	1
			239	14
			240	16
11083	S1594	5306-00-260-4508	12	22
			20	14
			23	6
			25	6
			27	7
			4A	8
			42	4
			5A	17
			56	5
			57	18
			59	8
			65	9
			86	10
			87	3
			89	22
			95	1
			99	24
			100	11
			101	12
			102	21
			104	11
			107	3
			110	28
			113	11
			115	4
			120	8
			122	3
			123	10
			124	2
			125	9
			132	31
			134	15
			135	13
			154	41
			159	27
			167	11
			173	7
			174	10
			178	13
			180	19
			182	22
			183	16
			186	10
			188	13
			225	32
			226	30

CROSS-REFERENCE INDEXES

PART NUMBER INDEX

CAGEC	PART NUMBER	STOCK NUMBER	FIG.	ITEM
11083	S1594	5306-00-260-4508	236	29
			243	5
			261	25
			261	29
			261	31
			261	58
			264	60
			265	36
			64A	5
			64B	1
			64E	17
11083	S1595	5306-00-423-8117	2	6
			3	12
			20	1
			29	15
			62	13
			114	2
			120	25
			166	19
			167	18
			168	28
			170	8
			172	30
			175	22
			175	22
			196	11
			236	19
			243	26
			244	14
			261	2
			261	25
			261	34
			261	49
			261	61
			264	25
			265	18
			29A	14
11083	S1601	5305-00-260-4511	129	43
11083	S1604	5306-00-263-7314	7	6
			131	5
			131	8
11083	S1615	5306-00-261-1153	36	1
			44	16
			91	12
			207	18
			207	27
			208	18
			208	27
			209	18
			210	18
			217	4

CROSS-REFERENCE INDEXES

PART NUMBER INDEX

CAGEC	PART NUMBER	STOCK NUMBER	FIG.	ITEM
11083	S1619	5306-00-426-2932	123	13
			232	8
11083	S1621	5306-00-426-2934	159	30
			162	2
			166	41
			167	37
			219	2
			230	6
			231	1
			236	33
			244	3
11083	S1625	5305-00-426-2936	139	4
			180	6
11083	S1626	5306-00-814-6588	260	2
11083	S1973	5306-00-426-2945	132	22
			161	9
			168	14
			235	26
92755	S2190PT3	5325-00-810-8932	181	1
77220	S40429	2815-00-923-1929	11	7
11083	S519	5340-00-223-7093	4	50
			4A	42
			4B	20
11083	S532	5307-00-274-8196	55	7
15434	S658	5310-00-109-7638	54	1
			117	26
			225	52
			226	50
			228	31
			229	31
			236	18
			237	38
99193	S9413-215	5331-00-245-6767	186	9
			243	30
72447	S997		147	51
60380	TRF2435	3110-00-875-1983	141	3
11083	T200	5340-00-276-5828	155	15
11083	T225	5330-00-297-5196	26	6
11083	T319	5306-00-260-4512	200	2
11083	T320	5306-00-260-4513	261	72
			264	48
			265	52
11083	T65	5306-00-426-2974	116	12
			117	20
			154	9
11083	T690	5306-01-175-6914	253	36
11083	T768	5306-00-426-2983	109	14
			213	17
			261	12
			264	52
			265	54

CROSS-REFERENCE INDEXES

PART NUMBER INDEX

CAGEC	PART NUMBER	STOCK NUMBER	FIG.	ITEM
11083	T924	5306-00-263-7305	102	34
			104	21
29690	V1635	3110-00-277-0636	129	23
29690	V1636	3110-00-277-0637	129	24
60532	WAS125	5310-00-080-9422	41	14
04998	WA1248	5310-00-143-5722	70	4
			88	19
			103	18
			230	23
			74A	46
			74B	7
			74B	11
81348	WW-P-471AASBCA	4730-00-288-8055	15	16
12128	W55	3110-00-554-5302	68	47
08162	W62222EAHX		128	20
14351	X5132	4730-00-193-0871	42	12
72962	X53NTU3612	5310-01-167-6325	241	4
53867	0 122 469 001	6115-01-279-2610	71B	1
57013	0-050026-0		88	2
11083	0L0364	2930-00-365-2152	23	7
			26	5
11083	0L0472		33	43
11083	0L0478		30	12
11083	0L0829	2520-00-362-7883	151	6
11083	0L1026	5340-00-229-9287	127	22
11083	0L1178	5306-00-423-8069	10	13
11083	0L1329	5306-00-268-5798	22	31
			184	9
11083	0L1351	5306-00-263-7301	31	12
11083	0L1365	5310-00-221-3150	27	14
			154	22
11083	0L1521	4730-00-924-7977	4A	31
			4B	16
11083	0L1546		26	19
11083	0L1547		4	31
			4A	30
			4B	14
11083	0L2070	5306-00-698-2150	63	11
			68	11
			111	18
11083	0L2119	5365-00-365-2281	168	22
11083	0R2663		5	1
11083	0S0509	5305-00-252-8919	6	1
			10	5
			12	8
			12	16
			25	28
			26	9
			30	16
			41	25
			55	11

CROSS-REFERENCE INDEXES

PART NUMBER INDEX

CAGEC	PART NUMBER	STOCK NUMBER	FIG.	ITEM
11083	0S0509	5305-00-252-8919	57	26
			58	32
			59	28
			60	28
			88	38
			92	27
			94	24
			101	7
			103	27
			107	10
			111	21
			113	22
			129	8
			154	38
			164	19
			165	20
			166	22
			167	21
			172	16
			182	15
			220	1
			221	1
			230	11
			231	5
			29A	11
11083	0S1566	5306-00-275-5012	68	50
11083	0S1571	5305-01-026-9518	6	7
			17	17
			22	15
			39	9
			48	5
			49	7
			51	7
			55	4
			56	10
			58	13
			60	17
			60	24
			60	30
			67	7
			126	22
			147	44
			150	17
			156	9
			202	8
			214	27
			215	6
			233	11
			238	13
			261	31
			265	67

CROSS REFERENCE INDEXES
PART NUMBER INDEX

CAGEC	PART NUMBER	STOCK NUMBER	FIG.	ITEM
11083	051571	5305-01-026-9518	39A	5
			64A	19
			64C	20
11083	051585	5306-01-127-9361	20	3
			29	11
			106	7
			108	5
			120	39
			128	25
			136	9
			137	6
			138	12
			141	27
			142	29
			149	4
			160	14
			164	16
			165	16
			168	32
			169	10
			170	14
			175	34
			186	25
			190	1
			196	3
			197	9
			233	2
			234	17
			239	22
			240	10
			243	21
			261	34
			265	70
			64B	16
			64F	7
11083	051587	5366-00-263-8978	8	1
			20	4
11083	051590	5306-01-094-9106	52	23
			105	4
			109	7
			147	32
			176	11
			186	5
			249	5
			64F	10
11053	051591	5305-01-015-6841	16	5
			25	7
			26	4
			27	11
			30	10
			38	4

CROSS-REFERENCE INDEXES

PART NUMBER INDEX

CAGEC	PART NUMBER	STOCK NUMBER	FIG.	ITEM
11083	0S1591	5305-01-015-6841	39	1
			48	23
			50	6
			55	9
			58	17
			60	30
			68	17
			106	18
			120	19
			121	14
			122	16
			159	26
			211	13
			218	12
			220	19
			221	18
			222	20
			239	5
			240	24
11083	0S1608	5306-00-814-6565	110	36
11083	0S1618	5306-01-116-9622	68	38
			193	24
11083	0S1619	5306-00-426-2932	26	16
			63	29
			110	34
			126	16
			126A	13
11083	0S1621	5306-00-426-2934	20	13
11083	0S1626	5306-00-814-6588	20	23
11083	0T0055	5306-01-159-1513	227	9
11083	0T0065		64	25
		5305-00-252-8906	64E	1
11083	0T0199	2520-01-066-9192	12	32
11083	0T0200		33	22
11083	0T0573	2910-00-309-9473	25	9
			27	22
			49	33
			63	21
			65	23
			116	10
			232	2
11083	0V0114	2520-00-423-8166	65	13
11083	0V0155	5307-00-423-8167	10	2
11083	0V0531	5310-00-480-6100	105	16
90940	0035392-0		164	1
			165	1
			264	46
			265	49
61510	010024	5307-00-358-3527	4	44
			4A	34
1CX05	021100-2530		71C	16

CROSS-REFERENCE INDEXES

PART NUMBER INDEX

CAGEC	PART NUMBER	STOCK NUMBER	FIG.	ITEM
1CX05	021250-1320		71C	17
1CX05	021580-2560		71C	9
1CX05	021997-3170		71C	23
1CX05	021997-3180		71C	21
19207	0516773-25		234	3
30780	06CP-8	4730-00-585-6565	236	28
19207	0625930-103		233	5
19207	0625930-33		225	24
			226	22
			228	11
			229	10
19207	0625930-4		264	69
19207	0625930-44		122	39
19207	0625930-49		261	37
			265	75
19207	0625930-6		265	31
19207	0625930-71		261	54
			264	35
19207	0625930-99		233	22
19207	0626121-42		32	20
19207	0630776-1		84	2
19207	0630776-11		80	8
19207	0630776-20		80	31
19207	0687274-16		248	24
19207	0687274-37		246	10
19207	0687274-39		246	9
19207	0687274-60		248	22
19207	0937331-19		42	1
19207	0937331-30		43	18
53867	1 120 200 023	5365-01-174-8876	71B	15
53867	1 120 220 007	5310-01-175-0630	71B	19
53867	1 120 222 001	5330-01-178-3728	71B	11
01843	1 124 035 017	2920-01-178-0499	71B	22
53867	1 124 210 001	5950-01-279-2818	71B	16
53867	1 125 045 115	6105-01-279-2683	71B	24
53867	1 125 500 024	2920-01-178-6536	71B	2
53867	1 125 825 021	2920-01-177-8565	71B	13
53867	1 125 885 031	2920-01-178-6574	71B	9
53867	1 127 320 503	5961-01-174-8652	71B	12
53867	1 197 011 000	2920-01-177-8505	71B	4
53867	1 900 910 024	3110-01-179-5935	71B	10
11083	1-5P7148	2815-01-053-7307	128	33
11083	1-6H5380/1-3H2617	4730-01-253-2819	130	3
11083	1-6Y7920	3010-01-203-5604	182	11
30708	1-8MR0B		82	5
11083	1A1399	5340-00-147-8390	127	14
11083	1A1460	5306-00-273-6357	37	12
			43	31
			58	18
			60	7

CROSS-REFERENCE INDEXES

PART NUMBER INDEX

CAGEC	PART NUMBER	STOCK NUMBER	FIG.	ITEM
11083	1A1460	5306-00-273-6357	69	6
			104	1
			109	1
			141	15
			201	17
			206	12
			219	5
			223	12
			237	34
			239	18
			239	19
			240	13
			261	67
			264	44
			265	40
11083	1A1884	5360-00-363-6199	15	15
11083	1A2029	5306-00-423-8194	4	11
			4	53
			20	10
			21	8
			42	18
			43	12
			48	17
			49	32
			52	18
			53	2
			57	8
			58	6
			59	11
			63	14
			64	26
			67	5
			68	45
			86	5
			91	14
			100	31
			108	7
			117	20
			120	10
			121	46
			122	19
			126	13
			127	8
			130	1
			147	27
			150	20
			153	20
			169	18
			17A	1
			185	5
			201	20

CROSS-REFERENCE INDEXES

PART NUMBER INDEX

CAGEC	PART NUMBER	STOCK NUMBER	FIG.	ITEM
11083	1A2029	5306-00-423-8194	205	14
			206	6
			206	17
			214	28
			220	17
			221	16
			222	9
			234	13
			260	17
			64B	12
			64D	12
11083	1A2209	5306-00-063-5001	47	31
			174	27
11083	1A3284	5315-00-870-6121	153	23
			155	12
11083	1A458	5306-00-245-0953	62	10
			164	4
			165	7
11083	1A4907	5310-00-209-0243	142	20
11083	1A5183	5306-00-637-4927	12	21
			117	20
			154	16
11083	1A5666	5310-00-423-8260	4	21
			5	11
			4A	14
11083	1A5822	5306-00-426-3080	22	2
			29	8
			153	10
			29A	4
11083	1A5919		4	37
			4A	25
			4B	9
58312	1A5964-00	5305-00-426-3085	23	15
			212	16
11083	1A744	5305-00-352-7292	15	11
11083	1A7669	5305-01-298-3128	5A	30
11083	1A8063	5306-00-426-3139	2	3
			3	1
			41	24
			62	17
			238	9
11083	1A8537	5306-00-426-3150	244	17
11083	1A8827	5315-01-164-7583	151	11
11083	1A9109	5310-00-423-8296	27	16
11083	1A9136	5306-00-263-7298	30	27
11083	1A9579	5306-00-930-5643	189	9
			194	2
11083	1B0676	5315-00-272-6760	48	9
11083	1B2522		177	3
11083	1B2713	5306-00-423-8313	36	5
			49	8

CROSS-REFERENCE INDEXES

PART NUMBER INDEX

CAGEC	PART NUMBER	STOCK NUMBER	FIG.	ITEM
11083	1B2790	5306-00-272-1804	31	5
			33	29
11083	1B2886	5306-00-423-8316	58	27
			60	22
11083	1B3057	5340-00-423-8320	32	2
			42	17
			43	11
			120	2
			248	20
			64A	15
			64C	14
11083	1B3934	3110-00-100-0338	149	36
11083	1B4102	3110-00-289-6803	174	19
11083	1B4109	3110-00-554-3184	65	8
11083	1B4116	3110-00-554-6051	65	12
11083	1B4205	5310-00-347-4123	13	3
			15	4
			20	25
			127	5
			159	23
11083	1B4207	5310-00-076-1504	2	7
			3	11
			141	31
			157	1
11083	1B4208	5310-00-076-1505	139	15
11083	1B4209	5310-01-123-1417	160	11
11083	1B4210		157	9
			158	19
11083	1B4333	5310-00-930-7454	133	10
			253	10
11083	1B4442	5310-00-221-4696	26	24
11083	1B5170	4730-01-022-6066	156	17
11083	1B5174	4730-00-122-3969	132	17
11083	1B5355	5310-00-498-8409	37	2
			39	8
			55	5
			56	11
11083	1B5357	5310-00-828-7334	28	5
11083	1B676	5315-00-272-6760	47	5
			147	23
			150	26
			151	22
			154	13
11083	1B7182		34	3
11083	1B8708	5315-00-616-5522	117	4
			117	24
			150	14
11083	1B8714	5315-00-012-4553	13	7
11083	1B8743	5315-01-069-0837	129	33
11083	1B8745	5315-01-069-0838	129	16
11083	1B9061	5360-01-254-2386	152	6

CROSS-REFERENCE INDEXES

PART NUMBER INDEX

CAGEC	PART NUMBER	STOCK NUMBER	FIG.	ITEM
11083	1B9575		34	5
11083	1B9917	5360-00-423-8384	15	17
11083	1B9920	5360-00-076-1478	95	9
11083	1C2251	5306-00-423-8393	58	11
			60	24
			183	5
11083	1D0158	5315-01-378-3067	125	13A
11083	1D1313	5360-01-068-9641	146	1
11083	1D3419	5305-01-102-7343	257	8
11083	1D3480		233	12
11083	1D4556	5306-00-698-2177	109	9
11083	1D4566	5306-00-426-3397	114	1
11083	1D4569	5306-00-272-4229	29	1
			60	22
			29A	5
11083	1D4572	5305-00-411-0777	37	14
			219	9
11083	1D4597	5306-00-270-9464	200	25
11083	1D4599	5305-01-062-9897	5A	8
			149	26
11083	1D4610	5306-00-426-3404	132	15
			142	43
			238	9
			242	20
11083	1D4612	5306-00-426-3405	62	15
11083	1D4617	5305-01-069-0839	255	1
11083	1D4620	5306-00-423-8409	142	23
11083	1D4621	5306-01-255-6396	141	19
11083	1D4625		132	20
			141	32
11083	1D4627	5306-00-732-7714	241	10
11083	1D4628	5306-00-426-3408	132	20
11083	1D4630	5306-00-426-3409	3	10
			133	24
11083	1D4631	5306-01-250-9937	241	12
11083	1D4639	5306-00-426-3410	160	5
			161	3
11083	1D4640	5306-01-237-5637	132	25
11083	1D4642	5305-00-494-1906	164	8
			165	11
11083	1D4643	5306-00-426-3412	62	1
11083	1D4709	5306-01-053-3837	164	6
			165	9
11083	1D4717	5310-01-194-5398	17	18
			18	18
			37	16
			38	5
			38	16
			42	19
			43	13
			47	11

CROSS-REFERENCE INDEXES

PART NUMBER INDEX

CAGEC	PART NUMBER	STOCK NUMBER	FIG.	ITEM
11083	1D4717	5310-01-194-5398	48	1
			49	4
			55	10
			56	6
			58	22
			60	16
			63	10
			87	19
			88	5
			89	20
			101	8
			102	24
			103	28
			104	2
			109	16
			110	3
			119	3
			121	47
			122	48
			159	9
			159	28
			166	12
			167	2
			17A	12
			183	10
			186	3
			190	28
			197	8
			202	9
			220	20
			221	19
			222	21
			223	11
			227	7
			234	14
			243	8
			261	26
			264	61
			265	63
			39A	6
			64A	17
			64C	16
11083	1D5117	5310-00-208-9476	72	48
			73	29
			76	18
11083	1D6259	5306-00-281-5599	235	13
11083	1D6260		5A	12
11083	10688	5310-01-254-8900	141	5
11083	1D6945	5310-00-639-7664	197	5
11083	1F0929	3120-00-362-7285	110	18
11083	1F1344	4730-00-278-8368	4	56

CROSS-REFERENCE INDEXES

PART NUMBER INDEX

CAGEC	PART NUMBER	STOCK NUMBER	FIG.	ITEM
11083	1F1344	4730-00-278-8368	127	33
11083	1F2627		23	12
11083	1F3278	4730-00-367-5013	27	3
11083	1F5403	5340-00-411-3926	47	7
11083	1F5573	5310-01-254-2505	140	5
11083	1F5842	5306-00-087-7178	209	9
			216	7
11083	1F73	5342-00-925-6897	74	19
11083	1F748	5310-00-445-4632	43	29
			120	6
			140	10
			166	26
			167	25
			168	6
			168	12
			168	18
			168	21
			168	34
			169	6
			170	3
			170	16
			172	11
			230	8
			231	27
			236	32
			244	20
			261	33
			264	67
			265	71
11083	1F7958	5310-00-972-0479	108	6
11083	1F7960	5310-00-595-6153	43	32
11083	1H1023	5331-00-920-6924	72	19
			77	10
			74A	61
11083	1H1200	5315-00-710-2087	146	6
			147	34
			126A	4
11083	1H2629	2920-00-737-3225	76	26
11083	1H30	3120-00-851-5554	22	7
11083	1H3135		130	18
11083	1H3244	5310-01-062-9898	71C	3
11083	1H4106	2530-01-066-8430	157	17
			158	1
11083	1H4148	5325-00-282-5047	154	20
11083	1H4393	5310-01-170-1508	80	5
11083	1H4769	5360-01-069-0841	130	35
11083	1H5165	5340-00-547-9875	80	11
			94	39
			99	26
			100	21
11083	1H5166	6220-00-778-7213	88	7

CROSS-REFERENCE INDEXES

PART NUMBER INDEX

CAGEC	PART NUMBER	STOCK NUMBER	FIG.	ITEM
11083	1H5166	6220-00-778-7213	92	17
			93	25
			99	27
			100	13
			101	11
11083	1H5495	5330-01-067-1487	130	24
11083	1H5581		11	6
11083	1H5728	5331-00-333-4384	134	4
			135	1
			142	36
			200	23
11083	1H6138		130	17
11083	1H6141		130	14
11083	1H6361	3020-00-738-8634	130	21
11083	1H7339	5331-00-593-1141	136	2
			137	15
			138	14
			200	4
11083	1H7365	2510-01-063-0635	95	10
11083	1H7366	2510-01-063-0636	95	8
11083	1H7855	5365-01-170-8781	153	16
11083	1H8128	5331-00-555-3810	118	17
			182	35
11083	1H8720	5331-00-555-3807	201	10
			213	3
11083	1H9696	5331-00-580-1226	194	21
			195	25
			201	18
			206	19
			215	21
11083	1J0245	2520-01-066-8434	134	23
11083	1J1738	5315-01-252-4967	254	10
11083	1J1971	5315-01-170-2228	102	14
11083	1J2176	5331-00-913-6137	224	8
			241	22
11083	1J2890	5330-01-189-3550	175	35
11083	1J4384	5315-00-619-2962	95	13
11083	1J5257	5306-00-436-9893	256	2
11083	1J5791		184	32
11083	1J5835		184	21
11083	1J5926	5306-01-284-6721	184	28
11083	1J5940		184	29
11083	1J6309	5365-01-257-3305	237	11
11083	1J6503		184	2
11083	1J6746	5315-00-491-0400	253	26
			254	20
11083	1J6749	5306-01-323-9638	253	27
11083	1J6775	5306-00-131-1660	253	32
			253	40
			257	11
11083	1J7478		253	30

CROSS-REFERENCE INDEXES

PART NUMBER INDEX

CAGEC	PART NUMBER	STOCK NUMBER	FIG.	ITEM
11083	1J7611		254	6
11083	1J7613		254	8
11083	1J8136	5315-01-254-1308	147	13
11083	1J8497	4820-00-923-7042	215	25
11083	1J8668	5307-00-118-3133	87	15
			119	10
11083	1J9227	3110-00-740-6784	174	25
11083	1J9671	5330-00-613-6500	35	21
11083	1K4129	5365-01-322-1468	232	1
11083	1K4709		249	12
11083	1K6705	5306-00-133-2090	24	5
			94	37
11083	1K6776	4730-01-250-5867	42	35
11083	1K6856	5310-01-063-0719	140	12
11083	1K6986	2520-00-756-9728	127	36
11083	1K7041		185	11
11083	1K7091	5310-01-377-2725	48	14
11083	1L3769	2910-01-051-2299	50	3
11083	1L4418	5360-01-155-5301	215	11
11083	1L480	4730-01-250-1570	42	13
			43	1
11083	1L482	4730-00-851-6273	42	9
			43	7
11083	1L5072	5315-00-532-5746	245	1
11083	1L5081	5310-01-146-1218	41	28
11083	1L5316	5315-00-479-2833	193	16
11083	1L9048	5310-01-353-3402	71B	6
11083	1M0424	5315-01-210-2959	146	21
11083	1M0988		6	10
11083	1M1078		18	13A
11083	1M1111		18	13
11083	1M1341	5340-01-053-3843	47	7
			47	27
			48	8
			150	11
			150	29
			151	25
11083	1M1440	3040-01-068-9690	141	24
11083	1M1455	5315-00-895-3774	145	10
11083	1M1480		127	28
11083	1M1495	5315-01-254-1310	158	17
11083	1M1604	3110-00-740-6782	128	15
11083	1M2651	5330-01-253-4355	107	1
11083	1M2675	4710-01-253-2752	122	31
11083	1M3069	6220-00-433-5959	86	3
			100	30
11083	1M3070	6220-00-350-8204	86	3
			100	28
11083	1M3148		105	1A
		3040-01-068-7256	105	10A
11083	1M3464	5340-01-255-0933	42	27

CROSS-REFERENCE INDEXES

PART NUMBER INDEX

CAGEC	PART NUMBER	STOCK NUMBER	FIG.	ITEM
11083	1M3464	5340-01-255-0933	64B	13
			64D	13
11083	1M3727	5365-01-066-0699	3	16
11083	1M3728	5365-01-066-0700	3	16
11083	1M3781	5365-00-869-1581	126A	2
11083	1M380	5330-00-234-4799	128	35
58312	1M3833-00	5315-00-409-3703	105	2
			105	11
11083	1M3836	2520-00-948-9786	105	17
11083	1M3862		105	1
11083	1M3863	2520-00-449-6999	105	10
11083	1M3897	2520-00-237-4581	105	8
11083	1M3917	2520-00-960-1853	105	6
11083	1M3926	5360-00-788-5807	105	9
11083	1M4091	5365-01-068-9691	112	23
11083	1M4095	3110-00-895-0495	112	1
11083	1M4102	5342-00-938-5530	107	23
11083	1M4153	3020-01-068-9692	112	21
11083	1M4155	3020-00-747-9854	112	26
11083	1M4156	3020-00-747-9853	113	19
11083	1M4167	2530-01-066-8437	112	25
11083	1M4169	2520-01-059-9288	127	10
11083	1M4171	3110-01-068-6082	113	24
11083	1M4173		127	7A
11083	1M4179	2510-01-066-8438	111	23
11083	1M4180	5310-01-068-7258	111	22
11083	1M4342	5342-01-066-8439	127	38
11083	1M4343	3110-00-756-9780	127	1
11083	1M4344	3040-01-377-7420	127	7
11083	1M437	5360-00-848-6107	146	23
11083	1M4593	5360-00-845-0943	149	22
11083	1M5471		121	19
11083	1M6119	5306-00-438-8600	94	10
			94	13
			94	18
11083	1M6120	5310-00-438-8604	94	9
			94	14
			94	19
11083	1M620	5307-01-254-2498	87	20
			110	15
11083	1M638		129	34
11083	1M6420	5330-00-756-9800	110	12
11083	1M6421	5307-00-419-4068	110	14
11083	1M6422	5307-00-419-4063	110	19
			127	20
11083	1M6423	5307-01-254-2501	110	21
11083	1M6593	5330-00-949-0070	108	23
11083	1M6594	5330-00-761-2536	108	4
11083	1M6603	3020-01-068-9693	127	2
11083	1M6604	3020-01-068-9694	127	24
11083	1M6718	3110-00-847-5036	203	5

CROSS-REFERENCE INDEXES

PART NUMBER INDEX

CAGEC	PART NUMBER	STOCK NUMBER	FIG.	ITEM
11083	1M8649	2520-00-948-6065	61	3
11083	1M8746	2530-00-738-8714	136	17
			137	13
			138	15
			142	27
11083	1M9444	2530-00-949-0817	149	27
11083	1M9653	2520-00-632-8279	107	21
11083	1N4695		40A	4
11083	1P0129		164	24
			165	23
11083	1P0130		164	18
			165	18
11083	1P0132	2510-01-223-0623	164	14
			165	15
11083	1P0232	2910-01-066-7693	33	14
11083	1P0234	5315-00-438-7015	33	13
11083	1P0983	5340-01-269-9284	116	18
11083	1P1013	2530-01-103-3692	139	17
11083	1P1014	4710-01-103-3693	139	14
11083	1P1080	2920-00-433-3720	70	17
11083	1P1086		70	23
11083	1P1091	2920-00-410-6815	70	34
11083	1P1130	5977-00-008-3338	70	13
11083	1P1131	5310-00-410-6816	70	44
11083	1P1134	3120-00-450-5433	70	15
11083	1P1137	2920-01-053-4512	70	6
11083	1P1138	2920-01-053-4513	70	5
11083	1P1145	2920-01-053-4514	70	1
11083	1P1210		11	4
11083	1P1367	5340-00-499-9648	17	9
			25	21
			17A	5
11083	1P1396	5310-00-431-7237	70	26
			109	11
			255	12
11083	1P1441	4730-00-762-1239	178	2
11083	1P1480		173	8
11083	1P1711		225	6
			227	33
11083	1P1713		26	20
11083	1P2085	5365-01-269-8552	118	22
11083	1P2086	5305-01-254-2519	118	21
11083	1P2156		178	18
			180	24
11083	1P2171		175	1
11083	1P2175	3040-01-254-4939	182	41
11083	1P2176	3040-01-254-1027	182	10
11083	1P2178		182	9
11083	1P2179		182	8
11083	1P2180		182	1
11083	1P2187	4320-01-202-5616	187	9

CROSS-REFERENCE INDEXES

PART NUMBER INDEX

CAGEC	PART NUMBER	STOCK NUMBER	FIG.	ITEM
2J565	1P2195	4820-01-158-6839	185	8
11083	1P2278	5365-00-003-4155	52	14
11083	1P2280		52	17
11083	1P2297	2910-00-421-7161	52	1
11083	1P2532		174	34
11083	1P2545		178	14
11083	1P2550		174	34
11083	1P2553		175	8
11083	1P2581	3020-01-255-5401	175	6
11083	1P2593	3040-01-254-1007	178	2
11083	1P2597	5330-01-258-9166	182	4
11083	1P2615		183	17
11083	1P2878	2530-01-069-0791	150	9
11083	1P3206	5330-01-263-8275	183	19
11083	1P3216	5360-01-162-2847	194	11
			195	11
11083	1P3240		175	31
11083	1P3262	5340-01-161-6223	185	7
11083	1P3276		175	26
11083	1P3318	3805-01-068-9720	142	25
11083	1P3321	5315-01-099-0060	230	21
11083	1P3593		124	3
11083	1P3594	4730-01-069-0876	126	15
11083	1P3703	5330-01-043-5565	232	4
11083	1P3704	5330-01-052-3917	225	49
			226	47
			228	16
			229	15
11083	1P3707	5330-01-053-2691	237	36
11083	1P3864	5305-01-254-2517	57	14
			59	15
			255	24
11083	1P4001	4730-01-023-8633	32	23
11083	1P4022	4730-01-069-0792	32	14
11083	1P4056	3040-01-254-1006	176	31
11083	1P4101	4820-01-377-6777	126	5
11083	1P4105	5330-01-257-7744	175	21
11083	1P4106		175	14
11083	1P4107	2520-01-018-0464	126	1
11083	1P4119	4820-01-377-6776	124	18
11083	1P4145	4820-01-017-8081	124	1
11083	1P4232	5365-01-164-6623	174	1
11083	1P4233		174	20
11083	1P4273	2815-01-068-7265	4	23
			4A	15
11083	1P4275	2815-01-068-7266	4	18
			4A	16
11083	1P4523		147	60
11083	1P4576	4730-01-051-3134	121	43
			225	36
			226	34

CROSS-REFERENCE INDEXES

PART NUMBER INDEX

CAGEC	PART NUMBER	STOCK NUMBER	FIG.	ITEM
11083	1P4576	4730-01-051-3134	227	3
			234	24
			235	4
			239	11
			240	20
11083	1P4577	4730-01-051-5256	120	22
			121	26
			122	49
			201	6
			201	13
			205	6
			206	8
			206	15
			211	4
			212	10
			232	5
			263	1
11083	1P4578	4730-01-051-5257	121	31
			122	21
			211	5
			212	4
			214	19
			219	10
			225	20
			226	18
			229	13
			233	18
			261	23
			264	58
			265	61
11083	1P4579	5340-01-060-0309	197	17
			233	3
			234	19
11083	1P4582	4730-01-053-2692	120	33
11083	1P4585	4730-01-163-7270	225	50
			226	48
			228	14
			229	28
			237	39
11083	1P4879	5330-01-017-5578	142	12
11083	1P4923	6645-00-476-5511	247	6
11083	1P5130		192	7
11083	1P5206		176	23
11083	1P5210		178	22
			180	28
11083	1P5269		176	19
11083	1P5270		174	35
11083	1P5273		175	37
11083	1P5274	5315-01-155-2618	185	10
			185	17
11083	1P5286	3130-01-257-7787	174	15

CROSS-REFERENCE INDEXES

PART NUMBER INDEX

CAGEC	PART NUMBER	STOCK NUMBER	FIG.	ITEM
11083	1P5290		174	2
11083	1P5292		176	13
11083	1P5294		176	1
11083	1P5307	2520-00-251-1783	104	8
11083	1P5419		175	5
11083	1P5420		175	4
11083	1P5486	6620-01-029-3168	246	15
11083	1P6071	3120-01-163-9375	176	41
11083	1P6153	3040-01-162-4303	176	12
11083	1P6155		176	7
11083	1P6158	3040-01-163-3240	176	6
11083	1P6167	2520-01-161-7796	176	20
11083	1P6172	5365-01-161-9161	174	6
11083	1P6173	3130-01-257-3836	174	32
11083	1P6174	3130-01-166-0810	174	26
11083	1P6175	5365-01-164-9962	174	33
11083	1P6176	3110-01-165-3725	176	8
11083	1P6178	5365-01-164-8702	174	11
11083	1P6179	3040-01-184-4026	176	2
11083	1P6180	3110-01-164-8765	174	8
11083	1P6181	5365-01-258-0113	175	33
11083	1P6182	3020-01-254-4807	176	35
11083	1P6185		174	29
11083	1P6187		179	14
			181	13
11083	1P6188	5365-01-266-3314	176	37
11083	1P6209	3130-01-259-9600	176	25
11083	1P6211		175	2
11083	1P6217		193	10
11083	1P6354	5340-01-237-6915	130	34
11083	1P6400	5340-01-255-0980	33	8
11083	1P6411		168	2
			169	9
11083	1P6434	5330-01-069-7444	58	5
			60	5
11083	1P6441	5330-01-066-9257	5	21
			5A	22
11083	1P6442	5330-01-066-9258	5	21
			5A	22
11083	1P6450	2940-01-058-8068	37	4
58312	1P6452-00	5970-00-213-7747	46	3
11083	1P667		4	20
			4A	12
11083	1P6692		182	25
11083	1P6694		198	6
11083	1P6704		196	26
11083	1P6724		179	12
			181	11
11083	1P6732		180	2
11083	1P6736		186	28
11083	1P6754	5365-01-258-9188	175	16

CROSS-REFERENCE INDEXES

PART NUMBER INDEX

CAGEC	PART NUMBER	STOCK NUMBER	FIG.	ITEM
11083	1P6832	5330-01-058-8264	38	7
11083	1P6834		38	18
11083	1P6886	4730-01-066-8443	246	4
11083	1P6908		263	7
			263	13
11083	1P6996	2520-01-018-1582	149	18
11083	1P7295	2530-01-069-0793	30	18
11083	1P7360	2940-01-018-4873	37	5
11083	1P7518		179	5
11083	1P7545		196	18
11083	1P7558		196	19
11083	1P7660	5365-01-070-2910	142	39
11083	1P7748	2940-01-058-8069	37	7
11083	1P7928		11	3
11083	1P7959	3020-00-937-1047	33	39
11083	1P8235	5330-01-211-6977	183	7
11083	1P8336	3110-01-068-9721	142	17
11083	1P8408	4730-01-068-9722	236	11
11083	1P8561	5365-01-066-8444	248	11
11083	1P8563	5310-01-066-8445	248	12
11083	1P8597	5365-01-284-8204	182	30
11083	1P8617	5342-01-069-0795	124	7
11083	1P8952	4030-01-196-2310	175	23
11083	1P9092		102	2
11083	1P9132	4730-01-069-0796	248	10
11083	1P9133		248	9
11083	1P921	3040-01-252-9527	102	39
11083	1P9283		178	15
			180	21
11083	1P929	3040-01-150-5425	102	11
11083	1P9340		21	1
11083	1P9600	5330-01-059-7141	118	20
11083	1P9670		175	8
11083	1P9699		125	4
11083	1P9919	4730-01-095-0834	261	14
			264	31
			265	24
11083	1P9958	2990-01-070-8548	46	7
11083	1P9976		30	21
11083	1P9988	2910-01-017-4518	33	1
11083	1R0716	2940-00-125-9544	17	15
			17A	13
11083	1R0740	2910-01-346-6362	51	16
11083	1S0746		63	28
11083	1S0763		63	24
11083	1S0764	5330-00-948-2292	63	1
11083	1S0795	5330-00-948-2288	63	8
11083	1S1476	5342-01-068-9739	27	13
11083	1S1571		53	7
11083	1S1953	3120-00-851-4696	33	18
11083	1S2093	4730-01-377-6788	64	29

CROSS-REFERENCE INDEXES

PART NUMBER INDEX

CAGEC	PART NUMBER	STOCK NUMBER	FIG.	ITEM
11083	1S2121	2520-00-237-4603	152	33
11083	1S2139		110	13B
11083	1S2244	2530-01-069-0802	94	4
			94	31
11083	1S2254	2520-01-268-5376	122	7
11083	1S2268	3040-01-068-5973	142	13
11083	1S2269	5365-01-066-8463	142	5
11083	1S2311	2910-01-068-6112	141	12
11083	1S2616	5330-01-377-2724	64E	14
11083	1S286	5307-00-458-2364	58	10
11083	1S3403	5342-00-498-2939	94	34
11083	1S3513	2540-01-069-8801	141	16
11083	1S3618	5340-00-618-0246	121	38
11083	1S3898	2530-01-069-8802	22	9
11083	1S3921	5360-00-455-2793	22	11
11083	1S4	5331-00-945-4395	150	22
			151	2
11083	1S4180	2530-01-067-5554	22	25
11083	1S4190	2530-01-067-5555	22	24
11083	1S4203	3120-00-238-7429	22	21
11083	1S4220		22	19
11083	1S4281	2990-01-103-6815	21	6
11083	1S4282	3020-01-067-5630	22	20
11083	1S4284		26	7
11083	1S4295	5330-00-924-0048	40	29
			40A	2
11083	1S4303		21	9
11083	1S4374		22	27
11083	1S4380	2910-01-068-7276	22	23
11083	1S4390	5330-00-788-5579	5	22
11083	1S454	5306-01-255-6448	129	38
11083	1S4741	2990-00-116-0433	44	12
11083	1S4915	2540-01-068-7149	94	5
			94	32
11083	1S5242	9905-01-345-5300	140	8
			141	9
11083	1S5347	5330-01-209-8719	175	29
11083	1S5440	5315-00-118-3070	44	9B
11083	1S6		155	29
11083	1S6385	5999-01-167-4779	95	6
11083	1S668	5330-00-953-1624	200	5
11083	1S6827	5330-01-377-2722	18	5
11083	1S6875		190	17
11083	1S6891	5330-00-948-6836	190	10
11083	1S7101	3120-00-003-6869	33	16
11083	1S7103	3120-00-003-6870	33	17
11083	1S7139	5360-01-254-2385	121	9
11083	1S7251	5940-01-058-9090	94	7
			99	23
11083	1S7252	2920-01-066-0593	94	21
			94	28

CROSS-REFERENCE INDEXES

PART NUMBER INDEX

CAGEC	PART NUMBER	STOCK NUMBER	FIG.	ITEM
11083	1S7252	2920-01-066-0593	99	21
11083	1S7294	2520-00-097-8230	131	3
11083	1S7462	5331-00-429-3547	49	27
11083	1S7592	5360-00-191-3255	33	7
11083	1S7771	5365-00-408-7606	160	3
11083	1S7837	5940-01-250-8720	92	11
			97	6
			99	18
			100	4
			100	15
			101	5
11083	1S8607	2815-00-222-8522	7	13
11083	1S8634	5360-00-434-7160	33	4
11083	1S8736		132	19
11083	1S8753		131	4
11083	1S8754	2520-00-410-9576	131	1
11083	1S8808	5340-00-083-7727	197	14
11083	1S8947	5331-00-031-2558	134	17
			135	15
			136	8
			137	5
			138	4
			142	38
11083	1S9150	2940-00-413-8521	130	30
11083	1S9312	5360-00-920-6786	45	31
11083	1S9353	4730-01-267-5992	122	17
11083	1S9480	5315-00-005-0707	33	32
11083	1S9481		33	27
11083	1S9497	5330-01-164-8576	176	5
			182	13
11083	1S9498	5330-01-208-7592	182	34
11083	1S9546	5330-00-105-0341	33	28
11083	1S969		94	1
11083	1S9691		159	17
11083	1S9692		159	17
11083	1S9808	5306-01-206-7167	182	7
11083	1S9936	3020-01-059-0869	176	28
11083	1S994	5340-01-151-9308	94	23
11083	1T 221		106	3
11083	1T 224		106	8
11083	1T 241	5305-01-103-7112	106	25
11083	1T 591		106	27
11083	1T 593		106	4
11083	1T 595		106	24
11083	1T0237		106	11
11083	1T0416	5306-00-253-7879	247	4
11083	1T0670	2520-00-097-8229	106	1
11083	1T0720	5306-01-103-7039	12	20
			30	25
11083	1T0765	5306-01-097-7874	183	11
11083	1T228		106	13

CROSS-REFERENCE INDEXES

PART NUMBER INDEX

CAGEC	PART NUMBER	STOCK NUMBER	FIG.	ITEM
11083	1T229	5310-01-253-8376	106	26
11083	1T231		106	5
11083	1T233		106	23
11083	1T242		106	2
11083	1T256		106	17
11083	1T278	3120-00-788-5809	106	12
11083	1T309		106	9
11083	1T43	3110-00-198-2292	174	30
11083	1T610		106	6
11083	1T633		106	16
11083	1T649	2520-01-059-7148	177	2
11083	1T68		136	4
			137	17
			138	1
11083	1T822	5306-00-452-1354	38	14
11083	1W0488		33	11
11083	1W1816	2815-01-377-6780	14A	8
11083	1W1818	2815-01-211-4230	14A	5
11083	1W1819	2815-01-211-4231	14A	4
11083	1W3174		30	15
11083	1W3175	3020-01-377-6938	13	6
11083	1W3176		13	4
11083	1W4792	5310-01-377-4412	44	3
11083	1W4795	9905-01-175-7150	40	26A
			40A	12
11083	1W6178		35	15
11083	1W7029	2930-00-756-8542	KIT	
23382	10A1913960	5305-00-428-6527	76	29
1CX05	100211-0860		71C	1
11083	102461	5305-01-254-2277	47	29
19207	1037036-1		97	4
19207	1037036-20		80	31
16764	10496037	5330-01-257-3807	74B	12
29510	105409	4730-00-639-9167	156	13
			186	7
77445	107277	5310-00-954-2993	106	14
15434	108330	5310-00-486-2505	120	36
19200	10910174-16	5310-00-987-1294	110	1A
19207	10951182	4730-00-203-2866	27	25
81859	11093	2990-00-251-3656	55	2
			56	1
01843	1129900009	3110-01-177-4667	71B	14
91024	1155701	2540-01-176-2987	171	1
19207	11621436-1	5365-01-035-4899	213	25
94135	1222007-260	5310-00-685-2973	189	19
78500	1229T1554	5310-00-949-9296	5	12
			5A	13
			132	23
			139	13
			141	33
			168	16

CROSS-REFERENCE INDEXES

PART NUMBER INDEX

CAGEC	PART NUMBER	STOCK NUMBER	FIG.	ITEM
78500	1229T1554	5310-00-949-9296	255	14
19207	12296626	7690-01-114-3702	199	6
91024	1264100	2540-01-163-7236	171	8
91024	1264700	2540-01-164-7840	171	9
91024	1265000	3040-01-162-8995	171	14
91024	1265500	5360-01-165-3682	171	10
91024	1265600	5315-01-167-3452	171	16
91024	1265801	2540-01-163-7237	171	13
91024	1265802	2540-01-164-0033	171	19
91024	1266100	5310-01-165-3342	171	15
91024	1266200	2540-01-165-4934	171	18
91024	1267001	2540-01-176-2910	171	24
91024	1267002	5340-01-160-6800	171	28
91024	1267300	3120-01-165-5662	171	2
91024	1267400	3040-01-162-7641	171	27
91024	1267600	5340-01-167-8357	171	21
91024	1267700	5360-01-069-0808	171	20
79550	12871	5999-01-059-0884	83	1
			87	11
			88	12
			88	45
			92	5
			92	33
			93	30
			93	41
			97	2
			99	5
14351	13XX3958	5306-00-685-2384	16	7
			48	12
			122	47
			182	20
21760	1305MF	3110-00-554-5637	70	40
53591	130665	5310-00-087-6875	40	22A
			40A	7
			40A	10
11083	138253	5305-01-214-5052	244	4
			244	7
19207	1402378-1		174	12
			176	18
93329	1403-57	5310-00-833-9298	81	6
24617	145036	5310-00-045-1079	146	11
			146	25
			146	41
			151	16
62983	154022	5331-00-865-0404	117	15
30076	154794	5970-00-403-5912	71	19
55355	1577AL	2520-00-113-5509	122	10
10001	1592919	5315-00-584-9792	149	12
11083	172311	5305-01-053-4517	70	38
16764	1846955	5305-01-238-3071	71A	3
16764	1846956	5305-01-163-5667	71A	34

CROSS-REFERENCE INDEXES

PART NUMBER INDEX

CAGEC	PART NUMBER	STOCK NUMBER	FIG.	ITEM
16764	1847807	5305-00-218-6387	74A	23
16764	1851632	2920-00-100-3403	KIT	
16764	1851808	5310-01-047-6064	71A	41
16764	1852888	5977-01-153-0247	74A	36
16764	1861785	5360-00-597-3278	73	8
			76	10
19207	1862341-1		230	28
19207	1862341-38		230	31
			231	13
72582	186649	5306-00-018-6649	237	31
16764	1869573	5340-00-844-7921	71A	4
16764	1869747	2920-00-891-0928	76	25
			74A	52
16764	1869760	5977-00-363-3568	73	12
			76	2
16764	1875627	5961-00-314-5166	71A	45
92194	1879-0		BULK	30
16764	1892242	2590-01-149-6777	92	30
			93	24
16764	1892243	2590-00-126-3730	92	18
			93	19
16764	1892765	3120-01-164-0994	71A	15
16764	1894444		71A	39
16764	1894445	5305-01-168-8928	71A	25
16764	1894446	2920-01-174-1278	71A	36
16764	1894458	5306-01-167-1084	71A	20
16764	1894462	3040-01-161-6659	71A	42
16764	1894463	5365-01-171-1560	71A	6
16764	1894464	3040-01-161-6657	71A	7
16764	1894465	2920-01-162-6410	71A	13
16764	1894467	2920-01-162-8999	71A	21
16764	1894472		71A	43
16764	1894473	3040-01-161-6658	71A	40
16764	1894474	2920-01-163-0758	71A	35
16764	1894483	2920-01-162-9006	71A	26
16764	1894635	3120-00-828-6852	74A	74
16764	1894637	3120-01-101-5089	72	11
			77	4
			74A	57
16764	1894638	3120-01-101-5088	74A	30
16764	1894641	5306-01-165-1266	71A	38
19207	1901021-130		100	19
19207	1901021-14		92	7
19207	1901021-162		100	5
19207	1901021-172		92	13
19207	1901021-76		93	35
24617	1905043	5977-00-249-5758	73	10
			76	7
16764	1905406	5310-00-262-4715	71A	23
16764	1911644	5310-00-297-7319	72	26
			77	11

CROSS-REFERENCE INDEXES

PART NUMBER INDEX

CAGEC	PART NUMBER	STOCK NUMBER	FIG.	ITEM
16764	1913080	5310-00-291-4498	73	5
			74A	20
16764	1913084	5310-00-734-8959	73	26
			76	32
			74A	10
19207	1913320-1		99	2
16764	1913846	5310-01-164-8539	71A	17
16764	1914379	5310-00-757-6377	80	4
			80	22
16764	1914580	5305-00-105-1207	76	9
16764	1914869	5306-00-550-9129	74A	31
16764	1914873	2920-00-737-3225	72	28
			74A	34
16764	1916439	9390-00-865-8270	72	44
			73	19
			76	43
			77	5
			77	23
19207	1921369-11		38	10
16764	1930611	5306-00-550-3023	72	3
			78	2
			74A	44
16764	1933111	5330-00-869-3369	72	10
			72	42
			73	21
			76	41
			77	8
			77	19
16764	1936466	5310-00-999-2527	74A	54
16764	1940006	5310-00-081-2658	72	27
			77	1
16764	1945356	5365-00-753-9528	73	14
			76	28
			77	17
			74A	68
16764	1945476	5330-00-976-4695	72	21
			77	25
			74A	70
16764	1945848	2920-01-138-7046	74A	27
16764	1945849	5977-00-828-9053	73	1
			76	1
16764	1945853	2920-00-993-4233	72	30
			74A	33
16764	1945857	2920-00-933-0790	72	8
			77	2
16764	1948519	5310-00-062-2051	74A	42
16764	1948520	5310-00-822-2236	72	5
			74A	41
16764	1948521	5360-00-812-0196	72	13
			74A	39
16764	1948522	2920-00-822-2287	72	7

CROSS-REFERENCE INDEXES

PART NUMBER INDEX

CAGEC	PART NUMBER	STOCK NUMBER	FIG.	ITEM
16764	1948522	2920-00-822-2287	74A	43
16764	1949619	9390-00-757-7131	74A	77
16764	1951254	2920-00-143-4059	72	31
			76	24
			74A	32
16764	1951258		73	16
			74A	71
16764	1953236	6150-00-758-0332	73	32
			76	30
16764	1955660	5330-00-928-9798	71A	28
16764	1955664	2920-00-221-8856	71A	29
16764	1957726	3120-01-183-1341	71A	32
16764	1958509	5330-00-237-6928	71	43
			71	51
16764	1961571		71	14
16764	1961867	5330-00-851-7742	71A	33
16764	1964857	5330-00-914-0703	73	15
			76	27
			77	16
			74A	67
16764	1965093	5970-00-918-5568	73	9
			76	6
			74A	19
16764	1968396	5305-00-450-5937	74A	53
11674	1968901		71	37
16764	1968930	5970-00-001-9382	71	17
16764	1968988	2920-00-484-2799	71	15
16764	1968990	3120-00-432-8120	71	29
16764	1969046	2920-01-099-3085	71A	30
16764	1969070	5310-01-164-1650	71A	27
16764	1969671	5940-00-351-8080	71	39
11862	1970227	5999-01-104-0445	71A	12
			71B	8
			71C	5
16764	1970593	4140-01-162-8967	71A	24
14082	1971465	2920-00-010-7340	71	36
16764	1971671	5961-00-232-3198	71	30
16764	1972716	3120-01-166-8144	74B	15
16764	1976061	5305-01-168-5422	71A	16
16764	1977264	2920-01-140-0116	74B	16
16764	1978754	9390-01-112-3500	74A	29
			74A	59
			74A	73
16764	1978756	5340-01-115-3548	74A	28
			74A	58
			74A	72
16764	1979388	5977-01-137-3421	74A	16
16764	1979389	5970-01-137-3420	74A	15
16764	1979498	5940-01-163-1435	74B	2
16764	1979870	2920-01-207-9671	74A	55
16764	1984705	5970-01-150-1446	74B	9

CROSS-REFERENCE INDEXES

PART NUMBER INDEX

CAGEC	PART NUMBER	STOCK NUMBER	FIG.	ITEM
16764	1984974	5977-01-253-5207	74A	11
16764	1984975		74A	21
16764	1984978	5970-01-138-7044	74A	14
16764	1984979	5977-01-153-0322	74A	17
16764	1984981	6105-01-254-2722	74A	22
16764	1985348	5961-00-099-9791	71A	44
16764	1985445	5910-01-162-8299	71A	5
19207	1985808-140		235	17
19207	1985808-19		228	2
			229	2
			235	7
19207	1985808-39		235	30
19207	1985808-50		236	35
19207	1985808-55		236	10
16764	1987518	2920-01-204-0263	71A	19
16764	1990232	2920-01-355-0530	72	1
			74A	1
09990	2-178N951-75	5331-01-060-0745	182	17
02697	2-216S1199-70	5331-00-913-8872	117	27
09990	2-219S1032-70	5331-00-925-4778	120	20
			121	4
			122	15
			151	3
			154	34
09990	2-223S1032-70	5331-00-914-5773	109	12
09990	2-225S1032-70	5331-00-948-6063	110	33
09990	2-227N951-75	5331-00-559-8786	177	1
			250	8
09990	2-231S103-70	5331-00-939-0871	120	14
02697	2-244C873-70	5331-00-941-3599	134	13
			200	9
09990	2-261N951-75	5331-00-714-2330	175	38
09990	2-279N951-75	5331-00-999-8364	175	7
09990	2-312S1032-70	5331-00-914-3320	151	1
09990	2-335S1032-70	5331-00-974-7169	120	42
11083	2A0615	5330-00-297-5025	63	18
11083	2A1465	2520-00-569-3839	156	4
11083	2A1466	5330-00-149-7248	156	5
11083	2A1538	5306-00-426-3605	3	5
11083	2A1736	5355-00-371-3370	47	4
			220	8
			221	8
			222	3
11083	2A1763	5330-00-363-9866	41	15
11083	2A1913	5365-00-141-1595	190	6
11083	2A1927	4820-00-362-8071	51	9
11083	2A2071	2910-00-423-8550	32	9
11083	2A309		128	18
11083	2A3211	5310-01-151-8350	102	12
11083	2A3307	5331-00-291-9182	30	26
11083	2A3349	4730-00-423-8591	4	36

CROSS-REFERENCE INDEXES

PART NUMBER INDEX

CAGEC	PART NUMBER	STOCK NUMBER	FIG.	ITEM
11083	2A3349	4730-00-423-8591	4A	26
			4B	10
11083	2A3798	5315-00-252-2959	4	32
			4A	28
			4B	12
11083	2A4429	2805-00-288-3650	14A	1
11083	2A4448	5330-00-641-2212	12	15
11083	2A4462	2815-00-423-8703	129	45
11083	2A4522		12	14
11083	2A4639	5306-00-263-4038	17	19
			58	41
			60	42
			87	18
			17A	16
			176	24
			186	24
11083	2A4791		4	47
			4A	38
11083	2A4996	5306-00-263-7299	202	4
			223	5
11083	2A5328	2815-00-423-8767	23	21
			107	19
11083	2A5349	5307-00-426-3716	12	34
11083	2B1459	5305-00-012-0784	142	19
11083	2B1738	5310-00-524-0260	21	15
11083	2B2006	5306-00-766-2182	29	2
			29A	7
11083	2B2404	5999-00-363-6240	127	30
			179	6
			181	5
			248	5
11083	2B2694		32	31
			34	4
11083	2B2938	5315-00-363-6577	95	11
11083	2B2994	5315-00-255-0996	4	48
			10	3
			4A	39
			4B	18
11083	2B3191		172	3
			244	12
11083	2B3243	5340-01-255-3577	27	6
11083	2B4443	2910-00-423-8872	32	8
11083	2B5721	5365-00-423-8884	248	2
11083	2B6296		4A	27
			4B	11
11083	2B6924	5330-00-363-6135	12	12
11083	2B7114	2815-00-423-8899	15	21
11083	2B7218	5306-01-193-9181	162	13
11083	2B7557	9390-01-167-3646	5	23
			5A	24
			129	25

CROSS-REFERENCE INDEXES

PART NUMBER INDEX

CAGEC	PART NUMBER	STOCK NUMBER	FIG.	ITEM
11083	2B7558	9390-01-185-5087	158	16
11083	2B7559		155	16
11083	2B7560		235	25
11083	2B8352	5310-00-507-5727	86	9
			100	27
			101	17
11083	2B8460	5340-00-423-8924	12	11
			110	22
11083	2B974	5315-00-272-6764	147	15
11083	2D1683	4730-00-278-4814	68	43
11083	2D2861	5360-01-254-7243	43	26
11083	2D3335		174	24
11083	2D6235	5310-01-160-2034	21	4
			91	11
11083	2D6392	5330-00-843-7194	72	20
			77	13
			74A	62
11083	2D6421		128	14
11083	2D6642	3110-00-992-1048	111	33
			113	15B
			187	4
			213	28
			218	16
11083	2D7091	5310-01-255-9345	121	20
11083	2D8009	5331-00-982-9312	116	5
11083	2D8390	4730-00-924-7974	186	17
11083	2D874	5315-01-265-9212	142	7
11083	2D92	5330-01-263-8274	110	26
11083	2F5721	3110-00-144-8519	71	46
11083	2F6156	5340-00-330-8289	147	2
11083	2F6678	5330-00-972-7644	72	12
			77	3
			74A	56
11083	2F6869		112	19
11083	2F7770		127	23
11083	2F7940	2815-00-409-6244	23	22
11083	2F7941	5330-00-805-8771	23	23
11083	2F7943		23	19
11083	2F808	5305-00-151-9899	40	26B
			199	4
			40A	11
11083	2F8581		15	2A
11083	2F8584	5342-00-341-1428	15	13
11083	2F8874	2815-00-395-4835	15	1
11083	2G2588	5315-01-179-4533	43	25
30780	2HP5N-S	5365-01-124-2945	207	3
			207	29
			208	3
			208	29
			209	4
			209	20

CROSS-REFERENCE INDEXES

PART NUMBER INDEX

CAGEC	PART NUMBER	STOCK NUMBER	FIG.	ITEM
30780	2HP5N-S	5365-01-124-2945	210	4
			210	20
			216	9
			218	6
11083	2H1062	3120-00-379-0728	11	12
11083	2H1190	5315-00-514-1616	30	7
			134	10
			189	11
11083	2H1730	5310-01-085-0881	154	26
11083	2H2255	5315-00-893-7264	33	38
			33	41
11083	2H2356	3120-00-296-8102	22	26
11083	2H2534	5342-01-255-3516	157	16
11083	2H2722		205	15
11083	2H3504	5340-00-620-5730	33	44
			122	29
11083	2H3755	5306-00-814-8967	22	14
11083	2H3757	5306-00-423-8807	139	12
			235	20
			253	20
11083	2H3788	5310-01-059-7159	118	16
11083	2H3855	5306-00-138-4466	31	9
			41	2
			128	34
11083	2H3931	5331-00-580-1216	200	6
			226	56
			228	29
11083	2H3932	5331-00-633-4535	215	18
11083	2H4010	5306-01-133-3502	133	9
11083	2H4054	5330-00-931-8651	10	7
11083	2H4145	5330-00-678-3369	185	19
11083	2H5001	5331-00-858-8223	192	18
11083	2H5330	5306-00-863-9890	51	17
11083	2H5558	5315-00-138-0319	64F	13
11083	2H5572	5330-00-527-7706	63	19
			65	2
11083	2H6139		70	10
11083	2H6184	5331-00-339-6220	68	14
			130	36
			175	17
			183	6
11083	2H8829	5365-00-618-5440	4A	5
			121	23
11083	2H9476		157	4
11083	2J1227	5340-01-323-8066	204	3
			258	3
			260	11
11083	2J1411	5330-00-031-2923	242	3
11083	2J1506	5315-01-258-0234	254	11
11083	2J157	5330-00-858-8224	45	2
11083	2J2622		254	12

CROSS-REFERENCE INDEXES

PART NUMBER INDEX

CAGEC	PART NUMBER	STOCK NUMBER	FIG.	ITEM
11083	2J3207	5315-01-162-6052	255	10
11083	2J3505	5310-00-919-2242	235	23
			239	3
			240	3
			255	17
11083	2J3507	5310-00-490-9859	62	2
			160	6
			161	4
			162	6
			164	9
			165	12
			251	7
			252	7
11083	2J4624		184	5
11083	2J4626	3110-01-264-5996	184	18
			184	35
11083	2J4628		184	17
			184	34
11083	2J5436		205	7
11083	2J5630		257	5
11083	2J5632		257	4
11083	2J5668		184	23
			184	36
11083	2J5820		205	9
11083	2J5845	5360-00-925-7048	205	11
11083	2J6089		215	26
11083	2J7295	5360-01-166-6940	220	10
			221	11
			222	22
11083	2J744	5330-00-948-6863	224	9
			241	21
11083	2J7686		242	13
11083	2J7761		245	4
11083	2J8163	5331-00-950-8217	200	8
			74A	26
11083	2J8165	2520-01-063-0677	200	10
11083	2J8168		200	13
11083	2J8169		200	18
11083	2J8170	4320-00-459-6426	200	14
11083	2J8172	5325-00-948-7246	200	20
11083	2J8333		202	6
			223	9
11083	2J8403		252	2
11083	2K0564	5310-01-066-0508	260	20
11083	2K1738	3110-01-164-7536	174	25
11083	2K2605	5365-01-066-4574	49	11
			49	25
11083	2K2939	5331-00-899-7672	242	6
11083	2K2940	5310-00-147-9154	242	7
11083	2K3656		196	16
11083	2K4096	5330-00-561-8286	238	16

CROSS-REFERENCE INDEXES

PART NUMBER INDEX

CAGEC	PART NUMBER	STOCK NUMBER	FIG.	ITEM
11083	2K4472	5331-00-506-1475	118	8
11083	2K4973	5310-01-058-8071	26	10
			38	1
			189	21
			220	14
			221	31
11083	2K5065		106	20
11083	2K5254	3110-00-913-8113	107	24
			190	22
11083	2K5957	5325-00-857-5703	182	23
11083	2K744	4730-01-253-0509	129	41
11083	2K7468	5310-01-160-4539	198	5
11083	2K8199	5331-00-937-5155	207	16
			207	25
			208	16
			208	25
			209	16
			210	16
			217	2
11083	2K9062		106	22
11083	2L5271	3110-00-293-9302	65	12
			200	12
11083	2L6267	5310-01-095-1246	221	33
			222	18
11083	2L8054	5940-00-118-8836	97	11
			99	15
11083	2L8066	5940-00-143-4794	69	12
11083	2L8068	5940-01-251-1327	84	7
11083	2L8069	5940-00-113-9826	69	11
11083	2L8071	5940-01-059-0873	97	9
			99	13
			74A	5
11083	2L8077	5940-01-053-4521	70	32
11083	2L9653		26	13
11083	2M0496	2910-01-051-3138	48	2
11083	2M0849	5310-00-431-7239	29	12
			5A	29
			113	2
11083	2M1125		107	32
11083	2M1165		141	25
11083	2M1168	2520-01-059-9381	194	7
			195	6
11083	2M1660	5306-01-255-6398	126	2
11083	2M287	5340-00-253-7912	94	36
			100	8
11083	2M2994		3	15
11083	2M3339	3040-01-069-0863	113	27
11083	2M3469	5360-00-730-8043	124	17
11083	2M3518	5365-01-069-1504	142	41
11083	2M4208	5365-00-458-1931	33	47
11083	2M4209	5365-00-149-8673	33	47

CROSS-REFERENCE INDEXES

PART NUMBER INDEX

CAGEC	PART NUMBER	STOCK NUMBER	FIG.	ITEM
11083	2M4210	5365-00-149-8640	33	47
11083	2M4211	5365-00-149-8639	33	47
11083	2M4212	5365-00-981-1614	33	47
11083	2M4453	5331-00-074-3768	213	19
11083	2M4779	5307-00-465-6789	119	10
			190	15
11083	2M5173	5331-00-835-1189	37	9
11083	2M5202		64F	3
11083	2M5282	6220-00-756-8787	85	4
11083	2M5284	6220-01-059-0874	85	5
11083	2M5414	5330-01-017-6427	64	20
			115	2
58312	2M5471-00	5305-00-004-7245	36	7
11083	2M5833		62	9
11083	2M6548	3020-00-275-1031	66	2
11083	2M6569	3020-00-844-2318	65	19
11083	2M7041	4730-01-068-7106	124	25
			125	2
11083	2M7057	2530-01-068-7107	126	4
11083	2M7068	2520-00-409-0207	105	3
11083	2M7167	5365-00-136-2006	43	22
			104	7
11083	2M849	5310-00-431-7239	42	28
			43	17
			58	19
			60	12
			62	14
			128	6
			133	5
			160	15
			161	12
			164	15
			165	5
			168	29
			169	12
			170	12
			244	5
			261	35
			261	60
			264	26
			265	19
11083	2M8868	3110-00-896-6817	127	4
11083	2M8900	5342-00-402-2822	104	12
11083	2M8908	5355-00-730-8027	102	10
11083	2M8916	2530-00-738-8716	137	8
11083	2M894	5310-01-254-5351	42	5
11083	2N1287	4730-00-647-3207	64	1
			17B	9
11083	2N2753	2815-01-053-7203	12	17
11083	2N7029	5360-01-070-0532	214	23
11083	2N9297	5340-01-204-7163	14A	2

CROSS-REFERENCE INDEXES

PART NUMBER INDEX

CAGEC	PART NUMBER	STOCK NUMBER	FIG.	ITEM
11083	2P-3988	5330-01-017-7161	KIT	
11083	2P0189		45	12
11083	2P0190	2990-01-377-6798	45	15
11083	2P0484	2815-01-068-7268	5	9
			5A	10
11083	2P1005	3120-01-164-8623	176	17
11083	2P1052	2940-01-253-7420	185	1
11083	2P1053	2520-01-165-0354	186	27
11083	2P1061		179	3
			181	3
11083	2P1076		117	10
11083	2P1078		117	19
11083	2P1079		117	12
11083	2P1117	4310-01-227-5985	67	1
11083	2P1126	3020-01-069-0881	8	3
11083	2P1127		68	28
11083	2P1129	3020-01-067-5622	68	40
11083	2P1130		68	21
11083	2P1131		68	20
11083	2P1132		68	27
11083	2P1151		12	27
11083	2P1152		12	37
11083	2P1211	6645-01-048-4671	247	5
11083	2P1281	4730-01-179-5396	235	31
11083	2P1325	4730-01-208-2036	235	11
11083	2P1499	2990-01-250-4503	44	1
11083	2P1566		234	10
11083	2P1604		149	15
11083	2P1605		149	30
11083	2P1625	5330-01-017-6431	129	27
11083	2P1709		70	19
11083	2P1710		70	41
11083	2P1711		70	24
11083	2P1712	2920-00-410-6817	70	18
11083	2P1713	5330-01-053-4529	70	39
11083	2P1714	5330-01-053-4873	70	11
11083	2P1719	2920-01-053-4530	70	20
11083	2P1720	2920-01-053-4531	70	21
11083	2P1726		93	32
11083	2P1976	2520-01-254-5579	182	14
11083	2P1981	3020-01-254-4803	176	26
11083	2P1984	3040-01-254-1028	174	21
11083	2P1985	5365-01-255-6668	176	33
11083	2P1986	3040-01-254-1098	182	37
11083	2P1990	5365-01-259-3960	176	36
11083	2P1991		175	25
11083	2P1992		175	30
11083	2P1993		175	3
11083	2P1994		175	39
11083	2P2001		180	1
11083	2P2005		176	16

CROSS-REFERENCE INDEXES

PART NUMBER INDEX

CAGEC	PART NUMBER	STOCK NUMBER	FIG.	ITEM
11083	2P2008		178	5
			180	11
11083	2P2009		179	9
			181	8
11083	2P2010		180	20
11083	2P2026		180	7
11083	2P2046	5365-01-257-3303	176	39
11083	2P2541	6220-01-037-5622	85	3
11083	2P2653	2910-01-018-1842	31	7
11083	2P2654	4710-01-018-2413	31	3
11083	2P2655	4710-01-018-1843	31	2
11083	2P2656	2910-01-017-3814	31	1
11083	2P2661		31	11
11083	2P2662		32	7
11083	2P2665		32	15
11083	2P2887	5310-01-066-9181	107	29
11083	2P2893		178	23
			180	29
11083	2P2894		179	4
			181	4
11083	2P2931		177	4
11083	2P2934	5360-01-207-0690	182	32
11083	2P3150		52	24
		4730-01-275-6167	53	8
11083	2P3230	5330-01-058-9176	58	38
			60	38
			61	2
11083	2P347	5365-00-032-4357	134	16
			135	14
			136	7
			137	4
			138	3
			142	37
11083	2P3558		180	8
11083	2P3559		180	3
11083	2P3560	5365-01-257-4394	183	9
11083	2P3561		183	3
11083	2P3566	4730-01-255-4468	182	33
11083	2P3572	5340-01-162-8857	178	19
			180	25
11083	2P3617		193	14
11083	2P3637	5330-01-164-8564	186	16
11083	2P3639		193	5
11083	2P3640	4820-01-017-6496	192	1
11083	2P3644	5330-01-162-8587	194	15
			195	20
11083	2P3646		194	5
			195	4
11083	2P3648		194	4
11083	2P3649		194	18
			195	1

CROSS-REFERENCE INDEXES

PART NUMBER INDEX

CAGEC	PART NUMBER	STOCK NUMBER	FIG.	ITEM
11083	2P3650	5330-01-161-0895	192	17
11083	2P3683	5315-01-164-9838	193	4
11083	2P3721		196	15
11083	2P3737		196	6
11083	2P3738		196	12
11083	2P3739		196	1
11083	2P3740		196	22
11083	2P3742		196	10
11083	2P3744		196	9
11083	2P3759	5330-01-066-9259	20	6
11083	2P3760	5330-00-222-0143	17	8
			17A	6
11083	2P3761	5340-00-207-9110	17	7
11083	2P3822		18	21
11083	2P3892		32	6
11083	2P4252	5360-01-066-7695	35	23
11083	2P4301	2815-00-204-9666	17	2
			17A	8
11083	2P4304	4730-01-053-4540	17	3
			17A	9
11083	2P4305	5330-00-216-8533	17	11
			17A	10
11083	2P4370	2520-01-161-9658	176	22
			182	12
11083	2P4371		176	21
11083	2P4437	5340-01-164-8760	186	2
11083	2P4438	5340-01-164-8621	186	1
11083	2P4439	4730-01-161-0160	178	3
			180	9
11083	2P4620	5330-01-285-2058	249	14
11083	2P4621		249	11
11083	2P4622		249	6
11083	2P4624		249	7
11083	2P4679		51	19
11083	2P4726	4730-01-250-5907	39	6
11083	2P4727		39	3
11083	2P4729		39	2
11083	2P4730	2930-01-377-6789	63	9
11083	2P4747		30	8
11083	2P4938	2510-01-222-4513	166	5
			167	7
11083	2P5051		51	28
11083	2P5065		69	14
11083	2P5084	5342-01-377-3693	17	1
			17A	11
11083	2P5085	5342-01-377-3694	17	13
			17A	18
11083	2P5086	5330-01-070-4701	25	24
11083	2P5087		25	22
11083	2P5089	4820-01-068-7135	25	15
11083	2P5094		19	2

CROSS-REFERENCE INDEXES

PART NUMBER INDEX

CAGEC	PART NUMBER	STOCK NUMBER	FIG.	ITEM
11083	2P5100		25	8
11083	2P5102		25	25
11083	2P5109	4710-01-250-8631	52	21
			53	5
11083	2P5110	4710-01-250-8632	52	22
			53	6
11083	2P5123	5365-01-254-6436	51	23
11083	2P5124	5330-01-068-9827	51	20
11083	2P5125	5330-01-068-9828	51	18
11083	2P5155	5330-01-068-9829	6	5
11083	2P5168		51	12
11083	2P5170	2990-01-103-6802	30	4
11083	2P5197		35	29
11083	2P5272		175	36
11083	2P5590		69	5
11083	2P5616	2920-01-053-4541	71	47
11083	2P5738	5340-01-161-9146	186	15
11083	2P5818	2940-01-171-3389	185	20
11083	2P5828		186	13
11083	2P5832	4330-01-164-7973	185	23
11083	2P5847		179	17
			181	16
11083	2P5896	3805-01-068-7270	142	32
11083	2P5897		132	12
11083	2P6001	3040-01-164-7841	189	3
11083	2P6008	3040-01-158-9329	188	17
11083	2P6009	3040-01-160-1057	189	5
11083	2P6227		32	32
11083	2P6240		249	9
11083	2P6261	5970-01-053-4543	70	22
11083	2P6286	5330-01-048-6001	153	27
11083	2P6437		197	10
11083	2P6548	2815-01-068-7136	10	8
11083	2P6589		234	23
11083	2P6590		197	20
11083	2P6591		197	13
11083	2P6592		197	19
11083	2P6902		183	15
11083	2P6969		192	10
11083	2P6971	5340-01-161-9923	192	14
11083	2P6973		189	10
11083	2P7342		249	10
11083	2P7506		261	56
			265	33
11083	2P7507		261	56
			265	33
11083	2P7631		166	43
			167	35
11083	2P7632		166	43
			167	35
11083	2P8052		136	12

CROSS-REFERENCE INDEXES

PART NUMBER INDEX

CAGEC	PART NUMBER	STOCK NUMBER	FIG.	ITEM
11083	2P8052		137	9
			138	7
11083	2P8409		102	20
11083	2P8421	2520-01-062-5198	218	4
			225	30
			226	28
11083	2P8509		164	10
			165	13
11083	2P8510		164	10
			165	13
11083	2P8515	5310-01-257-3232	162	12
11083	2P8616	3010-01-070-7008	33	34
11083	2P8630	5315-01-067-2168	44	23
11083	2P8725	2815-01-068-7271	44	11
11083	2P8763	5330-00-208-2207	45	32
11083	2P9037	2530-01-068-6106	149	21
11083	2P9038	2530-01-300-0190	128	1
11083	2P9039	3040-01-068-6107	149	28
11083	2P9237		116	3
11083	2P9238	9905-01-268-7576	199	5
11083	2P9239	4320-01-163-3546	116	1
11083	2P9301		196	23
11083	2P9302		196	13
11083	2P9303		196	7
11083	2P9372	5340-01-274-0865	79	1
11083	2P9482	3040-01-250-6495	47	2
11083	2P9484		144	9
11083	2P9486	5315-01-066-8453	144	10
11083	2P9490	2920-01-068-6997	143	4
11083	2P9492	3020-01-068-9730	144	6
11083	2P9512		144	1
11083	2P9514		144	1
11083	2P9516		144	1
11083	2P9517		144	1
11083	2P9518		144	1
11083	2P9519		144	1
11083	2P9665	5360-01-069-1421	142	2
11083	2P9666		142	1
11083	2P9884	2530-01-295-2499	148	2
11083	2R0364	2510-01-062-6107	171	17
11083	2R1034	2920-01-059-0878	99	10
11083	2R1176		104	24
11083	2R1980		249	8
11083	2S0115	5310-00-419-1363	2	8
			62	11
			142	24
			157	2
			164	5
			165	8
			168	24
11083	2S1043	2540-01-063-0736	92	16

CROSS-REFERENCE INDEXES

PART NUMBER INDEX

CAGEC	PART NUMBER	STOCK NUMBER	FIG.	ITEM
11083	2S1043	2540-01-063-0736	93	10
			100	6
			100	16
11083	2S1212	3120-00-492-6073	58	23
			60	18
11083	2S1439	5330-00-757-6470	110	23
11083	2S1631	4820-00-937-1073	33	5
11083	2S1641	4710-00-949-0874	119	8
11083	2S1715	2510-00-136-4380	172	22
11083	2S1731	5365-00-924-7056	134	16
11083	2S2109	5340-00-490-9869	166	7
			167	9
11083	2S2140	5310-00-097-6494	144	5
			145	5
11083	2S2319		69	3
			64B	14
11083	2S2726		21	13
11083	2S2846	5310-00-413-4983	58	37
			60	37
			61	6
11083	2S3732		146	27
11083	2S3898	4710-01-253-2878	151	5
11083	2S3913	3120-00-230-9962	149	35
11083	2S4078	5331-00-429-3542	228	18
			229	17
11083	2S4357	3020-00-916-1949	128	16
11083	2S4954		110	40
11083	2S4958		110	43
11083	2S4959	5365-01-066-8464	110	45
11083	2S4962	3120-01-263-2717	126	19
			182	29
			126A	19
11083	2S4964	5365-01-066-8465	126A	17
11083	2S4965	5365-01-066-8466	110	37
11083	2S5011	5920-01-059-0881	83	3
			88	43
			92	3
			93	39
			97	12
			99	7
11083	2S5012	5920-01-059-0882	87	10
			88	11
			92	32
			93	29
			97	3
			99	8
11083	2S5013	5360-01-059-0883	83	2
			88	44
			92	4
			93	40
			97	13

CROSS-REFERENCE INDEXES

PART NUMBER INDEX

CAGEC	PART NUMBER	STOCK NUMBER	FIG.	ITEM
11083	2S5013	5360-01-059-0883	99	6
11083	2S5016		97	7
11083	2S5100	4820-00-948-9962	42	32
			42	33
11083	2S5103	2990-00-948-9761	42	34
11083	2S5717	5310-00-950-2660	126	3
			126A	6
11083	2S5816	5360-01-069-1433	118	2
11083	2S5925	4730-00-911-9226	141	6
11083	2S5926	4820-00-911-9224	141	7
11083	2S5927	9905-01-163-9191	199	1
11083	2S6096	2930-01-059-0826	61	1
11083	2S6105	5365-00-762-6121	68	41
11083	2S6150	2930-00-402-8215	68	37
11083	2S6151	5330-00-948-2300	68	39
11083	2S6345	2530-00-097-8237	144	2
			145	2
11083	2S6346		144	2
			145	2
11083	2S6347		144	2
			145	2
11083	2S6364		144	2
			145	2
11083	2S6408	5310-01-154-0708	176	32
11083	2S6442	5365-01-068-7277	113	25
11083	2S6443	2520-01-026-9927	113	18
11083	2S6458	5330-00-918-3599	117	22
11083	2S6548	5342-00-193-1240	110	8
11083	2S6746		68	23
11083	2S6948		58	21
			60	14
11083	2S6989	4710-01-251-0917	63	20
11083	2S7	3120-00-116-0434	44	18
11083	2S7154		133	23
11083	2S7157		133	22
11083	2S7235	5360-00-231-9823	44	32
58312	2S7289-00	2990-00-422-5459	44	33
58312	2S7307-00	5970-00-444-7669	45	26
11083	2S7314	5330-00-104-6312	44	2
58312	2S7387-00		45	23
11083	2S7391	2910-00-137-2004	46	6
11083	2S7461	2910-00-116-9599	33	45
11083	2S7472	5330-00-005-5889	30	1
11083	2S7593	5310-00-413-6522	62	3
			140	3
			164	2
11083	2S7663		168	36
11083	2S7889		107	5
11083	2S7898		107	2
11083	2S7905	5365-00-419-3254	30	5
			45	17

CROSS-REFERENCE INDEXES

PART NUMBER INDEX

CAGEC	PART NUMBER	STOCK NUMBER	FIG.	ITEM
11083	2S7905	5365-00-419-3254	122	11
			190	16
11083	2S7910		117	8
11083	2S7916		117	18
11083	2S7917	3020-00-950-5746	117	23
11083	2S7922	4730-01-253-0501	121	27
11083	2S7928		117	13
11083	2S7931	3120-00-914-0691	117	6
			117	9
11083	2S795	5330-00-936-2162	114	6
11083	2S8268	3030-01-017-8320	67	8
11083	2S8311	4710-01-253-3530	121	42
11083	2S8359	3120-01-160-4604	152	41
			153	13
11083	2S8380	3040-00-950-7343	154	45
11083	2S8395		154	2
11083	2S8396		154	10
11083	2S8398	5360-00-950-2045	154	29
11083	2S8399	5365-01-254-2381	154	31
11083	2S8411	3120-00-948-6453	154	14
11083	2S8412	4710-00-405-7326	154	33
11083	2S8413	4710-00-405-7327	154	12
11083	2S8414	5330-00-912-1586	154	44
11083	2S8416	5340-01-162-2864	152	3
11083	2S8418	5325-01-079-6760	152	8
11083	2S8571	4820-01-159-5909	152	9
11083	2S8884	2815-00-406-6590	11	9
11083	2S8897	5365-01-067-5631	26	14
11083	2S9314		153	18
11083	2S9434	5310-00-224-0529	160	18
11083	2S9436		160	22
11083	2S9437	2590-01-229-7379	160	17
			161	13
11083	2S9732	5305-00-253-7629	160	19
11083	2S9750	5340-01-377-2467	125	8
11083	2S9874	5365-01-068-7153	28	2
43999	2W1-16-15-32	5310-00-579-4542	246	6
43999	2W1-24-28-63	5310-00-584-7762	123	7
11083	2W1491	3040-01-179-6553	44	31
11083	2W1493		44	27
43999	2W2SP25-20-125	5310-00-141-3099	130	29
11083	2W2191	5330-00-122-4372	7	12
11083	2W2604		53	1
11083	2W7498	4730-01-068-0042	45	8
01276	2082-6B	4730-00-427-5121	4	24
			4A	4
			57	21
			59	22
			64E	3
96151	20835	5315-00-484-1695	111	34
01276	2089-8-8S	4730-00-289-2357	43	39

CROSS-REFERENCE INDEXES

PART NUMBER INDEX

CAGEC	PART NUMBER	STOCK NUMBER	FIG.	ITEM
70210	211-020-9009	4730-00-204-3491	38	9
15434	213394	5340-01-087-0682	4B	15
			113	7
73680	21785-2046	5330-00-756-8632	238	19
6V699	22229	5930-01-342-5782	64	5
72962	24-NE-066	5310-00-557-9414	243	11
52788	265079	5310-00-404-2422	147	26
			171	11
11083	282342	5930-00-084-7570	80	15
64294	29620-3	5315-00-616-5524	47	33
			112	18
			146	28
			154	11
77060	2984033	5970-01-156-0688	70	30
02697	3-904N552-90		116	15
			121	6
		5330-01-049-1292	17B	7
			207	12
			208	12
			209	12
			210	9
			213	22
			216	4
			218	18
			230	2
			230	26
			231	11
			231	15
			231	23
			261	47
			264	19
			265	12
11083	3A3692	5340-01-238-7288	26	21
11083	3B0622	5340-00-223-7091	4B	4
11083	3B0623	5340-00-229-9294	5	3
			5A	5
			5A	15
11083	3B1142	5340-00-352-7480	14	2
11083	3B1143	2815-00-365-2275	14	1
11083	3B1915	5306-01-195-4681	41	25
			48	26
			49	1
			60	9
			60	33
			64	14
			89	22
			110	30
			170	4
			183	1
			187	6
			225	35

CROSS-REFERENCE INDEXES

PART NUMBER INDEX

CAGEC	PART NUMBER	STOCK NUMBER	FIG.	ITEM
11083	3B1915	5306-01-195-4681	226	33
			227	1
11083	3B1926	5360-01-067-5607	215	12
11083	3B3427	5140-00-426-4193	173	1
14544	3B4419	5306-00-263-8979	65	14
11083	3B4502	5310-00-852-8266	31	24
			32	18
			70	3
			70	14
			71	50
			74B	8
11083	3B4511	5310-01-053-4864	70	43
11083	3B4518	5310-01-051-6863	224	15
11083	3B4520	5310-00-404-3788	158	3
11083	3B4629	5315-01-052-3942	147	8
			262	4
11083	3B4990	5306-00-423-9054	149	8
11083	3B5324	5315-01-284-9805	186	21
11083	3B5325	5315-00-018-9396	178	1
			196	17
11083	3B5326	5315-01-209-8775	253	14
11083	3B622	5340-00-223-7091	15	2
11083	3B623	5340-00-229-9294	107	6
11083	3B6489	4730-01-061-7178	42	37
11083	3B7302	5340-00-423-9133	15	5
11083	3B8013	5340-01-285-2705	6	3
11083	3B8024	5330-00-423-9147	20	17
11083	3B8428	5306-00-263-8950	25	1
11083	3B8490	4730-00-048-1788	132	1
11083	3B8845	3110-00-151-8302	127	15
11083	3B8852		127	25
			128	30
11083	3B8996	4730-00-278-4596	121	39
58312	3B8998-00	4730-00-882-8621	27	24
			127	32
11083	3B9003	4730-00-484-0558	27	26
11083	3B9167	3040-00-363-6360	66	1
11083	3B9805	5305-00-149-8345	158	15
11083	3D2338		155	19
11083	3D2824	5331-00-944-8281	118	14
			197	2
			214	7
			215	14
			218	5
			225	9
			226	7
			227	11
			236	8
			126A	9
11083	3D2871	5307-00-411-4501	119	2
11083	3D2891	3110-01-051-5285	214	16

CROSS-REFERENCE INDEXES

PART NUMBER INDEX

CAGEC	PART NUMBER	STOCK NUMBER	FIG.	ITEM
11083	3D2992	5331-00-393-4054	33	48
11083	3D5724	3040-01-254-1177	102	18
11083	3D8525	3040-01-254-1173	150	13
11083	3F0957	5315-00-825-0082	133	19
			190	32
11083	3F1240	5325-00-846-8434	86	4
			100	29
11083	3F1395	5330-00-161-1882	175	15
11083	3F4134	2910-01-159-5883	41	12
11083	3F4598	2520-00-352-7531	130	20
11083	3F4729		184	10
11083	3F4897		184	22
11083	3F5016		168	5
			169	5
11083	3F5750		127	16
11083	3F5792	5330-00-234-4870	41	21
11083	3F6185	5315-00-260-0806	253	17
11083	3F6329		184	6
11083	3F701	5310-01-284-9697	184	30
11083	3F7473	3120-00-363-6130	12	38
11083	3F7474	3120-00-662-8991	12	36
11083	3F7673	5310-01-160-4538	239	24
			240	7
11083	3F8526	5310-00-365-2282	16	2
11083	3F9401		184	7
11083	3G0596	3120-01-257-4386	211	16
			212	18
11083	3G5451	2410-01-190-1048	258	8
11083	3G5452		258	8
11083	3G8089	3830-01-048-4201	238	1
11083	3G8279	3830-01-321-6784	251	9
11083	3G8280	3805-01-321-6783	251	9
11083	3G8301	5133-01-103-6780	251	9
11083	3G8302	5133-01-103-6841	251	9
11083	3G9194	5330-01-067-1729	200	17
11083	3H0703	5315-01-067-4665	68	24
			68	29
11083	3H0881	2815-00-656-7023	11	8
11083	3H107	5331-00-593-1192	193	6
11083	3H1461	5331-00-593-1193	52	5
11083	3H1489	5315-00-393-5684	35	8
11083	3H1977		152	25
11083	3H2652	5331-00-663-5075	64	30
			65	3
11083	3H3201	3120-00-895-7062	23	17
11083	3H3243	5306-00-472-5282	210	12
11083	3H3285	4730-00-122-0636	20	8
11083	3H3301	5330-00-541-2114	29	14
			29A	1
11083	3H3385	5331-00-710-2143	20	3A
11083	3H3387	3010-00-125-8037	21	2

CROSS-REFERENCE INDEXES

PART NUMBER INDEX

CAGEC	PART NUMBER	STOCK NUMBER	FIG.	ITEM
11083	3H3433	5315-00-532-4359	185	12
11083	3H3451	5340-00-879-3056	23	24
			111	24
11083	3H3680	5310-00-178-7700	74	5
			74A	8
			74B	3
11083	3H3681	5310-01-053-4818	74A	2
11083	3H3697		73	7
			76	14
11083	3H6660	5315-00-970-0153	36	18
			140	11
			146	30
			146	31
			147	19
11083	3H6767	2815-00-507-8321	11	18
11083	3H6828	5365-00-224-1304	190	7
11083	3H7161		252	10
11083	3H7162		257	2
11083	3H7164		257	3
11083	3H7224	5315-01-263-4544	184	15
11083	3H8389	5305-00-475-4440	41	13
11083	3J1770	5315-00-931-8963	254	27
11083	3J1881	3020-00-846-1923	184	4
11083	3J1984		255	27
11083	3J3429	5365-00-425-5471	215	29
11083	3J3493		254	22
11083	3J3863		254	7
11083	3J4038		184	16
11083	3J4039		184	3
11083	3J4313	5315-00-059-6492	239	10
			240	6
11083	3J5190	3130-01-258-4532	254	4
11083	3J5390	4730-00-427-5121	64	32
11083	3J5552	5330-00-119-0794	202	18
			223	1
11083	3J6034	5342-01-227-8610	260	4
11083	3J6484	3120-01-285-7125	241	8
			241	15
			242	9
			242	21
			259	3
11083	3J6497		254	15
11083	3J6588		254	5
11083	3J7166	5365-01-285-7772	263	8
11083	3J7470	5340-00-949-0311	215	30
11083	3J7473	5365-00-944-0863	215	31
11083	3J7582	2520-00-432-1627	223	7
11083	3J7584	3110-00-183-6784	154	17
11083	3J7848	2590-01-185-5363	242	14
11083	3J8683	5331-00-029-0394	241	3
11083	3J9196	5310-01-167-4059	260	21

CROSS-REFERENCE INDEXES

PART NUMBER INDEX

CAGEC	PART NUMBER	STOCK NUMBER	FIG.	ITEM
11083	3J970		254	9
11083	3K0360	5331-00-948-6482	64A	24
			64C	24
11083	3K0810	5325-00-737-6724	44	19
11083	3K0881		48	25
11083	3K3256	5307-01-063-0644	56	8
11083	3K360	5331-00-948-6482	121	2
			152	21
			153	6
			193	22
			195	14
			218	24
			228	34
			229	37
			230	4
			231	26
			243	29
11083	3K4290	3040-00-949-8665	47	28
11083	3K5234	5310-00-470-9833	132	6
			132	26
			160	7
			161	5
			162	11
			164	7
			165	10
			251	8
			252	6
11083	3K526	3110-00-198-1796	182	39
11083	3K6119	5365-01-377-2727	45	34
11083	3K6234	5305-01-053-4549	70	28
11083	3K8460	4730-01-103-3727	35	20
11083	3K8781	5920-01-103-3655	100	32
11083	3K925	5310-00-413-5060	154	39
			261	57
			265	34
11083	3L1454		82	2
11083	3L3380	5365-00-715-8065	72	47
			76	23
			74A	51
11083	3L3446	2910-00-493-7301	42	29
			43	41
11083	3L9689	5310-01-162-0412	189	20
11083	3M6018	5940-00-399-6676	99	11
11083	3N1414	5365-00-148-8015	5	6
			5A	7
11083	3N2070	5360-01-067-5617	33	42
11083	3N3790		199	3
11083	3N9631		5	18
11083	3N9632		5	24
11083	3P0573		168	4
			169	7

CROSS-REFERENCE INDEXES

PART NUMBER INDEX

CAGEC	PART NUMBER	STOCK NUMBER	FIG.	ITEM
11083	3P0719	5310-01-257-4299	175	20
11083	3P1686	2510-01-066-8454	112	11
11083	3P1687	2520-00-101-2575	112	6
11083	3P1757		141	26
11083	3P1824		155	1
11083	3P1932		230	3
			231	25
11083	3P1946		155	5
11083	3P2069	5340-01-284-9610	41	19
11083	3P2070	5340-01-285-1663	41	1
11083	3P2073	5340-01-284-9640	41	29
11083	3P2075	3805-01-213-6035	41	16
11083	3P2119		133	21
11083	3P218	5330-01-161-2429	193	3
			194	8
			195	10
11083	3P219		193	26
11083	3P220	5340-01-164-4596	193	19
11083	3P2279	2510-01-069-0798	149	20
11083	3P2292		140	16
11083	3P2335		168	20
11083	3P2336		168	11
11083	3P2367		140	18
11083	3P2399	3040-01-267-4365	151	21
11083	3P2402		133	17
11083	3P2429	3110-01-066-8456	133	15
11083	3P2444		155	4
11083	3P2445		155	4
11083	3P2674		133	13
11083	3P2695	3040-01-252-8488	151	15
11083	3P2717	4710-01-253-6894	102	7
11083	3P2756		153	8
11083	3P2767		194	12
			195	12
11083	3P2778	5330-01-069-1423	133	16
11083	3P2786	2540-01-068-7272	133	8
11083	3P2829		194	13
11083	3P2831	5360-01-287-5723	194	6
11083	3P2847	5340-01-161-9175	194	20
			195	24
11083	3P2886	4720-01-068-9733	233	4
11083	3P2888		233	21
11083	3P2890		236	9
11083	3P2895	4720-01-284-8183	226	1
			228	32
11083	3P2896		225	53
			226	51
			227	41
11083	3P2898		226	2
			227	31
11083	3P2900		236	34

CROSS-REFERENCE INDEXES

PART NUMBER INDEX

CAGEC	PART NUMBER	STOCK NUMBER	FIG.	ITEM
11083	3P2938		223	10
11083	3P2943		244	6
11083	3P2945	2510-01-259-8891	244	24
11083	3P2950		156	11
11083	3P2959		172	8
11083	3P3022		109A	1
11083	3P3069		153	12
11083	3P3070		152	38
11083	3P3080	4730-01-068-7143	144	15
11083	3P3178	5342-01-257-3847	244	19
11083	3P3186	5307-01-254-2495	47	9
11083	3P3187	3040-01-250-6507	47	12
11083	3P3202	5360-01-165-3674	193	20
11083	3P3247		178	11
			180	17
11083	3P3250	5340-01-264-6076	179	16
			181	15
11083	3P3259	2990-01-103-6642	113	8
11083	3P3307		178	16
			180	22
11083	3P3329	4710-01-253-7055	153	34
11083	3P3330	4710-01-253-7054	153	31
11083	3P3331	4710-01-253-2879	152	17
11083	3P3332	4710-01-253-2880	152	22
11083	3P3344	5340-01-284-9639	41	20
11083	3P3382		160	9
11083	3P3384		160	8
11083	3P3387		161	7
11083	3P3388		161	1
11083	3P3525	5340-01-258-0150	151	9
11083	3P3527	3040-01-253-5578	150	6
11083	3P3528	3040-01-254-1280	150	1
11083	3P3529		150	10
11083	3P3531		150	27
11083	3P3564	4820-01-018-0108	154	1
11083	3P3655	2540-01-253-4705	146	32
11083	3P3656	2540-01-253-5589	146	36
11083	3P3657	3040-01-253-7347	146	39
11083	3P3658	3040-01-253-7346	146	37
11083	3P3659	3040-01-264-9331	146	45
11083	3P366	4730-01-267-6077	116	6
11083	3P3660	5306-01-257-3316	146	44
11083	3P3661		146	43
11083	3P3662		146	46
11083	3P3663		146	9
11083	3P3665		146	24
11083	3P3668	5970-01-068-9734	118	19
11083	3P3676		222	15
11083	3P3702	2590-01-066-8457	94	16
11083	3P3716	4820-01-160-0852	154	27
11083	3P3717		154	28

CROSS-REFERENCE INDEXES

PART NUMBER INDEX

CAGEC	PART NUMBER	STOCK NUMBER	FIG.	ITEM
11083	3P3755		140	4
11083	3P3757		140	4
11083	3P3759		132	35
11083	3P3760		132	34
11083	3P3761		132	36
11083	3P3774	4820-01-103-6644	154	37
11083	3P3931	3040-01-253-4662	221	9
11083	3P3934		222	7
11083	3P3935	5315-01-266-9238	221	25
11083	3P3937	3040-01-253-7350	221	14
			222	5
11083	3P3938	3040-01-253-7456	220	21
			221	12
11083	3P3941		220	9
11083	3P3942	3040-01-161-5121	220	15
11083	3P3943	3040-01-253-7454	222	1
11083	3P3945	5340-01-258-9225	221	22
			222	12
11083	3P3949		222	19
11083	3P3952	2530-01-069-0799	150	5
11083	3P3966		170	6
11083	3P3968	5340-01-366-6634	170	7
11083	3P3972		170	11
11083	3P3976		168	1
11083	3P3981		168	17
11083	3P3983		261	36
			264	68
			265	74
11083	3P3985		169	4
11083	3P4020		261	69
			264	50
			265	55
11083	3P4026		264	54
			265	57
11083	3P4027		264	1
			265	43
11083	3P4028		261	71
			264	45
			265	41
11083	3P4034		41	4
11083	3P4053	5360-01-069-1425	125	13
11083	3P4117		193	15
11083	3P4119	4820-01-162-8950	194	1
11083	3P4121	4820-01-162-8951	193	1
11083	3P4122	5340-01-258-2681	244	23
11083	3P4124	5340-01-265-3359	244	9
11083	3P4126	5340-01-266-4674	244	10
11083	3P4133	5310-01-253-6496	41	23
11083	3P4134	5365-01-069-1426	244	18
11083	3P4165	5340-01-254-5362	120	28
11083	3P4166		118	10

CROSS-REFERENCE INDEXES

PART NUMBER INDEX

CAGEC	PART NUMBER	STOCK NUMBER	FIG.	ITEM
11083	3P4219	5340-01-259-4238	220	4
			221	3
11083	3P4243		118	1
11083	3P4333	5340-01-259-6427	169	17
11083	3P4564	2590-01-285-2983	189	14
11083	3P4565	2590-01-285-2982	189	13
11083	3P4659		195	2
11083	3P4660		195	17
11083	3P5035		87	17
11083	3P5058		87	21
11083	3P5064	2815-01-297-8391	62	18
11083	3P5100		87	27
11083	3P5113		146	22
11083	3P5157		170	17
11083	3P5168	5342-01-162-8767	195	5
11083	3P5169	5342-01-162-8768	195	19
11083	3P5206	3040-01-167-3669	146	4
11083	3P5207		146	5
11083	3P5208		147	25
11083	3P5213		109	18
11083	3P5334	5325-01-068-6229	246	11
11083	3P5434		146	20
11083	3P5549		172	1
11083	3P5550		234	7
11083	3P5552	4710-01-286-8825	234	16
11083	3P5668		230	17
11083	3P5669		230	20
11083	3P5749	4710-01-253-4714	122	4
11083	3P5828	4710-01-253-3529	121	28
11083	3P5885	2990-01-103-6805	84	1
11083	3P5886	2990-01-103-6806	97	1
11083	3P5929		120	40
11083	3P5931	4720-01-067-1397	120	1
11083	3P5934	4720-01-067-1398	122	46
11083	3P5938	5340-01-163-0918	188	9
11083	3P5942	4730-01-254-5540	187	3
11083	3P5945		233	10
11083	3P5951	5340-01-258-6065	244	13
11083	3P5952	3010-01-255-4450	187	2
11083	3P6047	4720-01-257-2353	BULK	6
19207	3P6047-1		230	35
			231	20
19207	3P6047-194		230	36
			231	21
11083	3P6048	4720-01-186-2341	BULK	5
19207	3P6048-1		231	12
11083	3P6049	4720-01-257-2354	BULK	7
19207	3P6049-1		230	24
			231	8
19207	3P6049-68		230	27
			231	9

CROSS-REFERENCE INDEXES

PART NUMBER INDEX

CAGEC	PART NUMBER	STOCK NUMBER	FIG.	ITEM
11083	3P6195	4710-01-253-2756	155	20
11083	3P6196	4710-01-253-4570	155	20
11083	3P6581		110	27
11083	3P6582		129	6
11083	3P6583		129	5
11083	3P6584	3040-01-069-0885	129	46
11083	3P6600	5365-01-103-6645	139	9
11083	3P6629	5340-01-262-4885	120	30
11083	3P6656		225	31
			226	29
11083	3P6657		225	46
			226	44
			228	21
			229	20
11083	3P6956	4720-01-245-6605	225	23
			226	21
			228	9
			229	8
11083	3P6957		261	51
			264	34
			265	28
11083	3P6984		93	14
11083	3P7157		152	28
11083	3P72	2920-01-053-4551	74	21
11083	3P7233	2990-01-103-6646	100	14
11083	3P7234	2990-01-103-6647	100	1
11083	3P7237		174	35
11083	3P7238	3040-01-254-9895	174	29
11083	3P7470		141	29
11083	3P7482		132	4
11083	3P7551		152	35
11083	3P7662	3805-01-068-7273	144	14
11083	3P7665	4820-01-041-1571	123	1
11083	3P7666		123	3
11083	3P7744		239	23
11083	3P7749		239	16
11083	3P7750		240	15
11083	3P7808	4730-01-250-3997	120	17
11083	3P7838	4720-01-067-1399	120	3
11083	3P7957	2510-01-068-5899	133	2
11083	3P7986	5365-01-066-8458	133	12
11083	3P8005		120	21
11083	3P8024		140	6
11083	3P8025		140	6
11083	3P8230	4720-01-067-1400	121	45
11083	3P8308		233	19
11083	3P8319		122	35
11083	3P8436		179	14
			181	13
11083	3P8989	5920-01-059-0894	87	12
			88	8

CROSS-REFERENCE INDEXES

PART NUMBER INDEX

CAGEC	PART NUMBER	STOCK NUMBER	FIG.	ITEM
11083	3P8990	5930-01-059-0930	87	13
11083	3P9032		168	35
11083	3P9373		167	41
11083	3P9374		167	41
11083	3P9394	2520-01-103-6648	112	20
11083	3P9566		170	1
11083	3P9577		170	15
11083	3P9901	5310-01-160-4543	71A	8
11083	3P9999		87	1
11083	3R0451		258	2
11083	3R3837	4820-00-932-0819	42	2
11083	3R4762	5315-01-160-4647	102	40
11083	3R4850	3040-01-357-3576	92	28
			155	11
11083	3S1262		108	20
		5340-01-068-7154	111	6
11083	3S1274	2530-01-068-9742	111	15
11083	3S1349	5310-01-095-1537	155	26
11083	3S1404	3110-01-068-7155	106	21
11083	3S1461	5365-01-253-4385	68	19
11083	3S1682		172	27
11083	3S1684	3040-01-272-5375	172	20
11083	3S2093	2920-01-058-9099	83	4
			88	35
			89	2
			92	6
			92	12
			92	37
			93	5
			93	9
			93	37
			94	6
			94	26
			94	33
			100	7
			100	20
			101	4
			103	12
			103	22
			248	8
11083	3S2113	5307-01-161-9140	198	2
11083	3S2252	2815-01-068-7156	28	3
11083	3S2420		142	6
11083	3S2467		159	1
11083	3S2469		159	29
11083	3S2682	3120-01-167-3402	193	13
11083	3S2708	5315-01-059-7198	176	30
11083	3S3352	5340-01-254-7167	41	6
11083	3S3439	2520-01-069-0891	119	4
11083	3S3440	5310-00-950-6980	119	5
11083	3S3875	4330-00-949-0868	119	7

CROSS-REFERENCE INDEXES

PART NUMBER INDEX

CAGEC	PART NUMBER	STOCK NUMBER	FIG.	ITEM
11083	3S4	5310-00-413-5144	116	8
			117	3
			130	23
11083	3S4040	2815-00-918-3569	11	1
11083	3S4346	5306-00-268-2449	192	4
11083	3S4388	5310-00-413-4757	174	24
11083	3S4459	5330-01-067-2310	75	5
11083	3S4484	5310-00-269-6797	40	3
			40B	1
11083	3S4487	2950-00-948-1771	40	19
11083	3S4488	5305-00-245-6035	40	20
58312	3S5126-00	5305-00-191-8284	40	23
			151	7
58312	3S5129-00	2950-00-950-2470	40	22
			40A	6
11083	3S5135	5330-00-949-1451	40	5
11083	3S6049	5940-01-169-3889	94	8
11083	3S6050	5940-00-201-8938	94	17
11083	3S6159		93	20
11083	3S6162	5310-01-255-0110	157	5
			158	9
			198	8
			204	6
11083	3S6605	5340-01-102-3538	113	5
11083	3S6721		168	3
			169	8
11083	3S6989	5310-01-067-1402	129	14
11083	3S7005	2530-00-949-4505	154	6
11083	3S7023	5310-01-255-0111	157	10
11083	3S7024		157	7
11083	3S7025		157	8
11083	3S7026		157	12
11083	3S7079	5305-01-255-6490	157	11
11083	3S7116	5365-01-067-1426	225	25
			226	23
			228	12
			229	11
			233	6
			233	23
			261	38
			261	53
			264	37
			264	70
			265	30
			265	76
11083	3S7165	4730-01-062-0292	234	5
11083	3S7166	5340-01-051-6767	225	7
			225	55
			226	5
			226	53
			227	35

CROSS-REFERENCE INDEXES

PART NUMBER INDEX

CAGEC	PART NUMBER	STOCK NUMBER	FIG.	ITEM
11083	3S7166	5340-01-051-6767	227	45
			232	11
			232	17
			232	23
			234	4
			263	12
11083	3S717		102	25
11083	3S718		102	33
11083	3S7306	4730-01-069-0892	128	4
11083	3S7308	3110-01-068-7157	128	31
11083	3S7334	5340-01-255-2756	159	20
11083	3S7336	5340-01-257-3341	159	19
11083	3S7881	2510-01-069-0804	166	13
			167	12
11083	3S8183	5935-01-062-7141	97	8
11083	3S8360		225	57
			226	55
			227	43
11083	3S8569	4730-01-062-6010	225	27
			226	25
			228	13
			229	12
11083	3S8570	4730-01-097-4728	261	52
			264	36
			265	29
11083	3S8571	4730-01-062-5898	225	26
			226	24
			228	10
			229	9
			233	7
11083	3S8606	4720-01-051-7602	122	37
			228	5
			229	5
			235	9
			235	18
			235	29
			236	12
			236	37
11083	3S8624	6150-00-481-3708	99	20
11083	3S8656	5330-01-067-1489	121	16
11083	3S8665	5340-01-098-6683	122	13
11083	3S8735		140	1
11083	3S8736		140	1
11083	3S8744	5310-01-254-2486	121	11
11083	3S9029	5365-01-067-5633	68	22
11083	3S9233	5330-00-251-4436	215	23
11083	3S9300	5330-00-194-8388	34	1
11083	3S9437		33	12
11083	3S9669	3110-00-913-8114	128	27
11083	3S9736	2815-00-244-0535	33	46
11083	3S9847	3040-01-250-5158	118	13

CROSS-REFERENCE INDEXES

PART NUMBER INDEX

CAGEC	PART NUMBER	STOCK NUMBER	FIG.	ITEM
11083	3S9911	3110-01-068-6118	108	19
11083	3S9919	2530-01-069-0805	107	22
11083	3T1981	2540-01-209-0463	172	4
11083	3T3422		74A	4
11083	3T4709		73	13
			76	12
11083	3T6352	2920-01-144-8796	71A	1
11083	3T8754	3020-01-017-6333	74A	69
11083	3T9494	5360-01-294-0436	74A	18
11083	3T9562	2920-00-932-0829	54	3
11083	3Y747		199	3
79550	300-2863	5940-00-291-0085	103	8
			103	23
96795	30014300	4820-01-163-7157	43	37
11083	303978	4730-01-062-9928	261	46
			264	18
			265	11
78640	307942	4730-01-051-2312	153	9
11083	307943	4730-01-169-5830	64B	8
			64D	8
11083	307946	4730-01-062-5206	230	1
			231	24
11083	307962	4730-01-163-7161	227	18
11083	308189	4730-01-063-0685	236	7
11083	308194	4730-01-058-9100	225	16
			226	14
11083	310243	5305-01-053-4553	70	33
11083	310249	5310-01-105-9384	88	18
			103	17
11083	314433		166	36
			167	33
11083	318759	4730-01-156-9977	197	4
98441	322F-E	4730-01-165-6616	42	36
			43	19
11083	324000	5305-01-053-4554	70	9
78189	3320-14-01	5310-01-094-8810	90	20
			159	10
			159	14
11083	336042	5330-01-068-9760	120	16
11083	337727	5310-01-068-9761	129	7
11083	340912	4710-01-251-0920	95	18
11083	345535	5306-01-254-7170	47	20
11083	4B1221	5305-00-863-1627	72	36
			76	35
11083	4B1280	5305-01-237-3324	102	4
11083	4B1282	5305-01-063-1423	188	8
11083	4B1398	2520-00-149-9205	141	23
11083	4B2764		10	6
11083	4B3057	5315-00-920-8200	230	18
11083	4B3251	5307-00-275-5698	4	49
11083	4B3388		32	27

CROSS-REFERENCE INDEXES

PART NUMBER INDEX

CAGEC	PART NUMBER	STOCK NUMBER	FIG.	ITEM
11083	4B3610	5305-01-185-0569	47	15
11083	4B3823	5305-00-455-0463	127	13
11083	4B4043	5306-00-423-9325	140	15
11083	4B4277	5310-00-362-8168	33	31
11083	4B4278	5310-01-266-2481	17	10
			26	23
			32	12
			50	8
			51	5
11083	4B4279	5310-00-118-3035	121	33
			122	24
			211	7
			212	6
			214	21
			219	12
			225	22
			226	20
			228	8
			229	7
			261	24
			264	59
11083	4B4280	5310-00-930-7013	102	17
			120	31
			140	14
			166	42
			167	36
			172	32
			192	16
			219	3
			233	20
			234	18
			236	21
			244	11
			74B	4
11083	4B4626	5365-01-254-5379	87	28
11083	4B4845	5365-00-734-2114	63	26
11083	4B4863	5310-00-432-8001	70	29
			71	20
11083	4B5167	5310-00-270-2108	4	46B
11083	4B5423	5330-00-143-8713	41	10
11083	4B5441	2590-00-356-1863	41	9
11083	4B5949	2910-00-367-5238	41	11
11083	4B6029	5365-00-423-9380	32	3
			246	2
			248	21
			64A	14
			64C	13
11083	4B6493	5360-00-149-9006	48	11
11083	4B7033	5360-00-249-3505	108	12
11083	4B7255	3110-00-100-0233	134	21
11083	4B7739	5365-00-363-9900	20	18

CROSS-REFERENCE INDEXES

PART NUMBER INDEX

CAGEC	PART NUMBER	STOCK NUMBER	FIG.	ITEM
11083	4B7739	5365-00-363-9900	57	24
			59	25
11083	4B7844	4730-01-069-0748	41	7
11083	4B8024	5330-00-362-7470	182	40
11083	4B8265		128	19
11083	4B8756	4730-00-013-7397	32	6A
			246	8
			248	19
11083	4B9782	3110-00-011-9935	126	10
			218	29
			237	15
11083	4B9784	3110-00-011-9931	130	6
11083	4B9880	3110-00-949-1438	124	21
			125	12
			125	16
			195	3
11083	4D0674		69	9
11083	4D3704	5310-00-139-7030	5	8
			5A	9
			128	13
			139	3
			164	2
			164	11
			165	2
			169	16
			175	28
			261	1
			264	47
			265	50
11083	4D4064	2910-01-058-8075	47	30
			104	22
			220	26
			221	32
11083	4D4278	5310-01-254-2279	101	9
11083	4D5882	5995-01-059-0829	94	11
11083	4D6419	5310-01-170-8530	133	25
11083	4D6466	5340-00-426-4644	230	5
			231	18
11083	4D7794	5340-00-426-4656	68	48
			88	36
			103	31
11083	4D8948	5342-00-999-8389	32	19
11083	4D8991	5306-01-259-3716	151	23
11083	4D9376	2420-01-062-5208	179	1
11083	4D9459	5999-01-193-5996	236	25
11083	4D9483	5305-01-160-4505	88	25
			102	41
			103	3
58312	4D9986-00	5330-00-498-2906	193	11
30780	4FNTXS	4730-00-808-6848	64A	3
11083	4F1113		130	15

CROSS-REFERENCE INDEXES

PART NUMBER INDEX

CAGEC	PART NUMBER	STOCK NUMBER	FIG.	ITEM
11083	4F1450	5307-00-272-7047	4	45
			4A	35
11083	4F255	5315-00-352-7706	253	17
11083	4F2611		130	16
11083	4F3508	5306-00-272-4222	207	9
			208	10
11083	4F4585	5340-00-423-4804	45	14
11083	4F4879	5306-00-426-5062	80	12
			179	7
			181	6
11083	4F4947	5330-00-297-5029	64E	10
11083	4F5003	2530-00-149-8899	141	22
11083	4F5192	5305-00-445-4630	225	42
			226	40
			228	25
			229	24
11083	4F5640	5330-00-297-5397	122	18
11083	4F6024	5315-00-363-9248	4	52
			33	20
			4A	43
			4B	21
11083	4F7390	5331-00-691-9950	243	13
11083	4F7391	5331-00-562-1073	52	5
			52	16
			237	4
11083	4F7952	5331-00-527-7748	130	41
			200	26
			212	20
11083	4F8122		243	3
11083	4F8135		243	4
11083	4F9325	5330-01-033-3438	4	26
			4A	6
11083	4H1134		147	14
11083	4H1641	5315-01-068-9644	45	7
			65	15
11083	4H2662	5365-00-598-5255	42	11
			42	15
			42	31
			43	3
			43	9
			43	43
11083	4H2663	4730-00-737-3364	42	10
			42	14
			42	30
			43	2
			43	8
			43	42
11083	4H2978	2520-00-974-9493	108	10
11083	4H2981		108	17
11083	4H3157	5315-00-850-9428	65	11
11083	4H3740		20	16

CROSS-REFERENCE INDEXES

PART NUMBER INDEX

CAGEC	PART NUMBER	STOCK NUMBER	FIG.	ITEM
11083	4H407		200	16
11083	4H4287		147	50
11083	4H5128	5315-00-924-5894	160	20
11083	4H5360	5340-01-377-2465	4	7
			4A	7
11083	4H6534		128	10
11083	4H6730	5331-00-881-1402	127	3
11083	4H6917	5360-00-739-4845	149	23
11083	4H6918		149	34
11083	4H7292	4710-00-131-1610	27	5
11083	4H7297	2815-00-341-1448	4	30
11083	4H7302	2815-00-341-1449	15	22
11083	4H7384	3020-00-739-4847	13	2
11083	4H8158	5325-00-848-7439	152	37
11083	4H8380	5315-00-891-5955	218	26
11083	4H8502		191	8
11083	4H8739	5330-00-893-8122	30	23
11083	4H8781	5330-00-895-8970	6	11
11083	4H8795		4	28
11083	4H8878	5340-00-875-5251	26	35
11083	4H8890	5330-00-628-0555	65	6
11083	4H8897		65	16
11083	4H8906	5342-01-068-6984	65	17
11083	4H8985	4730-01-068-6055	26	28
11083	4H8986	5310-00-999-5524	4	35
			12	3
			12	30
			4A	24
			4B	7
11083	4H9008	5330-00-541-2701	64	31
			65	5
11083	4H9026	5330-00-628-0547	107	33
11083	4H9073	3120-00-914-0263	191	7
11083	4H9105	5331-00-781-9134	187	1
11083	4H9116	3110-01-068-7241	191	6
11083	4H9303	5307-01-254-2500	110	17
11083	4H9448		191	5
11083	4H9541	5330-00-074-3513	27	9
11083	4H9628	5330-00-541-2111	68	46
11083	4H9629	5330-00-515-3503	12	1
11083	4H9640	3120-00-895-0661	4	40
			12	5
			12	28
			4A	22
			4B	6
11083	4H9648	2815-00-948-2221	13	8
11083	4H9836	5330-00-580-8976	65	7
11083	4J1657		200	3
11083	4J218		254	1
11083	4J3420	3830-00-929-3501	238	21
11083	4J4144	5310-01-216-7387	166	21

CROSS-REFERENCE INDEXES

PART NUMBER INDEX

CAGEC	PART NUMBER	STOCK NUMBER	FIG.	ITEM
11083	4J4144	5310-01-216-7387	167	20
11083	4J4670		200	7
11083	4J4742	6680-01-160-5291	174	16
11083	4J4790	5360-00-401-5077	213	4
11083	4J4955	5365-01-278-7722	241	9
			241	16
11083	4J5130		255	15
11083	4J519	5331-00-913-6143	205	10
			239	8
			240	21
11083	4J520	5331-00-913-6144	211	10
			212	9
			232	14
			263	4
11083	4J522	5331-00-948-4063	201	2
			204	10
			206	2
			211	15
			215	17
			219	8
			225	28
			226	26
			228	6
			229	38
			233	16
			239	20
			240	12
			261	40
			264	33
			265	27
11083	4J523	5331-01-006-2129	239	20
			240	12
			261	70
			264	51
			265	56
11083	4J524	5331-00-914-5846	197	16
			233	1
			234	20
11083	4J525	5331-00-922-6275	205	4
			211	21
11083	4J5268	5331-00-914-5316	51	21
11083	4J527	5331-00-914-5820	239	21
			240	11
11083	4J5351	5331-00-498-4556	186	20
11083	4J5573	5331-00-138-4418	225	47
			226	45
			228	22
			229	21
11083	4J6353	3040-00-949-1427	200	15
11083	4J6580	5310-01-066-0503	155	7
11083	4J6888	5310-01-067-2157	224	4

CROSS-REFERENCE INDEXES

PART NUMBER INDEX

CAGEC	PART NUMBER	STOCK NUMBER	FIG.	ITEM
11083	4J7101	4320-01-267-0639	250	5
11083	4J7376	4320-00-999-5025	224	6
11083	4J8224	5365-01-064-1030	218	8
11083	4J8251	5325-01-068-6227	237	23
11083	4J8252	6680-00-138-4143	237	22
11083	4J8981	5330-00-919-2240	132	27
			224	12
			260	6
11083	4J8996	5331-00-948-6924	214	24
11083	4J9058	5306-01-017-8609	251	6
			252	5
11083	4J9208	5306-01-185-5108	251	6
11083	4J9220		200	24
11083	4J9222	5310-00-949-2554	200	27
11083	4J9225	5330-00-107-6455	200	11
11083	4K2039	5330-01-068-6073	194	19
			195	23
11083	4K4221	5310-01-322-9622	204	2
11083	4K670		93	1
11083	4K684	5310-01-162-6012	198	4
			253	34
			253	42
			257	12
11083	4K8977		16	3
			117	25
		5310-01-066-9171	64C	19
11083	4L1250	5310-01-254-4257	118	18
11083	4L3916	5940-01-058-9112	89	6
			89	10
			89	19
			90	8
			90	12
			90	18
			91	4
			92	15
			92	23
			93	12
			93	23
			98	7
			98	18
			99	16
11083	4L4661	5330-00-074-3560	64E	18
11083	4L6943	5325-00-559-3901	155	31
11083	4L7551	5307-01-151-9304	220	25
			221	34
11083	4L8149	5330-00-976-9143	64A	9
			64C	8
11083	4L8337	5331-00-074-3773	29	4
			29A	8
11083	4L9337	5306-00-455-0462	65	26
11083	4M1336	4730-00-924-7125	63	27

CROSS-REFERENCE INDEXES

PART NUMBER INDEX

CAGEC	PART NUMBER	STOCK NUMBER	FIG.	ITEM
11083	4M1336	4730-00-924-7125	65	4B
11083	4M1474	5315-00-942-7167	33	23
11083	4M1643		147	10
11083	4M1712	5315-01-258-4780	174	23
11083	4M1740		147	1
11083	4M1814	2920-00-972-5378	74	17
11083	4M1815	5360-00-985-2253	74	16
			74B	17
11083	4M1816	2920-00-021-2314	74	2
11083	4M1827	5340-00-980-1367	72	14
			74A	38
11083	4M1833	5305-01-053-4557	72	24
			77	24
			74A	78
11083	4M1834	2920-01-053-4558	74	9
11083	4M1836	5970-01-053-4559	74	7
11083	4M1837	5365-00-999-2399	74	8
11083	4M1853	2920-01-053-4562	72	17
			74A	65
11083	4M1854	5315-01-066-4722	72	18
			77	12
			74A	63
11083	4M189	5331-00-904-0335	72	46
			76	33
			77	9
			117	7
11083	4M2381	5360-00-950-8041	124	22
			125	17
			218	28
11083	4M2435	2590-01-251-1113	41	5
11083	4M2542	3020-01-069-0864	130	9
11083	4M2571	2530-00-756-8501	149	33
11083	4M2800	5940-01-051-3136	74	12
11083	4M3217	5305-01-052-9758	74	20
11083	4M3915	3110-00-896-6819	113	20
			176	27
11083	4M3981	5306-01-254-4226	140	13
11083	4M443		104	18
11083	4M4862	2530-01-090-2283	153	30
11083	4M496	5306-00-140-2032	47	10
			102	29
			104	15
			220	12
			221	29
11083	4M497	5310-00-147-6143	47	11
			102	27
			104	16
			220	13
			221	30
11083	4M5274	5305-01-053-4564	74	18
			74B	14

CROSS-REFERENCE INDEXES

PART NUMBER INDEX

CAGEC	PART NUMBER	STOCK NUMBER	FIG.	ITEM
11083	4M5285		200	19
11083	4M5317	3120-01-127-5376	64A	4
			64C	4
11083	4M5858	3110-00-896-6823	111	4
			112	24
11083	4M5923	5360-00-950-2093	124	6
11083	4M5942	5340-01-254-4303	43	16
11083	4M5943	5330-00-919-2846	108	18
11083	4M5945		108	16
11083	4M660	5330-00-788-5810	129	12
11083	4M6646	5315-00-173-8417	40	10
			40B	13
11083	4M6953	5310-00-191-8297	3	9
			4	22
			4A	13
11083	4M706		128	26
11083	4M7930	5340-01-160-4084	146	10
			146	26
			146	42
11083	4M8239	5340-01-160-2240	123	2
11083	4M8303	5331-00-613-6522	35	34
			247	1
11083	4M8799	5360-00-757-2559	102	1
11083	4M8910	5365-01-071-1970	107	26
11083	4M8967	3020-01-068-9697	111	19
11083	4N0794	2815-01-050-8003	64	23
11083	4N1059	5330-01-332-4090	75	7
11083	4N3277	4710-01-378-4888	26	34
11083	4N3700		82	1
11083	4N3841	5330-01-063-9839	64	2
			89	4
			64B	11
			64D	11
11083	4N3887	5365-01-097-3237	44	22
11083	4N4577	2990-01-017-6452	56	2
11083	4N4865	3130-00-414-4394	35	3
11083	4N4867		35	17
11083	4N4870	3040-00-399-5214	35	16
11083	4N4880	4320-01-017-6639	35	1
11083	4N4988		49	30
11083	4N4989	5342-01-068-0032	49	29
11083	4N5053		4	2
11083	4N5390	3020-01-069-0871	69	18
11083	4N5526	4730-01-067-8065	49	3
11083	4N5560		225	14
			226	12
			227	27
11083	4N5572	5330-01-017-7158	58	15
			60	10
11083	4N5693	5360-01-067-8013	34	6
11083	4N5704		2	1

CROSS-REFERENCE INDEXES

PART NUMBER INDEX

CAGEC	PART NUMBER	STOCK NUMBER	FIG.	ITEM
11083	4N6197		57	1
			58	16
			59	27
11083	4N6201		58	30
			60	26
11083	4N6588		39	3
11083	4N6855	4720-01-066-0617	58	1
11083	4N7082	2940-01-053-4642	17	14
			17A	15
11083	4N7422	5340-01-254-7147	58	25
			60	20
11083	4N7465	5330-01-049-0553	35	24
11083	4N7570	5340-01-377-2893	6	8
11083	4N8724	4710-01-251-0918	63	4
11083	4N9187		39	3
11083	4N9221	5342-01-069-0790	56	7
11083	4N9244	4710-01-103-3674	37	1
11083	4N9317	2940-01-066-0618	38	11
11083	4N9742		68	18
11083	4N9884		2	4
11083	4N9926	2805-01-250-6496	29	5
11083	4N9927	4730-01-250-7001	29	10
11083	4N9928		29	13
			29A	3
11083	4S5414	4730-01-095-0075	227	39
			236	3
			261	5
			261	16
			261	21
			261	44
			264	4
			264	11
			264	16
			264	21
			264	29
			264	56
			265	4
			265	9
			265	14
			265	22
			265	46
			265	59
11083	4S5833	5365-01-068-9743	111	8
11083	4S5881	5330-00-940-7930	110	42
11083	4S5898	5331-00-929-5507	136	20
11083	4S6454		29	16
			29A	13
11083	4S6680		225	18
			226	16
			227	29
11083	4S6866		11	13

CROSS-REFERENCE INDEXES

PART NUMBER INDEX

CAGEC	PART NUMBER	STOCK NUMBER	FIG.	ITEM
11083	4S6867	2815-00-917-6947	11	11
11083	4S7367		3	4
11083	4S7455	2940-01-058-8094	38	2
11083	4S7458	4820-00-116-3226	36	14
11083	4S7515		20	20A
11083	4S7516		20	20
11083	4S7603		169	3
11083	4S7760	2930-01-103-3708	65	34
11083	4S7772		9	2A
11083	4S7793	2815-00-405-4165	7	3
11083	4S7818		68	31
11083	4S7863		7	5
11083	4S7869		13	7A
11083	4S7997		122	26
11083	4S8025		169	2
11083	4S8054	5330-01-017-6311	KIT	
11083	4S8073	5365-01-068-7159	136	19
			137	18
			138	17
11083	4S8379	4720-01-066-0619	37	11
11083	4S8472	2940-01-063-4213	38	6
11083	4S8473	2940-01-058-8095	38	3
11083	4S8651		110	39
11083	4S8743	9505-00-140-2378	BULK	29
11083	4S8968		147	57
11083	4S9024		147	55
11083	4S9055		KIT	
11083	4S9126		155	27
11083	4S9219	6140-00-190-9828	94	22
11083	4S9782	3110-00-102-4568	128	8
11083	4S9783	3110-00-101-8589	128	9
11083	4S9792		22	10
11083	4T2479	3830-01-190-1047	258	5
11083	4T2988	3830-01-017-4041	251	5
11083	4T6301	3830-01-321-6531	251	5
11083	4W4794	4820-01-207-3687	63	30
08179	400424-0	5365-01-020-5721	40B	17
08179	400438-1		40B	9
65282	400536	5310-00-350-3243	104	17
08179	400785-560	5340-01-297-3050	40A	9
70210	406063	2950-00-948-1653	40	24
70210	406064	2950-00-948-1611	40	25
08179	406385		40B	10
08179	406482-23	2950-00-259-2943	40	26
08179	406834-2		40	6
08179	406845-5	2950-00-551-8685	40	15
08179	407009-139	2910-01-377-6796	40A	5
08179	407484-1	2950-00-552-0197	40	8
08179	408049-4	2805-01-175-3881	40B	14
08179	408142-27		40A	8
08179	408178-11		40	4

CROSS-REFERENCE INDEXES

PART NUMBER INDEX

CAGEC	PART NUMBER	STOCK NUMBER	FIG.	ITEM
08179	408480-16		40B	7
08179	408493-16		40B	20
08179	408593	3120-01-020-5814	40	16
			40B	18
08179	408597	5310-01-174-8765	40B	6
08179	408768-1	5365-01-118-8822	40B	4
08179	409142-6		40B	2
19207	4213854-1		57	30
19207	4213854-10		60	2
19207	4213854-5		59	32
63005	427564	5306-00-400-3518	121	32
			122	25
			211	6
			212	5
			214	20
			225	21
			226	19
			228	7
			229	6
			233	17
79396	42980	2940-01-018-4872	37	6
08179	441094-1		40B	19
19207	443339	5310-00-044-3339	104	6
08179	447159-3		40B	11
08179	447364-1		40A	13
11083	454065	5305-01-187-0533	74B	13
11083	459285		KIT	
29510	46200D	5307-00-206-5455	4	46
			4A	37
08179	464083-2		64F	2
08179	464240-2		64F	1
77445	466473	5306-00-857-5672	230	13
62983	471060	5310-01-116-1212	71B	21
30327	48F1-8 1-4	4730-00-900-3296	68	2
75833	4827-J	5340-01-315-7377	42	2A
75833	4827-2-M	5305-01-298-3189	42	2B
11083	5B1959	5310-00-423-9538	248	1
11083	5B2183	5310-01-052-3924	87	22
11083	5B2200	5340-01-258-4854	147	39
11083	5B2547	5360-00-367-5891	152	2
11083	5B2638	5305-00-362-7336	117	11
			176	9
11083	5B3718	5331-01-306-2728	31	20
11083	5B4696	5315-01-068-9640	23	5
11083	5B5473	5306-00-275-5014	162	8
			253	8
11083	5B5812	5315-00-362-7367	4	17
			20	9
			22	6
			4A	17
			107	7

CROSS-REFERENCE INDEXES

PART NUMBER INDEX

CAGEC	PART NUMBER	STOCK NUMBER	FIG.	ITEM
11083	5B635	5310-00-423-9635	257	6
11083	5B7617	5310-00-363-8828	107	11
11083	5C2874	5310-01-352-7725	71B	3
11083	50122		82	10
11083	501911	2590-01-179-3017	245	3
11083	5D2643	5310-01-160-3967	102	3
11083	5D6523	5340-01-183-7009	32	35
11083	5D7927	4730-01-184-1145	237	19
11083	5F1474		255	7
11083	5F149	5331-00-863-5549	119	6
11083	5F1678	5331-00-741-0674	215	28
11083	5F1914	5315-01-378-3862	4A	46
			4B	3
11083	5F2807	5340-00-392-7334	31	16
11083	5F3106	5331-00-663-5709	136	15
			137	12
			138	10
			142	42
			190	23
			200	24
			225	43
			226	41
			228	26
			229	25
11083	5F3144	5331-00-298-5837	134	22
			238	17
11083	5F3498	5330-00-913-4681	238	15
11083	5F3500	5365-01-103-7155	238	11
11083	5F4899	5306-00-897-9295	117	2
11083	5F6182		166	30
			167	28
11083	5F7054	5331-00-339-6224	192	2
			218	15
11083	5F7993	5315-00-260-0807	253	13
11083	5F7994	5315-00-352-8035	254	20
11083	5F9144	5331-00-591-3112	193	18
11083	5F9657	5331-00-291-9572	218	10
11083	5H0779	5330-00-923-8959	190	3
11083	5H1092	5365-00-886-5163	4	39
			12	29
			4A	23
			4B	8
11083	5H1190	5330-00-154-7528	152	11
			153	22
11083	5H1385		65	18
11083	5H156	5342-01-160-3902	170	10
11083	5H1592	3120-00-949-1344	49	31
11083	5H1719		130	11
11083	5H1901	3110-00-117-0696	127	35
11083	5H2168	2540-00-101-4738	157	14
			158	4

CROSS-REFERENCE INDEXES

PART NUMBER INDEX

CAGEC	PART NUMBER	STOCK NUMBER	FIG.	ITEM
11083	5H2579	5330-00-580-9905	5	21
			5A	22
11083	5H2669	5330-00-893-5554	7	14
11083	5H2730	5330-00-530-1247	21	5
11083	5H2766	5307-01-069-0842	4	33
11083	5H2767	5331-00-850-7586	50	2
			186	19
11083	5H2786	4710-01-333-0044	4	43
			4A	32
			4B	17
11083	5H2830		59	9
11083	5H2831	5330-00-928-6894	59	10
11083	5H2902	2930-01-262-4950	63	16
11083	5H2906	5330-00-628-0558	63	15
11083	5H3327	5340-01-342-7873	158	7
11083	5H3328	5306-01-254-2463	158	20
11083	5H3329		158	21
11083	5H3895	3120-00-858-6240	43	24
			102	37
11083	5H4020	5340-01-169-2140	219	7
11083	5H4279	5340-00-819-2027	4B	2
11083	5H4380		26	27
11083	5H4759	5330-01-068-9820	25	2
11083	5H4909	5330-00-738-8622	174	18
11083	5H5782	2540-01-068-7068	127	9
11083	5H6001		192	12
11083	5H6005	5331-00-580-1227	214	17
11083	5H6308		146	40
11083	5H6467	5305-01-053-4850	73	3
			76	5
11083	5H6624	2590-00-195-5824	147	56
11083	5H6822	3120-00-478-8919	166	29
			167	27
11083	5H7033	5330-00-684-2974	18	16
11083	5H7071	2815-00-341-1504	5	4
			5A	6
11083	5H7110	4730-01-079-4374	183	13
11083	5H7152	5360-00-237-2158	49	18
11083	5H7225	4730-00-363-9320	31	17
11083	5H7370	5331-00-590-1064	25	11
11083	5H7376	5330-00-712-3241	18	15
11083	5H8177	2520-01-066-9163	10	11
11083	5H8803		158	2
11083	5H8812	5315-01-254-2374	158	22
11083	5H8840		82	7
11083	5H8985	5315-01-069-0755	4	29
			107	8
11083	5H9671	2815-00-470-6516	18	14
11083	5J0557	3120-01-154-7173	260	19
11083	5J1192	3110-01-067-2158	238	7
11083	5J1204		260	1

CROSS-REFERENCE INDEXES

PART NUMBER INDEX

CAGEC	PART NUMBER	STOCK NUMBER	FIG.	ITEM
11083	5J1355	5360-01-067-1417	218	17
11083	5J1389		214	14
11083	5J2527	5310-01-284-9726	238	5
11083	5J2528	2530-01-067-2159	238	4
11083	5J2529	5342-01-068-7248	238	3
11083	5J2531	2805-01-090-6871	238	2
11083	5J3241	3110-01-067-2160	202	15
			223	14
11083	5J3576	5360-01-129-4814	258	6
11083	5J3639		202	16
11083	5J3721	4820-01-267-0507	250	10
11083	5J3942	5330-01-066-8435	142	8
11083	5J4321		256	4
11083	5J4407	5330-01-322-8799	242	16
11083	5J442	5315-01-164-8693	186	22
11083	5J4698	5360-01-170-2229	154	24
11083	5J4870		231	7
11083	5J4993	3830-00-929-8148	242	15
11083	5J5020	3830-00-929-8149	238	20
11083	5J5118		255	19
11083	5J5120		255	23
11083	5J5315	2990-01-103-3652	47	18
			221	20
			222	17
11083	5J5559	5330-00-948-5162	224	7
			241	2
11083	5J7303	4730-01-304-2800	230	32
			231	16
11083	5J7947		257	7
11083	5J8207	5342-01-073-9953	253	22
11083	5J8300	5330-01-053-7368	242	4
11083	5J8325	5330-01-048-7317	241	18
11083	5J8350	5330-01-048-7111	224	11
11083	5K5959	5330-01-053-4684	219	13
11083	5K9239	4730-01-159-7677	248	15
11083	5K9241	4730-01-069-0768	248	18
11083	5K9242	4730-01-069-0769	32	1
			248	23
11083	5K9243	4730-01-059-9435	26	26
			32	34
			248	25
11083	5K9246	4730-01-059-9344	52	20
			53	4
			178	4
			179	13
			180	10
			181	12
11083	5K9979	4730-01-069-0770	246	14
11083	5K9988	4730-01-257-4902	179	15
			181	14
11083	5K9989	4730-01-202-3356	179	19

CROSS-REFERENCE INDEXES

PART NUMBER INDEX

CAGEC	PART NUMBER	STOCK NUMBER	FIG.	ITEM
11083	5K9989	4730-01-202-3356	181	18
11083	5L1883	4730-01-377-6781	5A	19
			64	12
11083	5L4197	5315-01-070-2810	52	12
11083	5L4426	5310-00-768-0319	71A	10
11083	5L4507		80	33
11083	5L5032	5331-00-074-3771	237	6
11083	5L7200	5305-01-058-9146	80	17
11083	5L8854	2815-00-994-7407	39	5
			39A	3
11083	5L8855	5330-00-994-7409	39	4
			39A	1
11083	5L8991	5330-00-104-6565	45	11
11083	5L8992	5340-00-116-0497	45	10
11083	5M0549	3020-00-747-9850	111	2
11083	5M0593	3020-01-067-5659	190	8
11083	5M0597	5330-00-923-8958	190	9
11083	5M0598		190	33
11083	5M0599		190	31
11083	5M0603	2520-01-377-6783	190	12
11083	5M1065		246	13
11083	5M1091	5307-00-008-2233	110	21A
11083	5M1167	5306-01-266-8455	113	1
11083	5M1168	5305-01-254-2563	113	16
11083	5M1177	2520-00-756-8551	129	11
11083	5M1247	2530-01-069-0783	136	6
			137	3
			138	5
11083	5M1669	5340-01-236-2475	134	18
11083	5M2043	5340-01-162-4077	135	16
11083	5M2051	3110-00-249-5244	107	30
11083	5M2057	5331-00-855-8047	243	20
58312	5M2477-00	9905-00-250-4399	199	3
11083	5M2622	5330-00-949-0735	24	3
11083	5M2691	5365-00-139-0096	33	47
11083	5M2697	5365-00-492-8851	33	47
11083	5M2894	5310-00-117-4788	4	6
			4	12
			4	54
			5	17
			6	2
			12	10
			15	20
			16	6
			20	15
			23	14
			25	13
			26	11
			27	8
			41	27
			42	24

CROSS-REFERENCE INDEXES

PART NUMBER INDEX

CAGEC	PART NUMBER	STOCK NUMBER	FIG.	ITEM
11083	5M2894	5310-00-117-4788	43	14
			48	4
			49	2
			5A	18
			53	3
			55	12
			56	3
			57	9
			58	7
			59	7
			60	15
			63	5
			64	9
			67	3
			68	26
			87	2
			88	27
			88	37
			89	21
			93	18
			102	19
			102	22
			103	2
			103	30
			104	3
			110	18
			111	17
			120	7
			120	24
			121	8
			122	44
			124	27
			126	12
			126	17
			146	19
			156	10
			166	23
			167	22
			17A	2
			170	5
			172	17
			178	9
			178	21
			179	8
			180	15
			180	27
			181	7
			182	19
			183	2
			186	11
			197	6

CROSS-REFERENCE INDEXES

PART NUMBER INDEX

CAGEC	PART NUMBER	STOCK NUMBER	FIG.	ITEM
11083	5M2894	5310-00-117-4788	211	3
			212	12
			220	18
			221	17
			222	11
			225	34
			226	32
			227	2
			227	8
			230	34
			231	19
			232	7
			234	11
			235	3
			239	13
			240	19
			244	8
			263	3
			265	62
			64A	6
			64B	2
			64C	5
			64D	2
			64E	12
			126A	12
11083	5M2976	2520-00-948-9854	113	23
11083	5M3012		260	9
11083	5M3306	3040-00-247-9923	47	32
11083	5M3320	3120-00-948-9964	116	7
			116	19
11083	5M3373	2530-00-482-3587	142	9
11083	5M3374	5330-00-788-5829	142	10
11083	5M3492	5365-00-948-1600	126	8
11083	5M3947	2530-01-070-4594	112	5
11083	5M3996	3020-01-068-9699	111	28
11083	5M3999	2530-01-068-9700	111	16
11083	5M4281	2815-00-795-2438	11	10
11083	5M4427	3020-01-068-9701	112	4
11083	5M4996		130	8
11083	5M5016	5310-01-067-1396	128	36
			149	13
11083	5M5017	5310-00-436-4328	129	21
11083	5M544	5305-01-255-6489	155	25
			224	14
11083	5M5860	5331-00-074-3776	183	8
11083	5M594	3020-00-949-1370	190	25
11083	5M6155	4710-01-253-4569	127	34
11083	5M6213	4730-00-089-2515	30	6
			51	13
			248	14
11083	5M6214	4730-00-924-7886	4	34

CROSS-REFERENCE INDEXES

PART NUMBER INDEX

CAGEC	PART NUMBER	STOCK NUMBER	FIG.	ITEM
11083	5M6214	4730-00-924-7886	12	7
			17	12
			29	3
			33	19
			38	12
			4A	20
			5A	16
			58	9
			64	17
			65	22
			123	12
			124	8
			125	7
			130	33
			150	19
			153	17
			17A	17
			29A	6
11083	5M6668	5305-00-005-0896	80	33
			85	6
11083	5M6708	5310-00-739-9977	141	8
11083	5M7306		142	15
11083	5M7423	5331-01-093-8484	198	3
11083	5M7743		155	34
11083	5M7908	5365-00-411-4584	206	20
11083	5M7937	5315-01-062-5209	111	27
			111	30
			112	9
			127	18
11083	5M7941		108	3
11083	5M7953	2520-01-068-7111	107	14
11083	5M7955	2530-01-069-0784	107	27
11083	5M7959	5342-01-068-7112	107	12
11083	5M7961	5310-01-067-5661	107	15
11083	5M7983		108	9
11083	5M7989	3020-01-069-0865	107	13
11083	5M7996		107	31
11083	5M8007	3020-01-069-0786	107	9
11083	5M8429	5340-00-829-0483	120	4
11083	5M8672		147	49
11083	5M8732		158	23
11083	5M902	4730-01-249-8409	122	8
11083	5M9621	5307-00-004-1605	110	6
11083	5M9622	5365-00-762-6106	124	16
11083	5M9623	5310-00-948-3280	124	15
11083	5M9624	5365-00-949-1439	124	14
			125	14
11083	5M9653	5340-01-258-0185	110	9
11083	5M9654	5330-00-913-8879	110	46
11083	5M9735	5330-00-950-8223	68	42
11083	5M9739	5330-00-131-1649	68	49

CROSS-REFERENCE INDEXES

PART NUMBER INDEX

CAGEC	PART NUMBER	STOCK NUMBER	FIG.	ITEM
11083	5N6969		27	12
11083	5N6978	4710-01-377-9235	64E	6
11083	5N7004	4710-01-378-5611	64E	16
11083	5N7006	4710-01-377-9795	64E	15
11083	5N8149	4710-01-377-9280	64B	3
			64D	3
11083	5N8153	4710-01-377-9240	64B	17
			64D	14
11083	5N8154	5340-01-378-7075	64B	19
			64D	16
11083	5N8218	4710-01-378-1583	4A	33
11083	5N8247		64A	12
			64C	12
11083	5N8405	4710-00-341-1479	27	1
11083	5N8520		5A	3
11083	5N8521	2815-01-377-6778	5A	2
11083	5N8522	2815-01-211-4624	5A	1
11083	5N8657	2815-01-361-3906	28	1
11083	5N8691	5330-01-066-9255	10	10
11083	5N9219		64E	4
11083	5N9248	4710-01-377-9300	64A	1
11083	5P 695	5975-01-103-3695	BULK	2
11083	5P 747	2990-01-103-3696	BULK	1
11083	5P-9222	5330-01-440-9658	KIT	
11083	5P-9224		KIT	
11083	5P-9227	5330-01-440-9664	KIT	
11083	5P-9228	5330-01-440-9666	KIT	
11083	5P-9229	5330-01-441-0381	KIT	
11083	5P-9232	5330-01-192-3336	KIT	
11083	5P-9233	5330-01-441-0384	KIT	
11083	5P-9552	5330-01-441-0386	KIT	
11083	5P-9556	5330-01-441-0412	KIT	
11083	5P0090		127	26
11083	5P0179	4720-00-198-5808	BULK	8
11083	5P0385	4720-01-190-1021	BULK	25
11083	5P0537	5310-01-051-2360	51	3
11083	5P0597	4730-01-053-4687	63	2
11083	5P0763-4.5		64E	9
11083	5P1076	5310-01-097-6720	159	21
11083	5P1198	4710-01-068-7274	BULK	18
11083	5P1198-51		BULK	23
11083	5P1200	4710-01-169-7206	BULK	19
19207	5P1200-24		122	32
11083	5P1201	4710-01-257-1478	BULK	20
19207	5P1201-38		42	26
19207	5P1201-39		42	21
19207	5P1201-41		43	40
19207	5P1201-48		43	6
11083	5P1201-49		42	26
19207	5P1201-89		42	16
19207	5P1201-97		43	4

CROSS-REFERENCE INDEXES

PART NUMBER INDEX

CAGEC	PART NUMBER	STOCK NUMBER	FIG.	ITEM
11083	5P1257	4720-01-192-1369	BULK	15
11083	5P1259	4720-00-293-7288	BULK	14
11083	5P1259-4		63	3
11083	5P1263	4720-00-421-3854	BULK	9
19207	5P1277-205		93	7
11083	5P1442	4720-01-093-7331	BULK	11
11083	5P1526		218	19
11083	5P178	4720-01-066-4587	BULK	12
19207	5P178-13		236	2
19207	5P178-17		261	43
			264	9
			265	2
11083	5P178-20		227	37
19207	5P178-5		264	57
19207	5P178-56		261	20
			264	15
			265	8
			265	60
19207	5P178-70		261	4
			264	2
			264	22
			265	44
19207	5P178-72		265	15
19207	5P178-73		265	21
19207	5P178-74		261	15
			264	28
19207	5P180-25		225	4
			227	32
19207	5P180-29		225	54
			226	3
			226	52
			227	42
19207	5P180-35		232	10
			232	16
			263	11
19207	5P180-41		232	21
			263	6
11083	5P2618	4730-01-062-9906	227	5
11083	5P2645	4730-01-184-9425	213	20
11083	5P2948	5935-01-068-7146	246	7
11083	5P2957	5940-01-250-8721	98	9
			98	21
			99	17
11083	5P3108	5330-01-069-0801	207	5
			208	5
			209	3
			210	3
			216	11
11083	5P3160	5935-01-118-8884	99	9
19207	5P384-15		83	6
19207	5P384-30		87	7

CROSS-REFERENCE INDEXES

PART NUMBER INDEX

CAGEC	PART NUMBER	STOCK NUMBER	FIG.	ITEM
19207	5P384-5		83	5
11083	5P3857		227	40
			236	4
11083	5P3860	4730-01-066-8597	37	10
11083	5P4443	4730-01-178-0773	19	5
11083	5P4448	4730-01-048-7874	19	4
11083	5P4908		19	6
11083	5P4933	5330-01-069-0886	213	27
11083	5P4935	5340-01-259-8962	166	32
			167	29
11083	5P497	2920-01-058-9147	BULK	28
19207	5P497-1		83	7
			84	2
19207	5P497-161		100	17
19207	5P497-260		100	2
19207	5P497-268		93	8
19207	5P497-29		87	8
19207	5P497-4		82	3
19207	5P497-66		93	28
19207	5P497-8		93	21
19207	5P497-80		93	36
11083	5P537	5310-01-051-2360	36	2
			91	10
11083	5P5582	5305-01-209-8693	88	17
11083	5P5583	5305-01-254-2280	103	16
11083	5P5621	6145-01-191-3320	BULK	32
11083	5P5621-12		74A	6
19207	5P5622-1		99	2
11083	5P5622-20		69	10
11083	5P5624	6145-00-805-1719	BULK	34
19207	5P5624-1		88	41
			98	2
			99	2
19207	5P5624-10		98	15
19207	5P5624-11		98	17
19207	5P5624-12		98	19
19207	5P5624-13		98	20
19207	5P5624-14		98	22
19207	5P5624-15		98	23
19207	5P5624-16		98	25
19207	5P5624-2		98	3
19207	5P5624-25		80	26
			89	7
19207	5P5624-3		98	4
19207	5P5624-4		98	5
19207	5P5624-45		89	7
			90	10
19207	5P5624-49		88	33
			103	10
19207	5P5624-5		89	11
			90	17

CROSS-REFERENCE INDEXES

PART NUMBER INDEX

CAGEC	PART NUMBER	STOCK NUMBER	FIG.	ITEM
19207	5P5624-5		98	6
19207	5P5624-53		101	2
19207	5P5624-6		88	10
			98	8
19207	5P5624-7		91	3
			98	10
19207	5P5624-8		98	11
19207	5P5624-9		89	18
			90	7
			98	14
11083	5P5628	4710-01-216-2151	BULK	21
19207	5P5628-1		97	5
19207	5P5628-5		103	21
19207	5P5628-52		101	3
19207	5P5629-1		97	4
11083	5P5630	4720-01-103-3700	BULK	26
19207	5P5630-65		246	12
11083	5P5632		BULK	35
11083	5P5633	4710-01-251-1007	BULK	16
19207	5P5633-12		96	1
11083	5P5756	5330-01-103-3701	40	18
11083	5P598	4730-01-059-5352	57	29
			58	2
			59	31
			60	1
			225	60
			229	33
11083	5P5995	4720-01-253-6944	BULK	17
19207	5P5995-21		103	11
11083	5P5996		BULK	22
19207	5P5996-25		88	32
11083	5P6016		BULK	27
19207	5P621-1		84	2
11083	5P6298		74A	12
11083	5P6642		BULK	37
19207	5P6642-1		97	4
11083	5P6725		88	3
			98	16
11083	5P6766	3110-01-079-4670	190	21
11083	5P6945	5305-01-158-2039	45	9
19207	5P695-31		94	2
			94	29
19207	5P695-88		94	2
11083	5P7071	5307-01-254-2497	60	32
11083	5P7213	5310-01-102-9866	131	6
11083	5P734	4720-01-251-3118	BULK	3
19207	5P734-24		227	13
19207	5P734-46		227	20
11083	5P735		BULK	4
19207	5P735-17		225	13
			226	11

CROSS-REFERENCE INDEXES

PART NUMBER INDEX

CAGEC	PART NUMBER	STOCK NUMBER	FIG.	ITEM
19207	5P735-17		227	25
19207	5P747-1		99	22
19207	5P747-110		94	3
19207	5P747-31		94	20
19207	5P747-36		94	3
			94	30
19207	5P747-8		94	15
11083	5P7925	5305-01-254-2518	59	18
11083	5P8245	5310-01-098-0624	65	14A
			69	2
			64B	15
			64F	6
11083	5P8247	5310-01-095-4631	159	8
			190	19
			64C	18
			71B	18
			71C	14
11083	5P8248	5310-01-102-2477	10	14
11083	5P89	3110-01-189-1968	127	27
11083	5P9262		118	23
11083	5P9294	5330-01-102-3252	35	4
11083	5P9514	3110-01-129-6756	71A	31
11083	5P9614	5305-01-254-2462	91	7
11083	5P9757	5331-01-102-4354	44	13
11083	5R0552	5340-01-377-2474	64A	18
11083	5R5304	4730-01-152-2666	17B	6
11083	5R7207		184	1
11083	5R8866	2815-01-317-7613	1	1
11083	5R8974	5340-01-377-9724	64C	17
11083	5R8975		64C	1
11083	5R8982		17A	3
11083	5R939		261	48
			264	24
			265	17
11083	5R940		261	48
			264	24
			265	17
11083	5S0162	2530-01-222-4613	132	13
			132	13
11083	5S0464		128	24
11083	5S0465		128	22
11083	5S1211	5340-00-246-2746	57	6
			59	5
11083	5S1213	2930-00-930-9098	57	7
			59	6
11083	5S1218	6620-00-912-9151	57	5
			59	4
11083	5S1220	2815-00-113-7929	15	23
11083	5S135		128	29
11083	5S1492	2540-01-068-7163	129	29
11083	5S1567		190	11

CROSS-REFERENCE INDEXES

PART NUMBER INDEX

CAGEC	PART NUMBER	STOCK NUMBER	FIG.	ITEM
11083	5S160	2530-01-305-3950	132	24
11083	5S161	3830-01-238-2541	132	33
11083	5S163	2590-01-190-1092	132	13
			132	13
11083	5S1911	2930-00-234-3033	65	1
11083	5S2620	5365-01-053-4689	46	4
11083	5S2884	2815-00-931-7856	40B	8
11083	5S3552	5310-01-257-4300	174	28
			174	28
11083	5S3618	5340-01-182-7381	182	16
11083	5S3664	2520-01-254-5580	182	18
11083	5S3779	4730-01-062-5932	233	8
			233	25
11083	5S3820	4730-01-284-6103	261	39
			261	55
			264	38
			264	71
			265	32
			265	77
11083	5S3828	5365-00-449-5817	30	20
11083	5S4017	4730-00-407-8330	156	18
11083	5S4033		128	7
11083	5S4361		124	20
			125	20
11083	5S4437	4730-01-069-0898	124	19
			125	15
11083	5S4629	5330-00-931-8011	57	2
			59	1
11083	5S467	5325-01-255-2603	128	23
11083	5S476		159	2
11083	5S478		159	12
11083	5S4905		172	19
11083	5S5059		44	9C
11083	5S5080	5306-00-458-1930	57	4
			59	3
11083	5S5125		33	40
11083	5S5128	5340-01-377-2471	63	13
11083	5S5746		139	1
11083	5S6120	2910-00-409-6549	36	8
11083	5S6274		36	9
11083	5S6371	5330-00-894-0653	18	9
11083	5S6622	5330-00-929-5514	116	17
11083	5S6876	5365-01-254-1309	154	18
11083	5S6880	2530-01-168-1038	152	36
11083	5S6921	2540-01-068-7165	129	15
11083	5S7189	5365-00-149-8683	33	47
11083	5S7830	2520-00-788-5812	112	12
11083	5S8002		68	30
11083	5S8034		2	5
			3	13
11083	5S8095	2510-01-066-9189	8	4

CROSS-REFERENCE INDEXES

PART NUMBER INDEX

CAGEC	PART NUMBER	STOCK NUMBER	FIG.	ITEM
11083	5S8096		8	5
11083	5S8576		79	2
11083	5S9068	6620-00-111-7089	246	16
11083	5S9593	4730-01-261-9432	235	8
11083	5S969		182	24
79136	5008-100MD	5365-00-687-5158	40	13
			40B	15
19207	503477	5310-00-050-3477	166	27
			167	24
			172	12
89346	50410DA	4730-00-044-4688	73	18
			76	44
			77	6
			77	22
			133	18
72582	5159347	5365-00-816-5830	156	8
72962	53NTU7947-2812	5310-00-460-8239	238	22
75377	56-941-45	5310-00-188-0473	74A	13
70040	5622759	2910-00-033-2200	52	13
52788	5660799	5331-00-325-6310	135	17
			185	3
11083	6A3626	6145-01-229-2077	BULK	38
19207	6A3626-172		92	14
19207	6A3626-19		92	8
19207	6A3626-7		92	21
			92	34
11083	6B3224	3110-00-100-0305	134	20
11083	6B4542	5310-00-434-1347	70	7
11083	6B6224	2930-00-352-8085	5	20
11083	6B6489	5307-00-423-9854	4	51
			4A	40
11083	6B6683	5310-00-347-4441	5	7
			149	7
11083	6B7020	5365-00-255-1231	26	29
11083	6B7687	3120-00-176-5546	152	27
11083	6B830	5340-00-423-9937	25	16
			193	2
			194	9
			195	7
11083	6B8505	2815-00-365-2160	15	12
11083	6B863	5310-00-421-9603	250	4
11083	6B9002		183	18
11083	6B9549	5360-00-423-9986	26	22
11083	6B9551		20	21
11083	6B9673	4730-01-250-5861	27	21
11083	6D0679	5355-01-189-1990	230	16
11083	6D9157	5330-01-064-7416	118	9
11083	6D9953	5315-01-053-4820	70	42
11083	6F0155	5325-00-309-7459	112	22
11083	6F0857	2520-00-149-7508	31	6
			32	26

CROSS-REFERENCE INDEXES

PART NUMBER INDEX

CAGEC	PART NUMBER	STOCK NUMBER	FIG.	ITEM
11083	6F0857	2520-00-149-7508	51	25
11083	6F1069	5330-00-333-5032	31	21
11083	6F2072	5315-00-274-4256	134	8
			135	5
11083	6F2956	3110-00-100-0321	149	1
11083	6F3202	5330-00-426-5652	63	22
			65	33
11083	6F4161	5315-01-254-2377	155	24
11083	6F4868	5330-00-297-6548	186	18
11083	6F5282		20	22
11083	6F5559	5331-00-580-1215	194	14
			195	21
11083	6F6673	5331-00-865-0404	205	5
			206	9
			206	16
			214	10
11083	6F7030	5306-00-272-4223	172	5
			244	21
11083	6F7048	5310-01-106-5268	47	3
11083	6F7062	5310-00-362-7988	24	6
			121	24
11083	6F7522	5310-00-136-4398	253	33
			253	41
			257	13
11083	6F7523	3130-00-131-1832	253	31
			253	39
			257	10
11083	6F7593	5330-00-292-4350	132	30
11083	6F7767	5330-00-377-2750	63	7
11083	6F8146	5331-00-599-2190	63	12
11083	6F8814	5340-01-058-8097	55	1
			56	9
11083	6H1717	5306-00-874-4001	20	26
			21	14
			58	4
			60	4
			100	22
			236	27
11083	6H1827	5325-00-949-1343	190	27
11083	6H1871	5331-00-708-3815	29	6
			29A	9
11083	6H2007	5330-00-585-3186	5	15
			5A	20
			64	11
11083	6H2948	5315-00-529-6952	124	9
11083	6H3035		26	33
11083	6H3068	5340-00-922-2596	248	4
11083	6H3142	4710-00-341-1518	27	18
11083	6H3369		26	30
11083	6H3956	5315-00-586-5103	47	24
11083	6H3977	5331-00-741-2096	176	14

CROSS-REFERENCE INDEXES

PART NUMBER INDEX

CAGEC	PART NUMBER	STOCK NUMBER	FIG.	ITEM
11083	6H4005	5325-00-249-5322	101	13
11083	6H4043	4710-00-657-9694	26	37
11083	6H4045	4710-00-657-9697	26	36
11083	6H4047		26	32
11083	6H4050	2815-00-130-3691	26	2
11083	6H411	5310-00-209-4771	15	14
11083	6H4208	5342-00-948-6464	147	45
11083	6H5139	2520-01-028-8096	237	16
11083	6H5380	2520-01-067-1392	130	4
11083	6H5474	5365-01-068-9646	130	38
11083	6H6043	5365-01-068-7242	111	5
			127	11
11083	6H6095	2940-00-894-6406	18	10
11083	6H6802		12	6
11083	6H6803	2510-01-069-0845	12	2
11083	6H7353		159	4
11083	6H7354		159	24
11083	6H9095	2815-00-876-8045	8	6
11083	6H9361	2590-01-066-0613	237	20
11083	6J0608	3830-00-044-1614	250	1
11083	6J1038	5330-01-066-1469	213	12
11083	6J1085		250	2
11083	6J1311	5315-00-246-0998	215	27
11083	6J1553		224	5
11083	6J2225		224	3
11083	6J2419	5331-00-494-2763	35	2
11083	6J2474		253	19
11083	6J3134	5330-01-064-8247	207	6
			208	6
			209	7
			210	7
			216	12
11083	6J3913	5306-01-108-3740	164	12
			165	14
11083	6J4169	5330-01-048-7315	241	17
11083	6J4337		242	17
11083	6J4793	3830-01-356-3583	253	28
11083	6J4804		253	15
11083	6J6680		258	14
11083	6J7167	5330-01-048-6002	241	19
11083	6J7890		224	16
11083	6J8002		206	11
11083	6J8006		205	1
11083	6J8013		206	22
11083	6J8016		205	16
11083	6J8019		205	13
11083	6J8020		205	8
11083	6J8115		205	12
11083	6J8210		201	15
			206	23
11083	6J8318		241	14

CROSS-REFERENCE INDEXES

PART NUMBER INDEX

CAGEC	PART NUMBER	STOCK NUMBER	FIG.	ITEM
11083	6J8319		241	20
11083	6J8320		241	7
11083	6J8419		260	5
11083	6J8711		235	24
11083	6J8809	5340-00-404-3996	258	10
11083	6J8811	3830-01-048-0809	258	9
11083	6J8813	3830-01-048-3207	258	8
11083	6J8814	2590-01-123-5945	258	7
11083	6J9121		242	11
11083	6J9122		242	18
11083	6J9124		242	8
11083	6J9128		242	12
11083	6J9129		242	1
11083	6J9340	3040-01-301-2966	235	21
11083	6J9474		260	16
11083	6J9480		260	14
11083	6J9482		260	13
11083	6K0806	4730-01-068-6077	87	23
11083	6K3934	6145-01-068-0017	80	7
11083	6K3979		225	48
			226	46
			228	15
			229	14
11083	6K6179		58	43
11083	6K6830	4720-01-067-1395	122	12
11083	6K7447		2	2
11083	6K8079	4730-01-053-4693	27	2
11083	6K8088	3110-01-066-9172	146	35
			150	2
11083	6K8329	3010-01-069-0776	149	2
11083	6K9194	4730-01-051-8745	26	17
11083	6L1698	5365-01-161-2642	102	16
11083	6L3616	4730-01-068-6081	26	1
			32	5
			179	10
			181	9
11083	6L3670	5306-00-118-3055	183	12
11083	6L4088	2815-01-361-6881	5A	14
11083	6L4470		185	24
11083	6L4783	5306-01-059-9566	192	19
58312	6L5305-00	5330-00-439-2716	25	14
11083	6L5311	5330-01-377-2720	20	19
11083	6L5359	5330-00-890-8104	225	1
			229	29
11083	6L5464	5330-00-122-0632	69	17
11083	6L5465	5330-00-122-0633	6	4
11083	6L5498	5330-00-679-6231	12	19
11083	6L5503	5330-00-125-8035	4	8
			4A	10
			249	4
11083	6L5556	5330-00-349-8341	16	8

CROSS-REFERENCE INDEXES

PART NUMBER INDEX

CAGEC	PART NUMBER	STOCK NUMBER	FIG.	ITEM
11083	6L5764	2910-00-116-0444	36	17
11083	6L5766	5330-00-105-0356	36	3
11083	6L5767	4810-00-116-0446	36	4
11083	6L5769	5310-00-116-0447	36	15
11083	6L5773	5330-00-105-0357	36	13
11083	6L7751	2520-01-066-0510	189	17
11083	6L7812	5331-00-123-2733	4	19
			4A	11
11083	6L7813	5330-00-124-9159	5	19
11083	6L7814	5330-00-232-0351	5	26
			5A	27
11083	6L7816	5331-00-238-7413	5	10
			5A	11
58312	6L8968-00	2990-00-177-3449	39	10
11083	6N0076		27	19
11083	6N0077		25	27
11083	6N0079		25	31
11083	6N0082		25	26
11083	6N0085		25	3
11083	6N0089		64	27
11083	6N0096		64	13
11083	6N0652		54	2
11083	6N0709		58	8
11083	6N0726		68	16
11083	6N0737		67	4
11083	6N0743		68	8
11083	6N0762		68	13
11083	6N0812	2930-01-250-4319	57	17
			59	19
11083	6N1226		70	36
11083	6N1230	4710-01-251-1223	32	4
11083	6N1311	2990-01-377-7852	44	9
11083	6N1312	3040-01-384-8994	44	9A
11083	6N1390	2930-01-377-7862	64F	5
11083	6N1498		29A	12
11083	6N1583	4710-01-377-9629	64E	11
11083	6N1603	2990-01-103-3675	36	11
11083	6N1604		249	13
11083	6N1606	5360-01-067-5618	36	16
11083	6N2676		24	1
11083	6N2822		7	7
11083	6N2823	2815-01-068-9717	7	4
11083	6N2954	5306-00-006-4758	36	12
11083	6N3279	5970-01-068-9787	73	25
			76	34
			74A	24
11083	6N334		115	1
11083	6N3504	5340-01-066-4744	44	6
11083	6N3821	2920-00-412-4148	70	27
11083	6N4301		68	10
11083	6N4302	4730-01-250-7002	64	21

CROSS-REFERENCE INDEXES

PART NUMBER INDEX

CAGEC	PART NUMBER	STOCK NUMBER	FIG.	ITEM
11083	6N4306	4730-01-250-5025	64	19
11083	6N4307		68	51
11083	6N4744	4730-01-194-4119	65	30
11083	6N5068	5307-01-377-6176	20	24
11083	6N5117		49	21
11083	6N5362		49	6
11083	6N5363		48	24
11083	6N5365		48	19
11083	6N5366		49	28
11083	6N5368		49	23
11083	6N5369		48	20
11083	6N5370		49	24
11083	6N5387		4	16
11083	6N5435		55	3
11083	6N5475	5330-01-145-6023	65	29
11083	6N5476	5365-01-145-0675	65	28
11083	6N5737		58	42
11083	6N5966	4730-01-250-5860	37	15
11083	6N5967	4730-01-377-6791	39A	4
11083	6N5968		55	8
11083	6N5978	4730-01-377-6792	39A	2
11083	6N5987	3040-01-103-3685	65	27
11083	6N6015	2930-01-047-9321	65	1
11083	6N6032		10	4
11083	6N6415		10	1
11083	6N6830	5330-01-049-2022	53	9
11083	6N7016	2990-01-103-3689	51	2
11083	6N7094	4710-01-250-4558	38	15
11083	6N7199	2590-01-377-7843	64	24
11083	6N7201	2990-01-103-6628	40	21
11083	6N7202	2990-01-103-6629	40	2
11083	6N7203	2990-01-048-4494	40	1
11083	6N7212	2990-01-048-7804	55	6
11083	6N7239	2990-01-103-6630	KIT	
11083	6N7515		58	33
			60	29
11083	6N7517		57	10
11083	6N7518		57	28
			58	14
			59	30
11083	6N7591		68	15
11083	6N7677	2990-01-103-6633	68	9
11083	6N7678		68	7
11083	6N793	4730-01-250-7157	57	19
			59	20
11083	6N795	4730-01-250-5865	58	3
11083	6N799		57	12
			59	13
11083	6N83		249	3
11083	6N84		4	14
			4A	9

CROSS-REFERENCE INDEXES

PART NUMBER INDEX

CAGEC	PART NUMBER	STOCK NUMBER	FIG.	ITEM
11083	6N8433	4710-01-250-5172	64	28
11083	6N8434	4720-01-251-0992	64	6
11083	6N854	5330-01-017-7157	58	44
11083	6N8629	5340-01-071-2545	44	7
11083	6N874	2930-01-315-0967	67	6
11083	6N875	5330-01-253-6465	57	20
			59	21
11083	6N876		57	15
			59	16
11083	6N877		57	16
			59	17
11083	6N8901	5930-01-342-5782	89	3
11083	6N907	5340-01-254-7148	58	26
			60	21
11083	6N908		58	40
11083	6N910		58	31
			60	27
11083	6N914		58	29
			60	25
11083	6N919		57	25
			59	26
11083	6N9294	2920-01-026-9521	69	20
11083	6N9313	5330-01-103-6637	65	24
11083	6N957	2930-01-018-6144	58	34
			60	34
11083	6N9587	5940-01-097-3578	99	3
			103	9
11083	6N961		57	27
			59	29
11083	6N9653	2520-01-048-3938	24	4
11083	6N968	5360-01-107-3892	36	10
11083	6P0683		120	32
11083	6P0685	4720-01-067-1401	120	38
11083	6P0819	4710-01-251-1226	109	5
11083	6P0821	4710-01-251-1225	109	3
11083	6P1357	5315-01-066-8459	133	14
11083	6P1403		133	3
11083	6P1404	5365-01-070-2911	133	3
11083	6P1703	2510-01-217-9361	165	3
11083	6P1705	5340-01-216-6831	165	3
11083	6P1998		93	6
11083	6P2083	3120-01-069-1430	142	33
11083	6P2243		87	24
11083	6P2488		62	7
11083	6P2495	2590-01-223-5173	62	6
11083	6P2502		62	4
11083	6P2506		167	6
11083	6P2776	3020-00-894-7279	129	37
11083	6P313		261	28
			264	43
			265	65

CROSS-REFERENCE INDEXES

PART NUMBER INDEX

CAGEC	PART NUMBER	STOCK NUMBER	FIG.	ITEM
11083	6P3131		93	34
11083	6P3132		93	13
11083	6P3135		132	2
11083	6P3136		132	2
11083	6P315		261	68
			264	64
			265	64
11083	6P317		261	8
			264	53
			265	51
11083	6P318		261	13
			264	27
			265	20
11083	6P3222		92	31
			93	27
11083	6P3303	2530-00-738-8715	136	11
			138	6
11083	6P3307	2530-01-085-3736	138	6
11083	6P3343		48	18
11083	6P3553		125	3
11083	6P3554	2520-01-018-1838	125	1
11083	6P3591		237	3
11083	6P3593	3040-01-318-8494	129	32
11083	6P3596		143	5
11083	6P3598		128	17
11083	6P3599		128	17
11083	6P382		47	17
11083	6P3896		87	6
11083	6P4132		143	1
11083	6P432	4710-01-250-5173	109	15
11083	6P434	4710-01-250-5174	109	13
11083	6P4350		199	1
11083	6P4749		141	11
11083	6P4750		141	11
11083	6P4897	2530-01-048-3937	136	1
11083	6P4898	2530-01-050-3277	137	1
11083	6P4899		138	2
11083	6P4900	2530-01-297-0335	138	2
11083	6P5159	4720-01-208-9237	225	12
			226	10
			227	24
11083	6P5204	5342-01-264-6075	188	14
11083	6P5205		220	22
11083	6P5206	5340-01-161-9162	221	27
11083	6P5207	5330-01-068-6110	220	7
			221	7
			222	4
11083	6P5208	3040-01-171-3357	220	6
			221	6
11083	6P5209	5340-01-163-5981	220	5
			221	5

CROSS-REFERENCE INDEXES

PART NUMBER INDEX

CAGEC	PART NUMBER	STOCK NUMBER	FIG.	ITEM
11083	6P5213	2510-01-238-5457	162	1
11083	6P5327	5340-01-258-4867	236	14
11083	6P5353	4720-01-208-7077	227	12
11083	6P5354		227	36
11083	6P5355	4720-01-273-1052	227	19
11083	6P5386	5340-01-263-8737	220	3
			221	4
11083	6P5441	5340-01-258-4685	244	1
11083	6P5450	5340-01-258-0140	244	15
11083	6P5588		236	31
11083	6P5624		164	3
			165	6
11083	6P5625		164	3
			165	6
11083	6P5638		164	23
			165	22
11083	6P5659	5340-01-228-0501	86	1
			100	9
			101	18
11083	6P5661	3020-01-160-3640	188	1
11083	6P5705		147	18
11083	6P5726		147	22
11083	6P5904		147	29
11083	6P5905		230	33
			231	17
11083	6P5906		147	31
11083	6P6005		101	1
11083	6P6031	5340-01-262-9742	189	1
11083	6P6033	3040-01-254-1118	188	4
11083	6P614		48	16
11083	6P6246		230	9
11083	6P6251	2510-01-171-5018	239	9
			240	5
11083	6P6253	2530-01-253-0440	146	38
			151	13
11083	6P6332		168	25
11083	6P6335		168	27
11083	6P6383		170	13
11083	6P6496	2510-01-184-0786	163	1
11083	6P6502	5340-01-258-0141	163	4
11083	6P6655		236	1
11083	6P6705		261	41
			264	8
			265	1
11083	6P6726		261	62
			264	39
			265	73
11083	6P6728		261	32
			264	65
11083	6P6729		261	63
			264	40

CROSS-REFERENCE INDEXES

PART NUMBER INOEX

CAGEC	PART NUMBER	STOCK NUMBER	FIG.	ITEM
11083	6P6729		265	72
11083	6P6731		261	66
			264	42
			265	38
11083	6P6732		264	41
			265	39
11083	6P6733		261	65
11083	6P699	5325-01-103-6650	94	35
11083	6P7131		132	9
11083	6P7132		132	9
11083	6P7164		48	10
11083	6P7676		120	5
11083	6P7679	4730-01-250-3961	120	12
11083	6P7691		139	6
11083	6P7692		139	11
11083	6P7693		139	10
11083	6P7694		139	7
11083	6P7725		261	3
			264	20
			265	13
11083	6P7726		261	18
			264	13
			265	6
11083	6P7757	4710-01-253-2877	122	53
11083	6P7948		231	6
11083	6P8829	2590-01-123-5946	160	4
			161	6
11083	6P9022	5365-01-255-2721	133	3
11083	6P9296	5307-01-254-2496	47	9
11083	6P9395		88	29
11083	6P9540		261	64
			265	37
11083	6P9556		142	16
11083	6P9598		132	2
11083	6P9599		132	2
11083	6S2828	3110-01-013-3083	175	41
11083	6S2829	3110-01-013-4036	175	42
11083	6S4301		80	29
11083	6S7113		166	31
			167	40
11083	6S7230		122	36
11083	6T1933	3110-01-068-6136	142	31
11083	6T4481	3040-01-377-6782	111	1
11083	6T6782	2990-01-103-3703	143	4
11083	6T8886	2520-00-640-4345	149	19
11083	6V-3710	5330-01-441-0424	KIT	
11083	6V-3711	5330-01-207-2900	KIT	
			64B	4
			64B	9
			64D	4
			64D	9

CROSS-REFERENCE INDEXES

PART NUMBER INDEX

CAGEC	PART NUMBER	STOCK NUMBER	FIG.	ITEM
11083	6V-5475	5330-01-441-1791	KIT	
11083	6V-6358	5330-01-441-1790	KIT	
11083	6V-6360	5330-01-441-0426	KIT	
11083	6V-6394	5330-01-441-0429	KIT	
			126A	18
11083	6V-6396	5330-01-441-0462	KIT	
11083	6V1720		199	3
11083	6V2376	4730-01-196-7172	17B	5
11083	6V4658	4730-01-162-4358	234	2
11083	6V4669	4730-01-289-2345	232	13
			232	18
11083	6V4676	4730-01-267-2634	232	19
11083	6V4678	4730-01-297-9328	225	5
			225	56
			226	4
			226	54
			227	34
			227	34
			227	44
11083	6V4679	4730-01-254-0177	232	12
			232	22
11083	6V7534		68	34
11083	6V8378	5310-01-212-4579	74A	48
11083	6V8666		68	33
11083	6V8977	5330-00-414-4406	35	28
11083	6Y2330	2530-01-262-7616	144	1
83259	600-001-5-8	5330-00-601-4934	50	4
20680	6028	5306-01-051-7598	250	6
11083	618844		93	33
19207	6299613	5310-00-629-9613	28	6
30076	6327		177	6
70040	6436205	4330-00-168-1861	118	12
81321	6676571		237	14
11083	679846		233	15
11083	680009	4730-01-284-9068	227	14
			227	22
11083	680556		225	15
			226	13
			227	26
60038	68709		106	19
11083	7B1598	5342-01-067-8043	32	36
11083	7B2420	5340-00-352-8292	5	25
11083	7B2501	5340-00-426-5759	126A	15
11083	7B2742	5306-00-423-8784	21	3
11083	7B3028	5305-00-708-3823	125	6B
			140	9
			141	10
			199	2
			199	4
			199	4
			250	3

CROSS-REFERENCE INDEXES

PART NUMBER INDEX

CAGEC	PART NUMBER	STOCK NUMBER	FIG.	ITEM
11083	7B3039	5360-00-597-8341	243	14
11083	7B3235	5306-00-424-0086	24	2
			32	30
			38	17
			39	7
			41	22
			95	19
			108	1
			118	3
			120	41
			128	5
			161	11
			163	2
			165	4
			196	21
11083	7B4488	5340-00-735-6100	169	13
11083	7B462		260	24
11083	7B5060	5320-00-164-0917	148	3
11083	7B5415	5315-00-663-3672	4	38
			12	4
			12	31
			4A	21
			4B	5
11083	7B6296		260	23
11083	7B7770		5	14
11083	7B8105	5325-00-650-3142	44	10
11083	7B8634		52	2
11083	7B9665	4730-01-171-1981	156	15
11083	7C0307		64	16
11083	7C0703	2815-01-327-2926	15	9
11083	7D1649	5310-01-095-1249	166	39
			167	39
			239	15
			240	17
11083	7D1728	5340-01-102-1789	32	22
11083	7D9749	5330-01-048-0983	215	33
11083	7E0176	3020-01-377-6786	22	29
11083	7E0178		22	22
11083	7E0179		22	18
11083	7E0196	3020-00-230-3166	22	16
11083	7E5085	5365-00-898-6703	33	26
11083	7E5929	3040-01-377-6785	22	28
11083	7F3425	5305-01-095-3292	153	7
11083	7F3488	2920-00-891-0928	72	29
11083	7F3506	3120-00-894-7247	72	40
			76	40
11083	7F3522	5305-01-053-4707	73	11
			76	8
11083	7F3525	5310-00-291-4498	76	3
11083	7F3587		127	12
11083	7F3901	2910-00-620-6887	51	8

CROSS-REFERENCE INDEXES

PART NUMBER INDEX

CAGEC	PART NUMBER	STOCK NUMBER	FIG.	ITEM
11083	7F4283	5306-01-223-4346	160	10
11083	7F4556	5306-00-162-5704	73	22
			76	46
			77	14
11083	7F4906		74	13
11083	7F4907	5970-00-411-4161	74	10
11083	7F7259	5310-01-059-0992	81	5
11083	7F7590	5330-00-297-7228	4	4
			27	23
11083	7F8351	5340-00-363-8827	149	9
11083	7F8607	5331-00-591-7543	178	10
			180	16
11083	7F8698	5306-00-853-2024	215	1
			225	40
			226	38
			228	23
			229	22
11083	7F9224	5940-01-058-9158	82	11
11083	7F9414	5360-00-209-8470	211	18
			212	19
11083	7G2144		159	5
11083	7G2145		159	6
11083	7G2570		91	15
11083	7G2854		230	33
11083	7G5468	4710-01-315-1116	240	8
11083	7G6085	3040-01-250-8624	43	33
11083	7G7023	4730-01-254-0175	150	16
			150	23
11083	7H0696		211	19
			212	2
11083	7H1447	2930-00-635-8296	237	18
11083	7H2069	5305-01-185-7113	141	4
11083	7H2079	5310-00-811-2861	71	6
			73	4
			76	4
11083	7H2444	5331-00-074-3764	175	18
11083	7H300		130	42
11083	7H3051	5307-01-037-4854	110	38
11083	7H3070	5340-00-247-4419	7	2
11083	7H3171	4730-00-042-8988	51	15
11083	7H3460	5995-00-520-2334	18	22
11083	7H3472	5306-01-066-4572	201	4
			204	8
			206	5
11083	7H3599	5306-00-895-3775	144	4
			145	4
11083	7H3609	5310-01-067-1393	143	3
11083	7H7539	5310-00-404-3787	198	9
11083	7H7628	3110-00-896-6825	111	12
11083	7H7629	3110-00-896-6826	111	13
11083	7H7658	5360-01-254-8891	112	16

CROSS-REFERENCE INDEXES

PART NUMBER INDEX

CAGEC	PART NUMBER	STOCK NUMBER	FIG.	ITEM
11083	7H7954	5305-00-138-0335	37	17
			51	22
			122	47
			64E	2
11083	7H8909	5310-01-209-8715	88	16
			103	6
11083	7H9678	5340-00-999-3230	50	12
11083	7J107	4710-01-321-8556	232	3
11083	7J1335	3120-01-285-4961	255	6
11083	7J1336	3120-01-319-2169	255	8
11083	7J1539		242	10
			242	22
11083	7J1769		258	12
11083	7J1795	3830-01-075-0018	258	11
11083	7J1965		241	6
11083	7J2025	5360-01-069-0852	152	7
11083	7J204	5330-01-096-0912	218	3
11083	7J251		262	3
11083	7J252		262	8
11083	7J2596	5340-01-265-1164	202	1
			223	2
11083	7J260	5420-01-079-4310	262	5
11083	7J3029		259	1
11083	7J3221	3830-01-047-9319	241	1
11083	7J3222	3830-01-048-4202	241	1
11083	7J4095		241	5
11083	7J43		204	1
11083	7J44		204	1
11083	7J4582		255	9
11083	7J4583		255	5
11083	7J5614	4730-00-647-3343	178	3
11083	7J6250	3120-01-182-4176	196	8
			196	14
			196	24
11083	7J67		235	22
11083	7J7844	5365-01-257-3304	207	21
			207	32
			208	21
			208	32
			209	23
			210	23
			217	7
11083	7J8015		201	5
			206	3
11083	7J8016	4810-01-327-2934	204	7
			206	1
11083	7K1181	2815-01-053-4712	197	15
11083	7K1457	4730-01-202-3353	179	11
			181	10
11083	7K3377	5365-01-185-4734	48	15
11083	7K5413	2540-00-449-7378	171	4

CROSS-REFERENCE INDEXES

PART NUMBER INDEX

CAGEC	PART NUMBER	STOCK NUMBER	FIG.	ITEM
11083	7K5448	2520-01-066-9173	135	8
11083	7K5449	2520-01-066-9174	135	9
11083	7K6413		196	20
11083	7K9197	4730-01-063-0817	64	10
11083	7L0631	5365-01-257-3282	164	22
			165	21
11083	7L6326	5340-01-257-7789	197	12
11083	7L7327	5340-01-377-2473	64A	21
11083	7L811	5315-01-168-1052	221	15
			222	6
11083	7L820		185	14
11083	7M0331	2920-00-021-2273	73	6
11083	7M0332		73	2
11083	7M0381		122	6
11083	7M1151		110	5
11083	7M1152		110	5A
11083	7M1161		111	25
11083	7M1184		111	29
11083	7M1185		111	26
11083	7M1186		112	8
11083	7M1192		111	29A
11083	7M1193		111	26A
11083	7M1194		112	8A
11083	7M1195		113	17
11083	7M1201	5315-01-160-2315	111	32
11083	7M1296	4820-01-103-4037	123	8
11083	7M1297	5360-00-950-3397	123	6
			206	14
			250	9
11083	7M1298	2520-00-195-5817	105	21
11083	7M1377		123	4
11083	7M168		21	11
11083	7M2855	5315-01-254-6453	47	13
11083	7M3222	5340-01-254-7175	79	4
11083	7M325	5970-01-287-8011	72	32
			76	48
			74A	35
11083	7M326	2990-01-103-3615	72	2
			76	20
			74A	49
11083	7M327	5310-01-253-8375	72	45
			76	38
			74A	25
11083	7M328	2990-01-103-3616	72	39
			76	39
11083	7M329	5977-00-809-2517	72	33
			76	17
11083	7M331		76	11
11083	7M332		76	13
11083	7M3331		158	13
11083	7M3332		158	13

CROSS-REFERENCE INDEXES

PART NUMBER INDEX

CAGEC	PART NUMBER	STOCK NUMBER	FIG.	ITEM
11083	7M334		77	18
11083	7M336	5305-01-053-4713	72	25
			77	24
			74A	76
11083	7M4353	5330-00-253-3224	21	12
11083	7M4603	2910-00-920-8213	31	18
11083	7M4926	5325-00-990-5595	11	17
11083	7M5007	2990-01-103-3619	41	8
11083	7M5182	2540-00-237-6245	172	28
11083	7M5716		111	31A
11083	7M5756		113	29
11083	7M5783	2520-00-788-5571	107	29
			176	29
11083	7M6425		26	12
11083	7M6463	4730-00-105-2593	130	27
11083	7M6469	5310-01-254-2490	132	14
11083	7M652	5365-01-253-8979	47	1
11083	7M6774	5310-01-291-8879	139	2
11083	7M6952	5330-00-253-8182	38	8
58312	7M6955-00	5330-00-920-8186	49	22
11083	7M706	5355-00-891-4401	102	6
			188	3
11083	7M7193	3120-00-118-3007	44	21
11083	7M7219	3110-00-629-4111	44	20
58312	7M7316-00	5360-00-081-9031	44	29
11083	7M7794		110	7
11083	7M8056	5365-01-102-9605	141	20
11083	7M8395	2520-01-102-9606	113	3
11083	7M8485	5330-00-930-9407	174	17
			214	9
			225	19
			226	17
			227	30
11083	7M8543		110	25
11083	7M8594	5320-00-949-0552	107	16
11083	7M8659	5310-01-053-8076	160	13
			161	10
11083	7M873	5342-01-103-3617	248	13
11083	7M9763	5340-00-920-8201	30	14
11083	7M9847	5360-00-984-5590	47	25
11083	7N0041		60	6
11083	7N0214	5930-01-237-3843	89	29
			90	1
11083	7N0634		60	40
11083	7N0637		60	26
			60	41
11083	7N0638		60	43
11083	7N0639		59	30
			60	11
11083	7N0908		74	2
11083	7N1066	5310-01-117-9326	33	6

CROSS-REFERENCE INDEXES

PART NUMBER INDEX

CAGEC	PART NUMBER	STOCK NUMBER	FIG.	ITEM
11083	7N1196		49	14
11083	7N1271	5307-01-051-3135	74	11
11083	7N1365		11	5
11083	7N1366	2815-01-377-6774	11	2
11083	7N1705		64	15
11083	7N1766		4	1
11083	7N1796	5365-01-254-6423	46	8
11083	7N2051	4820-01-103-6827	14	8
11083	7N2355		60	40
11083	7N2624		31	15
11083	7N2867		89	14
11083	7N2868	2910-01-377-3145	33	2
11083	7N2939	2930-01-288-3981	60	29
11083	7N2957	2930-01-143-0186	61	4
11083	7N3098	2815-01-377-7409	20	7A
11083	7N3176		12	35
11083	7N3346	2990-01-103-6830	23	4
11083	7N3347		23	2
11083	7N3348		23	18
11083	7N3349	2990-01-103-6831	23	1
11083	7N3350	3020-01-103-6832	23	16
11083	7N3351		23	3
11083	7N3352		4A	45
11083	7N3353	5330-01-377-2719	4A	44
11083	7N3357	4710-01-378-1986	4A	29
			4B	13
11083	7N3491	2815-01-377-6937	1	1
11083	7N3759	2805-01-175-3881	40	14
11083	7N3760	6115-01-168-6142	40	12
11083	7N3802		27	27
			KIT	
11083	7N4012	5365-01-254-6419	46	8
11083	7N4076	5340-01-377-8455	35	35
11083	7N4160	5930-01-202-2506	80	15
11083	7N4168		22	8
11083	7N4169		22	5
11083	7N4170	2990-01-105-7582	22	1
11083	7N4186		23	10
11083	7N4187		23	11
11083	7N4188		23	8
11083	7N4192		23	13
11083	7N4298		26	8
11083	7N4311		20	7
11083	7N4407	5330-01-103-7105	5	27
11083	7N5565	2930-01-127-2515	61	5
11083	7N5959	5360-01-050-8009	68	4
11083	7N636		59	27
11083	7N6378	4320-01-377-6794	35	27
11083	7N64	4730-01-250-5865	60	3
11083	7N6758	5330-01-377-9918	5A	22
11083	7N7091	4710-01-250-5964	32	24

CROSS-REFERENCE INDEXES

PART NUMBER INDEX

CAGEC	PART NUMBER	STOCK NUMBER	FIG.	ITEM
11083	7N7092	4710-01-251-1222	32	25
11083	7N7103	5340-01-377-3287	31	26
11083	7N716		60	31
11083	7N7559		27	10
11083	7N7628	5330-01-377-5327	64A	8
			64C	7
11083	7N7639	2815-00-928-3531	14	7
			14A	7
11083	7N7878		64B	5
			64D	5
11083	7N8259		65	31
11083	7N8260		65	4
11083	7N8261		65	4A
11083	7N8374	5340-01-150-9807	190	18
11083	7N8851	5340-01-377-3286	5A	26
11083	7N8852		5A	25
11083	7N909	5940-01-236-9895	74	12
11083	7N9236		78	1
11083	7N9352	5330-01-301-2084	16	10
11083	7N9356		91	1
11083	7N9357		91	6
11083	7N9917	3020-01-379-0424	9	3
11083	7P4190	3110-01-103-9158	48	21
11083	7S0687	2940-00-192-7417	246	3
58312	7S2374-00	5330-00-557-8485	35	11
11083	7S3913	5340-00-402-9175	122	51
11083	7S3916	5342-01-069-0904	42	3
11083	7S4433	4030-00-351-7002	35	30
11083	7S4434	2910-00-402-5539	35	12
11083	7S4435		35	13
11083	7S4439		35	7
11083	7S4440	5365-00-434-1306	35	25
11083	7S5380	5355-01-321-5693	171	6
11083	7S5383	5360-01-069-1437	171	25
11083	7S5390	2540-00-137-1914	171	5
11083	7S5391	2540-01-163-7235	171	7
11083	7S5432	5355-00-007-9980	80	3
11083	7S5544		117	16
11083	7S5757		171	12
			171	26
11083	7S585	5365-01-255-0924	68	12
11083	7S6139	3040-01-254-0310	147	48
11083	7S6140	3120-00-239-0939	147	41
			147	53
			147	58
11083	7S6143	3120-00-421-9629	147	42
11083	7S6146	3110-01-066-8467	147	11
11083	7S6147	3110-01-066-8468	147	43
			147	54
			147	59
11083	7S6402	5930-00-434-9121	80	2

CROSS-REFERENCE INDEXES

PART NUMBER INDEX

CAGEC	PART NUMBER	STOCK NUMBER	FIG.	ITEM
11083	7S6701	5305-00-169-8390	35	26
11083	7S6744	5330-00-557-8514	25	19
11083	7S7365	2530-01-068-9752	148	1
11083	7S7367	4730-01-253-0500	121	34
11083	7S7368	4720-01-067-1405	121	35
11083	7S7369	4730-00-921-3245	121	21
11083	7S7370	3040-01-253-9494	121	12
11083	7S7372	4710-01-253-3528	121	17
11083	7S7375	4710-01-253-2746	121	50
11083	7S7399		117	5
11083	7S7400	3020-01-068-7171	117	1
11083	7S7507	4730-01-252-7837	121	36
11083	7S7620	4710-01-253-4567	155	14
11083	7S7680	2940-01-058-8102	37	18
11083	7S7807	5342-01-066-0526	58	39
			60	39
11083	7S7809	2930-00-852-1174	58	35
			60	35
11083	7S7936		136	3
			137	16
			138	13
11083	7S8035		139	5
11083	7S8036		139	5
11083	7S8077		261	32
			265	69
11083	7S8445		44	148
11083	7S8920	5342-01-296-8891	234	12
11083	7S8921	5340-01-297-8910	234	12
11083	7S9093	2530-01-048-0813	144	2
			145	2
11083	7S9094		144	2
			145	2
11083	7S9096		144	2
			145	2
11083	7S9181	2530-01-211-1035	144	11
			145	11
11083	7S9182	2530-01-211-1036	144	19
			145	16
11083	7S9323	5360-00-116-0448	50	11
11083	7S9372	5306-01-237-3300	140	19
11083	7S9601	2530-01-048-3939	144	16
			145	13
11083	7S9602	2530-01-048-4917	144	17
			145	14
11083	7S9603	2530-01-048-3940	144	7
			145	9
11083	7S9604	2530-01-048-9734	144	8
			145	7
11083	7S9674	2530-01-068-9753	148	4
11083	7S9676	2530-00-230-9963	148	2
11083	7S9686	5306-01-209-7883	122	28

CROSS-REFERENCE INDEXES

PART NUMBER INDEX

CAGEC	PART NUMBER	STOCK NUMBER	FIG.	ITEM
11083	7S9826	4730-00-097-9815	72	9
			72	41
			73	20
			76	42
			77	7
			77	20
11083	7S9847		30	17
11083	7S9859	3030-01-232-2453	69	19
11083	7T2790	2920-01-351-4458	71C	12
11083	7T2792	2920-01-351-4542	71C	10
11083	7T2793	4140-01-353-4765	71C	15
11083	7T2795	2920-01-351-4543	71C	8
11083	7T2797	2920-01-352-2855	71C	2
11083	7T2798	2920-01-262-3072	71C	18
11083	7T2800	2920-01-351-4017	71C	22
11083	7T2801	5910-01-319-9841	71C	19
11083	7T2802	6150-01-353-7755	71C	20
11083	7T2804	2920-01-351-8198	71C	24
11083	7T2805	2920-01-351-8199	71C	25
11083	7T2816	2920-01-352-0028	71C	26
11083	7T3143	3120-01-257-4402	113	21
11083	7T8854	5945-01-287-3325	74	1
			74B	1
11083	7T9930		71A	11
11083	7V9507	2540-01-043-4053	172	7
11083	7W0205	2520-01-047-6754	114	3
11083	7W1927	5325-01-257-4598	33	9
11083	7W2368	5330-01-296-7776	40B	12
11083	7W2369		40	11
11083	7W5388		68	44
11083	7X0447	5310-01-353-3403	71C	6
11083	7X0620	5310-01-352-7562	71B	5
00742	71112A	5310-00-768-6822	10	12
19204	7161056	5315-00-716-1056	166	14
			167	13
78640	7244	4730-01-250-1566	43	38
19207	7267275-11		80	8
19207	7373635	5340-00-737-3635	13	5
			23	9
			107	28
			127	7B
13445	75900-09		81	1
19207	7809108-11		82	12
19207	7809108-4		82	3
19207	7809108-7		82	8
30780	8-6-F5G5-S	4730-00-933-0727	64A	23
			64C	23
11083	8A3022	5340-01-285-1664	41	30
58312	8B1261	4730-00-257-2117	248	16
11083	8B1312	5315-00-245-9995	176	3
			179	2

CROSS-REFERENCE INDEXES

PART NUMBER INDEX

CAGEC	PART NUMBER	STOCK NUMBER	FIG.	ITEM
11083	8B1312	5315-00-245-9995	181	2
11083	8B1419	5315-00-017-1893	68	5
11083	8B2327	5325-00-205-4711	68	32
11083	8B3090	5360-00-465-5447	172	21
11083	8B5084		232	1
11083	8B6599	5365-00-595-2836	108	14
11083	8B7216		213	27
11083	8B9777	5330-00-248-2165	110	4
11083	8C9126	5330-01-053-8043	242	5
11083	8C9127	5330-01-048-6003	224	10
11083	8D0071		64C	2
11083	8D2586	5307-01-155-6687	47	34
11083	8D5381	4720-01-066-4554	225	59
			229	34
11083	8D5578	2920-01-063-7834	87	14
11083	8D8456	5360-01-167-3642	146	1
11083	8F0236	4730-00-352-8509	26	3
11083	8F0394	5360-00-597-9087	33	33
11083	8F0492		69	7
11083	8F1326		45	25
			71	10
11083	8F1635	5305-00-401-5270	184	24
11083	8F244	5325-00-923-4575	248	3
11083	8F2621	5360-01-106-4246	185	16
11083	8F3437	5355-01-064-3851	80	16
11083	8F3556		184	20
11083	8F3709	2520-01-067-1391	130	37
11083	8F394	5360-00-597-9087	215	22
11083	8F4099	5330-00-641-7914	18	4
11083	8F4102	2815-00-341-1529	18	6
11083	8F4103	2590-00-341-1530	18	3
11083	8F4107		18	3A
11083	8F4994	5331-00-599-2951	16	4
11083	8F6058	3120-00-738-8651	35	6
			35	14
11083	8F6647	5330-00-714-3704	121	15
11083	8F6711	5331-00-506-4457	182	36
11083	8F6864	5315-01-253-4346	52	9
11083	8F737	5325-00-496-2235	177	5
11083	8F7559	5330-00-090-8363	18	1
11083	8F7689	6645-01-068-6052	22	30
11083	8F8513	5340-00-351-6992	122	40
11083	8F8523	3120-00-662-8989	4	41
			4A	41
			4B	19
11083	8F8682	5340-00-352-8560	21	10
11083	8F8997	4730-00-288-9391	121	40
11083	8F9206	5331-00-599-2938	73	31
			76	31
			237	10
11083	8F9836	2520-01-051-5278	178	17

CROSS-REFERENCE INDEXES

PART NUMBER INDEX

CAGEC	PART NUMBER	STOCK NUMBER	FIG.	ITEM
11083	8F9836	2520-01-051-5278	180	23
30780	8HP5N-S	5365-01-031-8183	153	5
			195	13
11083	8H0352	3040-00-961-0649	147	37
11083	8H0365		147	40
11083	8H1037	5342-00-894-7258	154	32
11083	8H1085		149	24
11083	8H1105	2540-01-068-7072	128	37
11083	8H175	4710-01-253-4568	155	21
11083	8H177	4710-01-253-2753	155	22
11083	8H178	4710-01-253-2754	155	22
11083	8H180	4710-01-253-2755	155	18
11083	8H1993	2815-00-065-1943	14	4
11083	8H1994	2815-00-087-8266	14	5
11083	8H2046	5330-00-232-8818	129	1
11083	8H214	5325-01-256-4631	142	14
11083	8H2262	5331-00-848-6108	134	3
			135	7
11083	8H2265	5331-00-848-6109	136	18
			137	14
			138	16
			142	28
11083	8H2778	5330-00-585-4284	50	15
11083	8H2807	5310-00-882-8876	50	5
11083	8H2810	2910-00-116-3227	50	10
11083	8H3190	5330-00-895-7037	28	4
11083	8H3325	5310-00-609-8042	175	19
11083	8H3390	5310-00-404-3784	157	6
			158	8
			198	7
			204	5
11083	8H3497	5325-00-950-8281	41	17
11083	8H3498	2910-00-948-9968	41	18
11083	8H350	5325-00-951-6973	147	36
11083	8H3692	5315-01-067-1394	127	19
			130	32
11083	8H3708	5307-01-069-0846	130	31
11083	8H372	2530-00-195-5822	147	46
11083	8H376	5315-00-948-6454	147	35
11083	8H3928	5310-01-091-8410	149	11
11083	8H4001		155	13
11083	8H4002		155	13
11083	8H4213		158	18
11083	8H4217		158	10
11083	8H4218		158	10
11083	8H4245		132	28
11083	8H5303	5310-01-063-7852	81	2
11083	8H5324	5330-00-895-7032	29	7
			29A	2
11083	8H5347	5307-01-254-2507	155	33
11083	8H5416	2540-01-068-7243	133	20

CROSS-REFERENCE INDEXES

PART NUMBER INDEX

CAGEC	PART NUMBER	STOCK NUMBER	FIG.	ITEM
11083	8H5422		156	3
11083	8H5433		147	52
11083	8H5488	5310-01-254-9008	149	14
11083	8H5727	5306-01-254-4254	155	6
11083	8H5772	5305-00-136-2009	139	8
			162	10
11083	8H5980		5	5
11083	8H6392		134	12
11083	8H6393	5365-01-068-7073	134	19
11083	8H6481		140	7
11083	8H6504	5342-01-066-9164	141	28
11083	8H6508	5305-01-152-0589	141	13
11083	8H6598		132	11
11083	8H7702		122	5
11083	8H8246	3040-01-253-0548	142	4
11083	8H8257	5331-00-893-9220	142	21
11083	8H8754		29	9
		5330-01-067-2307	64F	4
11083	8H878	5310-00-432-7976	71	4
			72	37
			76	36
11083	8H8871	5365-00-948-6452	147	47
11083	8H889	5365-01-254-2467	129	22
11083	8H8898	5315-00-245-8844	147	6
11083	8H908		129	31
11083	8H9155	5330-00-097-8231	108	22
			111	9
11083	8H9180	5330-00-858-6201	49	9
11083	8H9181	2990-00-903-6938	44	25
11083	8H9182	3110-00-924-1971	49	19
11083	8H9186	5360-00-898-6730	49	20
11083	8H9204	5330-00-858-6277	33	25
11083	8H9206		33	47
11083	8H931	5365-01-254-2529	129	26
11083	8H9513	5315-01-254-9668	125	5
11083	8H9718		30	13
11083	8H9787	5340-00-251-1375	30	29
11083	8H9788	5330-00-074-3605	30	28
11083	8H9789	3110-00-516-5490	30	22
			65	8
11083	8H9806	3020-00-921-7282	35	9
11083	8H9818	5330-00-893-7274	57	23
			59	24
11083	8H9819	3805-00-920-7472	57	22
			59	23
11083	8H984	2530-01-091-8399	129	19
11083	8H985	3110-00-100-0686	149	37
11083	8J1699	5330-01-064-8276	207	7
			208	2
			209	2
			210	2

CROSS-REFERENCE INDEXES

PART NUMBER INDEX

CAGEC	PART NUMBER	STOCK NUMBER	FIG.	ITEM
11083	8J1699	5330-01-064-8276	216	8
11083	8J232		202	12
11083	8J245		195	18
11083	8J2914		253	24
11083	8J3111	5340-00-268-1297	258	13
11083	8J3663	4820-01-321-4543	201	12
11083	8J3669		202	10
11083	8J3670	5365-01-323-8100	201	21
11083	8J3671		201	22
11083	8J3672	4810-01-322-0002	201	9
11083	8J3870	3040-01-321-4673	202	7
11083	8J4162		260	15
11083	8J4867		253	6
11083	8J5398	4810-01-321-3232	201	1
11083	8J5914	5365-01-170-6440	225	38
			226	36
11083	8J6644		254	18
			254	25
11083	8J6645		254	17
			254	24
11083	8J6647		254	19
			254	26
11083	8J6649		254	16
11083	8J6650		254	23
11083	8J6910	5307-01-217-2253	243	2
			243	10
11083	8J6913	2590-01-165-5746	237	21
11083	8J7317	4820-01-254-1017	213	16
11083	8J7342		213	6
11083	8J7343	5342-01-068-7083	213	2
11083	8J7349	4820-01-068-7249	214	22
11083	8J7360	5365-01-259-9622	215	9
11083	8J7366	4820-01-253-5554	214	25
11083	8J7369	2520-01-067-2163	215	13
11083	8J7409	5330-01-067-1490	243	6
11083	8J7415	5310-01-066-0506	162	7
11083	8J7431		215	16
11083	8J7435	3830-01-048-3941	213	1
11083	8J7436		213	29
11083	8J7461	2520-01-068-9665	219	6
11083	8J7462		215	24
11083	8J7464	5342-01-068-7084	213	5
11083	8J7465	5342-01-068-0011	214	5
11083	8J7466	2895-01-068-9667	215	32
11083	8J7467		213	8
11083	8J7487		208	1
11083	8J7488	4820-01-180-1045	216	1
11083	8J7489	4810-01-208-1802	207	1
11083	8J7494	4820-01-048-8597	207	13
			208	13
			217	1

CROSS-REFERENCE INDEXES

PART NUMBER INDEX

CAGEC	PART NUMBER	STOCK NUMBER	FIG.	ITEM
11083	8J7497	4730-01-253-7484	207	2
			208	7
			209	6
			210	6
			216	2
11083	8J7498	4730-01-253-7483	207	8
			208	8
			209	8
			210	10
			216	5
11083	8J7499	3830-01-048-3942	207	22
			208	22
			209	13
			210	13
11083	8J7501	4820-01-017-6344	213	11
11083	8J753		258	1
11083	8J7978		253	23
11083	8J8004	5330-01-067-2308	255	20
11083	8J8322	5365-01-068-6063	237	24
11083	8J8422	4730-01-254-1255	237	35
11083	8J8423		237	9
11083	8J8424	5330-01-067-1491	237	28
11083	8J8428		237	27
11083	8J8436	4710-01-253-2747	237	40
11083	8J8437	3040-01-253-4681	243	12
11083	8J8438	5365-01-257-3277	243	25
11083	8J8439	5306-01-210-1640	237	12
11083	8J8443		237	26
11083	8J8468	4820-01-068-6064	237	29
11083	8J8480		215	15
11083	8J8496	5340-01-258-0319	211	14
11083	8J8548		212	13
11083	8J8553	5330-01-048-6005	207	15
			207	24
			208	15
			208	24
			209	15
			210	15
			217	9
11083	8J8582	3040-01-354-2808	238	18
11083	8J8583		238	6
11083	8J8601		209	1
11083	8J8602	4810-01-327-2935	210	1
11083	8J8626	5340-01-264-3675	243	9
11083	8J8629		243	1
11083	8J8633	5340-01-258-0146	219	14
11083	8J8634	5340-01-258-0147	219	1
11083	8J8682	3830-01-048-4588	224	1
11083	8J8683	3040-01-018-4836	224	2
11083	8J8687		224	13
11083	8J8781	2990-01-068-9668	243	15

CROSS-REFERENCE INDEXES

PART NUMBER INDEX

CAGEC	PART NUMBER	STOCK NUMBER	FIG.	ITEM
11083	8J8782	4730-01-164-7821	243	18
11083	8J8783	4820-01-163-3581	243	16
11083	8J9013	3040-01-303-4886	251	4
			253	11
11083	8J9023		253	35
11083	8J9024		253	29
11083	8J9027		251	1
11083	8J9034	5306-01-322-7299	253	2
11083	8J9152	5306-01-324-1549	253	7
11083	8J9180	5365-01-106-3769	253	12
11083	8J9196		253	1
11083	8J920		259	4
11083	8J9617	4720-01-254-8689	232	20
			263	5
11083	8J9618		232	9
			263	10
11083	8J9659		252	1
11083	8J9667	3830-01-323-0999	252	3
11083	8J9827		255	16
11083	8J9857		257	9
11083	8J9858		257	1
11083	8J9859		239	1
			240	1
11083	8K4889	5330-01-265-2129	166	1
11083	8L4154	2990-00-244-0235	44	35
11083	8L4155	5305-00-497-0372	44	37
11083	8L8601	5365-00-205-3664	46	8
11083	8M0383		134	6
11083	8M0456	5920-01-182-4738	101	14
11083	8M0755	4730-01-066-4619	64A	11
			64C	11
11083	8M0874	4820-01-066-8441	35	22
11083	8M1013	5342-01-069-0788	124	23
			125	18
11083	8M1047	5307-00-923-9983	119	10
			183	4
11083	8M1470	5315-01-265-6967	155	30
11083	8M2295	5306-00-118-0108	40	28
			40A	1
11083	8M2296	5310-00-843-6947	40	27
			40A	3
11083	8M2502	4820-01-017-6495	126A	1
11083	8M2503		126A	10
11083	8M2504	2530-01-068-7261	126A	5
11083	8M2619		145	8
11083	8M2620	5330-00-788-5830	145	12
11083	8M2764	2520-00-950-2643	126	6
11083	8M3182	5360-00-950-8251	17	6
			25	20
			17A	4
11083	8M3393	5305-01-255-9376	129	3

CROSS-REFERENCE INDEXES

PART NUMBER INDEX

CAGEC	PART NUMBER	STOCK NUMBER	FIG.	ITEM
11083	8M4390	5331-00-999-5502	109	4
11083	8M4432	5331-00-913-8878	110	31
			126A	16
11083	8M4435	5331-00-948-9767	110	41
11083	8M4436	5331-00-948-9768	120	18
			243	17
11083	8M4437	5331-00-942-5114	126A	3
11083	8M4445	5331-00-914-5821	121	18
			150	21
			151	4
			154	30
11083	8M4446	5331-00-999-5504	26	31
			125	6
11083	8M4447	5331-00-985-2219	126	20
11083	8M468		132	10
11083	8M4791	5310-00-245-9841	20	22A
			69	8
11083	8M4986	5331-00-930-5736	110	35
			120	43
			122	22
			123	9
11083	8M4991	5331-00-948-6068	25	4
11083	8M4992	5331-00-914-5773	124	12
11083	8M5010	5331-00-939-0610	120	34
11083	8M506	3805-01-053-2703	227	23
11083	8M5070	2520-00-788-5813	113	30
11083	8M5127	5330-00-101-2561	4A	19
11083	8M5249	5331-00-948-6062	125	11
58312	8M5254		32	33
58312	8M5254-00	5331-00-913-8120	121	44
			124	4
			126	21
			178	12
			180	18
11083	8M5260	5331-00-431-7140	32	28
			193	12
11083	8M6141		141	1
11083	8M6521	2520-01-066-4723	49	16
11083	8M6900	5310-01-284-9727	196	25
11083	8M7160	2530-00-949-0666	119	9
11083	8M7166	2530-00-243-9486	119	12
11083	8M7587		21	7
11083	8M7758	5320-01-237-0685	88	21
			103	24
11083	8M8157	5331-00-999-5505	123	5
11083	8M8161		111	10
11083	8M8210	5360-01-068-2828	52	10
11083	8M8282	5330-01-026-2850	154	35
11083	8M8283	5330-01-061-9378	126	18
			182	31
11083	8M8403	2990-00-116-0423	45	16

CROSS-REFERENCE INDEXES

PART NUMBER INDEX

CAGEC	PART NUMBER	STOCK NUMBER	FIG.	ITEM
11083	8M8489	5315-00-760-7425	116	4
			117	14
			117	17
11083	8M8627	5360-00-950-2471	126	9
11083	8M8739		44	26
11083	8M9062	2910-00-116-0407	46	10
11083	8M9307	5365-00-938-5568	4	25
11083	8M9810	2815-00-918-3568	14	6
			14A	6
11083	8N0894	2815-01-377-6804	9	2
11083	8N1075	5935-01-269-0557	99	28
11083	8N1120		33	37
11083	8N1121	5330-01-377-5328	33	36
11083	8N1122	2910-01-250-8598	33	35
11083	8N1435	4710-01-378-5905	27	4
11083	8N1445	4730-01-384-6470	64A	7
			64C	6
11083	8N1466	4730-01-377-6793	64A	10
			64C	9
11083	8N1469	4730-01-383-5137	64B	10
			64D	10
11083	8N1474	5340-01-377-2472	64	18
11083	8N1831	2910-01-193-3648	31	19
11083	8N1833		31	14
11083	8N1850	2930-01-377-6790	63	32
11083	8N2112	6645-01-196-6277	247	7
11083	8N2770	4710-01-377-9393	63	23
11083	8N4305		4A	18
11083	8N4310		4B	23
11083	8N4311		4B	22
11083	8N4312	2815-01-203-1071	4A	1
			4B	1
11083	8N4638	5331-01-217-2016	4	9
			4A	2
11083	8N4674		5A	4
11083	8N4810	5330-01-377-2721	5A	23
11083	8N5676	2815-01-203-1047	4	10
			4A	3
11083	8N5889		45	27
11083	8N5909	2590-01-377-7851	64A	20
			64C	21
11083	8N6004	2815-00-262-1080	5	2
11083	8N6158	2990-01-353-8420	45	21
11083	8N6674		25	10
11083	8N6977	2990-01-376-2799	44	15
11083	8N6979	2990-00-116-0440	44	14
11083	8N6980		44	14A
11083	8N7923	3120-00-478-6645	7	9
11083	8N7928	3120-00-757-6349	7	8
11083	8N7933	3120-00-987-5561	11	16
11083	8N7934	3120-01-379-0739	11	16

CROSS-REFERENCE INDEXES

PART NUMBER INDEX

CAGEC	PART NUMBER	STOCK NUMBER	FIG.	ITEM
11083	8N7935	3120-01-379-0738	11	16
11083	8N984	5315-00-582-2466	44	28
11083	8P0230	2530-01-297-4592	80	14
			92	1
11083	8P0773		168	26
11083	8P0859		168	19
11083	8P1154		225	58
			229	32
11083	8P1156		225	2
			229	35
11083	8P1248		225	3
			227	31
11083	8P1268		92	2
11083	8P1269		92	10
11083	8P1270		92	29
11083	8P1342	5995-01-165-1843	91	2
			92	20
11083	8P1382		92	24
11083	8P1454	4720-01-253-2811	121	22
11083	8P1690		129	40
11083	8P1957		107	15
11083	8P2289	5340-01-254-7173	88	15
			103	5
11083	8P2290	5360-01-254-8890	88	14
			103	13
11083	8P2292		88	22
11083	8P3057		161	2
11083	8P3061	3020-01-190-1091	160	12
			161	8
11083	8P3219		155	8
11083	8P3293	5365-01-257-4347	164	13
11083	8P3729	3120-01-232-6641	162	5
11083	8P3732		162	9
11083	8P3733		162	9
11083	8P400		121	48
11083	8P4027	3040-01-253-3465	88	23
			102	5
11083	8P4028	5340-01-257-7755	88	46
11083	8P4029	5340-01-260-9030	88	20
			103	14
11083	8P4108		88	40
11083	8P4110	4720-01-103-6814	120	29
11083	8P4115		88	31
11083	8P4211	3040-01-253-9590	162	14
11083	8P4501		166	37
			167	34
11083	8P4503		166	17
			167	16
11083	8P4547	3040-01-267-2077	116	16
11083	8P4548	3040-01-267-2078	116	2
11083	8P4557	5330-01-265-2129	166	9

CROSS-REFERENCE INDEXES

PART NUMBER INDEX

CAGEC	PART NUMBER	STOCK NUMBER	FIG.	ITEM
11083	8P4557	5330-01-265-2129	167	4
11083	8P4736	2520-01-047-9388	113	31
11083	8P4791	4730-01-285-2941	42	8
11083	8P4804		168	33
11083	8P4902		168	17
11083	8P4923	3120-01-253-8946	88	28
			103	4
11083	8P4925	3040-01-253-5583	88	24
			103	26
11083	8P4966		102	2
11083	8P5117		141	29
11083	8P5443		168	26
11083	8P5502		168	19
11083	8P5596		173	5
11083	8P5715	5315-01-254-7407	47	23
11083	8P5716	5306-01-255-0930	47	26
11083	8P5717	3040-01-250-6508	47	21
11083	8P5849		111	31
11083	8P5875		89	9
			90	15
11083	8P5876		89	16
			90	5
11083	8P5877		89	5
11083	8P5878		89	5
			90	9
11083	8P5881	5340-01-253-8963	89	24
			90	19
11083	8P5883		98	1
11083	8P5884		98	13
11083	8P5954		166	25
			167	23
11083	8P5970	4710-01-250-5871	42	7
11083	8P602		146	16
11083	8P6144		42	6
11083	8P6188	3110-01-160-4714	135	11
11083	8P6216		88	9
11083	8P6245		135	10
11083	8P6255		135	3
11083	8P6256	2530-01-017-6340	134	1
11083	8P6373		155	3
11083	8P6374		155	10
11083	8P6650	3110-01-103-3702	137	11
			138	8
			142	35
11083	8P7215		62	16
11083	8P7279	2590-01-377-7858	124	5
11083	8P7308		62	12
11083	8P7427		110	13
11083	8P7782		133	1
11083	8P7845	5365-01-266-8284	103	15
11083	8P7908		99	1

CROSS-REFERENCE INDEXES

PART NUMBER INDEX

CAGEC	PART NUMBER	STOCK NUMBER	FIG.	ITEM
11083	8P8120		143	1
11083	8P8673	5340-01-289-4395	166	3
11083	8P9830	5340-01-150-1348	169	13
11083	8P9834	5340-01-258-0340	166	16
11083	8S0134	3120-00-237-6956	45	13
11083	8S0203	4720-01-066-9190	68	3
11083	8S0386	2530-01-203-5463	144	3
			145	3
11083	8S0388	2530-01-321-8329	144	3
			145	3
11083	8S0390		144	3
			145	3
11083	8S0396		145	6
11083	8S0404		145	1
11083	8S0405		145	1
11083	8S0406		145	1
11083	8S0407		145	1
11083	8S0410		145	1
11083	8S0411		145	1
11083	8S0412		145	1
11083	8S1015	2530-01-069-0809	154	19
11083	8S1016	2530-01-069-0810	154	42
11083	8S1039		154	36
11083	8S1042		154	7
11083	8S1043		154	23
11083	8S1047		152	10
11083	8S1194	2520-00-231-6166	129	2
11083	8S1197	5342-01-067-1406	129	4
11083	8S1326	4730-00-401-8098	19	3
11083	8S1783	5310-01-160-3978	155	32
11083	8S1813	5940-01-250-8718	118	24
11083	8S2123		129	30
11083	8S2125	3110-00-237-6949	129	35
11083	8S2126		129	13
11083	8S2127	3110-00-421-4804	129	36
11083	8S23	5340-01-169-7516	121	29
11083	8S2325	4730-01-068-9793	75	3
11083	8S2331	5306-01-061-8640	75	6
11083	8S2332	5306-00-402-9244	75	1
11083	8S2388	4720-00-948-2315	68	52
11083	8S24	5340-01-270-7426	121	30
11083	8S3371	5310-00-451-3384	176	4
11083	8S3482		113	15A
11083	8S3486		113	4A
11083	8S3487	3020-01-068-9754	113	4
11083	8S3491		113	15
11083	8S3653	2910-00-116-9598	33	3
11083	8S385	2530-01-017-6667	144	3
			145	3
11083	8S387		144	3
			145	3

CROSS-REFERENCE INDEXES

PART NUMBER INDEX

CAGEC	PART NUMBER	STOCK NUMBER	FIG.	ITEM
11083	8S391	2530-01-048-4166	144	3
			145	3
11083	8S392		144	3
			145	3
11083	8S395	5306-01-255-9253	144	18
			145	15
11083	8S4006	5340-01-253-8964	32	21
11083	8S4055	4730-01-051-7605	122	38
			228	3
			229	3
			235	10
			235	19
			235	28
11083	8S4275	5330-01-026-4217	5A	21
11083	8S4317	2910-00-138-8224	46	9
11083	8S4367		35	5
11083	8S4368	3020-00-460-6601	35	18
			35	19
11083	8S4591		232	24
			263	9
			263	14
11083	8S4780		120	27
11083	8S4781	3040-01-250-5157	118	11
11083	8S4784	5307-01-254-2502	118	7
11083	8S4785		118	6
11083	8S4914	6620-01-048-4145	246	17
11083	8S4915	6685-01-048-2246	246	18
11083	8S4936	4720-01-067-2177	235	16
11083	8S4943	4720-01-208-7078	228	1
			229	1
11083	8S4954		253	38
11083	8S5011	5330-00-003-4137	51	1
11083	8S5091		50	9
11083	8S557	2810-01-254-5338	113	32
11083	8S558	2810-01-254-5335	113	28
11083	8S5653	5330-01-254-9054	136	16
11083	8S5716	4710-01-170-9234	154	40
11083	8S5753	5360-01-069-0812	154	25
11083	8S5820	2520-00-455-9263	153	21
			156	12
			186	8
11083	8S5914		228	17
			229	16
11083	8S6157	5330-00-470-5683	52	25
11083	8S6257	4710-01-250-3986	113	13
11083	8S6391	4730-01-068-9756	228	4
			229	4
			236	13
			236	36
11083	8S6392	4730-01-095-0835	261	22
			264	5

CROSS-REFERENCE INDEXES

PART NUMBER INDEX

CAGEC	PART NUMBER	STOCK NUMBER	FIG.	ITEM
11083	8S6392	4730-01-095-0835	264	14
			265	7
			265	47
11083	8S6393	4730-01-095-0833	227	38
			261	6
			261	19
			261	45
			264	3
			264	12
			264	17
			264	23
			264	55
			265	5
			265	10
			265	16
			265	45
			265	58
11083	8S6417	4730-01-094-7469	261	17
			261	42
			264	10
			264	30
			265	3
			265	23
11083	8S6928	5365-01-254-2380	152	16
11083	8S7048	3120-01-166-3685	188	10
11083	8S7608	2910-01-323-7372	50	1
11083	8S7827		132	8
11083	8S7832		132	7
11083	8S8043	5365-00-181-7726	40	17
11083	8S8096	9905-01-053-4808	199	3
11083	8S8097	9905-01-053-4809	199	3
11083	8S8656		236	24
11083	8S8657		236	23
11083	8S8673	5340-00-195-8288	160	21
11083	8S8687		132	3
11083	8S8713		186	12
11083	8S8782	5340-01-165-2584	162	4
11083	8S8952	5306-00-476-5309	45	20
11083	8S9089	5305-00-008-5971	22	3
			114	7
11083	8S9092	5306-00-455-0460	152	29
11083	8S9093	5306-01-170-1338	158	11
11083	8S9129	4330-01-066-7713	185	6
11083	8S9130	4730-01-159-7840	185	2
11083	8S9191	5306-00-470-5543	88	1
			116	13
11083	8S9192		124	11
11083	8S9195	4820-00-237-4604	124	10
11083	8S9348	4720-00-687-8759	BULK	10
11083	8S9872		233	24
11083	8T2604	5330-01-270-1752	45	19

CROSS-REFERENCE INDEXES

PART NUMBER INDEX

CAGEC	PART NUMBER	STOCK NUMBER	FIG.	ITEM
11083	8T5360	5310-01-097-8955	71B	7
16764	800077	3020-01-017-6333	72	22
			77	26
16764	801077	9390-00-839-1864	72	4
			74A	40
16764	801078	4730-00-277-6320	74A	45
16764	807736		72	6
16764	830338	5306-01-166-7926	71A	2
19207	8328009	5310-00-262-4712	71	55
19207	8338570	5310-00-298-8903	99	12
19207	8356699	5310-00-905-4462	25	29
19207	8392184	5310-00-209-6512	154	5
13445	8398	5930-00-715-1939	81	3
19207	8743903-5	5306-00-182-9590	68	25
11083	88A51329-CH	4320-00-103-8883	65	32
11083	888439		176	38
11083	896650	3120-01-254-2470	136	14
11083	9B2289	5315-00-267-2268	136	13
			137	10
			138	9
			142	34
11083	9D4484	2590-01-222-2847	89	1
			90	13
11083	9D5248	4720-01-068-2816	235	6
11083	9F1720		262	1
11083	9F2049	5315-01-254-4264	155	23
11083	9F2241		71	32
11083	9F2247	4730-00-044-4688	33	24
11083	9F297B	5310-00-005-0781	43	21
			43	28
			57	13
			59	14
			109	19
			122	52
			15	10
			1	13
			159	18
			15	25
			9	6
			15	28
			9	8
			16	26
			6	7
			16	2
			6	2
			16	10
			7	14
			16	6
			7	9
			16	16
			8	2
			17	
			0	
			17	
			2	
			17	
			2	
			17	
			2	
			17	
			3	
			17	
			3	
			18	
			8	
			18	
			9	

CROSS-REFERENCE INDEXES

PART NUMBER INDEX

CAGEC	PART NUMBER	STOCK NUMBER	FIG.	ITEM
11083	9F2978	5310-00-005-0781	230	10
			231	3
			244	16
			261	7
			261	33
			264	66
			265	68
11083	9F307		132	29
11083	9F4684		252	8
11083	9F4976	5310-00-178-0741	72	49
			73	27
			74	3
			76	19
			74B	5
11083	9F5647	3120-00-064-1275	220	23
			221	10
			221	28
			222	2
			222	8
11083	9F5830	5340-01-377-2466	4	3
11083	9F5940	5330-00-530-2525	122	50
11083	9F6641	5305-00-983-6622	35	31
11083	9F6705	5360-00-664-4194	130	39
11083	9F6936	5305-01-255-9377	132	5
			251	2
11083	9F7378	5365-00-131-4761	174	5
11083	9F7882	5315-01-066-4707	52	6
			172	29
11083	9F7960		129	42
11083	9F7975	3020-01-069-1386	129	10
11083	9F8088		93	2
11083	9F9298		73	24
11083	9F9327	5305-00-005-0898	80	20
11083	9G6771	3040-01-377-6939	127	21
11083	9G6772		127	17
11083	9G6778	2520-01-221-3392	109A	1
11083	9G7397		125	6A
11083	9G8010	5930-01-095-6194	82	6
11083	9G9501	4720-01-196-7180	178	1
11083	9H0438	5365-01-068-7244	111	11
11083	9H0641		149	6
11083	9H1020	5307-00-406-4557	5	28
			5A	28
11083	9H1022	5307-00-232-0822	15	7
11083	9H1077	5307-00-762-6352	4	13
11083	9H1288	5307-00-232-0823	5	13
11083	9H1918		149	10
11083	9H1980	3020-01-068-7245	127	29
11083	9H223	5330-00-919-2249	154	3
11083	9H2400	3120-01-164-8629	47	22
			188	15

CROSS-REFERENCE INDEXES

PART NUMBER INDEX

CAGEC	PART NUMBER	STOCK NUMBER	FIG.	ITEM
11083	9H2400	3120-01-164-8629	189	4
			192	15
11083	9H297	5306-01-255-6399	126	14
			126A	7
11083	9H3273	5365-00-948-6480	150	3
11083	9H3452	2520-01-068-2763	142	18
11083	9H3757	5310-01-053-4720	72	51
			76	22
			74A	50
11083	9H415	5330-00-894-7280	113	9
11083	9H4351	2540-00-407-0417	166	33
			167	30
11083	9H4891	5330-00-858-6182	12	18
11083	9H5233		113	26
11083	9H5433	5365-01-068-9650	111	14
11083	9H5537	5360-00-894-7275	112	15
11083	9H5545	5315-01-090-8540	112	14
11083	9H5546	5315-01-067-1727	112	13
11083	9H5548	5330-00-894-7291	113	10
11083	9H5604	5325-00-490-0573	142	11
11083	9H5999	5307-00-409-7212	190	13
11083	9H6236	2815-00-707-6576	15	18
11083	9H6247		191	4
11083	9H6249		191	3
11083	9H6454	5330-00-848-9950	237	17
11083	9H6673	5315-00-193-0923	105	18
11083	9H6864	5306-00-987-7112	128	2
			149	16
11083	9H750	5315-01-254-1307	147	9
11083	9H7534	5360-01-069-1390	152	4
11083	9H7549	2530-01-090-6863	152	1
11083	9H7553	5360-00-137-3464	152	5
11083	9H7631		147	62
11083	9H7657		152	32
11083	9H7687	2530-00-950-5758	134	9
11083	9H7759	5365-01-068-7075	134	5
			135	2
11083	9H7908	5310-01-259-8502	107	20
11083	9H795	2530-01-090-6851	153	28
11083	9H8217	5330-00-584-6161	25	5
11083	9H8260	5306-00-008-5943	69	13
11083	9H8284	5365-01-264-5975	3	14
11083	9H8285	5365-01-263-8844	3	14
11083	9H8524	5310-01-254-4256	95	3
11083	9H858	5330-00-895-3831	105	7
11083	9H8625		147	17
11083	9H8644	5330-01-066-8585	147	30
11083	9H8770	5330-01-068-2908	153	19
11083	9H8823		146	12
11083	9H8873		146	15
11083	9H8876		147	61

CROSS-REFERENCE INDEXES

PART NUMBER INDEX

CAGEC	PART NUMBER	STOCK NUMBER	FIG.	ITEM
11083	9H8889	5340-01-270-1303	153	24
11083	9H8890	5330-00-913-8117	153	25
11083	9H8918	5315-01-254-2376	147	33
11083	9H9414		134	7
			135	4
11083	9H966		147	12
11083	9H973	5340-01-254-4342	109	17
11083	9J0110	3120-01-306-4200	7	11
11083	9J1302	2530-01-067-2164	223	15
11083	9J1477	3805-01-211-4739	252	4
11083	9J1478	3805-01-211-4740	252	4
11083	9J1479	3830-01-018-4830	251	9
11083	9J1480	3830-01-017-4036	251	9
11083	9J1999	2995-01-068-9670	214	15
11083	9J2272		253	5
11083	9J2914	5365-01-257-4621	237	25
11083	9J2916	5340-01-264-6101	211	17
11083	9J2917		211	8
			212	7
11083	9J2918		211	1
11083	9J2919		212	1
11083	9J3473	4730-01-253-7353	243	27
11083	9J3578	4320-01-262-3317	218	14
11083	9J3580		218	31
11083	9J3711	5342-01-068-7085	251	3
11083	9J3777	2590-01-123-5955	262	6
11083	9J3789	3110-01-270-1814	253	16
			253	25
11083	9J3817		260	22
11083	9J3848		262	7
11083	9J3866	4810-01-257-8821	211	9
			212	8
11083	9J3947	5342-01-068-7086	213	26
11083	9J4029	4820-01-068-6068	215	8
11083	9J4113		207	19
			207	28
			208	19
			208	28
			209	19
			210	19
			217	5
11083	9J4449	3120-01-322-2932	260	7
11083	9J4543		260	10
11083	9J4544		260	8
11083	9J4780		207	14
			207	23
			208	14
			208	23
			209	14
			210	14
			217	8

CROSS-REFERENCE INDEXES

PART NUMBER INDEX

CAGEC	PART NUMBER	STOCK NUMBER	FIG.	ITEM
11083	9J4800	5360-01-067-1728	207	20
			207	31
			208	20
			208	31
			209	22
			210	22
			217	6
11083	9J4862	5335-01-068-9671	237	30
11083	9J4994	5365-01-257-3281	237	7
11083	9J5050	4320-01-319-3981	200	1
11083	9J5169	4820-01-048-7098	218	1
11083	9J5229		260	12
11083	9J5258		255	25
11083	9J5273	5315-01-068-6070	256	3
11083	9J5283	4730-01-069-5817	255	3
11083	9J5284	3110-01-067-2165	255	4
11083	9J5490	5360-01-257-3419	218	13
11083	9J5491	5360-01-257-7810	218	9
11083	9J5498	5360-01-070-2809	215	34
11083	9J5499	5360-01-067-5611	215	35
11083	9J5645		238	8
11083	9J5646		238	12
11083	9J5694		203	13
11083	9J5695	5310-01-322-2922	203	2
11083	9J5696		203	10
11083	9J5697		203	6
11083	9J5698		203	11
11083	9J5699		203	12
11083	9J5702		203	14
11083	9J5703	4810-01-321-9984	203	3
11083	9J5704		203	15
11083	9J5706		203	9
11083	9J5707		203	4
11083	9J5709	5340-00-290-4545	203	7
11083	9J5753		214	3
11083	9J5754		214	4
11083	9J5756	5360-01-067-5614	213	13
11083	9J6491	5330-01-069-0856	213	23
			215	5
11083	9J6715		253	4
11083	9J6831		232	15
11083	9J7031	4730-01-165-9540	243	19
11083	9J750	3830-01-047-9395	237	5
11083	9J7548		235	1
11083	9J7549		253	43
11083	9J7550	2540-01-269-9369	235	12
11083	9J7753	5360-01-067-1730	218	20
11083	9J791		223	13
11083	9J8583		213	7
11083	9K4939		166	35
			167	32

CROSS-REFERENCE INDEXES

PART NUMBER INDEX

CAGEC	PART NUMBER	STOCK NUMBER	FIG.	ITEM
11083	9K700	5325-01-253-4416	86	2
			87	5
			100	12
11083	9K8555		213	5
11083	9L6243	2815-01-053-4726	40	9
11083	9L672		185	13
			185	15
11083	9L674		185	9
11083	9L8715	4730-01-067-8059	31	22
			32	16
11083	9L8716	4730-01-111-7800	31	25
11083	9L9850	5306-01-061-8635	31	23
			32	17
11083	9M0009	5340-00-921-4388	22	12
11083	9M0672	5340-01-264-6022	190	26
11083	9M0673	5330-01-285-2792	190	24
11083	9M1311	5310-00-445-4633	70	26
11083	9M1974	5310-00-432-4064	22	13
			64	4
			64B	6
			64D	7
11083	9M1997	3110-00-446-9696	182	38
11083	9M200	2530-00-756-8498	149	31
11083	9M201	2520-00-756-9796	149	29
11083	9M2042	3110-00-788-5814	112	2
11083	9M2151	5307-00-409-7208	38	19
			190	14
11083	9M2314		16	9
11083	9M2315	2815-01-255-6243	16	1
11083	9M2341	2910-00-989-3388	50	14
11083	9M3024	3040-01-254-0264	49	12
11083	9M3025	2990-01-103-6623	49	10
11083	9M3695	2590-01-064-7492	37	8
11083	9M3835	5342-00-410-1903	166	8
			167	10
11083	9M4007	5315-00-193-0919	155	9
11083	9M4217	5331-00-869-6562	64	22
11083	9M4685	5360-00-912-6674	201	11
11083	9M4789	2530-01-067-2166	45	1
11083	9M4823	3120-00-237-7342	22	17
11083	9M4849	5330-00-847-4351	27	20
11083	9M488	5307-00-762-6354	4	15
11083	9M5349	5360-00-788-5800	14	3
			14A	3
11083	9M5350	5360-00-788-5801	14	9
			14A	9
11083	9M5376		26	15
11083	9M5520		70	35
11083	9M5617	5325-01-223-7105	95	16
11083	9M5639	5340-01-255-0934	120	37
11083	9M5640	5340-01-255-0935	120	37

CROSS-REFERENCE INDEXES

PART NUMBER INDEX

CAGEC	PART NUMBER	STOCK NUMBER	FIG.	ITEM
11083	9M5742		166	16
			167	15
11083	9M5884	5340-00-493-3997	151	20
11083	9M6292	5340-00-116-0412	46	2
11083	9M6293	5340-00-116-0431	44	17
11083	9M6302	5310-00-470-5568	44	8
11083	9M6303	5360-00-116-0432	44	24
11083	9M6542	5330-00-005-0606	51	27
11083	9M6590	5305-01-188-4766	20	2
11083	9M673	5330-01-285-2792	187	5
11083	9M6775	2530-00-948-9748	149	25
11083	9M6950	4730-01-067-8063	31	8
11083	9M6987	2910-00-213-6512	31	4
11083	9M7394	2540-01-181-0999	245	2
11083	9M8041		115	3
11083	9M8669	4330-00-103-5502	119	1
11083	9M8720		45	28
11083	9M8745	2815-00-838-9965	14	6
			14A	6
11083	9M8919	5325-00-920-0222	40	7
			40B	3
11083	9M9187	5340-00-931-8006	45	30
11083	9M9423	4720-00-948-6037	18	11
11083	9M9542	2815-00-522-1995	18	7
11083	9M9549	5340-00-931-7929	18	8
11083	9M9624	5340-01-377-2487	64F	8
11083	9M9640	5330-01-377-2726	64F	9
11083	9M9646		64F	12
11083	9M9647	5331-00-869-6566	64F	14
11083	9M9784	4730-01-377-7834	64F	11
11083	9M9788	5315-00-952-7737	44	30
11083	9M9837		3	3
11083	9M9838		3	7
11083	9N1433	5365-01-257-7793	127	22
11083	9N1650	5310-01-102-2478	48	13
			166	4
11083	9N2041	3120-00-188-0392	KIT	
			40B	16
11083	9N2539	5330-01-189-3551	7	10
11083	9N6495	5365-01-184-3672	33	47
11083	9N6496	5365-01-185-0935	33	47
11083	9P1418		132	18
11083	9P1424		146	48
11083	9P1425		146	17
11083	9P1445	5330-01-048-6000	144	12
11083	9P1549		159	3
11083	9P1831		116	3
11083	9P2189	5995-01-208-9221	80	25
11083	9P2390		121	3
11083	9P2717		80	7
11083	9P2908		62	4

CROSS-REFERENCE INDEXES

PART NUMBER INDEX

CAGEC	PART NUMBER	STOCK NUMBER	FIG.	ITEM
11083	9P2909		62	6
11083	9P3089		132	2
11083	9P3090		132	2
11083	9P3308	2530-00-688-4757	136	5
11083	9P3309	2530-00-688-4849	137	2
11083	9P3663	2990-01-103-6655	113	14
11083	9P4608	5930-01-162-7313	88	30
			103	20
11083	9P4609	5340-01-170-6336	103	25
11083	9P4956	3120-01-266-6423	136	12
			137	9
11083	9P5223		127	17
11083	9P5253	5995-01-209-0426	103	7
11083	9P5397	5340-01-284-9586	43	20
11083	9P5398	5340-01-284-9585	43	27
11083	9P5400		43	23
11083	9P5406	2510-01-285-5064	164	21
11083	9P5545	5330-00-756-9799	110	44
11083	9P6592	3020-01-103-3705	111	35
11083	9P6593	3020-01-103-3706	112	7
11083	9P6594	3020-01-103-3707	112	10
11083	9P6595	3020-01-103-6656	112	17
11083	9S0428		132	9
11083	9S0440	4710-01-253-3527	120	35
11083	9S1026		149	5
11083	9S1269	5330-00-005-0607	51	11
11083	9S1303	5315-00-169-8105	192	8
			221	23
			222	13
11083	9S1307		180	4
11083	9S1308	5306-01-063-4264	174	13
			176	15
11083	9S1313	5310-00-619-7882	30	19
11083	9S1314	5342-01-068-7178	146	49
			151	17
11083	9S1315	5315-01-066-8470	146	7
			151	18
11083	9S1322	5306-00-003-0681	239	2
			240	2
			255	13
11083	9S1364	5306-00-116-1531	141	30
11083	9S1385	5365-01-130-4159	104	9
11083	9S1604		199	3
11083	9S1690	4720-01-067-2178	235	27
11083	9S2005		71	38
11083	9S2007	5305-00-450-0421	71	34
			71A	14
11083	9S2008	5305-00-450-0420	71	48
11083	9S2009	5305-00-450-0422	71	49
11083	9S2011	5305-01-053-4742	71	23
11083	9S2087	5305-01-254-2516	57	11

CROSS-REFERENCE INDEXES

PART NUMBER INDEX

CAGEC	PART NUMBER	STOCK NUMBER	FIG.	ITEM
11083	9S2087	5305-01-254-2516	58	20
			59	12
			60	13
			62	8
			92	19
			93	15
			166	2
			167	5
11083	9S2242	5365-00-432-8184	71	35
11083	9S2248	5950-00-758-7793	71	40
11083	9S2250	5325-00-031-3336	71	33
11083	9S2252	2920-01-053-4743	71	53
11083	9S2254	2920-01-053-4782	71	52
11083	9S2255	2920-01-053-4744	71	7
11083	9S2256	5330-01-053-4844	71	44
11083	9S2258	2920-00-484-1671	71	54
11083	9S2259	2920-00-231-7266	71	12
11083	9S2260	2920-01-053-4745	71	2
11083	9S2261	3040-01-053-4746	71	45
11083	9S2262	5330-00-429-3570	71	8
11083	9S2292	2920-00-427-6421	71	18
11083	9S2303		71	41
11083	9S2309	5310-00-498-2968	49	13
11083	9S2389	5325-00-026-3776	71	25
11083	9S2390	5330-01-053-4747	71	42
11083	9S2394	5330-00-432-4034	71	28
11083	9S2395	3120-00-237-6509	71	27
11083	9S2397	2920-01-053-4748	71	31
11083	9S2398	2920-01-053-4749	71	26
11083	9S2437	5305-00-090-4147	71	22
11083	9S2438	5305-00-090-4227	71	5
11083	9S247	4720-01-051-6773	BULK	13
11083	9S2539	6140-01-199-4503	95	15
11083	9S2542	5305-00-090-4204	71	16
11083	9S2544	5305-00-090-4256	71	3
11083	9S2612	5360-01-068-2840	46	5
11083	9S2727	5306-01-069-1440	143	2
11083	9S2792		126	11
11083	9S2802		124	13
11083	9S2836	3120-00-421-9627	110	20
11083	9S3032	5340-00-261-4042	35	36
			247	2
11083	9S3033	5340-00-261-4066	35	37
			247	3
11083	9S3902	2910-01-250-6492	33	10
11083	9S3968	2510-01-176-0750	168	8
11083	9S3970		236	26
11083	9S3975	2520-01-068-6135	141	21
11083	9S4160	3120-00-854-1068	33	15
11083	9S4167	5307-01-051-2364	51	14
11083	9S4169		52	8

CROSS-REFERENCE INDEXES

PART NUMBER INDEX

CAGEC	PART NUMBER	STOCK NUMBER	FIG.	ITEM
11083	9S4180	5365-01-067-2179	185	21
			213	14
			215	3
11083	9S4181	5365-01-026-9555	214	8
11083	9S4183	5365-00-478-2920	118	15
			214	6
11083	9S4185	5365-00-763-0120	193	21
			218	23
			243	28
11083	9S4191	5365-00-411-4584	110	10
			114	4
			116	11
			118	4
			152	14
			194	16
			195	15
			206	20
			214	11
			218	30
			225	29
			226	27
			228	19
			229	18
			237	1
11083	9S4197	3120-00-245-3219	33	21
11083	9S427		132	9
11083	9S4324		142	26
11083	9S4325	3130-01-254-2546	142	40
11083	9S4326	3130-01-254-2545	142	22
58312	9S4468-00	5306-00-402-9160	44	4
11083	9S4489	5305-01-053-4751	74	14
11083	9S4490	5330-00-760-7378	74	15
11083	9S4551	4720-01-067-1407	122	20
11083	9S4569		122	14
11083	9S4613	2590-01-066-8471	94	1
11083	9S4673	5340-00-251-3446	44	5
11083	9S4758	3040-01-253-5581	102	36
11083	9S4781		172	13
11083	9S4801		172	18
11083	9S4829	3110-00-913-8895	128	28
11083	9S4944		95	5
11083	9S4971	2990-00-237-6137	49	15
11083	9S4972		49	17
11083	9S4980	5305-01-068-2843	45	4
11083	9S4982		45	5
11083	9S5061		95	22
11083	9S5086	5306-01-266-7332	95	17
11083	9S5222	5365-01-064-3788	105	12
11083	9S5278	3110-01-068-9757	127	37
11083	9S5307		172	9
11083	9S5323	5315-01-254-2278	95	7

CROSS-REFERENCE INDEXES

PART NUMBER INDEX

CAGEC	PART NUMBER	STOCK NUMBER	FIG.	ITEM
11083	9S5360		128	21
11083	9S5393	5365-00-005-5825	45	33
11083	9S5633	2590-01-066-8472	94	27
11083	9S5645	5360-01-254-2681	96	2
11083	9S5682	4720-01-067-2180	234	1
11083	9S5771	3130-01-333-2801	12	23
11083	9S5772		12	25
11083	9S5773		12	24
11083	9S5774		12	26
11083	9S5937		91	8
11083	9S6155	5305-01-164-2318	218	25
11083	9S6402		104	13
11083	9S6518	6680-01-068-7287	19	1
11083	9S6526		20	12
11083	9S6862		95	2
11083	9S7077	5305-00-461-5427	45	3
11083	9S7078	5342-01-068-6137	45	6
11083	9S7479	5307-01-254-2506	155	2
			204	4
11083	9S777	4730-01-250-5939	51	26
11083	9S7949	2520-01-064-6625	182	5
11083	9S7950	3010-01-064-7524	182	6
11083	9S798	3120-00-482-1419	45	18
11083	9S8002	5365-00-078-6248	207	11
			208	11
			209	11
			210	8
			216	3
11083	9S8004	5365-01-036-0010	213	9
			214	13
			215	19
			218	21
11083	9S8006	2530-01-062-5318	202	13
11083	9S8007	5365-01-257-4480	218	2
11083	9S8008	4730-01-064-3790	214	18
			126A	8
11083	9S8015		52	4
11083	9S8016	5330-00-548-6119	52	7
11083	9S8017	4320-01-313-0634	52	3
11083	9S8018		52	15
11083	9S8025		52	11
11083	9S8216	5310-01-068-7288	141	2
11083	9S8217	5306-01-068-6138	142	3
11083	9S8220	5360-00-246-0489	147	3
11083	9S8304	2530-01-066-8473	134	11
11083	9S8437	3110-01-068-6139	113	6
11083	9S8438		113	6A
11083	9S8493	5306-01-067-5634	11	14
11083	9S8494	5310-01-066-9191	11	15
11083	9S8715		20	11
11083	9S8833	4710-01-250-3985	110	16

CROSS-REFERENCE INDEXES

PART NUMBER INDEX

CAGEC	PART NUMBER	STOCK NUMBER	FIG.	ITEM
11083	9S8847		110	13A
11083	9S8848	5330-00-409-3844	110	29
11083	9S9629		236	15
11083	9S9632		236	22
11083	9S9771		72	23
			77	27
11083	9S9830	5305-01-053-4758	71	9
11083	9S9979	2590-01-064-7493	58	36
			60	36
			61	7
11083	9T6405	4810-01-332-5464	203	1
11083	9T8610	5306-01-322-1385	203	8
11083	9W3563	5365-01-068-7142	144	13
11083	9W6647	5330-00-738-8639	134	2
			135	6
11083	9W7228	5330-01-017-8608	128	32
11083	9X6001	5305-01-352-4223	71B	20
11083	9Y3230	2815-01-377-6940	KIT	
18876	9024483	5310-00-754-3384	45	22
25184	906-737-70	5331-00-801-3354	110	11
			114	5
			116	9
			118	5
			152	12
			153	2
			194	17
			195	16
			206	21
			213	10
			214	12
			215	20
			218	22
			225	11
			226	9
			227	17
			228	20
			229	19
			230	30
			230	37
			236	6
			237	2
			261	10
			264	7
			265	25
			64A	22
			64C	22
16764	9418881	5310-00-944-5896	71	56
			157	13
			158	6
			71A	22
			71B	17

CROSS-REFERENCE INDEXES

PART NUMBER INDEX

CAGEC	PART NUMBER	STOCK NUMBER	FIG.	ITEM
16764	9418881	5310-00-944-5896	71C	13
16764	9419392	5310-00-952-0561	71	21
04718	96-014	4730-00-196-2055	248	17
73734	97410	5310-00-765-3237	126	7
30327	9975928	4730-00-289-1242	4	55
			4A	36

By Order of the Secretary of the Army:

ERIC K. SHINSEKI
General, United States Army
Chief of Staff

Official:

JOEL B. HUDSON
Administrative Assistant to the
Secretary of the Army
13306

DISTRIBUTION: To be distributed in accordance with the initial distribution requirements for IDN: 251917, requirements for TM 5-2410-234-34P.

RECOMMENDED CHANGES TO EQUIPMENT TECHNICAL PUBLICATIONS



SOMETHING WRONG WITH THIS PUBLICATION?

FROM (PRINT YOUR UNIT'S COMPLETE ADDRESS)

YOUR MAILING ADDRESS

DATE SENT

PUBLICATION NUMBER	PUBLICATION DATE	PUBLICATION TITLE
TM5-2410-234-34P		DS & GS Maintenance Repair Parts and Special Tools Lists for Tractor, Tracked, Heavy.

BE EXACT. . .PIN-POINT WHERE IT IS

PAGE NO	PARA-GRAPH	FIGURE NO	TABLE NO
9		2	

IN THIS SPACE TELL WHAT IS WRONG AND WHAT SHOULD BE DONE ABOUT IT:

Item 2, when ordered from the parts list, does not come as a flat washer. Please give the correct P/N for the flat washer.

SAMPLE

PRINTED NAME GRADE OR TITLE AND TELEPHONE NUMBER

SIGN HERE

DA FORM 1 JUL 79 2028-2

PREVIOUS EDITIONS ARE OBSOLETE.

P.S.--IF YOUR OUTFIT WANTS TO KNOW ABOUT YOUR RECOMMENDATION MAKE A CARBON COPY OF THIS AND GIVE IT TO YOUR HEADQUARTERS

REVERSE OF DA FORM 2028-2

SAMPLE

FILL IN YOUR
UNIT'S ADDRESS

FOLD BACK

DEPARTMENT OF THE ARMY

_____

_____

COMMANDER
U.S. ARMY TANK-AUTOMOTIVE AND ARMAMENTS COMMAND
ATTN: AMSTA-AC-NML
ROCK ISLAND, IL 61299-7630

TEAR ALONG PERFORATED LINE

RECOMMENDED CHANGES TO EQUIPMENT TECHNICAL PUBLICATIONS



SOMETHING WRONG WITH THIS PUBLICATION?

FROM: (PRINT YOUR UNIT'S COMPLETE ADDRESS)

DATE SENT

PUBLICATION NUMBER	PUBLICATION DATE	PUBLICATION TITLE
TM5-2410-234-34P		DS & GS Maintenance Repair Parts and Special Tools Lists for Tractor, Tracked, Heavy.

BE EXACT . PIN-POINT WHERE IT IS

PAGE NO	PARA-GRAPH	FIGURE NO	TABLE NO

IN THIS SPACE TELL WHAT IS WRONG AND WHAT SHOULD BE DONE ABOUT IT:

PRINTED NAME GRADE OR TITLE AND TELEPHONE NUMBER

SIGN HERE

DA FORM 1 JUL 79 2028-2

PREVIOUS EDITIONS ARE OBSOLETE.

P.S.--IF YOUR OUTFIT WANTS TO KNOW ABOUT YOUR RECOMMENDATION MAKE A CARBON COPY OF THIS AND GIVE IT TO YOUR HEADQUARTERS

REVERSE OF DA FORM 2028-2

FILL IN YOUR UNIT'S ADDRESS

FOLD BACK

DEPARTMENT OF THE ARMY

Commander
U.S. Army Tank-automotive and Armaments Command
ATTN: AMSTA-AC-NML
Rock Island, IL 61299-7630

TEAR ALONG PERFORATED LINE

THE METRIC SYSTEM AND EQUIVALENTS

NEAR MEASURE

. Centimeter = 10 Millimeters = 0.01 Meters = 0.3937 Inches
1 Meter = 100 Centimeters = 1000 Millimeters = 39.37 Inches
1 Kilometer = 1000 Meters = 0.621 Miles

WEIGHTS

Gram = 0.001 Kilograms = 1000 Milligrams = 0.035 Ounces
1 Kilogram = 1000 Grams = 2.2 lb.
1 Metric Ton = 1000 Kilograms = 1 Megagram = 1.1 Short Tons

LIQUID MEASURE

1 Milliliter = 0.001 Liters = 0.0338 Fluid Ounces
1 Liter = 1000 Milliliters = 33.82 Fluid Ounces

SQUARE MEASURE

1 Sq. Centimeter = 100 Sq. Millimeters = 0.155 Sq. Inches
1 Sq. Meter = 10,000 Sq. Centimeters = 10.76 Sq. Feet
1 Sq. Kilometer = 1,000,000 Sq. Meters = 0.386 Sq. Miles

CUBIC MEASURE

1 Cu. Centimeter = 1000 Cu. Millimeters = 0.06 Cu. Inches
1 Cu. Meter = 1,000,000 Cu. Centimeters = 35.31 Cu. Feet

TEMPERATURE

5/9(°F - 32) = °C
212° Fahrenheit is evuivalent to 100° Celsius
90° Fahrenheit is equivalent to 32.2° Celsius
32° Fahrenheit is equivalent to 0° Celsius
9/5C° + 32 =°F

APPROXIMATE CONVERSION FACTORS

TO CHANGE	TO	MULTIPLY BY
Inches	Centimeters	2.540
Feet	Meters	0.305
Yards	Meters	0.914
Miles	Kilometers	1.609
Square Inches	Square Centimeters	6.451
Square Feet	Square Meters	0.093
Square Yards	Square Meters	0.836
Square Miles	Square Kilometers	2.590
Acres	Square Hectometers	0.405
Cubic Feet	Cubic Meters	0.028
Cubic Yards	Cubic Meters	0.765
Fluid Ounces	Milliliters	29.573
ıts	Liters	0.473
arts	Liters	0.946
allons	Liters	3.785
Ounces	Grams	28.349
Pounds	Kilograms	0.454
Short Tons	Metric Tons	0.907
Pound-Feet	Newton-Meters	1.356
Pounds per Square Inch	Kilopascals	6.895
Miles per Gallon	Kilometers per Liter	0.425
Miles per Hour	Kilometers per Hour	1.609

TO CHANGE	TO	MULTIPLY BY
Centimeters	Inches	0.394
Meters	Feet	3.280
Meters	Yards	1.094
Kilometers	Miles	0.621
Square Centimeters	Square Inches	0.155
Square Meters	Square Feet	10.764
Square Meters	Square Yards	1.196
Square Kilometers	Square Miles	0.386
Square Hectometers	Acres	2.471
Cubic Meters	Cubic Feet	35.315
Cubic Meters	Cubic Yards	1.308
Milliliters	Fluid Ounces	0.034
Liters	Pints	2.113
Liters	Quarts	1.057
ers	Gallons	0.264
ms	Ounces	0.035
ograms	Pounds	2.205
Metric Tons	Short Tons	1.102
Newton-Meters	Pounds-Feet	0.738
Kilopascals	Pounds per Square Inch	0.145
lometers per Liter	Miles per Gallon	2.354
meters per Hour	Miles per Hour	0.621

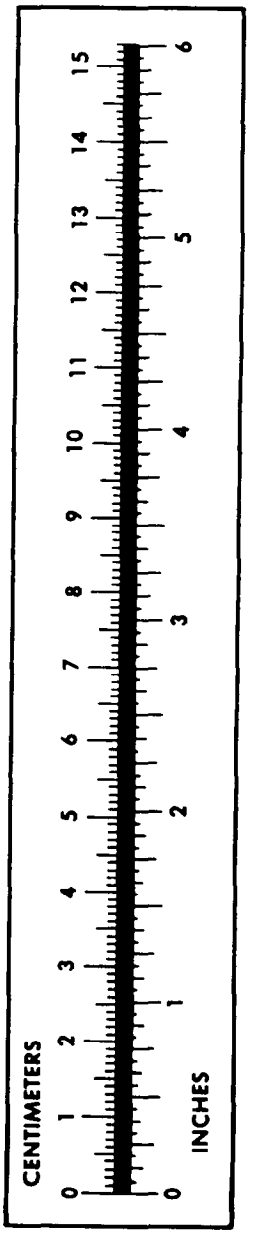

PIN: 059813-000

This fine document...

Was brought to you by me:



Liberated Manuals -- free army and government manuals

Why do I do it? I am tired of sleazy CD-ROM sellers, who take publicly available information, slap “watermarks” and other junk on it, and sell it. Those masters of search engine manipulation make sure that their sites that sell free information, come up first in search engines. They did not create it... They did not even scan it... Why should they get your money? Why are not letting you give those free manuals to your friends?

I am setting this document FREE. This document was made by the US Government and is NOT protected by Copyright. Feel free to share, republish, sell and so on.

I am not asking you for donations, fees or handouts. If you can, please provide a link to liberatedmanuals.com, so that free manuals come up first in search engines:

<A HREF=http://www.liberatedmanuals.com/>Free Military and Government Manuals</A>

– Sincerely
  Igor Chudov
  http://igor.chudov.com/