CATERPILLAR®

SEBP1356-04
March 1997

Volume I
Pages 1-610

RUTHZIL TRATOR COMERCIAL DE PEÇAS LTDA 11 97083-6812 ROLANDO CITRANGULO

Parts Manual

D8L Tractor
Power Shift

53Y1-99999 (Machine)
48W13002-99999 (Engine)
2NA1-99999 (Transmission)
4Y1-99999 (Bulldozer)
51M1-99999 (Bulldozer)
74M1-99999 (Bulldozer)
5Y1-99999 (Bulldozer)
6Y1-99999 (Bulldozer)
82M1-99999 (Bulldozer)
88M1-99999 (Ripper)
9N1-99999 (Ripper)
31N1-99999 (Ripper)
83Y1-99999 (Winch)
8XB1-99999 (Winch)

Powered by 3408 Engine

CATERPILLAR®

SEBP1356-04
March 1997

D8L Tractor
Power Shift

53Y1-99999 (Machine)
48W13002-99999 (Engine)
2NA1-99999 (Transmission)
4Y1-99999 (Bulldozer)
51M1-99999 (Bulldozer)
74M1-99999 (Bulldozer)
5Y1-99999 (Bulldozer)
6Y1-99999 (Bulldozer)
82M1-99999 (Bulldozer)
88M1-99999 (Ripper)
9N1-99999 (Ripper)
31N1-99999 (Ripper)
83Y1-99999 (Winch)
8XB1-99999 (Winch)

© 1997 Caterpillar
All Rights Reserved
SERVICE SUPPORT DEPARTMENT
PARTS & SERVICE SUPPORT

MACHINE IDENTIFICATION
Caterpillar machines are identified with SERIAL NUMBERS and/or PRODUCT IDENTIFICATION NUMBERS (PIN). These numbers are assigned to the chassis and to the engine. The chassis and the engine also carry ARRANGEMENT NUMBERS and in some cases MODIFICATION NUMBERS. These numbers are shown on the SERIAL NUMBER or PIN plates and on the MASTER PLATE in the operator's compartment.

Caterpillar dealers need all of these numbers to determine which components were included on the machine when it was assembled at the factory. This permits accurate identification of replacement part numbers.

ORDERING PARTS
Quality Caterpillar Replacement parts are available from Caterpillar dealers throughout the world. Their parts inventories are up to date and include all parts normally required to protect your investment in Caterpillar machines. Some dealers may offer repair kits, exchange components or remanufactured parts to allow selection of the most effective repair alternative for a specific situation. When ordering parts, your order should specify the quantity, part number, part name and the serial number/product identification number.

HOW TO USE THE PARTS MANUAL
Caterpillar Parts Manuals include illustrations of the groups or assemblies which make up the machine. These illustrations show the standard components and many of the attachments for each machine.

The maintenance part index located in the front of the manual references most frequently used maintenance part numbers with description, quantity, where used and page number. The alphabetical index also located in the front of the manual should be used to determine the page number on which specific illustrations are shown. Reference to those pages will identify each of the individual serviceable parts. A numerical index listing each part number and the corresponding page number (s) appears in the back of the manual.

Captions
The caption under each illustration identifies the part number and name of the group or assembly shown. Part numbers of groups are shown for reference purposes. Your Caterpillar dealer can help you identify the availability of a complete group. If more than one illustration is included for any group, the caption identifies the specific machine serial numbers to which each illustration applies. In some cases it is not possible to determine the specific machine serial numbers to which different illustrations are applicable. In those cases the caption identifies the illustration as "TYPE 1", "TYPE 2", etc. Reference to the actual group or assembly is necessary in those cases to determine which illustration should be used. Captions provide additional information such as page number references to separate illustrations, quantities used and other informational assistance for the user to determine parts needs.

Abbreviations and Symbols
O.D. OUTSIDE DIAMETER
I.D. INSIDE DIAMETER
A NOT PART OF THIS GROUP
B USE AS REQUIRED
C CHANGE FROM PREVIOUS TYPE
D ORDER BY THE METER
E ORDER BY THE CENTIMETER
F NOT SHOWN
G ORDER BY THE INCH
I SEE HOSE FABRICATION GUIDE
M METRIC PART
R REMFG PART MAY BE AVAILABLE
Y SEPARATE ILLUSTRATION
Z NOT SERVICED SEPARATELY

Illustration Reference Letters
When necessary, illustrations contain reference letters (A, B, C etc.) that are intended to track lines and harnesses from one point to another. They are also used to show where to reconnect illustrations that have been separated.

Ref No
The numbers shown in this column refer to the numbers shown within the illustration. To identify any item within the illustration, first determine its reference number, then refer to the same number in the Ref. No. column for information regarding that part.

Part Number
The identifying number of a part.

Qty
The quantities shown in this column indicate the total number of that item used in this illustration.

Part Name
Information in this column provides the name of the part as well as additional information such as size which further identifies the part.

Indented Part Names
Within each illustration is a parts list identifying each serviceable part. When a part name is indented, it is a part of the item under which it is indented.

NOTE:
Continuing improvement and advancement of product design may cause changes to your machine which may not be included in this publication. Each publication is reviewed and revised as required to update and include these changes in later editions.

Whenever a question arises regarding your Caterpillar product or this publication, please consult your Caterpillar dealer for the latest available information.

IDENTIFICATION DE LA MACHINE

Toutes les machines Caterpillar portent un NUMÉRO DE SÉRIE et un NUMÉRO D'IDENTIFICATION (PIN). Ces numéros s'appliquent au châssis et au moteur. Le châssis et le moteur peuvent également recevoir des NUMÉROS DE VERSION et, dans certains cas, de MODIFICATION. Ces numéros figurent sur les plaques de série ou d'identification et sur la plaque signalétique principale qui se trouve dans le poste de conduite.

Les concessionnaires Caterpillar doivent connaître tous ces numéros pour savoir quels composants ont été employés lors du montage en usine et trouver plus facilement le numéro des pièces de rechange.

COMMANDE DE PIÈCES

Les concessionnaires Caterpillar fournissent dans le monde entier des pièces de rechange de qualité Caterpillar. Leurs stocks de pièces sont constamment réapprovisionnés et comptent toutes les pièces nécessaires pour assurer la bonne marche de votre machine Caterpillar. Certains concessionnaires proposent également des kits de réparation, des échanges standard ou des pièces rénovées, ce qui permet de choisir la solution la plus économique dans une situation donnée. Lors des commandes de pièces, mentionner la quantité, le numéro et la désignation des pièces ainsi que le numéro de série.

UTILISATION DU CATALOGUE DE PIÈCES

Les Catalogues de pièces Caterpillar comportent des illustrations des groupes ou ensembles qui composent la machine. Ces illustrations représentent les composants standard et nombre des accessoires disponibles.

Au début du catalogue figure un index de numéros des pièces plus fréquemment utilisées pour l'entretien, avec leur description, quantité et numéro de page. Un index alphabétique figurant aussi au début du catalogue, renvoie aux pages et illustrations correspondantes. Toutes les pièces du moteur avec leur numéro figurent dans ces pages. Un index numérique de pièces détaillant chaque numéro de pièce avec le numéro de page correspondante se trouve à la fin du catalogue.

Légendes

Chaque illustration comporte une légende comprenant le numéro de pièce et la désignation du groupe ou celle de l'ensemble. Les numéros de groupe sont donnés à titre de référence. Pour savoir si un groupe complet peut être commandé, s'adresser au concessionnaire. Si à un groupe donné correspondent plusieurs illustrations, la légende indiquera le numéro de série de chaque machine spécifique. Parfois, il n'est pas possible de savoir à quels numéros de série spécifiques de la machine se rapportent les différentes illustrations. Dans ce cas, les légendes comportent la mention "Type 1", "Type 2", etc. Pour déterminer quelles illustrations utiliser, il faudra connaître la référence du groupe ou de l'ensemble correspondant. Les légendes indiquent également les numéros de page des plans des sous-ensembles, les quantités utilisées et autres renseignements destinés à aider l'utilisateur à déterminer quelles sont les pièces nécessaires.

Abréviations et symboles

O.D.	Diamètre extérieur
I.D.	Diamètre intérieur
A	Ne fait pas partie de ce groupe
B	Utiliser selon besoin
C	Modification
D	Commander par mètre
E	Commander par centimètre
F	Non représenté
G	Commander par pouce
I	Voir "Hose Fabrication Guide"
M	Pièce métrique (y compris fixations)
R	Pièce rénovée éventuellement disponible
X	Echange standard
Y	Illustration séparée
Z	Non fourni séparément

Lettres de référence des illustrations

Quand il est nécessaire, les illustrations comportent des lettres de référence (A, B, C, etc.) pour montrer le trajet des lignes et faisceaux de câbles d'un point à l'autre. Elles sont utilisées également pour indiquer où relier les illustrations séparées auparavant.

Ref No (No de réf.)

Les numéros figurant dans cette colonne renvoient aux numéros utilisés dans l'illustration. Pour identifier une pièce quelconque dans l'illustration, déterminer en premier son numéro de référence, puis rechercher les renseignements sur cette pièce dans la colonne de numéro de référence.

Part Number (No de pièce)

Ces numéros identifient les pièces.

Qty (Quantité)

Les quantités qui figurent dans cette colonne indiquent le nombre de la pièce concernée utilisé.

Part Name (Désignation de la pièce)

Les renseignements figurant dans cette colonne indiquent le nom de la pièce ainsi que des renseignements supplémentaires telles par exemple les dimensions, complétant l'identification de la pièce concernée.

Désignations de pièces en retrait

Chaque illustration comporte la liste des pièces qui la constituent et que l'on peut se procurer. Lorsqu'une désignation de pièce est en retrait, cela veut dire que l'article en regard fait partie de l'ensemble sous lequel il figure.

NOTA:

En raison du progrès technique et des améliorations continuelles apportées au matériel, votre machine comporte peut-être des modifications qui n'apparaissent pas dans la présente publication. Les éditions ultérieures seront revues et corrigées en conséquence.

En cas de doute sur un détail de votre machine Caterpillar ou sur le texte de la présente publication, adressez-vous à votre concessionnaire Caterpillar.

MAQUINAS

Las máquinas Caterpillar se identifican con NUMEROS DE SERIE y/o NUMEROS DE IDENTIFICACION DEL PRODUCTO (PIN). Estos números son asignados al chasis y al motor, respectivamente. El chasis y el motor tienen también NUMEROS DE DISPOSICION, y en algunos casos, NUMEROS DE MODIFICACION. Estos números están en la placa del número de serie del motor o en la placa principal en la cabina del operador.

Los distribuidores Caterpillar necesitan estos números para determinar con qué componentes se armó la máquina en la fábrica. Esto permite una identificación exacta de los números de pieza de repuesto.

COMO PEDIR REPUESTOS

Piezas de repuesto Caterpillar de calidad están disponibles de los distribuidores Caterpillar en todo el mundo. Sus existencias actualizadas incluyen todas las piezas normalmente requeridas para proteger su inversión en máquinas Caterpillar. Algunos distribuidores pueden tener juegos de reparación, componentes de intercambio o piezas remanufacturadas, para permitir la selección de la mejor alternativa de reparación de un caso en particular. Al pedir piezas de repuesto, especifique en su pedido la cantidad, el número de pieza, el nombre de la pieza y el número de serie. Si tiene duda del número de pieza, déle al distribuidor una descripción completa de la misma.

COMO USAR ESTE CATALOGO

Los Catálogos de Piezas Caterpillar tienen ilustraciones de los grupos o conjuntos que componen la máquina. Estas ilustraciones muestran los componentes estándar y muchos de los accesorios disponibles para la máquina.

Al frente de este catálogo se encuentra un índice de los números de piezas utilizadas más frecuentemente para el mantenimiento, que incluye descripción, cantidad necesaria y número de página. El índice alfabético, igualmente al frente de este catálogo, se debe usar para determinar el número de página donde se encuentran ilustraciones específicas. Dichas páginas identifican las piezas utilizables. Un índice numérico de piezas con el correspondiente número de página aparece al final de este catálogo.

Títulos

El título debajo de cada ilustración identifica el número de pieza y el nombre del grupo o del conjunto indicado. Los números de pieza de grupos se muestran para referencia. Su distribuidor Caterpillar puede ayudarle a identificar la disponibilidad de un grupo completo. Si se incluye más de una ilustración de cualquier grupo, el título identifica números de serie de las máquinas correspondientes a cada ilustración. En algunos casos no es posible determinar los números de serie de las máquinas correspondientes a las diferentes ilustraciones. En esos casos, el título identifica la ilustración como "Tipo 1", "Tipo 2", etc. Es necesario referirse al grupo o conjunto en sí para determinar cuál ilustración se debe utilizar. Los títulos proveen información adicional: los números de las páginas en que aparecen las ilustraciones de los subconjuntos, las cantidades utilizadas y demás información para ayudar al usuario a determinar las piezas necesarias.

Abreviaturas y símbolos

O.D.	Diámetro exterior
I.D.	Diámetro interior
A	No es pieza de este grupo
B	Utilizado según la demanda
C	Indica cambio
D	Se pide por metro
E	Se pide por centímetro
F	No se muestra
G	Se pide por pulgada
I	Ver "Hose Fabrication Guide"
M	Pieza métrica (Incluso tornillería)
R	Puede estar disponible como pieza remanufacturada
X	Puede ser posible el intercambio de Componentes Principales
Y	Ilustración separada
Z	No se suministra por separado

Letras de referencia de ilustraciones

Las ilustraciones contienen algunas veces letras de referencia (A, B, C, etc.) cuyo propósito es seguir el trayecto de líneas y mazos de cables de un punto a otro. También se utilizan para mostrar dónde volver a unir ilustraciones que se habían separado.

No. de Referencia

Los números en esta columna se refieren a los números en la ilustración. Para obtener información acerca de una pieza en la ilustración, determine primero el número de referencia y después refiérase al mismo número en la columna "No. de Referencia".

No. de Pieza

Estos números se utilizan para identificar piezas.

Cantidad

Las cantidades en esta columna indican el número de esa(s) pieza(s) utilizada(s).

Nombre de Pieza

La información en esta columna proporciona el nombre de la pieza, tamaño y cualesquiera otra información que ayude a identificar la pieza misma.

Nombres de Pieza sangrados

En cada ilustración hay una lista de piezas que identifica las piezas utilizables en la ilustración. Cuando el nombre de una pieza está sangrado en esta lista, significa que esta pieza forma parte de la pieza utilizable inmediatamente arriba.

NOTA:

Las continuas mejoras y adelantos en diseño podrían originar cambios a su máquina que no se incluyan en esta publicación. Cada publicación es analizada y revisada para actualizar e incluir estos cambios en ediciones subsecuentes.

Cuando tenga alguna pregunta acerca de su producto Caterpillar o de esta publicación, consulte al distribuidor Caterpillar para obtener la información más reciente.

IDENTIFICAÇÃO DA MÁQUINA

As máquinas Caterpillar são identificadas pelos NÚMEROS DE SÉRIE e/ou NÚMERO DE IDENTIFICAÇÃO DO PRODUTO (PIN). Esses números são atribuídos ao chassi e ao motor. O chassi e o motor recebem, também, NÚMEROS DE ARRANJO e, em alguns casos, NÚMEROS DE MODIFICAÇÃO. Esses números aparecem nas placas de NÚMERO DE SÉRIE ou PIN e na PLACA MESTRE no compartimento do operador.

Os revendedores Caterpillar necessitam desses números para determinar quais componentes foram incluídas na máquina durante a montagem na fábrica. Isso permite uma identificação precisa dos números de peça de reposição.

COMO OBTER PEÇAS

As Peças de Reposição de Qualidade Caterpillar estão disponíveis nos revendedores Caterpillar no mundo inteiro. Seus estoques de peças são atualizados e incluem todas as peças normalmente necessárias para proteger seu investimento nas máquinas Caterpillar. Alguns revendedores podem ter jogos de reparo e peças de troca/remanufaturadas disponíveis, como uma opção. Ao fazer um pedido de peças, especifique a quantidade, o número e o nome da peça, o número de série ou PIN.

COMO USAR O MANUAL DE PEÇAS

Os Manuais de Peças Caterpillar incluem ilustrações dos grupos ou conjuntos que compõem a máquina. Essas ilustrações mostram os componentes padrão e muitos dos acessórios disponíveis para a máquina.

O índice de peças de manutenção localizado na frente do manual indica os números das peas mais utilizadas com a descrição, quantidade, localização de uso e o número de página. O índice alfabético, no início do catálogo, deve ser usado para determinar o número da página em que se encontra determinada ilustração. Consultando tais páginas, você identificará cada uma das peças disponíveis, individualmente. Existe no fim do livro um índice numérico de cada número de peça e o(s) número(s) correspondente(s) da(s) página(s).

Legendas

A legenda de cada ilustração identifica o número da peça e o nome do grupo ou do conjunto mostrado. Os números de peças para grupos são indicados para fins de referência. O seu Revendedor Caterpillar pode fornecer assistência para identificar a disponibilidade de um grupo completo. Se for incluída mais de uma ilustração para qualquer grupo, a legenda indicará os números de série da máquina especifica a que cada ilustração se aplica. Em alguns casos, não é possível determinar os números de série da máquina específica a que as diferentes ilustrações se aplicam. Em tais casos, a legenda identifica a ilustração como "Tipo 1", "Tipo 2", etc. Será, então, necessário referir-se ao conjunto ou grupo real para determinar qual ilustração deverá ser usada. As legendas fornecem informações adicionais, tais como: números das páginas onde são mostradas as ilustrações de subconjuntos, informações referentes às quantidades usadas e outras informações que se destinam a auxiliar o usuário a determinar as peças necessárias.

Abreviaturas e Símbolos

O.D. "Outside Diameter" (Diâmetro Externo)
I.D. "Inside Diameter" (Diâmetro Interno)
A Não faz parte deste grupo
B Use conforme necessário
C Indica modificação
D Vendido por metro
E Vendido por centímetro
F Não mostrado
G Vendido por polegada
I Veja o "Guia de Fabricação de Mangueiras" (Hose Fabrication Guide)
M Peça métrica (inclusive fixadores)
R Peça remanufaturada. Pode estar disponível. Consulte o seu Revendedor Caterpillar
X Intercambio de componentes principais pode estar disponível. Consulte o seu Revendedor Cat
Y Ilustração separada
Z Não disponível separadamente

Letras de Referência nas Ilustrações

Quando necessário, as ilustrações contêm letras de referência (A, B, C, etc.) que são utilizados para seguir tubulações e cabos elétricos de um ponto para um outro. Também foram utilizados para indicar onde se pode reconectar as ilustrações que foram separadas.

Ref No (Número de Refêrencia)

Os números indicados nesta coluna se referem aos números mostrados na ilustração. Para identificar qualquer item dentro da ilustração, primeiro determine seu No. de Ref., então refere ao mesmo número na coluna para informação referente à peça.

Part Number (Número de Peça)

Tais números são usados para identificar as peças.

Qty (Quantidade)

As quantidades indicadas nesta coluna indicam o número de uma determinada peça utilizada.

Part Name (Nome de Peça)

A informação contida nesta coluna proporciona o nome da peça tanto quanto informação adicional tal como a dimensão, que ajuda identificar a peça.

Nomes de Peças Desalinhados

Cada ilustração apresenta uma lista de peças que identifica cada peça disponível na ilustração. Quando um nome de peça está desalinhado na lista, significa que tal item é disponível e faz parte do item disponível anterior.

Nota: Os contínuos aperfeiçoamentos e avanços no projeto do produto podem ocasionar modificações em sua máquina, que ainda não estejam incluídas nesta publicação. Cada publicação é revisada e corrigida, conforme necessário, para atualizar e incluir essas modificações nas edições mais recentes.

Sempre que surgir uma questão concernente ao seu produto Caterpillar ou a esta publicação, consulte o seu revendedor Caterpillar quanto às mais recentes informações disponíveis.

GERÄTEKENNZEICHNUNG

Cat-Geräte sind mit SERIAL NUMBERS und/oder PRODUCT IDENTIFICATION NUMBER (PIN) (Serien-Nr. und/oder Produktidentifizierungs-Nr.) gekennzeichnet. Diese Nummern dienen zur Kennzeichnung des Laufwerks und des Motors. Am Laufwerk und am Motor befinden sich außerdem ARRANGEMENT NUMBERS (Ausrüstungsnummern) sowie in einigen Fällen auch MODIFICATION NUMBERS (Änderungsnummern). Sie befinden sich auf den Typen- oder PIN-Schildern sowie auf dem HAUPTSCHILD im Fahrerhaus.

Die Cat-Händler benötigen alle genannten Nummern, um feststellen zu können, welche Baugruppen bei der Montage des Geräts im Werk eingebaut wurden. Nur mit Hilfe dieser Angaben lassen sich die Bestellnummern der benötigten Ersatzteile genau bestimmen.

BESTELLEN VON ERSATZTEILEN

Original-Cat-Ersatzteile können bei den Cat-Händlern überall auf der Welt bestellt werden. Ihre umfangreichen Lager enthalten normalerweise alle Teile, die Sie für Ihr Cat-Gerät benötigen. Einige Händler bieten Reparatursätze, Austausch- oder werküberholte Teile an, so daß Sie die Auswahl unter verschiedenen Reparaturmöglichkeiten treffen können. Ihre Bestellung muß folgende Angaben enthalten: Anzahl der benötigten Teile, Bestellnummer, Bezeichnung des Teils; Serien-Nr., Ausrüstungs-Nr. und Änderungs-Nr. des Geräts, für das die Teile benötigt werden. Wenn Sie Zweifel hinsichtlich der richtigen Bestell-Nr. haben, geben Sie dem Händler eine möglichst genaue Beschreibung des benötigten Teils.

HINWEISE ZUR BENUTZUNG DES PARTS BOOKS

Die Cat-Parts Books enthalten Zeichnungen der Gruppen oder Teile des Geräts. Gezeigt werden die Standardteile sowie verschiedenes Zubehör für die Geräte.

Anhand des Index vorn im Buch können Sie die Nummer der Seite heraussuchen, auf der sich die von Ihnen gesuchte Abbildung befindet. Beim Aufschlagen der betreffenden Seite können dann alle gesuchten Teile identifiziert werden. Hinten im Buch befindet sich ein numerischer Index, mit allen Bestell-Nr. und dem Hinweis auf die Seite, auf der sich die entsprechenden Zeichnungen befinden.

Bildunterschriften

Die Zeilen unter jeder Abbildung enthalten die Bestell-Nr. der gezeigten Baugruppen. Die Nummer wird nur als Referenz aufgeführt. Ihr Cat-Händler kann Ihnen sagen, ob eine Gruppe komplett lieferbar ist. Wenn für eine Gruppe mehrere Zeichnungen vorhanden sind, enthalten die Zeilen unter den Zeichnungen die Seriennummern, denen jede Zeichnung entspricht. In einigen Fällen ist es nicht möglich, die Serien-Nr. anzugeben, auf die sich die Zeichnungen beziehen. In diesem Fall wird lediglich "Typ 1", "Typ 2" usw. angegeben. Hier ist ein Hinweis auf die Baugruppe erforderlich, um anzuzeigen, welche Abbildung verwendet werden muß. Die Zeilen unter den Abbildungen enthalten ferner Angaben über die Seiten, auf denen sich Zeichnungen von Unterbaugruppen und Anzahl der benötigten Teile sowie andere Angaben befinden, die es dem Benutzer des Buchs erleichtern, die gewünschten Teile zu identifizieren.

Abkürzungen und Symbole

O.D.	Außendurchmesser
I.D.	Innendurchmesser
A	kein Teil dieser Gruppe
B	nach Bedarf verwenden
C	Hinweis auf eine Änderung
D	in Meter-Länge bestellen
E	in Zentimeter-Länge bestellen
F	nicht gezeigt
G	in Zoll-Länge bestellen
I	Siehe "Hose Fabrication Guide"
M	metrisches Teil
R	werküberholtes Teil unter Umständen lieferbar
X	Austauschteil
Y	separate Abbildung
Z	nicht einzeln erhältlich

Referenzbuchstaben

Falls erforderlich sind in den Zeichnungen Referenzbuchstaben enthalten (z.B. A, B, C, usw.), die Leitungen und Kabelbäume von einem Punkt zum andern verfolgen. Außerdem geben sie die Stelle an, an der getrennte Zeichnungen fortgesetzt werden.

Ref No (Referenz-Nr.)

Die in dieser Spalte aufgeführten Nummern beziehen sich auf die in der Zeichnung befindlichen Nummern. Zum Identifizieren eines Teils in der Zeichnung zuerst dessen Referenz-Nr. feststellen und diese dann in der Spalte "Ref No" aufsuchen, um weitere Angaben zum gesuchten Teil zu erhalten.

Part Number (Bestell-Nr.)

Anhand dieser Nummern lassen sich die Teile identifizieren.

Qty (Anzahl)

Die Zahlen in dieser Spalte geben an, wieviele der entsprechenden Teile benötigt werden.

Part Name (Bezeichnung)

In dieser Spalte wird die Bezeichung der betreffenden Teile zusammen mit zusätzlichen Informationen angegeben, z.B. Größe, die das Identifizieren erleichtern.

Eingerückte Bezeichnungen

In der zu jeder Abbildung gehörenden Ersatzteilliste sind manche Bezeichnungen eingerückt. Dadurch wird angezeigt, daß das entsprechende Teil zu dem gehört, unter dessen Bezeichnung es eingerückt ist.

ANMERKUNG:

Ständig vorgenommene Verbesserungen und Weiterentwicklungen an Ihrem Gerät können Änderungen verursachen, die in der vorliegenden Ausgabe noch nicht berücksichtigt sind. Sie werden jedoch in später folgenden Ausgaben erscheinen.

Fragen zu Ihrem Cat-Gerät oder diesem Ersatzteilbuch beantwortet Ihr Cat-Händler.

REMANUFACTURED COMPONENTS

As an option when making repairs consider Caterpillar Remanufactured Components. Components that are available through the Caterpillar Remanufactured Program are identified three ways in the parts book:

- with the letter R in the note field of the parts list
- with an R* at the beginning of the first line of the caption
- with an *R at the end of the first line of the caption

Typical components included in the Remanufacturing Program include:

ALTERNATORS
CONNECTING RODS
CRANKSHAFTS - UNDERSIZE
CRANKSHAFTS - UPGRADE TO NEW
CYLINDER HEADS
ELECTRONIC CONTROL MODULES (ECM)
ELECTRONIC SENSORS
FUEL INJECTORS
FUEL NOZZLES
FUEL PUMPS
GOVERNORS
OIL PUMPS
PISTONS
SHORT BLOCKS
STARTERS
TURBOCHARGERS - COMPLETE
TURBOCHARGER CARTRIDGES
WATER PUMPS

Caterpillar Remanufactured engines for many engine arrangements are also available. Check with your local Caterpillar Dealer for the availability of Remanufactured Components.

SUPPLEMENTAL COOLANT ADDITIVES

Customer Benefits: Protects against cavitation, foam, erosion, corrosion, and scale build-up in cooling systems. Provides measured coolant conditioner.

Description: Additives deplete from the coolant with normal operation. For this reason, Supplemental Coolant Additives (SCA) must be added to all heavy duty coolants at regular intervals. In addition, when not using a fully formulated, pre-charged antifreeze, like Caterpillar's DEAC, an initial charge of SCA must be added to the cooling system. The amount of SCA added to the system is dependent on the capacity of the system.

The SCA for initial fill is provided as a liquid. SCA's for maintenance intervals are available in liquid form and as a spin-on element.

Note: The amount of SCA added at initial fill is not the same as the amount added at the maintenance intervals.

The coolant additive elements can be used with any ethylene or propylene glycol type antifreeze which meet ASTM D4985 or ASTM D5345 Specifications.

Note: For use with standard heavy duty coolant only, not for use with Extended Life Coolant.

Parts Needed

Cooling System Capacity Liters	Cooling System Capacity Gallons	Liquid SCA at initial Fill	Liquid SCA at Maintenance*	Spin-on SCA Maintenance Element*
22-30	(6-8)	3P2033 (1)	6V3542 (1)	1112370 (1)
30	(8-10)	3P2044 (1) 6V3542 (1)	1112372 (1)	1112369 (1)
38-49	(10-13)	3P2044 (1) 8T1589 (1)	1112372 (1)	1112369 (1)
49-64	(13-17)	3P2044 (2)	8T1589 (1)	9N3368 (1)
64-83	(17-22)	3P2044 (2) 8T1589 (1)	1112372 (1) 6V3542 (1)	1112371 (1)
83-114	(22-30)	3P2044 (3) 8T1589 (1)	3P2044 (1)	9N3718 (1)
114-163	(30-43)	3P2044 (5)	3P2044 (1) 6V3542 (1)	1112371 (2)
163-242	(43-64)	3P2044 (8)	3P2044 (2)	9N3718 (2)

*** Normal maintenance period is 250 hrs. See your Operation and Maintenance Manual for complete coolant maintenance instructions.**

( ) Indicates quantity needed.

MAINTENANCE PARTS

DESCRIPTION	PART NO.	QTY	WHERE USED	PAGE NO.
BATTERY	9G4232	2	BATTERY & WIRING GP	90Z.31
BATTERY	9G4232	2	BATTERY GP	112C
		2	BATTERY GP	112E
BLADE AS-WIPER	6V5849	4	WIPER GP	309B
		4	WIPER GP	309F
		4	WIPER GP	309J
		4	WIPER GP	309M
	6V5851	1	WIPER GP	309L
	6V5853	1	WIPER GP	309L
BREATHER AS (CRANKCASE)	4N4668	1	BREATHER GP	31
CAP AS	6V9829	2	VALVE GP-CONTROL	203J.04
	9S9272	1	OIL CHANGE GP-HIGH SPEED	36A
CAP AS-FILLER	6N2206	1	FILLER GP-OIL	31A
	6N2985	1	COVER GP-VALVE MECHANISM	16
CAP AS-FUEL TANK	7T2036	1	TANK GP-FUEL	85C
CAP-AIR CONDITIONER	2L1224	2	LINES GP-AIR COMPRESSOR	325B
		2	LINES GP-AIR CONDITIONER	325D.02
CAP-FILLER	7H1447	1	TANK & FILTER GP-HYDRAULIC	197C
CAP-FUEL TANK FILLER	8P0408	1	TANK GP-FUEL	85C
CAP-FUSE HOLDER	7N2867	1	BATTERY & WIRING GP	90Z.33
CAP-RADIATOR	7N5565	1	COVER GP-RADIATOR CAP	37
CAP-TACHOMETER DRIVE	9B2232	1	DRIVE GP-TACHOMETER	63A
CIRCUIT BREAKER AS (10 AMP)	9G9487	1	BATTERY & WIRING GP	90Z.33
CIRCUIT BREAKER AS (15 AMP)	3T2662	1	BATTERY & WIRING GP	90Z.33
	6N8589	2	BATTERY & WIRING GP	90Z.33
ELEMENT AS	6N6444	1	AIR CLEANER GP	58
ELEMENT AS-FUEL FILTER	9M2341	1	FILTER GP-FUEL	80
ELEMENT AS-JACKET WATER				

MAINTENANCE PARTS

DESCRIPTION	PART NO.	QTY	WHERE USED	PAGE NO.
HEATER	9G6655	2	HEATER GP-JACKET WATER	37
ELEMENT AS-MAINTENANCE	9N3718	1	COOLANT CONDITIONER GP	41F
		1	LINES GP-WATER	45.01
ELEMENT AS-PRECHARGE	1W5518	1	COOLANT CONDITIONER GP	41F
ELEMENT AS-PRIMARY	7W5313	1	AIR CLEANER GP	58
ELEMENT-FILTER	2P5834	1	CONTROL GP-WINCH	286A
	4B5949	2	TANK GP-FUEL	85C
	4T3131	1	FILTER GP-TRANSMISSION	138
		1	FILTER GP-TRANSMISSION	138B
	7J0670	1	TANK & FILTER GP-HYDRAULIC	197C
	9M9740	1	FILTER GP-TRANSMISSION	138
		1	FILTER GP-TRANSMISSION	138B
	9W2932	1	FILTER GP-TRANSMISSION	138
		1	FILTER GP-TRANSMISSION	138B
FILTER	4N5834	1	PUMP GP-WATER	43
		1	PUMP GP-WATER	43.01
FILTER AS	7G8116	3	HEATER GP-CAB	327E
	9P5174	1	HEATER GP-CAB	327E
FILTER AS-ENGINE OIL	2P4005	2	FILTER GP-OIL	36A
FILTER AS-FUEL	1R0749	1	FILTER GP-FUEL	80
FILTER-AIR	8S7374	1	VALVE & CYLINDER GP	348
FITTING-GREASE	3B8489	2	EQUALIZER BAR GP	180.06
		2	CYLINDER GP-LIFT	230.01
		2	MOUNTING GP-CYLINDER	237.01
		2	BRACE GP-BULLDOZER	262.01
		2		262B
		2	BRACE GP-BULLDOZER	262D
		4	FRAME GP-RIPPER	271E
		4	FRAME GP-RIPPER	272C
		6	FAIRLEAD GP-WINCH	295
FUSE-10 AMP (10 AMP)	3K8782	6	BATTERY & WIRING GP	90Z.33
FUSE-15 AMP (15 AMP)	8M8948	1	BATTERY & WIRING GP	90Z.33
GASKET	4N1151	1	PAN GP-OIL	28.01
	8H2778	1	FILTER GP-FUEL	80
KEY	5P8500	2	PROTECTION GP-VANDALISM	29.04
		2	PROTECTION GP-VANDALISM	30.01
		2	COVER GP-RADIATOR CAP	37
		2	TANK GP-FUEL	85C
		2	COVER GP-HYDRAULIC TANK CAP	198

MAINTENANCE PARTS

DESCRIPTION	PART NO.	QTY	WHERE USED	PAGE NO.
		2	GUARD GP-VANDALISM	337B.01
	8H5306	1	SWITCH AS-DISCONNECT	100
LAMP	7N1996	1	INSTRUMENT GP	335P.02
LAMP-MINIATURE	5D0019	3	INSTRUMENT GP	335P.02
	7N5876	2	BATTERY & WIRING GP	90Z.33
LAMP-MINIATURE (24V)	7N9943	1	CAB GP	301F
LAMP-SEALED UNIT	1M5898	1	LAMP GP	114
	6N7987	1	LAMP GP-FLOOD	114.01
PADLOCK GP	5P8502	1	PROTECTION GP-VANDALISM	29.04
		1	PROTECTION GP-VANDALISM	30.01
		1	COVER GP-RADIATOR CAP	37
		1	TANK GP-FUEL	85C
		1	COVER GP-HYDRAULIC TANK CAP	198
		1	GUARD GP-VANDALISM	337B.01
PLUG-O-RING	5P4483	1	CASE & COVERS GP-WINCH	289
REGULATOR-WATER TEMPERATURE	4W4794	2	LINES GP-WATER	45.01
SCREEN-FUEL TANK	6T7774	1	FILTER & LINES GP-FUEL	79F
SEAL-O-RING	2S8439	1	FILTER GP-TRANSMISSION	138
		1	FILTER GP-TRANSMISSION	138B
SEAT BELT GP	7G2998	1	SEAT GP	316A
		1	SEAT GP	316B
	8D6899	1	SEAT GP	316A
		1	SEAT GP	316B
STRAINER-FUEL TANK	9P7121	1	TANK GP-FUEL	85C
V-BELT	1W2934	1	COMPRESSOR GP-REFRIGERANT	332A.01
	4N8221	1	ALTERNATOR GP-CHARGING	101.01
V-BELT SET (INCLUDES 3 BELTS)	4W0752	1	DRIVE GP-FAN	18.01

INDEX

Name	Page
A	
ACTUATOR AS	346.06
ADAPTER GP-FAST FILL FUEL	83
	84
ADJUSTER GP-SEAT	316.01
AIR CLEANER GP	57
	58
AIR CONDITIONER & MOUNTING GP	321
AIR CONDITIONER AR	320
	320A
	320B
AIR CONDITIONER GP	322
	323.01
AIR LINES	54
	56
ALARM GP	100
	100A
ALARM-BACKUP	90Z.28
ALARM-BACKUP (BACKUP)	90Z.07
	90Z.12
	90Z.17
	90Z.22
ALTERNATOR GP-CHARGING	101
	101.01
	102
	103
	104
	106
	106.01
	107
	108
ASHTRAY	327E
ATTACHMENT LINES	233B
B	
BATTERY	90Z.31
BATTERY & WIRING GP	86
	90Z.28
BATTERY	112C
	112E
BATTERY GP	112
BEARING-INNER	189Z.03
BELT TIGHTENER GP	17
	17.01
BIT & CUTTING EDGE GP	254
	254.01
	254.02
	254.04
	254.05
	255
	255.01
	255.02
	255.03
	255.04
	256
	256.01
	256.02
	257
BLADE AS-STRAIGHT	248C
BLADE AS-UNIVERSAL	248C
BLADE AS-WIPER	309B
	309F
	309J
	309L
	309M
BLADE GP	251A.04
	252
BLADE GP-STRAIGHT	250B
	251A
	251A.02
	251A.03
	251B
BLADE GP-UNIVERSAL	253
	253.02
	253A
	253B
BLOWER FAN	42.01
BOGIE SUSPENSION	190
BRACE GP-BULLDOZER	261
	262
	262A
	262C
BREATHER AS (CRANKCASE)	31
BREATHER GP	31
BULLDOZER AR-ANGLING	248
	249
	250A.01
	250A.02
BULLDOZER AR-STRAIGHT	248
	248B
BULLDOZER AR-UNIVERSAL	250
	250.01
	250A.01
	253A.01
BULLDOZER BRACE	261
	262
	262A
	262C
BULLDOZER LIFT CYLINDER	229A
BULLDOZER TRUNNION	258
BYPASS GP-FILTER	292A

INDEX

Name	Page
C	
C-FRAME GP	258B
CAB AR	298
	299
	299A
	299B
CAB GP	300
	301C
	301E
CAB HEATER	327G
CAB LINER	310.02
CAB MOUNTING	177.01
CAB WINDOW	305B
CAMSHAFT GP	11
CAP AS	36A
	203J.04
CAP AS-FILLER	16
	31A
CAP AS-FUEL TANK	85C
CAP AS-TRACK ROLLER	185B
CAP GP-TRACK IDLER	185
CAP GP-TRACK ROLLER	184K
	185B
CAP-AIR CONDITIONER	325B
	325D.02
CAP-FILLER	197C
CAP-FUEL TANK FILLER	85C
CAP-FUSE HOLDER	90Z.33
CAP-RADIATOR	37
CAP-TACHOMETER DRIVE	63A
CARTRIDGE GP	218.02
	219
CARTRIDGE GP-TURBOCHARGER	53
	53.01
CASE & COVERS GP-WINCH	288
CASE & FRAME GP	159
	159B
CASE & PARTS GP-PLANETARY	120
	121.01
CIRCUIT BREAKER AS (10 AMP)	90Z.33
CIRCUIT BREAKER AS (15 AMP)	90Z.33
CIRCUIT BREAKER AS (60 AMP)	90Z.33
CLUTCH & BRAKE GP-STEERING	154
	155B.01
	155C
CLUTCH & GEAR GP	276
CLUTCH GP-STEERING	155B.02
COMPRESSOR GP-CLUTCH & REFRIG	332A.02
	333
COMPRESSOR GP-REFRIGERANT	332
	332A.01
CONDENSER & MOUNTING GP	330B
CONTROL AR-HYDRAULIC	192
	193
	194
	194.01
	234
	235E
CONTROL GP-ELECTRONIC	100C
	341R.01
	341R.05
	341R.08
	345M.05
	345M.08
CONTROL GP-FUEL RATIO	81
	81A
	81B
	82
CONTROL GP-GOV & DECELERATOR	64
CONTROL GP-GOVERNOR	65.01
CONTROL GP-STEER CLUTCH & BRK	150
	153J
CONTROL GP-TRANSMISSION	132
CONTROL GP-TRANSMISSION HYD	128
CONTROL GP-WINCH	284
	285.01
	286
CONTROL VALVE	203J.01
CONVERSION AR-HYD CONTROL	194.01
CONVERSION GP	41E.02
CONVERSION GP-RADIATOR	41E.01
CONVERSION GP-WINCH	275
COOLANT CONDITIONER GP	41F
COOLER GP-ENGINE OIL	48
COOLER GP-HYDRAULIC OIL	48B
	50B
	50B.01
COOLER GP-TRANSMISSION OIL	50
	50B
CORD AS-HEATER	37
COUNTERWEIGHT & HITCH GP	182A.02
COUNTERWEIGHT GP	181
	182
	182A
	182A.03
COUPLING GP-PUMP	142
COVER GP-CYLINDER BLOCK	6A
	6A.02
COVER GP-FLYWHEEL HOUSING	24
COVER GP-FRONT HOUSING	21
	21A
	21B
COVER GP-FUEL SYSTEM	63
COVER GP-HYDRAULIC TANK CAP	198
COVER GP-RADIATOR CAP	37
COVER GP-SEAT	320
	320A
COVER GP-SHIPPING	296
COVER GP-TRUNNION	258A
COVER GP-VALVE MECHANISM	16
	16A
	16B
COVER-DUST	84
CRANKSHAFT AS	9.02
	10

INDEX

Name	Page
CRANKSHAFT GP	9
	9.02
CYLINDER AR-TILT	195
CYLINDER BLOCK AS	7
	7A
CYLINDER BLOCK COVER	6A
CYLINDER BLOCK GP	6
	6A.01
	7B
	8
	8A
CYLINDER GP-BULLDOZER LIFT	229A
CYLINDER GP-LIFT	230
	247
CYLINDER GP-RIPPER PIN PULLER	232
CYLINDER GP-TILT	264
CYLINDER GP-VALVE	346.05
	346D
CYLINDER GP-VALVE-LH	245
CYLINDER GP-VALVE-RH	244
CYLINDER HEAD AS	14B
	14C
	14D
CYLINDER HEAD GP	13
	13A.02
	13A.04
	13A.06
	14
	14A
CYLINDER MOUNTING	237

D

DAMPER GP	15.02
	16
DISCONNECT SWITCH	100
DRAIN LINES	83A
DRAWBAR GP	167
	167.01
DRIVE GP-AUXILIARY	19
DRIVE GP-FAN	18
	18.01
DRIVE GP-GOVERNOR & FUEL PUMP	63
	63A
DRIVE GP-TACHOMETER	63A
DRIVE SHAFT GUARD	144
DUST EJECTOR GP	62
	62.01

E

ELEMENT AS	58
ELEMENT AS-FUEL FILTER	80
ELEMENT AS-JACKET WATER HEATER	37
ELEMENT AS-MAINTENANCE	41F
	45.01
ELEMENT AS-PRECHARGE	41F
ELEMENT AS-PRIMARY	58
ELEMENT-FILTER	85C
	138
	138B
	197C
	286A
ENCLOSURE GP	175.03
	175.05
ENCLOSURE GP-ENGINE	160
ENCLOSURE GP-HYDRAULIC TANK	174
ENGINE & TRANSMISSION SUPPORT	22
ENGINE AR	2
	5
ENGINE ENCLOSURE	160
ENGINE LIFTING	12
ENGINE OIL COOLER	48
ENGINE OIL LINES	34
EQUALIZER BAR GP	180.06
EXHAUST MANIFOLD	59

F

FAIRLEAD GP-WINCH	295
FAN DRIVE	18.01
FAN GP-BLOWER	42
	42.01
	42A
FAN GP-REVERSIBLE	42B
FAN GP-SUCTION	42B.01
FASTENER GP-FUEL INJ LINES	75
FASTENER GP-OIL PUMP MOUNTING	32
FENDER GP	170
	172.04
FILLER GP-OIL	30.02
	31A
FILM-FIRE SUPPRESSION	341R.02
	341R.06
	345M.07
FILM-IDENTIFICATION	327A
FILM-INSTRUCTION	173.03
	327B
	341R.07
	345M.07
FILM-INSTRUCTION (FIRE CONTROL)	100C
FILM-INSTRUCTION (MOUNTED ON FUEL TANK)	341R.08
	345M.08
FILM-WARNING	112E
FILTER	43
	43.01
FILTER & LINES GP-FUEL	78
	79E
FILTER AS	327E
FILTER AS-ENGINE OIL	36A
FILTER AS-FUEL	80
FILTER GP-FUEL	80
FILTER GP-OIL	36
	36A

INDEX

Name	Page
FILTER GP-TRANSMISSION	138
	138B
FILTER HOUSING-CAB	332B
FILTER-AIR	348
FILTER-MAGNETIC	283
FINAL DRIVE GP	146
	148
FIRE EXTINGUISHER GP	350
	350A
	350B
FITTING-GREASE	180.06
	230.01
	237.01
	262.01
	262B
	262D
	271E
	272C
	295
FLOOR MAT	310.02
	310A.01
FLYWHEEL GP	23
	24
FLYWHEEL HOUSING	25A
FLYWHEEL HOUSING COVER	24
FRAME GP-RIPPER	271B
	272
	272A
FRAME GP-TELESCOPING RECOIL	188
	189N
	189U
FRONT GEAR	20
FRONT HOUSING	20
FRONT HOUSING COVER	21B
FUEL FILTER	80
FUEL FILTER & LINES	79E
FUEL FILTER LINES	77C
FUEL INJECTION LINES	76A
FUEL INJECTION LINES FASTENER	75
FUEL INJECTION PUMP	69A
	71A
FUEL PRIMING PUMP	81
FUEL RATIO CONTROL	81
	81A
	82
FUEL TANK	85C
FUEL TRANSFER PUMP	66D
	66E
	67
FUEL VALVE NOZZLE	76C
FUMES DISPOSAL GP	32
	32.01
FUSE-10 AMP (10 AMP)	90Z.33
FUSE-15 AMP (15 AMP)	90Z.33

G

Name	Page
GASKET	28.01
	80
GAUGE AS-OIL LEVEL (DIPSTICK)	29.02
GAUGE GP	336
GAUGE GP-OIL LEVEL (DIPSTICK)	29
	29.01
	29.02
GEAR GP-ACCESSORY	287
GEAR GP-BEVEL & TRANSFER	126
GEAR GP-FRONT	20
GEAR GP-REAR	26
GEAR PUMP	139
	140
	141
GOV & DECELERATOR CONTROL	64
GOVERNOR & FUEL PUMP DRIVE	63
	63A
GOVERNOR ADAPTER PLATE	74B
GOVERNOR CONTROL	65.01
GOVERNOR GP	72
	73.03
GOVERNOR SERVO PISTON	75
GREASE GUN AS	350C
GRID GP-SAND BLAST ERODING	169B.09
GUARD & HOOD	162
GUARD GP-BOTTOM	165
	166
GUARD GP-DRIVE SHAFT	144
GUARD GP-FUEL TANK	173
	173.02
	173.03
GUARD GP-POWER TRAIN	136D
	138D
GUARD GP-RADIATOR	168
	169B.03
GUARD GP-ROCK	248D
	248E
GUARD GP-VANDALISM	337
	337B
	337B.01
GUIDE GP-ROLLER	296

H

HARNESS AS	91
	91.01
	94
	94.01
	99
	99B
	304.01
	305
	310B
	312
	312A
	312B

INDEX

Name	Page
	312C
	337B.01
	346
	346A
HARNESS AS-DASH	96
HARNESS AS-ENGINE	95
	95B
HARNESS AS-FRONT	92
HEATER GP	327
	327A
HEATER GP-CAB	327C
	327G
	328
HEATER GP-FUEL	329
	330
HEATER GP-JACKET WATER	37
HEATER LINES	326C
HOOD & GUARD GP	162
HORN AS (HIGH TONE)	90Z.34
HORN AS (LOW TONE)	90Z.34
HOUSING AS-FUEL PUMP	70
HOUSING GP-FILTER	332B
HOUSING GP-FLYWHEEL	25
	25A
HOUSING GP-FRONT	20
HOUSING GP-LEVER	211
HYDRAULIC CONTROL	235E
HYDRAULIC OIL COOLER	48B
	50B
	50B.01

I

IDLER GP-TRACK	182B
	183.01
	183.01.01
	183.02
INDICATOR AS-CONV OIL TEMP (CONV. OIL TEMP.)	335P.02
INDICATOR-COOLANT TEMPERATURE (COOLANT TEMP)	335P.02
INSERT-INLET VALVE	14
	14B
INSERT-INLET VALVE (INTAKE)	14C
INSERT-VALVE SEAT (EXHAUST)	14C
INSTALLATION AR-WINCH	274.01
INSTRUMENT GP	334

K

KEY	29.04
	30.01
	37
	85C
	100
	198
	337B.01
KIT-BEARING	53
	53.01
	333
KIT-BEARING & WICK	111C.08
	111C.09
KIT-BEARING ALTERNATOR	106.01
KIT-BEARING REPLACEMENT	53
KIT-BRUSH	111C.09
KIT-BRUSH & SPRING	111C.09
KIT-CAPACITOR	107
KIT-CAPACITOR ALTERNATOR	106
KIT-CLUTCH DRIVE	333
KIT-COIL	333
KIT-CONTACT END CORE	111D
KIT-DIODE JUNCTION STUD	109
KIT-DUST COVER	332A.02
	333
KIT-DUST SEAL	332A.02
	333
KIT-FAN ALTERNATOR	106
KIT-FIELD COIL	111C.09
KIT-FLEX PLATE	219
KIT-FUEL PRIMING KNOB	81
KIT-HARDWARE ALTERNATOR	106.01
KIT-MOTOR BRUSH	327B
KIT-OUTPUT TERMINAL	107
	109
KIT-OUTPUT TERMINAL ALTERNATOR	106
KIT-PLUG	111C.09
KIT-POSITIVE DIODE	109
KIT-PULLEY	333
KIT-REGULATOR TERMINAL	107
KIT-REGULATOR TERMINAL ALTERNATOR	106
KIT-RELAY TERMINAL	107
	109
KIT-RELAY TERMINAL ALTERNATOR	106
KIT-SEAL	198
	218.01
	333
KIT-SEAL REFRIGERANT	332A.02
KIT-SERVICE METER	335P.02
KIT-TERMINAL	105
	111B
	111C.08
	111D
KIT-TERMINAL ALTERNATOR	105
	106.01
KIT-TERMINAL GROUND	107
KIT-TERMINAL GROUND ALTERNATOR	106
KIT-TERMINAL INSULATOR	111C.05
KIT-THRUST WASHER	111C.08
	111C.09
KIT-TORQUE DIVIDER BEARING	118.02
KIT-TRANSMISSION BEARING	118.01
KIT-VANE	218.02
	219
KIT-WATER PUMP REBUILD	43
	43.01

INDEX

Name	Page
KIT-YOKE ADJUSTMENT	111C.09
KIT-YOKE END CORE	111D

L

Name	Page
LAMP	335P.02
LAMP GP	114
LAMP GP-DOME	301F
LAMP GP-FLOOD	114.01
LAMP GP-HEAD	114
LAMP-MINIATURE	90Z.33
	335P.02
LAMP-MINIATURE (24V)	301F
LAMP-SEALED UNIT	114
	114.01
LANYARD	317
	317.02
LEVER HOUSING	211
LIFT CYLINDER LINES	231B
LIFTING GP-ENGINE	12
LIGHTING GP	113
	115
LINER GP-CAB	310
	310.02
	310A.01
LINES GP-AIR	54
	56
LINES GP-AIR COMPRESSOR	325A
LINES GP-AIR CONDITIONER	324
	325C
LINES GP-ATTACHMENT	233A
	233B
LINES GP-DRAIN	83
	83A
LINES GP-ENGINE OIL	34
LINES GP-FUEL FILTER	77
	77B
	77C
LINES GP-FUEL INJECTION	76
	76A
	76B.01
	76B.02
LINES GP-HEATER	326
	326C
LINES GP-HYDRAULIC PUMP	214
LINES GP-LIFT CYLINDER	231
	231B
LINES GP-POWER TRAIN OIL	134
LINES GP-PUMP	216
	217E
LINES GP-RIPPER	220
	221.05
	222
	224
	224B
	224C
	224D.01
	225
LINES GP-TILT CYLINDER	226
	227
	228
LINES GP-TURBOCHARGER OIL	51
	51A
LINES GP-TURBOCHARGER WATER	47.02
LINES GP-WATER	44
	46B
	48A
LINES GP-WINCH	290
	291
LINK AR-RIPPER	269
LINK AS-TRACK	191
	191.04
LINK GP	225.02
LINK GP-STABILIZER	262B
	263
LINKAGE GP-IMPLEMENT	238
	240
	241E
	242
	242.02
LOCK GP-VANDALISM	337B.02
LUBRICATION GP-PIVOT SHAFT	184H

M

Name	Page
MAGNETIC SCREEN	283
MANIFOLD GP-EXHAUST	59
MANIFOLD SHIELD	60
MIRROR GP-REAR VIEW	298
	310.01
MONITOR GP-OPERATOR	335P.02
MOUNTING GP-CAB	176
	177.01
MOUNTING GP-CYLINDER	237
MOUNTING GP-FIRE EXTINGUISHER	350A
MOUNTING GP-RIPPER	270B
	271A
MOUNTING GP-TRANSMISSION	119B
MOUNTING GP-WINCH	282
	282.01
MUFFLER GP	58.01
	58.02

N

Name	Page
NOZZLE AS-FUEL VALVE	76C

O

Name	Page
OIL CHANGE GP-HIGH SPEED	36A
OIL FILLER	31A
OIL FILTER	36A
OIL LEVEL GAUGE (DIPSTICK)	29.02
OIL PUMP MOUNTING FASTENER	32
OPERATOR PLATFORM	180.01

INDEX

Name	Page
P	
PADLOCK GP	29.04
	30.01
	37
	85C
	198
	337B.01
PAN GP-OIL	28
	28.01
PIN PULLER	236
	250A.02
PISTON & ROD GP	10
	10A
PISTON GP	10A
PISTON GP-GOVERNOR SERVO	75
PLANETARY GP	122
PLATE GP-GOVERNOR ADAPTER	74
	74B
PLATE GP-WEAR	253A.01
	253A.02
PLATFORM GP	178
PLATFORM GP-OPERATOR	180.01
PLUG-O-RING	289
PRESSURIZER GP	302
	304
PROTECTION COVER	198
PROTECTION GP-VANDALISM	29.03
	30
PULLER AR-PIN	195
	250A.02
PULLER GP-PIN	236
PULLEY AS-COMPRESSOR (REFRIGERANT)	332A.02
PULLEY GP	8B
PULLEY-ALTERNATOR	101.01
PUMP COUPLING	142
PUMP DRIVE YOKE	143
	143A
PUMP GP-FUEL INJECTION	68
	69A
	71A
	71B
PUMP GP-FUEL PRIMING	81
PUMP GP-FUEL TRANSFER	66D
	66D.01
	66E
	67
PUMP GP-GEAR	139
	140
	141
	282
	283
PUMP GP-GOV, FUEL INJ & TFR	66
	66C.02
PUMP GP-OIL	33
PUMP GP-VANE	219
PUMP GP-WATER	43
PUMP HOUSING-FUEL	70
PUMP LINES	217E
PUSH ARM GP-LH	266
PUSH ARM GP-RH	265
PUSH ARM GP-STABILIZER	260
	260A
R	
RADIATOR GP	38
	39A
	39C
	39D.03
	40
	41A
	41C
	41E
	41G
REAR GEAR	26
RECOIL & TRACK ADJUSTER	184
REFRIGERANT COMPRESSOR	332A.01
REGULATOR-FUEL TEMPERATURE	329.03
REGULATOR-WATER TEMPERATURE	45.01
RIPPER AR	267
	268
	269
	269A
	269B
	269C
	269D
RIPPER AR-DEEP PENETRATION	267.01
RIPPER AR-SHANK	267.01
	269B.01
RIPPER FRAME	271B
	272A
RIPPER GP	270
	270.01
	270.02
RIPPER LINES	221.05
	224B
RIPPER MOUNTING	270B
RIPPER PIN PULLER CYLINDER	232
RIPPER TOOTH	271
	272D
	273
ROCKER ARM GP	15.01
ROLLER GP-TRACK	186
	186B
ROLLER GP-TRACK-DOUBLE FLANGE	186A.02
ROLLER GP-TRACK-SINGLE FLANGE	186.02
	186A.01
ROPS GP	297

INDEX

Name	Page
S	
SCREEN GP-MAGNETIC	283
SCREEN GP-PROTECTION	315
SCREEN-FUEL TANK	79F
SEAL GP-CRANKSHAFT	9.01
	9.02
SEAL-O-RING	138
	138B
SEAT BELT GP	316A
	316B
SEAT GP	316
	316A
	316B
SEAT GP-SUSPENSION	317
	317.02
SEGMENT GP-SPROCKET	145
SENDER-TEMPERATURE (COOLANT)	335P.01
SENDER-TEMPERATURE (HYD. OIL TEMP)	335P.03
SENDER-TEMPERATURE (OIL)	335P.01
SENSOR WIPER	313C
SHAFT & LINK AS	314
SHAFT GP-MAIN DRIVE	142
SHIELD GP-MANIFOLD	60
SHUTOFF GP-ELECTRICAL	346.01
	346.04.02
SLEEVE-BOTTOM LINER	6A.01
SLEEVE-CABLE SPLICE	317
	317.02
SLEEVE-LIFTER BORE	6A.01
SOLENOID AS	111D
	346.01
	346B
SOLENOID AS-STARTING MOTOR	111B
	111C.04
	111C.08
	111D
	111D.01
SPROCKET SEGMENT	145
STABILIZER LINK	262B
STARTING AID GP-ETHER	110
STARTING MOTOR GP-ELECTRIC	111
	111A
	111C.01
	111C.04
	111C.08
	111C.10
STEER CLUTCH & BRAKE CONTROL	153J
STEERING CLUTCH	155B.02
STEERING CLUTCH & BRAKE	155B.01
STRAINER-FUEL TANK	85C
SUPPORT GP-ENGINE	22
SUPPORT GP-ENGINE & TMSN	22
SUPPRESSION AR-SOUND	337A
SUPPRESSION GP-FIRE	338
	341N
	342
	345J
SUSPENSION GP-BOGIE	190
	190C
SUSPENSION GP-SEAT	318
SUSPENSION SEAT	317.02
SUSPENSION SEAT COVER	320
	320A
SWITCH AS	100C
	346.03
	346D
SWITCH AS (ACTIVATOR)	346B
SWITCH AS (AIR PRESSURE)	346C
SWITCH AS (BACK-UP ALARM)	133G
SWITCH AS (COOLANT FLOW)	335P.03
SWITCH AS (DISCHARGE DETECTION)	341R.07
	345M.07
SWITCH AS (FIRE SUPPRESSION ACTIVATOR)	346.02
SWITCH AS (HEATER CONTROL)	327E
SWITCH AS (LIGHT)	90Z.33
SWITCH AS (MAGNETIC)	90Z.34
SWITCH AS (PARK BRAKE)	341R.07
SWITCH AS (PARKING BRAKE)	345M.07
SWITCH AS (PRESSURE)	335P.03
SWITCH AS (STARTING AID)	90Z.33
SWITCH AS-DISCONNECT	90Z.31
	100
SWITCH AS-FIRE SENSOR (FIRE)	341R.01
	341R.05
	345M.05
SWITCH AS-HORN (HORN)	90Z.07
	90Z.12
	90Z.17
	90Z.22
	90Z.28
SWITCH AS-MAGNETIC (MAGNETIC)	90Z.34
SWITCH AS-PRESSURE	346.04
	346.04.01
	346.05
SWITCH AS-PRESSURE (FUEL)	335P.01
SWITCH AS-ROTARY (WIPER WASHER)	309L
SWITCH AS-TEMPERATURE (FILTER BY-PASS TEMP.)	335P.03
SWITCH AS-TEMPERATURE (OIL)	335P.01
SWITCH AS-THERMOSTAT	322
	323.02
	323.04
SWITCH AS-TOGGLE	100B
	335P.04
SWITCH AS-TOGGLE (DOME LIGHT)	309L
SWITCH AS-TOGGLE (EMS TEST)	335P.02
SWITCH AS-TOGGLE (LIGHT)	90Z.33
SWITCH AS-TOGGLE (WARNING)	235E
SWITCH GP-FILTER BYPASS	335P.04
SWITCH GP-FILTER BYPASS (FILTER BYPASS)	335P.03
SWITCH GP-START	90Z.33
	100A

INDEX

Name	Page
SWITCH-TEMPERATURE (COOLANT TEMP. IND.)	335P.03
SWITCH-TEMPERATURE (TEMP. ETHER AID ACTIVATOR)	335P.03
SWITCH-TEMPERATURE (TEMP. HYD. OIL)	335P.03

T

TACHOMETER DRIVE	63A
TANK & FILTER GP-HYDRAULIC	196
TANK GP-FUEL	85
	85C
TELESCOPING FRAME	188
TIGHTENER-BELT	17.01
TILT CYLINDER	195
	264
TILT CYLINDER LINES	226
	227
	228
TOOL GP-HAND	349
TOOTH GP-RIPPER	271
	272D
	273
TORQUE CONTROL GP	70B
	70B.01
	70B.02
	70B.03
	71
TORQUE CONVERTER GP	116
	117
	118
TRACK ADJUSTER & RECOIL GP	184
	184D
	184F
TRACK GP	191.01
	191.02
	191.03
TRACK ROLLER CAP	184K
TRANSMISSION AR	119
TRANSMISSION FILTER	138
	138B
TRANSMISSION HYDRAULIC CONTROL	128
TRANSMISSION MOUNTING	119B
TRANSMISSION OIL COOLER	50
	50B
TRUNNION COVER	258A
TRUNNION GP-BULLDOZER	258
TRUNNION GP-ENGINE	19.02
TURBOCHARGER GP	52
	52.01
	52A
TURBOCHARGER OIL LINES	51A

Name	Page

U

UNDERCARRIAGE AR	185A
UNIVERSAL JOINT GP	143A

V

V-BELT	101.01
	332A.01
V-BELT SET (INCLUDES 3 BELTS)	18.01
VALVE	184D
	184E
	184E.01
	184F
	184G
	184G.01
	197D
	325D.02
VALVE & CYLINDER GP	346.02
	346.03
	346.04
	346.04.01
	347
	348
VALVE & MOUNTING GP	198
VALVE GP	130
	200
	203J.01
	204
	205
	206
	209
	209.01
	210
	210.01
	218.01
	246
	292
	292A
VALVE GP (TILT)	213
VALVE GP-ACTUATOR RELEASE	346B
	346C
VALVE GP-CONTROL	46
	156
	158A
	158G
	198B
	199
	200A
	201
	203J.01
	236
VALVE GP-PILOT	207
	208
	212
	213
VALVE GP-PRESSURE CONTROL	218
	286B

INDEX

Name	Page
	294
VALVE GP-PRIORITY	129
	129.01
VALVE GP-RELIEF	137
	218.01
VALVE GP-SELECTOR	293
VALVE GP-SELECTOR & PRESS CONT	131
VALVE MECHANISM COVER	16B
VALVE MECHANISM GP	15
VALVE-BALL	79F
VALVE-EXHAUST	13A.06
	14A
VALVE-FIRE SUPPRESSION	348
VALVE-INLET	13A.06
VALVE-SHUTOFF	348
VALVE-WATER	327
	327B.01
VANDALISM LOCK	337B.02

W

WASHER GP-WINDSHIELD	306
	307A
	307C
WATER LINES	48A
WATER PUMP	43
WINCH AR	274
	274.01
WINCH AR-TOWING	274
	275
WINDOW AS	299.01
WINDOW GP-CAB	304.01
	305B
WINDSHIELD WASHER	307C
WIPER GP	308
	309A
	309D
	309L
	312D
	313
	313.01
	313.02
	313A
	313B
	313C
	313E
WIPER PIVOT GP	312D

Y

YOKE GP	143
	143A

INDEX ALPHABETIQUE

Designation	Page
A	
ACCOUPLEMENT DE POMPE	142
ACCOUPLEMENT DE POMPE (ASS)	142
ADAPTATEUR DE REGULATEUR - PLAQUE	74B
ADAPTATEUR DE REMPLIS. RAPIDE DE CARBURANT (ASS)	83
	84
ADDITIF POUR LIQUIDE DE REFROIDISSEMENT (ASS)	41F
ALTERNATEUR DE CHARGE (ASS)	101
	101.01
	102
	103
	104
	106
	106.01
	107
	108
AMORCAGE DE CARBURANT - POMPE	81
AMORTISSEUR DE VIBRATIONS (ASS)	15.02
	16
AMPOULE	335P.02
ARBRE A CAMES (ASS)	11
ARBRE D'ENTRAINEMENT PRINCIPAL	142
ARRET ELECTRIQUE	346.01
	346.04.02
ARTICULATION (ASS)	225.02
ARTICULATION DE RIPPER (VERSION)	269
ATTELAGE ET CONTREPOIDS (ASS)	182A.02
AUTOCOLLANT - (AVERTISSEMENT - MAINS)	112E
AUTOCOLLANT D'IDENTIFICATION	327A
AUTOCOLLANT D'INSTRUCTION - SUR LE RES. DE CARB.	341R.08
	345M.08
AUTOCOLLANT D'INSTRUCTIONS	173.03
	327B
	341R.07
	345M.07
AUTOCOLLANT D'INSTRUCTIONS ANTI-INCENDIE	100C
AUXILIAIRE DE DEMARRAGE A L'ETHER (ASS)	110
AVERTISSEUR (ASS)	100
	100A
AVERTISSEUR DE RECUL	90Z.07
	90Z.12
	90Z.17
	90Z.22
	90Z.28

Designation	Page
AXE DE CULBUTEUR (ASS)	15.01
B	
BAIONNETTE - JAUGE D'HUILE MOTEUR	29.02
BALAI D'ESSUIE-GLACE (ENS)	309B
	309F
	309J
	309L
	309M
BALANCIER DE SUSPENSION (ASS)	180.06
BARBOTIN - SEGMENT	145
BARRE D'ATTELAGE (ASS)	167
	167.01
BATI DE RIPPER (ASS)	271B
	272
	272A
BATI EN C (ASS)	258B
BATI TELESCOPIQUE	188
BATTERIE	90Z.31
	112C
	112E
BATTERIE (ASS)	112
BATTERIE ET CABLAGE	86
	90Z.28
BIELLETTE DE STABILISATEUR	262B
BLINDAGE D'ARBRE DE TRANSMISSION	144
BLINDAGE D'ARBRE DE TRANSMISSION (ASS)	144
BLINDAGE DE TRANSMISSION (ASS)	136D
	138D
BLINDAGE INFERIEUR (ASS)	165
	166
BLOC-CYLINDRES (ASS)	6
	6A.01
	7B
	8
	8A
BLOC-CYLINDRES (ENS)	7
	7A
BLOC-CYLINDRES - COUVERCLE (ASS)	6A
	6A.02
BOITE DE VITESSES (TRANSMIS.) - MONTAGE	119B
BOITE DE VITESSES (VERSION)	119
BOUCHON DE GOULOTTE DE REMPLISSAGE	197C
BOUCHON DE GOULOTTE DE REMPLISSAGE (ENS)	16
	31A
BOUCHON DE GOULOTTE DE RESERVOIR DE CARBURANT	85C
BOUCHON DE RESERVOIR DE CARBURANT (ENS)	85C
BOUCHON-JOINT TORIQUE	289
BOULONNERIE DE MONTAGE DE LA POMPE A HUILE (ASS)	32
BOULONNERIE DES CANALISATIONS D'ALIMENTATION	75

INDEX ALPHABETIQUE

Designation	Page
BRAS DE POUSSEE - DROITE (ASS)	265
BRAS DE POUSSEE - GAUCHE (ASS)	266
BULLDOZER ORIENTABLE (VERSION)	248
	249
	250A.01
	250A.02
BUTEE ELASTIQUE (ASS)	70B
	70B.01
	70B.02
	70B.03
	71
C	
CABINE (ASS)	300
	301C
	301E
CABINE (VERSION)	298
	299
	299A
	299B
CABINE - CHAUFFAGE	327G
CABINE - REVETEMENT (ASS)	310
	310.02
	310A.01
CABLAGE MOTEUR (ENS)	95
	95B
CABLE DE BRANCHEMENT DE RECHAUFFEUR (ENS)	37
CACHE-SOUPAPES	16B
CACHE-SOUPAPES (ASS)	16
	16A
	16B
CADENAS (ASS)	29.04
	30.01
	37
	85C
	198
	337B.01
CANALISATIONS D'AIR	54
	56
CANALISATIONS D'AIR (ASS)	54
	56
CANALISATIONS D'EAU (ASS)	44
	46B
	48A
CANALISATIONS D'EAU DE TURBOCOMPRESSEUR.....	47.02
CANALISATIONS D'EQUIPEMENT	233B
CANALISATIONS D'EQUIPEMENT (ASS)	233A
	233B
CANALISATIONS D'HUILE DE TRANSMISSION (ASS).....	134
CANALISATIONS D'HUILE DE TURBOCOMPRESSEUR (ASS).....	51
	51A
CANALISATIONS D'HUILE MOTEUR	34
CANALISATIONS D'HUILE MOTEUR (ASS) ..	34
CANALISATIONS D'INJECTION DE CARBURANT (ASS)	76
	76A
	76B.01
	76B.02
CANALISATIONS DE CHAUFFAGE (ASS)	326
	326C
CANALISATIONS DE CLIMATISEUR (ASS) ..	324
	325C
CANALISATIONS DE FILTRE A CARBURANT	77C
CANALISATIONS DE FILTRE A CARBURANT (ASS)	77
	77B
	77C
CANALISATIONS DE POMPE	217E
CANALISATIONS DE POMPE (ASS)	216
	217E
CANALISATIONS DE POMPE HYDRAULIQUE (ASS)	214
CANALISATIONS DE RECHAUFFEUR	326C
CANALISATIONS DE RIPPER	221.05
	224B
CANALISATIONS DE TREUIL (ASS)	290
	291
CANALISATIONS DE VERIN D'INCLINAISON	226
	227
	228
CANALISATIONS DE VERIN D'INCLINAISON (ASS)	226
	227
	228
CANALISATIONS DE VERIN DE LEVAGE	231B
CANALISATIONS DE VERIN DE LEVAGE (ASS)	231
	231B
CANALISATIONS DE VIDANGE	83A
CANALISATIONS DE VIDANGE (ASS)	83
	83A
CANALISATIONS DU COMPRESSEUR D'AIR (ASS)	325A
CANALISATIONS DU RIPPER (ASS)	220
	221.05
	222
	224
	224B
	224C
	224D.01
	225
CAPOT ET PROTECTION (ASS)	162
CAPTEUR DE TEMPERATURE D'HUILE HYDRAULIQUE	335P.03
CARBURANT - FILTRE	80
CARBURANT - POMPE D'ALIMENTATION	66D
	66E
	67

INDEX ALPHABETIQUE

Designation	Page
CARENAGE (ASS)	175.03
	175.05
CARENAGE - RESERVOIR HYDRAULIQUE (ASS)	174
CARENAGE DE MOTEUR	160
CARENAGE DE MOTEUR (ASS)	160
CARTER AV (ASS)	20
CARTER AV - COUVERCLE	21B
CARTER AVANT	20
CARTER DE FILTRE (ASS)	332B
CARTER DE FILTRE A AIR DE CABINE	332B
CARTER DE LEVIER	211
CARTER DE LEVIER (ASS) - CIRCUIT HYDRAULIQUE (ASS	211
CARTER DE VOLANT	25A
CARTER DE VOLANT (ASS)	25
	25A
CARTER DE VOLANT - COUVERCLE	24
CARTER ET COUVERCLES - TREUIL	288
CARTER TELESCOPIQUE DE MECANISME AMORTISSEUR	188
	189N
	189U
CARTOUCHE (ASS)	218.02
	219
CEINTURE DE SECURITE	316A
	316B
CENDRIER	327E
CHAINES (ASS)	191.01
	191.02
	191.03
CHAPEAU (ENS)	36A
	203J.04
CHAPEAU (PORTE-FUSIBLES)	90Z.33
CHAPEAU - RADIATEUR	37
CHAPEAU D'ENTRAINEMENT DE TACHYMETRE	63A
CHAPEAU DE CLIMATISEUR	325B
	325D.02
CHAPEAU DE GALET	184K
CHAPEAU DE GALET INFERIEUR (ASS)	184K
	185B
CHAPEAU DE GALET INFERIEUR (ENS)	185B
CHAPEAU DE ROUE AV (CHAINE) (ASS)	185
CHASSIS DE RIPPER	271B
	272A
CHASSIS ET CARTER (ASS)	159
	159B
CHAUFFAGE (ASS)	327
	327A
CHEMISE INFERIEURE	6A.01
CIRCUIT DE CARBURANT - COUVERCLE (ASS)	63
CLAPET	184D
	184E
	184E.01
	184F
	184G
	184G.01
	197D
	325D.02
CLAPET (ASS)	130
	200
	203J.01
	204
	205
	206
	209
	209.01
	210
	210.01
	218.01
	246
	292
	292A
CLAPET A BILLE	79F
CLAPET DE DECHARGE (ASS)	137
	218.01
CLAVETTE	29.04
	30.01
	37
	85C
	100
	198
	337B.01
CLIMATISEUR (ASS)	322
	323.01
CLIMATISEUR (VERSION)	320
	320A
	320B
CLIMATISEUR ET MONTAGE (ASS)	321
COLLECTEUR D'ECHAPPEMENT (ASS)	59
COMMANDE D'EMBRAYAGE DE DIRECTION ET FREIN	153J
COMMANDE D'EMBRAYAGE DE DIRECTION ET FREINS	150
	153J
COMMANDE DE BOITE DE VITESSES	132
COMMANDE DE REGULATEUR (ASS)	65.01
COMMANDE DE REGULATEUR ET DE DECELERATEUR	64
COMMANDE DE REGULATEUR ET DECELERATEUR (ASS)	64
COMMANDE DE TREUIL (ASS)	284
	285.01
	286
COMMANDE ELECTRONIQUE DE BOITE (ASS)	100C
	341R.01
	341R.05
	341R.08
	345M.05
	345M.08
COMMANDE HYDRAULIQUE	235E
COMMANDE HYDRAULIQUE (VERSION)	192
	193

INDEX ALPHABETIQUE

Designation	Page
	194
	194.01
	234
	235E
COMMANDE HYDRAULIQUE DE BOITE	128
COMMANDE HYDRAULIQUE DE BOITE (ASS)	128
COMPRESSEUR DE REFRIGERANT (ASS)	332
	332A.01
COMPRESSEUR DE REFRIGERANT (ENS)	332A.02
CONDENSATEUR ET MONTAGE (ASS)	330B
CONTACTEUR (ENS)	100C
	346.03
	346D
CONTACTEUR D'AVERTISSEUR DE RECULE (ENS)	133G
CONTACTEUR D'ECLAIRAGE (ENS)	90Z.33
CONTACTEUR DE DEBIT DE REFRIGERANT (ENS)	335P.03
CONTACTEUR DE DETECTION DE DECHARGE (ENS)	341R.07
	345M.07
CONTACTEUR DE DISPOSITIF DE COMMANDE	346B
CONTACTEUR DE FREIN DE STATIONNEMENT	341R.07
CONTACTEUR DE KLAXON (ENS)	90Z.07
	90Z.12
	90Z.17
	90Z.22
	90Z.28
CONTACTEUR DU FREIN DE STATIONNEMENT	345M.07
CONTACTEUR MAGNETIQUE (ENS)	90Z.34
CONTREPOIDS (ASS)	181
	182
	182A
	182A.03
CONVERTISSEUR DE COUPLE (ASS)	116
	117
	118
CORDON POUR LITTERATURE	317
	317.02
COURONNE ET ENGRENAGES DE TRANSFERT (ASS)	126
COURROIE TRAPEZOIDALE	101.01
	332A.01
COUSSINET D'ARBRE PIVOT	189Z.03
COUVERCLE ANTI-POUSSIERE	84
COUVERCLE DE BLOC-CYLINDRES	6A
COUVERCLE DE BOUCHON DE RADIATEUR (ASS)	37
COUVERCLE DE CARTER AV (ASS)	21
	21A
	21B
COUVERCLE DE CARTER DE VOLANT (ASS)	24
COUVERCLE DE PROTECTION	198
COUVERCLE DE RESERVOIR HYDRAULIQUE	198
COUVERCLE DE TOURILLON (ASS)	258A
COUVERCLES D'EXPEDITION (ASS)	296
CULASSE (ASS)	13
	13A.02
	13A.04
	13A.06
	14
	14A
CULASSE (ENS)	14B
	14C
	14D
CULBUTERIE (ASS)	15

D

Designation	Page
DEFLECTEUR PARE-SABLE (ASS)	169B.09
DEMARREUR ELECTRIQUE (ASS)	111
	111A
	111C.01
	111C.04
	111C.08
	111C.10
DENT DE RIPPER	271
	272D
	273
DENT DE RIPPER (ASS)	271
	272D
	273
DENT DE RIPPER (VERSION)	267.01
	269B.01
DIRECTION - EMBRAYAGE	155B.02
DIRECTION - EMBRAYAGE ET FREIN	155B.01
DISJONCTEUR - 10 A (ENS)	90Z.33
DISJONCTEUR - 15 A (ENS)	90Z.33
DISJONCTEUR 60 A (ENS)	90Z.33
DISPOSITIF AMORTISSEUR ET DE REGLAGE DE CHAINE	184
DISPOSITIF ANTI-INCENDIE (ASS)	338
	341N
	342
	345J
DISPOSITIF D'EVACUATION DES VAPEURS DE CARTER	32
	32.01
DISPOSITIF DE VIDANGE RAPIDE D'HUILE (ASS)	36A
DISTRIBUTEUR	203J.01
DISTRIBUTEUR (ASS)	46
	156
	158A
	158G
	198B
	199
	200A
	201
	203J.01
	236

INDEX ALPHABETIQUE

Designation	Page
DISTRIBUTEUR DE PRESSION (ASS)	218
	286B
	294
DISTRIBUTEUR ET VERIN (ASS)	346.02
	346.03
	346.04
	346.04.01
	347
	348

E

EAU - CANALISATIONS	48A
EAU DES CHEMISES - RECHAUFFEUR (ASS)	37
ECHAPPEMENT - COLLECTEUR	59
ECLAIRAGE (ASS)	113
	115
ECRAN DE COLLECTEUR	60
ECRAN DE COLLECTEUR (ASS)	60
ECRAN MAGNETIQUE	283
ECRAN MAGNETIQUE (ASS)	283
EJECTEUR AUTOMATIQUE DE POUSSIERE (ASS)	62
	62.01
ELECTROMODULE DE SURVEILLANCE (ASS)	335P.02
ELEMENT (ENS)	58
ELEMENT DE FILTRE	85C
	138
	138B
	197C
	286A
ELEMENT DE FILTRE - ENTRETIEN (ENS)	41F
	45.01
ELEMENT DE FILTRE A CARBURANT (ENS)	80
ELEMENT DE PRECHARGE (ENS)	41F
ELEMENT DU RECHAUFFEUR D'EAU DES CHEMISES (ENS).....	37
ELEMENT PRIMAIRE (ENS)	58
EMBOUT ET LAME DE COUPE (ASS)	254
	254.01
	254.02
	254.04
	254.05
	255
	255.01
	255.02
	255.03
	255.04
	256
	256.01
	256.02
	257
EMBRAYAGE DE DIRECTION (ASS)	155B.02
EMBRAYAGE ET COMPRESSEUR DE REFRIGERANT	332A.02
	333
EMBRAYAGE ET ENGRANAGE (ASS)	276
EMBRAYAGE ET FREIN DE DIRECTION (ASS)	154
	155B.01
	155C
ENGRENAGE D'EQUIPEMENT (ASS)	287
ENTR. DE REGULATEUR ET POMPE A CARBURANT (ASS)	63
	63A
ENTRAINEMENT AUXILIAIRE (ASS)	19
ENTRAINEMENT DE TACHYMETRE (ASS)	63A
ENTRAINEMENT DE VENTILATEUR (ASS)	18
	18.01
ESSIEU ET PIECE DE LIAISON (ENS)	314
ESSUIE-GLACE (ASS)	308
	309A
	309D
	309L
	312D
	313
	313.01
	313.02
	313A
	313B
	313C
	313E
ESSUIE-GLACE - CAPTEUR	313C
ETRIER (ASS)	143
	143A
ETRIER D'ENTRAINEMENT DE POMPE	143
	143A
EXTINCTEUR D'INCENDIES (ASS)	350
	350A
	350B
EXTRACTEUR DE BROCHE	236
	250A.02
EXTRACTEUR DE BROCHE (ASS)	236
EXTRACTEUR DE BROCHE (VERSION)	195
	250A.02

F

FAISCEAU DE CABLES (ENS)	91
	91.01
	94
	94.01
	99
	99B
	304.01
	305
	310B
	312
	312A
	312B
	312C

INDEX ALPHABETIQUE

Designation	Page
	337B.01
	346
	346A
FAISCEAU DE CABLES AV (ENS)	92
FAISCEAU DE CABLES DU TABLEAU DE BORD (ENS)	96
FILTRE	43
	43.01
FILTRE (ENS)	327E
FILTRE A AIR	348
FILTRE A AIR (ASS)	57
	58
FILTRE A CARBURANT (ASS)	80
FILTRE A CARBURANT (ENS)	80
FILTRE A CARBURANT ET CANALISATIONS	79E
FILTRE A HUILE	36A
FILTRE A HUILE (ASS)	36
	36A
FILTRE A HUILE DE BOITE (ASS)	138
	138B
FILTRE A HUILE MOTEUR (ENS)	36A
FILTRE DE BOITE DE VITESSES	138
	138B
FILTRE DE BYPASS (ASS)	292A
FILTRE ET CANALISATIONS DE CARBURANT (ASS)	78
	79E
FUSIBLE (10 A)	90Z.33
FUSIBLE (15 A)	90Z.33

G

GALET A BOUDIN DOUBLE (ASS)	186A.02
GALET A BOUDIN SIMPLE (ASS)	186.02
	186A.01
GALET INFERIEUR (ASS)	186
	186B
GARDE-BOUE (ASS)	170
	172.04
GLACE DE CABINE	305B
GLACE DE CABINE (ASS)	304.01
	305B
GLACE DE CABINE (ENS)	299.01
GOULOTTE D'HUILE MOTEUR	31A
GOULOTTE D'HUILE MOTEUR (ASS)	30.02
	31A
GRAISSAGE DE LA TRAVERSE-PIVOT	184H
GRAISSEUR	180.06
	230.01
	237.01
	262.01
	262B
	262D
	271E
	272C
	295
GRILLE DE PROTECTION (ASS)	315
GROUPE DE TRANSFOR. (VERSION) - COMMANDE HYDR.X	194.01
GROUPE DE TRANSFORMATION	41E.02
GROUPE DE TRANSFORMATION DE TREUIL	275
GROUPE DE TRANSFORMATION DU RADIATEUR	41E.01
GUIDE DE GALET (ASS)	296
GUIDE-CABLE DE TREUIL (ASS)	295

H

HOUSSE DE SIEGE (ASS)	320
	320A
HOUSSE DE SIEGE AVEC SUSPENSION	320
	320A
HUILE MOTEUR - CARTER (ASS)	28
	28.01

I

INDICATEURS (ASS)	336
INJECTEUR DE CARBURANT	76C
INJECTEUR DE CARBURANT (ENS)	76C
INJECTION DE CARBURANT - BOULONNERIE DES CANALISAT	75
INJECTION DE CARBURANT - CANALISATIONS	76A
INSONORISATION (VERSION)	337A
INTERRUPT. D'ACTIVANT DE SURPRESSEUR D'INCENDIE	346.02
INTERRUPTEUR A BASCULE (AVERTISSEUR)	235E
INTERRUPTEUR A BASCULE (ENS)	100B
	335P.04
INTERRUPTEUR A BASCULE (PLAFONNIER) (ENS)	309L
INTERRUPTEUR A BASCULE D'ECLAIRAGE (ENS)	90Z.33
INTERRUPTEUR D'AUXILIAIRE DE DEMARRAGE (ASS)	90Z.33
INTERRUPTEUR D'ESSAI DU PANNEAU DE COMMANDE	335P.02
INTERRUPTEUR DE CAPTEUR D'INCENDIE	341R.01
	341R.05
	345M.05
INTERRUPTEUR DE COMMANDE DE CHAUFFAGE (ENS)	327E
INTERRUPTEUR DE DEMARRAGE (ASS)	90Z.33
	100A
INTERRUPTEUR DE FILTRE DE DERIVATION (BYPASS)	335P.03
	335P.04
INTERRUPTEUR DE THERMOSTAT (ENS)	322
	323.02
	323.04
INTERRUPTEUR ROTATIF D'ESSUIE-GLACE/LAVE-GLACE	309L

INDEX ALPHABETIQUE

Designation	Page
J	
JAUGE D'HUILE MOTEUR (BAIONNETTE) (ASS)	29
	29.01
	29.02
JAUGE D'HUILE MOTEUR (BAIONNETTE) (ENS)	29.02
JEU DE 3 COURROIES TRAPEZOIDALES	18.01
JOINT DE VILEBREQUIN (ASS)	9.01
	9.02
JOINT PLAT	28.01
	80
JOINT TORIQUE	138
	138B
JOINT UNIVERSEL (ASS)	143A
K	
KIT D'ENTRAINEMENT D'EMBRAYAGE	333
KIT DE BALAIS	111C.09
KIT DE BALAIS DE MOTEUR	327B
KIT DE BALAIS ET RESSOR	111C.09
KIT DE BOBINE	333
KIT DE BOBINE D'INDUCTEUR	111C.09
KIT DE BORNE	105
	111B
	111C.08
	111D
KIT DE BORNE - REGULATEUR - ALTERNATEUR	106
KIT DE BORNE DE L'ALTERNATEUR	105
	106.01
KIT DE BORNE DE MASSE	107
KIT DE BORNE DE MISE A LA MASSE DE L'ALTERNATEUR	106
KIT DE BORNE DE REGULATEUR	107
KIT DE BORNE DE RELAIS	107
	109
KIT DE BORNE DE RELAIS DE L'ALTERNATEUR	106
KIT DE BORNE DE SORTIE	107
	109
KIT DE BORNE DE SORTIE DE L'ALTERNATEUR	106
KIT DE BORNE ISOLANT	111C.05
KIT DE BOUCHON	111C.09
KIT DE BOULONNERIE DE L'ALTERNATEUR	106.01
KIT DE BOUTON DE POMPE D'AMORCAGE	81
KIT DE COMPTEUR D'ENTRETIEN	335P.02
KIT DE CONDENSATEUR	107
KIT DE CONDENSATEUR DE L'ALTERNATEUR	106
KIT DE COUSSINET	53
	53.01
	333
KIT DE COUSSINET DE REMPLACEMENT	53
KIT DE COUSSINET ET MECHE	111C.08
	111C.09
KIT DE COUSSINETS - BOITE DE VITESSES	118.01
KIT DE COUSSINETS DE L'ALTERNATEUR	106.01
KIT DE COUVERCLE ANTI-POUSSIERE	332A.02
	333
KIT DE DIODE POSITIF	109
KIT DE JOINT ANTI-POUSSIERE	332A.02
	333
KIT DE JOINTS	198
	218.01
	333
KIT DE JOINTS POUR LIQUIDE DE REFROIDISSEMENT	332A.02
KIT DE MISE AU POINT DE LA POMPE A EAU	43
	43.01
KIT DE NOYAU - EXTREMITE D'ETRIER	111D
KIT DE NOYAU - EXTREMITE DE CONTACT	111D
KIT DE PALETTE	218.02
	219
KIT DE PALIER DE COUPLEUR DIFFERENTIEL	118.02
KIT DE PLAQUE SOUPLE	219
KIT DE PLOT DE CONNEXION DE DIODE	109
KIT DE POULIE	333
KIT DE REGLAGE D'ETRIER	111C.09
KIT DE RONDELLE DE POUSSEE	111C.08
	111C.09
KIT DE VENTILATEUR DE L'ALTERNATEUR	106
KLAXON A FAIBLE TON	90Z.34
KLAXON A TON ELEVE	90Z.34
L	
LAME (ASS)	251A.04
	252
LAME DE BULLDOZER DROITE (VERSION)	248
	248B
LAME DE BULLDOZER UNIVERSELLE (VERSION)	250
	250.01
	250A.01
	253A.01
LAME DROITE (ASS)	250B
	251A
	251A.02
	251A.03
	251B
LAME DROITE (ENS)	248C
LAME UNIVERSELLE (ASS)	253
	253.02
	253A
	253B
LAME UNIVERSELLE (ENS)	248C

INDEX ALPHABETIQUE

Designation	Page
LAMPE (AMPOULE MINIATURE)	90Z.33
	335P.02
LAMPE - AMPOULE MINIATURE (24 V)	301F
LAMPE - PHARE (ASS)	114.01
LAVE-GLACE DE PARE-BRISE (ASS)	306
	307A
	307C
LAVE-GLACE PARE-BRISE	307C
LIMITEUR D'INJECTION	81
	81A
	82
LIMITEUR D'INJECTION (ASS)	81
	81A
	81B
	82

M

MAILLON DE CHAINE (ENS)	191
	191.04
MANCHON DE JONCTION DE CABLES	317
	317.02
MANCHON POUR L'ALESAGE DE POUSSOIR	6A.01
MANOCONTACT (ENS)	335P.03
	346.04
	346.04.01
	346.05
MANOCONTACT D'AIR	346C
MECANISME AMORTISSEUR ET REGLAGE DE CHAINES (ASS)	184
	184D
	184F
MECANISME DE COMMANDE (ENS)	346.06
MONTAGE D'EXTINCTEUR D'INCENDIES (ASS)	350A
MONTAGE DE CABINE	177.01
MONTAGE DE CABINE (ASS)	176
	177.01
MONTAGE DE LA BOITE DE VITESSES (ASS)	119B
MONTAGE DE RIPPER	270B
MONTAGE DE RIPPER (ASS)	270B
	271A
MONTAGE DE TREUIL (ASS)	282
	282.01
MONTAGE DE TREUIL (VERSION)	274.01
MONTAGE DE VERIN	237
MONTAGE DE VERIN (ASS)	237
MOTEUR (VERSION)	2
	5
MOTEUR - OEILLETONS DE LEVAGE	12

O

OEILLETONS DE LEVAGE MOTEUR (ASS)	12
OUTILS (ASS)	349

Designation	Page

P

PARE-PIERRES (ASS)	248D
	248E
PHARE - OPTIQUE ETANCHE	114
	114.01
PHARE AV (ASS)	114
PIGNON AR	26
PIGNON AR (ASS)	26
PIGNONNERIE AV	20
PIGNONNERIE AV (ASS)	20
PISTON (ASS)	10A
PISTON A SERVO DE REGULATEUR	75
PISTON ET BIELLE (ASS)	10
	10A
PISTON SERVO DE REGULATEUR (ASS)	75
PIVOT D'ESSUIE-GLACE (ASS)	312D
PLAFONNIER (ASS)	301F
PLAQUE D'ADAPTATEUR DE REGULATEUR (ASS)	74
	74B
PLAQUE D'USURE (ASS)	253A.01
	253A.02
PLAQUE SIGNALETIQUE DE DISPOSITIF ANTI-INCENDIE	341R.02
	341R.06
	345M.07
PLATE-FORME (ASS)	178
PLATE-FORME DE CABINE	180.01
PLATE-FORME DU CONDUCTEUR	180.01
POMPE A CARBURANT - BOITIER	70
POMPE A CARBURANT - CARTER (ENS)	70
POMPE A EAU	43
POMPE A EAU (ASS)	43
POMPE A ENGRENAGES	139
	140
	141
POMPE A ENGRENAGES (ASS)	139
	140
	141
	282
	283
POMPE A HUILE	33
POMPE A HUILE - BOULONNERIE DE MONTAGE	32
POMPE A PALETTES (ASS)	219
POMPE D'ALIMENTATION EN CARBURANT (ASS)	66D
	66D.01
	66E
	67
POMPE D'AMORCAGE DE CARBURANT (ASS)	81
POMPE D'INJECTION DE CARBURANT	69A
	71A
POMPE D'INJECTION DE CARBURANT (ASS)	68
	69A

INDEX ALPHABETIQUE

Designation	Page
	71A
	71B
POMPE D'INJECTION ET D'ALIMENTATION EN CARBURANT	66
	66C.02
POMPE DE GRAISSAGE	350C
POULIE (ASS)	8B
POULIE D'ALTERNATEUR	101.01
PROTECTION ANTI-VANDALISME (ASS)	29.03
	30
	337
	337B
	337B.01
PROTECTION DU RESERVOIR DE CARBURANT (ASS)	173
	173.02
	173.03
PROTECTION ET CAPOT	162
PROTEGE-RADIATEUR (ASS)	168
	169B.03

R

RADIATEUR (ASS)	38
	39A
	39C
	39D.03
	40
	41A
	41C
	41E
	41G
RECHAUFFEUR DE CABINE (ASS)	327C
	327G
	328
RECHAUFFEUR DE CARBURANT (ASS)	329
	330
REDUCTEURS LATERAUX (ASS)	146
	148
REFRIGERANT - COMPRESSEUR	332A.01
REFROIDISSEUR D'HUILE DE BOITE	50
	50B
REFROIDISSEUR D'HUILE DE BOITE (ASS)	50
	50B
REFROIDISSEUR D'HUILE HYDRAULIQUE	48B
	50B
	50B.01
REFROIDISSEUR D'HUILE HYDRAULIQUE (ASS)	48B
	50B
	50B.01
REFROIDISSEUR D'HUILE MOTEUR	48
REFROIDISSEUR D'HUILE MOTEUR (ASS)	48
REGLAGE DE SIEGE (ASS)	316.01
REGULATEUR (ASS)	72
	73.03
REGULATEUR - COMMANDE	65.01
REGULATEUR DE TEMPERATURE DE CARBURANT	329.03
REGULATEUR ET ENTRAINEMENT DE POMPE A CARBURANT	63
	63A
RENIFLARD (ASS)	31
RENIFLARD DE CARTER D'HUILE MOTEUR (ENS)	31
RESERVOIR DE CARBURANT	85C
RESERVOIR DE CARBURANT (ASS)	85
	85C
RESERVOIR HYDRAULIQUE ET FILTRE (ASS)	196
RETROVISEUR (ASS)	298
	310.01
REVETEMENT DE CABINE	310.02
RIPPER (ASS)	270
	270.01
	270.02
RIPPER (VERSION)	267
	268
	269
	269A
	269B
	269C
	269D
RIPPER - PENETRATION PROFONDE (VERSION)	267.01
ROBINET DE BATTERIE	100
ROBINET DE BATTERIE (ENS)	90Z.31
	100
ROUE AV - CHAINES (ASS)	182B
	183.01
	183.01.01
	183.02

S

SEGMENT DE BARBOTIN (ASS)	145
SIEGE (ASS)	316
	316A
	316B
SIEGE AVEC SUSPENSION	317.02
SIEGE AVEC SUSPENSION (ASS)	317
	317.02
	318
SIEGE RAPPORTE DE SOUPAPE D'ADMISSION	14
	14B
	14C
SIEGE RAPPORTE DE SOUPAPE D'ECHAPPEMENT	14C
SILENCIEUX (ASS)	58.01
	58.02
SOLENOIDE (ENS)	111D
	346.01
	346B

INDEX ALPHABETIQUE

Designation	Page
SOLENOIDE DE DEMARREUR (ENS)	111B
	111C.04
	111C.08
	111D
	111D.01
SOUPAPE - INCLINAISON (ASS)	213
SOUPAPE ANTI-INCENDIE	348
SOUPAPE D'ADMISSION	13A.06
SOUPAPE D'ARRET	348
SOUPAPE D'ECHAPPEMENT	13A.06
	14A
SOUPAPE DE DECHARGE DE DISPOSITIF DE COMMANDE	346B
	346C
SOUPAPE DE PRIORITE (ASS)	129
	129.01
SOUPAPE DE VERIN (ASS)	346.05
	346D
SOUPAPE DE VERIN - DROITE (ASS)	244
SOUPAPE DE VERIN - GAUCHE (ASS)	245
SOUPAPE ET MONTAGE (ASS)	198
SOUPAPE PILOTE (ASS)	207
	208
	212
	213
SOUPAPE SELECTRICE (ASS)	293
SOUPAPE SELECTRICE ET REGULATRICE DE PRESSION	131
STABILISATEUR - BRAS DE POUSSEE (ASS)	262B
	263
STABILISATEUR DU BRAS DE POUSSEE (ASS)	260
	260A
SUPPORT DE MOTEUR (ASS)	22
SUPPORT DE MOTEUR ET BOITE (ASS)	22
SUPPORT DU MOTEUR ET BOITE	22
SURPRESSEUR (ASS)	302
	304
SUSPENSION A BOGIES	190
SUSPENSION A BOGIES (ASS)	190
	190C

T

Designation	Page
TABLEAU DE BORD (ASS)	334
TACHYMETRE - ENTRAINEMENT	63A
TAMIS - CARBURANT	79F
TAMIS DE RESERVOIR DE CARBURANT	85C
TAPIS DE PLANCHER	310.02
	310A.01
TEMOINS (ASS)	114
TENDEUR DE COURROIE	17.01
TENDEUR DE COURROIE (ASS)	17
	17.01
THERMOCONTACT D'AUX. DE DEMARR. ETHER	335P.03
THERMOCONTACT D'HUILE HYDRAULIQUE	335P.03
THERMOCONTACT DE FILTRE DE BYPASS (DERIVATION)	335P.03
THERMOCONTACT DE LIQUIDE DE REFROIDIS.	335P.03
THERMOMETRE D'HUILE DE CONVERTISSEUR (ENS)	335P.02
THERMOMETRE DU LIQUIDE DE REFROIDISSEMENT	335P.02
THERMOSTAT - TEMPERATURE D'EAU	45.01
TIRANT DE BULLDOZER	261
	262
	262A
	262C
TIRANT DE BULLDOZER (ASS)	261
	262
	262A
	262C
TOIT ROPS (ASS)	297
TOURILLON - COUVERCLE	258A
TOURILLON DE BULLDOZER	258
TOURILLON DE BULLDOZER (ASS)	258
TOURILLON DE MOTEUR (ASS)	19.02
TRAIN DE ROULEMENT	185A
TRAINS PLANETAIRES (ASS)	122
TRAINS PLANETAIRES - CARTER ET PIECES	120
	121.01
TREUIL COMPLET (ENS)	274
	274.01
TREUIL DE REMORQUAGE (ENS)	274
	275
TRINGLERIE D'EQUIPEMENT (ASS)	238
	240
	241E
	242
	242.02
TURBOCOMPRESSEUR (ASS)	52
	52.01
	52A
TURBOCOMPRESSEUR - CANALISATIONS D'HUILE	51A
TURBOCOMPRESSEUR - CARTOUCHE (ASS)	53
	53.01

V

Designation	Page
VANNE-EAU	327
	327B.01
VENTILATEUR - ENTRAINEMENT	18.01
VENTILATEUR A PALES REVERSIBLES (ASS)	42B
VENTILATEUR ASPIRANT (ASS)	42B.01
VENTILATEUR SOUFFLANT	42.01
VENTILATEUR SOUFFLANT (ASS)	42
	42.01
	42A
VERIN D'EXTRACTEUR DE BROCHE DE RIPPER	232

INDEX ALPHABETIQUE

Designation	Page
VERIN D'EXTRACTEUR DE BROCHE DE RIPPER (ASS)	232
VERIN D'INCLINAISON	195
	264
VERIN D'INCLINAISON (ASS)	264
VERIN D'INCLINAISON (VERSION)	195
VERIN DE LEVAGE (ASS)	230
	247
VERIN DE LEVAGE DE BULLDOZER	229A
VERIN DE LEVAGE DE LAME DE BULLDOZER (ASS)	229A
VERROUILLAGE ANTI-VANDALISME (ASS)	337B.02
VERROUILLAGE DE PROTECTION ANTI-VANDALISME	337B.02
VILEBREQUIN (ASS)	9
	9.02
VILEBREQUIN (ENS)	9.02
	10
VOLANT MOTEUR (ASS)	23
	24

INDICE

Nombre	Pagina
A	
ACCIONADOR (CONJ)	346.06
ACEITE - FILTRO DE	36A
ACEITE - INDICADOR (VARILLA) DE NIVEL DE	29.02
ACEITE - TUBO DE LLENADO DE	31A
ACONDICIONADOR DE AIRE (CONFIG)	320
	320A
	320B
ACONDICIONADOR DE AIRE (GR)	322
	323.01
ACONDICIONADOR DE AIRE - TUBERIAS DEL (GR)	324
	325C
ACONDICIONADOR DE AIRE Y MONTAJE (GR)	321
ACONDICIONADOR DE REFRIGERANTE (GR)	41F
ACOPLAMIENTO DE BOMBA	142
ACOPLAMIENTO DE BOMBA (GR)	142
ADAPTADOR DE LLENADO RAPIDO DE COMBUSTIBLE (GR)	83
	84
AGUA - BOMBA DE	43
AGUA - TUBERIAS DE	48A
AGUA DE LAS CAMISAS - CALENTADOR DEL (GR)	37
AIRE - TUBERIAS DE (GR)	54
	56
AJUSTADOR DE LA CORREA	17.01
AJUSTADOR DE LA CORREA (GR)	17
	17.01
AJUSTADOR DEL ASIENTO (GR)	316.01
ALARMA (GR)	100
	100A
ALARMA DE RETROCESO	90Z.07
	90Z.12
	90Z.17
	90Z.22
	90Z.28
ALFOMBRILLA DEL PISO	310.02
	310A.01
ALTERNADOR DE CARGA (GR)	101
	101.01
	102
	103
	104
	106
	106.01
	107
	108
AMORTIGUADOR DE VIBRACIONES (GR)	15.02
	16
ARBOL DE LEVAS (GR)	11
ARRANQUE - INTERRUPTOR DE (GR)	90Z.33
	100A
ARRANQUE CON ETER - AYUDA DE	110
ASIENTO (GR)	316
	316A
	316B
ASIENTO CON SUSPENSION	317.02
ASIENTO CON SUSPENSION (GR)	318
B	
BALANCIN (GR)	15.01
BARRA COMPENSADORA (GR)	180.06
BARRA DE TIRO (GR)	167
	167.01
BASTIDOR DEL DESGARRADOR	271B
	272A
BASTIDOR DEL DESGARRADOR (GR)	271B
	272
	272A
BASTIDOR EN C (GR)	258B
BASTIDOR TELESCOPICO	188
BASTIDOR TELESCOPICO DEL RESORTE TENSOR	188
	189N
	189U
BATERIA	90Z.31
	112C
	112E
BATERIA (GR)	112
BATERIA Y CABLES (GR)	86
	90Z.28
BLOQUE MOTOR (CONJ)	7
	7A
BLOQUE MOTOR (GR)	6
	6A.01
	7B
	8
	8A
BLOQUE MOTOR - TAPA DEL (GR)	6A
	6A.02
BOCINA DE TONO ALTO (CONJ)	90Z.34
BOCINA DE TONO BAJO (CONJ)	90Z.34
BOMBA - TUBERIAS DE (GR)	216
	217E
BOMBA DE ACEITE	33
BOMBA DE ACEITE - TORNILLERIA DE MONTAJE DE LA	32
BOMBA DE AGUA (GR)	43
BOMBA DE CEBADO DE COMBUSTIBLE (GR)	81
BOMBA DE COMBUSTIBLE - CAJA	70
BOMBA DE ENGRANAJES (GR)	139
	140
	141

INDICE

Nombre	Pagina
	282
	283
BOMBA DE INYECCION DE COMBUSTIBLE (GR)	68
	69A
	71A
	71B
BOMBA DE INYECCION DE COMBUSTIBLE Y TRANSFERENCIA	66
	66C.02
BOMBA DE PALETAS (GR)	219
BOMBA DE TRANSFERENCIA DE COMBUSTIBLE (GR)	66D
	66D.01
	66E
	67
BOMBILLA MINIATURA	90Z.33
	335P.02
BOMBILLA MINIATURA (24V)	301F
BRAZO DE EMPUJE DERECHO (GR)	265
BRAZO DE EMPUJE IZQUIERDO (GR)	266

C

CABINA (CONFIG)	298
	299
	299A
	299B
CABINA (GR)	300
	301C
	301E
CABINA - GRUPO DE MONTAJE	176
	177.01
CABLE DE ENCHUFE DEL CALENTADOR (ENS)	37
CABRESTANTE - REMOLQUE (CONFIG)	274
	275
CADENA - RUEDA GUIA (GR)	182B
	183.01
	183.01.01
	183.02
CADENAS (GR)	191.01
	191.02
	191.03
CADENAS - RODILLO INFERIOR DE (GR)	186
	186B
CAJA DE LA BOMBA DE COMBUSTIBLE (CONJ)	70
CAJA DE PALANCA	211
CAJA DE PALANCA (GR)	211
CAJA DE VOLANTE	25A
CAJA DE VOLANTE - TAPA DE LA	24
CAJA DELANTERA	20
CAJA DELANTERA (GR)	20
CAJA DELANTERA - TAPA DE LA	21B
CAJA Y BASTIDOR (GR)	159
	159B
CAJA Y PIEZAS DE LOS PLANETARIOS	120
	121.01
CAJA Y TAPAS DE CABRESTANTE (GR)	288
CALCOMANIA DE ADVERTENCIA	112E
CALCOMANIA DE IDENTIFICACION	327A
CALEFACCION (GR)	327
	327A
CALEFACCION DE LA CABINA	327G
CALEFACCION DE LA CABINA (GR)	327C
	327G
	328
CALENTADOR DEL COMBUSTIBLE (GR)	329
	330
CAMBIO RAPIDO DE ACEITE (GR)	36A
CAMISA INFERIOR	6A.01
CANCAMOS DE LEVANTAMIENTO DEL MOTOR	12
CANCAMOS DE LEVANTAMIENTO DEL MOTOR (GR)	12
CANDADO (GR)	29.04
	30.01
	37
	85C
	198
	337B.01
CANTONERA Y CUCHILLA (GR)	254
	254.01
	254.02
	254.04
	254.05
	255
	255.01
	255.02
	255.03
	255.04
	256
	256.01
	256.02
	257
CAPO Y PROTECTOR (GR)	162
CARTER - COLECTOR DEL (GR)	28
	28.01
CARTER DE FILTRO DE AIRE DE LA CABINA	332B
CEBADO DE COMBUSTIBLE - BOMBA DE	81
CENICERO	327E
CHAVETA	29.04
	30.01
	37
	85C
	100
	198
	337B.01
CIGUENAL (CONJ)	9.02
	10
CIGUENAL (GR)	9
	9.02

INDICE

Nombre	Pagina
CIGUENAL - SELLO DE (GR)	9.01
	9.02
CILINDRO DE EXTRACTOR DE PASADOR DEL DESGARRADOR	232
CILINDRO DE INCLINACION (GR)	195
CILINDRO DE INCLINACION HORIZONTAL ..	195
	264
CILINDRO DE LEVANTAMIENTO (GR)	230
	247
CILINDRO DE LEVANTAMIENTO - TUBERIAS DEL.....	231
	231B
CILINDRO DE LEVANTAMIENTO DE LA HOJA TOPADORA	229A
CILINDRO DE LEVANTAMIENTO DE LA HOJA TOPADORA (GR).....	229A
CILINDRO DEL EXTRACTOR DE PASADOR DEL DESGARRADOR	232
CINTURON DE SEGURIDAD (GR)	316A
	316B
COJINETES DE EJE PIVOTE	189Z.03
COLADOR DEL TANQUE DE COMBUSTIBLE	85C
COMBUSTIBLE - BOMBA DE INYECCION DE.....	69A
	71A
COMBUSTIBLE - FILTRO DE	80
COMBUSTIBLE - TANQUE DE (GR)	85
	85C
COMBUSTIBLE - TUBERIAS DE INYECCION DE.....	76A
COMBUSTIBLE - VALVULA INYECTORA DE ..	76C
COMPARTIMIENTO (GR)	175.03
	175.05
COMPARTIMIENTO DEL MOTOR	160
COMPARTIMIENTO DEL MOTOR (GR)	160
COMPARTIMIENTO DEL TANQUE HIDRAULICO (GR)	174
COMPRESOR DE EMBRAGUE Y REFRIGERANTE (GR)	332A.02
	333
COMPRESOR DE REFRIGERANTE (GR)	332
	332A.01
CONDENSADOR Y MONTAJE (GR)	330B
CONEXION DE ENGRASE	180.06
	230.01
	237.01
	262.01
	262B
	262D
	271E
	272C
	295
CONJUNTO DE EJE Y TIRANTE (LIMPIA/LAVAPARAB.)	314
CONTRAPESO (GR)	181
	182
	182A
	182A.03

Nombre	Pagina
CONTROL DE LA RELACION DE COMBUSTIBLE (GR).....	81
	81A
	81B
	82
CONTROL DE LA TRANSMISION (GR)	132
CONTROL DE PAR (GR)	70B
	70B.01
	70B.02
	70B.03
	71
CONTROL DEL CABRESTANTE (GR)	284
	285.01
	286
CONTROL DEL EMBRAGUE DE DIRECCION Y FRENO	150
	153J
CONTROL DEL REGULADOR (GR)	65.01
CONTROL DEL REGULADOR Y DECELERADOR	64
CONTROL ELECTRONICO, DEL OPERADOR (GR).....	335P.02
CONTROL HIDRAULICO	235E
CONTROL HIDRAULICO (CONFIG)	192
	193
	194
	194.01
	234
	235E
CONTROL HIDRAULICO DE LA TRANSMISION	128
CONTROL HIDRAULICO DE LA TRANSMISION (GR).....	128
CONVERTIDOR DE PAR (GR)	116
	117
	118
CORONA Y TRANSFERENCIA (GR)	126
CORREA TRAPEZOIDAL	101.01
	332A.01
CORTE ELECTRICO	346.01
	346.04.02
CULATA DE CILINDROS (CONJ)	14B
	14C
	14D
CULATA DE CILINDROS (GR)	13
	13A.02
	13A.04
	13A.06
	14
	14A

D

DESGARRADOR (CONFIG)	267
	268
	269
	269A
	269B

INDICE

Nombre	Pagina
	269C
	269D
DESGARRADOR (GR)	270
	270.01
	270.02
DESGARRADOR - GRUPO DE MONTAJE	270B
	271A
DESGARRADOR - VASTAGO DEL (CONFIG)	267.01
	269B.01
DESGARRADOR DE PENETRACION PROFUNDA (CONFIG)	267.01
DETECTOR DE TEMPERATURA DEL ACEITE HIDRAULICO	335P.03
DETECTOR DEL LIMPIADOR	313C
DIENTE DE DESGARRADOR	271
	272D
	273
DIENTE DE DESGARRADOR (GR)	271
	272D
	273
DIRECCION - EMBRAGUE DE	155B.02
DISYUNTOR	100
DISYUNTOR DE 10 A (CONJ)	90Z.33
DISYUNTOR DE 15 A (CONJ)	90Z.33
DISYUNTOR DE 60 A (CONJ)	90Z.33

E

EJE DE MANDO PRINCIPAL (GR)	142
ELEMENTO (CONJ)	58
ELEMENTO DE FILTRO	85C
	138
	138B
	197C
	286A
ELEMENTO DE PRECARGA (CONJ)	41F
ELEMENTO DE SERVICIO (CONJ)	41F
	45.01
ELEMENTO DEL CALENTADOR DEL AGUA DE LAS CAMISAS	37
ELEMENTO DEL FILTRO DE COMBUSTIBLE	80
ELEMENTO PRIMARIO (CONJ)	58
EMBRAGUE DE DIRECCION (GR)	155B.02
EMBRAGUE DE DIRECCION Y FRENO	155B.01
EMBRAGUE Y ENGRANAJE (GR)	276
EMPAQUETADURA	28.01
	80
ENFRIADOR DE ACEITE DE LA TRANSMISION (GR)	50
	50B
ENFRIADOR DE ACEITE DEL MOTOR	48
ENFRIADOR DE ACEITE DEL MOTOR (GR)	48
ENFRIADOR DEL ACEITE DE LA TRANSMISION	50
	50B
ENFRIADOR DEL ACEITE HIDRAULICO	48B
	50B
	50B.01
ENFRIADOR DEL ACEITE HIDRAULICO (GR)	48B
	50B
	50B.01
ENGANCHE Y CONTRAPESO (GR)	182A.02
ENGRANAJE ACCESORIO (GR)	287
ENGRANAJE DELANTERO	20
ENGRANAJE DELANTERO (GR)	20
ENGRANAJE TRASERO	26
ENGRANAJE TRASERO (GR)	26
ENGRANAJES - BOMBA DE	139
	140
	141
ESCAPE - MULTIPLE DE	59
ESCAPE DE GASES (GR)	32
	32.01
ESLABON DE CADENA (CONJ)	191
	191.04
ESTABILIZADOR DEL BRAZO DE EMPUJE	262B
	263
ESTABILIZADOR DEL BRAZO DE EMPUJE (GR)	260
	260A
ESTRUCTURA ROPS (GR)	297
EXPULSOR DE POLVO (GR)	62
	62.01
EXTINTOR DE INCENDIOS (GR)	350
	350A
	350B
EXTRACTOR DE PASADOR	236
	250A.02
EXTRACTOR DE PASADOR (CONFIG)	195
	250A.02
EXTRACTOR DE PASADOR (GR)	236

F

FILTRO	43
	43.01
FILTRO (CONJ)	327E
FILTRO DE ACEITE (GR)	36
	36A
FILTRO DE ACEITE DEL MOTOR (CONJ)	36A
FILTRO DE AIRE	348
FILTRO DE AIRE (GR)	57
	58
FILTRO DE AIRE DE LA CABINA - CARTER DEL (GR)	332B
FILTRO DE COMBUSTIBLE (CONJ)	80
FILTRO DE COMBUSTIBLE (GR)	80
FILTRO DE COMBUSTIBLE - TUBERIAS DEL	77C
FILTRO DE DERIVACION (GR)	292A
FILTRO DE LA TRANSMISION (GR)	138
	138B
FILTRO MAGNETICO	283
FILTRO Y TUBERIAS DE COMBUSTIBLE (GR)	78

INDICE

Nombre	Pagina
	79E
FORRO DEL ASIENTO (GR)	320
	320A
FORRO DEL ASIENTO CON SUSPENSION	320
	320A
FRENO Y EMBRAGUE DE DIRECCION (GR) ..	154
	155B.01
	155C
FUSIBLE DE 10 A	90Z.33
FUSIBLE DE 15 A	90Z.33

G

GRUPO DE CONVERSION DEL MALACATE	275
GRUPO DE INDICADORES	336
GRUPO DE MODIFICACION DEL RADIADOR	41E.01
GRUPO DE PROTECCION CONTRA EL VANDALISMO.....	29.03
	30
GRUPO DE TRANSFORMACION	41E.02
GRUPO DE VALVULA Y CILINDRO	346.02
	346.03
	346.04
	346.04.01
	347
	348
GRUPO DE VALVULAS	130
	200
	203J.01
	204
	205
	206
	209
	209.01
	210
	210.01
	218.01
	246
	292
	292A
GUARDABARROS (GR)	170
	172.04
GUIA DE RODILLO (GR)	296
GUIACABLE DEL CABRESTANTE (GR)	295

H

HERRAMIENTAS	349
HOJA (GR)	251A.04
	252
HOJA DE LIMPIAPARABRISAS (CONJ)	309B
	309F
	309J
	309L
	309M
HOJA DERECHA (GR)	250B
	251A
	251A.02
	251A.03
	251B
HOJA RECTA (CONJ)	248C
HOJA TOPADORA DERECHA (CONFIG)	248
	248B
HOJA TOPADORA ORIENTABLE (CONFIG)	248
	249
	250A.01
	250A.02
HOJA TOPADORA UNIVERSAL (CONFIG)	250
	250.01
	250A.01
	253A.01
HOJA UNIVERSAL (CONJ)	248C
HOJA UNIVERSAL (GR)	253
	253.02
	253A
	253B

I

IMPULSOR DE VENTILADOR (GR)	18
	18.01
INCLINACION HORIZONTAL - CILINDRO DE (GR)	264
INDICADOR DE NIVEL DEL ACEITE (VARILLA) (CONJ).....	29.02
INDICADOR DE NIVEL DEL ACEITE (VARILLA) (GR).....	29
	29.01
	29.02
INSERTO DE ASIENTO DE VALVULA DE ESCAPE.....	14C
INSERTO DE VALVULA DE ADMISION	14
	14B
	14C
INSONORIZADOR (CONFIG)	337A
INSTALACION DEL CABRESTANTE (CONFIG).....	274.01
INSTRUMENTOS (GR)	334
INTERR. DE TEMP. DE ACTIV. DE AUXILIAR DE ETER.....	335P.03
INTERRUPTOR (CONJ)	100C
	346.03
	346D
INTERRUPTOR DE ACTIVADOR (CONJ)	346B
INTERRUPTOR DE ACTIVADOR DEL SUPRESOR DE INCENDIOS	346.02
INTERRUPTOR DE ALARMA DE RETROCESO (CONJ).....	133G
INTERRUPTOR DE CONTROL DE LA CALEFACCION (CONJ).....	327E
INTERRUPTOR DE DETECCION DE DESCARGA (CONJ)	341R.07
	345M.07
INTERRUPTOR DE FILTRO DE DERIVACION (GR)	335P.04

INDICE

Nombre	Pagina
INTERRUPTOR DE FLUJO DEL REFRIGERANTE (CONJ)	335P.03
INTERRUPTOR DE LA AYUDA DE ARRANQUE (CONJ)	90Z.33
INTERRUPTOR DE LA BOCINA (CONJ)	90Z.07
	90Z.12
	90Z.17
	90Z.22
	90Z.28
INTERRUPTOR DE LUCES (CONJ)	90Z.33
INTERRUPTOR DE PRESION (CONJ)	335P.03
	346.04
	346.04.01
	346.05
INTERRUPTOR DE PRESION DE AIRE (CONJ)	346C
INTERRUPTOR DE SENSOR DE INCENDIO (CONJ)	341R.01
	341R.05
	345M.05
INTERRUPTOR DE TEMPERATURA DE ACEITE HIDRAULICO	335P.03
INTERRUPTOR DE TEMPERATURA DE FILTRO DE DERIVACION	335P.03
INTERRUPTOR DE TERMOMETRO DEL REFRIGERANTE	335P.03
INTERRUPTOR DE VOLQUETE (ADVERTENCIA) (CONJ)	235E
INTERRUPTOR DE VOLQUETE (CONJ)	100B
	335P.04
INTERRUPTOR DE VOLQUETE (LUZ DEL TECHO)	309L
INTERRUPTOR DE VOLQUETE DE LAS LUCES (CONJ)	90Z.33
INTERRUPTOR DE VOLQUETE DE PRUEBA DEL TABLERO	335P.02
INTERRUPTOR DEL FILTRO DE DERIVACION (GR)	335P.03
INTERRUPTOR DEL FRENO DE ESTACIONAMIENTO (CONJ)	341R.07
	345M.07
INTERRUPTOR DEL TERMOSTATO (CONJ)	322
	323.02
	323.04
INTERRUPTOR GENERAL (CONJ)	90Z.31
	100
INTERRUPTOR MAGNETICO (CONJ)	90Z.34
INTERRUPTOR ROTATIVO DE LAVAPARABRISAS (CONJ)	309L

J

Nombre	Pagina
JUEGO DE AISLACION DE BORNE	111C.05
JUEGO DE ARANDELA DE TOPE	111C.08
	111C.09
JUEGO DE BOBINA	333
JUEGO DE BOBINA INDUCTORA	111C.09
JUEGO DE BOTON DEL CEBADO DE COMBUSTIBLE	81
JUEGO DE COJINETE Y MECHA	111C.08
	111C.09
JUEGO DE COJINETES	53
	53.01
	333
JUEGO DE COJINETES DE DIVISOR DE PAR	118.02
JUEGO DE COJINETES DE LA TRANSMISION	118.01
JUEGO DE COJINETES DE REEMPLAZO	53
JUEGO DE COJINETES DEL ALTERNADOR	106.01
JUEGO DE CONDENSADOR DEL ALTERNADOR	106
JUEGO DE DIODO POSITIVO	109
JUEGO DE DIODOS DEL PRISIONERO DE EMPALME	109
JUEGO DE ESCOBILLAS	111C.09
	327B
JUEGO DE HORQUILLA DE AJUSTE	111C.09
JUEGO DE MANDO DE EMBRAGUE	333
JUEGO DE MEDIDOR DE SERVICIO	335P.02
JUEGO DE NUCLEO, EXTREMO DE CONTACTO	111D
JUEGO DE NUCLEO, EXTREMO DE HORQUILLA	111D
JUEGO DE PALETA DE BOMBA	218.02
	219
JUEGO DE PLACA FLEXIBLE	219
JUEGO DE POLEA	333
JUEGO DE RECONSTRUCCION DE LA BOMBA DE AGUA	43
	43.01
JUEGO DE RESISTENCIAS	107
JUEGO DE RESORTE Y ESCOBILLAS	111C.09
JUEGO DE SELLO CONTRA EL POLVO	332A.02
	333
JUEGO DE SELLOS	198
	218.01
	333
JUEGO DE SELLOS DEL REFRIGERANTE	332A.02
JUEGO DE TAPA CONTRA EL POLVO	332A.02
	333
JUEGO DE TAPON	111C.09
JUEGO DE TERMINAL	105
	111B
	111C.08
	111D
JUEGO DE TERMINAL A MASA	107
JUEGO DE TERMINAL A MASA DEL ALTERNADOR	106
JUEGO DE TERMINAL DE ENTREGA	107
	109
JUEGO DE TERMINAL DE REGULADOR	107
JUEGO DE TERMINAL DE RELE	107
	109

INDICE

Nombre	Pagina
JUEGO DE TERMINAL DE RELE DEL ALTERNADOR	106
JUEGO DE TERMINAL DE SALIDA DEL ALTERNADOR	106
JUEGO DE TERMINAL DEL ALTERNADOR	105
	106.01
JUEGO DE TERMINAL REGULADOR DEL ALTERNADOR	106
JUEGO DE TORNILLERIA DEL ALTERNADOR	106.01
JUEGO DE VENTILADOR DEL ALTERNADOR	106
JUEGO DE 3 CORREAS TRAPEZOIDALES	18.01
JUNTA UNIVERSAL (GR)	143A
L	
LAMPARA	335P.02
LAMPARA DE FARO DELANTERO (GR)	114
LAMPARA DE REFLECTOR (GR)	114.01
LAMPARA DEL TECHO (GR)	301F
LAMPARA SELLADA	114
	114.01
LAMPARAS (GR)	114
LAVAPARABRISAS	307C
LAVAPARABRISAS (GR)	306
	307A
	307C
LIMPIAPARABRISAS (GR)	308
	309A
	309D
	309L
	312D
	313
	313.01
	313.02
	313A
	313B
	313C
	313E
LUBRICACION DE EJE PIVOTE (GR)	184H
LUCES (GR)	113
	115
M	
MALACATE (CONFIG)	274
	274.01
MANDO AUXILIAR (GR)	19
MANDO DE REGULADOR Y BOMBA DE COMBUSTIBLE (GR)	63
	63A
MANDO DE REGULADOR Y DE LA BOMBA DE COMBUSTIBLE	63
	63A
MANDO DE TACOMETRO	63A
MANDO DE TACOMETRO (GR)	63A
MANDO FINAL (GR)	146
	148
MANGUITO DE EMPALME DE CABLE	317
	317.02
MANGUITO PARA CALIBRE DE LEVANTAVALVULAS	6A.01
MAZO DE CABLES	91
	91.01
	94
	94.01
	99
	99B
	304.01
	305
	310B
	312
	312A
	312B
	312C
	337B.01
	346
	346A
MAZO DE CABLES DEL MOTOR (CONJ)	95
	95B
MAZO DE CABLES DEL TABLERO (CONJ)	96
MAZO DE CABLES DELANTERO (CONJ)	92
MECANISMO DE VALVULAS (GR)	15
MECANISMO DE VALVULAS - TAPA DEL	16B
MODIFICACION DEL CONTROL HIDRAULICO (CONFIG)	194.01
MONTAJE DE CILINDRO	237
MONTAJE DE CILINDRO (GR)	237
MONTAJE DE LA CABINA	177.01
MONTAJE DE LA TRANSMISION (GR)	119B
MONTAJE DEL CABRESTANTE (GR)	282
	282.01
MONTAJE DEL DESGARRADOR	270B
MONTAJE DEL EXTINTOR DE INCENDIOS (GR)	350A
MOTOR (CONFIG)	2
	5
MOTOR - SOPORTE DEL (GR)	22
MOTOR DE ARRANQUE ELECTRICO (GR)	111
	111A
	111C.01
	111C.04
	111C.08
	111C.10
MULTIPLE - PROTECTOR DEL	60
MULTIPLE DE ESCAPE (GR)	59
MUNON - TAPA DEL	258A
MUNON DE LA HOJA TOPADORA	258
MUNON DE LA HOJA TOPADORA (GR)	258
MUNON DEL MOTOR (GR)	19.02
N	
NUCLEO (GR)	218.02
	219

INDICE

Nombre	Pagina
P	
PISTOLA DE ENGRASE (CONJ)	350C
PISTON (GR)	10A
PISTON DE SERVO DEL REGULADOR (GR)	75
PISTON Y BIELA (GR)	10
	10A
PIVOTE DEL LIMPIADOR (GR)	312D
PLACA - SUPRESION DE INCENDIOS	341R.02
	341R.06
	345M.07
PLACA DE INSTRUCCIONES	173.03
	327B
	341R.07
	345M.07
PLACA DE INSTRUCCIONES (CONTROL DE INCENDIOS)	100C
PLACA DE INSTRUCCIONES (SOBRE EL TANQUE DE COMBUS)	341R.08
	345M.08
PLANCHA ADAPTADORA DEL REGULADOR (GR)	74
	74B
PLANCHA DE DESGASTE (GR)	253A.01
	253A.02
PLANETARIOS (GR)	122
PLATAFORMA (GR)	178
PLATAFORMA DE LA CABINA	180.01
PLATAFORMA DEL OPERADOR	180.01
POLEA (GR)	8B
POLEA DEL ALTERNADOR	101.01
POLEA DEL COMPRESOR DE REFRIGERANTE (CONJ)	332A.02
PRESION - VALVULA DE CONTROL DE (GR)	218
	286B
	294
PRESURIZADOR (GR)	302
	304
PRIORIDAD - VALVULA DE (GR)	129
	129.01
PROTECTOR CONTRA ARENA (GR)	169B.09
PROTECTOR CONTRA EL VANDALISMO (GR)	337
	337B
	337B.01
PROTECTOR CONTRA ROCAS (GR)	248D
	248E
PROTECTOR DEL EJE DE MANDO	144
PROTECTOR DEL EJE IMPULSOR (GR)	144
PROTECTOR DEL MULTIPLE	60
PROTECTOR DEL RADIADOR (GR)	168
	169B.03
PROTECTOR DEL TANQUE DE COMBUSTIBLE	173
	173.02
	173.03
PROTECTOR DEL TREN DE FUERZA (GR)	136D
	138D
PROTECTOR INFERIOR (GR)	165
	166
PROTECTOR Y CAPO	162
R	
RADIADOR (GR)	38
	39A
	39C
	39D.03
	40
	41A
	41C
	41E
	41G
REFRIGERANTE - COMPRESOR DE	332A.01
REGULADOR (GR)	72
	73.03
REGULADOR - CONTROL DEL	65.01
REGULADOR - PLANCHA ADAPTADORA DEL	74B
REGULADOR DE PISTON DE SERVO	75
REGULADOR DE TEMPERATURA DEL AGUA	45.01
REGULADOR DE TEMPERATURA DEL COMBUSTIBLE	329.03
REJILLA DEL TANQUE DE COMBUSTIBLE	79F
REJILLA MAGNETICA	283
REJILLA MAGNETICA (GR)	283
REJILLA PROTECTORA (GR)	315
RELACION DE COMBUSTIBLE - CONTROL DE LA	81
	81A
	82
RESORTE TENSOR Y AJUSTADOR DE LA CADENA	184
RESORTE TENSOR Y AJUSTADOR DE LA CADENA (GR)	184
	184D
	184F
RESPIRADERO (GR)	31
RESPIRADERO DEL CARTER (CONJ)	31
RETROVISOR (GR)	298
	310.01
REVESTIMIENTO DE LA CABINA	310
	310.02
	310A.01
RODILLOS DE PESTANA DOBLE (GR)	186A.02
RODILLOS DE PESTANA SIMPLE (GR)	186.02
	186A.01
RUEDA MOTRIZ - SEGMENTO DE	145

INDICE

Nombre	Pagina
S	
SEGMENTO DE RUEDA MOTRIZ (GR)	145
SELLO ANULAR	138
	138B
SILENCIADOR (GR)	58.01
	58.02
SOLENOIDE (CONJ)	111D
	346.01
	346B
SOLENOIDE DEL MOTOR DE ARRANQUE (CONJ)	111B
	111C.04
	111C.08
	111D
	111D.01
SOPORTE BASCULANTE	190
SOPORTE BASCULANTE (GR)	190
	190C
SOPORTE DE LA HOJA TOPADORA	261
	262
	262A
	262C
SOPORTE DEL MOTOR Y LA TRANSMISION	22
SOPORTE DEL MOTOR Y LA TRANSMISION (GR)	22
SUCCION - VENTILADOR DE (GR)	42B.01
SUJETADOR DEL MANUAL DE LA MAQUINA	317
	317.02
SUPRESOR DE INCENDIOS (GR)	338
	341N
	342
	345J
SUSPENSION - ASIENTO CON (GR)	317
	317.02
T	
TABLERO DE CONTROL ELECTRONICO (GR)	100C
	341R.01
	341R.05
	341R.08
	345M.05
	345M.08
TANQUE DE COMBUSTIBLE	85C
TANQUE Y FILTRO HIDRAULICOS (GR)	196
TAPA CONTRA EL POLVO	84
TAPA DE ACONDICIONADOR DE AIRE	325B
	325D.02
TAPA DE LA CAJA DE VOLANTE (GR)	24
TAPA DE LA CAJA DELANTERA (GR)	21
	21A
	21B
TAPA DE LLENADO	197C
TAPA DE LLENADO (CONJ)	16
	31A
TAPA DE LLENADO DEL TANQUE DE COMBUSTIBLE	85C
TAPA DE PORTAFUSIBLE	90Z.33
TAPA DE RODILLO INFERIOR	184K
	185B
TAPA DE RODILLO INFERIOR (CONJ)	185B
TAPA DE RUEDA GUIA (GR)	185
TAPA DE SISTEMA DE COMBUSTIBLE (GR)	63
TAPA DEL BLOQUE MOTOR	6A
TAPA DEL MANDO DE TACOMETRO	63A
TAPA DEL MECANISMO DE VALVULAS (GR)	16
	16A
	16B
TAPA DEL MUNON (GR)	258A
TAPA DEL RADIADOR	37
TAPA DEL TANQUE DE COMBUSTIBLE (CONJ)	85C
TAPA DEL TAPON DEL TANQUE HIDRAULICO (GR)	198
TAPA PROTECTORA	198
TAPA PROTECTORA DEL RADIADOR (GR)	37
TAPAS PROTECTORAS DE EMBARQUE (GR)	296
TAPON	289
TAPON (CONJ)	36A
	203J.04
TERMOMETRO DE ACEITE DEL CONVERTIDOR (CONJ)	335P.02
TERMOMETRO DEL REFRIGERANTE	335P.02
TIRANTE (GR)	225.02
TIRANTE DEL DESGARRADOR (CONFIG)	269
TIRANTE ESTABILIZADOR	262B
TORNILLARIA DE LAS TUBERIAS DE INYECCION DE COMB.	75
TORNILLERIA DE MONT. DE LA BOMBA DE ACEITE (GR)	32
TORNILLERIA DE TUBERIAS DE INYECCION DE COMBUST.	75
TRABA CONTRA EL VANDALISMO	337B.02
TRABA CONTRA EL VANDALISMO (GR)	337B.02
TRANSFERENCIA DE COMBUSTIBLE - BOMBA DE	66D
	66E
	67
TRANSMISION (CONFIG)	119
TRANSMISION - FILTRO DE LA	138
	138B
TRANSMISION - MONTAJE DE LA	119B
TREN DE RODAJE (CONFIG)	185A
TUBERIAS DE ACCESORIOS	233B
TUBERIAS DE ACCESORIOS (GR)	233A
	233B
TUBERIAS DE ACEITE	34
TUBERIAS DE ACEITE DEL MOTOR (GR)	34
TUBERIAS DE ACEITE DEL TREN DE FUERZA (GR)	134

INDICE

Nombre	Pagina
TUBERIAS DE ACEITE DEL TURBOCOMPRESOR	51A
TUBERIAS DE AGUA DEL TURBOALIMENTADOR (GR)	47.02
TUBERIAS DE AIRE	54
	56
TUBERIAS DE BOMBA	217E
TUBERIAS DE DRENAJE	83A
TUBERIAS DE DRENAJE (GR)	83
	83A
TUBERIAS DE INYECCION DE COMBUSTIBLE (GR)	76
	76A
	76B.01
	76B.02
TUBERIAS DE LA BOMBA HIDRAULICA	214
TUBERIAS DE LA CALEFACCION	326C
TUBERIAS DE LA CALEFACCION (GR)	326
	326C
TUBERIAS DEL AGUA (GR)	44
	46B
	48A
TUBERIAS DEL CABRESTANTE (GR)	290
	291
TUBERIAS DEL CILINDRO DE INCLINACION	226
	227
	228
TUBERIAS DEL CILINDRO DE INCLINACION (GR)	226
	227
	228
TUBERIAS DEL CILINDRO DE LEVANTAMIENTO	231B
TUBERIAS DEL COMPRESOR DE AIRE (GR)	325A
TUBERIAS DEL DESGARRADOR	221.05
	224B
TUBERIAS DEL DESGARRADOR (GR)	220
	221.05
	222
	224
	224B
	224C
	224D.01
	225
TUBERIAS DEL FILTRO DE COMBUSTIBLE	77
	77B
	77C
	79E
TUBO DE LLENADO DE ACEITE (GR)	30.02
	31A
TURBOCOMPRESOR (GR)	52
	52.01
	52A
TURBOCOMPRESOR - NUCLEO DEL (GR)	53
	53.01
TURBOCOMPRESOR - TUBERIAS DE ACEITE DEL (GR)	51
	51A

V

Nombre	Pagina
VALVULA	184D
	184E
	184E.01
	184F
	184G
	184G.01
	197D
	325D.02
VALVULA AUXILIAR	207
	208
	212
	213
VALVULA DE ALIVIO (GR)	137
	218.01
VALVULA DE ALIVIO DEL ACTIVADOR (GR)	346B
	346C
VALVULA DE BOLA	79F
VALVULA DE CILINDRO (GR)	346.05
	346D
VALVULA DE CILINDRO DERECHO (GR)	244
VALVULA DE CILINDRO IZQUIERDO (GR)	245
VALVULA DE CONTROL	203J.01
VALVULA DE CONTROL (GR)	46
	156
	158A
	158G
	198B
	199
	200A
	201
	203J.01
	236
VALVULA DE ENTRADA	13A.06
VALVULA DE ESCAPE	13A.06
	14A
VALVULA DE INCLINACION (GR)	213
VALVULA DE PARADA	348
VALVULA DE SUPRESION DE INCENDIOS	348
VALVULA DEL AGUA	327
	327B.01
VALVULA INYECTORA DE COMBUSTIBLE	76C
VALVULA SELECTORA (GR)	293
VALVULA SELECTORA Y DE CONTROL DE PRESION (GR)	131
VALVULA Y MONTAJE (GR)	198
VARILLAJE DE LOS IMPLEMENTOS	238
	240
	241E
	242
	242.02
VENTANA (CONJ)	299.01

INDICE

Nombre	Pagina
VENTANA DE LA CABINA	305B
VENTANA DE LA CABINA (GR)	304.01
	305B
VENTILADOR - MANDO DE	18.01
VENTILADOR REVERSIBLE	42B
VENTILADOR SOPLADOR	42.01
VENTILADOR SOPLADOR (GR)	42
	42.01
	42A
VOLANTE (GR)	23
	24
VOLANTE - CAJA DE (GR)	25
	25A

Y

YUGO (GR)	143
	143A
YUGO DEL MANDO DE LA BOMBA	143
	143A

INDICE

Designacao	Pagina
A	
ACESSORIOS - TUBOS	233B
ACOLCHOAMENTO DO ASSENTO	320
	320A
ACOLCHOAMENTO DO ASSENTO COM SUSPENSAO	320
	320A
ACOPLAMENTO DA BOMBA	142
ADAPTADOR PARA ENCHIMENTO RAPIDO DO COMB.	83
	84
AGUA DO MOTOR - BOMBA	43
AGUA DO MOTOR - TUBOS	48A
AJUSTADOR DE CORREIAS	17
	17.01
AJUSTADOR DE ESTEIRAS E MOLA TENSORA	184
	184D
	184F
AJUSTADOR DO ASSENTO	316.01
ALARME	100
	100A
ALARME DE MARCHA A RE	90Z.07
	90Z.12
	90Z.17
	90Z.22
	90Z.28
ALOJAMENTO DA ALAVANCA	211
ALOJAMENTO DO FILTRO	332B
ALTERNADOR DE CORRENTE	101
	101.01
	102
	103
	104
	106
	106.01
	107
	108
AMORTECEDOR	15.02
	16
ANEL E ROLETES DE ROLAMENTO INTERNO	189Z.03
AQUECEDOR	327
	327A
AQUECEDOR - TUBOS	326C
AQUECEDOR DA CABINA	327C
	327G
	328
AQUECEDOR DE AGUA DO MOTOR	37
AQUECEDOR DO COMBUSTIVEL	329
	330
AR - TUBOS	54
	56
ARMACAO "C"	258B
ARMACAO DE SUPORTE DO CIRCULO	167
	167.01
ARMACAO DO RIPER	271B
	272
	272A
ARMACAO TELESCOPICA	188
ARMACAO TELESCOPICA DA MOLA TENSORA	188
	189N
	189U
ARR. DE CONVERSAO - CONTROLE HIDRAULICO	194.01
ARREFECEDOR DE OLEO DA CAIXA DE MUDANCAS	50
	50B
ARREFECEDOR DE OLEO DA TRANSMISSAO	50
	50B
ARREFECEDOR DE OLEO DO MOTOR	48
ARREFECEDOR DO OLEO HIDRAULICO	48B
	50B
	50B.01
ARREFECEDOR DO SISTEMA HIDRAULICO	48B
	50B
	50B.01
ARTICULACOES DO IMPLEMENTO	238
	240
	241E
	242
	242.02
ASSENTO	316
	316A
	316B
ASSENTO COM SUSPENSAO	317
	317.02
AUXILIO DE PARTIDA COM ETER	110
B	
BALANCIM	15.01
BARRA EQUALIZADORA	180.06
BARULHO - ARRANJO PARA REDUCAO	337A
BATERIA	90Z.31
	112
	112C
	112E
BATERIA - INTERRUPTOR	100
BATERIA E CABOS/FIOS ELETRICOS	86
	90Z.28
BICO INJETOR DO COMBUSTIVEL	76C
BLINDAGEM DO COLETOR	60
BLOCO DO MOTOR (CONJ)	7
	7A
BLOCO DO MOTOR (GR)	6
	6A.01
	7B

INDICE

Designacao	Pagina
	8
	8A
BLOCO DO MOTOR - TAMPA	6A
BOCAL DE ENCHIMENTO DE OLEO DO MOTOR	30.02
	31A
BOCAL DE ENCHIMENTO DO OLEO	31A
BOMBA - ACOPLAMENTO	142
BOMBA DE AGUA DO MOTOR	43
BOMBA DE ENGRENAGENS	139
	140
	141
	282
	283
BOMBA DE ESCORVA DO COMBUSTIVEL	81
BOMBA DE INJECAO DO COMBUSTIVEL	68
	69A
	71A
	71B
BOMBA DE OLEO - FIXADORES	32
BOMBA DE OLEO - MOTOR	33
BOMBA DE PALHETAS	219
BOMBA DE TRANSFERENCIA DO COMBUSTIVEL	66D
	66D.01
	66E
	67
BOMBA DO GOVERNADOR, INJECAO E TRANSF. DO COMB.....	66
	66C.02
BOMBA E TUBOS	217E
BOMBA MANUAL DE LUBRIFICACAO	350C
BRACO DE EMPUXO - DIREITO	265
BRACO DE EMPUXO - ESQUERDO	266
BRACO DE EMPUXO - ESTABILIZADOR	260
	260A
BRACO E ELO DO LIMPADOR DO PARA-BRISA.....	314
BUJAO - ANEL O	289
BUZINA (TOM ALTA)	90Z.34
BUZINA (TOM BAIXA)	90Z.34

C

CABECOTE DO MOTOR (CONJ)	14B
	14C
	14D
CABECOTE DO MOTOR (GR)	13
	13A.02
	13A.04
	13A.06
	14
	14A
CABINA - AQUECEDOR	327G
CABINE	298
	299
	299A
	299B
	300
	301C
	301E
CABO ELETRICO DO AQUECEDOR	37
CADEADO	29.04
	30.01
	37
	85C
	198
	337B.01
CADEADO CONTRA VANDALISMO	337B.02
CAIXA DA ALAVANCA	211
CAIXA DA BOMBA DE COMBUSTIVEL	70
CAIXA DA BOMBA DE INJECAO DO COMBUSTIVEL	70
CAIXA DAS ENGRENAGENS PLANETARIAS E COMPONENTES	120
	121.01
CAIXA DIANTEIRA	20
CAIXA DIANTEIRA - TAMPA	21B
CAIXA DO VOLANTE DO MOTOR	25
	25A
CAIXA DO VOLANTE DO MOTOR - TAMPA	24
CAIXA E TAMPAS DO GUINCHO	288
CANTO E BORDA CORTANTE	254
	254.01
	254.02
	254.04
	254.05
	255
	255.01
	255.02
	255.03
	255.04
	256
	256.01
	256.02
	257
CAPO E PROTETOR	162
CARCACA DA VALVULA; GR DE VALVULA	130
	200
	203J.01
	204
	205
	206
	209
	209.01
	210
	210.01
	218.01
	246
	292
	292A
CARTER DO OLEO DO MOTOR	28
	28.01
CARTUCHO	218.02
	219

INDICE

Designacao	Pagina
CARTUCHO DO TURBOALIMENTADOR	53
	53.01
CHAPA DE DESGASTE	253A.01
	253A.02
CHASSI TRASEIRO (GR)	159
	159B
CHAVE	29.04
	30.01
	37
	85C
	100
	198
	337B.01
CHICOTE	91
	91.01
	94
	94.01
	99
	99B
	304.01
	305
	310B
	312
	312A
	312B
	312C
	337B.01
	346
	346A
CHICOTE - DIANTEIRO	92
CHICOTE - MOTOR	95
	95B
CHICOTE - PAINEL DE INSTRUMENTOS	96
CILINDRO - MONTAGEM	237
CILINDRO DA VALVULA DO SIST. REFRATARIO	346.05
	346D
CILINDRO DA VALVULA DO SIST. REFRATARIO - DIR	244
CILINDRO DA VALVULA DO SIST. REFRATARIO - ESQ	245
CILINDRO DE INCLINACAO	195
	264
CILINDRO DE INCLINACAO - TUBOS	226
	227
	228
CILINDRO DE LEVANTAMENTO	230
	247
CILINDRO DE LEVANTAMENTO - TUBOS	231B
CILINDRO DE LEVANTAMENTO DA LAMINA	229A
CILINDRO DO SACADOR DE PINO DO RIPER	232
CINTO DE SEGURANCA	316A
	316B
CINZEIRO DE METAL COMUM	327E
COBERTURA	175.03
	175.05
COBERTURA - TANQUE HIDRAULICO	174
COBERTURA DO MOTOR	160
COLETOR - BLINDAGEM	60
COLETOR DE ESCAPE	59
COMANDO AUXILIAR	19
COMANDO DO GOVERNADOR E DA BOMBA DE COMB	63
	63A
COMANDO DO TACOMETRO	63A
COMANDO DO VENTILADOR	18
	18.01
COMANDO FINAL	146
	148
COMANDO HIDRAULICO	235E
COMANDO TRASEIRO - ENGRENAGENS	26
COMBUSTIVEL - BICO INJETOR	76C
COMBUSTIVEL - BOMBA DE ESCORVA	81
COMBUSTIVEL - BOMBA DE INJECAO	69A
	71A
COMBUSTIVEL - BOMBA DE TRANSFERENCIA	66D
	66E
	67
COMBUSTIVEL - FILTRO	80
COMBUSTIVEL - FILTRO E TUBOS	79E
COMBUSTIVEL - LIMITADOR	81
	81A
	82
COMBUSTIVEL - TANQUE	85C
COMBUSTIVEL - TUBOS DE INJECAO	76A
COMBUSTIVEL - TUBOS DO FILTRO	77C
COMPRESSOR DE REFRIGERANTE	332
	332A.01
COMPRESSOR DE REFRIGERANTE E EMBREAGEM	332A.02
	333
CONDENSADOR E MONTAGEM	330B
CONDICIONADOR DE AR	320
	320A
	320B
	322
	323.01
CONDICIONADOR DE AR E MONTAGEM	321
CONDICIONADOR DE LIQUIDO ARREFECEDOR	41F
CONJUNTO ACIONADOR	346.06
CONTRAPESO	181
	182
	182A
	182A.03
CONTRAPESO E ENGATE	182A.02
CONTROLE DA EMBREAGEM DA DIRECAO E FREIO	153J
CONTROLE DA EMBREAGEM DE DIRECAO E FREIO	150
	153J
CONTROLE DA TRANSMISSAO	132
CONTROLE DO GOVERNADOR	65.01

INDICE

Designacao	Pagina
CONTROLE DO GOVERNADOR E DECELERADOR	64
CONTROLE DO GUINCHO	284
	285.01
	286
CONTROLE ELETRONICO	100C
	341R.01
	341R.05
	341R.08
	345M.05
	345M.08
CONTROLE ELETRONICO DE MONITORIZACAO	335P.02
CONTROLE HIDRAULICO	192
	193
	194
	194.01
	234
	235E
CONTROLE HIDRAULICO DAS MARCHAS	128
CONVERSOR DE TORQUE	116
	117
	118
CORDAO PARA LITERATURA	317
	317.02
COROA E ENGRENAGEM DE TRANSFERENCIA	126
CORREIA EM "V"	101.01
	332A.01

D

DECALQUE - ADVERTENCIA	112E
DECALQUE - IDENTIFICACAO	327A
DECALQUE - INSTRUCAO	173.03
	327B
	341R.07
	345M.07
DECALQUE - INSTRUCAO SOBRE CONTROLE DE INCENDIOS	100C
DECALQUE - INTRUCAO SOBRE TANQUE DE COMBUSTIVEL	341R.08
	345M.08
DECALQUE - SUPRESSAO DE INCENDIO	341R.02
	341R.06
	345M.07
DENTE DA BORDA CORTANTE	271
	272D
	273
DENTE DO RIPER	271
	272D
	273
DIRECAO - EMBREAGEM	155B.02
DIRECAO - EMBREAGEM E FREIO	155B.01
DISJUNTOR ELETRICO AUTOMATICO - 10 A	90Z.33
DISJUNTOR ELETRICO AUTOMATICO - 15 A	90Z.33
DISJUNTOR ELETRICO AUTOMATICO - 60 A	90Z.33
DISTRIBUICAO - ENGRENAGENS	20

E

EIXO DE TRANSMISSAO	142
EIXO DE TRANSMISSAO - PROTETOR	144
EIXO PIVO - LUBRIFICACAO	184H
EIXO-COMANDO DE VALVULAS	11
EJETOR DE POEIRA	62
	62.01
ELEMENTO	58
ELEMENTO - AQUECEDOR DE AGUA DA CAMISA	37
ELEMENTO - FILTRANTE	85C
	138
	138B
	197C
	286A
ELEMENTO - FILTRO DE COMBUSTIVEL	80
ELEMENTO - MANUTENCAO	41F
	45.01
ELEMENTO - PRE-CARGA	41F
ELEMENTO - PRIMARIO	58
ELIMINACAO DE VAPORES DO CARTER	32
	32.01
ELO	225.02
ELO DA ESTEIRA	191
	191.04
ELO DO RIPER	269
ELO ESTABILIZADOR	262B
	263
EMBREAGEM DE DIRECAO	155B.02
EMBREAGEM DE DIRECAO E FREIOS	154
	155B.01
	155C
EMBREAGEM E ENGRENAGEM	276
EMISSOR - TEMP. DO OLEO DO SISTEMA HIDRAULICO	335P.03
ENGRENAGEM DO ACESSORIO	287
ENGRENAGENS - BOMBA	139
	140
	141
ENGRENAGENS DE COMANDO TRASEIRO	26
ENGRENAGENS DE DISTRIBUICAO	20
ENGRENAGENS PLANETARIAS	122
ESCAPE - COLETOR	59
ESPELHO RETRO-VISOR	298
	310.01
ESTEIRA	191.01
	191.02
	191.03
ESTRUTURA CONTRA CAPOTAMENTO ROPS	297
EXTINTOR DE INCENDIO	350
	350A
	350B

INDICE

Designacao	Pagina
F	
FAROL - FACHO SELADO	114
	114.01
FERRAMENTAS	349
FILTRO	43
	43.01
	327E
FILTRO - ALOJAMENTO - CABINE	332B
FILTRO - AR	348
FILTRO - COMBUSTIVEL (CONJ)	80
FILTRO - COMBUSTIVEL (GR)	80
FILTRO - DERIVACAO	292A
FILTRO - MAGNETICO	283
FILTRO - OLEO	36
	36A
FILTRO - OLEO DA TRANSMISSAO	138
	138B
FILTRO - OLEO DO MOTOR (CONJ)	36A
FILTRO DO SISTEMA DE TRANSMISSAO	138
	138B
FILTRO E TUBOS - COMBUSTIVEL	78
	79E
FIXADORES - BOMBA DE OLEO DO MOTOR	32
FIXADORES - TUBOS INJETORES DE COMBUSTIVEL	75
FIXADORES - TUBOS INJETORES DO COMBUSTIVEL	75
FUSIVEL - 10 A	90Z.33
FUSIVEL - 15 A	90Z.33
G	
GARFO	143
	143A
GARFO DE COMANDO DA BOMBA	143
	143A
GOVERNADOR	72
	73.03
GOVERNADOR - CONTROLE	65.01
GOVERNADOR E COMANDO DA BOMBA DE COMBUSTIVEL	63
	63A
GOVERNADOR E CONTROLE DE REDUCAO DE VELOCIDADE	64
GR. DE CONVERSAO	41E.02
GR. DE CONVERSAO - GUINCHO	275
GR. DE CONVERSAO - RADIADOR	41E.01
GRADE DO RADIADOR CONTRA EROSAO	169B.09
GRAXEIRA	180.06
	230.01
	237.01
	262.01
	262B
	262D
	271E
	272C
	295
GUIA DAS ESTEIRAS	296
GUINCHO	274
	274.01
GUINCHO DE REBOQUE	274
	275
I	
ILUMINACAO - SISTEMA	113
	115
INCLINACAO - CILINDRO	195
	264
INDICADOR - NIVEL DO OLEO DO MOTOR (VARETA)	29
	29.01
	29.02
INDICADOR - TEMP. DO LIQUIDO ARREFECEDOR	335P.02
INDICADOR - TEMP. DO OLEO DO CONVERSOR	335P.02
INDICADOR/MANOMETRO	336
INSERTO - SEDE DE VALVULA (ESCAPE)	14C
INSERTO - VALVULA DE ADMISSAO	14C
INSERTO - VALVULA DE ENTRADA	14
	14B
INSTALACAO DO GUINCHO	274.01
INSTRUMENTOS	334
INTERRUPTOR	100C
	346.03
	346D
INTERRUPTOR - ACTIVADOR	346B
INTERRUPTOR - ALARME DE MARCHA A RE	133G
INTERRUPTOR - ATIVADOR DE SUPRESSAO DE INCENDIO	346.02
INTERRUPTOR - AUXILIO DE ARRANQUE	90Z.33
INTERRUPTOR - BALANCIM	100B
	335P.04
INTERRUPTOR - BALANCIM - ALARME	235E
INTERRUPTOR - BALANCIM - PROVA DO PAINEL EMS	335P.02
INTERRUPTOR - BATERIA	90Z.31
	100
INTERRUPTOR - BUZINA	90Z.07
	90Z.12
	90Z.17
	90Z.22
	90Z.28
INTERRUPTOR - CONTROLE DO AQUECEDOR	327E
INTERRUPTOR - DERIVACAO DO FILTRO	335P.03
	335P.04
INTERRUPTOR - DETECAO DE DESCARGA	341R.07
	345M.07
INTERRUPTOR - FLUXO DE REFRIGERANTE	335P.03
INTERRUPTOR - FREIO DE ESTACIONAMENTO	341R.07

INDICE

Designacao	Pagina
	345M.07
INTERRUPTOR - INDICADOR DE TEMP. DO LIQ. ARREFEC.	335P.03
INTERRUPTOR - LUZ	90Z.33
INTERRUPTOR - LUZ INTERIOR DO TETO	309L
INTERRUPTOR - LUZES	90Z.33
INTERRUPTOR - MAGNETICO	90Z.34
INTERRUPTOR - PARTIDA	90Z.33
	100A
INTERRUPTOR - PRESSAO	335P.03
INTERRUPTOR - PRESSSAO DO AR	346C
INTERRUPTOR - ROTATIVO - LIMPADOR/LAVADOR	309L
INTERRUPTOR - SENSOR DE INCENDIO	341R.01
	341R.05
	345M.05
INTERRUPTOR - TEMP. DE ATIVACAO AUXILIAR DE ETER	335P.03
INTERRUPTOR - TEMP. DO FILTRO DE DERIVACAO	335P.03
INTERRUPTOR - TEMP. DO OLEO HIDRAULICO	335P.03
INTERRUPTOR - TERMOSTATO	322
	323.02
	323.04
INTERRUPTOR DE PRESSAO	346.04
	346.04.01
	346.05
ISOLADOR ACUSTICO E CALORIFUGO DA CABINA	310
	310.02
	310A.01

J

Designacao	Pagina
JANELA	299.01
JANELA DA CABINA	304.01
	305B
JANELA DA CABINE	305B
JOGO DE ACONDICIONAMENTO - BOMBA DE AGUA	43
	43.01
JOGO DE ARRUELA DE ENCOSTO	111C.08
	111C.09
JOGO DE BOBINA	333
JOGO DE BOBINA DE CAMPO	111C.09
JOGO DE BUJAO	111C.09
JOGO DE CAPACITOR	107
JOGO DE CAPACITOR DO ALTERNADOR	106
JOGO DE COMANDO DA EMBREAGEM	333
JOGO DE DIODO POSITIVO	109
JOGO DE ESCOVA	111C.09
JOGO DE ESCOVA E MOLA	111C.09
JOGO DE ESCOVAS DE MOTOR	327B
JOGO DE FIXADORES DO ALTERNADOR	106.01
JOGO DE GARFO DE AJUSTE	111C.09
JOGO DE ISOLAMENTO DE TERMINAL	111C.05
JOGO DE MACANETA - BOMBA DE ESCORVA DO COMBUSTIVEL	81
JOGO DE MANCAL	53
	53.01
	333
JOGO DE MANCAL DA TRANSMISSAO	118.01
JOGO DE MANCAL DE SUBSTITUICAO	53
JOGO DE MANCAL DO DIVISOR DO TORQUE	118.02
JOGO DE MANCAL E MECHA	111C.08
	111C.09
JOGO DE MARCADOR DE HORAS DE SERVICO	335P.02
JOGO DE PALHETA	218.02
	219
JOGO DE PLACA FLEXIVEL	219
JOGO DE POLIA	333
JOGO DE PRISIONEIRO DIODO DE JUNCAO	109
JOGO DE REPARO - MOTOR DE ARRANQUE	111D
JOGO DE RETENTOR	198
	218.01
	333
JOGO DE RETENTOR CONTRA POEIRA	332A.02
	333
JOGO DE RETENTOR DE REFRIGERANTE	332A.02
JOGO DE TAMPA CONTRA POEIRA	332A.02
	333
JOGO DE TERMINAL	105
	111B
	111C.08
	111D
JOGO DE TERMINAL DE SAIDA	107
	109
JOGO DE TERMINAL DE SAIDA DO ALTERNADOR	106
JOGO DE TERMINAL DO ALTERNADOR	105
	106.01
JOGO DE TERMINAL DO REGULADOR	107
JOGO DE TERMINAL DO REGULADOR DO ALTERNADOR	106
JOGO DE TERMINAL RELE	107
	109
JOGO DE TERMINAL RELE DO ALTERNADOR	106
JOGO DE TERMINAL TERRA	107
JOGO DE TERMINAL TERRA DO ALTERNADOR	106
JOGO DE 3 CORREIAS EM "V"	18.01
JOGO DO MANCAL DO ALTERNADOR	106.01
JOGO DO VENTILADOR/ALTERNADOR	106
JUNTA	28.01
	80
JUNTA UNIVERSAL	143A

INDICE

Designacao	Pagina
L	
LAMINA	251A.04
	252
LAMINA - CILINDRO DE LEVANTAMENTO	229A
LAMINA - MUNHAO	258
LAMINA - TIRANTE	261
	262
	262A
	262C
LAMINA ANGULAVEL	248
	249
	250A.01
	250A.02
LAMINA RETA	248
	248B
	248C
	250B
	251A
	251A.02
	251A.03
	251B
LAMINA UNIVERSAL	248C
	250
	250.01
	250A.01
	253
	253.02
	253A
	253A.01
	253B
LAMPADA	114
	335P.02
LAMPADA - DIANTEIRO	114
LAMPADA - FAROL	114.01
LAMPADA - MINIATURA	90Z.33
	335P.02
LAMPADA - MINIATURA DE 24 V	301F
LAMPADA - TETO	301F
LAVADOR DE PARA-BRISA	306
	307A
	307C
LEVANTAMENTO DO MOTOR	12
LIMITADOR DO COMBUSTIVEL	81
	81A
	81B
	82
LIMPADOR DE PARA-BRISA	308
	309A
	309D
	309L
	312D
	313
	313.01
	313.02
	313A
	313B
	313C
	313E
LUVA - REVESTIMENTO INFERIOR	6A.01
LUVA DE JUNCAO DE CABO	317
	317.02
LUVA DO TUCHO	6A.01
M	
MATERIAL RODANTE; ESTRUTURA INFERIOR	185A
MECANISMO DAS VALVULAS	15
MOLA DE CONTROLE DO TORQUE	70B
	70B.01
	70B.02
	70B.03
	71
MOLA TENSORA E AJUSTADOR DE ESTEIRAS	184
MONTAGEM - CABINA	176
	177.01
MONTAGEM - CILINDRO	237
MONTAGEM - EXTINTOR DE INCENDIO	350A
MONTAGEM - GUINCHO	282
	282.01
MONTAGEM - RIPER	270B
	271A
MONTAGEM - TRANSMISSAO	119B
MOTOR	2
	5
MOTOR - COBERTURA	160
MOTOR - TUBOS DE OLEO	34
MOTOR E TRANSMISSAO - SUPORTE	22
MOTOR ELETRICO DE ARRANQUE	111
	111A
	111C.01
	111C.04
	111C.08
	111C.10
MUNHAO - TAMPA	258A
MUNHAO DA LAMINA	258
MUNHAO DO MOTOR	19.02
O	
OLEO - FILTRO	36A
OLEO DO MOTOR - ARRANJO PARA TROCA RAPIDA	36A
OLEO DO MOTOR - ARREFECEDOR	48
OLHAL DE LEVANTAMENTO DO MOTOR	12
P	
PA DO LIMPADOR DO PARA-BRISA	309B
	309F
	309J
	309L
	309M
PARA-BRISA - LAVADOR	307C

INDICE

Designacao	Pagina
PARA-LAMA	17O
	172.04
PARADA ELETRICA	346.01
	346.04.02
PISTAO	1OA
PISTAO E BIELA	1O
	1OA
PISTAO SERVO DO GOVERNADOR	75
PIVO DO LIMPADOR	312D
PLACA ADAPTADORA DO GOVERNADOR	74
	74B
PLATAFORMA	178
PLATAFORMA DO OPERADOR	18O.01
POLIA	8B
POLIA DO ALTERNADOR	1O1.01
POLIA DO COMPRESSOR DE REFRIGERANTE	332A.02
PRESSURIZADOR / VENTILADOR DA CABINE	3O2
	3O4
PROTECAO - VANDALISMO	29.03
	3O
PROTETOR - EIXO DE TRANSMISSAO	144
PROTETOR - INFERIOR	165
	166
PROTETOR - RADIADOR	168
	169B.03
PROTETOR - ROCHA	248D
	248E
PROTETOR - TANQUE DE COMBUSTIVEL	173
	173.02
	173.03
PROTETOR - TREM DE FORCA	136D
	138D
PROTETOR - VANDALISMO	337
	337B
	337B.01
PROTETOR E CAPO	162
PURIFICADOR DE AR	57
	58

R

Designacao	Pagina
RADIADOR	38
	39A
	39C
	39D.03
	4O
	41A
	41C
	41E
	41G
REFRIGERANTE - COMPRESSOR	332A.01
REGULADOR DE TEMPERATURA DE AGUA	45.01
REGULADOR DE TEMPERATURA DO COMBUSTIVEL	329.03
RESPIRO	31
RESPIRO (CARTER)	31
RETENTOR - VIRABREQUIM	9.01
	9.02
RETENTOR DE ANEL-O	138
	138B
REVESTIMENTO DA CABINA	31O.02
RIPER	267
	268
	269
	269A
	269B
	269C
	269D
	27O
	27O.01
	27O.02
RIPER - CILINDRO DO SACADOR DE PINO	232
RIPER - MONTAGEM	27OB
RIPER - PENETRACAO PROFUNDA	267.01
RIPER - PORTA-PONTAS	267.01
	269B.01
RIPER - TUBOS	221.05
	224B
RODA MOTRIZ - SEGMENTO	145
RODA-GUIA DAS ESTEIRAS	182B
	183.01
	183.01.01
	183.02
ROLDANAS DE GUIA DO GUINCHO	295
ROLETE DE ESTEIRA	186
	186B
ROLETE DE ESTEIRA DE FLANGE DUPLO	186A.02
ROLETE DE ESTEIRA DE FLANGE SINGELO	186.02
	186A.01

S

Designacao	Pagina
SACADOR DE PINO	236
	25OA.02
SACADOR DE PINOS	195
	236
	25OA.02
SEGMENTO DA RODA MOTRIZ	145
SENSOR DO LIMPADOR DA PARA-BRISA	313C
SILENCIADOR DO ESCAPAMENTO	58.01
	58.02
SISTEMA REFRATARIO	338
	341N
	342
	345J
SOLENOIDE	111D
	346.01
	346B
SOLENOIDE DO MOTOR DE ARRANQUE	111B
	111C.04
	111C.08
	111D

INDICE

Designacao	Pagina
	111D.01
SUPORTE - MOTOR	22
SUPORTE - MOTOR E TRANSMISSAO	22
SUSPENSAO - ASSENTO	317.02
	318
SUSPENSAO - TRUQUE; TRAVESSA GIRATORIA	190
	190C
SUSPENSAO DE BOGIE	190

T

TACOMETRO - COMANDO	63A
TAMPA	36A
	203J.04
TAMPA - BLOCO DO MOTOR	6A
	6A.02
TAMPA - BOCAL DE ENCHIMENTO	16
	31A
	197C
TAMPA - BOCAL DO TANQUE DE COMBUSTIVEL	85C
TAMPA - CAIXA DIANTEIRA	21
	21A
	21B
TAMPA - CAIXA DO VOLANTE	24
TAMPA - COMANDO DO TACOMETRO	63A
TAMPA - CONDICIONADOR DE AR	325B
	325D.02
TAMPA - CONTRA POEIRA	84
TAMPA - EMBARQUE	296
TAMPA - MECANISMO DAS VALVULAS	16
	16A
	16B
TAMPA - MUNHAO	258A
TAMPA - PORTA-FUSIVEL	90Z.33
TAMPA - PROTECAO	198
TAMPA - RADIADOR	37
TAMPA - RODA-GUIA	185
TAMPA - ROLETE DE ESTEIRA	184K
	185B
TAMPA - SISTEMA DE COMBUSTIVEL	63
TAMPA - SUPERIOR DO MOTOR	16B
TAMPA - TANQUE DE COMBUSTIVEL	85C
TAMPA - TANQUE HIDRAULICO	198
TANQUE DE COMBUSTIVEL	85
	85C
TANQUE HIDRAULICO E FILTRO	196
TAPETE	310.02
	310A.01
TELA DE PROTECAO	315
TELA DO TANQUE DE COMBUSTIVEL	79F
TELA FILTRANTE DO TANQUE DE COMBUSTIVEL	85C
TENSOR DE CORREIAS	17.01
TIRANTE DA LAMINA	261
	262
	262A
	262C
TRANSMISSAO	119
TRANSMISSAO - CONTROLE HIDRAULICO DAS MARCHAS	128
TRANSMISSAO - MONTAGEM	119B
TRAVA CONTRA VANDALISMO	337B.02
TUBOS - ACESSORIOS	233A
	233B
TUBOS - AGUA	44
	46B
	48A
TUBOS - AGUA DO TURBOALIMENTADOR	47.02
TUBOS - AQUECEDOR	326
	326C
TUBOS - AR	54
	56
TUBOS - AR CONDICIONADO	324
	325C
TUBOS - AR DO COMPRESSOR	325A
TUBOS - BOMBA	216
	217E
TUBOS - BOMBA HIDRAULICA	214
TUBOS - CILINDRO DE INCLINACAO	226
	227
	228
TUBOS - CILINDRO DE LEVANTAMENTO	231
	231B
TUBOS - DRENAGEM	83
	83A
TUBOS - DRENAGEM DO SISTEMA DE COMBUSTIVEL	83A
TUBOS - FILTRO DO COMBUSTIVEL	77
	77B
	77C
TUBOS - GUINCHO	290
	291
TUBOS - INJECAO DO COMBUSTIVEL	76
	76A
	76B.01
	76B.02
TUBOS - OLEO DO MOTOR	34
TUBOS - OLEO DO TREM DE FORCA	134
TUBOS - OLEO DO TURBOALIMENTADOR	51
	51A
TUBOS - RIPER	220
	221.05
	222
	224
	224B
	224C
	224D.01
	225
TUBOS DO OLEO DO TURBOALIMENTADOR	51A
TURBOALIMENTADOR	52
	52.01
	52A

INDICE

Designacao	Pagina
V	
VALVULA	184D
	184E
	184E.01
	184F
	184G
	184G.01
	197D
	325D.02
VALVULA DE ADMISSAO	13A.06
VALVULA DE AGUA	327
	327B.01
VALVULA DE ALIVIO	137
	218.01
VALVULA DE CONTROLE	46
	156
	158A
	158G
	198B
	199
	200A
	201
	203J.01
	236
VALVULA DE CONTROLE DE PRESSAO	218
	286B
	294
VALVULA DE CONTROLE PILOTO	207
	208
	212
	213
VALVULA DE DESENGATE DO CONJUNTO ACIONADOR	346B
	346C
VALVULA DE ESCAPE	13A.06
	14A
VALVULA DE ESFERA	79F
VALVULA DE INCLINACAO	213
VALVULA DE PARADA	348
VALVULA DE PRIORIDADE	129
	129.01
VALVULA DE SUPRESSAO DE INCENDIO	348
VALVULA E CILINDRO	346.02
	346.03
	346.04
	346.04.01
	347
	348
VALVULA E MONTAGEM	198
VALVULA SELETORA	293
VALVULA SELETORA E CONTROLE DE PRESSAO	131
VARETA DE NIVEL DO OLEO	29.02
VENTILADOR - COMANDO	18.01
VENTILADOR DE SOPRO	42
	42.01
	42A
VENTILADOR DE SUCCAO	42B.01
VENTILADOR REVERSIVEL	42B
VIRABREQUIM	9
	9.02
	10
VOLANTE DO MOTOR	23
	24
VOLANTE DO MOTOR - CAIXA	25A

INHALTSVERZEICHNIS

Bezeichnung	Seite
A	
ABLASSLEITUNGEN	83
	83A
ACHSWELLENSCHMIERUNG	184H
AETHERSTARTHILFE	110
AETHERSTARTHILFE-TEMPERATURSCHALTER	335P.03
ALARMSATZ	100
	100A
ANLASSMOTOR, ELEKTR.	111
	111A
	111C.01
	111C.04
	111C.08
	111C.10
ANSCHLUSSKLEMME (MASSE)	107
ANSCHLUSSKLEMME (RELAIS)	107
	109
ANSCHLUSSKLEMMENRELAIS - DREHSTROMLICHTMASCHINE	106
ANSCHLUSSKLEMMENSATZ	105
	111B
	111C.08
	111D
ANSCHLUSSKLEMMENSATZ - DREHSTROMLICHTMASCHINE	105
	106.01
ANSCHLUSSKLEMMENSATZ - LICHTMASCHINENERDUNG	106
ANTRIEBSRADSEGMENT	145
ANTRIEBSSCHUTZ	136D
	138D
ANTRIEBSWELLENVERKLEIDUNG	144
ANZEIGENSATZ	336
ARBEITSGERAETEGESTAENGE	238
	240
	241E
	242
	242.02
ARBEITSGERAETELEITUNGEN	233A
	233B
ARBEITSLEUCHTEN	114.01
ASCHENBECHER	327E
AUFREISSER	270
	270.01
	270.02
AUFREISSER (TIEFAUFREISSER)	267.01
AUFREISSER - TEILLISTE	267
	268
	269
	269A
	269B
	269C
	269D
AUFREISSER-BOLZENZIEHERZYLINDER	232
AUFREISSERAUFHAENGUNG	270B
	271A
AUFREISSERGESTAENGE	269
AUFREISSERLEITUNGEN	221.05
	224B
AUFREISSERRAHMEN	271B
	272
	272A
AUFREISSERSCHENKEL	267.01
	269B.01
AUFREISSERZAHN	271
	272D
	273
AUSGANGS - ANSCHLUSSKLEMMENSATZ	107
	109
AUSLASSVENTIL	13A.06
	14A
AUSPUFFKRUEMMER	59
B	
BATTERIE	90Z.31
	112
	112C
	112E
BATTERIE UND VERDRAHTUNG	86
	90Z.28
BEFESTIGUNGSTEILE - DREHSTROMLICHTMASCHINE	106.01
BELEUCHTUNGSANLAGE	113
	115
BELEUCHTUNGSSCHALTER	90Z.33
BETAETIGUNGSAUSLOESERVENTIL	346B
	346C
BETAETIGUNGSSCHALTER	346B
BETRIEBSSTUNDENZAEHLER - EINBAUSATZ	335P.02
BOLZENZIEHER	195
	236
	250A.02
BRANDSCHUTZEINRICHTUNG	338
	341N
	342
	345J
BRANDVERHUETUNG	341R.02
	341R.06
	345M.07
BUCHSENLAUFFLAECHE, UNTEN	6A.01
BUERSTEN- UND FEDEREINBAUSATZ	111C.09
BUERSTEN-EINBAUSATZ	111C.09
C	
C-RAHMEN	258B

INHALTSVERZEICHNIS

Bezeichnung	Seite
D	
DAEMPFER	15.02
	16
DICHTUNG	28.01
	80
DICHTUNGSSATZ	198
	218.01
	333
DIFFERENTIALWANDLER-LAGERSATZ	118.02
DIODE (ANSCHLUSSSTEHBOLZEN)	109
DOPPELFLANSCHROLLEN	186A.02
DREHMOMENTWANDLER	116
	117
	118
DREHSTROMLICHTMASCHINE	101
	101.01
	102
	103
	104
	106
	106.01
	107
	108
DREHZAHLMESSERANTRIEB	63A
DREHZAHLMESSERANTRIEBSKAPPE	63A
DRUCKLUEFTER	42
	42.01
	42A
DRUCKLUFTLEITUNGEN	54
	56
DRUCKLUFTSCHALTER	346C
DRUCKSCHALTER	335P.03
	346.04
	346.04.01
	346.05
DRUCKSCHEIBEN-EINBAUSATZ	111C.08
	111C.09
DRUCKSTEUERVENTIL	218
	286B
	294
DURCHFUEHRUNGSKLEMME - DREHSTROMLICHTMASCHINE	106
E	
ECK- UND SCHNEIDMESSER	254
	254.01
	254.02
	254.04
	254.05
	255
	255.01
	255.02
	255.03
	255.04
	256
	256.01
	256.02
	257
EINBAUSATZ (KRAFTSTOFFENTLUEFTUNGSPUMPE)	81
EINBAUSATZ - FELDSPULE	111C.09
EINBAUSATZ - JOCHENDENKERN	111D
EINBAUSATZ - KONTAKTENDENKERN	111D
EINBAUSATZ - LAGER UND DOCHT	111C.08
	111C.09
EINFUELLSTUTZENKAPPE	16
	31A
	197C
EINLASSVENTIL	13A.06
EINLASSVENTILEINSATZ	14
	14B
EINSPRITZDUESE	76C
EINZELFLANSCHROLLEN	186.02
	186A.01
ELASTISCHE PLATTE	219
ELEKTR. UEBERWACHUNGSSYSTEM	335P.02
ENTDUNSTER	32
	32.01
ENTLUEFTER	31
ERSTELEMENT	41F
F	
FAHRERHAUS	298
	299
	299A
	299B
	300
	301C
	301E
FAHRERHAUSANBAUSATZ	176
	177.01
FAHRERHAUSAUSKLEIDUNG	310
	310.02
	310A.01
FAHRERHAUSBELEUCHTUNG	301F
FAHRERHAUSBELUEFTUNG	302
	304
FAHRERHAUSFENSTER	304.01
	305B
FAHRERHAUSHEIZUNG	327
	327A
	327C
	327G
	328
FAHRERPLATTFORM	178
	180.01
FAHRERSITZ	316
	316A
	316B
FAHRERSITZFEDERUNG	317.02
	318
FAHRERSITZVERSTELLER	316.01
FENSTER	299.01

INHALTSVERZEICHNIS

Bezeichnung	Seite
FESTSTELLBREMSENSCHALTER	345M.07
FESTSTELLBREMSSCHALTER	341R.07
FETTPRESSE	350C
FEUERLOESCHER	350
	350A
	350B
FEUERLOESCHER-AUSLOESERSCHALTER	346.02
FEUERLOESCHERAUFHAENGUNG	350A
FEUERMELDESCHALTER	341R.01
	341R.05
	345M.05
FILTER	43
	43.01
FILTERELEMENT	58
	85C
	138
	138B
	197C
	286A
FILTERGEHAEUSE	332B
FILTERGEHAEUSE (FAHRERHAUSBELUEFTUNG)	332B
FILTERNEBENSTROMSCHALTER	335P.03
	335P.04
FILTERSATZ	327E
FLUEGELSATZ	218.02
	219
FRONTSCHEINWERFER	114
FUSSMATTE	310.02
	310A.01

G

GEGENGEWICHT	181
	182
	182A
	182A.03
GEGENGEWICHT UND ZUGVORRICHTUNG	182A.02
GELENKSTUECK	225.02
GETRIEBE	119
GETRIEBE-LAGERSATZ	118.01
GETRIEBEAUFLAGER	119B
GETRIEBEHYDRAULIK	128
GETRIEBEOELKUEHLER	50
	50B
GETRIEBESCHMIERFILTER	138
	138B
GETRIEBESTEUERUNG	132

H

HALTETEILE (KRAFTSTOFFEINSPRITZLEITUNGEN)	75
HANDWERKZEUGE	349
HAUPTANTRIEBSWELLE	142
HEBELGEHAEUSE	211
HEIZUNGSKABEL	37
HEIZUNGSLEITUNGEN	326
	326C
HEIZUNGSSTEUERUNGSSCHALTER	327E
HUBOESE (MOTOR)	12
HUBZYLINDER	230
	247
HUBZYLINDERLEITUNGEN	231
	231B
HUPENSCHALTER	90Z.07
	90Z.12
	90Z.17
	90Z.22
	90Z.28
HYDRAULIKOEL-TEMPERATURSCHALTER	335P.03
HYDRAULIKOELKUEHLER	48B
	50B
	50B.01
HYDRAULIKPUMPE UND -LEITUNGEN	216
	217E
HYDRAULIKPUMPENLEITUNGEN	214
HYDRAULIKSTEUERUNG	192
	193
	194
	194.01
	234
	235E
HYDRAULIKSTEUERUNG-UMBAUSATZ	194.01
HYDRAULIKTANK UND SCHMIERFILTER	196
HYDRAULIKTANKKAPPE	198
HYDRAULIKTANKVERKLEIDUNG	174

I

IDENTIFIZIERUNGS-AUFKLEBER	327A
INNENLAGER	189Z.03
INSTRUKTIONS-AUFKLEBER	173.03
	327B
	341R.07
	345M.07
INSTRUKTIONS-AUFKLEBER (AUF DEM KRAFTSTOFFTANK)	341R.08
	345M.08
INSTRUKTIONS-AUFKLEBER (BRANDSCHUTZ)	100C
INSTRUMENTENSATZ	334

J

JOCHNACHSTELLUNGSSATZ	111C.09
JOCHSATZ	143
	143A

INHALTSVERZEICHNIS

Bezeichnung	Seite
K	
KABELBAUM	91
	91.01
	94
	94.01
	99
	99B
	304.01
	305
	310B
	312
	312A
	312B
	312C
	337B.01
	346
	346A
KABELBAUM - ARMATURENBRETT	96
KABELBAUM - MOTOR	95
	95B
KABELBAUM, VORNE	92
KAELTEMITTEL-DICHTUNGSSATZ	332A.02
KAPPE	36A
	203J.04
KAPPE FUER KRAFTSTOFFTANK - EINFUELLSTUTZEN	85C
KEILRIEMEN	101.01
	332A.01
KEILRIEMENSATZ (3 RIEMEN)	18.01
KETTENGLIEDER	191
	191.04
KETTENSPANNER U. SPANNFEDER	184
KETTENSPANNER UND -FEDERRUECKLAUF	184
	184D
	184F
KIPPSCHALTER	100B
	335P.04
KIPPSCHALTER (FAHRERHAUSBELEUCHTUNG)	309L
KIPPSCHALTER (LEUCHTE)	90Z.33
KLEMMLEISTEN-ISOLIERUNGSSATZ	111C.05
KLIMAANLAGE	320
	320A
	320B
	322
	323.01
KLIMAANLAGE UND AUFHAENGUNG	321
KLIMAANLAGENDECKEL	325B
	325D.02
KLIMAANLAGENLEITUNGEN	324
	325C
KOLBEN	10A
KONDENSATOR UND AUFHAENGUNG	330B
KONDENSATORSATZ	107
KONDENSATORSATZ - DREHSTROMLICHTMASCHINE	106
KRAFTSTOFFANHEIZUNG	329
	330
KRAFTSTOFFEINSPRITZDUESE	76C
KRAFTSTOFFEINSPRITZLEITUNGEN	76
	76A
	76B.01
	76B.02
KRAFTSTOFFEINSPRITZLEITUNGEN UND BEFESTIGUNG	75
KRAFTSTOFFEINSPRITZPUMPE	68
	69A
	71A
	71B
KRAFTSTOFFENTLUEFTUNGSPUMPE	81
KRAFTSTOFFFILTER UND -LEITUNG	79E
KRAFTSTOFFGEMISCHREGLER	81
	81A
	81B
	82
KRAFTSTOFFILTER	80
KRAFTSTOFFILTER UND LEITUNGEN	78
	79E
KRAFTSTOFFILTERELEMENT	80
KRAFTSTOFFILTERLEITUNGEN	77
	77B
	77C
KRAFTSTOFFOERDERPUMPE	66D
	66D.01
	66E
	67
KRAFTSTOFFPUMPENGEHAEUSE	70
KRAFTSTOFFTANK	85
	85C
KRAFTSTOFFTANK-SIEBEINSATZ	85C
KRAFTSTOFFTANKKAPPE	85C
KRAFTSTOFFTANKSIEB	79F
KRAFTSTOFFTANKVERKLEIDUNG	173
	173.02
	173.03
KRAFTSTOFFTEMPERATURREGLER	329.03
KREUZGELENK	143A
KRUEMMERSCHILD	60
KUEHLER-UMBAUSATZ	41E.01
KUEHLERKAPPE	37
KUEHLERNETZ	38
	39A
	39C
	39D.03
	40
	41A
	41C
	41E
	41G
KUEHLERSCHUTZ	168
	169B.03
KUEHLKOMPRESSOR	332A.01
KUEHLKOMPRESSOR UND KUPPLUNG	332A.02
	333

INHALTSVERZEICHNIS

Bezeichnung	Seite
KUEHLKOMPRESSOR-RIEMENSCHEIBE	332A.02
KUEHLKOMPRESSORAUFHAENGUNG	332
	332A.01
KUEHLMITTEL-TEMPERATURANZEIGESCHALTER.....	335P.03
KUEHLMITTELFLUSSSCHALTER	335P.03
KUEHLMITTELTEMPERATURANZEIGE	335P.02
KUEHLWASSERLEITUNGEN	44
	46B
	48A
KUEHLWASSERPUMPE	43
KUEHLWASSERPUMPEN - REGENERIERSATZ ..	43
	43.01
KUEHLWASSERZUSATZELEMENT	41F
KUPPLUNG UND ANTRIEB	276
KUPPLUNGSANTRIEBS-EINBAUSATZ	333
KURBELGEHAEUSEENTLUEFTER	31
KURBELWELLE	9
	9.02
	10
KURBELWELLENDICHTUNG	9.01
	9.02

L

LAGERERSATZEINBAUSATZ	53
LAGERSATZ	53
	53.01
	333
LAGERSATZ - DREHSTROMLICHTMASCHINE	106.01
LAUFROLLE	186
	186B
LAUFROLLENAUFSATZ	184K
	185B
LAUFROLLENKAPPE	184K
	185B
LAUFROLLENRAHMEN (TELESKOPRUECKLAUF)	188
	189N
	189U
LAUFROLLENRAHMEN-KNICKFEDERUNG	190
	190C
LAUFWERKSKETTE	191.01
	191.02
	191.03
LAUFWERKSRAHMEN	185A
LEITRAD	182B
	183.01
	183.01.01
	183.02
LEITRADAUFSATZ	185
LEITUNGEN, AUFREISSER	220
	221.05
	222
	224
	224B
	224C
	224D.01

Bezeichnung	Seite
	225
LENKKUPPLUNG	155B.02
LENKKUPPLUNG U. BREMSE	155B.01
LENKKUPPLUNG UND BREMSE	154
	155B.01
	155C
LENKKUPPLUNG UND BREMSKONTROLLE	153J
LENKKUPPLUNG- UND BREMSSTEUERUNG	150
	153J
LEUCHTE	335P.02
LICHTMASCHINEN-RIEMENSCHEIBE	101.01
LICHTMASCHINENLUEFTER	106
LITERATURABLAGE	317
	317.02
LUEFTERANTRIEB	18
	18.01
LUFTFILTER	348
LUFTKOMPRESSORLEITUNGEN	325A
LUFTREINIGER	57
	58

M

MAGNETFILTER	283
MAGNETSCHALTER	90Z.34
MAGNETSIEB	283
MAGNETSPULE	111D
	346.01
	346B
MAGNETSPULE - ANLASSMOTOR (ELEKTR.)	111B
	111C.04
	111C.08
	111D
	111D.01
MANSCHETTE	317
	317.02
MESSERPUMPE	219
MINIATURLEUCHTE	90Z.33
	335P.02
MINIATURLEUCHTEN - 24 V	301F
MONTAGEZAPFEN	19.02
MONTAGEZAPFEN (PLANIERSCHILD)	258
MONTAGEZAPFEN (PLANIERSCHILDEINRICHTUNG).....	258
MONTAGEZAPFENVERKLEIDUNG	258A
MOTOR- UND GETRIEBEAUFHAENGUNG	22
MOTOR- UND GETRIEBEAUFLAGER	22
MOTORAUFHAENGUNG	22
MOTORAUSFUEHRUNG	2
	5
MOTORBLOCK	6
	6A.01
	7
	7A
	7B
	8
	8A

INHALTSVERZEICHNIS

Bezeichnung	Seite
MOTORBLOCKDECKEL	6A
	6A.02
MOTORBUERSTENSATZ	327B
MOTORHAUBE UND VERKLEIDUNG	162
MOTORHUBOESE	12
MOTOROELKUEHLER	48
MOTOROELLEITUNGEN	34
MOTORVERKLEIDUNG	160
N	
NEBENANTRIEB	19
NEBENSTROMFILTER	292A
NEIGEZYLINDER	195
	264
NEIGEZYLINDERLEITUNGEN	226
	227
	228
NOCKENWELLE	11
NOTABSCHALTER, ELEKTR.	346.01
	346.04.02
O	
O-RING-DICHTUNG	138
	138B
OELEINFUELLSTUTZEN	30.02
	31A
OELLEITUNGEN (KRAFTUEBERTRAGUNG)	134
OELMESSSTAB	29
	29.01
	29.02
OELSCHNELLWECHSELANSCHLUSS	36A
OELWANNE	28
	28.01
P	
PANZERWANNE	165
	166
PENDELGESTELL-AUFHAENGUNG	190
PLANETENGEHAEUSE UND TEILE	120
	121.01
PLANETENSATZ	122
PLANIERSCHILDHUBZYLINDER	229A
PLEUELSTANGE UND KOLBEN	10
	10A
PLUS-DIODEN-EINBAUSATZ	109
PRUEFSCHALTER (ELEKTRON. UEBERWACHUNGSSYSTEM)	335P.02
PUMPE	66
	66C.02
PUMPENANSCHLUSS	142
PUMPENANTRIEBSJOCH	143
	143A
PUMPENLEITUNGEN	217E

Bezeichnung	Seite
Q	
QUERSTABILISATOR	262B
QUERTRAVERSE	180.06
R	
RAHMEN UND GEHAEUSE	159
	159B
REGELKLEMME - DREHSTROMLICHTMASCHINE	106
REGLER	72
	73.03
REGLER - ANSCHLUSSKLEMMENSATZ	107
REGLER U. GASREDUZIERGESTAENGE	64
REGLER UND KRAFTSTOFFPUMPENANTRIEB	63
	63A
REGLER- UND GASREDUZIERGESTAENGE	64
REGLER-ANSCHLUSSPLATTE	74
	74B
REGLER-SERVOKOLBEN	75
REGLER-STELLMOTOR	346.06
REGLERANSCHLUSSPLATTE	74B
REGLERGEHAEUSEDECKEL	63
REGLERSTEUERUNG	65.01
RIEMENSCHEIBE	8B
RIEMENSCHEIBEN-EINBAUSATZ	333
RIEMENSPANNER	17
	17.01
ROLLENFUEHRUNG	296
ROLLENTURM	295
RUECHFAHRWARNEINRICHTUNG	90Z.07
	90Z.12
	90Z.17
	90Z.22
RUECKFAHRWARNEINRICHTUNG	90Z.28
RUECKFAHRWARNHORNSCHALTER	133G
RUECKSPIEGEL	298
	310.01
S	
S-SCHILD	248C
SANDSTRAHLSCHUTZGITTER	169B.09
SAUGLUEFTER	42B.01
SCHALLDAEMPFER	58.01
	58.02
SCHALLDAEMPFUNG	337A
SCHALT- UND DRUCKSTEUERUNG	131
SCHALTER	100C
	346.03
	346D
SCHALTVENTIL	293
SCHEIBENWASCHANLAGE	306
	307A
	307C
SCHEIBENWISCHER	308
	309A

INHALTSVERZEICHNIS

Bezeichnung	Seite
	309D
	309L
	312D
	313
	313.01
	313.02
	313A
	313B
	313C
	313E
SCHEIBENWISCHER-/-WASCHERSCHALTER	309L
SCHEIBENWISCHERBLATT	309B
	309F
	309J
	309L
	309M
SCHEIBENWISCHERWELLE UND GESTAENGE ..	314
SCHEINWERFER	114
SCHILD	251A.04
	252
SCHILD-HUBZYLINDER	229A
SCHILDSTREBE	261
	262
	262A
	262C
SCHLUESSEL	29.04
	30.01
	37
	85C
	100
	198
	337B.01
SCHMIERFILTER	36
	36A
SCHMIERNIPPEL	180.06
	230.01
	237.01
	262.01
	262B
	262D
	271E
	272C
	295
SCHMIERPUMPE	33
SCHMIERPUMPEN-HALTETEILE	32
SCHNELLTANKANSCHLUSS	83
	84
SCHUBARM - STABILISETOR	260
	260A
SCHUBARM, LINKS	266
SCHUBARM, RECHTS	265
SCHUTZABDECKEN	29.03
	30
	198
SCHUTZABDECKUNG	337B.02
SCHUTZBLECHE	170
	172.04
SCHUTZGITTER	315

Bezeichnung	Seite
SCHUTZVERKLEIDUNG	337
	337B
	337B.01
SCHWENKSCHILD	248
	249
	250A.01
	250A.02
SCHWINGSITZ	317
	317.02
SCHWINGSITZUEBERZUG	320
	320A
SCHWUNGSCHEIBE	23
	24
SCHWUNGSCHEIBENGEHAEUSE	25
	25A
SCHWUNGSCHEIBENGEHAEUSEDECKEL	24
SEALED-BEAM-SCHEINWERFER	114
	114.01
SEILWINDE - TEILLISTE	274
	274.01
SEILWINDENAUFHAENGUNG	282
	282.01
SEILWINDENGEHAEUSE UND DECKEL	288
SEITENANTRIEB	146
	148
SICHERHEITSGURT	316A
	316B
SICHERUNG (10 A)	90Z.33
SICHERUNG (15 A)	90Z.33
SICHERUNGSHALTERDECKEL	90Z.33
SITZUEBERZUG	320
	320A
SPIRALEN-EINBAUSATZ	333
STABILISATORGELENK	262B
	263
STARRSCHILD	248
	248B
	250B
	251A
	251A.02
	251A.03
	251B
STARTHILFESCHALTER	90Z.33
STARTSCHALTER	90Z.33
	100A
STAUBAUSWERFER	62
	62.01
STAUBDECKEL	84
STAUBDECKEL-EINBAUSATZ	332A.02
	333
STAUBDICHTUNGSSATZ	332A.02
	333
STEINSCHUTZ	248D
	248E
STEUERUNG, ELEKTRON.	100C
	341R.01
	341R.05
	341R.08

INHALTSVERZEICHNIS

Bezeichnung	Seite
	345M.05
	345M.08
STEUERVENTIL	46
	156
	158A
	158G
	198B
	199
	200A
	201
	203J.01
	236
STIRNRAD	20
STIRNRADGEHAEUSE	20
STIRNRADGEHAEUSEDECKEL	21
	21A
	21B
STOESSELLAUFFLAECHE	6A.01
STOPFEN MIT O-RING	289

T

TELESKOPRAHMEN	188
TELLERRAD- UND VORGELEGERADSATZ	126
TEMPERATURGEBER (HYDRAULIKOELTEMPERATUR)	335P.03
TEMPERATURSCHALTER (NEBENSTROMFILTER)	335P.03
THERMOSTATSCHALTER	322
	323.02
	323.04
TRENNSCHALTER	90Z.31
	100
TROCKENLOESCHER (VENTIL UND ZYLINDER)	346.05
	346D
TURBOLADER	52
	52.01
	52A
TURBOLADER - EINTEILIGER ROTOR	53
	53.01
	218.02
	219
TURBOLADER - OELLEITUNGEN	51A
TURBOLADER-KUEHLWASSERLEITUNGEN	47.02
TURBOLADEROELLEITUNGEN	51
	51A

U

U-PLANIERSCHILDEINRICHTUNG	250
	250.01
	250A.01
	253A.01
U-SCHILD	248C
	253
	253.02
	253A
	253B
UEBERDRUCKVENTIL	137
	218.01
UEBERROLLSCHUTZ	297
UEBERSTROEMSCHALTER	341R.07
	345M.07
UMBAUSATZ	41E.02
UMKEHRLUEFTER	42B
UMLAUFKUEHLWASSERHEIZUNG	37
UMLAUFKUEHLWASSERHEIZUNGSELEMENT	37
UNTERBRECHER (10 A)	90Z.33
UNTERBRECHER (15 A)	90Z.33
UNTERBRECHER (60 A)	90Z.33

V

VANDALISMUSSCHUTZSCHLOSS	337B.02
VENTIL	184D
	184E
	184E.01
	184F
	184G
	184G.01
	197D
	325D.02
	348
VENTIL (NEIGEEINRICHTUNG)	213
VENTIL UND ZYLINDER	346.02
	346.03
	346.04
	346.04.01
	347
	348
VENTILABSTELLUNG	348
VENTILAUFHAENGUNG	198
VENTILDECKEL	16
	16A
	16B
VENTILKEGEL	79F
VENTILKIPPHEBEL	15.01
VENTILSATZ	130
	200
	203J.01
	204
	205
	206
	209
	209.01
	210
	210.01
	218.01
	246
	292
	292A
VENTILSITZEINSATZ (AUSLASS)	14C
VENTILSITZEINSATZ (EINLASS)	14C
VENTILSTEUERUNG	15

INHALTSVERZEICHNIS

Bezeichnung	Seite
VERKLEIDUNG	175.03
	175.05
VERSANDDECKEL	296
VERSCHLEISSPLATTEN	253A.01
	253A.02
VERSCHLUSSSTOPFENSATZ	111C.09
VORFILTERELEMENT	58
VORHAENGESCHLOSS	29.04
	30.01
	37
	85C
	198
	337B.01
VORSCHMIERVENTIL	129
	129.01
VORSTEUERVENTIL	207
	208
	212
	213

W

Bezeichnung	Seite
WANDLEROELTEMPERATURANZEIGE	335P.02
WARNAUFKLEBER	112E
WARNHORN (HOECHSTE LAUTSTAERKE)	90Z.34
WARNHUPE (LEISE)	90Z.34
WARNSCHALTER	235E
WARTUNGSELEMENT	41F
	45.01
WASSERTEMPERATURREGLER	45.01
WASSERVENTIL	327
	327B.01
WINDEN-OELLEITUNGEN	290
	291
WINDEN-UMBAUSATZ	275
WINDENEINBAUSATZ	274.01
WINDENSTEUERUNG	284
	285.01
	286
WISCHERARM	312D
WISCHERGEBER	313C

Z

Bezeichnung	Seite
ZAHNRADPUMPE	139
	140
	141
	282
	283
ZAHNRADVORGELEGE	26
ZAHNSTANGENANSCHLAG	70B
	70B.01
	70B.02
	70B.03
	71
ZUGHAKEN	167
	167.01
ZUGWINDE	274
	275
ZUSATZANTRIEB	287
ZYLINDERAUFHAENGUNG	237
ZYLINDERKOPF	13
	13A.02
	13A.04
	13A.06
	14
	14A
	14B
	14C
	14D
ZYLINDERVENTIL (LINKS)	245
ZYLINDERVENTIL (RECHTS)	244

ENGINE ARRANGEMENT

			PAGE
		CENTRAL STRUCTURE	
1	4N6866	CYLINDER BLOCK COVER GP	6A.02
		-OR-	
1	4N1960	CYLINDER BLOCK COVER GP	6A
1	7N9681	CYLINDER BLOCK GP	6
1	7N3410	CRANKSHAFT GP	9
1	4N0963	CAMSHAFT GP	11
8	7N3518	CONNECTING ROD & PISTON GP	10
		-OR-	
8	2W9054	CONNECTING ROD & PISTON GP	10A
		UPPER STRUCTURE	
1	4N4299	VALVE MECHANISM COVER GP	16
		-OR-	
1	2W1815	VALVE MECHANISM COVER GP	16A
		-OR-	
1	4W6827	VALVE MECHANISM COVER GP	16B
1	8N8585	LIFTING GP	12
1	4N1816	CYLINDER HEAD GP	13
		-OR-	
1	4W7005	CYLINDER HEAD GP	13A.02
1	4N4298	VALVE MECHANISM GP	15
		FRONT STRUCTURE	
1	1W0998	PULLEY & DAMPER GP	16
		-OR-	
1	4W5973	DAMPER GP	15.02
1	6N4914	FRONT HOUSING COVER GP	21
1	7N1346	TRUNNION GP	19.02
1	6N5885	SUPPORT GP	22
1	4N5226	FRONT HOUSING GP	20
1	7N2840	FRONT TIMING GEAR GP	20

107523 P

ENGINE ARRANGEMENT

			PAGE
		REAR STRUCTURE	
1	1W4050	FLYWHEEL HOUSING GP	25
1	7N9572	FLYWHEEL GP	23
1	4N6876	FLYWHEEL HOUSING COVER GP	24
1	7N9574	REAR GEAR GP	26
		LOWER STRUCTURE	
1	6N5787	OIL PAN GP	28
		LUBRICATION SYSTEM	
1	1W6001	OIL PAN GP	33
1	4N2481	OIL PUMP FASTENER GP	32
1	7N6700	OIL MOUNTING LINES GP	34
1	8N0615	OIL FILTER GP	36
1	7N7021	OIL FILLER GP	30.02
		-OR-	
1	2W6537	OIL FILLER GP	31A
2	2N8220	BREATHER GP	31
1	7N7020	OIL LEVEL GAUGE GP	29
		COOLING SYSTEM	
1	4N0729	OIL COOLER GP	48
1	7N7022	WATER LINES GP	44
1	8N0616	WATER LINES GP-TURBOCHARGER	47.02
		-OR-	
1	2W9269	WATER LINES GP-TURBOCHARGER	48A
		INTAKE AND EXHAUST SYSTEM	
1	7N9578	EXHAUST MANIFOLD GP	59
1	7N7027	TURBOCHARGER GP	52
		-OR-	
1	7W0831	TURBOCHARGER GP	52A
1	7N9579	AIR LINES GP	54
1	7N7029	TURBOCHARGER OIL LINES GP	51

107523 P

ENGINE ARRANGEMENT

			PAGE
		FUEL SYSTEM AND GOVERNOR	
1	6N2056	GOVERNOR, FUEL INJECTION & FUEL TRANSFER PUMP GROUP	66
		-OR-	
1	4W7057	GOVERNOR, FUEL INJECTION & FUEL TRANSFER PUMP GROUP	66C.02
1	6N6209	FUEL RATIO CONTROL GROUP	81
1	7N7024	FUEL FILTER LINES GROUP	77
1	1N4310	FUEL LINES FASTENER GROUP	75
1	4N2088	FUEL INJECTION LINES GROUP	76
		-OR-	
1	4W6310	FUEL INJECTION LINES GROUP	76A
1	6N3195	GOVERNOR AND FUEL PUMP DRIVE GROUP	63
		-OR-	
1	6N8171	GOVERNOR AND FUEL PUMP DRIVE GROUP	63A
1	7N4686	FUEL SYSTEM COVER GROUP	63
		-OR-	
1	2W2094	TACHOMETER DRIVE GROUP	63A
1	1W1850	DRAIN LINES GROUP	83

NOTE: REFER TO INDEX FOR PAGE LOCATION OF GASKET KITS

107523 P

ENGINE ARRANGEMENT

			PAGE
		CENTRAL STRUCTURE	
1	4N1960	CYLINDER BLOCK COVER GP	6A
1	1W5082	CYLINDER BLOCK GP	6A.01
1	1W5010	CRANKSHAFT GP	9.02
1	4N0963	CAMSHAFT GP	11
8	2W9054	CONNECTING ROD & PISTON GP	10A
1	4N0729	COOLER GP-ENGINE	48
		S/N 48W23275-23924	
1	7W2206	COOLER GP-ENGINE	48
		S/N 48W23925-UP	
		UPPER STRUCTURE	
1	4W6827	VALVE MECHANISM COVER GP	16B
1	8N8585	LIFTING GP	12
1	4W7005	CYLINDER HEAD GP	13A.02
1	4N4298	VALVE MECHANISM GP	15
		FRONT STRUCTURE	
1	4W5973	DAMPER GP	15.02
1	7N1346	TRUNNION GP	19.02
1	6N5885	SUPPORT GP	22
1	4N5226	FRONT HOUSING GP	20
1	7N2840	FRONT TIMING GEAR GP	20
1	7W0971	COVER GP-FRONT HOUSING	21A
		S/N 48W19973-20450	
1	7W6810	COVER GP-FRONT STRUCTURE	21B
		S/N 48W20451-UP	
		REAR STRUCTURE	
1	1W1608	FLYWHEEL HOUSING GP	25A
1	2W8025	FLYWHEEL GP	24
1	4N6876	FLYWHEEL HOUSING COVER GP	24
1	7N9574	REAR GEAR GP	26
		LOWER STRUCTURE	
1	6N5787	PAN GP-OIL	28
		S/N 48W19973-20266	
1	7W6381	PAN GP-OIL	28.01
		S/N 48W20267-UP	

531298 P

ENGINE ARRANGEMENT

			PAGE
		LUBRICATION SYSTEM	
1	1W6001	OIL PUMP GP	33
1	4N2481	OIL PUMP FASTENER GP	32
1	7N6700	OIL MOUNTING LINES GP	34
1	2W6537	OIL FILLER GP	31A
2	2N8220	BREATHER GP	31
1	7N7020	GAUGE GP-OIL LEVEL	29
		S/N 48W19973-20266	
1	7W6491	GAUGE GP-OIL LEVEL	29.01
		S/N 48W20267-23274	
1	7C5022	GAUGE GP-OIL LEVEL	29.02
		S/N 48W23275-UP	
1	4W8724	OIL FILTER GP	36A
		COOLING SYSTEM	
1	4N0729	OIL COOLER GP	48
1	7N7022	WATER LINES GP	44
1	2W9269	WATER LINES GP-TURBOCHARGER	48A
		INTAKE AND EXHAUST SYSTEM	
1	7N9578	EXHAUST MANIFOLD GP	59
1	7W0831	TURBOCHARGER GP	52A
1	7N9579	AIR LINES GP	54
1	4W7504	TURBOCHARGER OIL LINES GP	51A
		FUEL SYSTEM AND GOVERNOR	
1	4W7057	GOVERNOR,FUEL INJECTION & TRANSFER PUMP GP	66C.02
1	6N6209	FUEL RATIO CONTROL GP	81
1	4W4806	FUEL FILTER LINES GP	77C
1	4W6310	FUEL INJECTION LINES GP	76A
		ENGINE S/N 48W19973-33207	
1	7E6847	FUEL INJECTION LINES GP	76B.01
		ENGINE S/N 48W33208-UP	
1	1N4310	FUEL INJECTION LINES FASTENER GP	75
1	6N8171	GOVERNOR & FUEL PUMP DRIVE GP	63A
1	2W2094	TACHOMETER DRIVE GP	63A
1	7N8243	DRAIN LINES GP	83A

NOTE: REFER TO INDEX FOR PAGE LOCATION OF GASKET KIT

531298 P

MEMORANDA

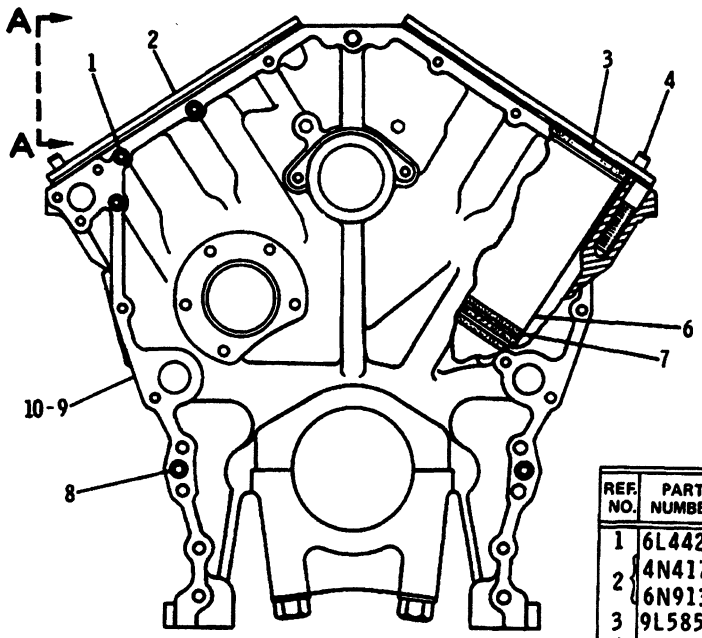

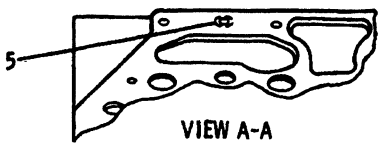

REF. NO.	PART NUMBER	DESCRIPTION	QTY
1	6L4428	STUD	3
2	4N4178	PLATE	2
	6N9133	GASKET	2
3	9L5854	BAND	8
4	4N1650	DOWEL	4
5	8M8283	SEAL	2
6	7N943	LINER	8
7	2N6210	SEAL	24
8	4N683	DOWEL	4
9	7N9683	BLOCK ASSEM. (Separate Illustration)	1
10	9F2247	PLUG	1

219306

219306 P

1201 **7N9681 CYLINDER BLOCK GP**

Engine S/N 48W13003-13009,13011-13018,13020-13026,13028-13035,13037-13044

BASIC ENGINE

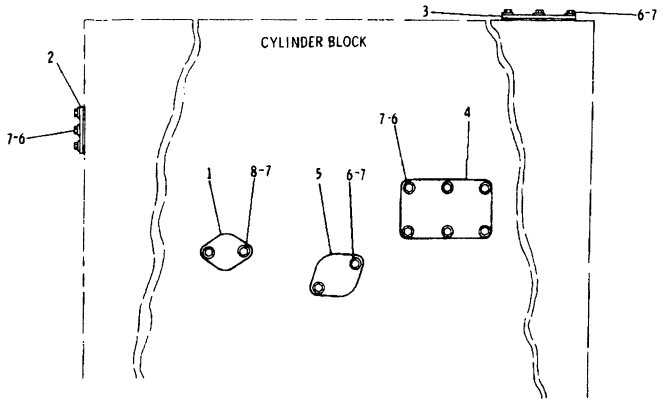

NOTE	REF NO	PART NUMBER	QTY	PART NAME
	1	2P2772	1	COVER
B		4N0933	1	GASKET
	2	4N1683	1	COVER
		4N1684	1	GASKET
	3	4N1779	1	COVER
		4N4307	1	GASKET
	4	4N1682	1	COVER
		4N0864	1	GASKET
B	5	4N0794	1	COVER
		4N0790	1	GASKET
CB	6	0S1594	14	BOLT
B	7	5M2894	16	WASHER
CB	8	0L1351	2	BOLT

B-USE AS REQUIRED
C-CHANGE FROM PREVIOUS TYPE

B-210183 EP

1201 **4N1960 COVER GP-CYLINDER BLOCK**
Engine S/N 48W16805-Up

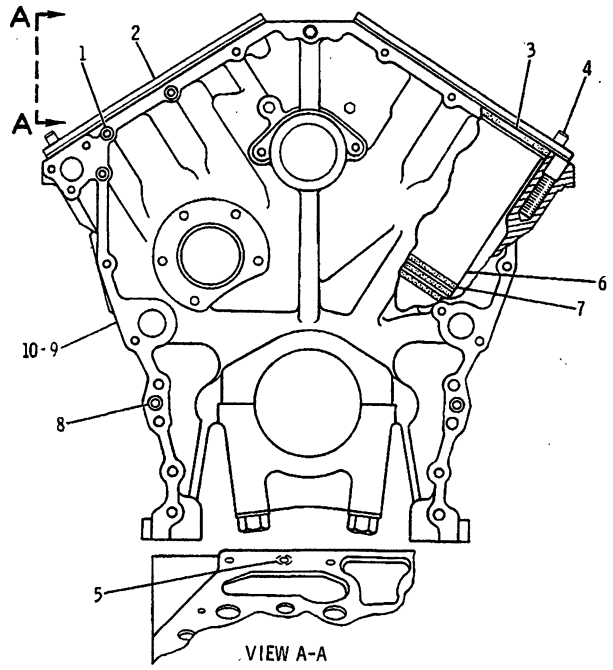

NOTE	REF NO	PART NUMBER	QTY	PART NAME
	1	6L4428	3	STUD-TAPERLOCK
	2	4N4178	2	PLATE-BLOCK
		6N9133	2	GASKET-PLATE
	3	9L5854	8	BAND-FILLER
	4	4N1650	4	DOWEL
	5	8M8283	2	SEAL-O-RING
	6	7N0943	8	LINER-CYLINDER
A		2W3815	8	INSERT-SEAT
	7	2N6210	24	SEAL-O-RING
	8	4N0683	4	DOWEL
CY	9	7N0851	1	CYLINDER BLOCK AS
	10	9F2247	1	PLUG

A-NOT PART OF THIS GROUP
C-CHANGE FROM PREVIOUS TYPE
Y-SEPARATE ILLUSTRATION

B-303824 EP

1201 **7N9681 CYLINDER BLOCK GP**
Engine S/N 48W13002,13010,13019,13027,13036,13045-19972
7N0851-Page 7

BASIC ENGINE

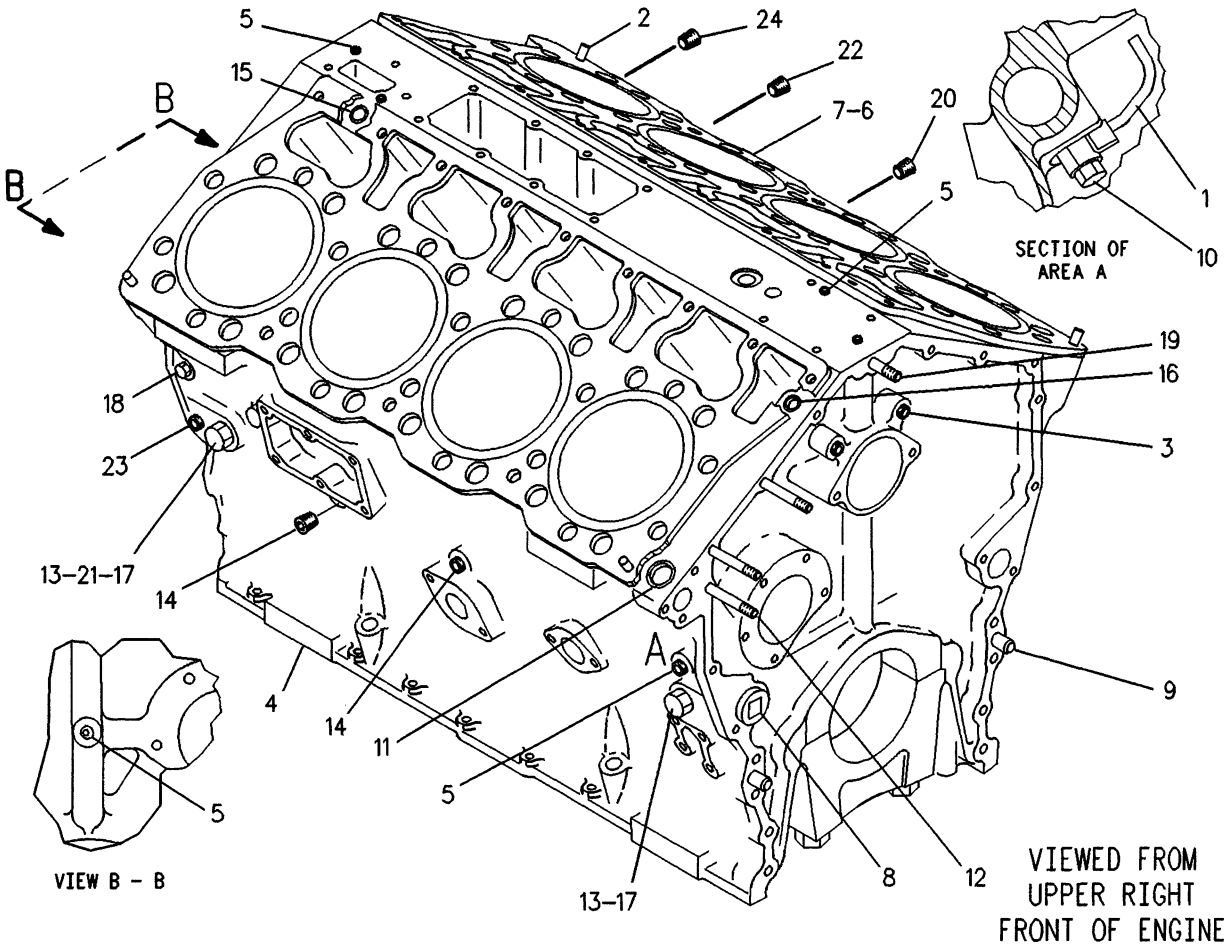

NOTE	REF NO	PART NUMBER	QTY	PART NAME	NOTE	REF NO	PART NUMBER	QTY	PART NAME
	1	7W4990	8	TUBE AS-OIL JET	CJ	22	7W6534	1	PLUG-PIPE
	2	4N1650	4	DOWEL	BC	23	7W6534	1	PLUG-PIPE
C	3	8T6763	4	PLUG					
Y	4	1W5081	1	CYLINDER BLOCK AS	B	24	7W6534	1	PLUG-PIPE
C	5	8T6757	7	PLUG-PIPE	LAF		4W6061		SLEEVE-BOTTOM LINER
	6	6N9133	2	GASKET-PLATE	NAF		4W4588		SLEEVE-LIFTER BORE
C	7	6I4613	2	PLATE-SPACER	NAF		9Y3368		INSERT-SEAT
	8	4N0693	3	PLUG-TAPERLOCK					.834MM(.03IN)THK
				38.10MM(1.50IN)OD	NAF		2W3815		INSERT-SEAT
				-OR-					1.59MM(.06IN)THK
		7C9614	3	PLUG-TAPERLOCK	NAF		5N0093		INSERT-SEAT
				41.28MM(1.62IN)OD					2.71MM(.11IN)THK
	9	4N0683	4	DOWEL	NAF		1010523		INSERT-LINER SEAT
	10	7E6479	8	BOLT-OIL JET					5.21MM(.20IN)THK
	11	3B0645	1	PLUG-CUP					
	12	6L4428	3	STUD-TAPERLOCK					J-MOUNTED ON LH SIDE
	13	2M9780	2	SEAL-O-RING (19.18MM ID)					OF CYLINDER BLOCK
C	14	7W6534	2	PLUG-PIPE					
	15	8M8283	2	SEAL-O-RING					L-FOR SALVAGE OF BOTTOM
	16	3S6605	2	PLUG-CUP					LINER O-RING BORE. QTY
	17	9S4190	2	PLUG-O-RING					TO BE DETERMINED BY USER
BC	18	8T6764	1	PLUG-PIPE					
	19	7C7407	1	STUD					N-FOR SALVAGE OF DAMAGED
BJC	20	7W6534	1	PLUG-PIPE					LIFTER BORES IN CYL
BJ	21	9S4190	2	PLUG-O-RING					BLOCK. QTY TO BE
BJ		2M9780	2	SEAL-O-RING (19.18MM ID)					DETERMINED BY USER.

A-NOT PART OF THIS GROUP
B-USE AS REQUIRED
C-CHANGE FROM PREVIOUS TYPE
F-NOT SHOWN
Y-SEPARATE ILLUSTRATION

F-570220 EP

1201

1W5082 CYLINDER BLOCK GP

Engine S/N 48W19973-Up

1W5081-Page 7A

4W6061 Sleeve Is Available

Provides A Sleeve For The Bottom Liner O-Ring Bore

BASIC ENGINE

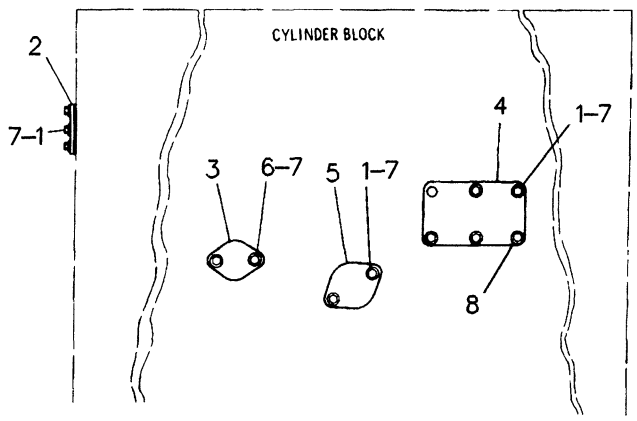

NOTE	REF NO	PART NUMBER	QTY	PART NAME
C	1	0S1594	9	BOLT
	2	4N1683	1	COVER
		4N1684	1	GASKET
B	3	2P2772	1	COVER
B		4N0933	1	GASKET
	4	4N1682	1	COVER
		4N0864	1	GASKET
B	5	4N0794	1	COVER
B		4N0790	1	GASKET
C	6	0L1351	2	BOLT
	7	5M2894	11	WASHER
B	8	0S1594	1	BOLT
B		5M2894	1	WASHER

B-USE AS REQUIRED
C-CHANGE FROM PREVIOUS TYPE

R-545098 EP

1201 **4N6866 COVER GP-CYLINDER BLOCK**
Engine S/N 48W13002-16804

MEMORANDA

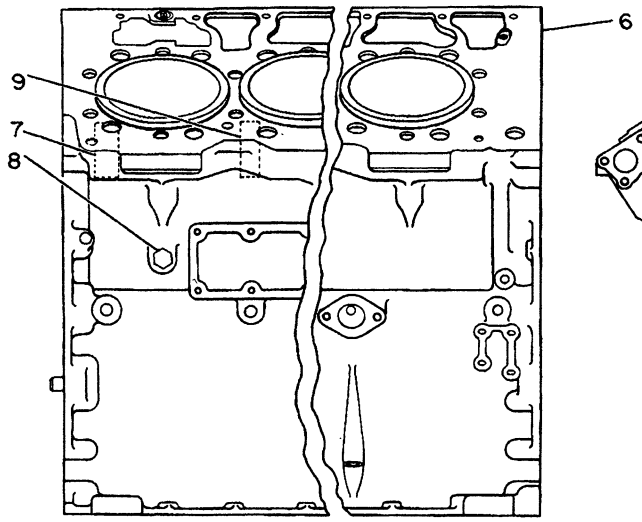

SIDE VIEW

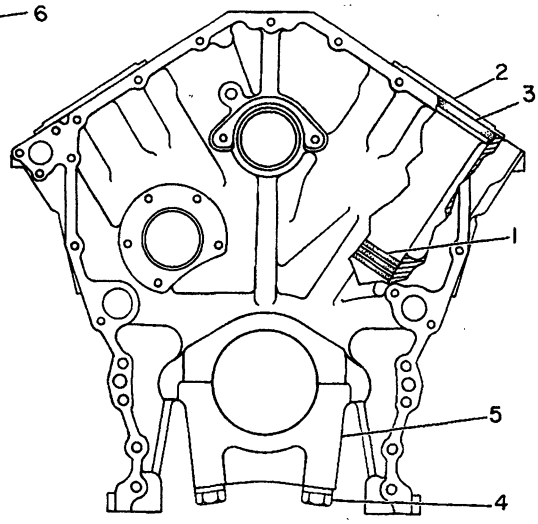

END VIEW

NOTE	REF NO	PART NUMBER	QTY	PART NAME
	1	2N6210	24	SEAL-O-RING
	2	7N0943	8	LINER-CYLINDER
	3	9L5854	8	BAND-FILLER
	4	3P1323	10	BOLT-BEARING CAP
		9H1031	10	WASHER-HARD
	5	4N0614	5	CAP-CRANKSHAFT BEARING
	6	7N0853	1	CYLINDER BLOCK GP
	7	4N6658	2	BEARING-SLEEVE
	8	3J5389	2	PLUG
	9	4N0685	3	BEARING-SLEEVE

B-234684 EP

1201 **7N0851 CYLINDER BLOCK AS**

Engine S/N 48W13002,13010,13019,13027,13036,13045-19972
Part Of 7N9681 Cylinder Block
For Field Replacement Order 2W4640-Page 8A Or 7N0853-Page 8

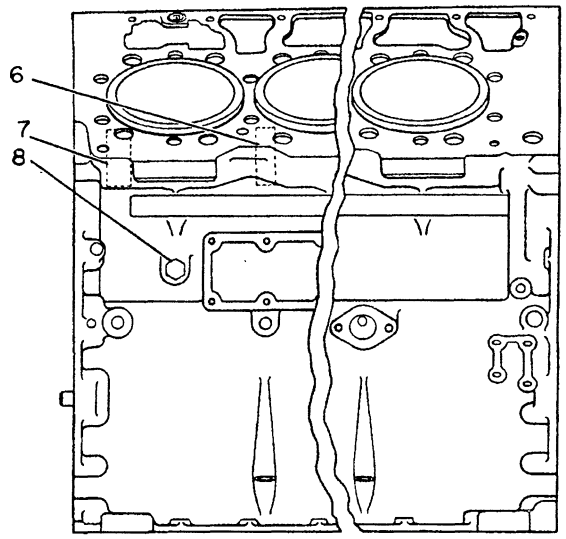

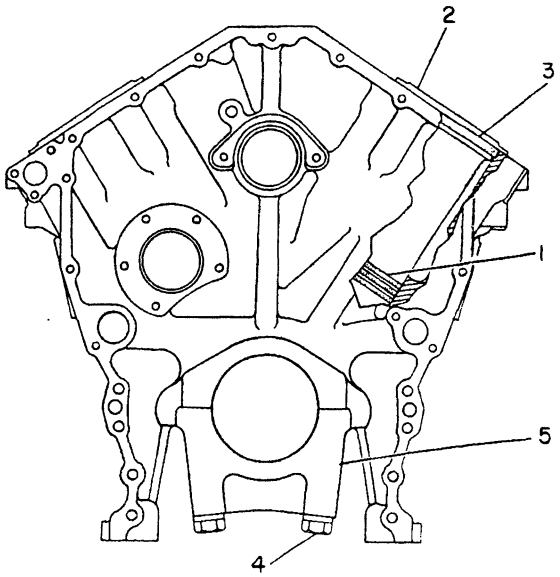

NOTE	REF NO	PART NUMBER	QTY	PART NAME
	1	1102220	24	SEAL-O-RING
	2	2W6000	8	LINER-CYLINDER
	3	9L5854	8	BAND-FILLER
	4	3P1323	10	BOLT-BEARING CAP
		9H1031	10	WASHER-HARD
	5	4N5858	5	CAP
	6	4N0685	3	BEARING-SLEEVE
	7	4N6658	2	BEARING-SLEEVE
	8	7W6492	2	PLUG-PIPE

B-600783 CP

1201

1W5081 CYLINDER BLOCK AS
Engine S/N 48W19973-Up
Part Of 1W5082 Cylinder Block
For Field Replacement Order 1W5084-Page 7B

BASIC ENGINE

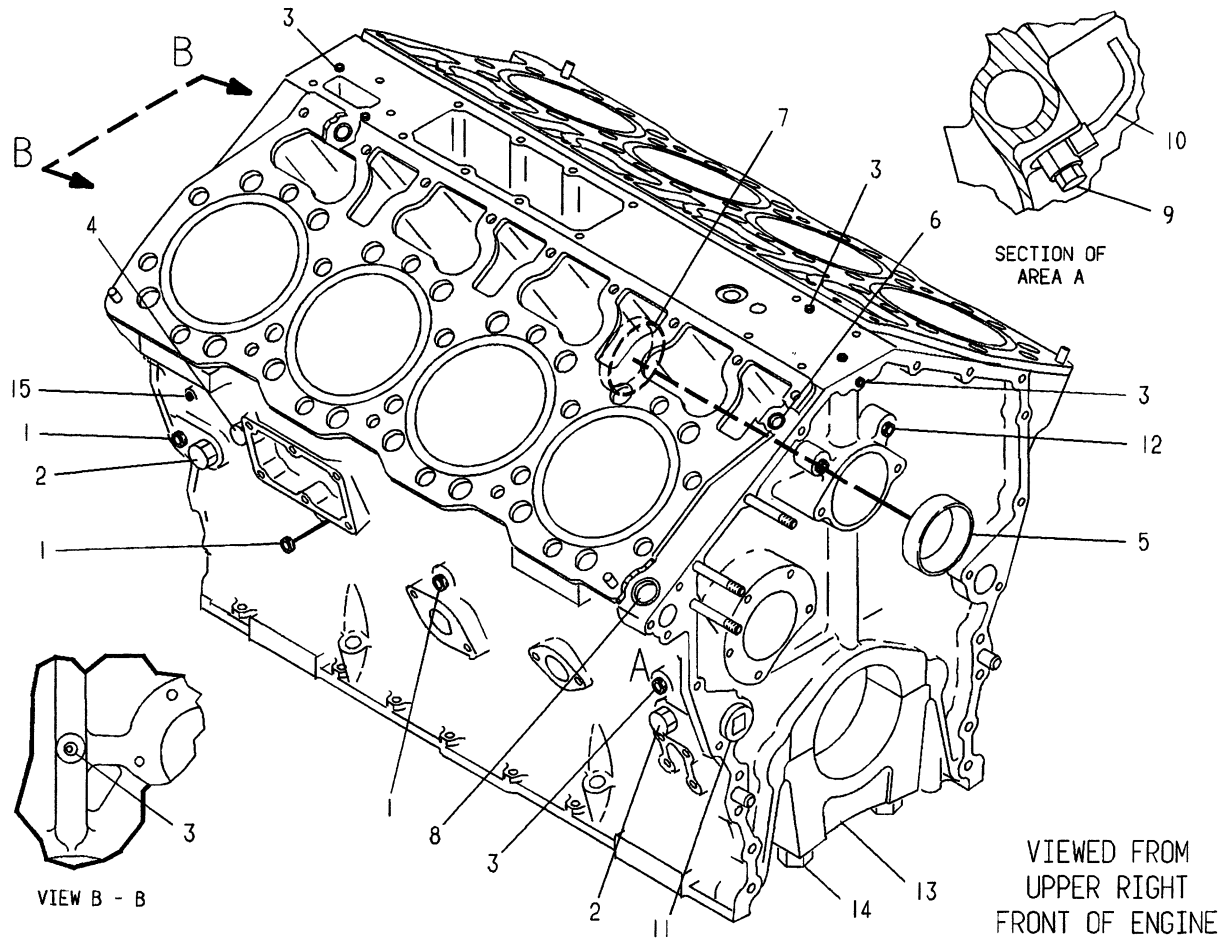

NOTE	REF NO	PART NUMBER	QTY	PART NAME
	1	7M7410	6	PLUG 9.53MM(.375IN)PIPE THD
	2	9S4190	4	PLUG-O-RING 22.23MM(.875IN)OD
		2M9780	4	SEAL-O-RING
C	3	9F2247	7	PLUG 3.18MM(.125IN)PIPE THD
	4	3J5389	2	PLUG 12.70MM(.50IN)PIPE THD
	5	4N6658	2	BEARING-SLEEVE
	6	3S6605	2	PLUG-CUP 8.05MM(.31IN)OD
	7	4N0685	3	BEARING-SLEEVE
	8	3B0645	1	PLUG-CUP 32.08MM(1.26IN)OD
C	9	7E6479	8	BOLT-OIL JET
C	10	7W4990	8	TUBE AS-OIL JET
	11	4N0693	3	PLUG-TAPERLOCK 38.10MM(1.50IN)OD -OR-
C		7C9614	3	PLUG-TAPERLOCK 41.28MM(1.62IN)OD
	12	7H3171	4	PLUG-PIPE 6.5MM(.256IN)PIPE THD
	13	4N5858	5	CAP
	14	3P1323	10	BOLT-BEARING CAP
		9H1031	10	WASHER-HARD
	15	5M6214	1	PLUG-PIPE

C-CHANGE FROM PREVIOUS TYPE

R-495176 EP

1201 **1W5084 CYLINDER BLOCK GP**

Engine S/N 48W19973-Up

Field Replacement For 1W5081-Page 7A

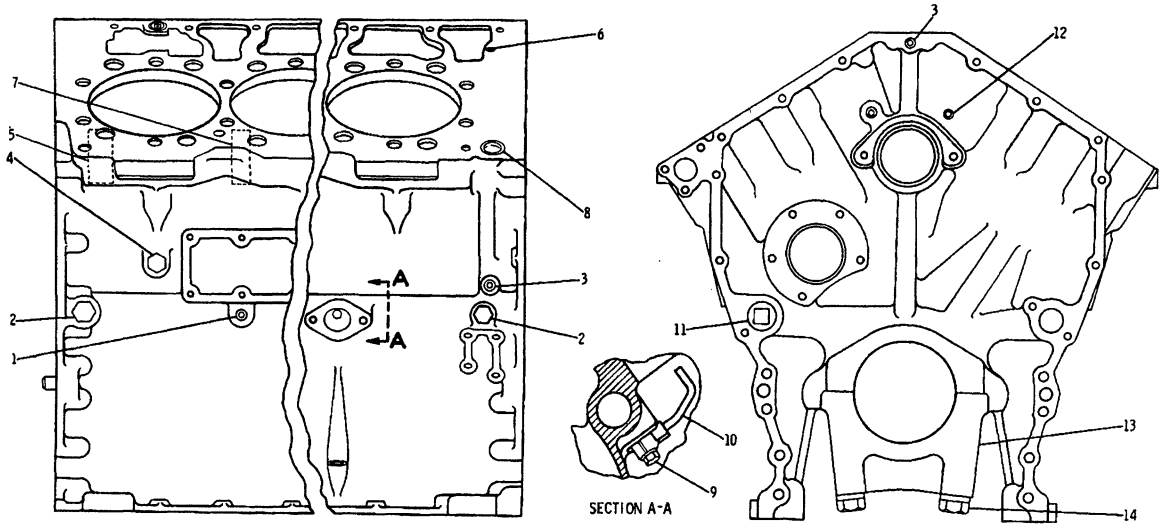

REF. NO.	PART NUMBER	DESCRIPTION	QTY
1	7M7410	PLUG	4
2	9S4190	PLUG	4
	2M9780	SEAL	4
3	9F2247	PLUG	8
4	3J5389	PLUG-----(use as required)------	2
5	4N6658	BEARING	2
6	3S6605	PLUG	2
7	4N685	BEARING	3
8	3B645	PLUG	1
9	4N9916	BOLT	8
10	4N9881	TUBE ASSEM.	8
11	4N693	PLUG	3
12	7H3171	PLUG	4
13	4N5858	CAP	5
14	3P1323	BOLT	10
	9H1031	WASHER	10

234685

B-234685 EP

1201

7N0853 CYLINDER BLOCK GP

Replaced By 2W4640-Page 8A

Engine S/N 48W13002,13010,13019,13027,13036,13045-19972

Field Replacement For 7N0851-Page 7

BASIC ENGINE

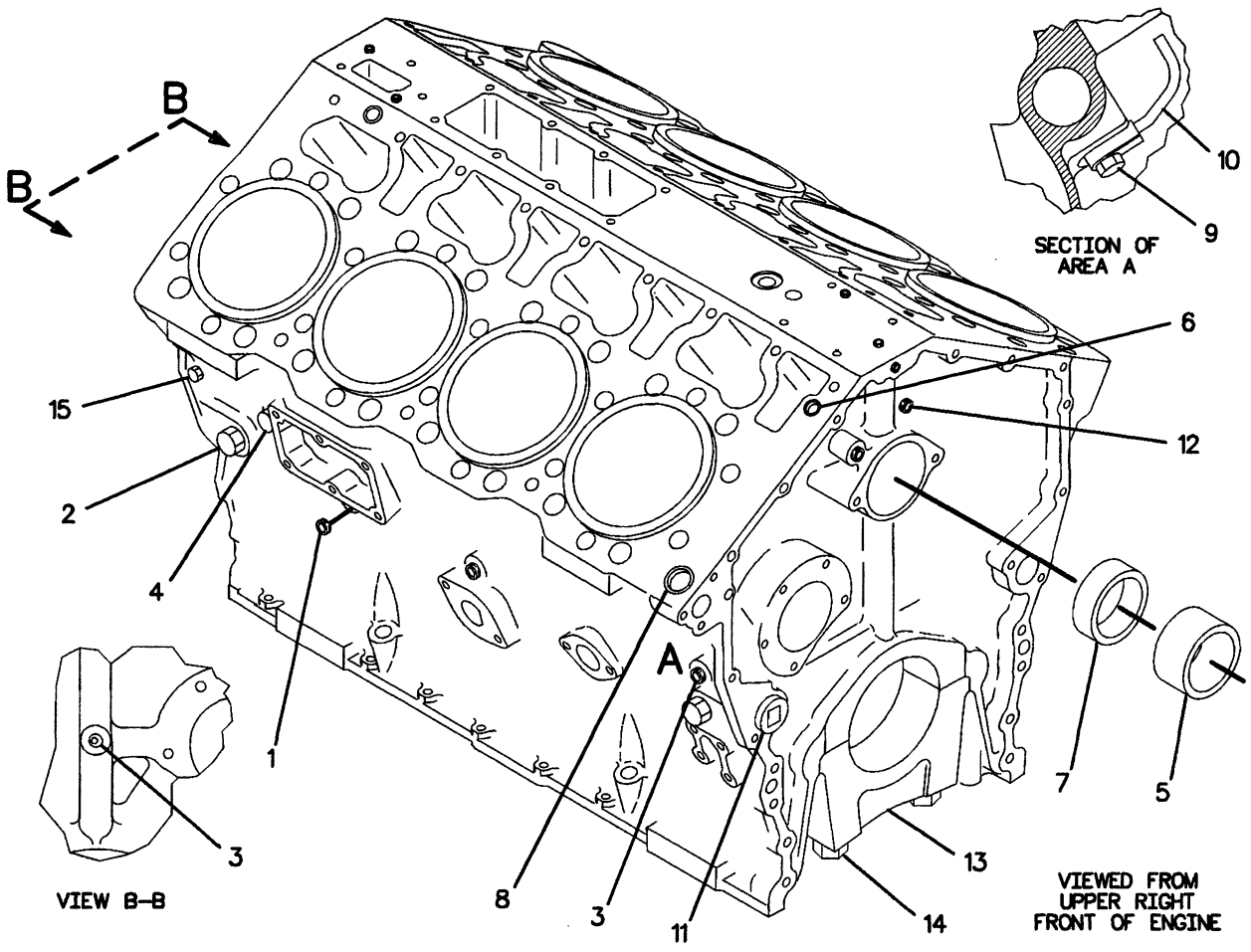

NOTE	REF NO	PART NUMBER	QTY	PART NAME	NOTE	REF NO	PART NUMBER	QTY	PART NAME
	1	7W6534	4	PLUG-PIPE					
	2	9S4190	4	PLUG-O-RING					
		1144427	4	SEAL-O-RING					
	3	8T6757	7	PLUG-PIPE					
B	4	7W6492	2	PLUG-PIPE					
	5	4N6658	2	BEARING-SLEEVE					
	6	3S6605	2	PLUG-CUP					
	7	4N0685	3	BEARING-SLEEVE					
	8	3B0645	1	PLUG-CUP					
	9	7E6479	8	BOLT-OIL JET					
	10	7W4990	8	TUBE AS-OIL JET					
	11	4N0693	3	PLUG-TAPERLOCK 1.5 IN.-12-2A THD.					
				OR					
		7C9614	3	PLUG-TAPERLOCK 1.63 IN.-12-2A THD.					
	12	8T6763	4	PLUG					
	13	4N5858	5	CAP					
	14	3P1323	10	BOLT-BEARING CAP					
		9H1031	10	WASHER-HARD					
	15	8T6764	1	PLUG-PIPE					

B-USE AS REQUIRED

F-629132 CP

1201 **2W4640 CYLINDER BLOCK GP**

Engine S/N 48W13002,13010,13019,13027,13036,13045-19972

Field Replacement For 7N0851-Page 7

BASIC ENGINE

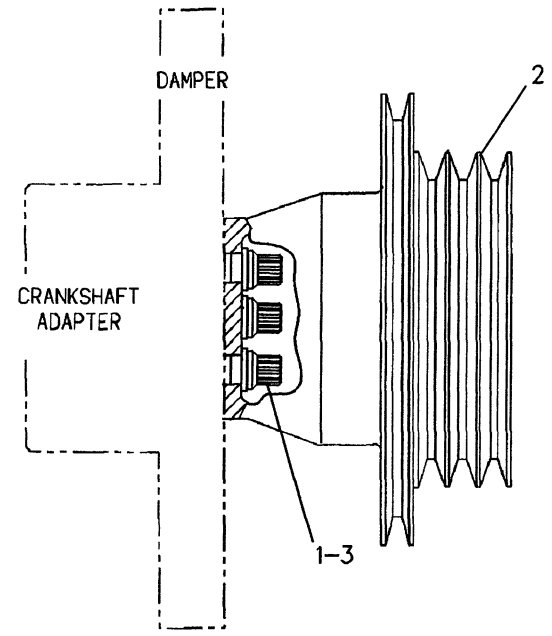

NOTE	REF NO	PART NUMBER	QTY	PART NAME
	1	8S2332	4	BOLT-12 POINT HEAD
	2	4W0839	1	PULLEY-CRANKSHAFT
	3	2S0736	4	WASHER-HARD

R-591491 EP

1205

4W1330 PULLEY GP
Crankshaft
S/N 53Y3308-Up

BASIC ENGINE

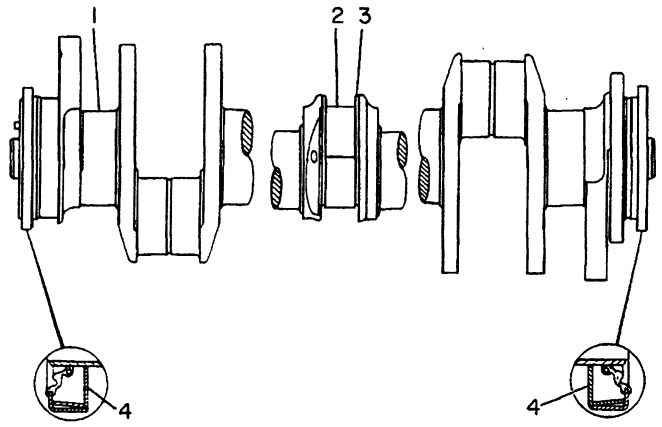

NOTE	REF NO	PART NUMBER	QTY	PART NAME
Y	1	7N3407	1	CRANKSHAFT AS
C	2	8N5421	5	BEARING-MAIN
C	3	1W5252	2	PLATE-THRUST
C	4	7N1999	2	SEAL GP-CRANKSHAFT

C-CHANGE FROM PREVIOUS TYPE
Y-SEPARATE ILLUSTRATION

B-234686 EP

1202 **7N3410 CRANKSHAFT GP**
Engine S/N 48W13002-18465
7N3407-Page 10

CYLINDER BLOCK NOT REBORED
CRANKSHAFT GROUND FOR UNDERSIZE
MAIN BEARING I.D. OF:

5 7N1192 .025IN.
5 7N1194 .050IN.

CYLINDER BLOCK REBORED (.025 IN.)
(FOR BEARING OVERSIZE O.D.)

5 7N1195 0 (STANDARD)
5 7N1193 .025 IN.

CRANKSHAFT BEARING REPLACEMENTS

BASIC ENGINE

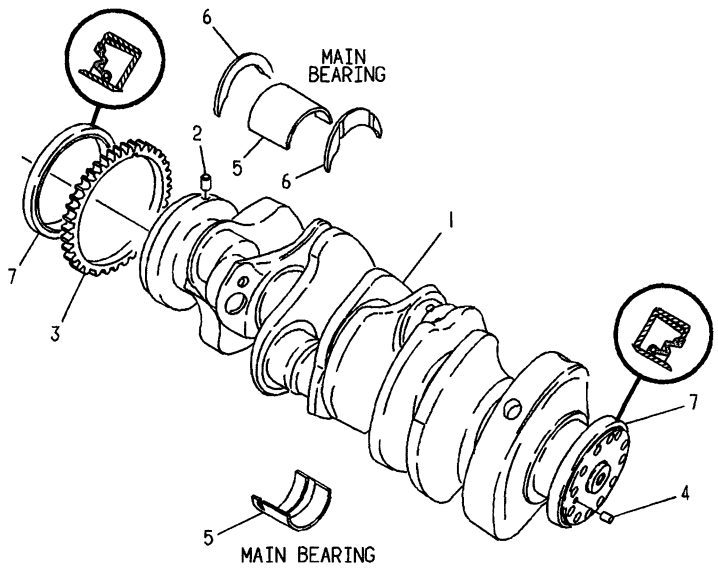

NOTE	REF NO	PART NUMBER	QTY	PART NAME
R	1	1W6209	1	CRANKSHAFT AS
	2	7S5005	1	DOWEL
	3	7N7591	1	GEAR-CRANKSHAFT (80 TEETH)
	4	4N0684	1	DOWEL
	5	4W5492	5	BEARING-MAIN
	6	1W5252	2	PLATE-THRUST
	7	7N1999	2	SEAL GP-CRANKSHAFT

R-REMFG PART MAY BE AVAILABLE

A-326411 EP

1202 **7N3410 CRANKSHAFT GP**
Engine S/N 48W18466-18853

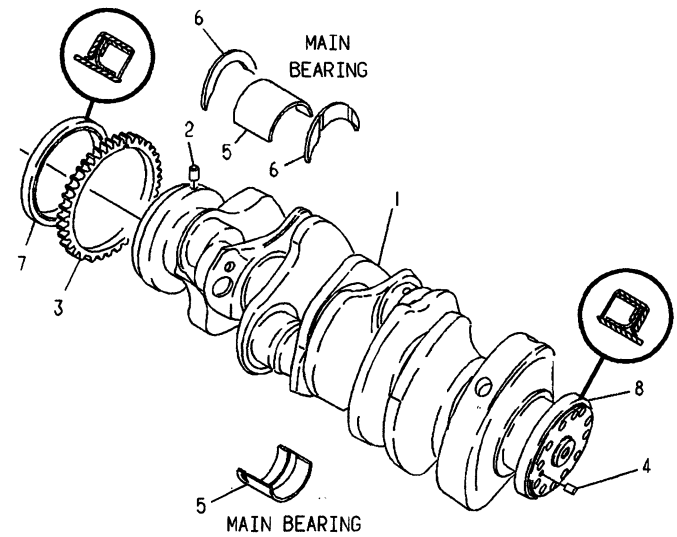

NOTE	REF NO	PART NUMBER	QTY	PART NAME
R	1	1W6209	1	CRANKSHAFT AS
	2	7S5005	1	DOWEL
	3	7N7591	1	GEAR-CRANKSHAFT (80 TEETH)
	4	4N0684	1	DOWEL
	5	4W5492	5	BEARING-MAIN
	6	1W5252	2	PLATE-THRUST
	7	2W1733	1	SEAL GP-CRANKSHAFT
	8	2W1734	1	SEAL GP-CRANKSHAFT

R-REMFG PART MAY BE AVAILABLE

A-326430 EP

1202 **7N3410 CRANKSHAFT GP**
Engine S/N 48W18854-19972

BASIC ENGINE

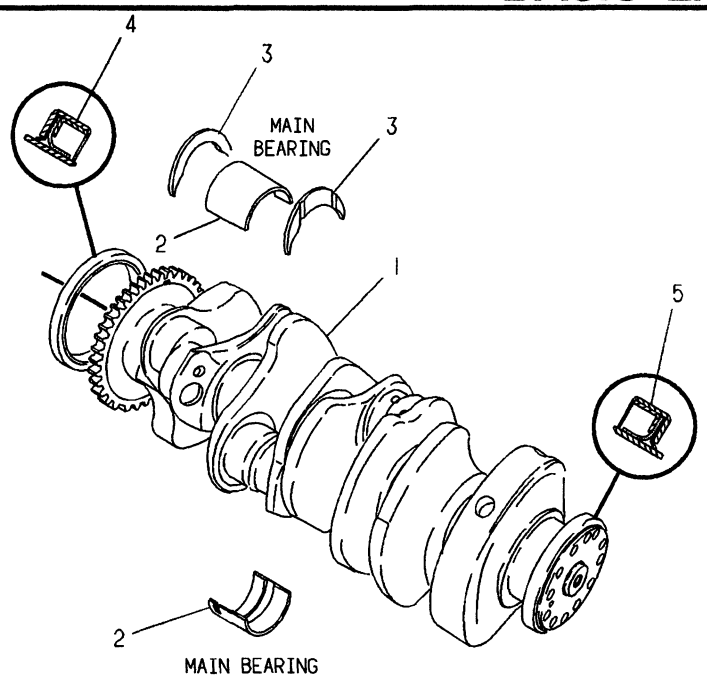

NOTE	REF NO	PART NUMBER	QTY	PART NAME
RY	1	1W5009	1	CRANKSHAFT AS
	2	4W5492	5	BEARING-MAIN (STANDARD)
AC		4W5698	5	BEARING-MAIN .025IN US
AC		4W5699	5	BEARING-MAIN .050IN US
AC		4W5700	5	BEARING-MAIN .025IN OS
AC		4W5701	5	BEARING-MAIN .025IN OS
	3	7E9262	2	PLATE-THRUST
C	4	2W1733	1	SEAL GP-CRANKSHAFT
C	5	2W1734	1	SEAL GP-CRANKSHAFT

A-NOT PART OF THIS GROUP
C-CHANGE FROM PREVIOUS TYPE
R-REMFG PART MAY BE AVAILABLE
Y-SEPARATE ILLUSTRATION

A-632721 CP

1202

1W5010 CRANKSHAFT GP
Engine S/N 48W19973-Up
1W5009-Page 9.02

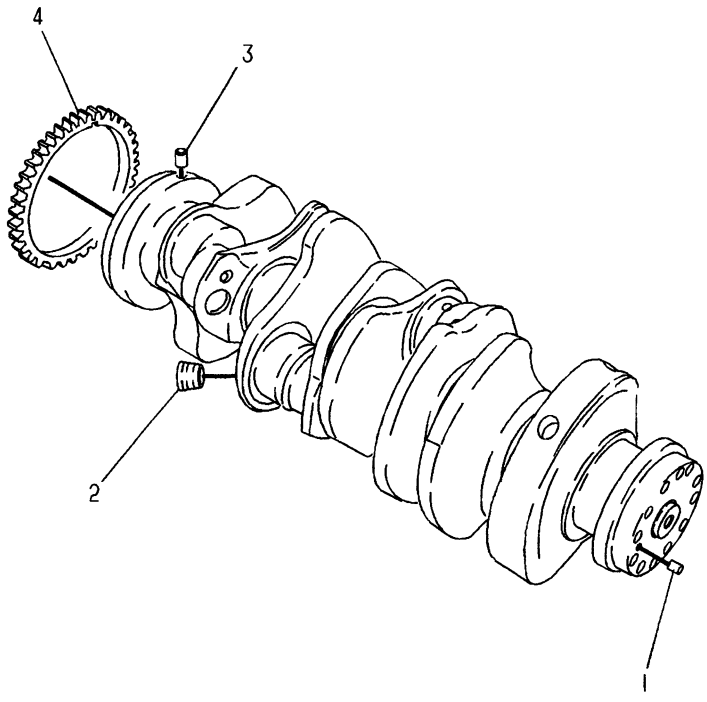

NOTE	REF NO	PART NUMBER	QTY	PART NAME
	1	4N0684	1	DOWEL
	2	8T6757	5	PLUG-PIPE
	3	7S5005	1	DOWEL
	4	7N7591	1	GEAR-CRANKSHAFT (80 TEETH)

A-601314 CP

1202

1W5009 CRANKSHAFT AS*R
Engine S/N 48W19973-Up
Part Of 1W5010 Crankshaft

BASIC ENGINE

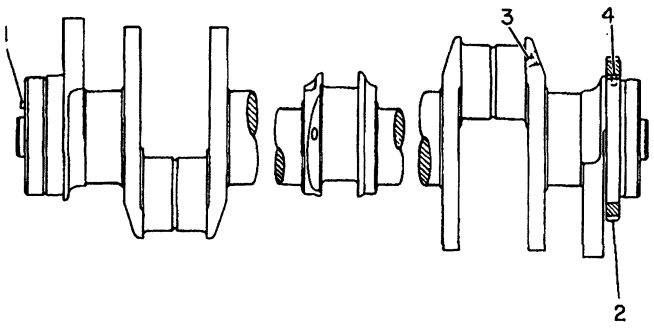

NOTE	REF NO	PART NUMBER	QTY	PART NAME
	1	4N0684	1	DOWEL
C	2	7N7591	1	GEAR-CRANKSHAFT (80 TEETH)
	3	9F2247	5	PLUG
	4	7S5005	1	DOWEL

C-CHANGE FROM PREVIOUS TYPE

B-226141 EP

1202

7N3407 CRANKSHAFT AS*R

Engine S/N 48W13002-18465
Part Of 7N3410 Crankshaft

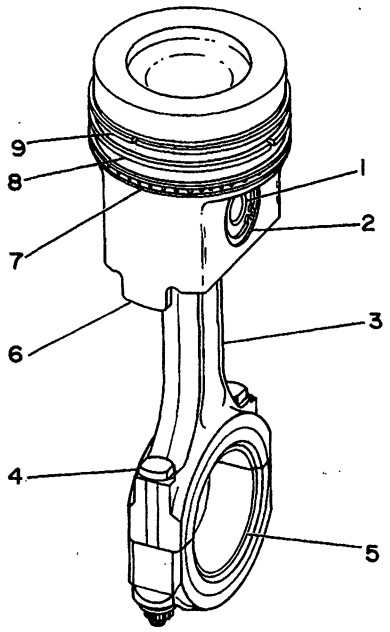

NOTE	REF NO	PART NUMBER	QTY	PART NAME
C	1	8N1608	1	PIN-PISTON
C	2	8N7295	2	RETAINER-PIN
CR	3	8N1728	1	ROD AS-CONNECTING
		8N2018	1	BEARING-SLEEVE
	4	6N8942	2	BOLT-CONNECTING ROD
		8L3441	2	NUT
C	5	1W7524	1	BEARING
CA		8N5427	1	BEARING-CONNECTING ROD .64MM(.025 IN)UNDERSIZE
CA		8N5428	1	BEARING-CONNECTING ROD 1.27MM(.050 IN)UNDERSIZE
C	6	8N1496	1	PISTON GP
J	7	7N7078	1	RING-OIL
J	8	2P2817	1	RING-PISTON
J	9	8N0502	1	RING-PISTON (TOP)
A		8N0822	1	RING GP-PISTON (CONSISTS OF COMPLETE SET OF RINGS FOR ONE PISTON) (INCL PARTS MARKED J)

A-NOT PART OF THIS GROUP
C-CHANGE FROM PREVIOUS TYPE
R-REMFG PART MAY BE AVAILABLE

B-312771 EP

1225

7N3518 PISTON & ROD GP-CONNECTING

8 Required
Engine S/N 48W13002-16804

BASIC ENGINE

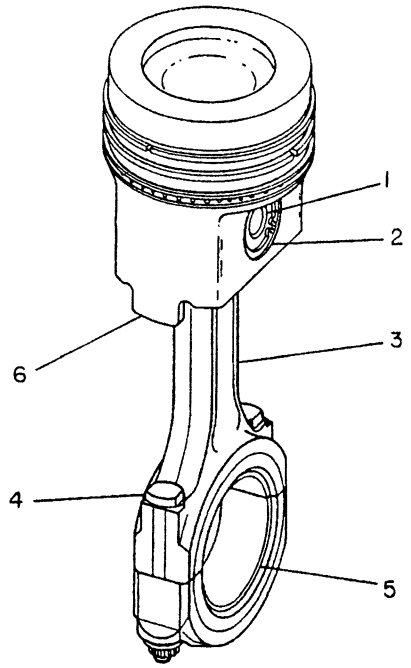

NOTE	REF NO	PART NUMBER	QTY	PART NAME
	1	8N1608	1	PIN-PISTON
	2	8N7295	2	RETAINER-PIN
	3	8N1728	1	ROD AS-CONNECTING
		8N2018	1	BEARING-SLEEVE
	4	6N8942	2	BOLT-CONNECTING ROD
		8L3441	2	NUT
C	5	9Y9497	1	BEARING-CONNECTING ROD (STANDARD)
CA		4W5702	1	BEARING-CONNECTING ROD .025IN(.63MM)UNDERSIZE
CA		4W5703	1	BEARING-CONNECTING ROD .050IN(1.27MM)UNDERSIZE
Y	6	2W9053	1	PISTON GP

A-NOT PART OF THIS GROUP
C-CHANGE FROM PREVIOUS TYPE
Y-SEPARATE ILLUSTRATION

B-496696 EP

1225 **2W9054 PISTON & ROD GP-CONNECTING**
Engine S/N 48W16805-Up
2W9053-Page 10A

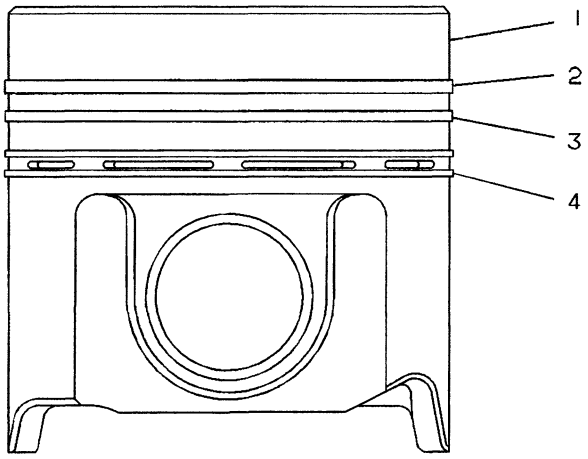

NOTE	REF NO	PART NUMBER	QTY	PART NAME
	1	2W0865	1	BODY AS-PISTON
	2	1W9460	1	RING-PISTON
	3	2P2817	1	RING-PISTON
	4	7N7078	1	RING-OIL
FA		1W8922	1	RING GP-PISTON (STANDARD) (CONSISTS OF A COMPLETE SET OF RINGS FOR ONE PISTON)

A-NOT PART OF THIS GROUP
F-NOT SHOWN

A-307861 EP

1214 **2W9053 PISTON GP**
Engine S/N 48W16805-Up
Part Of 2W9054 Rod & Piston

MEMORANDA

BASIC ENGINE

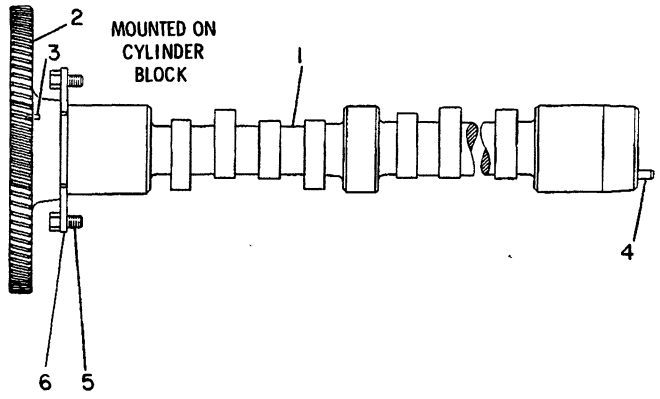

NOTE	REF NO	PART NUMBER	QTY	PART NAME
C	1	1W5058	1	CAMSHAFT AS
	2	7N8345	1	GEAR-CAMSHAFT (86 TEETH)
	3	1B8705	1	KEY-WOODRUFF
	4	4N0955	1	DOWEL
	5	0S0509	2	BOLT
	6	4N0342	1	PLATE-CAMSHAFT THRUST

C-CHANGE FROM PREVIOUS TYPE

B-518512 EP

1210 **4N0963 CAMSHAFT GP**
Engine S/N 48W13002-17859

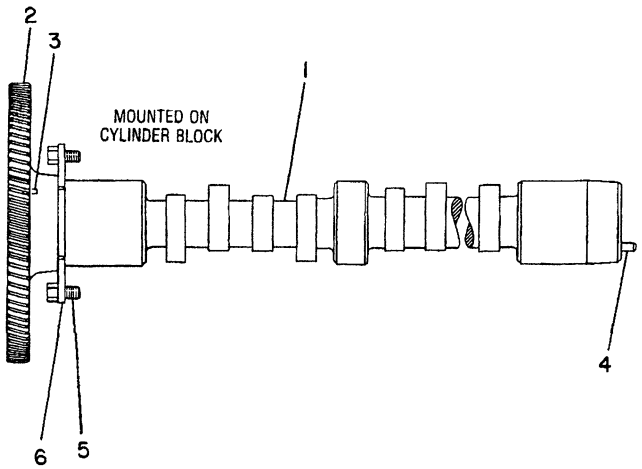

NOTE	REF NO	PART NUMBER	QTY	PART NAME
CR	1	2W7980	1	CAMSHAFT AS
	2	1O13374	1	GEAR-CAMSHAFT DRIVE (86 TEETH)
	3	1B8705	1	KEY-WOODRUFF
	4	4N0955	1	DOWEL
	5	0S0509	2	BOLT
	6	4N0342	1	PLATE-CAMSHAFT THRUST

C-CHANGE FROM PREVIOUS TYPE
R-REMFG PART MAY BE AVAILABLE

B-629331 CP

1210 **4N0963 CAMSHAFT GP**
Engine S/N 48W17860-Up

BASIC ENGINE

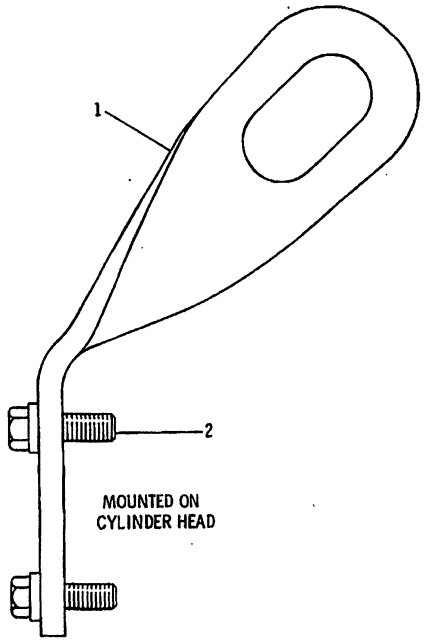

NOTE	REF NO	PART NUMBER	QTY	PART NAME
	1	7N1751	1	BRACKET-LIFTING (R.H.)
		8N8584	1	BRACKET-LIFTING (L.H.)
B	2	OS1585	4	BOLT
B		5P8245	4	WASHER

B-USE AS REQUIRED

B-328295 EP

1122 **8N8585 LIFTING GP**

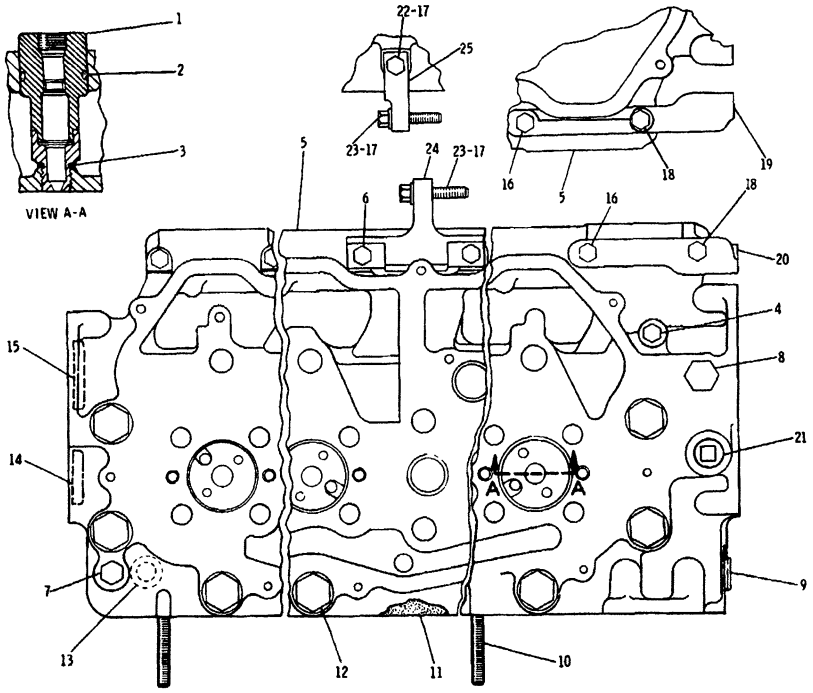

REF NO	PART NUMBER	DESCRIPTION	QTY
1	6N5898	ADAPTER ASSEM	8
2	2S2251	SEAL	8
3	4N7253	GASKET	8
4	5M6214	PLUG	2
5	6N9979	CYLINDER HEAD GROUP (Separate Illustration)	2
6	L1352	BOLT	11
7	3J5390	PLUG	2
8	3J5389	PLUG	2
9	1B5174	PLUG	2
10	4S6137	STUD	16
11	4N1820	GASKET	2
12	2H3750	BOLT	28
	5H1504	WASHER	28
13	4N2269	SEAL	32
14	5P63	PLUG	4
15	4N932	PLUG	2
C 16	1A5183	BOLT	2
C 17	5M2894	WASHER	5
C 18	5B2638	BOLT	2
C 19	6N6731	SUPPORT-----(L. H.)	1
C 20	6N6732	SUPPORT-----(R. H.)	1
21	2B858	PLUG	2
22	8S9191	BOLT	3
23	S1591	BOLT	2
24	9N2607	BRACKET	1
25	9N2583	BRACKET	1

C INDICATES CHANGE

173785

173785 P

1100 **4N1816 CYLINDER HEAD GP*R**
Engine S/N 48W13002-13025

BASIC ENGINE

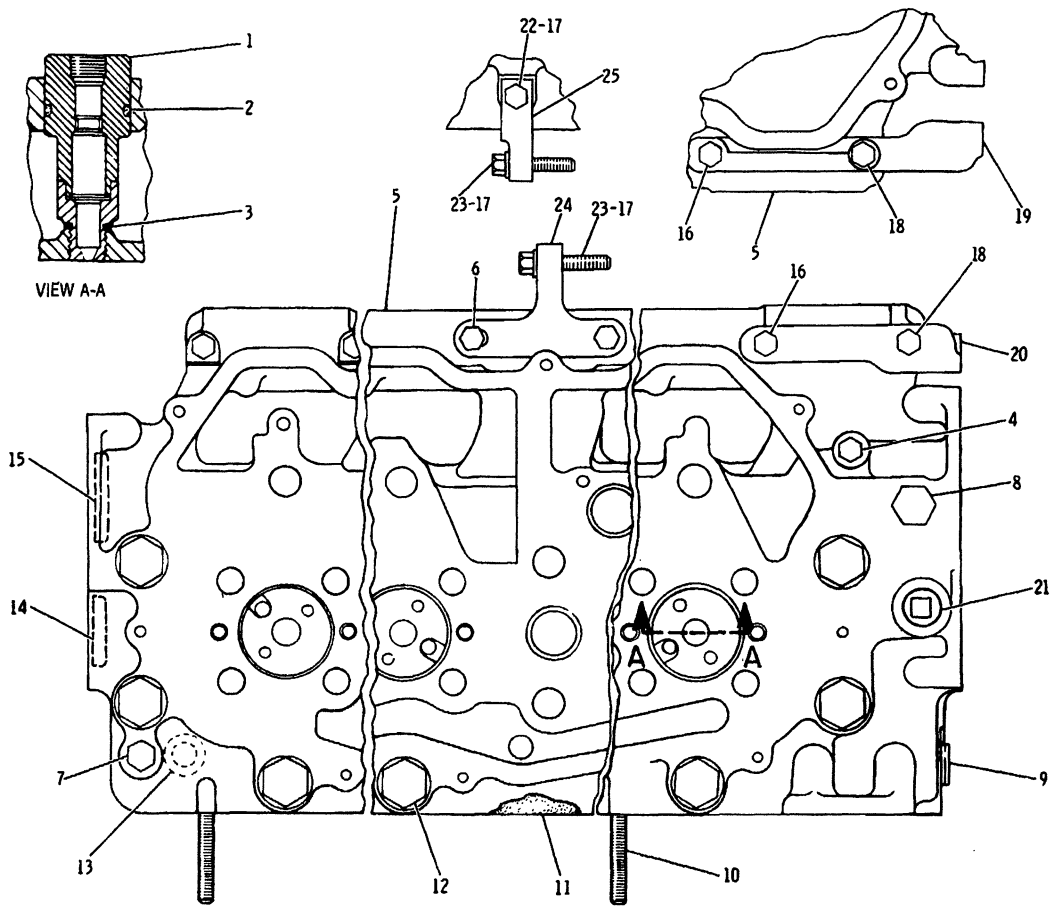

NOTE	REF NO	PART NUMBER	QTY	PART NAME	NOTE	REF NO	PART NUMBER	QTY	PART NAME
C	1	1W7885	8	ADAPTER AS-FUEL VALVE					
	2	2S2251	8	SEAL-O-RING					
	3	4N7253	8	GASKET-CHAMBER					
	4	5M6214	2	PLUG-PIPE					
Y	5	7N0857	2	CYLINDER HEAD GP					
	6	0L1352	11	BOLT					
	7	3J5390	2	PLUG					
	8	3J5389	2	PLUG					
	9	1B5174	2	PLUG-PIPE					
	10	4S6137	16	STUD-TAPERLOCK					
	11	4N1820	2	GASKET-CYLINDER HEAD					
	12	2H3750	28	BOLT					
		5H1504	28	WASHER-HARD					
	13	4N2269	32	SEAL-WATER					
	14	5P0063	4	PLUG-CUP					
	15	4N0932	2	PLUG-CUP					
	16	1A5183	2	BOLT					
	17	5M2894	5	WASHER					
	18	5B2638	2	BOLT					
	19	6N6731	1	SUPPORT-HOUSING (LH)					
	20	6N6732	1	SUPPORT-HOUSING (RH)					
	21	2B0858	2	PLUG-PIPE					
	22	8S9191	3	BOLT					
	23	0S1591	2	BOLT					
C	24	1W5207	1	BRACKET-FUEL PUMP					
	25	9N2583	1	BRACKET-FUEL PUMP					

C-CHANGE FROM PREVIOUS TYPE
Y-SEPARATE ILLUSTRATION

B-237395 EP

BASIC ENGINE

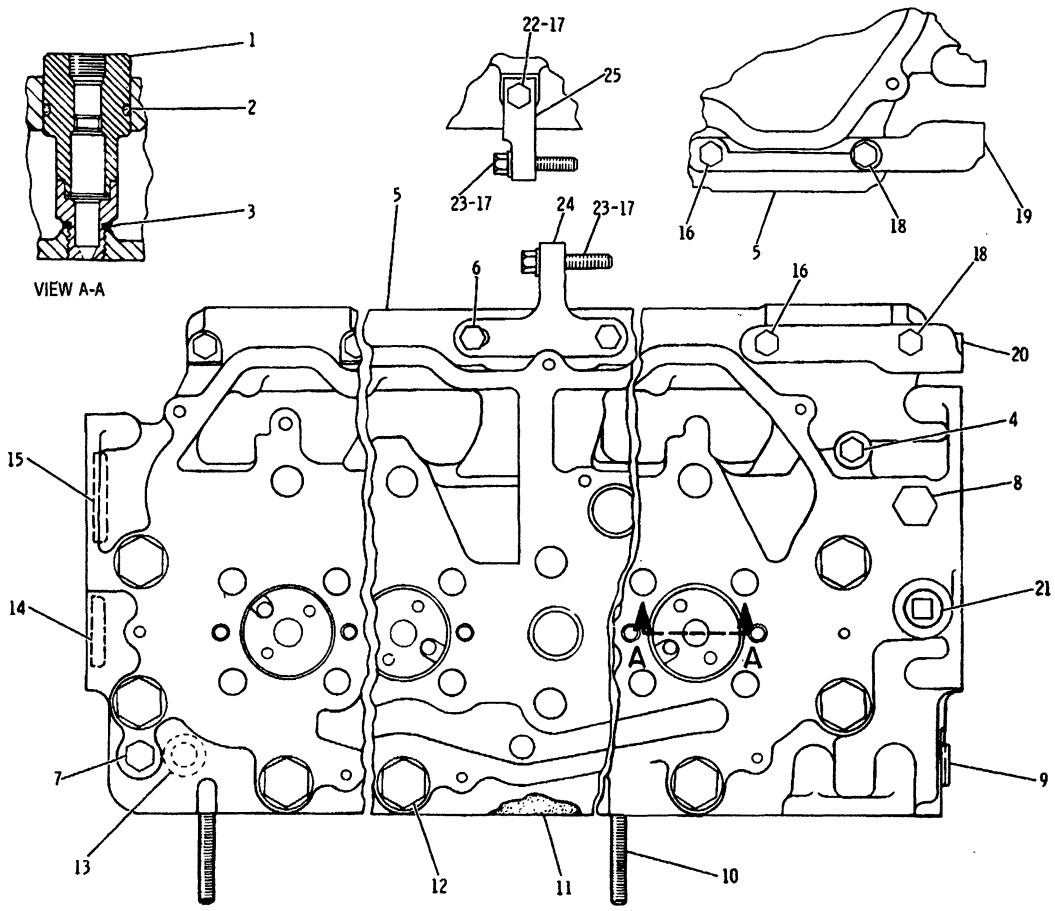

NOTE	REF NO	PART NUMBER	QTY	PART NAME	NOTE	REF NO	PART NUMBER	QTY	PART NAME
C	1	2W9757	8	ADAPTER AS					
	2	2S2251	8	SEAL-O-RING					
	3	4N7253	8	GASKET-CHAMBER					
B	4	5M6214	2	PLUG-PIPE					
CY	5	1W9802	2	CYLINDER HEAD GP					
	6	OL1352	11	BOLT					
	7	3J5390	2	PLUG					
	8	3J5389	2	PLUG					
	9	1B5174	2	PLUG-PIPE					
	10	4S6137	16	STUD-TAPERLOCK					
C	11	2W7984	2	GASKET-CYLINDER HEAD					
	12	2H3750	28	BOLT					
		5H1504	28	WASHER-HARD					
C	13	4W1055	32	SEAL-WATER					
B	14	5P0063	4	PLUG-CUP					
B	15	4N0932	2	PLUG-CUP					
	16	1A5183	2	BOLT					
	17	5M2894	5	WASHER					
	18	5B2638	2	BOLT					
	19	6N6731	1	SUPPORT-HOUSING (LH)					
	20	6N6732	1	SUPPORT-HOUSING (RH)					
	21	2B0858	2	PLUG-PIPE					
	22	8S9191	3	BOLT					
	23	0S1591	2	BOLT					
	24	1W5207	1	BRACKET-FUEL PUMP					
	25	9N2583	1	BRACKET-FUEL PUMP					

B-USE AS REQUIRED
C-CHANGE FROM PREVIOUS TYPE
Y-SEPARATE ILLUSTRATION

B-312645 EP

1100

4N1816 CYLINDER HEAD GP*R
Engine S/N 48W17631-17830
1W9802-Page 14A

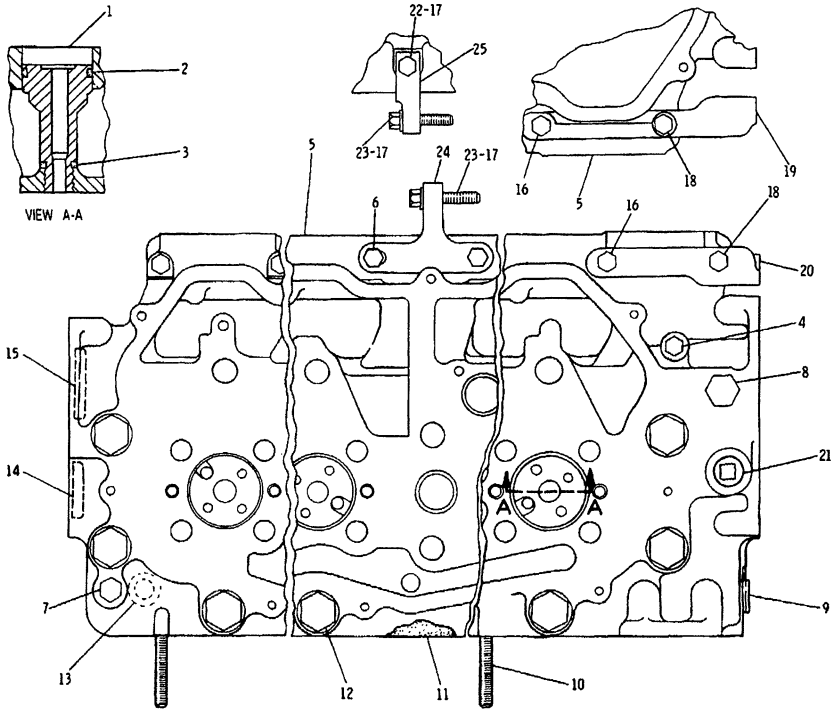

NOTE	REF NO	PART NUMBER	QTY	DESCRIPTION
C	1	7W1902	8	ADAPTER
	2	2S2251	8	SEAL
	3	4N7253	8	GASKET
B	4	5M6214	2	PLUG
Y	5	1W9802	2	CYLINDER HEAD GROUP
	6	L1352	11	BOLT
	7	3J5390	2	PLUG
	8	3J5389	2	PLUG
	9	1B5174	2	PLUG
	10	4S6137	16	STUD
	11	2W7984	2	GASKET
	12	2H3750	28	BOLT
		5H1504	28	WASHER
	13	4W1055	32	SEAL
B	14	5P63	4	PLUG
B	15	4N932	2	PLUG
	16	1A5183	2	BOLT
	17	5M2894	5	WASHER
	18	5B2638	2	BOLT
	19	6N6731	1	SUPPORT (L.H.)
	20	6N6732	1	SUPPORT (R.H.)
	21	2B858	2	PLUG
	22	8S9191	3	BOLT
	23	S1591	2	BOLT
	24	1W5207	1	BRACKET
	25	9N2583	1	BRACKET

C INDICATES CHANGE
B USE AS REQUIRED
Y SEPARATE ILLUSTRATION

340372

340372 EP

MEMORANDA

BASIC ENGINE

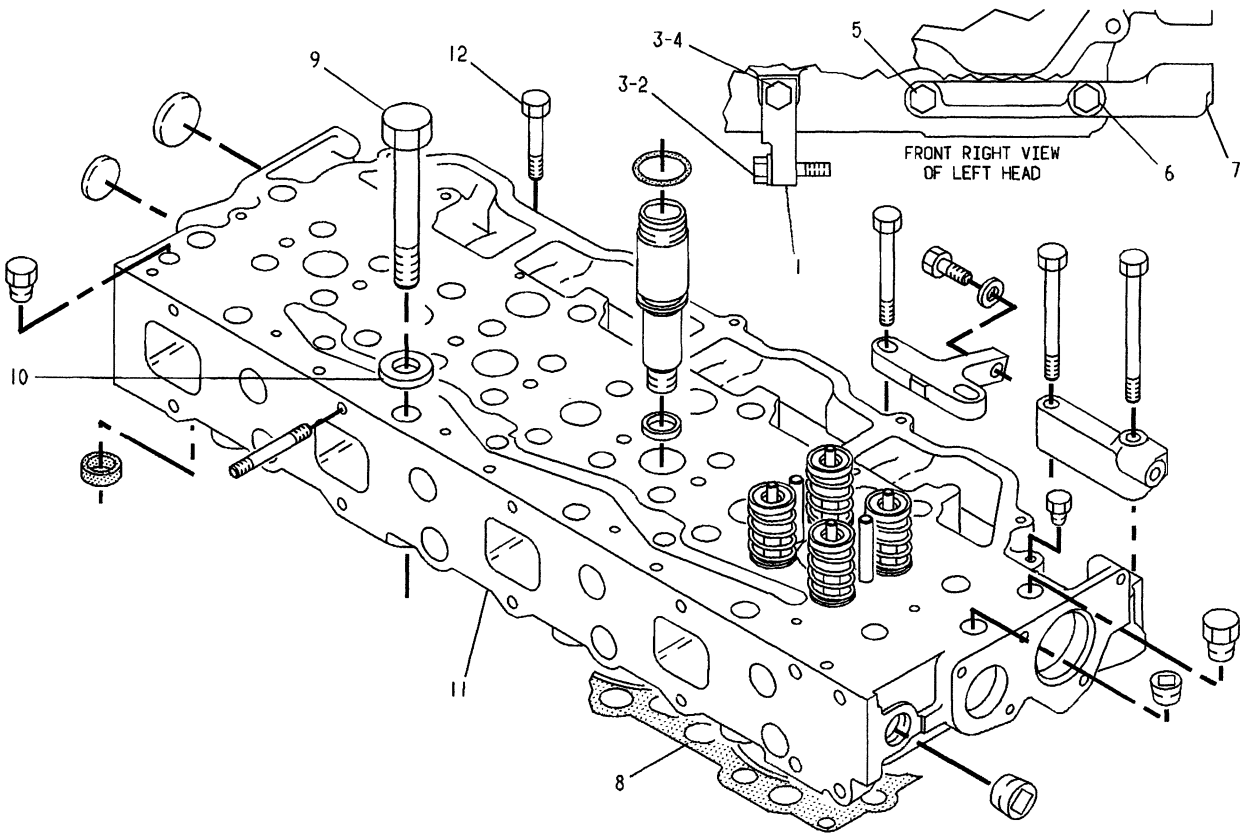

NOTE	REF NO	PART NUMBER	QTY	PART NAME	NOTE	REF NO	PART NUMBER	QTY	PART NAME
	1	9N2583	1	BRACKET-FUEL PUMP					
	2	0S1591	1	BOLT					
	3	5M2894	2	WASHER					
	4	8S9191	1	BOLT					
	5	1A5183	1	BOLT					
	6	5B2638	1	BOLT					
	7	6N6731	1	SUPPORT-HOUSING (LH)					
	8	2W7984	2	GASKET-CYLINDER HEAD					
	9	2H3750	28	BOLT					
	10	5H1504	28	WASHER-HARD					
Y	11	7W2224	2	CYLINDER HEAD GP					
	12	0L1352	11	BOLT					

Y-SEPARATE ILLUSTRATION

A-326783 EP

1100 **4W7005 CYLINDER HEAD GP-PART 1 OF 2*R**

Engine S/N 48W19408-21898

7W2224-Page 13A.06

BASIC ENGINE

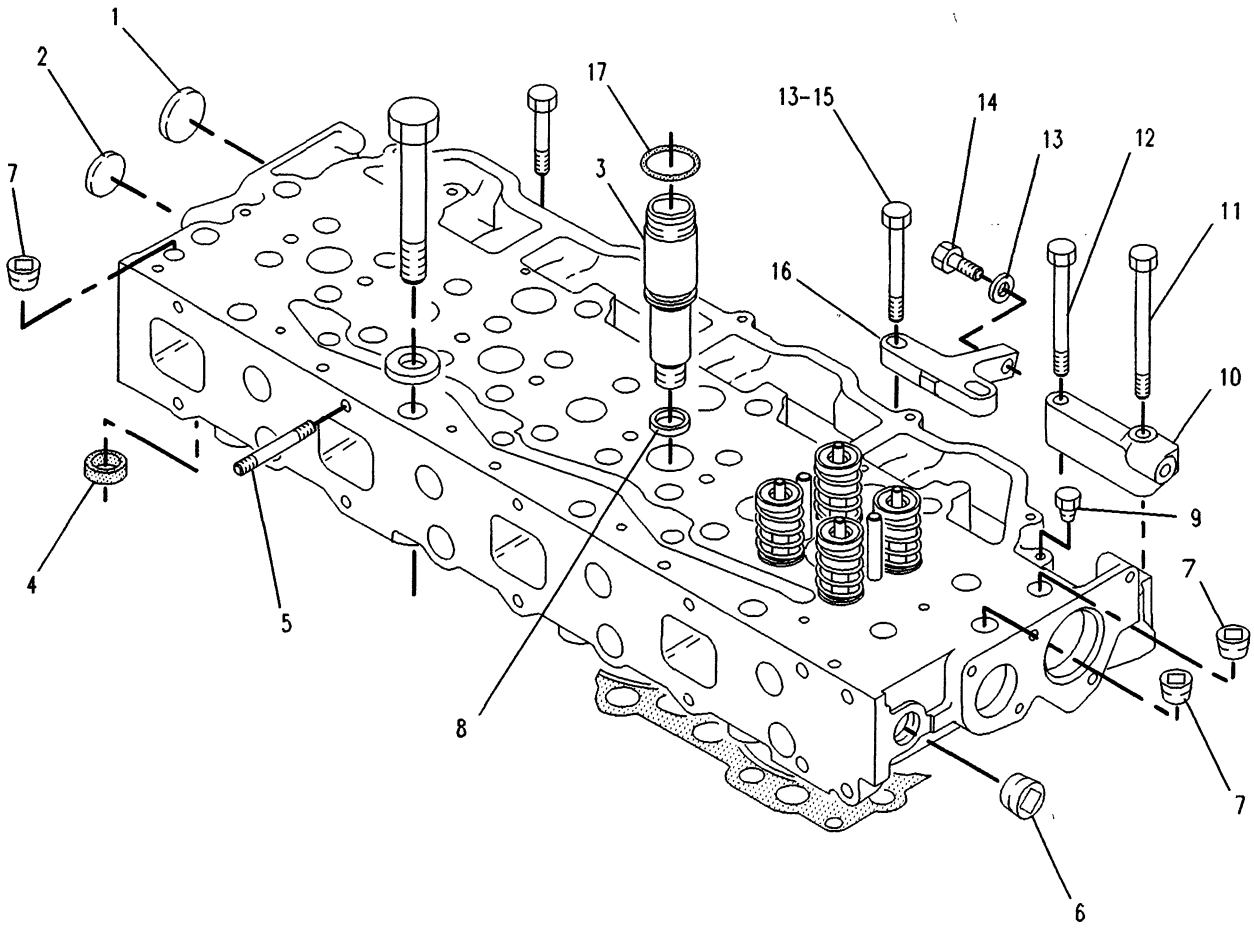

NOTE	REF NO	PART NUMBER	QTY	PART NAME	NOTE	REF NO	PART NUMBER	QTY	PART NAME
B	1	4N0932	2	PLUG-CUP					
B	2	5P0063	4	PLUG-CUP					
	3	7W5435	8	ADAPTER-NOZZLE					
	4	4W1055	32	SEAL-WATER					
	5	4S6137	16	STUD-TAPERLOCK					
	6	1B5174	2	PLUG-PIPE					
	7	2B0858	6	PLUG-PIPE					
	8	4N7253	8	GASKET-CHAMBER					
B	9	5M6214	2	PLUG-PIPE					
	10	6N6732	1	SUPPORT-HOUSING (R.H.)					
	11	5B2638	1	BOLT					
	12	1A5183	1	BOLT					
	13	5M2894	3	WASHER					
	14	0S1591	1	BOLT					
	15	8S9191	2	BOLT					
	16	1W5207	1	BRACKET-FUEL PUMP					
	17	5H7153	8	SEAL					

B-USE AS REQUIRED

F-529250 EP

1100 **4W7005 CYLINDER HEAD GP-PART 2 OF 2*R**

Engine S/N 48W19408-21898

BASIC ENGINE

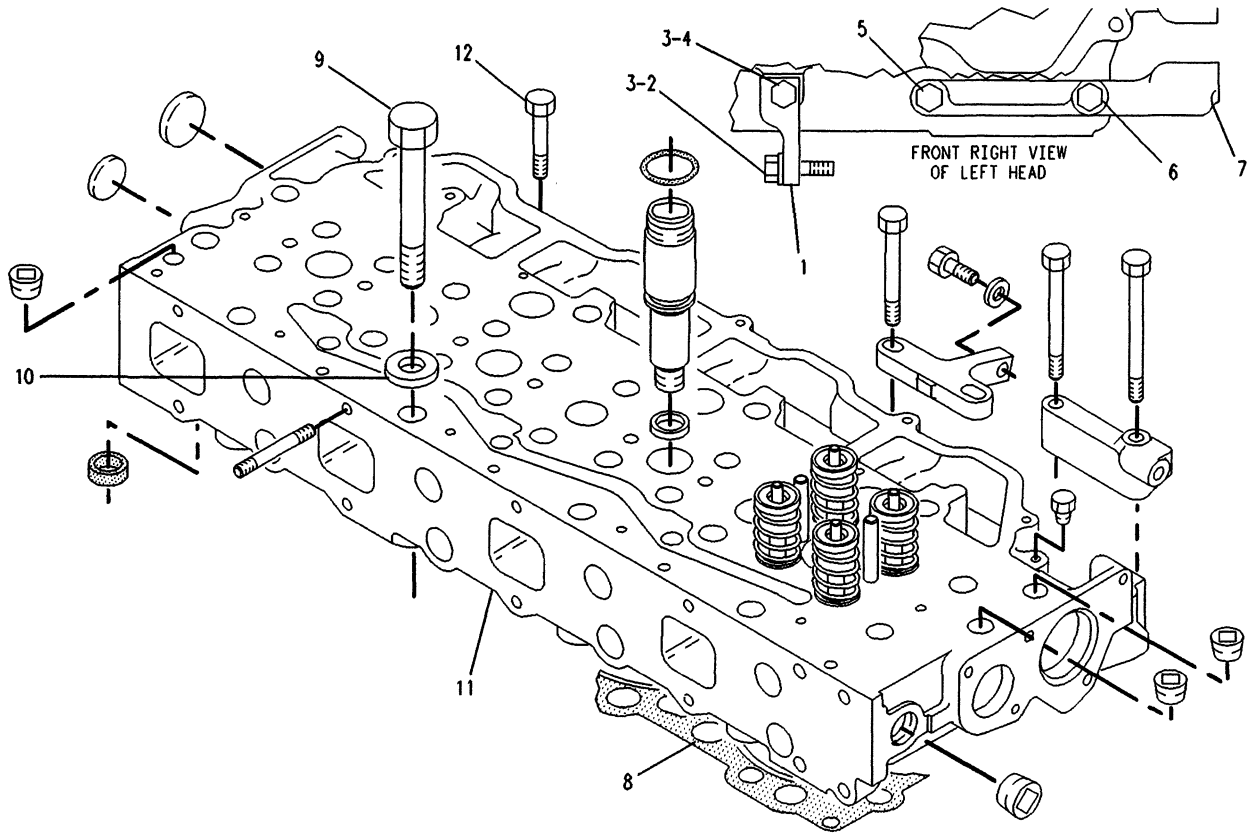

NOTE	REF NO	PART NUMBER	QTY	PART NAME	NOTE	REF NO	PART NUMBER	QTY	PART NAME
C	1	7W8071	1	BRACKET-FUEL PUMP					
C	2	3B1915	1	BOLT					
	3	5M2894	2	WASHER					
C	4	0S1608	1	BOLT					
	5	1A5183	1	BOLT					
	6	5B2638	1	BOLT					
	7	6N6731	1	SUPPORT-HOUSING (L.H.)					
	8	7E7308	2	GASKET-CYLINDER HEAD					
	9	2H3750	28	BOLT					
	10	5H1504	28	WASHER-HARD					
Y	11	7W2224	2	CYLINDER HEAD GP					
C	12	0L1352	7	BOLT					
CB		0L1352	4	BOLT					

B-USE AS REQUIRED
C-CHANGE FROM PREVIOUS TYPE
Y-SEPARATE ILLUSTRATION

F-557256 EP

1100 **4W7005 CYLINDER HEAD GP-PART 1 OF 2*R**
Engine S/N 48W21899-Up
7W2224-Page 13A.06

BASIC ENGINE

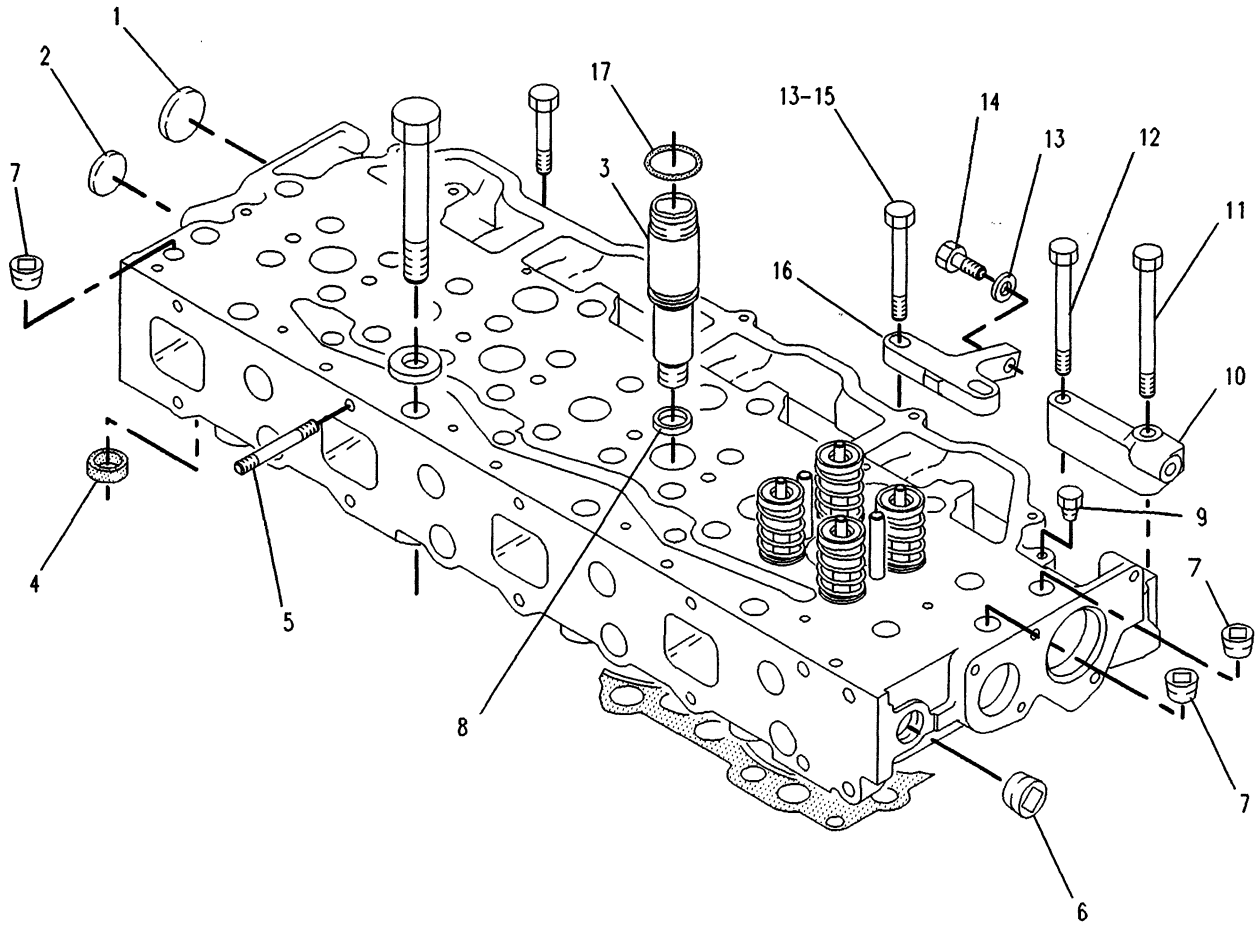

NOTE	REF NO	PART NUMBER	QTY	PART NAME	NOTE	REF NO	PART NUMBER	QTY	PART NAME
B	1	4N0932	2	PLUG-CUP					
B	2	5P0063	4	PLUG-CUP					
	3	7W5435	8	ADAPTER-NOZZLE					
	4	4W1055	32	SEAL-WATER					
	5	4S6137	16	STUD-TAPERLOCK					
	6	1B5174	2	PLUG-PIPE					
	7	2B0858	6	PLUG-PIPE					
	8	4N7253	8	GASKET-CHAMBER					
B	9	5M6214	2	PLUG-PIPE					
	10	6N6732	1	SUPPORT-HOUSING (R.H.)					
	11	5B2638	1	BOLT					
	12	1A5183	1	BOLT					
	13	5M2894	3	WASHER					
	14	0S1591	1	BOLT					
	15	8S9191	2	BOLT					
	16	1W5207	1	BRACKET-FUEL PUMP					
	17	5H7153	8	SEAL					

B-USE AS REQUIRED

F-529250 EP

1100 **4W7005 CYLINDER HEAD GP-PART 2 OF 2*R**
Engine S/N 48W21899-Up

BASIC ENGINE

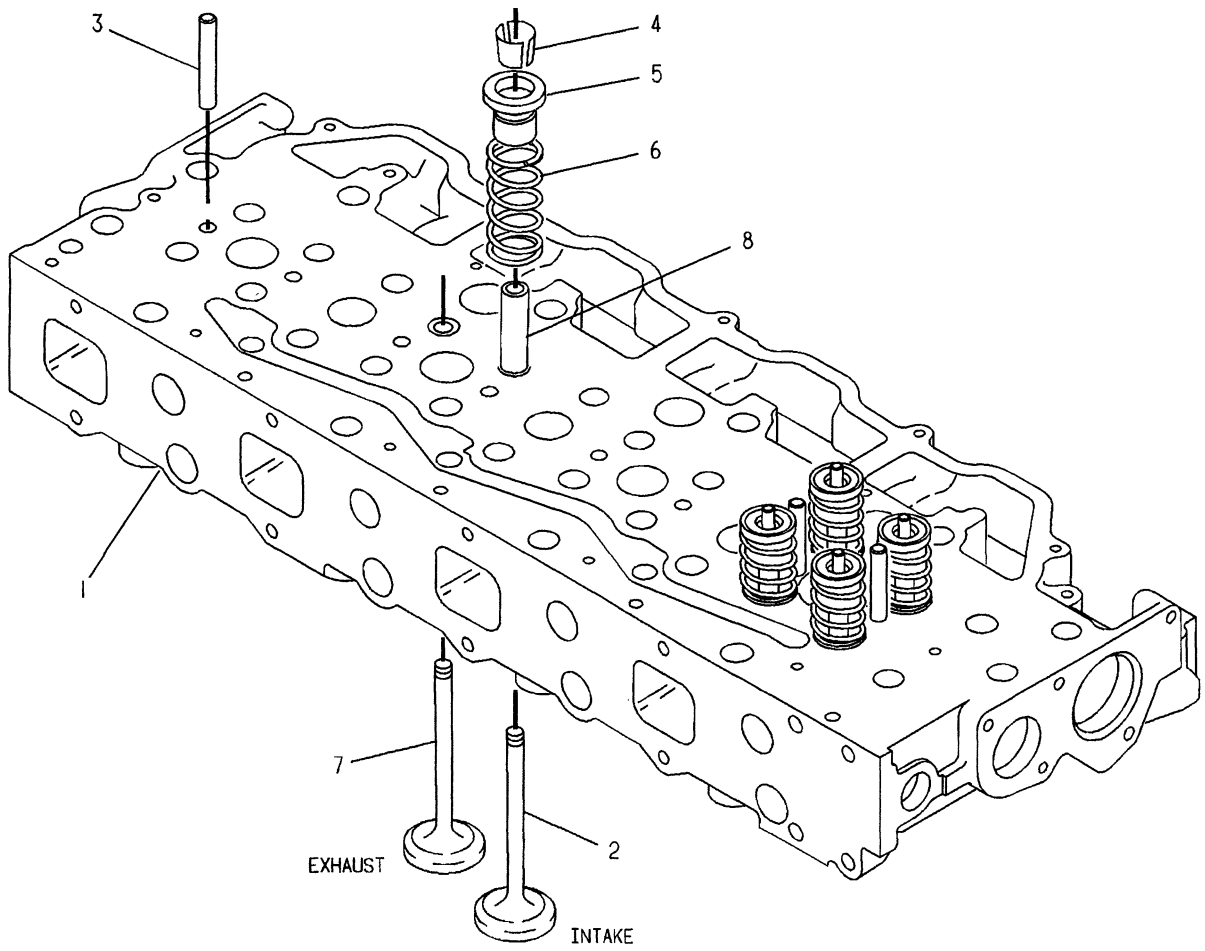

NOTE	REF NO	PART NUMBER	QTY	PART NAME	NOTE	REF NO	PART NUMBER	QTY	PART NAME
Y	1	7W2223	1	CYLINDER HEAD AS					
	2	2W2622	8	VALVE-INLET					
	3	2N5775	8	DOWEL					
	4	2A4429	32	LOCK-RETAINER					
	5	6N7175	16	ROTOCOIL AS					
C		6N7174	1	SHIELD-OIL					
	6	4N5906	16	SPRING-VALVE					
	7	1W3860	8	VALVE-EXHAUST					
	8	4N2803	16	GUIDE-VALVE					

C-CHANGE FROM PREVIOUS TYPE
Y-SEPARATE ILLUSTRATION

A-343904 EP

1100

7W2224 CYLINDER HEAD GP
Engine S/N 48W19408-Up
7W2223-Page 14C
Part Of 4W7005 Cylinder Head

MEMORANDA

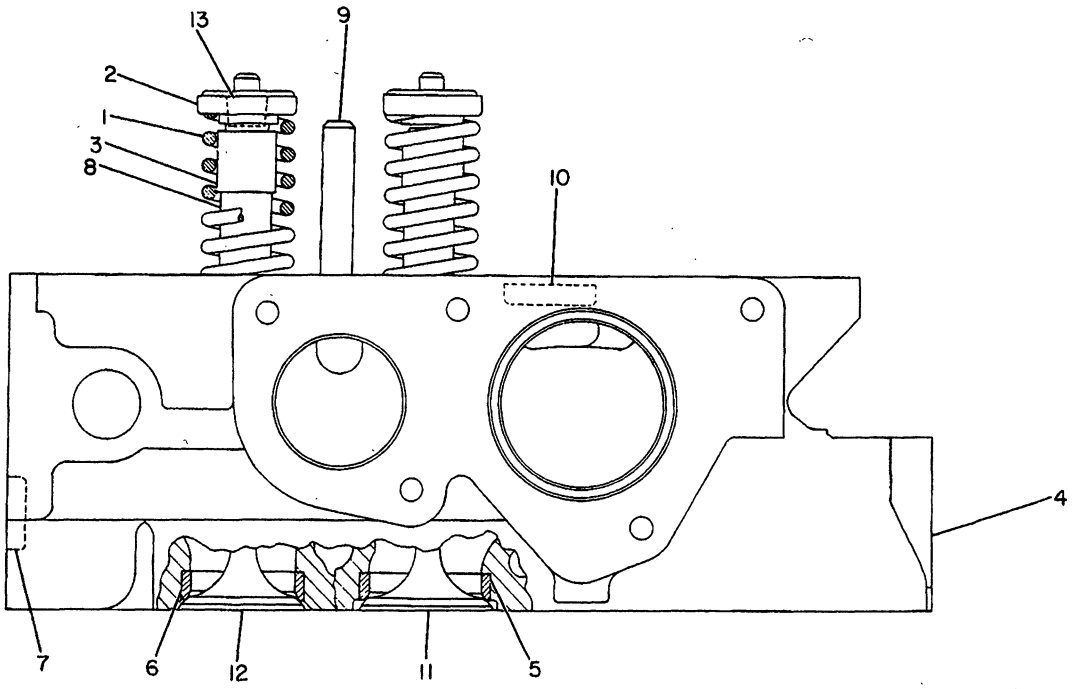

NOTE	REF NO	PART NUMBER	QTY	PART NAME	NOTE	REF NO	PART NUMBER	QTY	PART NAME
	1	4N5906	16	SPRING-VALVE					
	2	6N7175	16	ROTOCOIL AS (EACH INCLUDES)					
	3	6N7174	1	SHIELD-OIL					
	4	7N0858	1	CYLINDER HEAD AS					
	5	4N5893	8	INSERT-INLET VALVE					
A		4S8898	8	INSERT .13MM(.005IN)OVERSIZE					
A		4S8899	8	INSERT .26MM(.010IN)OVERSIZE					
	6	9S9699	8	INSERT-SEAT (EXHAUST)					
A		4S8902	8	INSERT .13MM(.005IN)OVERSIZE					
A		4S8903	8	INSERT .26MM(.010IN)OVERSIZE					
	7	3B0623	8	PLUG-CUP					
	8	4N2803	16	GUIDE-VALVE					
	9	2N5775	8	DOWEL					
	10	3B0645	6	PLUG-CUP					
	11	4N5654	8	VALVE-INLET					
	12	7N4580	8	VALVE-EXHAUST					
	13	2A4429	32	LOCK-RETAINER					

A-NOT PART OF THIS GROUP

B-234690 EP

1100

7N0857 CYLINDER HEAD GP
Engine S/N 48W13026-17630
Part Of 4N1816 Cylinder Head

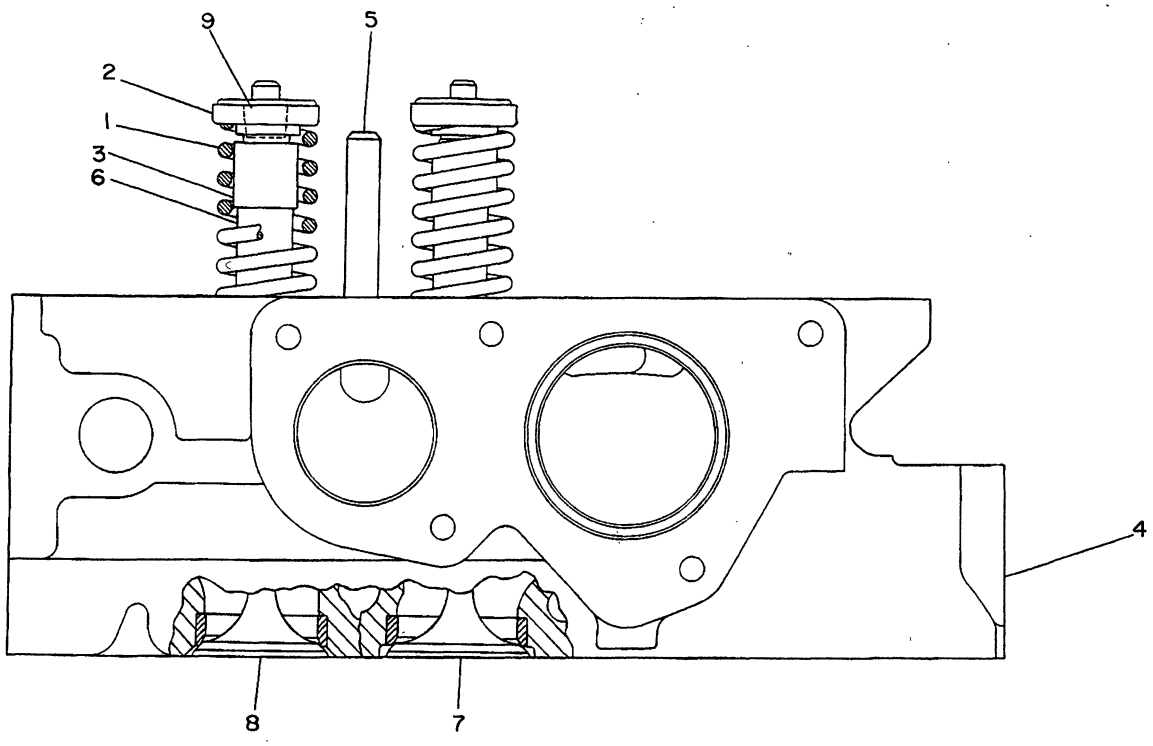

NOTE	REF NO	PART NUMBER	QTY	PART NAME	NOTE	REF NO	PART NUMBER	QTY	PART NAME
	1	4N5906	16	SPRING-VALVE					
	2	6N7175	16	ROTOCOIL AS (EACH INCLUDES)					
		6N7154	1	ROTOCOIL AS					
	3	6N7174	1	SHIELD-OIL					
Y	4	1W9799	1	CYLINDER HEAD AS					
	5	2N5775	8	DOWEL					
	6	4N2803	16	GUIDE-VALVE					
	7	1W3859	8	VALVE-INLET					
	8	1W3860	8	VALVE-EXHAUST					
	9	2A4429	32	LOCK-RETAINER					

Y-SEPARATE ILLUSTRATION

B-312646 EP

1100

1W9802 CYLINDER HEAD GP
Engine S/N 48W17631-19407
1W9799-Page 14B
Part Of 4N1816,4W7005 Cylinder Heads

BASIC ENGINE

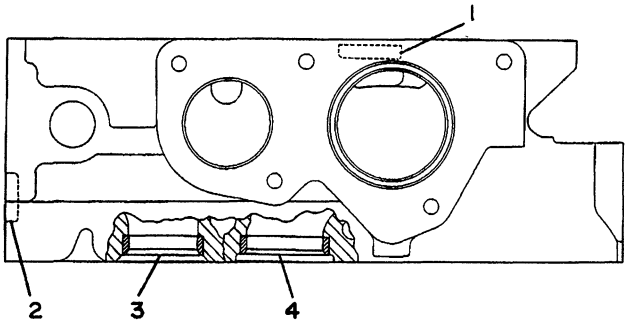

NOTE	REF NO	PART NUMBER	QTY	PART NAME
	1	3B0645	6	PLUG-CUP
	2	3B0623	8	PLUG-CUP
	3	9S9699	8	INSERT-SEAT (EXHAUST)
A		4S8902	8	INSERT .13MM(.005IN)OVERSIZE
A		4S8903	8	INSERT .26MM(.010IN)OVERSIZE
	4	4N5893	8	INSERT-INLET VALVE
A		4S8898	8	INSERT .13MM(.005IN)OVERSIZE
A		4S8899	8	INSERT .26MM(.010IN)OVERSIZE

A-NOT PART OF THIS GROUP

B-312756 EP

1101

1W9799 CYLINDER HEAD AS
Engine S/N 48W18740-Up
Part Of 1W9802,1W9800,7N0858 Cylinder Heads
Field Replacement Order 1W9800-Page 14B

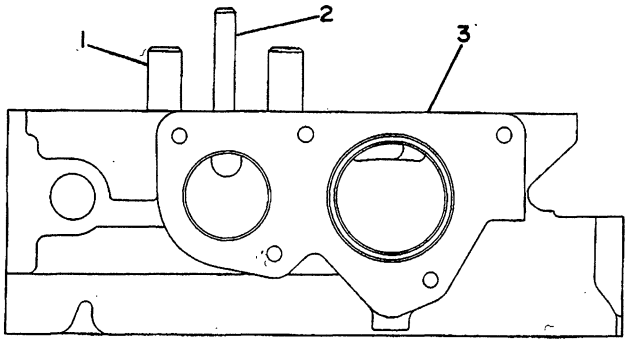

NOTE	REF NO	PART NUMBER	QTY	PART NAME
	1	4N2803	16	GUIDE-VALVE
	2	2N5775	8	DOWEL
Y	3	1W9799	1	CYLINDER HEAD AS

Y-SEPARATE ILLUSTRATION

B-312759 EP

1101

1W9800 CYLINDER HEAD AS
Engine S/N 48W17631-18739
1W9799-Page 14B
Field Replacement For 1W9799-Page 14B

BASIC ENGINE

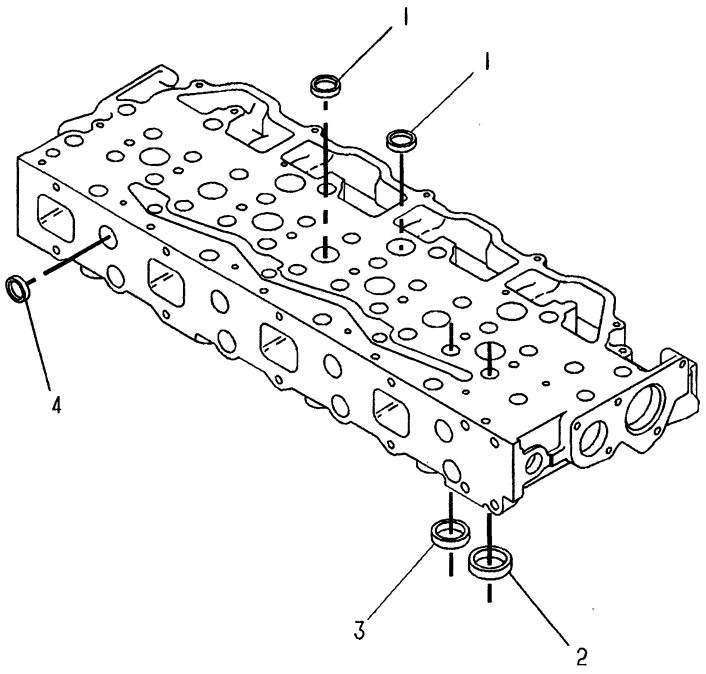

NOTE	REF NO	PART NUMBER	QTY	PART NAME
	1	3B0645	6	PLUG-CUP
	2	4N5893	8	INSERT-INLET VALVE (INTAKE)
	3	1W5283	8	INSERT-VALVE SEAT (EXHAUST)
	4	3B0623	8	PLUG-CUP

A-326788 EP

1101

7W2223 CYLINDER HEAD AS
Engine S/N 48W19408-Up
Part Of 7W2224,7W2225 Cylinder Heads
For Field Replacement Order 7W2225-Page 14C

PAGE

1 7W2223 CYLINDER HEAD AS..... 14C

16 4N2803 GUIDE

8 2N5775 DOWEL

590035 P

1101

7W2225 CYLINDER HEAD AS*R
Engine S/N 48W19408-Up
Provides Field Replacement For 7W2223-Page 14C

BASIC ENGINE

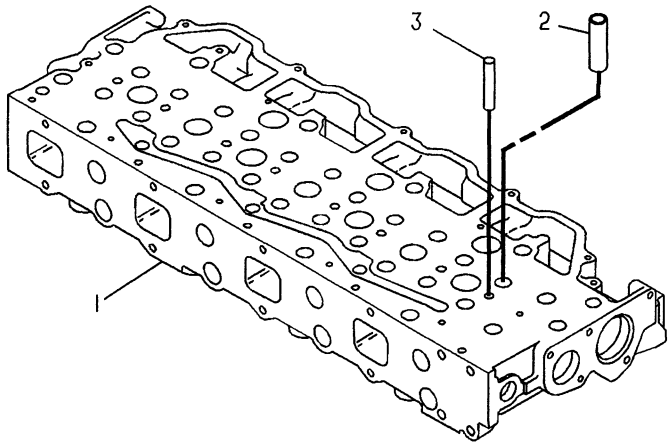

NOTE	REF NO	PART NUMBER	QTY	PART NAME
Y	1	1W9799	1	CYLINDER HEAD AS
	2	4N2803	16	GUIDE-VALVE
	3	2N5775	8	DOWEL

Y-SEPARATE ILLUSTRATION

A-331707 EP

1101

7N0858 CYLINDER HEAD AS*R
Engine S/N 48W18740-Up
1W9799-Page 14B

BASIC ENGINE

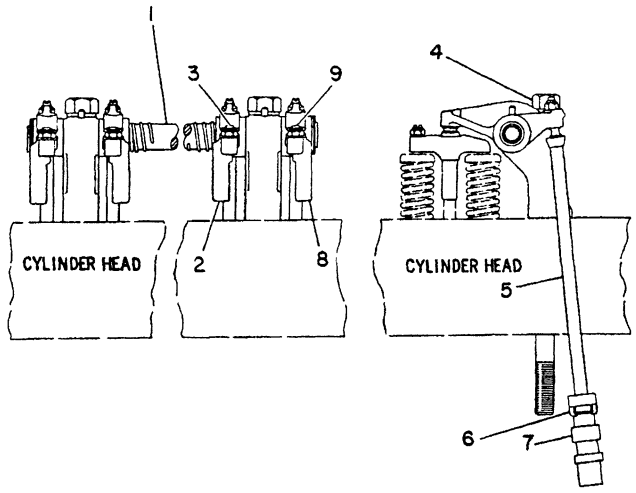

NOTE	REF NO	PART NUMBER	QTY	PART NAME
Y	1	4N1718	2	ROCKER ARM GP
	2	4N5611	8	BRIDGE AS-EXHAUST (EACH INCLUDES)
	3	2N5842	1	SCREW
		9L7712	1	NUT (3/8-24 THD)
	4	2P9845	8	BOLT
		5H1504	8	WASHER-HARD
	5	4W5998	16	PUSHROD AS
	6	6N6872	16	SPRING-GUIDE
	7	1O17788	16	LIFTER AS-VALVE
	8	4N5612	8	BRIDGE AS-INLET (EACH INCLUDES)
	9	2N5842	1	SCREW
		9L7712	1	NUT (3/8-24 THD)

Y-SEPARATE ILLUSTRATION

B-570199 EP

1102 **4N4298 VALVE MECHANISM GP**

4N1718-Page 15.01

BASIC ENGINE

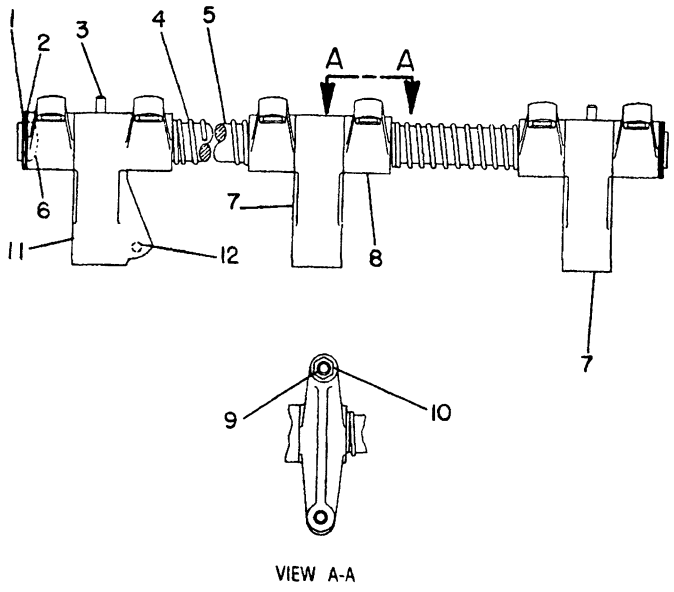

VIEW A-A

NOTE	REF NO	PART NUMBER	QTY	PART NAME
	1	67403	2	RING-RETAINING
	2	2N7228	4	WASHER
	3	4N0955	2	PIN-DOWEL
	4	2N7229	3	SPRING
	5	4N1106	1	SHAFT AS-ROCKER
	6	0L1022	2	PLUG-CUP
C	7	9Y4384	3	BRACKET-SHAFT
	8	4N5614	8	ROCKER ARM AS
	9	1085603	8	SCREW-ROCKER ADJUSTMENT
	10	9L7712	8	NUT
C	11	9Y4385	1	BRACKET AS-SHAFT
		2D6642	1	BALL 6.35MM DIA
	12	4B9880	1	BALL 7.93MM DIA

C-CHANGE FROM PREVIOUS TYPE

B-575102 EP

1102 **4N1718 ARM GP-ROCKER**

Engine S/N 48W20785-Up

Part Of 4N4298 Valve Mechanism

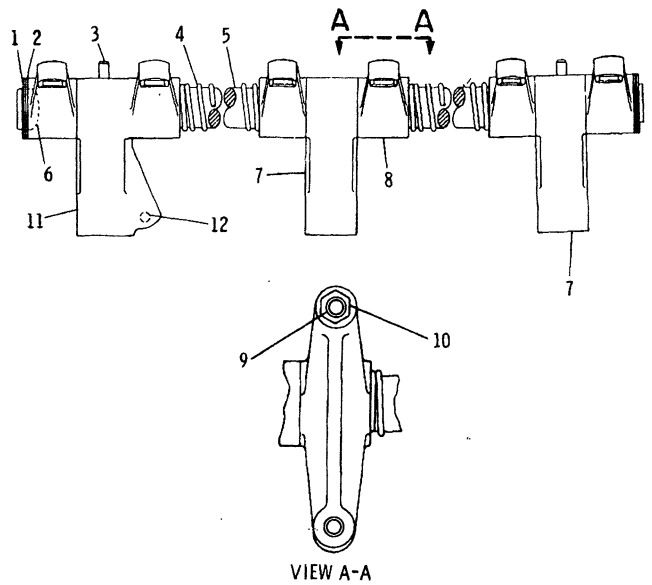

VIEW A-A

NOTE	REF NO	PART NUMBER	QTY	PART NAME
C	1	67403	2	RING-RETAINING
	2	2N7228	4	WASHER
	3	4N0955	2	DOWEL
	4	2N7229	3	SPRING
	5	4N1106	1	SHAFT AS-ROCKER ARM
C	6	0L1022	2	PLUG-CUP
C	7	7N1198	3	BRACKET-ROCKER ARM SHAFT
	8	4N5614	8	ROCKER ARM AS
	9	1A2935	8	SCREW-ROCKER ADJUSTMENT
	10	9L7712	8	NUT
C	11	7N0839	1	BRACKET AS
C	12	2D6642	2	BALL 6.35MM(.25IN.)DIA.
				-OR-
C		2D6642	1	BALL 6.35MM(.25IN.)DIA.
C		4B9880	1	BALL 7.93MM(.312IN.)DIA.

C-CHANGE FROM PREVIOUS TYPE

B-234687 EP

1102 **4N1718 ARM GP-ROCKER**

Engine S/N 48W13002-20784

Part Of 4N4298 Valve Mechanism

BASIC ENGINE

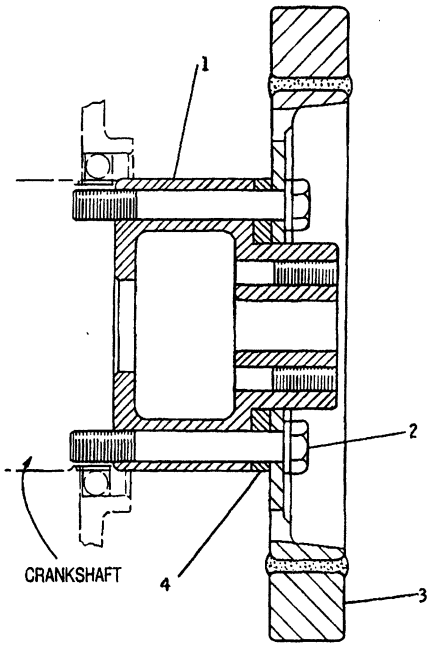

NOTE	REF NO	PART NUMBER	QTY	PART NAME
	1	4N2109	1	ADAPTER-DAMPER
C	2	6F7024	6	BOLT
		2S7593	6	WASHER-HARD
	3	4W8089	1	DAMPER AS
C	4	7W2338	1	SPACER

C-CHANGE FROM PREVIOUS TYPE

B-335279 EP

1205

4W5973 DAMPER GP
Rubber
Engine S/N 48W17504-Up

BASIC ENGINE

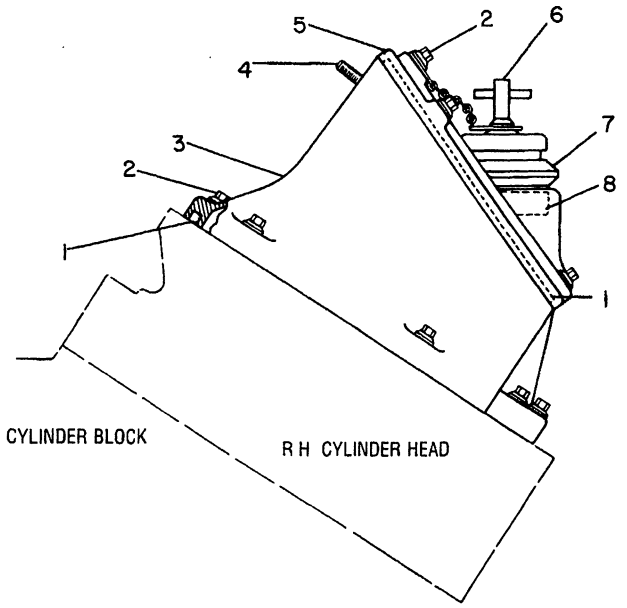

NOTE	REF NO	PART NUMBER	QTY	PART NAME
BCD	1	5P5678		SEAL 7.22M(284.50 IN)
	2	9L8925	40	BOLT
	3	6N2522	2	BASE-ARMATURE COVER
C	4	7M1599	8	STUD-TAPERLOCK
	5	6N2438	2	COVER-ROCKER ARM
	6	6N2985	1	CAP AS-FILLER
	7	4N0851	3	ADAPTER
C	8	4N4957	1	PLUG

B-USE AS REQUIRED
C-CHANGE FROM PREVIOUS TYPE
D-ORDER BY THE METER

B-169621 EP

1107 **4N4299 COVER GP-VALVE MECHANISM**
Engine S/N 48W13002-14482

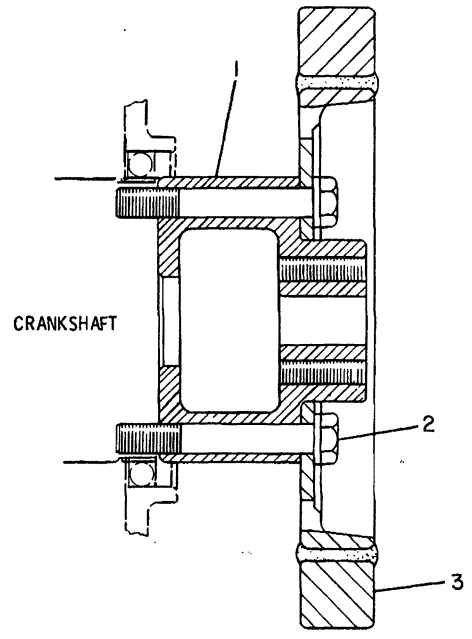

NOTE	REF NO	PART NUMBER	QTY	PART NAME
	1	4N2109	1	ADAPTER-DAMPER
	2	1A3203	6	BOLT
		4D3704	6	WASHER-HARD
	3	4W8089	1	DAMPER AS

B-496612 EP

1205 **1W0998 DAMPER GP**
Engine S/N 48W13002-17503

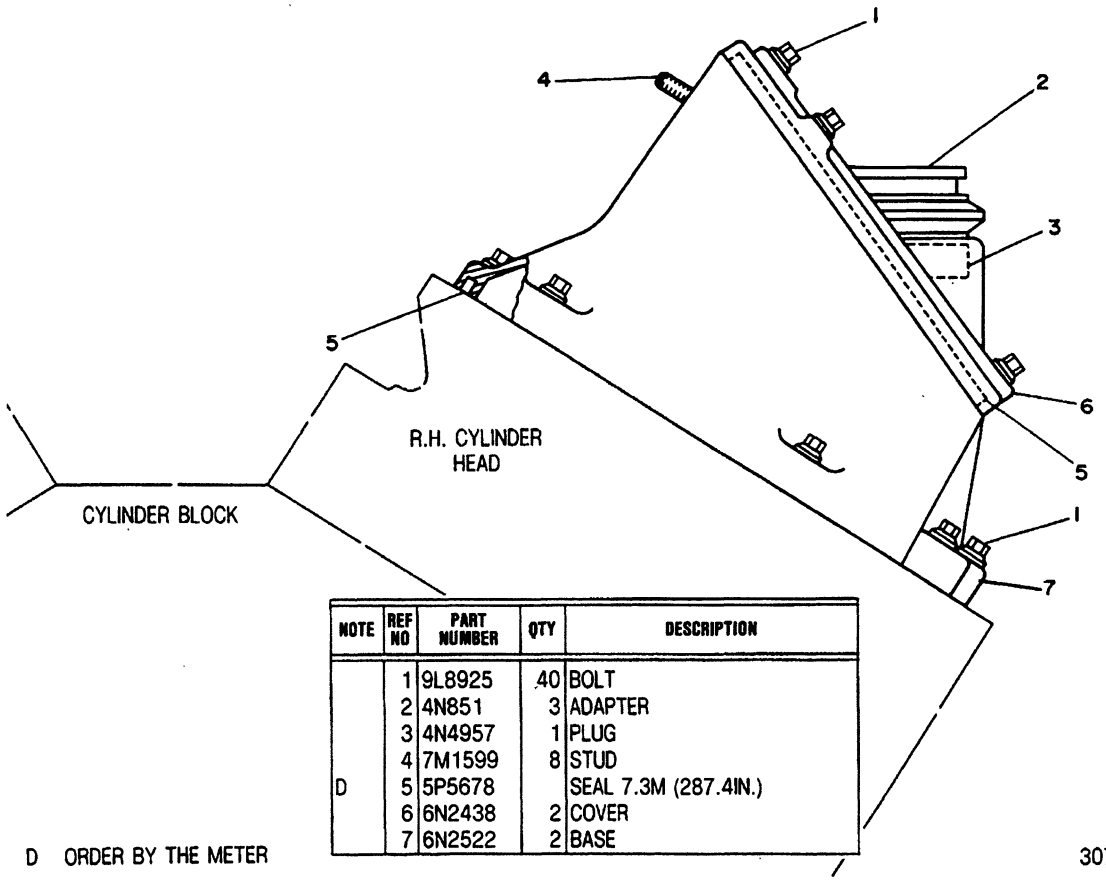

NOTE	REF NO	PART NUMBER	QTY	DESCRIPTION
	1	9L8925	40	BOLT
	2	4N851	3	ADAPTER
	3	4N4957	1	PLUG
	4	7M1599	8	STUD
D	5	5P5678		SEAL 7.3M (287.4IN.)
	6	6N2438	2	COVER
	7	6N2522	2	BASE

D ORDER BY THE METER

307839

307839 P

1107 **2W1815 COVER GP-VALVE MECHANISM**
Engine S/N 48W14483-17830

BASIC ENGINE

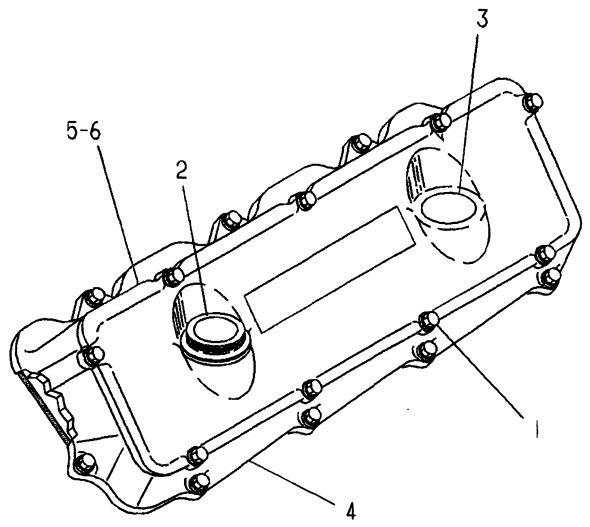

VIEWED FROM UPPER FRONT
LEFT SIDE OF ENGINE

NOTE	REF NO	PART NUMBER	QTY	PART NAME
	1	9L8925	37	BOLT
	2	4N0851	3	ADAPTER
	3	4N4957	1	PLUG
	4	4W6822	2	BASE-COVER
BD	5	5P5678		SEAL
	6	6N2438	2	COVER-ROCKER ARM
CBF		9L8925	1	BOLT (MOUNTED ON R.H. VALVE COVER)

B-USE AS REQUIRED
C-CHANGE FROM PREVIOUS TYPE
D-ORDER BY THE METER
F-NOT SHOWN

A-347450 EP

1107 **4W6827 COVER GP-VALVE MECHANISM**
Engine S/N 48W17831-24670

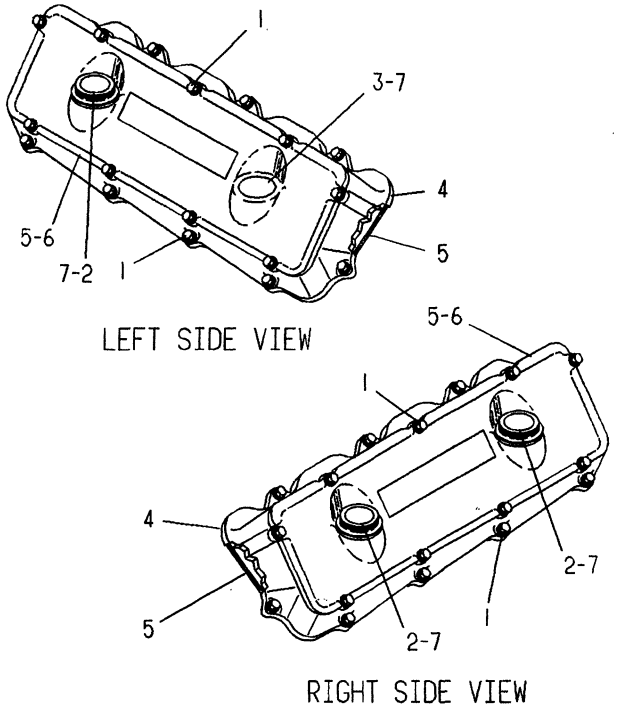

NOTE	REF NO	PART NUMBER	QTY	PART NAME
	1	9L8925	37	BOLT
C	2	7C6514	3	ADAPTER
C	3	7C9621	1	PLUG
	4	4W6822	2	BASE-COVER
BD	5	5P5678		SEAL
C	6	7C9635	2	COVER-ROCKER ARM
C	7	8C5196	4	SEAL-O-RING

B-USE AS REQUIRED
C-CHANGE FROM PREVIOUS TYPE
D-ORDER BY THE METER

A-454048 EP

1107 **4W6827 COVER GP-VALVE MECHANISM**
Engine S/N 48W24671-Up

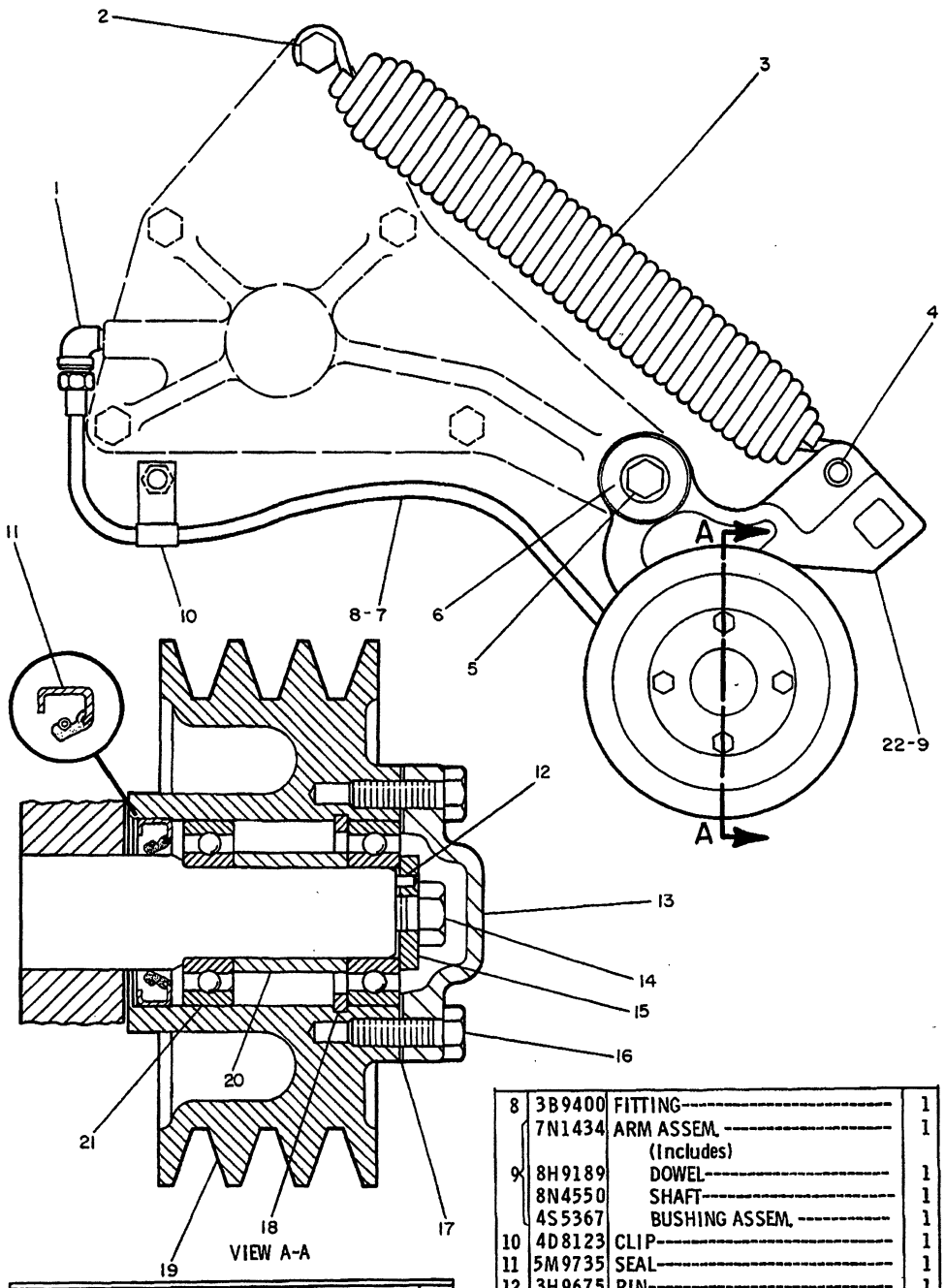

REF. NO.	PART NUMBER	DESCRIPTION	QTY.
1	3B6552	ELBOW	1
2	5M5830	SCREW	1
3	7N5959	SPRING	1
4	S175	PIN	1
	3B4617	COTTER	1
	4B4280	WASHER	1
5	S1594	BOLT	1
	5M2894	WASHER	1
6	2M2742	PLATE	1
7	8S2387	HOSE ASSEM. ---50.8 cm (20 in.)--	1
8	3B9400	FITTING	1
	7N1434	ARM ASSEM. (Includes)	1
9	8H9189	DOWEL	1
	8N4550	SHAFT	1
	4S5367	BUSHING ASSEM.	1
10	4D8123	CLIP	1
11	5M9735	SEAL	1
12	3H9675	PIN	1
13	2S6150	COVER	1
14	S509	BOLT	1
15	8N4549	WASHER	1
16	S1618	BOLT	4
17	2S6151	GASKET	1
18	8B2327	RETAINER	1
19	6N3641	PULLEY	1
20	1S8687	SPACER	1
21	6B1124	BEARING	2
22	3B8485	FITTING	2

230585

230585 P

1358 **7N1330 BELT TIGHTENER GP**
S/N 53Y1-3307

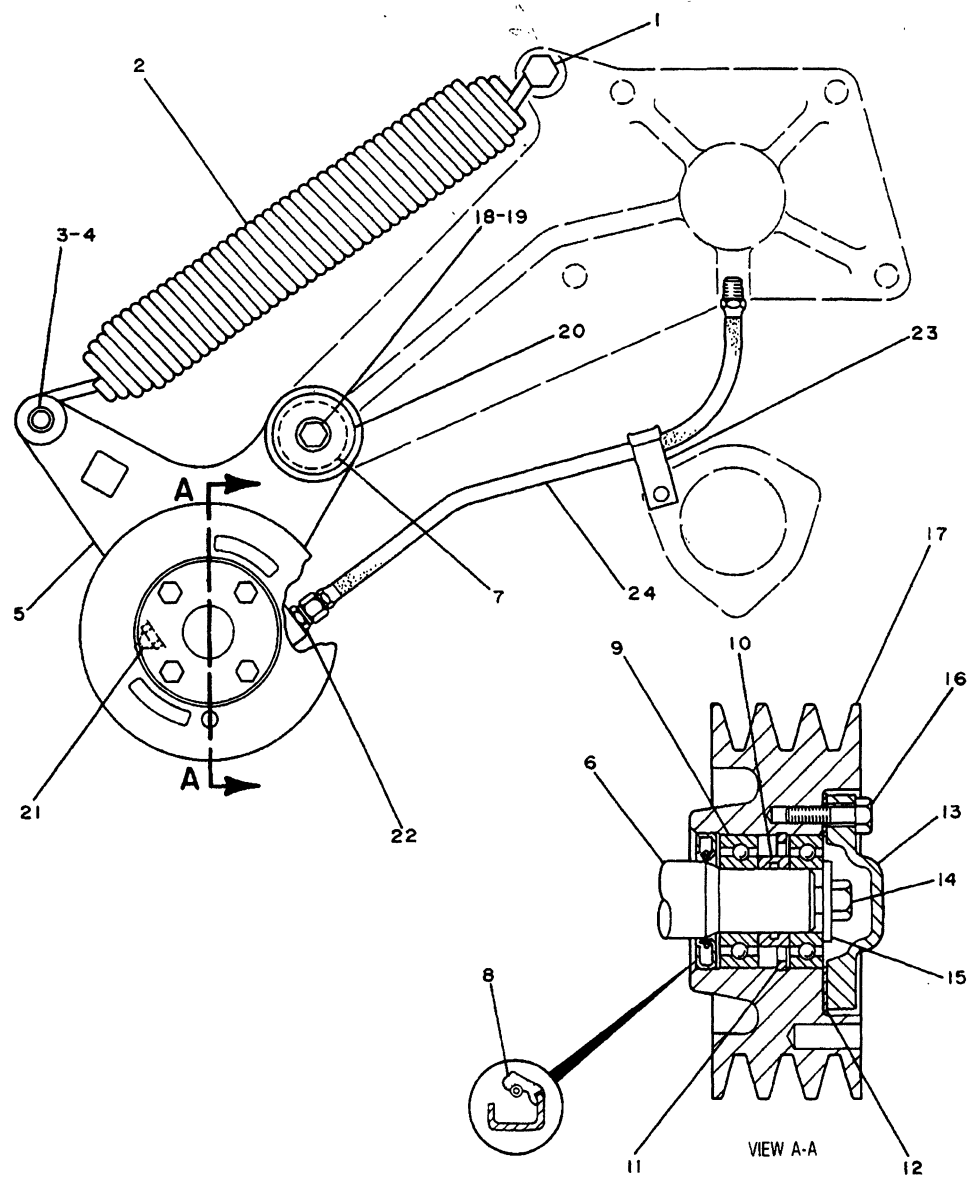

NOTE	REF NO	PART NUMBER	QTY	DESCRIPTION
	1	2W3376	1	SCREW
	2	7N5959	1	SPRING
	3	S175	1	PIN
	4	3B4617	1	COTTER
	5	2W5087	1	ARM ASSEM.
		8H9189	1	DOWEL
	6	8N3301	1	SHAFT
	7	4S5367	1	BUSHING ASSEM.
	8	5M9735	1	SEAL
	9	6B1124	2	BEARING
	10	8N3300	1	SPACER
	11	8B2327	1	RETAINER
	12	2S6151	1	GASKET
	13	2S6150	1	COVER
	14	S509	1	BOLT
	15	8N4549	1	WASHER
	16	S1618	4	BOLT
	17	8N3304	1	PULLEY
	18	S1594	1	BOLT
	19	5M2894	1	WASHER
	20	2M2742	1	PLATE
	21	3B8485	2	FITTING
	22	3B9400	1	CONNECTOR
	23	4D8123	1	CLIP
C	24	8S2387	1	HOSE ASSEM. 50.8CM(20 IN.)

C INDICATES CHANGE

323673 323673 EP

1358

2W5088 BELT TIGHTENER GP

S/N 53Y3308-Up

MEMORANDA

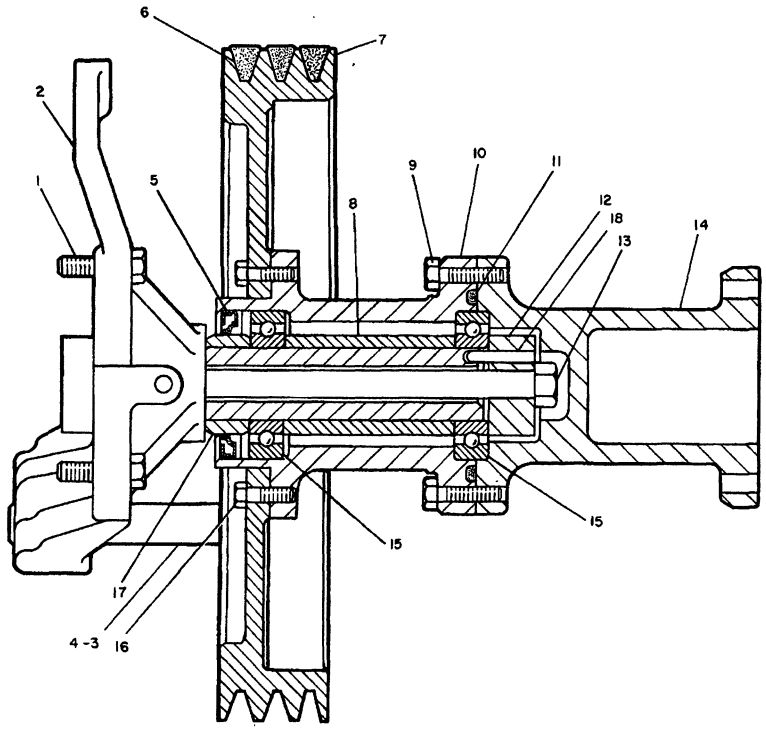

REF. NO.	PART NUMBER	DESCRIPTION	QTY.
1	S1585	BOLT	4
2	8N8984	BRACKET ASSEM. (Includes)	1
3	1S9209	SHAFT	1
4	8H9189	DOWEL	1
5	8B8255	SEAL	1
C 6	6N6651	VEE BELT SET-----(3 belts)	1
7	7N1275	PULLEY	1
8	8N8979	SPACER	1
9	S1588	BOLT	6
10	8N8983	HUB	1
11	5H8624	SEAL	1
12	1W4564	WASHER	1
13	1D4602	BOLT	1
14	8N8981	ADAPTER	1
15	6H3957	BEARING	2
16	1A2029	BOLT	6
17	8N8978	SPACER	1
18	6H3956	PIN	1

C INDICATES CHANGE

182574

182574 P

1359

7N2018 FAN DRIVE GP
S/N 53Y1-3307

BASIC ENGINE

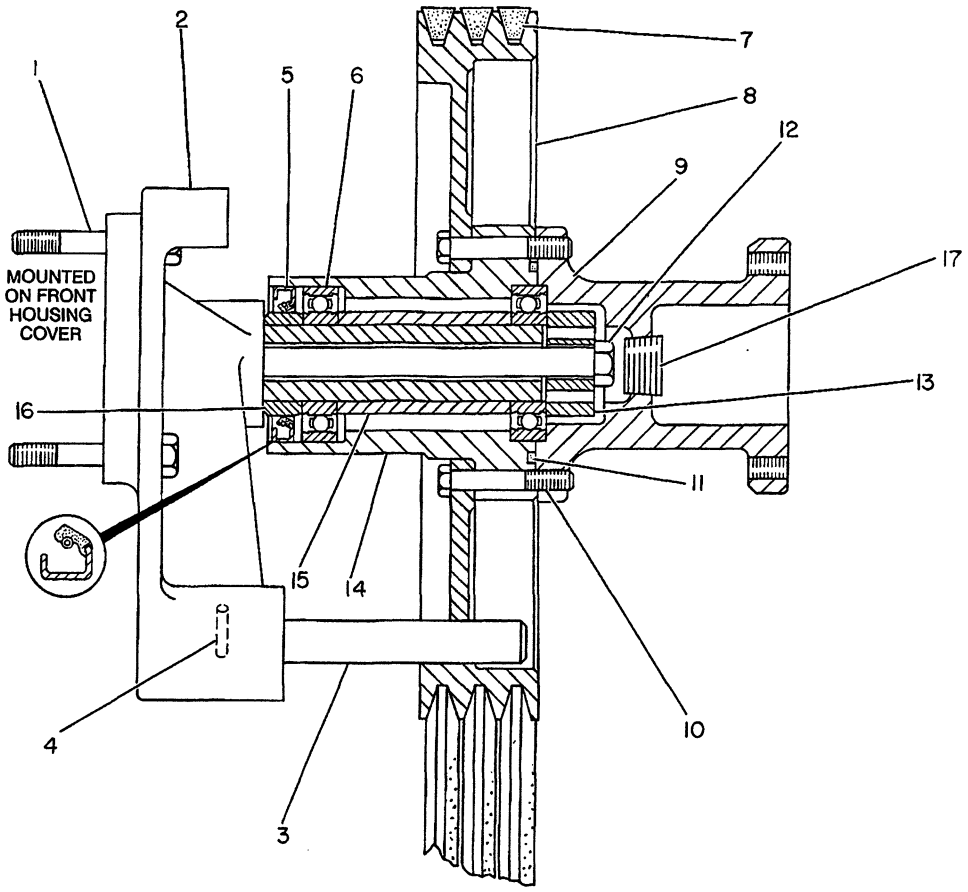

NOTE	REF NO	PART NUMBER	QTY	PART NAME	NOTE	REF NO	PART NUMBER	QTY	PART NAME
C	1	1D4566	2	BOLT 8.9CM(3.5OIN)LG					
				-OR-					
		1A1460	4	BOLT 5.1CM(2OIN)LG					
	2	2W5095	1	BRACKET AS-FAN					
	3	1S9209	1	SHAFT-TIGHTENER					
	4	8H9189	1	DOWEL					
	5	8B8255	1	SEAL-LIP					
	6	6H3957	2	BALL BEARING					
	7	4WO752	1	V-BELT SET					
				(INCLUDES 3 BELTS)					
	8	7N1275	1	PULLEY-FAN DRIVE					
	9	2W5090	1	HUB-FAN PULLEY					
	10	OL1143	6	BOLT					
	11	5H8624	1	SEAL-O-RING					
	12	1D4602	1	BOLT					
	13	1W4564	1	WASHER-RETAINING					
	14	2W5097	1	ADAPTER-FAN					
	15	8N8979	1	SPACER					
	16	8N8978	1	SPACER					
	17	3BO551	1	PLUG-PIPE					

C-CHANGE FROM PREVIOUS TYPE

B-332391 EP

1359 **2W5094 FAN DRIVE GP-BELT**
S/N 53Y3308-Up

MEMORANDA

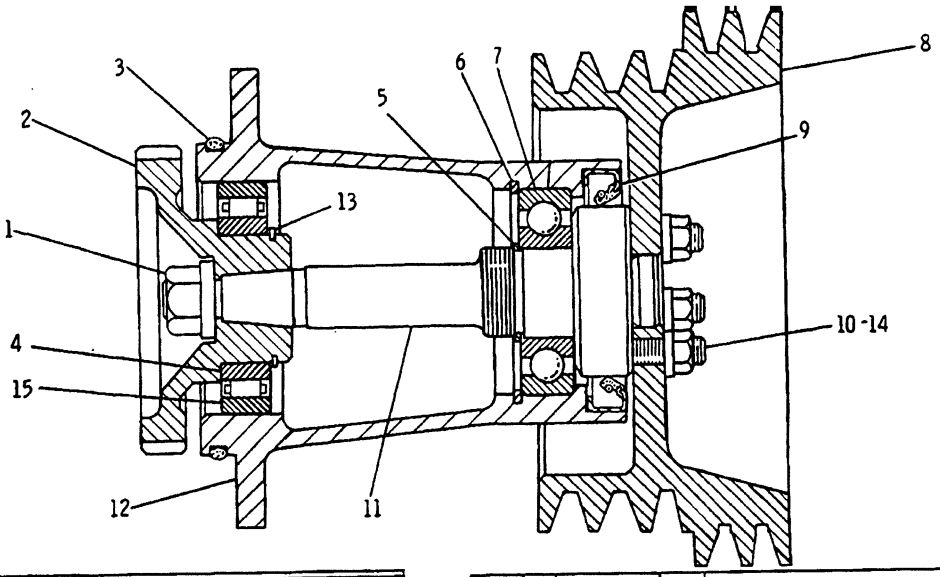

NOTE	REF NO	PART NUMBER	QTY	DESCRIPTION
C	1	6B6683	1	NUT
		4D3704	1	WASHER
C	2	2W5275	1	GEAR (43 TEETH)
	3	1S1225	1	SEAL
C	4	4M6107	1	BEARING
	5	6K7909	1	RING
				-OR-
C		2H3777	1	NUT
C		5F8916	1	LOCK
	6	1K6985	1	RING
	7	1B4117	1	BEARING
C	8	1W6238	1	PULLEY
	9	3J365	1	SEAL
	10	2M1538	5	STUD
		1D4717	5	NUT
C	11	2W7917	1	SHAFT
C	12	2W3262	1	HOUSING
	13	8L9811	1	RING
	14	5M2894	5	WASHER
C	15	6V6570	1	RACE

C INDICATES CHANGE

307701

307701 P

1356 **1W2484 FAN GP-DRIVE AUXILIARY**
S/N 53Y1-3217

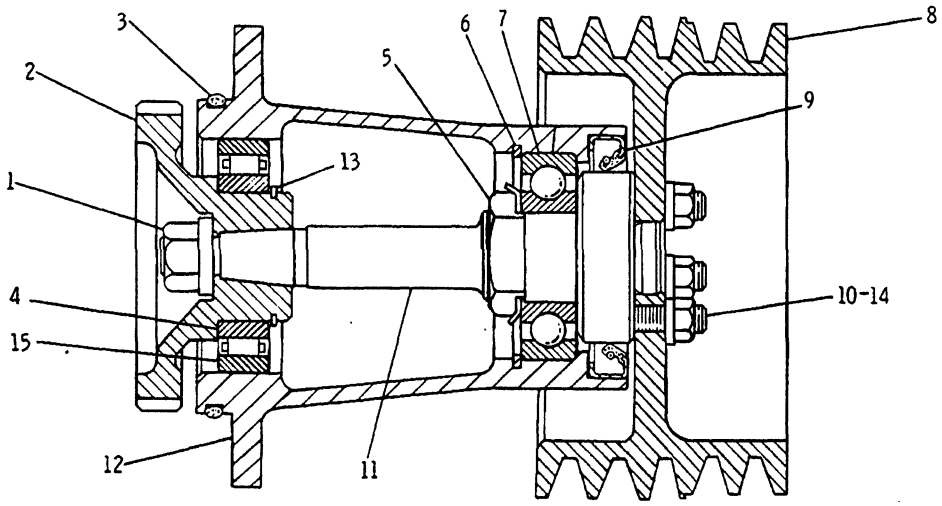

NOTE	REF NO	PART NUMBER	QTY	DESCRIPTION
	1	6B6683	1	NUT
		4D3704	1	WASHER
	2	2W5275	1	GEAR (43 TEETH)
	3	1S1225	1	SEAL
	4	4M6107	1	BEARING
	5	2H3777	1	NUT
		5F8916	1	LOCK
	6	1K6985	1	RING
	7	1B4117	1	BEARING
C	8	7W0221	1	PULLEY
	9	3J365	1	SEAL
	10	2M1538	5	STUD
		1D4717	5	NUT
	11	2W7917	1	SHAFT
	12	2W3262	1	HOUSING
	13	8L9811	1	RING
	14	5M2894	5	WASHER
C	15	8T0209	1	RACE

C INDICATES CHANGE

332355

332355 P

BASIC ENGINE

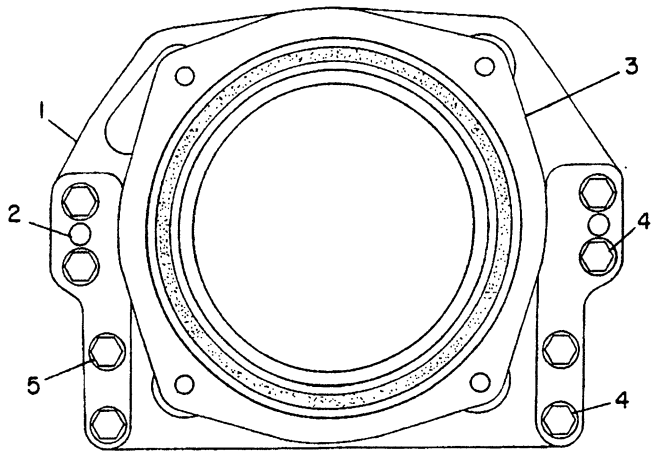

NOTE	REF NO	PART NUMBER	QTY	PART NAME
C	1	1W3014	1	ADAPTER AS
	2	4N0683	2	DOWEL
	3	7N1210	1	MOUNT AS (RESILIENT)
C	4	0S1573	6	BOLT
C	5	1D4569	2	BOLT

C-CHANGE FROM PREVIOUS TYPE

B-353064 EP

6069 **7N1346 TRUNNION GP**

BASIC ENGINE

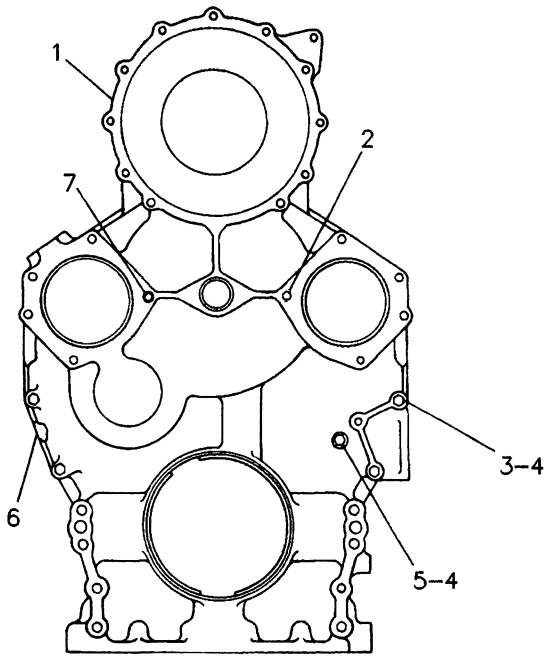

NOTE	REF NO	PART NUMBER	QTY	PART NAME
C	1	6N7142	1	HOUSING-GEAR
C	2	3K3256	1	STUD
C	3	0L1352	2	BOLT
	4	5M2894	5	WASHER
	5	0L1143	3	BOLT
	6	4N1625	1	GASKET-CYLINDER BLOCK
C	7	6F7012	1	STUD

C-CHANGE FROM PREVIOUS TYPE

B-222292 EP

1162 **4N5226 HOUSING GP-FRONT**
Timing Gear
Type 1

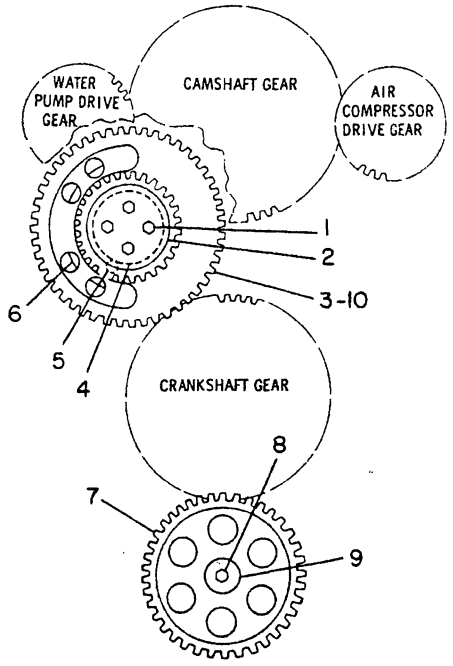

NOTE	REF NO	PART NUMBER	QTY	PART NAME
	1	2B2695	4	BOLT (5/16-18X.875IN)
	2	1129217	1	PLATE-THRUST
C	3	7N7586	1	GEAR AS-IDLER & WEIGHT (43 & 80 TEETH)
		1B8705	1	KEY-WOODRUFF
	4	7N2483	1	BEARING-SLEEVE
	5	3G2292	5	BOLT-LOCKING
	6	1179712	1	SHAFT-DRIVE IDLER
C	7	7E5661	1	GEAR-OIL PUMP DRIVE (69 TEETH)
		1B8705	1	KEY-WOODRUFF
	8	0S1571	1	BOLT (3/8-16X1.75IN)
	9	1P7346	1	WASHER
	10	7N2443	1	WASHER-THRUST

C-CHANGE FROM PREVIOUS TYPE

B-600862 CP

1206 **7N2840 GEAR GP-FRONT TIMING**

BASIC ENGINE

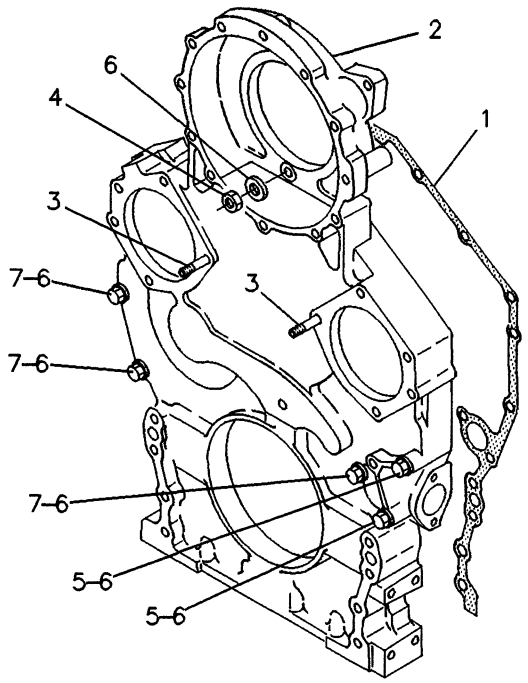

NOTE	REF NO	PART NUMBER	QTY	PART NAME
	1	1234207	1	GASKET-CYLINDER BLOCK
C	2	7C4843	1	HOUSING-GEAR
	3	3K3256	2	STUD
	4	9S8752	1	NUT-FULL
	5	OL1352	2	BOLT
C	6	5M2894	6	WASHER
	7	OL1143	3	BOLT

C-CHANGE FROM PREVIOUS TYPE

F-607302 CP

1162 **4N5226 HOUSING GP-FRONT**
Timing Gear
Type 2

MEMORANDA

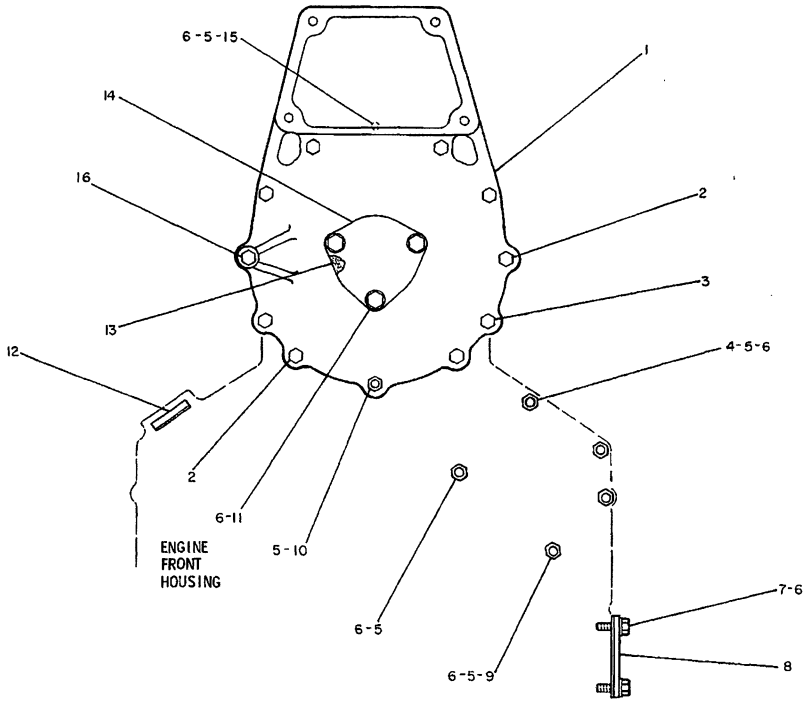

	REF. NO.	PART NUMBER	DESCRIPTION	QTY.
C	1	1W386	COVER	1
		4N1998	GASKET	1
C	2	5B9603	BOLT	3
	3	T573	BOLT	6
	4	2P1974	STUD	3
	5	1D4717	NUT	7
	6	5M2894	WASHER	11
	7	1A2029	BOLT	2
	8	2P2772	COVER	1
		4N933	GASKET	1
	9	6F7012	STUD	1
	10	4M8363	STUD	1
	11	S1594	BOLT	3
	12	4N8478	PLUG	1
	13	6N2508	GASKET	1
	14	6N2509	COVER	1
	15	8M1871	STUD	1
C	16	8F6350	BOLT	1

C INDICATES CHANGE

235858

235858 P

1166 **6N4914 COVER GP-FRONT HOUSING**
Engine S/N 48W13002-19972

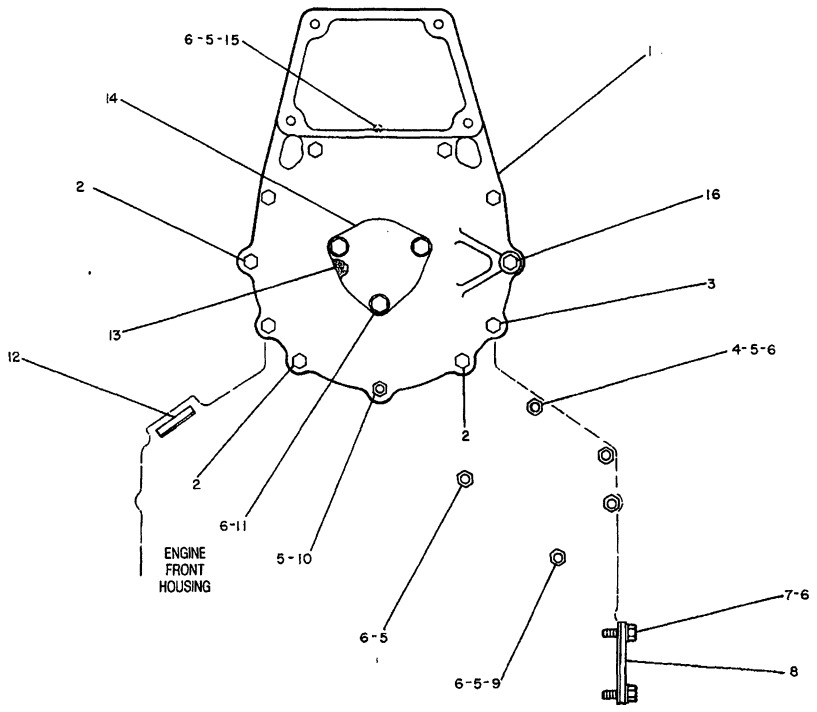

NOTE	REF NO	PART NUMBER	QTY	DESCRIPTION
	1	4W0828	1	COVER
		4N1998	1	GASKET
	2	5B9603	3	BOLT
	3	0T0573	6	BOLT
	4	2P1974	3	STUD
	5	1D4717	7	NUT
	6	5M2894	11	WASHER
	7	1A2029	2	BOLT
	8	2P2772	1	COVER
		4N0933	1	GASKET
	9	6F7012	1	STUD
	10	4M8363	1	STUD
	11	0S1594	3	BOLT
	12	4N8478	1	PLUG
	13	6N2508	1	GASKET
	14	6N2509	1	COVER
	15	8M1871	1	STUD
	16	9F2773	1	BOLT

322329

322329 P

1166

7W0971 COVER GP-FRONT HOUSING
Engine S/N 48W19973-20450

BASIC ENGINE

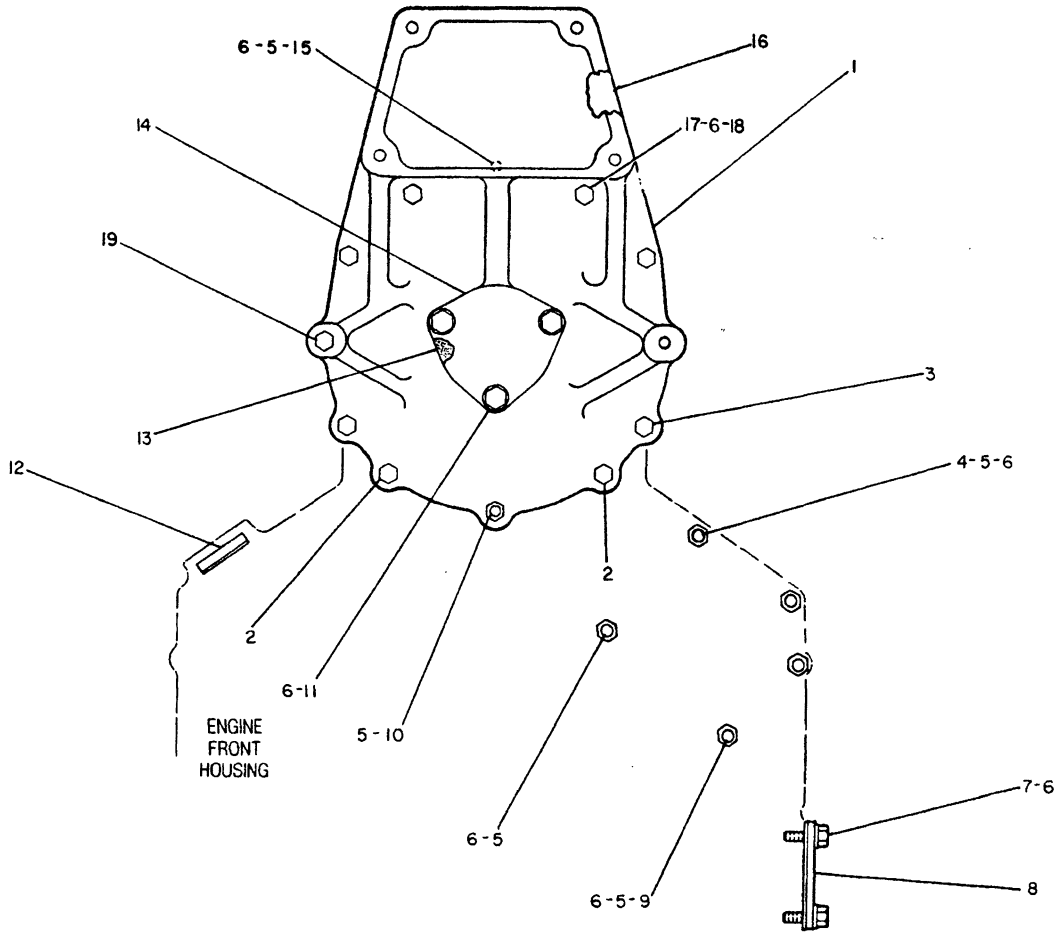

NOTE	REF NO	PART NUMBER	QTY	PART NAME	NOTE	REF NO	PART NUMBER	QTY	PART NAME
	1	7W6809	1	COVER-PUMP GEAR					
B		6V6640		SEALANT					
	2	5B9603	2	BOLT					
	3	0T0573	5	BOLT					
	4	2P1974	3	STUD-TAPERLOCK					
	5	1D4717	7	NUT					
	6	5M2894	12	WASHER					
	7	1A2029	2	BOLT					
	8	2P2772	1	COVER					
		4N0933	1	GASKET					
	9	6F7012	1	STUD					
	10	4M8363	1	STUD					
	11	0S1594	3	BOLT					
	12	4N8478	1	PLUG					
	13	6N2508	1	GASKET					
	14	6N2509	1	COVER					
	15	8M1871	1	STUD-TAPERLOCK					
	16	7C1177	1	PLATE-SUPPORT					
	17	0S1608	1	BOLT					
	18	9R1685	1	SPACER					
	19	8F6350	1	BOLT					

B-USE AS REQUIRED

B-347420 EP

1166 **7W6810 COVER GP-FRONT STRUCTURE**

Type 1. Engine S/N 48W20451-Up

BASIC ENGINE

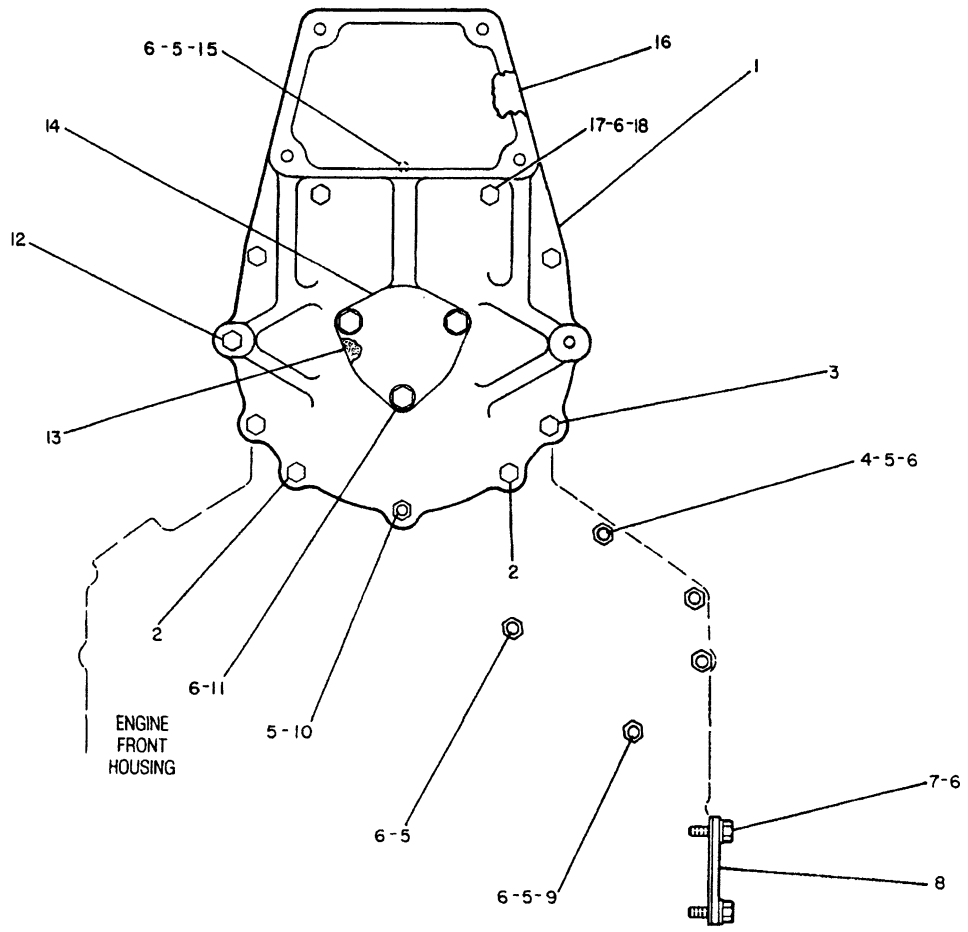

NOTE	REF NO	PART NUMBER	QTY	PART NAME
	1	1321442	1	COVER
B		6V6640		SEALANT
	2	5B9603	2	BOLT (3/8-16X5IN)
	3	0T0573	5	BOLT (3/8-16X2.75IN)
	4	2P1974	3	STUD-TAPERLOCK
	5	9S8752	7	NUT-FULL (3/8-16 THD)
	6	5M2894	12	WASHER (2.5MM THK)
	7	1A2029	2	BOLT (3/8-16X1.125IN)
	8	2P2772	1	COVER
		4N0933	1	GASKET
	9	3K3256	1	STUD
	10	2B2471	1	STUD
	11	0S1594	3	BOLT
	12	8F6350	1	BOLT (3/8-16X8IN)
	13	6N2508	1	GASKET
	14	6N2509	1	COVER
	15	8M1871	1	STUD-TAPERLOCK
	16	7C1177	1	PLATE-SUPPORT
	17	0S1608	1	BOLT (3/8-16X3.75IN)
	18	9R1685	1	SPACER

B-USE AS REQUIRED

B-639779 CP

1166 **7W6810 COVER GP-FRONT STRUCTURE**

Type 2. Engine S/N 48W20451-Up

MEMORANDA

BASIC ENGINE

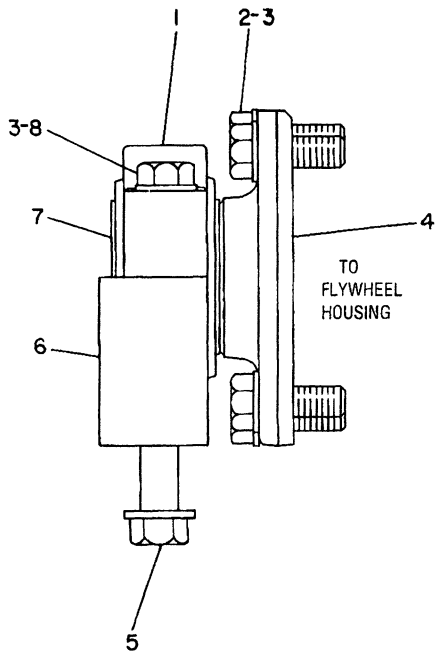

NOTE	REF NO	PART NUMBER	QTY	PART NAME
	1	6N3896	2	CAP
	2	2A1538	12	BOLT
	3	5P8248	16	WASHER-HARD
	4	6N3897	2	SUPPORT-ENGINE
	5	1D4627	4	BOLT
		5P8249	4	WASHER
	6	7N2230	2	SUPPORT
	7	6N1572	2	MOUNT AS
	8	3B2968	4	BOLT
F		1D4631	4	BOLT
F		5P8249	4	WASHER (MOUNTED ON FRONT SUPPORT)

F-NOT SHOWN

B-230430 EP

1154 **6N1379 SUPPORT GP-ENGINE & TRANSMISSION**

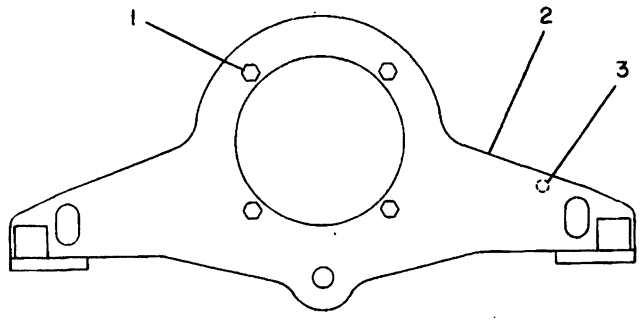

NOTE	REF NO	PART NUMBER	QTY	PART NAME
	1	OS1589	4	BOLT
		5P8247	4	WASHER-HARD
	2	7N6697	1	SUPPORT AS-ENGINE
C	3	8F9836	1	LUG

C-CHANGE FROM PREVIOUS TYPE

B-182573 EP

1153 **6N5885 SUPPORT GP-ENGINE**
Front

BASIC ENGINE

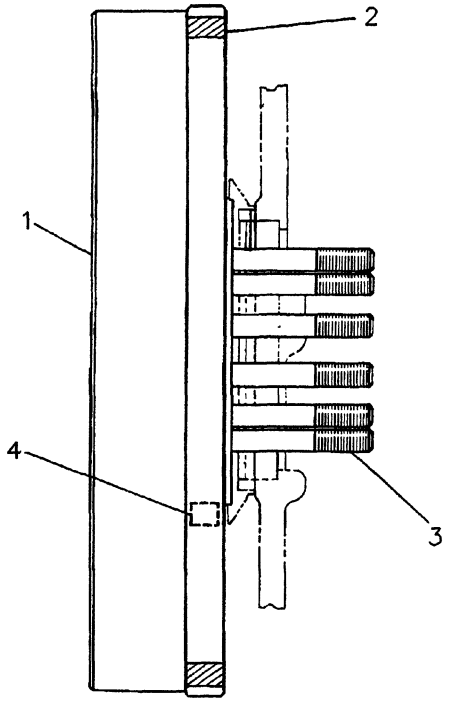

NOTE	REF NO	PART NUMBER	QTY	PART NAME
	1	1W2709	1	FLYWHEEL AS
	2	4N2514	1	GEAR (113 TEETH)
	3	5L2683	12	BOLT
		5P8247	12	WASHER-HARD
	4	1W4319	2	DOWEL

R-527218 EP

1156 **7N9572 FLYWHEEL GP**

Engine S/N 48W13002-19972

BASIC ENGINE

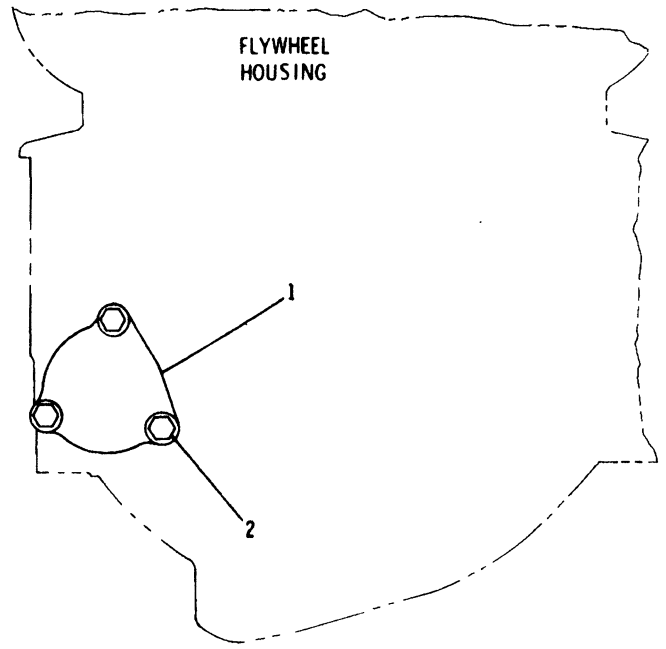

NOTE	REF NO	PART NUMBER	QTY	PART NAME
	1	4N1114	1	COVER
		9Y6089	1	GASKET
	2	OS1566	3	BOLT (5/8-11X1.5IN)
		5P8247	3	WASHER-HARD (3.5MM THK)

B-616157 CP

1157 **4N6876 COVER GP-FLYWHEEL HOUSING**

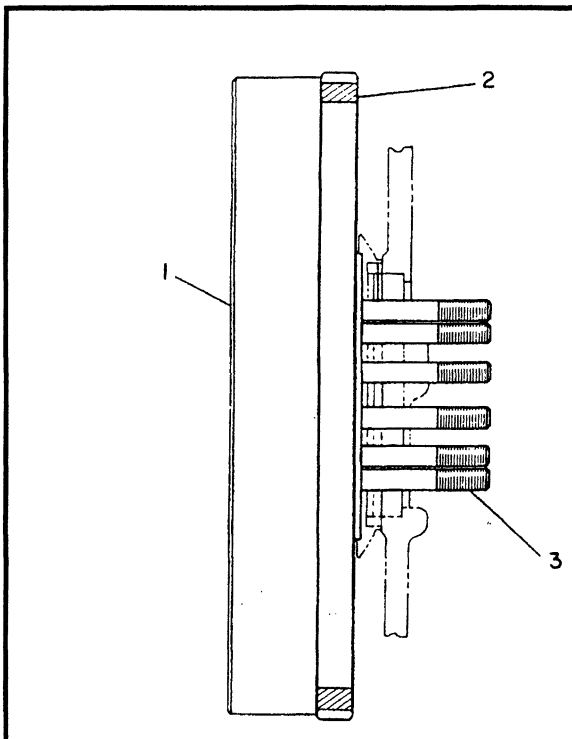

NOTE	REF NO	PART NUMBER	QTY	PART NAME
	1	2W8026	1	FLYWHEEL AS
	2	4N2514	1	GEAR (113 TEETH)
	3	5L2683	12	BOLT
		4D3704	12	WASHER-HARD

B-515756 EP

1156 **2W8025 FLYWHEEL GP**
Engine S/N 48W19973-Up

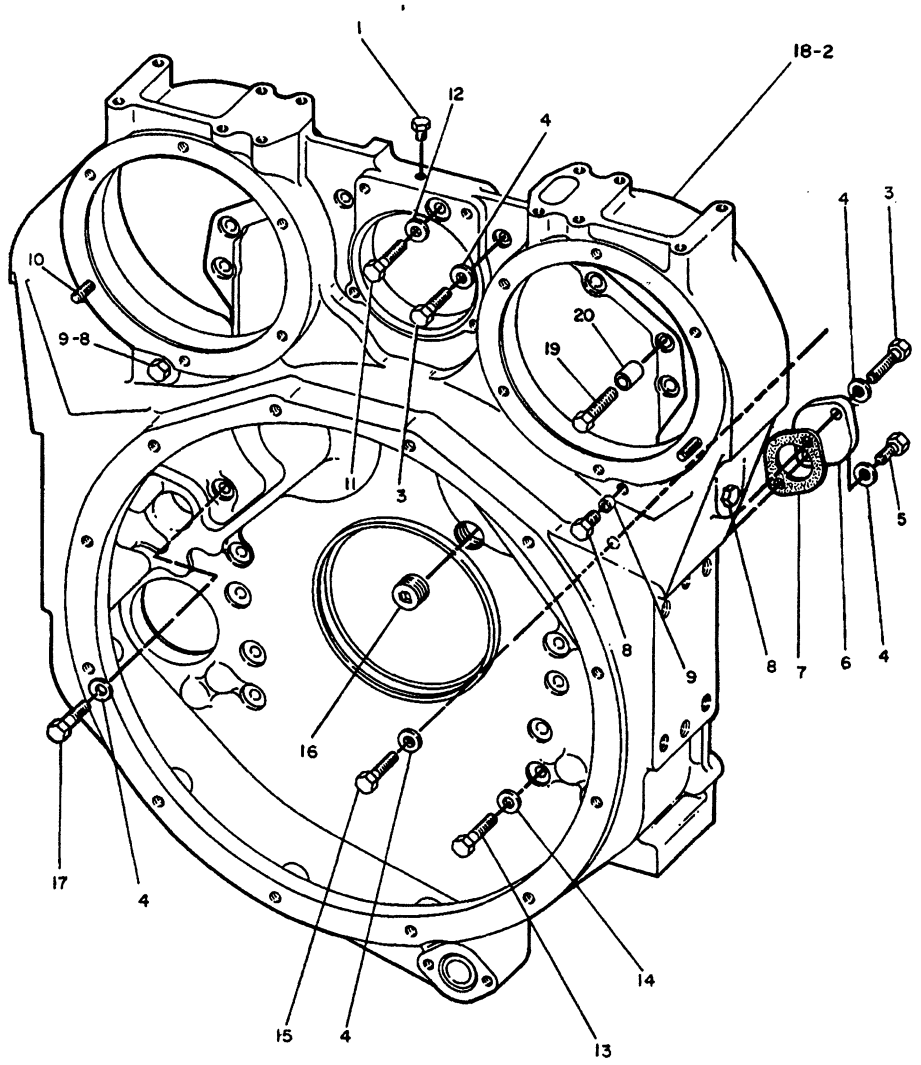

REF. NO.	PART NUMBER	DESCRIPTION	QTY
1	5M6214	PLUG	1
C 2	6V6640	SEALANT	
3	S1619	BOLT	4
4	5M2894	WASHER	10
5	1A2029	BOLT	2
6	2P2772	COVER	2
7	4N933	GASKET	2
8	5M6213	PLUG	5
9	3S36	PLUG	2
10	3D2871	STUD	2
11	L1352	BOLT	1
12	8M9124	WASHER	1
13	2H6488	BOLT	8
14	5P8245	WASHER	8
15	T55	BOLT	2
16	3B551	PLUG	1
17	1A5964	BOLT	2
18	1W4798	HOUSING ASSEM.	1
		(Includes)	
	1W3136	BAFFLE	1
19	S1590	BOLT	6
20	1W3189	SPACER	6

304730

304730 P

1157

1W4050 HOUSING GP-FLYWHEEL
Engine S/N 48W13002-19972

BASIC ENGINE

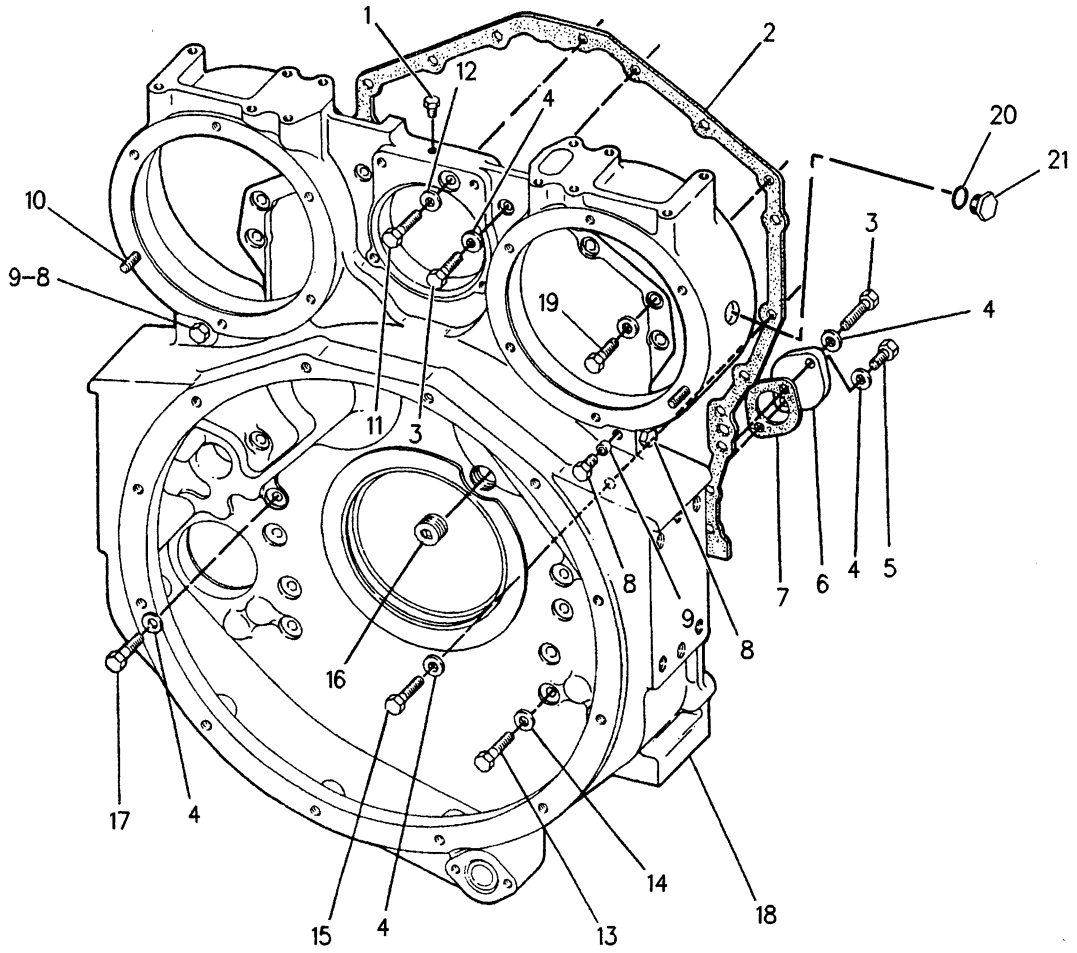

NOTE	REF NO	PART NUMBER	QTY	PART NAME	NOTE	REF NO	PART NUMBER	QTY	PART NAME
B	1	8T6764	1	PLUG-PIPE		19	0S1590	6	BOLT
	2	1131474	1	GASKET-CYLINDER					5.08CM (2 IN.)LONG
	3	0S1619	4	BOLT			1W3189	6	SPACER
C	4	5M2894	10	WASHER					20MM (.79 IN.)THICK
	5	1A2029	2	BOLT					-OR-
	6	2P2772	2	COVER			0S1588	6	BOLT
	7	4N0933	2	GASKET					3.18CM (1.25 IN.)LONG
	8	8T6765	5	PLUG-PIPE					
	9	3S0036	2	PLUG-CORE			5M2894	6	WASHER
	10	3D2871	2	STUD					2.88MM (.11 IN.)THICK
	11	0L1352	1	BOLT		20	2A1162	1	GASKET
	12	8M9124	1	WASHER		21	5F0304	1	PLUG-DRAIN
	13	2H6488	8	BOLT					
	14	5P8245	8	WASHER					
	15	9M4225	2	BOLT					
	16	8T6761	1	PLUG-PIPE					
	17	1A5964	2	BOLT					
	18	1056138	1	HOUSING AS-FLYWHEEL					
		1W3136	2	BAFFLE					

B-USE AS REQUIRED
C-CHANGE FROM PREVIOUS TYPE

R-623288 CP

1157

1W1608 HOUSING GP-FLYWHEEL
Engine S/N 48W19973-Up

MEMORANDA

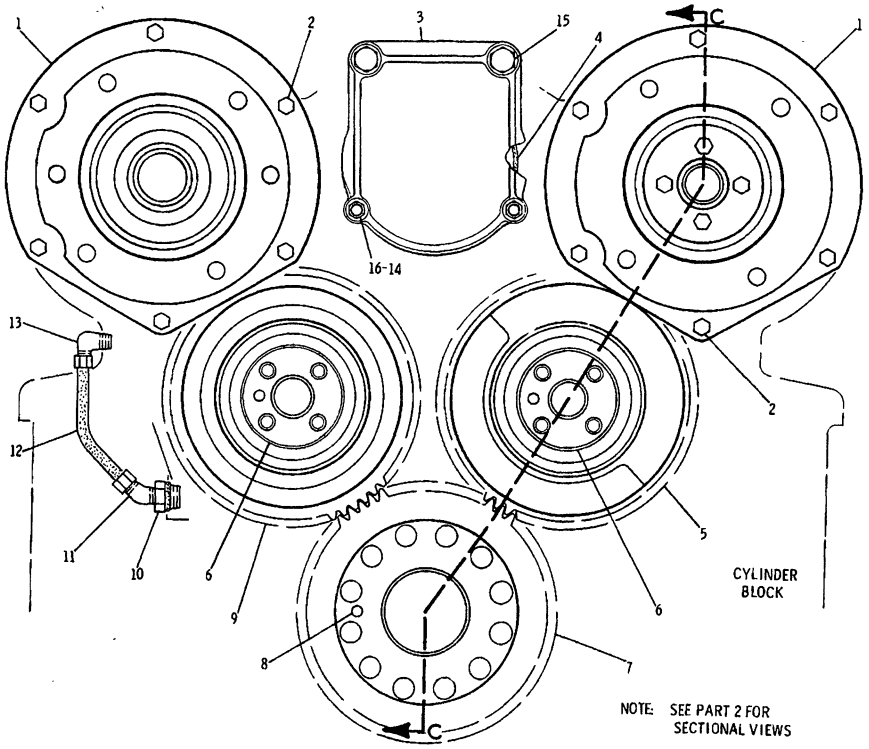

NOTE: SEE PART 2 FOR SECTIONAL VIEWS

REF. NO.	PART NUMBER	DESCRIPTION	QTY.
1	8N634	ADAPTER	2
2	1A2029	BOLT	12
3	8N605	COVER	1
4	5F3106	SEAL	1
5	8N938	GEAR--(balancer-64 teeth)	1
6	4N1235	SHAFT	2
7	7N9181	GEAR--(crankshaft-64 teeth)	1
8	4N684	PIN	1
9	7N8956	GEAR-----(idler-64 teeth)	1
10	3P764	PLUG	1
	2M9780	SEAL	1
11	16498	ELBOW	1
12	7N3761	TUBE ASSEM.	1
13	321268	ELBOW	1
14	5M2894	WASHER	2
15	S1595	BOLT	2
	5P8245	WASHER	2
16	S1594	BOLT	2
		- OR -	
	1D4717	NUT	2

234693

234693 P

1204 **7N9574 GEAR GP-REAR-PART 1 OF 2**
Engine S/N 48W13002-14185

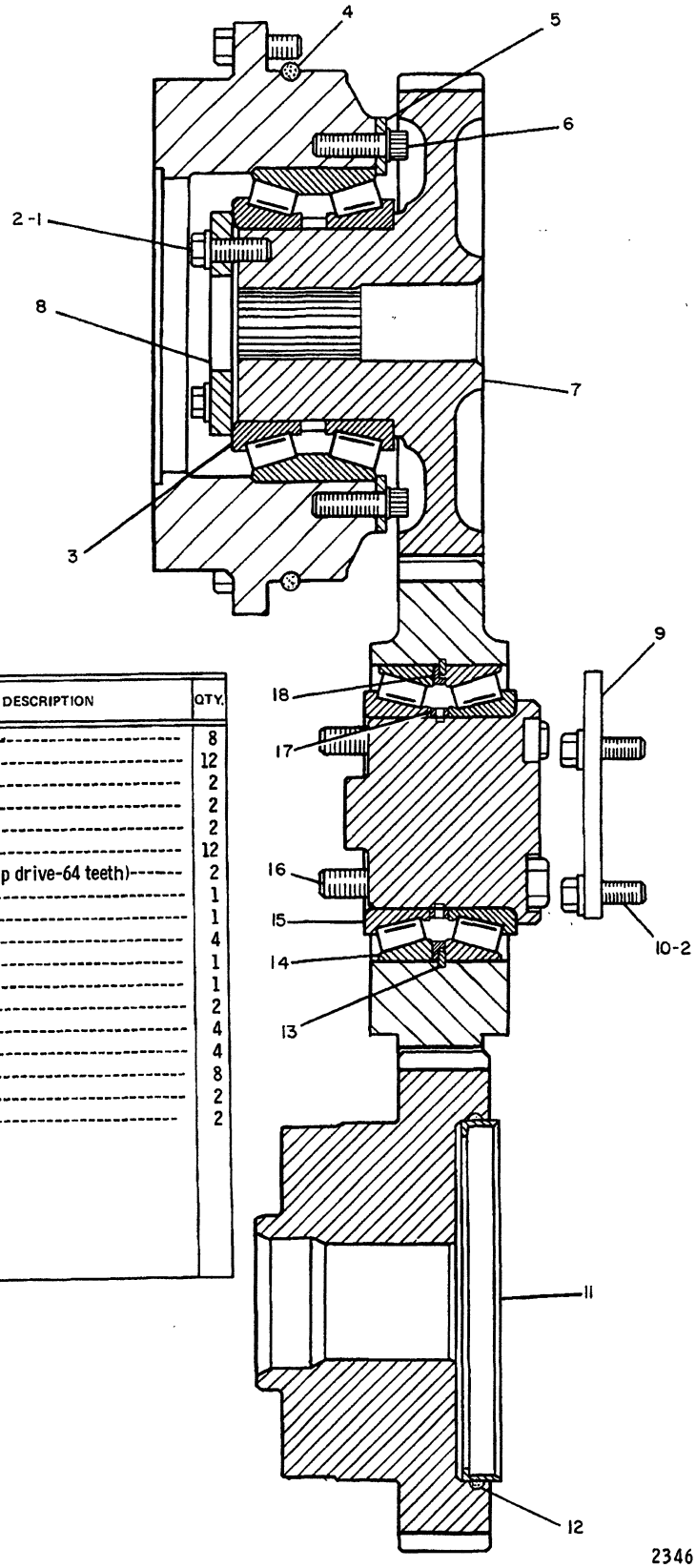

REF. NO.	PART NUMBER	DESCRIPTION	QTY.
1	1A2029	BOLT	8
2	5M2894	WASHER	12
3	5P1370	BEARING	2
4	4N1230	SEAL	2
5	4N7183	RING	2
6	1T720	BOLT	12
7	1W3188	GEAR-(pump drive-64 teeth)	2
8	4N1232	WASHER	1
9	4N1720	COVER	1
10	S1594	BOLT	4
11	4N848	SLEEVE	1
12	2K4472	SEAL	1
13	5K9065	RING	2
14	300060	CUP	4
15	300061	CONE	4
16	1D4566	BOLT	8
17	2P7554	SPACER	2
18	2P7555	SPACER	2

1204 **7N9574 GEAR GP-REAR-PART 2 OF 2**
Engine S/N 48W13002-14185

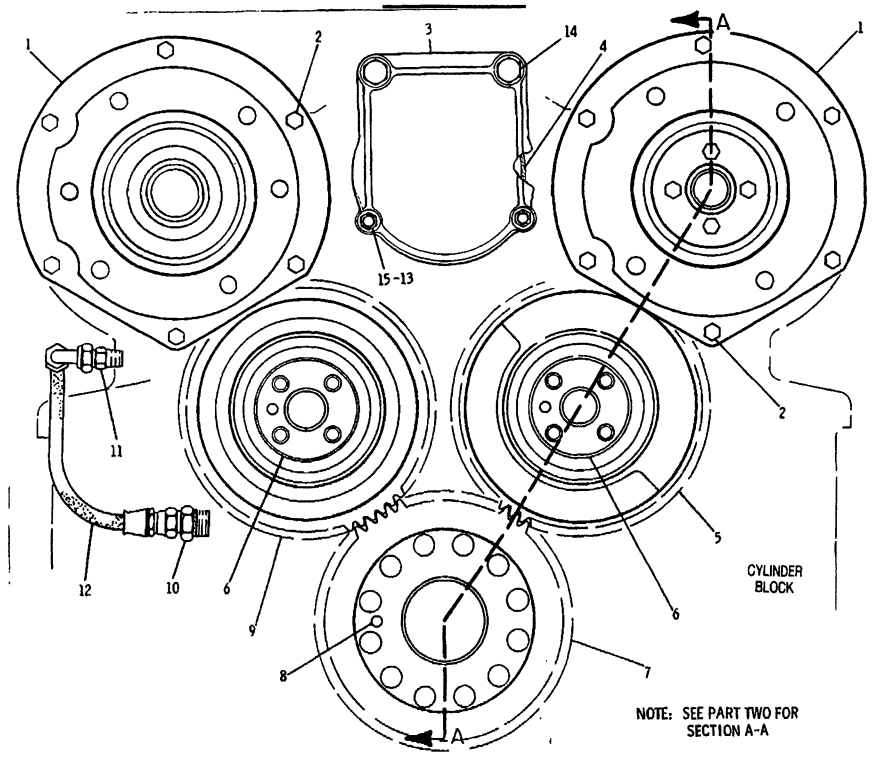

NOTE	REF NO	PART NUMBER	QTY	DESCRIPTION
	1	8N634	2	ADAPTER
	2	1A2029	12	BOLT
	3	8N605	1	COVER
	4	5F3106	1	SEAL
	5	8N938	1	GEAR (BALANCER-64 TEETH)
	6	4N1235	2	SHAFT
	7	7N9181	1	GEAR (CRANKSHAFT-64 TEETH)
	8	4N684	1	PIN
	9	7N8956	1	GEAR (IDLER-64 TEETH)
C	10	308194	1	CONNECTOR
		2M9780	1	SEAL
C	11	321267	1	CONNECTOR
C	12	8N7806	1	HOSE ASSEM.
	13	5M2894	2	WASHER
	14	S1595	2	BOLT
		5P8245	2	WASHER
	15	S1594	2	BOLT
				-OR-
		1D4717	2	NUT

C INDICATES CHANGE

307302

307302 P

1204 **7N9574 GEAR GP-REAR-PART 1 OF 2**
Engine S/N 48W14186-18090

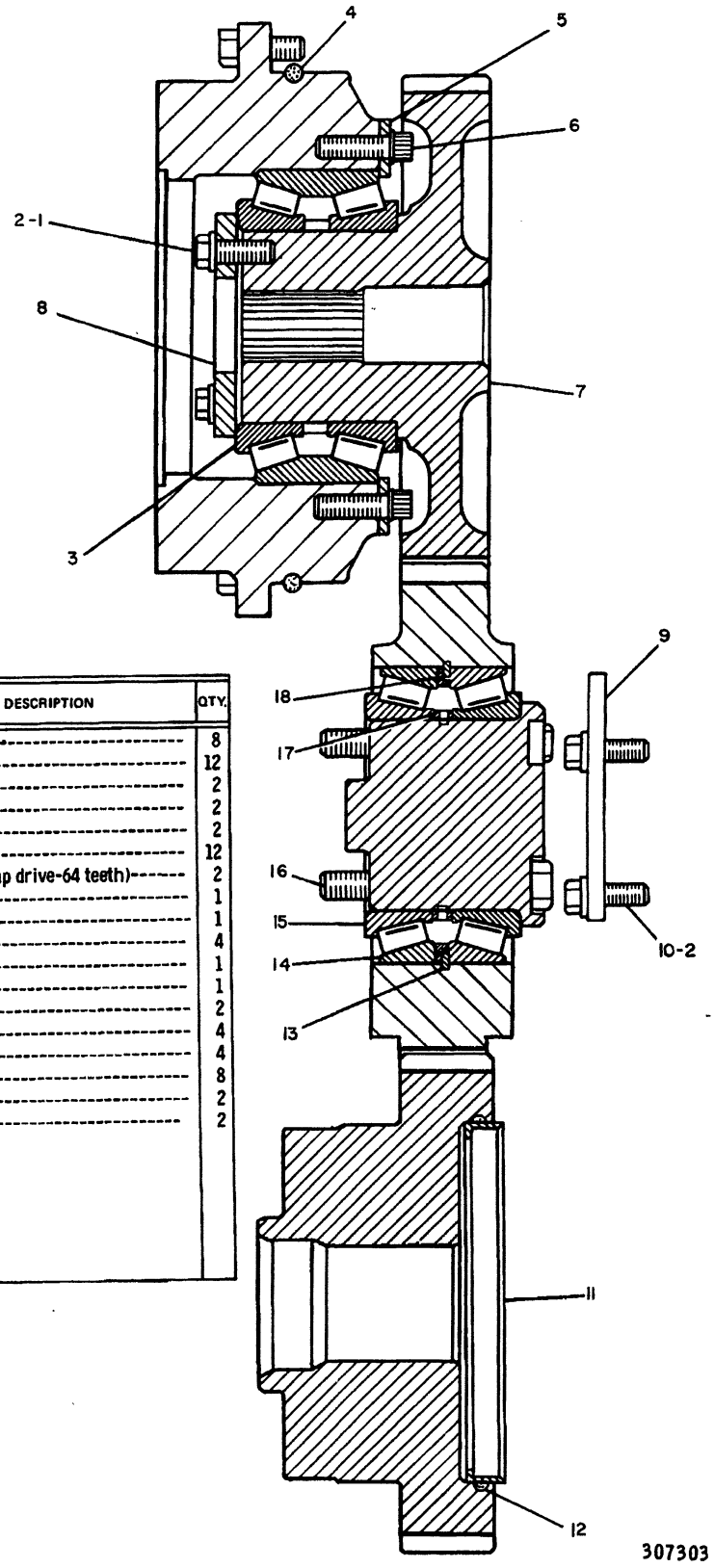

REF. NO.	PART NUMBER	DESCRIPTION	QTY.
1	1A2029	BOLT	8
2	5M2894	WASHER	12
3	5P1370	BEARING	2
4	4N1230	SEAL	2
5	4N7183	RING	2
6	1T720	BOLT	12
7	1W3188	GEAR-(pump drive-64 teeth)	2
8	4N1232	WASHER	1
9	4N1720	COVER	1
10	S1594	BOLT	4
11	4N848	SLEEVE	1
12	2K4472	SEAL	1
13	5K9065	RING	2
14	300060	CUP	4
15	300061	CONE	4
16	1D4566	BOLT	8
17	2P7554	SPACER	2
18	2P7555	SPACER	2

307303 P

1204 **7N9574 GEAR GP-REAR-PART 2 OF 2**
Engine S/N 48W14186-18090

BASIC ENGINE

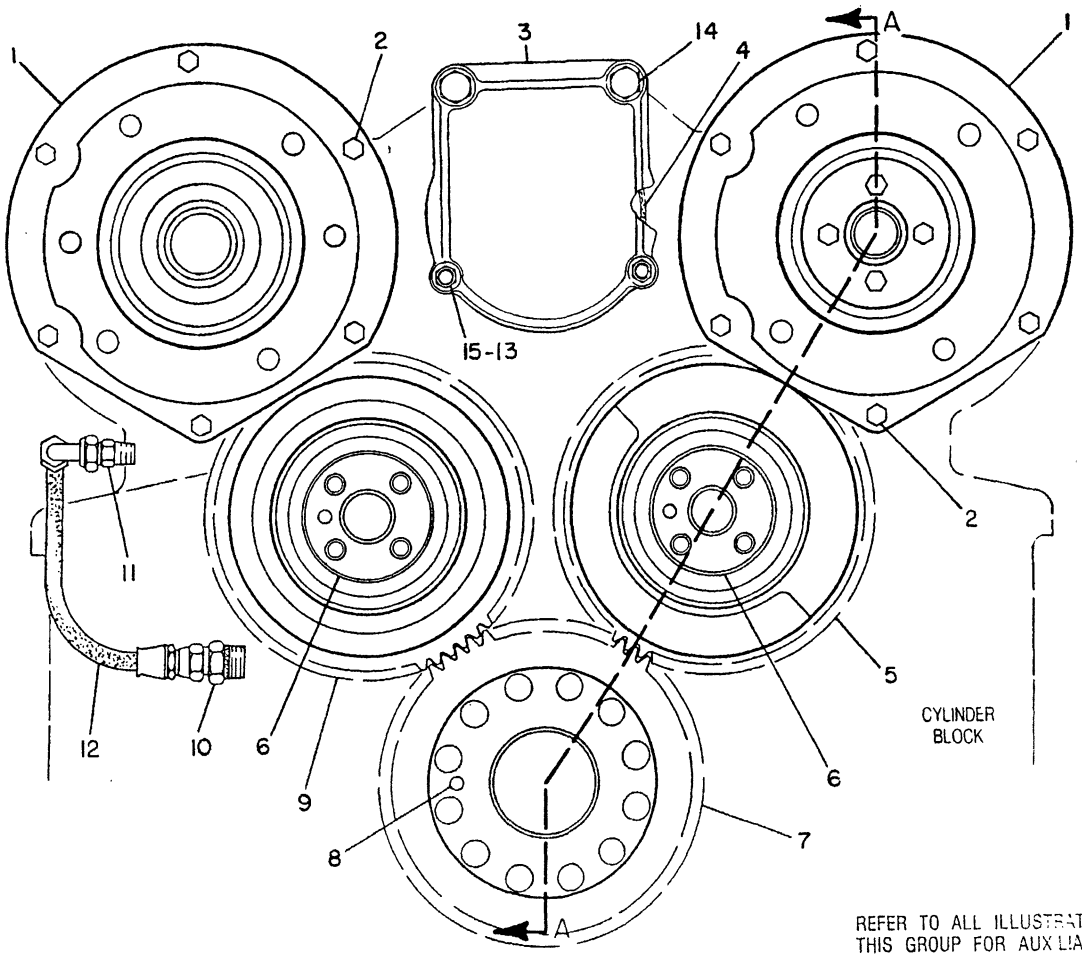

REFER TO ALL ILLUSTRATIONS OF THIS GROUP FOR AUXILIARY VIEWS

NOTE	REF NO	PART NUMBER	QTY	PART NAME	NOTE	REF NO	PART NUMBER	QTY	PART NAME
	1	9Y9929	2	ADAPTER AS (EACH INCLUDES)					
		1T0550	2	PIN-SPRING					
	2	1A2029	12	BOLT					
	3	8N0605	1	COVER-FLYWHEEL HOUSING					
	4	9X7371	1	SEAL-O-RING					
C	5	2W7611	1	GEAR-BALANCER (64 TEETH)					
	6	4N1235	2	SHAFT-IDLER GEAR					
C	7	2W7614	1	GEAR-CRANKSHAFT (64 TEETH)					
	8	4N0684	1	DOWEL					
C	9	2W7615	1	GEAR-IDLER (64 TEETH)					
	10	3O8194	1	CONNECTOR-FLARED					
		6V4589	1	SEAL-O-RING					
	11	321267	1	CONNECTOR-FLARED					
	12	8N7806	1	HOSE AS					
	13	5M2894	2	WASHER					
	14	0S1595	2	BOLT					
		5P8245	2	WASHER					
	15	9S8752	2	NUT-FULL					

C-CHANGE FROM PREVIOUS TYPE

B-639287 CP

1204 **7N9574 GEAR GP-REAR-PART 1 OF 2**
S/N 48W18091-Up

BASIC ENGINE

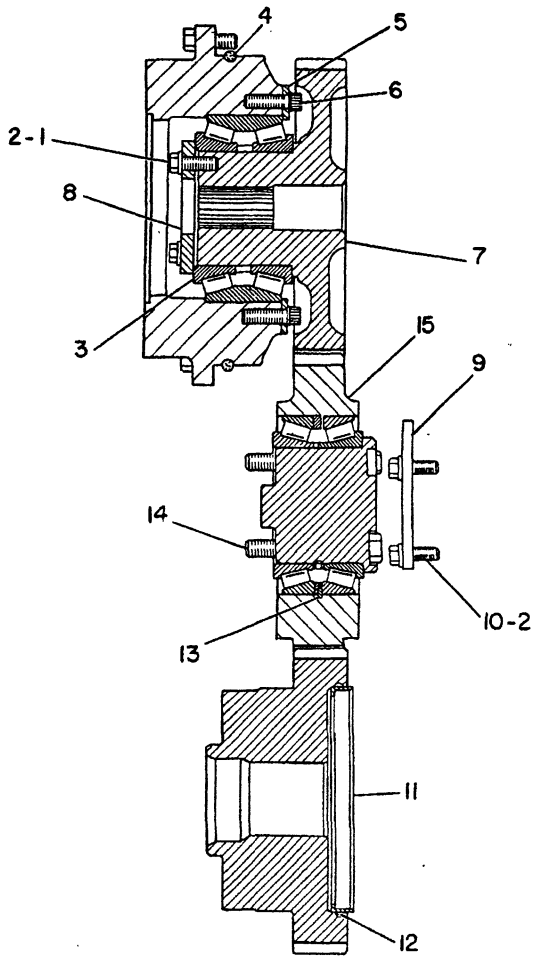

NOTE	REF NO	PART NUMBER	QTY	PART NAME	NOTE	REF NO	PART NUMBER	QTY	PART NAME
	1	1A2029	8	BOLT					
	2	5M2894	12	WASHER					
	3	5P1370	2	BEARING AS-ROLLER					
	4	5P8429	2	SEAL-O-RING					
	5	4N7183	2	RING-RETAINER					
	6	1T0720	12	BOLT-12 POINT HEAD					
	7	2W7610	2	GEAR (64 TEETH) (PUMP DRIVE)					
	8	4N1232	1	WASHER-RETAINER					
	9	4N1720	1	COVER-BALANCE WEIGHT					
C	10	3G2292	4	BOLT-LOCKING					
	11	4N0848	1	SLEEVE-WEAR					
	12	6V3319	1	SEAL-O-RING					
	13	5K9065	2	RING-RETAINING					
	14	1D4566	8	BOLT					
	15	6V7423	2	BEARING AS-ROLLER					

C-CHANGE FROM PREVIOUS TYPE

B-639288 CP

1204 **7N9574 GEAR GP-REAR-PART 2 OF 2**
S/N 48W18091-Up

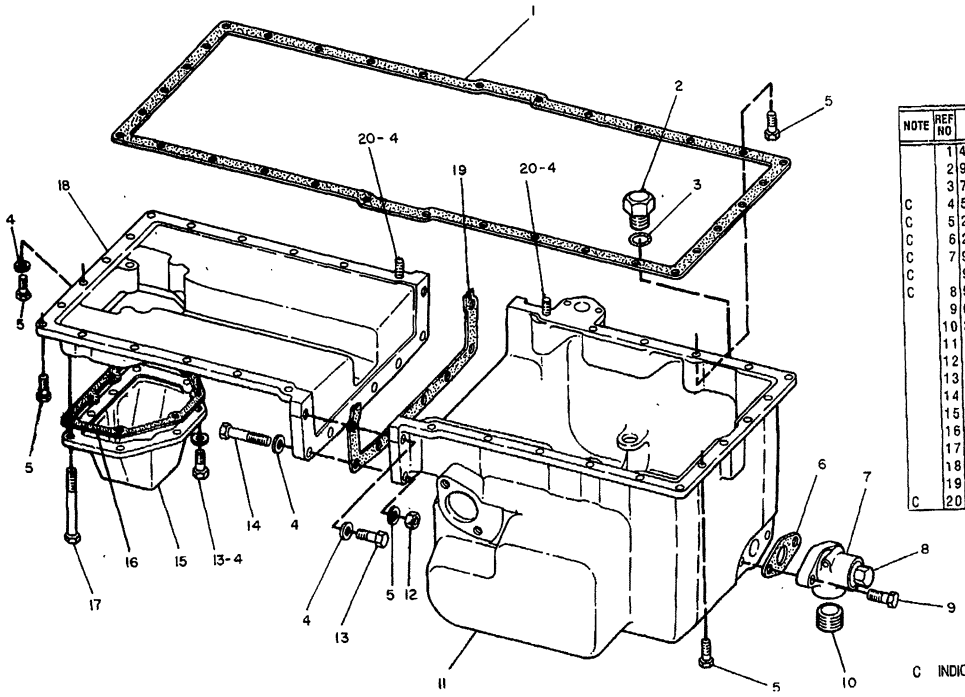

NOTE	REF NO	PART NUMBER	QTY	PART NAME
	1	4N1151	1	GASKET
	2	9S4181	1	PLUG-O-RING
	3	7M8485	1	SEAL-O-RING
C	4	5M2894	22	WASHER-HARD
C	5	2P3203	26	BOLT-WASHER HEAD
C	6	2M9189	1	GASKET
C	7	9H6687	1	PIN-SPRING
C		9S9993	1	ADAPTER-PLUG
C	8	5M2669	1	PLUG-OIL DRAIN
	9	0S1587	2	BOLT
	10	3B0551	1	PLUG-PIPE
	11	1W5993	1	PAN
	12	1D4717	6	NUT-FULL
	13	3B1915	6	BOLT
	14	1C2251	6	BOLT
	15	1W5814	1	PAN
	16	1W5813	1	GASKET
	17	8S9191	4	BOLT
	18	1W5817	1	PAN
	19	6N2469	1	GASKET
C	20	2P3204	2	BOLT-WASHER HEAD

C INDICATES CHANGE

343606

343606 P

1302

6N5787 PAN GP-OIL

Engine S/N 48W19973-20255,20257-20266

LUBRICATION SYSTEM

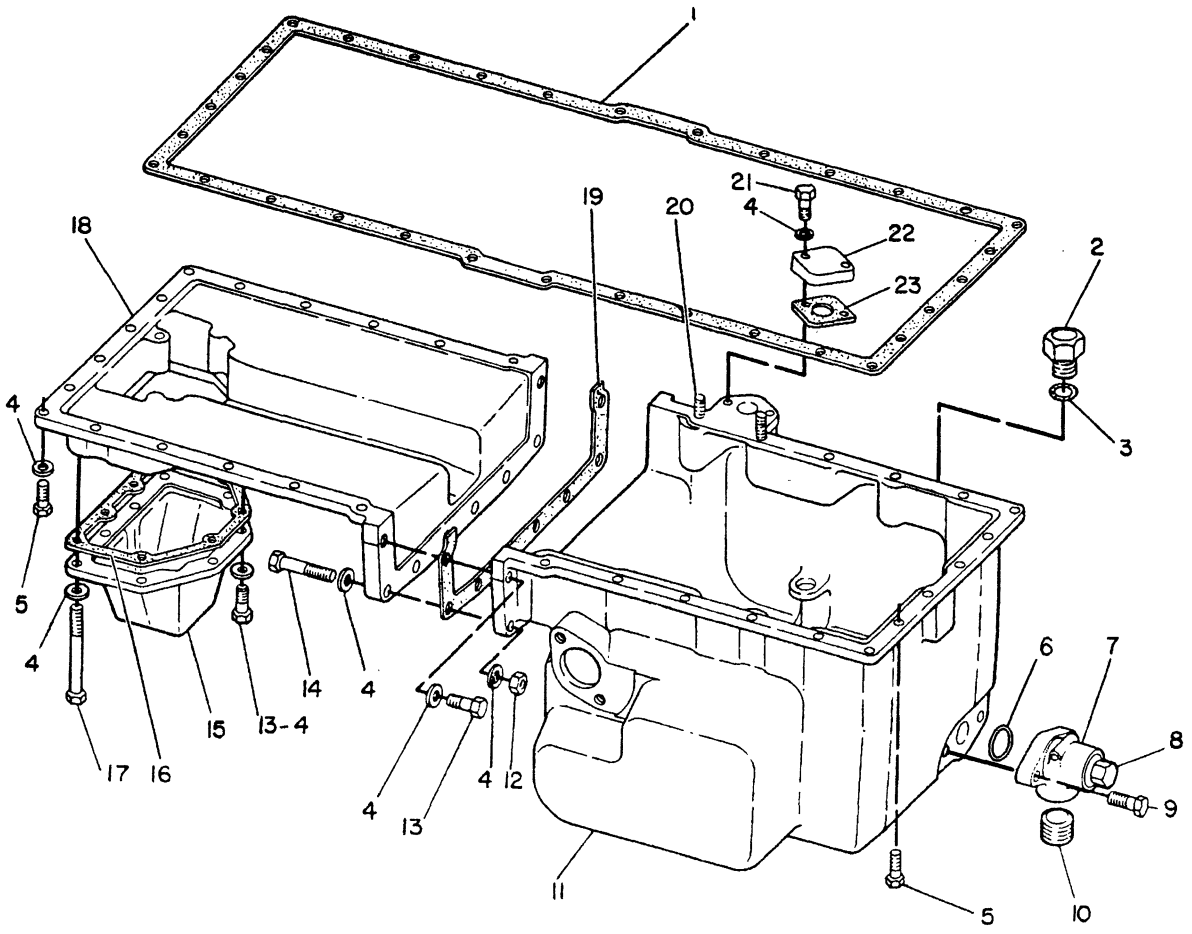

NOTE	REF NO	PART NUMBER	QTY	PART NAME	NOTE	REF NO	PART NUMBER	QTY	PART NAME
	1	4N1151	1	GASKET					
	2	9S4181	1	PLUG-STRAIGHT THREAD					
	3	7M8485	1	SEAL-O-RING					
	4	5M2894	24	WASHER					
	5	2P3203	26	BOLT-WASHER HEAD					
	6	6V3830	1	SEAL-O-RING					
	7	4P0519	1	ADAPTER AS-DRAIN					
		4P0520	1	ADAPTER-PLUG					
	8	4P0513	1	PLUG-OIL DRAIN					
	9	0S1587	2	BOLT					
	10	3B0551	1	PLUG-PIPE					
	11	7W6382	1	PAN-OIL					
	12	1D4717	6	NUT					
	13	3B1915	6	BOLT					
	14	0S1571	6	BOLT					
	15	1W5814	1	PAN-OIL					
	16	1W5813	1	GASKET-OIL PAN					
	17	8S9191	4	BOLT					
	18	1W5817	1	PAN-REAR OIL					
	19	6N2469	1	GASKET-OIL PAN					
	20	2P3204	2	BOLT-WASHER HEAD					
	21	0S1594	2	BOLT					
	22	2M1656	1	COVER					
	23	2M5407	1	GASKET					

R-576320 EP

1302 **7W6381 PAN GP-OIL**

Engine S/N 48W20256,20267-Up

MEMORANDA

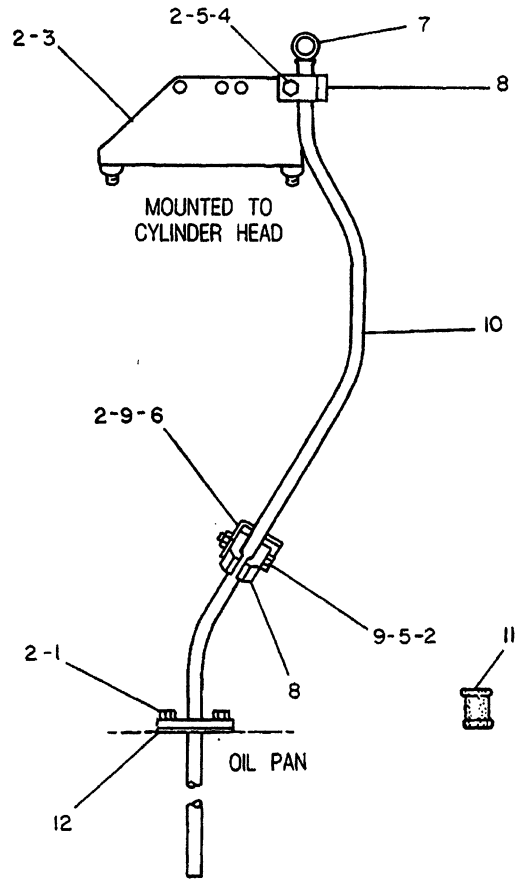

NOTE	REF NO	PART NUMBER	QTY	PART NAME
	1	0S1588	2	BOLT
	2	5M2894	9	WASHER
	3	7N6886	1	BRACKET AS
	4	0T0573	1	BOLT
	5	1D4717	2	NUT-FULL
	6	9M4172	1	BRACKET
C	7	2W3587	1	GAUGE AS-OIL LEVEL
	8	1W3116	4	CLAMP
C	9	0L1143	2	BOLT
	10	1W4387	1	TUBE AS
J	11	4N0999	4	PLUG
	12	2M5407	1	GASKET

C INDICATES CHANGE
J USE AS REQUIRED TO PLUG
OPTIONAL DIPSTICK LOCATION
HOLES IN CYLINDER BLOCK

355054

355054 P

1326 **7N7020 GAUGE GP-OIL LEVEL**
Engine S/N 48W19973-20266

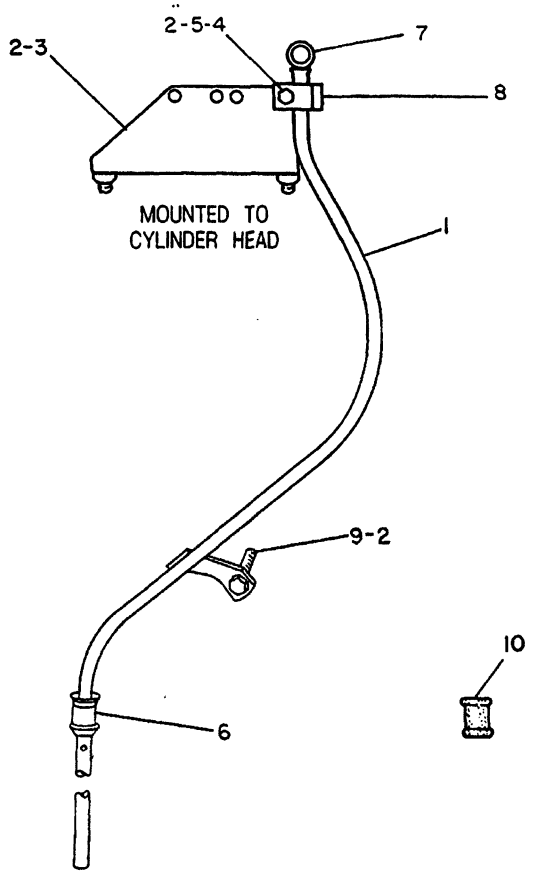

NOTE	REF NO	PART NUMBER	QTY	DESCRIPTION
	1	4W7760	1	GUIDE AS.
	2	5M2894	5	WASHER
	3	7N6886	1	BRACKET AS.
	4	0T0573	1	BOLT
	5	1D4717	1	NUT
	6	8M5260	1	SEAL
	7	7W6391	1	GAUGE AS.
	8	1W3116	2	CLAMP
	9	0L1143	1	BOLT
J	10	4N0999	3	PLUG

J USE AS REQUIRED TO PLUG OPTIONAL DIPSTICK LOCATION HOLES IN CYLINDER BLOCK

334484

334484 EP

1326

7W6491 GAUGE GP-OIL LEVEL
Engine S/N 48W20267-23274

LUBRICATION SYSTEM

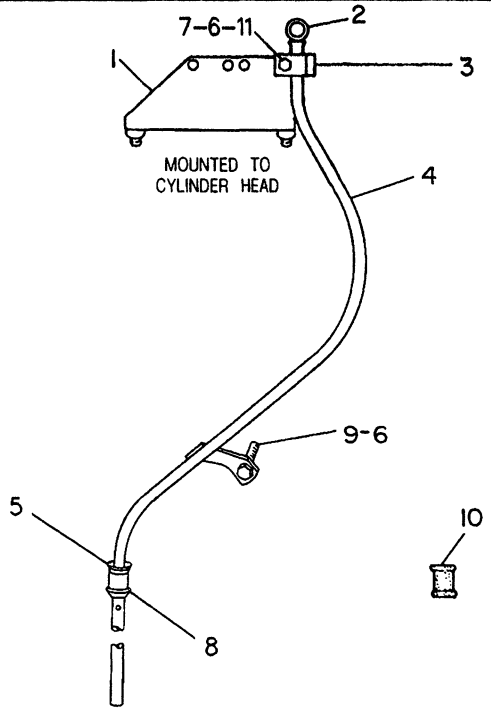

NOTE	REF NO	PART NUMBER	QTY	PART NAME
	1	7N6886	1	BRACKET AS
		1L5081	2	SPACER
	2	1104355	1	GAUGE AS-OIL LEVEL (DIPSTICK)
	3	1W3116	2	CLAMP
	4	1006393	1	GUIDE AS
E		3E8086		TUBE (121CM)
	5	4N1294	1	ADAPTER
	6	5M2894	5	WASHER
	7	9S8752	1	NUT-FULL
	8	1185068	1	SEAL-O-RING
	9	0L1143	1	BOLT
J	10	4N0999	3	PLUG
	11	0S1619	1	BOLT
		6B0933	1	SPACER
				J-USE AS REQUIRED TO PLUG OPTIONAL DIPSTICK LOCATION HOLES IN CYLINDER BLOCK

E-ORDER BY THE CENTIMETER

R-609372 CP

1326 **7C5022 GAUGE GP-ENGINE OIL LEVEL**
Engine S/N 48W23275-Up

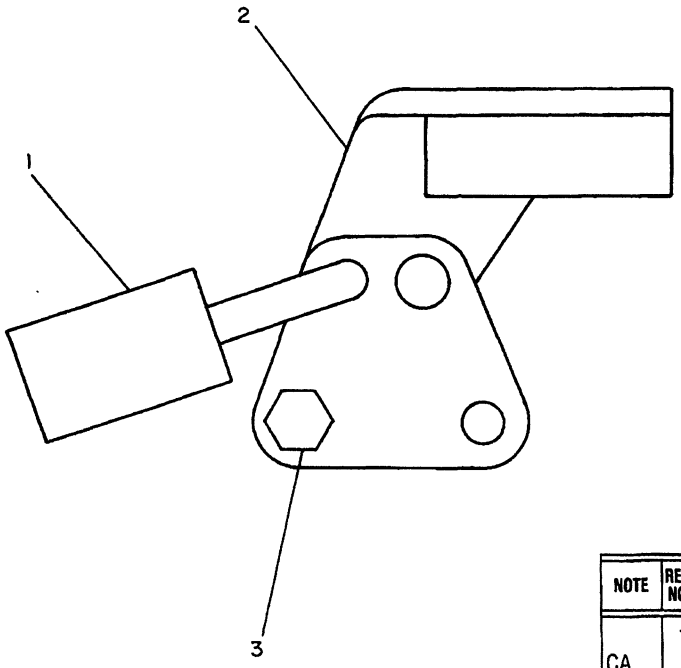

NOTE	REF NO	PART NUMBER	QTY	DESCRIPTION
	1	5P8502	1	PADLOCK GP.
CA		6V5874	1	COVER
A		5P8500	2	KEY
	2	1W4383	1	BRACKET AS.
C		4B4334	1	RIVET
	3	0S1588	1	BOLT
		1D4717	1	NUT
		5M2894	2	WASHER

350567

A NOT PART OF THIS GROUP
C INDICATES CHANGE

350567 P

LUBRICATION SYSTEM

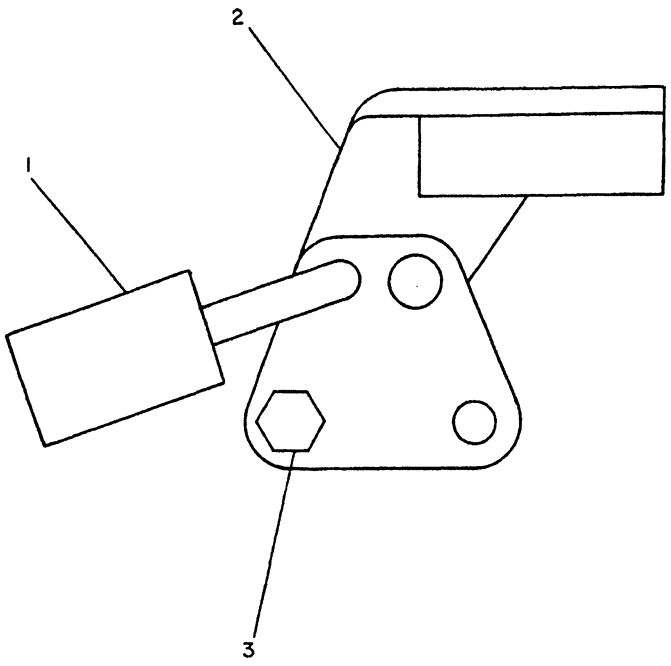

NOTE	REF NO	PART NUMBER	QTY	PART NAME
	1	5P8502	1	PADLOCK GP
AF		6V5874	1	COVER
AF		5P8500	2	KEY
	2	1W4383	1	BRACKET AS
C		4B4336	1	RIVET
	3	0S1588	1	BOLT
		1D4717	1	NUT
		5M2894	2	WASHER

A-NOT PART OF THIS GROUP
C-CHANGE FROM PREVIOUS TYPE
F-NOT SHOWN

B-350595 EP

7315 **1W4368 PROTECTION GP-VANDALISM**

Oil Level Gauge
Type 2. Part Of 6T6957 Lock-Vandalism
An Attachment

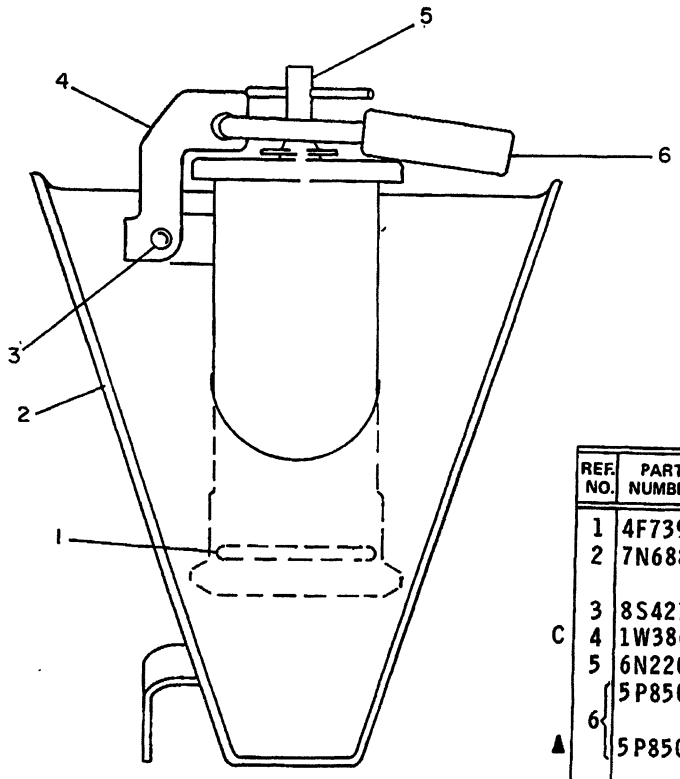

	REF. NO.	PART NUMBER	DESCRIPTION	QTY
	1	4F7390	SEAL----------	1
	2	7N6881	TUBE ASSEM.----------	1
			(Includes)	
	3	8S4212	RIVET----------	1
C	4	1W3862	HASP----------	1
	5	6N2206	CAP ASSEM.----------	1
	6	5P8502	PADLOCK GROUP----------	1
			(Includes)	
▲		5P8500	KEY----------	2

C INDICATES CHANGE

▲ NOT PART OF 7N9187 GROUP

235980

235980 P

7315

7N9187 PROTECTION GP-VANDALISM
Oil Filler
Type 1
Part Of 6T6957 Lock-Vandalism
An Attachment

LUBRICATION SYSTEM

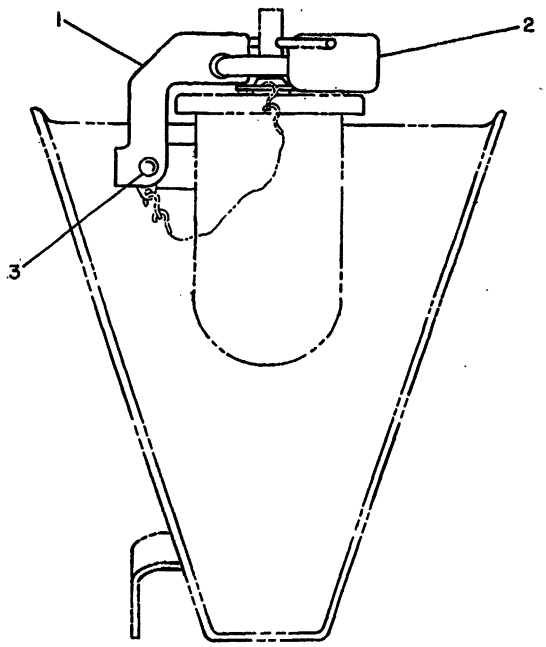

NOTE	REF NO	PART NUMBER	QTY	PART NAME
C	1	1W3862	1	HASP-OIL FILLER
	2	5P8502	1	PADLOCK GP
AF		5P8500	2	KEY
AF		6V5874	1	COVER (PADLOCK)
C	3	8S4212	1	RIVET

A-NOT PART OF THIS GROUP
C-CHANGE FROM PREVIOUS TYPE
F-NOT SHOWN

B-501781 EP

7315 **7N9187 PROTECTION GP-VANDALISM**

Type 2. Oil Filler
Part Of 6T6957 Lock-Vandalism
An Attachment

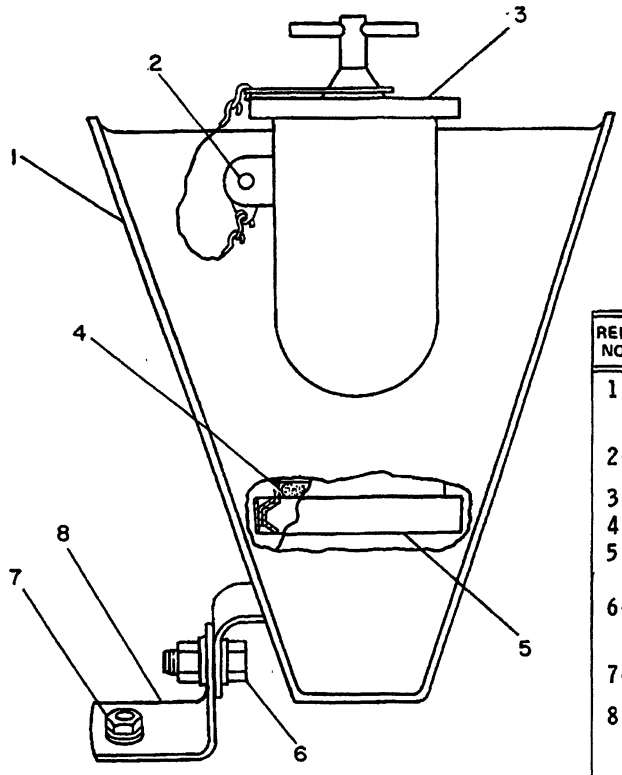

REF. NO.	PART NUMBER	DESCRIPTION	QTY
1	7N6880	TUBE ASSEM. ---------- (Includes)	1
2	9M5732	RIVET----------	1
	4B4274	WASHER----------	1
3	6N2206	CAP ASSEM. ----------	1
4	4F7390	SEAL----------	1
5	2N8109	CLAMP----------	1
6	S1594	BOLT----------	1
	1D4717	NUT----------	1
	5M2894	WASHER----------	2
7	1A9579	BOLT----------	1
	9M1974	WASHER----------	1
8	6K360	STRIP----------	1

230563

230563 P

1316

7N7021 FILLER GP-OIL
Engine S/N 48W13002-17800, 19130-Up

LUBRICATION SYSTEM

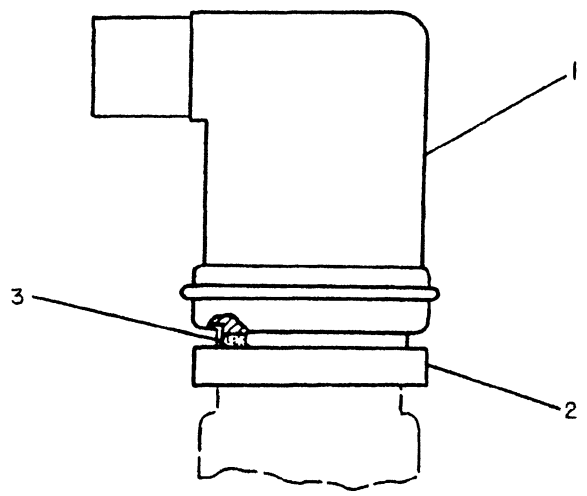

NOTE	REF NO	PART NUMBER	QTY	PART NAME
	1	4N4668	1	BREATHER AS (CRANKCASE)
	2	2N8109	1	CLAMP
	3	4F7390	1	SEAL

B-118081 EP

1317 **2N8220 BREATHER GP**

LUBRICATION SYSTEM

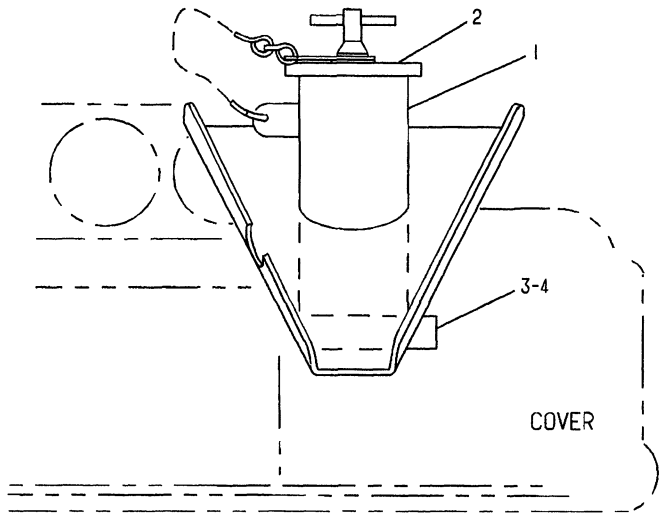

NOTE	REF NO	PART NUMBER	QTY	PART NAME
	1	2W6694	1	TUBE AS
	2	6N2206	1	CAP AS-FILLER
	3	4F7390	1	SEAL
	4	2N8109	1	CLAMP

A-317272 EP

1316

2W6537 FILLER GP-OIL
Engine S/N 48W17801-Up

MEMORANDA

LUBRICATION SYSTEM

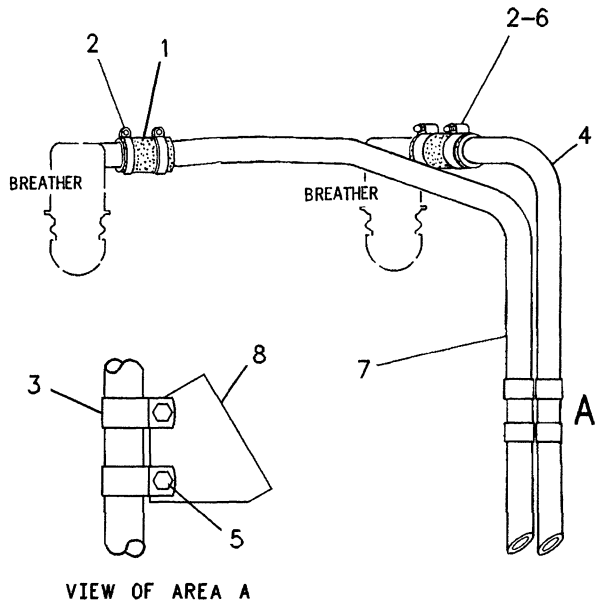

VIEW OF AREA A

NOTE	REF NO	PART NUMBER	QTY	PART NAME
E	1	5P1255		HOSE 7.62 CM(3 IN.)
	2	9M2904	4	CLAMP-HOSE
	3	2S2053	4	CLIP
	4	7N8139	1	TUBE
	5	0S1588	2	BOLT
		9S8752	2	NUT-FULL
		5M2894	4	WASHER
E	6	5P1255		HOSE 7.62 CM(3 IN.)
	7	8N8138	1	TUBE-DISPOSAL
	8	7N7498	1	BRACKET

E-ORDER BY THE CENTIMETER

R-587681 EP

1317 **7N7033 FUMES DISPOSAL GP**
S/N 53Y1-3217

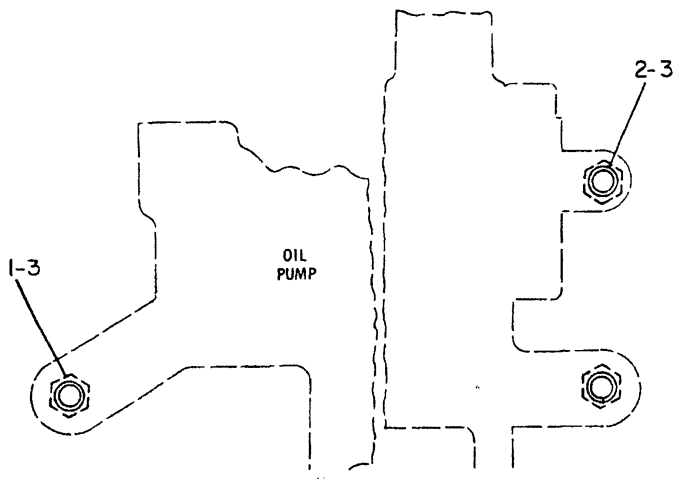

NOTE	REF NO	PART NUMBER	QTY	PART NAME
	1	0L1143	2	BOLT
	2	0S1590	1	BOLT
C	3	5M2894	3	WASHER

C-CHANGE FROM PREVIOUS TYPE

B-210186 EP

1304 **4N2481 FASTENER GP-OIL PUMP MOUNTING**

LUBRICATION SYSTEM

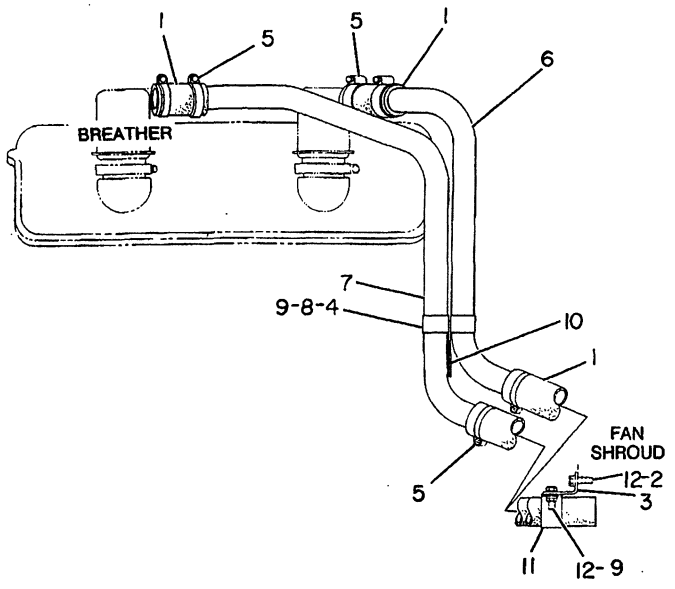

NOTE	REF NO	PART NUMBER	QTY	PART NAME
BE	1	5P1255		HOSE
	2	5P1075	1	WASHER-HARD
	3	9M0766	1	BRACKET
	4	2S2053	2	CLIP
	5	9M2904	6	CLAMP-HOSE
	6	7W5442	1	TUBE-DISPOSAL
	7	7W5443	1	TUBE-DISPOSAL
	8	0S1594	1	BOLT
	9	1D4717	2	NUT
		5M2894	4	WASHER
	10	7N7498	1	BRACKET
	11	6V9192	1	CLIP
	12	1A2029	2	BOLT

B-USE AS REQUIRED
E-ORDER BY THE CENTIMETER

B-332304 EP

1317 **7W5454 FUMES DISPOSAL GP**
S/N 53Y3218-Up

MEMORANDA

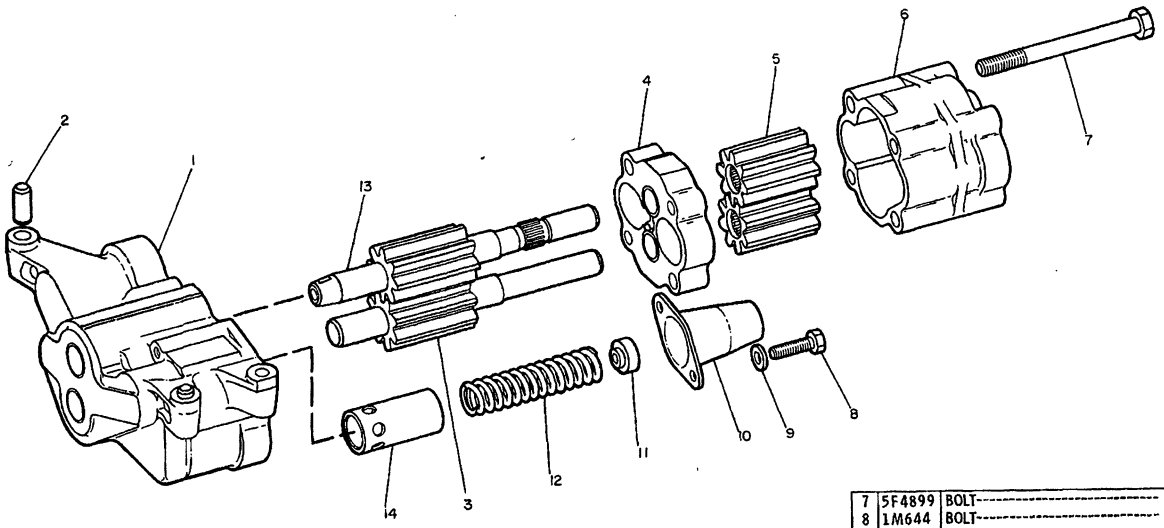

REF. NO.	PART NUMBER	DESCRIPTION	QTY.
1	4N513	BODY ASSEM. (Includes)	1
	7N2156	BEARING	2
2	8M8489	DOWEL	2
3	6N2196	SHAFT ASSEM.	1
4	4N5339	SPACER ASSEM. (Includes)	1
	7N2155	BEARING	2
5	6N2199	GEAR (8 teeth)	2
6	6N2343	BODY ASSEM. (Includes)	1
	7N2213	BEARING	2
7	5F4899	BOLT	2
8	1M644	BOLT	2
9	5M2894	WASHER	2
10	1N3246	RETAINER	1
11	4N8816	SPACER	1
12	2S2760	SPRING	1
13	6N2198	SHAFT ASSEM.	1
14	6N1931	PLUNGER	1

237855

237855 P

LUBRICATION SYSTEM

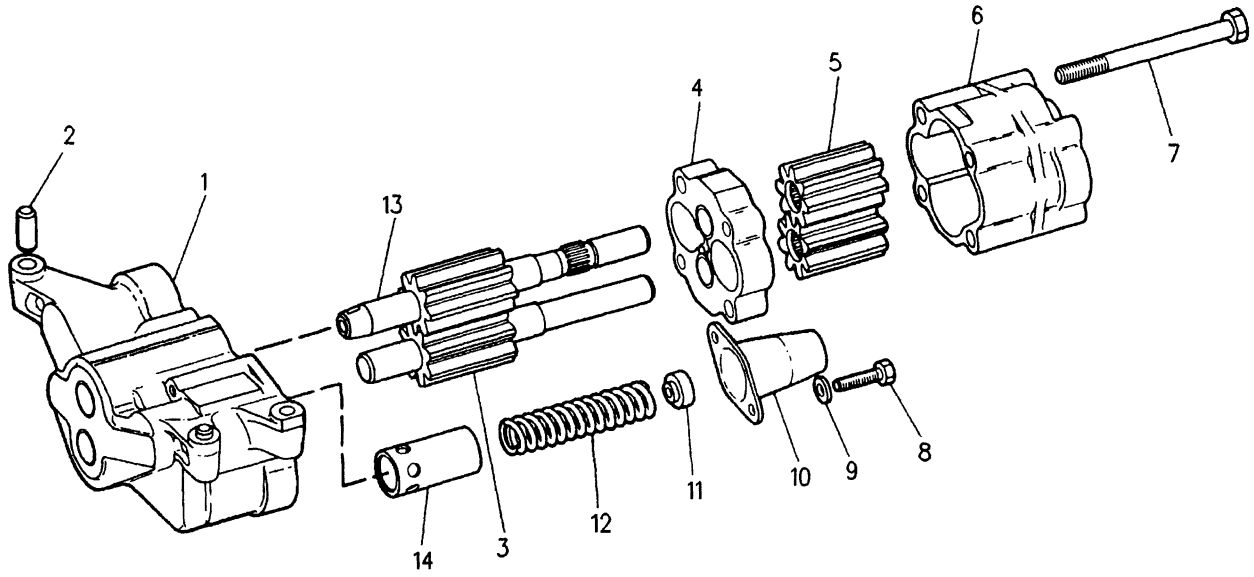

NOTE	REF NO	PART NUMBER	QTY	PART NAME
	1	4N0513	1	BODY AS-OIL PUMP
		7N2156	2	BEARING-SLEEVE (27.013MM OD)
	2	8M8489	2	DOWEL (12.54MM DIA)
	3	1W7242	1	SHAFT AS-IDLER
	4	4N5339	1	SPACER AS-OIL PUMP
		7N2155	2	BEARING
	5	6N2199	2	GEAR-SCAVENGE PUMP (8 TEETH)
	6	6N2343	1	BODY AS-PUMP
		7N2155	2	BEARING
	7	5F4899	2	BOLT (3/8-16X5.5IN)
	8	1M0644	2	BOLT (3/8-16X2-1/4IN)
	9	5M2894	2	WASHER (2.5MM THK)
	10	1N3246	1	RETAINER-VALVE SPRING
	11	4N8816	1	SPACER
	12	2S2760	1	SPRING
	13	1W7241	1	SHAFT AS-PUMP DRIVE
	14	6N1931	1	PLUNGER-RELIEF

R-696367 CP

1304 **1W6001 PUMP GP-OIL**

Engine S/N 48W14186-16393

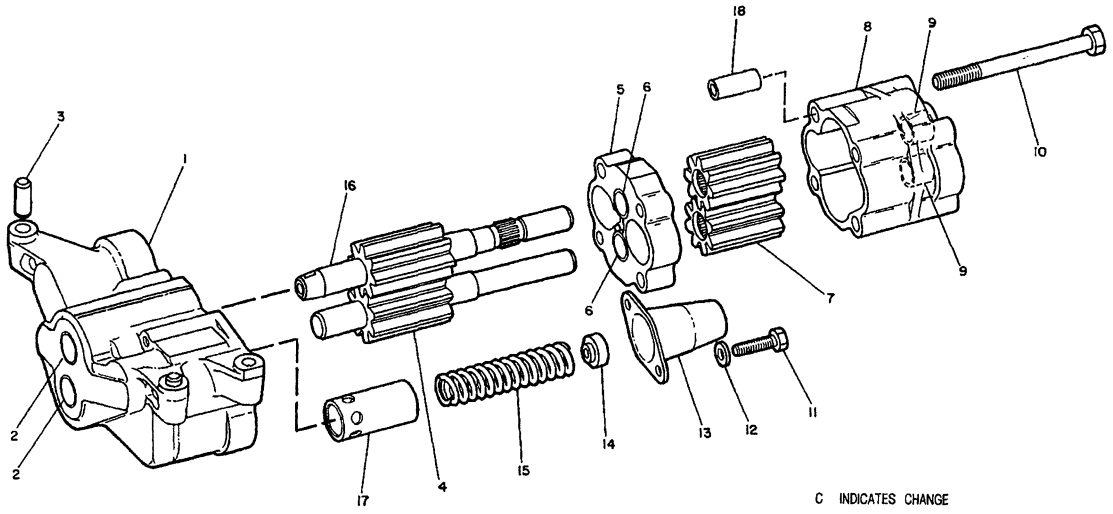

NOTE	REF NO	PART NUMBER	QTY	DESCRIPTION
	1	4N513	1	BODY AS.
	2	7N2156	2	BEARING
	3	8M8489	2	DOWEL
	4	1W7242	1	SHAFT AS.
	5	4N5339	1	SPACER AS.
	6	7N2155	2	BEARING
	7	6N2199	2	GEAR (8 TEETH)
	8	6N2343	1	BODY AS.
	9	7N2213	2	BEARING
	10	5F4899	2	BOLT
	11	1M644	2	BOLT
	12	5M2894	2	WASHER
	13	1N3246	1	RETAINER
	14	4N8816	1	SPACER
	15	2S2760	1	SPRING
	16	1W7241	1	SHAFT AS.
	17	6N1931	1	PLUNGER
C	18	7G2176	4	DAMPER

C INDICATES CHANGE

312234

312234 P

1W6001 PUMP GP-OIL
Engine S/N 48W16394-17684

LUBRICATION SYSTEM

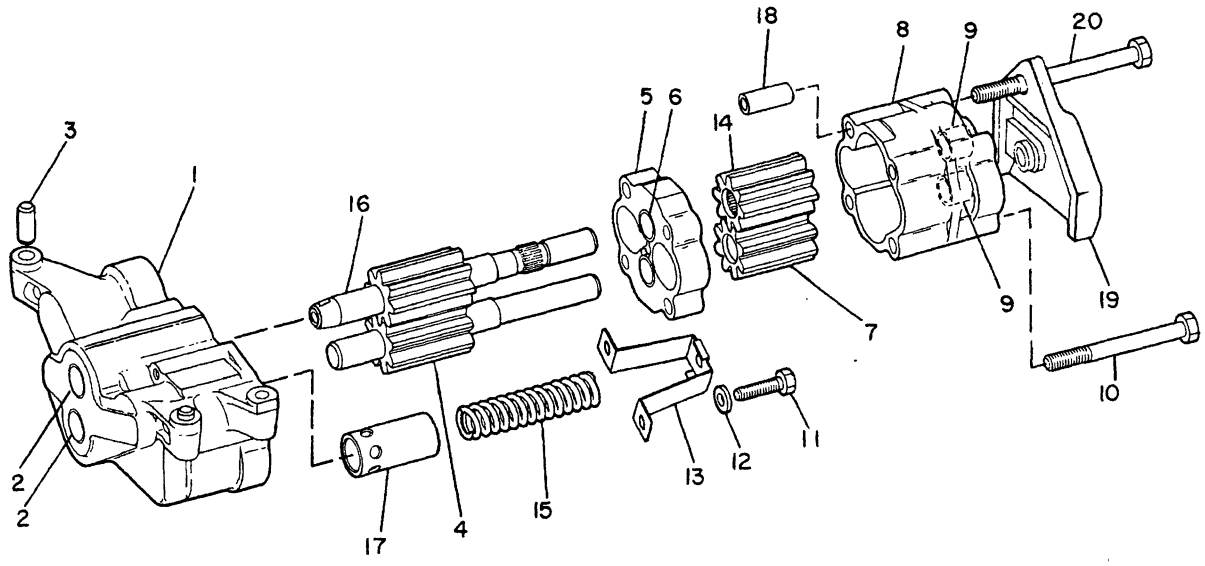

NOTE	REF NO	PART NUMBER	QTY	PART NAME	NOTE	REF NO	PART NUMBER	QTY	PART NAME
	1	4N0513	1	BODY AS-OIL PUMP					
	2	7N2156	2	BEARING-SLEEVE					
	3	8M8489	2	DOWEL					
	4	1W7242	1	SHAFT AS-IDLER					
	5	4N5339	1	SPACER AS-OIL PUMP					
	6	7N2155	2	BEARING					
C	7	7W6528	1	GEAR-PUMP (8 TEETH)					
	8	6N2343	1	BODY AS-PUMP					
	9	7N2213	2	BEARING					
	10	5F4899	2	BOLT					
	11	1M0644	2	BOLT					
	12	5M2894	2	WASHER					
C	13	9Y1792	1	RETAINER					
C	14	7W7141	1	GEAR-PUMP (8 TEETH)					
	15	2S2760	1	SPRING					
	16	1W7241	1	SHAFT AS-PUMP DRIVE					
	17	6N1931	1	PLUNGER-RELIEF					
	18	7G2176	4	DAMPER-BOLT					
C	19	1W5994	1	COVER-SCAVENGE PUMP					
C	20	1D4706	2	BOLT					

C-CHANGE FROM PREVIOUS TYPE

B-454655 EP

1304 **1W6001 PUMP GP-OIL**

Engine S/N 48W17685-Up

MEMORANDA

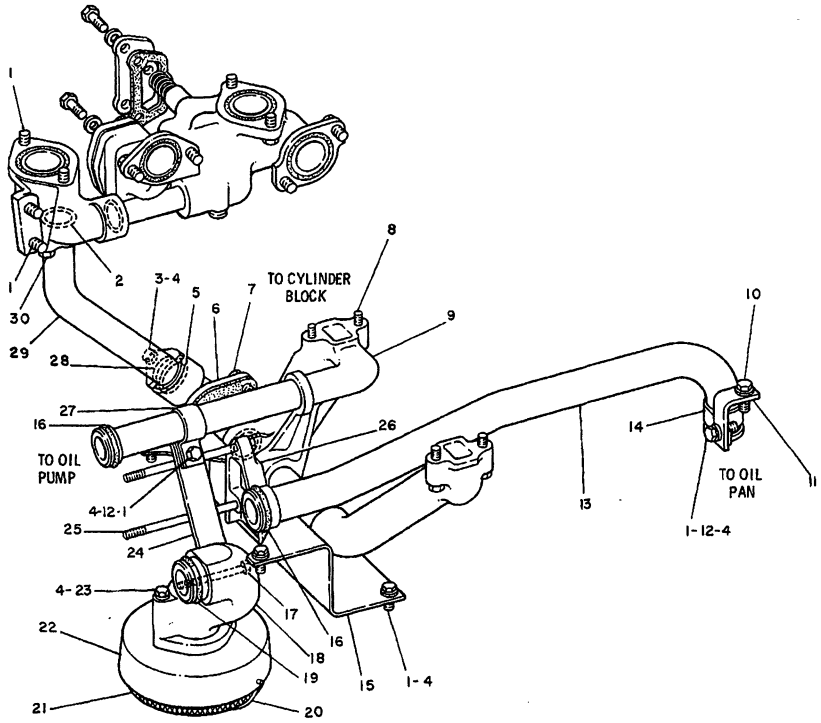

REF. NO.	PART NUMBER	DESCRIPTION	QTY.
1	S1594	BOLT	10
2	1P3705	SEAL	1
3	L1351	BOLT	1
4	5M2894	WASHER	12
5	5P5316	SEAL	1
6	7N6253	ELBOW	1
7	S1588	BOLT	2
8	S1591	BOLT	2
9	7N6251	TUBE ASSEM.	1
10	S1595	BOLT	1
	5P8245	WASHER	1
11	1W5815	BRACKET	1
12	1D4717	NUT	2
13	1W6012	TUBE ASSEM. (Includes)	1
14	9K4430	CLAMP	1
15	1W5996	PLATE	1
16	5L2727	SEAL	2
17	S1608	BOLT	1
18	1W5992	PIPE ASSEM.	1
19	8J4351	SEAL	1
20	4N914	CLIP	1
21	4N913	SCREEN ASSEM.	1
22	8N2104	BELL ASSEM. (Includes)	1
	9F2978	NUT	2
23	L1352	BOLT	2
24	1W5995	SUPPORT	1
25	1D4706	BOLT	2
26	1W5994	COVER	1
27	2S2053	CLIP	1
28	8N6740	RETAINER	1
	8N6739	RING	1
29	7N6255	TUBE ASSEM.	1
30	T768	BOLT	4

234695

234695 P

1307 **7N6700 LINES GP-ENGINE OIL-PART 1 OF 2**
Engine S/N 48W13002-17684

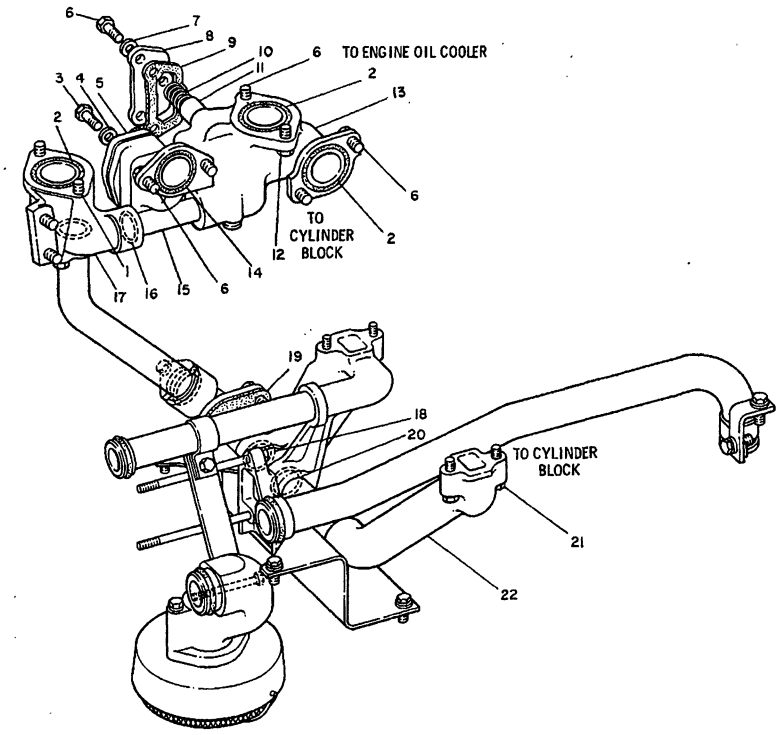

REF. NO.	PART NUMBER	DESCRIPTION	QTY.
1	T65	BOLT	1
2	6L1651	SEAL	3
3	4F8965	BOLT	4
4	5P8244	WASHER	4
5	5H2068	COVER	1
	4F7952	SEAL	1
6	S1594	BOLT	8
7	5M2894	WASHER	3
8	4N861	COVER	1
9	4N865	GASKET	1
10	4N8150	SPRING	2
11	9M853	PLUNGER	2
12	L2070	BOLT	1
13	1W1116	BODY	1
14	9M7002	SEAL	1
15	4N8410	TUBE	1
16	9M4849	SEAL	2
17	4N9753	ELBOW	1
18	5L2727	SEAL	1
19	5H135	GASKET	1
20	5P5316	SEAL	1
21	S1591	BOLT	2
22	7N6252	TUBE ASSEM.	1

234696

234696 P

1307 **7N6700 LINES GP-ENGINE OIL-PART 2 OF 2**
Engine S/N 48W13002-17684

LUBRICATION SYSTEM

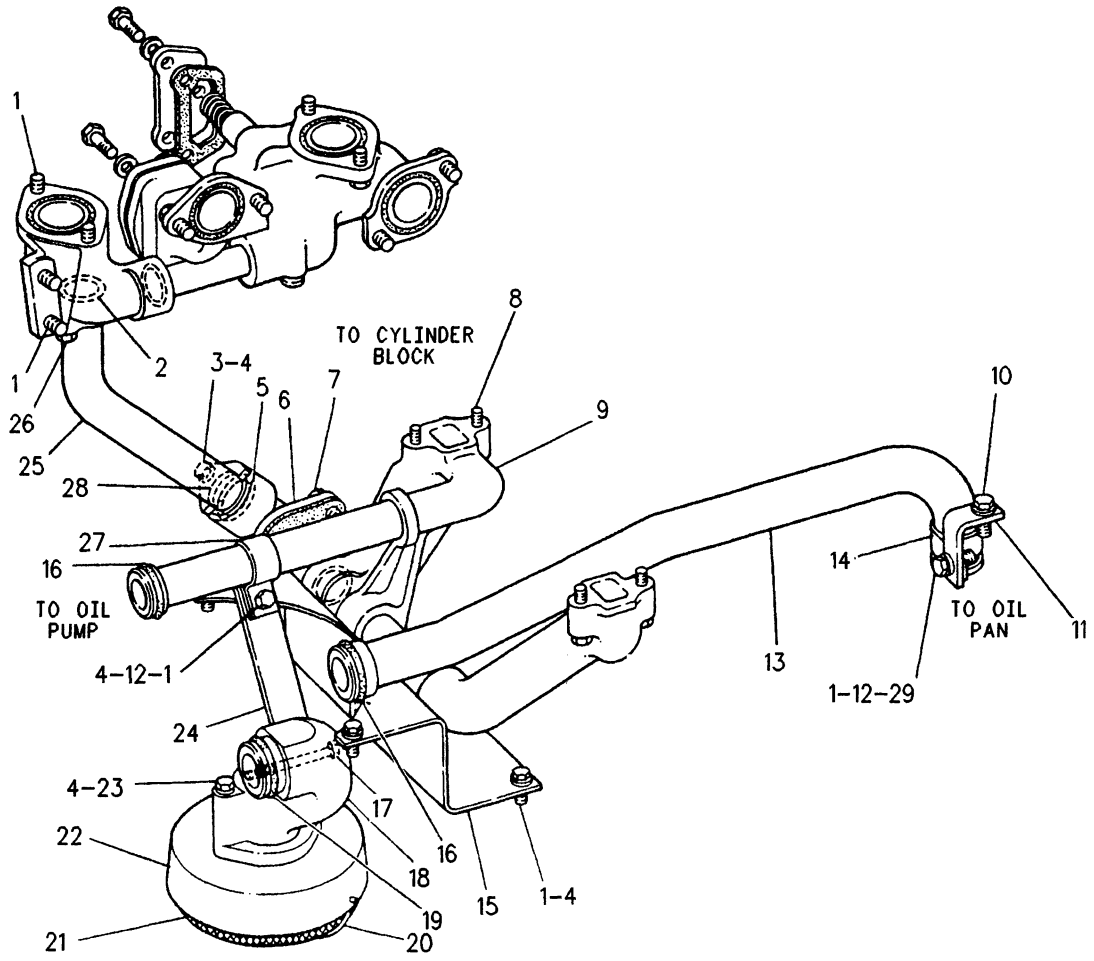

NOTE	REF NO	PART NUMBER	QTY	PART NAME	NOTE	REF NO	PART NUMBER	QTY	PART NAME
	1	0S1594	10	BOLT (3/8-16X1IN)		25	7N6255	1	TUBE AS-OUTLET
	2	1P3705	1	SEAL (44.7MM ID)		26	0T0768	4	BOLT (7/16-14X1.75IN)
	3	0L1351	1	BOLT (3/8-16X.875IN)		27	2S2053	1	CLIP (34.92MM ID)
	4	5M2894	10	WASHER (2.5MM THK)		28	8N6740	1	RETAINER
	5	6V3830	1	SEAL-O-RING (34.29MM ID)			8N6739	1	RING-RETAINING
	6	7N6253	1	ELBOW		29	9L9132	2	WASHER (2.5MM THK)
	7	0S1588	2	BOLT (3/8-16X1.25IN)					
	8	0S1591	2	BOLT (3/8-16X1.5IN)					
	9	7N6251	1	TUBE AS					
	10	0S1595	1	BOLT (1/2-13X1.25IN)					
		5P8245	1	WASHER (3MM THK)					
C	11	1W8795	1	BRACKET					
	12	9S8752	2	NUT-FULL (3/8-16 THD)					
	13	1W6012	1	TUBE AS					
	14	9K4430	1	CLAMP					
	15	1W5996	1	PLATE-FRONT PAN					
	16	1090078	2	SEAL-O-RING (33.47MM ID)					
	17	0S1608	1	BOLT (3/8-16X3.75IN)					
	18	1W5992	1	PIPE AS-PUMP SUCTION					
	19	8J4351	1	SEAL-O-RING (44.04MM)					
	20	4N0914	1	CLIP (SUCTION SCREEN)					
	21	4N0913	1	SCREEN AS-BELL					
	22	8N2104	1	BELL AS-SUCTION					
		9F2978	2	NUT-WELD (3/8-16 THD)					
	23	0L1352	2	BOLT (3/8-16X3.25IN)					
C	24	2W1010	1	SUPPORT					

C-CHANGE FROM PREVIOUS TYPE

R-628199 CP

1307 **7N6700 LINES GP-ENGINE OIL-PART 1 OF 2**
Engine S/N 48W17685-Up

LUBRICATION SYSTEM

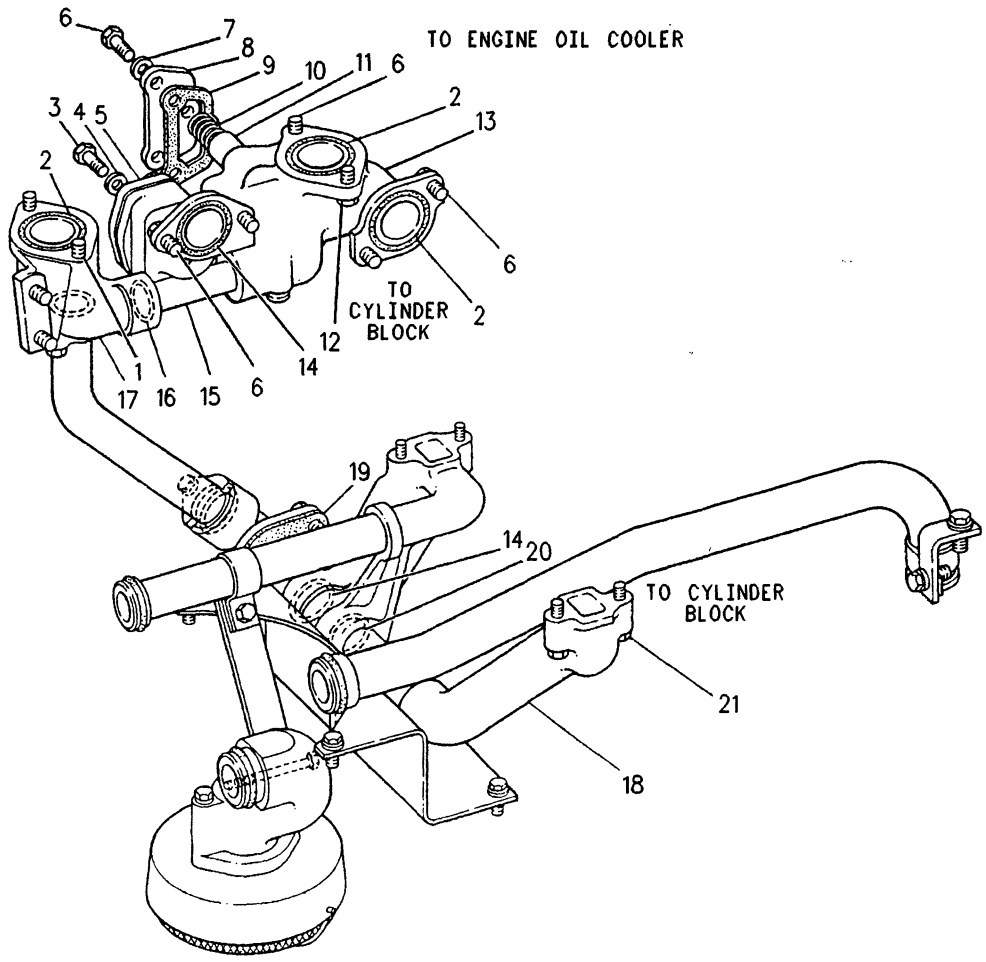

NOTE	REF NO	PART NUMBER	QTY	PART NAME	NOTE	REF NO	PART NUMBER	QTY	PART NAME
	1	0T0065	1	BOLT (3/8-16X3.5IN)					
	2	1090076	3	SEAL-O-RING (50.17MM ID)					
	3	4F8965	4	BOLT (7/16-14X1.125IN)					
	4	5P8244	4	WASHER (2.5MM THK)					
	5	5H2068	1	COVER					
		1187214	1	SEAL-O-RING (37.69MM ID)					
	6	0S1594	8	BOLT (3/8-16X1IN)					
	7	5M2894	3	WASHER (2.5MM THK)					
	8	4N0861	1	COVER					
	9	4N0865	1	GASKET					
C	10	9F6304	2	SPRING					
	11	9M0853	2	PLUNGER-RELIEF VALVE					
	12	0L2070	1	BOLT (3/8-16X2.25IN)					
	13	1W1116	1	BODY-BYPASS					
	14	1090078	2	SEAL-O-RING (33.47MM ID)					
	15	4N8410	1	TUBE-COOLER BYPASS					
	16	1142687	2	SEAL-O-RING (23.16MM ID)					
	17	4N9753	1	ELBOW-COOLER OUTLET					
	18	7N6252	1	TUBE AS-LH					
	19	5H0135	1	GASKET					
	20	6V3830	1	SEAL-O-RING (34.29MM ID)					
	21	0S1591	2	BOLT (3/8-16X1.5IN)					

C-CHANGE FROM PREVIOUS TYPE

R-628200 CP

1307 **7N6700 LINES GP-ENGINE OIL-PART 2 OF 2**
Engine S/N 48W17685-Up

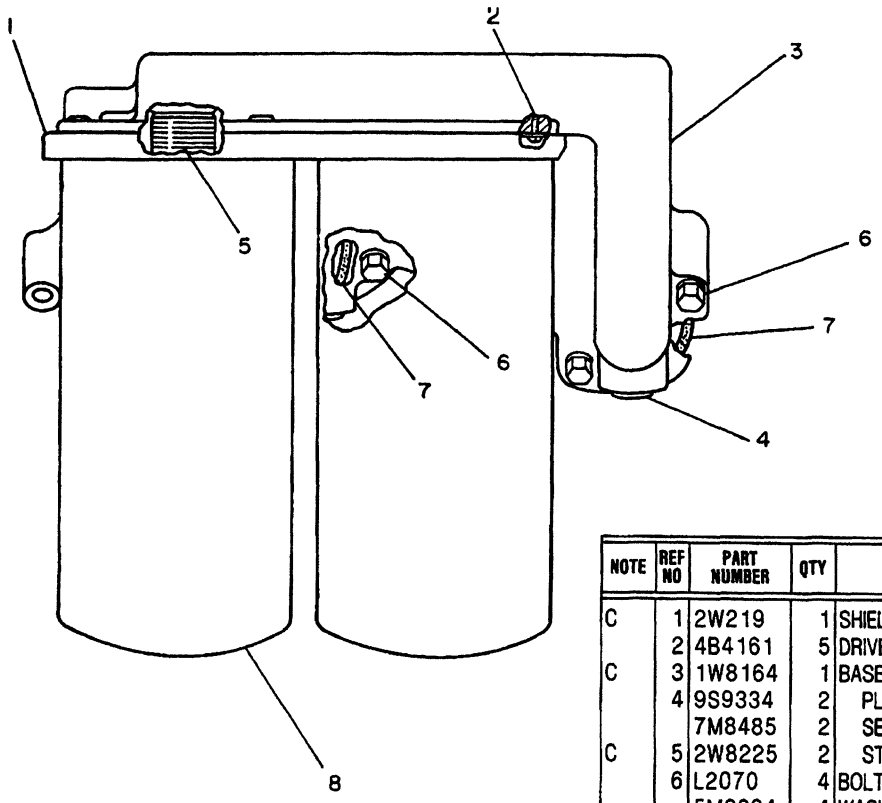

NOTE	REF NO	PART NUMBER	QTY	DESCRIPTION
C	1	2W219	1	SHIELD
	2	4B4161	5	DRIVE SCREW
C	3	1W8164	1	BASE AS.
	4	9S9334	2	PLUG
		7M8485	2	SEAL
C	5	2W8225	2	STUD
	6	L2070	4	BOLT
		5M2894	4	WASHER
C	7	8M4992	2	SEAL
C	8	2P4005	2	FILTER AS.

C INDICATES CHANGE

312209

312209 P

1318

8N0615 FILTER GP-OIL-LH
Engine S/N 48W13002-19972

COOLING SYSTEM

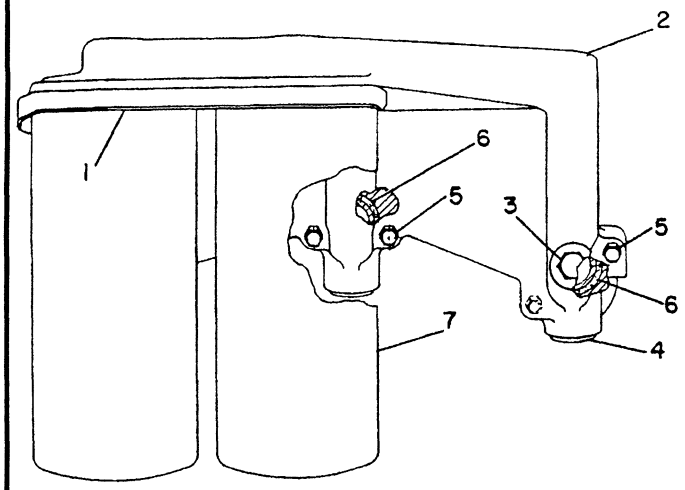

NOTE	REF NO	PART NUMBER	QTY	PART NAME
	1	2W0219	1	SHIELD
		4B4161	5	SCREW-DRIVE
	2	7W5497	1	BASE AS-FILTER
		2W8225	2	STUD-TAPERLOCK
	3	9S4191	1	PLUG-O-RING
		2M9780	1	SEAL-O-RING
	4	9S9334	2	PLUG
		7M8485	2	SEAL-O-RING
C	5	0L2070	3	BOLT
	6	8M4992	2	SEAL-O-RING
	7	2P4005	2	FILTER AS-ENGINE OIL

C-CHANGE FROM PREVIOUS TYPE

B-353326 EP

1318 **4W8724 FILTER GP-OIL**
Engine S/N 48W19973-Up

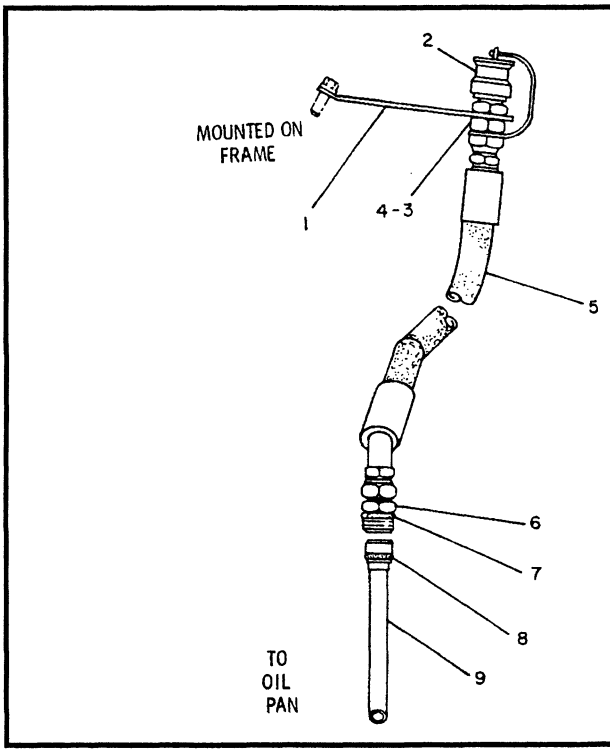

NOTE	REF NO	PART NUMBER	QTY	PART NAME
	1	3T6264	1	BRACKET
	2	9S9272	1	CAP AS
	3	6K8420	1	LOCKNUT
	4	1P7919	1	COUPLER-MALE
C	5	314564	1	HOSE AS
	6	4S6680	1	CONNECTOR-FLARED
	7	7M8485	1	SEAL-O-RING
	8	1S0004	1	SEAL-O-RING
	9	6N5650	1	TUBE AS-OIL CHANGE

C-CHANGE FROM PREVIOUS TYPE

B-350399 EP

1325 **9G0804 OIL CHANGE GP-HIGH SPEED**
An Attachment

MEMORANDA

COOLING SYSTEM

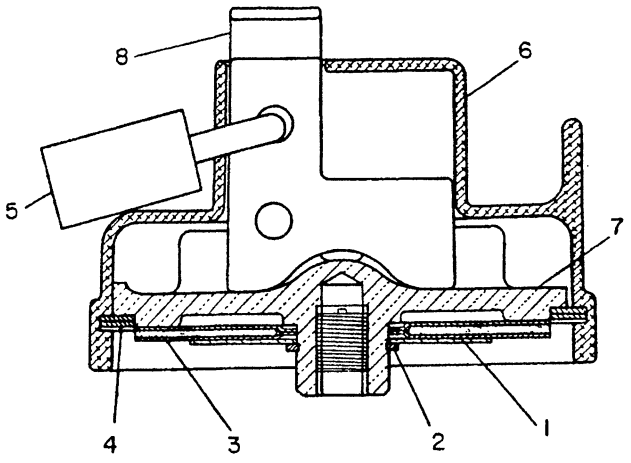

NOTE	REF NO	PART NUMBER	QTY	PART NAME
	1	2S2846	1	RETAINER-GASKET
	2	9S9979	1	RING-RETAINER
	3	2P3230	1	GASKET
	4	1M8649	1	RING-RETAINING
	5	5P8502	1	PADLOCK GP
A		5P8500	2	KEY
A		8Y6364	1	SLEEVE
	6	7N2957	1	COVER-RADIATOR CAP
	7	7N5565	1	CAP-RADIATOR
	8	2S6097	1	TANG

A-NOT PART OF THIS GROUP

B-623790 CP

1382 **1N3599 COVER GP-PROTECTION**

Radiator Cap
Part Of 6T6957 Lock-Vandalism
An Attachment

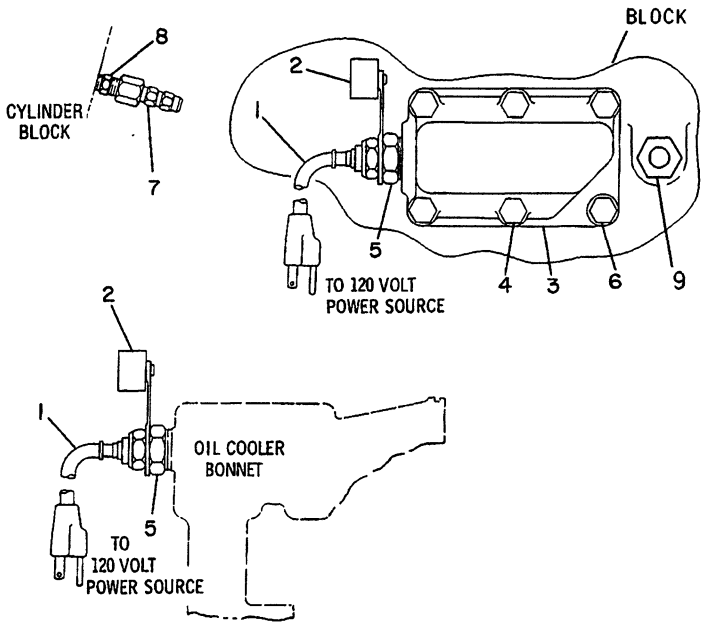

NOTE	REF NO	PART NUMBER	QTY	PART NAME
C	1	9N5253	2	CORD AS-HEATER
	2	6N1604	2	CAP AS-DUST
	3	7N0210	1	ADAPTER-HEATER
		4N0864	1	GASKET
C	4	8T7008	5	BOLT
C	5	9G6655	2	ELEMENT AS-JACKET WATER HEATER (1500 WATT)
B	6	4L6454	1	BOLT (3/8-16X1IN)
				-OR-
B		9B7237	1	BOLT (3/8-16X1.25IN)
B		8T4896	1	WASHER-HARD
CB	7	6V2376	1	CONNECTOR-FLARED
CB	8	26454	1	NIPPLE
CB	9	7D4903	1	ADAPTER

B-USE AS REQUIRED
C-CHANGE FROM PREVIOUS TYPE

R-568624 EP

1383 **7N0037 HEATER GP-JACKET WATER**

For Severe Cold Weather Applications
1500 Watts, 120 Volts
An Attachment

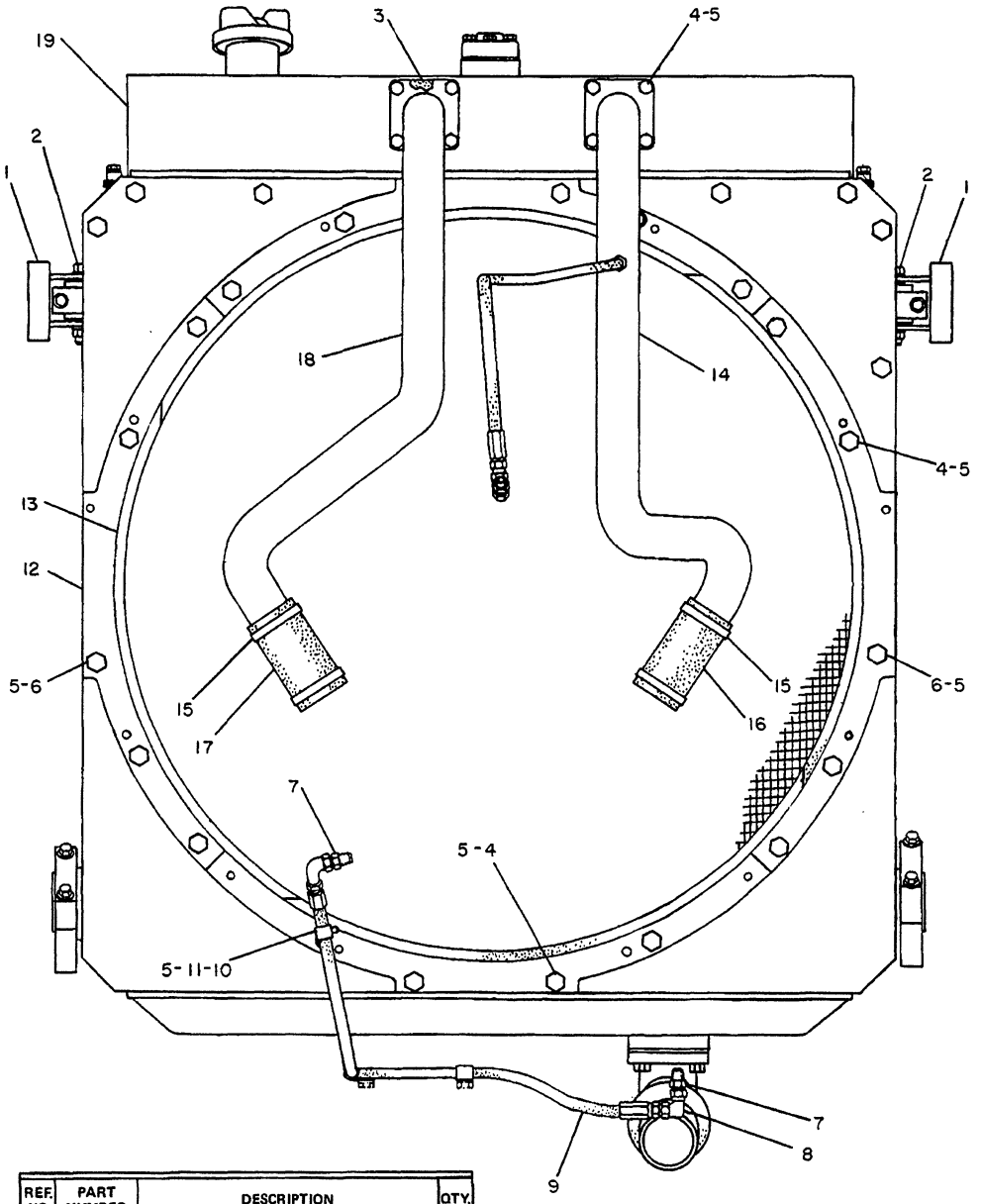

REF. NO.	PART NUMBER	DESCRIPTION	QTY.
1	8N5576	PLATE ASSEM.	2
2	8S4739	BOLT	2
	8S5150	NUT	2
	5P8246	WASHER	8
	2S1212	BUSHING	2
3	4N1418	GASKET	2
4	1A2029	BOLT	26
5	5M2894	WASHER	29
6	S1591	BOLT	2
7	3R5387	CONNECTOR	2
8	8M547	ELBOW	1
9	6N9255	HOSE ASSEM. ---135 cm(53.15 in.)	1
10	3S8664	CLIP	3
11	2H5330	BOLT	1
12	7N4481	STRIP	4
13	7N4480	BAFFLE	4
14	7N8217	TUBE ASSEM.	1
	2H1193	FERRULE	1
15	5P4868	CLAMP	4
▲ 16	5P1262	HOSE------- 15.2 cm(6 in.)	
▲ 17	5P1262	HOSE------- 15.2 cm(6 in.)	
18	7N8215	TUBE ASSEM.	1
19	7N7510	RADIATOR GROUP (Separate Illustration)	1

▲ ORDER BY THE CENTIMETER

234718

234718 P

1353

7N2023 RADIATOR GP-REAR VIEW
S/N 53Y1-734
7N7510-Page 40

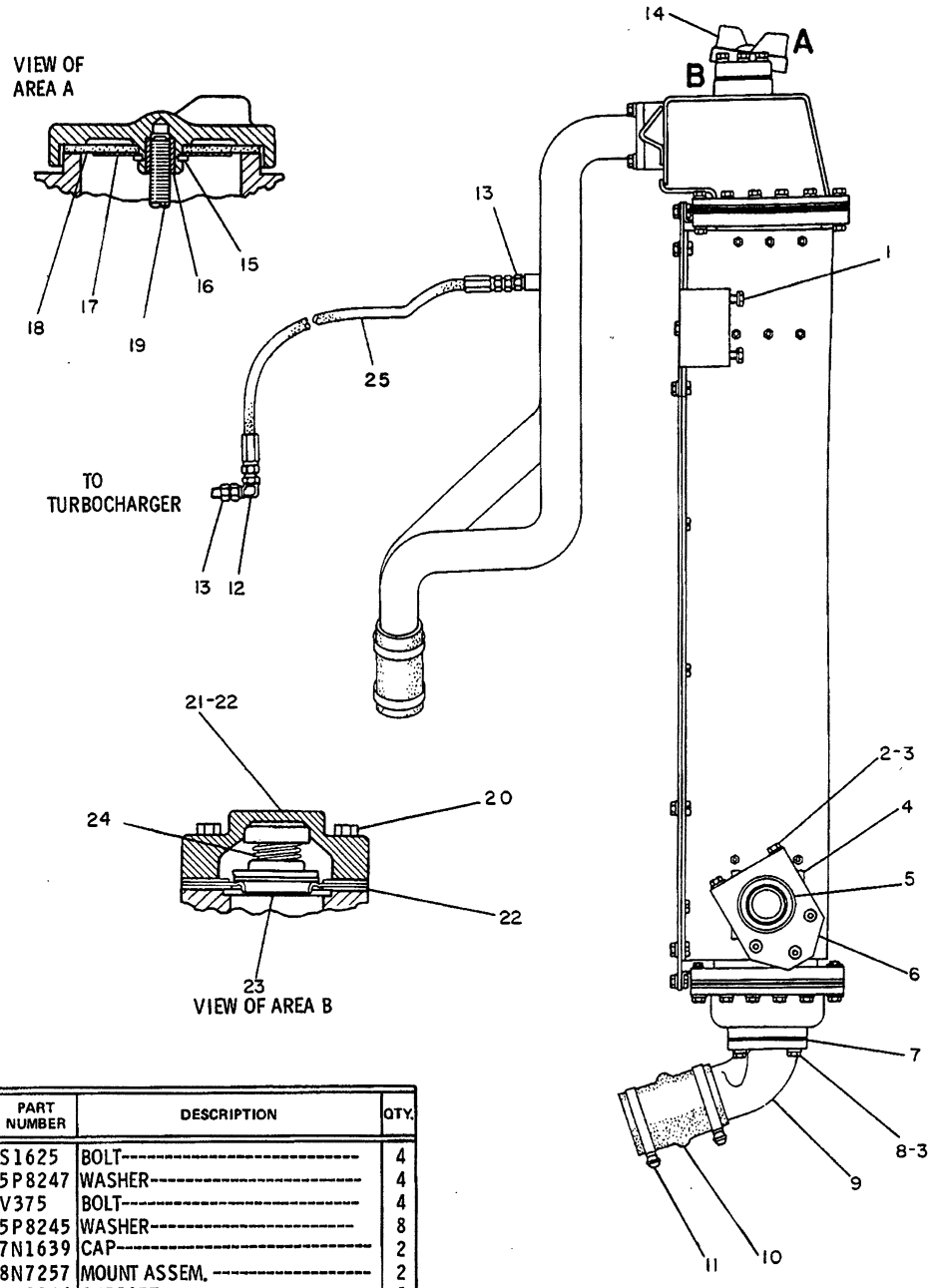

REF. NO.	PART NUMBER	DESCRIPTION	QTY.
1	1S1625	BOLT	4
	5P8247	WASHER	4
2	V375	BOLT	4
3	5P8245	WASHER	8
4	7N1639	CAP	2
5	8N7257	MOUNT ASSEM.	2
6	7N3864	SUPPORT	2
7	4N1419	GASKET	1
8	S1595	BOLT	4
9	1W6056	ELBOW	1
10	6N1608	HOSE	1
11	5P598	CLAMP	2
12	8M547	ELBOW	1
13	8M755	CONNECTOR	2
14	7S7809	CAP ASSEM. (Includes)	1
15	9S9979	RING	1
16	7S7807	INSERT	1
17	2S2846	RETAINER	1
18	2P3230	GASKET	1
19	1S286	STUD	1
20	5S5080	BOLT	5
	9M1974	WASHER	5
21	5S1211	COVER	1
22	5S4629	GASKET	2
23	5S1213	PLATE	1
24	5S1218	VALVE ASSEM	1
25	2G3672	HOSE ASSEM.--1.09m(42.91 in.)---	1

234719

234719 P

1353

7N2023 RADIATOR GP-SIDE VIEW
S/N 53Y1-734

COOLING SYSTEM

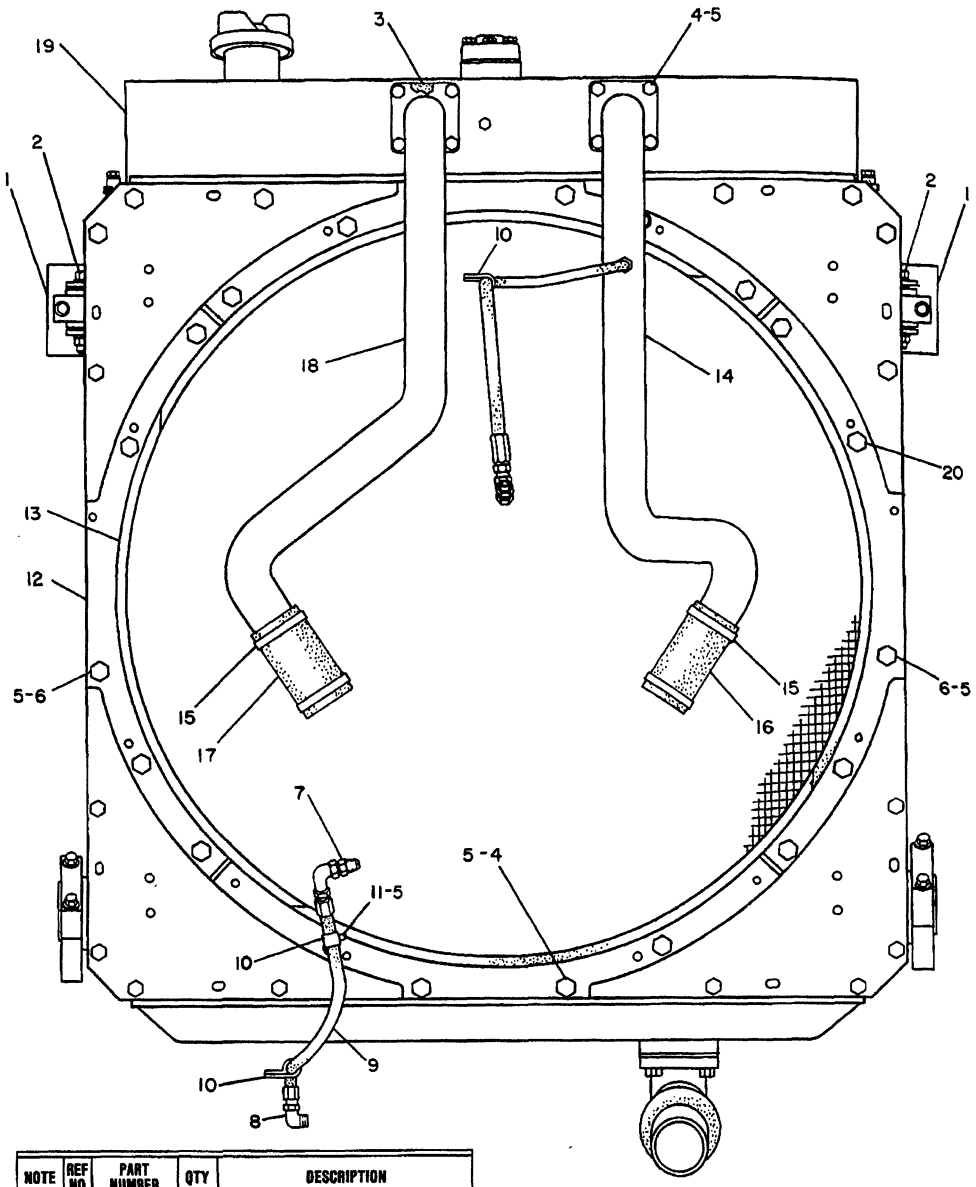

NOTE	REF NO	PART NUMBER	QTY	DESCRIPTION
	1	8N5576	2	PLATE ASSEM.
	2	8S4739	2	BOLT
		8S5150	2	NUT
		5P8246	8	WASHER
		2S1212	2	BUSHING ASSEM.
	3	4N1418	2	GASKET
	4	1A2029	12	BOLT
	5	5M2894	15	WASHER
	6	S1591	2	BOLT
	7	9M6522	1	CONNECTOR
	8	321269	1	ELBOW
	9	6N8785	1	HOSE ASSEM. 122CM (48.04IN.)
	10	3S8664	3	CLIP
	11	2H5330	1	BOLT
	12	7N4481	4	STRIP
	13	7N4480	4	BAFFLE
	14	7N8217	1	TUBE ASSEM.
		2H1193	1	FERRULE
	15	5P4868	4	CLAMP
E	16	5P1262		HOSE 11.4CM (4.5IN.)
E	17	5P1262		HOSE 11.4CM (4.5IN.)
	18	7N8215	1	TUBE ASSEM.
Y	19	1W9387	1	RADIATOR GROUP
	20	321952	14	SCREW

C INDICATES CHANGE
E ORDER BY THE CENTIMETER
Y SEPARATE ILLUSTRATION

306779

306779 P

1353

1W9390 RADIATOR GP-REAR VIEW
S/N 53Y735-977
1W9387-Page 41A

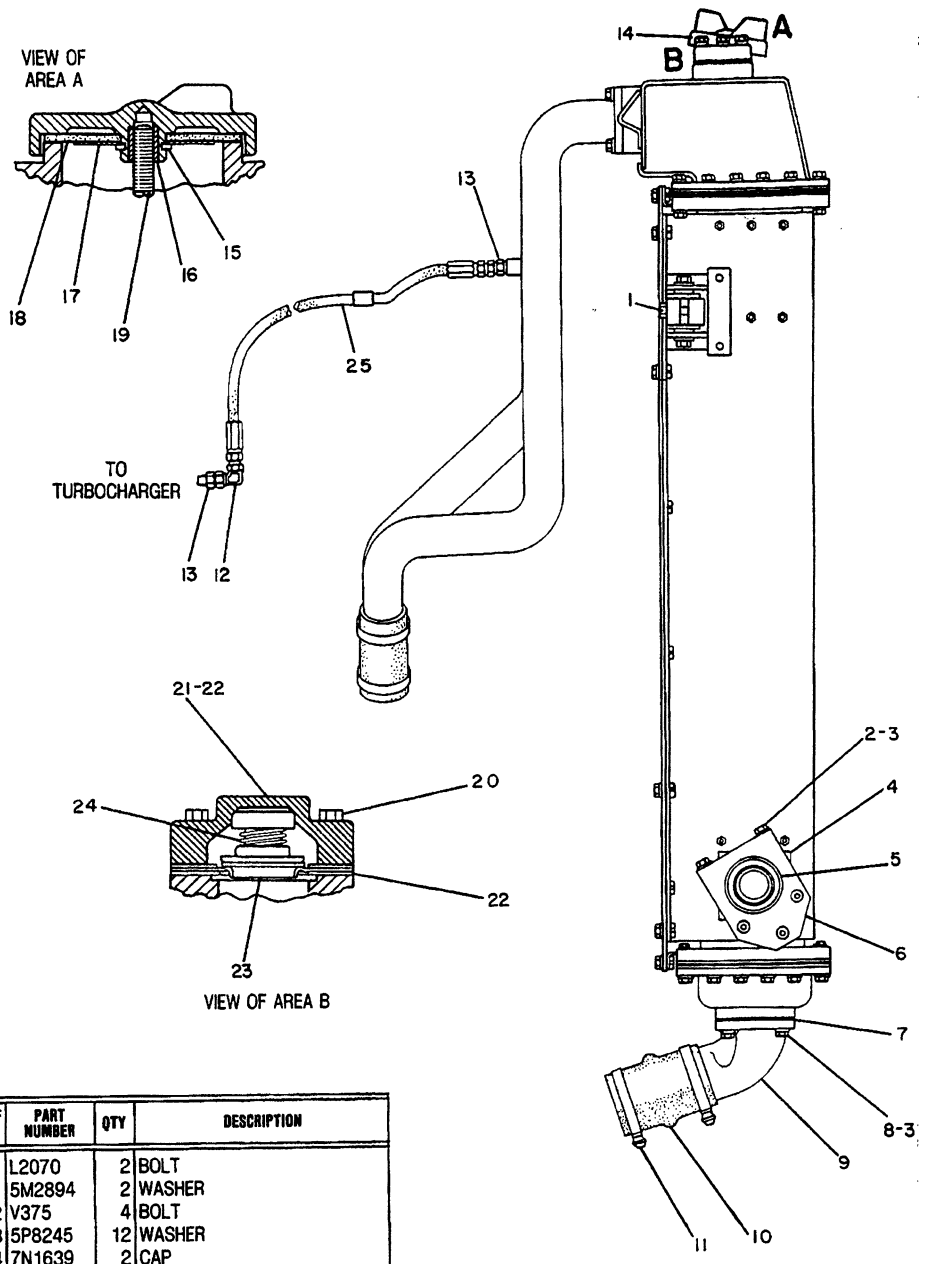

NOTE	REF NO	PART NUMBER	QTY	DESCRIPTION
	1	L2070	2	BOLT
		5M2894	2	WASHER
	2	V375	4	BOLT
	3	5P8245	12	WASHER
	4	7N1639	2	CAP
	5	8N7257	2	MOUNT
	6	7N3864	2	SUPPORT
	7	4N1419	1	GASKET
	8	S1595	4	BOLT
	9	1W6056	1	ELBOW
E	10	5P764		HOSE 18CM (7.09IN.)
	11	5P598	2	CLAMP
	12	8M547	1	ELBOW
	13	8M755	2	CONNECTOR
	14	7S7809	1	CAP ASSEM.
	15	9S9979	1	RING
	16	7S7807	1	INSERT
	17	2S2846	1	RETAINER
	18	2P3230	1	GASKET
	19	1S286	1	STUD
	20	5S5080	5	BOLT
		9M1974	5	WASHER
	21	5S1211	1	COVER
	22	5S4629	2	GASKET
	23	5S1213	1	PLATE
	24	5S1218	1	VALVE ASSEM.
	25	334953	-1	HOSE ASSEM.
				96.5CM (38IN.)

C INDICATES CHANGE
E ORDER BY THE CENTIMETER

306780

306780 P

1353

1W9390 RADIATOR GP-SIDE VIEW
S/N 53Y735-977

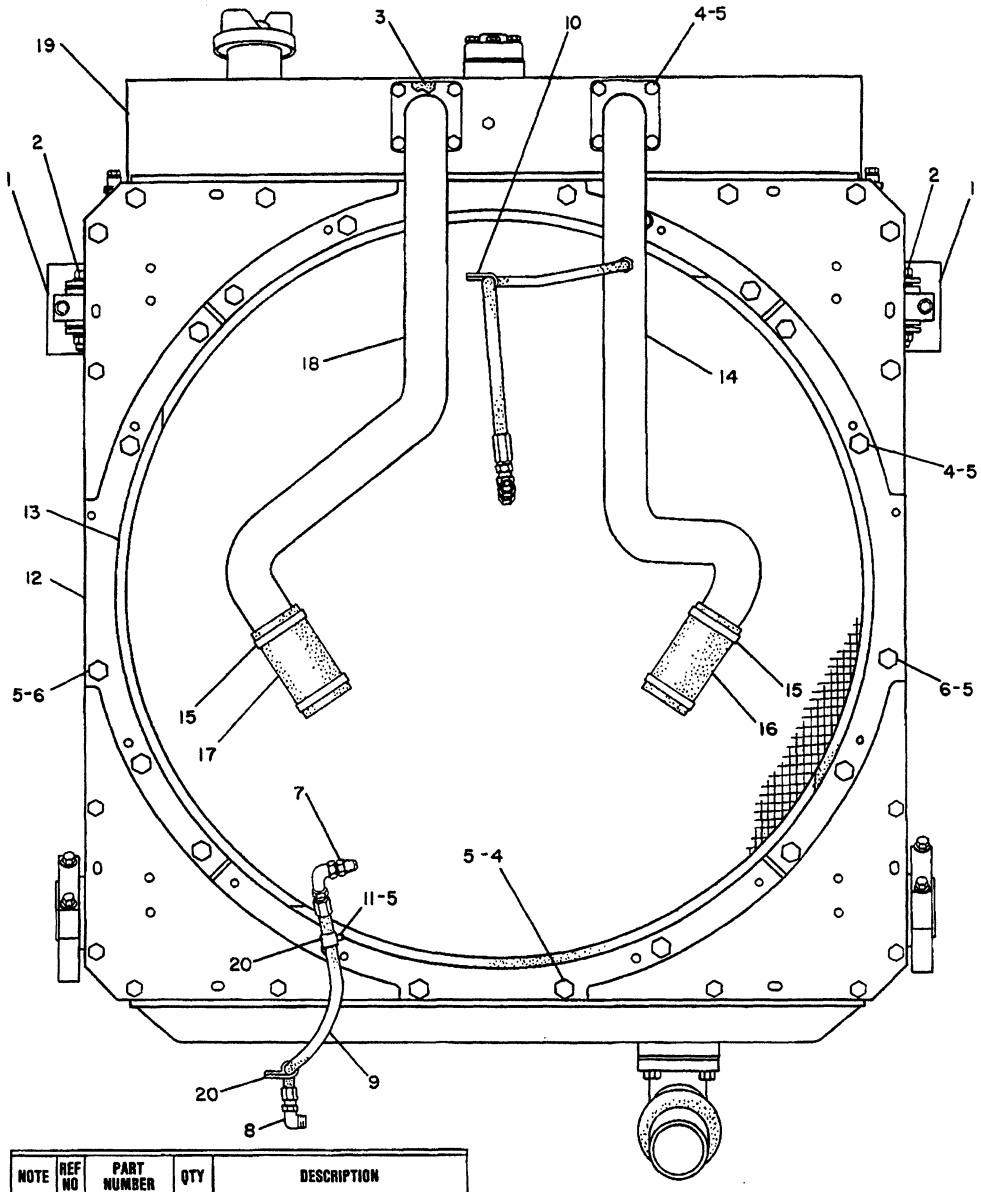

NOTE	REF NO	PART NUMBER	QTY	DESCRIPTION
	1	8N5576	2	PLATE ASSEM.
	2	8S4739	2	BOLT
		8S5150	2	NUT
		5P8246	8	WASHER
		2S1212	2	BUSHING ASSEM.
	3	4N1418	2	GASKET
	4	1A2029	26	BOLT
	5	5M2894	29	WASHER
	6	S1591	2	BOLT
C	7	9M6522	1	CONNECTOR
C	8	321269	1	ELBOW
C	9	6N8785	1	HOSE ASSEM. 122CM (48.04IN.)
C	10	3S8664	1	CLIP
	11	2H5330	1	BOLT
	12	7N4481	4	STRIP
	13	7N4480	4	BAFFLE
	14	7N8217	1	TUBE ASSEM.
		2H1193	1	FERRULE
	15	5P4868	4	CLAMP
E	16	5P1262		HOSE 11.4CM (4.5IN.)
E	17	5P1262		HOSE 11.4CM (4.5IN.)
	18	7N8215	1	TUBE ASSEM.
Y	19	7N7510	1	RADIATOR GROUP
C	20	6D4636	2	CLIP

C INDICATES CHANGE
E ORDER BY THE CENTIMETER
Y SEPARATE ILLUSTRATION

306783

306783 P

1353

7N2023 RADIATOR GP-REAR VIEW-PART 1 OF 2

For S/N See Page 39D.05
7N7510-Page 40

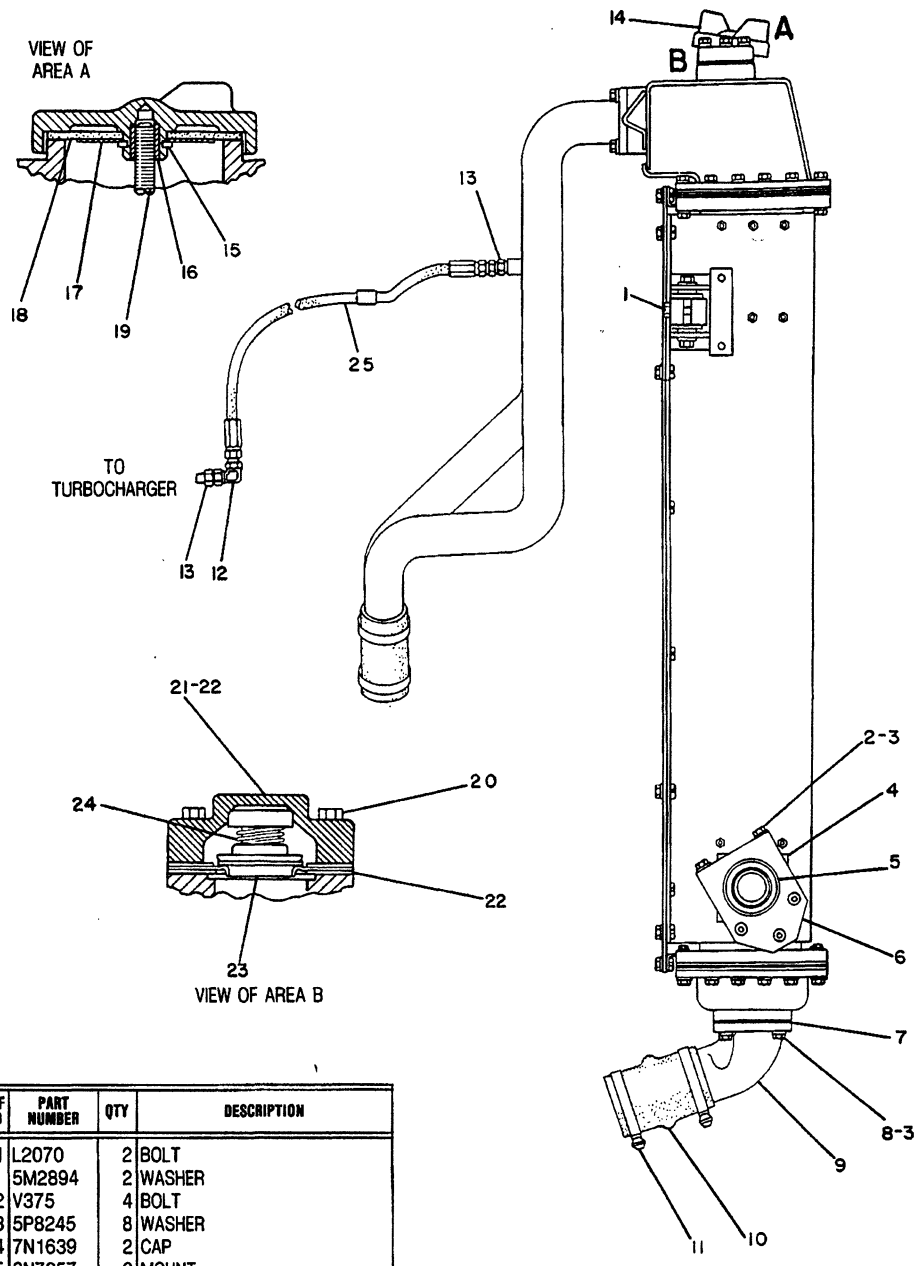

NOTE	REF NO	PART NUMBER	QTY	DESCRIPTION
C	1	L2070	2	BOLT
C		5M2894	2	WASHER
	2	V375	4	BOLT
	3	5P8245	8	WASHER
	4	7N1639	2	CAP
	5	8N7257	2	MOUNT
	6	7N3864	2	SUPPORT
	7	4N1419	1	GASKET
	8	S1595	4	BOLT
	9	1W6056	1	ELBOW
CE	10	5P0764		HOSE 18CM (7.09IN.)
	11	5P598	2	CLAMP
	12	8M547	1	ELBOW
	13	8M755	2	CONNECTOR
	14	7S7809	1	CAP ASSEM.
	15	9S9979	1	RING
	16	7S7807	1	INSERT
	17	2S2846	1	RETAINER
	18	2P3230	1	GASKET
	19	1S286	1	STUD
	20	5S5080	5	BOLT
		9M1974	5	WASHER
	21	5S1211	1	COVER
	22	5S4629	2	GASKET
	23	5S1213	1	PLATE
	24	5S1218	1	VALVE ASSEM.
C	25	334953	1	HOSE ASSEM. 96.5CM (38IN.)

C INDICATES CHANGE
E ORDER BY THE CENTIMETER

306784

306784 P

1353 **7N2023 RADIATOR GP-SIDE VIEW-PART 2 OF 2**

For S/N See Page 39D.05

COOLING SYSTEM

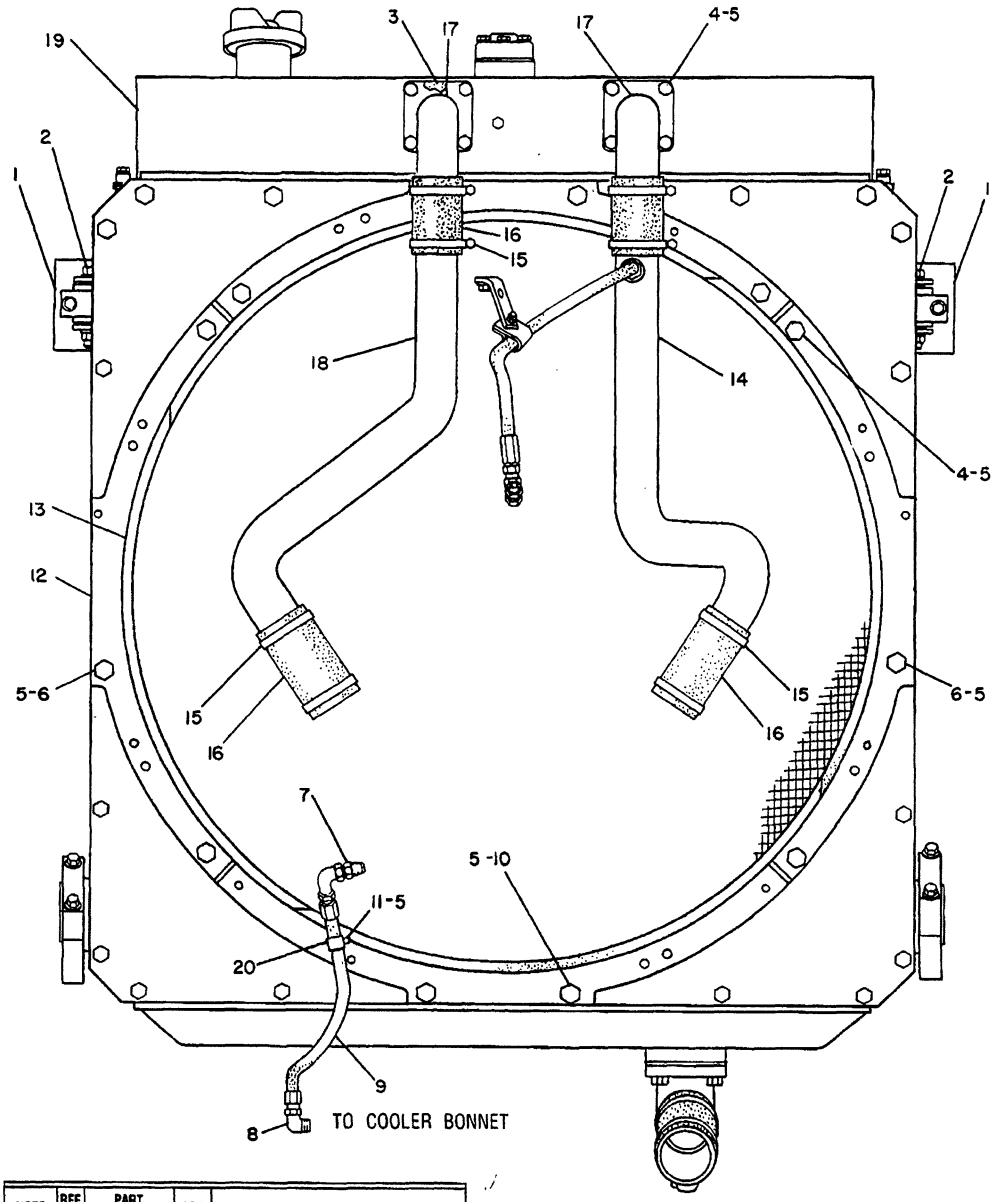

NOTE	REF NO	PART NUMBER	QTY	DESCRIPTION
	1	8N5576	2	PLATE AS.
	2	8S4739	2	BOLT
		8S5150	2	NUT
		5P8246	8	WASHER
		2S1212	2	BUSHING AS.
	3	4N1418	2	GASKET
C	4	1A2029	14	BOLT
C	5	5M2894	21	WASHER
	6	0S1591	2	BOLT
	7	9M6522	1	CONNECTOR
	8	321269	1	ELBOW
	9	6N8785	1	HOSE AS.
C	10	0S1594	4	BOLT
C	11	0L2070	1	BOLT
	12	7N4481	4	STRIP
	13	7N4480	4	BAFFLE

B USE AS REQUIRED
C INDICATES CHANGE
E ORDER BY THE CENTIMETER
Y SEPARATE ILLUSTRATION

C	14	1N3702	1	TUBE AS.
		2H1193	1	FERRULE
C	15	5P4868	8	CLAMP
CBE	16	5P1262		HOSE
C	17	2W6630	2	TUBE AS.
C	18	2W6638	1	TUBE AS.
Y	19	7N7510	1	RADIATOR GP.
C	20	6D4636	1	CLIP

330269 330269 P

1353 **7N2023 RADIATOR GP-REAR VIEW-PART 1 OF 2**

S/N 53Y2396,2410,2419,2420,2423,2427,2429,2444,2451,2460,2471,2473,2477, 2481,2483-2485,2489,2490,2494,2495,2498,2504,2505,2510-2512,2515,2521-2524,2529,2531,2534,2535,2537,2539,2541,2542,2546,2549,2550,2552,2554, 2557-3217. 7N7510-Page 40

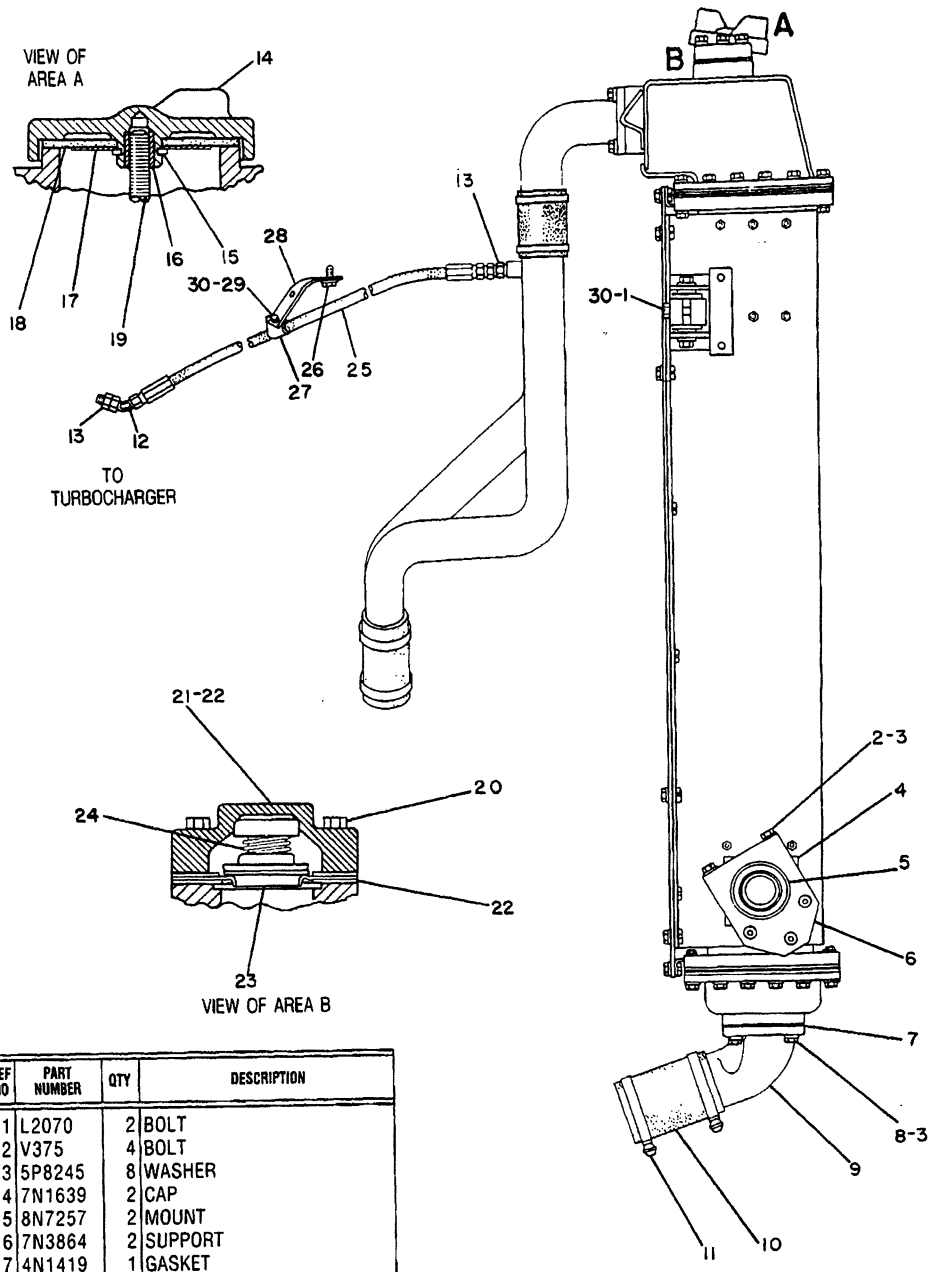

NOTE	REF NO	PART NUMBER	QTY	DESCRIPTION
	1	L2070	2	BOLT
	2	V375	4	BOLT
	3	5P8245	8	WASHER
	4	7N1639	2	CAP
	5	8N7257	2	MOUNT
	6	7N3864	2	SUPPORT
	7	4N1419	1	GASKET
	8	S1595	4	BOLT
	9	1W6056	1	ELBOW
BE	10	5P0764		HOSE
	11	5P598	2	CLAMP
C	12	307963	1	ELBOW
	13	8M755	2	CONNECTOR
C	14	7N7918	1	CAP ASSEM.
	15	9S9979	1	RING
	16	7S7807	1	INSERT
	17	2S2846	1	RETAINER
	18	2P3230	1	GASKET
	19	1S286	1	STUD
	20	5S5080	5	BOLT
		9M1974	5	WASHER
	21	5S1211	1	COVER
	22	5S4629	2	GASKET
	23	5S1213	1	PLATE
	24	5S1218	1	VALVE ASSEM.
C	25	2G4561	1	HOSE ASSEM.
C	26	L1351	1	BOLT
C		3V3308	1	WASHER
C	27	3S8664	1	CLIP
C	28	9G150	1	BRACKET
C	29	S1594	1	BOLT
C		2K4973	1	LOCKNUT
C	30	5M2894	4	WASHER

B USE AS REQUIRED C INDICATES CHANGE

E ORDER BY THE CENTIMETER

330270

330270 P

1353 7N2023 RADIATOR GP-SIDE VIEW-PART 2 OF 2

S/N 53Y2396,2410,2419,2420,2423,2427,2429,2444,2451,2460,2471,2473,2477, 2481,2483-2485,2489,2490,2494,2495,2498,2504,2505,2510-2512,2515,2521-2524,2529,2531,2534,2535,2537,2539,2541,2542,2546,2549,2550,2552,2554, 2557-3217

COOLING SYSTEM

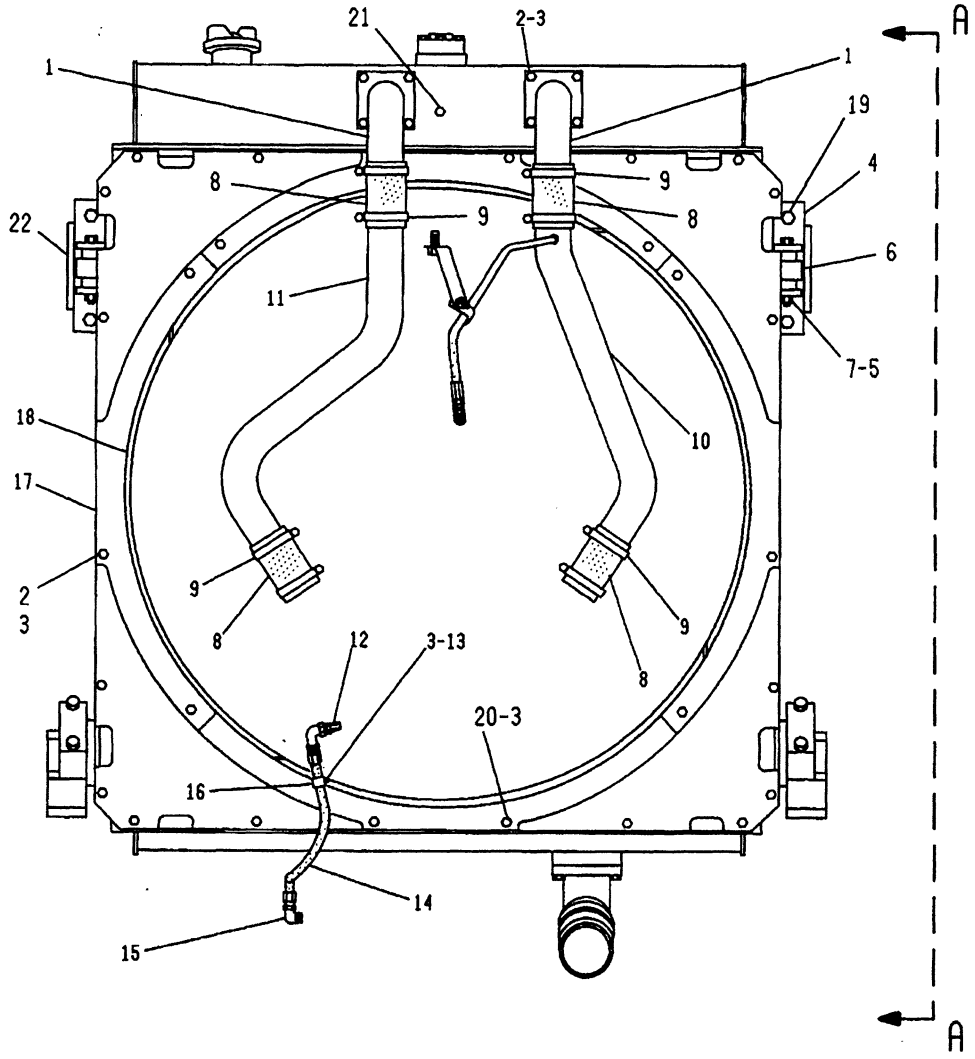

REFER TO ALL PARTS OF THIS GROUP FOR AUXILIARY VIEWS

NOTE	REF NO	PART NUMBER	QTY	DESCRIPTION
	1	5W1885	2	TUBE AS. (RAD. INLET)
		4N1418	2	GASKET
C	2	1A2029	16	BOLT
	3	5M2894	21	WASHER
C	4	7W4425	2	BRACKET AS.
C	5	7F5227	2	BOLT
C	6	7W2813	2	MOUNT AS.
C	7	1B4331	2	NUT
	8	5P1262	4	HOSE
	9	5P4868	8	CLAMP
	10	1N3702	1	TUBE AS. (R.H.)
		2H1193	1	FERRULE
	11	2W6638	1	TUBE AS. (L.H.)
	12	9M6522	1	CONNECTOR
	13	2H5330	1	BOLT
	14	6N8785	1	HOSE AS.
	15	321269	1	ELBOW
	16	6D4636	1	CLIP
	17	7N4481	4	STRIP
	18	7N4480	4	BAFFLE
C	19	0S1566	4	BOLT
C		5P8247	4	WASHER
C	20	0S1591	4	BOLT
C	21	5M6213	1	PLUG
C	22	7W4142	2	BLOCK

C-INDICATES CHANGE

* 332343 A-332343 P

1353 **8N9904 RADIATOR GP-REAR VIEW-PART 1 OF 2**
S/N 53Y3218-3545,3547-3968

COOLING SYSTEM

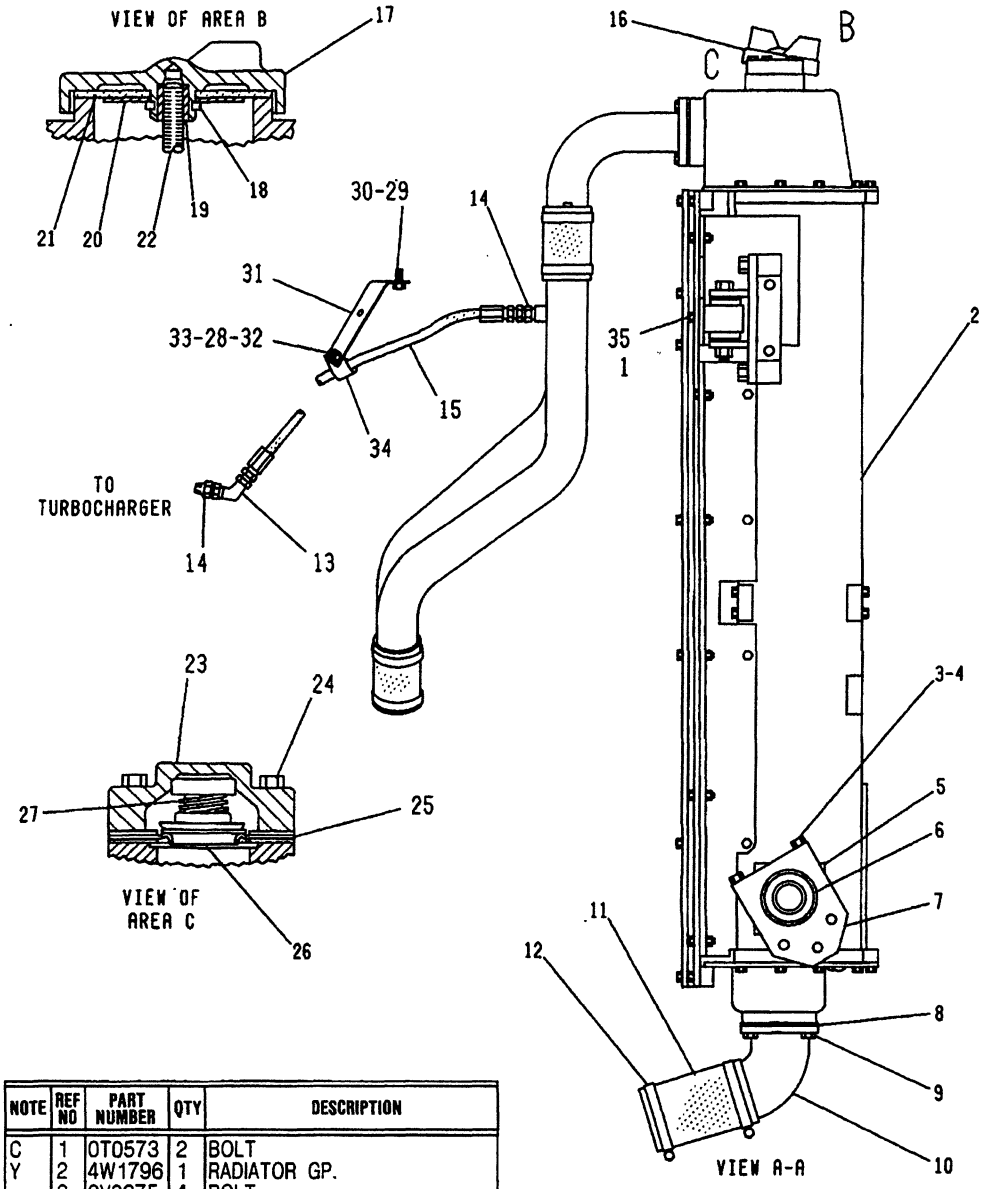

NOTE	REF NO	PART NUMBER	QTY	DESCRIPTION
C	1	0T0573	2	BOLT
Y	2	4W1796	1	RADIATOR GP.
	3	0V0375	4	BOLT
	4	5P8245	4	WASHER
	5	7N1639	2	CAP
	6	8N7257	2	MOUNT AS.
	7	7N3864	2	SUPPORT
	8	4N1419	1	GASKET
	9	0S1595	4	BOLT
	10	9N9909	1	ELBOW
C	11	5T0093	1	HOSE
	12	5P0598	2	CLAMP
	13	307963	1	ELBOW
	14	8M755	2	CONNECTOR
	15	2G4561	1	HOSE AS.
	16	7N7918	1	CAP AS. (RADIATOR)
	17	7N7373	1	CAP
	18	9S9979	1	RING
	19	7S7807	1	INSERT
	20	2S2846	1	RETAINER
	21	2P3230	1	GASKET
	22	1S0286	1	STUD
	23	5S1211	1	COVER
	24	5S5080	5	BOLT
		9M1974	5	WASHER
	25	5S4629	2	GASKET
	26	5S1213	1	PLATE
	27	5S1218	1	VALVE AS.
	28	5M2894	2	WASHER
C	29	0L1351	1	BOLT
C	30	3V3308	1	WASHER
C	31	9G0150	1	BRACKET
C	32	0S1594	1	BOLT
C	33	2K4973	1	LOCKNUT
C	34	3S8664	1	CLIP
C	35	5P1075	2	WASHER

C-INDICATES CHANGE

Y-SEPARATE ILLUSTRATION

* 332344 A ÷ 332344 P

1353 **8N9904 RADIATOR GP-SIDE VIEW-PART 2 OF 2**
S/N 53Y3218-3545,3547-3968
4W1796-Page 41E

COOLING SYSTEM

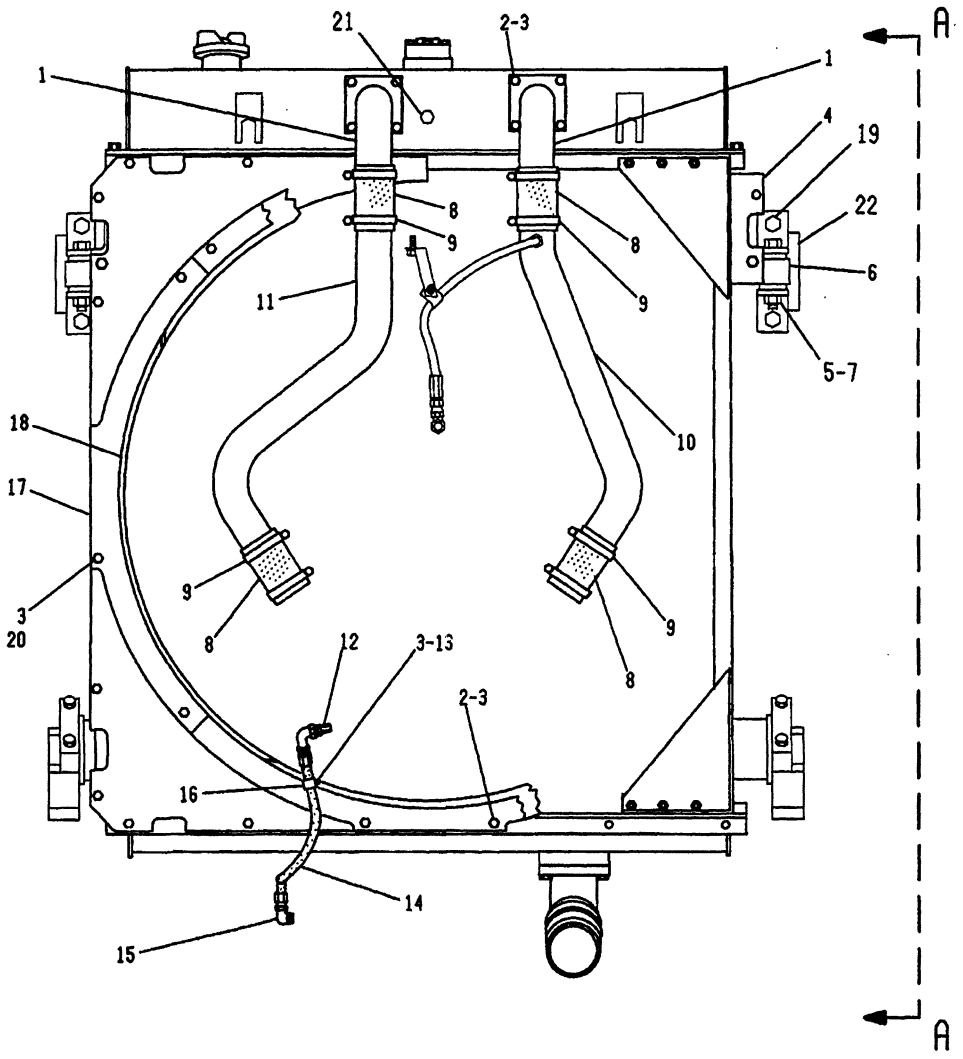

B-USE AS REQUIRED
C-INDICATES CHANGE
E-ORDER BY THE CENTIMETER

NOTE	REF NO	PART NUMBER	QTY	DESCRIPTION
C	1	4W1885	2	TUBE AS. (RAD. INLET)
		4N1418	2	GASKET
	2	1A2029	16	BOLT
	3	5M2894	21	WASHER
	4	7W4425	2	BRACKET AS.
	5	7F5227	2	BOLT
	6	7W2813	2	MOUNT AS.
	7	1B4331	2	NUT
BE	8	5P1262		HOSE
	9	5P4868	8	CLAMP
C	10	7C0312	1	TUBE AS. (R.H.)
	11	2W6638	1	TUBE AS. (L.H.)
	12	9M6522	1	CONNECTOR
	13	2H5330	1	BOLT
	14	6N8785	1	HOSE AS.
	15	321269	1	ELBOW
	16	6D4636	1	CLIP
	17	7N4481	4	STRIP
	18	7N4480	4	BAFFLE
	19	0S1566	4	BOLT
		5P8247	4	WASHER
	20	0S1591	4	BOLT
	21	5M6213	1	PLUG
	22	7W4142	2	BLOCK

REFER TO ALL PARTS OF THIS GROUP FOR AUXILIARY VIEWS

346253

A-346253 EP

1353

8N9904 RADIATOR GP-REAR VIEW-PART 1 OF 2
S/N 53Y3546,3969-Up

COOLING SYSTEM

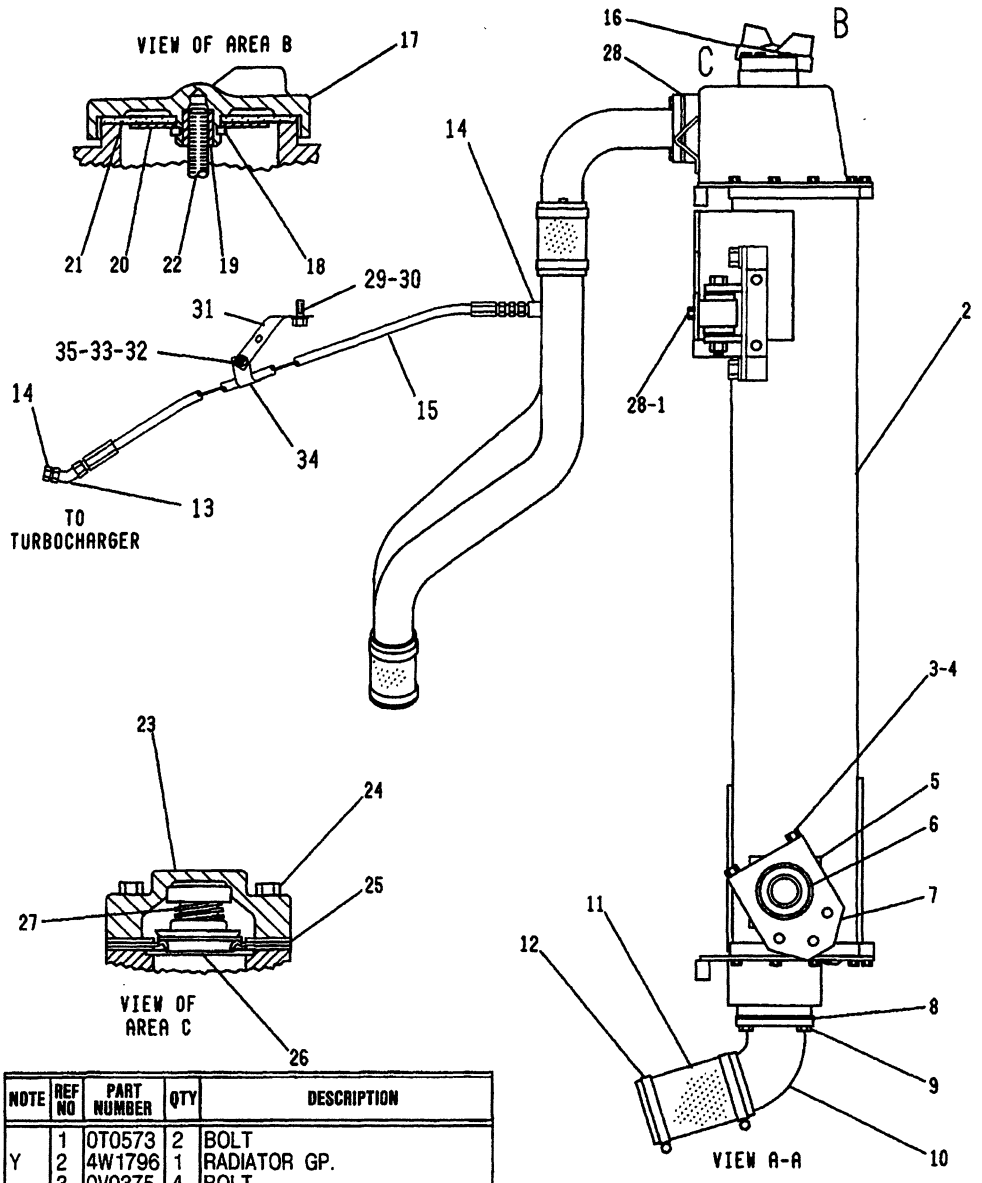

NOTE	REF NO	PART NUMBER	QTY	DESCRIPTION
	1	0T0573	2	BOLT
Y	2	4W1796	1	RADIATOR GP.
	3	0V0375	4	BOLT
	4	5P8245	4	WASHER
	5	7N1639	2	CAP
	6	8N7257	2	MOUNT AS.
	7	7N3864	2	SUPPORT
	8	4N1419	1	GASKET
	9	0S1595	4	BOLT
C	10	8N9909	1	ELBOW
	11	5T0093	1	HOSE
	12	5P0598	2	CLAMP
	13	307963	1	ELBOW
	14	8M755	2	CONNECTOR
	15	2G4561	1	HOSE AS.
	16	7N7918	1	CAP AS. (RADIATOR)
	17	7N7373	1	CAP
	18	9S9979	1	RING
	19	7S7807	1	INSERT
	20	2S2846	1	RETAINER
	21	2P3230	1	GASKET
	22	1S0286	1	STUD
	23	5S1211	1	COVER
	24	5S5080	5	BOLT
		9M1974	5	WASHER
	25	5S4629	2	GASKET
	26	5S1213	1	PLATE
	27	5S1218	1	VALVE AS.
	28	5M2894	2	WASHER
	29	0L1351	1	BOLT
	30	3V3308	1	WASHER
	31	9G0150	1	BRACKET
	32	0S1594	1	BOLT
	33	2K4973	1	LOCKNUT
	34	3S8664	1	CLIP
	35	5P1075	2	WASHER

C-INDICATES CHANGE

Y-SEPARATE ILLUSTRATION

348122

A-348122 EP

1353 **8N9904 RADIATOR GP-SIDE VIEW-PART 2 OF 2**

S/N 53Y3546,3969-Up

4W1796-Page 41E

COOLING SYSTEM

SERIAL NO:
53Y978-2395,2397-2409,2411-2418,2421,
2422,2424-2426,2428,2430-2443,2445-2450,
2452-2459,2461-2470,2472,2474-2476,2478-
2480,2482,2486-2488,2491-2493,2496-2497,
2499-2503,2506-2509,2513,2514,2516-2520,
2525-2528,2530,2532,2533,2536,2538,2540,
2543-2545,2547-2548,2551,2553,2555,2556,
3546-UP

7N2023 RADIATOR GP

For Illustration See Pages 39C And 39D

MEMORANDA

COOLING SYSTEM

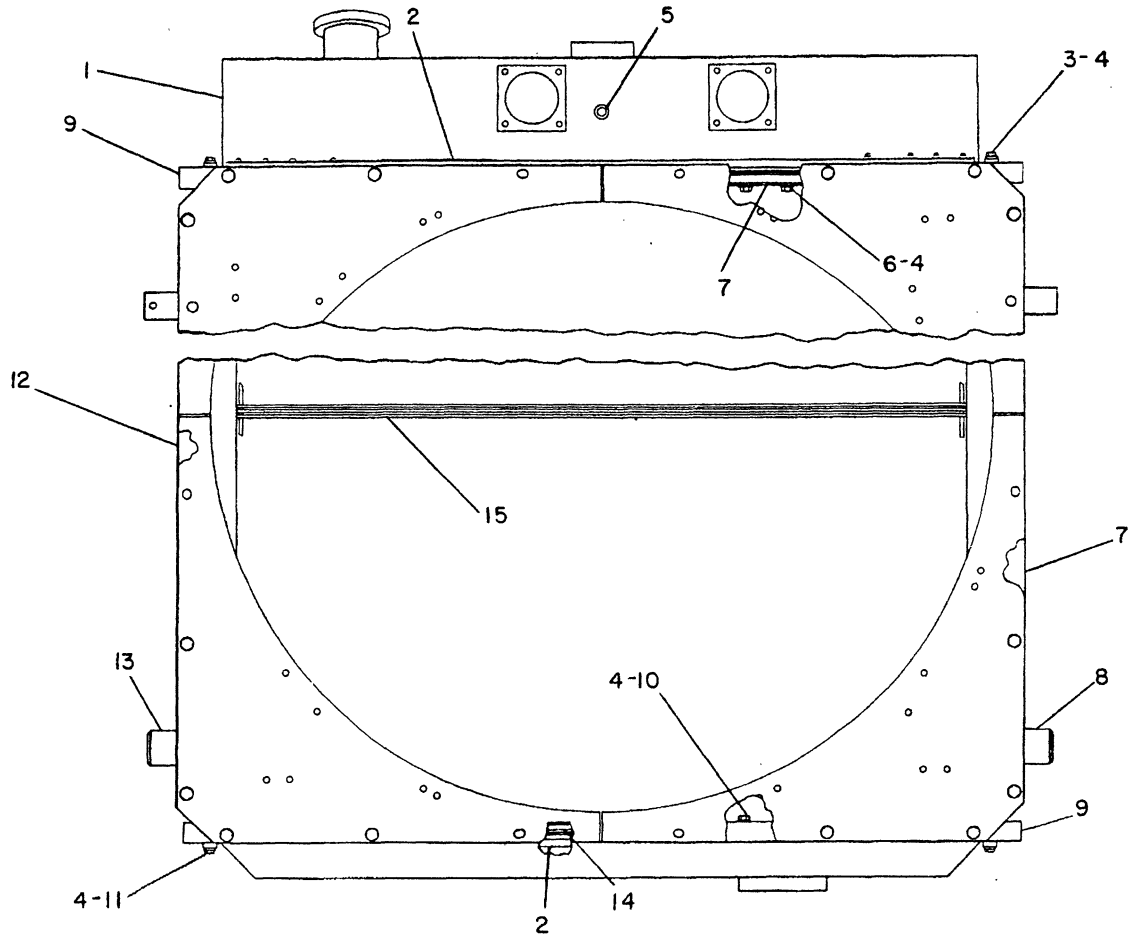

NOTE	REF NO	PART NUMBER	QTY	PART NAME	NOTE	REF NO	PART NUMBER	QTY	PART NAME
	1	7N4235	1	TANK AS-RADIATOR TOP					
	2	7N4284	4	STRIP					
	3	0S1571	6	BOLT (3/8-16X1.75IN)					
C	4	5M2894	66	WASHER (2.5MM THK)					
C	5	5M6213	1	PLUG					
	6	3B1915	24	BOLT (3/8-16X1.375IN) (FAR SIDE)					
	7	7N4233	4	STRIP					
C	8	2W1072	1	CHANNEL AS-RH					
		2W1071	1	CLAMP					
		9F2978	8	NUT-WELD (3/8-16 THD)					
	9	7N4477	2	ANGLE AS (EACH INCLUDES)					
		9F2978	6	NUT-WELD (3/8-16 THD)					
C	10	2A4639	12	BOLT (3/8-16X1.625IN)					
	11	1C2251	6	BOLT (3/8-16X1.87IN)					
C	12	2W1073	1	CHANNEL AS-LH					
		2W1071	1	CLAMP					
		9F2978	8	NUT-WELD (3/8-16 THD)					
	13	7N3112	1	CORE AS-RADIATOR					

C-CHANGE FROM PREVIOUS TYPE

B-655760 CP

1353 **7N7510 RADIATOR GP-REAR VIEW**

S/N 53Y1-734

Part Of 7N2023 Radiator-Rear View

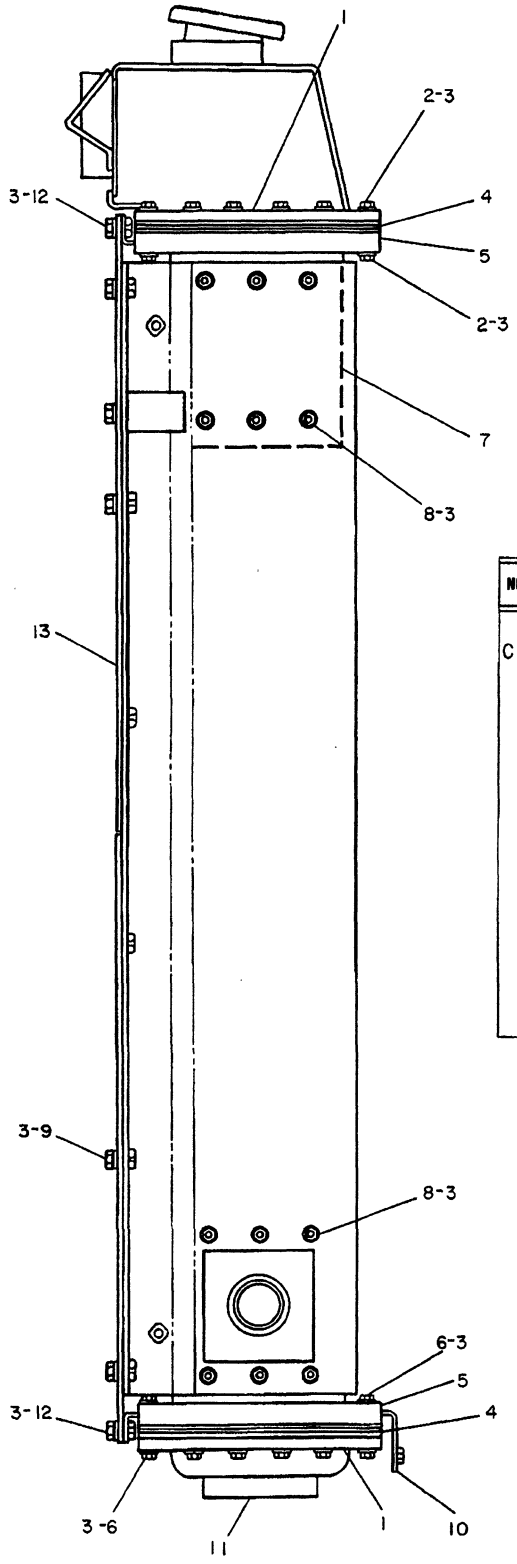

NOTE	REF NO	PART NUMBER	QTY	DESCRIPTION
	1	7N4232	4	STRIP
C	2	S1571	22	BOLT
	3	5M2894	84	WASHER
	4	7N4251	2	GASKET
	5	7N3860	4	BRACKET ASSEM.
				(EACH INCLUDES)
		7M7794	6	STUD
	6	1C2251	22	BOLT
	7	8N7600	2	DAMPER ASSEM.
	8	1D4717	24	NUT
	9	S1594	8	BOLT
	10	1N4384	1	PLATE ASSEM.
		9F2978	4	NUT
	11	7N4282	1	TANK ASSEM.
	12	L1351	8	BOLT
	13	7N4482	4	SHIELD ASSEM.
				(EACH INCLUDES)
		9F2978	8	NUT

C INDICATES CHANGE

307918

307918 P

1353

7N7510 RADIATOR GP-SIDE VIEW
S/N 53Y1-734
Part Of 7N2023 Radiator

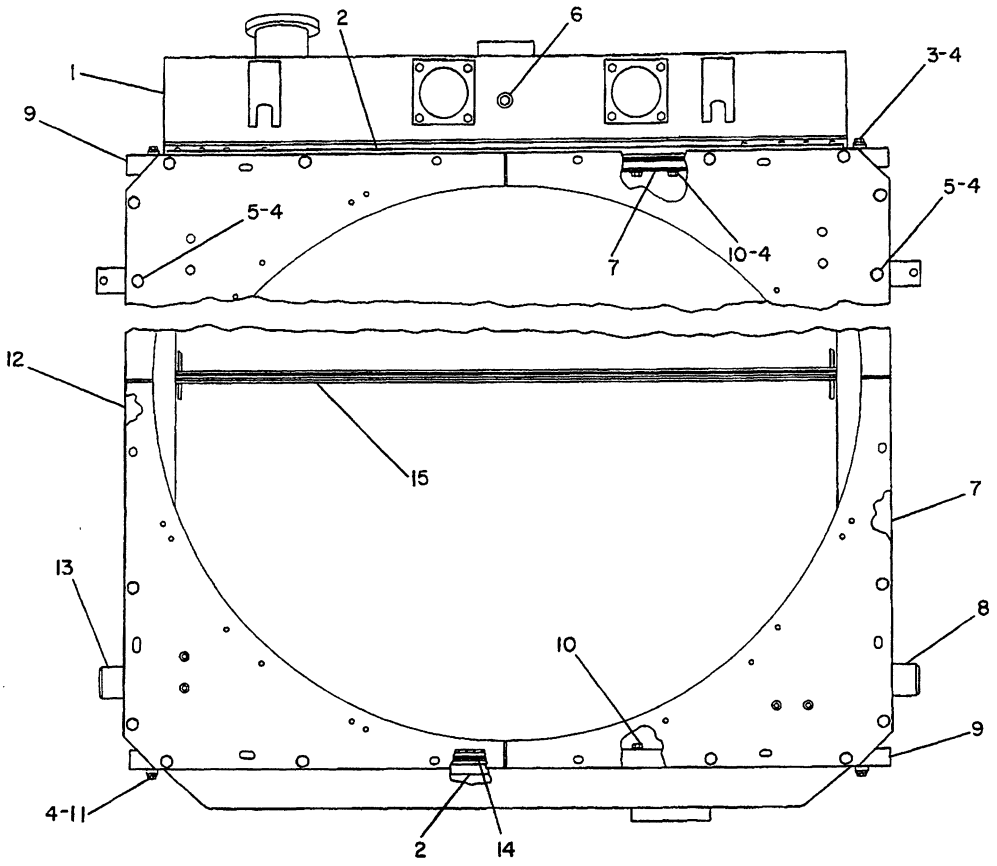

NOTE	REF NO	PART NUMBER	QTY	PART NAME
	1	7N4235	1	TANK AS-RADIATOR TOP
	2	2W0298	4	STRIP
	3	0S1571	6	BOLT
	4	5M2894	26	WASHER
	5	0L1143	2	BOLT
	6	5M6213	1	PLUG
	7	2W1072	1	CHANNEL AS-RH
		9F2978	6	NUT-WELD
C	8	7N3926	1	PLATE AS
	9	7N4477	2	ANGLE AS
				(EACH INCLUDES)
		9F2978	6	NUT-WELD
	10	1P3864	48	SCREW-HEX HEAD
	11	1C2251	6	BOLT
	12	2W1073	1	CHANNEL AS-LH
		9F2978	6	NUT-WELD
C	13	7N3926	1	PLATE AS
	14	7N4233	4	STRIP
	15	7N3112	1	CORE AS-RADIATOR

C-CHANGE FROM PREVIOUS TYPE

B-455560 P

1353

1W9387 RADIATOR GP-REAR VIEW

S/N 53Y735-977

Part Of 1W9390 Radiator-Rear View

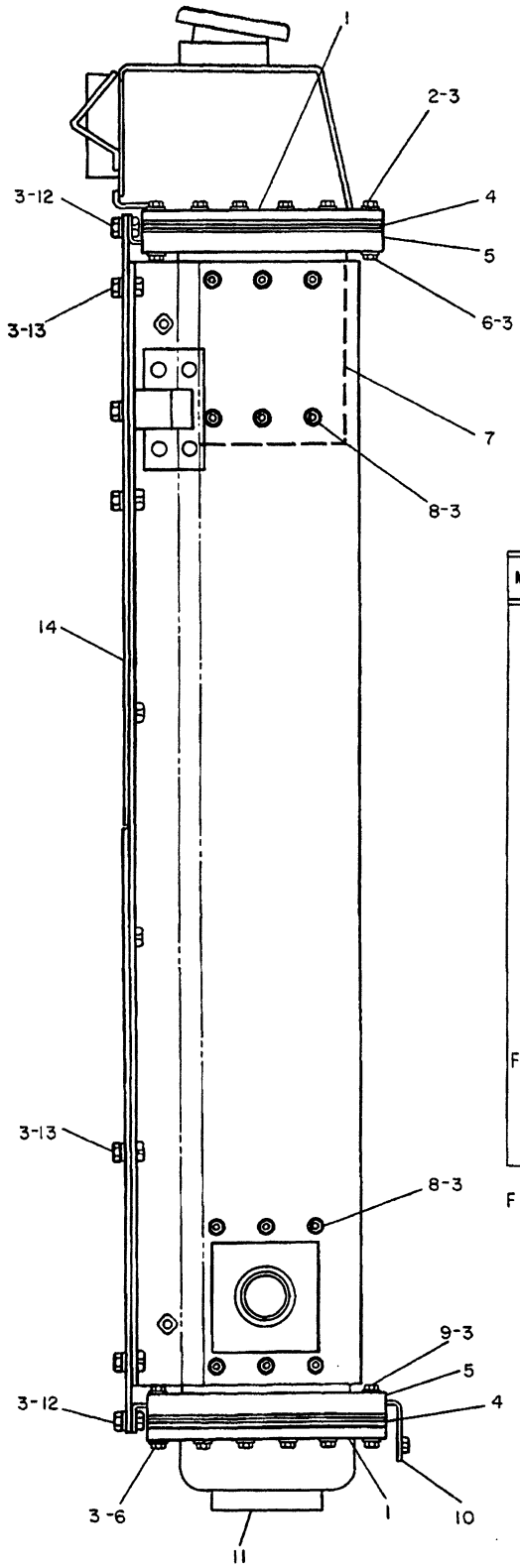

NOTE	REF NO	PART NUMBER	QTY	DESCRIPTION
	1	7N4232	4	STRIP
	2	S1571	6	BOLT
	3	5M2894	84	WASHER
	4	7N4251	2	GASKET
	5	7N3860	4	BRACKET ASSEM. (EACH INCLUDES)
		7M7794	6	STUD
	6	1C2251	22	BOLT
	7	8N7600	2	DAMPER ASSEM.
	8	1D4717	24	NUT
	9	S1590	16	BOLT
	10	1N4384	1	PLATE ASSEM.
		9F2978	4	NUT
	11	7N4282	1	TANK ASSEM.
	12	L1351	8	BOLT
	13	S1594	8	BOLT
	14	1W9389	2	SHIELD ASSEM. (EACH INCLUDES)
		9F2978	2	NUT
F		5P7976	1	TAG

F NOT SHOWN

306782

306782 P

1353

1W9387 RADIATOR GP-SIDE VIEW
S/N 53Y735-977
Part Of 1W9390 Radiator-Rear View

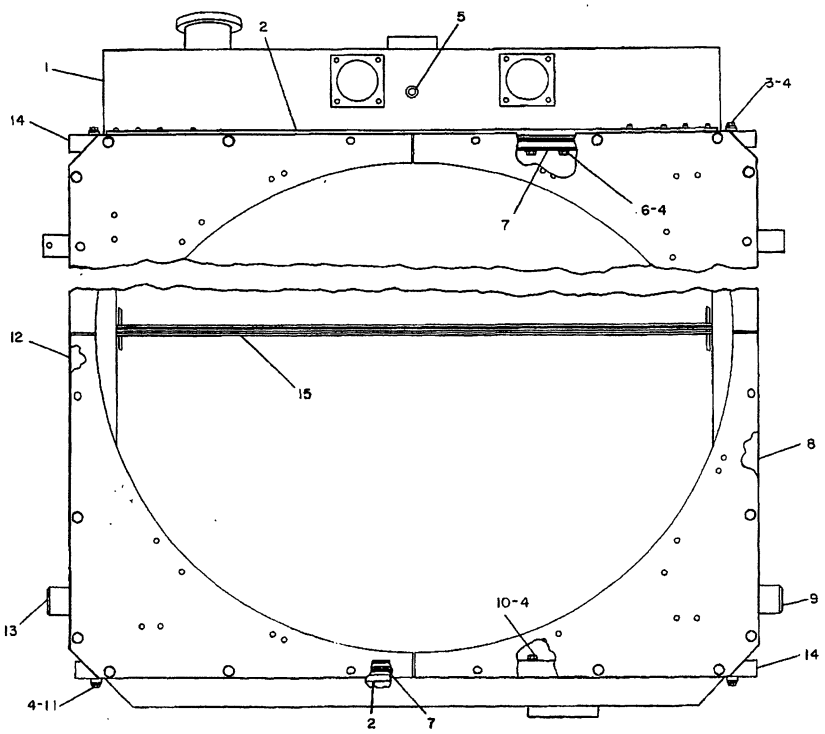

NOTE	REF NO	PART NUMBER	QTY	PART NAME
	1	7N4235	1	TANK AS-RADIATOR TOP
	2	7N4284	4	STRIP
	3	0S1571	6	BOLT
	4	5M2894	66	WASHER
	5	5M6213	1	PLUG-PIPE
	6	3B1915	24	BOLT 3.505CM (1.38 IN)
	7	7N4233	4	STRIP
	8	2W1072	1	CHANNEL AS-R.H.
		9F2978	8	NUT
	9	7N3926	1	PLATE AS
	10	2A4639	12	BOLT
	11	1C2251	6	BOLT
	12	2W1073	1	CHANNEL AS-L.H.
		9F2978	8	NUT
	13	7N3926	1	PLATE AS
	14	7N4477	2	ANGLE AS
				(EACH INCLUDES)
		9F2978	6	NUT
	15	7N3112	1	CORE AS-RADIATOR

345752

345752 P

1353 **7N7510 RADIATOR GP-REAR VIEW-PART 1 OF 2**
S/N 53Y978-3217
Part Of 7N2023 Radiator

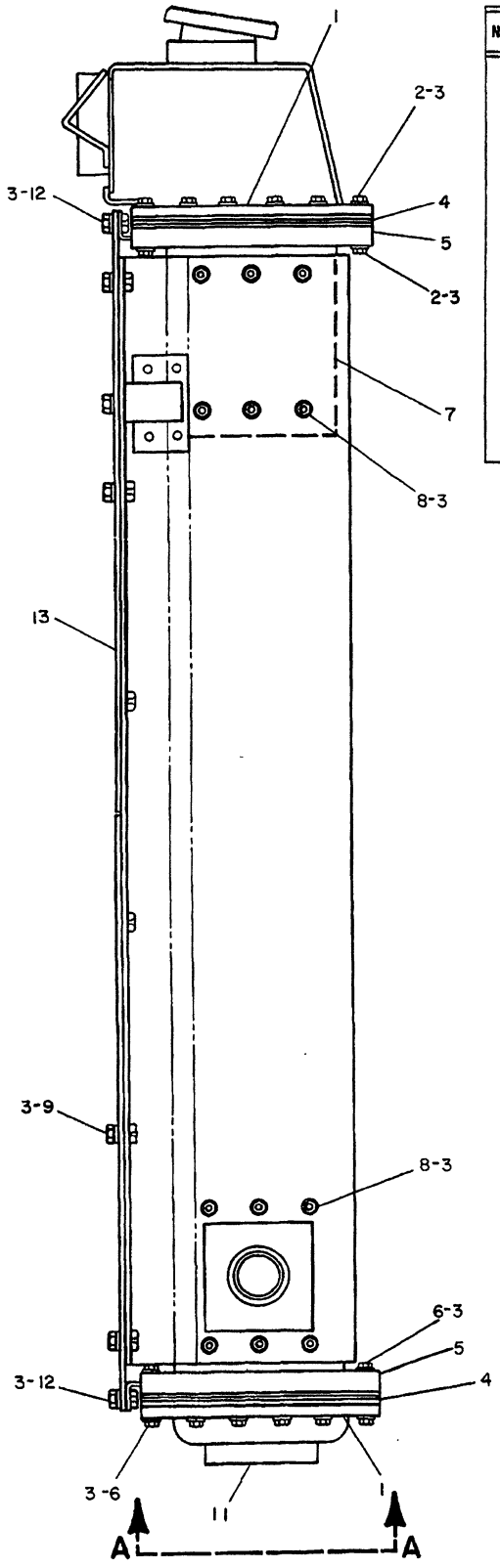

NOTE	REF NO	PART NUMBER	QTY	PART NAME
	1	7N4232	4	STRIP
	2	0S1571	22	BOLT
	3	5M2894	84	WASHER
	4	7N4251	2	GASKET
	5	7N3860	4	BRACKET AS
				(EACH INCLUDES)
		7M7794	6	STUD-WELD
	6	1C2251	22	BOLT
	7	8N7600	2	DAMPER AS
	8	1D4717	30	NUT-FULL
	9	0S0509	8	BOLT
	10	0S1591	6	BOLT
	11	7N4282	1	TANK AS-RADIATOR BOTTOM
	12	0L1351	8	BOLT
	13	7N4482	4	SHIELD AS
				(EACH INCLUDES)
		9F2978	8	NUT
	14	7F0192	6	BOLT

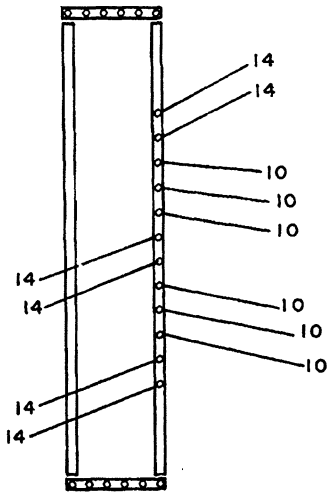

VIEW A-A

345753

345753 P

1353 **7N7510 RADIATOR GP-SIDE VIEW-PART 2 OF 2**

S/N 53Y978-3217

Part Of 7N2023 Radiator

COOLING SYSTEM

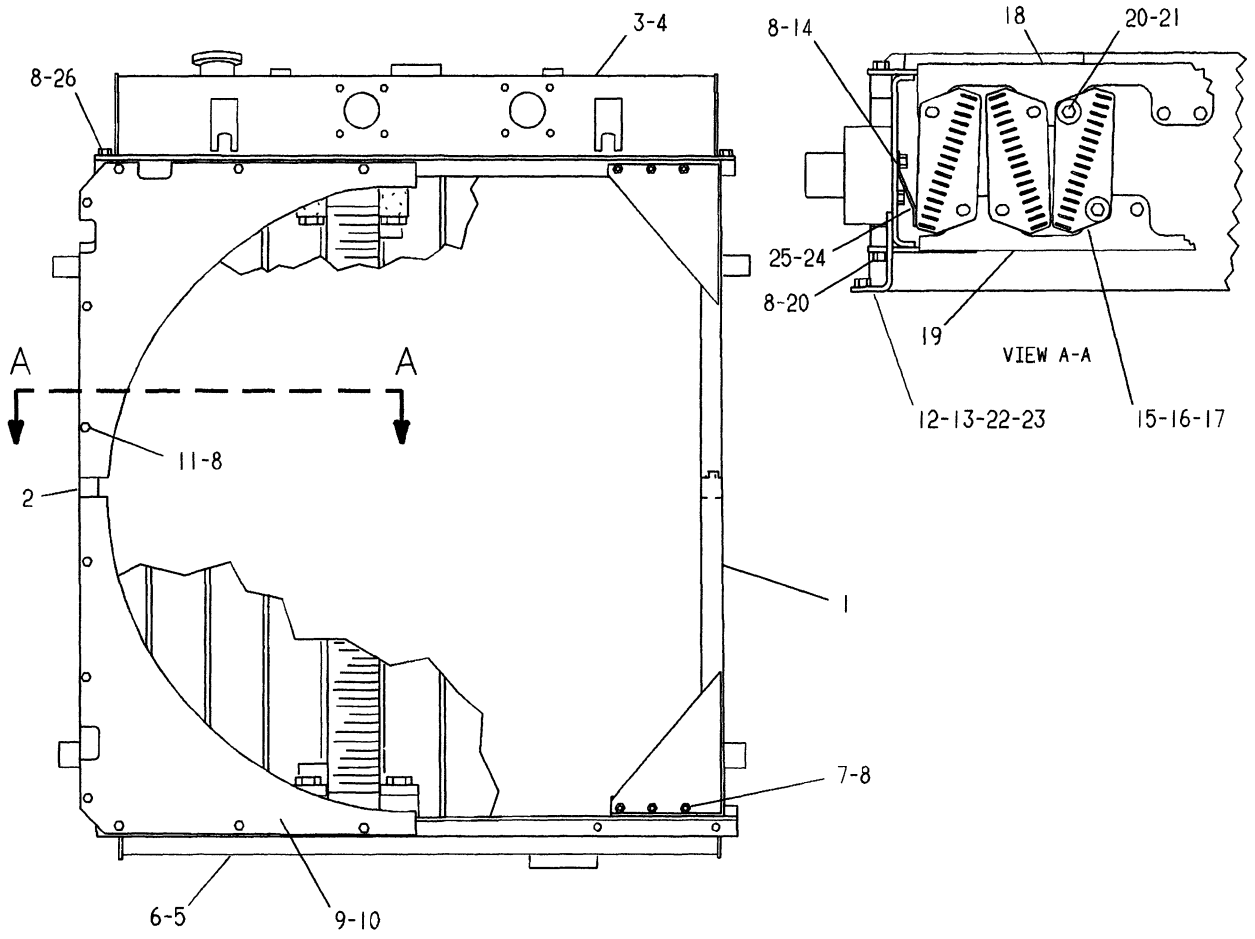

NOTE	REF NO	PART NUMBER	QTY	PART NAME
	1	4W1075	1	CHANNEL AS-RH
	2	4W0462	1	CHANNEL AS-LH
	3	4W1887	1	TANK AS-RADIATOR (TOP)
	4	7M7794	6	STUD-WELD
	5	4W1886	1	TANK AS-RADIATOR (BOTTOM)
	6	7M7794	6	STUD-WELD
C	7	6V8801	12	NUT
	8	5P1075	90	WASHER-HARD
	9	7N4482	4	SHIELD AS (EACH INCLUDES)
	10	9F2978	8	NUT-WELD (WELD)
C	11	5S7379	24	BOLT
	12	4W0972	1	PLATE AS-LH
	13	9F2978	5	NUT-WELD (WELD)
C	14	5M3062	14	BOLT
C	15	9Y3317	14	CORE AS-RADIATOR
	16	8N5130	14	SEAL (WIDE END)
	17	8N7139	14	SEAL (NARROW END)
	18	4W1883	1	STRAP AS (FRONT)
	19	4W1881	1	STRAP AS-REAR
C	20	4L6454	36	BOLT
C	21	8M7145	28	WASHER
	22	4W0973	1	PLATE AS-RH
	23	9F2978	5	NUT-WELD (WELD)
	24	4W5904	2	PLATE AS (EACH INCLUDES)
	25	9F2978	3	NUT-WELD (WELD)
C	26	9B7237	32	BOLT

C-CHANGE FROM PREVIOUS TYPE

A-458521 EP

1353 **4W1796 RADIATOR GP**

Folded Core
S/N 53Y3218-Up
Part Of 8N9904 Radiator

2	7N4477	ANGLE AS
1	9P5481	BAFFLE AS
6	6B4594	RIVET
1	9P5480	BAFFLE AS
6	6B4594	RIVET
1	6T1997	BAFFLE AS.
10	6B4594	RIVET
18	0S1591	BOLT (3/8-16X1.5IN)
8	0S0509	BOLT (3/8-16X.75IN)
8	0L1351	BOLT (3/8-16X.875IN)
34	0S1590	BOLT (3/8-16X2IN)
24	3B1915	BOLT (3/8-16X1.375IN)
4	7N3860	BRACKET AS
6	7M7794	STUD-WELD
1	2W1073	CHANNEL AS-L.H.
1	2W1072	CHANNEL AS-R.H.
1	7N3112	CORE AS-RADIATOR
2	8N7600	DAMPER AS
1	1W6056	ELBOW-WATER
2	7N4251	GASKET
1	4N1419	GASKET-OUTLET
2	4N1418	GASKET-RADIATOR INLET
2	5S4629	GASKET-VALVE
1	7S5833	HOSE
2	7W2813	MOUNT AS
2	8N7257	MOUNT AS
30	1D4717	NUT-FULL
1	5M6213	PLUG
2	5P7514	SEAL
4	7N4232	STRIP
4	7N4284	STRIP
4	7N4233	STRIP
1	7N4282	TANK AS-RADIATOR BOTTOM
1	7N4235	TANK AS-RADIATOR TOP
1	1F2417	BOSS
150	5M2894	WASHER

462098 P

COOLING SYSTEM

8	0S0509	BOLT(3/8-16X.75IN)
4	0S1588	BOLT(3/8-16X1.25IN)
4	0S1590	BOLT(3/8-16X2IN)
2	0S1594	BOLT(3/8-16X1IN)
1	2W2385	BRACKET
1	2W2386	BRACKET
1	2W2384	BRACKET
1	2W2387	BRACKET
1	2W1652	CONDENSER AS
2	9D4508	COUPLING
2	5P2493	COUPLING
4	6N8744	GROMMET AS
1	5P5664	HOSE
4	5P5645	HOSE
4	1D4717	NUT-FULL
1	7N8357	PLATE
2	5F9144	SEAL-O RING(7.65MM ID)
2	6M5062	SEAL-O-RING(10.82MM ID)
16	6N8863	WASHER(32MM OD)
14	5M2894	WASHER(2.5MM THK)

462100 P

1353

9Y0319 CONVERSION GP
Freon Condenser
S/N 53Y3218-Up

COOLING SYSTEM

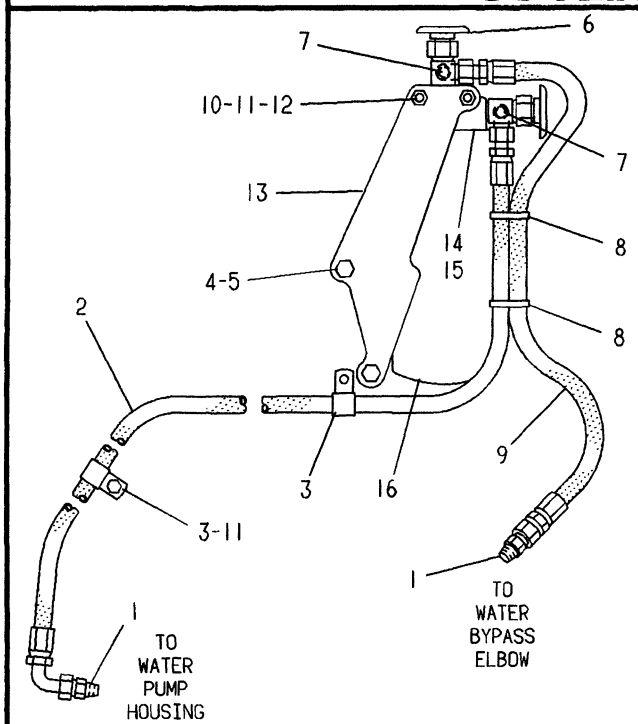

NOTE	REF NO	PART NUMBER	QTY	PART NAME
	1	6L9781	2	CONNECTOR-FLARED
I	2	6P5355	1	HOSE AS
	3	8M2773	2	CLIP
	4	OS1573	2	BOLT
	5	5P8245	2	WASHER
	6	9N3666	2	VALVE AS
	7	2N8037	2	ELBOW
C	8	7K1181	2	STRAP-CABLE
I	9	9L5158	1	HOSE AS-END
	10	OS1588	2	BOLT
	11	5M2894	3	WASHER
	12	9S8752	2	NUT-FULL
	13	4W1297	1	PLATE
	14	9N3668	1	BASE AS (COOLANT CONDR)
	15	3J5390	2	PLUG
A	16	9N3718	1	ELEMENT AS-MAINTENANCE (FOR RTN REPLACEMENT-SYSTEM NOT DRAINED)
				-OR-
		1W5518	1	ELEMENT AS-PRECHARGE (USE WHEN SYSTEM IS DRAINED AND REFILLED)

A-NOT PART OF THIS GROUP
C-CHANGE FROM PREVIOUS TYPE
I-SEE HOSE FABRICATION GUIDE

A-414798 EP

1352 **4W0811 CONDITIONER GP-COOLANT**
S/N 53Y3308-Up

COOLING SYSTEM

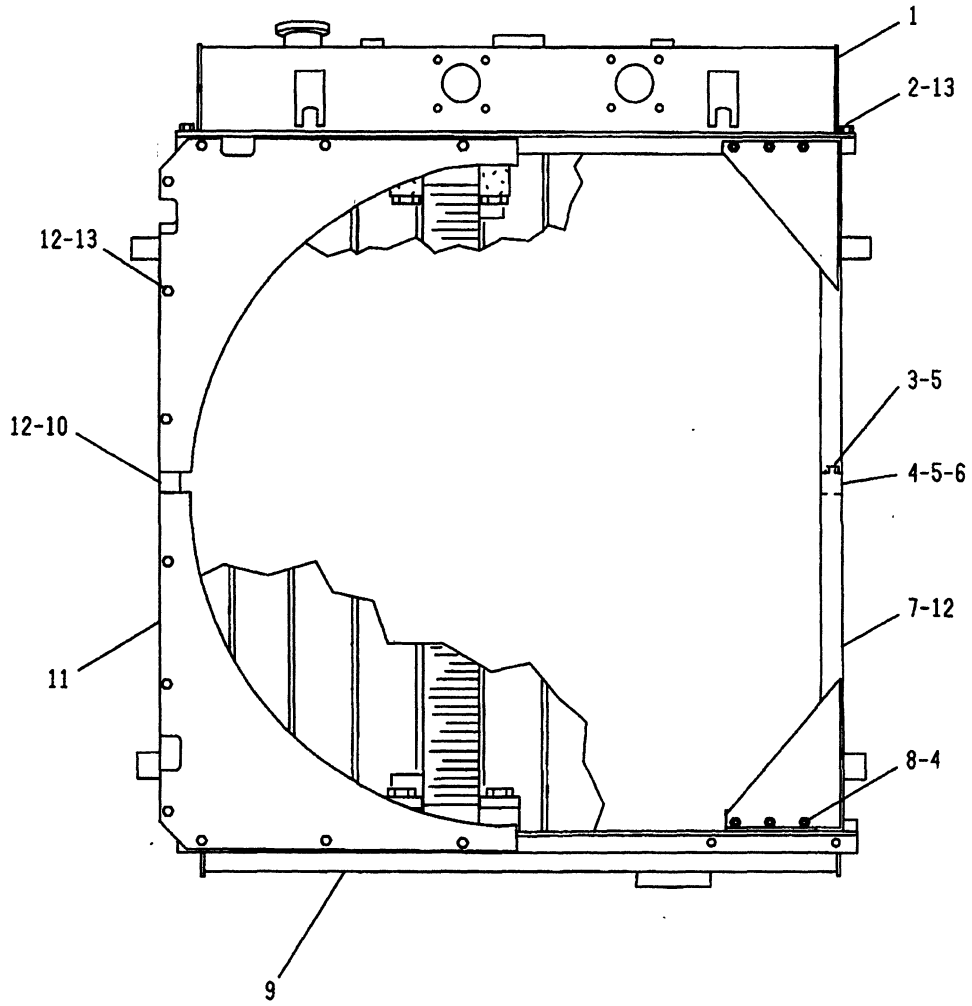

NOTE	REF NO	PART NUMBER	QTY	DESCRIPTION
	1	4W3861	1	TANK AS. (TOP)
		1F2417	1	BOSS
		9S3766	1	BOSS (RELIEF VALVE)
		7M7794	6	STUD
	2	0S1594	36	BOLT
	3	0L1351	2	BOLT
	4	5P1075	62	WASHER
	5	2W1545	2	BLOCK
	6	0S0509	6	BOLT
	7	4W1075	1	CHANNEL AS. (R.H.)
		9F2978	5	NUT (WELD)
		7G3945	1	PLATE
	8	0S1588	32	BOLT
	9	4W3820	1	TANK AS. (BOTTOM)
		7M7794	6	STUD
	10	4W0462	1	CHANNEL AS. (L.H.)
		9F2978	5	NUT (WELD)
		7G3945	1	PLATE
	11	7N4482	4	SHIELD AS. (EACH INCLUDES)
		9F2978	8	NUT (WELD)
	12	9S8752	12	NUT
	13	8M7145	28	WASHER

* 336786

A-336786 P

1353

4W1795 RADIATOR GP-PART 1 OF 2

Folded Core
S/N 53Y3218-3484
Part Of 7T1442,7T5371 Air Conditioners
An Attachment

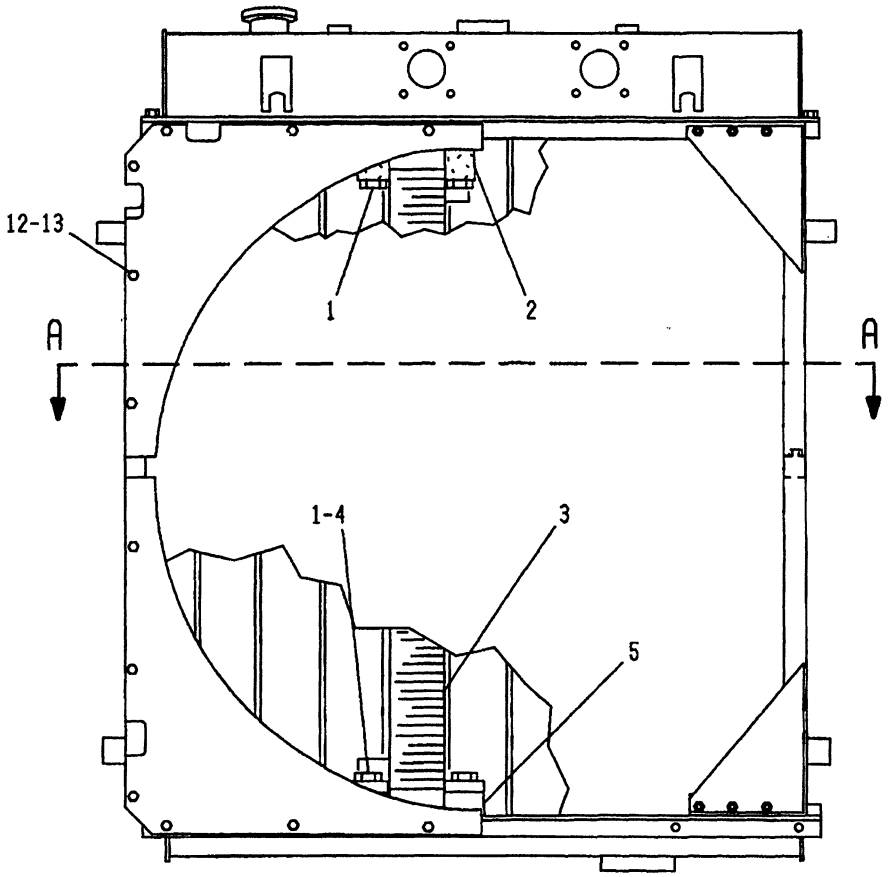

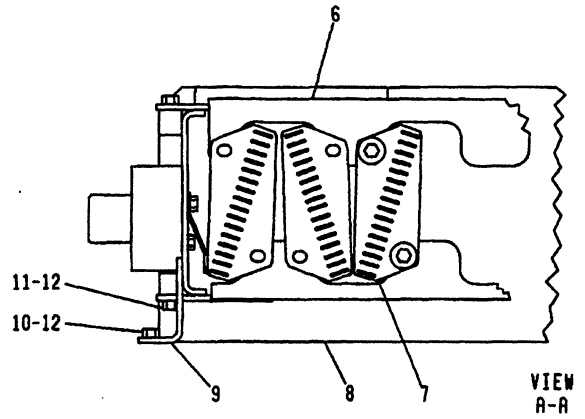

NOTE	REF NO	PART NUMBER	QTY	DESCRIPTION
	1	1B2790	2	BOLT
		5P4116	4	WASHER
	2	4W2357	2	MOUNT AS.
	3	4W2456	1	CORE AS. (CONDENSER)
	4	0S1618	2	BOLT
	5	4W2455	2	SPACER
	6	4W1438	1	STRAP AS. (FRONT)
	7	2W5542	14	CORE AS.
C		8N5130	14	SEAL (FOLDED CORE)
C		8N7139	14	SEAL
	8	4W1141	1	STRAP (REAR)
	9	4W0972	1	PLATE (L.H.)
		4W0973	1	PLATE (R.H.)
C	10	0S0509	8	BOLT
	11	0S1594	8	BOLT
C	12	5P1075	26	WASHER
C	13	0L1351	24	BOLT

C-INDICATES CHANGE

* 335260

A-335260 P

1353 **4W1795 RADIATOR GP-PART 2 OF 2**

Folded Core
S/N 53Y3218-3484
Part Of 7T1442,7T5371 Air Conditioners
An Attachment

COOLING SYSTEM

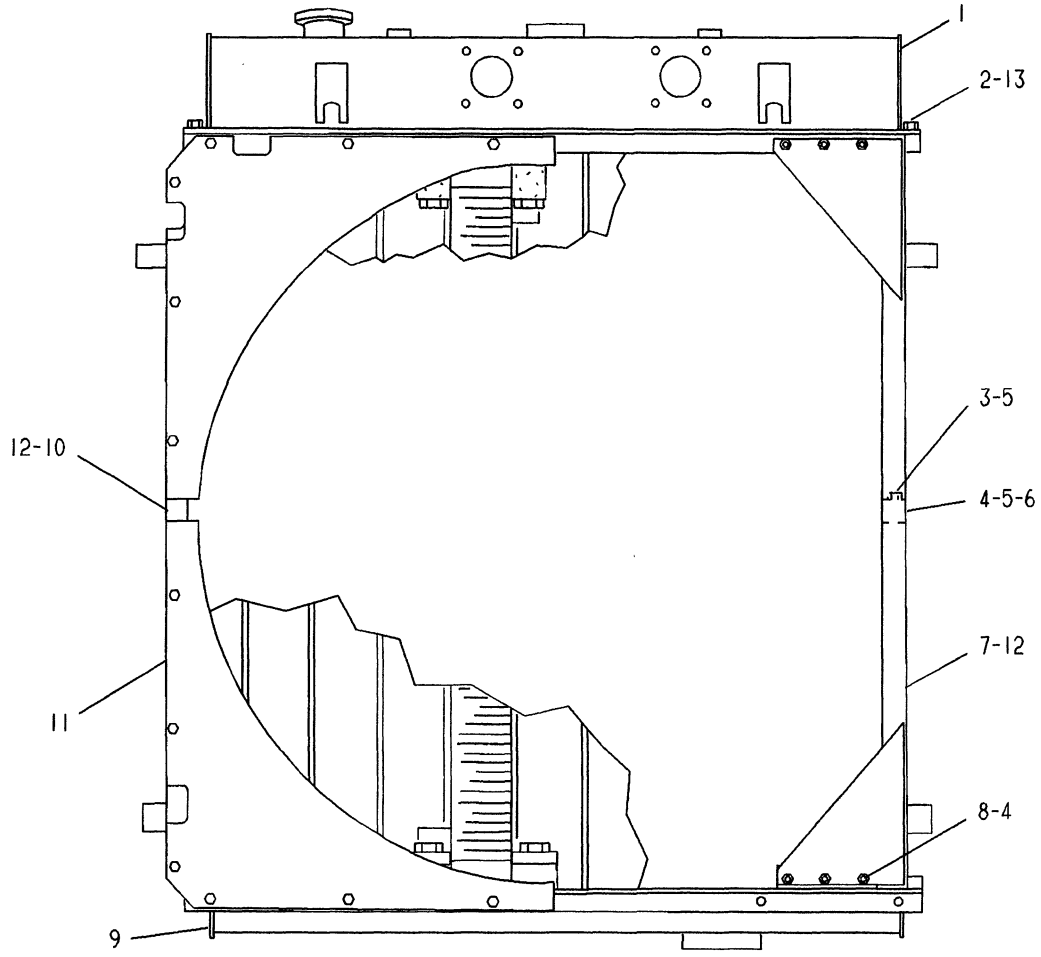

NOTE	REF NO	PART NUMBER	QTY	PART NAME
	1	4W3861	1	TANK AS-RADIATOR (TOP)
		1F2417	1	BOSS
		9S3766	1	BOSS-VALVE (RELIEF)
		7M7794	6	STUD-WELD
	2	0S1594	36	BOLT
	3	0L1351	18	BOLT
	4	5P1075	62	WASHER-HARD
	5	2W1545	2	BLOCK
	6	0S0509	6	BOLT
	7	4W1075	1	CHANNEL AS-RH
		9F2978	5	NUT-WELD
		7G3945	1	PLATE
	8	0S1588	32	BOLT
	9	4W3820	1	TANK AS (BOTTOM)
		7M7794	6	STUD-WELD
	10	4W0462	1	CHANNEL AS-LH
		9F2978	5	NUT-WELD
		7G3945	1	PLATE
	11	7N4482	4	SHIELD AS
				(EACH INCLUDES)
		9F2978	8	NUT-WELD
	12	9S8752	12	NUT-FULL
	13	8M7145	26	WASHER

A-336776 P

1353

4W1795 RADIATOR GP-PART 1 OF 2

Folded Core
S/N 53Y3485-Up
Part Of 7T1442,7T5371 Air Conditioners
An Attachment

COOLING SYSTEM

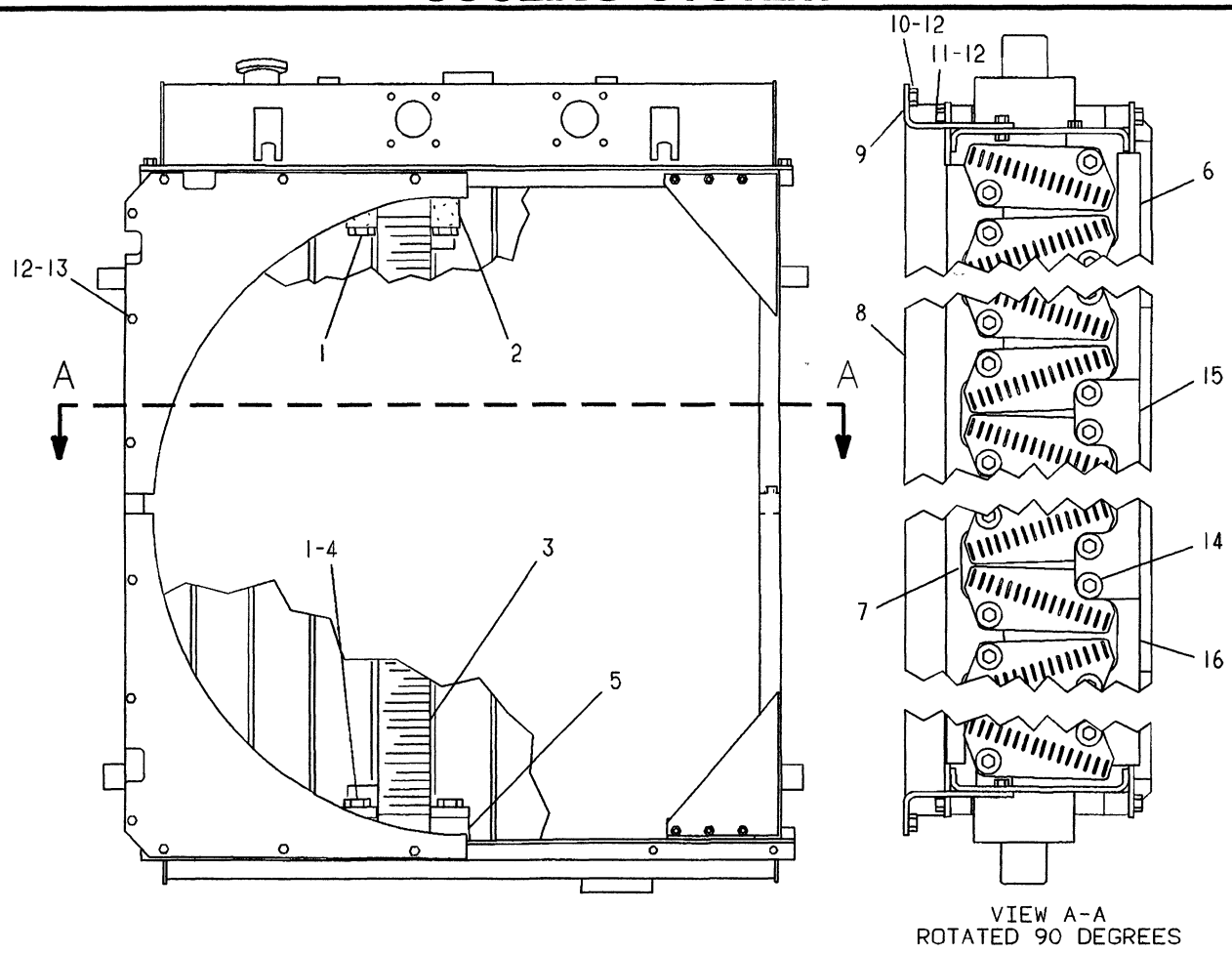

VIEW A-A
ROTATED 90 DEGREES

NOTE	REF NO	PART NUMBER	QTY	PART NAME	NOTE	REF NO	PART NUMBER	QTY	PART NAME
	1	1B2790	2	BOLT					
		5P4116	4	WASHER					
	2	4W2357	2	MOUNT AS					
	3	4W2456	1	CORE AS-CONDENSER					
	4	0S1618	2	BOLT					
	5	4W2455	2	SPACER					
C	6	7W6649	1	STRAP AS					
	7	2W5542	14	CORE AS-RADIATOR					
		8N5130	14	SEAL (FOLDED CORE)					
		8N7139	14	SEAL					
	8	4W1141	1	STRAP AS (REAR)					
	9	4W0972	1	PLATE AS-LH					
		4W0973	1	PLATE AS-RH					
	10	0S0509	8	BOLT					
C	11	0S1594	4	BOLT					
	12	5P1075	26	WASHER-HARD					
	13	0L1351	8	BOLT					
C	14	0S1588	4	BOLT					
C		8M7145	4	WASHER					
C	15	7W6651	1	STRAP AS					
C	16	7W6650	1	STRAP AS					

C-CHANGE FROM PREVIOUS TYPE

A-335261 P

1353 **4W1795 RADIATOR GP-PART 2 OF 2**

Folded Core
S/N 53Y3485-Up
Part Of 7T1442,7T5371 Air Conditioners
An Attachment

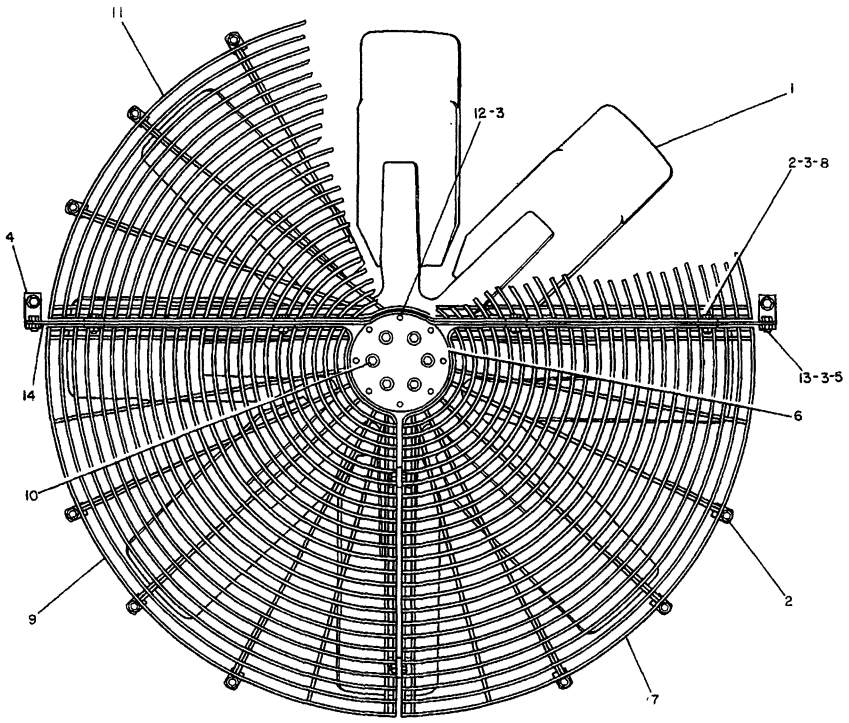

NOTE	REF NO	PART NUMBER	QTY	DESCRIPTION
	1	7N2131	1	SPIDER AS.
C	2	3B1915	10	BOLT
		9L9132	10	WASHER
C	3	5M2894	18	WASHER
	4	7N8220	2	PLATE AS. (EACH INCLUDES)
	5	9F2978	2	NUT
	6	7N2851	1	PLATE
	7	7N8224	1	GUARD AS. (LOWER R.H.)
	8	9F2978	4	NUT
	9	7N8223	1	GUARD AS. (LOWER L.H.)
		9F2978	2	NUT
	10	0S1585	6	BOLT
		5P8245	6	WASHER
	11	7N8222	1	GUARD AS. (UPPER)
C	12	0S1591	10	BOLT
	13	0S1594	8	BOLT
	14	7N8221	1	PLATE

C INDICATES CHANGE 354063

354063 P

1356 **7N7037 FAN GP-BLOWER**
S/N 53Y1-734,978-3307

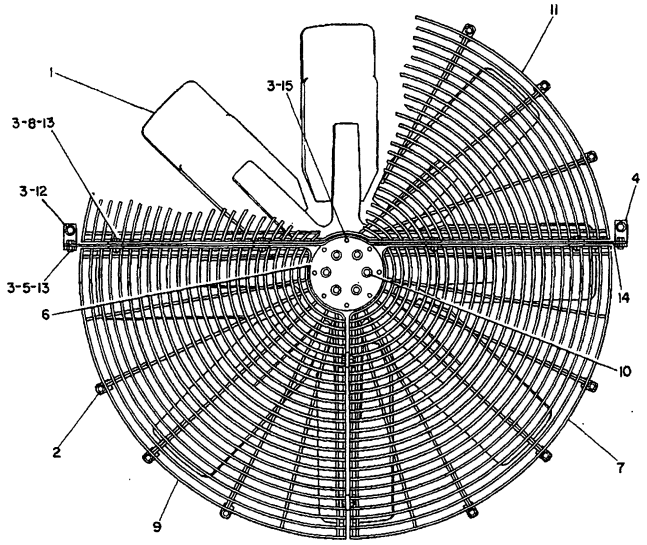

NOTE	REF NO	PART NUMBER	QTY	DESCRIPTION
	1	2W5082	1	SPIDER AS.
	2	1A2029	10	BOLT
		9L9132	10	WASHER
	3	5M2894	18	WASHER
	4	7N8220	2	PLATE AS.
				(EACH INCLUDES)
	5	9F2978	2	NUT
	6	7N2851	1	PLATE
	7	7N8224	1	GUARD AS. (LOWER R.H.)
	8	9F2978	4	NUT
	9	7N8223	1	GUARD AS. (LOWER L.H.)
		9F2978	2	NUT
	10	0S1585	6	BOLT
		5P8245	6	WASHER
	11	7N8222	1	GUARD AS. (UPPER)
	12	0S1591	2	BOLT
	13	0S1594	8	BOLT
	14	7N8221	1	PLATE
	15	2A4639	8	BOLT

317103

317103 EP

1356 **2W5083 FAN GP-BLOWER**

S/N 53Y3308-3486,3488-3628,3630-3993,3995-4007,4011,4013,4015-4019,
4021-4032,4034-4036,4038,4040,4041,4043-4053,4055-4059,4061-4063,4065,
4067-4070,4072-4082,4084-4092,4094,4095,4097-4099,4101,4105-4108,
4110-4114,4116,4118,4121,4122,4124-4131,4133-4135,4137-4140

COOLING SYSTEM

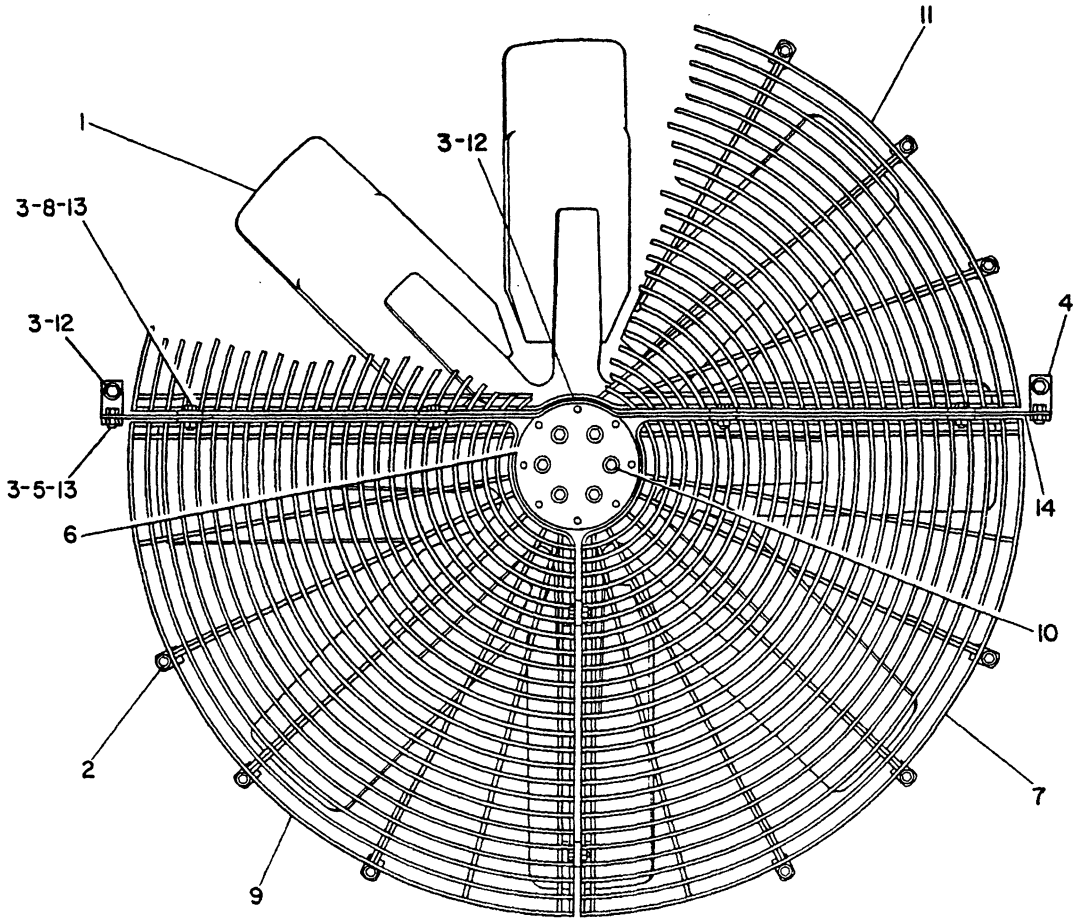

NOTE	REF NO	PART NUMBER	QTY	PART NAME
	1	2W5082	1	SPIDER AS-FAN
C	2	0S1588	10	BOLT
		9L9132	10	WASHER
	3	5M2894	18	WASHER
	4	7N8220	2	PLATE AS
				(EACH INCLUDES)
	5	9F2978	2	NUT-WELD
	6	7N2851	1	PLATE
	7	7N8224	1	GUARD AS (LOWER R.H.)
	8	9F2978	4	NUT-WELD
	9	7N8223	1	GUARD AS (LOWER L.H.)
		9F2978	2	NUT-WELD
	10	0S1585	6	BOLT
		5P8245	6	WASHER
	11	7N8222	1	GUARD AS (UPPER)
	12	0S1591	10	BOLT
	13	0S1594	8	BOLT
	14	2W6167	1	PLATE

C-CHANGE FROM PREVIOUS TYPE

B-457750 EP

1356 **2W5083 FAN GP-BLOWER**

S/N 53Y3487,3629,3994,4008-4010,4012,4014,4020,4033,4037,4039,4042,4054, 4060,4064,4066,4071,4083,4093,4096,4100,4102-4104,4109,4115,4117, 4119-4120,4123,4132,4136,4141-Up

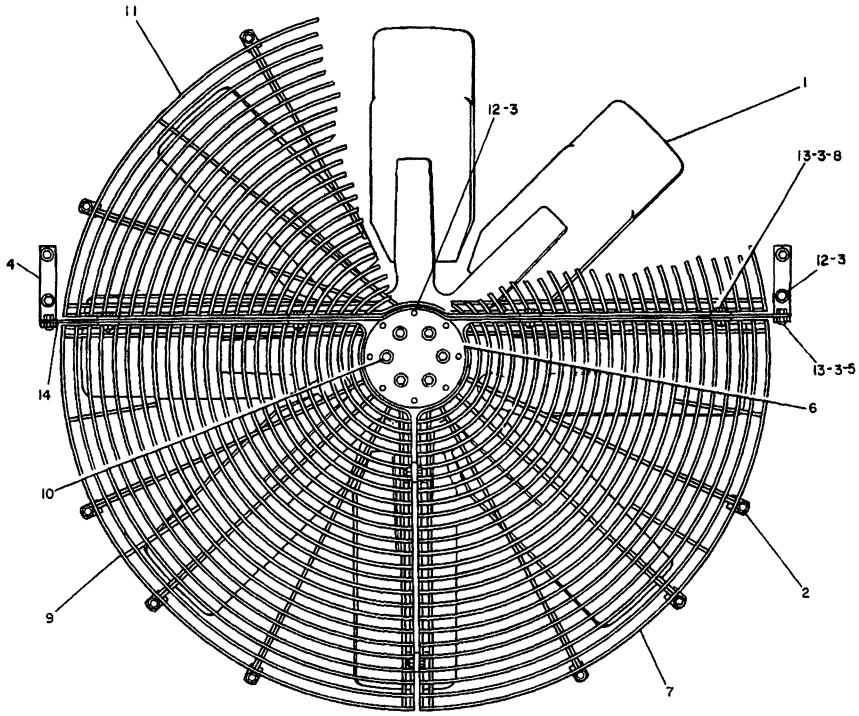

NOTE	REF NO	PART NUMBER	QTY	DESCRIPTION
	1	7N2131	1	SPIDER ASSEM.
	2	9L9132	10	WASHER
	3	5M2894	20	WASHER
	4	7N8220	2	PLATE ASSEM. (EACH INCLUDES)
	5	9F2978	2	NUT
	6	7N2851	1	PLATE
	7	7N8224	1	GUARD ASSEM. (LOWER-R.H.)
	8	9F2978	4	NUT
	9	7N8223	1	GUARD ASSEM. (LOWER-L.H.)
		9F2978	2	NUT
	10	S1585	6	BOLT
		5P8245	6	WASHER
	11	7N8222	1	GUARD ASSEM. (UPPER)
	12	S1591	12	BOLT
	13	S1594	8	BOLT
	14	7N8221	1	PLATE

306777

306777 P

1356

1W9386 FAN GP-BLOWER
S/N 53Y735-977

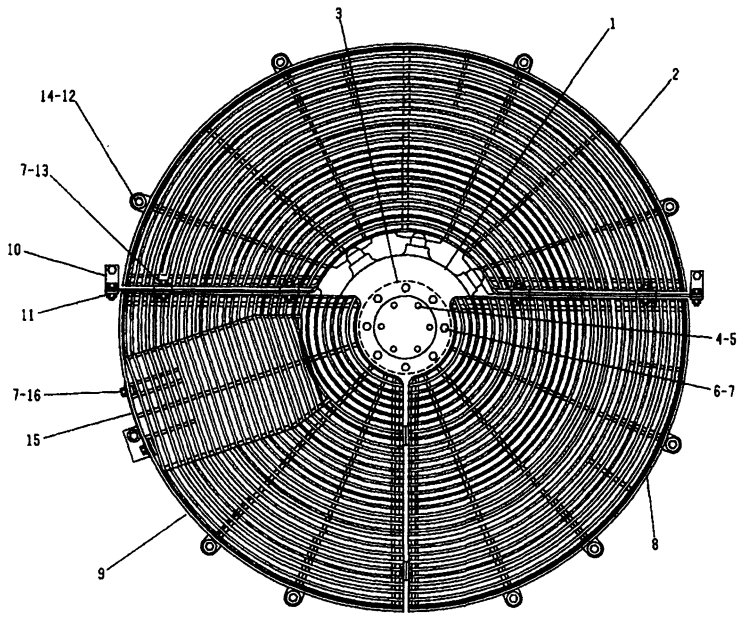

NOTE	REF NO	PART NUMBER	QTY	DESCRIPTION
	1	2W2172	1	FAN AS. (REVERSIBLE)
	2	2W8307	1	GUARD AS. FAN (UPPER)
	3	7N2851	1	PLATE
	4	S1585	6	BOLT
	5	5P8245	6	WASHER
	6	S1591	10	BOLT
	7	5M2894	20	WASHER
	8	4W1298	1	GUARD AS. FAN (LOWER R.H.)
	9	2W8308	1	GUARD AS. FAN (LOWER L.H.)
	10	2W7035	2	PLATE AS.
	11	2W6167	1	PLATE
	12	1A2029	10	BOLT
	13	S1594	8	BOLT
	14	9L9132	10	WASHER
	15	2W5825	1	PLATE
	16	4F4879	2	BOLT

▪ 317280

A-317280 EP

1356

4W1299 FAN GP-REVERSIBLE
Cannot Be Used With Auxiliary Driven Fan
S/N 53Y3308-Up
An Attachment

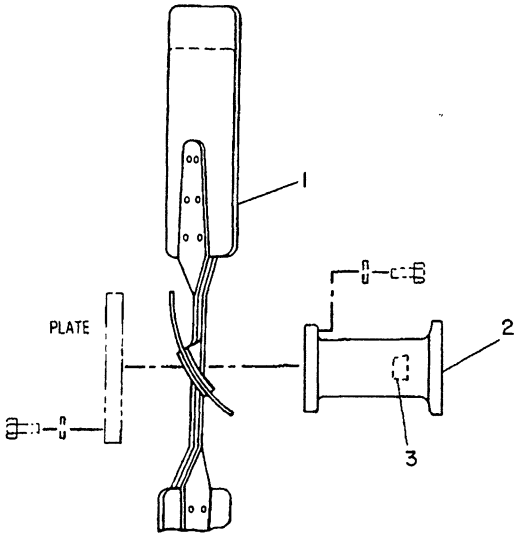

NOTE	REF NO	PART NUMBER	QTY	PART NAME	NOTE	REF NO	PART NUMBER	QTY	PART NAME
	1	8N5025	1	SPIDER AS-FAN					
	2	2W4116	1	ADAPTER-FAN					
	3	1B5170	1	PLUG-PIPE					

B-454274 EP

1356 **7N9573 FAN GP-SUCTION**

Cannot Be Used With Vehicles With Air Conditioning
S/N 53Y1-3307
An Attachment

MEMORANDA

COOLING SYSTEM

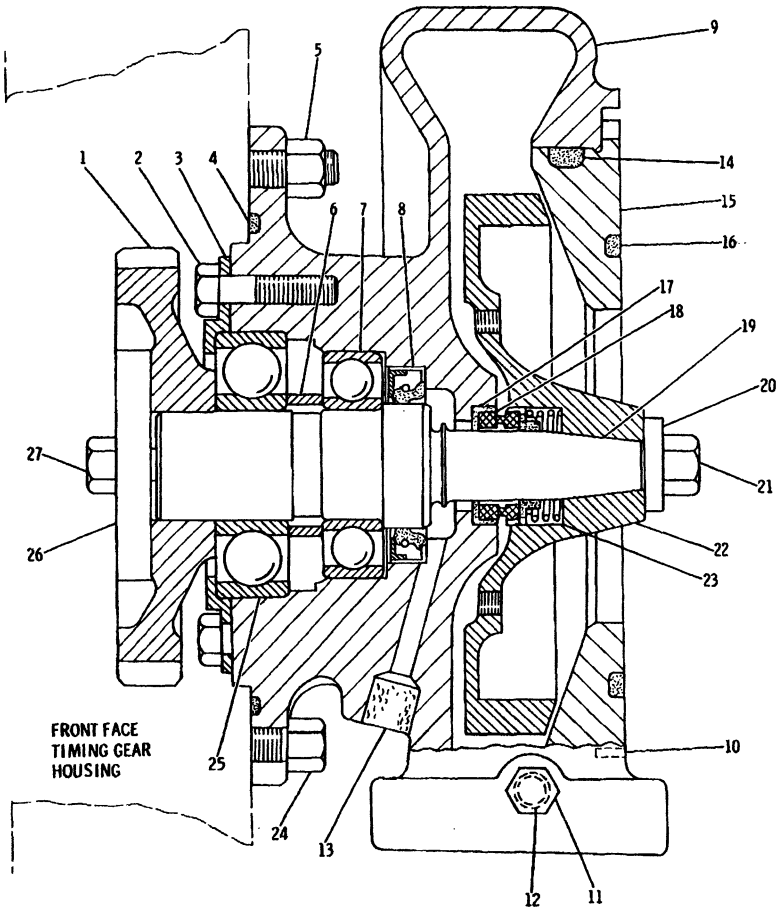

NOTE	REF NO	PART NUMBER	QTY	PART NAME
	1	4N1948	1	GEAR (43 TEETH)
	2	1B7182	4	BOLT
C	3	9N3033	1	RETAINER
A	4	4S5898	1	SEAL-O-RING
	5	1D4717	4	NUT
J	6	2N7942	1	SPACER
J	7	1B3867	1	BALL BEARING
	8	5P1713	1	SEAL-LIP
	9	4N1956	1	HOUSING AS-PUMP
	10	5H8985	1	PIN-SPRING
	11	5M6214	1	PLUG-PIPE
	12	4M1336	1	FERRULE
J	13	4N5834	1	FILTER
A	14	5L5032	1	SEAL-O-RING
A	15	4N5835	1	ADAPTER-INLET
A	16	5H5672	1	SEAL-O-RING
	17	8S8821	1	SEAL-IMPELLER
	18	8S7762	1	RING-SEAL
J	19	6N0139	1	SHAFT-WATER PUMP
J	20	9M6527	1	WASHER-HARD
J	21	0S1591	1	BOLT
	22	4N1751	1	IMPELLER-PUMP
	23	4N6556	1	SEAL AS-PUMP
A	24	0S1594	1	BOLT
J	25	2L5271	1	BALL BEARING
J	26	2P3696	1	RETAINER
J	27	1A1135	1	BOLT
				THE FOLLOWING REPAIR KIT IS AVAILABLE:
C		9N6289	1	KIT-WATER PUMP REBUILD (INCL PARTS MARKED J)

A-NOT PART OF THIS GROUP
C-CHANGE FROM PREVIOUS TYPE

B-226250 EP

1361 **4N7498 PUMP GP-WATER*R**

Engine S/N 48W13002-23361
4N1951 Not Serviced Seperately

COOLING SYSTEM

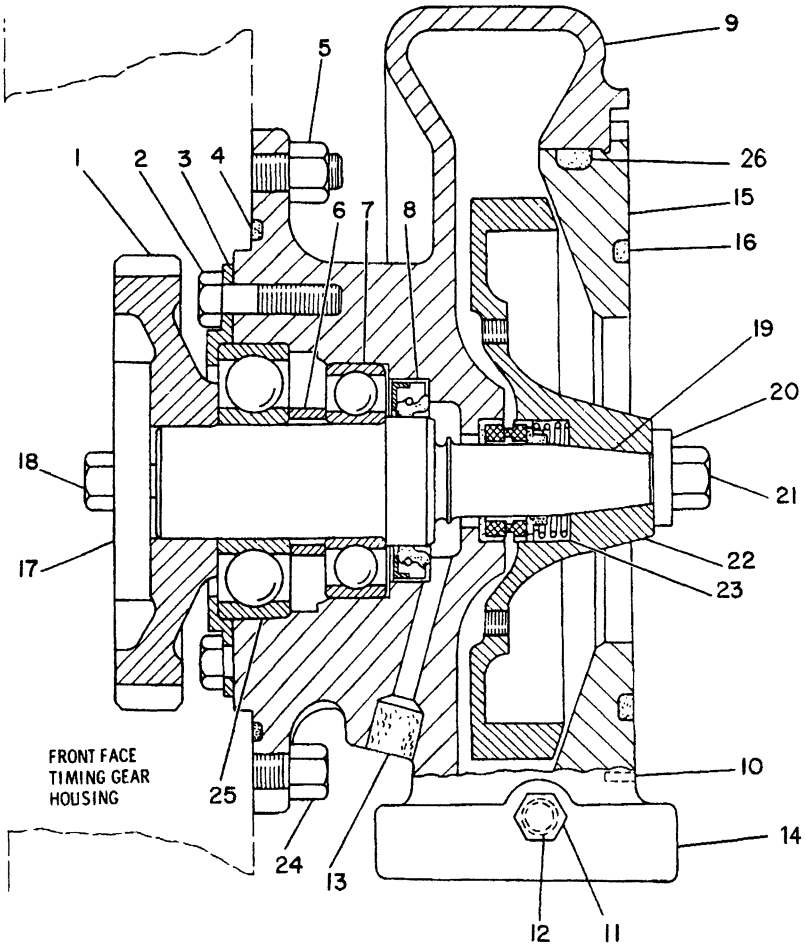

NOTE	REF NO	PART NUMBER	QTY	PART NAME
	1	4N1948	1	GEAR (43 TEETH)
	2	1B7182	4	BOLT (5/16-18X1.25IN)
	3	9N3033	1	RETAINER
A	4	4S5898	1	SEAL-O-RING
A	5	1D4717	4	NUT
J	6	2N7942	1	SPACER
J	7	1B3867	1	BALL BEARING
C	8	8C3100	1	SEAL-LIP
C	9	6I0862	1	HOUSING AS-PUMP
	10	5H8985	1	PIN-SPRING
C	11	8T6764	1	PLUG-PIPE
	12	4M1336	1	FERRULE
	13	4N5834	1	FILTER
	14	6I0863	1	HOUSING-WATER PUMP
A	15	7C1652	1	ADAPTER-INLET
A	16	5H5672	1	SEAL-O-RING
	17	2P3696	1	RETAINER
	18	1A1135	1	BOLT (5/8-11X2IN)
J	19	7W1821	1	SHAFT-WATER PUMP
J	20	9M6527	1	WASHER-HARD
J	21	0S1591	1	BOLT (3/8-16X1.5IN)
C	22	7C1067	1	IMPELLER-PUMP
	23	4W3864	1	SEAL GP
A	24	0S1594	1	BOLT (3/8-16X1IN)
J	25	2L5271	1	BALL BEARING
A	26	5L5032	1	SEAL-O-RING

NOTE	REF NO	PART NUMBER	QTY	PART NAME
				THE FOLLOWING REPAIR
				KIT IS AVAILABLE:
		9N6289	1	KIT-WATER PUMP REBUILD
				(INCL PARTS MARKED J)

A-NOT PART OF THIS GROUP
C-CHANGE FROM PREVIOUS TYPE

R-549931 EP

1361

4N7498 PUMP GP-WATER*R
Engine S/N 48W23362-Up
4N1951 Not Serviced Seperately

MEMORANDA

COOLING SYSTEM

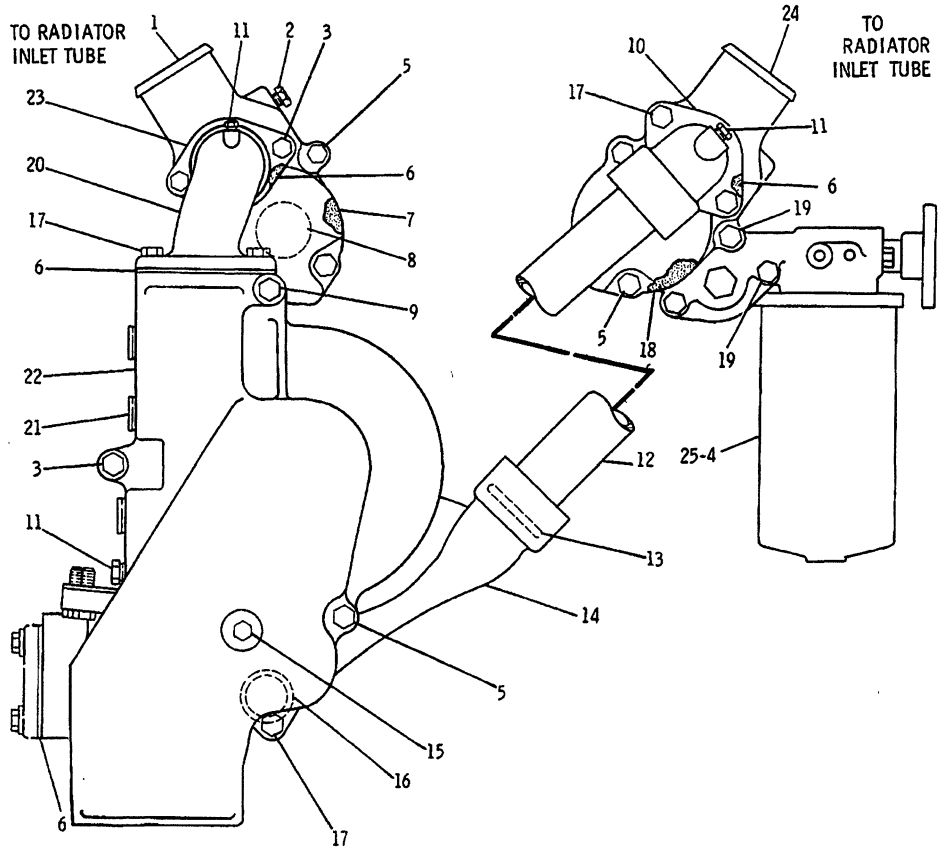

REF. NO.	PART NUMBER	DESCRIPTION	QTY
1	4N362	COVER ASSEM. (Includes)	1
	2H1193	FERRULE	1
	3S9643	SEAL	1
2	5M6213	PLUG	1
3	S1588	BOLT	3
4	1W5518	FILTER	1
5	S1619	BOLT	7
6	4N790	GASKET	4
7	4N1156	GASKET	1
8	9N3711	REGULATOR	2
9	L1143	BOLT	1
10	6N1411	ELBOW	1
11	5M6214	PLUG	3
12	8N5543	TUBE	1
13	2H3927	SEAL	2
14	6N1412	ELBOW	1
15	5B9603	BOLT	1
16	5K5959	SEAL	1
17	S1594	BOLT	5
18	8N8156	GASKET	1
19	L1352	BOLT	2
20	6N1410	ELBOW	1
21	1B5174	PLUG	3
22	6N1518	COVER	1
23	4N1799	FLANGE	1
	4F8824	SEAL	1
24	8N8208	VALVE GROUP (Separate Illustration)	1
C▲	9N3718	ELEMENT ASSEM. --(maintenance) (For routines replacement-- system not drained)	1
		- OR -	
▲	1W5518	ELEMENT ASSEM. --(purchased)-- (Use when system is drained & refilled.)	1

▲ NOT PART OF 7N7022 WATER LINES GROUP

C INDICATES CHANGE

182361 P

1380

7N7022 LINES GP-WATER-PART 1 OF 2

Engine S/N 48W13002-18704

8N8208-Page 46

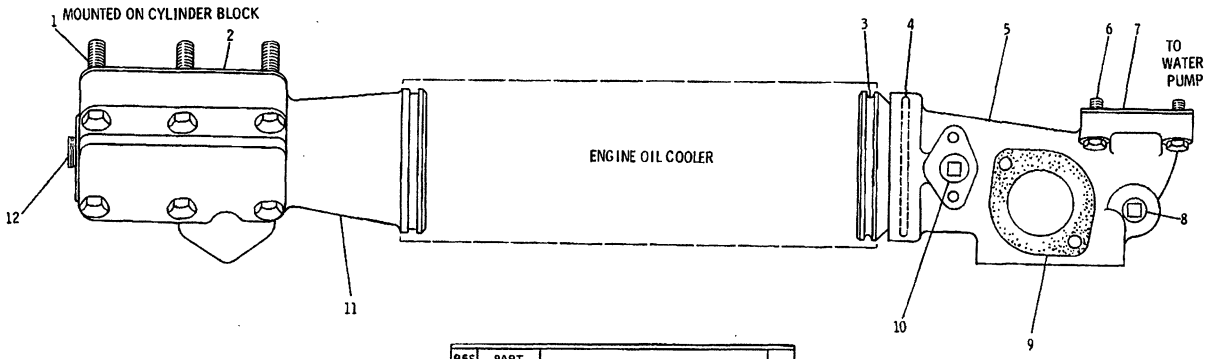

TORQUE CONVERTER TRANSMISSION OIL COOLER

REF. NO.	PART NUMBER	DESCRIPTION	QTY.
1	S1619	BOLT	6
2	4N864	GASKET	1
3	6N8	ADAPTER	1
4	5F149	SEAL	1
5	6N7145	BONNET	1
6	S1588	BOLT	4
7	4N1946	GASKET	1
8	2B858	PLUG	1
9	4N790	GASKET	1
10	1B5174	PLUG	1
11	7N7876	BONNET	1
12	3B551	PLUG	1

234699

234699 P

1380 **7N7022 LINES GP-WATER-PART 2 OF 2**
Engine S/N 48W13002-18704

COOLING SYSTEM

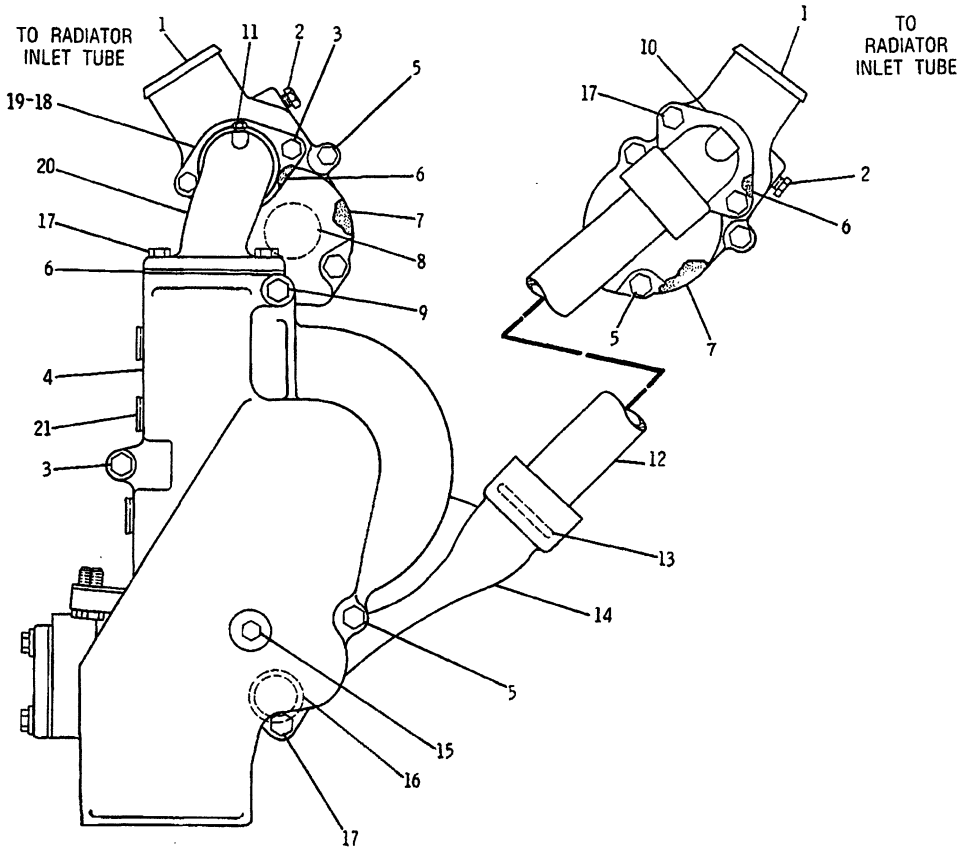

NOTE	REF NO	PART NUMBER	QTY	PART NAME	NOTE	REF NO	PART NUMBER	QTY	PART NAME
	1	4W1336	2	COVER AS-REGULATOR		19	1090073	1	SEAL-O-RING
				EACH INCLUDES		20	6N1410	1	ELBOW-OUTLET
		7N7689	1	VALVE AS		21	7X7731	3	PLUG-PIPE
		7N7688	1	FERRULE	AF		9N3718	1	ELEMENT AS-MAINTENANCE
		9M5590	1	BALL					(FOR ROUTINE REPLACEMENT
		3S9643	1	SEAL-LIP					SYSTEM NOT DRAINED)
	2	5M6213	1	PLUG					
	3	0S1588	7	BOLT					
	4	4P3864	1	COVER-WATER PUMP					
	5	0S1619	7	BOLT					
	6	7C0307	3	GASKET					
	7	4N1156	2	GASKET-REGULATOR COVER					
	8	4W4794	2	REGULATOR-WATER					
				TEMPERATURE					
	9	0L1143	1	BOLT					
	10	6N1411	1	ELBOW-OUTLET					
	11	8T6764	1	PLUG-PIPE					
	12	8N5543	1	TUBE					
	13	1090072	2	SEAL-O-RING					
	14	6N1412	1	ELBOW-BYPASS					
	15	5B9603	1	BOLT					
	16	1090076	1	SEAL-O-RING					
	17	0S1594	5	BOLT					
	18	4N1799	1	FLANGE					

A-NOT PART OF THIS GROUP
F-NOT SHOWN

R-628717 CP

1380 **7N7022 LINES GP-WATER-PART 1 OF 2**
Engine S/N 48W18705-Up

COOLING SYSTEM

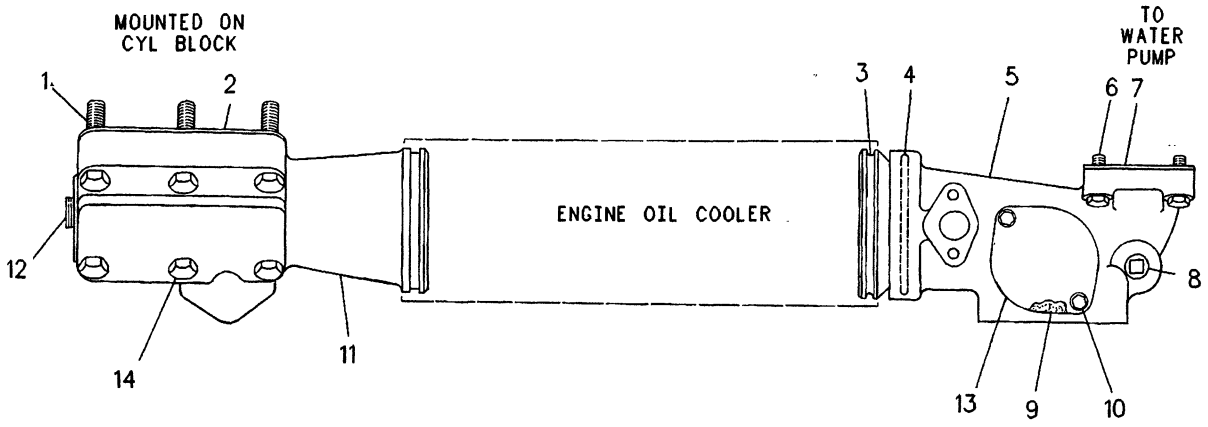

NOTE	REF NO	PART NUMBER	QTY	PART NAME	NOTE	REF NO	PART NUMBER	QTY	PART NAME
	1	0T0065	3	BOLT					
	2	4N0864	1	GASKET					
	3	6N0008	1	ADAPTER					
	4	1090074	1	SEAL-O-RING					
	5	6N7145	1	BONNET-COOLER INLET					
	6	0S1588	7	BOLT					
	7	4N1946	1	GASKET					
	8	8T6762	1	PLUG-PIPE					
	9	7C0307	1	GASKET					
	10	1A2029	2	BOLT					
		5M2894	2	WASHER					
	11	7N7876	1	BONNET-OIL COOLER					
	12	8T6761	1	PLUG-PIPE					
	13	4N0794	1	COVER					
	14	1A5964	3	BOLT					

R-628718 CP

1380 **7N7022 LINES GP-WATER-PART 2 OF 2**
Engine S/N 48W18705-Up

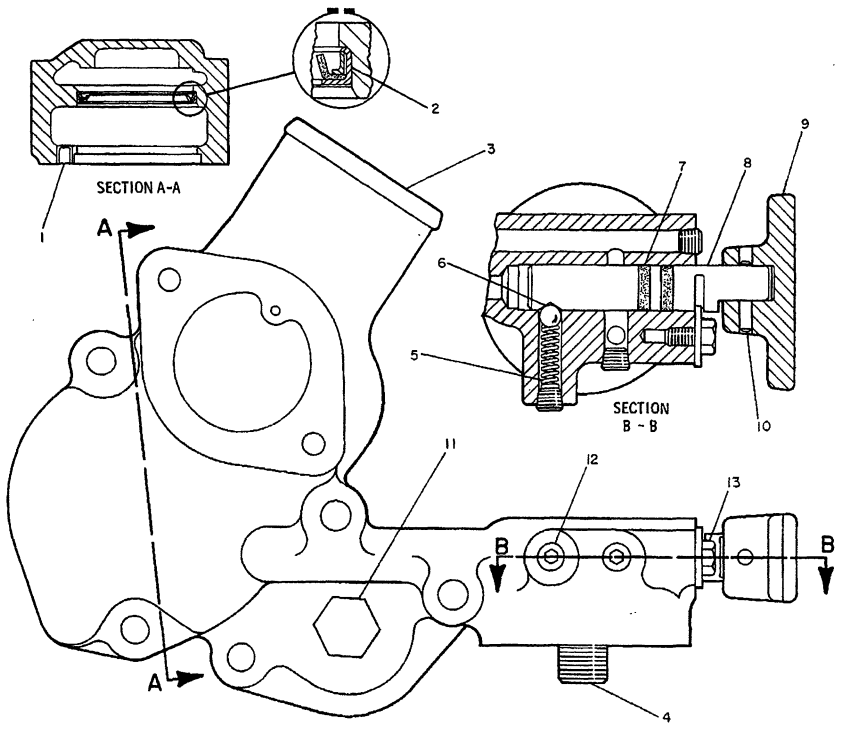

REF. NO.	PART NUMBER	DESCRIPTION	QTY.
1	2H1193	FERRULE	1
2	3S9643	SEAL	1
C 3	1W5163	HOUSING ASSEM. (Includes)	1
4	9N3645	STUD	1
C 5	1W762	SPRING	1
6	9M5590	BALL	1
7	8M5251	SEAL	2
C 8	8N8157	VALVE	1
9	8N8183	KNOB	1
10	6H3956	PIN	1
11	3J5389	PLUG	1
12	9F2247	PLUG	3
13	6F7027	BOLT	1
	2R4330	WASHER	1

C INDICATES CHANGE

234700

234700 P

1380

8N8208 VALVE GP-CONTROL
Engine S/N 48W13002-13957
Part Of 7N7022 Lines-Water

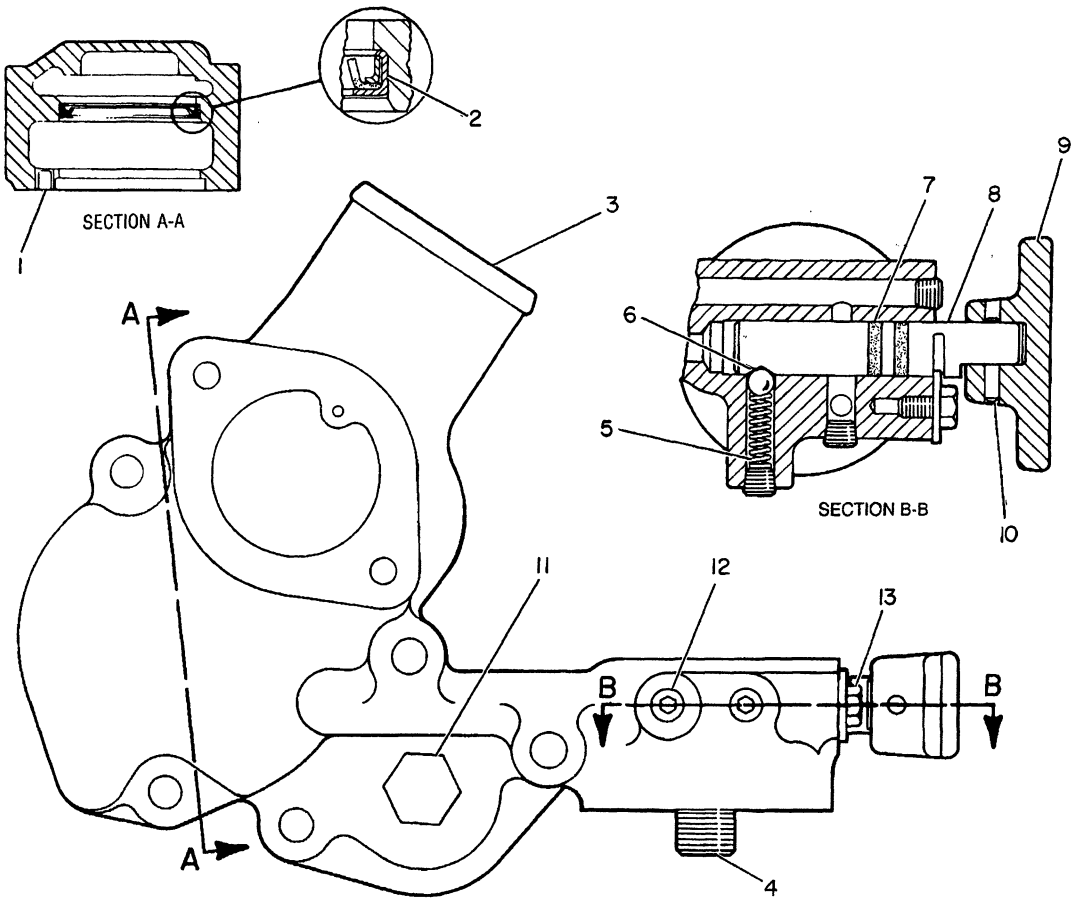

NOTE	REF NO	PART NUMBER	QTY	PART NAME	NOTE	REF NO	PART NUMBER	QTY	PART NAME
	1	2H1193	1	FERRULE					
	2	3S9643	1	SEAL-LIP					
	3	1W5163	1	HOUSING AS-REGULATOR & FILTER					
	4	9N3645	1	STUD-TAPERLOCK					
	5	1W0762	1	SPRING					
	6	9M5590	1	BALL					
	7	8M5251	2	SEAL-O-RING					
	8	8N8157	1	VALVE					
	9	8N8183	1	KNOB					
C	10	6H3956	1	PIN					
	11	3J5389	1	PLUG					
	12	9F2247	3	PLUG					
	13	6F7027	1	BOLT					
		2R4330	1	WASHER					

C-CHANGE FROM PREVIOUS TYPE

B-306903 EP

1380 **8N8208 VALVE GP-CONTROL**
Engine S/N 48W13958-Up
Part Of 7N7022 Lines-Water

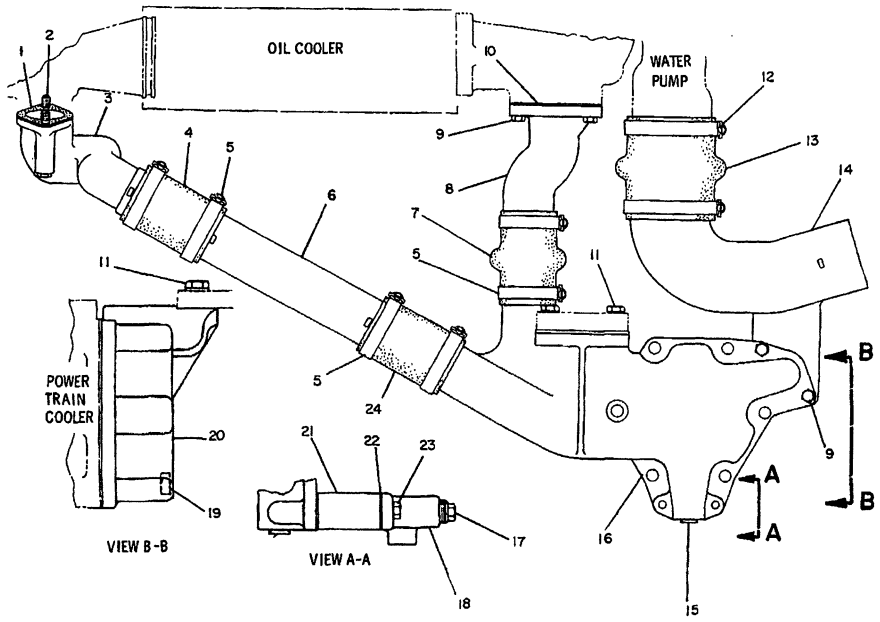

REF. NO.	PART NUMBER	DESCRIPTION	QTY.
1	4N790	GASKET	1
2	L1352	BOLT	2
3	7N6321	ELBOW	1
▲ 4	5P1262	HOSE---11.43 cm(4.5 in.)	
5	5P598	CLAMP	6
6	1W254	TUBE ASSEM.	1
7	4N6749	HOSE	1
8	7N6654	ELBOW	1
9	1A2029	BOLT	5
10	4N2199	GASKET	1
11	S1585	BOLT	4
	5P8245	WASHER	4
12	5P1717	CLAMP	2
13	7N2628	HOSE	1
14	7N6610	ELBOW	1
15	1B5174	PLUG	1
16	7N6655	BONNET	1
	5H244	GASKET	1
17	4B7739	PLUG	1
18	8H9819	ADAPTER	1
19	2B858	PLUG	1
20	7N6656	BONNET	1
21	7N6604	ADAPTER	1
22	8H9818	GASKET	2
23	T65	BOLT	2
▲ 24	5P1262	HOSE----11.43 cm(4.5 in.)	

▲ ORDER BY THE CENTIMETER

235033

235033 P

1380

7N7023 LINES GP-WATER
S/N 53Y1-734

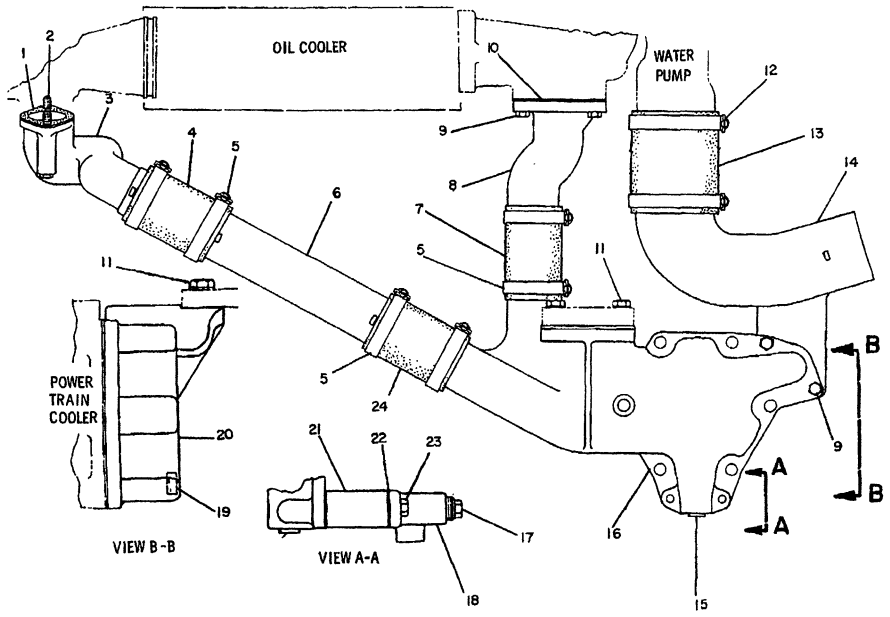

NOTE	REF NO	PART NUMBER	QTY	DESCRIPTION
	1	4N790	1	GASKET
	2	L1352	2	BOLT
	3	7N6321	1	ELBOW
E	4	5P1262		HOSE 11.43CM(4.5IN.)
C	5	5P4868	6	CLAMP
	6	1W254	1	TUBE ASSEM.
CE	7	5P1262		HOSE 12CM(4.72IN.)
	8	7N6654	1	ELBOW
	9	1A2029	5	BOLT
	10	4N2199	1	GASKET
	11	S1585	4	BOLT
		5P8245	4	WASHER
	12	5P1717	2	CLAMP
CE	13	5P1268		HOSE 13CM(5.11IN.)
	14	7N6610	1	ELBOW
	15	1B5174	1	PLUG
	16	7N6655	1	BONNET
		5H244	1	GASKET
	17	4B7739	1	PLUG
	18	8H9819	1	ADAPTER
	19	2B858	1	PLUG
	20	7N6656	1	BONNET
	21	7N6604	1	ADAPTER
C	22	1F4417	2	GASKET
	23	T65	2	BOLT
E	24	5P1262		HOSE 11.43CM(4.5IN.)

C INDICATES CHANGE
E ORDER BY THE CENTIMETER

310152

310152 P

1380 **7N7023 LINES GP-WATER**
S/N 53Y735-3100

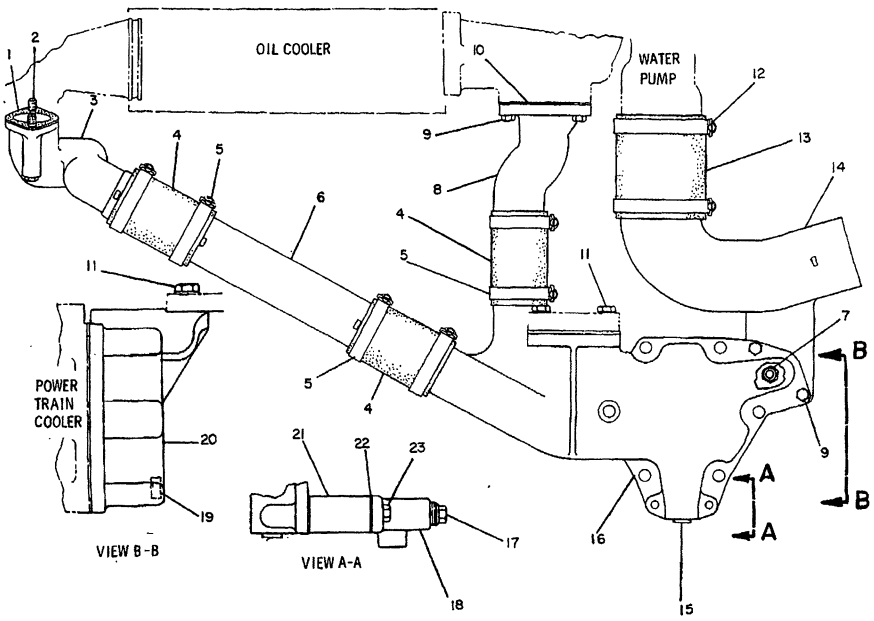

NOTE	REF NO	PART NUMBER	QTY	DESCRIPTION
	1	4N790	1	GASKET
	2	L1352	2	BOLT
	3	7N6321	1	ELBOW
BE	4	5P1262		HOSE
	5	5P4868	6	CLAMP
	6	1W254	1	TUBE ASSEM.
C	7	8N0301	1	VALVE ASSEM.
	8	7N6654	1	ELBOW
	9	1A2029	5	BOLT
	10	4N2199	1	GASKET
	11	S1585	4	BOLT
		5P8245	4	WASHER
	12	5P1717	2	CLAMP
BE	13	5P1268		HOSE
	14	7N6610	1	ELBOW
	15	1B5174	1	PLUG
	16	7N6655	1	BONNET
		5H244	1	GASKET
	17	4B7739	1	PLUG
	18	8H9819	1	ADAPTER
	19	2B858	1	PLUG
	20	7N6656	1	BONNET
	21	7N6604	1	ADAPTER
	22	1F4417	2	GASKET
	23	T65	2	BOLT

B USE AS REQUIRED C INDICATES CHANGE E ORDER BY THE CENTIMETER 334736

B-334736 P

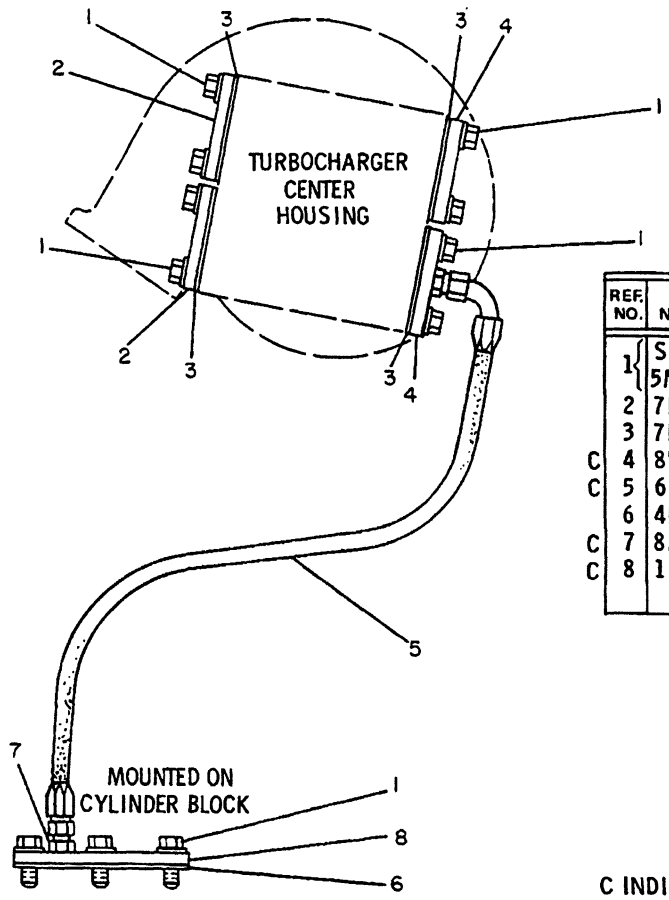

	REF. NO.	PART NUMBER	DESCRIPTION	QTY.
	1	S1594	BOLT	11
		5M2894	WASHER	11
	2	7N7878	COVER	2
	3	7N7628	GASKET	4
C	4	8N788	COVER	2
C	5	618087	HOSE ASSEM.	1
	6	4N4307	GASKET	1
C	7	8M755	CONNECTOR	2
C	8	1W2339	COVER	1

C INDICATES CHANGE

234741

234741 P

1380 **8N0616 LINES GP-TURBOCHARGER WATER**
Engine S/N 48W13002-16804

COOLING SYSTEM

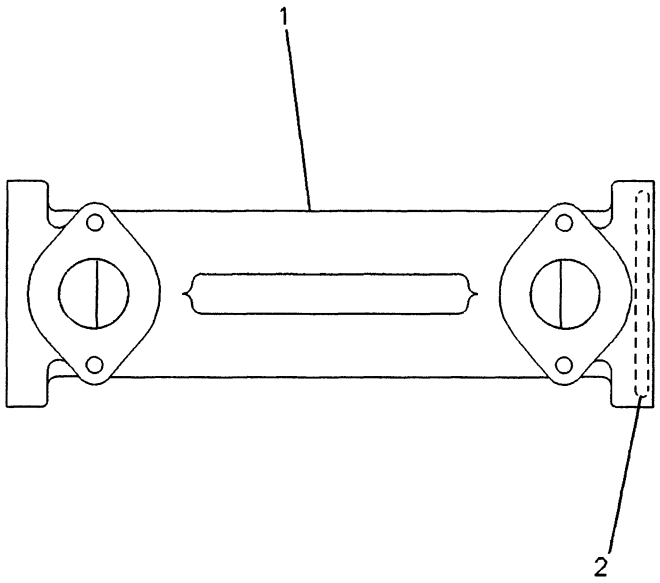

NOTE	REF NO	PART NUMBER	QTY	PART NAME
	1	2W1008	1	CORE AS-OIL COOLER
	2	4F7387	2	SEAL-O-RING

F-500502 EP

1378 **4N0729 COOLER GP-ENGINE OIL**

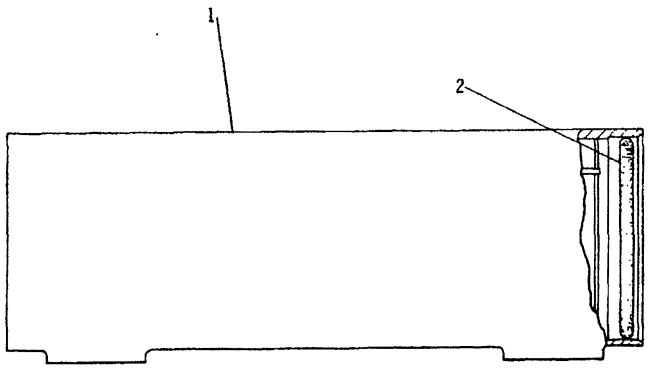

NOTE	REF NO	PART NUMBER	QTY	PART NAME
R	1	7C3039	1	CORE AS
	2	1090077	2	SEAL-O-RING

R-REMFG PART MAY BE AVAILABLE

B-573090 EP

1378 **7W2206 COOLER GP-ENGINE OIL**

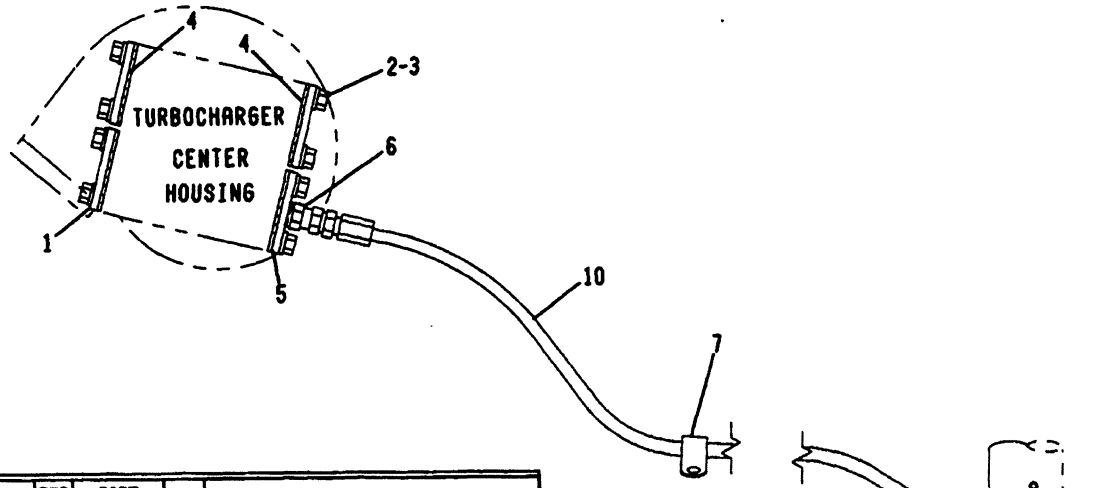

NOTE	REF NO	PART NUMBER	QTY	DESCRIPTION
	1	7N7878	2	COVER
	2	S1594	8	BOLT
	3	5M2894	8	WASHER
	4	7N7628	4	GASKET
	5	8N788	2	COVER
	6	8M755	1	CONNECTOR
	7	3S8664	2	CLIP
	8	8M547	1	ELBOW
	9	619463	1	CONNECTOR
	10	2G4561	1	HOSE ASSEM. 85CM (33.46IN.)

■ 307840

A- 307840 P

1380

2W9269 LINES GP-WATER
Turbocharger
Engine S/N 48W16805-17099

COOLING SYSTEM

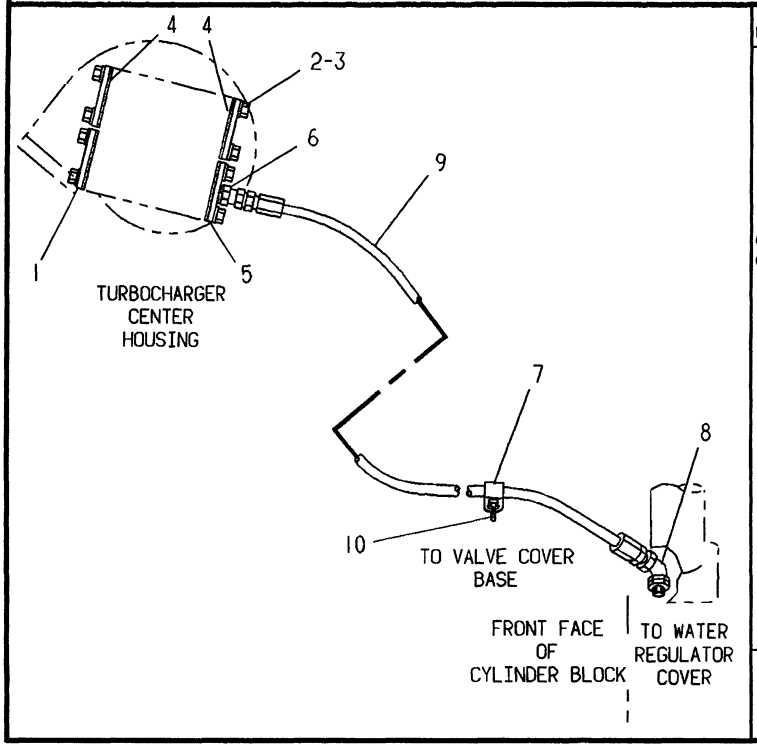

NOTE	REF NO	PART NUMBER	QTY	PART NAME
	1	7N7878	2	PLATE-COVER
	2	OS1594	8	BOLT
	3	5M2894	8	WASHER
	4	7N7628	4	GASKET
	5	8NO788	2	COVER
	6	8MO755	1	CONNECTOR
	7	6D4246	2	CLIP
	8	6L9777	1	ELBOW-FLARED
	9	2G4561	1	HOSE AS
C	10	1A9579	1	BOLT
C		9M1974	1	WASHER-HARD

C-CHANGE FROM PREVIOUS TYPE

A-347393 EP

1380 **2W9269 LINES GP-WATER**

Turbocharger

Engine S/N 48W17100-Up

MEMORANDA

COOLING SYSTEM

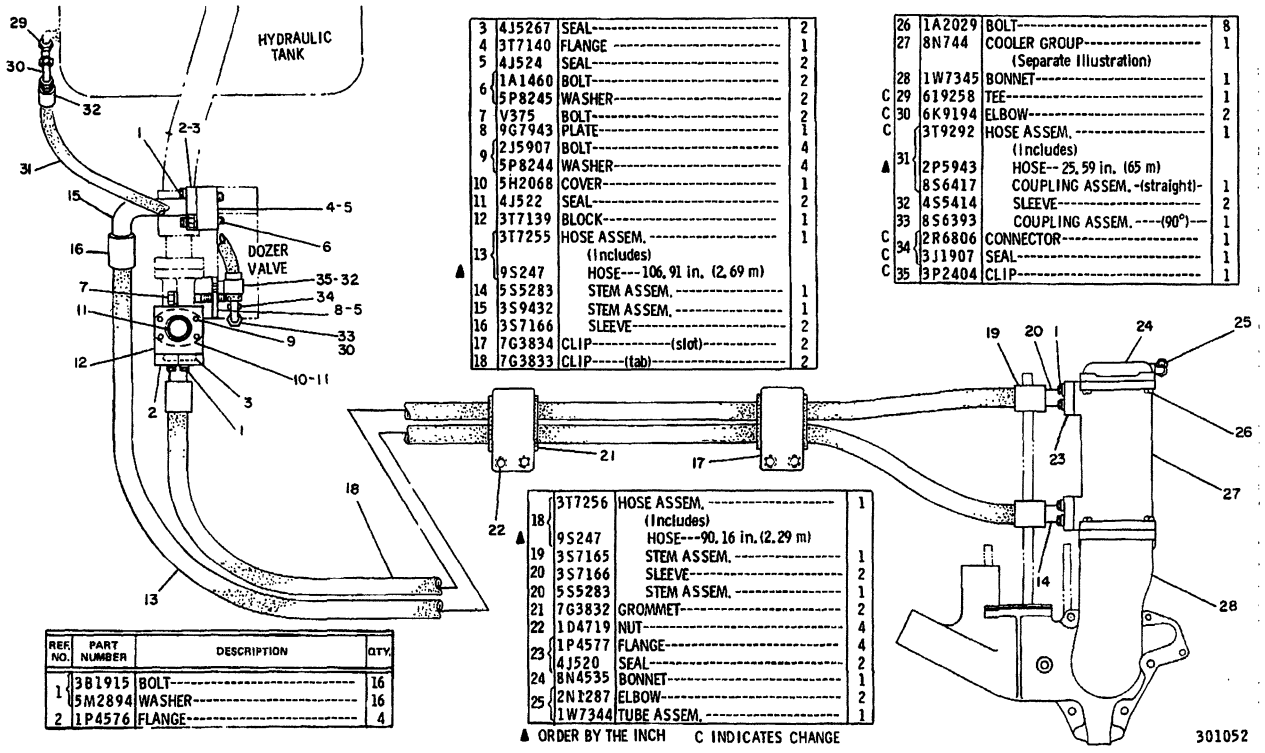

REF. NO.	PART NUMBER	DESCRIPTION	QTY.
1	3B1915	BOLT	16
	5M2894	WASHER	16
2	1P4576	FLANGE	4
3	4J5267	SEAL	2
4	3T7140	FLANGE	1
5	4J524	SEAL	2
6	1A1460	BOLT	2
	5P8245	WASHER	2
7	V375	BOLT	2
8	9G7943	PLATE	1
9	2J5907	BOLT	4
	5P8244	WASHER	4
10	5H2068	COVER	1
11	4J522	SEAL	2
12	3T7139	BLOCK	1
13	3T7255	HOSE ASSEM.	1
▲		(Includes)	
	9S247	HOSE---106.91 in. (2.69 m)	
14	5S5283	STEM ASSEM.	1
15	3S9432	STEM ASSEM.	1
16	3S7166	SLEEVE	2
17	7G3834	CLIP----------(slot)----------	2
18	7G3833	CLIP-----(tab)----------	2
18	3T7256	HOSE ASSEM.	1
▲		(Includes)	
	9S247	HOSE---90.16 in. (2.29 m)	
19	3S7165	STEM ASSEM.	1
20	3S7166	SLEEVE	2
20	5S5283	STEM ASSEM.	1
21	7G3832	GROMMET	2
22	1D4719	NUT	4
23	1P4577	FLANGE	4
	4J520	SEAL	2
24	8N4535	BONNET	1
25	2N1287	ELBOW	2
	1W7344	TUBE ASSEM.	1
26	1A2029	BOLT	8
27	8N744	COOLER GROUP	1
		(Separate Illustration)	
28	1W7345	BONNET	1
C 29	619258	TEE	1
C 30	6K9194	ELBOW	2
C	3T9292	HOSE ASSEM.	1
		(Includes)	
▲ 31	2P5943	HOSE--25.59 in. (65 m)	
	8S6417	COUPLING ASSEM.-(straight)-	1
32	4S5414	SLEEVE	2
33	8S6393	COUPLING ASSEM.----(90°)---	1
C 34	2R6806	CONNECTOR	1
C	3J1907	SEAL	1
C 35	3P2404	CLIP	1

▲ ORDER BY THE INCH C INDICATES CHANGE

301052

301052 P

3T7141 COOLER GP-HYDRAULIC OIL

Type 1

8N0744-Page 50B

An Attachment

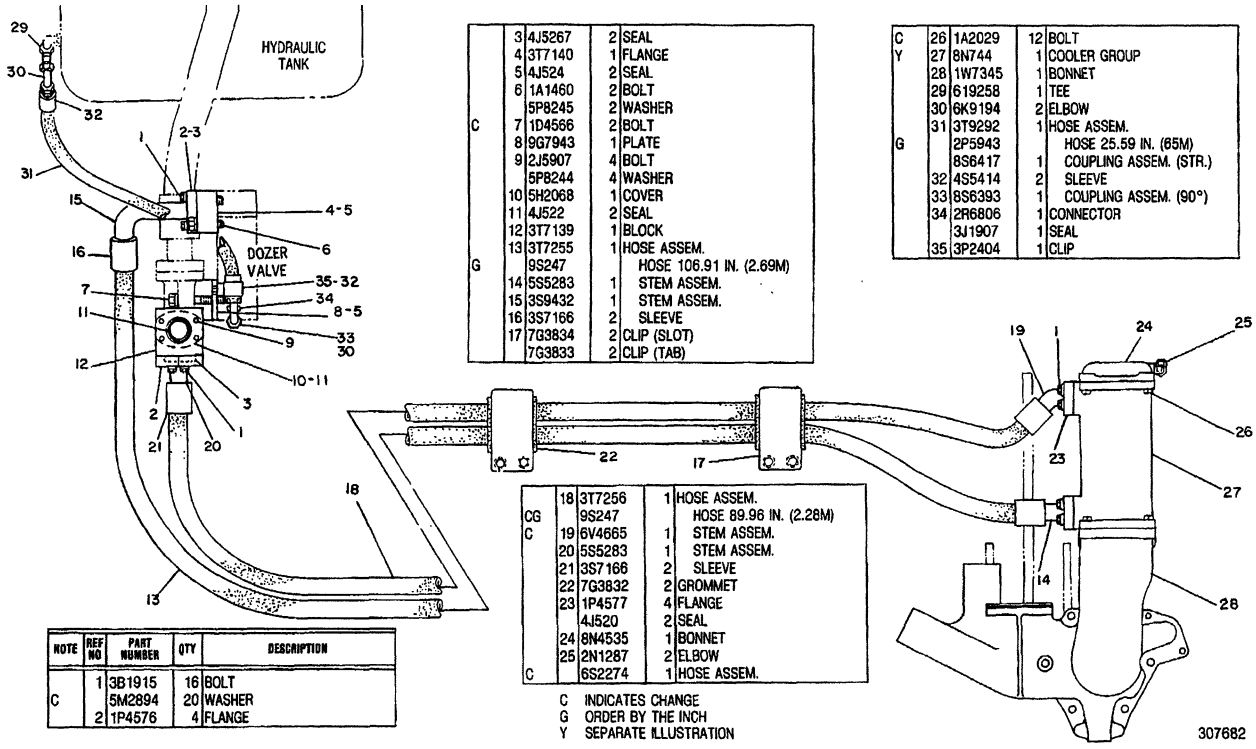

NOTE	REF NO	PART NUMBER	QTY	DESCRIPTION
C	1	3B1915	16	BOLT
		5M2894	20	WASHER
	2	1P4576	4	FLANGE
	3	4J5267	2	SEAL
	4	3T7140	1	FLANGE
	5	4J524	2	SEAL
	6	1A1460	2	BOLT
		5P8245	2	WASHER
C	7	1D4566	2	BOLT
	8	9G7943	1	PLATE
	9	2J5907	4	BOLT
		5P8244	4	WASHER
	10	5H2068	1	COVER
	11	4J522	2	SEAL
	12	3T7139	1	BLOCK
	13	3T7255	1	HOSE ASSEM.
G		9S247		HOSE 106.91 IN. (2.69M)
	14	5S5283	1	STEM ASSEM.
	15	3S9432	1	STEM ASSEM.
	16	3S7166	2	SLEEVE
	17	7G3834	2	CLIP (SLOT)
		7G3833	2	CLIP (TAB)
CG	18	3T7256	1	HOSE ASSEM.
		9S247		HOSE 89.96 IN. (2.28M)
C	19	6V4665	1	STEM ASSEM.
	20	5S5283	1	STEM ASSEM.
	21	3S7166	2	SLEEVE
	22	7G3832	2	GROMMET
	23	1P4577	4	FLANGE
		4J520	2	SEAL
	24	8N4535	1	BONNET
	25	2N1287	2	ELBOW
C		6S2274	1	HOSE ASSEM.
C	26	1A2029	12	BOLT
Y	27	8N744	1	COOLER GROUP
	28	1W7345	1	BONNET
	29	619258	1	TEE
	30	6K9194	2	ELBOW
	31	3T9292	1	HOSE ASSEM.
G		2P5943		HOSE 25.59 IN. (65M)
		8S6417	1	COUPLING ASSEM. (STR.)
	32	4S5414	2	SLEEVE
	33	8S6393	1	COUPLING ASSEM. (90°)
	34	2R6806	1	CONNECTOR
		3J1907	1	SEAL
	35	3P2404	1	CLIP

C INDICATES CHANGE
G ORDER BY THE INCH
Y SEPARATE ILLUSTRATION

307682 P

1374 **3T7141 COOLER GP-HYDRAULIC OIL**
Type 2
8N0744-Page 50B
An Attachment

COOLING SYSTEM

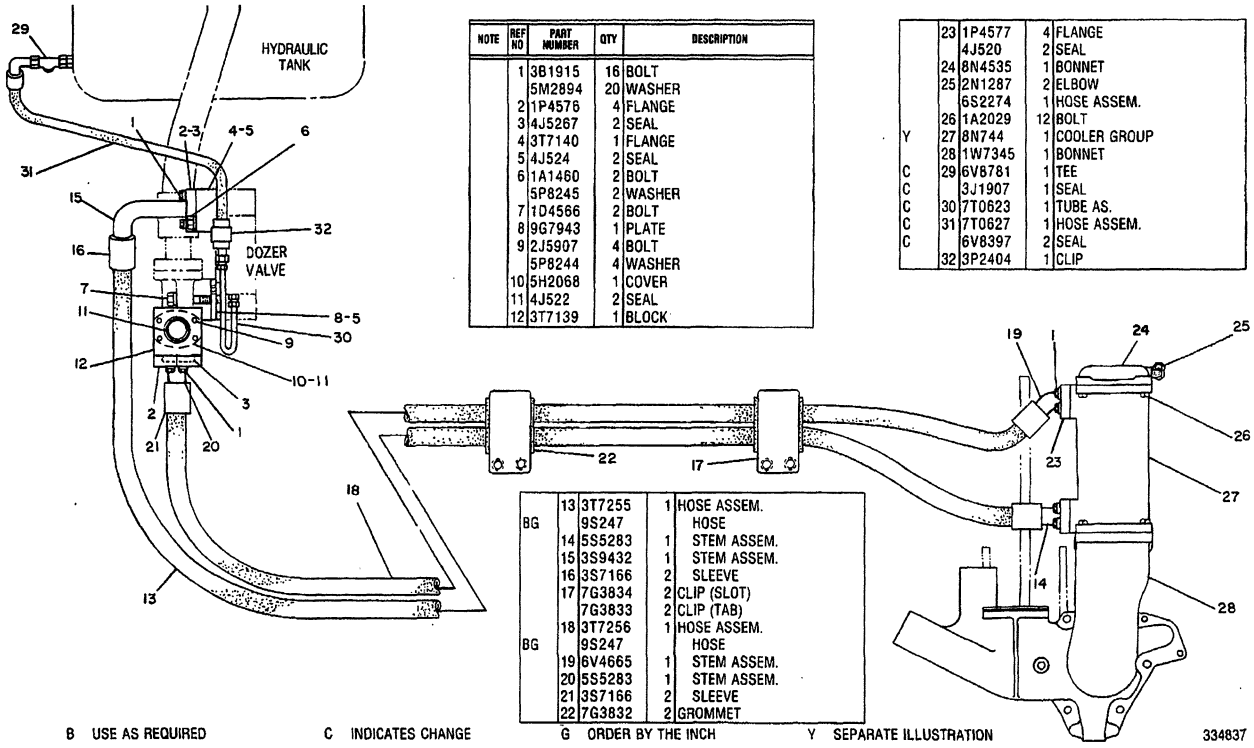

NOTE	REF NO	PART NUMBER	QTY	DESCRIPTION
	1	3B1915	16	BOLT
		5M2894	20	WASHER
	2	1P4576	4	FLANGE
	3	4J5267	2	SEAL
	4	3T7140	1	FLANGE
	5	4J524	2	SEAL
	6	1A1460	2	BOLT
		5P8245	2	WASHER
	7	1D4566	2	BOLT
	8	9G7943	1	PLATE
	9	2J5907	4	BOLT
		5P8244	4	WASHER
	10	5H2068	1	COVER
	11	4J522	2	SEAL
	12	3T7139	1	BLOCK
	13	3T7255	1	HOSE ASSEM.
BG		9S247		HOSE
	14	5S5283	1	STEM ASSEM.
	15	3S9432	1	STEM ASSEM.
	16	3S7166	2	SLEEVE
	17	7G3834	2	CLIP (SLOT)
		7G3833	2	CLIP (TAB)
	18	3T7256	1	HOSE ASSEM.
BG		9S247		HOSE
	19	6V4665	1	STEM ASSEM.
	20	5S5283	1	STEM ASSEM.
	21	3S7166	2	SLEEVE
	22	7G3832	2	GROMMET
	23	1P4577	4	FLANGE
		4J520	2	SEAL
	24	8N4535	1	BONNET
	25	2N1287	2	ELBOW
		6S2274	1	HOSE ASSEM.
	26	1A2029	12	BOLT
Y	27	8N744	1	COOLER GROUP
	28	1W7345	1	BONNET
C	29	6V8781	1	TEE
C		3J1907	1	SEAL
C	30	7T0623	1	TUBE AS.
C	31	7T0627	1	HOSE ASSEM.
C		6V8397	2	SEAL
	32	3P2404	1	CLIP

B USE AS REQUIRED C INDICATES CHANGE G ORDER BY THE INCH Y SEPARATE ILLUSTRATION 334837

334837 P

1374 **3T7141 COOLER GP-HYDRAULIC OIL**

Type 3

8N0744-Page 50B

An Attachment

COOLING SYSTEM

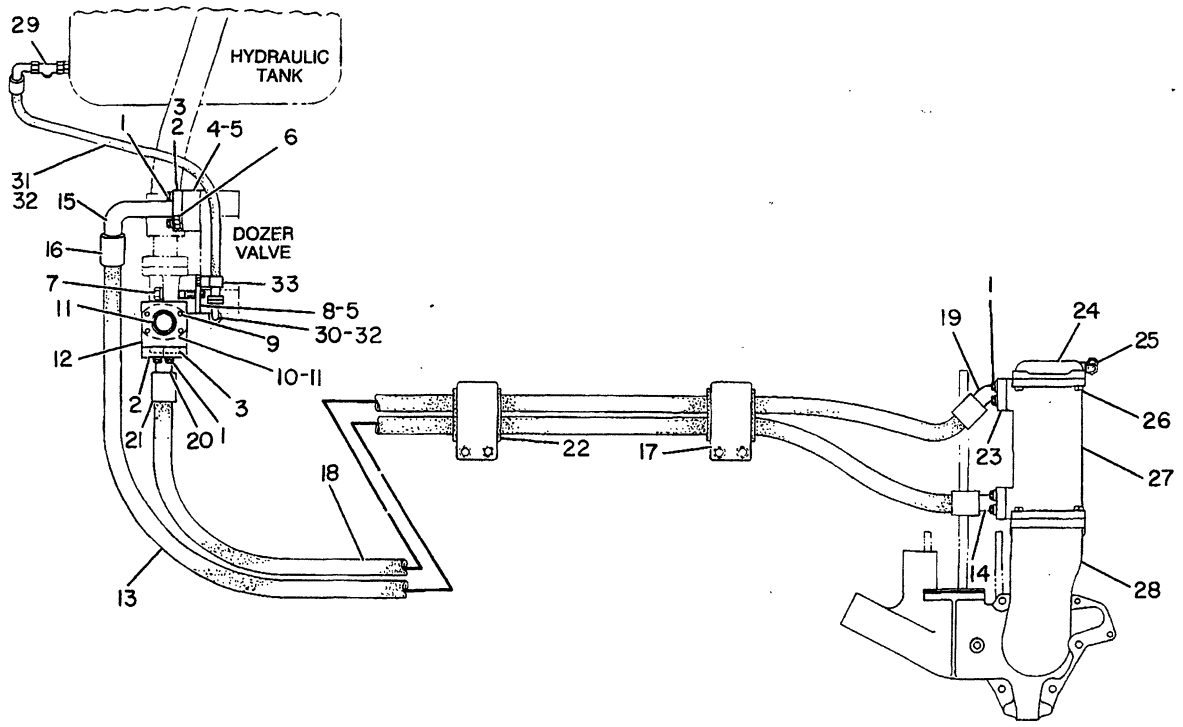

NOTE	REF NO	PART NUMBER	QTY	PART NAME
	1	3B1915	16	BOLT
		5M2894	20	WASHER
	2	1P4576	4	FLANGE (HALF)
	3	4J5267	2	SEAL
	4	3T7140	1	FLANGE
	5	4J0524	2	SEAL
	6	1A1460	2	BOLT
		5P8245	2	WASHER
	7	1D4566	2	BOLT
	8	9G7943	1	PLATE-ORIFICE
	9	2J5907	4	BOLT
		5P8244	4	WASHER
	10	5H2068	1	COVER
	11	4J0522	2	SEAL-O-RING
	12	3T7139	1	BLOCK
I	13	3T7255	1	HOSE AS
BG		9S0247		HOSE
	14	5S5283	1	STEM AS-COLLET
	15	3S9432	1	STEM AS-COLLET
	16	3S7166	2	SLEEVE
	17	7G3834	2	CLIP (SLOT)
		7G3833	2	CLIP (TAB)

NOTE	REF NO	PART NUMBER	QTY	PART NAME
I	18	3T7256	1	HOSE AS
BG		9S0247		HOSE
	19	6V4665	1	STEM AS-COLLET
	20	5S5283	1	STEM AS-COLLET
	21	3S7166	2	SLEEVE
	22	7G3832	2	GROMMET
	23	1P4577	4	FLANGE-HALF
		4J0520	2	SEAL-O-RING (O-RING)
	24	8N4535	1	BONNET
	25	2N1287	2	ELBOW-FLARED
I		6S2274	1	HOSE AS
	26	1A2029	12	BOLT
Y	27	8N0744	1	COOLER GP-HYDRAULIC OIL
	28	1W7345	1	BONNET
	29	6V8781	1	TEE-FACE SEAL
		3J1907	1	SEAL-O-RING
C	30	6V9850	1	ELBOW-SWIVEL (SWIVEL)
I	31	7T0627	1	HOSE AS
C	32	6V8397	3	SEAL-O-RING
C	33	1S1015	1	CLIP

B-USE AS REQUIRED
C-CHANGE FROM PREVIOUS TYPE
G-ORDER BY THE INCH

I-SEE HOSE FABRICATION GUIDE
Y-SEPARATE ILLUSTRATION

B-408930 EP

1374 **3T7141 COOLER GP-HYDRAULIC OIL**

Type 4
8N0744-Page 50B
An Attachment

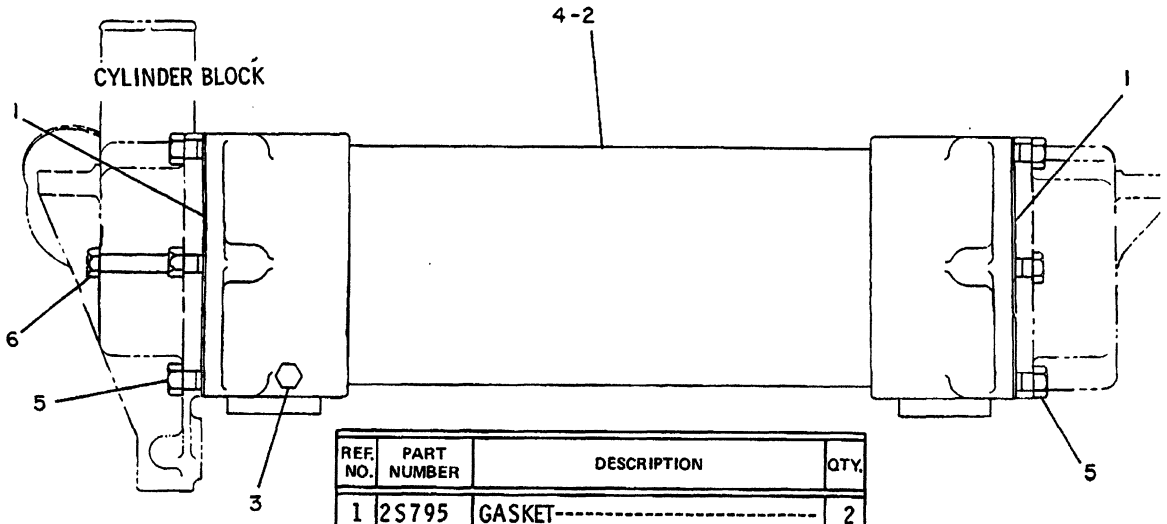

	REF. NO.	PART NUMBER	DESCRIPTION	QTY.
	1	2S795	GASKET	2
C	2	2W999	CORE ASSEM. (Includes)	1
	3	5M6214	PLUG	2
	4	8M9307	PLUG	1
		6F7062	WASHER	1
	5	S1595	BOLT	11
	6	1D4566	BOLT	1

C INDICATES CHANGE

301043

301043 P

1375 **7N2112 COOLER GP-TRANSMISSION OIL**
S/N 53Y1-3100

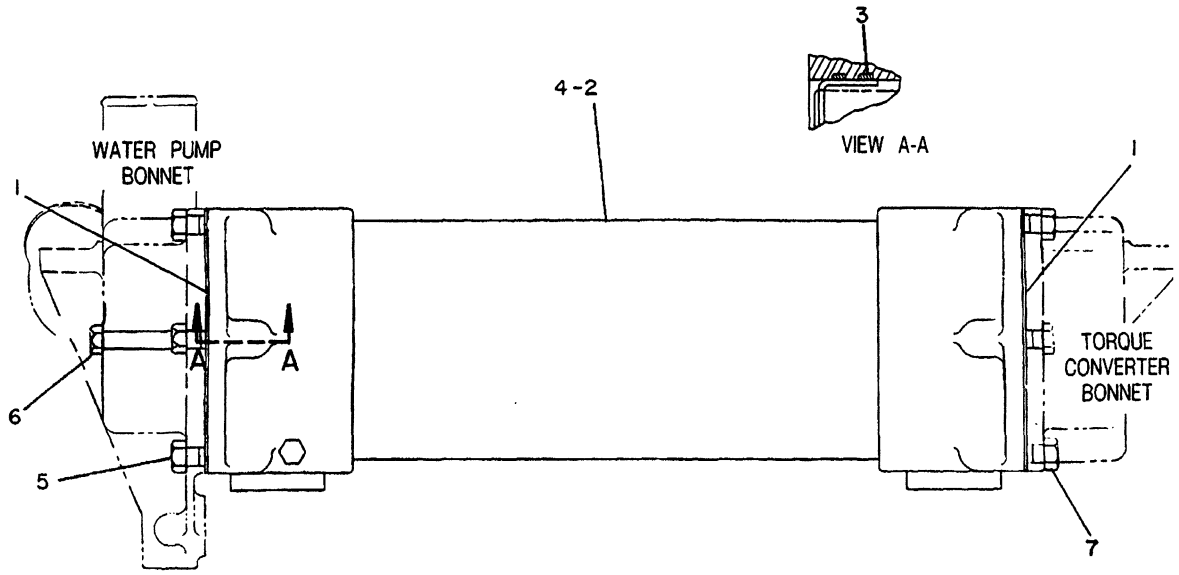

NOTE	REF NO	PART NUMBER	QTY	DESCRIPTION
C	1	7S8767	2	GASKET
C	2	2W5102	1	CORE GROUP
	3	6V3689	2	SEAL
	4	6V7681	1	SEAL
C	5	0S1595	5	BOLT
	6	1D4566	1	BOLT
C	7	2B0947	6	BOLT

C INDICATES CHANGE

317117

317117 P

1375 **7N2112 COOLER GP-TRANSMISSION OIL**
S/N 53Y3101-3297

AIR INLET AND EXHAUST SYSTEM

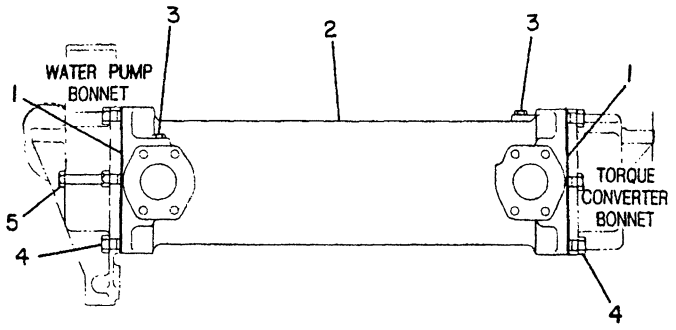

NOTE	REF NO	PART NUMBER	QTY	PART NAME
	1	2S0795	2	GASKET
C	2	7W0205	1	CORE GP-OIL COOLER
C	3	9S4191	2	PLUG-O-RING
C		3J1907	2	SEAL-O-RING
	4	0S1595	11	BOLT
	5	1D4566	1	BOLT

C-CHANGE FROM PREVIOUS TYPE

B-346273 EP

1375 **7N2112 COOLER GP-TRANSMISSION OIL**
S/N 53Y3298-Up

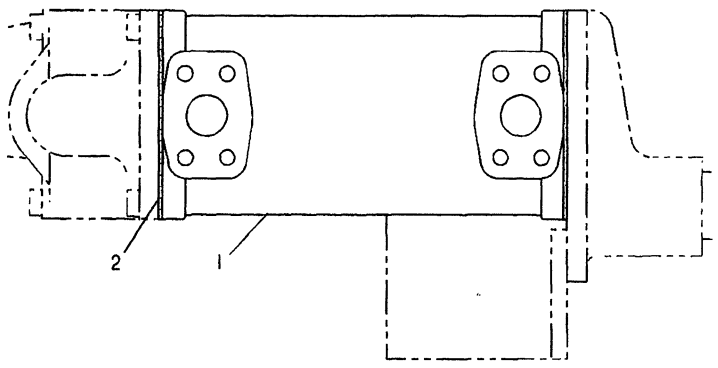

NOTE	REF NO	PART NUMBER	QTY	PART NAME
	1	2W8655	1	CORE AS-OIL COOLER
	2	5M4741	2	GASKET

A-306901 EP

1374 **8N0744 COOLER GP-HYDRAULIC OIL**
Type 1
Part Of 3T7141 Cooler-Hydraulic Oil
An Attachment

AIR INLET AND EXHAUST SYSTEM

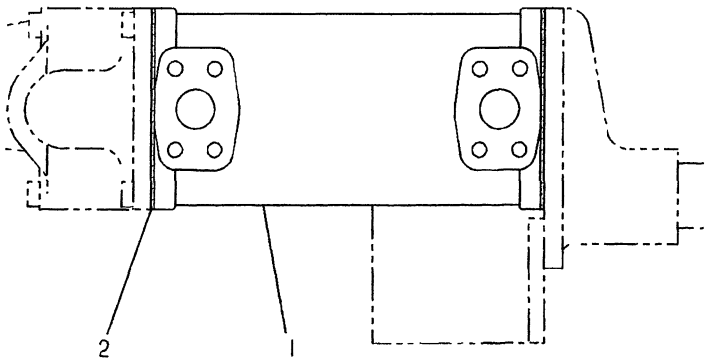

NOTE	REF NO	PART NUMBER	QTY	PART NAME
CR	1	2W9978	1	CORE AS-OIL COOLER
	2	1189685	2	GASKET

C-CHANGE FROM PREVIOUS TYPE
R-REMFG PART MAY BE AVAILABLE

A-614301 CP

1374 **8N0744 COOLER GP-HYDRAULIC OIL**

Type 2
Part Of 3T7141 Cooler-Hydraulic Oil
An Attachment

MEMORANDA

AIR INLET AND EXHAUST SYSTEM

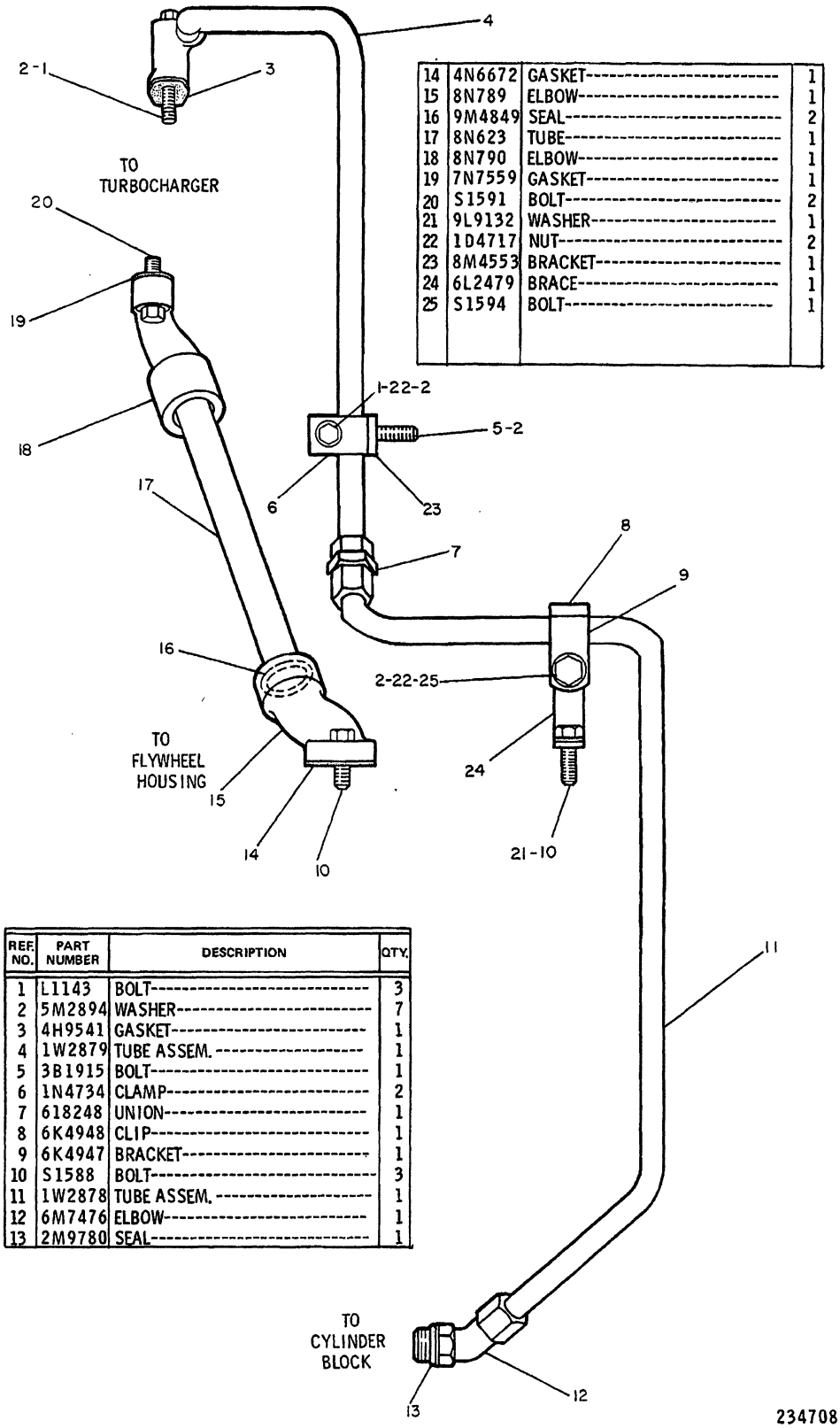

REF. NO.	PART NUMBER	DESCRIPTION	QTY.
1	L1143	BOLT	3
2	5M2894	WASHER	7
3	4H9541	GASKET	1
4	1W2879	TUBE ASSEM.	1
5	3B1915	BOLT	1
6	1N4734	CLAMP	2
7	618248	UNION	1
8	6K4948	CLIP	1
9	6K4947	BRACKET	1
10	S1588	BOLT	3
11	1W2878	TUBE ASSEM.	1
12	6M7476	ELBOW	1
13	2M9780	SEAL	1

14	4N6672	GASKET	1
15	8N789	ELBOW	1
16	9M4849	SEAL	2
17	8N623	TUBE	1
18	8N790	ELBOW	1
19	7N7559	GASKET	1
20	S1591	BOLT	2
21	9L9132	WASHER	1
22	1D4717	NUT	2
23	8M4553	BRACKET	1
24	6L2479	BRACE	1
25	S1594	BOLT	1

234708 P

1307 **7N7029 LINES GP-TURBOCHARGER OIL**
Engine S/N 48W13002-19972

AIR INLET AND EXHAUST SYSTEM

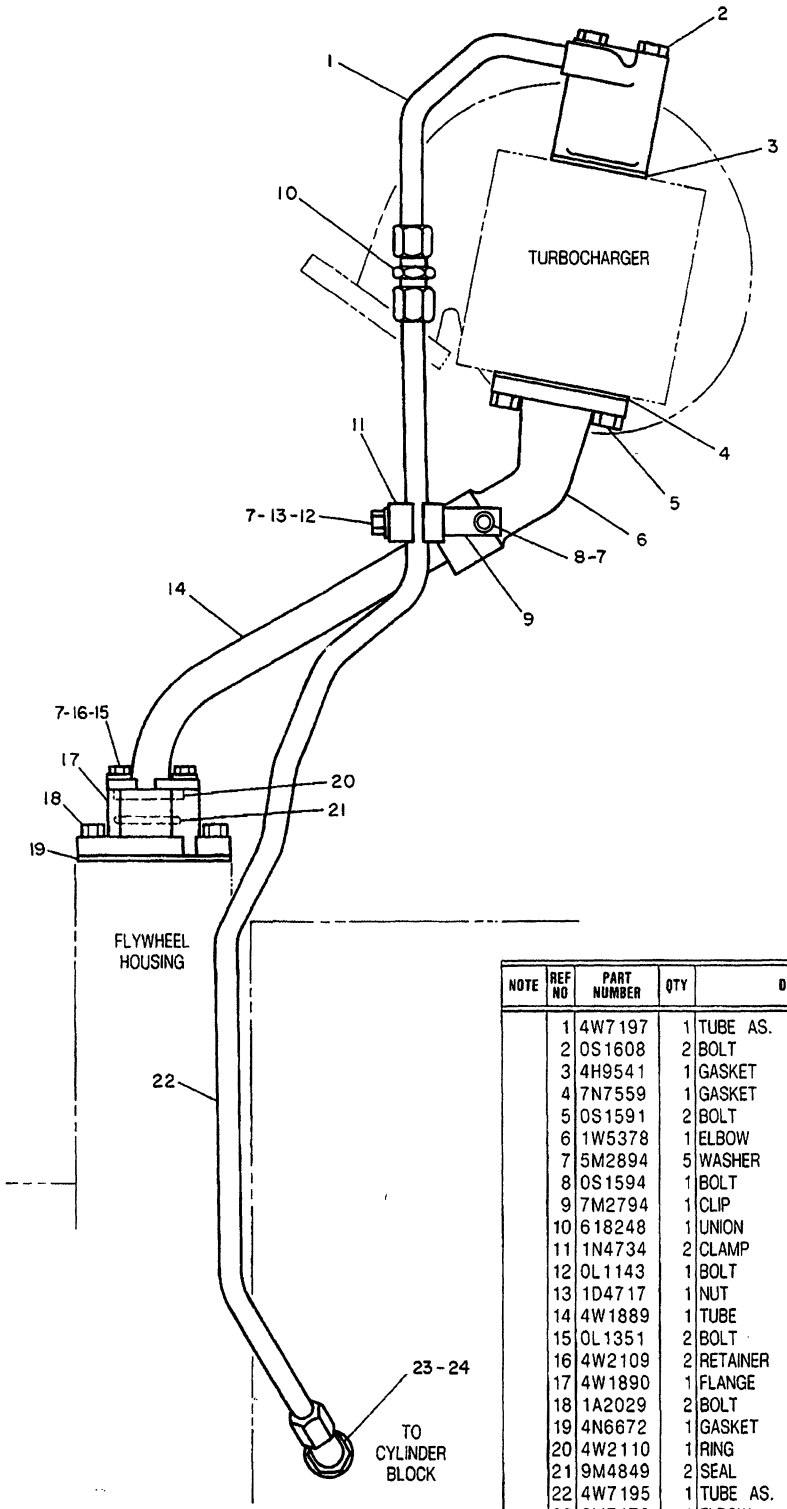

NOTE	REF NO	PART NUMBER	QTY	DESCRIPTION
	1	4W7197	1	TUBE AS.
	2	0S1608	2	BOLT
	3	4H9541	1	GASKET
	4	7N7559	1	GASKET
	5	0S1591	2	BOLT
	6	1W5378	1	ELBOW
	7	5M2894	5	WASHER
	8	0S1594	1	BOLT
	9	7M2794	1	CLIP
	10	618248	1	UNION
	11	1N4734	2	CLAMP
	12	0L1143	1	BOLT
	13	1D4717	1	NUT
	14	4W1889	1	TUBE
	15	0L1351	2	BOLT
	16	4W2109	2	RETAINER
	17	4W1890	1	FLANGE
	18	1A2029	2	BOLT
	19	4N6672	1	GASKET
	20	4W2110	1	RING
	21	9M4849	2	SEAL
	22	4W7195	1	TUBE AS.
	23	6M7476	1	ELBOW
	24	2M9780	1	SEAL

322336

322336 P

1307

4W7504 LINES GP-TURBOCHARGER OIL
Engine S/N 48W19973-Up

MEMORANDA

AIR INLET AND EXHAUST SYSTEM

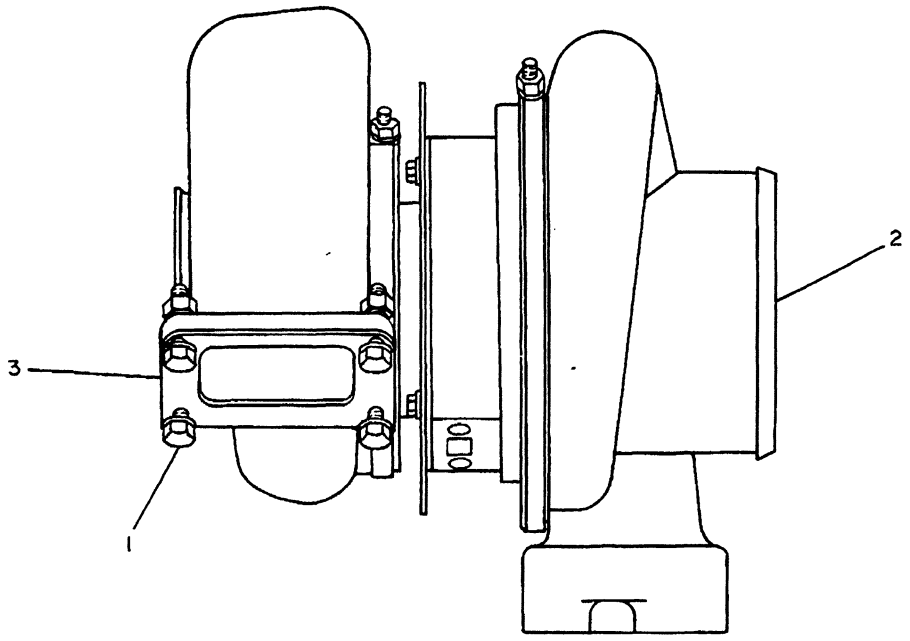

REF. NO.	PART NUMBER	DESCRIPTION	QTY
1	2N2765	BOLT----------	4
	2N2766	LOCKNUT----------	4
2	8N1447	TURBOCHARGER GROUP---------- (Separate Illustration)	1
3	1S4295	GASKET----------	1

234703

234703 P

AIR INLET AND EXHAUST SYSTEM

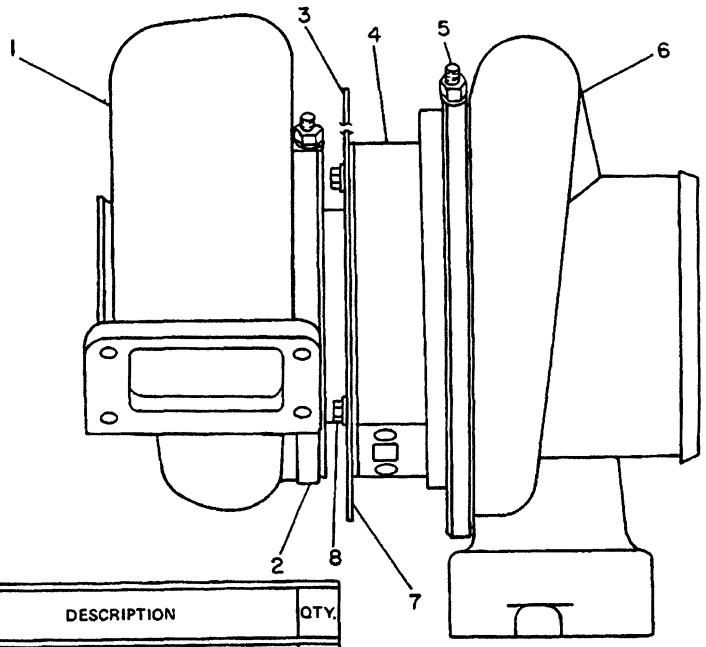

REF. NO.	PART NUMBER	DESCRIPTION	QTY.
1	8N5525	HOUSING-----(turbine)----------	1
2	9N2038	CLAMP ASSEM.----------	1
	7M9918	NUT----------	1
3	8N9104	PLATE----------	1
4	8N1448	CARTRIDGE GROUP---------- (Separate Illustration)	1
5	9N2039	CLAMP ASSEM.----------	1
	7M9918	NUT----------	1
6	7N8186	HOUSING----(compressor)--------	1
7	8N9103	PLATE----------	1
8	S1613	BOLT----------	4
	5P537	WASHER----------	4
▲	7N9420	NAMEPLATE----------	1
▲	2F808	SCREW ----------	2

234704

▲ NOT SHOWN

234704 P

MEMORANDA

AIR INLET AND EXHAUST SYSTEM

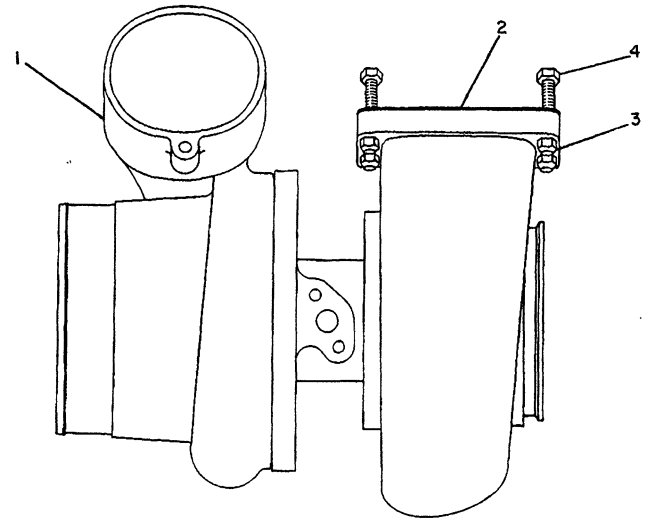

NOTE	REF NO	PART NUMBER	QTY	PART NAME
RY	1	4W9104	1	TURBOCHARGER GP
	2	1S4295	1	GASKET-TURBOCHARGER
	3	2N2766	4	LOCKNUT
	4	2N2765	4	BOLT-HIGH TEMPERATURE

R-REMFG PART MAY BE AVAILABLE
Y-SEPARATE ILLUSTRATION

B-323718 EP

1052

7W0831 TURBOCHARGER GP
Engine S/N 48W18022-Up
4W9104-Page 52A

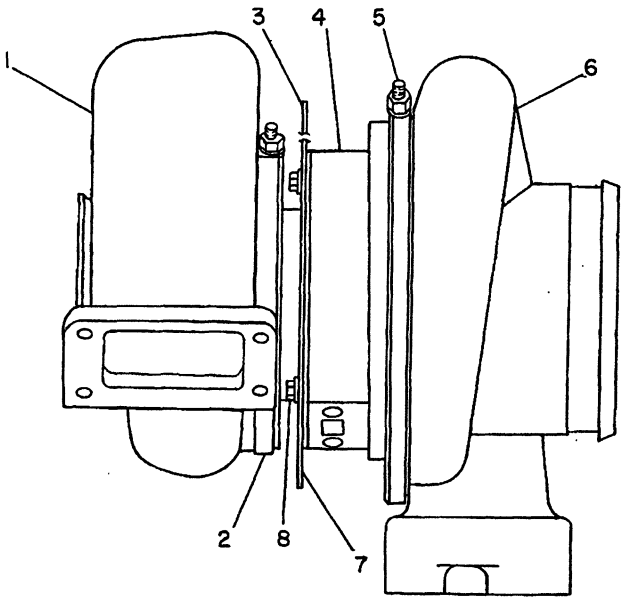

NOTE	REF NO	PART NUMBER	QTY	PART NAME
	1	1W3840	1	HOUSING-TURBINE
	2	9N2038	1	CLAMP AS
		7M9918	1	LOCKNUT
	3	8N9104	1	PLATE
YR	4	8N6553	1	CARTRIDGE GP-TURBOCHARGER
	5	9N2039	1	CLAMP AS
		7M9918	1	LOCKNUT
	6	6N7959	1	HOUSING-COMPRESSOR
	7	8N9103	1	PLATE
	8	OS1614	4	BOLT
		5P0537	4	WASHER
F		1W4795	1	PLATE-IDENTIFICATION
F		2F0808	2	SCREW

F-NOT SHOWN
R-REMFG PART MAY BE AVAILABLE
Y-SEPARATE ILLUSTRATION

B-317067 EP

1052

4W9104 TURBOCHARGER GP*R
Engine S/N 48W18022-Up
8N6553-Page 53.01
Part Of 7W0831 Turbocharger

MEMORANDA

AIR INLET AND EXHAUST SYSTEM

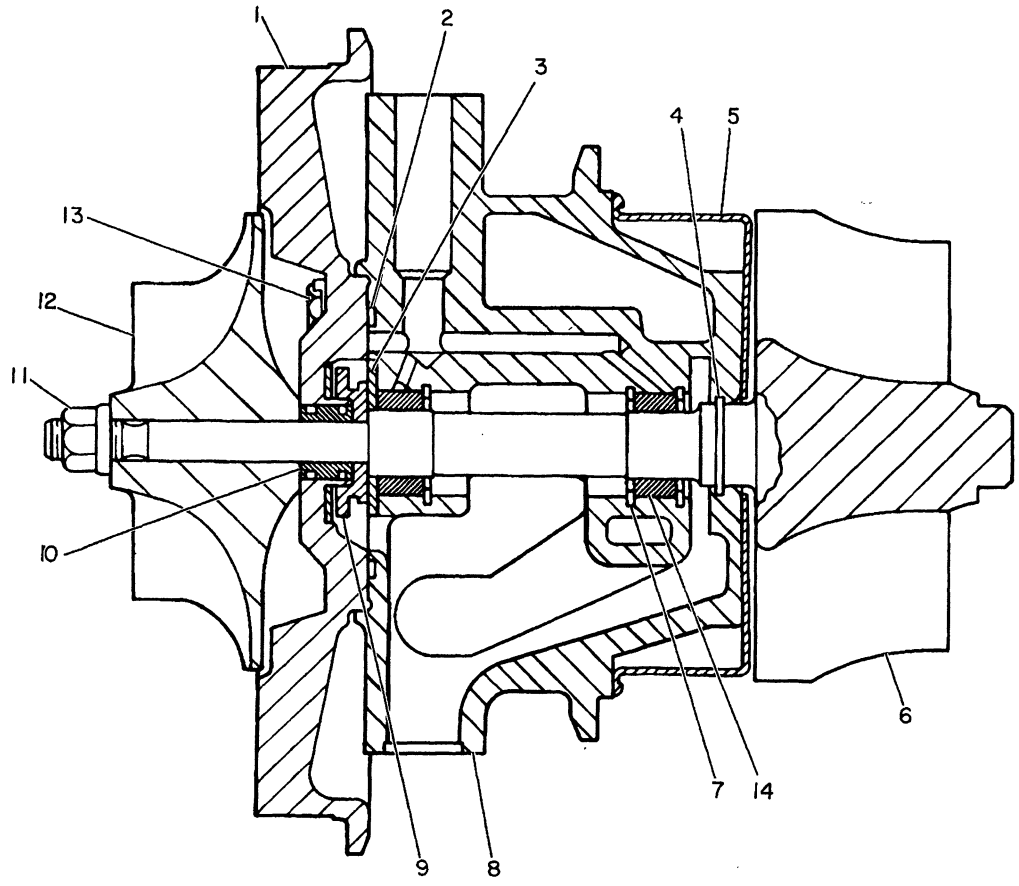

NOTE	REF NO	PART NUMBER	QTY	PART NAME	NOTE	REF NO	PART NUMBER	QTY	PART NAME
R	1	6N7962	1	PLATE AS-BACKING	FJ		2F0808	2	SCREW
	2	1P1120	1	RING-SEAL					
	3	6N5004	1	BEARING-THRUST					
	4	7N3759	1	RING-PISTON					
	5	1N3751	1	SHROUD-TURBINE WHEEL					
R	6	6N4606	1	WHEEL & SHAFT AS					
	7	9M8915	3	RING-RETAINING					
R	8	7N8188	1	HOUSING AS-BEARING					
		4M6646	2	PIN-GROOVED					
	9	9M8911	1	COLLAR-THRUST					
	10	9N2046	1	SPACER-THRUST					
		9M8919	2	RING-SEAL					
	11	1S1770	1	LOCKNUT-TURBOCHARGER					
	12	7N8190	1	WHEEL-COMPRESSOR					
	13	0S1616	4	BOLT					
		9N2036	4	PLATE-LOCKING					
	14	9N2041	1	KIT-BEARING					
AF		7N3193	1	KIT-BEARING REPLACEMENT (.005IN OVERSIZE AND .005IN UNDERSIZE ID) -OR-					
AF		7N3194	1	KIT-BEARING REPLACEMENT (.010IN OVERSIZE AND .010IN UNDESIZE ID)					
FJ		9N2047	1	PLATE-CARTRIDGE IDENTIFICATION					

J-MOUNTED ON CARTRIDGE AS
A-NOT PART OF THIS GROUP
F-NOT SHOWN

R-REMFG PART MAY BE AVAILABLE

B-234705 EP

1053 **8N1448 CARTRIDGE GP-TURBOCHARGER*R**

Engine S/N 48W13002-18021
Part Of 8N1447 Turbocharger

AIR INLET AND EXHAUST SYSTEM

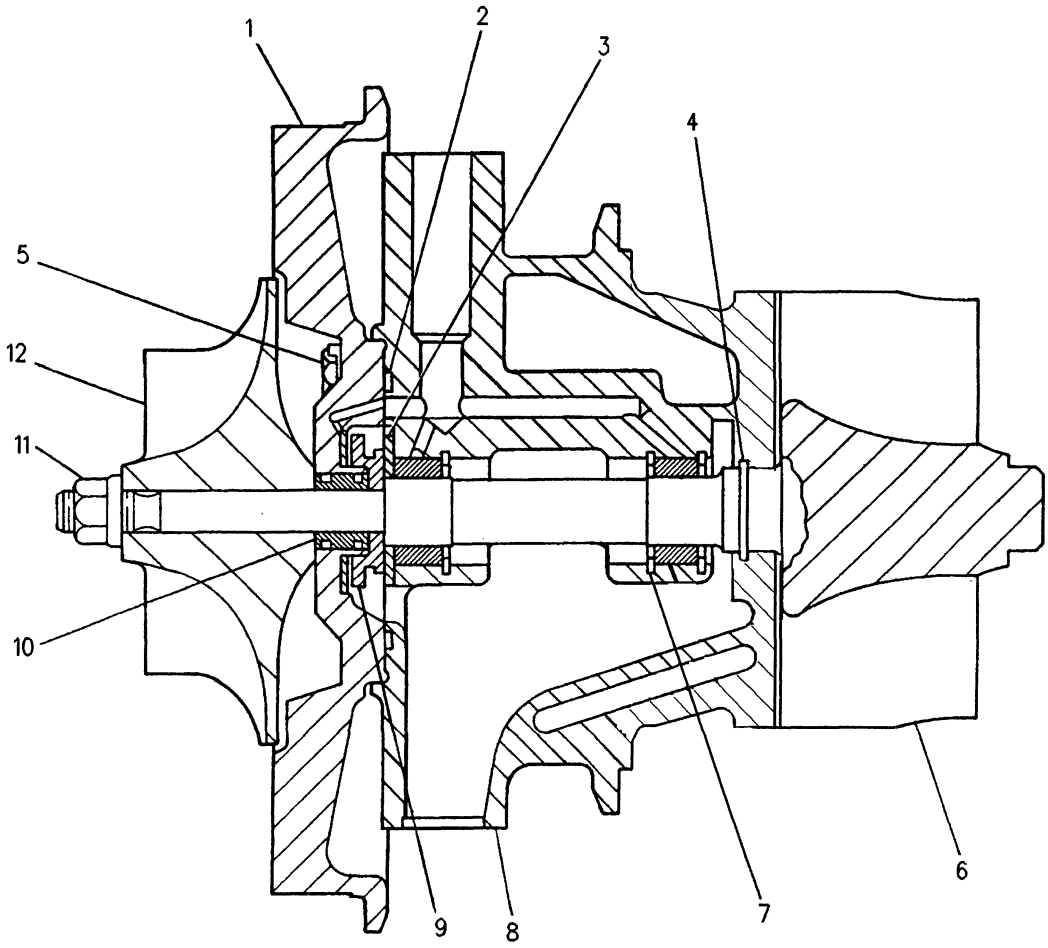

NOTE	REF NO	PART NUMBER	QTY	PART NAME
R	1	6N7962	1	PLATE AS-BACKING
	2	1P1120	1	RING-SEAL
	3	6N5004	1	BEARING-THRUST
	4	7N3759	1	RING-PISTON
	5	0S1616	4	BOLT (1/4-20X1 IN)
		9N2036	4	PLATE-LOCKING
R	6	9N2043	1	WHEEL & SHAFT AS
	7	9M8915	3	RING-RETAINING
	8	7E9493	1	HOUSING AS-BEARING
		4M6646	2	PIN-GROOVED
		7W2368	1	RING-SEAL
	9	9M8911	1	COLLAR-THRUST
	10	9N2046	1	SPACER-THRUST
		9M8919	2	RING-SEAL
	11	1S1770	1	LOCKNUT-TURBOCHARGER
	12	4P3429	1	WHEEL-COMPRESSOR
F		1W4795	1	PLATE-IDENTIFICATION
F		2F0808	2	SCREW (MOUNTED ON CARTRIDGE AS.)

NOTE	REF NO	PART NUMBER	QTY	PART NAME
				THE FOLLOWING REPAIR KITS ARE AVAILABLE:
		9N2041	1	KIT-BEARING
		7N3193	1	KIT-BEARING (.005 IN. OVERSIZE & .005 IN. UNDERSIZE I.D.) -OR-
		7N3194	1	KIT-BEARING (.010 IN. OVERSIZE & .010 IN. UNDERSIZE I.D.)

F-NOT SHOWN
R-REMFG PART MAY BE AVAILABLE

R-639721 CP

1053

8N6553 CARTRIDGE GP-TURBOCHARGER*R
Engine S/N 48W18022-Up
Part Of 4W9104 Turbocharger

MEMORANDA

AIR INLET AND EXHAUST SYSTEM

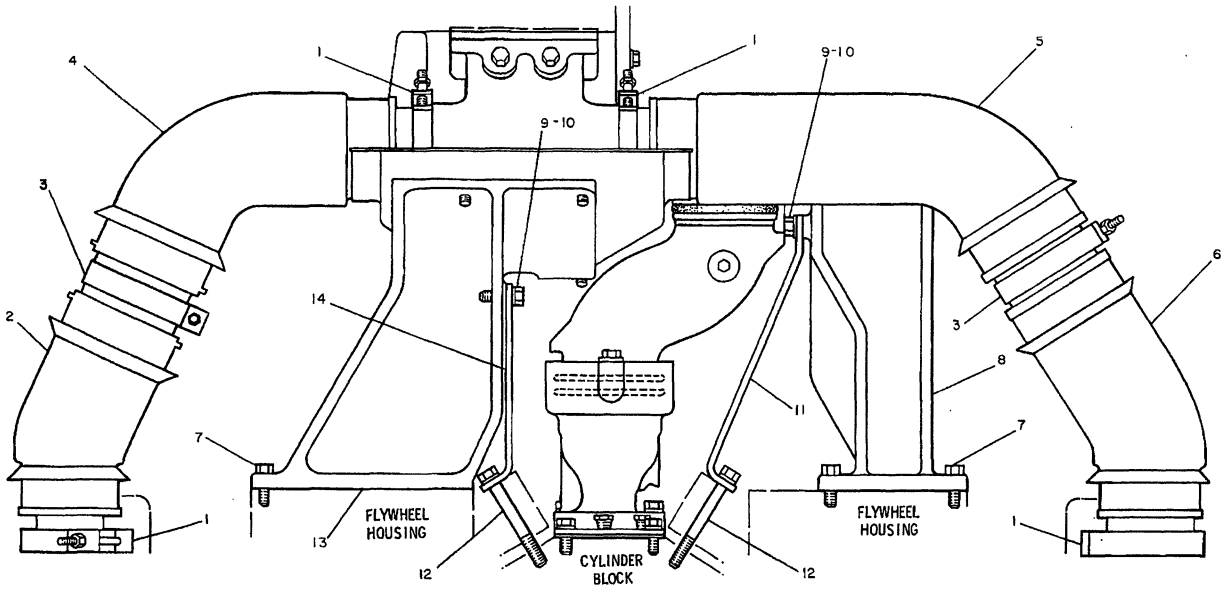

NOTE	REF NO	PART NUMBER	QTY	PART NAME
	1	8N0879	4	CLAMP
C	2	1W5654	1	TUBE AS-EXHAUST
	3	8N0878	2	CLAMP
		8N0886	2	SEAL-EXHAUST
		1W0481	2	RING-EXHAUST SEAL
C	4	1W5653	1	TUBE AS-EXHAUST
C	5	1W5652	1	TUBE AS-EXHAUST
C	6	1W5651	1	TUBE AS-EXHAUST
C	7	1A2029	9	BOLT
C	8	7W1367	1	SUPPORT-AIR CLEANER
	9	0S1594	3	BOLT
	10	5M2894	3	WASHER
	11	7N9427	1	PLATE
	12	0S1608	4	BOLT
		9J8583	4	WASHER
C	13	4W4314	1	SUPPORT-TURBOCHARGER
	14	7N9424	1	PLATE

C-INDICATES CHANGE

355028

355028 P

1058 7N9579 LINES GP-AIR-PART 1 OF 2

AIR INLET AND EXHAUST SYSTEM

NOTE	REF NO	PART NUMBER	QTY	PART NAME
	1	8N2258	1	SHIELD AS-BOTTOM
		4K9097	7	NUT
	2	8N2056	1	MANIFOLD-INLET

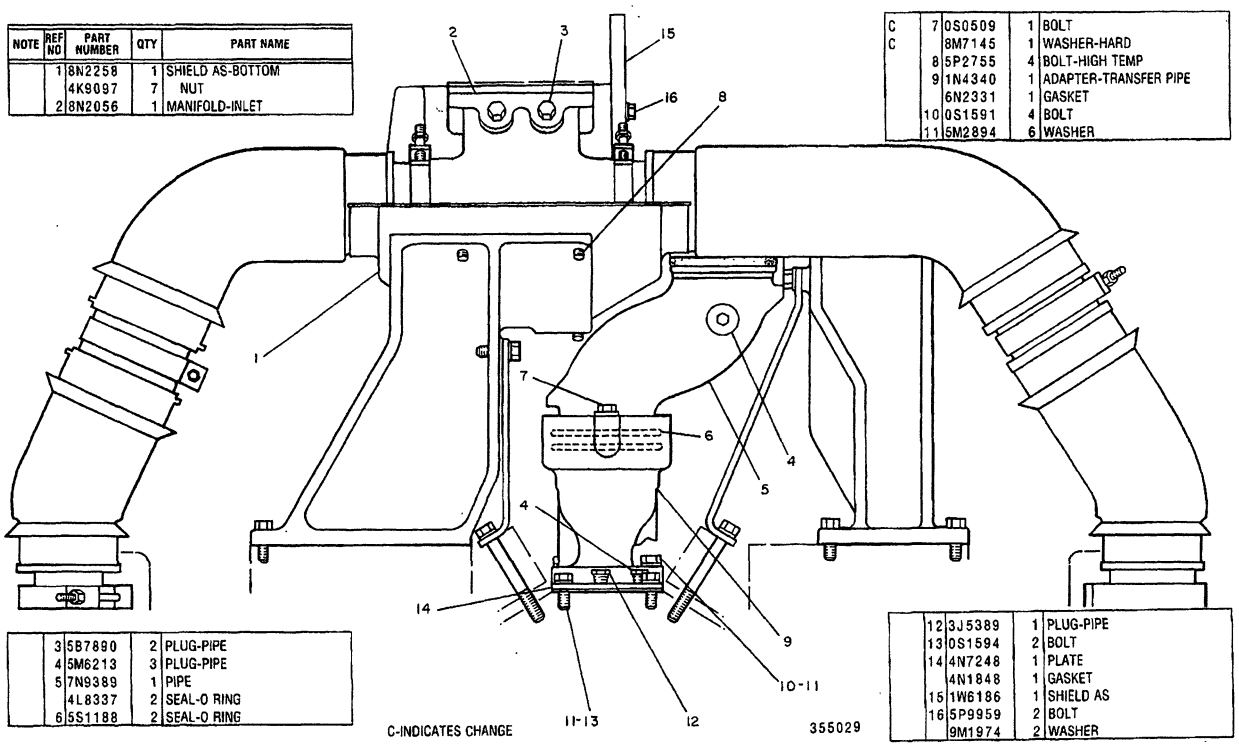

NOTE	REF NO	PART NUMBER	QTY	PART NAME
C	7	0S0509	1	BOLT
C		8M7145	1	WASHER-HARD
	8	5P2755	4	BOLT-HIGH TEMP
	9	1N4340	1	ADAPTER-TRANSFER PIPE
		6N2331	1	GASKET
	10	0S1591	4	BOLT
	11	5M2894	6	WASHER

NOTE	REF NO	PART NUMBER	QTY	PART NAME
	3	5B7890	2	PLUG-PIPE
	4	5M6213	3	PLUG-PIPE
	5	7N9389	1	PIPE
		4L8337	2	SEAL-O RING
	6	5S1188	2	SEAL-O RING

NOTE	REF NO	PART NUMBER	QTY	PART NAME
	12	3J5389	1	PLUG-PIPE
	13	0S1594	2	BOLT
	14	4N7248	1	PLATE
		4N1848	1	GASKET
	15	1W6186	1	SHIELD AS
	16	5P9959	2	BOLT
		9M1974	2	WASHER

355029 P

1058 **7N9579 LINES GP-AIR-PART 2 OF 2**

AIR INLET AND EXHAUST SYSTEM

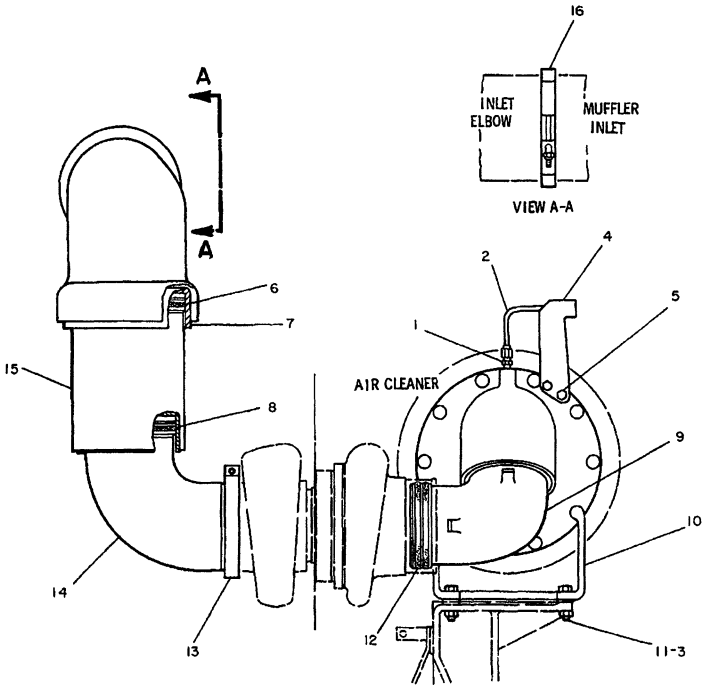

NOTE	REF NO	PART NUMBER	QTY	DESCRIPTION
	1	8L6557	2	CONNECTOR
	2	1W6118	1	TUBE AS.
	3	1D4717	4	NUT
	4	1W6119	1	BRACKET
C	5	L1351	2	BOLT
		5M2894	2	WASHER
	6	8N2730	1	RING
	7	1N4382	1	ELBOW
	8	8N2729	1	RING
	9	7N6908	1	ELBOW
C	10	1W5671	1	SUPPORT AS.
		7M1764	1	ELEMENT
	11	S1571	4	BOLT
	12	2M5173	4	SEAL
	13	8N2745	1	CLAMP
C	14	2W6967	1	ELBOW AS.
C	15	2W6965	1	COUPLING
	16	1W6694	1	CLAMP

C INDICATES CHANGE

312217

312217 P

AIR INLET AND EXHAUST SYSTEM

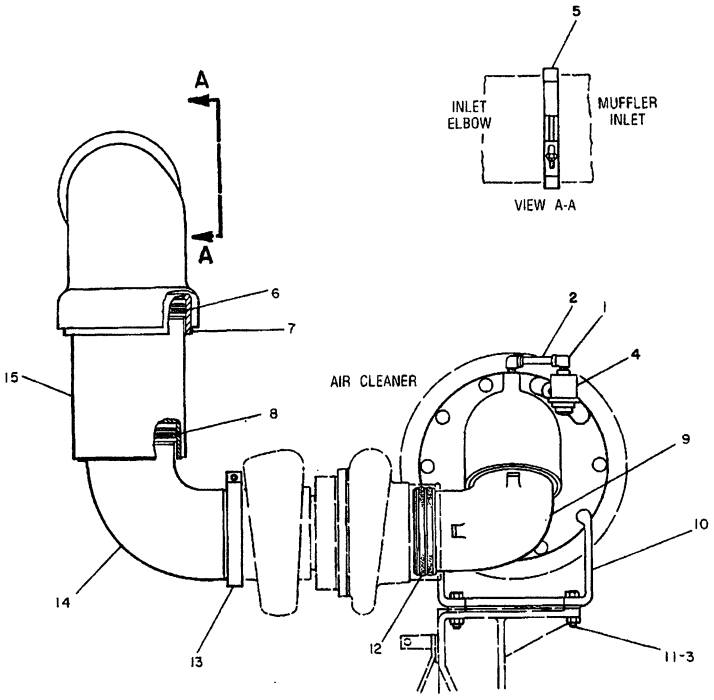

NOTE	REF NO	PART NUMBER	QTY	DESCRIPTION
C	1	3B6552	2	ELBOW
C	2	3B7285	1	NIPPLE
	3	1D4717	4	NUT
C	4	8N2694	1	INDICATOR
	5	1W6694	1	CLAMP
	6	8N2730	1	RING
	7	1N4382	1	ELBOW
	8	8N2729	1	RING
	9	7N6908	1	ELBOW
	10	1W5671	1	SUPPORT AS.
		7M1764	1	ELEMENT
	11	0S1571	4	BOLT
	12	2M5173	4	SEAL
	13	8N2745	1	CLAMP
	14	2W6967	1	ELBOW AS.
	15	2W6965	1	COUPLING

C INDICATES CHANGE

334739

334739 P

MEMORANDA

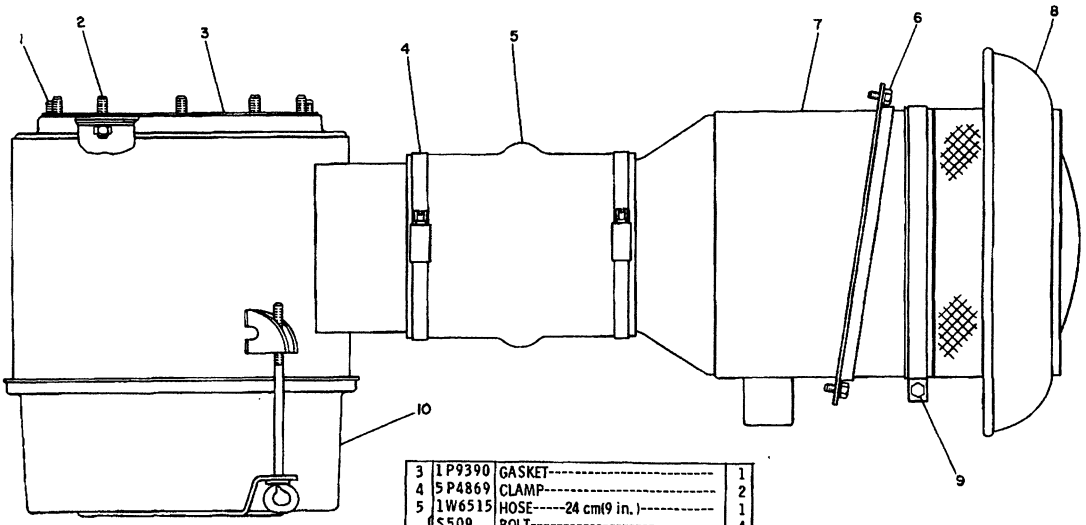

REF. NO.	PART NUMBER	DESCRIPTION	QTY.
1	1T822	BOLT	2
2	9M2151	STUD	10
	2K4973	LOCKNUT	10
3	1P9390	GASKET	1
4	5P4869	CLAMP	2
5	1W6515	HOSE-----24 cm(9 in.)	1
6	5S509	BOLT	4
	5M2894	WASHER	4
7	1W6470	BODY ASSEM.	1
8	7S3687	HOOD ASSEM. (Includes)	1
9	5S1591	BOLT	1
	1D4717	NUT	1
10	8N4150	CLEANER GROUP (Separate Illustration)	1

235035

235035 P

1051

7N7034 AIR CLEANER GP

8N4150-Page 58

7S8817 Prescreener Assembly Is Available

AIR INLET AND EXHAUST SYSTEM

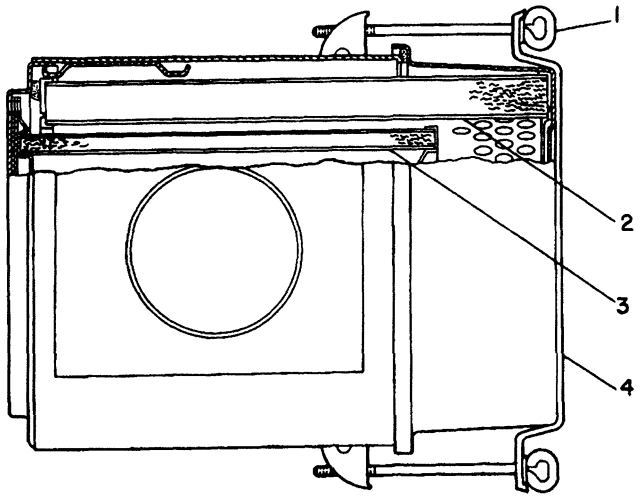

NOTE	REF NO	PART NUMBER	QTY	PART NAME
	1	6N6460	2	ROD AS
	2	7W5313	1	ELEMENT AS-PRIMARY
	3	6N6444	1	ELEMENT AS (SECONDARY)
	4	6N6223	1	CUP AS-AIR CLEANER
C		6N7692	1	GASKET

C-CHANGE FROM PREVIOUS TYPE

B-470331 EP

1051

8N4150 AIR CLEANER GP

Part Of 7N7034 Air Cleaner

AIR INLET AND EXHAUST SYSTEM

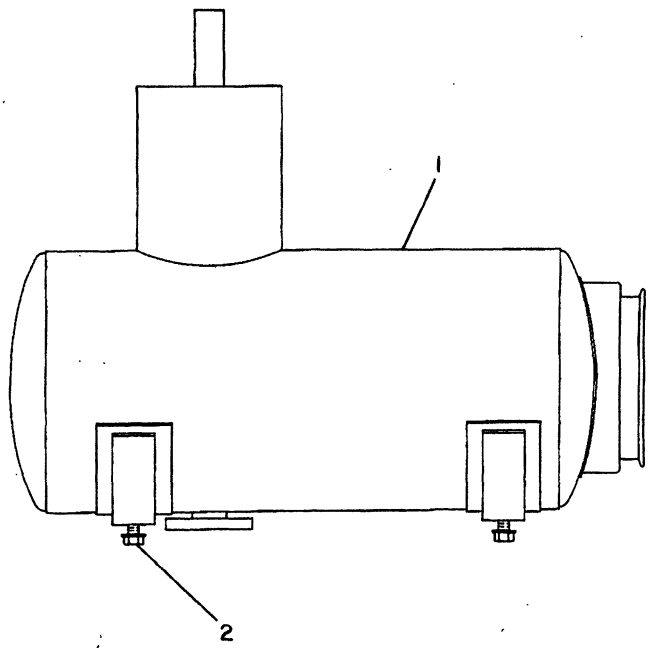

NOTE	REF NO	PART NUMBER	QTY	PART NAME
	1	4W8485	1	MUFFLER AS
	2	6H1717	4	BOLT
		5P1076	4	WASHER-HARD

B-489437 EP

1062

2W6296 MUFFLER GP
S/N 53Y3051-Up

AIR INLET AND EXHAUST SYSTEM

REF. NO.	PART NUMBER	DESCRIPTION	QTY.
1	1N4383	MUFFLER ASSEM.	1
2	6H1717	BOLT	4
	5P8245	WASHER	4

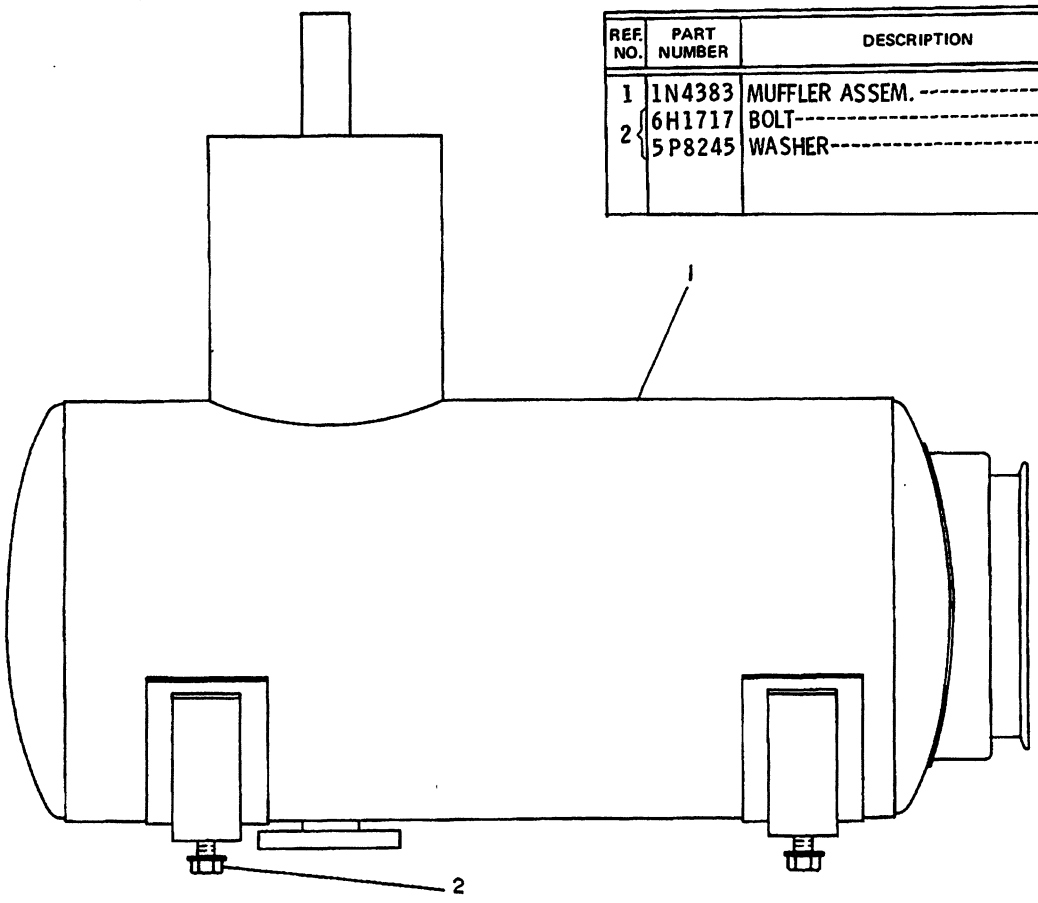

235038

235038 P

1062

7N7038 MUFFLER GP
S/N 53Y1-3050

AIR INLET AND EXHAUST SYSTEM

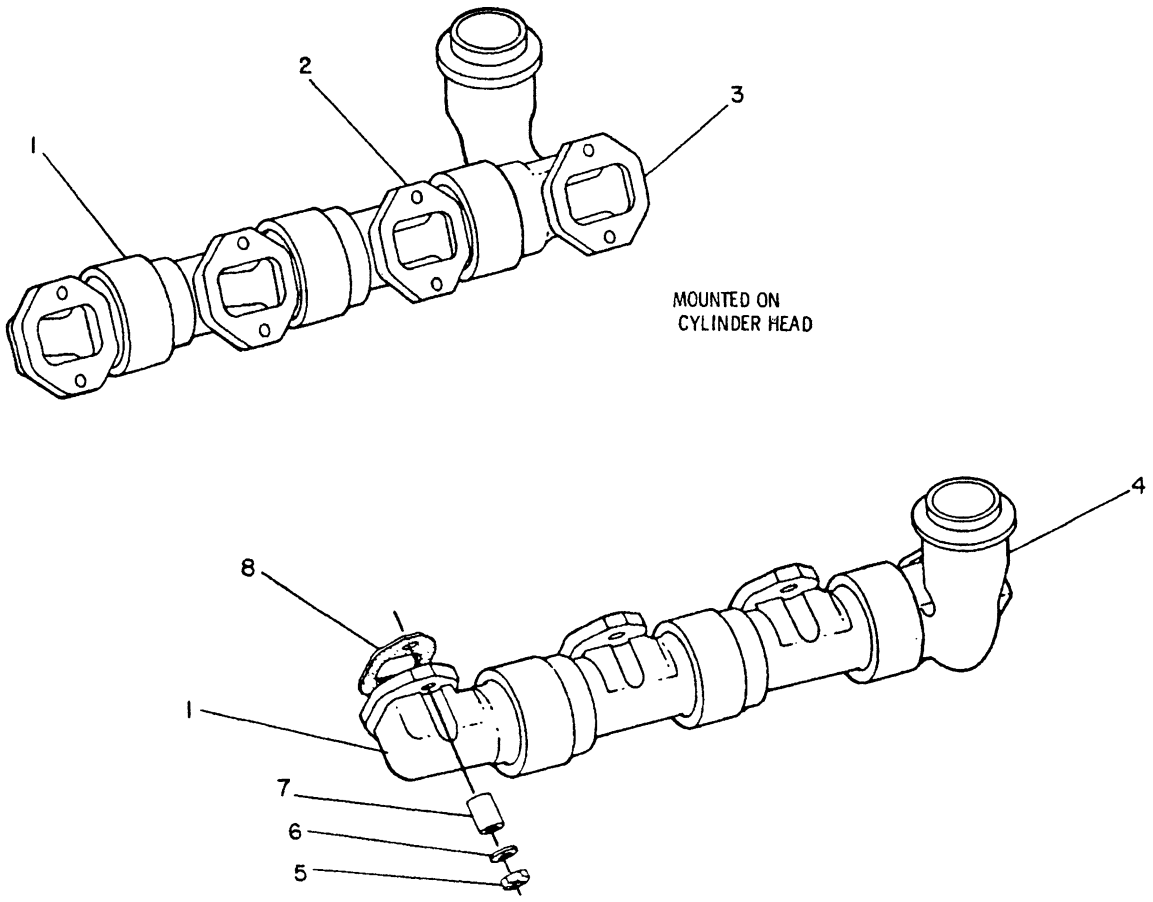

NOTE	REF NO	PART NUMBER	QTY	PART NAME	NOTE	REF NO	PART NUMBER	QTY	PART NAME
	1	9Y1229	2	MANIFOLD-EXHAUST (END)					
	2	9Y1230	4	MANIFOLD-EXHAUST (CENTER)					
	3	7E3203	1	MANIFOLD-REAR (RH)					
	4	7E3204	1	MANIFOLD-REAR (LH)					
	5	2N2766	16	LOCKNUT (3/8-16 NPTF THD)					
	6	5M2894	16	WASHER (2.5MM THK)					
	7	2S3770	16	SPACER (33.5MM THK)					
	8	1299452	8	GASKET-EXHAUST MANIFOLD					

B-617923 CP

1059 **7N9578 MANIFOLD GP-EXHAUST**

AIR INLET AND EXHAUST SYSTEM

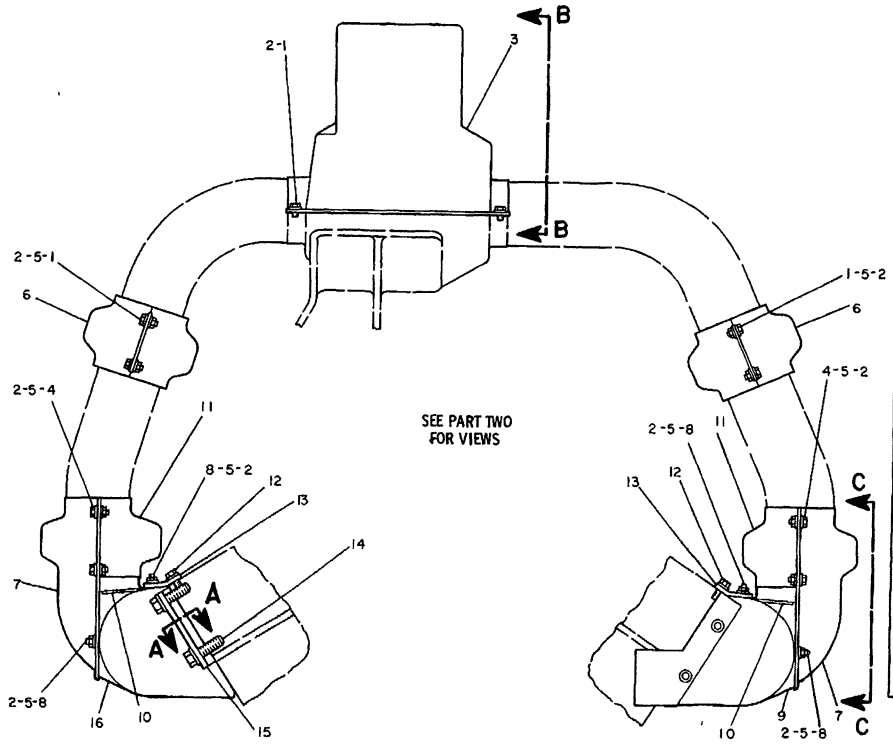

REF. NO.	PART NUMBER	DESCRIPTION	QTY.
1	1C569	BOLT	15
2	9M1974	WASHER	51
3	8N2368	SHIELD ASSEM.	1
4	2H3755	BOLT	8
5	1B5354	NUT	28
6	1N3300	SHIELD ASSEM.	4
7	8N1594	SHIELD ASSEM.	2
8	6V2712	STUD	12
9	8N1622	SHIELD ASSEM.	1
10	8N1616	SHIELD ASSEM.	2
11	8N1619	SHIELD ASSEM.	2
12	S1594	BOLT	8
	5M2894	WASHER	8
13	8N1614	PLATE	2
14	S1587	BOLT	2
	5P8245	WASHER	2
15	8N7953	PLATE	1
16	8N1620	SHIELD ASSEM.	1

235044

235044 P

1067 **7N7032 SHIELD GP-MANIFOLD-PART 1 OF 2**
S/N 53Y1-3307

AIR INLET AND EXHAUST SYSTEM

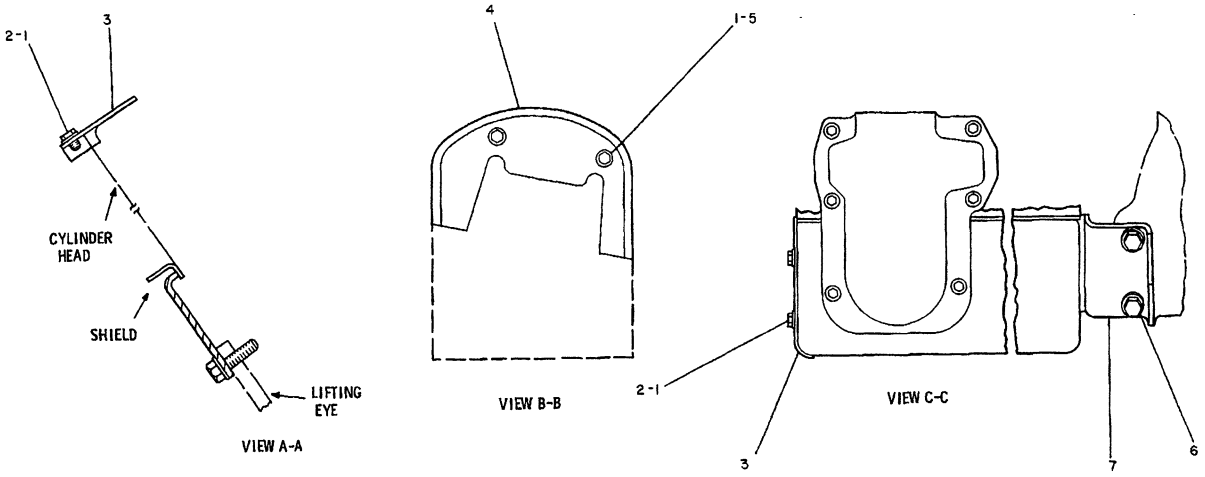

REF. NO.	PART NUMBER	DESCRIPTION	QTY.
1	5P9959	BOLT	6
2	4B4277	WASHER	4
3	8N7954	PLATE	2
4	1W6185	SHIELD ASSEM.	1
5	9M1974	WASHER	2

6	1S1587	BOLT	2
	5P8245	WASHER	2
7	1W385	BRACKET	1

235045

235045 P

1067 **7N7032 SHIELD GP-MANIFOLD-PART 2 OF 2**
S/N 53Y1-3307

AIR INLET AND EXHAUST SYSTEM

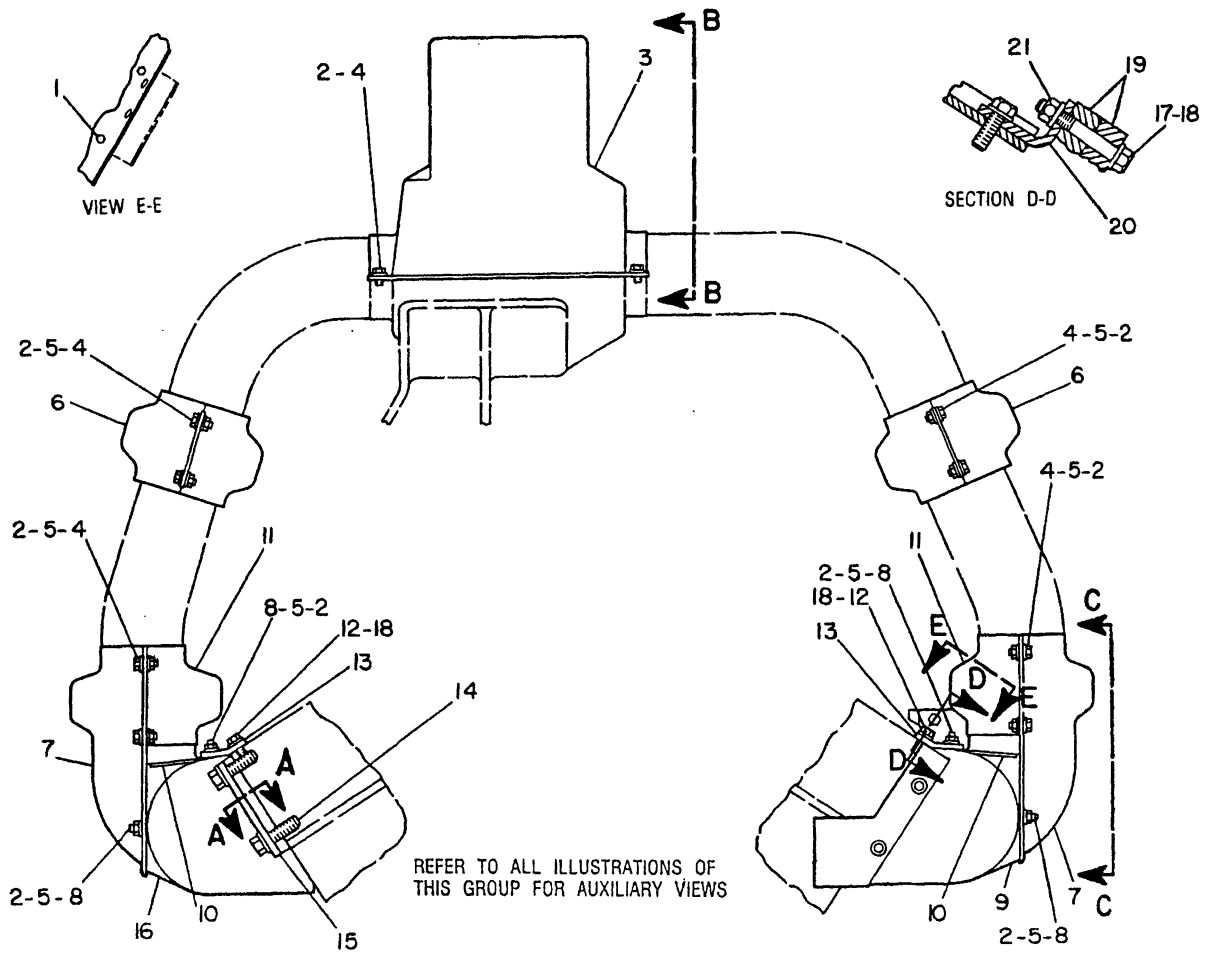

NOTE	REF NO	PART NUMBER	QTY	PART NAME	NOTE	REF NO	PART NUMBER	QTY	PART NAME
	1	0S1571	2	BOLT					
	2	9M1974	51	WASHER-HARD					
	3	8N2368	1	SHIELD AS					
C	4	2H3755	23	BOLT					
	5	1B5354	28	NUT-FULL					
	6	1N3300	4	SHIELD AS					
	7	8N1594	2	SHIELD AS					
	8	6V2712	12	STUD					
	9	8N1622	1	SHIELD AS-MANIFOLD					
	10	8N1616	2	SHIELD AS					
	11	8N1619	2	SHIELD AS					
C	12	0S1594	6	BOLT					
	13	8N1614	2	PLATE					
	14	0S1587	2	BOLT					
		5P8245	2	WASHER					
	15	8N7953	1	PLATE					
	16	8N1620	1	SHIELD AS-MANIFOLD					
C	17	0L1143	1	BOLT					
C	18	5M2894	8	WASHER					
C	19	1N4734	2	CLAMP					
C	20	2P0911	1	ANGLE					
C	21	1D4717	1	NUT					

C-CHANGE FROM PREVIOUS TYPE

B-334740 EP

1067 **7N7032 SHIELD GP-MANIFOLD-PART 1 OF 2**
S/N 53Y3308-Up

AIR INLET AND EXHAUST SYSTEM

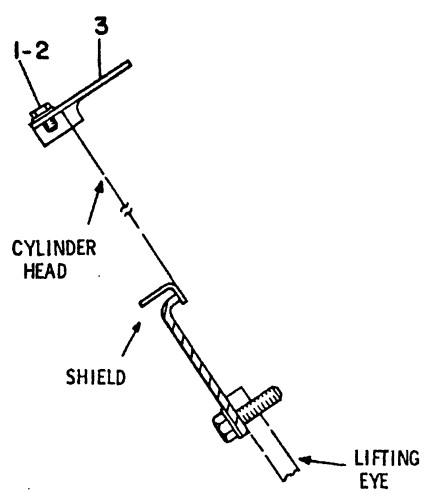

VIEW A-A

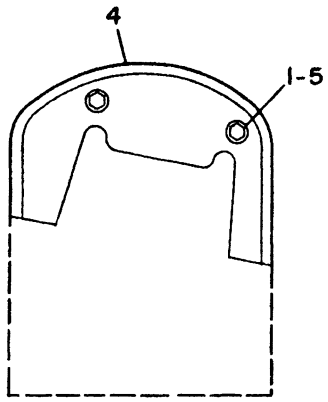

VIEW B-B

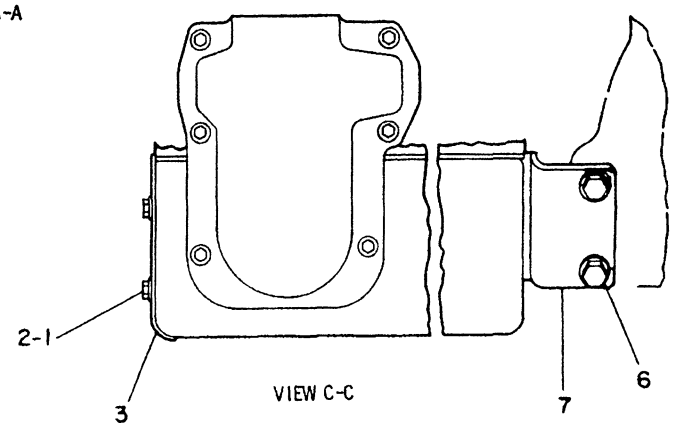

VIEW C-C

NOTE	REF NO	PART NUMBER	QTY	PART NAME
	1	5P9959	6	BOLT
	2	4B4277	4	WASHER
	3	8N7954	2	PLATE
	4	1W6185	1	SHIELD AS
	5	9M1974	2	WASHER-HARD
	6	OS1587	2	BOLT
		5P8245	2	WASHER
C	7	8N7953	1	PLATE

C-CHANGE FROM PREVIOUS TYPE

B-334741 EP

1067 **7N7032 SHIELD GP-MANIFOLD-PART 2 OF 2**
S/N 53Y3308-Up

AIR INLET AND EXHAUST SYSTEM

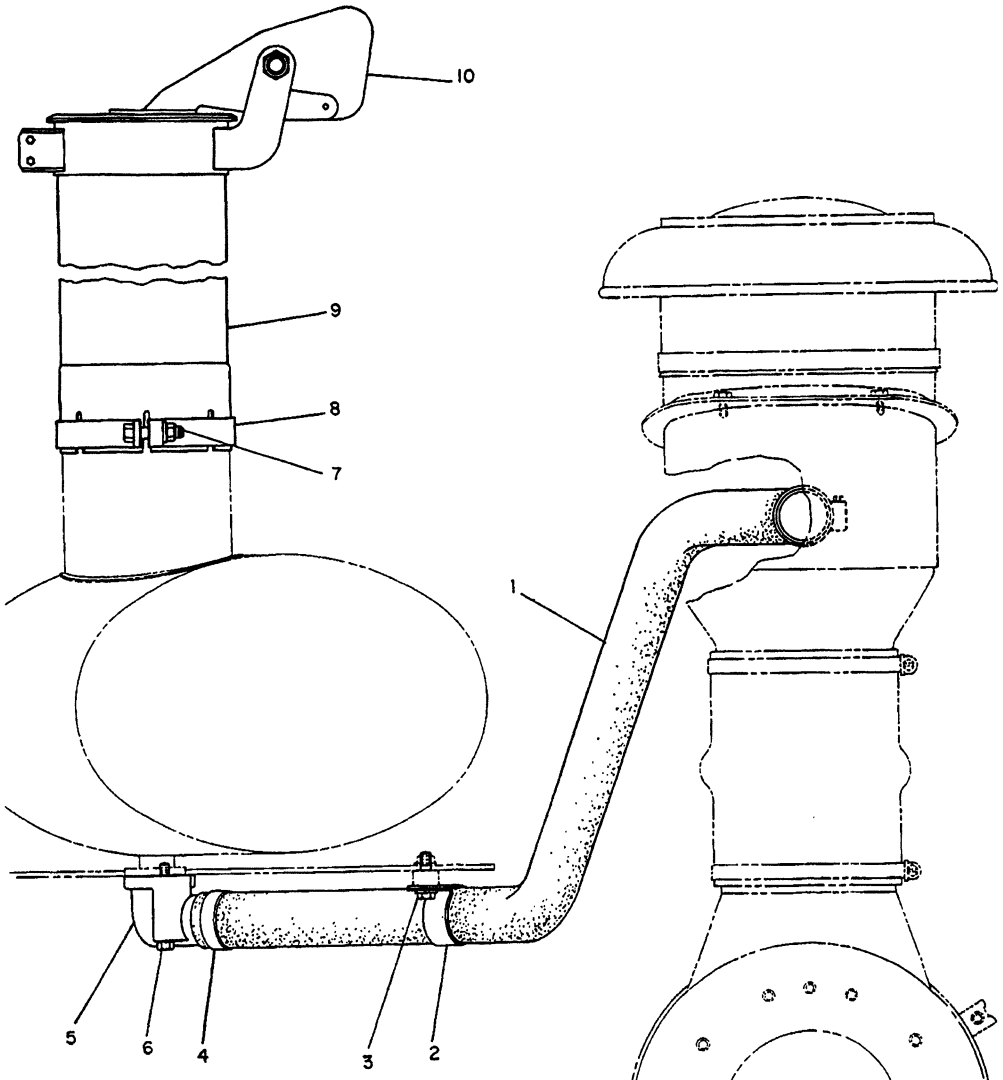

	REF. NO.	PART NUMBER	DESCRIPTION	QTY.
C	1	5P1471	HOSE----102.5 cm(40.36 in.)-----	1
	2	5P4325	CLIP----------	1
	3	L1351	BOLT----------	1
		5M2894	WASHER----------	1
	4	5P597	CLAMP----------	2
	5	1W1115	ELBOW----------	1
	6	S1619	BOLT----------	1
		S1594	BOLT----------	1
	7	1A1460	BOLT----------	1
		1K6872	LOCKNUT----------	1
		5P8245	WASHER----------	2
	8	5S5327	CLAMP----------	1
	9	7N7507	EJECTOR ASSEM.----------	1
	10	7S5003	CAP ASSEM.----------	1

C INDICATES CHANGE

305257 305257 P

1068

7N7036 EJECTOR GP-DUST
S/N 53Y1-3307

AIR INLET AND EXHAUST SYSTEM

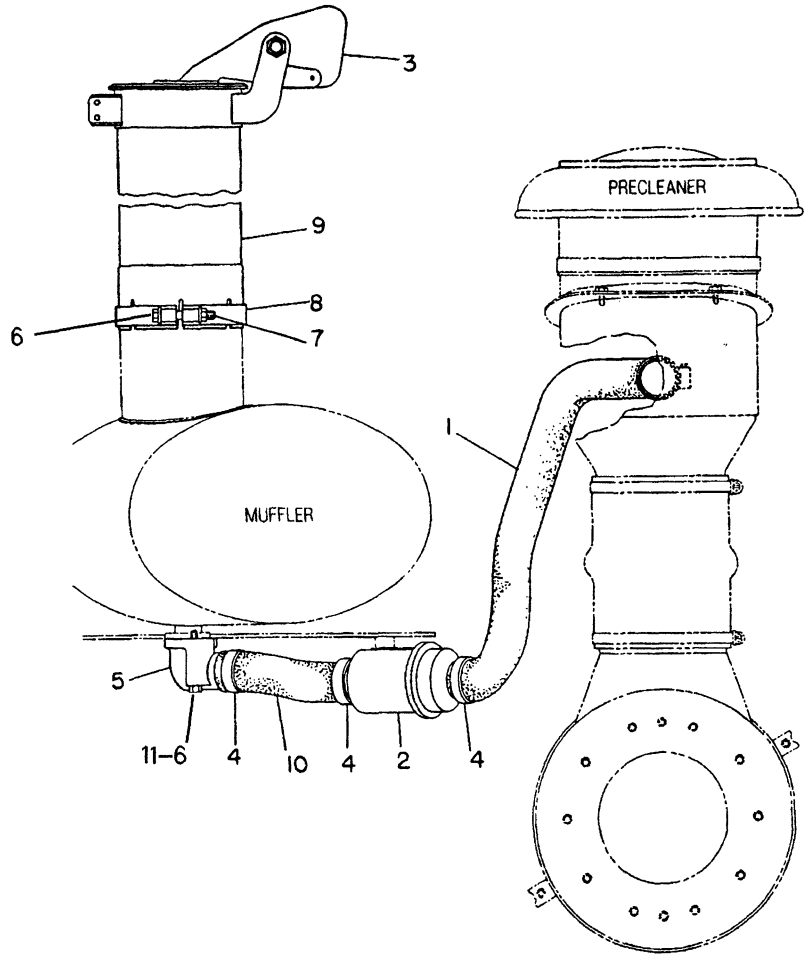

NOTE	REF NO	PART NUMBER	QTY	PART NAME
BE	1	5P1471		HOSE 74CM (29.134IN)
	2	1W8620	1	VALVE AS-CHECK
	3	7S5003	1	CAP AS-RAIN
	4	5P0597	4	CLAMP
	5	1W1115	1	ELBOW
C		7W2478	1	GASKET
	6	0S1619	2	BOLT 76.20MM(3 IN)LG
C	7	2K4973	1	LOCKNUT
C		5P1075	2	WASHER-HARD
C	8	7W1208	1	CLAMP
C	9	7W5524	1	EJECTOR AS-EXHAUST
BE	10	5P1471		HOSE 27CM (10.63IN)
	11	0S1594	1	BOLT 25.40MM(1 IN)LG

B-USE AS REQUIRED
C-CHANGE FROM PREVIOUS TYPE
E-ORDER BY THE CENTIMETER

R-549211 EP

1068 **2W6298 EJECTOR GP-DUST**
S/N 53Y3308-Up

MEMORANDA

FUEL SYSTEM AND GOVERNOR

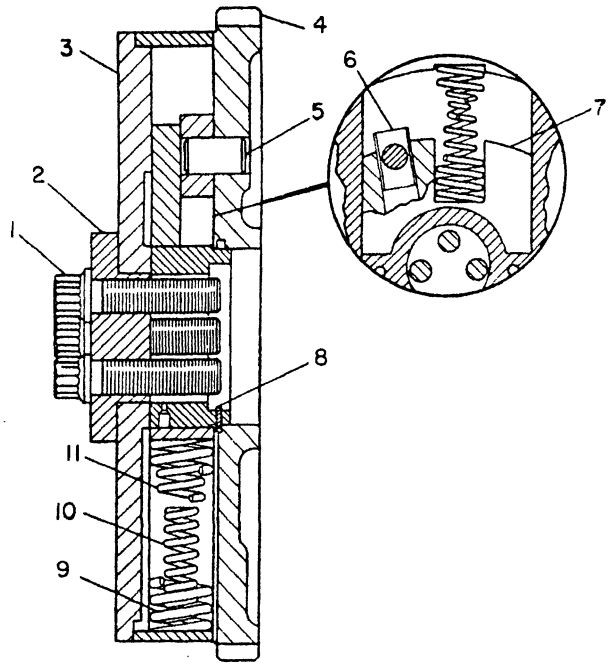

NOTE	REF NO	PART NUMBER	QTY	PART NAME
	1	5J5793	4	BOLT-12 POINT HEAD
	2	6N3927	1	RETAINER
	3	6N5654	1	FLANGE AS
	4	6N2533	1	GEAR AS-ADVANCE (86 TEETH)
	5	8H0333	2	PISTON
	6	6N2523	2	SLIDE
	7	6N5156	2	WEIGHT-ADVANCE
	8	6N0493	1	RING
	9	6N3191	2	SPRING (OUTER)
	10	6N3190	2	SPRING (INNER)
	11	6N3189	2	SPRING (MIDDLE)

B-541867 EP

1288 **6N3195 DRIVE GP-GOVERNOR & FUEL PUMP**
Engine S/N 48W13002-18021

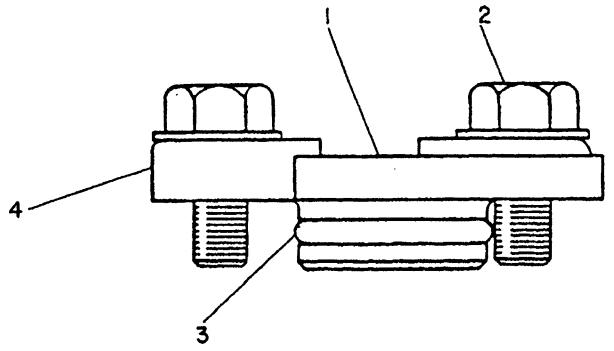

MOUNTED ON FUEL TRANSFER PUMP

NOTE	REF NO	PART NUMBER	QTY	PART NAME
	1	7N4076	1	COVER
	2	0S1617	2	BOLT
		9M1974	2	WASHER-HARD
	3	4M8303	1	SEAL-O-RING
	4	9S3032	2	CLAMP

B-217685 EP

1256 **7N4686 COVER GP-FUEL SYSTEM**
Engine S/N 48W13002-17800

FUEL SYSTEM AND GOVERNOR

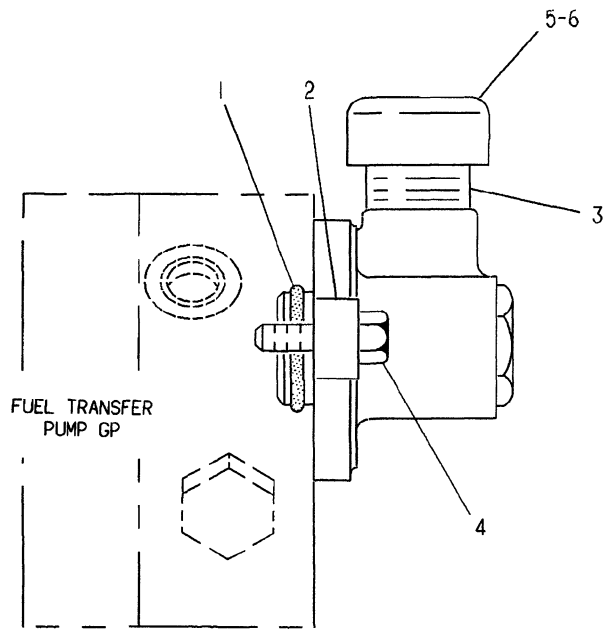

NOTE	REF NO	PART NUMBER	QTY	PART NAME
	1	4M8303	1	SEAL-O-RING
	2	9S3032	2	CLAMP
C	3	4W6538	1	ADAPTER AS-DRIVE
	4	0S1617	2	BOLT
C	5	9B2232	1	CAP-TACHOMETER DRIVE
C	6	7H9899	1	SEAL

C-CHANGE FROM PREVIOUS TYPE

A-324752 EP

7487 **2W2094 DRIVE GP-TACHOMETER**
Engine S/N 48W17801-Up

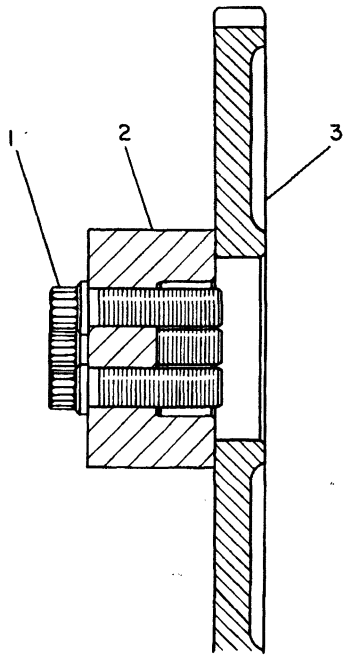

NOTE	REF NO	PART NUMBER	QTY	PART NAME
	1	5J5793	4	BOLT-12 POINT HEAD
	2	7C6287	1	RETAINER
	3	4W9987	1	GEAR-FUEL PUMP DRIVE (86 TEETH)

B-492169 EP

1288 **6N8171 DRIVE GP-GOVERNOR & FUEL PUMP**
Engine S/N 48W18022-Up

MEMORANDA

FUEL SYSTEM AND GOVERNOR

NOTE	REF NO	PART NUMBER	QTY	DESCRIPTION
	1	9G3737	1	HOUSING
	2	3T0371	1	PLATE
	3	2A1736	1	KNOB
	4	7G7653	1	LEVER
	5	1B8706	1	KEY
	6	0S1571	1	BOLT
	7	1D4717	3	NUT
C	8	8B2377	4	BOLT
	9	4B3609	4	SETSCREW
	10	9G0772	1	PEDAL
	11	0S1588	5	BOLT
	12	310214	2	BOLT
		9G4512	1	BRACKET
	13	7G8858	1	ROD AS.
	14	8M1019	1	SPRING
	15	4D4064	3	END
	16	9P2388	1	LEVER
	17	1B8704	2	KEY
	18	0S1591	2	BOLT
	19	5P1885	2	BEARING
	20	7G8418	1	SHAFT
		1K0502	2	WASHER
C	21	8L5202	3	BOLT
	22	2K4973	3	NUT (SELF LOCKING)
	23	0S1617	2	BOLT
		314155	2	LOCKNUT
C	24	6T0095	1	ROD AS.
	25	1B4203	3	NUT
	26	3D9918	1	LEVER
	27	5M2894	4	WASHER
	28	7G8419	1	BRACKET
	29	4B6493	1	SPRING
	30	1B0676	1	PIN
		3B4615	1	COTTER
C	31	1B2578	7	NUT
	32	1A2029	3	BOLT
		5P1075	3	WASHER
	33	7B2742	1	BOLT
CY	34	9N1822	1	CONTROL GROUP
	35	8L5202	2	BOLT

C INDICATES CHANGE
Y SEPARATE ILLUSTRATION

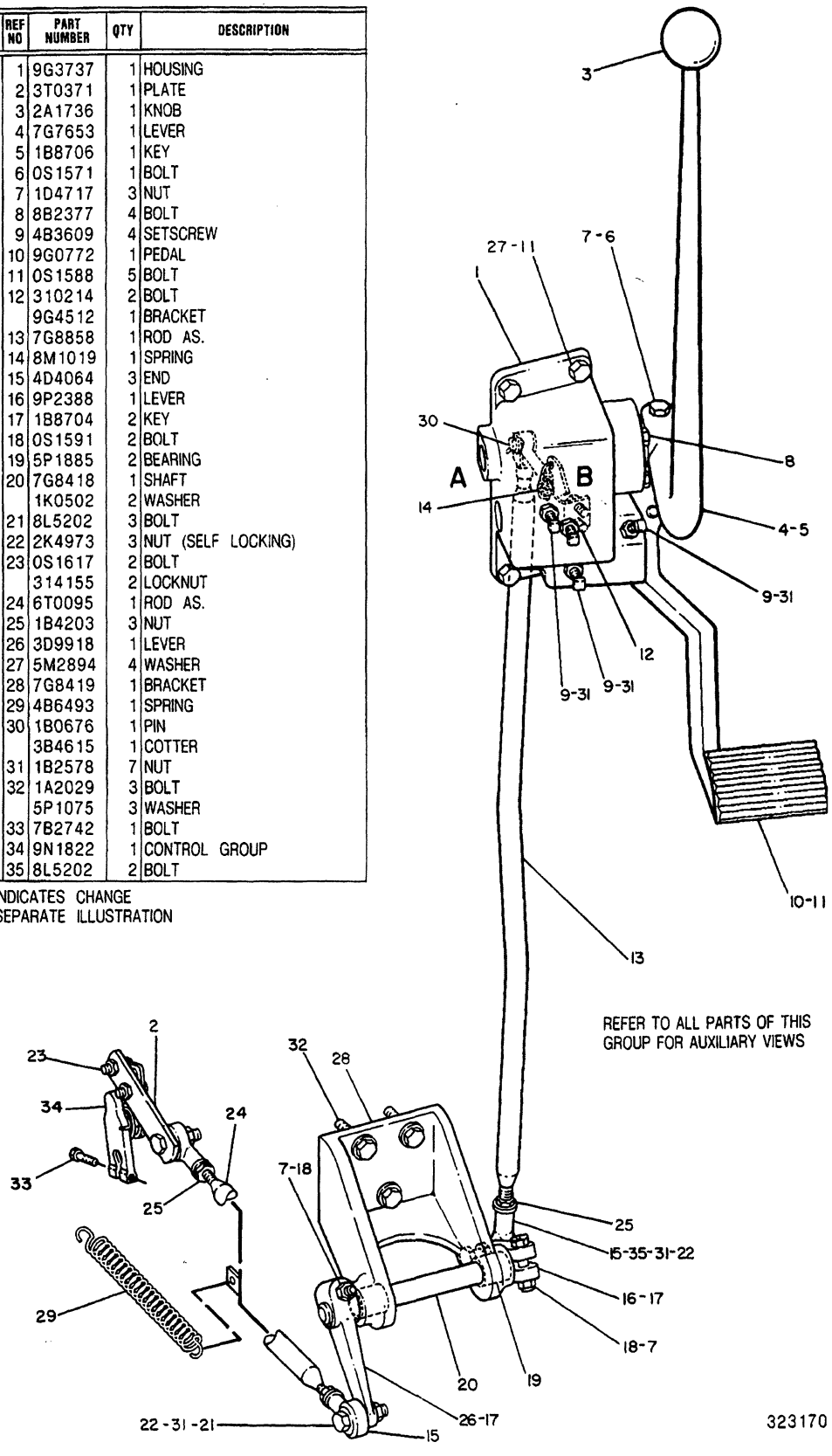

1265 **6P7329 CONTROL GP-GOVERNOR & DECELERATOR-PART 1 OF 2**
9N1822-Page 65.01

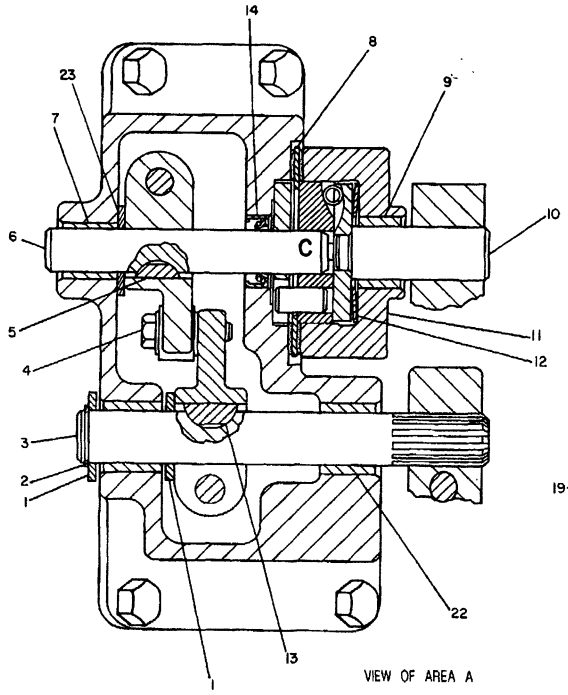

VIEW OF AREA A

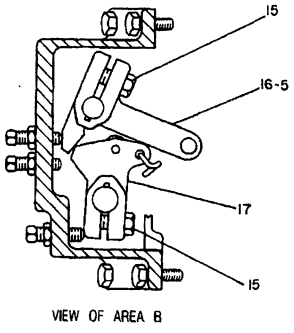

VIEW OF AREA B

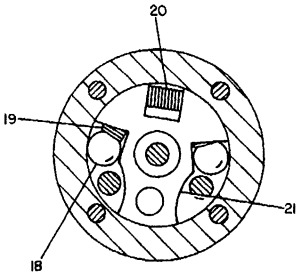

VIEW OF AREA C

NOTE	REF NO	PART NUMBER	QTY	PART NAME
	1	1F4166	2	WASHER
	2	2J6356	1	RING-RETAINING
	3	7G7682	1	SHAFT
	4	315085	1	BOLT-LOCKING
		6D3886	1	BEARING-BALL
	5	1B8704	2	KEY-WOODRUFF
	6	7G7655	1	SHAFT AS
	7	6P0593	1	BEARING-ROLLER
	8	9G1913	1	PLATE
		7M6955	2	GASKET
	9	6D5974	1	BEARING-ROLLER
	10	7G7681	1	SHAFT AS
		2S6091	3	DOWEL
	11	7G7678	1	COVER-INTERLOCK
	12	3T3389	1	SPRING-DISC
	13	1B8706	1	KEY-WOODRUFF
	14	8H9180	1	SEAL-LIP TYPE
	15	1A2029	2	BOLT
C	16	9W4657	1	LEVER
	17	7G7684	1	LEVER
	18	8H9182	2	ROLLER-GOVERNOR CONTROL
	19	8H9186	2	SPRING
	20	5H7152	1	SPRING
	21	9G4521	1	PLATE AS-LOCKING
		8M6521	1	DOWEL
	22	7P4190	2	BEARING-ROLLER
C	23	4B4281	1	WASHER

C-INDICATES CHANGE

355022

355022 P

1265 6P7329 CONTROL GP-GOVERNOR & DECELERATOR-PART 2 OF 2

FUEL SYSTEM AND GOVERNOR

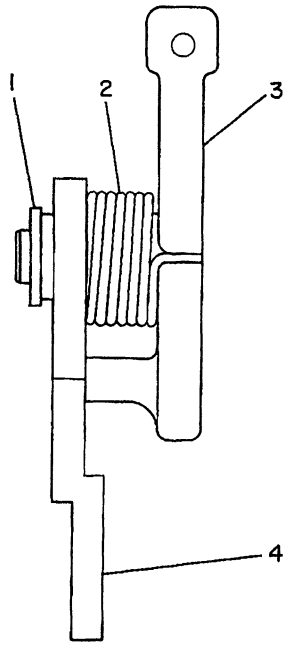

NOTE	REF NO	PART NUMBER	QTY	PART NAME
	1	8S7803	1	RING-RETAINING
	2	6I1936	1	SPRING
	3	9N3735	1	LEVER
	4	9N3736	1	LEVER

B-555347 EP

1265

9N1822 CONTROL GP-GOVERNOR

Part Of 6P7329 Control-Governor & Decelerator

MEMORANDA

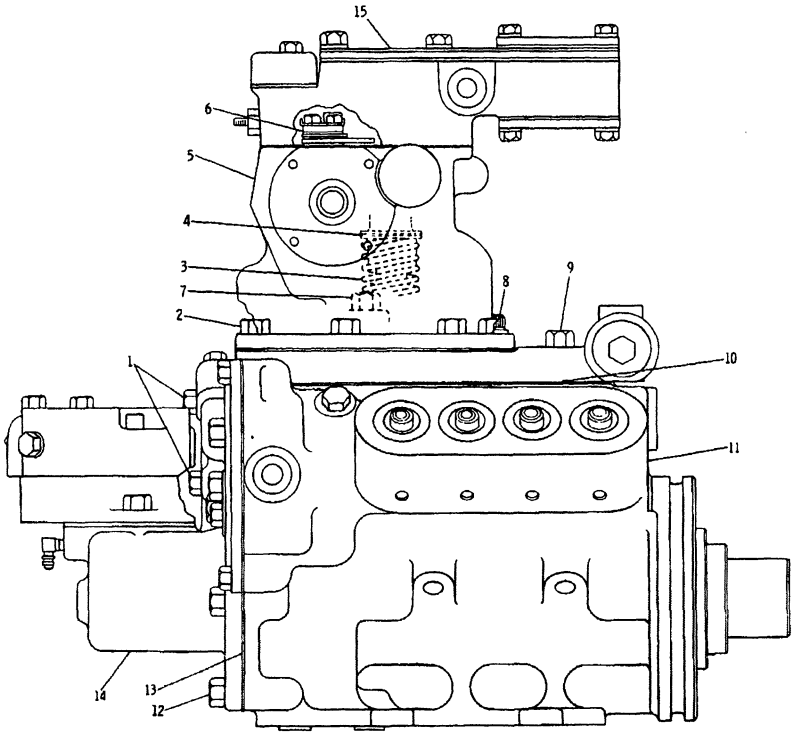

REF. NO.	PART NUMBER	DESCRIPTION	QTY
1	S1591	BOLT	2
2	1C2251	BOLT	4
3	9L6448	SPRING	1
4	2P9556	WASHER-------(flat)----------	1
	2N828	WASHER---------(spring)---------	2
5	7N6867	GOVERNOR GROUP (Separate Illustration)	1
6	7N7099	TORQUE SPRING GROUP (Separate Illustration)	1
7	L1143	BOLT	1
8	532294	BOLT	1
9	3B1915	BOLT	4
10	4N1868	GASKET	1
11	9N3328	FUEL INJECTION PUMP GROUP (Separate Illustration)	1
12	S1594	BOLT	6
13	4N1104	GASKET	1
14	4N1101	FUEL TRANSFER PUMP GROUP (Separate Illustration)	1
15	2P8643	GASKET	1

234709

234709 P

1286 **6N2056 PUMP GP-GOVERNOR,FUEL INJECTION & FUEL TRANSFER**

Type 1. Engine S/N 48W13002-16460

4N1101-Page 67,9N3328-Page 68,7N7099-Page 71,7N6867-Page 72

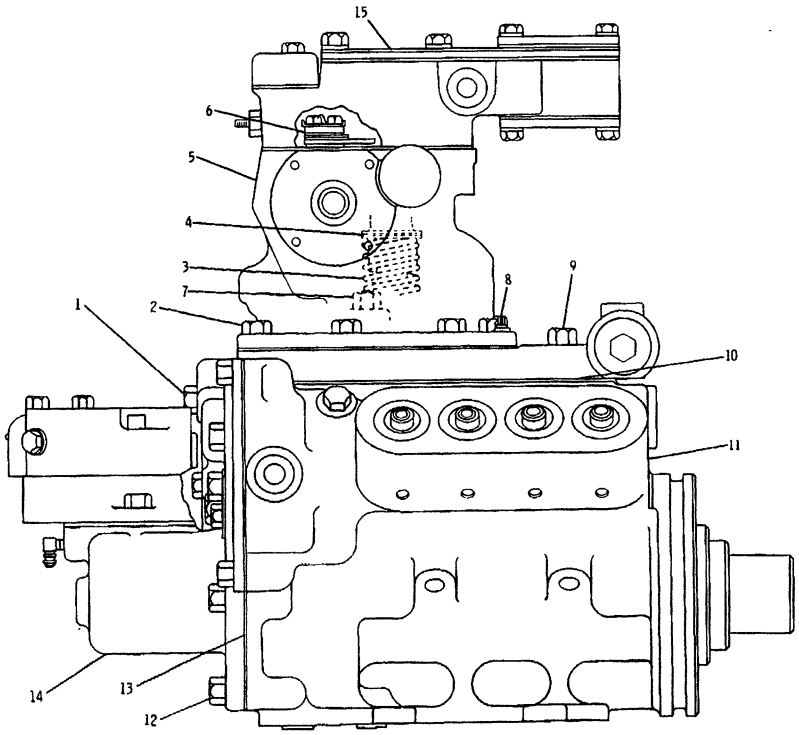

NOTE	REF NO	PART NUMBER	QTY	DESCRIPTION
	1	S1591	2	BOLT
	2	1C2251	4	BOLT
	3	9L6448	1	SPRING
	4	2P9556	1	WASHER (FLAT)
		2N828	2	WASHER (SPRING)
Y	5	7N6867	1	GOVERNOR GROUP
CY	6	7N8028	1	TORQUE SPRING GROUP
	7	L1143	1	BOLT
	8	532294	1	BOLT
	9	3B1915	4	BOLT
	10	4N1868	1	GASKET
Y	11	9N3328	1	FUEL INJECTION PUMP GRP.
	12	S1594	6	BOLT
	13	4N1104	1	GASKET
Y	14	4N1101	1	FUEL TRANSFER PUMP GRP.
	15	2P8643	1	GASKET

C INDICATES CHANGE
Y SEPARATE ILLUSTRATION

310086

310086 P

1286 6N2056 PUMP GP-GOVERNOR,FUEL INJECTION & FUEL TRANSFER
Type 2. Engine S/N 48W13002-16460
4N1101-Page 67,9N3328-Page 68,7N8028-Page 70B,7N6867-Page 72

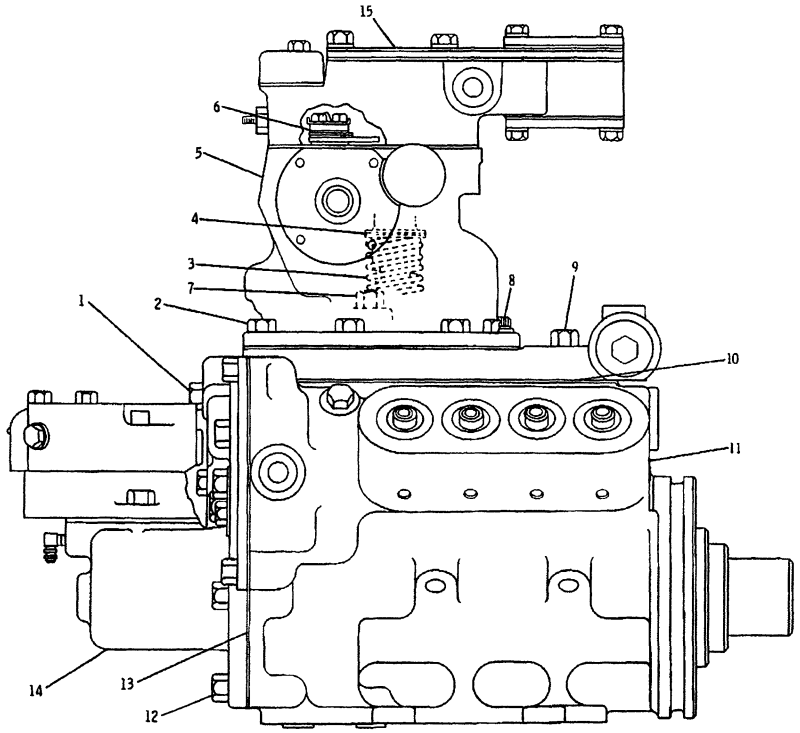

NOTE	REF NO	PART NUMBER	QTY	DESCRIPTION
	1	S1591	2	BOLT
	2	1C2251	4	BOLT
	3	9L6448	1	SPRING
	4	2P9556	1	WASHER (FLAT)
		2N828	2	WASHER (SPRING)
Y	5	7N6867	1	GOVERNOR GROUP
CY	6	9N1071	1	TORQUE SPRING GROUP
	7	L1143	1	BOLT
	8	532294	1	BOLT
	9	3B1915	4	BOLT
	10	4N1868	1	GASKET
Y	11	9N3328	1	FUEL INJECTION PUMP GRP.
	12	S1594	6	BOLT
	13	4N1104	1	GASKET
Y	14	4N1101	1	FUEL TRANSFER PUMP GRP.
	15	2P8643	1	GASKET

C INDICATES CHANGE
Y SEPARATE ILLUSTRATION

310089

310089 P

1286 6N2056 PUMP GP-GOVERNOR,FUEL INJECTION & FUEL TRANSFER
Engine S/N 48W16461-16502
4N1101-Page 67,9N3328-Page 68,9N1071-Page 70B.02,7N6867-Page 72

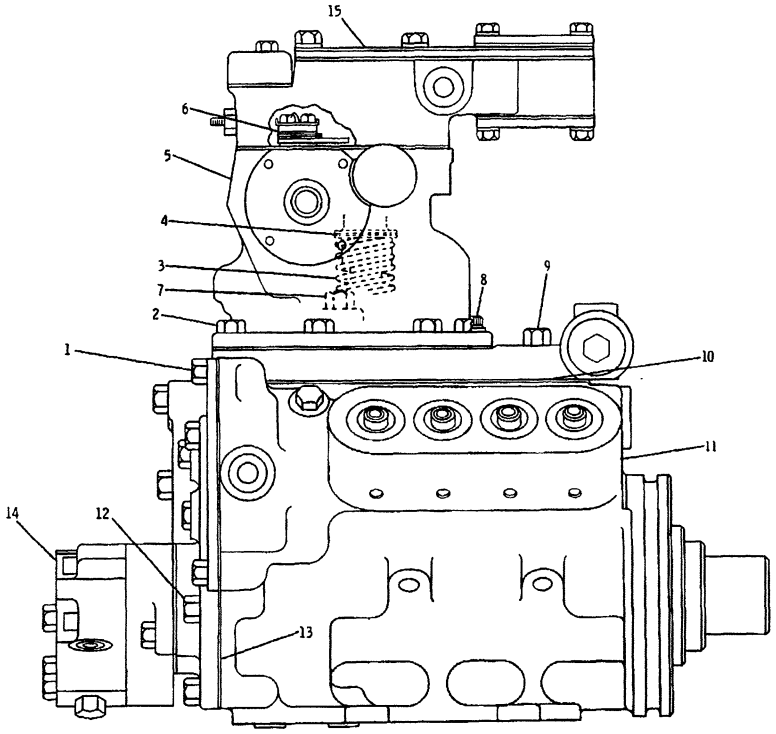

NOTE	REF NO	PART NUMBER	QTY	DESCRIPTION
C	1	S1571	2	BOLT
	2	1C2251	4	BOLT
	3	9L6448	1	SPRING
	4	2P9556	1	WASHER (FLAT)
		2N828	2	WASHER (SPRING)
Y	5	7N6867	1	GOVERNOR GROUP
CY	6	9N1071	1	TORQUE SPRING GROUP
	7	L1143	1	BOLT
	8	532294	1	BOLT
	9	3B1915	4	BOLT
	10	4N1868	1	GASKET
Y	11	9N3328	1	FUEL INJECTION PUMP GRP.
	12	S1594	6	BOLT
	13	4N1104	1	GASKET
CY	14	8N1630	1	FUEL TRANSFER PUMP GRP.
	15	2P8643	1	GASKET

C INDICATES CHANGE
Y SEPARATE ILLUSTRATION

310092

310092 P

1286 6N2056 PUMP GP-GOVERNOR,FUEL INJECTION & FUEL TRANSFER
Engine S/N 48W16503-17230
8N1630-Page 66D,9N3328-Page 68,7N6867-Page 72

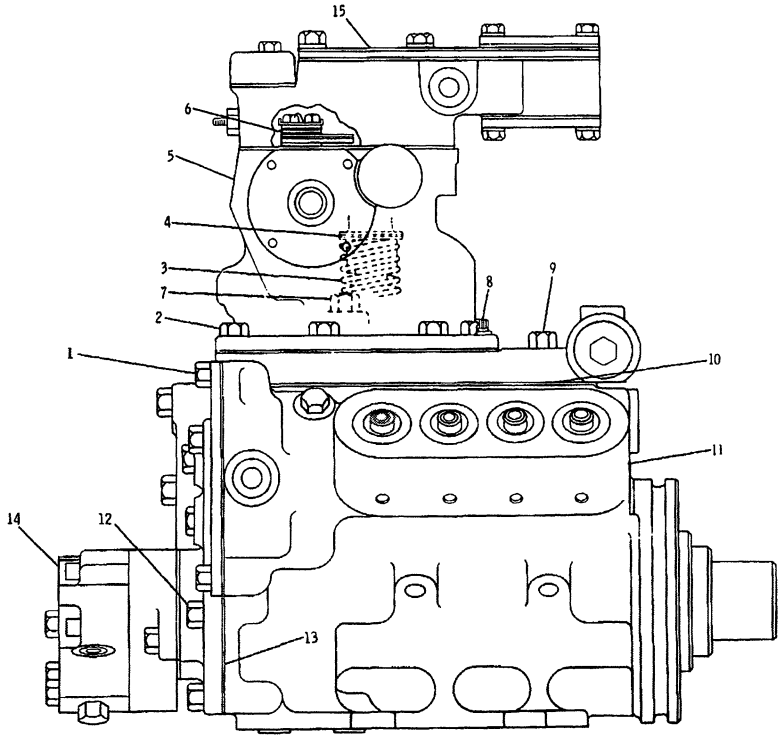

NOTE	REF NO	PART NUMBER	QTY	DESCRIPTION
	1	S1571	2	BOLT
	2	1C2251	4	BOLT
	3	9L6448	1	SPRING
	4	2P9556	1	WASHER (FLAT)
		2N828	2	WASHER (SPRING)
Y	5	7N6867	1	GOVERNOR GROUP
CY	6	4N8346	1	CONTROL GROUP
	7	L1143	1	BOLT
	8	532294	1	BOLT
	9	3B1915	4	BOLT
	10	4N1868	1	GASKET
Y	11	9N3328	1	FUEL INJECTION PUMP GRP.
	12	S1594	6	BOLT
	13	4N1104	1	GASKET
Y	14	8N1630	1	FUEL TRANSFER PUMP GRP.
	15	2P8643	1	GASKET

C INDICATES CHANGE
Y SEPARATE ILLUSTRATION

323723

323723 P

1286 6N2056 PUMP GP-GOVERNOR,FUEL INJECTION & FUEL TRANSFER
Engine S/N 48W17231-17830
8N1630-Page 66D,9N3328-Page 68,4N8346-Page 70B.01,7N6867-Page 72

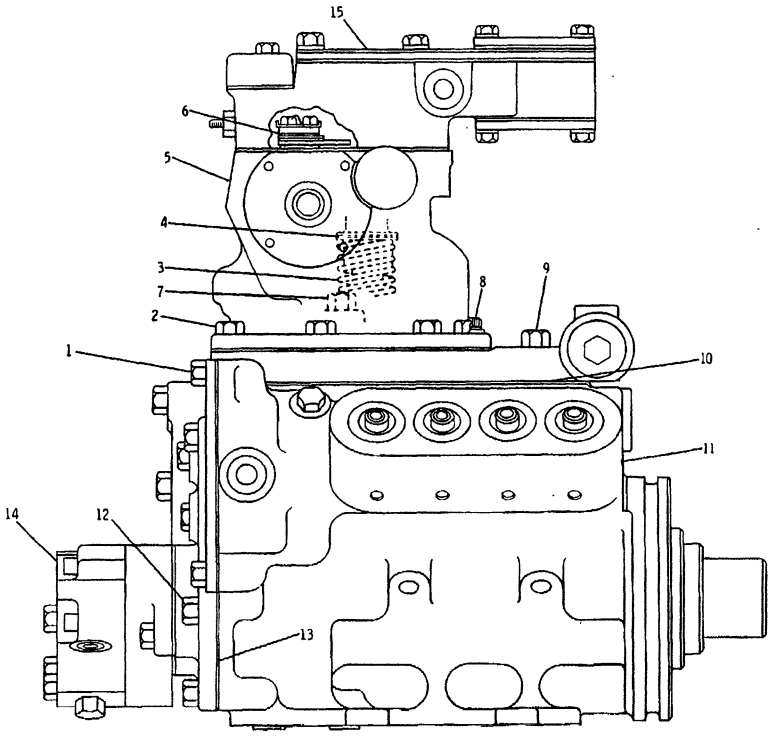

NOTE	REF NO	PART NUMBER	QTY	DESCRIPTION
	1	S1571	2	BOLT
	2	1C2251	4	BOLT
	3	9L6448	1	SPRING
	4	2P9556	1	WASHER (FLAT)
		2N828	2	WASHER (SPRING)
Y	5	4W7416	1	GOVERNOR GROUP
Y	6	9N1071	1	TORQUE CONTROL GROUP
	7	L1143	1	BOLT
	8	532294	1	BOLT
	9	3B1915	4	BOLT
	10	4N1868	1	GASKET
Y	11	4W6012	1	FUEL INJECTION PUMP GRP.
	12	S1594	6	BOLT
	13	4N1104	1	GASKET
Y	14	8N1630	1	FUEL TRANSFER PUMP GRP.
	15	2P8643	1	GASKET

Y SEPARATE ILLUSTRATION

317094

317094 P

1286 4W7057 PUMP GP-GOVERNOR,FUEL INJECTION & FUEL TRANSFER

Engine S/N 48W17831-20669

8N1630-Page 66D,4W6012-Page 69A,9N1071-Page 70B.02,4W7416-Page 73.03

FUEL SYSTEM AND GOVERNOR

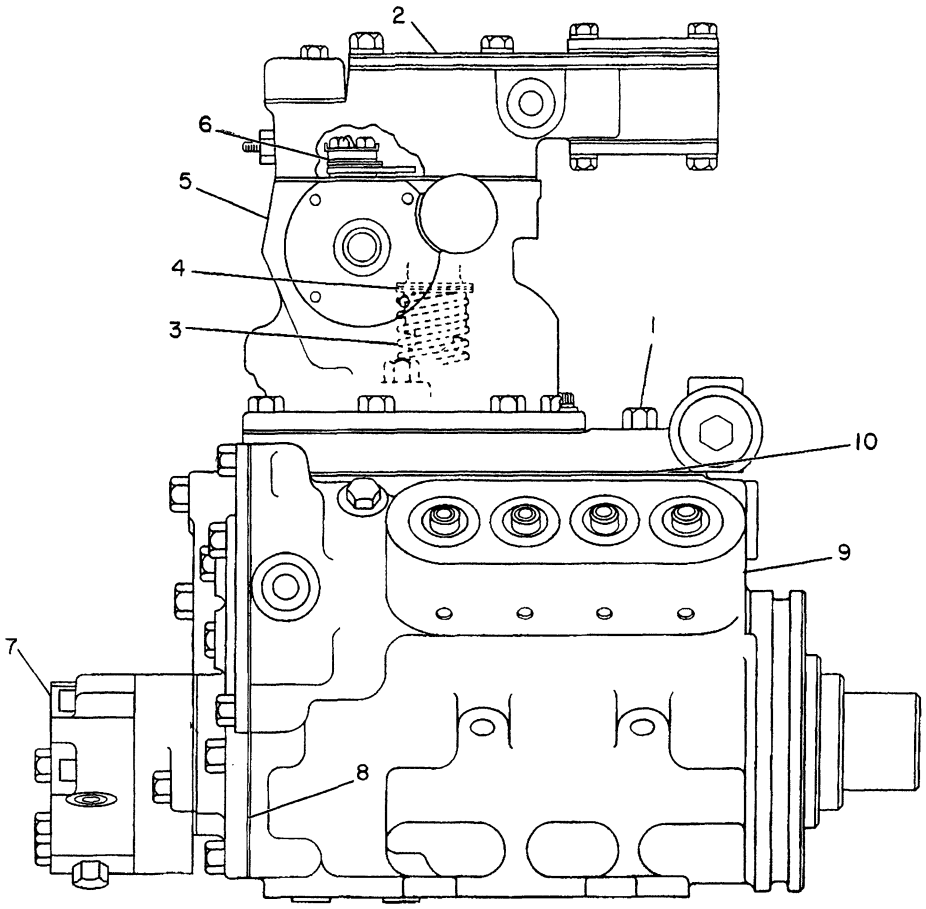

NOTE	REF NO	PART NUMBER	QTY	PART NAME	NOTE	REF NO	PART NUMBER	QTY	PART NAME
Y	1	9Y3764	1	FASTENER GP-GOV,FUEL INJ & TFR					
	2	2P8643	1	GASKET					
	3	9L6448	1	SPRING-GOVERNOR					
	4	2P9556	1	WASHER (FLAT)					
		2N0828	2	WASHER (SPRING)					
Y	5	4W7416	1	GOVERNOR GP					
CY	6	9N2806	1	TORQUE CONTROL GP					
Y	7	8N1630	1	PUMP GP-FUEL TRANSFER					
	8	4N1104	1	GASKET					
Y	9	4W6012	1	PUMP GP-FUEL INJECTION					
	10	4N1868	1	GASKET					

C-CHANGE FROM PREVIOUS TYPE
Y-SEPARATE ILLUSTRATION

B-463915 EP

1286 4W7057 PUMP GP-GOVERNOR,FUEL INJECTION & FUEL TRANSFER

Engine S/N 48W20670-Up

8N1630-Page 66D,4W6012-Page 69A,9N2806-Page 70B.03,4W7416-Page 73.03

MEMORANDA

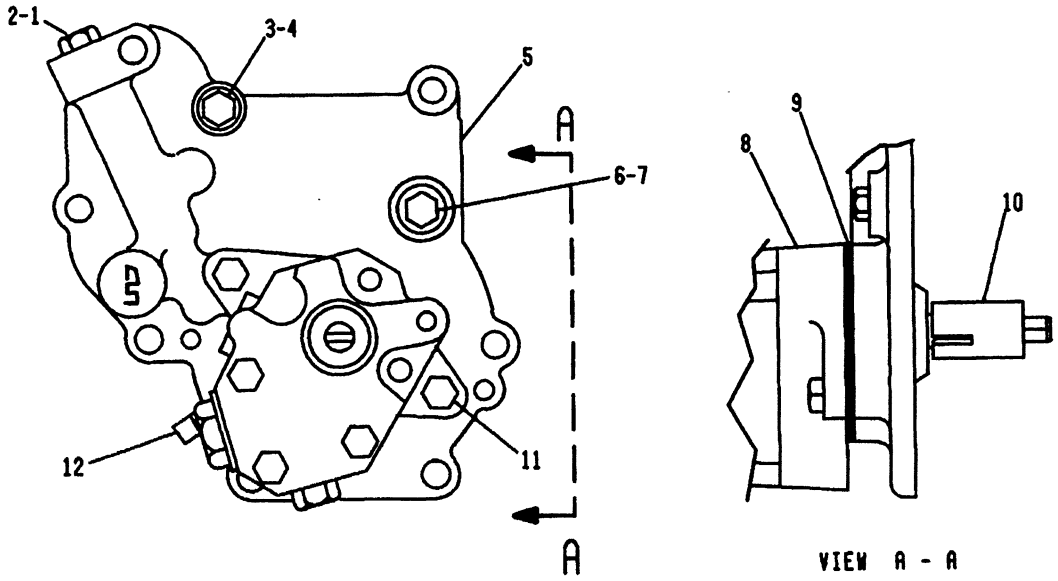

NOTE	REF NO	PART NUMBER	QTY	DESCRIPTION
C	1	9S4191	1	PLUG
	2	3J1907	1	SEAL
	3	9S4182	1	PLUG
	4	3J7354	1	SEAL
	5	8N1189	1	ADAPTER
C	6	4N7437	1	PLUG
	7	7J204	1	SEAL
Y	8	8N1629	1	PUMP GROUP
	9	4N1105	1	GASKET
	10	8N1626	1	COUPLING
	11	2B2695	2	BOLT
	12	9S9332	1	FITTING

C-INDICATES CHANGE

Y-SEPARATE ILLUSTRATION

306659

A-306659 EP

1256

8N1630 PUMP GP-FUEL TRANSFER

Type 1. Engine S/N 48W16503-Up

8N1629-Page 66D.01

Part Of 6N2056 Pump-Governor,Fuel Injection & Fuel Transfer

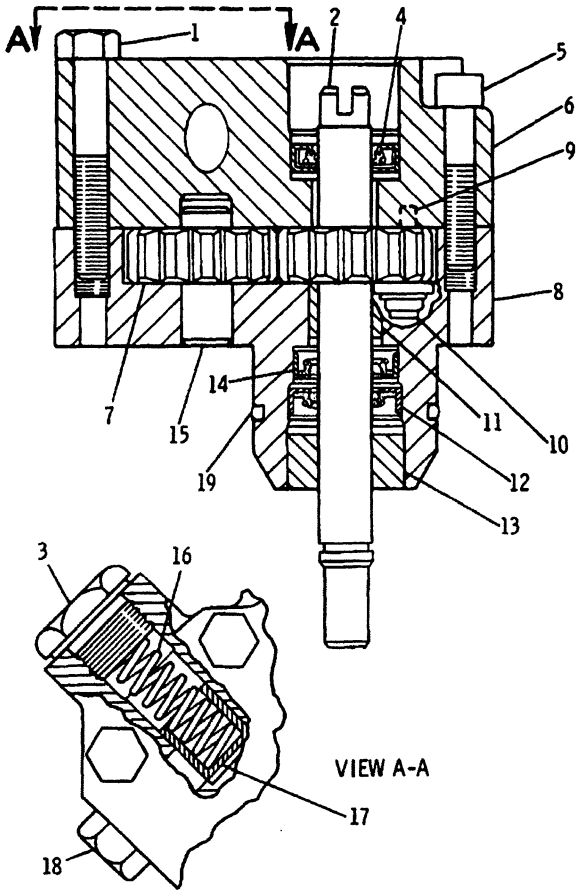

REF. NO.	PART NUMBER	DESCRIPTION	QTY.
1	2B2694	BOLT	3
2	8N1628	SHAFT ASSEM.	1
3	7S4440	BOLT	1
	4N7465	GASKET	1
4	5P9295	SEAL	1
5	5J5314	BOLT	3
6	7N6128	COVER	1
7	4N1119	GEAR------(10 teeth)	1
8	2W1704	BODY ASSEM. (Includes)	1
9	7S4433	FERRULE	1
10	1P2298	VALVE ASSEM.	1
11	8F6058	BUSHING	1
12	5P9294	SEAL	1
13	4N7357	BEARING	1
14	5P9295	SEAL	1
15	1W6177	SHAFT	1
16	6N1069	SPRING	1
17	8M874	PLUNGER ASSEM.	1
18	3K8460	PLUG	1
	1J9671	SEAL	1
19	6J2419	SEAL	1

301468

301468 EP

1256 **8N1629 PUMP GP-FUEL TRANSFER**
S/N 48W16503-Up
Part Of 8N1630 Pump-Fuel Transfer

MEMORANDA

FUEL SYSTEM AND GOVERNOR

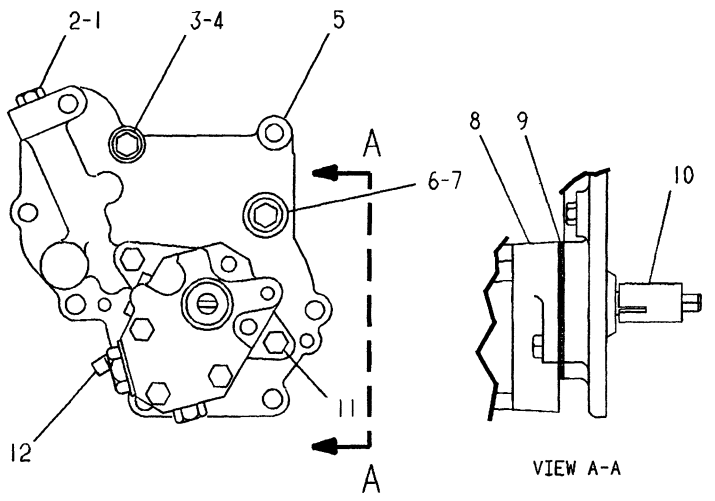

NOTE	REF NO	PART NUMBER	QTY	PART NAME
	1	9S4191	1	PLUG-O-RING
	2	3J1907	1	SEAL-O-RING
	3	9S4182	1	PLUG
	4	3J7354	1	SEAL-O-RING
	5	8N1189	1	ADAPTER-PUMP MOUNTING
	6	4N7437	1	PLUG-O-RING
	7	7J0204	1	SEAL-O-RING
YC	8	4W5479	1	PUMP GP-FUEL TRANSFER
	9	4N1105	1	GASKET
	10	8N1626	1	COUPLING-PUMP DRIVE
	11	2B2695	2	BOLT
	12	9S9332	1	FITTING-ELBOW

C-CHANGE FROM PREVIOUS TYPE
Y-SEPARATE ILLUSTRATION

A-317095 EP

1256 **8N1630 PUMP GP-FUEL TRANSFER**
Type 2. Engine S/N 48W16503-Up
4W5479-Page 66E
Part Of 6N2056,4W7057 Pumps-Governor,Fuel Injection & Fuel Transfer

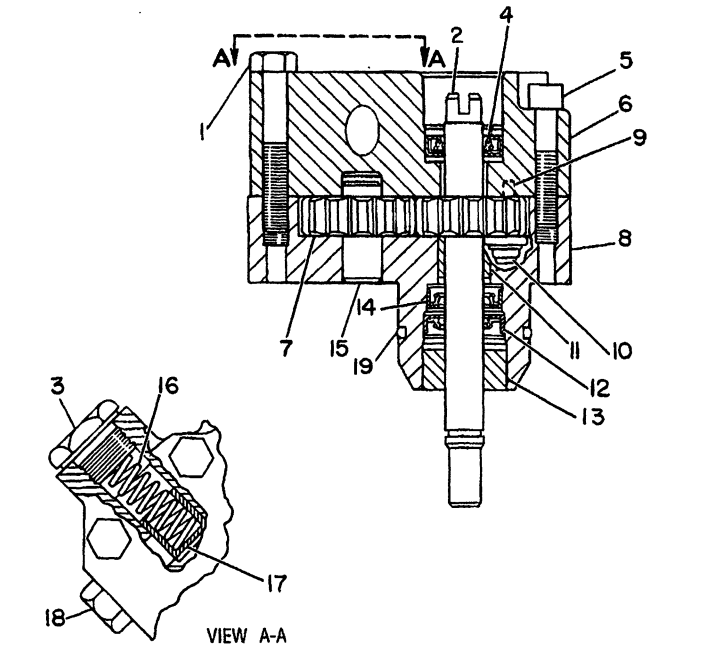

NOTE	REF NO	PART NUMBER	QTY	PART NAME
	1	2B2694	3	BOLT
	2	8N1628	1	SHAFT AS
	3	7S4440	1	BOLT
		4N7465	1	GASKET
	4	6V8977	1	SEAL-LIP
	5	5J5314	3	BOLT
	6	7N6128	1	COVER-TRANSFER PUMP
	7	4N1119	1	GEAR-TRANSFER PUMP (10 TEETH)
	8	4W5478	1	BODY AS-TRANSFER PUMP
	9	7S4433	1	FERRULE
	10	1P2298	1	VALVE AS
	11	8F6058	1	BEARING
	12	5P9294	1	SEAL-LIP
	13	4N7357	1	BEARING-SLEEVE
	14	6V8977	1	SEAL-LIP
	15	1W6177	1	SHAFT-IDLER
	16	6N1069	1	SPRING
	17	2W3294	1	PLUNGER AS-VALVE
	18	3K8460	1	PLUG
		1J9671	1	SEAL-O-RING
	19	6J2419	1	SEAL-O-RING
F		4B4863	2	WASHER (1.2MM THK)

F-NOT SHOWN

B-628188 CP

1256 **4W5479 PUMP GP-FUEL TRANSFER**
One Section Gear
S/N 48W16503-Up
Part Of 8N1630 Pump-Fuel Transfer

MEMORANDA

FUEL SYSTEM AND GOVERNOR

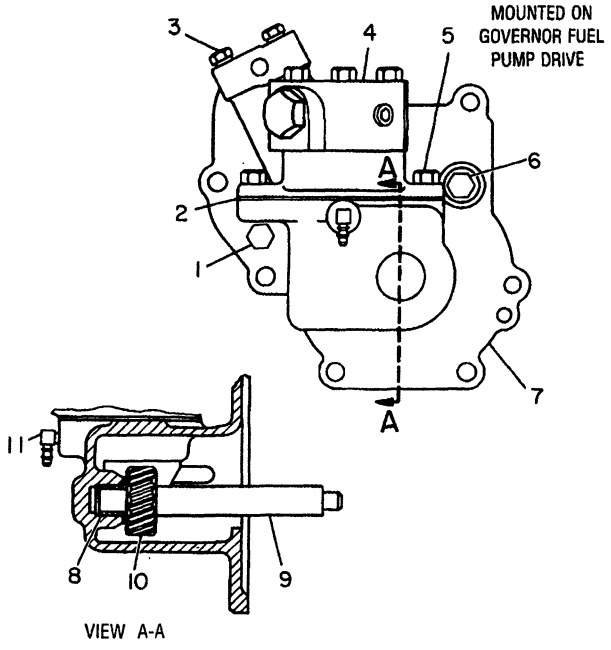

NOTE	REF NO	PART NUMBER	QTY	PART NAME
	1	5M6213	1	PLUG
	2	4N1105	1	GASKET
C	3	5M6214	2	PLUG-PIPE
Y	4	4N1111	1	PUMP GP-FUEL TRANSFER
	5	0S1617	2	BOLT
	6	4N7437	1	PLUG-O-RING
		7J0204	1	SEAL-O-RING
	7	4N1091	1	HOUSING AS
	8	2D8576	1	BEARING-FLANGE
	9	4N1098	1	SHAFT AS
	10	4N1102	1	GEAR-TRANSFER PUMP DRIVE
C	11	9S9332	1	FITTING-ELBOW

C-CHANGE FROM PREVIOUS TYPE
Y-SEPARATE ILLUSTRATION

B-216560 EP

1256 **4N1101 PUMP GP-FUEL TRANSFER**
Engine S/N 48W13002-16502
4N1111-Page 67
Part Of 6N2056 Pump-Governor,Fuel Injection & Fuel Transfer

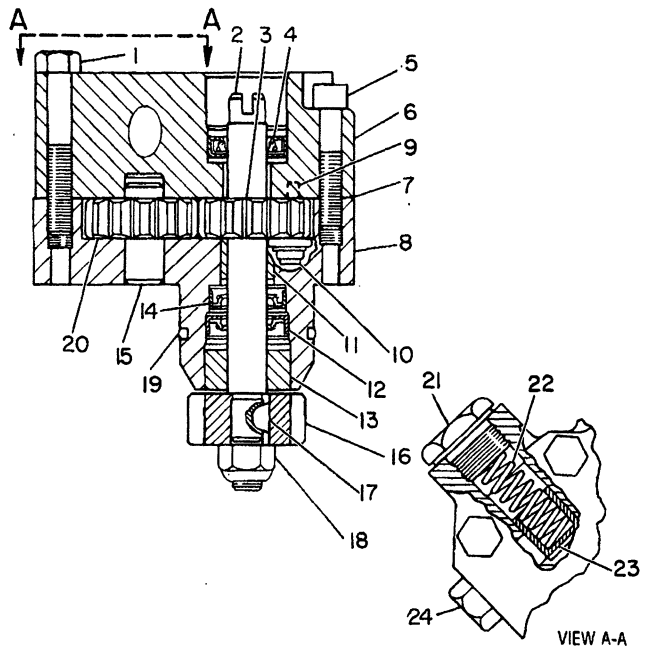

NOTE	REF NO	PART NUMBER	QTY	PART NAME
	1	2B2694	3	BOLT
	2	4N1116	1	SHAFT AS-PUMP
	3	4N1119	1	GEAR-TRANSFER PUMP (10 T)
C	4	5P9295	1	SEAL-LIP
	5	5J5314	3	BOLT
C	6	7N6128	1	COVER-TRANSFER PUMP
	7	7M7260		GASKET-LIQUID
	8	4N1120	1	BODY AS-TRANSFER PUMP
	9	7S4433	1	FERRULE
	10	1P2298	1	VALVE AS
	11	8F6058	1	BEARING
C	12	5P9294	1	SEAL-LIP
	13	4N7357	1	BEARING-SLEEVE
C	14	5P9295	1	SEAL-LIP
	15	8H9804	1	SHAFT-PUMP IDLER
	16	8S1925	1	GEAR-SHAFT DRIVE (11 T)
	17	3H1489	1	KEY-WOODRUFF
	18	2F8616	1	LOCKNUT
	19	6J2419	1	SEAL-O-RING
	20	4N1119	1	GEAR-TRANSFER PUMP (10 T)
	21	7S4440	1	BOLT
C		4N7465	1	GASKET
	22	6N1069	1	SPRING
	23	8M0874	1	PLUNGER AS-VALVE
C	24	3K8460	1	PLUG
C		1J9671	1	SEAL-O-RING

C-CHANGE FROM PREVIOUS TYPE

B-225838 EP

1256 **4N1111 PUMP GP-FUEL TRANSFER**
Part Of 4N1101 Pump-Fuel Transfer

FUEL SYSTEM AND GOVERNOR

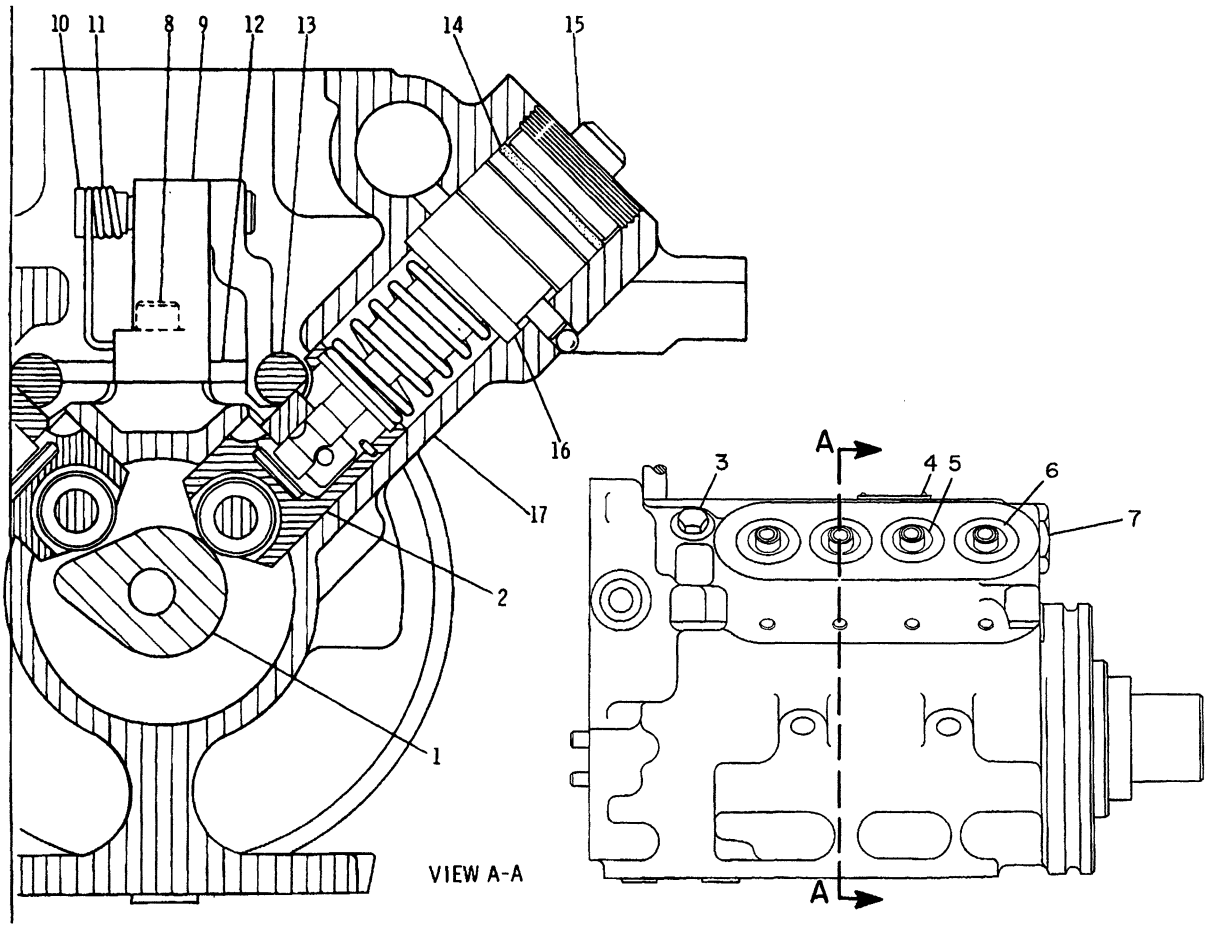

NOTE	REF NO	PART NUMBER	QTY	PART NAME	NOTE	REF NO	PART NUMBER	QTY	PART NAME
	1	6N1480	1	CAMSHAFT-FUEL PUMP	Y	17	7N4574	1	HOUSING AS-FUEL PUMP
	2	9N2505	8	LIFTER AS-FUEL INJ PUMP					
	3	9S4191	1	PLUG-O-RING					
		3J1907	1	SEAL-O-RING					
	4	4B4158	2	SCREW					
	5	8H9204	8	WASHER-FELT					
	6	2M4314	8	BUSHING-TERMINAL					
	7	9S8008	2	PLUG-O-RING					
		3D2824	2	SEAL-O-RING					
	8	1T0284	1	BOLT-SOCKET HEAD					
	9	7N2694	1	BRACKET AS-CONTROL					
	10	6N6955	1	PIN					
	11	7N2693	1	SPRING-TORSION					
	12	4N1572	1	LINK-RACK					
	13	4N0900	1	RACK-REGULATOR-RH					
		4N0901	1	RACK-REGULATOR-LH					
	14	1M1077	8	SEAL-O-RING					
Y	15	7N1185	8	PUMP GP-FUEL INJECTION					
B	16	5M2697	8	SPACER (4.32MM THK)					
B		2M4208	8	SPACER (4.42MM THK)					
B		2M4209	8	SPACER (4.52MM THK)					
B		2M4210	8	SPACER (4.62MM THK)					
B		2M4211	8	SPACER (4.72MM THK)					
B		2M4212	8	SPACER (4.83MM THK)					
B		5M2691	8	SPACER (4.93MM THK)					
B		5S7189	8	SPACER (5.03MM THK)					

B-USE AS REQUIRED
Y-SEPARATE ILLUSTRATION

B-474822 EP

1286 **9N3328 PUMP GP-FUEL INJECTION-PART 1 OF 2**

Engine S/N 48W13002-17830
7N4574-Page 70,7N1185-Page 71B
Part Of 6N2056 Pump-Governor,Fuel Injection & Fuel Transfer

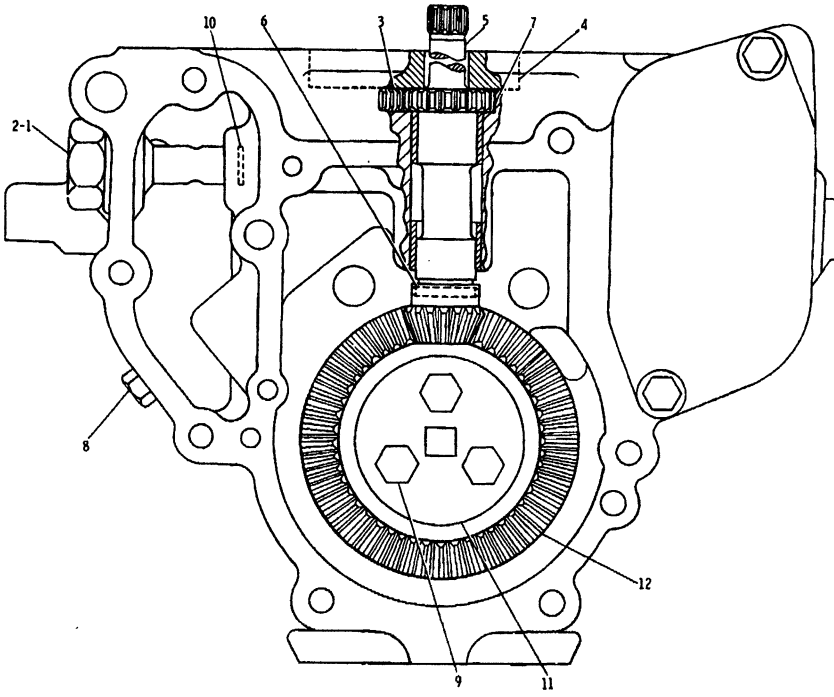

	REF. NO.	PART NUMBER	DESCRIPTION	QTY
	1	4N824	VALVE ASSEM. (Includes)	1
		7L8696	SPRING	1
	2	3K360	SEAL	1
C	3	8N561	GEAR--(idler-9 teeth)	1
	4	6N7695	COVER	1
		6L5897	BOLT	2
	5	6N4165	PINION ASSEM. (Includes)	1
	6	6N4090	DOWEL	1
C	7	8N560	GEAR--(drive-11 teeth)	1
	8	5M6214	PLUG	1
	9	S1618	BOLT	3
	10	5F9144	SEAL	1
	11	4N776	RETAINER	1
	12	4N905	GEAR--(Bevel - 42 teeth)	2
		SMHS6996	FORM (Installing Fuel Pump Housing)	1

C INDICATES CHANGE

222257

222257 EP

1286 **9N3328 PUMP GP-FUEL INJECTION-PART 2 OF 2**

Engine S/N 48W13002-17830

Part Of 6N2056 Pump-Governor,Fuel Injection & Fuel Transfer

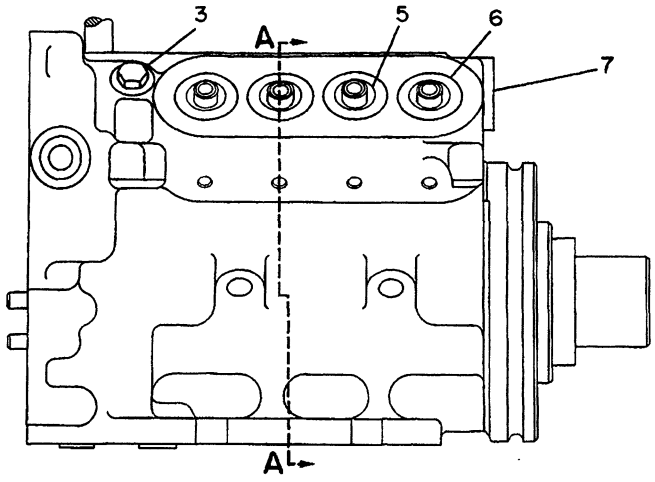

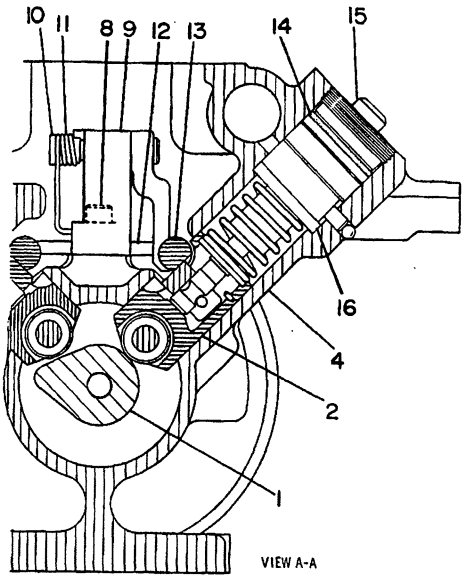

NOTE	REF NO	PART NUMBER	QTY	PART NAME
	1	9N3847	1	CAMSHAFT-FUEL PUMP
	2	8N6981	8	LIFTER AS
	3	9S4191	1	PLUG-O-RING
		3J1907	1	SEAL-O-RING
Y	4	7N4574	1	HOUSING AS-FUEL PUMP
	5	8H9204	8	WASHER-FELT
	6	2M4314	8	BUSHING-TERMINAL
	7	9S8008	2	PLUG-O-RING
		3D2824	2	SEAL-O-RING
	8	1TO284	1	BOLT-SOCKET HEAD
	9	7N2694	1	BRACKET AS-CONTROL
	10	6N9655	1	PIN
	11	7N2693	1	SPRING-TORSION
	12	4N1572	1	LINK-RACK
	13	4NO900	1	RACK-REGULATOR-RH
		4NO901	1	RACK-REGULATOR-LH
	14	3D2992	8	SEAL
Y	15	4WO101	8	PUMP GP-FUEL INJECTION
B	16	5M2697	8	SPACER 4.32MM(.17OIN)THK
		2M4208	8	SPACER 4.42MM(.174IN)THK
		2M4209	8	SPACER 4.52MM(.178IN)THK
		2M4210	8	SPACER 4.62MM(.182IN)THK
		2M4211	8	SPACER 4.72MM(.186IN)THK
		2M4212	8	SPACER 4.83MM(.19OIN)THK
		5M2691	8	SPACER 4.93MM(.194IN)THK
		5S7189	8	SPACER 5.03MM(.198IN)THK

B-USE AS REQUIRED
Y-SEPARATE ILLUSTRATION

B-337328 EP

1251 **4W6012 PUMP GP-FUEL INJECTION-PART 1 OF 2**

Type 1. Engine S/N 48W17831-Up
7N4574-Page 70,4WO101-Page 71A
Part Of 4W7057 Pump-Governor,Fuel Injection & Fuel Transfer

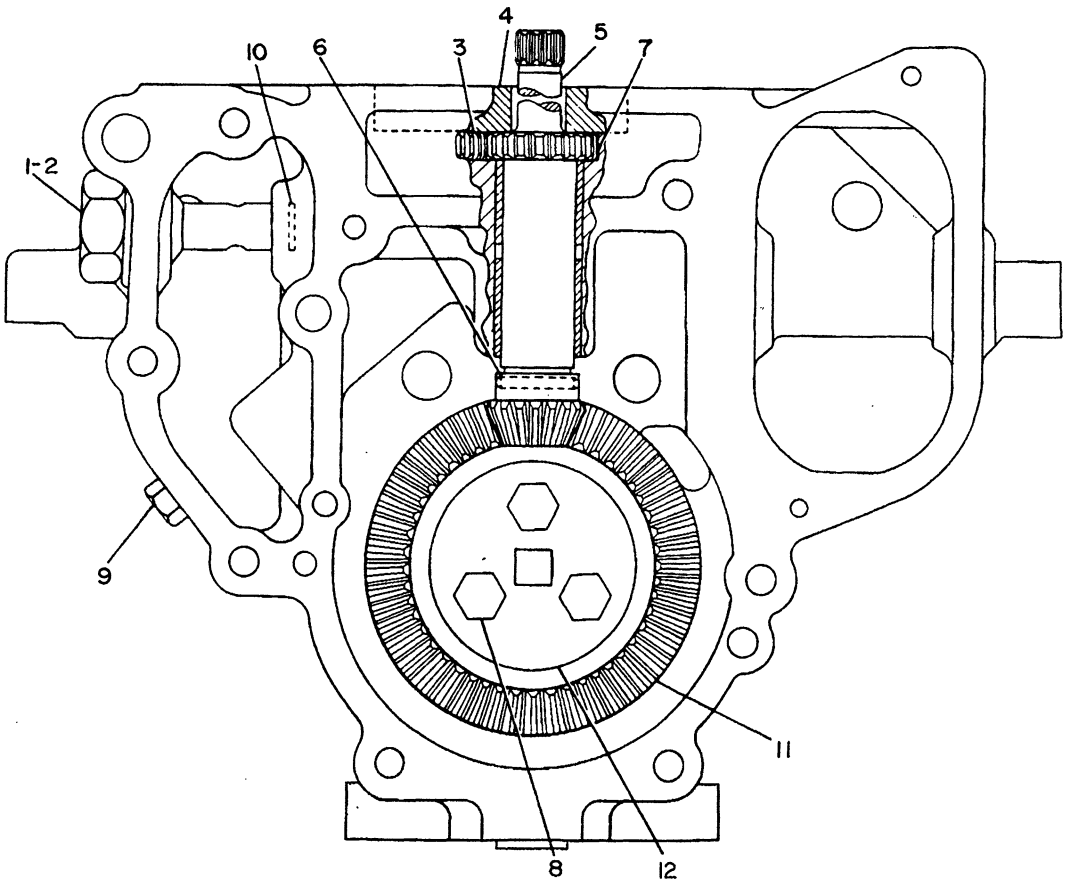

NOTE	REF NO	PART NUMBER	QTY	PART NAME
	1	4N0824	1	VALVE AS-BYPASS
		7L8696	1	SPRING-BYPASS
	2	3K0360	1	SEAL-O-RING
	3	8N0561	1	GEAR IDLER-9 TEETH
	4	6N7695	1	COVER-OIL PUMP
		6L5897	2	BOLT
	5	6N4165	1	PINION AS-GOVERNOR DRIVE
	6	6N4090	1	DOWEL
	7	8N0560	1	GEAR (DRIVE-11 TEETH)
	8	0S1618	3	BOLT
	9	5M6214	1	PLUG-PIPE
	10	5F9144	1	SEAL-O-RING
	11	4N0905	1	GEAR-BEVEL (42 TEETH)
	12	4N0776	1	RETAINER

B-316908 EP

1251 **4W6012 PUMP GP-FUEL INJECTION-PART 2 OF 2**

Type 1. Engine S/N 48W17831-Up

Part Of 4W7057 Pump-Governor,Fuel Injection & Fuel Transfer

FUEL SYSTEM AND GOVERNOR

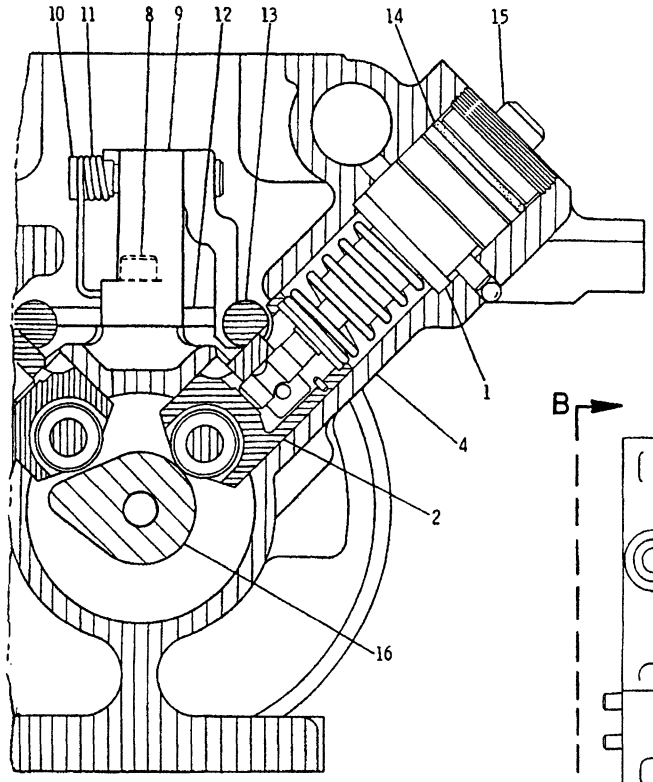

SECTION A-A

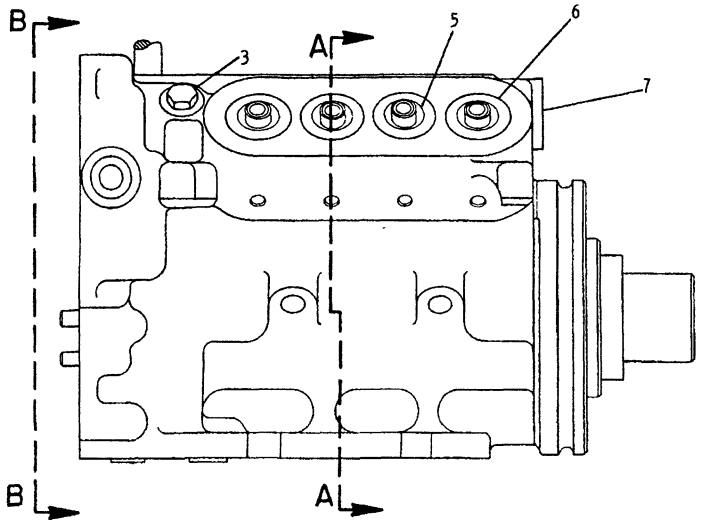

REFER TO ALL ILLUSTRATIONS OF THIS GROUP FOR AUXILIARY VIEWS

NOTE	REF NO	PART NUMBER	QTY	PART NAME	NOTE	REF NO	PART NUMBER	QTY	PART NAME
B	1	5M2697	8	SPACER (4.32MM THK)	Y	15	7W0561	8	PUMP GP-FUEL INJECTION
B		2M4208	8	SPACER (4.42MM THK)	C	16	4W8140	1	CAMSHAFT-FUEL PUMP
B		2M4209	8	SPACER (4.52MM THK)					
B		2M4210	8	SPACER (4.62MM THK)					
B		2M4211	8	SPACER (4.72MM THK)					
B		2M4212	8	SPACER (4.83MM THK)					
B		5M2691	8	SPACER (4.93MM THK)					
B		5S7189	8	SPACER (5.03MM THK)					
	2	8N6981	8	LIFTER AS					
	3	9S4191	1	PLUG-O-RING (9/16-18 THD)					
		3J1907	1	SEAL-O-RING (11.89MM ID)					
Y	4	7N4574	1	HOUSING AS-FUEL PUMP					
	5	8H9204	8	WASHER-FELT					
	6	7E5085	8	BUSHING-TERMINAL					
	7	9S8008	2	PLUG-O-RING (1 1/16-12 THD)					
		3D2824	2	SEAL-O-RING (23.47MM ID)					
	8	1T0284	1	BOLT-SOCKET HEAD					
	9	7N2694	1	BRACKET AS-CONTROL					
	10	6N6955	1	PIN					
	11	7N2693	1	SPRING-TORSION					
	12	4N1572	1	LINK-RACK					
	13	4N0900	1	RACK-REGULATOR-RH					
		4N0901	1	RACK-REGULATOR-LH					
	14	1148718	8	SEAL-O-RING (26.64MM ID)					

B-USE AS REQUIRED
C-CHANGE FROM PREVIOUS TYPE
Y-SEPARATE ILLUSTRATION

B-617786 CP

1251 **4W6012 PUMP GP-FUEL INJECTION-PART 1 OF 2**

Type 2. Engine S/N 48W17831-Up
7N4574-Page 70,7W0561-Page 71A
Part Of 4W7057 Pump-Governor,Fuel Injection & Fuel Transfer

FUEL SYSTEM AND GOVERNOR

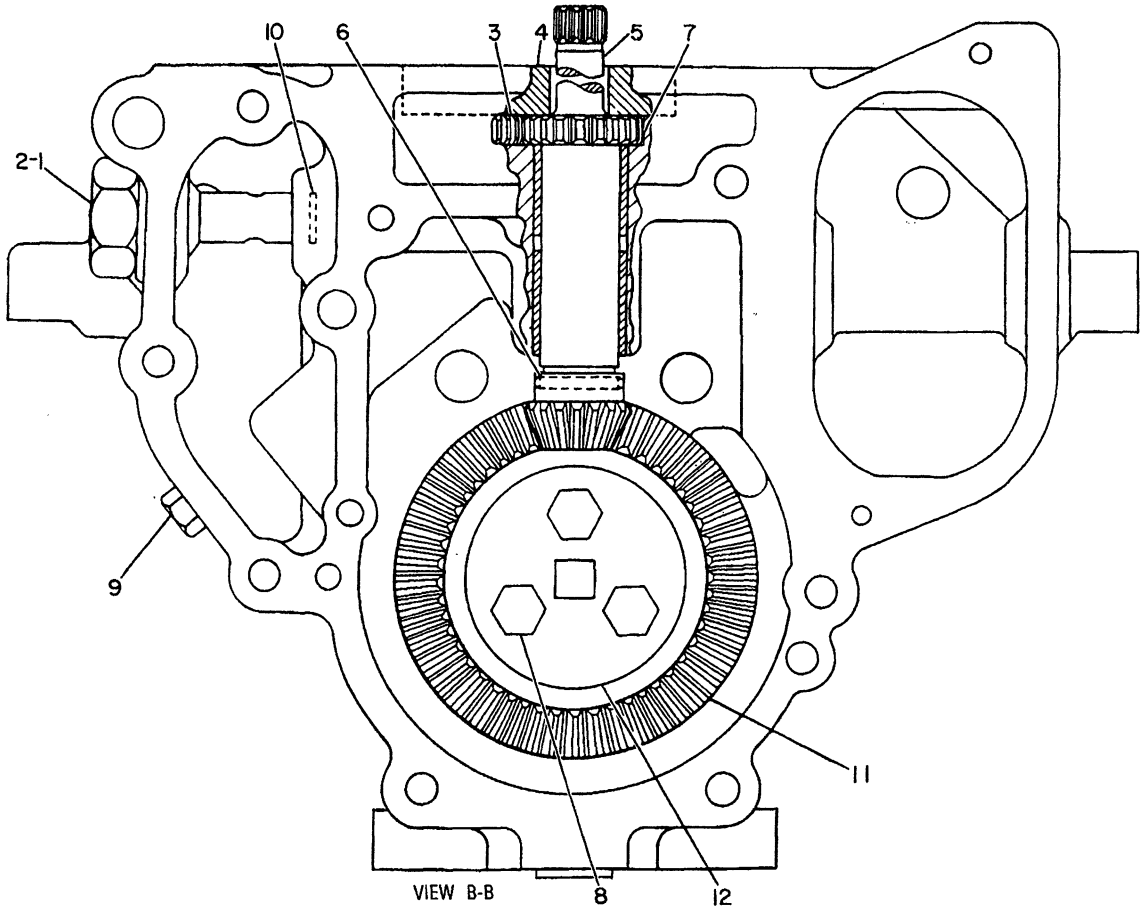

NOTE	REF NO	PART NUMBER	QTY	PART NAME	NOTE	REF NO	PART NUMBER	QTY	PART NAME
	1	4N0824	1	VALVE AS-BYPASS					
		7L8696	1	SPRING-BYPASS					
	2	3K0360	1	SEAL-O-RING					
	3	8N0561	1	GEAR (IDLER-9 TEETH)					
	4	6N7695	1	COVER-OIL PUMP					
		6L5897	2	BOLT					
	5	6N4165	1	PINION AS-GOVERNOR DRIVE					
	6	6N4090	1	DOWEL					
	7	8N0560	1	GEAR (DRIVE-11 TEETH)					
	8	0S1618	3	BOLT					
	9	5M6214	1	PLUG-PIPE					
	10	5F9144	1	SEAL-O-RING					
	11	4N0905	1	GEAR-BEVEL (42 TEETH)					
	12	4N0776	1	RETAINER					

B-450947 EP

1251 **4W6012 PUMP GP-FUEL INJECTION-PART 2 OF 2**

Type 2. Engine S/N 48W17831-Up

Part Of 4W7057 Pump-Governor,Fuel Injection & Fuel Transfer

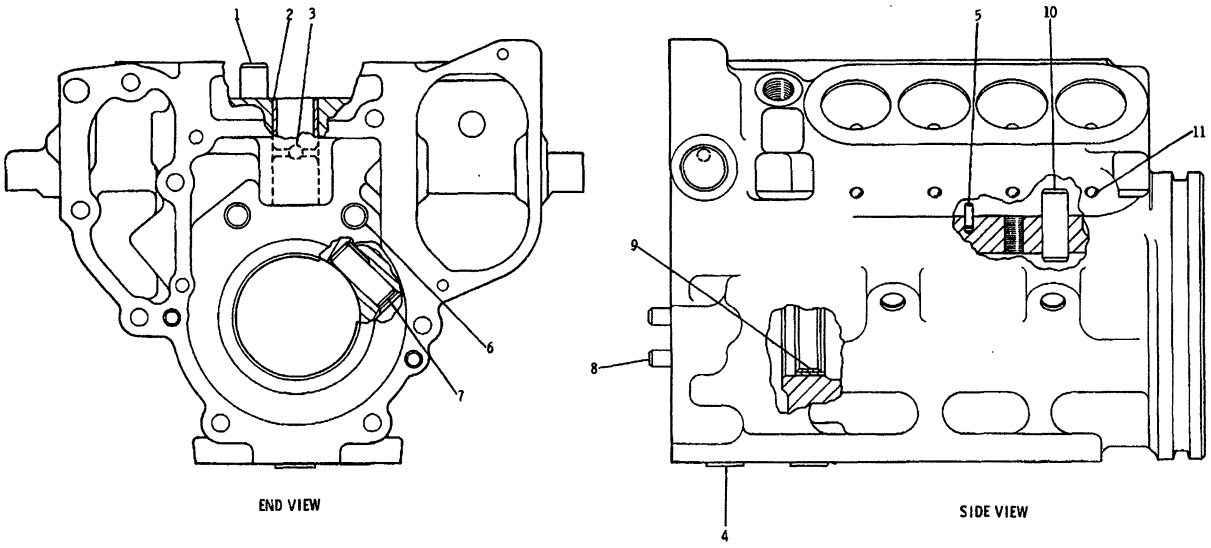

REF. NO.	PART NUMBER	DESCRIPTION	QTY.
1	6N7266	SHAFT	1
2	7N242	BEARING	2
3	5B9318	BALL	1
4	4N775	DOWEL	2
5	8L6565	PIN	1
6	9S4160	BEARING	2
7	4M1474	PIN	4
8	9L9766	PIN	2
9	6N8441	BEARING	2
10	4N899	DOWEL	1
11	1P232	BALL	8
	1P234	DOWEL	8

SMHS6996	FORM-(Installing Fuel Pump Housing)	

234712

234712 P

1253 **7N4574 HOUSING AS-FUEL PUMP**

Type 1

Part Of 9N3328,4W6012 Pumps-Fuel Injection

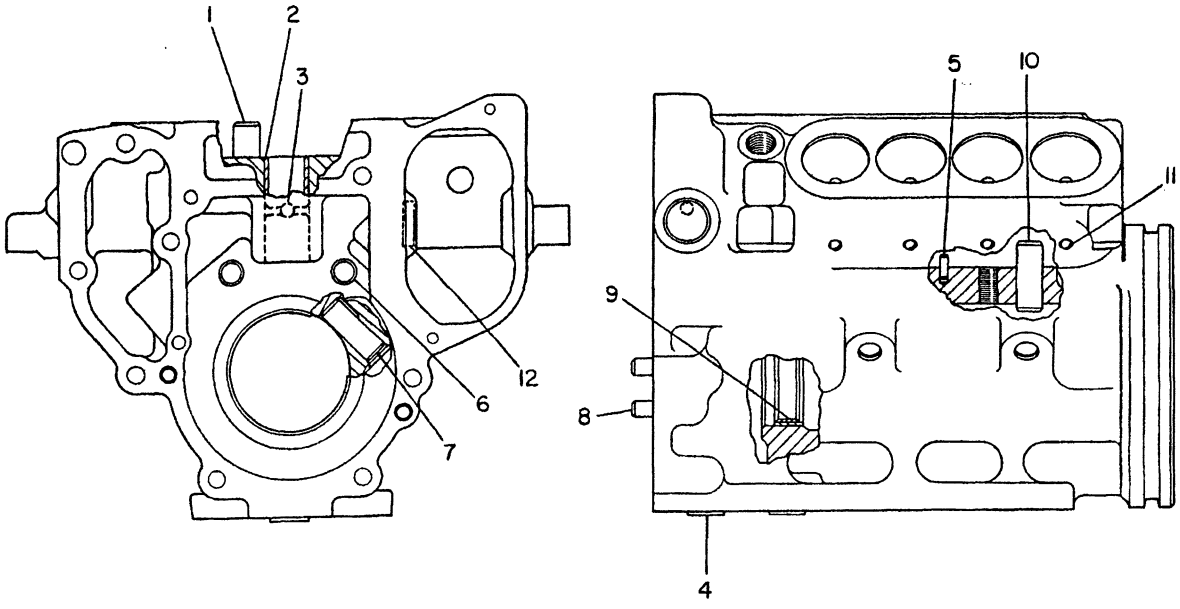

END VIEW SIDE VIEW

NOTE	REF NO	PART NUMBER	QTY	PART NAME
	1	6N7266	1	SHAFT-PUMP IDLER
	2	7N0242	2	BEARING-SLEEVE
	3	5B9318	1	BALL
	4	4N0775	2	DOWEL-HOLLOW
	5	8L6565	1	PIN-SPRING
	6	9S4160	2	BEARING-SLEEVE
	7	4M1474	4	PIN-LIFTER GUIDE
	8	9L9766	2	PIN-PLUNGER LIFT
	9	6N8441	2	BEARING-SLEEVE
	10	4N0899	1	DOWEL-HOLLOW
	11	1P0232	8	BALL
		1P0234	8	DOWEL
C	12	4N0952	1	PLUG-CUP

C-CHANGE FROM PREVIOUS TYPE

B-301909 EP

1253 **7N4574 HOUSING AS-FUEL PUMP**

Type 2

Part Of 9N3328,4W6012 Pumps-Fuel Injection

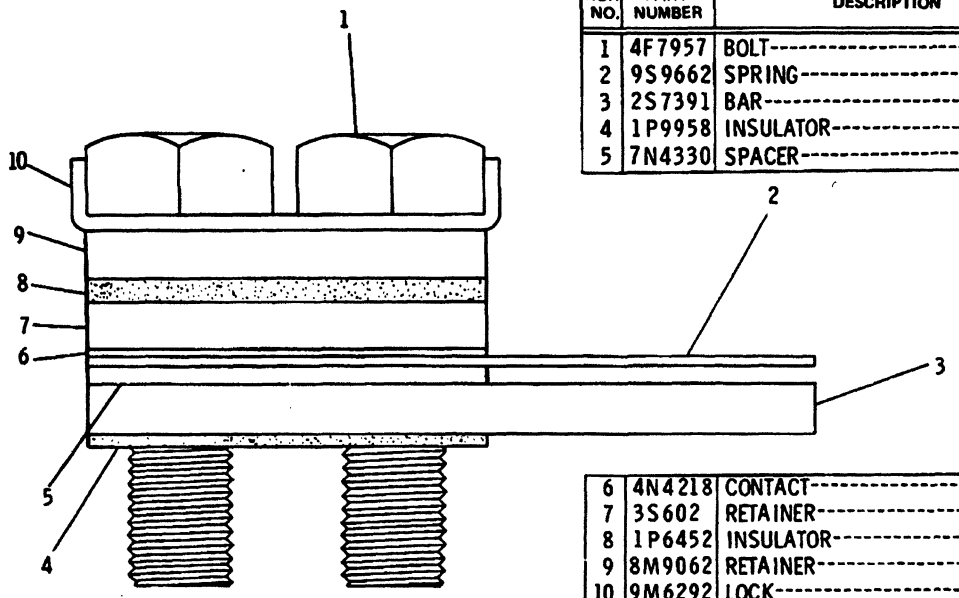

REF. NO.	PART NUMBER	DESCRIPTION	QTY
1	4F7957	BOLT	2
2	9S9662	SPRING	1
3	2S7391	BAR	1
4	1P9958	INSULATOR	1
5	7N4330	SPACER	1
6	4N4218	CONTACT	1
7	3S602	RETAINER	1
8	1P6452	INSULATOR	1
9	8M9062	RETAINER	1
10	9M6292	LOCK	1

169133

169133 P

1257

7N8028 TORQUE CONTROL GP

Engine S/N 48W13002-16460

Part Of 6N2056 Pump-Governor,Fuel Injection & Fuel Transfer

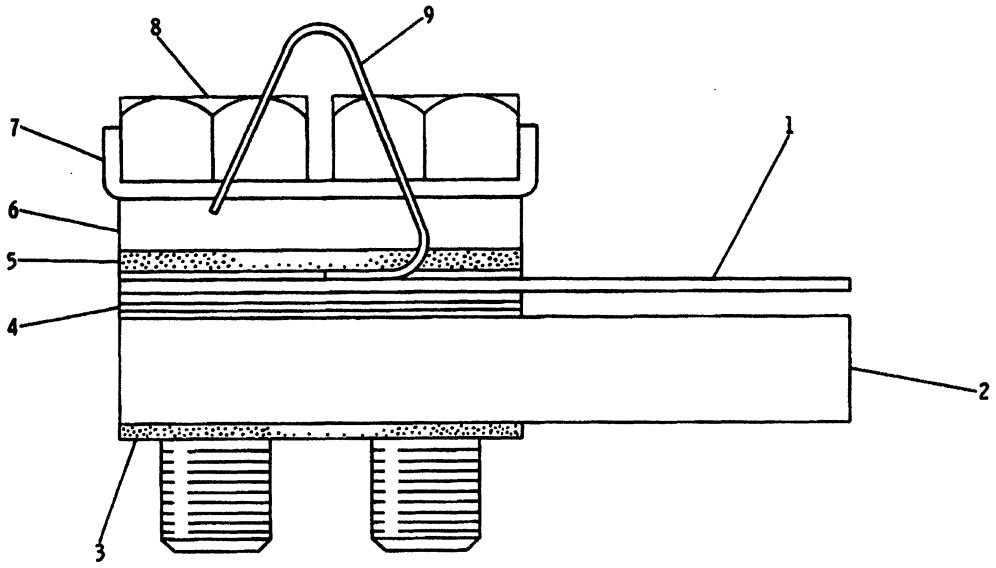

REF. NO.	PART NUMBER	DESCRIPTION	QTY
1	9S9662	SPRING----------	1
2	1P6453	BAR----------	1
3	1P9958	INSULATOR----------	1
4	9L9347	SPACER-----.51 mm(.020 in.) thick	1
	9L3626	SPACER-----.41 mm(.016 in.) thick	2
5	1P6452	INSULATOR----------	1
6	8M9062	RETAINER----------	1
7	9M6292	LOCK----------	1
8	4F7957	BOLT----------	2
9	4N4218	CONTACT----------	1

158354

158354 P

1257

4N8346 TORQUE CONTROL GP

Engine S/N 48W17231-Up

Part Of 6N2056 Pump-Governor,Fuel Injection & Fuel Transfer

FUEL SYSTEM AND GOVERNOR

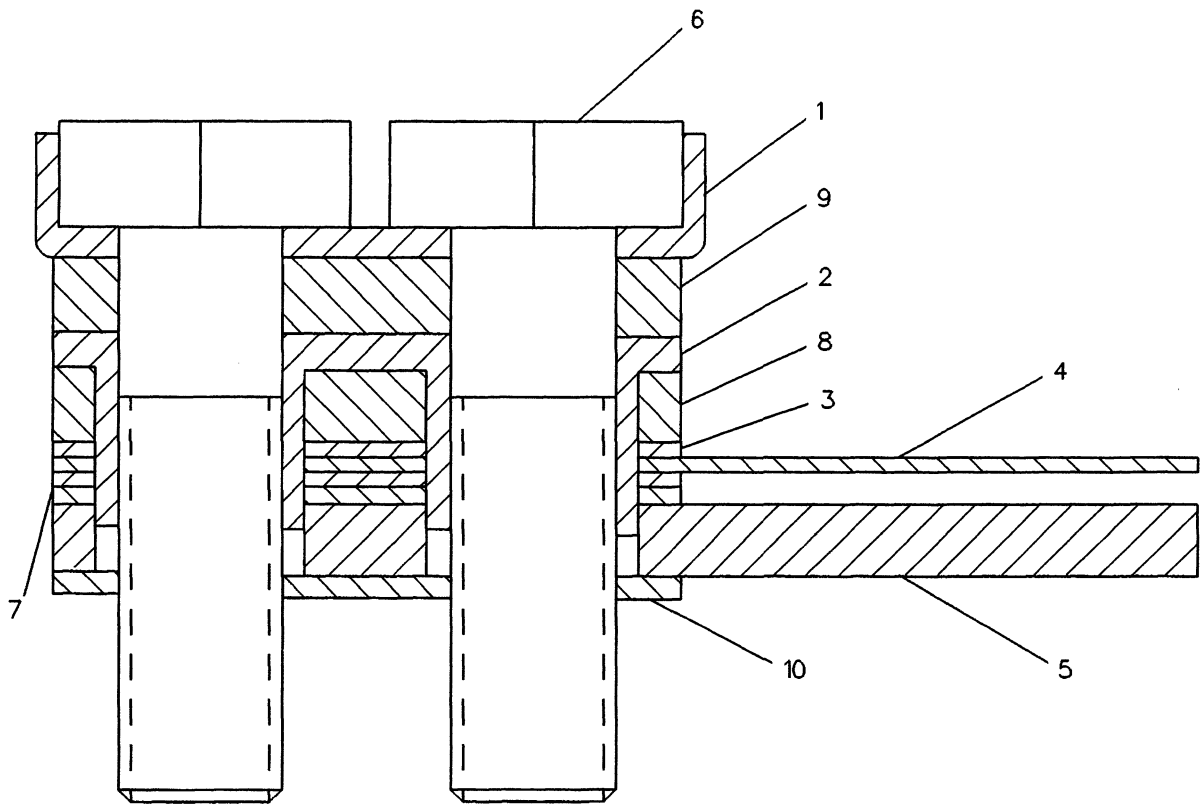

NOTE	REF NO	PART NUMBER	QTY	PART NAME	NOTE	REF NO	PART NUMBER	QTY	PART NAME
	1	9M6292	1	LOCK-NUT					
	2	1P6452	1	INSULATOR					
	3	4N4218	1	CONTACT					
	4	9S9662	1	SPRING-TORQUE .45MM(.018IN)THK					
	5	2S7391	1	BAR-STOP 2.997MM(.118IN)THK					
	6	4F7957	2	BOLT					
	7	9L9347	2	SHIM-TORQUE SPRING .020IN(.508MM)THK					
	8	3S0602	1	RETAINER-SPRING					
	9	8M9062	1	RETAINER-SPRING					
	10	1P9958	1	INSULATOR					

R-512736 EP

1257

9N1071 TORQUE CONTROL GP

Engine S/N 48W16461-17230,17831-Up

Part Of 6N2056,4W7057 Pumps-Governor,Fuel Injection & Fuel Transfer

FUEL SYSTEM AND GOVERNOR

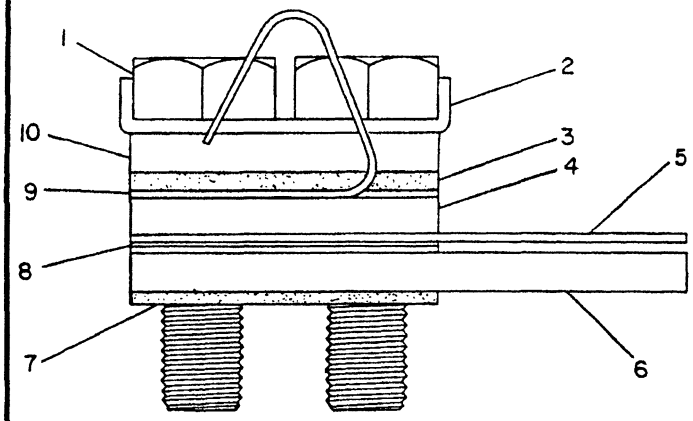

NOTE	REF NO	PART NUMBER	QTY	PART NAME
	1	4F7957	2	BOLT
	2	9M6292	1	LOCK-NUT
	3	1P6452	1	INSULATOR
	4	2P0942	1	SPACER 2.54MM(.100IN)THICK
C	5	9S9662	1	SPRING-TORQUE .45MM(.018IN)THICK
	6	2S7391	1	BAR-STOP
	7	1P9958	1	INSULATOR
C	8	6N2504	1	SPACER .127MM(.005IN)THICK
C		9L7235	1	SHIM-TORQUE SPRING 1.02MM(.040IN)THICK
	9	4N4218	1	CONTACT
	10	8M9062	1	RETAINER-SPRING

C-CHANGE FROM PREVIOUS TYPE

B-170095 EP

1257 **9N2806 TORQUE CONTROL GP**

Engine S/N 48W20670-Up

Part Of 4W7057 Pump-Governor,Fuel Injection & Fuel Transfer

MEMORANDA

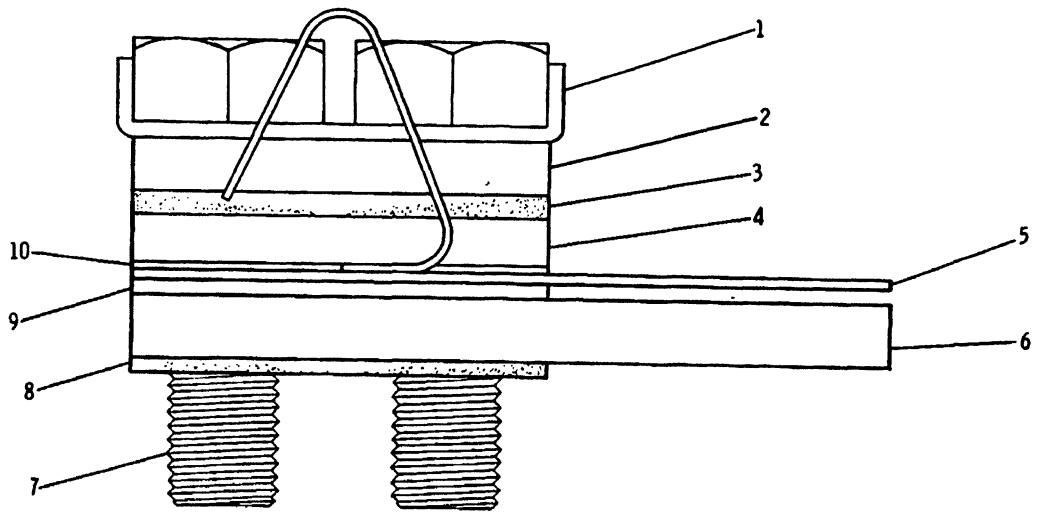

REF. NO.	PART NUMBER	DESCRIPTION	QTY
1	9M6292	LOCK----------	1
2	8M9062	RETAINER----------	1
3	1P6452	INSULATOR----------	1
4	3S602	RETAINER----------	1
5	9L5176	SPRING----------	1
6	2S7391	BAR------2.997 mm(.118in.) thick	1
7	4F7957	BOLT----------	2
8	1P9958	INSULATOR----------	1
9	9L7235	SHIM----------	1
10	4N4218	CONTACT----------	1

234710

234710 P

1257

7N7099 TORQUE CONTROL GP

Engine S/N 48W13002-16460

Part Of 6N2056 Pump-Governor,Fuel Injection & Fuel Transfer

FUEL SYSTEM AND GOVERNOR

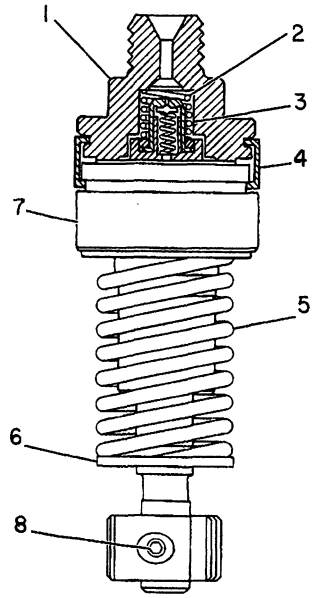

NOTE	REF NO	PART NUMBER	QTY	PART NAME
	1	1W9171	1	BONNET-VALVE
	2	8N1415	1	SPRING-CHECK
	3	1W6987	1	VALVE AS-CHECK
	4	1M3506	1	RING-RETAINER
	5	7N1208	1	SPRING-LIFTER
	6	7N1066	1	WASHER-RETAINER
	7	6N7828	1	PLUNGER AS-FUEL PUMP
	8	8H9299	1	SCREW-PLUNGER GEAR

B-316909 EP

1251 **4W0101 PUMP GP-FUEL INJECTION**
Engine S/N 48W17831-Up
Replaced By 7W0561-Page 71A
Part Of 4W6012 Pump-Fuel Injection

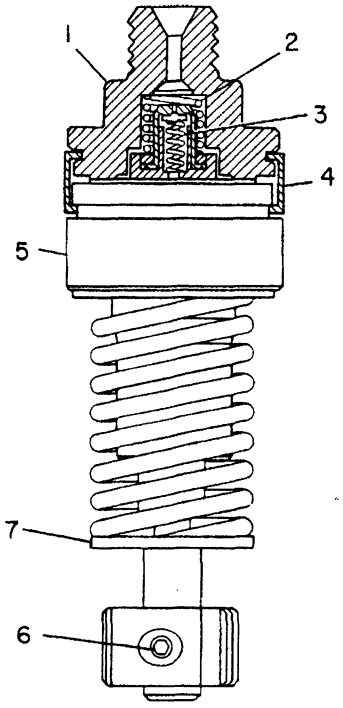

NOTE	REF NO	PART NUMBER	QTY	PART NAME
	1	1W9171	1	BONNET-VALVE
	2	8N1415	1	SPRING-CHECK
	3	1W6987	1	VALVE AS-CHECK
	4	7W1927	1	RING-RETAINER
	5	7W0182	1	PLUNGER & BARREL AS
C	6	7C5278	1	BOLT-GEAR
C	7	7N1066	1	WASHER-RETAINER

C-CHANGE FROM PREVIOUS TYPE

B-353004 EP

1251 **7W0561 PUMP GP-FUEL INJECTION**
Engine S/N 48W17831-Up
Part Of 4W6012 Pump-Governor,Fuel Injection & Fuel Transfer

FUEL SYSTEM AND GOVERNOR

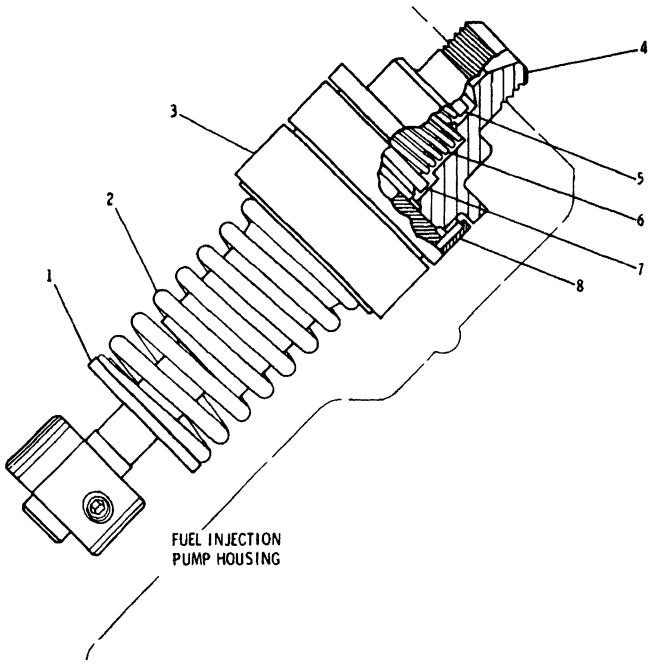

NOTE	REF NO	PART NUMBER	QTY	PART NAME
C	1	7N1066	1	WASHER-RETAINER
	2	1S7592	1	SPRING-LIFTER
	3	7N1183	1	PLUNGER AS-FUEL PUMP
	4	9L6893	1	BONNET-VALVE
	5	9N0593	1	CHECK AS-PUMP
	6	6N0024	1	SPRING
	7	9L6892	1	COLLAR-CHECK VALVE
	8	1M3506	1	RING-RETAINER

C-CHANGE FROM PREVIOUS TYPE

B-222340 EP

1251 **7N1185 PUMP GP-FUEL INJECTION**

Engine S/N 48W13002-17830

Part Of 9N3328 Pump-Fuel Injection

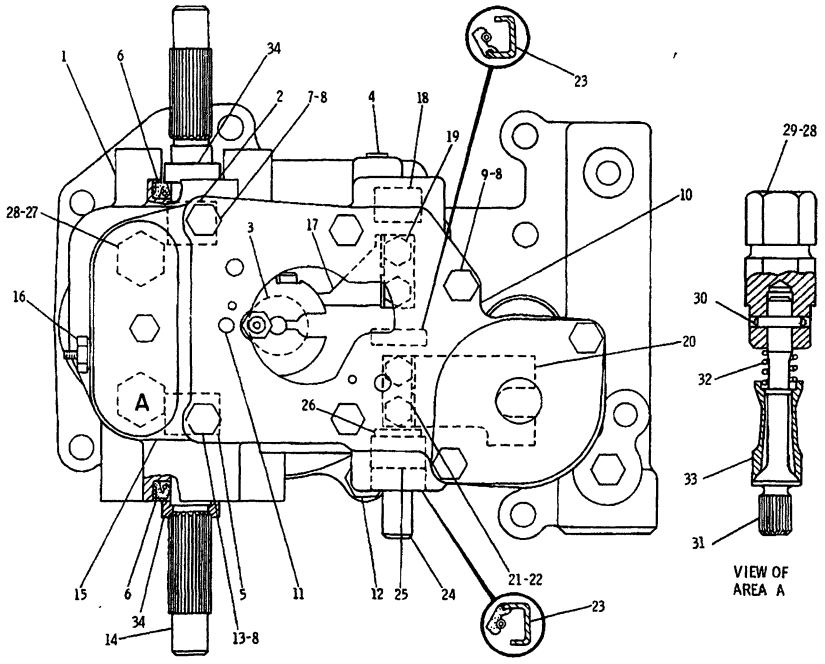

REF. NO.	PART NUMBER	DESCRIPTION	QTY.
1	9N3363	HOUSING ASSEM. (Includes)	1
2	8S134	BEARING	1
3	8M8403	GUIDE	1
4	9S8001	PLUG	1
	4J7533	SEAL	1
5	9S798	BEARING	1
6	5P3272	SEAL	2
7	8L4308	BOLT	1
8	3F9556	WASHER	5
9	2B2695	BOLT	1
10	2P8707	PLATE ASSEM. (Includes)	1
11	8L4175	DOWEL	1
12	S1594	BOLT	1
13	1D4540	BOLT	3
14	1N4656	SHAFT	1
15	9N1917	COVER ASSEM. (Includes)	1
16	3P9	INSULATOR	1
17	9N1916	LEVER	1
18	5M6228	BEARING	1
19	2A762	BOLT	2
20	9N2165	LEVER	1
21	1S7336	LOCK	2
22	S1614	BOLT	2
23	5P796	SEAL	2
24	4N951	SHAFT	1
25	1S7984	BEARING	1
26	1K4703	WASHER	1
27	9N3324	SCREW ---(hi-idle)---	1
28	2J157	SEAL	2
29	8N3153	END	1
30	4H1641	PIN	1
31	9S4980	SCREW ---(lo-idle)---	1
32	9S4982	SPRING	1
33	9S7052	SLEEVE	1
34	8H9204	WASHER	2

230556

230556 P

1286

7N6867 GOVERNOR GP-PART 1 OF 2

Type 1. Engine S/N 48W13002-17830

Part Of 6N2056 Pump-Governor,Fuel Injection & Fuel Transfer

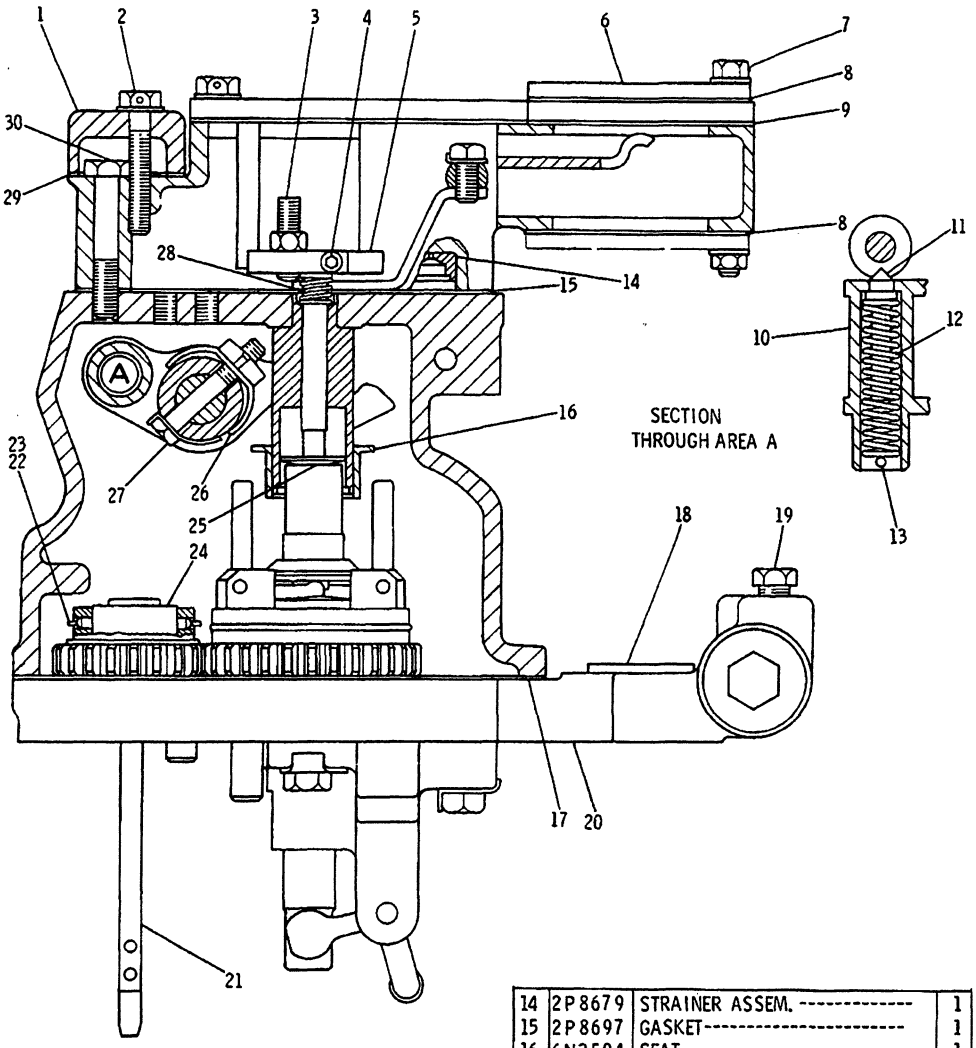

REF. NO.	PART NUMBER	DESCRIPTION	QTY
1	5L8992	COVER	1
2	5P6945	BOLT	1
	4B9747	WASHER	1
3	8L4155	SCREW	1
	1B4201	NUT	1
4	9M4704	BOLT	1
5	8L4154	COLLAR	1
6	2N4386	COVER	1
	1B2714	BOLT	2
7	1B4330	NUT	2
	5P537	WASHER	4
8	8S5388	GASKET	2
9	2P8669	GASKET	1
	2P8686	LEVER ASSEM.	1
10		(Includes)	
	9S4466	LEVER ASSEM.	1
11	9M9788	PLUNGER	1
12	7M7316	SPRING	1
13	5H1351	PIN	1

14	2P8679	STRAINER ASSEM.	1
15	2P8697	GASKET	1
16	6N3504	SEAT	1
17	4N1870	GASKET	1
18	9S8008	PLUG	1
	3D2824	SEAL	1
19	5M6214	PLUG	1
20	9N3684	PLATE GROUP	1
		(Separate Illustration)	
21	6N9040	DRIVE ASSEM.	1
22	3H1258	RING	1
23	6N265	DOWEL	1
24	6N8780	STOP	1
25	8H9181	SPRING	1
26	9S4673	BAND ASSEM.	1
27	9S4468	BOLT	1
	2F4159	LOCK	1
28	6N8793	SPRING	1
29	5L8991	GASKET	1
30	1B9575	BOLT	1

230557

230557 P

1286

7N6867 GOVERNOR GP-PART 2 OF 2

Type 1. Engine S/N 48W13002-17830

9N3684-Page 74

Part Of 6N2056 Pump-Governor,Fuel Injection & Fuel Transfer

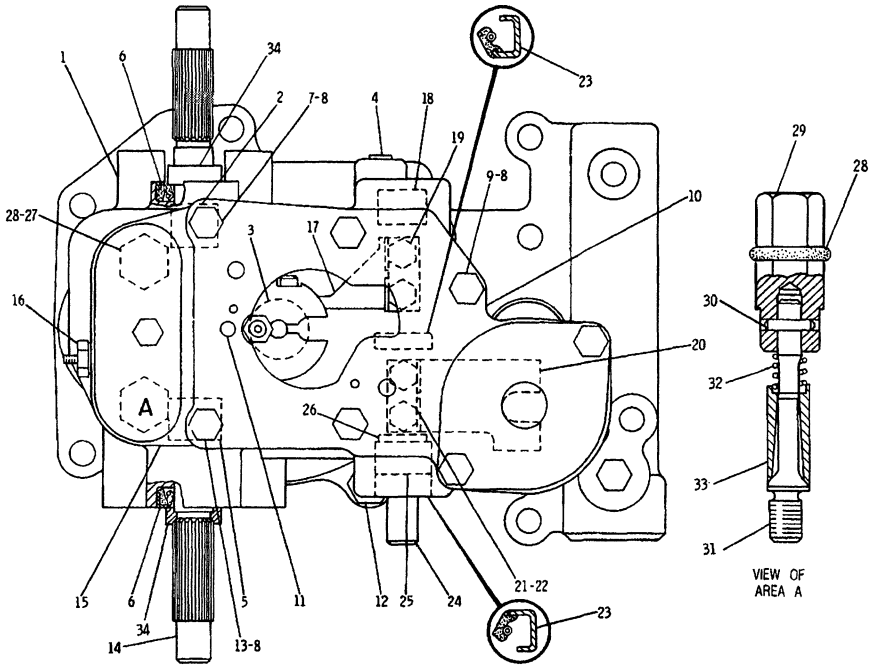

NOTE	REF NO	PART NUMBER	QTY	DESCRIPTION
	1	9N3363	1	HOUSING AS.
	2	8S0134	1	BEARING
	3	8M8403	1	GUIDE
	4	9S8001	1	PLUG
		4J7533	1	SEAL
	5	9S0798	1	BEARING
	6	5P3272	2	SEAL
	7	8L4308	1	BOLT
	8	3F9556	5	WASHER
	9	2B2695	1	BOLT
	10	2P8707	1	PLATE AS.
	11	8L4175	1	DOWEL
	12	0S1594	1	BOLT
	13	1D4540	3	BOLT
	14	1N4656	1	SHAFT
	15	9N1917	1	COVER AS.
	16	3P0009	1	INSULATOR
	17	9N1916	1	LEVER
	18	5M6228	1	BEARING
	19	2A0762	2	BOLT
	20	9N2165	1	LEVER
	21	1S7336	2	LOCK
	22	0S1614	2	BOLT
	23	5P0796	2	SEAL
	24	4N0951	1	SHAFT
	25	1S7984	1	BEARING
	26	1K4703	1	WASHER
	27	9N3324	1	SCREW (HI-IDLE)
	28	2J0157	2	SEAL
	29	8N3154	1	SCREW AS. (LO-IDLE)
		8N3153	1	END
	30	4H1641	1	PIN
	31	9S4980	1	SCREW
	32	9S4982	1	SPRING
C	33	2W7498	1	SLEEVE
	34	8H9204	2	WASHER

C INDICATES CHANGE

324926

324926 P

1286 **7N6867 GOVERNOR GP-PART 1 OF 2**

Type 2. Engine S/N 48W13002-17830

Part Of 6N2056 Pump-Governor,Fuel Injection & Fuel Transfer

FUEL SYSTEM AND GOVERNOR

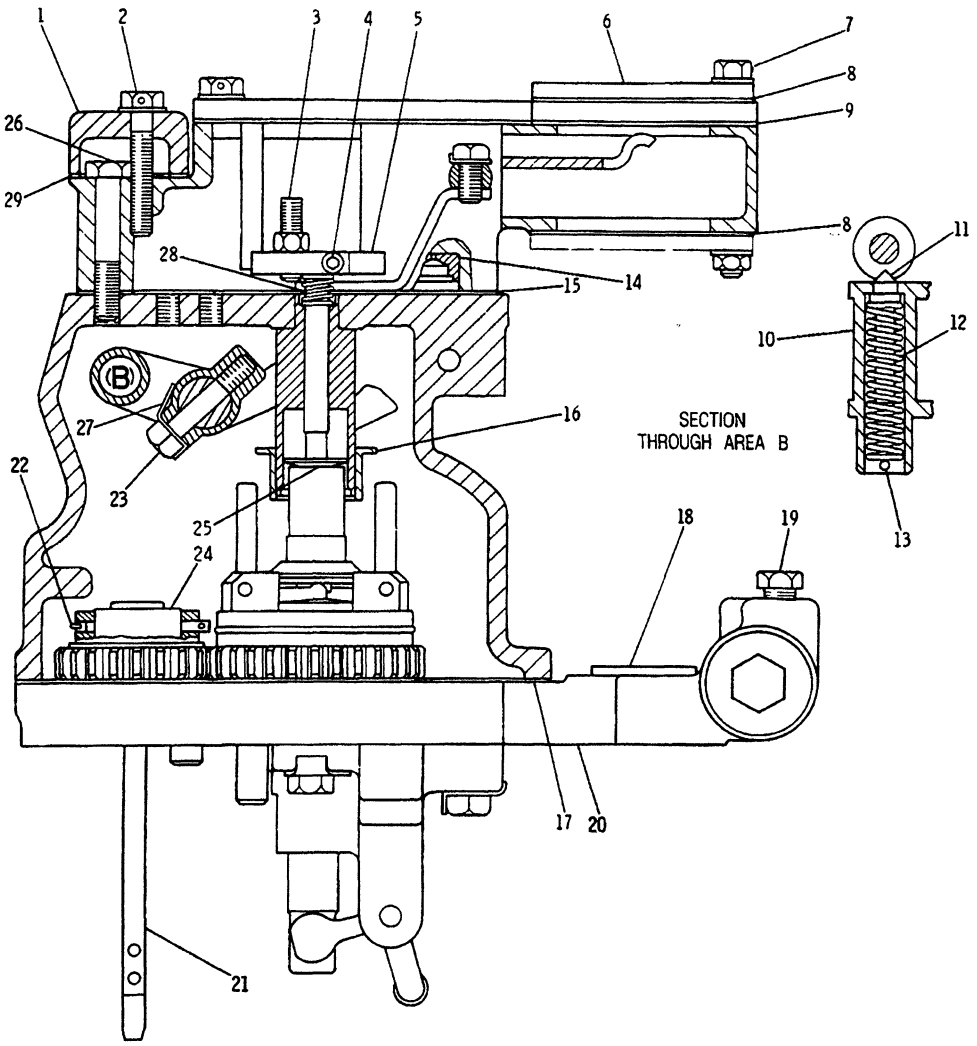

NOTE	REF NO	PART NUMBER	QTY	DESCRIPTION
	1	5L8992	1	COVER
	2	5P6945	1	BOLT
		4B9747	1	WASHER
	3	8L4155	1	SCREW
		1B4201	1	NUT
	4	9M4704	1	BOLT
	5	8L4154	1	COLLAR
	6	2N4386	1	COVER
	7	1B2714	2	BOLT
		1B4330	2	NUT
		5P0537	4	WASHER
C	8	6L1597	2	GASKET
	9	2P8669	1	GASKET
C	10	2W1491	1	LEVER
	11	9M9788	1	PLUNGER
	12	7M7316	1	SPRING
	13	5H1351	1	PIN
	14	2P8679	1	STRAINER AS.
	15	2P8697	1	GASKET
	16	6N3504	1	SEAT
	17	4N1870	1	GASKET
	18	9S8008	1	PLUG
		3D2824	1	SEAL
	19	5M6214	1	PLUG
Y	20	9N3684	1	PLATE GROUP
	21	6N9040	1	DRIVE AS.
C	22	2W9780	1	PIN AS.
	23	9S4468	1	BOLT
	24	6N8780	1	STOP
	25	8H9181	1	SPRING
	26	1B9575	1	BOLT
	27	2F4159	1	LOCK
	28	6N8793	1	SPRING
	29	5L8991	1	GASKET

C INDICATES CHANGE

Y SEPARATE ILLUSTRATION

323729

323729 P

1286

7N6867 GOVERNOR GP-PART 2 OF 2

Type 2. Engine S/N 48W13002-17830

9N3684-Page 74

Part Of 6N2056 Pump-Governor,Fuel Injection & Fuel Transfer

FUEL SYSTEM AND GOVERNOR

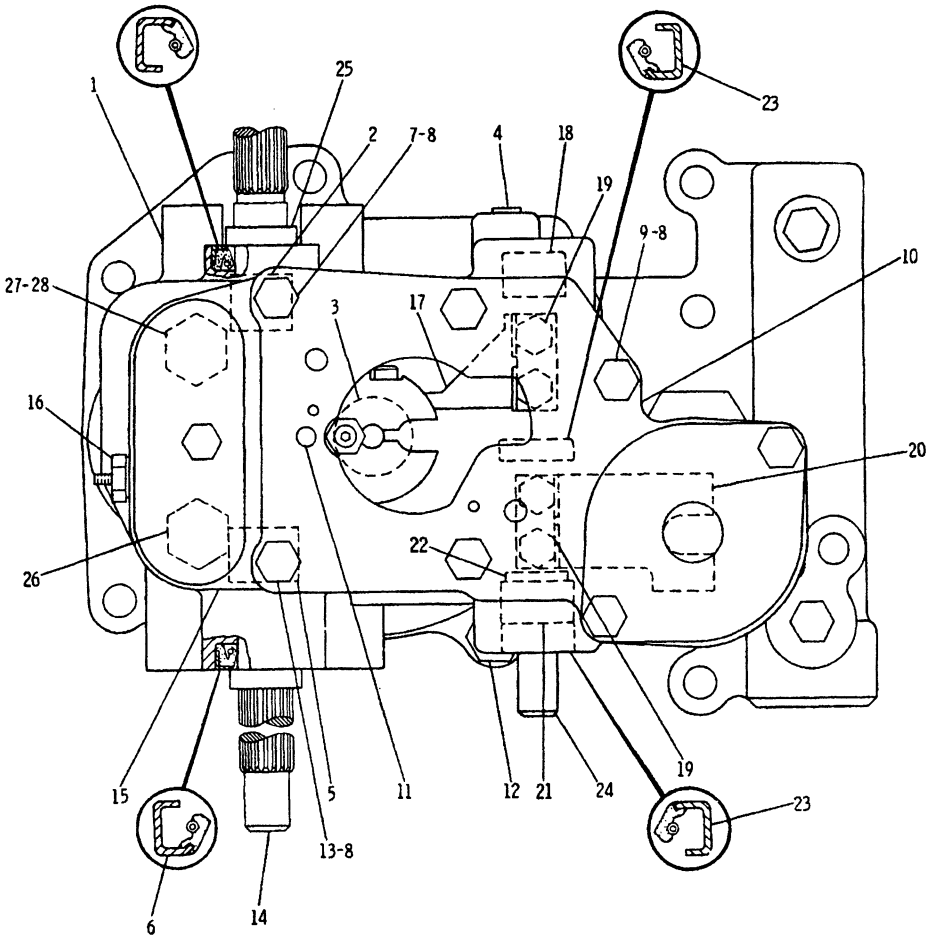

NOTE	REF NO	PART NUMBER	QTY	PART NAME
	1	9N3363	1	HOUSING AS-GOVERNOR
	2	7E8940	1	BEARING-SLEEVE
	3	8M8403	1	SPRING-GUIDE
	4	9S8001	1	PLUG-O-RING
		4J7533	1	SEAL-O-RING
	5	7E8941	1	BEARING-SLEEVE
	6	5P3272	2	SEAL-LIP
	7	8L4308	1	BOLT
	8	3F9556	5	LOCKWASHER
	9	2B2695	1	BOLT
	10	2P8707	1	PLATE AS-GOVERNOR
	11	8L4175	1	DOWEL
	12	0S1594	1	BOLT
	13	1D4540	3	BOLT
	14	1N4656	1	SHAFT-GOVERNOR CONTROL
	15	9N1917	1	COVER AS-GOVERNOR
	16	3P0009	1	INSULATOR-STUD
	17	9N1916	1	LEVER-SHUTOFF
	18	5M6228	1	BEARING-NEEDLE
	19	3I0215	4	BOLT-LOCKING
	20	9N2165	1	LEVER-SOLENOID
	21	1S7984	1	BEARING-SLEEVE
	22	1K4703	1	WASHER
	23	5P0796	2	SEAL-LIP
	24	4N0951	1	SHAFT-SHUTOFF
	25	8H9204	1	WASHER-FELT
	26	8N3154	1	SCREW AS-ADJUSTMENT (LOW-IDLE)
	27	2J0157	1	SEAL-O-RING
	28	9N3324	1	SCREW-ADJUSTMENT (HI-IDLE)

B-503048 EP

1264 **4W7416 GOVERNOR GP-PART 1 OF 2**

Engine S/N 48W17831-Up

Part Of 4W7057 Pump-Governor,Fuel Injection & Fuel Transfer

FUEL SYSTEM AND GOVERNOR

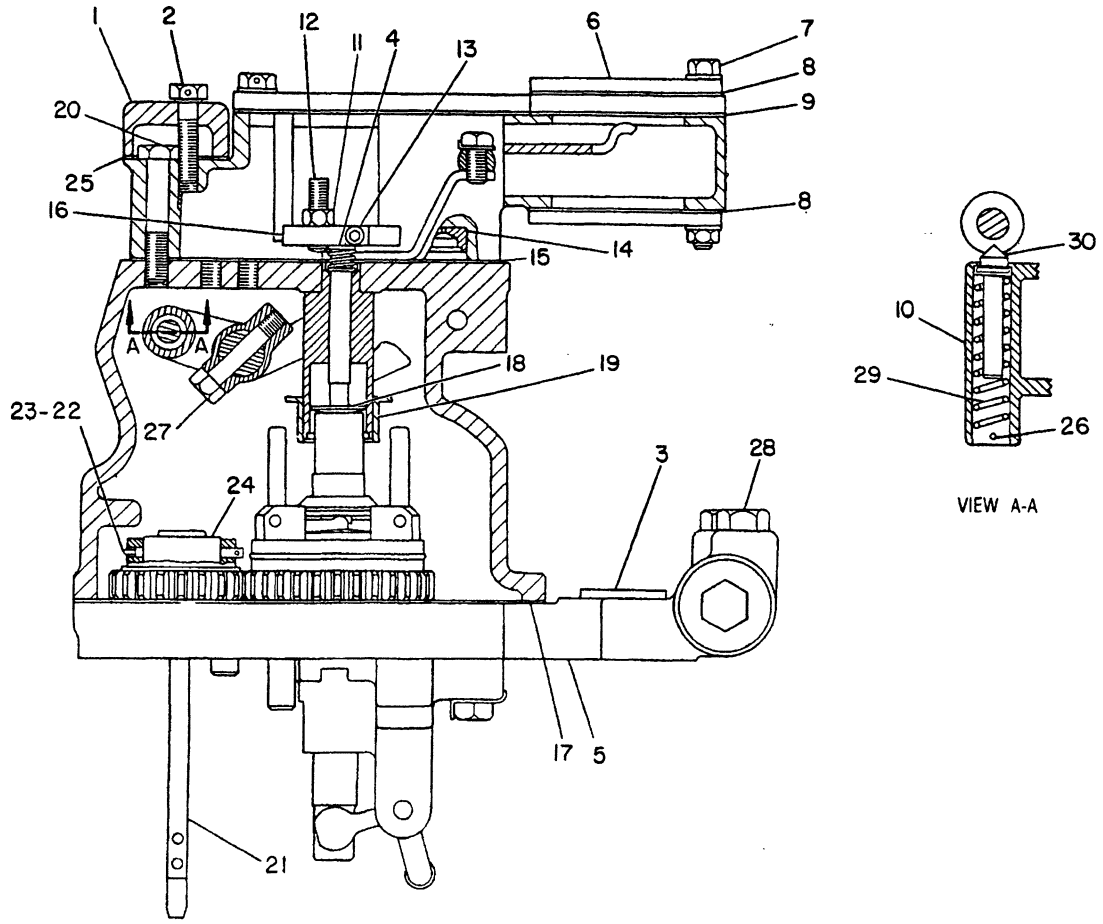

NOTE	REF NO	PART NUMBER	QTY	PART NAME	NOTE	REF NO	PART NUMBER	QTY	PART NAME
	1	5L8992	1	COVER-ADJUSTMENT		22	2W9780	1	PIN AS
	2	5P6945	1	BOLT		23	6N0265	1	DOWEL
		4B9747	1	WASHER		24	6N8780	1	STOP
	3	9S8008	1	PLUG-O-RING		25	5L8991	1	GASKET-COVER
		3D2824	1	SEAL-O-RING		26	5H1351	1	PIN-SPRING
	4	6N8793	1	SPRING		27	4W7654	1	BOLT
Y	5	4W7374	1	PLATE GP-GOVERNOR	C	28	9S4182	2	PLUG
				ADAPTER	C		3J7354	2	SEAL-O-RING
	6	2N4386	1	COVER		29	7M7316	1	SPRING
	7	1B2714	2	BOLT		30	9M9788	1	PLUNGER-STOP
		1B4330	2	NUT					
		5P0537	4	WASHER					
	8	6L1597	2	GASKET					
	9	2P8669	1	GASKET					
	10	2W1491	1	LEVER-CONTROL					
	11	1B4201	1	NUT-FULL					
	12	8L4155	1	SETSCREW					
	13	9M4704	1	BOLT					
	14	2P8679	1	STRAINER AS					
	15	2P8697	1	GASKET					
	16	8L4154	1	COLLAR-LOAD STOP					
	17	4N1870	1	GASKET-HOUSING					
	18	8H9181	1	SPRING-BUMPER					
	19	6N3504	2	SEAT-GOVERNOR SPRING					
	20	1B9575	1	BOLT					
	21	6N9040	1	DRIVE AS-FLEXIBLE					

C-CHANGE FROM PREVIOUS TYPE
Y-SEPARATE ILLUSTRATION

B-347462 EP

1264 **4W7416 GOVERNOR GP-PART 2 OF 2**

Engine S/N 48W17831-Up
4W7374-Page 74B
Part Of 4W7057 Pump-Governor,Fuel Injection & Fuel Transfer

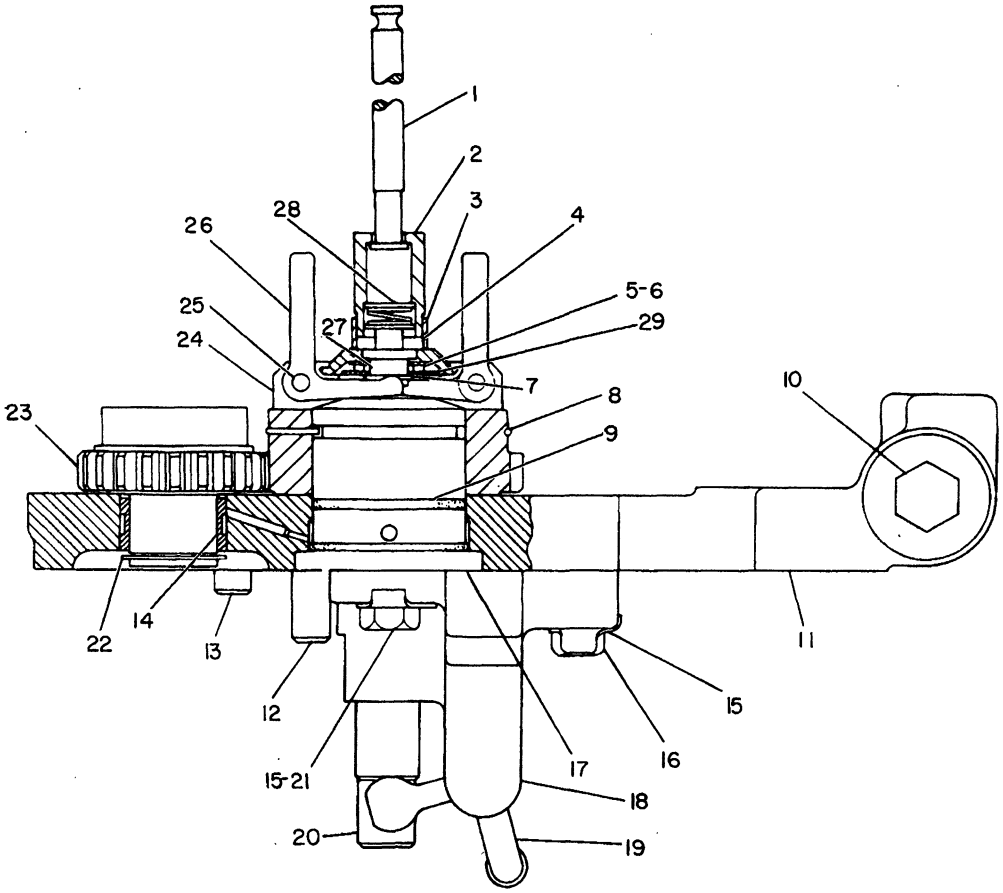

NOTE	REF NO	PART NUMBER	QTY	PART NAME	NOTE	REF NO	PART NUMBER	QTY	PART NAME
	1	8M8739	1	BOLT-LOAD STOP		24	9L6509	1	WEIGHT AS-GOVERNOR
	2	6N8629	1	SEAT-SPRING		25	1S5440	2	DOWEL
	3	4N3887	1	RING-RETAINER		26	9L4989	1	WEIGHT-GOVERNOR
	4	2P8630	1	DOWEL		27	2S0007	2	SLEEVE-PILOT
	5	7M7193	1	RACE-THRUST BEARING		28	9M6302	2	WASHER
	6	7M7219	1	BEARING-THRUST			9M6303	1	SPRING
	7	3K0810	1	LOCKRING		29	6N8195	1	RACE-THRUST
	8	6N7818	1	LOCKRING					
	9	5P5601	2	SEAL-O-RING					
	10	9S8008	1	PLUG-O-RING					
		3D2824	1	SEAL-O-RING					
	11	7N4554	1	PLATE AS-ADAPTER					
		6N3175	1	DOWEL					
	12	4N0898	1	DOWEL-HOLLOW					
	13	9M2089	1	DOWEL					
	14	7N0579	1	BEARING-SLEEVE					
C	15	2A5328	3	LOCK					
	16	7L6210	1	BOLT-LOCATING					
Y	17	6N1947	1	PISTON GP-GOVERNOR SERVO					
	18	6N2501	1	BRACKET-CONNECTION					
		2S7316	1	DOWEL					
	19	7N4555	1	LEVER-RACK CONTROL					
	20	7N2351	1	PIN-CONTROL					
	21	0S1618	2	BOLT					
	22	8M6393	1	RING-RETAINING					
	23	6N8783	1	GEAR (42 TEETH)					

C-CHANGE FROM PREVIOUS TYPE
Y-SEPARATE ILLUSTRATION

B-230555 EP

1264

9N3684 PLATE GP-GOVERNOR ADAPTER
Type 1. Engine S/N 48W13002-17830
6N1947-Page 75
Part Of 7N6867 Governor

FUEL SYSTEM AND GOVERNOR

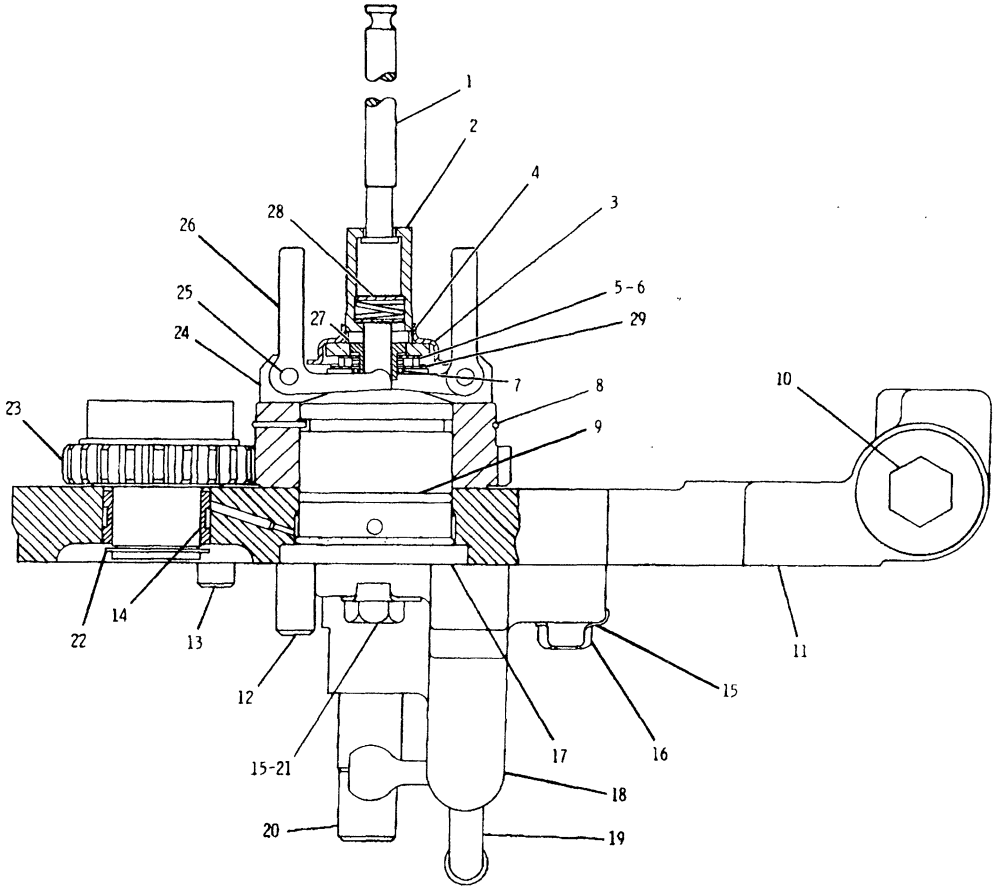

NOTE	REF NO	PART NUMBER	QTY	PART NAME	NOTE	REF NO	PART NUMBER	QTY	PART NAME
	1	8M8739	1	BOLT-LOAD STOP		24	9L6509	1	WEIGHT AS-GOVERNOR
C	2	1W4642	1	RISER-GOVERNOR		25	1S5440	2	DOWEL
C	3	1W4640	1	SEAT-SPRING		26	9L4989	1	WEIGHT-GOVERNOR
	4	2P8630	1	DOWEL		27	2S0007	1	SLEEVE-PILOT
	5	7M7193	1	RACE-THRUST BEARING		28	9M6302	2	WASHER
	6	7M7219	1	BEARING-THRUST			9M6303	1	SPRING
	7	3K0810	1	LOCKRING		29	6N8195	1	RACE-THRUST
	8	6N7818	1	LOCKRING					
	9	5P5601	2	SEAL-O-RING					
	10	9S8008	1	PLUG-O-RING					
		3D2824	1	SEAL-O-RING					
	11	7N4554	1	PLATE AS-ADAPTER					
		6N3175	1	DOWEL					
	12	4N0898	1	DOWEL-HOLLOW					
	13	9M2089	1	DOWEL					
	14	7N0579	1	BEARING-SLEEVE					
	15	2A5328	3	LOCK					
	16	7L6210	1	BOLT-LOCATING					
Y	17	6N1947	1	PISTON GP-GOVERNOR SERVO					
	18	6N2501	1	BRACKET-CONNECTION					
		2S7316	1	DOWEL					
	19	7N4555	1	LEVER-RACK CONTROL					
	20	7N2351	1	PIN-CONTROL					
	21	0S1618	2	BOLT					
	22	8M6393	1	RING-RETAINING					
	23	6N8783	1	GEAR (42 TEETH)					

C-CHANGE FROM PREVIOUS TYPE
Y-SEPARATE ILLUSTRATION

B-312634 EP

1264 **9N3684 PLATE GP-GOVERNOR ADAPTER**
Type 2. Engine S/N 48W13002-17830
6N1947-Page 75
Part Of 7N6867 Governor

FUEL SYSTEM AND GOVERNOR

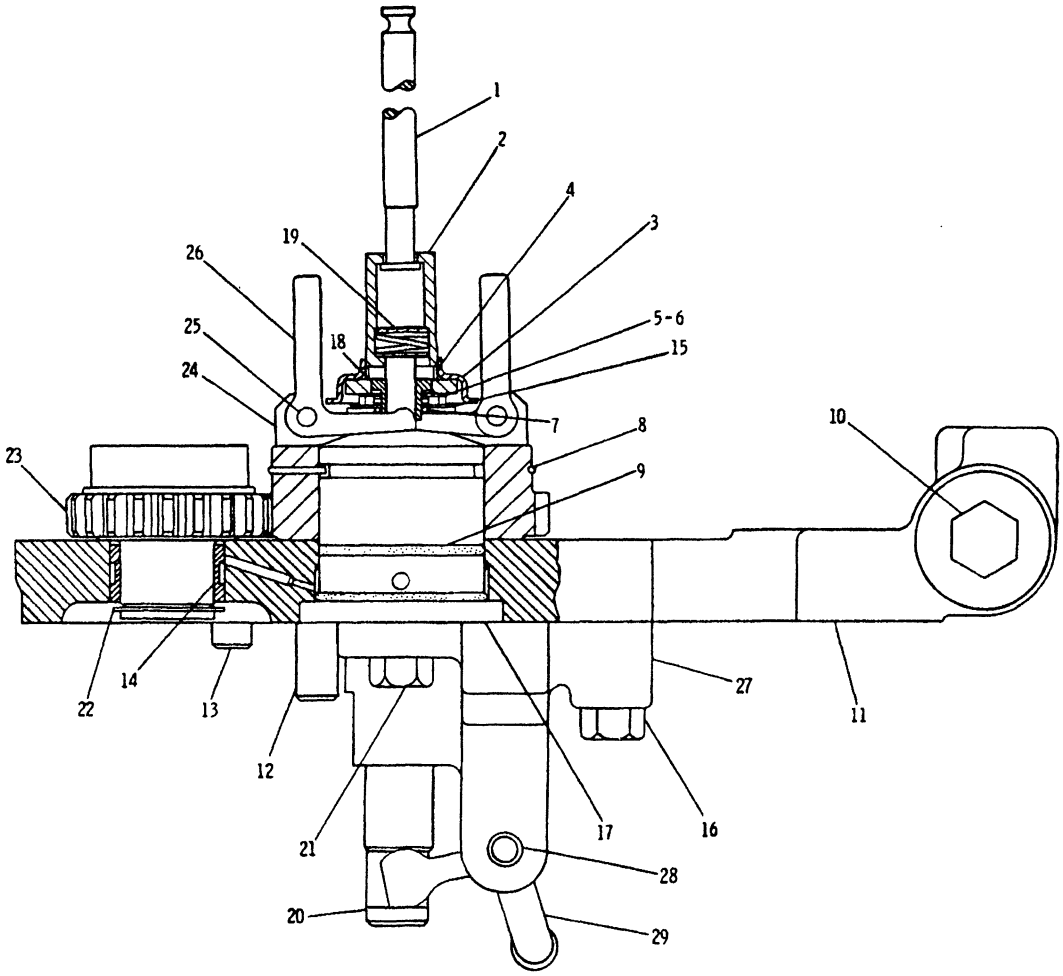

NOTE	REF NO	PART NUMBER	QTY	PART NAME	NOTE	REF NO	PART NUMBER	QTY	PART NAME
	1	8M8739	1	BOLT-LOAD STOP		24	9L6509	1	WEIGHT AS-GOVERNOR
	2	1W4642	1	RISER-GOVERNOR		25	1S5440	2	DOWEL
	3	1W4640	1	SEAT-SPRING		26	9L4989	2	WEIGHT-GOVERNOR
	4	2P8630	1	DOWEL		27	9N3323	1	BRACKET AS-CONTROL (RACK)
	5	7M7193	1	RACE-THRUST BEARING					
	6	7M7219	1	BEARING-THRUST	C	28	2S7316	1	DOWEL
	7	3K0810	1	RING-LOCK	C	29	7W7129	1	LEVER-RACK CONTROL
	8	6N7818	1	LOCKRING					
	9	5P5601	2	SEAL-O-RING					
	10	9S8008	1	PLUG-O-RING					
		3D2824	1	SEAL-O-RING					
	11	4W2169	1	PLATE AS-ADAPTER					
		6N3175	1	DOWEL					
	12	4N0898	1	DOWEL-HOLLOW					
	13	9M2089	1	DOWEL					
	14	7N0579	1	BEARING-SLEEVE					
	15	6N8195	1	RACE-THRUST					
	16	4W7653	1	BOLT-GROUND BODY					
Y	17	6N1947	1	PISTON GP-GOVERNOR SERVO					
	18	2S0007	1	SLEEVE-PILOT					
	19	9M6302	2	WASHER					
		9M6303	1	SPRING					
	20	7N2351	1	PIN-CONTROL					
	21	344160	2	BOLT-SELF LOCKING					
	22	8M6393	1	RING-RETAINING					
	23	6N8783	1	GEAR (42 TEETH)					

C-CHANGE FROM PREVIOUS TYPE
Y-SEPARATE ILLUSTRATION

B-350858 EP

1264 **4W7374 PLATE GP-GOVERNOR ADAPTER**
Engine S/N 48W17831-Up
6N1947-Page 75
Part Of 4W7416 Governor

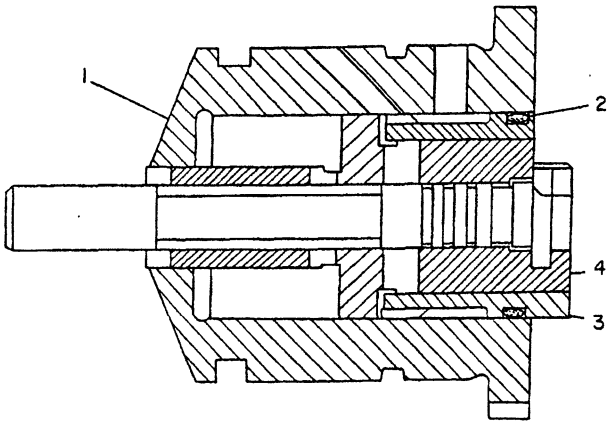

NOTE	REF NO	PART NUMBER	QTY	PART NAME
	1	4N1807	1	CYLINDER-SERVO
C	2	5P9757	1	SEAL-O-RING
C	3	8N6983	1	SLEEVE
C	4	8N6979	1	PISTON & VALVE AS

C-CHANGE FROM PREVIOUS TYPE

B-230564 EP

1264 **6N1947 PISTON GP-GOVERNOR SERVO**

Part Of 9N3684,4W7374 Plates-Governor Adapter

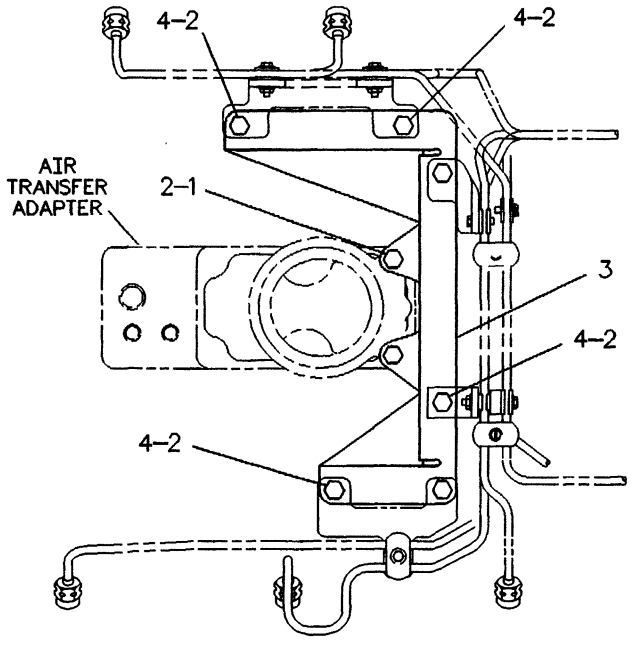

NOTE	REF NO	PART NUMBER	QTY	PART NAME
	1	0L1351	2	BOLT
	2	5M2894	8	WASHER
	3	6I4434	1	BRACKET AS
	4	0S0509	6	BOLT

F-541041 EP

1252 **1N4310 FASTENER GP-FUEL INJECTION LINES**

FUEL SYSTEM AND GOVERNOR

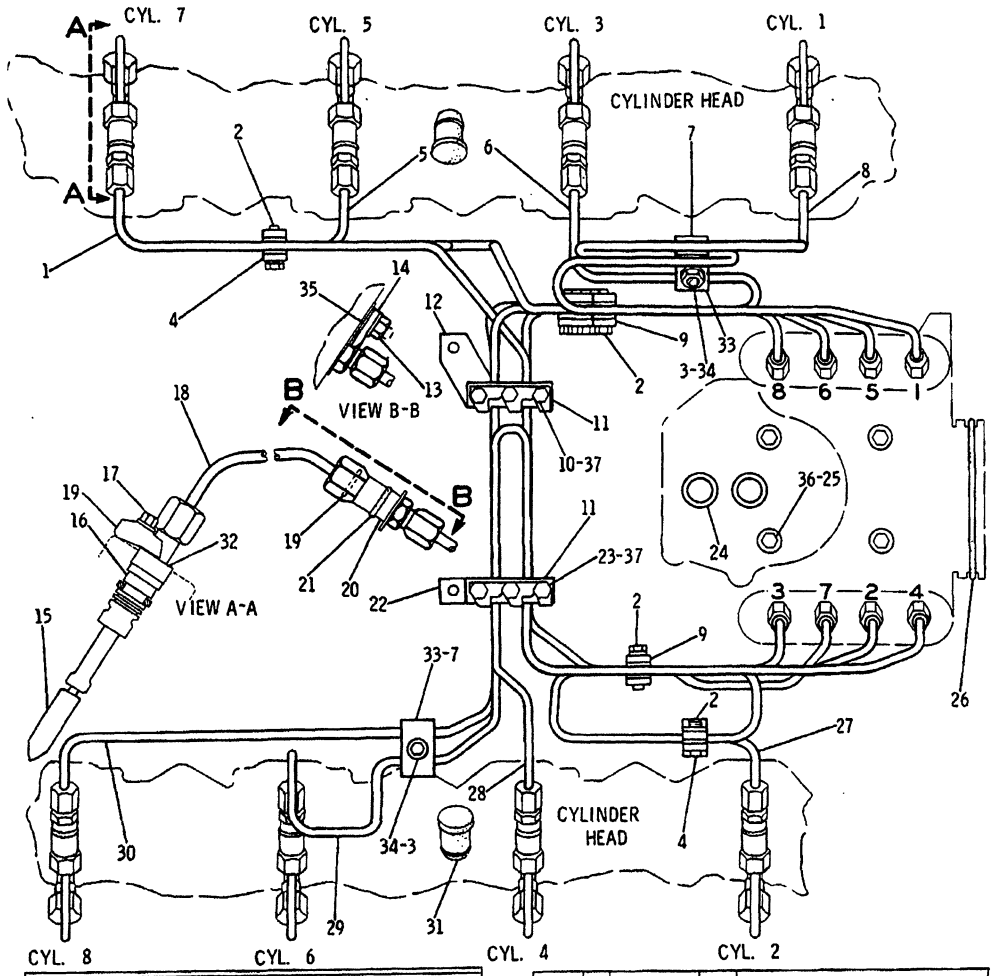

NOTE	REF NO	PART NUMBER	QTY	DESCRIPTION
	1	9N1117	1	LINE AS.
	2	7N0654	14	BOLT AS.
				(EACH INCLUDES)
		1B7182	1	BOLT
		3B4505	1	LOCKWASHER
C	3	3B4505	2	LOCKWASHER
	4	7N0665	2	CLAMP
		7N0671	4	DAMPER
		6N2751	2	CLAMP (TAPPED)
	5	9N1115	1	LINE AS.
	6	9N1113	1	LINE AS.
	7	1P6909	2	STRIP AS.
				(EACH INCLUDES)
		9S8586	1	STUD
	8	9N1111	1	LINE AS.
	9	7N0667	2	CLAMP
		7N0815	4	DAMPER
		6N2754	2	CLAMP (TAPPED)
C	10	8N5046	3	BOLT AS.
	11	7N0672	10	DAMPER
		7N0668	5	CLAMP
	12	6N1277	1	CLAMP
	13	1B5354	8	NUT
		9M1974	8	WASHER
	14	4N1292	8	LOCK
	15	9L6884	8	NOZZLE SET
C	16	2W3391	8	BODY AS. (EA. INCL.)
		5P2060	1	SEAL
C	17	5P6900	16	BOLT
	18	9N1161	8	LINE AS. (EA. INCL.)
C		1H1023	1	SEAL
C	19	4W5717	8	CLAMP
	20	4N1797	8	ADAPTER AS. (EA. INCL.)
	21	8M4437	1	SEAL
	22	6N0608	1	CLAMP
C	23	8N5045	3	BOLT AS.
	24	1S0004	2	SEAL
	25	5M2894	4	WASHER
		688438	4	SPACER
	26	8J1688	1	SEAL
	27	9N1112	1	LINE AS.
	28	9N1114	1	LINE AS.
	29	9N2586	1	LINE AS.
	30	9N2588	1	LINE AS.
	31	6N2944	2	PLUG
C	32	4W5718	8	SLEEVE
	33	9S2299	2	STRIP
		4N2555	2	DAMPER
	34	1B5354	2	NUT
	35	9N2481	8	SPACER
C		4L1468	8	WASHER
	36	0S1591	4	BOLT
C	37	8N5118	2	LOCK

C INDICATES CHANGE

353056

353056 EP

1252 **4N2088 LINES GP-FUEL INJECTION**
S/N 48W13002-17830

FUEL SYSTEM AND GOVERNOR

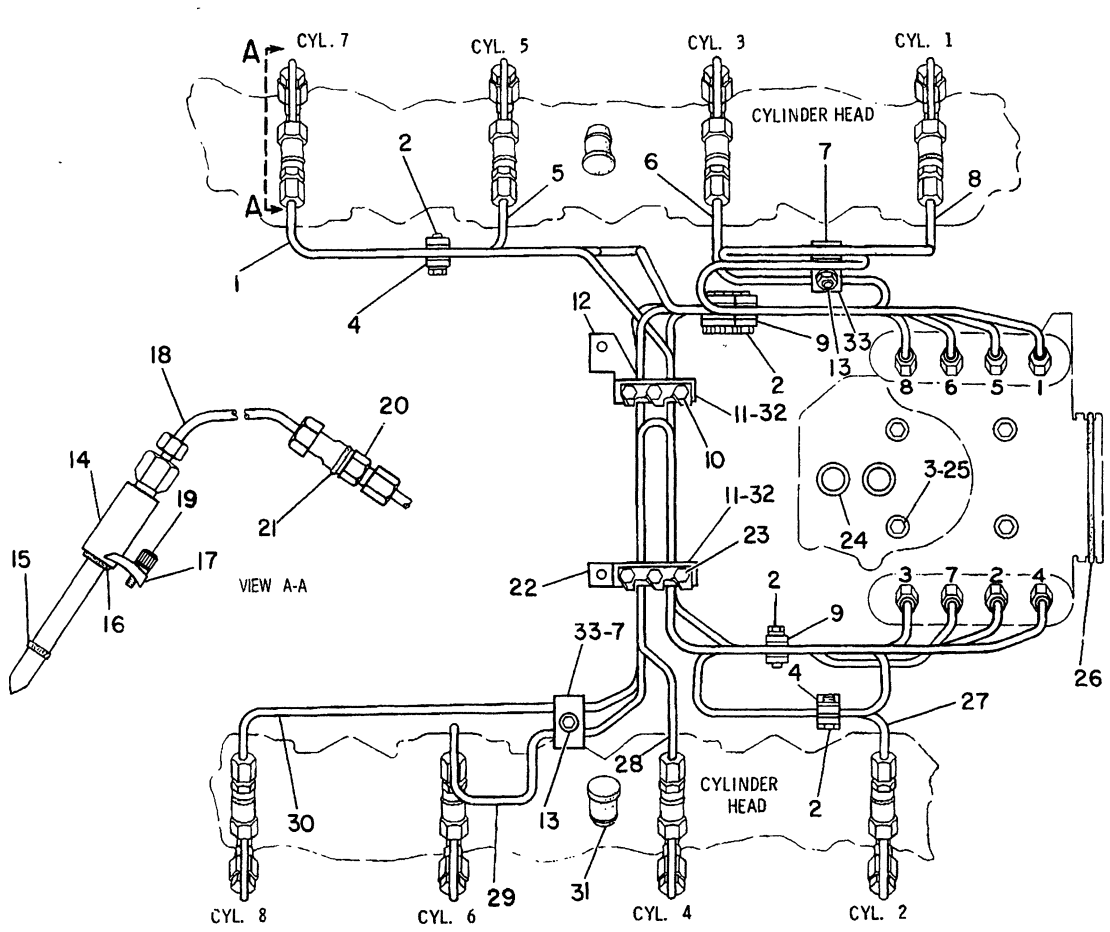

NOTE	REF NO	PART NUMBER	QTY	PART NAME
	1	4W6317	1	LINE AS-FUEL INJ
	2	7N0654	14	BOLT AS
	3	0S1591	4	BOLT
	4	7N0665	2	CLAMP
		7N0671	4	DAMPER
		6N2751	2	CLAMP (TAPPED)
	5	4W6315	1	LINE AS-FUEL INJ
	6	4W6313	1	LINE AS-FUEL INJ
	7	1P6909	2	STRIP AS
		9S8586	1	STUD-WELD
	8	4W6311	1	LINE AS-FUEL INJ
	9	7N0667	2	CLAMP-FUEL LINE
		7N0815	4	DAMPER-FUEL LINE
		6N2754	2	CLAMP-FUEL LINE (TAPPED)
	10	8N5046	3	BOLT AS
	11	7N0672	10	DAMPER-FUEL LINE
		7N0668	5	CLAMP-FUEL LINE
	12	6N1277	1	CLAMP-FUEL LINE
	13	1B5354	2	NUT-FULL
		9M1974	2	WASHER-HARD
	14	8N7007	8	NOZZLE AS-FUEL VALVE (EACH INCLUDES)
		2W1230	1	SCREW-BUTTON HEAD
		1W8616	1	WASHER-SEAL
	15	9L9098	1	SEAL-CARBON STOP
	16	2W4693	1	WASHER
	17	1W4664	8	CLAMP-NOZZLE
	18	2W8142	8	LINE AS-FUEL INJ
	19	1T0416	8	BOLT
	20	5B1484	8	NUT
	21	5P8119	8	SEAL-O-RING
	22	6N0608	1	CLAMP-FUEL LINE
	23	8N5045	3	BOLT AS
	24	1S0004	2	SEAL-O-RING
	25	5M2894	4	WASHER
		688438	4	SPACER
	26	8J1688	1	SEAL-O-RING
	27	4W6312	1	LINE AS-FUEL INJ
	28	4W6314	1	LINE AS-FUEL INJ
	29	4W6316	1	LINE AS-FUEL INJ
	30	4W6318	1	LINE AS-FUEL INJ
	31	6N2944	2	PLUG
	32	8N5118	2	LOCK
	33	9S2299	2	STRIP
		4N2555	2	DAMPER

B-316958 EP

1252 **4W6310 LINES GP-FUEL INJECTION**
Engine S/N 48W17831-19407

FUEL SYSTEM AND GOVERNOR

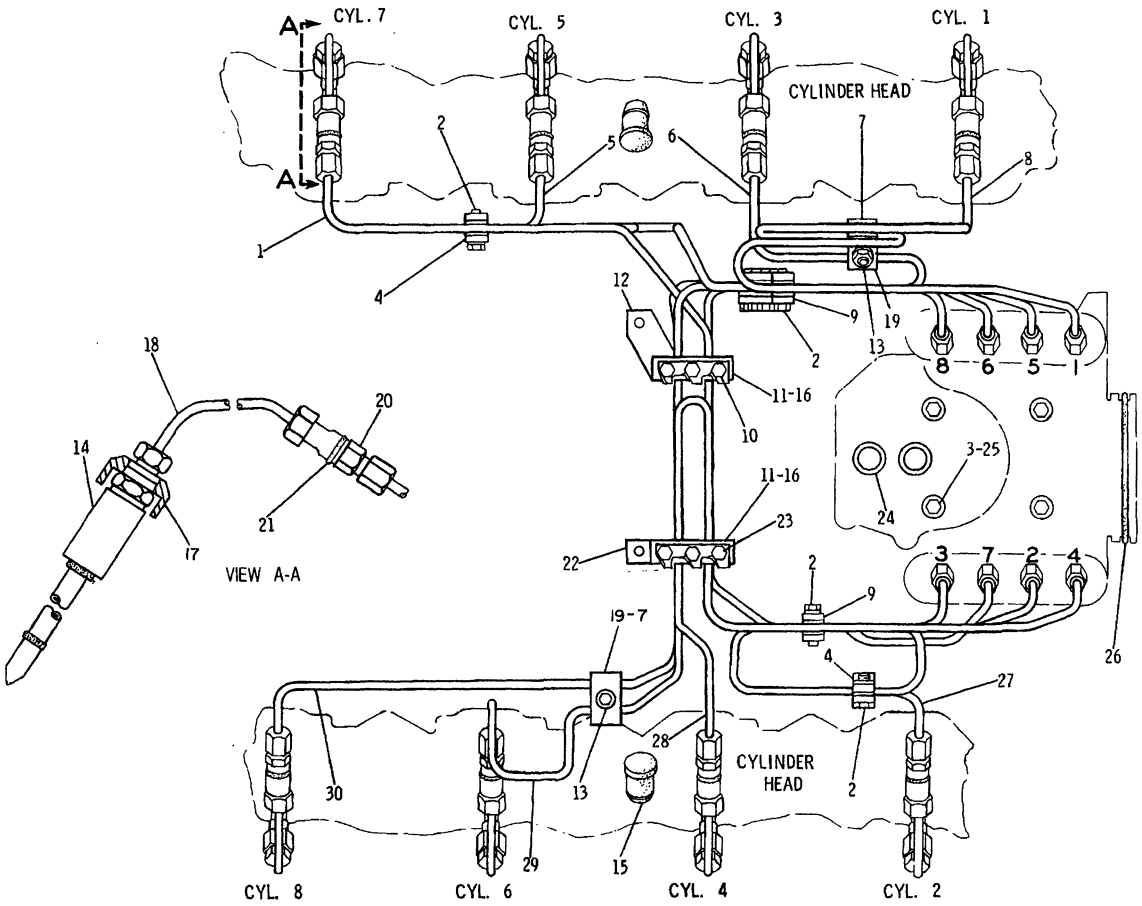

NOTE	REF NO	PART NUMBER	QTY	PART NAME	NOTE	REF NO	PART NUMBER	QTY	PART NAME
	1	4W6317	1	LINE AS-FUEL INJ		19	9S2299	2	STRIP
	2	7N0654	14	BOLT AS			4N2555	2	DAMPER
	3	0S1591	4	BOLT		20	5B1484	8	NUT
	4	7N0665	2	CLAMP		21	5P8119	8	SEAL-O-RING
		7N0671	4	DAMPER		22	6N0608	1	CLAMP-FUEL LINE
		6N2751	2	CLAMP (TAPPED)		23	8N5045	3	BOLT AS
	5	4W6315	1	LINE AS-FUEL INJ		24	1S0004	2	SEAL-O-RING
	6	4W6313	1	LINE AS-FUEL INJ		25	5M2894	4	WASHER
	7	1P6909	2	STRIP AS			688438	4	SPACER
		9S8586	1	STUD-WELD	C	26	6V4314	1	SEAL-O-RING
	8	4W6311	1	LINE AS-FUEL INJ		27	4W6312	1	LINE AS-FUEL INJ
	9	7N0667	2	CLAMP-FUEL LINE		28	4W6314	1	LINE AS-FUEL INJ
		7N0815	4	DAMPER-FUEL LINE		29	4W6316	1	LINE AS-FUEL INJ
		6N2754	2	CLAMP-FUEL LINE (TAPPED)		30	4W6318	1	LINE AS-FUEL INJ
	10	8N5046	3	BOLT AS					
	11	7N0672	10	DAMPER-FUEL LINE					
		7N0668	5	CLAMP-FUEL LINE					
	12	6N1277	1	CLAMP-FUEL LINE					
	13	1B5354	2	NUT-FULL					
		9M1974	2	WASHER-HARD					
CY	14	4W7018	8	NOZZLE AS-FUEL VALVE					
	15	6N2944	2	PLUG					
	16	8N5118	2	LOCK					
C	17	7W2315	8	RETAINER					
	18	2W8142	8	LINE AS-FUEL INJ					

C-CHANGE FROM PREVIOUS TYPE
Y-SEPARATE ILLUSTRATION

B-351020 EP

1252 **4W6310 LINES GP-FUEL INJECTION**
Engine S/N 48W19408-33207
4W7018-Page 76C

FUEL SYSTEM AND GOVERNOR

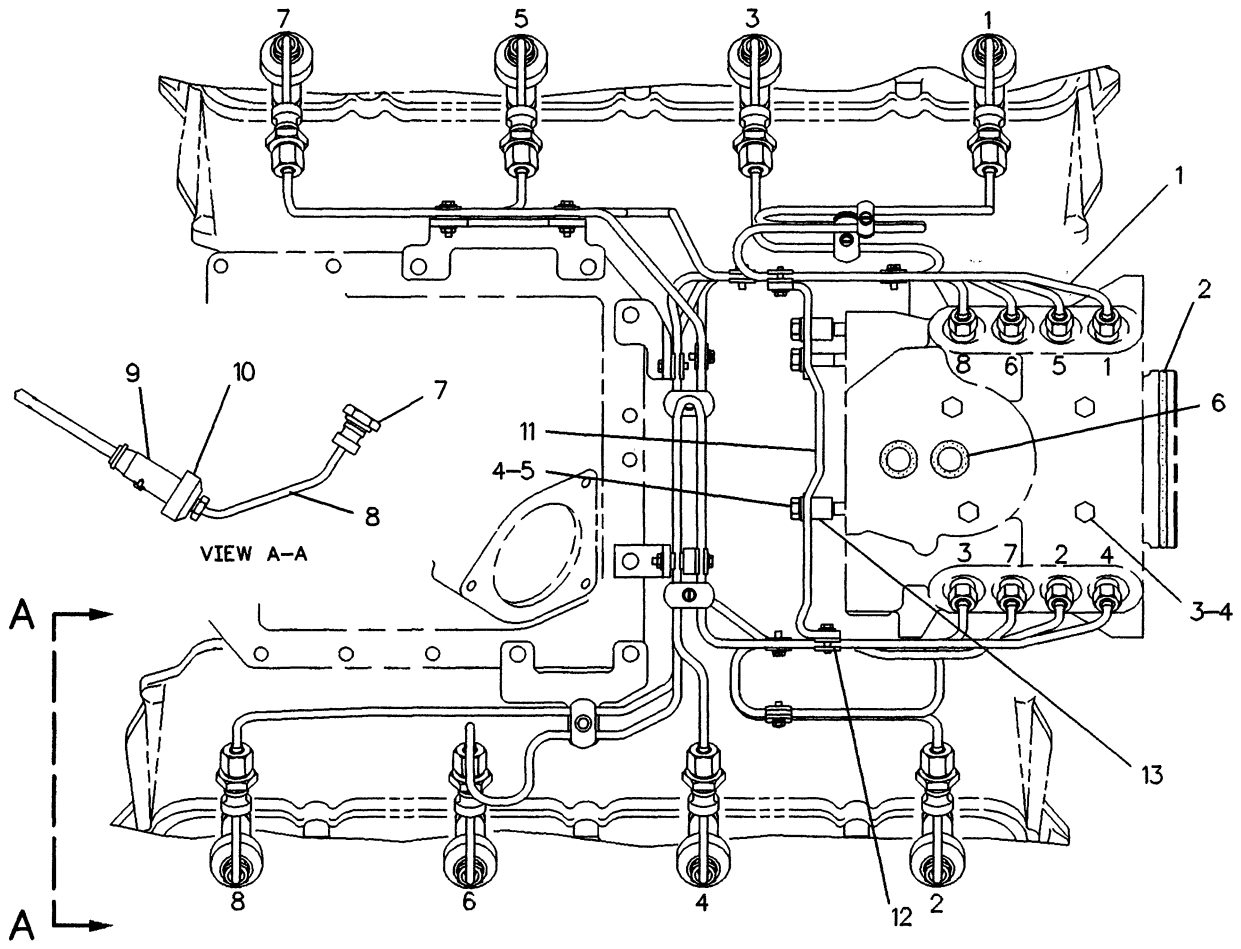

NOTE	REF NO	PART NUMBER	QTY	PART NAME	NOTE	REF NO	PART NUMBER	QTY	PART NAME
CY	1	6I0030	1	LINES GP-FUEL INJECTION					
	2	6V4314	1	SEAL-O-RING					
	3	688438	4	SPACER					
		OS1591	4	BOLT					
	4	5M2894	7	WASHER					
	5	1C2251	3	BOLT					
	6	1S0004	2	SEAL-O-RING					
	7	5B1484	8	NUT					
		5P8119	8	SEAL-O-RING					
C	8	9Y3969	8	LINE AS-FUEL INJ (EACH INCLUDES)					
		1H1023	1	SEAL-O-RING					
RY	9	4W7018	8	NOZZLE AS-FUEL VALVE					
	10	7W2315	8	RETAINER					
	11	9Y4577	1	BRACKET					
	12	7C6589	2	CLAMP-FUEL LINE					
		7C6525	2	CLAMP-FUEL LINE					
		7M9831	4	SCREW-MACHINE					
		4B4274	4	WASHER					
	13	9Y3358	2	SPACER					

C-CHANGE FROM PREVIOUS TYPE
R-REMFG PART MAY BE AVAILABLE
Y-SEPARATE ILLUSTRATION

F-590556 EP

1252 **7E6847 LINES GP-FUEL INJECTION**

Engine S/N 48W33208-Up

4W7018-Page 76C,6I0030-Page 76B.02

FUEL SYSTEM AND GOVERNOR

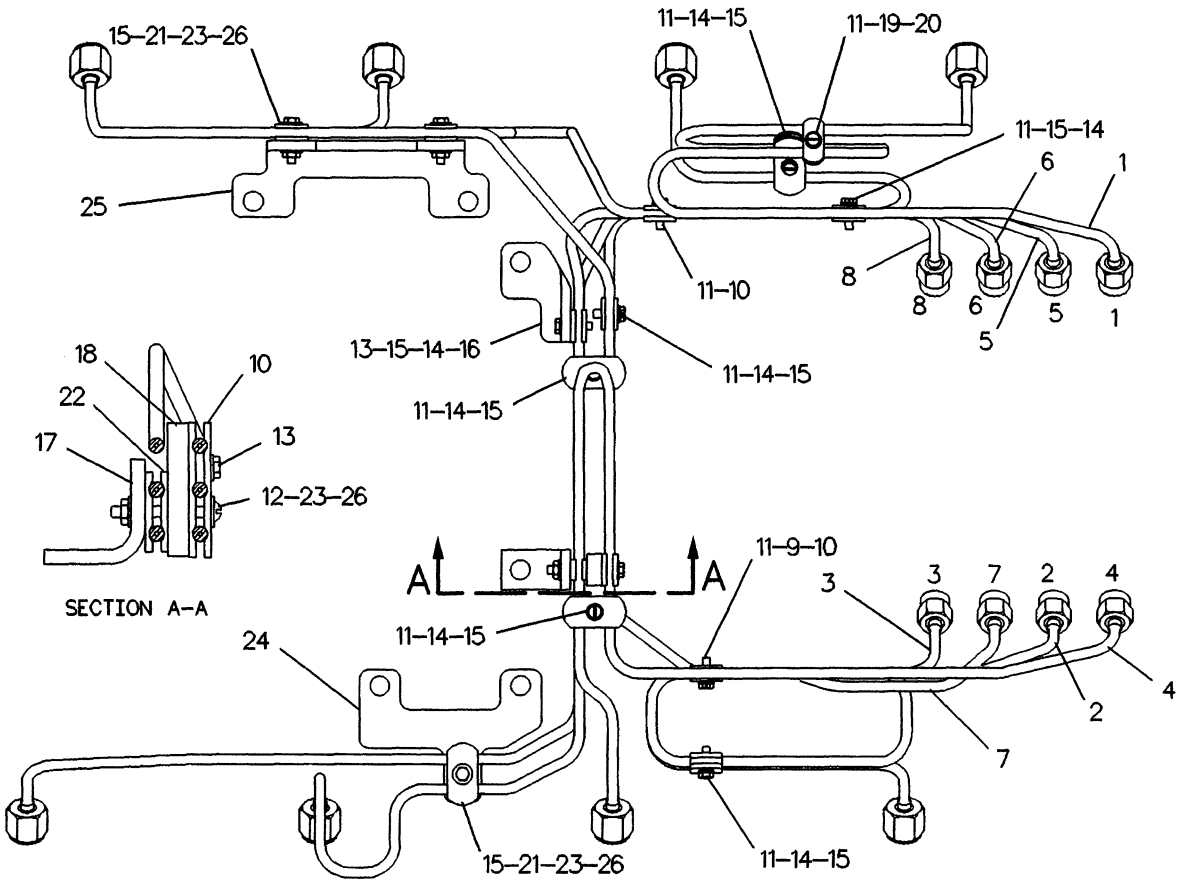

NOTE	REF NO	PART NUMBER	QTY	PART NAME
	1	6I0031	1	LINE AS-FUEL INJ
	2	6I0032	1	LINE AS-FUEL INJ
	3	6I0033	1	LINE AS-FUEL INJ
	4	6I0034	1	LINE AS-FUEL INJ
	5	1245945	1	LINE AS-FUEL INJ
	6	6I0036	1	LINE AS-FUEL INJ
	7	1245947	1	LINE AS-FUEL INJ
	8	6I0038	1	LINE AS-FUEL INJ
	9	7C6589	2	CLAMP-FUEL LINE (THREADED)
	10	7C6525	4	CLAMP-FUEL LINE (NON-THREADED)
	11	5P4939	11	SCREW AS-MACHINE
	12	1043038	1	SCREW-MACHINE
	13	1043039	2	SCREW AS
	14	7C6591	7	CLAMP-FUEL LINE (THREADED)
	15	7C7747	12	CLAMP-FUEL LINE (NON-THREADED)
	16	6I2318	1	BRACKET
	17	6I2319	1	BRACKET
	18	9Y4578	1	SPACER
	19	1W9168	1	CLAMP (TAPPED)
	20	1W9169	1	CLAMP (UNTAPPED)
	21	7M9910	3	SCREW-MACHINE
	22	2W7264	2	CLAMP-FUEL LINE
	23	4B4274	8	WASHER (1.2MM THK)
	24	4P8487	1	PLATE
	25	4P8260	1	BRACKET
	26	4B2047	4	NUT (10 X 24 THD)

F-609684 CP

1252 **6I0030 LINES GP-FUEL INJECTION**

Engine S/N 48W33208-Up

Part Of 7E6847 Lines-Fuel Injection

FUEL SYSTEM AND GOVERNOR

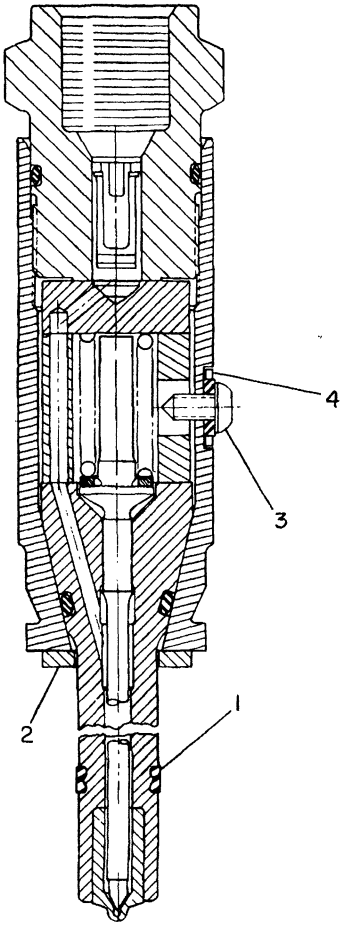

NOTE	REF NO	PART NUMBER	QTY	PART NAME	NOTE	REF NO	PART NUMBER	QTY	PART NAME
	1	9L9098	1	SEAL-CARBON STOP					
	2	7W4482	1	WASHER (9.76MM ID)					
M	3	9X2836	1	SCREW-BUTTON HEAD					
	4	1143364	1	WASHER (SEALING)					

M-METRIC PART

B-617919 CP

1254 **4W7018 NOZZLE AS-FUEL VALVE*R**

8 Required

Engine S/N 48W19408-Up

Part Of 4W6310,7E6847 Lines-Fuel Injection

MEMORANDA

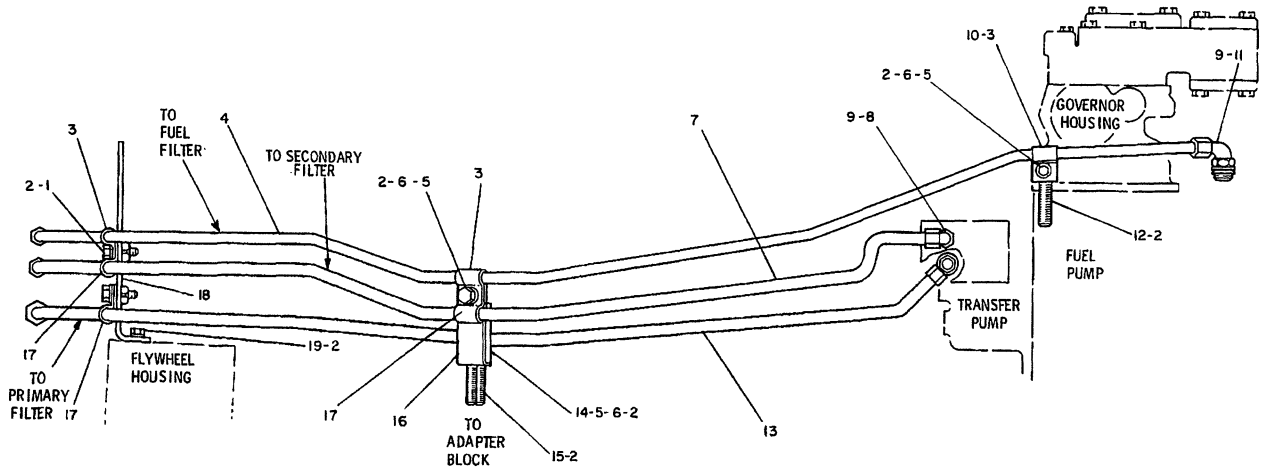

REF. NO.	PART NUMBER	DESCRIPTION	QTY.
1	L1351	BOLT	2
2	5M2894	WASHER	13
3	5P9297	CLIP	3
4	8N4521	TUBE ASSEM.	1
5	S1594	BOLT	3
6	1D4717	NUT	3
7	8N4519	TUBE ASSEM.	1
8	4K6297	ELBOW	2
9	3J1907	SEAL	3
10	9L6791	BRACKET	1
11	307947	ELBOW	1
12	S1590	BOLT	1
13	8N4523	TUBE ASSEM.	1
14	8P5210	BRACKET	1
	5P9298	CLIP	1
15	S1571	BOLT	2
16	4N6162	BRACKET	1
17	5P9299	CLIP	3
18	8N4592	BRACKET ASSEM.	1
19	S1588	BOLT	2

234715

234715 P

1274 **7N7024 LINES GP-FUEL FILTER**
Engine S/N 48W13002-16502

MEMORANDA

FUEL SYSTEM AND GOVERNOR

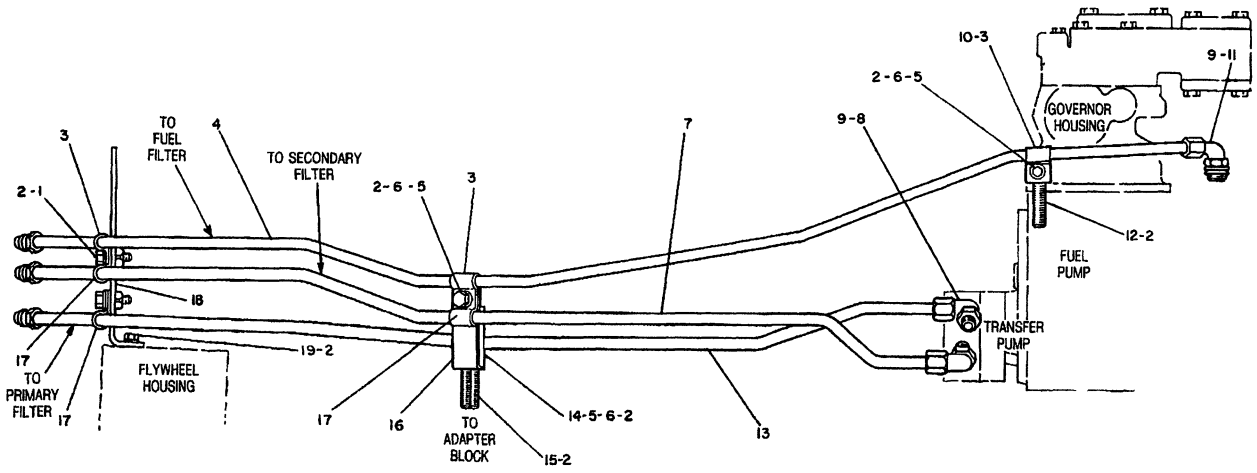

NOTE	REF NO	PART NUMBER	QTY	DESCRIPTION
	1	L1351	2	BOLT
	2	5M2894	13	WASHER
	3	5P9297	3	CLIP
	4	8N4521	1	TUBE ASSEM.
	5	S1594	3	BOLT
	6	1D4717	3	NUT
C	7	2W2253	1	TUBE ASSEM.
	8	4K6297	2	ELBOW
	9	3J1907	3	SEAL
	10	9L6791	1	BRACKET
	11	307947	1	ELBOW
	12	S1590	1	BOLT
C	13	2W2251	1	TUBE ASSEM.
	14	8P5210	1	BRACKET
		5P9298	1	CLIP
	15	S1571	2	BOLT
	16	4N6162	1	BRACKET
	17	5P9299	3	CLIP
	18	8N4592	1	BRACKET ASSEM.
	19	S1588	2	BOLT

C INDICATES CHANGE

310135

310135 P

1274 **7N7024 LINES GP-FUEL FILTER**
Engine S/N 48W16503-19972

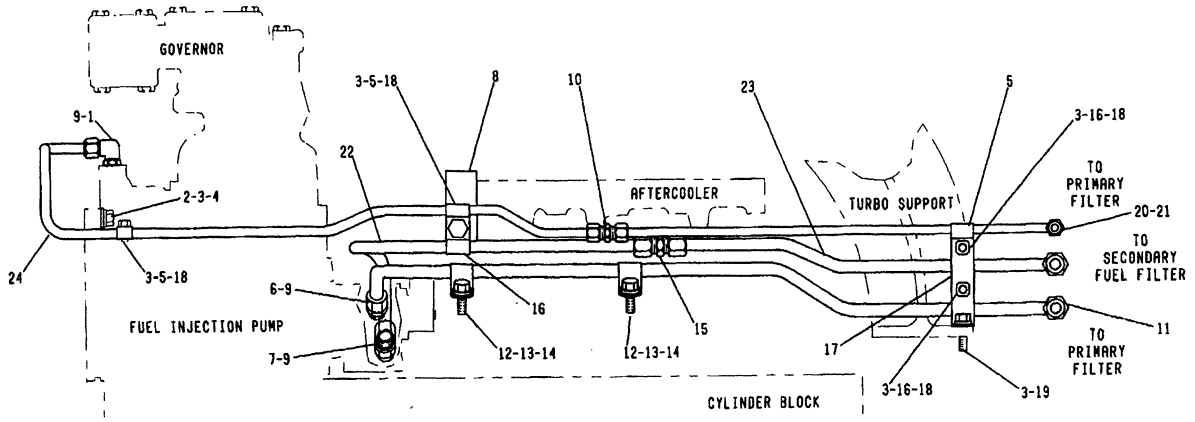

NOTE	REF NO	PART NUMBER	QTY	DESCRIPTION
	1	307947	1	ELBOW
	2	L1351	1	BOLT
	3	5M2894	6	WASHER
	4	4W4591	1	BRACKET AS.
	5	5P9297	3	CLIP
	6	8M506	1	CONNECTOR
	7	4K6297	1	ELBOW
	8	4W4592	1	BRACKET AS.
	9	3J1907	3	SEAL
	10	7K4129	1	UNION
	11	4W4768	1	TUBE AS. (TRANS PUMP SUPPLY)
	12	5P9298	2	CLIP
	13	1B2790	2	BOLT
	14	5P4116	2	WASHER
	15	3R2704	1	UNION
	16	5P9299	3	CLIP
	17	4W4590	1	BRACKET AS.
	18	S509	4	BOLT
	19	3B1915	1	BOLT
	20	4W4769	1	TUBE AS. (FUEL SUPPLY REAR)
	21	2P8384	1	CONNECTOR
	22	4W4495	1	TUBE AS. (TRANS. PUMP RETURN FRONT)
	23	4W4770	1	TUBE AS. (TRANS. PUMP RETURN REAR)
	24	4W4497	1	TUBE AS. (FUEL SUPPLY)

▪ 317091

A-317091 P

1274 **4W4806 LINES GP-FUEL FILTER**
Engine S/N 48W19973-20450

FUEL SYSTEM AND GOVERNOR

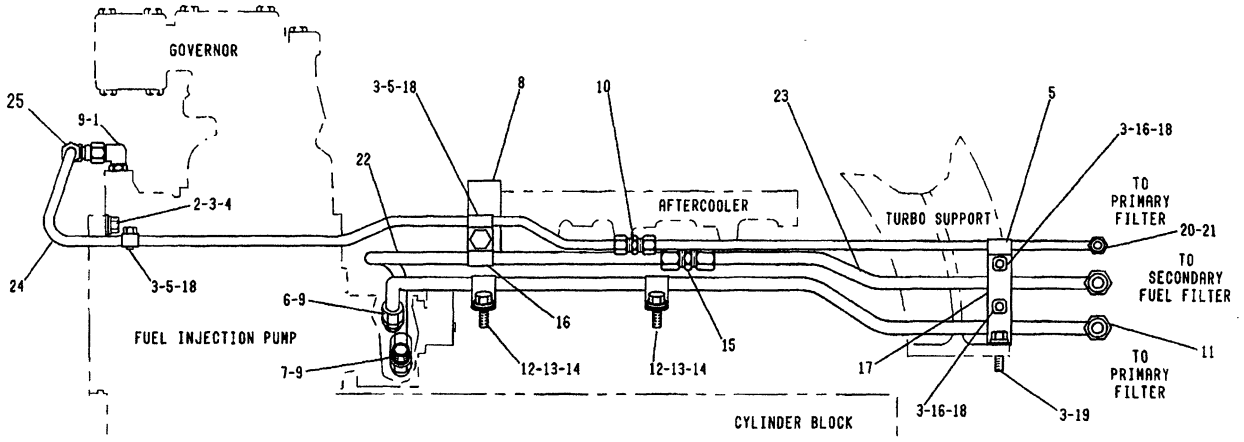

NOTE	REF NO	PART NUMBER	QTY	DESCRIPTION
	1	307947	1	ELBOW
	2	L1351	1	BOLT
	3	5M2894	6	WASHER
	4	4W4591	1	BRACKET AS.
	5	5P9297	3	CLIP
	6	8M506	1	CONNECTOR
	7	4K6297	1	ELBOW
	8	4W4592	1	BRACKET AS.

	9	3J1907	3	SEAL
	10	7K4129	1	UNION
	11	4W4768	1	TUBE AS. (TRANS PUMP SUPPLY)
	12	5P9298	2	CLIP
	13	1B2790	2	BOLT
	14	5P4116	2	WASHER
	15	3R2704	1	UNION
	16	5P9299	3	CLIP
	17	4W4590	1	BRACKET AS.

	18	S509	4	BOLT
	19	3B1915	1	BOLT
	20	4W4769	1	TUBE AS. (FUEL SUPPLY REAR)
	21	2P8384	1	CONNECTOR
	22	4W4495	1	TUBE AS. (TRANS. PUMP RETURN FRONT)
	23	4W4770	1	TUBE AS. (TRANS. PUMP RETURN REAR)
C	24	7W7067	1	TUBE AS. (FUEL SUPPLY)
C	25	6K9194	1	ELBOW

C-INDICATES CHANGE

* 335278

A- 335278 P

1274 **4W4806 LINES GP-FUEL FILTER**
Engine S/N 48W20451-20989

FUEL SYSTEM AND GOVERNOR

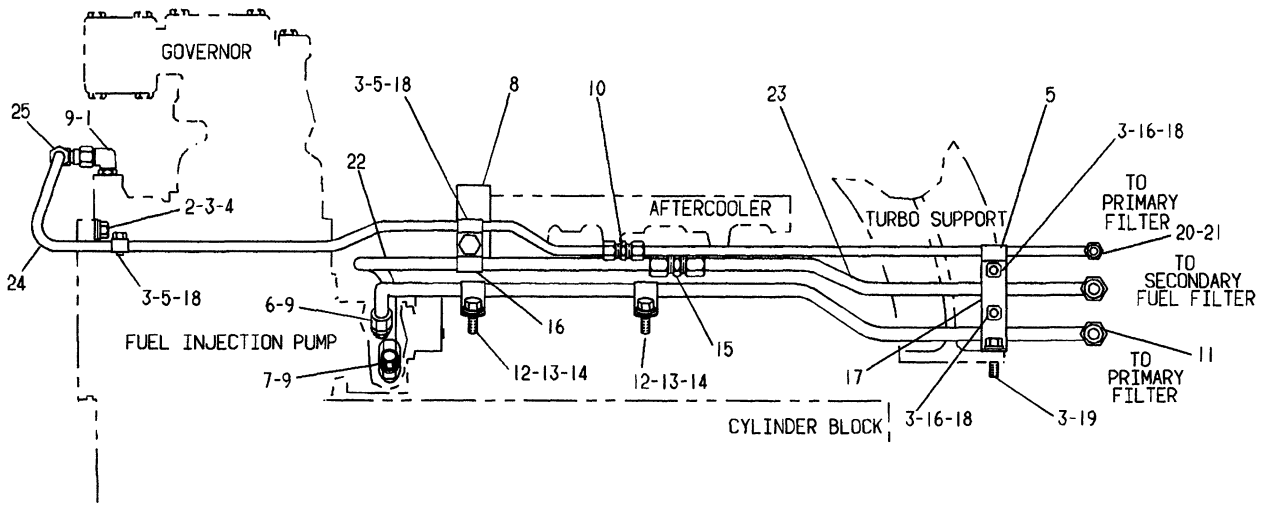

NOTE	REF NO	PART NUMBER	QTY	PART NAME	NOTE	REF NO	PART NUMBER	QTY	PART NAME
	1	3O7947	1	ELBOW					(TMSN PUMP REAR)
	2	0L1351	1	BOLT		24	7W7067	1	TUBE AS-SUPPLY (FUEL)
	3	5M2894	6	WASHER		25	6K9194	1	ELBOW
	4	4W4591	1	BRACKET AS					
	5	5P9297	3	CLIP					
	6	8M0506	1	CONNECTOR					
	7	4K6297	1	ELBOW-FLARED					
	8	4W4592	1	BRACKET AS					
	9	3J1907	3	SEAL-O-RING					
	10	7K4129	1	UNION-FLARED					
C	11	7W9546	1	TUBE AS-SUPPLY (TMSN PUMP)					
	12	5P9298	2	CLIP					
	13	1B2790	2	BOLT					
	14	5P4116	2	WASHER					
	15	3R2704	1	UNION-FLARED					
	16	5P9299	3	CLIP					
	17	4W4590	1	BRACKET AS					
	18	0S0509	4	BOLT					
	19	3B1915	1	BOLT					
C	20	7W9547	1	TUBE AS-FUEL SUPPLY (REAR)					
	21	2P8384	1	CONNECTOR-FLARED					
	22	4W4495	1	TUBE AS-RETURN (TMSN PUMP FRONT)					
C	23	7W9544	1	TUBE AS-RETURN					

C-CHANGE FROM PREVIOUS TYPE

A-347399 EP

1274 **4W4806 LINES GP-FUEL FILTER**
Engine S/N 48W20990-Up

MEMORANDA

FUEL SYSTEM AND GOVERNOR

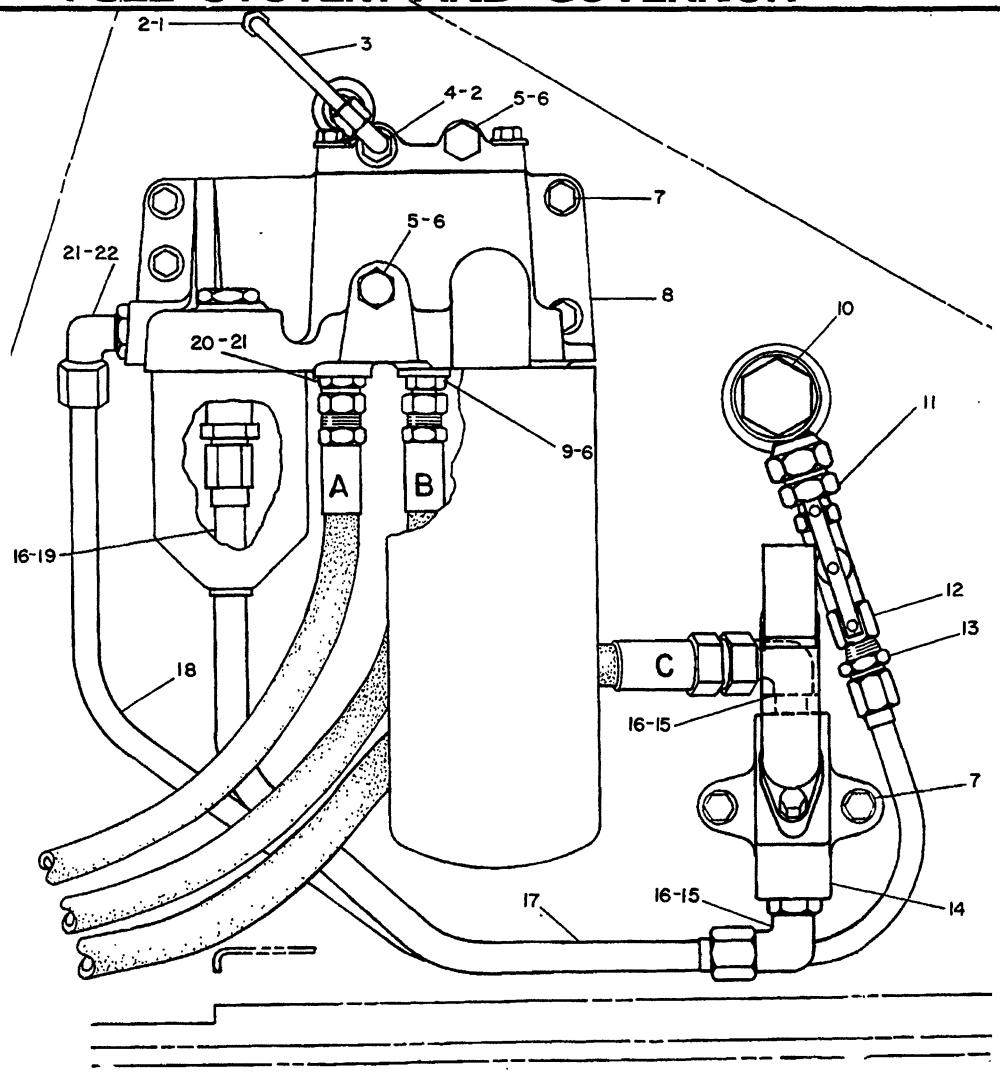

REF. NO.	PART NUMBER	DESCRIPTION	QTY.
1	3J7352	CONNECTOR	1
2	3J7354	SEAL	2
3	9P9744	TUBE ASSEM.	1
4	307946	ELBOW	1
5	9S4191	PLUG	2
6	3J1907	SEAL	3
7	S1588	BOLT	6
	5M2894	WASHER	6
8	7N4415	FILTER GROUP (Separate Illustration)	1
9	2R6806	CONNECTOR	1
10	5P7984	ELBOW	1
	7M8485	SEAL	1
11	8B2664	BUSHING	1
12	5P6940	VALVE	1
13	3R5387	CONNECTOR	1
14	7N4416	PUMP GROUP (Separate Illustration)	1
15	307949	ELBOW	2
16	2M9780	SEAL	3
17	9P9745	TUBE ASSEM.	1
18	9P9743	TUBE ASSEM.	1
19	9G1501	VALVE	1
20	8M505	CONNECTOR	1
21	3K360	SEAL	2
22	307948	ELBOW	1

235054

235054 P

1261

6P7328 FILTER & LINES GP-FUEL-PART 1 OF 2

S/N 53Y1-2005

7N4415-Page 80, 7N4416-Page 81

NOTE	REF NO	PART NUMBER	QTY	DESCRIPTION
D	1	5P1442		HOSE .6M(23.6IN.)
	2	9G608	1	SEAL
C	3	5D1026	1	CLAMP
	4	5P6940	1	VALVE
	5	7G1971	1	HOSE ASSEM. 2M(78.74IN.)
	6	4D7733	2	CLIP (LARGE)
	7	1S994	2	CLIP (SMALL)
	8	S1588	2	BOLT
		5M2894	2	WASHER
	9	7G1972	1	HOSE ASSEM. 2M(78.74IN.)
	10	7G1973	1	HOSE ASSEM. 2M(78.74IN.)
C	11	7244	1	ELBOW
C	12	9G8856	1	SCREEN
C	13	5P1065	1	CONNECTOR

C INDICATES CHANGE
D ORDER BY THE METER

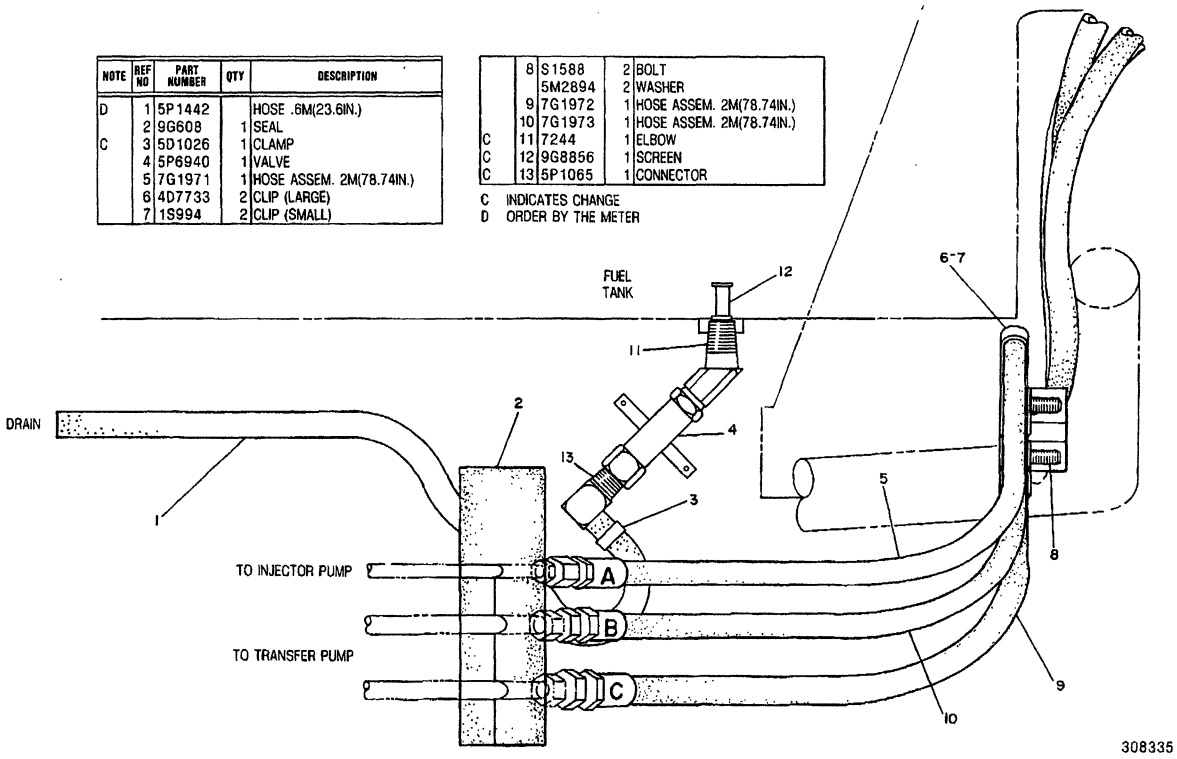

308335 P

1261 **6P7328 FILTER & LINES GP-FUEL-PART 2 OF 2**
S/N 53Y1-2005

FUEL SYSTEM AND GOVERNOR

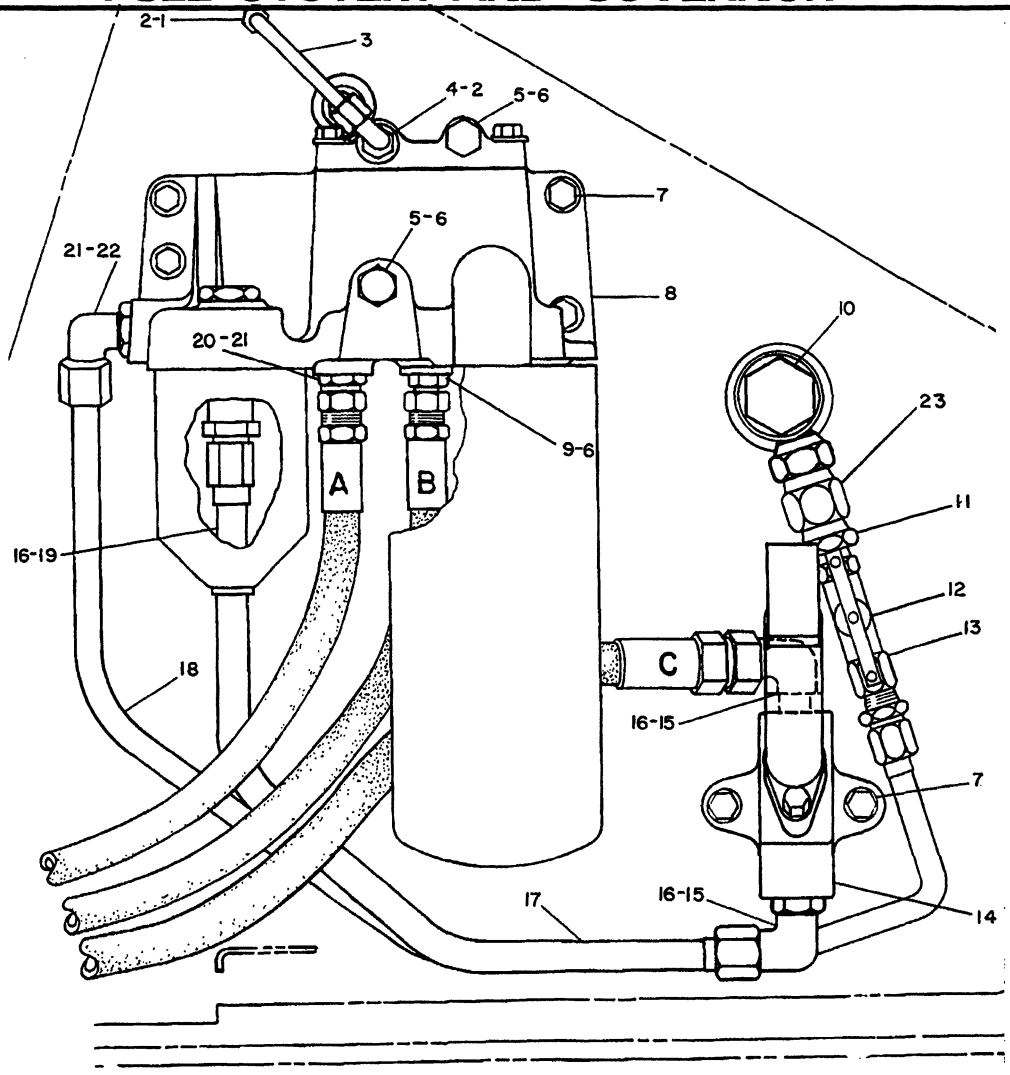

NOTE	REF NO	PART NUMBER	QTY	DESCRIPTION
	1	3J7352	1	CONNECTOR
	2	3J7354	2	SEAL
	3	9P9744	1	TUBE ASSEM.
	4	307946	1	ELBOW
	5	9S4191	2	PLUG
	6	3J1907	3	SEAL
	7	S1588	6	BOLT
		5M2894	6	WASHER
Y	8	7N4415	1	FILTER GROUP
	9	2R6806	1	CONNECTOR
C	10	8K6898	1	FITTING ASSEM.
		7M8485	1	SEAL
C	11	619593	1	BUSHING
	12	5P6940	1	VALVE
	13	3R5387	1	CONNECTOR

C INDICATES CHANGE
Y SEPARATE ILLUSTRATION

Y	14	7N4416	1	PUMP GROUP
	15	307949	2	ELBOW
	16	2M9780	3	SEAL
	17	9P9745	1	TUBE ASSEM.
C	18	6T3349	1	TUBE ASSEM.
	19	9G1501	1	VALVE
	20	8M505	1	CONNECTOR
	21	3K360	2	SEAL
	22	307948	1	ELBOW
C	23	618962	1	CONNECTOR

310174

310174 P

1261

6P7328 FILTER & LINES GP-FUEL-PART 1 OF 2

S/N 53Y2006-2234

7N4415-Page 80, 7N4416-Page 81

NOTE	REF NO	PART NUMBER	QTY	DESCRIPTION
D	1	5P1442		HOSE .6M(23.6IN.)
	2	9G608	1	SEAL
	3	5D1026	1	CLAMP
	4	5P6940	1	VALVE
	5	7G1971	1	HOSE ASSEM. 2M(78.74IN.)
	6	4D7733	2	CLIP (LARGE)
	7	1S994	2	CLIP (SMALL)
	8	S1588	2	BOLT
		5M2894	2	WASHER
	9	7G1972	1	HOSE ASSEM. 2M(78.74IN.)
	10	7G1973	1	HOSE ASSEM. 2M(78.74IN.)
	11	7244	1	ELBOW
	12	9G8856	1	SCREEN
	13	5P1065	1	CONNECTOR

D ORDER BY THE METER

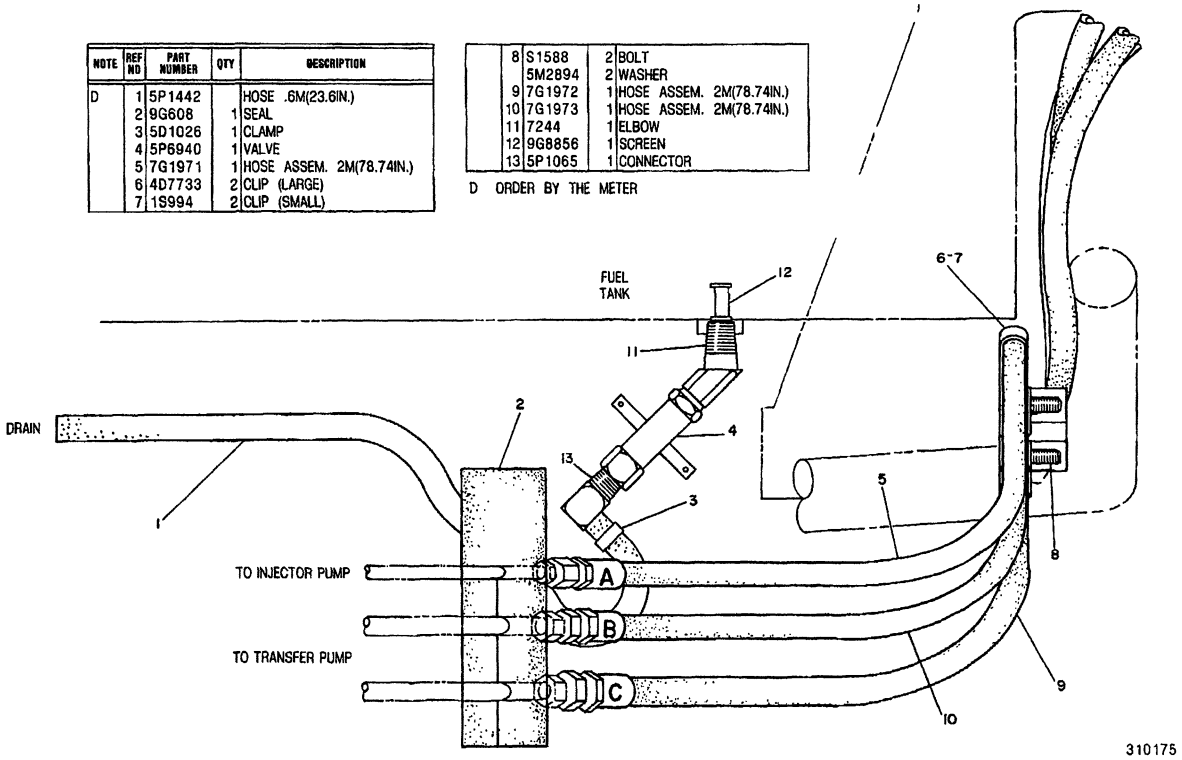

310175

310175 P

1261 **6P7328 FILTER & LINES GP-FUEL-PART 2 OF 2**
S/N 53Y2006-2234

FUEL SYSTEM AND GOVERNOR

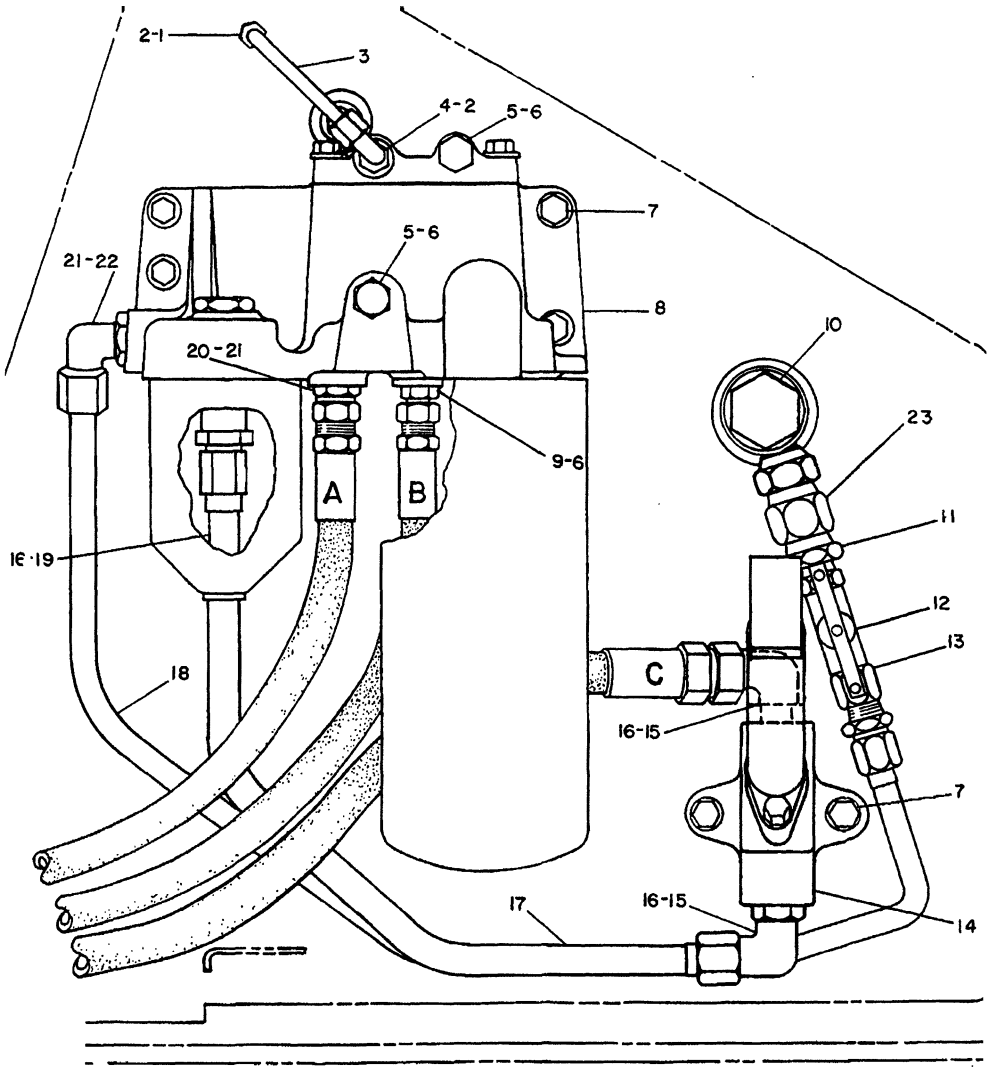

NOTE	REF NO	PART NUMBER	QTY	DESCRIPTION
	1	3J7352	1	CONNECTOR
	2	3J7354	2	SEAL
	3	9P9744	1	TUBE AS.
	4	307946	1	ELBOW
	5	9S4191	2	PLUG
	6	3J1907	3	SEAL
	7	0S1588	6	BOLT
		5M2894	6	WASHER
Y	8	7N4415	1	FILTER GROUP
	9	2R6806	1	CONNECTOR
	10	8K6898	1	FITTING AS.
		7M8485	1	SEAL
	11	619593	1	BUSHING
	12	5P6940	1	VALVE
	13	3R5387	1	CONNECTOR

Y	14	7N4416	1	PUMP GROUP
	15	307949	2	ELBOW
	16	2M9780	3	SEAL
	17	9P9745	1	TUBE AS.
	18	6T3349	1	TUBE AS.
	19	9G1501	1	VALVE
	20	8M0505	1	CONNECTOR
	21	3K0360	2	SEAL
	22	307948	1	ELBOW
	23	618962	1	CONNECTOR

Y SEPARATE ILLUSTRATION

312716 '

312716 P

1261

6P7328 FILTER & LINES GP-FUEL-PART 1 OF 2

S/N 53Y2235-3444

7N4415-Page 80, 7N4416-Page 81

NOTE	REF NO	PART NUMBER	QTY	DESCRIPTION
D	1	5P1442		HOSE .6M(23.6IN.)
	2	9G0608	1	SEAL
C	3	2R8613	1	ADAPTER
C	4	6V5016	1	VALVE
	5	7G1971	1	HOSE AS. 2M(78.7 IN.)
	6	4D7733	2	CLIP (LARGE)
	7	1S0994	2	CLIP (SMALL)
	8	0S1588	2	BOLT
		5M2894	2	WASHER
	9	7G1972	1	HOSE AS. 2M(78.7IN.)
	10	7G1973	1	HOSE AS. 2M(78.7IN.)
C	11	3K0360	1	SEAL
	12	9G8856	1	SCREEN
C	13	6D2784	1	CONNECTOR

C INDICATES CHANGE
D ORDER BY THE METER

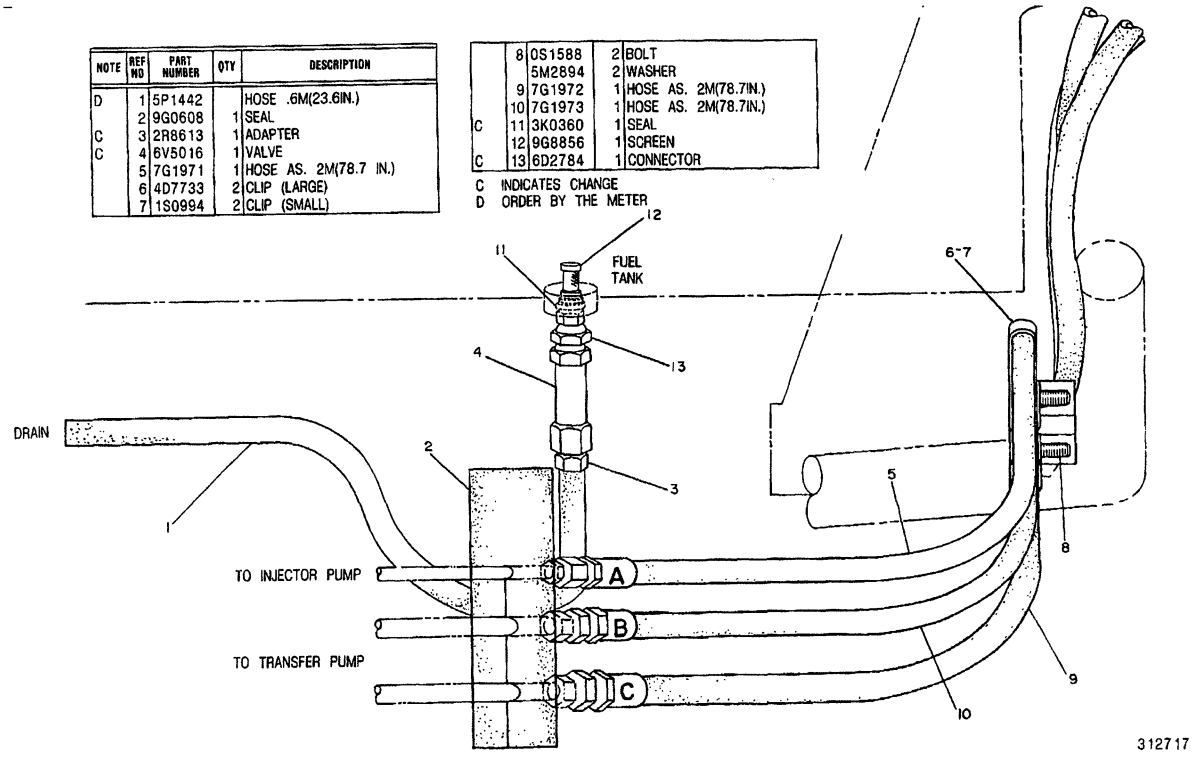

312717 P

1261 **6P7328 FILTER & LINES GP-FUEL-PART 2 OF 2**
S/N 53Y2235-3444

FUEL SYSTEM AND GOVERNOR

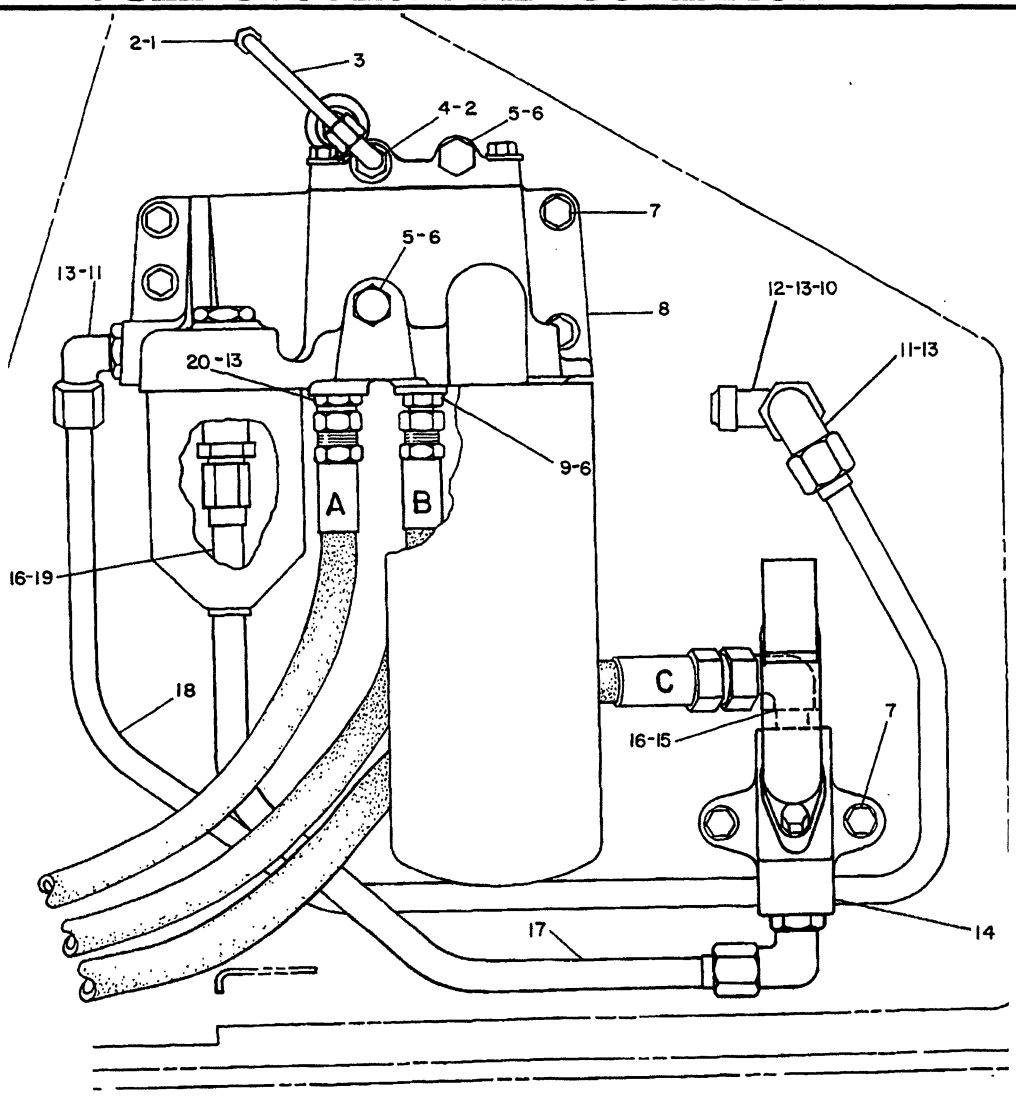

NOTE	REF NO	PART NUMBER	QTY	DESCRIPTION
	1	3J7352	1	CONNECTOR
	2	3J7354	2	SEAL
	3	9P9744	1	TUBE AS.
	4	307946	1	ELBOW
	5	9S4191	2	PLUG
	6	3J1907	3	SEAL
	7	0S1588	6	BOLT
		5M2894	6	WASHER
Y	8	7N4415	1	FILTER GROUP
	9	2R6806	1	CONNECTOR
C	10	5P5777	1	ADAPTER
		7M8485	1	SEAL
C	11	307948	2	ELBOW
C	12	8T0081	1	VALVE
C	13	3K0360	4	SEAL
Y	14	7N4416	1	PUMP GROUP
	15	307949	2	ELBOW
	16	2M9780	3	SEAL
	17	9P9745	1	TUBE AS.
C	18	6T7789	1	TUBE AS.
	19	9G1501	1	VALVE
	20	8M0505	1	CONNECTOR

C INDICATES CHANGE

Y SEPARATE ILLUSTRATION

338973 338973 P

1261

6P7328 FILTER & LINES GP-FUEL-PART 1 OF 2

S/N 53Y3445-3484

7N4415-Page 80, 7N4416-Page 81

NOTE	REF NO	PART NUMBER	QTY	DESCRIPTION
BD	1	5P1442		HOSE
	2	6D2784	1	CONNECTOR
	3	2R8613	1	ADAPTER
	4	6V5016	1	VALVE
	5	7G1971	1	HOSE AS.
	6	4D7733	2	CLIP (LARGE)
	7	1S0994	2	CLIP (SMALL)
	8	0S1588	2	BOLT
		5M2894	2	WASHER
	9	7G1972	1	HOSE AS.
	10	7G1973	1	HOSE AS.
	11	3K0360	1	SEAL
	12	9G8856	1	SCREEN

B USE AS REQUIRED
D ORDER BY THE METER

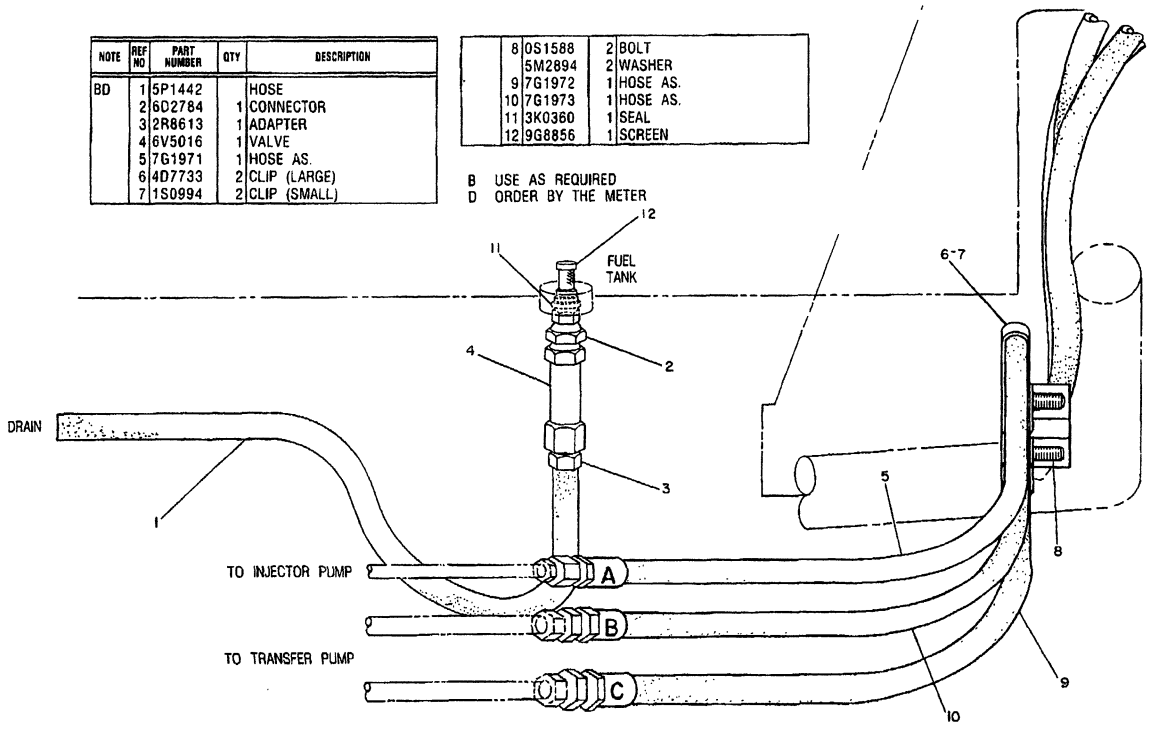

338974

338974 P

1261 **6P7328 FILTER & LINES GP-FUEL-PART 2 OF 2**
S/N 53Y3445-3484

FUEL SYSTEM AND GOVERNOR

NOTE	REF NO	PART NUMBER	QTY	DESCRIPTION
	1	3J7354	2	SEAL
	2	3J7352	1	CONNECTOR
	3	307946	1	ELBOW
	4	7T0392	1	TUBE AS.
	5	9S4191	2	PLUG
	6	3J1907	3	SEAL
	7	9G1501	1	VALVE
	8	2M9780	3	SEAL
	9	307949	2	ELBOW
	10	4D7733	2	CLIP
	11	7T6625	1	HOSE AS.
	12	0S1588	8	BOLT
		5M2894	8	WASHER
	13	7T6624	1	HOSE AS.
	14	7T6626	1	HOSE AS.
	15	1S0994	2	CLIP
	16	6T7774	1	SCREEN
	17	3D2824	4	SEAL
	18	336783	1	NIPPLE
	19	2S3440	1	CLAMP
BE	20	5P1695		HOSE
	21	6V8358	1	VALVE
	22	3P2298	1	ELBOW
	23	2R6806	1	CONNECTOR
	24	9P9745	1	TUBE AS.
	25	6T7789	1	TUBE AS.
	26	307948	1	ELBOW
	27	3K0360	2	SEAL
	28	8M0505	1	CONNECTOR
Y	29	7N4415	1	FILTER GP.
Y	30	7N4416	1	PUMP GP.
	31	8T6638	1	VALVE (BALL)

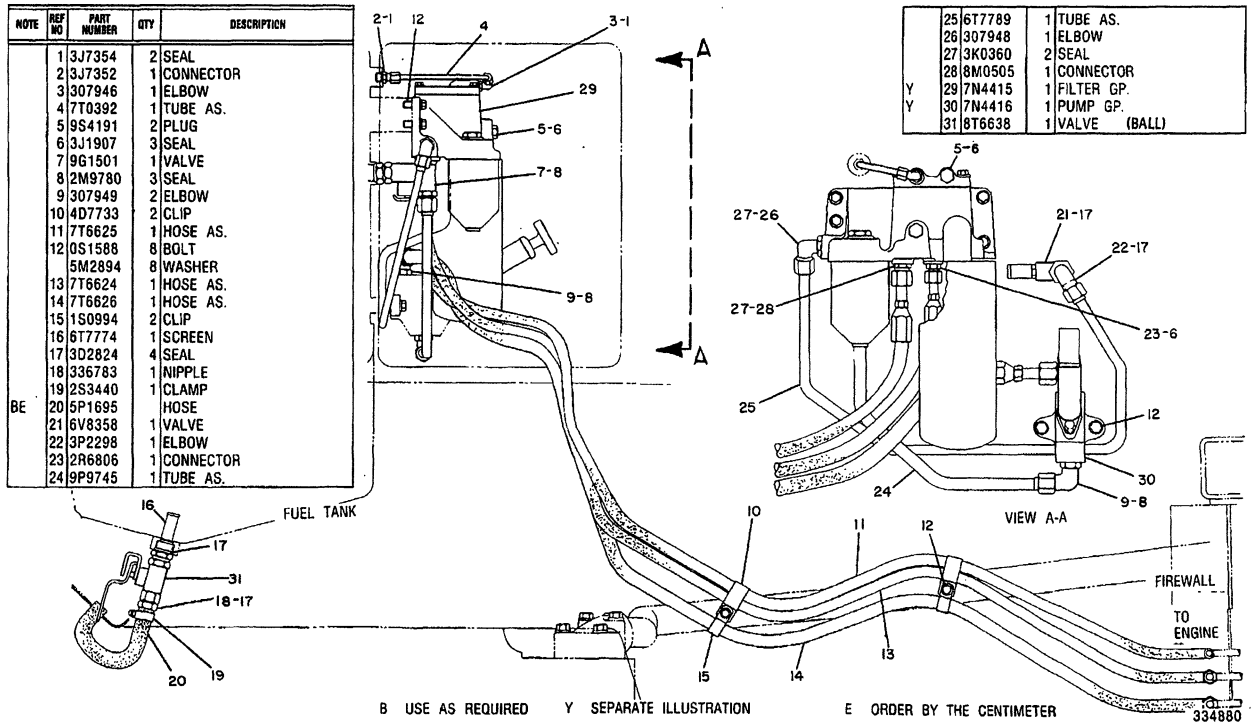

B USE AS REQUIRED Y SEPARATE ILLUSTRATION E ORDER BY THE CENTIMETER

334880 P

1261

6T7773 FILTER & LINES GP-FUEL
S/N 53Y3485-3677
7N4415-Page 80, 7N4416-Page 81

FUEL SYSTEM AND GOVERNOR

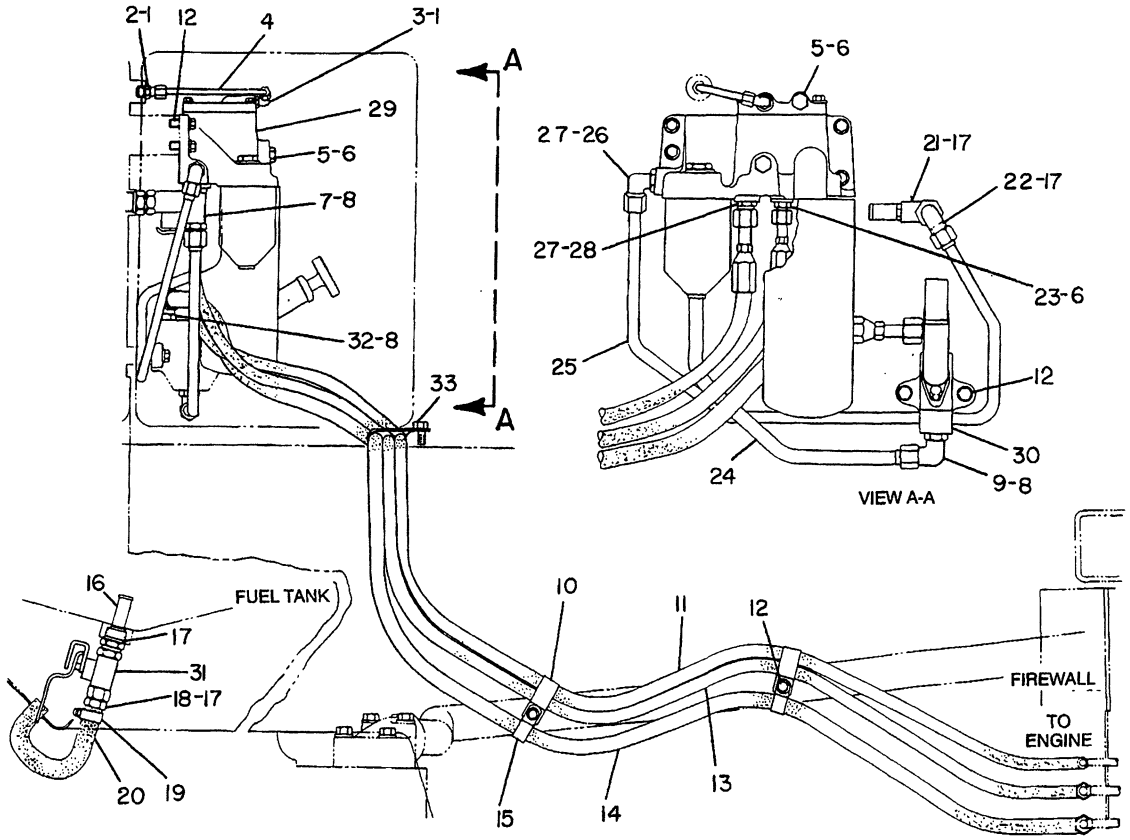

NOTE	REF NO	PART NUMBER	QTY	PART NAME	NOTE	REF NO	PART NUMBER	QTY	PART NAME
	1	3J7354	2	SEAL-O-RING	C	23	6V8636	1	CONNECTOR
	2	3J7352	1	CONNECTOR		24	9P9745	1	TUBE AS
	3	307946	1	ELBOW		25	6T7789	1	TUBE AS
	4	7T0392	1	TUBE AS		26	307948	1	ELBOW
	5	9S4191	2	PLUG-O-RING		27	3K0360	2	SEAL-O-RING
	6	3J1907	3	SEAL-O-RING	C	28	6V8639	1	CONNECTOR-SEAL
	7	9G1501	1	VALVE-CHECK	Y	29	7N4415	1	FILTER GP-FUEL
	8	2M9780	3	SEAL-O-RING	Y	30	7N4416	1	PUMP GP-FUEL PRIMING
C	9	307949	1	ELBOW		31	8T6638	1	VALVE-BALL
	10	4D7733	2	CLIP	C	32	6V8626	1	ELBOW-FACE SEAL
CI	11	9W1707	1	HOSE AS	C	33	0S1594	1	BOLT
C		6V8397	2	SEAL-O-RING	C		5D0718	1	CLIP
	12	0S1588	8	BOLT	C		5P1075	1	WASHER-HARD
		5M2894	8	WASHER					
CI	13	9W1710	1	HOSE AS					
C		6V8398	2	SEAL-O-RING					
CI	14	9W1706	1	HOSE AS					
C		7J9108	2	SEAL-O-RING					
C	15	6D4244	2	CLIP					
	16	6T7774	1	SCREEN-FUEL TANK					
	17	3D2824	4	SEAL-O-RING					
	18	336783	1	NIPPLE-HOSE					
	19	2S3440	1	CLAMP-HOSE					
BE	20	5P1695		HOSE					
	21	6V8358	1	VALVE-BALL					
	22	3P2298	1	ELBOW-FLARED					

B-USE AS REQUIRED
C-CHANGE FROM PREVIOUS TYPE
E-ORDER BY THE CENTIMETER
I-SEE HOSE FABRICATION GUIDE
Y-SEPARATE ILLUSTRATION

B-349385 EP

1261 **6T7773 FILTER & LINES GP-FUEL**
S/N 53Y3678-Up
7N4415-Page 80,7N4416-Page 81

FUEL SYSTEM AND GOVERNOR

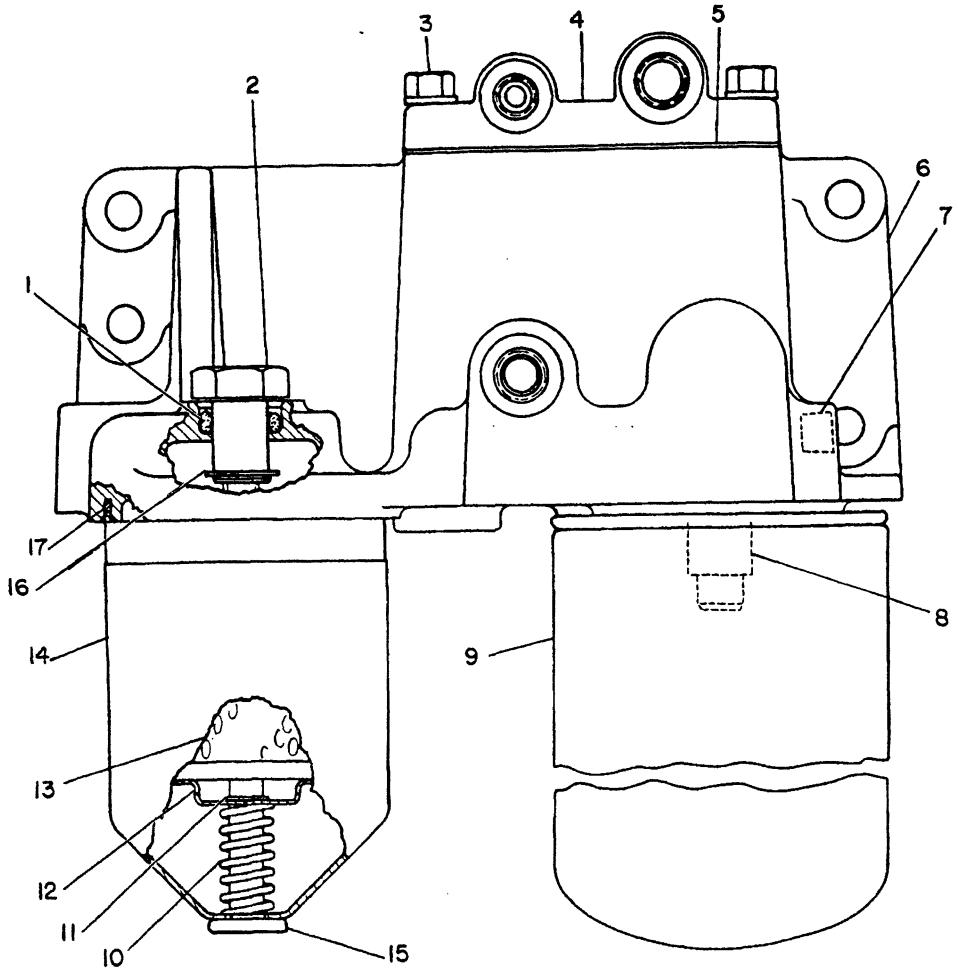

NOTE	REF NO	PART NUMBER	QTY	PART NAME	NOTE	REF NO	PART NUMBER	QTY	PART NAME
	1	5H8038	1	SEAL-O-RING					
	2	7N1628	1	NUT					
C		8M5817	1	WASHER					
	3	1B7182	4	BOLT					
		9M1974	4	WASHER-HARD					
	4	7N4410	1	COVER AS					
	5	7N4411	1	GASKET					
	6	8N0031	1	BASE AS-FUEL FILTER					
	7	7H3171	4	PLUG-PIPE					
	8	9S4167	1	STUD-HOLLOW					
	9	1R0749	1	FILTER AS-FUEL					
	10	7S9323	1	SPRING					
	11	2H3429	1	RING-RETAINING					
	12	7H9678	1	RETAINER-ELEMENT					
	13	9M2341	1	ELEMENT AS-FUEL FILTER					
	14	8H2810	1	CASE AS-FILTER					
	15	8H2808	1	STUD					
	16	1L3769	1	RING-RETAINING					
	17	8H2778	1	GASKET					

C-CHANGE FROM PREVIOUS TYPE

B-638961 CP

1261 **7N4415 FILTER GP-FUEL**

Part Of 6P7328,6T7773 Filters & Lines-Fuel

FUEL SYSTEM AND GOVERNOR

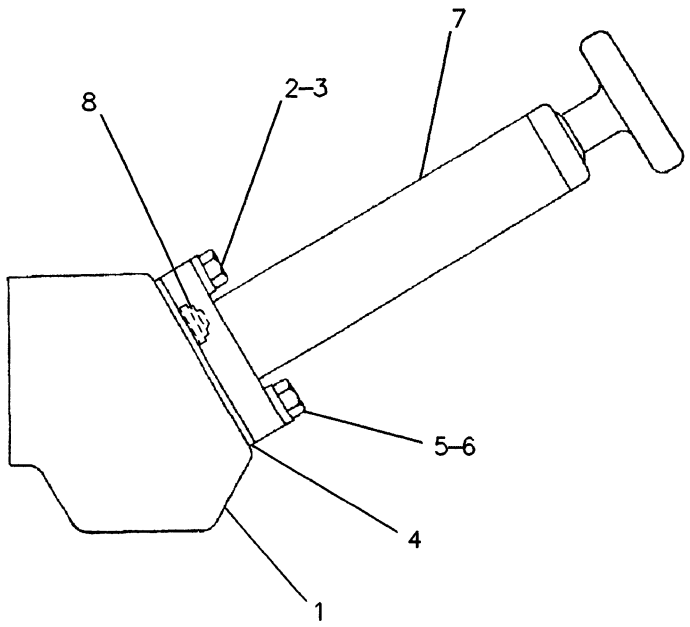

NOTE	REF NO	PART NUMBER	QTY	PART NAME
	1	8N3052	1	BLOCK-MOUNTING
	2	6D2928	1	BOLT (1/4-20X1.125IN)
	3	8T4205	1	WASHER-HARD (2MM THK)
	4	1P0436	1	GASKET
	5	6V8918	1	BOLT (5/16-18X1.25IN)
	6	8T4224	1	WASHER-HARD
	7	2W2605	1	PUMP AS-FUEL PRIMING
	8	7E5346	2	VALVE AS
				THE FOLLOWING REPAIR KIT IS AVAILABLE:
		8N6287	1	KIT-FUEL PRIMING KNOB (INCL. KNOBS, WASHERS, SPRING & PIN)

R-504880 EP

1258 **7N4416 PUMP GP-FUEL PRIMING**

Part Of 6P7328,6Y7773 Filters & Lines-Fuel

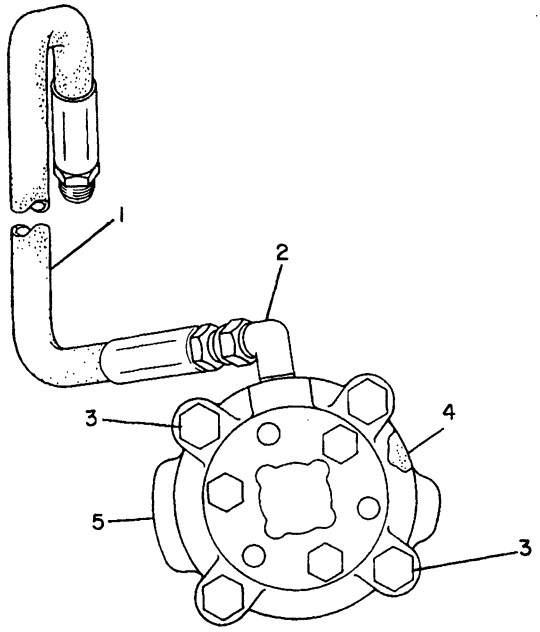

NOTE	REF NO	PART NUMBER	QTY	PART NAME
C	1	6N3169	1	HOSE AS 60.96CM(24 IN)
C	2	2N1287	1	ELBOW-FLARED
	3	4N8112	2	BOLT
C		8F7242	2	WASHER
C		3B4505	2	LOCKWASHER
	4	2P8643	1	GASKET
RY	5	6N0651	1	CONTROL GP-FUEL RATIO

C-CHANGE FROM PREVIOUS TYPE
R-REMFG PART MAY BE AVAILABLE
Y-SEPARATE ILLUSTRATION

B-231301 EP

1278 **6N6209 CONTROL GP-FUEL RATIO**

Engine S/N 48W13002-16067

6N0651-Page 81B

FUEL SYSTEM AND GOVERNOR

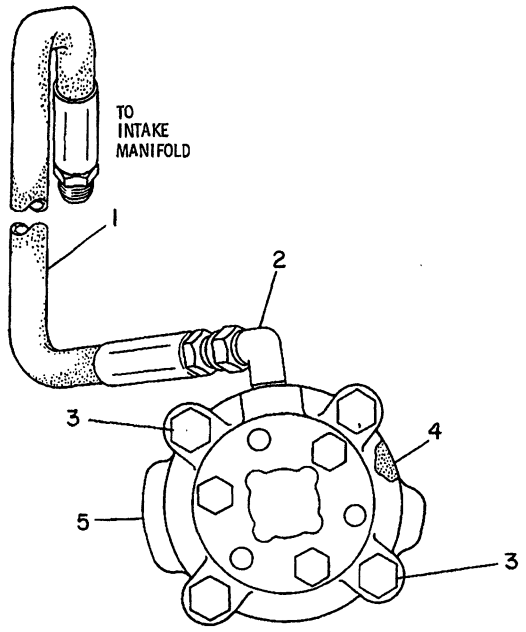

NOTE	REF NO	PART NUMBER	QTY	PART NAME
IJ	1	6N3169	1	HOSE AS 60.96CM(24IN.)
	2	2N1287	1	ELBOW-FLARED
	3	4N8112	2	BOLT
		8F7242	2	WASHER
		3B4505	2	LOCKWASHER (.097IN THK)
	4	2P8643	1	GASKET
CYR	5	2W3157	1	CONTROL GP-FUEL RATIO
				J-INSTALLATION POSITION MAY VARY, TYPICAL POSITION SHOWN

C-CHANGE FROM PREVIOUS TYPE
I-SEE HOSE FABRICATION GUIDE
R-REMFG PART MAY BE AVAILABLE
Y-SEPARATE ILLUSTRATION B-570187 EP

1278 **6N6209 CONTROL GP-FUEL RATIO**
Engine S/N 48W16068-Up
2W3157-Page 82

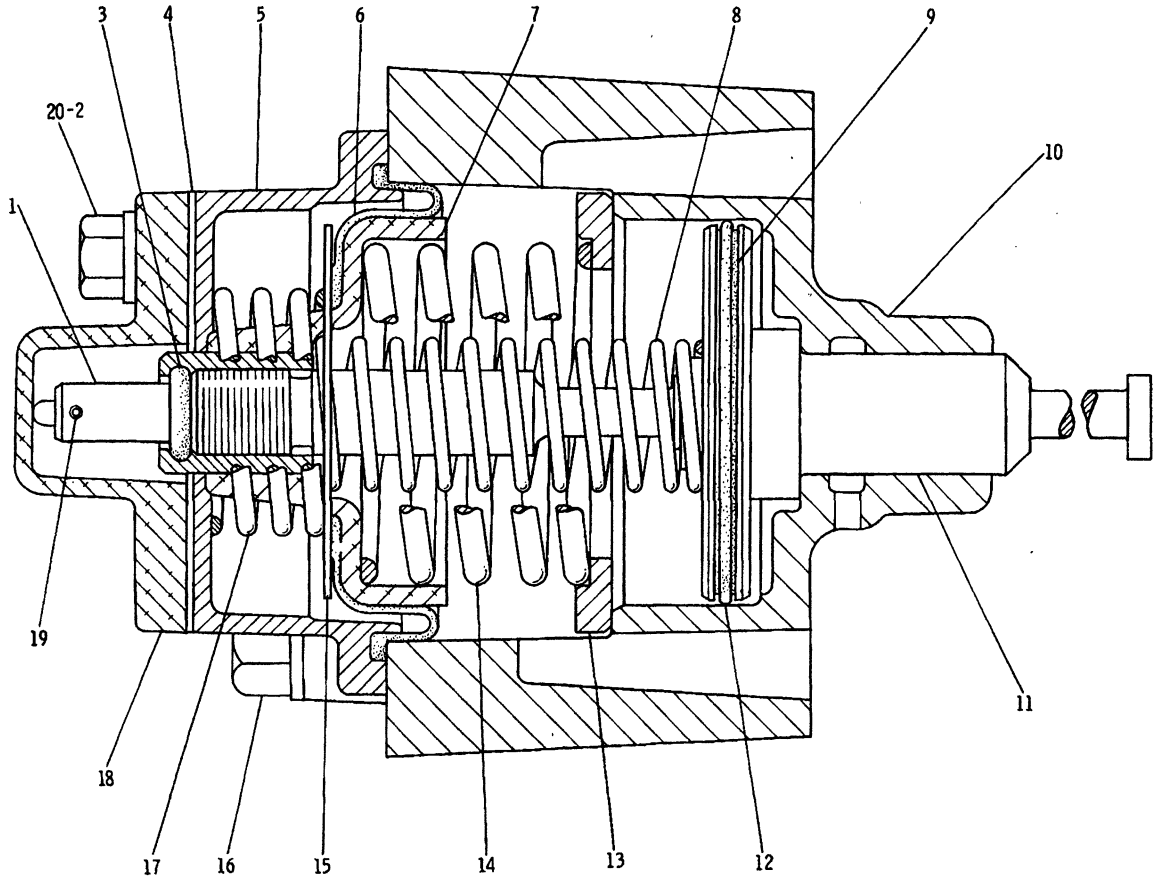

NOTE	REF NO	PART NUMBER	QTY	PART NAME	NOTE	REF NO	PART NUMBER	QTY	PART NAME
	1	2P8939	1	VALVE-INTERNAL					
C	2	9S5282	3	WASHER-HARD					
	3	4J2506	1	SEAL-O-RING					
	4	6L5766	1	GASKET					
	5	2P8226	1	COVER-DIAPHRAGM					
	6	2P8804	1	DIAPHRAGM					
	7	2P8875	1	RETAINER AS					
	8	6N0515	1	SPRING (INNER)					
C	9	3P1979	1	SEAL-O-RING					
	10	2P8225	1	HOUSING-DIAPHRAGM					
	11	6N0593	1	VALVE AS-LIMITER					
	12	2P8234	1	SEAL-RING					
	13	2P8801	1	RETAINER-SPRING					
C	14	7N0209	1	SPRING (OUTER)					
	15	2P8803	1	WASHER					
	16	4B3388	2	BOLT					
		8F7242	2	WASHER					
	17	6N0513	1	SPRING					
C	18	6N7148	1	COVER					
C	19	7N5715	1	PIN					
	20	0S1347	1	BOLT (DRILLED HEAD)					
		0S1615	2	BOLT (1/4-20X.75IN)					
				-OR-					
C		6V2627	3	BOLT-12 POINT HEAD					

C-CHANGE FROM PREVIOUS TYPE

B-231354 EP

1278 **6N0651 CONTROL GP-FUEL RATIO*R**

Engine S/N 48W13002-16067

Part Of 6N6209 Control-Fuel Ratio

FUEL SYSTEM AND GOVERNOR

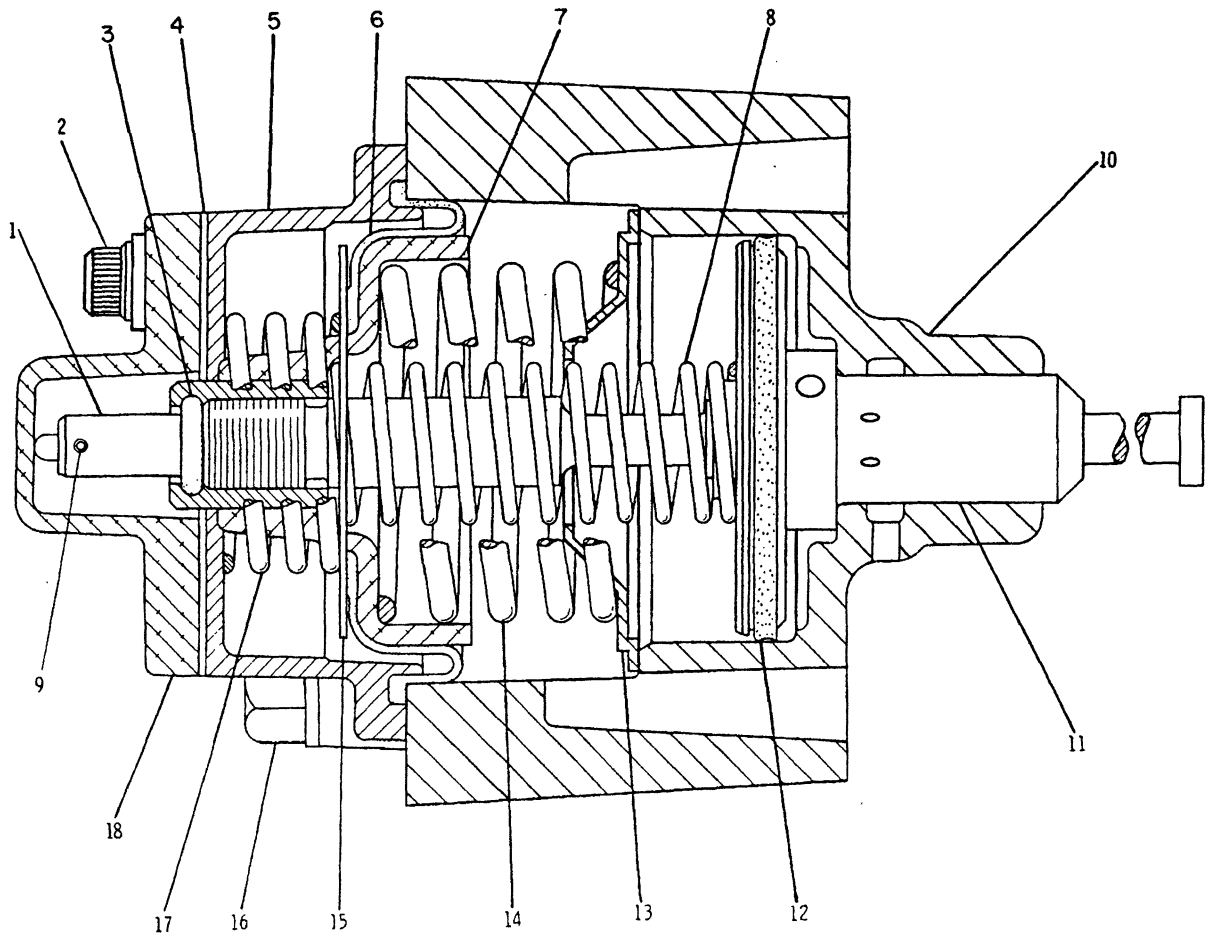

NOTE	REF NO	PART NUMBER	QTY	PART NAME
	1	2P8939	1	VALVE-INTERNAL
	2	6V2627	3	BOLT-12 POINT HEAD
		9S5282	3	WASHER-HARD
	3	4J2506	1	SEAL-O-RING
	4	6L5766	1	GASKET
	5	2P8226	1	COVER-DIAPHRAGM
	6	1W4797	1	DIAPHRAGM
	7	2P8875	1	RETAINER AS
	8	6N0515	1	SPRING (INNER)
	9	7N5715	1	PIN
	10	2P8225	1	HOUSING-DIAPHRAGM
	11	2W3156	1	VALVE AS-LIMITER
	12	7N8512	1	SEAL
	13	1W2567	1	RETAINER-SPRING
	14	7N0209	1	SPRING (OUTER)
	15	2P8803	1	WASHER
	16	4B3388	2	BOLT
		8F7242	2	WASHER
	17	6N0513	1	SPRING
	18	6N7148	1	COVER

B-312636 EP

1278 **2W3157 CONTROL GP-FUEL RATIO*R**

Engine S/N 48W16068-Up

Part Of 6N6209 Control-Fuel Ratio

FUEL SYSTEM AND GOVERNOR

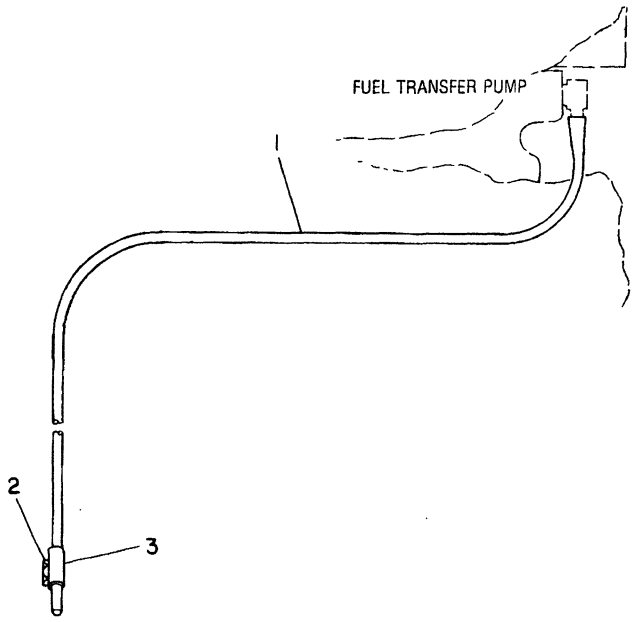

NOTE	REF NO	PART NUMBER	QTY	PART NAME
D	1	5P6011		TUBE 1M(39.37IN)
	2	0S0509	1	BOLT
		5M2894	1	WASHER
	3	4H8878	1	CLIP

D-ORDER BY THE METER

B-230548 EP

1273 **1W1850 LINES GP-DRAIN**
Fuel
Engine S/N 48W13002-19972

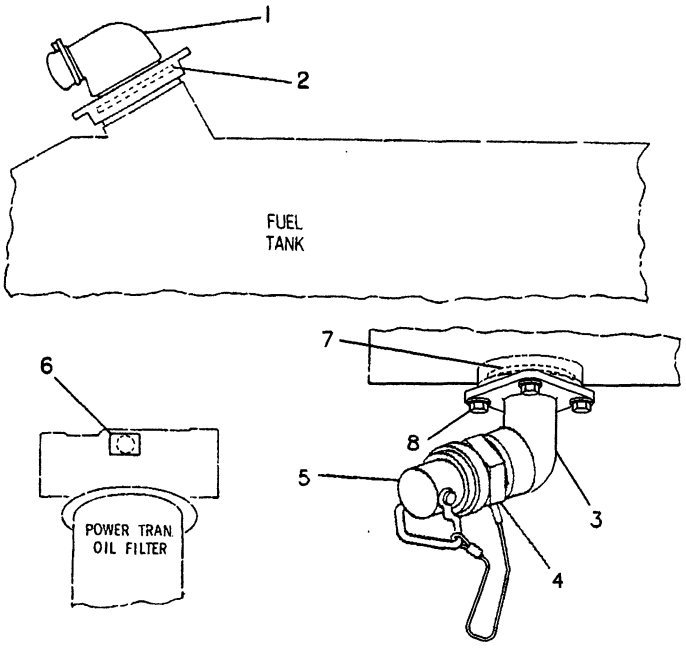

NOTE	REF NO	PART NUMBER	QTY	PART NAME
C	1	4T1314	1	VENT AS-TANK
C	2	5T8592	1	SEAL-BODY
	3	9G1711	1	ELBOW
Y	4	2G9000	1	ADAPTER GP-FAST FILL FUEL
Y	5	9D0630	1	COVER-DUST
	6	6V0484	1	ADAPTER-O-RING
		3J1907	1	SEAL-O-RING
C	7	1H5728	1	SEAL-O-RING
	8	8T8917	4	BOLT
		8T4223	4	WASHER-HARD

C-CHANGE FROM PREVIOUS TYPE
Y-SEPARATE ILLUSTRATION

R-480066 EP

1710 **9P9088 ADAPTER GP-FAST FILL FUEL**
9D0630,2G9000-Page 84
For Use With Dozer Tilt & Adjustable Ripper
An Attachment

FUEL SYSTEM AND GOVERNOR

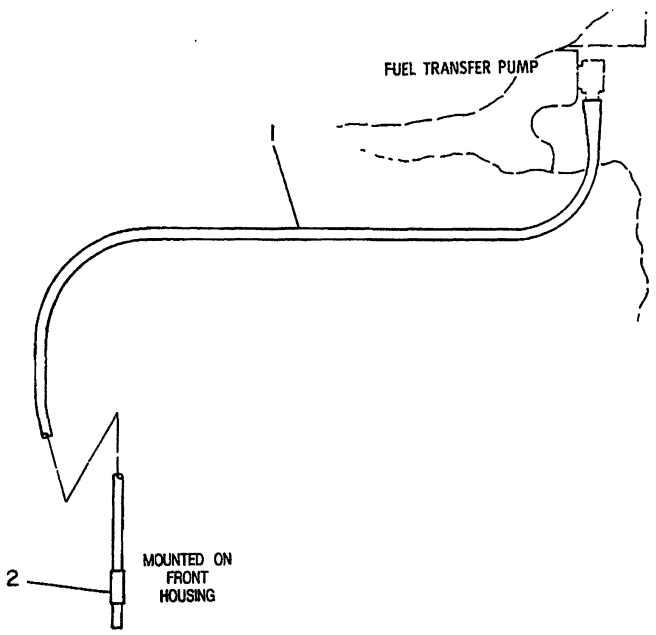

NOTE	REF NO	PART NUMBER	QTY	PART NAME
CD	1	5P6011		TUBE 1M(39.37IN.)
	2	4H8878	1	CLIP

C-CHANGE FROM PREVIOUS TYPE
D-ORDER BY THE METER

B-312630 EP

1274

7N8243 LINES GP-DRAIN
Fuel Transfer Pump
Engine S/N 48W19973-Up

MEMORANDA

FUEL SYSTEM AND GOVERNOR

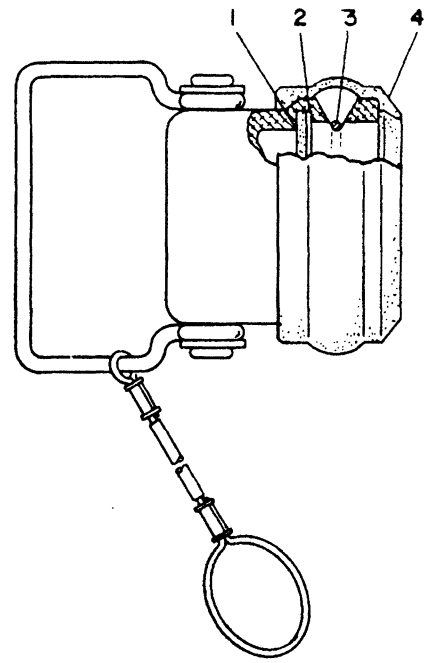

NOTE	REF NO	PART NUMBER	QTY	PART NAME
	1	9D0625	1	SEAL
	2	9D0644	1	RING-RETAINING
	3	9D0643	1	LOCKRING
	4	9D0624	1	COVER-DUST

B-118192 EP

1710

9D0630 COVER GP-DUST
Fast Fill
Part Of 9P9088 Adapter-Fast Fill Fuel
An Attachment

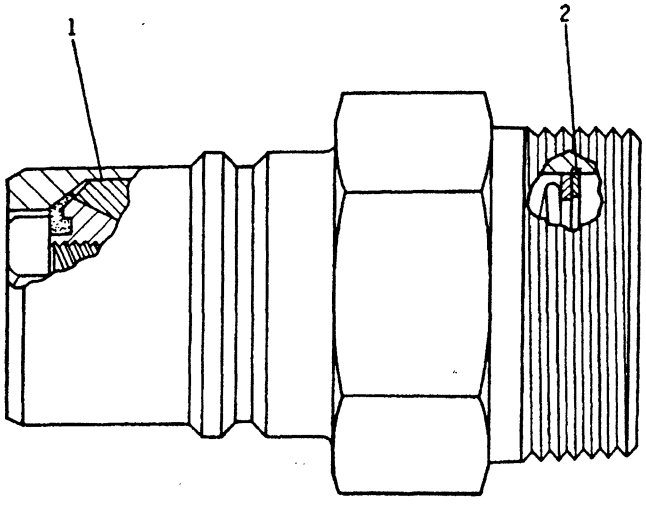

NOTE	REF NO	PART NUMBER	QTY	PART NAME
	1	2G8957	1	PLUNGER
	2	5P8233	1	RING-RETAINING

B-213834 EP

1710

2G9000 ADAPTER GP-FAST FILL FUEL
Part Of 9P9088 Adapter-Fast Fill Fuel
An Attachment

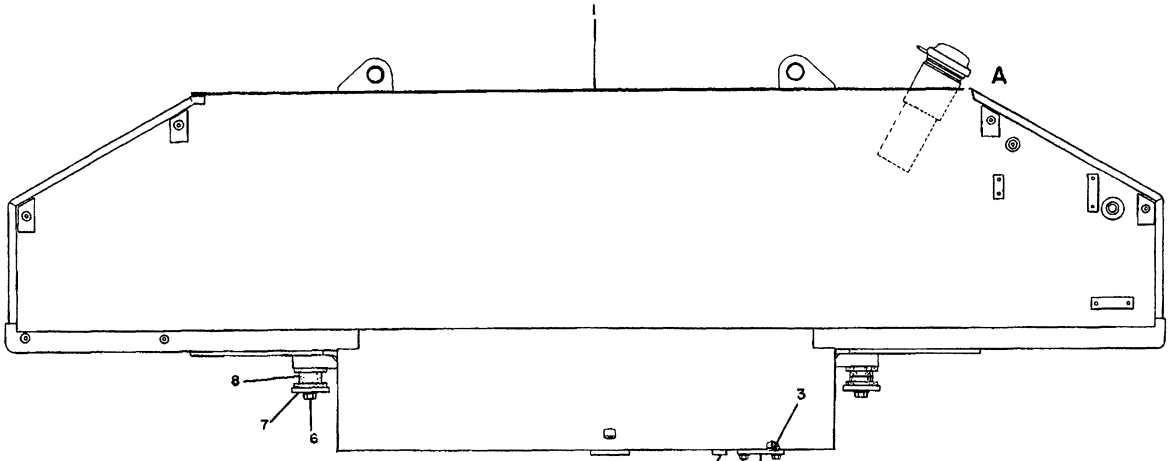

REF. NO.	PART NUMBER	DESCRIPTION	QTY.
1	9P6614	TANK ASSEM. (Includes)	1
2	7M5007	LUG	1
3	1H5728	SEAL	1
4	9G1815	COVER	1
5	6H1717	BOLT	4
	5P8245	WASHER	4
6	1B4367	BOLT	4
	4D3704	WASHER	4
7	2G493	WASHER	4
8	9P3066	MOUNT	8

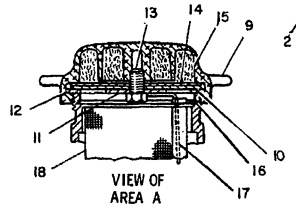

REF. NO.	PART NUMBER	DESCRIPTION	QTY.
9	9G6082	CAP ASSEM. (Includes)	1
	8P408	CAP	1
10	3F4134	BAFFLE	1
11	7B2002	WASHER	1
12	2A1763	GASKET	1
13	3H8389	SCREW	1
14	4B5423	GASKET	1
15	4B5949	ELEMENT	2
16	8H3497	RING	1
17	9P6629	PLUNGER	1
18	9P7121	STRAINER	1

235069

235069 P

1273

6P7327 TANK GP-FUEL
795 Liters (210 Gallons)
S/N 53Y1-2234

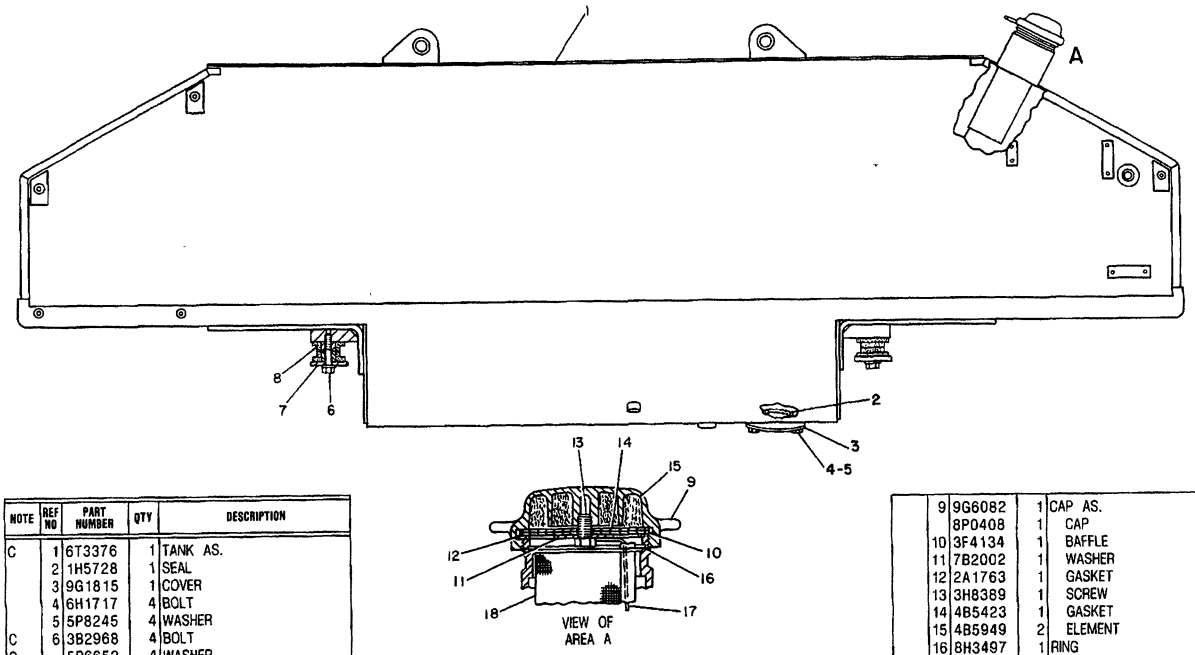

NOTE	REF NO	PART NUMBER	QTY	DESCRIPTION
C	1	6T3376	1	TANK AS.
	2	1H5728	1	SEAL
	3	9G1815	1	COVER
	4	6H1717	4	BOLT
	5	5P8245	4	WASHER
C	6	3B2968	4	BOLT
C		5P6652	4	WASHER
	7	2G0493	4	WASHER
C	8	6T1698	8	MOUNT

	9	9G6082	1	CAP AS.
		8P0408	1	CAP
	10	3F4134	1	BAFFLE
	11	7B2002	1	WASHER
	12	2A1763	1	GASKET
	13	3H8389	1	SCREW
	14	4B5423	1	GASKET
	15	4B5949	2	ELEMENT
	16	8H3497	1	RING
C	17	6T3365	1	PLUNGER
	18	9P7121	1	STRAINER

C INDICATES CHANGE

312714

312714 P

1273

6P7327 TANK GP-FUEL
795 Liters (210 Gallons)
S/N 53Y2235-2513

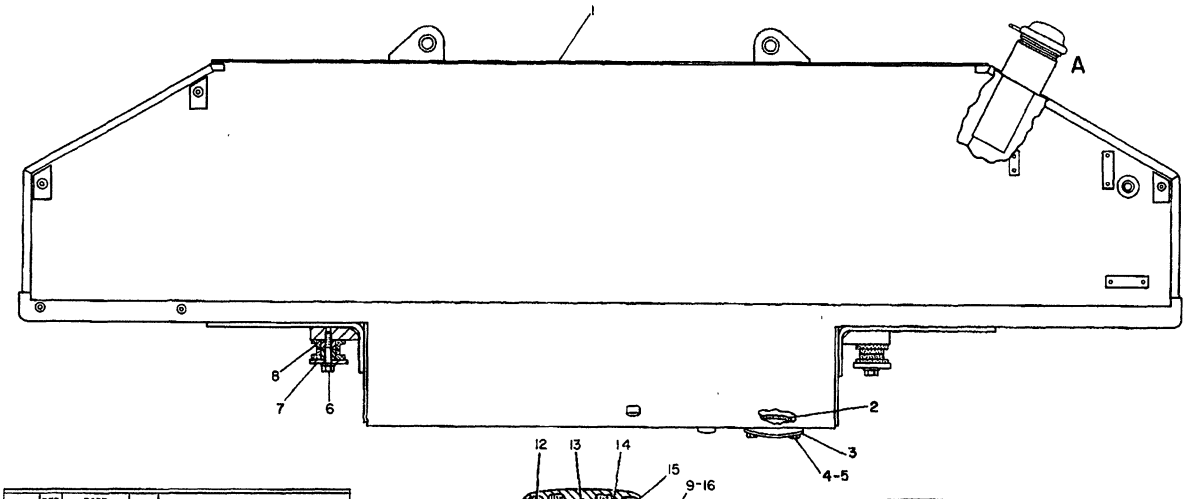

NOTE	REF NO	PART NUMBER	QTY	DESCRIPTION
	1	6T3376	1	TANK AS.
	2	1H5728	1	SEAL
	3	9G1815	1	COVER
	4	6H1717	4	BOLT
	5	5P8245	4	WASHER
	6	3B2968	4	BOLT
		5P6652	4	WASHER
	7	2G0493	4	WASHER
	8	6T1698	8	MOUNT

C	9	7T2036	1	CAP AS.
		8P0408	1	CAP
	10	3F4134	1	BAFFLE
	11	7B2002	1	WASHER
	12	7T2037	1	GASKET
	13	7T2009	1	VALVE AS.
	14	4B5423	1	GASKET
	15	4B5949	2	ELEMENT
	16	8H3497	1	RING
	17	6T3365	1	PLUNGER
	18	9P7121	1	STRAINER

C INDICATES CHANGE 327730

327730 P

1273

6P7327 TANK GP-FUEL
795 Liters (210 Gallons)
S/N 53Y2514-3484

FUEL SYSTEM AND GOVERNOR

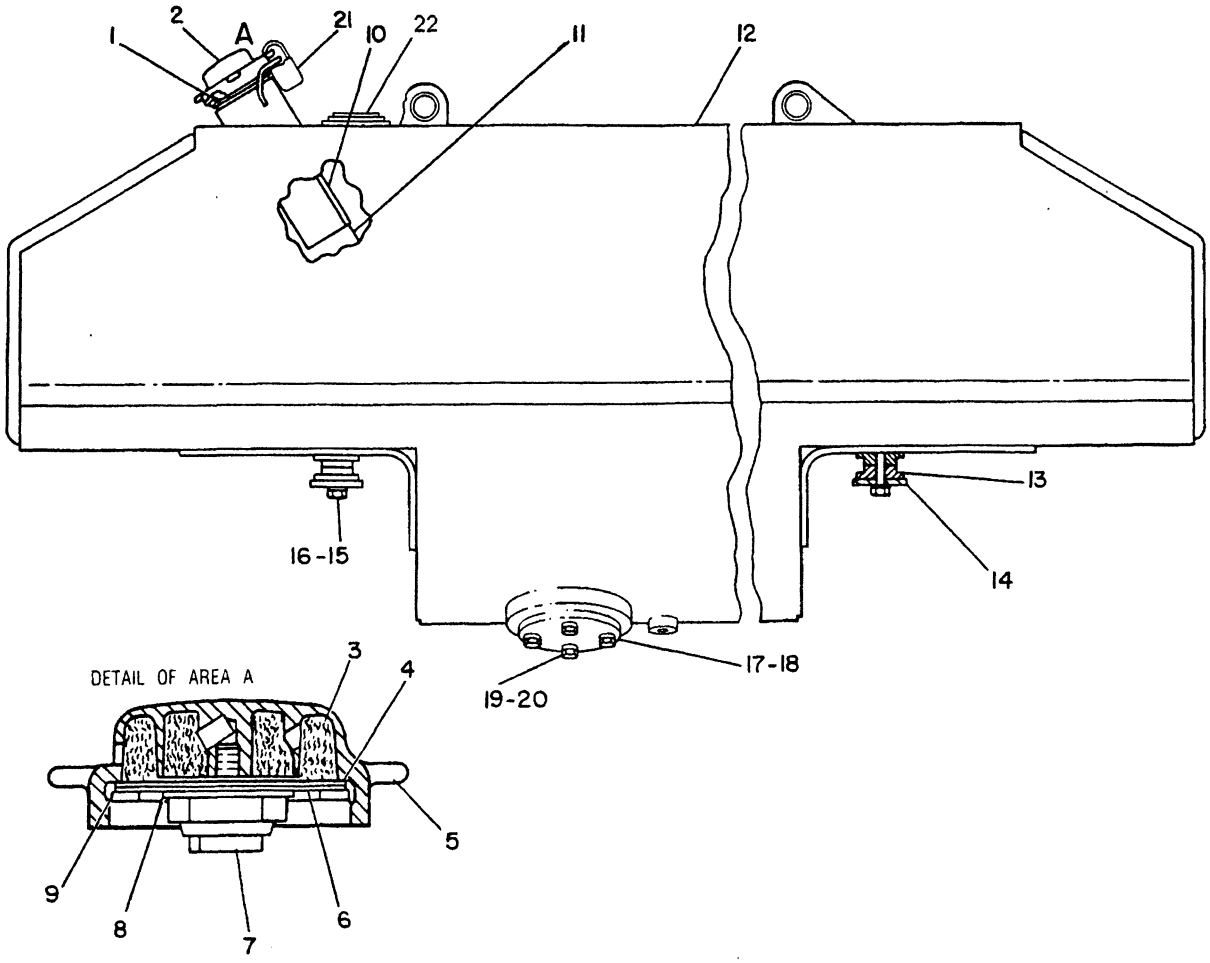

NOTE	REF NO	PART NUMBER	QTY	PART NAME	NOTE	REF NO	PART NUMBER	QTY	PART NAME
	1	8H3497	1	RING-RETAINER					
	2	7T2036	1	CAP AS-FUEL TANK					
	3	4B5949	2	ELEMENT-FILTER					
	4	4B5423	1	GASKET-BAFFLE					
	5	8P0408	1	CAP-FUEL TANK FILLER					
	6	3F4134	1	BAFFLE-CAP					
	7	7T2009	1	VALVE AS					
	8	7B2002	1	WASHER					
	9	7T2037	1	GASKET					
	10	9P7121	1	STRAINER-FUEL TANK					
	11	6T7785	1	PLUNGER					
	12	6T7797	1	TANK AS					
	13	6T1698	8	MOUNTING					
	14	2G0493	4	WASHER-RETAINING					
	15	1D4612	4	BOLT					
	16	5P6652	4	WASHER					
	17	9G1815	1	COVER					
	18	1H5728	1	SEAL-O-RING					
	19	5C6565	4	BOLT					
	20	8T4223	4	WASHER-HARD					
C	21	5P8502	1	PADLOCK GP					
A		5P8500	2	KEY					
A		6V5874	1	COVER					
	22	4H9027	1	PLUG-PIPE					

A-NOT PART OF THIS GROUP
C-CHANGE FROM PREVIOUS TYPE

R-492107 EP

1273

6T7798 TANK GP-FUEL
795 Liters (210 Gallons)
S/N 53Y3485-Up

MEMORANDA

NOTE	REF NO	PART NUMBER	QTY	DESCRIPTION
	1	9G2673	1	GROMMET
	2	4D7794	8	CLIP
C	3	L1351	1	BOLT
	4	5M2894	20	WASHER
	5	5D7635	2	GROMMET
	6	8S9191	2	BOLT
	7	3T1815	1	ALARM (BACKUP)
	8	9G6259	1	WIRE ASSEM.
D		5P5624		WIRE .56M (22.05 IN.)
	9	7N9737	1	HOUSING
		7N7780	1	PIN
		7N7779	1	SOCKET
	10	2L8075	2	TERMINAL
	11	9G9150	4	CLIP
C	12	T102	9	BOLT
Y	13	3T7728	1	HARNESS ASSEM.
	14	3T2357	1	SWITCH (HORN)
	15	5P9085	5	CLIP
	16	9G9152	2	CLIP
Y	17	7G538	1	HARNESS ASSEM.
	18	7G530	2	WIRE ASSEM.
				(EACH INCLUDES)
D		5P5624		WIRE 1.35M (53.15 IN.)
		7N7778	1	HOUSING
		7N7780	1	PIN

C INDICATES CHANGE
D ORDER BY THE METER
Y SEPARATE ILLUSTRATION

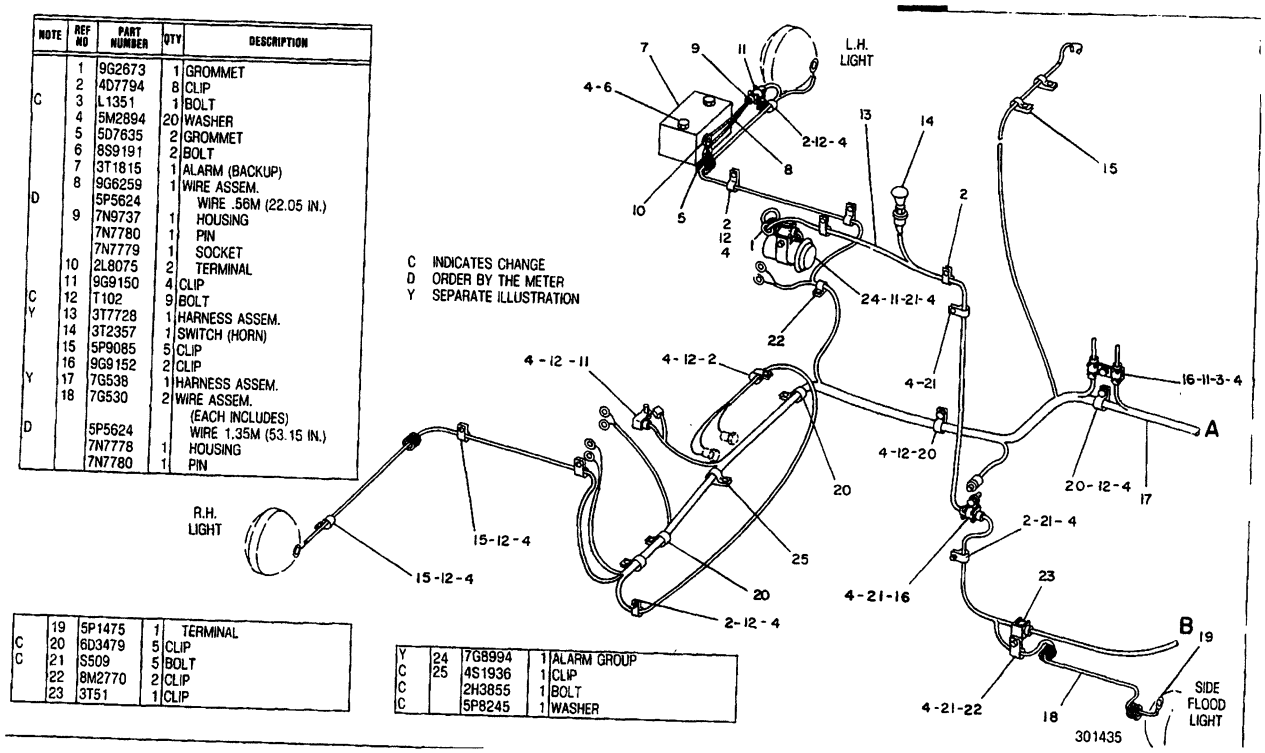

	19	5P1475	1	TERMINAL
C	20	6D3479	5	CLIP
C	21	S509	5	BOLT
	22	8M2770	2	CLIP
	23	3T51	1	CLIP

Y	24	7G8994	1	ALARM GROUP
C	25	4S1936	1	CLIP
C		2H3855	1	BOLT
C		5P8245	1	WASHER

301435 P

1408 **6P7330 BATTERY & WIRING GP-PART 1 OF 5**

S/N 53Y1-1222

3T7728-Page 94,7G0538-Page 99,7G8994-Page 100

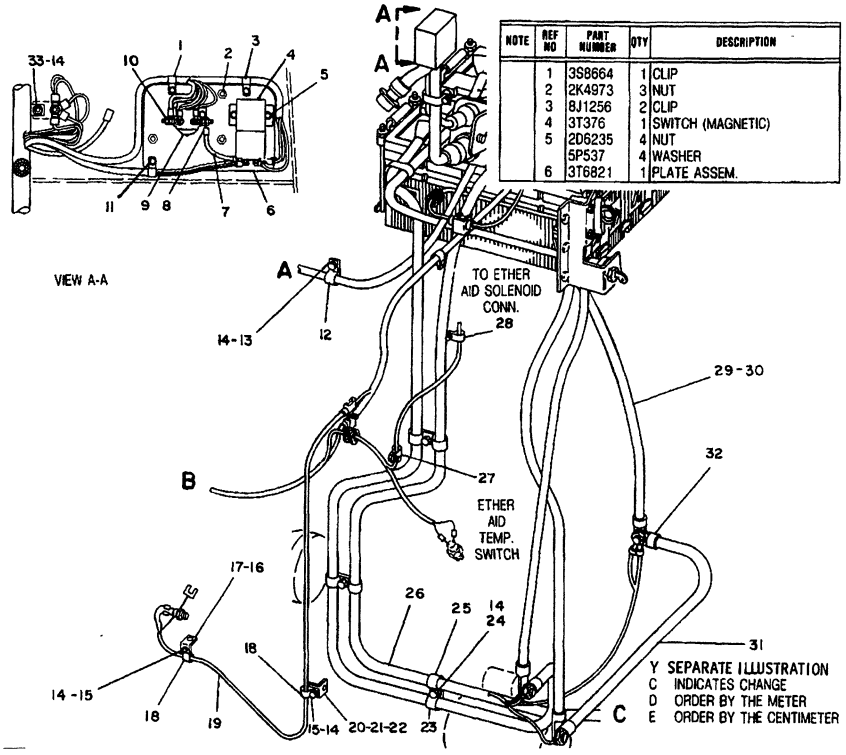

NOTE	REF NO	PART NUMBER	QTY	DESCRIPTION
	1	3S8664	1	CLIP
	2	2K4973	3	NUT
	3	8J1256	2	CLIP
	4	3T376	1	SWITCH (MAGNETIC)
	5	2D6235	4	NUT
		5P537	4	WASHER
	6	3T6821	1	PLATE ASSEM.
	7	3T7709	1	WIRE ASSEM.
D		5P5675		WIRE .12M (4.73 IN.)
	8	7F8031	2	TERMINAL
	9	9F3099	1	SWITCH (MAGNETIC)
		4B2043	2	NUT
	10	4N2294	2	NUT
	11	1B4330	3	NUT
		4B4276	3	WASHER
	12	4D7735	1	CLIP
C	13	T102	1	BOLT
	14	5M2894	8	WASHER
	15	S509	2	BOLT
	16	1A2029	1	BOLT
	17	1P4908	1	BRACKET ASSEM.
		9F2978	1	NUT
	18	4D7794	2	CLIP
Y	19	9G5530	1	HARNESS ASSEM.
	20	4M4983	1	SUPPORT ASSEM.
	21	9F2978	1	NUT
	22	5P8245	1	WASHER
	23	1S994	3	CLIP
	24	1D4717	2	NUT
	25	6D4636	3	CLIP
Y	26	7G539	1	HARNESS ASSEM.
	27	7N3718	1	CLIP
	28	9G9150	1	CLIP
	29	6T463	1	CABLE ASSEM.
E		5P747		CABLE 65.4CM(25.75 IN.)
	30	1S7251	2	TERMINAL
	31	2V6166	1	CABLE ASSEM.
E		5P747		CABLE 40.6 CM (16 IN.)
	32	1S7251	2	TERMINAL
	33	3B2460	2	STUD
		1B4203	2	NUT

301436

301436 P

1408 **6P7330 BATTERY & WIRING GP-PART 2 OF 5**

S/N 53Y1-53Y1222

9G5530-Page 91.01,7G0539-Page 92

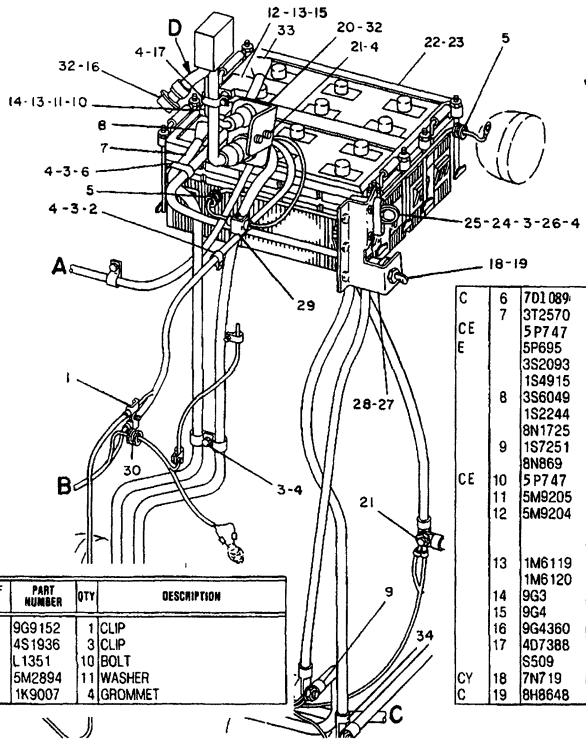

C INDICATES CHANGE
E ORDER BY THE CENTIMETER
Y SEPARATE ILLUSTRATION

NOTE	REF NO	PART NUMBER	QTY	DESCRIPTION
	1	9G9152	1	CLIP
	2	4S1936	3	CLIP
C	3	L1351	10	BOLT
	4	5M2894	11	WASHER
	5	1K9007	4	GROMMET
C	6	7D1089	1	CLIP
	7	3T2570	1	CABLE ASSEM.
CE		5P747		CABLE 231CM (90.95 IN.)
E		5P695		CONDUIT 216CM (85.04 IN.)
		3S2093	2	STRAP
		1S4915	2	LINER
	8	3S6049	1	TERMINAL
		1S2244	2	BOOT
		8N1725	1	COVER
	9	1S7251	1	TERMINAL
		8N869	1	COVER
CE	10	5P747		CABLE 15CM (5.9 IN.)
	11	5M9205	1	TERMINAL (NEG.)
	12	5M9204	1	TERMINAL (POS.) (EACH TERMINAL ASSEM. INCLUDES)
	13	1M6119	2	BOLT
		1M6120	2	NUT
	14	9G3	1	COVER
	15	9G4	1	COVER
	16	9G4360	1	CAP
	17	4D7388	1	CLIP
		S509	1	BOLT
CY	18	7N719	1	SWITCH ASSEM.
C	19	8H8648	1	PLATE
	20	3T1501	1	PLATE
		8N1523	1	LOCKWASHER 58.32MM (2.29 IN.) I.D.
	21	1D4719	1	NUT
	22	9G4232	2	BATTERY (EACH INCLUDES)
		7G9383	6	VENT ASSEM.
	23	8P6206	1	HOLDDOWN ASSEM.
		6B1557	8	BOLT
		4B5271	8	WASHER
C	24	3T8733	1	RECEPTACLE ASSEM.
E		5P747		CABLE 220CM (86.6 IN.)
		1S7251	2	TERMINAL
	25	8S2634	1	COVER ASSEM.
		4D2297	1	SEAL
	26	1D4717	4	NUT
	27	3T2671	1	PLATE
	28	6F7044	2	NUT
		9B453	2	LOCKWASHER
	29	3T3049	1	CLIP ASSEM.
		9G9149	1	CLIP
	30	2D2751	1	GROMMET
	31	3T3047	1	CLIP ASSEM.
		9G9155	1	CLIP
	32	8N1537	2	LOCKWASHER 42.37MM(1.66 IN.) I.D.
	33	7G535	1	CABLE ASSEM
E		5P747		CABLE 19CM (7.49 IN.)
		3S6050	1	TERMINAL ASSEM.
		1M6119	1	BOLT
		1M6120	1	NUT
		7N5274	1	COVER
	34	1S7251	1	TERMINAL

319219

319219 P

1408 **6P7330 BATTERY & WIRING GP-PART 3 OF 5**
S/N 53Y1-1222
7N0719-Page 100

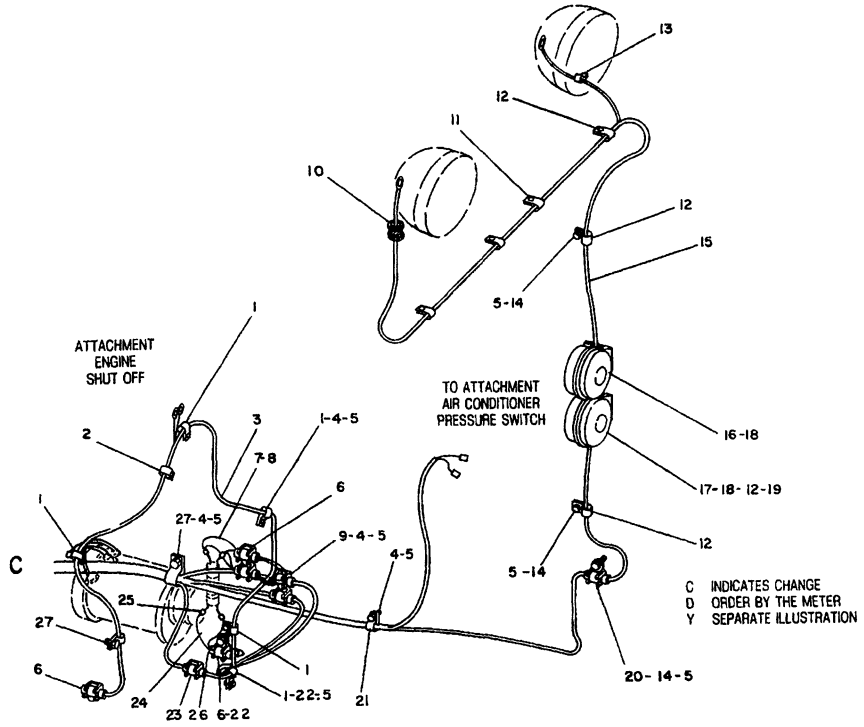

NOTE	REF NO	PART NUMBER	QTY	DESCRIPTION
	1	3S8664	5	CLIP
	2	9M8406	1	CLIP
Y	3	3T2569	1	HARNESS ASSEM.
	4	1D4717	4	NUT
	5	5M2894	8	WASHER
	6	9G9150	4	CLIP
C	7	3T9459	1	WIRE ASSEM.
D		5P5623		WIRE .6M (23.63 IN.)
		2D8757	2	TERMINAL
	8	7N9738	2	HOUSING
		7N7780	2	PIN
		7N7779	2	SOCKET
	9	3T1221	1	CLIP
	10	4D12	1	GROMMET
	11	8M2772	3	CLIP
	12	338248	5	CLIP
	13	4D8123	1	CLIP
C	14	S1594	5	BOLT
Y	15	7G537	1	HARNESS ASSEM.
	16	9G1811	1	HORN ASSEM.
	17	7N1138	1	HORN ASSEM. (EACH HORN ASSEM. INCLUDES)
	18	5P7848	2	NUT
		1H4393	2	WASHER
	19	5P1075	2	WASHER
	20	9G9152	1	CLIP
	21	4D9517	1	CLIP
	22	S509	2	BOLT
	23	3T3048	1	CLIP ASSEM.
		9G9151	1	CLIP
	24	3T1480	1	WIRE ASSEM.
D		5P5623		WIRE .2M (7.88 IN.)
	25	2L8075	2	TERMINAL
	26	7N9738	1	HOUSING
		7N7779	1	SOCKET
		7N7780	1	PIN
	27	4D7794	2	CLIP

301438

301438 P

1408 **6P7330 BATTERY & WIRING GP-PART 4 OF 5**

S/N 53Y1-1222

7G0537-Page 91,3T2569-Page 95

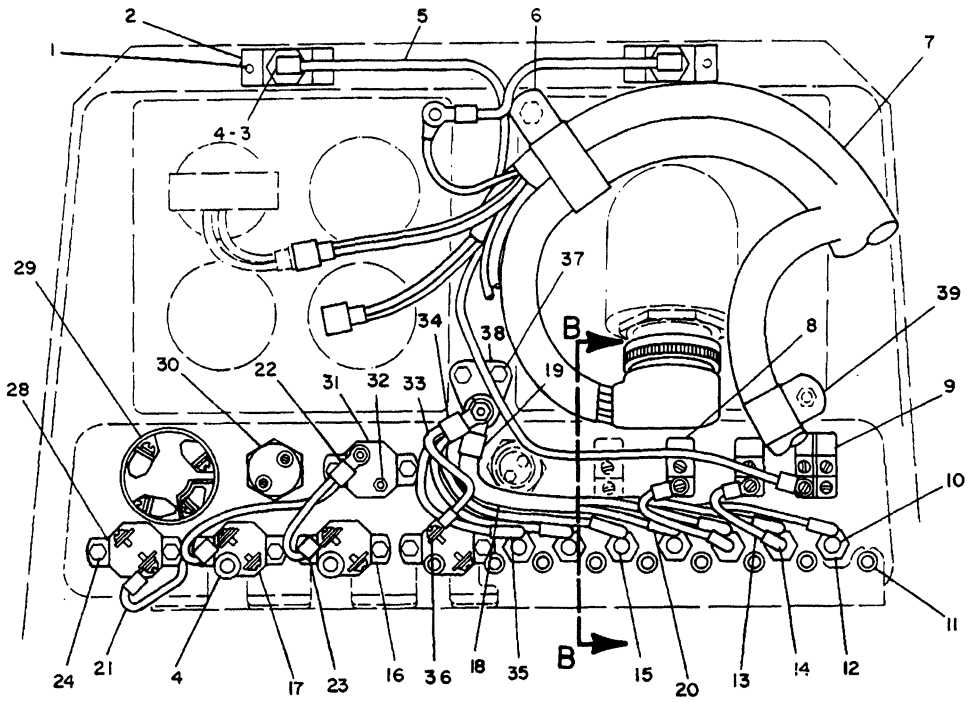

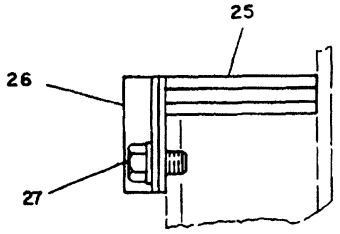

VIEW B-B

B USE AS REQUIRED
C INDICATES CHANGE
D ORDER BY THE METER
Y SEPARATE ILLUSTRATION

NOTE	REF NO	PART NUMBER	QTY	DESCRIPTION
C	1	178715	4	SCREW
	2	3T6661	2	PLATE
	3	7N5876	2	LAMP
	4	7G9463	4	BUSHING
Y	5	3T7729	1	HARNESS ASSEM.
	6	5K5338	1	CLIP
Y	7	3T7394	1	HARNESS ASSEM.
	8	7N8000	2	SWITCH (LIGHT)
C	9	7N8005	1	SWITCH (LIGHT)
	10	8M8948	1	FUSE (15 AMP)
	11	7G9465	9	BUSHING
	12	4K5122	7	HOLDER (FUSE)
				(EACH INCLUDES)
		7N2867	1	CAP
	13	3T2524	2	WIRE ASSEM.
				(EACH INCLUDES)
BD		5P5624		WIRE (14 GAUGE)
		5P2321	1	TERMINAL
	14	3T5433	1	TERMINAL
	15	3K8782	6	FUSE (10 AMP)
	16	3T2662	1	CIRCUIT BREAKER (15 AMP)
	17	6N8589	2	CIRCUIT BREAKER (15 AMP)
	18	3T2539	1	WIRE ASSEM.
BD		5P5624		WIRE (14 GAUGE)
	19	9F3965	1	TERMINAL
	20	9F3965	4	TERMINAL
	21	3T7870	1	WIRE ASSEM.
BD		5P2624		WIRE (14 GAUGE)
	22	2L8049	1	TERMINAL
	23	2D8781	3	TERMINAL
	24	7M4823	10	SCREW ASSEM.
	25	3T2522	1	GROMMET
	26	3T6679	1	CLAMP
		3T6680	1	SEAL
	27	L1351	2	BOLT
		5M2894	2	WASHER
	28	9G9487	1	CIRCUIT BREAKER (10 AMP)
Y	29	9G7641	1	SWITCH GROUP (START)
	30	3T3453	1	SWITCH (STARTING AID)
	31	9S173	1	CIRCUIT BREAKER (60 AMP)
	32	4B2049	2	NUT
		4B4274	2	WASHER
	33	3T2523	1	WIRE ASSEM.
BD		5P5624		WIRE (14 GAUGE)
	34	9F3965	1	TERMINAL
	35	3T5433	3	TERMINAL
	36	5P1475	1	TERMINAL
	37	1B4330	2	NUT
		5P537	2	WASHER
	38	9G8451	1	BLOCK ASSEM.
		4L7124	1	BOLT
		9S8750	1	NUT
		1H3244	1	LOCKWASHER
		2D6235	1	LOCKNUT
		4B4276	1	WASHER
	39	3S8664	1	CLIP

312888

312888 P

1408 **6P7330 BATTERY & WIRING GP-PART 5 OF 5**

S/N 53Y1-1222

3T7729-Page 94.01,3T7394-Page 96,9G7641-Page 100A

NOTE	REF NO	PART NUMBER	QTY	DESCRIPTION
	1	9G2673	1	GROMMET
	2	4D7794	8	CLIP
	3	L1351	1	BOLT
	4	5M2894	20	WASHER
	5	5D7635	2	GROMMET
	6	8S9191	2	BOLT
	7	3T1815	1	ALARM (BACKUP)
	8	9G6259	1	WIRE ASSEM.
D		5P5624		WIRE .56M (22.05 IN.)
	9	7N9737	1	HOUSING
		7N7780	1	PIN
		7N7779	1	SOCKET
	10	2L8075	2	TERMINAL
C	11	9G9150	5	CLIP
	12	T102	9	BOLT
Y	13	3T7728	1	HARNESS ASSEM.
	14	3T2357	1	SWITCH (HORN)
	15	5P9085	5	CLIP
	16	9G9152	2	CLIP
Y	17	7G538	1	HARNESS ASSEM.

C INDICATES CHANGE
D ORDER BY THE METER
Y SEPARATE ILLUSTRATION

	18	7G530	2	WIRE ASSEM. (EACH INCLUDES)
D		5P5624		WIRE 1.35M(53.15IN.)
		7N7778	1	HOUSING
		7N7780	1	PIN
	19	5P1475	1	TERMINAL
C	20	6D3479	5	CLIP

	21	S509	5	BOLT
	22	8M2770	2	CLIP
C	23	338248	1	CLIP
Y	24	7G8994	1	ALARM GROUP

	25	4S1936	1	CLIP
		2H3855	1	BOLT
		5P8245	1	WASHER
C	26	8M2772	1	CLIP

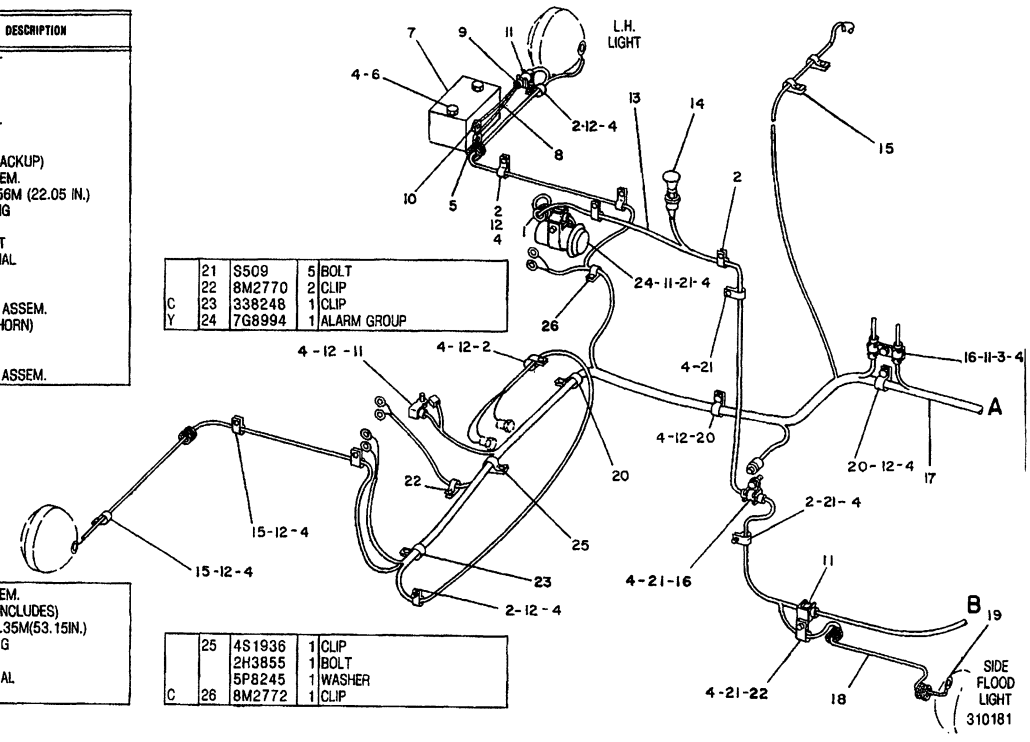

310181 P

6P7330 BATTERY & WIRING GP-PART 1 OF 5
S/N 53Y1223-1536
3T7728-Page 94,7G0538-Page 99,7G8994-Page 100

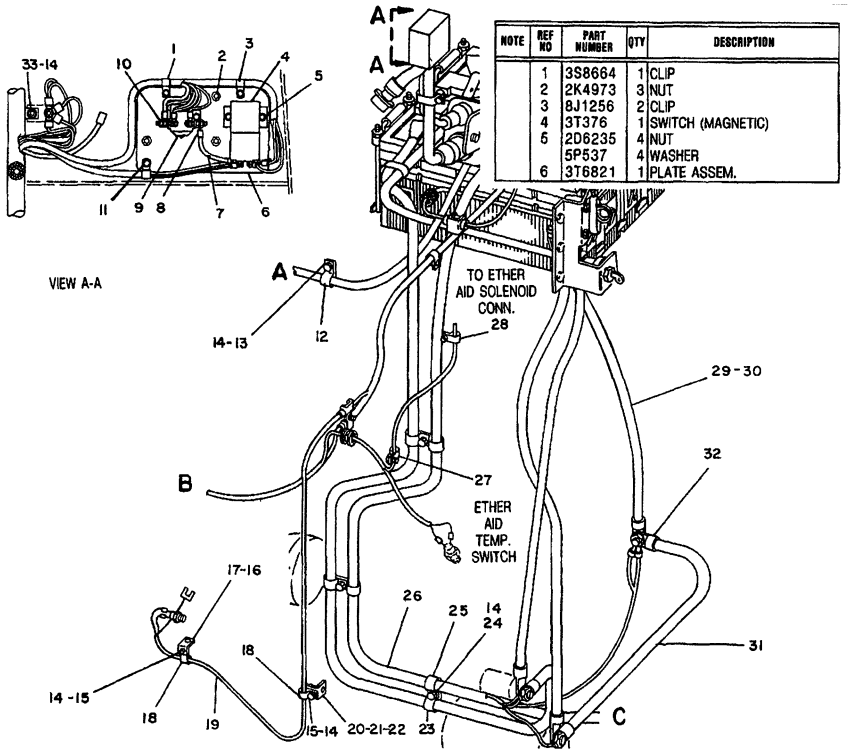

NOTE	REF NO	PART NUMBER	QTY	DESCRIPTION
	1	3S8664	1	CLIP
	2	2K4973	3	NUT
	3	8J1256	2	CLIP
	4	3T376	1	SWITCH (MAGNETIC)
	5	2D6235	4	NUT
		5P537	4	WASHER
	6	3T6821	1	PLATE ASSEM.
	7	3T7709	1	WIRE ASSEM.
D		5P5675		WIRE .12M (4.73 IN.)
	8	7F8031	2	TERMINAL
	9	9F3099	1	SWITCH (MAGNETIC)
		4B2043	2	NUT
	10	4N2294	2	NUT
	11	1B4330	3	NUT
		4B4276	3	WASHER
	12	4D7735	1	CLIP
	13	T102	1	BOLT
	14	5M2894	8	WASHER
	15	S509	2	BOLT
	16	1A2029	1	BOLT
	17	1P4908	1	BRACKET ASSEM.
		9F2978	1	NUT
	18	4D7794	2	CLIP
Y	19	9G5530	1	HARNESS ASSEM.
	20	4M4983	1	SUPPORT ASSEM.
	21	9F2978	1	NUT
	22	5P8245	1	WASHER
	23	1S994	3	CLIP
	24	1D4717	2	NUT
C	25	6V1889	3	CLIP
Y	26	7G539	1	HARNESS ASSEM.
	27	7N3718	1	CLIP
	28	9G9150	1	CLIP
	29	6T463	1	CABLE ASSEM.
E		5P747		CABLE 65.4CM(25.75 IN.)
	30	1S7251	2	TERMINAL
	31	2V6166	1	CABLE ASSEM.
E		5P747		CABLE 40.6 CM (16 IN.)
	32	1S7251	2	TERMINAL
	33	3B2460	2	STUD
		1B4203	2	NUT

C INDICATES CHANGE
D ORDER BY THE METER
E ORDER BY THE CENTIMETER
Y SEPARATE ILLUSTRATION

310182

310182 P

1408 **6P7330 BATTERY & WIRING GP-PART 2 OF 5**
S/N 53Y1223-1536
9G5530-Page 91.01,7G0539-Page 92

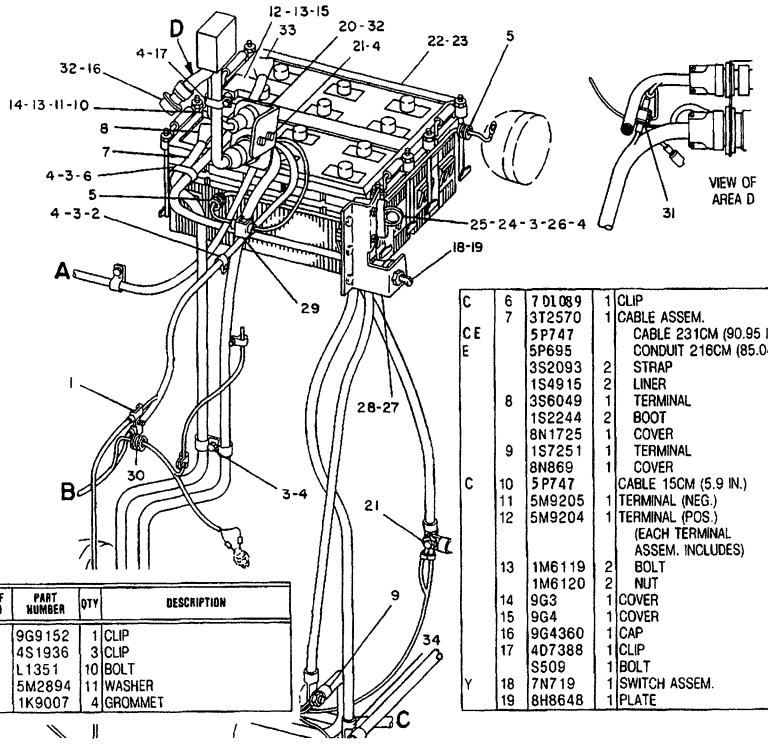

NOTE	REF NO	PART NUMBER	QTY	DESCRIPTION
	1	9G9152	1	CLIP
	2	4S1936	3	CLIP
	3	L1351	10	BOLT
	4	5M2894	11	WASHER
	5	1K9007	4	GROMMET

C	6	7D1089	1	CLIP
	7	3T2570	1	CABLE ASSEM.
CE		5P747		CABLE 231CM (90.95 IN.)
E		5P695		CONDUIT 216CM (85.04 IN.)
		3S2093	2	STRAP
		1S4915	2	LINER
	8	3S6049	1	TERMINAL
		1S2244	2	BOOT
		8N1725	1	COVER
	9	1S7251	1	TERMINAL
		8N869	1	COVER
C	10	5P747		CABLE 15CM (5.9 IN.)
	11	5M9205	1	TERMINAL (NEG.)
	12	5M9204	1	TERMINAL (POS.) (EACH TERMINAL ASSEM. INCLUDES)
	13	1M6119	2	BOLT
		1M6120	2	NUT
	14	9G3	1	COVER
	15	9G4	1	COVER
	16	9G4360	1	CAP
	17	4D7388	1	CLIP
		S509	1	BOLT
Y	18	7N719	1	SWITCH ASSEM.
	19	8H8648	1	PLATE

C INDICATES CHANGE
E ORDER BY THE CENTIMETER
Y SEPARATE ILLUSTRATION

	20	3T1501	1	PLATE
		8N1523	1	LOCKWASHER 58.32MM (2.29 IN.) I.D.
	21	1D4719	1	NUT
	22	9G4232	2	BATTERY (EACH INCLUDES)
		7G9383	6	VENT ASSEM.
	23	8P6206	1	HOLDDOWN ASSEM.
		6B1557	8	BOLT
C		5P1075	8	WASHER
	24	3T8733	1	RECEPTACLE ASSEM.
E		5P747		CABLE 220CM (86.6 IN.)
		1S7251	2	TERMINAL
	25	8S2634	1	COVER ASSEM.
C		2P2975	2	SEAL
	26	1D4717	4	NUT
	27	3T2671	1	PLATE
	28	6F7044	2	NUT
		9B453	2	LOCKWASHER
C	29	3T3048	1	CLIP ASSEM.
C		9G9151	1	CLIP
	30	2D2751	1	GROMMET
	31	3T3047	1	CLIP ASSEM.
		9G9155	1	CLIP
	32	8N1537	2	LOCKWASHER 42.37MM(1.66 IN.) I.D.
	33	7G535	1	CABLE ASSEM.
E		5P747		CABLE 19CM (7.49 IN.)
		3S6050	1	TERMINAL ASSEM.
		1M6119	1	BOLT
		1M6120	1	NUT
		7N5274	1	COVER
	34	1S7251	1	TERMINAL

319231

319231 P

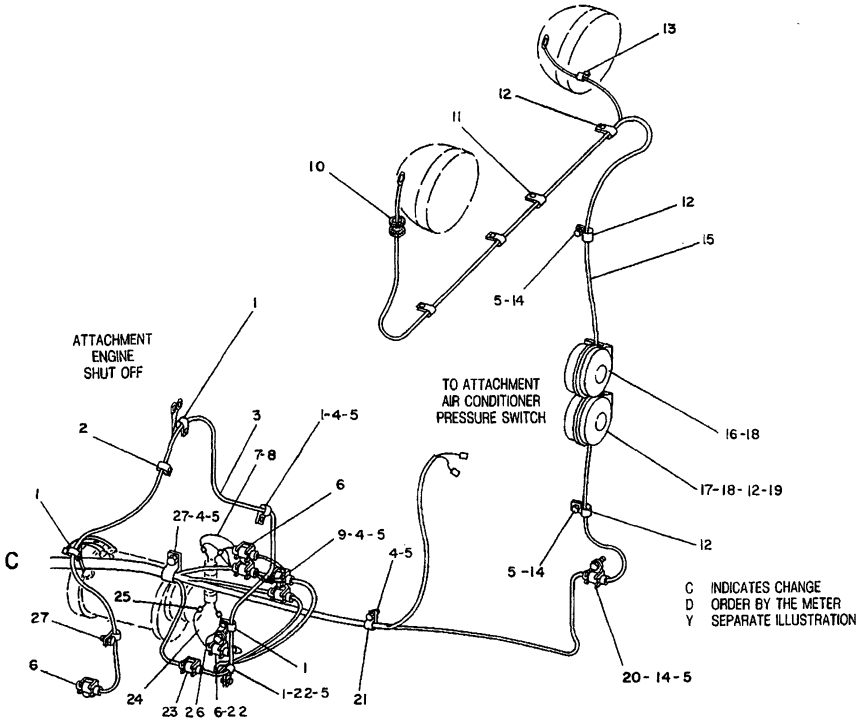

NOTE	REF NO	PART NUMBER	QTY	DESCRIPTION
	1	3S8664	5	CLIP
	2	9M8406	1	CLIP
Y	3	3T2569	1	HARNESS ASSEM.
	4	1D4717	4	NUT
	5	5M2894	8	WASHER
	6	9G9150	4	CLIP
	7	3T9459	1	WIRE ASSEM.
DC		5P5623		WIRE .9M (35.43 IN.)
		2D8757	2	TERMINAL
	8	7N9738	2	HOUSING
		7N7780	2	PIN
		7N7779	2	SOCKET
	9	3T1221	1	CLIP
	10	4D12	1	GROMMET
	11	8M2772	3	CLIP
	12	338248	5	CLIP
	13	4D8123	1	CLIP
	14	S1594	5	BOLT
Y	15	7G537	1	HARNESS ASSEM.
	16	9G1811	1	HORN ASSEM.
	17	7N1138	1	HORN ASSEM. (EACH HORN ASSEM. INCLUDES)
	18	5P7848	2	NUT
		1H4393	2	WASHER
	19	5P1075	2	WASHER
	20	9G9152	1	CLIP
	21	4D9517	1	CLIP
	22	S509	2	BOLT
	23	3T3048	1	CLIP ASSEM.
		9G9151	1	CLIP
	24	3T1480	1	WIRE ASSEM.
D		5P5623		WIRE .2M (7.88 IN.)
	25	2L8075	2	TERMINAL
	26	7N9738	1	HOUSING
		7N7779	1	SOCKET
		7N7780	1	PIN
	27	4D7794	2	CLIP

310184

310184 P

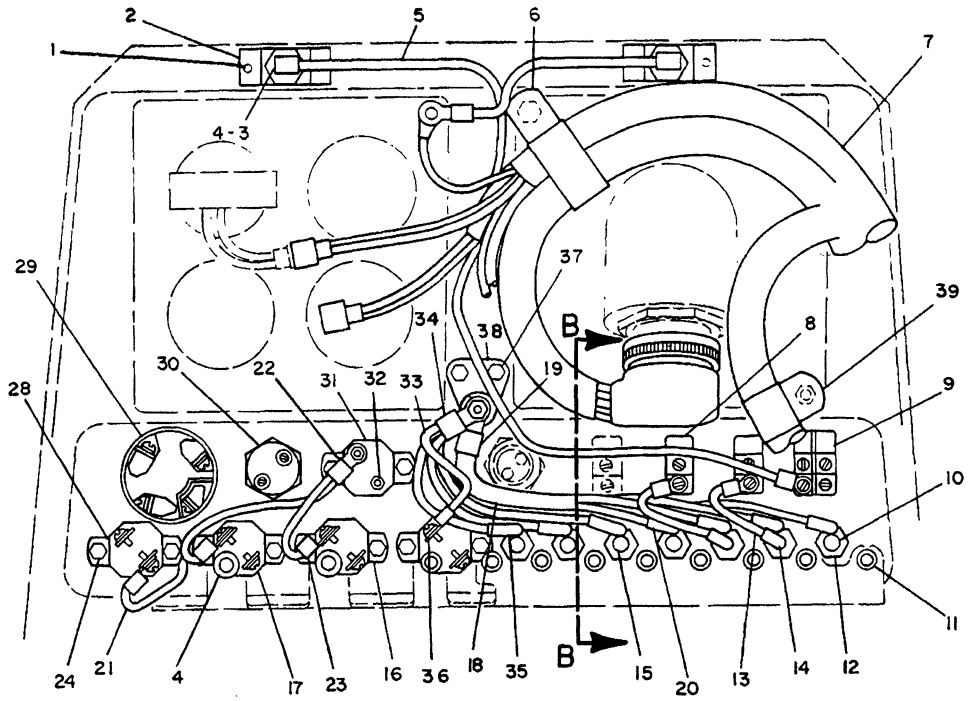

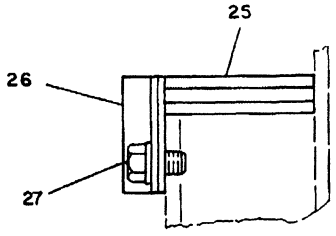

VIEW B-B

B USE AS REQUIRED
D ORDER BY THE METER
Y SEPARATE ILLUSTRATION

NOTE	REF NO	PART NUMBER	QTY	DESCRIPTION
	1	178715	4	SCREW
	2	3T6661	2	PLATE
	3	7N5876	2	LAMP
	4	7G9463	4	BUSHING
Y	5	3T7729	1	HARNESS ASSEM.
	6	5K5338	1	CLIP
Y	7	3T7394	1	HARNESS ASSEM.
	8	7N8000	2	SWITCH (LIGHT)
	9	7N8005	1	SWITCH (LIGHT)
	10	8M8948	1	FUSE (15 AMP)
	11	7G9465	9	BUSHING
	12	4K5122	7	HOLDER (FUSE)
				(EACH INCLUDES)
		7N2867	1	CAP
	13	3T2524	2	WIRE ASSEM.
				(EACH INCLUDES)
BD		5P5624		WIRE (14 GAUGE)
		5P2321	1	TERMINAL
	14	3T5433	1	TERMINAL
	15	3K8782	6	FUSE (10 AMP)
	16	3T2662	1	CIRCUIT BREAKER (15 AMP)
	17	6N8589	2	CIRCUIT BREAKER (15 AMP)
	18	3T2539	1	WIRE ASSEM.
BD		5P5624		WIRE (14 GAUGE)
	19	9F3965	1	TERMINAL
	20	9F3965	4	TERMINAL
	21	3T7870	1	WIRE ASSEM.
BD		5P2624		WIRE (14 GAUGE)
	22	2L8049	1	TERMINAL
	23	2D8781	3	TERMINAL
	24	7M4823	10	SCREW ASSEM.
	25	3T2522	1	GROMMET
	26	3T6679	1	CLAMP
		3T6680	1	SEAL
	27	L1351	2	BOLT
		5M2894	2	WASHER
	28	9G9487	1	CIRCUIT BREAKER (10 AMP)
Y	29	9G7641	1	SWITCH GROUP (START)
	30	3T3453	1	SWITCH (STARTING AID)
	31	9S173	1	CIRCUIT BREAKER (60 AMP)
	32	4B2049	2	NUT
		4B4274	2	WASHER
	33	3T2523	1	WIRE ASSEM.
BD		5P5624		WIRE (14 GAUGE)
	34	9F3965	1	TERMINAL
	35	3T5433	3	TERMINAL
	36	5P1475	1	TERMINAL
	37	1B4330	2	NUT
		5P537	2	WASHER
	38	9G8451	1	BLOCK ASSEM.
		4L7124	1	BOLT
		9S8750	1	NUT
		1H3244	1	LOCKWASHER
		2D6235	1	LOCKNUT
		4B4276	1	WASHER
	39	3S8664	1	CLIP

312889

312889 P

6P7330 BATTERY & WIRING GP-PART 5 OF 5

S/N 53Y1223-1536

3T7729-Page 94.01,3T7394-Page 96,9G7641-Page 100A

NOTE	REF NO	PART NUMBER	QTY	DESCRIPTION
	1	9G2673	1	GROMMET
	2	4D7794	8	CLIP
	3	L1351	1	BOLT
	4	5M2894	20	WASHER
	5	5D7635	2	GROMMET
	6	8S9191	2	BOLT
	7	3T1815	1	ALARM (BACKUP)
	8	9G6259	1	WIRE AS.
D		5P5624		WIRE .56M(22.05IN.)
	9	7N9737	1	HOUSING
		7N7780	1	PIN
		7N7779	1	SOCKET
	10	2L8075	2	TERMINAL
	11	9G9150	5	CLIP
	12	T102	9	BOLT
Y	13	3T7728	1	HARNESS AS.
	14	3T2357	1	SWITCH (HORN)
	15	5P9085	5	CLIP
	16	9G9152	2	CLIP
Y	17	7G538	1	HARNESS AS.

C INDICATES CHANGE
D ORDER BY THE METER
Y SEPARATE ILLUSTRATION

	18	7G530	2	WIRE AS. (EACH INCLUDES)
D		5P5624		WIRE 1.35M(53.15IN.)
		7N7778	1	HOUSING
		7N7780	1	PIN
	19	5P1475	1	TERMINAL
	20	6D3479	5	CLIP

	21	S509	5	BOLT
C	22	8M2770	3	CLIP
	23	338248	1	CLIP
Y	24	7G8994	1	ALARM GROUP

	25	4S1936	1	CLIP
		2H3855	1	BOLT
		5P8245	1	WASHER

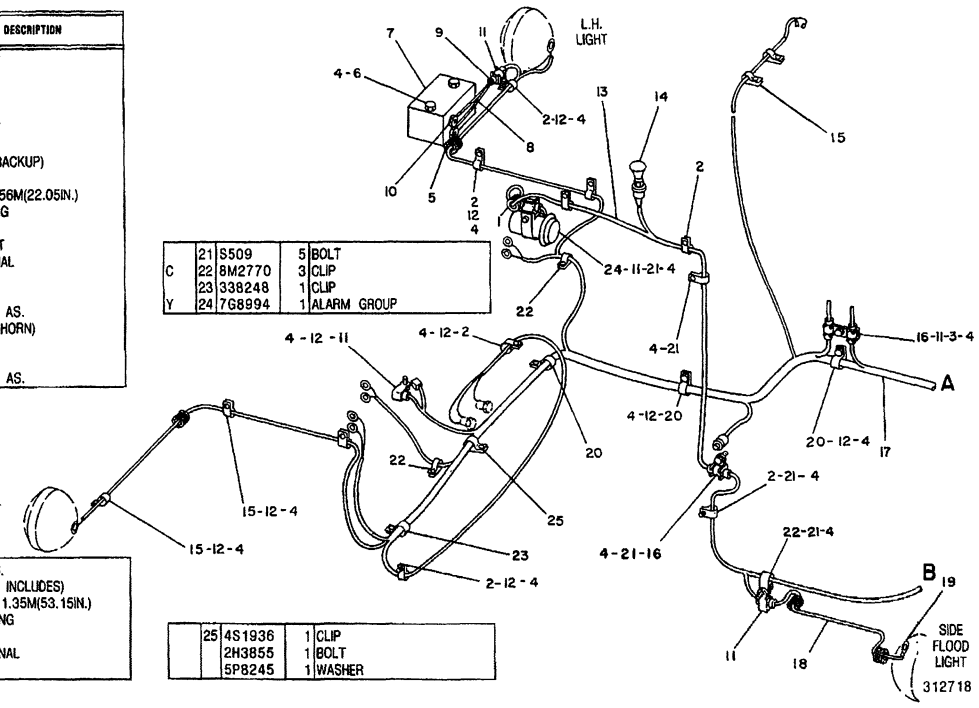

312718 P

1408 **6P7330 BATTERY & WIRING GP-PART 1 OF 5**
S/N 53Y1537-1678
3T7728-Page 94,7G0538-Page 99,7G8994-Page 100

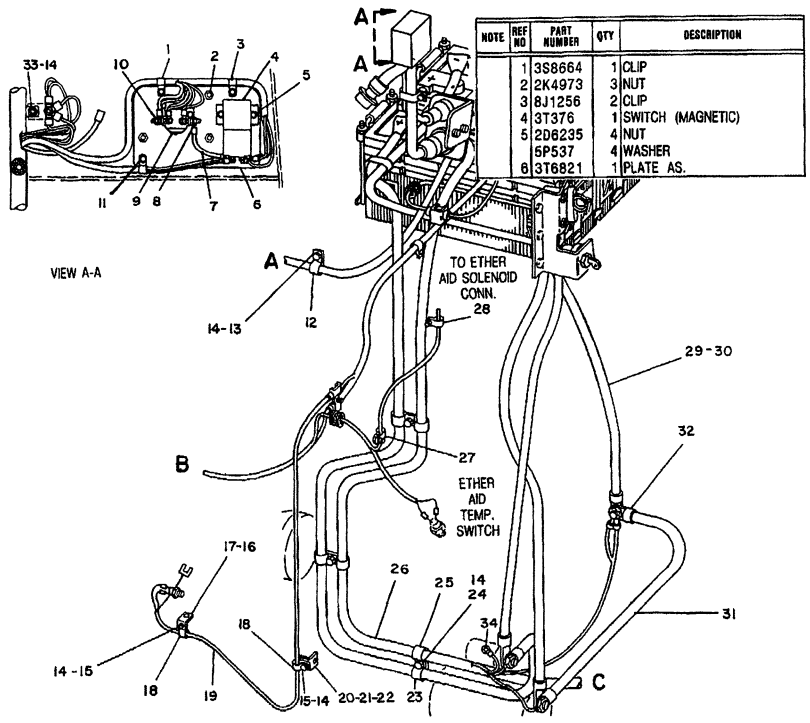

NOTE	REF NO	PART NUMBER	QTY	DESCRIPTION
	1	3S8664	1	CLIP
	2	2K4973	3	NUT
	3	8J1256	2	CLIP
	4	3T376	1	SWITCH (MAGNETIC)
	5	2D6235	4	NUT
		5P537	4	WASHER
	6	3T6821	1	PLATE AS.
	7	3T7709	1	WIRE AS.
D		5P5675		WIRE .12M(4.73IN.)
	8	7F8031	2	TERMINAL
	9	9F3099	1	SWITCH (MAGNETIC)
		4B2043	2	NUT
	10	4N2294	2	NUT
	11	1B4330	3	NUT
		4B4276	3	WASHER
	12	4D7735	1	CLIP
	13	T102	1	BOLT
	14	5M2894	8	WASHER
	15	S509	2	BOLT
	16	1A2029	1	BOLT
	17	1P4908	1	BRACKET AS.
		9F2978	1	NUT
	18	4D7794	2	CLIP
Y	19	9G5530	1	HARNESS AS.
	20	4M4983	1	SUPPORT AS.
	21	9F2978	1	NUT
	22	5P8245	1	WASHER
	23	1S994	3	CLIP
	24	1D4717	2	NUT
	25	6V1889	3	CLIP
Y	26	7G539	1	HARNESS AS.
	27	7N3718	1	CLIP
	28	9G9150	1	CLIP
	29	6T463	1	CABLE AS.
E		5P747		CABLE 65.4CM(25.75IN.)
	30	1S7251	2	TERMINAL
	31	2V6166	1	CABLE AS.
E		5P747		CABLE 40.6CM(16IN.)
	32	1S7251	2	TERMINAL
	33	3B2460	2	STUD
		1B4203	2	NUT
C	34	9L6770	1	CAP

C INDICATES CHANGE
D ORDER BY THE METER
E ORDER BY THE CENTIMETER
Y SEPARATE ILLUSTRATION

312719

312719 P

1408 **6P7330 BATTERY & WIRING GP-PART 2 OF 5**
S/N 53Y1537-1678
9G5530-Page 91.01,7G0539-Page 92

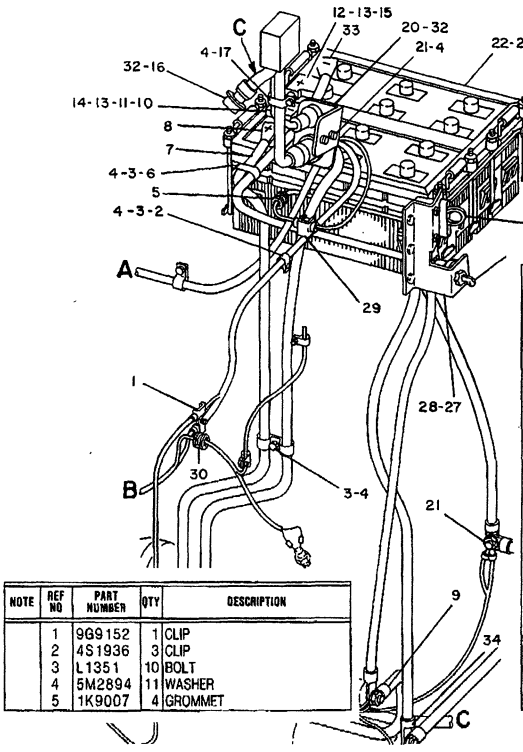

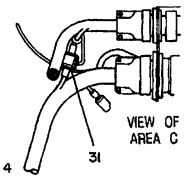

C INDICATES CHANGE
E ORDER BY THE CENTIMETER
Y SEPARATE ILLUSTRATION

NOTE	REF NO	PART NUMBER	QTY	DESCRIPTION
	1	9G9152	1	CLIP
	2	4S1936	3	CLIP
	3	L1351	10	BOLT
	4	5M2894	11	WASHER
	5	1K9007	4	GROMMET

C	6	7D1089	1	CLIP
	7	3T2570	1	CABLE AS.
CE		5P747		CABLE 231CM(90.95IN.)
E		5P695		CONDUIT 216CM(85.04IN.)
		3S2093	2	STRAP
		1S4915	2	LINER
	8	3S6049	1	TERMINAL (POS.)
		1S2244	2	BOOT
		8N1725	1	COVER
	9	1S7251	1	TERMINAL
		8N869	1	COVER
CE	10	5P747		CABLE 15CM(5.9IN.)
	11	5M9205	1	TERMINAL (NEG.)
	12	5M9204	1	TERMINAL (POS.) (EACH TERMINAL AS. INCLUDES)
	13	1M6119	2	BOLT
		1M6120	2	NUT
	14	9G3	1	COVER
	15	9G4	1	COVER
	16	9G4360	1	CAP
	17	4D7388	1	CLIP
		S509	1	BOLT
Y	18	7N719	1	SWITCH AS.
	19	8H8648	1	PLATE
	20	3T1501	1	PLATE
		8N1523	1	LOCKWASHER 58.32MM(2.29IN.)I.D.
	21	1D4719	1	NUT
	22	9G4232	2	BATTERY (EACH INCLUDES)
		7G9383	6	VENT AS.
	23	8P6206	1	HOLDDOWN AS.
		6B1557	8	BOLT
		5P1075	8	WASHER
	24	3T8733	1	RECEPTACLE AS.
E		5P747		CABLE 220CM(86.6IN.)
		1S7251	2	TERMINAL
	25	8S2634	1	COVER AS.
		2P2975	2	SEAL
	26	1D4717	4	NUT
	27	3T2671	1	PLATE
	28	6F7044	2	NUT
		9B453	2	LOCKWASHER
	29	3T3048	1	CLIP AS.
		9G9151	1	CLIP
	30	2D2751	1	GROMMET
	31	3T3047	1	CLIP AS.
		9G9155	1	CLIP
	32	8N1537	2	LOCKWASHER 42.37MM(1.66IN.)I.D.
	33	7G535	1	CABLE AS.
E		5P747		CABLE 19CM(7.49IN.)
		3S6050	1	TERMINAL AS. (NEG.)
		1M6119	1	BOLT
		1M6120	1	NUT
		7N5274	1	COVER
	34	1S7251	1	TERMINAL

319174

319174 P

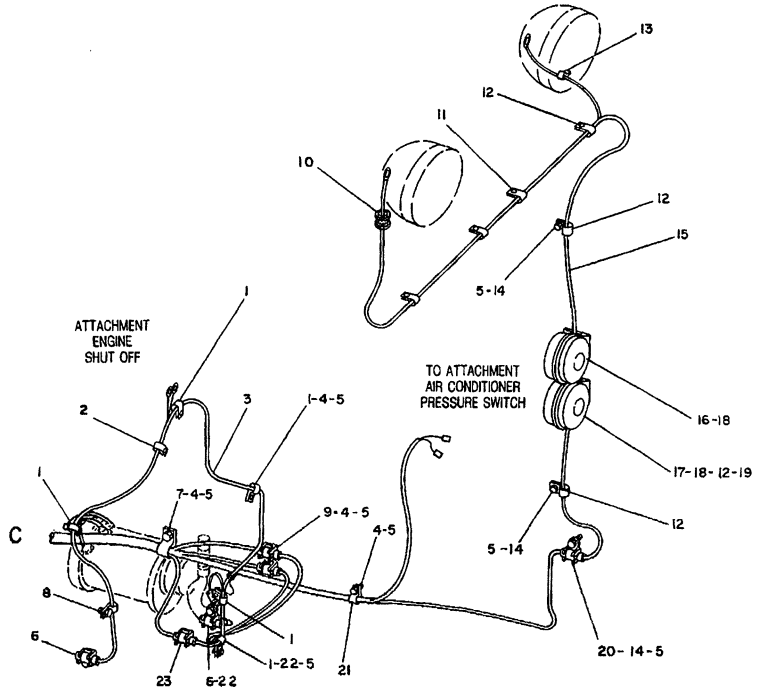

NOTE	REF NO	PART NUMBER	QTY	DESCRIPTION
	1	3S8664	5	CLIP
	2	9M8406	1	CLIP
Y	3	3T2569	1	HARNESS AS.
	4	1D4717	4	NUT
	5	5M2894	8	WASHER
C	6	9G9150	3	CLIP
C	7	6D4636	1	CLIP
C	8	4D7794	1	CLIP
	9	3T1221	1	CLIP
	10	4D12	1	GROMMET
	11	8M2772	3	CLIP
	12	338248	5	CLIP
	13	4D8123	1	CLIP
	14	S1594	5	BOLT
Y	15	7G537	1	HARNESS AS.
	16	9G1811	1	HORN AS.
	17	7N1138	1	HORN AS. (EACH HORN AS. INCLUDES)
	18	5P7848	2	NUT
		1H4393	2	WASHER
	19	5P1075	2	WASHER
	20	9G9152	1	CLIP
	21	4D9517	1	CLIP
	22	S509	2	BOLT
	23	3T3048	1	CLIP AS.
		9G9151	1	CLIP

C INDICATES CHANGE
Y SEPARATE ILLUSTRATION

312721

312721 P

1408 **6P7330 BATTERY & WIRING GP-PART 4 OF 5**
S/N 53Y1537-1678
7G0537-Page 91,3T2569-Page 95B

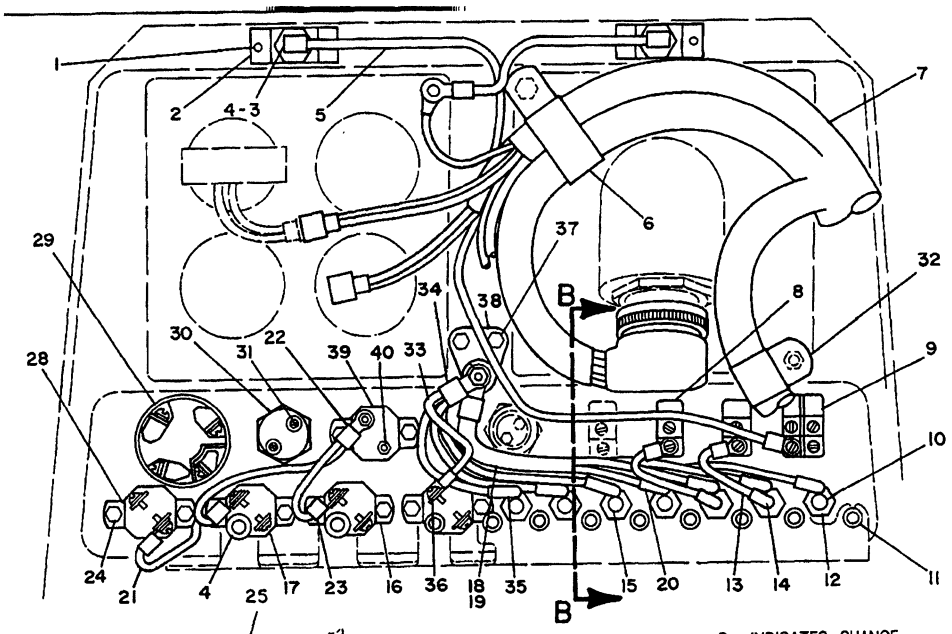

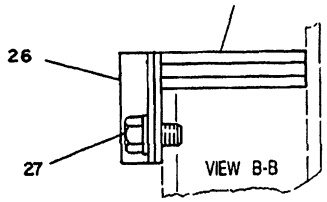

C INDICATES CHANGE
D ORDER BY THE METER
Y SEPARATE ILLUSTRATION

NOTE	REF NO	PART NUMBER	QTY	DESCRIPTION
	1	178715	4	SCREW
	2	3T6661	2	PLATE
	3	7N5876	2	LAMP
	4	7G9463	4	BUSHING
Y	5	3T7729	1	HARNESS AS.
	6	5K5338	1	CLIP
Y	7	3T7394	1	HARNESS AS.
	8	7N8000	2	SWITCH (LIGHT)
	9	7N8005	1	SWITCH (LIGHT)
	10	8M8948	1	FUSE (15 AMP)
	11	7G9465	9	BUSHING
	12	4K5122	7	HOLDER AS. (FUSE)
				(EACH INCLUDES)
		7N2867	1	CAP
C		6T8115	1	NUT
	13	3T2524	2	WIRE AS.
				(EACH INCLUDES)
D		5P5624		WIRE .095M(3.74IN.)
		5P2321	1	TERMINAL
	14	3T5433	1	TERMINAL
	15	3K8782	6	FUSE (10 AMP)
	16	3T2662	1	CIRCUIT BREAKER (15 AMP)
C	17	6N8589	2	CIRCUIT BREAKER AS.
				(15 AMP)
				(EACH INCLUDES)
		6V8376	2	SCREW
		9B7233	2	LOCKWASHER
	18	3T2539	1	WIRE AS.
D	19	5P5624		WIRE .762M(30IN.)
	20	9F3965	5	TERMINAL
	21	3T7870	1	WIRE AS.
D		5P5624		WIRE .4M(15.75IN.)
	22	2L8049	1	TERMINAL
	23	2D8781	3	TERMINAL
	24	7M4823	10	SCREW AS.
	25	3T2522	1	GROMMET
	26	3T6679	1	CLAMP
		3T6680	1	SEAL
	27	L1351	2	BOLT
		5M2894	2	WASHER
C	28	9G9487	1	CIRCUIT BREAKER AS.
				(10 AMP)
		6V8376	2	SCREW
		9B7233	2	LOCKWASHER
CY	29	9G7641	1	SWITCH GROUP (START)
C	30	3T3453	1	SWITCH AS.
				(STARTING AID)
		6V8370	1	NUT
		2H3922	1	LOCKWASHER
	31	6V8363	2	SCREW
		8F1434	2	LOCKWASHER
	32	3S8664	1	CLIP
	33	3T2523	1	WIRE AS.
D		5P5624		WIRE .455M(17.92IN.)
	34	9F3965	1	TERMINAL
	35	3T5433	3	TERMINAL
	36	5P1475	1	TERMINAL
	37	1B4330	2	NUT
		5P537	2	WASHER
	38	9G8451	1	BLOCK AS.
		4L7124	1	BOLT
C		6V8185	1	NUT
		1H3244	1	LOCKWASHER
		2D6235	1	LOCKNUT
		4B4276	1	WASHER
C	39	9S173	1	CIRCUIT BREAKER AS.
				(60 AMP)
	40	6V8378	2	NUT
		8F1434	2	LOCKWASHER

312722

312722 P

1408 **6P7330 BATTERY & WIRING GP-PART 5 OF 5**

S/N 53Y1537-1678

3T7729-Page 94.01, 3T7394-Page 96, 9G7641-Page 100A

NOTE	REF NO	PART NUMBER	QTY	DESCRIPTION
	1	9G2673	1	GROMMET
	2	4D7794	8	CLIP
	3	L1351	1	BOLT
	4	5M2894	20	WASHER
	5	5D7635	2	GROMMET
	6	8S9191	2	BOLT
	7	3T1815	1	ALARM (BACKUP)
	8	9G6259	1	WIRE ASSEM.
D		5P5624		WIRE .56M(22.05IN.)
	9	7N9737	1	HOUSING
		7N7780	1	PIN
		7N7779	1	SOCKET
	10	2L8075	2	TERMINAL
C	11	9G9150	3	CLIP
	12	T102	9	BOLT
Y	13	3T7728	1	HARNESS ASSEM.
	14	3T2357	1	SWITCH (HORN)
	15	5P9085	5	CLIP
	16	9G9152	2	CLIP
Y	17	7G538	1	HARNESS ASSEM.

C INDICATES CHANGE
D ORDER BY THE METER
Y SEPARATE ILLUSTRATION

	20	6D3479	5	CLIP
	21	S509	5	BOLT
C	22	8M2770	3	CLIP
	23	9G9150	1	CLIP
Y	24	7G8994	1	ALARM GROUP
	25	4S1936	1	CLIP
		2H3855	1	BOLT
		5P8245	1	WASHER

	18	7G530	2	WIRE ASSEM.
				(EACH INCLUDES)
D		5P5624		WIRE 1.35M(53.15IN.)
C		7N9737	1	HOUSING
		7N7780	1	PIN
C		9G3695	1	PLUG
	19	5P1475	1	TERMINAL

C	26	338248	1	CLIP
	27	3T3048	1	CLIP AS.
		9G9151	1	CLIP

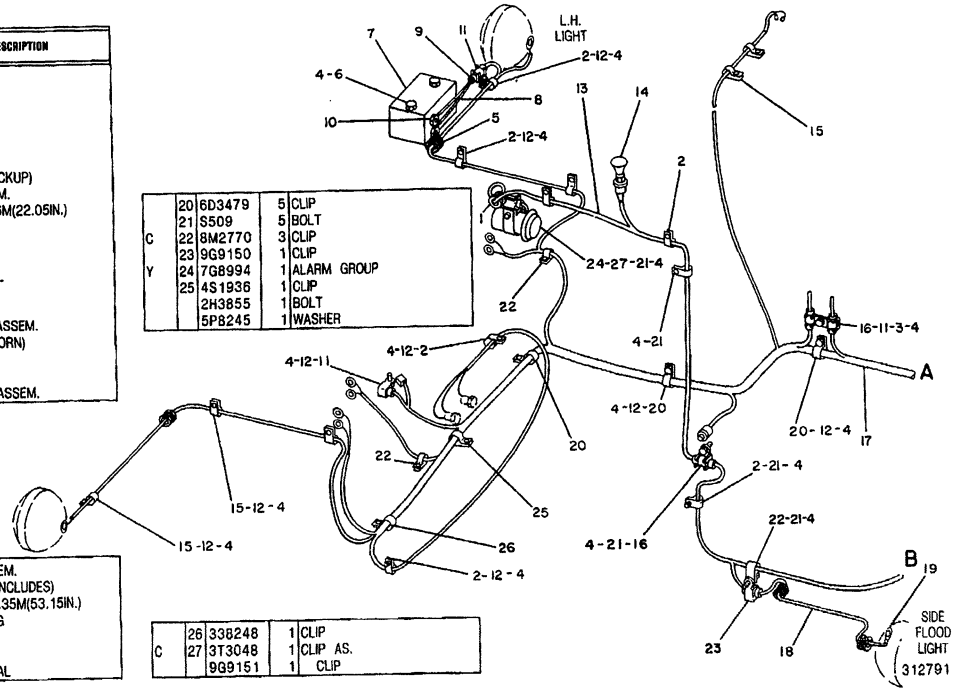

312791 P

1408 **6P7330 BATTERY & WIRING GP-PART 1 OF 5**

S/N 53Y1679-2492

3T7728-Page 94,7G0538-Page 99,7G8994-Page 100

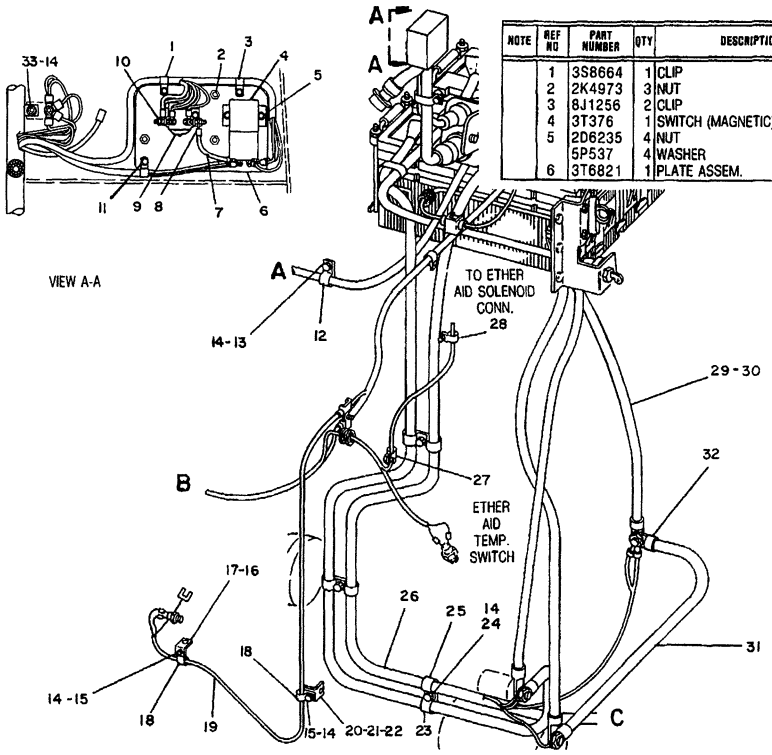

NOTE	REF NO	PART NUMBER	QTY	DESCRIPTION
	1	3S8664	1	CLIP
	2	2K4973	3	NUT
	3	8J1256	2	CLIP
	4	3T376	1	SWITCH (MAGNETIC)
	5	2D6235	4	NUT
		5P537	4	WASHER
	6	3T6821	1	PLATE ASSEM.
	7	3T7709	1	WIRE ASSEM.
D		5P5675		WIRE .12M (4.73 IN.)
	8	7F8031	2	TERMINAL
	9	9F3099	1	SWITCH (MAGNETIC)
		4B2043	2	NUT
	10	4N2294	2	NUT
	11	1B4330	3	NUT
		4B4276	3	WASHER
	12	4D7735	1	CLIP
	13	T102	1	BOLT
	14	5M2894	8	WASHER
	15	S509	2	BOLT
	16	1A2029	1	BOLT
	17	1P4908	1	BRACKET ASSEM.
		9F2978	1	NUT
	18	4D7794	2	CLIP
Y	19	9G5530	1	HARNESS ASSEM.
	20	4M4983	1	SUPPORT ASSEM.
	21	9F2978	1	NUT
	22	5P8245	1	WASHER
	23	1S994	3	CLIP
	24	1D4717	2	NUT
	25	6V1889	3	CLIP
Y	26	7G539	1	HARNESS ASSEM.
	27	7N3718	1	CLIP
	28	9G9150	1	CLIP
	29	6T463	1	CABLE ASSEM.
E		5P747		CABLE 65.4CM(25.75 IN.)
	30	1S7251	2	TERMINAL
	31	2V6166	1	CABLE ASSEM.
E		5P747		CABLE 40.6 CM (16 IN.)
	32	1S7251	2	TERMINAL
	33	3B2460	2	STUD
		1B4203	2	NUT

D ORDER BY THE METER
E ORDER BY THE CENTIMETER
Y SEPARATE ILLUSTRATION

310272

310272 P

1408 **6P7330 BATTERY & WIRING GP-PART 2 OF 5**
S/N 53Y1679-2492
9G5530-Page 91.01,7G0539-Page 92

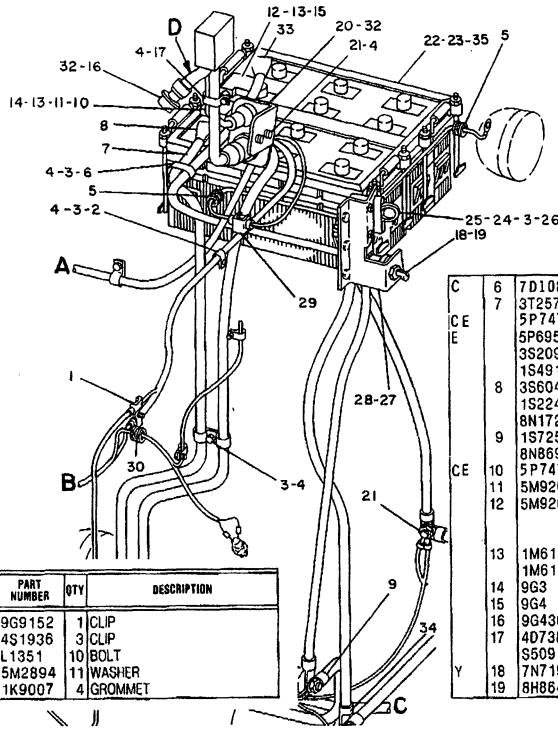

NOTE	REF NO	PART NUMBER	QTY	DESCRIPTION
	1	9G9152	1	CLIP
	2	4S1936	3	CLIP
	3	L1351	10	BOLT
	4	5M2894	11	WASHER
	5	1K9007	4	GROMMET

C	6	7D1089	1	CLIP
	7	3T2570	1	CABLE ASSEM.
CE		5P747		CABLE 231CM (90.95 IN.)
E		5P695		CONDUIT 216CM (85.04 IN.)
		3S2093	2	STRAP
		1S4915	2	LINER
	8	3S6049	1	TERMINAL
		1S2244	2	BOOT
		8N1725	1	COVER
	9	1S7251	1	TERMINAL
		8N869	1	COVER
CE	10	5P747		CABLE 15CM (5.9 IN.)
	11	5M9205	1	TERMINAL (NEG.)
	12	5M9204	1	TERMINAL (POS.) (EACH TERMINAL ASSEM. INCLUDES)
	13	1M6119	2	BOLT
		1M6120	2	NUT
	14	9G3	1	COVER
	15	9G4	1	COVER
	16	9G4360	1	CAP
	17	4D7388	1	CLIP
		S509	1	BOLT
Y	18	7N719	1	SWITCH ASSEM.
	19	8H8648	1	PLATE

C INDICATES CHANGE
E ORDER BY THE CENTIMETER
Y SEPARATE ILLUSTRATION

	20	3T1501	1	PLATE
		8N1523	1	LOCKWASHER 58.32MM (2.29 IN.) I.D.
	21	1D4719	1	NUT
	22	9G4232	2	BATTERY (EACH INCLUDES)
		7G9383	6	VENT ASSEM.
	23	8P6206	1	HOLDDOWN ASSEM.
C		8P1601	8	ROD
		5P1075	8	WASHER
	24	3T8733	1	RECEPTACLE ASSEM.
E		5P747		CABLE 220CM (86.6 IN.)
		1S7251	2	TERMINAL
	25	8S2634	1	COVER ASSEM.
		2P2975	2	SEAL
	26	1D4717	4	NUT
	27	3T2671	1	PLATE
	28	6F7044	2	NUT
		9B453	2	LOCKWASHER
	29	3T3048	1	CLIP ASSEM.
		9G9151	1	CLIP
	30	2D2751	1	GROMMET
	31	3T3047	1	CLIP ASSEM.
		9G9155	1	CLIP
	32	8N1537	2	LOCKWASHER 42.37MM(1.66 IN.) I.D.
	33	7G535	1	CABLE ASSEM.
E		5P747		CABLE 19CM (7.49 IN.)
		3S6050	1	TERMINAL ASSEM.
		1M6119	1	BOLT
		1M6120	1	NUT
		7N5274	1	COVER
	34	1S7251	1	TERMINAL
C	35	2K4973	8	NUT

319234

319234 P

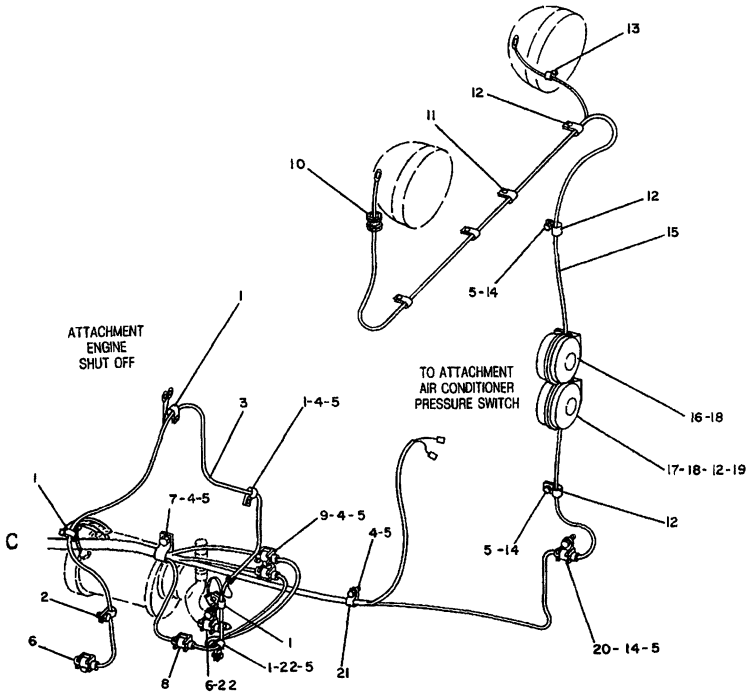

NOTE	REF NO	PART NUMBER	QTY	DESCRIPTION
	1	3S8664	5	CLIP
C	2	4D7794	1	CLIP
Y	3	3T2569	1	HARNESS AS.
	4	1D4717	4	NUT
	5	5M2894	8	WASHER
C	6	9G9150	3	CLIP
C	7	6D4636	1	CLIP
	8	3T3048	1	CLIP AS.
		9G9151	1	CLIP
	9	3T1221	1	CLIP
	10	4D12	1	GROMMET
	11	8M2772	3	CLIP
	12	338248	5	CLIP
	13	4D8123	1	CLIP
	14	S1594	5	BOLT
Y	15	7G537	1	HARNESS AS.
	16	9G1811	1	HORN AS.
	17	7N1138	1	HORN AS. (EACH HORN AS. INCLUDES)
	18	5P7848	2	NUT
		1H4393	2	WASHER
	19	5P1075	2	WASHER
	20	9G9152	1	CLIP
	21	4D9517	1	CLIP
	22	S509	2	BOLT

C INDICATES CHANGE
Y SEPARATE ILLUSTRATION

312770

312770 P

1408 **6P7330 BATTERY & WIRING GP-PART 4 OF 5**

S/N 53Y1679-2492

7G0537-Page 91,3T2569-Page 95

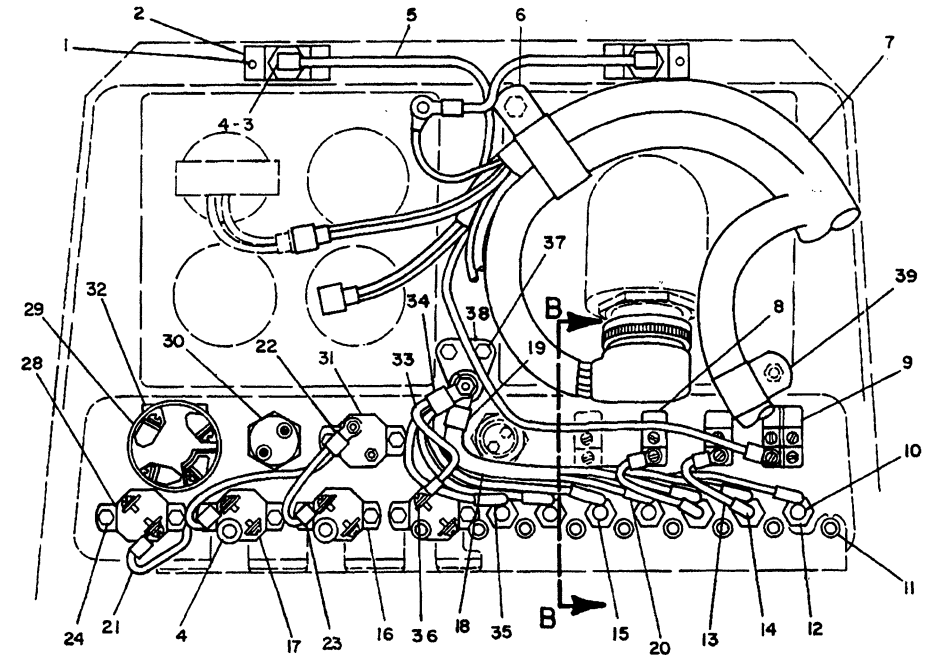

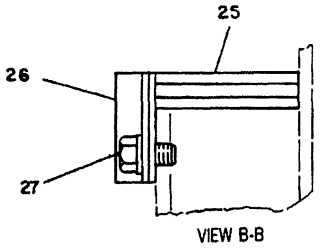

VIEW B-B

C INDICATES CHANGE
D ORDER BY THE METER
Y SEPARATE ILLUSTRATION

NOTE	REF NO	PART NUMBER	QTY	DESCRIPTION
	1	178715	4	SCREW
	2	3T6661	2	PLATE
	3	7N5876	2	LAMP
	4	7G9463	4	BUSHING
Y	5	3T7729	1	HARNESS AS.
	6	5K5338	1	CLIP
Y	7	3T7394	1	HARNESS AS.
	8	7N8000	2	SWITCH (LIGHT)
	9	7N8005	1	SWITCH (LIGHT)
	10	8M8948	1	FUSE (15 AMP)
	11	7G9465	9	BUSHING
	12	4K5122	7	HOLDER (FUSE)
				(EACH INCLUDES)
		7N2867	1	CAP
	13	3T2524	2	WIRE AS.
				(EACH INCLUDES)
D		5P5624		WIRE .095M(3.74IN.)
		5P2321	1	TERMINAL
	14	3T5433	1	TERMINAL
	15	3K8782	6	FUSE (10 AMP)
	16	3T2662	1	CIRCUIT BREAKER (15 AMP)
	17	6N8589	2	CIRCUIT BREAKER (15 AMP)
	18	3T2539	1	WIRE AS.
D		5P5624		WIRE .762M(30IN.)
	19	9F3965	1	TERMINAL
	20	9F3965	4	TERMINAL
	21	3T7870	1	WIRE AS.
D		5P2624		WIRE .4M(15.75IN.)
	22	2L8049	1	TERMINAL
	23	2D8781	3	TERMINAL
	24	7M4823	10	SCREW AS.
	25	3T2522	1	GROMMET
	26	3T6679	1	CLAMP
		3T6680	1	SEAL
	27	L1351	2	BOLT
		5M2894	2	WASHER
	28	9G9487	1	CIRCUIT BREAKER (10 AMP)
CY	29	9G7641	1	SWITCH GROUP (START)
	30	3T3453	1	SWITCH (STARTING AID)
	31	9S173	1	CIRCUIT BREAKER (60 AMP)
C	32	3T8730	1	COVER AS.
	33	3T2523	1	WIRE AS.
D		5P5624		WIRE .455M(17.92IN.)
	34	9F3965	1	TERMINAL
	35	3T5433	3	TERMINAL
	36	5P1475	1	TERMINAL
	37	1B4330	2	NUT
		5P537	2	WASHER
	38	9G8451	1	BLOCK AS.
		4L7124	1	BOLT
		9S8750	1	NUT
		1H3244	1	LOCKWASHER
		2D6235	1	LOCKNUT
		4B4276	1	WASHER
	39	3S8664	1	CLIP

312890

312890 P

1408 **6P7330 BATTERY & WIRING GP-PART 5 OF 5**

S/N 53Y1679-2492

3T7729-Page 94.01,3T7394-Page 96,9G7641-Page 100A

NOTE	REF NO	PART NUMBER	QTY	DESCRIPTION
	1	9G2673	1	GROMMET
	2	4D7794	8	CLIP
	3	L1351	1	BOLT
	4	5M2894	20	WASHER
	5	5D7635	2	GROMMET
	6	8S9191	2	BOLT
	7	3T1815	1	ALARM (BACKUP)
	8	9G6259	1	WIRE AS.
BD		5P5624		WIRE (14 GAUGE)
	9	7N9737	1	HOUSING
		7N7780	1	PIN
		7N7779	1	SOCKET
	10	2L8075	2	TERMINAL
	11	9G9150	4	CLIP (SMALL)
	12	T102	9	BOLT
Y	13	3T7728	1	HARNESS AS.
	14	3T2357	1	SWITCH (HORN)
C		6V8370	1	NUT
C		2H3922	1	LOCKWASHER (LARGE)
C		6V8363	2	SCREW
C		8F1434	2	LOCKWASHER (SMALL)
	15	5P9085	5	CLIP
	16	9G9152	2	CLIP (LARGE)
Y	17	7G538	1	HARNESS AS.

	20	6D3479	5	CLIP
	21	S509	5	BOLT
	22	8M2770	3	CLIP
	23	3T3048	1	CLIP AS.
Y	24	7G8994	1	ALARM GROUP
	25	4S1936	1	CLIP
		2H3855	1	BOLT
		5P8245	1	WASHER
	26	338248	1	CLIP

	18	7G530	2	WIRE AS. (EACH INCLUDES)
BD		5P5624		WIRE (14 GAUGE)
		7N9737	1	HOUSING
		7N7780	1	PIN
		9G3695	1	PLUG
	19	5P1475	1	TERMINAL

B USE AS REQUIRED
C INDICATES CHANGE
D ORDER BY THE METER
Y SEPARATE ILLUSTRATION

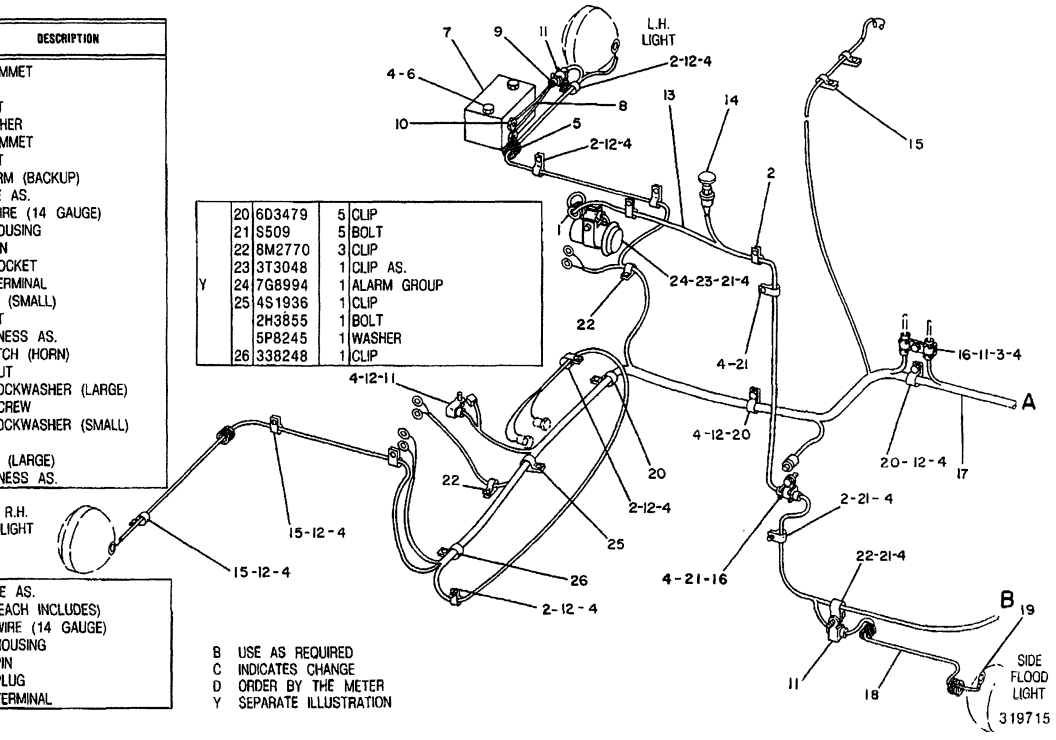

319715 P

6P7330 BATTERY & WIRING GP-PART 1 OF 5

S/N 53Y2493-2563

3T7728-Page 94,7G0538-Page 99B,7G8994-Page 100

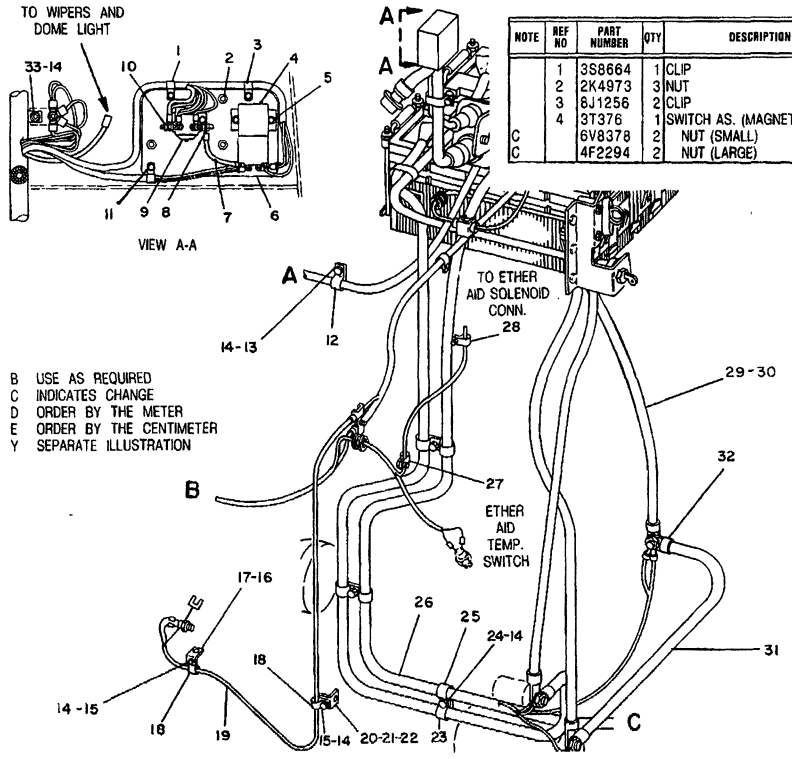

NOTE	REF NO	PART NUMBER	QTY	DESCRIPTION
	1	3S8664	1	CLIP
	2	2K4973	3	NUT
	3	8J1256	2	CLIP
	4	3T376	1	SWITCH AS. (MAGNETIC)
C		6V8378	2	NUT (SMALL)
C		4F2294	2	NUT (LARGE)
	5	2D6235	4	NUT
		5P537	4	WASHER
	6	3T6821	1	PLATE ASSEM.
	7	3T7709	1	WIRE ASSEM.
BD		5P5675		WIRE (6 GAUGE)
	8	7F8031	2	TERMINAL
	9	9F3099	1	SWITCH (MAGNETIC)
		4B2043	2	NUT
	10	4N2294	2	NUT
	11	1B4330	3	NUT
		4B4276	3	WASHER
	12	4D7735	1	CLIP
	13	T102	1	BOLT
	14	5M2894	8	WASHER
	15	S509	2	BOLT
	16	1A2029	1	BOLT
	17	1P4908	1	BRACKET ASSEM.
		9F2978	1	NUT
	18	4D7794	2	CLIP
Y	19	9G5530	1	HARNESS ASSEM.
	20	4M4983	1	SUPPORT ASSEM.
	21	9F2978	1	NUT
	22	5P8245	1	WASHER
	23	1S994	3	CLIP
	24	1D4717	2	NUT
	25	6V1889	3	CLIP
Y	26	7G539	1	HARNESS ASSEM.
	27	7N3718	1	CLIP
	28	9G9150	1	CLIP
	29	6T463	1	CABLE ASSEM.
BE		5P747		CABLE (00 GAUGE)
	30	1S7251	2	TERMINAL
	31	2V6166	1	CABLE ASSEM.
BE		5P747		CABLE (00 GAUGE)
	32	1S7251	2	TERMINAL
	33	3B2460	2	STUD
		1B4203	2	NUT

319716

319716 P

1408 **6P7330 BATTERY & WIRING GP-PART 2 OF 5**

S/N 53Y2493-2563

9G5530-Page 91.01,7G0539-Page 93A

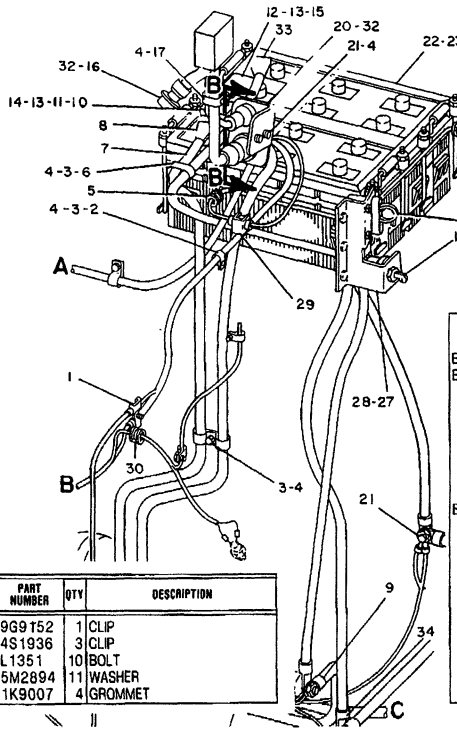

NOTE	REF NO	PART NUMBER	QTY	DESCRIPTION
	1	9G9152	1	CLIP
	2	4S1936	3	CLIP
	3	L1351	10	BOLT
	4	5M2894	11	WASHER
	5	1K9007	4	GROMMET
	6	7D1089	1	CLIP
	7	3T2570	1	CABLE ASSEM.
BE		5P747		CABLE (00 GAUGE)
E		5P695		CONDUIT 216CM (85.04 IN.)
		3S2093	2	STRAP
		1S4915	2	LINER
	8	3S6049	1	TERMINAL
		1S2244	2	BOOT
		8N1725	1	COVER
	9	1S7251	1	TERMINAL
		8N869	1	COVER
BE	10	5P747		CABLE (00 GAUGE)
	11	5M9205	1	TERMINAL AS.(NEG.)
	12	5M9204	1	TERMINAL AS. (POS.) (EACH TERMINAL ASSEM. INCLUDES)
	13	1M6119	2	BOLT
		1M6120	2	NUT
	14	9G3	1	COVER
	15	9G4	1	COVER
	16	9G4360	1	CAP
	17	4D7388	1	CLIP
		S509	1	BOLT

B USE AS REQUIRED
E ORDER BY THE CENTIMETER
Y SEPARATE ILLUSTRATION

Y	18	7N719	1	SWITCH ASSEM.
	19	8H8648	1	PLATE
	20	3T1501	1	PLATE
		8N1523	1	LOCKWASHER 58.32MM (2.29 IN.) I.D.
	21	1D4719	1	NUT
	22	9G4232	2	BATTERY (EACH INCLUDES)
		7G9383	6	VENT ASSEM.
	23	8P6206	1	HOLDDOWN ASSEM.
		8P1601	8	ROD
		5P1075	8	WASHER
	24	3T8733	1	RECEPTACLE ASSEM.
BE		5P747		CABLE (00 GAUGE)
		1S7251	2	TERMINAL
	25	8S2634	1	COVER ASSEM.
		2P2975	2	SEAL
	26	1D4717	4	NUT
	27	3T2671	1	PLATE
	28	6F7044	2	NUT
		9B453	2	LOCKWASHER
	29	3T3048	1	CLIP ASSEM.
	30	2D2751	1	GROMMET
	31	3T3047	1	CLIP ASSEM.
	32	8N1537	2	LOCKWASHER 42.37MM(1.66 IN.) I.D.
	33	7G535	1	CABLE ASSEM.
BE		5P747		CABLE (00 GAUGE)
		3S6050	1	TERMINAL ASSEM.
		1M6119	1	BOLT
		1M6120	1	NUT
		7N5274	1	COVER
	34	1S7251	1	TERMINAL
	35	2K4973	8	NUT

319717

319717 P

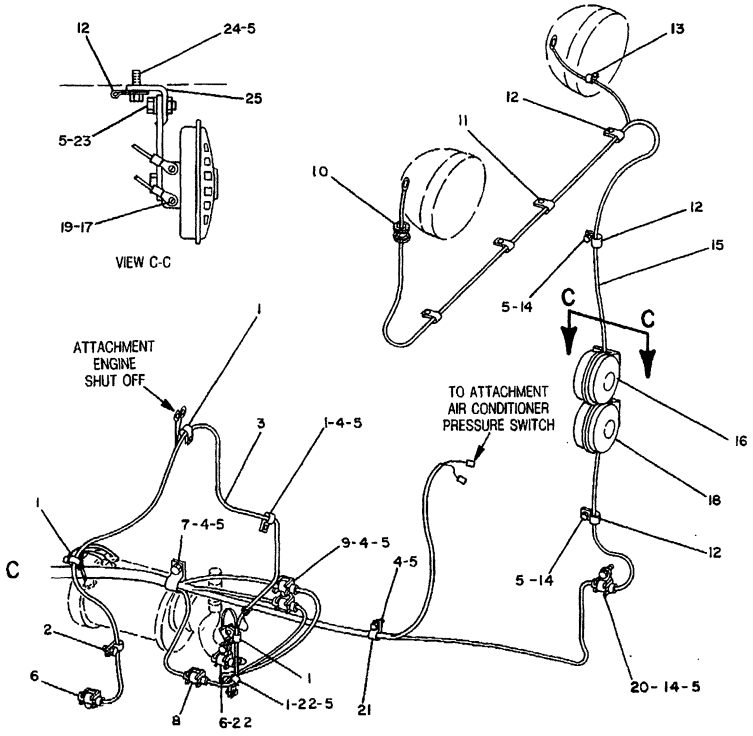

NOTE	REF NO	PART NUMBER	QTY	DESCRIPTION
	1	3S8664	5	CLIP
	2	4D7794	1	CLIP
Y	3	3T2569	1	HARNESS AS.
	4	1D4717	4	NUT
C	5	5M2894	12	WASHER
	6	9G9150	3	CLIP
	7	6D4636	1	CLIP
	8	3T3048	1	CLIP AS.
	9	3T1221	1	CLIP
	10	4D12	1	GROMMET
	11	8M2772	3	CLIP
	12	338248	5	CLIP
	13	4D8123	1	CLIP
C	14	S1594	3	BOLT
Y	15	7G537	1	HARNESS AS.
C	16	7T970	1	HORN AS. (HIGH TONE)
	17	6V9490	2	SCREW
		9B7233	2	LOCKWASHER
C	18	7T969	1	HORN AS. (LOW TONE)
	19	6V9490	2	SCREW
		9B7233	2	LOCKWASHER
	20	9G9152	1	CLIP
	21	4D9517	1	CLIP
	22	S509	2	BOLT
C	23	0L1351	2	BOLT
C	24	0S1588	2	BOLT
C	25	7T1377	2	BRACKET AS.

C INDICATES CHANGE
Y SEPARATE ILLUSTRATION

319718

319718 P

1408 **6P7330 BATTERY & WIRING GP-PART 4 OF 5**
S/N 53Y2493-2563
7G0537-Page 91,3T2569-Page 95B

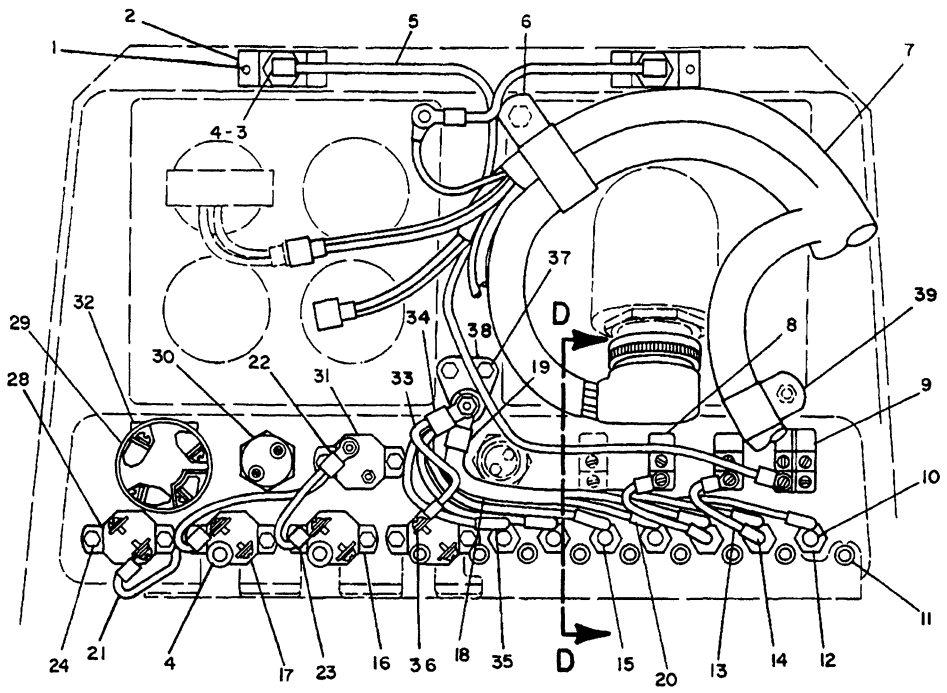

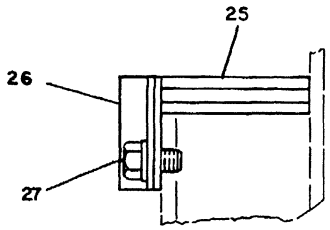

VIEW D-D

C INDICATES CHANGE
D ORDER BY THE METER
Y SEPARATE ILLUSTRATION

NOTE	REF NO	PART NUMBER	QTY	DESCRIPTION
	1	178715	4	SCREW
	2	3T6661	2	PLATE
	3	7N5876	2	LAMP
	4	7G9463	4	BUSHING
Y	5	3T7729	1	HARNESS AS.
	6	5K5338	1	CLIP
Y	7	3T7394	1	HARNESS AS.
Y	8	7N8000	2	SWITCH (LIGHT)
	9	7N8005	1	SWITCH (LIGHT)
	10	8M8948	1	FUSE (15 AMP)
	11	7G9465	9	BUSHING
	12	4K5122	7	HOLDER (FUSE)
				(EACH INCLUDES)
		7N2867	1	CAP
C		6T8115	1	NUT
	13	3T2524	2	WIRE AS.
				(EACH INCLUDES)
BD		5P5624		WIRE (14 GAUGE)
		5P2321	1	TERMINAL
	14	3T5433	1	TERMINAL
	15	3K8782	6	FUSE (10 AMP)
	16	3T2662	1	CIRCUIT BREAKER (15 AMP)
		6V8376	2	SCREW
		9B7233	2	LOCKWASHER
	17	6N8589	2	CIRCUIT BREAKER (15 AMP)
	18	3T2539	1	WIRE AS.
BD		5P5624		WIRE (14 GAUGE)
	19	9F3965	1	TERMINAL
	20	9F3965	4	TERMINAL
	21	3T7870	1	WIRE AS.
BD		5P2624		WIRE (14 GAUGE)
	22	2L8049	1	TERMINAL
	23	2D8781	3	TERMINAL
	24	7M4823	10	SCREW AS.
	25	3T2522	1	GROMMET
	26	3T6679	1	CLAMP
		3T6680	1	SEAL
	27	L1351	2	BOLT
		5M2894	2	WASHER
	28	9G9487	1	CIRCUIT BREAKER (10 AMP)
Y	29	9G7641	1	SWITCH GROUP (START)
	30	3T3453	1	SWITCH (STARTING AID)
	31	9S173	1	CIRCUIT BREAKER (60 AMP)
	32	3T8730	1	COVER AS.
	33	3T2523	1	WIRE AS.
BD		5P5624		WIRE (14 GAUGE)
	34	9F3965	1	TERMINAL
	35	3T5433	3	TERMINAL
	36	5P1475	1	TERMINAL
	37	1B4330	2	NUT
		5P537	2	WASHER
	38	9G8451	1	BLOCK AS.
		4L7124	1	BOLT
		9S8750	1	NUT
		1H3244	1	LOCKWASHER
		2D6235	1	LOCKNUT
		4B4276	1	WASHER
	39	3S8664	1	CLIP

319719

319719 P

1408 6P7330 BATTERY & WIRING GP-PART 5 OF 5

S/N 53Y2493-2563

3T7729-Page 94.01,3T7394-Page 96,9G7641-Page 100A,7N8000-Page 100B

NOTE	REF NO	PART NUMBER	QTY	DESCRIPTION
	1	9G2673	1	GROMMET
	2	4D7794	8	CLIP
	3	L1351	1	BOLT
C	4	5M2894	19	WASHER
	5	5D7635	2	GROMMET
	6	8S9191	2	BOLT
	7	3T1815	1	ALARM (BACKUP)
	8	9G6259	1	WIRE AS.
BD		5P5624		WIRE (14 GAUGE)
	9	7N9737	1	HOUSING
		7N7780	1	PIN
		7N7779	1	SOCKET
	10	2L8075	2	TERMINAL
	11	9G9150	3	CLIP (SMALL)
C	12	T102	8	BOLT
Y	13	3T7728	1	HARNESS AS.
	14	3T2357	1	SWITCH (HORN)
		6V8370	1	NUT
		2H3922	1	LOCKWASHER (LARGE)
		6V8363	2	SCREW
		8F1434	2	LOCKWASHER (SMALL)
	15	5P9085	5	CLIP
	16	9G9152	2	CLIP (LARGE)
Y	17	7G538	1	HARNESS AS.

	20	6D3479	5	CLIP
	21	S509	5	BOLT
	22	8M2770	3	CLIP
	23	3T3048	1	CLIP AS.
CY	24	9G9813	1	ALARM GROUP
	25	4S1936	1	CLIP
		2H3855	1	BOLT
		5P8245	1	WASHER
	26	338248	1	CLIP

	18	7G530	2	WIRE AS. (EACH INCLUDES)
BD		5P5624		WIRE (14 GAUGE)
		7N9737	1	HOUSING
		7N7780	1	PIN
		9G3695	1	PLUG
	19	5P1475	1	TERMINAL

B USE AS REQUIRED
C INDICATES CHANGE
D ORDER BY THE METER
Y SEPARATE ILLUSTRATION

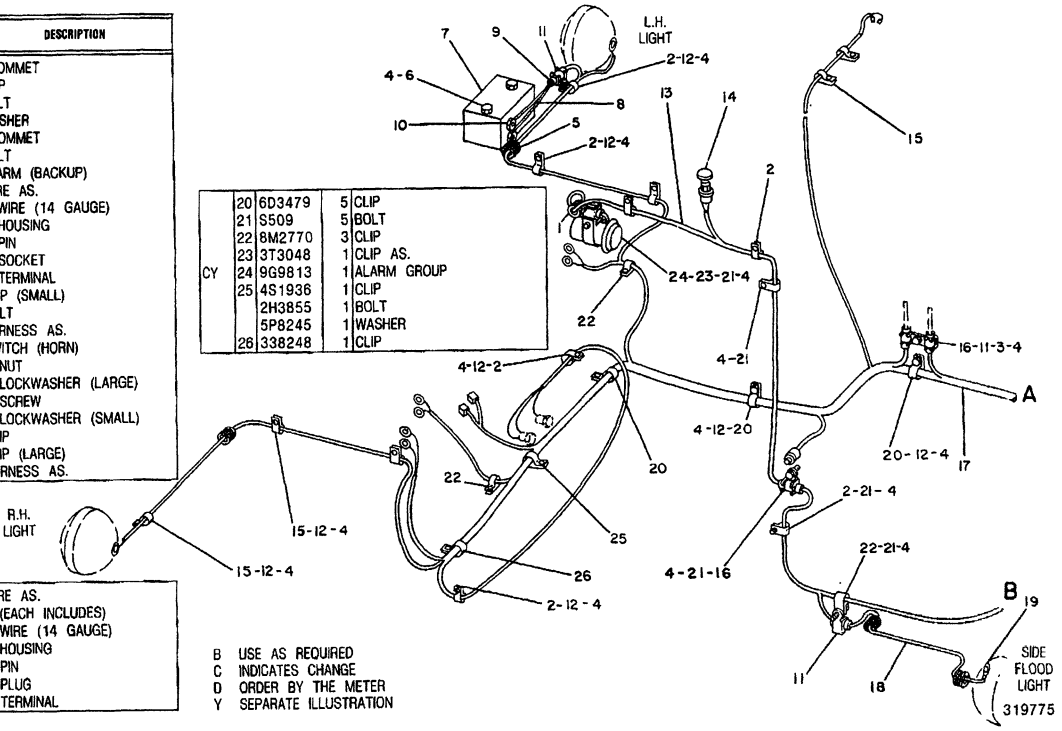

319775 P

1408 **6P7330 BATTERY & WIRING GP-PART 1 OF 5**

S/N 53Y2564-2568

3T7728-Page 94,7G0538-Page 99B,9G9813-Page 100A

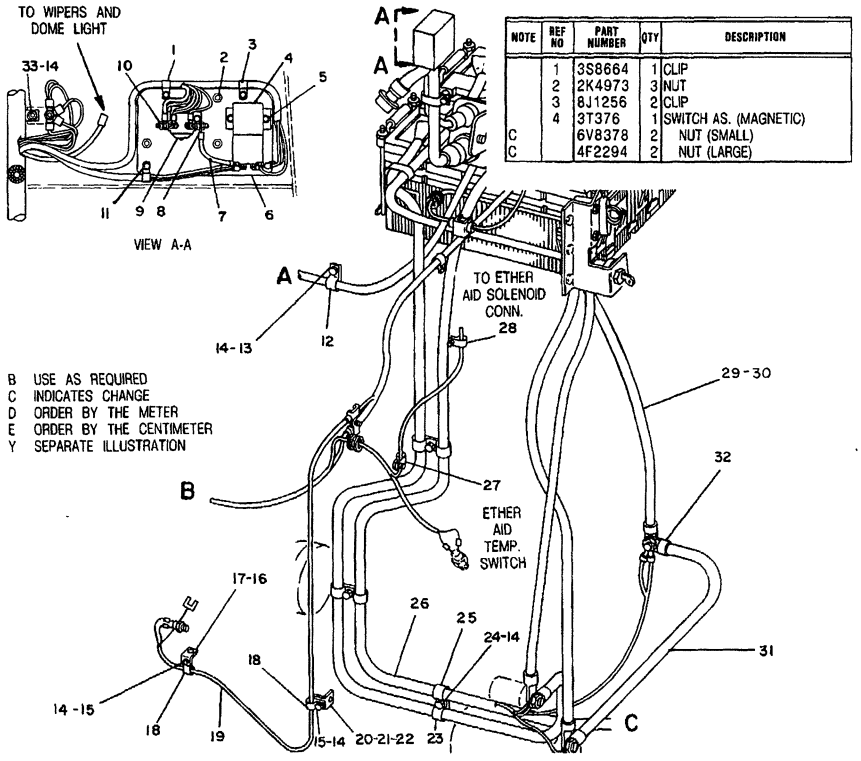

NOTE	REF NO	PART NUMBER	QTY	DESCRIPTION
	1	3S8664	1	CLIP
	2	2K4973	3	NUT
	3	8J1256	2	CLIP
	4	3T376	1	SWITCH AS. (MAGNETIC)
C		6V8378	2	NUT (SMALL)
C		4F2294	2	NUT (LARGE)

B USE AS REQUIRED
C INDICATES CHANGE
D ORDER BY THE METER
E ORDER BY THE CENTIMETER
Y SEPARATE ILLUSTRATION

	5	2D6235	4	NUT
		5P537	4	WASHER
	6	3T6821	1	PLATE ASSEM.
	7	3T7709	1	WIRE ASSEM.
BD		5P5675		WIRE (6 GAUGE)
	8	7F8031	2	TERMINAL
	9	9F3099	1	SWITCH (MAGNETIC)
		4B2043	2	NUT
	10	4N2294	2	NUT
	11	1B4330	3	NUT
		4B4276	3	WASHER
	12	4D7735	1	CLIP
	13	T102	1	BOLT
	14	5M2894	8	WASHER
	15	S509	2	BOLT
	16	1A2029	1	BOLT
	17	1P4908	1	BRACKET ASSEM.
		9F2978	1	NUT
	18	4D7794	2	CLIP
Y	19	9G5530	1	HARNESS ASSEM.
	20	4M4983	1	SUPPORT ASSEM.
	21	9F2978	1	NUT
	22	5P8245	1	WASHER
	23	1S994	3	CLIP
	24	1D4717	2	NUT
	25	6V1889	3	CLIP
Y	26	7G539	1	HARNESS ASSEM.
	27	7N3718	1	CLIP
	28	9G9150	1	CLIP
	29	6T463	1	CABLE ASSEM.
BE		5P747		CABLE (00 GAUGE)
	30	1S7251	2	TERMINAL
	31	2V6166	1	CABLE ASSEM.
BE		5P747		CABLE (00 GAUGE)
	32	1S7251	2	TERMINAL
	33	3B2460	2	STUD
		1B4203	2	NUT

319716

319716 P

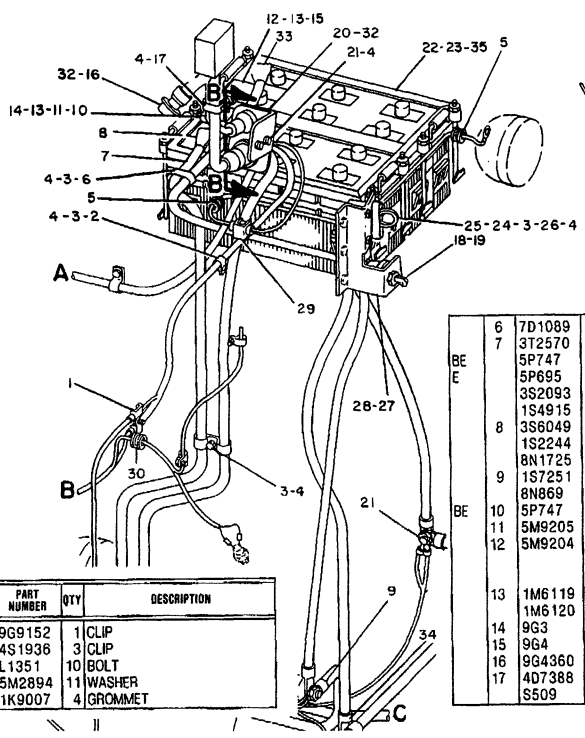

NOTE	REF NO	PART NUMBER	QTY	DESCRIPTION
	1	9G9152	1	CLIP
	2	4S1936	3	CLIP
	3	L1351	10	BOLT
	4	5M2894	11	WASHER
	5	1K9007	4	GROMMET

	6	7D1089	1	CLIP
	7	3T2570	1	CABLE ASSEM.
BE		5P747		CABLE (00 GAUGE)
E		5P695		CONDUIT 216CM (85.04 IN.)
		3S2093	2	STRAP
		1S4915	2	LINER
	8	3S6049	1	TERMINAL
		1S2244	2	BOOT
		8N1725	1	COVER
	9	1S7251	1	TERMINAL
		8N869	1	COVER
BE	10	5P747		CABLE (00 GAUGE)
	11	5M9205	1	TERMINAL AS.(NEG.)
	12	5M9204	1	TERMINAL AS. (POS.) (EACH TERMINAL 'ASSEM. INCLUDES)
	13	1M6119	2	BOLT
		1M6120	2	NUT
	14	9G3	1	COVER
	15	9G4	1	COVER
	16	9G4360	1	CAP
	17	4D7388	1	CLIP
		S509	1	BOLT

B USE AS REQUIRED
C INDICATES CHANGE
E ORDER BY THE CENTIMETER
Y SEPARATE ILLUSTRATION

Y	18	7N719	1	SWITCH ASSEM.
	19	8H8648	1	PLATE
	20	3T1501	1	PLATE
		8N1523	1	LOCKWASHER 58.32MM (2.29 IN.) I.D.
	21	1D4719	1	NUT
	22	9G4232	2	BATTERY (EACH INCLUDES)
		7G9383	6	VENT ASSEM.
	23	8P6206	1	HOLDDOWN ASSEM.
		8P1601	8	ROD
		5P1075	8	WASHER
	24	3T8733	1	RECEPTACLE ASSEM.
BE		5P747		CABLE (00 GAUGE)
		1S7251	2	TERMINAL
	25	8S2634	1	COVER ASSEM.
		2P2975	2	SEAL
	26	1D4717	4	NUT
	27	3T2671	1	PLATE
	28	6F7044	2	NUT
		9B453	2	LOCKWASHER
	29	3T3048	1	CLIP ASSEM.
	30	2D2751	1	GROMMET
	31	3T3047	1	CLIP ASSEM.
	32	8N1537	2	LOCKWASHER 42.37MM(1.66 IN.) I.D.
	33	7G535	1	CABLE ASSEM.
BE		5P747		CABLE (00 GAUGE)
		3S6050	1	TERMINAL ASSEM.
		1M6119	1	BOLT
		1M6120	1	NUT
		7N5274	1	COVER
	34	1S7251	1	TERMINAL
	35	2K4973	8	NUT
C	36	5K4778	1	CLIP

321631

321631 P

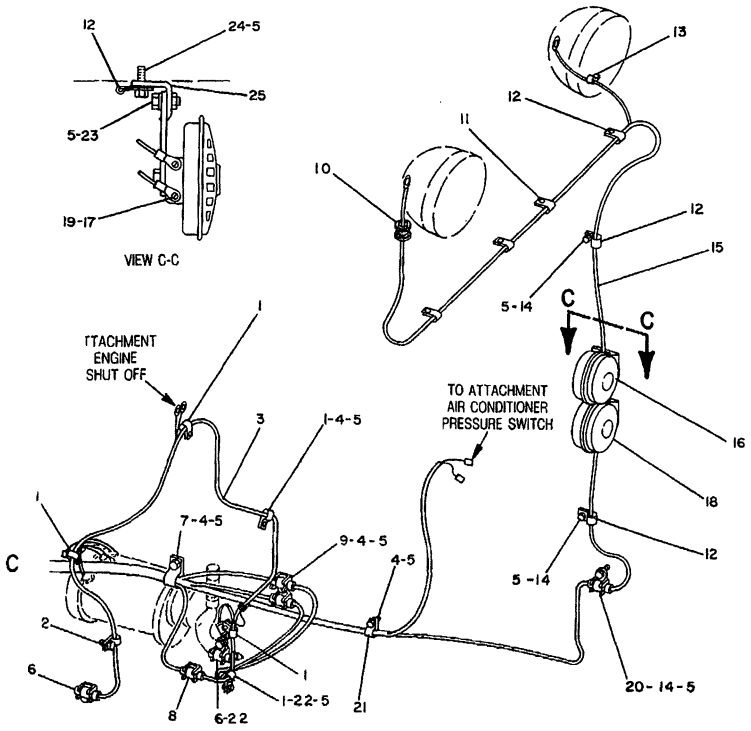

NOTE	REF NO	PART NUMBER	QTY	DESCRIPTION
	1	3S8664	5	CLIP
	2	4D7794	1	CLIP
Y	3	3T2569	1	HARNESS AS.
	4	1D4717	4	NUT
	5	5M2894	12	WASHER
	6	9G9150	3	CLIP
	7	6D4636	1	CLIP
	8	3T3048	1	CLIP AS.
		9G9151	1	CLIP
	9	3T1221	1	CLIP
	10	4D12	1	GROMMET
	11	8M2772	3	CLIP
	12	338248	5	CLIP
	13	4D8123	1	CLIP
	14	S1594	3	BOLT
Y	15	7G537	1	HARNESS AS.
	16	7T970	1	HORN AS. (HIGH TONE)
	17	6V9490	2	SCREW
		9B7233	2	LOCKWASHER
	18	7T969	1	HORN AS. (LOW TONE)
	19	6V9490	2	SCREW
		9B7233	2	LOCKWASHER
	20	9G9152	1	CLIP
	21	4D9517	1	CLIP
	22	S509	2	BOLT
	23	0L1351	2	BOLT
	24	0S1588	2	BOLT
	25	7T1377	2	BRACKET AS.

C INDICATES CHANGE
Y SEPARATE ILLUSTRATION

319776

319776 P

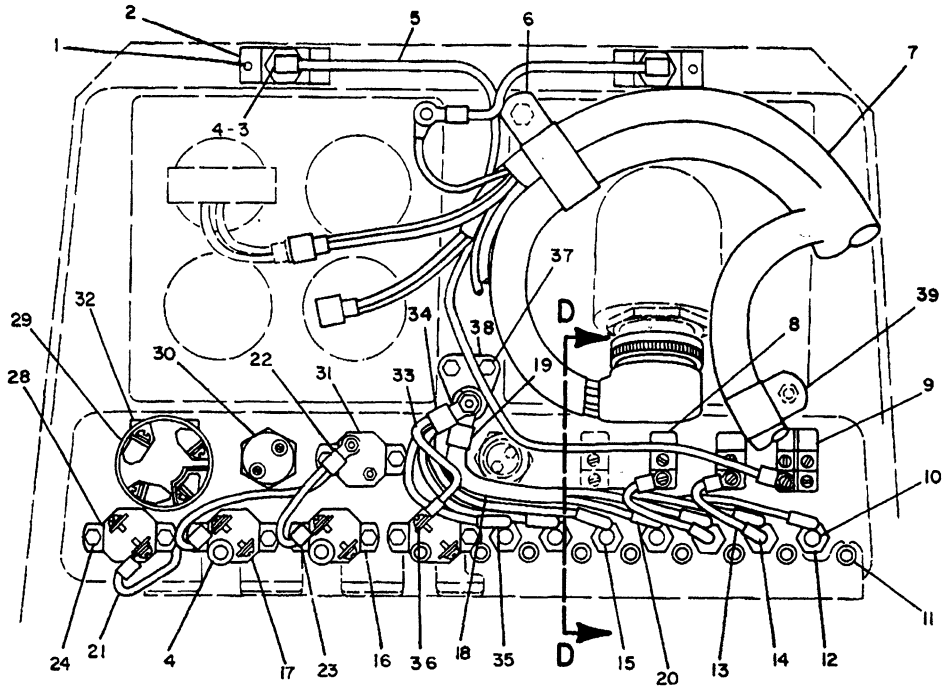

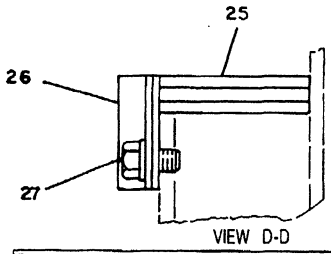

VIEW D-D

B USE AS REQUIRED
D ORDER BY THE METER
Y SEPARATE ILLUSTRATION

NOTE	REF NO	PART NUMBER	QTY	DESCRIPTION
	1	178715	4	SCREW
	2	3T6661	2	PLATE
	3	7N5876	2	LAMP
	4	7G9463	4	BUSHING
Y	5	3T7729	1	HARNESS AS.
	6	5K5338	1	CLIP
Y	7	3T7394	1	HARNESS AS.
Y	8	7N8000	2	SWITCH (LIGHT)
	9	7N8005	1	SWITCH (LIGHT)
	10	8M8948	1	FUSE (15 AMP)
	11	7G9465	9	BUSHING
	12	4K5122	7	HOLDER (FUSE)
				(EACH INCLUDES)
		7N2867	1	CAP
		6T8115	1	NUT
	13	3T2524	2	WIRE AS.
				(EACH INCLUDES)
BD		5P5624		WIRE (14 GAUGE)
		5P2321	1	TERMINAL
	14	3T5433	1	TERMINAL
	15	3K8782	6	FUSE (10 AMP)
	16	3T2662	1	CIRCUIT BREAKER (15 AMP)
		6V8376	2	SCREW
		9B7233	2	LOCKWASHER
	17	6N8589	2	CIRCUIT BREAKER (15 AMP)
	18	3T2539	1	WIRE AS.
BD		5P5624		WIRE (14 GAUGE)
	19	9F3965	1	TERMINAL
	20	9F3965	4	TERMINAL
	21	3T7870	1	WIRE AS.
BD		5P2624		WIRE (14 GAUGE)
	22	2L8049	1	TERMINAL
	23	2D8781	3	TERMINAL
	24	7M4823	10	SCREW AS.
	25	3T2522	1	GROMMET
	26	3T6679	1	CLAMP
		3T6680	1	SEAL
	27	L1351	2	BOLT
		5M2894	2	WASHER
	28	9G9487	1	CIRCUIT BREAKER (10 AMP)
Y	29	9G7641	1	SWITCH GROUP (START)
	30	3T3453	1	SWITCH (STARTING AID)
	31	9S173	1	CIRCUIT BREAKER (60 AMP)
	32	3T8730	1	COVER AS.
	33	3T2523	1	WIRE AS.
BD		5P5624		WIRE (14 GAUGE)
	34	9F3965	1	TERMINAL
	35	3T5433	3	TERMINAL
	36	5P1475	1	TERMINAL
	37	1B4330	2	NUT
		5P537	2	WASHER
	38	9G8451	1	BLOCK AS.
		4L7124	1	BOLT
		9S8750	1	NUT
		1H3244	1	LOCKWASHER
		2D6235	1	LOCKNUT
		4B4276	1	WASHER
	39	3S8664	1	CLIP

319777

319777 P

NOTE	REF NO	PART NUMBER	QTY	DESCRIPTION
	1	9G2673	1	GROMMET
	2	4D7794	8	CLIP
C	3	3T3045	1	CLIP AS.
C	4	5M2894	18	WASHER
	5	5D7635	2	GROMMET
	6	8S9191	2	BOLT
	7	3T1815	1	ALARM (BACKUP)
	8	9G6259	1	WIRE AS.
BD		5P5624		WIRE (14 GAUGE)
	9	7N9737	1	HOUSING
		7N7780	1	PIN
		7N7779	1	SOCKET
	10	2L8075	2	TERMINAL
C	11	9G9150	2	CLIP
	12	T102	8	BOLT
Y	13	3T7728	1	HARNESS AS.
	14	3T2357	1	SWITCH (HORN)
		6V8370	1	NUT
		2H3922	1	LOCKWASHER (LARGE)
		6V8363	2	SCREW
		8F1434	2	LOCKWASHER (SMALL)
	15	5P9085	5	CLIP
C	16	9G9152	1	CLIP
Y	17	7G538	1	HARNESS AS.

	20	6D3479	5	CLIP
	21	S509	5	BOLT
	22	8M2770	3	CLIP
C	23	3T3048	2	CLIP AS.
Y	24	9G9813	1	ALARM GROUP
	25	4S1936	1	CLIP
		2H3855	1	BOLT
		5P8245	1	WASHER
	26	338248	1	CLIP

	18	7G530	2	WIRE AS. (EACH INCLUDES)
BD		5P5624		WIRE (14 GAUGE)
		7N9737	1	HOUSING
		7N7780	1	PIN
		9G3695	1	PLUG
	19	5P1475	1	TERMINAL

B USE AS REQUIRED
C INDICATES CHANGE
D ORDER BY THE METER
Y SEPARATE ILLUSTRATION

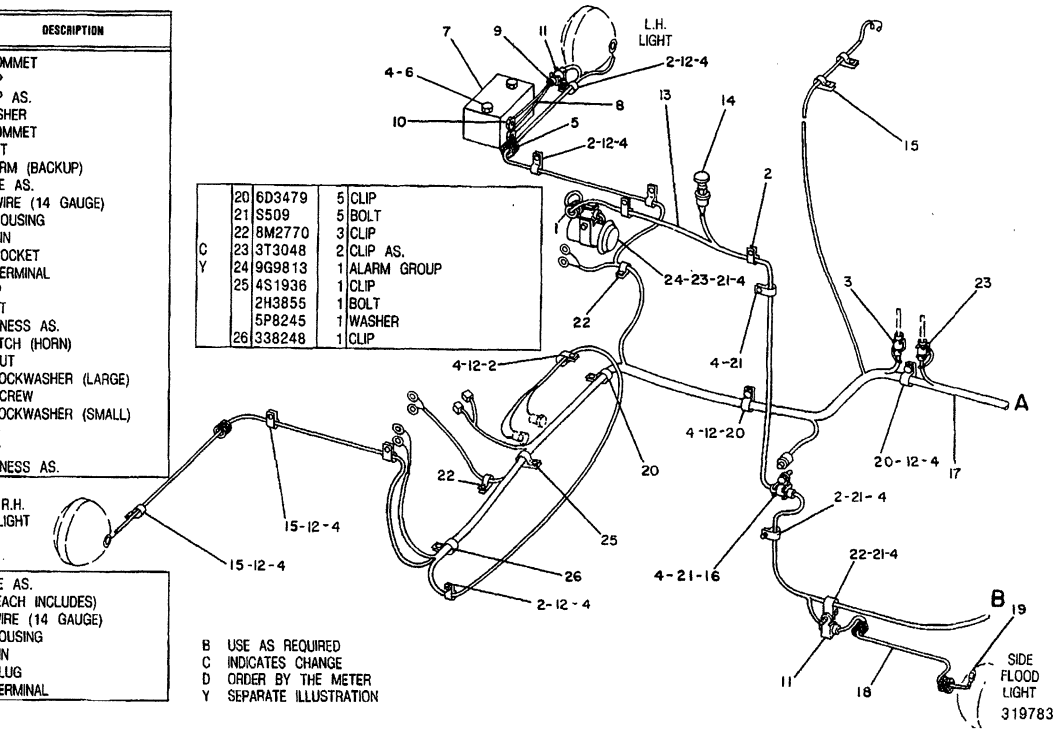

319783 P

6P7330 BATTERY & WIRING GP-PART 1 OF 5

S/N 53Y2569-2726

3T7728-Page 94,7G0538-Page 99B,9G9813-Page 100A

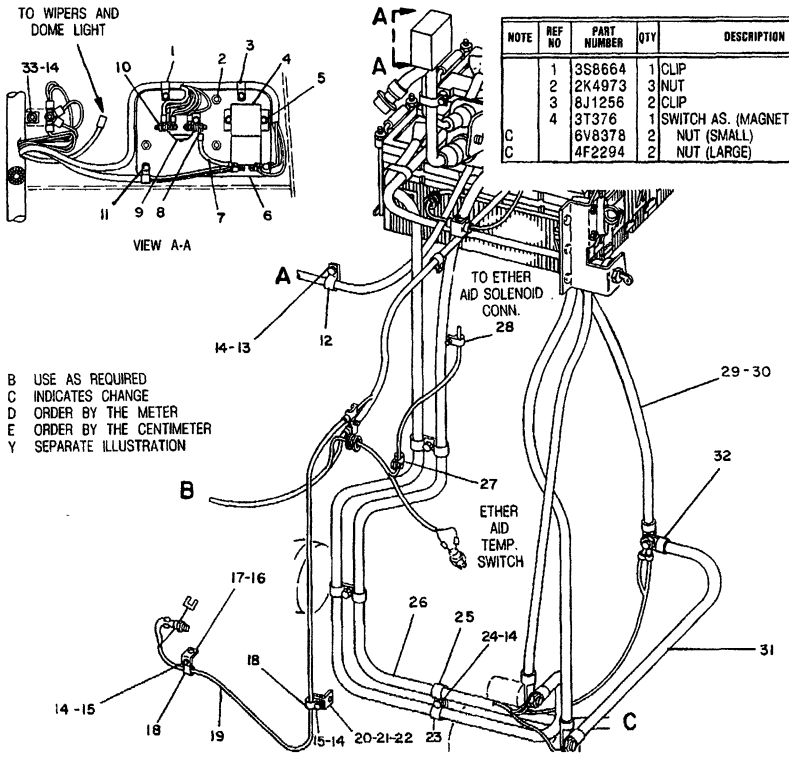

NOTE	REF NO	PART NUMBER	QTY	DESCRIPTION
	1	3S8664	1	CLIP
	2	2K4973	3	NUT
	3	8J1256	2	CLIP
	4	3T376	1	SWITCH AS. (MAGNETIC)
C		6V8378	2	NUT (SMALL)
C		4F2294	2	NUT (LARGE)
	5	2D6235	4	NUT
		5P537	4	WASHER
	6	3T6821	1	PLATE ASSEM.
	7	3T7709	1	WIRE ASSEM.
BD		5P5675		WIRE (6 GAUGE)
	8	7F8031	2	TERMINAL
	9	9F3099	1	SWITCH (MAGNETIC)
		4B2043	2	NUT
	10	4N2294	2	NUT
	11	1B4330	3	NUT
		4B4276	3	WASHER
	12	4D7735	1	CLIP
	13	T102	1	BOLT
	14	5M2894	8	WASHER
	15	S509	2	BOLT
	16	1A2029	1	BOLT
	17	1P4908	1	BRACKET ASSEM.
		9F2978	1	NUT
	18	4D7794	2	CLIP
Y	19	9G5530	1	HARNESS ASSEM.
	20	4M4983	1	SUPPORT ASSEM.
	21	9F2978	1	NUT
	22	5P8245	1	WASHER
	23	1S994	3	CLIP
	24	1D4717	2	NUT
	25	6V1889	3	CLIP
Y	26	7G539	1	HARNESS ASSEM.
	27	7N3718	1	CLIP
	28	9G9150	1	CLIP
	29	6T463	1	CABLE ASSEM.
BE		5P747		CABLE (00 GAUGE)
	30	1S7251	2	TERMINAL
	31	2V6166	1	CABLE ASSEM.
BE		5P747		CABLE (00 GAUGE)
	32	1S7251	2	TERMINAL
	33	3B2460	2	STUD
		1B4203	2	NUT

319716

319716 P

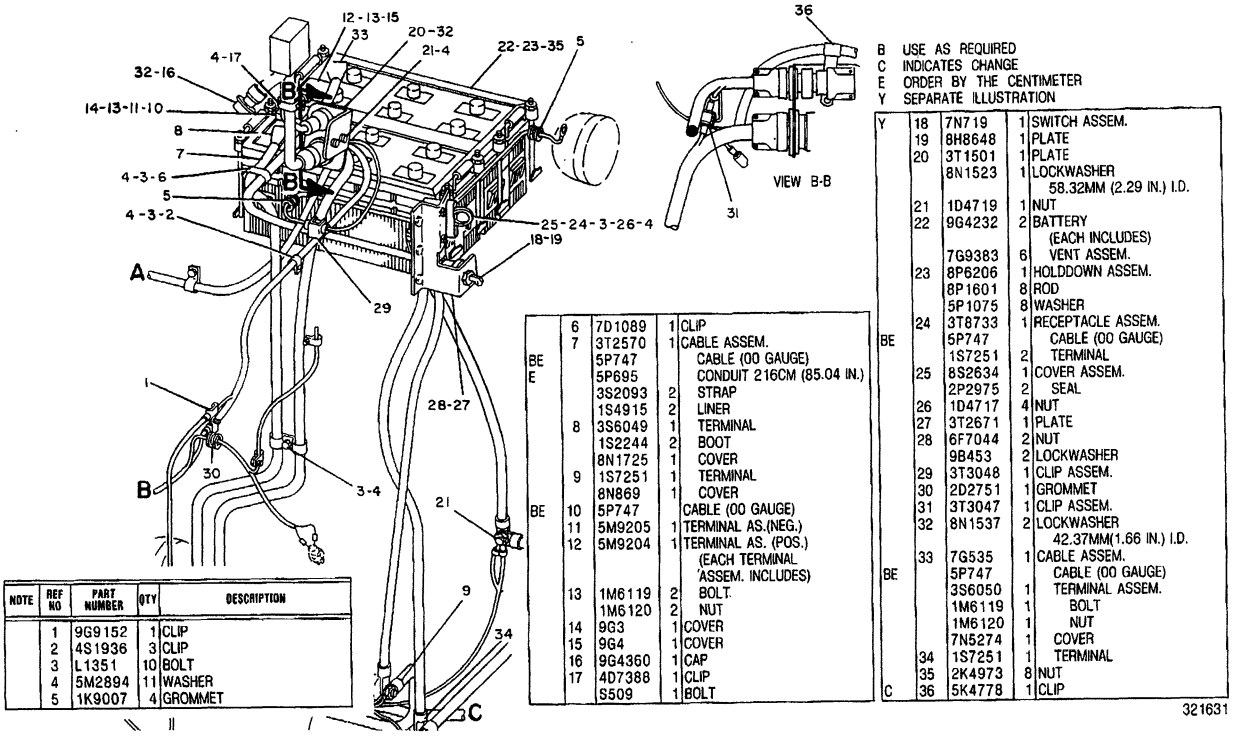

B USE AS REQUIRED
C INDICATES CHANGE
E ORDER BY THE CENTIMETER
Y SEPARATE ILLUSTRATION

NOTE	REF NO	PART NUMBER	QTY	DESCRIPTION
	1	9G9152	1	CLIP
	2	4S1936	3	CLIP
	3	L1351	10	BOLT
	4	5M2894	11	WASHER
	5	1K9007	4	GROMMET
	6	7D1089	1	CLIP
	7	3T2570	1	CABLE ASSEM.
BE		5P747		CABLE (00 GAUGE)
E		5P695		CONDUIT 216CM (85.04 IN.)
		3S2093	2	STRAP
		1S4915	2	LINER
	8	3S6049	1	TERMINAL
		1S2244	2	BOOT
		8N1725	1	COVER
	9	1S7251	1	TERMINAL
		8N869	1	COVER
BE	10	5P747		CABLE (00 GAUGE)
	11	5M9205	1	TERMINAL AS.(NEG.)
	12	5M9204	1	TERMINAL AS. (POS.) (EACH TERMINAL 'ASSEM. INCLUDES)
	13	1M6119	2	BOLT
		1M6120	2	NUT
	14	9G3	1	COVER
	15	9G4	1	COVER
	16	9G4360	1	CAP
	17	4D7388	1	CLIP
		S509	1	BOLT
Y	18	7N719	1	SWITCH ASSEM.
	19	8H8648	1	PLATE
	20	3T1501	1	PLATE
		8N1523	1	LOCKWASHER 58.32MM (2.29 IN.) I.D.
	21	1D4719	1	NUT
	22	9G4232	2	BATTERY (EACH INCLUDES)
		7G9383	6	VENT ASSEM.
	23	8P6206	1	HOLDDOWN ASSEM.
		8P1601	8	ROD
		5P1075	8	WASHER
	24	3T8733	1	RECEPTACLE ASSEM.
BE		5P747		CABLE (00 GAUGE)
		1S7251	2	TERMINAL
	25	8S2634	1	COVER ASSEM.
		2P2975	2	SEAL
	26	1D4717	4	NUT
	27	3T2671	1	PLATE
	28	6F7044	2	NUT
		9B453	2	LOCKWASHER
	29	3T3048	1	CLIP ASSEM.
	30	2D2751	1	GROMMET
	31	3T3047	1	CLIP ASSEM.
	32	8N1537	2	LOCKWASHER 42.37MM(1.66 IN.) I.D.
	33	7G535	1	CABLE ASSEM.
BE		5P747		CABLE (00 GAUGE)
		3S6050	1	TERMINAL ASSEM.
		1M6119	1	BOLT
		1M6120	1	NUT
		7N5274	1	COVER
	34	1S7251	1	TERMINAL
	35	2K4973	8	NUT
C	36	5K4778	1	CLIP

321631

321631 P

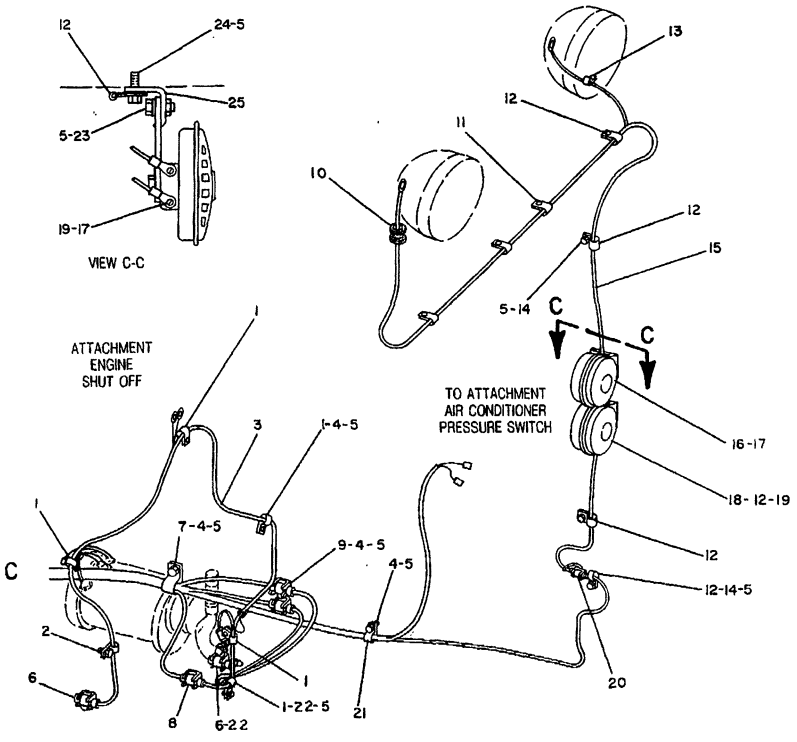

NOTE	REF NO	PART NUMBER	QTY	DESCRIPTION
	1	3S8664	5	CLIP
	2	4D7794	1	CLIP
Y	3	3T2569	1	HARNESS AS.
	4	1D4717	4	NUT
	5	5M2894	12	WASHER
	6	9G9150	3	CLIP
	7	6D4636	1	CLIP
	8	3T3048	1	CLIP AS.
		9G9151	1	CLIP
	9	3T1221	1	CLIP
	10	4D12	1	GROMMET
	11	8M2772	3	CLIP
C	12	338248	6	CLIP
	13	4D8123	1	CLIP
	14	S1594	3	BOLT
Y	15	7G537	1	HARNESS AS.
	16	7T970	1	HORN AS. (HIGH TONE)
	17	6V9490	2	SCREW
		9B7233	2	LOCKWASHER
	18	7T969	1	HORN AS. (LOW TONE)
	19	6V9490	2	SCREW
		9B7233	2	LOCKWASHER
C	20	3T3045	1	CLIP AS.
	21	4D9517	1	CLIP
	22	S509	2	BOLT
	23	0L1351	2	BOLT
	24	0S1588	2	BOLT
	25	7T1377	2	BRACKET AS.

C INDICATES CHANGE
Y SEPARATE ILLUSTRATION

319784

319784 P

1408

6P7330 BATTERY & WIRING GP-PART 4 OF 5
S/N 53Y2569-2726
7G0537-Page 91,3T2569-Page 95B

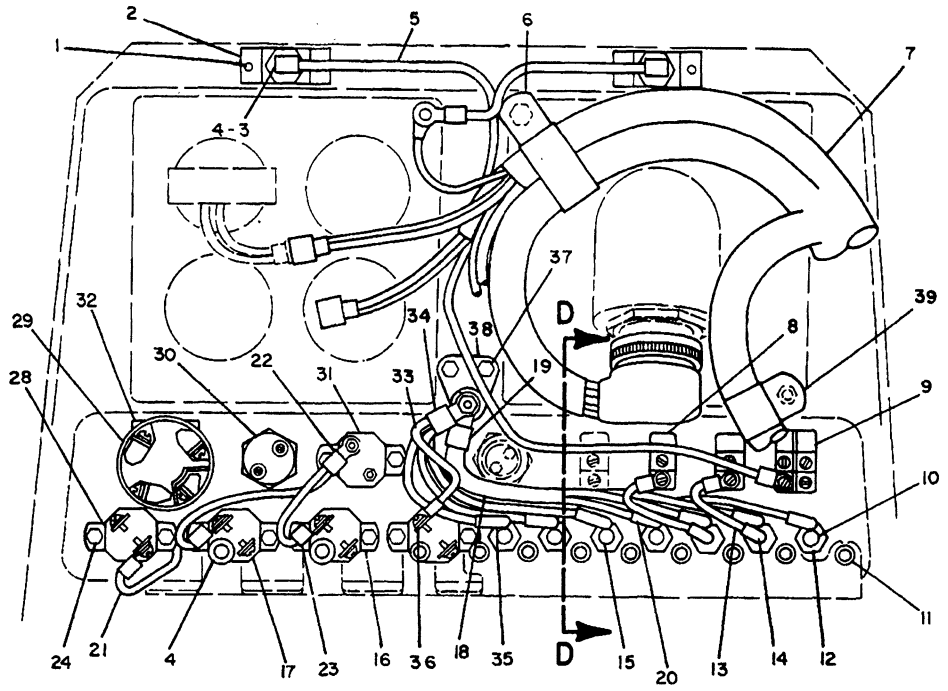

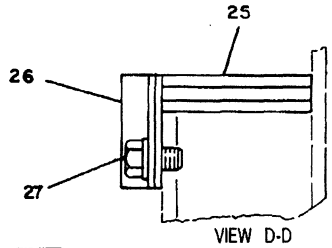

VIEW D-D

B USE AS REQUIRED
D ORDER BY THE METER
Y SEPARATE ILLUSTRATION

NOTE	REF NO	PART NUMBER	QTY	DESCRIPTION
	1	178715	4	SCREW
	2	3T6661	2	PLATE
	3	7N5876	2	LAMP
	4	7G9463	4	BUSHING
Y	5	3T7729	1	HARNESS AS.
	6	5K5338	1	CLIP
Y	7	3T7394	1	HARNESS AS.
Y	8	7N8000	2	SWITCH (LIGHT)
	9	7N8005	1	SWITCH (LIGHT)
	10	8M8948	1	FUSE (15 AMP)
	11	7G9465	9	BUSHING
	12	4K5122	7	HOLDER (FUSE)
				(EACH INCLUDES)
		7N2867	1	CAP
		6T8115	1	NUT
	13	3T2524	2	WIRE AS.
				(EACH INCLUDES)
BD		5P5624		WIRE (14 GAUGE)
		5P2321	1	TERMINAL
	14	3T5433	1	TERMINAL
	15	3K8782	6	FUSE (10 AMP)
	16	3T2662	1	CIRCUIT BREAKER (15 AMP)
		6V8376	2	SCREW
		9B7233	2	LOCKWASHER
	17	6N8589	2	CIRCUIT BREAKER (15 AMP)
	18	3T2539	1	WIRE AS.
BD		5P5624		WIRE (14 GAUGE)
	19	9F3965	1	TERMINAL
	20	9F3965	4	TERMINAL
	21	3T7870	1	WIRE AS.
BD		5P2624		WIRE (14 GAUGE)
	22	2L8049	1	TERMINAL
	23	2D8781	3	TERMINAL
	24	7M4823	10	SCREW AS.
	25	3T2522	1	GROMMET
	26	3T6679	1	CLAMP
		3T6680	1	SEAL
	27	L1351	2	BOLT
		5M2894	2	WASHER
	28	9G9487	1	CIRCUIT BREAKER (10 AMP)
Y	29	9G7641	1	SWITCH GROUP (START)
	30	3T3453	1	SWITCH (STARTING AID)
	31	9S173	1	CIRCUIT BREAKER (60 AMP)
	32	3T8730	1	COVER AS.
	33	3T2523	1	WIRE AS.
BD		5P5624		WIRE (14 GAUGE)
	34	9F3965	1	TERMINAL
	35	3T5433	3	TERMINAL
	36	5P1475	1	TERMINAL
	37	1B4330	2	NUT
		5P537	2	WASHER
	38	9G8451	1	BLOCK AS.
		4L7124	1	BOLT
		9S8750	1	NUT
		1H3244	1	LOCKWASHER
		2D6235	1	LOCKNUT
		4B4276	1	WASHER
	39	3S8664	1	CLIP

319777

319777 P

1408 **6P7330 BATTERY & WIRING GP-PART 5 OF 5**

S/N 53Y2569-2726

3T7729-Page 94.01,3T7394-Page 96,9G7641-Page 100A,7N8000-Page 100B

STARTING AND ELECTRICAL SYSTEM

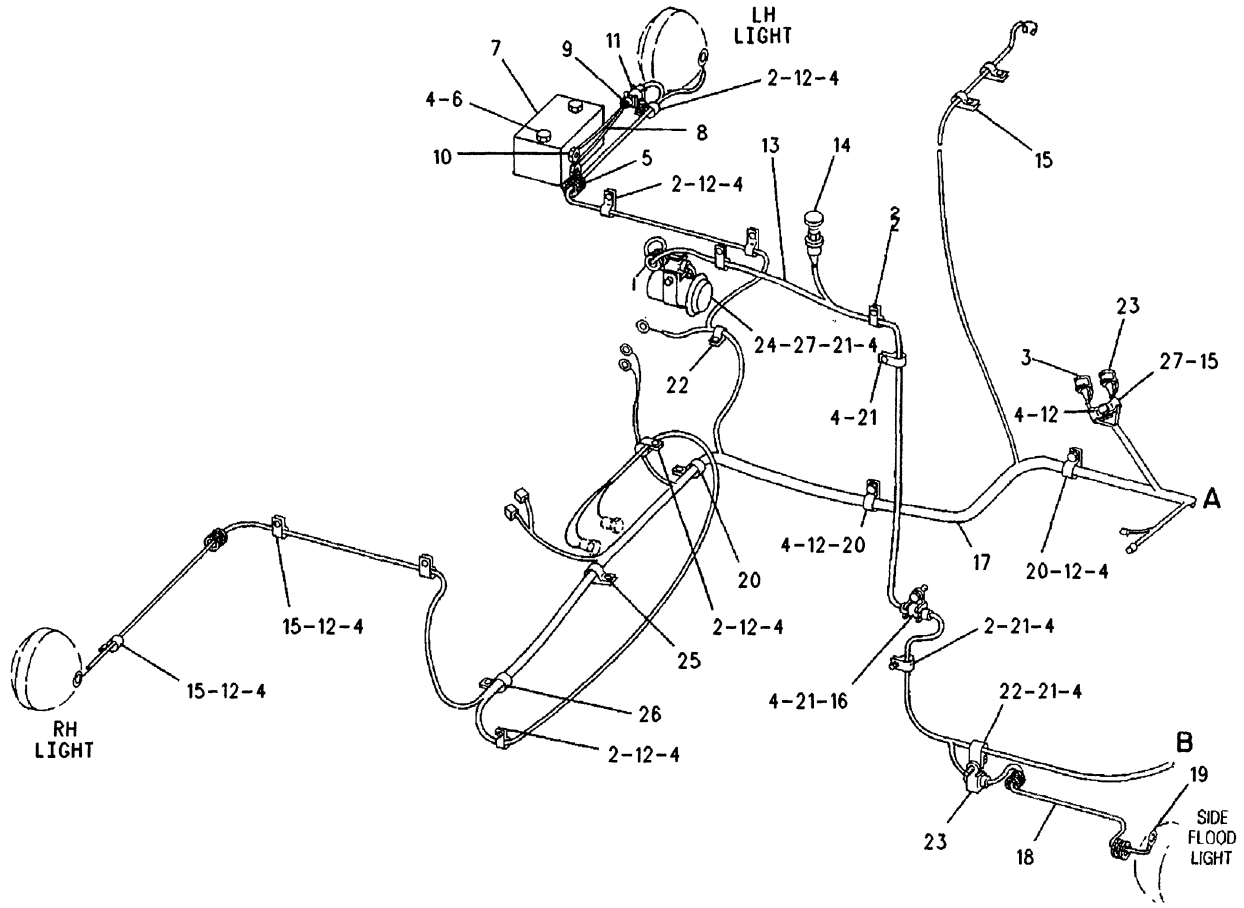

NOTE	REF NO	PART NUMBER	QTY	PART NAME
	1	9G2673	1	GROMMET
	2	4D7794	8	CLIP
	3	3T3045	1	CLIP AS
	4	5M2894	18	WASHER
	5	5D7635	2	GROMMET
	6	8S9191	2	BOLT
	7	3T1815	1	ALARM-BACKUP (BACKUP)
	8	9G6259	1	WIRE AS-ALARM
BD		5P5624		WIRE (14 GAUGE)
	9	7N9737	1	HOUSING-PLUG
		7N7780	1	PIN-CONNECTOR
		7N7779	1	SOCKET
	10	2L8075	2	TERMINAL
	11	9G9150	2	CLIP
C	12	0T0102	9	BOLT
Y	13	3T7728	1	HARNESS AS
	14	3T2357	1	SWITCH AS-HORN (HORN)
		6V8370	1	NUT-HEX
		2H3922	1	LOCKWASHER (LARGE)
		6V8363	2	SCREW
		8F1434	2	LOCKWASHER (SMALL)
C	15	5P9085	6	CLIP (LARGE)
	16	9G9152	1	CLIP
Y	17	7G0538	1	HARNESS AS
	18	7G0530	2	WIRE AS (EACH INCLUDES)
BD		5P5624		WIRE (14 GAUGE)
		7N9737	1	HOUSING-PLUG
		7N7780	1	PIN-CONNECTOR
		9G3695	1	PLUG-SEAL
	19	5P1475	1	TERMINAL
	20	6D3479	5	CLIP
	21	0S0509	5	BOLT
C	22	8M2770	2	CLIP
	23	3T3048	2	CLIP AS
Y	24	9G9813	1	ALARM GP
	25	4S1936	1	CLIP
		2H3855	1	BOLT
		5P8245	1	WASHER
	26	338248	1	CLIP
C	27	8M2772	1	CLIP (SMALL)

B-USE AS REQUIRED
C-CHANGE FROM PREVIOUS TYPE
D-ORDER BY THE METER
Y-SEPARATE ILLUSTRATION

R-540459 EP

1408 **6P7330 BATTERY & WIRING GP-PART 1 OF 5**

S/N 53Y2727-2874

3T7728-Page 94,7G0538-Page 99,9G9813-Page 100A

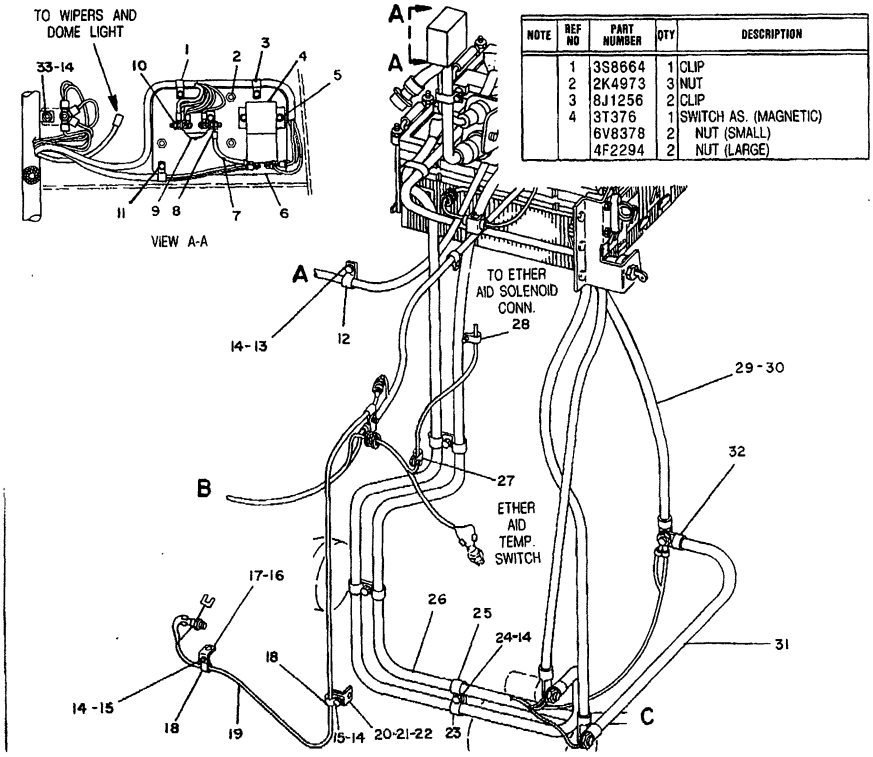

NOTE	REF NO	PART NUMBER	QTY	DESCRIPTION
	1	3S8664	1	CLIP
	2	2K4973	3	NUT
	3	8J1256	2	CLIP
	4	3T376	1	SWITCH AS. (MAGNETIC)
		6V8378	2	NUT (SMALL)
		4F2294	2	NUT (LARGE)
	5	2D6235	4	NUT
		5P537	4	WASHER
	6	3T6821	1	PLATE ASSEM.
	7	3T7709	1	WIRE ASSEM.
BD		5P5675		WIRE (6 GAUGE)
	8	7F8031	2	TERMINAL
	9	9F3099	1	SWITCH (MAGNETIC)
		4B2043	2	NUT
	10	4N2294	2	NUT
	11	1B4330	3	NUT
		4B4276	3	WASHER
	12	4D7735	1	CLIP
	13	T102	1	BOLT
	14	5M2894	8	WASHER
	15	S509	2	BOLT
	16	1A2029	1	BOLT
	17	1P4908	1	BRACKET ASSEM.
		9F2978	1	NUT
	18	4D7794	2	CLIP
Y	19	9G5530	1	HARNESS ASSEM.
	20	4M4983	1	SUPPORT ASSEM.
	21	9F2978	1	NUT
	22	5P8245	1	WASHER
	23	1S994	3	CLIP
	24	1D4717	2	NUT
	25	6V1889	3	CLIP
Y	26	7G539	1	HARNESS ASSEM.
	27	7N3718	1	CLIP
	28	9G9150	1	CLIP
	29	6T463	1	CABLE ASSEM.
BE		5P747		CABLE (00 GAUGE)
	30	1S7251	2	TERMINAL
	31	2V6166	1	CABLE ASSEM.
BE		5P747		CABLE (00 GAUGE)
	32	1S7251	2	TERMINAL
	33	3B2460	2	STUD
		1B4203	2	NUT

B USE AS REQUIRED
D ORDER BY THE METER
E ORDER BY THE CENTIMETER
Y SEPARATE ILLUSTRATION

319879

319879 P

1408 **6P7330 BATTERY & WIRING GP-PART 2 OF 5**
S/N 53Y2727-2874
9G5530-Page 91.01,7G0539-Page 92

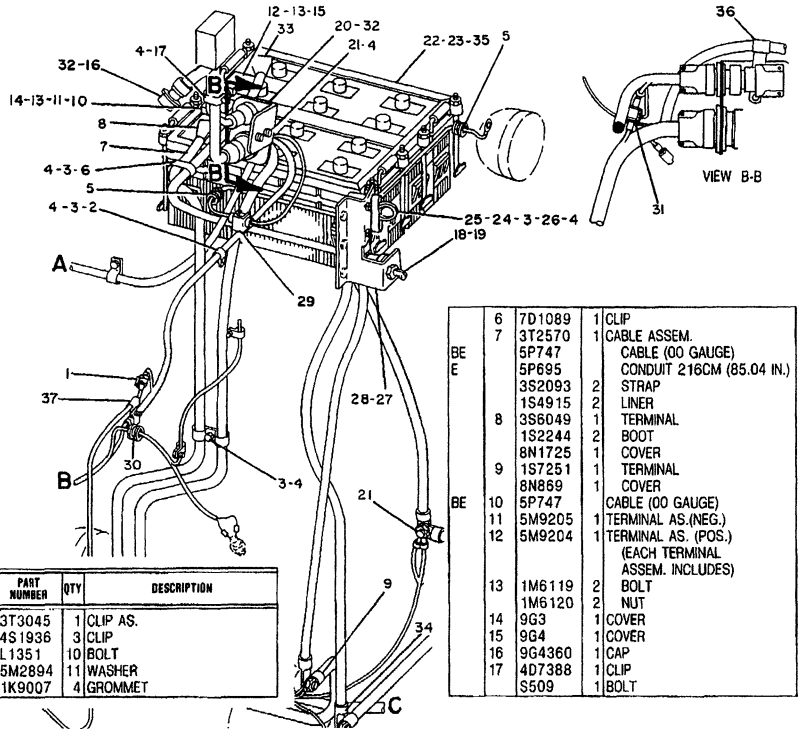

NOTE	REF NO	PART NUMBER	QTY	DESCRIPTION
C	1	3T3045	1	CLIP AS.
	2	4S1936	3	CLIP
	3	L1351	10	BOLT
	4	5M2894	11	WASHER
	5	1K9007	4	GROMMET
	6	7D1089	1	CLIP
	7	3T2570	1	CABLE ASSEM.
BE		5P747		CABLE (00 GAUGE)
E		5P695		CONDUIT 216CM (85.04 IN.)
		3S2093	2	STRAP
		1S4915	2	LINER
	8	3S6049	1	TERMINAL
		1S2244	2	BOOT
		8N1725	1	COVER
	9	1S7251	1	TERMINAL
		8N869	1	COVER
BE	10	5P747		CABLE (00 GAUGE)
	11	5M9205	1	TERMINAL AS.(NEG.)
	12	5M9204	1	TERMINAL AS. (POS.) (EACH TERMINAL ASSEM. INCLUDES)
	13	1M6119	2	BOLT
		1M6120	2	NUT
	14	9G3	1	COVER
	15	9G4	1	COVER
	16	9G4360	1	CAP
	17	4D7388	1	CLIP
		S509	1	BOLT

B USE AS REQUIRED
C INDICATES CHANGE
E ORDER BY THE CENTIMETER
Y SEPARATE ILLUSTRATION

Y	18	7N719	1	SWITCH ASSEM.
	19	8H8648	1	PLATE
	20	3T1501	1	PLATE
		8N1523	1	LOCKWASHER 58.32MM (2.29 IN.) I.D.
	21	1D4719	1	NUT
	22	9G4232	2	BATTERY (EACH INCLUDES)
		7G9383	6	VENT ASSEM.
	23	8P6206	1	HOLDDOWN ASSEM.
		8P1601	8	ROD
		5P1075	8	WASHER
	24	3T8733	1	RECEPTACLE ASSEM.
BE		5P747		CABLE (00 GAUGE)
		1S7251	2	TERMINAL
	25	8S2634	1	COVER ASSEM.
		2P2975	2	SEAL
	26	1D4717	4	NUT
	27	3T2671	1	PLATE
	28	6F7044	2	NUT
		9B453	2	LOCKWASHER
	29	3T3048	1	CLIP ASSEM.
	30	2D2751	1	GROMMET
	31	3T3047	1	CLIP ASSEM.
	32	8N1537	2	LOCKWASHER 42.37MM(1.66 IN.) I.D.
	33	7G535	1	CABLE ASSEM.
BE		5P747		CABLE (00 GAUGE)
		3S6050	1	TERMINAL ASSEM.
		1M6119	1	BOLT
		1M6120	1	NUT
		7N5274	1	COVER
	34	1S7251	1	TERMINAL
	35	2K4973	8	NUT
	36	5K4778	1	CLIP
C	37	4D7794	1	CLIP

319880

319880 P

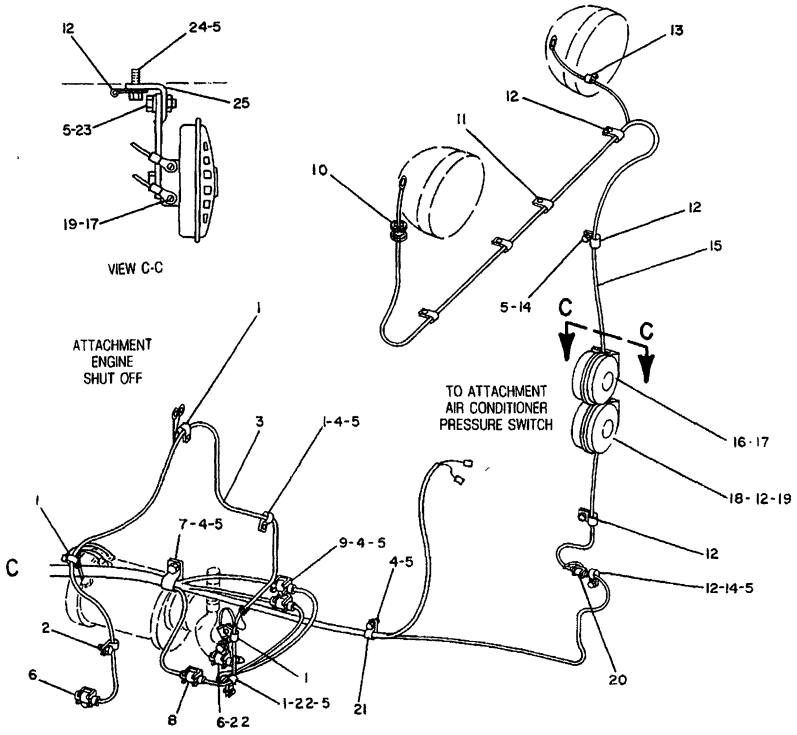

NOTE	REF NO	PART NUMBER	QTY	DESCRIPTION
	1	3S8664	5	CLIP
	2	4D7794	1	CLIP
Y	3	3T2569	1	HARNESS AS.
	4	1D4717	4	NUT
	5	5M2894	12	WASHER
	6	9G9150	3	CLIP
	7	6D4636	1	CLIP
	8	3T3048	1	CLIP AS.
	9	3T1221	1	CLIP
	10	4D12	1	GROMMET
	11	8M2772	3	CLIP
	12	338248	6	CLIP
	13	4D8123	1	CLIP
	14	S1594	3	BOLT
Y	15	7G537	1	HARNESS AS.
	16	7T970	1	HORN AS. (HIGH TONE)
	17	6V9490	2	SCREW
		9B7233	2	LOCKWASHER
	18	7T969	1	HORN AS. (LOW TONE)
	19	6V9490	2	SCREW
		9B7233	2	LOCKWASHER
	20	3T3045	1	CLIP AS.
	21	4D9517	1	CLIP
	22	S509	2	BOLT
	23	0L1351	2	BOLT
	24	0S1588	2	BOLT
	25	7T1377	2	BRACKET AS.

Y SEPARATE ILLUSTRATION

319881

319881 P

1408

6P7330 BATTERY & WIRING GP-PART 4 OF 5

S/N 53Y2727-2874

7G0537-Page 91,3T2569-Page 95

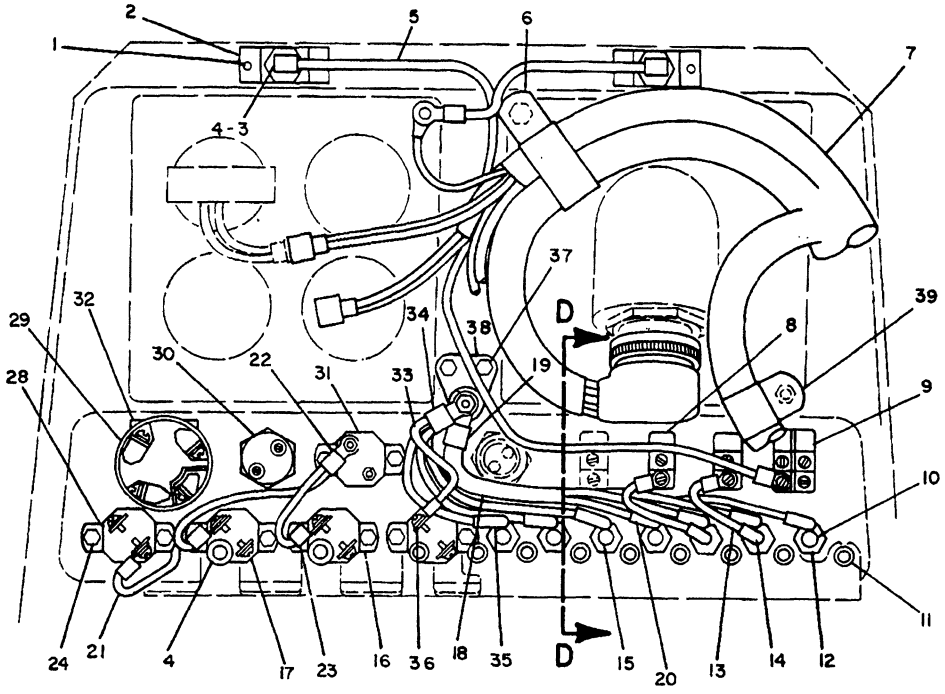

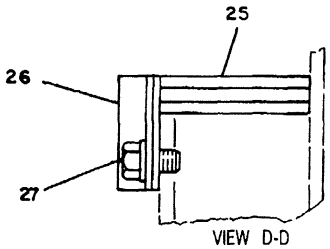

VIEW D-D

B USE AS REQUIRED
D ORDER BY THE METER
Y SEPARATE ILLUSTRATION

NOTE	REF NO	PART NUMBER	QTY	DESCRIPTION
	1	178715	4	SCREW
	2	3T6661	2	PLATE
	3	7N5876	2	LAMP
	4	7G9463	4	BUSHING
Y	5	3T7729	1	HARNESS AS.
	6	5K5338	1	CLIP
Y	7	3T7394	1	HARNESS AS.
Y	8	7N8000	2	SWITCH (LIGHT)
	9	7N8005	1	SWITCH (LIGHT)
	10	8M8948	1	FUSE (15 AMP)
	11	7G9465	9	BUSHING
	12	4K5122	7	HOLDER (FUSE)
				(EACH INCLUDES)
		7N2867	1	CAP
		6T8115	1	NUT
	13	3T2524	2	WIRE AS.
				(EACH INCLUDES)
BD		5P5624		WIRE (14 GAUGE)
		5P2321	1	TERMINAL
	14	3T5433	1	TERMINAL
	15	3K8782	6	FUSE (10 AMP)
	16	3T2662	1	CIRCUIT BREAKER (15 AMP)
		6V8376	2	SCREW
		9B7233	2	LOCKWASHER
	17	6N8589	2	CIRCUIT BREAKER (15 AMP)
	18	3T2539	1	WIRE AS.
BD		5P5624		WIRE (14 GAUGE)
	19	9F3965	1	TERMINAL
	20	9F3965	4	TERMINAL
	21	3T7870	1	WIRE AS.
BD		5P2624		WIRE (14 GAUGE)
	22	2L8049	1	TERMINAL
	23	2D8781	3	TERMINAL
	24	7M4823	10	SCREW AS.
	25	3T2522	1	GROMMET
	26	3T6679	1	CLAMP
		3T6680	1	SEAL
	27	L1351	2	BOLT
		5M2894	2	WASHER
	28	9G9487	1	CIRCUIT BREAKER (10 AMP)
Y	29	9G7641	1	SWITCH GROUP (START)
	30	3T3453	1	SWITCH (STARTING AID)
	31	9S173	1	CIRCUIT BREAKER (60 AMP)
	32	3T8730	1	COVER AS.
	33	3T2523	1	WIRE AS.
BD		5P5624		WIRE (14 GAUGE)
	34	9F3965	1	TERMINAL
	35	3T5433	3	TERMINAL
	36	5P1475	1	TERMINAL
	37	1B4330	2	NUT
		5P537	2	WASHER
	38	9G8451	1	BLOCK AS.
		4L7124	1	BOLT
		9S8750	1	NUT
		1H3244	1	LOCKWASHER
		2D6235	1	LOCKNUT
		4B4276	1	WASHER
	39	3S8664	1	CLIP

319777

319777 P

1408 **6P7330 BATTERY & WIRING GP-PART 5 OF 5**

S/N 53Y2727-2874

3T7729-Page 94.01,3T7394-Page 96,9G7641-Page 100A,7N8000-Page 100B

STARTING AND ELECTRICAL SYSTEM

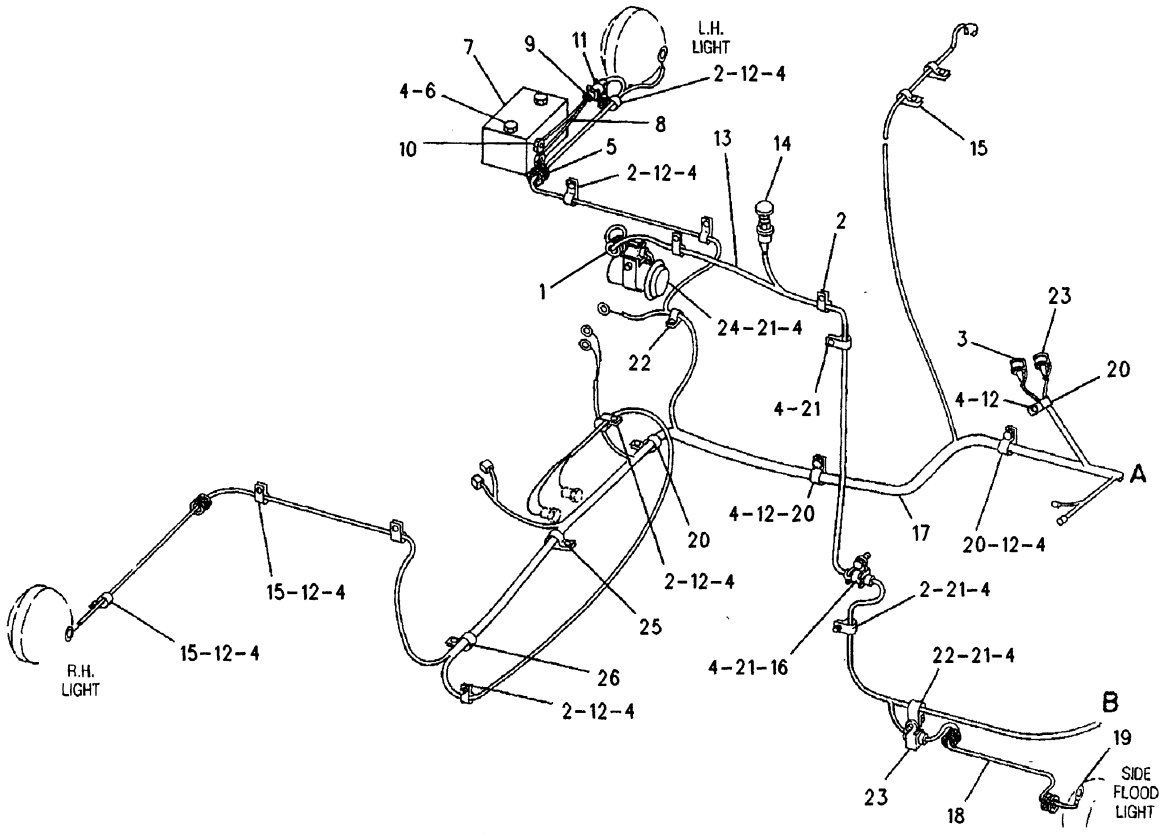

NOTE	REF NO	PART NUMBER	QTY	PART NAME
	1	9G2673	1	GROMMET
	2	4D7794	8	CLIP
	3	3T3045	1	CLIP AS
	4	5M2894	18	WASHER
	5	5D7635	2	GROMMET
	6	8S9191	2	BOLT
	7	3T1815	1	ALARM-BACKUP (BACKUP)
	8	9G6259	1	WIRE AS-ALARM
BD		5P5624		WIRE (14 GAUGE)
	9	7N9737	1	HOUSING-PLUG
		7N7780	1	PIN-CONNECTOR
		7N7779	1	SOCKET
	10	2L8075	2	TERMINAL
	11	9G9150	2	CLIP
	12	0T0102	9	BOLT
Y	13	3T7728	1	HARNESS AS
	14	3T2357	1	SWITCH AS-HORN (HORN)
		6V8370	1	NUT-HEX
		2H3922	1	LOCKWASHER (LARGE)
		6V8363	2	SCREW
		8F1434	2	LOCKWASHER (SMALL)
C	15	5P9085	5	CLIP (LARGE)
	16	9G9152	1	CLIP
Y	17	7G0538	1	HARNESS AS
	18	7G0530	2	WIRE AS (EACH INCLUDES)
BD		5P5624		WIRE (14 GAUGE)
		7N9737	1	HOUSING-PLUG
		7N7780	1	PIN-CONNECTOR
		9G3695	1	PLUG-SEAL
	19	5P1475	1	TERMINAL
C	20	6D3479	6	CLIP
	21	0S0509	5	BOLT
	22	8M2770	2	CLIP
	23	3T3048	2	CLIP AS
Y	24	9G9813	1	ALARM GP
	25	4S1936	1	CLIP
		2H3855	1	BOLT
		5P8245	1	WASHER
	26	338248	1	CLIP

B-USE AS REQUIRED
C-CHANGE FROM PREVIOUS TYPE
D-ORDER BY THE METER
Y-SEPARATE ILLUSTRATION

R-540470 EP

1408 **6P7330 BATTERY & WIRING GP-PART 1 OF 5**

S/N 53Y2875-3295

3T7728-Page 94,7G0538-Page 99,9G9813-Page 100A

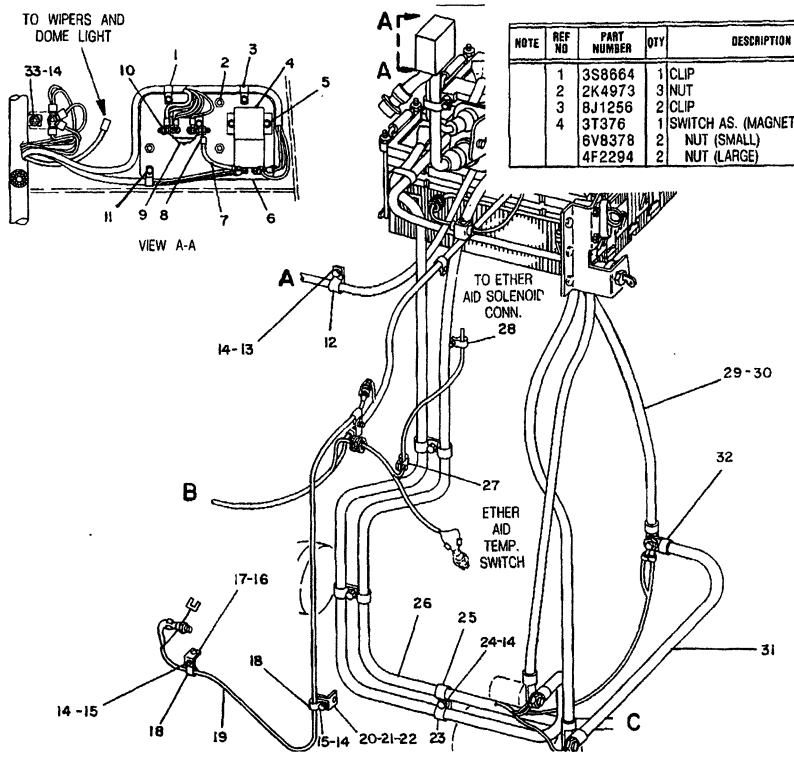

NOTE	REF NO	PART NUMBER	QTY	DESCRIPTION
	1	3S8664	1	CLIP
	2	2K4973	3	NUT
	3	8J1256	2	CLIP
	4	3T376	1	SWITCH AS. (MAGNETIC)
		6V8378	2	NUT (SMALL)
		4F2294	2	NUT (LARGE)

C	5	7H8909	4	LOCKNUT
		5P537	4	WASHER
	6	3T6821	1	PLATE ASSEM.
	7	3T7709	1	WIRE ASSEM.
BD		5P5675		WIRE (6 GAUGE)
	8	7F8031	2	TERMINAL
	9	9F3099	1	SWITCH (MAGNETIC)
		4B2043	2	NUT
	10	4N2294	2	NUT
	11	1B4330	3	NUT
		4B4276	3	WASHER
	12	4D7735	1	CLIP
	13	T102	1	BOLT
	14	5M2894	8	WASHER
	15	S509	2	BOLT
	16	1A2029	1	BOLT
	17	1P4908	1	BRACKET ASSEM.
		9F2978	1	NUT
	18	4D7794	2	CLIP
Y	19	9G5530	1	HARNESS ASSEM.
	20	4M4983	1	SUPPORT ASSEM.
	21	9F2978	1	NUT
	22	5P8245	1	WASHER
	23	1S994	3	CLIP
	24	1D4717	2	NUT
	25	6V1889	3	CLIP
Y	26	7G539	1	HARNESS ASSEM.
	27	7N3718	1	CLIP
	28	9G9150	1	CLIP
	29	6T463	1	CABLE ASSEM.
BE		5P747		CABLE (00 GAUGE)
	30	1S7251	2	TERMINAL
	31	2V6166	1	CABLE ASSEM.
BE		5P747		CABLE (00 GAUGE)
	32	1S7251	2	TERMINAL
	33	3B2460	2	STUD
		1B4203	2	NUT

B USE AS REQUIRED
C INDICATES CHANGE
D ORDER BY THE METER
E ORDER BY THE CENTIMETER
Y SEPARATE ILLUSTRATION

330558

330558 P

1408 **6P7330 BATTERY & WIRING GP-PART 2 OF 5**
S/N 53Y2875-3295
9G5530-Page 91.01,7G0539-Page 92

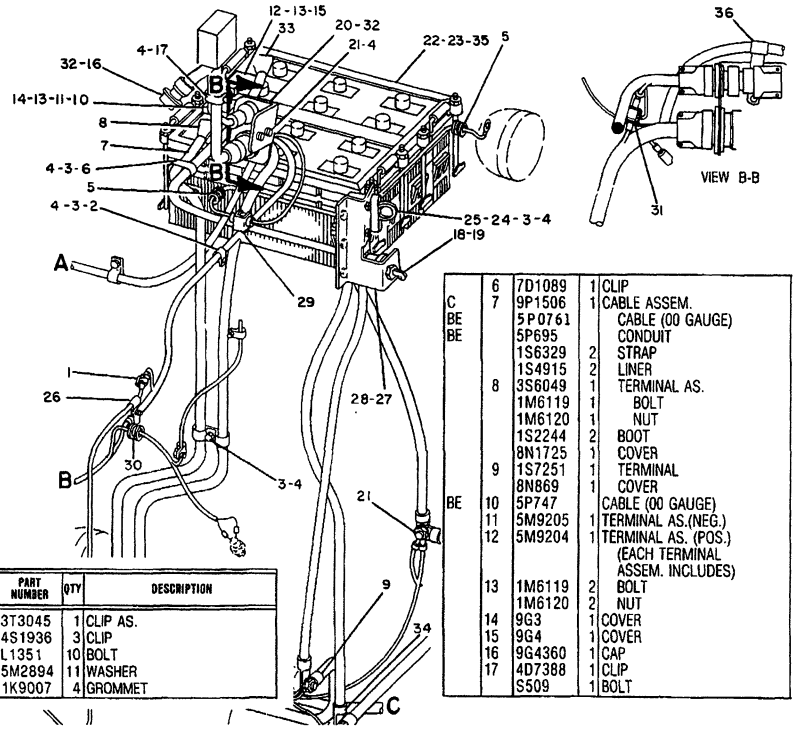

NOTE	REF NO	PART NUMBER	QTY	DESCRIPTION
	1	3T3045	1	CLIP AS.
	2	4S1936	3	CLIP
	3	L1351	10	BOLT
	4	5M2894	11	WASHER
	5	1K9007	4	GROMMET
	6	7D1089	1	CLIP
C	7	9P1506	1	CABLE ASSEM.
BE		5P0761		CABLE (00 GAUGE)
BE		5P695		CONDUIT
		1S6329	2	STRAP
		1S4915	2	LINER
	8	3S6049	1	TERMINAL AS.
		1M6119	1	BOLT
		1M6120	1	NUT
		1S2244	2	BOOT
		8N1725	1	COVER
	9	1S7251	1	TERMINAL
		8N869	1	COVER
BE	10	5P747		CABLE (00 GAUGE)
	11	5M9205	1	TERMINAL AS.(NEG.)
	12	5M9204	1	TERMINAL AS. (POS.) (EACH TERMINAL ASSEM. INCLUDES)
	13	1M6119	2	BOLT
		1M6120	2	NUT
	14	9G3	1	COVER
	15	9G4	1	COVER
	16	9G4360	1	CAP
	17	4D7388	1	CLIP
		S509	1	BOLT

B USE AS REQUIRED
C INDICATES CHANGE
E ORDER BY THE CENTIMETER
Y SEPARATE ILLUSTRATION

Y	18	7N719	1	SWITCH ASSEM.
	19	8H8648	1	PLATE
	20	3T1501	1	PLATE
		8N1523	1	LOCKWASHER 58.32MM (2.29 IN.) I.D.
	21	1D4719	1	NUT
	22	9G4232	2	BATTERY (EACH INCLUDES)
		7G9383	6	VENT ASSEM.
	23	8P6206	1	HOLDDOWN ASSEM.
		8P1601	8	ROD
		5P1075	8	WASHER
	24	3T8733	1	RECEPTACLE ASSEM.
BE		5P747		CABLE (00 GAUGE)
		1S7251	2	TERMINAL
	25	8S2634	1	COVER ASSEM.
		2P2975	2	SEAL
	26	4D7794	1	CLIP
C	27	8S4211	2	PLATE
	28	6F7044	2	NUT
		9B453	2	LOCKWASHER
	29	3T3048	1	CLIP ASSEM.
	30	2D2751	1	GROMMET
	31	3T3047	1	CLIP ASSEM.
	32	8N1537	2	LOCKWASHER 42.37MM(1.66 IN.) I.D.
	33	7G535	1	CABLE ASSEM.
BE		5P747		CABLE (00 GAUGE)
		3S6050	1	TERMINAL ASSEM.
		1M6119	1	BOLT
		1M6120	1	NUT
		7N5274	1	COVER
	34	1S7251	1	TERMINAL
	35	2K4973	8	NUT
	36	5K4778	1	CLIP

330559

330559 P

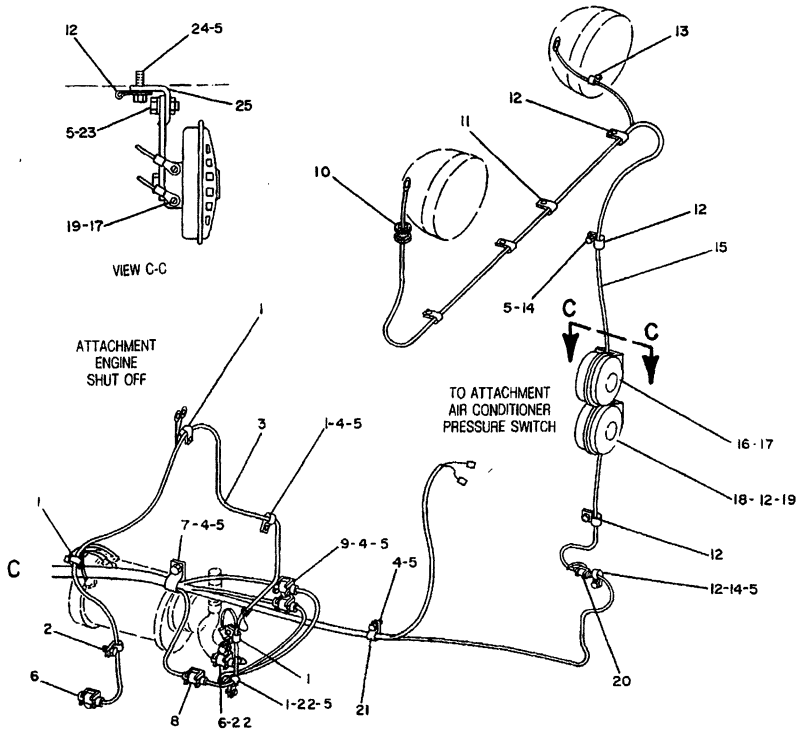

NOTE	REF NO	PART NUMBER	QTY	DESCRIPTION
	1	3S8664	5	CLIP
	2	4D7794	1	CLIP
Y	3	3T2569	1	HARNESS AS.
	4	1D4717	4	NUT
	5	5M2894	12	WASHER
	6	9G9150	3	CLIP
	7	6D4636	1	CLIP
	8	3T3048	1	CLIP AS.
	9	3T1221	1	CLIP
	10	4D12	1	GROMMET
	11	8M2772	3	CLIP
	12	338248	6	CLIP
	13	4D8123	1	CLIP
	14	S1594	3	BOLT
Y	15	7G537	1	HARNESS AS.
	16	7T970	1	HORN AS. (HIGH TONE)
	17	6V9490	2	SCREW
		9B7233	2	LOCKWASHER
	18	7T969	1	HORN AS. (LOW TONE)
	19	6V9490	2	SCREW
		9B7233	2	LOCKWASHER
	20	3T3045	1	CLIP AS.
	21	4D9517	1	CLIP
	22	S509	2	BOLT
	23	0L1351	2	BOLT
	24	0S1588	2	BOLT
	25	7T1377	2	BRACKET AS.

Y SEPARATE ILLUSTRATION

319881

319881 P

1408 **6P7330 BATTERY & WIRING GP-PART 4 OF 5**

S/N 53Y2875-3295

7G0537-Page 91,3T2569-Page 95

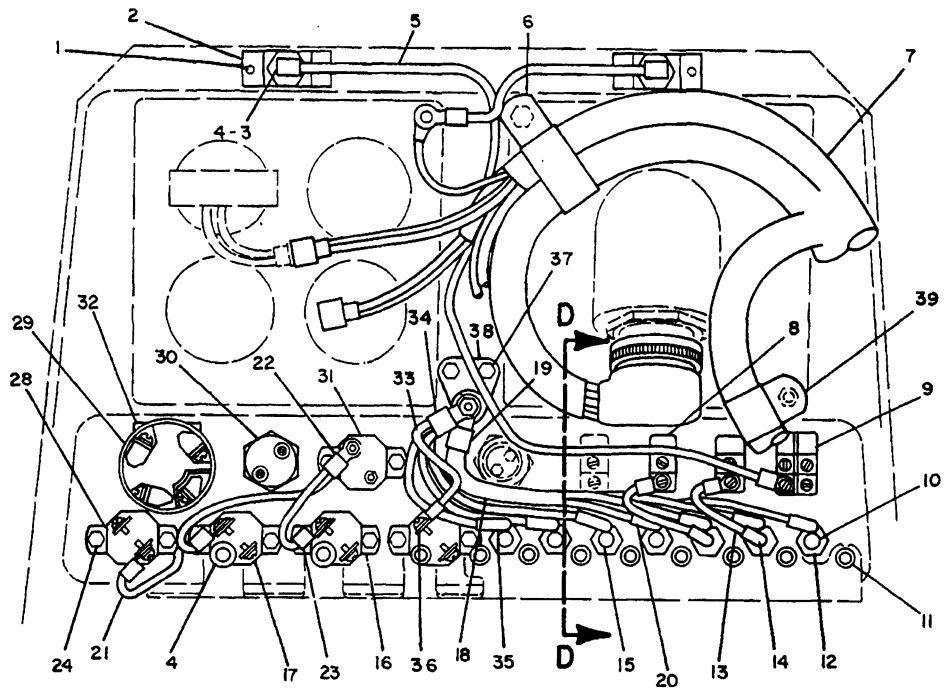

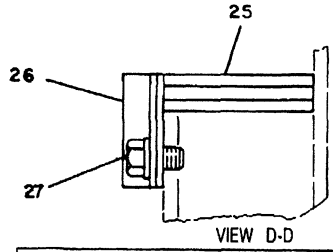

VIEW D-D

B USE AS REQUIRED
D ORDER BY THE METER
Y SEPARATE ILLUSTRATION

NOTE	REF NO	PART NUMBER	QTY	DESCRIPTION
	1	178715	4	SCREW
	2	3T6661	2	PLATE
	3	7N5876	2	LAMP
	4	7G9463	4	BUSHING
Y	5	3T7729	1	HARNESS AS.
	6	5K5338	1	CLIP
Y	7	3T7394	1	HARNESS AS.
Y	8	7N8000	2	SWITCH (LIGHT)
	9	7N8005	1	SWITCH (LIGHT)
	10	8M8948	1	FUSE (15 AMP)
	11	7G9465	9	BUSHING
	12	4K5122	7	HOLDER (FUSE)
				(EACH INCLUDES)
		7N2867	1	CAP
		6T8115	1	NUT
	13	3T2524	2	WIRE AS.
				(EACH INCLUDES)
BD		5P5624		WIRE (14 GAUGE)
		5P2321	1	TERMINAL
	14	3T5433	1	TERMINAL
	15	3K8782	6	FUSE (10 AMP)
	16	3T2662	1	CIRCUIT BREAKER (15 AMP)
		6V8376	2	SCREW
		9B7233	2	LOCKWASHER
	17	6N8589	2	CIRCUIT BREAKER (15 AMP)
	18	3T2539	1	WIRE AS.
BD		5P5624		WIRE (14 GAUGE)
	19	9F3965	1	TERMINAL
	20	9F3965	4	TERMINAL
	21	3T7870	1	WIRE AS.
BD		5P2624		WIRE (14 GAUGE)
	22	2L8049	1	TERMINAL
	23	2D8781	3	TERMINAL
	24	7M4823	10	SCREW AS.
	25	3T2522	1	GROMMET
	26	3T6679	1	CLAMP
		3T6680	1	SEAL
	27	L1351	2	BOLT
		5M2894	2	WASHER
	28	9G9487	1	CIRCUIT BREAKER (10 AMP)
Y	29	9G7641	1	SWITCH GROUP (START)
	30	3T3453	1	SWITCH (STARTING AID)
	31	9S173	1	CIRCUIT BREAKER (60 AMP)
	32	3T8730	1	COVER AS.
	33	3T2523	1	WIRE AS.
BD		5P5624		WIRE (14 GAUGE)
	34	9F3965	1	TERMINAL
	35	3T5433	3	TERMINAL
	36	5P1475	1	TERMINAL
	37	1B4330	2	NUT
		5P537	2	WASHER
	38	9G8451	1	BLOCK AS.
		4L7124	1	BOLT
		9S8750	1	NUT
		1H3244	1	LOCKWASHER
		2D6235	1	LOCKNUT
		4B4276	1	WASHER
	39	3S8664	1	CLIP

319777

319777 P

1408 **6P7330 BATTERY & WIRING GP-PART 5 OF 5**

S/N 53Y2875-3295

3T7729-Page 94.01,3T7394-Page 96,9G7641-Page 100A,7N8000-Page 100B

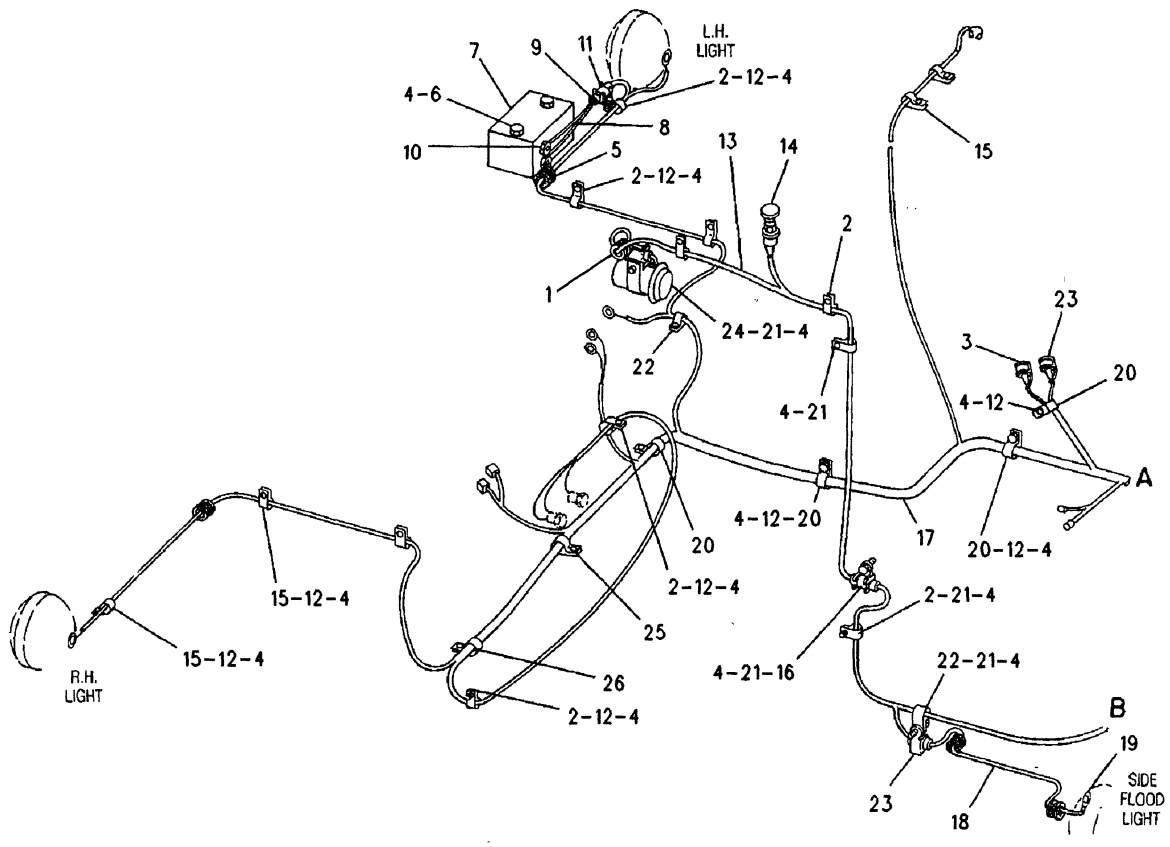

NOTE	REF NO	PART NUMBER	QTY	PART NAME
	1	9G2673	1	GROMMET
	2	4D7794	8	CLIP
	3	3T3045	1	CLIP AS
	4	5M2894	18	WASHER
	5	5D7635	2	GROMMET
	6	8S9191	2	BOLT
	7	3T1815	1	ALARM-BACKUP (BACKUP)
	8	9G6259	1	WIRE AS-ALARM
BD		5P5624		WIRE (14 GAUGE)
	9	7N9737	1	HOUSING-PLUG
		7N7780	1	PIN-CONNECTOR
		7N7779	1	SOCKET
	10	2L8075	2	TERMINAL
	11	9G9150	2	CLIP
	12	OTO102	9	BOLT
Y	13	3T7728	1	HARNESS AS
	14	3T2357	1	SWITCH AS-HORN (HORN)
		6V8370	1	NUT-HEX
		2H3922	1	LOCKWASHER (LARGE)
		6V8363	2	SCREW
		8F1434	2	LOCKWASHER (SMALL)
C	15	5P9085	5	CLIP (LARGE)
	16	9G9152	1	CLIP
Y	17	7G0538	1	HARNESS AS
	18	7G0530	2	WIRE AS (EACH INCLUDES)
BD		5P5624		WIRE (14 GAUGE)
		7N9737	1	HOUSING-PLUG
		7N7780	1	PIN-CONNECTOR
		9G3695	1	PLUG-SEAL
	19	5P1475	1	TERMINAL
C	20	6D3479	6	CLIP
	21	OSO509	5	BOLT
	22	8M2770	2	CLIP
	23	3T3048	2	CLIP AS
Y	24	9G9813	1	ALARM GP
	25	4S1936	1	CLIP
		2H3855	1	BOLT
		5P8245	1	WASHER
	26	338248	1	CLIP

B-USE AS REQUIRED
C-CHANGE FROM PREVIOUS TYPE
D-ORDER BY THE METER
Y-SEPARATE ILLUSTRATION

R-540470 EP

1408 **6P7330 BATTERY & WIRING GP-PART 1 OF 5**

S/N 53Y3296-3307

3T7728-Page 94,7G0538-Page 99,9G9813-Page 100A

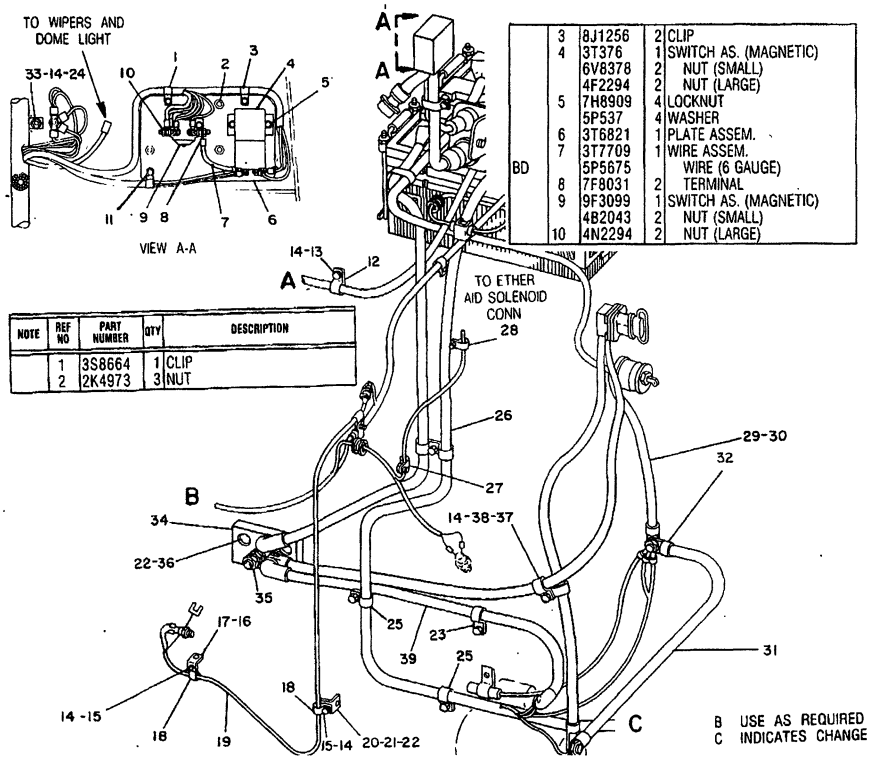

NOTE	REF NO	PART NUMBER	QTY	DESCRIPTION
	1	3S8664	1	CLIP
	2	2K4973	3	NUT
	3	8J1256	2	CLIP
	4	3T376	1	SWITCH AS. (MAGNETIC)
		6V8378	2	NUT (SMALL)
		4F2294	2	NUT (LARGE)
	5	7H8909	4	LOCKNUT
		5P537	4	WASHER
	6	3T6821	1	PLATE ASSEM.
	7	3T7709	1	WIRE ASSEM.
BD		5P5675		WIRE (6 GAUGE)
	8	7F8031	2	TERMINAL
	9	9F3099	1	SWITCH AS. (MAGNETIC)
		4B2043	2	NUT (SMALL)
	10	4N2294	2	NUT (LARGE)
	11	1B4330	3	NUT
		4B4276	3	WASHER
	12	4D7735	1	CLIP
	13	T102	1	BOLT
C	14	5M2894	11	WASHER
	15	S509	2	BOLT
	16	1A2029	1	BOLT
	17	1P4908	1	BRACKET ASSEM.
		9F2978	1	NUT
	18	4D7794	2	CLIP
Y	19	9G5530	1	HARNESS ASSEM.
	20	4M4983	1	SUPPORT ASSEM.
	21	9F2978	1	NUT
C	22	5P8245	3	WASHER
	23	1S994	3	CLIP
	24	1B4203	2	NUT
	25	6V1889	3	CLIP
Y	26	7G539	1	HARNESS ASSEM.
	27	7N3718	1	CLIP
	28	9G9150	1	CLIP
	29	6T463	1	CABLE ASSEM.
BE		5P747		CABLE (00 GAUGE)
	30	1S7251	2	TERMINAL
	31	2V6166	1	CABLE ASSEM.
BE		5P747		CABLE (00 GAUGE)
	32	1S7251	2	TERMINAL
	33	3B2460	2	STUD
C	34	7T7768	1	BAR AS.
	35	8T3518	6	NUT
		7F560	6	WASHER
C	36	2H3855	2	BOLT
C	37	6D3479	1	CLIP
C	38	0L1351	2	BOLT
C	39	7T7777	1	CABLE AS.
C		5P747		CABLE (00 GAUGE)
		1S7251	2	TERMINAL
		8N869	2	COVER
BE		5P695		CONDUIT
		1S4915	2	LINER

B USE AS REQUIRED
C INDICATES CHANGE
D ORDER BY THE METER
E ORDER BY THE CENTIMETER
Y SEPARATE ILLUSTRATION

334657

334657 P

1408 **6P7330 BATTERY & WIRING GP-PART 2 OF 5**
S/N 53Y3296-3307
9G5530-Page 91.01,7G0539-Page 92

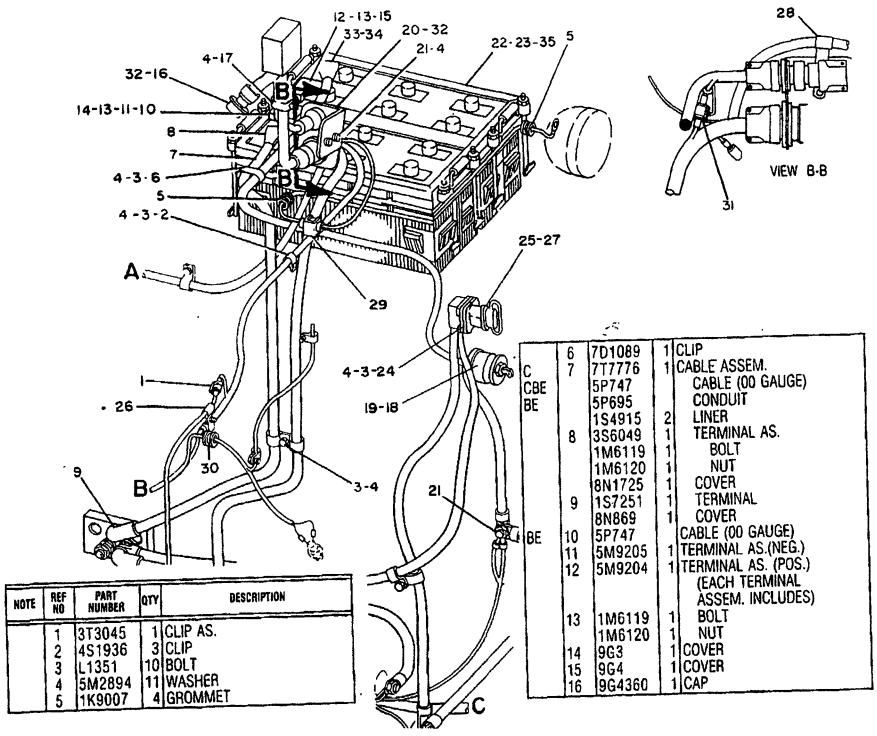

NOTE	REF NO	PART NUMBER	QTY	DESCRIPTION
	1	3T3045	1	CLIP AS.
	2	4S1936	3	CLIP
	3	L1351	10	BOLT
	4	5M2894	11	WASHER
	5	1K9007	4	GROMMET

	6	7D1089	1	CLIP
C	7	7T7776	1	CABLE ASSEM.
CBE		5P747		CABLE (00 GAUGE)
BE		5P695		CONDUIT
		1S4915	2	LINER
	8	3S6049	1	TERMINAL AS.
		1M6119	1	BOLT
		1M6120	1	NUT
		8N1725	1	COVER
	9	1S7251	1	TERMINAL
		8N869	1	COVER
BE	10	5P747		CABLE (00 GAUGE)
	11	5M9205	1	TERMINAL AS.(NEG.)
	12	5M9204	1	TERMINAL AS. (POS.) (EACH TERMINAL ASSEM. INCLUDES)
	13	1M6119	1	BOLT
		1M6120	1	NUT
	14	9G3	1	COVER
	15	9G4	1	COVER
	16	9G4360	1	CAP

B USE AS REQUIRED
C INDICATES CHANGE
E ORDER BY THE CENTIMETER
Y SEPARATE ILLUSTRATION

	17	4D7388	1	CLIP
		S509	1	BOLT
Y	18	7N719	1	SWITCH AS. (DISCONNECT)
	19	8H8648	1	PLATE
	20	3T1501	1	PLATE
		8N1523	1	LOCKWASHER 58.32MM (2.29 IN.) I.D.
	21	1D4719	1	NUT
	22	9G4232	2	BATTERY (EACH INCLUDES)
		7N60	6	VENT ASSEM.
	23	8P6206	1	HOLDDOWN ASSEM.
		8P1601	8	ROD
		5P1075	8	WASHER
C	24	7T7778	1	RECEPTACLE ASSEM.
BE		5P747		CABLE (00 GA. RED)
		1S7251	2	TERMINAL
		1S4915	2	LINER
BE		5P695		CONDUIT
	25	8S2634	1	COVER ASSEM.
		2P2975	2	SEAL
	26	4D7794	1	CLIP
	27	8S4211	2	PLATE
	28	5K4778	1	CLIP
	29	3T3048	1	CLIP ASSEM.
	30	2D2751	1	GROMMET
	31	3T3047	1	CLIP ASSEM.
	32	8N1537	2	LOCKWASHER 42.37MM(1.66 IN.) I.D.
	33	7G535	1	CABLE ASSEM.
BE		5P747		CABLE (00 GAUGE)
		3S6050	1	TERMINAL ASSEM.
		1M6119	1	BOLT
		1M6120	1	NUT
		7N5274	1	COVER
	34	1S7251	1	TERMINAL
	35	2K4973	8	NUT

334658

334658 P

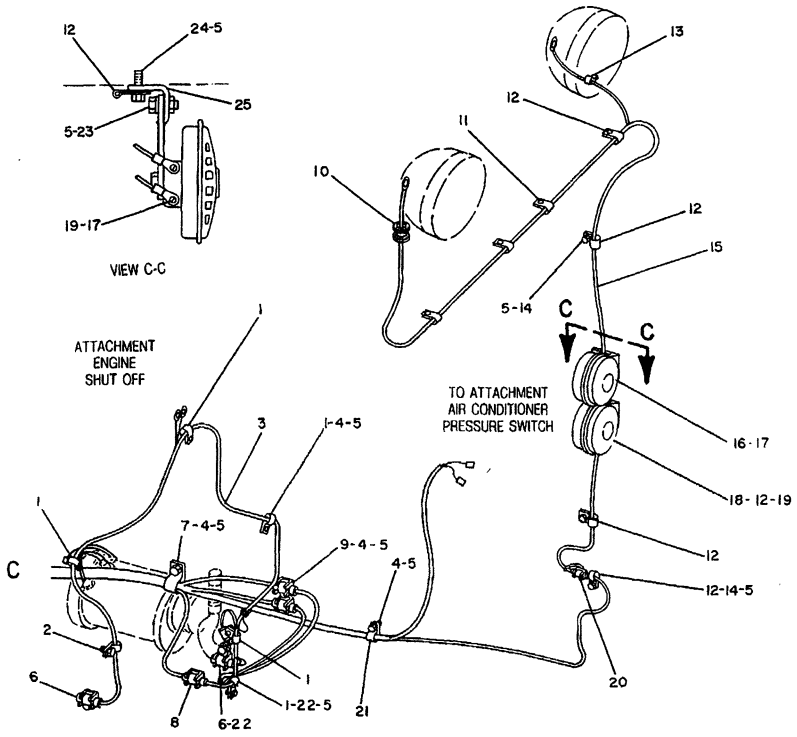

NOTE	REF NO	PART NUMBER	QTY	DESCRIPTION
	1	3S8664	5	CLIP
	2	4D7794	1	CLIP
Y	3	3T2569	1	HARNESS AS.
	4	1D4717	4	NUT
	5	5M2894	12	WASHER
	6	9G9150	3	CLIP
	7	6D4636	1	CLIP
	8	3T3048	1	CLIP AS.
	9	3T1221	1	CLIP
	10	4D12	1	GROMMET
	11	8M2772	3	CLIP
	12	338248	6	CLIP
	13	4D8123	1	CLIP
	14	S1594	3	BOLT
Y	15	7G537	1	HARNESS AS.
	16	7T970	1	HORN AS. (HIGH TONE)
	17	6V9490	2	SCREW
		9B7233	2	LOCKWASHER
	18	7T969	1	HORN AS. (LOW TONE)
	19	6V9490	2	SCREW
		9B7233	2	LOCKWASHER
	20	3T3045	1	CLIP AS.
	21	4D9517	1	CLIP
	22	S509	2	BOLT
	23	0L1351	2	BOLT
	24	0S1588	2	BOLT
	25	7T1377	2	BRACKET AS.

Y SEPARATE ILLUSTRATION

319881

319881 P

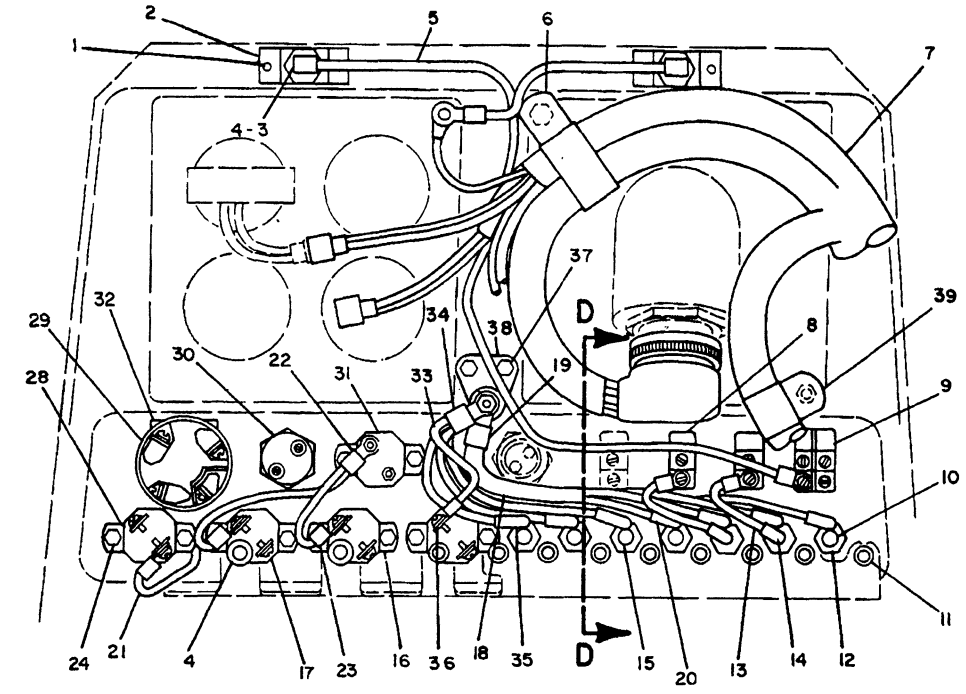

VIEW D-D

B USE AS REQUIRED
D ORDER BY THE METER
Y SEPARATE ILLUSTRATION

NOTE	REF NO	PART NUMBER	QTY	DESCRIPTION
	1	178715	4	SCREW
	2	3T6661	2	PLATE
	3	7N5876	2	LAMP
	4	7G9463	4	BUSHING
Y	5	3T7729	1	HARNESS AS.
	6	5K5338	1	CLIP
Y	7	3T7394	1	HARNESS AS.
Y	8	7N8000	2	SWITCH (LIGHT)
	9	7N8005	1	SWITCH (LIGHT)
	10	8M8948	1	FUSE (15 AMP)
	11	7G9465	9	BUSHING
	12	4K5122	7	HOLDER (FUSE)
				(EACH INCLUDES)
		7N2867	1	CAP
		6T8115	1	NUT
	13	3T2524	2	WIRE AS.
				(EACH INCLUDES)
BD		5P5624		WIRE (14 GAUGE)
		5P2321	1	TERMINAL
	14	3T5433	1	TERMINAL
	15	3K8782	6	FUSE (10 AMP)
	16	3T2662	1	CIRCUIT BREAKER (15 AMP)
		6V8376	2	SCREW
		9B7233	2	LOCKWASHER
	17	6N8589	2	CIRCUIT BREAKER (15 AMP)
	18	3T2539	1	WIRE AS.
BD		5P5624		WIRE (14 GAUGE)
	19	9F3965	1	TERMINAL
	20	9F3965	4	TERMINAL
	21	3T7870	1	WIRE AS.
BD		5P2624		WIRE (14 GAUGE)
	22	2L8049	1	TERMINAL
	23	2D8781	3	TERMINAL
	24	7M4823	10	SCREW AS.
	25	3T2522	1	GROMMET
	26	3T6679	1	CLAMP
		3T6680	1	SEAL
	27	L1351	2	BOLT
		5M2894	2	WASHER
	28	9G9487	1	CIRCUIT BREAKER (10 AMP)
Y	29	9G7641	1	SWITCH GROUP (START)
	30	3T3453	1	SWITCH (STARTING AID)
	31	9S173	1	CIRCUIT BREAKER (60 AMP)
	32	3T8730	1	COVER AS.
	33	3T2523	1	WIRE AS.
BD		5P5624		WIRE (14 GAUGE)
	34	9F3965	1	TERMINAL
	35	3T5433	3	TERMINAL
	36	5P1475	1	TERMINAL
	37	1B4330	2	NUT
		5P537	2	WASHER
	38	9G8451	1	BLOCK AS.
		4L7124	1	BOLT
		9S8750	1	NUT
		1H3244	1	LOCKWASHER
		2D6235	1	LOCKNUT
		4B4276	1	WASHER
	39	3S8664	1	CLIP

319777

319777 P

1408 **6P7330 BATTERY & WIRING GP-PART 5 OF 5**

S/N 53Y3296-3307

3T7729-Page 94.01,3T7394-Page 96,9G7641-Page 100A,7N8000-Page 100B

STARTING AND ELECTRICAL SYSTEM

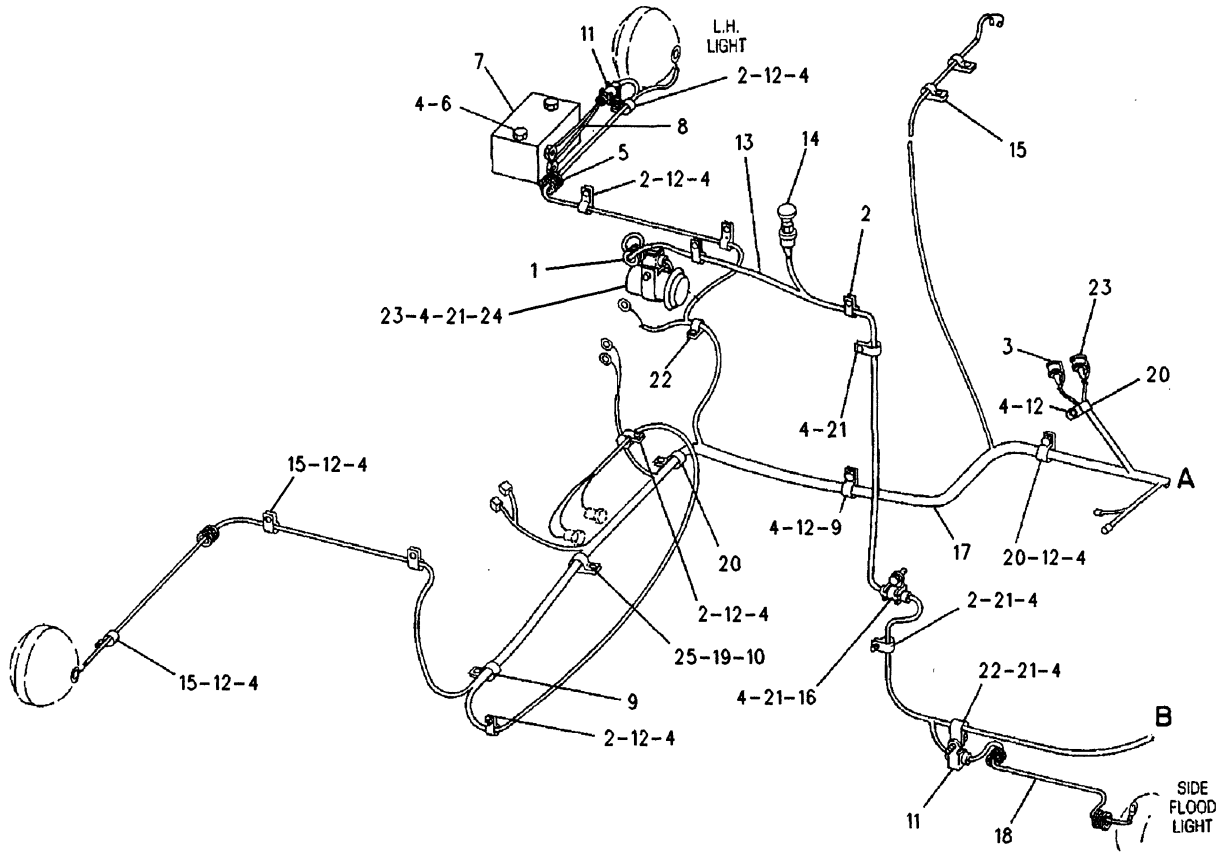

NOTE	REF NO	PART NUMBER	QTY	PART NAME	NOTE	REF NO	PART NUMBER	QTY	PART NAME
	1	9G2673	1	GROMMET		23	3T3048	2	CLIP AS
	2	4D7794	10	CLIP	Y	24	9G9813	1	ALARM GP
	3	3T3045	1	CLIP AS		25	4S1936	1	CLIP
	4	5M2894	20	WASHER					
	5	5D7635	2	GROMMET					
	6	OS1608	2	BOLT					
	7	3T1815	1	ALARM-BACKUP (BACKUP)					
	8	9G6259	1	WIRE AS-ALARM					
	9	338248	2	CLIP					
	10	5P8245	1	WASHER					
	11	9G9150	2	CLIP					
	12	OTO102	11	BOLT					
	13	3T7728	1	HARNESS AS					
	14	3T2357	1	SWITCH AS-HORN (HORN)					
		6V8370	1	NUT-HEX					
		2H3922	1	LOCKWASHER (LARGE)					
		6V8363	2	SCREW					
		8F1434	2	LOCKWASHER (SMALL)					
	15	5P9085	5	CLIP (LARGE)					
	16	9G9152	1	CLIP					
	17	7GO538	1	HARNESS AS					
	18	7GO530	2	WIRE AS					
	19	2H3855	1	BOLT					
	20	6D3479	3	CLIP					
	21	OSO509	7	BOLT					
	22	8M2770	1	CLIP					

Y-SEPARATE ILLUSTRATION

R-540472 EP

1408 **6P7330 BATTERY & WIRING GP-PART 1 OF 5**
S/N 53Y3308-3484
9G9813-Page 100A

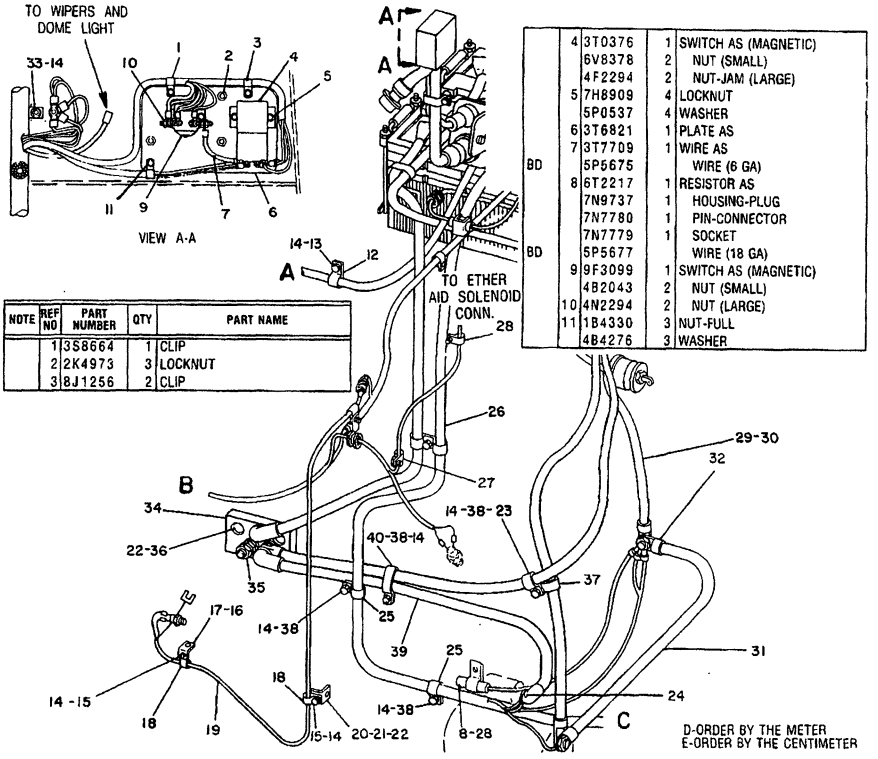

NOTE	REF NO	PART NUMBER	QTY	PART NAME
	1	3S8664	1	CLIP
	2	2K4973	3	LOCKNUT
	3	8J1256	2	CLIP

	4	3T0376	1	SWITCH AS (MAGNETIC)
		6V8378	2	NUT (SMALL)
		4F2294	2	NUT-JAM (LARGE)
	5	7H8909	4	LOCKNUT
		5P0537	4	WASHER
	6	3T6821	1	PLATE AS
	7	3T7709	1	WIRE AS
BD		5P5675		WIRE (6 GA)
	8	6T2217	1	RESISTOR AS
		7N9737	1	HOUSING-PLUG
		7N7780	1	PIN-CONNECTOR
		7N7779	1	SOCKET
BD		5P5677		WIRE (18 GA)
	9	9F3099	1	SWITCH AS (MAGNETIC)
		4B2043	2	NUT (SMALL)
	10	4N2294	2	NUT (LARGE)
	11	1B4330	3	NUT-FULL
		4B4276	3	WASHER

	12	4D7735	1	CLIP
	13	0T0102	1	BOLT
	14	5M2894	10	WASHER
	15	0S0509	2	BOLT
	16	1A2029	1	BOLT
	17	1P4908	1	BRACKET AS
		9F2978	1	NUT-WELD
	18	4D7794	2	CLIP
	19	9G5530	1	HARNESS AS
	20	4M4983	1	SUPPORT AS-TUBE
	21	9F2978	1	NUT-WELD
	22	5P8245	3	WASHER
C	23	1S0994	1	CLIP
	24	9L6770	1	CAP
	25	6V1889	3	CLIP
	26	6T8264	1	HARNESS AS
	27	7N3718	1	CLIP
	28	9G9150	2	CLIP
	29	6T0463	1	CABLE AS
BE		5P0747		CABLE (00 GA)
	30	1S7251	2	TERMINAL
	31	2V6166	1	CABLE AS
BE		5P0747		CABLE (00 GA)
	32	1S7251	2	TERMINAL
	33	3B2460	2	STUD
		1B4203	2	NUT-FULL
	34	7T7768	1	BAR AS-BUS
	35	8T3518	6	NUT-FULL
		7F0560	6	WASHER
	36	2H3855	2	BOLT
	37	6D3479	1	CLIP
	38	0L1351	4	BOLT
	39	7T7777	1	CABLE AS
BE		5P0747		CABLE (00 GA)
		1S7251	2	TERMINAL
		8N0869	2	COVER
BE		5P0695		CONDUIT
		1S4915	2	LINER-CONDUIT
C	40	6D4247	1	CLIP

C-INDICATES CHANGE
B-USE AS REQUIRED

409760

B- 409760 P

1408 **6P7330 BATTERY & WIRING GP-PART 2 OF 5**
S/N 53Y3308-3484

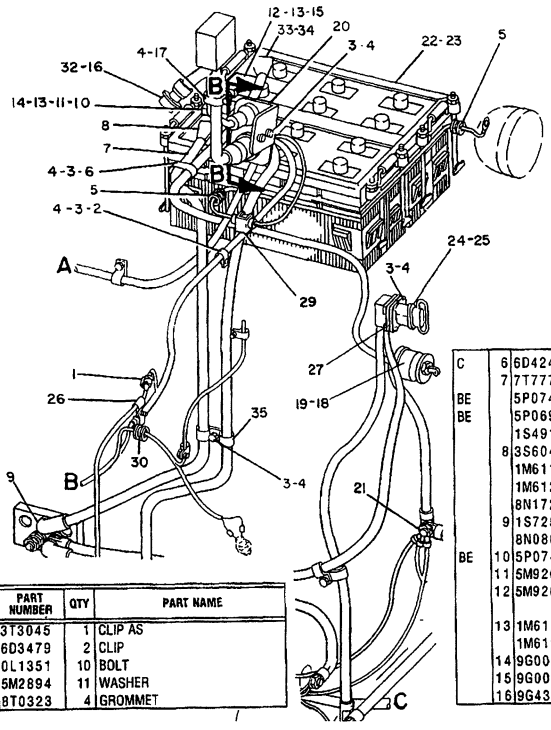

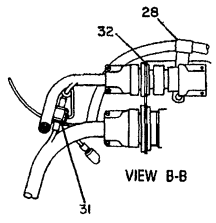

C-INDICATES CHANGE

B-USE AS REQUIRED

E-ORDER BY THE CENTIMETER

Y-SEPARATE ILLUSTRATION

NOTE	REF NO	PART NUMBER	QTY	PART NAME
	1	3T3045	1	CLIP AS
	2	6D3479	2	CLIP
	3	0L1351	10	BOLT
	4	5M2894	11	WASHER
	5	8T0323	4	GROMMET
C	6	6D4247	1	CLIP
	7	7T7776	1	CABLE AS
BE		5P0695		CONDUIT
BE		1S4915	2	LINER-CONDUIT
	8	3S6049	1	TERMINAL AS
		1M6119	1	BOLT
		1M6120	1	NUT
		8N1725	1	COVER
	9	1S7251	1	TERMINAL
		8N0869	1	COVER
BE	10	5P0747		CABLE (00 GA)
	11	5M9205	1	TERMINAL AS (NEG)
	12	5M9204	1	TERMINAL AS (POS)
				(EA TERM AS INCL)
	13	1M6119	1	BOLT
		1M6120	1	NUT
	14	9G0003	1	COVER
	15	9G0004	1	COVER
	16	9G4360	1	CAP-CONNECTOR
	17	4D7388	1	CLIP
		0S0509	1	BOLT
Y	18	7N0719	1	SWITCH AS-DISCONNECT
	19	8H8648	1	FILM-INSTRUCTION
	20	3T1501	1	PLATE
		8N1523	1	LOCKWASHER-TOOTH
	21	1D4719	1	NUT-FULL
	22	9G4232	2	BATTERY-12 V
				(EACH INCLUDES)
		7N0060	6	VENT AS
	23	8P6206	1	HOLD DOWN AS-BATTERY
		8P1601	8	ROD
		5P1075	8	WASHER
		4J8265	8	NUT-SELF LOCKING
	24	7T7778	1	RECEPTACLE AS
BE		5P0747		CABLE (00 GA)
		1S7251	2	TERMINAL
		1S4915	2	LINER-CONDUIT
BE		5P0695		CONDUIT
	25	8S2634	1	COVER AS
		2P2975	2	SEAL-O RING
	26	4D7794	1	CLIP
	27	8S4211	2	PLATE
	28	5K4778	1	CLIP
	29	3T3048	1	CLIP AS
	30	2D2751	1	GROMMET
	31	3T3047	1	CLIP AS
	32	8N1537	2	LOCKWASHER-TOOTH
	33	7G0535	1	CABLE AS
BE		5P0747		CABLE (00 GA)
		3S6050	1	TERMINAL AS
		1M6119	1	BOLT
		1M6120	1	NUT
		7N5274	1	COVER
	34	1S7251	1	TERMINAL
	35	1S0994	1	CLIP

409761

B-409761 P

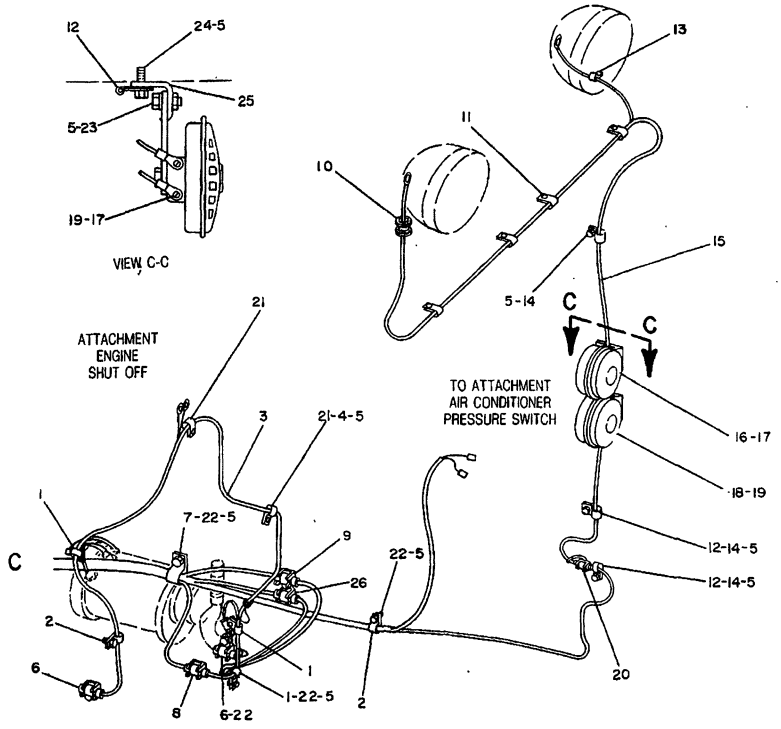

NOTE	REF NO	PART NUMBER	QTY	DESCRIPTION
	1	3S8664	3	CLIP
C	2	4D7794	2	CLIP
C	3	6T8263	1	HARNESS AS.
	4	1D4717	1	NUT
	5	5M2894	11	WASHER
	6	9G9150	3	CLIP
	7	6D4636	1	CLIP
	8	3T3048	1	CLIP AS.
	9	3T3046	1	CLIP AS.
C	10	3K1787	1	GROMMET
C	11	8M2772	5	CLIP
	12	338248	4	CLIP
	13	4D8123	1	CLIP
	14	0S1594	3	BOLT
	15	7G0537	1	HARNESS AS.
	16	7T0970	1	HORN AS. (HIGH TONE)
	17	6V9490	2	SCREW
		9B7233	2	LOCKWASHER
	18	7T0969	1	HORN AS. (LOW TONE)
	19	6V9490	2	SCREW
		9B7233	2	LOCKWASHER
	20	3T3045	1	CLIP AS.
C	21	8M2770	2	CLIP
C	22	0S0509	4	BOLT
	23	0L1351	2	BOLT
	24	0S1588	2	BOLT
	25	7T1377	2	BRACKET AS.
	26	3T3047	1	CLIP AS.

C INDICATES CHANGE

334665

334665 P

1408 **6P7330 BATTERY & WIRING GP-PART 4 OF 5**
S/N 53Y3308-3484

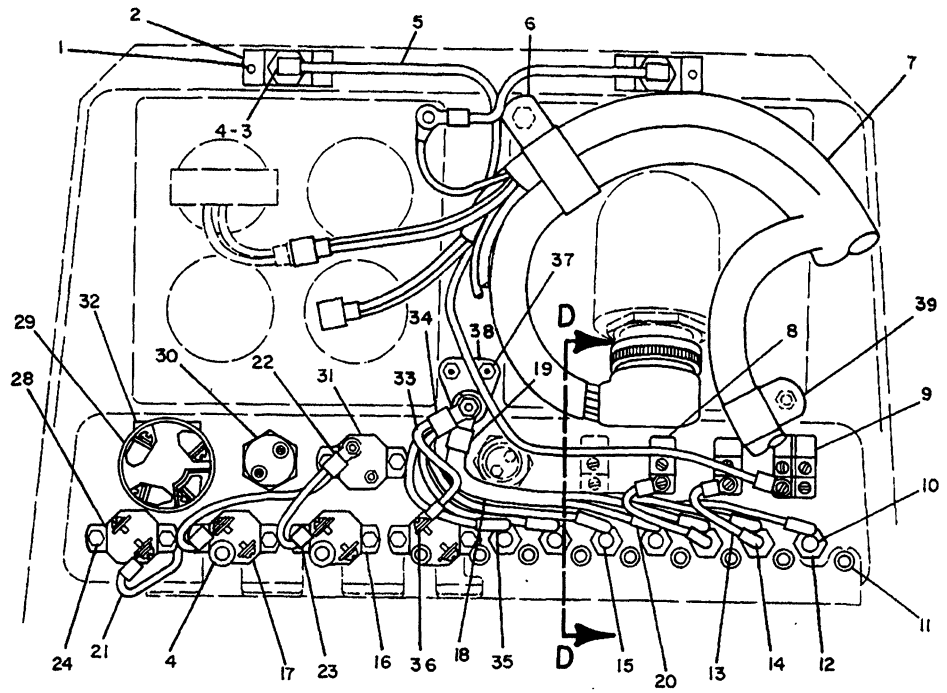

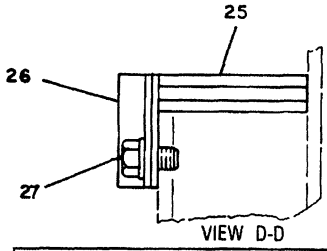

VIEW D-D

B USE AS REQUIRED
C INDICATES CHANGE
D ORDER BY THE METER
Y SEPARATE ILLUSTRATION

NOTE	REF NO	PART NUMBER	QTY	DESCRIPTION
	1	178715	4	SCREW
	2	3T6661	2	PLATE
	3	7N5876	2	LAMP
	4	7G9463	4	BUSHING
	5	3T7729	1	HARNESS AS.
	6	5K5338	1	CLIP
	7	3T7394	1	HARNESS AS.
Y	8	7N8000	2	SWITCH AS. (LIGHT)
	9	7N8005	1	SWITCH AS. (LIGHT)
	10	8M8948	1	FUSE (15 AMP)
	11	7G9465	9	BUSHING
	12	4K5122	7	HOLDER (FUSE)
				(EACH INCLUDES)
		7N2867	1	CAP
		6T8115	1	NUT
	13	3T2524	2	WIRE AS.
				(EACH INCLUDES)
BD		5P5624		WIRE (14 GAUGE)
		5P2321	1	TERMINAL
	14	3T5433	1	TERMINAL
	15	3K8782	6	FUSE (10 AMP)
	16	3T2662	1	CIRCUIT BREAKER (15 AMP)
		6V8376	2	SCREW
		9B7233	2	LOCKWASHER
	17	6N8589	2	CIRCUIT BREAKER (15 AMP)
	18	3T2539	1	WIRE AS.
BD		5P5624		WIRE (14 GAUGE)
	19	9F3965	1	TERMINAL
	20	9F3965	4	TERMINAL
	21	3T7870	1	WIRE AS.
BD		5P2624		WIRE (14 GAUGE)
	22	2L8049	1	TERMINAL
	23	2D8781	3	TERMINAL
C	24	3D9799	10	SCREW
	25	3T2522	1	GROMMET
	26	3T6679	1	CLAMP
		3T6680	1	SEAL
	27	L1351	2	BOLT
		5M2894	2	WASHER
	28	9G9487	1	CIRCUIT BREAKER (10 AMP)
Y	29	9G7641	1	SWITCH GROUP (START)
	30	3T3453	1	SWITCH (STARTING AID)
	31	9S173	1	CIRCUIT BREAKER (60 AMP)
	32	3T8730	1	COVER AS.
	33	3T2523	1	WIRE AS.
BD		5P5624		WIRE (14 GAUGE)
	34	9F3965	1	TERMINAL
	35	3T5433	3	TERMINAL
	36	5P1475	1	TERMINAL
	37	1B4330	2	NUT
		5P537	2	WASHER
	38	9G8451	1	BLOCK AS.
		4L7124	1	BOLT
		9S8750	1	NUT
		1H3244	1	LOCKWASHER
		2D6235	1	LOCKNUT
		4B4276	1	WASHER
	39	3S8664	1	CLIP

334666

334666 P

1408 **6P7330 BATTERY & WIRING GP-PART 5 OF 5**

S/N 53Y3308-3484

9G7641-Page 100A, 7N8000-Page 100B

MEMORANDA

STARTING AND ELECTRICAL SYSTEM

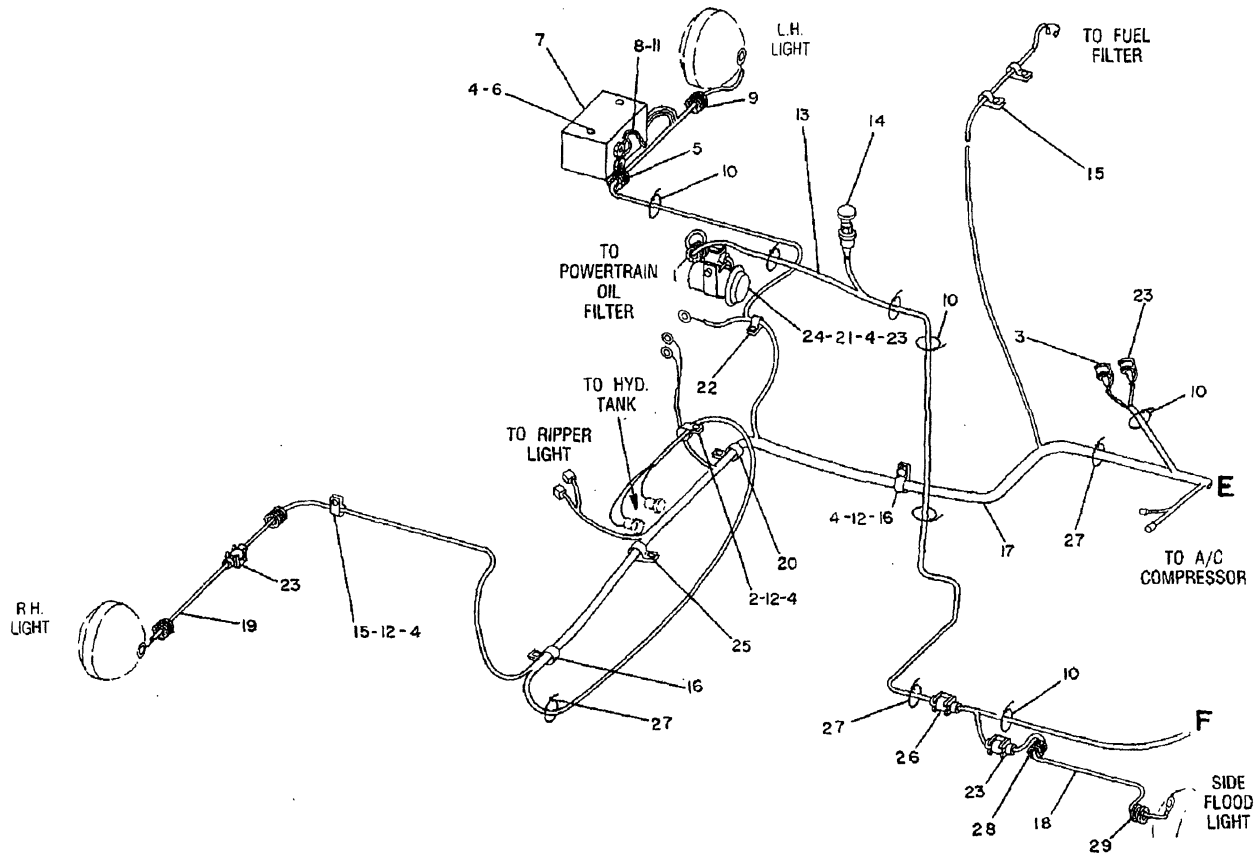

NOTE	REF NO	PART NUMBER	QTY	PART NAME	NOTE	REF NO	PART NUMBER	QTY	PART NAME
	1	9G2673	1	GROMMET		23	3T3048	4	CLIP AS
C	2	4D7794	1	CLIP	Y	24	9G9813	1	ALARM GP
C	3	3T3045	1	CLIP AS		25	4S1936	1	CLIP
C	4	5M2894	6	WASHER			2H3855	1	BOLT
C	5	6S1066	2	GROMMET			5P8245	1	WASHER
	6	0S1608	2	BOLT	C	26	3T3047	1	CLIP AS
	7	3T1815	1	ALARM-BACKUP	CB	27	7K1181	4	STRAP-CABLE
	8	9G6259	1	WIRE AS-ALARM	C	28	8T0323	1	GROMMET
	9	1H7459	2	GROMMET	C	29	7B1251	1	GROMMET
CB	10	3S2093	13	STRAP-CABLE					
	11	9G9150	1	CLIP					
C	12	0T0102	3	BOLT					
	13	7T6349	1	HARNESS AS					
	14	3T2357	1	SWITCH AS-HORN (HORN)					
		6V8370	1	NUT-HEX					
		2H3922	1	LOCKWASHER (20MM ID)					
		6V8363	2	SCREW					
		8F1434	2	LOCKWASHER (5MM ID)					
	15	5P9085	3	CLIP (LARGE)					
	16	338248	2	CLIP					
	17	9W0697	1	HARNESS AS-REAR					
	18	7G0530	2	WIRE AS					
	19	3T1729	1	WIRE AS					
	20	6D3479	1	CLIP					
	21	0S0509	1	BOLT					
	22	8M2770	1	CLIP					

B-USE AS REQUIRED
C-CHANGE FROM PREVIOUS TYPE
Y-SEPARATE ILLUSTRATION

R-551611 EP

1408 **7T2263 BATTERY & WIRING GP-PART 1 OF 5**
S/N 53Y3485-Up
9G9813-Page 100A

STARTING AND ELECTRICAL SYSTEM

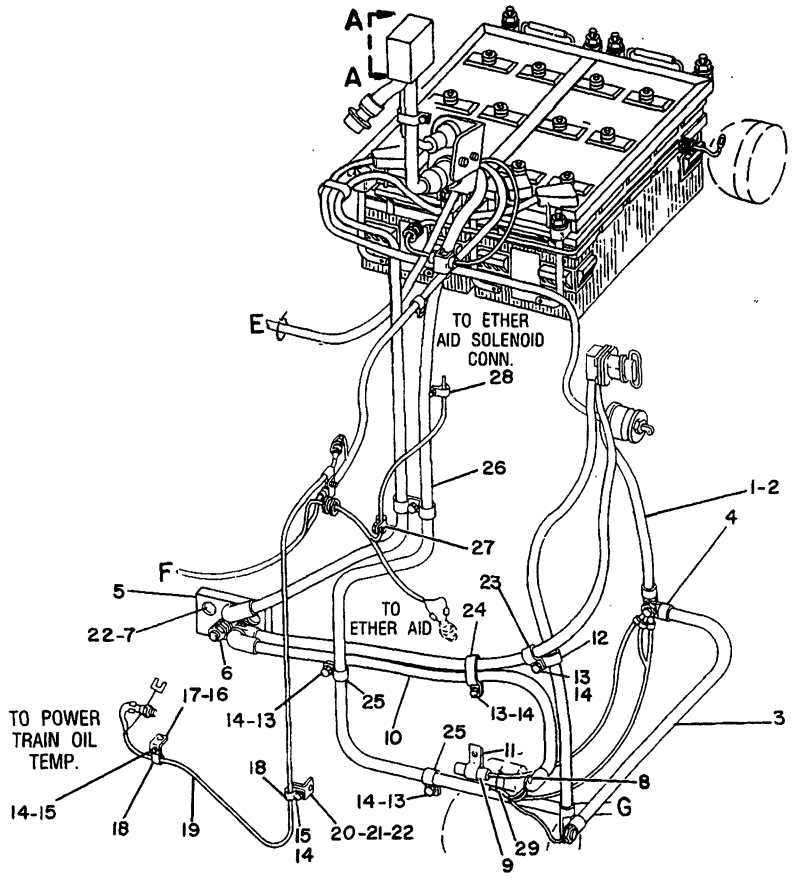

REFER TO ALL ILLUSTRATIONS OF THIS GROUP FOR AUXILIARY VIEWS

NOTE	REF NO	PART NUMBER	QTY	PART NAME
	1	6T0463	1	CABLE AS
BE		5P0747		CABLE (00 GA)
	2	1S7251	2	TERMINAL
	3	2V6166	1	CABLE AS
BE		5P0747		CABLE (00 GA)
	4	1S7251	2	TERMINAL
	5	7T7768	1	BAR AS-BUS
	6	8T3518	6	NUT-FULL
		7F0560	6	WASHER
	7	2H3855	2	BOLT
	8	9L6770	1	CAP
	9	6T2217	1	RESISTOR AS
		7N9737	1	HOUSING-PLUG
		7N7780	1	PIN-CONNECTOR
		7N7779	1	SOCKET
BD		5P5677		WIRE (18 GA)
	10	7T7777	1	CABLE AS
CBE		5P0761		CABLE-STARTING MOTOR (00 GA)
BE		5P0695		CONDUIT
		1S7251	2	TERMINAL
		8N0869	2	COVER
		1S4915	2	LINER-CONDUIT
C	11	3T3048	1	CLIP AS
	12	6D3479	1	CLIP
	13	OL1351	4	BOLT
	14	5M2894	7	WASHER
	15	0S0509	2	BOLT
	16	1A2029	1	BOLT
	17	1P4908	1	BRACKET AS
		9F2978	1	NUT-WELD
	18	4D7794	2	CLIP
	19	9G5530	1	HARNESS AS
	20	4M4983	1	SUPPORT AS
	21	9F2978	1	NUT-WELD
	22	5P8245	3	WASHER
	23	1S0994	1	CLIP
	24	6D4247	1	CLIP
	25	6V1889	3	CLIP
	26	9W1791	1	HARNESS AS-FRONT
	27	7N3718	1	CLIP
C	28	9G9150	1	CLIP
CB	29	3S2093	1	STRAP-CABLE

B-USE AS REQUIRED
C-CHANGE FROM PREVIOUS TYPE
D-ORDER BY THE METER
E-ORDER BY THE CENTIMETER

B-454665 EP

1408 **7T2263 BATTERY & WIRING GP-PART 2 OF 5**
S/N 53Y3485-Up

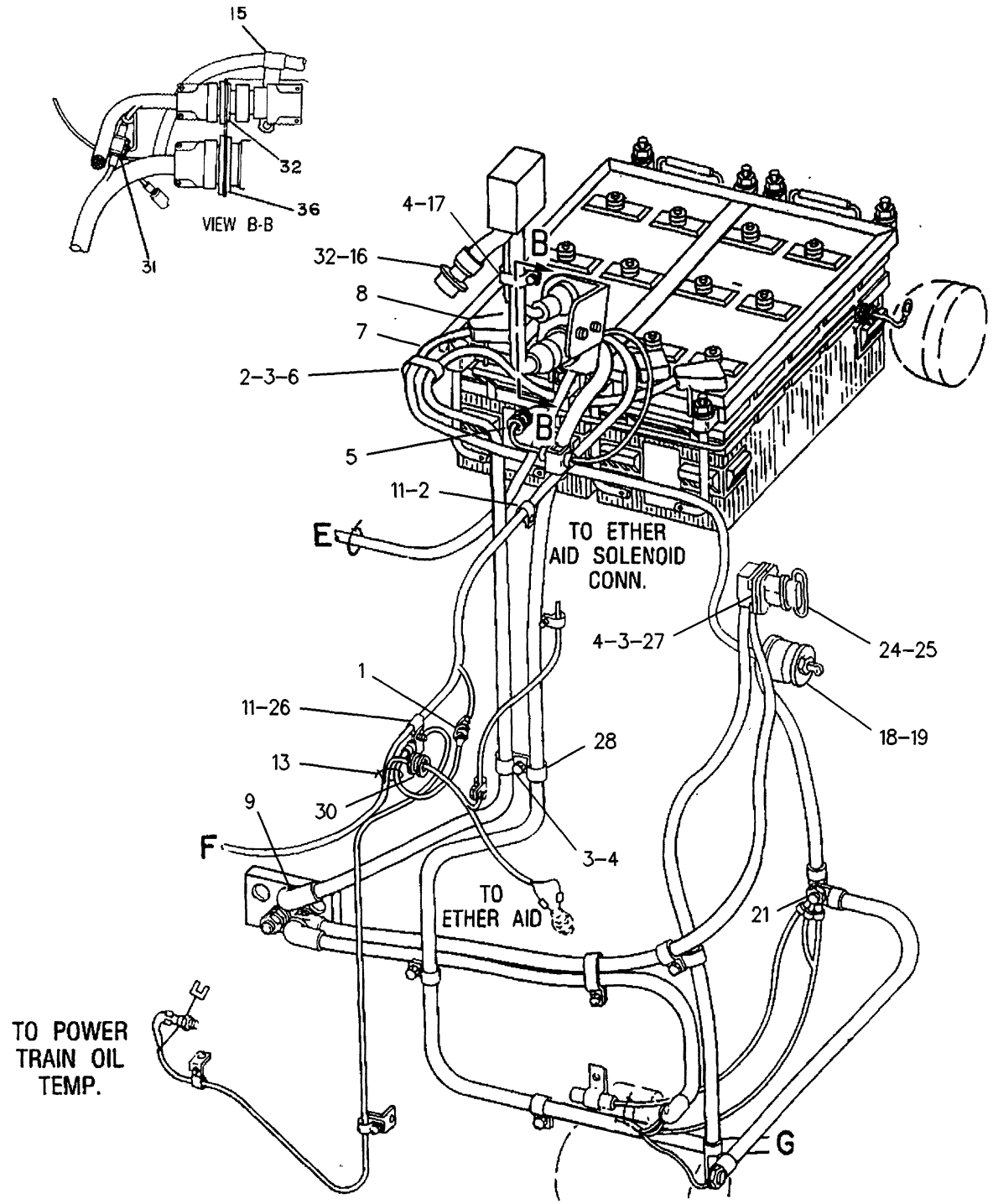

R-551815 EP

1408 **7T2263 BATTERY & WIRING GP-PART 3 OF 5**
S/N 53Y3485-Up

STARTING AND ELECTRICAL SYSTEM

NOTE	REF NO	PART NUMBER	QTY	PART NAME
	1	3T3045	1	CLIP AS
	2	6D3479	2	CLIP
C	3	OL1351	6	BOLT
C	4	5M2894	7	WASHER
C	5	8T0323	1	GROMMET
	6	7D1089	1	CLIP
	7	9W0739	1	CABLE AS
BE		5P0747		CABLE (00 GA)
BE		5P0695		CONDUIT
		1S4915	2	LINER-CONDUIT
	8	3S6049	1	TERMINAL AS
		1M6119	1	BOLT
		1M6120	1	NUT
		8N1725	1	COVER
	9	1S7251	1	TERMINAL
		8N0869	1	COVER
	10	3P2179	1	CABLE AS
BE		5P0747		CABLE (00 GA)
		5M9205	1	TERMINAL AS (-)
		5M9204	1	TERMINAL AS (+)
				(EACH TERMINAL ASSEM INCLUDES)
		1M6119	2	BOLT
		1M6120	2	NUT
		9G0003	1	COVER (+)
		9G0004	1	COVER (-)
C	11	319831	4	SCREW-HEX HEAD
C	12	9W4661	8	ROD
CB	13	3S2093	1	STRAP-CABLE
C	14	7B1251	1	GROMMET
	15	5K4778	1	CLIP
	16	9G4360	1	CAP-CONNECTOR
	17	4D7388	1	CLIP
		0S0509	1	BOLT
Y	18	7N0719	1	SWITCH AS-DISCONNECT
	19	8H8648	1	PLATE-INSTRUCTION
	20	3T1501	1	PLATE
	21	1D4719	1	NUT
	22	9G4232	2	BATTERY
				(EACH INCLUDES)
		7N0060	6	VENT AS
C	23	9W4515	1	HOLD-DOWN AS-BATTERY
		5P1075	8	WASHER-HARD
	24	7T7778	1	RECEPTACLE AS
BE		5P0747		CABLE (00 GA)
		1S7251	2	TERMINAL
BE		5P0695		CONDUIT
		1S4915	2	LINER-CONDUIT
	25	8S2634	1	COVER AS
		2P2975	2	SEAL-O-RING
	26	4D7794	1	CLIP
	27	8S4211	2	PLATE
	28	1S0994	1	CLIP
	29	3T3048	1	CLIP AS
	30	2D2751	1	GROMMET
	31	3T3047	1	CLIP AS
	32	8N1537	2	LOCKWASHER-TOOTH
	33	9P1503	1	CABLE AS
BE		5P0747		CABLE (00 GA)
		3S6050	1	TERMINAL AS
		1M6119	1	BOLT
		1M6120	1	NUT
		7N5274	1	COVER
		1S2244	2	BOOT-CONDUIT
		1S4915	2	LINER-CONDUIT
BE		5P0695		CONDUIT
	34	1S7251	1	TERMINAL
		9G8909	1	COVER
	35	4J8265	8	NUT
	36	8N1523	1	LOCKWASHER-TOOTH

B-USE AS REQUIRED
C-CHANGE FROM PREVIOUS TYPE
E-ORDER BY THE CENTIMETER
Y-SEPARATE ILLUSTRATION

551817 EP

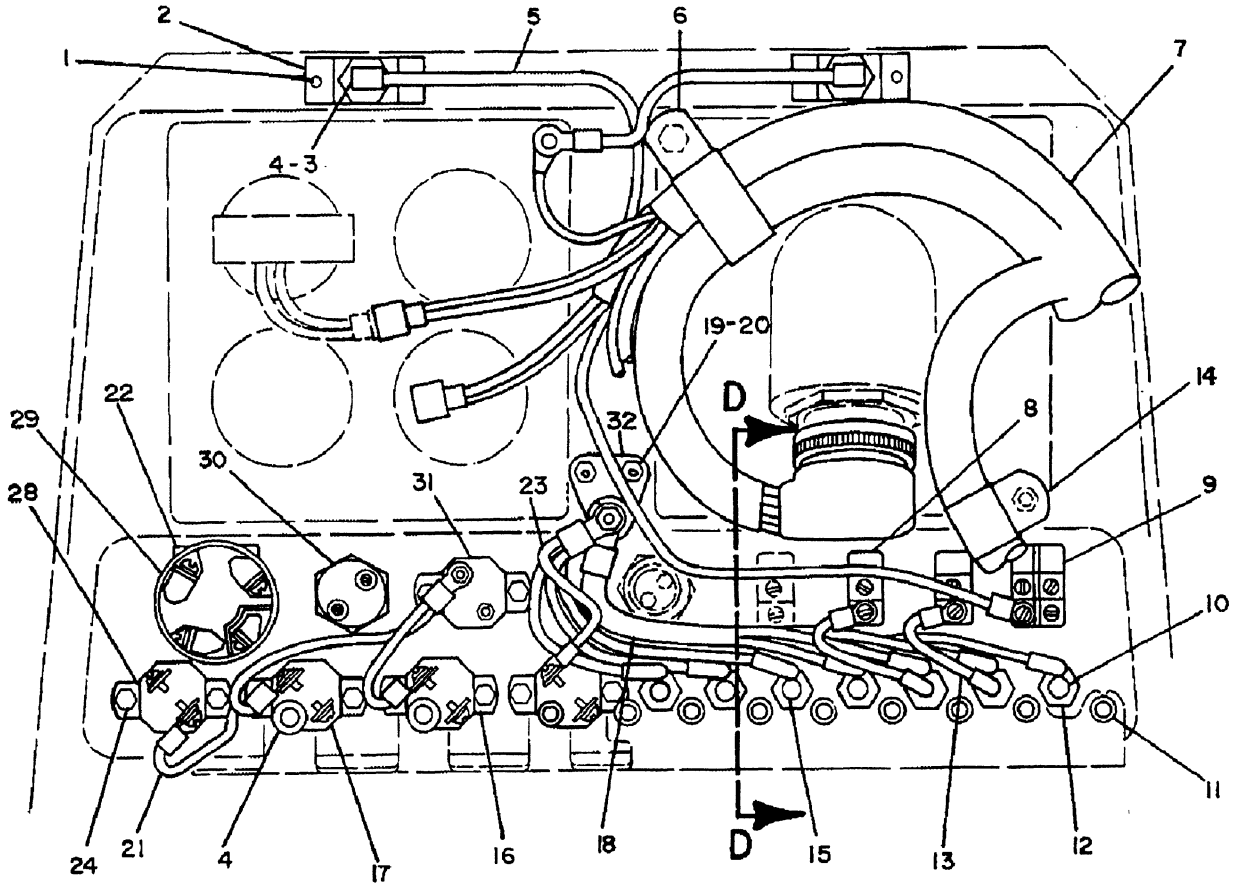

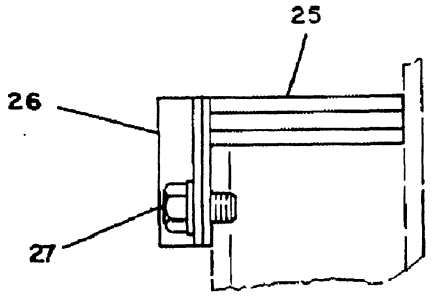

VIEW D-D

R-551816 EP

1408 **7T2263 BATTERY & WIRING GP-PART 4 OF 5**
S/N 53Y3485-Up

STARTING AND ELECTRICAL SYSTEM

NOTE	REF NO	PART NUMBER	QTY	PART NAME
	1	178715	4	SCREW
	2	3T6661	2	PLATE
	3	7N5876	2	LAMP-MINIATURE
	4	7G9463	4	BUSHING-SPLIT
	5	3T7729	1	HARNESS AS
	6	5K5338	1	CLIP
	7	7T5466	1	HARNESS AS-DASH
Y	8	7N8000	2	SWITCH AS-TOGGLE (LIGHT)
	9	7N8005	1	SWITCH AS (LIGHT)
	10	8M8948	1	FUSE-15 AMP (15 AMP)
	11	7G9465	9	BUSHING-SPLIT
	12	4K5122	7	HOLDER AS-FUSE (EACH INCLUDES)
		7N2867	1	CAP-FUSE HOLDER
		6T8115	1	NUT
	13	3T2524	2	WIRE AS
	14	3S8664	1	CLIP
	15	3K8782	6	FUSE-10 AMP (10 AMP)
	16	3T2662	1	CIRCUIT BREAKER AS (15 AMP)
		9B7233	2	LOCKWASHER
		6V8376	2	SCREW-MACHINE
	17	6N8589	2	CIRCUIT BREAKER AS (15 AMP)
		6V8376	2	SCREW-MACHINE
		9B7233	2	LOCKWASHER
	18	3T2539	1	WIRE AS
	19	1B4330	2	NUT
	20	5P0537	2	WASHER
	21	3T7870	1	WIRE AS
	22	3T8730	1	COVER AS-PROTECTION
	23	3T2523	1	WIRE AS
	24	3D9799	10	SCREW-MACHINE
	25	3T2522	1	GROMMET
	26	3T6679	1	CLAMP
		3T6680	1	SEAL
	27	0L1351	2	BOLT
		5M2894	2	WASHER
	28	9G9487	1	CIRCUIT BREAKER AS (10 AMP)
		6V8376	2	SCREW-MACHINE
		9B7233	2	LOCKWASHER
Y	29	9G7641	1	SWITCH GP-START
	30	3T3453	1	SWITCH AS (STARTING AID)
		2H3922	1	LOCKWASHER (20MM ID)
		3B4501	1	LOCKWASHER (4.5MM ID)
		5L7200	1	SCREW (8-32X.375IN)
		6V8363	2	SCREW (10-32X.312IN)
		6V8370	1	NUT-HEX
		7T9517	1	KNOB
		8F1434	2	LOCKWASHER (5MM ID)
	31	9S0173	1	CIRCUIT BREAKER AS (60 AMP)
		6V8378	2	NUT
		8F1434	2	LOCKWASHER
	32	9G8451	1	BLOCK AS
		4L7124	1	BOLT
		9S8750	1	NUT-FULL
		1H3244	1	LOCKWASHER
		2D6235	1	LOCKNUT
		4B4276	1	WASHER

Y-SEPARATE ILLUSTRATION

556121 EP

1408 **7T2263 BATTERY & WIRING GP-PART 4 OF 5**

S/N 53Y3485-Up

9G7641-Page 100A,7N8000-Page 100B

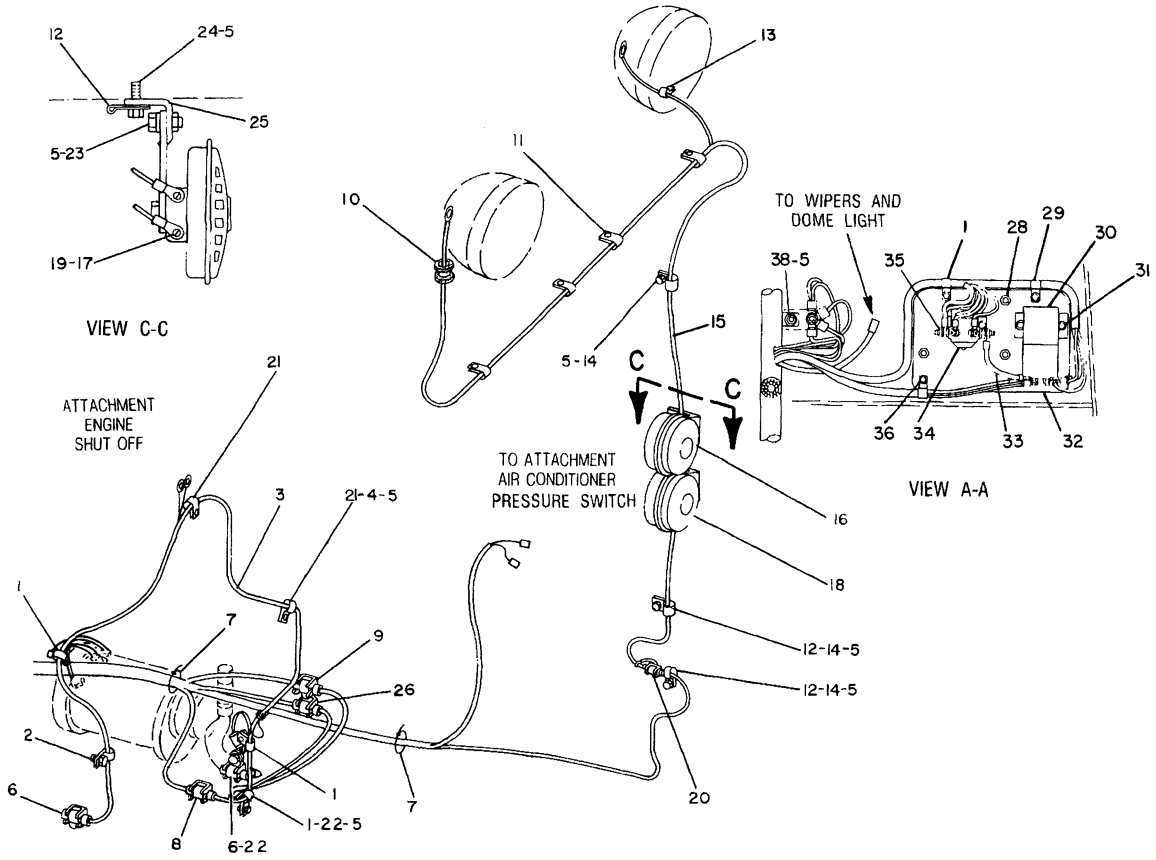

NOTE	REF NO	PART NUMBER	QTY	PART NAME
	1	3S8664	4	CLIP
	2	4D7794	1	CLIP
	3	6T8263	1	HARNESS AS-ENGINE
	4	1D4717	1	NUT
C	5	5M2894	15	WASHER
	6	9G9150	3	CLIP
CB	7	7K1181	3	STRAP-CABLE
	8	3T3048	1	CLIP AS
	9	3T3046	1	CLIP AS
	10	3K1787	1	GROMMET
	11	8M2772	5	CLIP
	12	338248	3	CLIP
	13	4D8123	1	CLIP
C	14	0S1594	7	BOLT
	15	7G0537	1	HARNESS AS
	16	7T0970	1	HORN AS (HIGH TONE)
	17	6V9490	2	SCREW-MACHINE
		9B7233	2	LOCKWASHER
	18	7T0969	1	HORN AS (LOW TONE)
	19	6V9490	2	SCREW-MACHINE
		9B7233	2	LOCKWASHER
	20	3T3045	1	CLIP AS
	21	8M2770	2	CLIP
	22	0S0509	2	BOLT
	23	0L1351	2	BOLT
	24	0S1588	2	BOLT
	25	7T1377	2	BRACKET AS
	26	3T3047	1	CLIP AS
	27	3B2460	2	STUD
		1B4203	2	NUT-FULL
	28	2K4973	3	LOCKNUT
	29	8J1256	2	CLIP
	30	3T0376	1	SWITCH AS-MAGNETIC (MAGNETIC)
		6V8378	2	NUT (SMALL)
		4F2294	2	NUT-JAM (LARGE)
	31	7H8909	4	LOCKNUT
		5P0537	4	WASHER
	32	3T6821	1	PLATE AS
	33	3T7709	1	WIRE AS
	34	9F3099	1	SWITCH AS (MAGNETIC)
		4B2043	2	NUT (SMALL)
C		3B4501	2	LOCKWASHER
	35	4N2294	2	NUT (LARGE)
C		3L6789	2	LOCKWASHER
C		8F0908	2	WASHER
	36	1B4330	3	NUT
		5P4115	3	WASHER

B-USE AS REQUIRED
C-CHANGE FROM PREVIOUS TYPE

B-456885 EP

1408 **7T2263 BATTERY & WIRING GP-PART 5 OF 5**
S/N 53Y3485-Up

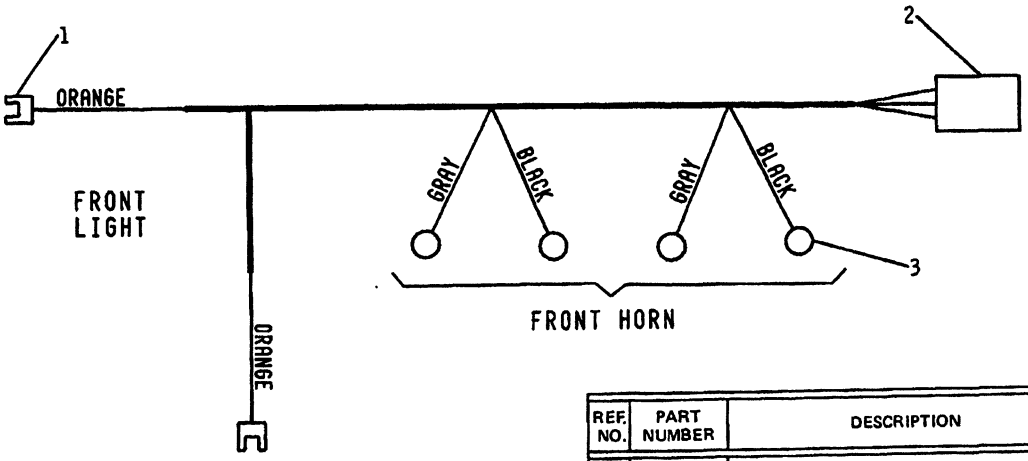

REF. NO.	PART NUMBER	DESCRIPTION	QTY.
1	5P1475	TERMINAL	2
2	7N7781	HOUSING	1
	7N7780	PIN	2
	7N7779	SOCKET	1
3	2L8075	TERMINAL	4
		THE FOLLOWING WIRES ARE AVAILABLE:	
▲	5P5624	WIRE---------(14 gauge)	
▲	5P5623	WIRE---------(16 gauge)	

▲ ORDER BY THE METER

235077

A- 235077 P

1408

7G0537 HARNESS AS
Lights & Horns To Radiator Guard
Part Of 6P7330 Battery & Wiring

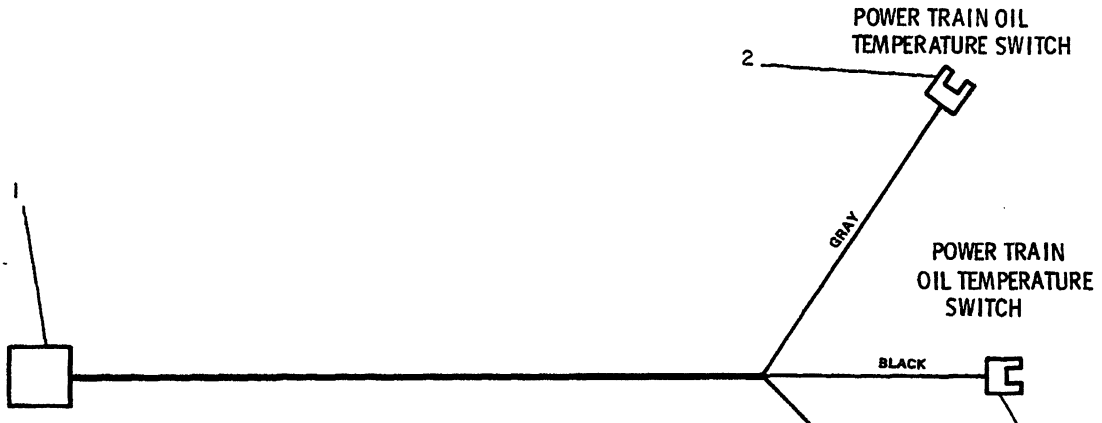

REF. NO.	PART NUMBER	DESCRIPTION	QTY.
1	7N7782	HOUSING----------	1
	7N7779	SOCKET----------	2
	7N7780	PIN----------	1
2	5P1475	TERMINAL----------	2
3	5P1476	TERMINAL----------	1
		THE FOLLOWING WIRE IS AVAILABLE:	
▲	5P5623	WIRE---------(16 gauge)	

▲ ORDER BY THE METER - USE AS REQUIRED

235081

235081 P

7413

9G5530 HARNESS AS

Front Harness To Selector Valves
Part Of 6P7330 Battery & Wiring

MEMORANDA

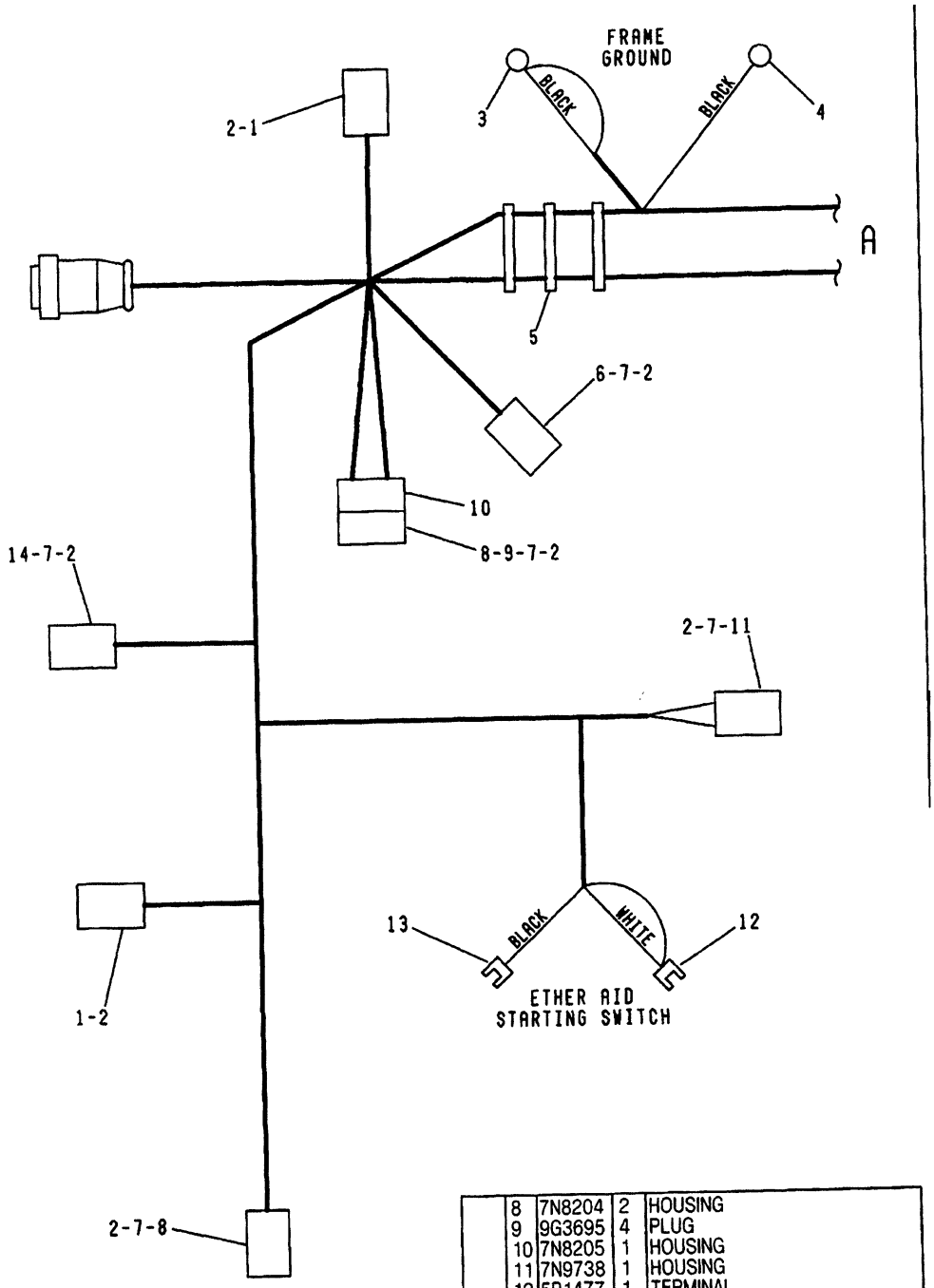

NOTE	REF NO	PART NUMBER	QTY	DESCRIPTION
	1	7N7777	2	HOUSING
	2	7N7779	10	SOCKET
C	3	2L8054	1	TERMINAL
	4	2L8081	1	TERMINAL
C	5	8L8413	3	STRAP
	6	9G3678	1	HOUSING
	7	7N7780	10	PIN
	8	7N8204	2	HOUSING
	9	9G3695	4	PLUG
	10	7N8205	1	HOUSING
	11	7N9738	1	HOUSING
	12	5P1477	1	TERMINAL
	13	5P1475	1	TERMINAL
	14	7N7781	1	HOUSING
				THE FOLLOWING WIRES ARE AVAILABLE:
D		5P5675		WIRE (6 GAUGE)
D		5P5689		WIRE (8 GAUGE)
D		5P5624		WIRE (14 GAUGE)
D		5P5623		WIRE (16 GAUGE)

C-INDICATES CHANGE

D-ORDER BY THE METER

* 305394

A-305394 P

7G0539 HARNESS AS-PART 1 OF 2
S/N 53Y1-1222
Part Of 6P7330 Battery & Wiring

REF NO.	PART NUMBER	DESCRIPTION	QTY.
1	3K8671	TERMINAL	1
2	7N7782	HOUSING	1
3	3T5433	TERMINAL	2
4	9G4348	HOUSING	1
5	9G3674	HOUSING	1
6	7N7780	PIN	6
7	7N7779	SOCKET	8
8	7N9738	HOUSING	1
9	2L8081	TERMINAL	2
10	2L8049	TERMINAL	1

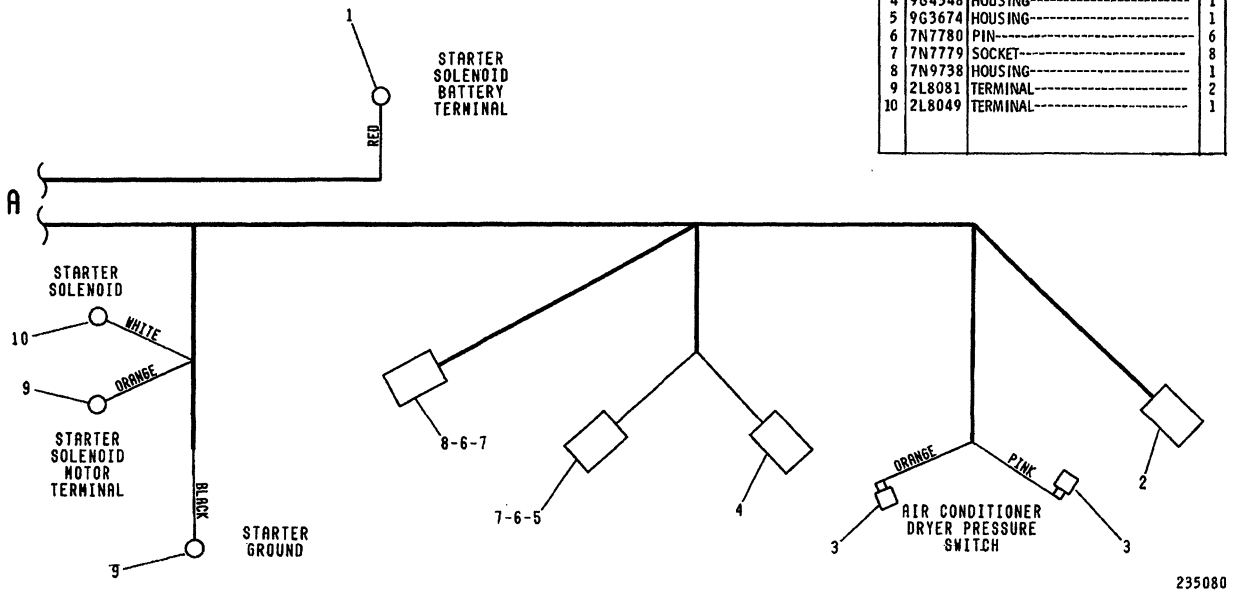

A- 235080 P

7G0539 HARNESS AS-PART 2 OF 2
S/N 53Y1-1222
Part Of 6P7330 Battery & Wiring

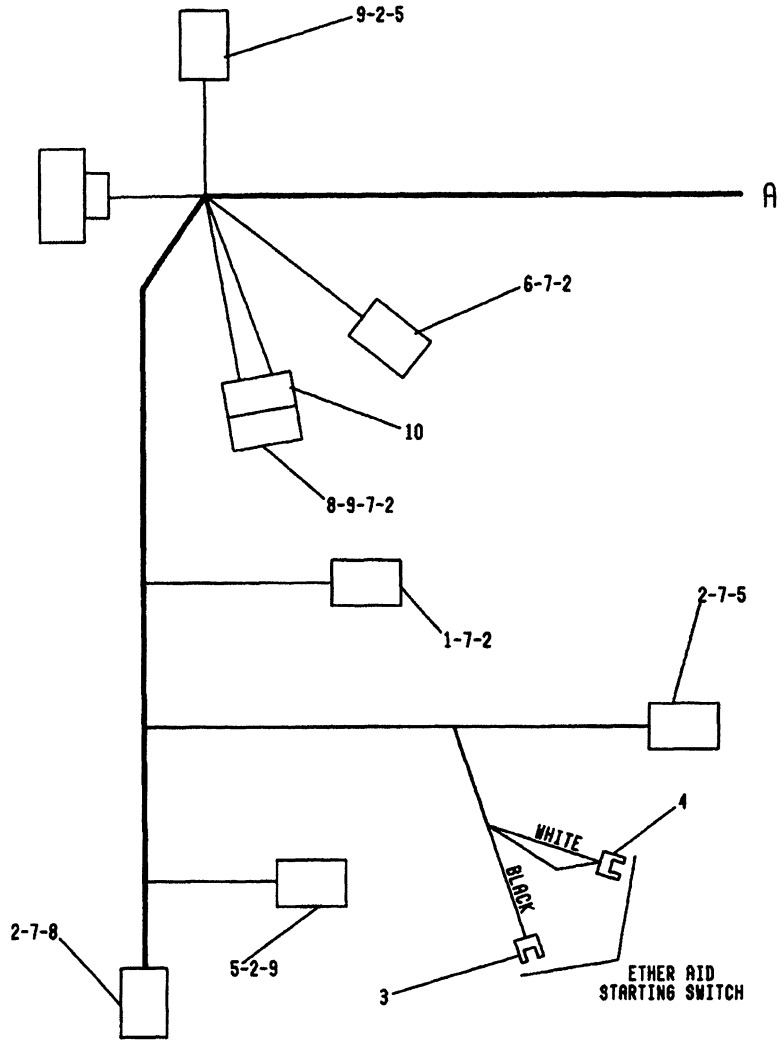

NOTE	REF NO	PART NUMBER	QTY	DESCRIPTION
	1	7N7781	1	HOUSING
	2	7N7779	10	SOCKET
	3	5P1475	1	TERMINAL
	4	5P1477	1	TERMINAL
C	5	7N9738	3	HOUSING
	6	9G3678	1	HOUSING
	7	7N7780	10	PIN
	8	7N8204	2	HOUSING
C	9	9G3695	2	PLUG
	10	7N8205	1	HOUSING
				THE FOLLOWING WIRES ARE AVAILABLE:
D		5P5689		WIRE (8 GAUGE)
D		5P5624		WIRE (14 GAUGE)
D		5P5623		WIRE (16 GAUGE)

C-INDICATES CHANGE

D-ORDER BY THE METER

■ 310133

A-310133 P

7G0539 HARNESS AS-PART 1 OF 2
S/N 53Y1223-Up
Part Of 6P7330 Battery & Wiring

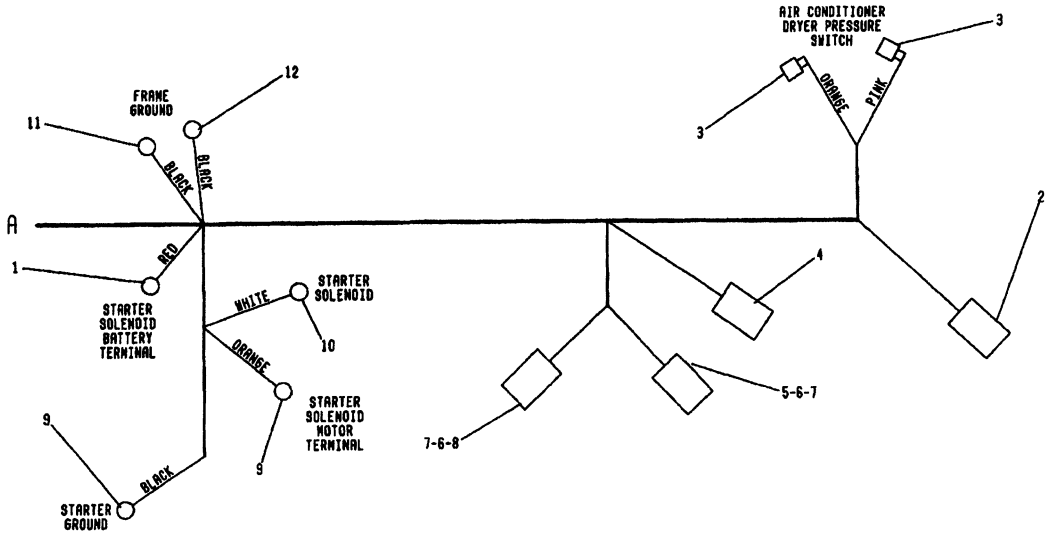

NOTE	REF NO	PART NUMBER	QTY	DESCRIPTION
	1	3K8671	1	TERMINAL
	2	7N7782	1	HOUSING
	3	3T5433	2	TERMINAL
	4	9G4348	1	HOUSING
	5	9G3674	1	HOUSING
	6	7N7780	6	PIN
	7	7N7779	8	SOCKET
	8	7N9738	1	HOUSING
	9	2L8081	2	TERMINAL
	10	2L8049	1	TERMINAL
	11	2L8054	1	TERMINAL
	12	2L8081	1	TERMINAL

■ 310924

A- 310924 P

7G0539 HARNESS AS-PART 2 OF 2
S/N 53Y1223-Up
Part Of 6P7330 Battery & Wiring

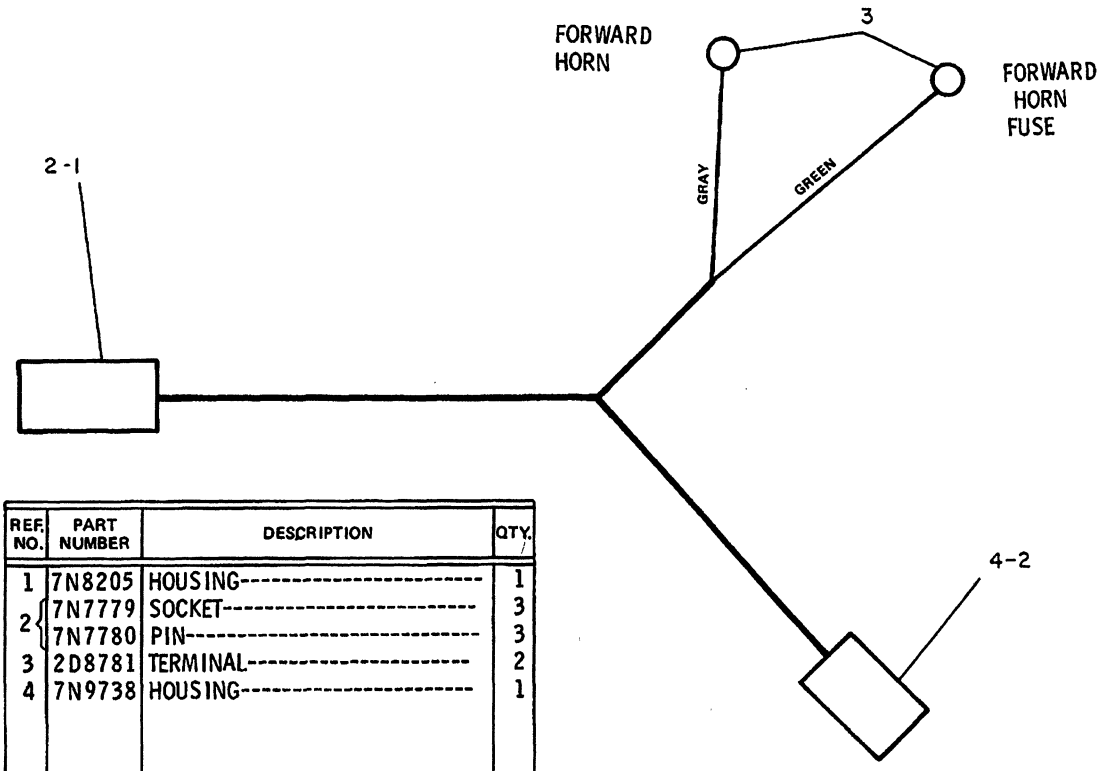

REF. NO.	PART NUMBER	DESCRIPTION	QTY.
1	7N8205	HOUSING----------	1
2	7N7779	SOCKET----------	3
	7N7780	PIN----------	3
3	2D8781	TERMINAL----------	2
4	7N9738	HOUSING----------	1
		THE FOLLOWING WIRE IS AVAILABLE:	
▲	5P5623	WIRE---------(16 gauge)	

▲ ORDER BY THE METER- USE AS REQUIRED

235155

235155 P

7402

3T7728 HARNESS AS

Front Harness To Horn Button And Fault Horn
Part Of 6P7330 Battery & Wiring

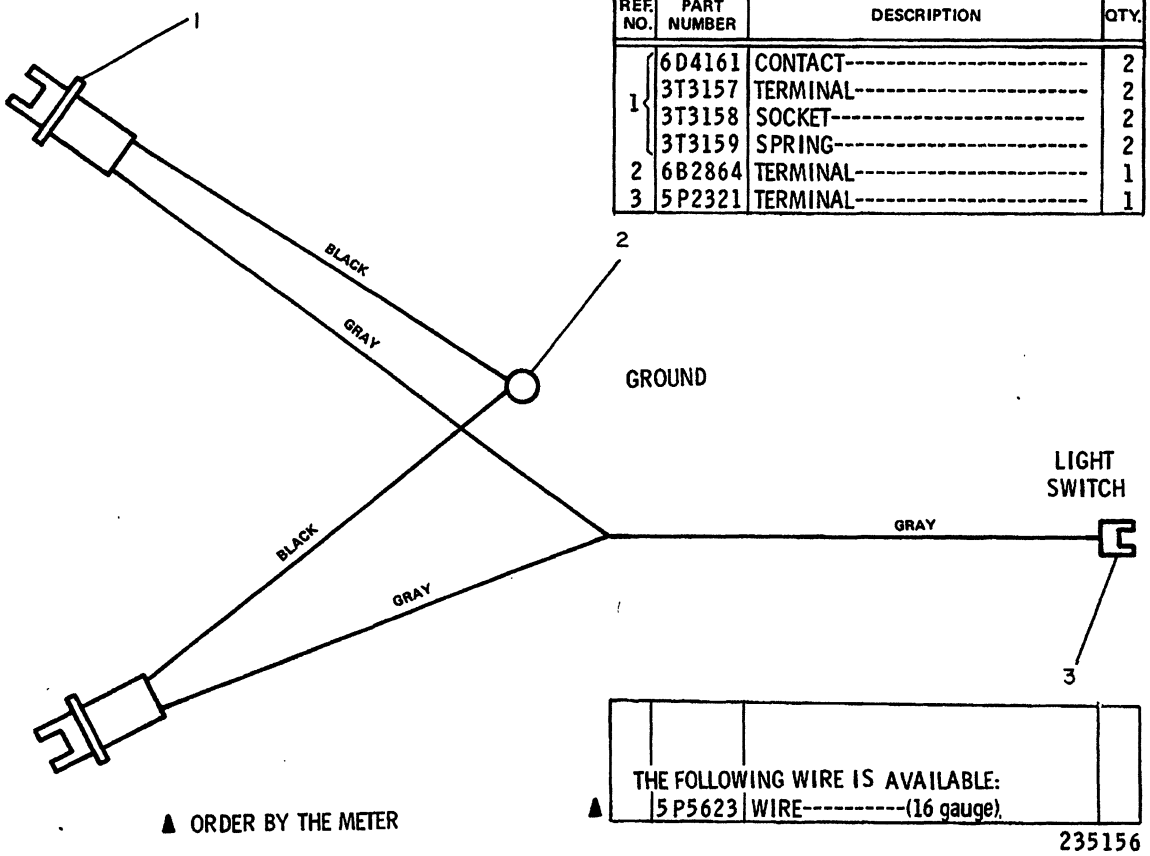

REF. NO.	PART NUMBER	DESCRIPTION	QTY.
1	6D4161	CONTACT----------	2
	3T3157	TERMINAL----------	2
	3T3158	SOCKET----------	2
	3T3159	SPRING----------	2
2	6B2864	TERMINAL----------	1
3	5P2321	TERMINAL----------	1

235156 P

1408

3T7729 HARNESS AS
S/N 53Y1-2339
Part Of 6P7330 Battery & Wiring

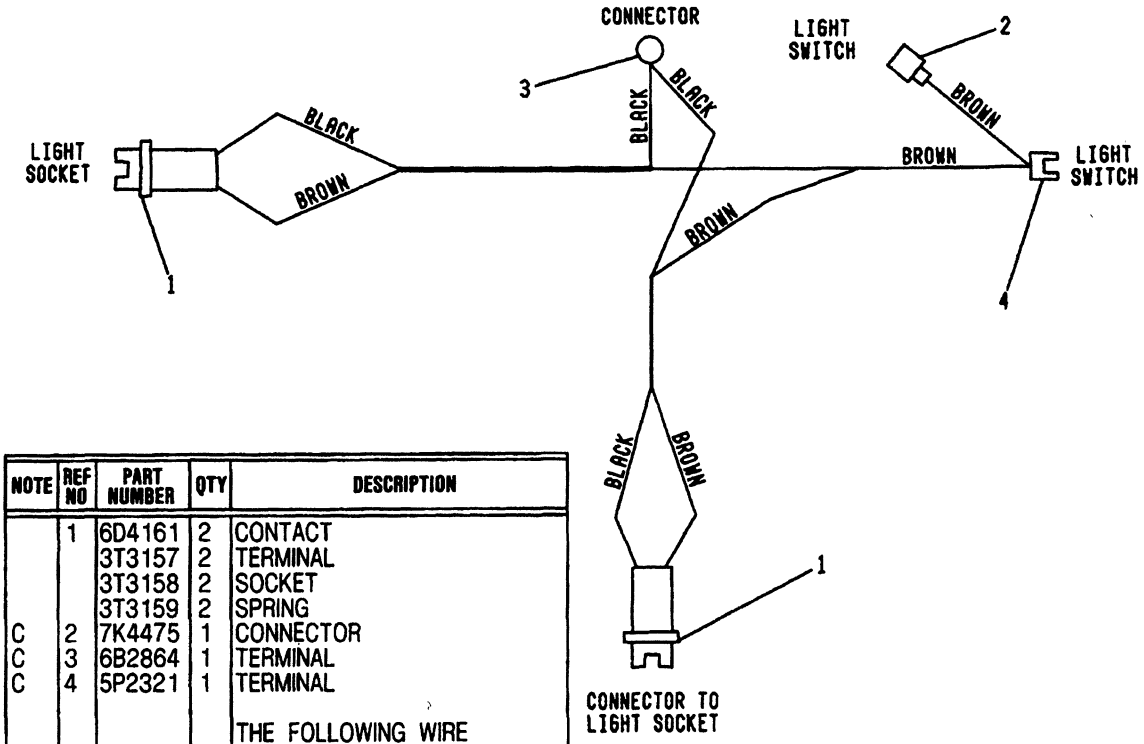

NOTE	REF NO	PART NUMBER	QTY	DESCRIPTION
	1	6D4161	2	CONTACT
		3T3157	2	TERMINAL
		3T3158	2	SOCKET
		3T3159	2	SPRING
C	2	7K4475	1	CONNECTOR
C	3	6B2864	1	TERMINAL
C	4	5P2321	1	TERMINAL
				THE FOLLOWING WIRE IS AVAILABLE:
CD		5P5623		WIRE (16 GAUGE)

C-INDICATES CHANGE

D-ORDER BY THE METER

* 317207

A-317207 P

1408

3T7729 HARNESS AS
S/N 53Y2340-Up
Part Of 6P7330 Battery & Wiring

REF. NO.	PART NUMBER	DESCRIPTION	QTY.
1	9G3668	HOUSING	1
2	7N7779	SOCKET	10
3	7N7780	PIN	10
4	9G4351	HOUSING	1
5	7N9737	HOUSING	4
6	2L8075	TERMINAL	2
7	2L8054	TERMINAL	1
8	7N7777	HOUSING	1

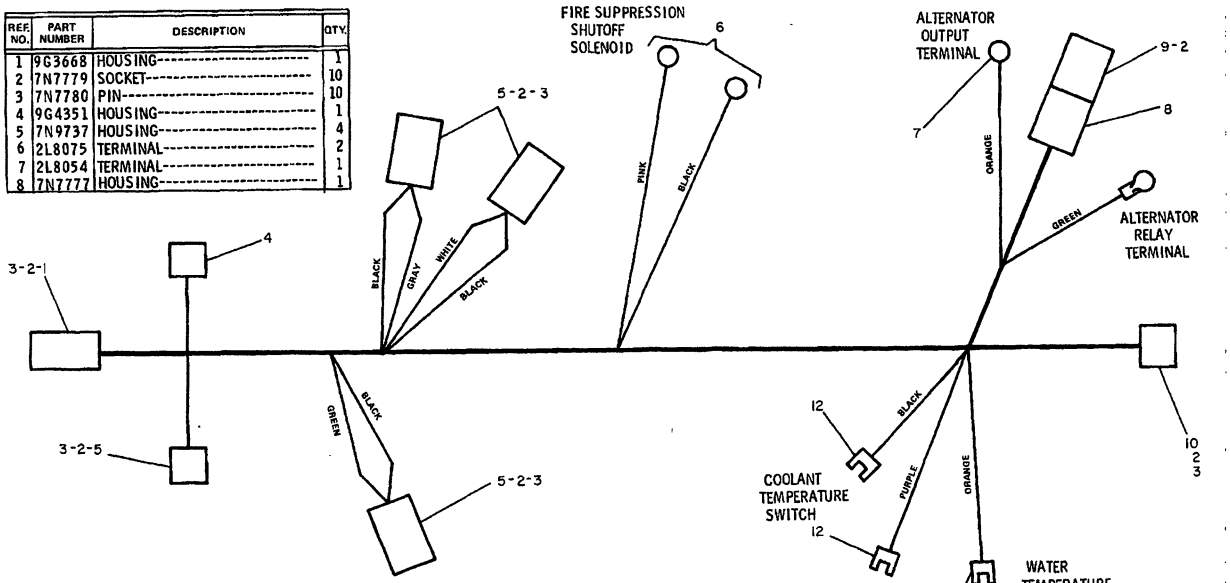

REF. NO.	PART NUMBER	DESCRIPTION	QTY.
9	7N7778	HOUSING	1
	9G3695	PLUG	1
10	7N9738	HOUSING	1
11	5P1476	TERMINAL	1
12	5P1475	TERMINAL	2

	THE FOLLOWING WIRES ARE AVAILABLE:	
▲	5P5675	WIRE---------(6 gauge)
▲	5P5624	WIRE----------(14 gauge)
▲	5P5623	WIRE----------(16 gauge)

▲ ORDER BY THE METER

235084 P

1408 **3T2569 HARNESS AS-ENGINE**

S/N 53Y1-1420

Part Of 6P7330 Battery & Wiring

MEMORANDA

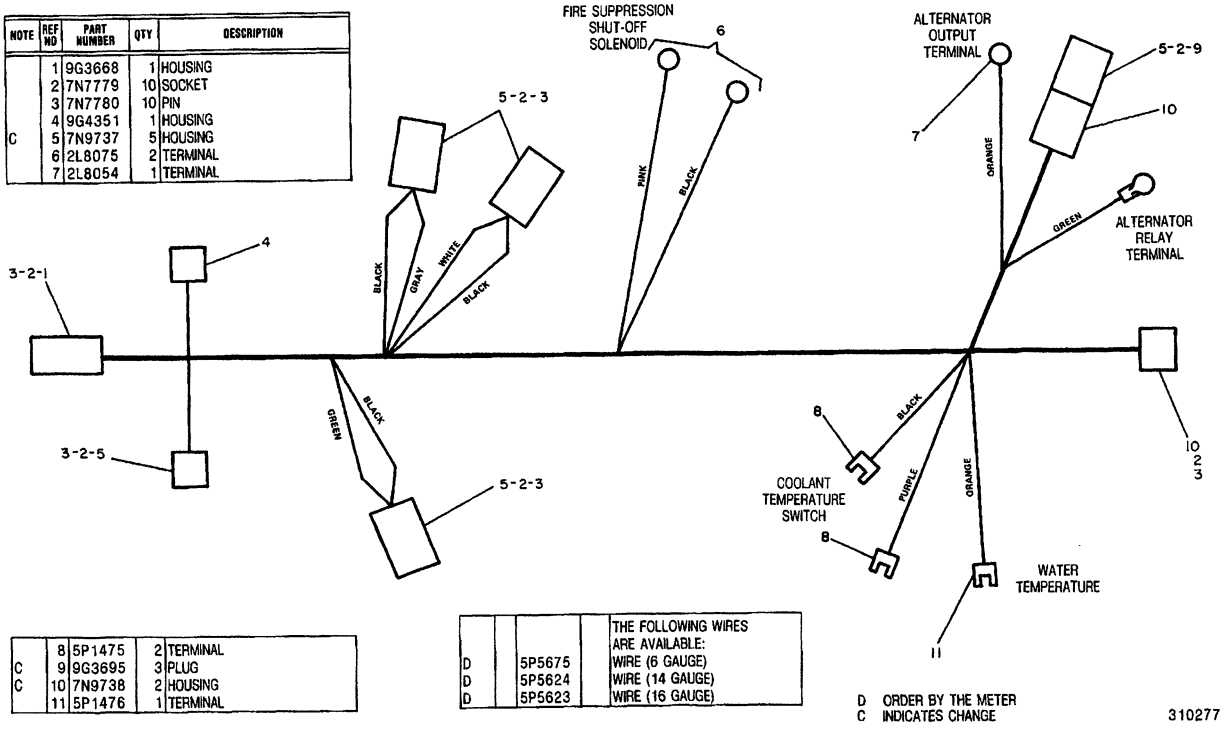

NOTE	REF NO	PART NUMBER	QTY	DESCRIPTION
	1	9G3668	1	HOUSING
	2	7N7779	10	SOCKET
	3	7N7780	10	PIN
	4	9G4351	1	HOUSING
C	5	7N9737	5	HOUSING
	6	2L8075	2	TERMINAL
	7	2L8054	1	TERMINAL

	8	5P1475	2	TERMINAL
C	9	9G3695	3	PLUG
C	10	7N9738	2	HOUSING
	11	5P1476	1	TERMINAL

			THE FOLLOWING WIRES ARE AVAILABLE:
D		5P5675	WIRE (6 GAUGE)
D		5P5624	WIRE (14 GAUGE)
D		5P5623	WIRE (16 GAUGE)

D ORDER BY THE METER
C INDICATES CHANGE

310277

310277 P

1408 **3T2569 HARNESS AS-ENGINE**
S/N 53Y1421-3307
Part Of 6P7330 Battery & Wiring

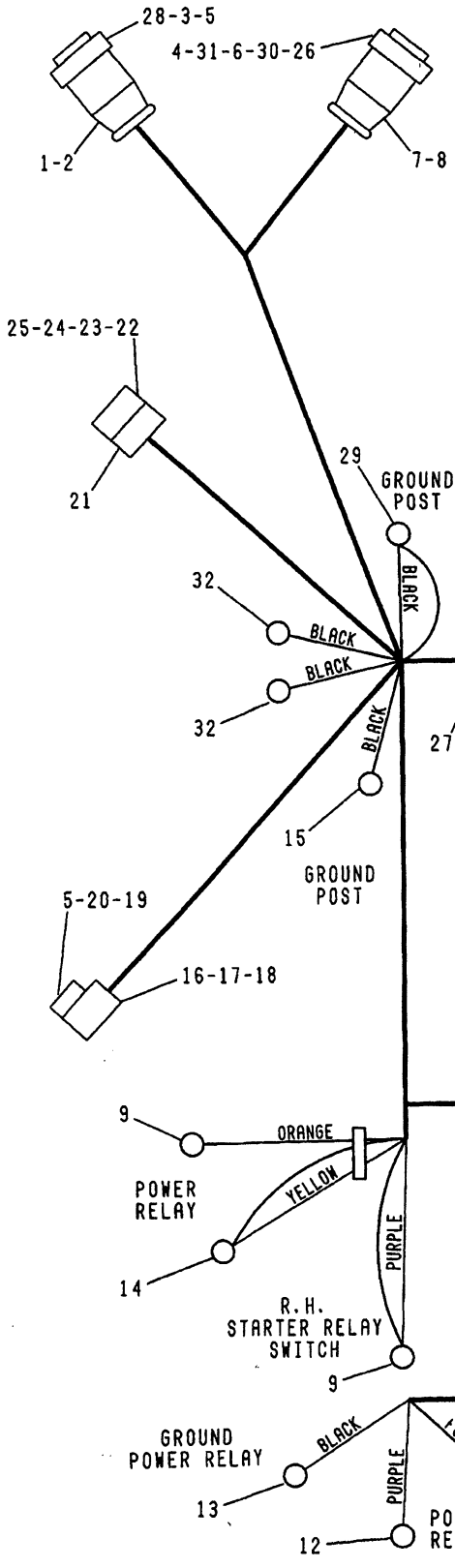

REF. NO.	PART NUMBER	DESCRIPTION	QTY.
1	8N1535	ENDBELL ASSEM. (Includes)	1
2	6F5832	SCREW	2
3	8N1539	SOCKET	25
4	3T3044	PLUG ASSEM.	1
5	3T7261	SOCKET	3
6	8N1544	SOCKET	3
7	8N1521	ENDBELL ASSEM. (Includes)	1
8	6F5949	SCREW	2
9	7F8031	TERMINAL	4
10	2L8075	TERMINAL	1
11	2D8757	TERMINAL	1
12	6H6755	TERMINAL	1
13	2L8076	TERMINAL	1
14	2L8066	TERMINAL	1
15	2L8052	TERMINAL	1
16	3T3454	ENDBELL	1
17	3T3622	CLAMP	1
18	8L8413	STRAP	1
19	3T204	RECEPTACLE ASSEM. (Includes)	1
20	8N1536	NUT	1
21	7N9738	HOUSING	1
22	7N9737	HOUSING	1
23	9G3695	PLUG	2
24	7N7780	PIN	1
25	7N7779	SOCKET	1
26	8N1546	SOCKET	2
27	6V1889	CLIP	1
28	8N1527	PLUG ASSEM.	1
29	6B2759	TERMINAL	1
30	8N1538	PIN	16
31	8N1540	PIN	4
32	2L8079	TERMINAL	2
▲	5P5675	WIRE----------(6 gauge)	
▲	5P5689	WIRE----------(8 gauge)	
▲	5P5624	WIRE----------(14 gauge)	
▲	5P5623	WIRE----------(16 gauge)	

▲ ORDER BY THE METER

235157
A-235157 P

3T7394 HARNESS AS-PART 1 OF 3
Dash To Front & Rear
Type 1
Part Of 6P7330 Battery & Wiring

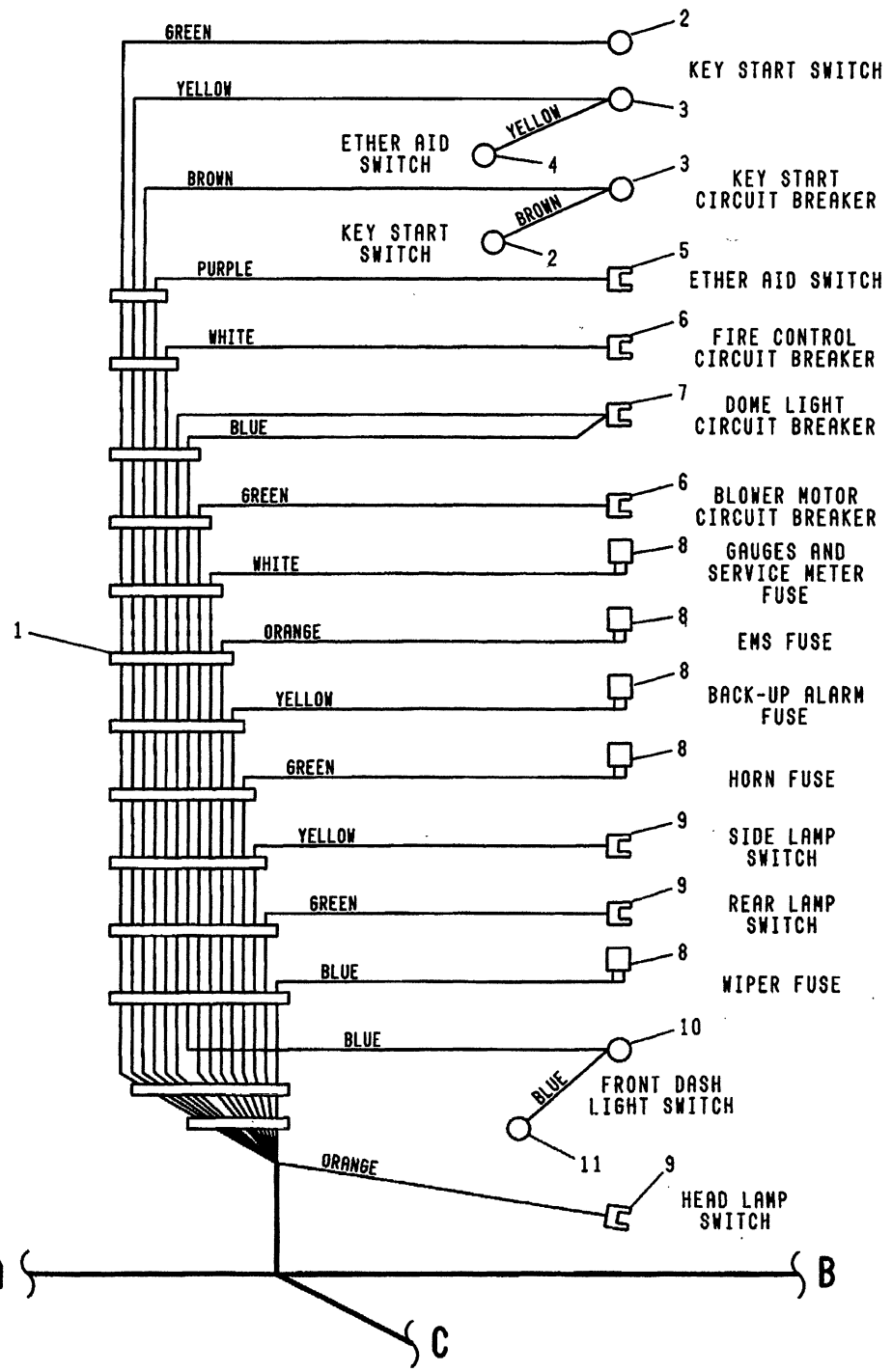

REF. NO.	PART NUMBER	DESCRIPTION	QTY.
1	1S9593	STRAP----------	15
2	2L8075	TERMINAL----------	2
3	2D8757	TERMINAL----------	2
4	2L8076	TERMINAL----------	1
5	5P1476	TERMINAL----------	1
6	5P1475	TERMINAL----------	2
7	5P1477	TERMINAL----------	1
8	3T5433	TERMINAL----------	5
9	5P2321	TERMINAL----------	3
10	2L8064	TERMINAL----------	1
11	2L8074	TERMINAL----------	1

236460

236460 P

3T7394 HARNESS AS-PART 2 OF 3
Dash To Front & Rear
Type 1
Part Of 6P7330 Battery & Wiring

REF. NO.	PART NUMBER	DESCRIPTION	QTY.
1	9F3965	TERMINAL	1
2	5P2321	TERMINAL	3
3	7N7978	TERMINAL	1
4	7N8205	HOUSING	1
5	7N8204	HOUSING	1
6	9G3695	PLUG	4
7	7N7779	SOCKET	3
8	8N1525	PLUG ASSEM.	1
9	8N1539	SOCKET	19
10	3T3454	ENDBELL	1
11	3T3622	CLAMP	1
12	8L8413	STRAP	1
13	7N9738	HOUSING	1
14	6B2864	TERMINAL	2
15	2L8076	TERMINAL	2
16	7N7780	PIN	3

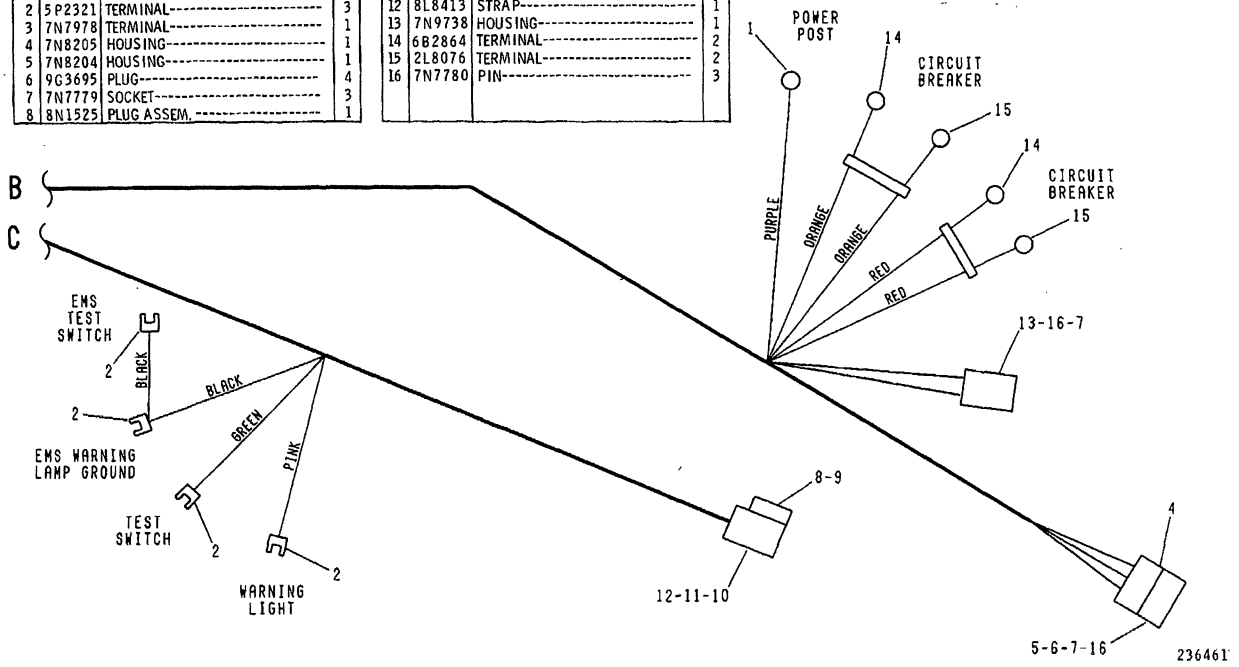

A-236461 P

3T7394 HARNESS AS-PART 3 OF 3
Dash To Front & Rear
Type 1
Part Of 6P7330 Battery & Wiring

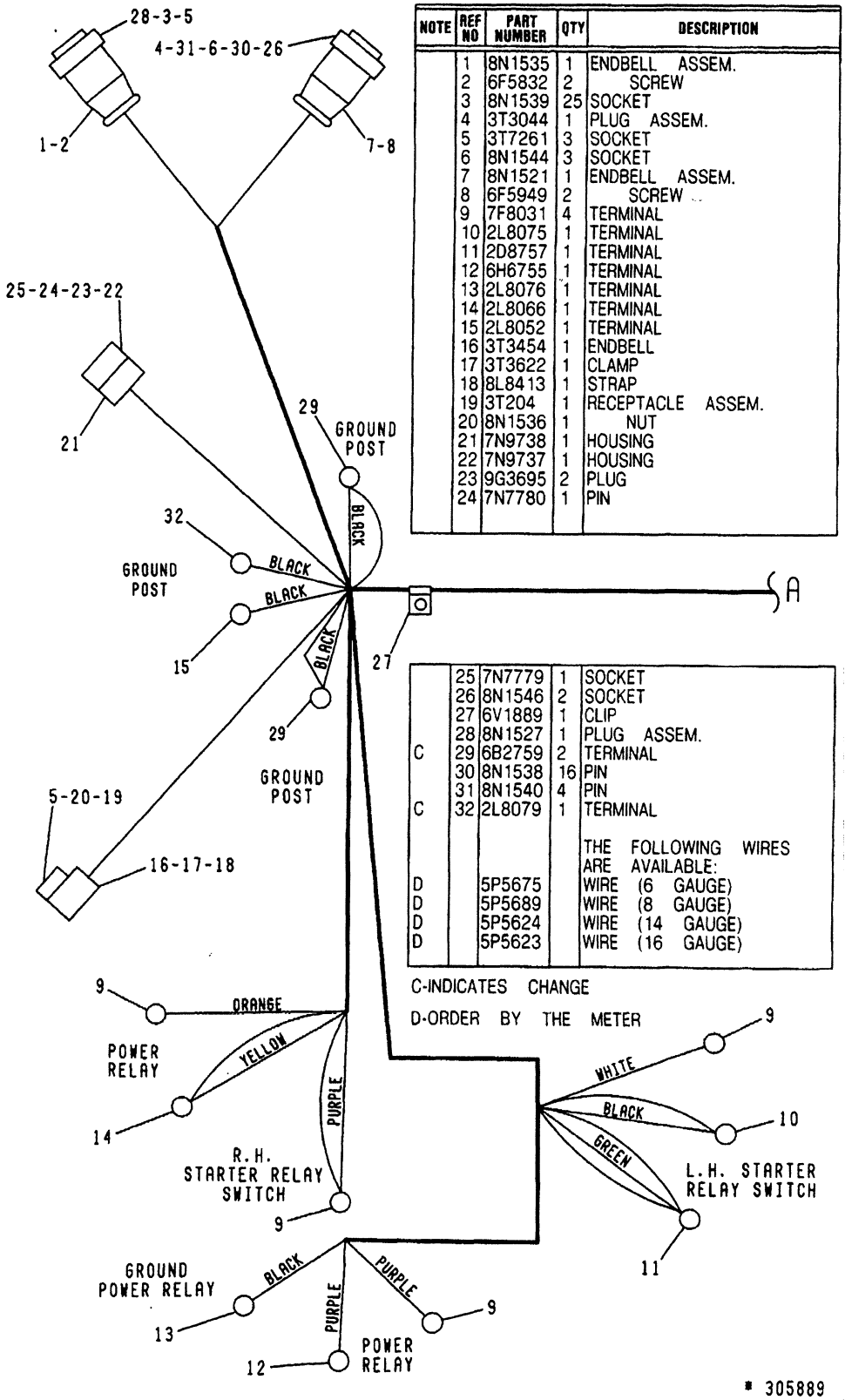

NOTE	REF NO	PART NUMBER	QTY	DESCRIPTION
	1	8N1535	1	ENDBELL ASSEM.
	2	6F5832	2	SCREW
	3	8N1539	25	SOCKET
	4	3T3044	1	PLUG ASSEM.
	5	3T7261	3	SOCKET
	6	8N1544	3	SOCKET
	7	8N1521	1	ENDBELL ASSEM.
	8	6F5949	2	SCREW
	9	7F8031	4	TERMINAL
	10	2L8075	1	TERMINAL
	11	2D8757	1	TERMINAL
	12	6H6755	1	TERMINAL
	13	2L8076	1	TERMINAL
	14	2L8066	1	TERMINAL
	15	2L8052	1	TERMINAL
	16	3T3454	1	ENDBELL
	17	3T3622	1	CLAMP
	18	8L8413	1	STRAP
	19	3T204	1	RECEPTACLE ASSEM.
	20	8N1536	1	NUT
	21	7N9738	1	HOUSING
	22	7N9737	1	HOUSING
	23	9G3695	2	PLUG
	24	7N7780	1	PIN
	25	7N7779	1	SOCKET
	26	8N1546	2	SOCKET
	27	6V1889	1	CLIP
	28	8N1527	1	PLUG ASSEM.
C	29	6B2759	2	TERMINAL
	30	8N1538	16	PIN
	31	8N1540	4	PIN
C	32	2L8079	1	TERMINAL
				THE FOLLOWING WIRES ARE AVAILABLE:
D		5P5675		WIRE (6 GAUGE)
D		5P5689		WIRE (8 GAUGE)
D		5P5624		WIRE (14 GAUGE)
D		5P5623		WIRE (16 GAUGE)

C-INDICATES CHANGE

D-ORDER BY THE METER

* 305889

A- 305889 P

3T7394 HARNESS AS-PART 1 OF 3
Dash To Front & Rear
Type 2
Part Of 6P7330 Battery & Wiring

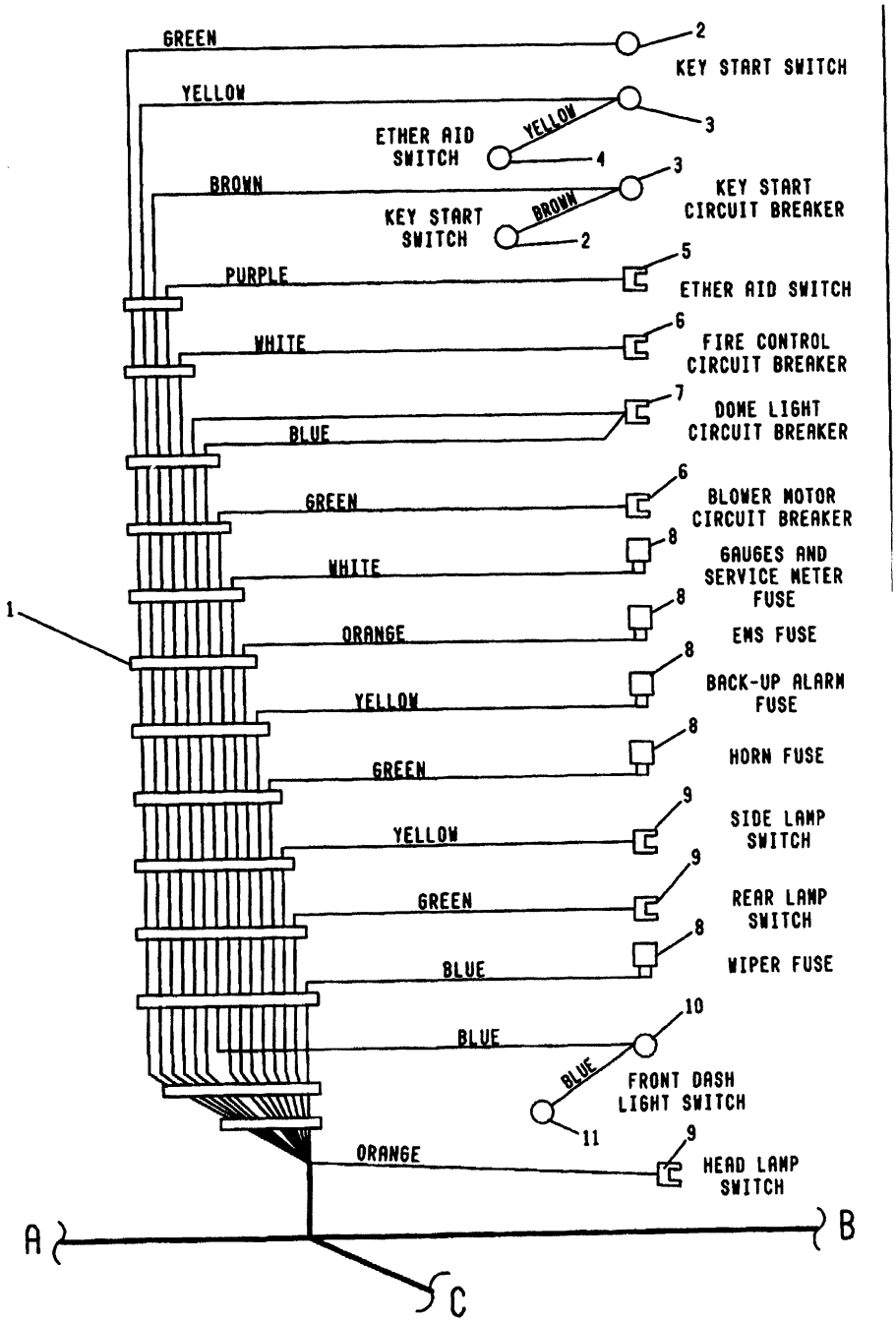

NOTE	REF NO	PART NUMBER	QTY	DESCRIPTION
C	1	1S9593	14	STRAP
	2	2L8075	2	TERMINAL
	3	2D8757	2	TERMINAL
	4	2L8076	1	TERMINAL
	5	5P1476	1	TERMINAL
C	6	5P1475	2	TERMINAL
	7	5P1477	1	TERMINAL
	8	9G9314	5	TERMINAL
	9	5P2321	3	TERMINAL
	10	2L8064	1	TERMINAL
	11	2L8074	1	TERMINAL

C-INDICATES CHANGE

* 306588

A-306588 P

3T7394 HARNESS AS-PART 2 OF 3
Dash To Front & Rear
Type 2
Part Of 6P7330 Battery & Wiring

NOTE	REF NO	PART NUMBER	QTY	DESCRIPTION
C	1	2L8077	1	TERMINAL
	2	5P2321	3	TERMINAL
	3	7N7978	1	TERMINAL
	4	7N8205	1	HOUSING
	5	7N8204	1	HOUSING
	6	9G3695	4	PLUG
	7	7N7779	3	SOCKET
	8	8N1525	1	PLUG ASSEM.
	9	8N1539	19	SOCKET
	10	3T3454	1	ENDBELL
	11	3T3622	1	CLAMP
	12	8L8413	1	STRAP
	13	7N9738	1	HOUSING
	14	6B2864	2	TERMINAL
	15	2L8076	2	TERMINAL
	16	7N7780	3	PIN

C-INDICATES CHANGE

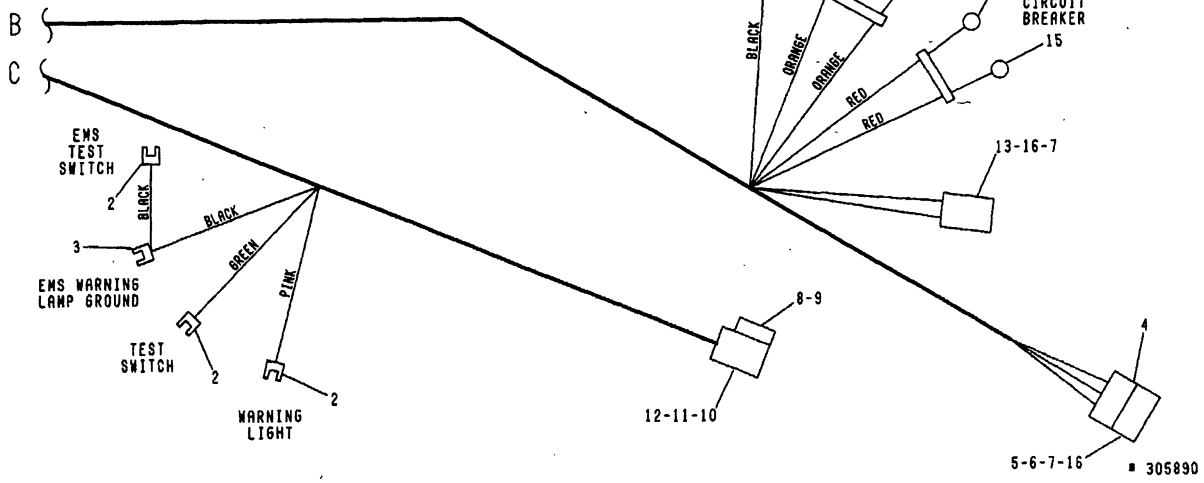

A- 305890 P

3T7394 HARNESS AS-PART 3 OF 3
Dash To Front & Rear
Type 2
Part Of 6P7330 Battery & Wiring

MEMORANDA

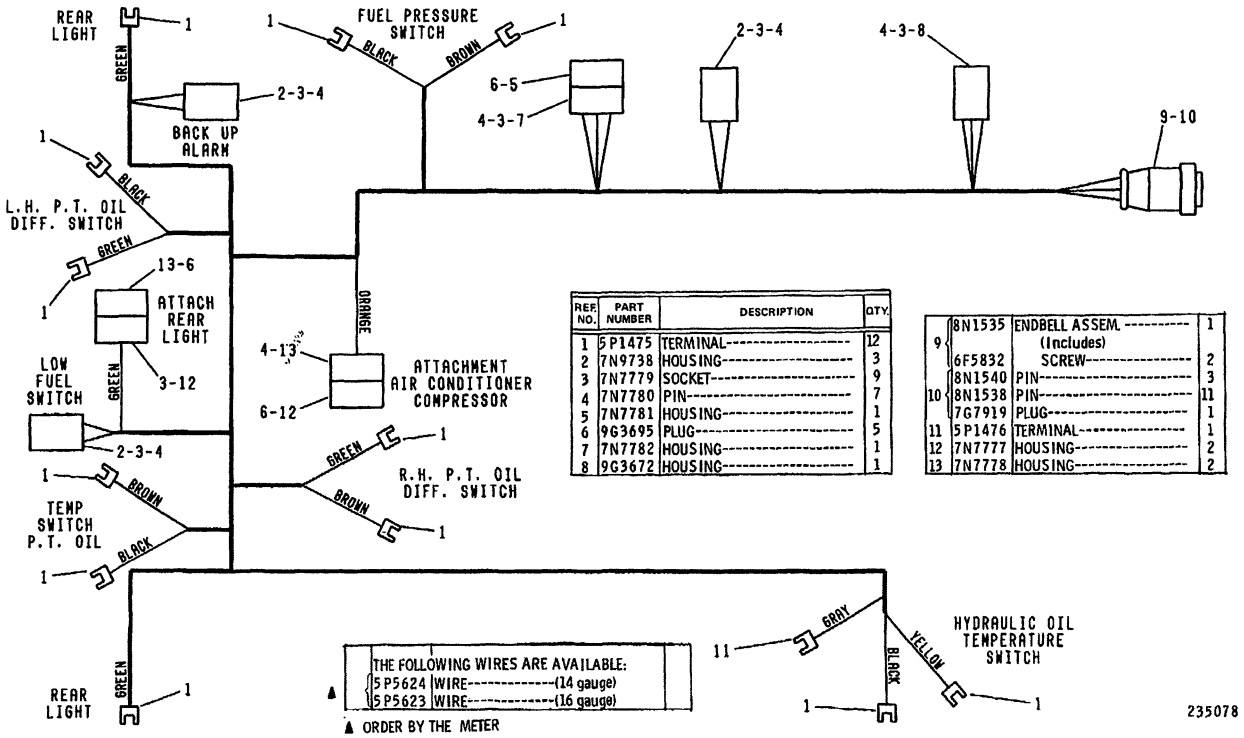

REF NO.	PART NUMBER	DESCRIPTION	QTY.
1	5P1475	TERMINAL----------	12
2	7N9738	HOUSING----------	3
3	7N7779	SOCKET----------	9
4	7N7780	PIN----------	7
5	7N7781	HOUSING----------	1
6	9G3695	PLUG----------	5
7	7N7782	HOUSING----------	1
8	9G3672	HOUSING----------	1

9	8N1535	ENDBELL ASSEM. ---------- (Includes)	1
	6F5832	SCREW----------	2
10	8N1540	PIN----------	3
	8N1538	PIN----------	11
	7G7919	PLUG----------	1
11	5P1476	TERMINAL----------	1
12	7N7777	HOUSING----------	2
13	7N7778	HOUSING----------	2

A- 235078 P

1408 **7G0538 HARNESS AS**

Dash Harness To Rear Of Tractor & Side Lights
S/N 53Y1-1222
Part Of 6P7330 Battery & Wiring

MEMORANDA

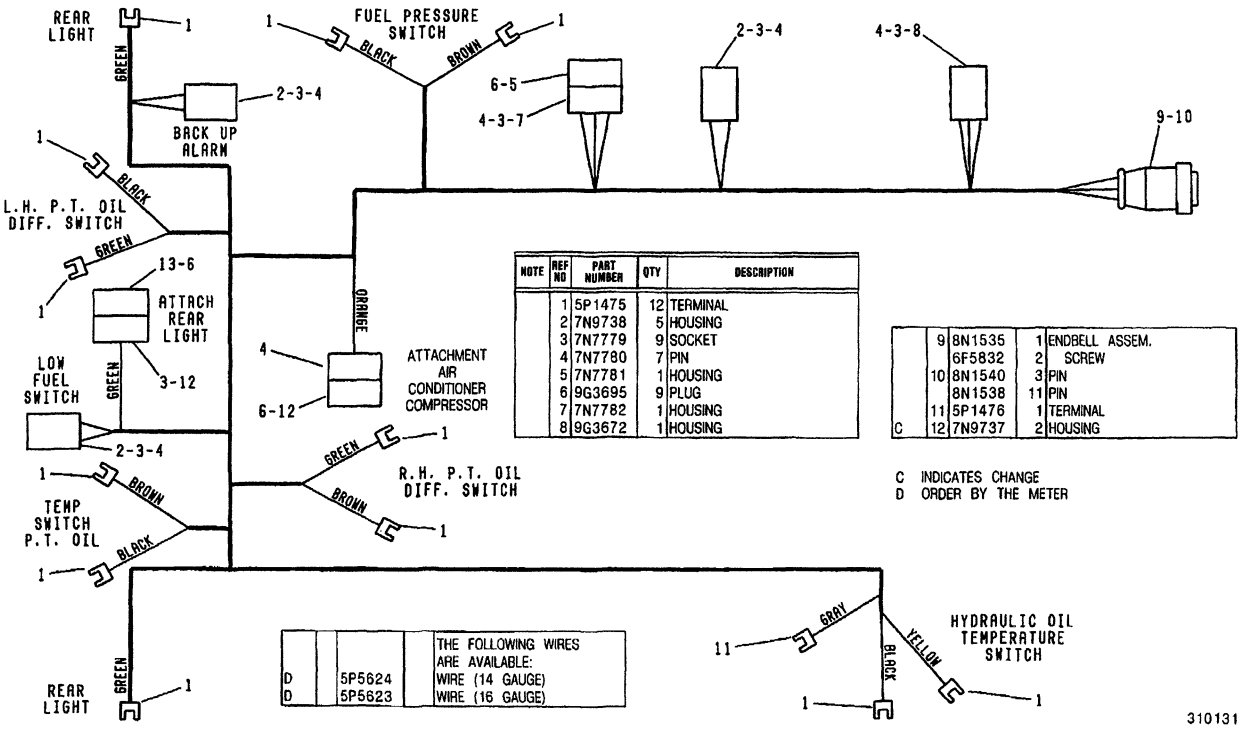

NOTE	REF NO	PART NUMBER	QTY	DESCRIPTION
	1	5P1475	12	TERMINAL
	2	7N9738	5	HOUSING
	3	7N7779	9	SOCKET
	4	7N7780	7	PIN
	5	7N7781	1	HOUSING
	6	9G3695	9	PLUG
	7	7N7782	1	HOUSING
	8	9G3672	1	HOUSING
	9	8N1535	1	ENDBELL ASSEM.
		6F5832	2	SCREW
	10	8N1540	3	PIN
		8N1538	11	PIN
	11	5P1476	1	TERMINAL
C	12	7N9737	2	HOUSING

C INDICATES CHANGE
D ORDER BY THE METER

D	5P5624	THE FOLLOWING WIRES ARE AVAILABLE: WIRE (14 GAUGE)
D	5P5623	WIRE (16 GAUGE)

310131 P

1408 **7G0538 HARNESS AS**

Dash Harness To Rear Of Tractor & Side Lights
S/N 53Y1223-2726
Part Of 6P7330 Battery & Wiring

STARTING AND ELECTRICAL SYSTEM

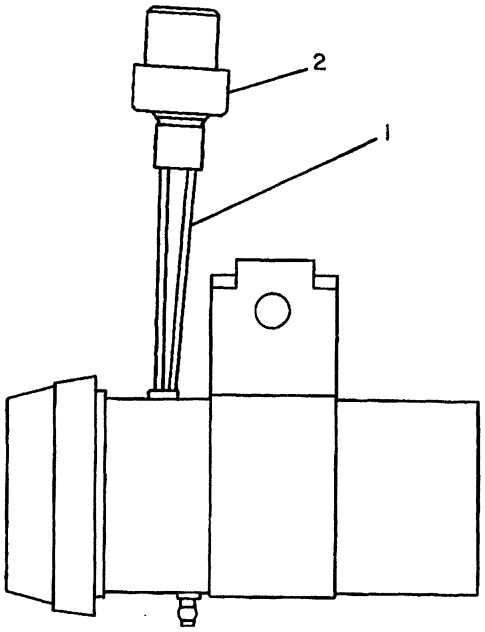

NOTE	REF NO	PART NUMBER	QTY	PART NAME
D	1	5P5623		WIRE .2M(7.8IN)
	2	7N9737	1	HOUSING-PLUG
		7N7779	1	SOCKET
		7N7780	1	PIN-CONNECTOR

D-ORDER BY THE METER

B-228443 EP

7402

7G8994 ALARM GP
S/N 53Y1-2563
Part Of 6P7330 Battery & Wiring

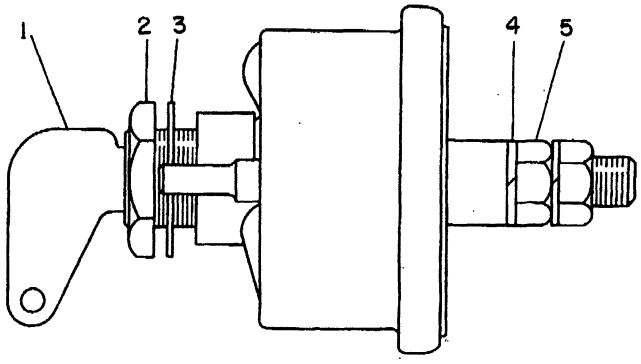

NOTE	REF NO	PART NUMBER	QTY	PART NAME
	1	8H5306	1	KEY
	2	8H5303	1	NUT-HEX (3/4-16-2A THD)
	3	2H3922	1	LOCKWASHER (3/4 INTERNAL TOOTH)
	4	9F5644	2	LOCKWASHER (9.93MM ID)
	5	6F7045	2	NUT-FULL (3/8X24 THD)

B-341218 EP

1411

7N0719 SWITCH AS-DISCONNECT
Part Of 6P7330 Battery & Wiring

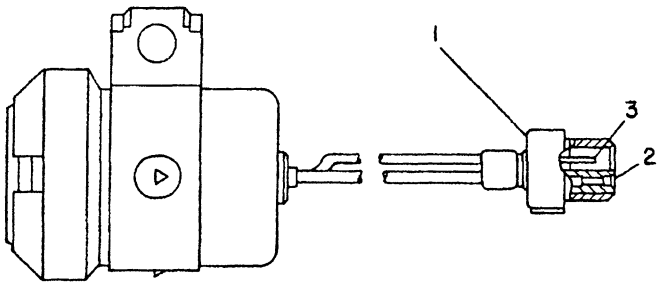

NOTE	REF NO	PART NUMBER	QTY	PART NAME
	1	7N9737	1	HOUSING-PLUG
	2	7N7779	1	SOCKET
	3	7N7780	1	PIN-CONNECTOR (BLADE)

B-312999 EP

7451 **9G9813 ALARM GP**

24 Volt. Warning Horn,Fault
S/N 53Y2564-Up
Part Of 7T4696,7T4695 Fire Suppressions,6P7330 Battery & Wiring

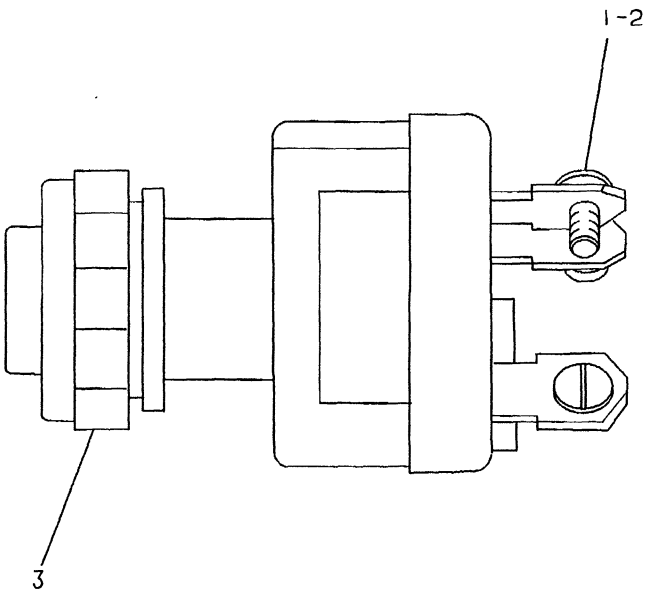

NOTE	REF NO	PART NUMBER	QTY	PART NAME
	1	6V8362	4	SCREW-MACHINE
	2	9B7233	4	LOCKWASHER
C	3	7T6799	1	NUT-MOUNTING

5P8500 KEY IS REQUIRED
C-CHANGE FROM PREVIOUS TYPE

A-342418 EP

1416 **9G7641 SWITCH GP-START**

Part Of 6P7330 Battery & Wiring

STARTING AND ELECTRICAL SYSTEM

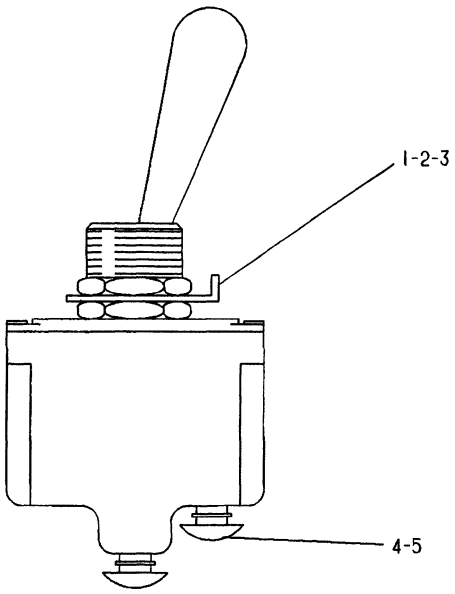

NOTE	REF NO	PART NUMBER	QTY	PART NAME
	1	6T3631	2	NUT-HEX (15/32-32 THD)
	2	6T3632	1	LOCKWASHER (12MM ID)
	3	6T3633	1	LOCKRING
	4	6V8374	2	SCREW-MACHINE (6-32X.25)
	5	3L8187	2	LOCKWASHER (3.7MM ID)

A-317496 EP

7332 **7N8000 SWITCH AS-TOGGLE**

Part Of 3T9139 Wiper,6P7330 Battery & Wiring

STARTING AND ELECTRICAL SYSTEM

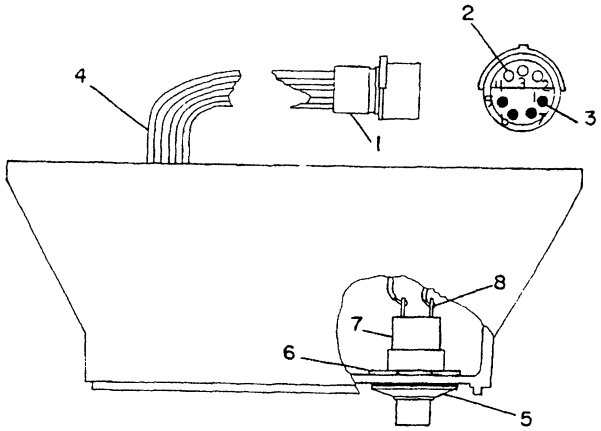

NOTE	REF NO	PART NUMBER	QTY	PART NAME
	1	9G3670	1	HOUSING-PLUG
	2	7N7779	3	SOCKET
	3	7N7780	4	PIN-CONNECTOR
BD	4	5P5677		WIRE (18 GA)
	5	6T9442	1	SWITCH AS
		8T8748	1	ADAPTER-MOUNT
		6F0253	1	LOCKWASHER
	6	8M8457	1	NUT
	7	9W0625	1	SWITCH AS
	8	1S0812	2	SCREW-TAPPING

B-USE AS REQUIRED
D-ORDER BY THE METER

B-350354 EP

7401 **6T5618 CONTROL GP-ELECTRONIC**
Fire Monitor
Part Of 7T4696,7T4695 Fire Suppressions

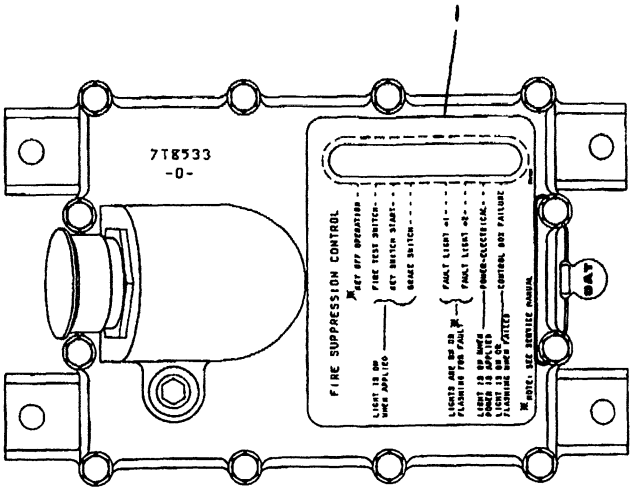

NOTE	REF NO	PART NUMBER	QTY	PART NAME
	1	7T1532	1	FILM-INSTRUCTION (FIRE CONTROL)

B-335213 EP

7401 **6T5619 CONTROL GP-ELECTRONIC*R**
Automatic Fire Suppression Control
Part Of 7T4696,7T4695 Fire Suppressions

MEMORANDA

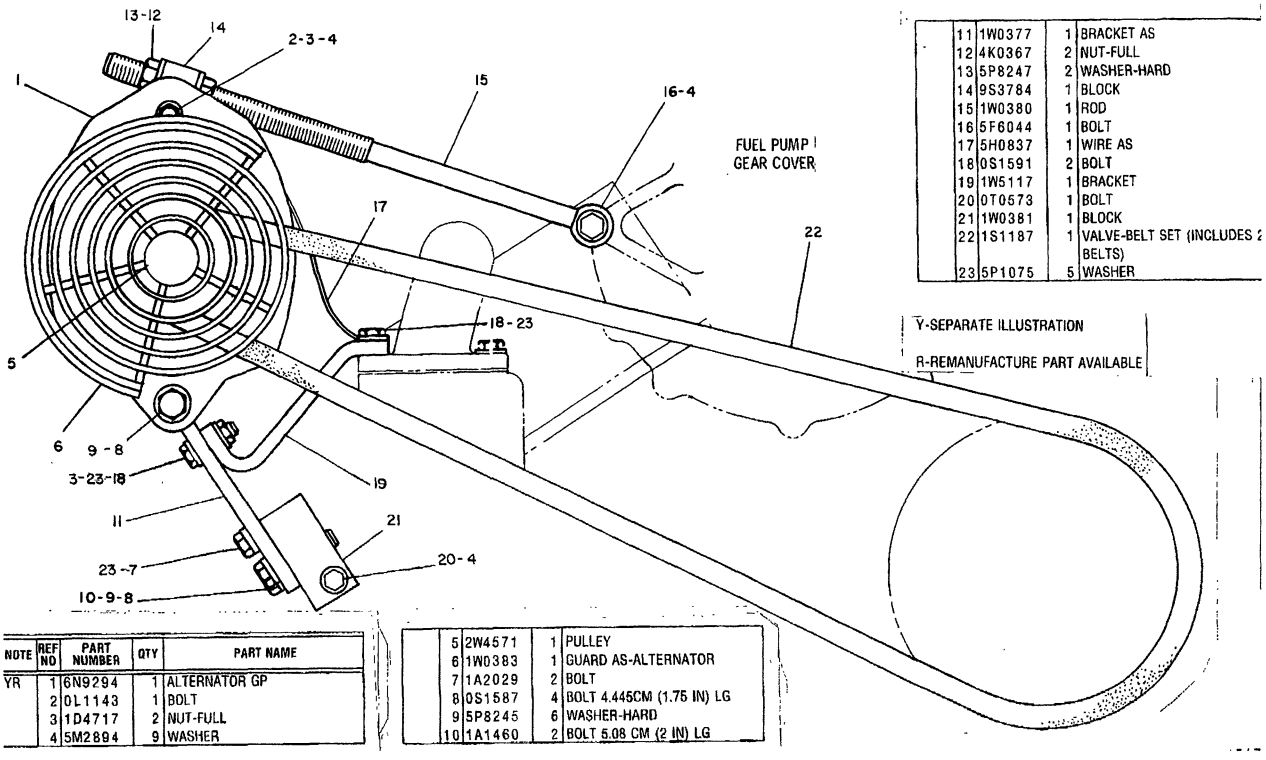

	11	1W0377	1	BRACKET AS
	12	4K0367	2	NUT-FULL
	13	5P8247	2	WASHER-HARD
	14	9S3784	1	BLOCK
	15	1W0380	1	ROD
	16	5F6044	1	BOLT
	17	5H0837	1	WIRE AS
	18	0S1591	2	BOLT
	19	1W5117	1	BRACKET
	20	0T0573	1	BOLT
	21	1W0381	1	BLOCK
	22	1S1187	1	VALVE-BELT SET (INCLUDES 2 BELTS)
	23	5P1075	5	WASHER

Y-SEPARATE ILLUSTRATION

R-REMANUFACTURE PART AVAILABLE

NOTE	REF NO	PART NUMBER	QTY	PART NAME
YR	1	6N9294	1	ALTERNATOR GP
	2	0L1143	1	BOLT
	3	1D4717	2	NUT-FULL
	4	5M2894	9	WASHER

	5	2W4571	1	PULLEY
	6	1W0383	1	GUARD AS-ALTERNATOR
	7	1A2029	2	BOLT
	8	0S1587	4	BOLT 4.445CM (1.75 IN) LG
	9	5P8245	6	WASHER-HARD
	10	1A1460	2	BOLT 5.08 CM (2 IN) LG

345171 P

1405 **1N4848 ALTERNATOR GP**
S/N 53Y1-3307
6N9294-Page 102

STARTING AND ELECTRICAL SYSTEM

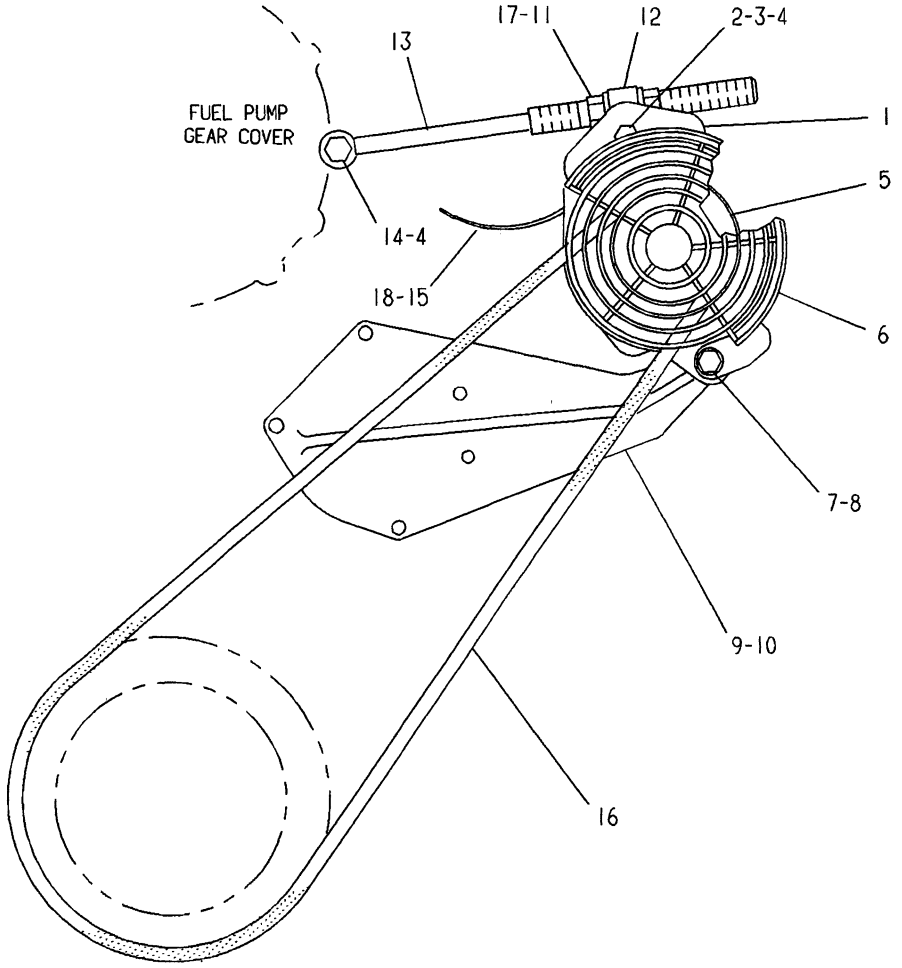

NOTE	REF NO	PART NUMBER	QTY	PART NAME	NOTE	REF NO	PART NUMBER	QTY	PART NAME
YR	1	6N9294	1	ALTERNATOR GP-CHARGING					
	2	4L6459	1	BOLT					
	3	6V8801	1	NUT					
C	4	8T4896	4	WASHER-HARD					
	5	4N8225	1	PULLEY-ALTERNATOR					
	6	6N6967	1	GUARD AS-ALTERNATOR					
		5F2101	3	PLATE					
	7	8T8919	2	BOLT					
	8	8T4223	2	WASHER-HARD					
	9	7W2291	1	BRACKET-ALTERNATOR					
	10	4S5898	1	SEAL-O-RING					
	11	7X0448	2	NUT					
C	12	9S3784	1	BLOCK					
	13	1W0380	1	ROD					
	14	4H3283	1	BOLT					
C	15	7C5287	1	CABLE AS					
	16	4N8221	1	V-BELT					
	17	8T4122	2	WASHER					
	18	5P1075	1	WASHER-HARD					

C-CHANGE FROM PREVIOUS TYPE
R-REMFG PART MAY BE AVAILABLE
Y-SEPARATE ILLUSTRATION

A-522291 EP

1405

4W0810 ALTERNATOR GP
24 Volt,35 Amps
S/N 53Y3308-Up
6N9294-Page 102

MEMORANDA

			PAGE
1	7N9720	ALTERNATOR GP	106
		-OR-	
1	3T6352	ALTERNATOR GP	104
		-OR-	
1	9G4574	ALTERNATOR GP	106.01

108024 P

1405

6N9294 ALTERNATOR GP*R
24 Volt,35 Ampere
Part Of 1N4848,4W0810 Alternators

			PAGE
1	5S9088	ALTERNATOR AS	103
1	3T2792	WIRE AS	
		1 2L8054 TERMINAL	
		1 2L8050 TERMINAL	
		3 DM 5P2759 WIRE	

107512 P

1405

7G9750 ALTERNATOR GP
24 Volt,50 Ampere
Part Of 6T8696,7T2563 Cabs
An Attachment

PAGE

1 9G9538 ALTERNATOR GP..... 107

-OR-

1 3T1888 ALTERNATOR GP..... 108

548954 P

1405

5S9088 ALTERNATOR AS*R
24 Volt,50 Ampere
Part Of 7G9750 Alternator
An Attachment

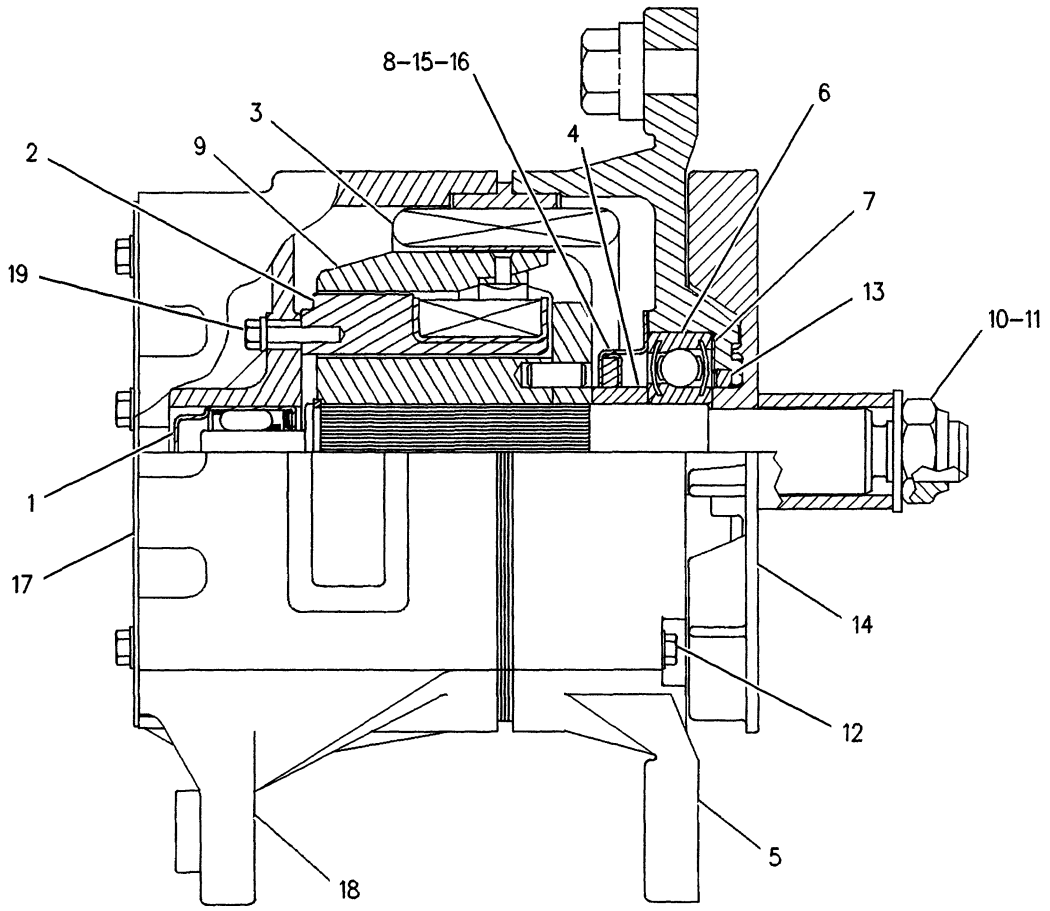

NOTE	REF NO	PART NUMBER	QTY	PART NAME	NOTE	REF NO	PART NUMBER	QTY	PART NAME
	1	5P6920	1	BEARING-ROLLER					
	2	7N7806	1	COIL AS-FIELD					
	3	7N7804	1	STATOR AS					
	4	7N7795	1	COLLAR					
	5	7N7810	1	FRAME AS-DRIVE END					
	6	6V2202	1	BALL BEARING					
	7	9L2140	1	PLATE					
	8	8F1434	3	LOCKWASHER (5MM ID)					
	9	7N7800	1	ROTOR AS					
	10	2K4821	1	LOCKNUT (5/8-18 THD)					
	11	7F7621	1	WASHER					
	12	7N9024	4	BOLT					
	13	9L2139	1	WASHER-FELT					
	14	3E5454	1	FAN-ALTERNATOR					
	15	9S2437	3	SCREW-TAPPING					
	16	9L2137	1	RETAINER AS					
	17	7N7809	1	PLATE					
	18	7N7805	1	HOUSING					
	19	9N3388	4	SCREW-SELF LOCKING					

F-561610 EP

1405 **3T6352 ALTERNATOR GP-PART 1 OF 2**

24 Volt, 35 Ampere

Part Of 6N9294 Alternator

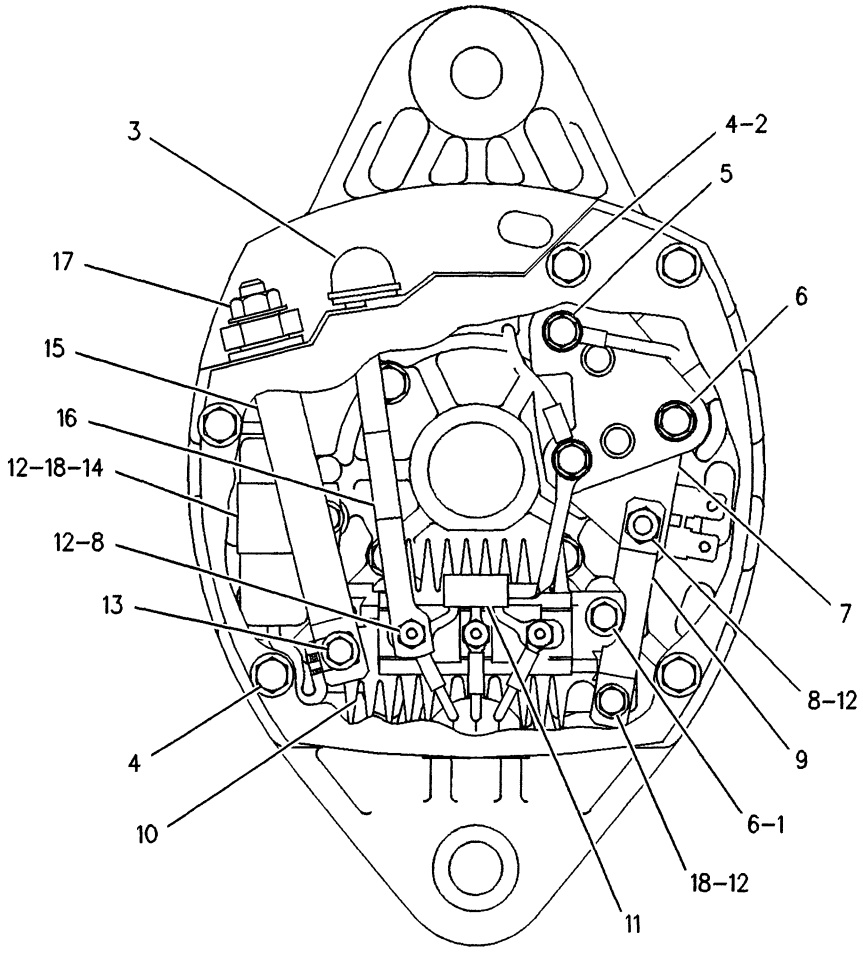

NOTE	REF NO	PART NUMBER	QTY	PART NAME
	1	8T0328	2	WASHER-HARD (1MM THK)
	2	8F1434	4	LOCKWASHER (5MM ID)
	3	9L6770	1	CAP
	4	309612	5	SCREW-FORMING
C	5	6N1872	2	SCREW AS
	6	7N9023	2	SCREW AS
C	7	3T6354	1	REGULATOR AS
	8	4B2043	4	NUT (8-32 THD)
	9	7N7811	1	CONNECTOR
	10	7N7122	1	RECTIFIER AS
	11	1129119	1	DIODE AS-ALTERNATOR
	12	9B7233	6	LOCKWASHER (NO.8)
	13	7N9021	1	SCREW AS
		7N7796	1	BUSHING-TERMINAL
	14	7N7802	1	CAPACITOR AS
		3N4082	1	BRACKET
	15	7N7798	1	CONNECTOR
	16	7N7801	1	CONNECTOR
C	17	5L4426	1	NUT-FULL
C		3B4504	1	LOCKWASHER (.077IN THK)
		8T4205	1	WASHER-HARD (2MM THK)
	18	9S2544	2	SCREW-HEX HEAD

NOTE	REF NO	PART NUMBER	QTY	PART NAME
				THE FOLLOWING REPAIR KITS ARE AVAILABLE:
		7N7807	1	KIT-TERMINAL (OUTPUT) (INCL INSULATOR, SCREW, WASHERS, LOCKWASHER, NUT & ADAPTER)
		7N7808	1	KIT-TERMINAL ALTERNATOR (INCL STUD, BUSHINGS, WASHERS & NUT AS)

C-CHANGE FROM PREVIOUS TYPE

F-595386 EP

1405 **3T6352 ALTERNATOR GP-PART 2 OF 2**

24 Volt,35 Ampere

Part Of 6N9294 Alternator

STARTING AND ELECTRICAL SYSTEM

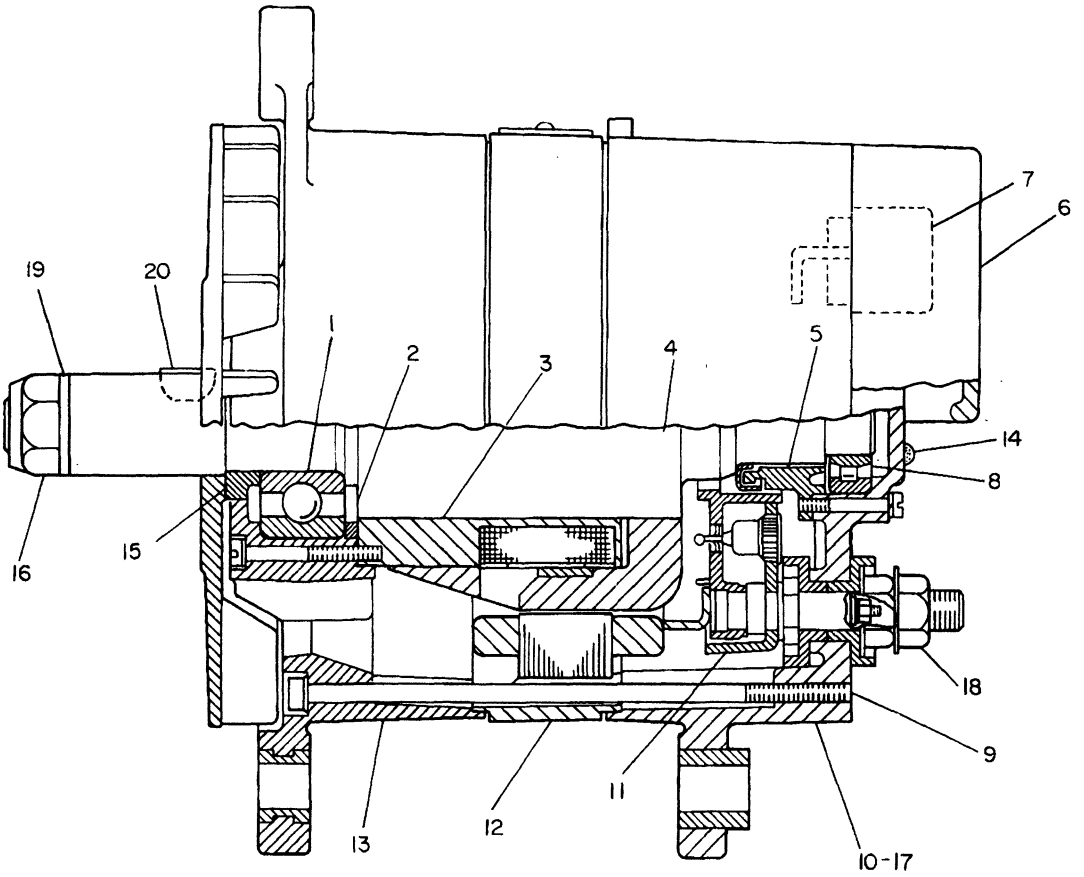

NOTE	REF NO	PART NUMBER	QTY	PART NAME
	1	9G7551	1	BEARING
	2	9G7548	1	RING
	3	9G7558	1	COIL AS-FIELD
	4	9G7560	1	ROTOR AS
	5	9G7553	1	RING-COVER
	6	9G7562	1	COVER AS
	7	9G7567	1	REGULATOR AS
	8	9G7552	1	BEARING
M	9	9X6001	4	BOLT-HEX HEAD
		8T0328	4	WASHER-HARD
	10	9G7568	1	FRAME AS-REAR
	11	3T1887	1	DIODE AS
	12	9G7561	1	STATOR AS
	13	9G7566	1	FRAME-DRIVE END
C	14	9L6770	1	CAP
	15	9G7549	1	SPACER
	16	2K4821	1	LOCKNUT
M	17	5C2874	1	NUT
		7X0620	1	WASHER-HARD
	18	1L9048	1	NUT-PLATED JAM
		8T5360	1	WASHER
	19	5P8247	1	WASHER-HARD
	20	1B8705	1	KEY-WOODRUFF

NOTE	REF NO	PART NUMBER	QTY	PART NAME
				THE FOLLOWING REPAIR KITS ARE AVAILABLE:
		9G7554	1	KIT-TERMINAL GROUND ALTERNATOR (INCLS, NUTS) AND LOCKWASHERS)
		9G7555	1	KIT-OUTPUT TERMINAL ALTERNATOR (OUTPUT-INCLS) NUTS WASHERS AND BUSHINGS)
		9G7556	1	KIT-CAPACITOR ALTERNATOR (INCLS CAPACITOR SCREW, AND LOCKWASHER)
		9G7559	1	KIT-RELAY TERMINAL ALTERNATOR (RELAY-INCLS, SPLICE,NUT TUBE, TERMINAL, WASHERS, LOCKWASHER AND BUSHING)
		9G7565	1	KIT-REGULATOR TERMINAL ALTERNATOR (REGULATOR-INCLS, NUTS, LOCKWASHERS, WASHERS AND BUSHING)
C		7T0816	1	KIT-FAN ALTERNATOR (INCLS, FAN, SUPPORT, PLATE AND SPACER)

C-CHANGE FROM PREVIOUS TYPE
M-METRIC PART

B-595423 EP

1405 **7N9720 ALTERNATOR GP**
24 Volt,35 Ampere
Part Of 6N9294 Alternator

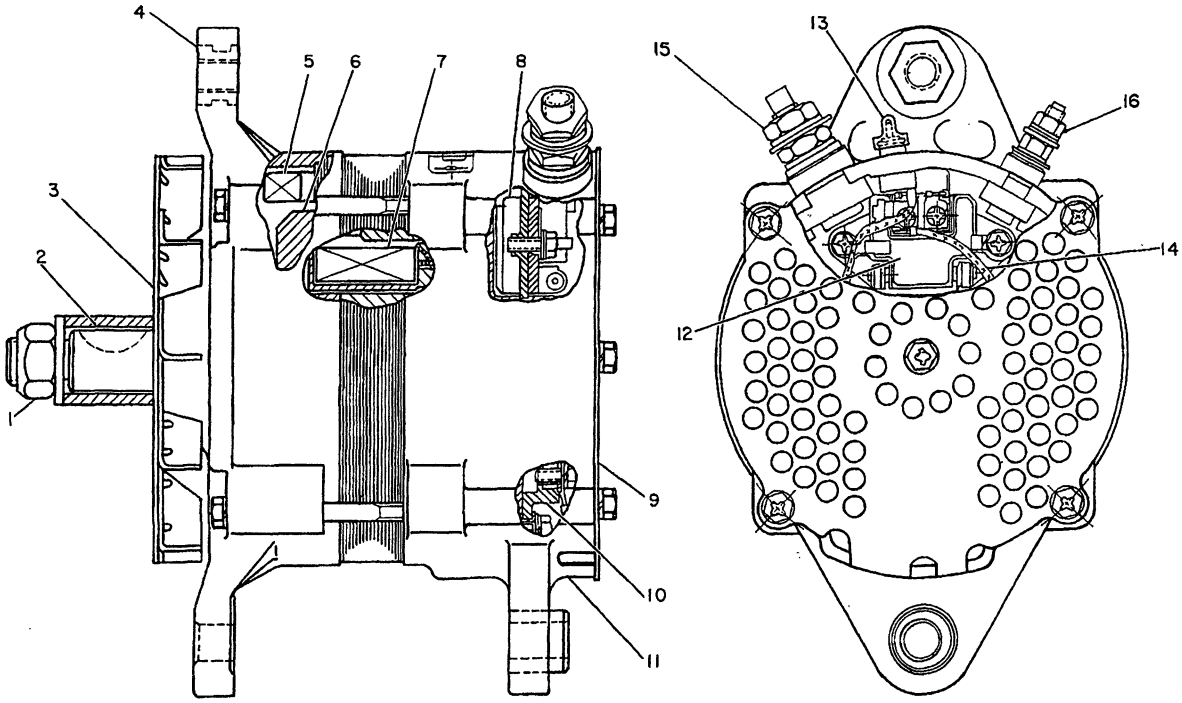

NOTE	REF NO	PART NUMBER	QTY	PART NAME
	1	2K4821	1	LOCKNUT
		5P8247	1	WASHER-HARD
	2	1B8705	1	KEY-WOODRUFF
	3	7T2793	1	FAN AS
	4	7T2792	1	FRAME AS
	5	7T2794	1	STATOR AS
	6	7T2790	1	ROTOR AS
	7	7T2791	1	COIL AS
	8	7T2798	1	REGULATOR AS
	9	7T2797	1	COVER
	10	7T2796	1	HOLDER AS
	11	7T2795	1	FRAME AS
	12	7T2801	1	CONDENSER
	13	9L6770	1	CAP
	14	7T2802	1	WIRE AS
	15	7X0447	1	NUT
		2H3920	1	LOCKWASHER
	16	6V8185	1	NUT
		1H3244	1	LOCKWASHER

NOTE	REF NO	PART NUMBER	QTY	PART NAME
				THE FOLLOWING REPAIR KITS ARE AVAILABLE:
		7T2800	1	KIT-TERMINAL ALTERNATOR (POS) (INCLUDES INSULATORS NUTS, LOCKWASHERS & WASHERS)
		7T2804	1	KIT-TERMINAL ALTERNATOR (RELAY) (INCLS, WIRE AS CAP BOLT & INSULATOR)
		7T2805	1	KIT-TERMINAL ALTERNATOR (NEG) (INCLUDES INSULATORS, NUTS, WASHERS & LOCKWASHERS)
		7T2799	1	KIT-BEARING ALTERNATOR (INCLUDES BEARINGS)
		7T2803	1	KIT-HARDWARE ALTERNATOR (INCLS, SCREW AS & BOLT AS)
		7T2816	1	KIT-HARDWARE ALTERNATOR (INCLS, PLATE AS PLATE BOLT AS WASHERS SPACERS & RING)

B-595417 EP

1405

9G4574 ALTERNATOR GP
24 Volt,35 Ampere
Part Of 6N9294 Alternator

MEMORANDA

STARTING AND ELECTRICAL SYSTEM

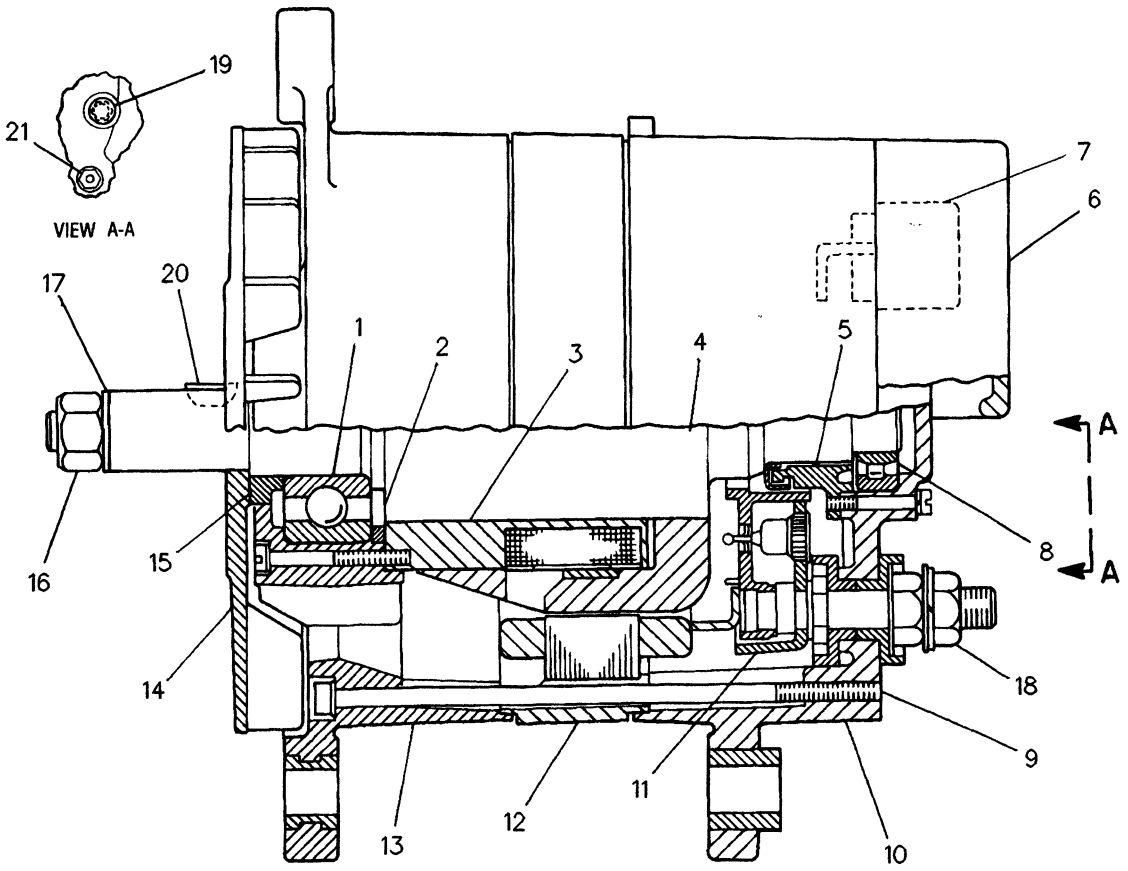

NOTE	REF NO	PART NUMBER	QTY	PART NAME
	1	9G7551	1	BEARING
	2	9G7548	1	RING
	3	3T1885	1	COIL AS-FIELD
	4	9G7560	1	ROTOR AS
	5	9G7553	1	RING-COVER
	6	9G7562	1	COVER AS
	7	9G7567	1	REGULATOR AS
	8	9G7552	1	BEARING
M	9	9X6001	4	BOLT-HEX HEAD
		8T0328	4	WASHER-HARD
	10	9G7568	1	FRAME AS-REAR
	11	3T1887	1	DIODE AS
	12	3T1886	1	STATOR AS
	13	9G7566	1	FRAME-DRIVE END
	14	9G7564	1	FAN
	15	9G7549	1	SPACER
	16	2K4821	1	LOCKNUT
	17	5P8247	1	WASHER-HARD
	18	7X0447	1	NUT
		8T5360	1	WASHER
	19	9L6770	1	CAP
	20	1B8705	1	KEY-WOODRUFF
M	21	5C2874	1	NUT
		7X0620	1	WASHER-HARD
		8F1434	1	LOCKWASHER

NOTE	REF NO	PART NUMBER	QTY	PART NAME
				THE FOLLOWING REPAIR KITS ARE AVAILABLE:
		9G7554	1	KIT-TERMINAL GROUND (INCL NUTS AND LOCKWASHERS)
		9G7555	1	KIT-OUTPUT TERMINAL (INCL NUTS, WASHERS AND BUSHINGS)
		9G7556	1	KIT-CAPACITOR (INCL CAPACITOR, SCREW, LOCKWASHER AND WASHER)
		9G7559	1	KIT-RELAY TERMINAL (INCL SPLICE, TUBE, NUT, TERMINAL, WASHERS AND BUSHINGS)
		9G7565	1	KIT-REGULATOR TERMINAL (INCL NUTS, WASHERS AND BUSHING)

M-METRIC PART

R-518470 EP

1405 **9G9538 ALTERNATOR GP**
24 Volt,50 Ampere
An Attachment

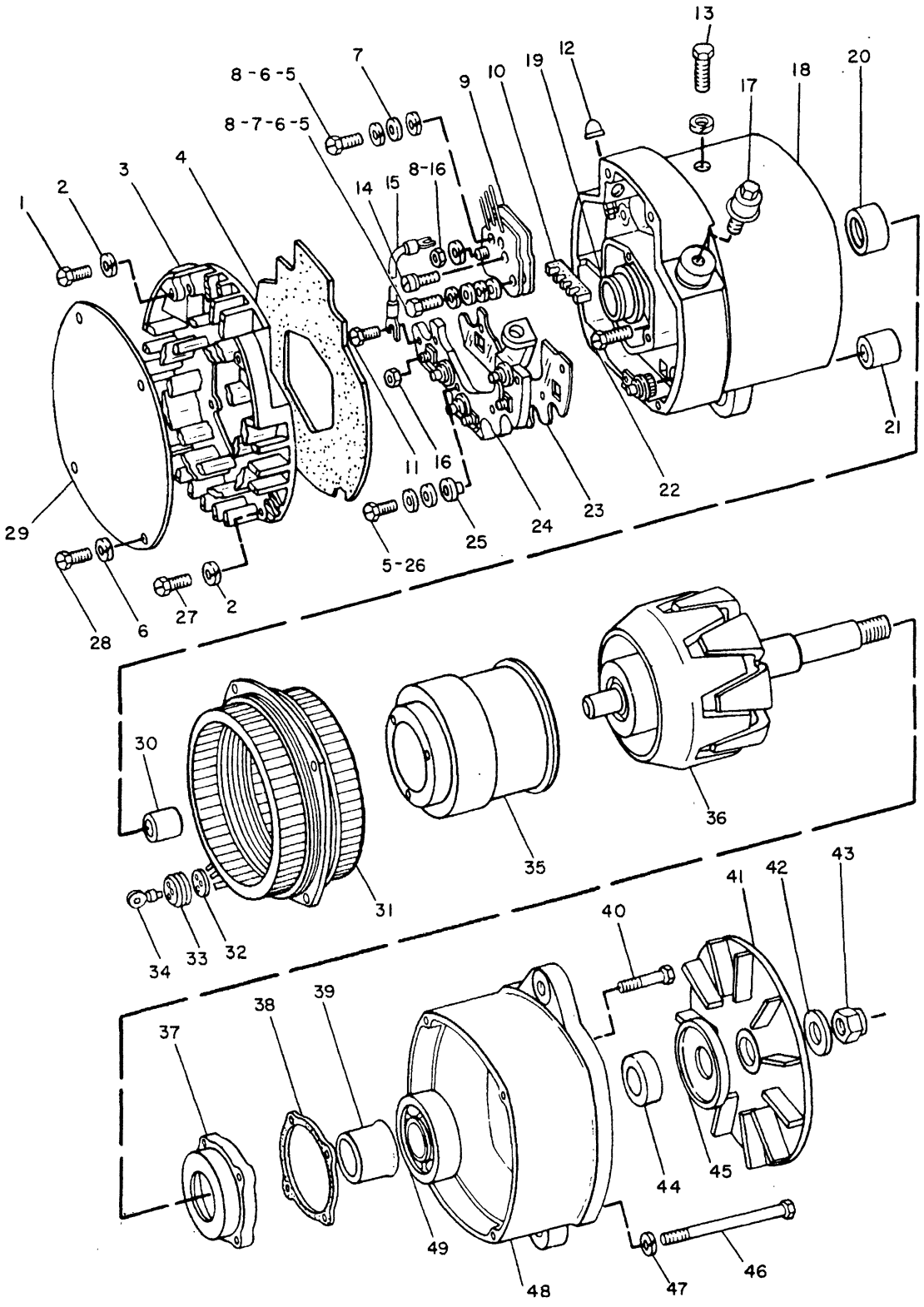

B-518662 EP

1405

3T1888 ALTERNATOR GP
24 Volt, 50 Ampere
Part Of 5S9088 Alternator
An Attachment

STARTING AND ELECTRICAL SYSTEM

NOTE	REF NO	PART NUMBER	QTY	PART NAME
	1	9S2438	2	SCREW-TAPPING
	2	7H2079	7	LOCKWASHER
	3	9S2255	1	COVER
	4	9S2262	1	GASKET
	5	9S9830	6	SCREW-FORMING
	6	8H0878	6	LOCKWASHER
	7	8F1326	3	WASHER (0.8MM THK)
	8	9B7233	3	LOCKWASHER (SHAKEPROOF)(NO.8)
	9	7N0129	1	REGULATOR AS
	10	9S2250	1	GROMMET
	11	9S2542	1	SCREW-TAPPING
C	12	9L6770	1	CAP
	13	9S2011	1	SCREW-MACHINE
		1L4789	1	LOCKWASHER
	14	9S9829	1	SCREW AS
	15	9S2246	1	LEAD AS
	16	4B2043	4	NUT (8-32 THD)
	17	9S2389	1	STUD AS
	18	7N0174	1	HOUSING AS
	19	9N0943	1	PLUG-BEARING WELL
	20	5P3418	1	BEARING-ROLLER
	21	9S2396	1	BUSHING-TERMINAL
	22	9S2007	3	LOCKSCREW
	23	9S2301	1	INSULATION
	24	9S2292	1	HEAT SINK AS
	25	9S2300	4	INSULATOR
	26	9S2247	4	WASHER-SPRING
		4B4863	4	WASHER (PLAIN)(1.2MM THK)
	27	9S2437	5	SCREW-TAPPING
	28	9S2544	4	SCREW-HEX HEAD
	29	9S2260	1	PLATE-COVER
	30	5P3419	1	RACE-BEARING INNER
	31	9S2004	1	STATOR AS
	32	9S2006	1	INSULATOR
	33	9S2005	1	GROMMET
	34	9S2014	3	CLIP
	35	9S2248	1	COIL & SUPPORT AS
	36	9S2302	1	ROTOR AS
	37	9S2390	1	RETAINER
	38	9S2256	1	GASKET
	39	9S2261	1	COLLAR-SHAFT
	40	9S2008	4	SCREW-HEAD
	41	9S2258	1	FAN & BAFFLE AS
	42	7F7621	1	WASHER
	43	2K4821	1	LOCKNUT (5/8-18 THD)
	44	9S2254	1	COLLAR-SHAFT
	45	9S2252	1	SLINGER
	46	9S2009	4	SCREW-HEAD
	47	3B4502	4	LOCKWASHER (.047IN THK)
	48	2P5616	1	FRAME-DRIVE END
C	49	5P7807	1	BALL BEARING
				THE FOLLOWING REPAIR KITS ARE AVAILABLE:
		9S2013	1	KIT-RELAY TERMINAL ((INCLUDES BUSHING,) O-RING & HARDWARE)
		9S2012	1	KIT-OUTPUT TERMINAL ((INCLUDES GASKETS,) TERMINALS & HARDWARE)
		9S2290	3	KIT-DIODE JUNCTION STUD (HEAT SINK-HARDWARE)
		9S2291	3	KIT-POSITIVE DIODE (HEAT SINK-HARDWARE)

C-CHANGE FROM PREVIOUS TYPE

607395 CP

1405

3T1888 ALTERNATOR GP
24 Volt,50 Ampere
Part Of 5S9088 Alternator
An Attachment

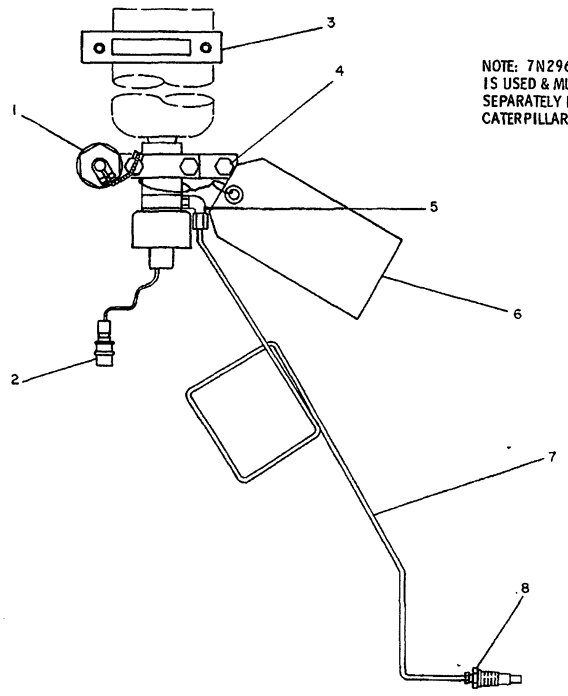

NOTE: 7N296 ETHER CYLINDER IS USED & MUST BE PURCHASED SEPARATELY FROM YOUR CATERPILLAR DEALER.

REF. NO.	PART NUMBER	DESCRIPTION	QTY.
1	7N7259	VALVE ASSEM. (Includes)	1
2	7N9737	HOUSING	1
	7N7779	SOCKET	1
	7N7780	PIN	1
3	7N2059	CLAMP ASSEM.	1
4	2H3755	BOLT	4
	5P4116	WASHER	4
5	5P6315	ELBOW	1
	5P6313	NUT	1
	5P6314	SLEEVE	1
6	2V1713	TAG-----(Instruction)	1
7	9P8705	TUBE	1
8	6N7672	ATOMIZER ASSEM.	1

235096

235096 P

1456 **9P9762 STARTING AID GP-ETHER**
S/N 53Y1-2316

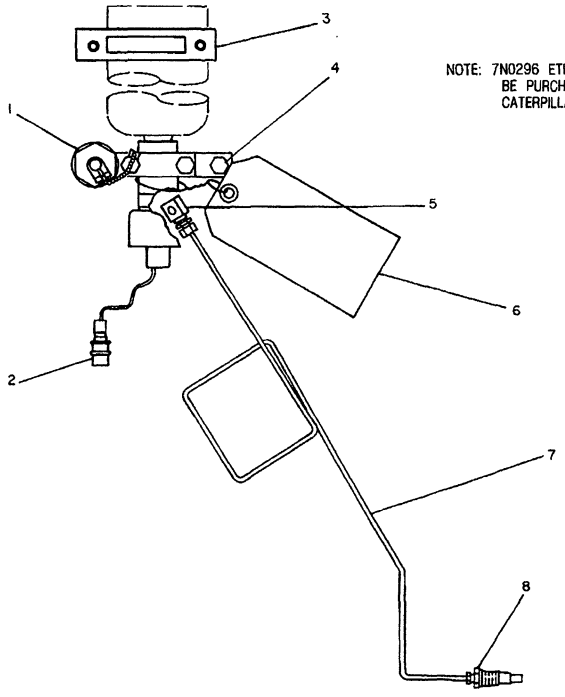

NOTE: 7N0296 ETHER CYLINDER IS USED & MUST BE PURCHASED SEPARATELY FROM YOUR CATERPILLAR DEALER.

NOTE	REF NO	PART NUMBER	QTY	DESCRIPTION
	1	7N7259	1	VALVE AS.
	2	7N9737	1	HOUSING
		7N7779	1	SOCKET
		7N7780	1	PIN
	3	7N2059	1	CLAMP AS.
	4	2H3755	4	BOLT
		5P4116	4	WASHER
C	5	4M8973	1	ELBOW
C		5P7907	1	CONNECTOR
		5P6313	1	NUT
		5P6314	1	SLEEVE
	6	2V1713	1	TAG (INSTRUCTION)
	7	9P8705	1	TUBE
	8	6N7672	1	ATOMIZER AS.

C INDICATES CHANGE

327835

327835 P

1456 **9P9762 STARTING AID GP-ETHER**
S/N 53Y2317-Up

MEMORANDA

STARTING AND ELECTRICAL SYSTEM

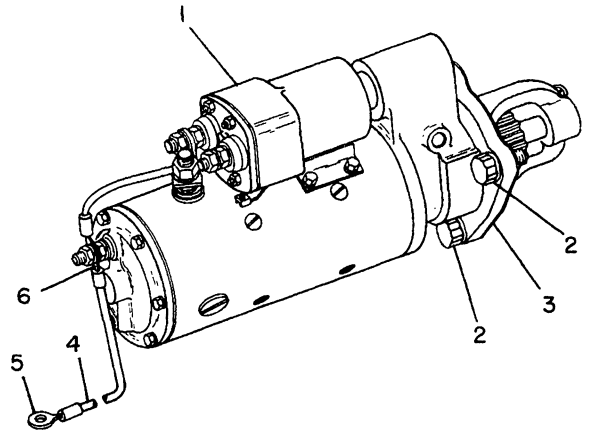

NOTE	REF NO	PART NUMBER	QTY	PART NAME
CY	1	3T2784	1	STARTING MOTOR GP-ELECTRIC
	2	8S2332	3	BOLT-12 POINT HEAD
	3	7N6494	1	GASKET
	4	9F4337	1	WIRE AS
CD		5P5675	1	WIRE .230M(9.06IN)
	5	2L8052	1	TERMINAL (GROUND)
	6	2L8054	1	TERMINAL

C-CHANGE FROM PREVIOUS TYPE
D-ORDER BY THE METER
Y-SEPARATE ILLUSTRATION

B- 306890 P

1453 **7N7049 STARTING MOTOR GP-ELECTRIC**
S/N 53Y1-2879
3T2784-Page 111A

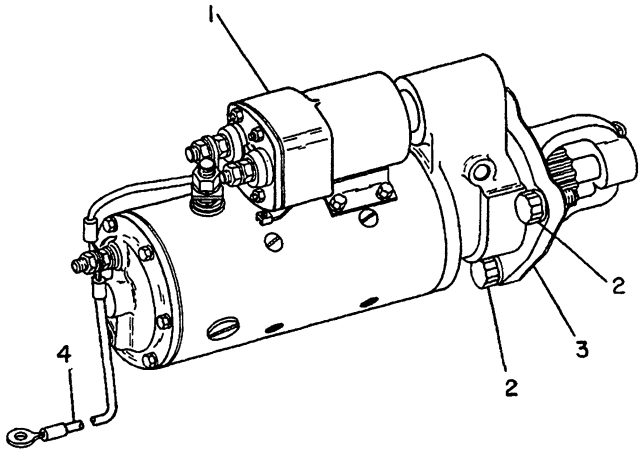

NOTE	REF NO	PART NUMBER	QTY	PART NAME
CRY	1	6T0643	1	STARTING MOTOR GP-ELECTRIC
	2	8S2332	3	BOLT-12 POINT HEAD
	3	7N6494	1	GASKET
	4	5R7755	1	WIRE AS

C-CHANGE FROM PREVIOUS TYPE
R-REMFG PART MAY BE AVAILABLE
Y-SEPARATE ILLUSTRATION

B-515706 EP

1453 **7N7049 STARTING MOTOR GP-ELECTRIC**
S/N 53Y2880-Up
6T0643-Page 111C.10

STARTING AND ELECTRICAL SYSTEM

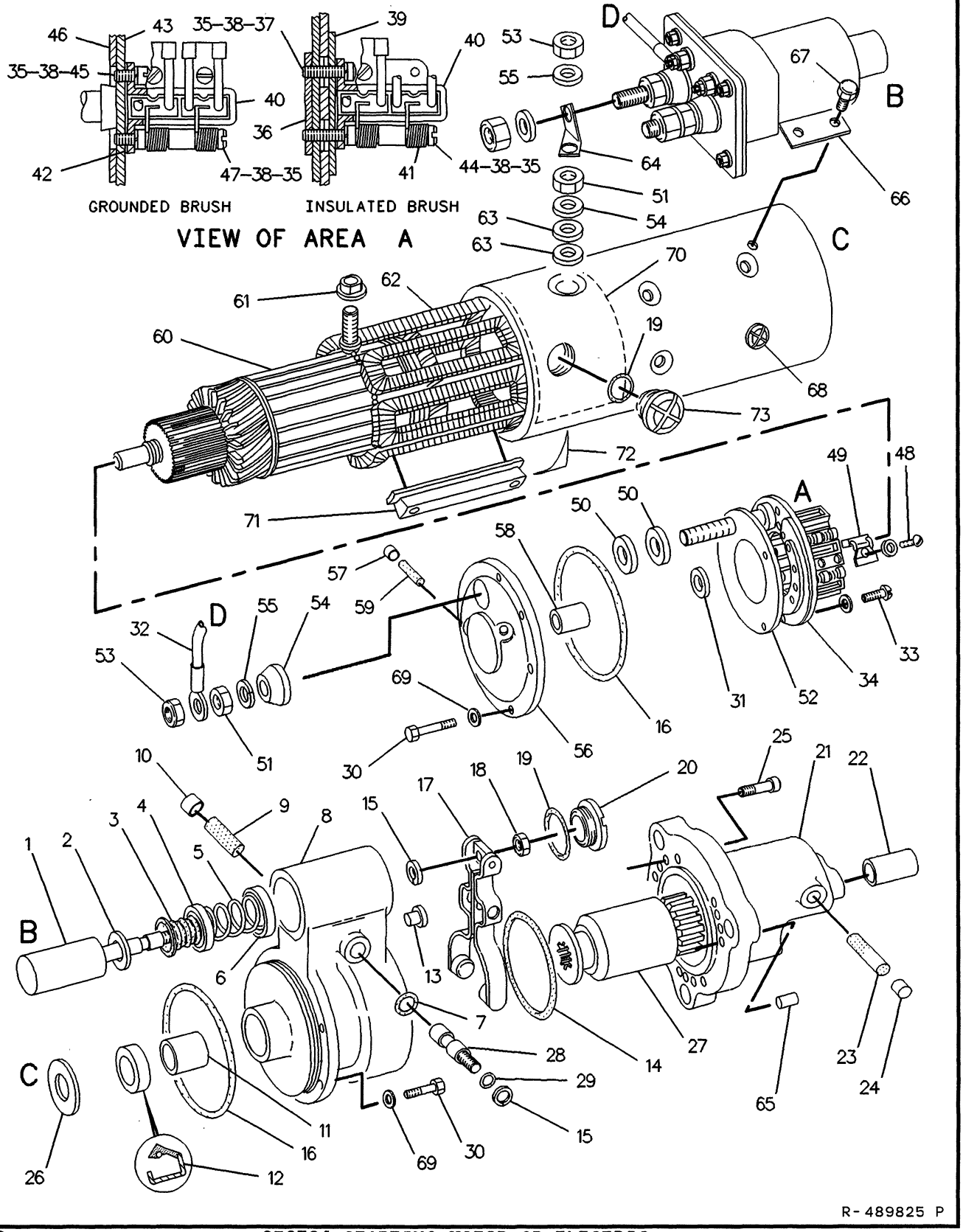

1453 **3T2784 STARTING MOTOR GP-ELECTRIC**

24 Volt

S/N 53Y1-2879

Part Of 7N7049 Starting Motor-Electric

STARTING AND ELECTRICAL SYSTEM

NOTE	REF NO	PART NUMBER	QTY	PART NAME
	1	9M7606	1	PLUNGER AS
	2	369821	1	WASHER
	3	4M1829	1	BOOT-RUBBER
	4	4M1828	1	RETAINER-SPRING
	5	9M7609	1	SPRING
	6	4M1827	1	RETAINER-SPRING
	7	1H1023	1	SEAL-O-RING
	8	3T3420	1	HOUSING AS-LEVER
	9	3T3424	1	PLUG-FELT
	10	3T3423	1	CUP
	11	1M9968	1	BUSHING
	12	2F6678	1	SEAL-LIP
	13	3T3433	1	PLUG
	14	4M1851	1	GASKET
	15	9M7611	2	RING-RETAINING
	16	2J8163	2	SEAL-O-RING
	17	4M1853	1	LEVER AS-SHIFT
	18	5M3034	1	LOCKNUT
	19	7L2894	4	GASKET
	20	4M1831	1	PLUG-LEVER HOUSING
	21	3T5345	1	HOUSING AS-DRIVE
	22	4M1896	1	BUSHING-TERMINAL
	23	3T3424	1	PLUG-FELT
	24	3T3423	1	CUP
	25	4M1833	4	SCREW 38.1MM(1.5 IN)LONG
		7M0336	2	SCREW 22.23MM(.875 IN)LONG
	26	1M9971	1	SPACER
	27	6N3826	1	DRIVE AS-MOTOR
	28	4M1854	1	SHAFT-LEVER
	29	2D6392	1	SEAL-O-RING
	30	369823	13	BOLT
	31	7M0327	1	WASHER-THRUST
	32	3T3422	1	WIRE AS
	33	3T3106	3	SCREW AS
	34	7M0330	1	PLATE AS-BRUSH
	35	7F3525	12	WASHER-BUSHING
	36	7F3520	1	PLATE-CONNECTOR
	37	5H6467	3	SCREW-MACHINE
	38	7H2079	12	LOCKWASHER
	39	2L6679	3	PLATE-INSULATOR
	40	7F3513	6	HOLDER-BRUSH
	41	7F3512	12	SPRING-BRUSH
	42	3T4709	3	PLATE
	43	7M0331	1	PLATE AS
	44	7F3522	3	SCREW-HOLDER
	45	7F7611	3	SCREW
	46	7M0332	1	PLATE-INSULATOR
	47	3H3697	3	SCREW
	48	2F2860	12	SCREW-MACHINE
	49	7M0329	12	BRUSH AS
	50	7F3491	2	WASHER
	51	3H3680	2	NUT-JAM
	52	6N3279	1	INSULATOR
	53	3H3681	2	NUT-FULL
	54	7F3494	2	WASHER-STUD
	55	9F4976	2	LOCKWASHER
	56	3T3418	1	FRAME AS-END
	57	3T3423	1	CUP
	58	9G4367	1	BUSHING-TERMINAL
	59	3T3424	1	PLUG-FELT
	60	7M8651	1	ARMATURE AS
	61	3L3380	1	BUSHING-TERMINAL
	62	7M0324	1	COIL AS-FIELD
	63	9H3757	2	WASHER
	64	7M0326	1	CONNECTOR
	65	3T3434	6	PLUG
Y	66	3T5051	1	SOLENOID AS-STARTING MOTOR
	67	6H3622	4	SCREW-MACHINE
	68	3F0379	12	SCREW-POLE SHOE
	69	1L4789	13	LOCKWASHER
	70	7M0325	1	INSULATOR-COIL
	71	7F3488	6	SHOE-POLE
	72	1H2629	3	STRIP-INSULATION
	73	4M1831	3	PLUG-LEVER HOUSING
				THE FOLLOWING REPAIR REPAIR KIT IS AVAILABLE:
		3N3763	1	KIT-TERMINAL (INCLS INSULATOR BUSHINGS & WASHER)

Y-SEPARATE ILLUSTRATION

489826 P

1453 **3T2784 STARTING MOTOR GP-ELECTRIC**

S/N 53Y1-2879. 24 Volt

3T3421-Page 111D

Part Of 7N7049 Starting Motor-Electric

MEMORANDA

NOTE	REF NO	PART NUMBER	QTY	DESCRIPTION
	1	369823	6	BOLT
	2	7F3488	6	SHOE
	3	3T3418	1	FRAME ASSEM.
	4	3T3423	1	CUP
	5	9G4101	1	BUSHING
	6	3T3424	1	PLUG
	7	3H3680	1	NUT
	8	7M327	1	WASHER
	9	7M8651	1	ARMATURE ASSEM.
	10	3L3380	1	BUSHING
	11	7M324	1	COIL ASSEM.
	12	9H3757	2	WASHER
	13	7F3494	1	WASHER
	14	7M326	1	CONNECTOR
	15	3H3681	1	NUT
Y	16	3T3421	1	SOLENOID ASSEM
	17	6H3622	4	SCREW
	18	9F4976	1	LOCKWASHER
	19	3F379	12	SCREW
	20	7M325	1	INSULATOR
	21	4M1831	3	PLUG
	22	7L2894	3	GASKET
	23	1H2629	3	STRIP

Y SEPARATE ILLUSTRATION

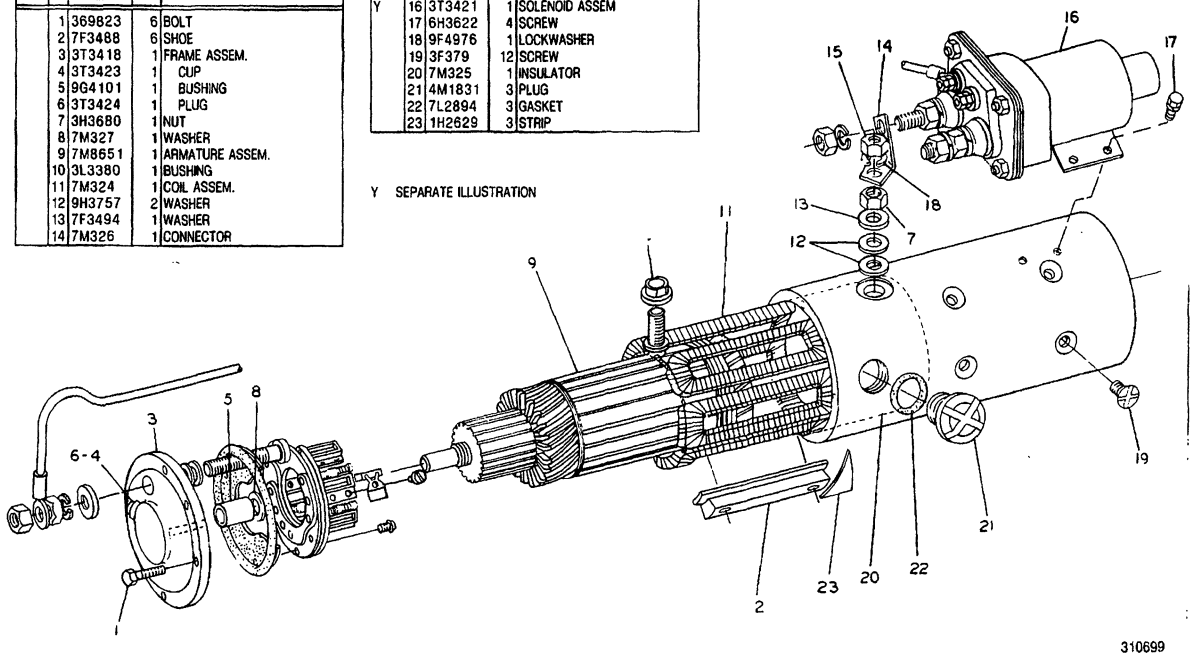

310699

310699 P

1453 3T8951 STARTING MOTOR GP-ELECTRIC-PART 1 OF 3

24 Volt

S/N 53Y2880-3225

3T3421-Page 111D

NOTE	REF NO	PART NUMBER	QTY	DESCRIPTION
	1	3T3422	1	WIRE ASSEM.
D		5P5621		WIRE 23M (9.06 IN.)
	2	2L8071	1	TERMINAL (1/2 IN. SCREW)
	3	2L8066	1	TERMINAL
	4	3T3106	3	SCREW ASSEM.
	5	2J8163	1	SEAL
	6	3T9525	1	PLATE ASSEM.
	7	6T371	1	INSULATOR
	8	6T372	1	PLATE
	9	3T4709	3	PLATE
	10	7F3525	6	WASHER
	11	2L6679	3	PLATE
	12	3T4710	3	PLATE
	13	5P6298	12	SCREW
		9F5599	12	LOCKWASHER
	14	6T363	6	HOLDER ASSEM. (EACH INCLUDES)
	15	3T9494	1	SPRING (BRUSH)

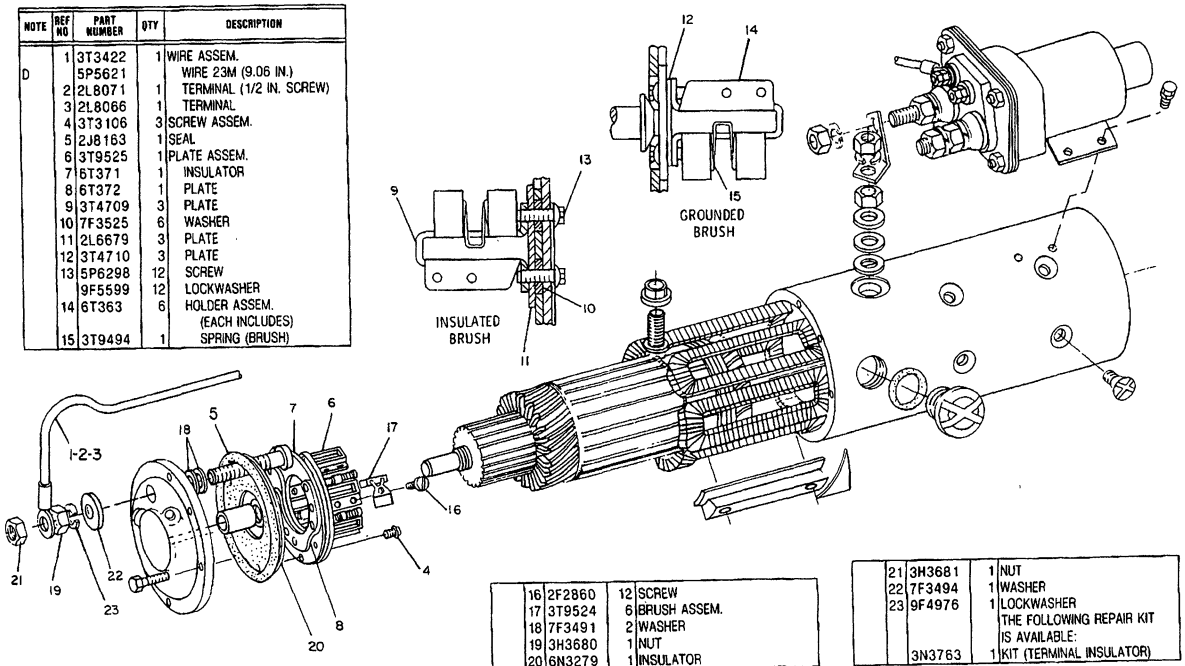

	16	2F2860	12 SCREW
	17	3T9524	6 BRUSH ASSEM.
	18	7F3491	2 WASHER
	19	3H3680	1 NUT
	20	6N3279	1 INSULATOR

	21	3H3681	1 NUT
	22	7F3494	1 WASHER
	23	9F4976	1 LOCKWASHER
			THE FOLLOWING REPAIR KIT IS AVAILABLE:
		3N3763	1 KIT (TERMINAL INSULATOR)

D ORDER BY THE METER

310700

310700 P

1453 **3T8951 STARTING MOTOR GP-ELECTRIC-PART 2 OF 3**

24 Volt

S/N 53Y2880-3225

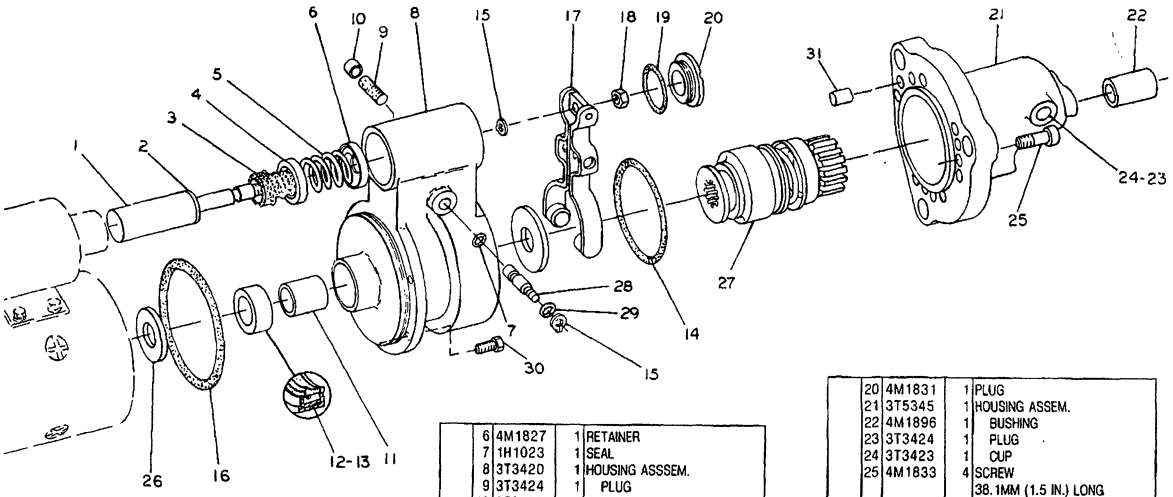

NOTE	REF NO	PART NUMBER	QTY	DESCRIPTION
	1	9M7606	1	PLUNGER ASSEM.
	2	369821	1	WASHER
	3	4M1829	1	BOOT
	4	4M1828	1	RETAINER
	5	9M7609	1	SPRING
	6	4M1827	1	RETAINER
	7	1H1023	1	SEAL
	8	3T3420	1	HOUSING ASSSEM.
	9	3T3424	1	PLUG
	10	3T3423	1	CUP
	11	1M9968	1	BUSHING
	12	2F6678	1	SEAL
	13	3T3433	1	PLUG
	14	4M1851	1	GASKET
	15	9M7611	2	RING
	16	2J8163	1	SEAL
	17	4M1853	1	LEVER ASSEM.
	18	5M3034	1	LOCKNUT
	19	7L2894	1	GASKET
	20	4M1831	1	PLUG
	21	3T5345	1	HOUSING ASSEM.
	22	4M1896	1	BUSHING
	23	3T3424	1	PLUG
	24	3T3423	1	CUP
	25	4M1833	4	SCREW 38.1MM (1.5 IN.) LONG
		7M336	2	SCREW 22.23MM (.875 IN.) LONG
	26	1M9971	1	SPACER
	27	6N3826	1	DRIVE ASSEM.
	28	4M1854	1	SHAFT
	29	2D6392	1	SEAL
	30	369823	7	BOLT
	31	3T3434	6	PLUG
		SMHS7660	1	FORM (INSTALLING ELECTRIC STARTING MOTOR)

311979

311979 P

1453 **3T8951 STARTING MOTOR GP-ELECTRIC-PART 3 OF 3**

24 Volt

S/N 53Y2880-3225

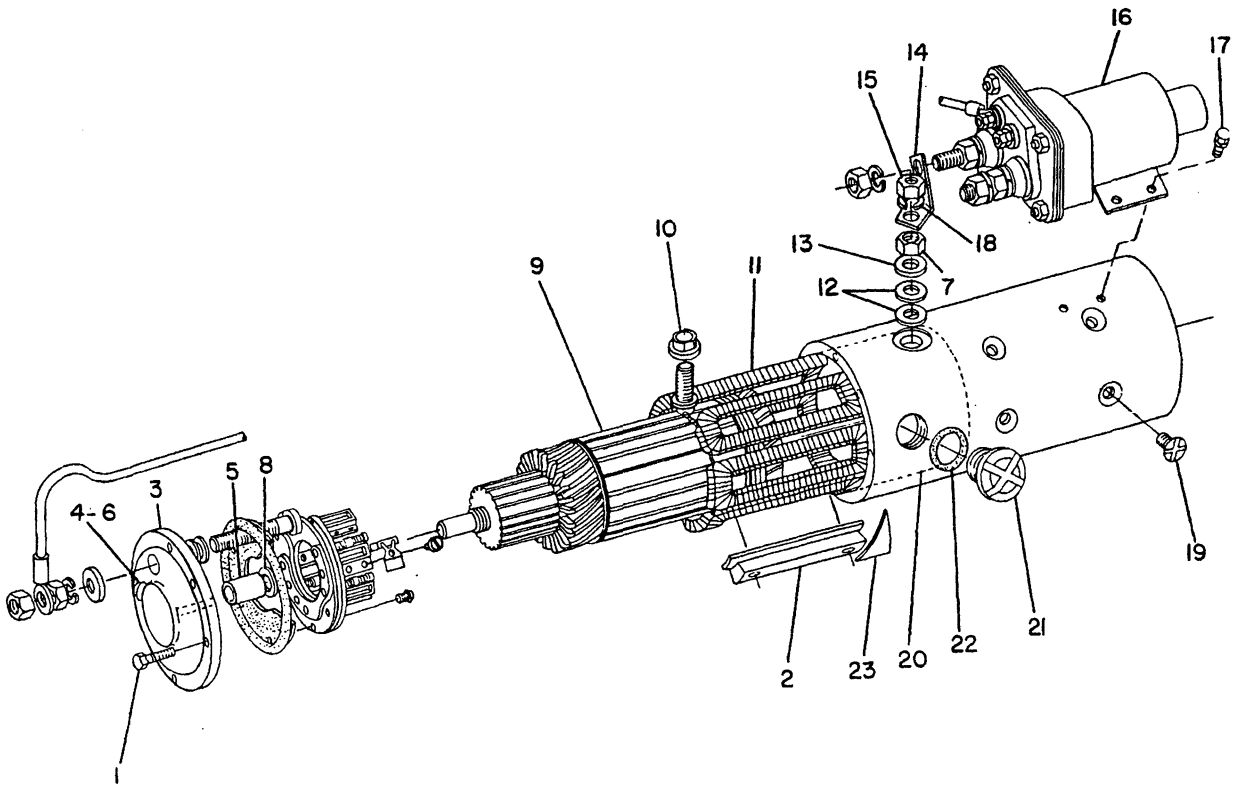

NOTE	REF NO	PART NUMBER	QTY	PART NAME	NOTE	REF NO	PART NUMBER	QTY	PART NAME
	1	369823	6	BOLT					
	2	7F3488	6	SHOE-POLE					
	3	3T3418	1	FRAME AS-END					
	4	3T3423	1	CUP					
	5	9G4101	1	BUSHING-END					
	6	3T3424	1	PLUG-FELT					
	7	3H3680	1	NUT-JAM					
	8	7M0327	1	WASHER-THRUST					
	9	7M8651	1	ARMATURE AS					
	10	3L3380	1	BUSHING-TERMINAL					
	11	7M0324	1	COIL AS-FIELD					
	12	9H3757	2	WASHER					
	13	7F3494	1	WASHER-STUD					
	14	7M0326	1	CONNECTOR					
	15	3H3681	1	NUT-FULL					
Y	16	7T8854	1	SOLENOID AS-STARTING MOTOR					
	17	6H3622	4	SCREW-MACHINE					
	18	9F4976	1	LOCKWASHER					
	19	3F0379	12	SCREW-POLE SHOE					
	20	7M0325	1	INSULATOR-COIL					
	21	4M1831	3	PLUG-LEVER HOUSING					
	22	7L2894	3	GASKET					
	23	1H2629	3	STRIP-INSULATION					

Y-SEPARATE ILLUSTRATION

B-334861 EP

1453 **7T9162 STARTING MOTOR GP-ELECTRIC-PART 1 OF 3**

S/N 53Y3226-Up. 24 Volt

7T8854-Page 111D.01

Part Of 6T0643 Starting Motor

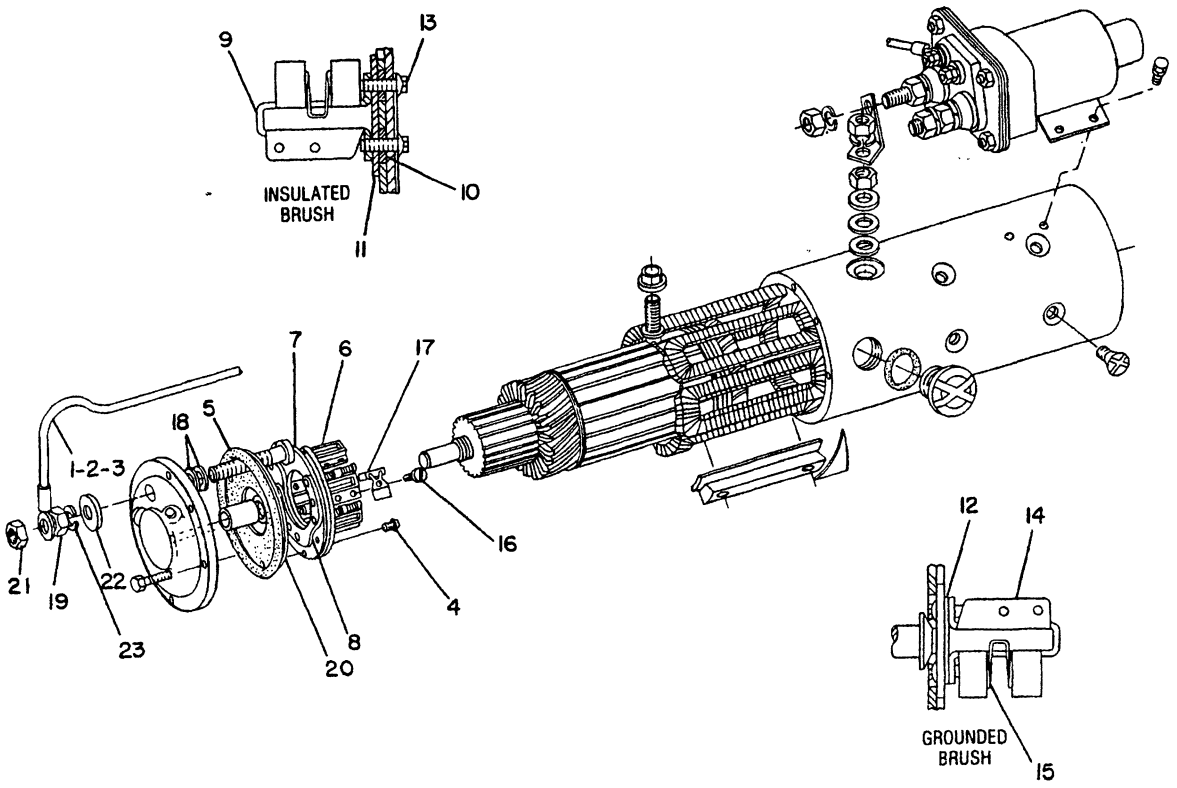

NOTE	REF NO	PART NUMBER	QTY	PART NAME
	1	3T3422	1	WIRE AS
BD		5P5621		WIRE (12 GA)
	2	2L8071	1	TERMINAL (1/2 IN SCREW)
	3	2L8066	1	TERMINAL
	4	3T3106	3	SCREW AS
	5	2J8163	1	SEAL-O-RING
	6	3T9525	1	PLATE AS-BRUSH
	7	6T0371	1	INSULATOR
	8	6T0372	1	PLATE
	9	3T4709	3	PLATE
	10	7F3525	6	WASHER-BUSHING
	11	2L6679	3	PLATE-INSULATOR
	12	3T4710	3	PLATE
	13	5P6298	12	SCREW-MACHINE
		9F5599	12	LOCKWASHER
	14	6T0363	6	HOLDER AS-BRUSH (EACH INCLUDES)
	15	3T9494	1	SPRING-BRUSH
	16	2F2860	12	SCREW-MACHINE
	17	3T9524	6	BRUSH AS
	18	7F3491	2	WASHER
	19	3H3680	1	NUT-JAM
	20	6N3279	1	INSULATOR
	21	3H3681	1	NUT-FULL
	22	7F3494	1	WASHER-STUD
	23	9F4976	1	LOCKWASHER
				THE FOLLOWING REPAIR KIT IS AVAILABLE:
		3N3763	1	KIT-TERMINAL INSULATOR

B-USE AS REQUIRED
D-ORDER BY THE METER

B-334862 EP

1453 7T9162 STARTING MOTOR GP-ELECTRIC-PART 2 OF 3
S/N 53Y3226-Up. 24 Volt
Part Of 6T0643 Starting Motor-Electric

STARTING AND ELECTRICAL SYSTEM

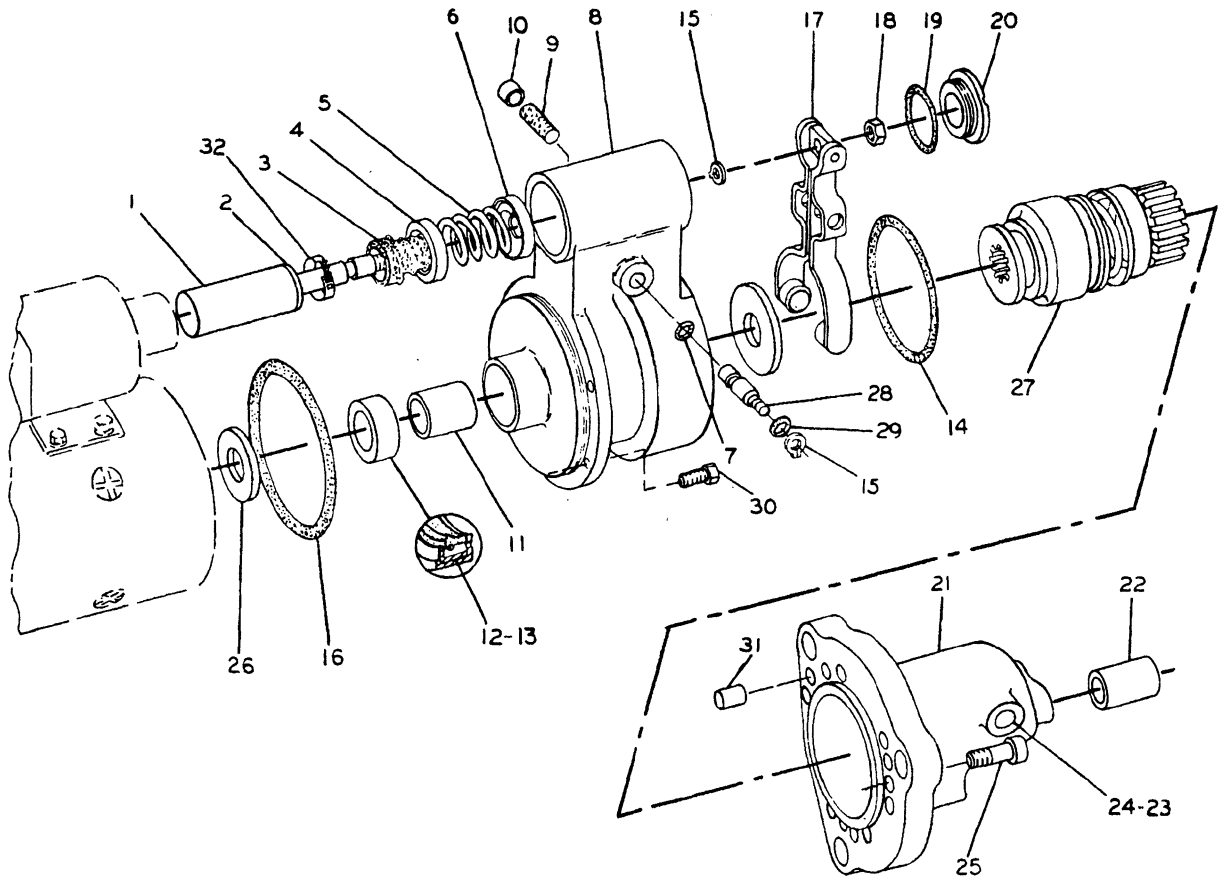

NOTE	REF NO	PART NUMBER	QTY	PART NAME
	1	9M7606	1	PLUNGER AS
	2	369821	1	WASHER
	3	4M1829	1	BOOT-RUBBER
	4	4M1828	1	RETAINER-SPRING
	5	9M7609	1	SPRING
	6	4M1827	1	RETAINER-SPRING
	7	1H1023	1	SEAL-O-RING
	8	3T3420	1	HOUSING AS-LEVER
	9	3T3424	1	PLUG-FELT
	10	3T3423	1	CUP
	11	1M9968	1	BUSHING
	12	2F6678	1	SEAL-LIP
	13	3T3433	1	PLUG
	14	4M1851	1	GASKET
	15	9M7611	2	RING-RETAINING
	16	2J8163	1	SEAL-O-RING
	17	4M1853	1	LEVER AS-SHIFT
	18	5M3034	1	LOCKNUT
	19	7L2894	1	GASKET
	20	4M1831	1	PLUG-LEVER HOUSING
	21	3T5345	1	HOUSING AS-DRIVE
	22	4M1896	1	BUSHING-TERMINAL
	23	3T3424	1	PLUG-FELT
	24	3T3423	1	CUP
	25	4M1833	4	SCREW 38.1MM(1.5IN)LONG
		7M0336	2	SCREW
				22.23MM(.875IN)LONG
	26	1M9971	1	SPACER
	27	6N3826	1	DRIVE AS-MOTOR
	28	4M1854	1	SHAFT-LEVER
	29	2D6392	1	SEAL-O-RING
	30	369823	7	BOLT
	31	3T3434	6	PLUG
	32	3R8801	1	CLAMP-BOOT

B-334863 EP

1453 7T9162 STARTING MOTOR GP-ELECTRIC-PART 3 OF 3

S/N 53Y3226-Up. 24 Volt

Part Of 6T0643 Starting Motor-Electric

MEMORANDA

STARTING AND ELECTRICAL SYSTEM

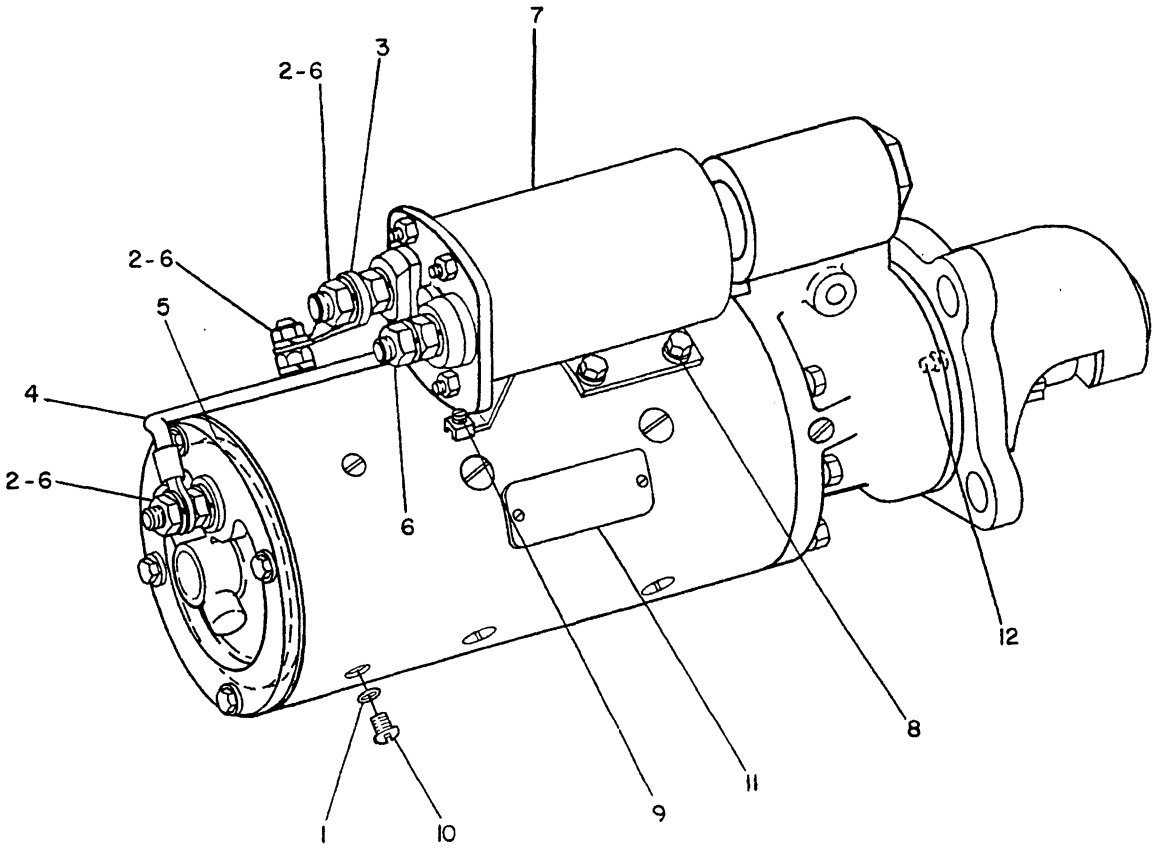

NOTE	REF NO	PART NUMBER	QTY	PART NAME
	1	8F7219	3	SEAL-O-RING
	2	9F4976	4	LOCKWASHER
	3	6T0627	1	CONNECTOR
	4	4N9404	1	LEAD AS
	5	2J8163	1	SEAL-O-RING
	6	3H3681	4	NUT-FULL
Y	7	3T8635	1	SOLENOID AS-STARTING MOTOR
	8	6V0884	4	SCREW-MACHINE
		4B4276	4	WASHER
	9	4M3217	2	SCREW
		6T0645	2	LOCKWASHER
	10	4B1230	3	SCREW-MACHINE
	11	3T5962	1	PLATE-IDENTIFICATION
		2H3880	2	SCREW-DRIVE
	12	8S1571	6	BOLT
				THE FOLLOWING SERVICE REPAIR KITS ARE AVAILABLE:
		1P7832	1	KIT-BEARING & WICK
		6T0636	1	KIT-TERMINAL (INCLUDES WASHERS, BUSHINGS, NUTS & LOCKWASHERS)
		6T0637	1	KIT-HARDWARE (INCLUDES 17 SCREWS)
		6T0638	1	KIT-THRUST WASHER

Y-SEPARATE ILLUSTRATION

B-310692 EP

1453 **6T0646 STARTING MOTOR GP-ELECTRIC-PART 1 OF 2**
24 Volt
3T8635-Page 111D

STARTING AND ELECTRICAL SYSTEM

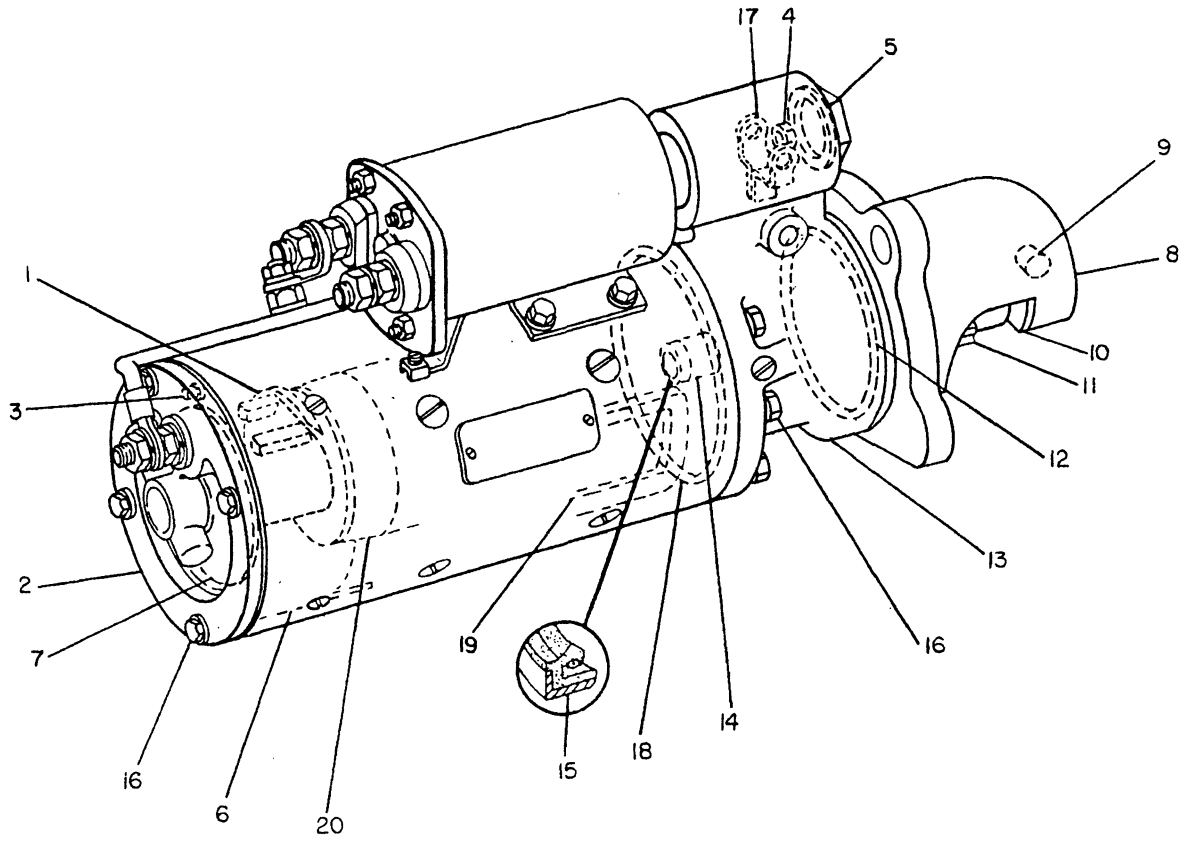

NOTE	REF NO	PART NUMBER	QTY	PART NAME	NOTE	REF NO	PART NUMBER	QTY	PART NAME
	1	6T0631	1	PLATE AS-BRUSH					THE FOLLOWING SERVICE
		443994	3	SCREW					REPAIR KITS ARE
		6T0634	3	INSULATION-PLATE					AVAILABLE:
	2	6T0624	1	HOUSING AS			6T0639	1	KIT-BRUSH
	3	7M4824	3	SCREW AS-MACHINE			6T0635	1	KIT-FIELD COIL
	4	5M3034	1	LOCKNUT			8S4684	1	KIT-BEARING & WICK
	5	2P8867	1	GASKET			2P8817	1	KIT-YOKE ADJUSTMENT
	6	6T0621	1	INSULATOR			8S1535	1	KIT-PLUG
	7	6T0622	1	PLATE AS-BRUSH			8S8075	1	KIT-THRUST WASHER
		5P6298	3	SCREW-MACHINE			6T0594	1	KIT-BRUSH & SPRING
	8	6T0629	1	HOUSING AS					
	9	3T3424	1	PLUG-FELT					
	10	6T0628	1	SPACER					
	11	4N4405	1	CLUTCH AS-DRIVE					
	12	2H3931	1	SEAL-O-RING					
	13	6T0623	1	HOUSING AS					
	14	8S2226	1	BUSHING-TERMINAL					
	15	8S2225	1	SEAL-LIP					
	16	0L1340	11	BOLT					
	17	2P8825	1	YOKE AS-SHIFT					
	18	2J8163	1	SEAL-O-RING					
	19	6T0632	1	COIL AS-FIELD					
	20	6T0626	1	ARM AS					

B-310693 EP

1453 **6T0646 STARTING MOTOR GP-ELECTRIC-PART 2 OF 2**
24 Volt

PAGE

1 3T8951 STARTING MOTOR GP-ELECTRIC..... 111C.01

OR

1 7T9162 STARTING MOTOR GP-ELECTRIC..... 111C.04

OR

1 6T0646 STARTING MOTOR GP-ELECTRIC..... 111C.08

310684 P

1453

6T0643 STARTING MOTOR GP-ELECTRIC*R

24 Volt

Part Of 7N7049 Starting Motor-Electric

STARTING AND ELECTRICAL SYSTEM

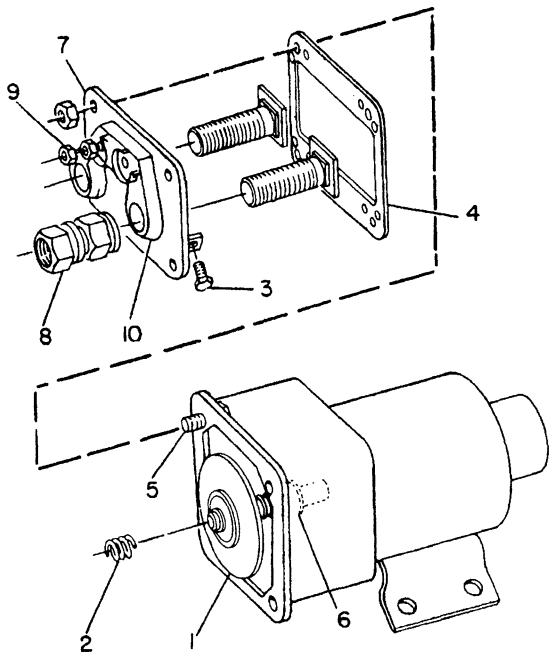

NOTE	REF NO	PART NUMBER	QTY	PART NAME
	1	9G6770	1	CONTACT AS
	2	4M1815	1	SPRING-CONTACT
	3	4M5274	3	SCREW-MACHINE
	4	6T1121	1	GASKET-TERMINAL PLATE
	5	454065	4	SCREW-MACHINE
		4B4274	8	WASHER
		4B2049	4	NUT
	6	6T1120	1	BUSHING-TERMINAL
	7	6T1119	1	TERMINAL AS
	8	3H3680	3	NUT-JAM
		4B4280	3	WASHER
		9F4976	2	LOCKWASHER
	9	4B2049	3	NUT
		4B4274	3	WASHER
		3B4502	2	LOCKWASHER
	10	6T0362	1	INSULATOR

B-302523 EP

1467 **3T3421 SOLENOID AS**

Part Of 3T2784,3T8951 Starting Motors-Electric

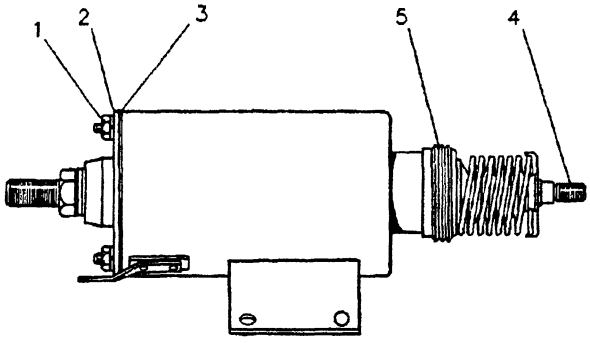

NOTE	REF NO	PART NUMBER	QTY	PART NAME
	1	9M7657	4	NUT-SEALING
	2	8S8023	1	COVER AS
	3	8S8024	1	GASKET-COVER
	4	3T3370	1	CORE AS
	5	8S1528	1	BOOT
		6T3701	1	KIT-TERMINAL
		9S8688	1	KIT-CONTACT END CORE
		8S1527	1	KIT-YOKE END CORE

R-589480 EP

1467 **3T8635 SOLENOID AS**

24 Volt

Part Of 6T0646 Starting Motor-Electric

STARTING AND ELECTRICAL SYSTEM

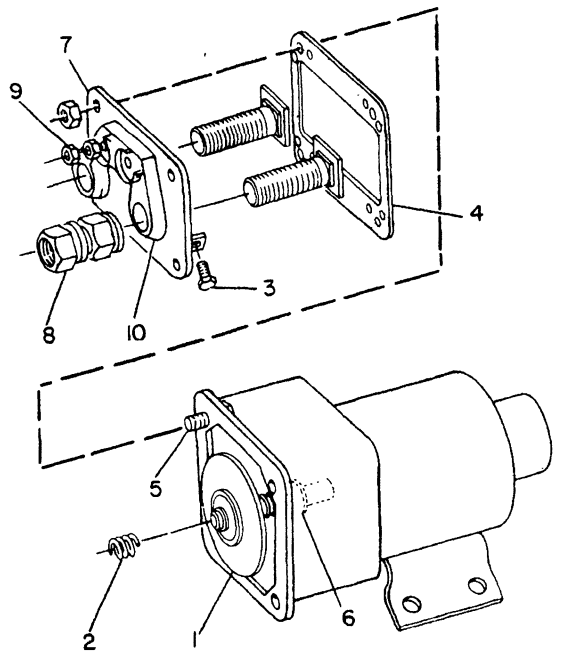

NOTE	REF NO	PART NUMBER	QTY	PART NAME
	1	9G6770	1	CONTACT AS
	2	4M1815	1	SPRING-CONTACT
	3	4M5274	3	SCREW-MACHINE
	4	7T9123	1	GASKET-PLATE
	5	454065	4	SCREW-MACHINE
		4B4274	8	WASHER
		4B2049	4	NUT
	6	6T1120	1	BUSHING-TERMINAL
	7	6T1119	1	TERMINAL AS
	8	3H3680	3	NUT-JAM
		4B4280	3	WASHER
		9F4976	2	LOCKWASHER
	9	4B2049	3	NUT
		4B4274	3	WASHER
		3B4502	2	LOCKWASHER
	10	6T0362	1	INSULATOR

B-565031 EP

1467 **7T8854 SOLENOID AS**

24 Volt

Part Of 7T9162 Starting Motor-Electric

MEMORANDA

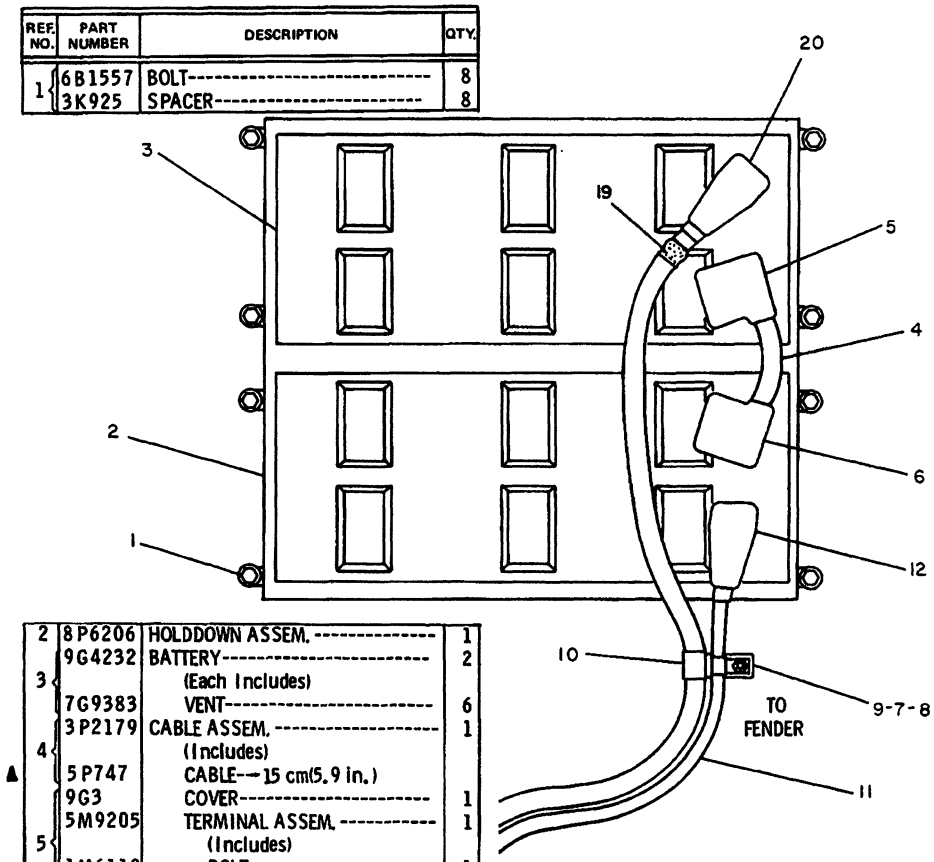

REF. NO.	PART NUMBER	DESCRIPTION	QTY.
1	6B1557	BOLT	8
	3K925	SPACER	8
2	8P6206	HOLDDOWN ASSEM.	1
	9G4232	BATTERY	2
3		(Each Includes)	
	7G9383	VENT	6
	3P2179	CABLE ASSEM.	1
4		(Includes)	
▲	5P747	CABLE--15 cm(5.9 in.)	
	9G3	COVER	1
	5M9205	TERMINAL ASSEM.	1
5		(Includes)	
	1M6119	BOLT	1
	1M6120	NUT	1
	9G4	COVER	1
	5M9204	TERMINAL ASSEM.	1
6		(Includes)	
	1M6119	BOLT	1
	1M6120	NUT	1
7	L1351	BOLT	2
8	5M2894	WASHER	1
9	4K8864	CLIP-(small)	2
10	1S996	CLIP-(large)	2
	3T1728	CABLE ASSEM.	1
11		(Includes)	
▲	5P747	CABLE-225 cm(88.5 in.)	
	7N5274	COVER	1
	3S6050	TERMINAL ASSEM.	1
12		(Includes)	
	1M6119	BOLT	1
	1M6120	NUT	1
C 13	1S7252	TERMINAL	1
14	3S2093	STRAP	3
15	7D1089	CLIP	1
C 16	7S1912	CLIP	3
	9P1505	CABLE ASSEM.	1
17		(Includes)	
▲	5P747	CABLE-362 cm(142.5 in.)	
▲	5P695	CONDUIT-345.5 cm(136 in.)	
	8N869	COVER	1
18	1S7251	TERMINAL	1
	1S2244	BOOT	2
19	1S4915	LINER	2
	3S2093	STRAP	2
	8N1725	COVER	1
	3S6049	TERMINAL ASSEM.	1
20		(Includes)	
	1M6119	BOLT	1
	1M6120	NUT	1

C INDICATES CHANGE

▲ ORDER BY THE CENTIMETER

301464

301464 P

1401

3T0717 BATTERY GP-12 VOLT

Type 1

Low Temperature Start. Heavy Duty

An Attachment

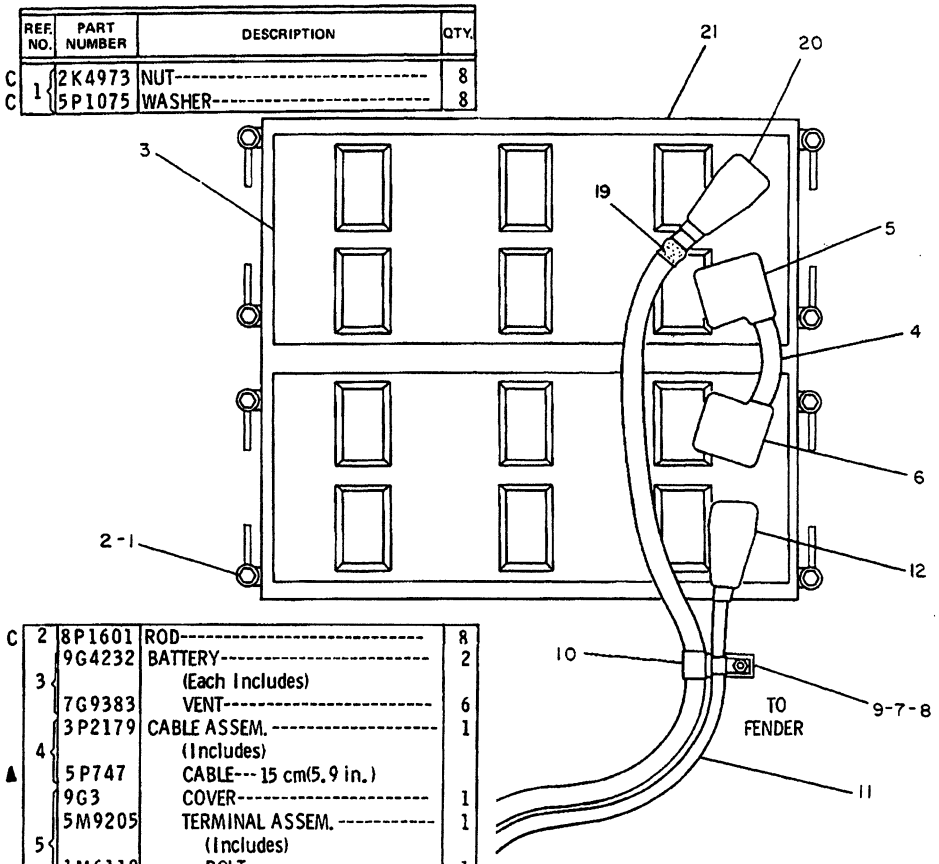

REF. NO.	PART NUMBER	DESCRIPTION	QTY.
C 1	2K4973	NUT	8
C 1	5P1075	WASHER	8
C 2	8P1601	ROD	8
	9G4232	BATTERY	2
3		(Each Includes)	
	7G9383	VENT	6
	3P2179	CABLE ASSEM. (Includes)	1
4			
▲	5P747	CABLE---15 cm(5.9 in.)	
	9G3	COVER	1
	5M9205	TERMINAL ASSEM. (Includes)	1
5			
	1M6119	BOLT	1
	1M6120	NUT	1
	9G4	COVER	1
	5M9204	TERMINAL ASSEM. (Includes)	1
6			
	1M6119	BOLT	1
	1M6120	NUT	1
7	L1351	BOLT	2
8	5M2894	WASHER	1
9	4K8864	CLIP---(small)	2
10	1S996	CLIP---(large)	2
	3T1728	CABLE ASSEM.	1
11		(Includes)	
▲	5P747	CABLE---225 cm(88.5 in.)	
	7N5274	COVER	1
	3S6050	TERMINAL ASSEM. (Includes)	1
12			
	1M6119	BOLT	1
	1M6120	NUT	1
13	1S7252	TERMINAL	1
14	3S2093	STRAP	3
15	7D1089	CLIP	1
16	7S1912	CLIP	3
	9P1505	CABLE ASSEM. (Includes)	1
17			
▲	5P747	CABLE---362 cm(142.5 in.)	
▲	5P695	CONDUIT--345.5 cm(136 in.)	
	8N869	COVER	1
18	1S7251	TERMINAL	1
	1S2244	BOOT	2
19	1S4915	LINER	2
	3S2093	STRAP	2
	8N1725	COVER	1
	3S6049	TERMINAL ASSEM. (Includes)	1
20			
	1M6119	BOLT	1
	1M6120	NUT	1
21	8P6206	HOLDDOWN ASSSEM.	1

C INDICATES CHANGE

▲ ORDER BY THE CENTIMETER

307674

307674 P

1401

3T0717 BATTERY GP-12 VOLT

Type 2

Low Temperature Start. Heavy Duty

An Attachment

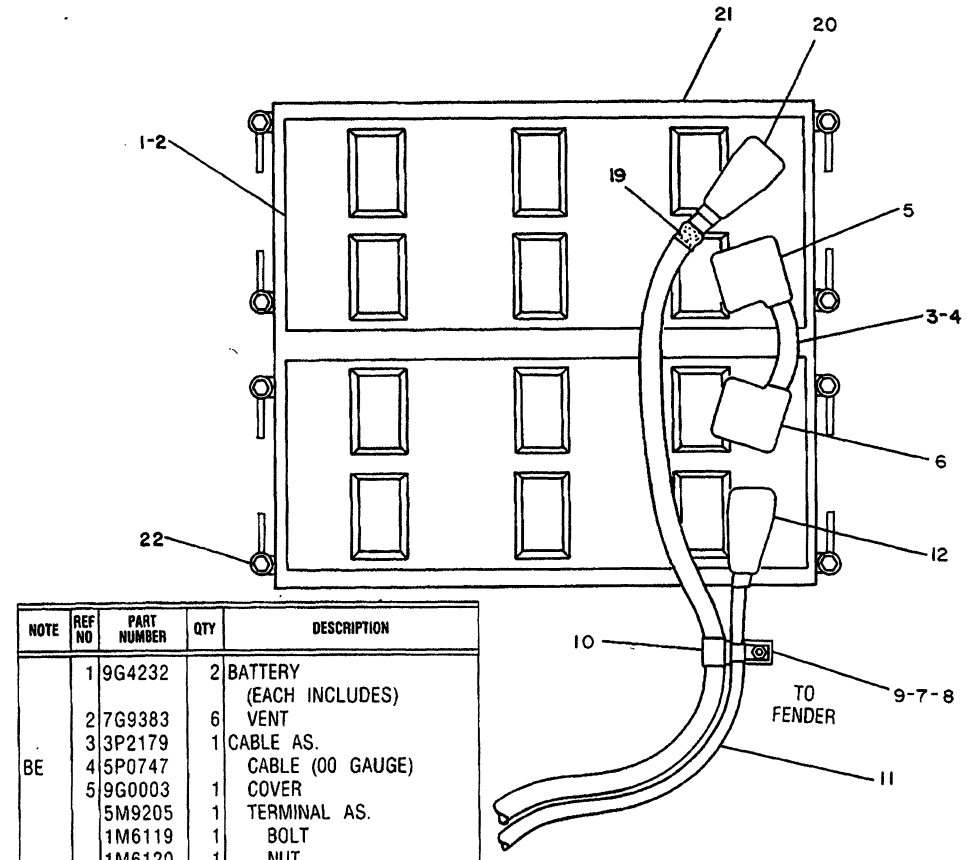

NOTE	REF NO	PART NUMBER	QTY	DESCRIPTION
	1	9G4232	2	BATTERY
				(EACH INCLUDES)
	2	7G9383	6	VENT
	3	3P2179	1	CABLE AS.
BE	4	5P0747		CABLE (00 GAUGE)
	5	9G0003	1	COVER
		5M9205	1	TERMINAL AS.
		1M6119	1	BOLT
		1M6120	1	NUT
	6	9G0004	1	COVER
		5M9204	1	TERMINAL AS.
		1M6119	1	BOLT
		1M6120	1	NUT

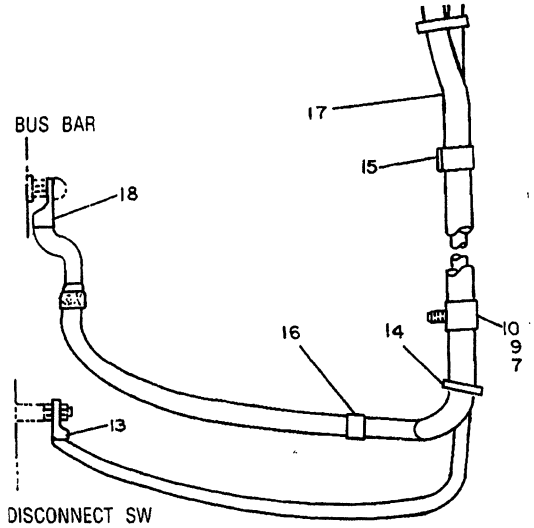

	7	0L1351	2	BOLT
	8	5M2894	1	WASHER
	9	4K8864	2	CLIP (SMALL)
	10	1S0996	2	CLIP (LARGE)
	11	3T1728	1	CABLE AS.
BE		5P0747		CABLE (00 GAUGE)
		7N5274	1	COVER
	12	3S6050	1	TERMINAL AS.
		1M6119	1	BOLT
		1M6120	1	NUT
	13	1S7252	1	TERMINAL
	14	3S2093	3	STRAP
	15	7D1089	1	CLIP
C	16	7S1912	1	CLIP
C	17	9G9145	1	CABLE AS.
BE		5P0747		CABLE (00 GAUGE)
BE		5P0695		CONDUIT
	18	1S7251	1	TERMINAL
	19	1S2244	2	BOOT
		1S4915	2	LINER
		3S2093	2	STRAP
	20	8N1725	1	COVER
		3S6049	1	TERMINAL AS.
		1M6119	1	BOLT
		1M6120	1	NUT
	21	8P6206	1	HOLDDOWN AS.
	22	2K4973	8	NUT
		5P1075	8	WASHER
		8P1601	8	ROD

B USE AS REQUIRED
C INDICATES CHANGE
E ORDER BY THE CENTIMETER

334498

334498 P

1401

3T0717 BATTERY GP-12 VOLT

Type 3
Low Temperature Start. Heavy Duty
An Attachment

STARTING AND ELECTRICAL SYSTEM

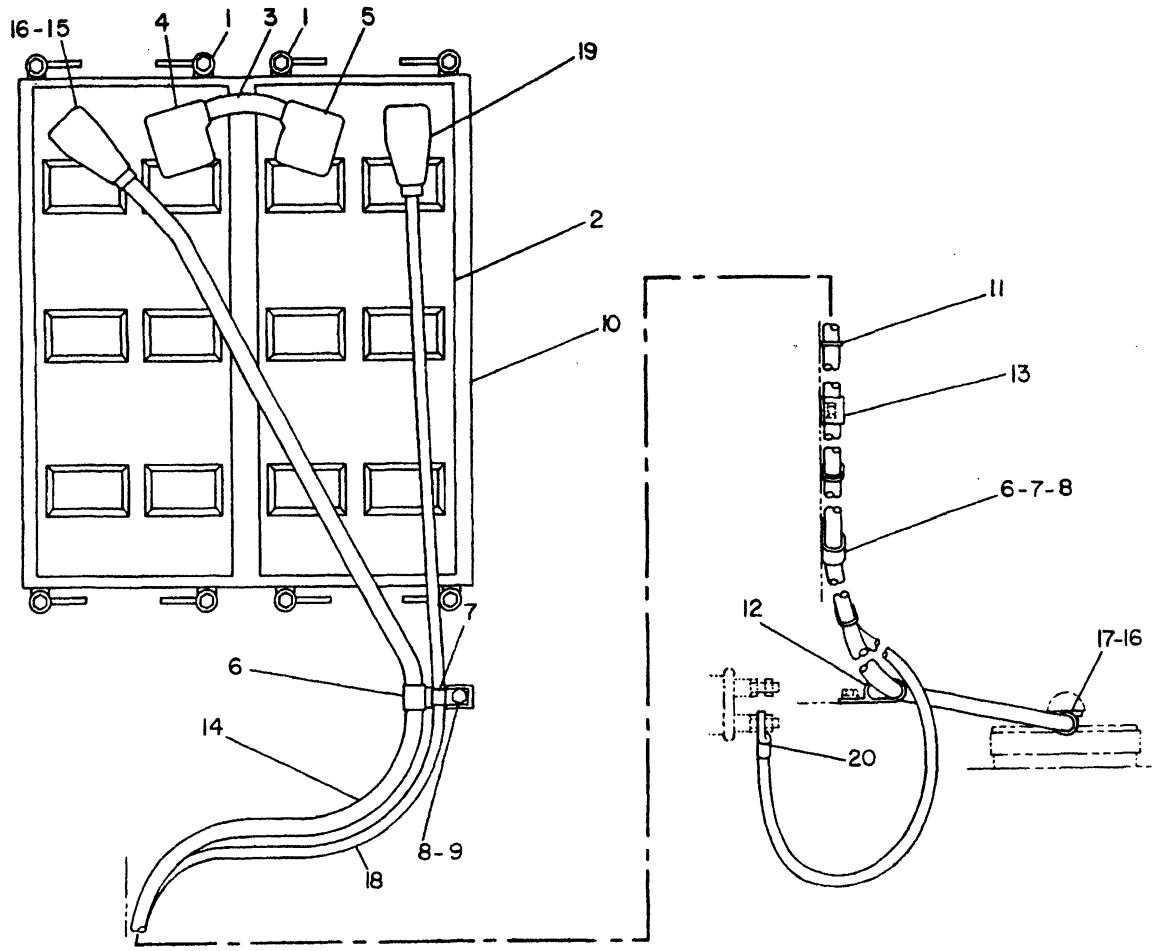

NOTE	REF NO	PART NUMBER	QTY	PART NAME
	1	8P1601	8	ROD
		2K4973	8	LOCKNUT
		5P1075	8	WASHER-HARD
	2	9G4232	2	BATTERY
				(EACH INCLUDES)
		7N0060	6	VENT AS
	3	3P2179	1	CABLE AS
BE		5P0747		CABLE (00 GA)
	4	9G0003	1	COVER
		5M9205	1	TERMINAL AS
		1M6119	1	BOLT
		1M6120	1	NUT
	5	9G0004	1	COVER
		5M9204	1	TERMINAL AS
		1M6119	1	BOLT
		1M6120	1	NUT
	6	1S0996	2	CLIP
	7	4K8864	2	CLIP
	8	0L1351	2	BOLT
	9	5M2894	1	WASHER
	10	8P6206	1	HOLD-DOWN AS-BATTERY
	11	3S2093	3	STRAP-CABLE
	12	7S1912	1	CLIP
	13	7D1089	1	CLIP
	14	9W1725	1	CABLE AS
BE		5P0747		CABLE (00 GA)
E		5P0695		CONDUIT
				302CM(118.9IN.)
	15	8N1725	1	COVER
		3S6049	1	TERMINAL AS
		1M6119	1	BOLT
		1M6120	1	NUT
	16	1S4915	2	LINER-CONDUIT
E		8T2225		TUBE 16CM(6.3IN.)
	17	1S7251	1	TERMINAL
C	18	8M4969	1	CABLE AS
BE		5P0747		CABLE (00 GA)
	19	3S6050	1	TERMINAL AS
		1M6119	1	BOLT
		1M6120	1	NUT
		7N5274	1	COVER
	20	1S7252	1	TERMINAL

B-USE AS REQUIRED
C-CHANGE FROM PREVIOUS TYPE
E-ORDER BY THE CENTIMETER

B-334499 EP

1401 **3T0717 BATTERY GP-12 VOLT**

Type 4
Low Temperature Start. Heavy Duty
An Attachment

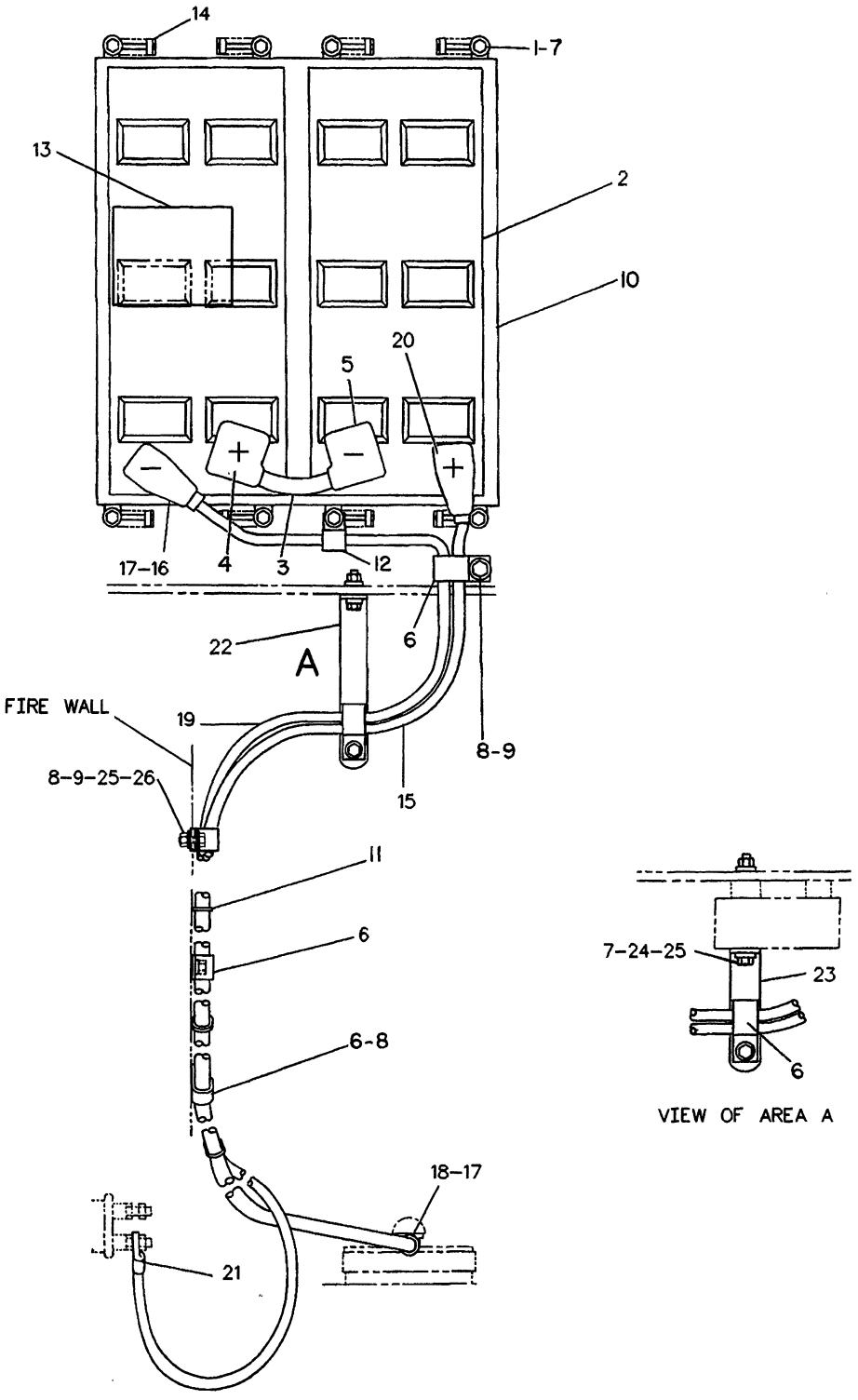

R-531527 EP

1401

3T0717 BATTERY GP-12 VOLT

Type 5

Low Temperature Start. Heavy Duty

An Attachment

STARTING AND ELECTRICAL SYSTEM

NOTE	REF NO	PART NUMBER	QTY	PART NAME
	1	9W4661	8	ROD
		4J8265	8	NUT
	2	9G4232	2	BATTERY
				(EACH INCLUDES)
		7N0060	6	VENT AS
	3	3P2179	1	CABLE AS
E		5P0747		CABLE (00'GA) (15CM)
	4	9G0003	1	COVER (POS)
		5M9205	1	TERMINAL AS (POS)
		1M6119	1	BOLT
		1M6120	1	NUT
	5	9G0004	1	COVER (NEG)
		5M9204	1	TERMINAL AS (NEG)
		1M6119	1	BOLT
		1M6120	1	NUT
C	6	7D1089	4	CLIP
C	7	5P1075	12	WASHER-HARD
	8	5S7379	3	BOLT
	9	8T4896	3	WASHER-HARD
	10	9W4515	1	HOLD-DOWN AS-BATTERY
	11	7K1181	3	STRAP-CABLE
C	12	6D3479	1	CLIP
	13	6V4611	1	FILM-WARNING
	14	3B4609	8	PIN-COTTER
		6B2882	8	SPACER
	15	3T2570	1	CABLE AS
		3S2093	2	STRAP-CABLE
E		5P0761		CABLE-STARTING MOTOR (00 GA) (231CM)
E		5P0695		CONDUIT (216CM)
		1S2244	2	BOOT-CONDUIT
	16	8N1725	1	COVER (NEG)
		3S6049	1	TERMINAL AS (NEG)
		1M6119	1	BOLT
		1M6120	1	NUT
	17	1S4915	2	LINER-CONDUIT
	18	1S7251	1	TERMINAL (RING)
		8N0869	1	COVER
	19	8M4969	1	CABLE AS
E		5P0747		CABLE (00'GA) (264CM)
	20	3S6050	1	TERMINAL AS (POS)
		1M6119	1	BOLT
		1M6120	1	NUT
		7N5274	1	COVER (POS)
	21	1S7252	1	TERMINAL (RING)
C	22	7W2124	1	BRACKET
C	23	2V9053	1	ANGLE
C	24	9B7237	2	BOLT
	25	6V8801	3	NUT
	26	1S0994	1	CLIP

C-CHANGE FROM PREVIOUS TYPE
E-ORDER BY THE CENTIMETER

531528 EP

1401 **3T0717 BATTERY GP-12 VOLT**

Type 5
Low Temperature Start. Heavy Duty
An Attachment

MEMORANDA

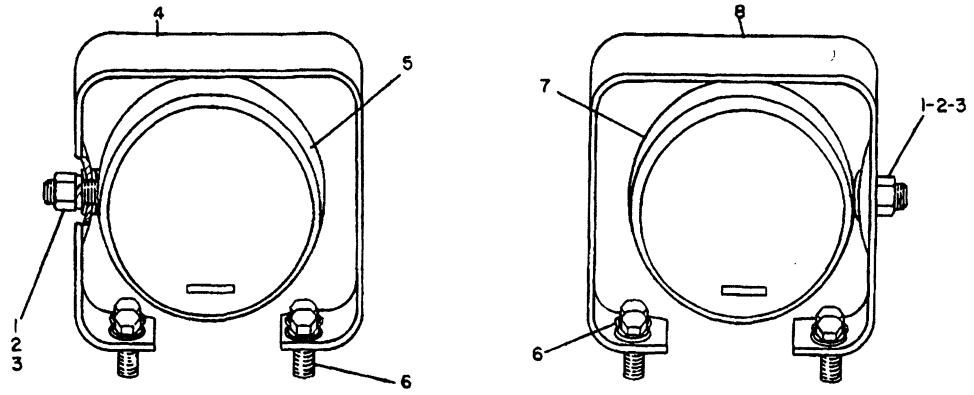

HEAD LAMPS

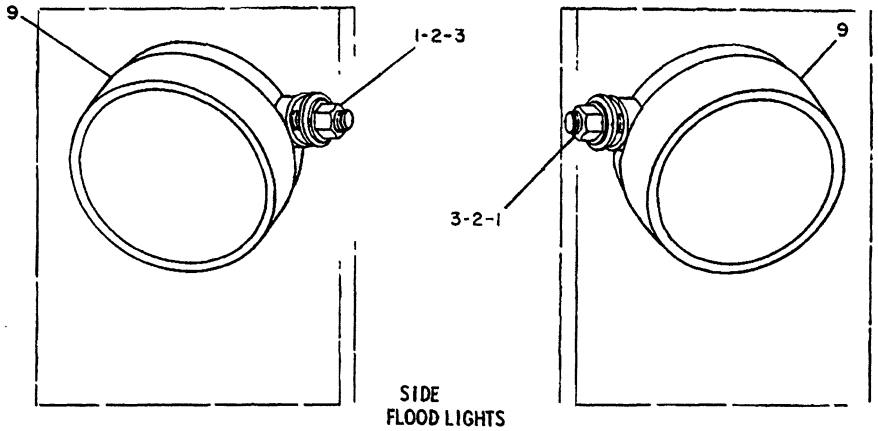

SIDE
FLOOD LIGHTS

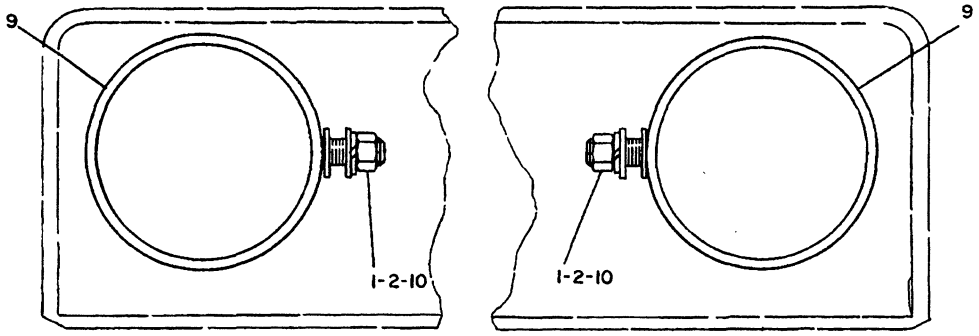

REAR
LIGHTS

REF. NO.	PART NUMBER	DESCRIPTION	QTY.
1	1B4206	NUT	6
2	3B4510	LOCKWASHER	6
3	2B8352	WASHER	8
4	3T5286	GUARD	1
5	2S4788	LAMP GROUP (Separate Illustration)	1
6	S1588	BOLT	8
	5M2894	WASHER	8
7	2S4787	LAMP GROUP (Separate Illustration)	1
8	3T5287	GUARD	1
9	1M1882	LAMP GROUP (Separate Illustration)	4
10	4B4281	WASHER	4

235092 235092 P

1429

6P9337 LIGHTING GP-6 LAMP
2S4787, 1M1882-Page 114

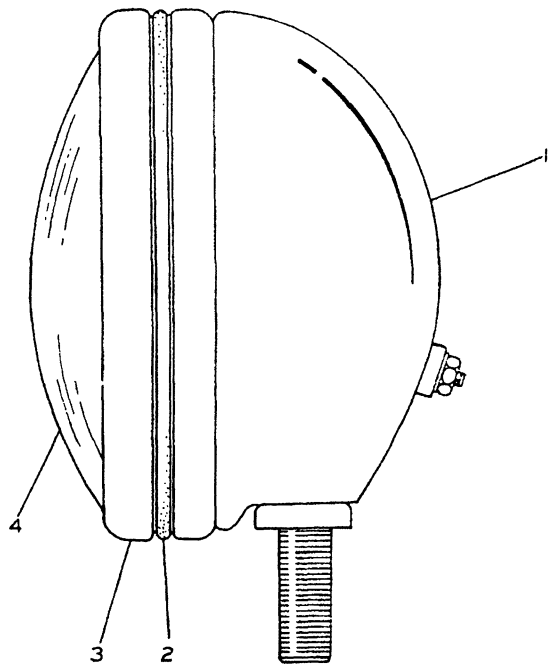

NOTE	REF NO	PART NUMBER	QTY	PART NAME
C	1	2P2541	1	BODY AS
	2	2M5282	1	RING-MOUNTING
	3	2M5284	2	MOLDING AS
		5M6668	2	SCREW-MACHINE
	4	1M5928	1	LAMP-SEALED UNIT

C-CHANGE FROM PREVIOUS TYPE

B-235093 EP

1429

2S4787 HEAD LAMP GROUP-LH
2S4788 Head Lamp Group-RH
24 Volt. Horizontal Mount
Part Of 6P9337 Lighting

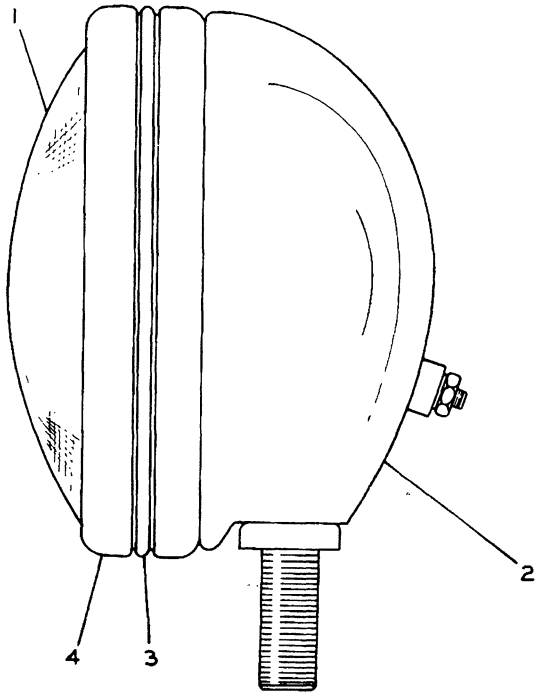

NOTE	REF NO	PART NUMBER	QTY	PART NAME
	1	1M5898	1	LAMP-SEALED UNIT
	2	2P2541	1	BODY AS
	3	2M5282	1	RING-MOUNTING
	4	2M5284	2	MOLDING AS
		5M6668	2	SCREW-MACHINE

B-119409 EP

1434

1M1882 LAMP GP
24 Volt. Flood
Part Of 6P9337,3T0718 Lightings

STARTING AND ELECTRICAL SYSTEM

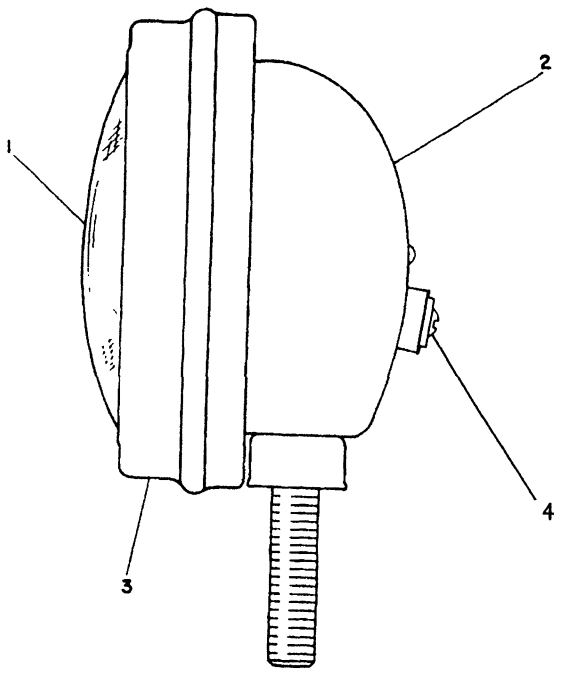

NOTE	REF NO	PART NUMBER	QTY	PART NAME
	1	6N7987	1	LAMP-SEALED UNIT
	2	6N7988	1	BODY AS-LAMP
	3	2P7468	1	MOLDING
	4	6V8376	1	SCREW-MACHINE
		9B7233	1	LOCKWASHER

R-553493 EP

1434

6N7989 LAMP GP
Flood. 24 Volt
Part Of 3T0718 Lighting
An Attachment

MEMORANDA

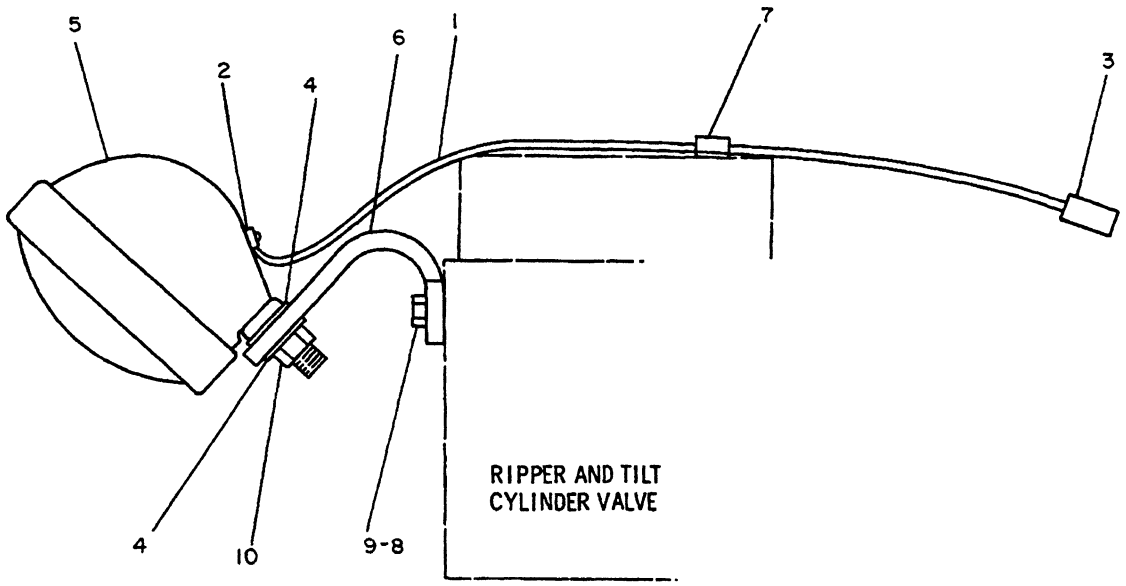

REF. NO.	PART NUMBER	DESCRIPTION	QTY.
1	3T1729	WIRE ASSEM.	1
		(Includes)	
▲	5P5624	WIRE---.56m(22 in.)	
2	5P1475	TERMINAL	1
3	7N7778	HOUSING---(plug)	1
	7N7780	PIN	1
4	4B4281	WASHER	2
5	1M1882	LAMP GROUP	1
		(Separate Illustration)	
6	3T7007	BRACKET	1
7	5P9085	CLIP	1
● 8	S1571	BOLT---44.45mm(1.75 in.)long	2
● 9	5B9603	BOLT--127mm(5 in.)long	2
10	1B4206	NUT	1

▲ ORDER BY THE METER

● USE AS REQUIRED

235215

235215 P

1429

3T0718 LIGHTING GP-RIPPER
Type 1. One Lamp
1M1882-Page 114
An Attachment

STARTING AND ELECTRICAL SYSTEM

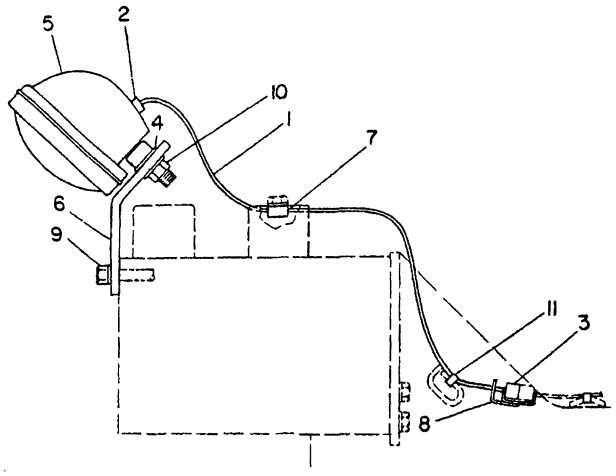

NOTE	REF NO	PART NUMBER	QTY	PART NAME
	1	3T1729	1	WIRE AS
BD		5P5624		WIRE (14 GA)
	2	5P1475	1	TERMINAL
	3	7N9737	1	HOUSING-PLUG
		9G3695	1	PLUG-SEAL
		7N7780	1	PIN-CONNECTOR
	4	5P8245	2	WASHER
Y	5	6N7989	1	LAMP GP-FLOOD
	6	9W4578	1	BRACKET
	7	6V2383	1	CLIP
	8	3T3048	1	CLIP AS
B	9	5B9603	2	BOLT 127MM(5IN)LG
	10	3H3681	1	NUT-FULL
C	11	7K1181	2	STRAP-CABLE

B-USE AS REQUIRED
C-CHANGE FROM PREVIOUS TYPE
D-ORDER BY THE METER
Y-SEPARATE ILLUSTRATION V-412121 EP

1429 **3T0718 LIGHTING GP-RIPPER**
Type 2. One Lamp
6N7989-Page 114.01
An Attachment

MEMORANDA

POWER TRAIN-POWER TRANSMISSION UNIT

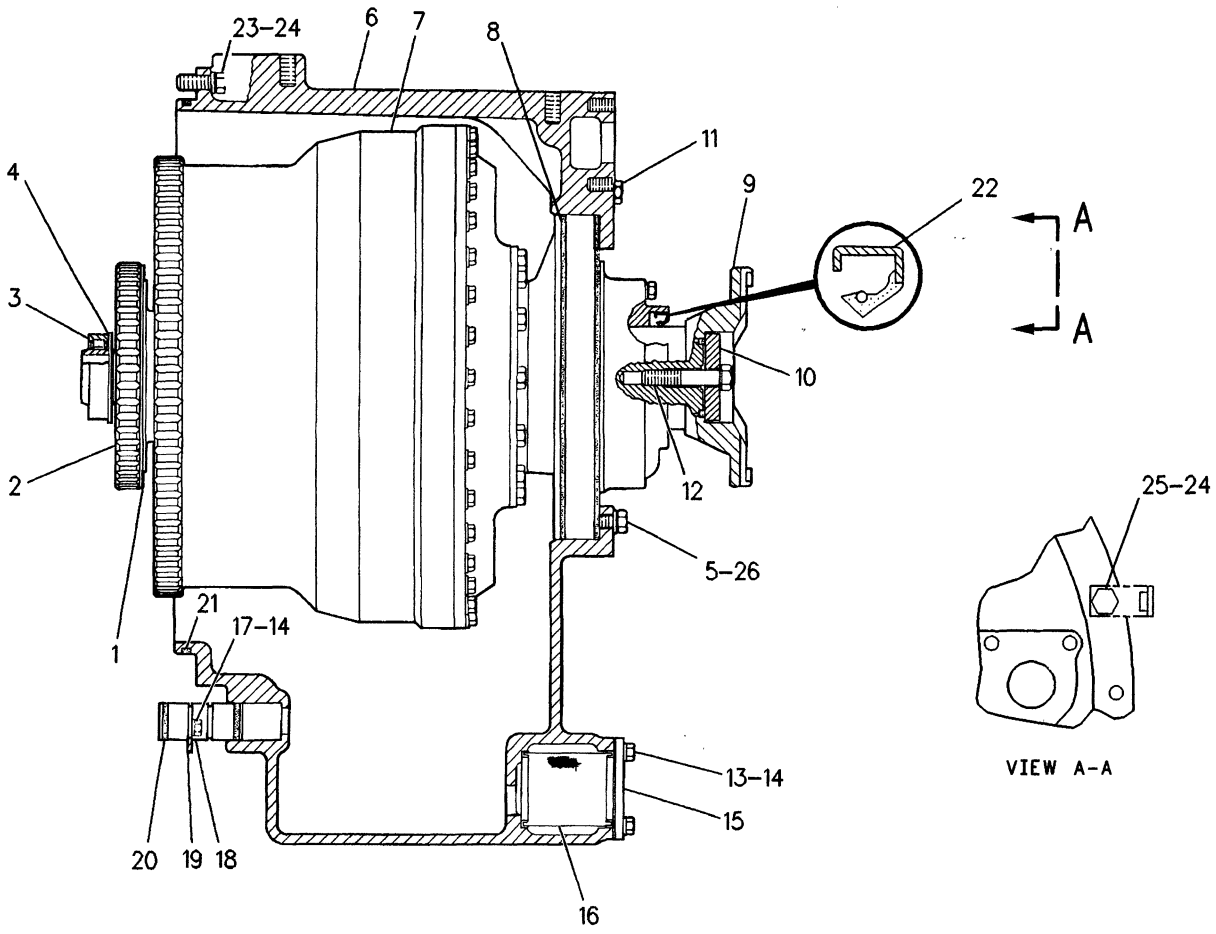

NOTE	REF NO	PART NUMBER	QTY	PART NAME	NOTE	REF NO	PART NUMBER	QTY	PART NAME
	1	7X2623	1	RING-RETAINING		24	8T4223	12	WASHER-HARD (3MM THK)
	2	8E7838	1	GEAR-SUN (35 TEETH)	B	25	8T8919	3	BOLT (1/2-13X1.50IN)
	3	2K5254	1	BEARING-OUTER		26	5P8245	12	WASHER (3MM THK)
	4	4M8910	1	RING-RETAINING					
	5	0S1585	12	BOLT (1/2-13X1.5IN)					
	6	7G3441	1	COVER					
Y	7	9P4889	1	TORQUE CONVERTER GP					
	8	2D6533	2	SEAL-O-RING					
	9	8P6083	1	YOKE-UNIVERSAL JOINT					
	10	9S4372	1	RETAINER					
		8M4989	1	SEAL-O-RING					
	11	9S4191	1	PLUG-O-RING (9/16-18THD)					
		3J1907	1	SEAL-O-RING (11.89MM ID)					
	12	1B4367	1	BOLT (5/8-11X3IN)					
	13	4L6454	4	BOLT (3/8-16 X 1.0IN)					
	14	8T4896	5	WASHER-HARD (2.5MM THK)					
	15	4H5440	1	COVER-PUMP INLET					
		7L3111	1	GASKET					
	16	8S9130	1	SCREEN-SUCTION					
	17	5S7379	1	BOLT (3/8-16X.875IN)					
	18	6P8340	1	SLEEVE					
	19	6P8339	1	LOCK					
	20	8M4433	2	SEAL-O-RING (29.74MM ID)					
	21	3D8241	1	SEAL-O-RING					
	22	8C3075	1	SEAL-LIP					
	23	5P2566	11	BOLT (1/2-13X1.50IN)					

B-USE AS REQUIRED
Y-SEPARATE ILLUSTRATION

R-608548 CP

3101

9P4890 TORQUE CONVERTER GP*R
With Housing
9P4889-Page 117

POWER TRAIN-POWER TRANSMISSION UNIT

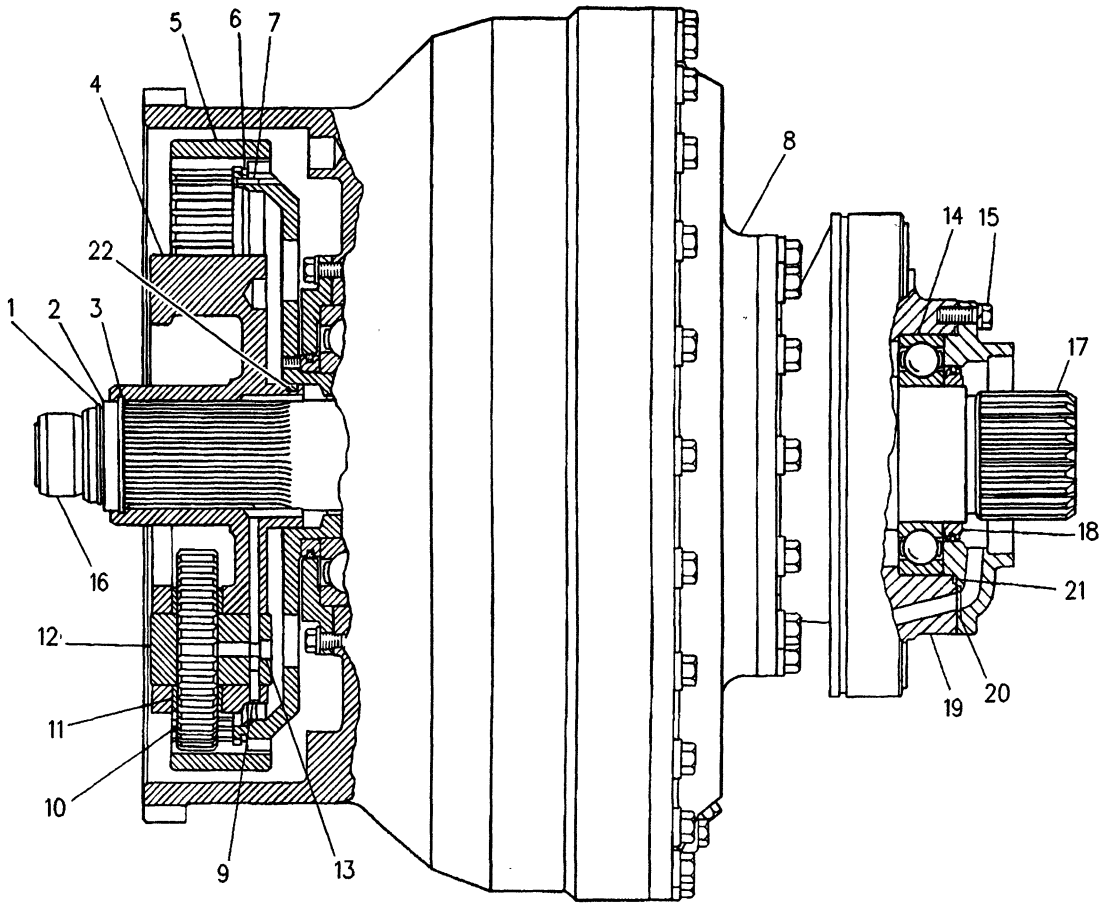

NOTE	REF NO	PART NUMBER	QTY	PART NAME	NOTE	REF NO	PART NUMBER	QTY	PART NAME
	1	8J8322	1	RING-RETAINING		21	8F8733	1	SEAL-O-RING (151.99MM ID)
	2	9P4057	1	SPACER					
	3	6L6560	1	RING-RETAINING		22	1T0141	1	RING-METAL SEAL
	4	1067099	1	CARRIER-PLANETARY (38 TEETH)					
	5	9M2074	1	GEAR-RING (106 TEETH)					
	6	9M2076	1	RING-SNAP					
	7	5H8985	2	PIN-SPRING					
Y	8	9P4888	1	TORQUE CONVERTER GP					
	9	3S2708	3	PIN-SPRING					
	10	7G5622	3	GEAR-PLANETARY (EA INCL 35 TEETH)					
		1S9110	3	ROLLER AS					
C	11	8E8316	6	DISC-THRUST					
	12	6P3901	3	SHAFT AS (EACH INCLUDES)					
	13	2A3746	1	PLUG-CUP					
C	14	6V9176	1	BALL BEARING					
	15	1A2029	8	BOLT (3/8-16X1.125IN)					
		5M2894	8	WASHER (2.5MM THK)					
	16	5P5405	1	RACE-BEARING INNER					
	17	8P5242	1	SHAFT-OUTPUT					
	18	8P5056	1	CARRIER-RING					
		6Y5888	1	RING-SEAL					
	19	8P5189	1	RETAINER-BEARING					
	20	8M5253	1	SEAL (18.72MM ID)					

C-CHANGE FROM PREVIOUS TYPE
Y-SEPARATE ILLUSTRATION

R-609802 CP

3101 **9P4889 TORQUE CONVERTER GP*X**

With Torque Divider
9P4888-Page 118
Part Of 9P4890 Torque Converter

POWER TRAIN-POWER TRANSMISSION UNIT

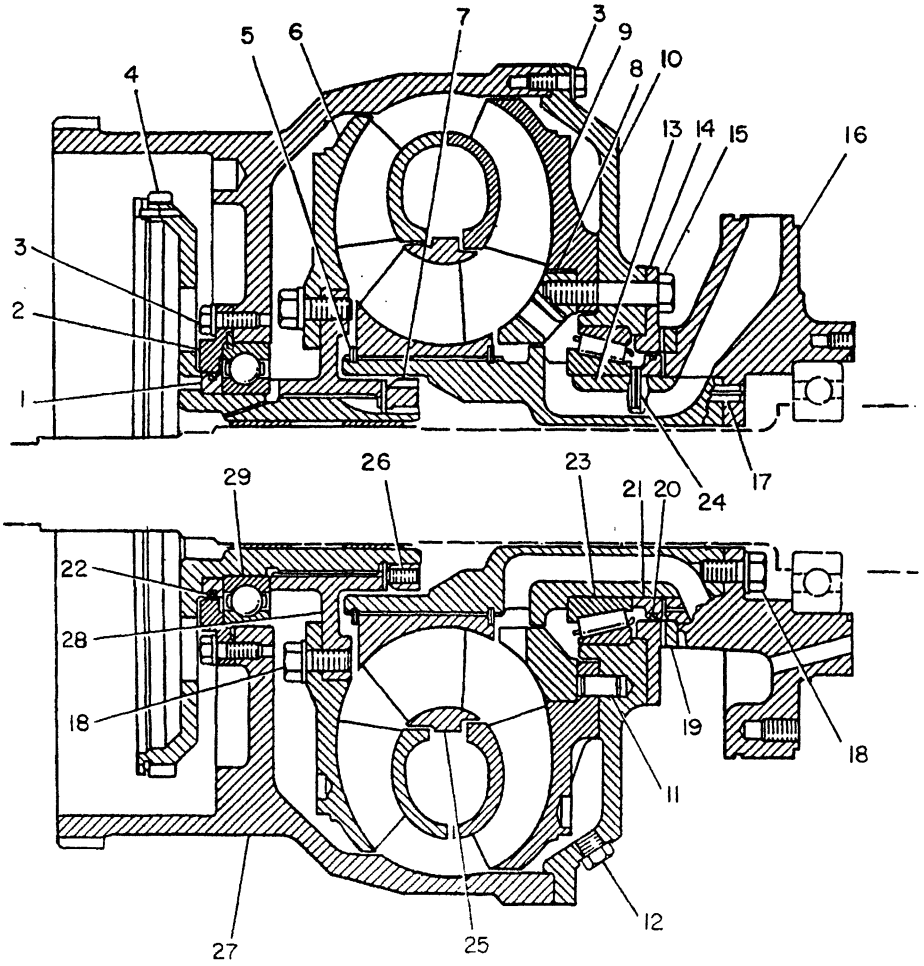

NOTE	REF NO	PART NUMBER	QTY	PART NAME
	1	6P9163	1	CARRIER-RING
	2	6P3904	1	RETAINER-BEARING
	3	1A2029	44	BOLT
		5M2894	44	WASHER
	4	1067098	1	FLANGE AS
		1T0278	2	BEARING-SLEEVE
	5	5P6393	2	RING-RETAINING
	6	8P9265	1	TURBINE-CONVERTER
	7	1T0229	1	NUT-BEARING LOCK
		1T0242	1	WASHER-BEARING LOCK
	8	7G5671	1	HUB-IMPELLER
	9	9P6476	1	IMPELLER-CONVERTER
	10	7G5578	1	FLANGE AS
	11	9M4007	2	DOWEL
	12	9S4191	2	PLUG-O-RING
		3J1907	2	SEAL-O-RING
	13	8P5229	1	CARRIER-STATOR
	14	7G6114	1	SLEEVE-WEAR
	15	1A5822	12	BOLT
	16	3T3811	1	SUPPORT-STATOR
	17	2L3650	5	PIN-SPRING
	18	6H1717	36	BOLT
		5P8245	36	WASHER
	19	7G6115	1	PLATE-THRUST
	20	9W6991	1	RING-SEAL
	21	7G6059	1	CARRIER-RING
	22	6Y5793	1	RING-SEAL
	23	4F2041	1	CUP-ROLLER BEARING
		2D9457	1	CONE-ROLLER BEARING
	24	6H3956	1	PIN
	25	8P9266	1	STATOR-CONVERTER
	26	1T0241	1	SETSCREW
	27	8P8780	1	HOUSING
	28	8P6817	1	HUB
	29	1T0610	1	BALL BEARING

B-581879 EP

3101

9P4888 TORQUE CONVERTER GP

Torque Converter S/N 78T1-Up

Part Of 9P4889 Torque Converter

3	5M6126	BEARING
1	7H7628	BEARING
3	5P6254	BEARING
1	3S9669	BEARING
1	6V8121	BEARING AS-ROLLER
1	2D5658	BEARING-BALL
1	5P6721	BEARING-ROLLER
6	5M7925	BEARING-ROLLER
1	7T4155	BEARING-SLEEVE
3	4S8546	BEARING-SPECIAL BALL
2	6YO296	BEARING-SPECIAL BALL
2	2P1374	CONE-ROLLER BEARING
1	6VO457	CONE-ROLLER BEARING
1	2K5103	CONE-ROLLER BEARING
1	5P9504	CUP-ROLLER BEARING
1	6VO458	CUP-ROLLER BEARING
2	2P1373	CUP-ROLLER BEARING
6	6T7799	DISC-THRUST
18	7T3145	DISC-THRUST
1	3P2558	RACE-BEARING INNER
1	7D1677	RACE-BEARING INNER

531420 P

3188 **8C9040 KIT-TRANSMISSION BEARING**

Transmission S/N 2NA1-Up

Provides Complete Replacement Of Torque Converter Bearings

1	6V9176	BEARING-BALL
1	1T0610	BEARING-BALL
1	2K5254	BEARING-OUTER
2	1T0278	BEARING-SLEEVE
1	2D9457	CONE-ROLLER BEARING
1	4F2041	CUP-ROLLER BEARING
6	6T7800	DISC-THRUST
1	5P5405	RACE-BEARING INNER
3	1S9110	ROLLER AS

459489 P

3101 **8C9042 KIT-TORQUE DIVIDER BEARING**

Provides Complete Replacement Of Torque Converter Bearings

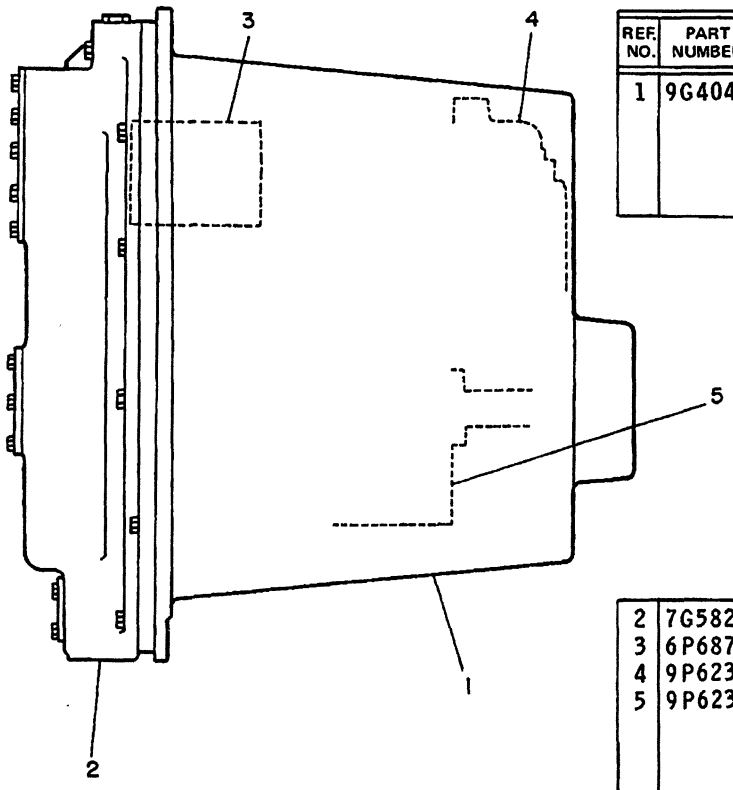

REF. NO.	PART NUMBER	DESCRIPTION	QTY.
1	9G4047	COVERS GROUP---------- (Shipping and storage-includes clamp assem, adapter assem., cover assem., cover, plugs, seals, and hardware)	1
2	7G5828	TRANSMISSION CASE GROUP --	1
3	6P6876	HYDRAULIC CONTROL GROUP --	1
4	9P6235	BEVEL AND TRANSFER GEAR GRP-	1
5	9P6236	PLANETARY TRANSMISSION GRP- (Separate Illustration)	

235100

235100 P

3188 **9P6237 TRANSMISSION AR*R**

Transmission S/N 2NA1-Up

7G5828-Page 120,9P6236-Page 122,9P6235-Page 126,6P6876-Page 128

MEMORANDA

POWER TRAIN-POWER TRANSMISSION UNIT

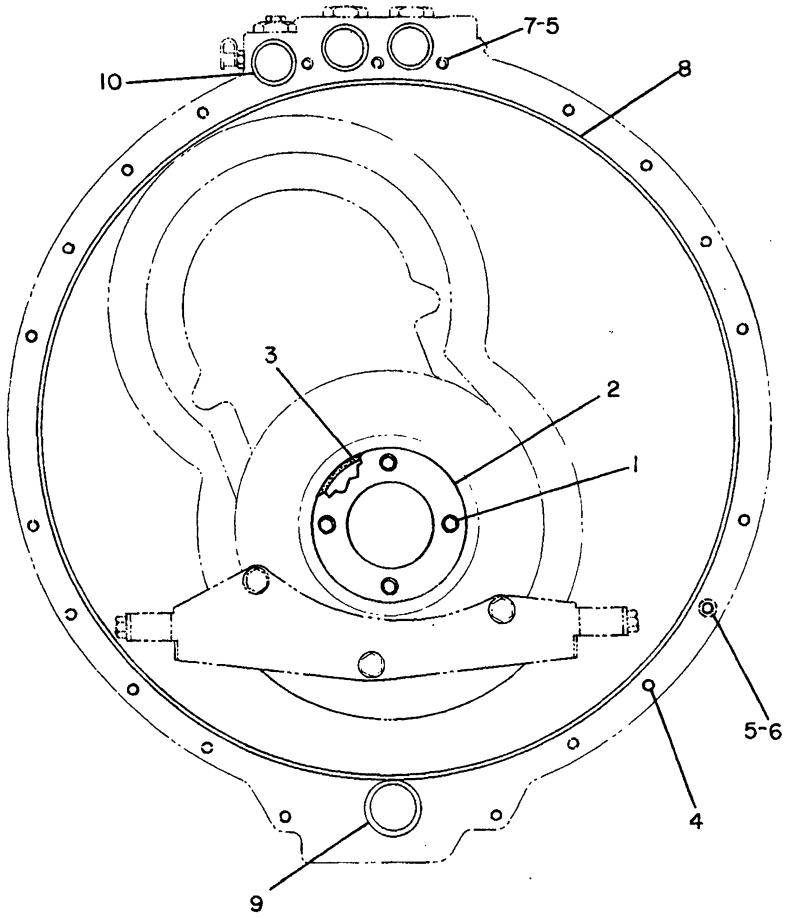

NOTE	REF NO	PART NUMBER	QTY	PART NAME	NOTE	REF NO	PART NUMBER	QTY	PART NAME
	1	0S1591	4	BOLT					
		5M2894	4	WASHER					
	2	3T5830	1	PLATE					
	3	7M0475	1	RING-SEALING					
	4	5P5855	2	BOLT-12 POINT HEAD					
	5	5P8245	19	WASHER					
	6	1A5822	16	BOLT					
	7	2B2006	3	BOLT					
	8	5P9519	1	SEAL-O-RING					
	9	6L9284	1	SEAL 59.69MM(2.33IN)					
	10	9M9647	3	SEAL 40.64MM(1.59IN)					

V-409711 EP

3188 **9G9994 MOUNTING GP-TRANSMISSION**

POWER TRAIN-POWER TRANSMISSION UNIT

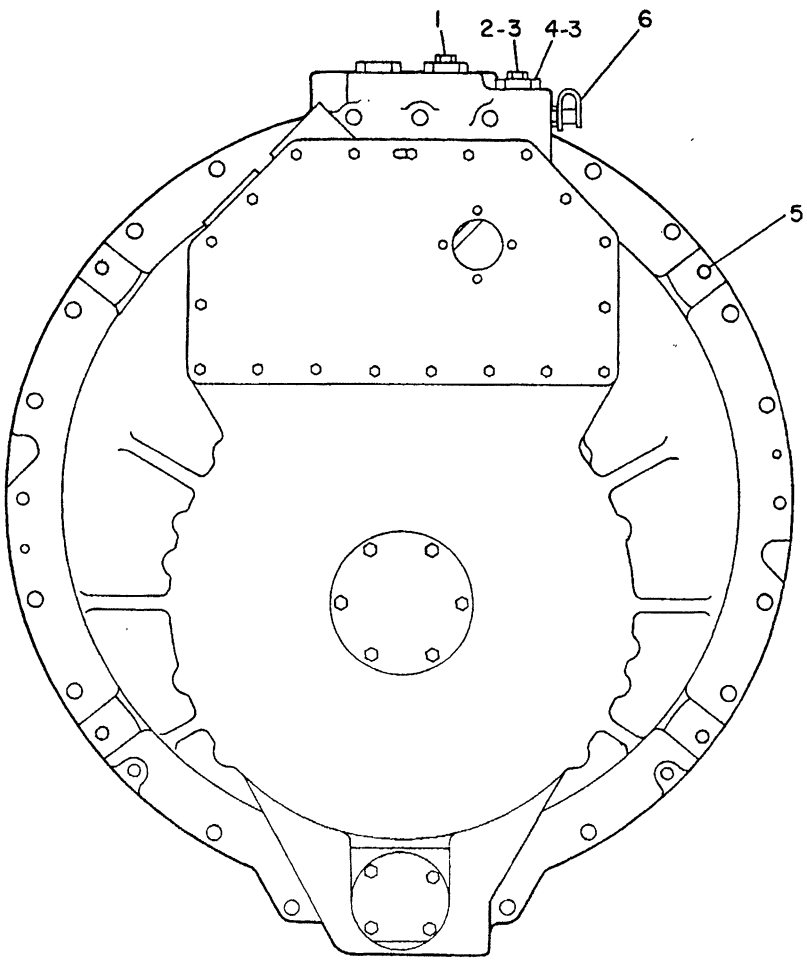

NOTE	REF NO	PART NUMBER	QTY	PART NAME	NOTE	REF NO	PART NUMBER	QTY	PART NAME
	1	9S4191	2	PLUG-O-RING					
		3J1907	2	SEAL-O-RING					
	2	9S6130	1	PLUG-O-RING					
	3	2S4078	3	SEAL-O-RING					
	4	8J5914	2	PLUG-O-RING					
	5	8M2530	4	BOLT-12 POINT HEAD					
C	6	6V3965	1	NIPPLE AS					
		6V0852	1	CAP-DUST					
C		3J1907	1	SEAL-O-RING					

C-CHANGE FROM PREVIOUS TYPE

B-301963 EP

3188 **7G5828 CASE & PARTS GP-PLANETARY-PART 1 OF 2**

Transmission S/N 2NA1-4794

Part Of 9P6237 Transmission Ar

POWER TRAIN-POWER TRANSMISSION UNIT

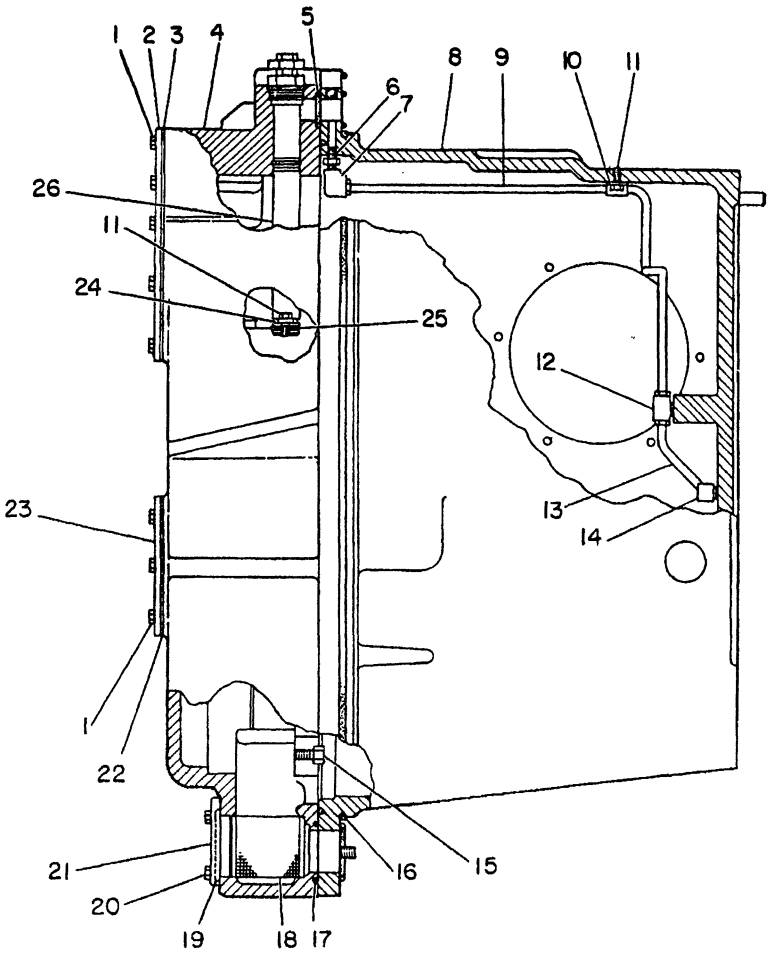

NOTE	REF NO	PART NUMBER	QTY	PART NAME	NOTE	REF NO	PART NUMBER	QTY	PART NAME
	1	3O8535	25	BOLT-LOCKING		23	9G8615	1	COVER
	2	9G7498	1	COVER AS		24	5K5120	1	STRIP
	3	7G5756	1	GASKET-COVER		25	8M4432	2	SEAL-O-RING
C	4	3T4577	1	COVER AS-TRANSMISSION		26	7G5751	1	SLEEVE
		7M8480	2	DOWEL					
C	5	9M9647	3	SEAL					
	6	5P8998	1	NIPPLE					
	7	9S7710	1	ELBOW-FLARED					
C	8	3T4575	1	CASE AS					
		3F3442	2	DOWEL					
		4B9785	2	BALL					
C	9	9W3413	1	TUBE AS					
	10	8S8820	1	CLIP					
	11	5K9107	2	BOLT-LOCKING					
	12	5K9989	1	TEE-FLARED					
	13	7G2862	1	TUBE AS					
	14	5K9235	1	ELBOW-FLARED					
	15	0S1589	15	BOLT					
		5P8247	15	WASHER-HARD					
C	16	5P9519	1	SEAL-O-RING					
C	17	6L9284	1	SEAL					
	18	8S9130	1	SCREEN-SUCTION					
	19	2H6184	1	SEAL-O-RING					
	20	5D0353	4	BOLT-LOCKING					
	21	9P6500	1	COVER					
	22	8P0058	1	GASKET-COVER					

C-CHANGE FROM PREVIOUS TYPE

B-349738 EP

3188 **7G5828 CASE & PARTS GP-PLANETARY-PART 2 OF 2**

Transmission S/N 2NA1-4794

Part Of 9P6237 Transmission Ar

POWER TRAIN-POWER TRANSMISSION UNIT

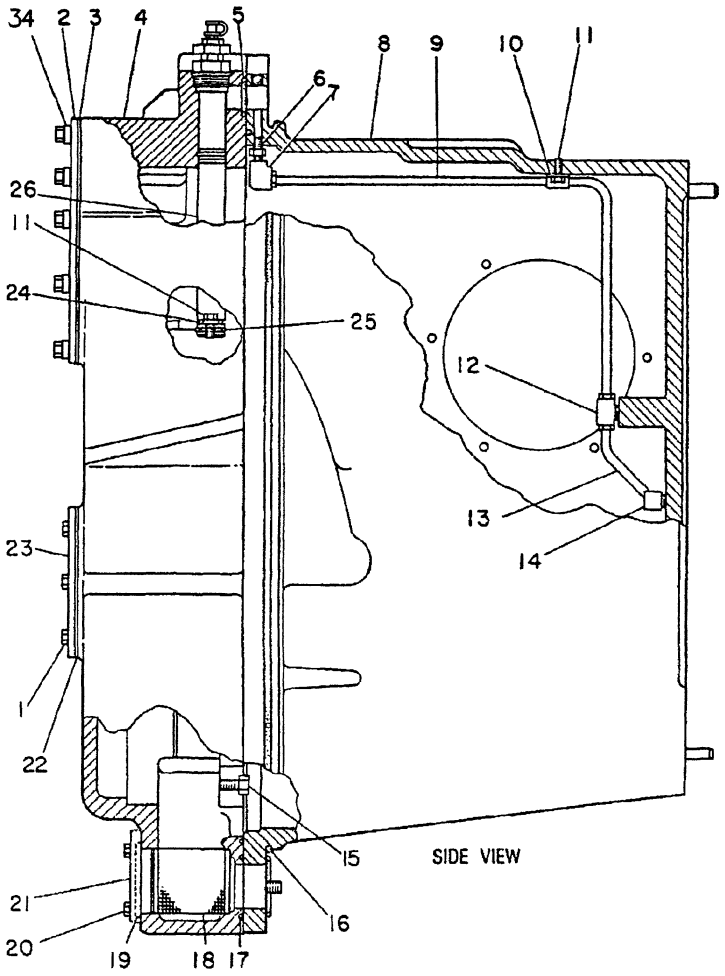

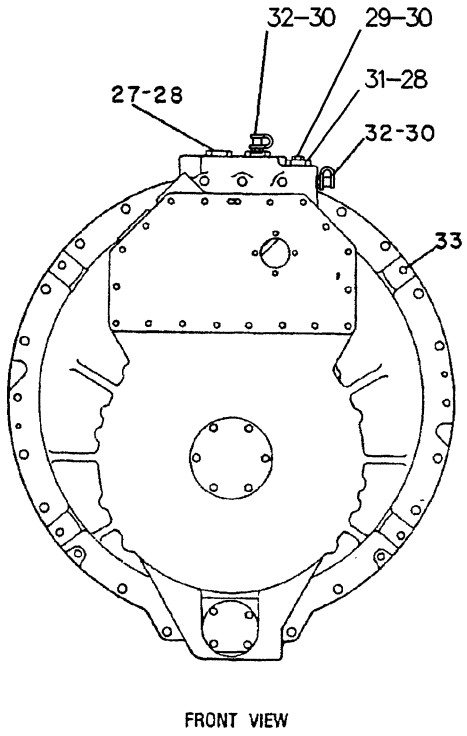

NOTE	REF NO	PART NUMBER	QTY	PART NAME
	1	3O8535	6	BOLT-LOCKING (22.22MM)LG
	2	9G7498	1	COVER AS
		7G5755	1	COVER-TRANSMISSION
				CASE
	3	7G5756	1	GASKET-COVER
	4	3T4577	1	COVER AS-TRANSMISSION
		7M8480	2	DOWEL
	5	9M9647	3	SEAL
	6	5P8998	1	NIPPLE
	7	9S7710	1	ELBOW-FLARED
	8	9W5357	1	CASE AS
		3F3442	2	DOWEL
		4B9785	2	BALL
	9	9W3413	1	TUBE AS
	10	9S1350	1	CLIP
	11	5K9107	2	BOLT-LOCKING
	12	5K9989	1	TEE-FLARED
	13	7G2862	1	TUBE AS
	14	5K9235	1	ELBOW-FLARED
	15	OS1589	15	BOLT
		5P8247	15	WASHER-HARD
	16	5P9519	1	SEAL-O-RING
	17	6L9284	1	SEAL
	18	8S9130	1	SCREEN-SUCTION
	19	2H6184	1	SEAL-O-RING
	20	5D0353	4	BOLT-LOCKING
	21	9P6500	1	COVER
	22	8P0058	1	GASKET-COVER
	23	9G8615	1	COVER
	24	5K5120	1	STRIP
	25	8M4432	2	SEAL-O-RING
	26	7G5751	1	SLEEVE
	27	9S6130	1	PLUG-O-RING
	28	2S4078	3	SEAL-O-RING
	29	9S4191	1	PLUG-O-RING
	30	3J1907	3	SEAL-O-RING
	31	8J5914	2	PLUG-O-RING
	32	6V3965	2	NIPPLE AS
		6V0852	2	CAP-DUST
	33	8M2530	4	BOLT-12 POINT HEAD
	34	3O8535	19	BOLT-LOCKING (22.22MM)LG
				"OR"
		2J3118	19	BOLT-LOCKING (32MM LONG)
		7W3447	19	SPACER

R-506892 EP

MEMORANDA

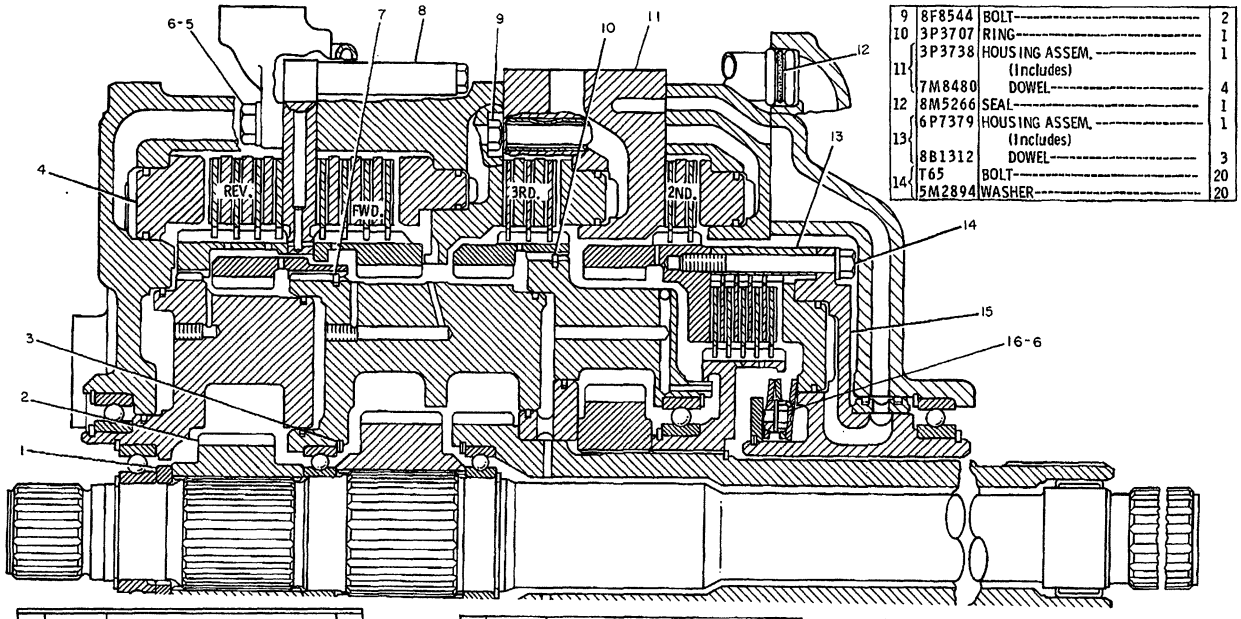

REF. NO.	PART NUMBER	DESCRIPTION	QTY.
1	6P3458	SPACER	1
2	9G1918	GEAR--------(34 teeth)	1
3	8S9104	RING	2
4	7G5739	PISTON	1
5	7B3235	BOLT	1
6	5P8245	WASHER	3
7	3P3708	RING	1
8	8P56	SLEEVE	2
9	8F8544	BOLT	2
10	3P3707	RING	1
11	3P3738	HOUSING ASSEM. (Includes)	1
	7M8480	DOWEL	4
12	8M5266	SEAL	1
13	6P7379	HOUSING ASSEM. (Includes)	1
	8B1312	DOWEL	3
14	T65	BOLT	20
	5M2894	WASHER	20
15	9P5530	HOUSING ASSEM. (Includes)	1
	4S8537	DOWEL	1
	6B6863	PIN	1
16	8S6212	BOLT	2

235103

235103 P

3160 **9P6236 PLANETARY GP-PART 1 OF 4**
Transmission S/N 2NA1-2215
Part Of 9P6237 Transmission Ar

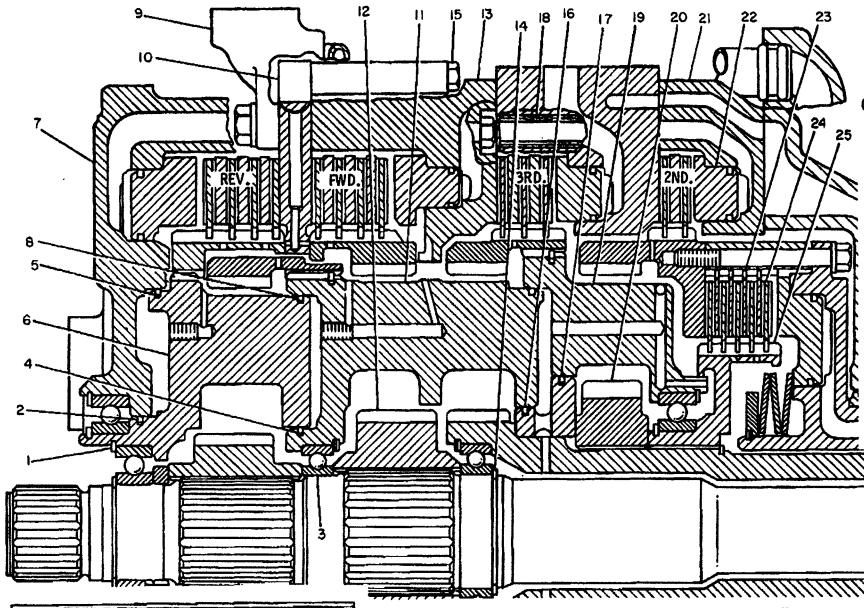

REF. NO.	PART NUMBER	DESCRIPTION	QTY.
1	8K2692	RING	1
2	6F156	SEAL	1
3	6V1781	BEARING	2
4	9F3788	SEAL	1
5	3P3321	SEAL	2
6	7G3437	CARRIER ASSEM.	1
	4S8537	DOWEL	1
7	3T2139	HOUSING ASSEM.	1
	9S1343	PLUG	1
8	8P4617	SEAL	1
9	8P8405	TUBE ASSEM.	1
10	9P5536	PLATE ASSEM.	1
	3S2708	PIN---(spring)	1
	4B9880	BALL	2
	7M8479	DOWEL---(large)	2
	7M8480	DOWEL---(small)	1
11	7G8920	CARRIER	1
12	3P3059	GEAR---(42 teeth)	1
13	7G5746	HOUSING	1
14	6S1753	RING	1
15	S1608	BOLT	2
16	5M6187	SEAL	1
17	9M1503	SEAL	1
18	9M4355	DAMPER	20
19	7G8211	CARRIER ASSEM.	1
	2D6642	BALL	2
20	3P3096	GEAR---(51 teeth)	1
21	3P2791	HOUSING	1
22	3P2685	PISTON	2
23	3P7489	PLATE	4
24	9P6082	DISC ASSEM.	5
25	6P5554	HUB ASSEM.	1
	4S8537	DOWEL	1

C INDICATES CHANGE

304790

304790 P

3160

9P6236 PLANETARY GP-PART 2 OF 4
Transmission S/N 2NA1-2215
Part Of 9P6237 Transmission Ar

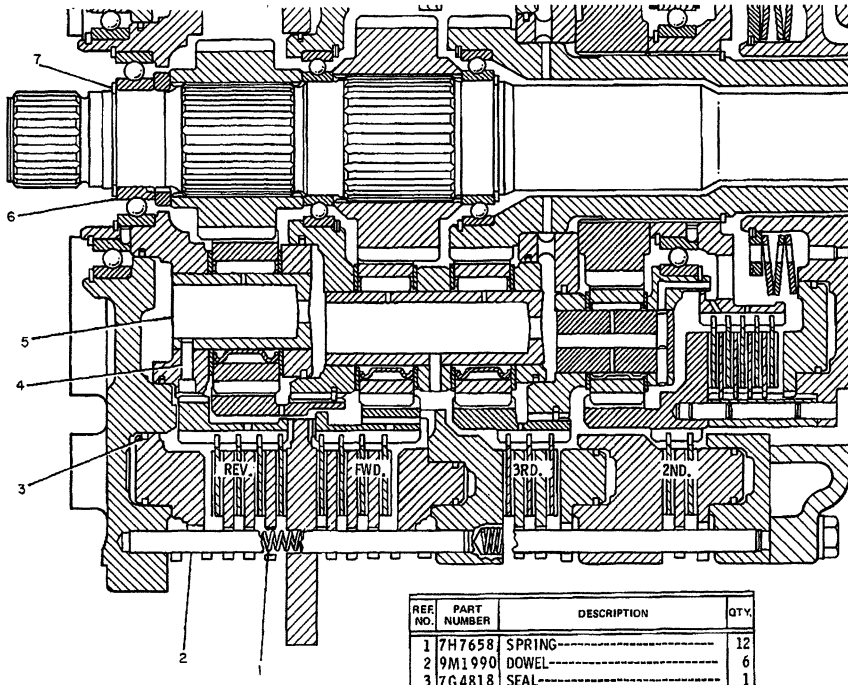

REF. NO.	PART NUMBER	DESCRIPTION	QTY.
1	7H7658	SPRING	12
2	9M1990	DOWEL	6
3	7G4818	SEAL	1
4	3S2708	PIN	9
5	8P4047	SHAFT	3
6	5P9301	BEARING	1
7	6V1898	RING	1
8	9P5537	SHAFT ASSEM. (Includes)	1
	9M2001	DOWEL	3
9	9P5538	SHAFT ASSEM. (Includes)	1
	3P3103	CARRIER	1
	5P6721	BEARING	1
10	3P3441	RING	3
11	4S8546	BEARING	3
12	6V836	RING	3

235105

235105 P

3160

9P6236 PLANETARY GP-PART 3 OF 4
Transmission S/N 2NA1-2215
Part Of 9P6237 Transmission Ar

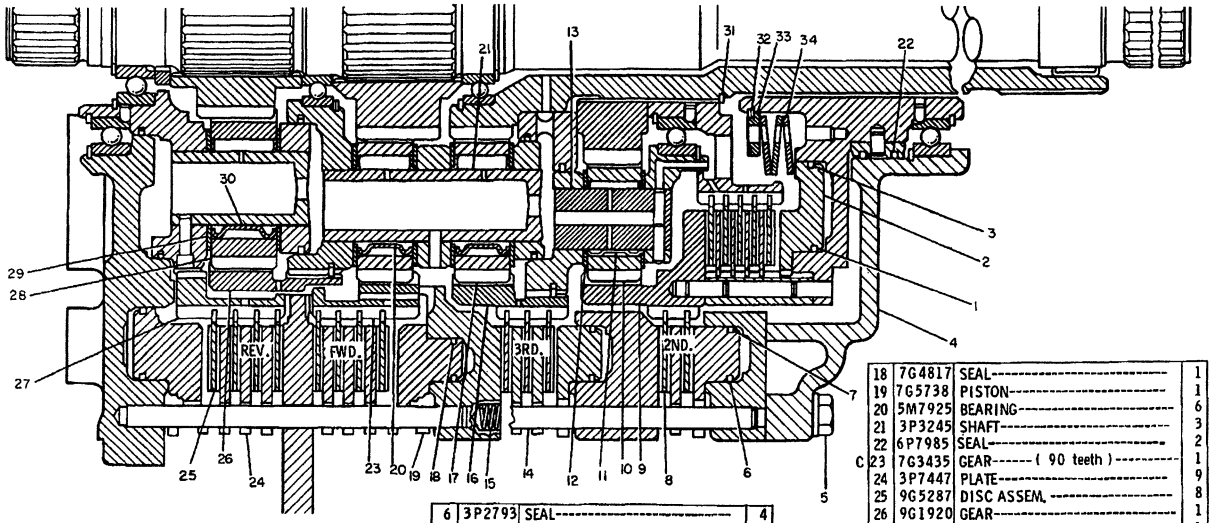

REF. NO.	PART NUMBER	DESCRIPTION	QTY.
1	3P2792	SEAL	1
2	3P2768	PISTON	1
3	1P9261	SEAL	1
4	9P5535	MANIFOLD ASSEM. (Includes)	1
4	7M8480	DOWEL	2
5	5M7900	BOLT	17
5	5P8245	WASHER	17
6	3P2793	SEAL	4
7	3P2794	SEAL	2
8	9G2408	DISC ASSEM.	5
9	6P5751	GEAR	1
10	7G2476	GEAR-(20 teeth)	3
11	5M6126	BEARING	3
C 12	6P5005	DISC	6
13	6P6739	SHAFT	3
14	9H5546	DOWEL	6
15	9H5537	SPRING	24
16	3P3098	GEAR	1
17	7G3457	GEAR-(25 teeth)	6
18	7G4817	SEAL	1
19	7G5738	PISTON	1
20	5M7925	BEARING	6
21	3P3245	SHAFT	3
22	6P7985	SEAL	2
C 23	7G3435	GEAR-(90 teeth)	1
24	3P7447	PLATE	9
25	9G5287	DISC ASSEM.	8
26	9G1920	GEAR	1
27	3P2810	GEAR	1
28	9G1919	GEAR-(25 teeth)	3
29	7G897	WASHER	18
30	5P6254	BEARING	3
C 31	7J6525	RING	1
32	5P3150	RING	1
33	8P6986	PLATE	1
34	8P6997	SPRING	3
▲	6V1720	PLATE-(serial number)	1
▲	7B3028	SCREW	2

C INDICATES CHANGE

▲ NOT SHOWN

309667

309667 P

3160

9P6236 PLANETARY GP-PART 4 OF 4

Transmission S/N 2NA1-2215

Part Of 9P6237 Transmission Ar

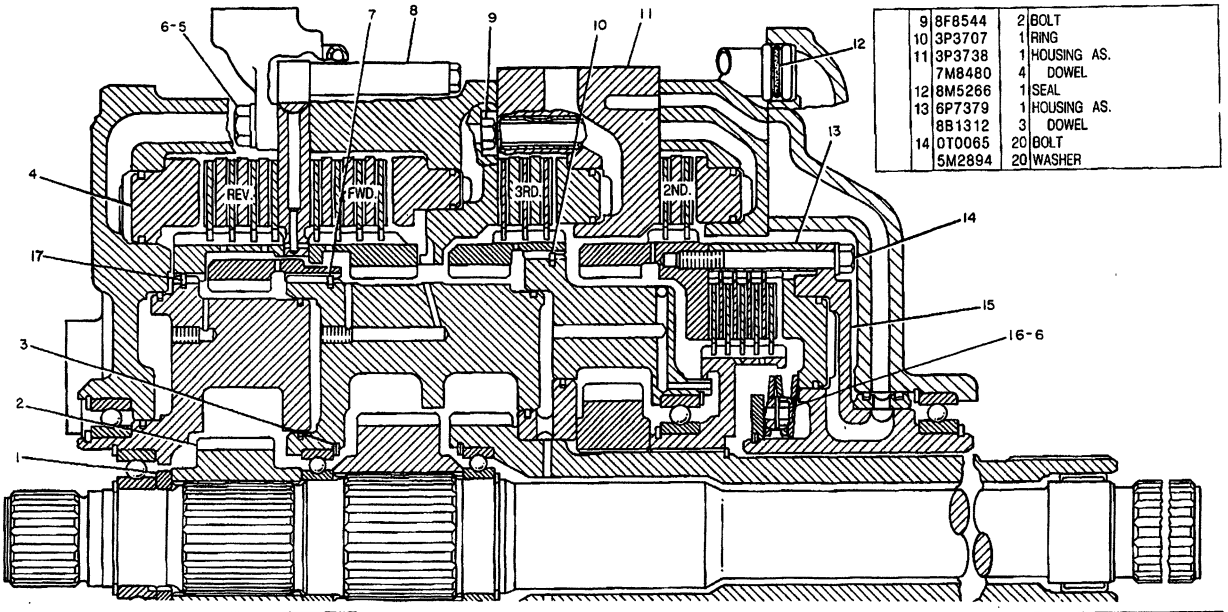

NOTE	REF NO	PART NUMBER	QTY	DESCRIPTION
	1	6P3458	1	SPACER
	2	9G1918	1	GEAR (34 TEETH)
	3	8S9104	2	RING
	4	7G5739	1	PISTON
	5	7B3235	1	BOLT
	6	5P8245	3	WASHER
	7	3P3708	1	RING
	8	8P0056	2	SLEEVE
	9	8F8544	2	BOLT
	10	3P3707	1	RING
	11	3P3738	1	HOUSING AS.
		7M8480	4	DOWEL
	12	8M5266	1	SEAL
	13	6P7379	1	HOUSING AS.
		8B1312	3	DOWEL
	14	0T0065	20	BOLT
		5M2894	20	WASHER
	15	9P5530	1	HOUSING AS.
		4S8537	1	DOWEL
		6B6863	1	PIN
	16	8S6212	2	BOLT
C	17	3P3708	1	RING

C INDICATES CHANGE

327837

327837 P

3160

9P6236 PLANETARY GP-PART 1 OF 4
Transmission S/N 2NA2216-2832
Part Of 9P6237 Transmission Ar

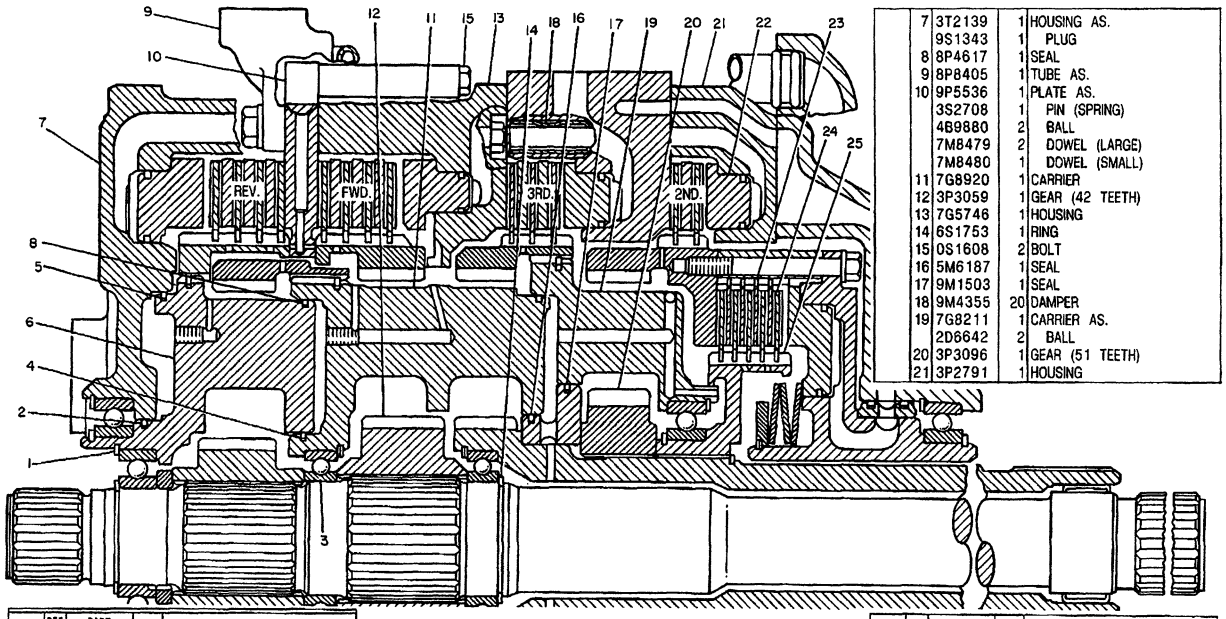

	7	3T2139	1 HOUSING AS.
		9S1343	1 PLUG
	8	8P4617	1 SEAL
	9	8P8405	1 TUBE AS.
	10	9P5536	1 PLATE AS.
		3S2708	1 PIN (SPRING)
		4B9880	2 BALL
		7M8479	2 DOWEL (LARGE)
		7M8480	1 DOWEL (SMALL)
	11	7G8920	1 CARRIER
	12	3P3059	1 GEAR (42 TEETH)
	13	7G5746	1 HOUSING
	14	6S1753	1 RING
	15	0S1608	2 BOLT
	16	5M6187	1 SEAL
	17	9M1503	1 SEAL
	18	9M4355	20 DAMPER
	19	7G8211	1 CARRIER AS.
		2D6642	2 BALL
	20	3P3096	1 GEAR (51 TEETH)
	21	3P2791	1 HOUSING

NOTE	REF NO	PART NUMBER	QTY	DESCRIPTION
	1	8K2692	1	RING
	2	6F0156	1	SEAL
	3	6V1781	2	BEARING

	4	9F3788	1	SEAL
	5	3P3321	2	SEAL
C	6	7T1124	1	CARRIER AS.
		4S8537	1	DOWEL

	22	3P2685	2	PISTON
	23	3P7489	4	PLATE
C	24	7T2476	5	DISC
	25	6P5554	1	HUB AS.
		4S8537	1	DOWEL

C INDICATES CHANGE

327838

327838 P

3160

9P6236 PLANETARY GP-PART 2 OF 4
Transmission S/N 2NA2216-2832
Part Of 9P6237 Transmission Ar

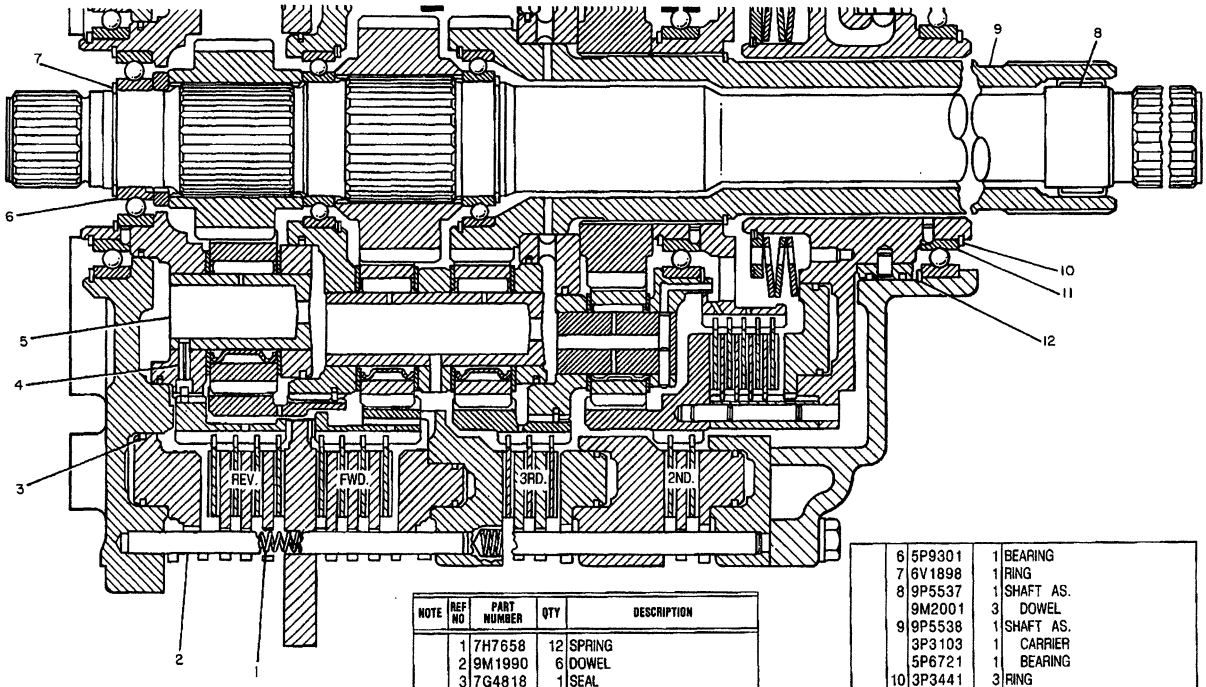

NOTE	REF NO	PART NUMBER	QTY	DESCRIPTION
	1	7H7658	12	SPRING
	2	9M1990	6	DOWEL
	3	7G4818	1	SEAL
	4	3S2708	9	PIN
	5	8P4047	3	SHAFT
	6	5P9301	1	BEARING
	7	6V1898	1	RING
	8	9P5537	1	SHAFT AS.
		9M2001	3	DOWEL
	9	9P5538	1	SHAFT AS.
		3P3103	1	CARRIER
		5P6721	1	BEARING
	10	3P3441	3	RING
	11	4S8546	3	BEARING
	12	6V0836	3	RING

327839

327839 P

3160

9P6236 PLANETARY GP-PART 3 OF 4
Transmission S/N 2NA2216-2832
Part Of 9P6237 Transmission Ar

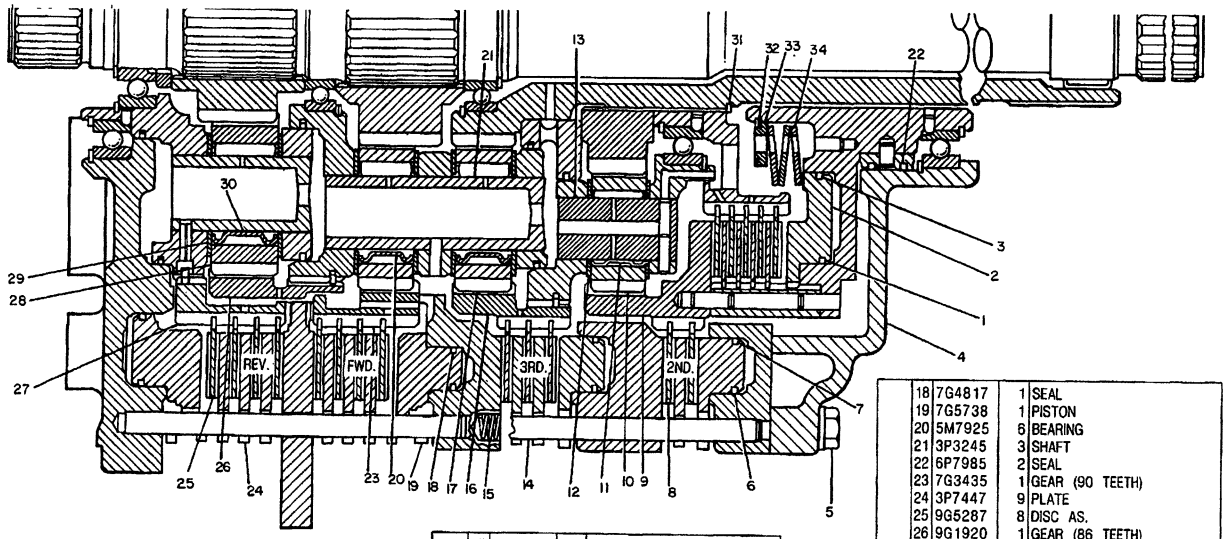

NOTE	REF NO	PART NUMBER	QTY	DESCRIPTION
	1	3P2792	1	SEAL
	2	3P2768	1	PISTON
	3	1P9261	1	SEAL
	4	9P5535	1	MANIFOLD AS.
		7M8480	2	DOWEL
	5	5M7900	17	BOLT
		5P8245	17	WASHER
	6	3P2793	4	SEAL
	7	3P2794	2	SEAL
	8	9G2408	5	DISC AS.
	9	6P5751	1	GEAR (90 TEETH)
	10	7G2476	3	GEAR (20 TEETH)
	11	5M6126	3	BEARING
	12	6P5005	6	DISC
	13	6P6739	3	SHAFT
	14	9H5546	6	DOWEL
	15	9H5537	24	SPRING
	16	3P3098	1	GEAR (90 TEETH)
	17	7G3457	6	GEAR (25 TEETH)
	18	7G4817	1	SEAL
	19	7G5738	1	PISTON
	20	5M7925	6	BEARING
	21	3P3245	3	SHAFT
	22	6P7985	2	SEAL
	23	7G3435	1	GEAR (90 TEETH)
	24	3P7447	9	PLATE
	25	9G5287	8	DISC AS.
	26	9G1920	1	GEAR (86 TEETH)
C	27	6T3720	1	GEAR
	28	9G1919	3	GEAR (25 TEETH)
	29	7G0897	18	WASHER
	30	5P6254	3	BEARING
	31	7J6525	1	RING
	32	5P3150	1	RING
	33	8P6986	1	PLATE
	34	8P6997	3	SPRING
F		6V1720	1	PLATE (SERIAL NO.)
F		7B3028	2	SCREW

C INDICATES CHANGE

F NOT SHOWN

327840

327840 P

9P6236 PLANETARY GP-PART 4 OF 4
Transmission S/N 2NA2216-2832
Part Of 9P6237 Transmission Ar

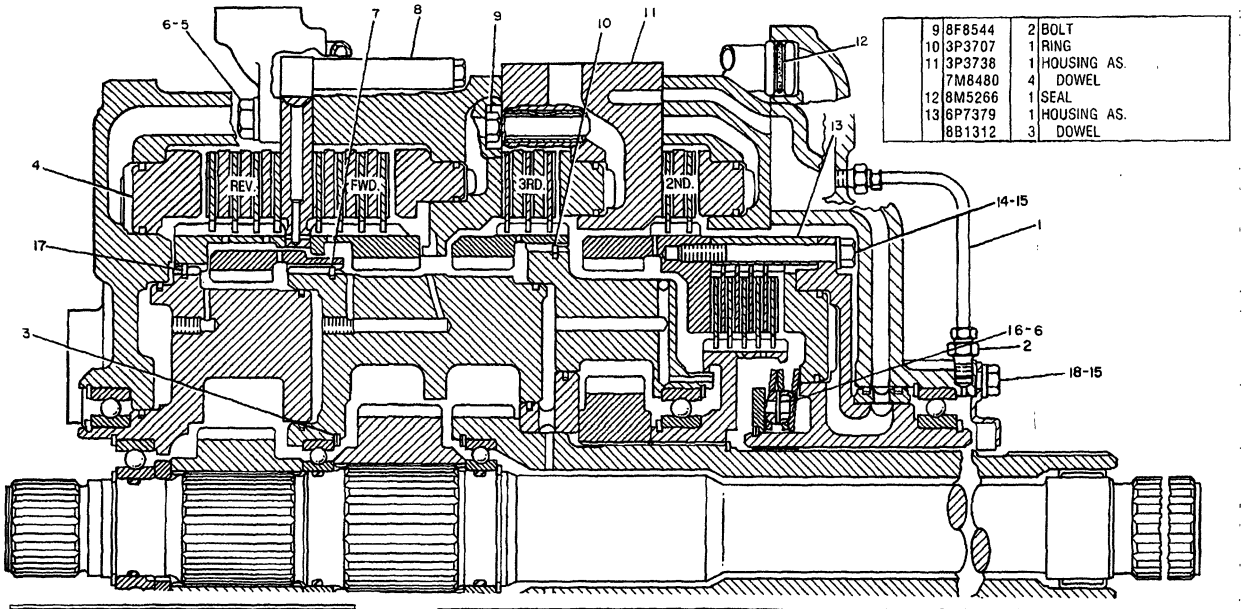

NOTE	REF NO	PART NUMBER	QTY	DESCRIPTION
C	1	7T2166	1	TUBE AS.
C	2	6L3616	2	CONNECTOR
	3	8S9104	2	RING
	4	7G5739	1	PISTON
	5	7B3235	1	BOLT
	6	5P8245	3	WASHER
	7	3P3708	1	RING
	8	8P0056	2	SLEEVE
	9	8F8544	2	BOLT
	10	3P3707	1	RING
	11	3P3738	1	HOUSING AS.
		7M8480	4	DOWEL
	12	8M5266	1	SEAL
	13	6P7379	1	HOUSING AS.
		8B1312	3	DOWEL
	14	0T0065	20	BOLT
C	15	5M2894	24	WASHER
	16	8S6212	2	BOLT
	17	3P3708	1	RING
C	18	5K9107	4	BOLT

C INDICATES CHANGE

334820

334820 EP

3160 **9P6236 PLANETARY GP-PART 1 OF 4**

Transmission S/N 2NA2833-4646

Part Of 9P6237 Transmission Ar

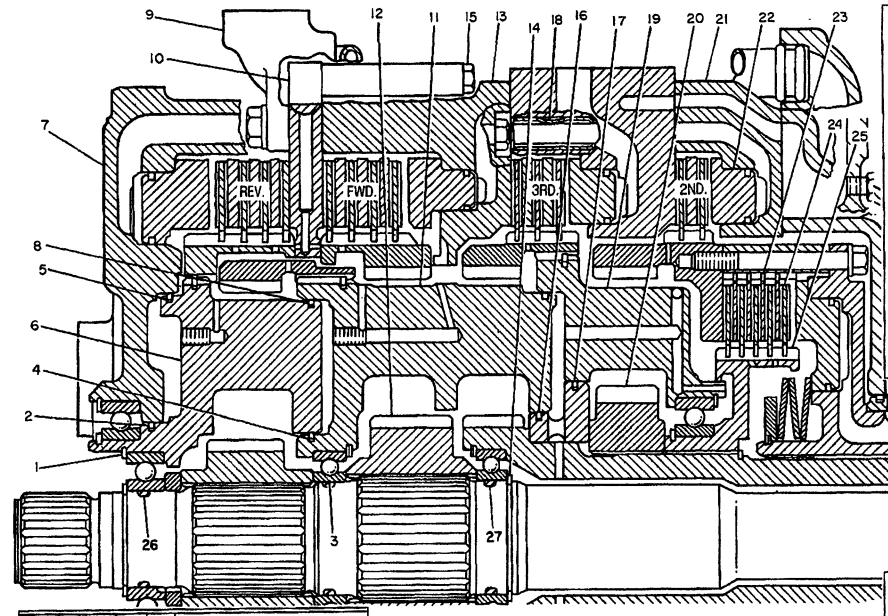

NOTE	REF NO	PART NUMBER	QTY	DESCRIPTION
	1	8K2692	1	RING
	2	6F0156	1	SEAL
C	3	8T1925	2	BEARING
	4	9F3788	1	SEAL
	5	3P3321	2	SEAL
	6	7T1124	1	CARRIER AS.
		4S8537	1	DOWEL
	7	3T2139	1	HOUSING AS.
		9S1343	1	PLUG
	8	8P4617	1	SEAL
	9	8P8405	1	TUBE AS.
	10	9P5536	1	PLATE AS.
		3S2708	1	PIN (SPRING)
		4B9880	2	BALL
		7M8479	2	DOWEL (LARGE)
		7M8480	1	DOWEL (SMALL)
	11	7G8920	1	CARRIER
	12	3P3059	1	GEAR (42 TEETH)
	13	7G5746	1	HOUSING
	14	6S1753	1	RING
	15	0S1608	2	BOLT
	16	5M6187	1	SEAL
	17	9M1503	1	SEAL
	18	9M4355	20	DAMPER
	19	7G8211	1	CARRIER AS.
		2D6642	2	BALL
	20	3P3096	1	GEAR (51 TEETH)
	21	3P2791	1	HOUSING
	22	3P2685	2	PISTON
	23	3P7489	4	PLATE
	24	7T2476	5	DISC
	25	6P5554	1	HUB AS.
		4S8537	1	DOWEL
C	26	8M5661	1	SEAL
C	27	8M4390	2	SEAL

C INDICATES CHANGE

334821

334821 EP

3160

9P6236 PLANETARY GP-PART 2 OF 4
Transmission S/N 2NA2833-4646
Part Of 9P6237 Transmission Ar

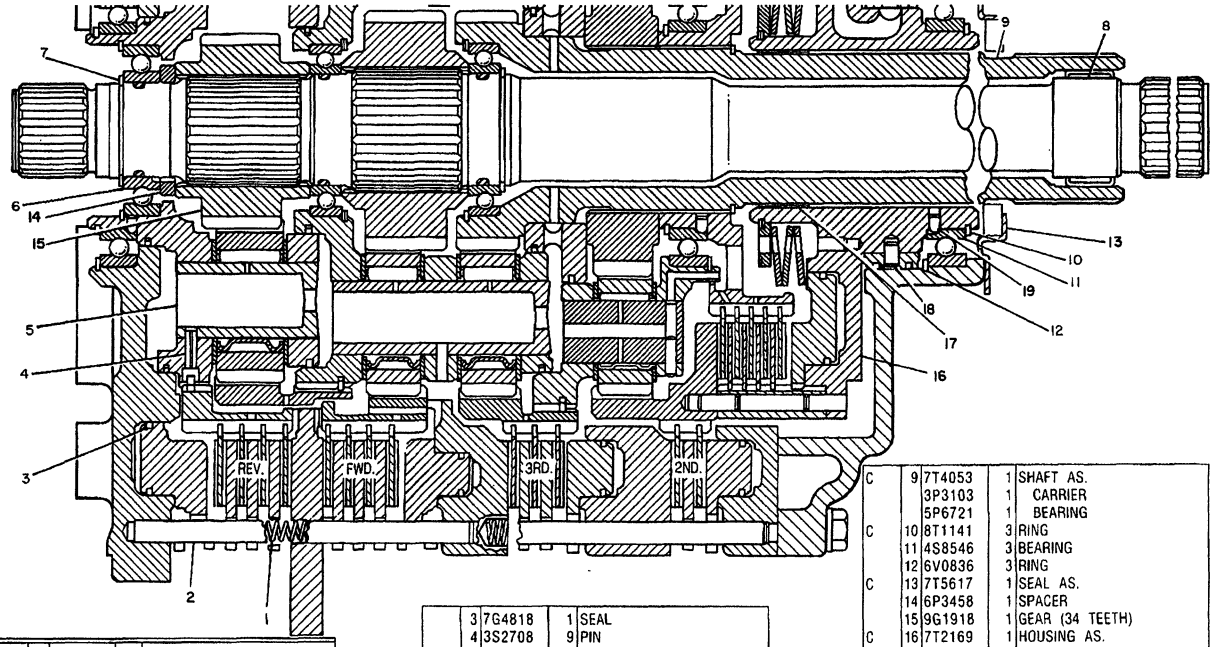

NOTE	REF NO	PART NUMBER	QTY	DESCRIPTION
	1	7H7658	12	SPRING
	2	9M1990	6	DOWEL
	3	7G4818	1	SEAL
	4	3S2708	9	PIN
	5	8P4047	3	SHAFT
C	6	2D5658	1	BEARING
	7	6V1898	1	RING
C	8	7T2170	1	SHAFT
C	9	7T4053	1	SHAFT AS.
		3P3103	1	CARRIER
		5P6721	1	BEARING
C	10	8T1141	3	RING
	11	4S8546	3	BEARING
	12	6V0836	3	RING
C	13	7T5617	1	SEAL AS.
	14	6P3458	1	SPACER
	15	9G1918	1	GEAR (34 TEETH)
C	16	7T2169	1	HOUSING AS.
		6P7564	1	CARRIER
	17	7T4155	1	BEARING
	18	6B6863	1	PIN
	19	4S8537	1	DOWEL

C INDICATES CHANGE

334822

334822 EP

3160

9P6236 PLANETARY GP-PART 3 OF 4
Transmission S/N 2NA2833-4646
Part Of 9P6237 Transmission Ar

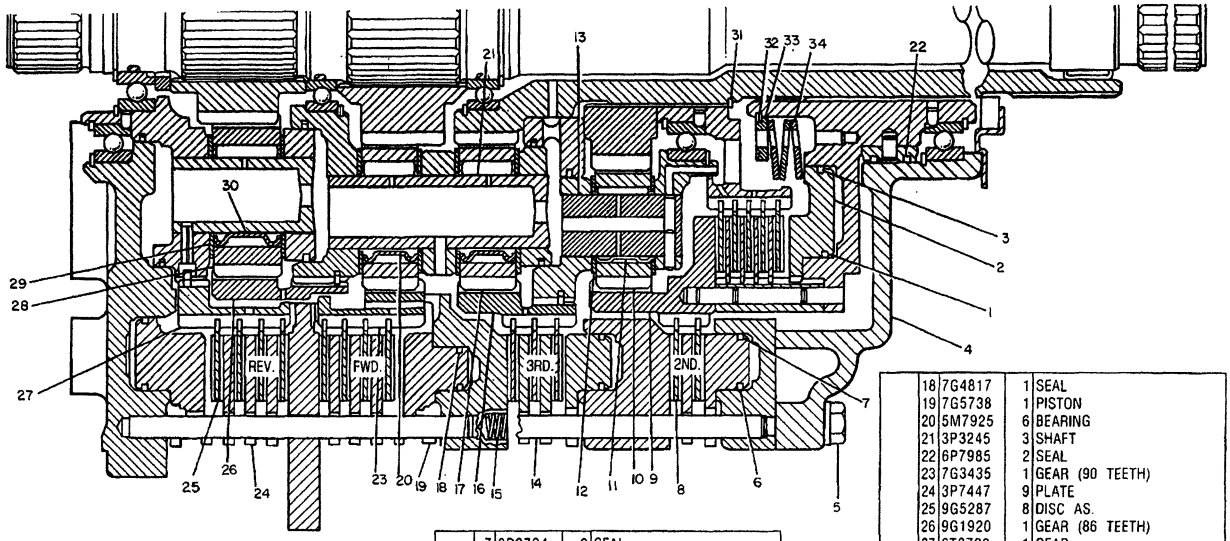

NOTE	REF NO	PART NUMBER	QTY	DESCRIPTION
	1	3P2792	1	SEAL
	2	3P2768	1	PISTON
	3	1P9261	1	SEAL
C	4	7T4050	1	MANIFOLD AS.
		7M8480	2	DOWEL
	5	5M7900	17	BOLT
		5P8245	17	WASHER
	6	3P2793	4	SEAL
	7	3P2794	2	SEAL
	8	9G2408	5	DISC AS.
	9	6P5751	1	GEAR (90 TEETH)
	10	7G2476	3	GEAR (20 TEETH)
	11	5M6126	3	BEARING
	12	6P5005	6	DISC
	13	6P6739	3	SHAFT
	14	9H5546	6	DOWEL
	15	9H5537	24	SPRING
	16	3P3098	1	GEAR (90 TEETH)
	17	7G3457	6	GEAR (25 TEETH)
	18	7G4817	1	SEAL
	19	7G5738	1	PISTON
	20	5M7925	6	BEARING
	21	3P3245	3	SHAFT
	22	6P7985	2	SEAL
	23	7G3435	1	GEAR (90 TEETH)
	24	3P7447	9	PLATE
	25	9G5287	8	DISC AS.
	26	9G1920	1	GEAR (86 TEETH)
	27	6T3720	1	GEAR
	28	9G1919	3	GEAR (25 TEETH)
	29	7G0897	18	WASHER
	30	5P6254	3	BEARING
	31	7J6525	1	RING
	32	5P3150	1	RING
	33	8P6986	1	PLATE
	34	8P6997	3	SPRING
F		6V1720	1	PLATE (SERIAL NO.)
F		7B3028	2	SCREW

C INDICATES CHANGE

F NOT SHOWN

334823

334823 EP

3160

9P6236 PLANETARY GP-PART 4 OF 4
Transmission S/N 2NA2833-4646
Part Of 9P6237 Transmission Ar

POWER TRAIN-POWER TRANSMISSION UNIT

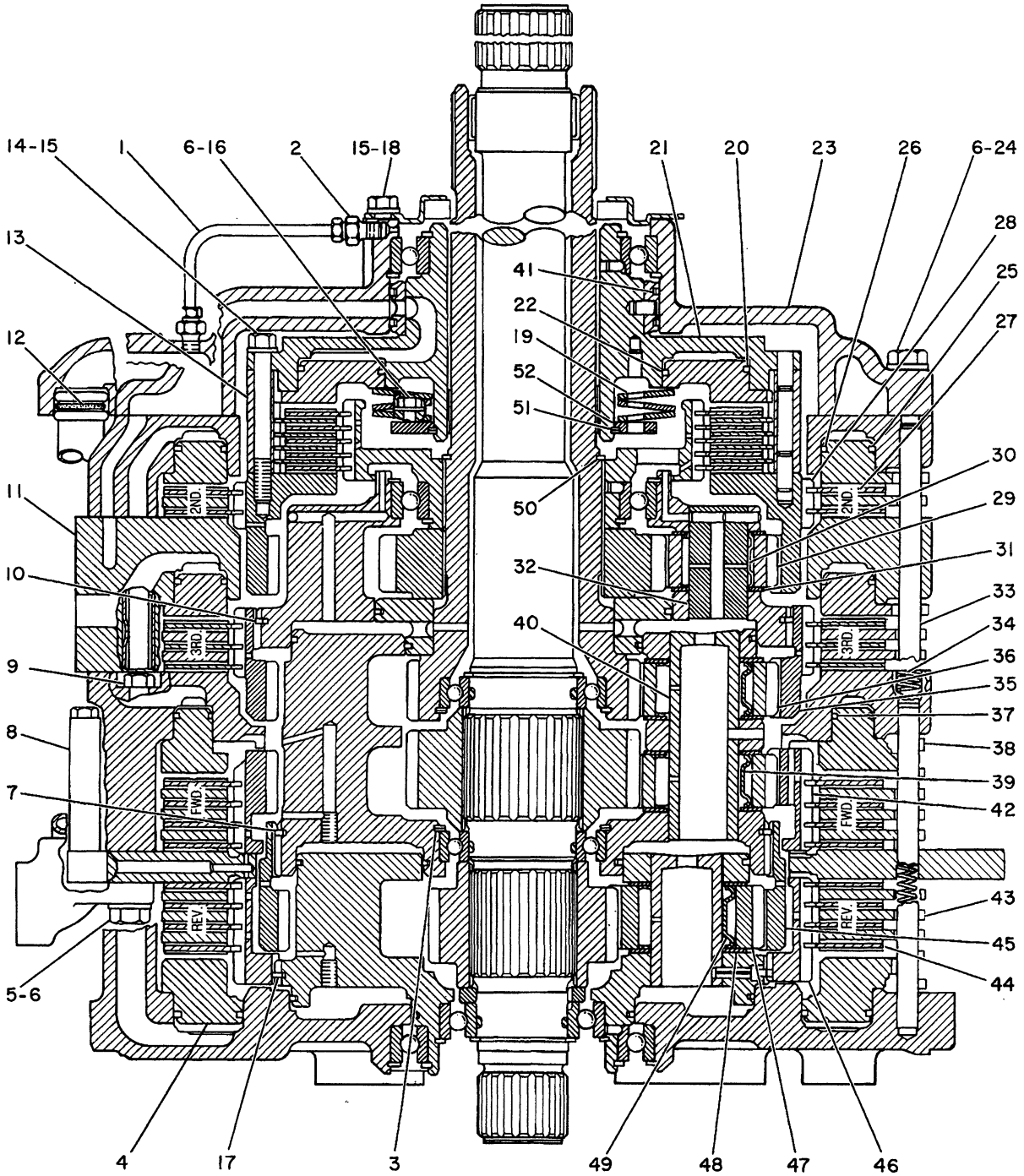

B-489981 EP

3160

9P6236 PLANETARY GP-PART 1 OF 4
Transmission S/N 2NA4647-Up
Part Of 9P6237 Transmission Ar

POWER TRAIN-POWER TRANSMISSION UNIT

NOTE	REF NO	PART NUMBER	QTY	PART NAME
	1	7T2166	1	TUBE AS
	2	6L3616	2	CONNECTOR-FLARED
	3	8S9104	2	RING-RETAINING
C	4	9W6099	1	PISTON-CLUTCH
	5	7B3235	1	BOLT
	6	5P8245	20	WASHER
	7	3P3708	1	LOCKRING
	8	8P0056	2	SLEEVE
	9	8F8544	2	BOLT
	10	3P3707	1	LOCKRING
	11	3P3738	1	HOUSING AS
		7M8480	4	DOWEL
	12	8M5266	1	SEAL-O-RING
	13	6P7379	1	HOUSING AS
		8B1312	3	DOWEL
	14	0T0065	20	BOLT
	15	5M2894	24	WASHER
	16	8S6212	2	BOLT
	17	3P3708	1	LOCKRING
	18	5K9107	4	BOLT-LOCKING
	19	8P6997	3	SPRING-DISC
	20	3P2792	1	SEAL-RING
	21	3P2768	1	PISTON-CLUTCH
	22	1P9261	1	RING-SEAL
	23	7T4050	1	MANIFOLD AS
		7M8480	2	DOWEL
	24	5M7900	17	BOLT
	25	3P2793	4	SEAL-RING
	26	3P2794	2	SEAL-RING
	27	9G2408	5	DISC AS-FRICTION
	28	6P5751	1	GEAR-RING
	29	7G2476	3	GEAR
	30	5M6126	3	BEARING
	31	6T7799	6	DISC-THRUST
	32	6P6739	3	SHAFT-PLANETARY
	33	9W8298	6	DOWEL
	34	9H5537	24	SPRING
	35	3P3098	1	GEAR-RING
	36	7G3457	6	GEAR
	37	7G4817	1	RING-SEAL
	38	9W7458	1	PISTON-CLUTCH
	39	5M7925	6	BEARING-ROLLER
	40	3P3245	3	SHAFT-PLANETARY
	41	6P7985	2	RING-SEAL
	42	7G3435	1	GEAR-RING
	43	3P7447	9	PLATE-CLUTCH
	44	9G5287	8	DISC AS-FRICTION
	45	9W5768	1	GEAR-RING
	46	6T3720	1	GEAR-RING
	47	9G1919	3	GEAR
	48	7T3145	18	DISC-THRUST
	49	5P6254	3	BEARING
	50	7J6525	1	RING-RETAINING
	51	5P3150	1	RING-RETAINING
	52	8P6986	1	PLATE-RETAINER
		6V1720	1	PLATE-SERIAL NUMBER
		7B3028	2	SCREW-DRIVE (MTD ON TRANS HOUSING)

C-CHANGE FROM PREVIOUS TYPE

B-489982 EP

3160 **9P6236 PLANETARY GP-PART 2 OF 4**

Transmission S/N 2NA4647-Up

Part Of 9P6237 Transmission Ar

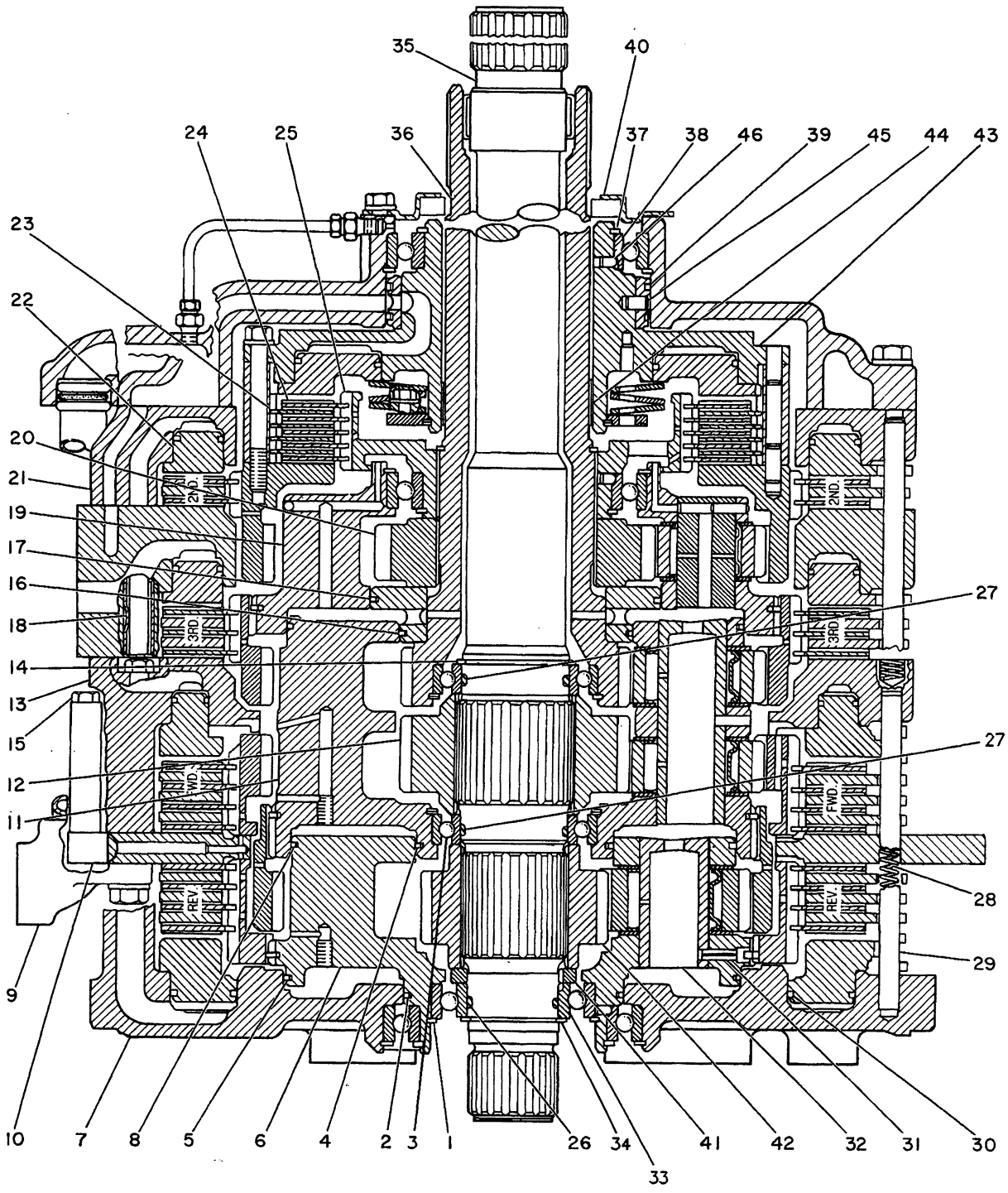

R-533079 EP

3160

9P6236 PLANETARY GP-PART 3 OF 4
Transmission S/N 2NA4647-Up
Part Of 9P6237 Transmission Ar

POWER TRAIN-POWER TRANSMISSION UNIT

NOTE	REF NO	PART NUMBER	QTY	PART NAME
	1	8K2692	1	RING-RETAINING
	2	6F0156	1	RING-METAL SEAL
C	3	6Y0296	1	BALL BEARING
	4	9F3788	1	RING-METAL SEAL
	5	3P3321	2	SEAL-METAL RING
	6	7T1124	1	CARRIER AS
		4S8537	1	DOWEL
	7	3T2139	1	HOUSING AS-CLUTCH
		9S1343	1	PLUG-CUP
	8	8P4617	1	SEAL-METAL RING
	9	8P8405	1	TUBE AS
C	10	9W6191	1	PLATE AS
		8T1444	2	DOWEL 50.80MM(2IN)
		8T1443	1	DOWEL 31.75MM(1.25IN)
		7M5130	1	PIN 19.05MM(.75IN)
	11	7G8920	1	CARRIER-PLANETARY
	12	3P3059	1	GEAR-SUN (42 TEETH)
	13	7G5746	1	HOUSING-CLUTCH
	14	6S1753	1	RING-RETAINING
	15	0S1608	2	BOLT
	16	5M6187	1	RING-METAL SEAL
	17	9M1503	1	RING-METAL SEAL
	18	9M4355	20	DAMPER-BOLT
	19	7G8211	1	CARRIER AS
		2D6642	2	BALL
	20	3P3096	1	GEAR-SUN (51 TEETH)
	21	3P2791	1	HOUSING-CLUTCH
	22	3P2685	2	PISTON-CLUTCH
	23	3P7489	4	PLATE-CLUTCH
	24	7T2476	5	DISC-FRICTION
C	25	9W2977	1	HUB AS
		4S8537	1	DOWEL
	26	8M5661	1	SEAL-O-RING
	27	8M4390	2	SEAL-O-RING
	28	7H7658	12	SPRING
	29	9W8297	6	DOWEL
	30	7G4818	1	RING-SEAL
	31	3S2708	9	PIN-SPRING
	32	8P4047	3	SHAFT-PLANETARY
	33	2D5658	1	BALL BEARING
	34	6V1898	1	RING-RETAINING
	35	7T2170	1	SHAFT-TRANSMISSION INPUT
	36	7T4053	1	SHAFT AS-OUTPUT
		3P3103	1	CARRIER-RING
		5P6721	1	BEARING-ROLLER
	37	8T1141	3	RING-RETAINING
	38	4S8546	3	BALL BEARING
	39	6V0836	3	RING-RETAINING
	40	7T5617	1	SEAL AS
	41	6P3458	1	SPACER
	42	9G1918	1	GEAR-SUN
	43	7T2169	1	HOUSING AS-ROTATION
		6P7564	1	CARRIER-RING
	44	7T4155	1	BEARING-SLEEVE
	45	6B6863	1	PIN-SPRING
	46	4S8537	1	DOWEL

C-CHANGE FROM PREVIOUS TYPE

B-489984 EP

3160

9P6236 PLANETARY GP-PART 4 OF 4
Transmission S/N 2NA4647-Up
Part Of 9P6237 Transmission Ar

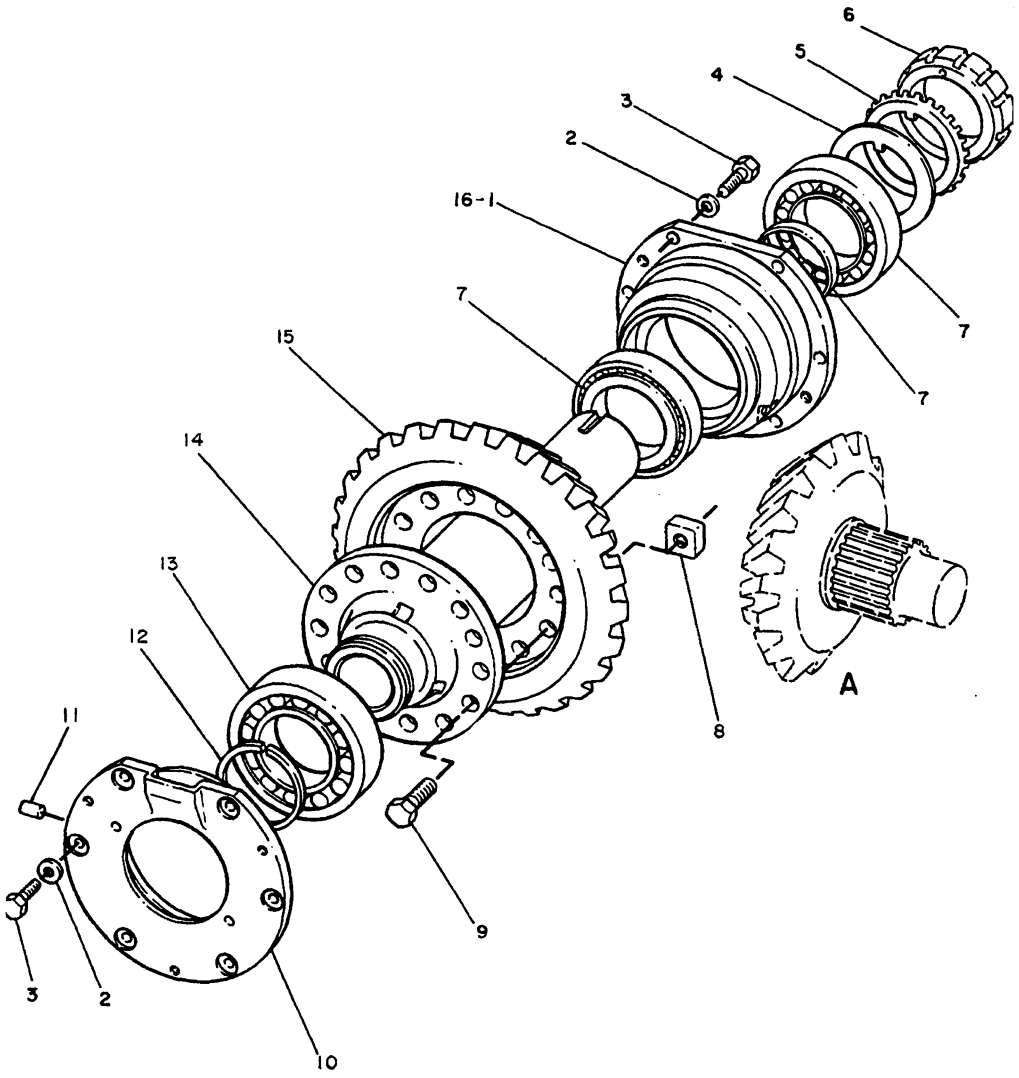

NOTE	REF NO	PART NUMBER	QTY	DESCRIPTION
	1	9P6482	1	CAGE
	2	5P8245	12	WASHER
	3	S1587	12	BOLT
	4	7G8115	1	WASHER
	5	6V1071	1	WASHER
	6	3T1783	1	NUT
C	7	6V8121	1	BEARING ASSEM. (INCLUDES 2 CONES, 2 CUPS AND 1 SPACER)
	8	1S1860	14	NUT
	9	7H3598	14	BOLT
	10	9P1114	1	CAGE
	11	9P9161	1	DOWEL
	12	5P3414	1	RING
	13	3S9669	1	BEARING (OUTER)
		3P2558	1	RACE (INNER)
	14	3T2273	1	SHAFT
	15	8P6241	1	GEAR (29 TEETH)
	16	7G2325	2	SHIM PACK

C INDICATES CHANGE

312206 312206 P

3159 **9P6235 GEAR GP-BEVEL & TRANSFER-PART 1 OF 2**

Transmission S/N 2NA1-4794

Part Of 9P6237 Transmission Ar

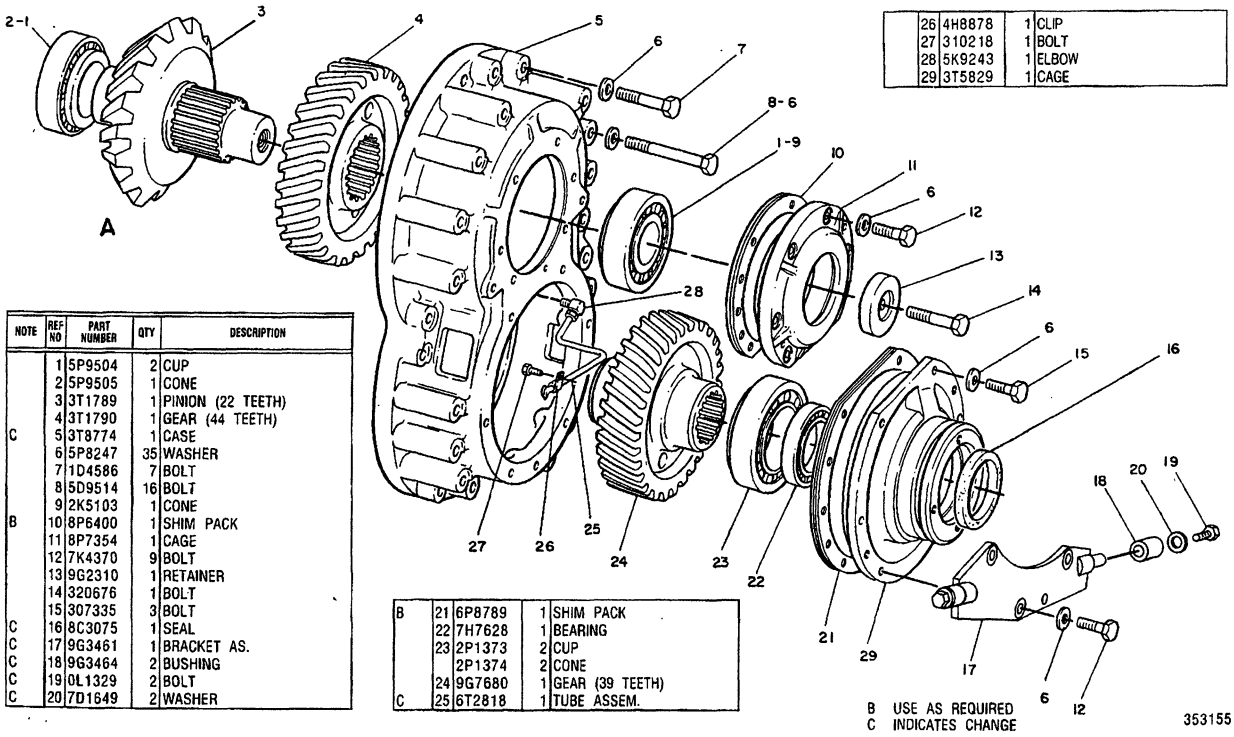

NOTE	REF NO	PART NUMBER	QTY	DESCRIPTION
	1	5P9504	2	CUP
	2	5P9505	1	CONE
	3	3T1789	1	PINION (22 TEETH)
	4	3T1790	1	GEAR (44 TEETH)
C	5	3T8774	1	CASE
	6	5P8247	35	WASHER
	7	1D4586	7	BOLT
	8	5D9514	16	BOLT
	9	2K5103	1	CONE
B	10	8P6400	1	SHIM PACK
	11	8P7354	1	CAGE
	12	7K4370	9	BOLT
	13	9G2310	1	RETAINER
	14	320676	1	BOLT
	15	307335	3	BOLT
C	16	8C3075	1	SEAL
C	17	9G3461	1	BRACKET AS.
C	18	9G3464	2	BUSHING
C	19	0L1329	2	BOLT
C	20	7D1649	2	WASHER

	26	4H8878	1	CLIP
	27	310218	1	BOLT
	28	5K9243	1	ELBOW
	29	3T5829	1	CAGE

B	21	6P8789	1	SHIM PACK
	22	7H7628	1	BEARING
	23	2P1373	2	CUP
		2P1374	2	CONE
	24	9G7680	1	GEAR (39 TEETH)
C	25	6T2818	1	TUBE ASSEM.

B USE AS REQUIRED
C INDICATES CHANGE

353155

353155 P

3159 **9P6235 GEAR GP-BEVEL & TRANSFER-PART 2 OF 2**

Transmission S/N 2NA1-4794

Part Of 9P6237 Transmission Ar

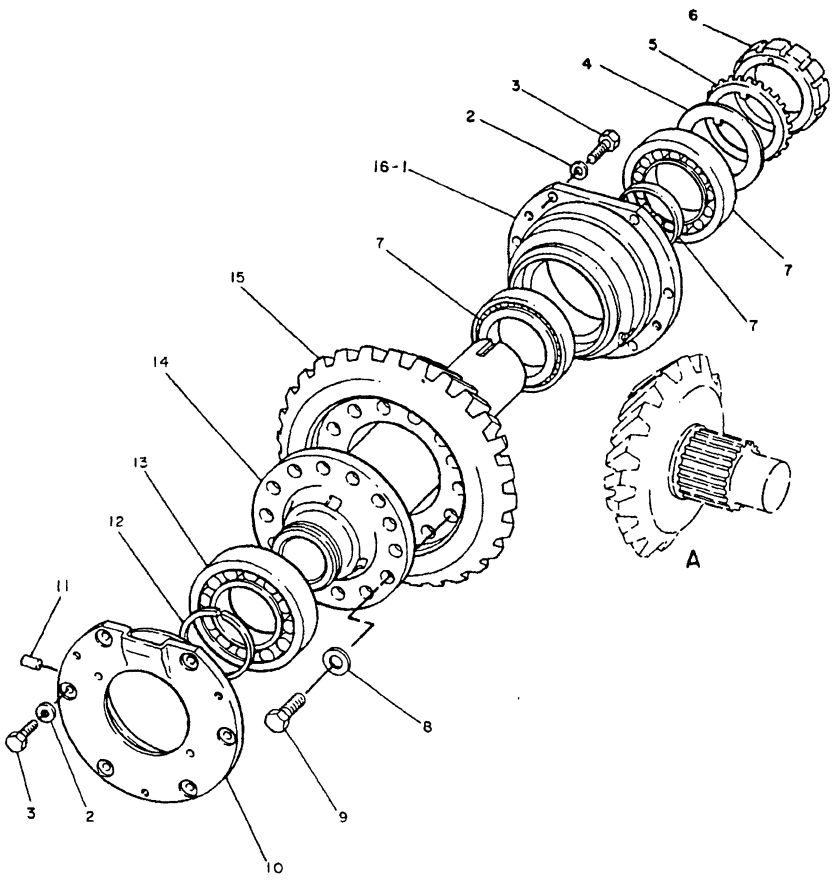

NOTE	REF NO	PART NUMBER	QTY	PART NAME	NOTE	REF NO	PART NUMBER	QTY	PART NAME
	1	9P6482	1	CAGE-BEARING					
	2	5P8245	12	WASHER					
	3	0S1587	12	BOLT					
	4	7G8115	1	LOCKWASHER-BEARING					
	5	6V1071	1	LOCKWASHER-BEARING					
	6	3T1783	1	NUT					
	7	6V8121	1	BEARING AS-ROLLER (INCLUDES 2 CONES, 2 CUPS AND 1 SPACER)					
C	8	5P8248	14	WASHER-HARD					
C	9	9S1362	14	BOLT					
C	10	9W7378	1	CAGE-BEARING					
	11	9P9161	1	DOWEL					
	12	5P3414	1	RING-RETAINING					
	13	3S9669	1	BEARING (OUTER)					
		3P2558	1	RACE-BEARING INNER					
	14	3T2273	1	SHAFT-BEVEL GEAR					
C	15	9W5168	1	GEAR-BEVEL (29 TEETH)					
	16	7G2325	2	SHIM PACK					

C-CHANGE FROM PREVIOUS TYPE

B-413418 EP

3159 **9P6235 GEAR GP-BEVEL & TRANSFER-PART 1 OF 2**

Transmission S/N 2NA4795-Up

Part Of 9P6237 Transmission Ar

POWER TRAIN-POWER TRANSMISSION UNIT

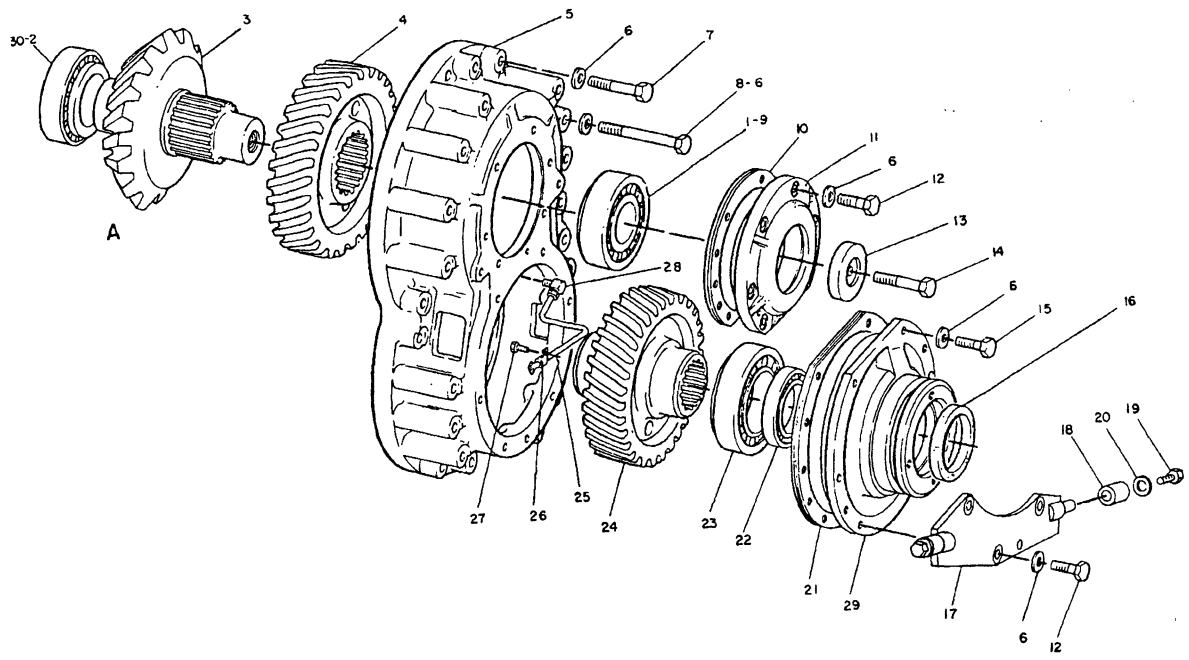

NOTE	REF NO	PART NUMBER	QTY	PART NAME	NOTE	REF NO	PART NUMBER	QTY	PART NAME
C	1	5P9504	1	CUP-ROLLER BEARING		26	4H8878	1	CLIP
C	2	6V0457	1	CONE-ROLLER BEARING		27	310218	1	BOLT-LOCKING
C	3	9W5167	1	PINION-BEVEL (22 TEETH)		28	5K9243	1	ELBOW-FLARED
	4	3T1790	1	GEAR-TRANSFER (44 TEETH)		29	3T5829	1	CAGE-BEARING
C	5	9W7394	1	CASE-TRANSFER GEAR	C	30	6V0458	1	CUP-ROLLER BEARING
	6	5P8247	35	WASHER-HARD					
	7	1D4586	7	BOLT					
	8	5D9514	16	BOLT					
	9	2K5103	1	CONE-ROLLER BEARING					
B	10	8P6400	1	SHIM PACK					
	11	8P7354	1	CAGE-BEARING					
	12	7K4370	9	BOLT					
	13	9G2310	1	RETAINER					
	14	320676	1	BOLT-LOCKING					
	15	307335	3	BOLT-LOCKING					
	16	8C3075	1	SEAL-LIP					
	17	9G3461	1	BRACKET AS					
	18	9G3464	2	BUSHING-TERMINAL					
	19	OL1329	2	BOLT					
	20	7D1649	2	WASHER					
B	21	6P8789	1	SHIM PACK					
	22	7H7628	1	BEARING					
	23	2P1373	2	CUP-ROLLER BEARING					
		2P1374	2	CONE-ROLLER BEARING					
	24	9G7680	1	GEAR-TRANSFER (39 TEETH)					
	25	6T2818	1	TUBE AS					

B-USE AS REQUIRED
C-CHANGE FROM PREVIOUS TYPE

B-413419 EP

3159 **9P6235 GEAR GP-BEVEL & TRANSFER-PART 2 OF 2**
Transmission S/N 2NA4795-Up
Part Of 9P6237 Transmission Ar

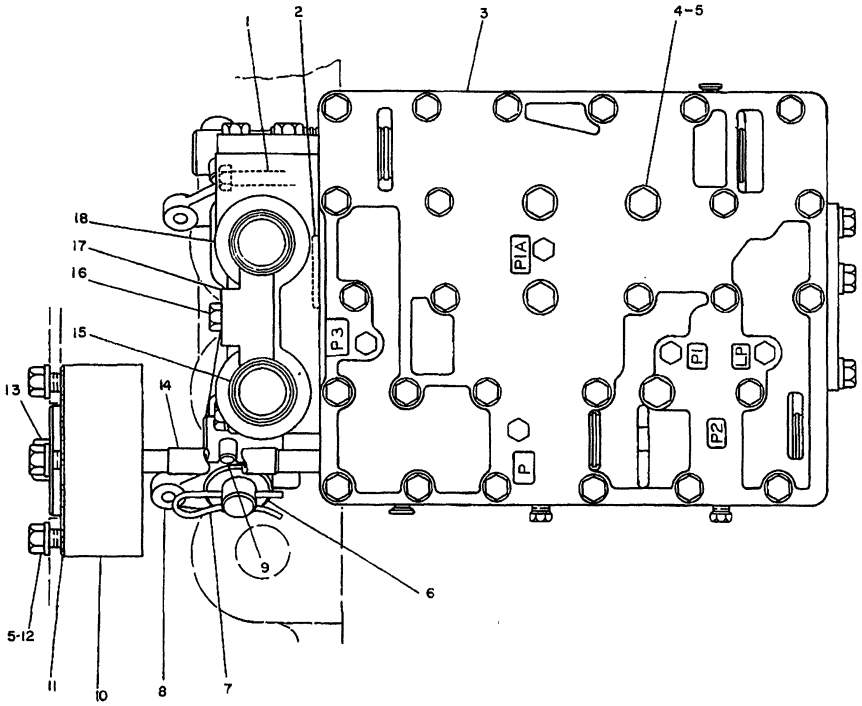

	REF. NO.	PART NUMBER	DESCRIPTION	QTY
	1	1D4539	BOLT	4
		9M1974	WASHER	4
	2	8M4986	SEAL	2
C	3	3T5017	VALVE GROUP (Separate Illustration)	1
	4	6B1557	BOLT	4
	5	5M2894	WASHER	8
	6	4H1394	WASHER	4
	7	6S6646	PIN	2
	8	9P5977	LEVER ASSEM. (Each Includes)	2
		8H8175	BEARING	1
	9	9P6217	DOWEL	1
		2H3429	RING	2
	10	7G5963	ADAPTER	1
	11	2J4672	GASKET	1
	12	S1594	BOLT	4
	13	9S4191	PLUG	2
		3J1907	SEAL	2
	14	7G5964	SLEEVE	2
		8M8157	SEAL	4
	15	9P6205	SLEEVE	2
		8M4432	SEAL	4
	16	2H3755	BOLT	1
	17	8P310	RETAINER	1
	18	9P6220	VALVE GROUP (Separate Illustration)	1

C INDICATES CHANGE

235233

235233 P

3167

6P6876 CONTROL GP-TRANSMISSION HYDRAULIC

Transmission S/N 2NA1-686
9P6220-Page 129, 3T5017-Page 130
Part Of 9P6237 Transmission Ar

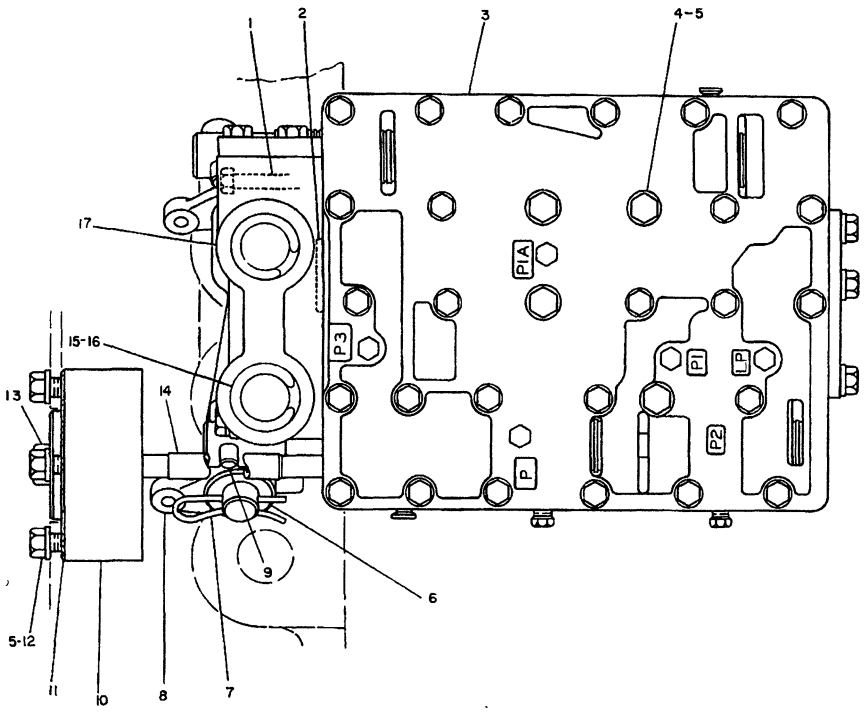

REF. NO.	PART NUMBER	DESCRIPTION	QTY
1	1D4539	BOLT	4
	9M1974	WASHER	4
2	8M4986	SEAL	2
3	3T5017	VALVE GROUP (Separate Illustration)	1
4	6B1557	BOLT	4
5	5M2894	WASHER	8
6	4H1394	WASHER	4
7	6S6646	PIN	2
8	9P5977	LEVER ASSEM. (Each includes)	2
	8H8175	BEARING	1
9	9P6217	DOWEL	1
	2H3429	RING	2
10	7G5963	ADAPTER	1
11	2J4672	GASKET	1
12	S1594	BOLT	4
13	9S4191	PLUG	2
	3J1907	SEAL	2
14	7G5964	SLEEVE	2
	8M8157	SEAL	4
C 15	3T6457	SLEEVE	2
	8M4432	SEAL	4
C 16	3T4403	SPRING	2
C 17	9P6220	VALVE GROUP (Separate Illustration)	1

C INDICATES CHANGE

307028

307028 P

3167 **6P6876 CONTROL GP-TRANSMISSION HYDRAULIC**

Transmission S/N 2NA687-2528
9P6220-Page 129,3T5017-Page 130
Part Of 9P6237 Transmission Ar

POWER TRAIN-POWER TRANSMISSION UNIT

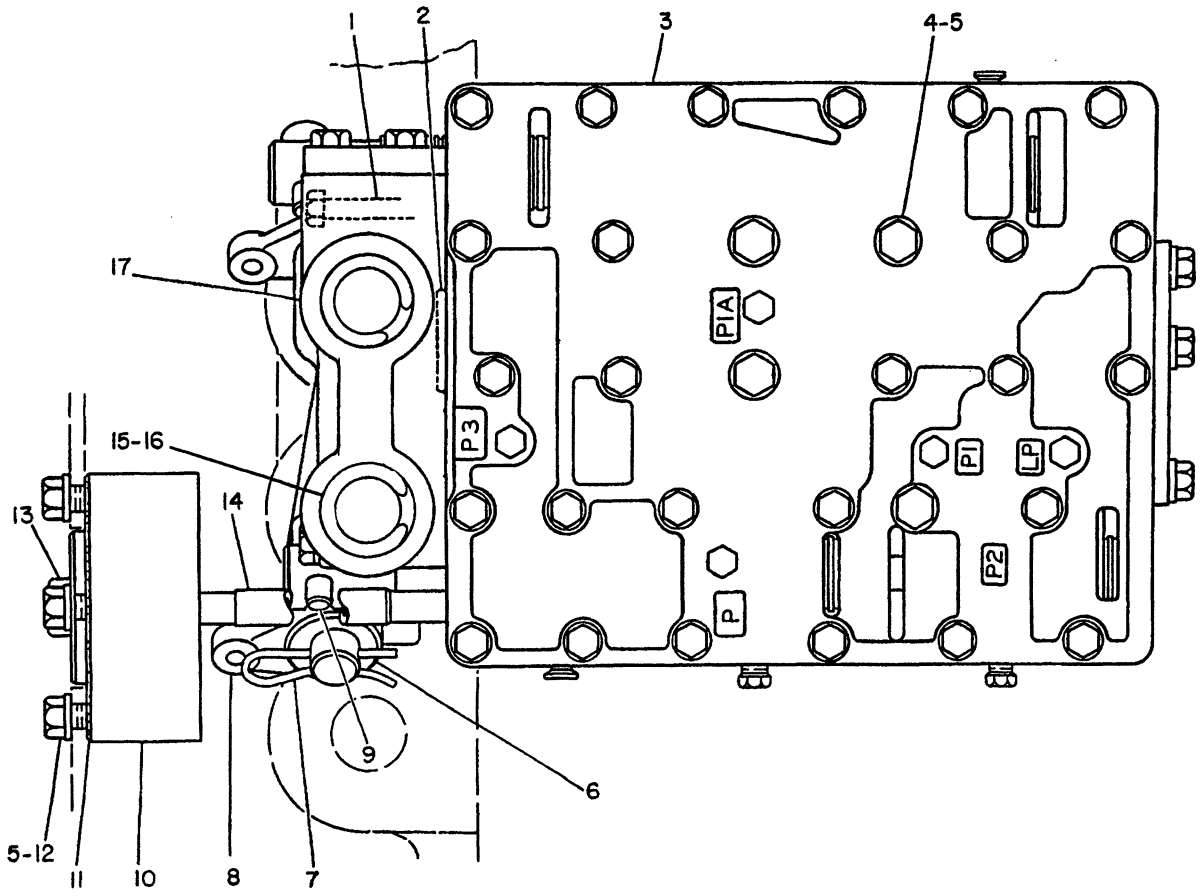

NOTE	REF NO	PART NUMBER	QTY	PART NAME
	1	1D4539	4	BOLT
		9M1974	4	WASHER-HARD
	2	8M4986	2	SEAL-O-RING
Y	3	3T5017	1	VALVE GP
	4	6B1557	4	BOLT
	5	5M2894	8	WASHER
	6	4H1394	4	WASHER
	7	6S6646	2	PIN
	8	9P5977	2	LEVER AS
				(EACH INCLUDES)
		8H8175	1	BEARING
	9	9P6217	1	DOWEL
		2H3429	2	RING-RETAINING
	10	7G5963	1	ADAPTER
	11	2J4672	1	GASKET
	12	0S1594	4	BOLT
	13	9S4191	2	PLUG-O-RING
		3J1907	2	SEAL-O-RING
	14	7G5964	2	SLEEVE
		8M8157	4	SEAL
	15	3T6457	2	SLEEVE
		8M4432	4	SEAL-O-RING
	16	3T4403	2	SPRING
CY	17	6T2313	1	VALVE GP-PRIORITY

C-CHANGE FROM PREVIOUS TYPE
Y-SEPARATE ILLUSTRATION

B-596558 CP

3167 **6P6876 CONTROL GP-TRANSMISSION HYDRAULIC**

Transmission S/N 2NA2529-Up
6T2313-Page 129.01,3T5017-Page 130
Part Of 9P6237 Transmission Ar

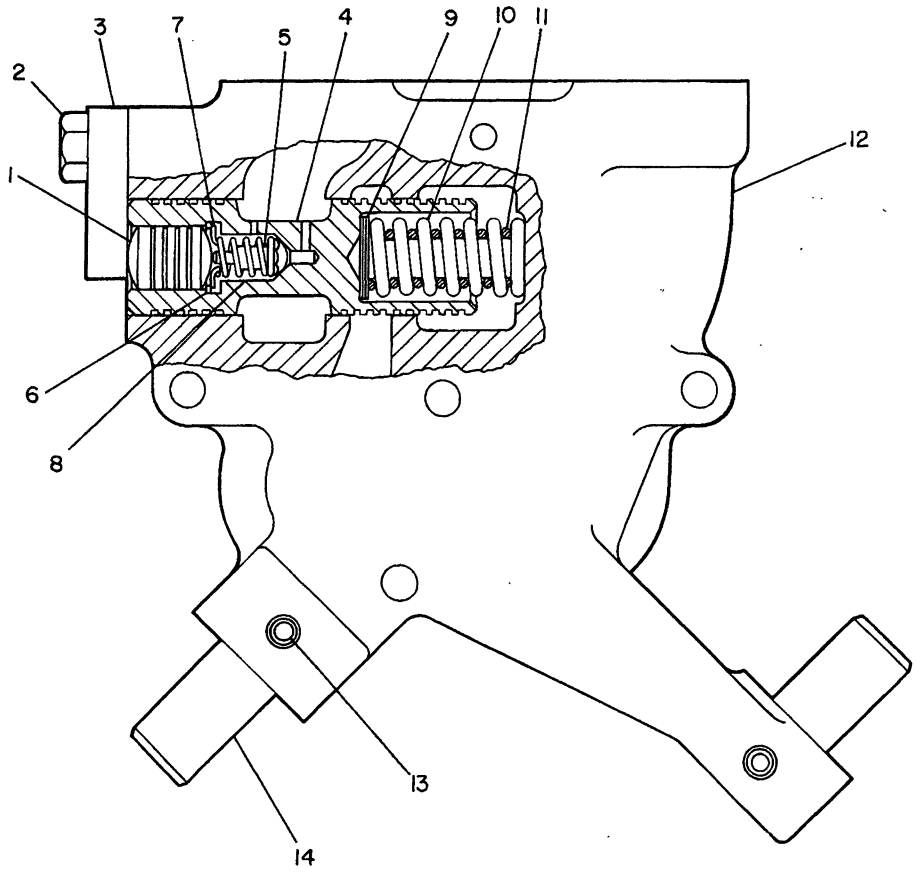

NOTE	REF NO	PART NUMBER	QTY	PART NAME	NOTE	REF NO	PART NUMBER	QTY	PART NAME
	1	2M7041	1	SLUG					
	2	0L1351	2	BOLT					
	3	9S2792	1	COVER					
	4	5S4437	1	SPOOL AS					
	5	1S2121	1	PLUNGER-DAMPING					
	6	3D8317	1	RING-RETAINING					
	7	8M1013	1	RETAINER					
	8	4M2381	1	SPRING					
B	9	5M9624	6	SPACER					
C	10	3T3772	1	SPRING (OUTER)					
C	11	3T3771	1	SPRING (INNER)					
	12	9P6222	1	BODY-VALVE					
	13	4H4737	2	PIN-SPRING					
	14	8P0311	2	SHAFT-GOVERNOR CONTROL					

B-USE AS REQUIRED
C-CHANGE FROM PREVIOUS TYPE

B-235232 EP

3180 **9P6220 VALVE GP-PRIORITY**
Transmission S/N 2NA1-2528
Part Of 6P6876 Control-Transmission Hydraulic

POWER TRAIN-POWER TRANSMISSION UNIT

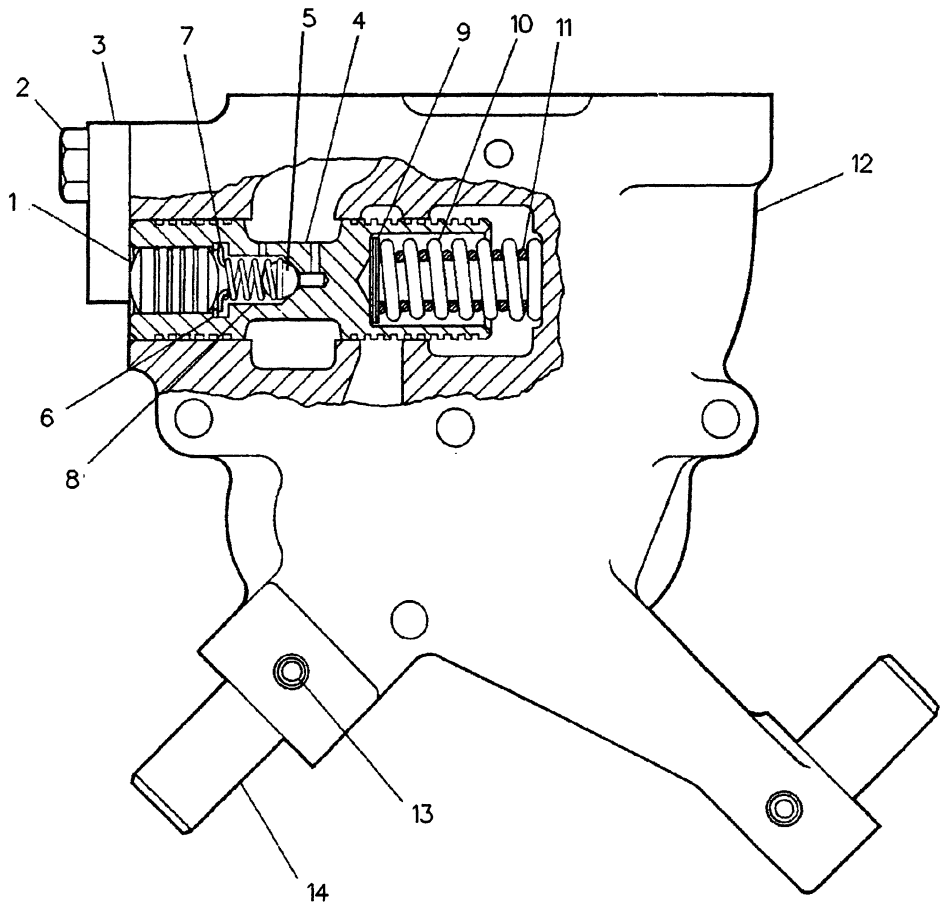

NOTE	REF NO	PART NUMBER	QTY	PART NAME	NOTE	REF NO	PART NUMBER	QTY	PART NAME
	1	2M7041	1	SLUG					
	2	0L1351	2	BOLT					
	3	9S2792	1	COVER					
	4	5S4437	1	SPOOL AS					
	5	4B9880	1	BALL					
	6	3D8317	1	RING-RETAINING					
	7	8M1013	1	RETAINER					
	8	4M2381	1	SPRING					
B	9	5M9624	6	SPACER .25MM(.01IN)THK					
B		5M9623	1	SPACER .9MM(.035IN)THK					
B		5M9622	1	SPACER 1.6MM(.062IN)THK					
	10	3T3772	1	SPRING (OUTER)					
	11	3T3771	1	SPRING (INNER)					
	12	6T2307	1	BODY-VALVE					
	13	4H4737	2	PIN-SPRING					
	14	8P0311	2	SHAFT-GOVERNOR CONTROL					

B-USE AS REQUIRED

R-503766 EP

3180 **6T2313 VALVE GP-PRIORITY**

Transmission S/N 2NA2529-Up

Part Of 6P6876 Control-Transmission Hydraulic

MEMORANDA

POWER TRAIN-POWER TRANSMISSION UNIT

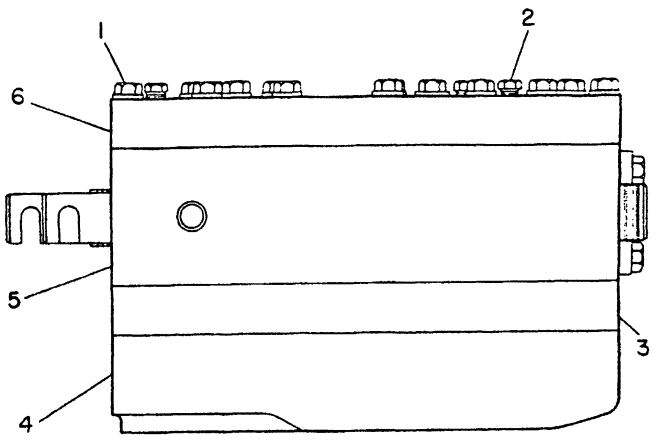

NOTE	REF NO	PART NUMBER	QTY	PART NAME
	1	5L1761	26	BOLT
		9M1974	26	WASHER-HARD
	2	5M6214	4	PLUG-PIPE
	3	7G5680	1	PLATE-DIVIDER
	4	6P6877	1	MANIFOLD-BOTTOM
Y	5	3T5018	1	VALVE GP-SELECTOR & PRESS CONT
	6	9P9814	1	MANIFOLD-TOP

Y-SEPARATE ILLUSTRATION

B-235234 EP

3152 **3T5017 VALVE GP**

Selector & Pressure Control
Transmission S/N 2NA1-Up. 3T5018-Page 131
Part Of 6P6876 Control-Transmission Hydraulic

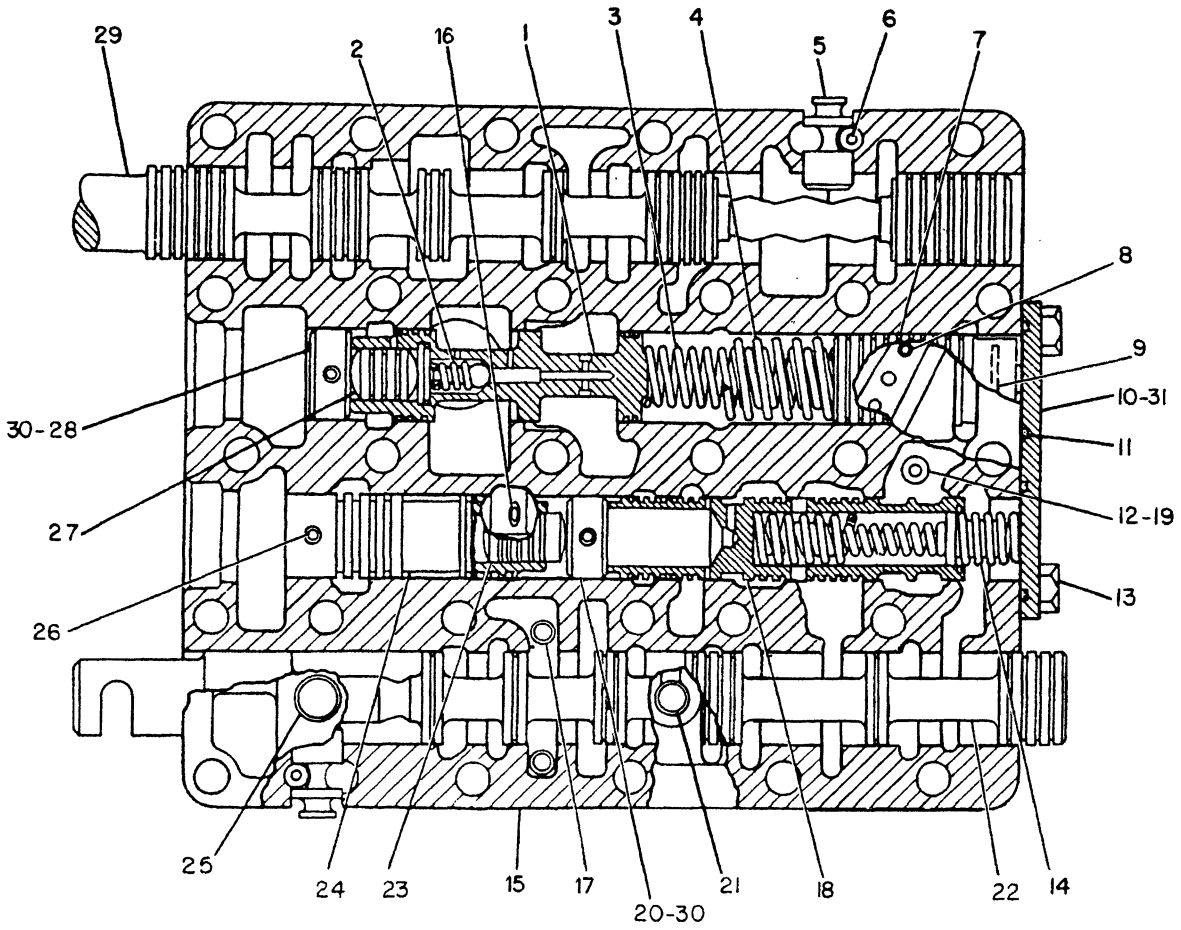

NOTE	REF NO	PART NUMBER	QTY	PART NAME	NOTE	REF NO	PART NUMBER	QTY	PART NAME
	1	7G4291	1	SPOOL AS-RELIEF		19	5H8853	1	SEAL-O-RING
		3D8317	1	RING-RETAINING		20	2S4872	1	STOP
		8M1013	1	RETAINER		21	2A3746	1	PLUG-CUP
	2	4M2381	1	SPRING		22	9P6219	1	SPOOL-SELECTOR
		4B9880	1	BALL		23	3T4215	1	SLUG
	3	9P3041	1	SPRING (INNER)		24	3T3494	1	SPOOL-RATIO
	4	7G4842	1	SPRING (OUTER)		25	7S4607	4	DETENT AS
	5	6P4971	2	STOP			1P8116	4	SEAL-O-RING
	6	1J5353	2	PIN-SPRING		26	8P6321	1	DOWEL
	7	9G5301	1	PISTON-LOAD		27	2M7041	1	SLUG
	8	2H2995	1	SETSCREW		28	6P4940	1	STOP
B	9	5M9622	1	SPACER 1.58MM(.062IN)THICK		29	9G7390	1	SPOOL-SPEED SELECTOR
						30	2S0696	2	DOWEL
B		5M9623	1	SPACER .92MM(.036IN)THICK		31	3T5020	1	PLATE-IDENTIFICATION
							7B3028	1	SCREW-DRIVE
B		5M9624	3	SPACER .26MM(.010IN)THICK					
	10	6P4938	1	COVER					
	11	6F6673	2	SEAL-O-RING					
	12	8P9749	1	ORIFICE-SCREEN					
	13	2B2695	3	BOLT					
	14	6P9785	1	SPRING					
	15	7G9569	1	BODY AS					
	16	7G9562	1	PLUG-ORIFICE					
	17	7G9476	1	ORIFICE-PLUG					
	18	6Y2319	1	SPOOL AS-DIFFERENTIAL					

B-USE AS REQUIRED

R-537469 EP

3152 **3T5018 VALVE GP**

Transmission S/N 2NA1-Up
Selector & Pressure Control
Part Of 3T5017 Valve

POWER TRAIN–POWER TRANSMISSION UNIT

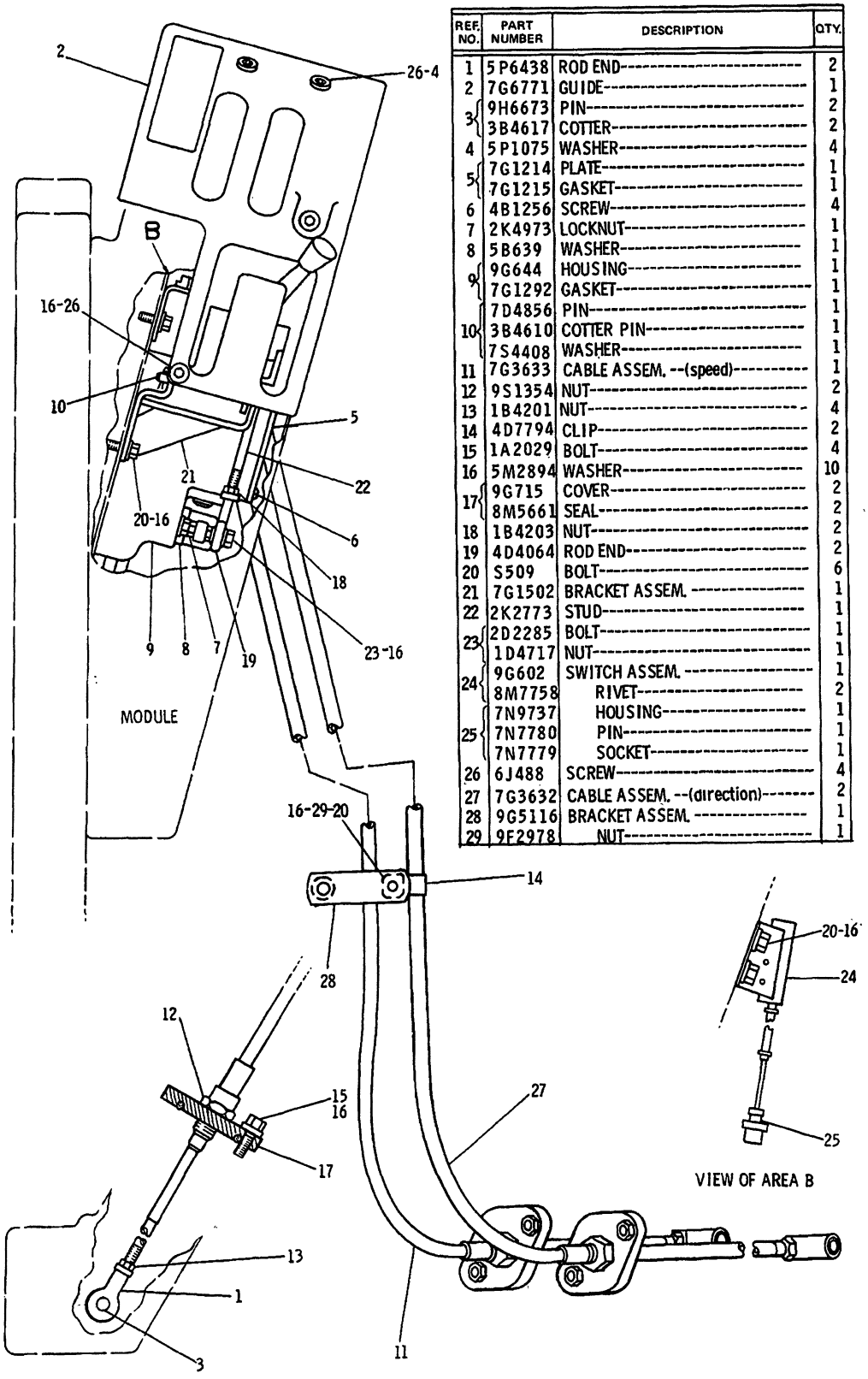

REF. NO.	PART NUMBER	DESCRIPTION	QTY.
1	5P6438	ROD END	2
2	7G6771	GUIDE	1
3	9H6673	PIN	2
	3B4617	COTTER	2
4	5P1075	WASHER	4
5	7G1214	PLATE	1
	7G1215	GASKET	1
6	4B1256	SCREW	4
7	2K4973	LOCKNUT	1
8	5B639	WASHER	1
9	9G644	HOUSING	1
	7G1292	GASKET	1
10	7D4856	PIN	1
	3B4610	COTTER PIN	1
	7S4408	WASHER	1
11	7G3633	CABLE ASSEM. --(speed)	1
12	9S1354	NUT	2
13	1B4201	NUT	4
14	4D7794	CLIP	2
15	1A2029	BOLT	4
16	5M2894	WASHER	10
17	9G715	COVER	2
	8M5661	SEAL	2
18	1B4203	NUT	2
19	4D4064	ROD END	2
20	S509	BOLT	6
21	7G1502	BRACKET ASSEM.	1
22	2K2773	STUD	1
23	2D2285	BOLT	1
	1D4717	NUT	1
24	9G602	SWITCH ASSEM.	1
	8M7758	RIVET	2
25	7N9737	HOUSING	1
	7N7780	PIN	1
	7N7779	SOCKET	1
26	6J488	SCREW	4
27	7G3632	CABLE ASSEM. --(direction)	2
28	9G5116	BRACKET ASSEM.	1
29	9F2978	NUT	1

235071
235071 P

3156 **6P7340 CONTROL GP-TRANSMISSION-PART 1 OF 2**
S/N 53Y1-1410

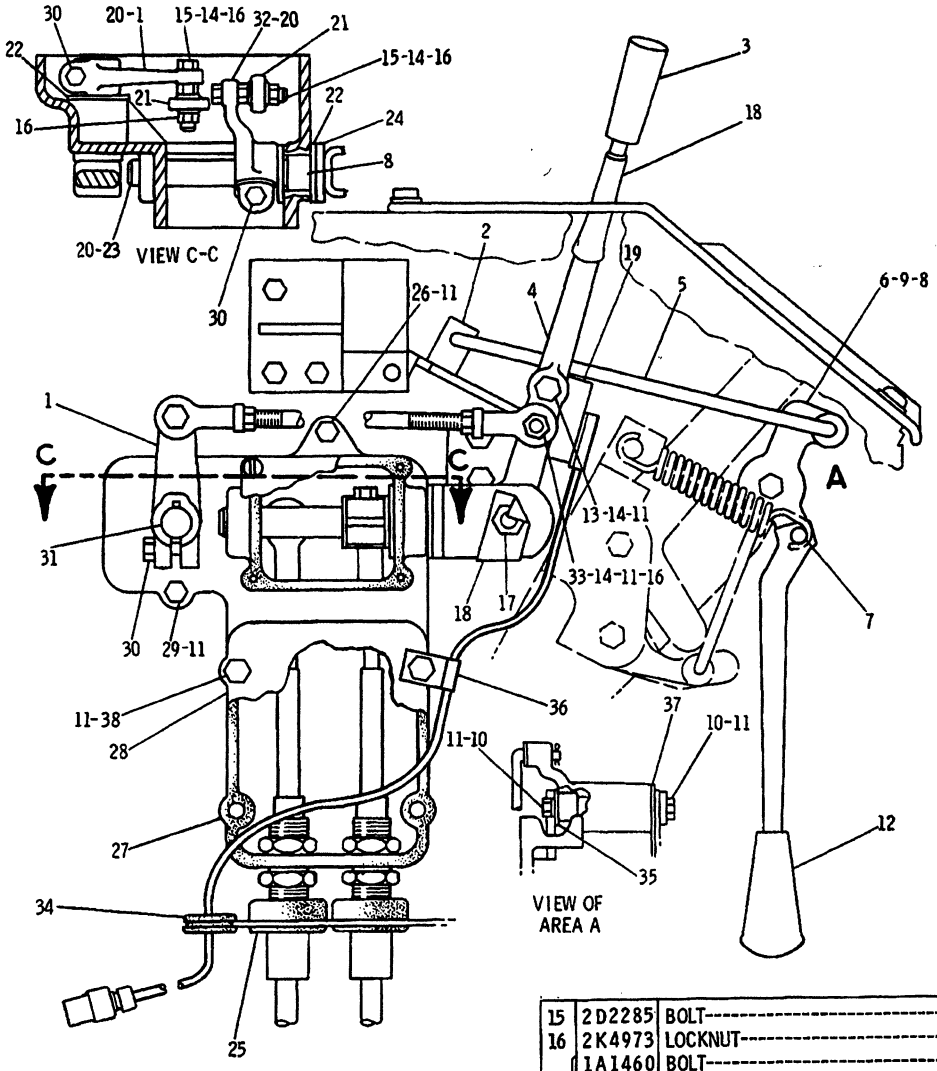

REF. NO.	PART NUMBER	DESCRIPTION	QTY.
1	9P391	LEVER	2
2	7G1371	BRACKET ASSEM.	1
3	7M706	KNOB	1
4	7G1690	LEVER ASSEM. (Includes)	1
	5H3895	BUSHING	1
5	7G1319	ROD	1
	3B4610	COTTER PIN	2
	7S4408	WASHER	2
6	7G1836	LEVER ASSEM. (Includes)	1
7	2S975	PIN	1
8	6D5974	BEARING	6
9	7G1548	SHAFT	1
10	S1588	BOLT	2
11	5M2894	WASHER--2.78mm(.109 in.)thick-	11
12	2M8908	KNOB	1
13	S1591	BOLT	1
14	1D4717	NUT	4
15	2D2285	BOLT	2
16	2K4973	LOCKNUT	3
17	1A1460	BOLT	1
	1K6872	LOCKNUT	1
	2M7167	SPACER	1
18	3T7292	SLEEVE	1
19	7G1291	BRACKET ASSEM.	1
20	1B8706	KEY	3
21	6V1542	ROD END	2
22	6F6977	WASHER	3
23	9P387	SHAFT ASSEM.	1
24	9S1385	SPACER	1
25	9G623	BOOT	2
26	S1571	BOLT	1
27	7G1217	GASKET	1
28	7G1216	PLATE	1
29	L1352	BOLT	2
30	1A2029	BOLT	3
31	7G1539	SHAFT	1
32	9P389	LEVER	1
33	1M644	BOLT	1
34	9G2673	GROMMET	1
35	6H190	WASHER	1
36	8M2772	CLIP	1
37	94089	WASHER	1
38	S1608	BOLT	4

235072

235072 P

3156 **6P7340 CONTROL GP-TRANSMISSION-PART 2 OF 2**

S/N 53Y1-1410

POWER TRAIN-POWER TRANSMISSION UNIT

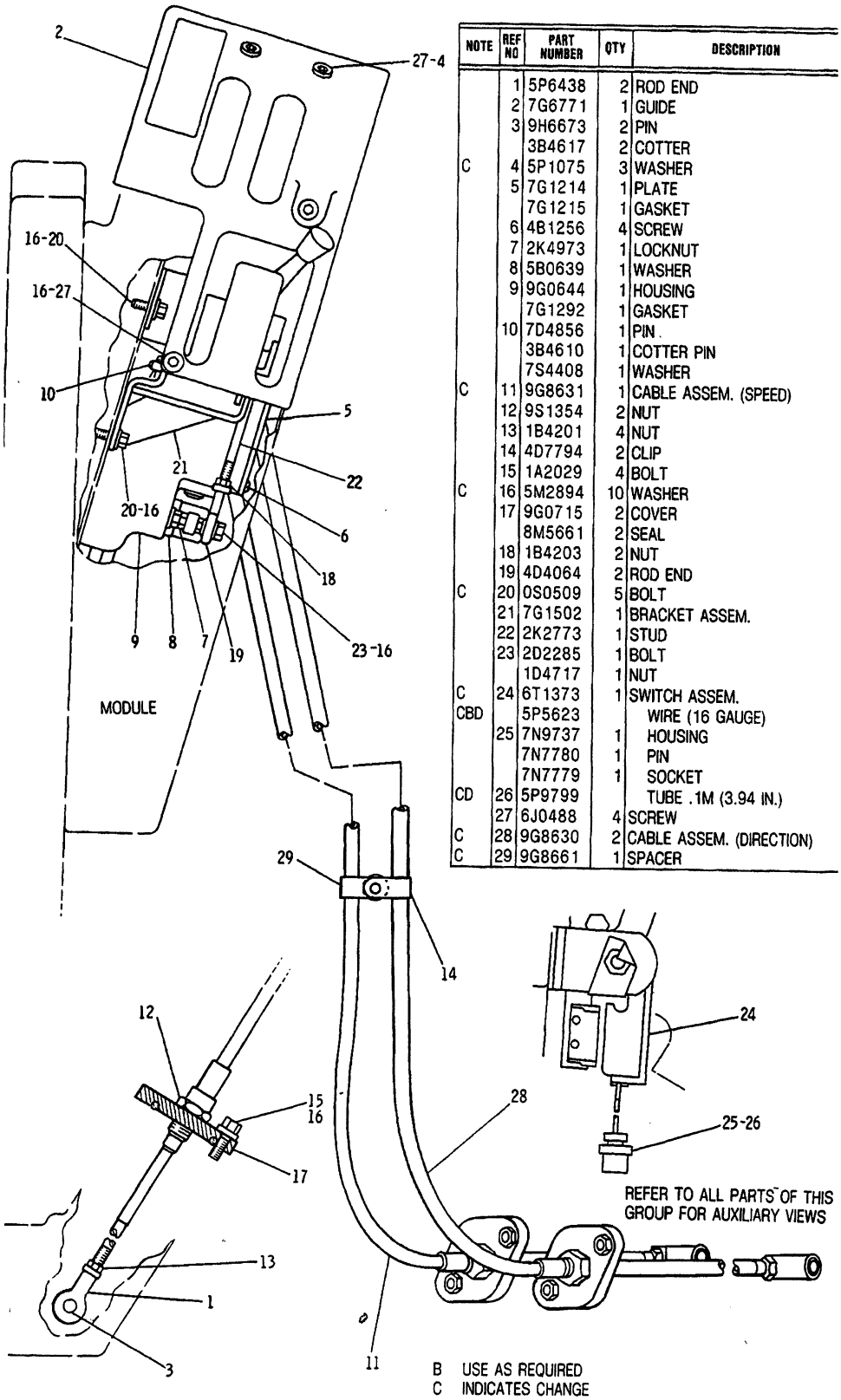

NOTE	REF NO	PART NUMBER	QTY	DESCRIPTION
	1	5P6438	2	ROD END
	2	7G6771	1	GUIDE
	3	9H6673	2	PIN
		3B4617	2	COTTER
C	4	5P1075	3	WASHER
	5	7G1214	1	PLATE
		7G1215	1	GASKET
	6	4B1256	4	SCREW
	7	2K4973	1	LOCKNUT
	8	5B0639	1	WASHER
	9	9G0644	1	HOUSING
		7G1292	1	GASKET
	10	7D4856	1	PIN.
		3B4610	1	COTTER PIN
		7S4408	1	WASHER
C	11	9G8631	1	CABLE ASSEM. (SPEED)
	12	9S1354	2	NUT
	13	1B4201	4	NUT
	14	4D7794	2	CLIP
	15	1A2029	4	BOLT
C	16	5M2894	10	WASHER
	17	9G0715	2	COVER
		8M5661	2	SEAL
	18	1B4203	2	NUT
	19	4D4064	2	ROD END
C	20	0S0509	5	BOLT
	21	7G1502	1	BRACKET ASSEM.
	22	2K2773	1	STUD
	23	2D2285	1	BOLT
		1D4717	1	NUT
C	24	6T1373	1	SWITCH ASSEM.
CBD		5P5623		WIRE (16 GAUGE)
	25	7N9737	1	HOUSING
		7N7780	1	PIN
		7N7779	1	SOCKET
CD	26	5P9799		TUBE .1M (3.94 IN.)
	27	6J0488	4	SCREW
C	28	9G8630	2	CABLE ASSEM. (DIRECTION)
C	29	9G8661	1	SPACER

B USE AS REQUIRED
C INDICATES CHANGE
D ORDER BY THE METER

323323 323323 P

3156 **6P7340 CONTROL GP-TRANSMISSION-PART 1 OF 2**
S/N 53Y1411-2129

POWER TRAIN-POWER TRANSMISSION UNIT

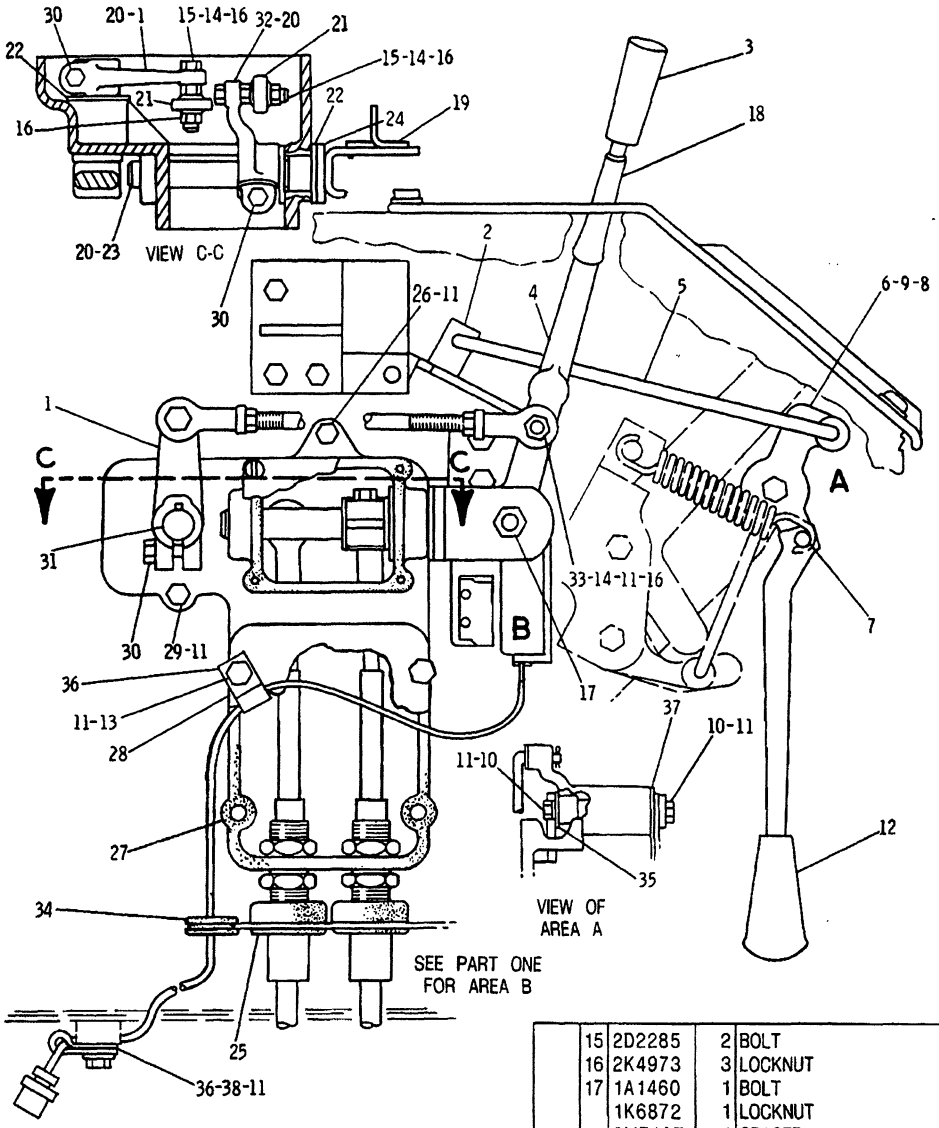

NOTE	REF NO	PART NUMBER	QTY	DESCRIPTION
	1	9P0391	2	LEVER
C	2	7G1369	1	BRACKET AS.
	3	7M0706	1	KNOB
C	4	6T4199	1	LEVER AS.
		5H3895	1	BUSHING
	5	7G1319	1	ROD
		3B4610	2	COTTER PIN
		7S4408	2	WASHER
	6	7G1836	1	LEVER AS.
	7	2S0975	1	PIN
	8	6D5974	6	BEARING
	9	7G1548	1	SHAFT
	10	0S1588	2	BOLT
	11	5M2894	11	WASHER 2.78MM(.109IN)THK.
	12	2M8908	1	KNOB
	13	0S1608	4	BOLT
C	14	1D4717	3	NUT
	15	2D2285	2	BOLT
	16	2K4973	3	LOCKNUT
	17	1A1460	1	BOLT
		1K6872	1	LOCKNUT
		2M7167	1	SPACER
	18	3T7292	1	SLEEVE
C	19	6T1372	1	BRACKET
	20	1B8706	3	KEY
	21	6V1542	2	ROD END
	22	6F6977	3	WASHER
	23	9P0387	1	SHAFT AS.
	24	9S1385	1	SPACER
	25	9G0623	2	BOOT
	26	0S1571	1	BOLT
	27	7G1217	1	GASKET
	28	7G1216	1	PLATE
	29	0L1352	2	BOLT
	30	1A2029	3	BOLT
	31	7G1539	1	SHAFT
	32	9P0389	1	LEVER
	33	1M0644	1	BOLT
	34	9G2673	1	GROMMET
	35	6H0190	1	WASHER
C	36	8M2772	2	CLIP
	37	094089	1	WASHER
C	38	0T0102	1	BOLT

C INDICATES CHANGE

323324

323324 P

3156 **6P7340 CONTROL GP-TRANSMISSION-PART 2 OF 2**

S/N 53Y1411-2129

POWER TRAIN-POWER TRANSMISSION UNIT

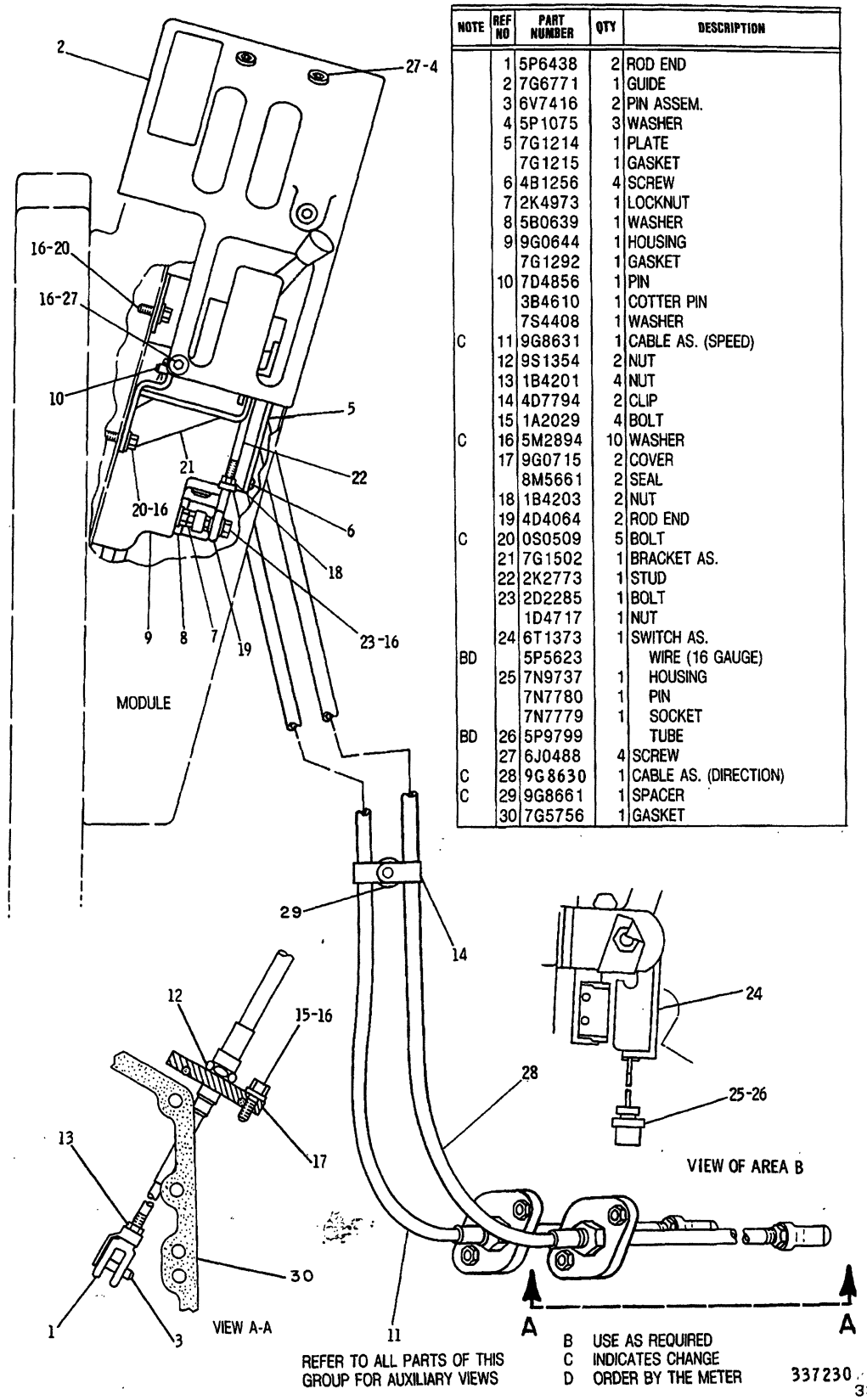

NOTE	REF NO	PART NUMBER	QTY	DESCRIPTION
	1	5P6438	2	ROD END
	2	7G6771	1	GUIDE
	3	6V7416	2	PIN ASSEM.
	4	5P1075	3	WASHER
	5	7G1214	1	PLATE
		7G1215	1	GASKET
	6	4B1256	4	SCREW
	7	2K4973	1	LOCKNUT
	8	5B0639	1	WASHER
	9	9G0644	1	HOUSING
		7G1292	1	GASKET
	10	7D4856	1	PIN
		3B4610	1	COTTER PIN
		7S4408	1	WASHER
C	11	9G8631	1	CABLE AS. (SPEED)
	12	9S1354	2	NUT
	13	1B4201	4	NUT
	14	4D7794	2	CLIP
	15	1A2029	4	BOLT
C	16	5M2894	10	WASHER
	17	9G0715	2	COVER
		8M5661	2	SEAL
	18	1B4203	2	NUT
	19	4D4064	2	ROD END
C	20	0S0509	5	BOLT
	21	7G1502	1	BRACKET AS.
	22	2K2773	1	STUD
	23	2D2285	1	BOLT
		1D4717	1	NUT
	24	6T1373	1	SWITCH AS.
BD		5P5623		WIRE (16 GAUGE)
	25	7N9737	1	HOUSING
		7N7780	1	PIN
		7N7779	1	SOCKET
BD	26	5P9799		TUBE
	27	6J0488	4	SCREW
C	28	9G8630	1	CABLE AS. (DIRECTION)
C	29	9G8661	1	SPACER
	30	7G5756	1	GASKET

3156 **6P7340 CONTROL GP-TRANSMISSION-PART 1 OF 2**
S/N 53Y2130-2474

POWER TRAIN-POWER TRANSMISSION UNIT

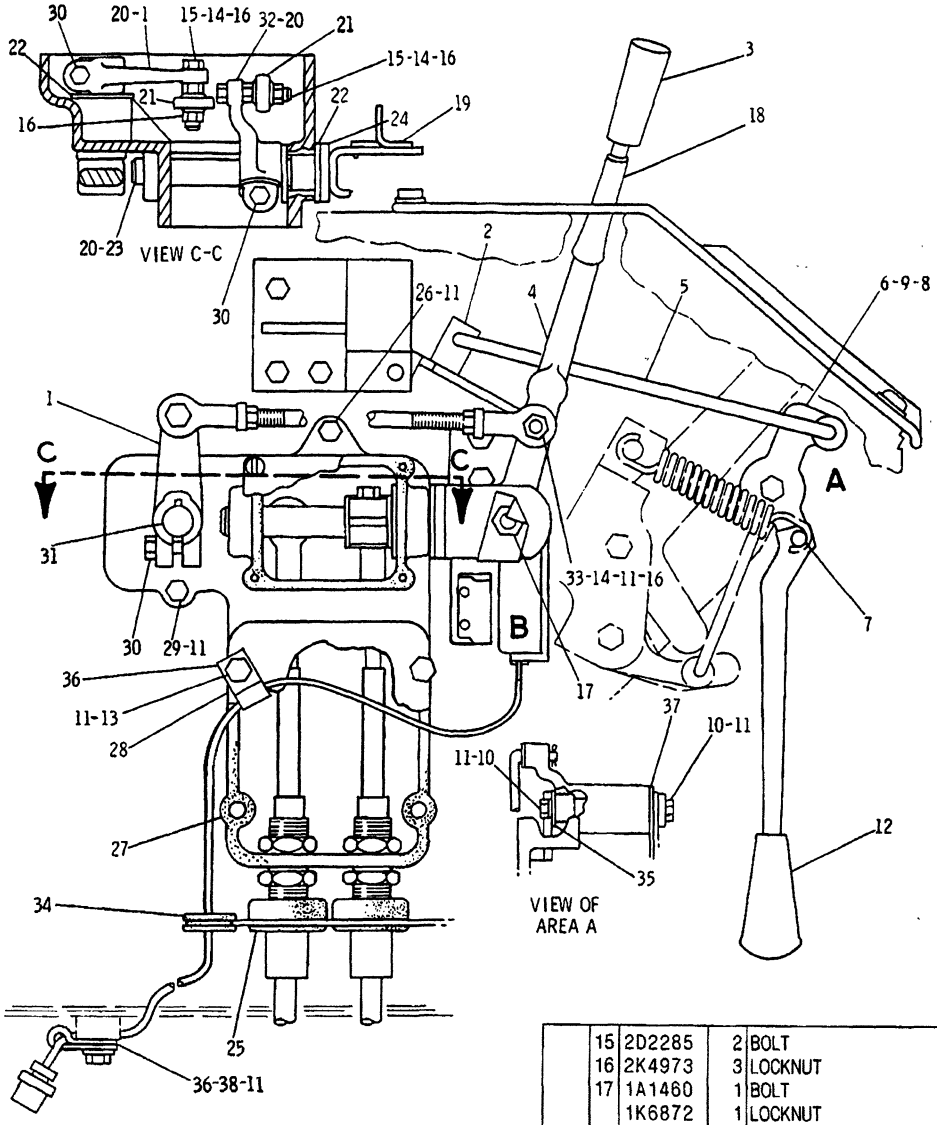

NOTE	REF NO	PART NUMBER	QTY	DESCRIPTION
	1	9P0391	2	LEVER
C	2	7G1369	1	BRACKET
	3	7M0706	1	KNOB
C	4	6T4199	1	LEVER AS.
		5H3895	1	BUSHING
	5	7G1319	1	ROD
		3B4610	2	COTTER PIN
		7S4408	2	WASHER
	6	7G1836	1	LEVER AS.
	7	2S0975	1	PIN
	8	6D5974	6	BEARING
	9	7G1548	1	SHAFT
	10	0S1588	2	BOLT
	11	5M2894	11	WASHER 2.78MM(.109IN.)THK
	12	2M8908	1	KNOB
	13	0S1608	4	BOLT
	14	1D4717	3	NUT
	15	2D2285	2	BOLT
	16	2K4973	3	LOCKNUT
	17	1A1460	1	BOLT
		1K6872	1	LOCKNUT
		2M7167	1	SPACER
	18	3T7292	1	SLEEVE
	19	6T1372	1	BRACKET
	20	1B8706	3	KEY
	21	6V1542	2	ROD END
	22	6F6977	3	WASHER
	23	9P0387	1	SHAFT ASSEM.
	24	9S1385	1	SPACER
	25	9G0623	2	BOOT
	26	0S1571	1	BOLT
	27	7G1217	1	GASKET
	28	7G1216	1	PLATE
	29	0L1352	2	BOLT
	30	1A2029	3	BOLT
	31	7G1539	1	SHAFT
	32	9P0389	1	LEVER
	33	1M0644	1	BOLT
	34	9G2673	1	GROMMET
	35	6H0190	1	WASHER
	36	8M2772	2	CLIP
	37	094089	1	WASHER
	38	0T0102	1	BOLT

C INDICATES CHANGE

317343 317343 P

3156 **6P7340 CONTROL GP-TRANSMISSION-PART 2 OF 2**

S/N 53Y2130-2474

POWER TRAIN-POWER TRANSMISSION UNIT

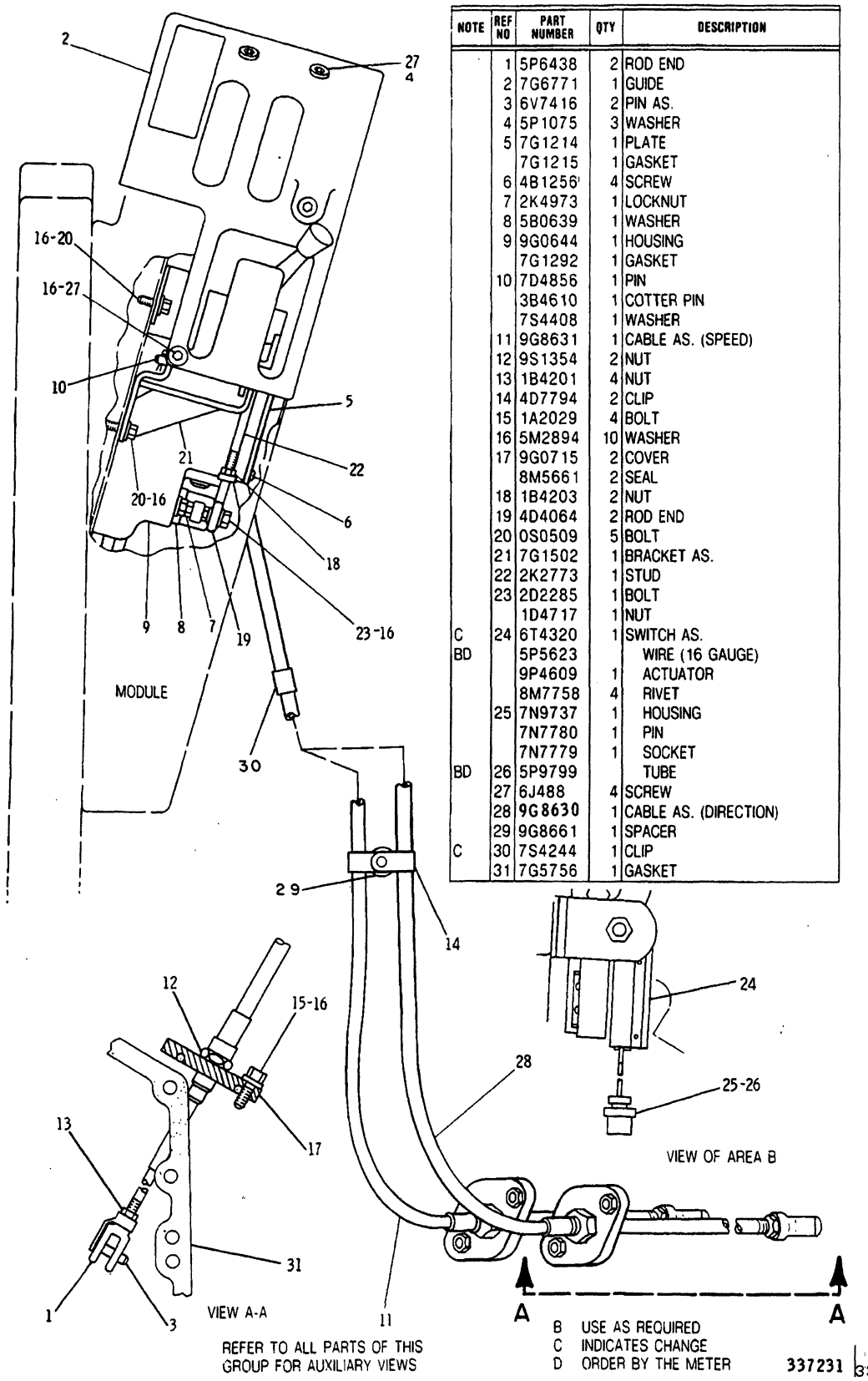

NOTE	REF NO	PART NUMBER	QTY	DESCRIPTION
	1	5P6438	2	ROD END
	2	7G6771	1	GUIDE
	3	6V7416	2	PIN AS.
	4	5P1075	3	WASHER
	5	7G1214	1	PLATE
		7G1215	1	GASKET
	6	4B1256	4	SCREW
	7	2K4973	1	LOCKNUT
	8	5B0639	1	WASHER
	9	9G0644	1	HOUSING
		7G1292	1	GASKET
	10	7D4856	1	PIN
		3B4610	1	COTTER PIN
		7S4408	1	WASHER
	11	9G8631	1	CABLE AS. (SPEED)
	12	9S1354	2	NUT
	13	1B4201	4	NUT
	14	4D7794	2	CLIP
	15	1A2029	4	BOLT
	16	5M2894	10	WASHER
	17	9G0715	2	COVER
		8M5661	2	SEAL
	18	1B4203	2	NUT
	19	4D4064	2	ROD END
	20	0S0509	5	BOLT
	21	7G1502	1	BRACKET AS.
	22	2K2773	1	STUD
	23	2D2285	1	BOLT
		1D4717	1	NUT
C	24	6T4320	1	SWITCH AS.
BD		5P5623		WIRE (16 GAUGE)
		9P4609	1	ACTUATOR
		8M7758	4	RIVET
	25	7N9737	1	HOUSING
		7N7780	1	PIN
		7N7779	1	SOCKET
BD	26	5P9799		TUBE
	27	6J488	4	SCREW
	28	9G8630	1	CABLE AS. (DIRECTION)
	29	9G8661	1	SPACER
C	30	7S4244	1	CLIP
	31	7G5756	1	GASKET

B USE AS REQUIRED
C INDICATES CHANGE
D ORDER BY THE METER

337231 337231 P

3156 **6P7340 CONTROL GP-TRANSMISSION-PART 1 OF 2**
S/N 53Y2475-3484

POWER TRAIN-POWER TRANSMISSION UNIT

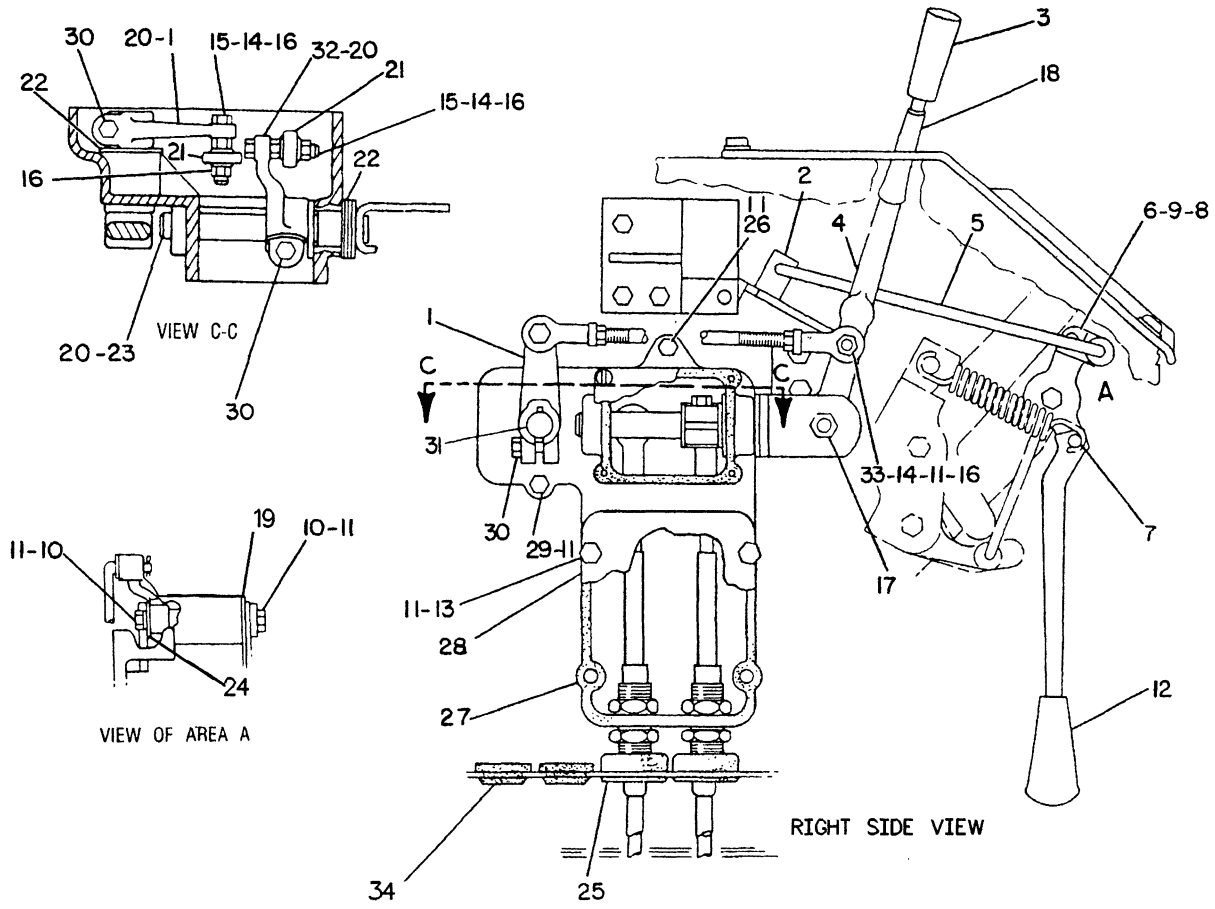

NOTE	REF NO	PART NUMBER	QTY	PART NAME	NOTE	REF NO	PART NUMBER	QTY	PART NAME
	1	9P0391	2	LEVER		21	6V1542	2	END-ROD
	2	7G1369	1	BRACKET		22	6F6977	5	WASHER-PLAIN
	3	7M0706	1	KNOB		23	9P0387	1	SHAFT AS
	4	6T4199	1	LEVER AS (SHIFT)		24	6H0190	1	WASHER
		5H3895	1	BUSHING-TERMINAL		25	9G0623	2	BOOT
	5	7G1319	1	ROD		26	0S1571	1	BOLT
		3B4610	2	COTTER		27	7G1217	1	GASKET
		7S4408	2	WASHER		28	7G1216	1	PLATE
C	6	6Y2655	1	LEVER AS (NEUTRAL SAFETY LOCK)		29	0L1352	2	BOLT
						30	1A2029	3	BOLT
C	7	6V4415	1	PIN-CLEVIS		31	7G1539	1	SHAFT-GOVERNOR CONTROL
	8	6D5974	6	BEARING-ROLLER		32	9P0389	1	LEVER
	9	7G1548	1	SHAFT-GOVERNOR CONTROL		33	1M0644	1	BOLT
	10	0S1588	2	BOLT		34	8P6364	2	PLUG
	11	5M2894	10	WASHER (2.5MM THK)					
C	12	6Y3007	1	KNOB					
	13	0S1608	4	BOLT					
	14	1D4717	3	NUT					
	15	2D2285	2	BOLT					
	16	2K4973	3	LOCKNUT					
	17	1A1460	1	BOLT					
		1K6872	1	LOCKNUT					
		2M7167	1	SPACER-SHAFT					
	18	3T7292	1	SLEEVE					
	19	94089	1	WASHER					
	20	1B8706	3	KEY-WOODRUFF					

C-CHANGE FROM PREVIOUS TYPE

R- 476793 P

3156 **6P7340 CONTROL GP-TRANSMISSION-PART 2 OF 2**

S/N 53Y2475-3484

POWER TRAIN-POWER TRANSMISSION UNIT

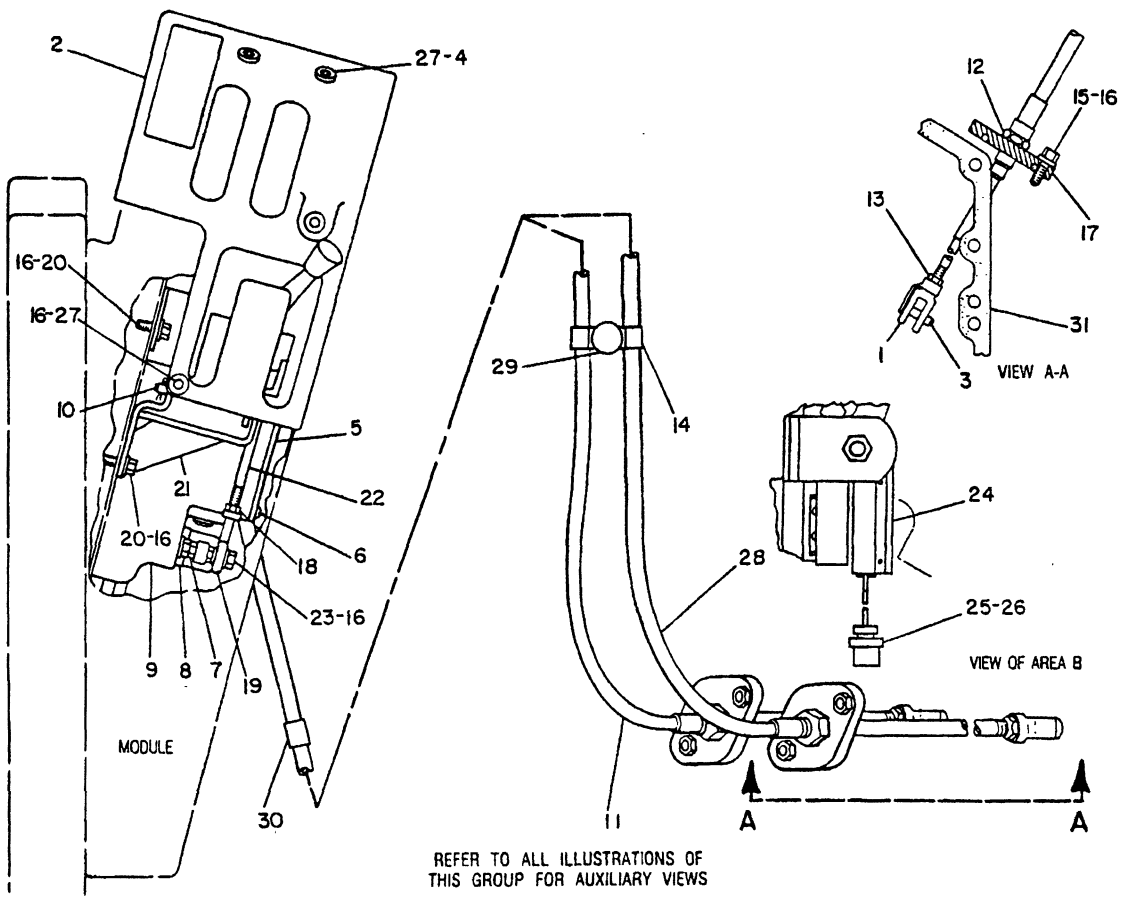

NOTE	REF NO	PART NUMBER	QTY	PART NAME	NOTE	REF NO	PART NUMBER	QTY	PART NAME
	1	5P6438	2	END-YOKE ROD		22	2K2773	1	STUD
	2	7G6771	1	GUIDE		23	2D2285	1	BOLT
	3	6V7416	2	PIN AS-SPRING			1D4717	1	NUT
	4	5P1075	3	WASHER-HARD		24	6T4320	1	SWITCH AS
	5	7G1214	1	PLATE					(BACK-UP ALARM)
		7G1215	1	GASKET	BD		5P5623		WIRE (16 GA)
	6	4B1256	4	SCREW-MACHINE			9P4609	1	ACTUATOR-MAGNETIC
	7	2K4973	1	LOCKNUT			8M7758	4	RIVET-POP
	8	5B0639	1	WASHER		25	7N9737	1	HOUSING-PLUG
	9	9G0644	1	HOUSING			7N7780	1	PIN-CONNECTOR
		7G1292	1	GASKET			7N7779	1	SOCKET
	10	7D4856	1	PIN-CLEVIS	BD	26	5P9799		TUBE
		3B4610	1	COTTER		27	6J0488	4	SCREW-HEAD
		7S4408	1	WASHER	C	28	9G8630	1	CABLE AS (DIRECTION)
	11	9G8631	1	CABLE AS (SPEED)		29	9G8661	1	SPACER
	12	9S1354	2	NUT		30	7S4244	1	CLIP
	13	1B4201	4	NUT-FULL		31	7G5756	1	GASKET-COVER
	14	5P9297	2	CLIP					
	15	1A2029	4	BOLT					
	16	5M2894	10	WASHER					
	17	9G0715	2	COVER					
C		8T7163	2	SEAL					
	18	1B4203	2	NUT-FULL					
	19	4D4064	2	END-ROD					
	20	0S0509	5	BOLT					
	21	7G1502	1	BRACKET AS					

B-USE AS REQUIRED
C-CHANGE FROM PREVIOUS TYPE
D-ORDER BY THE METER

B-458111 P

3156 **6P7340 CONTROL GP-TRANSMISSION-PART 1 OF 2**
S/N 53Y3485-Up

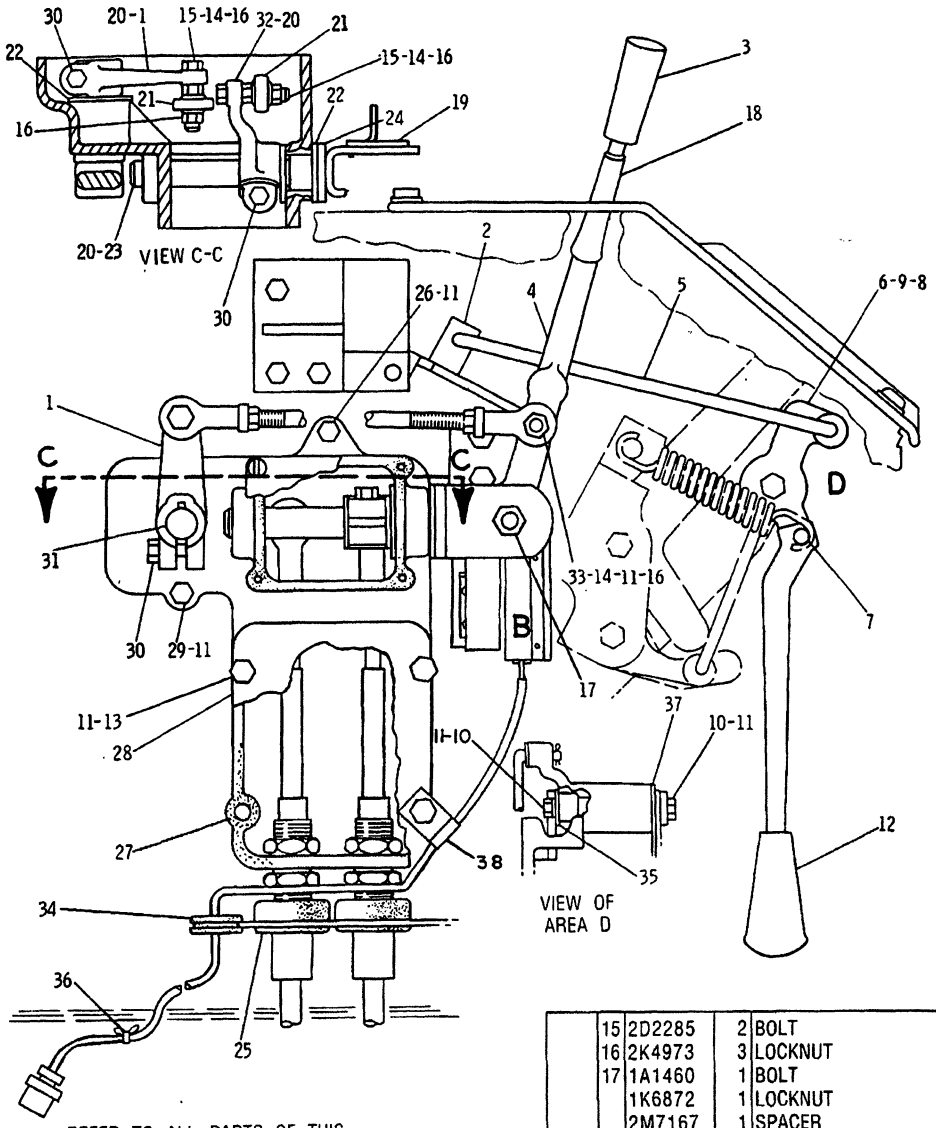

REFER TO ALL PARTS OF THIS GROUP FOR AUXILIARY VIEWS

NOTE	REF NO	PART NUMBER	QTY	DESCRIPTION
	1	9P0391	2	LEVER
	2	7G1369	1	BRACKET
	3	7M0706	1	KNOB
	4	6T4199	1	LEVER AS. (SPEED CONT.)
		5H3895	1	BUSHING
	5	7G1319	1	ROD
		3B4610	2	COTTER PIN
		7S4408	2	WASHER
	6	7G1836	1	LEVER AS. (DIRECTION)
	7	2S0975	1	PIN
	8	6D5974	6	BEARING
	9	7G1548	1	SHAFT
	10	0S1588	2	BOLT
C	11	5M2894	10	WASHER 2.78MM(.109IN)THK
	12	2M8908	1	KNOB
	13	0S1608	4	BOLT
	14	1D4717	3	NUT
	15	2D2285	2	BOLT
	16	2K4973	3	LOCKNUT
	17	1A1460	1	BOLT
		1K6872	1	LOCKNUT
		2M7167	1	SPACER
	18	3T7292	1	SLEEVE
	19	6T4317	1	BRACKET
	20	1B8706	3	KEY
	21	6V1542	2	ROD END
	22	6F6977	3	WASHER
	23	9P0387	1	SHAFT ASSEM.
	24	9S1385	1	SPACER
	25	9G0623	2	BOOT
	26	0S1571	1	BOLT
	27	7G1217	1	GASKET
	28	7G1216	1	PLATE
	29	0L1352	2	BOLT
	30	1A2029	3	BOLT
	31	7G1539	1	SHAFT
	32	9P0389	1	LEVER
	33	1M0644	1	BOLT
	34	9G2673	1	GROMMET
	35	6H0190	1	WASHER
C	36	3S2093	1	STRAP
	37	094089	1	WASHER
	38	8M2772	1	CLIP

C INDICATES CHANGE

334772

334772 P

3156 **6P7340 CONTROL GP-TRANSMISSION-PART 2 OF 2**

S/N 53Y3485-Up

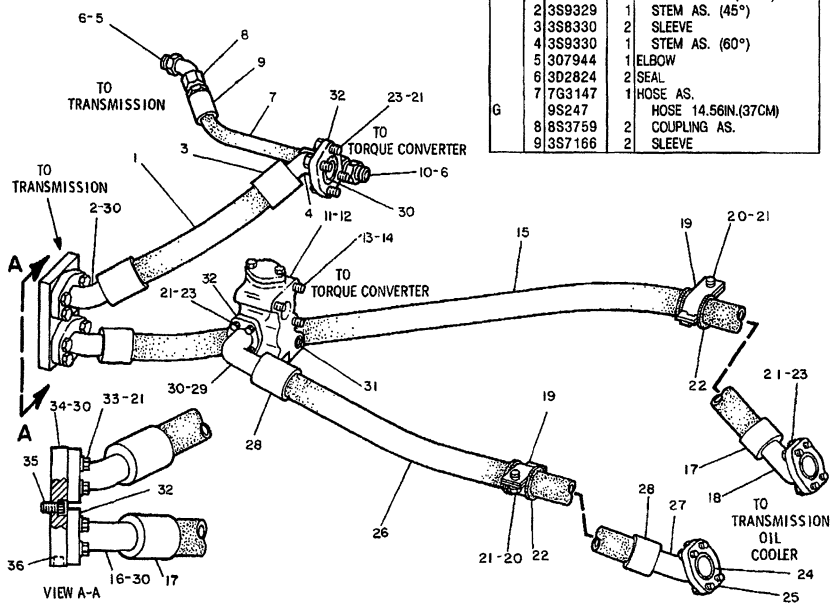

NOTE	REF NO	PART NUMBER	QTY	DESCRIPTION
	1	7G5127	1	HOSE AS.
G		8S8220		HOSE 16.54IN(42CM)
	2	3S9329	1	STEM AS. (45°)
	3	3S8330	2	SLEEVE
	4	3S9330	1	STEM AS. (60°)
	5	3D7944	1	ELBOW
	6	3D2824	2	SEAL
	7	7G3147	1	HOSE AS.
G		9S247		HOSE 14.56IN.(37CM)
	8	8S3759	2	COUPLING AS.
	9	3S7166	2	SLEEVE
	10	2R6276	1	CONNECTOR
Y	11	3T3505	1	VALVE GROUP
	12	4J523	1	SEAL
	13	T65	3	BOLT
	14	5M2894	3	WASHER
	15	7G5129	1	HOSE AS.
G		8S8220		HOSE 88.78IN.(225.5CM)
	16	3S9330	1	STEM AS. (60°)
	17	3S8330	2	SLEEVE
	18	5P3229	1	STEM AS. (45°)
	19	5P7471	2	CLIP (TAB)
		5P7470	2	CLIP (SLOT)
	20	S1621	2	BOLT
	21	5P8245	26	WASHER
	22	5P7703	2	GROMMET
	23	S1585	16	BOLT
	24	4J527	2	SEAL
	25	1P4582	4	FLANGE
	26	7G5128	1	HOSE AS.
G		8S8220		HOSE 61.42IN.(156CM)
	27	5P3229	1	STEM AS. (45°)
	28	3S8330	2	SLEEVE
	29	3S9332	1	STEM AS. (90°)
	30	4J524	6	SEAL 4.72CM(1.86IN.)DIA.
	31	8M8157	1	SEAL
	32	1P4579	8	FLANGE
	33	9S1366	8	BOLT
	34	3T8663	1	PLATE
		4J5140	1	SEAL 1.86CM(.74IN.)DIA.
	35	9M6590	1	BOLT
	36	7H3171	1	PLUG

G ORDER BY THE INCH
Y SEPARATE ILLUSTRATION

312231

312231 P

3016 **7G5126 LINES GP-POWER TRAIN OIL-PART 1 OF 3**
S/N 53Y1-749
3T3505-Page 137

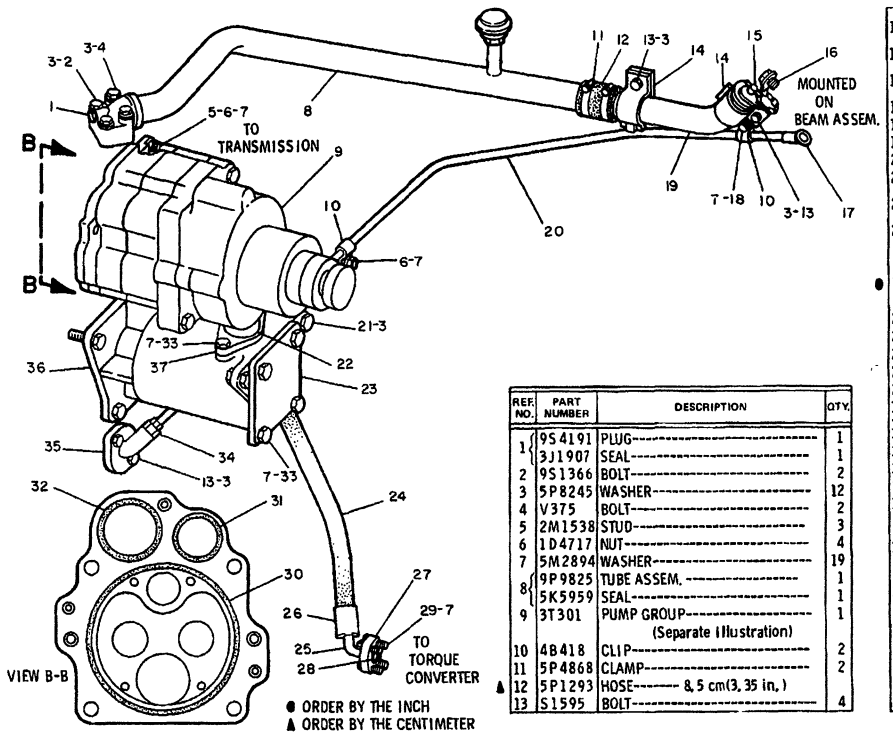

REF. NO.	PART NUMBER	DESCRIPTION	QTY.
1	9S4191	PLUG	1
	3J1907	SEAL	1
2	9S1366	BOLT	2
3	5P8245	WASHER	12
4	V375	BOLT	2
5	2M1538	STUD	3
6	1D4717	NUT	4
7	5M2894	WASHER	19
8	9P9825	TUBE ASSEM.	1
	5K5959	SEAL	1
9	3T301	PUMP GROUP (Separate Illustration)	1
10	4B418	CLIP	2
11	5P4868	CLAMP	2
▲ 12	5P1293	HOSE-------- 8,5 cm(3,35 in.)	4
13	S1595	BOLT	
14	5P7469	CLIP----------(tab)----------	2
	5P7468	CLIP----------(slot)----------	2
15	6N2985	CAP ASSEM.	1
16	S1614	BOLT	1
	5P537	WASHER	1
17	3T2199	GAUGE ASSEM.	1
18	S1594	BOLT	1
19	3T1105	TUBE	1
20	9P9826	TUBE ASSEM.	1
21	S1587	BOLT	4
22	7G4993	TUBE	1
	1H5728	SEAL	2
23	3S3439	COVER	1
● 24	7G3146	HOSE ASSEM. (Includes)	1
	9S247	HOSE---------29, 92 in. (76 cm)	
	3S8363	STEM ASSEM. -----(90°)------	1
25	3S8361	STEM ASSEM. -----(60°)-----	1
26	3S7166	SLEEVE	2
27	1P4576	FLANGE	4
28	4J5267	SEAL	2
29	3B1915	BOLT	8
30	2D8009	SEAL	1
31	8M4992	SEAL	1
32	4J1526	SEAL	1
33	S1588	BOLT	6
34	5K9238	CONNECTOR	1
35	7G7434	ADAPTER	1
	5D1597	SEAL	1
36	3T1502	HOUSING	1
	3S3875	SCREEN	1
	1H8128	SEAL	2
37	3T2710	FLANGE	1
	2H6184	SEAL	1

● ORDER BY THE INCH
▲ ORDER BY THE CENTIMETER

304992

304992 P

3016 **7G5126 LINES GP-POWER TRAIN OIL-PART 2 OF 3**
S/N 53Y1-749
3T0301-Page 139

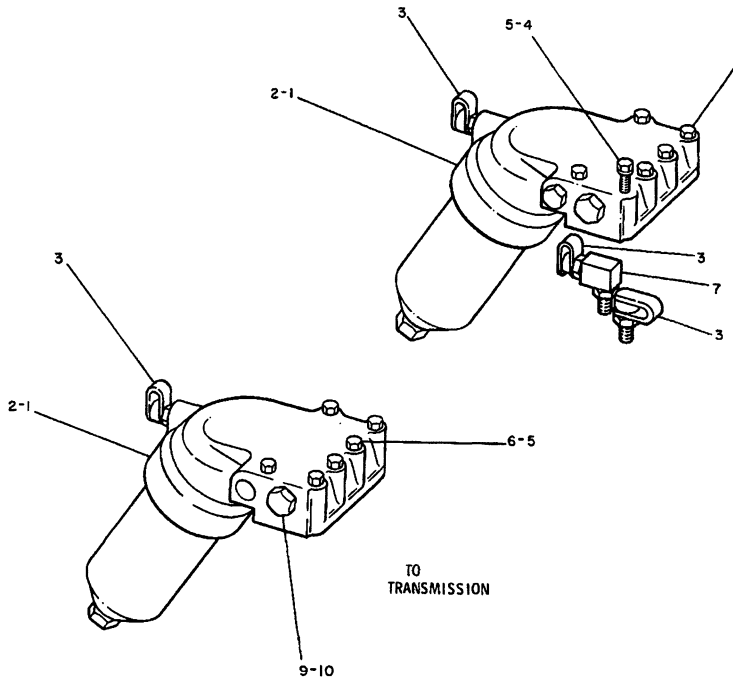

REF. NO.	PART NUMBER	DESCRIPTION	QTY.
1	7G3137	FILTER GROUP---------- (Separate Illustration)	2
2	9M9647	SEAL--------4.06 cm(1.6 in.) dia.	2
	6L1651	SEAL--------5.02 cm(1.97 in.) dia.	2
	5H7153	SEAL--------3.11 cm(1.22 in.) dia.	2
3	6V852	CAP----------	4
	6V3965	NIPPLE ASSEM.----------	4
	3J1907	SEAL----------	5
4	T55	BOLT--------10.8 cm(4.25 in.) long	1
5	5M2894	WASHER----------	12
6	L1352	BOLT--------8.26 cm(3.25 in.) long	11
7	6V484	ADAPTER----------	1
8	9G9981	BREATHER----------	1
9	9S8008	PLUG----------	2
10	3D2824	SEAL----------	3
11	9S8896	CAP----------	1
	2R6276	CONNECTOR----------	1

305421

305421 P

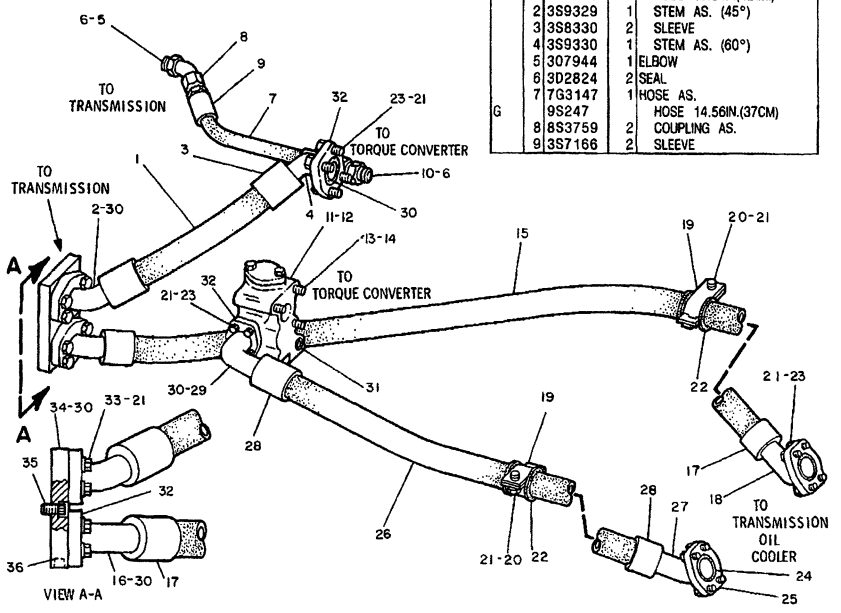

NOTE	REF NO	PART NUMBER	QTY	DESCRIPTION
	1	7G5127	1	HOSE AS.
G		8S8220		HOSE 16.54IN(42CM)
	2	3S9329	1	STEM AS. (45°)
	3	3S8330	2	SLEEVE
	4	3S9330	1	STEM AS. (60°)
	5	3O7944	1	ELBOW
	6	3D2824	2	SEAL
	7	7G3147	1	HOSE AS.
G		9S247		HOSE 14.56IN.(37CM)
	8	8S3759	2	COUPLING AS.
	9	3S7166	2	SLEEVE
	10	2R6276	1	CONNECTOR
Y	11	3T3505	1	VALVE GROUP
	12	4J523	1	SEAL
	13	T65	3	BOLT
	14	5M2894	3	WASHER
	15	7G5129	1	HOSE AS.
G		8S8220		HOSE 88.78IN.(225.5CM)
	16	3S9330	1	STEM AS. (60°)
	17	3S8330	2	SLEEVE
	18	5P3229	1	STEM AS. (45°)
	19	5P7471	2	CLIP (TAB)
		5P7470	2	CLIP (SLOT)
	20	S1621	2	BOLT
	21	5P8245	26	WASHER
	22	5P7703	2	GROMMET
	23	S1585	16	BOLT
	24	4J527	2	SEAL
	25	1P4582	4	FLANGE
	26	7G5128	1	HOSE AS.
G		8S8220		HOSE 61.42IN.(156CM)
	27	5P3229	1	STEM AS. (45°)
	28	3S8330	2	SLEEVE
	29	3S9332	1	STEM AS. (90°)
	30	4J524	6	SEAL 4.72CM(1.86IN.)DIA.
	31	8M8157	1	SEAL
	32	1P4579	8	FLANGE
	33	9S1366	8	BOLT
	34	3T8663	1	PLATE
		4J5140	1	SEAL 1.86CM(.74IN.)DIA.
	35	9M6590	1	BOLT
	36	7H3171	1	PLUG

G ORDER BY THE INCH
Y SEPARATE ILLUSTRATION

312231

312231 P

3016 **7G5126 LINES GP-POWER TRAIN OIL-PART 1 OF 3**
S/N 53Y750-2991
3T3505-Page 137

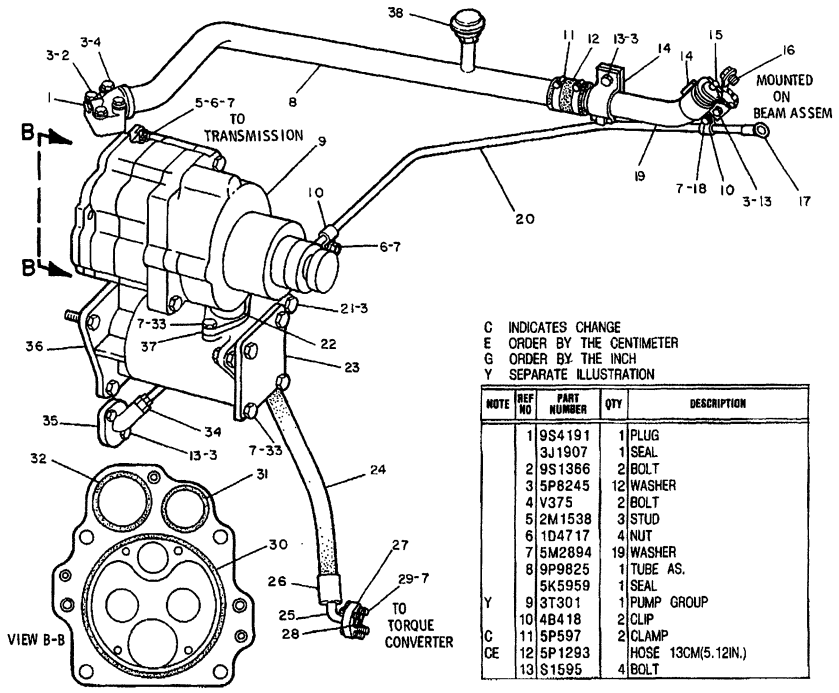

C INDICATES CHANGE
E ORDER BY THE CENTIMETER
G ORDER BY THE INCH
Y SEPARATE ILLUSTRATION

NOTE	REF NO	PART NUMBER	QTY	DESCRIPTION
	1	9S4191	1	PLUG
		3J1907	1	SEAL
	2	9S1366	2	BOLT
	3	5P8245	12	WASHER
	4	V375	2	BOLT
	5	2M1538	3	STUD
	6	1D4717	4	NUT
	7	5M2894	19	WASHER
	8	9P9825	1	TUBE AS.
		5K5959	1	SEAL
Y	9	3T301	1	PUMP GROUP
	10	4B418	2	CLIP
C	11	5P597	2	CLAMP
CE	12	5P1293		HOSE 13CM(5.12IN.)
	13	S1595	4	BOLT
	14	5P7469	2	CLIP (TAB)
		5P7468	2	CLIP (SLOT)
	15	6N2985	1	CAP AS.
	16	S1614	1	BOLT
		5P537	1	WASHER
C	17	6T6805	1	GAUGE AS.
	18	S1594	1	BOLT
	19	3T1105	1	TUBE
	20	9P9826	1	TUBE AS.
	21	S1587	4	BOLT
	22	7G4993	1	TUBE
		1H5728	2	SEAL
	23	3S3439	1	COVER
	24	7G3146	1	HOSE AS.
G		9S247		HOSE 29.92IN.(76CM)
		3S8363	1	STEM AS. (90°)
	25	3S8361	1	STEM AS. (60°)
	26	3S7166	2	SLEEVE
	27	1P4576	4	FLANGE
	28	4J5267	2	SEAL
	29	3B1915	8	BOLT
	30	2D8009	1	SEAL
	31	8M4992	1	SEAL
	32	4J526	1	SEAL
	33	S1588	6	BOLT
	34	5K9238	1	CONNECTOR
	35	7G7434	1	ADAPTER
		5D1597	1	SEAL
	36	3T1502	1	HOUSING
		3S3875	1	SCREEN
		1H8128	2	SEAL
	37	3T2710	1	FLANGE
		2H6184	1	SEAL
C	38	9G9981	1	BREATHER

312232

312232 P

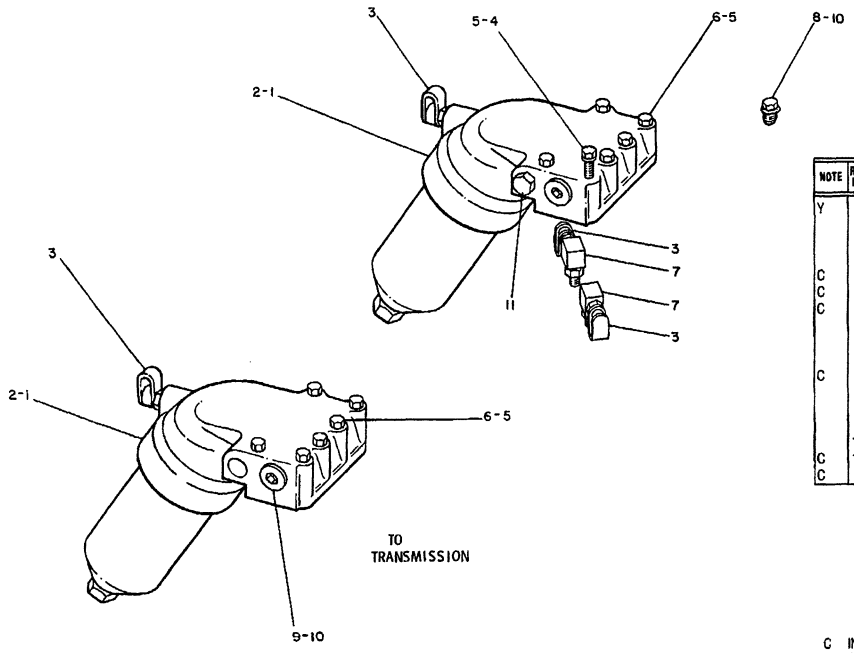

NOTE	REF NO	PART NUMBER	QTY	DESCRIPTION
Y	1	7G3137	2	FILTER GROUP
	2	9M9647	2	SEAL 4.06CM(1.6IN.)DIA.
		6L1651	2	SEAL 5.02CM(1.97IN.)DIA.
		5H7153	2	SEAL 3.11CM(1.22IN.)DIA.
C	3	6V852	5	CAP
C		6V3965	5	NIPPLE AS.
C		3J1907	7	SEAL
	4	T55	1	BOLT 10.8CM(4.25IN.)LONG
	5	5M2894	12	WASHER
	6	L1352	11	BOLT 8.26CM(3.25IN.)LONG
C	7	6V484	2	ADAPTER
	8	9S8896	1	CAP
		2R6276	1	CONNECTOR
	9	9S8008	2	PLUG
	10	3D2824	3	SEAL
C	11	9S4185	1	PLUG
C		3K360	1	SEAL

C INDICATES CHANGE
Y SEPARATE ILLUSTRATION

312233

312233 P

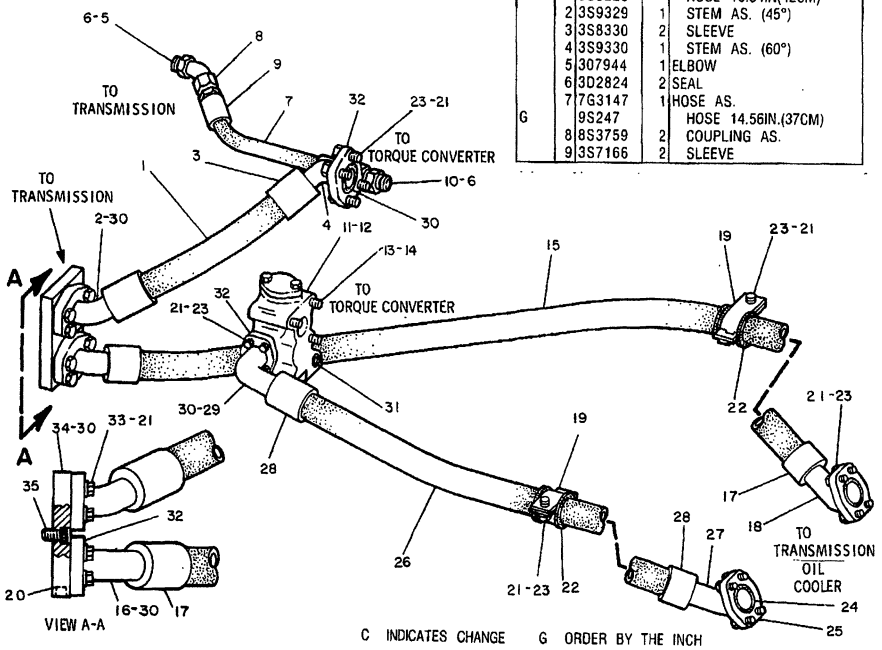

NOTE	REF NO	PART NUMBER	QTY	DESCRIPTION
	1	7G5127	1	HOSE AS.
G		8S8220		HOSE 16.54IN(42CM)
	2	3S9329	1	STEM AS. (45°)
	3	3S8330	2	SLEEVE
	4	3S9330	1	STEM AS. (60°)
	5	307944	1	ELBOW
	6	3D2824	2	SEAL
	7	7G3147	1	HOSE AS.
G		9S247		HOSE 14.56IN.(37CM)
	8	8S3759	2	COUPLING AS.
	9	3S7166	2	SLEEVE
	10	2R6276	1	CONNECTOR
Y	11	3T3505	1	VALVE GROUP
	12	4J523	1	SEAL
	13	T65	3	BOLT
	14	5M2894	3	WASHER
	15	7G5129	1	HOSE AS.
G		8S8220		HOSE 88.78IN.(225.5CM)
	16	3S9330	1	STEM AS. (60°)
	17	3S8330	2	SLEEVE
	18	5P3229	1	STEM AS. (45°)
	19	5P7471	2	CLIP (TAB)
		5P7470	2	CLIP (SLOT)
	20	7H3171	1	PLUG
	21	5P8245	26	WASHER
	22	5P7703	2	GROMMET
C	23	S1585	18	BOLT
	24	4J527	2	SEAL
	25	1P4582	4	FLANGE
	26	7G5128	1	HOSE AS.
G		8S8220		HOSE 61.42IN.(156CM)
	27	5P3229	1	STEM AS. (45°)
	28	3S8330	2	SLEEVE
	29	3S9332	1	STEM AS. (90°)
	30	4J524	6	SEAL 4.72CM(1.86IN.)DIA.
	31	8M8157	1	SEAL
	32	1P4579	8	FLANGE
	33	9S1366	8	BOLT
	34	3T8663	1	PLATE
		4J5140	1	SEAL 1.86CM(.74IN.)DIA.
	35	9M6590	1	BOLT

C INDICATES CHANGE G ORDER BY THE INCH Y SEPARATE ILLUSTRATION 333328

333328 P

3016 7G5126 LINES GP-POWER TRAIN OIL-PART 1 OF 3
S/N 53Y2992-Up
3T3505-Page 137

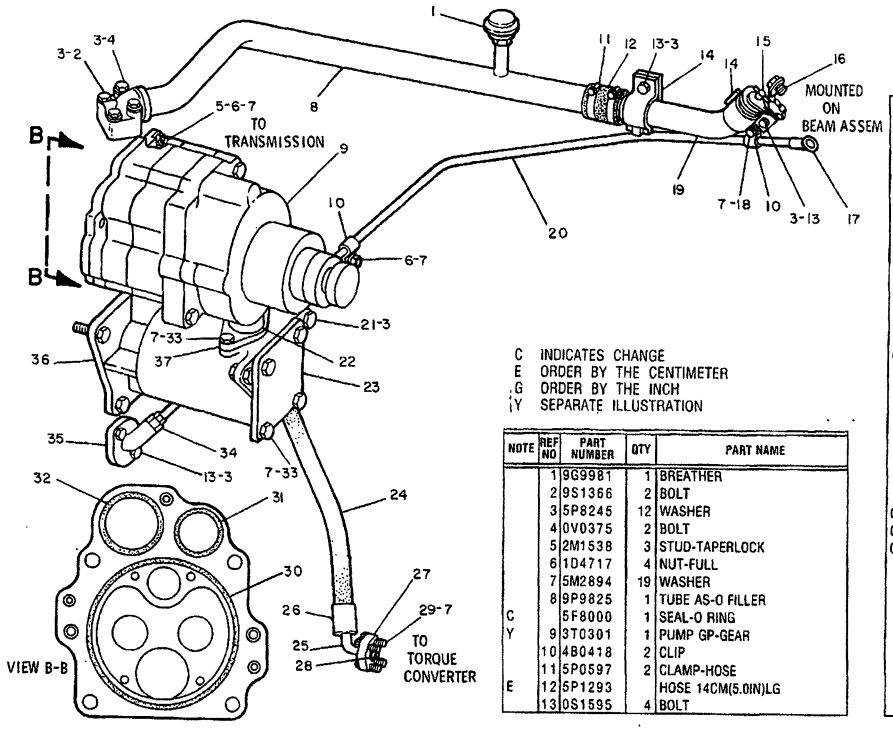

C INDICATES CHANGE
E ORDER BY THE CENTIMETER
G ORDER BY THE INCH
Y SEPARATE ILLUSTRATION

NOTE	REF NO	PART NUMBER	QTY	PART NAME
	1	9G9981	1	BREATHER
	2	9S1366	2	BOLT
	3	5P8245	12	WASHER
	4	0V0375	2	BOLT
	5	2M1538	3	STUD-TAPERLOCK
	6	1D4717	4	NUT-FULL
	7	5M2894	19	WASHER
	8	9P9825	1	TUBE AS-O FILLER
C		5F8000	1	SEAL-O RING
Y	9	3T0301	1	PUMP GP-GEAR
	10	4B0418	2	CLIP
	11	5P0597	2	CLAMP-HOSE
E	12	5P1293		HOSE 14CM(5.0IN)LG
	13	0S1595	4	BOLT
	14	5P7469	2	CLIP (TAB)
		5P7468	2	CLIP (SLOT)
	15	6N2985	1	CAP AS-FILLER
	16	0S1614	1	BOLT
		5P0537	1	WASHER
	17	6T6805	1	GAGE AS-OIL LEVEL
	18	0S1594	1	BOLT
	19	3T1105	1	TUBE
	20	9P9826	1	TUBE AS
	21	0S1587	4	BOLT
	22	7G4993	1	TUBE
		1H5728	2	SEAL-O-RING
	23	3S3439	1	COVER-TOP
	24	7G3146	1	HOSE AS
G		9S0247		HOSE 760MM(29.9IN)LG
		3S8363	1	STEM AS-COLLET (90 DEG)
	25	3S8361	1	STEM AS-COLLET (60 DEG)
	26	3S7166	2	SLEEVE
	27	1P4576	4	FLANGE-HALF
	28	4J5267	2	SEAL
	29	3B1915	8	BOLT
C	30	8T7148	1	SEAL-FACE
C	31	8T7182	1	SEAL-FACE
C	32	8C3077	1	SEAL-FACE
	33	0S1588	6	BOLT
	34	5K9238	1	CONNECTOR-FLARED
	35	7G7434	1	ADAPTER
		5D1597	1	SEAL-O-RING
	36	3T1502	1	HOUSING
		3S3875	1	SCREEN-SUCTION
		1H8128	2	SEAL-O RING
	37	3T2710	1	FLANGE
		2H6184	1	SEAL-O-RING

409273

B- 409273 P

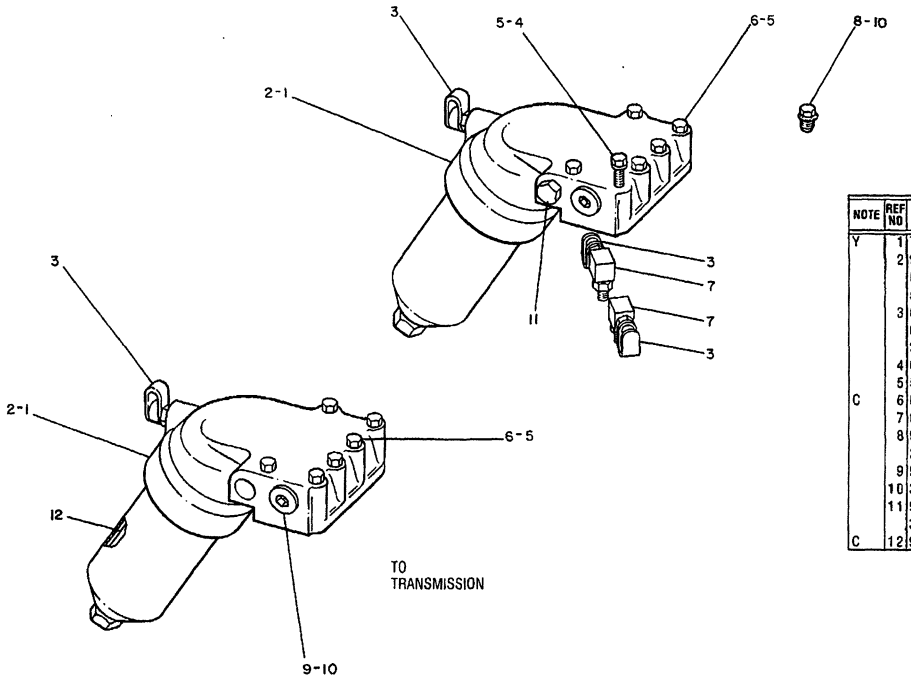

NOTE	REF NO	PART NUMBER	QTY	PART NAME
Y	1	7G3137	2	FILTER GP-TRANSMISSION
	2	9M9647	2	SEAL 4.06CM(1.6IN.)DIA.
		6L1651	2	SEAL 5.02CM(1.97IN.)DIA.
		5H7153	2	SEAL 3.11CM(1.22IN.)DIA.
	3	6V0852	5	CAP-DUST
		6V3965	5	NIPPLE AS
		3J1907	8	SEAL
	4	0T0055	1	BOLT 10.8CM(4.25IN.)LONG
	5	5M2894	12	WASHER
C	6	0T0065	11	BOLT 8.89CM(3.5IN.)LONG
	7	6V0484	2	ADAPTER-O-RING
	8	9S8896	1	CAP
		2R6276	1	CONNECTOR
	9	9S8008	2	PLUG-O-RING
	10	3D2824	3	SEAL
	11	9S4185	1	PLUG-O-RING
		3K0360	1	SEAL
C	12	9M9740	2	ELEMENT

C INDICATES CHANGE Y SEPARATE ILLUSTRATION 410023

B-410023 P

MEMORANDA

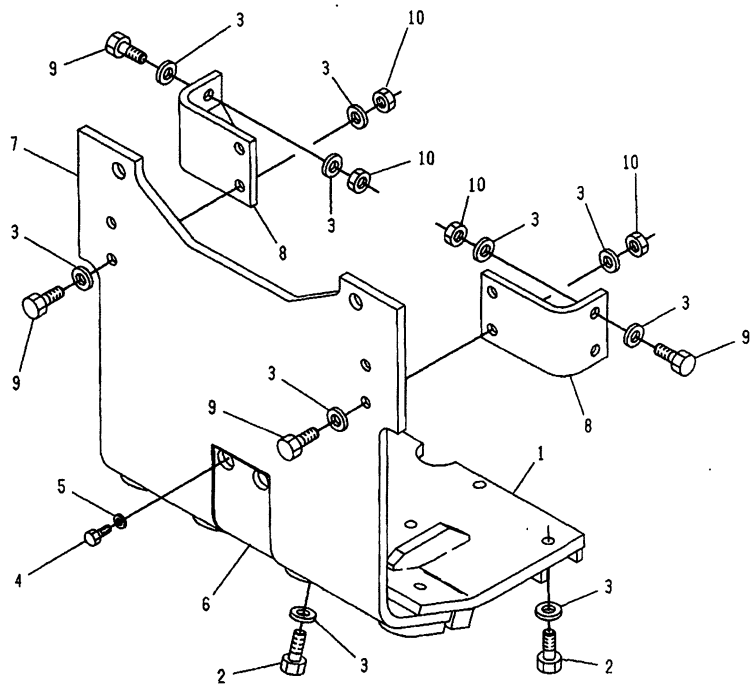

NOTE	REF NO	PART NUMBER	QTY	DESCRIPTION
	1	6T2139	1	GUARD AS.
	2	2A1538	10	BOLT
	3	5P8248	26	WASHER
	4	0S1594	4	BOLT
	5	5M2894	4	WASHER
	6	6T2137	1	PLATE
	7	7T1846	1	GUARD AS.
	8	7T1844	2	BRACKET AS.
	9	1D4608	8	BOLT
	10	2J3506	8	NUT

* 331104

A-331104 P

7153 **7T1847 GUARD GP-POWER TRAIN**

Rear

An Attachment

POWER TRAIN-POWER TRANSMISSION UNIT

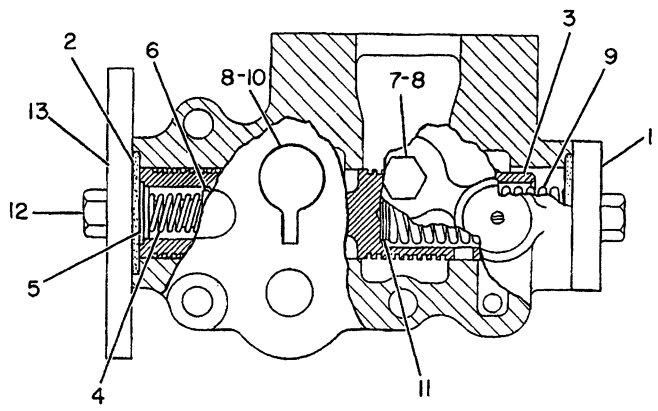

NOTE	REF NO	PART NUMBER	QTY	PART NAME
C	1	4M8239	1	COVER
	2	8M4986	2	SEAL-O-RING
	3	2P4538	1	SPOOL AS-RELIEF
	4	5M9548	1	SPRING
	5	1L3162	1	RING-RETAINING
		8M2537	1	RETAINER
	6	9M4313	1	POPPET
	7	9S4191	1	PLUG-O-RING
	8	3J1907	2	SEAL-O-RING
	9	2P5711	1	SPRING
	10	6V3965	1	NIPPLE AS
		6V0852	1	CAP-DUST
B	11	5M9622	2	SPACER 1.58MM(.062IN)THK
B		5M9623	3	SPACER .91MM(.036IN)THK
B		5M9624	1	SPACER .25MM(.01IN)THK
	12	0S1594	4	BOLT
		3B4506	4	LOCKWASHER
C	13	7T1784	1	PLATE

B-USE AS REQUIRED
C-CHANGE FROM PREVIOUS TYPE

B-323255 EP

3152 **3T3505 VALVE GP-RELIEF**

Part Of 7G5126 Lines-Power Train Oil

POWER TRAIN-POWER TRANSMISSION UNIT

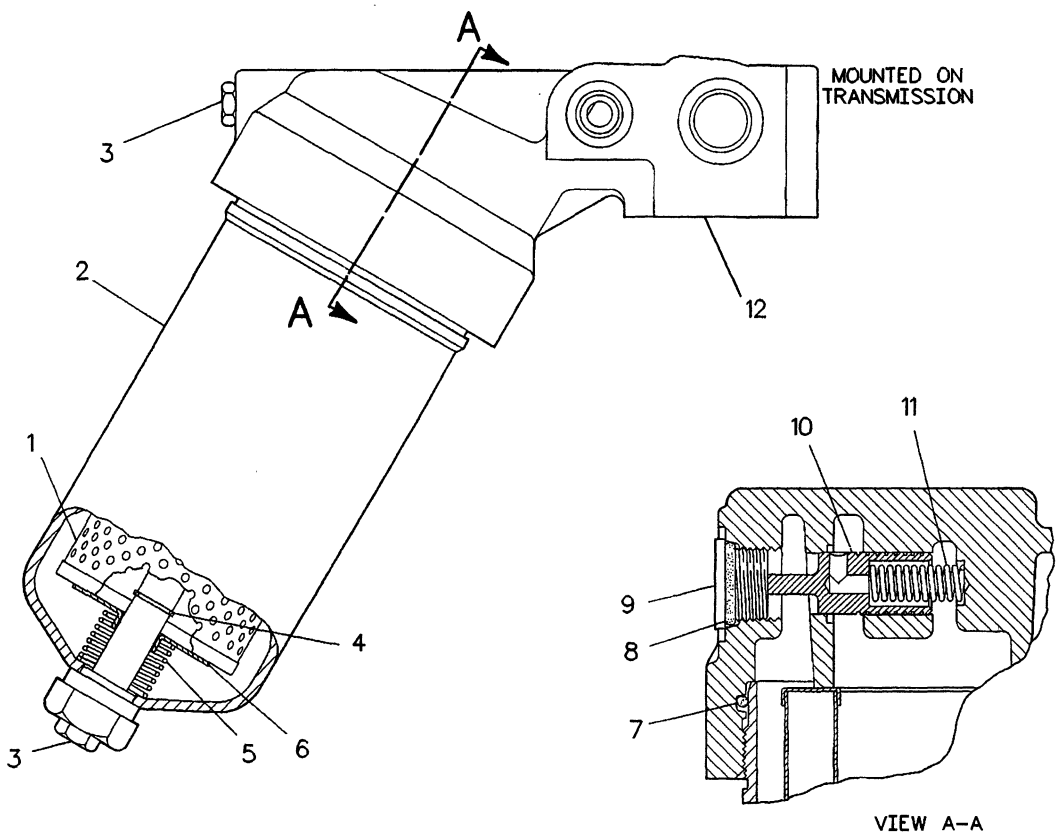

NOTE	REF NO	PART NUMBER	QTY	PART NAME
	1	9M9740	1	ELEMENT-FILTER (DISPOSABLE)
				-OR-
A		4T3131	1	ELEMENT-FILTER (FIRE RESISTANT FLUID)
				-OR-
A		9W2932	1	ELEMENT-FILTER (HIGH PERFORMANCE)
	2	3P0887	1	HOUSING AS
	3	9S4191	2	PLUG-O-RING
		3J1907	2	SEAL-O-RING
	4	2J6356	1	RING-RETAINING
	5	7S6745	1	RETAINER
	6	3S8652	1	SPRING
	7	2S8439	1	SEAL-O-RING
	8	3D2824	1	SEAL-O-RING
	9	9S8008	1	PLUG-O-RING
	10	3T0688	1	SPOOL
	11	9M1986	1	SPRING
	12	7G2443	1	BASE-HOUSING

A-NOT PART OF THIS GROUP

R-495948 P

3179 **7G3137 FILTER GP-TRANSMISSION-PART 1 OF 2**

2 Required. With Housing

For S/N Refer To Part 2-Page 138A

Part Of 7G5126 Lines-Power Train Oil

SERIAL NO:
53Y1-722,725-1618,1620-1629,1631-1635,
1637,1639-1643,1645,1646,1649-1653,1655-
1657,1659-1663,1666,1667,1669-1684,1687-
1718,1720,1722,1724-1728,1730,1731,1733-
1738,1742-1745,1747,1750-1753,1755-1763,
1765,1767-1774,1776,1778,1781,1784,1786,
1787,1789,1792,1793,1796-1798,1802,1806,
1808,1809,1848,1855-1862

7G3137 FILTER GP-TRANSMISSION-PART 2 OF 2
2 Required. With Housing
For Illustration Refer To Part 1-Page 138
Part Of 7G5126 Lines-Power Train Oil

POWER TRAIN-POWER TRANSMISSION UNIT

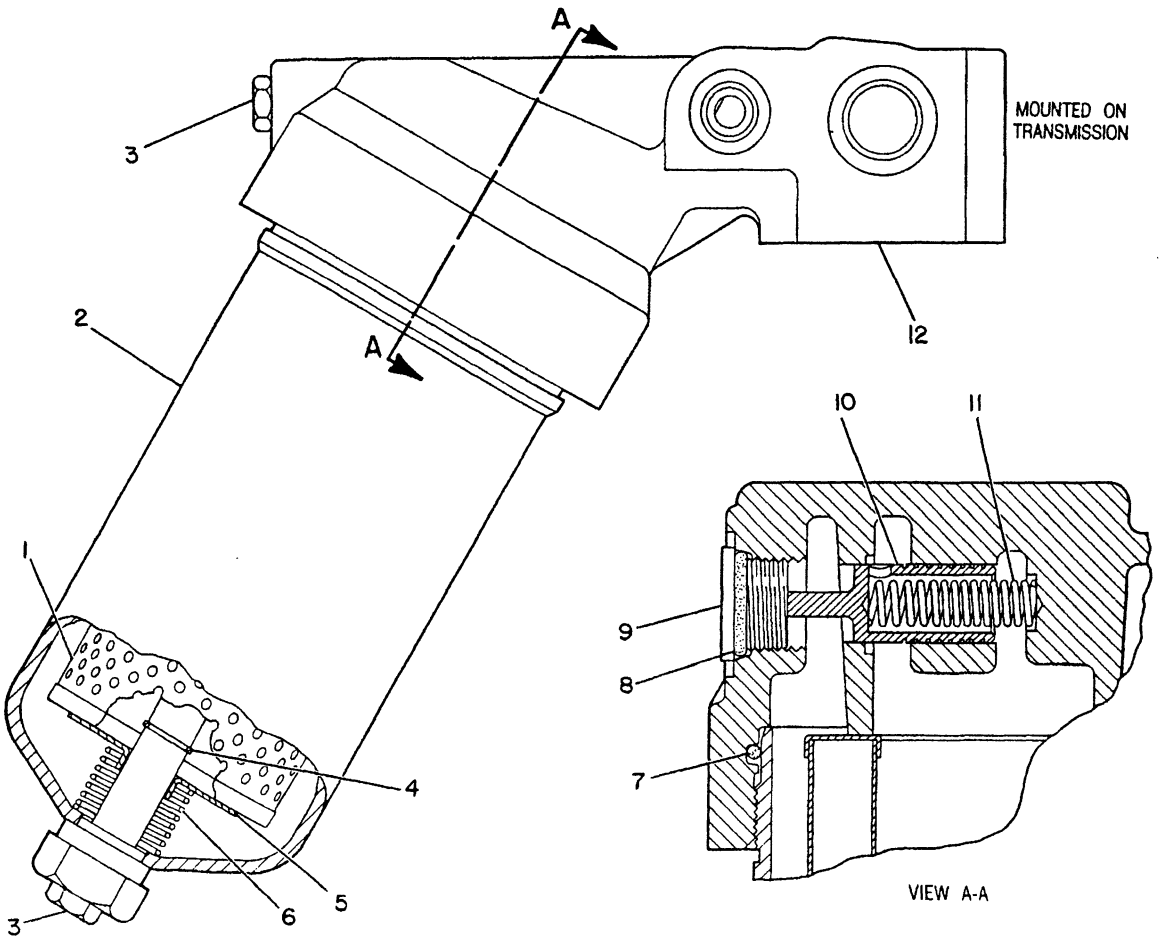

NOTE	REF NO	PART NUMBER	QTY	PART NAME
	1	9M9740	1	ELEMENT-FILTER (DISPOSABLE)
				-OR-
A		4T3131	1	ELEMENT-FILTER (FIRE RESISTANT FLUID)
				-OR-
A		9W2932	1	ELEMENT-FILTER (HIGH PERFORMANCE)
	2	3P0887	1	HOUSING AS
	3	9S4191	2	PLUG-O-RING
		3J1907	2	SEAL-O-RING
	4	2J6356	1	RING-RETAINING
	5	7S6745	1	RETAINER
	6	3S8652	1	SPRING
	7	2S8439	1	SEAL-O-RING
	8	3D2824	1	SEAL-O-RING
	9	9S8008	1	PLUG-O-RING
C	10	6T9222	1	SPOOL
C	11	6T9223	1	SPRING
	12	7G2443	1	BASE-HOUSING

A-NOT PART OF THIS GROUP
C-CHANGE FROM PREVIOUS TYPE

B-496134 EP

3179 **7G3137 FILTER GP-TRANSMISSION-PART 1 OF 2**

2 Required-With Housing
For S/N Refer To Part 2-Page 138C
Part Of 7G5126 Lines

SERIAL NO:
53Y723,724,1619,1630,1636,1638,1644,
1647,1648,1654,1658,1664,1665,1668,
1685,1686,1719,1721,1723,1729,1732,
1739,1740,1741,1746,1748,1749,1754,
1764,1766,1775,1777,1779,1780,1782,
1783,1785,1788,1790,1791,1794,1795,
1799-1801,1803-1805,1807,1810-1847,
1849-1854,1856-1861,1863-UP

7G3137 FILTER GP-TRANSMISSION-PART 2 OF 2
2 Required. With Housing
For Illustration Refer To Part 1-Page 138B
Part Of 7G5126 Lines

POWER TRAIN-POWER TRANSMISSION UNIT

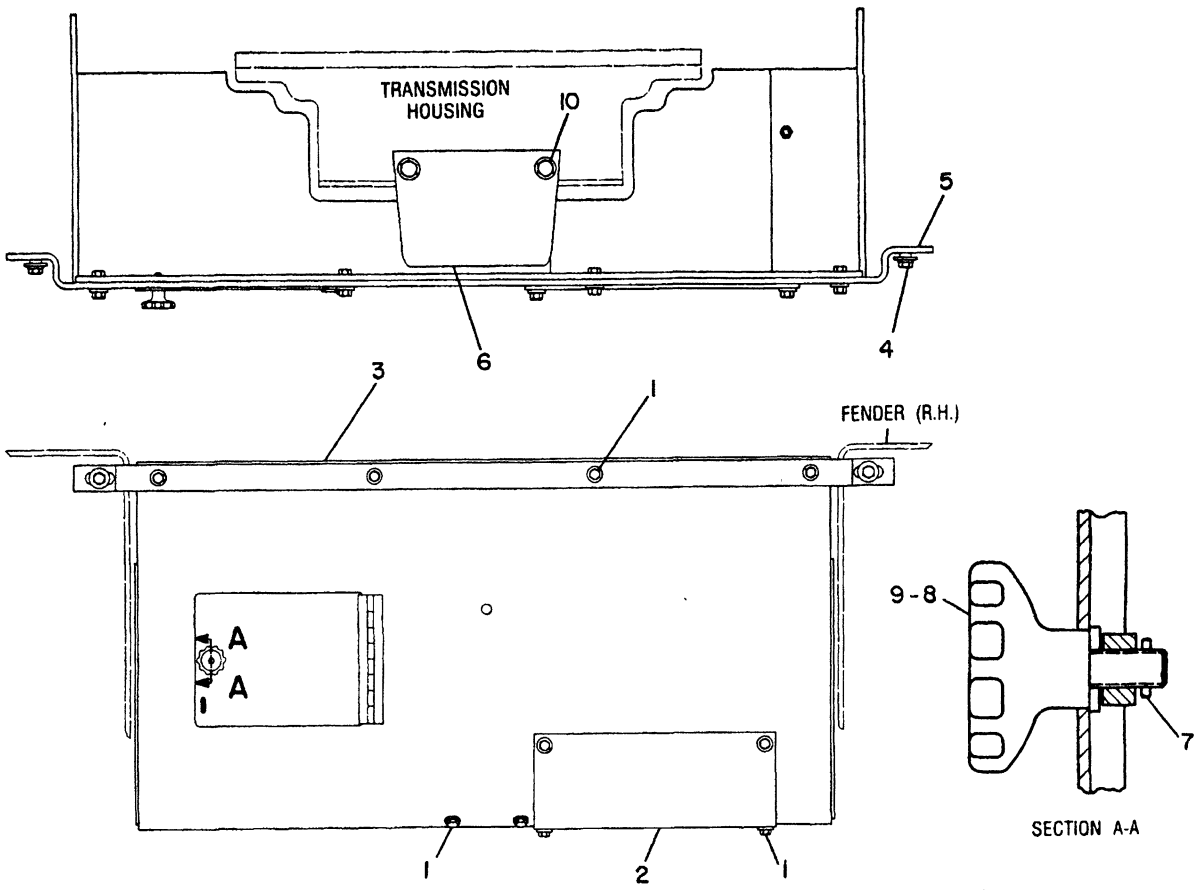

NOTE	REF NO	PART NUMBER	QTY	PART NAME
	1	7B3235	10	BOLT
		7D1649	10	WASHER
	2	7T1021	1	PLATE
	3	7T1022	1	GUARD AS
	4	0S1587	2	BOLT
		5P8245	2	WASHER
	5	7T1019	1	STRAP
	6	3T6224	1	BRACKET AS
		1F0748	2	NUT-WELD (WELD)
		2K2794	2	WASHER
	7	4H1641	1	PIN-SPRING
	8	7S2043	1	KNOB AS
		2D4295	1	KNOB
		3H6660	1	PIN-SPRING
		7S2042	1	STUD
	9	9S8230	1	PLATE AS
	10	1A0458	2	BOLT
		5P8248	2	WASHER-HARD

B-335162 EP

7153 **7T1018 GUARD GP-POWER TRAIN**

Type 1

Cannot Be Used With Ripper Ar Or Ripper Hydraulic Control An Attachment

POWER TRAIN-POWER TRANSMISSION UNIT

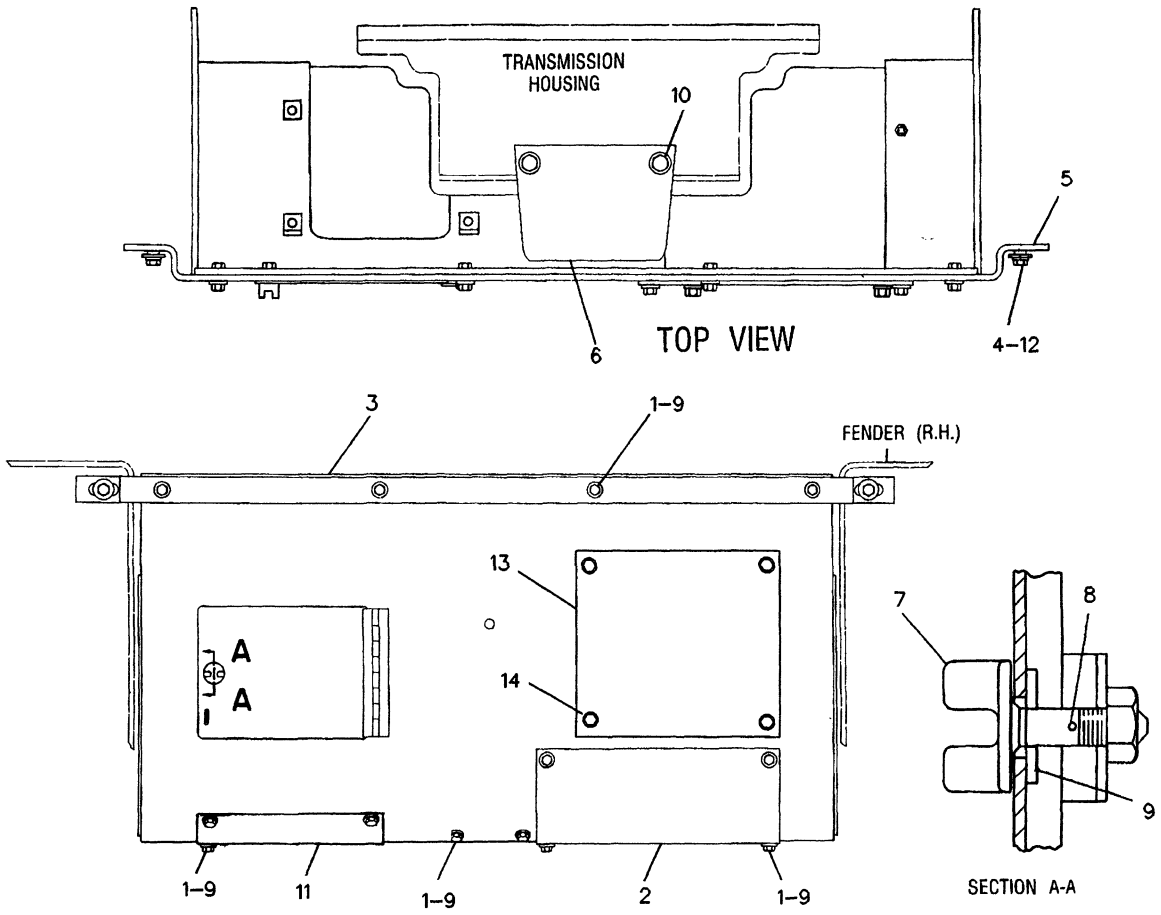

NOTE	REF NO	PART NUMBER	QTY	PART NAME	NOTE	REF NO	PART NUMBER	QTY	PART NAME
	1	8C4436	13	BOLT					
	2	7T1021	1	PLATE					
	3	7T1022	1	GUARD AS					
	4	8T8919	2	BOLT					
		7X0590	2	WASHER-HARD					
	5	7T1019	1	STRAP					
	6	3T6224	1	BRACKET AS					
		1F0748	2	NUT-WELD (WELD)					
		2K2794	2	WASHER					
C	7	4D6082	1	BOLT					
C	8	3B4610	1	COTTER					
C	9	7X0550	14	WASHER-HARD					
	10	8T9398	2	BOLT					
		8T4994	2	WASHER					
	11	6Y3299	1	PLATE					
	12	2J8239	2	ADAPTER					
	13	7G9592	1	SHIM					
	14	5P2566	4	BOLT					
		8T4223	4	WASHER-HARD					

C-CHANGE FROM PREVIOUS TYPE

R-492109 EP

7153 **7T1018 GUARD GP-POWER TRAIN**

Type 2

Cannot Be Used With Ripper Ar Or Ripper Hydraulic Control An Attachment

MEMORANDA

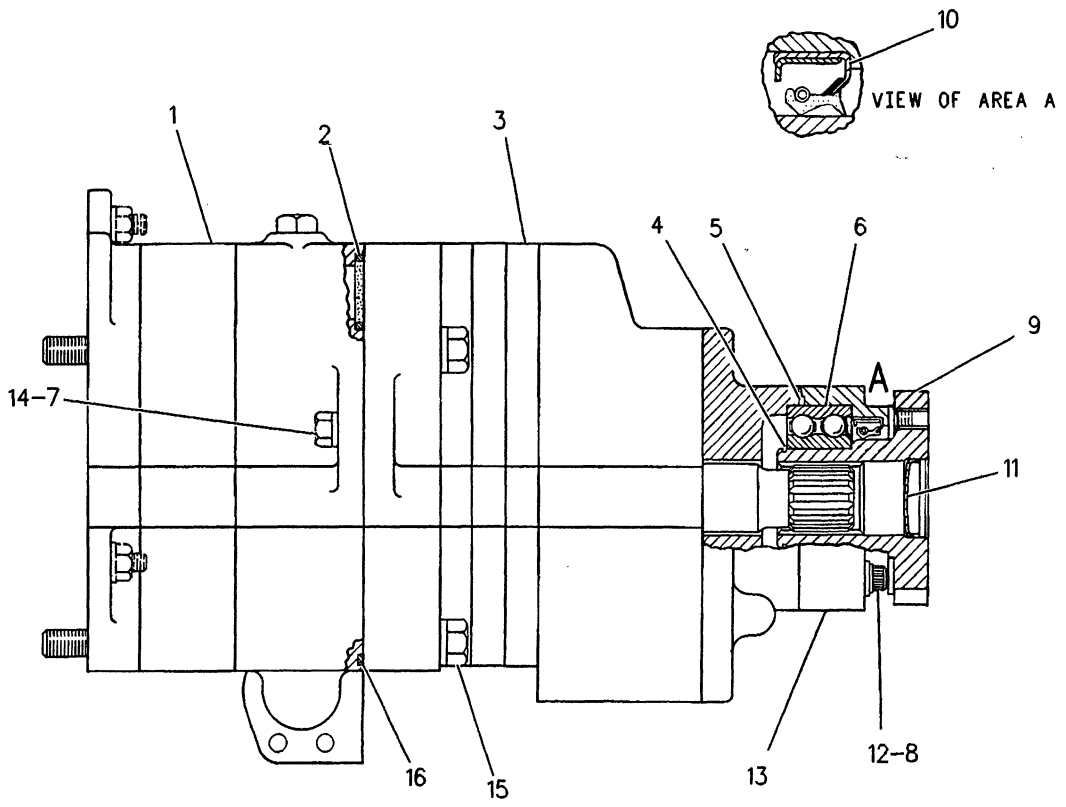

NOTE	REF NO	PART NUMBER	QTY	PART NAME	NOTE	REF NO	PART NUMBER	QTY	PART NAME
Y	1	7G2262	1	PUMP GP-GEAR (CONVERTER CHARGING AND SCAVENGE)					
	2	8M5248	2	SEAL-O-RING					
Y	3	3T0300	1	PUMP GP-GEAR (TMSN CONVERTER CHARGING & STEERING CLUTCH & BRAKE LUB)					
	4	2M3974	1	RING-RETAINING					
	5	2H3931	1	SEAL-O-RING					
	6	1B5675	1	BALL BEARING					
	7	1A2029	2	BOLT					
	8	9M1974	4	WASHER-HARD					
C	9	3T5355	1	FLANGE					
	10	1114919	1	SEAL-LIP TYPE					
	11	5H4279	1	PLUG-CUP					
	12	6L4784	4	BOLT-12 POINT HEAD					
	13	7G2248	1	CAGE-BEARING					
	14	5M2894	2	WASHER					
	15	1A0168	4	BOLT					
		2M0849	4	WASHER					
	16	2K8257	1	SEAL-O-RING					

C-CHANGE FROM PREVIOUS TYPE
Y-SEPARATE ILLUSTRATION

R-599651 CP

3017 **3T0301 PUMP GP-GEAR**

4 Section

7G2262-Page 140, 3T0300-Page 141

Part Of 7G5126 Lines-Power Train Oil

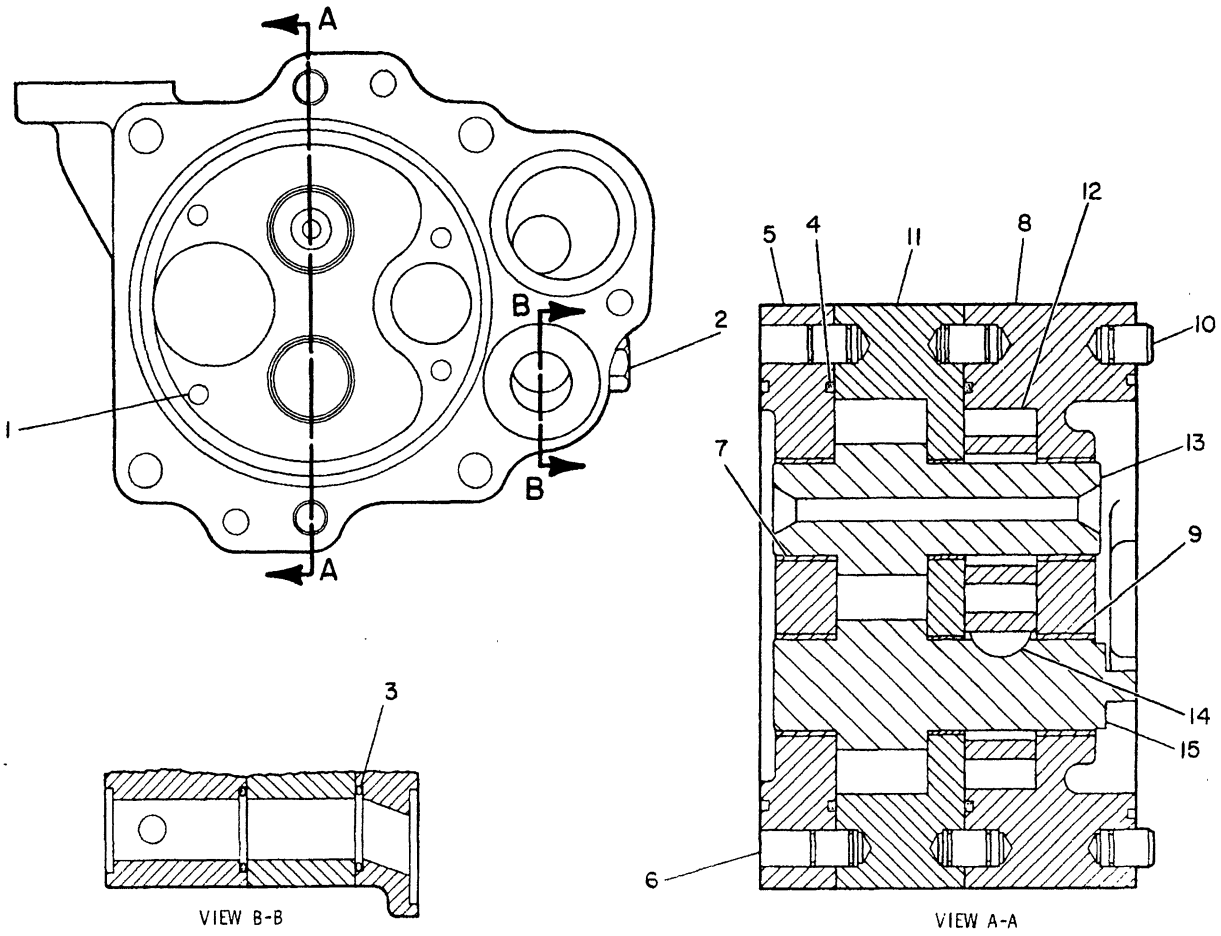

NOTE	REF NO	PART NUMBER	QTY	PART NAME	NOTE	REF NO	PART NUMBER	QTY	PART NAME
	1	1A5964	4	BOLT					
		3S0004	4	WASHER					
	2	9S4191	2	PLUG-O-RING					
		3J1907	2	SEAL-O-RING					
	3	8T7183	4	SEAL-FACE					
	4	8T7148	2	SEAL-FACE					
	5	7G2259	1	COVER AS-OIL PUMP					
	6	8M8489	2	DOWEL					
	7	9M4370	2	BEARING					
	8	7G2256	1	BODY AS-OIL PUMP					
	9	9M4370	2	BEARING					
	10	8M8489	4	DOWEL					
	11	7G2257	1	BODY-OIL PUMP					
	12	3P0747	2	GEAR (12 TEETH)					
	13	7G2244	1	GEAR AS-PUMP (8 TEETH)					
	14	1B8736	1	KEY-WOODRUFF					
	15	7G2243	1	GEAR AS-PUMP (8 TEETH)					

B-489519 EP

3153 **7G2262 PUMP GP-GEAR**

2 Section

Part Of 3T0301 Pump-Gear

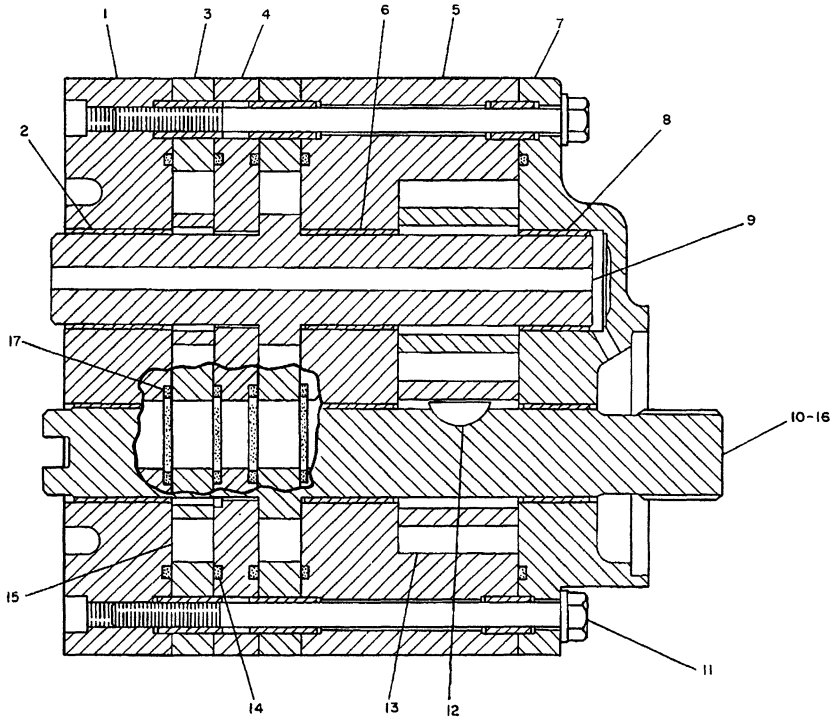

REF. NO.	PART NUMBER	DESCRIPTION	QTY
1	7G2254	COVER ASSEM. (Includes)	1
2	5M3320	BEARING	2
3	3T3662	BODY ASSEM. (Each Includes)	2
	5M3605	DOWEL	2
4	3T3665	SPACER	1
5	3T1217	BODY ASSEM. (Includes)	1
	8M8489	DOWEL	2
6	5M3320	BEARING	2
7	7G2250	COVER ASSEM. (Includes)	1
8	1M3780	BEARING	2
9	3T3666	GEAR ASSEM. ---(8 teeth)---	1
10	3T3667	GEAR ASSEM. ---(8 teeth)---	1
11	8F8544	BOLT	6
	3S4	WASHER	6
12	1B8736	KEY	1
13	9P8078	GEAR ---(12 teeth)---	2
14	2D8009	SEAL	5
15	3T3663	GEAR ---(8 teeth)---	2
16	1B8705	KEY	1
17	8M5248	SEAL	4

235163

235163 EP

3017

3T0300 PUMP GP-GEAR
2 Section
Part Of 3T0301 Pump-Gear

POWER TRAIN-POWER TRANSMISSION UNIT

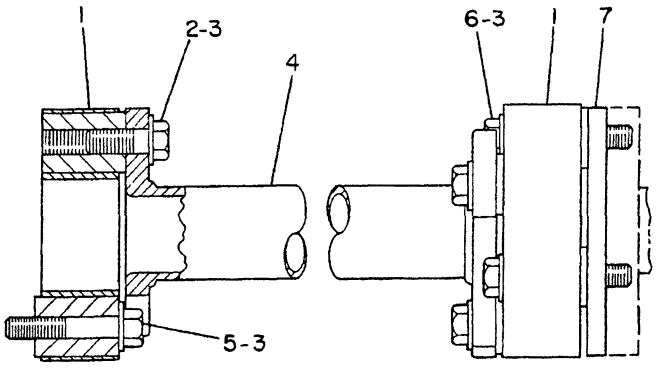

NOTE	REF NO	PART NUMBER	QTY	PART NAME
	1	3E4880	2	COUPLING AS
	2	5S7383	6	BOLT
	3	8T4896	12	WASHER-HARD
	4	3T2280	1	TUBE AS
	5	8T2501	3	BOLT
	6	8T9377	3	BOLT
	7	3T5284	1	SPACER

B-573184 EP

5062 **7G7009 COUPLING GP-PUMP**

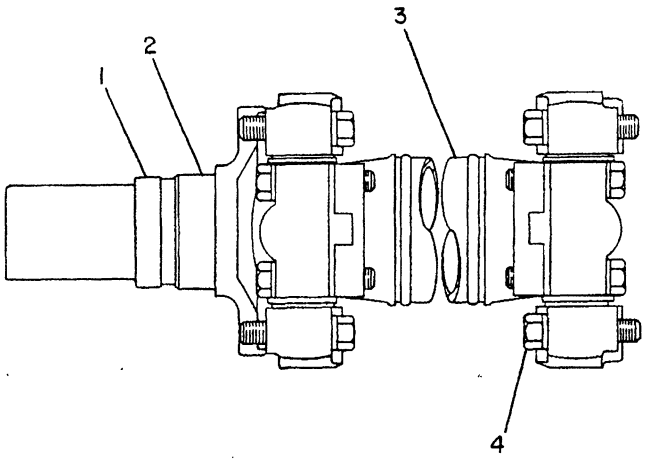

NOTE	REF NO	PART NUMBER	QTY	PART NAME
	1	7D1677	1	RACE-BEARING INNER
	2	8P8843	1	YOKE AS
		4F8503	1	PLUG-CUP
Y	3	7G3265	1	UNIVERSAL JOINT GP
	4	0S0484	8	BOLT
		5P7213	8	WASHER-HARD

Y-SEPARATE ILLUSTRATION

B-487713 EP

3253 **6P7335 SHAFT GP-MAIN DRIVE**

7G3265-Page 143A

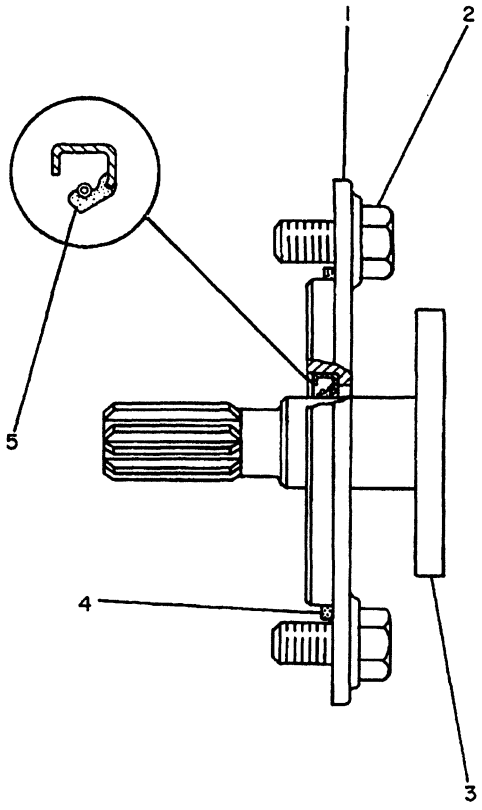

NOTE	REF NO	PART NUMBER	QTY	DESCRIPTION
	1	7N9337	1	COVER
	2	0S1592	2	BOLT
C	3	1W5690	1	FLANGE AS.
	4	5F3106	1	SEAL
C	5	5P1713	1	SEAL

C INDICATES CHANGE

331086

331086 P

POWER TRAIN-POWER TRANSMISSION UNIT

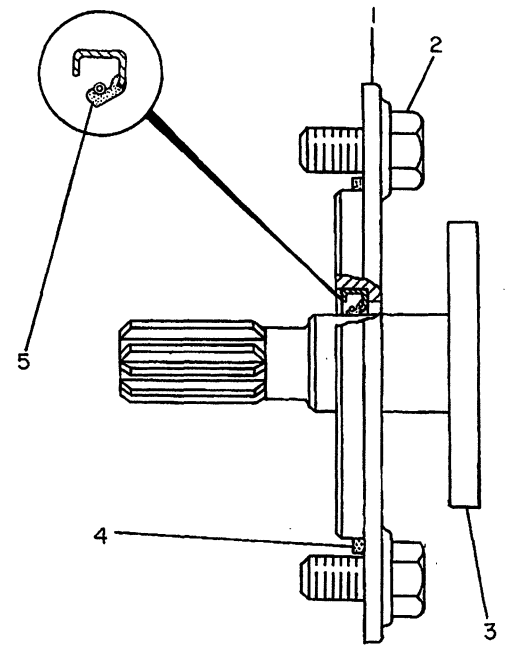

NOTE	REF NO	PART NUMBER	QTY	PART NAME
C	1	7W5854	1	COVER-REAR GEAR
	2	7X0343	2	BOLT
C	3	7G7014	1	FLANGE-STUB
	4	6V8260	1	SEAL-O-RING
C	5	8T2230	1	SEAL-LIP TYPE

C-CHANGE FROM PREVIOUS TYPE

B-544279 EP

3108 **8N0198 YOKE GP**
S/N 53Y3366-Up

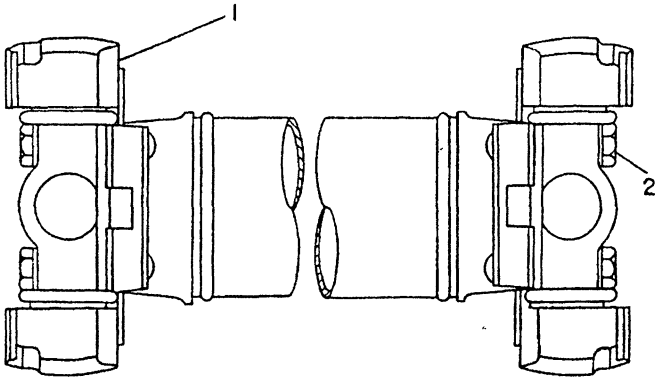

NOTE	REF NO	PART NUMBER	QTY	PART NAME
	1	9P4809	2	SPIDER & BEARING AS
	2	0S0484	8	BOLT
		5P7213	8	WASHER-HARD

B-465557 EP

3251 **7G3265 UNIVERSAL JOINT GP**
Part Of 6P7335 Shaft-Main Drive

MEMORANDA

POWER TRAIN-POWER TRANSMISSION UNIT

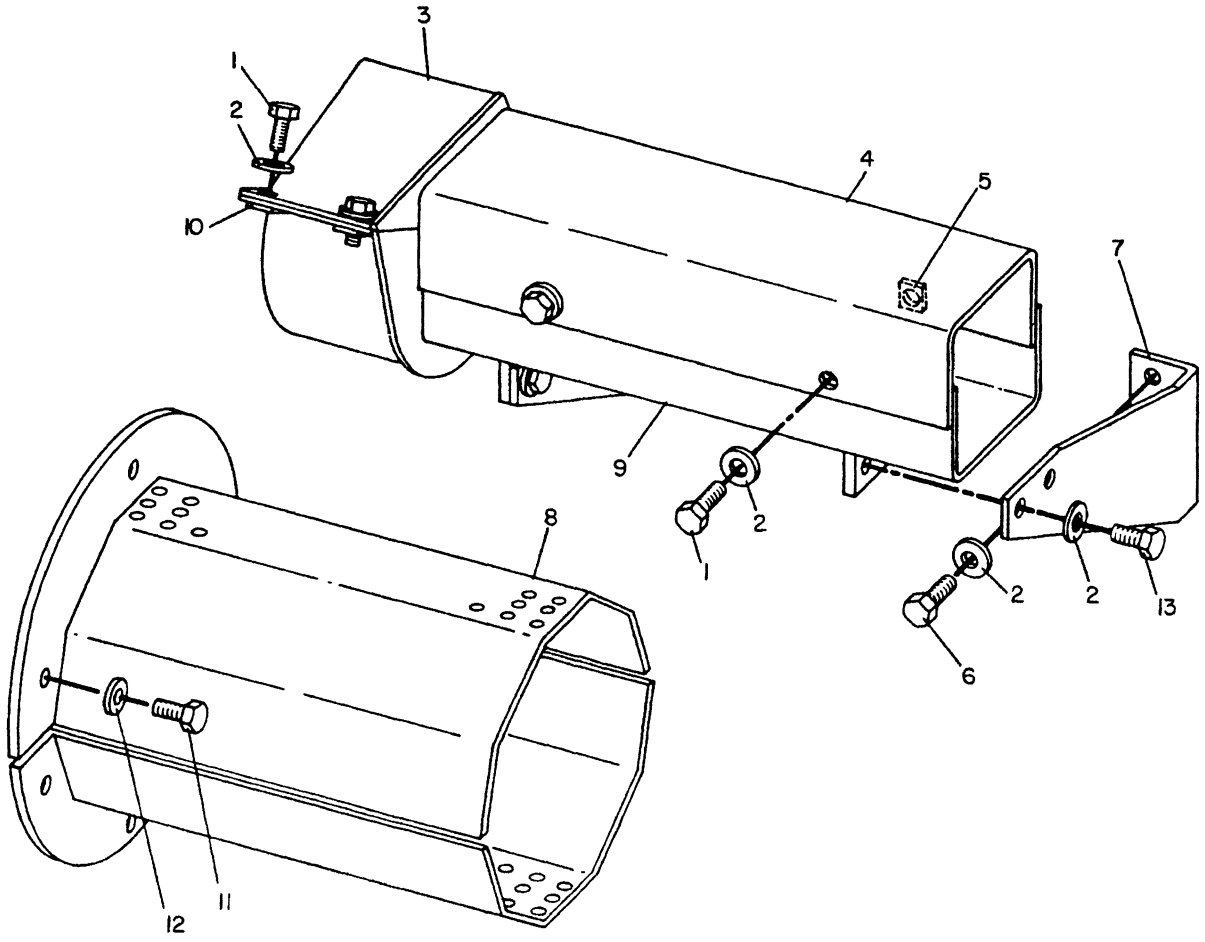

NOTE	REF NO	PART NUMBER	QTY	PART NAME	NOTE	REF NO	PART NUMBER	QTY	PART NAME
	1	0T0102	8	BOLT					
	2	5M2894	16	WASHER					
	3	3T0142	1	GUARD AS					
	4	3T0151	1	GUARD AS					
	5	9F2978	2	NUT-WELD					
C	6	0L1351	4	BOLT					
C	7	3T0145	2	BRACKET					
	8	7G4873	2	GUARD AS					
	9	3T0149	1	GUARD AS					
C	10	1F0750	4	NUT-WELD					
C	11	6H1717	6	BOLT					
	12	5P8245	6	WASHER					
C	13	0S1594	4	BOLT					

C-CHANGE FROM PREVIOUS TYPE

B-311601 EP

7153 **3T0719 GUARD GP-DRIVE SHAFT**

POWER TRAIN-POWER TRANSMISSION UNIT

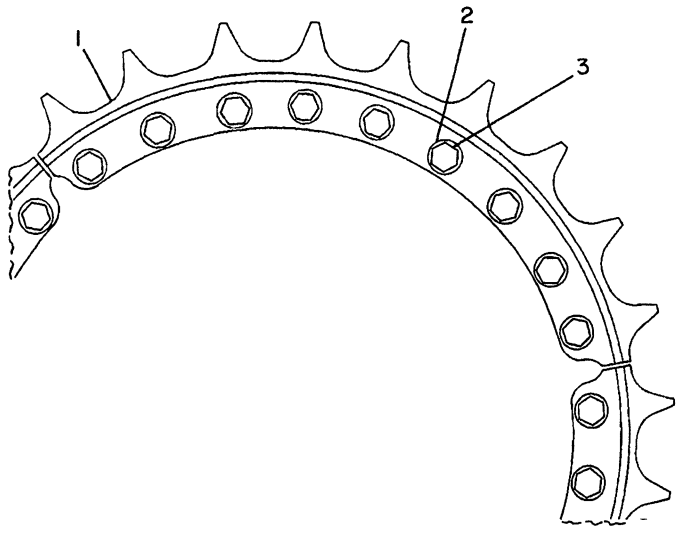

NOTE	REF NO	PART NUMBER	QTY	PART NAME
C	1	6T0490	3	SEGMENT-SPROCKET
	2	340707	27	WASHER
	3	5P4130	27	BOLT-SPROCKET
		7H3608	27	NUT

C-CHANGE FROM PREVIOUS TYPE

B-301443 EP

4155 **9P4747 SEGMENT GP-SPROCKET**
Part Of 6P7342 Final Drive

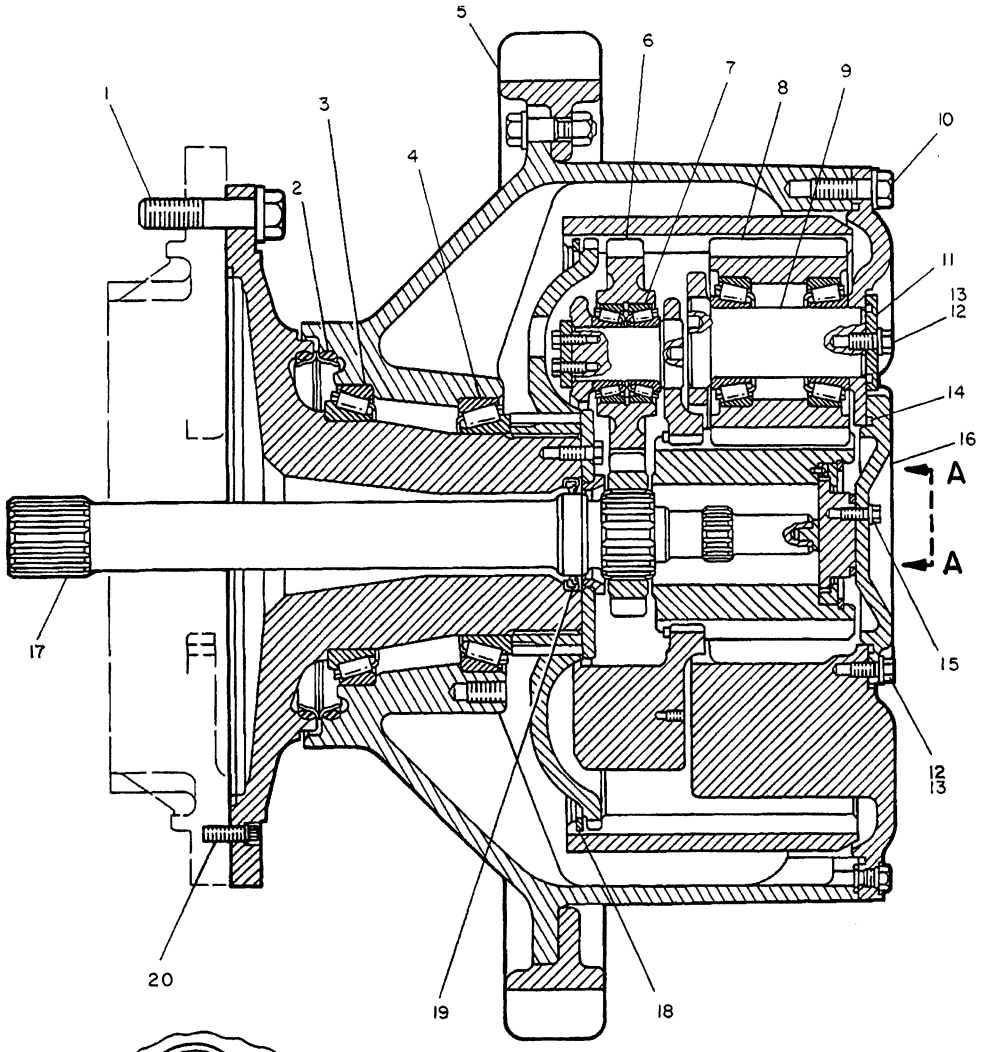

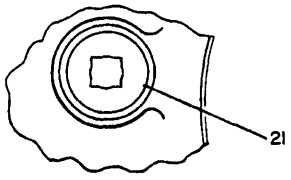

VIEW A-A

NOTE	REF NO	PART NUMBER	QTY	DESCRIPTION
C	1	1D4640	30	BOLT
C		5P8250	30	WASHER
	2	9G5347	1	SEAL GROUP
		4M0736	2	RING
	3	5P8876	1	CUP
		5P8875	1	CONE
	4	1P9594	1	CUP
		1P9593	1	CONE
Y	5	9P4747	1	SEGMENT GROUP
	6	9P3429	3	GEAR (27 TEETH)
		9P3657	3	RING
	7	1B3978	6	CUP
		1B3980	6	CONE
C	8	9P3366	3	GEAR (24 TEETH)
	9	9P3467	3	SHAFT
	10	1A8063	35	BOLT
C		5P8248	35	WASHER
	11	3P8827	3	PLATE
		2H2665	3	SEAL
C	12	308538	9	BOLT
C	13	5P8245	9	WASHER
	14	9M5894	1	SEAL
	15	1A2029	3	BOLT
		5M2894	3	WASHER
	16	9P3474	1	COVER
	17	9P3416	1	SHAFT
	18	9P4959	1	RING
	19	5P7796	1	SEAL
	20	4K5175	3	BOLT
	21	6V3298	1	PLUG
		2S4078	1	SEAL

C INDICATES CHANGE

Y SEPARATE ILLUSTRATION

323179

323179 P

4050

6P7342 FINAL DRIVE GP-PART 1 OF 2

9P4747-Page 145

Field Replacement Order 3T6240-Page 148

Note: 8C6494 Bearing Kit Is Available For Complete Replacement Of Final Drive Bearings For One Final Drive

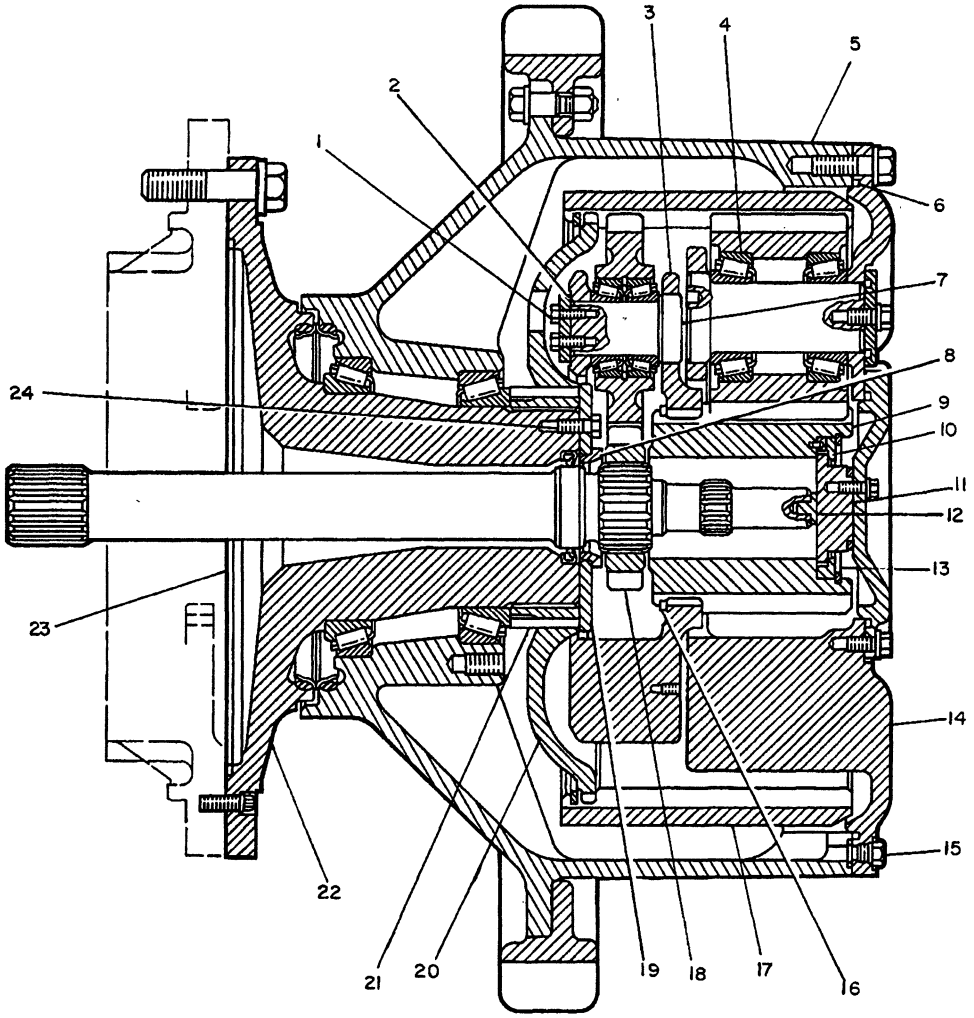

REF. NO.	PART NUMBER	DESCRIPTION	QTY.
1	5D353	BOLT	6
2	8P5698	PLATE	3
3	9P3415	CARRIER	1
4	6H3568	CUP	6
	7K394	CONE	6
5	9P3255	HUB	1
6	3D8422	SEAL	1
7	9P3592	SHAFT	3
8	9P3472	RING	1
9	9P3471	GEAR-------(24 teeth)	1
	7S4326	DOWEL	1
10	3P8820	RING	1
11	3P8819	RETAINER	1
	6F8146	SEAL	1
12	2D604	BUTTON	1
13	2S613	RING	1
14	9P3468	CARRIER	1
15	9S4185	PLUG	1
	3K360	SEAL----------(small)----------	1
	5F7054	SEAL----------(large)----------	1
16	5P7911	RING	1
17	9P3320	GEAR-----(72 teeth)----------	1
18	9P3454	GEAR--------(18 teeth)----------	1
19	9P3473	RETAINER	1
20	3T7364	HUB	1
21	3T6882	PIN	12
22	9P2912	HUB	1
23	8D4771	SEAL	1
24	308538	BOLT	12

235087

235087 P

4050

6P7342 FINAL DRIVE GP-PART 2 OF 2

Field Replacement Order 3T6240-Page 148

Note: 8C6494 Bearing Kit Is Available For Complete Replacement Of Final Drive Bearings For One Final Drive

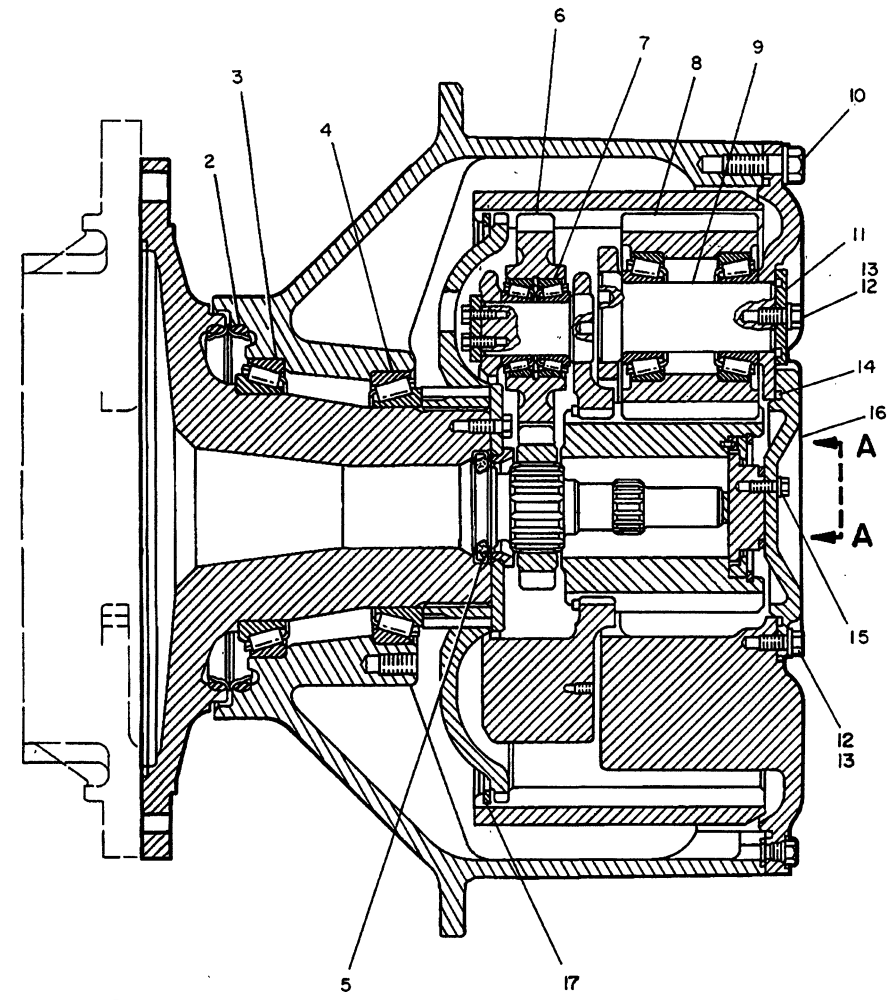

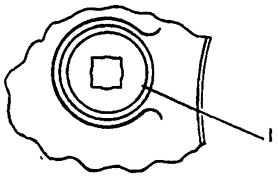

VIEW A-A

NOTE	REF NO	PART NUMBER	QTY	PART NAME
	1	6V3298	1	PLUG-MAGNETIC
		2S4078	1	SEAL
	2	9G5347	1	SEAL GP-DUO-CONE
		4M0736	2	RING-SEALING
	3	5P8876	1	CUP-ROLLER BEARING
		5P8875	1	CONE-ROLLER BEARING
	4	1P9594	1	CUP-ROLLER BEARING
C		9W2151	1	CONE-ROLLER BEARING
C	5	9W5210	1	SEAL-LIP TYPE
	6	9P3429	3	GEAR (27 TEETH)
		9P3657	3	RING-LOCK
	7	1B3978	6	CUP-ROLLER BEARING
		1B3980	6	CONE-ROLLER BEARING
C	8	9P3366	3	GEAR (24 TEETH)
	9	9P3467	3	SHAFT
	10	1A8063	35	BOLT
		5P8248	35	WASHER
	11	3P8827	3	PLATE
C		6V1653	3	SEAL-QUAD RING
C	12	308538	9	BOLT
C	13	5P8245	9	WASHER
	14	9M5894	1	SEAL-O RING
	15	1A2029	3	BOLT
		5M2894	3	WASHER
	16	9P3474	1	COVER
	17	9P4959	1	RING-RETAINING

C-INDICATES CHANGE

404702
404702 P

4050 **3T6240 FINAL DRIVE GP-PART 1 OF 2*R**
Field Installation

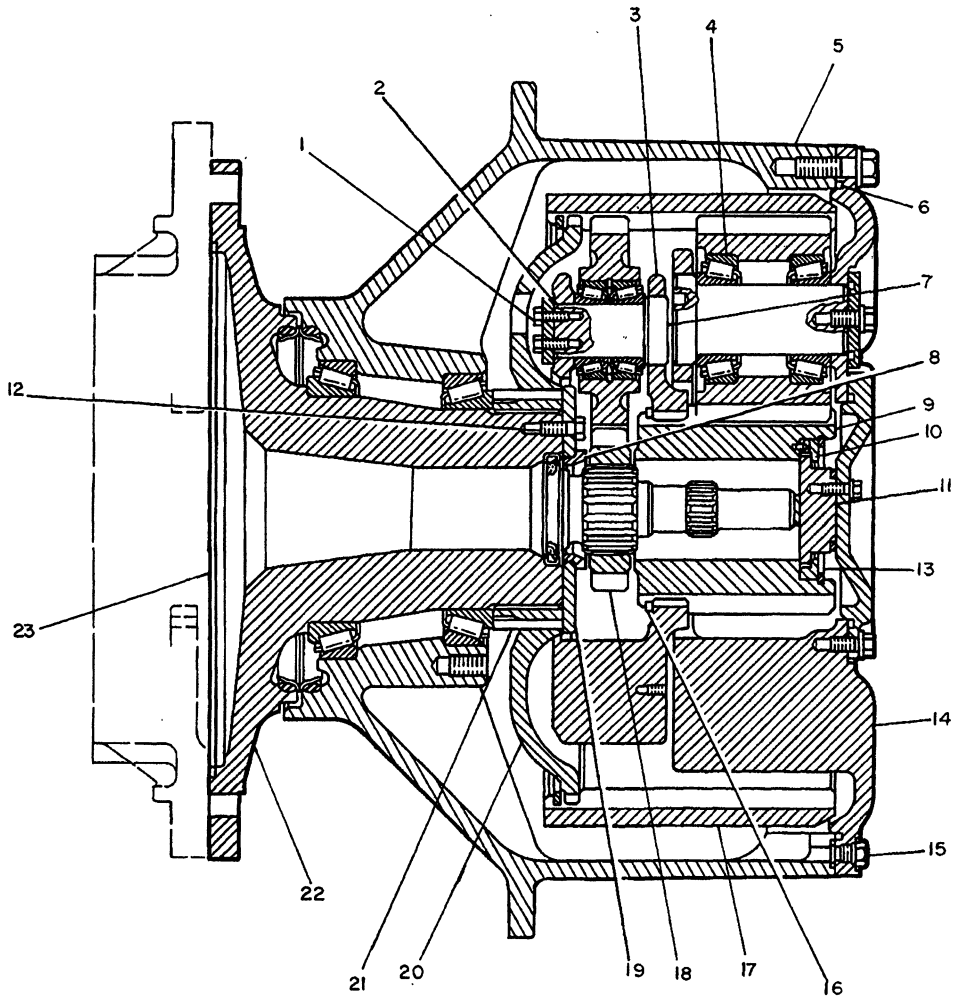

NOTE	REF NO	PART NUMBER	QTY	PART NAME
	1	5D0353	6	BOLT
	2	8P5698	3	PLATE
	3	9P3415	1	CARRIER-PLANETARY
	4	6H3568	6	CUP-BEARING
		7K0394	6	CONE-ROLLER BEARING
	5	9P3255	1	HUB-SPROCKET
	6	3D8422	1	SEAL-O RING
	7	9P3592	3	SHAFT
	8	9P3472	1	RING-THRUST
	9	9P3471	1	GEAR-SUN (24 TEETH)
		7S4326	1	DOWEL
	10	3P8820	1	RING-THRUST
	11	3P8819	1	RETAINER
		6F8146	1	SEAL-O-RING
	12	308538	8	BOLT
	13	2S0613	1	RING-RETAINING
	14	9P3468	1	CARRIER-PLANETARY
	15	9S4185	1	PLUG-O-RING
		3K0360	1	SEAL (SMALL)
		5F7054	1	SEAL-O RING (LARGE)
	16	5P7911	1	RING-RETAINING
	17	9P3320	1	GEAR-RING (72 TEETH)
	18	9P3454	1	GEAR (18 TEETH)
	19	9P3473	1	RETAINER
	20	3T7364	1	HUB-REACTION
	21	3T6882	12	PIN
R	22	9P2912	1	HUB-SPROCKET SUPPORT
	23	8D4771	1	SEAL-O-RING

R-REMFG PART MAY BE AVAILABLE

404703

404703 P

4050 **3T6240 FINAL DRIVE GP-PART 2 OF 2*R**

Field Installation

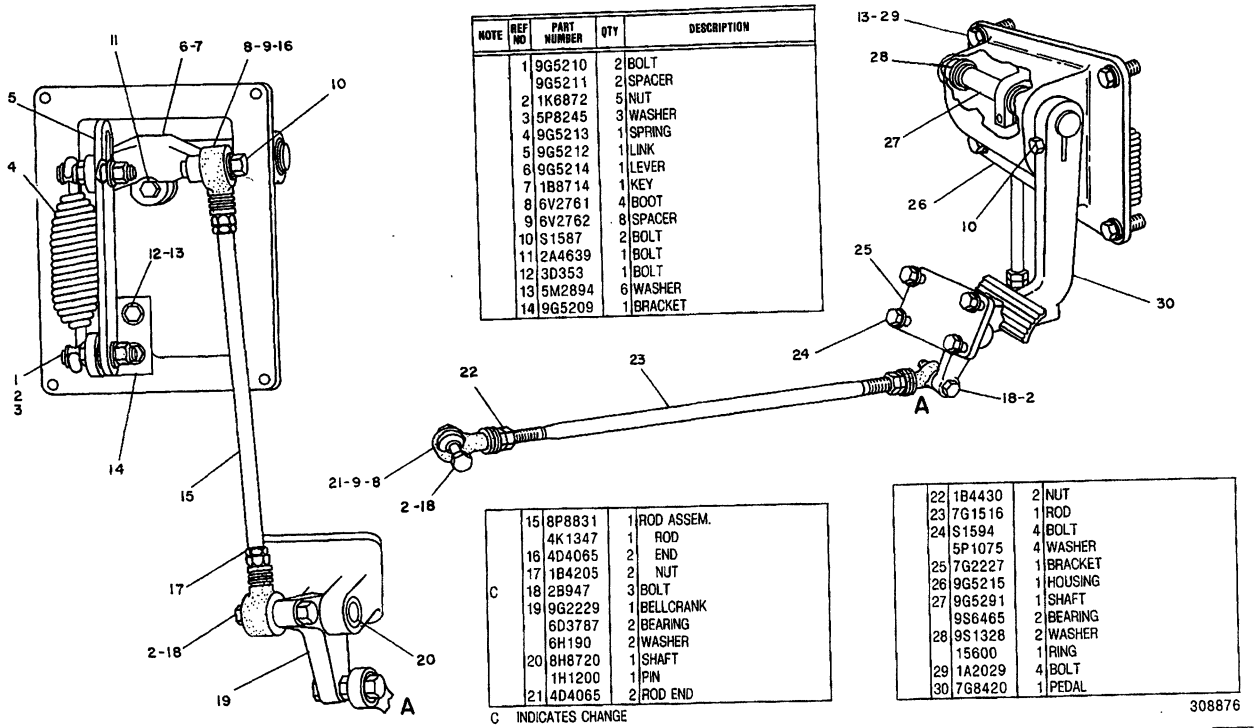

NOTE	REF NO	PART NUMBER	QTY	DESCRIPTION
	1	9G5210	2	BOLT
		9G5211	2	SPACER
	2	1K6872	5	NUT
	3	5P8245	3	WASHER
	4	9G5213	1	SPRING
	5	9G5212	1	LINK
	6	9G5214	1	LEVER
	7	1B8714	1	KEY
	8	6V2761	4	BOOT
	9	6V2762	8	SPACER
	10	S1587	2	BOLT
	11	2A4639	1	BOLT
	12	3D353	1	BOLT
	13	5M2894	6	WASHER
	14	9G5209	1	BRACKET
	15	8P8831	1	ROD ASSEM.
		4K1347	1	ROD
	16	4D4065	2	END
	17	1B4205	2	NUT
C	18	2B947	3	BOLT
	19	9G2229	1	BELLCRANK
		6D3787	2	BEARING
		6H190	2	WASHER
	20	8H8720	1	SHAFT
		1H1200	1	PIN
	21	4D4065	2	ROD END
	22	1B4430	2	NUT
	23	7G1516	1	ROD
	24	S1594	4	BOLT
		5P1075	4	WASHER
	25	7G2227	1	BRACKET
	26	9G5215	1	HOUSING
	27	9G5291	1	SHAFT
		9S6465	2	BEARING
	28	9S1328	2	WASHER
		15600	1	RING
	29	1A2029	4	BOLT
	30	7G8420	1	PEDAL

C INDICATES CHANGE

308876

308876 P

4122 6P9156 CONTROL GP-STEERING CLUTCH & BRAKE-PART 1 OF 4
S/N 53Y1-1339

STEERING CLUTCHES AND BRAKES

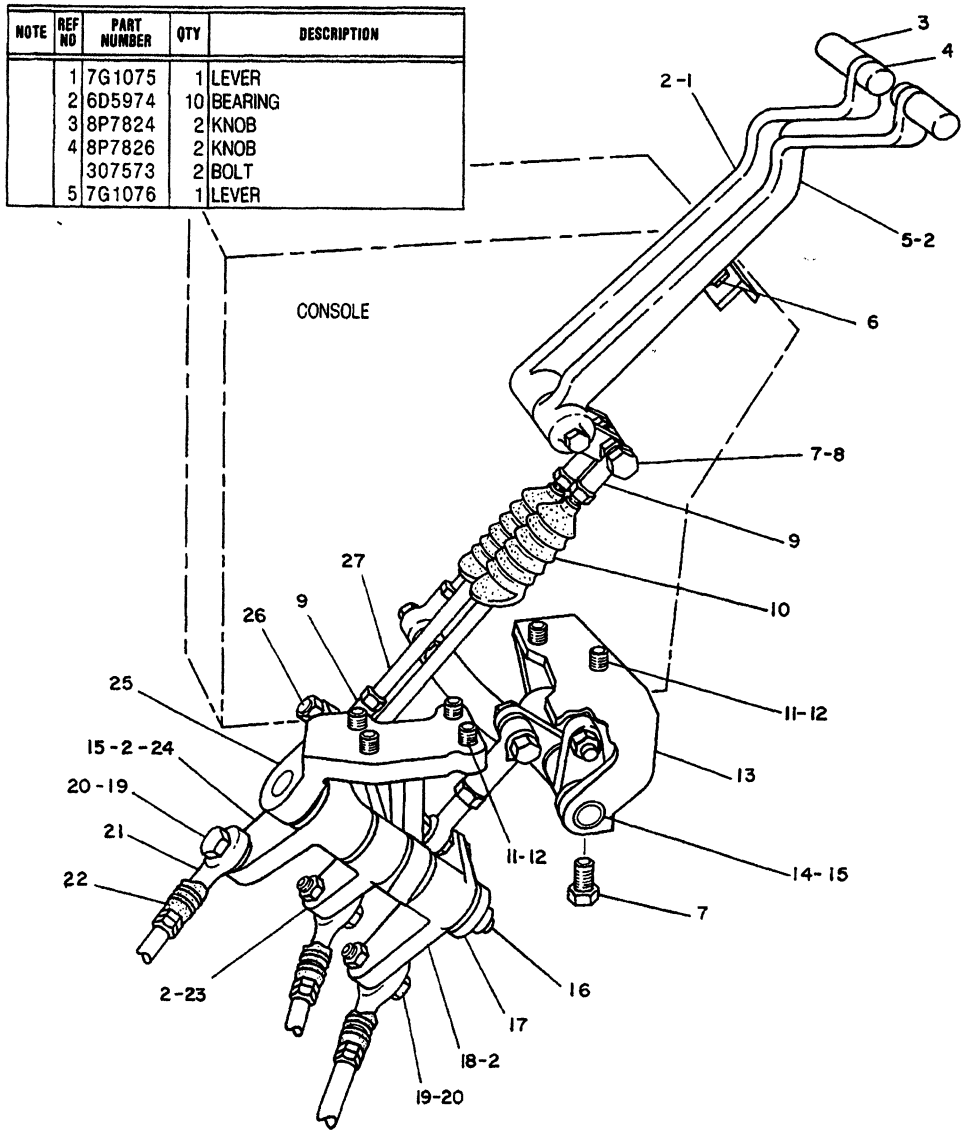

NOTE	REF NO	PART NUMBER	QTY	DESCRIPTION
	1	7G1075	1	LEVER
	2	6D5974	10	BEARING
	3	8P7824	2	KNOB
	4	8P7826	2	KNOB
		307573	2	BOLT
	5	7G1076	1	LEVER
	6	9M5884	2	BUMPER
	7	3B1915	3	BOLT
	8	1B2578	2	NUT
	9	4D4064	4	END
	10	9P365	3	BOOT
	11	S1588	7	BOLT
	12	5M2894	7	WASHER
	13	7G1080	1	BRACKET
	14	7G1603	1	SHAFT
		7P4190	2	BEARING
	15	94089	9	WASHER
	16	7G1602	1	SHAFT
		2J6356	1	RING
		7B8167	1	BOLT
		5P537	1	WASHER
	17	7G1562	1	SPACER
	18	7G3643	1	BELLCRANK
C	19	2B947	3	BOLT
	20	1K6872	3	NUT
	21	4D4065	4	ROD END
	22	6V2761	4	BOOT
		6V2762	8	SPACER
	23	7G3644	1	BELLCRANK
	24	7G3645	1	BELLCRANK
	25	7G3646	1	BRACKET
	26	S1591	2	BOLT
		1B2578	2	NUT
		2K4973	2	LOCKNUT
	27	7G1520	2	ROD
		5B9079	4	NUT

C INDICATES CHANGE

308877

308877 P

4122 **6P9156 CONTROL GP-STEERING CLUTCH & BRAKE-PART 2 OF 4**

S/N 53Y1-1339

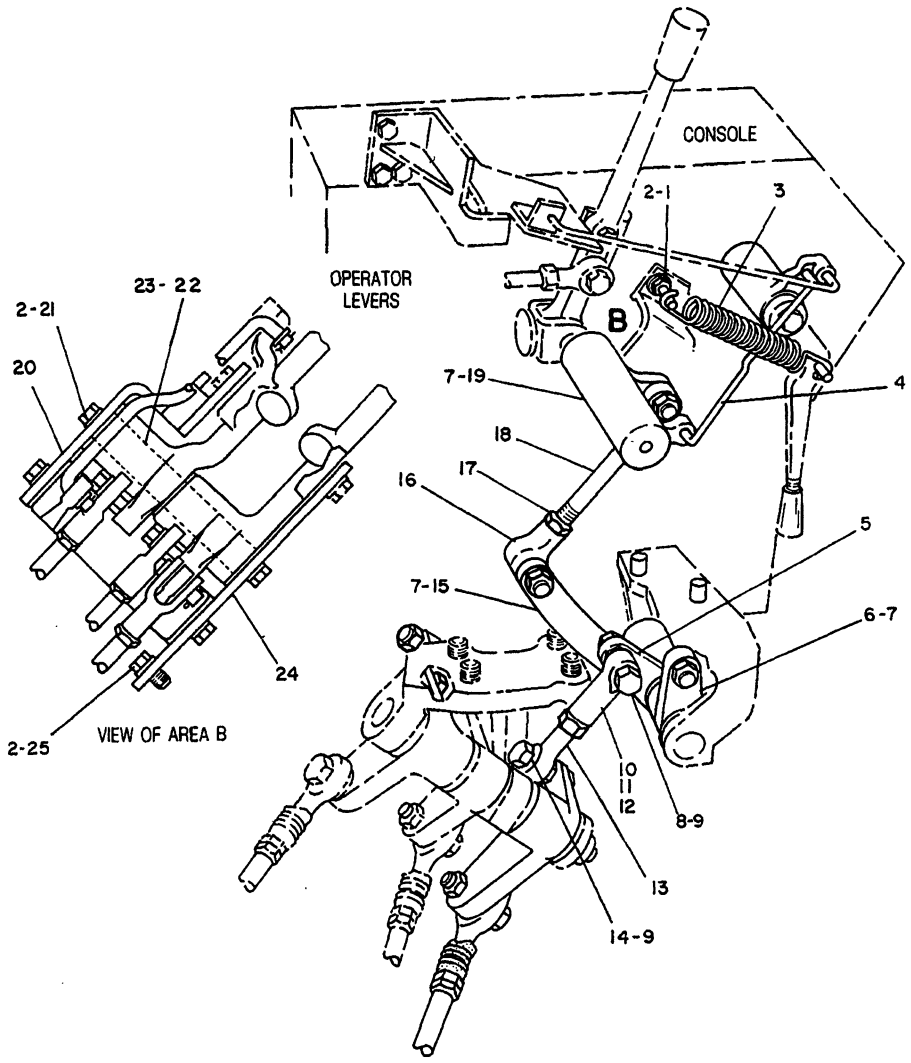

NOTE	REF NO	PART NUMBER	QTY	DESCRIPTION
	1	7G1327	1	ANCHOR
		1D4717	1	NUT
	2	5M2894	9	WASHER
	3	7G1251	1	SPRING
	4	7G1315	1	ROD
		7S4408	2	WASHER
		3B4610	2	COTTER PIN
	5	7G1122	1	LEVER
	6	7G1170	1	LEVER
	7	6D5974	6	BEARING
C	8	2B947	1	BOLT
	9	1K6872	2	LOCKNUT
	10	4D4065	1	ROD END
	11	6V2761	1	BOOT
	12	6V2762	2	SPACER
	13	2J5038	1	ROD END
		1B4430	1	NUT

	14	5L4398	1	BOLT
		1D5117	1	NUT
	15	7G1169	1	LEVER
	16	1F5403	2	ROD END
	17	5B9079	2	NUT
	18	7G5761	1	ROD
		1B676	1	PIN
		3B4615	1	COTTER PIN
	19	7G1509	1	LEVER
	20	7G1554	1	PLATE ASSEM.
	21	S1588	4	BOLT
	22	7G1549	2	SHAFT
	23	94089	5	WASHER
	24	7G1553	1	PLATE
	25	L1351	4	BOLT

C INDICATES CHANGE

308878

308878 P

4122 6P9156 CONTROL GP-STEERING CLUTCH & BRAKE-PART 3 OF 4
S/N 53Y1-1339

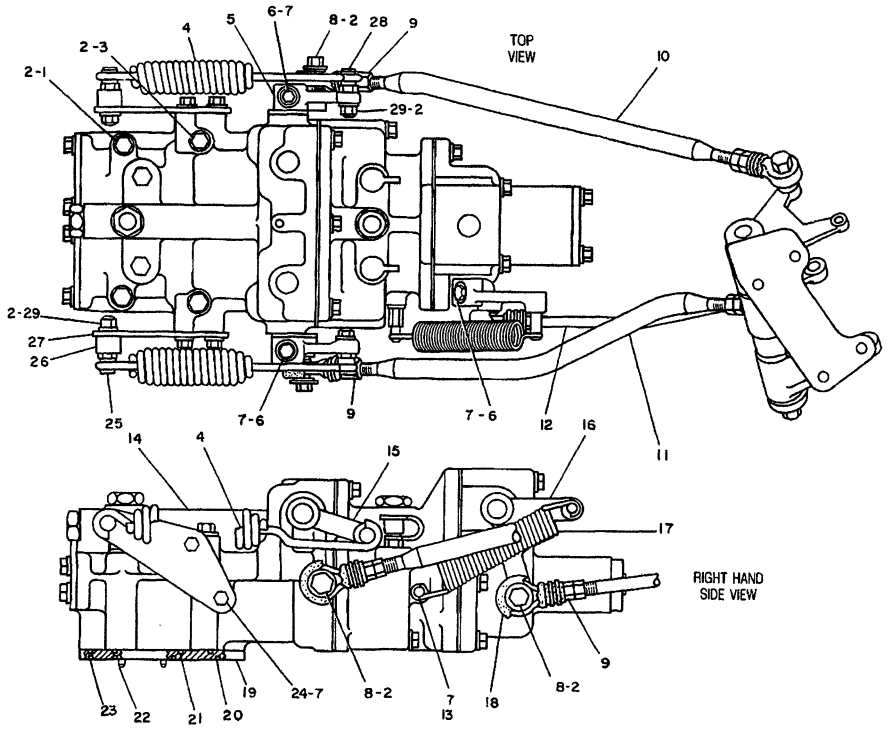

NOTE	REF NO	PART NUMBER	QTY	DESCRIPTION
	1	2B2006	2	BOLT
C	2	5P8245	11	WASHER
	3	1D4572	2	BOLT
C	4	3T9870	2	SPRING
C	5	7G3639	1	LEVER
	6	2A4639	3	BOLT
C	7	5M2894	8	WASHER
C	8	S1587	3	BOLT
	9	1B4430	6	NUT
	10	7G3636	1	ROD
	11	7G3635	1	ROD
	12	7G3634	1	ROD
C	13	7G2211	1	PIN
CY	14	3T8816	1	VALVE GROUP
C	15	7G3641	1	LEVER
	16	7G3638	1	LEVER ASSEM.
	17	9P9185	1	SPRING
	18	4D4065	2	ROD END
		6V2761	2	BOOT
		6V2762	4	SPACER
	19	9G5853	1	PLATE
	20	8M4992	6	SEAL (LARGE)
	21	8M5248	6	SEAL (SMALL)
	22	3H2617	2	PIN
	23	8M4445	2	SEAL
C	24	L1351	4	BOLT
C	25	9G5210	2	BOLT
C	26	1P2841	2	SPACER
C	27	3T9868	2	PLATE
C	28	3T9869	2	BOLT
C	29	1D4719	4	NUT

C INDICATES CHANGE
Y SEPARATE ILLUSTRATION

308879

308879 P

4122 6P9156 CONTROL GP-STEERING CLUTCH & BRAKE-PART 4 OF 4
S/N 53Y1-1339
3T8816-Page 156

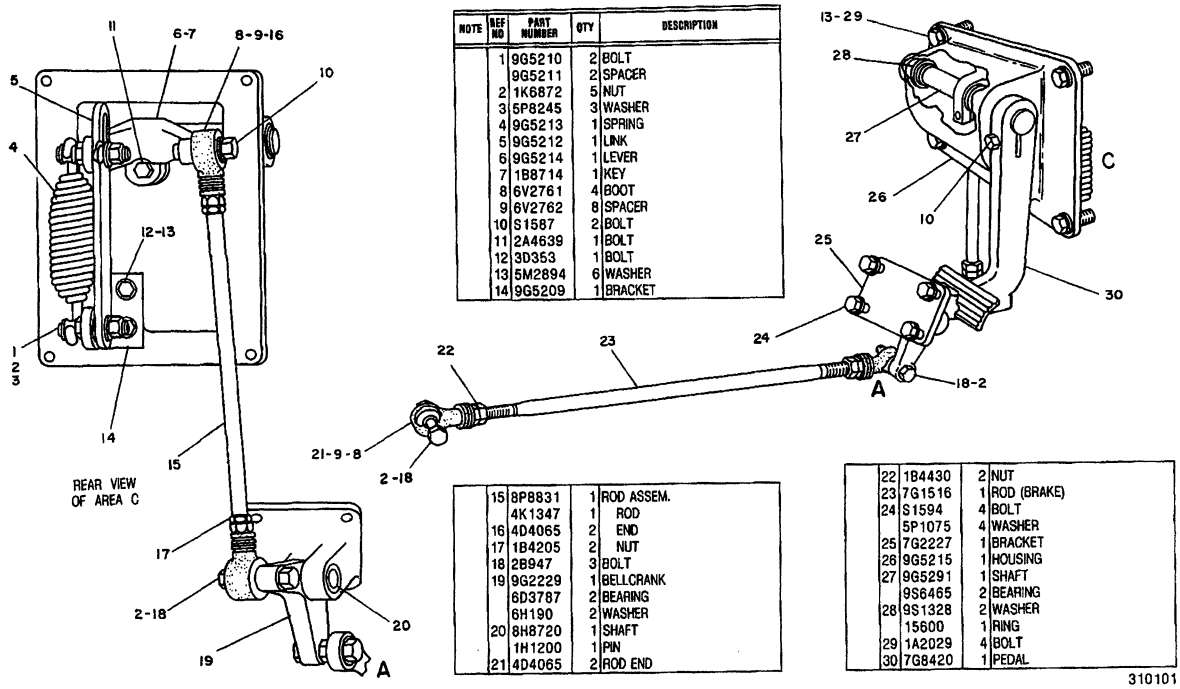

NOTE	REF NO	PART NUMBER	QTY	DESCRIPTION
	1	9G5210	2	BOLT
		9G5211	2	SPACER
	2	1K6872	5	NUT
	3	5P8245	3	WASHER
	4	9G5213	1	SPRING
	5	9G5212	1	LINK
	6	9G5214	1	LEVER
	7	1B8714	1	KEY
	8	6V2761	4	BOOT
	9	6V2762	8	SPACER
	10	S1587	2	BOLT
	11	2A4639	1	BOLT
	12	3D353	1	BOLT
	13	5M2894	6	WASHER
	14	9G5209	1	BRACKET

	15	8P8831	1	ROD ASSEM.
		4K1347	1	ROD
	16	4D4065	2	END
	17	1B4205	2	NUT
	18	2B947	3	BOLT
	19	9G2229	1	BELLCRANK
		6D3787	2	BEARING
		6H190	2	WASHER
	20	8H8720	1	SHAFT
		1H1200	1	PIN
	21	4D4065	2	ROD END

	22	1B4430	2	NUT
	23	7G1516	1	ROD (BRAKE)
	24	S1594	4	BOLT
		5P1075	4	WASHER
	25	7G2227	1	BRACKET
	26	9G5215	1	HOUSING
	27	9G5291	1	SHAFT
		9S6465	2	BEARING
	28	9S1328	2	WASHER
		15600	1	RING
	29	1A2029	4	BOLT
	30	7G8420	1	PEDAL

310101

310101 P

4122 **6P9156 CONTROL GP-STEERING CLUTCH & BRAKE-PART 1 OF 4**
S/N 53Y1340-2503

STEERING CLUTCHES AND BRAKES

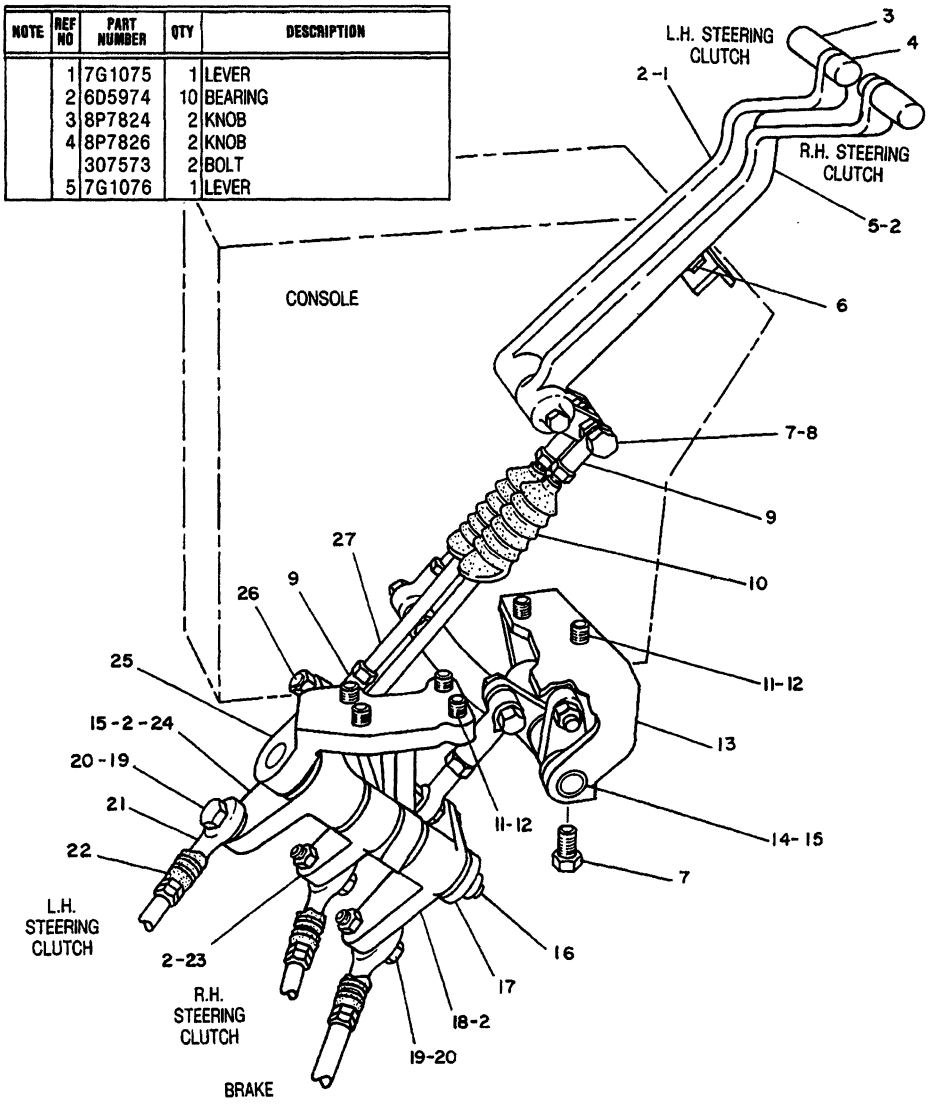

NOTE	REF NO	PART NUMBER	QTY	DESCRIPTION
	1	7G1075	1	LEVER
	2	6D5974	10	BEARING
	3	8P7824	2	KNOB
	4	8P7826	2	KNOB
		307573	2	BOLT
	5	7G1076	1	LEVER
	6	9M5884	2	BUMPER
	7	3B1915	3	BOLT
	8	1B2578	2	NUT
	9	4D4064	4	END
	10	9P365	3	BOOT
	11	S1588	7	BOLT
	12	5M2894	7	WASHER
	13	7G1080	1	BRACKET
	14	7G1603	1	SHAFT
		7P4190	2	BEARING
	15	94089	9	WASHER
	16	7G1602	1	SHAFT
		2J6356	1	RING
		7B8167	1	BOLT
		5P537	1	WASHER
	17	7G1562	1	SPACER
	18	7G3643	1	BELLCRANK
	19	2B947	3	BOLT
	20	1K6872	3	NUT
	21	4D4065	4	ROD END
	22	6V2761	4	BOOT
		6V2762	8	SPACER
	23	7G3644	1	BELLCRANK
	24	7G3645	1	BELLCRANK
	25	7G3646	1	BRACKET
	26	S1591	2	BOLT
		1B2578	2	NUT
		2K4973	2	LOCKNUT
	27	7G1520	2	ROD (CLUTCH)
		5B9079	4	NUT

310102

310102 P

4122 **6P9156 CONTROL GP-STEERING CLUTCH & BRAKE-PART 2 OF 4**
S/N 53Y1340-2503

STEERING CLUTCHES AND BRAKES

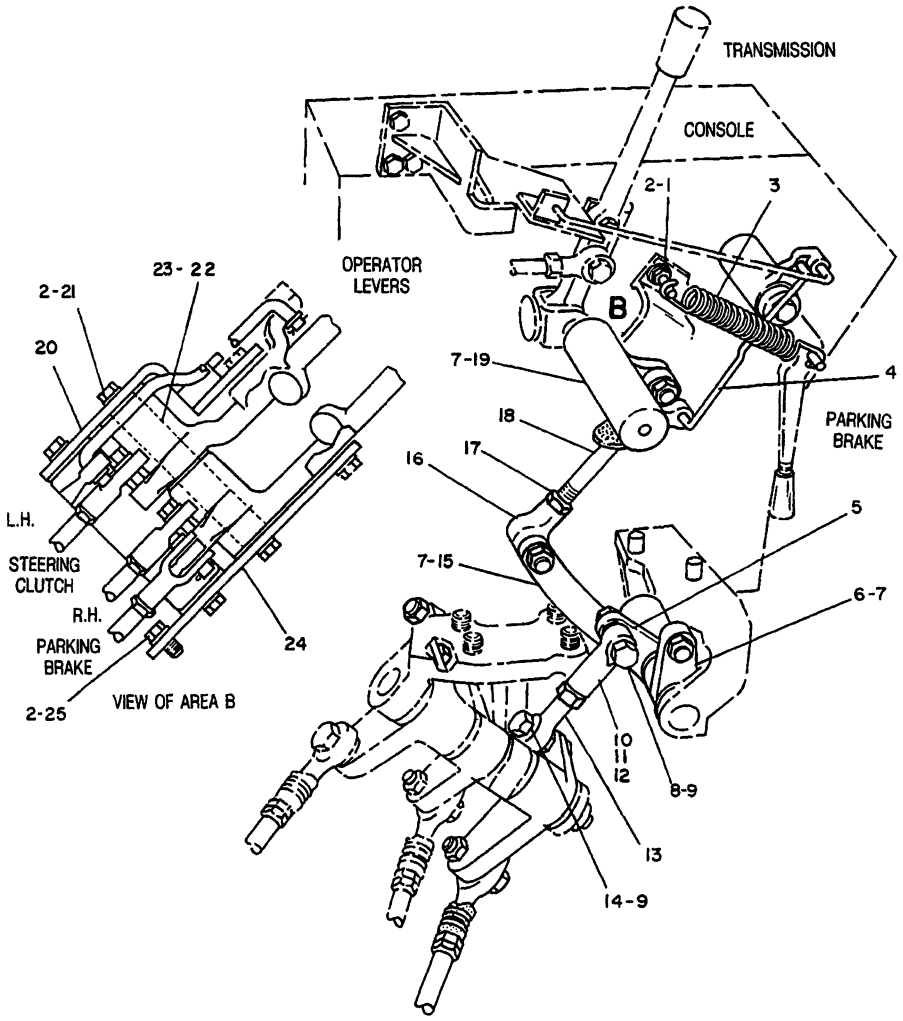

NOTE	REF NO	PART NUMBER	QTY	DESCRIPTION
	1	7G1327	1	ANCHOR
		1D4717	1	NUT
	2	5M2894	9	WASHER
	3	7G1251	1	SPRING
	4	7G1315	1	ROD
		7S4408	2	WASHER
		3B4610	2	COTTER PIN
	5	7G1122	1	LEVER
	6	7G1170	1	LEVER
	7	6D5974	6	BEARING
	8	2B947	1	BOLT
	9	1K6872	2	LOCKNUT
	10	4D4065	1	ROD END
	11	6V2761	1	BOOT
	12	6V2762	2	SPACER
	13	2J5038	1	ROD END
		1B4430	1	NUT

	14	5L4398	1	BOLT
		1D5117	1	NUT
	15	7G1169	1	LEVER
	16	1F5403	2	ROD END
	17	5B9079	2	NUT
	18	7G5761	1	ROD
		1B676	1	PIN
		3B4615	1	COTTER PIN
	19	7G1509	1	LEVER
	20	7G1554	1	PLATE ASSEM.
	21	S1588	4	BOLT
	22	7G1549	2	SHAFT
	23	94089	5	WASHER
	24	7G1553	1	PLATE
	25	L1351	4	BOLT

310103

310103 P

4122 **6P9156 CONTROL GP-STEERING CLUTCH & BRAKE-PART 3 OF 4**
S/N 53Y1340-2503

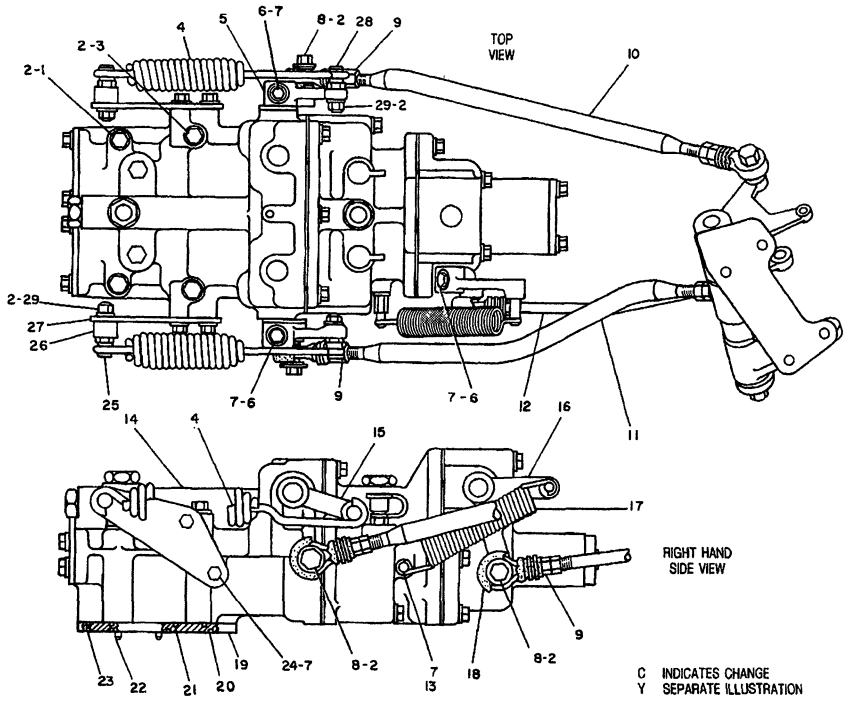

NOTE	REF NO	PART NUMBER	QTY	DESCRIPTION
	1	2B2006	2	BOLT
	2	5P8245	11	WASHER
	3	1D4572	2	BOLT
	4	3T9870	2	SPRING
	5	7G3639	1	LEVER
	6	2A4639	3	BOLT
	7	5M2894	8	WASHER
	8	S1587	3	BOLT
	9	1B4430	6	NUT
	10	7G3636	1	ROD (L.H. CLUTCH)
	11	7G3635	1	ROD (R.H. CLUTCH)
	12	7G3634	1	ROD (BRAKE)
	13	7G2211	1	PIN
CY	14	9G9643	1	VALVE GROUP
	15	7G3641	1	LEVER
	16	7G3638	1	LEVER ASSEM.
	17	9P9185	1	SPRING
	18	4D4065	2	ROD END
		6V2761	2	BOOT
		6V2762	4	SPACER
	19	9G5853	1	PLATE
	20	8M4992	6	SEAL (LARGE)
	21	8M5248	6	SEAL (SMALL)
	22	3H2617	2	PIN
	23	8M4445	2	SEAL
	24	L1351	4	BOLT
	25	9G5210	2	BOLT
	26	1P2841	2	SPACER
	27	3T9868	2	PLATE
	28	3T9869	2	BOLT
	29	1D4719	4	NUT

310104

310104 P

4122 6P9156 CONTROL GP-STEERING CLUTCH & BRAKE-PART 4 OF 4

S/N 53Y1340-2503

9G9643-Page-158A

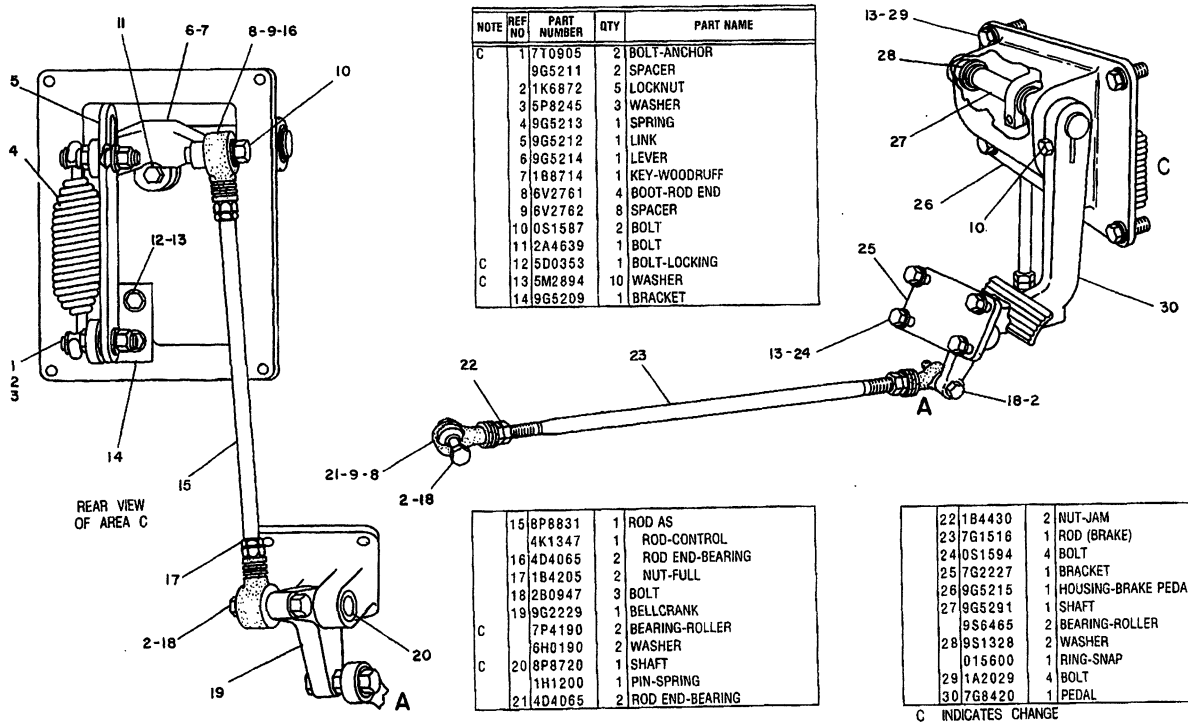

NOTE	REF NO	PART NUMBER	QTY	PART NAME
C	1	7T0905	2	BOLT-ANCHOR
		9G5211	2	SPACER
	2	1K6872	5	LOCKNUT
	3	5P8245	3	WASHER
	4	9G5213	1	SPRING
	5	9G5212	1	LINK
	6	9G5214	1	LEVER
	7	1B8714	1	KEY-WOODRUFF
	8	6V2761	4	BOOT-ROD END
	9	6V2762	8	SPACER
	10	0S1587	2	BOLT
	11	2A4639	1	BOLT
C	12	5D0353	1	BOLT-LOCKING
C	13	5M2894	10	WASHER
	14	9G5209	1	BRACKET

	15	8P8831	1	ROD AS
		4K1347	1	ROD-CONTROL
	16	4D4065	2	ROD END-BEARING
	17	1B4205	2	NUT-FULL
	18	2B0947	3	BOLT
	19	9G2229	1	BELLCRANK
C		7P4190	2	BEARING-ROLLER
		6H0190	2	WASHER
C	20	8P8720	1	SHAFT
		1H1200	1	PIN-SPRING
	21	4D4065	2	ROD END-BEARING

	22	1B4430	2	NUT-JAM
	23	7G1516	1	ROD (BRAKE)
	24	0S1594	4	BOLT
	25	7G2227	1	BRACKET
	26	9G5215	1	HOUSING-BRAKE PEDAL
	27	9G5291	1	SHAFT
		9S6465	2	BEARING-ROLLER
	28	9S1328	2	WASHER
		015600	1	RING-SNAP
	29	1A2029	4	BOLT
	30	7G8420	1	PEDAL

C INDICATES CHANGE

355024

355024 P

4122 **6P9156 CONTROL GP-STEERING CLUTCH & BRAKE-PART 1 OF 4**
S/N 53Y2504-3484

STEERING CLUTCHES AND BRAKES

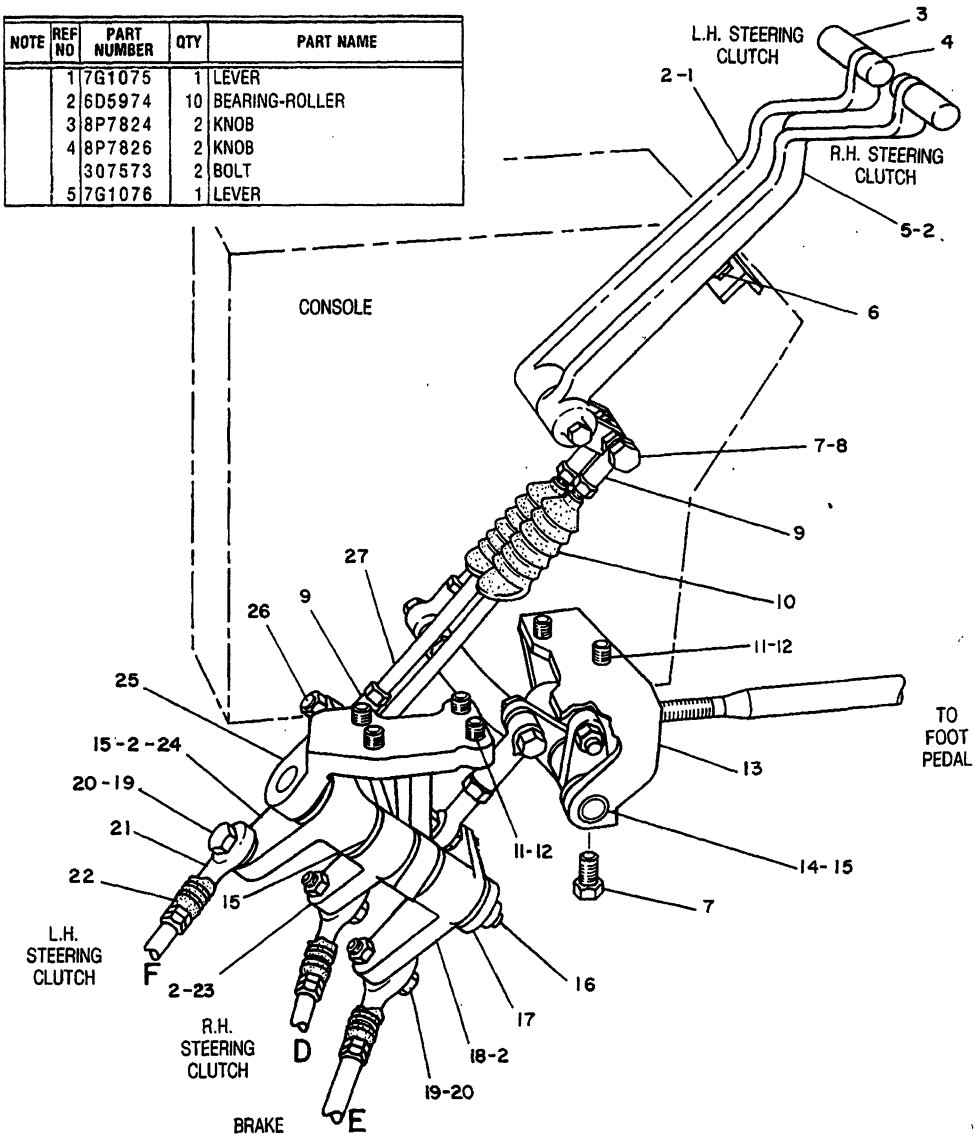

NOTE	REF NO	PART NUMBER	QTY	PART NAME
	1	7G1075	1	LEVER
	2	6D5974	10	BEARING-ROLLER
	3	8P7824	2	KNOB
	4	8P7826	2	KNOB
		307573	2	BOLT
	5	7G1076	1	LEVER
	6	9M5884	2	BUMPER
	7	3B1915	3	BOLT
	8	1B2578	2	NUT-JAM
	9	4D4064	4	ROD END-BEARING
	10	9P0365	3	BOOT
	11	0S1588	7	BOLT
	12	5M2894	7	WASHER
	13	7G1080	1	BRACKET
	14	7G1603	1	SHAFT
		7P4190	2	BEARING-ROLLER
C	15	094089	11	WASHER
	16	7G1602	1	SHAFT
		2J6356	1	RING-RETAINING
		7B8167	1	BOLT
		5P0537	1	WASHER-HARD
	17	7G1562	1	SPACER
	18	7G3643	1	BELLCRANK
	19	2B0947	3	BOLT
	20	1K6872	3	LOCKNUT
	21	4D4065	4	ROD END-BEARING
	22	6V2761	4	BOOT-ROD END
		6V2762	8	SPACER
	23	7G3644	1	BELLCRANK
	24	7G3645	1	BELLCRANK
	25	7G3646	1	BRACKET
	26	0S1591	2	BOLT
		1B2578	2	NUT-JAM
		2K4973	2	LOCKNUT
	27	7G1520	2	ROD (CLUTCH)
		5B9079	4	NUT-JAM

C-INDICATES CHANGE

355474

355474 P

4122 6P9156 CONTROL GP-STEERING CLUTCH & BRAKE-PART 2 OF 4
S/N 53Y2504-3484

STEERING CLUTCHES AND BRAKES

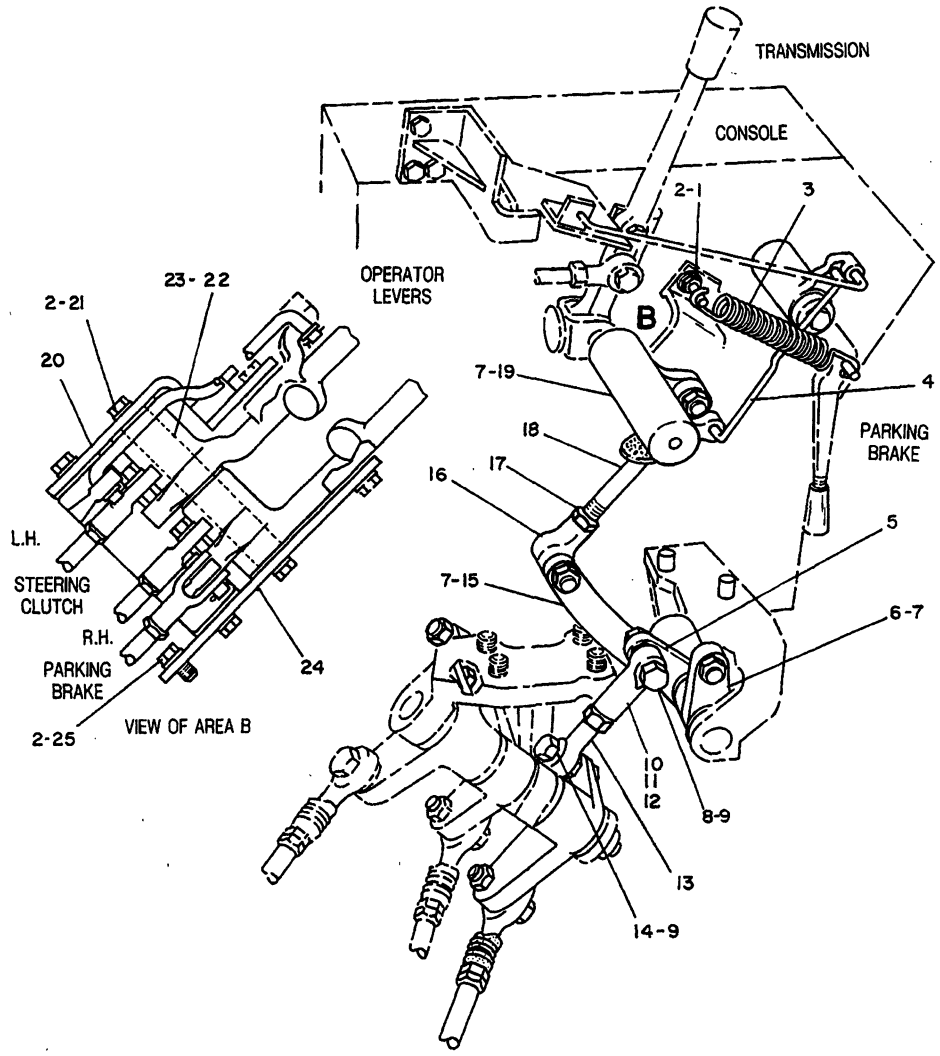

NOTE	REF NO	PART NUMBER	QTY	PART NAME
C	1	7T0906	1	BOLT-ANCHOR
		1D4717	1	NUT-FULL
	2	5M2894	9	WASHER
	3	7G1251	1	SPRING
	4	7G1315	1	ROD
		7S4408	2	WASHER
		3B4610	2	COTTER
	5	7G1122	1	LEVER
	6	7G1170	1	LEVER
	7	6D5974	6	BEARING-ROLLER
	8	2B0947	1	BOLT
	9	1K6872	2	LOCKNUT
	10	4D4065	1	ROD END-BEARING
	11	6V2761	1	BOOT-ROD END
	12	6V2762	2	SPACER
	13	2J5038	1	ROD END-BEARING
		1B4430	1	NUT-JAM
	14	5L4398	1	BOLT
		1D5117	1	NUT-JAM
	15	7G1169	1	LEVER
	16	1F5403	2	END-ADJUSTABLE ROD
	17	5B9079	2	NUT-JAM
	18	7G5761	1	ROD
		1B0676	1	PIN
		3B4615	1	PIN-COTTER
	19	7G1509	1	LEVER
	20	7G1554	1	PLATE AS
	21	0S1588	4	BOLT
	22	7G1549	2	SHAFT
	23	094089	5	WASHER
	24	7G1553	1	PLATE
C	25	0S1594	4	BOLT

C INDICATES CHANGE

355025 355025 P

4122 6P9156 CONTROL GP-STEERING CLUTCH & BRAKE-PART 3 OF 4
S/N 53Y2504-3484

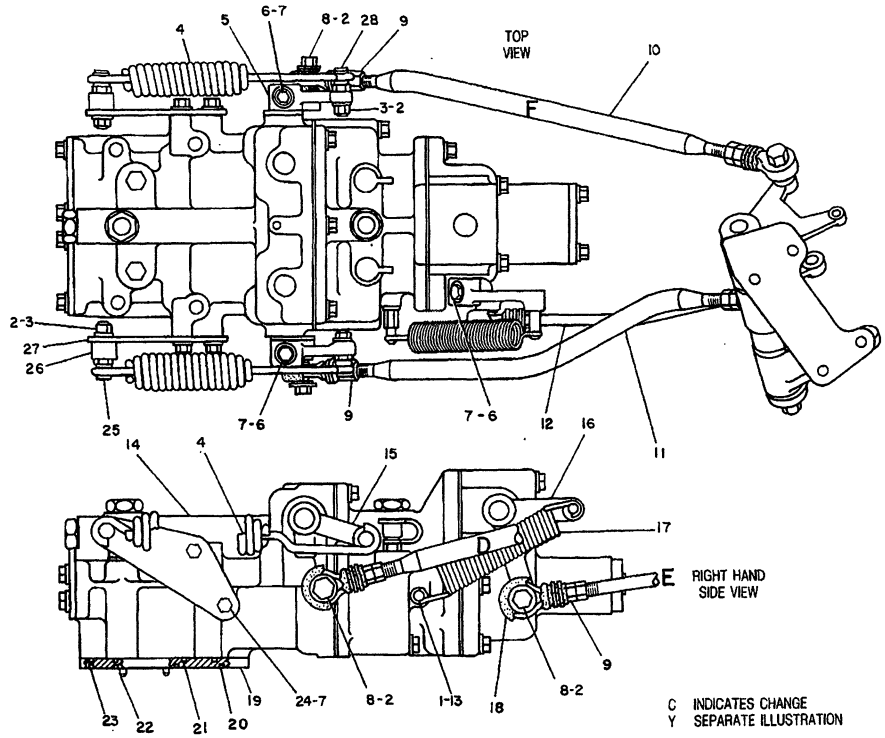

NOTE	REF NO	PART NUMBER	QTY	PART NAME
C	1	8D5898	1	SPACER
C	2	5P8245	7	WASHER
	3	1D4719	4	NUT-FULL
	4	3T9870	2	SPRING
	5	7G3639	1	LEVER
	6	2A4639	3	BOLT
C	7	5M2894	7	WASHER
	8	0S1587	3	BOLT
	9	1B4430	6	NUT-JAM
	10	7G3636	1	ROD (L.H. CLUTCH)
	11	7G3635	1	ROD (R.H. CLUTCH)
	12	7G3634	1	ROD (BRAKE)
C	13	7T0703	1	PIN
Y	14	9G9643	1	VALVE GP-CONTROL
	15	7G3641	1	LEVER
	16	7G3638	1	LEVER AS
	17	9P9185	1	SPRING
	18	4D4065	2	ROD END-BEARING
		6V2761	2	BOOT-ROD END
		6V2762	4	SPACER
	19	9G5853	1	PLATE
	20	8M4992	6	SEAL-O-RING (LARGE)
	21	8M5248	6	SEAL-O-RING (SMALL)
	22	3H2617	2	PIN-SPRING
	23	8M4445	2	SEAL-O-RING
	24	0L1351	4	BOLT
C	25	7T0905	2	BOLT-ANCHOR
C	26	6H7062	2	SPACER
	27	3T9868	2	PLATE
C	28	7T0904	2	BOLT-ANCHOR

355026

355026 P

4122 6P9156 CONTROL GP-STEERING CLUTCH & BRAKE-PART 4 OF 4
S/N 53Y2504-3484
9G9643-Page 158A

STEERING CLUTCHES AND BRAKES

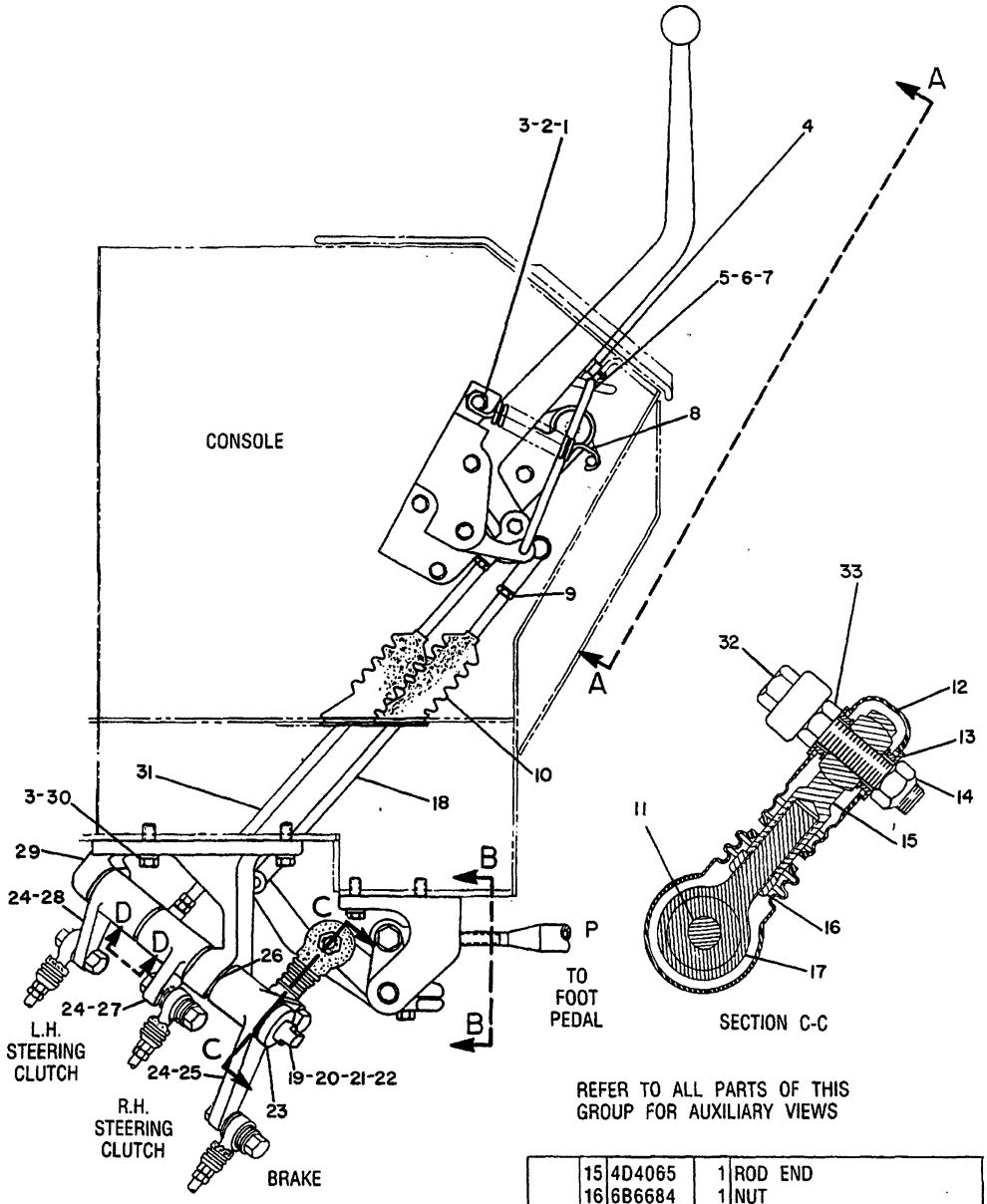

REFER TO ALL PARTS OF THIS GROUP FOR AUXILIARY VIEWS

NOTE	REF NO	PART NUMBER	QTY	DESCRIPTION
	1	7T0906	1	BOLT
	2	9S8752	1	NUT
	3	5M2894	5	WASHER
	4	9M5884	2	BUMPER
	5	7G1315	1	ROD
	6	3B4610	2	COTTER PIN
	7	7S4408	2	WASHER
	8	7G1251	1	SPRING
	9	3S2713	4	NUT
	10	9P0365	3	BOOT
	11	2B0947	2	BOLT
	12	6V2761	2	BOOT
	13	6V2762	4	SPACER
	14	1K6872	2	LOCKNUT
	15	4D4065	1	ROD END
	16	6B6684	1	NUT
	17	2J5038	1	ROD END
	18	7G5761	1	ROD
	19	7G1602	1	SHAFT
	20	2J6356	1	RING
	21	7B8167	1	BOLT
	22	5P0537	1	WASHER
	23	7G1562	1	SPACER
	24	6D3787	6	BEARING
	25	7T3231	1	BELLCRANK
	26	094089	7	WASHER
	27	7T3230	1	BELLCRANK
	28	7T3229	1	BELLCRANK
	29	7T3236	1	BRACKET
	30	0S1588	4	BOLT
	31	7G1520	2	ROD
C	32	1H2415	1	BOLT
C	33	1D5117	1	NUT

C INDICATES CHANGE

351534

351534 P

4122 **7T2615 CONTROL GP-STEERING CLUTCH & BRAKE-PART 1 OF 4**
S/N 53Y3485-4030

STEERING CLUTCHES AND BRAKES

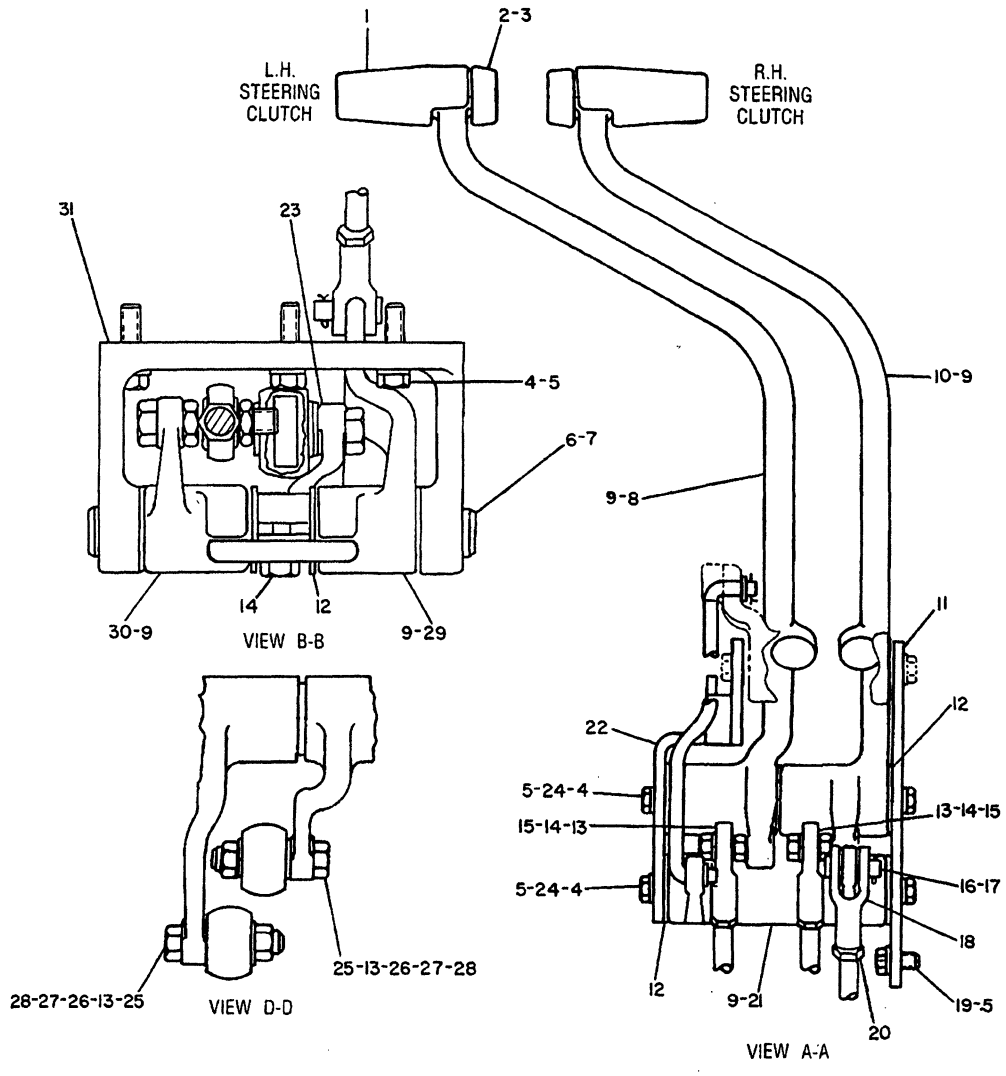

NOTE	REF NO	PART NUMBER	QTY	DESCRIPTION
	1	8P7824	2	KNOB
	2	8P7826	2	KNOB
	3	307573	2	BOLT
	4	0S1588	7	BOLT
	5	5M2894	11	WASHER
	6	7G1603	1	SHAFT
	7	7P4190	2	BEARING
	8	7G1075	1	LEVER
	9	6D3787	10	BEARING
	10	7G1076	1	LEVER
	11	7G1553	1	PLATE
	12	094089	9	WASHER
	13	4D4064	4	ROD END
	14	3B1915	3	BOLT
	15	9S8752	2	NUT
	16	1B0676	2	PIN
	17	3B4615	2	COTTER PIN
	18	1F5403	2	ROD END
	19	0S1594	4	BOLT
	20	3S2713	2	NUT
	21	7G1509	1	LEVER
	22	7G1554	1	PLATE AS.
	23	7G1122	1	LEVER
	24	7G1549	2	SHAFT
	25	0S1571	2	BOLT
	26	6V2866	4	SPACER
	27	6V2867	2	BOOT
	28	2K4973	2	LOCKNUT
	29	7G1169	1	LEVER
	30	7G1170	1	LEVER
	31	7G1080	1	BRACKET

334432 334432 P

4122 7T2615 CONTROL GP-STEERING CLUTCH & BRAKE-PART 2 OF 4
S/N 53Y3485-4030

STEERING CLUTCHES AND BRAKES

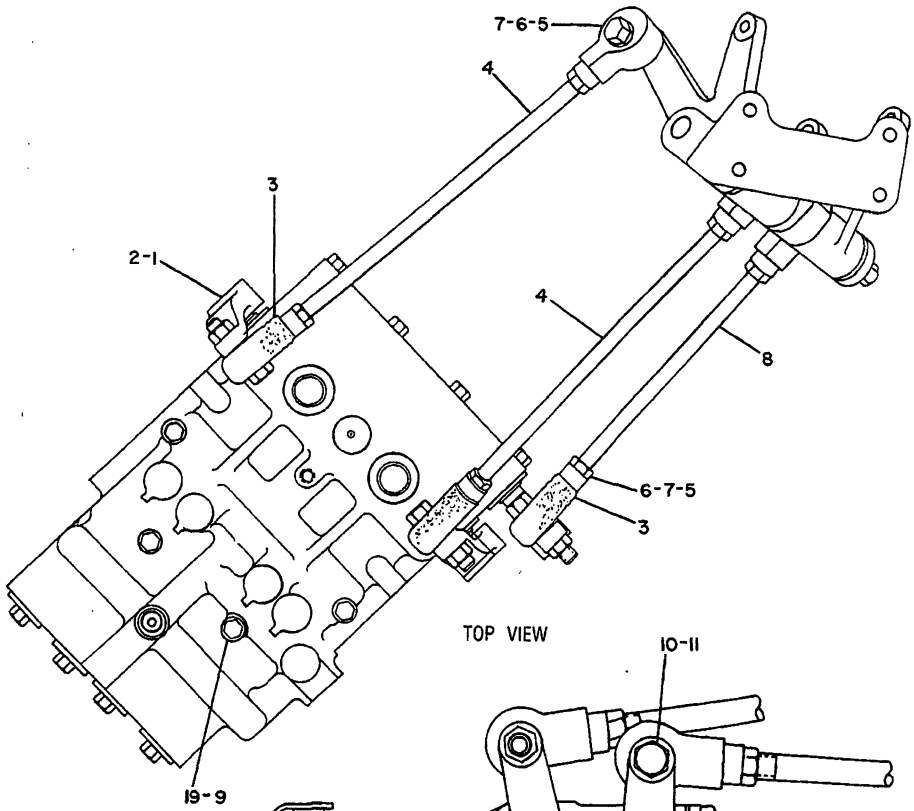

RIGHT HAND SIDE VIEW

NOTE	REF NO	PART NUMBER	QTY	DESCRIPTION
	1	6T5735	1	LEVER
	2	0S1588	3	BOLT
	3	6V2761	6	BOOT
C	4	5J7702	2	ROD
	5	4D4065	6	ROD END
	6	6B6684	6	NUT
	7	6V2762	12	SPACER
	8	538185	1	ROD
	9	5M2894	4	WASHER
	10	2B0947	6	BOLT
	11	1K6872	6	LOCKNUT
	12	7T3232	1	LEVER
	13	1B8706	3	KEY
	14	6T5734	1	LEVER
	15	8M4433	12	SEAL
	16	3H2617	2	PIN
	17	7T1688	1	PLATE
Y	18	6T1171	1	VALVE GP.
	19	0T0055	4	BOLT

C INDICATES CHANGE

Y SEPARATE ILLUSTRATION

351535 351535 P

4122 7T2615 CONTROL GP-STEERING CLUTCH & BRAKE-PART 3 OF 4

S/N 53Y3485-4030

6T1171-Page 158G

STEERING CLUTCHES AND BRAKES

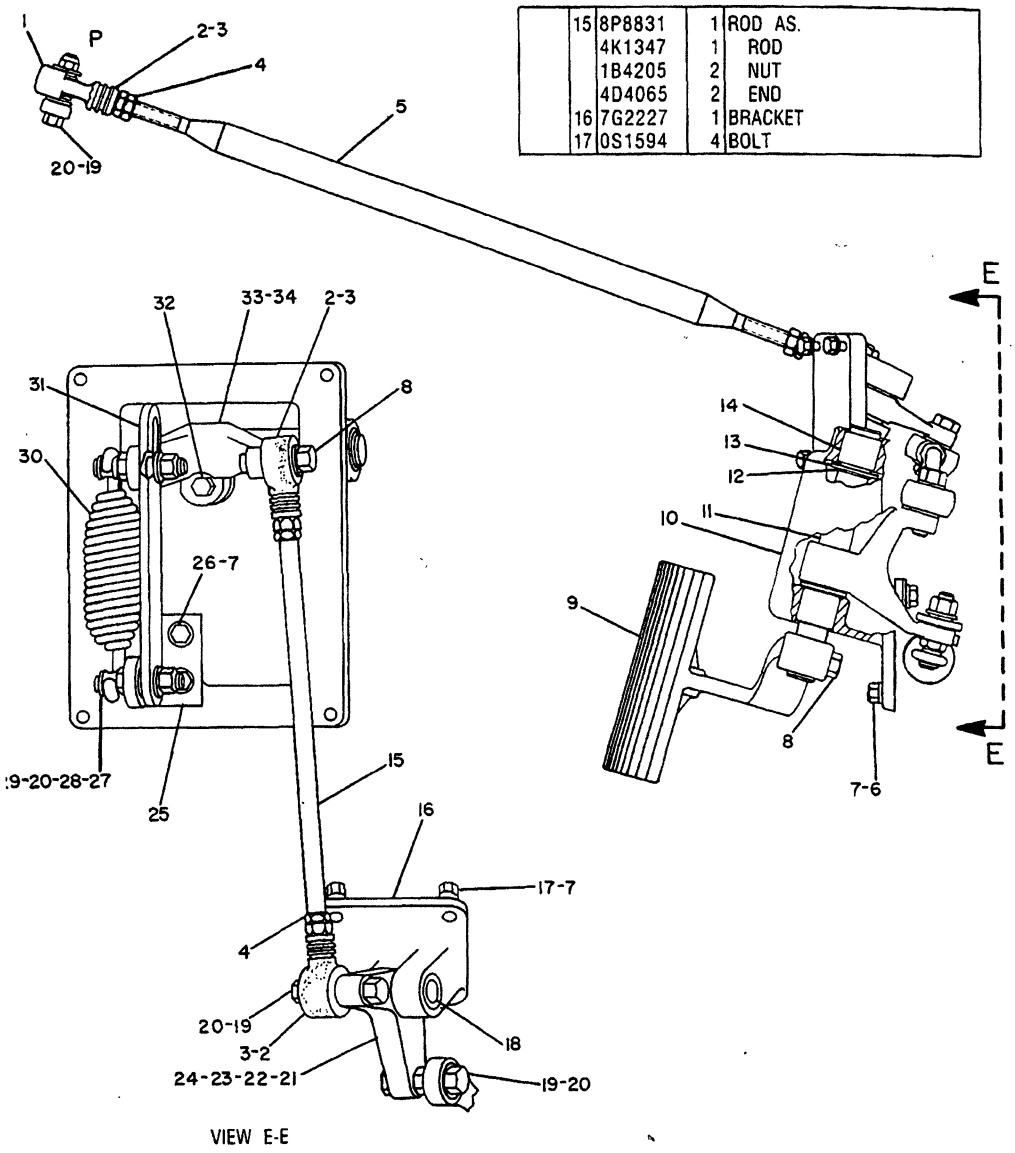

VIEW E-E

	15	8P8831	1	ROD AS.
		4K1347	1	ROD
		1B4205	2	NUT
		4D4065	2	END
	16	7G2227	1	BRACKET
	17	0S1594	4	BOLT

NOTE	REF NO	PART NUMBER	QTY	DESCRIPTION
	1	4D4065	2	ROD END
	2	6V2761	4	BOOT
	3	6V2762	8	SPACER
	4	6B6684	2	NUT
	5	7G1516	1	ROD
	6	1A2029	4	BOLT
	7	5M2894	10	WASHER
	8	0S1587	2	BOLT
	9	7G8420	1	PEDAL
	10	9G5215	1	HOUSING
	11	9G5291	1	SHAFT
	12	015600	1	RING
	13	9S1328	2	WASHER
	14	9S6465	2	BEARING

	18	8P8720	1	SHAFT
	19	2B0947	3	BOLT
	20	1K6872	5	LOCKNUT
	21	7G2229	1	BELLCRANK
	22	7P4190	2	BEARING
	23	1H1200	1	PIN
	24	6H0190	2	WASHER
	25	9G5209	1	BRACKET
	26	5D0353	2	BOLT
	27	7T0905	2	BOLT
	28	9G5211	2	SPACER
	29	5P8245	3	WASHER
	30	9G5213	1	SPRING
	31	9G5212	1	LINK
	32	2A4639	1	BOLT
	33	9G5214	1	LEVER
	34	1B8714	1	KEY

334598 334598 P

4122 7T2615 CONTROL GP-STEERING CLUTCH & BRAKE-PART 4 OF 4
S/N 53Y3485-4030

STEERING CLUTCHES AND BRAKES

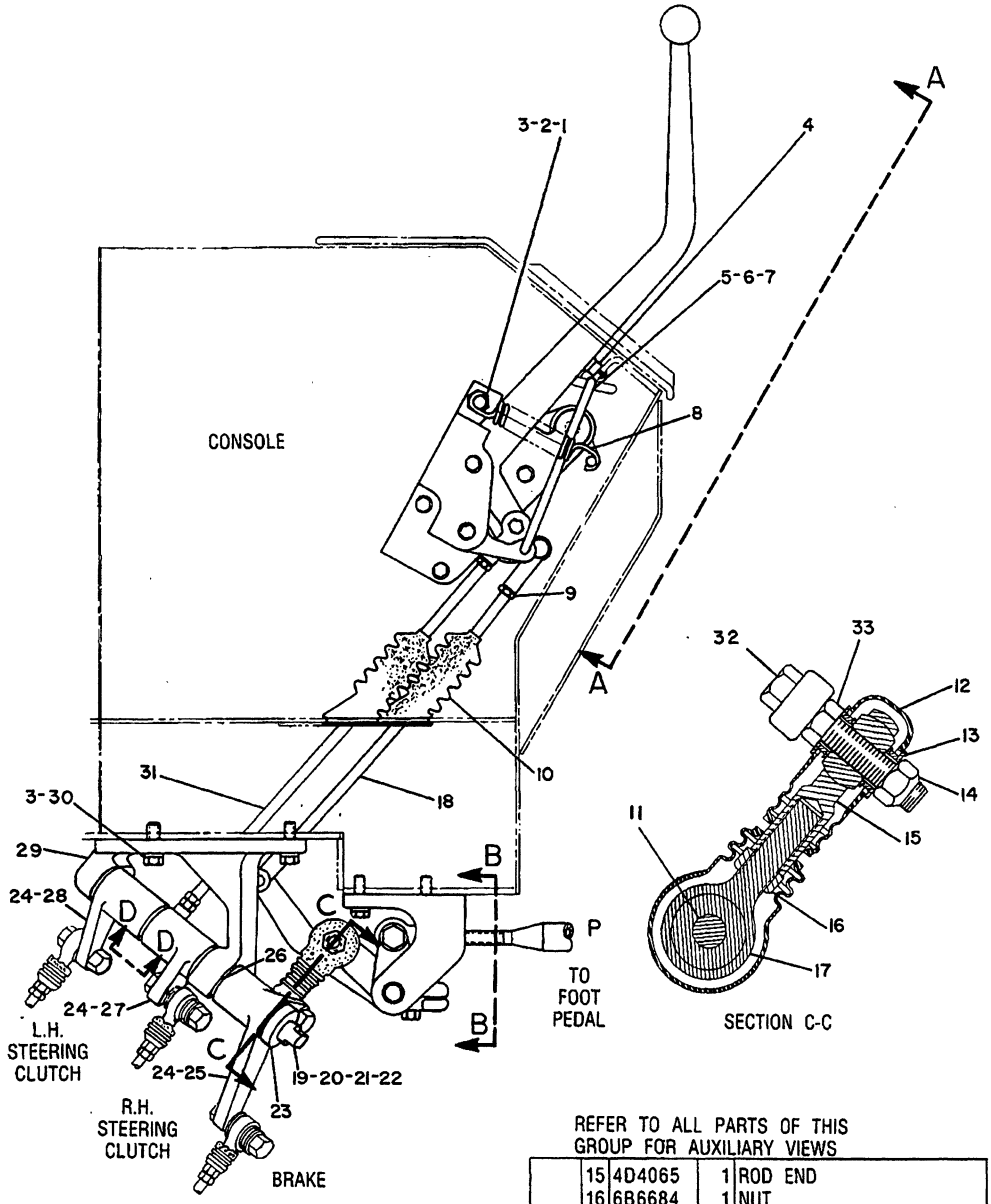

NOTE	REF NO	PART NUMBER	QTY	DESCRIPTION
	1	7T0906	1	BOLT
	2	9S8752	1	NUT
	3	5M2894	5	WASHER
	4	9M5884	2	BUMPER
	5	7G1315	1	ROD
	6	3B4610	2	COTTER PIN
	7	7S4408	2	WASHER
	8	7G1251	1	SPRING
	9	3S2713	4	NUT
	10	9P0365	3	BOOT
C	11	2B0947	1	BOLT
	12	6V2761	2	BOOT
	13	6V2762	4	SPACER
	14	1K6872	2	LOCKNUT

REFER TO ALL PARTS OF THIS GROUP FOR AUXILIARY VIEWS

	15	4D4065	1	ROD END
	16	6B6684	1	NUT
	17	2J5038	1	ROD END
	18	7G5761	1	ROD
	19	7G1602	1	SHAFT
	20	2J6356	1	RING
	21	7B8167	1	BOLT
	22	5P0537	1	WASHER
	23	7G1562	1	SPACER
	24	6D3787	6	BEARING
	25	7T3231	1	BELLCRANK
	26	094089	7	WASHER
	27	7T3230	1	BELLCRANK
	28	7T3229	1	BELLCRANK
	29	7T3236	1	BRACKET
	30	0S1588	4	BOLT
	31	7G1520	2	ROD
	32	1H2415	1	BOLT
	33	1D5117	1	NUT

C INDICATES CHANGE. 351953

351953 P

4122 **7T2615 CONTROL GP-STEERING CLUTCH & BRAKE-PART 1 OF 4**
S/N 53Y4031-Up

STEERING CLUTCHES AND BRAKES

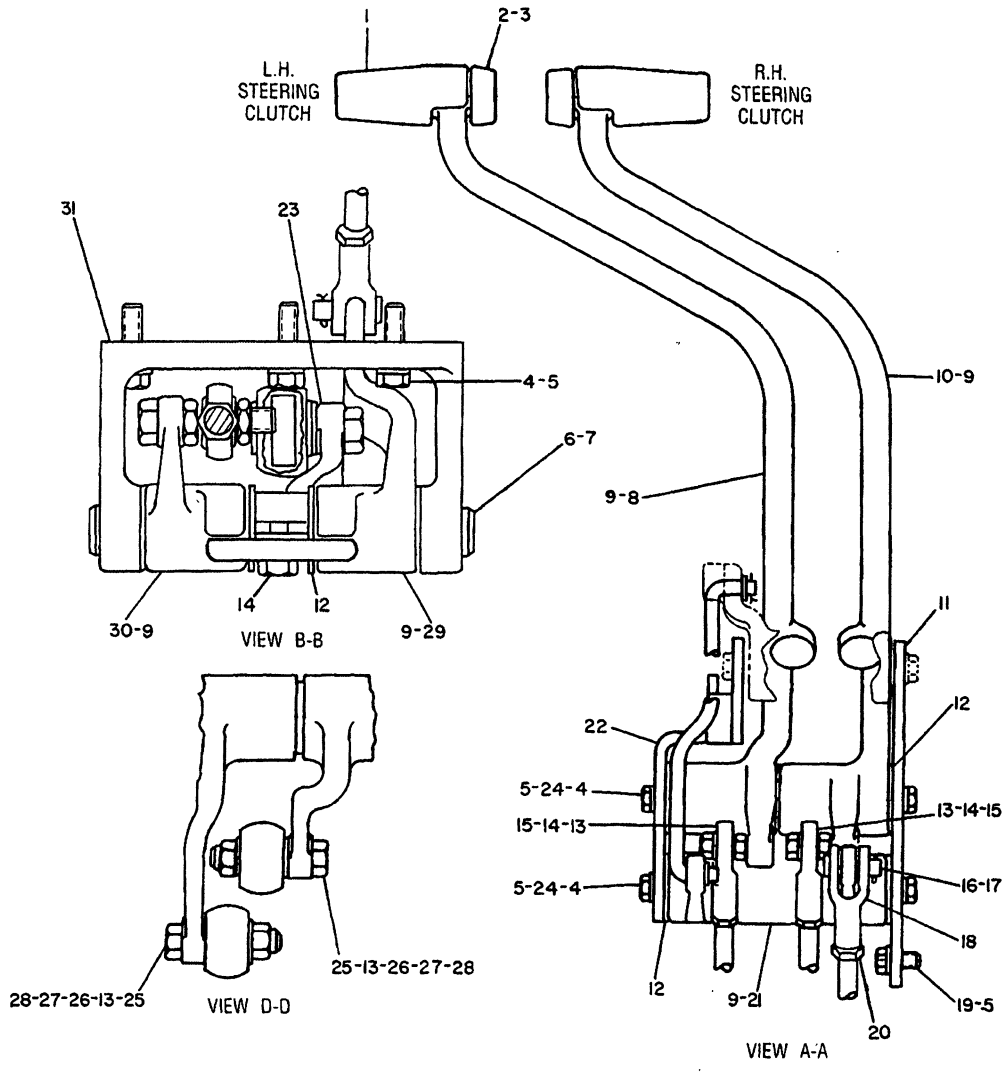

NOTE	REF NO	PART NUMBER	QTY	DESCRIPTION
	1	8P7824	2	KNOB
	2	8P7826	2	KNOB
	3	307573	2	BOLT
	4	0S1588	7	BOLT
	5	5M2894	11	WASHER
	6	7G1603	1	SHAFT
	7	7P4190	2	BEARING
	8	7G1075	1	LEVER
	9	6D3787	10	BEARING
	10	7G1076	1	LEVER
	11	7G1553	1	PLATE
	12	094089	9	WASHER
	13	4D4064	4	ROD END
	14	3B1915	3	BOLT
	15	9S8752	2	NUT
	16	1B0676	2	PIN
	17	3B4615	2	COTTER PIN
	18	1F5403	2	ROD END
	19	0S1594	4	BOLT
	20	3S2713	2	NUT
	21	7G1509	1	LEVER
	22	7G1554	1	PLATE AS.
	23	7G1122	1	LEVER
	24	7G1549	2	SHAFT
	25	0S1571	2	BOLT
	26	6V2866	4	SPACER
	27	6V2867	2	BOOT
	28	2K4973	2	LOCKNUT
	29	7G1169	1	LEVER
	30	7G1170	1	LEVER
	31	7G1080	1	BRACKET

334432 334432 P

4122 7T2615 CONTROL GP-STEERING CLUTCH & BRAKE-PART 2 OF 4
S/N 53Y4031-Up

STEERING CLUTCHES AND BRAKES

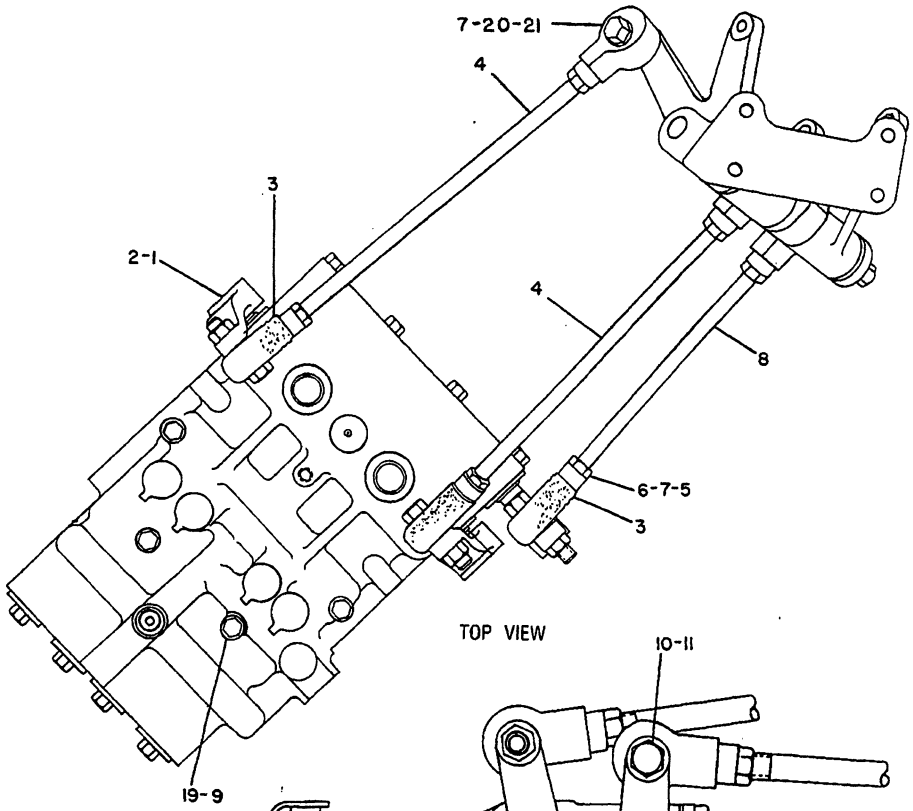

RIGHT HAND SIDE VIEW

NOTE	REF NO	PART NUMBER	QTY	DESCRIPTION
	1	6T5735	1	LEVER
	2	0S1588	3	BOLT
	3	6V2761	6	BOOT
C	4	9W4164	2	ROD
	5	4D4065	6	ROD END
C	6	6B6684	3	NUT
	7	6V2762	12	SPACER
C	8	4D4086	1	ROD
	9	5M2894	4	WASHER
	10	2B0947	6	BOLT
	11	1K6872	6	LOCKNUT
	12	7T3232	1	LEVER
	13	1B8706	3	KEY
	14	6T5734	1	LEVER
	15	8M4433	12	SEAL
	16	3H2617	2	PIN
	17	7T1688	1	PLATE
Y	18	6T1171	1	VALVE GP.
	19	0T0055	4	BOLT
C	20	4D4088	3	NUT
C	21	4D3512	3	ROD END

C INDICATES CHANGE

Y SEPARATE ILLUSTRATION

351955 351955 P

4122 7T2615 CONTROL GP-STEERING CLUTCH & BRAKE-PART 3 OF 4

S/N 53Y4031-Up

6T1171-Page 158G

STEERING CLUTCHES AND BRAKES

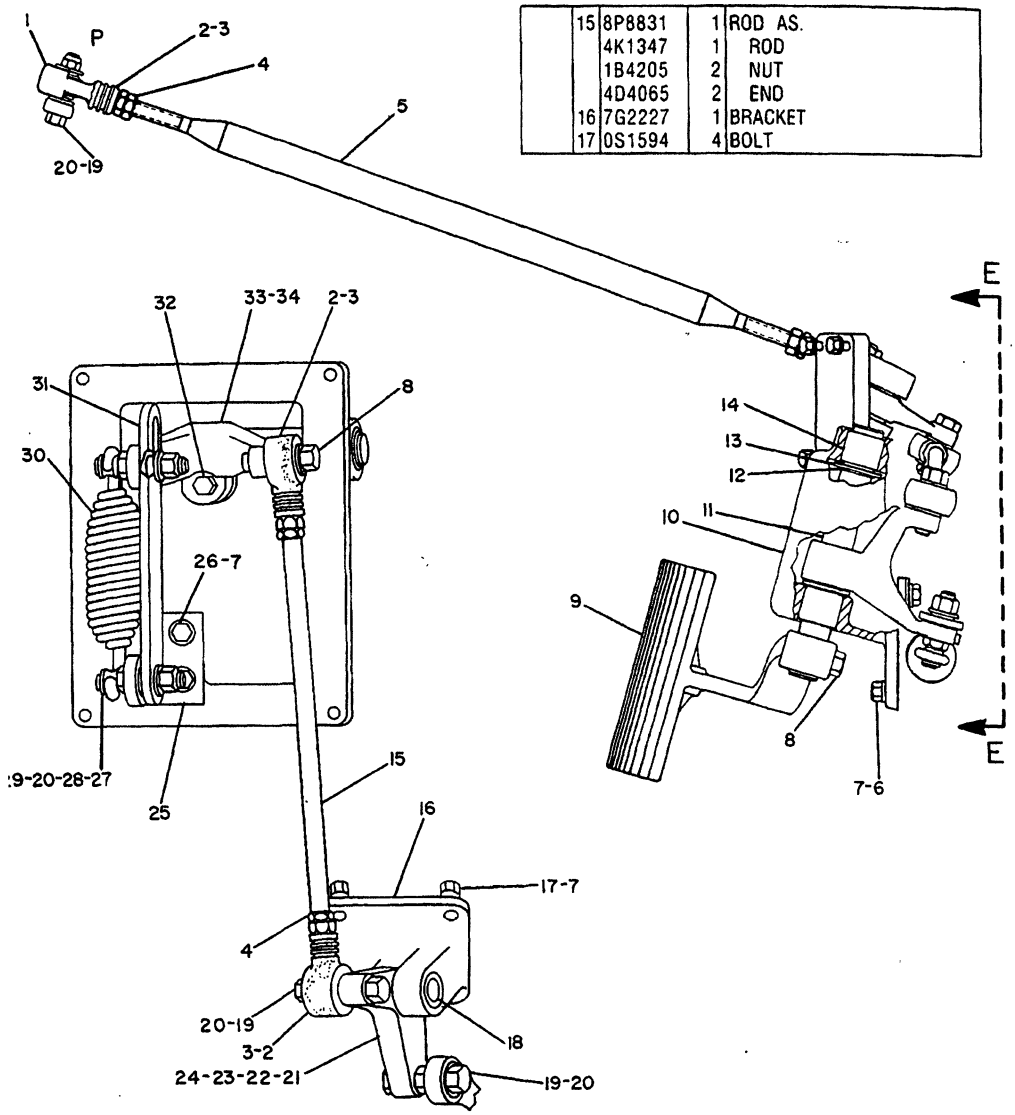

VIEW E-E

	15	8P8831	1	ROD AS.
		4K1347	1	ROD
		1B4205	2	NUT
		4D4065	2	END
	16	7G2227	1	BRACKET
	17	0S1594	4	BOLT

NOTE	REF NO	PART NUMBER	QTY	DESCRIPTION
	1	4D4065	2	ROD END
	2	6V2761	4	BOOT
	3	6V2762	8	SPACER
	4	6B6684	2	NUT
	5	7G1516	1	ROD
	6	1A2029	4	BOLT
	7	5M2894	10	WASHER
	8	0S1587	2	BOLT
	9	7G8420	1	PEDAL
	10	9G5215	1	HOUSING
	11	9G5291	1	SHAFT
	12	015600	1	RING
	13	9S1328	2	WASHER
	14	9S6465	2	BEARING

	18	8P8720	1	SHAFT
	19	2B0947	3	BOLT
	20	1K6872	5	LOCKNUT
	21	7G2229	1	BELLCRANK
	22	7P4190	2	BEARING
	23	1H1200	1	PIN
	24	6H0190	2	WASHER
	25	9G5209	1	BRACKET
	26	5D0353	2	BOLT
	27	7T0905	2	BOLT
	28	9G5211	2	SPACER
	29	5P8245	3	WASHER
	30	9G5213	1	SPRING
	31	9G5212	1	LINK
	32	2A4639	1	BOLT
	33	9G5214	1	LEVER
	34	1B8714	1	KEY

334598 334598 P

4122 7T2615 CONTROL GP-STEERING CLUTCH & BRAKE-PART 4 OF 4
S/N 53Y4031-Up

STEERING CLUTCHES AND BRAKES

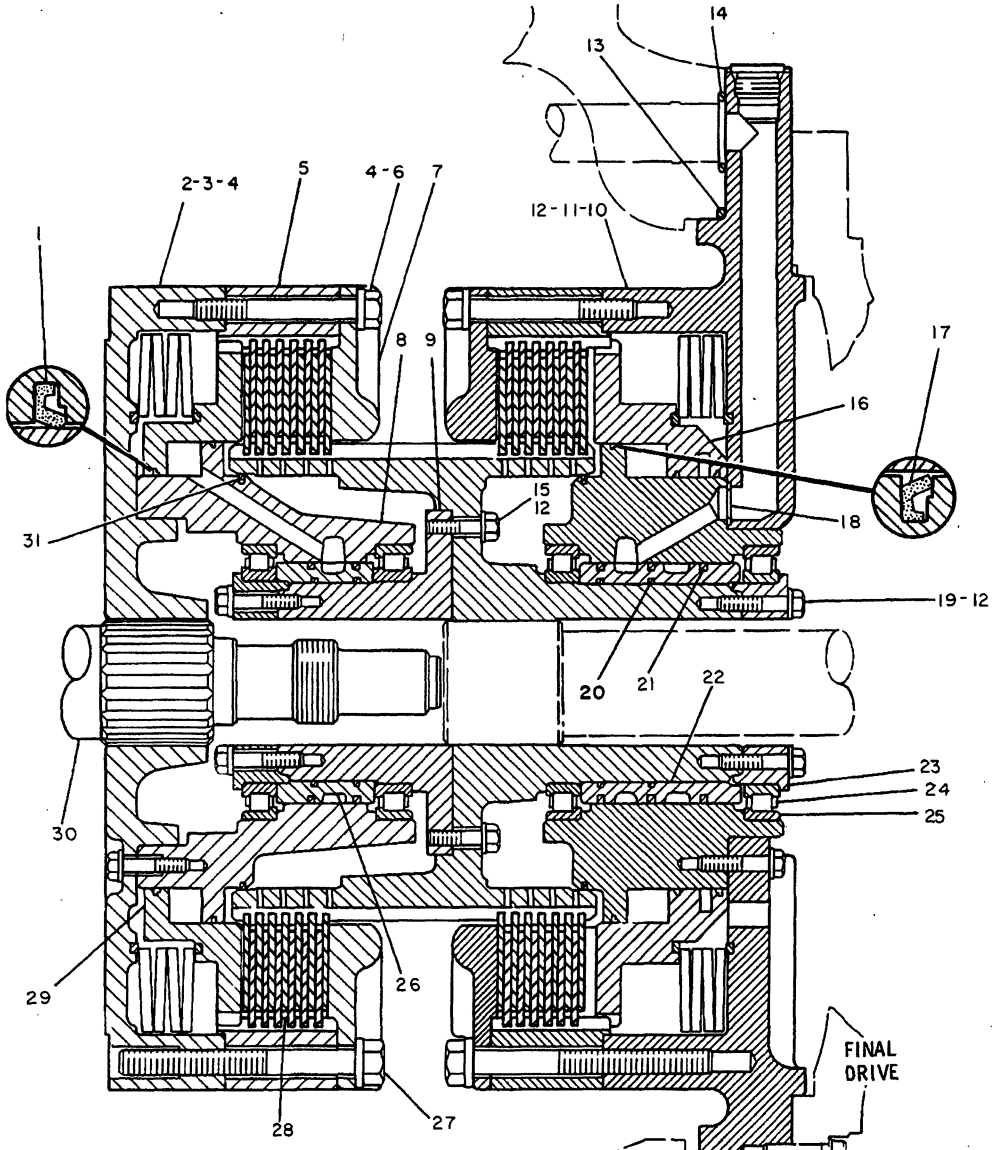

NOTE	REF NO	PART NUMBER	QTY	PART NAME
	1	8P8357	3	RING-SEAL
	2	8P7636	1	HOUSING-CLUTCH
	3	9S1366	3	BOLT
C	4	5P8245	33	WASHER
	5	8P8365	2	RING
	6	0S1573	30	BOLT
	7	8P7769	2	RETAINER
	8	8P7788	1	RETAINER-CLUTCH PISTON
	9	8P7789	1	RETAINER
	10	8P7708	1	HOUSING-BRAKE
	11	1A2029	6	BOLT
	12	5M2894	30	WASHER
	13	4H6730	1	SEAL-O-RING
	14	4F7389	3	SEAL-O-RING
	15	3B1915	8	BOLT
	16	8P7836	1	PISTON
	17	6P5317	2	RING-SEAL
	18	8M4389	3	SEAL-O-RING
	19	0S1571	16	BOLT
	20	5P1705	4	SEAL-O-RING
C	21	7T1346	5	RING-SEAL
	22	8P9379	1	CARRIER
	23	8P7786	2	RETAINER
	24	9S5279	4	BEARING-INNER
	25	9H5322	4	RACE-SPEC ROLLER BRG
	26	8P7719	1	CARRIER
	27	8D4348	6	BOLT
C		5P8247	6	WASHER-HARD
	28	8P8360	7	DISC-FRICTION
C	29	8P7787	1	PISTON
	30	8P7833	1	SHAFT
		2D0604	1	BUTTON
	31	8P7780	2	RING-SEAL

C INDICATES CHANGE

400772400772 P

4101 6P6359 CLUTCH & BRAKE GP-STEERING-PART 1 OF 2

2 Required

S/N 53Y1-1178

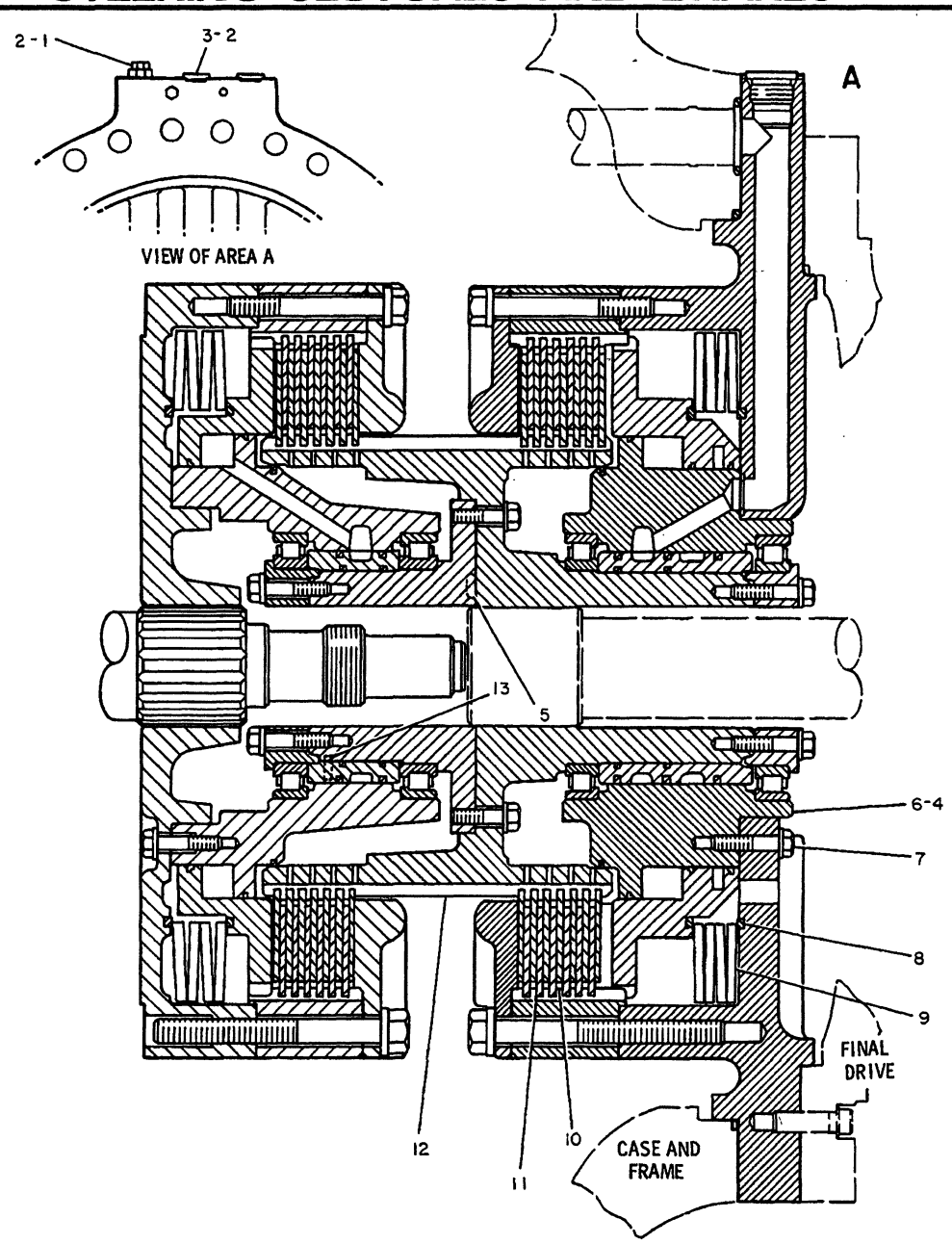

REF. NO.	PART NUMBER	DESCRIPTION	QTY
1	2P8421	ADAPTER	1
	9S4191	PLUG	1
	3J1907	SEAL---11.8mm(.468 in.) I.D.	1
2	3D2824	SEAL---23.4mm(.924 in.) I.D.	3
3	9S8008	PLUG	2
4	7G885	ORIFICE	1
5	8M5251	SEAL	1
6	8P7634	RETAINER	1
7	S1571	BOLT	23
	5M2894	WASHER	23
8	7G6923	RING	4
9	7G6698	SPRING	8
10	8P4316	DISC ASSEM.	7
11	6P5404	PLATE	12
12	8P7635	HUB	1
13	2H1190	DOWEL	2

235090

235090 P

4101 **6P6359 CLUTCH & BRAKE GP-STEERING-PART 2 OF 2**

2 Required

S/N 53Y1-1178

STEERING CLUTCHES AND BRAKES

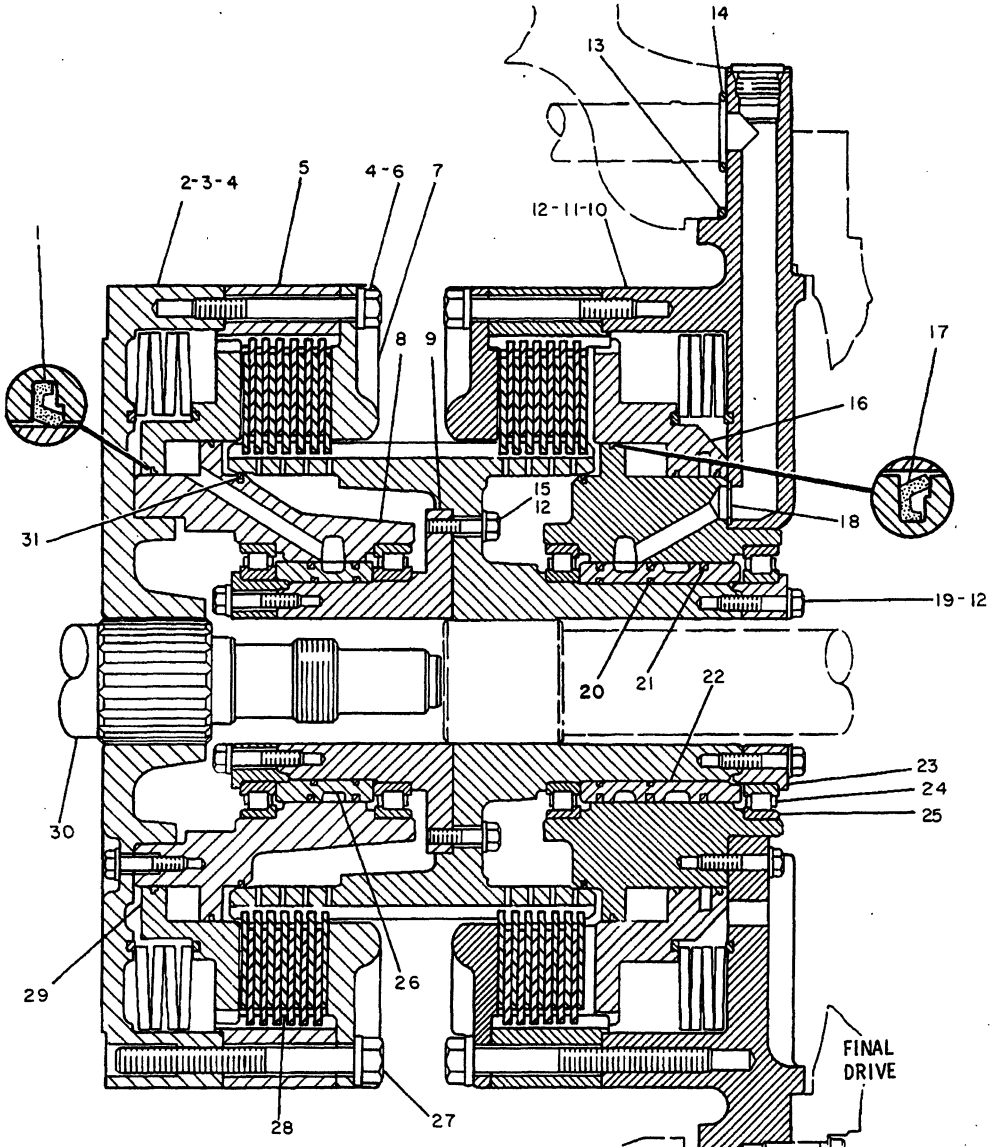

NOTE	REF NO	PART NUMBER	QTY	PART NAME
	1	8P8357	3	RING-SEAL
	2	8P7636	1	HOUSING-CLUTCH
	3	9S1366	3	BOLT
C	4	5P8245	33	WASHER
	5	8P8365	2	RING
	6	0S1573	30	BOLT
	7	8P7769	2	RETAINER
	8	8P7788	1	RETAINER-CLUTCH PISTON
	9	8P7789	1	RETAINER
	10	8P7708	1	HOUSING-BRAKE
	11	1A2029	6	BOLT
	12	5M2894	30	WASHER
	13	4H6730	1	SEAL-O-RING
	14	4F7389	3	SEAL-O-RING
	15	3B1915	8	BOLT
	16	8P7836	1	PISTON
	17	6P5317	2	RING-SEAL
	18	8M4389	3	SEAL-O-RING
	19	0S1571	16	BOLT
	20	5P1705	4	SEAL-O-RING
C	21	7T1346	5	RING-SEAL
	22	8P9379	1	CARRIER
	23	8P7786	2	RETAINER
	24	9S5279	4	BEARING-INNER
	25	9H5322	4	RACE-SPEC ROLLER BRG
	26	8P7719	1	CARRIER
	27	8D4348	6	BOLT
C		5P8247	6	WASHER-HARD
	28	8P8360	7	DISC-FRICTION
C	29	8P7787	1	PISTON
	30	8P7833	1	SHAFT
		2D0604	1	BUTTON
	31	8P7780	2	RING-SEAL

C INDICATES CHANGE

400772 400772 P

4101 **6P6359 CLUTCH & BRAKE GP-STEERING-PART 1 OF 2**

2 Required

S/N 53Y1179-3484

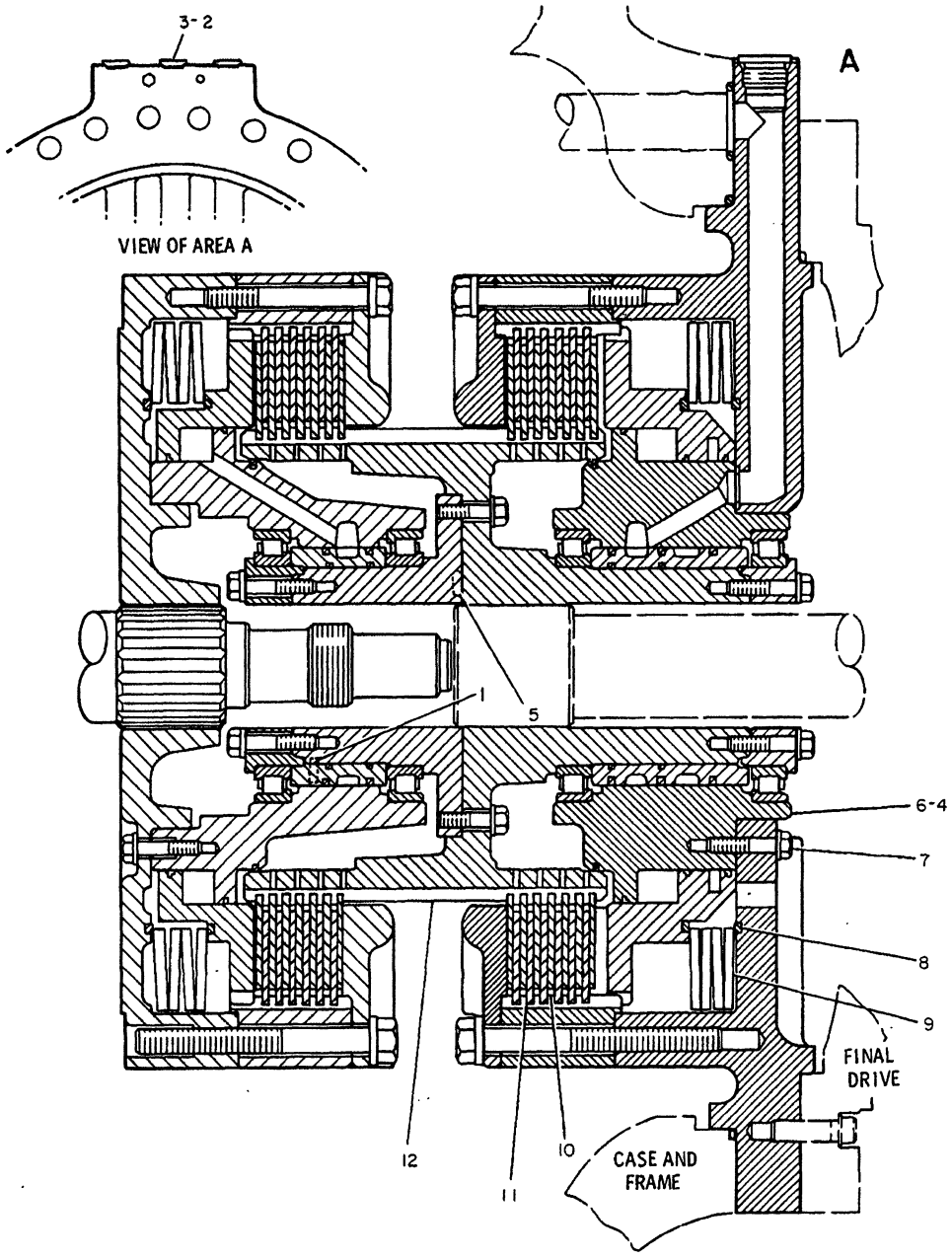

NOTE	REF NO	PART NUMBER	QTY	DESCRIPTION
C	1	7T5620	2	PIN
	2	3D2824	3	SEAL
C	3	9S8008	3	PLUG
	4	7G0885	1	ORIFICE
	5	8M5251	1	SEAL
	6	8P7634	1	RETAINER
	7	S1571	23	BOLT
		5M2894	23	WASHER
	8	7G6923	4	RING
	9	7G6698	8	SPRING
	10	8P4316	7	DISC ASSEM.
	11	6P5404	12	PLATE
	12	8P7635	1	HUB

C INDICATES CHANGE

341457

341457 P

4101 **6P6359 CLUTCH & BRAKE GP-STEERING-PART 2 OF 2**

2 Required

S/N 53Y1179-3484

STEERING CLUTCHES AND BRAKES

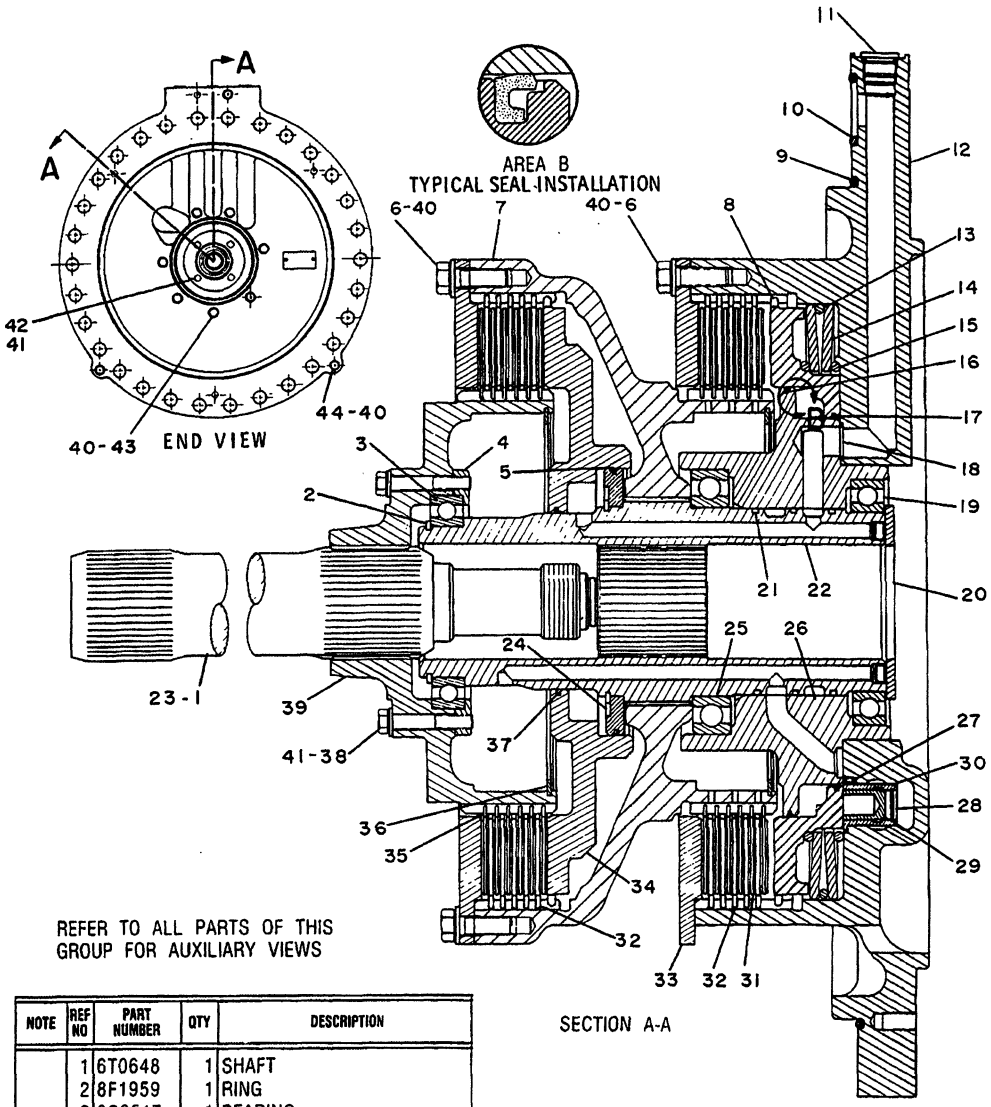

NOTE	REF NO	PART NUMBER	QTY	DESCRIPTION
	1	6T0648	1	SHAFT
	2	8F1959	1	RING
	3	8S3517	1	BEARING
	4	6T0244	1	PLATE
	5	6T0252	1	RING
	6	0S1585	20	BOLT
	7	7T3096	1	HUB
	8	6T0235	1	PISTON
	9	9H3360	1	SEAL
	10	4F7389	3	SEAL
	11	9S8006	3	PLUG
		2M9780	3	SEAL
	12	7T3131	1	HOUSING
	13	3T3601	1	RING
	14	3T4717	2	SPRING
	15	3T3602	2	RING
	16	6P5317	1	RING
	17	6T2037	1	RING
	18	8M4389	2	SEAL
	19	4M5858	1	BEARING
	20	6T0247	1	PLATE
	21	6T0248	3	RING
	22	6T4189	1	SHAFT AS.
		0L1026	2	PLUG
	23	2D0604	1	BUTTON
	24	6T0243	1	PLATE
		5P5297	1	RING
	25	4F2129	1	BEARING
	26	6T0237	1	RETAINER
	27	6D9953	1	PIN
	28	6J7836	1	RING
	29	6T7862	1	SPOOL
	30	6T7863	1	SLEEVE
	31	8P4316	6	DISC
	32	7T6994	10	PLATE
	33	6T0234	2	RETAINER
	34	6T0241	1	PISTON
	35	8P8360	6	DISC
	36	7T1885	2	RING
	37	6T0257	1	RING
	38	0L2070	4	BOLT
	39	7T3097	1	HUB
	40	5P8245	30	WASHER
	41	5M2894	8	WASHER
	42	1A2029	4	BOLT
	43	0S1587	7	BOLT
	44	9S1366	3	BOLT

334875 334875 P

4101 **6P6359 CLUTCH & BRAKE GP-STEERING*X**

2 Required

S/N 53Y3485-Up

STEERING CLUTCHES AND BRAKES

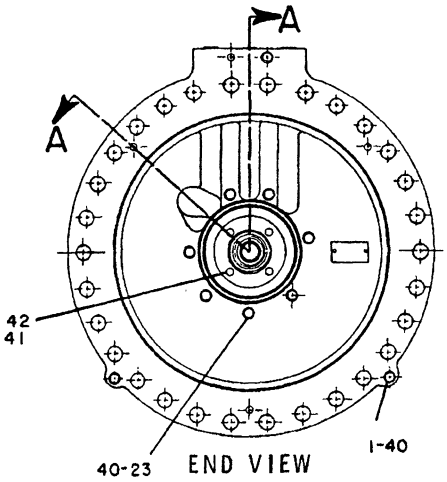

END VIEW



AREA B
TYPICAL SEAL INSTALLATION

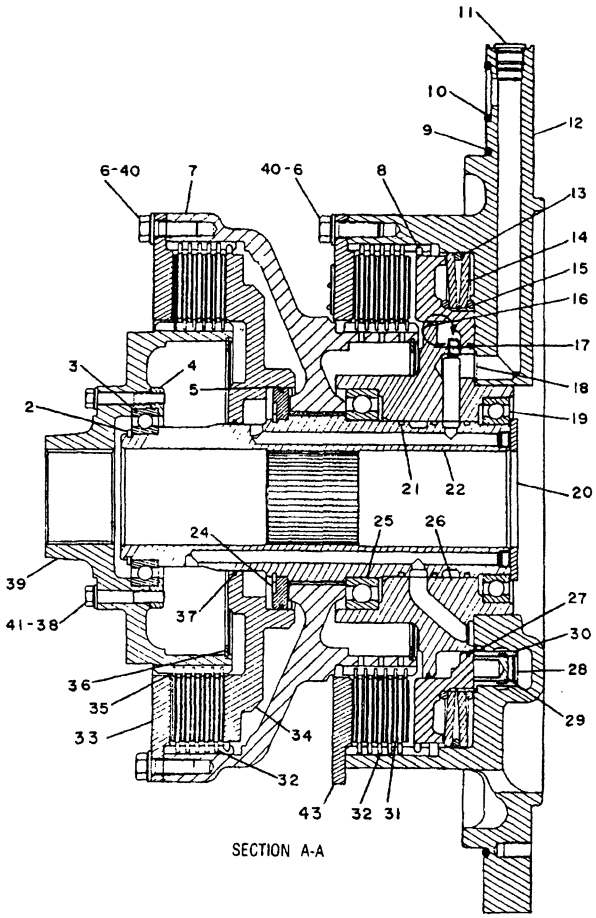

SECTION A-A

NOTE	REF NO	PART NUMBER	QTY	PART NAME
	1	9S1366	3	BOLT
	2	8F1959	1	RING-RETAINING
	3	8S3517	1	BALL BEARING
	4	6T0244	1	PLATE
	5	6T0252	1	RING-SEAL
	6	0S1585	20	BOLT
	7	7T3096	1	HUB
	8	6T0235	1	PISTON
	9	9H3360	1	SEAL-O-RING
	10	4F7389	3	SEAL-O-RING
	11	9S8006	3	PLUG-O-RING
		2M9780	3	SEAL-O-RING
	12	7T3131	1	HOUSING-BRAKE
	13	3T3601	1	RING-SPACER
	14	3T4717	2	SPRING-DISC
	15	3T3602	2	RING-SPACER
	16	6P5317	1	RING-SEAL
	17	6T2037	1	RING-SEAL
	18	8M4389	2	SEAL-O-RING
	19	4M5858	1	BALL BEARING
	20	6T0247	1	PLATE
	21	6T0248	3	RING-SEAL
	22	6T4189	1	SHAFT AS
		0L1026	2	PLUG-CUP
	23	0S1587	7	BOLT
	24	6T0243	1	PLATE-THRUST
		5P5297	1	RING-RETAINING
	25	4F2129	1	BALL BEARING
	26	6T0237	1	RETAINER
	27	6D9953	1	PIN-SPRING
	28	6J7836	1	RING-SNAP
	29	6T7862	1	SPOOL
	30	6T7863	1	SLEEVE
	31	8P4316	6	DISC-FRICTION
	32	7T6994	10	PLATE-CLUTCH & BRAKE
C	33	6T0234	1	RETAINER
	34	6T0241	1	PISTON
	35	8P8360	6	DISC-FRICTION
	36	7T1885	2	RING
	37	6T0257	1	RING-SEAL
	38	0L2070	4	BOLT
	39	7T3097	1	HUB-INPUT
	40	5P8245	30	WASHER
	41	5M2894	8	WASHER
	42	1A2029	4	BOLT
C	43	9W8662	1	RETAINER AS
		6V0709	1	PLATE-WARNING
		7B3028	4	SCREW-DRIVE

C-CHANGE FROM PREVIOUS TYPE

V-413185 P

4101 **9W3169 CLUTCH & BRAKE GP-STEERING**
S/N 53Y3485-Up
Field Installation

STEERING CLUTCHES AND BRAKES

NOTE	REF NO	PART NUMBER	QTY	DESCRIPTION
	1	8P8357	3	RING
	2	8P7636	1	HOUSING
	3	8P7780	2	RING

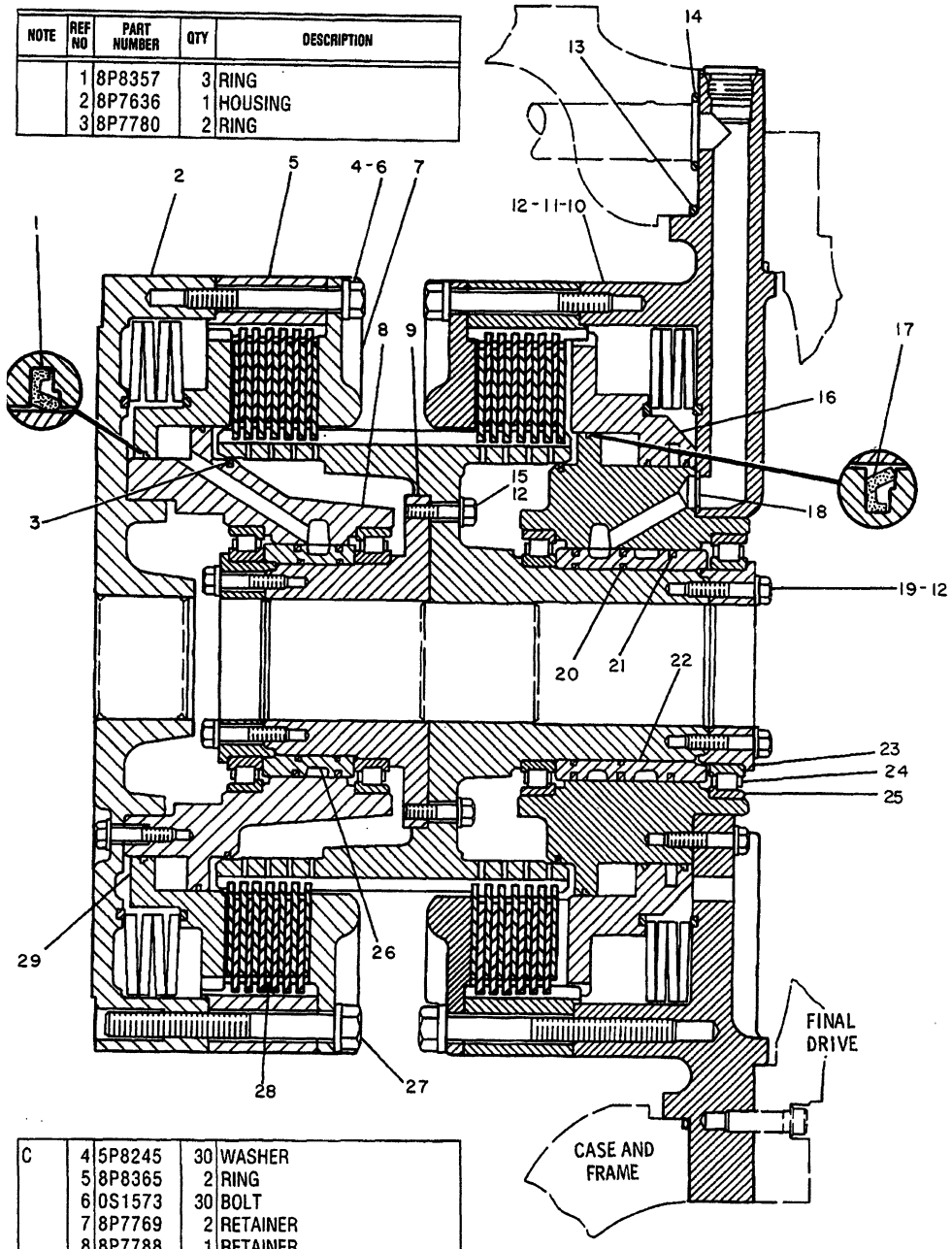

NOTE	REF NO	PART NUMBER	QTY	DESCRIPTION
C	4	5P8245	30	WASHER
	5	8P8365	2	RING
	6	0S1573	30	BOLT
	7	8P7769	2	RETAINER
	8	8P7788	1	RETAINER
	9	8P7789	1	RETAINER
	10	8P7708	1	HOUSING
	11	1A2029	6	BOLT
	12	5M2894	30	WASHER
	13	4H6730	1	SEAL
	14	4F7389	3	SEAL
	15	3B1915	8	BOLT
	16	8P7836	1	PISTON
	17	6P5317	2	RING
	18	8M4389	3	SEAL
	19	0S1571	16	BOLT
	20	5P1705	4	SEAL
C	21	7T1346	5	RING
	22	8P9379	1	CARRIER

NOTE	REF NO	PART NUMBER	QTY	DESCRIPTION
	23	8P7786	2	RETAINER
	24	9S5279	4	BEARING
	25	9H5322	4	RACE
	26	8P7719	1	CARRIER
	27	8D4348	6	BOLT
C		5P8247	6	WASHER
	28	8P8360	7	DISC AS.
	29	8P7787	1	PISTON

C INDICATES CHANGE

350983

350983 P

4101 **3T8700 CLUTCH & BRAKE GP-STEERING-PART 1 OF 2*X**

Type 1

Field Installation

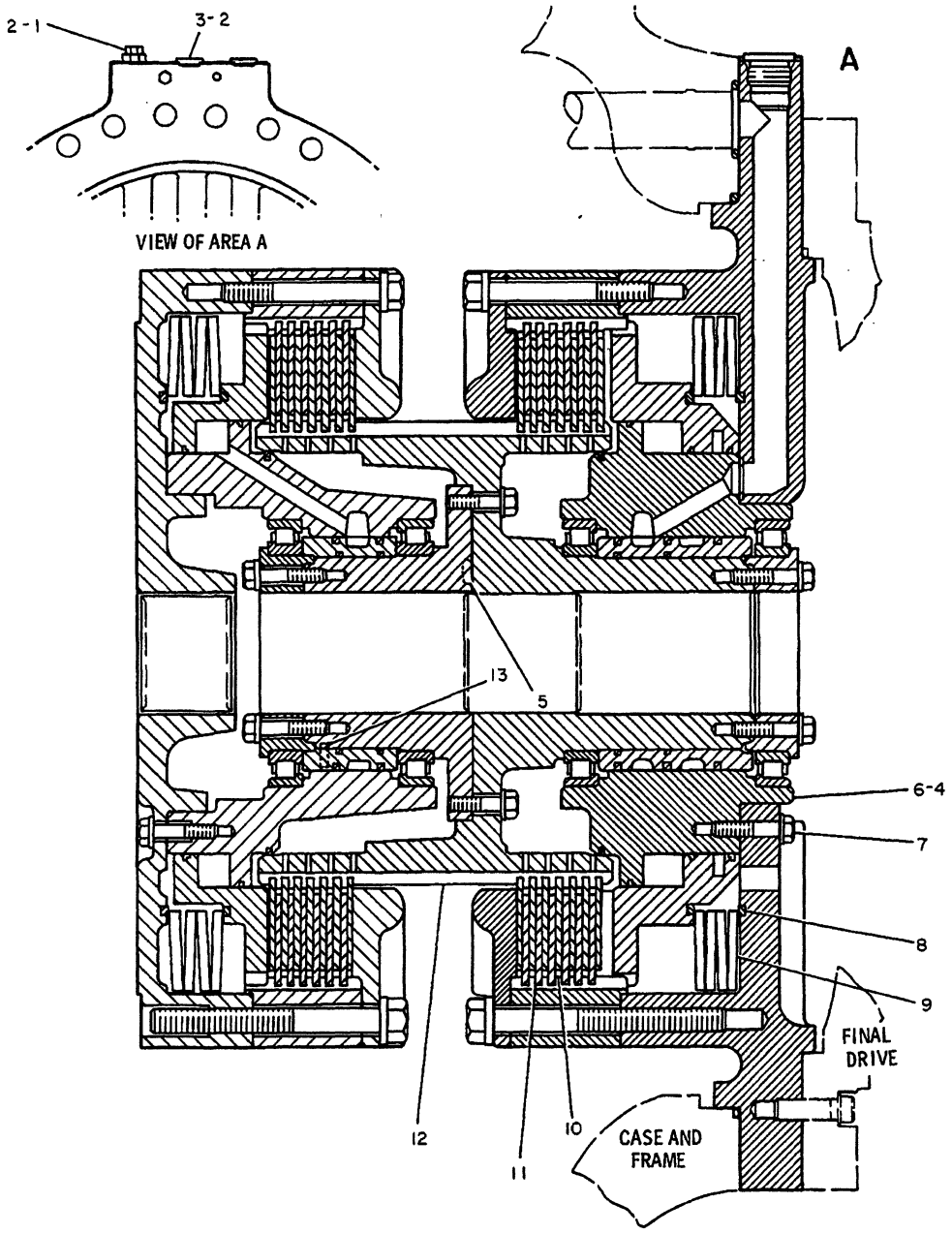

REF. NO.	PART NUMBER	DESCRIPTION	QTY
1	2P8421	ADAPTER	1
	9S4191	PLUG	1
	3J1907	SEAL---11.8mm(.468 in.) I.D.	1
2	3D2824	SEAL---23.4mm(.924 in.) I.D.	3
3	9S8008	PLUG	2
4	7G885	ORIFICE	1
5	8M5251	SEAL	1
6	8P7634	RETAINER	1
7	S1571	BOLT	23
	5M2894	WASHER	23
8	7G6923	RING	4
9	7G6698	SPRING	8
10	8P4316	DISC ASSEM.	7
11	6P5404	PLATE	12
12	8P7635	HUB	1
13	2H1190	DOWEL	2

180282

180282 P

4101 **3T8700 CLUTCH & BRAKE GP-STEERING-PART 2 OF 2*X**

Type 1

Field Installation

STEERING CLUTCHES AND BRAKES

NOTE	REF NO	PART NUMBER	QTY	DESCRIPTION
	1	8P8357	3	RING
	2	8P7636	1	HOUSING
	3	8P7780	2	RING

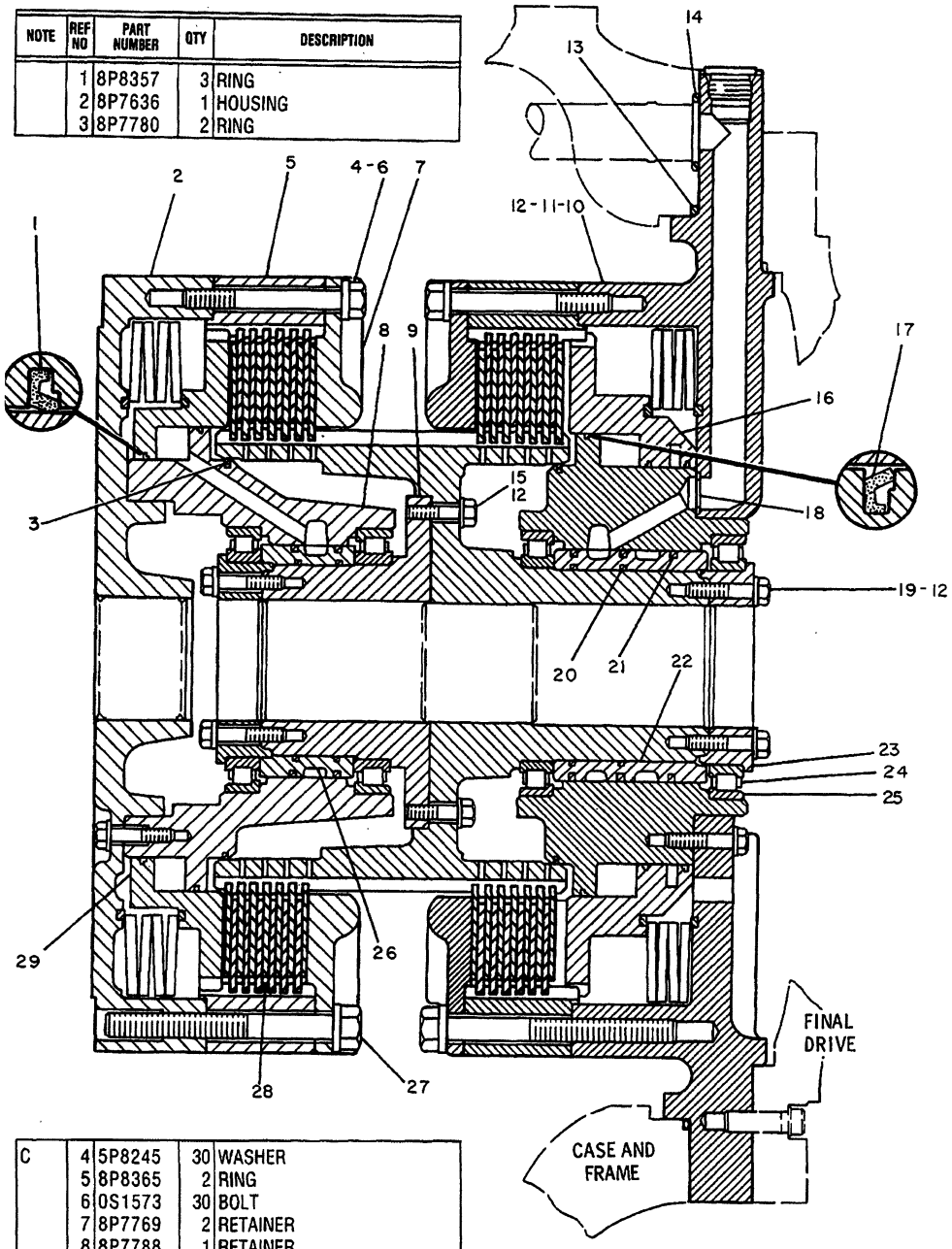

C	4	5P8245	30	WASHER
	5	8P8365	2	RING
	6	0S1573	30	BOLT
	7	8P7769	2	RETAINER
	8	8P7788	1	RETAINER
	9	8P7789	1	RETAINER
	10	8P7708	1	HOUSING
	11	1A2029	6	BOLT
	12	5M2894	30	WASHER
	13	4H6730	1	SEAL
	14	4F7389	3	SEAL
	15	3B1915	8	BOLT
	16	8P7836	1	PISTON
	17	6P5317	2	RING
	18	8M4389	3	SEAL
	19	0S1571	16	BOLT
	20	5P1705	4	SEAL
C	21	7T1346	5	RING
	22	8P9379	1	CARRIER

	23	8P7786	2	RETAINER
	24	9S5279	4	BEARING
	25	9H5322	4	RACE
	26	8P7719	1	CARRIER
	27	8D4348	6	BOLT
C		5P8247	6	WASHER
	28	8P8360	7	DISC AS.
	29	8P7787	1	PISTON

C INDICATES CHANGE

350983 350983 P

4101 3T8700 CLUTCH & BRAKE GP-STEERING-PART 1 OF 2*X

Type 2

Field Installation

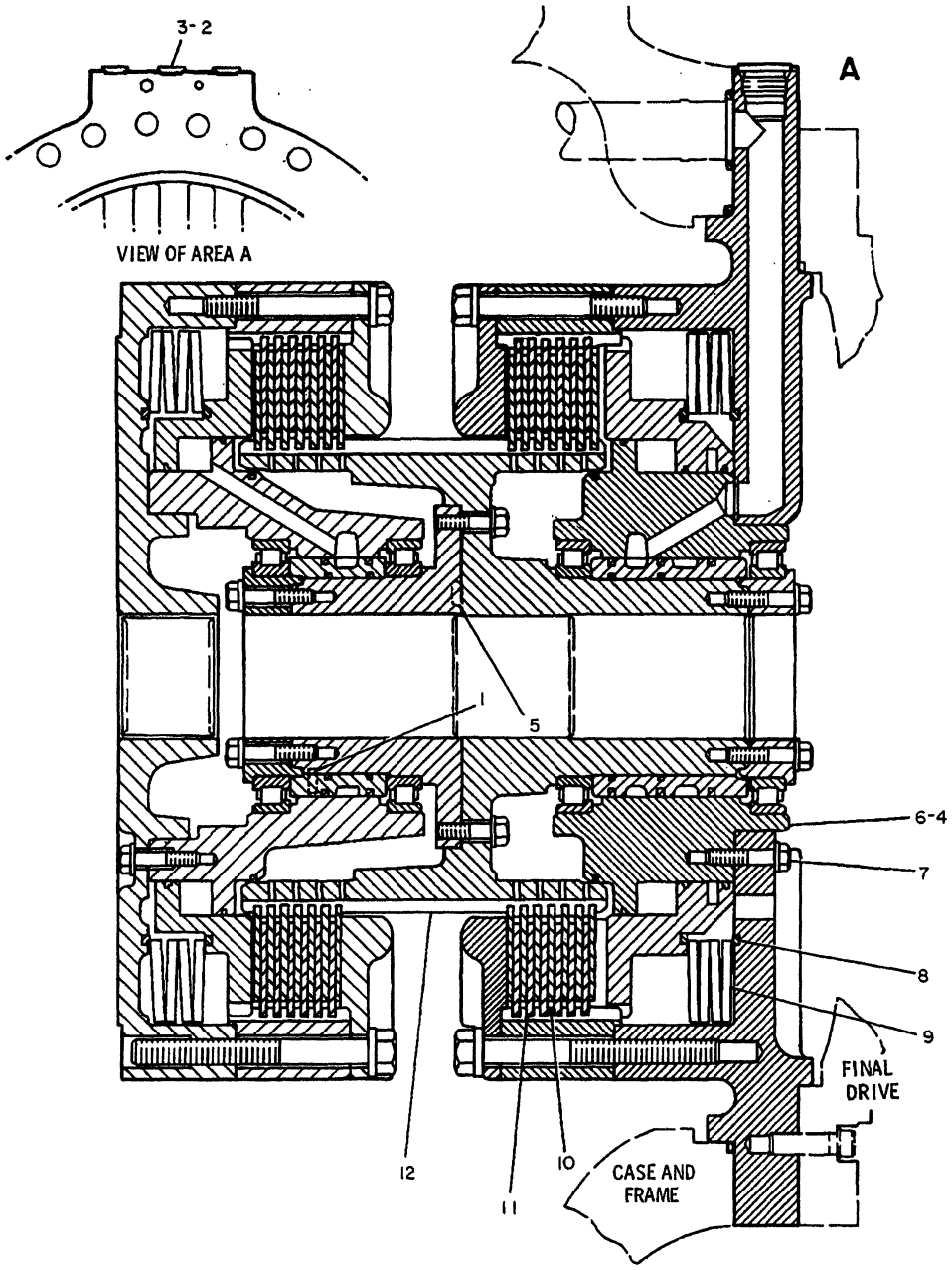

NOTE	REF NO	PART NUMBER	QTY	DESCRIPTION
C	1	7T5620	2	PIN
	2	3D2824	3	SEAL 23.4MM(.924IN.)I.D.
C	3	9S8008	3	PLUG
	4	7G0885	1	ORIFICE
	5	8M5251	1	SEAL
	6	8P7634	1	RETAINER
	7	0S1571	23	BOLT
		5M2894	23	WASHER
	8	7G6923	4	RING
	9	7G6698	8	SPRING
	10	8P4316	7	DISC AS.
	11	6P5404	12	PLATE
	12	8P7635	1	HUB

C INDICATES CHANGE

350984

350984 P

4101 3T8700 CLUTCH & BRAKE GP-STEERING-PART 2 OF 2*X

Type 2

Field Installation

STEERING CLUTCHES AND BRAKES

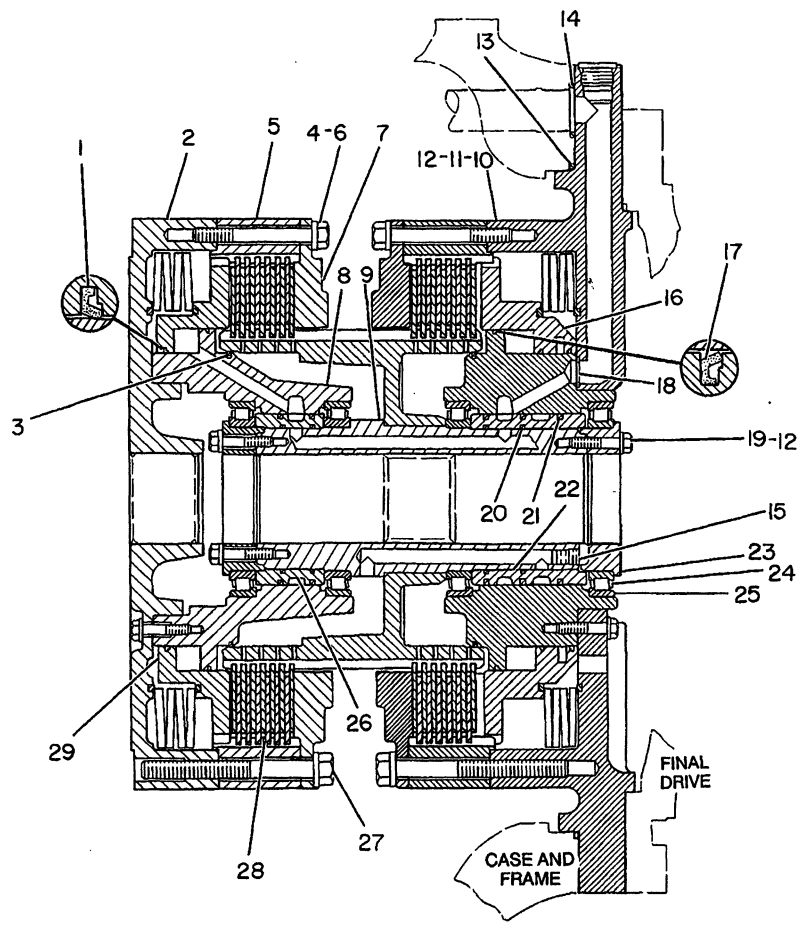

NOTE	REF NO	PART NUMBER	QTY	PART NAME	NOTE	REF NO	PART NUMBER	QTY	PART NAME
	1	8P8357	3	RING-SEAL		27	8D4348	6	BOLT
	2	8P7636	1	HOUSING-CLUTCH			5P8247	6	WASHER-HARD
	3	8P7780	2	RING-SEAL		28	8P8360	7	DISC-FRICTION
	4	5P8245	30	WASHER		29	8P7787	1	PISTON
	5	8P8365	2	RING					
	6	0S1573	30	BOLT					
	7	8P7769	2	RETAINER					
	8	8P7788	1	RETAINER-CLUTCH PISTON					
C	9	7T8337	1	SHAFT-GOVERNOR CONTROL					
	10	8P7708	1	HOUSING-BRAKE					
	11	1A2029	6	BOLT					
C	12	5M2894	22	WASHER					
	13	4H6730	1	SEAL-O-RING					
	14	4F7389	3	SEAL-O-RING					
C	15	7H3171	2	PLUG-PIPE					
	16	8P7836	1	PISTON					
	17	6P5317	2	RING-SEAL					
	18	8M4389	3	SEAL-O-RING					
	19	0S1571	16	BOLT					
	20	5P1705	4	SEAL-O-RING					
	21	7T1346	5	RING-SEAL					
	22	8P9379	1	CARRIER					
	23	8P7786	2	RETAINER					
	24	9S5279	4	BEARING-INNER					
	25	9H5322	4	RACE-SPL ROLLER BEARING					
	26	8P7719	1	CARRIER					

C-CHANGE FROM PREVIOUS TYPE

B-542366 EP

4101 3T8700 CLUTCH & BRAKE GP-STEERING-PART 1 OF 2*X

Type 3

Field Installation

STEERING CLUTCHES AND BRAKES

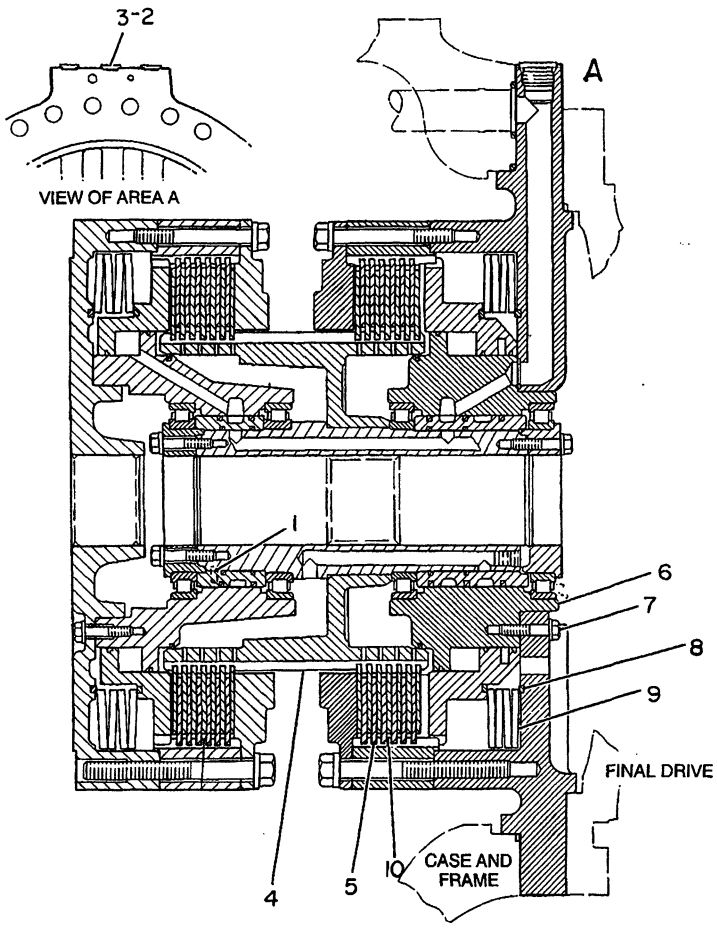

NOTE	REF NO	PART NUMBER	QTY	PART NAME	NOTE	REF NO	PART NUMBER	QTY	PART NAME
	1	7T5620	2	PIN					
	2	3D2824	3	SEAL-O-RING 23.4MM(.924IN)ID					
	3	9S8008	3	PLUG-O-RING					
	4	6P5404	12	PLATE-CLUTCH & BRAKE					
C	5	7T8336	1	HUB					
	6	8P7634	1	RETAINER-PISTON					
	7	OS1571	23	BOLT					
		5M2894	23	WASHER					
	8	7G6923	4	RING					
	9	7G6698	8	SPRING-DISC					
	10	8P4316	7	DISC-FRICTION					

C-CHANGE FROM PREVIOUS TYPE

B- 350971 P

4101 3T8700 CLUTCH & BRAKE GP-STEERING-PART 2 OF 2*X

Type 3

Field Installation

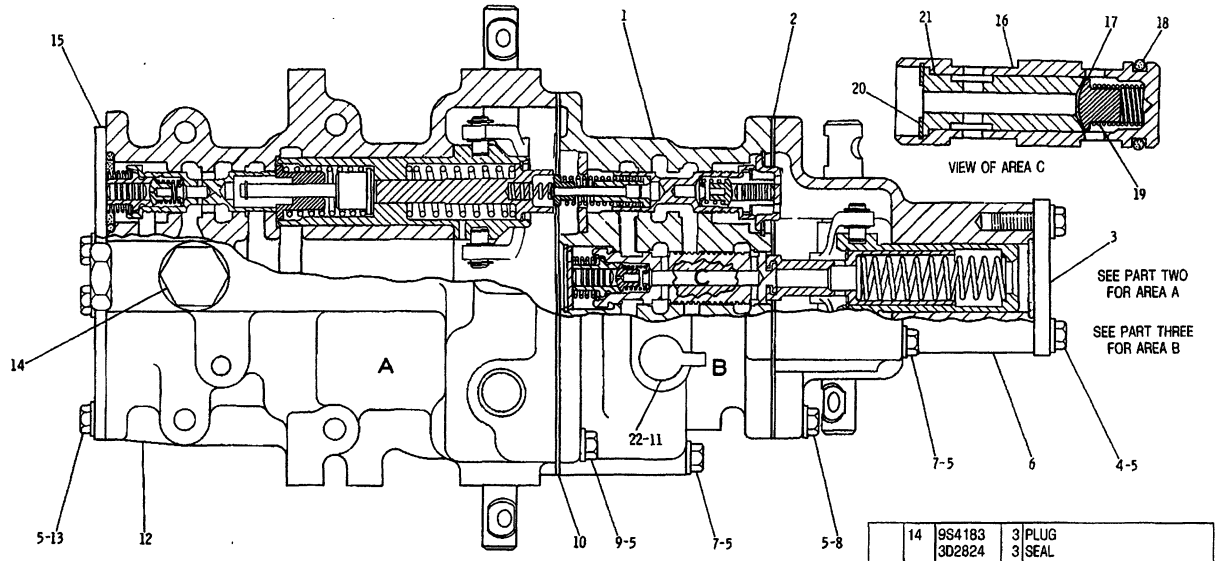

NOTE	REF NO	PART NUMBER	QTY	DESCRIPTION
	1	9P9228	1	BODY
	2	9P9212	1	GASKET
	3	5H2830	1	COVER
	4	S1594	2	BOLT
	5	5M2894	21	WASHER
	6	9G6	1	BODY
	7	T65	6	BOLT
	8	S1588	4	BOLT
	9	1A2029	5	BOLT
	10	9P9213	1	GASKET
C	11	6V3965	2	NIPPLE ASSEM.
		3J1907	2	SEAL
	12	9G5847	1	BODY
	13	L1351	4	BOLT
	14	9S4183	3	PLUG
		3D2824	3	SEAL
	15	7G1577	2	COVER
	16	8P9129	1	VALVE ASSEM.
		8P9131	1	SPOOL
	17	8P9125	1	POPPET
	18	4J5140	1	SEAL
	19	5M9548	1	SPRING
	20	5S4455	1	RING
	21	8P9130	1	SLEEVE
	22	6V852	2	CAP

C INDICATES CHANGE

182583

182583 P

4120 **3T8816 VALVE GP-CONTROL-PART 1 OF 3**

S/N 53Y1-1339

Part Of 6P9156 Control-Steering Clutch & Brake

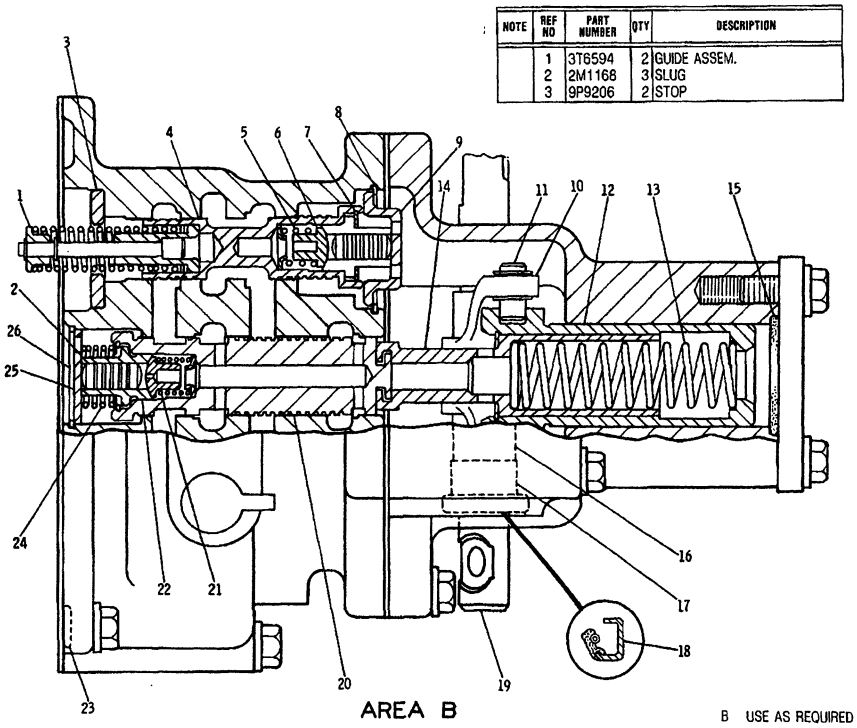

AREA B

NOTE	REF NO	PART NUMBER	QTY	DESCRIPTION
	1	3T6594	2	GUIDE ASSEM.
	2	2M1168	3	SLUG
	3	9P9206	2	STOP

	4	8P9128	2	SPOOL ASSEM.
				(EACH INCLUDES)
		8P9490	1	SPOOL
		8M2538	1	POPPET
		8M4409	1	RETAINER
	5	5M9548	1	SPRING
	6	8P9489	1	SLEEVE
	7	5P7073	1	RING
	8	23455	2	RING
	9	9P9205	2	RETAINER
	10	9P9179	1	YOKE
		2A4639	1	BOLT
		5M2894	1	WASHER
	11	9P9181	2	DOWEL
		2H3429	4	RING
	12	3T6593	1	PISTON ASSEM.
		9P9188	1	PISTON
		5P7234	1	RING
	13	3T6367	1	SPRING
	14	9P9189	1	PISTON
	15	8M4986	1	SEAL
	16	8P9463	2	SPACER
	17	8B4132	2	BEARING
	18	9H223	2	SEAL
	19	9P9208	1	SHAFT
	20	8P9717	1	SPOOL ASSEM.
		8P9716	1	SPOOL
		8M4409	1	RETAINER
		8M2538	1	POPPET
		5P7073	1	RING
	21	5M9548	1	SPRING
	22	8P9489	1	SLEEVE
	23	8M4988	4	SEAL
	24	9P9186	1	SPRING
B		8P9494	1	SHIM
	25	8P9145	1	SPACER
	26	1L3768	1	RING

B USE AS REQUIRED

182584

182584 P

4120 **3T8816 VALVE GP-CONTROL-PART 2 OF 3**

S/N 53Y1-1339

Part Of 6P9156 Control-Steering Clutch & Brake

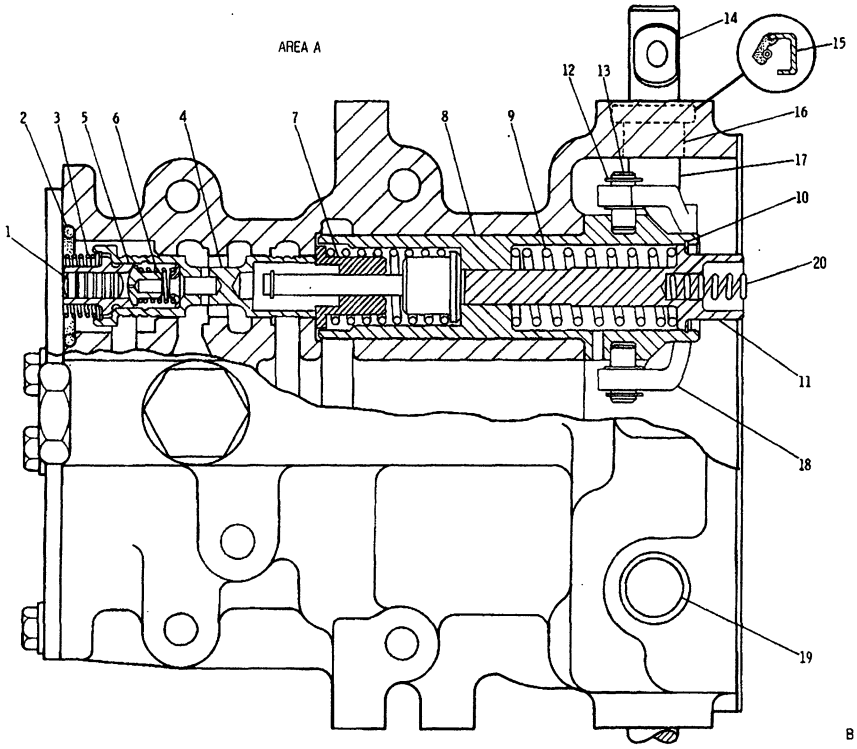

NOTE	REF NO	PART NUMBER	QTY	DESCRIPTION
	1	2M1168	2	SLUG
	2	5M5860	2	SEAL
	3	9P9211	2	SPRING
B		8P9494	4	SHIM
	4	8P9128	2	SPOOL ASSEM.
				(EACH INCLUDES)
		8P9490	1	SPOOL
		8M4409	1	RETAINER
		5P7073	1	RING
		8M2538	1	POPPET
	5	8P9489	1	SLEEVE
	6	5M9548	1	SPRING
	7	3T6454	2	GUIDE ASSEM.
	8	3T6455	2	PISTON ASSEM.
				(EACH INCLUDES)
		3T6408	1	PISTON
	9	7G7475	1	SPRING
	10	8H1037	1	RING
	11	3T6409	1	STEM
	12	2H3429	4	RING
	13	9P9181	2	DOWEL
	14	9P9203	2	SHAFT
	15	9H223	2	SEAL
	16	8B4132	4	BEARING
	17	8P9463	4	SPACER
	18	3T9639	1	YOKE
		2A4639	2	BOLT
		5M2894	2	WASHER
	19	4K8603	3	PLUG
	20	9N1646	2	SPRING

B USE AS REQUIRED

182585

182585 P

4120 **3T8816 VALVE GP-CONTROL-PART 3 OF 3**

S/N 53Y1-1339

Part Of 6P9156 Control-Steering Clutch & Brake

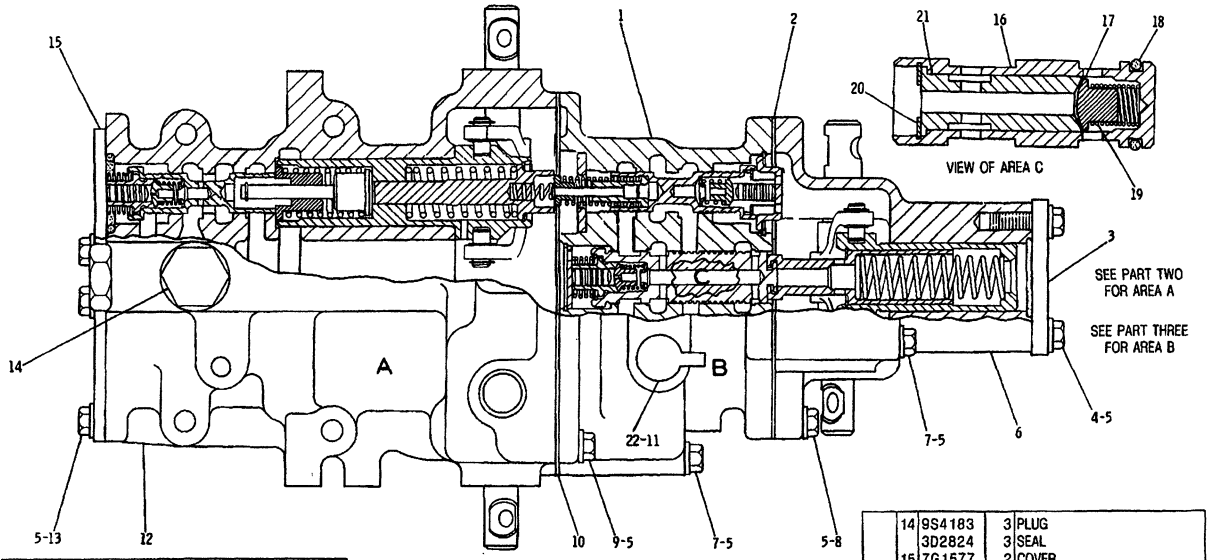

NOTE	REF NO	PART NUMBER	QTY	DESCRIPTION
	1	9P9228	1	BODY
	2	9P9212	1	GASKET
	3	5H2830	1	COVER
	4	S1594	2	BOLT
	5	5M2894	21	WASHER
	6	9G6	1	BODY
	7	T65	6	BOLT
	8	S1588	4	BOLT
	9	1A2029	5	BOLT
	10	9P9213	1	GASKET
	11	6V3965	2	NIPPLE ASSEM.
		3J1907	2	SEAL
	12	9G5847	1	BODY
	13	L1351	4	BOLT
	14	9S4183	3	PLUG
		3D2824	3	SEAL
	15	7G1577	2	COVER
	16	8P9129	1	VALVE ASSEM.
		8P9131	1	SPOOL
	17	8P9125	1	POPPET
	18	4J5140	1	SEAL
	19	5M9548	1	SPRING
	20	5S4455	1	RING
	21	8P9130	1	SLEEVE
	22	6V852	2	CAP

310106

310106 P

4102 **9G9643 VALVE GP-CONTROL-PART 1 OF 3**

Type 1. S/N 53Y1340-3484

Part Of 6P9156 Control-Steering Clutch & Brake

NOTE	REF NO	PART NUMBER	QTY	DESCRIPTION
	1	9G9638	2	GUIDE ASSEM.
	2	2M1168	3	SLUG
	3	9P9206	2	STOP

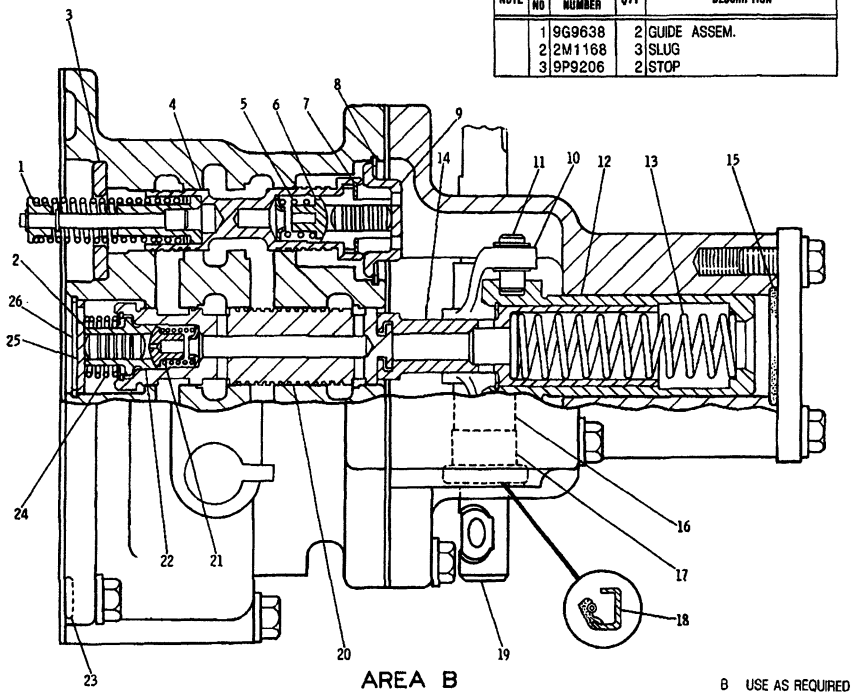

AREA B

NOTE	REF NO	PART NUMBER	QTY	DESCRIPTION
	4	8P9128	2	SPOOL ASSEM. (EACH INCLUDES)
		8P9490	1	SPOOL
		8M2538	1	POPPET
		8M4409	1	RETAINER
	5	5M9548	1	SPRING
	6	8P9489	1	SLEEVE
	7	5P7073	1	RING
	8	23455	2	RING
	9	9P9205	2	RETAINER
	10	9P9179	1	YOKE
		2A4639	1	BOLT
		5M2894	1	WASHER
	11	9P9181	2	DOWEL
		2H3429	4	RING
	12	3T6593	1	PISTON ASSEM.
		9P9188	1	PISTON
		5P7234	1	RING
	13	3T6367	1	SPRING
	14	9P9189	1	PISTON
	15	8M4986	1	SEAL
	16	8P9463	2	SPACER
	17	8B4132	2	BEARING
	18	9H223	2	SEAL
	19	9P9208	1	SHAFT
	20	8P9717	1	SPOOL ASSEM.
		8P9716	1	SPOOL
		8M4409	1	RETAINER
		8M2538	1	POPPET
		5P7073	1	RING
	21	5M9548	1	SPRING
	22	8P9489	1	SLEEVE
	23	8M4988	4	SEAL
	24	9P9186	1	SPRING
B		8P9494	1	SHIM
	25	8P9145	1	SPACER
	26	1L3768	1	RING

B USE AS REQUIRED

310107

310107 P

4102 **9G9643 VALVE GP-CONTROL-PART 2 OF 3**

Type 1. S/N 53Y1340-3484

Part Of 6P9156 Control-Steering Clutch & Brake

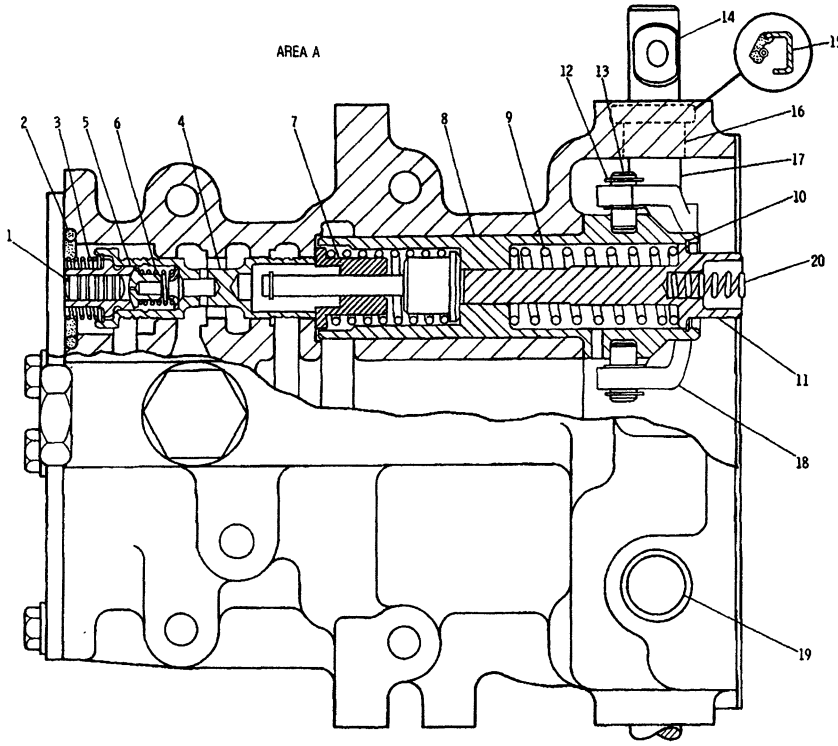

NOTE	REF NO	PART NUMBER	QTY	DESCRIPTION
	1	2M1168	2	SLUG
	2	5M5860	2	SEAL
	3	9P9211	2	SPRING
B		8P9494	4	SHIM
	4	8P9128	2	SPOOL ASSEM. (EACH INCLUDES)
		8P9490	1	SPOOL
		8M4409	1	RETAINER
		5P7073	1	RING
		8M2538	1	POPPET
	5	8P9489	1	SLEEVE
	6	5M9548	1	SPRING
	7	3T6454	2	GUIDE ASSEM.
	8	9G9637	2	PISTON ASSEM. (EACH INCLUDES)
		3T6408	1	PISTON
	9	7G7475	1	SPRING
	10	8H1037	1	RING
	11	9G9636	1	STEM
	12	2H3429	8	RING
	13	9P9181	4	DOWEL
	14	9P9203	2	SHAFT
	15	9H223	2	SEAL
	16	8B4132	4	BEARING
	17	8P9463	4	SPACER
	18	3T9639	2	YOKE
		2A4639	2	BOLT
		5M2894	2	WASHER
	19	4K8603	3	PLUG
	20	9N1646	2	SPRING
		SMHS8071	1	FORM (INSTALLING STEERING BRAKE CONTROL VALVE GROUP)

B USE AS REQUIRED

310108

310108 P

4102 **9G9643 VALVE GP-CONTROL-PART 3 OF 3**

Type 1. S/N 53Y1340-3484

Part Of 6P9156 Control-Steering Clutch & Brake

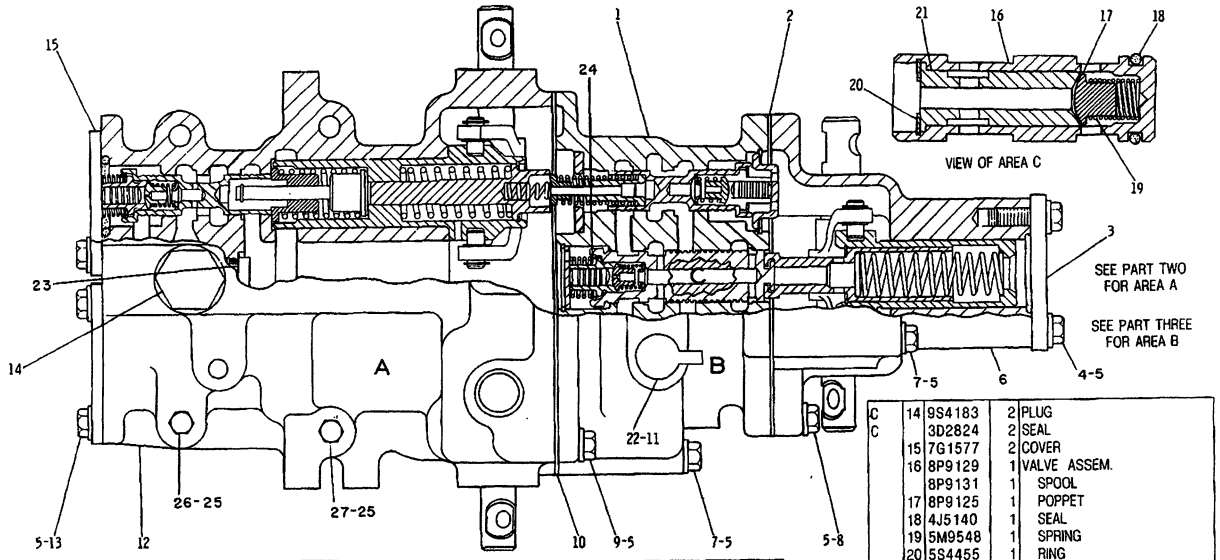

NOTE	REF NO	PART NUMBER	QTY	DESCRIPTION
	1	9P9228	1	BODY
	2	9P9212	1	GASKET
	3	5H2830	1	COVER
	4	0S1594	2	BOLT
	5	5M2894	21	WASHER
	6	9G0006	1	BODY
	7	0T0065	6	BOLT
	8	0S1588	4	BOLT
	9	1A2029	5	BOLT
	10	9P9213	1	GASKET
	11	6V3965	2	NIPPLE ASSEM.
		3J1907	2	SEAL
C	12	6T4367	1	BODY
	13	0L1351	4	BOLT
C	14	9S4183	2	PLUG
C		3D2824	2	SEAL
	15	7G1577	2	COVER
	16	8P9129	1	VALVE ASSEM.
		8P9131	1	SPOOL
	17	8P9125	1	POPPET
	18	4J5140	1	SEAL
	19	5M9548	1	SPRING
	20	5S4455	1	RING
	21	8P9130	1	SLEEVE
	22	6V852	2	CAP
C	23	9S8006	1	PLUG
C		2M9780	1	SEAL
C	24	8P9494	1	SHIM
C	25	5P8245	4	WASHER
C	26	2B2006	2	BOLT
C	27	1D4572	2	BOLT

C \ INDICATES CHANGE

317528

317528 P

4102 **9G9643 VALVE GP-CONTROL-PART 1 OF 3**

Type 2. S/N 53Y1340-3484

Part Of 6P9156 Control-Steering Clutch & Brake

NOTE	REF NO	PART NUMBER	QTY	DESCRIPTION
	1	9G9638	2	GUIDE ASSEM.
	2	2M1168	3	SLUG
	3	9P9206	2	STOP

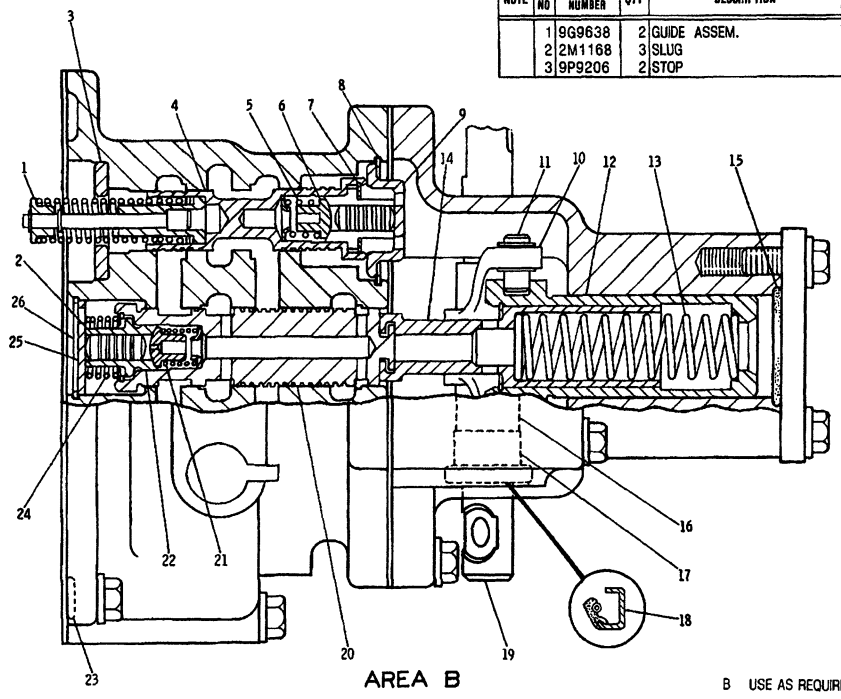

AREA B

B USE AS REQUIRED

	4	8P9128	2	SPOOL ASSEM. (EACH INCLUDES)
		8P9490	1	SPOOL
		8M2538	1	POPPET
		8M4409	1	RETAINER
	5	5M9548	1	SPRING
	6	8P9489	1	SLEEVE
	7	5P7073	1	RING
	8	23455	2	RING
	9	9P9205	2	RETAINER
	10	9P9179	1	YOKE
		2A4639	1	BOLT
		5M2894	1	WASHER
	11	9P9181	2	DOWEL
		2H3429	4	RING
	12	3T6593	1	PISTON ASSEM.
		9P9188	1	PISTON
		5P7234	1	RING
	13	3T6367	1	SPRING
	14	9P9189	1	PISTON
	15	8M4986	1	SEAL
	16	8P9463	2	SPACER
	17	8B4132	2	BEARING
	18	9H223	2	SEAL
	19	9P9208	1	SHAFT
	20	8P9717	1	SPOOL ASSEM.
		8P9716	1	SPOOL
		8M4409	1	RETAINER
		8M2538	1	POPPET
		5P7073	1	RING
	21	5M9548	1	SPRING
	22	8P9489	1	SLEEVE
	23	8M4988	4	SEAL
	24	9P9186	1	SPRING
B		8P9494	1	SHIM
	25	8P9145	1	SPACER
	26	1L3768	1	RING

310107

310107 P

4102 **9G9643 VALVE GP-CONTROL-PART 2 OF 3**

Type 2. S/N 53Y1340-3484

Part Of 6P9156 Control-Steering Clutch & Brake

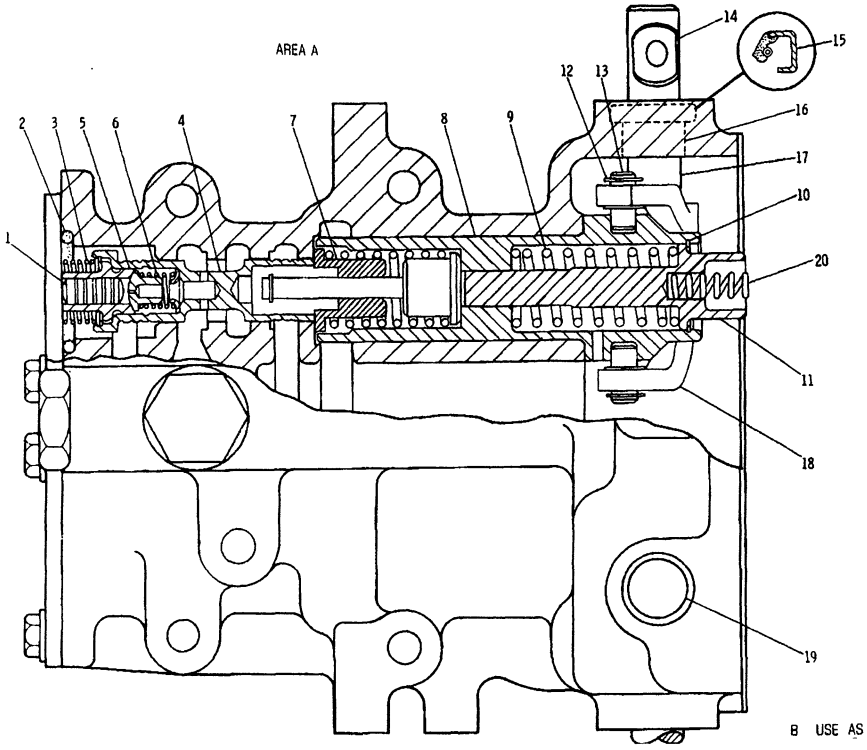

NOTE	REF NO	PART NUMBER	QTY	DESCRIPTION
	1	2M1168	2	SLUG
	2	5M5860	2	SEAL
	3	9P9211	2	SPRING
CB		8P9494	8	SHIM
	4	8P9128	2	SPOOL AS.
				(EACH INCLUDES)
		8P9490	1	SPOOL
		8M4409	1	RETAINER
		5P7073	1	RING
		8M2538	1	POPPET
	5	8P9489	1	SLEEVE
	6	5M9548	1	SPRING
	7	3T6454	2	GUIDE AS.
	8	9G9637	2	PISTON AS.
				(EACH INCLUDES)
		3T6408	1	PISTON
	9	7G7475	1	SPRING
	10	8H1037	1	RING
	11	9G9636	1	STEM
	12	2H3429	8	RING
	13	9P9181	4	DOWEL
	14	9P9203	2	SHAFT
	15	9H223	2	SEAL
	16	8B4132	4	BEARING
	17	8P9463	4	SPACER
	18	3T9639	2	YOKE
		2A4639	2	BOLT
		5M2894	2	WASHER
	19	4K8603	3	PLUG
	20	9N1646	2	SPRING
		SMHS8071	1	FORM (INSTALLING STEERING BRAKE CONTROL VALVE GROUP)

B USE AS REQUIRED C INDICATES CHANGE 319745

319745 P

4102 **9G9643 VALVE GP-CONTROL-PART 3 OF 3**

Type 2. S/N 53Y1340-3484

Part Of 6P9156 Control-Steering Clutch & Brake

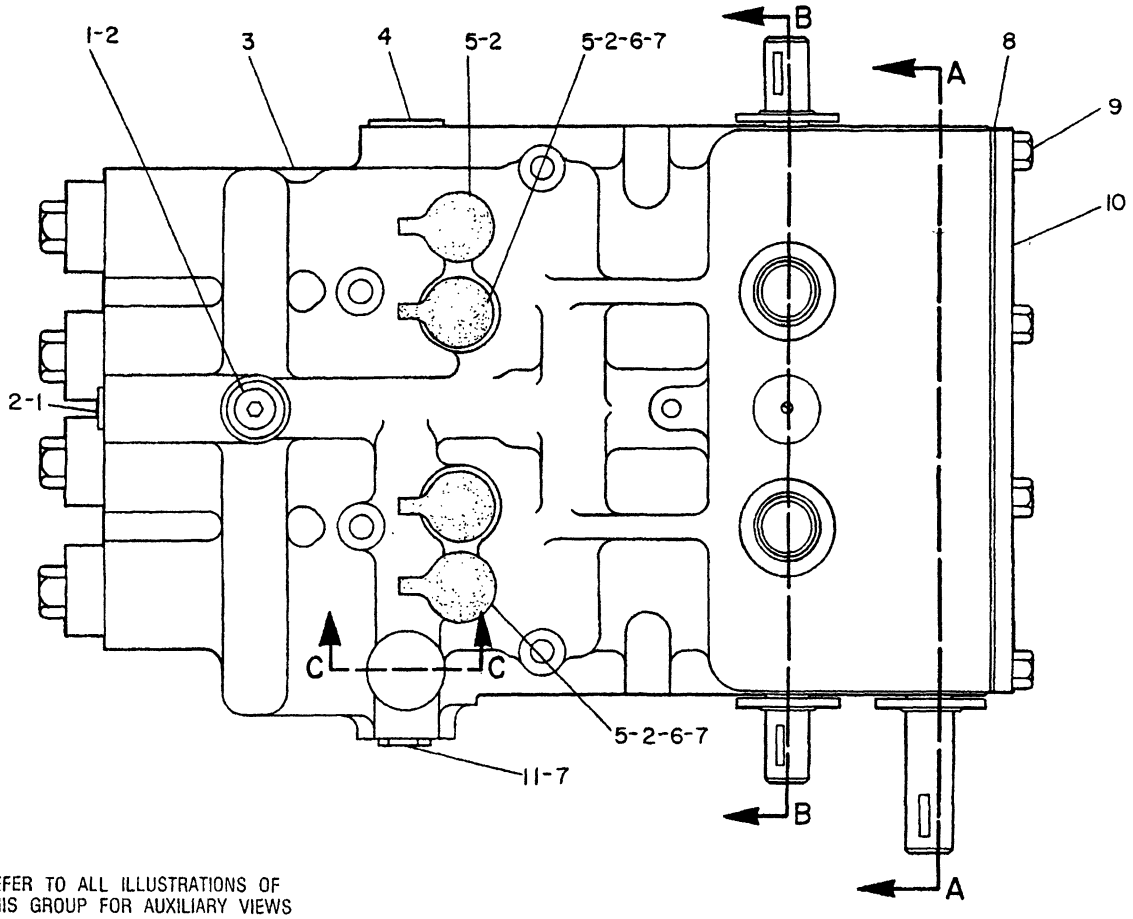

REFER TO ALL ILLUSTRATIONS OF
THIS GROUP FOR AUXILIARY VIEWS

NOTE	REF NO	PART NUMBER	QTY	PART NAME
	1	9S4191	3	PLUG-O-RING
	2	3J1907	7	SEAL-O-RING 11.89MM(.468IN.)I.D.
	3	6T6058	1	BODY-CONTROL
	4	9S8008	1	PLUG-O-RING
		3D2824	1	SEAL-O-RING
	5	6V0852	4	CAP-DUST
		6V3965	4	NIPPLE AS
	6	5P6944	2	ADAPTER-STRAIGHT THREAD
	7	3K0360	3	SEAL-O-RING 16.33MM(6.44IN.)I.D.
	8	3T6466	1	GASKET
	9	OL1351	10	BOLT
	10	3T6465	1	COVER
	11	9S8005	1	PLUG-O-RING

B-453857 EP

4120 **6T1171 VALVE GP-CONTROL-PART 1 OF 3**

S/N 53Y3485-Up

Part Of 7T2615 Control-Steering Clutch & Brake

STEERING CLUTCHES AND BRAKES

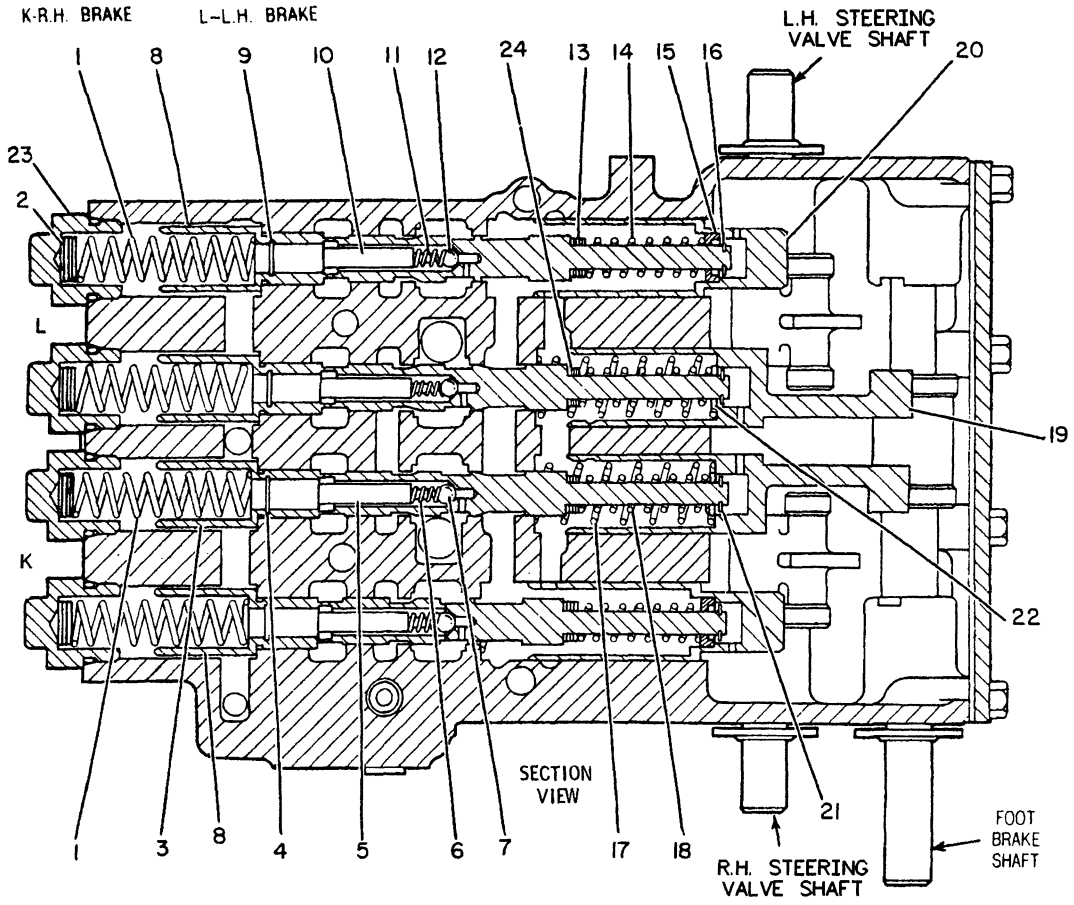

NOTE	REF NO	PART NUMBER	QTY	PART NAME
	1	7T1112	4	SPRING (OUTER)
CB	2	5M9624	16	SPACER .26MM(.010IN)THK.
CB		5M9623	10	SPACER .92MM(.036IN)THK.
CB		5M9622	14	SPACER 1.58MM(.062IN)THK.
	3	7T1114	2	SPOOL AS (BRAKE) (EACH INCLUDES)
		7T1115	1	SPOOL
	4	1S1638	1	RING-RETAINING
	5	6T1310	1	SEAT
	6	4M2381	1	SPRING
	7	4B9880	1	BALL
C	8	9W5606	2	SPOOL AS (EACH INCLUDES)
		7T1117	1	SPOOL
	9	1S1638	1	RING-RETAINING
	10	6T1310	1	SEAT
	11	4M2381	1	SPRING
	12	4B9880	1	BALL
B	13	7G3046	2	SHIM
B		7G3177	5	SHIM
	14	7T1118	1	SPRING
	15	9W5605	1	RETAINER
	16	6L8598	1	RING-RETAINING
C	17	3P3202	2	SPRING (OUTER)
C	18	7T8568	2	SPRING (INNER)
	19	3T0646	2	PLUNGER-BRAKE
	20	3T0647	2	PLUNGER-CLUTCH
C	21	6L8598	2	RING-RETAINING
C	22	6T8248	2	WASHER
	23	7T1111	4	PLUG-O-RING
		7M8485	4	SEAL-O-RING
CB	24	7G3046	4	SHIM
CB		7G3177	4	SHIM

B-USE AS REQUIRED
C-CHANGE FROM PREVIOUS TYPE

R-518981 EP

4120 **6T1171 VALVE GP-CONTROL-PART 2 OF 3**

S/N 53Y3485-Up

Part Of 7T2615 Control-Steering Clutch & Brake

STEERING CLUTCHES AND BRAKES

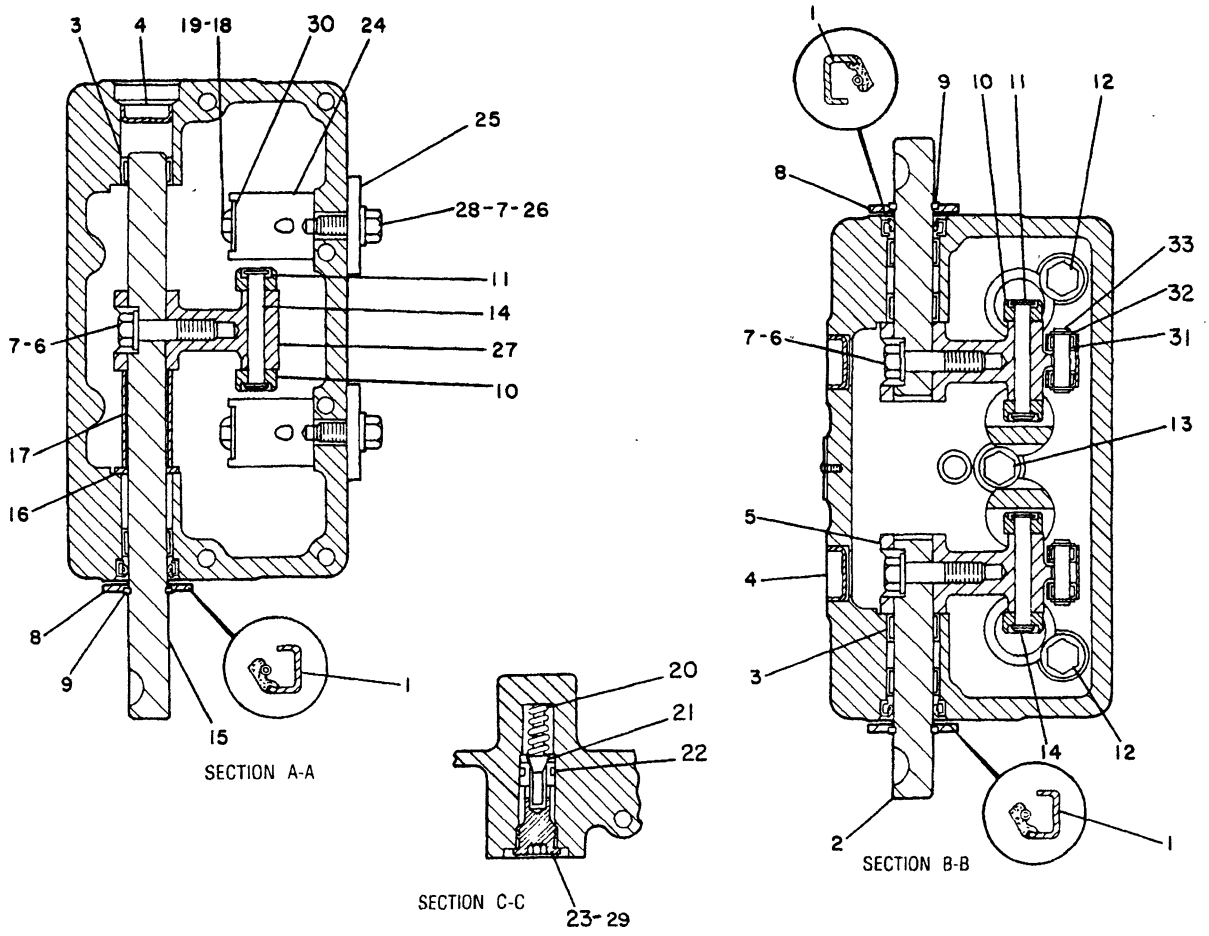

NOTE	REF NO	PART NUMBER	QTY	PART NAME
	1	9H0223	3	SEAL-LIP
	2	7G3036	2	SHAFT-GOVERNOR CONTROL
	3	8B4132	6	BEARING-NEEDLE
	4	3B0623	3	PLUG-CUP
	5	7T4623	2	LEVER-CAM
	6	2A4639	3	BOLT
	7	5M2894	5	WASHER
	8	9M8186	3	WASHER
	9	3S7005	3	LOCKRING
	10	3T6519	6	ROLLER
	11	3P3547	3	RING-RETAINING
	12	1A9579	2	BOLT
		1Y0462	2	WASHER
	13	5B5620	1	BOLT
		6T0861	1	RETAINER
	14	3T6521	3	PIN
	15	7G3035	1	SHAFT-GOVERNOR CONTROL
	16	6V7607	1	WASHER-HARD
	17	3T6219	1	SPACER
	18	0S1618	2	BOLT
	19	9W1544	2	STOP
	20	4J6555	1	SPRING
C	21	6Y2336	1	POPPET
	22	8M5127	1	SEAL-O-RING
	23	3T5681	1	SEAT
	24	7T4556	2	BLOCK
		2A3348	4	DOWEL
	25	7T7120	2	PLATE
		8M5249	2	SEAL-O-RING
	26	8M8157	2	SEAL
	27	3T6520	1	LEVER
	28	2A4639	2	BOLT
	29	3K0360	1	SEAL-O-RING
	30	7T4627	2	SPRING AS (EACH INCLUDES)
	31	6V5701	2	BEARING-NEEDLE
	32	3G3916	2	RING-RETAINING
	33	6T9818	1	PIN

C-CHANGE FROM PREVIOUS TYPE

B-453859 EP

4120 **6T1171 VALVE GP-CONTROL-PART 3 OF 3**

S/N 53Y3485-Up

Part Of 7T2615 Control-Steering Clutch & Brake

MEMORANDA

CHASSIS AND UNDERCARRIAGE

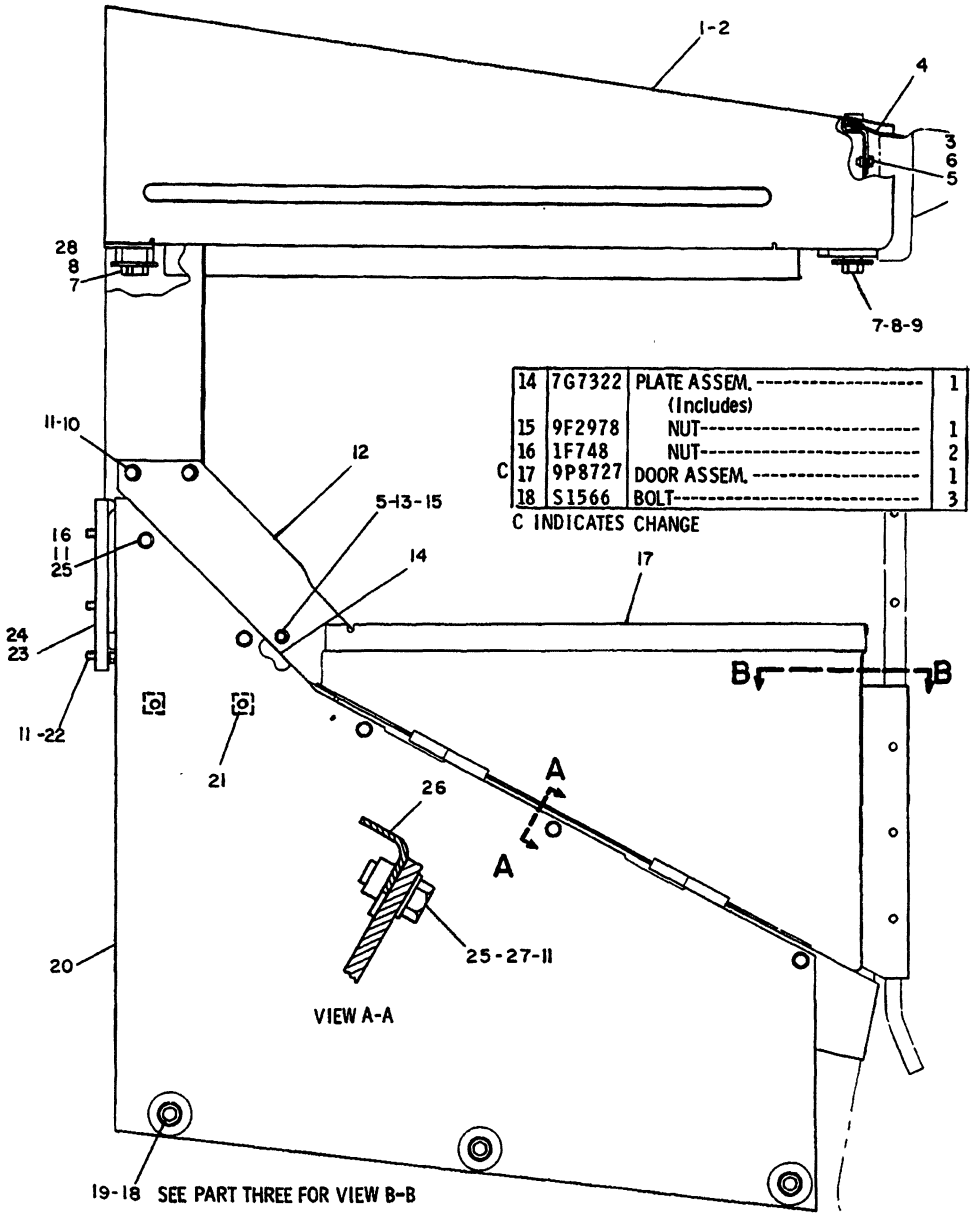

14	7G7322	PLATE ASSEM. (Includes)	1
15	9F2978	NUT	1
16	1F748	NUT	2
C 17	9P8727	DOOR ASSEM.	1
18	S1566	BOLT	3

C INDICATES CHANGE

REF. NO.	PART NUMBER	DESCRIPTION	QTY.
1	9P8680	HOOD ASSEM. (Includes)	1
2	9F2978	NUT--9.52mm(.375 in.)I. D.	8
3	1F748	NUT--12.7 mm(.5 in.)I. D.	2
4	9G7025	BAFFLE ASSEM.	1
5	S509	BOLT	5
6	5M2894	WASHER	4
7	2A1538	BOLT	4
8	2G8742	WASHER	4
9	9G8634	SLIDE	2
10	S1620	BOLT	2
11	5P8245	WASHER	17
12	3T8361	PLATE	1
13	5P1075	WASHER	1

19	5P8247	WASHER	3
20	9P8706	PLATE ASSEM. (Includes)	1
21	1F748	NUT	2
22	S1585	BOLT	10
23	9P8719	SUPPORT ASSEM. (Includes)	1
24	9F2978	NUT	2
25	6H1717	BOLT	5
26	7G7328	PLATE ASSEM. (Includes)	1
27	1F748	NUT	3
28	2V1817	SPACER	2

303263 P

7251 **6P7325 HOOD & GUARD GP-RIGHT SIDE-PART 1 OF 3**
S/N 53Y1-2564

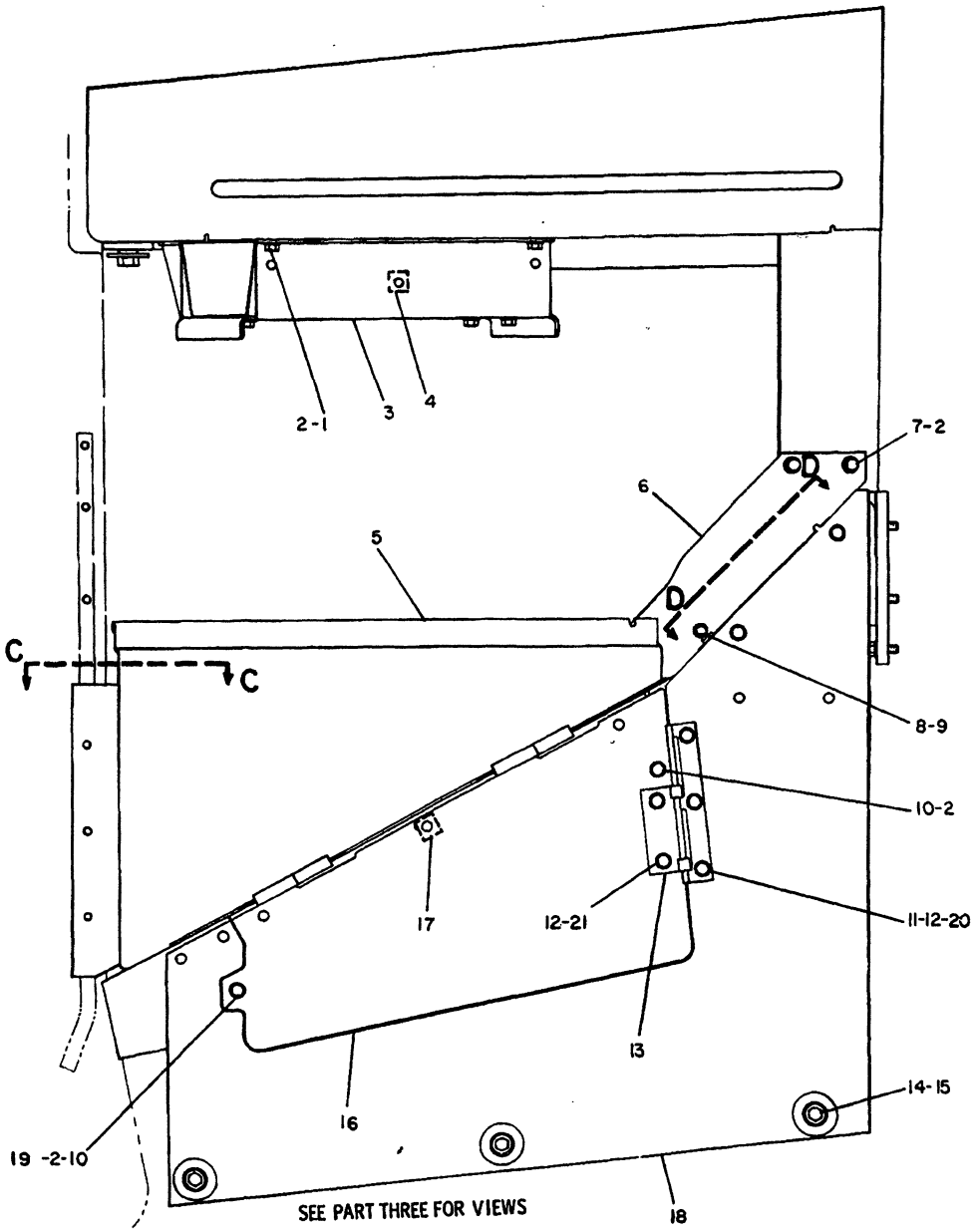

	REF. NO.	PART NUMBER	DESCRIPTION	QTY.
	1	S1585	BOLT	4
	2	5P8245	WASHER	8
	3	9G652	PLATE ASSEM. (Includes)	1
	4	9F2978	NUT	3
C	5	9P8726	DOOR ASSEM.	1
	6	3T8362	PLATE	1
	7	S1620	BOLT	2
	8	S509	BOLT	1
	9	5P1075	WASHER	1
	10	6H1717	BOLT	2
C	11	1A2029	BOLT	3
	12	5M2894	WASHER	5
	13	3T8268	HINGE ASSEM.	1
	14	S1566	BOLT	3
	15	5P8247	WASHER	3
	16	3T8265	DOOR ASSEM. (Includes)	1
	17	1F748	NUT	3
	18	9P8707	PLATE ASSEM. (Includes)	1
	19	1F748	NUT	5
	20	9F2978	NUT	3
C	21	1A2029	BOLT--28.57mm(1.12 in.)long	2
		S509	BOLT---19.05mm(.75 in.)long	2

C INDICATES CHANGE

303264

303264 P

7251 **6P7325 HOOD & GUARD GP-LEFT SIDE-PART 2 OF 3**

S/N 53Y1-2764

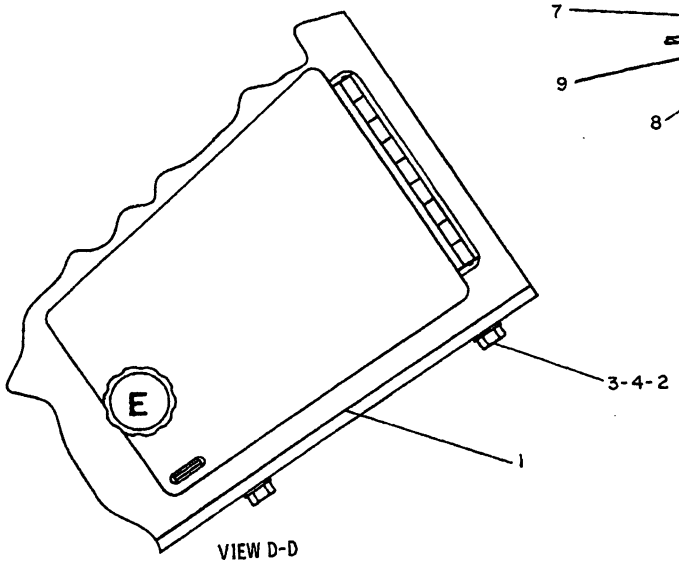

VIEW D-D

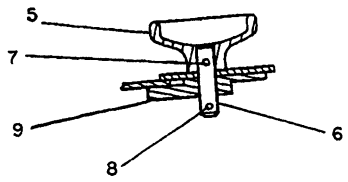

VIEW OF AREA E

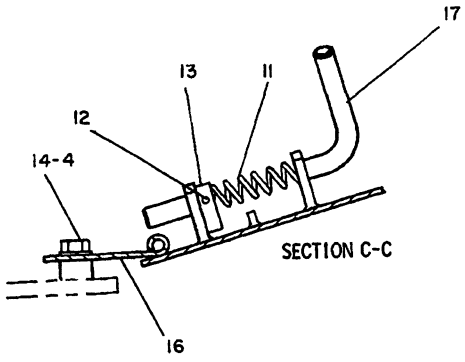

SECTION C-C

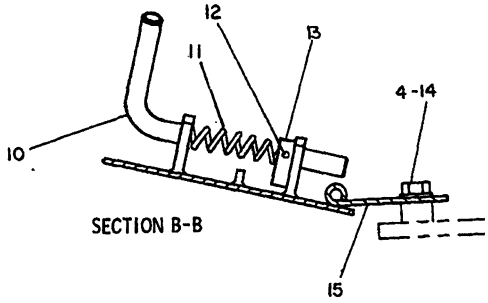

SECTION B-B

REF. NO.	PART NUMBER	DESCRIPTION	QTY.
1	7G7325	PLATE ASSEM. (Includes)	1
2	1F748	NUT	2
3	6H1717	BOLT	2
4	5P8245	WASHER	8
5	7S2043	KNOB ASSEM. (Includes)	1
	2D4295	KNOB	1
6	3H6660	PIN	1
7	7S2042	STUD	1
8	4H1641	PIN	1
9	9S8230	PLATE ASSEM.	1

10	2M6095	HANDLE	1
11	6B533	SPRING	2
12	6H3956	PIN	2
13	1M9587	PLATE	2
14	S1620	BOLT	6
15	7G7320	PLATE	1
16	7G7319	PLATE	1
17	2M6096	HANDLE	1

235059 P

7251 **6P7325 HOOD & GUARD GP-PART 3 OF 3**
S/N 53Y1-2764

CHASSIS AND UNDERCARRIAGE

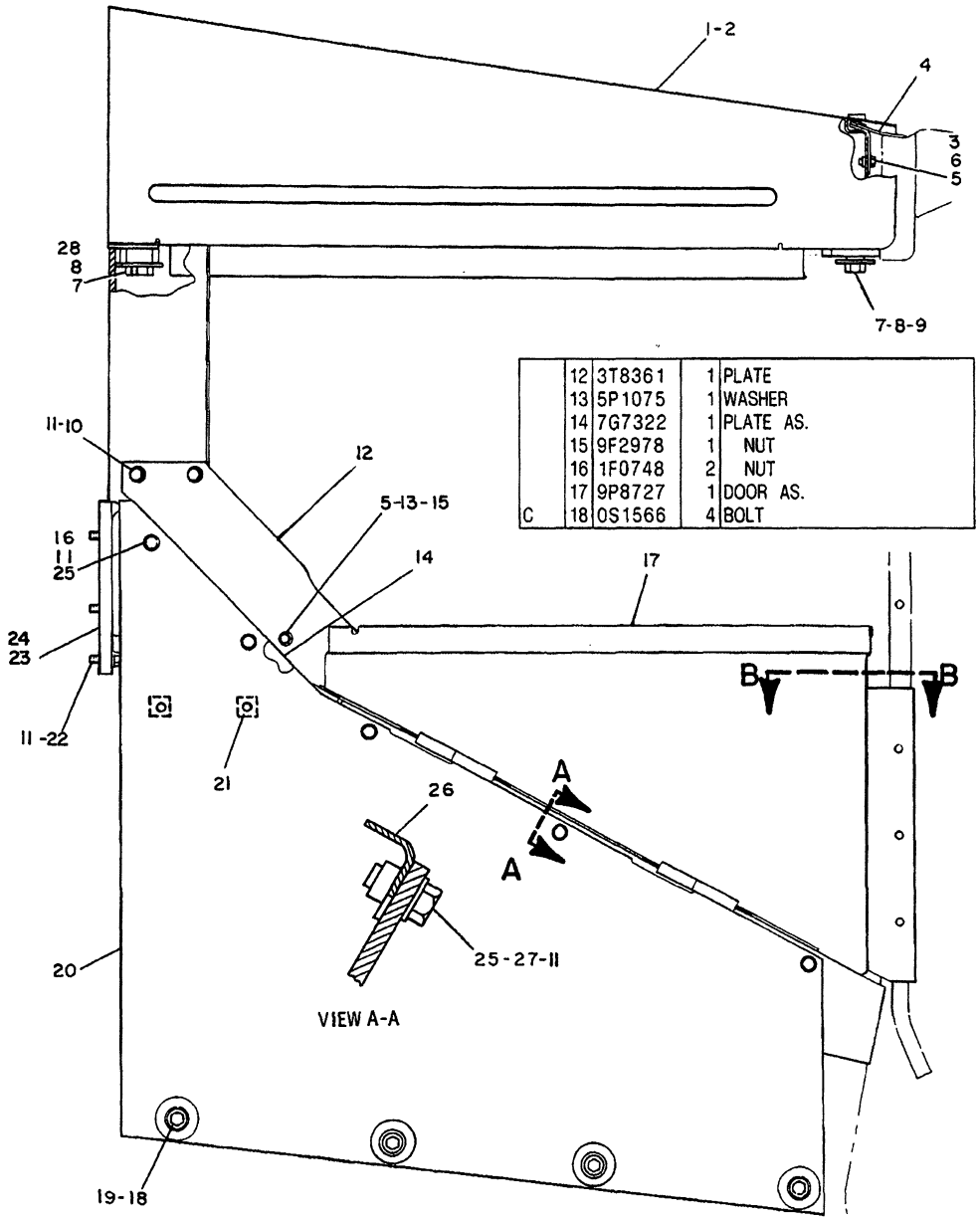

	12	3T8361	1	PLATE
	13	5P1075	1	WASHER
	14	7G7322	1	PLATE AS.
	15	9F2978	1	NUT
	16	1F0748	2	NUT
	17	9P8727	1	DOOR AS.
C	18	0S1566	4	BOLT

NOTE	REF NO	PART NUMBER	QTY	DESCRIPTION
	1	9P8680	1	HOOD AS.
	2	9F2978	8	NUT 9.52MM(.375IN)I.D.
	3	1F0748	2	NUT 12.7MM(.5IN)I.D.
	4	9G7025	1	BAFFLE AS.
	5	0S0509	5	BOLT
	6	5M2894	4	WASHER
	7	2A1538	4	BOLT
	8	2G8742	4	WASHER
	9	9G8634	2	SLIDE
	10	0S1620	2	BOLT
	11	5P8245	17	WASHER

REFER TO ALL PARTS OF THIS GROUP FOR AUXILIARY VIEWS

C	19	5P8247	4	WASHER
C	20	6T7993	1	PLATE AS.
	21	1F0748	2	NUT
	22	0S1585	10	BOLT
	23	9P8719	1	SUPPORT AS.
	24	9F2978	2	NUT
	25	6H1717	5	BOLT
	26	7G7328	1	PLATE AS.
	27	1F0748	3	NUT
	28	2V1817	2	SPACER

C INDICATES CHANGE

317138

317138 P

7251 **6P7325 HOOD & GUARD GP-RIGHT SIDE-PART 1 OF 3**
S/N 53Y2765-3245

CHASSIS AND UNDERCARRIAGE

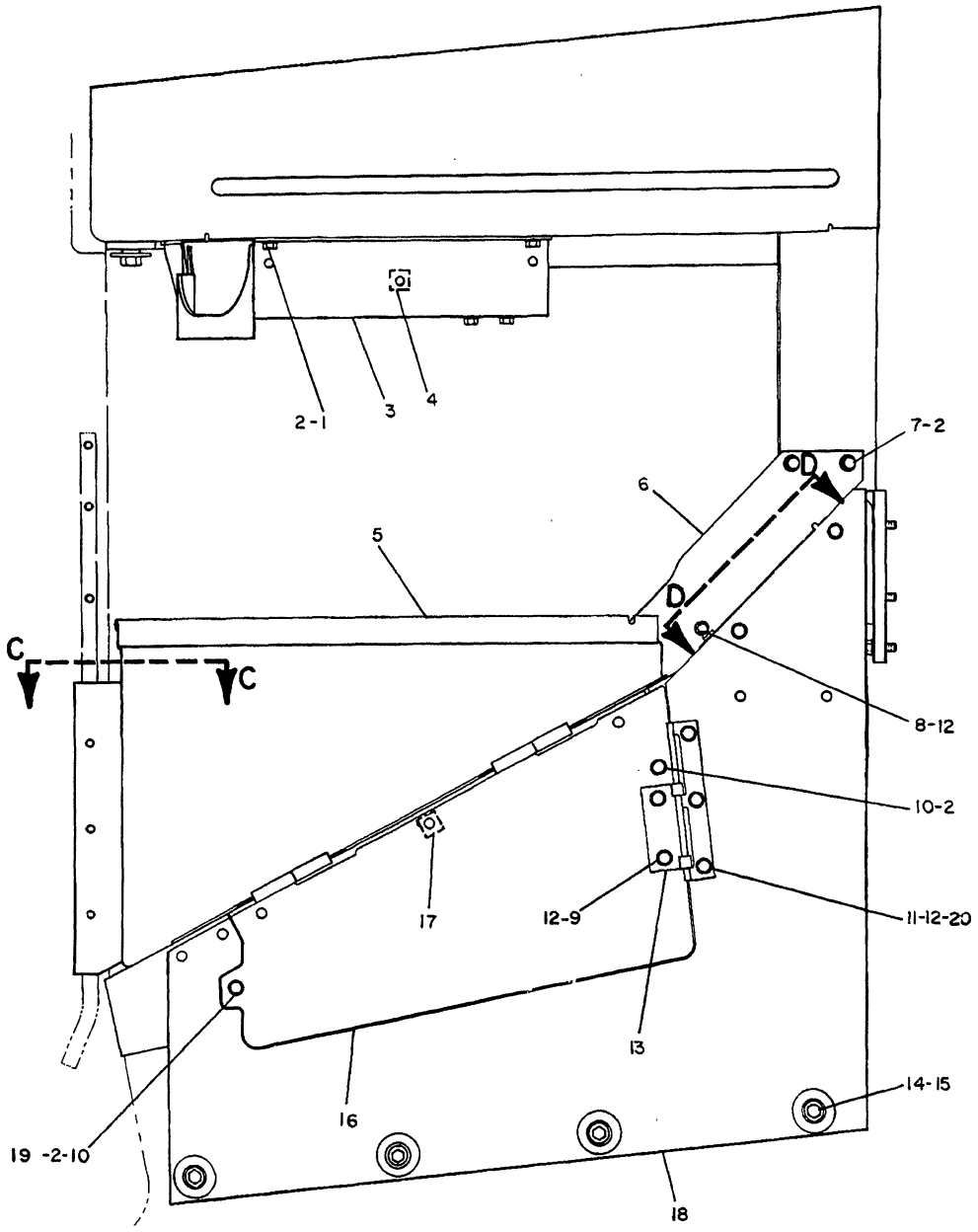

NOTE	REF NO	PART NUMBER	QTY	DESCRIPTION
	1	0S1585	4	BOLT
	2	5P8245	8	WASHER
C	3	6T4912	1	PLATE AS.
	4	9F2978	3	NUT
	5	9P8726	1	DOOR AS.
	6	3T8362	1	PLATE
	7	0S1620	2	BOLT
	8	0S0509	1	BOLT
	9	1A2029	2	BOLT 28.57MM(1.12IN)LG
		0S0509	2	BOLT 19.05MM(.75IN)LG
	10	6H1717	2	BOLT
	11	1A2029	3	BOLT
C	12	5P1075	6	WASHER
	13	3T8268	1	HINGE AS.
C	14	0S1566	4	BOLT
C	15	5P8247	4	WASHER
	16	3T8265	1	DOOR AS.
	17	1F0748	3	NUT
C	18	6T7994	1	PLATE AS.
	19	1F0748	5	NUT
	20	9F2978	3	NUT

C INDICATES CHANGE

317139

317139 P

7251

6P7325 HOOD & GUARD GP-LEFT SIDE-PART 2 OF 3

S/N 53Y2765-3245

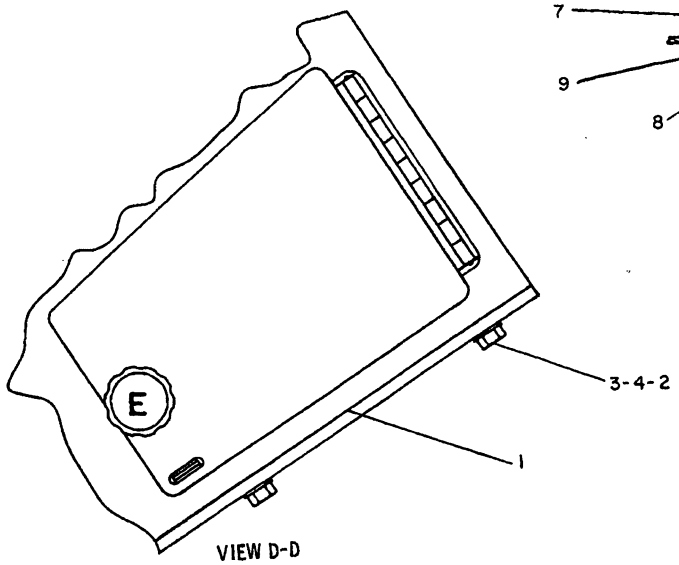

VIEW D-D

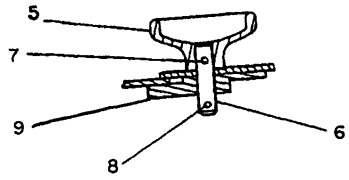

VIEW OF AREA E

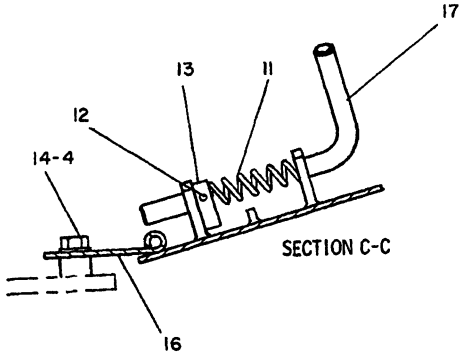

SECTION C-C

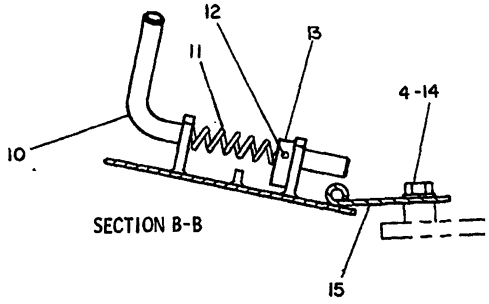

SECTION B-B

REF. NO.	PART NUMBER	DESCRIPTION	QTY.
1	7G7325	PLATE ASSEM. (Includes)	1
2	1F748	NUT	2
3	6H1717	BOLT	2
4	5P8245	WASHER	8
5	7S2043	KNOB ASSEM. (Includes)	1
	2D4295	KNOB	1
6	3H6660	PIN	1
7	7S2042	STUD	1
8	4H1641	PIN	1
9	9S8230	PLATE ASSEM.	1
10	2M6095	HANDLE	1
11	6B533	SPRING	2
12	6H3956	PIN	2
13	1M9587	PLATE	2
14	S1620	BOLT	6
15	7G7320	PLATE	1
16	7G7319	PLATE	1
17	2M6096	HANDLE	1

235059

235059 P

7251 **6P7325 HOOD & GUARD GP-PART 3 OF 3**
S/N 53Y2765-3245

CHASSIS AND UNDERCARRIAGE

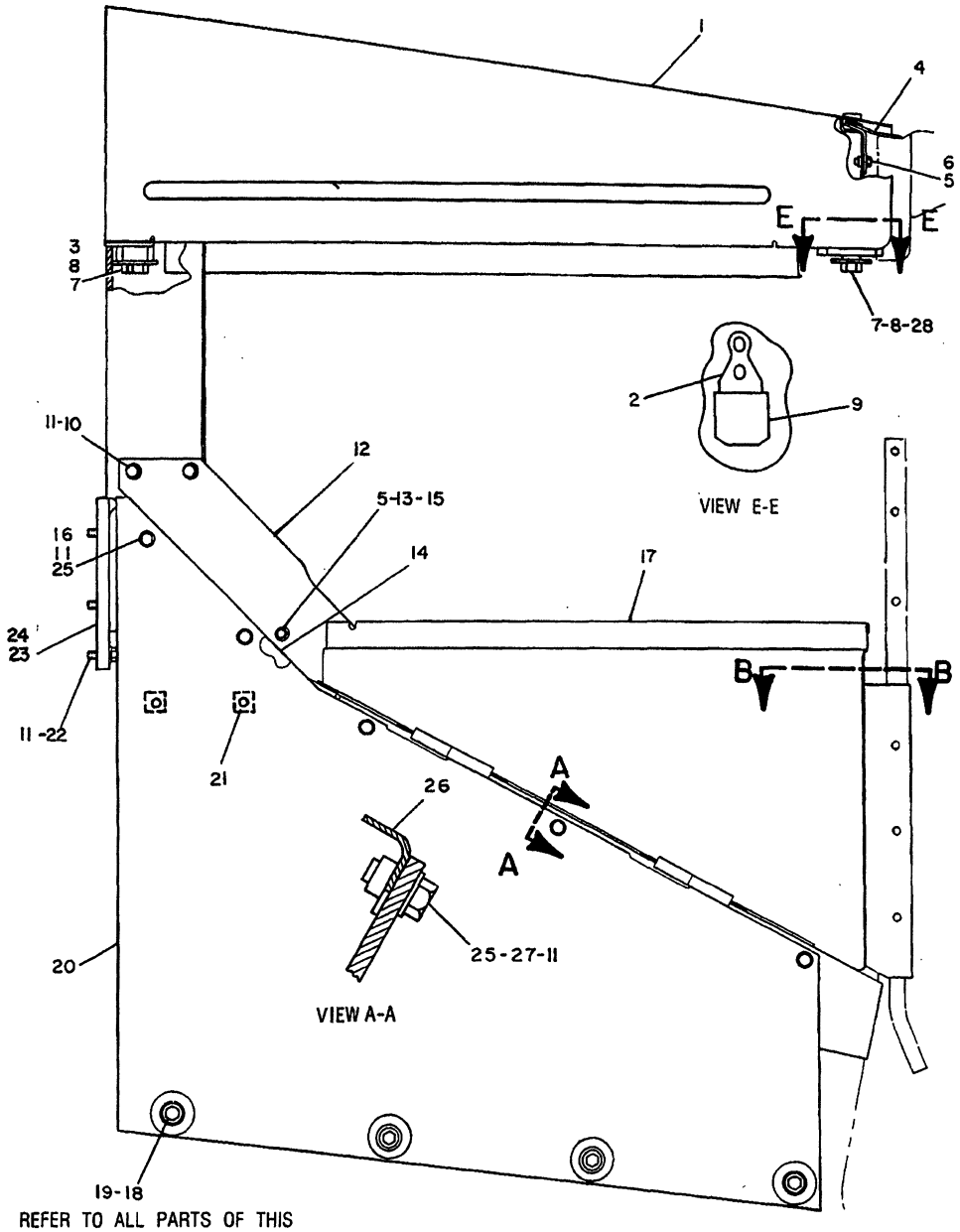

REFER TO ALL PARTS OF THIS GROUP FOR AUXILIARY VIEWS

NOTE	REF NO	PART NUMBER	QTY	DESCRIPTION
C	1	7T1774	1	HOOD AS.
C	2	7T1777	2	PLATE
	3	2V1817	2	SPACER
	4	9G7025	1	BAFFLE AS.
	5	0S0509	5	BOLT
C	6	5P1075	4	WASHER
C	7	0L1329	4	BOLT
C	8	5P8245	4	WASHER
C	9	7T1776	2	SLIDE
	10	0S1620	2	BOLT
	11	5P8245	17	WASHER
	12	3T8361	1	PLATE
	13	5P1075	1	WASHER
	14	7G7322	1	PLATE AS.
	15	9F2978	1	NUT
	16	1F0748	2	NUT
	17	9P8727	1	DOOR AS.
	18	0S1566	4	BOLT
	19	5P8247	4	WASHER
	20	6T7993	1	PLATE AS.
	21	1F0748	2	NUT
	22	0S1585	10	BOLT
	23	9P8719	1	SUPPORT AS.
	24	9F2978	2	NUT
	25	6H1717	5	BOLT
	26	7G7328	1	PLATE AS.
	27	1F0748	3	NUT
C	28	7T1778	2	PLATE

C INDICATES CHANGE.

334744 P

7251 **6P7325 HOOD & GUARD GP-RIGHT SIDE-PART 1 OF 3**
S/N 53Y3246-3510

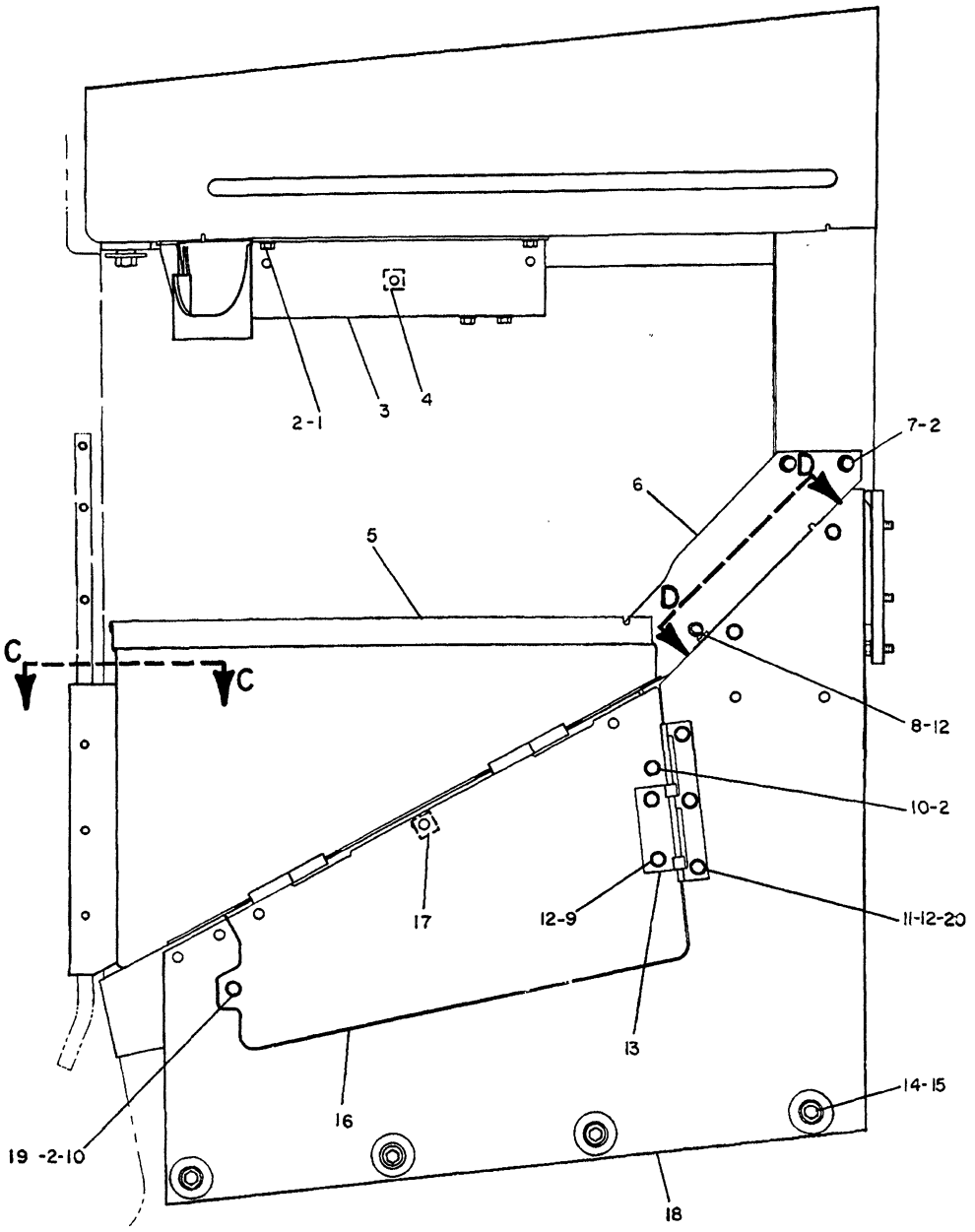

NOTE	REF NO	PART NUMBER	QTY	DESCRIPTION
	1	0S1585	4	BOLT
	2	5P8245	8	WASHER
C	3	6T4912	1	PLATE AS.
	4	9F2978	3	NUT
	5	9P8726	1	DOOR AS.
	6	3T8362	1	PLATE
	7	0S1620	2	BOLT
	8	0S0509	1	BOLT
	9	1A2029	2	BOLT 28.57MM(1.12IN)LG
		0S0509	2	BOLT 19.05MM(.75IN)LG
	10	6H1717	2	BOLT
	11	1A2029	3	BOLT
C	12	5P1075	6	WASHER
	13	3T8268	1	HINGE AS.
C	14	0S1566	4	BOLT
C	15	5P8247	4	WASHER
	16	3T8265	1	DOOR AS.
	17	1F0748	3	NUT
C	18	6T7994	1	PLATE AS.
	19	1F0748	5	NUT
	20	9F2978	3	NUT

C INDICATES CHANGE

317139

317139 P

7251 **6P7325 HOOD & GUARD GP-LEFT SIDE-PART 2 OF 3**
S/N 53Y3246-3510

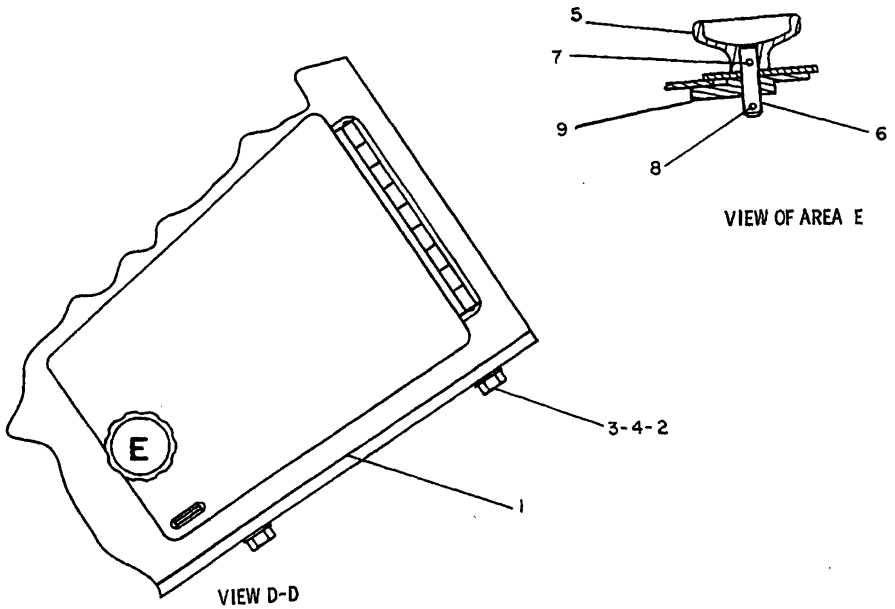

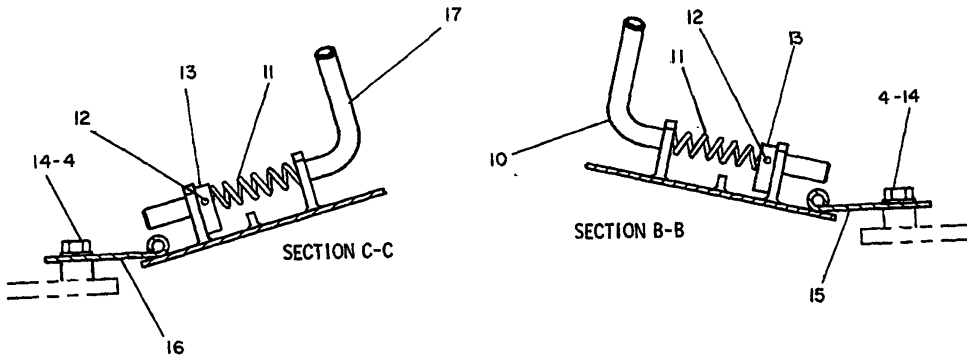

REF. NO.	PART NUMBER	DESCRIPTION	QTY.
1	7G7325	PLATE ASSEM. (Includes)	1
2	1F748	NUT	2
3	6H1717	BOLT	2
4	5P8245	WASHER	8
5	7S2043	KNOB ASSEM. (Includes)	1
	2D4295	KNOB	1
6	3H6660	PIN	1
7	7S2042	STUD	1
8	4H1641	PIN	1
9	9S8230	PLATE ASSEM.	1
10	2M6095	HANDLE	1
11	6B533	SPRING	2
12	6H3956	PIN	2
13	1M9587	PLATE	2
14	S1620	BOLT	6
15	7G7320	PLATE	1
16	7G7319	PLATE	1
17	2M6096	HANDLE	1

235059

235059 P

7251

6P7325 HOOD & GUARD GP-PART 3 OF 3

S/N 53Y3246-3510

CHASSIS AND UNDERCARRIAGE

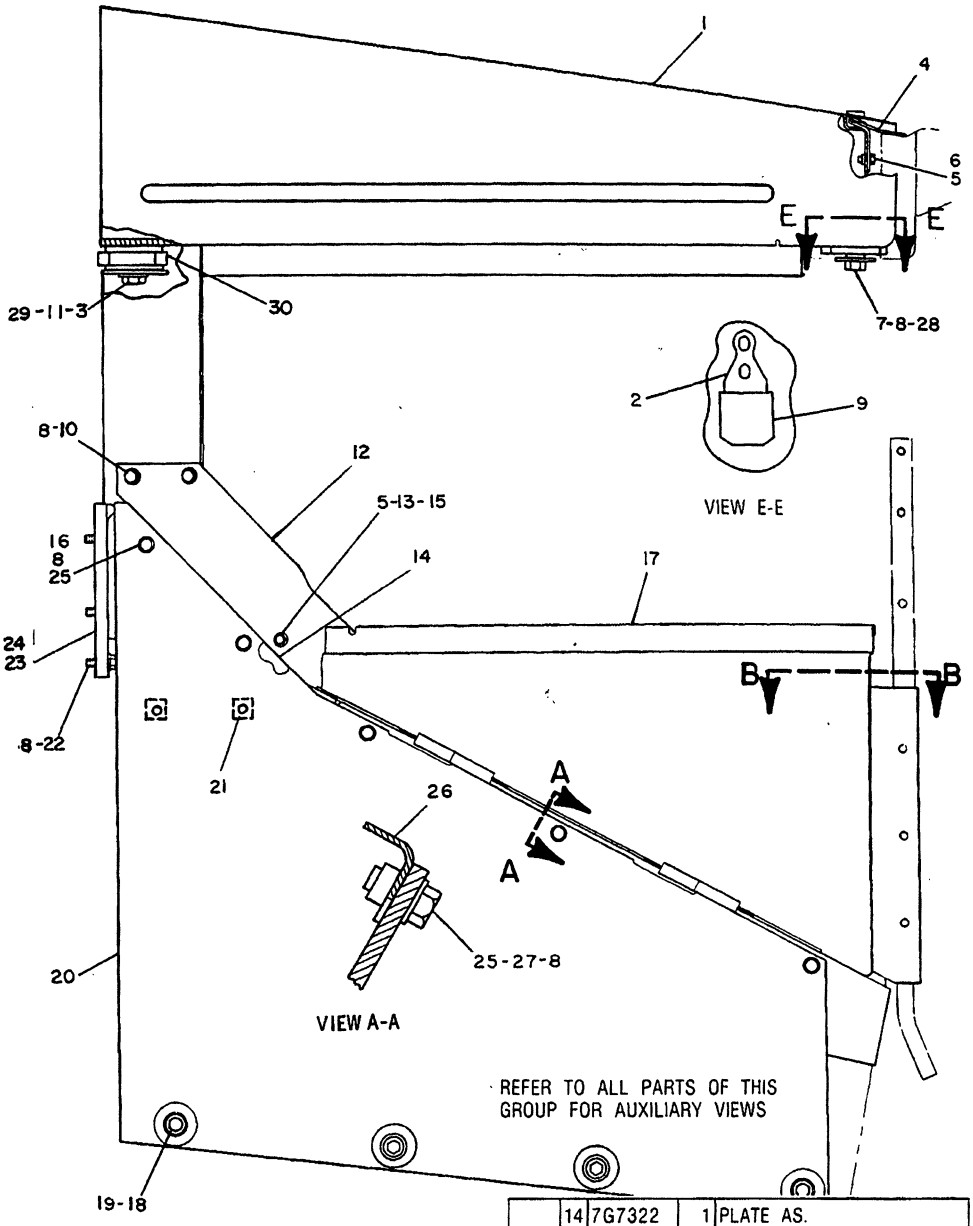

NOTE	REF NO	PART NUMBER	QTY	DESCRIPTION
	1	7T1774	1	HOOD AS.
	2	7T1777	2	PLATE
C	3	3B2968	1	BOLT
	4	9G7025	1	BAFFLE AS.
	5	0S0509	5	BOLT
	6	5P1075	4	WASHER
	7	0L1329	4	BOLT
	8	5P8245	21	WASHER
	9	7T1776	2	SLIDE
	10	0S1620	2	BOLT
C	11	5P8248	1	WASHER 36.5MM(1.44IN.)O.D.
	12	3T8361	1	PLATE
	13	5P1075	1	WASHER
	14	7G7322	1	PLATE AS.
	15	9F2978	1	NUT
	16	1F0748	2	NUT
	17	9P8727	1	DOOR AS.
	18	0S1566	4	BOLT
	19	5P8247	4	WASHER
	20	6T7993	1	PLATE AS.
	21	1F0748	2	NUT
	22	0S1585	10	BOLT
C	23	7T1775	1	SUPPORT AS.
		5H9394	1	BOSS
	24	9F2978	2	NUT
	25	6H1717	5	BOLT
	26	7G7328	1	PLATE AS.
	27	1F0748	3	NUT
	28	7T1778	2	PLATE
C	29	6P8269	1	WASHER 88MM(3.46IN.)O.D.
C	30	9P3066	2	MOUNTING

C INDICATES CHANGE

335401

335401 P

7251

6P7325 HOOD & GUARD GP-PART 1 OF 3

S/N 53Y3511-Up

CHASSIS AND UNDERCARRIAGE

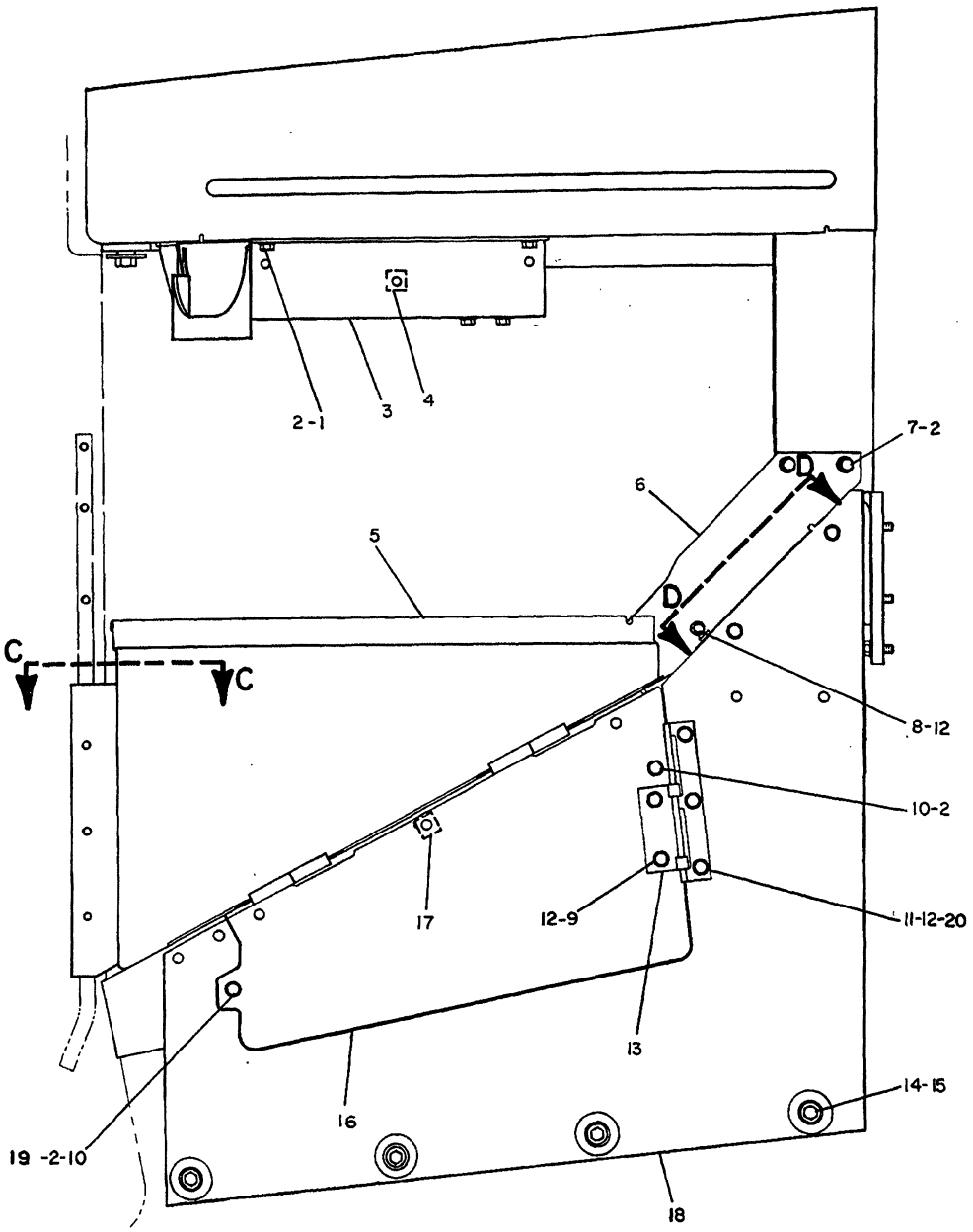

NOTE	REF NO	PART NUMBER	QTY	DESCRIPTION
	1	0S1585	4	BOLT
	2	5P8245	8	WASHER
	3	6T4912	1	PLATE AS.
	4	9F2978	3	NUT
	5	9P8726	1	DOOR AS.
	6	3T8362	1	PLATE
	7	0S1620	2	BOLT
	8	0S0509	1	BOLT
	9	1A2029	2	BOLT 28.57MM(1.12IN)LG
		0S0509	2	BOLT 19.05MM(.75IN)LG
	10	6H1717	2	BOLT
	11	1A2029	3	BOLT

REFER TO ALL PARTS OF THIS GROUP FOR AUXILIARY VIEWS

	12	5P1075	6	WASHER
	13	3T8268	1	HINGE AS.
	14	0S1566	4	BOLT
	15	5P8247	4	WASHER
	16	3T8265	1	DOOR AS.
	17	1F0748	3	NUT
	18	6T7994	1	PLATE AS.
	19	1F0748	5	NUT
	20	9F2978	3	NUT

335402

335402 P

7251

6P7325 HOOD & GUARD GP-PART 2 OF 3

S/N 53Y3511-Up

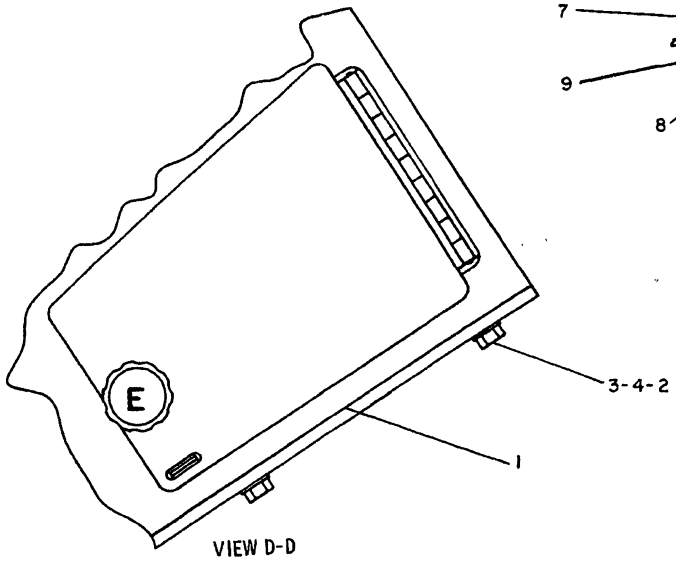

VIEW D-D

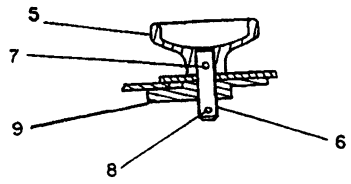

VIEW OF AREA E

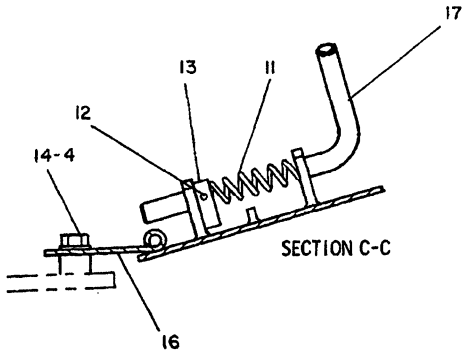

SECTION C-C

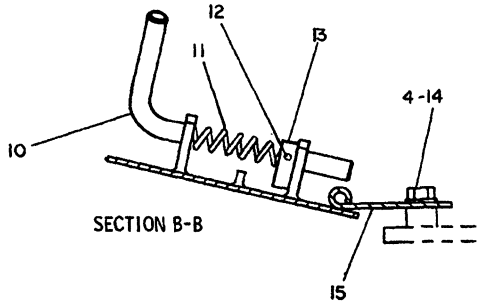

SECTION B-B

NOTE	REF NO	PART NUMBER	QTY	DESCRIPTION
	1	7G7325	1	PLATE AS.
	2	1F0748	2	NUT
	3	6H1717	2	BOLT
	4	5P8245	8	WASHER
	5	7S2043	1	KNOB AS.
		2D4295	1	KNOB
	6	3H6660	1	PIN
	7	7S2042	1	STUD
	8	4H1641	1	PIN
	9	9S8230	1	PLATE AS.
	10	2M6095	1	HANDLE
	11	6B0533	2	SPRING
	12	6H3956	2	PIN
	13	1M9587	2	PLATE
	14	0S1620	6	BOLT
C	15	7T8505	1	PLATE AS.
C	16	7T8506	1	PLATE AS.
	17	2M6096	1	HANDLE

C INDICATES CHANGE

335403

335403 P

7251 **6P7325 HOOD & GUARD GP-PART 3 OF 3**
S/N 53Y3511-Up

MEMORANDA

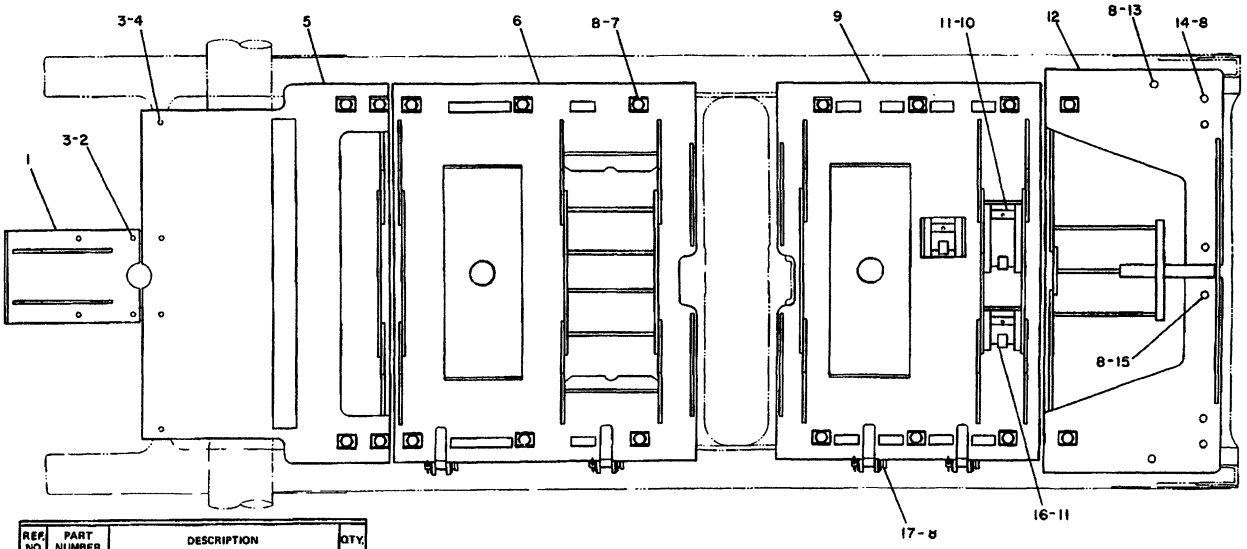

REF. NO.	PART NUMBER	DESCRIPTION	QTY.
1	7G339	GUARD ASSEM.	1
2	S1626	BOLT	4
3	5P8248	WASHER	8
4	1A458	BOLT	4
5	7G91	GUARD ASSEM.	1
6	7G11	GUARD ASSEM.	1
7	6P8829	RETAINER	18
	9F6936	BOLT	18
	1B4333	NUT	18

	REF. NO.	PART NUMBER	DESCRIPTION	QTY.
C	8	5P8250	WASHER	34
	9	7G328	GUARD ASSEM.	1
	10	7G322	PLATE ASSEM.	1
	11	S1620	BOLT	3
	12	7G282	GUARD ASSEM.	1
	13	1D4635	BOLT	2
	14	9S1363	BOLT	4
	15	1J7370	BOLT	2
	16	7G302	PLATE ASSEM.	2

REF. NO.	PART NUMBER	DESCRIPTION	QTY.
17	4S8033	PIN	4
	3B6677	COTTER PIN	4

C INDICATES CHANGE

182577

182577 P

7153 **6P7333 GUARD GP-BOTTOM**
S/N 53Y1-1399

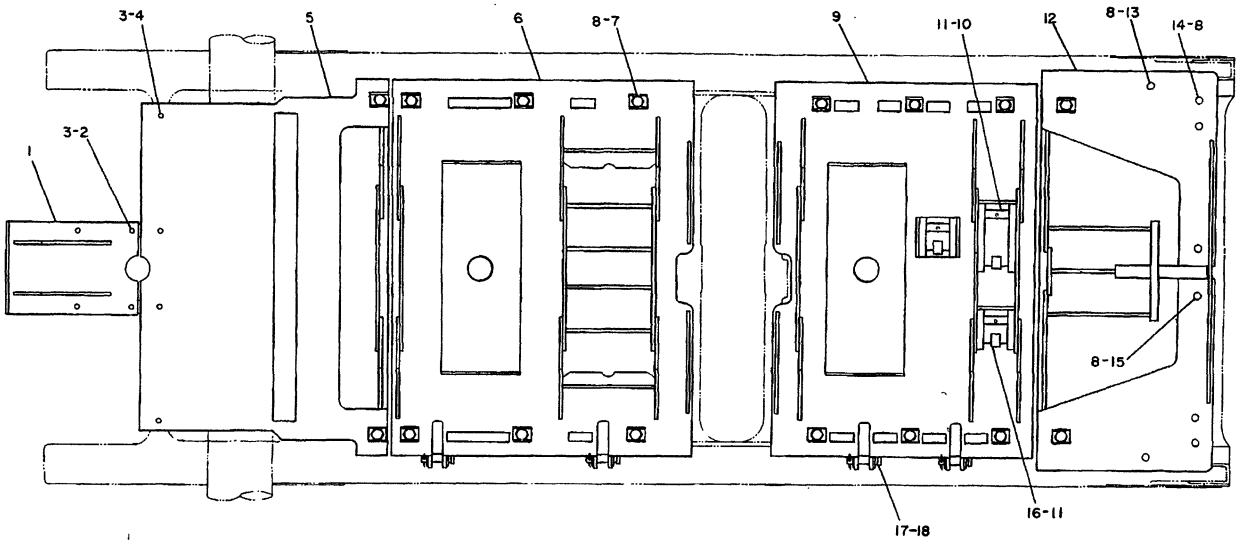

NOTE	REF NO	PART NUMBER	QTY	DESCRIPTION
	1	7G0339	1	GUARD AS.
	2	0S1626	4	BOLT
	3	5P8248	8	WASHER
	4	1A0458	4	BOLT
	5	7G0091	1	GUARD AS.
	6	7G0011	1	GUARD AS.
C	7	6P8829	16	RETAINER
C		9F6936	16	BOLT
C		2J3507	16	NUT
C	8	5D4661	24	WASHER
C	9	7G1499	1	GUARD AS.
	10	7G0322	1	PLATE AS.
	11	0S1620	3	BOLT
	12	7G0282	1	GUARD AS.
	13	1D4635	2	BOLT
	14	9S1363	4	BOLT
	15	1J7370	2	BOLT
	16	7G0302	2	PLATE AS.
C	17	6T5941	4	PIN
		3B6677	4	COTTER PIN
C	18	5P8250	4	WASHER

C INDICATES CHANGE

348364

348364 P

7153 **6P7333 GUARD GP-BOTTOM**

S/N 53Y1400-3486,3888-3889,3891-3897,3899-3901,3903-3914,3916,3918-3919,
3921-3027,3929,3931,3933-3936,3938,3940,3943-3945,3947,3949-3953,3957,3959
-3960,3963,3966,3971,3975,3977,3979-3983,3985,3987,3989-3990,3992,3993,
3995,3998,4000,4004,4013,4015,4021,4027,4036,4041,4050,4051,4053,4057,4058

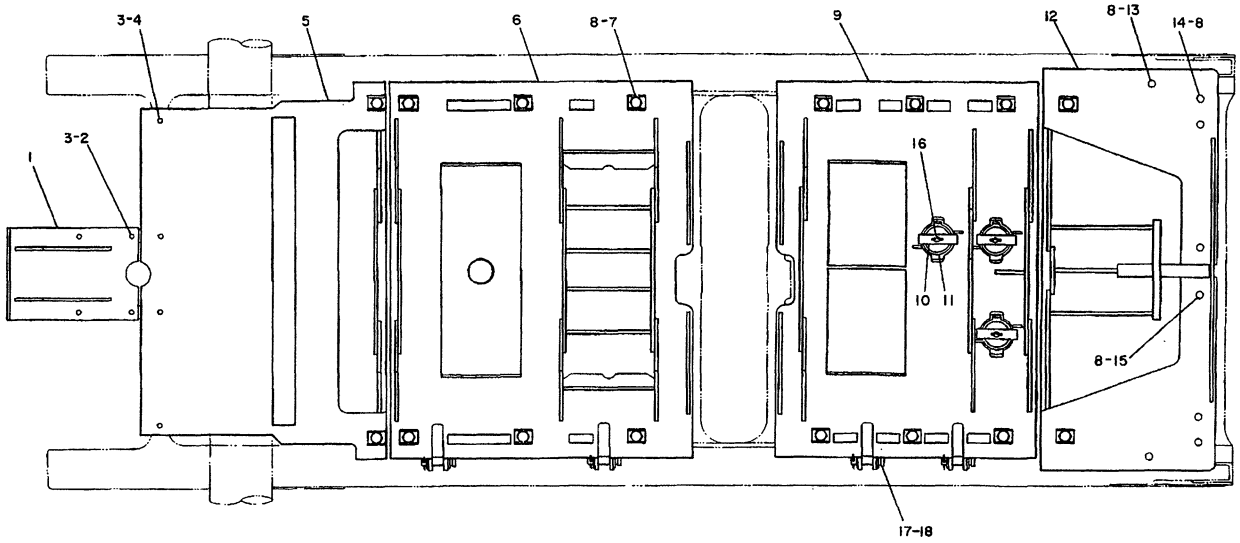

NOTE	REF NO	PART NUMBER	QTY	DESCRIPTION
	1	7G0339	1	GUARD AS.
	2	0S1626	4	BOLT
	3	5P8248	8	WASHER
	4	1A0458	4	BOLT
	5	7G0091	1	GUARD AS.
	6	7G0011	1	GUARD AS.

	7	6P8829	16	RETAINER
		9F6936	16	BOLT
		2J3507	16	NUT
	8	5D4661	24	WASHER
C	9	7T6803	1	GUARD AS.
C	10	2S9434	3	STRIP
C	11	8S8673	3	COVER
	12	7G0282	1	GUARD AS.

	13	1D4635	2	BOLT
	14	9S1363	4	BOLT
	15	1J7370	2	BOLT
C	16	5S9765	3	BOLT
		5P8245	3	WASHER
		4H5128	3	PIN
	17	6T5941	4	PIN
		3B6677	4	COTTER PIN
	18	5P8250	4	WASHER

C INDICATES CHANGE 351903

351903 P

7153 **6P7333 GUARD GP-BOTTOM**

S/N 53Y3487,3890,3898,3902,3915,3917,3920,3928,3930,3932,3937,3939,3941, 3942,3946,3948,3954-3956,3958,3961-3962,3964,3965,3967-3970,3972-3974,3976 3978,3984,3986,3988,3991,3994,3996-3997,3999,4001-4003,4005-4012,4014, 4016-4020,4022-4026,4028-4035,4037-4040,4042-4049,4052,4054-4056,4059-Up

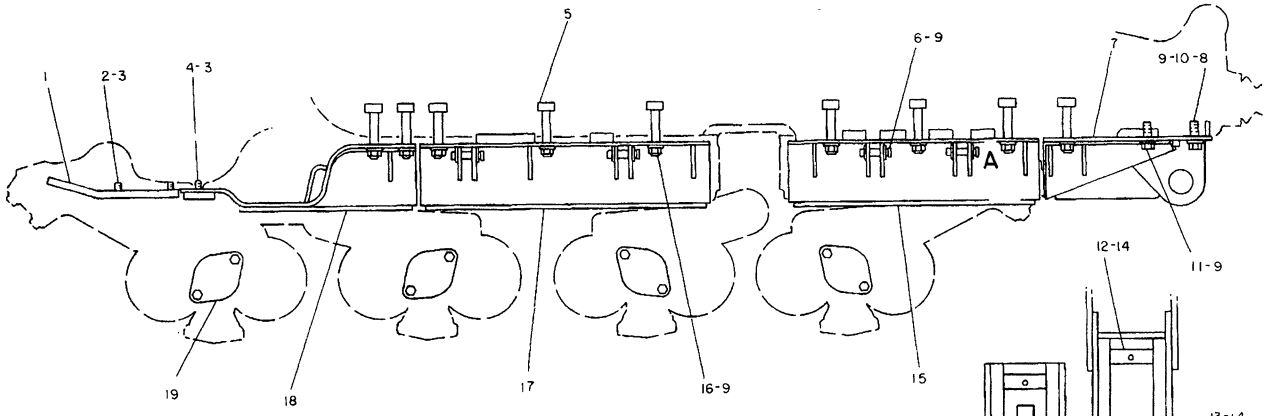

REF. NO.	PART NUMBER	DESCRIPTION	QTY.
1	7G339	GUARD ASSEM.	1
2	S1626	BOLT	4
3	5P8248	WASHER	8
4	1A458	BOLT	4
5	6P8829	RETAINER	18
6	4S8033	PIN	4
	3B6677	COTTER	4
7	7G282	GUARD ASSEM.	1
8	9S1363	BOLT------69, 85 mm(2, 75 in.) long	4
C 9	5P8250	WASHER	34
10	1J7370	BOLT-----44, 45 mm(1, 75 in.) long	2
11	1D4635	BOLT	2
12	7G322	PLATE ASSEM.	1
13	7G302	PLATE ASSEM.	2
14	S1620	BOLT	3
15	7G1499	GUARD ASSEM.	1
16	9F6936	BOLT	18
	1B4333	NUT	18
17	7G1498	GUARD ASSEM.	1
18	3T4081	GUARD ASSEM.	1
19	9P7823	PLATE	16
	8S4755	BOLT	32

C INDICATES CHANGE

182571 P

7153

7G1515 GUARD GP-BOTTOM
Heavy Duty. Type 1
An Attachment

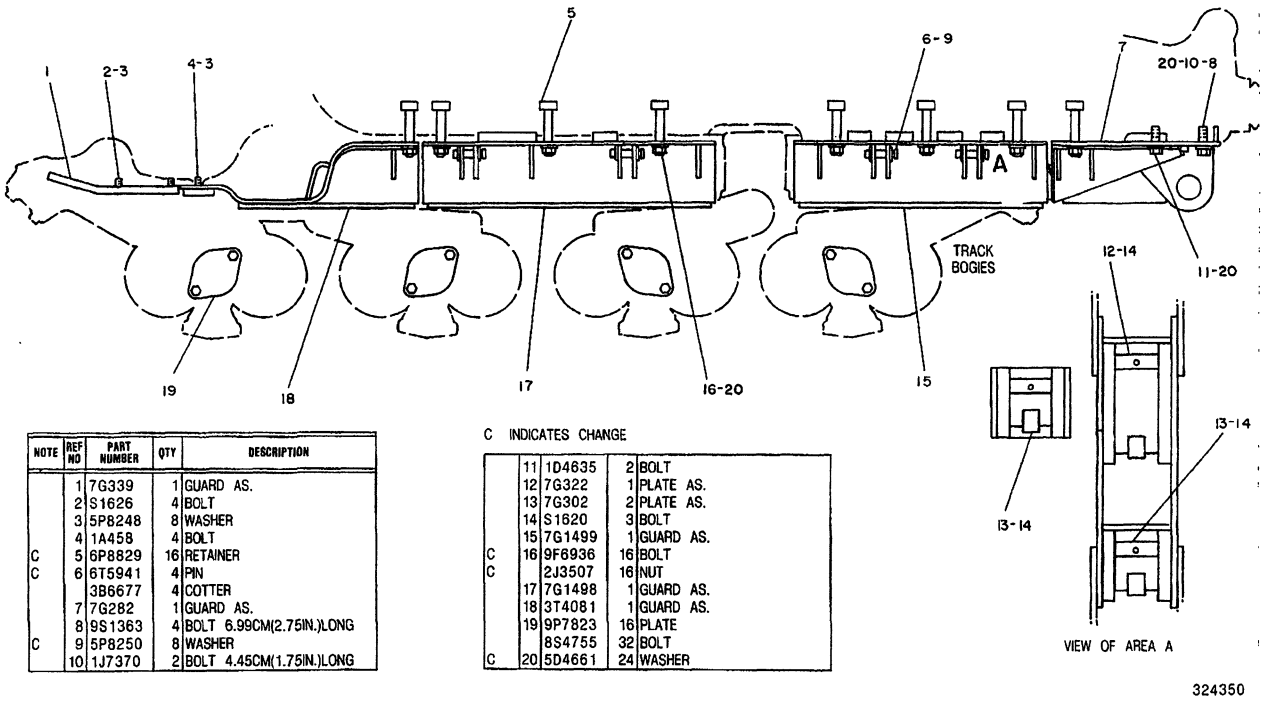

NOTE	REF NO	PART NUMBER	QTY	DESCRIPTION
	1	7G339	1	GUARD AS.
	2	S1626	4	BOLT
	3	5P8248	8	WASHER
	4	1A458	4	BOLT
C	5	6P8829	16	RETAINER
C	6	6T5941	4	PIN
		3B6677	4	COTTER
	7	7G282	1	GUARD AS.
	8	9S1363	4	BOLT 6.99CM(2.75IN.)LONG
C	9	5P8250	8	WASHER
	10	1J7370	2	BOLT 4.45CM(1.75IN.)LONG

C INDICATES CHANGE

	11	1D4635	2	BOLT
	12	7G322	1	PLATE AS.
	13	7G302	2	PLATE AS.
	14	S1620	3	BOLT
	15	7G1499	1	GUARD AS.
C	16	9F6936	16	BOLT
C		2J3507	16	NUT
	17	7G1498	1	GUARD AS.
	18	3T4081	1	GUARD AS.
	19	9P7823	16	PLATE
		8S4755	32	BOLT
C	20	5D4661	24	WASHER

324350

324350 P

7153 **7G1515 GUARD GP-BOTTOM**
Heavy Duty. Type 2
An Attachment

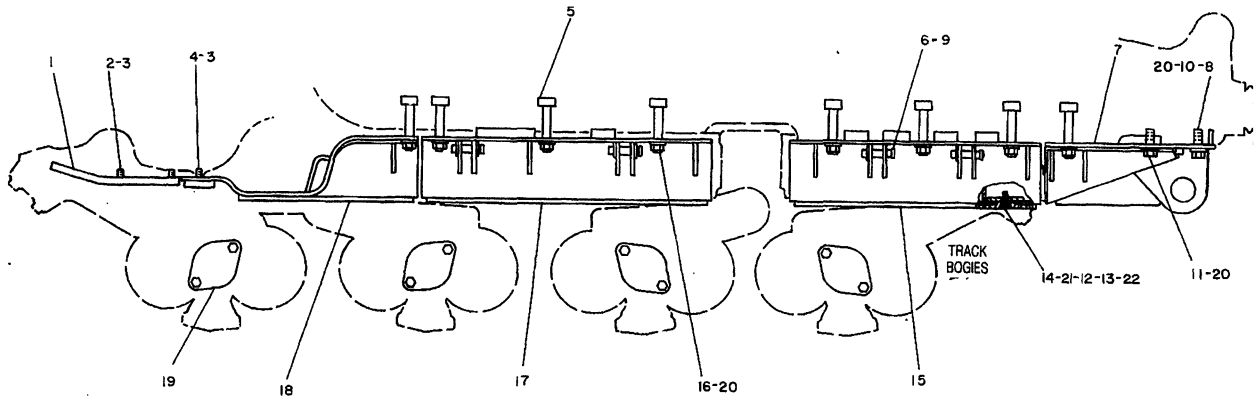

NOTE	REF NO	PART NUMBER	QTY	DESCRIPTION
	1	7G339	1	GUARD AS.
	2	S1626	4	BOLT
	3	5P8248	8	WASHER
	4	1A458	4	BOLT
	5	6P8829	16	RETAINER
	6	6T5941	4	PIN
		3B6677	4	COTTER
	7	7G282	1	GUARD AS.
	8	9S1363	4	BOLT 6.99CM(2.75IN.)LONG
C	9	5P8250	4	WASHER
	10	1J7370	2	BOLT 4.45CM(1.75IN.)LONG
	11	1D4635	2	BOLT
C	12	2S9434	3	STRIP
C	13	4H5128	3	PIN
C	14	5S9765	3	BOLT
C	15	7T6803	1	GUARD AS.
	16	9F6936	16	BOLT
		2J3507	16	NUT
	17	7G1498	1	GUARD AS.
	18	3T4081	1	GUARD AS.
	19	9P7823	16	PLATE
		8S4755	32	BOLT
	20	5D4661	24	WASHER
C	21	5P8245	3	WASHER
C	22	8S8673	3	COVER

C INDICATES CHANGE

342077

342077 P

7153

7G1515 GUARD GP-BOTTOM
Heavy Duty. Type 3
An Attachment

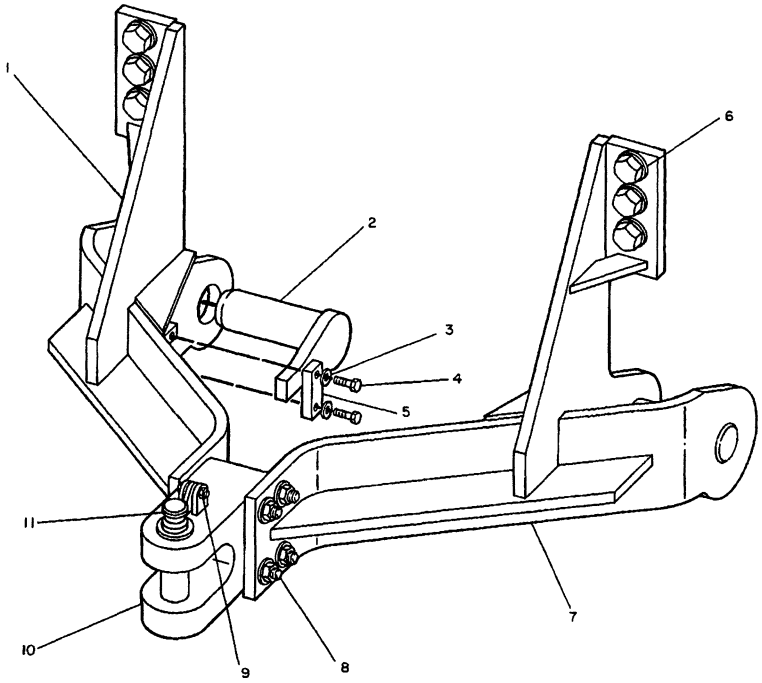

NOTE	REF NO	PART NUMBER	QTY	DESCRIPTION
	1	9P8639	1	BRACKET ASSEM.
	2	9J2290	2	PIN ASSEM.
C	3	5P6652	4	WASHER
	4	1A458	4	BOLT
	5	3J6034	2	PLATE
	6	1J2921	6	BOLT
		3S6162	6	WASHER
	7	9P8638	1	BRACKET ASSEM.
	8	3S7079	4	BOLT
		1B4210	4	NUT
		3S7023	8	WASHER
	9	S1577	1	BOLT
		2K4821	1	LOCKNUT
		5H2168	1	LATCH
	10	2H2534	1	CLEVIS
	11	1H4106	1	PIN ASSEM.

C INDICATES CHANGE

312222

312222 P

7105 **6P9245 DRAWBAR GP**

S/N 53Y1-2419,2421-2560,2562-2598,2600-2617,2620-2622,2624,2626,2627,2629, 2630,2633-2645,2647,2648,2650,2651,2654,2655,2657,2658,2661,2662,2668, 2671,2711

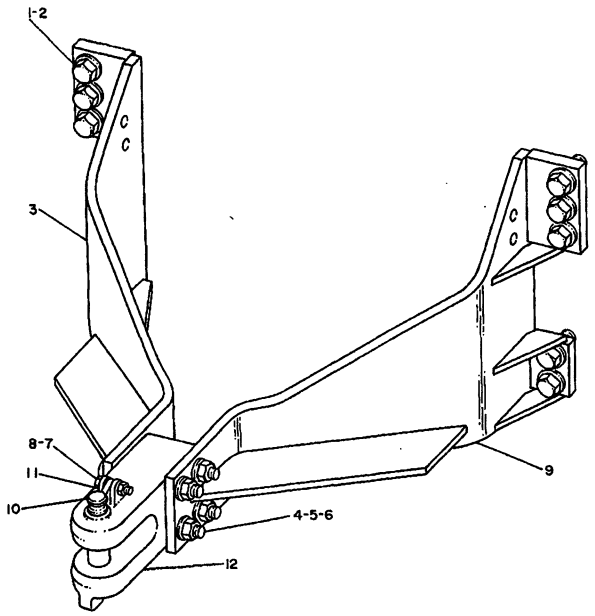

NOTE	REF NO	PART NUMBER	QTY	DESCRIPTION
	1	6V8970	10	BOLT
	2	3S6162	10	WASHER
	3	6T6868	1	BRACKET AS.
	4	1K9420	4	BOLT
	5	3S7023	8	WASHER
	6	3K9770	4	NUT
	7	0S1577	1	BOLT
	8	2K4821	1	LOCKNUT
	9	6T6867	1	BRACKET AS.
	10	1H4106	1	PIN AS.
	11	5H2168	1	LATCH
	12	2H2534	1	CLEVIS

331103

331103 P

7105 **6T6869 DRAWBAR GP**

S/N 53Y2420,2561,2599,2618,2619,2623,2625,2628,2631,2632,2646,2649,2652, 2653,2656,2659,2660,2663,2664-2667,2669,2670,2672,2673-2710,2712-Up

MEMORANDA

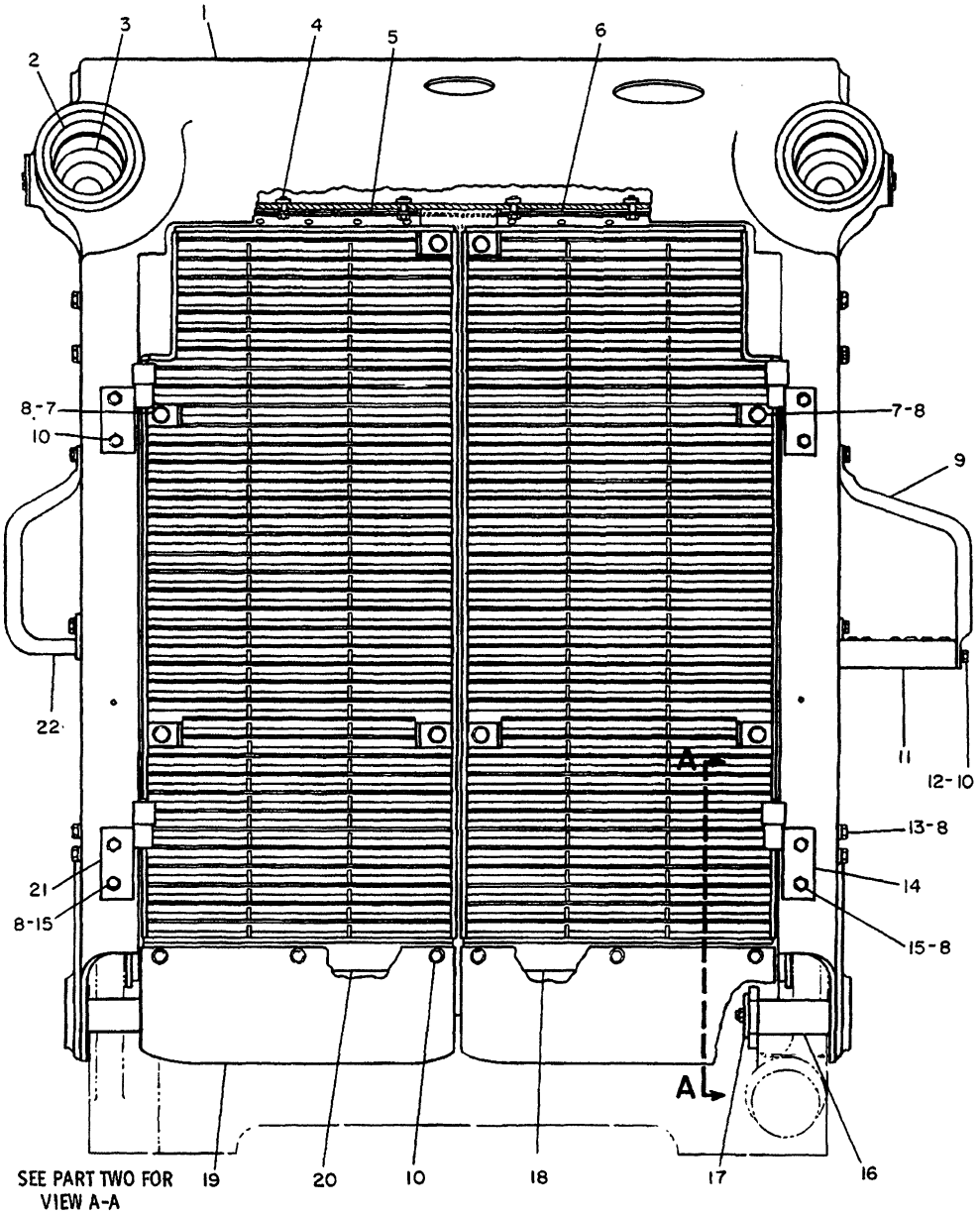

REF. NO.	PART NUMBER	DESCRIPTION	QTY.
1	9P6303	GUARD ASSEM. (Includes)	1
	9P4048	BEARING	2
2	7J1335	BEARING-(large)	2
3	7J1336	BEARING-(small)	2
C 4	S1588	BOLT	6
	5M2894	WASHER	6
5	9P5480	BAFFLE ASSEM.	1
6	9P5481	BAFFLE ASSEM.	1
7	S1566	BOLT	8
8	5P8247	WASHER	18
9	9G5207	HANDLE-(grab)	1
10	S1595	BOLT	13
	5P8245	WASHER	13
11	9G2992	STEP ASSEM. (Includes)	1
12	1F748	NUT	1
13	S1625	BOLT	2
14	8P5869	HINGE ASSEM.	2
15	1A1135	BOLT	8
16	9P4193	PIN	2
17	6P8269	WASHER	2
18	9P5009	DOOR ASSEM.	1
19	3T3779	PLATE	2
20	9P5023	DOOR ASSEM.	1
21	8P5868	HINGE ASSEM.	2
22	9G9239	HANDLE ASSEM.-(grab)	1

C INDICATES CHANGE

182575 P

7155

6P7326 GUARD GP-RADIATOR-PART 1 OF 2

S/N 53Y1-726,728-780,782-790,792-797,799,809,824,840

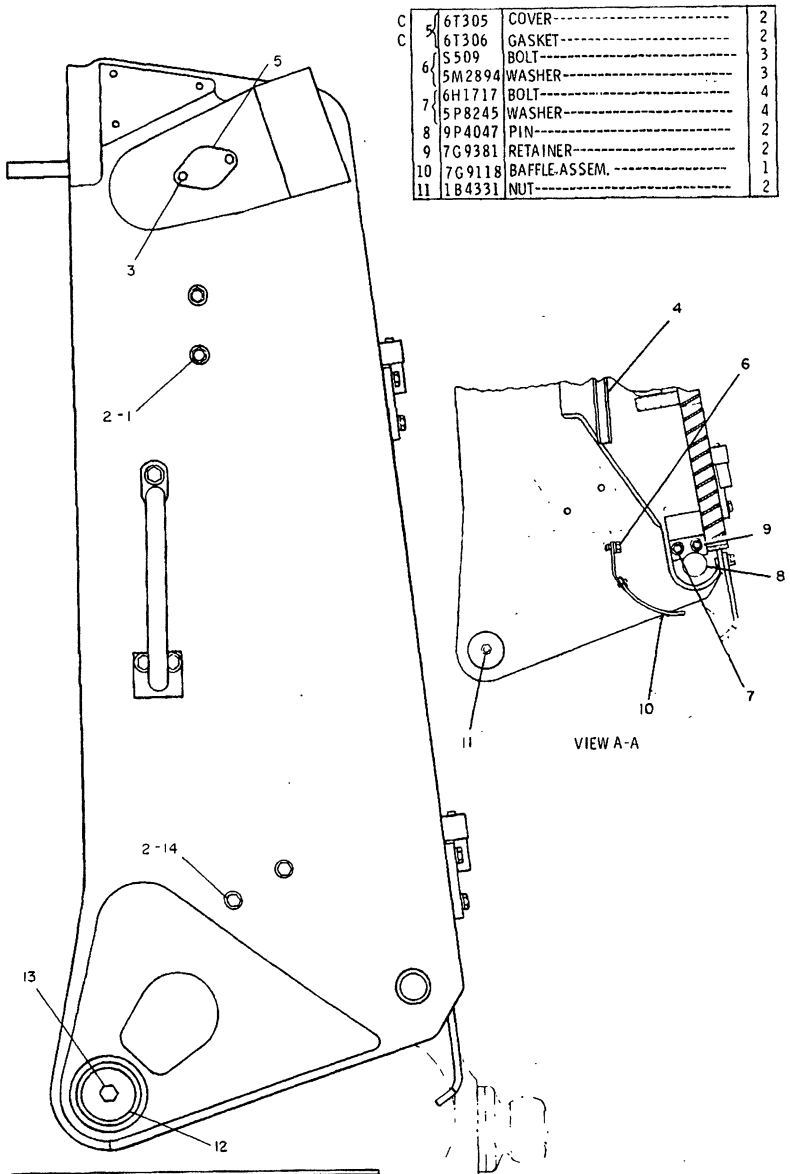

	REF. NO.	PART NUMBER	DESCRIPTION	QTY.
C	1	S1566	BOLT	4
	2	5P8247	WASHER	6
C	3	1A458	BOLT	4
▲	4	5P7514	SEAL---------1.95 m(76.78 in.)	

C INDICATES CHANGE

C	5	6T305	COVER	2
C		6T306	GASKET	2
	6	S509	BOLT	3
		5M2894	WASHER	3
	7	6H1717	BOLT	4
		5P8245	WASHER	4
	8	9P4047	PIN	2
	9	7G9381	RETAINER	2
	10	7G9118	BAFFLE ASSEM.	1
	11	1B4331	NUT	2

12	6P8269	WASHER	2
13	1D4622	BOLT	2
14	S1625	BOLT	2

▲ ORDER BY THE METER

182576

182576 P

7155 **6P7326 GUARD GP-RADIATOR-PART 2 OF 2**

S/N 53Y1-726,728-780,782-790,792-797,799,809,824,840

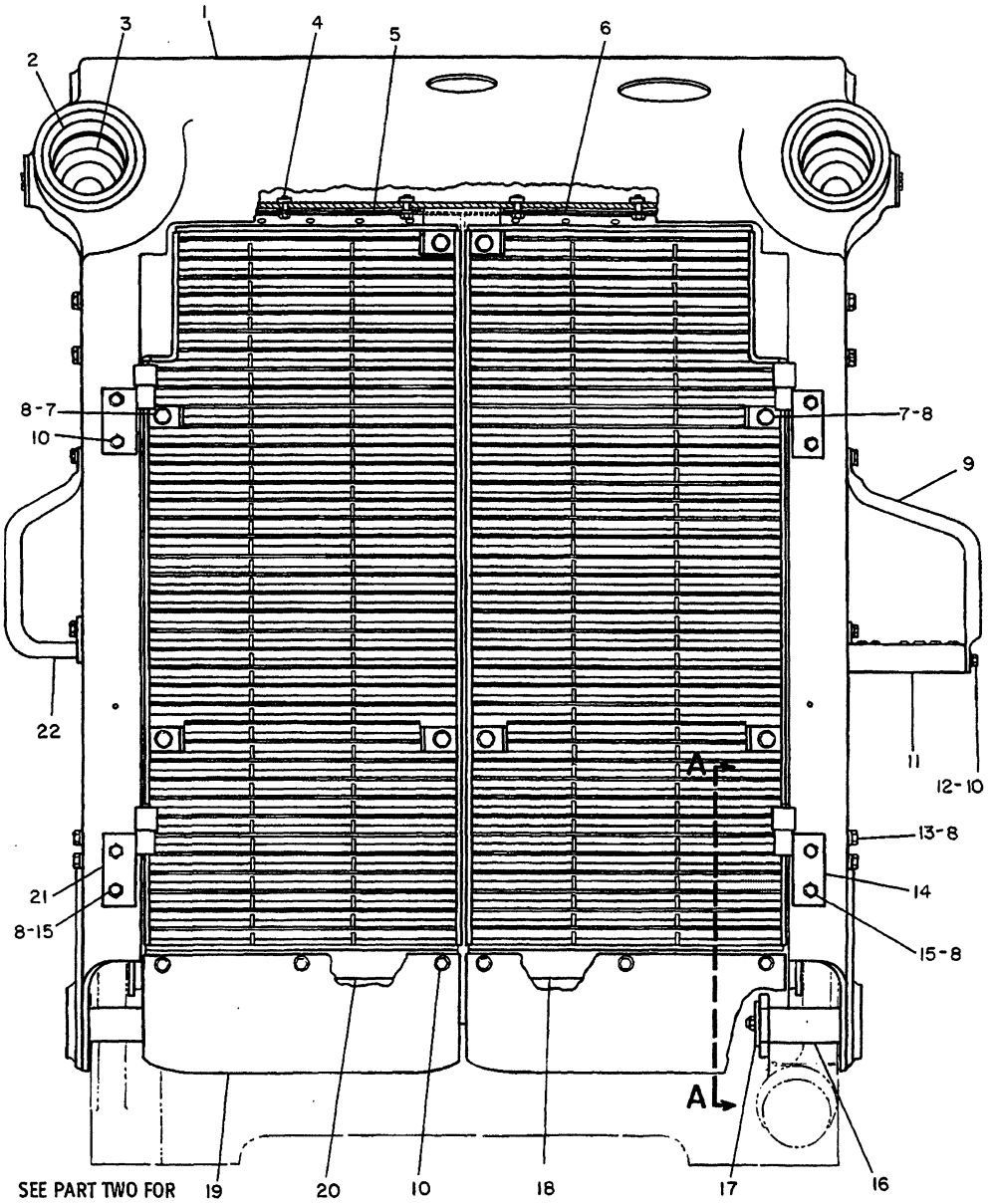

NOTE	REF NO	PART NUMBER	QTY	DESCRIPTION
	1	9P6303	1	GUARD AS.
		9P4048	2	BEARING
	2	7J1335	2	BEARING (LARGE)
	3	7J1336	2	BEARING (SMALL)
	4	S1588	6	BOLT
		5M2894	6	WASHER
	5	9P5480	1	BAFFLE AS.
	6	9P5481	1	BAFFLE AS.
	7	S1566	8	BOLT
	8	5P8247	18	WASHER
	9	9G5207	1	HANDLE (GRAB)
	10	S1595	13	BOLT
		5P8245	13	WASHER
	11	9G2992	1	STEP AS.
	12	1F748	1	NUT
	13	S1625	2	BOLT
	14	8P5869	2	HINGE AS.
	15	1A1135	8	BOLT
	16	9P4193	2	PIN
	17	6P8269	2	WASHER
	18	9P5009	1	DOOR AS.
	19	3T3779	2	PLATE
	20	9P5023	1	DOOR AS.
	21	8P5868	2	HINGE AS.
	22	9G9239	1	HANDLE AS. (GRAB)

310158

310158 P

7155

6P7326 GUARD GP-RADIATOR-PART 1 OF 2

For S/N Refer To Page 169B.01

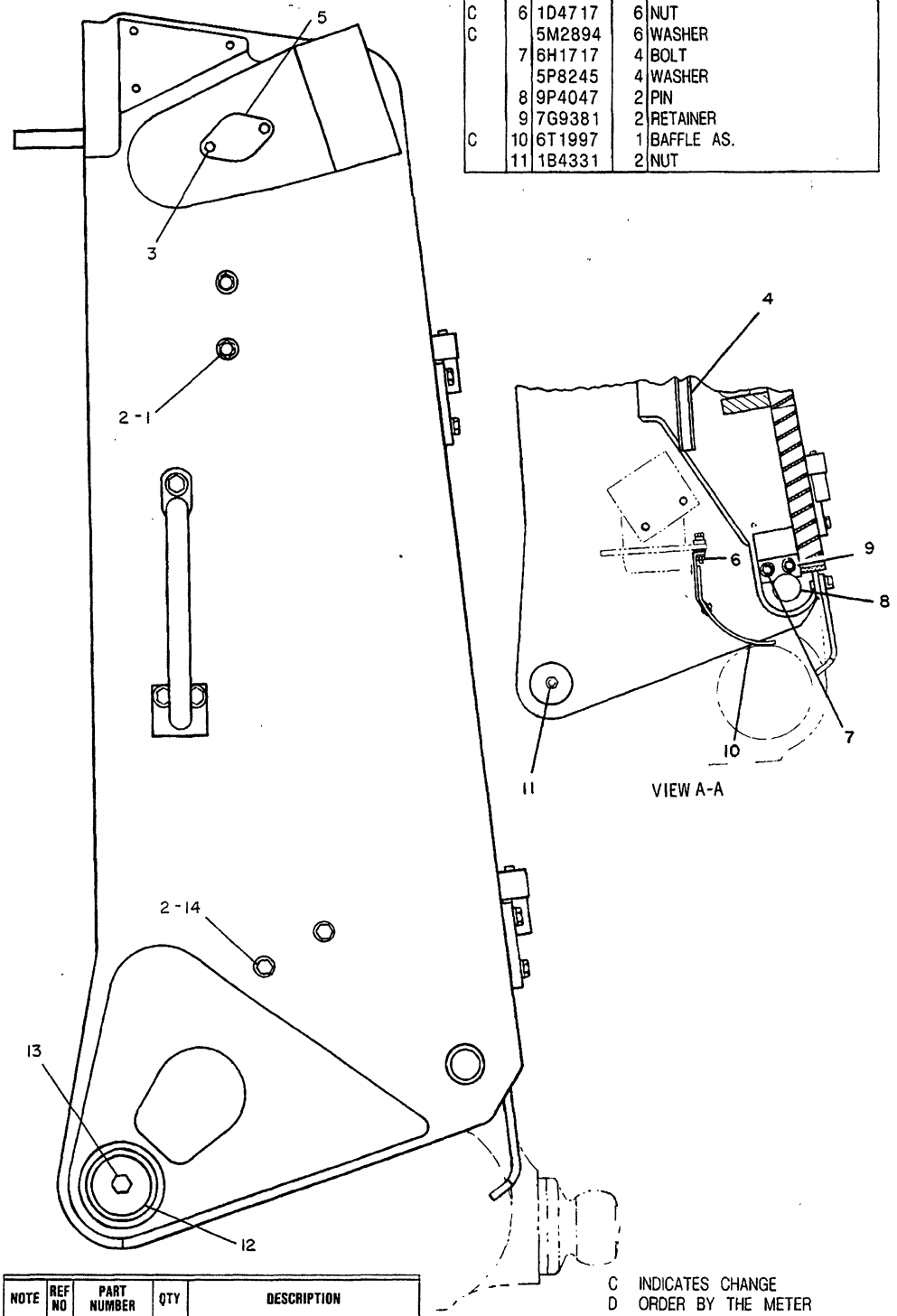

	5	6T305	2	COVER
		6T306	2	GASKET
C	6	1D4717	6	NUT
C		5M2894	6	WASHER
	7	6H1717	4	BOLT
		5P8245	4	WASHER
	8	9P4047	2	PIN
	9	7G9381	2	RETAINER
C	10	6T1997	1	BAFFLE AS.
	11	1B4331	2	NUT

NOTE	REF NO	PART NUMBER	QTY	DESCRIPTION
	1	S1566	4	BOLT
	2	5P8247	6	WASHER
	3	1A458	4	BOLT
D	4	5P7514		SEAL 1.95M(76.78IN.)

C INDICATES CHANGE
D ORDER BY THE METER

	12	6P8269	2	WASHER
	13	1D4622	2	BOLT
	14	S1625	2	BOLT

310159

310159 P

7155 **6P7326 GUARD GP-RADIATOR-PART 2 OF 2**

For S/N Refer To Page 169B.01

CHASSIS AND UNDERCARRIAGE

SERIAL NO:
53Y727,781,791,798,800-808,810-823,825-
839,841-2214,2217,2219,2220,2223,2225,
2227,2228,2230,2233-2236,2238-2240,2242,
2243,2245-2247,2250,2253,2254,2257,2258,
2260,2261,2263,2265,2270,2273,2274,2276,
2279,2280,2282,2283,2285,2288,2290,2291,
2293,2294,2297,2298,2300-2304,2307,2310,
2311,2314,2317,2319,2321-2323,2326,2328,
2331-2337,2343,2349

6P7326 GUARD GP-RADIATOR

For Illustration Refer To Pages 169A & 169B

CHASSIS AND UNDERCARRIAGE

SERIAL NO:
53Y2215,2216,2218,2221,2222,2224,2226,
2229,2231,2232,2237,2241,2244,2248,
2249,2251,2252,2255,2256,2259,2262,
2264,2266-2269,2271,2272,2275,2277,
2278,2281,2284,2286,2287,2289,2292,
2295,2296,2299,2305,2306,2308,2309,
2312,2313,2315,2316,2318,2320,2324,
2325,2327,2329,2330,2338-2342,2344-
2348,2350-3217

6P7326 GUARD GP-RADIATOR

For Illustration Refer To Pages 169B.03 & 169B.04

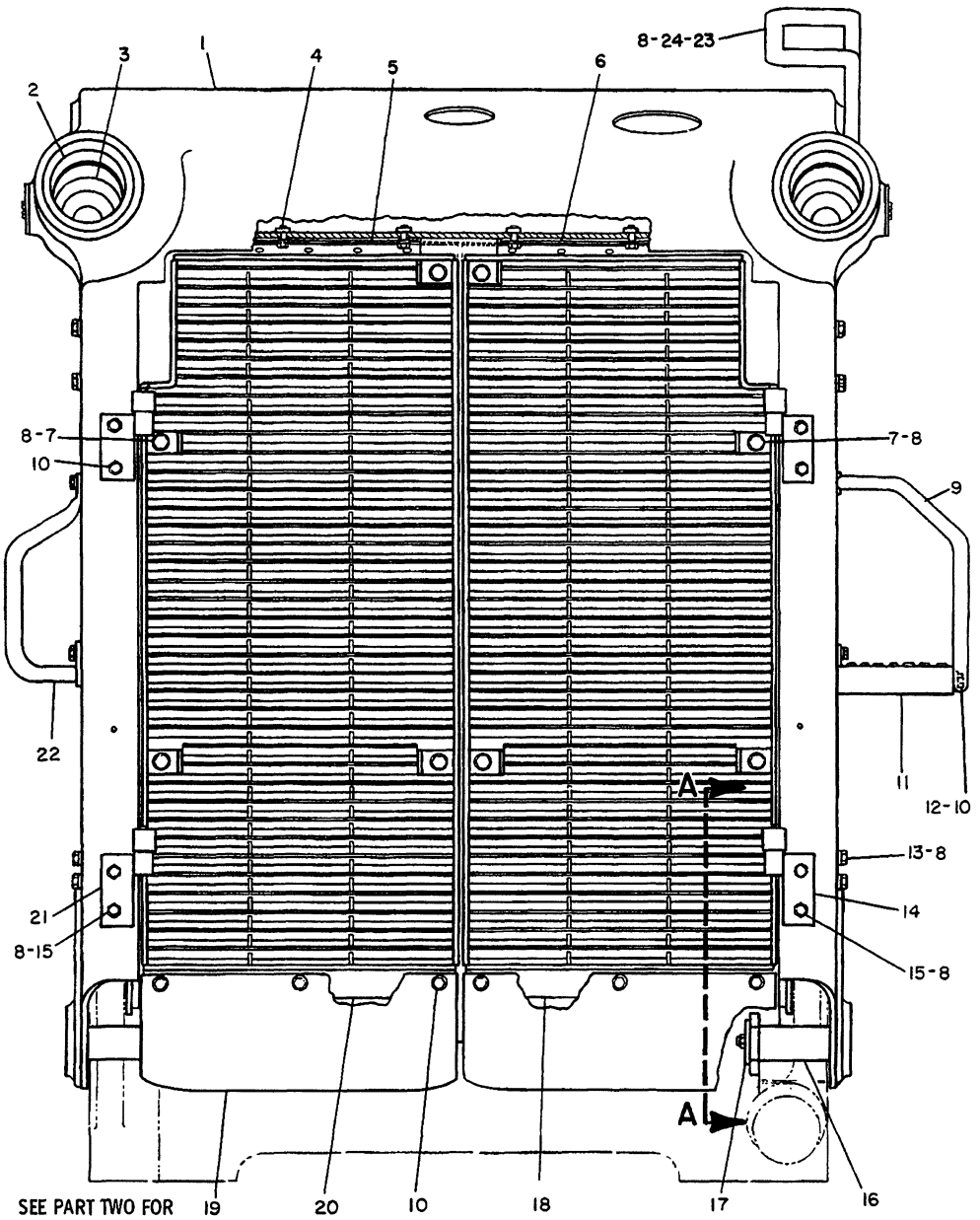

SEE PART TWO FOR VIEW A-A

NOTE	REF NO	PART NUMBER	QTY	DESCRIPTION
	1	9P6303	1	GUARD AS.
		9P4048	2	BEARING
	2	7J1335	2	BEARING (LARGE)
	3	7J1336	2	BEARING (SMALL)
	4	S1588	6	BOLT
		5M2894	6	WASHER
	5	9P5480	1	BAFFLE AS.
	6	9P5481	1	BAFFLE AS.
	7	S1566	8	BOLT
C	8	5P8247	20	WASHER
C	9	6T1361	1	HANDLE (GRAB)
	10	S1595	13	BOLT
		5P8245	13	WASHER

C	11	6T1362	1	STEP AS.
	12	1F748	1	NUT
	13	S1625	2	BOLT
	14	8P5869	2	HINGE AS.
	15	1A1135	8	BOLT
	16	9P4193	2	PIN
	17	6P8269	2	WASHER
	18	9P5009	1	DOOR AS.
	19	3T3779	2	PLATE
	20	9P5023	1	DOOR AS.
	21	8P5868	2	HINGE AS.
	22	9G9239	1	HANDLE AS. (GRAB)
	23	6T1147	1	HANDLE
	24	4B4043	2	BOLT

C INDICATES CHANGE

327734

327734 P

7155

6P7326 GUARD GP-RADIATOR-PART 1 OF 2

For S/N Refer To Page 169B.02

CHASSIS AND UNDERCARRIAGE

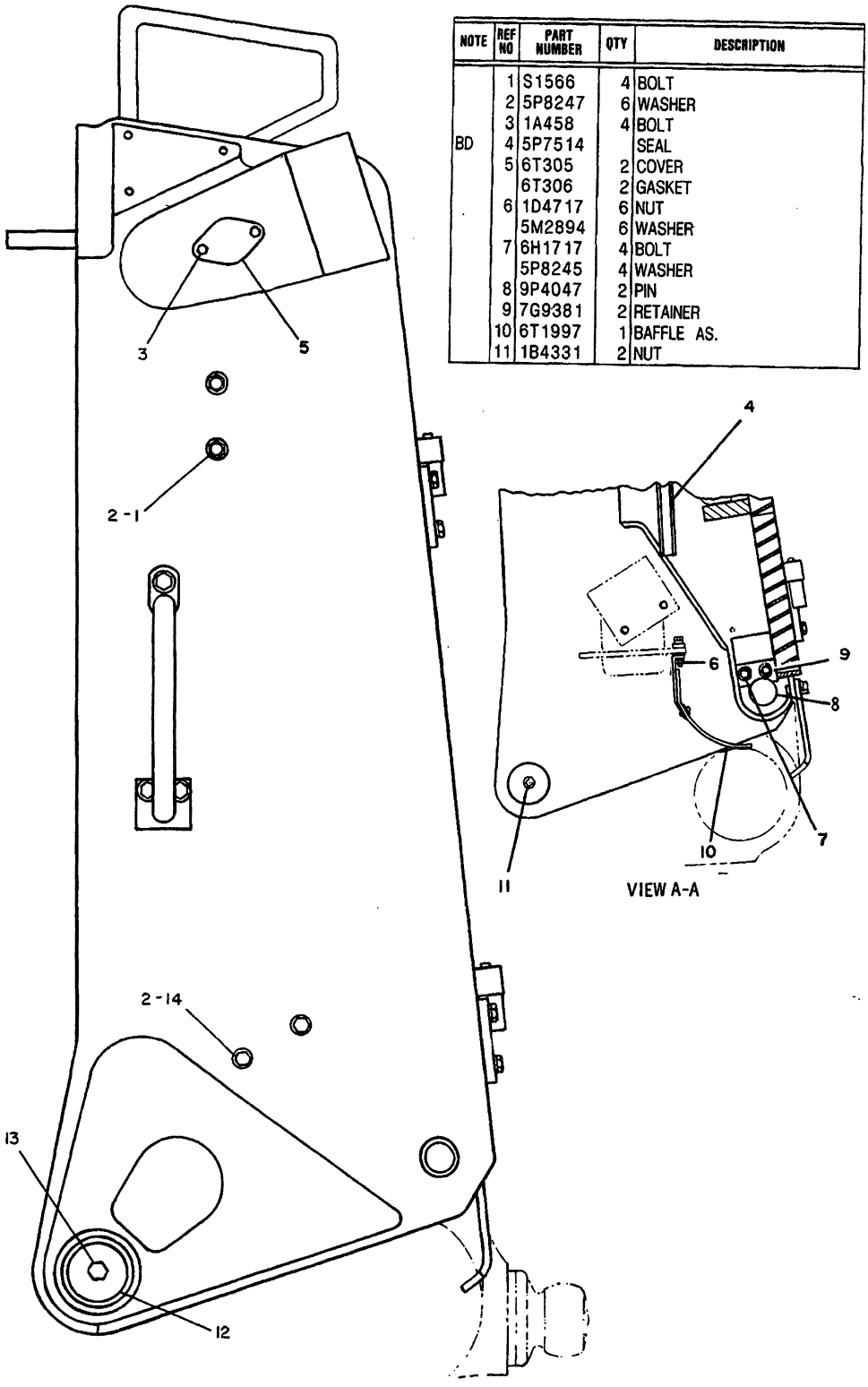

NOTE	REF NO	PART NUMBER	QTY	DESCRIPTION
	1	S1566	4	BOLT
	2	5P8247	6	WASHER
	3	1A458	4	BOLT
BD	4	5P7514		SEAL
	5	6T305	2	COVER
		6T306	2	GASKET
	6	1D4717	6	NUT
		5M2894	6	WASHER
	7	6H1717	4	BOLT
		5P8245	4	WASHER
	8	9P4047	2	PIN
	9	7G9381	2	RETAINER
	10	6T1997	1	BAFFLE AS.
	11	1B4331	2	NUT
	12	6P8269	2	WASHER
	13	1D4622	2	BOLT
	14	S1625	2	BOLT

D ORDER BY THE METER

B USE AS REQUIRED

327735

327735 P

7155

6P7326 GUARD GP-RADIATOR-PART 2 OF 2

For S/N Refer To Page 169B.02

CHASSIS AND UNDERCARRIAGE

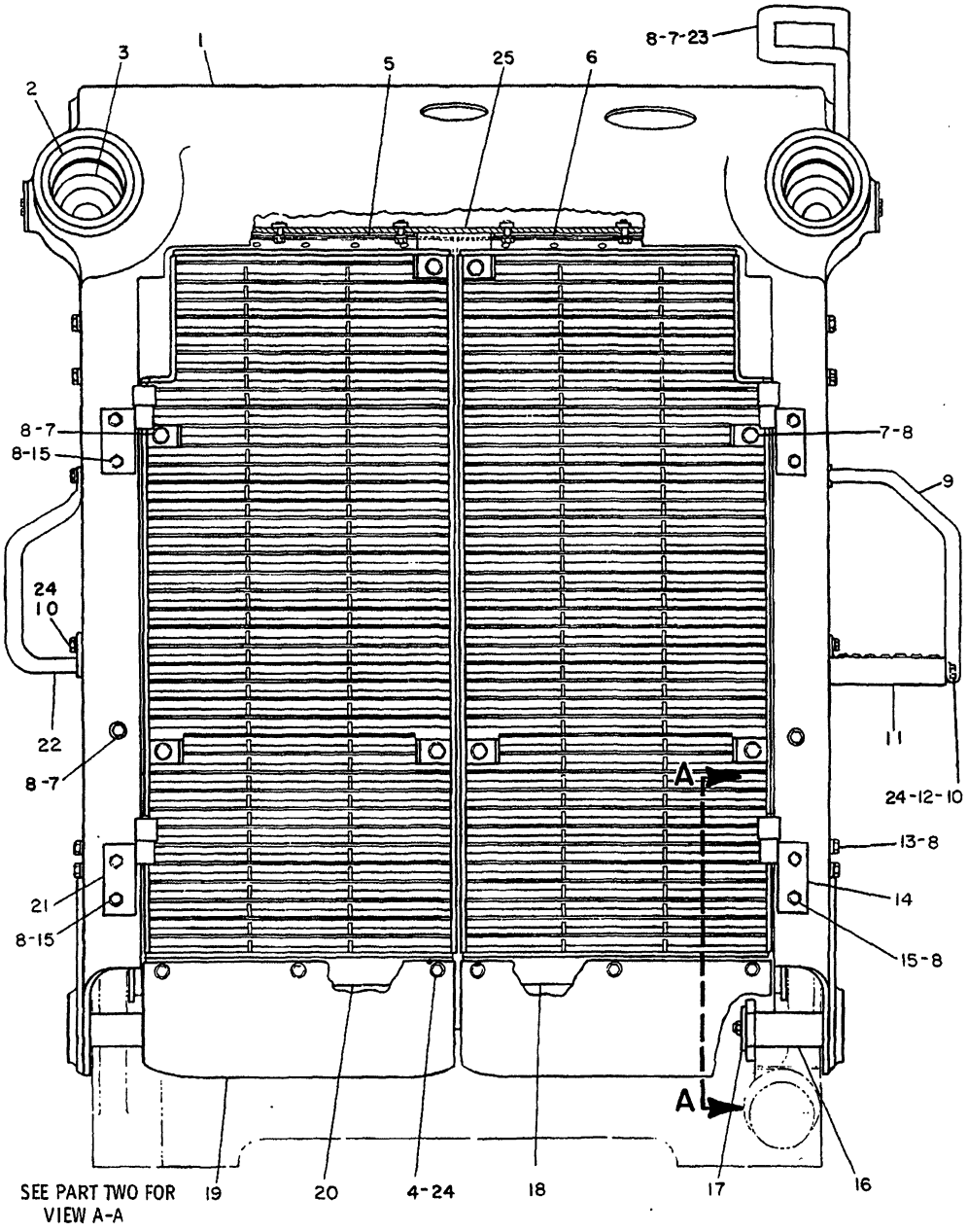

NOTE	REF NO	PART NUMBER	QTY	DESCRIPTION
	1	9P6303	1	GUARD AS.
		9P4048	2	BEARING
	2	7J1335	2	BEARING (LARGE)
	3	7J1336	2	BEARING (SMALL)
C	4	0S1595	5	BOLT
C	5	7T1407	1	BAFFLE
C	6	7T1406	1	BAFFLE
C	7	0S1592	12	BOLT
C	8	5P8247	22	WASHER
	9	6T1361	1	HANDLE (GRAB)
C	10	7B3235	7	BOLT
	11	6T1362	1	STEP AS.
	12	1F0748	1	NUT
	13	0S1625	2	BOLT
	14	8P5869	2	HINGE AS.
	15	1A1135	8	BOLT
	16	9P4193	2	PIN
	17	6P8269	2	WASHER
	18	9P5009	1	DOOR AS.
	19	3T3779	2	PLATE
	20	9P5023	1	DOOR AS.
	21	8P5868	2	HINGE AS.
	22	9G9239	1	HANDLE AS. (GRAB)
	23	6T1147	1	HANDLE
C	24	5P8245	12	WASHER
CBD	25	5P7905		SEAL

B USE AS REQUIRED C INDICATES CHANGE D ORDER BY THE METER 334745 334745 P

7155

6P7326 GUARD GP-RADIATOR-PART 1 OF 2

S/N 53Y3218-3484

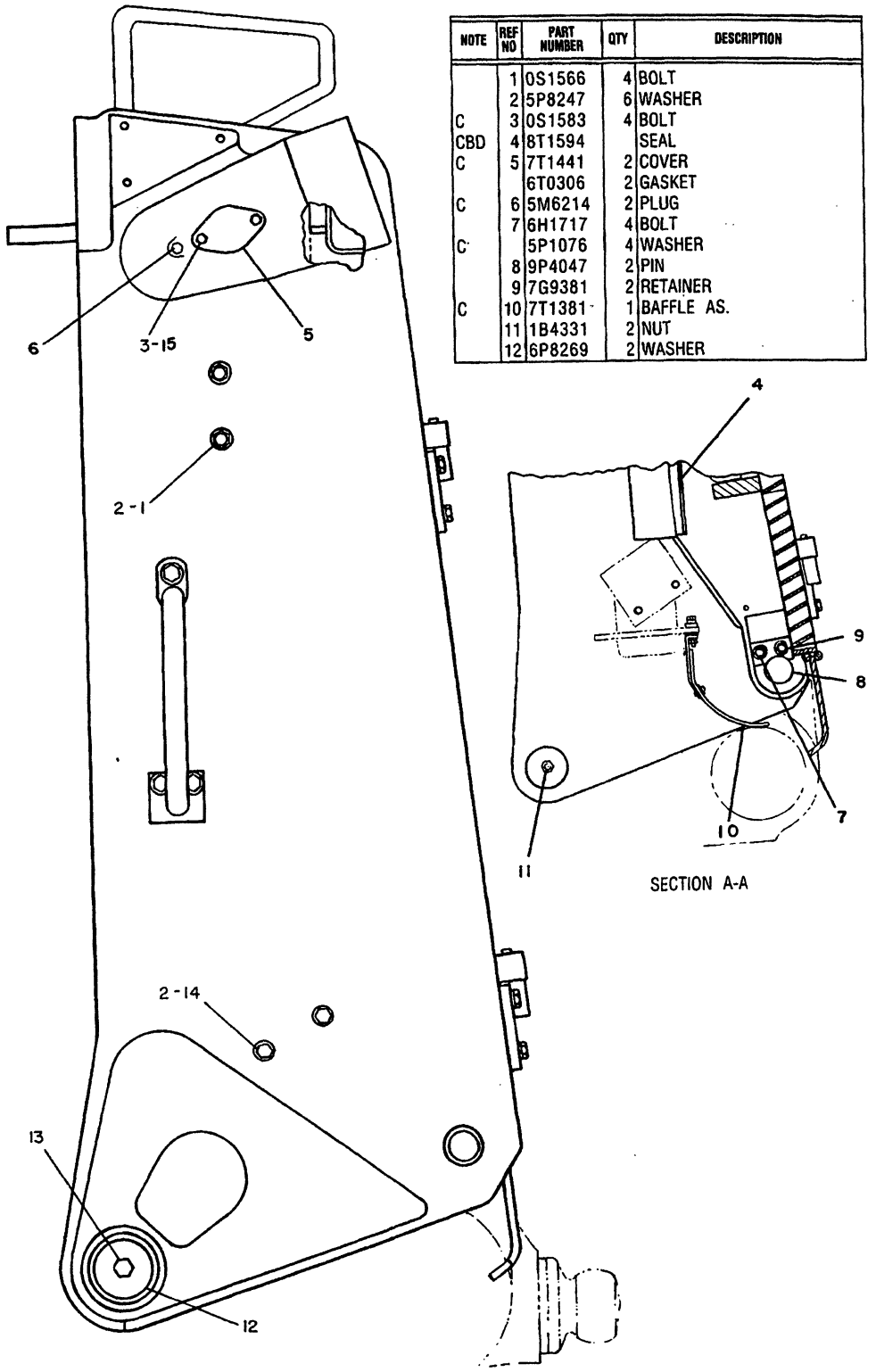

NOTE	REF NO	PART NUMBER	QTY	DESCRIPTION
	1	0S1566	4	BOLT
	2	5P8247	6	WASHER
C	3	0S1583	4	BOLT
CBD	4	8T1594		SEAL
C	5	7T1441	2	COVER
		6T0306	2	GASKET
C	6	5M6214	2	PLUG
	7	6H1717	4	BOLT
C		5P1076	4	WASHER
	8	9P4047	2	PIN
	9	7G9381	2	RETAINER
C	10	7T1381	1	BAFFLE AS.
	11	1B4331	2	NUT
	12	6P8269	2	WASHER
	13	1D4622	2	BOLT
	14	0S1625	2	BOLT
C	15	5P8248	4	WASHER

B USE AS REQUIRED
C INDICATES CHANGE
D ORDER BY THE METER

334746

334746 P

7155

6P7326 GUARD GP-RADIATOR-PART 2 OF 2
S/N 53Y3218-3484

CHASSIS AND UNDERCARRIAGE

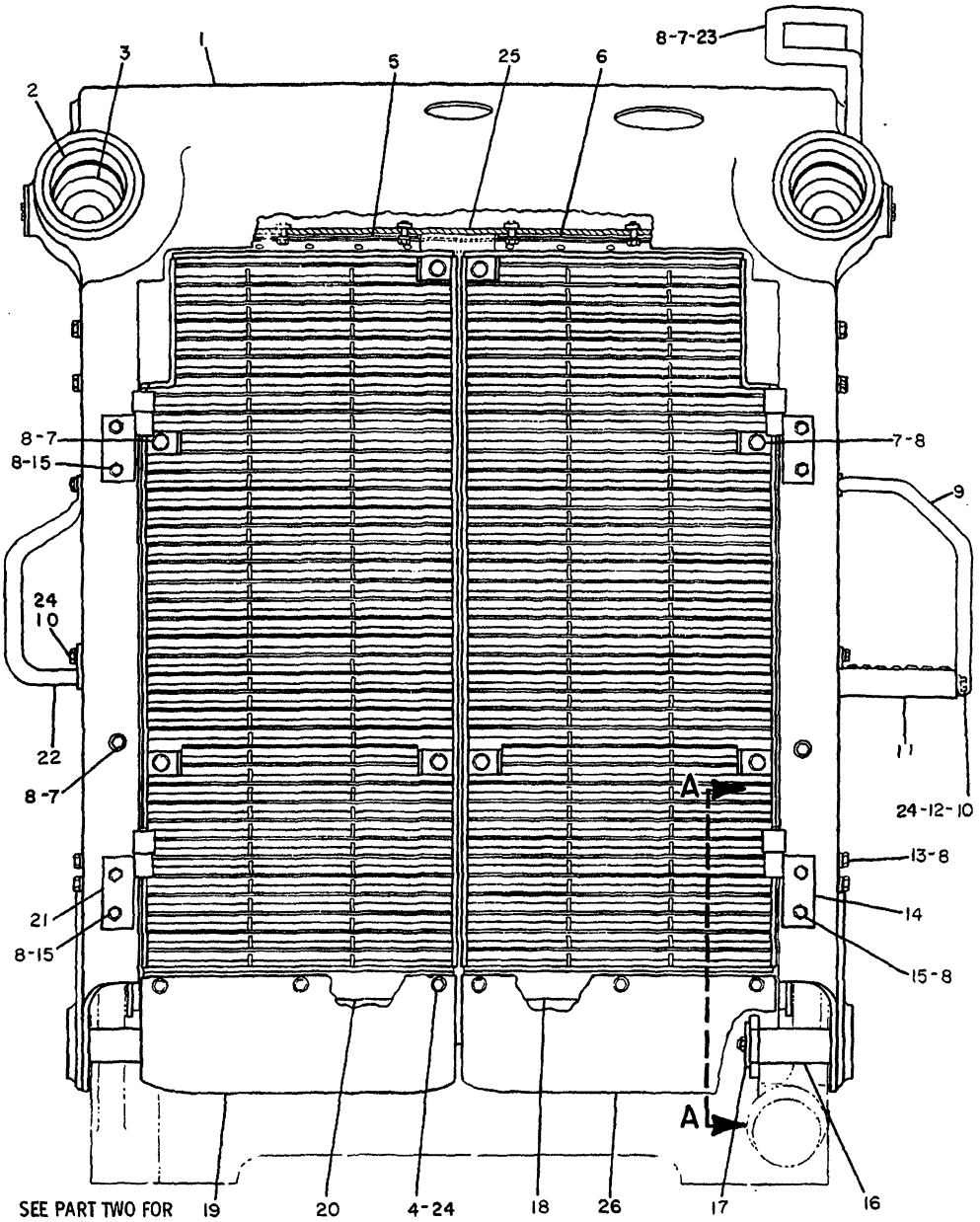

NOTE	REF NO	PART NUMBER	QTY	DESCRIPTION
	1	9P6303	1	GUARD AS.
		9P4048	2	BEARING
	2	7J1335	2	BEARING (LARGE)
	3	7J1336	2	BEARING (SMALL)
	4	0S1595	5	BOLT
	5	7T1407	1	BAFFLE
	6	7T1406	1	BAFFLE
	7	0S1592	12	BOLT
	8	5P8247	22	WASHER
	9	6T1361	1	HANDLE (GRAB)
	10	7B3235	7	BOLT
	11	6T1362	1	STEP AS.
	12	1F0748	1	NUT
	13	0S1625	2	BOLT
	14	8P5869	2	HINGE AS.
	15	1A1135	8	BOLT
	16	9P4193	2	PIN
	17	6P8269	2	WASHER
	18	9P5009	1	DOOR AS.
C	19	3T3779	1	PLATE
	20	9P5023	1	DOOR AS.
	21	8P5868	2	HINGE AS.
	22	9G9239	1	HANDLE AS. (GRAB)
	23	6T1147	1	HANDLE
	24	5P8245	12	WASHER
BD	25	5P7905		SEAL
C	26	7T1398	1	PLATE AS.
C		3T3827	1	PLATE

B USE AS REQUIRED C INDICATES CHANGE D ORDER BY THE METER 334748

334748 P

7155

6P7326 GUARD GP-RADIATOR-PART 1 OF 2

S/N 53Y3485-3952

SEBP1356

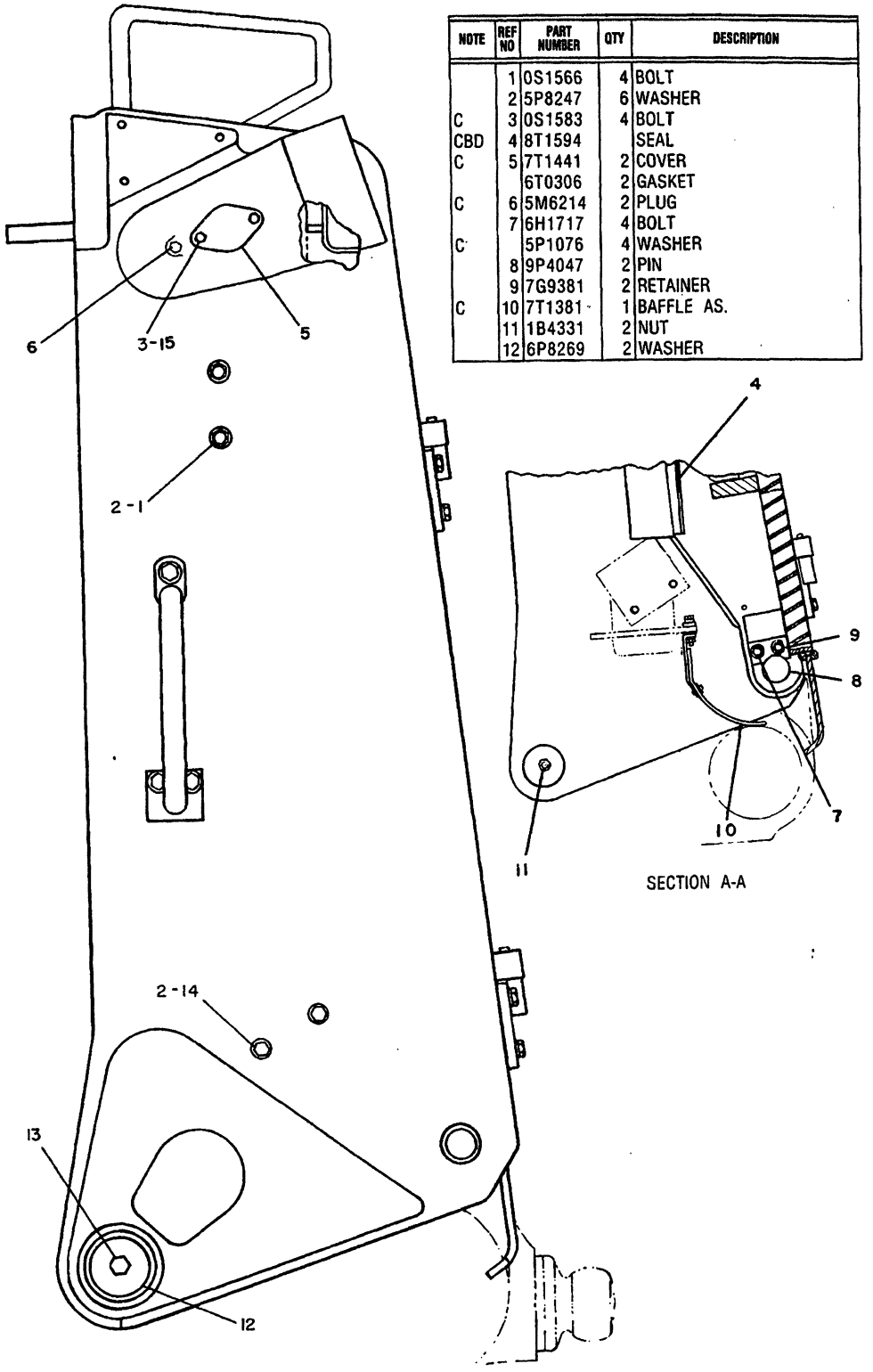

NOTE	REF NO	PART NUMBER	QTY	DESCRIPTION
	1	0S1566	4	BOLT
	2	5P8247	6	WASHER
C	3	0S1583	4	BOLT
CBD	4	8T1594		SEAL
C	5	7T1441	2	COVER
		6T0306	2	GASKET
C	6	5M6214	2	PLUG
	7	6H1717	4	BOLT
C		5P1076	4	WASHER
	8	9P4047	2	PIN
	9	7G9381	2	RETAINER
C	10	7T1381	1	BAFFLE AS.
	11	1B4331	2	NUT
	12	6P8269	2	WASHER
	13	1D4622	2	BOLT
	14	0S1625	2	BOLT
C	15	5P8248	4	WASHER

B USE AS REQUIRED
C INDICATES CHANGE
D ORDER BY THE METER

334746

334746 P

7155 **6P7326 GUARD GP-RADIATOR-PART 2 OF 2**
S/N 53Y3485-3952

CHASSIS AND UNDERCARRIAGE

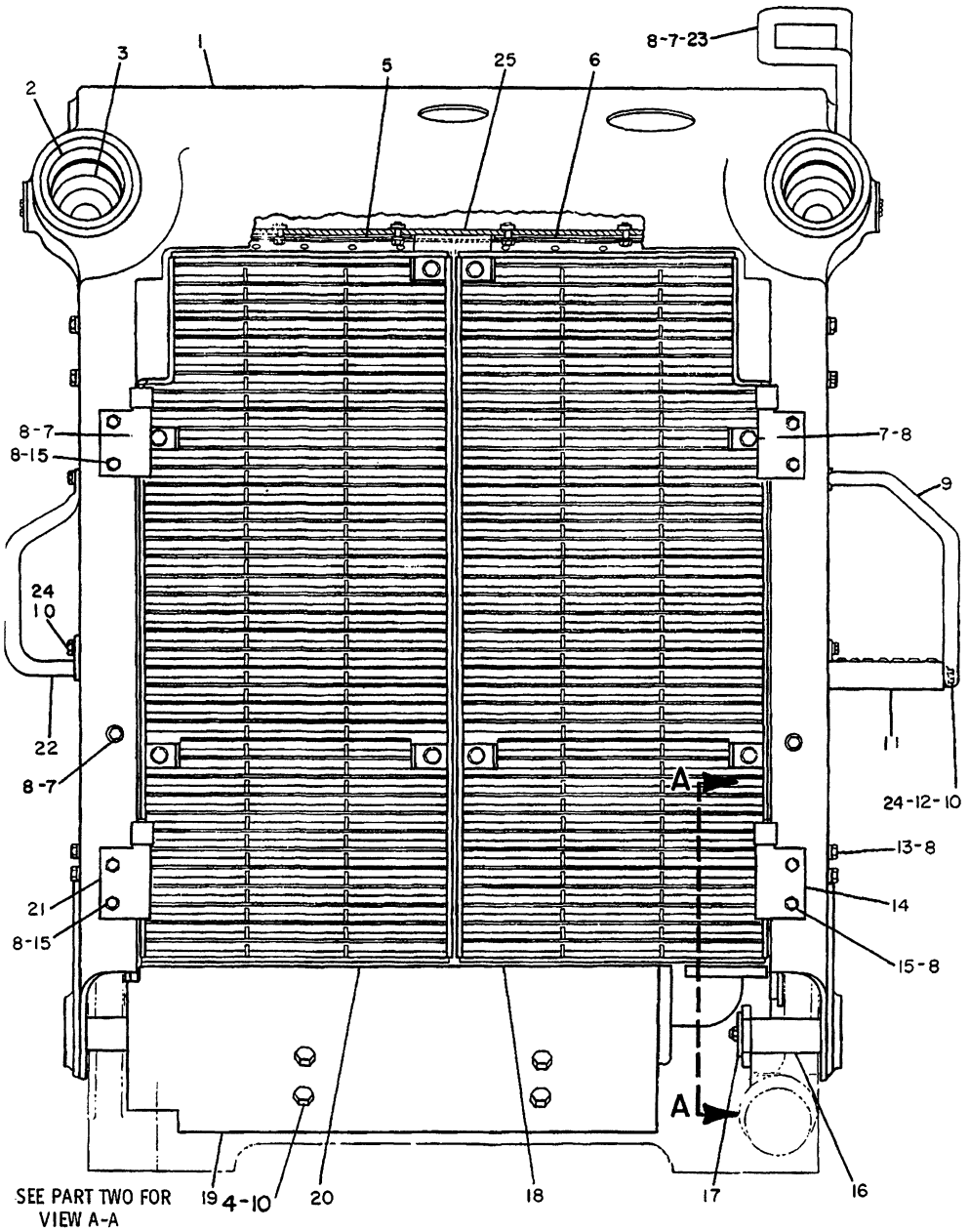

NOTE	REF NO	PART NUMBER	QTY	DESCRIPTION
	1	9P6303	1	GUARD AS.
		9P4048	2	BEARING
	2	7J1335	2	BEARING (LARGE)
	3	7J1336	2	BEARING (SMALL)
C	4	5P1076	4	WASHER
	5	7T1407	1	BAFFLE
	6	7T1406	1	BAFFLE
	7	0S1592	12	BOLT
	8	5P8247	22	WASHER
	9	6T1361	1	HANDLE (GRAB)
C	10	7B3235	11	BOLT
	11	6T1362	1	STEP AS.
	12	1F0748	1	NUT
	13	0S1625	2	BOLT
	14	8P5869	2	HINGE AS.
	15	1A1135	8	BOLT
	16	9P4193	2	PIN
	17	6P8269	2	WASHER
C	18	9W2645	1	DOOR AS.
C	19	9W2374	1	PLATE AS.
C	20	9W2646	1	DOOR AS.
	21	8P5868	2	HINGE AS.
	22	9G9239	1	HANDLE AS. (GRAB)
	23	6T1147	1	HANDLE
C	24	5P8245	7	WASHER
BD	25	5P7905		SEAL

B USE AS REQUIRED C INDICATES CHANGE D ORDER BY THE METER 351895 351895 P

7155

6P7326 GUARD GP-RADIATOR-PART 1 OF 2
S/N 53Y3953-Up

CHASSIS AND UNDERCARRIAGE

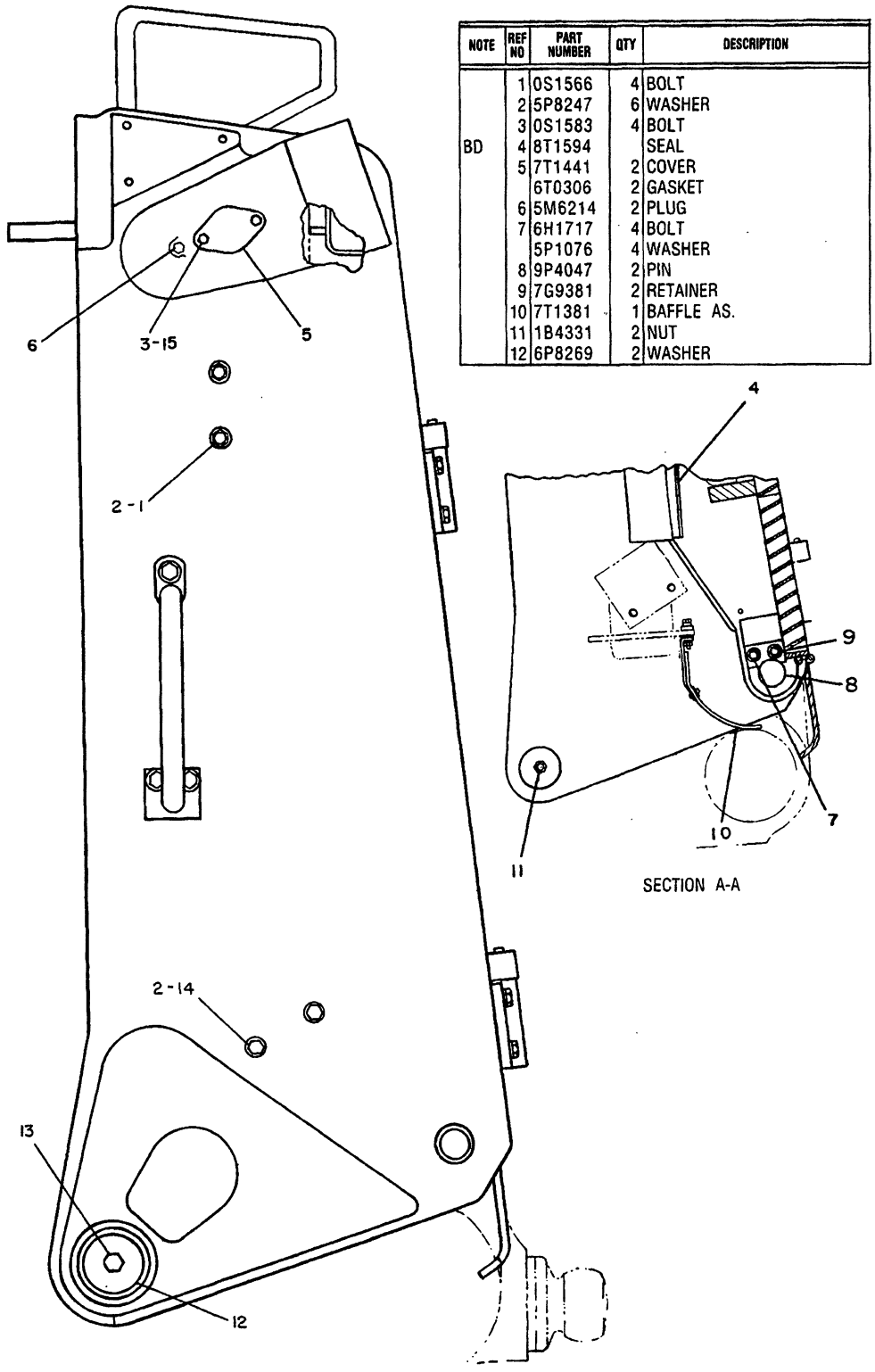

SECTION A-A

NOTE	REF NO	PART NUMBER	QTY	DESCRIPTION
	1	0S1566	4	BOLT
	2	5P8247	6	WASHER
	3	0S1583	4	BOLT
BD	4	8T1594		SEAL
	5	7T1441	2	COVER
		6T0306	2	GASKET
	6	5M6214	2	PLUG
	7	6H1717	4	BOLT
		5P1076	4	WASHER
	8	9P4047	2	PIN
	9	7G9381	2	RETAINER
	10	7T1381	1	BAFFLE AS.
	11	1B4331	2	NUT
	12	6P8269	2	WASHER
	13	1D4622	2	BOLT
	14	0S1625	2	BOLT
	15	5P8248	4	WASHER

B USE AS REQUIRED
D ORDER BY THE METER

351896

351896 P

7155 **6P7326 GUARD GP-RADIATOR-PART 2 OF 2**
S/N 53Y3953-Up

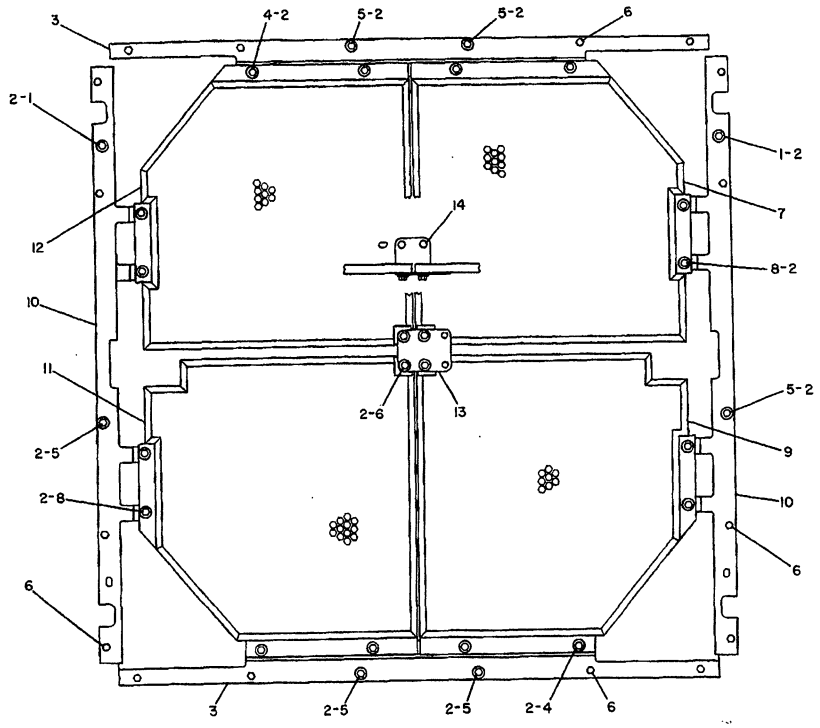

NOTE	REF NO	PART NUMBER	QTY	DESCRIPTION
	1	0L1143	2	BOLT
	2	5P1075	28	WASHER
	3	7W2054	2	PLATE AS.
	4	0S0509	8	BOLT
	5	0S1588	6	BOLT
	6	0S1594	20	BOLT
	7	4W8327	1	GRID AS. (R.H.-TOP)
	8	0T0102	8	BOLT
	9	4W8329	1	GRID AS. (R.H.-BOTTOM)
	10	7W2052	2	PLATE AS.
	11	4W8326	1	GRID AS. (L.H.-BOTTOM)
	12	4W8328	1	GRID AS. (L.H.-TOP)
	13	7W1941	1	PLATE AS.
	14	1A2029	2	BOLT

335280

335280 EP

7179

7W2208 GRID GP-SAND BLAST ERODING
For Use With 8W9904 & 4W1795 Radiators
An Attachment

MEMORANDA

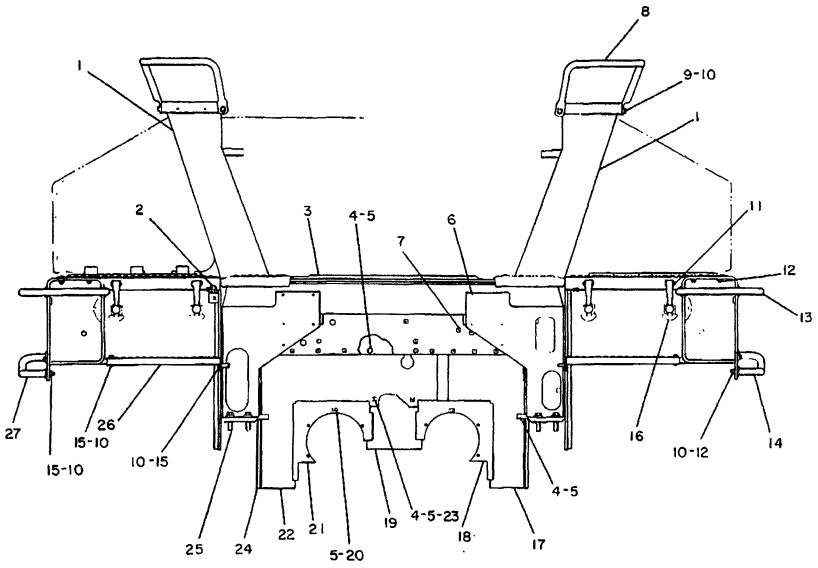

REF. NO.	PART NUMBER	DESCRIPTION	QTY.
1	9G8257	SUPPORT ASSEM.	2
2	5P8502	PADLOCK GROUP (Includes)	1
▲	5P8500	KEY	2
● 3	5P8309	SEAL---1.3 m(51.19 in.)	
4	S509	BOLT	16
5	5M2894	WASHER	24
6	7G4293	BEAM ASSEM. (Includes)	1
7	9F2978	NUT	19
8	9G9947	HANDLE	2
9	S1621	BOLT	4
10	5P8245	WASHER	16
11	2M5795	PIN	4
	3B4611	COTTER PIN	4
12	1D4717	NUT	8
	8M7145	WASHER	8
13	3T8375	HANDLE ASSEM. (Each Includes)	2
C	2B122	LOCK	1
14	9P7874	HANDLE ASSEM.	1
15	S1585	BOLT	12
16	9M3835	LATCH ASSEM.	4
17	7G7179	PLATE	1
18	7G7389	PLATE	1
19	7G7193	PLATE	1
20	S1588	BOLT	8
21	7G7390	PLATE	1
22	7G7479	PLATE ASSEM. (Includes)	1
23	9F2978	NUT	2
● 24	5P8310	SEAL---1.12m(44.10 in.)	
25	S1625	BOLT	8
	2S7593	WASHER	8
26	7G6673	STEP ASSEM.	2
27	9P7869	HANDLE ASSEM.	1

▲ NOT PART OF 6P7324 FENDER GROUP
● ORDER BY THE METER

C INDICATES CHANGE

301431

301431 P

7252

6P7324 FENDER GP-PART 1 OF 3
S/N 53Y1-3307

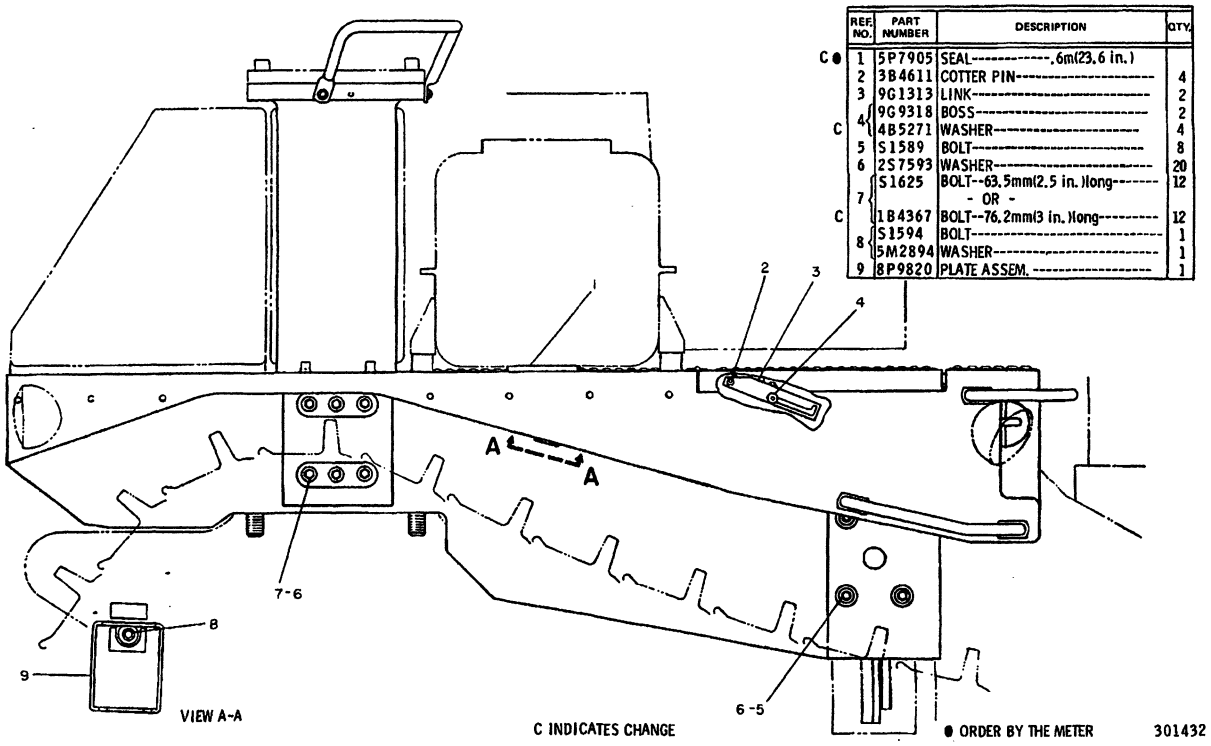

	REF. NO.	PART NUMBER	DESCRIPTION	QTY.
C●	1	5P7905	SEAL----------.6m(23.6 in.)	
	2	3B4611	COTTER PIN----------	4
	3	9G1313	LINK----------	2
	4	9G9318	BOSS----------	2
C		4B5271	WASHER----------	4
	5	S1589	BOLT----------	8
	6	2S7593	WASHER----------	20
	7	S1625	BOLT--63.5mm(2.5 in.)long-------	12
			- OR -	
C		1B4367	BOLT--76.2mm(3 in.)long---------	12
	8	S1594	BOLT----------	1
		5M2894	WASHER----------	1
	9	8P9820	PLATE ASSEM.----------	1

C INDICATES CHANGE

● ORDER BY THE METER

301432

301432 P

7252 **6P7324 FENDER GP-PART 2 OF 3**
S/N 53Y1-3307

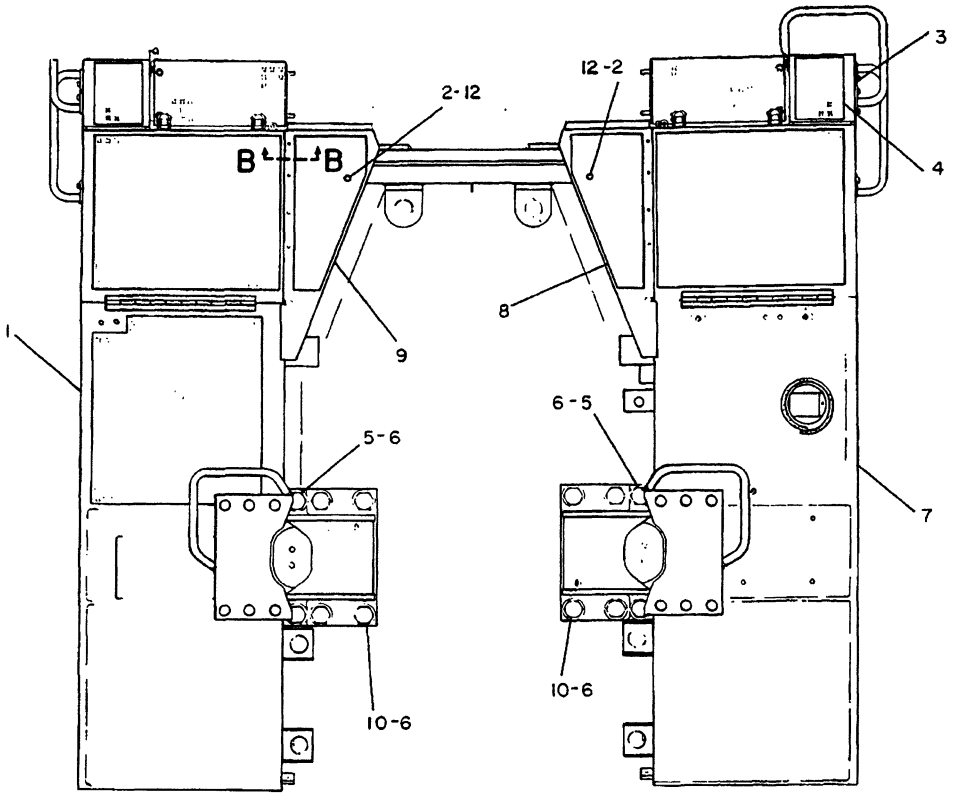

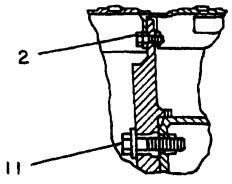

VIEW B-B

REF. NO.	PART NUMBER	DESCRIPTION	QTY.
1	9P7809	FENDER ASSEM. (Includes)	1
	1F748	NUT-----(large)----------	8
	9F2978	NUT-----(small)----------	4
2	S1594	BOLT----------	6
3	S1585	BOLT----------	4
	5P8245	WASHER----------	4
4	3T6954	PLATE ASSEM. ----------	2
5	8F1692	BOLT----------	4
6	9P4052	SPACER----------	12

	REF. NO.	PART NUMBER	DESCRIPTION	QTY.
	7	9P7227	FENDER ASSEM. (Includes) ----------	1
C		1F748	NUT----------(large)---------	10
		9F2978	NUT----------(small)--------	2
	8	9P7816	COVER ASSEM. ----------	1
	9	9P7821	COVER ASSEM. ----------	1
	10	5P9402	BOLT----------	8
	11	S1625	BOLT----------	4
		2S7593	WASHER----------	4
	12	5M2894	WASHER---2.5mm(.098 in.)thick-- - OR -	6
C		5P1075	WASHER---3mm(.118 in.)thick---	6

C INDICATES CHANGE

301433

301433 P

7252

6P7324 FENDER GP-PART 3 OF 3

S/N 53Y1-3307

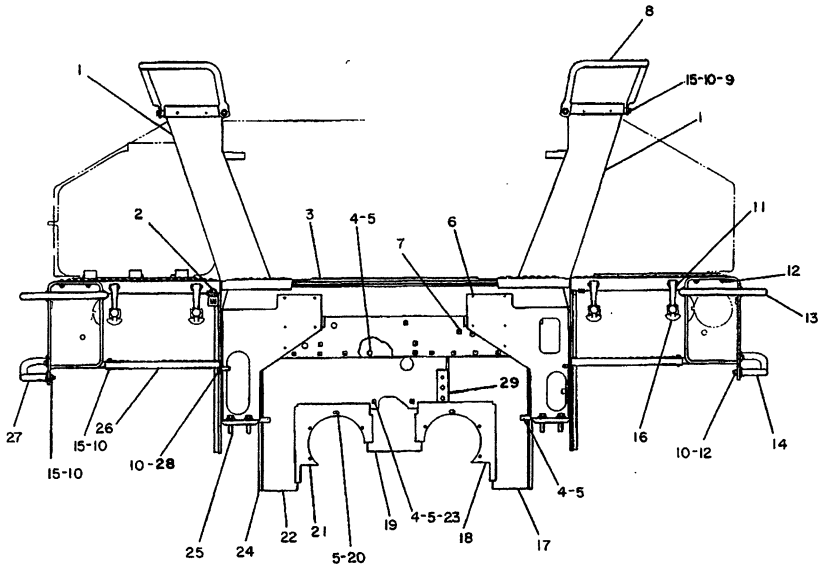

NOTE	REF NO	PART NUMBER	QTY	DESCRIPTION
	1	9G8257	2	SUPPORT AS.
	2	5P8502	1	PADLOCK GROUP
A		5P8500	2	KEY
BD		5P8309		SEAL
	4	0S0509	16	BOLT
	5	5M2894	24	WASHER
	6	7G4293	1	BEAM AS.
	7	9F2978	19	NUT
	8	9G9947	2	HANDLE
C	9	2K2794	4	SPACER
	10	5P8245	16	WASHER
	11	2M5795	4	PIN
		3B4611	4	COTTER PIN
	12	1D4717	8	NUT
		8M7145	8	WASHER
	13	3T8375	2	HANDLE AS. (EACH INCLUDES)
		2B0122	1	LOCK
	14	9P7874	1	HANDLE AS.
C	15	0S1585	8	BOLT
	16	9M3835	4	LATCH AS.
C	17	7T1345	1	PLATE
	18	7G7389	1	PLATE
	19	7G7193	1	PLATE
	20	0S1588	8	BOLT
	21	7G7390	1	PLATE
C	22	7T1343	1	PLATE AS.
	23	9F2978	2	NUT
BD	24	5P8310		SEAL
	25	0S1625	8	BOLT
		2S7593	8	WASHER
	26	7G6673	2	STEP AS.
	27	9P7869	1	HANDLE AS.
C	28	6H1717	8	BOLT
C	29	9G7959	1	GROMMET

317131

A NOT PART OF THIS GROUP
B USE AS REQUIRED
C INDICATES CHANGE
D ORDER BY THE METER

317131 P

7252 **6P7324 FENDER GP-PART 1 OF 3**
S/N 53Y3308-3484

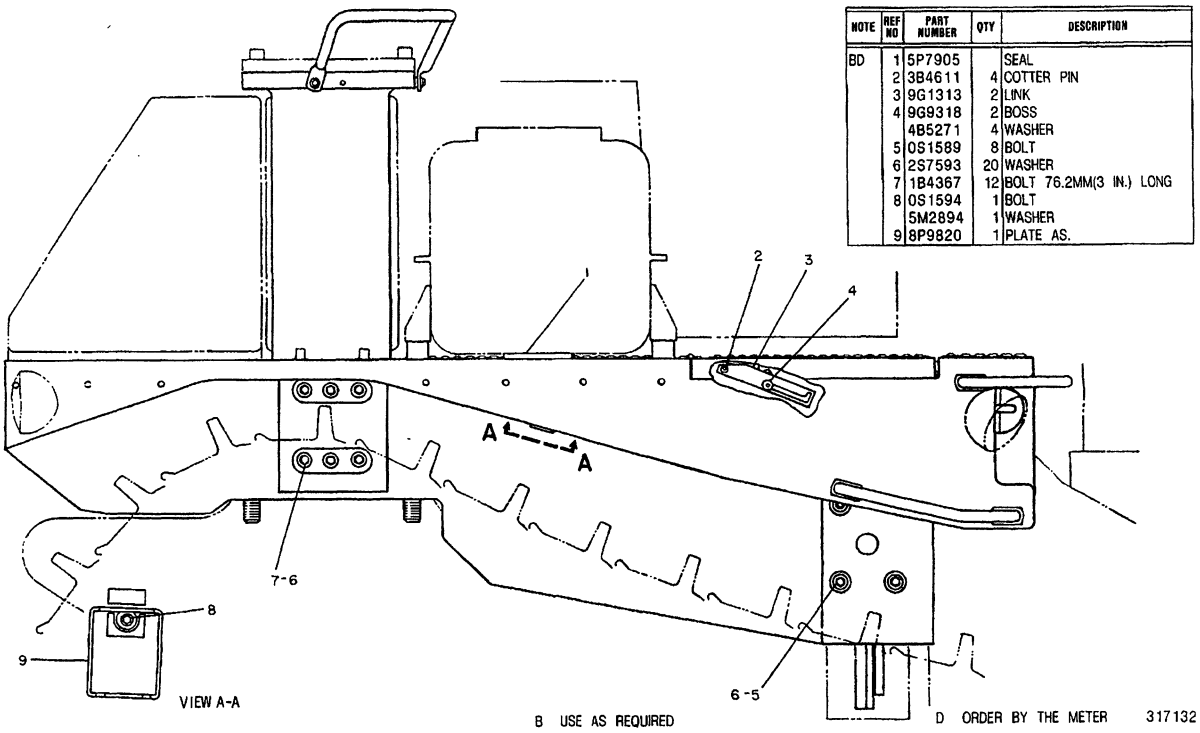

NOTE	REF NO	PART NUMBER	QTY	DESCRIPTION
BD	1	5P7905		SEAL
	2	3B4611	4	COTTER PIN
	3	9G1313	2	LINK
	4	9G9318	2	BOSS
		4B5271	4	WASHER
	5	0S1589	8	BOLT
	6	2S7593	20	WASHER
	7	1B4367	12	BOLT 76.2MM(3 IN.) LONG
	8	0S1594	1	BOLT
		5M2894	1	WASHER
	9	8P9820	1	PLATE AS.

B USE AS REQUIRED

D ORDER BY THE METER

317132

317132 P

7252

6P7324 FENDER GP-PART 2 OF 3
S/N 53Y3308-3484

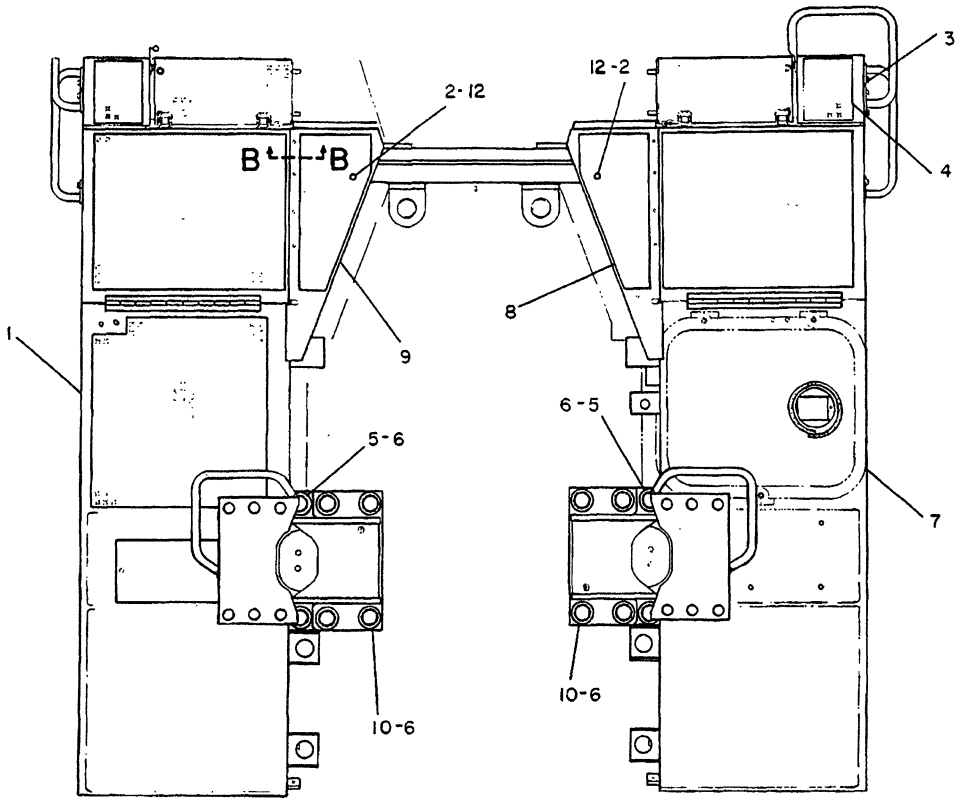

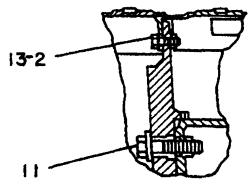

VIEW B-B

NOTE	REF NO	PART NUMBER	QTY	DESCRIPTION
	1	9P7809	1	FENDER AS.
		1F0748	8	NUT (LARGE)
		9F2978	4	NUT (SMALL)
	2	0S1594	6	BOLT
C	3	0S1585	6	BOLT
C		5P8245	6	WASHER
	4	3T6954	2	PLATE AS.
C	5	6V6584	4	BOLT 177.8MM(7IN)LONG
				-OR-
C		6V8971	4	BOLT 184.1MM(7.2IN)LONG
	6	9P4052	12	SPACER
	7	9P7227	1	FENDER AS.
		1F0748	10	NUT (LARGE)
		9F2978	2	NUT (SMALL)
	8	9P7816	1	COVER AS.
	9	9P7821	1	COVER AS.
C	10	6V6583	8	BOLT 127MM(5IN)LONG
				-OR-
C		6V8381	8	BOLT 133.3MM(5.2IN)LONG
	11	0S1625	4	BOLT
C	12	6N8863	2	WASHER
C	13	5P1075	4	WASHER

C INDICATES CHANGE

317133

317133 P

7252

6P7324 FENDER GP-PART 3 OF 3
S/N 53Y3308-3484

CHASSIS AND UNDERCARRIAGE

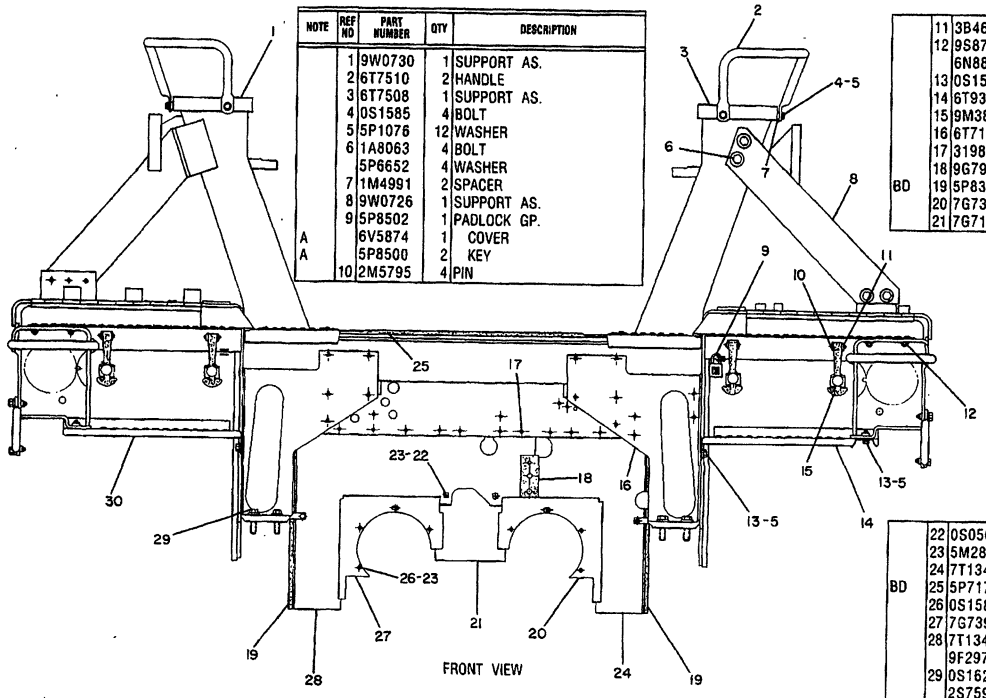

NOTE	REF NO	PART NUMBER	QTY	DESCRIPTION
	1	9W0730	1	SUPPORT AS.
	2	6T7510	2	HANDLE
	3	6T7508	1	SUPPORT AS.
	4	0S1585	4	BOLT
	5	5P1076	12	WASHER
	6	1A8063	4	BOLT
		5P6652	4	WASHER
	7	1M4991	2	SPACER
	8	9W0726	1	SUPPORT AS.
	9	5P8502	1	PADLOCK GP.
A		6V5874	1	COVER
A		5P8500	2	KEY
	10	2M5795	4	PIN
	11	3B4607	4	COTTER PIN
	12	9S8752	8	NUT
		6N8863	8	WASHER
	13	0S1595	8	BOLT
	14	6T9361	1	STEP
	15	9M3835	4	LATCH AS.
	16	6T7132	1	BEAM AS.
	17	319831	14	SCREW
	18	9G7959	1	GROMMET
BD	19	5P8310		SEAL
	20	7G7389	1	PLATE
	21	7G7193	1	PLATE
	22	0S0509	2	BOLT
	23	5M2894	10	WASHER
	24	7T1345	1	PLATE
BD	25	5P7174		SEAL
	26	0S1588	8	BOLT
	27	7G7390	1	PLATE
	28	7T1343	1	PLATE AS.
		9F2978	2	NUT
	29	0S1625	8	BOLT
		2S7593	8	WASHER
	30	6T9360	1	STEP

B USE AS REQUIRED A NOT PART OF THIS GROUP D ORDER BY THE METER

334878

334878 P

7252

6T7511 FENDER GP-PART 1 OF 3
S/N 53Y3485-4718

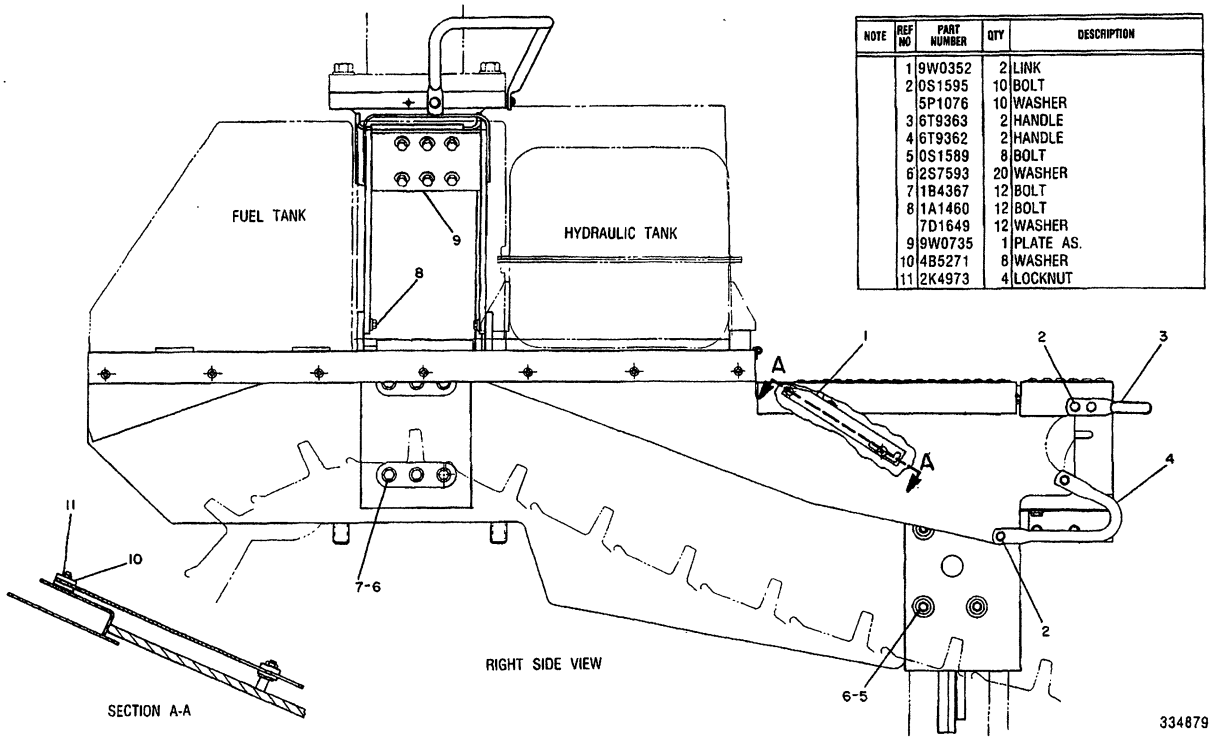

NOTE	REF NO	PART NUMBER	QTY	DESCRIPTION
	1	9W0352	2	LINK
	2	0S1595	10	BOLT
		5P1076	10	WASHER
	3	6T9363	2	HANDLE
	4	6T9362	2	HANDLE
	5	0S1589	8	BOLT
	6	2S7593	20	WASHER
	7	1B4367	12	BOLT
	8	1A1460	12	BOLT
		7D1649	12	WASHER
	9	9W0735	1	PLATE AS.
	10	4B5271	8	WASHER
	11	2K4973	4	LOCKNUT

334879 P

7252 **6T7511 FENDER GP-PART 2 OF 3**
S/N 53Y3485-4718

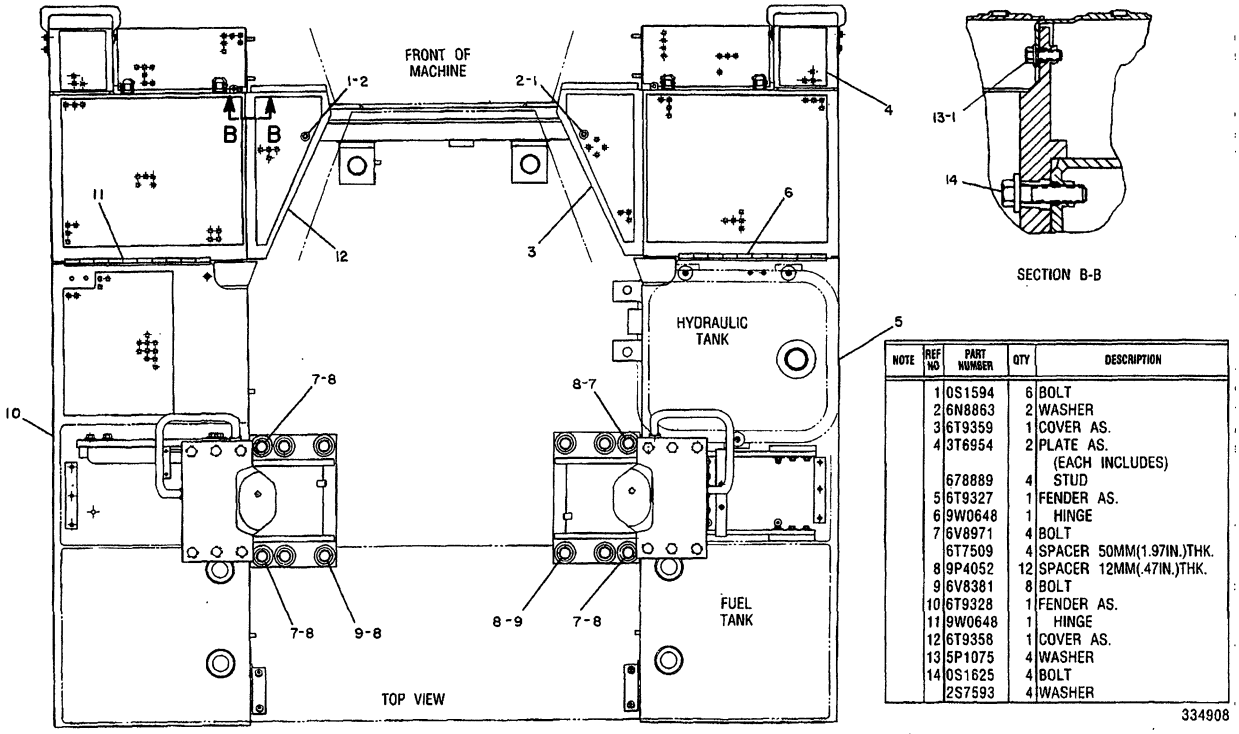

NOTE	REF NO	PART NUMBER	QTY	DESCRIPTION
	1	0S1594	6	BOLT
	2	6N8863	2	WASHER
	3	6T9359	1	COVER AS.
	4	3T6954	2	PLATE AS.
				(EACH INCLUDES)
		678889	4	STUD
	5	6T9327	1	FENDER AS.
	6	9W0648	1	HINGE
	7	6V8971	4	BOLT
		6T7509	4	SPACER 50MM(1.97IN.)THK.
	8	9P4052	12	SPACER 12MM(.47IN.)THK.
	9	6V8381	8	BOLT
	10	6T9328	1	FENDER AS.
	11	9W0648	1	HINGE
	12	6T9358	1	COVER AS.
	13	5P1075	4	WASHER
	14	0S1625	4	BOLT
		2S7593	4	WASHER

334908

334908 P

7252

6T7511 FENDER GP-PART 3 OF 3
S/N 53Y3485-4718

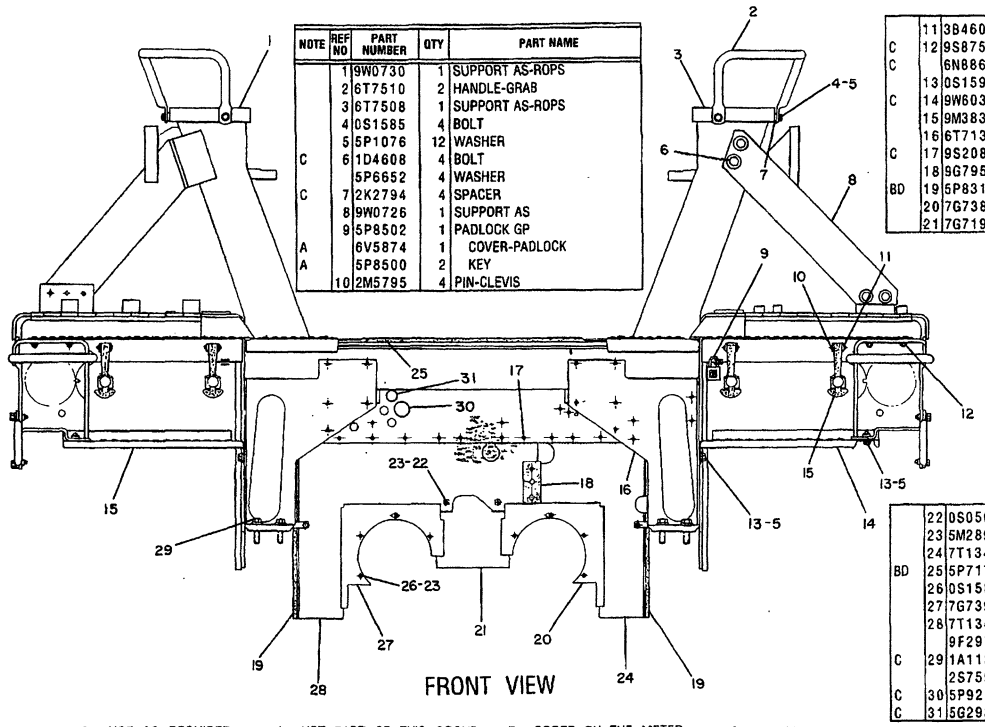

NOTE	REF NO	PART NUMBER	QTY	PART NAME
	1	9W0730	1	SUPPORT AS-ROPS
	2	6T7510	2	HANDLE-GRAB
	3	6T7508	1	SUPPORT AS-ROPS
	4	0S1585	4	BOLT
	5	5P1076	12	WASHER
C	6	1D4608	4	BOLT
		5P6652	4	WASHER
C	7	2K2794	4	SPACER
	8	9W0726	1	SUPPORT AS
	9	5P8502	1	PADLOCK GP
A		6V5874	1	COVER-PADLOCK
A		5P8500	2	KEY
	10	2M5795	4	PIN-CLEVIS
	11	3B4607	4	COTTER
C	12	9S8752	10	NUT-FULL
C		6N8863	10	WASHER-HARD
	13	0S1595	8	BOLT
C	14	9W6033	2	STEP
	15	9M3835	4	LATCH-RUBBER
	16	6T7132	1	BEAM AS
C	17	9S2087	14	SCREW-FORMING
	18	9G7959	1	GROMMET
BD	19	5P8310		SEAL
	20	7G7389	1	PLATE
	21	7G7193	1	PLATE
	22	0S0509	2	BOLT
	23	5M2894	10	WASHER
	24	7T1345	1	PLATE
BD	25	5P7174		SEAL
	26	0S1588	8	BOLT
	27	7G7390	1	PLATE
	28	7T1343	1	PLATE AS
		9F2978	2	NUT-WELD
C	29	1A1135	8	BOLT
		2S7593	8	WASHER-HARD
C	30	5P9212	1	PLUG
C	31	5G2934	1	PLUG

B USE AS REQUIRED A NOT PART OF THIS GROUP D ORDER BY THE METER C-INDICATES CHANGE

408444

408444 P

7252 **6T7511 FENDER GP-PART 1 OF 3**
S/N 53Y4719-Up

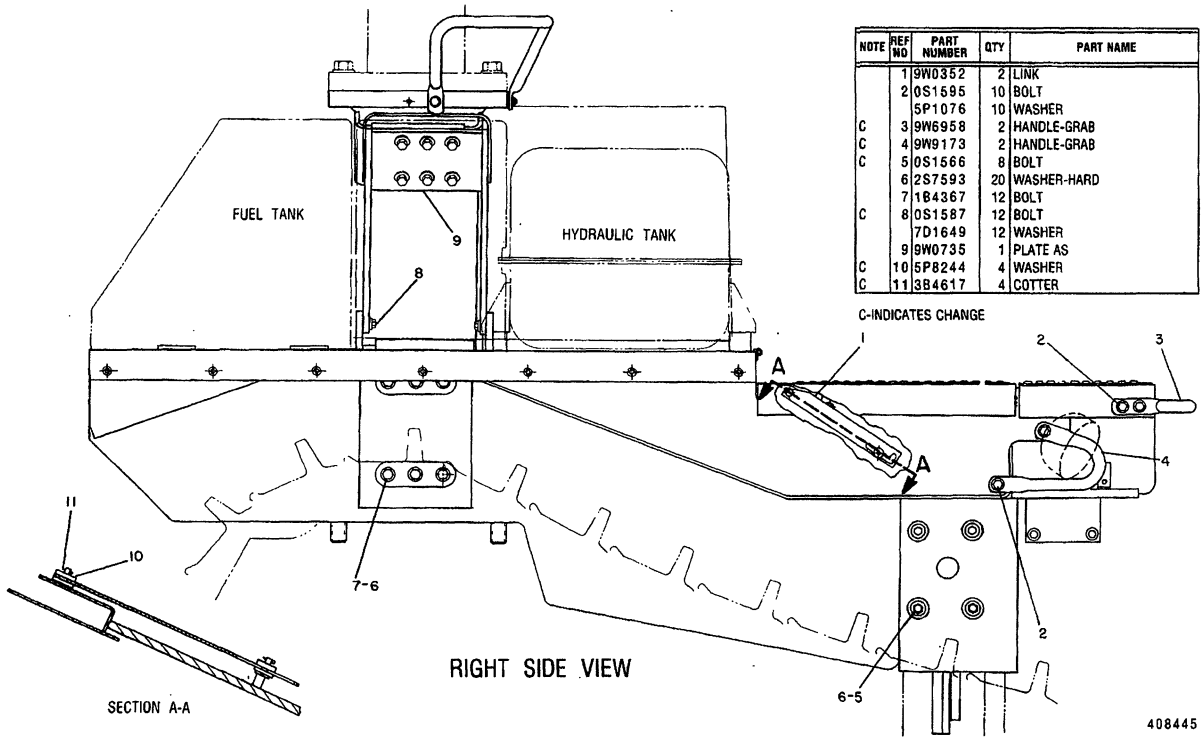

NOTE	REF NO	PART NUMBER	QTY	PART NAME
	1	9W0352	2	LINK
	2	0S1595	10	BOLT
		5P1076	10	WASHER
C	3	9W6958	2	HANDLE-GRAB
C	4	9W9173	2	HANDLE-GRAB
C	5	0S1566	8	BOLT
	6	2S7593	20	WASHER-HARD
	7	1B4367	12	BOLT
C	8	0S1587	12	BOLT
		7D1649	12	WASHER
	9	9W0735	1	PLATE AS
C	10	5P8244	4	WASHER
C	11	3B4617	4	COTTER

C-INDICATES CHANGE

408445 P

7252

6T7511 FENDER GP-PART 2 OF 3
S/N 53Y4719-Up

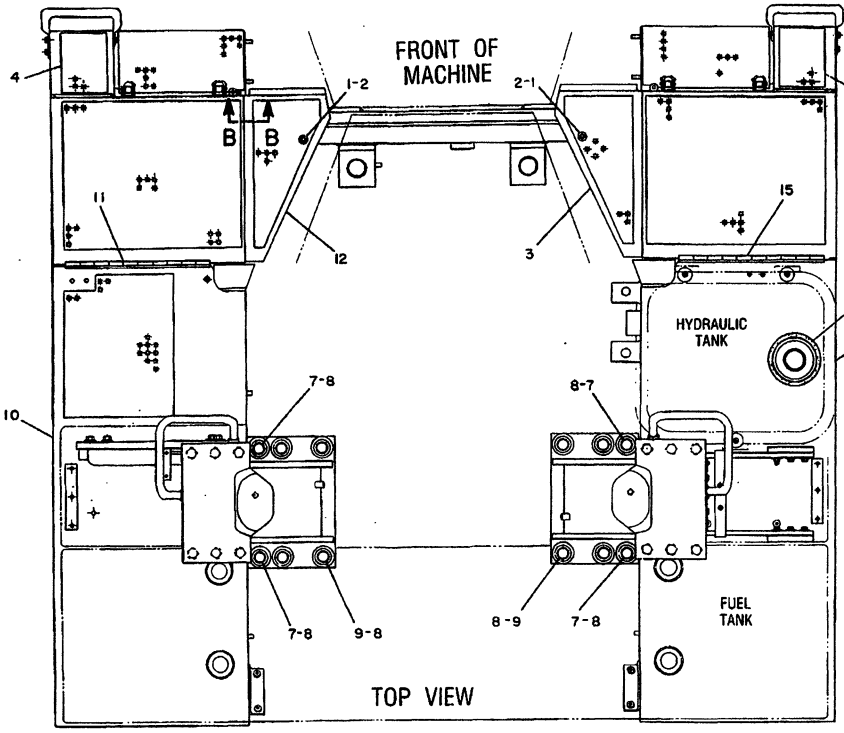

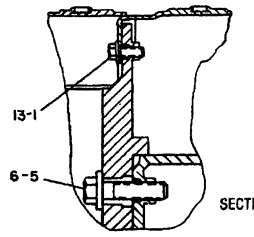

SECTION B-B

NOTE	REF NO	PART NUMBER	QTY	PART NAME
	1	0S1594	6	BOLT
	2	6N8863	2	WASHER-HARD
	3	6T9369	1	COVER AS
C	4	3T6954	1	PLATE AS
		678889	4	STUD
	5	0S1625	4	BOLT
	6	2S7593	4	WASHER-HARD
	7	6V8971	4	BOLT
		6T7509	4	SPACER 50MM(1.971IN.)THK.
	8	9P4052	12	SPACER 12MM(.471IN.)THK.
	9	6V8381	8	BOLT
C	10	9W6049	1	FENDER AS-L.H.
C		1F0748	13	NUT-WELD (LARGE)
		9F2978	2	NUT-WELD (SMALL)
	11	9W0648	1	HINGE
	12	6T9358	1	COVER AS
	13	5P1075	4	WASHER
C	14	9W6048	1	FENDER AS-R.H.
		1F0748	12	NUT-WELD (LARGE)
		9F2978	4	NUT-WELD (SMALL)
	15	9W0648	1	HINGE
CD	16	5P7905		SEAL .6M(23.6IN)
C	17	9W6739	1	PLATE AS
C		678889	6	STUD

C-INDICATES CHANGE D-ORDER BY THE METER 408446

408446 P

7252 **6T7511 FENDER GP-PART 3 OF 3**
S/N 53Y4719-Up

MEMORANDA

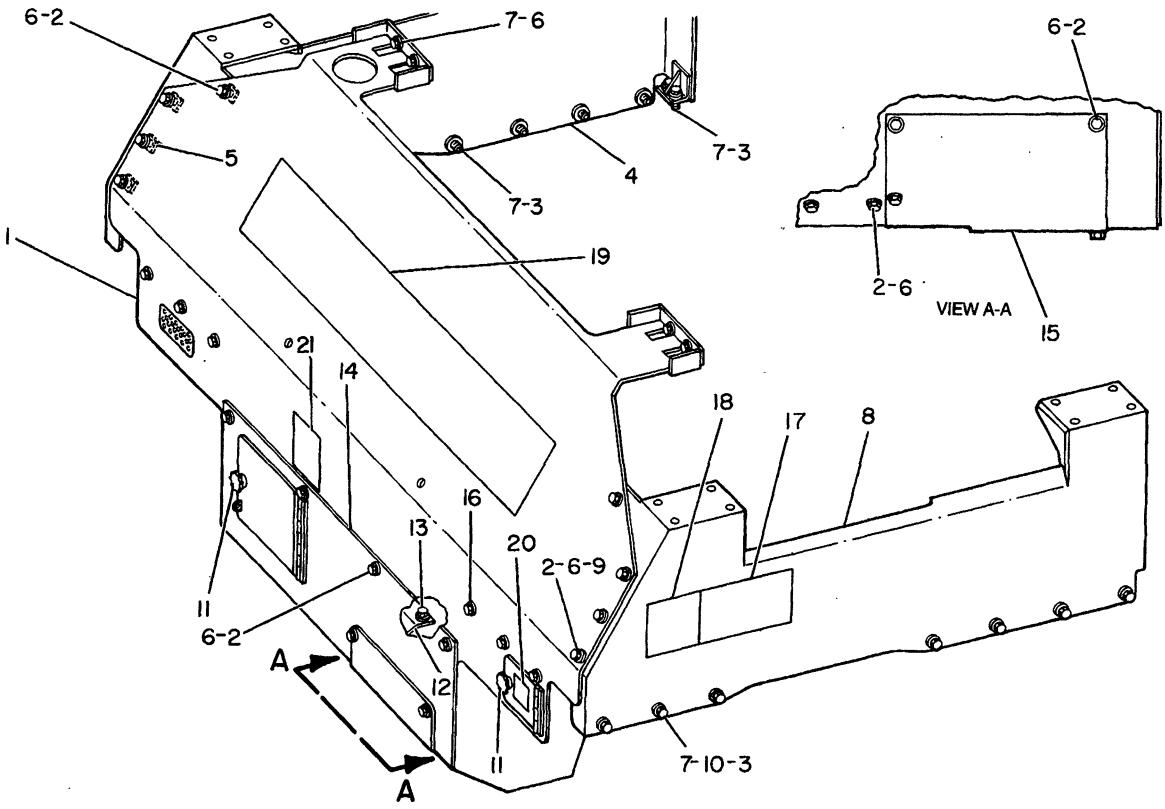

NOTE	REF NO	PART NUMBER	QTY	PART NAME	NOTE	REF NO	PART NUMBER	QTY	PART NAME
	1	7G9215	1	GUARD AS-BACK					
C	2	0S1585	18	BOLT					
C	3	5P8245	24	WASHER					
	4	7G9211	1	GUARD AS					
	5	1F0748	4	NUT					
C	6	7D1649	22	WASHER					
C	7	1A1460	22	BOLT					
	8	7G9204	1	GUARD AS					
	9	1F0748	4	NUT					
	10	1D4719	6	NUT					
	11	7S2043	2	KNOB AS					
		9S8230	2	PLATE AS					
		4H1641	2	PIN-SPRING					
	12	3T6224	1	BRACKET AS					
	13	1A0458	2	BOLT					
		5P8248	2	WASHER-HARD					
	14	3T6230	1	GUARD AS					
	15	3T6225	1	PLATE					
C	16	1A5822	6	BOLT					
C		2S1654	6	WASHER					
C	17	6V0326	2	FILM-D8L					
C	18	2P9743	2	FILM-CORPORATE SYMBOL					
C	19	8S8974	1	FILM-CATERPILLAR					
BC	20	5P8782	1	FILM-INSTRUCTION					
C	21	5P8189	1	FILM-PATENT					

B-USE AS REQUIRED
C-CHANGE FROM PREVIOUS TYPE

B- 312230 P

1273 **7G9203 GUARD GP-FUEL TANK**
Type 1. S/N 53Y1-3484
An Attachment

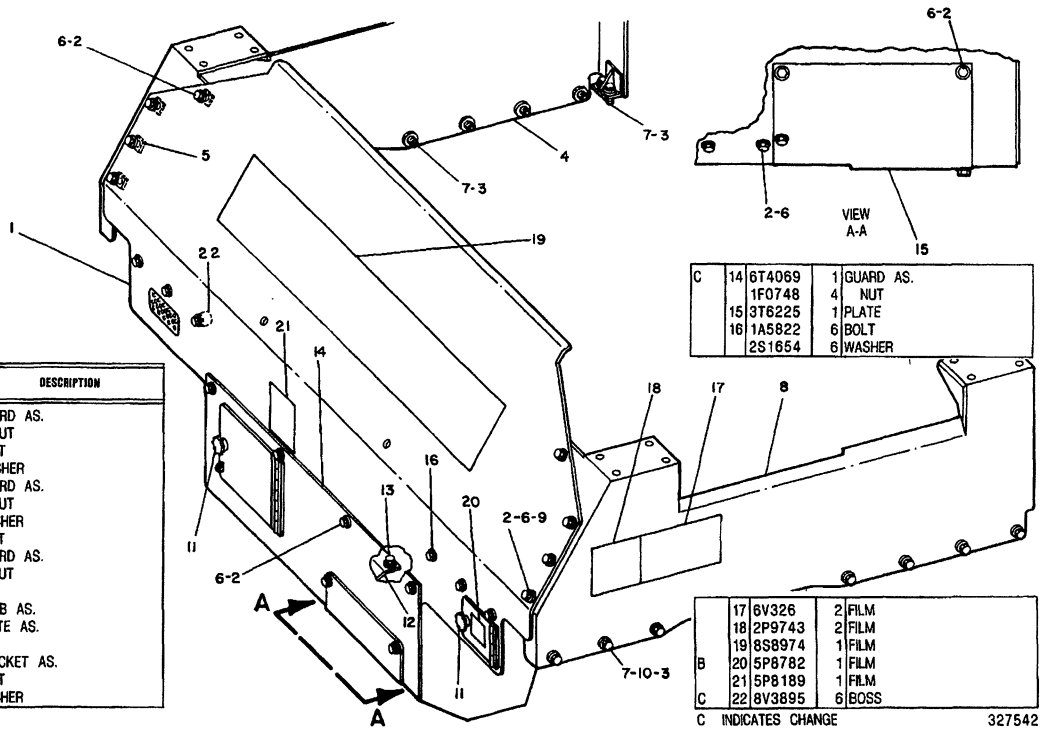

NOTE	REF NO	PART NUMBER	QTY	DESCRIPTION
C	1	6T4072	1	GUARD AS.
		1F0748	6	NUT
	2	S1585	18	BOLT
	3	5P8245	24	WASHER
	4	7G9211	1	GUARD AS.
	5	1F748	4	NUT
C	6	7D1649	18	WASHER
C	7	1A1460	18	BOLT
	8	7G9204	1	GUARD AS.
	9	1F748	4	NUT
	10	1D4719	6	NUT
	11	7S2043	2	KNOB AS.
		9S8230	2	PLATE AS.
		4H1641	2	PIN
	12	3T6224	1	BRACKET AS.
	13	1A458	2	BOLT
		5P8248	2	WASHER

B USE AS REQUIRED

C	14	6T4069	1	GUARD AS.
		1F0748	4	NUT
	15	3T6225	1	PLATE
	16	1A5822	6	BOLT
		2S1654	6	WASHER

	17	6V326	2	FILM
	18	2P9743	2	FILM
	19	8S8974	1	FILM
B	20	5P8782	1	FILM
	21	5P8189	1	FILM
C	22	8V3895	6	BOSS

C INDICATES CHANGE

327542

327542 P

7G9203 GUARD GP-FUEL TANK
Type 2. S/N 53Y1-3484
An Attachment

CHASSIS AND UNDERCARRIAGE

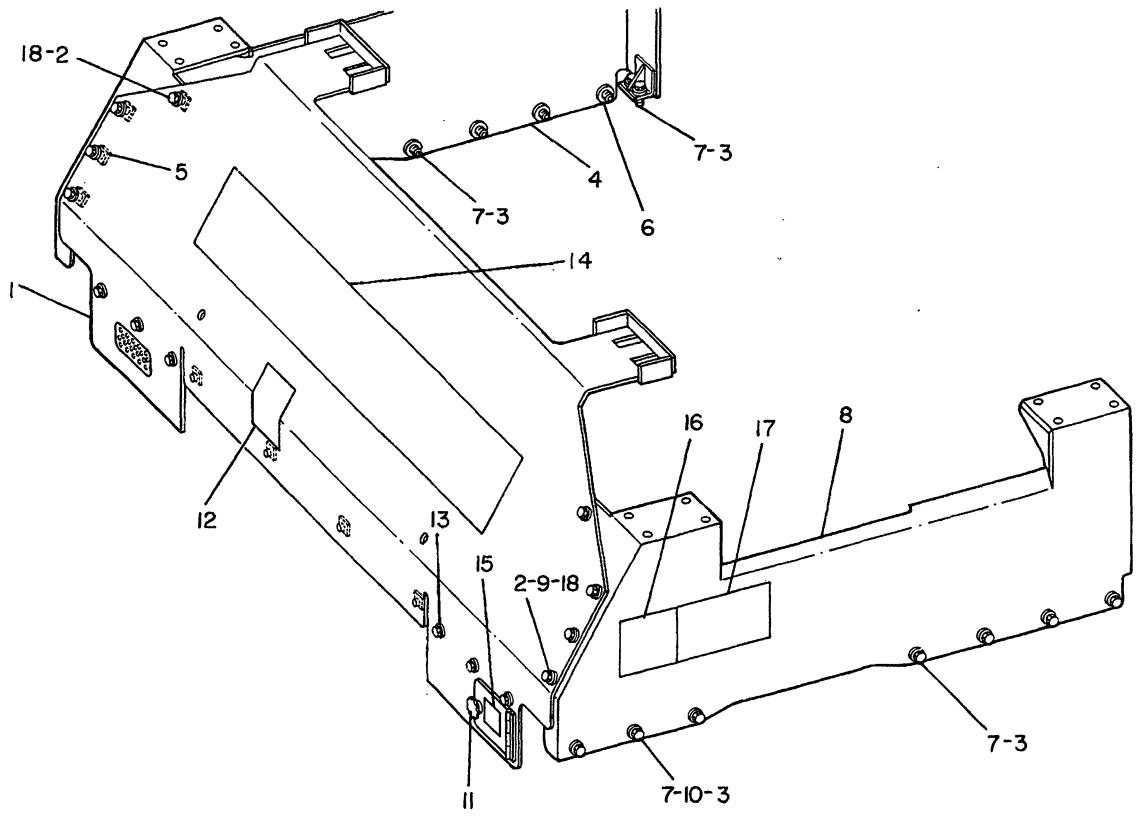

NOTE	REF NO	PART NUMBER	QTY	PART NAME	NOTE	REF NO	PART NUMBER	QTY	PART NAME
	1	6T4072	1	GUARD AS-BACK		16	2P9743	2	FILM-CORPORATE SYMBOL
		1F0748	6	NUT		17	6V0326	2	FILM-D8L
	2	0S1585	8	BOLT		18	7D1649	8	WASHER
	3	5P8245	24	WASHER					
	4	7G9211	1	GUARD AS					
		3J5169	8	NUT 1.59CM(.63IN)THD					
	5	1F0748	4	NUT 1.27CM(.5IN)THD					
	6	7F0548	7	WASHER					
	7	1A1460	18	BOLT					
	8	7G9204	1	GUARD AS					
		3J5169	8	NUT 1.59CM(.63IN)THD					
		7F0548	7	WASHER					
	9	1F0748	4	NUT 1.27CM(.5IN)THD					
	10	1D4719	6	NUT					
	11	7S2043	1	KNOB AS					
		2D4295	1	KNOB					
		3H6660	1	PIN-SPRING (LONG)					
		7S2042	1	STUD					
		9S8230	1	PLATE AS					
		4H1641	1	PIN-SPRING (SHORT)					
	12	5P8189	1	FILM-PATENT					
	13	1A5822	6	BOLT					
		2S1654	6	WASHER					
		8V3895	6	BOSS					
	14	8S8974	1	FILM-CATERPILLAR					
B	15	5P8782	1	FILM-INSTRUCTION					

B-USE AS REQUIRED

B- 328337 P

1273 **6T4073 GUARD GP-FUEL TANK**

S/N 53Y2235-3484

An Attachment

CHASSIS AND UNDERCARRIAGE

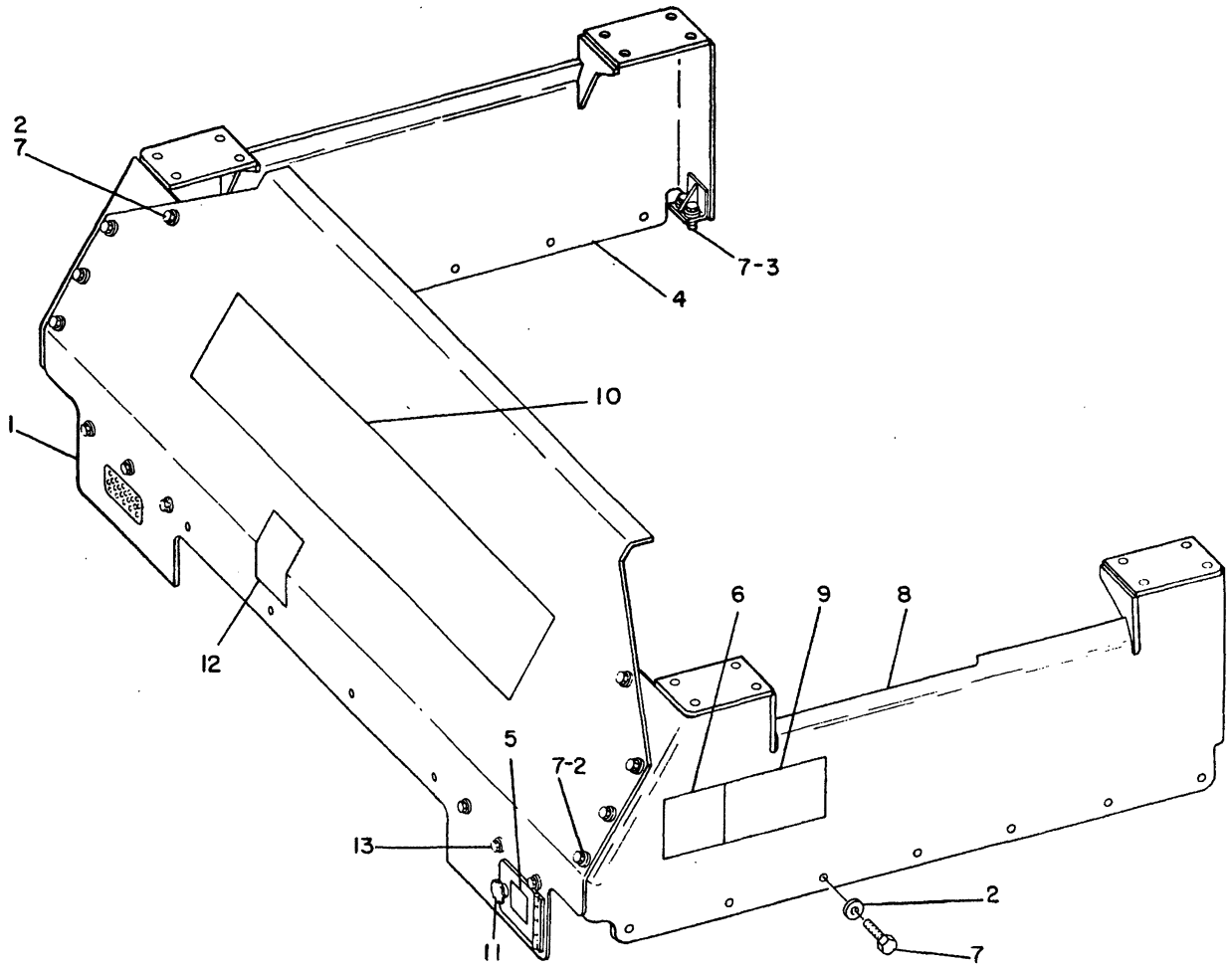

NOTE	REF NO	PART NUMBER	QTY	PART NAME	NOTE	REF NO	PART NUMBER	QTY	PART NAME
	1	7T1029	1	GUARD AS					
C	2	7D1649	22	WASHER					
C	3	5P8245	4	WASHER					
	4	7T1025	1	GUARD AS (L.H.)					
CB	5	8T3630	1	FILM-INSTRUCTION					
	6	2P9743	2	FILM-CORPORATE SYMBOL					
C	7	OS1587	26	BOLT					
	8	7T1027	1	GUARD AS					
	9	6V0326	2	FILM-D8L					
	10	8S8974	1	FILM-CATERPILLAR					
	11	7S2043	1	KNOB AS					
		2D4295	1	KNOB					
		3H6660	1	PIN-SPRING (LONG)					
		7S2042	1	STUD					
		9S8230	1	PLATE AS					
		4H1641	1	PIN-SPRING (SHORT)					
	12	5P8189	1	FILM-PATENT					
C	13	1D4566	6	BOLT					
		2S1654	6	WASHER					
		3L1704	6	SPACER					

B-USE AS REQUIRED
C-CHANGE FROM PREVIOUS TYPE

B-454391 P

1273 **7T1017 GUARD GP-FUEL TANK**
S/N 53Y3485-Up

MEMORANDA

REF. NO.	PART NUMBER	DESCRIPTION	QTY.
1	7G136	COVER AS SEM.	1
2	3B4611	COTTER	2
	4B5271	WASHER	4
3	9G1313	LINK	1
4	5P7705	PLUG	1
5	9P9898	ANGLE	1
6	S1594	BOLT	2
	8M7145	WASHER	2
7	9S8230	PLATE ASSEM.	3
8	7S2043	KNOB ASSEM.	4
		(Includes)	
	2D4295	KNOB	1
	3H6660	PIN	1
	7S2042	STUD	1
9	4H1641	PIN	3
10	9P9934	COVER ASSEM.	1

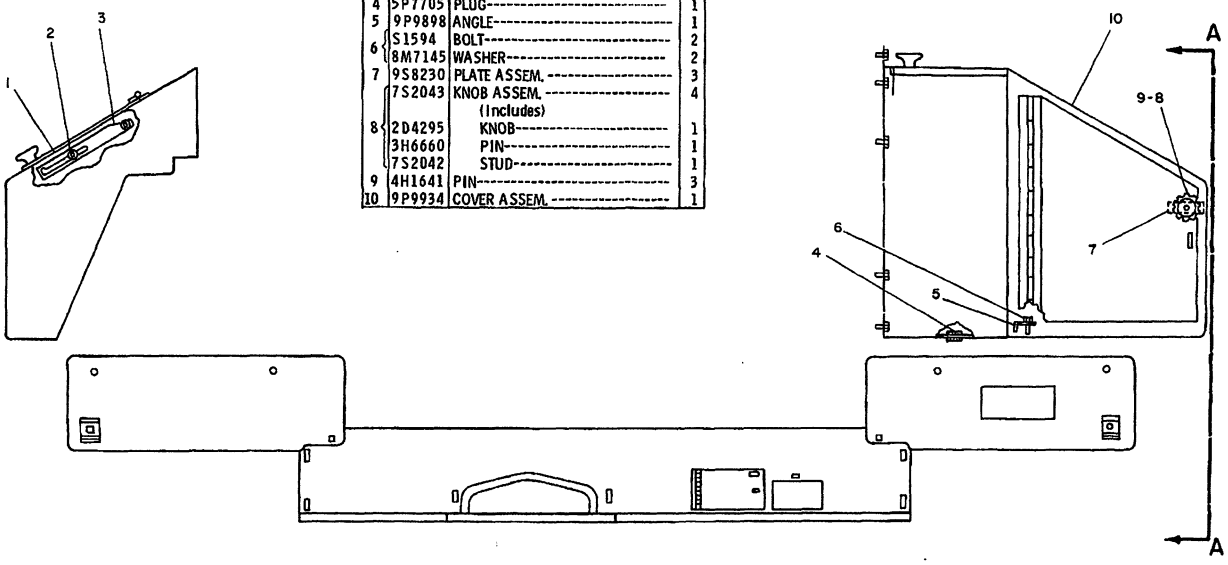

235153

235153 P

5056 **7G0108 ENCLOSURE GP-HYDRAULIC TANK-PART 1 OF 2**
S/N 53Y1-2234

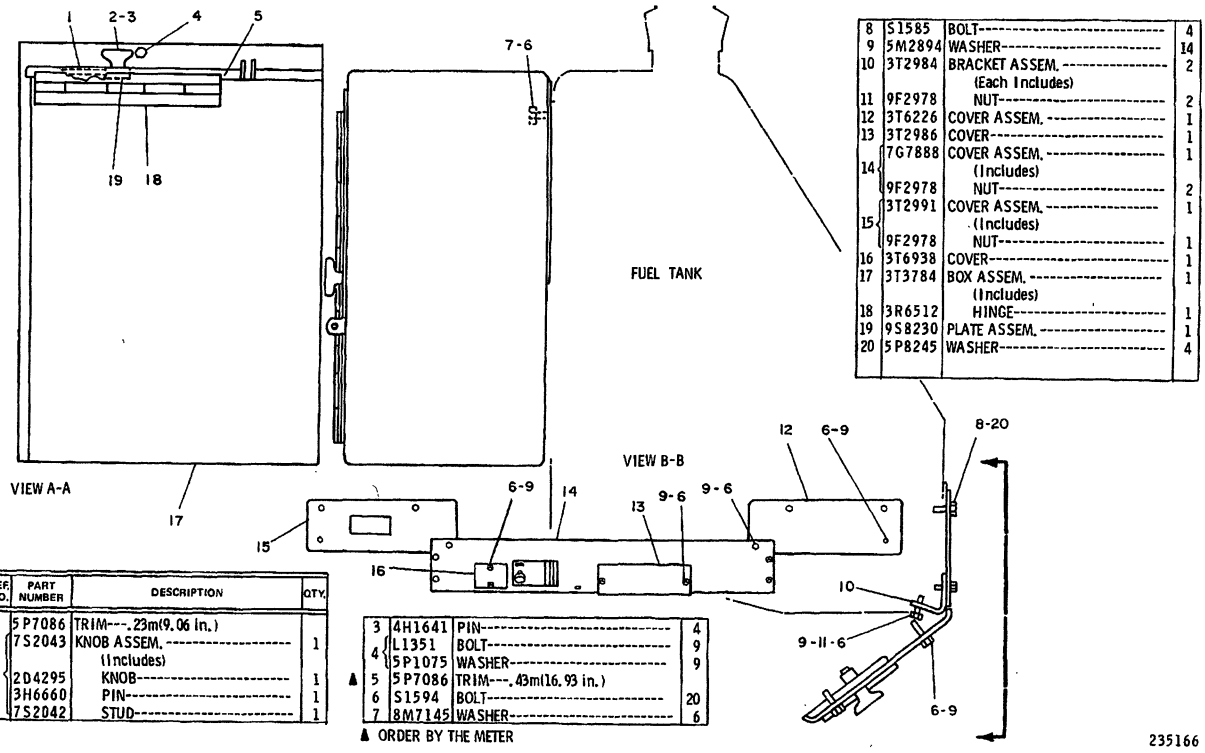

REF. NO.	PART NUMBER	DESCRIPTION	QTY.
▲ 1	5P7086	TRIM---.23m(9.06 in.)	
	7S2043	KNOB ASSEM.	1
		(Includes)	
2	2D4295	KNOB	1
	3H6660	PIN	1
	7S2042	STUD	1

3	4H1641	PIN	4
4	L1351	BOLT	9
	5P1075	WASHER	9
▲ 5	5P7086	TRIM---.43m(16.93 in.)	
6	S1594	BOLT	20
7	8M7145	WASHER	6

▲ ORDER BY THE METER

8	S1585	BOLT	4
9	5M2894	WASHER	14
10	3T2984	BRACKET ASSEM.	2
		(Each Includes)	
11	9F2978	NUT	2
12	3T6226	COVER ASSEM.	1
13	3T2986	COVER	1
14	7G7888	COVER ASSEM.	1
		(Includes)	
	9F2978	NUT	2
15	3T2991	COVER ASSEM.	1
		(Includes)	
	9F2978	NUT	1
16	3T6938	COVER	1
17	3T3784	BOX ASSEM.	1
		(Includes)	
18	3R6512	HINGE	1
19	9S8230	PLATE ASSEM.	1
20	5P8245	WASHER	4

235166 P

5056 7G0108 ENCLOSURE GP-HYDRAULIC TANK-PART 2 OF 2
S/N 53Y1-2234

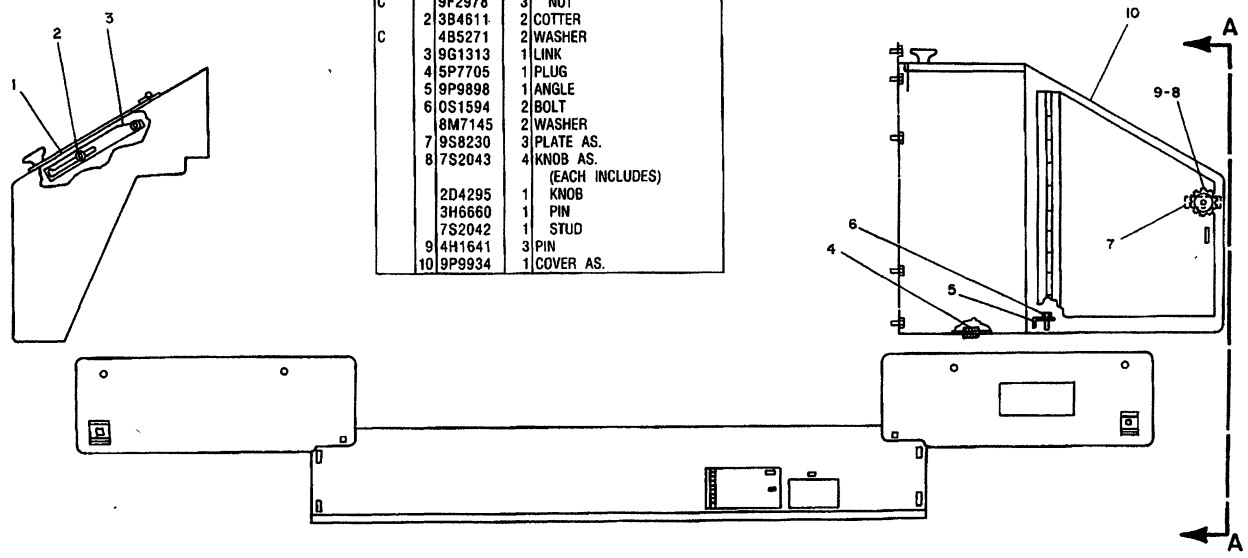

NOTE	REF NO	PART NUMBER	QTY	DESCRIPTION
	1	7G0136	1	COVER AS.
C		9F2978	3	NUT
	2	3B4611	2	COTTER
C		4B5271	2	WASHER
	3	9G1313	1	LINK
	4	5P7705	1	PLUG
	5	9P9898	1	ANGLE
	6	0S1594	2	BOLT
		8M7145	2	WASHER
	7	9S8230	3	PLATE AS.
	8	7S2043	4	KNOB AS.
				(EACH INCLUDES)
		2D4295	1	KNOB
		3H6660	1	PIN
		7S2042	1	STUD
	9	4H1641	3	PIN
	10	9P9934	1	COVER AS.

C INDICATES CHANGE

REFER TO ALL PARTS OF THIS GROUP FOR AUXILIARY VIEWS

329917

329917 P

5056 **7G0108 ENCLOSURE GP-HYDRAULIC TANK-PART 1 OF 2**
S/N 53Y2235-3484

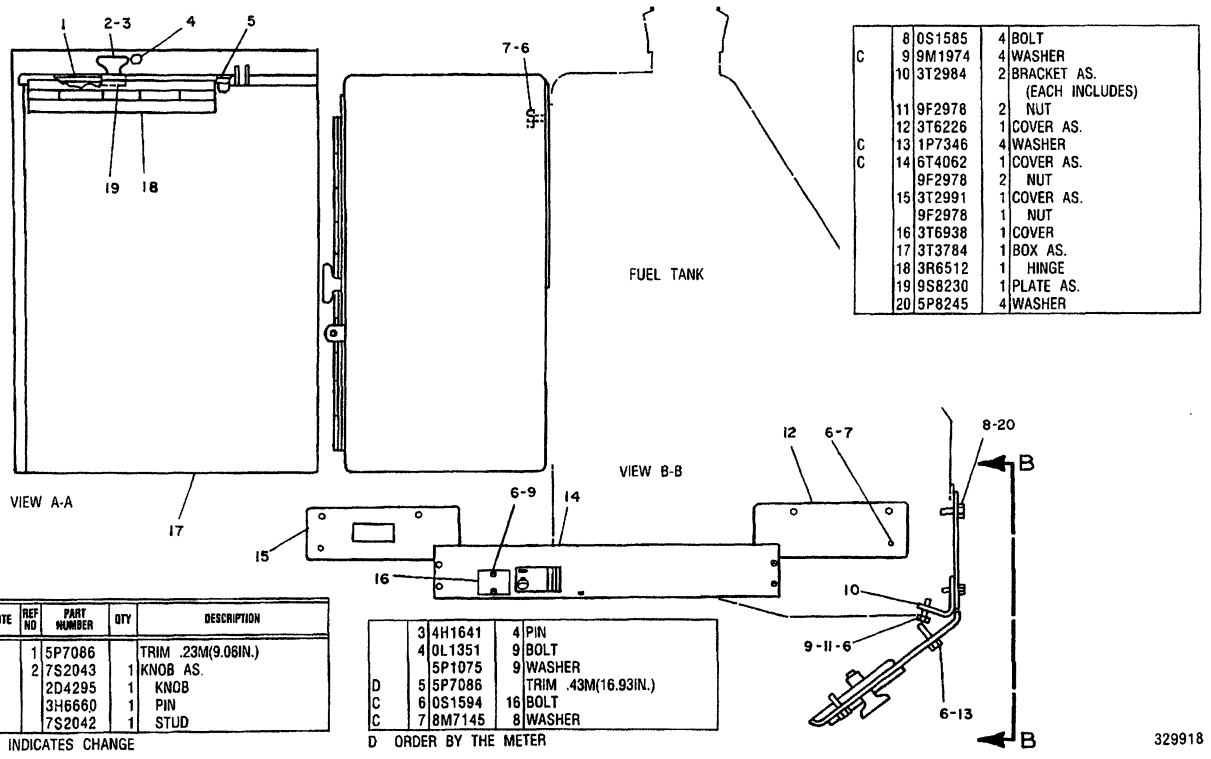

	8	0S1585	4	BOLT
C	9	9M1974	4	WASHER
	10	3T2984	2	BRACKET AS. (EACH INCLUDES)
	11	9F2978	2	NUT
	12	3T6226	1	COVER AS.
C	13	1P7346	4	WASHER
C	14	6T4062	1	COVER AS.
		9F2978	2	NUT
	15	3T2991	1	COVER AS.
		9F2978	1	NUT
	16	3T6938	1	COVER
	17	3T3784	1	BOX AS.
	18	3R6512	1	HINGE
	19	9S8230	1	PLATE AS.
	20	5P8245	4	WASHER

NOTE	REF NO	PART NUMBER	QTY	DESCRIPTION
D	1	5P7086		TRIM .23M(9.06IN.)
	2	7S2043	1	KNOB AS.
		2D4295	1	KNOB
		3H6660	1	PIN
		7S2042	1	STUD

C INDICATES CHANGE

	3	4H1641	4	PIN
	4	0L1351	9	BOLT
		5P1075	9	WASHER
D	5	5P7086		TRIM .43M(16.93IN.)
C	6	0S1594	16	BOLT
C	7	8M7145	8	WASHER

D ORDER BY THE METER

329918 P

5056 **7G0108 ENCLOSURE GP-HYDRAULIC TANK-PART 2 OF 2**
S/N 53Y2235-3484

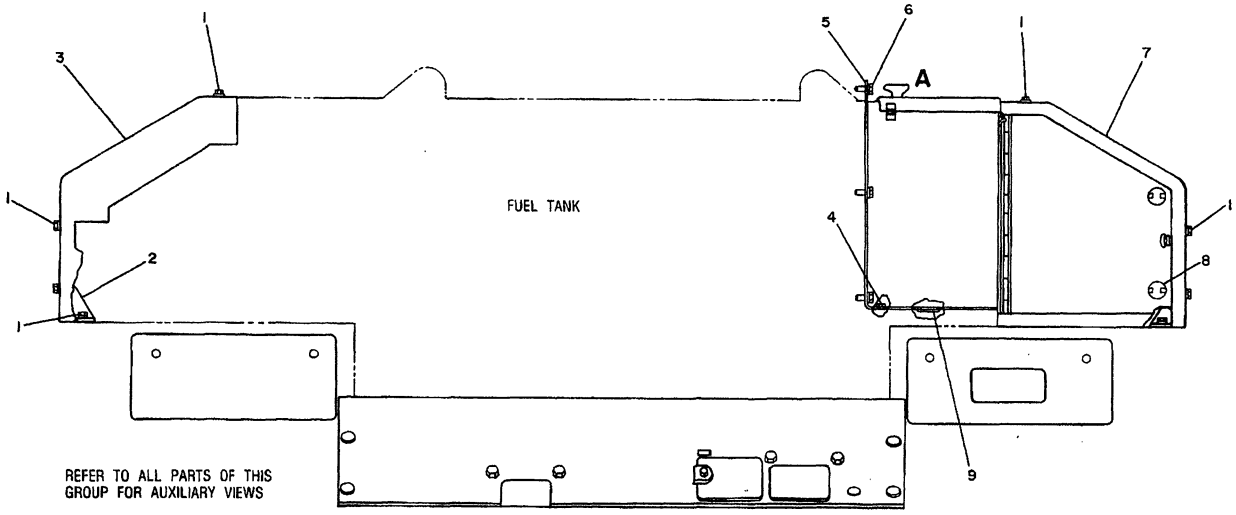

REFER TO ALL PARTS OF THIS GROUP FOR AUXILIARY VIEWS

NOTE	REF NO	PART NUMBER	QTY	DESCRIPTION
	1	0S1621	18	BOLT
		5P1076	18	WASHER
	2	7T9052	2	PLATE AS.
	3	7T0853	1	COVER
	4	6H3615	4	PLUG
	5	7T4385	1	BOX AS.
		9F2978	4	NUT (WELD)
	6	0L1351	8	BOLT
		5P1075	8	WASHER
	7	7T0852	1	COVER AS.
	8	6D1746	2	BOLT
		3B4610	2	COTTER PIN
		4B4280	2	WASHER
	9	5P7705	1	PLUG

334893

334893 P

1273 **7T0837 ENCLOSURE GP-HYDRAULIC TANK-PART 1 OF 2**
S/N 53Y3485-Up

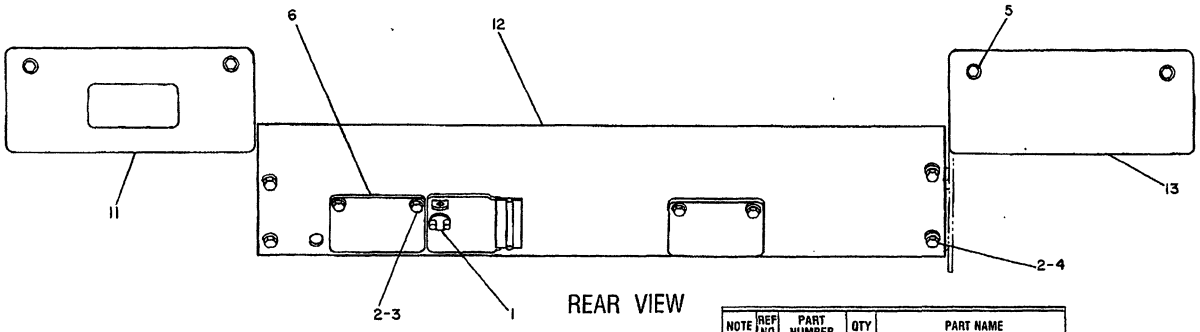

REAR VIEW

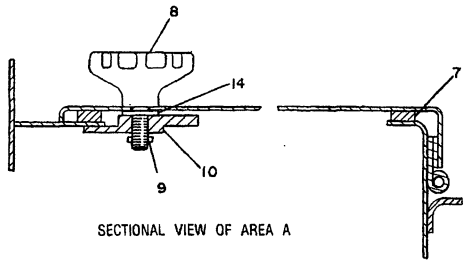

SECTIONAL VIEW OF AREA A

NOTE	REF NO	PART NUMBER	QTY	PART NAME
	1	6D1746	1	BOLT
		3B4610	1	COTTER
		4B4280	1	WASHER
	2	0S1594	8	BOLT
	3	5M2894	4	WASHER
	4	1P7346	4	WASHER
	5	0S1585	4	BOLT
		5P8245	4	WASHER
	6	2V8077	2	PLATE
BD	7	5P5639		SEAL
	8	7T5067	1	KNOB AS
		2D4295	1	KNOB
		3H6660	1	PIN-SPRING
	9	4H1641	1	PIN-SPRING
	10	9S8230	1	PLATE AS
	11	9W3719	1	PLATE
	12	9W3716	1	COVER AS
		1F0748	1	NUT-WELD (SQUARE)
		9F2978	4	NUT-WELD (HEXAGON)
	13	9W3720	1	PLATE
C	14	5P1075	1	WASHER

D ORDER BY THE METER C-INDICATES CHANGE B USE AS REQUIRED

406478

406478 P

1273 7T0837 ENCLOSURE GP-HYDRAULIC TANK-PART 2 OF 2
S/N 53Y3485-Up

CHASSIS AND UNDERCARRIAGE

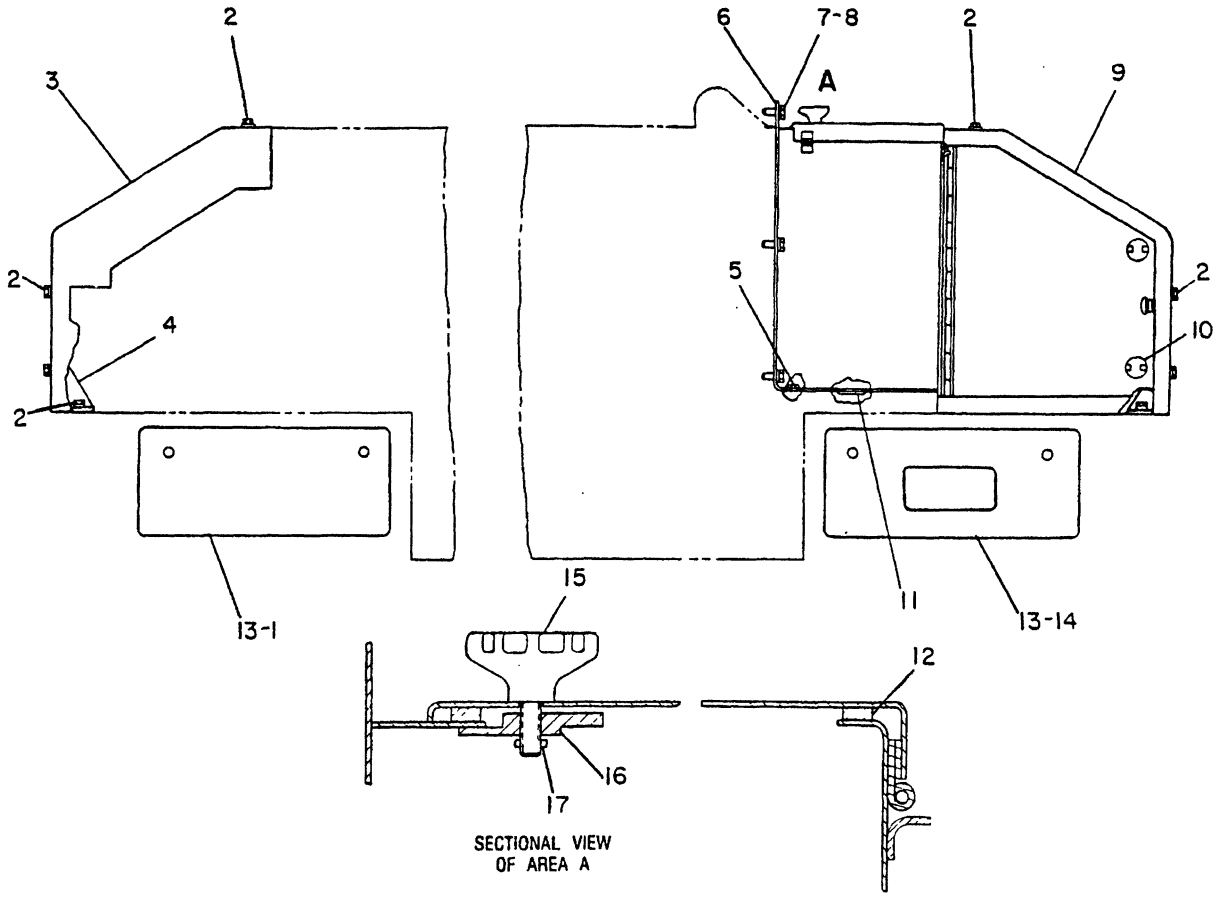

NOTE	REF NO	PART NUMBER	QTY	PART NAME	NOTE	REF NO	PART NUMBER	QTY	PART NAME
	1	9W3720	1	PLATE					
	2	0S1621	18	BOLT (1/2-13X1.0IN)					
		5P1076	18	WASHER-HARD					
	3	7T0853	1	COVER					
	4	7T9052	2	PLATE AS					
				(EACH INCLUDES)					
		1F0748	4	NUT					
	5	6H3615	4	PLUG-PROTECTION					
	6	7T4385	1	BOX AS					
	7	0L1351	8	BOLT (3/8-16X.875IN)					
	8	5P1075	8	WASHER-HARD					
	9	7T0852	1	COVER AS					
		1F0748	2	NUT					
	10	6D1746	2	BOLT					
		4B4280	2	WASHER					
		3B4610	2	COTTER					
	11	5P7705	1	PLUG-BUTTON					
BD	12	5P5639		SEAL					
	13	0S1585	4	BOLT (1/2-13X1.5IN)					
		5P8245	4	WASHER					
	14	9W3719	1	PLATE					
	15	7T5067	1	KNOB AS					
		2D4295	1	KNOB					
		3H6660	1	PIN-SPRING					
	16	9S8230	1	PLATE AS					
	17	4H1641	1	PIN-SPRING					

B-USE AS REQUIRED
D-ORDER BY THE METER

B-348012 P

5357 **9W3721 ENCLOSURE GP**
Part Of 9W0574 Control Ar
An Attachment

MEMORANDA

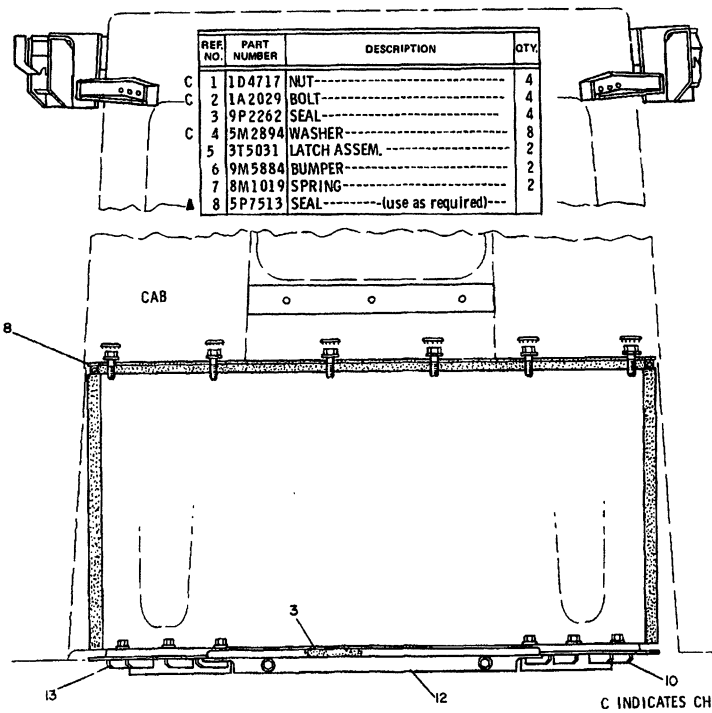

	REF. NO.	PART NUMBER	DESCRIPTION	QTY.
C	1	1D4717	NUT	4
C	2	1A2029	BOLT	4
	3	9P2262	SEAL	4
C	4	5M2894	WASHER	8
	5	3T5031	LATCH ASSEM.	2
	6	9M5884	BUMPER	2
	7	8M1019	SPRING	2
▲	8	5P7513	SEAL---(use as required)---	

C INDICATES CHANGE

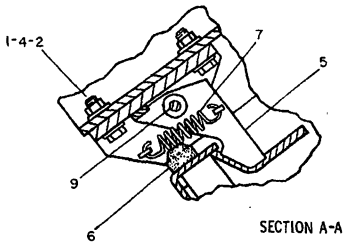

SECTION A-A

9	9P1976	PIN	2
	3B4617	COTTER PIN	2
	5B9628	WASHER	2
10	7G1785	PLATE ASSEM. (Includes)	1
	9F2978	NUT	3
11	7G1744	PLATE	1
12	7G1786	PLATE ASSEM. (Includes)	1
	9F2978	NUT	3

▲ ORDER BY THE METER

335241

335241 P

7301

3T7252 MOUNTING GP-CAB-PART 1 OF 2

S/N 53Y1-3484

Part Of 6T8696 Cab Ar

An Attachment

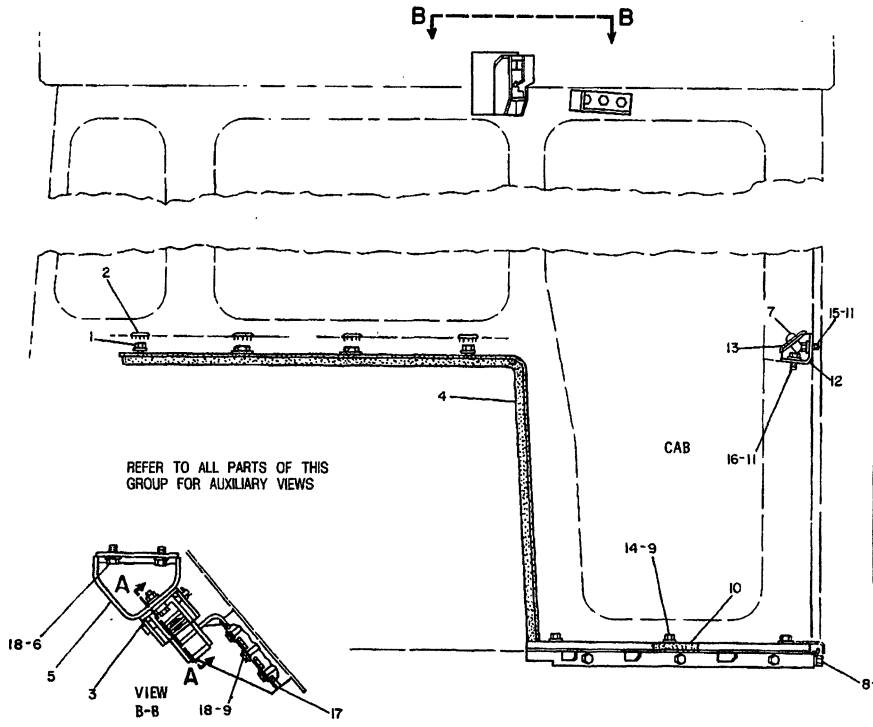

NOTE	REF NO	PART NUMBER	QTY	DESCRIPTION
	1	S1590	12	BOLT
		9M6527	12	WASHER
	2	4F8711	12	PLUG
	3	3T5022	2	BRACKET
BD	4	5P7513		SEAL
	5	7G7637	1	BRACKET AS. (L.H.)
		7G7646	1	BRACKET AS. (R.H.)
	6	S509	8	BOLT
C	7	6V1193	2	SCREW
C		4B4278	2	WASHER
	8	S1588	2	BOLT
C	9	S1594	12	BOLT
BD	10	5P5755		SEAL
	11	1P7346	6	WASHER
C	12	6T918	1	PLATE AS.
C	13	6T1150	1	COVER
	14	3V3308	8	WASHER
	15	5D353	3	BOLT
	16	2J3118	3	BOLT
	17	7G7633	1	PLATE AS. (L.H.)
		7G7634	1	PLATE AS. (R.H.)
	18	5M2894	14	WASHER

B USE AS REQUIRED
C INDICATES CHANGE
D ORDER BY THE METER

312196

312196 P

7301

3T7252 MOUNTING GP-CAB-PART 2 OF 2
S/N 53Y1-3484
Part Of 6T8696 Cab Ar
An Attachment

CHASSIS AND UNDERCARRIAGE

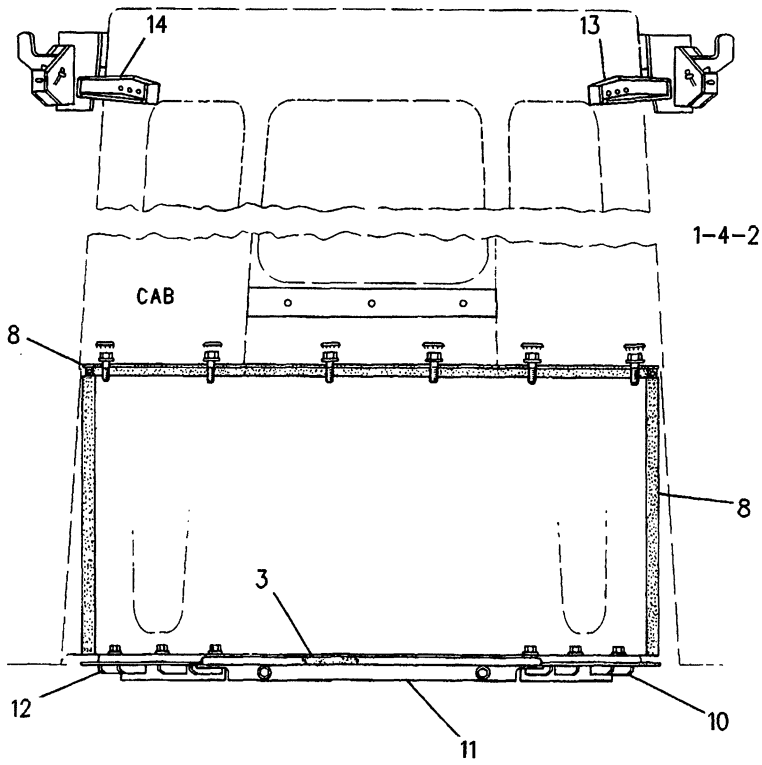

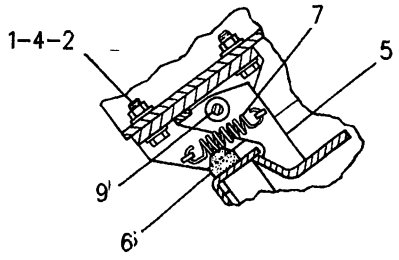

SECTION A-A

REFER TO ALL ILLUSTRATIONS OF THIS GROUP FOR AUXILIARY VIEWS

NOTE	REF NO	PART NUMBER	QTY	PART NAME	NOTE	REF NO	PART NUMBER	QTY	PART NAME
	1	5P1075	8	WASHER-HARD					
C	2	9B7237	4	BOLT					
	3	9P2262	1	SEAL					
	4	1D4717	4	NUT					
	5	3T5031	2	LATCH					
	6	9M5884	2	BUMPER					
C	7	8C3442	2	SPRING-COIL					
BD	8	5P7513		SEAL					
C	9	8C3441	2	PIN-CLEVIS					
		3B4617	2	COTTER (PIN)					
		5B9628	2	WASHER					
	10	7G1785	1	PLATE AS					
		9F2978	3	NUT-WELD					
	11	7G1744	1	PLATE					
	12	7G1786	1	PLATE AS					
		9F2978	3	NUT-WELD					
	13	7T0353	1	PLATE AS					
	14	7T0354	1	PLATE AS					

B-USE AS REQUIRED
C-CHANGE FROM PREVIOUS TYPE
D-ORDER BY THE METER

B-349990 EP

7301 **7T1350 MOUNTING GP-CAB-PART 1 OF 2**

S/N 53Y3485-Up
Part Of 7T2563 Cab Ar
An Attachment

CHASSIS AND UNDERCARRIAGE

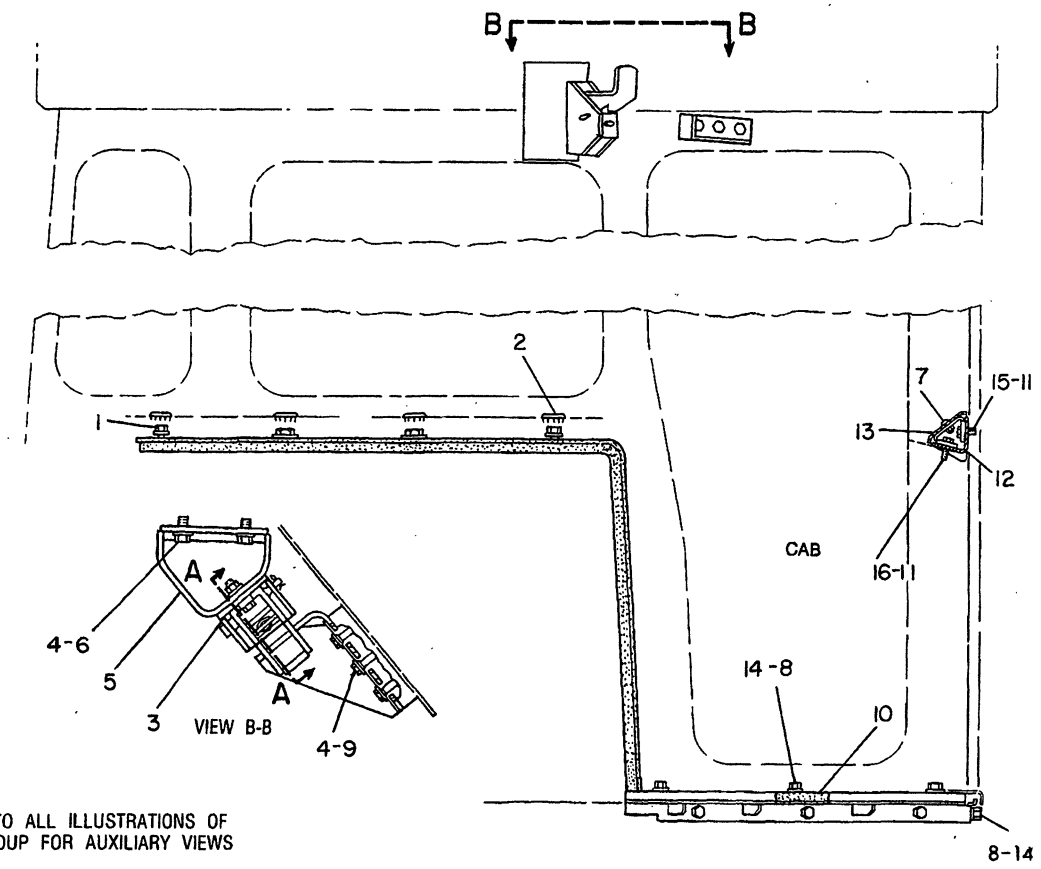

REFER TO ALL ILLUSTRATIONS OF
THIS GROUP FOR AUXILIARY VIEWS

NOTE	REF NO	PART NUMBER	QTY	PART NAME	NOTE	REF NO	PART NUMBER	QTY	PART NAME
	1	0S1590	12	BOLT					
C		8M7145	12	WASHER					
	2	4F8711	12	PLUG					
	3	3T5022	2	BRACKET					
	4	5P1075	14	WASHER-HARD					
	5	7T0351	1	BRACKET AS (LH)					
		7T0347	1	BRACKET AS (RH)					
C	6	5M3062	8	BOLT					
	7	6V1193	2	SCREW-HEX SOCKET					
		4B4278	2	WASHER					
C	8	5S7379	14	BOLT					
C	9	4L6454	6	BOLT					
BD	10	5P5755		SEAL					
	11	1P7346	6	WASHER					
	12	6T0918	1	PLATE AS					
	13	6T1150	1	COVER					
C	14	3V3308	14	WASHER					
	15	5D0353	3	BOLT-LOCKING					
	16	2J3118	3	BOLT-LOCKING					

B-USE AS REQUIRED
C-CHANGE FROM PREVIOUS TYPE
D-ORDER BY THE METER

B-349991 EP

7301 **7T1350 MOUNTING GP-CAB-PART 2 OF 2**
S/N 53Y3485-Up
Part Of 7T2563 Cab Ar
An Attachment

CHASSIS AND UNDERCARRIAGE

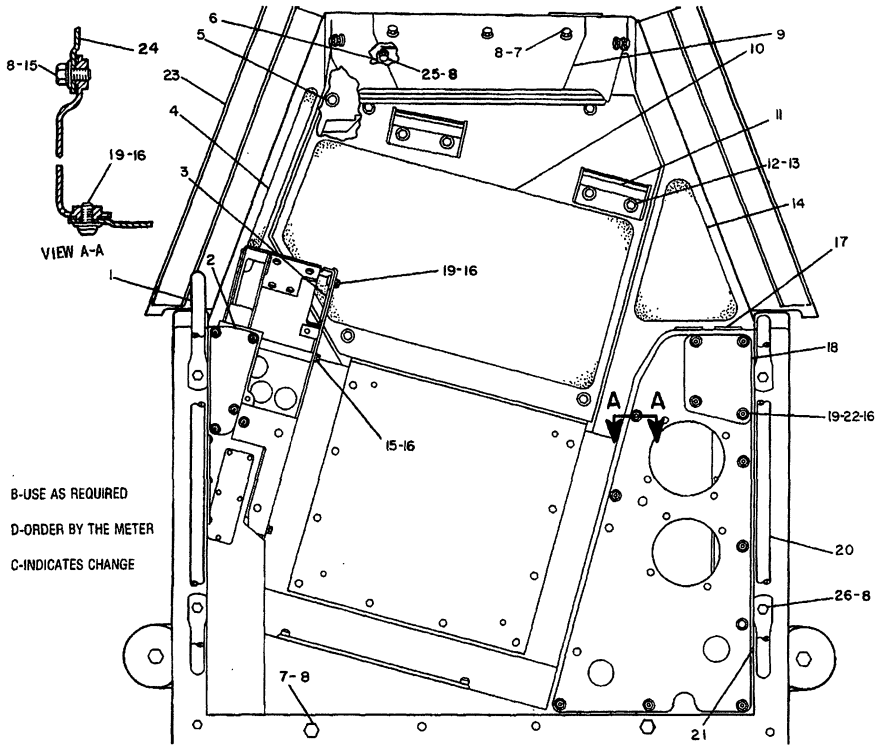

NOTE	REF NO	PART NUMBER	QTY	PART NAME
	1	3T3634	1	HANDLE-GRAB
	2	7G6657	1	COVER
		7G6658	1	GASKET
	3	7G6753	1	COVER AS
		9F2978	3	NUT
BD	4	5P5894		TREAD
	5	1D4615	2	BOLT
		5P6652	2	WASHER-HARD
		3T3462	2	PLATE
		3T3445	4	MOUNTING
	6	3T4756	1	COVER
C	7	0L1351	7	BOLT
C	8	5P1075	19	WASHER
	9	3T2294	1	DASH AS
		9F2978	4	NUT
BD	10	5P5898		TREAD
	11	9P1444	2	SUPPORT AS-FOOT
	12	0S1621	4	BOLT
	13	5P8245	4	WASHER
BD	14	5P5899		TREAD
	15	0S0509	11	BOLT
	16	5M2894	20	WASHER
	17	7G3411	6	COVER
	18	7G6742	1	COVER
		7G6743	1	GASKET
	19	6J0488	13	SCREW-HEAD
	20	3T3635	1	HANDLE-GRAB
	21	4B4158	4	SCREW-DRIVE
	22	7G6741	4	SPACER
	23	3T3951	1	PLATE AS
	24	7G6723	1	COVER
		7G6724	1	GASKET
C	25	0S1594	4	BOLT
C	26	1A2029	4	BOLT

354935

354935 P

7253 **9G5115 PLATFORM GP-PART 1 OF 3**
S/N 53Y1-3484

NOTE	REF NO	PART NUMBER	QTY	PART NAME
	1	6V1950	1	PLUG-BUTTON
	2	3T1462	1	MODULE AS-OPR
C		1F0748	6	NUT-WELD (LARGE)
C		9F2978	60	NUT (SMALL)

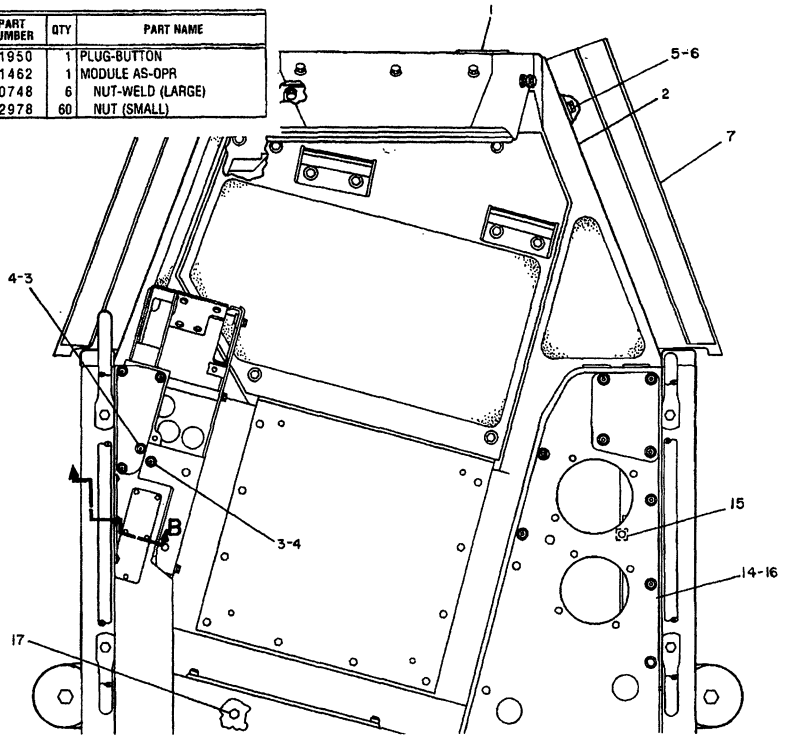

	3	6J0488	5	SCREW-HEAD
C	4	5M2894	5	WASHER
	5	0S1594	6	BOLT
	6	3V3308	6	WASHER-HARD
	7	3T3953	1	PLATE AS
		9F2978	4	NUT
	8	0L1351	3	BOLT
	9	5P1075	3	WASHER
	10	6D3031	11	SCREW-SOCKET HEAD
	11	7G6468	1	COVER
		7G6469	1	GASKET
	12	7G6659	1	COVER
		7G6660	1	GASKET
	13	7G6873	1	GASKET
	14	3T2292	1	COVER AS
	15	9F2978	8	NUT
	16	3T2291	1	GASKET
C	17	6K4936	2	BOLT-LOCKING
C		6B2882	2	SPACER

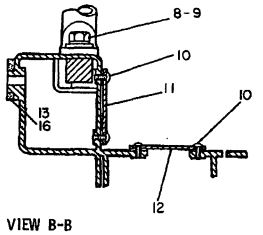

VIEW B-B

C INDICATES CHANGE

354 936

B- 354936 P

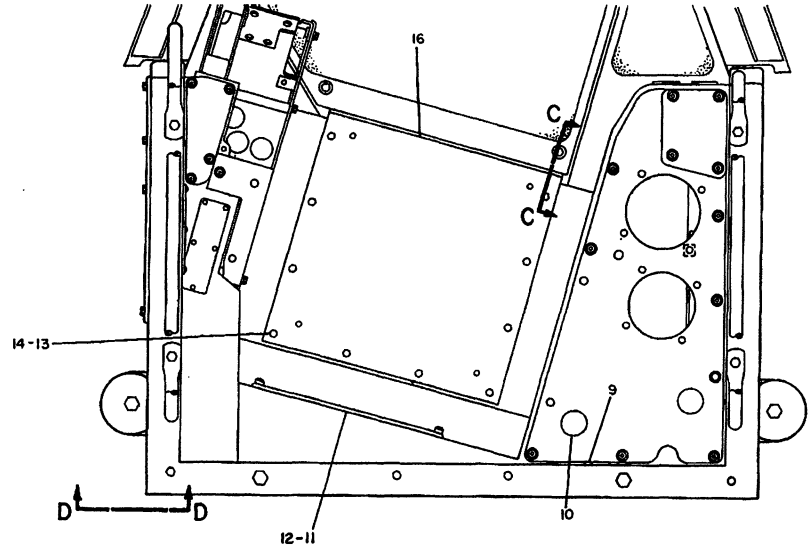

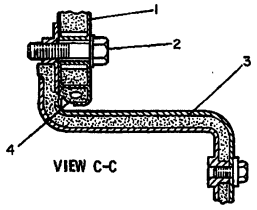

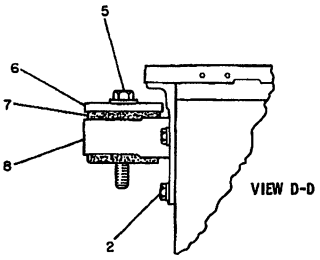

REF. NO.	PART NUMBER	DESCRIPTION	QTY.
1	7G6739	FLOORPLATE ASSEM.	1
2	1A1460	BOLT	12
	5P8245	WASHER	12
3	7G6744	GASKET	1
▲ 4	5P5626	SEAL—2.6 m (102 in.)	
5	1D4615	BOLT	2
	5P6652	WASHER	2
6	3T3462	PLATE	2
7	3T3445	MOUNTING	4
8	3T2264	SUPPORT ASSEM.	2
9	6H3616	PLUG	2
10	5P7705	PLUG	2
11	7G6916	COVER ASSEM.	1
12	7G6917	GASKET	1
13	S509	BOLT	10
14	5P1075	WASHER	13
15	L1351	BOLT	3
16	3T6743	SUPPORT ASSEM. (Includes)	1
	9F2978	NUT	7

▲ ORDER BY THE METER

235151

235151 P

7253

9G5115 PLATFORM GP-PART 3 OF 3
S/N 53Y1-3484

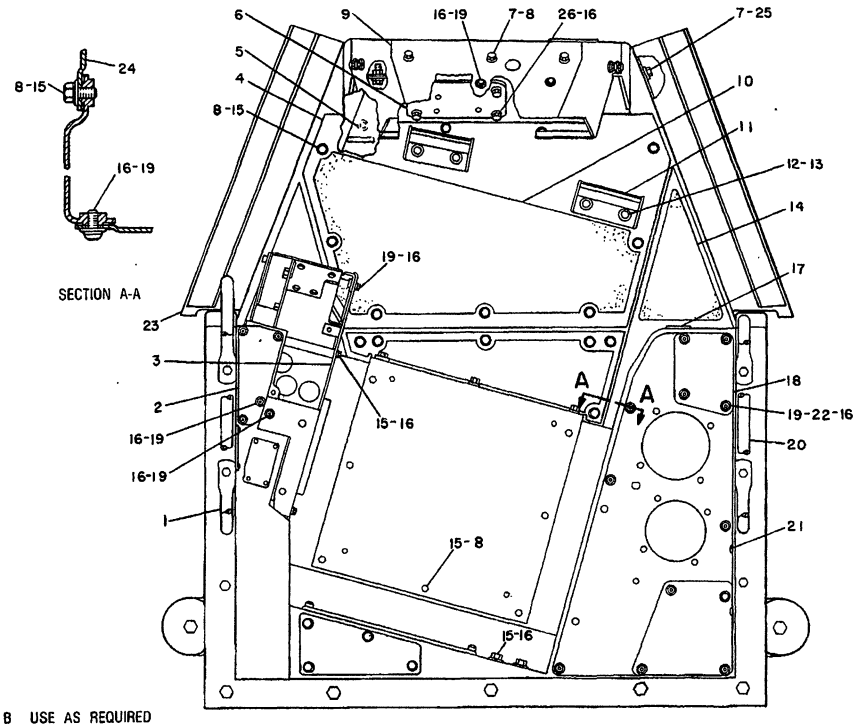

NOTE	REF NO	PART NUMBER	QTY	DESCRIPTION
	1	3T3634	1	HANDLE
	2	7G6657	1	COVER
		7G6658	1	GASKET
	3	7G6753	1	COVER AS.
		9F2978	3	NUT
	4	7T0131	1	FLOORPLATE AS.
	5	1D4615	2	BOLT
		5P6652	2	WASHER
		3T3462	2	PLATE
		3T3445	4	MOUNTING
		7T0135	1	SEAL
	6	3T4756	1	COVER
	7	0L1351	15	BOLT
	8	5P1075	33	WASHER
	9	7T0867	1	DASH AS.
	10	7T3483	1	TREAD
	11	9P1444	2	SUPPORT AS.
	12	0S1621	4	BOLT
	13	5P8245	4	WASHER
BD	14	5P5897		COATING (ANTI-SKID)
	15	0S0509	31	BOLT
C	16	5P1075	31	WASHER
	17	7G3411	6	COVER
	18	7G6742	1	COVER
		7G6743	1	GASKET
	19	6J0488	20	SCREW
	20	3T3635	1	HANDLE
	21	4B4158	4	SCREW
	22	7G6741	4	SPACER
	23	3T3951	1	PLATE AS.
	24	7G6723	1	COVER
		7G6724	1	GASKET
	25	3V3308	6	WASHER
	26	0S1594	4	BOLT

B USE AS REQUIRED

C INDICATES CHANGE
D ORDER BY THE METER

341305

341305 P

7253 **6T8880 PLATFORM GP-OPERATOR-PART 1 OF 3**
S/N 53Y3485-3844

CHASSIS AND UNDERCARRIAGE

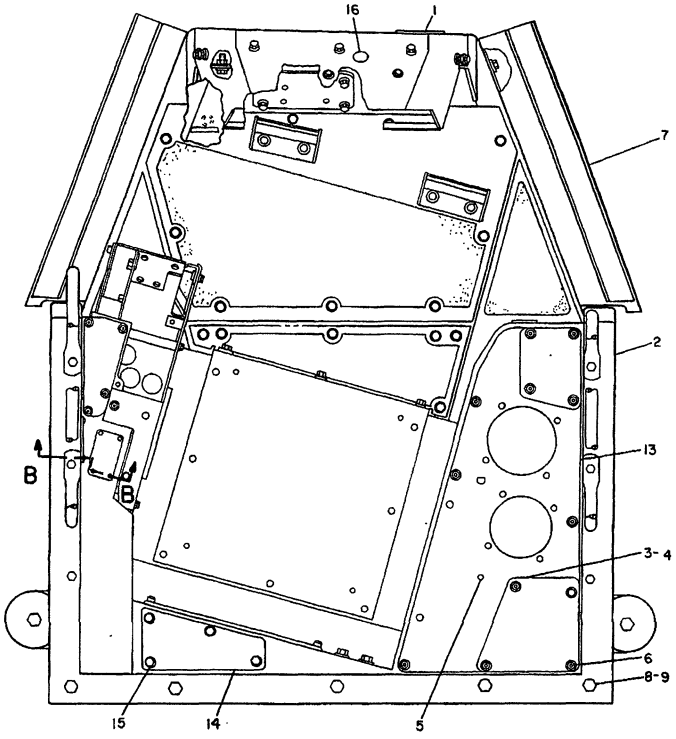

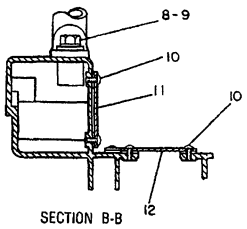

SECTION B-B

NOTE	REF NO	PART NUMBER	QTY	DESCRIPTION
	1	6V1950	1	PLUG
	2	6T8879	1	MODULE AS.
	3	9W0182	1	COVER
	4	9W0184	1	GASKET
	5	7V8087	1	PLUG
	6	7G6741	3	SPACER
	7	3T3953	1	PLATE AS.
		9F2978	4	NUT
	8	0S1594	12	BOLT
	9	5P1075	12	WASHER
	10	6D3031	8	BOLT
	11	7T0891	1	COVER
	12	7T0892	1	COVER
	13	7T0139	1	COVER AS.
		7T0141	1	GASKET
	14	7T5066	1	COVER
		7T0779	1	GASKET
	15	4M5283	4	BOLT
		5P4115	4	WASHER
	16	9P6571	1	PLUG

343480

343480 P

7253 **6T8880 PLATFORM GP-OPERATOR-PART 2 OF 3**
S/N 53Y3485-3844

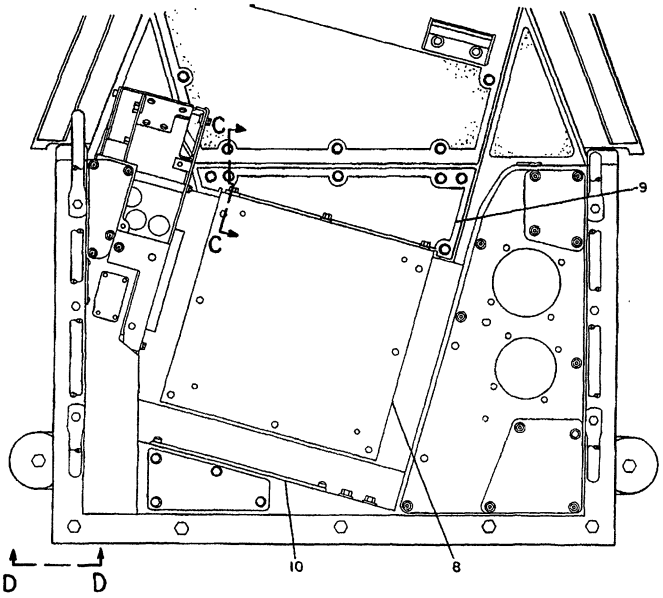

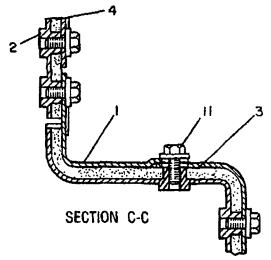

SECTION C-C

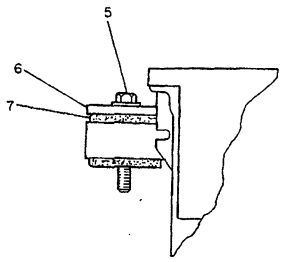

VIEW D-D

NOTE	REF NO	PART NUMBER	QTY	DESCRIPTION
	1	7T0134	1	PLATE
	2	7T0133	1	PLATE AS.
	3	7T0138	1	GASKET
	4	3T6281	1	SEAL
	5	1D4615	2	BOLT
		5P6652	2	WASHER
	6	3T3462	2	PLATE
	7	3T3445	4	MOUNTING
	8	7T0136	1	PLATE AS.
	9	7T3482	1	TREAD
	10	7G6916	1	COVER AS.
		7G6917	1	GASKET
	11	0S0509	9	BOLT
		5P1075	9	WASHER

334885

334885 P

7253 **6T8880 PLATFORM GP-OPERATOR-PART 3 OF 3**
S/N 53Y3485-3844

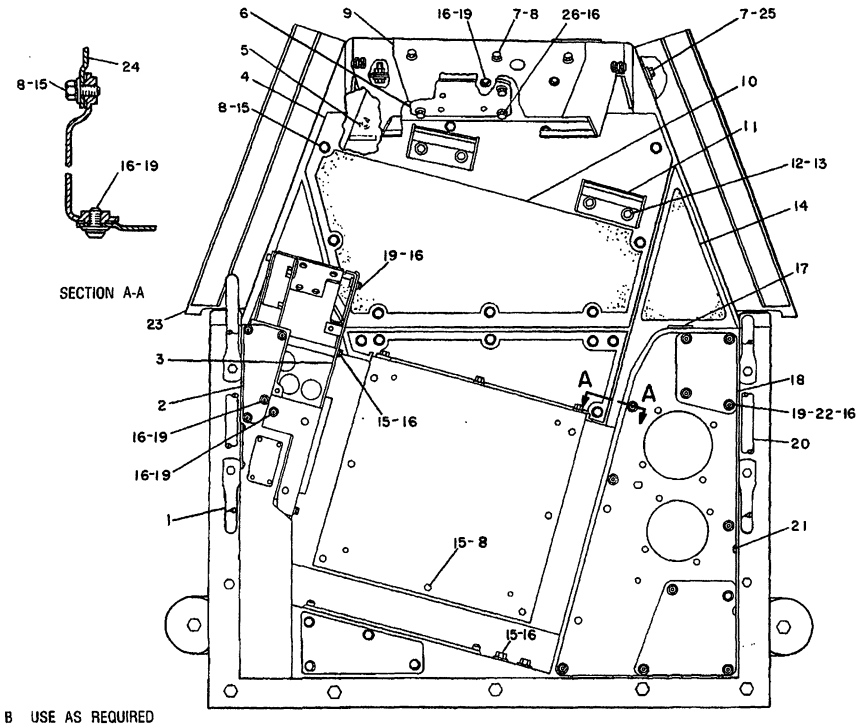

NOTE	REF NO	PART NUMBER	QTY	DESCRIPTION
	1	3T3634	1	HANDLE
	2	7G6657	1	COVER
		7G6658	1	GASKET
	3	7G6753	1	COVER AS.
		9F2978	3	NUT
	4	7T0131	1	FLOORPLATE AS.
	5	1D4615	2	BOLT
		5P6652	2	WASHER
		3T3462	2	PLATE
		3T3445	4	MOUNTING
		7T0135	1	SEAL
	6	3T4756	1	COVER
	7	0L1351	15	BOLT
	8	5P1075	33	WASHER
	9	7T0867	1	DASH AS.
	10	7T3483	1	TREAD
	11	9P1444	2	SUPPORT AS.
	12	0S1621	4	BOLT
	13	5P8245	4	WASHER
BD	14	5P5897		COATING (ANTI-SKID)
	15	0S0509	31	BOLT
	16	5P1075	31	WASHER
	17	7G3411	6	COVER
	18	7G6742	1	COVER
		7G6743	1	GASKET
	19	6J0488	20	SCREW
	20	3T3635	1	HANDLE
	21	4B4158	4	SCREW
	22	7G6741	4	SPACER
	23	3T3951	1	PLATE AS.
	24	7G6723	1	COVER
		7G6724	1	GASKET
	25	3V3308	6	WASHER
	26	0S1594	4	BOLT

B USE AS REQUIRED

B USE AS REQUIRED
D ORDER BY THE METER

351569

351569 P

7253

6T8880 PLATFORM GP-OPERATOR-PART 1 OF 2
S/N 53Y3845-Up

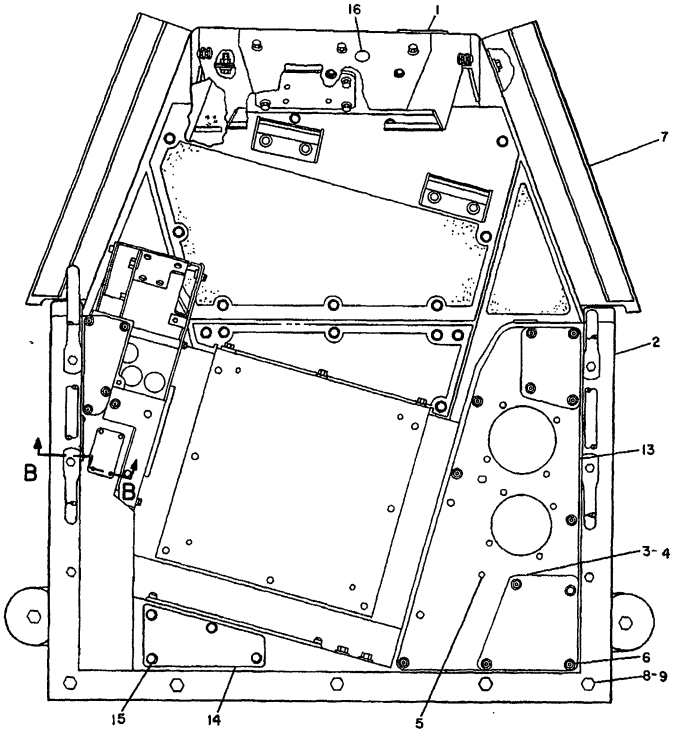

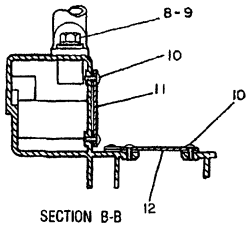

SECTION B-B

NOTE	REF NO	PART NUMBER	QTY	DESCRIPTION
	1	6V1950	1	PLUG
	2	6T8879	1	MODULE AS.
	3	9W0182	1	COVER
	4	9W0184	1	GASKET
	5	7V8087	1	PLUG
	6	7G6741	3	SPACER
	7	3T3953	1	PLATE AS.
		9F2978	4	NUT
	8	0S1594	12	BOLT
	9	5P1075	12	WASHER
	10	6D3031	8	BOLT
C	11	9W3428	1	COVER
	12	7T0892	1	COVER
	13	7T0139	1	COVER AS.
		7T0141	1	GASKET
	14	7T5066	1	COVER
		7T0779	1	GASKET
	15	4M5283	4	BOLT
		5P4115	4	WASHER
	16	9P6571	1	PLUG

C INDICATES CHANGE

351570

351570 P

7253 **6T8880 PLATFORM GP-OPERATOR-PART 2 OF 2**
S/N 53Y3845-Up

CHASSIS AND UNDERCARRIAGE

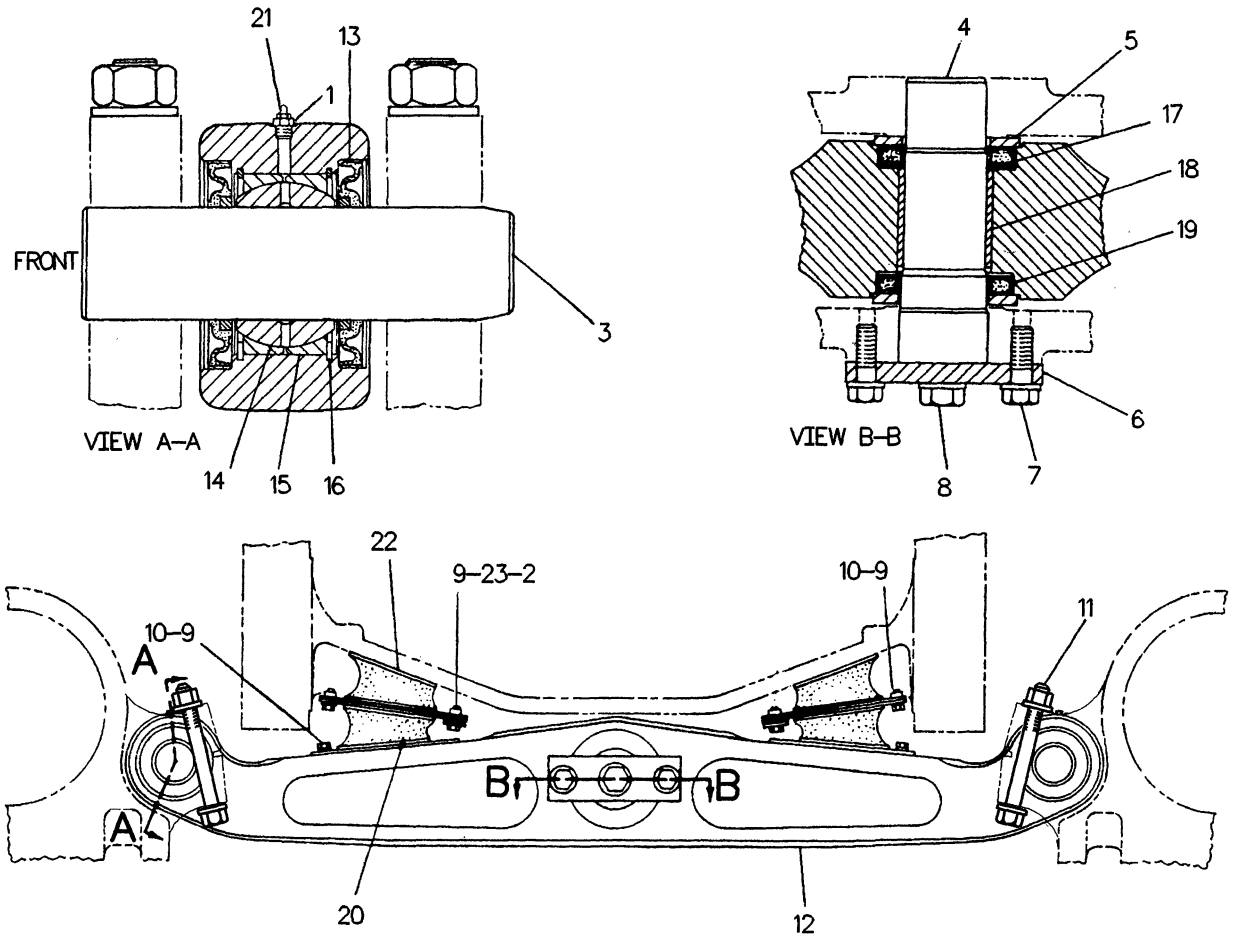

NOTE	REF NO	PART NUMBER	QTY	PART NAME	NOTE	REF NO	PART NUMBER	QTY	PART NAME
	1	8F5838	2	PLUG		22	9G1696	2	PAD AS
	2	3J4278	4	SPACER					(EACH INCLUDES)
	3	9G7038	2	PIN			1F0748	4	NUT
	4	2Y8749	1	PIN		23	2S1654	4	WASHER
	5	9G2790	2	SPACER					
	6	9P6911	1	PLATE					
	7	6B9194	2	BOLT					
		5P8250	2	WASHER					
	8	7F6112	1	BOLT					
		4K0684	1	WASHER-HARD					
	9	6H1717	12	BOLT					
	10	5P8245	8	WASHER					
	11	2M3530	4	BOLT					
		3S1349	8	WASHER					
		3S1356	4	NUT-FULL					
	12	8E4164	1	EQUALIZER BAR AS					
	13	8E5450	1	SEAL					
	14	3T4615	2	BUSHING-SPHERICAL					
	15	3T4616	4	CUP-SPHERICAL					
	16	5L4751	4	RING-RETAINING					
	17	6P8369	1	SEAL					
	18	6Y3549	1	BEARING-SLEEVE					
	19	9G7127	1	SEAL					
	20	9G1697	2	PAD AS					
	21	3B8489	2	FITTING-GREASE					

R-503277 EP

7206 **6P7345 EQUALIZER BAR GP**
2200 Gauge

CHASSIS AND UNDERCARRIAGE

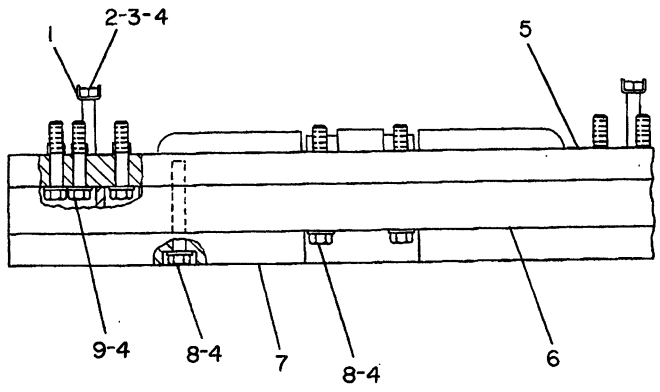

NOTE	REF NO	PART NUMBER	QTY	PART NAME
	1	6P8829	2	RETAINER
C	2	1D4644	2	BOLT
C	3	2J3507	2	NUT-FULL
	4	5P8250	14	WASHER
	5	3T6543	1	COUNTERWEIGHT AS
	6	3T5306	1	COUNTERWEIGHT AS
	7	3T5309	1	COUNTERWEIGHT
C	8	2B7218	6	BOLT
	9	1D4642	6	BOLT

C-CHANGE FROM PREVIOUS TYPE

B-312211 EP

7056 **3T5304 COUNTERWEIGHT GP-FRONT**
1284KG (2830LB)
Replaced By 6T9239-Page 182
An Attachment

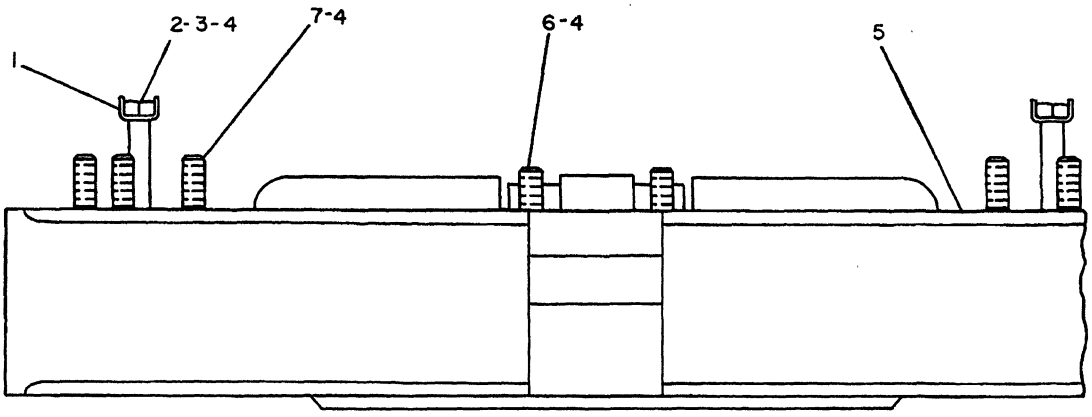

NOTE	REF NO	PART NUMBER	QTY	DESCRIPTION
	1	6P8829	2	RETAINER
	2	2H4010	2	BOLT
	3	2J3507	2	NUT
	4	5P8250	10	WASHER
	5	6T9240	1	COUNTERWEIGHT AS.
	6	1D4645	2	BOLT
	7	1D4647	6	BOLT

324757

324757 P

7056 **6T9239 COUNTERWEIGHT GP-FRONT**
1284KG (2830LB)
Type 1
An Attachment

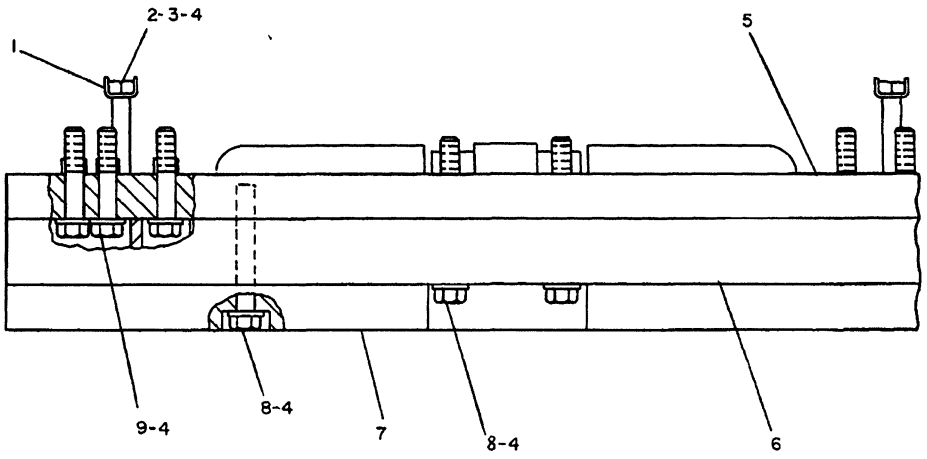

NOTE	REF NO	PART NUMBER	QTY	DESCRIPTION
	1	6P8829	2	RETAINER
C	2	1D4644	2	BOLT
	3	2J3507	2	NUT
C	4	5P8250	14	WASHER
C	5	3T6543	1	COUNTERWEIGHT AS.
C	6	3T5306	1	COUNTERWEIGHT AS.

C INDICATES CHANGE

C	7	3T5309	1	COUNTERWEIGHT
C	8	2B7218	6	BOLT
C	9	1D4642	6	BOLT

351928

351928 P

7056 **6T9239 COUNTERWEIGHT GP-FRONT**
1284KG (2830LB)
Type 2
An Attachment

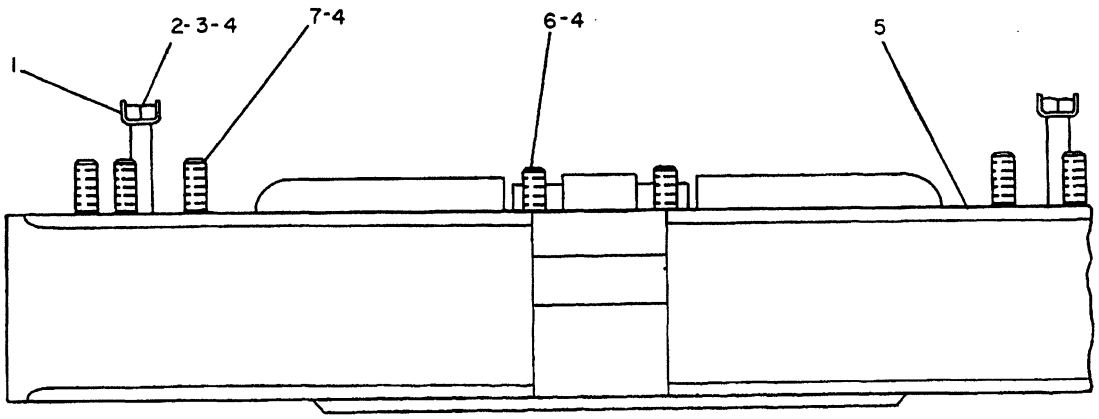

NOTE	REF NO	PART NUMBER	QTY	PART NAME
	1	6P8829	2	RETAINER
C	2	2H4010	2	BOLT
	3	2J3507	2	NUT-FULL
C	4	5P8250	10	WASHER
C	5	6T9240	1	COUNTERWEIGHT AS.
C	6	1D4645	2	BOLT
C	7	1D4647	6	BOLT

C-INDICATES CHANGE

407985

B-407985 P

7056

6T9239 COUNTERWEIGHT GP-FRONT
1284KG (2830LB)
Type 3
An Attachment

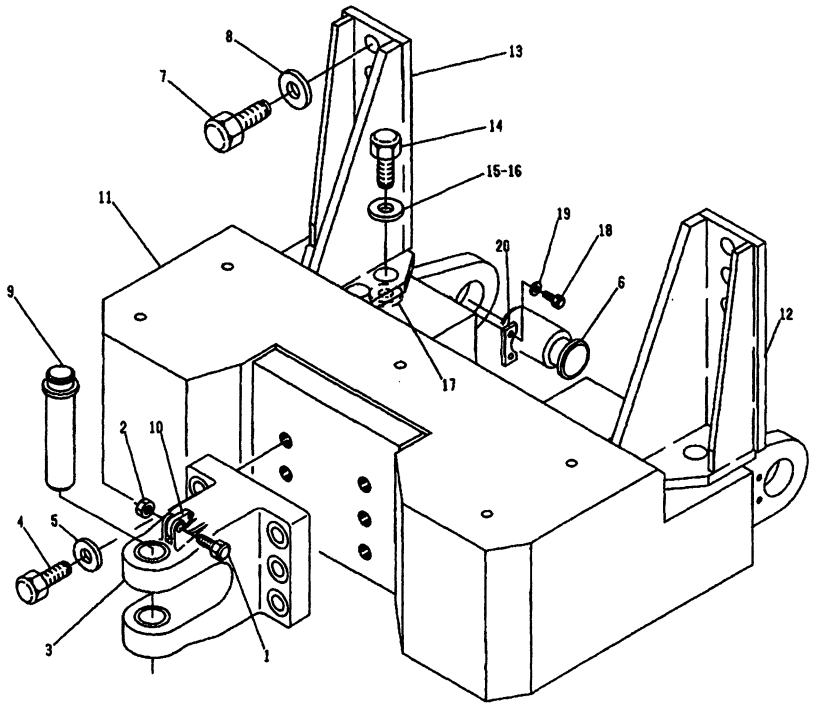

NOTE	REF NO	PART NUMBER	QTY	DESCRIPTION
	1	S1577	1	BOLT
	2	2K4821	1	LOCKNUT
	3	7G6623	1	HITCH
	4	2H1537	6	BOLT
	5	4K684	6	WASHER
	6	3T7566	2	PIN
	7	6V2710	6	BOLT
	8	3S6162	6	WASHER
	9	1H4106	1	PIN ASSEM.
	10	5H2168	1	LATCH
	11	3T8709	1	COUNTERWEIGHT ASSEM.
	12	3T8791	1	BRACKET ASSEM.
	13	3T8792	1	BRACKET ASSEM.
	14	5M544	8	BOLT
	15	3S1349	8	WASHER 30MM(1.18IN.)I.D.
	16	7F5711	8	WASHER 32MM(1.28IN.)I.D.
	17	3D8012	8	SPACER
	18	1A1460	4	BOLT
	19	5P8245	4	WASHER
	20	3T7567	2	BAR

■ 182586

A- 182586 P

7056 **3T8710 COUNTERWEIGHT GP-REAR**

Type 1
Replaced By 7T1693-Page 182A.02
For Downhill Dozing
An Attachment

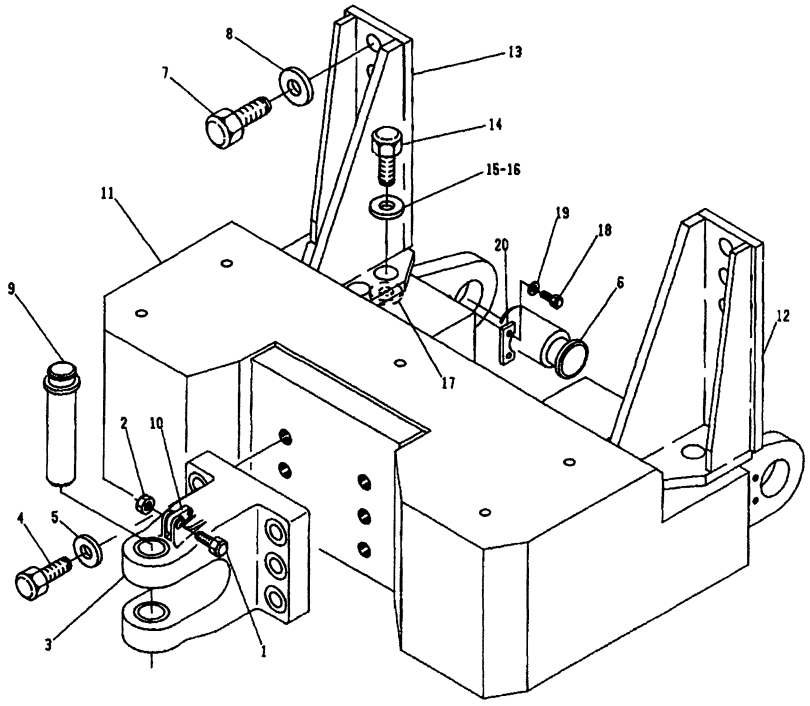

NOTE	REF NO	PART NUMBER	QTY	DESCRIPTION
	1	0S1577	1	BOLT
	2	2K4821	1	LOCKNUT
	3	7G6623	1	HITCH
	4	2H1537	6	BOLT
	5	4K0684	6	WASHER
	6	3T7566	2	PIN
C	7	3J1805	6	BOLT
	8	3S6162	6	WASHER
	9	1H4106	1	PIN AS.
	10	5H2168	1	LATCH
	11	3T8709	1	COUNTERWEIGHT AS.
	12	3T8791	1	BRACKET AS.
	13	3T8792	1	BRACKET AS.
	14	5M0544	8	BOLT
	15	3S1349	8	WASHER 30MM(1.18IN.)I.D.
	16	7F5711	8	WASHER 32MM(1.28IN.)I.D.
	17	3D8012	8	SPACER
C	18	0S1587	4	BOLT
	19	5P8245	4	WASHER
	20	3T7567	2	BAR

C-INDICATES CHANGE

* 328149

A-328149 P

7056

3T8710 COUNTERWEIGHT GP-REAR
Type 2
Replaced By 7T1693-Page 182A.02
For Downhill Dozing
An Attachment

CHASSIS AND UNDERCARRIAGE

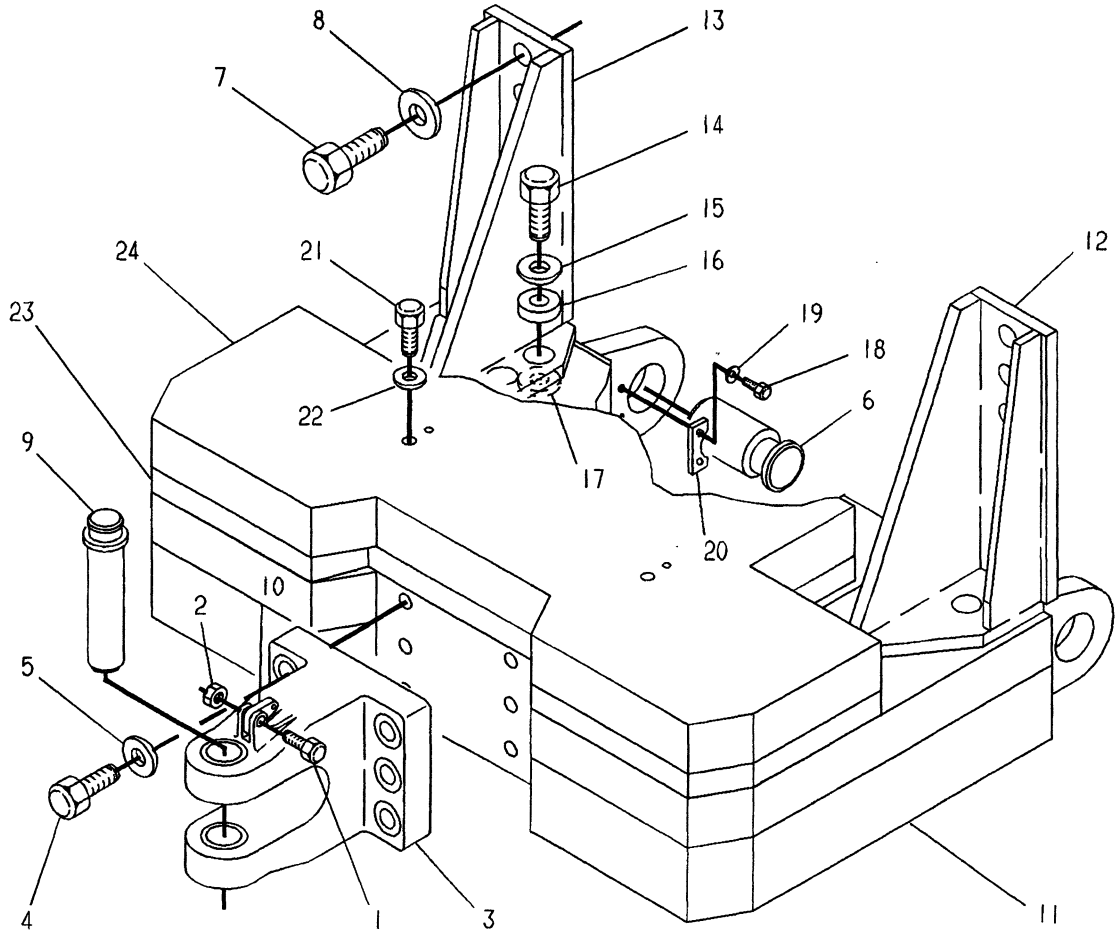

NOTE	REF NO	PART NUMBER	QTY	PART NAME	NOTE	REF NO	PART NUMBER	QTY	PART NAME
	1	7X0349	1	BOLT		24	7T1709	1	PLATE
	2	3K2889	1	LOCKNUT					
	3	7G6623	1	HITCH					
	4	2H1537	6	BOLT					
	5	4K0684	6	WASHER-HARD					
	6	3T7566	2	PIN					
C	7	3J1805	6	BOLT 88.9MM(3.5IN)LG					
				-OR-					
C		6V8970	6	BOLT 101.6MM(3.99IN)LG					
C		5T4896	6	SPACER					
	8	3S6162	6	WASHER-HARD					
	9	1H4106	1	PIN AS-DRAWBAR					
	10	8E9289	1	LATCH					
	11	7T1708	1	COUNTERWEIGHT AS					
	12	3T8791	1	BRACKET AS					
	13	3T8792	1	BRACKET AS					
	14	5M0544	8	BOLT					
	15	3S1349	8	WASHER 30MM(1.18IN)ID					
	16	7F5711	8	WASHER 32MM(1.28IN)ID					
	17	3D8012	8	SPACER					
	18	5P2566	4	BOLT					
	19	8T4223	4	WASHER-HARD					
	20	3T7567	2	BAR					
	21	7X0414	4	BOLT					
	22	8T5361	4	WASHER					
	23	7T1711	1	PLATE					

C-CHANGE FROM PREVIOUS TYPE

A-530768 EP

7056 **7T1693 COUNTERWEIGHT & HITCH GP**

3120KG (6900LB)

An Attachment

CHASSIS AND UNDERCARRIAGE

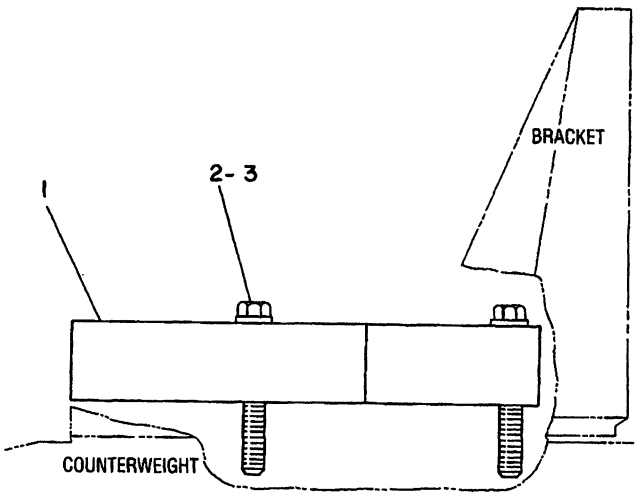

NOTE	REF NO	PART NUMBER	QTY	PART NAME
	1	7T1709	1	PLATE
B	2	2B7218	4	BOLT 19.05CM(7.5IN.)LONG
B	3	7K4363	4	BOLT 29.21CM(11.5IN.)LONG

B-USE AS REQUIRED

B-335177 EP

7056

7T1694 COUNTERWEIGHT GP
544KG (1200LB)
For Use With 7T1693-Page 182A.02
An Attachment

MEMORANDA

CHASSIS AND UNDERCARRIAGE

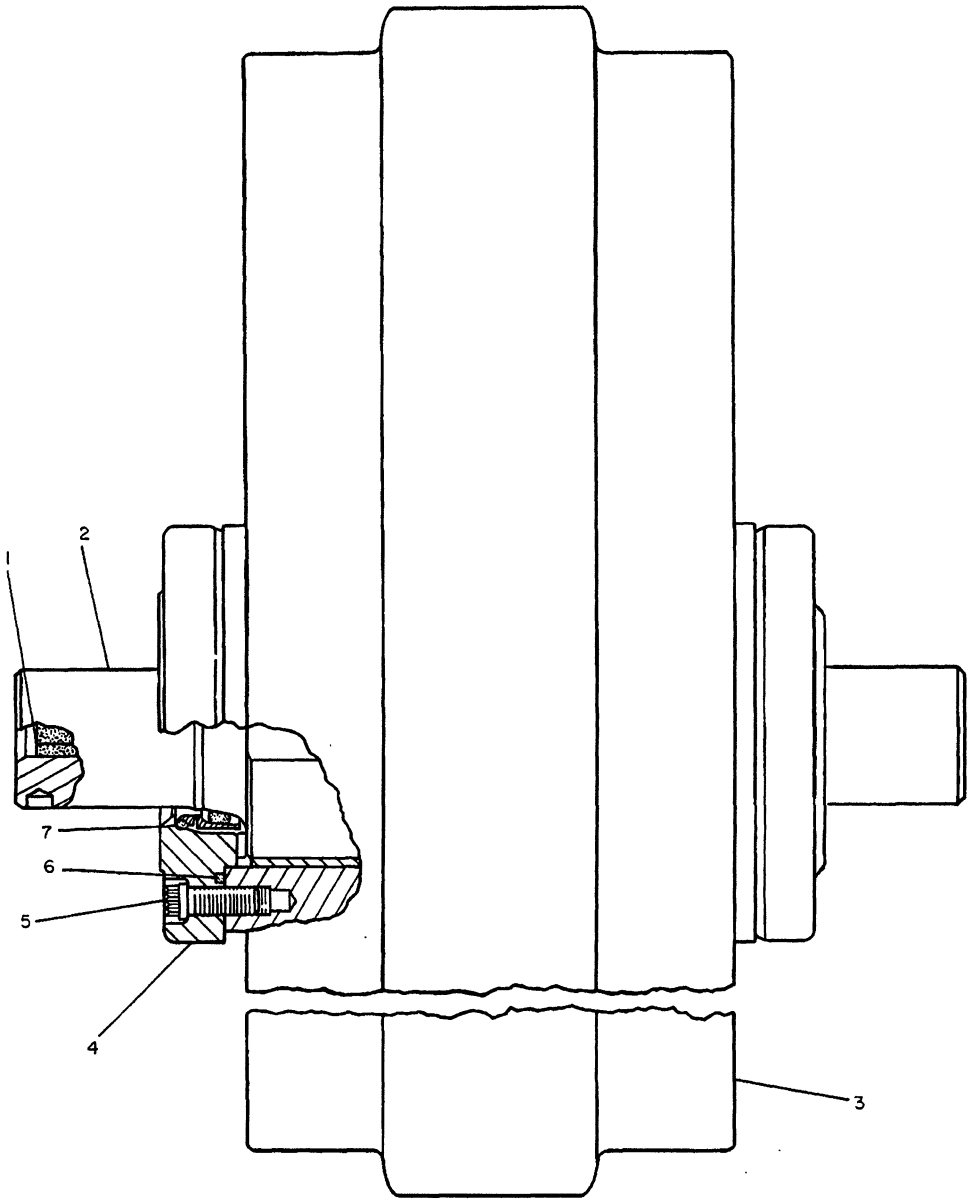

NOTE	REF NO	PART NUMBER	QTY	DESCRIPTION
	1	7G4408	1	PLUG
		9G4872	1	STOPPER
	2	8P6938	1	SHAFT
	3	9P208	1	IDLER ASSEM.
C		8P34	2	BEARING
	4	9P202	2	RETAINER ASSEM.
	5	5P2546	24	BOLT
	6	8F9516	2	SEAL
	7	6V2733	2	SEAL GROUP
				(EACH INCLUDES)
		6V2700	1	SEAL
		8P21	1	RING

C INDICATES CHANGE

308566

308566 P

4159

9P0209 IDLER GP-TRACK
S/N 53Y1-2604

CHASSIS AND UNDERCARRIAGE

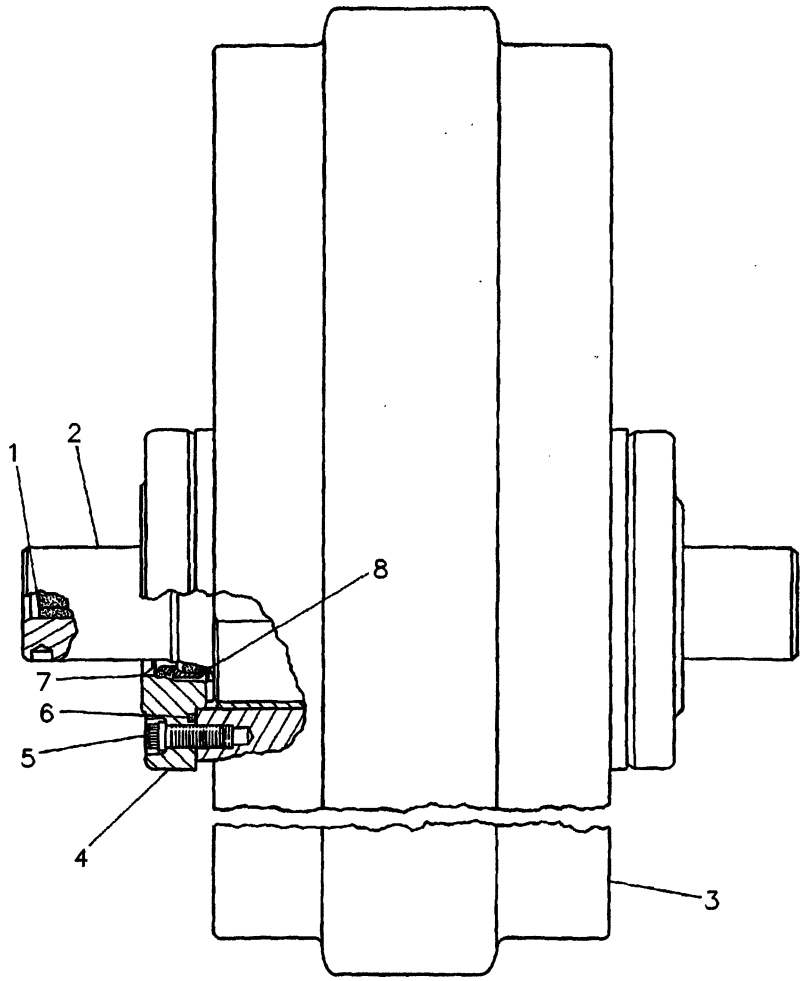

NOTE	REF NO	PART NUMBER	QTY	PART NAME
	1	7G4408	1	PLUG
		9G4872	1	STOPPER-RUBBER
	2	8P6938	1	SHAFT-IDLER
	3	9P0208	1	IDLER & BEARING AS
C		8P0034	2	BEARING-SLEEVE
	4	9P0202	2	RETAINER AS
	5	5P2546	24	BOLT-12 POINT HEAD
	6	8F9516	2	SEAL-O-RING
C	7	7T0159	2	SEAL GP-DUO-CONE
				(EACH INCLUDES)
		6V2700	1	SEAL-O-RING
		8P0021	1	RING-SEALING
C	8	6T5247	2	STABILIZER-SEAL

C-CHANGE FROM PREVIOUS TYPE

R-527291 EP

4159 **9P0209 IDLER GP-TRACK**
S/N 53Y2605-3783

CHASSIS AND UNDERCARRIAGE

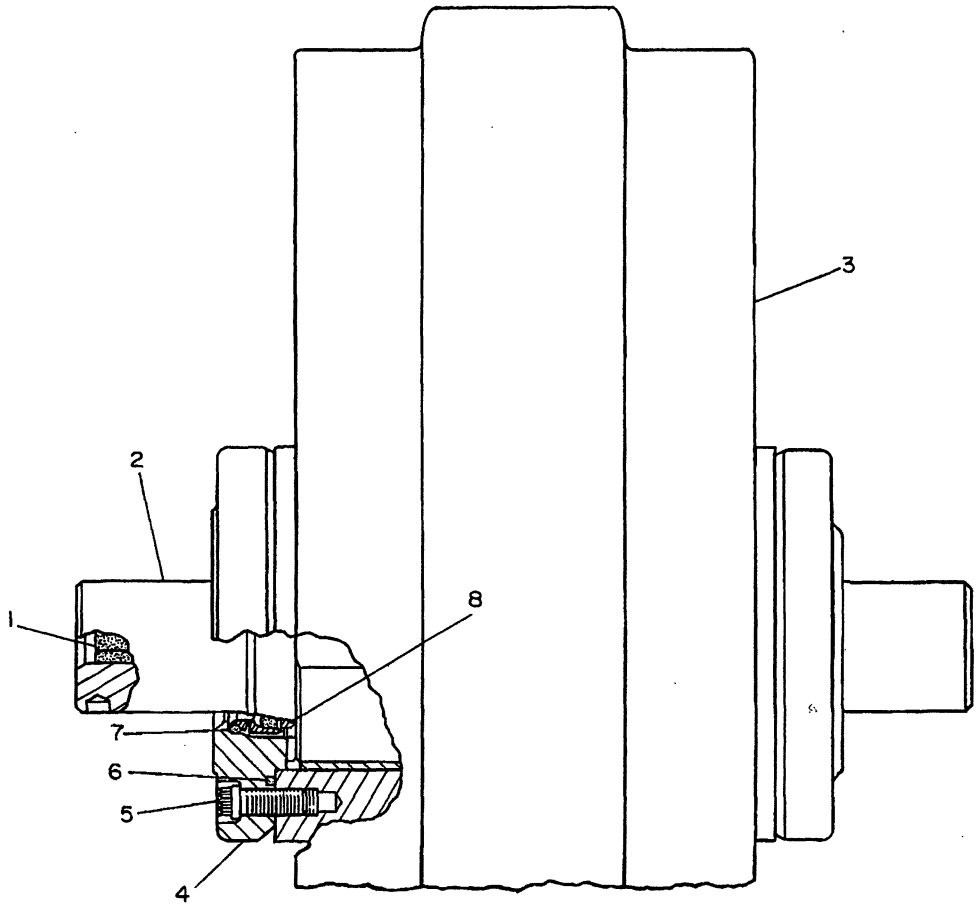

NOTE	REF NO	PART NUMBER	QTY	PART NAME	NOTE	REF NO	PART NUMBER	QTY	PART NAME
	1	7G4408	1	PLUG					
		9G4872	1	STOPPER-RUBBER					
	2	8P6938	1	SHAFT-IDLER					
	3	7T2048	1	IDLER & BEARING AS					
		8P0034	2	BEARING-SLEEVE					
	4	9P0202	2	RETAINER AS					
	5	5P2546	24	BOLT-12 POINT HEAD					
	6	8F9516	2	SEAL-O-RING					
	7	7T0159	2	SEAL GP-DUO-CONE					
				(EACH INCLUDES)					
		6V2700	1	SEAL-O-RING					
		8P0021	1	RING-SEALING					
	8	6T5247	2	STABILIZER-SEAL (SEAL)					

B-352085 P

4159 **7T2050 IDLER GP-TRACK**
4 Required
S/N 53Y3784-4493

CHASSIS AND UNDERCARRIAGE

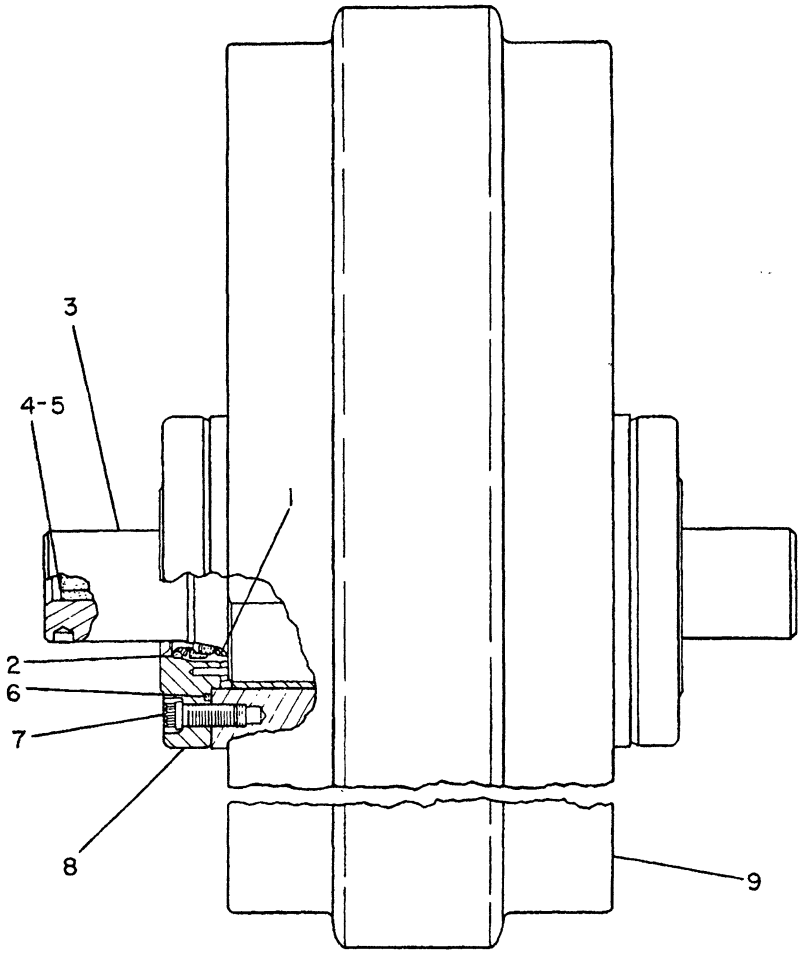

NOTE	REF NO	PART NUMBER	QTY	PART NAME
	1	6T5247	2	STABILIZER-SEAL
	2	7T0159	2	SEAL GP-DUO-CONE
				(EACH INCLUDES)
		6V2700	1	SEAL-O-RING
		8P0021	1	RING-SEALING
	3	8P6938	1	SHAFT-IDLER
	4	9G4872	1	STOPPER-RUBBER
	5	7G4408	1	PLUG
	6	8F9516	2	SEAL-O-RING
	7	5P2546	24	BOLT-12 POINT HEAD
	8	9P0202	2	RETAINER AS
	9	7T9511	1	IDLER & BEARING AS
		8P0034	2	BEARING-SLEEVE

B-346149 EP

4159 **7T9461 IDLER GP-TRACK-FRONT**

4 Required

S/N 53Y4494-Up

MEMORANDA

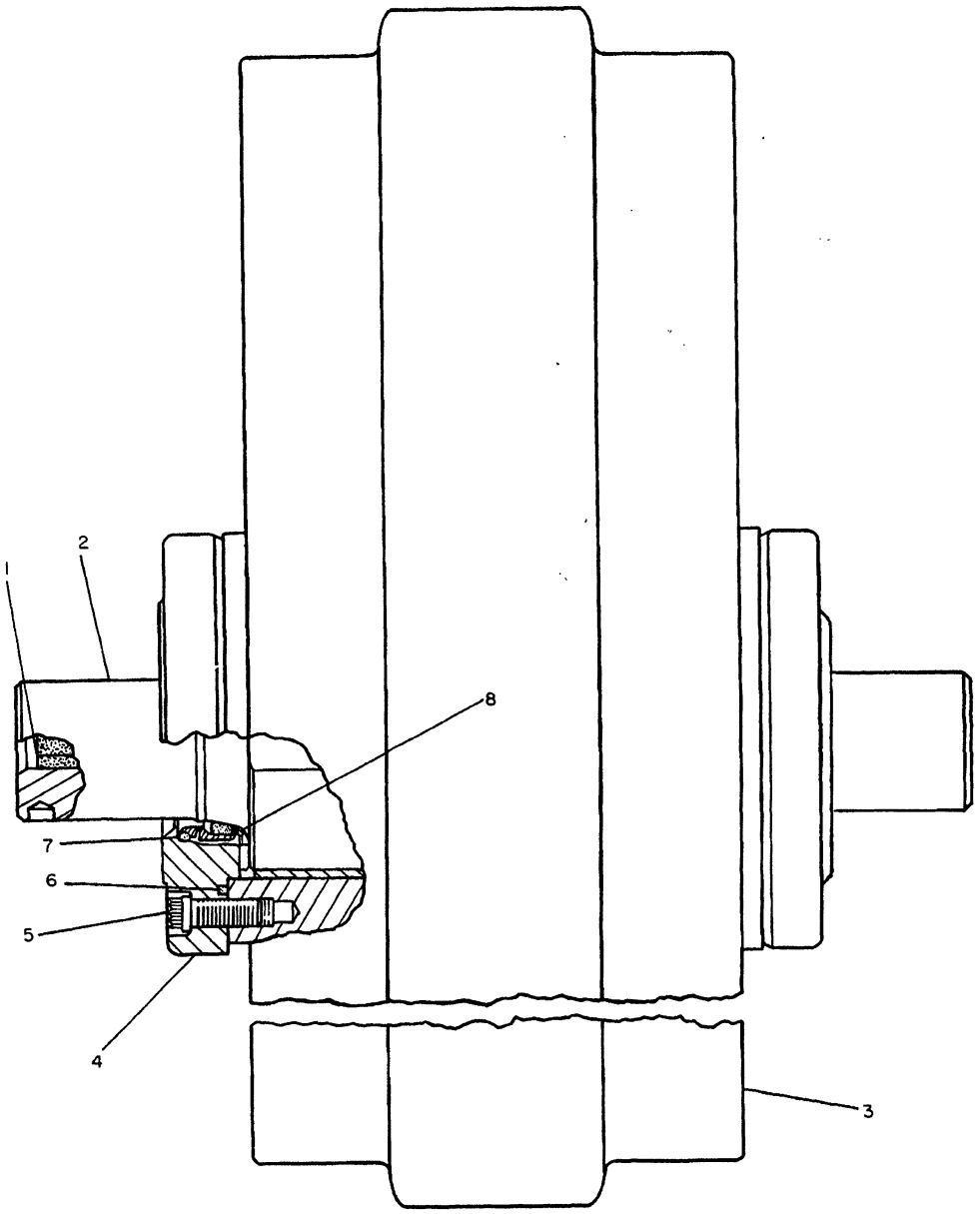

NOTE	REF NO	PART NUMBER	QTY	DESCRIPTION
	1	7G4408	1	PLUG
		9G4872	1	STOPPER
	2	8P6938	1	SHAFT
	3	7T2048	1	IDLER AS.
		8P0034	2	BEARING
	4	9P0202	2	RETAINER AS.
	5	5P2546	24	BOLT
	6	8M5007	2	SEAL
	7	7T5125	2	SEAL GP.
				(EACH INCLUDES)
		6V2700	1	SEAL-O-RING
		7T1093	1	RING (TORIC)
	8	6T5247	2	STABILIZER (SEAL)

335239

335239 P

4159 **7T5030 IDLER GP-TRACK**

4 Required

Field Installation

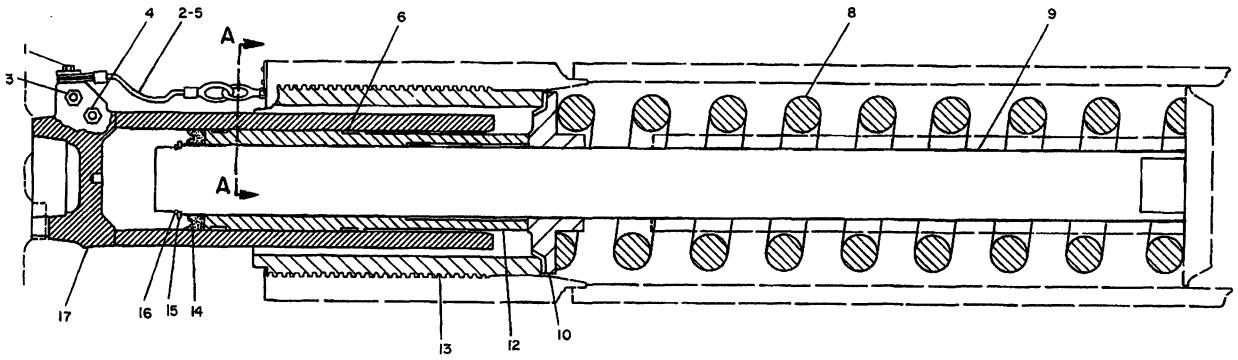

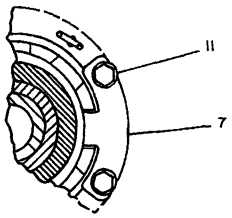

VIEW A-A

REF NO.	PART NUMBER	DESCRIPTION	QTY.
1	S1588	BOLT	2
	1P7346	WASHER	2
	8B8679	SPACER	2
2	7G8282	CABLE ASSEM.	2
3	2S5926	VALVE	2
4	2S5925	VALVE	2
5	1D4717	NUT	2
6	9P7255	RING	4
7	9G611	STOP	4
8	9P5696	SPRING	2
9	9P7258	PISTON	2
10	9P7445	GUIDE	2
11	L1178	BOLT	8
	5P8248	WASHER	8
12	9P7380	SLEEVE	2
13	9P7447	RETAINER	2
14	3T8392	SEAL GROUP	2
15	9P7256	RING	2
16	7J6580	RING	2
17	9P6841	CYLINDER ASSEM. ---(R. H.)	1
	9P6840	CYLINDER ASSEM. ---(L. H.)	1

235085

235085 P

4158 **6P7343 TRACK ADJUSTER & RECOIL GP**
S/N 53Y1-734

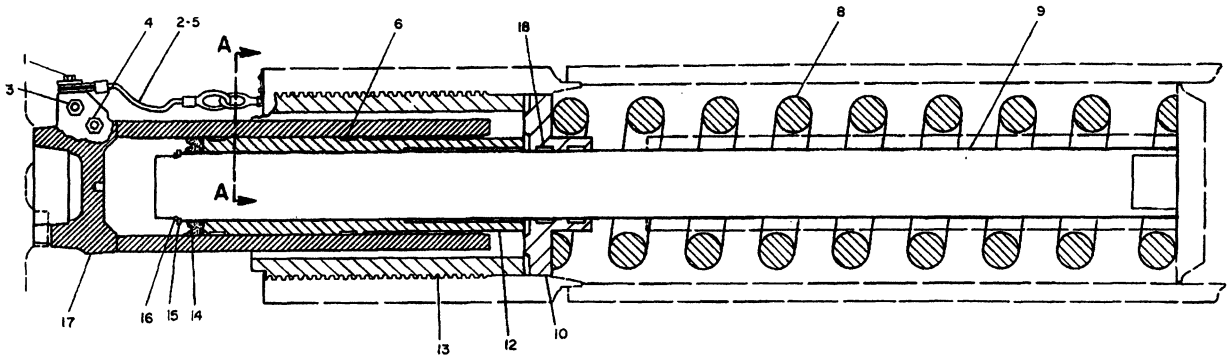

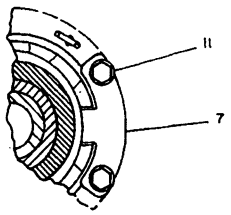

VIEW A-A

	REF. NO.	PART NUMBER	DESCRIPTION	QTY.
	1	S1588	BOLT	2
		1P7346	WASHER	2
		8B8679	SPACER	2
	2	7G8282	CABLE ASSEM.	2
	3	2S5926	VALVE	2
	4	2S5925	VALVE	2
	5	1D4717	NUT	2
	6	9P7255	RING	4
	7	9G611	STOP	4
C	8	6T208	SPRING	2
	9	9P7258	PISTON	2
C	10	6T209	GUIDE	2
	11	L1178	BOLT	8
C		6V2360	WASHER	8
	12	9P7380	SLEEVE	2
	13	9P7447	RETAINER	2
	14	3T8392	SEAL GROUP	2
	15	9P7256	RING	2
	16	7J6580	RING	2
	17	9P6841	CYLINDER ASSEM. ---(R. H.)	1
		9P6840	CYLINDER ASSEM. ---(L. H.)	1
C	18	6T481	RING	8

C INDICATES CHANGE

305923

305923 P

4158 **6P7343 TRACK ADJUSTER & RECOIL GP**
S/N 53Y735-2397

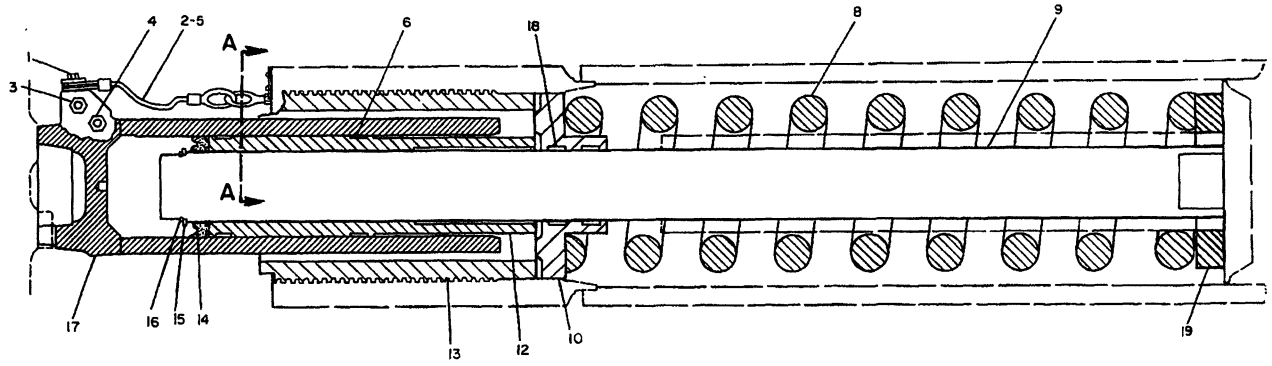

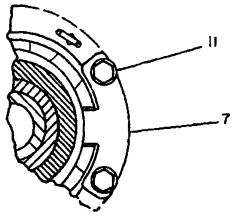

VIEW A-A

NOTE	REF NO	PART NUMBER	QTY	DESCRIPTION
	1	S1588	2	BOLT
		1P7346	2	WASHER
		8B8679	2	SPACER
	2	7G8282	2	CABLE AS.
	3	2S5926	2	VALVE
	4	2S5925	2	VALVE
	5	1D4717	2	NUT
	6	9P7255	4	RING
	7	9G611	4	STOP
	8	6T208	2	SPRING
	9	9P7258	2	PISTON
C	10	6T9732	2	GUIDE AS.
	11	L1178	8	BOLT
		6V2360	8	WASHER
	12	9P7380	2	SLEEVE
	13	9P7447	2	RETAINER
C	14	6V6900	2	SEAL
	15	9P7256	2	RING
	16	7J6580	2	RING
	17	9P6841	1	CYLINDER AS. (R.H.)
		9P6840	1	CYLINDER AS. (L.H.)
	18	6T481	8	RING
C	19	6T9013	2	SPACER

C INDICATES CHANGE

317241

317241 P

4158 **6P7343 TRACK ADJUSTER & RECOIL GP**
S/N 53Y2398-3194

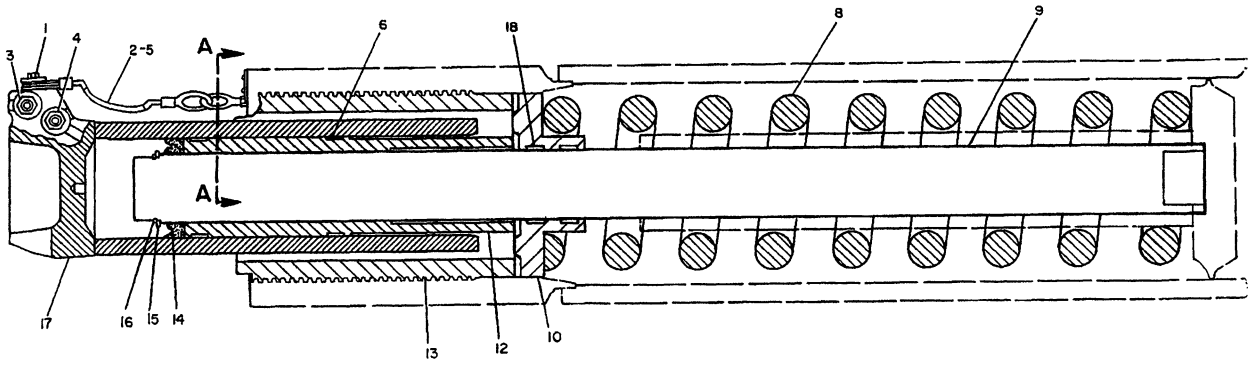

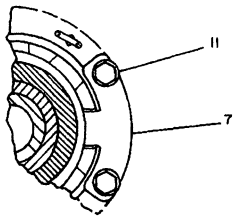

VIEW A-A

NOTE	REF NO	PART NUMBER	QTY	DESCRIPTION
C	1	3B1915	2	BOLT
		1P7346	2	WASHER
C		1L5081	2	SPACER
	2	7G8282	2	CABLE AS.
	3	2S5926	2	VALVE
	4	2S5925	2	VALVE
	5	1D4717	2	NUT
	6	9P7255	4	RING
	7	9G611	4	STOP
	8	6T208	2	SPRING
	9	9P7258	2	PISTON

C	10	6T0209	2	GUIDE
	11	L1178	8	BOLT
		6V2360	8	WASHER
	12	9P7380	2	SLEEVE
	13	9P7447	2	RETAINER
	14	6V6900	2	SEAL
	15	9P7256	2	RING
	16	7J6580	2	RING
	17	9P6841	1	CYLINDER AS. (R.H.)
		9P6840	1	CYLINDER AS. (L.H.)
	18	6T481	8	RING

C INDICATES CHANGE

334780

334780 P

4158 **6P7343 TRACK ADJUSTER & RECOIL GP**
S/N 53Y3195-3424

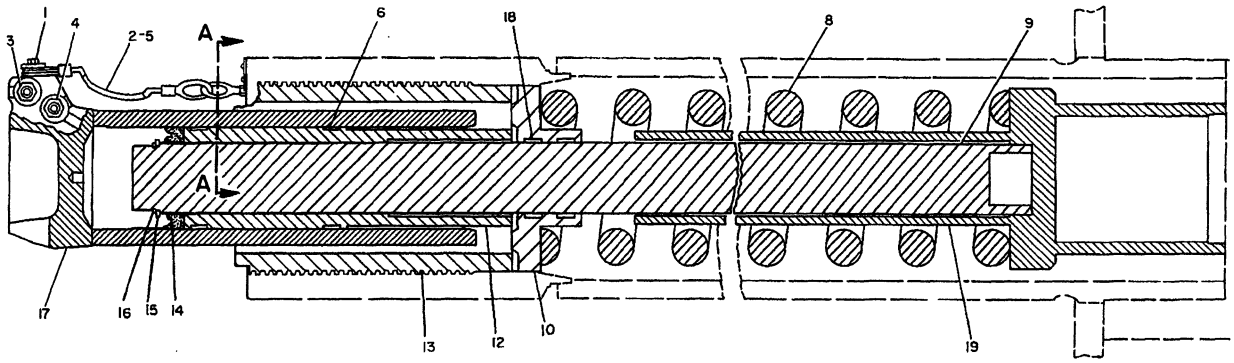

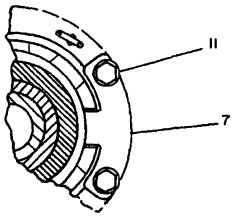

VIEW A-A

NOTE	REF NO	PART NUMBER	QTY	DESCRIPTION
	1	3B1915	2	BOLT
		1P7346	2	WASHER
		1L5081	2	SPACER
	2	7G8282	2	CABLE AS.
	3	2S5926	2	VALVE
	4	2S5925	2	VALVE
	5	1D4717	2	NUT
	6	9P7255	4	RING
	7	9G611	4	STOP
	8	6T208	2	SPRING
	9	9P7258	2	PISTON
	10	6T0209	2	GUIDE
	11	L1178	8	BOLT
		6V2360	8	WASHER
	12	9P7380	2	SLEEVE
	13	9P7447	2	RETAINER
	14	6V6900	2	SEAL
	15	9P7256	2	RING
	16	7J6580	2	RING
	17	9P6841	1	CYLINDER AS. (R.H.)
		9P6840	1	CYLINDER AS. (L.H.)
	18	6T481	8	RING
C	19	9W1189	2	SUPPORT AS.

C INDICATES CHANGE

339733

339733 P

4158 **6P7343 TRACK ADJUSTER & RECOIL GP**
S/N 53Y3425-Up

MEMORANDA

CHASSIS AND UNDERCARRIAGE

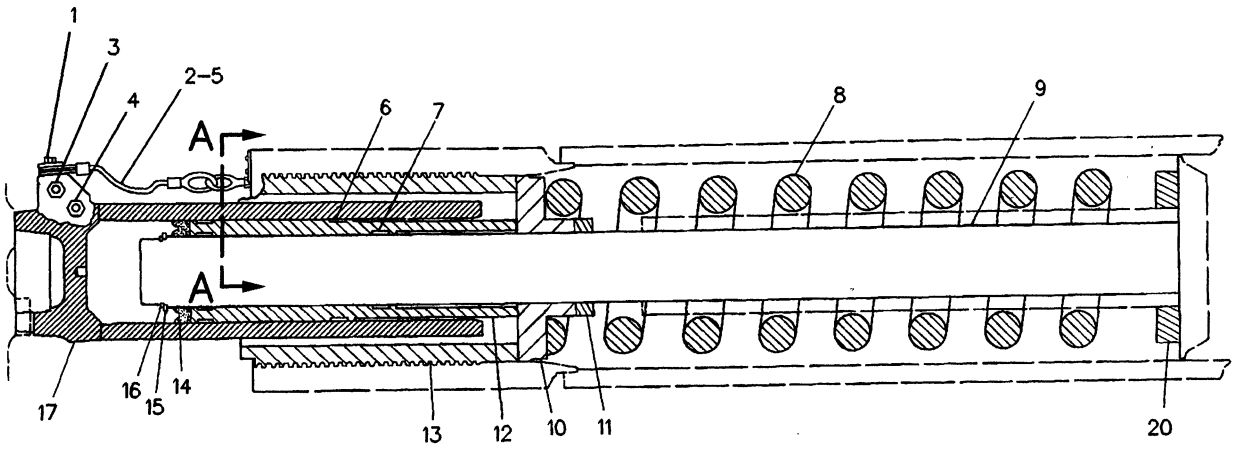

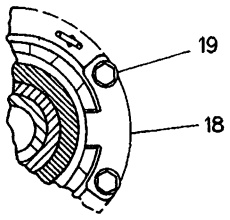

VIEW A-A

NOTE	REF NO	PART NUMBER	QTY	PART NAME	NOTE	REF NO	PART NUMBER	QTY	PART NAME
	1	0S1588	1	BOLT					
		1P7346	1	WASHER					
		8B8679	1	SPACER					
	2	7G8282	1	CABLE AS					
	3	2S5925	1	VALVE					
	4	2S5926	1	VALVE					
	5	1D4717	1	NUT					
	6	9P7255	2	RING					
	7	6T0481	4	RING					
	8	6T0208	1	SPRING					
	9	9P7258	1	PISTON					
	10	6T9732	1	GUIDE AS					
		6T0209	1	GUIDE					
	11	6T9014	1	SPACER					
	12	9P7380	1	SLEEVE					
	13	9P7447	1	RETAINER					
	14	6V6900	1	SEAL-U-CUP					
	15	9P7256	1	RING					
	16	7J6580	1	RING-RETAINING					
	17	9P6841	1	CYLINDER AS (L.H.)					
	18	9G0611	2	STOP					
	19	0L1178	4	BOLT					
		6V2360	4	WASHER-HARD					
	20	6T9013	1	SPACER					

R-530239 P

4157 **6T2647 TRACK ADJUSTER & RECOIL GP-RH**

Type 1

Part Of 6T2545 Undercarriage Ar

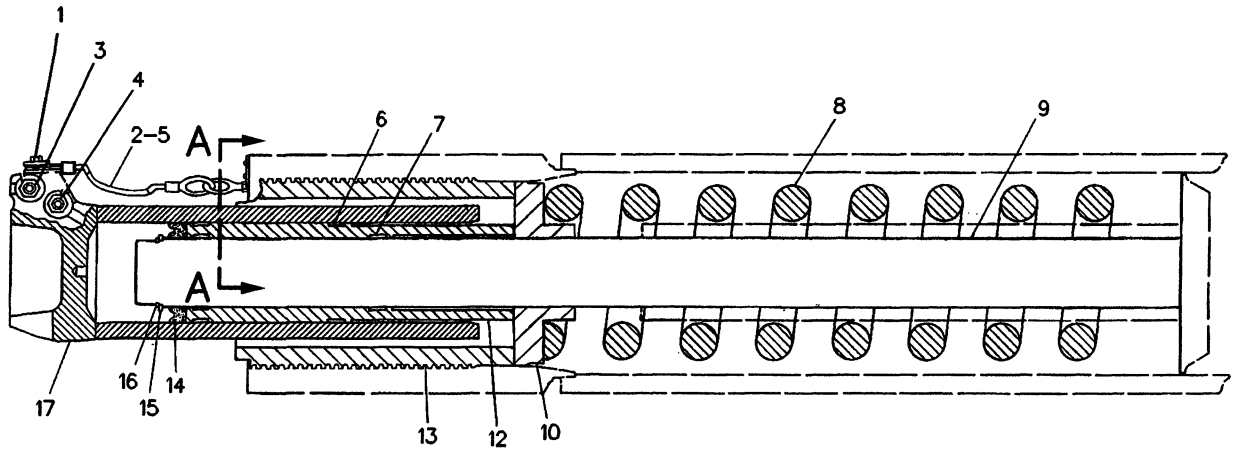

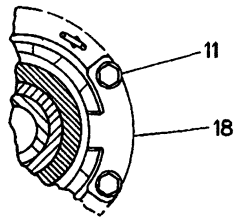

VIEW A-A

NOTE	REF NO	PART NUMBER	QTY	PART NAME	NOTE	REF NO	PART NUMBER	QTY	PART NAME
C	1	3B1915	1	BOLT					
		1P7346	1	WASHER					
C		1L5081	1	SPACER					
	2	7G8282	1	CABLE AS					
	3	2S5925	1	VALVE					
	4	2S5926	1	VALVE					
	5	1D4717	1	NUT					
	6	9P7255	2	RING					
	7	6T0481	4	RING					
	8	6T0208	1	SPRING					
	9	9P7258	1	PISTON					
C	10	6T0209	1	GUIDE					
	11	0L1178	4	BOLT					
		6V2360	4	WASHER-HARD					
	12	9P7380	1	SLEEVE					
	13	9P7447	1	RETAINER					
	14	6V6900	1	SEAL-U-CUP					
	15	9P7256	1	RING					
	16	7J6580	1	RING-RETAINING					
	17	9P6841	1	CYLINDER AS (R.H.)					
	18	9G0611	2	STOP					

C-CHANGE FROM PREVIOUS TYPE

R-530240 EP

4157 **6T2647 TRACK ADJUSTER & RECOIL GP-RH**

Type 2

Part Of 6T2545 Undercarriage Ar

CHASSIS AND UNDERCARRIAGE

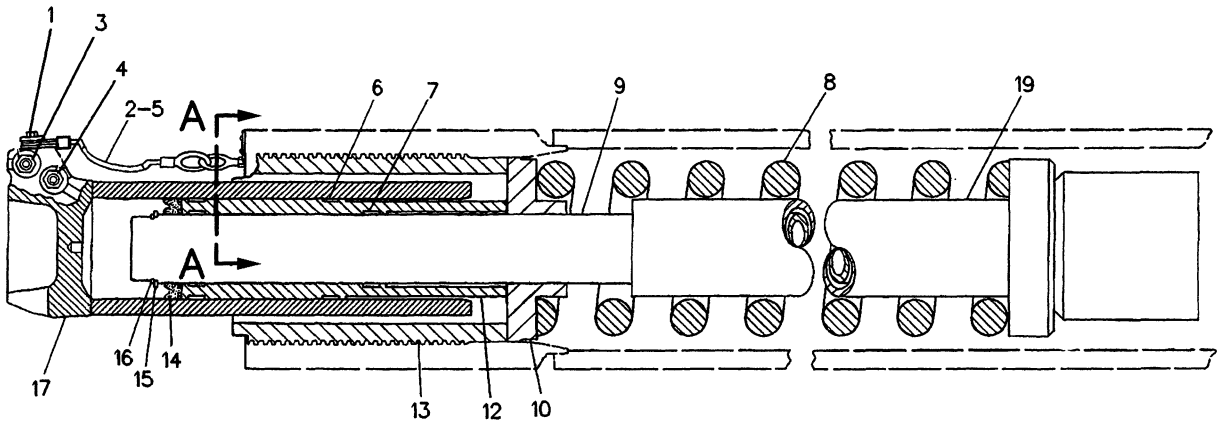

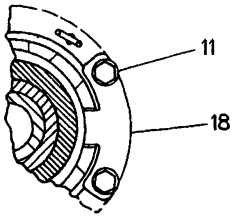

VIEW A-A

NOTE	REF NO	PART NUMBER	QTY	PART NAME	NOTE	REF NO	PART NUMBER	QTY	PART NAME
	1	3B1915	1	BOLT					
		1P7346	1	WASHER					
		1L5081	1	SPACER					
	2	7G8282	1	CABLE AS					
	3	2S5925	1	VALVE					
	4	2S5926	1	VALVE					
	5	1D4717	1	NUT					
	6	9P7255	2	RING					
	7	6T0481	4	RING					
	8	6T0208	1	SPRING					
	9	9P7258	1	PISTON					
	10	6T0209	1	GUIDE					
	11	0L1178	4	BOLT					
		6V2360	4	WASHER-HARD					
	12	9P7380	1	SLEEVE					
	13	9P7447	1	RETAINER					
	14	6V6900	1	SEAL-U-CUP					
	15	9P7256	1	RING					
	16	7J6580	1	RING-RETAINING					
	17	9P6841	1	CYLINDER AS (R.H.)					
	18	9G0611	2	STOP					
C	19	9W1189	1	SUPPORT AS					

C-CHANGE FROM PREVIOUS TYPE

R-530238 EP

4157 **6T2647 TRACK ADJUSTER & RECOIL GP-RH**

Type 3

Part Of 6T2545 Undercarriage Ar

MEMORANDA

CHASSIS AND UNDERCARRIAGE

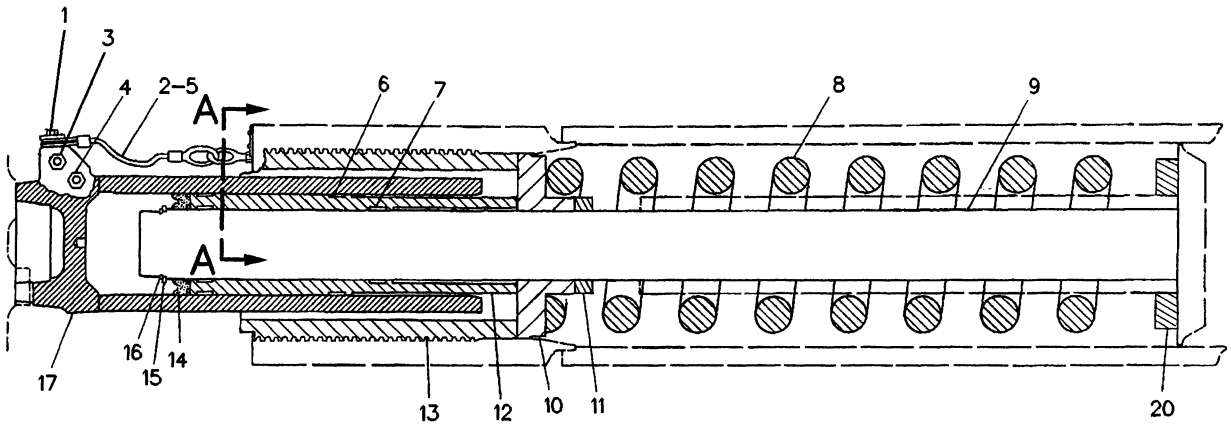

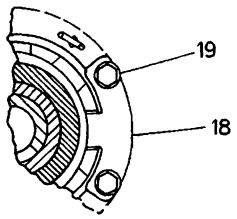

VIEW A-A

NOTE	REF NO	PART NUMBER	QTY	PART NAME	NOTE	REF NO	PART NUMBER	QTY	PART NAME
	1	0S1588	1	BOLT					
		1P7346	1	WASHER					
		8B8679	1	SPACER					
	2	7G8282	1	CABLE AS					
	3	2S5925	1	VALVE					
	4	2S5926	1	VALVE					
	5	1D4717	1	NUT					
	6	9P7255	2	RING					
	7	6T0481	4	RING					
	8	6T0208	1	SPRING					
	9	9P7258	1	PISTON					
	10	6T9732	1	GUIDE AS					
		6T0209	1	GUIDE					
	11	6T9014	1	SPACER					
	12	9P7380	1	SLEEVE					
	13	9P7447	1	RETAINER					
	14	6V6900	1	SEAL-U-CUP					
	15	9P7256	1	RING					
	16	7J6580	1	RING-RETAINING					
	17	9P6840	1	CYLINDER AS (L.H.)					
	18	9G0611	2	STOP					
	19	0L1178	4	BOLT					
		6V2360	4	WASHER-HARD					
	20	6T9013	1	SPACER					

R-530244 EP

4157 **6T2648 TRACK ADJUSTER & RECOIL GP-LH**

Type 1

Part Of 6T2544 Undercarriage Ar

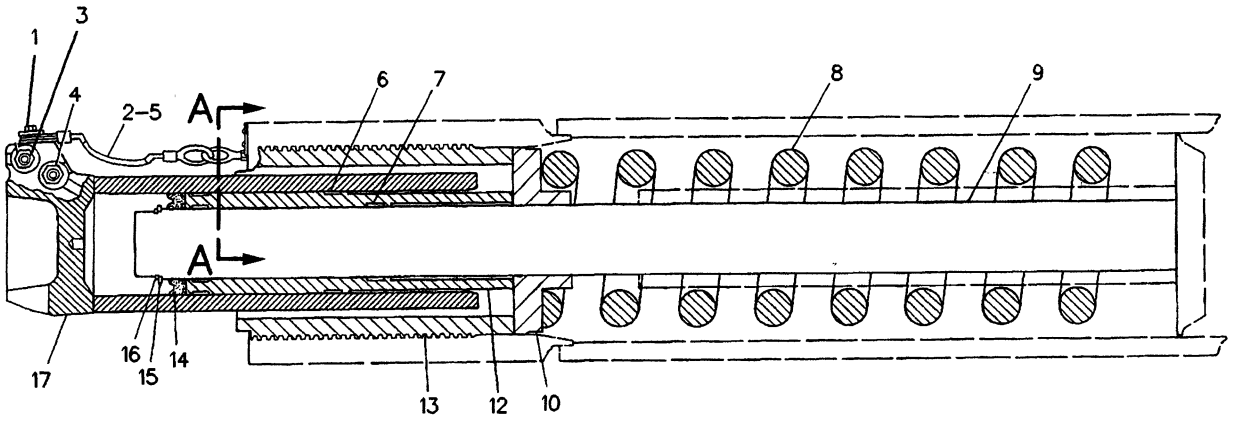

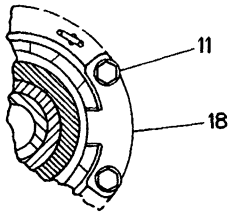

VIEW A-A

NOTE	REF NO	PART NUMBER	QTY	PART NAME	NOTE	REF NO	PART NUMBER	QTY	PART NAME
C	1	3B1915	1	BOLT					
		1P7346	1	WASHER					
C		1L5081	1	SPACER					
	2	7G8282	1	CABLE AS					
	3	2S5925	1	VALVE					
	4	2S5926	1	VALVE					
	5	1D4717	1	NUT					
	6	9P7255	2	RING					
	7	6T0481	4	RING					
	8	6T0208	1	SPRING					
	9	9P7258	1	PISTON					
C	10	6T0209	1	GUIDE					
	11	0L1178	4	BOLT					
		6V2360	4	WASHER-HARD					
	12	9P7380	1	SLEEVE					
	13	9P7447	1	RETAINER					
	14	6V6900	1	SEAL-U-CUP					
	15	9P7256	1	RING					
	16	7J6580	1	RING-RETAINING					
	17	9P6840	1	CYLINDER AS (L.H.)					
	18	9G0611	2	STOP					

C-CHANGE FROM PREVIOUS TYPE

R-530245 EP

4157 **6T2648 TRACK ADJUSTER & RECOIL GP-LH**

Type 2

Part Of 6T2544 Undercarriage Ar

CHASSIS AND UNDERCARRIAGE

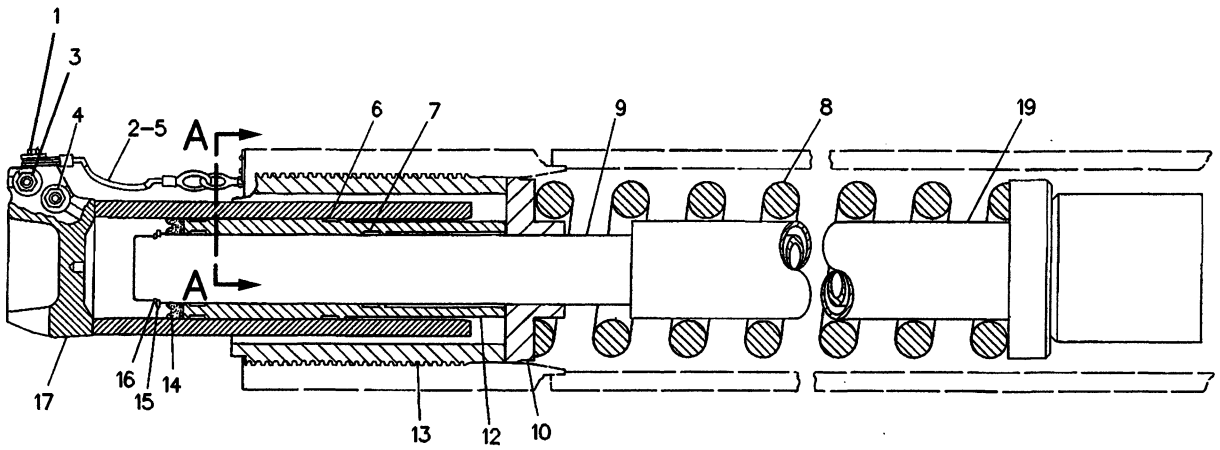

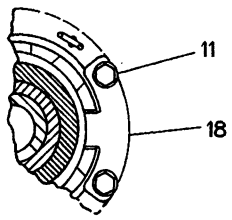

VIEW A-A

NOTE	REF NO	PART NUMBER	QTY	PART NAME	NOTE	REF NO	PART NUMBER	QTY	PART NAME
	1	3B1915	1	BOLT					
		1P7346	1	WASHER					
		1L5081	1	SPACER					
	2	7G8282	1	CABLE AS					
	3	2S5925	1	VALVE					
	4	2S5926	1	VALVE					
	5	1D4717	1	NUT					
	6	9P7255	2	RING					
	7	6T0481	4	RING					
	8	6T0208	1	SPRING					
	9	9P7258	1	PISTON					
	10	6T0209	1	GUIDE					
	11	OL1178	4	BOLT					
		6V2360	4	WASHER-HARD					
	12	9P7380	1	SLEEVE					
	13	9P7447	1	RETAINER					
	14	6V6900	1	SEAL-U-CUP					
	15	9P7256	1	RING					
	16	7J6580	1	RING-RETAINING					
	17	9P6840	1	CYLINDER AS (L.H.)					
	18	9G0611	2	STOP					
C	19	9W1189	1	SUPPORT AS					

C-CHANGE FROM PREVIOUS TYPE

R-530246 EP

4157 **6T2648 TRACK ADJUSTER & RECOIL GP-LH**

Type 3

Part Of 6T2544 Undercarriage Ar

MEMORANDA

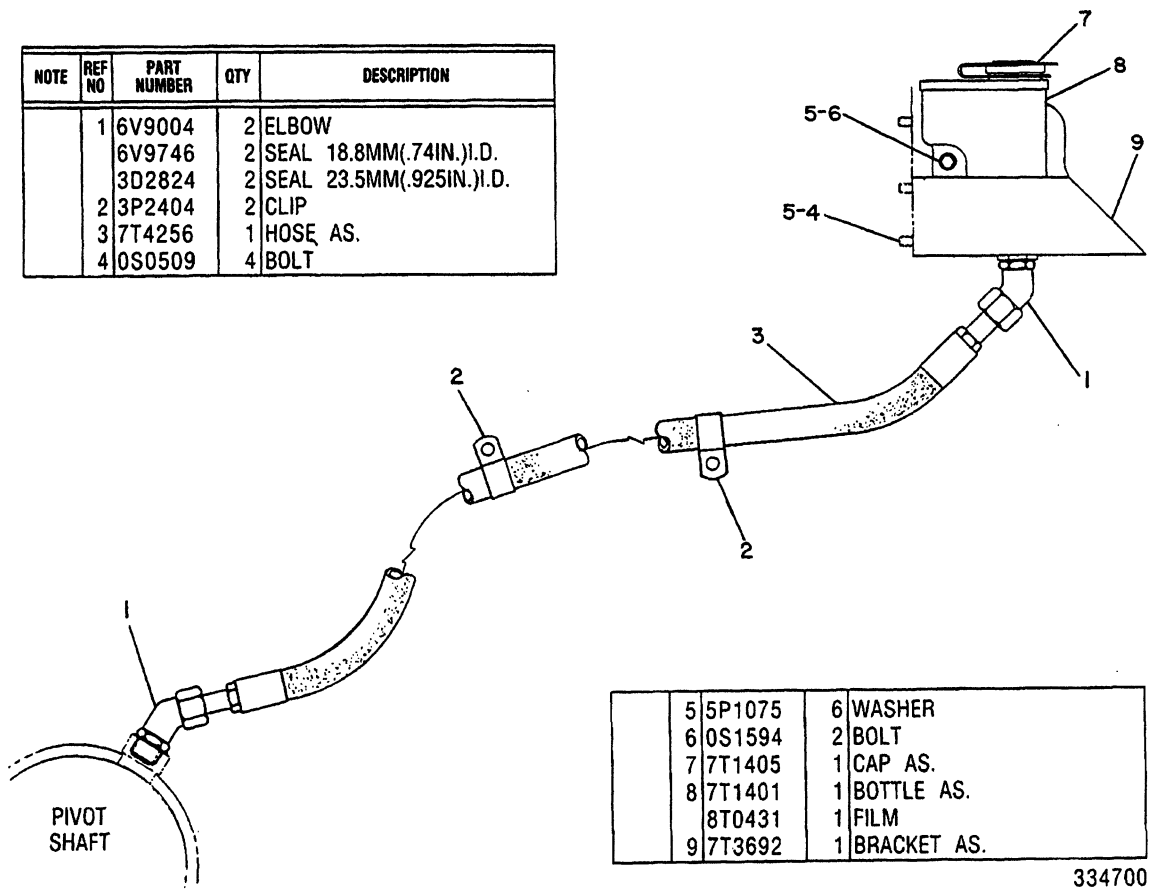

NOTE	REF NO	PART NUMBER	QTY	DESCRIPTION
	1	6V9004	2	ELBOW
		6V9746	2	SEAL 18.8MM(.74IN.)I.D.
		3D2824	2	SEAL 23.5MM(.925IN.)I.D.
	2	3P2404	2	CLIP
	3	7T4256	1	HOSE AS.
	4	0S0509	4	BOLT
	5	5P1075	6	WASHER
	6	0S1594	2	BOLT
	7	7T1405	1	CAP AS.
	8	7T1401	1	BOTTLE AS.
		8T0431	1	FILM
	9	7T3692	1	BRACKET AS.

334700

334700 P

3286 **7T4383 LUBRICATION GP-PIVOT SHAFT**
S/N 53Y3065-3484

NOTE	REF NO	PART NUMBER	QTY	DESCRIPTION
	1	6V9746	2	SEAL 1.88CM(.74IN.)I.D.
		3D2824	2	SEAL 2.35CM(.925IN.)I.D.
C	2	6V9004	1	ELBOW
C	3	5P7854	2	CLIP
	4	7T4256	1	HOSE AS.
C	5	0S0509	6	BOLT
	6	5P1075	6	WASHER
C	7	9W3335	1	PLATE
C	8	9W3334	1	PLATE AS.
C	9	6V9007	1	ELBOW
C	10	7T7662	1	BOTTLE
		8T0431	1	FILM

B USE AS REQUIRED
C INDICATES CHANGE
D ORDER BY THE METER

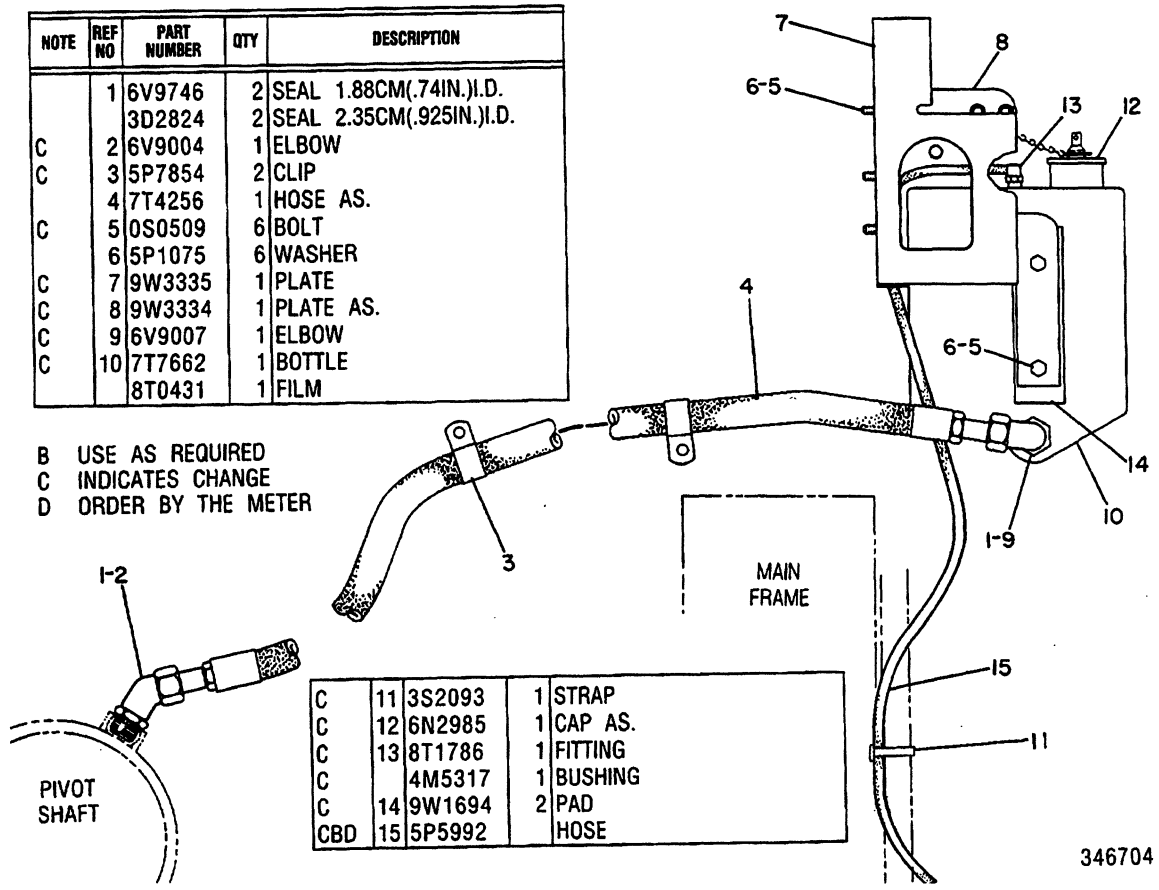

C	11	3S2093	1	STRAP
C	12	6N2985	1	CAP AS.
C	13	8T1786	1	FITTING
C		4M5317	1	BUSHING
C	14	9W1694	2	PAD
CBD	15	5P5992		HOSE

346704

346704 P

3286 **7T4383 LUBRICATION GP-PIVOT SHAFT**
S/N 53Y3485-Up

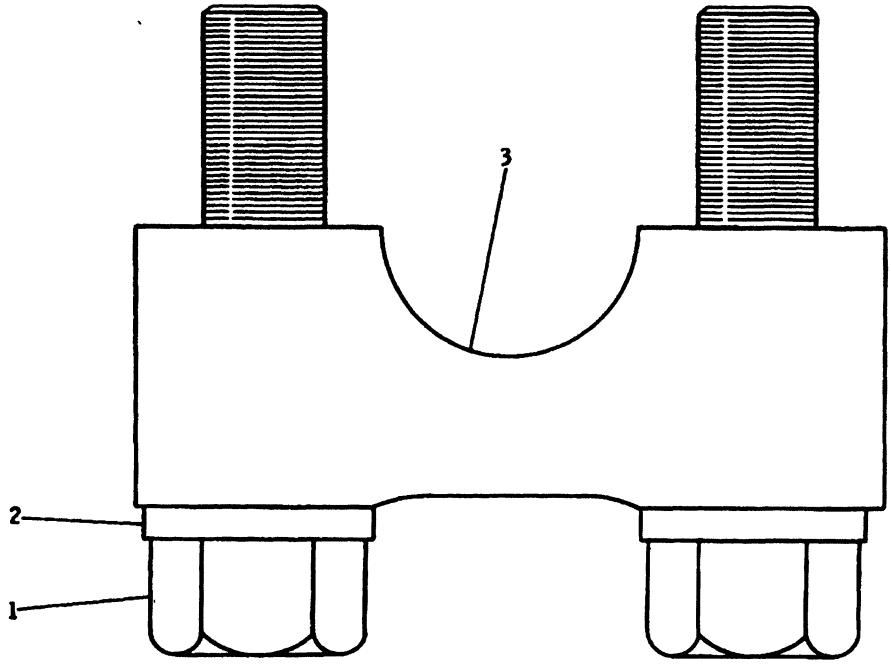

REF. NO.	PART NUMBER	DESCRIPTION	QTY
1	6V1723	BOLT	2
2	5P8249	WASHER	2
3	7G180	CAP ASSEM.	1
	1T68	PIN	1

235154

235154 P

4180

7G0179 CAP GP-TRACK ROLLER
32 Required
S/N 53Y1-784

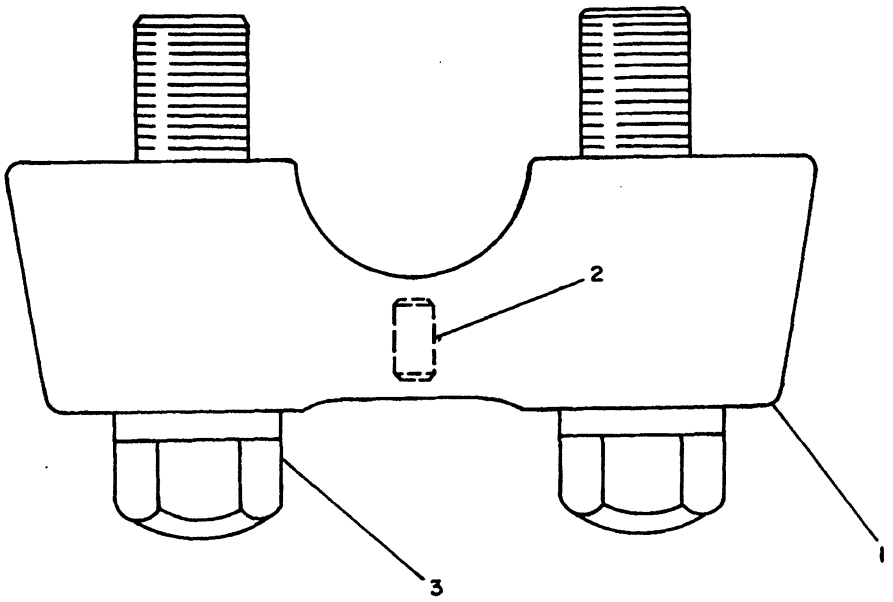

REF. NO.	PART NUMBER	DESCRIPTION	QTY.
1	9P9720	CAP ASSEM.	1
2	1T68	PIN	1
3	6V1726	BOLT	2
	3K5234	WASHER	2

303744

303744 P

4159

9P9721 IDLER GP-CAP TRACK
8 Required
S/N 53Y1-784

CHASSIS AND UNDERCARRIAGE

1	6T2542	FRAME GP	189U
1	6T2658	SUSPENSION GP	190C
1	6T2648	RECOIL GP	184F
16	6T1142	CAP GP	185B
2	6T3122	STRAP	
4	2H3743	BOLT	
4	9G1049	SPACER	
2	7K2507	SPACER	
2	6B9194	BOLT	
2	5P8250	WASHER	
1	6T3121	STRAP	
4	6V5859	PLUG	
4	9G7516	PLUG	

334874 P

4180 **6T2544 UNDERCARRIAGE AR-LH**

1	6T2541	FRAME GP	189N
1	6T2658	SUSPENSION GP	190C
1	6T2647	RECOIL GP	184D
16	6T1142	CAP GP	185B
2	6T3122	STRAP	
4	2H3743	BOLT	
4	9G1049	SPACER	
2	7K2507	SPACER	
2	6B9194	WASHER	
2	5P8250	WASHER	
4	6V5859	PLUG	
4	9G7516	PLUG	
1	6T3121	STRAP	

334870 P

4180 **6T2545 UNDERCARRIAGE AR-RH**

Note: Provides Necessary Parts To Allow Field Service Exchange Of Undercarriage

CHASSIS AND UNDERCARRIAGE

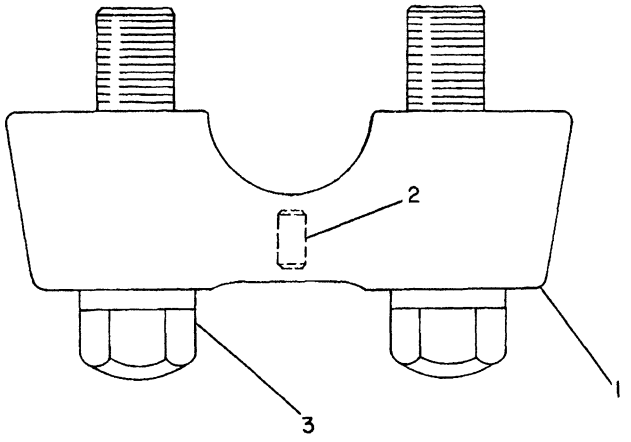

NOTE	REF NO	PART NUMBER	QTY	PART NAME
C	1	6T4964	1	TRACK ROLLER AS
	2	1T0068	1	PIN-SPRING
	3	6T1139	2	BOLT-ROLLER MOUNTING
		3K5234	2	WASHER-HARD

C-CHANGE FROM PREVIOUS TYPE

B-330568 EP

4180 **6T1141 CAP GP-TRACK ROLLER**
8 Required
S/N 53Y785-Up

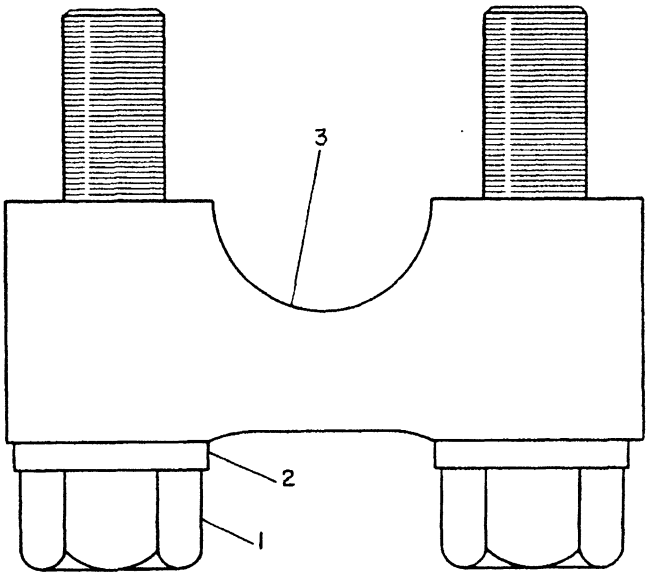

NOTE	REF NO	PART NUMBER	QTY	PART NAME
	1	6T1140	2	BOLT-ROLLER MOUNTING
	2	5P8249	2	WASHER
	3	6T4504	1	CAP AS-TRACK ROLLER
		1T0068	1	PIN-SPRING

B-307390 EP

4180 **6T1142 CAP GP-TRACK ROLLER**
32 Required
S/N 53Y785-Up
Part Of 6T2544,6T2545 Undercarriage Ars

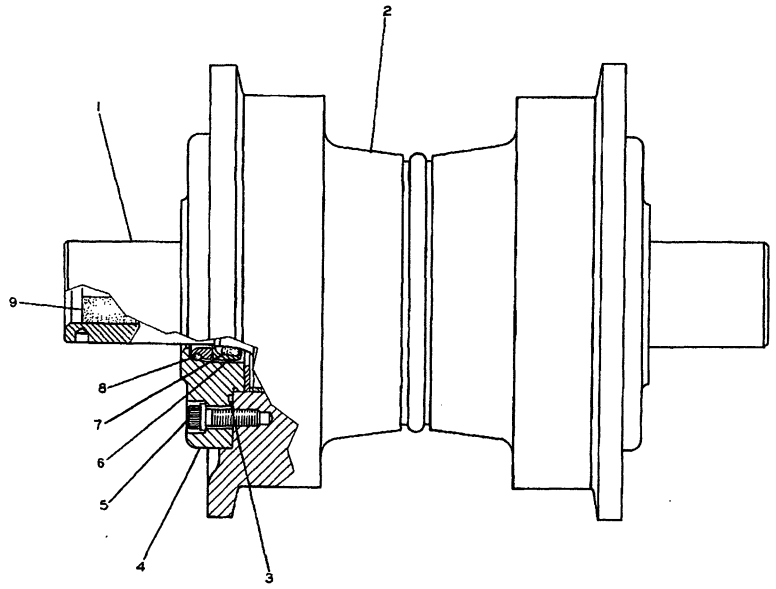

NOTE	REF NO	PART NUMBER	QTY	DESCRIPTION
	1	8P5703	1	SHAFT
	2	7G7592	1	ROLLER AS.
	3	5F3106	2	SEAL
	4	8P5702	2	RETAINER AS.
	5	1T0720	12	BOLT
	6	6V1799	2	SEAL GROUP
				(EACH INCLUDES)
C	7	6P8912	1	RING
C	8	6V2701	1	SEAL
C	9	9G4872	1	STOPPER
		7G4408	1	PLUG

C INDICATES CHANGE

316785

316785 P

4180

7G7594 ROLLER GP-TRACK
8 Required
Single Flange
Type 1. S/N 53Y1-3932

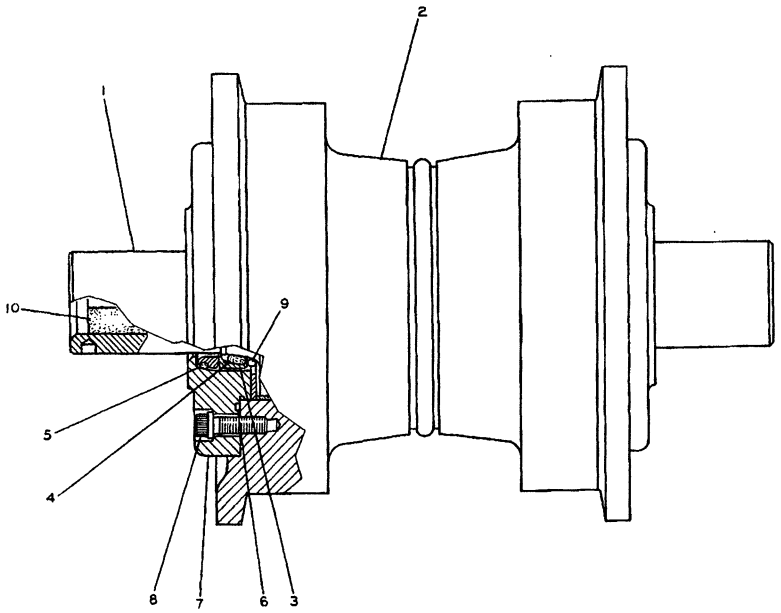

NOTE	REF NO	PART NUMBER	QTY	DESCRIPTION
	1	8P5703	1	SHAFT
	2	7G7592	1	ROLLER AS.
C	3	7T0158	2	SEAL GROUP
				(EACH INCLUDES)
	4	6P8912	1	RING
	5	6V2701	1	SEAL
	6	5F3106	2	SEAL
	7	8P5702	2	RETAINER AS.
	8	1T0720	12	BOLT
C	9	6T4871	2	STABILIZER (SEAL)
	10	9G4872	1	STOPPER
		7G4408	1	PLUG

C INDICATES CHANGE

317252

317252 P

4180

7G7594 ROLLER GP-TRACK
8 Required
Single Flange
Type 2. S/N 53Y1-3932

CHASSIS AND UNDERCARRIAGE

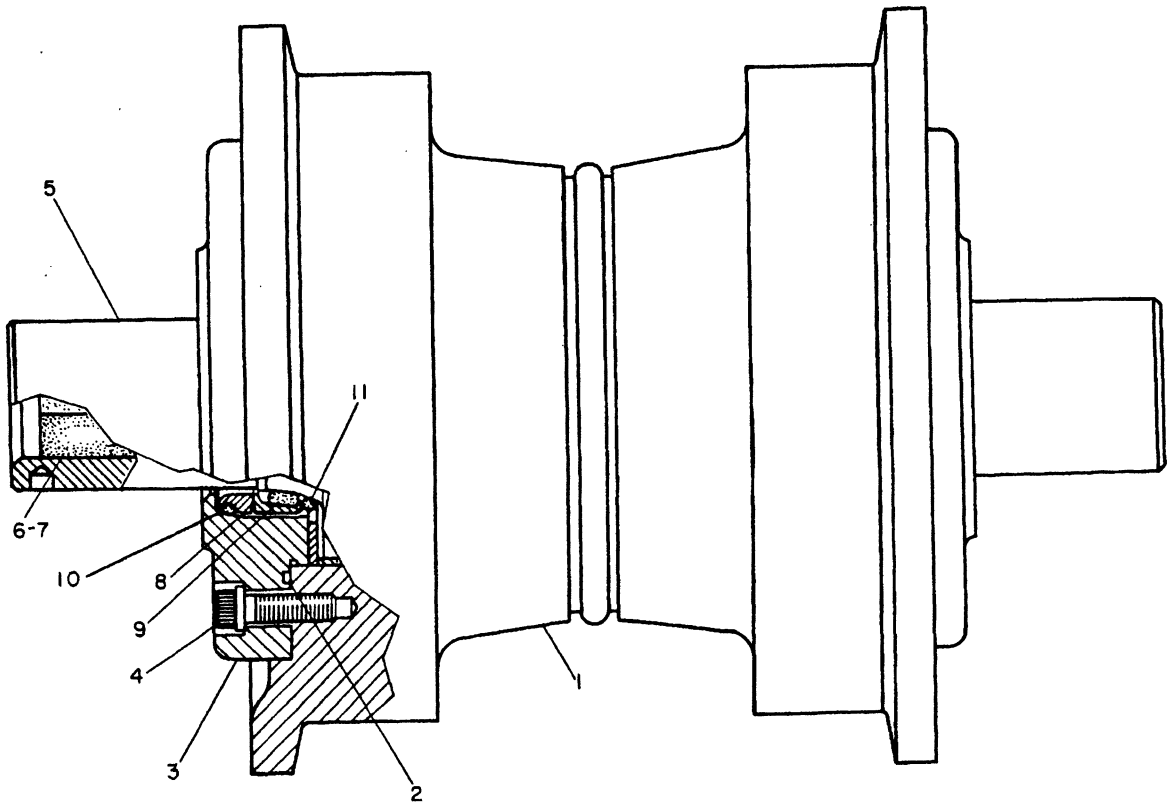

NOTE	REF NO	PART NUMBER	QTY	PART NAME	NOTE	REF NO	PART NUMBER	QTY	PART NAME
	2	8T7130	2	SEAL-FACE					
	3	8P5702	2	RETAINER AS					
	4	1T0720	12	BOLT-12 POINT HEAD					
	5	8P5703	1	SHAFT-TRACK ROLLER					
	6	7G4408	1	PLUG					
	7	9G4872	1	STOPPER-RUBBER					
	8	7T0158	2	SEAL GP-DUO-CONE (EACH INCLUDES)					
	9	6P8912	1	RING-SEALING					
	10	6V2701	1	SEAL-O-RING					
	11	6T4871	2	STABILIZER-SEAL					

B-352090 P

4180

7T2018 ROLLER GP-TRACK
8 Required
Single Flange
S/N 53Y3933-Up

MEMORANDA

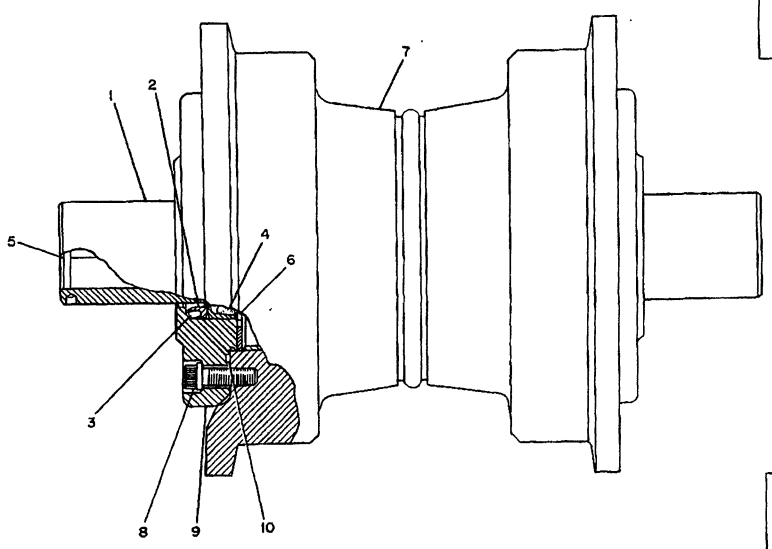

NOTE	REF NO	PART NUMBER	QTY	DESCRIPTION
	1	8P5703	1	SHAFT
	2	7T5133	2	SEAL GP. (EACH INCLUDES)
	3	6V2701	1	SEAL
	4	7T1094	1	RING
	5	7G4408	1	PLUG
		9G4872	1	STOPPER
	6	6T4871	2	STABILIZER
	7	7T2017	1	ROLLER AS.
	8	1T0720	12	BOLT
	9	8P5702	2	RETAINER AS. (EACH INCLUDES)
		8P5217	1	WASHER
	10	4S5898	2	SEAL

335235

335235 P

4180

7T5028 ROLLER GP-TRACK

8 Required

Single Flange

Provides Silicone Seals For Cold Weather Application

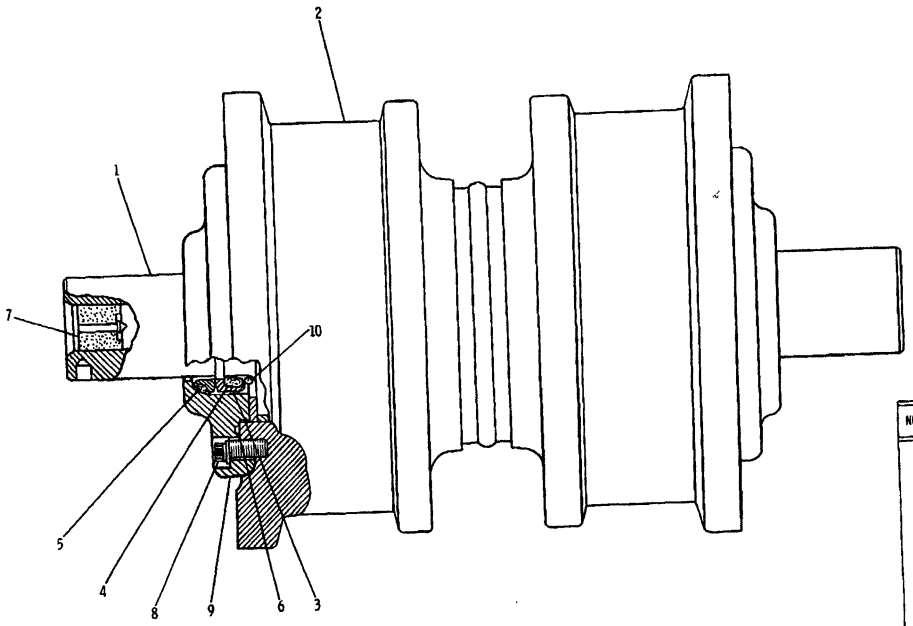

NOTE	REF NO	PART NUMBER	QTY	DESCRIPTION
	1	8P5703	1	SHAFT
	2	7G7593	1	ROLLER AS.
	3	7T5133	2	SEAL GROUP (EACH INCLUDES)
	4	7T1094	1	RING
	5	6V2701	1	SEAL
	6	4S5898	2	SEAL
	7	9G4872	1	STOPPER
		7G4408	1	PLUG
	8	1T0720	12	BOLT
	9	8P5702	2	RETAINER AS.
	10	6T4871	2	STABILIZER (SEAL)

335236

335236 P

4180 **7T5029 ROLLER GP-TRACK**

8 Required
Double Flange
Provides Silicone Seals For Cold Weather Application

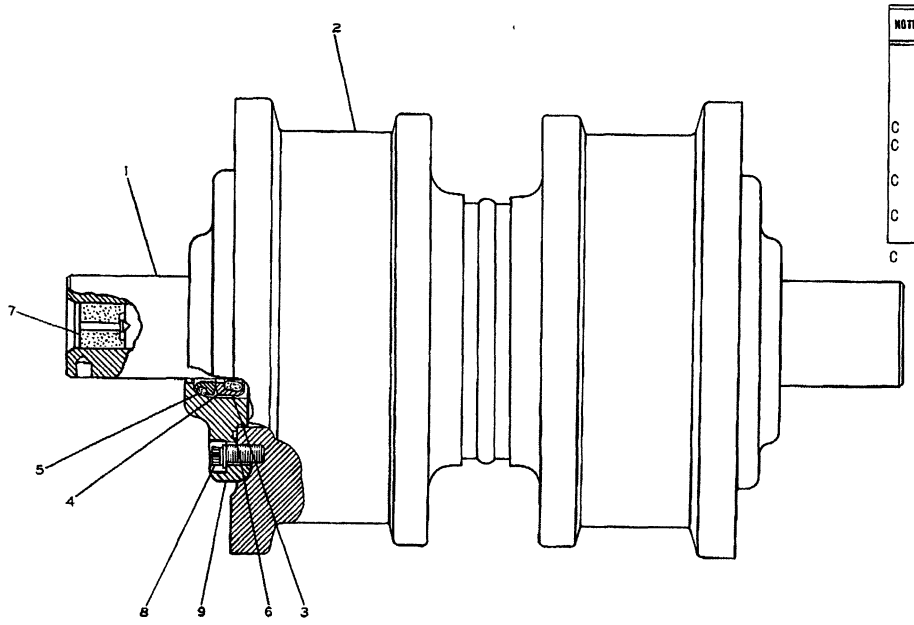

NOTE	REF NO	PART NUMBER	QTY	DESCRIPTION
	1	8P5703	1	SHAFT
	2	7G7593	1	ROLLER AS.
	3	6V1799	2	SEAL GROUP
				(EACH INCLUDES)
C	4	6P8912	1	RING
C	5	6V2701	1	SEAL
	6	5F3106	2	SEAL
C	7	9G4872	1	STOPPER
		7G4408	1	PLUG
C	8	1T0720	12	BOLT
	9	8P5702	2	RETAINER AS.

C INDICATES CHANGE

316786

316786 P

4180 **7G7595 ROLLER GP-TRACK**

8 Required
Double Flange
Type 1

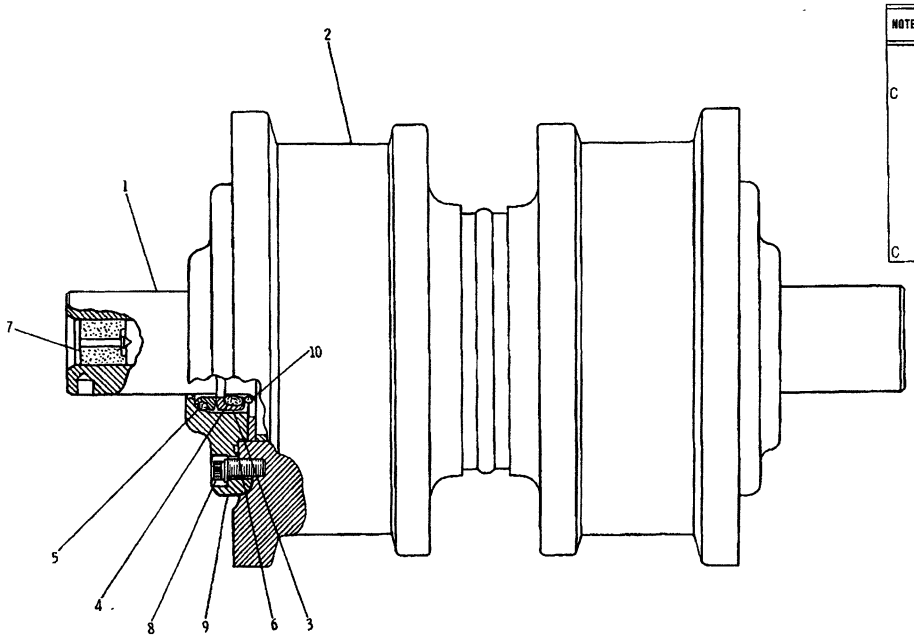

NOTE	REF NO	PART NUMBER	QTY	DESCRIPTION
	1	8P5703	1	SHAFT
	2	7G7593	1	ROLLER AS.
C	3	7T0158	2	SEAL GROUP (EACH INCLUDES)
	4	6P8912	1	RING
	5	6V2701	1	SEAL
	6	5F3106	2	SEAL
	7	9G4872	1	STOPPER
		7G4408	1	PLUG
	8	1T0720	12	BOLT
	9	8P5702	2	RETAINER AS.
C	10	6T4871	2	STABILIZER (SEAL)

C INDICATES CHANGE

317254

317254 P

4180

7G7595 ROLLER GP-TRACK
8 Required
Double Flange
Type 2

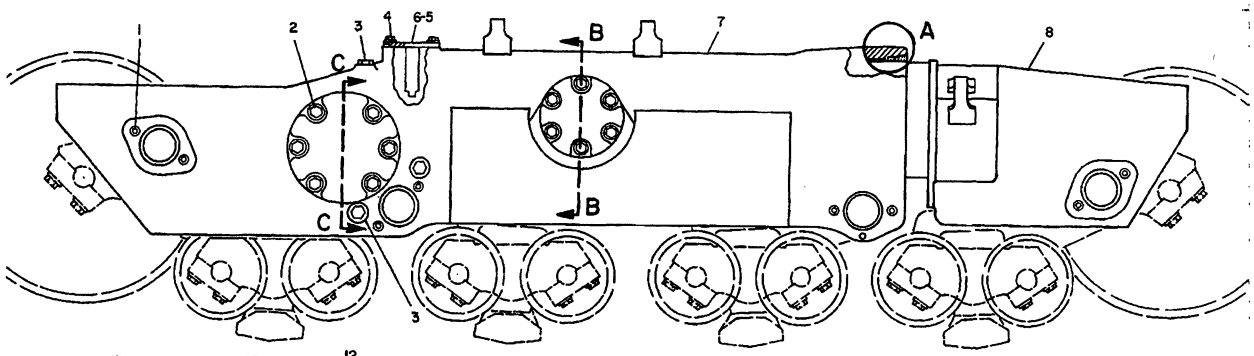

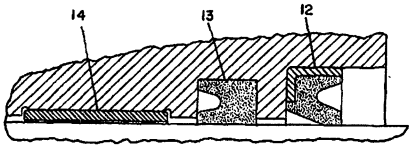

VIEW OF AREA A

REF. NO.	PART NUMBER	DESCRIPTION	QTY.
1	9G7516	PLUG	32
2	8S9093	BOLT	12
	5P8250	WASHER	12
3	6B5262	PLUG	6
	6K5551	GASKET	6
4	S1585	BOLT	8
	5P1076	WASHER	8
5	6D9157	SEAL	2

SEE PART TWO FOR VIEW C-C

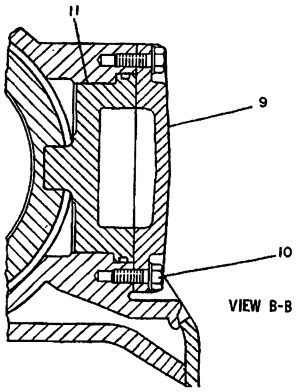

VIEW B-B

6	9G349	COVER ASSEM.	2
7	9P6838	FRAME ASSEM. ---(R. H.)	1
	9P6839	FRAME ASSEM. ---(L. H.)	1
8	9P7998	FRAME ASSEM. (Each Includes)	2
	9P7990	BEARING	1
	6V709	PLATE	1
	4B4158	SCREW	4
9	6P8931	COVER	4
	7L3380	SEAL	4
10	S1589	BOLT	24
	5P8247	WASHER	24
11	9P5974	GUIDE	4
12	5P4591	SEAL	2
13	5P4589	SEAL	2
14	9G296	BEARING	2

235168

235168 P

4151 **6P7344 FRAME GP-TELESCOPING RECOIL-PART 1 OF 2**
S/N 53Y1-1188

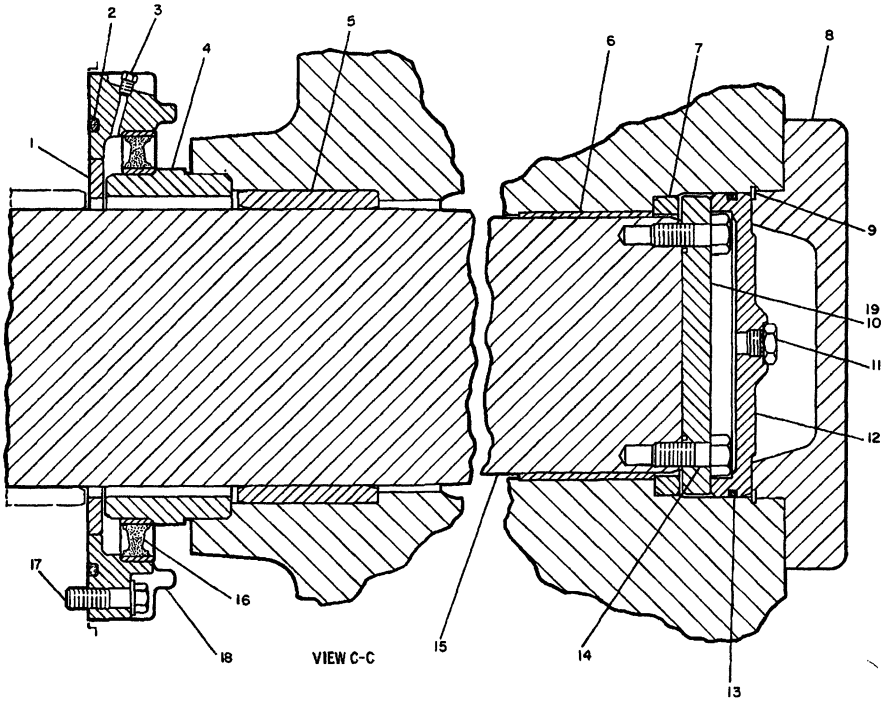

REF. NO.	PART NUMBER	DESCRIPTION	QTY.
1	9P7053	PLATE	2
2	4D4508	SEAL	2
3	5M6214	PLUG	2
4	3T7920	SLEEVE	2
5	3P8845	BEARING	2
6	7G9709	BEARING	2
7	7G9707	RING	2
8	6P8901	COVER	2
9	1P9254	RING	2
10	7G9708	PLATE	2
11	9S4185	PLUG	2
	3K360	SEAL	2
12	7G5972	PLATE	2
13	9M5894	SEAL	2
14	1A1135	BOLT	24
15	7G8916	SHAFT	1
16	9P8309	SEAL	2
17	1A1460	BOLT	16
	5P8245	WASHER	16
18	7G7736	RETAINER	2
19	2P1692	SEAL	2

235169

235169 P

4151 **6P7344 FRAME GP-TELESCOPING RECOIL-PART 2 OF 2**
S/N 53Y1-1188

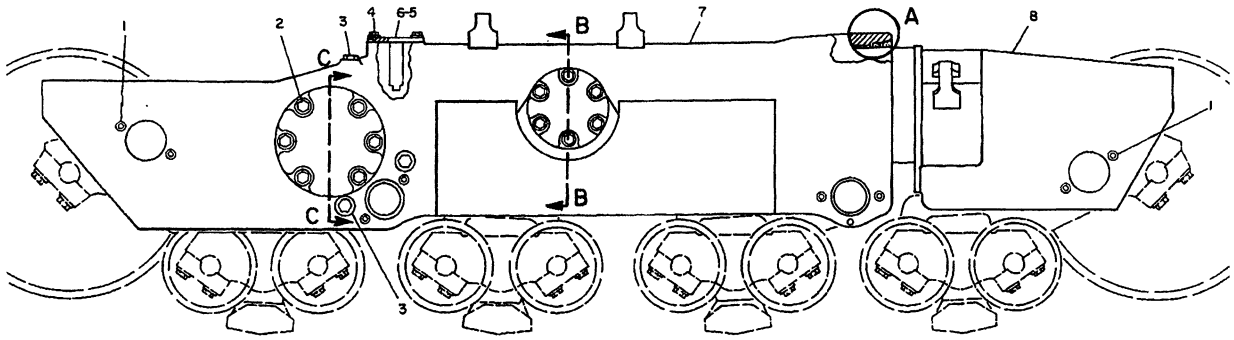

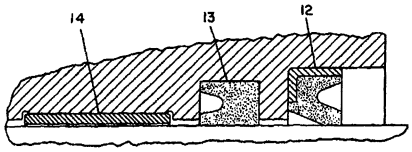

VIEW OF AREA A

NOTE	REF NO	PART NUMBER	QTY	DESCRIPTION
	1	9G7516	32	PLUG
	2	8S9093	12	BOLT
		5P8250	12	WASHER
	3	6B5262	6	PLUG
		6K5551	6	GASKET
	4	S1585	8	BOLT
		5P1076	8	WASHER
	5	6D9157	2	SEAL

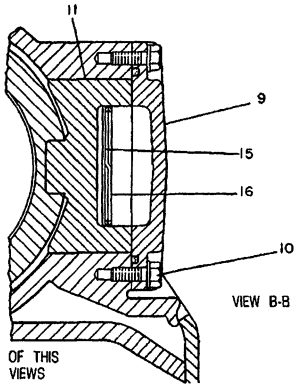

VIEW B-B

REFER TO ALL PARTS OF THIS GROUP FOR AUXILIARY VIEWS

	6	9G349	2	COVER AS.
	7	9P6838	1	FRAME AS. (R.H.)
		9P6839	1	FRAME AS. (L.H.)
C	8	6T210	2	FRAME AS.
				(EACH INCLUDES)
		9P7990	1	BEARING
		6V709	1	PLATE
		4B4158	4	SCREW
	9	6P8931	4	COVER
		7L3380	4	SEAL
	10	S1589	24	BOLT
		5P8247	24	WASHER
	11	9P5974	4	GUIDE
	12	5P4591	2	SEAL
	13	5P4589	2	SEAL
	14	9G296	2	BEARING
C	15	6T8258	4	PLATE (WARNING)
C	16	1H8142	4	RING

C INDICATES CHANGE

312789

312789 P

4151 **6P7344 FRAME GP-TELESCOPING RECOIL-PART 1 OF 2**
S/N 53Y1189-1536

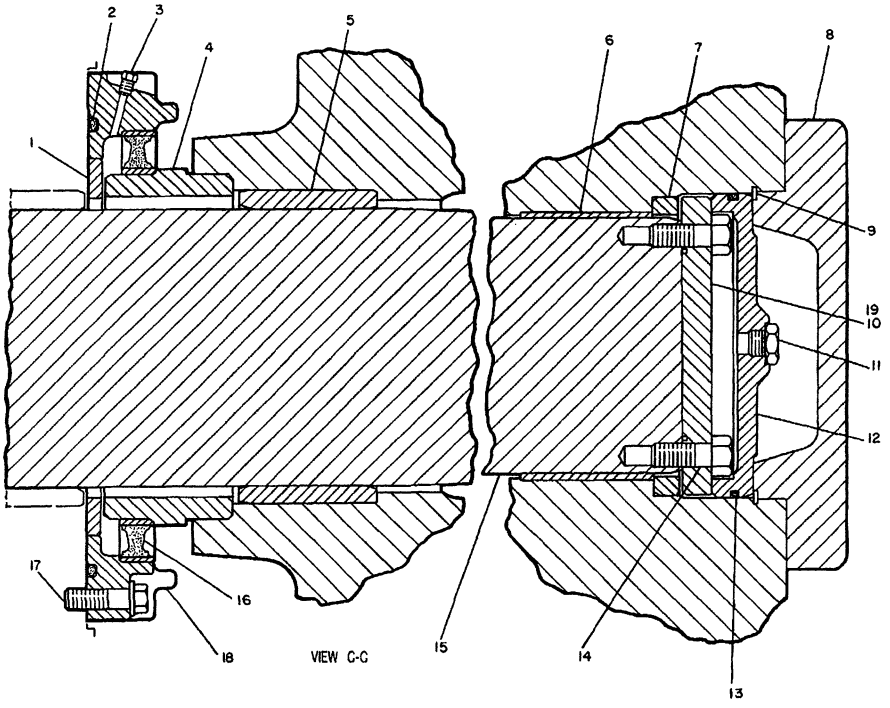

NOTE	REF NO	PART NUMBER	QTY	DESCRIPTION
	1	9P7053	2	PLATE
	2	4D4508	2	SEAL
	3	5M6214	2	PLUG
	4	3T7920	2	SLEEVE
	5	3P8845	2	BEARING
	6	7G9709	2	BEARING
	7	7G9707	2	RING
	8	6P8901	2	COVER
	9	1P9254	2	RING
	10	7G9708	2	PLATE
	11	9S4185	2	PLUG
		3K360	2	SEAL
	12	7G5972	2	PLATE
	13	9M5894	2	SEAL
	14	1A1135	24	BOLT
	15	7G8916	1	SHAFT
	16	9P8309	2	SEAL
	17	1A1460	16	BOLT
		5P8245	16	WASHER
	18	7G7736	2	RETAINER
	19	2P1692	2	SEAL

312790

312790 P

4151 6P7344 FRAME GP-TELESCOPING RECOIL-PART 2 OF 2
S/N 53Y1189-1536

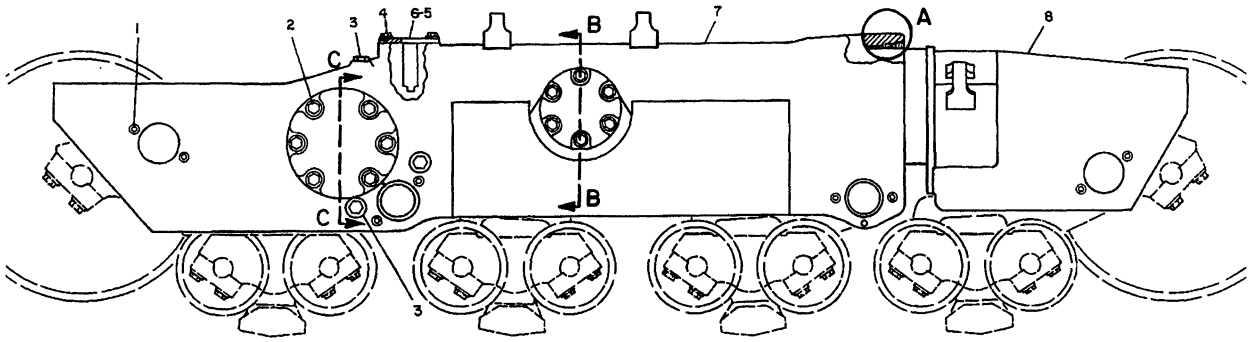

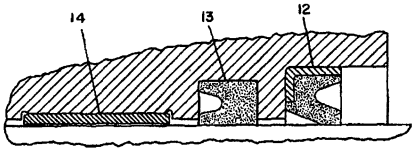

VIEW OF AREA A

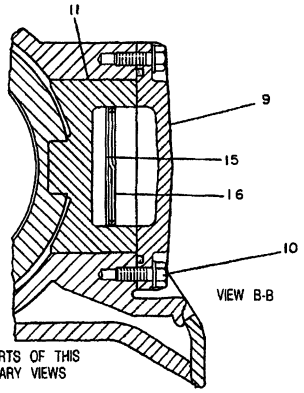

VIEW B-B

REFER TO ALL PARTS OF THIS GROUP FOR AUXILIARY VIEWS

NOTE	REF NO	PART NUMBER	QTY	DESCRIPTION
	1	9G7516	32	PLUG
	2	8S9093	12	BOLT
		5P8250	12	WASHER
	3	6B5262	6	PLUG
		6K5551	6	GASKET
	4	S1585	8	BOLT
		5P1076	8	WASHER
	5	6D9157	2	SEAL
	6	9G349	2	COVER AS.
	7	9P6838	1	FRAME AS. (R.H.)
		9P6839	1	FRAME AS. (L.H.)
C	8	6T7444	2	FRAME AS. (EACH INCLUDES)
		9P7990	1	BEARING
		6V709	1	PLATE
		4B4158	4	SCREW
	9	6P8931	4	COVER
		7L3380	4	SEAL
	10	S1589	24	BOLT
		5P8247	24	WASHER
C	11	6T7445	4	GUIDE
	12	5P4591	2	SEAL
	13	5P4589	2	SEAL
	14	9G296	2	BEARING
	15	6T8258	4	PLATE (WARNING)
	16	1H8142	4	RING

C INDICATES CHANGE

312712

312712 P

4151 **6P7344 FRAME GP-TELESCOPING RECOIL-PART 1 OF 2**

S/N 53Y1537-2367

Note: 6T8029 Tube Assembly Is Available

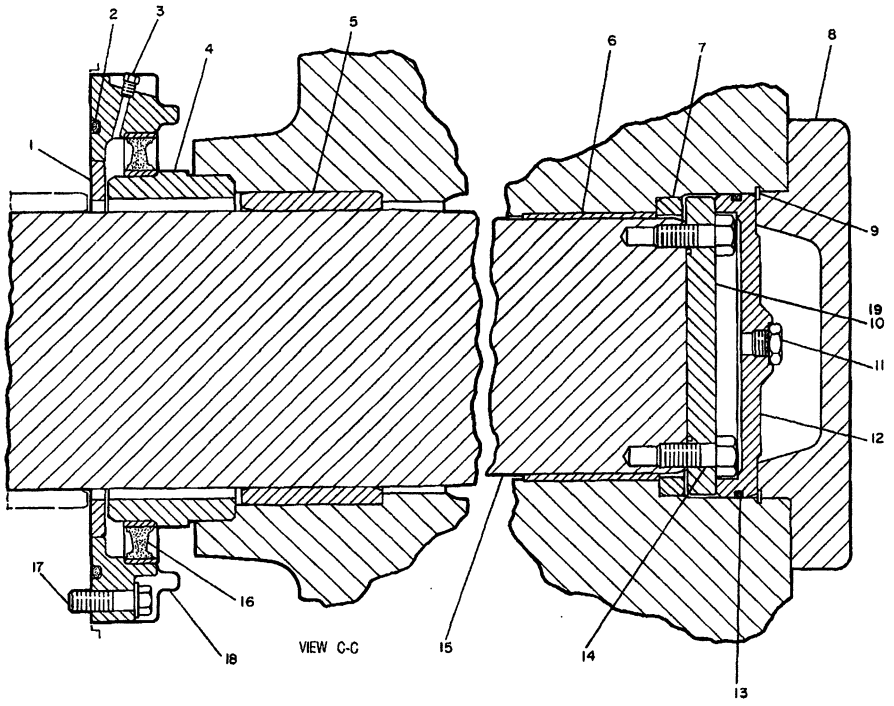

NOTE	REF NO	PART NUMBER	QTY	DESCRIPTION
	1	9P7053	2	PLATE
	2	4D4508	2	SEAL
	3	5M6214	2	PLUG
	4	3T7920	2	SLEEVE
	5	3P8845	2	BEARING
	6	7G9709	2	BEARING
	7	7G9707	2	RING
	8	6P8901	2	COVER
	9	1P9254	2	RING
	10	7G9708	2	PLATE
	11	9S4185	2	PLUG
		3K360	2	SEAL
	12	7G5972	2	PLATE
	13	9M5894	2	SEAL
	14	1A1135	24	BOLT
	15	7G8916	1	SHAFT
	16	9P8309	2	SEAL
	17	1A1460	16	BOLT
		5P8245	16	WASHER
	18	7G7736	2	RETAINER
	19	2P1692	2	SEAL

312713

312713 P

4151 **6P7344 FRAME GP-TELESCOPING RECOIL-PART 2 OF 2**
S/N 53Y1537-2367

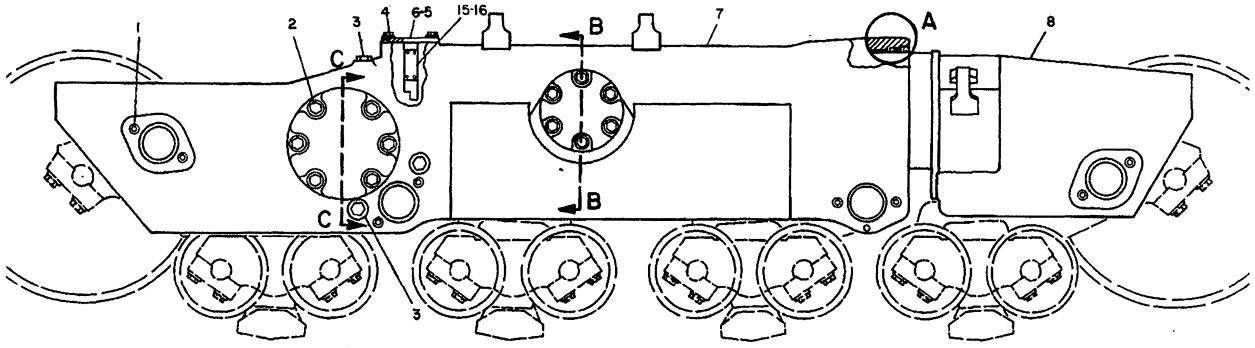

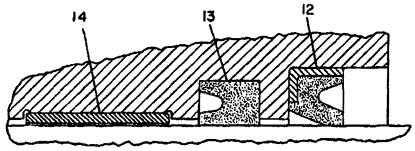

VIEW OF AREA A

NOTE	REF NO	PART NUMBER	QTY	DESCRIPTION
	1	9G7516	32	PLUG
	2	8S9093	12	BOLT
		5P8250	12	WASHER
	3	6B5262	6	PLUG
		6K5551	6	GASKET
	4	0S1585	8	BOLT
		5P1076	8	WASHER
	5	6D9157	2	SEAL

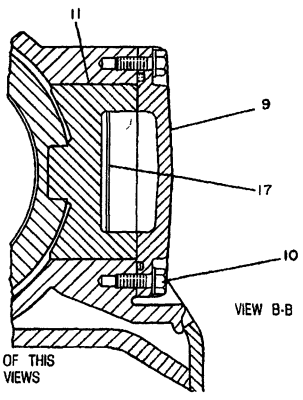

VIEW B-B

REFER TO ALL PARTS OF THIS GROUP FOR AUXILIARY VIEWS

C	6	6T0740	2	COVER AS.
	7	9P6838	1	FRAME AS. (R.H.)
		9P6839	1	FRAME AS. (L.H.)
	8	6T7444	2	FRAME AS. (EACH INCLUDES)
		9P7990	1	BEARING
		6V0709	1	PLATE
		4B4158	4	SCREW
	9	6P8931	4	COVER
		7L3380	4	SEAL
	10	0S1589	24	BOLT
		5P8247	24	WASHER
	11	6T7445	4	GUIDE
	12	5P4591	2	SEAL
	13	5P4589	2	SEAL
	14	9G0296	2	BEARING
C	15	5P7179	4	PLATE
C	16	9N1995	8	RIVET
	17	6T8258	4	PLATE

C INDICATES CHANGE

317393

317393 P

4151 **6P7344 FRAME GP-TELESCOPING RECOIL-PART 1 OF 2**

S/N 53Y2368-2535

Note: 6T8029 Tube Assembly Is Available

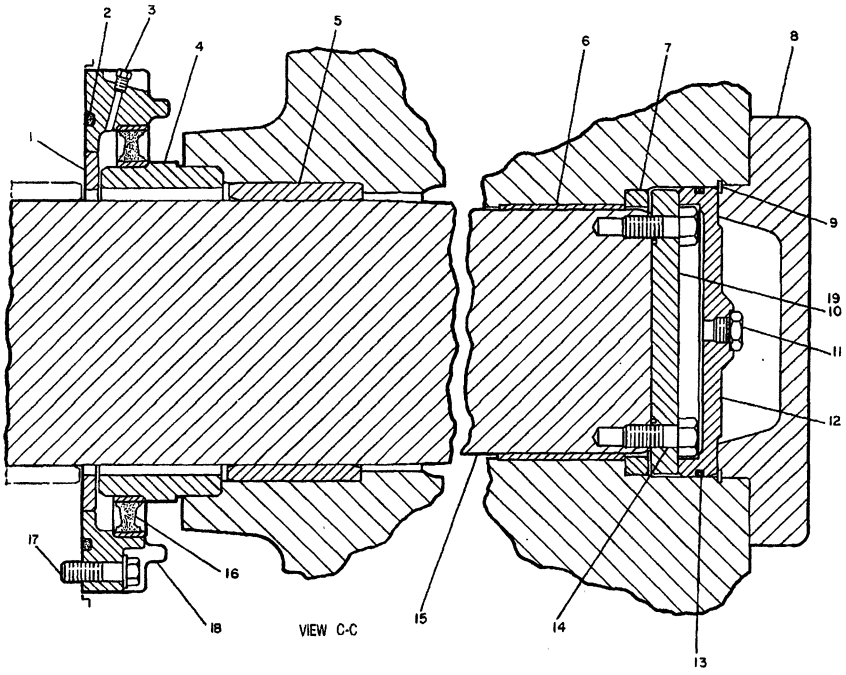

REFER TO ALL PARTS OF THIS GROUP FOR AUXILIARY VIEWS

NOTE	REF NO	PART NUMBER	QTY	DESCRIPTION
	1	9P7053	2	PLATE
	2	4D4508	2	SEAL
	3	5M6214	2	PLUG
	4	3T7920	2	SLEEVE
	5	3P8845	2	BEARING
	6	7G9709	2	BEARING
	7	7G9707	2	RING
	8	6P8901	2	COVER
	9	1P9254	2	RING
	10	7G9708	2	PLATE
	11	9S4185	2	PLUG
		3K0360	2	SEAL
	12	7G5972	2	PLATE
	13	9M5894	2	SEAL
	14	1A1135	24	BOLT
	15	7G8916	1	SHAFT
	16	9P8309	2	SEAL
	17	1A1460	16	BOLT
		5P8245	16	WASHER
	18	7G7736	2	RETAINER
	19	2P1692	2	SEAL

317394

317394 P

4151 6P7344 FRAME GP-TELESCOPING RECOIL-PART 2 OF 2
S/N 53Y2368-2535

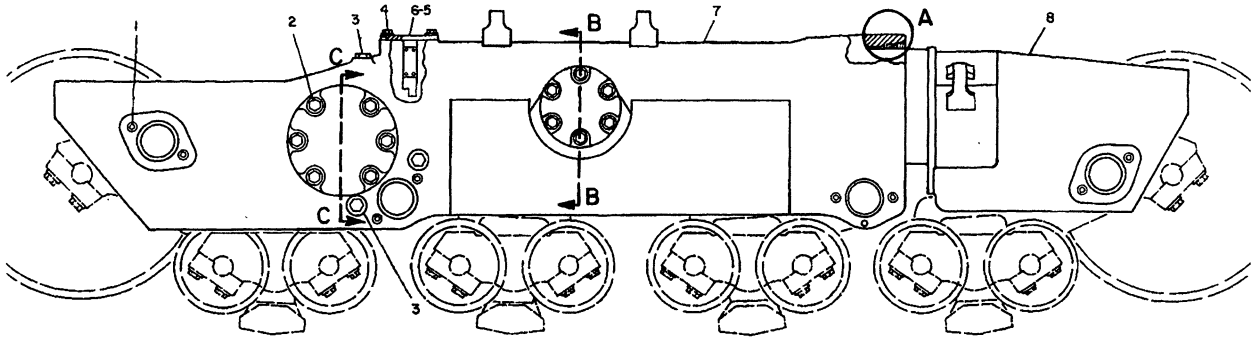

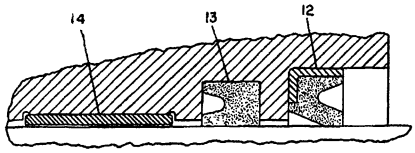

VIEW OF AREA A

NOTE	REF NO	PART NUMBER	QTY	DESCRIPTION
	1	9G7516	32	PLUG
	2	8S9093	12	BOLT
		5P8250	12	WASHER
	3	6B5262	6	PLUG
		6K5551	6	GASKET
	4	0S1585	8	BOLT
		5P1076	8	WASHER
	5	6D9157	2	SEAL

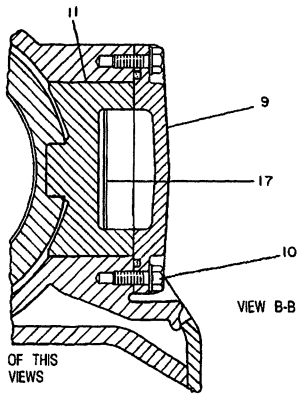

VIEW B-B

REFER TO ALL PARTS OF THIS GROUP FOR AUXILIARY VIEWS

	6	6T0740	2	COVER AS.
	7	9P6838	1	FRAME AS. (R.H.)
		9P6839	1	FRAME AS. (L.H.)
	8	6T7444	2	FRAME AS. (EACH INCLUDES)
		9P7990	1	BEARING
C		8T0128	1	PLATE
		4B4158	4	SCREW
	9	6P8931	4	COVER
C		2K4472	4	SEAL
	10	0S1589	24	BOLT
		5P8247	24	WASHER
	11	6T7445	4	GUIDE
	12	5P4591	2	SEAL
	13	5P4589	2	SEAL
	14	9G0296	2	BEARING
	15	5P7179	4	PLATE
	16	9N1995	8	RIVET
	17	6T8258	4	PLATE

C INDICATES CHANGE

317454

317454 P

4151 **6P7344 FRAME GP-TELESCOPING RECOIL-PART 1 OF 2**

S/N 53Y2536-3194

Note: 6T8029 Tube Assembly Is Available

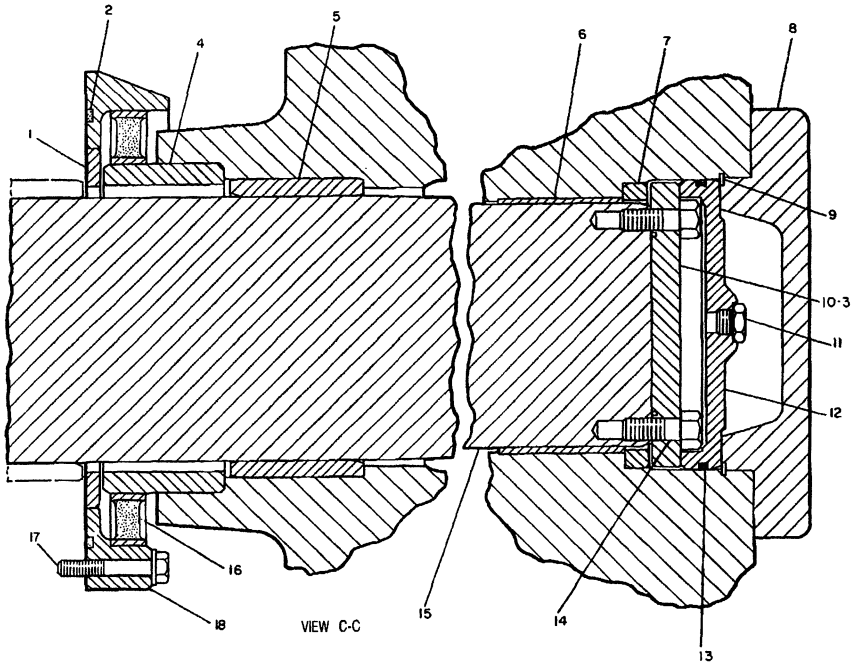

VIEW C-C

REFER TO ALL PARTS OF THIS GROUP FOR AUXILIARY VIEWS

NOTE	REF NO	PART NUMBER	QTY	DESCRIPTION
	1	9P7053	2	PLATE
	2	4D4508	2	SEAL
	3	2P1692	2	SEAL
	4	3T7920	2	SLEEVE
	5	3P8845	2	BEARING
	6	7G9709	2	BEARING
	7	7G9707	2	RING
	8	6P8901	2	COVER
	9	1P9254	2	RING
	10	7G9708	2	PLATE
	11	9S4185	2	PLUG
		3K0360	2	SEAL
	12	7G5972	2	PLATE
	13	9M5894	2	SEAL
	14	1A1135	24	BOLT
	15	7G8916	1	SHAFT
C	16	8T0208	2	SEAL
C	17	1A5822	16	BOLT
		5P8245	16	WASHER
C	18	7T0889	2	RETAINER

C INDICATES CHANGE

317455

317455 P

4151 **6P7344 FRAME GP-TELESCOPING RECOIL-PART 2 OF 2**
S/N 53Y2536-3194

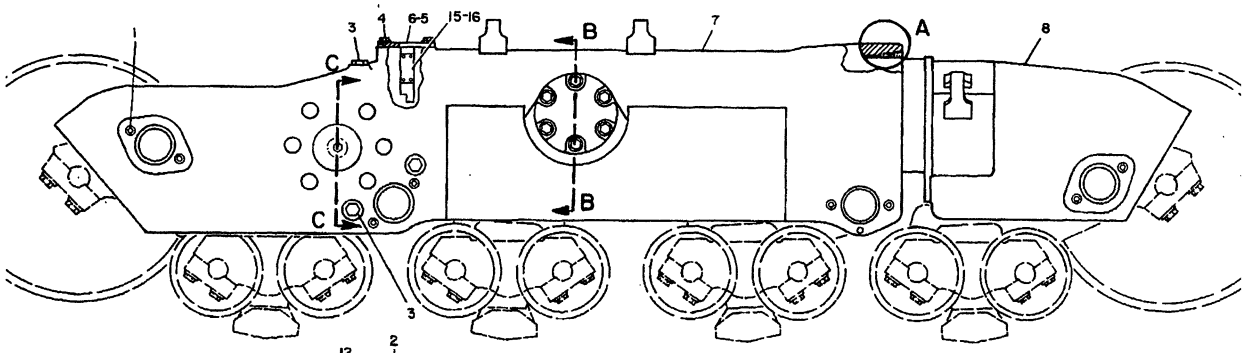

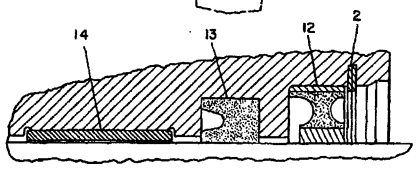

VIEW OF AREA A

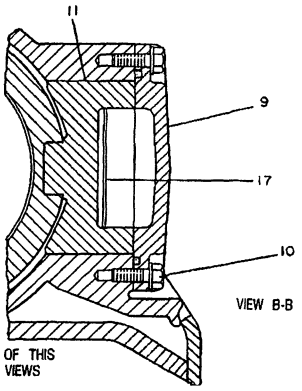

VIEW B-B

NOTE	REF NO	PART NUMBER	QTY	DESCRIPTION
	1	9G7516	32	PLUG
C	2	7T8003	2	RING
C	3	4T2069	6	PLUG
C		2H3932	6	SEAL
	4	0S1585	8	BOLT
		5P1076	8	WASHER
C	5	3S1223	2	SEAL

REFER TO ALL PARTS OF THIS GROUP FOR AUXILIARY VIEWS

NOTE	REF NO	PART NUMBER	QTY	DESCRIPTION
	6	6T0740	2	COVER AS.
	7	9P6838	1	FRAME AS. (R.H.)
		9P6839	1	FRAME AS. (L.H.)
C	8	7T3945	2	FRAME AS. (EACH INCLUDES)
		9P7990	1	BEARING
		6V0709	1	PLATE
		4B4158	4	SCREW
	9	6P8931	4	COVER
		2K4472	4	SEAL
	10	0S1589	24	BOLT
		5P8247	24	WASHER
	11	6T7445	4	GUIDE
C	12	8T2889	2	SEAL AS.
	13	5P4589	2	SEAL
	14	9G0296	2	BEARING
	15	5P7179	4	PLATE
	16	9N1995	8	RIVET
	17	6T8258	4	PLATE

C INDICATES CHANGE

334777

334777 P

4151

6P7344 FRAME GP-TELESCOPING RECOIL-PART 1 OF 2

S/N 53Y3195-3424

Note: 6T8029 Tube Assembly Is Available

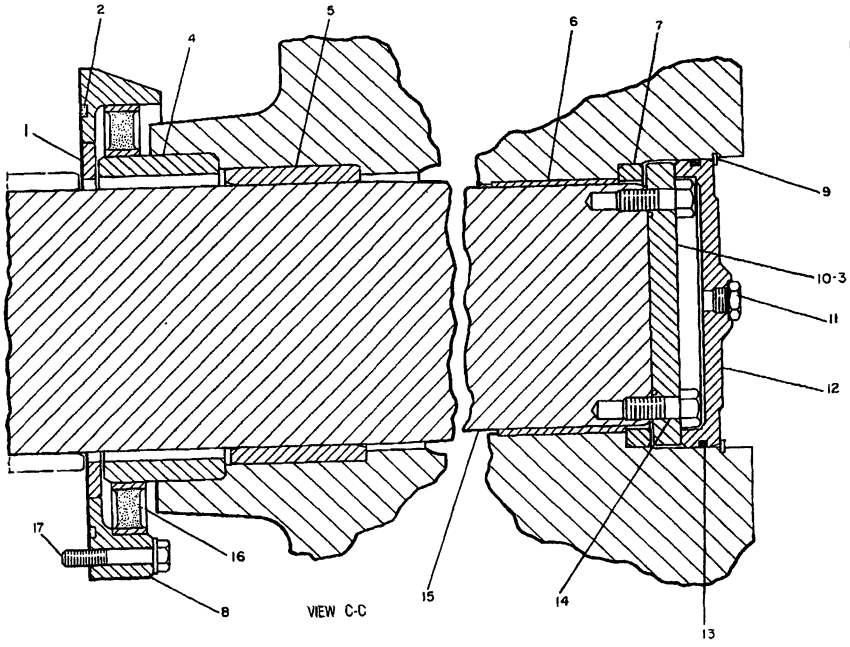

REFER TO ALL PARTS OF THIS GROUP FOR AUXILIARY VIEWS

NOTE	REF NO	PART NUMBER	QTY	DESCRIPTION
	1	9P7053	2	PLATE
	2	4D4508	2	SEAL
	3	2P1692	2	SEAL
	4	3T7920	2	SLEEVE
	5	3P8845	2	BEARING
	6	7G9709	2	BEARING
	7	7G9707	2	RING
	8	7T0889	2	RETAINER
	9	1P9254	2	RING
	10	7G9708	2	PLATE
	11	9S4185	2	PLUG
		3K0360	2	SEAL
	12	7G5972	2	PLATE
	13	9M5894	2	SEAL
	14	1A1135	24	BOLT
	15	7G8916	1	SHAFT
	16	8T0208	2	SEAL
	17	1A5822	16	BOLT
		5P8245	16	WASHER

334778

334778 P

4151 **6P7344 FRAME GP-TELESCOPING RECOIL-PART 2 OF 2**
S/N 53Y3195-3424

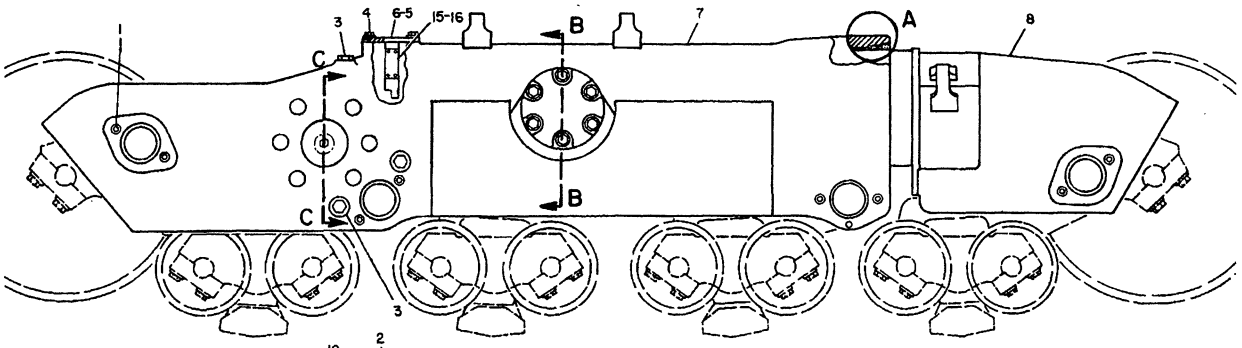

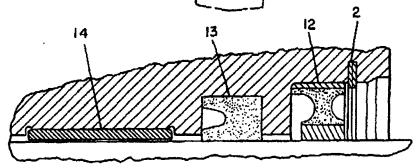

VIEW OF AREA A

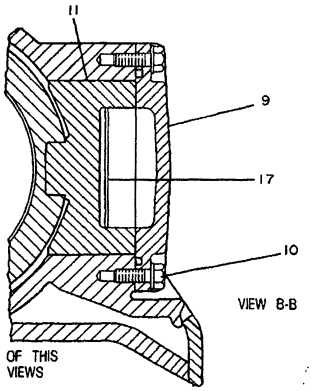

VIEW B-B

NOTE	REF NO	PART NUMBER	QTY	DESCRIPTION
	1	9G7516	32	PLUG
	2	7T8003	2	RING
	3	4T2069	6	PLUG
		2H3932	6	SEAL
	4	0S1585	8	BOLT
		5P1076	8	WASHER
	5	3S1223	2	SEAL
	6	6T0740	2	COVER AS.
	7	9P6838	1	FRAME AS. (R.H.)
		9P6839	1	FRAME AS. (L.H.)
C	8	9W1193	2	FRAME AS. (EACH INCLUDES)
		9P7990	1	BEARING
		6V0709	1	PLATE
		4B4158	4	SCREW
	9	6P8931	4	COVER
		2K4472	4	SEAL
	10	0S1589	24	BOLT
		5P8247	24	WASHER
	11	6T7445	4	GUIDE
	12	8T2889	2	SEAL AS.
	13	5P4589	2	SEAL
	14	9G0296	2	BEARING
	15	5P7179	4	PLATE
	16	9N1995	8	RIVET
	17	6T8258	4	PLATE

REFER TO ALL PARTS OF THIS GROUP FOR AUXILIARY VIEWS

C INDICATES CHANGE

334779

334779 P

4151 **6P7344 FRAME GP-TELESCOPING RECOIL-PART 1 OF 2**

S/N 53Y3425-3751

Note: 6T8029 Tube Assembly Is Available

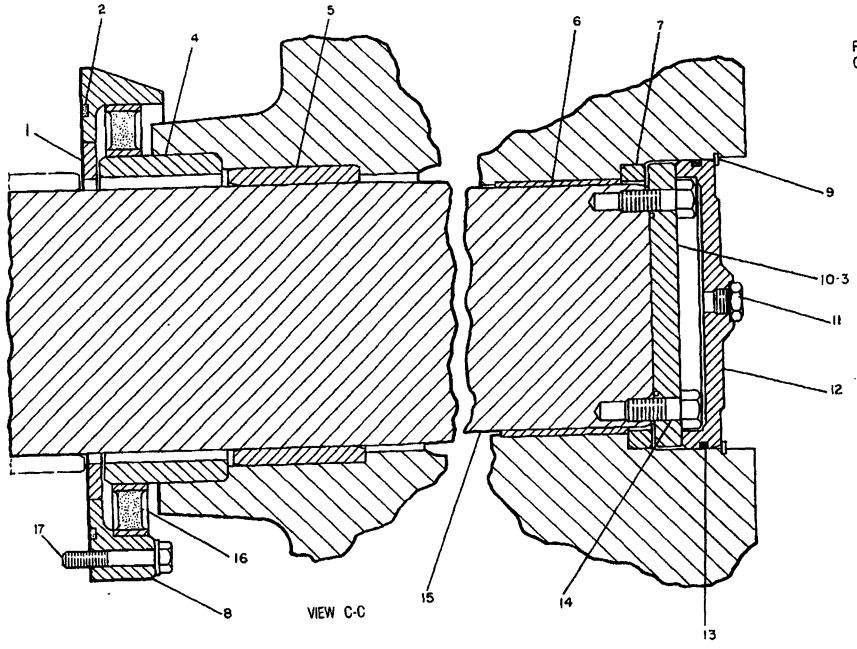

REFER TO ALL PARTS OF THIS GROUP FOR AUXILIARY VIEWS

NOTE	REF NO	PART NUMBER	QTY	DESCRIPTION
	1	9P7053	2	PLATE
	2	4D4508	2	SEAL
	3	2P1692	2	SEAL
	4	3T7920	2	SLEEVE
	5	3P8845	2	BEARING
	6	7G9709	2	BEARING
	7	7G9707	2	RING
	8	7T0889	2	RETAINER
	9	1P9254	2	RING
	10	7G9708	2	PLATE
	11	9S4185	2	PLUG
		3K0360	2	SEAL
	12	7G5972	2	PLATE
	13	9M5894	2	SEAL
	14	1A1135	24	BOLT
	15	7G8916	1	SHAFT
	16	8T0208	2	SEAL
	17	1A5822	16	BOLT
		5P8245	16	WASHER

334778

334778 P

4151 **6P7344 FRAME GP-TELESCOPING RECOIL-PART 2 OF 2**
S/N 53Y3425-3751

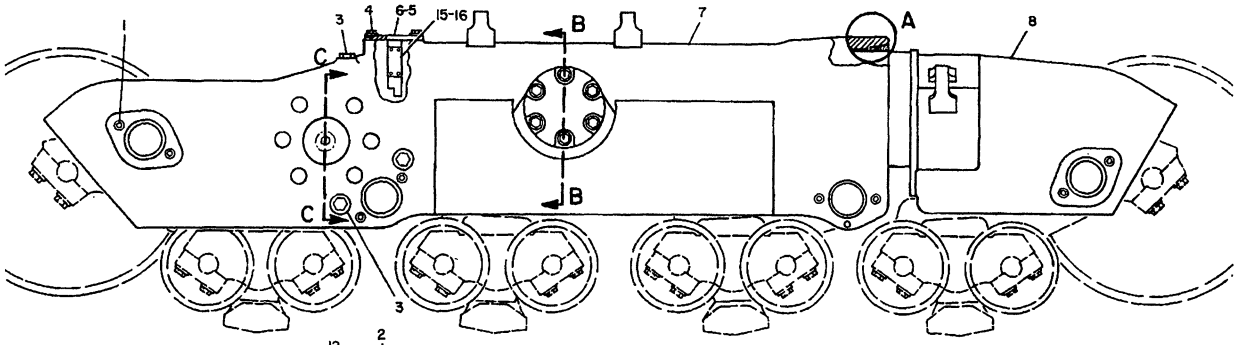

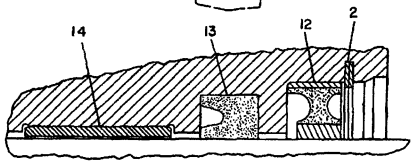

VIEW OF AREA A

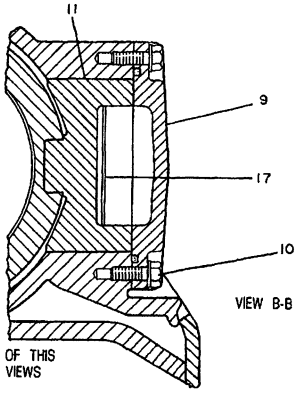

VIEW B-B

NOTE	REF NO	PART NUMBER	QTY	DESCRIPTION
	1	9G7516	32	PLUG
	2	7T8003	2	RING
	3	4T2069	6	PLUG
C		8T7301	6	SEAL
	4	0S1585	8	BOLT
		5P1076	8	WASHER
C	5	8T7241	2	SEAL
	6	6T0740	2	COVER AS.
	7	9P6838	1	FRAME AS. (R.H.)
		9P6839	1	FRAME AS. (L.H.)
	8	9W1193	2	FRAME AS. (EACH INCLUDES)
		9P7990	1	BEARING
		6V0709	1	PLATE
		4B4158	4	SCREW
	9	6P8931	4	COVER
C		8T7157	4	SEAL
	10	0S1589	24	BOLT
		5P8247	24	WASHER
	11	6T7445	4	GUIDE
	12	8T2889	2	SEAL AS.
	13	5P4589	2	SEAL
	14	9G0296	2	BEARING
	15	5P7179	4	PLATE
	16	9N1995	8	RIVET
	17	6T8258	4	PLATE

REFER TO ALL PARTS OF THIS GROUP FOR AUXILIARY VIEWS

C INDICATES CHANGE

351909

351909 P

4151 **6P7344 FRAME GP-TELESCOPING RECOIL-PART 1 OF 2**

S/N 53Y3752-Up

Note: 6T8029 Tube Assembly Is Available

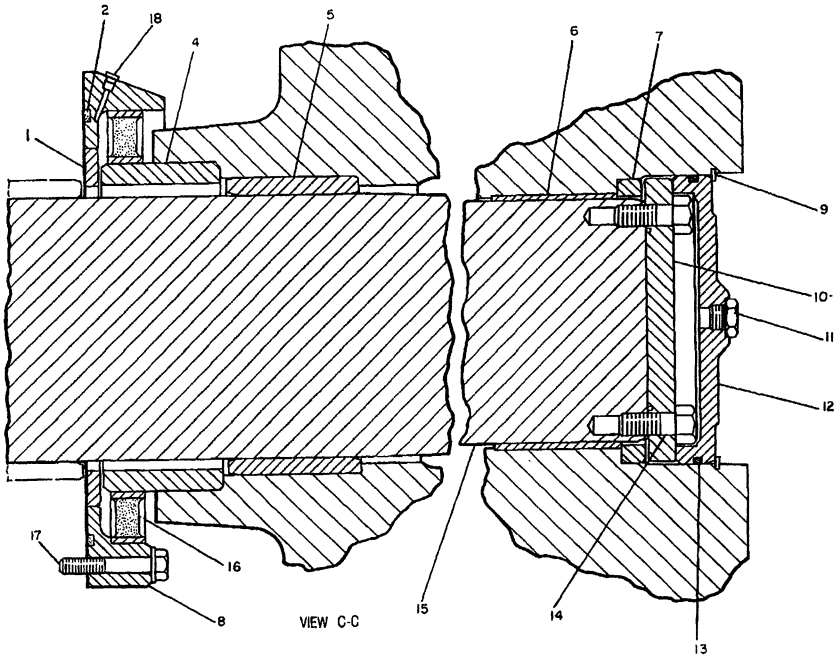

NOTE	REF NO	PART NUMBER	QTY	DESCRIPTION
	1	9P7053	2	PLATE
C	2	8T7170	2	SEAL
C	3	8T8154	2	SEAL
	4	3T7920	2	SLEEVE
	5	3P8845	2	BEARING
	6	7G9709	2	BEARING
	7	7G9707	2	RING
C	8	9W2380	2	RETAINER
	9	1P9254	2	RING
	10	7G9708	2	PLATE
	11	9S4185	2	PLUG
		3K0360	2	SEAL
	12	7G5972	2	PLATE
	13	9M5894	2	SEAL
	14	1A1135	24	BOLT
	15	7G8916	1	SHAFT
	16	8T0208	2	SEAL
	17	1A5822	16	BOLT
		5P8245	16	WASHER
C	18	9F2247	4	PLUG

C INDICATES CHANGE

351910

351910 P

4151 **6P7344 FRAME GP-TELESCOPING RECOIL-PART 2 OF 2**
S/N 53Y3752-Up

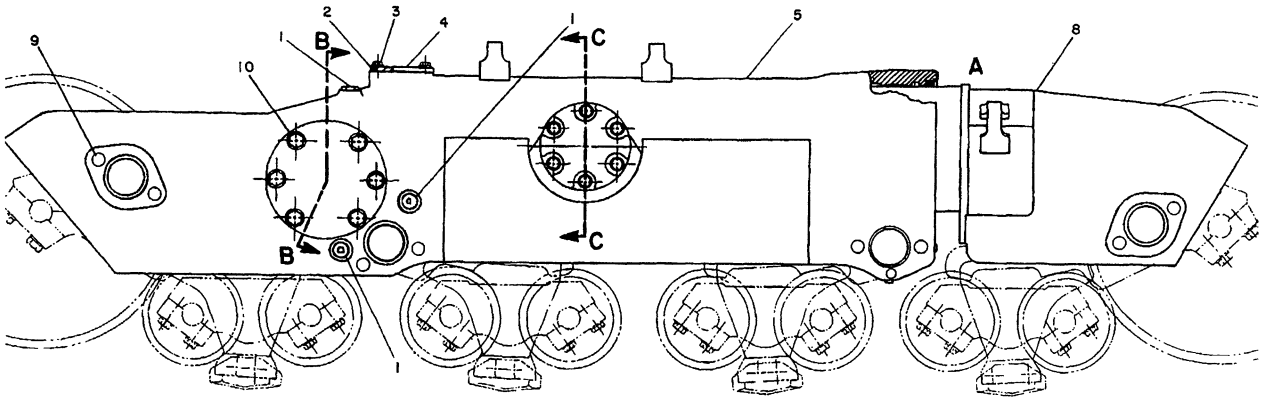

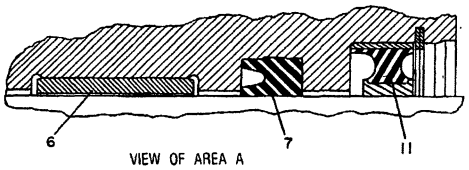

VIEW OF AREA A

REFER TO ALL PARTS OF THIS GROUP FOR AUXILIARY VIEWS

NOTE	REF NO	PART NUMBER	QTY	DESCRIPTION
	1	6B5262	3	PLUG
		6K5551	3	GASKET
	2	6D9157	1	SEAL
	3	0S1585	4	BOLT
		5P1076	4	WASHER
	4	9G2965	1	COVER AS.
		9P5925	1	COVER
	5	9P6838	1	FRAME AS.
	6	9G0296	1	BEARING
	7	5P4589	1	SEAL
	8	6T0210	1	FRAME AS.
		9P7990	1	BEARING
		6V0709	1	PLATE
		4B4158	4	SCREW
	9	9G7516	16	PLUG
	10	1D4635	6	BOLT
		5P8250	6	WASHER
	11	5P4591	1	SEAL
BF		9G7038	1	PIN
BF		2M3530	2	BOLT
BF		3S1349	2	WASHER
BF		3S1356	4	NUT

B USE AS REQUIRED

F NOT SHOWN

330513

330513 P

4151 6T2541 FRAME GP-TELESCOPING RECOIL-RH-PART 1 OF 2

Type 1

Part Of 6T2545 Undercarriage Ar

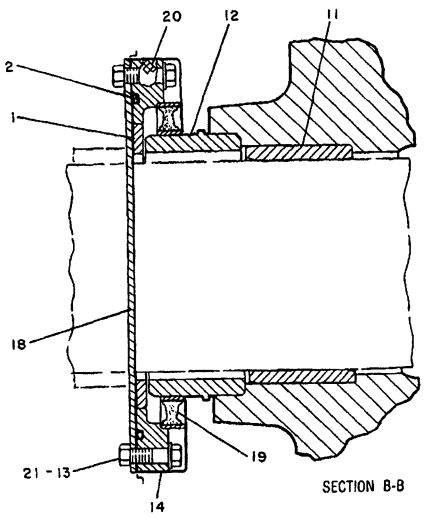

SECTION B-B

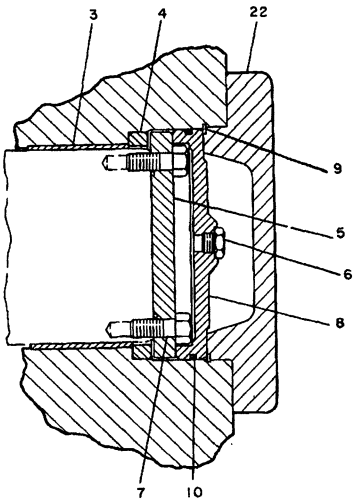

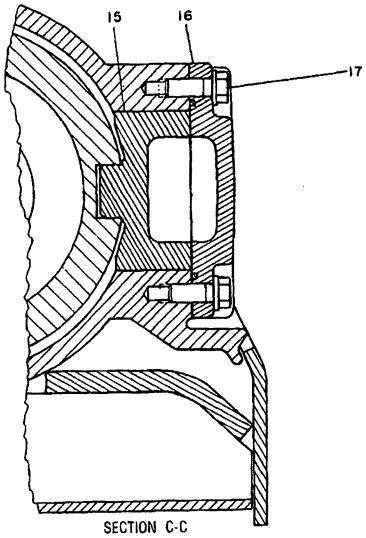

SECTION C-C

NOTE	REF NO	PART NUMBER	QTY	DESCRIPTION
	1	9P7053	1	PLATE
	2	4D4508	1	SEAL
	3	7G9709	1	BEARING
	4	7G9707	1	RING
	5	7G9708	1	PLATE
		2P1692	1	SEAL
	6	9S4185	1	PLUG
		3K0360	1	SEAL

	7	1A1135	12	BOLT
	8	7G5972	1	PLATE
	9	1P9254	1	RING
	10	9M5894	1	SEAL
	11	3P8845	1	BEARING
	12	3T7920	1	SLEEVE
	13	1A1460	8	BOLT
		5P8245	8	WASHER
	14	7G7736	1	RETAINER
	15	9P5974	2	GUIDE

	16	6P8931	2	COVER
		7L3380	2	SEAL
	17	0S1589	12	BOLT
		5P8247	12	WASHER
	18	3T6162	1	COVER
	19	9P8309	1	SEAL
	20	5M6214	1	PLUG
	21	1D4719	8	NUT
	22	6P8901	1	COVER

330514

330514 P

4151 6T2541 FRAME GP-TELESCOPING RECOIL-RH-PART 2 OF 2

Type 1

Part Of 6T2545 Undercarriage Ar

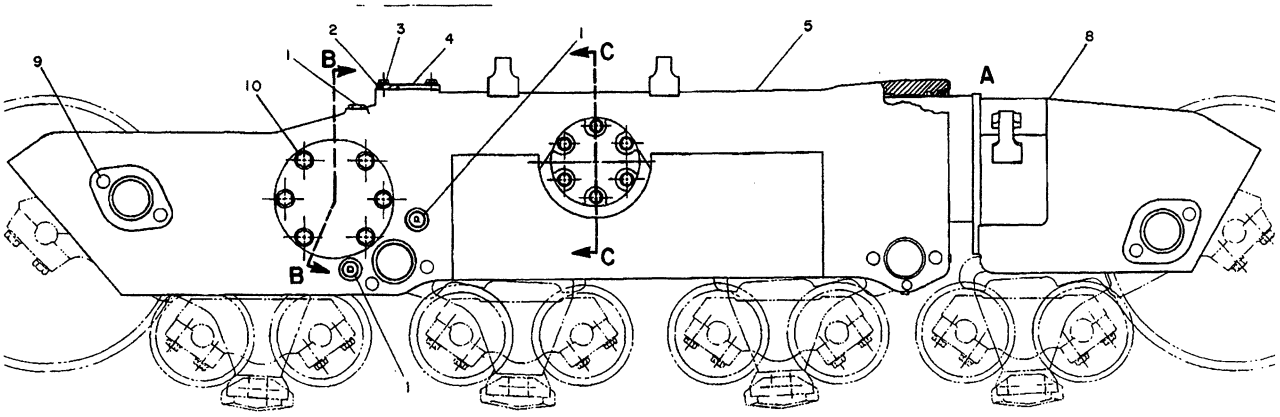

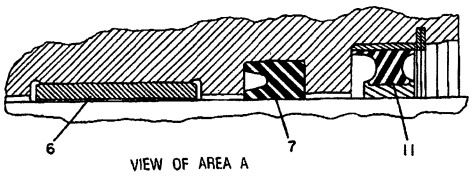

VIEW OF AREA A

REFER TO ALL PARTS OF THIS GROUP FOR AUXILIARY VIEWS

NOTE	REF NO	PART NUMBER	QTY	DESCRIPTION
	1	6B5262	3	PLUG
		6K5551	3	GASKET
	2	6D9157	1	SEAL
	3	0S1585	4	BOLT
		5P1076	4	WASHER
	4	9G2965	1	COVER AS.
		9P5925	1	COVER
	5	9P6838	1	FRAME AS.
	6	9G0296	1	BEARING
	7	5P4589	1	SEAL
C	8	6T7444	1	FRAME AS.
		9P7990	1	BEARING
		8T0128	1	PLATE
		4B4158	4	SCREW
	9	9G7516	16	PLUG
	10	1D4635	6	BOLT
		5P8250	6	WASHER
	11	5P4591	1	SEAL
BF		9G7038	1	PIN
BF		2M3530	2	BOLT
BF		3S1349	2	WASHER
BF		3S1356	4	NUT

B USE AS REQUIRED C INDICATES CHANGE

F NOT SHOWN

330520

330520 P

4151 6T2541 FRAME GP-TELESCOPING RECOIL-RH-PART 1 OF 2

Type 2

Part Of 6T2545 Undercarriage Ar

Note: 6T8029 Tube Assembly Is Available

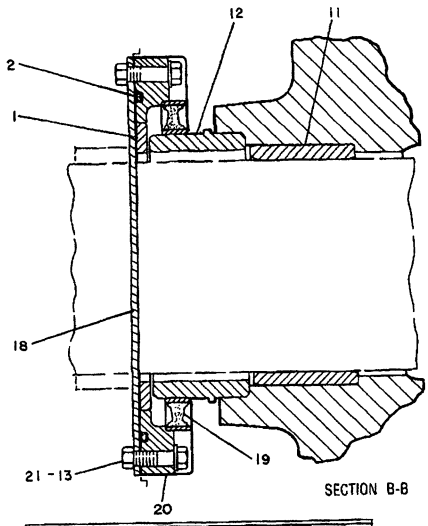

SECTION B-B

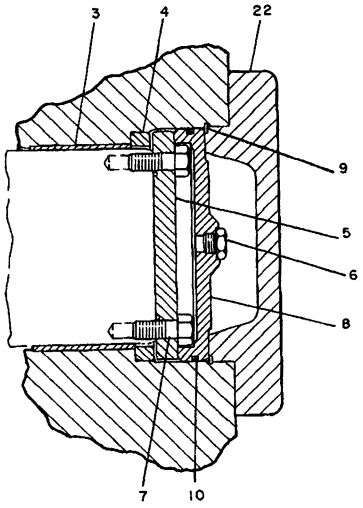

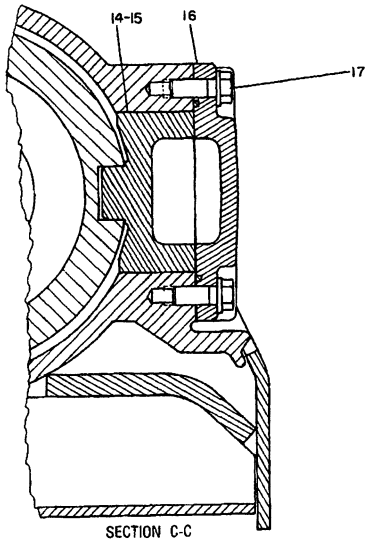

SECTION C-C

NOTE	REF NO	PART NUMBER	QTY	DESCRIPTION
	1	9P7053	1	PLATE
	2	4D4508	1	SEAL
	3	7G9709	1	BEARING
	4	7G9707	1	RING
	5	7G9708	1	PLATE
		2P1692	1	SEAL
	6	9S4185	1	PLUG
		3K0360	1	SEAL
	7	1A1135	12	BOLT
	8	7G5972	1	PLATE
	9	1P9254	1	RING
	10	9M5894	1	SEAL
	11	3P8845	1	BEARING
	12	3T7920	1	SLEEVE
C	13	1A5822	8	BOLT
		5P8245	8	WASHER
C	14	6T8801	2	GUIDE AS. (EACH INCLUDES)
	15	6T8258	1	PLATE
	16	6P8931	2	COVER
		7L3380	2	SEAL
	17	0S1589	12	BOLT
		5P6247	12	WASHER
	18	3T6162	1	COVER
C	19	8T0208	1	SEAL
C	20	7T0889	1	RETAINER
	21	1D4719	8	NUT
	22	6P8901	1	COVER

C INDICATES CHANGE

330521

330521 P

4151 6T2541 FRAME GP-TELESCOPING RECOIL-RH-PART 2 OF 2

Type 2

Part Of 6T2545 Undercarriage Ar

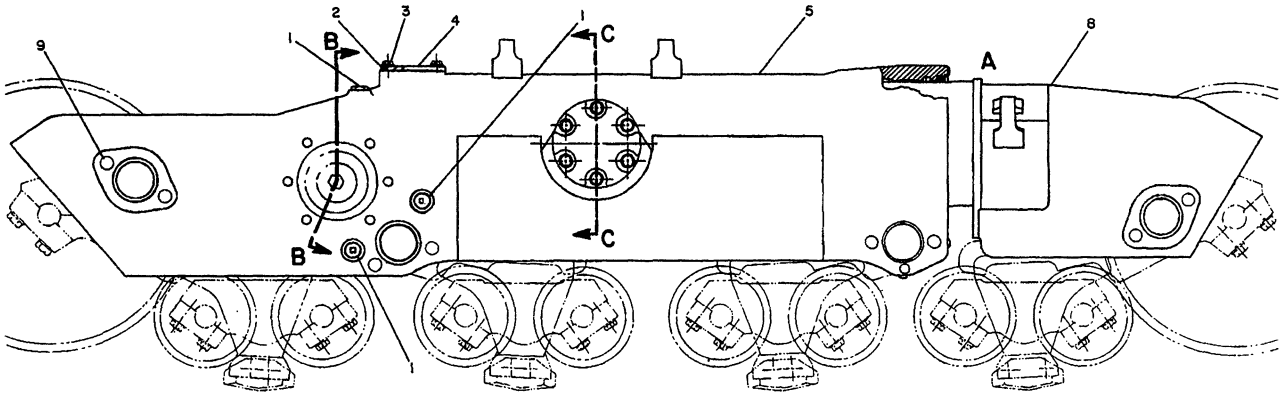

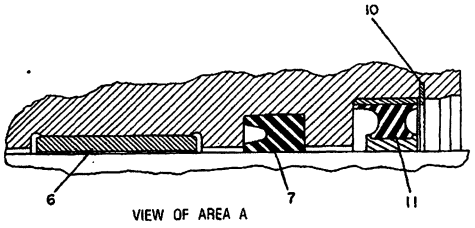

VIEW OF AREA A

NOTE	REF NO	PART NUMBER	QTY	DESCRIPTION
C	1	4T2069	3	PLUG
C		2H3932	3	SEAL
C	2	3S1223	1	SEAL
	3	0S1585	4	BOLT
		5P1076	4	WASHER
	4	9G2965	1	COVER AS.
		9P5925	1	COVER
	5	9P6838	1	FRAME AS.
	6	9G0296	1	BEARING
	7	5P4589	1	SEAL

B USE AS REQUIRED C INDICATES CHANGE

REFER TO ALL PARTS OF THIS GROUP FOR AUXILIARY VIEWS

C	8	7T3945	1	FRAME AS.
		9P5708	2	SUPPORT
		9P7990	1	BEARING
		6V0709	1	PLATE
		4B4158	4	SCREW
	9	9G7516	16	PLUG
C	10	7T8003	1	RING
C	11	8T2889	1	SEAL AS.
BF		9G7038	1	PIN
BF		2M3530	2	BOLT
BF		3S1349	2	WASHER
BF		3S1356	4	NUT

F NOT SHOWN

334864

334864 P

4151 **6T2541 FRAME GP-TELESCOPING RECOIL-RH-PART 1 OF 2**

Type 3

Part Of 6T2545 Undercarriage Ar

Note: 6T8029 Tube Assembly Is Available

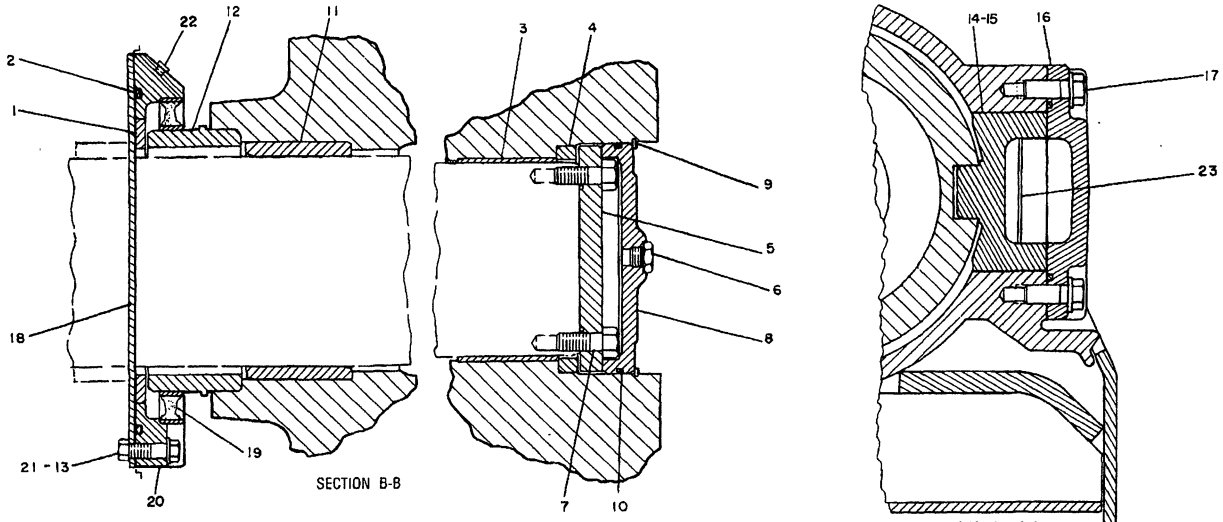

NOTE	REF NO	PART NUMBER	QTY	DESCRIPTION
	1	9P7053	1	PLATE
	2	4D4508	1	SEAL
	3	7G9709	1	BEARING
	4	7G9707	1	RING
	5	7G9708	1	PLATE
		2P1692	1	SEAL
	6	9S4185	1	PLUG
		3K0360	1	SEAL
	7	1A1135	12	BOLT
	8	7G5972	1	PLATE
	9	1P9254	1	RING
	10	9M5894	1	SEAL
	11	3P8845	1	BEARING
	12	3T7920	1	SLEEVE
	13	1A5822	8	BOLT
		5P8245	8	WASHER
	14	6T8801	2	GUIDE AS. (EACH INCLUDES)
	15	6T8258	1	PLATE
	16	6P8931	2	COVER
		7L3380	2	SEAL
	17	0S1589	12	BOLT
		5P8247	12	WASHER
	18	3T6162	1	COVER
	19	8T0208	1	SEAL
C	20	9W2380	1	RETAINER
	21	1D4719	8	NUT
C	22	9F2247	2	PLUG
C	23	6T8258	2	FILM

C INDICATES CHANGE

351374

351374 P

4151 6T2541 FRAME GP-TELESCOPING RECOIL-RH-PART 2 OF 2

Type 3

Part Of 6T2545 Undercarriage Ar

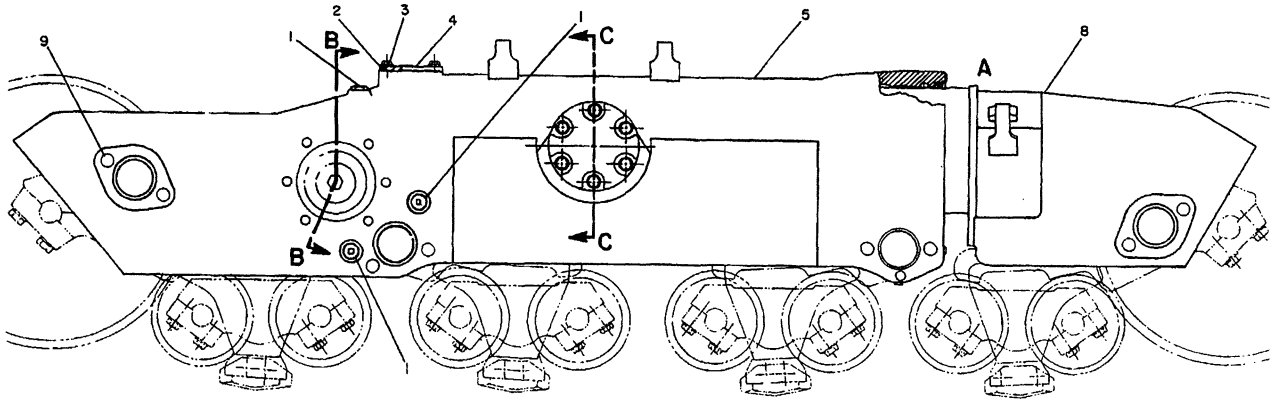

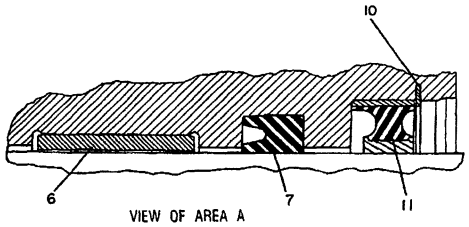

VIEW OF AREA A

REFER TO ALL PARTS OF THIS GROUP FOR AUXILIARY VIEWS

B USE AS REQUIRED
C INDICATES CHANGE
F NOT SHOWN

NOTE	REF NO	PART NUMBER	QTY	DESCRIPTION
	1	4T2069	3	PLUG
		2H3932	3	SEAL
	2	3S1223	1	SEAL
	3	0S1585	4	BOLT
		5P1076	4	WASHER
	4	9G2965	1	COVER AS.
		9P5925	1	COVER
	5	9P6838	1	FRAME AS.
	6	9G0296	1	BEARING
	7	5P4589	1	SEAL
C	8	9W1193	1	FRAME AS.
		9P5708	2	SUPPORT 8.6CM(3.39IN.)I.D.
		9P7990	1	BEARING
		6V0709	1	PLATE
		4B4158	4	SCREW
		9P5827	2	SUPPORT 8.8CM(3.46IN.)I.D.
	9	9G7516	16	PLUG
	10	7T8003	1	RING
	11	8T2889	1	SEAL AS.
BF		9G7038	1	PIN
BF		2M3530	2	BOLT
BF		3S1349	2	WASHER
CBF		3S1356	2	NUT

351373

351373 P

4151 **6T2541 FRAME GP-TELESCOPING RECOIL-RH-PART 1 OF 2**

Type 4
Part Of 6T2545 Undercarriage Ar
Note: 6T8029 Tube Assembly Is Available
An Attachment

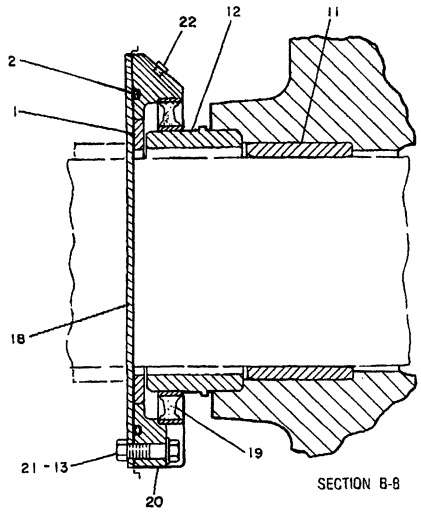

SECTION B-B

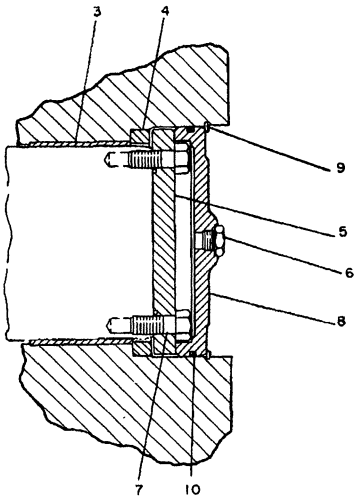

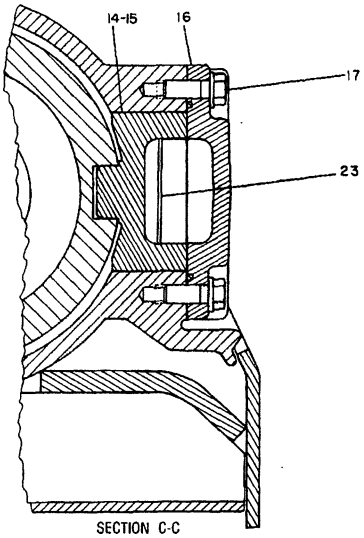

SECTION C-C

NOTE	REF NO	PART NUMBER	QTY	DESCRIPTION
	1	9P7053	1	PLATE
	2	4D4508	1	SEAL
	3	7G9709	1	BEARING
	4	7G9707	1	RING
	5	7G9708	1	PLATE
		2P1692	1	SEAL
	6	9S4185	1	PLUG
		3K0360	1	SEAL
	7	1A1135	12	BOLT
	8	7G5972	1	PLATE
	9	1P9254	1	RING
	10	9M5894	1	SEAL
	11	3P8845	1	BEARING
	12	3T7920	1	SLEEVE
	13	1A5822	8	BOLT
		5P8245	8	WASHER
	14	6T8801	2	GUIDE AS. (EACH INCLUDES)
	15	6T8258	1	PLATE
	16	6P8931	2	COVER
		7L3380	2	SEAL
	17	0S1589	12	BOLT
		5P8247	12	WASHER
	18	3T6162	1	COVER
	19	8T0208	1	SEAL
C	20	9W2380	1	RETAINER
	21	1D4719	8	NUT
C	22	9F2247	2	PLUG
C	23	6T8258	2	FILM

C INDICATES CHANGE

351374

351374 P

4151 6T2541 FRAME GP-TELESCOPING RECOIL-RH-PART 2 OF 2

Type 4

Part Of 6T2545 Undercarriage Ar

An Attachment

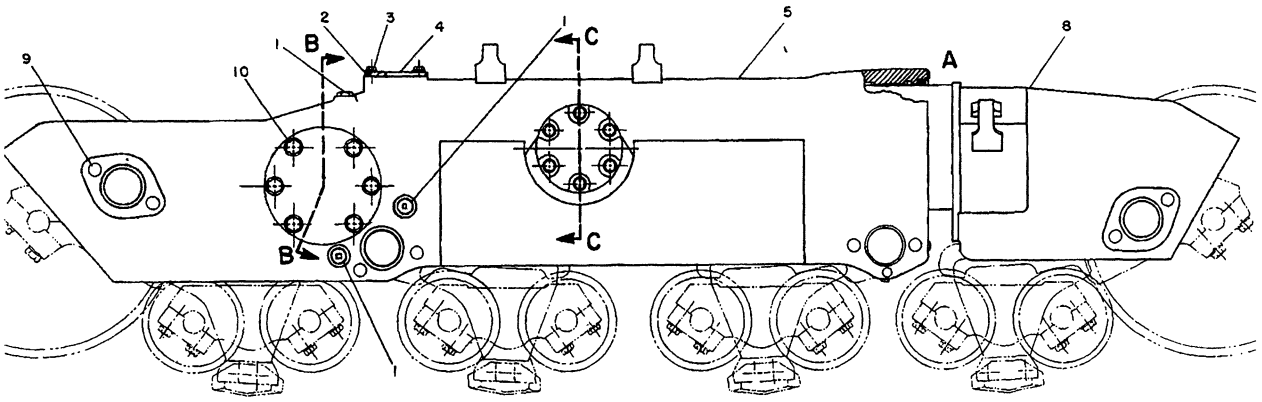

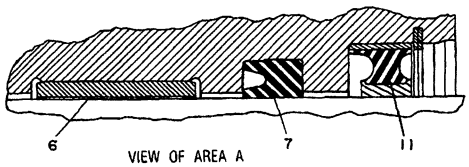

VIEW OF AREA A

REFER TO ALL PARTS OF THIS GROUP FOR AUXILIARY VIEWS

NOTE	REF NO	PART NUMBER	QTY	DESCRIPTION
	1	6B5262	3	PLUG
		6K5551	3	GASKET
	2	6D9157	1	SEAL
	3	0S1585	4	BOLT
		5P1076	4	WASHER
	4	9G2965	1	COVER AS.
		9P5925	1	COVER
	5	9P6839	1	FRAME AS.
	6	9G0296	1	BEARING
	7	5P4589	1	SEAL
	8	6T0210	1	FRAME AS.
		9P7990	1	BEARING
		6V0709	1	PLATE
		4B4158	4	SCREW
	9	9G7516	16	PLUG
	10	1D4635	6	BOLT
		5P8250	6	WASHER
	11	5P4591	1	SEAL
BF		9G7038	1	PIN
BF		2M3530	2	BOLT
BF		3S1349	2	WASHER
BF		3S1356	4	NUT

B USE AS REQUIRED

F NOT SHOWN

330523

330523 P

4151 6T2542 FRAME GP-TELESCOPING RECOIL-LH-PART 1 OF 2

Type 1

Part Of 6T2544 Undercarriage Ar

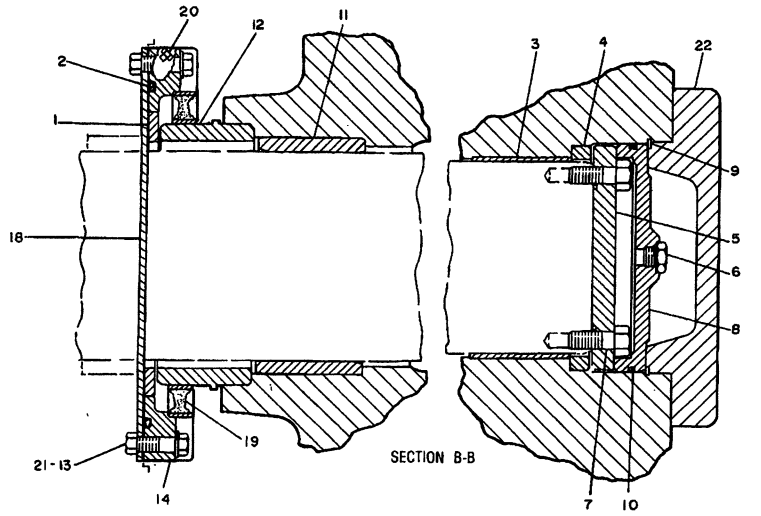

NOTE	REF NO	PART NUMBER	QTY	DESCRIPTION
	1	9P7053	1	PLATE
	2	4D4508	1	SEAL
	3	7G9709	1	BEARING
	4	7G9707	1	RING
	5	7G9708	1	PLATE
		2P1692	1	SEAL
	6	9S4185	1	PLUG
		3K0360	1	SEAL
	7	1A1135	12	BOLT
	8	7G5972	1	PLATE
	9	1P9254	1	RING
	10	9M5894	1	SEAL
	11	3P8845	1	BEARING
	12	3T7920	1	SLEEVE
	13	1A1460	8	BOLT
		5P8245	8	WASHER
	14	7G7736	1	RETAINER
	15	9P5974	2	GUIDE

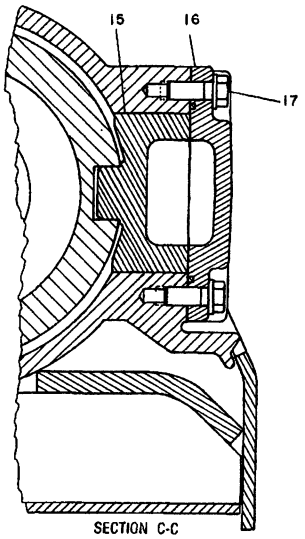

16	6P8931	2	COVER
	7L3380	2	SEAL
17	0S1589	12	BOLT
	5P8247	12	WASHER
18	3T6162	1	COVER
19	9P8309	1	SEAL
20	5M6214	1	PLUG
21	1D4719	8	NUT
22	6P8901	1	COVER

330524

330524 P

4151 6T2542 FRAME GP-TELESCOPING RECOIL-LH-PART 2 OF 2

Type 1

Part Of 6T2544 Undercarriage Ar

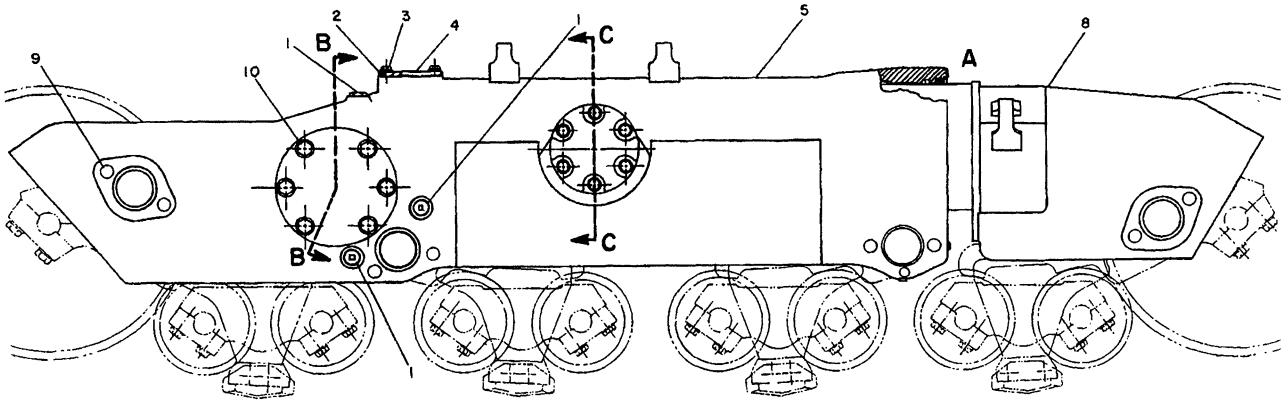

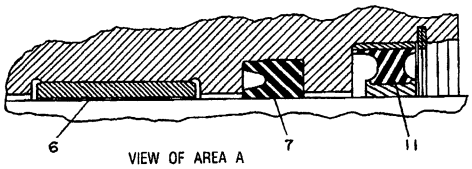

VIEW OF AREA A

REFER TO ALL PARTS OF THIS GROUP FOR AUXILIARY VIEWS

NOTE	REF NO	PART NUMBER	QTY	DESCRIPTION
	1	6B5262	3	PLUG
		6K5551	3	GASKET
	2	6D9157	1	SEAL
	3	0S1585	4	BOLT
		5P1076	4	WASHER
	4	9G2965	1	COVER AS.
		9P5925	1	COVER
	5	9P6839	1	FRAME AS.
	6	9G0296	1	BEARING
	7	5P4589	1	SEAL
C	8	6T7444	1	FRAME AS.
		9P7990	1	BEARING
		8T0128	1	PLATE
		4B4158	4	SCREW
	9	9G7516	16	PLUG
	10	1D4635	6	BOLT
		5P8250	6	WASHER
	11	5P4591	1	SEAL
BF		9G7038	1	PIN
BF		2M3530	2	BOLT
BF		3S1349	2	WASHER
BF		3S1356	4	NUT

B USE AS REQUIRED C INDICATES CHANGE F NOT SHOWN

330525

330525 P

4151 6T2542 FRAME GP-TELESCOPING RECOIL-LH-PART 1 OF 2

Type 2

Part Of 6T2544 Undercarriage Ar

Note: 6T8029 Tube Assembly Is Available

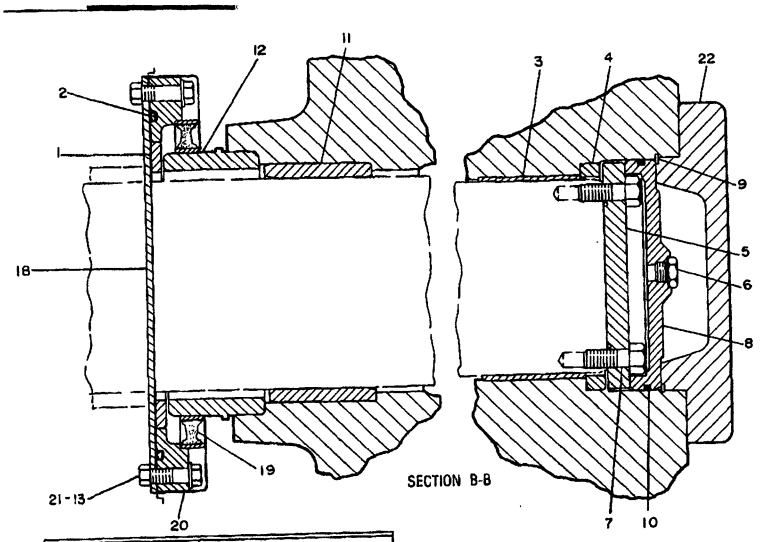

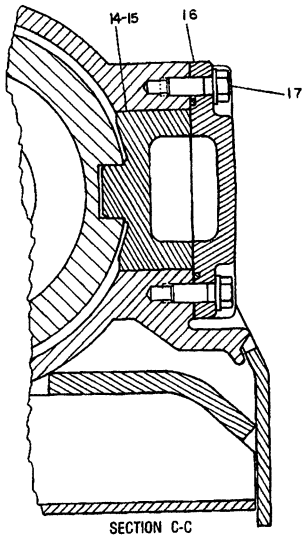

NOTE	REF NO	PART NUMBER	QTY	DESCRIPTION
	1	9P7053	1	PLATE
	2	4D4508	1	SEAL
	3	7G9709	1	BEARING
	4	7G9707	1	RING
	5	7G9708	1	PLATE
		2P1692	1	SEAL
	6	9S4185	1	PLUG
		3K0360	1	SEAL
	7	1A1135	12	BOLT
	8	7G5972	1	PLATE
	9	1P9254	1	RING
	10	9M5894	1	SEAL
	11	3P8845	1	BEARING
	12	3T7920	1	SLEEVE
C	13	1A5822	8	BOLT
		5P8245	8	WASHER
C	14	6T8801	2	GUIDE AS. (EACH INCLUDES)
	15	6T8258	1	PLATE
	16	6P8931	2	COVER
		7L3380	2	SEAL
	17	0S1589	12	BOLT
		5P8247	12	WASHER
	18	3T6162	1	COVER
C	19	8T0208	1	SEAL
C	20	7T0889	1	RETAINER
	21	1D4719	8	NUT
	22	6P8901	1	COVER

C INDICATES CHANGE

330526

330526 P

4151 6T2542 FRAME GP-TELESCOPING RECOIL-LH-PART 2 OF 2

Type 2

Part Of 6T2544 Undercarriage Ar

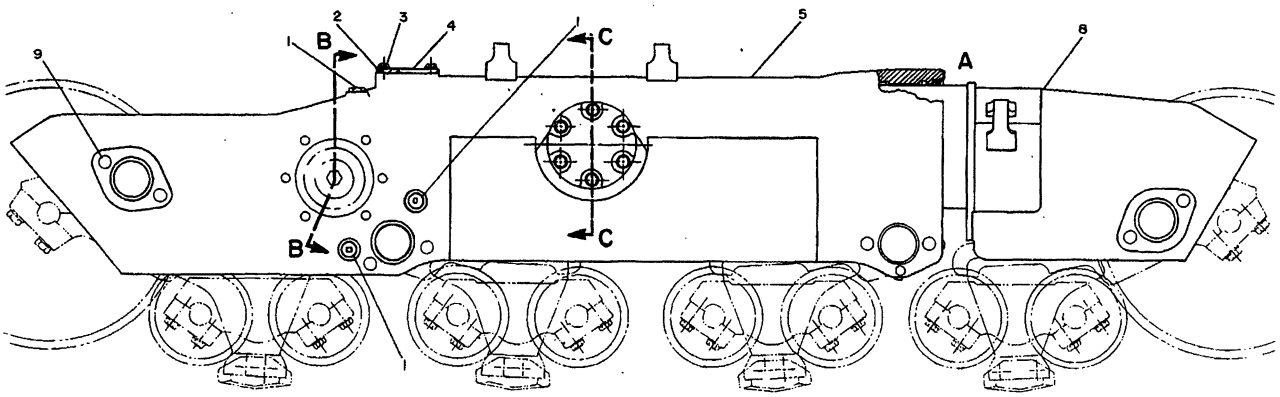

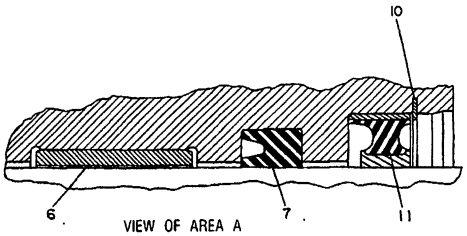

VIEW OF AREA A

NOTE	REF NO	PART NUMBER	QTY	DESCRIPTION
C	1	4T2069	3	PLUG
C		2H3932	3	SEAL
C	2	3S1223	1	SEAL
	3	0S1585	4	BOLT
		5P1076	4	WASHER
	4	9G2965	1	COVER AS.
		9P5925	1	COVER
	5	9P6839	1	FRAME AS.
	6	9G0296	1	BEARING
	7	5P4589	1	SEAL

B USE AS REQUIRED C INDICATES CHANGE

REFER TO ALL PARTS OF THIS GROUP FOR AUXILIARY VIEWS

C	8	7T3945	1	FRAME AS.
		9P5708	2	SUPPORT
		9P7990	1	BEARING
		6V0709	1	PLATE
		4B4158	4	SCREW
	9	9G7516	16	PLUG
C	10	7T8003	1	RING
C	11	8T2889	1	SEAL AS.
BF		9G7038	1	PIN
BF		2M3530	2	BOLT
BF		3S1349	2	WASHER
BF		3S1356	4	NUT

F NOT SHOWN

334868

334868 P

4151 6T2542 FRAME GP-TELESCOPING RECOIL-LH-PART 1 OF 2

Type 3

Part Of 6T2544 Undercarriage Ar

Note: 6T8029 Tube Assembly Is Available

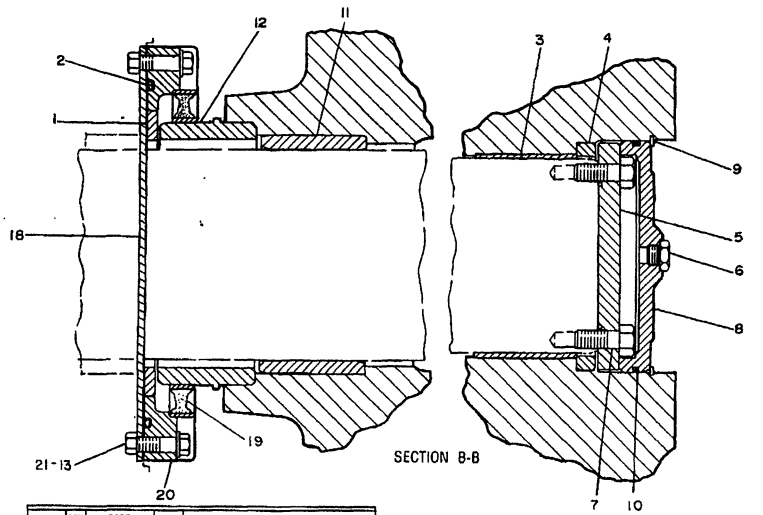

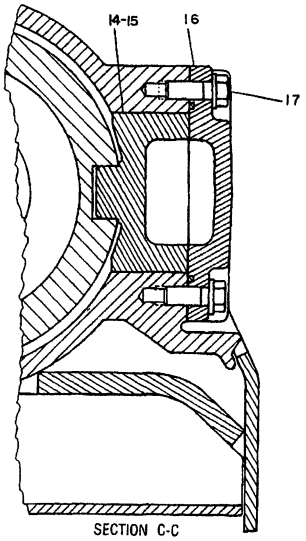

NOTE	REF NO	PART NUMBER	QTY	DESCRIPTION
	1	9P7053	1	PLATE
	2	4D4508	1	SEAL
	3	7G9709	1	BEARING
	4	7G9707	1	RING
	5	7G9708	1	PLATE
		2P1692	1	SEAL
	6	9S4185	1	PLUG
		3K0360	1	SEAL
	7	1A1135	12	BOLT
	8	7G5972	1	PLATE
	9	1P9254	1	RING
	10	9M5894	1	SEAL
	11	3P8845	1	BEARING
	12	3T7920	1	SLEEVE
	13	1A5822	8	BOLT
		5P8245	8	WASHER
	14	6T8801	2	GUIDE AS. (EACH INCLUDES)
	15	6T8258	1	PLATE
	16	6P8931	2	COVER
		7L3380	2	SEAL
	17	0S1589	12	BOLT
		5P8247	12	WASHER
	18	3T6162	1	COVER
	19	8T0208	1	SEAL
	20	7T0889	1	RETAINER
	21	1D4719	8	NUT

334869

334869 P

4151 6T2542 FRAME GP-TELESCOPING RECOIL-LH-PART 2 OF 2

Type 3

Part Of 6T2544 Undercarriage Ar

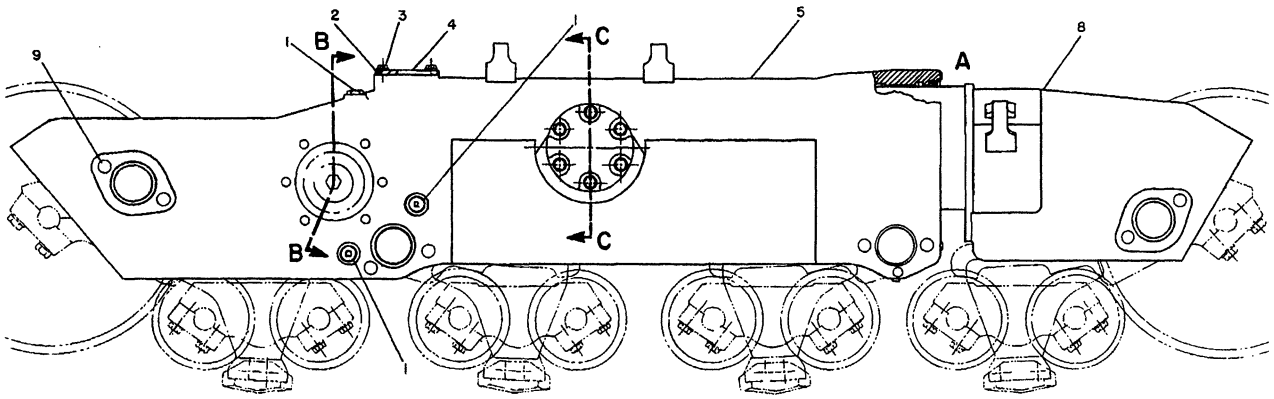

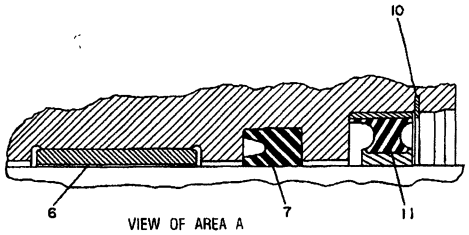

VIEW OF AREA A

B USE AS REQUIRED
C INDICATES CHANGE
F NOT SHOWN

NOTE	REF NO	PART NUMBER	QTY	DESCRIPTION
	1	4T2069	3	PLUG
		2H3932	3	SEAL
	2	3S1223	1	SEAL
	3	0S1585	4	BOLT
		5P1076	4	WASHER
	4	9G2965	1	COVER AS.
		9P5925	1	COVER
	5	9P6839	1	FRAME AS.
	6	9G0296	1	BEARING
	7	5P4589	1	SEAL

REFER TO ALL PARTS OF THIS GROUP FOR AUXILIARY VIEWS

C	8	9W1193	1	FRAME AS.
		9P5708	2	SUPPORT
		9P7990	1	BEARING
		6V0709	1	PLATE
		4B4158	4	SCREW
	9	9G7516	16	PLUG
	10	7T8003	1	RING
	11	8T2889	1	SEAL AS.
BF		9G7038	1	PIN
BF		2M3530	2	BOLT
BF		3S1349	2	WASHER
CBF		3S1356	4	NUT

351371

351371 P

4151 6T2542 FRAME GP-TELESCOPING RECOIL-LH-PART 1 OF 2

Type 4
Part Of 6T2544 Undercarriage Ar
Note: 6T8029 Tube Assembly Is Available

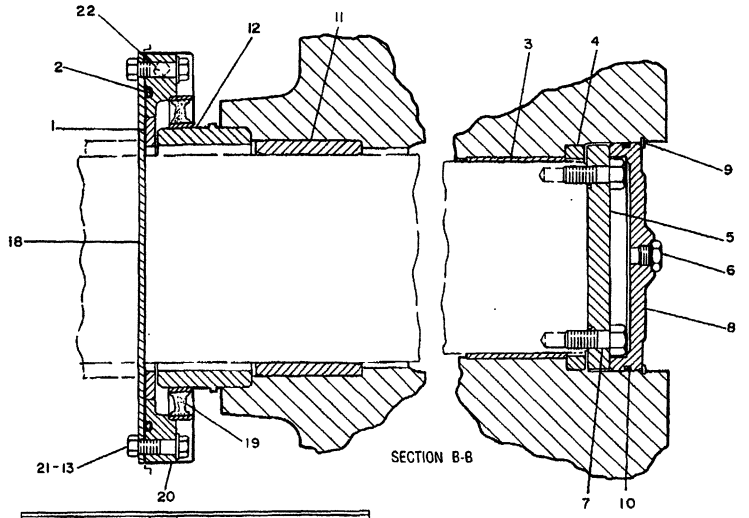

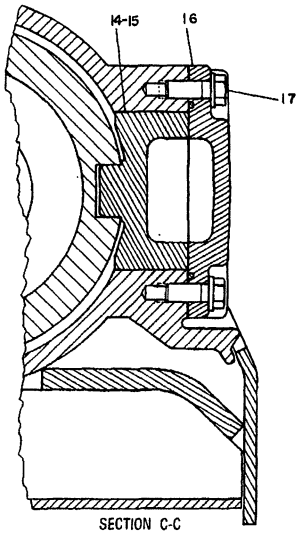

NOTE	REF NO	PART NUMBER	QTY	DESCRIPTION
	1	9P7053	1	PLATE
	2	4D4508	1	SEAL
	3	7G9709	1	BEARING
	4	7G9707	1	RING
	5	7G9708	1	PLATE
		2P1692	1	SEAL
	6	9S4185	1	PLUG
		3K0360	1	SEAL
	7	1A1135	12	BOLT
	8	7G5972	1	PLATE
	9	1P9254	1	RING
	10	9M5894	1	SEAL
	11	3P8845	1	BEARING
	12	3T7920	1	SLEEVE
	13	1A5822	8	BOLT
		5P8245	8	WASHER
	14	6T8801	2	GUIDE AS.
				(EACH INCLUDES)
	15	6T8258	1	FILM (WARNING)
	16	6P8931	2	COVER
		7L3380	2	SEAL
	17	0S1589	12	BOLT
		5P8247	12	WASHER
	18	3T6162	1	COVER
	19	8T0208	1	SEAL
C	20	9W2380	1	RETAINER
	21	1D4719	8	NUT
C	22	9F2247	2	PLUG

C INDICATES CHANGE

351372

351372 P

4151 6T2542 FRAME GP-TELESCOPING RECOIL-LH-PART 2 OF 2

Type 4

Part Of 6T2544 Undercarriage Ar

CHASSIS AND UNDERCARRIAGE

MODEL	STANDARD PART	SERVICE PART
D8L, D8L SA D9L TRACTORS	3P8845 7G9709	6T7326 9W7919
D10 TRACTORS	8P8929 3P5250 3P5251	6T7327 6T7328 6T7329

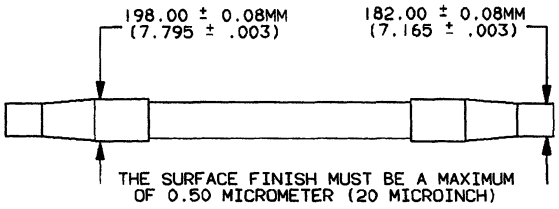

ILLUSTRATION 1. DIMENSIONS FOR RECONDITIONING PIVOT SHAFTS IN D8L AND D9L TRACTORS.

NOTE	REF NO	PART NUMBER	QTY	PART NAME

C-464555 EP

4153 **6T7326 PIVOT SHAFT BEARINGS**

MEMORANDA

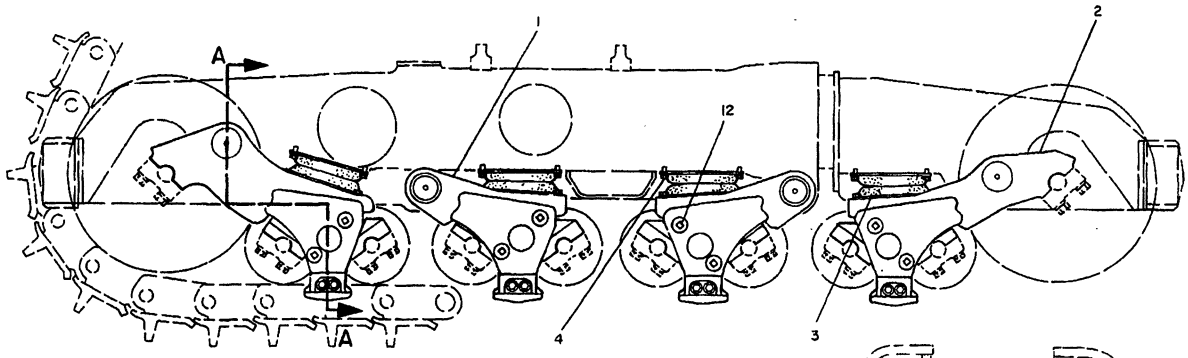

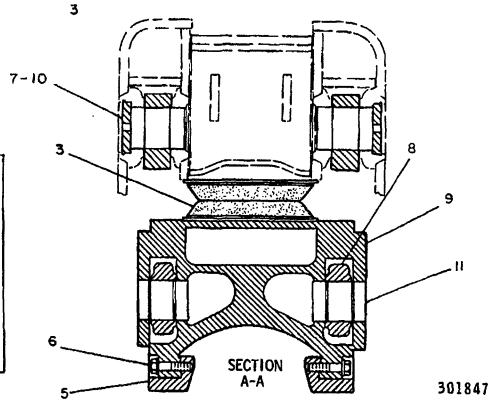

	REF. NO.	PART NUMBER	DESCRIPTION	QTY.
	1	9P6833	BOGIE ASSEM. ---(middle)--------	4
	2	9P6834	BOGIE ASSEM. -----(front)--------	2
	3	9P5542	PAD ASSEM. ----------	16
C	4	S1621	BOLT----------	64
C		5P1076	WASHER----------	64
	5	8P4303	GUIDE----------	16
	6	1A8063	BOLT----------	32
		5P8248	WASHER----------	32
	7	673161	RING----------	16
	8	9P7941	BOGIE----------	16
	9	9P6832	BOGIE ASSEM. ---(rear)----------	2
	10	7G5221	PLATE----------	16

	REF. NO.	PART NUMBER	DESCRIPTION	QTY.
	11	7G524	PIN ASSEM. -----(cartridge)------- (Each Includes)	32
		9G4872	STOPPER----------	2
		7G4408	PLUG----------	2
C	12	6V5859	PLUG----------	32

NOTE: QUANTITIES SHOWN THOSE REQUIRED FOR BOTH R. H. & L. H. SIDES C INDICATES CHANGE

301847

301847 P

7217 **6P7346 SUSPENSION GP-BOGIE**

S/N 53Y1-784

Note: 7T5027 Pin Assembly (Qty 32) Is Available For Cold Weather Starting

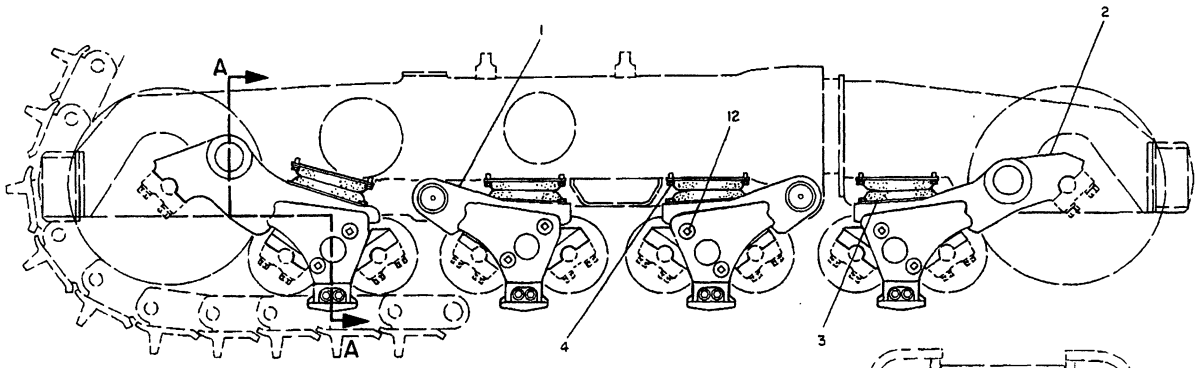

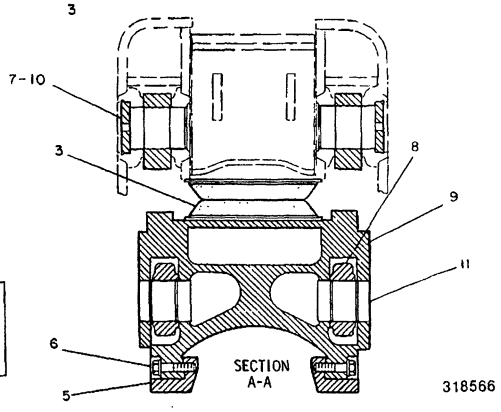

318566

NOTE	REF NO	PART NUMBER	QTY	DESCRIPTION
	1	9P6833	4	BOGIE AS. (MIDDLE)
C	2	6T1163	2	BOGIE AS. (FRONT)
	3	9P5542	16	PAD AS.
	4	0S1621	64	BOLT
		5P1076	64	WASHER
	5	8P4303	16	GUIDE
	6	1A8063	32	BOLT
		5P8248	32	WASHER
	7	6Z3161	16	RING
C	8	6T1165	16	BOGIE
C	9	6T1164	2	BOGIE AS. (REAR)
	10	7G5221	16	PLATE

QUANTITIES SHOWN ARE THOSE REQUIRED FOR BOTH L.H. & R.H. SIDES

	11	7G0524	32	PIN AS. (CARTRIDGE) (EACH INCLUDES)
		9G4872	2	STOPPER
		7G4408	2	PLUG
	12	6V5859	32	PLUG

C INDICATES CHANGE

318566 P

7217 **6P7346 SUSPENSION GP-BOGIE**

S/N 53Y785-2584

Note: 7T5027 Pin Assembly (Qty 32) Is Available For Cold Weather Starting

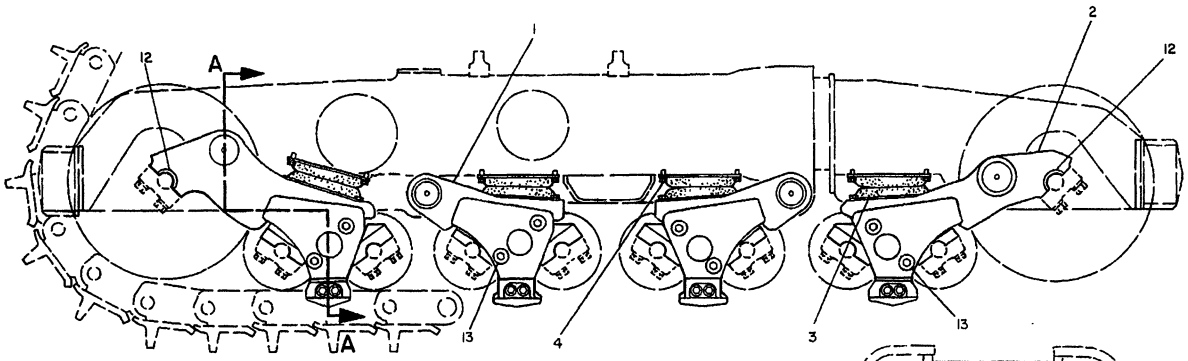

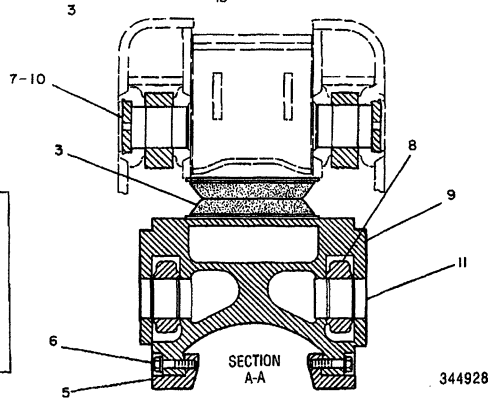

QUANTITIES SHOWN ARE THOSE REQUIRED FOR BOTH L.H. & R.H. SIDES

NOTE	REF NO	PART NUMBER	QTY	DESCRIPTION
C	1	9P6833	4	BOGIE AS. (MIDDLE)
C	2	6T2652	2	BOGIE AS. (FRONT)
C	3	7T5510	16	PAD AS.
	4	0S1621	64	BOLT
		5P1076	64	WASHER
	5	8P4303	16	GUIDE
	6	1A8063	32	BOLT
		5P8248	32	WASHER
	7	673161	16	RING
C	8	7T8555	16	BOGIE
C	9	6T2651	2	BOGIE AS. (REAR)
	10	7G5221	16	PLATE
C	11	7T9307	32	PIN AS. (CARTRIDGE) (EACH INCLUDES)
		9G4872	2	STOPPER
		7G4408	2	PLUG
C	12	6T1263	8	INSERT
C	13	6V5859	32	PLUG

C INDICATES CHANGE

344928 P

7217 **6P7346 SUSPENSION GP-BOGIE**

S/N 53Y2585-Up

Note: 7T5027 Pin Assembly (Qty 32) Is Available For Cold Weather Starting

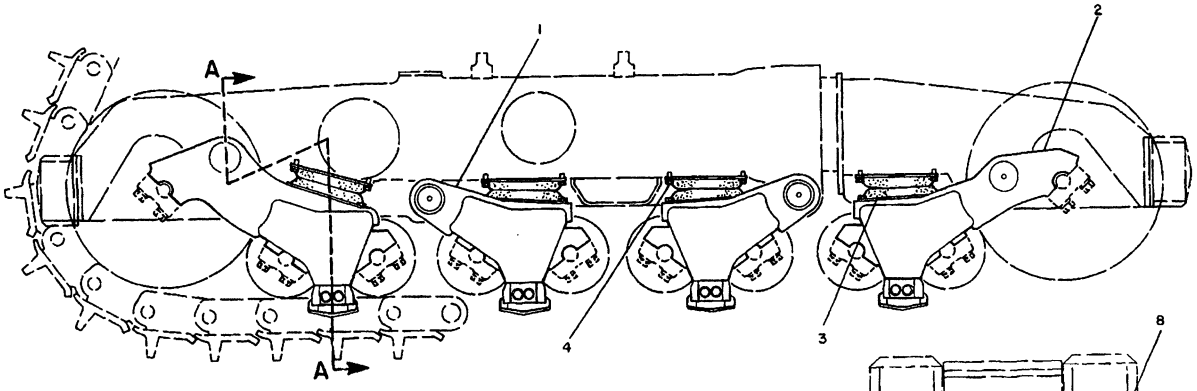

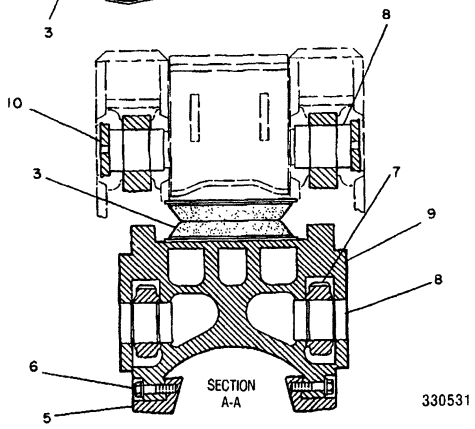

NOTE	REF NO	PART NUMBER	QTY	DESCRIPTION
	1	9P6833	2	BOGIE AS. (MIDDLE)
	2	6T1163	1	BOGIE AS. (FRONT)
	3	9P5542	8	PAD AS.
	4	0S1621	32	BOLT
		5P1076	32	WASHER
	5	8P4303	8	GUIDE
	6	1A8063	16	BOLT
		5P8248	16	WASHER
	7	6T1165	8	BOGIE (COARSE THREAD)
	8	7G0524	16	PIN AS. (CARTRIDGE) (EACH INCLUDES)
		9G4872	2	STOPPER
		7G4408	2	PLUG
	9	6T1164	1	BOGIE AS. (REAR)
	10	7G5221	8	PLATE
		673161	8	RING

330531 P

7217 **6T2658 SUSPENSION GP-BOGIE**

Type 1

Part Of 6T2544 Undercarriage Ar

Note: 7T5027 Pin Assembly (Qty 32) Is Available For Cold Weather Starting

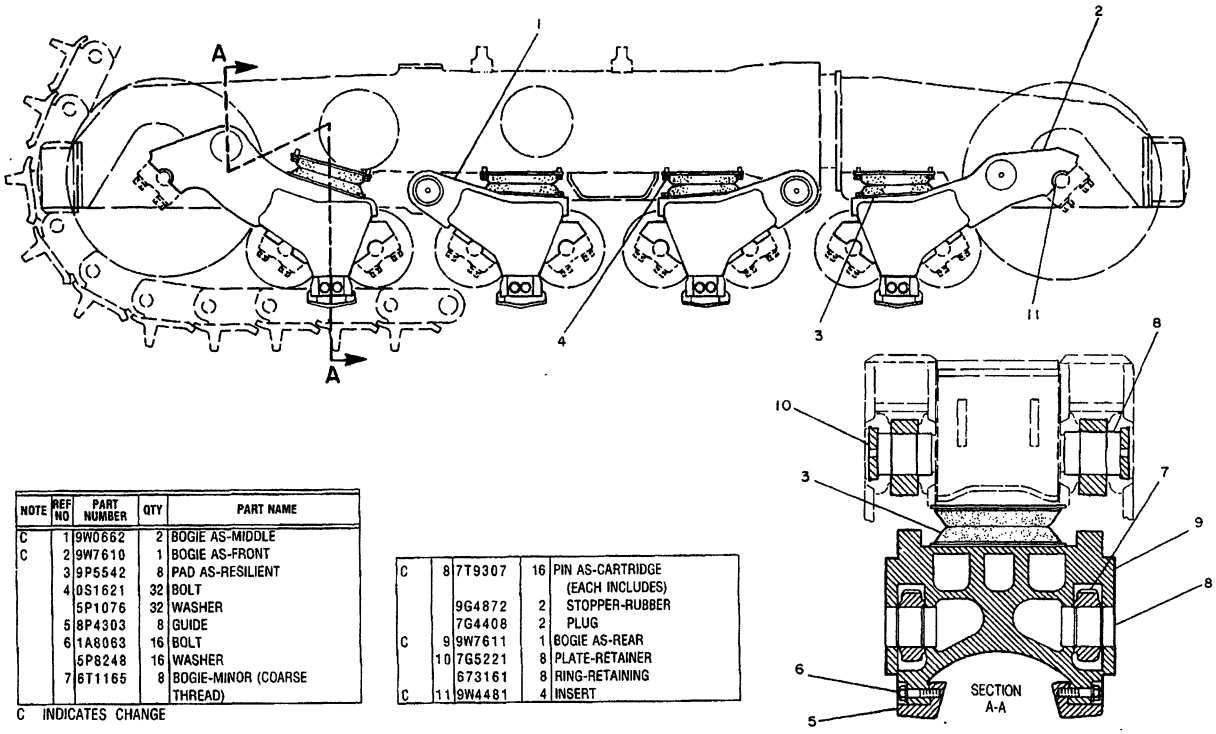

NOTE	REF NO	PART NUMBER	QTY	PART NAME
C	1	9W0662	2	BOGIE AS-MIDDLE
C	2	9W7610	1	BOGIE AS-FRONT
	3	9P5542	8	PAD AS-RESILIENT
	4	0S1621	32	BOLT
		5P1076	32	WASHER
	5	8P4303	8	GUIDE
	6	1A8063	16	BOLT
		5P8248	16	WASHER
	7	6T1165	8	BOGIE-MINOR (COARSE THREAD)

C INDICATES CHANGE

C	8	7T9307	16	PIN AS-CARTRIDGE (EACH INCLUDES)
		9G4872	2	STOPPER-RUBBER
		7G4408	2	PLUG
C	9	9W7611	1	BOGIE AS-REAR
	10	7G5221	8	PLATE-RETAINER
		673161	8	RING-RETAINING
C	11	9W4481	4	INSERT

B-409360 P

7217

6T2658 SUSPENSION GP-BOGIE

Type 2

Part Of 6T2544 Undercarriage Ar

Note: 7T5027 Pin Assembly (Qty 32) Is Available For Cold Weather Starting

CHASSIS AND UNDERCARRIAGE

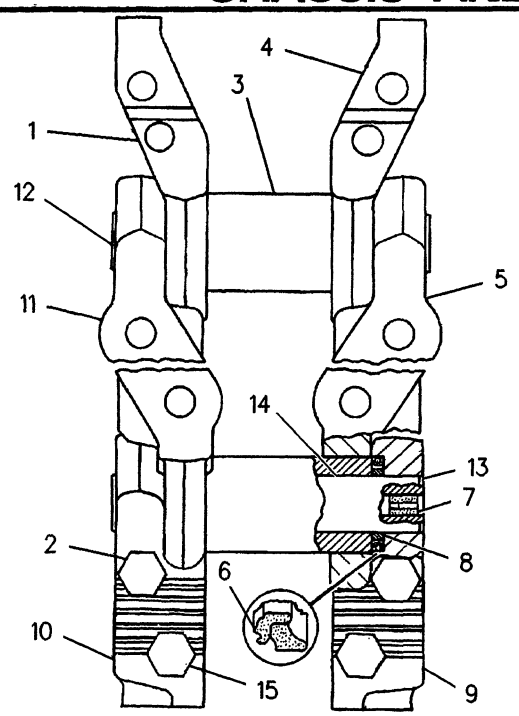

NOTE	REF NO	PART NUMBER	QTY	PART NAME
	1	7G6024	1	LINK (MASTER) (L.H. BUSHING END)
	2	6V1724	2	BOLT-MASTER TRACK
	3	6T0489	45	BUSHING-TRACK
	4	7G6023	1	LINK (MASTER) (R.H. BUSHING END)
	5	7G5685	44	LINK-TRACK-RH
	6	7G7363	90	SEAL AS
	7	7G4332	45	STOPPER-RUBBER
		7G4408	45	PLUG
	8	6P8138	90	RING-THRUST
	9	7G6021	1	LINK (MASTER) (R.H. PIN END)
	10	7G6022	1	LINK (MASTER) (L.H. PIN END)
	11	7G5686	44	LINK-TRACK-LH
	12	9P2251	44	PIN-TRACK
	13	3T9118	2	RING-RETAINING
	14	7G6679	1	PIN-TRACK
	15	6V1725	2	BOLT-MASTER TRACK

R-581159 EP

4169 **7G6441 LINK AS-TRACK**

Replaced By 7T2753-Page 191.04

			PAGE
1	7T2753	LINK AS.....	191.04
1	9P2666	SHOE-MASTER	
44	9P2665	SHOE	
176	6V1723	BOLT	
176	7G6442	NUT	

324618 P

4170 **7T2760 TRACK GP-2 REQUIRED-SEALED & LUBRICATED**
660MM (26IN) Grouser Shoe-Moderate Service
Part Of 7T2761 Track
An Attachment

			PAGE
1	7T2753	LINK AS.....	191.04
1	7G6453	SHOE-MASTER	
44	7G6454	SHOE	
176	6V1723	BOLT	
176	7G6442	NUT	

324621 P

4170 **7T2764 TRACK GP-2 REQUIRED-SEALED & LUBRICATED**
710MM (28IN) Grouser Shoe-Moderate Service
Part Of 7T2765 Track
An Attachment

			PAGE
1	7T2753	LINK AS.....	191.04
1	7G6447	SHOE-MASTER	
44	7G6448	SHOE	
176	6V1723	BOLT	
176	7G6442	NUT	

334702 P

4170 **7T2755 TRACK GP-2 REQUIRED**
Sealed & Lubricated
560MM (22IN) Grouser Shoe-Moderate Service
An Attachment

			PAGE
1	7T2753	LINK AS.....	191.04
1	7T2391	SHOE-MASTER	
44	7T2390	SHOE	
176	6V1723	BOLT	
176	7G6442	NUT	

324604 P

4170 **7T2757 TRACK GP-2 REQUIRED**
Sealed & Lubricated
560MM (22IN) Grouser Shoe-Extreme Service
An Attachment

			PAGE
1	7T2753	LINK AS.....	191.04
1	9P2662	SHOE-MASTER	
44	9P2661	SHOE	
176	6V1723	BOLT	
176	7G6442	NUT	

324594 P

4170 **7T2758 TRACK GP-2 REQUIRED**
Sealed & Lubricated
610MM (24IN) Grouser Shoe-Moderate Service
An Attachment

			PAGE
1	7T2753	LINK AS.....	191.04
1	7T2393	SHOE-MASTER	
44	7T2392	SHOE	
176	6V1723	BOLT	
176	7G6442	NUT	

324606 P

4170 **7T2759 TRACK GP-2 REQUIRED**
Sealed & Lubricated
610MM (24IN) Grouser Shoe-Extreme Service
An Attachment

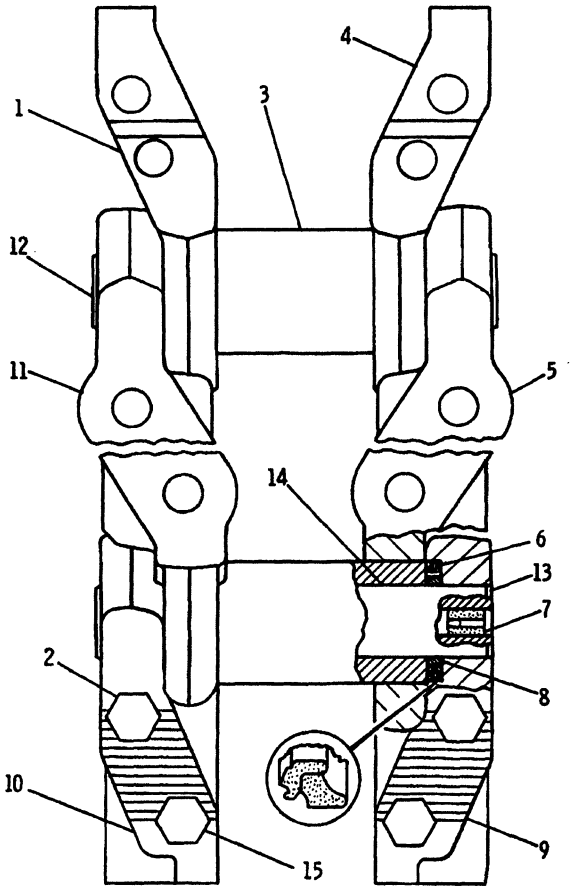

NOTE	REF NO	PART NUMBER	QTY	DESCRIPTION
	1	7T2753	1	TRACK LINK AS.
		7T2212	1	LINK (MASTER) (L.H. BUSHING END)
	2	6V1724	2	BOLT
C	3	7T6627	45	BUSHING
	4	7T2211	1	LINK (MASTER) (R.H. BUSHING END)
	5	7T2207	44	LINK (R.H.)
	6	6T8447	90	SEAL AS.
	7	7G4332	45	STOPPER
		7G4408	45	PLUG
	8	6T4971	90	RING
	9	7T2209	1	LINK (MASTER) (R.H. PIN END)
	10	7T2210	1	LINK (MASTER) (L.H. PIN END)
	11	7T2208	44	LINK (L.H.)
	12	9P2251	44	PIN
	13	3T9118	2	RING
	14	7G6679	1	PIN
	15	6V1725	2	BOLT

C INDICATES CHANGE

334693

334693 P

4169 **7T2753 LINK AS-TRACK**

Sealed & Lubricated

Part Of 7T2760,7T2764,7T2755,7T2757,7T2758,7T2759 Tracks

An Attachment

			PAGE
1	3G5638	VALVE GP-CONTROL	201
1	3G9768	VALVE GP-CONTROL	199
1	4T5900	VALVE GP-CONTROL	198B
1	3G5900	TANK & FILTER GP-HYDRAULIC	196
1	7G0085	LINKAGE GP-IMPLEMENT	238
1	3T2593	LINKAGE GP-IMPLEMENT	242
1	7G5125	LINES GP-PUMP	216
1	6P8865	LINES GP-LIFT CYLINDER	231
1	7G0087	LINES GP-RIPPER	222
1	9J8277	PUMP GP-VANE	219
1	3G5093	VALVE GP	205
1		FILM-HYDRAULIC OIL-ON TOP OF HYDRAULIC TANK ADJACENT TO FILLER SPOUT	

108190 P

9P9077 CONTROL AR-HYDRAULIC-DOUBLE VALVE
For Use With 8A Bulldozer & 8D Ripper With Solid Link
An Attachment

		CONSISTS OF:	PAGE
1	3G5900	FILTERM AND TANK GROUP	196
1	6P8865	LIFT CYLINDER LINES GROUP	231
1	7G0085	IMPLEMENT LINKAGE GROUP	238
1	7G0084	PUMP LINES GROUP	214
1	3G5638	CONTROL VALVE GROUP-BULLDOZER	201
1	9J8277	VANE PUMP GROUP	219
1		FILM-HYD. OIL-TOP OF HYD. TANK ADJACENT TO FILLER SPOUT	

1259

9P9078 CONTROL AR-HYDRAULIC-SINGLE VALVE
For Use With 8A Bulldozer
An Attachment

			PAGE
1	3G5638	VALVE GP-CONTROL	201
1	3G9771	VALVE GP	200
		-OR-	
1	4T5901	VALVE GP-CONTROL	200A
1	3G5900	TANK & FILTER GP-HYDRAULIC	196
1	8P0903	LINKAGE GP-IMPLEMENT	240
1	3T2594	LINKAGE GP-IMPLEMENT	242.02
1	6P8865	LINES GP-LIFT CYLINDER	231
1	7G5125	LINES GP-PUMP	216
1	8P2252	LINES GP-RIPPER	220
1	8P1253	LINES GP-TILT CYLINDER	226
1	3G3159	VALVE GP-PILOT	208
1	9J8277	PUMP GP-VANE	219
1		FILM-HYDRAULIC OIL-ON TOP OF HYDRAULIC TANK ADJACENT TO FILLER SPOUT	

108194 P

1259 9P9079 CONTROL AR-HYDRAULIC-TRIPLE VALVE
For Use With 8S Or 8U Bulldozer, With Blade Tilt & 8D Adjustable Ripper
An Attachment

			PAGE
1	3G5638	VALVE GP-CONTROL	201
1	3G9768	VALVE GP-CONTROL	199
		-OR-	
1	4T5900	VALVE GP-CONTROL	198B
1	3G5900	TANK & FILTER GP-HYDRAULIC	196
1	8P0903	LINKAGE GP-IMPLEMENT	240
1	3T2593	LINKAGE GP-IMPLEMENT	242
1	6P8865	LINES GP-LIFT CYLINDER	231
1	7G5125	LINES GP-PUMP	216
1	7G0087	LINES GP-RIPPER	222
1	8P1253	LINES GP-TILT CYLINDER	226
1	3G5092	VALVE GP	206
1	9J8277	PUMP GP-VANE	219
1		FILM-HYDRAULIC OIL-ON TOP OF HYDRAULIC TANK ADJACENT TO FILLER SPOUT	

108195 P

1259 9P9080 CONTROL AR-HYDRAULIC-TRIPLE VALVE
For Use With 8S Or 8U Bulldozer With Blade Tilt & 8D Ripper With Solid Link
An Attachment

			PAGE
1	3G5638	VALVE GP-CONTROL	201
1	3G5900	TANK & FILTER GP-HYDRAULIC	196
1	8P0903	LINKAGE GP-IMPLEMENT	240
1	6P8865	LINES GP-LIFT CYLINDER	231
1	7G5125	LINES GP-PUMP	216
1	8P1253	LINES GP-TILT CYLINDER	226
1	3G5091	VALVE GP-PILOT	207
1	9J8277	PUMP GP-VANE	219
1		FILM-HYDRAULIC OIL-ON TOP OF HYDRAULIC TANK ADJACENT TO FILLER SPOUT	

108197 P

1259 **9P9081 CONTROL AR-HYDRAULIC-DOUBLE VALVE**
For Use With 8S Or 8U Bulldozer With Blade Tilt
An Attachment

			PAGE
1	3G5638	VALVE GP-CONTROL	201
1	3G9771	VALVE GP	200
1	4T5901	VALVE GP-CONTROL	200A
1	3G5900	TANK & FILTER GP-HYDRAULIC	196
1	7G0085	LINKAGE GP-IMPLEMENT	238
1	3T2594	LINKAGE GP-IMPLEMENT	242.02
1	6P8865	LINES GP-LIFT CYLINDER	231
1	7G5125	LINES GP-PUMP	216
1	8P2252	LINES GP-RIPPER	220
1	9J8277	PUMP GP-VANE	219
1	3G5094	VALVE GP	204
		FILM-HYDRAULIC OIL-ON TOP OF HYDRAULIC TANK ADJCENT TO FILLER SPOUT	

108193 P

1259 **9P9082 CONTROL AR-HYDRAULIC-TRIPLE VALVE**
For Use With 8A Bulldozer & Adjustable Ripper
An Attachment

			PAGE
1	3G3159	VALVE GP-PILOT	208
1	8P2252	LINES GP-RIPPER	220
1	3T2594	LINKAGE GP-IMPLEMENT	242.02
1	4T5901	VALVE GP-CONTROL	200A
1	9W3721	ENCLOSURE GP	175.05

335284 P

1259 **9W0574 CONTROL AR-HYDRAULIC**
Adjustable Ripper
S/N 53Y3485-4524
An Attachment

2	5H4019	COVER-TO DOZER VALVE
2	4J0520	SEAL-TO COVER
1	2K4973	LOCKNUT
1	7F0192	BOLT
1	1B2578	NUT

335286 P

7153 **9W0584 CONVERSION AR-HYDRAULIC CONTROL**
Dozer
An Attachment

HYDRAULIC SYSTEM

			PAGE
1	9W3721	ENCLOSURE GP	175.05
1	9W4314	LINES GP-RIPPER	221.05
1	3T2594	LINKAGE GP-IMPLEMENT	242.02
1	4T5901	VALVE GP-CONTROL	200A
1	3G3159	VALVE GP-PILOT	208

409014 P

1259 **9W0574 CONTROL AR-HYDRAULIC**
Adjustable Ripper
S/N 53Y4525-Up
An Attachment

			PAGE
1	1U4165	LINES GP-ATTACHMENT	233A
1	1U3373	CYLINDER GP-RIPPER PIN PULLER	232
1	4T0140	PULLER GP-PIN	236

108203 P

9P9906 PULLER AR-PIN
Also Part Of 4T0147 Ripper Ar
An Attachment

			PAGE
1	9J8802	CYLINDER GP-BULLDOZER LIFT	229A
1	3G8030	LINES GP-TILT CYLINDER	228

108204 P

5104

3G6155 CYLINDER AR-TILT
8A Bulldozer S/N 5Y1-Up
Must Be Equipped With 9P9079,9P9080 Or 9P9081 Control Ar-Hydraulic
An Attachment

HYDRAULIC SYSTEM

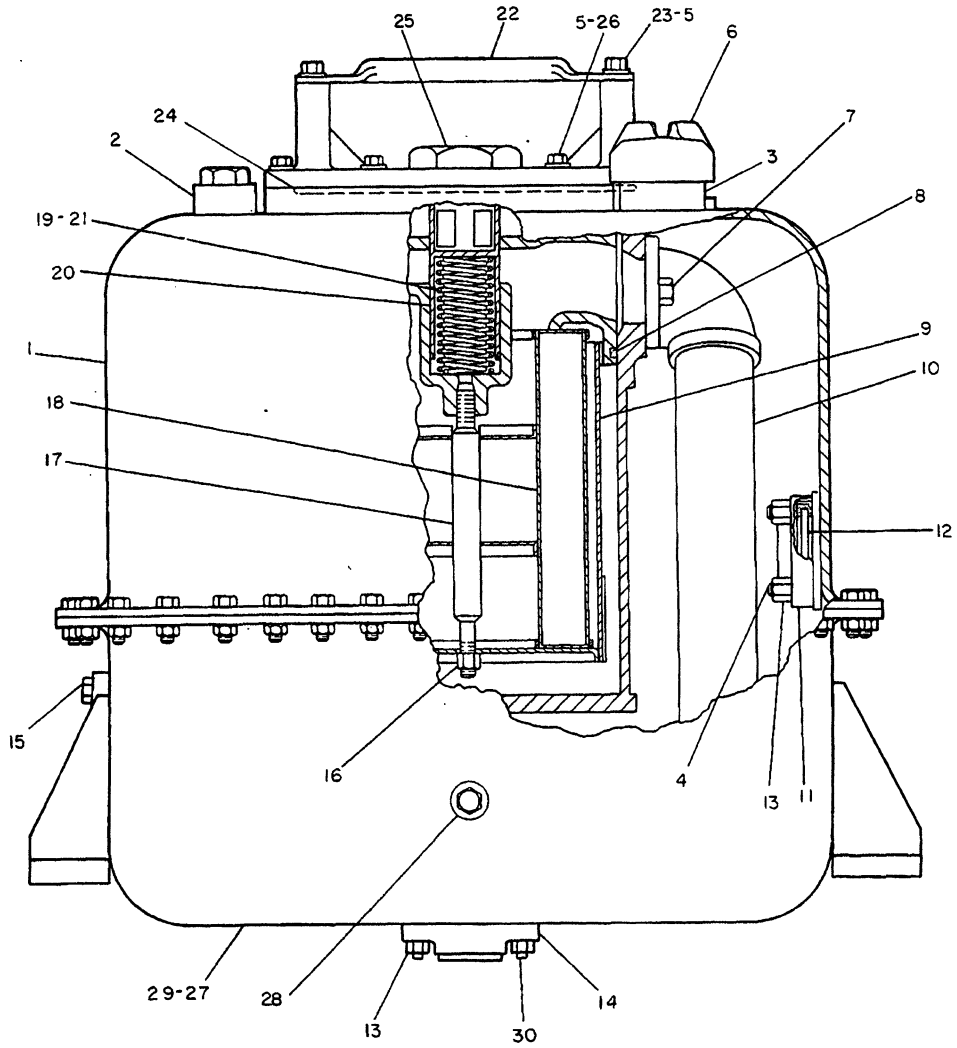

REF. NO.	PART NUMBER	DESCRIPTION	QTY.
1	4T876	TANK ASSEM. (Includes)	1
2	7J5225	FITTING	1
3	9J8588	FILLER	1
4	8J6910	STUD	4
5	5M2894	WASHER	8
6	7H1447	CAP	1
7	6K7917	BOLT	2
8	9M5894	SEAL	1
9	3G3130	SCREEN	1
10	3G5087	TUBE ASSEM.	1
11	8J6913	RETAINER	1
	4J8251	GROMMET	1
12	4J8252	GLASS	1
	3G6796	PLATE	1
13	4J8265	NUT	6
14	8J8782	BODY	1
15	9S4191	PLUG	2
	3J1907	SEAL	2
16	9M5048	LOCKNUT	1
17	3G3147	STUD	1
18	7J670	ELEMENT ASSEM.	1
19	8J4361	SPRING-------(inner)----------	1
20	3G306	SPOOL	1
21	3G2731	SPRING-----(outer)----------	1
22	1U1097	HANDLE	1
23	S1594	BOLT	2
24	5P2235	SEAL	1
25	9S7583	PLUG	1
	304606	SEAL	1
26	1A2029	BOLT	6
27	3G5806	TANK ASSEM. (Includes)	1
C 28	5J3306	FITTING	3
29	7J5544	FITTING	1
30	8J6910	STUD	2

C INDICATES CHANGE

340750

340750 P

5056 **3G5900 TANK & FILTER GP-PART 1 OF 2**

Type 1

An Attachment

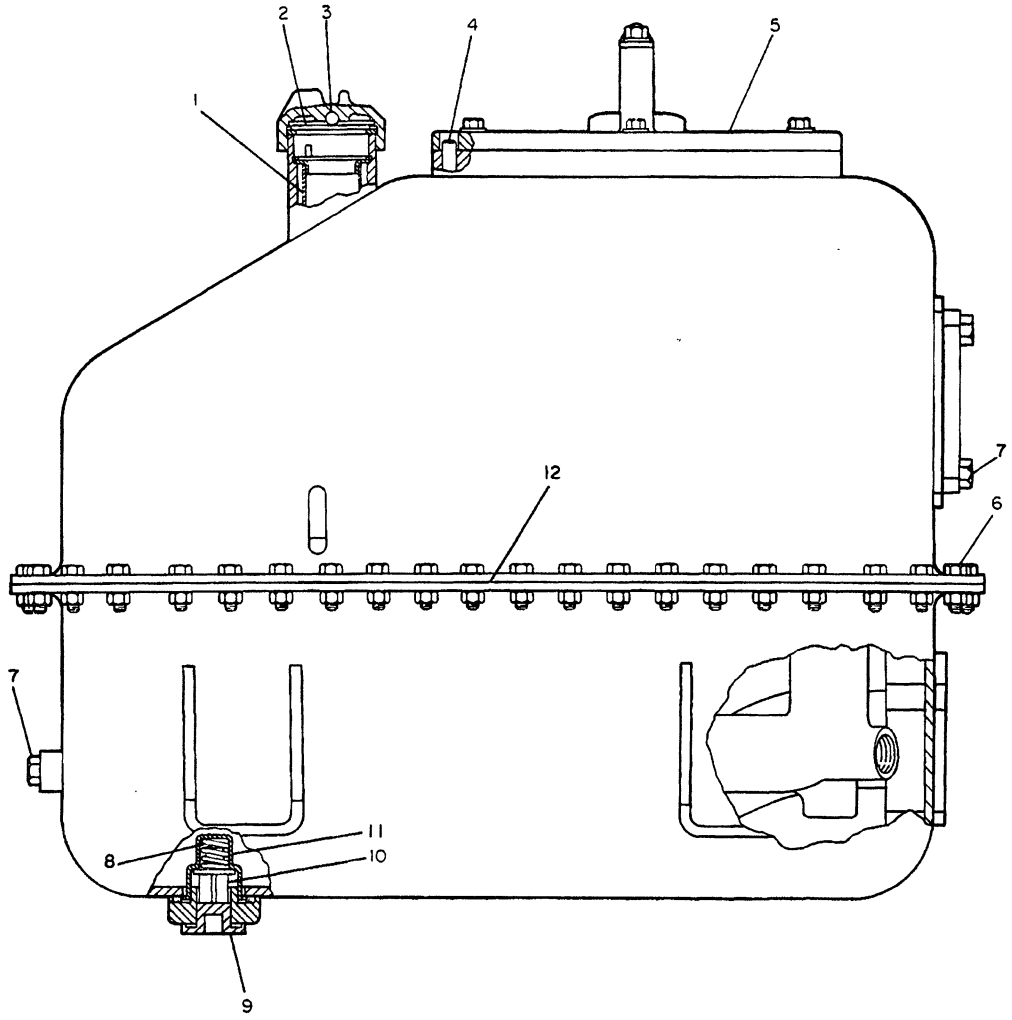

NOTE	REF NO	PART NUMBER	QTY	DESCRIPTION
	1	3G7250	1	STRAINER AS.
		6H9361	1	RING
	2	6H5139	1	PLATE
		9H6454	1	GASKET
	3	4B9782	1	BALL
	4	5P3149	1	DOWEL
	5	1U1107	1	COVER
	6	0S1594	62	BOLT
		2K4973	62	LOCKNUT
	7	9S4191	2	PLUG
		3J1907	2	SEAL
	8	7B3039	1	SPRING
	9	9J7031	1	PLUG
		5M2057	1	SEAL
	10	8J8783	1	VALVE
	11	1U2827	1	GUIDE
		8M4436	1	SEAL
CD	12	5P9119		SEALANT 3M(18.11IN)

C INDICATES CHANGE

D ORDER BY THE METER

316780

316780 P

5056

3G5900 TANK & FILTER GP-PART 2 OF 2

Type 1

An Attachment

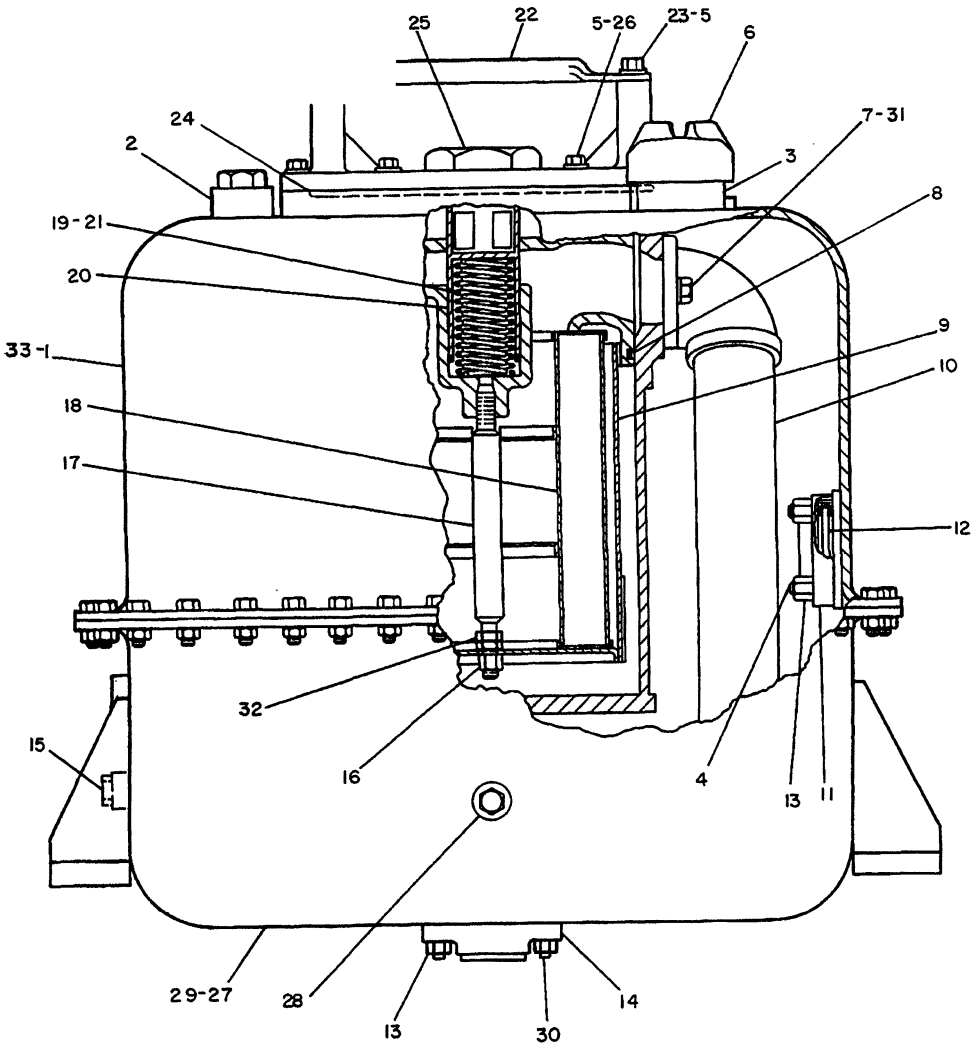

NOTE	REF NO	PART NUMBER	QTY	DESCRIPTION
	1	4T876	1	TANK ASSEM.
	2	7J5225	1	FITTING
	3	9J8588	1	FILLER
	4	8J6910	4	STUD
C	5	5M2894	2	WASHER
	6	7H1447	1	CAP
C	7	6H1717	2	BOLT
	8	9M5894	1	SEAL
	9	3G3130	1	SCREEN
	10	3G5087	1	TUBE ASSEM.
	11	8J6913	1	RETAINER
		4J8251	1	GROMMET
	12	4J8252	1	GLASS
		3G6796	1	PLATE
	13	4J8265	6	NUT
	14	8J8782	1	BODY
C	15	9S4191	1	PLUG
C		3J1907	1	SEAL
C	16	6V5729	1	LOCKNUT
	17	3G3147	1	STUD
	18	7J670	1	ELEMENT ASSEM.
	19	8J4361	1	SPRING (INNER)
C	20	4T2572	1	SPOOL
	21	3G2731	1	SPRING (OUTER)
	22	1U1097	1	HANDLE
	23	S1594	2	BOLT
	24	5P2235	1	SEAL
	25	9S7583	1	PLUG
		304606	1	SEAL
	26	1A2029	6	BOLT
	27	3G5806	1	TANK ASSEM.
C	28	5J3306	3	FITTING
	29	7J5544	1	FITTING
	30	8J6910	2	STUD
C	31	5P8245	2	WASHER
C	32	1L9048	2	NUT
CD	33	5P9119		SEALANT 2.3M(90.55IN.)

C INDICATES CHANGE
D ORDER BY THE METER

340751

340751 P

5056

3G5900 TANK & FILTER GP-PART 1 OF 2

Type 2
An Attachment

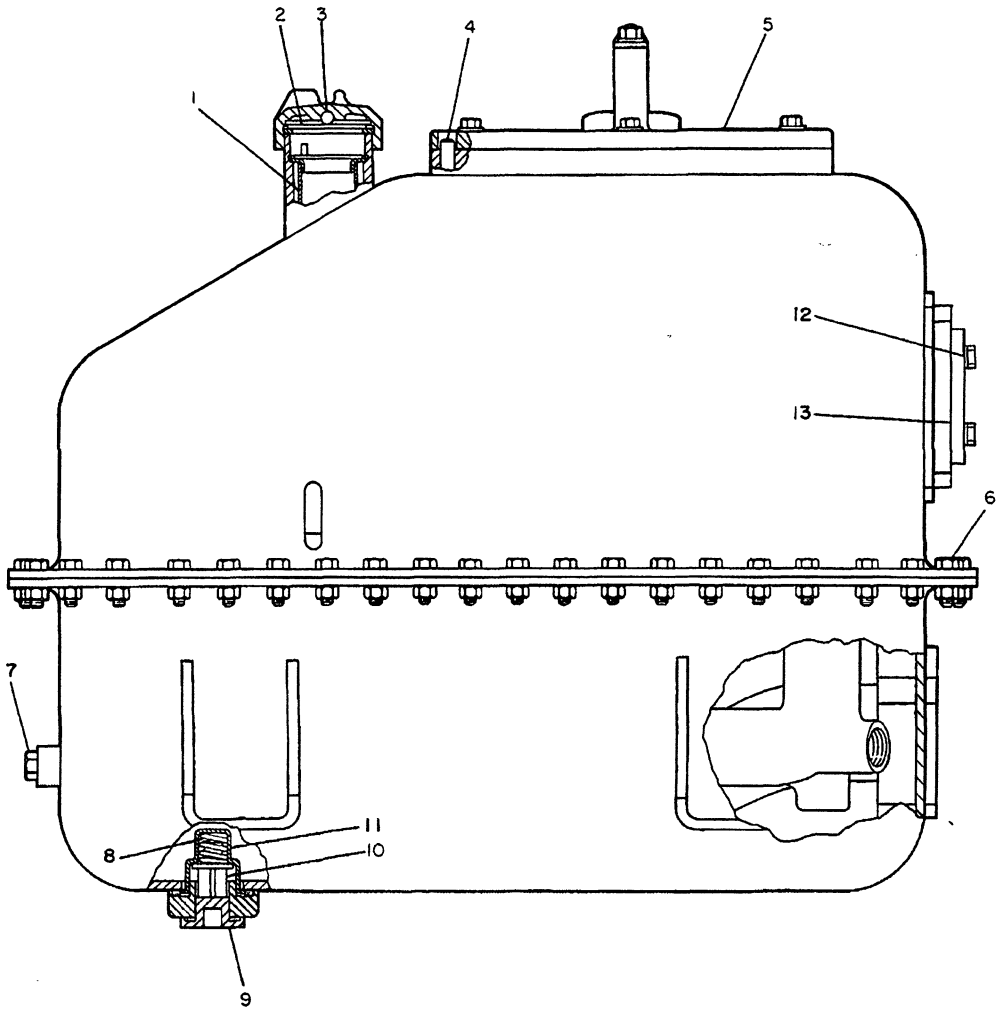

NOTE	REF NO	PART NUMBER	QTY	DESCRIPTION
	1	3G7250	1	STRAINER ASSEM.
		6H9361	1	RING
	2	6H5139	1	PLATE
		9H6454	1	GASKET
	3	4B9782	1	BALL
	4	5P3149	1	DOWEL
C	5	4T1023	1	COVER
	6	S1594	62	BOLT
		2K4973	62	LOCKNUT
C	7	9S4191	1	PLUG
C		3J1907	1	SEAL
	8	7B3039	1	SPRING
	9	9J7031	1	PLUG
		5M2057	1	SEAL
	10	8J8783	1	VALVE
	11	1U2827	1	GUIDE
		8M4436	1	SEAL
C	12	S1595	4	BOLT
C		5P8245	4	WASHER
C	13	1P4582	2	FLANGE

C INDICATES CHANGE

307782

307782 P

5056

3G5900 TANK & FILTER GP-PART 2 OF 2

Type 2

An Attachment

HYDRAULIC SYSTEM

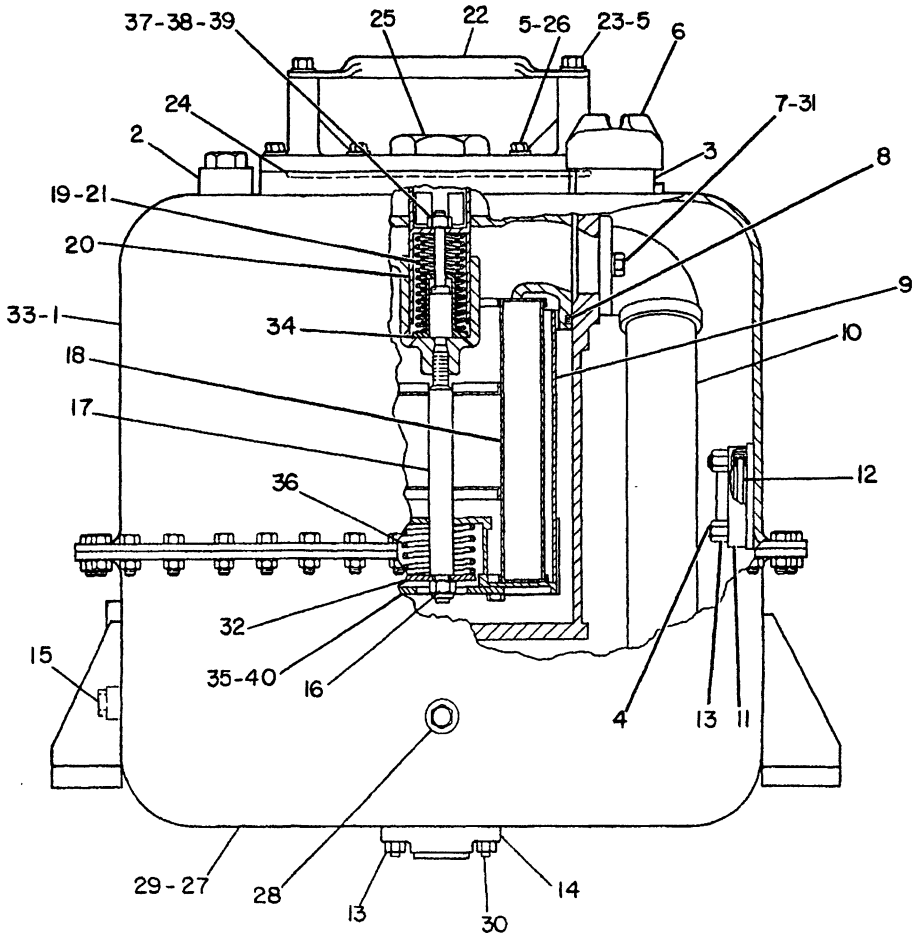

NOTE	REF NO	PART NUMBER	QTY	PART NAME	NOTE	REF NO	PART NUMBER	QTY	PART NAME
	1	4T0876	1	TANK AS		24	5P2235	1	SEAL-O-RING
	2	7J5225	1	FITTING		25	9S7583	1	PLUG
	3	9J8588	1	FILLER			304606	1	SEAL-O-RING
	4	8J6910	4	STUD-WELD		26	1A2029	6	BOLT
	5	5M2894	2	WASHER		27	3G5806	1	TANK AS
	6	7H1447	1	CAP-FILLER	C	28	5J3306	3	FITTING
	7	6H1717	2	BOLT		29	7J5544	1	FITTING
	8	9M5894	1	SEAL-O-RING		30	8J6910	2	STUD-WELD
C	9	4T9302	1	SCREEN		31	5P8245	2	WASHER
	10	3G5087	1	TUBE AS-BAFFLE	C	32	4T8698	1	WASHER
	11	8J6913	1	RETAINER-GLASS	D	33	5P9119		SEALANT 2.3M(90.55IN.)
		4J8251	1	GROMMET	C	34	4T9295	1	RETAINER
	12	4J8252	1	GLASS	C	35	4T8699	1	PLATE
		9T0714	1	PLATE	C	36	7J1277	1	SPRING
	13	4J8265	6	NUT	C	37	4T9294	1	PIN
	14	8J8782	1	BODY-DRAIN VALVE	C	38	3B4611	1	PIN-COTTER
	15	9S4191	1	PLUG-O-RING	C	39	8F4397	1	NUT-SLOTTED
		3J1907	1	SEAL-O-RING	C	40	309612	3	SCREW-FORMING
C	16	9M5048	1	LOCKNUT					
C	17	4T9303	1	STUD					
	18	7J0670	1	ELEMENT-FILTER					
	19	8J4361	1	SPRING (INNER)					
C	20	4T9293	1	SPOOL-DUMP					
	21	3G2731	1	SPRING (OUTER)					
	22	1U1097	1	HANDLE					
	23	0S1594	2	BOLT					

C-CHANGE FROM PREVIOUS TYPE
D-ORDER BY THE METER

B-493227 EP

5056 **3G5900 TANK & FILTER GP-PART 1 OF 2**

Type 3

An Attachment

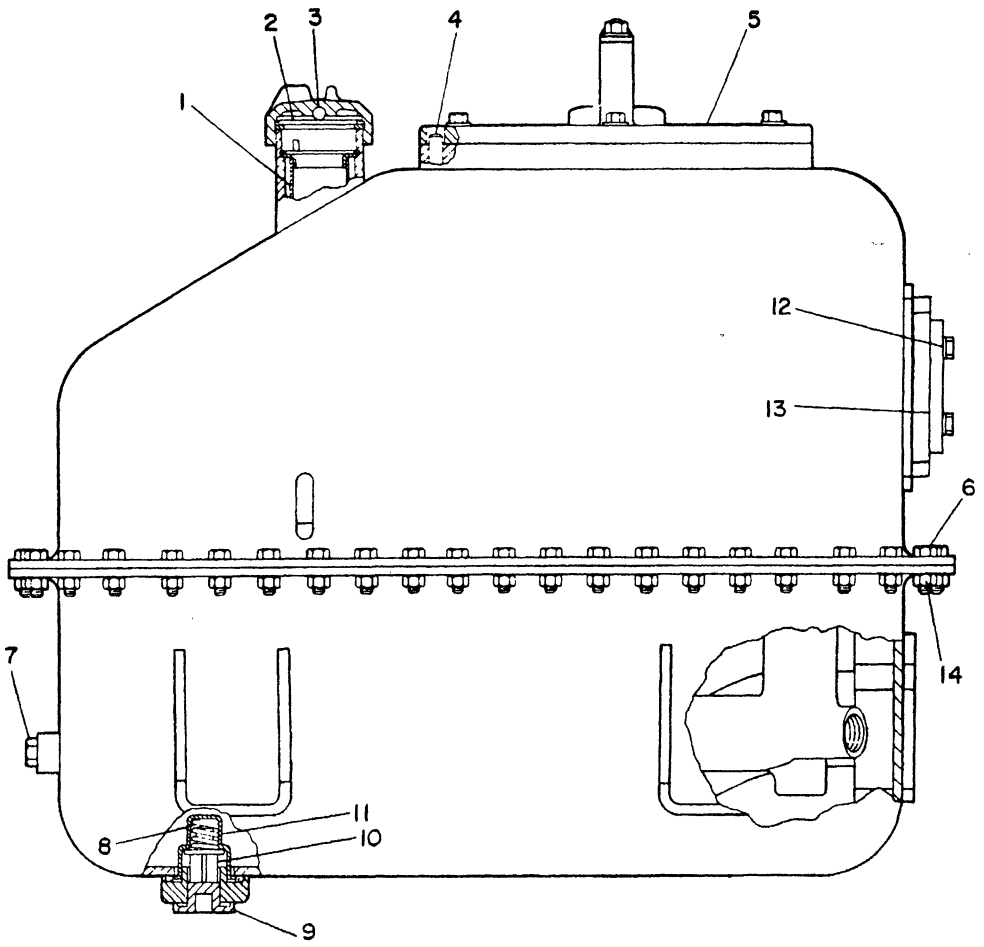

NOTE	REF NO	PART NUMBER	QTY	PART NAME	NOTE	REF NO	PART NUMBER	QTY	PART NAME
	1	3G7250	1	STRAINER AS					
		6H9361	1	RING-RETAINER					
	2	6H5139	1	PLATE-PRESSURE					
		9H6454	1	GASKET					
	3	4B9782	1	BALL					
	4	5P3149	1	DOWEL					
	5	4T1023	1	COVER					
	6	0S1594	62	BOLT					
	7	9S4191	1	PLUG-O-RING					
		3J1907	1	SEAL-O-RING					
	8	7B3039	1	SPRING					
	9	9J7031	1	PLUG-DRAIN					
		5M2057	1	SEAL-O-RING					
	10	8J8783	1	VALVE					
	11	1U2827	1	GUIDE-VALVE					
		8M4436	1	SEAL-O-RING					
C	12	0S1585	4	BOLT					
		5P8245	4	WASHER					
	13	1P4582	2	FLANGE-HALF					
C	14	2K4973	62	LOCKNUT					

C-CHANGE FROM PREVIOUS TYPE

B-317377 EP

5056 **3G5900 TANK & FILTER GP-PART 2 OF 2**

Type 3

An Attachment

HYDRAULIC SYSTEM

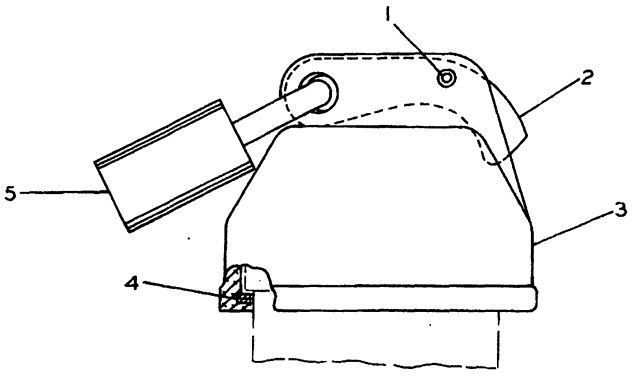

NOTE	REF NO	PART NUMBER	QTY	PART NAME
	1	1L5072	1	DOWEL
	2	9M7394	1	LEVER
	3	5D1911	1	COVER-HYDRAULIC CAP
	4	2J7761	1	RING-RETAINING
	5	5P8502	1	PADLOCK GP
A		5P8500	2	KEY
A		6V5874	1	COVER

A-NOT PART OF THIS GROUP

B-519475 EP

5056 **9G9288 COVER GP-PROTECTION**
Hydraulic Tank Cap
An Attachment

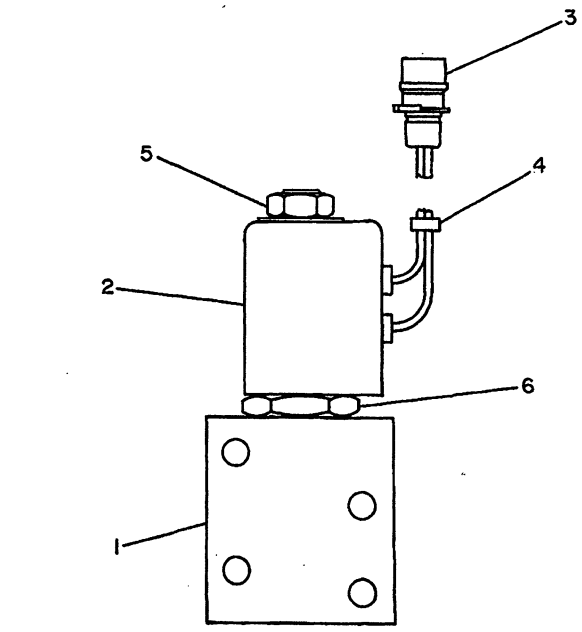

NOTE	REF NO	PART NUMBER	QTY	PART NAME
	1	6T9559	1	MANIFOLD
	2	9G9988	1	VALVE GP-SOLENOID
		6T3383	1	COIL AS
	3	7N8205	1	HOUSING-PLUG
		7N7780	2	PIN-CONNECTOR
		7N7779	2	SOCKET
	4	1S9593	2	STRAP-CABLE
	5	9S1354	1	NUT
	6	6T3382	1	CARTRIDGE AS
				THE FOLLOWING REPAIR KIT IS AVAILABLE:
		6T3381	1	KIT-SEAL

B-335199 EP

5051 **6T4531 VALVE & MOUNTING GP**
Part Of 7T4413 Control Ar-Hydraulic
An Attachment

MEMORANDA

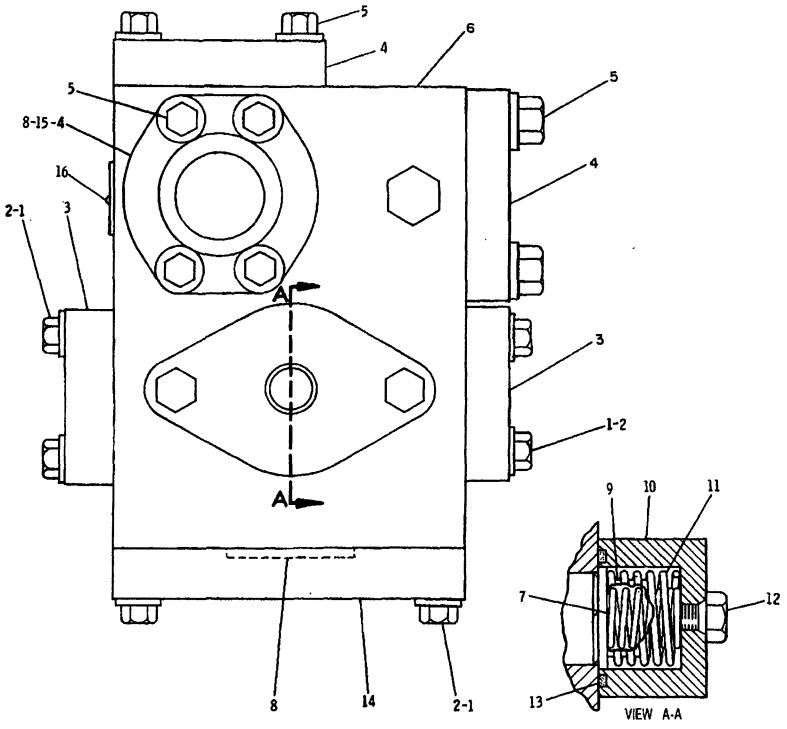

NOTE	REF NO	PART NUMBER	QTY	PART NAME
	1	0S1588	22	BOLT
	2	5M2894	22	WASHER
	3	1P4577	8	FLANGE-HALF
C	4	1P4578	6	FLANGE-HALF
C	5	3H5368	12	BOLT
C		5P8244	12	WASHER
Y	6	4T5899	1	VALVE GP
	7	9J4800	2	SPRING (INNER)
	8	4J0522	4	SEAL
	9	3G8439	2	RETAINER
	10	9J2916	2	HOUSING
	11	1U2760	2	SPRING (OUTER)
	12	1D4556	4	BOLT
	13	4J0525	2	SEAL-O-RING
	14	8J8496	1	PLATE
	15	5H4020	1	COVER
	16	4B4158	1	SCREW-DRIVE

C-INDICATES CHANGE

Y SEPARATE ILLUSTRATION

406681

406681 P

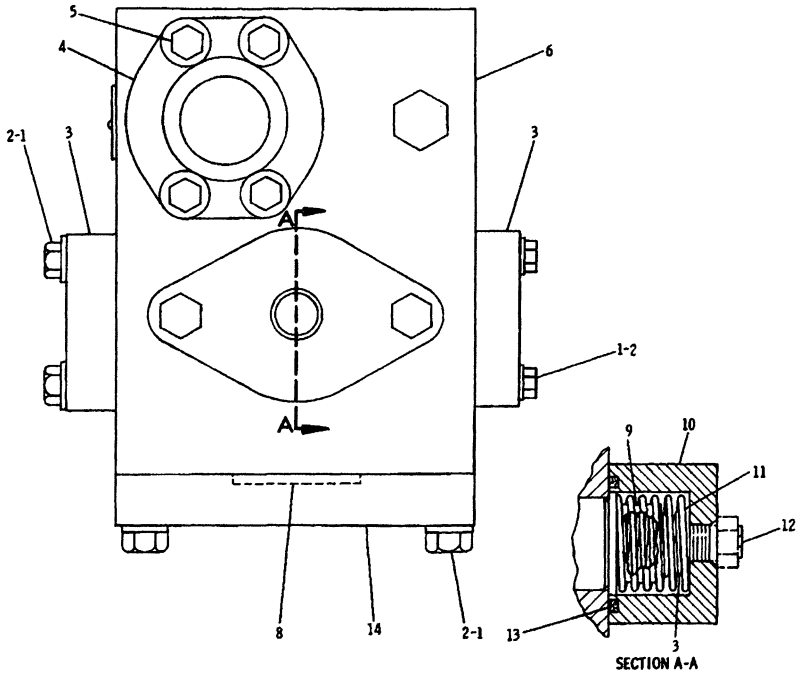

REF NO.	PART NUMBER	DESCRIPTION	QTY.
1	S1588	BOLT	22
2	5M2894	WASHER	22
3	1P4577	FLANGE	8
4	1P4578	FLANGE	2
5	3H5368	BOLT	4
	5P8244	WASHER	4
6	3G9769	VALVE GROUP (Separate Illustration)	1
7	9J4800	SPRING (inner)	2
8	4J522	SEAL	3
9	3G8439	RETAINER	2
10	9J2916	HOUSING	2
11	1U2760	SPRING (outer)	2
12	1D4556	BOLT	4
13	4J525	SEAL	2
14	8J8496	PLATE	1

235221

235221 P

5351 **3G9768 VALVE GP-CONTROL-RIPPER-SOLID LINK RIPPER**

Replaced By 4T5900-Page 198B
3G9769-Page 209
An Attachment

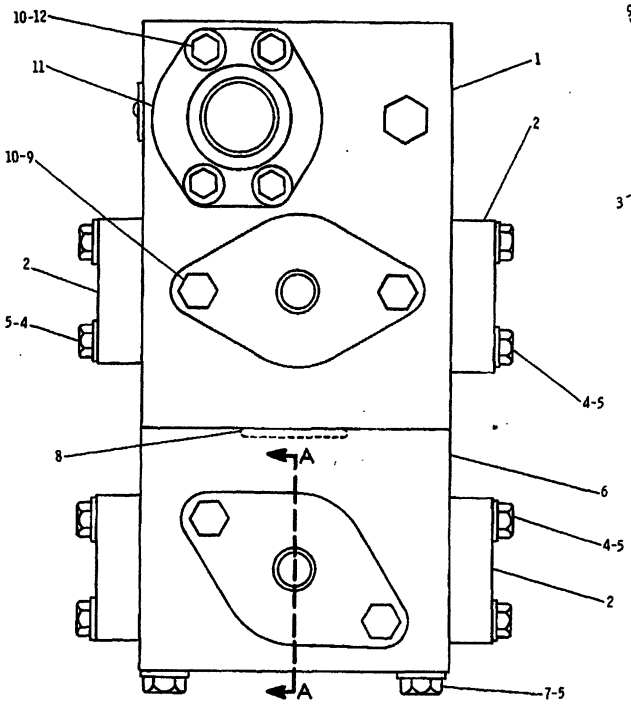

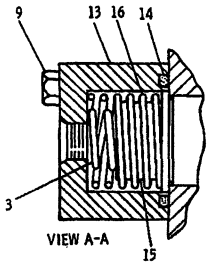

REF. NO.	PART NUMBER	DESCRIPTION	QTY
1	3G9769	VALVE GROUP (Separate Illustration)	1
2	1P4577	FLANGE	16
3	9J4800	SPRING	4
4	S1588	BOLT	32
5	5M2894	WASHER	38
6	3G9770	VALVE GROUP	1
7	1A5964	BOLT	6
8	4J522	SEAL	3
9	1D4556	BOLT	8
10	5P8244	WASHER	4
11	1P4578	FLANGE	2
12	3H5368	BOLT	4
13	9J2916	HOUSING	4
14	4J525	SEAL	4
15	3G8439	RETAINER	4
16	1U2760	SPRING	4

235255

235255 P

5351

3G9771 VALVE GP-CONTROL
Adjustable Ripper
Replaced By 4T5901-Page 200A
3G9769-Page 209
An Attachment

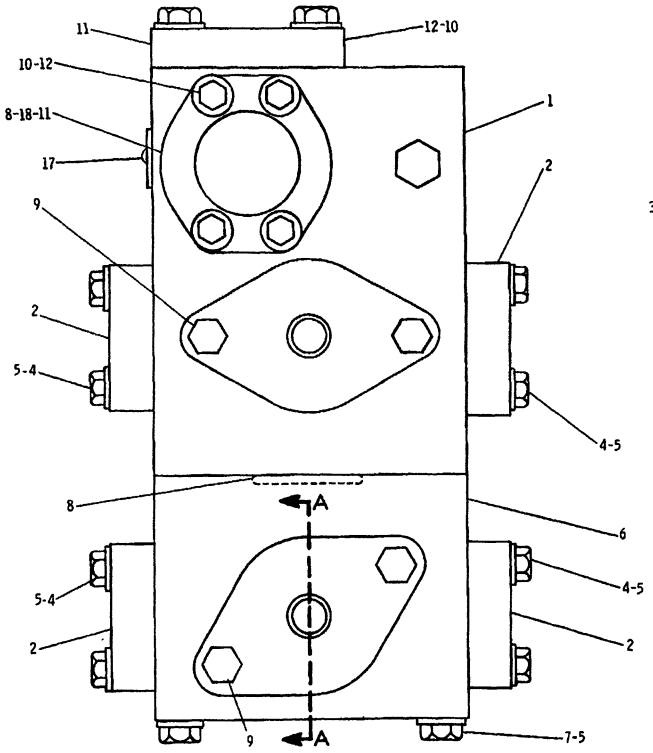

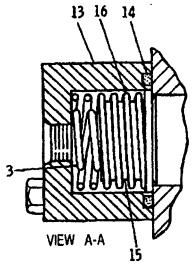

NOTE	REF NO	PART NUMBER	QTY	DESCRIPTION
Y	1	4T5899	1	VALVE GROUP
	2	1P4577	16	FLANGE
	3	9J4800	4	SPRING (INNER)
	4	0S1588	32	BOLT
	5	5M2894	38	WASHER
	6	3G9770	1	VALVE GROUP
	7	1A5964	6	BOLT
	8	4J0522	4	SEAL
	9	1D4556	8	BOLT
C	10	5P8244	12	WASHER
C	11	1P4578	6	FLANGE
C	12	3H5368	12	BOLT
	13	9J2916	4	HOUSING
	14	4J0525	4	SEAL
	15	3G8439	4	RETAINER
	16	1U2760	4	SPRING (OUTER)
	17	4B4158	1	SCREW
	18	5H4020	1	COVER

C INDICATES CHANGE
Y SEPARATE ILLUSTRATION

324097

324097 P

5351

4T5901 VALVE GP-CONTROL
Adjustable Ripper
4T5899-Page 209.01
Part Of 9W0574 Hydraulic Control
An Attachment

MEMORANDA

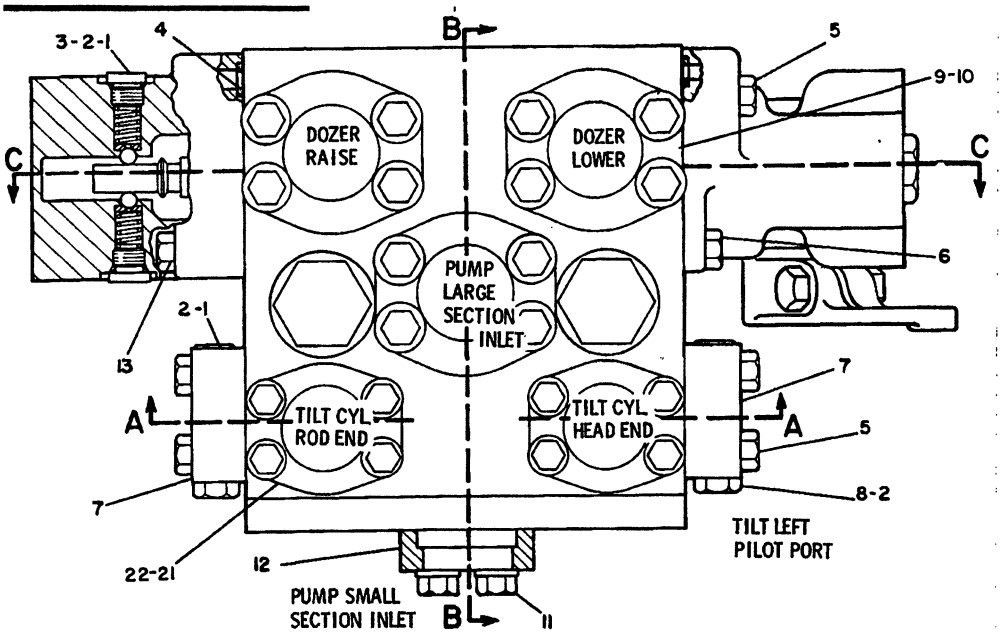

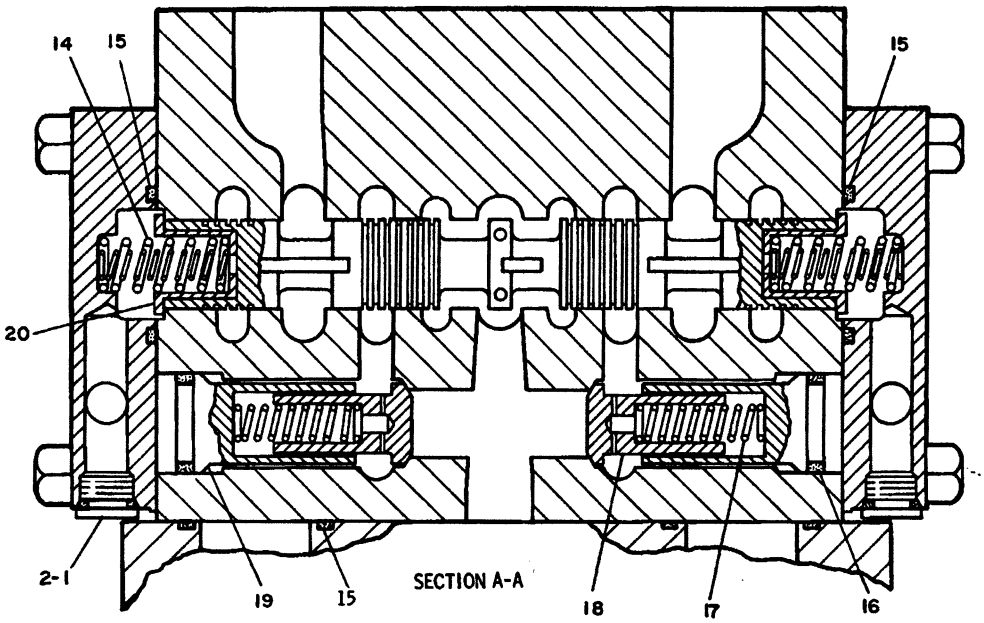

NOTE	REF NO	PART NUMBER	QTY	DESCRIPTION
	1	9S8004	6	PLUG
	2	3J1907	8	SEAL
	3	5J1389	2	SPRING
		9J1999	2	SEAT
		3D2891	2	BALL
	4	5H6005	2	SEAL
	5	2A4639	9	BOLT
	6	S1594	3	BOLT
	7	3G8415	2	COVER
	8	9S4191	2	PLUG
C	9	1P4578	4	FLANGE
C	10	3H5368	8	BOLT
C		5P8244	8	WASHER
	11	S1588	12	BOLT
		5M2894	12	WASHER
	12	1P4577	6	FLANGE
	13	S1571	4	BOLT
	14	9J5754	2	SPRING (LARGE)
		9J5753	2	SPRING (SMALL)
	15	4J522	4	SEAL
	16	4J8996	2	SEAL
	17	2N7029	2	SPRING
	18	8J7349	2	VALVE
	19	8J7366	2	PLUG
	20	2G1258	2	RETAINER
C	21	5H4019	2	COVER
C	22	4J520	2	SEAL

SEE PART TWO & THREE FOR SECTION BB & CC

C INDICATES CHANGE

305859

305859 P

5115

3G5638 VALVE GP-PART 1 OF 3

Bulldozer Control,Tilt

Type 1. S/N 53Y3485-4524

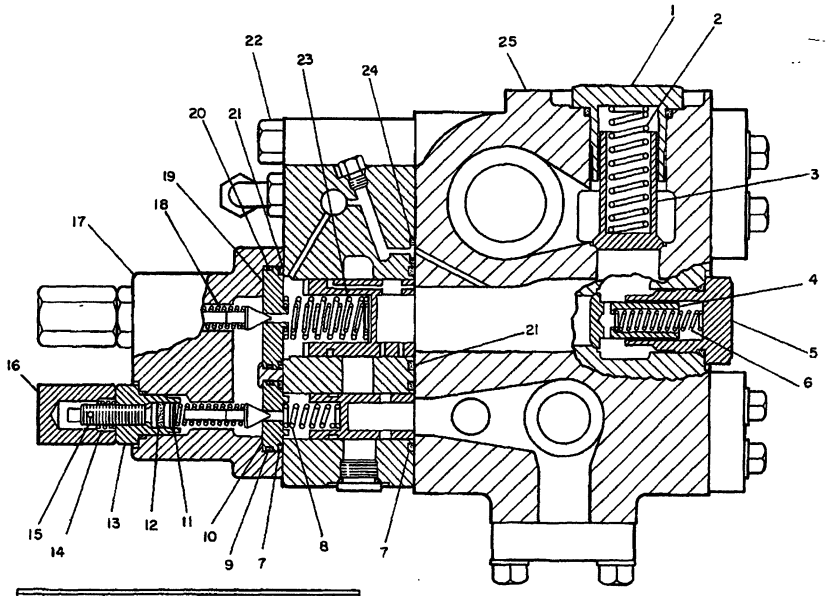

SECTION B-B

REF. NO.	PART NUMBER	DESCRIPTION	QTY.
1	8J7360	PLUG	1
	2S4078	SEAL	1
2	2A5885	SPRING	1
3	9J4029	VALVE	1
4	3G8711	VALVE	2
5	3G8710	PLUG	2
	7M8485	SEAL	2
6	3G3475	SPRING	2
7	4J8997	SEAL	2
8	5J4664	SPRING	1
9	3S9233	SEAL	1
10	8J7462	SEAT	1
11	3J7470	SHIM---1.22 mm(.048 in.) thick	4
	3J7473	SHIM---.12 mm(.005 in.) thick	12
12	6J3134	SEAL	2
13	1U1799	PLUG	2
	2M9780	SEAL	2
14	3G8164	NUT	2
15	3G8163	SCREW	2
	3F4479	PIN	2
16	3G8165	NUT	2
17	3G8162	BODY	1
18	2J6089	SPRING	2
	1J8497	VALVE	2
	6J1311	ROD	2
19	8J7466	SEAT	1
20	7D9749	SEAL	1
21	4J523	SEAL	2
22	1D4566	BOLT	4
23	9J5498	SPRING-----(outer)	1
	9J5499	SPRING------(inner)	1
24	9J6491	SEAL	1
25	3G3283	VALVE GROUP	1

235219

235219 P

5115

3G5638 VALVE GP-PART 2 OF 3
Bulldozer Control,Tilt
Type 1. S/N 53Y3485-4524

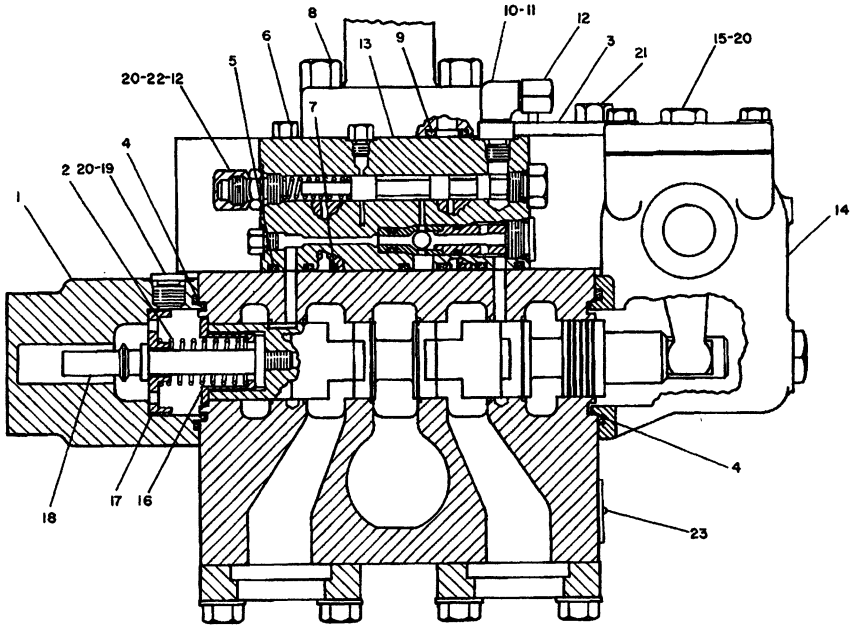

SECTION C-C

NOTE	REF NO	PART NUMBER	QTY	DESCRIPTION
	1	8J7467	1	HOUSING
	2	3G9182	1	SPRING
	3	7J1592	1	COVER
		1H9696	1	SEAL
	4	1H8720	2	SEAL
	5	6J1038	3	SEAL
	6	5P7892	1	BOLT (12 POINT)
	7	9J6491	2	SEAL
	8	T772	4	BOLT
	9	2M4453	1	SEAL
	10	5P2645	1	ELBOW
	11	3J7354	1	SEAL
C	12	8S4950	2	CAP
Y	13	3G8628	1	VALVE GROUP
Y	14	1U1760	1	HOUSING GROUP
C	15	9S4191	1	PLUG
	16	3G8149	1	RETAINER
	17	3G8148	2	RETAINER
	18	3G5766	1	BOLT
	19	9S8004	1	PLUG
C	20	3J1907	3	SEAL
	21	S1621	2	BOLT
C	22	6V5318	1	CONNECTOR
C	23	7B3028	1	SCREW

C INDICATES CHANGE
Y SEPARATE ILLUSTRATION

305860

305860 P

5115

3G5638 VALVE GP-PART 3 OF 3
Bulldozer Control,Tilt
Type 1. S/N 53Y3485-4524
3G8628-Page 210,1U1760-Page 211

HYDRAULIC SYSTEM

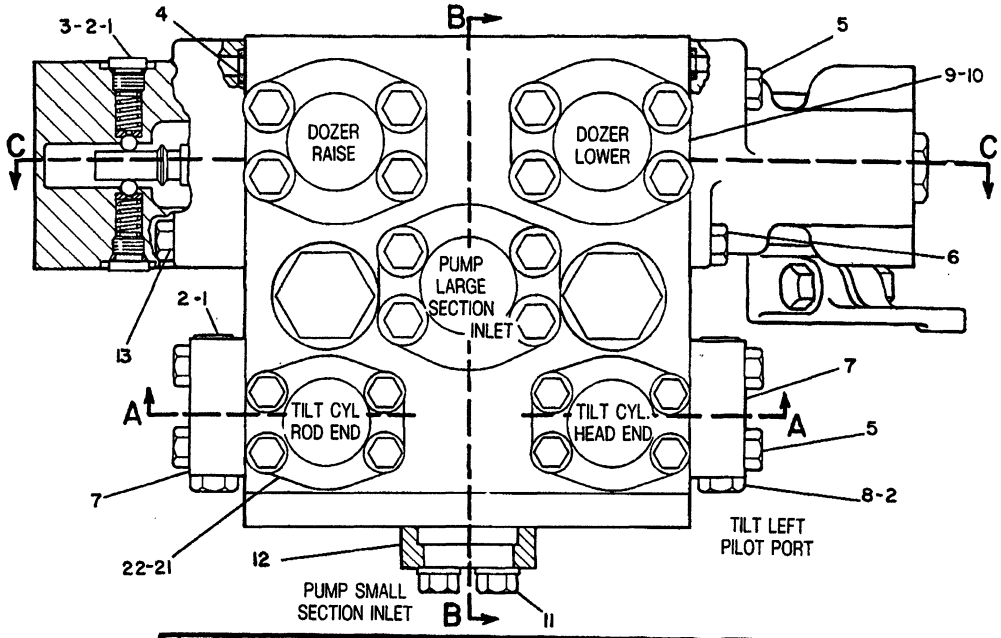

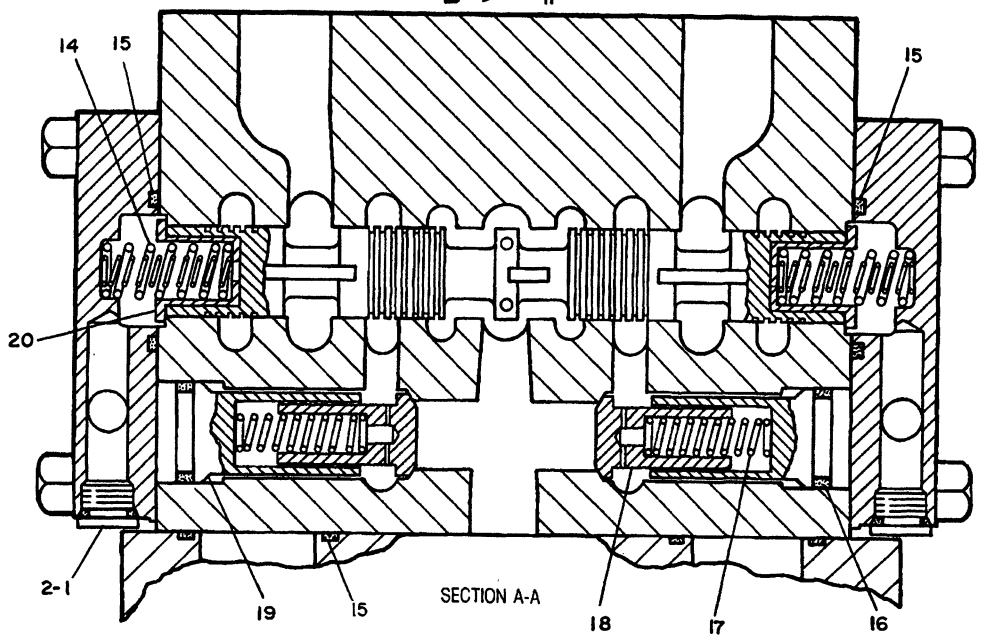

NOTE	REF NO	PART NUMBER	QTY	DESCRIPTION
	1	9S8004	6	PLUG
	2	3J1907	8	SEAL
	3	5J1389	2	SPRING
		9J1999	2	SEAT
		3D2891	2	BALL
	4	5H6005	2	SEAL
	5	2A4639	9	BOLT
	6	S1594	3	BOLT
	7	3G8415	2	COVER
	8	9S4191	2	PLUG
	9	1P4578	4	FLANGE
	10	3H5368	8	BOLT
		5P8244	8	WASHER

REFER TO ALL PARTS OF THIS GROUP FOR AUXILIARY VIEWS

	11	S1588	12	BOLT
		5M2894	12	WASHER
	12	1P4577	6	FLANGE
	13	S1571	4	BOLT
	14	9J5754	2	SPRING (LARGE)
		9J5753	2	SPRING (SMALL)
	15	4J522	4	SEAL
	16	4J8996	2	SEAL
	17	2N7029	2	SPRING
	18	8J7349	2	VALVE (LOAD CHECK)
	19	8J7366	2	PLUG
	20	2G1258	2	RETAINER
	21	5H4019	2	COVER
	22	4J520	2	SEAL

323444 323444 P

5115

3G5638 VALVE GP-PART 1 OF 3

Bulldozer Control,Tilt

Type 2. S/N 53Y3485-4524

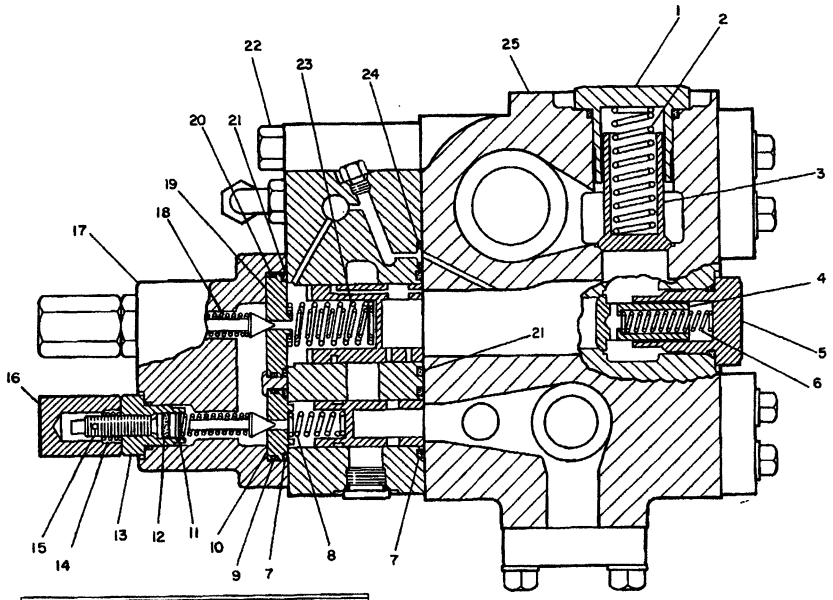

SECTION B-B

NOTE	REF NO	PART NUMBER	QTY	DESCRIPTION
	1	8J7360	1	PLUG
		2S4078	1	SEAL
	2	2A5885	1	SPRING
	3	9J4029	1	VALVE (LOAD CHECK)

C INDICATES CHANGE

	4	3G8711	2	VALVE (LOAD CHECK)
	5	3G8710	2	PLUG
		7M8485	2	SEAL
	6	3G3475	2	SPRING
	7	4J8997	2	SEAL
	8	5J4664	1	SPRING
	9	3S9233	1	SEAL
	10	8J7462	1	SEAT
	11	3J7470	4	SHIM 1.22MM(.048IN.)THK.
		3J7473	12	SHIM .12MM(.005IN.)THK.
	12	6J3134	2	SEAL
	13	1U1799	2	PLUG
		2M9780	2	SEAL
	14	3G8164	2	NUT
	15	3G8163	2	SCREW
		3F4479	2	PIN
	16	3G8165	2	NUT
	17	3G8162	1	BODY
	18	2J6089	2	SPRING
C		6J2561	2	VALVE (RELIEF POPPET)
	19	8J7466	1	SEAT
	20	7D9749	1	SEAL
	21	4J0523	2	SEAL
	22	1D4566	4	BOLT
	23	9J5498	1	SPRING (OUTER)
		9J5499	1	SPRING (INNER)
	24	9J6491	1	SEAL
	25	3G3283	1	VALVE GP. (LIFT & TILT)

323445

323445 P

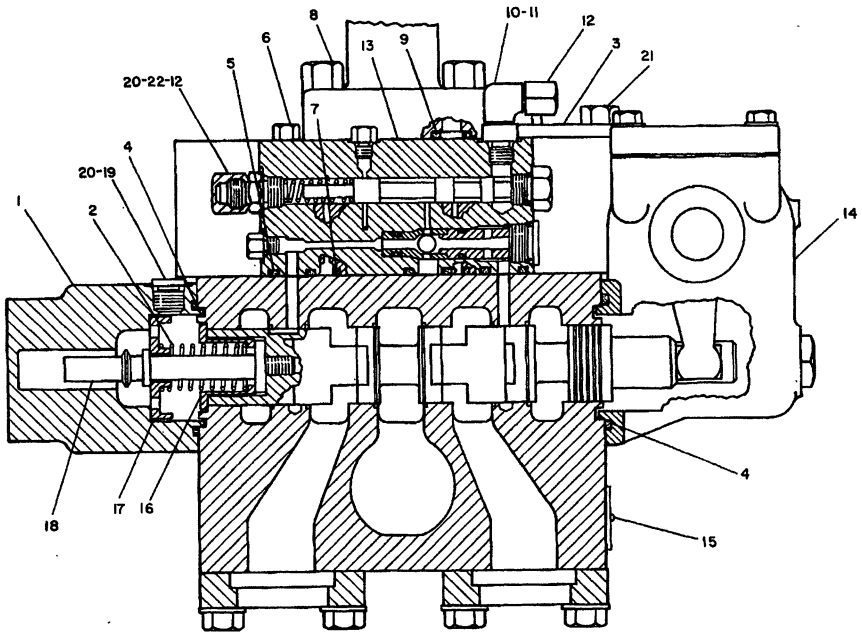

SECTION C-C

NOTE	REF NO	PART NUMBER	QTY	DESCRIPTION
	1	8J7467	1	HOUSING
	2	3G9182	1	SPRING
	3	7J1592	1	COVER
		1H9696	1	SEAL
	4	1H8720	2	SEAL
	5	6J1038	3	SEAL
	6	5P7892	1	BOLT (12 POINT)
	7	9J6491	2	SEAL
	8	T772	4	BOLT
	9	2M4453	1	SEAL
	10	5P2645	1	ELBOW
	11	3J7354	1	SEAL
	12	8S4950	2	CAP
Y	13	3G8628	1	VALVE GP. (FLOW CONTROL)
Y	14	1U1760	1	HOUSING GROUP
	15	7B3028	1	SCREW
	16	3G8149	1	RETAINER
	17	3G8148	2	RETAINER
	18	3G5766	1	BOLT
	19	9S8004	1	PLUG
C	20	3J1907	2	SEAL
	21	S1621	2	BOLT
	22	6V5318	1	CONNECTOR

C INDICATES CHANGE
Y SEPARATE ILLUSTRATION

323446

323446 P

HYDRAULIC SYSTEM

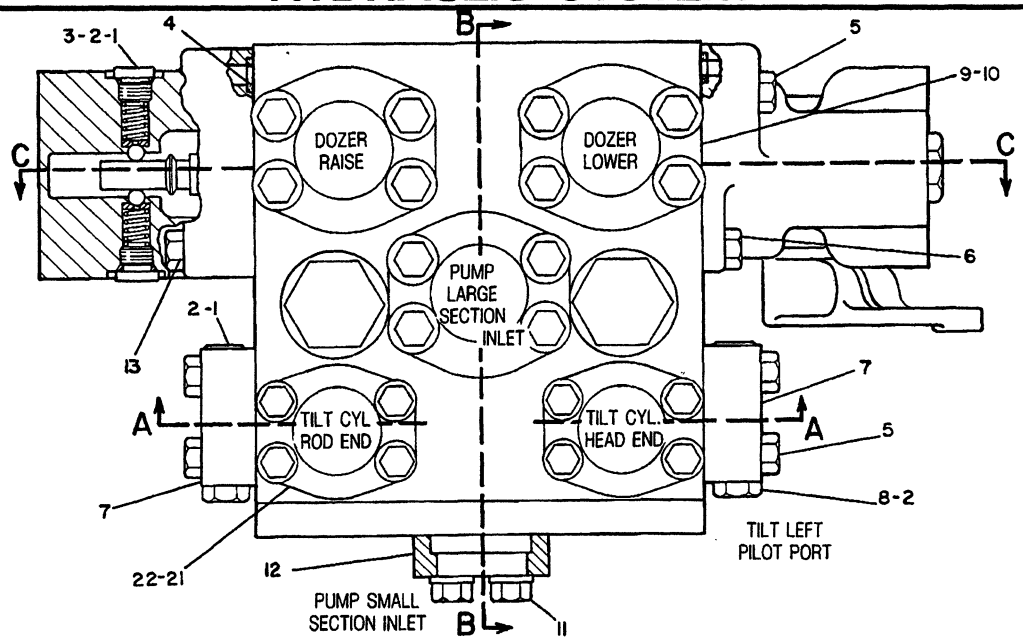

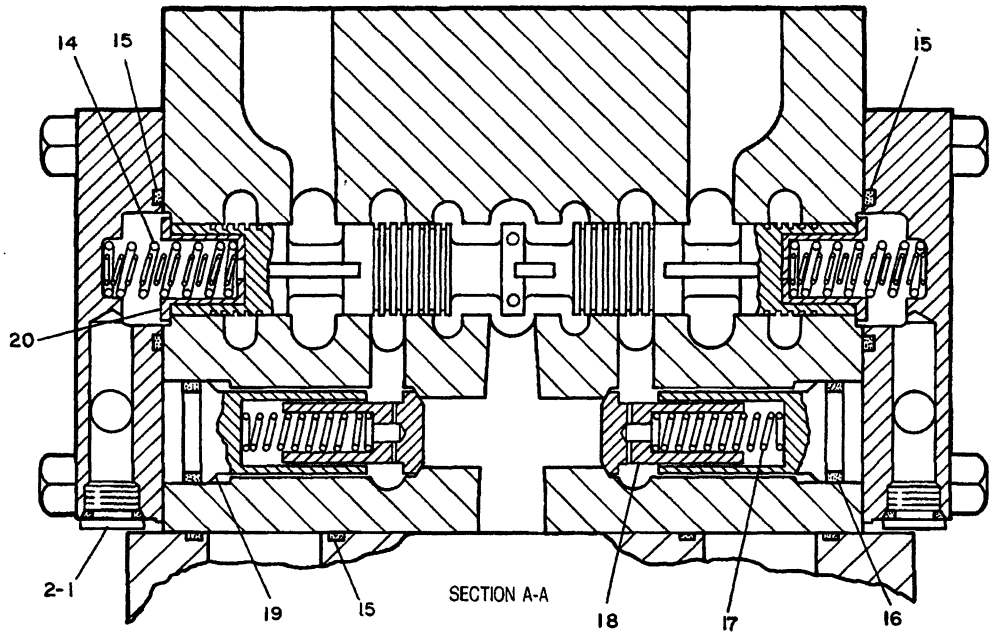

NOTE	REF NO	PART NUMBER	QTY	DESCRIPTION
	1	9S8004	6	PLUG
	2	3J1907	8	SEAL
	3	5J1389	2	SPRING
		9J1999	2	SEAT
		3D2891	2	BALL
	4	5H6005	2	SEAL
	5	2A4639	9	BOLT
	6	0S1594	3	BOLT
	7	3G8415	2	COVER
	8	9S4191	2	PLUG
	9	1P4578	4	FLANGE
	10	3H5368	8	BOLT
		5P8244	8	WASHER

REFER TO ALL PARTS OF THIS GROUP FOR AUXILIARY VIEWS

	11	0S1588	12	BOLT
		5M2894	12	WASHER
	12	1P4577	6	FLANGE
	13	0S1571	4	BOLT
	14	9J5754	2	SPRING (LARGE)
		9J5753	2	SPRING (SMALL)
	15	4J0522	4	SEAL
	16	4J8996	2	SEAL
	17	2N7029	2	SPRING
	18	8J7349	2	VALVE (LOAD CHECK)
	19	8J7366	2	PLUG
	20	2G1258	2	RETAINER
	21	5H4019	2	COVER
	22	4J0520	2	SEAL

351824

351824 P

5115

3G5638 VALVE GP-PART 1 OF 3
Bulldozer Control,Tilt
Type 3. S/N 53Y3485-4524

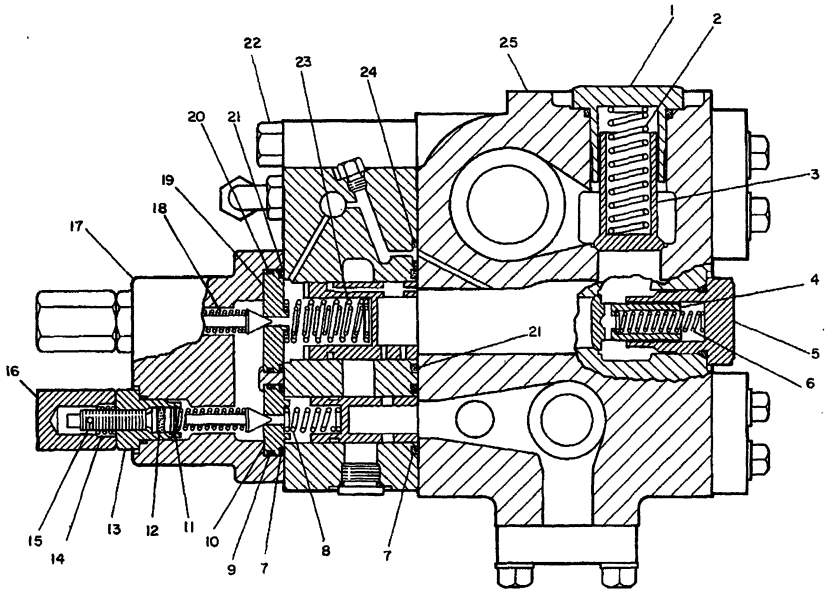

SECTION B-B

NOTE	REF NO	PART NUMBER	QTY	DESCRIPTION
	1	8J7360	1	PLUG
		2S4078	1	SEAL
	2	2A5885	1	SPRING
	3	9J4029	1	VALVE (LOAD CHECK)
	4	3G8711	2	VALVE (LOAD CHECK)
	5	3G8710	2	PLUG
		7M8485	2	SEAL
	6	3G3475	2	SPRING
	7	4J8997	2	SEAL
	8	5J4664	1	SPRING
	9	3S9233	1	SEAL
	10	8J7462	1	SEAT
	11	3J7470	4	SHIM 1.22MM(.048IN.)THK.
		3J7473	12	SHIM .12MM(.005IN.)THK.
	12	6J3134	2	SEAL
	13	1U1799	2	PLUG
		2M9780	2	SEAL
	14	3G8164	2	NUT
	15	3G8163	2	SCREW
		3F4479	2	PIN
	16	3G8165	2	NUT
	17	3G8162	1	BODY
	18	2J6089	2	SPRING
		6J2561	2	VALVE (RELIEF POPPET)
	19	8J7466	1	SEAT
	20	7D9749	1	SEAL
	21	4J0523	2	SEAL
	22	1D4566	4	BOLT
	23	9J5498	1	SPRING (OUTER)
		9J5499	1	SPRING (INNER)
	24	9J6491	1	SEAL
C	25	9T1183	1	VALVE GP. (LIFT & TILT)

C INDICATES CHANGE

351825

351825 P

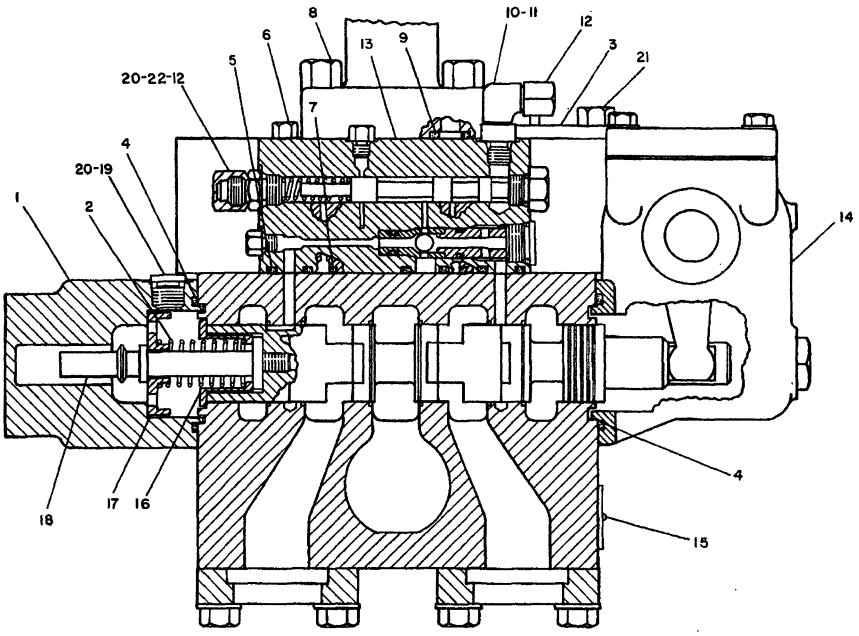

SECTION C-C

NOTE	REF NO	PART NUMBER	QTY	DESCRIPTION
	1	8J7467	1	HOUSING
	2	3G9182	1	SPRING
	3	7J1592	1	COVER
		1H9696	1	SEAL
	4	1H8720	2	SEAL
	5	6J1038	3	SEAL
	6	5P7892	1	BOLT (12 POINT)
	7	9J6491	2	SEAL
	8	0T0772	4	BOLT
	9	2M4453	1	SEAL
	10	5P2645	1	ELBOW
	11	3J7354	1	SEAL
	12	8S4950	2	CAP
CY	13	9T1184	1	VALVE GP. (FLOW CONTROL)
Y	14	1U1760	1	HOUSING GROUP
	15	7B3028	1	SCREW
	16	3G8149	1	RETAINER
	17	3G8148	2	RETAINER
	18	3G5766	1	BOLT
	19	9S8004	1	PLUG
	20	3J1907	2	SEAL
	21	0S1621	2	BOLT
	22	6V5318	1	CONNECTOR

C INDICATES CHANGE
Y SEPARATE ILLUSTRATION

351826

351826 P

3G5638 VALVE GP-PART 3 OF 3
Bulldozer Control,Tilt
Type 3. S/N 53Y3485-4524
9T1184-Page 210.01,1U1760-Page 211

HYDRAULIC SYSTEM

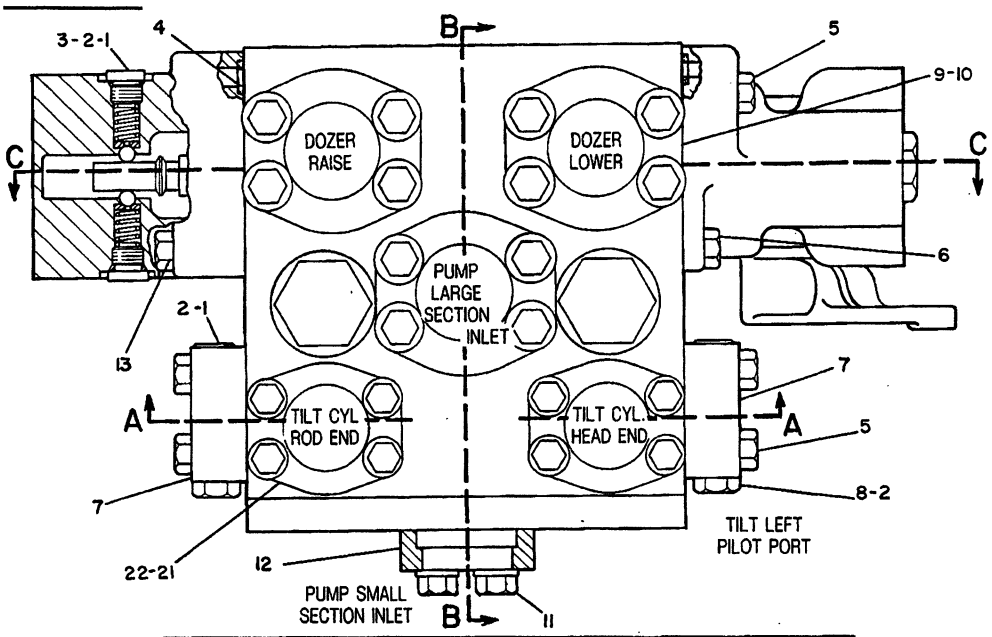

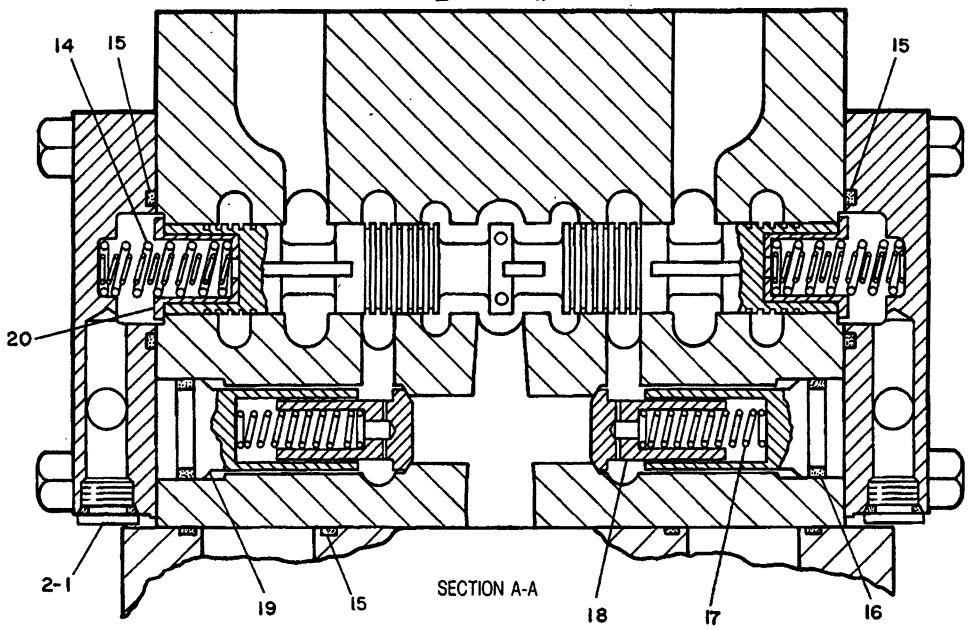

NOTE	REF NO	PART NUMBER	QTY	DESCRIPTION
	1	9S8004	6	PLUG
	2	3J1907	8	SEAL
	3	5J1389	2	SPRING
		9J1999	2	SEAT
		3D2891	2	BALL
	4	5H6005	2	SEAL
	5	2A4639	9	BOLT
	6	0S1594	3	BOLT
	7	3G8415	2	COVER
	8	9S4191	2	PLUG
	9	1P4578	4	FLANGE
	10	3H5368	8	BOLT
		5P8244	8	WASHER
	11	0S1588	12	BOLT
		5M2894	12	WASHER
	12	1P4577	6	FLANGE
	13	0S1571	4	BOLT
	14	9J5754	2	SPRING (LARGE)
		9J5753	2	SPRING (SMALL)
	15	4J0522	4	SEAL
	16	4J8996	2	SEAL
	17	2N7029	2	SPRING
C	18	9T3747	2	VALVE (LOAD CHECK)
	19	8J7366	2	PLUG
	20	2G1258	2	RETAINER
	21	5H4019	2	COVER
	22	4J0520	2	SEAL

REFER TO ALL PARTS OF THIS GROUP FOR AUXILIARY VIEWS

C INDICATES CHANGE

354613

354613 P

5115

3G5638 VALVE GP-PART 1 OF 3

Bulldozer Control,Tilt

Type 4. S/N 53Y3485-4524

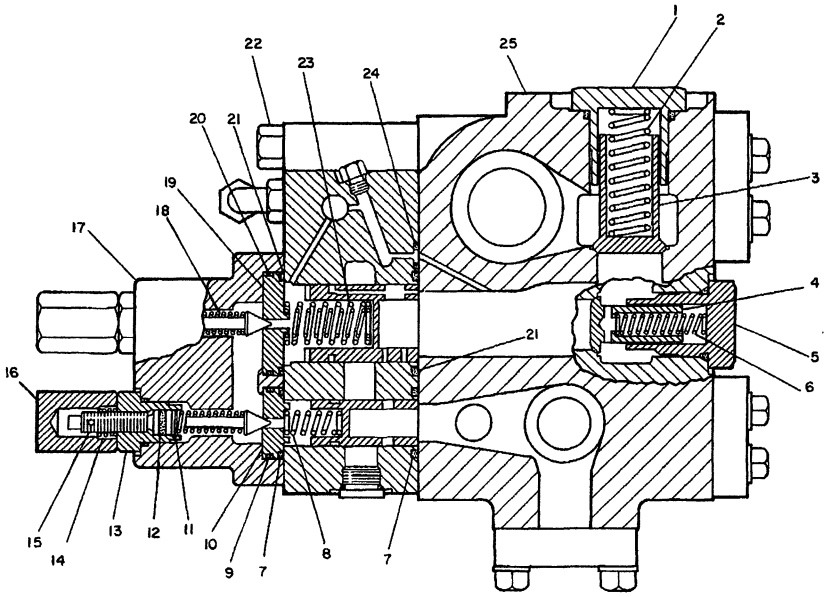

SECTION B-B

B USE AS REQUIRED
C INDICATES CHANGE

NOTE	REF NO	PART NUMBER	QTY	DESCRIPTION
	1	8J7360	1	PLUG
		2S4078	1	SEAL
	2	2A5885	1	SPRING
C	3	9T3746	1	VALVE (LOAD CHECK)
C	4	9T3748	2	VALVE (LOAD CHECK)
	5	3G8710	2	PLUG
		7M8485	2	SEAL
	6	3G3475	2	SPRING
	7	4J8997	2	SEAL
	8	5J4664	1	SPRING
	9	3S9233	1	SEAL
	10	8J7462	1	SEAT
B	11	3J7470	4	SHIM 1.22MM(.048IN.)THK.
B		3J7473	12	SHIM .12MM(.005IN.)THK.
	12	6J3134	2	SEAL
	13	1U1799	2	PLUG
		2M9780	2	SEAL
	14	3G8164	2	NUT
	15	3G8163	2	SCREW
		3F4479	2	PIN
	16	3G8165	2	NUT
C	17	9T5483	1	BODY
	18	2J6089	2	SPRING
		6J2561	2	VALVE (RELIEF POPPET)
	19	8J7466	1	SEAT
	20	7D9749	1	SEAL
	21	4J0523	2	SEAL
	22	1D4566	4	BOLT
	23	9J5498	1	SPRING (OUTER)
		9J5499	1	SPRING (INNER)
	24	9J6491	1	SEAL
	25	9T1183	1	VALVE GP. (LIFT & TILT)

354614

354614 P

5115

3G5638 VALVE GP-PART 2 OF 3
Bulldozer Control,Tilt
Type 4. S/N 53Y3485-4524

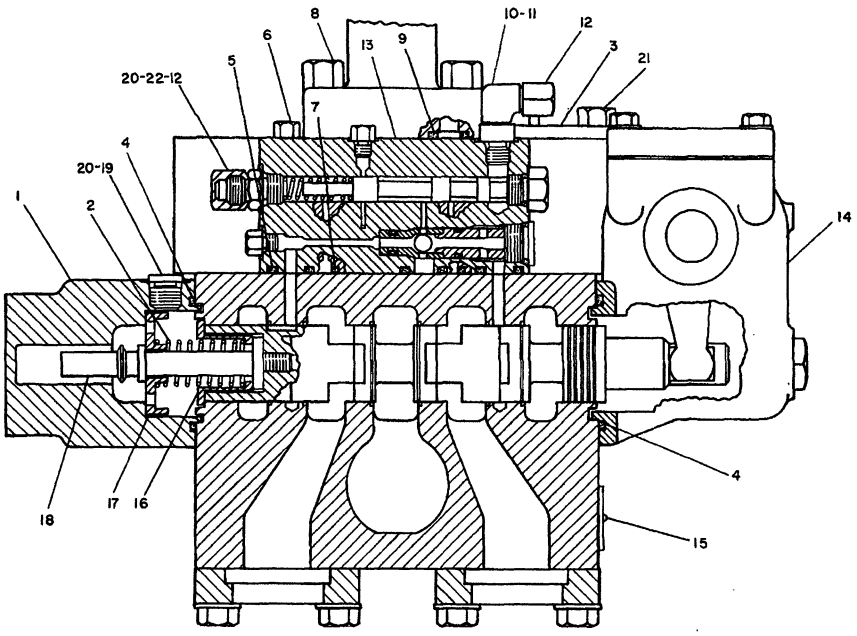

SECTION C-C

NOTE	REF NO	PART NUMBER	QTY	DESCRIPTION
	1	8J7467	1	HOUSING
	2	3G9182	1	SPRING
	3	7J1592	1	COVER
		1H9696	1	SEAL
	4	1H8720	2	SEAL
	5	6J1038	3	SEAL
	6	5P7892	1	BOLT (12 POINT)
	7	9J6491	2	SEAL
	8	0T0772	4	BOLT
	9	2M4453	1	SEAL
	10	5P2645	1	ELBOW
	11	3J7354	1	SEAL
	12	8S4950	2	CAP
CY	13	9T1184	1	VALVE GP. (FLOW CONTROL)
Y	14	1U1760	1	HOUSING GROUP
	15	7B3028	1	SCREW
	16	3G8149	1	RETAINER
	17	3G8148	2	RETAINER
	18	3G5766	1	BOLT
	19	9S8004	1	PLUG
	20	3J1907	2	SEAL
	21	0S1621	2	BOLT
	22	6V5318	1	CONNECTOR

C INDICATES CHANGE
Y SEPARATE ILLUSTRATION

351826

351826 P

3G5638 VALVE GP-PART 3 OF 3
Bulldozer Control,Tilt
Type 4. S/N 53Y3485-4524
9T1184-Page 210.01,1U1760-Page 211

HYDRAULIC SYSTEM

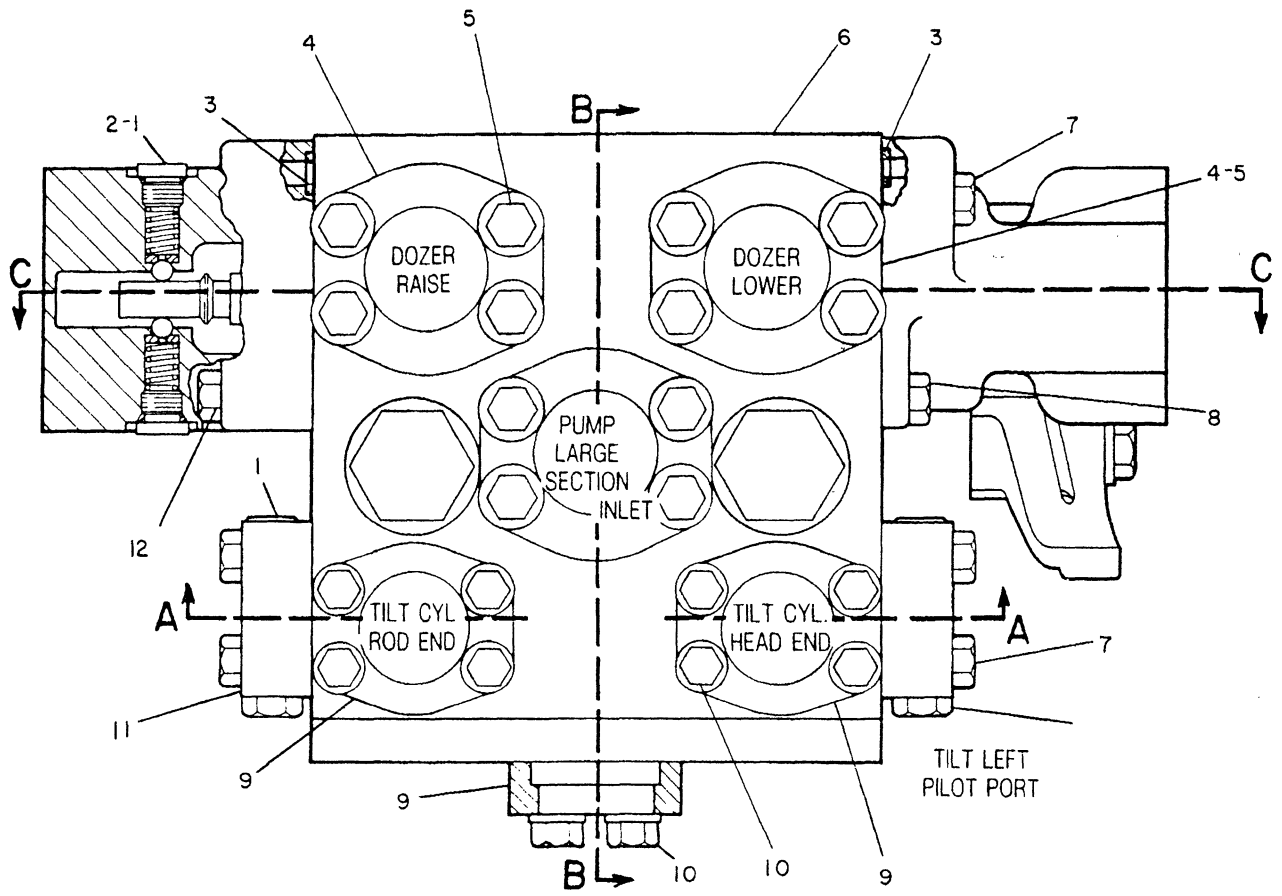

REFER TO ALL ILLUSTRATIONS OF THIS GROUP FOR AUXILIARY VIEWS

NOTE	REF NO	PART NUMBER	QTY	PART NAME	NOTE	REF NO	PART NUMBER	QTY	PART NAME
	1	9S8004	4	PLUG-O-RING					
		3J1907	4	SEAL-O-RING					
	2	3D2891	2	BALL					
		9J1999	2	SEAT					
		5J1389	2	SPRING					
	3	5H6005	2	SEAL-O-RING					
	4	1P4578	4	FLANGE					
	5	3H5368	8	BOLT					
		5P8244	8	WASHER					
	6	9T1183	1	VALVE GP					
	7	2A4639	9	BOLT					
	8	0S1594	3	BOLT					
	9	1P4577	6	FLANGE-HALF					
	10	0S1588	12	BOLT					
		5M2894	12	WASHER					
	11	3G8415	2	COVER					
	12	0S1571	4	BOLT					

V-408918 EP

5051 **9T4319 VALVE GP-CONTROL-PART 1 OF 4**
S/N 53Y4525-Up

HYDRAULIC SYSTEM

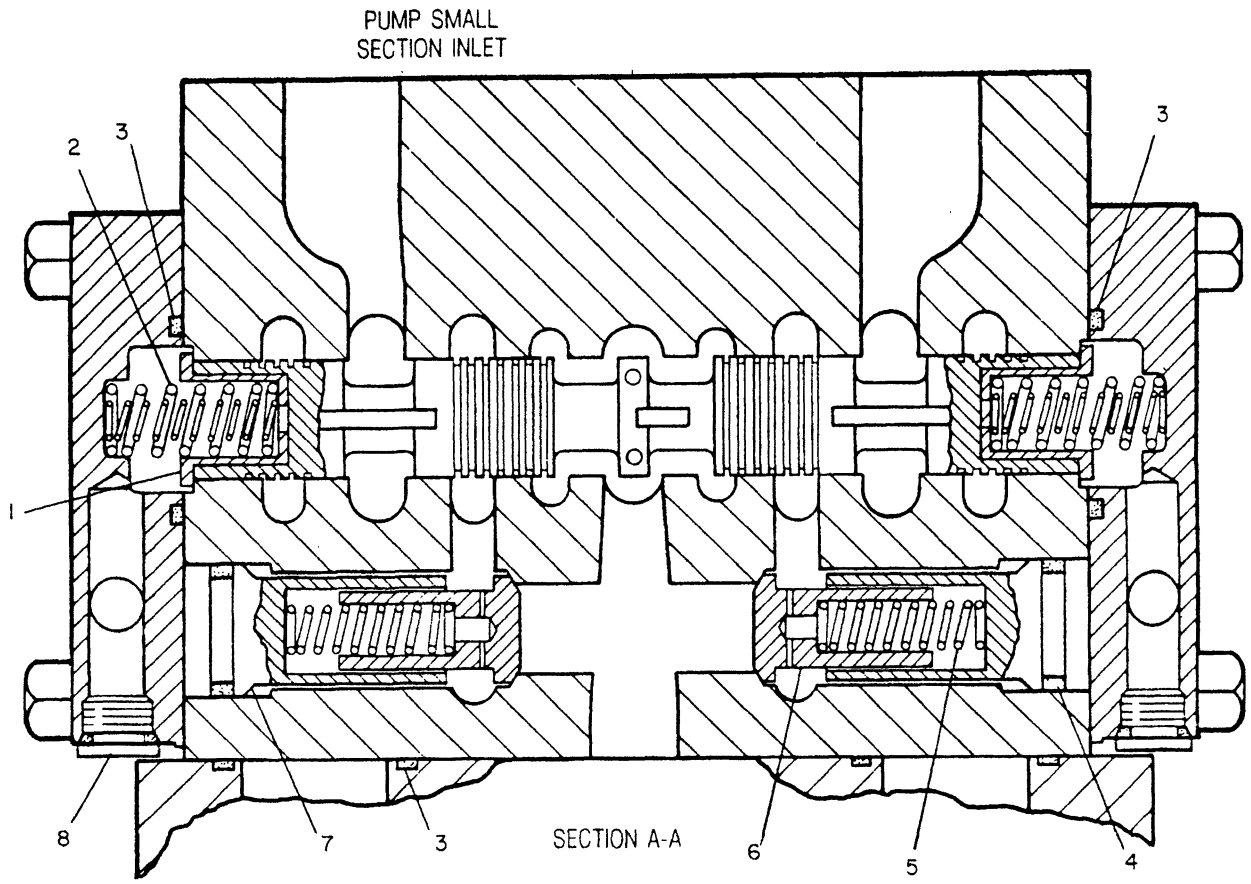

NOTE	REF NO	PART NUMBER	QTY	PART NAME	NOTE	REF NO	PART NUMBER	QTY	PART NAME
	1	3G1258	2	RETAINER					
	2	9J5754	2	SPRING (LARGE)					
		9J5753	2	SPRING (SMALL)					
	3	4J0522	4	SEAL					
	4	4J8996	2	SEAL-O-RING					
	5	2N7029	2	SPRING-CONTROL PIN					
	6	9T3747	2	VALVE					
	7	8J7366	2	PLUG					
	8	9S8004	2	PLUG-O-RING					
		3J1907	2	SEAL-O-RING					

V-408919 EP

5051 **9T4319 VALVE GP-CONTROL-PART 2 OF 4**
S/N 53Y4525-Up

HYDRAULIC SYSTEM

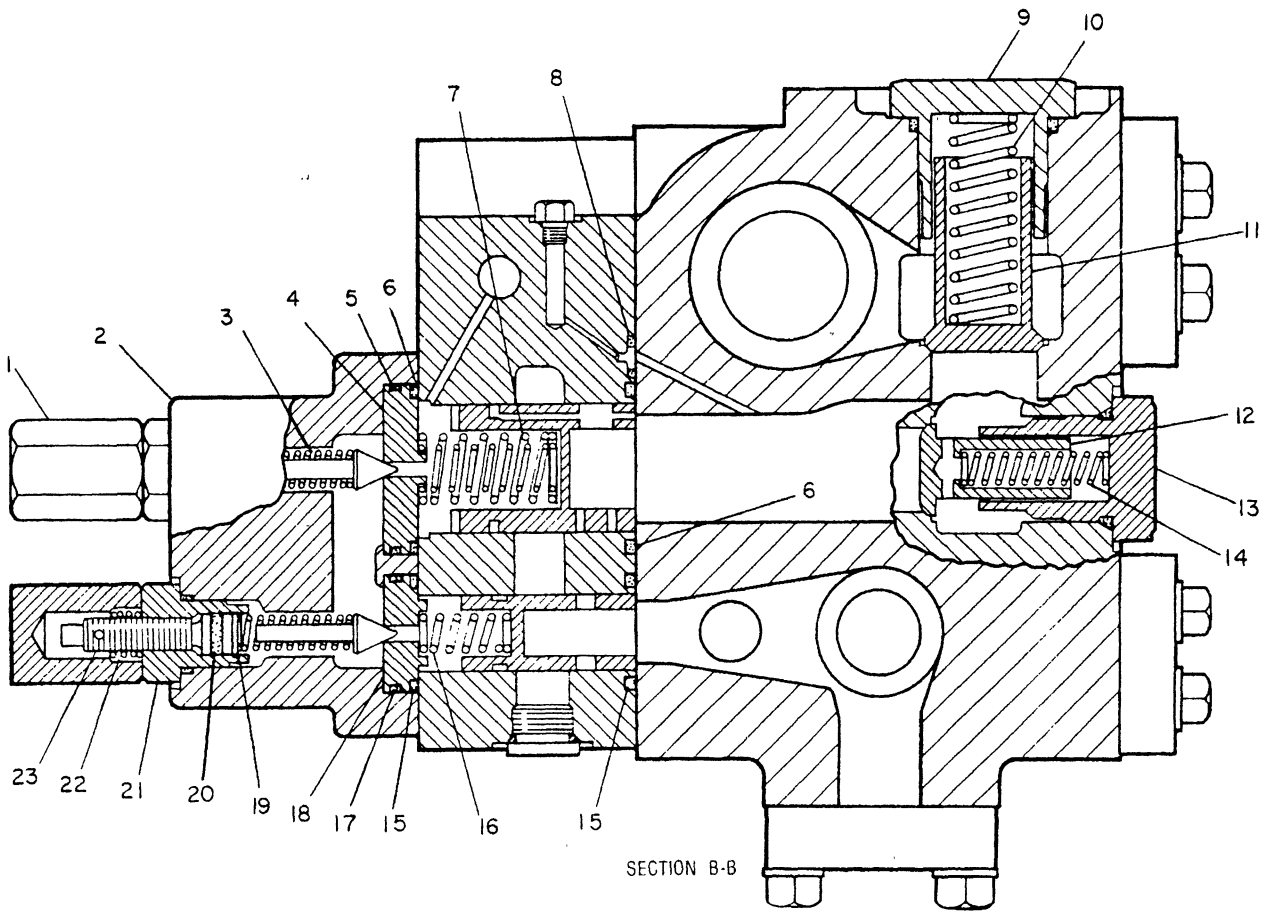

NOTE	REF NO	PART NUMBER	QTY	PART NAME	NOTE	REF NO	PART NUMBER	QTY	PART NAME
	1	3G8165	2	NUT		21	1U1799	2	PLUG
	2	9T5483	1	BODY-VALVE			2M9780	2	SEAL-O-RING
	3	2J6089	2	SPRING		22	3G8164	2	NUT
		6J2561	2	VALVE-RELIEF POPPET (RELIEF)		23	3G8163	2	SCREW-ADJUSTMENT
							3F4479	2	PIN-SPRING
	4	8J7466	1	SEAT					
	5	7D9749	1	SEAL-O-RING					
	6	4J0523	2	SEAL-O-RING					
	7	9J5498	1	SPRING					
		9J5499	1	SPRING					
	8	9J6491	1	SEAL-O-RING					
	9	8J7360	1	PLUG-O-RING					
		2S4078	1	SEAL-O-RING					
	10	2A5885	1	SPRING					
	11	9T3746	1	VALVE (LOAD CHECK)					
	12	9T3748	2	VALVE (LOAD CHECK)					
	13	3G8710	2	PLUG-O-RING					
		7M8485	2	SEAL-O-RING					
	14	3G3475	2	SPRING					
	15	4J8997	2	SEAL					
	16	5J4664	1	SPRING					
	17	3S9233	1	SEAL-O-RING					
	18	8J7462	1	SEAT					
B	19	3J7470	4	SHIM					
B		3J7473	12	SHIM					
	20	6J3134	2	SEAL					

B-USE AS REQUIRED

V-408920 EP

5051 **9T4319 VALVE GP-CONTROL-PART 3 OF 4**

S/N 53Y4525-Up

HYDRAULIC SYSTEM

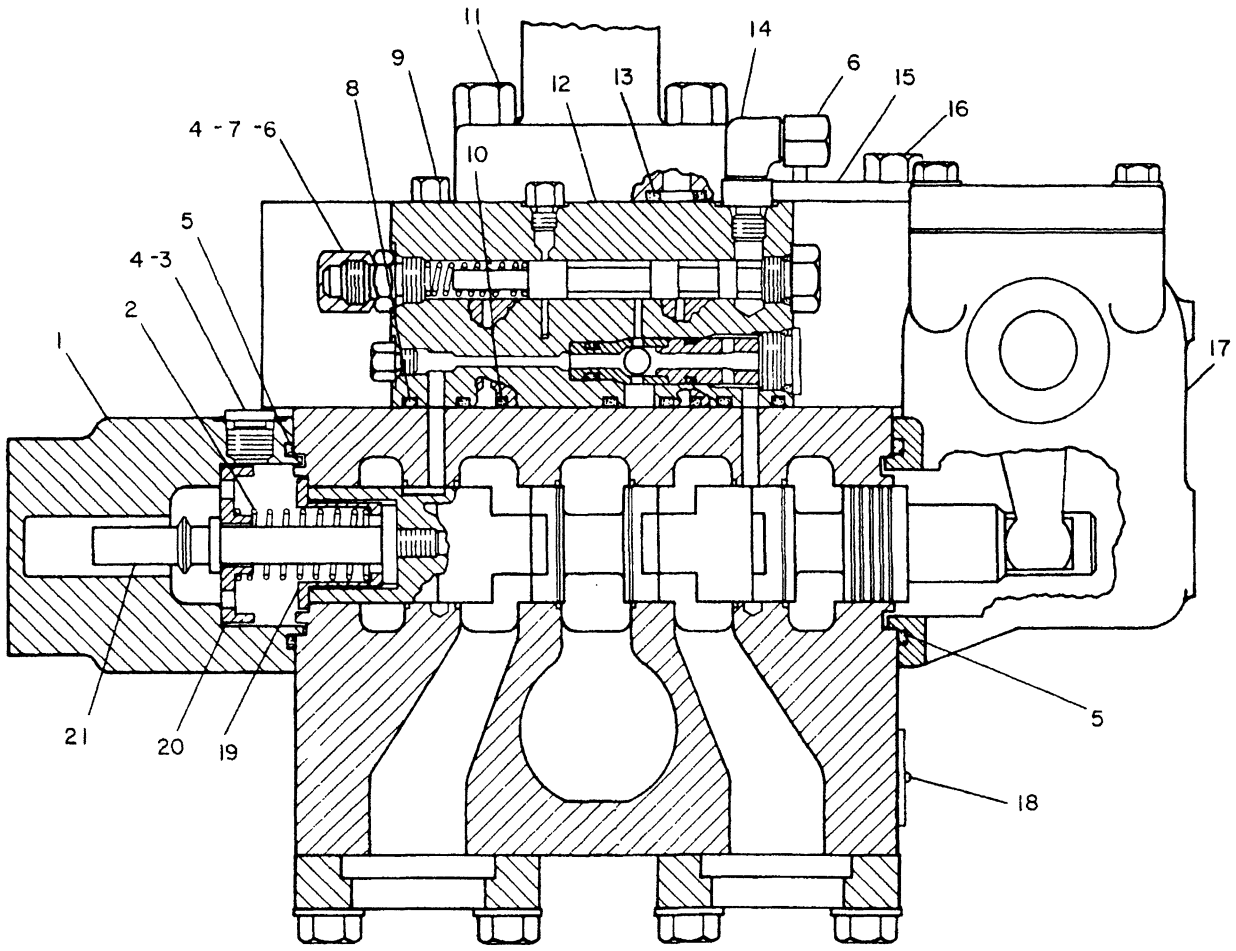

SECTION C-C

NOTE	REF NO	PART NUMBER	QTY	PART NAME	NOTE	REF NO	PART NUMBER	QTY	PART NAME
	1	8J7467	1	HOUSING		21	3G5766	1	BOLT
	2	3G9182	1	SPRING					
	3	9S8004	1	PLUG-O-RING					
	4	3J1907	2	SEAL-O-RING					
	5	1H8720	2	SEAL-O-RING					
	6	6V9829	2	CAP AS					
		6V8553	1	NUT-FACE SEAL					
		6V9355	1	PLUG					
		6V8397	2	SEAL-O-RING					
	7	8T9041	1	CONNECTOR					
	8	6J1038	3	SEAL-O-RING					
	9	1D4566	4	BOLT					
	10	9J6491	2	SEAL-O-RING					
	11	OTO772	4	BOLT					
Y	12	9T1184	1	VALVE GP					
		5P7892	1	BOLT-12 POINT HEAD					
	13	2M4453	1	SEAL-O-RING					
	14	6V9200	1	ELBOW-FACE SEAL					
		3J7354	1	SEAL-O-RING					
	15	7J1592	1	COVER					
		1H9696	1	SEAL-O-RING					
	16	OS1621	2	BOLT					
Y	17	1U1760	1	HOUSING GP-LEVER					
	18	7B3028	1	SCREW-DRIVE					
	19	3G8149	1	RETAINER					
	20	3G8148	2	RETAINER					

Y-SEPARATE ILLUSTRATION

V-412702 P

5051 **9T4319 VALVE GP-CONTROL-PART 4 OF 4**

S/N 53Y4525-Up

1U1760-Page 211,9T1184-Page 210.01

MEMORANDA

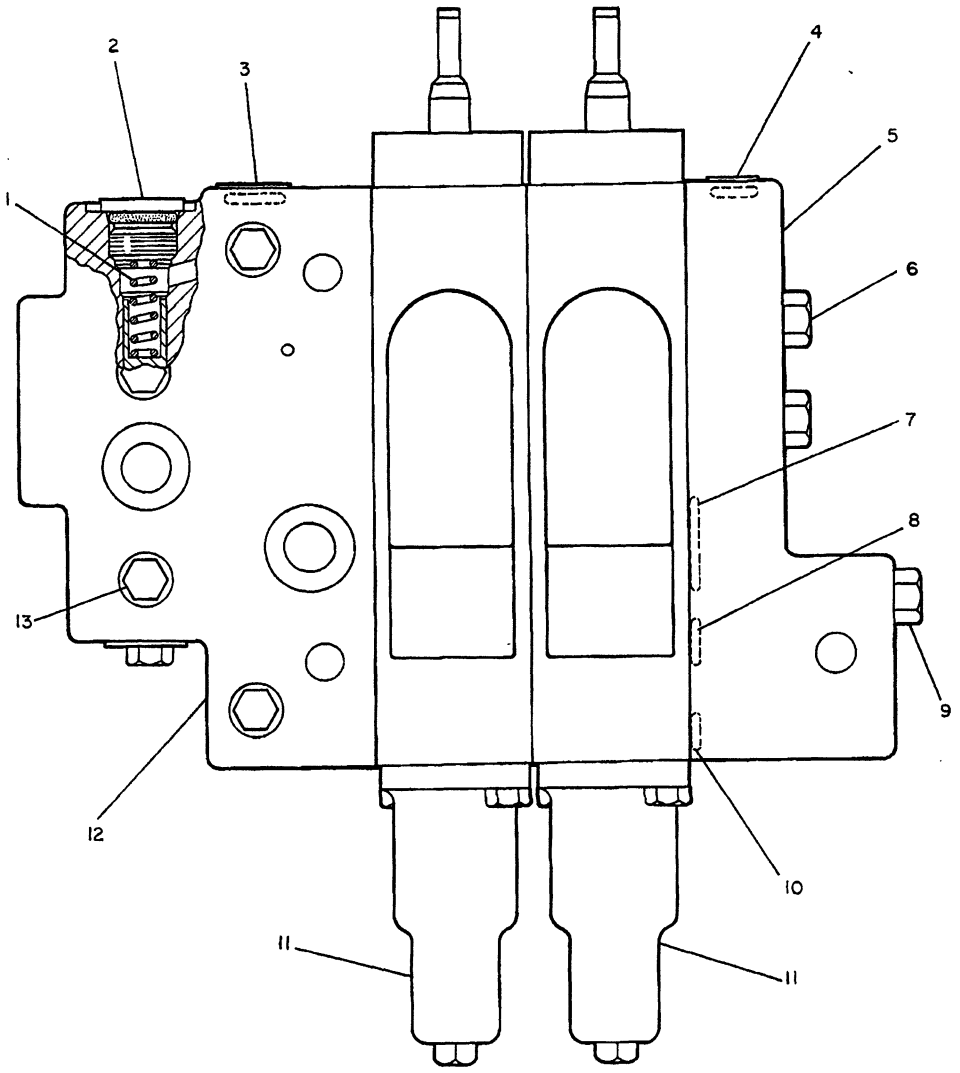

REF. NO.	PART NUMBER	DESCRIPTION	QTY.
1	3G6859	SPRING	1
2	9S8005	PLUG	2
	3K360	SEAL	2
3	9S8004	PLUG	1
	3J1907	SEAL	1
4	9S8002	PLUG	1
	3J7354	SEAL	1
5	3G7669	MANIFOLD	1
6	3H3243	BOLT	2
7	5P3108	SEAL	9
8	6J3134	SEAL	3
9	5P59	BOLT	1
10	8J1699	SEAL	6
11	3G8695	VALVE GROUP (Separate Illustration)	2

12	3G3094	VALVE GROUP	1
13	9S4180	PLUG	5
	4J7533	SEAL	5

230729

230729 P

5351

3G5094 VALVE GP-PILOT-RIPPER LIFT & TIP

3G8695-Page 212

Part Of 9P9082 Control Ar-Hydraulic

An Attachment

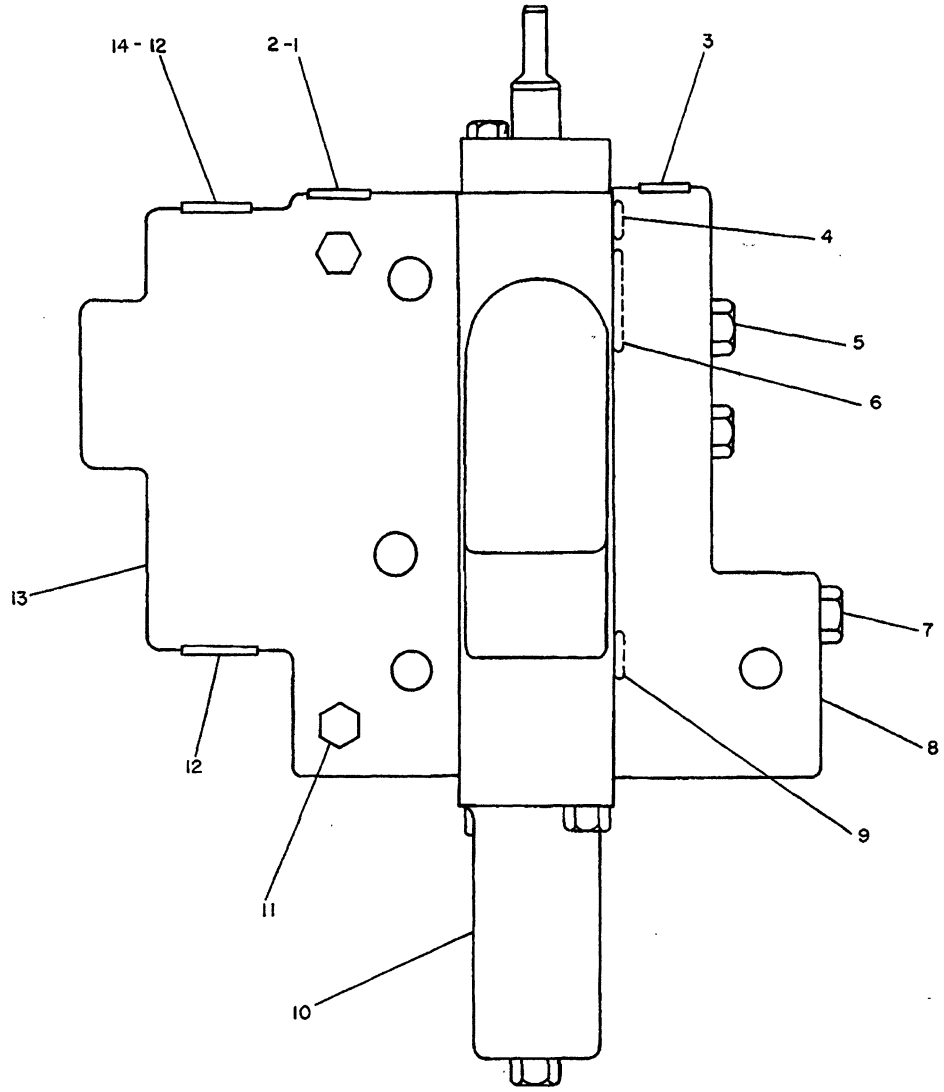

REF. NO.	PART NUMBER	DESCRIPTION	QTY
1	9S8004	PLUG	1
2	3J1907	SEAL	1
3	9S8002	PLUG	1
	3J7354	SEAL	1
4	8J1699	SEAL	4
5	1F5842	BOLT	2
6	5P3108	SEAL	6
7	8H8769	BOLT	1
8	3G7669	MANIFOLD	1
9	6J3134	SEAL	2
10	3G8695	VALVE GROUP (Separate Illustration)	1
11	9S4180	PLUG	5
	4J7533	SEAL	5
12	9S8005	PLUG	2
	3K360	SEAL	2
13	3G3094	VALVE GROUP	1
14	3G6859	SPRING	1

230735

230735 P

5351

3G5093 VALVE GP-RIPPER LIFT

3G8695-Page 212

Part Of 9P7077 Control Ar-Hydraulic

An Attachment

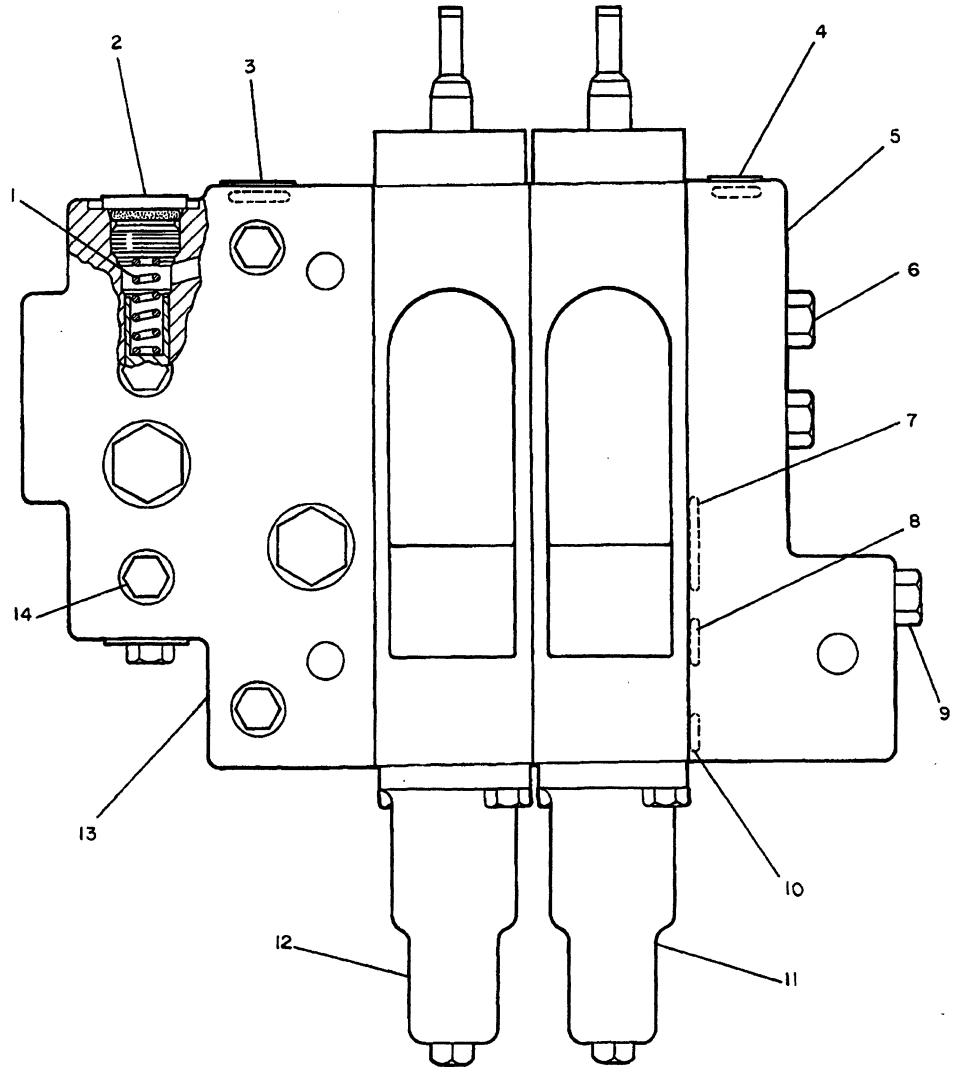

REF. NO.	PART NUMBER	DESCRIPTION	QTY.
1	3G6859	SPRING	1
2	9S8005	PLUG	2
	3K360	SEAL	2
3	9S8004	PLUG	1
	3J1907	SEAL	1
4	9S8002	PLUG	1
	3J7354	SEAL	1
5	3G7669	MANIFOLD	1
6	3H3243	BOLT	2
7	5P3108	SEAL	9
8	6J3134	SEAL	3
9	5P59	BOLT	1
10	8J1699	SEAL	6
11	3G8695	VALVE GROUP (Separate Illustration)	1
12	3G8693	VALVE GROUP (Separate Illustration)	1
13	3G3094	VALVE GROUP	1
14	9S4180	PLUG	5
	4J7533	SEAL	5

230734

230734 P

5059

3G5092 VALVE GP

Bulldozer Tilt & Ripper Lift
3G8695-Page 212, 3G8693 Page 213
Part Of 9P9080 Control Ar-Hydraulic
An Attachment

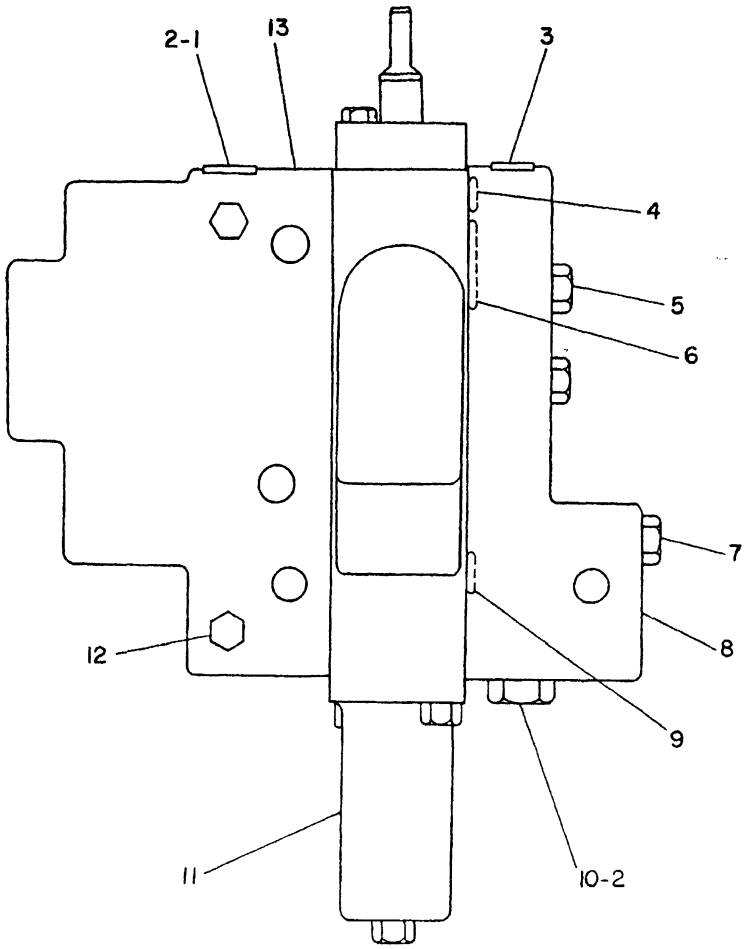

NOTE	REF NO	PART NUMBER	QTY	PART NAME	NOTE	REF NO	PART NUMBER	QTY	PART NAME
	1	9S8004	1	PLUG-O-RING					
	2	3J1907	2	SEAL-O-RING					
	3	9S8002	1	PLUG-O-RING					
		3J7354	1	SEAL-O-RING					
	4	8J1699	4	SEAL-O-RING					
	5	1F5842	2	BOLT					
	6	5P3108	6	SEAL-O-RING					
	7	8H8769	1	BOLT					
	8	3G7669	1	MANIFOLD					
	9	6J3134	2	SEAL					
	10	9S4191	1	PLUG-O-RING					
Y	11	3G8693	1	VALVE GP-PILOT					
	12	9S4180	2	PLUG-O-RING					
		4J7533	2	SEAL-O-RING					
	13	1U4717	1	BODY					
F		3G5379	1	PLATE					
F		7B3028	1	SCREW-DRIVE					

F-NOT SHOWN
Y-SEPARATE ILLUSTRATION

B-344929 EP

5125

3G5091 VALVE GP-PILOT
Bulldozer Tilt
3G8693-Page 213
Part Of 9P9081 Control Ar-Hydraulic
An Attachment

HYDRAULIC SYSTEM

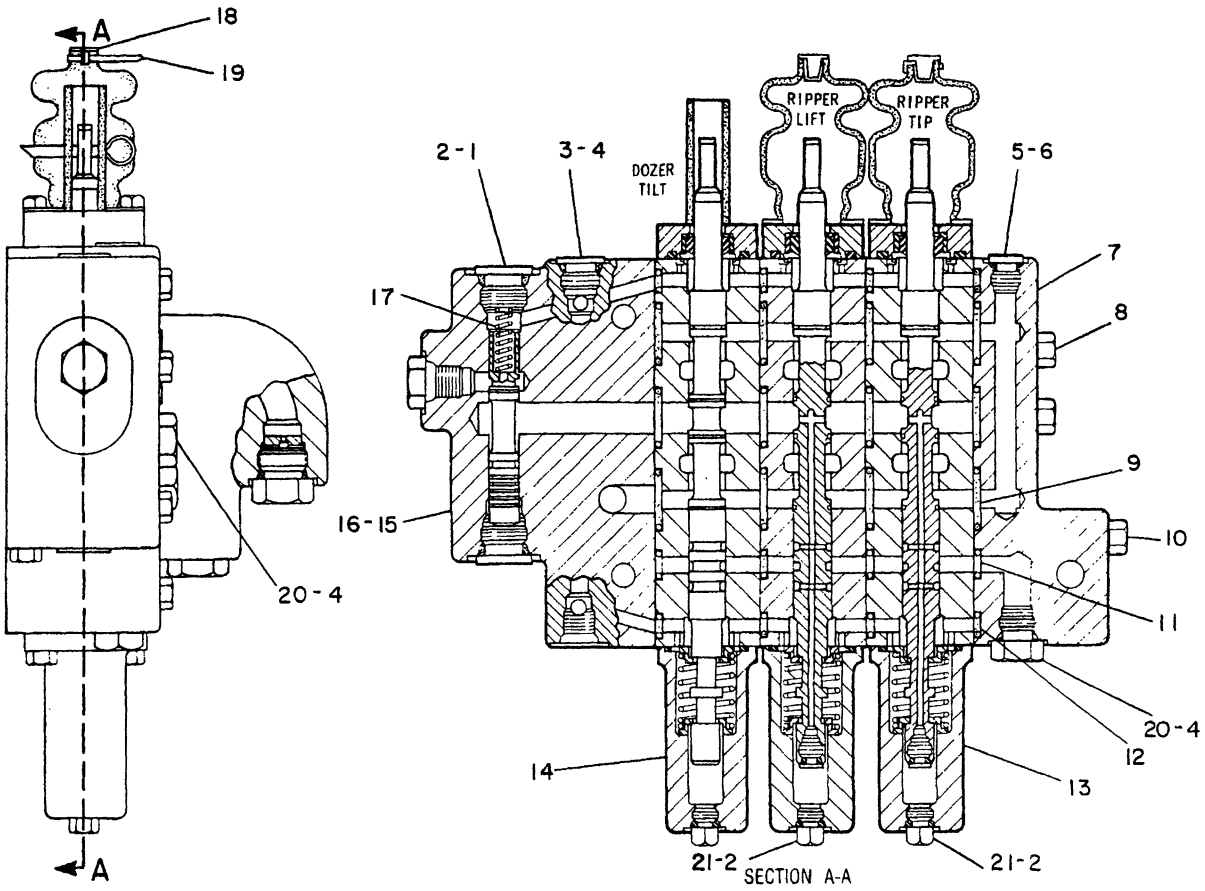

NOTE	REF NO	PART NUMBER	QTY	PART NAME	NOTE	REF NO	PART NUMBER	QTY	PART NAME
	1	9S8005	2	PLUG-O-RING					
C	2	3K0360	6	SEAL-O-RING					
	3	9S8004	1	PLUG-O-RING					
C	4	3J1907	3	SEAL-O-RING					
	5	9S8002	1	PLUG-O-RING					
	6	3J7354	1	SEAL-O-RING					
	7	3G7669	1	MANIFOLD					
	8	7X0282	2	BOLT					
C	9	5P3108	12	SEAL-O-RING					
	10	6V1050	1	BOLT					
	11	6J3134	4	SEAL					
	12	8J1699	8	SEAL-O-RING					
Y	13	3G8695	2	VALVE GP-PILOT					
Y	14	3G8693	1	VALVE GP-PILOT					
	15	3G3094	1	VALVE GP					
	16	9S4180	5	PLUG-O-RING					
		4J7533	5	SEAL-O-RING					
	17	3G6859	1	SPRING					
C	18	4H0408	2	PLUG-PROTECTION					
C	19	1S9593	2	STRAP-CABLE					
C	20	9S4191	2	PLUG-O-RING					
C	21	9S4185	4	PLUG-O-RING					

C-CHANGE FROM PREVIOUS TYPE
Y-SEPARATE ILLUSTRATION

B-578192 EP

5051

3G3159 VALVE GP-PILOT
Bulldozer Tilt,Ripper Lift & Ripper Tip
3G8695-Page 212,3G8693-Page 213
Part Of 9P9079,9W0574 Control Ars-Hydraulic
An Attachment

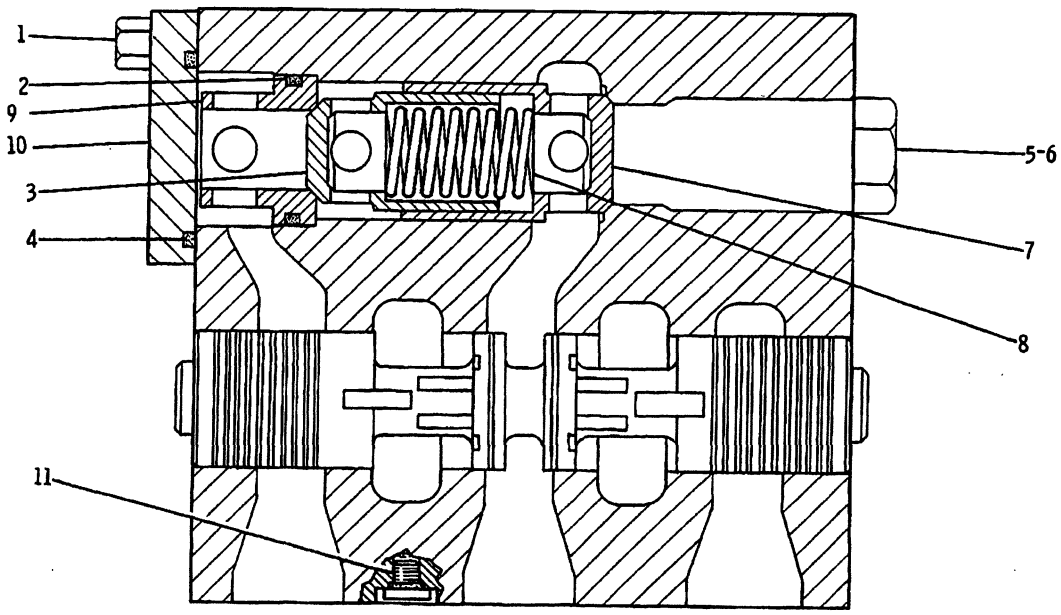

REF. NO.	PART NUMBER	DESCRIPTION	QTY.
1	T320	BOLT	2
2	4J521	SEAL	1
3	8J8338	VALVE	1
4	4J525	SEAL	1
5	9S4190	PLUG	2
6	2M9780	SEAL	2
7	8J8336	VALVE	1
8	4H1718	SPRING	1
9	8J8497	SEAT	1
10	9J2915	COVER	1
11	9S8001	PLUG	1
	4J7533	SEAL	1

235222

235222 P

5351

3G9769 VALVE GP

Part Of 3G9768,3G9771 Valves
An Attachment

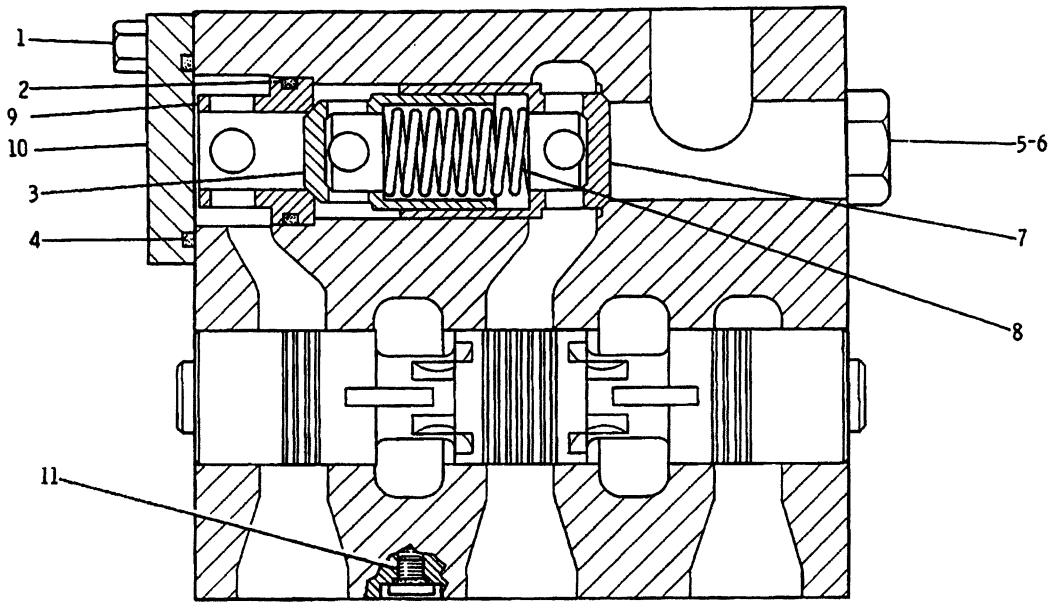

NOTE	REF NO	PART NUMBER	QTY	DESCRIPTION
	1	0T0320	2	BOLT
	2	4J0521	1	SEAL
	3	8J8338	1	VALVE
	4	4J0525	1	SEAL
	5	9S4190	2	PLUG
	6	2M9780	2	SEAL
	7	8J8336	1	VALVE
	8	4H1718	1	SPRING
	9	8J8497	1	SEAT
	10	9J2915	1	COVER
	11	9S8001	1	PLUG
		4J7533	1	SEAL

312733

312733 P

5051

4T5899 VALVE GP
Part Of 4T5900,4T5901 Valves
An Attachment

MEMORANDA

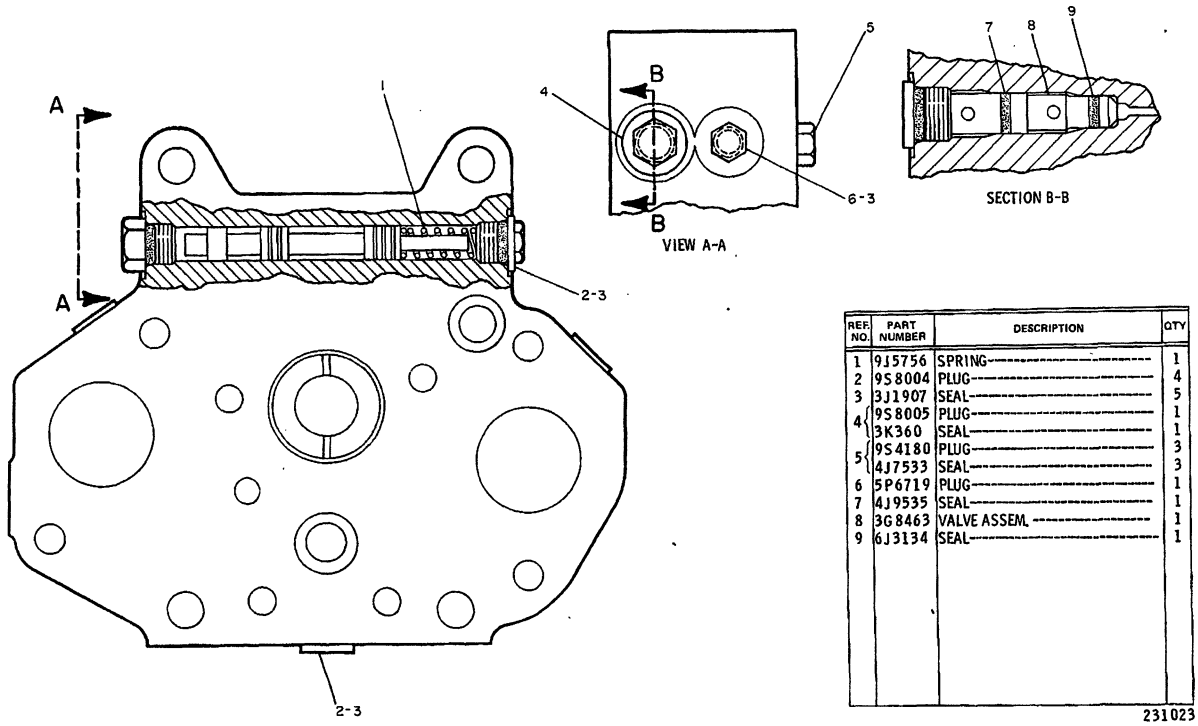

REF. NO.	PART NUMBER	DESCRIPTION	QTY
1	9J5756	SPRING	1
2	9S8004	PLUG	4
3	3J1907	SEAL	5
4	9S8005	PLUG	1
	3K360	SEAL	1
5	9S4180	PLUG	3
	4J7533	SEAL	3
6	5P6719	PLUG	1
7	4J9535	SEAL	1
8	3G8463	VALVE ASSEM.	1
9	6J3134	SEAL	1

231023

231023 P

5115

3G8628 VALVE GP-BASIC
Part Of 3G5638 Valve
An Attachment

HYDRAULIC SYSTEM

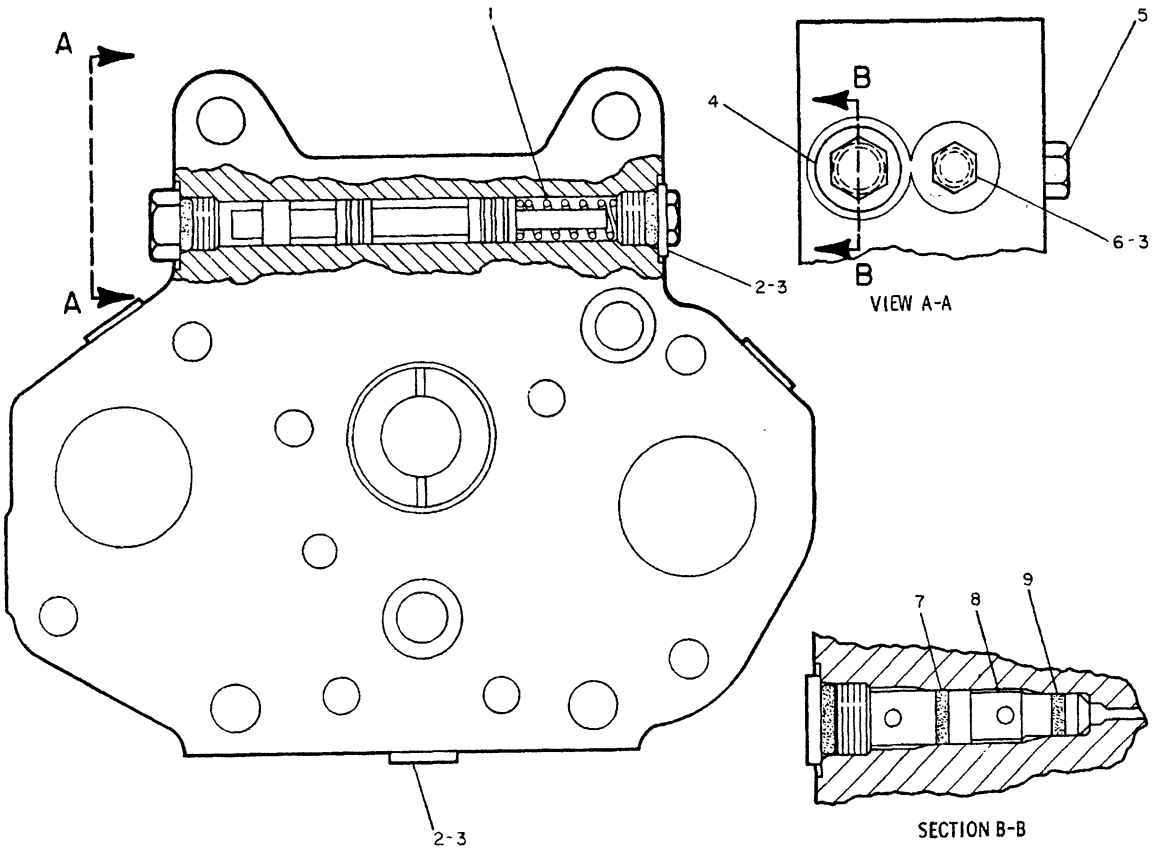

NOTE	REF NO	PART NUMBER	QTY	PART NAME	NOTE	REF NO	PART NUMBER	QTY	PART NAME
	1	9J5756	1	SPRING					
	2	9S8004	4	PLUG-O-RING					
	3	3J1907	5	SEAL-O-RING					
	4	9S8005	1	PLUG-O-RING					
		3K0360	1	SEAL-O-RING					
	5	9S4180	3	PLUG-O-RING					
		4J7533	3	SEAL-O-RING					
	6	5P6719	1	PLUG					
	7	4J9535	1	SEAL					
	8	3G8463	1	VALVE AS					
	9	6J3134	1	SEAL					

B-350020 EP

5051

9T1184 VALVE GP
Part Of 3G5638,9T4319 Valves
An Attachment

MEMORANDA

HYDRAULIC SYSTEM

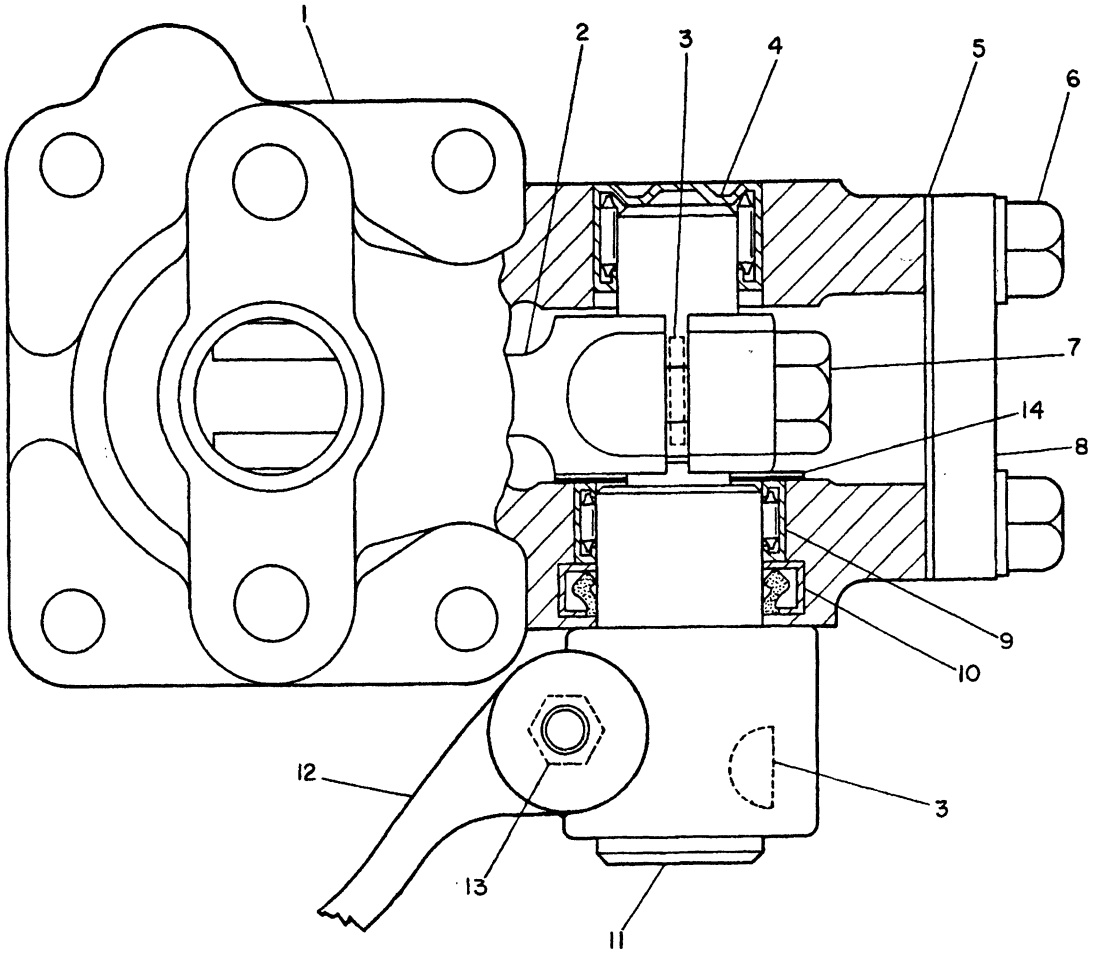

NOTE	REF NO	PART NUMBER	QTY	PART NAME	NOTE	REF NO	PART NUMBER	QTY	PART NAME
	1	9J0791	1	HOUSING-LEVER					
	2	3J7582	1	LEVER					
	3	1B8707	2	KEY-WOODRUFF					
	4	5J3241	1	BEARING-NEEDLE					
	5	3J5552	1	GASKET					
C	6	4B3388	4	BOLT					
C		9M1974	4	WASHER-HARD					
	7	2A4996	1	BOLT					
C	8	7J2596	1	COVER					
	9	2K5830	1	BEARING-NEEDLE					
C	10	6V4253	1	SEAL-LIP					
	11	9J1302	1	SHAFT-GOVERNOR CONTROL					
	12	3G6815	1	LEVER					
	13	0S1587	1	BOLT					
C	14	6V1982	1	BEARING-THRUST					
C		4T8594	1	SHIM					

C-CHANGE FROM PREVIOUS TYPE

B-350019 EP

5063 **1U1760 HOUSING GP-LEVER**

Part Of 3G5638,9T4319 Valves

An Attachment

HYDRAULIC SYSTEM

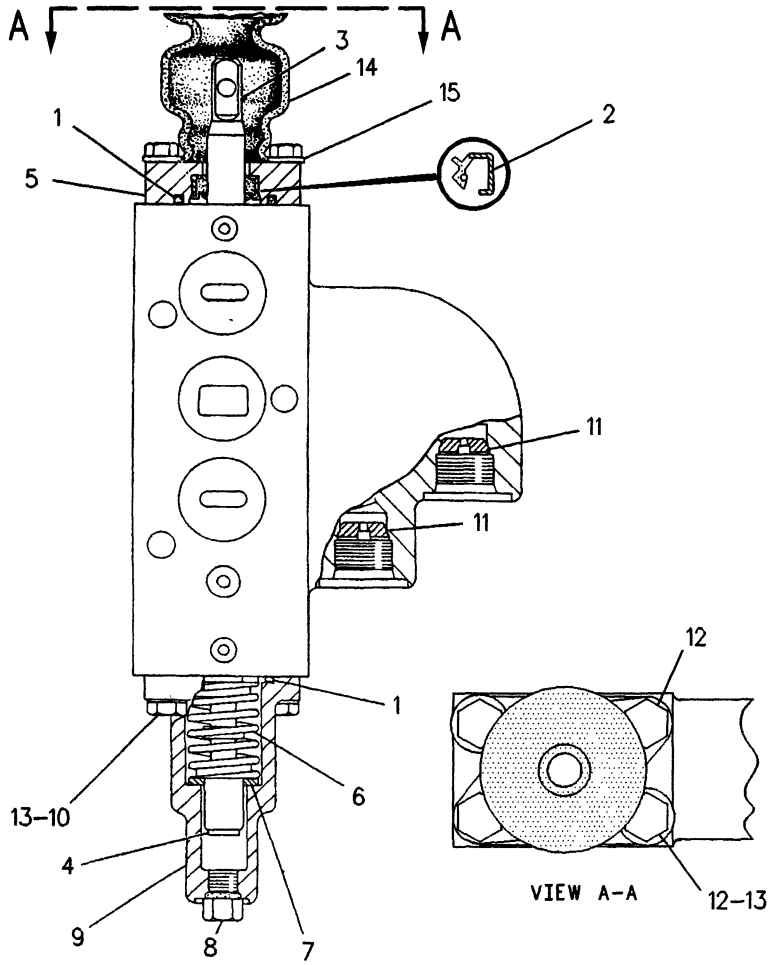

NOTE	REF NO	PART NUMBER	QTY	PART NAME	NOTE	REF NO	PART NUMBER	QTY	PART NAME
C	1	2K8199	2	SEAL-O-RING					
C	2	6V1949	1	SEAL-LIP					
	3	3G8698	1	VALVE GP					
	4	9S8001	1	PLUG-O-RING					
		4J7533	1	SEAL-O-RING					
	5	9J8714	1	HOUSING-SEAL					
C	6	1U3243	1	SPRING					
	7	7J7844	4	RETAINER					
	8	9S4180	1	PLUG-O-RING					
		4J7533	1	SEAL-O-RING					
	9	9J4772	1	HOUSING-SPRING					
	10	4M5281	2	BOLT					
	11	3G9037	2	PLUG-ORIFICE					
	12	8T8908	4	BOLT					
	13	8T4205	4	WASHER-HARD					
C	14	9P3697	1	BOOT					
C	15	9P7361	1	FLANGE					

C-CHANGE FROM PREVIOUS TYPE

R-578244 EP

5059 **3G8695 VALVE GP-PILOT**

Ripper Lift & Ripper Tip

Part Of 3G5094,3G5093,3G5092,3G3159 Valves

An Attachment

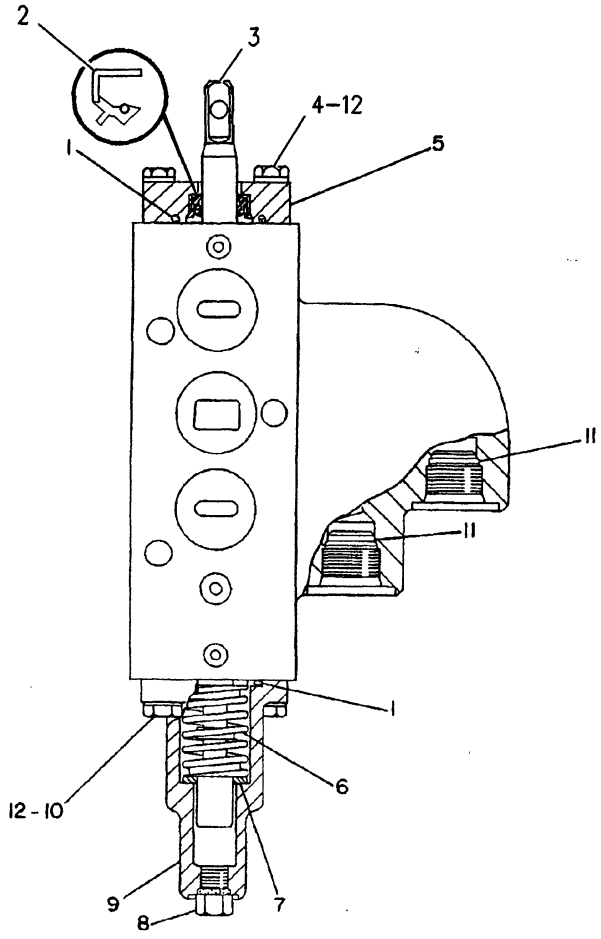

NOTE	REF NO	PART NUMBER	QTY	PART NAME	NOTE	REF NO	PART NUMBER	QTY	PART NAME
	1	2K8199	2	SEAL-O-RING					
C	2	6V1949	1	SEAL-LIP					
	3	3G8696	1	VALVE GP (TILT)					
	4	8T8908	4	BOLT					
	5	9J8714	1	HOUSING-SEAL					
	6	1U3243	1	SPRING					
	7	7J7844	4	RETAINER					
	8	9S4180	1	PLUG-O-RING					
		4J7533	1	SEAL-O-RING					
	9	9J4772	1	HOUSING-SPRING					
	10	4M5281	2	BOLT					
	11	3G9037	2	PLUG-ORIFICE					
C	12	8T4205	6	WASHER-HARD					

C-CHANGE FROM PREVIOUS TYPE

R-578223 EP

5069

3G8693 VALVE GP-PILOT
Bulldozer Tilt
Part Of 3G5092,3G5091,3G3159 Valves

HYDRAULIC SYSTEM

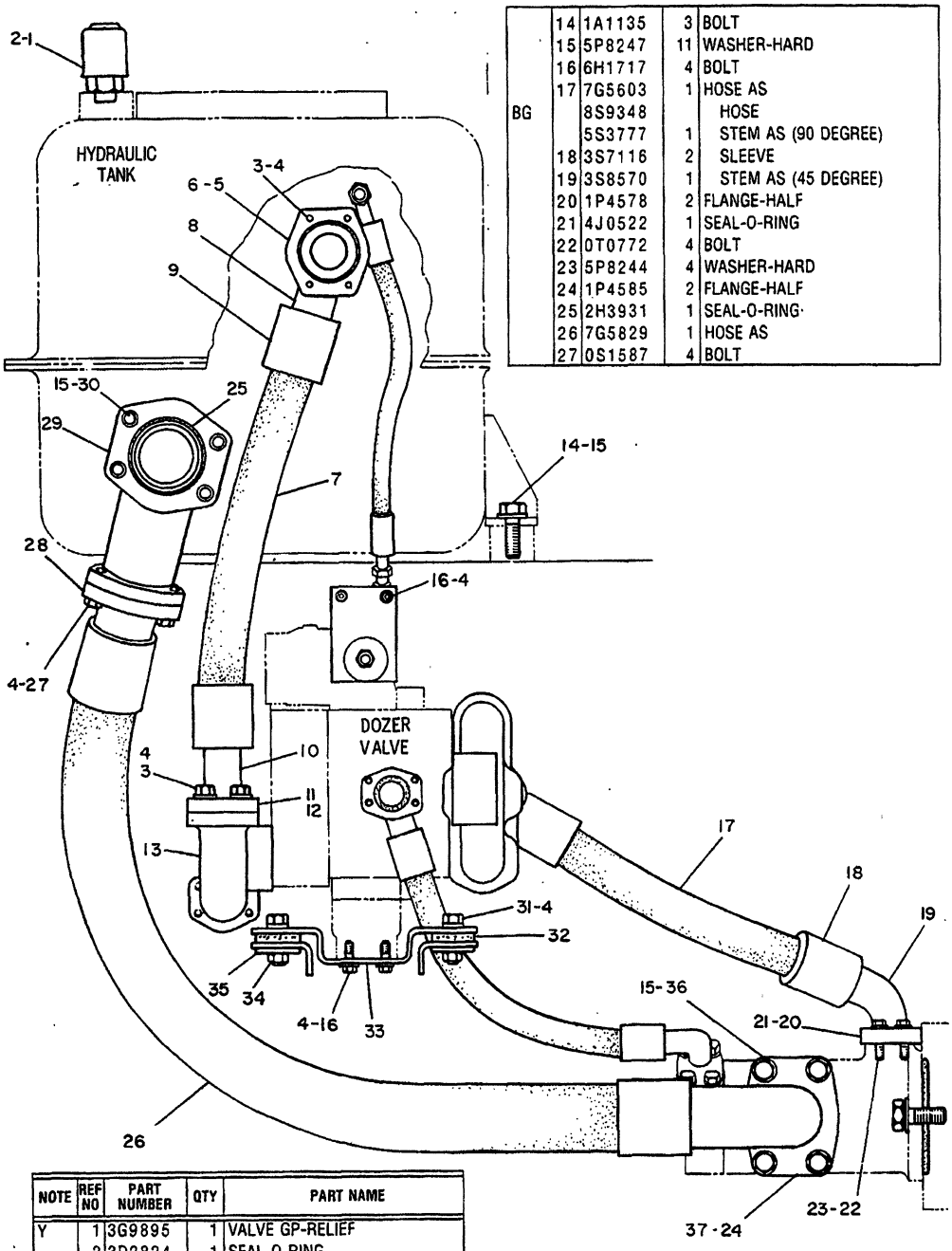

	14	1A1135	3	BOLT
	15	5P8247	11	WASHER-HARD
	16	6H1717	4	BOLT
	17	7G5603	1	HOSE AS
BG		8S9348		HOSE
		5S3777	1	STEM AS (90 DEGREE)
	18	3S7116	2	SLEEVE
	19	3S8570	1	STEM AS (45 DEGREE)
	20	1P4578	2	FLANGE-HALF
	21	4J0522	1	SEAL-O-RING
	22	0T0772	4	BOLT
	23	5P8244	4	WASHER-HARD
	24	1P4585	2	FLANGE-HALF
	25	2H3931	1	SEAL-O-RING
	26	7G5829	1	HOSE AS
	27	0S1587	4	BOLT

NOTE	REF NO	PART NUMBER	QTY	PART NAME
Y	1	3G9895	1	VALVE GP-RELIEF
	2	3D2824	1	SEAL-O-RING
	3	0S1585	8	BOLT
	4	5P8245	18	WASHER-HARD (SMALL)
	5	1P4582	2	FLANGE-HALF
	6	4J0527	1	SEAL-O-RING
	7	7G5605	1	HOSE AS
BG		8S8220		HOSE
	8	7S8439	1	STEM AS-COLLET
	9	3S8330	2	SLEEVE
	10	1P1238	1	STEM AS (STRAIGHT)
	11	1P4579	2	FLANGE-HALF
	12	4J0524	1	SEAL-O-RING
	13	8P9288	1	MANIFOLD

	28	1P4584	2	FLANGE-HALF
		6J2680	1	SEAL-O-RING
	29	7G0222	1	MANIFOLD
	30	1D4590	4	BOLT
	31	2B0947	2	BOLT
	32	9G0162	2	MOUNTING
	33	9P9694	1	BRACKET
	34	1D4719	2	NUT-FULL
	35	8F6437	2	WASHER (LARGE)
	36	0S1589	4	BOLT
	37	2H6338	1	SEAL-O-RING

B-USE AS REQUIRED G ORDER BY THE INCH Y SEPARATE ILLUSTRATION 344628

344628 P

5057

7G0084 LINES GP-PUMP-PART 1 OF 2

8A Bulldozer-Without Pilot
3G9895-Page 218. 01
Part Of 9P9078 Control Ar-Hydraulic
An Attachment

HYDRAULIC SYSTEM

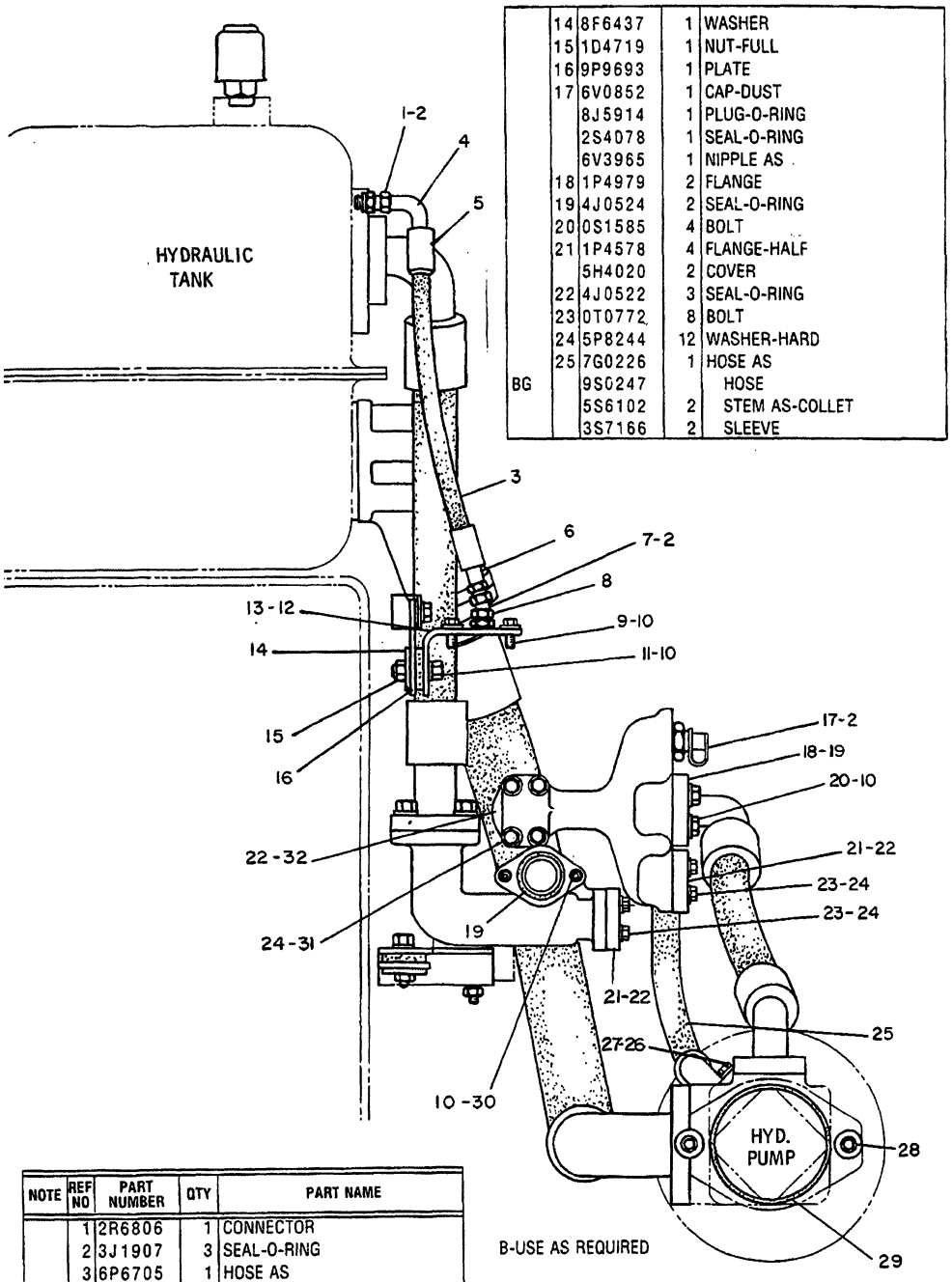

	14	8F6437	1	WASHER
	15	1D4719	1	NUT-FULL
	16	9P9693	1	PLATE
	17	6V0852	1	CAP-DUST
		8J5914	1	PLUG-O-RING
		2S4078	1	SEAL-O-RING
		6V3965	1	NIPPLE AS
	18	1P4979	2	FLANGE
	19	4J0524	2	SEAL-O-RING
	20	0S1585	4	BOLT
	21	1P4578	4	FLANGE-HALF
		5H4020	2	COVER
	22	4J0522	3	SEAL-O-RING
	23	0T0772	8	BOLT
	24	5P8244	12	WASHER-HARD
	25	7G0226	1	HOSE AS
BG		9S0247		HOSE
		5S6102	2	STEM AS-COLLET
		3S7166	2	SLEEVE

NOTE	REF NO	PART NUMBER	QTY	PART NAME
	1	2R6806	1	CONNECTOR
	2	3J1907	3	SEAL-O-RING
	3	6P6705	1	HOSE AS
BG		2P5943		HOSE-HYDRAULIC
	4	8S6393	1	COUPLING AS
	5	4S5414	2	SLEEVE
	6	8S6417	1	COUPLING AS
	7	3O7942	1	ELBOW
	8	5P1404	1	ADAPTER-O-RING
		2M9780	1	SEAL-O-RING
	9	6H1717	2	BOLT
	10	5P8245	9	WASHER-HARD (SMALL)
	11	2B0947	1	BOLT
	12	9P9692	1	PLATE
	13	9G0162	1	MOUNTING

B-USE AS REQUIRED

G-ORDER BY THE INCH

	26	3B1915	4	BOLT
		5M2894	4	WASHER
	27	1P4577	2	FLANGE-HALF
		4J0520	2	SEAL-O-RING
	28	0S1589	2	BOLT
		5P8247	2	WASHER-HARD
	29	5F3106	1	SEAL-O-RING (PUMP)
	30	0L1329	2	BOLT
	31	3B8428	4	BOLT
	32	9P0161	1	MANIFOLD

344629

344629 P

5057

7G0084 LINES GP-PUMP-PART 2 OF 2
8A Bulldozer-Without Pilot
Part Of 9P9078 Control Ar-Hydraulic
An Attachment

HYDRAULIC SYSTEM

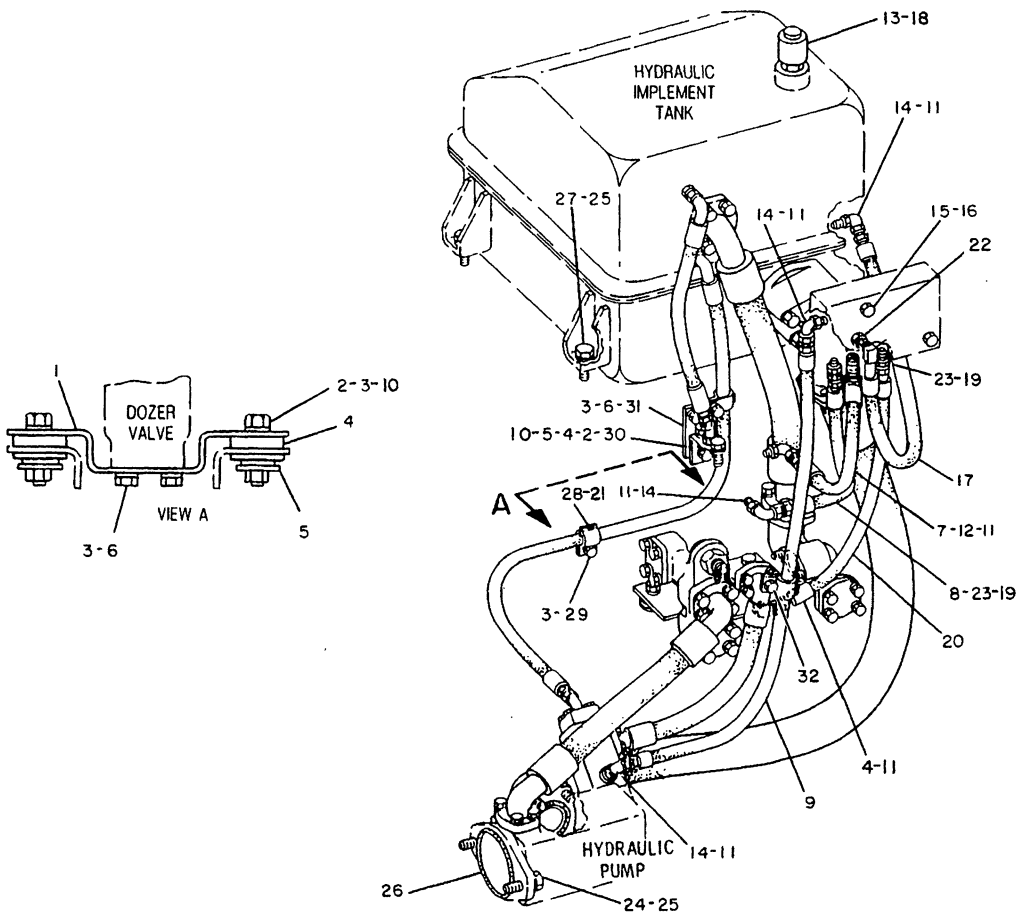

NOTE	REF NO	PART NUMBER	QTY	PART NAME
	1	9P9694	1	BRACKET
C	2	2B0947	3	BOLT
	3	5P8245	10	WASHER (SMALL)
C	4	9G0162	3	MOUNTING
	5	8F6437	3	WASHER (LARGE)
C	6	6H1717	5	BOLT
I	7	7G5608	1	HOSE AS
I	8	7G5612	1	HOSE AS
I	9	2V1821	1	HOSE AS
	10	1D4719	3	NUT
	11	3J1907	8	SEAL-O-RING 11.89MM(.468IN)ID
C	12	2R6806	1	CONNECTOR
Y	13	3G9895	1	VALVE GP-RELIEF
	14	3O7947	6	ELBOW
	15	OL1352	3	BOLT
	16	5M2894	3	WASHER
I	17	3T1723	1	HOSE AS
	18	3D2824	1	SEAL-O-RING
	19	3K0360	2	SEAL-O-RING
I	20	5G0683	1	HOSE AS
	21	5R0940	3	CLIP (SLOT)
C	22	3O7942	1	ELBOW
	23	3O8188	2	CONNECTOR-FLARED
	24	OS1589	2	BOLT
	25	5P8247	5	WASHER-HARD
	26	5F3106	1	SEAL-O-RING
	27	1A1135	3	BOLT
	28	5R0939	3	CLIP (TAB)
	29	OS1620	1	BOLT
	30	9P9692	1	PLATE
	31	9P9693	1	PLATE
C	32	OS1591	1	BOLT

C-CHANGE FROM PREVIOUS TYPE
I-SEE HOSE FABRICATION GUIDE
Y-SEPARATE ILLUSTRATION

B-475281 P

5057 **7G5125 LINES GP-PUMP-PART 1 OF 2**

Type 1
3G9895-Page 218.01
An Attachment

HYDRAULIC SYSTEM

NOTE	REF NO	PART NUMBER	QTY	DESCRIPTION
	1	6P6705	1	HOSE AS.
G		2P5943		HOSE 16.77IN.(43CM)
	2	8S6393	1	COUPLING AS. (90°)
	3	4S5414	2	SLEEVE
	4	8S6417	1	COUPLING AS.
	5	307942	1	ELBOW
		5P1404	1	ADAPTER
		2M9780	1	SEAL 19.18MM(.755IN.)I.D.
	6	3J1907	4	SEAL
	7	2R6806	2	CONNECTOR
	8	4J527	1	SEAL
C	9	S1585	9	BOLT
C	10	5P8245	14	WASHER
	11	7G222	1	MANIFOLD
	12	2H3931	2	SEAL
	13	1D4590	4	BOLT
	14	5P8247	8	WASHER

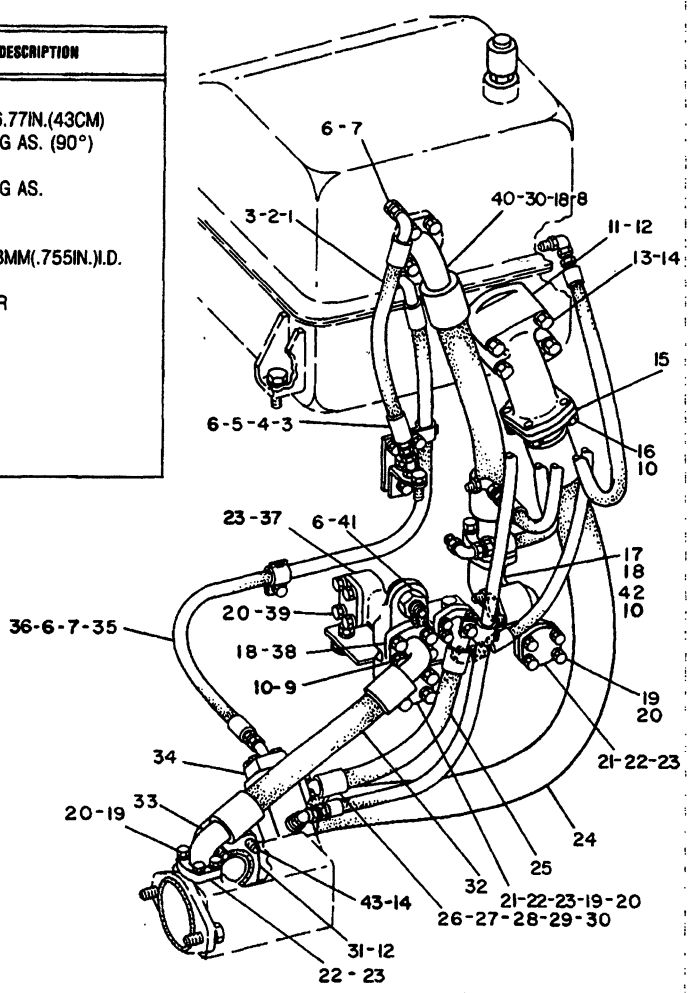

	15	1P4584	2	FLANGE
		8F8882	1	SEAL
	16	S1587	4	BOLT
	17	8P9288	1	MANIFOLD
	18	4J524	3	SEAL 47.22CM(1.85IN.)I.D.
	19	T772	12	BOLT
	20	5P8244	16	WASHER
	21	5H4020	2	COVER
	22	1P4578	6	FLANGE
	23	4J522	4	SEAL 37.69MM(1.48IN.)I.D.
	24	7G5829	1	HOSE AS. 129CM(50.78IN.)
	25	7G5604		HOSE AS.
G		9S247		HOSE 14.96IN.(38CM)
		5S6102	1	STEM AS. (90°)
	26	3S7166	2	SLEEVE
	27	5S5283	1	STEM AS. (STRAIGHT)
C	28	1P4577	2	FLANGE
		4J520	2	SEAL
C	29	3B1915	4	BOLT
C	30	5M2894	5	WASHER
	31	1P4585	2	FLANGE
	32	7G5603	1	HOSE AS.
G		8S9348		HOSE 17.71IN.(45CM)
		5S3777	1	STEM AS. (90°)
		3S7116	2	SLEEVE
	33	3S8572	1	STEM AS. (67.5°)

Y	34	4T1865	1	VALVE GROUP
	35	7G5610	1	HOSE AS.
G		2P5943		HOSE 43.31IN.(110CM)
		4S5414	2	SLEEVE
		8S6393	1	COUPLING AS. (90°)
	36	8S6417	1	COUPLING AS. (STRAIGHT)
	37	9P161	1	MANIFOLD
	38	1P4579	4	FLANGE
	39	3B8428	4	BOLT
	40	7G5605	1	HOSE AS.
G		8S8220		HOSE 20.08IN.(51CM)
		7S8439	1	STEM AS. (90°)
		3S8330	2	SLEEVE
		1P1238	1	STEM AS. (STRAIGHT)
	41	6V852	1	CAP
		8J5914	1	PLUG
		2S4078	1	SEAL
		6V3965	1	NIPPLE AS.
	42	L1329	2	BOLT 76.2MM(3IN.)LONG
C	43	S1589	4	BOLT

C INDICATES CHANGE
G ORDER BY THE INCH
Y SEPARATE ILLUSTRATION

306430

306430 P

5057 **7G5125 LINES GP-PUMP-PART 2 OF 2**

Type 1
4T1865-Page 218
An Attachment

HYDRAULIC SYSTEM

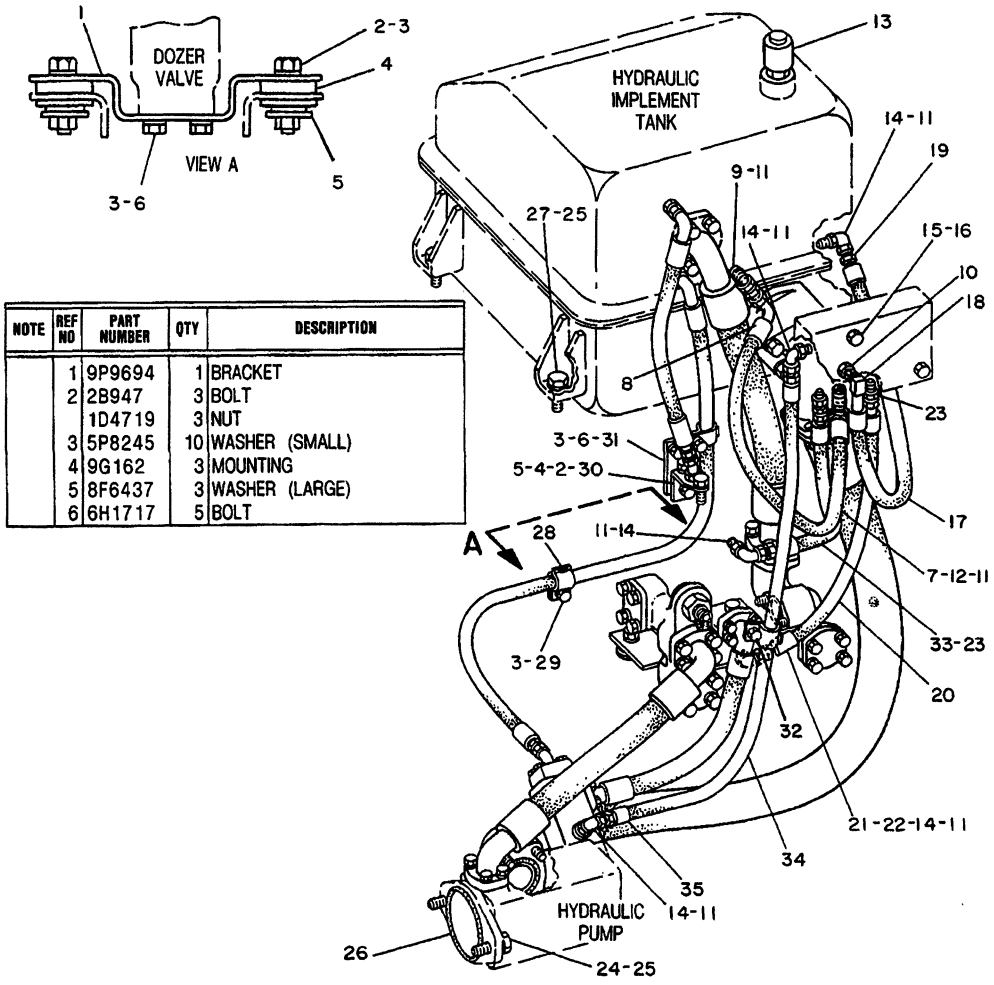

NOTE	REF NO	PART NUMBER	QTY	DESCRIPTION
	1	9P9694	1	BRACKET
	2	2B947	3	BOLT
		1D4719	3	NUT
	3	5P8245	10	WASHER (SMALL)
	4	9G162	3	MOUNTING
	5	8F6437	3	WASHER (LARGE)
	6	6H1717	5	BOLT

C	7	3T9292	1	HOSE AS.
G		2P5943		HOSE 29.52IN.(75CM)
		8S6417	1	COUPLING AS. (STRAIGHT)
		8S6393	1	COUPLING AS. (90°)
	8	4S5414	2	SLEEVE
C	9	2P7214	1	ELBOW
	10	307942	1	ELBOW
	11	3J1907	8	SEAL 11.89MM(.468IN.)I.D.
	12	2R6806	1	CONNECTOR
Y	13	3G9895	1	VALVE GROUP
		3D2824	1	SEAL
C	14	307947	5	ELBOW
	15	L1352	3	BOLT
	16	5M2894	3	WASHER
	17	3T1723	1	HOSE AS.
G		2P5943		HOSE 24.02IN.(61CM)
		4S5414	2	SLEEVE
	18	5P3857	1	COUPLING AS. (90°)
	19	8S6417	1	COUPLING AS. (STRAIGHT)
	20	5G683	1	HOSE AS.
G		2P5943		HOSE 21.54IN.(54.7CM)
	21	4S5414	2	SLEEVE
	22	8S6417	2	COUPLING AS. (STRAIGHT)

C INDICATES CHANGE
G ORDER BY THE INCH
Y SEPARATE ILLUSTRATION

	23	308188	2	CONNECTOR
		3K360	2	SEAL
	24	S1589	2	BOLT
	25	5P8247	5	WASHER
	26	5F3106	1	SEAL
	27	1A1135	3	BOLT
	28	5R939	3	CLIP (TAB)
		5R940	3	CLIP (SLOT)
	29	S1620	1	BOLT
	30	9P9692	1	PLATE
	31	9P9693	1	PLATE
	32	S1591	1	BOLT
	33	7G5612	1	HOSE AS.
G		5P5943		HOSE 15.35IN.(39CM)
	34	2V1821	1	HOSE AS.
G		5P5943		HOSE 40.10IN.(102CM) (EACH HOSE AS. INCL.)
	35	4S5414	2	SLEEVE
		8S6417	2	COUPLING AS. (STRAIGHT)

310485

310485 P

5057

7G5125 LINES GP-PART 1 OF 2
Type 2
3G9895-Page 218.01
An Attachment

HYDRAULIC SYSTEM

NOTE	REF NO	PART NUMBER	QTY	DESCRIPTION
	1	6P6705	1	HOSE AS.
G		2P5943		HOSE 16.77IN.(43CM)
	2	8S6393	1	COUPLING AS. (90°)
	3	4S5414	2	SLEEVE
	4	8S6417	1	COUPLING AS.
	5	307942	1	ELBOW
		5P1404	1	ADAPTER
		2M9780	1	SEAL 19.18MM(.755IN.)I.D.
	6	3J1907	4	SEAL
	7	2R6806	2	CONNECTOR
	8	4J527	1	SEAL
	9	S1585	9	BOLT
	10	5P8245	14	WASHER
	11	7G222	1	MANIFOLD
	12	2H3931	2	SEAL
	13	1D4590	4	BOLT
	14	5P8247	8	WASHER

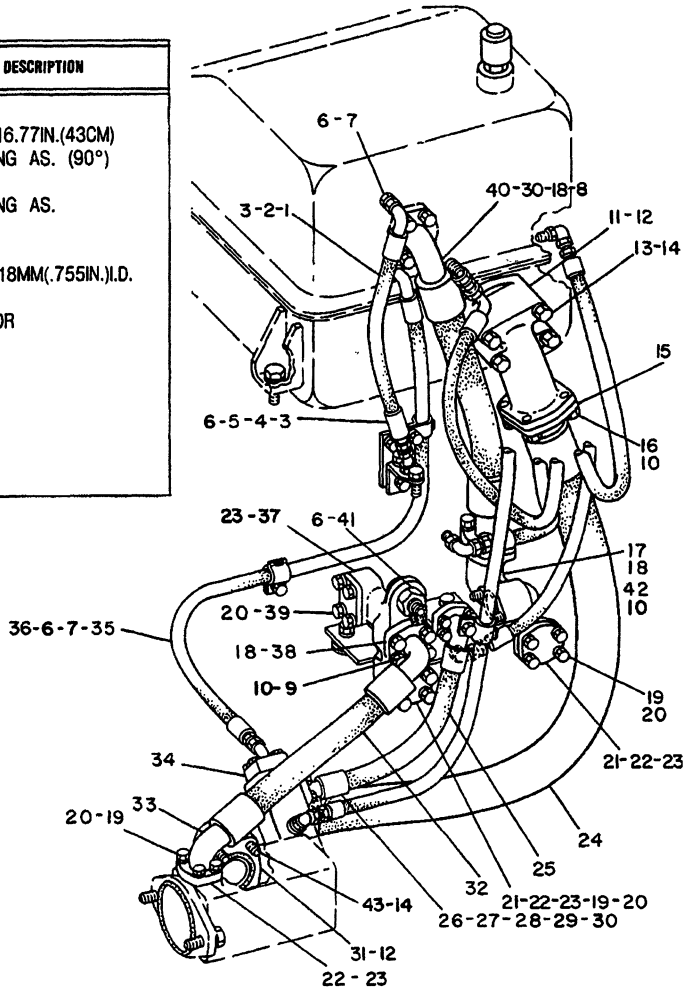

	15	1P4584	2	FLANGE
		8F8882	1	SEAL
	16	S1587	4	BOLT
	17	8P9288	1	MANIFOLD
	18	4J524	3	SEAL 47.22CM(1.85IN.)I.D.
	19	T772	12	BOLT
	20	5P8244	16	WASHER
	21	5H4020	2	COVER
	22	1P4578	6	FLANGE
	23	4J522	4	SEAL 37.69MM(1.48IN.)I.D.
	24	7G5829	1	HOSE AS. 129CM(50.78IN.)
	25	7G5604	1	HOSE AS.
G		9S247		HOSE 14.96IN.(38CM)
		5S6102	1	STEM AS. (90°)
	26	3S7166	2	SLEEVE
	27	5S5283	1	STEM AS. (STRAIGHT)
	28	1P4577	2	FLANGE
		4J520	2	SEAL
	29	3B1915	4	BOLT
	30	5M2894	5	WASHER
	31	1P4585	2	FLANGE
	32	7G5603	1	HOSE AS.
G		8S9348		HOSE 17.71IN.(45CM)
		5S3777	1	STEM AS. (90°)
		3S7116	2	SLEEVE
	33	3S8572	1	STEM AS. (67.5°)

G ORDER BY THE INCH
Y SEPARATE ILLUSTRATION

Y	34	4T1865	1	VALVE GROUP
	35	7G5610	1	HOSE AS.
G		2P5943		HOSE 43.31IN.(110CM)
		4S5414	2	SLEEVE
		8S6393	1	COUPLING AS. (90°)
	36	8S6417	1	COUPLING AS. (STRAIGHT)
	37	9P161	1	MANIFOLD
	38	1P4579	4	FLANGE
	39	3B8428	4	BOLT
	40	7G5605	1	HOSE AS.
G		8S8220		HOSE 20.08IN.(51CM)
		7S8439	1	STEM AS. (90°)
		3S8330	2	SLEEVE
		1P1238	1	STEM AS. (STRAIGHT)
	41	6V852	1	CAP
		8J5914	1	PLUG
		2S4078	1	SEAL
		6V3965	1	NIPPLE AS.
	42	L1329	2	BOLT 76.2MM(3IN.)LONG
	43	S1589	4	BOLT

310486

310486 P

5057 **7G5125 LINES GP-PUMP-PART 2 OF 2**

Type 2
4T1865-Page 218
An Attachment

HYDRAULIC SYSTEM

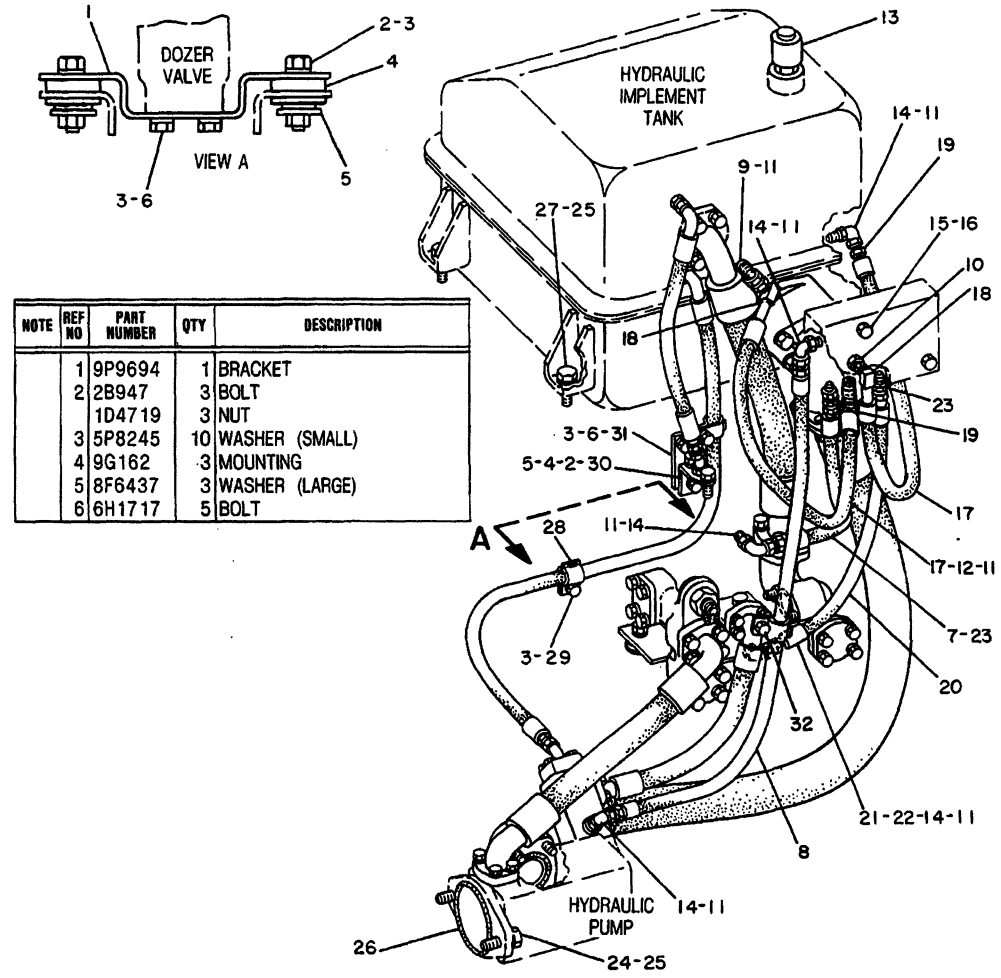

NOTE	REF NO	PART NUMBER	QTY	DESCRIPTION
	1	9P9694	1	BRACKET
	2	2B947	3	BOLT
		1D4719	3	NUT
	3	5P8245	10	WASHER (SMALL)
	4	9G162	3	MOUNTING
	5	8F6437	3	WASHER (LARGE)
	6	6H1717	5	BOLT

B USE AS REQUIRED
C INDICATES CHANGE
G ORDER BY THE INCH
Y SEPARATE ILLUSTRATION

	7	7G5612	1	HOSE AS.
	8	2V1821	1	HOSE AS.
	9	2P7214	1	ELBOW
	10	307942	1	ELBOW
	11	3J1907	8	SEAL 11.89MM(.468IN.)I.D.
	12	2R6806	1	CONNECTOR
Y	13	3G9895	1	VALVE GROUP
		3D2824	1	SEAL
	14	307947	5	ELBOW
	15	L1352	3	BOLT
	16	5M2894	3	WASHER
C	17	3T1723	2	HOSE AS.
				(EACH INCLUDES)
BG		2P5943		HOSE
		4S5414	2	SLEEVE
	18	5P3857	1	COUPLING AS. (90°)
	19	8S6417	1	COUPLING AS. (STRAIGHT)

	20	5G683	1	HOSE AS.
BG		2P5943		HOSE
	21	4S5414	2	SLEEVE
	22	8S6417	2	COUPLING AS. (STRAIGHT)
	23	308188	2	CONNECTOR
		3K360	2	SEAL
	24	S1589	2	BOLT
	25	5P8247	5	WASHER
	26	5F3106	1	SEAL
	27	1A1135	3	BOLT
	28	5R939	3	CLIP (TAB)
		5R940	3	CLIP (SLOT)
	29	S1620	1	BOLT
	30	9P9692	1	PLATE
	31	9P9693	1	PLATE
	32	S1591	1	BOLT

327540 327540 P

5057 **7G5125 LINES GP-PUMP-PART 1 OF 2**
Type 3
3G9895-Page 218.01
An Attachment

HYDRAULIC SYSTEM

NOTE	REF NO	PART NUMBER	QTY	DESCRIPTION
	1	6P6705	1	HOSE AS.
BG		2P5943		HOSE
	2	8S6393	1	COUPLING AS. (90°)
	3	4S5414	2	SLEEVE
	4	8S6417	1	COUPLING AS.
	5	307942	1	ELBOW
		5P1404	1	ADAPTER
		2M9780	1	SEAL 19.18MM(.755IN.)I.D.
	6	3J1907	4	SEAL
	7	2R6806	2	CONNECTOR
	8	4J527	1	SEAL
	9	S1585	9	BOLT
	10	5P8245	14	WASHER
	11	7G222	1	MANIFOLD
C	12	2H3931	1	SEAL
	13	1D4590	4	BOLT
	14	5P8247	8	WASHER

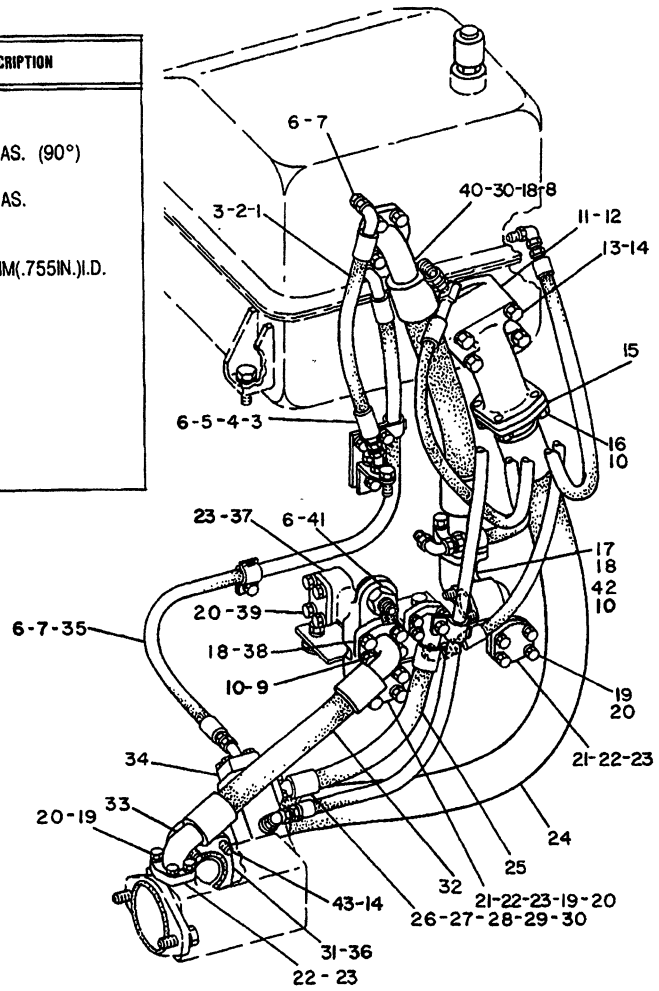

	15	1P4584	2	FLANGE
C		6J2680	1	SEAL
	16	S1587	4	BOLT
	17	8P9288	1	MANIFOLD
	18	4J524	3	SEAL 4.722CM(1.85IN.)I.D.
	19	T772	12	BOLT
	20	5P8244	16	WASHER
	21	5H4020	2	COVER
	22	1P4578	6	FLANGE
	23	4J522	4	SEAL 37.69MM(1.48IN.)I.D.
	24	7G5829	1	HOSE AS.
	25	7G5604	1	HOSE AS.
BG		9S247		HOSE
		5S6102	1	STEM AS. (90°)
	26	3S7166	2	SLEEVE
	27	5S5283	1	STEM AS. (STRAIGHT)
	28	1P4577	2	FLANGE
		4J520	2	SEAL
	29	3B1915	4	BOLT
	30	5M2894	5	WASHER
	31	1P4585	2	FLANGE
	32	7G5603	1	HOSE AS.
BG		8S9348		HOSE
		5S3777	1	STEM AS. (90°)
		3S7116	2	SLEEVE
	33	3S8572	1	STEM AS. (67.5°)

B USE AS REQUIRED
C INDICATES CHANGE
G ORDER BY THE INCH
Y SEPARATE ILLUSTRATION

Y	34	4T1865	1	VALVE GROUP
C	35	9P7973	1	HOSE AS.
C	36	2H6338	1	SEAL
	37	9P161	1	MANIFOLD
	38	1P4579	4	FLANGE
	39	3B8428	4	BOLT
	40	7G5605	1	HOSE AS.
	41	6V852	1	CAP
		8J5914	1	PLUG
		2S4078	1	SEAL
		6V3965	1	NIPPLE AS.
	42	L1329	2	BOLT 76.2MM(3IN.)LONG
	43	S1589	4	BOLT

327541

327541 P

5057 **7G5125 LINES GP-PUMP-PART 2 OF 2**

Type 3
4T1865-Page 218
An Attachment

HYDRAULIC SYSTEM

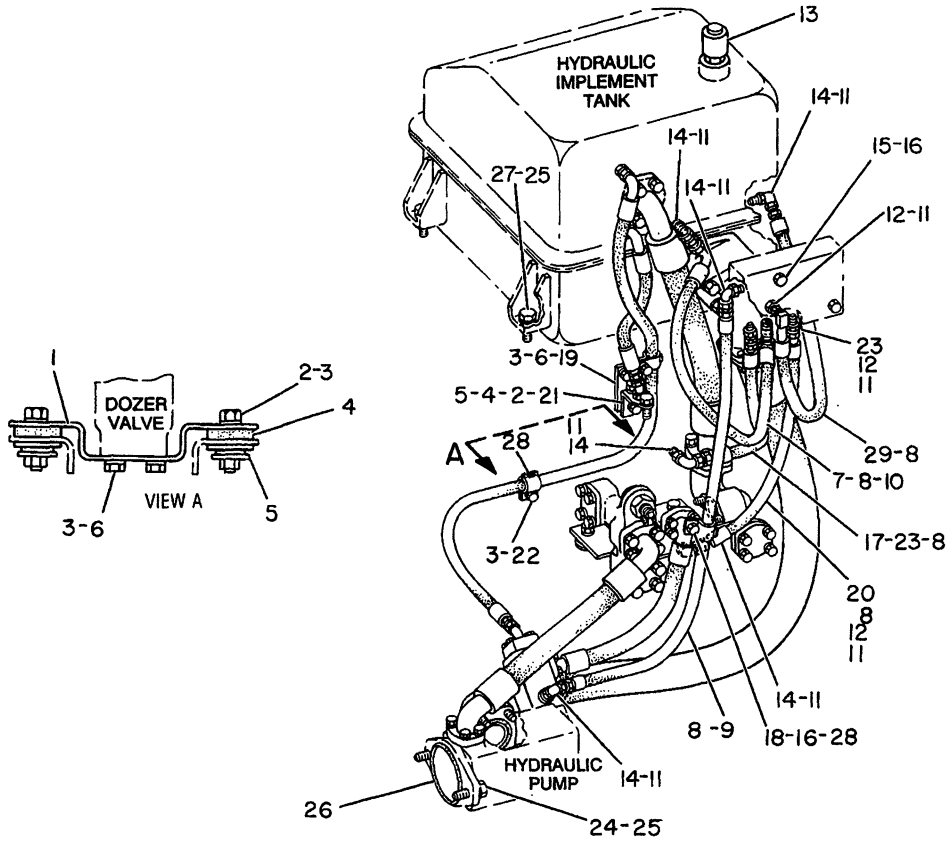

NOTE	REF NO	PART NUMBER	QTY	PART NAME	NOTE	REF NO	PART NUMBER	QTY	PART NAME
	1	9P9694	1	BRACKET		21	9P9692	1	PLATE
	2	2B0947	3	BOLT		22	0S1620	1	BOLT
		1D4719	3	NUT (FULL)		23	5P6944	2	ADAPTER-STRAIGHT THREAD
	3	5P8245	10	WASHER (SMALL)			3K0360	2	SEAL-O-RING
	4	9G0162	3	MOUNTING		24	0S1589	2	BOLT
	5	8F6437	3	WASHER (LARGE)		25	5P8247	5	WASHER-HARD
	6	6H1717	5	BOLT		26	5F3106	1	SEAL-O-RING
	7	7T0630	1	HOSE AS (PILOT VALVE DRAIN)		27	1A1135	3	BOLT
						28	5R0939	3	CLIP (TAB)
	8	6V8397	10	SEAL-O-RING 9.25MM(.364IN)ID			5R0940	3	CLIP (SLOT)
						29	7T0630	1	HOSE AS (PILOT VALVE TANK RETURN)
I	9	7T0626	1	HOSE AS (PILOT VALVE PRESSURE)					
	10	6V9001	1	ELBOW-45 DEGREE (SEAL)					
C	11	3J1907	10	SEAL-O-RING 11.89MM(.468IN)ID					
C	12	6V8636	3	CONNECTOR (SEAL)					
Y	13	3G9895	1	VALVE GP-RELIEF					
		3D2824	1	SEAL-O-RING					
	14	6V8724	6	ELBOW					
	15	0L1352	3	BOLT					
	16	5M2894	4	WASHER					
I	17	7T0628	1	HOSE AS (TILT LEFT)					
	18	0S1591	1	BOLT					
	19	9P9693	1	PLATE					
I	20	7T0629	1	HOSE AS (TILT RIGHT)					

C-CHANGE FROM PREVIOUS TYPE
I-SEE HOSE FABRICATION GUIDE
Y-SEPARATE ILLUSTRATION

B-404843 EP

5057 **7T0621 LINES GP-PUMP-PART 1 OF 2**

3G9895-Page 218.01

An Attachment

HYDRAULIC SYSTEM

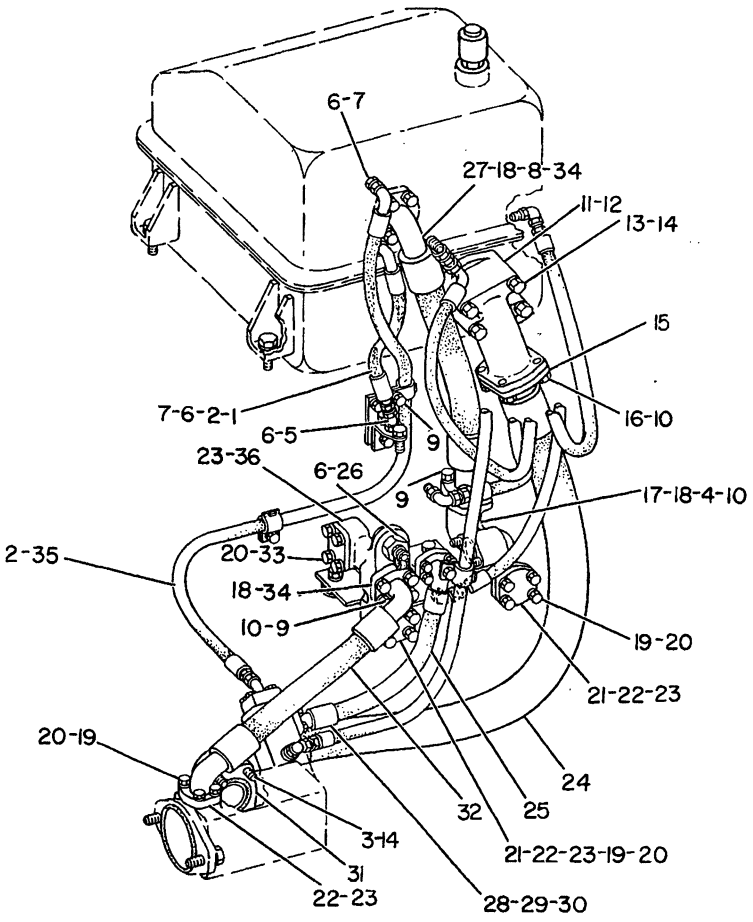

NOTE	REF NO	PART NUMBER	QTY	PART NAME	NOTE	REF NO	PART NUMBER	QTY	PART NAME
	1	7T0632	1	HOSE AS (HOUSING DRAIN-DOZER LIFT)		22	1P4578	6	FLANGE
						23	4J0522	4	SEAL 37.69MM(1.48IN)ID
	2	6V8397	4	SEAL-O-RING		24	7T0624	1	HOSE AS
	3	0S1589	4	BOLT	I	25	7G5604	1	HOSE AS
	4	0L1329	2	BOLT 76.2MM(3IN)LG		26	6V0852	1	CAP-DUST
	5	6V9001	1	ELBOW			8J5914	1	PLUG-O-RING
		5P1404	1	ADAPTER-O-RING			2S4078	1	SEAL-O-RING
		2M9780	1	SEAL-O-RING			6V3965	1	NIPPLE AS
				19.18MM(.755IN)ID	I	27	7T0625	1	HOSE AS
C	6	3J1907	4	SEAL-O-RING		28	1P4577	2	FLANGE-HALF
C	7	6V8636	2	CONNECTOR			4J0520	2	SEAL
	8	4J0527	1	SEAL-O-RING		29	3B1915	4	BOLT
	9	0S1585	9	BOLT		30	5M2894	4	WASHER
	10	5P8245	14	WASHER		31	1P4585	2	FLANGE-HALF
	11	7T0634	1	MANIFOLD			2H6338	1	SEAL-O-RING
	12	2H3931	1	SEAL-O-RING		32	7G5603	1	HOSE AS
	13	1D4588	4	BOLT		33	3B8428	4	BOLT
	14	5P8247	8	WASHER-HARD		34	1P4579	4	FLANGE-HALF
	15	1P4584	2	FLANGE-HALF		35	7T0631	1	HOSE AS (RESTRICTOR VALVE DRAIN)
		6J2680	1	SEAL-O-RING					
	16	0S1587	4	BOLT					
	17	7T0633	1	MANIFOLD		36	9P0161	1	MANIFOLD
	18	4J0524	3	SEAL 47.22MM(1.85IN)ID					
	19	0T0772	12	BOLT					
	20	5P8244	16	WASHER					
	21	5H4020	2	COVER					

C-CHANGE FROM PREVIOUS TYPE
I-SEE HOSE FABRICATION GUIDE

B-343483 EP

5057 **7T0621 LINES GP-PUMP-PART 2 OF 2**
An Attachment

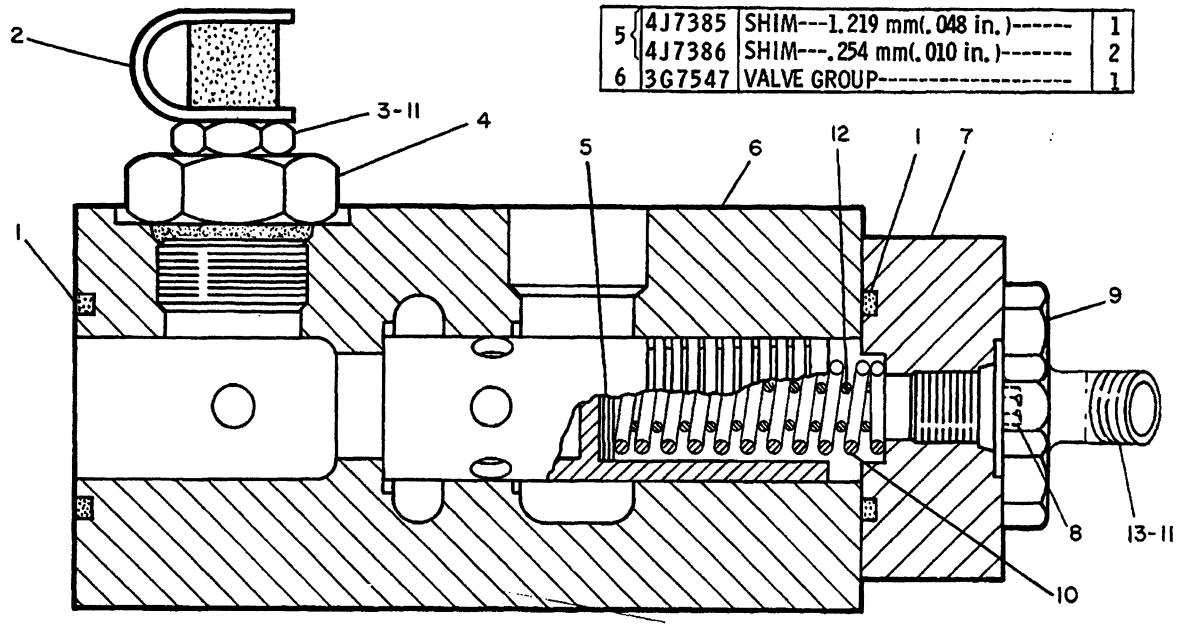

REF. NO.	PART NUMBER	DESCRIPTION	QTY
1	4J520	SEAL	2
2	6V852	CAP	1
3	6V3965	NIPPLE ASSEM.	1
4	2P8421	ADAPTER	1
	3D2824	SEAL	1
5	4J7385	SHIM---1.219 mm(.048 in.)	1
	4J7386	SHIM---.254 mm(.010 in.)	2
6	3G7547	VALVE GROUP	1
7	4T1864	COVER	1
8	5J5314	BOLT	2
9	9F8999	BOLT	4
10	3G3126	SPRING-------(outer)	1
11	3J1907	SEAL	2
12	4M5912	SPRING----(inner)	1
13	307942	ELBOW	1

235231

235231 P

5117

4T1865 VALVE GP
Pressure Control
Part Of 7G5125 Lines
An Attachment

HYDRAULIC SYSTEM

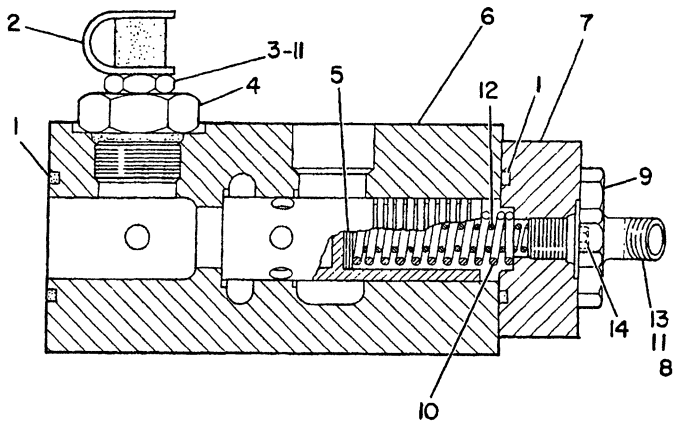

NOTE	REF NO	PART NUMBER	QTY	PART NAME
	1	4J0520	2	SEAL
	2	6V0852	1	CAP-DUST
	3	6V3965	1	NIPPLE AS
	4	2P8421	1	ADAPTER-O-RING
		3D2824	1	SEAL-O-RING
B	5	4J7385	1	SHIM 1.219MM(.048 IN)THK
B		4J7386	2	SHIM .254MM(.010 IN)THK
	6	3G7547	1	VALVE GP
	7	4T1864	1	COVER
	8	6V8397	1	SEAL-O-RING 9.25MM(.364 IN)ID
	9	7X0301	4	BOLT
	10	3G3126	1	SPRING (OUTER)
	11	3J1907	2	SEAL-O-RING 11.89MM(.468 IN)ID
	12	4M5912	1	SPRING (INNER)
	13	6V9001	1	ELBOW-45 DEGREE
	14	5J5314	2	BOLT 38.1MM(1.50 IN)LG
				-OR-
C		9F6641	2	BOLT 31.75MM(1.25 IN)LG

B-USE AS REQUIRED
C-CHANGE FROM PREVIOUS TYPE

B-582282 EP

5066 **9T0993 VALVE GP**
Pressure Control-Hydraulic Pump Lines
Hydraulic Pump Lines
S/N 53Y3485-Up

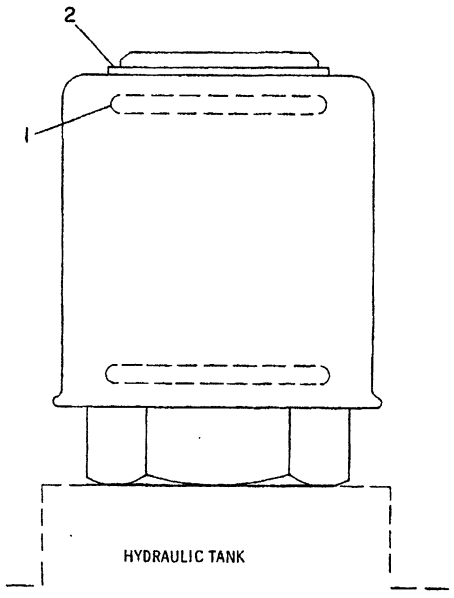

NOTE	REF NO	PART NUMBER	QTY	PART NAME
	1	2S4663	2	SEAL-O-RING
	2	5P8132	1	RING-RETAINING
				THE FOLLOWING REPAIR KIT IS AVAILABLE:
		1U0367	1	KIT-SEAL

B-230712 EP

5069 **3G9895 VALVE GP-RELIEF**
Breaker Relief
Part Of 7G0084,7G5125,7T0621 Lines
An Attachment

HYDRAULIC SYSTEM

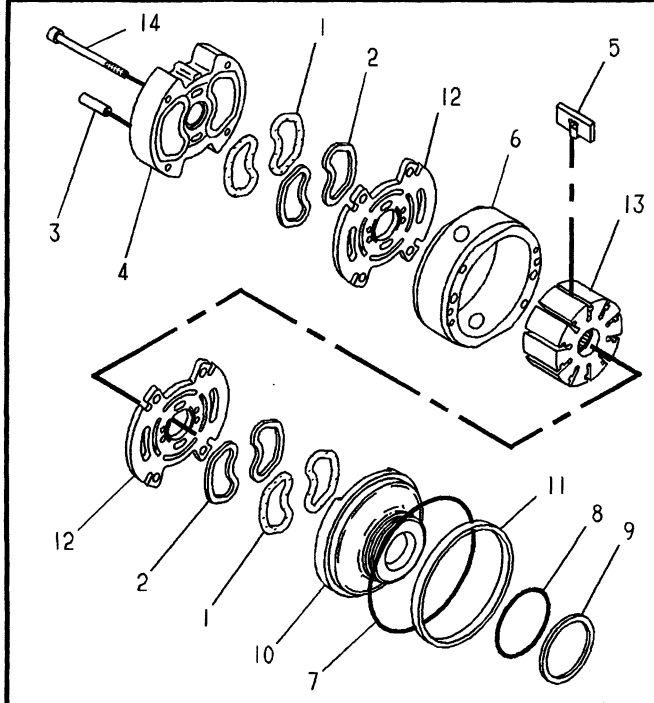

NOTE	REF NO	PART NUMBER	QTY	PART NAME
	1	8C3078	4	SEAL-O-RING
	2	3G2192	4	RETAINER-SEAL
	3	9T5041	2	DOWEL
	4	9T5048	1	PLATE-INLET
	5	647311	1	KIT-VANE
	6	9T5069	1	RING
	7	6V1197	1	SEAL-O-RING
	8	8J4351	1	SEAL-O-RING
	9	9T5086	1	RING
	10	9T5090	1	PLATE-OUTLET
	11	3G2193	1	RING-SEAL
	12	9T5098	2	PLATE-FLEX
	13	647310	1	ROTOR-PUMP
	14	9T5110	2	SCREW

A-402146 EP

5055 **1U2666 CARTRIDGE GP-REAR*R**

64 L/Min (17GPM)
Part Of 9J8277 Pump
An Attachment

HYDRAULIC SYSTEM

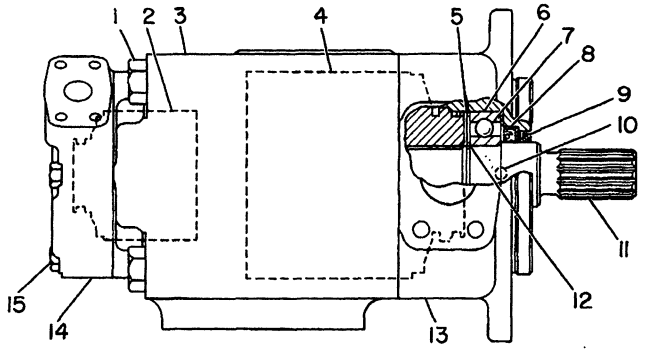

NOTE	REF NO	PART NUMBER	QTY	PART NAME
	1	1D4599	4	BOLT
RY	2	1U2666	1	CARTRIDGE GP 64 L/M(17GPM)
	3	4K0413	1	COVER
RY	4	1U2669	1	CARTRIDGE GP 144 L/M(38GPM)
	5	4M5285	1	RING-RETAINING
	6	2L5271	1	BALL BEARING
	7	2J8168	1	WASHER
	8	9J7814	1	SEAL-LIP
	9	3G9194	1	SEAL-LIP
	10	3G7242	1	PLUG
	11	1U3883	1	SHAFT-GOVERNOR CONTROL
	12	2J8172	1	RING-RETAINING
	13	1U3937	1	BODY
	14	4K0415	1	COVER-OUTLET
	15	2B0947	4	BOLT
				THE FOLLOWING REPAIR KITS ARE AVAILABLE:
		1U0379	1	KIT-FLEX PLATE (SMALL)
		1U0380	1	KIT-FLEX PLATE (LARGE)

R-REMFG PART MAY BE AVAILABLE
Y-SEPARATE ILLUSTRATION

B-235237 EP

5055 **9J8277 PUMP GP-VANE**

1U2669-Page 219, 1U2666-Page 218.02

An Attachment

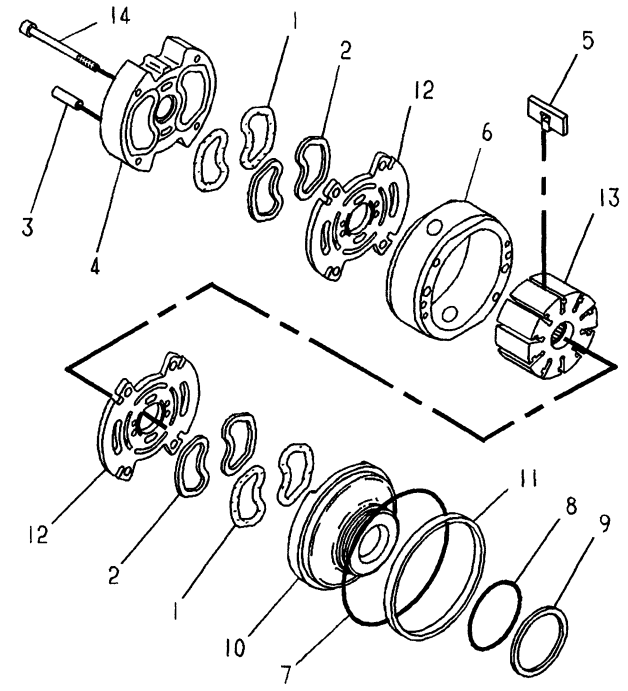

NOTE	REF NO	PART NUMBER	QTY	PART NAME
C	1	8C3079	4	SEAL-O-RING
C	2	3G1264	4	RETAINER-SEAL
C	3	9T5042	2	DOWEL
C	4	9T5050	1	PLATE-INLET
C	5	9T5057	1	KIT-VANE
C	6	9T5077	1	RING
	7	5D5958	1	SEAL-O-RING
	8	619457	1	SEAL-O-RING
C	9	9T5087	1	RING
C	10	9T5092	1	PLATE-OUTLET
	11	3G1820	1	RING-SEAL
C	12	9T5100	2	PLATE-FLEX
C	13	9T5107	1	ROTOR
C	14	9T5112	2	SCREW

C-CHANGE FROM PREVIOUS TYPE

A-402799 EP

5055 **1U2669 CARTRIDGE GP*R**

144L/Min (38GPM)

Part Of 9J8277 Pump

An Attachment

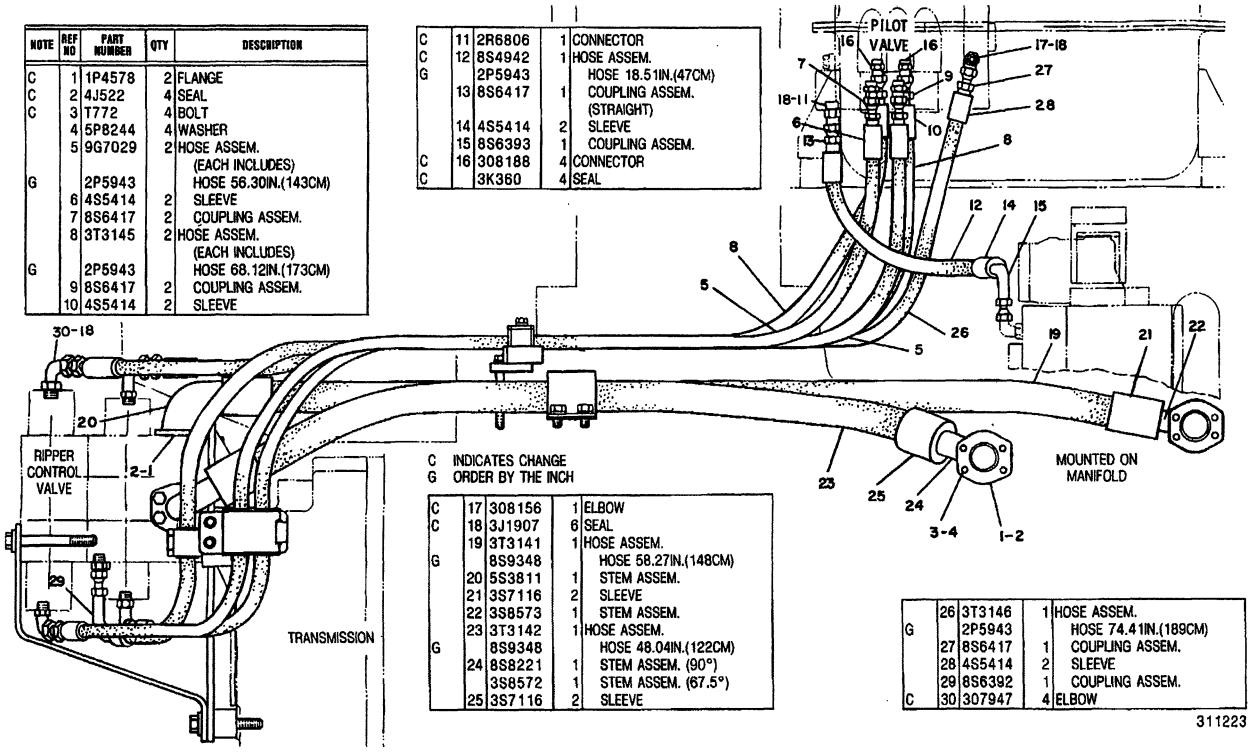

NOTE	REF NO	PART NUMBER	QTY	DESCRIPTION
C	1	1P4578	2	FLANGE
C	2	4J522	4	SEAL
C	3	T772	4	BOLT
	4	5P8244	4	WASHER
	5	9G7029	2	HOSE ASSEM. (EACH INCLUDES)
G		2P5943		HOSE 56.30IN.(143CM)
	6	4S5414	2	SLEEVE
	7	8S6417	2	COUPLING ASSEM.
	8	3T3145	2	HOSE ASSEM. (EACH INCLUDES)
G		2P5943		HOSE 68.12IN.(173CM)
	9	8S6417	2	COUPLING ASSEM.
	10	4S5414	2	SLEEVE
C	11	2R6806	1	CONNECTOR
C	12	8S4942	1	HOSE ASSEM.
G		2P5943		HOSE 18.51IN.(47CM)
	13	8S6417	1	COUPLING ASSEM. (STRAIGHT)
	14	4S5414	2	SLEEVE
	15	8S6393	1	COUPLING ASSEM.
C	16	308188	4	CONNECTOR
C		3K360	4	SEAL

C INDICATES CHANGE
G ORDER BY THE INCH

C	17	308156	1	ELBOW
C	18	3J1907	6	SEAL
	19	3T3141	1	HOSE ASSEM.
G		8S9348		HOSE 58.27IN.(148CM)
	20	5S3811	1	STEM ASSEM.
	21	3S7116	2	SLEEVE
	22	3S8573	1	STEM ASSEM.
	23	3T3142	1	HOSE ASSEM.
G		8S9348		HOSE 48.04IN.(122CM)
	24	8S8221	1	STEM ASSEM. (90°)
		3S8572	1	STEM ASSEM. (67.5°)
	25	3S7116	2	SLEEVE
	26	3T3146	1	HOSE ASSEM.
G		2P5943		HOSE 74.41IN.(189CM)
	27	8S6417	1	COUPLING ASSEM.
	28	4S5414	2	SLEEVE
	29	8S6392	1	COUPLING ASSEM.
C	30	307947	4	ELBOW

311223

311223 P

5057

8P2252 LINES GP-ADJUSTABLE RIPPER-PART 1 OF 2

Type 1

Part Of 9P9079,9P9082,9W0574 Control Ars-Hydraulic

An Attachment

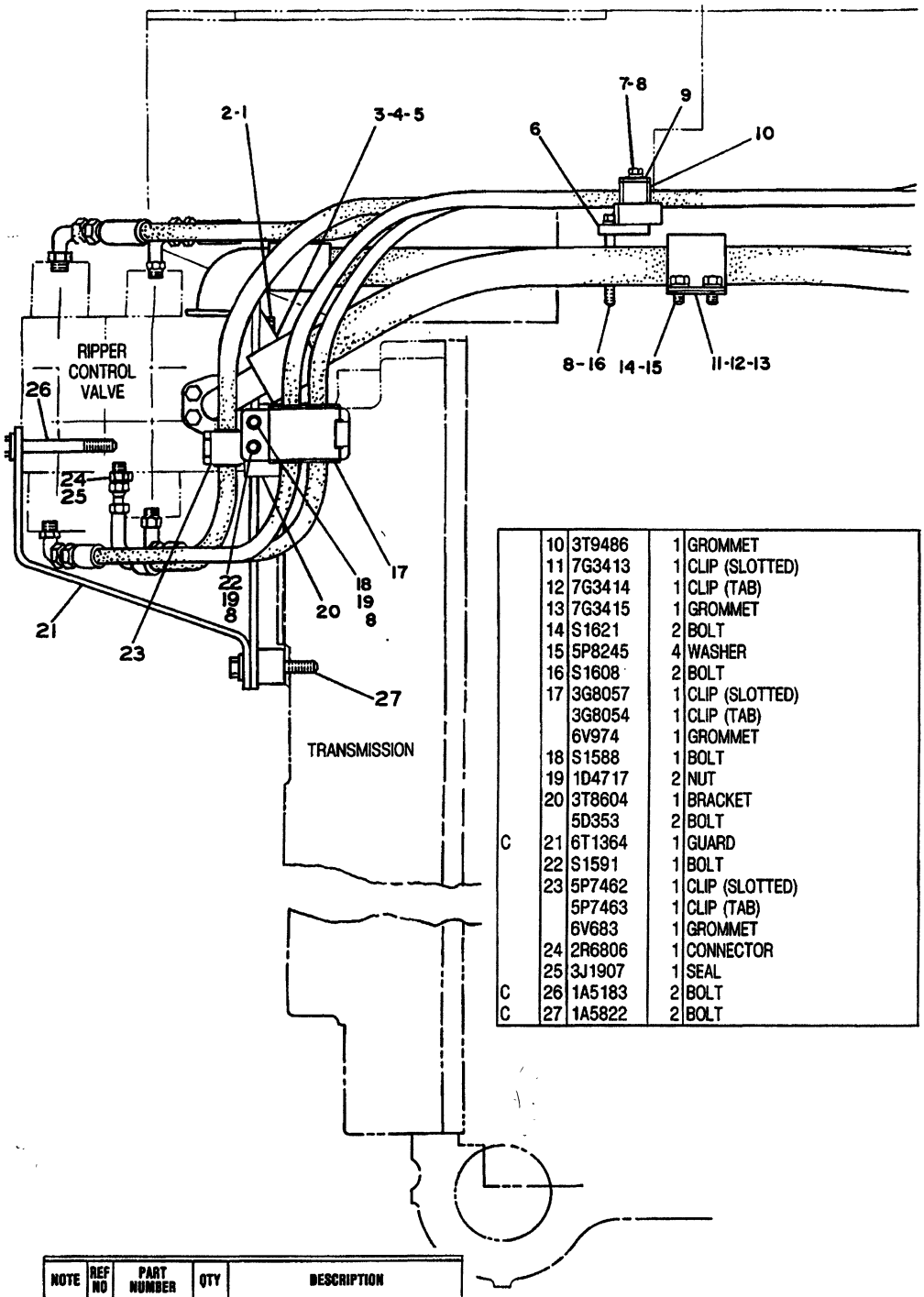

	10	3T9486	1	GROMMET
	11	7G3413	1	CLIP (SLOTTED)
	12	7G3414	1	CLIP (TAB)
	13	7G3415	1	GROMMET
	14	S1621	2	BOLT
	15	5P8245	4	WASHER
	16	S1608	2	BOLT
	17	3G8057	1	CLIP (SLOTTED)
		3G8054	1	CLIP (TAB)
		6V974	1	GROMMET
	18	S1588	1	BOLT
	19	1D4717	2	NUT
	20	3T8604	1	BRACKET
		5D353	2	BOLT
C	21	6T1364	1	GUARD
	22	S1591	1	BOLT
	23	5P7462	1	CLIP (SLOTTED)
		5P7463	1	CLIP (TAB)
		6V683	1	GROMMET
	24	2R6806	1	CONNECTOR
	25	3J1907	1	SEAL
C	26	1A5183	2	BOLT
C	27	1A5822	2	BOLT

NOTE	REF NO	PART NUMBER	QTY	DESCRIPTION
	1	T320	4	BOLT
	2	5P8244	4	WASHER
	3	3T5311	1	BRACKET ASSEM.
	4	1A8063	2	BOLT
C	5	5P8248	2	WASHER
	6	3T6877	1	PLATE ASSEM.
	7	L1351	2	BOLT
	8	5M2894	10	WASHER
	9	3T9637	1	PLATE

C INDICATES CHANGE

307951

307951 P

5057 **8P2252 LINES GP-ADJUSTABLE RIPPER-PART 2 OF 2**

Type 1

Part Of 9P9079,9P9082,9W0574 Control Ars-Hydraulic

An Attachment

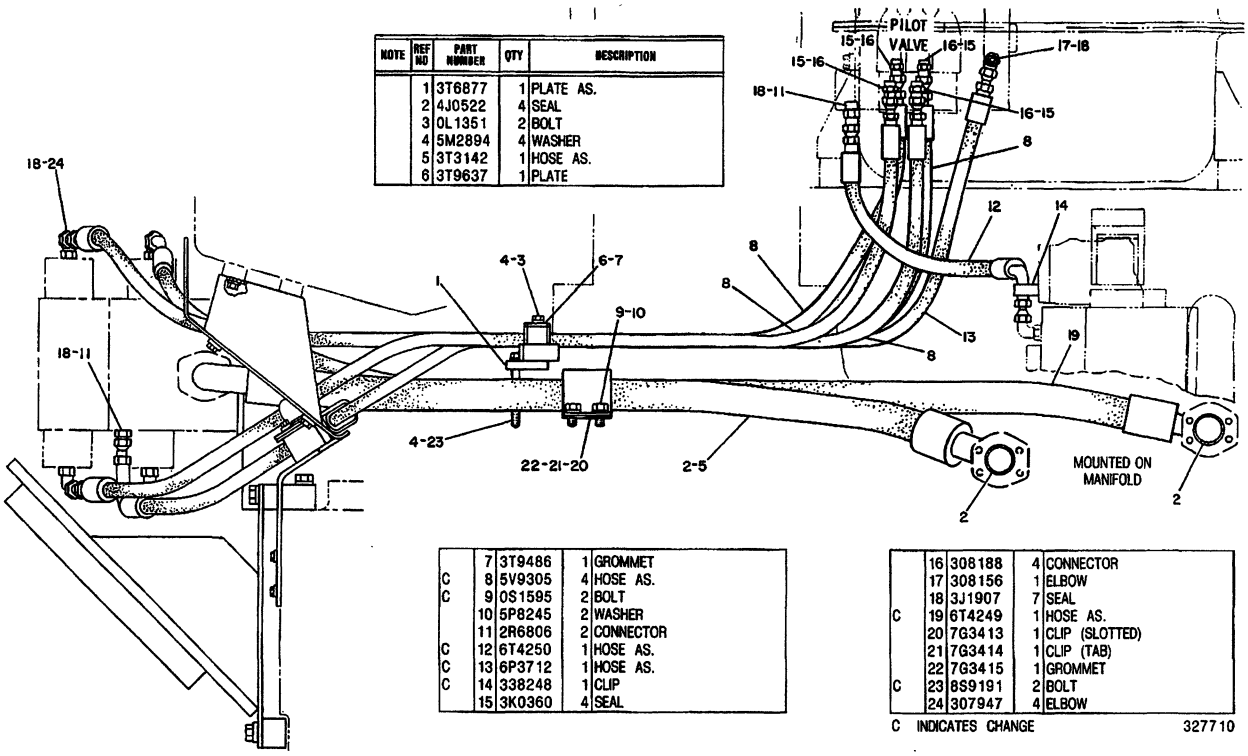

NOTE	REF NO	PART NUMBER	QTY	DESCRIPTION
	1	3T6877	1	PLATE AS.
	2	4J0522	4	SEAL
	3	0L1351	2	BOLT
	4	5M2894	4	WASHER
	5	3T3142	1	HOSE AS.
	6	3T9637	1	PLATE

NOTE	REF NO	PART NUMBER	QTY	DESCRIPTION
	7	3T9486	1	GROMMET
C	8	5V9305	4	HOSE AS.
C	9	0S1595	2	BOLT
	10	5P8245	2	WASHER
	11	2R6806	2	CONNECTOR
C	12	6T4250	1	HOSE AS.
C	13	6P3712	1	HOSE AS.
C	14	338248	1	CLIP
	15	3K0360	4	SEAL

NOTE	REF NO	PART NUMBER	QTY	DESCRIPTION
	16	308188	4	CONNECTOR
	17	308156	1	ELBOW
	18	3J1907	7	SEAL
C	19	6T4249	1	HOSE AS.
	20	7G3413	1	CLIP (SLOTTED)
	21	7G3414	1	CLIP (TAB)
	22	7G3415	1	GROMMET
C	23	8S9191	2	BOLT
	24	307947	4	ELBOW

C INDICATES CHANGE

327710

327710 P

5057 **8P2252 LINES GP-ADJUSTABLE RIPPER-PART 1 OF 2**

Type 2

Part Of 9P9079,9P9082,9W0574 Control Ars-Hydraulic

An Attachment

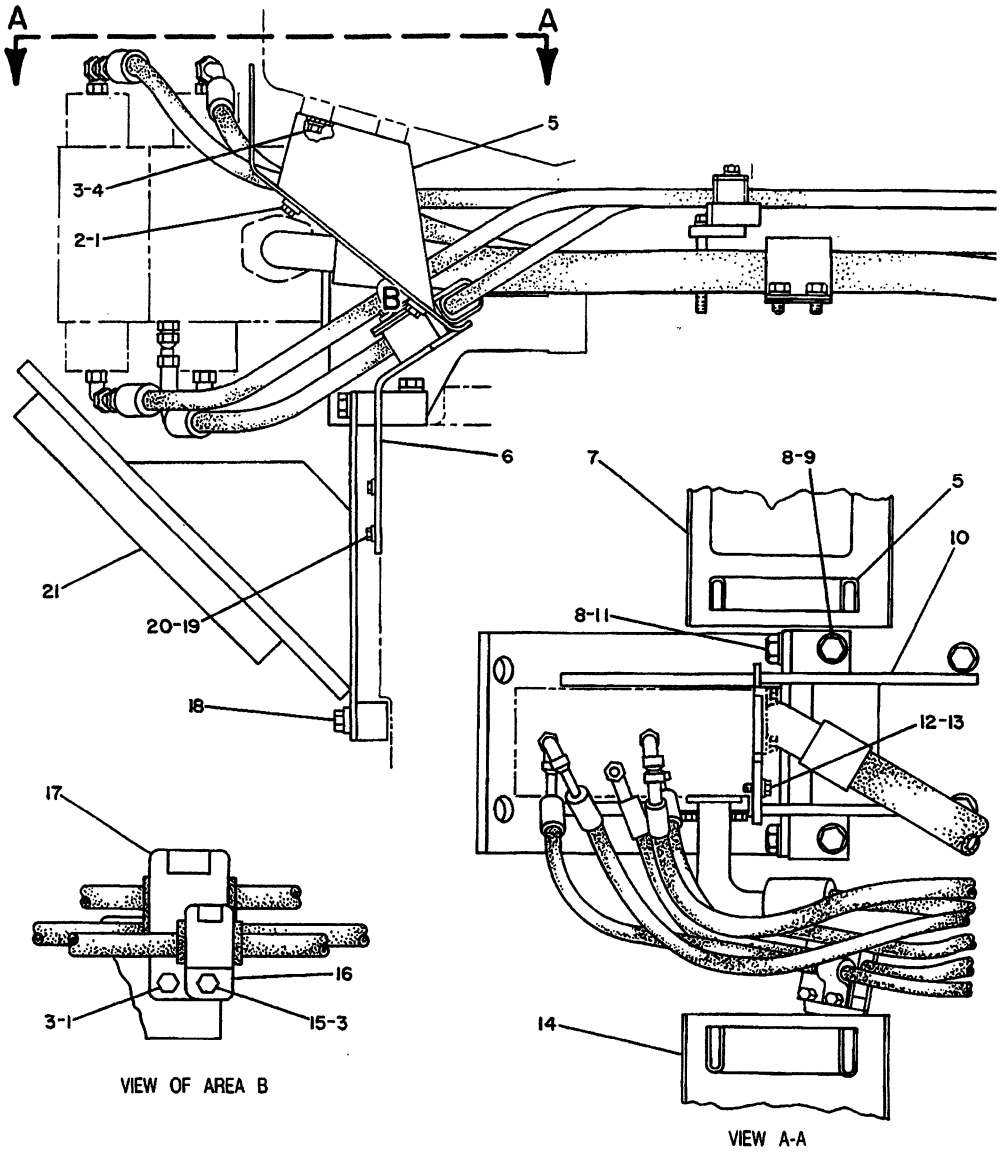

VIEW OF AREA B

VIEW A-A

NOTE	REF NO	PART NUMBER	QTY	DESCRIPTION
C	1	0S1594	5	BOLT
C	2	1P7346	4	WASHER
	3	5M2894	6	WASHER
C	4	0S0509	4	BOLT
C	5	6T4067	2	BRACKET AS.
C	6	6T9134	1	BRACKET AS.
C	7	6T4064	1	COVER AS.
		9F2978	2	NUT
C	8	2S0115	10	WASHER
C	9	3B2968	4	BOLT
C	10	6T3949	1	BRACKET AS.
C	11	1A0458	2	BOLT
	12	0T0320	4	BOLT
	13	5P8244	4	WASHER
C	14	6T4065	1	PLATE
	15	0S1588	1	BOLT
	16	5P7462	1	CLIP (SLOTTED)
		5P7463	1	CLIP (TAB)
		6V0683	1	GROMMET
	17	3G8057	1	CLIP (SLOTTED)
		3G8054	1	CLIP (TAB)
		6V0974	1	GROMMET
C	18	9S1366	2	BOLT
		5P8245	2	WASHER
C	19	2J3118	2	BOLT
C	20	5P1075	2	WASHER
C	21	6T3948	1	GUARD AS.

C INDICATES CHANGE

327711

327711 P

5057 **8P2252 LINES GP-ADJUSTABLE RIPPER-PART 2 OF 2**

Type 2

Part Of 9P9079,9P9082,9W0574 Control Ars-Hydraulic

An Attachment

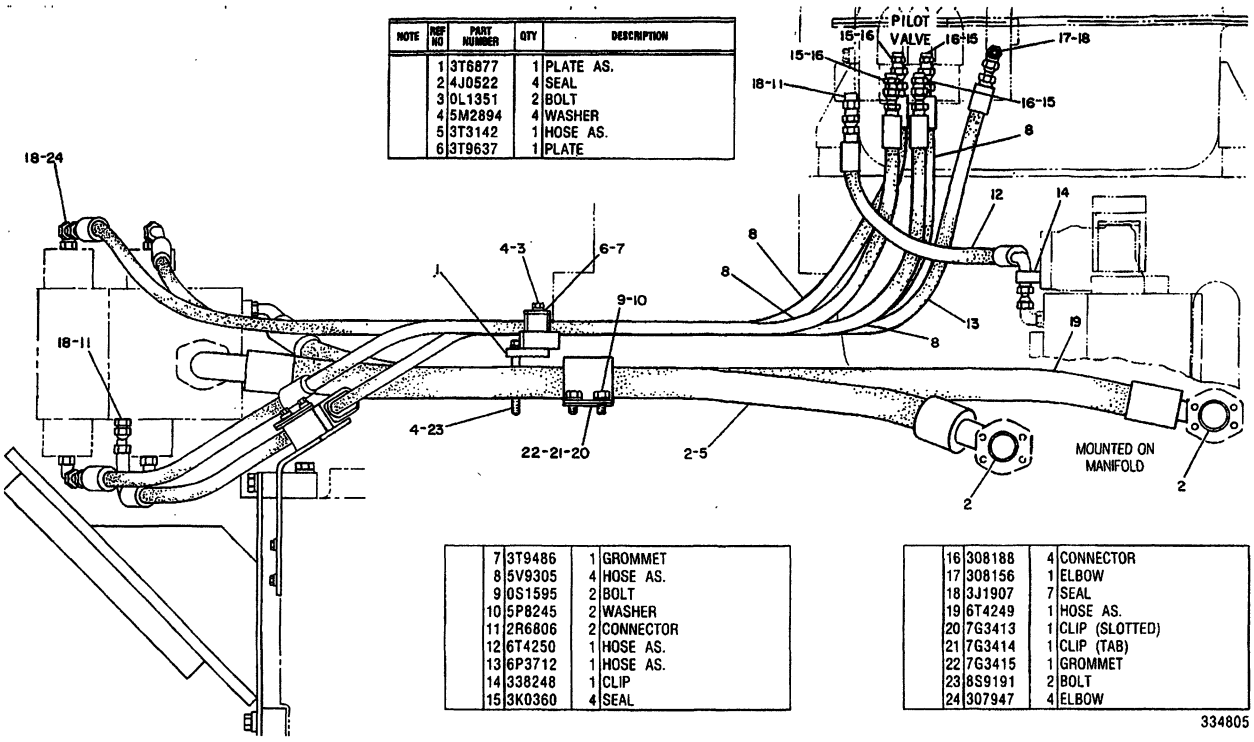

NOTE	REF NO	PART NUMBER	QTY	DESCRIPTION
	1	3T6877	1	PLATE AS.
	2	4J0522	4	SEAL
	3	0L1351	2	BOLT
	4	5M2894	4	WASHER
	5	3T3142	1	HOSE AS.
	6	3T9637	1	PLATE
	7	3T9486	1	GROMMET
	8	5V9305	4	HOSE AS.
	9	0S1595	2	BOLT
	10	5P8245	2	WASHER
	11	2R6806	2	CONNECTOR
	12	6T4250	1	HOSE AS.
	13	6P3712	1	HOSE AS.
	14	338248	1	CLIP
	15	3K0360	4	SEAL
	16	308188	4	CONNECTOR
	17	308156	1	ELBOW
	18	3J1907	7	SEAL
	19	6T4249	1	HOSE AS.
	20	7G3413	1	CLIP (SLOTTED)
	21	7G3414	1	CLIP (TAB)
	22	7G3415	1	GROMMET
	23	8S9191	2	BOLT
	24	307947	4	ELBOW

334805 P

5057

8P2252 LINES GP-ADJUSTABLE RIPPER-PART 1 OF 2

Type 3

Part Of 9P9079,9P9082,9W0574 Control Ars-Hydraulic

An Attachment

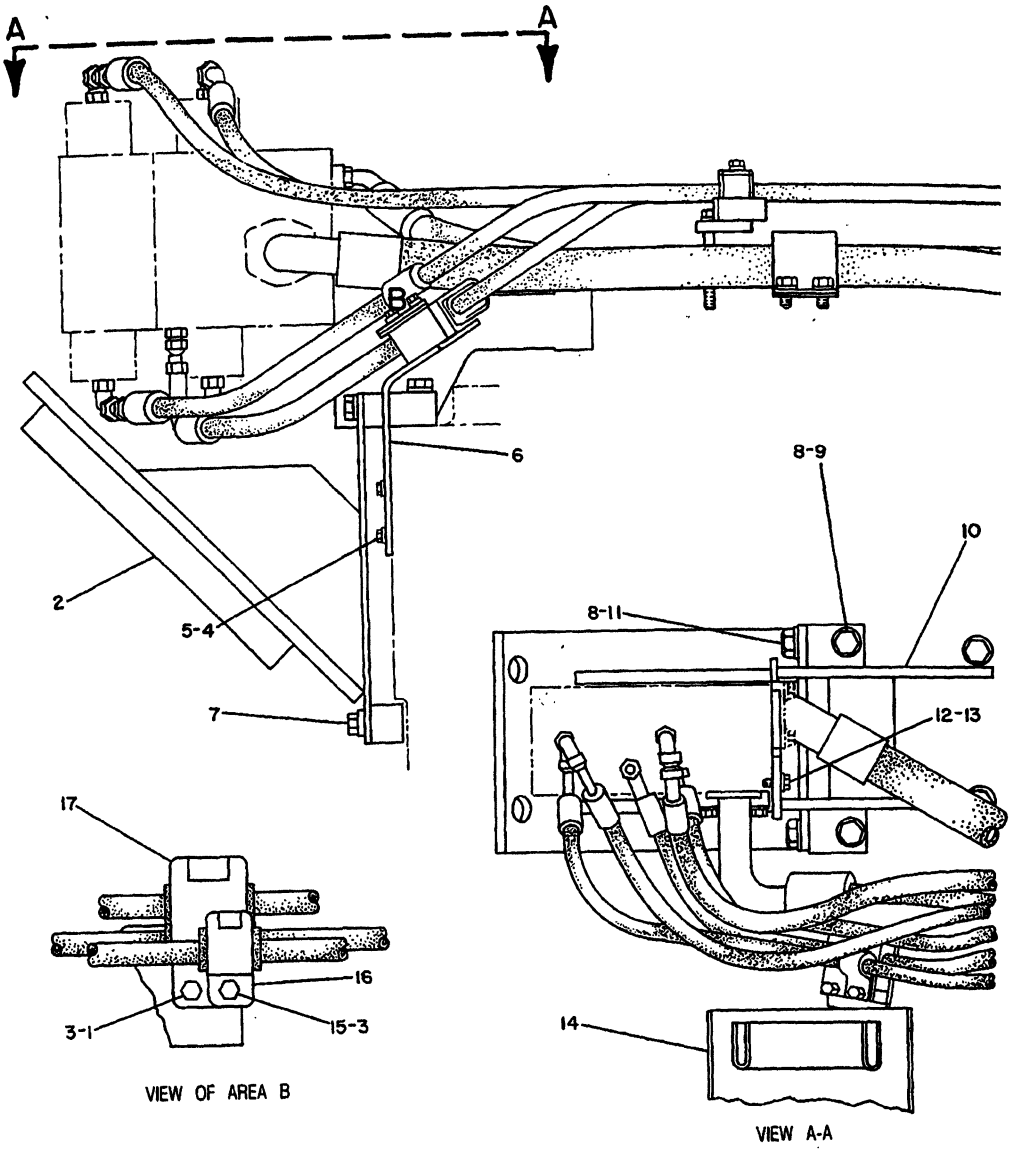

NOTE	REF NO	PART NUMBER	QTY	DESCRIPTION
C	1	0S1594	1	BOLT
	2	6T3948	1	GUARD AS.
C	3	5M2894	2	WASHER
	4	2J3118	2	BOLT
	5	5P1075	2	WASHER
	6	6T9134	1	BRACKET AS.
	7	9S1366	2	BOLT
		5P8245	2	WASHER
	8	2S0115	10	WASHER
	9	3B2968	4	BOLT
	10	6T3949	1	BRACKET AS.
	11	1A0458	2	BOLT
	12	0T0320	4	BOLT
	13	5P8244	4	WASHER
	14	6T4065	1	PLATE
	15	0S1588	1	BOLT
	16	5P7462	1	CLIP (SLOTTED)
		5P7463	1	CLIP (TAB)
		6V0683	1	GROMMET
	17	3G8057	1	CLIP (SLOTTED)
		3G8054	1	CLIP (TAB)
		6V0974	1	GROMMET

C INDICATES CHANGE

334806

334806 P

5057

8P2252 LINES GP-ADJUSTABLE RIPPER-PART 2 OF 2

Type 3

Part Of 9P9079,9P9082,9W0574 Control Ars-Hydraulic

An Attachment

HYDRAULIC SYSTEM

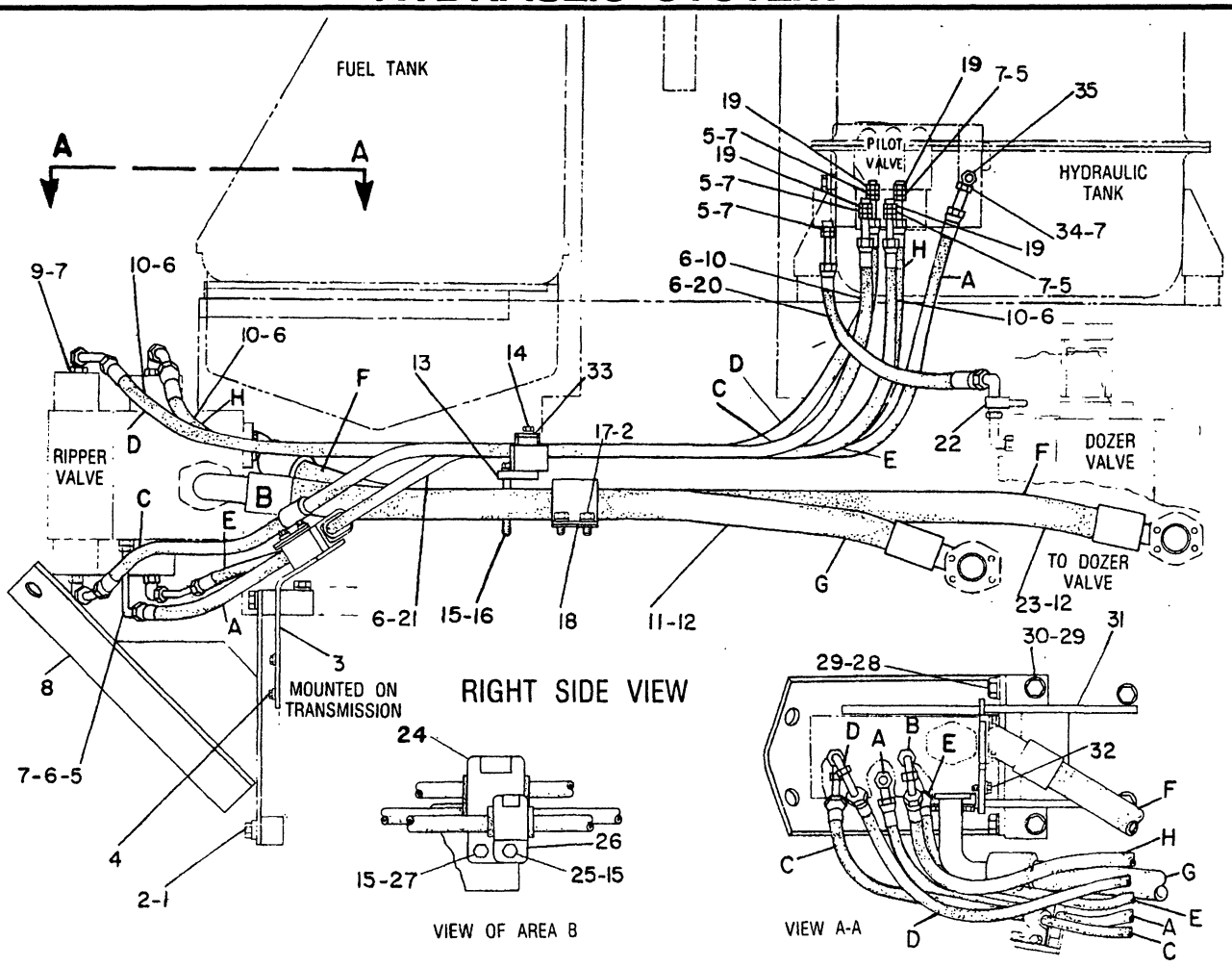

NOTE	REF NO	PART NUMBER	QTY	PART NAME	NOTE	REF NO	PART NUMBER	QTY	PART NAME
	1	9S1366	2	BOLT		20	9W4201	1	HOSE AS
	2	5P8245	4	WASHER		21	8W2598	1	HOSE AS
	3	6T9134	1	BRACKET AS		22	338248	1	CLIP
	4	2J3118	2	BOLT-LOCKING			1A9579	1	BOLT
		5P1075	2	WASHER-HARD			8D5898	1	SPACER
	5	6V8636	6	CONNECTOR		23	6T4249	1	HOSE AS
	6	6V8397	13	SEAL-O-RING 9.91MM(.39IN.)ID		24	3G8054	1	CLIP (TAB)
							3G8057	1	CLIP (SLOT)
	7	3J1907	11	SEAL-O-RING 11.89MM(.468IN.)ID			6V0974	1	GROMMET
						25	0S1588	1	BOLT
	8	6T3948	1	GUARD AS		26	5P7462	1	CLIP (SLOT)
	9	6V8724	4	ELBOW-90 DEGREE			5P7463	1	CLIP (TAB)
	10	9W4203	4	HOSE AS			6V0683	1	GROMMET
	11	3T3142	1	HOSE AS		27	0S1594	1	BOLT
C	12	8T7212	4	SEAL		28	1A0458	2	BOLT
	13	3T6877	1	PLATE AS		29	5P8248	6	WASHER-HARD
	14	0L1351	2	BOLT		30	3B2968	4	BOLT
	15	5M2894	6	WASHER		31	6T3949	1	BRACKET AS
	16	8S9191	2	BOLT		32	0T0320	4	BOLT
	17	0S1595	2	BOLT			5P8244	4	WASHER
	18	7G3413	1	CLIP (SLOT)		33	3T9637	1	PLATE
		7G3414	1	CLIP (TAB)			3T9486	1	GROMMET
		7G3415	1	GROMMET		34	6V9850	1	ELBOW-SWIVEL
	19	5P6944	4	ADAPTER-STRAIGHT THREAD		35	8T0075	1	CONNECTOR
		3K0360	4	SEAL-O-RING 16.36MM(.644IN.)ID					

C-CHANGE FROM PREVIOUS TYPE

B-454095 EP

5057

9W4314 LINES GP-RIPPER
Adjustable
S/N 53Y4525-Up
Part Of 9W0574 Control Ar
An Attachment

MEMORANDA

REF NO.	PART NUMBER	DESCRIPTION	QTY.
1	1P4578	FLANGE	8
2	4J522	SEAL	4
3	T772	BOLT	16
4	5P8244	WASHER	16
5	9G7029	HOSE ASSEM. (Includes)	1
▲	2P5943	HOSE---56.30 in. (143 cm)	
6	4S5414	SLEEVE	2
7	8S6417	COUPLING ASSEM.	2
8	3T3145	HOSE ASSEM. (Includes)	1
▲	2P5943	HOSE---68.12 in. (173 cm)	
9	8S6417	COUPLING ASSEM.	2
10	4S5414	SLEEVE	2
11	303978	CONNECTOR	1
	3J7354	SEAL	1
12	8S4942	HOSE ASSEM. (Includes)	1
▲	2P5943	HOSE---18.51 in. (47 cm)	
13	8S6417	COUPLING ASSEM. --(straight)	1
14	4S5414	SLEEVE	2
15	8S6393	COUPLING ASSEM.	1
16	308188	CONNECTOR	2
	3K360	SEAL	2
17	308156	ELBOW	3
18	3J1907	SEAL	3
19	3T3141	HOSE ASSEM. (Includes)	1
▲	8S9348	HOSE--58.27 in. (148 cm)	
20	5S3811	STEM ASSEM.	1
21	3S7116	SLEEVE	2
22	3S8573	STEM ASSEM.	1
23	3T3142	HOSE ASSEM. (Includes)	1
▲	8S9348	HOSE---48.04 in. (122 cm)	
24	8S8221	STEM ASSEM. --(90°)	1
	3S8572	STEM ASSEM. ---(67.5°)	1
25	3S7116	SLEEVE	2
26	3T3146	HOSE ASSEM. (Includes)	1
▲	2P5943	HOSE---74.41 in. (189 cm)	
27	8S6417	COUPLING ASSEM.	1
28	4S5414	SLEEVE	2
29	8S6392	COUPLING ASSEM.	1

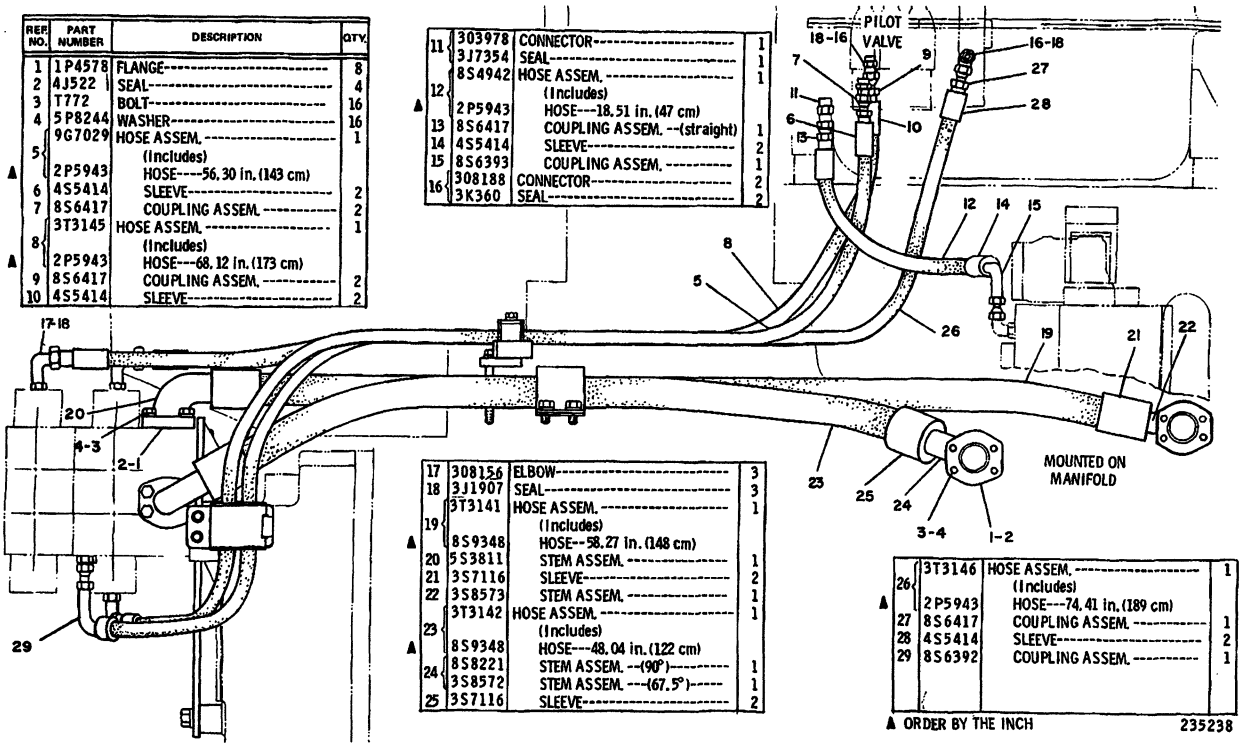

▲ ORDER BY THE INCH

235238

235238 P

5057

7G0087 LINES GP-RIPPER-PART 1 OF 2

Type 1

An Attachment

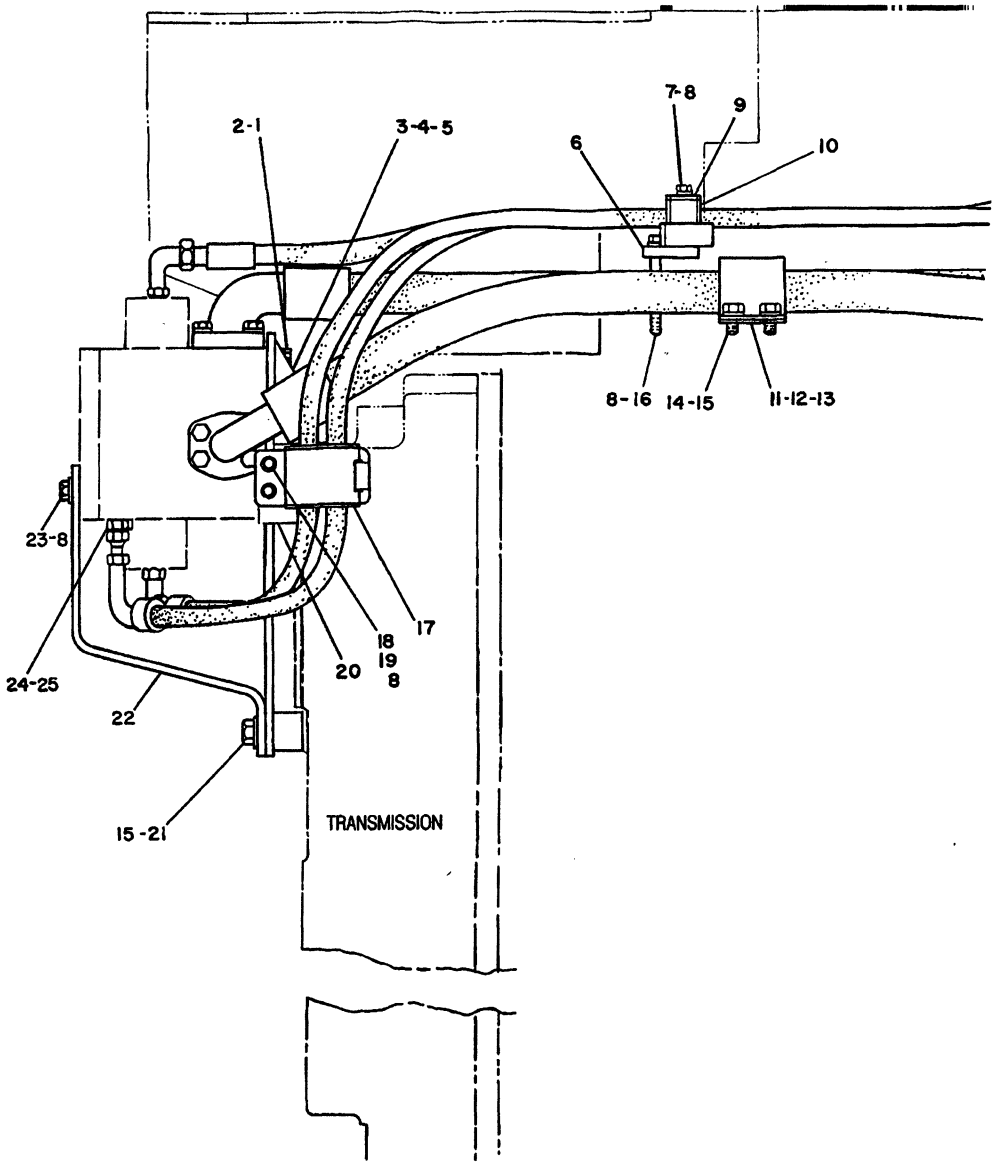

C INDICATES CHANGE

NOTE	REF NO	PART NUMBER	QTY	DESCRIPTION
	1	T320	4	BOLT
	2	5P8244	4	WASHER
	3	3T5311	1	BRACKET ASSEM.
	4	1A8063	2	BOLT
C	5	5P8248	2	WASHER
	6	3T6877	1	PLATE ASSEM.
	7	L1351	2	BOLT
	8	5M2894	10	WASHER
	9	3T9637	1	PLATE
	10	3T9486	1	GROMMET
	11	7G3413	1	CLIP (SLOTTED)
	12	7G3414	1	CLIP (TAB)
	13	7G3415	1	GROMMET
	14	S1621	2	BOLT
	15	5P8245	4	WASHER
	16	S1608	2	BOLT
	17	3G8057	1	CLIP (SLOTTED)
		3G8054	1	CLIP (TAB)
		6V974	1	GROMMET
	18	S1588	2	BOLT
	19	1D4717	2	NUT
	20	3T8604	1	BRACKET
		5D353	2	BOLT
C	21	1A5822	2	BOLT
C	22	6T1366	1	GUARD
C	23	S1591	2	BOLT
	24	2R6806	1	CONNECTOR
	25	3J1907	1	SEAL

307955

307955 P

5057 **7G0087 LINES GP-RIPPER-PART 2 OF 2**

Type 1

An Attachment

NOTE	REF NO	PART NUMBER	QTY	DESCRIPTION
C	1	6T4067	2	BRACKET AS.
		9F2978	4	NUT
C	2	338248	1	CLIP
C	3	5V9305	1	HOSE AS.
G		2P5943		HOSE 56.3 IN.(143 CM)
		1P9919	1	COUPLING AS. (45°)
	4	4S5414	2	SLEEVE
	5	8S6417	1	COUPLING AS. (STRT.)
	6	307947	2	ELBOW
	7	4J0522	4	SEAL
	8	3T3145	1	HOSE AS.
G		2P5943		HOSE 68.1 IN.(173CM)
	9	8S6417	2	COUPLING AS.
	10	4S5414	2	SLEEVE
	11	5P8245	2	WASHER
		9S1366	2	BOLT
C	12	6T4250	1	HOSE AS.
G		2P5943		HOSE 18.5 IN.(47 CM)
	13	8S6417	1	COUPLING AS. (STRT.)
	14	4S5414	2	SLEEVE
	15	5P2467	1	COUPLING AS. (90°)

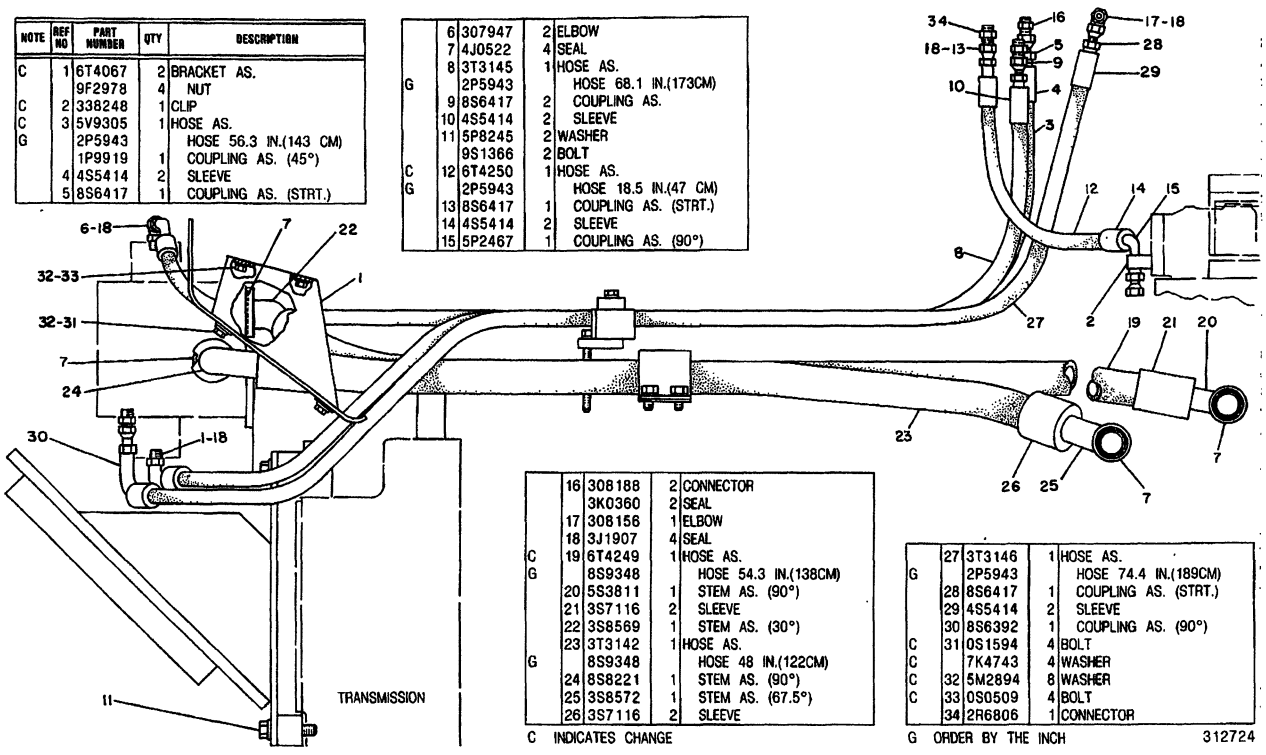

	16	308188	2	CONNECTOR
		3K0360	2	SEAL
	17	308156	1	ELBOW
	18	3J1907	4	SEAL
C	19	6T4249	1	HOSE AS.
G		8S9348		HOSE 54.3 IN.(138CM)
	20	5S3811	1	STEM AS. (90°)
	21	3S7116	2	SLEEVE
	22	3S8569	1	STEM AS. (30°)
	23	3T3142	1	HOSE AS.
G		8S9348		HOSE 48 IN.(122CM)
	24	8S8221	1	STEM AS. (90°)
	25	3S8572	1	STEM AS. (67.5°)
	26	3S7116	2	SLEEVE

C INDICATES CHANGE

	27	3T3146	1	HOSE AS.
G		2P5943		HOSE 74.4 IN.(189CM)
	28	8S6417	1	COUPLING AS. (STRT.)
	29	4S5414	2	SLEEVE
	30	8S6392	1	COUPLING AS. (90°)
C	31	0S1594	4	BOLT
C		7K4743	4	WASHER
C	32	5M2894	8	WASHER
C	33	0S0509	4	BOLT
	34	2R6806	1	CONNECTOR

G ORDER BY THE INCH

312724

312724 P

5057

7G0087 LINES GP-RIPPER-PART 1 OF 2

Type 2

An Attachment

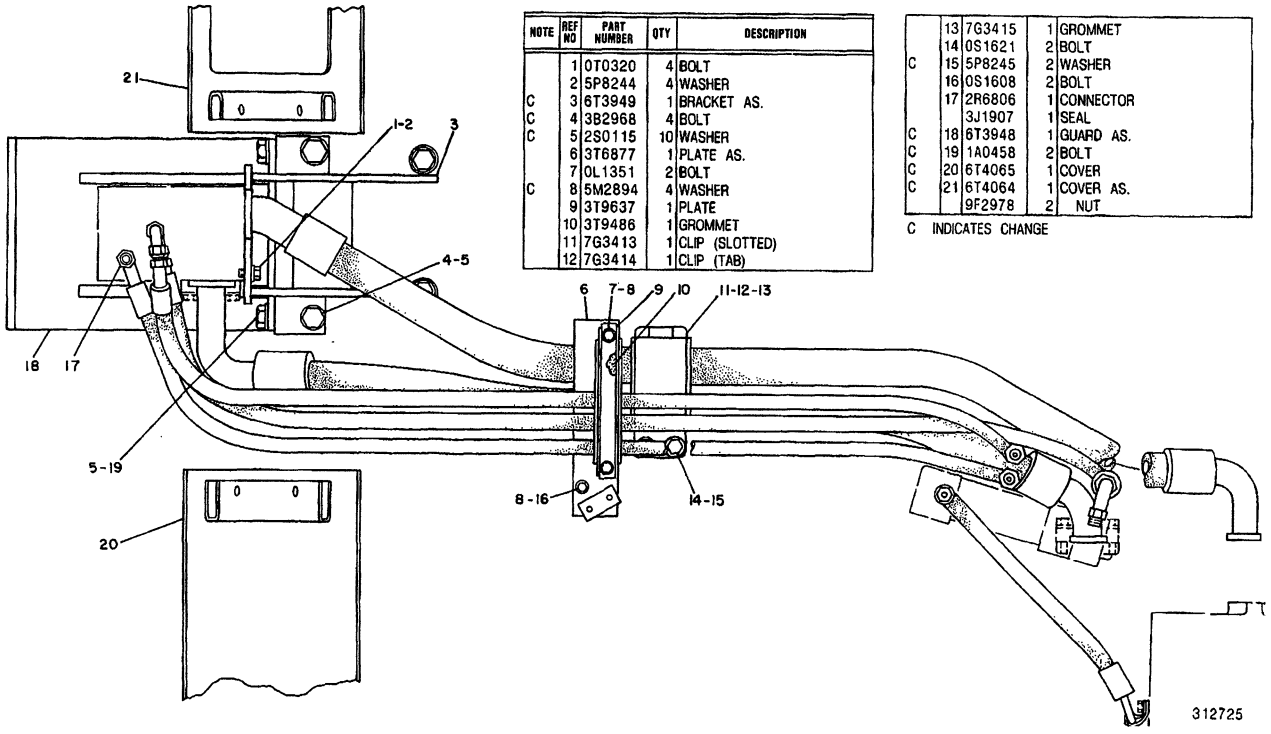

NOTE	REF NO	PART NUMBER	QTY	DESCRIPTION
	1	0T0320	4	BOLT
	2	5P8244	4	WASHER
C	3	6T3949	1	BRACKET AS.
C	4	3B2968	4	BOLT
C	5	2S0115	10	WASHER
	6	3T6877	1	PLATE AS.
	7	0L1351	2	BOLT
C	8	5M2894	4	WASHER
	9	3T9637	1	PLATE
	10	3T9486	1	GROMMET
	11	7G3413	1	CLIP (SLOTTED)
	12	7G3414	1	CLIP (TAB)
	13	7G3415	1	GROMMET
	14	0S1621	2	BOLT
C	15	5P8245	2	WASHER
	16	0S1608	2	BOLT
	17	2R6806	1	CONNECTOR
		3J1907	1	SEAL
C	18	6T3948	1	GUARD AS.
C	19	1A0458	2	BOLT
C	20	6T4065	1	COVER
C	21	6T4064	1	COVER AS.
		9F2978	2	NUT

C INDICATES CHANGE

312725 P

5057 **7G0087 LINES GP-RIPPER-PART 2 OF 2**

Type 2

An Attachment

HYDRAULIC SYSTEM

NOTE	REF NO	PART NUMBER	QTY	DESCRIPTION
	1	6T4067	2	BRACKET AS.
		9F2978	4	NUT
	2	338248	1	CLIP
	3	5V9305	1	HOSE AS.
BG		2P5943		HOSE
		1P9919	1	COUPLING AS. (45°)
	4	4S5414	2	SLEEVE
	5	8S6417	1	COUPLING AS. (STRT.)

	6	307947	2	ELBOW
	7	4J0522	4	SEAL
C	8	5V9305	1	HOSE AS.
BG		2P5943		HOSE
	9	8S6417	1	COUPLING AS.
		1P9919	1	COUPLING AS. (45°)
	10	4S5414	2	SLEEVE
	11	5P8245	2	WASHER
		9S1366	2	BOLT
	12	6T4250	1	HOSE AS.
BG		2P5943		HOSE
	13	8S6417	1	COUPLING AS. (STRT.)
	14	4S5414	2	SLEEVE
	15	5P2467	1	COUPLING AS. (90°)

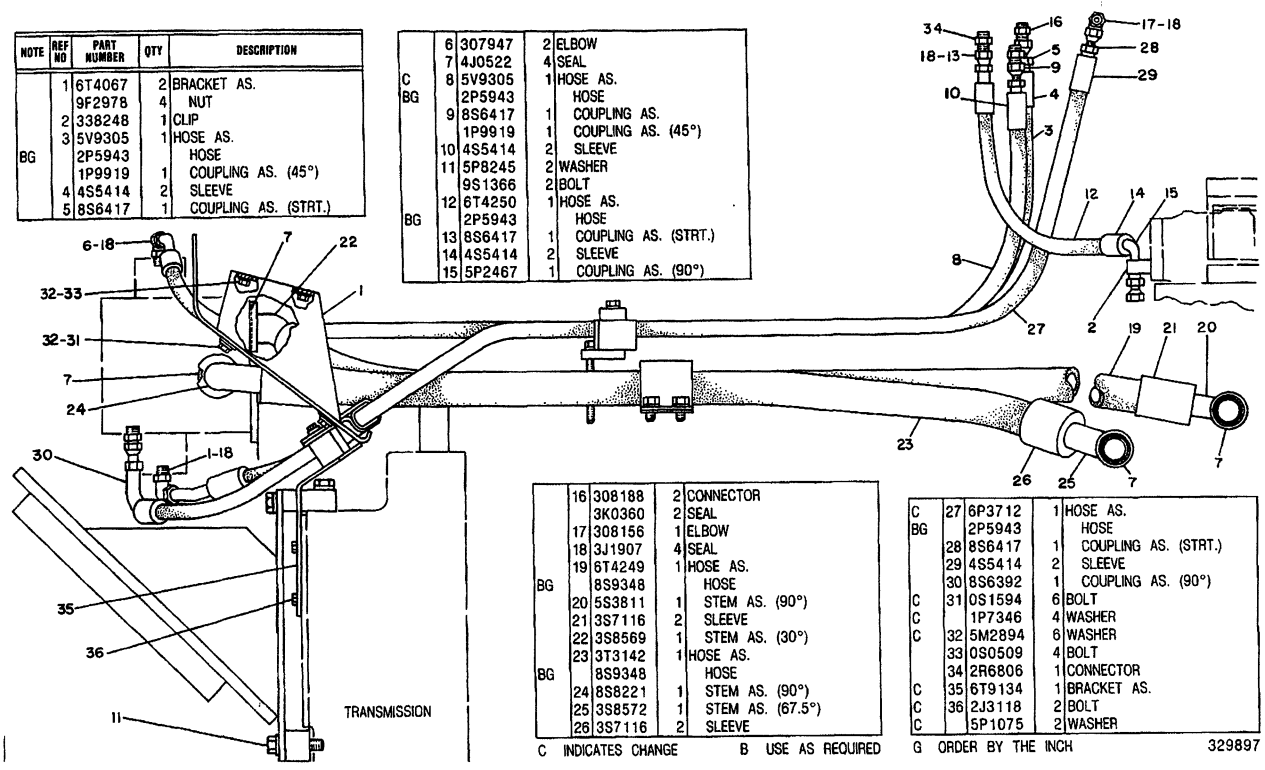

	16	308188	2	CONNECTOR
		3K0360	2	SEAL
	17	308156	1	ELBOW
	18	3J1907	4	SEAL
	19	6T4249	1	HOSE AS.
BG		8S9348		HOSE
	20	5S3811	1	STEM AS. (90°)
	21	3S7116	2	SLEEVE
	22	3S8569	1	STEM AS. (30°)
	23	3T3142	1	HOSE AS.
BG		8S9348		HOSE
	24	8S8221	1	STEM AS. (90°)
	25	3S8572	1	STEM AS. (67.5°)
	26	3S7116	2	SLEEVE

C	27	6P3712	1	HOSE AS.
BG		2P5943		HOSE
	28	8S6417	1	COUPLING AS. (STRT.)
	29	4S5414	2	SLEEVE
	30	8S6392	1	COUPLING AS. (90°)
C	31	0S1594	6	BOLT
C		1P7346	4	WASHER
C	32	5M2894	6	WASHER
	33	0S0509	4	BOLT
	34	2R6806	1	CONNECTOR
C	35	6T9134	1	BRACKET AS.
C	36	2J3118	2	BOLT
C		5P1075	2	WASHER

C INDICATES CHANGE B USE AS REQUIRED G ORDER BY THE INCH

329897

329897 P

5057 **7G0087 LINES GP-RIPPER-PART 1 OF 2**

Type 3

An Attachment

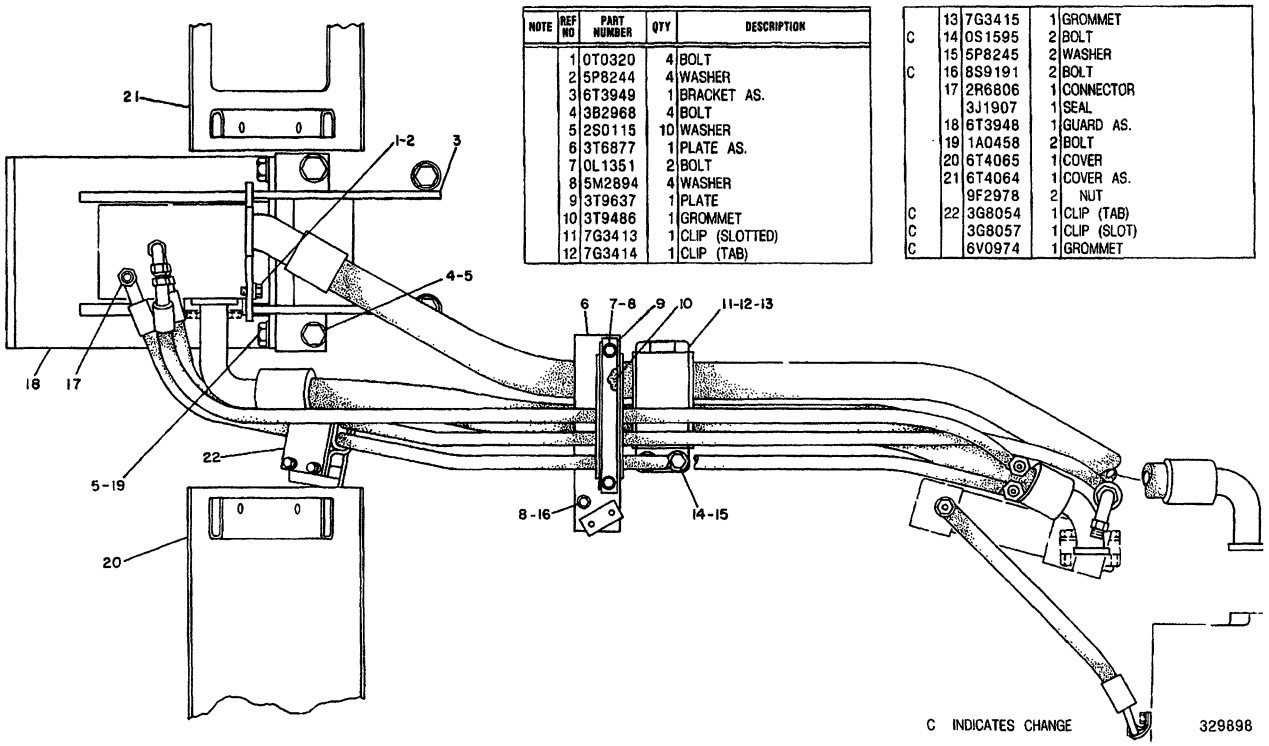

NOTE	REF NO	PART NUMBER	QTY	DESCRIPTION
	1	0T0320	4	BOLT
	2	5P8244	4	WASHER
	3	6T3949	1	BRACKET AS.
	4	3B2968	4	BOLT
	5	2S0115	10	WASHER
	6	3T6877	1	PLATE AS.
	7	0L1351	2	BOLT
	8	5M2894	4	WASHER
	9	3T9637	1	PLATE
	10	3T9486	1	GROMMET
	11	7G3413	1	CLIP (SLOTTED)
	12	7G3414	1	CLIP (TAB)
	13	7G3415	1	GROMMET
C	14	0S1595	2	BOLT
	15	5P8245	2	WASHER
C	16	8S9191	2	BOLT
	17	2R6806	1	CONNECTOR
		3J1907	1	SEAL
	18	6T3948	1	GUARD AS.
	19	1A0458	2	BOLT
	20	6T4065	1	COVER
	21	6T4064	1	COVER AS.
		9F2978	2	NUT
C	22	3G8054	1	CLIP (TAB)
C		3G8057	1	CLIP (SLOT)
C		6V0974	1	GROMMET

329898 P

5057 **7G0087 LINES GP-RIPPER-PART 2 OF 2**

Type 3

An Attachment

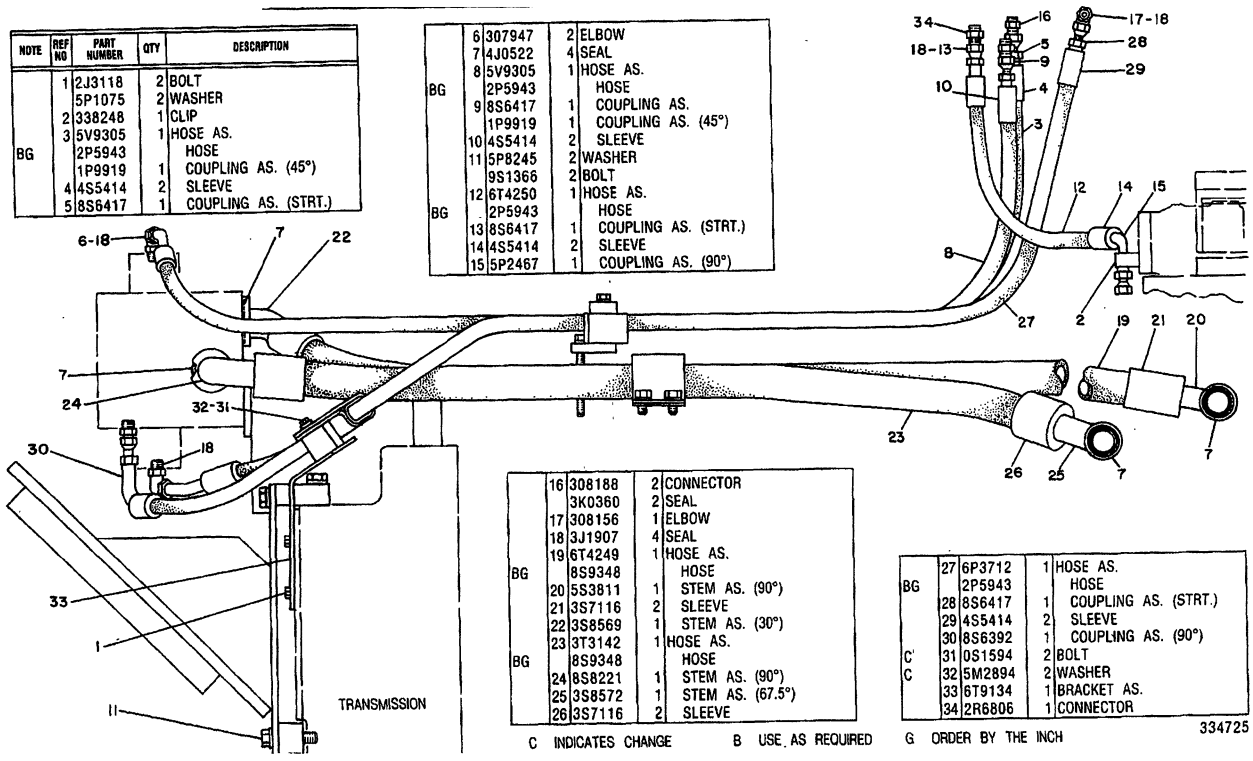

NOTE	REF NO	PART NUMBER	QTY	DESCRIPTION
	1	2J3118	2	BOLT
		5P1075	2	WASHER
	2	338248	1	CLIP
	3	5V9305	1	HOSE AS.
BG		2P5943		HOSE
		1P9919	1	COUPLING AS. (45°)
	4	4S5414	2	SLEEVE
	5	8S6417	1	COUPLING AS. (STRT.)
	6	307947	2	ELBOW
	7	4J0522	4	SEAL
	8	5V9305	1	HOSE AS.
BG		2P5943		HOSE
	9	8S6417	1	COUPLING AS.
		1P9919	1	COUPLING AS. (45°)
	10	4S5414	2	SLEEVE
	11	5P8245	2	WASHER
		9S1366	2	BOLT
	12	6T4250	1	HOSE AS.
BG		2P5943		HOSE
	13	8S6417	1	COUPLING AS. (STRT.)
	14	4S5414	2	SLEEVE
	15	5P2467	1	COUPLING AS. (90°)
	16	308188	2	CONNECTOR
		3K0360	2	SEAL
	17	308156	1	ELBOW
	18	3J1907	4	SEAL
	19	6T4249	1	HOSE AS.
BG		8S9348		HOSE
	20	5S3811	1	STEM AS. (90°)
	21	3S7116	2	SLEEVE
	22	3S8569	1	STEM AS. (30°)
	23	3T3142	1	HOSE AS.
BG		8S9348		HOSE
	24	8S8221	1	STEM AS. (90°)
	25	3S8572	1	STEM AS. (67.5°)
	26	3S7116	2	SLEEVE
	27	6P3712	1	HOSE AS.
BG		2P5943		HOSE
	28	8S6417	1	COUPLING AS. (STRT.)
	29	4S5414	2	SLEEVE
	30	8S6392	1	COUPLING AS. (90°)
C'	31	0S1594	2	BOLT
C	32	5M2894	2	WASHER
	33	6T9134	1	BRACKET AS.
	34	2R6806	1	CONNECTOR

C INDICATES CHANGE B USE AS REQUIRED G ORDER BY THE INCH

334725

334725 P

5057 **7G0087 LINES GP-RIPPER-PART 1 OF 2**

Type 4

An Attachment

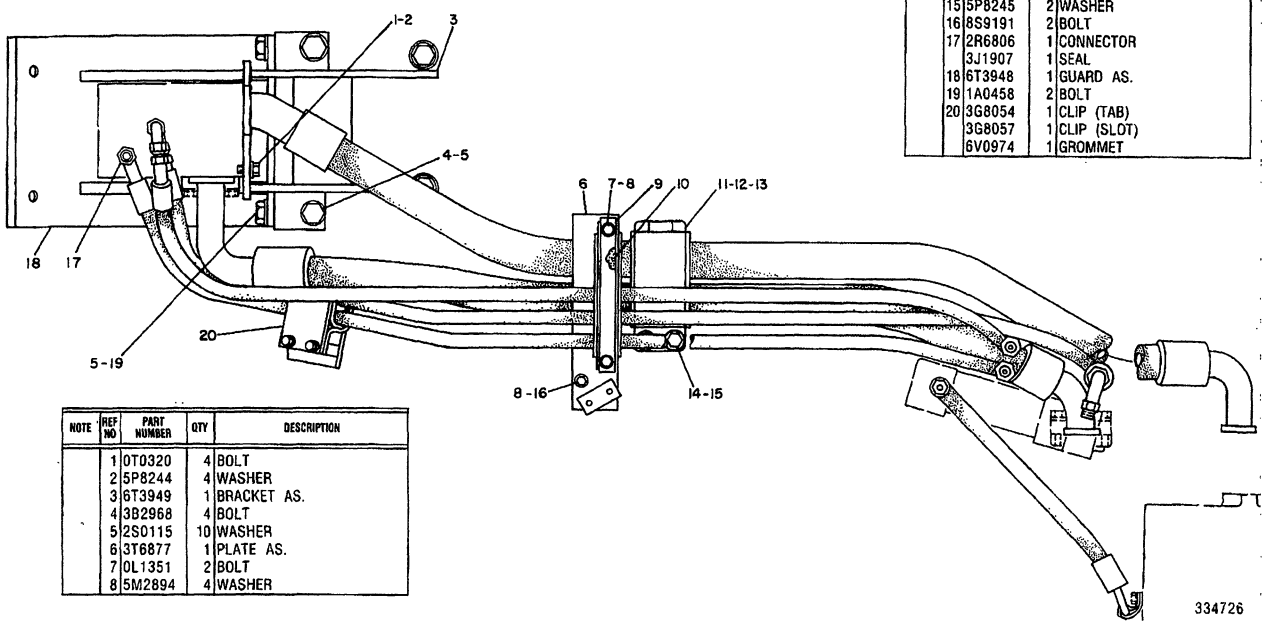

NOTE	REF NO	PART NUMBER	QTY	DESCRIPTION
	1	0T0320	4	BOLT
	2	5P8244	4	WASHER
	3	6T3949	1	BRACKET AS.
	4	3B2968	4	BOLT
	5	2S0115	10	WASHER
	6	3T6877	1	PLATE AS.
	7	0L1351	2	BOLT
	8	5M2894	4	WASHER
	9	3T9637	1	PLATE
	10	3T9486	1	GROMMET
	11	7G3413	1	CLIP (SLOTTED)
	12	7G3414	1	CLIP (TAB)
	13	7G3415	1	GROMMET
	14	0S1595	2	BOLT
	15	5P8245	2	WASHER
	16	8S9191	2	BOLT
	17	2R6806	1	CONNECTOR
		3J1907	1	SEAL
	18	6T3948	1	GUARD AS.
	19	1A0458	2	BOLT
	20	3G8054	1	CLIP (TAB)
		3G8057	1	CLIP (SLOT)
		6V0974	1	GROMMET

334726 P

5057 **7G0087 LINES GP-RIPPER-PART 2 OF 2**

Type 4

An Attachment

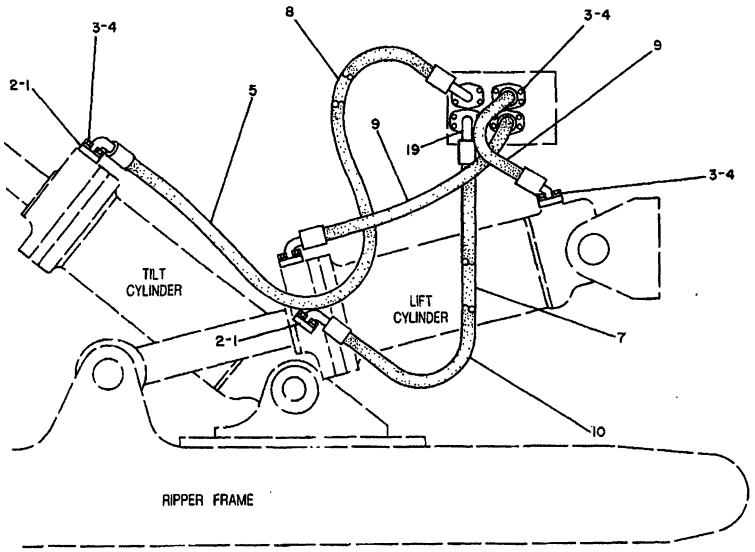

NOTE	REF NO	PART NUMBER	QTY	DESCRIPTION
C	1	1P4577	16	FLANGE
	2	4J0520	16	SEAL
C	3	0S1588	32	BOLT
C	4	5M2894	32	WASHER
	5	4T0533	1	HOSE AS.
	6	4T0251	2	HOSE AS.
	7	4T0534	1	HOSE AS.
	8	4T0221	1	HOSE AS.
	9	4T0252	2	HOSE AS.
	10	1U4164	1	HOSE AS.

C INDICATES CHANGE

337628

337628 P

5057

4T0201 LINES GP-RIPPER
Type 1
An Attachment

HYDRAULIC SYSTEM

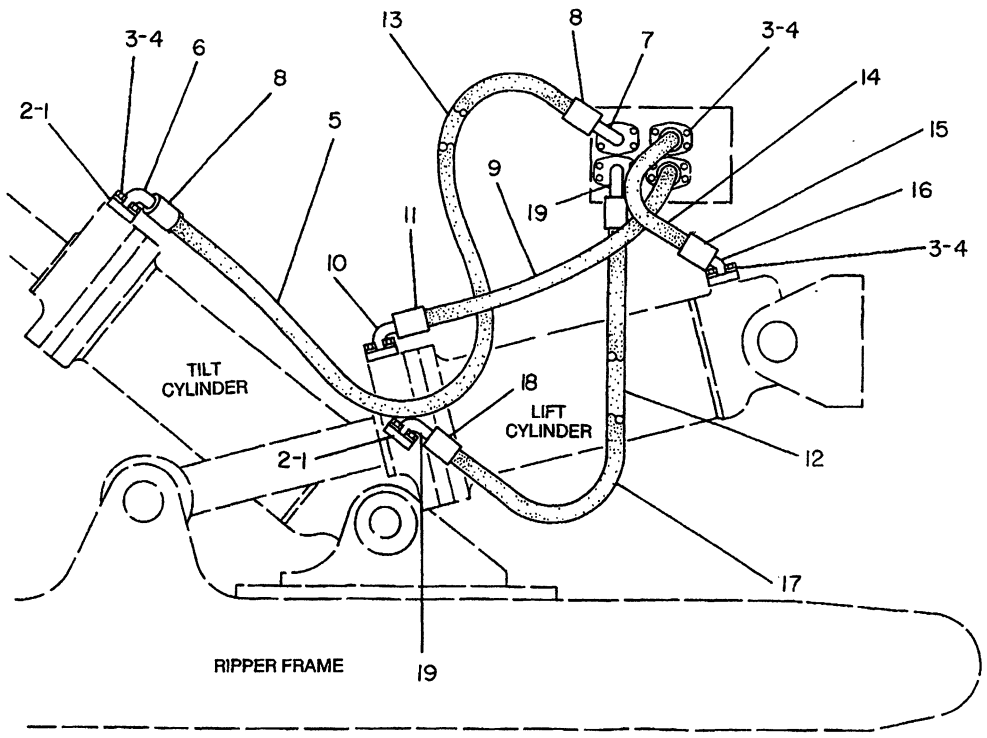

NOTE	REF NO	PART NUMBER	QTY	PART NAME
	1	1P4577	16	FLANGE-HALF
	2	4J0520	16	SEAL
	3	0S1588	32	BOLT
	4	5M2894	32	WASHER
I	5	4T0533	1	HOSE AS
BG		9S0247		HOSE
	6	1P6908	1	STEM AS-COLLET
	7	5S6102	1	STEM AS-COLLET
	8	3S7166	2	SLEEVE
I	9	4T0251	2	HOSE AS
				(EACH INCLUDES)
BG		9S0247		HOSE
	10	5S6102	1	STEM AS-COLLET
	11	3S7166	2	SLEEVE
I	12	4T0534	1	HOSE AS
BG		9S0247		HOSE
		5S6102	1	STEM AS-COLLET
				(SHORT)
		1P6908	1	STEM AS-COLLET (LONG)
		3S7166	2	SLEEVE
I	13	4T0221	1	HOSE AS
BG		9S0247		HOSE
		5S6102	2	STEM AS-COLLET
		3S7166	2	SLEEVE
I	14	4T0252	2	HOSE AS
				(EACH INCLUDES)
BG		9S0247		HOSE
	15	3S7166	2	SLEEVE
	16	5S5283	1	STEM AS-COLLET
				(STRAIGHT)
		5S5287	1	STEM AS-COLLET
				(45 DEGREE)
I	17	1U4164	1	HOSE AS
BG		9S0247		HOSE
	18	3S7166	2	SLEEVE
	19	5S6102	2	STEM AS-COLLET

B-USE AS REQUIRED
G-ORDER BY THE INCH
I-SEE HOSE FABRICATION GUIDE

B- 328625 P

5057 **4T0201 LINES GP-RIPPER**
Type 2
An Attachment

HYDRAULIC SYSTEM

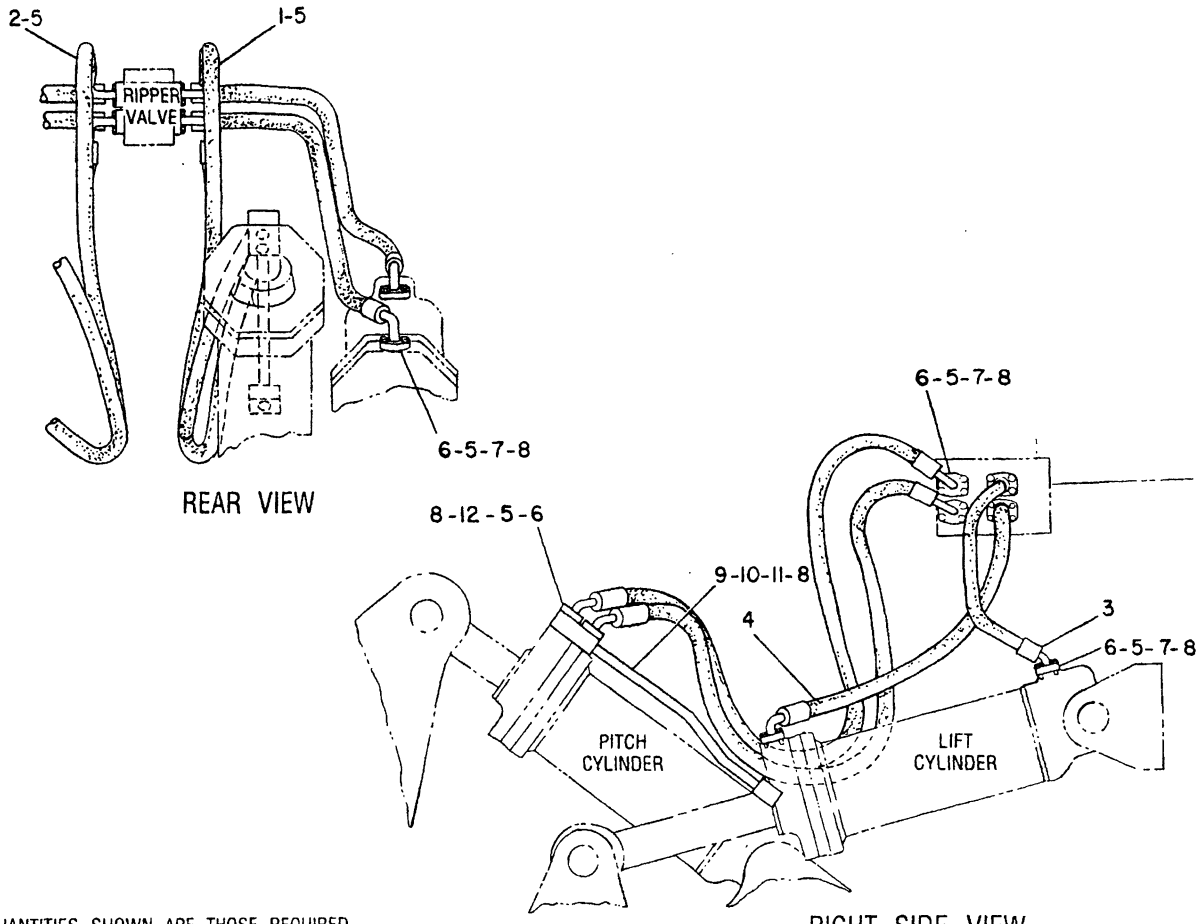

QUANTITIES SHOWN ARE THOSE REQUIRED FOR BOTH L.H. & R.H. SIDES

NOTE	REF NO	PART NUMBER	QTY	PART NAME	NOTE	REF NO	PART NUMBER	QTY	PART NAME
	1	7T4537	2	HOSE AS					
	2	7T4536	2	HOSE AS					
C	3	4T9651	2	HOSE AS					
C	4	4T9650	2	HOSE AS					
	5	4J0520	16	SEAL-O-RING					
	6	1P4577	16	FLANGE-HALF					
	7	0S1588	24	BOLT (1.25IN.)LONG					
	8	5M2894	40	WASHER					
	9	4T7466	2	TUBE AS					
	10	1P3703	4	SEAL-RECTANGULAR					
	11	0L2070	8	BOLT					
	12	0S1619	8	BOLT (3.0IN.)LONG					

C-CHANGE FROM PREVIOUS TYPE

B-455541 EP

5057

7T5137 LINES GP-RIPPER

Part Of 7T6939,7T6940 Ripper Ars

An Attachment

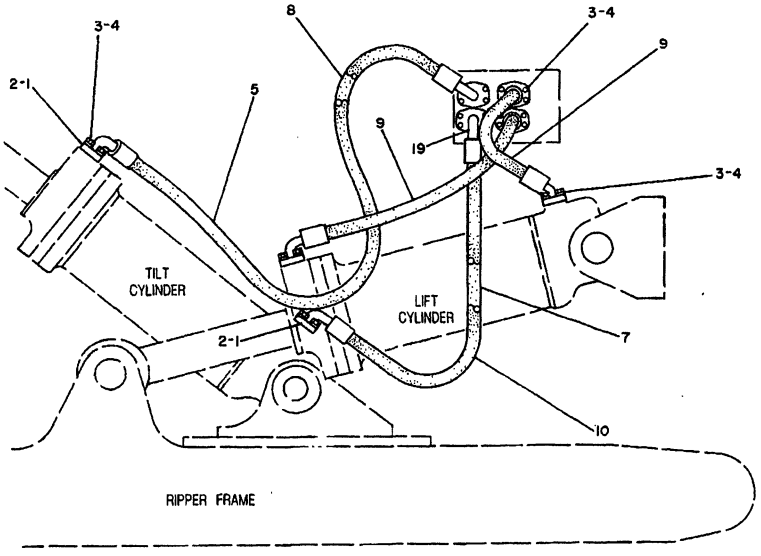

NOTE	REF NO	PART NUMBER	QTY	DESCRIPTION
C	1	1P4577	16	FLANGE
	2	4J0520	16	SEAL
C	3	0S1588	32	BOLT
C	4	5M2894	32	WASHER
	5	4T0533	1	HOSE AS.
	6	4T0251	2	HOSE AS.
	7	4T0534	1	HOSE AS.
	8	4T0221	1	HOSE AS.
	9	4T0252	2	HOSE AS.
	10	1U4164	1	HOSE AS.

C INDICATES CHANGE

337628

337628 P

5057

4T0201 LINES GP-RIPPER
Japan Market. Type 1
An Attachment

HYDRAULIC SYSTEM

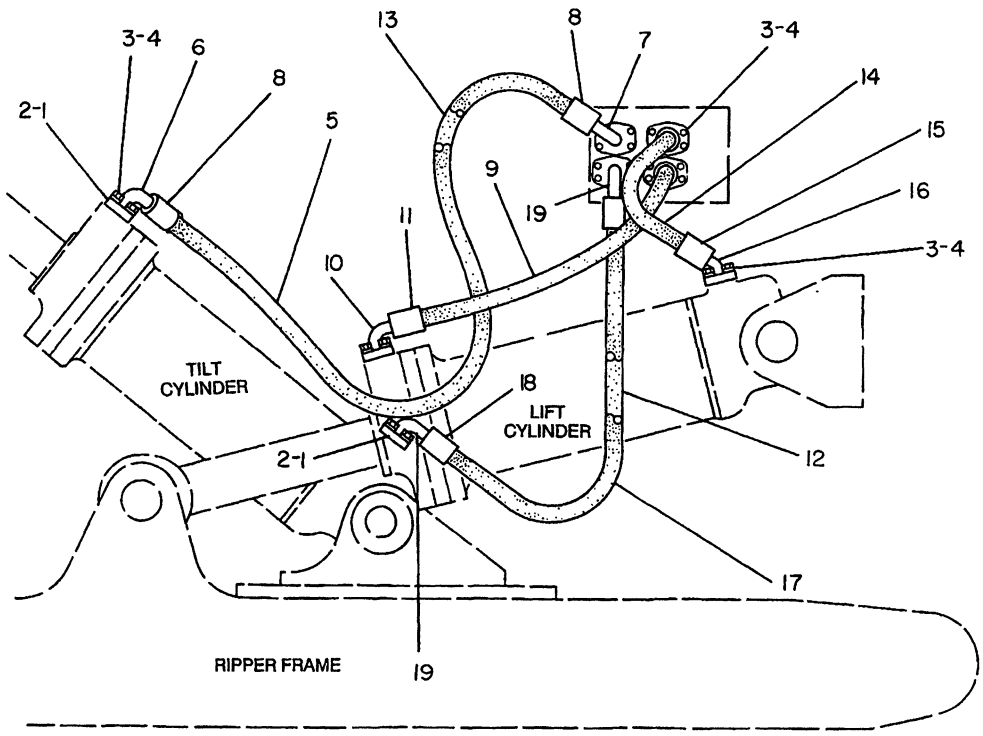

NOTE	REF NO	PART NUMBER	QTY	PART NAME
	1	1P4577	16	FLANGE-HALF
	2	4J0520	16	SEAL
	3	0S1588	32	BOLT
	4	5M2894	32	WASHER
I	5	4T0533	1	HOSE AS
BG		9S0247		HOSE
	6	1P6908	1	STEM AS-COLLET
	7	5S6102	1	STEM AS-COLLET
	8	3S7166	2	SLEEVE
I	9	4T0251	2	HOSE AS
				(EACH INCLUDES)
BG		9S0247		HOSE
	10	5S6102	1	STEM AS-COLLET
	11	3S7166	2	SLEEVE
I	12	4T0534	1	HOSE AS
BG		9S0247		HOSE
		5S6102	1	STEM AS-COLLET
				(SHORT)
		1P6908	1	STEM AS-COLLET (LONG)
		3S7166	2	SLEEVE
I	13	4T0221	1	HOSE AS
BG		9S0247		HOSE
		5S6102	2	STEM AS-COLLET
		3S7166	2	SLEEVE
I	14	4T0252	2	HOSE AS
				(EACH INCLUDES)
BG		9S0247		HOSE
	15	3S7166	2	SLEEVE
	16	5S5283	1	STEM AS-COLLET
				(STRAIGHT)
		5S5287	1	STEM AS-COLLET
				(45 DEGREE)
I	17	1U4164	1	HOSE AS
BG		9S0247		HOSE
	18	3S7166	2	SLEEVE
	19	5S6102	2	STEM AS-COLLET

B-USE AS REQUIRED
G-ORDER BY THE INCH
I-SEE HOSE FABRICATION GUIDE

B-328625 P

5057

4T0201 LINES GP-RIPPER
Japan Market. Type 2
An Attachment

HYDRAULIC SYSTEM

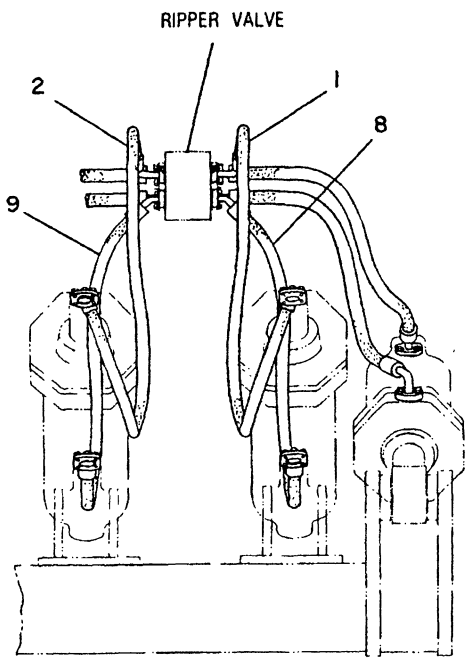

REAR VIEW

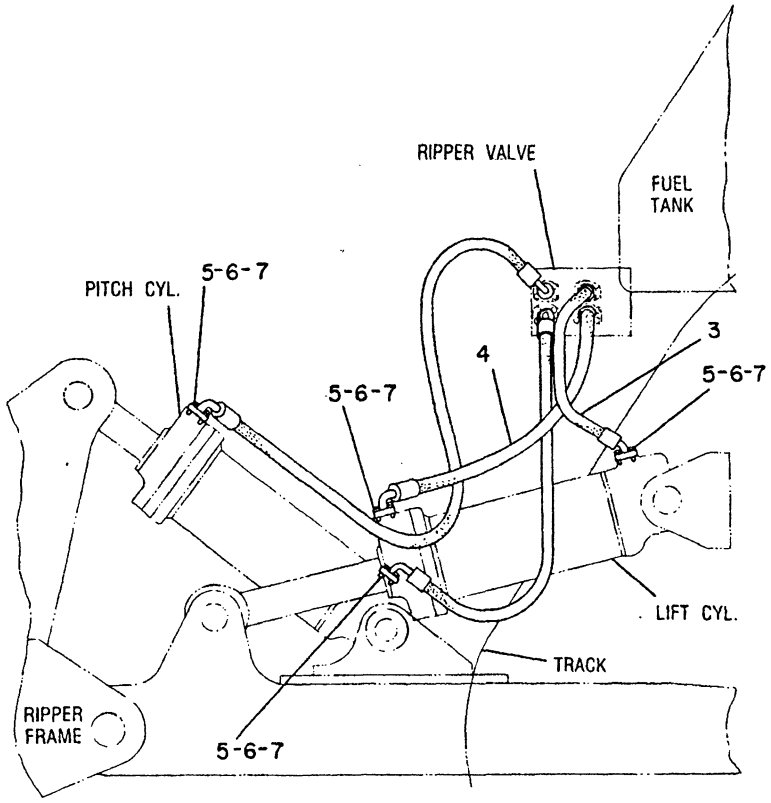

RIGHT SIDE VIEW

NOTE	REF NO	PART NUMBER	QTY	PART NAME	NOTE	REF NO	PART NUMBER	QTY	PART NAME
	1	7T4537	1	HOSE AS					
	2	7T4536	1	HOSE AS					
	3	4T9651	2	HOSE AS					
	4	4T9650	2	HOSE AS					
	5	8T7211	16	SEAL					
	6	1P4577	16	FLANGE-HALF					
	7	0S1588	32	BOLT					
		5M2894	32	WASHER					
	8	9W7502	1	HOSE AS					
	9	9W7501	1	HOSE AS					

B-407871 P

5057

9W7500 LINES GP-RIPPER
S/N 53Y2235-Up
An Attachment

MEMORANDA

NOTE	REF NO	PART NUMBER	QTY	DESCRIPTION
C	1	1P4577	8	FLANGE
C	2	S1588	16	BOLT
C		5M2894	16	WASHER
	3	4T252	2	HOSE ASSEM.
				(EACH INCLUDES)
G		9S247		HOSE 36IN.(92CM)
		5S5287	1	STEM ASSEM. (45°)
	4	3S7166	2	SLEEVE
	5	5S5283	1	STEM ASSEM. (STRAIGHT)
	6	4J520	8	SEAL
	7	4T251	2	HOSE ASSEM.
				(EACH INCLUDES)
G		9S247		HOSE 37IN.(95CM)
		5S5283	1	STEM ASSEM. (STRAIGHT)
	8	3S7166	2	SLEEVE
	9	5S6102	1	STEM ASSEM. (90°)

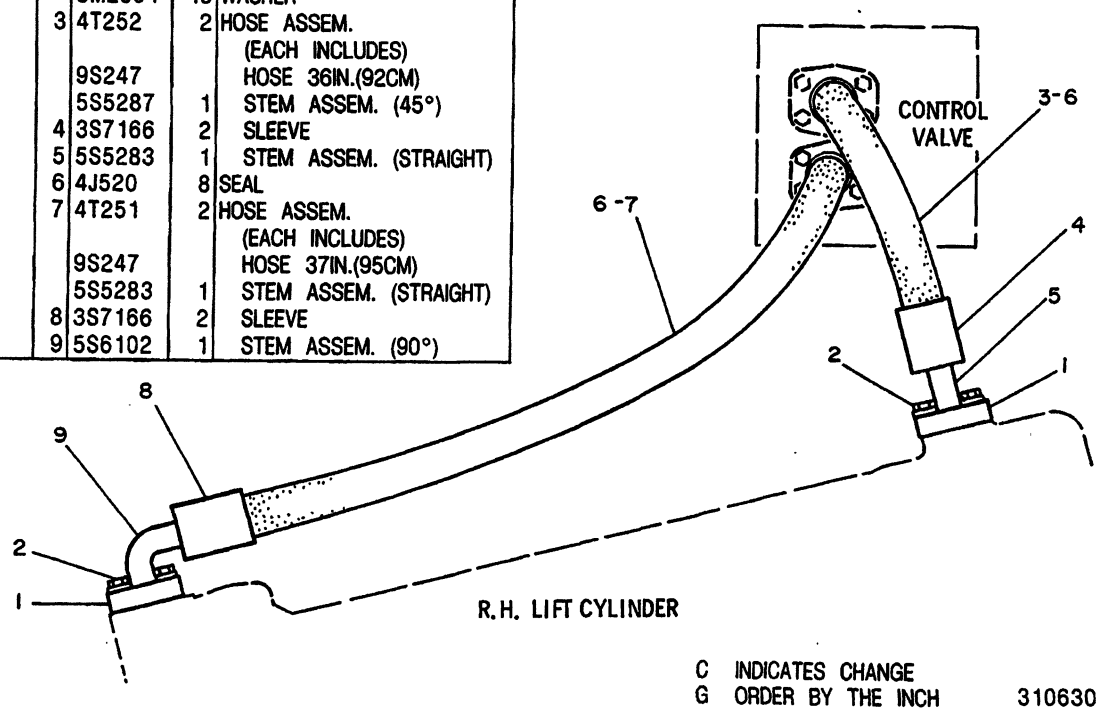

C INDICATES CHANGE
G ORDER BY THE INCH

310630

310630 P

5057

4T0199 LINES GP-RIPPER
Type 1
Part Of 4T0197 Link Ar
An Attachment

NOTE	REF NO	PART NUMBER	QTY	DESCRIPTION
	1	1P4577	8	FLANGE
	2	0S1588	16	BOLT
		5M2894	16	WASHER
C	3	4T9651	2	HOSE AS.
	4	4J0520	8	SEAL
C	5	4T9650	2	HOSE AS.

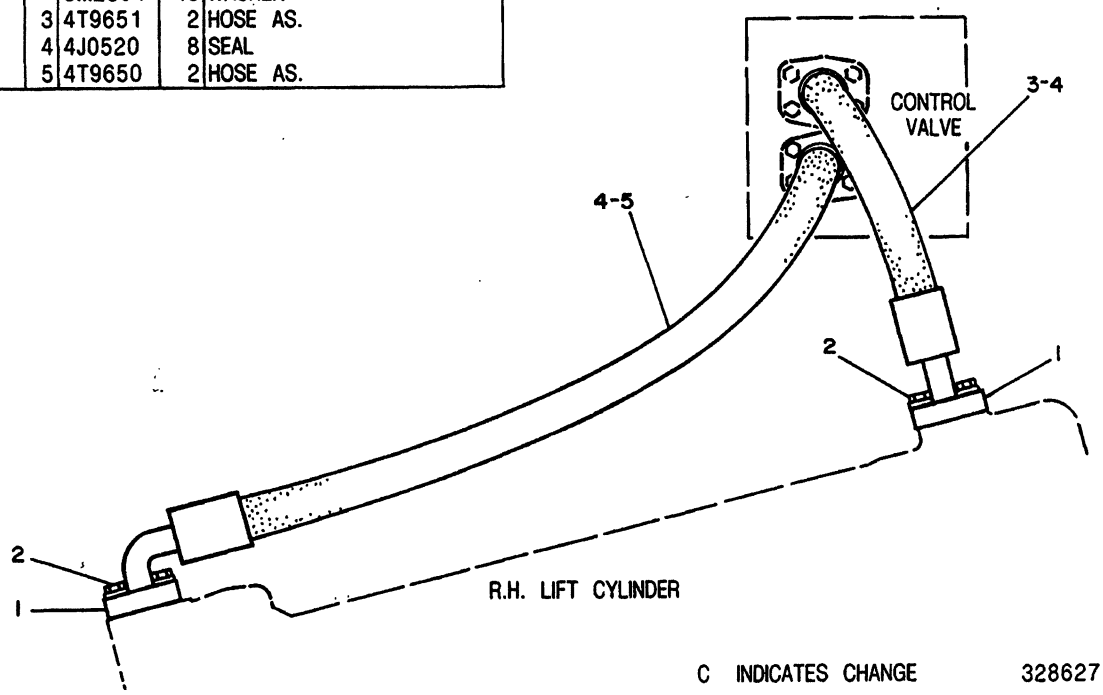

C INDICATES CHANGE 328627

328627 P

5057

4T0199 LINES GP-RIPPER
Type 2
Part Of 4T0197 Link Ar
An Attachment

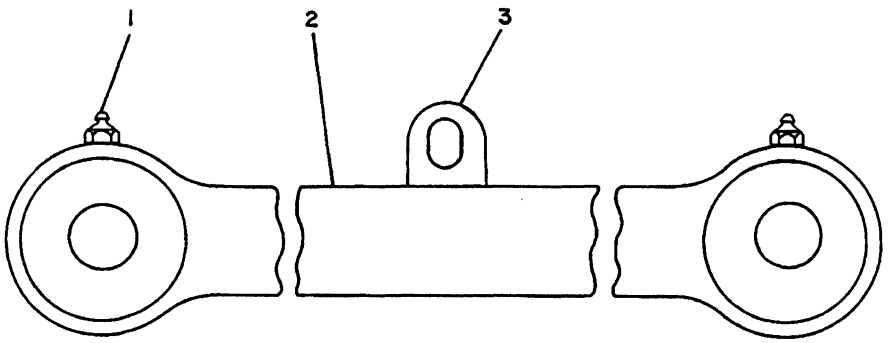

REF. NO.	PART NUMBER	DESCRIPTION	QTY.
1	3B8489	FITTING----------	4
2	4T218	LINK ASSEM. ---------- (Each Includes)	2
3	3G5596	LUG----------	1

235974

235974 P

6313 **4T0198 LINK GP-RIPPER**
Stiff Link
An Attachment

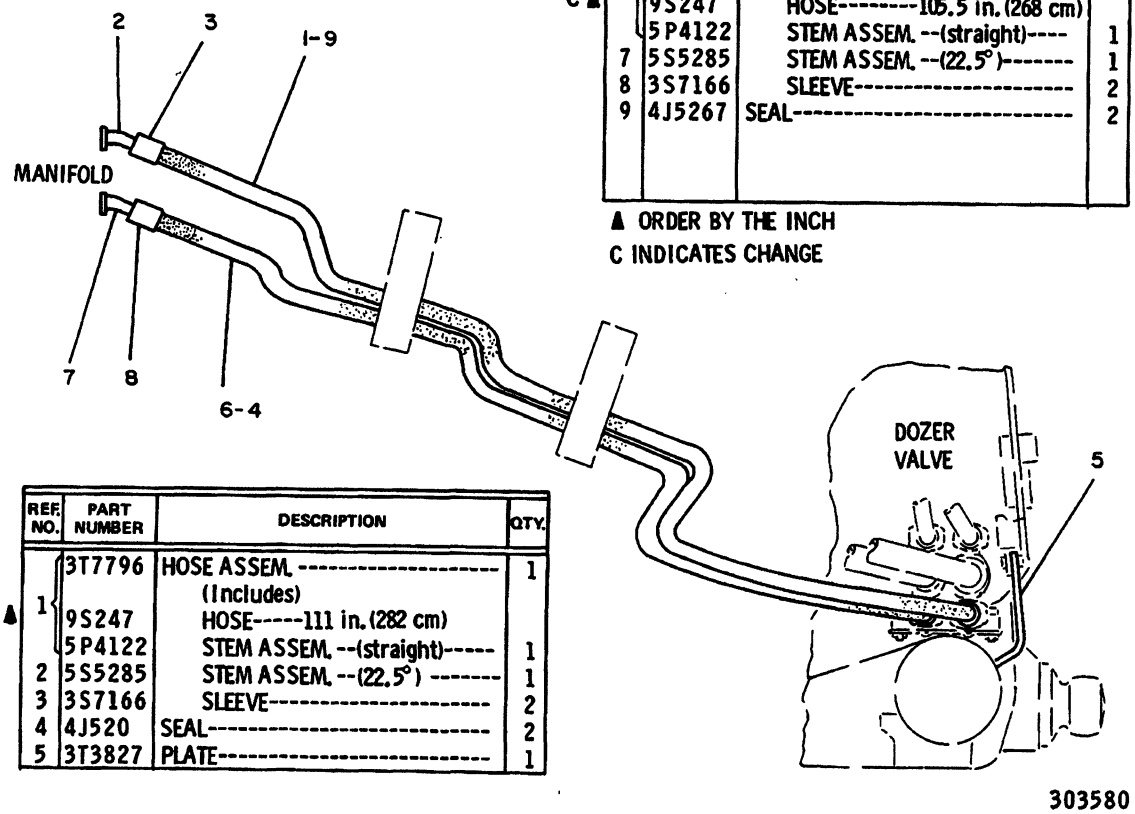

REF. NO.	PART NUMBER	DESCRIPTION	QTY.
▲ 1	3T7796	HOSE ASSEM. ---------- (Includes)	1
	9S247	HOSE-----111 in. (282 cm)	
	5P4122	STEM ASSEM. --(straight)-----	1
2	5S5285	STEM ASSEM. --(22.5°) -------	1
3	3S7166	SLEEVE----------	2
4	4J520	SEAL----------	2
5	3T3827	PLATE----------	1

	REF. NO.	PART NUMBER	DESCRIPTION	QTY.
C ▲	6	7G196	HOSE ASSEM. ---------- (Includes)	1
		9S247	HOSE--------105.5 in. (268 cm)	
		5P4122	STEM ASSEM. --(straight)----	1
	7	5S5285	STEM ASSEM. --(22.5°)-------	1
	8	3S7166	SLEEVE----------	2
	9	4J5267	SEAL----------	2

▲ ORDER BY THE INCH
C INDICATES CHANGE

303580

303580 P

5057

8P1253 LINES GP-TILT CYLINDER
Type 1
An Attachment

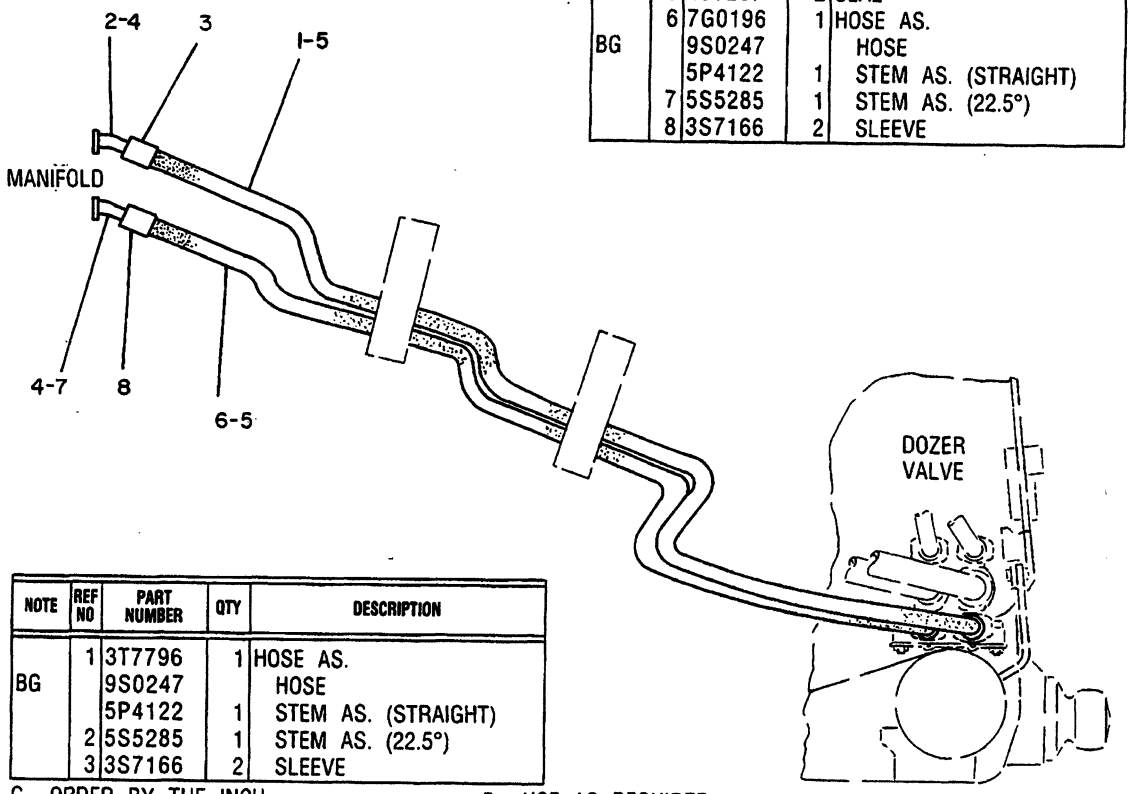

NOTE	REF NO	PART NUMBER	QTY	DESCRIPTION
	4	4J0520	2	SEAL
	5	4J5267	2	SEAL
	6	7G0196	1	HOSE AS.
BG		9S0247		HOSE
		5P4122	1	STEM AS. (STRAIGHT)
	7	5S5285	1	STEM AS. (22.5°)
	8	3S7166	2	SLEEVE

NOTE	REF NO	PART NUMBER	QTY	DESCRIPTION
	1	3T7796	1	HOSE AS.
BG		9S0247		HOSE
		5P4122	1	STEM AS. (STRAIGHT)
	2	5S5285	1	STEM AS. (22.5°)
	3	3S7166	2	SLEEVE

G ORDER BY THE INCH

B USE AS REQUIRED

334635

334635 P

5057 **8P1253 LINES GP-TILT CYLINDER**

Type 2

An Attachment

MEMORANDA

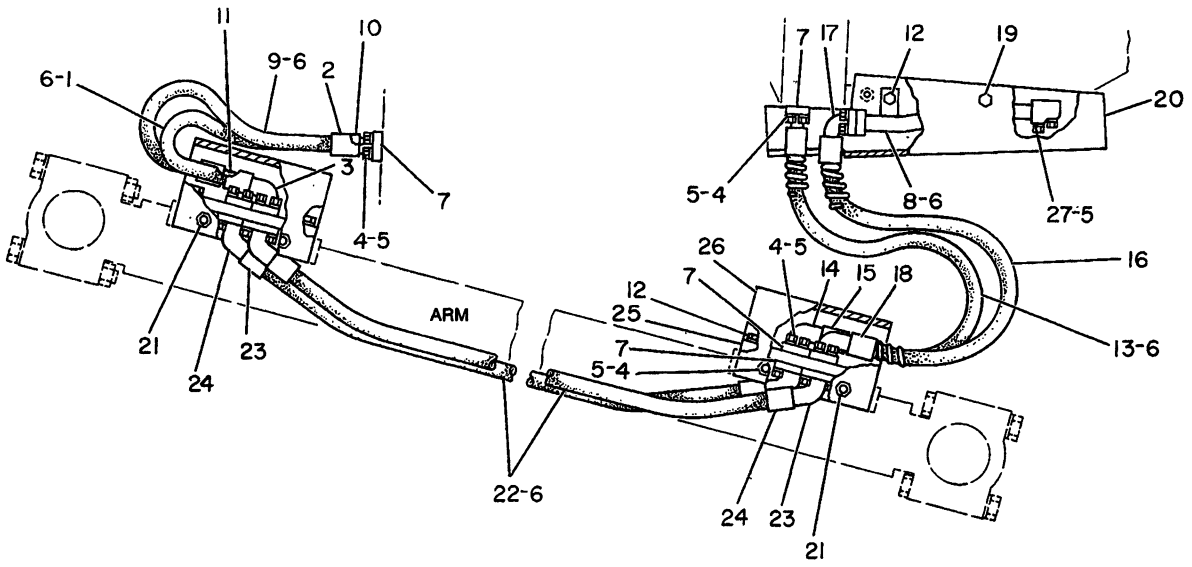

NOTE	REF NO	PART NUMBER	QTY	PART NAME
I	1	1U3558	1	HOSE AS
G		9SO671		HOSE 25.98IN(66CM)
		3S9454	1	STEM AS-COLLET (STRAIGHT)
	2	3S8606	2	SLEEVE
	3	5S9593	1	STEM AS-COLLET (90 DEGREE)
	4	3B1915	48	BOLT
	5	5M2894	52	WASHER
	6	4J5267	13	SEAL
	7	1P4576	24	FLANGE
	8	3G7326	1	TUBE AS
I	9	1U3557	1	HOSE AS
G		9SO671		HOSE 29.29IN(76CM)
		3S9454	1	STEM AS-COLLET (STRAIGHT)
	10	3S8606	2	SLEEVE
	11	5S9593	1	STEM AS-COLLET (90 DEGREE)
	12	OS1595	9	BOLT
		5P8245	9	WASHER
I	13	3G7452	1	HOSE AS
G		9SO247		HOSE 31.1IN(79CM)
CE		6VO745		GUARD-HOSE 7OCM(27.55IN)
		3S7165	1	STEM AS (STRAIGHT)
	14	3S8363	1	STEM AS (90 DEGREE)
	15	3S7166	2	SLEEVE
I	16	3G7806	1	HOSE AS
		9SO247		HOSE 32.28IN(82CM)
CE		6VO745		GUARD-HOSE 62CM(24.4IN)
	17	3S8363	2	STEM AS
	18	3S7166	2	SLEEVE
	19	OTO690	4	BOLT
		5P8249	4	WASHER
	20	1U3587	1	GUARD
	21	1D4599	4	BOLT
		1D4720	4	NUT
		5P8247	4	WASHER-HARD
I	22	3G7451	2	HOSE AS (EACH INCLUDES)
G		9SO247		HOSE 62.99IN(160CM)
	23	3S7166	2	SLEEVE
	24	3S8362	2	STEM AS-COLLET
	25	3G7172	2	PLATE-COVER
	26	3G7168	2	GUARD
	27	OS1590	4	BOLT

C-CHANGE FROM PREVIOUS TYPE
E-ORDER BY THE CENTIMETER
G-ORDER BY THE INCH
I-SEE HOSE FABRICATION GUIDE

B-311151 EP

5057 **3G1550 LINES GP-TILT CYLINDER**

Type 1

Part Of 3G6087,4T7702,7T3639,3G6092,7T3460 Bulldozer Ars An Attachment

NOTE	REF NO	PART NUMBER	QTY	DESCRIPTION
	1	1U3558	1	HOSE ASSEM.
BG		9S671		HOSE
		3S9454	1	STEM ASSEM. (STRAIGHT)
	2	3S8606	2	SLEEVE
	3	5S9593	1	STEM ASSEM. (90°)
C	4	3B1915	40	BOLT
C	5	5M2894	44	WASHER
C	6	4J5267	11	SEAL
C	7	1P4576	20	FLANGE
C	8	4T5338	1	TUBE ASSEM.

C	13	3G7452	2	HOSE ASSEM.
				(EACH INCLUDES)
BG		9S247		HOSE
E		6V745		GUARD 70CM(27.55IN.)
		3S7165	1	STEM ASSEM. (STRAIGHT)
	14	3S8363	1	STEM ASSEM. (90°)
	15	3S7166	2	SLEEVE
	16	0S1590	4	BOLT
	17	3G7168	2	GUARD
	18	3G7172	2	PLATE
	19	T690	4	BOLT
		5P8249	4	WASHER
C	20	4T5336	1	GUARD ASSEM.

C	21	1D4597	4	BOLT
		1D4720	4	NUT
		5P8247	8	WASHER
	22	3G7451	2	HOSE ASSEM.
				(EACH INCLUDES)
BG		9S247		HOSE
	23	3S7166	2	SLEEVE
	24	3S8362	2	STEM ASSEM.

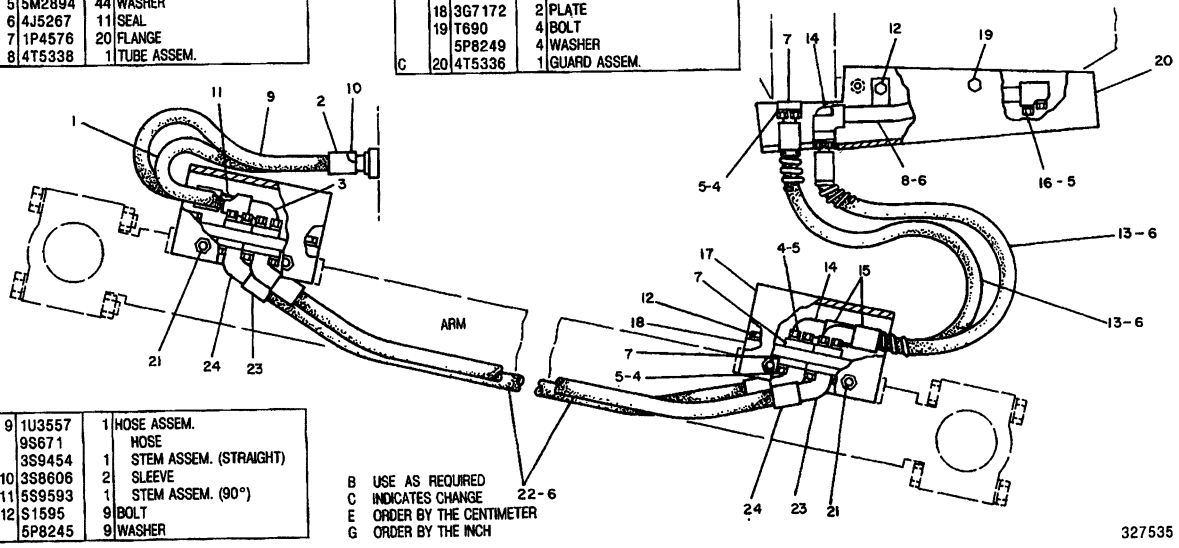

	9	1U3557	1	HOSE ASSEM.
BG		9S671		HOSE
		3S9454	1	STEM ASSEM. (STRAIGHT)
	10	3S8606	2	SLEEVE
	11	5S9593	1	STEM ASSEM. (90°)
	12	S1595	9	BOLT
		5P8245	9	WASHER

B USE AS REQUIRED
C INDICATES CHANGE
E ORDER BY THE CENTIMETER
G ORDER BY THE INCH

327535

327535 P

5057 **3G1550 LINES GP-TILT CYLINDER**

Type 2

Part Of 3G6087,4T7702,7T3639,3G6092,7T3460 Bulldozer Ars
An Attachment

HYDRAULIC SYSTEM

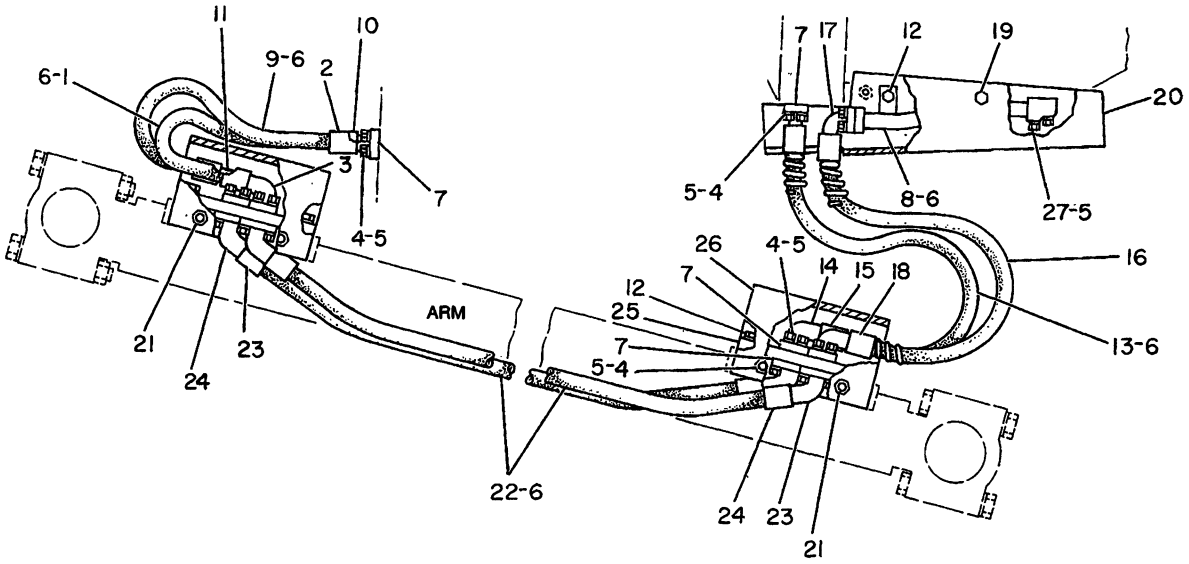

NOTE	REF NO	PART NUMBER	QTY	PART NAME
I	1	1U3558	1	HOSE AS
G		9S0671		HOSE 25.98IN(66CM)
		3S9454	1	STEM AS-COLLET (STRAIGHT)
	2	3S8606	2	SLEEVE
	3	5S9593	1	STEM AS-COLLET (90 DEGREE)
	4	3B1915	48	BOLT
	5	5M2894	52	WASHER
	6	4J5267	13	SEAL
	7	1P4576	24	FLANGE
	8	3G7326	1	TUBE AS
I	9	1U3557	1	HOSE AS
G		9S0671		HOSE 29.29IN(76CM)
		3S9454	1	STEM AS-COLLET (STRAIGHT)
	10	3S8606	2	SLEEVE
	11	5S9593	1	STEM AS-COLLET (90 DEGREE)
	12	0S1595	9	BOLT
		5P8245	9	WASHER
I	13	3G7452	1	HOSE AS
G		9S0247		HOSE 31.1IN(79CM)
CE		6V0745		GUARD-HOSE 70CM(27.55IN)
		3S7165	1	STEM AS (STRAIGHT)
	14	3S8363	1	STEM AS (90 DEGREE)
	15	3S7166	2	SLEEVE
I	16	3G7806	1	HOSE AS
		9S0247		HOSE 32.28IN(82CM)
CE		6V0745		GUARD-HOSE 62CM(24.4IN)
	17	3S8363	2	STEM AS
	18	3S7166	2	SLEEVE
	19	0T0690	4	BOLT
		5P8249	4	WASHER
	20	1U3587	1	GUARD
	21	1D4599	4	BOLT
		1D4720	4	NUT
		5P8247	4	WASHER-HARD
I	22	3G7451	2	HOSE AS (EACH INCLUDES)
G		9S0247		HOSE 62.99IN(160CM)
	23	3S7166	2	SLEEVE
	24	3S8362	2	STEM AS-COLLET
	25	3G7172	2	PLATE-COVER
	26	3G7168	2	GUARD
	27	0S1590	4	BOLT

C-CHANGE FROM PREVIOUS TYPE
E-ORDER BY THE CENTIMETER
G-ORDER BY THE INCH
I-SEE HOSE FABRICATION GUIDE

B-311151 EP

5057 **3G1550 LINES GP-TILT CYLINDER**
Japan Market

HYDRAULIC SYSTEM

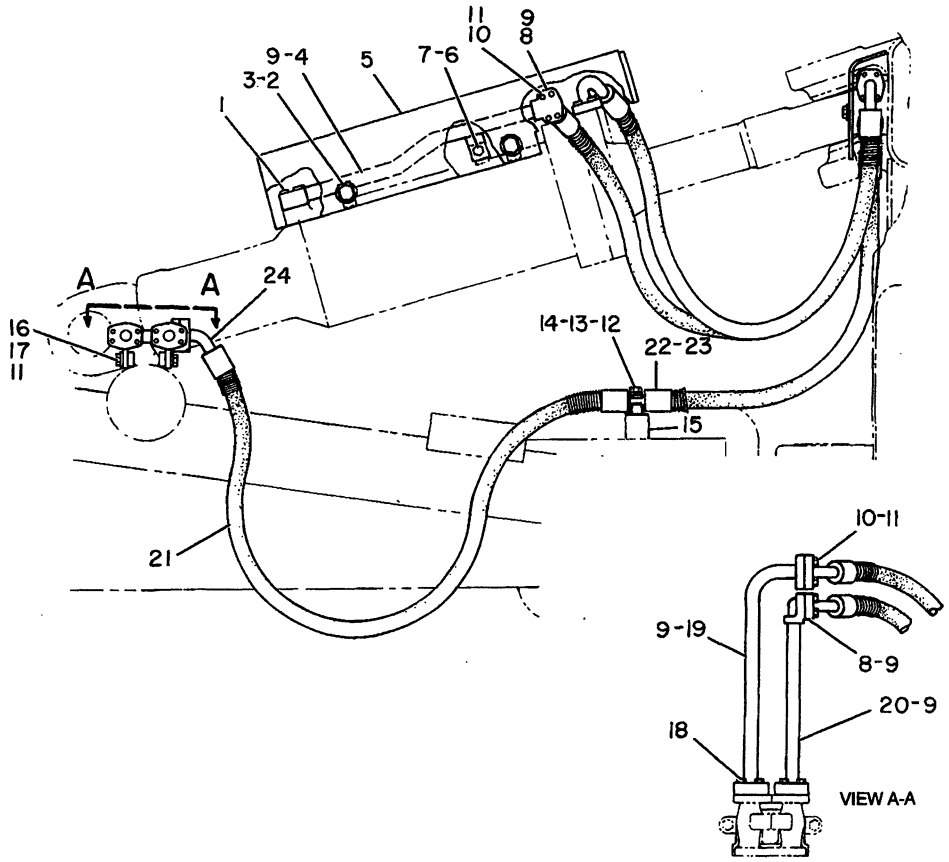

NOTE	REF NO	PART NUMBER	QTY	PART NAME	NOTE	REF NO	PART NUMBER	QTY	PART NAME
	1	0S1571	4	BOLT	I	21	1U4179	2	HOSE AS
	2	0T0690	4	BOLT					(EACH INCLUDES)
	3	5P8249	4	WASHER	G		9S0247		HOSE 86.62IN(220CM)
	4	1U4178	1	TUBE AS	E		6V0745		GUARD-HOSE
	5	1U4172	1	GUARD AS					135CM(53.15IN)
	6	0S1595	1	BOLT			3S8363	1	STEM AS (90 DEGREE)
	7	5P8245	1	WASHER		22	3S7166	4	SLEEVE
	8	1P4576	6	FLANGE		23	2P2525	1	STEM AS (STRAIGHT)
	9	4J5267	6	SEAL		24	3S8361	1	STEM AS (60 DEGREE)
	10	3B1915	12	BOLT					
	11	5M2894	14	WASHER					
	12	0S1585	1	BOLT					
	13	1J7647	1	CLAMP (TAPPED)					
	14	1J7468	1	CLAMP					
	15	1U4166	1	BLOCK					
	16	0S0509	2	BOLT					
	17	7V4240	2	BLOCK					
	18	0S1591	8	BOLT					
	19	1U4177	1	TUBE AS					
	20	1U4176	1	TUBE AS					

E-ORDER BY THE CENTIMETER
G-ORDER BY THE INCH
I-SEE HOSE FABRICATION GUIDE

B-235265 EP

5057 **3G8030 LINES GP-TILT CYLINDER-PART 1 OF 2**

Part Of 3G6155 Cylinder Ar
An Attachment

HYDRAULIC SYSTEM

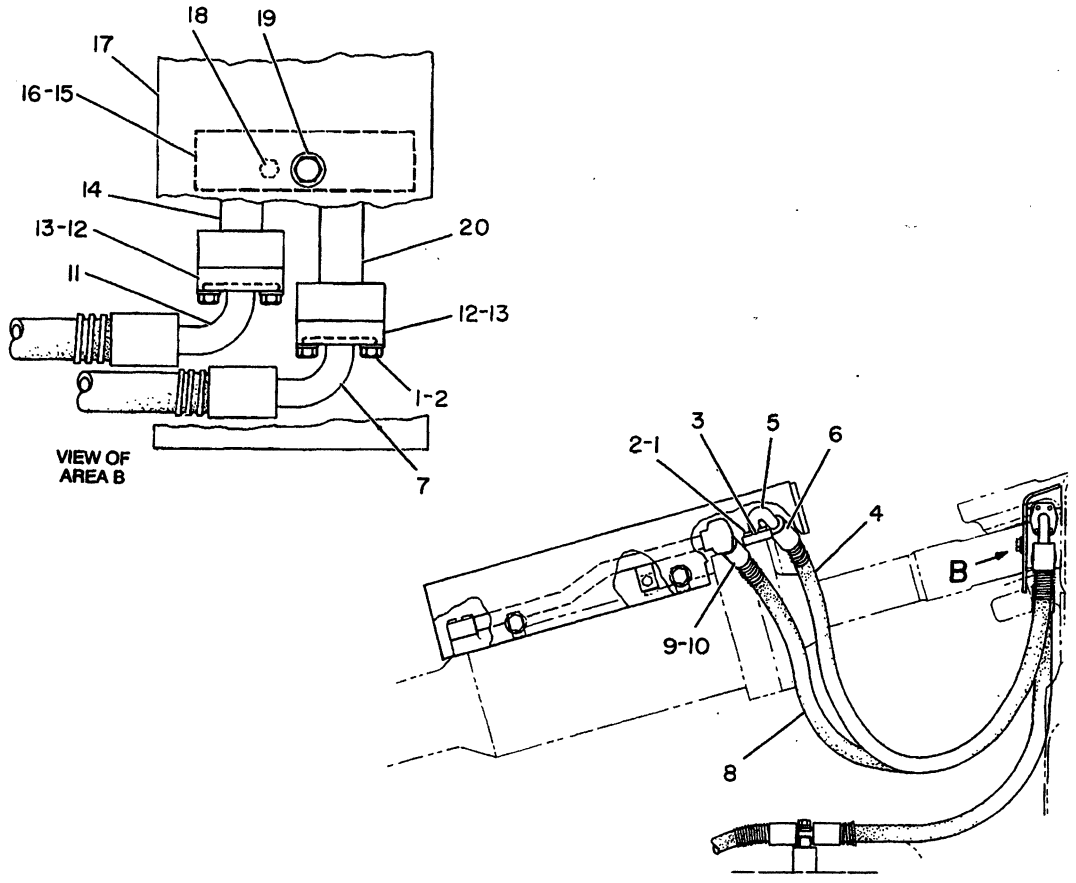

NOTE	REF NO	PART NUMBER	QTY	PART NAME
	1	3B1915	20	BOLT
	2	5M2894	20	WASHER
	3	1P4577	2	FLANGE-HALF
		4J0520	1	SEAL 32.92MM(1.33IN)ID
I	4	1U4180	1	HOSE AS
G		9S0247		HOSE 45.67IN(116CM)
E		6V0745		GUARD-HOSE
				107CM(42.13IN)
	5	6V3364	1	STEM AS-COLLET
				(135 DEGREE)
	6	3S7166	2	SLEEVE
	7	3S8363	1	STEM AS (90 DEGREE)
I	8	1U4181	1	HOSE AS
G		9S0247		HOSE 50.59IN(128.5CM)
E		6V0745		GUARD-HOSE
				119.5CM(47.05IN)
	9	3S8360	1	STEM AS-COLLET
				(45 DEGREE)
	10	3S7166	2	SLEEVE
	11	3S8363	1	STEM AS
	12	1P4576	8	FLANGE
	13	4J5267	4	SEAL 24.99CM(.98IN)ID
	14	1U2332	1	TUBE AS
	15	5S8712	3	BLOCK (TOP)
	16	5S8711	3	BLOCK (LOWER)
	17	1U4171	1	GUARD
	18	0S1591	3	BOLT
	19	9S1366	3	BOLT
		5P8245	3	WASHER
	20	1U4099	1	TUBE AS

E-ORDER BY THE CENTIMETER
G-ORDER BY THE INCH
I-SEE HOSE FABRICATION GUIDE

B-235978 EP

5057 **3G8030 LINES GP-TILT CYLINDER-PART 2 OF 2**

Part Of 3G6155 Cylinder Ar
An Attachment

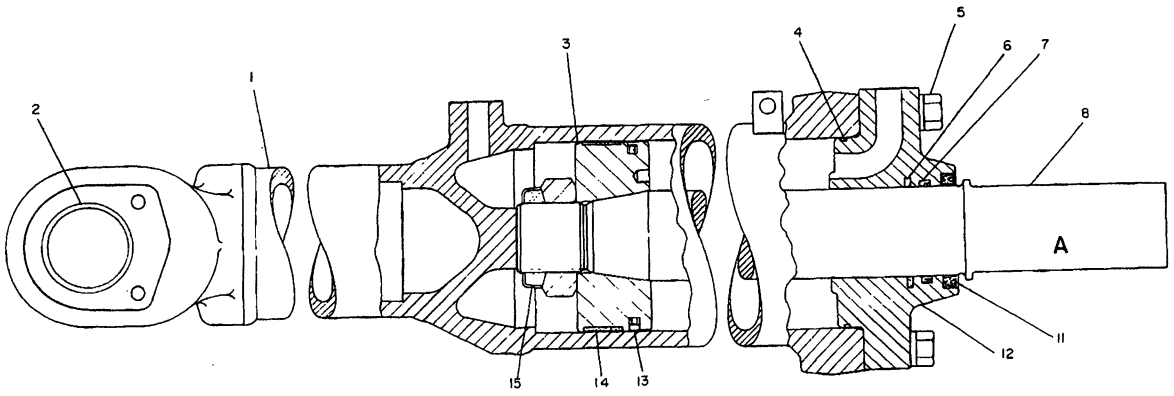

REF. NO.	PART NUMBER	DESCRIPTION	QTY.
1	9J8803	CYLINDER ASSEM. (Includes)	1
2	1U2182	BEARING	2
3	1U2583	PISTON	1
4	5P3235	RING	1
	4H6520	SEAL	1
5	1D4629	BOLT--88.90mm(3.50 in.)long	2
	1D4628	BOLT---82.55mm(3.25 in.)long	6
	5P8249	WASHER	8
6	6J6736	SEAL	1
7	5J8350	SEAL	1

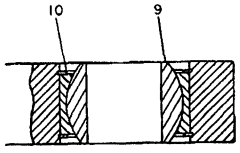

VIEW OF AREA A

	REF. NO.	PART NUMBER	DESCRIPTION	QTY.
	8	1U2183	ROD ASSEM. (Includes)	1
	9	6V3340	BEARING	1
	10	7J3296	RING	2
	11	4J8981	SEAL	1
	12	9J8808	HEAD	1
	13	9J7117	SEAL ASSEM.	1
	14	1U2218	RING	1
C	15	4J6888	NUT	1

C INDICATES CHANGE

182572

182572 P

5104

9J8802 CYLINDER GP-BULLDOZER LIFT

Type 1. 190.5MM (7.5IN) Bore X 349.2MM (13.7IN) Stroke

Part Of 3G6155 Cylinder Ar

An Attachment

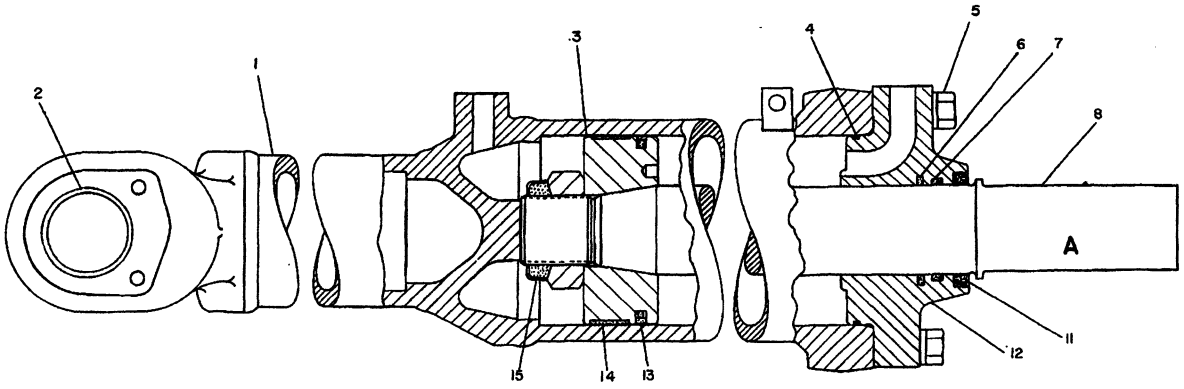

NOTE	REF NO	PART NUMBER	QTY	DESCRIPTION
	1	9J8803	1	CYLINDER AS.
	2	1U2182	2	BEARING
	3	1U2583	1	PISTON
C	4	4T3107	1	RING
		4H6520	1	SEAL
	5	1D4629	2	BOLT 88.90MM(3.50IN.)LG.
		1D4628	6	BOLT 82.55MM(3.25IN.)LG.
		5P8249	8	WASHER

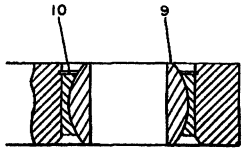

VIEW OF AREA A

	6	6J6736	1	SEAL
	7	5J8350	1	SEAL
C	8	4T6838	1	ROD AS.
	9	6V3340	1	BEARING
	10	5J9454	1	RING
	11	4J8981	1	SEAL
	12	9J8808	1	HEAD
	13	9J7117	1	SEAL AS.
	14	1U2218	1	RING
	15	4J6888	1	NUT

C INDICATES CHANGE 330159

330159 P

5104

9J8802 CYLINDER GP-DOZER TILT

Type 2. 190.5MM (7.5IN) Bore X 349.2MM (13.7IN) Stroke
Part Of 3G6155 Cylinder Ar
An Attachment

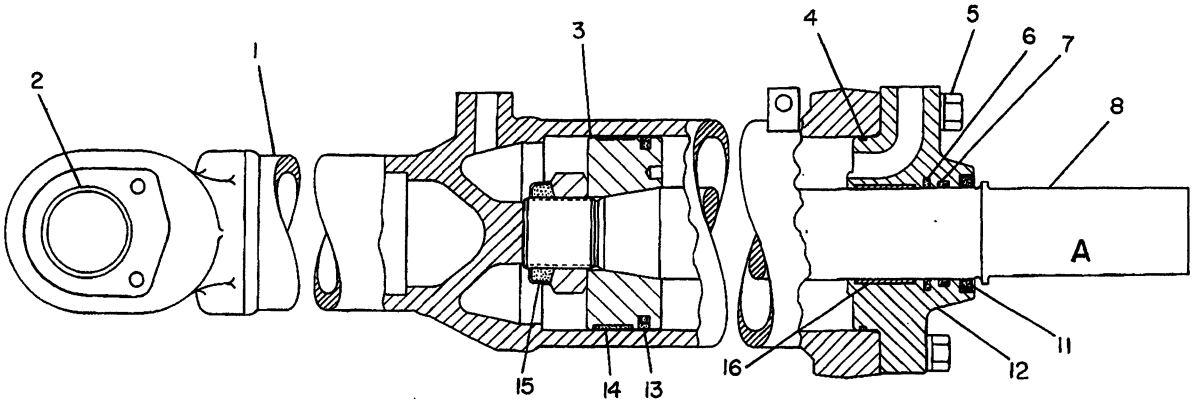

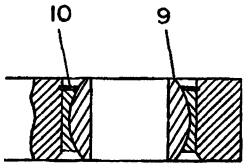

VIEW OF AREA A

NOTE	REF NO	PART NUMBER	QTY	PART NAME	NOTE	REF NO	PART NUMBER	QTY	PART NAME
	1	9J8803	1	CYLINDER AS					
	2	1U2182	2	BEARING-SLEEVE					
	3	1U2583	1	PISTON					
	4	4T3107	1	RING-BACKUP					
		4H6520	1	SEAL-O-RING					
	5	1D4629	2	BOLT 88.90MM(3.50IN)LG					
		1D4628	6	BOLT 82.55MM(3.25IN)LG					
		5P8249	8	WASHER					
	6	6J6736	1	SEAL-RING					
	7	5J8350	1	SEAL					
R	8	4T6838	1	ROD AS					
	9	6V3340	1	BEARING-SPHERICAL					
	10	5J9454	1	RING-RETAINING					
	11	4J8981	1	SEAL-LIP					
C	12	9T3508	1	HEAD					
	13	9J7117	1	SEAL AS					
	14	1U2218	1	RING-WEAR					
	15	4J6888	1	LOCKNUT					
C	16	8T6746	1	RING-WEAR					

C-CHANGE FROM PREVIOUS TYPE
R-REMFG PART MAY BE AVAILABLE

B-351303 EP

5104

9J8802 CYLINDER GP-DOZER TILT
Type 3. 190.5MM (7.5IN) Bore X 349.2MM (13.7IN) Stroke
Part Of 3G6155 Cylinder Ar
An Attachment

MEMORANDA

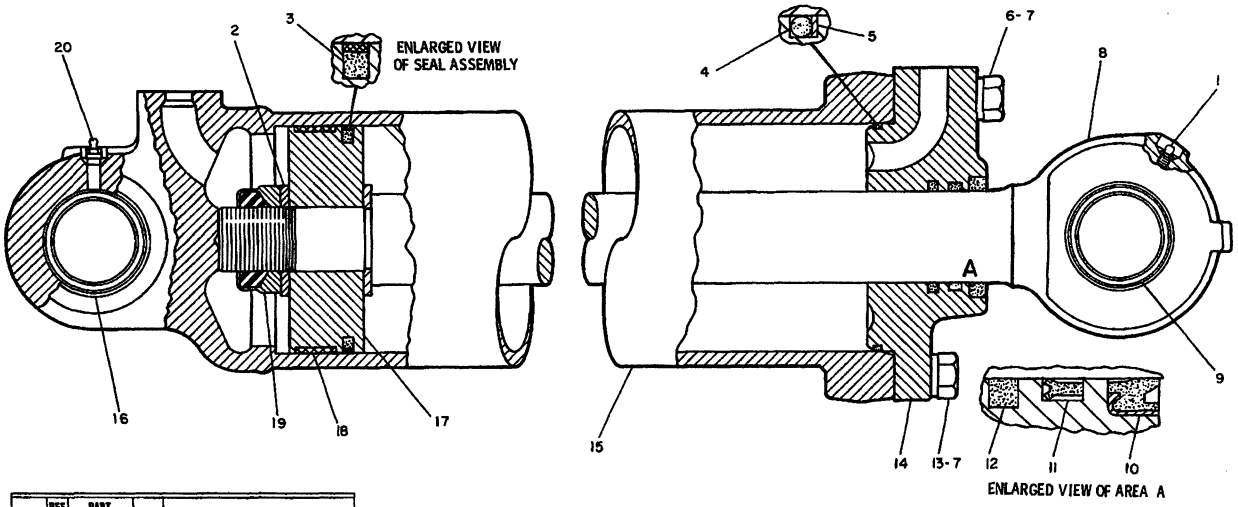

NOTE	REF NO	PART NUMBER	QTY	DESCRIPTION
C	1	3B8489	1	FITTING
	2	7J1965	2	WASHER
	3	5J5559	1	SEAL ASSEM.
	4	1J2176	1	SEAL
	5	2J744	1	RING
	6	1D4631	2	BOLT
	7	5P8249	8	WASHER
	8	3G6827	1	ROD ASSEM.
	9	3G5999	1	BEARING
	10	6J4169	1	SEAL
	11	5J8325	1	SEAL
	12	6J7167	1	SEAL
	13	1D4627	6	BOLT
	14	6J8319	1	HEAD
	15	3G6828	1	CYLINDER ASSEM.
	16	3G5999	1	BEARING
	17	1U1808	1	PISTON
	18	4J7376	1	RING
	19	5J3488	1	NUT
C	20	3J7283	1	FITTING

C INDICATES CHANGE

312198

312198 P

5102

3G6457 CYLINDER GP-LIFT

Type 1. 210MM (8.3IN) Bore X 457MM (18IN) Stroke
Part Of 4T0148,4T0150,7T6939,7T6940 Ripper Ars
An Attachment

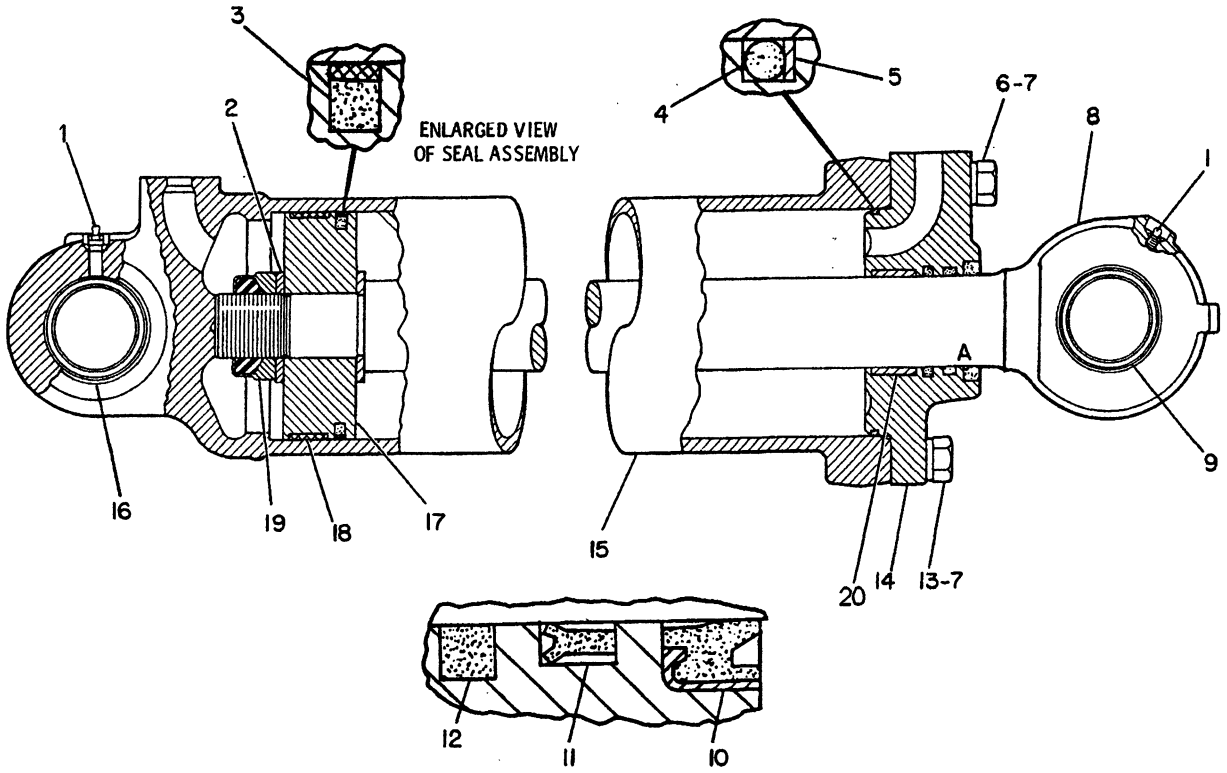

ENLARGED VIEW OF AREA A

NOTE	REF NO	PART NUMBER	QTY	PART NAME	NOTE	REF NO	PART NUMBER	QTY	PART NAME
	1	3B8489	2	FITTING-GREASE					
	2	7J1965	2	WASHER					
	3	5J5559	1	SEAL AS					
	4	1J2176	1	SEAL-O-RING					
	5	2J0744	1	RING-BACKUP					
C	6	1D4630	2	BOLT					
	7	5P8249	8	WASHER					
R	8	3G6827	1	ROD AS-PISTON					
	9	3G5999	1	BEARING-SLEEVE					
	10	8T8389	1	SEAL					
	11	5J8325	1	SEAL-U-CUP					
	12	8C9121	1	SEAL AS					
	13	1D4627	6	BOLT					
C	14	9T3505	1	HEAD					
R	15	3G6828	1	CYLINDER AS-HYDRAULIC					
	16	3G5999	1	BEARING-SLEEVE					
	17	1U1808	1	PISTON					
	18	4J7376	1	RING-WEAR					
	19	5J3488	1	LOCKNUT					
C	20	8T6745	1	RING-WEAR					

C-CHANGE FROM PREVIOUS TYPE
R-REMFG PART MAY BE AVAILABLE

R-530630 EP

5102 **3G6457 CYLINDER GP-LIFT**

210MM (8.3IN) Bore X 457MM (18IN) Stroke-Type 2
Part Of 4T0148,4T0150,7T6939,7T6940 Ripper Ars
An Attachment

MEMORANDA

NOTE	REF NO	PART NUMBER	QTY	DESCRIPTION
	1	7G203	1	HOSE AS.
CBG		8S9348		HOSE
	2	3S7116	2	SLEEVE
	3	1P1219	2	STEM AS. (STRAIGHT)
	4	4J522	4	SEAL
	5	7G201	1	HOSE AS.
BG		8S9348		HOSE
	6	3S7116	2	SLEEVE
	7	1P1219	2	STEM AS. (STRAIGHT)
	8	7G5606	2	PLATE
	9	9G6373	2	GROMMET
	10	S1621	8	BOLT
	11	5P8245	21	WASHER
C	12	7G0204	2	HOSE AS.
				(EACH INCLUDES)
BG		9S247		HOSE
	13	3S7166	2	SLEEVE
		5P4122	2	STEM AS. (STRAIGHT)
	14	5P7466	4	CLIP (SLOT)
		5P7467	4	CLIP (TAB)
		5P8112	4	GROMMET
C	15	1A1460	2	BOLT
C	16	1D4719	5	NUT
	17	7G205	2	HOSE AS.
				(EACH INCLUDES)
CBG		9S247		HOSE
		5P4122	1	STEM AS. (STRAIGHT)
	18	3S7166	2	SLEEVE
	19	3S8363	1	STEM AS. (90°)
	20	1P4576	32	FLANGE
	21	9P5540	1	BLOCK
	22	3B1915	64	BOLT
		5M2894	64	WASHER
	23	4J5267	8	SEAL
	24	1B2886	2	BOLT
	25	L1329	4	BOLT
	26	9G8928	1	MANIFOLD
	27	9G8929	1	MANIFOLD
	28	9S1366	2	BOLT
	29	1P4578	4	FLANGE
	30	T772	8	BOLT
		5P8244	8	WASHER
	31	9P5541	1	BLOCK
C	32	2B947	3	BOLT

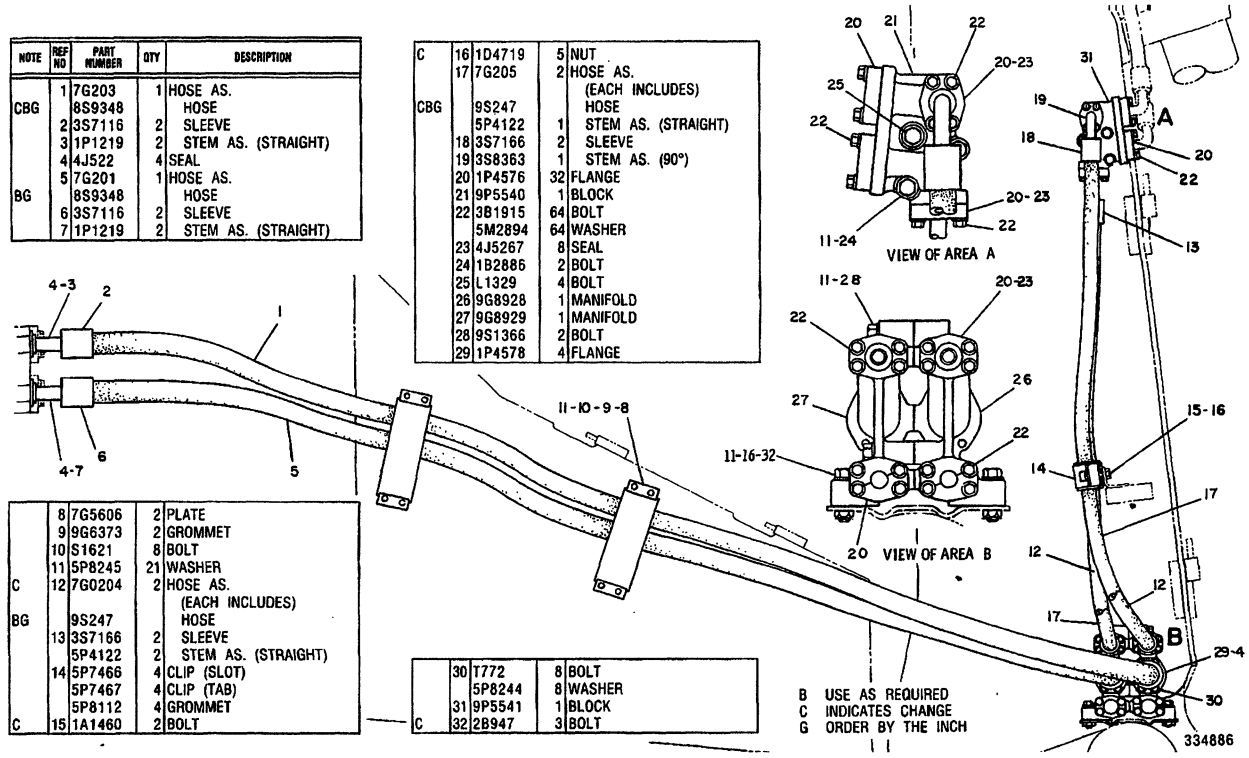

334886 P

5057 **6P8865 LINES GP-LIFT CYLINDER**

Type 1

An Attachment

NOTE	REF NO	PART NUMBER	QTY	DESCRIPTION
	1	7G203	1	HOSE AS.
BG		8S9348		HOSE
	2	3S7116	2	SLEEVE
	3	1P1219	2	STEM AS. (STRAIGHT)
	4	4J522	4	SEAL
	5	7G201	1	HOSE AS.
BG		8S9348		HOSE
	6	3S7116	2	SLEEVE
	7	1P1219	2	STEM AS. (STRAIGHT)
	8	7G5606	2	PLATE
	9	9G6373	2	GROMMET
	10	S1621	8	BOLT
C	11	5P8245	21	WASHER
	12	7G0204	2	HOSE AS.
				(EACH INCLUDES)
BG		9S247		HOSE
	13	3S7166	2	SLEEVE
		5P4122	2	STEM AS. (STRAIGHT)
C	14	7G3834	4	CLIP (SLOT)
C		7G3833	4	CLIP (TAB)
C	15	7G3832	4	GROMMET
C	16	1D4719	3	NUT
	17	7G205	2	HOSE AS.
				(EACH INCLUDES)
BG		9S247		HOSE
		5P4122	1	STEM AS. (STRAIGHT)
	18	3S7166	2	SLEEVE
	19	3S8363	1	STEM AS. (90°)
	20	1P4576	32	FLANGE
C	21	6T9304	1	BLOCK
	22	3B1915	64	BOLT
		5M2894	64	WASHER
	23	4J5267	8	SEAL
C	24	1B2886	4	BOLT
	25	0S1595	4	BOLT
	26	9G8928	1	MANIFOLD
	27	9G8929	1	MANIFOLD
	28	9S1366	2	BOLT
	29	1P4578	4	FLANGE
	30	T772	8	BOLT
		5P8244	8	WASHER
C	31	6T9305	1	BLOCK
	32	2B947	3	BOLT

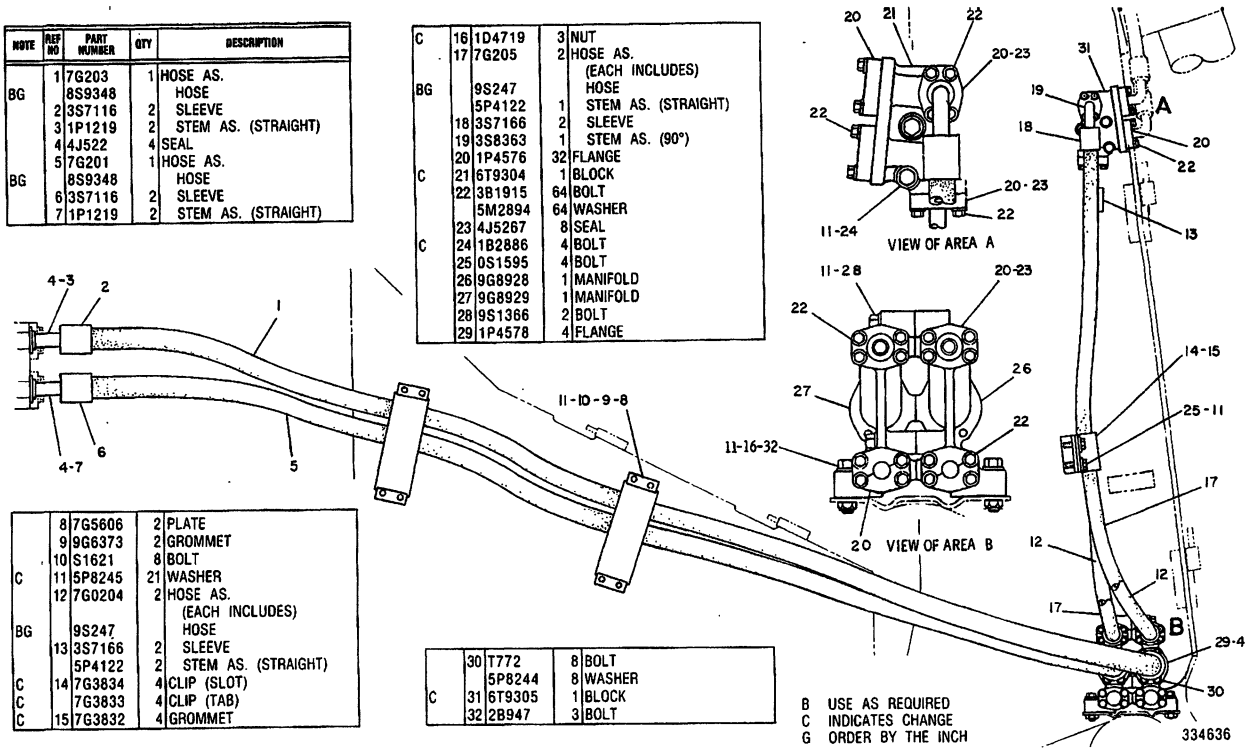

B USE AS REQUIRED
C INDICATES CHANGE
G ORDER BY THE INCH

334636 P

5057 **6P8865 LINES GP-LIFT CYLINDER-TYPE 2**

S/N 53Y3485-3897,3899-3914,3916,3918,3919,3921-3931,3933,3935-3938,3940, 3941,3943-3944,3947,3949-3953,3957,3959-3960,3962-3967,3969,3971,3973, 3975,3977,3979-3981,3983-3985,3987,3989,3992,3993,3995,3998,4000

An Attachment

NOTE	REF NO	PART NUMBER	QTY	DESCRIPTION
	1	7G0203	1	HOSE AS.
BG		8S9348		HOSE
	2	3S7116	2	SLEEVE
	3	1P1219	2	STEM AS. (STRAIGHT)
	4	4J0522	4	SEAL
	5	7G0201	1	HOSE AS.
BG		8S9348		HOSE
	6	3S7116	2	SLEEVE
	7	1P1219	2	STEM AS. (STRAIGHT)
	8	7G5606	2	PLATE
C	9	9W0512	4	GROMMET
	10	0S1621	8	BOLT
	11	5P8245	21	WASHER
	12	7G0204	2	HOSE AS.
				(EACH INCLUDES)
BG		9S0247		HOSE
	13	3S7166	2	SLEEVE
		5P4122	2	STEM AS. (STRAIGHT)
	14	7G3834	4	CLIP (SLOT)
		7G3833	4	CLIP (TAB)
	15	7G3832	4	GROMMET
	16	1D4719	3	NUT
	17	7G0205	2	HOSE AS.
				(EACH INCLUDES)
BG		9S0247		HOSE
		5P4122	1	STEM AS. (STRAIGHT)
	18	3S7166	2	SLEEVE
	19	3S8363	1	STEM AS. (90°)
	20	1P4576	32	FLANGE
	21	6T9304	1	BLOCK
	22	3B1915	64	BOLT
		5M2894	64	WASHER
C	23	4J5267	14	SEAL
	24	1B2886	4	BOLT
	25	0S1595	4	BOLT
	26	9G8928	1	MANIFOLD
	27	9G8929	1	MANIFOLD
	28	9S1366	2	BOLT
	29	1P4578	4	FLANGE
	30	0T0772	8	BOLT
		5P8244	8	WASHER
	31	6T9305	1	BLOCK
	32	2B0947	3	BOLT
C	33	5H4018	6	COVER

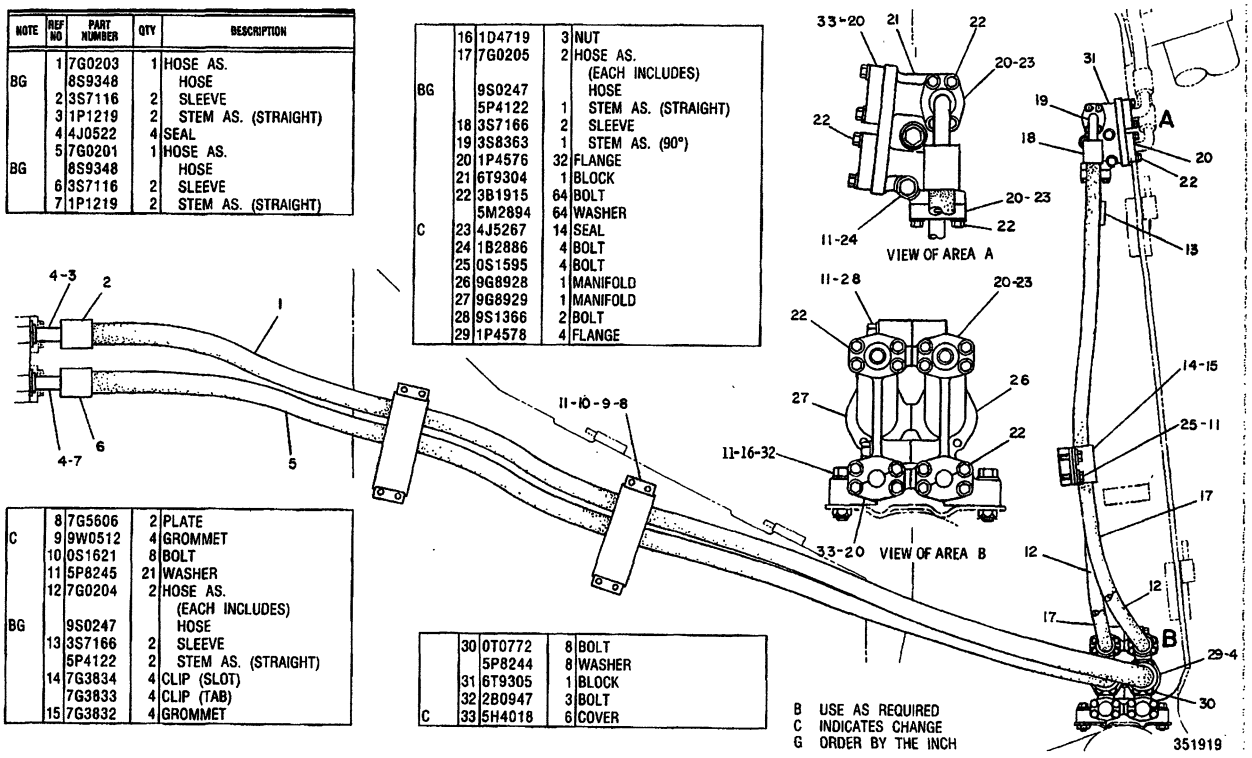

B USE AS REQUIRED
C INDICATES CHANGE
G ORDER BY THE INCH

351919 P

5057 **6P8865 LINES GP-LIFT CYLINDER-TYPE 3**

S/N 53Y3898,3915,3917,3920,3932,3934,3939,3942,3945-3946,3948,3954-3956, 3958,3961,3968,3970,3972,3974,3976,3978,3982,3986,3988,3990-3991,3994, 3996-3997,3999,4001-Up

MEMORANDA

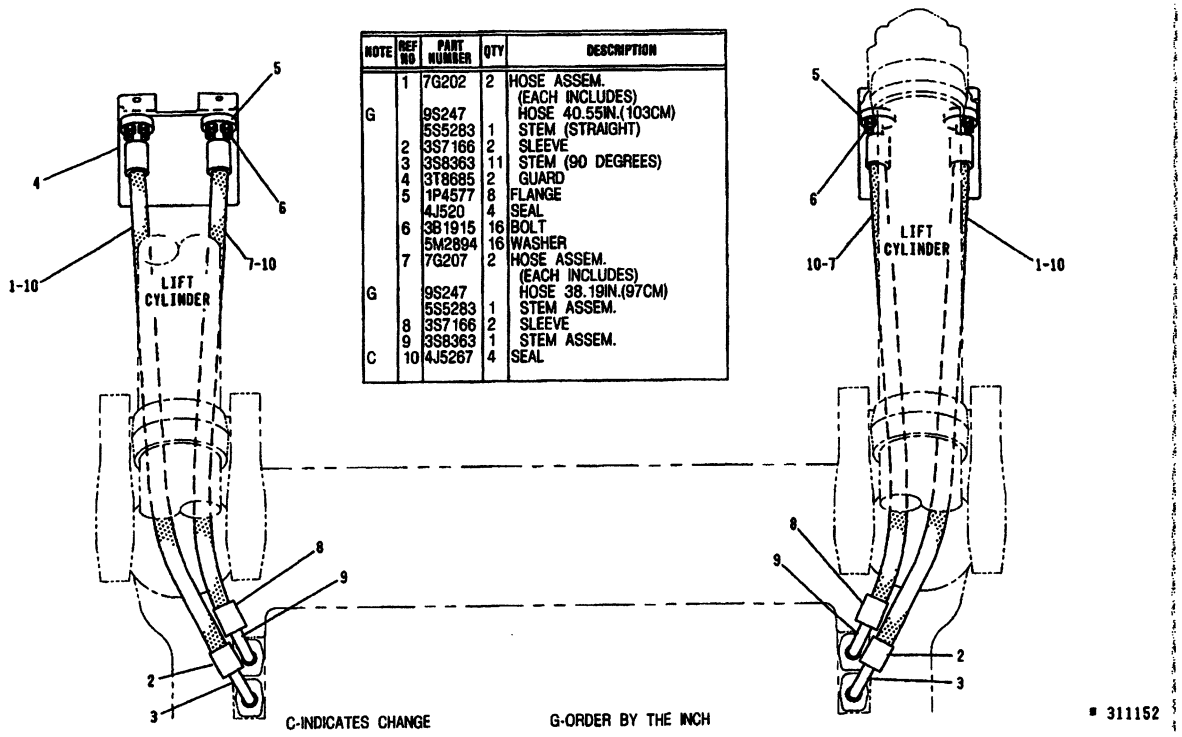

NOTE	REF NO	PART NUMBER	QTY	DESCRIPTION
	1	7G202	2	HOSE ASSEM. (EACH INCLUDES)
G		9S247		HOSE 40.55IN.(103CM)
		5S5283	1	STEM (STRAIGHT)
	2	3S7166	2	SLEEVE
	3	3S8363	11	STEM (90 DEGREES)
	4	3T8685	2	GUARD
	5	1P4577	8	FLANGE
		4J520	4	SEAL
	6	3B1915	16	BOLT
		5M2894	16	WASHER
	7	7G207	2	HOSE ASSEM. (EACH INCLUDES)
G		9S247		HOSE 38.19IN.(97CM)
		5S5283	1	STEM ASSEM.
	8	3S7166	2	SLEEVE
	9	3S8363	1	STEM ASSEM.
C	10	4J5267	4	SEAL

C-INDICATES CHANGE G-ORDER BY THE INCH

■ 311152

A- 311152 P

5057 **3T8686 LINES GP-LIFT CYLINDER**

Type 1

Part Of 3G6088 Bulldozer Ar

An Attachment

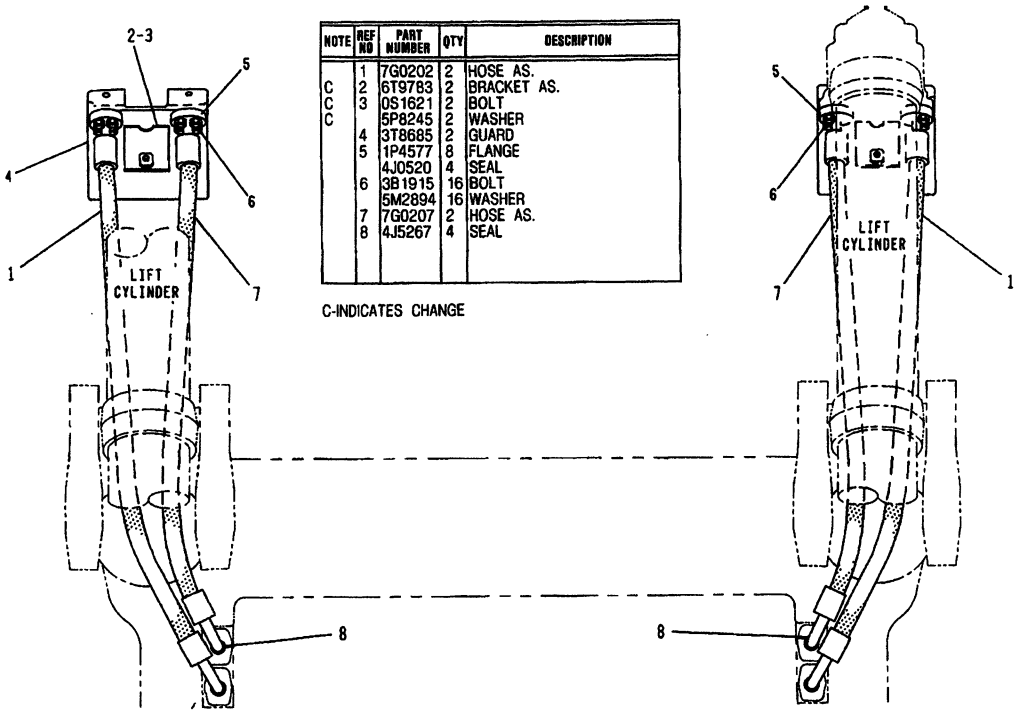

NOTE	REF NO	PART NUMBER	QTY	DESCRIPTION
	1	7G0202	2	HOSE AS.
C	2	6T9783	2	BRACKET AS.
C	3	0S1621	2	BOLT
C		5P8245	2	WASHER
	4	3T8685	2	GUARD
	5	1P4577	8	FLANGE
		4J0520	4	SEAL
	6	3B1915	16	BOLT
		5M2894	16	WASHER
	7	7G0207	2	HOSE AS.
	8	4J5267	4	SEAL

C-INDICATES CHANGE

A-328147 P

5057

3T8686 LINES GP-LIFT CYLINDER
Type 2
Part Of 3G6088 Bulldozer Ar
An Attachment

HYDRAULIC SYSTEM

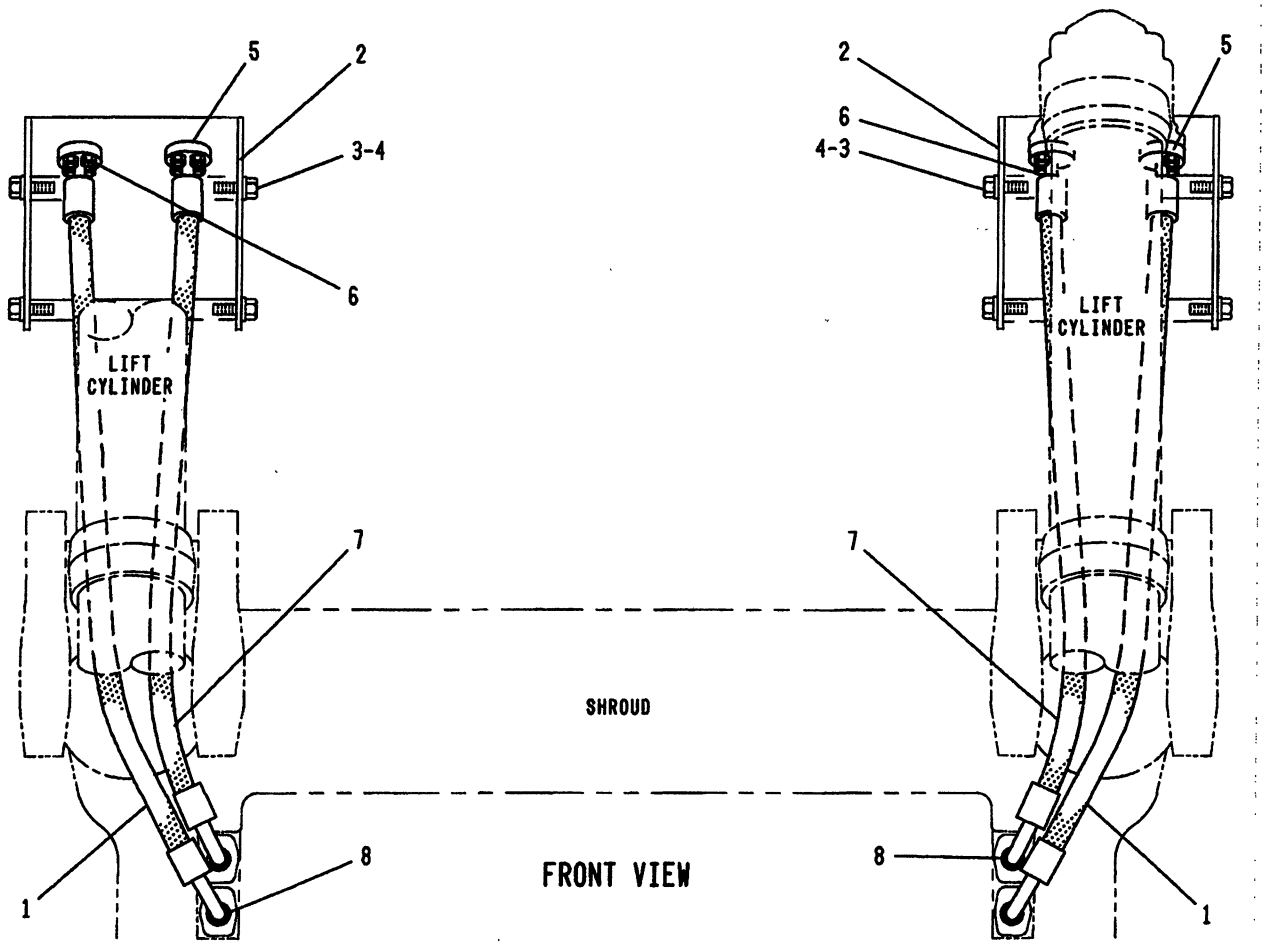

NOTE	REF NO	PART NUMBER	QTY	PART NAME	NOTE	REF NO	PART NUMBER	QTY	PART NAME
	1	7G0202	2	HOSE AS					
C	2	7T9821	2	BRACKET					
C	3	6H1717	8	BOLT					
C	4	5P8245	8	WASHER					
	5	1P4577	8	FLANGE-HALF					
		4J0520	4	SEAL					
	6	3B1915	16	BOLT					
		5M2894	16	WASHER					
	7	7G0207	2	HOSE AS					
	8	4J5267	4	SEAL					

C-INDICATES CHANGE

A- 414037 P

5057 **3T8686 LINES GP-LIFT CYLINDER**

Type 3

Part Of 3G6092,3G6090,3G6088 Bulldozer Ars

An Attachment

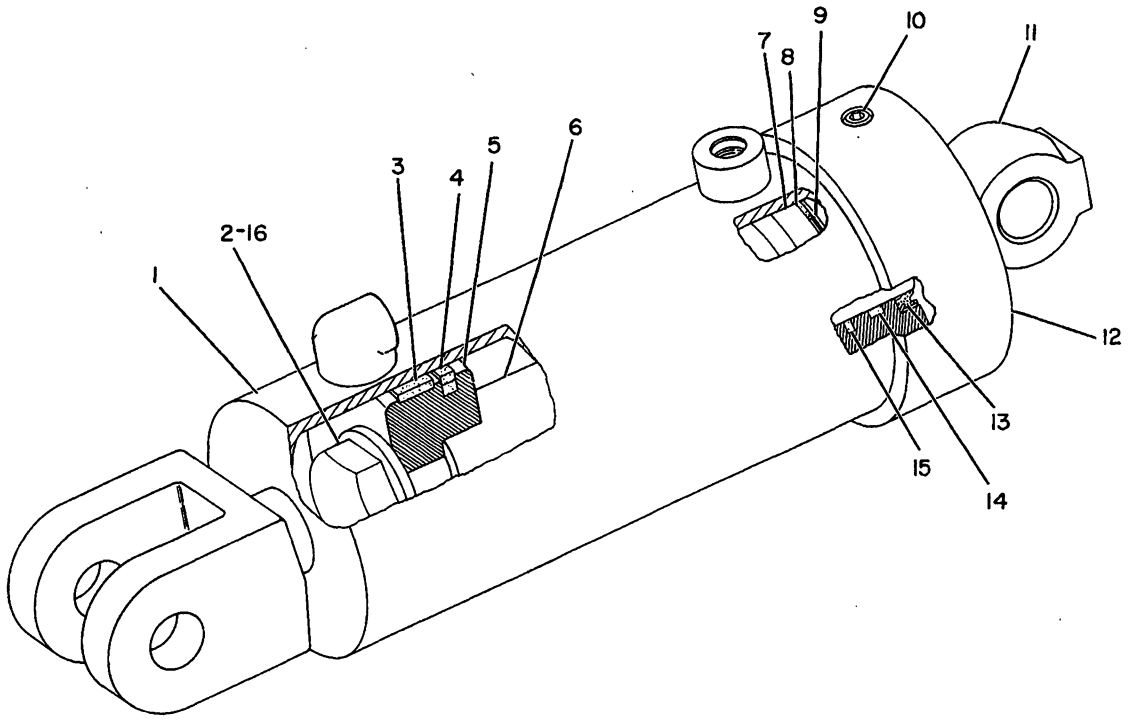

NOTE	REF NO	PART NUMBER	QTY	PART NAME
	1	1U3374	1	CYLINDER AS
	2	7J5639	1	BOLT-LOCKING
	3	5J7154	1	RING-WEAR
	4	5J5402	1	SEAL AS
		5J5400	1	SEAL
	5	7J6084	1	PISTON
	6	8J2073	1	ROD
	7	7J7983	1	HEAD
	8	1H8128	1	SEAL-O-RING
	9	2K6830	1	RING-BACKUP
	10	8J5912	1	SETSCREW
	11	8J2076	1	EYE
	12	7J7984	1	CROWN
	13	4J8979	1	SEAL-LIP
	14	5J8150	1	SEAL-U-CUP
	15	6J9733	1	SEAL-RING
	16	8J7415	1	WASHER-HARD

B-229338 EP

4315 **1U3373 CYLINDER GP-PIN PULLER**

Type 1. 101.6MM (4IN) Bore & 138.9MM (5.5IN) Stroke
Part Of 9W3728 Puller Ar-Pin
An Attachment

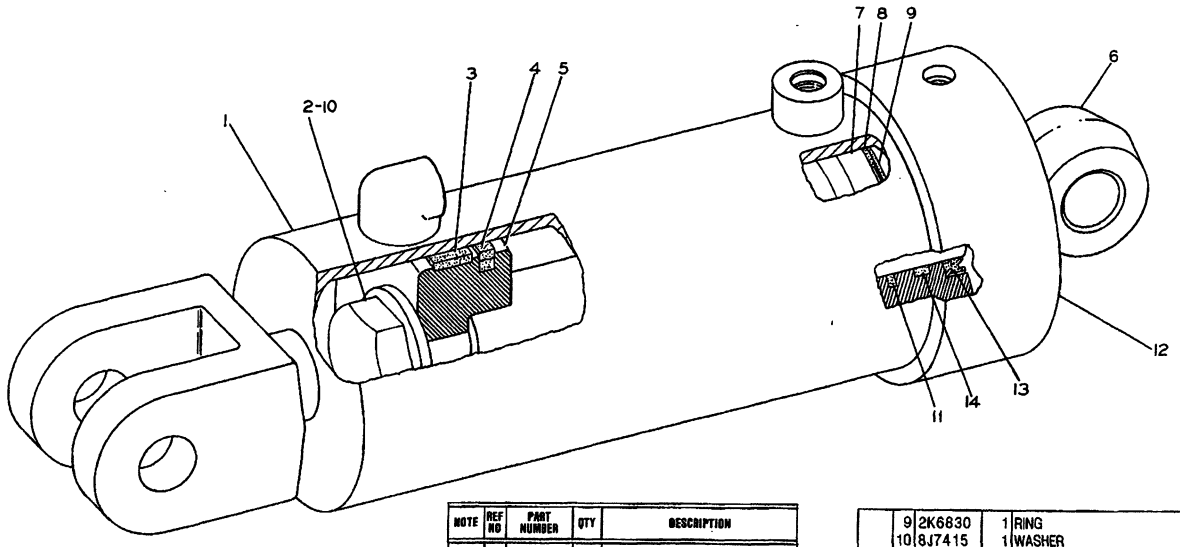

NOTE	REF NO	PART NUMBER	QTY	DESCRIPTION
	1	1U3374	1	CYLINDER AS.
	2	7J5639	1	BOLT
	3	5J7154	1	RING
	4	5J5402	1	SEAL AS.
		5J5400	1	SEAL
	5	7J6084	1	PISTON
C	6	4T3120	1	ROD AS.
	7	7J7983	1	HEAD
	8	1H8128	1	SEAL
	9	2K6830	1	RING
	10	8J7415	1	WASHER
	11	6J9733	1	SEAL
	12	7J7984	1	CROWN
	13	4J8979	1	SEAL
	14	5J8150	1	SEAL
				THE FOLLOWING REPAIR KIT IS AVAILABLE:
C		8T1382	1	KIT (SEAL) (FOR HYD. CYLINDER)

C INDICATES CHANGE

328686

328686 P

4315 **1U3373 CYLINDER GP-HYDRAULIC**

Type 2. 101.6MM (4IN) Bore X 138.9MM (5.5IN) Stroke
Part Of 9P9906,9W3728 Puller Ars
An Attachment

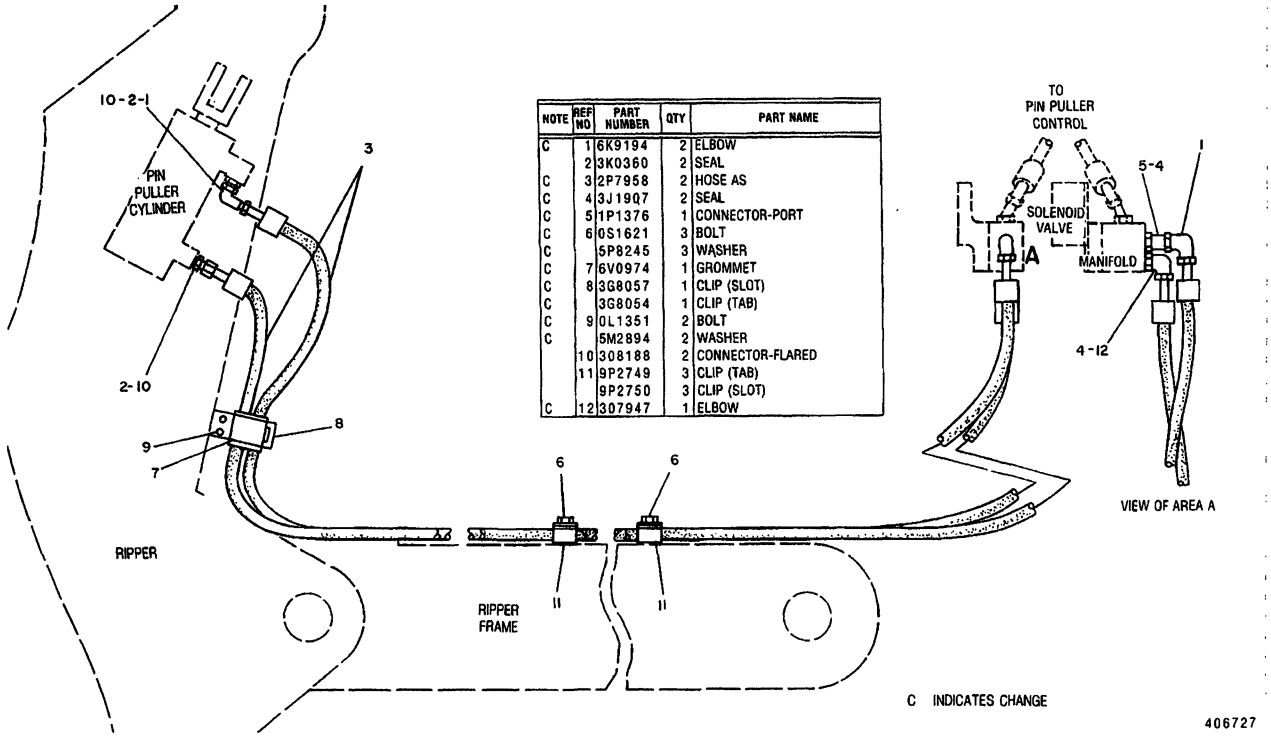

NOTE	REF NO	PART NUMBER	QTY	PART NAME
C	1	6K9194	2	ELBOW
	2	3K0360	2	SEAL
C	3	2P7958	2	HOSE AS
C	4	3J1907	2	SEAL
C	5	1P1376	1	CONNECTOR-PORT
C	6	0S1621	3	BOLT
C		5P8245	3	WASHER
C	7	6V0974	1	GROMMET
C	8	3G8057	1	CLIP (SLOT)
C		3G8054	1	CLIP (TAB)
C	9	0L1351	2	BOLT
C		5M2894	2	WASHER
	10	308188	2	CONNECTOR-FLARED
	11	9P2749	3	CLIP (TAB)
		9P2750	3	CLIP (SLOT)
C	12	307947	1	ELBOW

C INDICATES CHANGE

406727

406727 P

5057

1U4165 LINES GP-ATTACHMENT
Part Of 9P9906 Puller Ar-Pin
An Attachment

HYDRAULIC SYSTEM

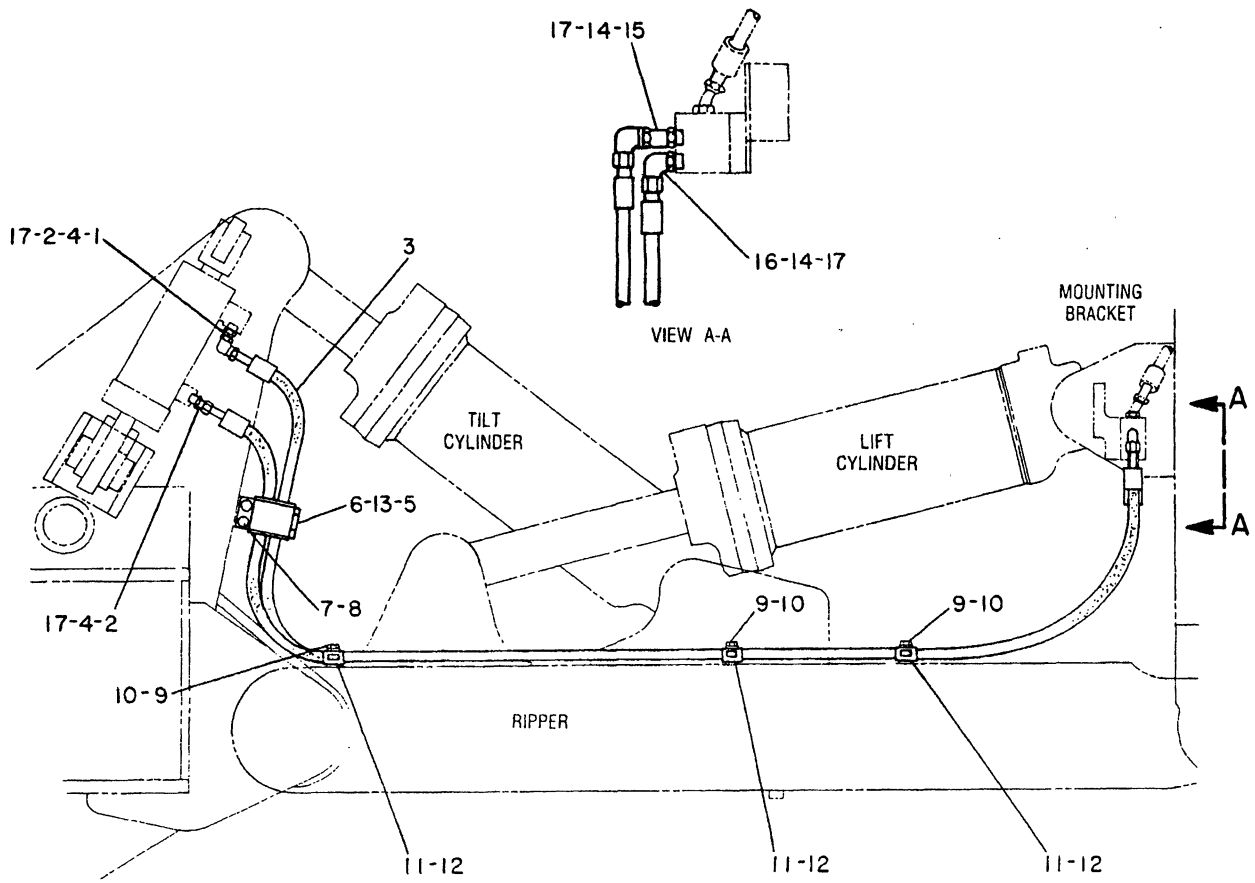

NOTE	REF NO	PART NUMBER	QTY	PART NAME
	1	6V9850	1	ELBOW-SWIVEL
	2	6V8634	2	CONNECTOR-SEAL
	3	9W3726	2	HOSE AS
	4	3K0360	2	SEAL-O-RING 16.36MM(.64IN)ID
	5	6V0974	1	GROMMET
	6	3G8057	1	CLIP (SLOTTED)
	7	OL1351	2	BOLT
	8	5M2894	2	WASHER
	9	OS1621	3	BOLT
	10	5P8245	3	WASHER
	11	9P2749	3	CLIP (TAB)
	12	9P2750	3	CLIP (SLOTTED)
	13	3G8054	1	CLIP (TAB)
	14	3J1907	2	SEAL-O-RING 11.89MM(.47IN)ID
	15	8T1905	1	ELBOW-90 DEGREE
	16	6V8724	1	ELBOW-90 DEGREE
	17	6V8397	5	SEAL-O-RING 9.91MM(.39IN)ID

B-350273 EP

5057 **9W3727 LINES GP-ATTACHMENT**
Part Of 9W3728 Puller Ar
An Attachment

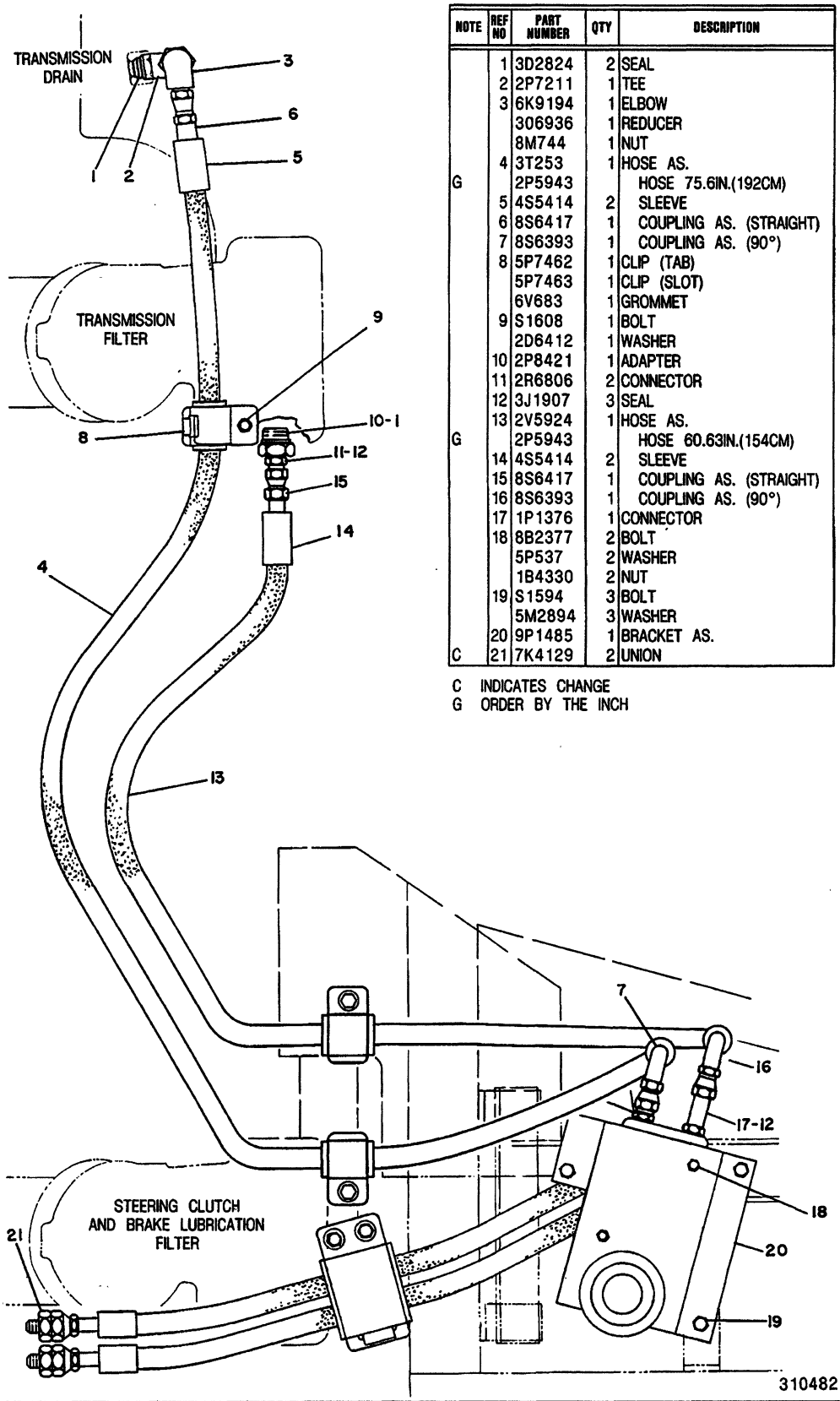

NOTE	REF NO	PART NUMBER	QTY	DESCRIPTION
	1	3D2824	2	SEAL
	2	2P7211	1	TEE
	3	6K9194	1	ELBOW
		306936	1	REDUCER
		8M744	1	NUT
	4	3T253	1	HOSE AS.
G		2P5943		HOSE 75.6IN.(192CM)
	5	4S5414	2	SLEEVE
	6	8S6417	1	COUPLING AS. (STRAIGHT)
	7	8S6393	1	COUPLING AS. (90°)
	8	5P7462	1	CLIP (TAB)
		5P7463	1	CLIP (SLOT)
		6V683	1	GROMMET
	9	S1608	1	BOLT
		2D6412	1	WASHER
	10	2P8421	1	ADAPTER
	11	2R6806	2	CONNECTOR
	12	3J1907	3	SEAL
	13	2V5924	1	HOSE AS.
G		2P5943		HOSE 60.63IN.(154CM)
	14	4S5414	2	SLEEVE
	15	8S6417	1	COUPLING AS. (STRAIGHT)
	16	8S6393	1	COUPLING AS. (90°)
	17	1P1376	1	CONNECTOR
	18	8B2377	2	BOLT
		5P537	2	WASHER
		1B4330	2	NUT
	19	S1594	3	BOLT
		5M2894	3	WASHER
	20	9P1485	1	BRACKET AS.
C	21	7K4129	2	UNION

C INDICATES CHANGE
G ORDER BY THE INCH

5051 **7G5124 CONTROL AR-HYDRAULIC-PIN PULLER-PART 1 OF 2**
Type 1. S/N 53Y1-3484
Required Whenever A Machine Is Equipped With A 4T0147 Ripper Or A 9P9906 Pin Puller Ar
An Attachment

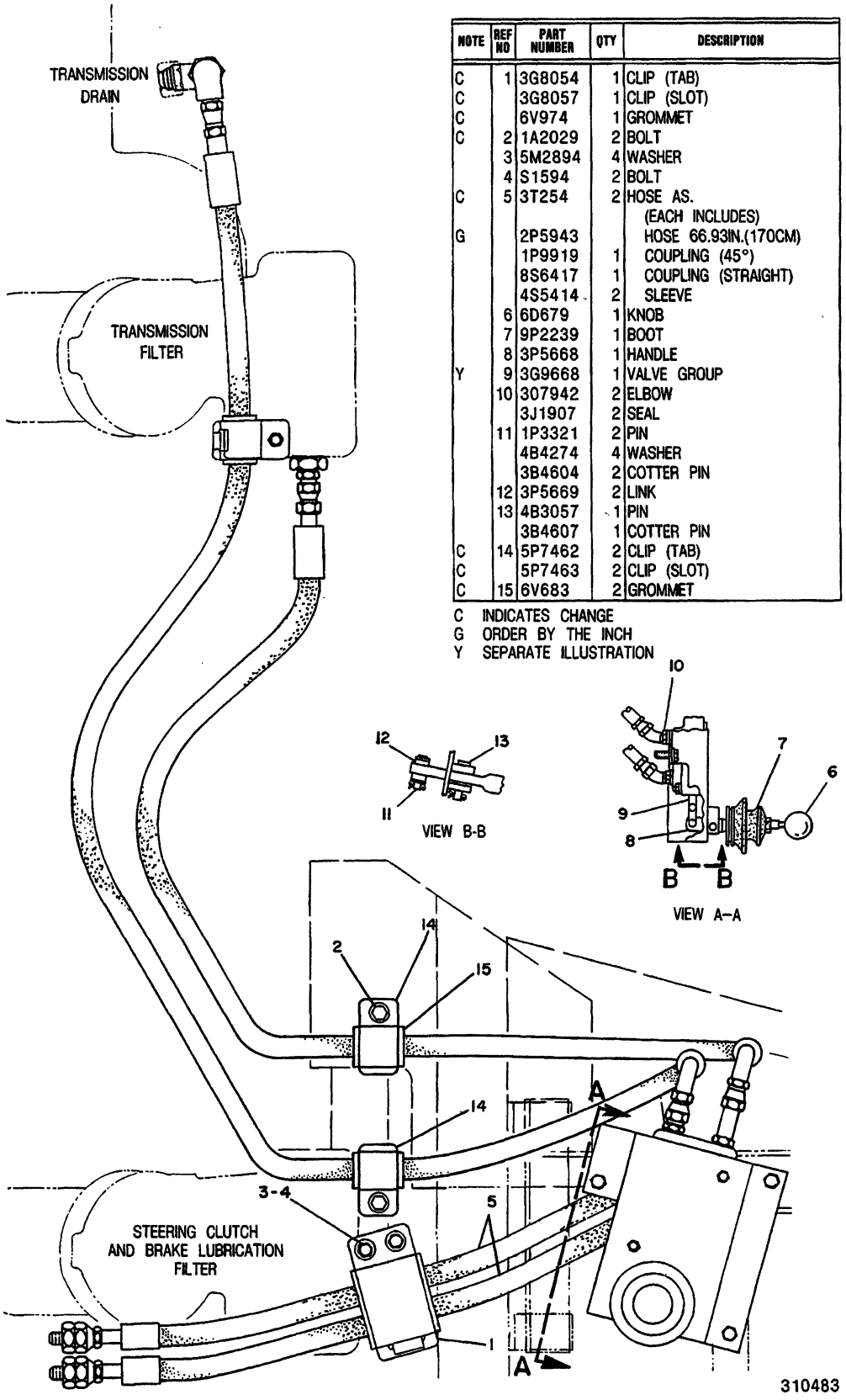

NOTE	REF NO	PART NUMBER	QTY	DESCRIPTION
C	1	3G8054	1	CLIP (TAB)
C		3G8057	1	CLIP (SLOT)
C		6V974	1	GROMMET
C	2	1A2029	2	BOLT
	3	5M2894	4	WASHER
	4	S1594	2	BOLT
C	5	3T254	2	HOSE AS.
				(EACH INCLUDES)
G		2P5943		HOSE 66.93IN.(170CM)
		1P9919	1	COUPLING (45°)
		8S6417	1	COUPLING (STRAIGHT)
		4S5414	2	SLEEVE
	6	6D679	1	KNOB
	7	9P2239	1	BOOT
	8	3P5668	1	HANDLE
Y	9	3G9668	1	VALVE GROUP
	10	307942	2	ELBOW
		3J1907	2	SEAL
	11	1P3321	2	PIN
		4B4274	4	WASHER
		3B4604	2	COTTER PIN
	12	3P5669	2	LINK
	13	4B3057	1	PIN
		3B4607	1	COTTER PIN
C	14	5P7462	2	CLIP (TAB)
C		5P7463	2	CLIP (SLOT)
C	15	6V683	2	GROMMET

C INDICATES CHANGE
G ORDER BY THE INCH
Y SEPARATE ILLUSTRATION

310483 P

5051 7G5124 CONTROL AR-HYDRAULIC-PIN PULLER-PART 2 OF 2
Type 1. S/N 53Y1-3484
3G9668-Page 236. Required Whenever A Machine Is Equipped With A 4T0147 Ripper Or A 9P9906 Pin Puller Ar
An Attachment

HYDRAULIC SYSTEM

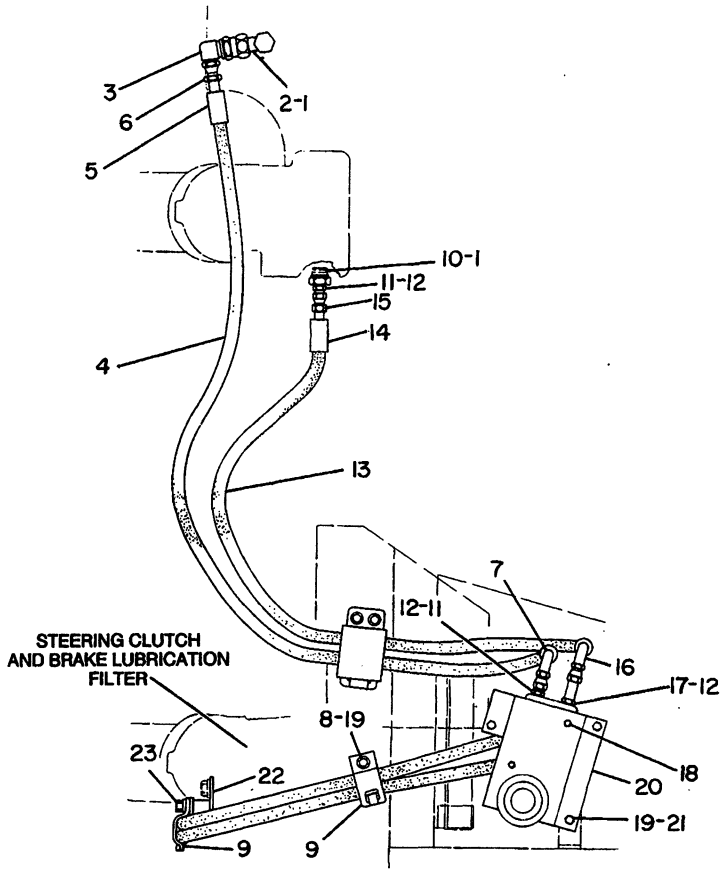

NOTE	REF NO	PART NUMBER	QTY	PART NAME	NOTE	REF NO	PART NUMBER	QTY	PART NAME
	1	3D2824	2	SEAL-O-RING		18	8B2377	2	BOLT
	2	2P7211	1	TEE			5P0537	2	WASHER
	3	6K9194	1	ELBOW			1B4330	2	NUT
		306936	1	REDUCER-FLARED	C	19	0S1594	4	BOLT
		8M0744	1	NUT-FLARED		20	9P1485	1	BRACKET AS
I	4	3T0253	1	HOSE AS		21	5M2894	3	WASHER
G		2P5943		HOSE 75.6IN.(192CM)	C	22	4T2142	1	CLIP AS
	5	4S5414	2	SLEEVE			5H9394	1	BOSS
	6	8S6417	1	COUPLING AS (STRAIGHT)	C	23	0S1621	1	BOLT
					C		5P8245	1	WASHER
	7	8S6393	1	COUPLING AS (90 DEGREE)					
C	8	5P1075	1	WASHER-HARD					
C	9	9P2749	2	CLIP (SLOT)					
C		9P2750	2	CLIP (TAB)					
	10	2P8421	1	ADAPTER-O-RING					
	11	2R6806	2	CONNECTOR					
	12	3J1907	3	SEAL-O-RING					
I	13	2V5924	1	HOSE AS					
G		2P5943		HOSE 60.63IN(154CM)					
	14	4S5414	2	SLEEVE					
	15	8S6417	1	COUPLING AS (STRAIGHT)					
	16	8S6393	1	COUPLING AS (90 DEGREE)					
	17	1P1376	1	CONNECTOR-PORT					

C-CHANGE FROM PREVIOUS TYPE
G-ORDER BY THE INCH
I-SEE HOSE FABRICATION GUIDE

B-310498 P

5051 **7G5124 CONTROL AR-HYDRAULIC-PIN PULLER-PART 1 OF 2**

Type 2. S/N 53Y1-3484
Required Whenever A Machine Is Equipped With A 4T0147 Ripper Or A 9P9906 Pin Puller Ar
An Attachment

HYDRAULIC SYSTEM

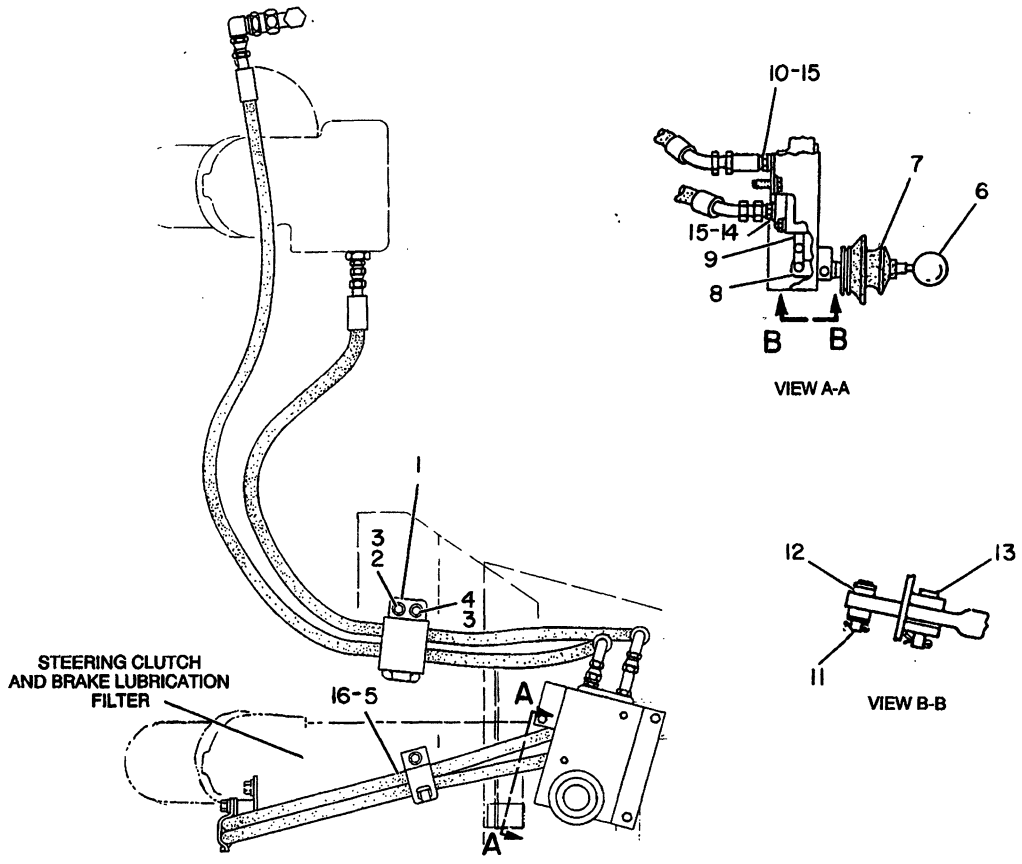

NOTE	REF NO	PART NUMBER	QTY	PART NAME	NOTE	REF NO	PART NUMBER	QTY	PART NAME
	1	3G8054	1	CLIP (TAB)	C	14	2R6806	1	CONNECTOR
		3G8057	1	CLIP (SLOT)		15	3J1907	2	SEAL-O-RING
		6V0974	1	GROMMET		16	7K4129	2	UNION-FLARED
C	2	1A2029	1	BOLT					
C	3	5M2894	3	WASHER					
C	4	0S0509	1	BOLT					
C		1D4717	1	NUT					
I	5	3T0254	2	HOSE AS (EACH INCLUDES)					
G		2P5943		HOSE 66.93IN(170CM)					
		1P9919	1	COUPLING AS (45 DEGREE)					
		8S6417	1	COUPLING AS (STRAIGHT)					
		4S5414	2	SLEEVE					
	6	6D0679	1	KNOB					
	7	9P2239	1	BOOT					
	8	3P5668	1	HANDLE					
Y	9	3G9668	1	VALVE GP-CONTROL					
C	10	1P1376	1	CONNECTOR-PORT					
	11	1P3321	2	PIN					
		4B4274	4	WASHER					
		3B4604	2	PIN-COTTER					
	12	3P5669	2	LINK					
	13	4B3057	1	PIN-CLEVIS					
		3B4607	1	COTTER (PIN)					

C-CHANGE FROM PREVIOUS TYPE
G-ORDER BY THE INCH
I-SEE HOSE FABRICATION GUIDE
Y-SEPARATE ILLUSTRATION

B- 310499 P

5051 7G5124 CONTROL AR-HYDRAULIC-PIN PULLER-PART 2 OF 2

Type 2. S/N 53Y1-3484

3G9668-Page 236. Required Whenever A Machine Is Equipped With A 4T0147 Ripper Or A 9P9906 Pin Puller Ar An Attachment

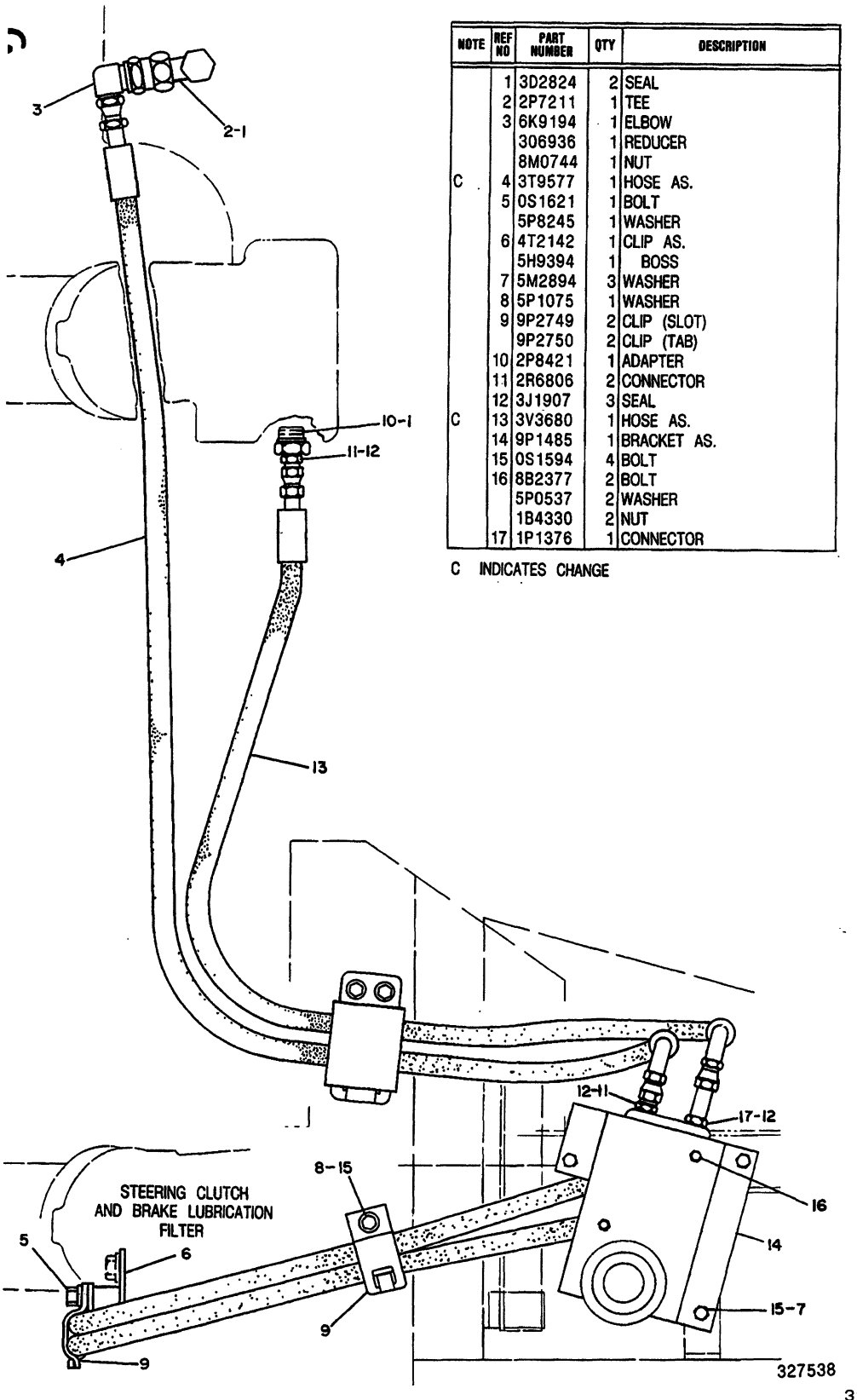

NOTE	REF NO	PART NUMBER	QTY	DESCRIPTION
	1	3D2824	2	SEAL
	2	2P7211	1	TEE
	3	6K9194	1	ELBOW
		306936	1	REDUCER
		8M0744	1	NUT
C	4	3T9577	1	HOSE AS.
	5	0S1621	1	BOLT
		5P8245	1	WASHER
	6	4T2142	1	CLIP AS.
		5H9394	1	BOSS
	7	5M2894	3	WASHER
	8	5P1075	1	WASHER
	9	9P2749	2	CLIP (SLOT)
		9P2750	2	CLIP (TAB)
	10	2P8421	1	ADAPTER
	11	2R6806	2	CONNECTOR
	12	3J1907	3	SEAL
C	13	3V3680	1	HOSE AS.
	14	9P1485	1	BRACKET AS.
	15	0S1594	4	BOLT
	16	8B2377	2	BOLT
		5P0537	2	WASHER
		1B4330	2	NUT
	17	1P1376	1	CONNECTOR

C INDICATES CHANGE

327538 P

5051 **7G5124 CONTROL AR-HYDRAULIC-PIN PULLER-PART 1 OF 2**

Type 3. S/N 53Y1-3484

Required Whenever A Machine Is Equipped With A 4T0147 Ripper Or A 9P9906 Pin Puller Ar An Attachment

NOTE	REF NO	PART NUMBER	QTY	DESCRIPTION
	1	3G8054	1	CLIP (TAB)
		3G8057	1	CLIP (SLOT)
		6V974	1	GROMMET
	2	1A2029	1	BOLT
	3	5M2894	3	WASHER
C	4	S1594	1	BOLT
		1D4717	1	NUT
	5	3T254	2	HOSE AS.
	6	6D679	1	KNOB
	7	9P2239	1	BOOT
	8	3P5668	1	HANDLE
Y	9	3G9668	1	VALVE GROUP
	10	1P1376	1	CONNECTOR
	11	1P3321	2	PIN
		4B4274	4	WASHER
		3B4604	2	COTTER PIN
	12	3P5669	2	LINK
	13	4B3057	1	PIN
		3B4607	1	COTTER PIN
	14	2R6806	1	CONNECTOR
	15	3J1907	2	SEAL
	16	7K4129	2	UNION

C INDICATES CHANGE
G ORDER BY THE INCH
Y SEPARATE ILLUSTRATION

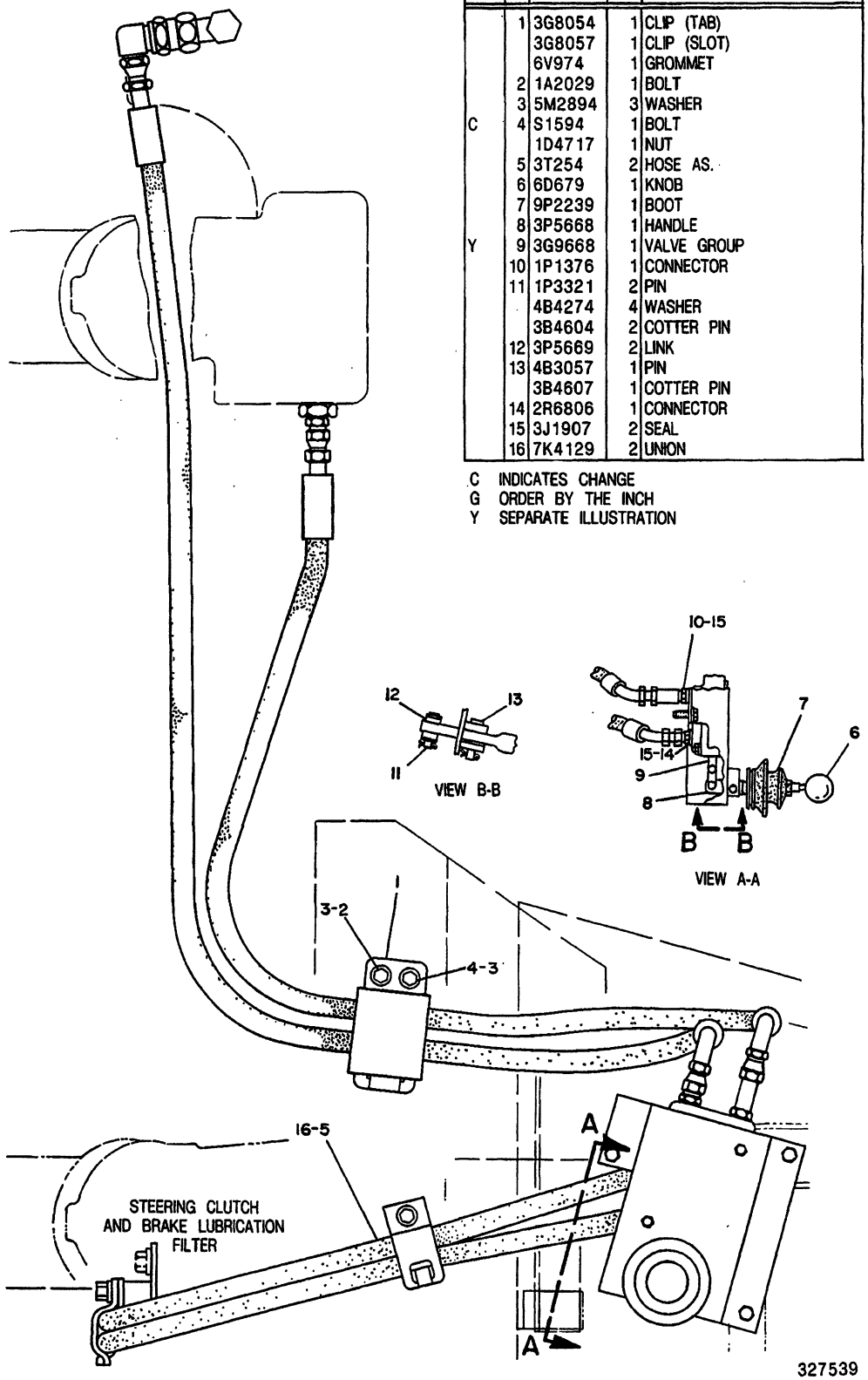

327539 P

5051 7G5124 CONTROL AR-HYDRAULIC-PIN PULLER-PART 2 OF 2

Type 3. S/N 53Y1-3484
3G9668-Page 236. Required Whenever A Machine Is Equipped With A 4T0147
Ripper Or A 9P9906 Pin Puller Ar
An Attachment

HYDRAULIC SYSTEM

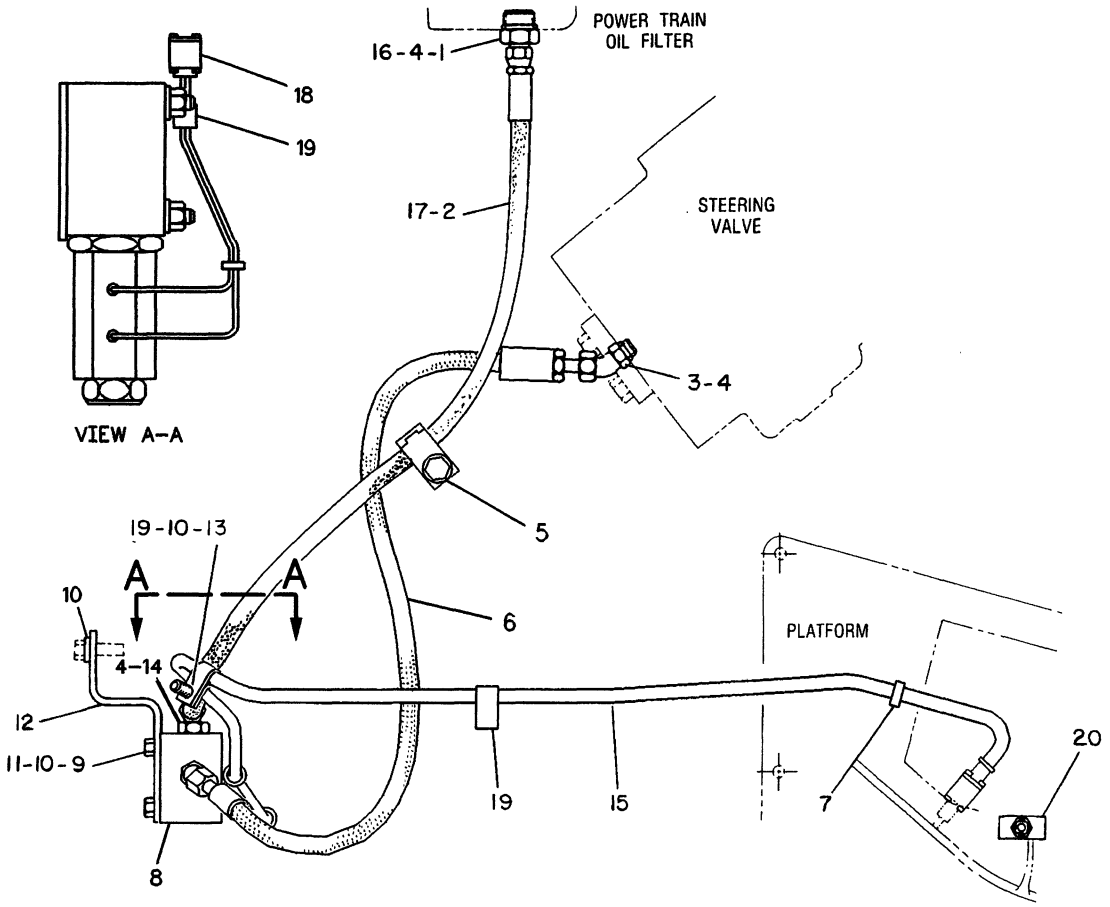

NOTE	REF NO	PART NUMBER	QTY	PART NAME	NOTE	REF NO	PART NUMBER	QTY	PART NAME
	1	2P8421	1	ADAPTER-O-RING		20	6T6970	1	SWITCH AS-TOGGLE
		3D2824	1	SEAL-O-RING					(WARNING)
I	2	7T9611	1	HOSE AS			6T3631	2	NUT-HEX
	3	6V9001	2	ELBOW-45 DEGREE			6T3632	1	LOCKWASHER (LARGE)
	4	3J1907	4	SEAL-O-RING			6T3633	1	LOCKRING
B	5	8T9384	1	BOLT			6V8374	3	SCREW-MACHINE
B		8T4223	1	WASHER-HARD			3L8187	3	LOCKWASHER (SMALL)
B		5P7458	1	CLIP (SLOT)					
B		5P7459	1	CLIP (TAB)					
I	6	7T9612	1	HOSE AS					
	7	7K1181	1	STRAP-CABLE					
Y	8	6T4531	1	VALVE & MOUNTING GP					
	9	8T9101	4	BOLT					
	10	8T4896	7	WASHER-HARD					
	11	2K4973	4	LOCKNUT					
	12	7T4414	1	BRACKET					
C	13	5M3062	1	BOLT					
	14	6V8724	1	ELBOW					
	15	7T7628	1	HARNESS AS					
	16	6V8636	1	CONNECTOR					
	17	6V8397	4	SEAL-O-RING					
	18	3T3045	2	CLIP AS					
	19	4D7794	3	CLIP					

B-USE AS REQUIRED
C-CHANGE FROM PREVIOUS TYPE
I-SEE HOSE FABRICATION GUIDE

Y-SEPARATE ILLUSTRATION

F-573201 EP

5725 **7T4413 CONTROL AR-HYDRAULIC**

Pin Puller
S/N 53Y3485-Up
6T4531-Page 198
An Attachment

MEMORANDA

HYDRAULIC SYSTEM

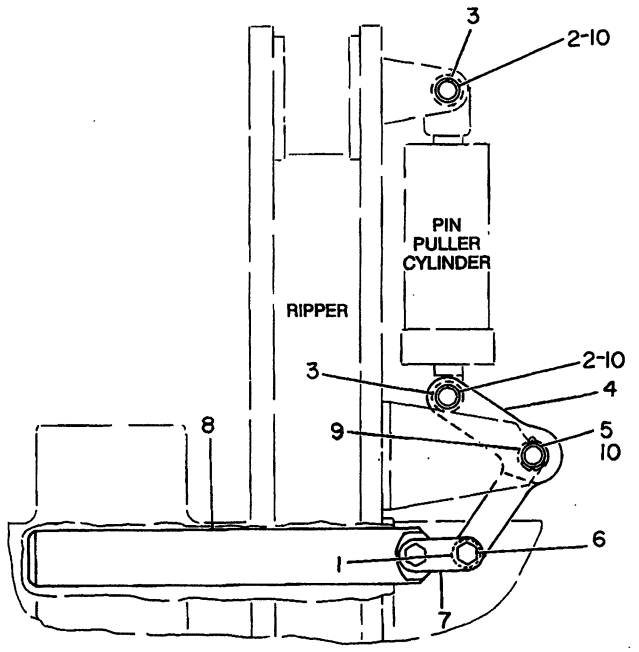

NOTE	REF NO	PART NUMBER	QTY	PART NAME
CB	1	4K0684	1	WASHER-HARD
	2	9F1720	2	PIN
CB	3	1A1898	5	WASHER
	4	4T1213	1	LEVER
	5	2K1606	1	PIN
		3B4639	2	COTTER
	6	1D4612	2	BOLT
		1D5119	4	NUT (JAM)
	7	1U1205	2	LINK
	8	4T0142	1	PIN
	9	3G9367	2	SPACER
C	10	3B5313	4	COTTER 38.1MM(1.5IN)LG
				-OR-
C		3B4639	4	COTTER 44.45MM(1.75IN)LG

B-USE AS REQUIRED
C-CHANGE FROM PREVIOUS TYPE

B-406609 EP

5354 **4T0140 PULLER GP-PIN**
Part Of 9P9906,9W3728 Puller Ars
An Attachment

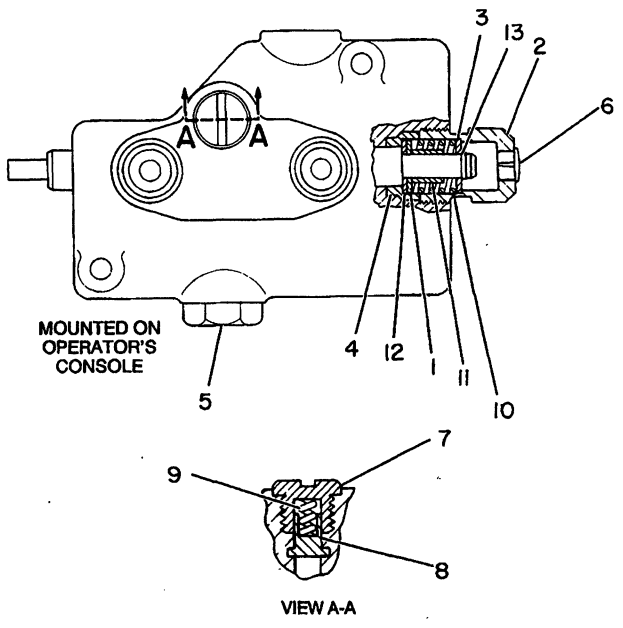

NOTE	REF NO	PART NUMBER	QTY	PART NAME
C	1	1U0372	1	WASHER
C	2	1U0373	1	CAP
C	3	1U0374	1	WASHER
	4	9J5702	1	BUSHING-TERMINAL
	5	9J5704	1	PLUG
C	6	5L6688	1	BUTTON-PLUG
	7	9J5705	1	PLUG
	8	9J5706	1	PLUNGER
	9	9J5696	1	SPRING
	10	9J5698	1	SPRING
	11	9J5699	1	SPACER
	12	9J5694	1	WASHER
C	13	1U0375	1	RING
				THE FOLLOWING REPAIR KIT IS AVAILABLE:
		9J5708	1	KIT-SEAL (INCL SEALS & WASHER)

C-CHANGE FROM PREVIOUS TYPE

B-174502 P

5353 **3G9668 VALVE GP**
Pin Puller Control
Part Of 7G5124 Control Ar-Hydraulic
An Attachment

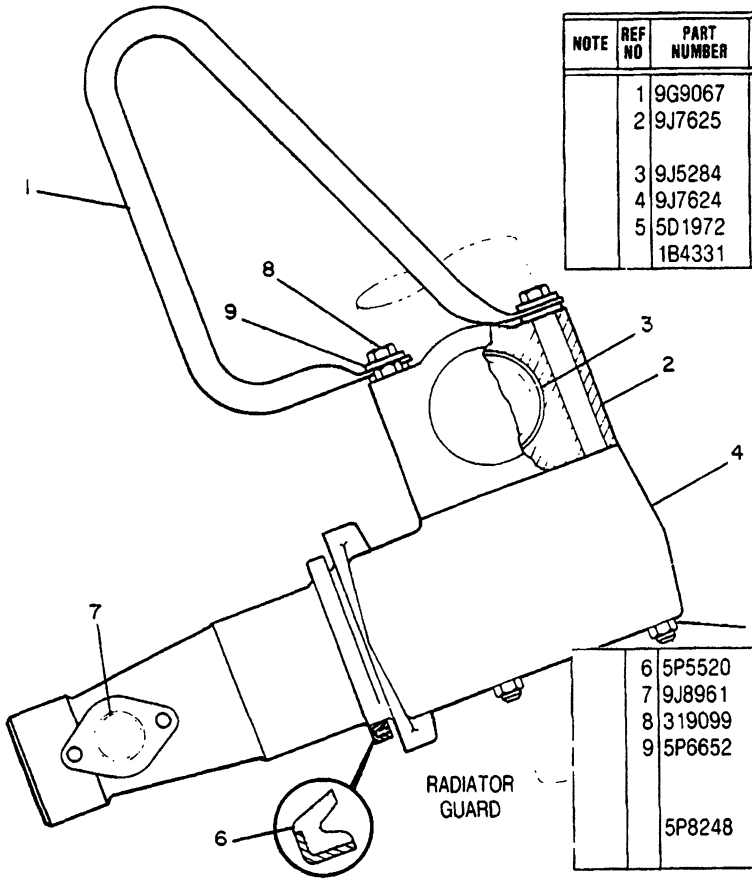

NOTE	REF NO	PART NUMBER	QTY	DESCRIPTION
	1	9G9067	1	HANDLE
	2	9J7625	4	CAP ASSEM. (EACH INCLUDES)
	3	9J5284	1	BEARING
	4	9J7624	2	YOKE
	5	5D1972	6	BOLT
		1B4331	8	NUT
	6	5P5520	2	SEAL
	7	9J8961	2	PIN
	8	319099	2	BOLT
	9	5P6652	4	WASHER 44.5MM (1.75IN.)O.D. -OR-
		5P8248	6	WASHER 36.5MM (1.44IN.)O.D.

305879

305879 P

6068 **9J7623 MOUNTING GP-CYLINDER**

Type 1. Japan Market

Part Of 3G6088,3G6092,3G6090 Bulldozer Ars

An Attachment

HYDRAULIC SYSTEM

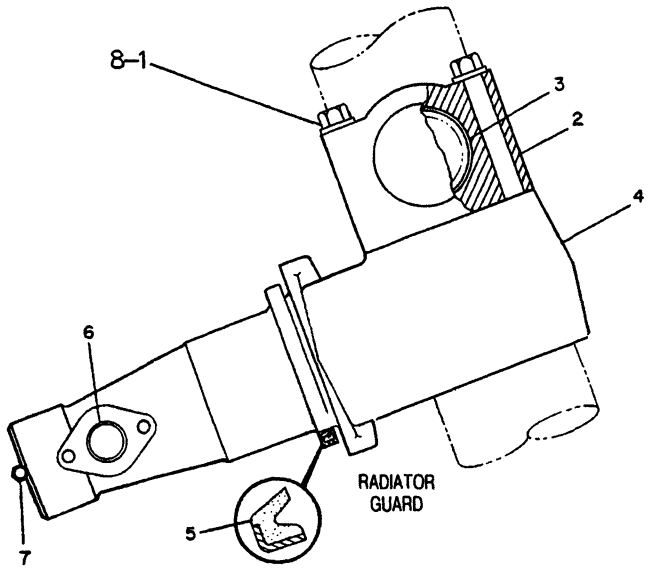

NOTE	REF NO	PART NUMBER	QTY	PART NAME
	1	8T9312	8	BOLT
	2	9J7625	4	CAP AS
				(EACH INCLUDES)
	3	9J5284	1	BEARING-SLEEVE
C	4	6Y2651	2	YOKE
	5	5P5520	2	SEAL-LIP
	6	4T4875	2	PIN
	7	3B8489	2	FITTING-GREASE
	8	8T4994	8	WASHER

C-CHANGE FROM PREVIOUS TYPE

R-488593 EP

6068 **9J7623 MOUNTING GP-CYLINDER**

Type 3. Japan Market

Part Of 3G6088,3G6092,3G6090 Bulldozer Ars

An Attachment

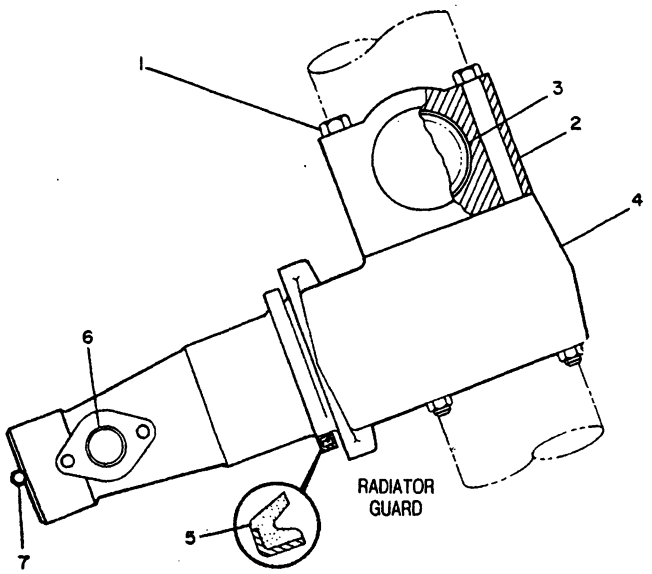

NOTE	REF NO	PART NUMBER	QTY	PART NAME
C	1	5D1972	8	BOLT
C		2J3506	8	NUT-FULL
	2	9J7625	4	CAP AS
				(EACH INCLUDES)
	3	9J5284	1	BEARING-SLEEVE
C	4	4T4874	2	YOKE
	5	5P5520	2	SEAL-LIP
C	6	4T4875	2	PIN
C	7	3B8489	2	FITTING-GREASE

C-CHANGE FROM PREVIOUS TYPE

B-354906 EP

6068 **9J7623 MOUNTING GP-CYLINDER**

Type 2. Japan Market

Part Of 3G6088,3G6092,3G6090 Bulldozer Ars

An Attachment

MEMORANDA

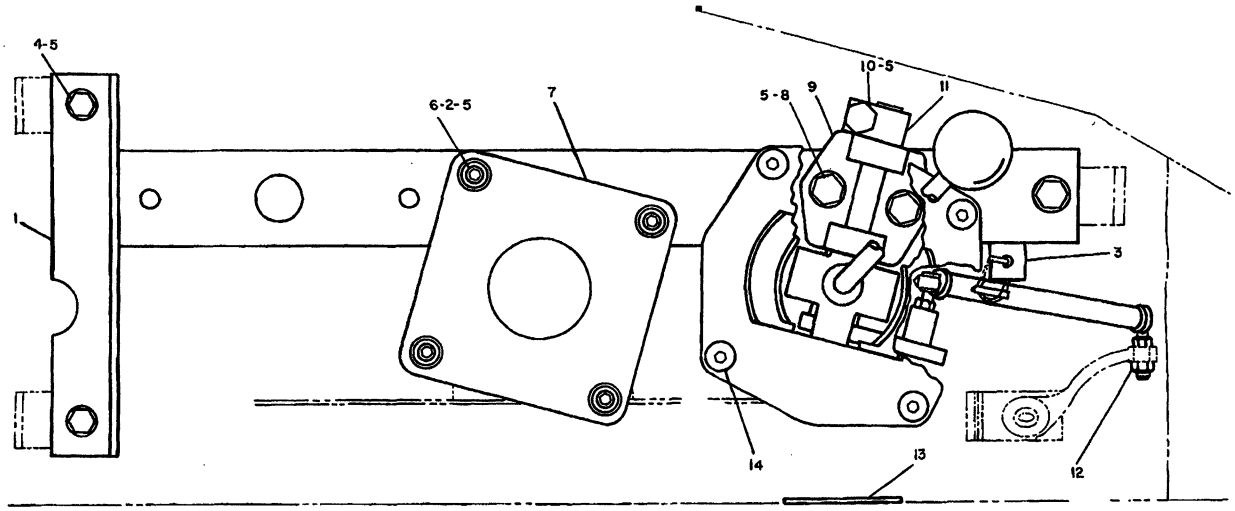

REF. NO.	PART NUMBER	DESCRIPTION	QTY.
1	3T1880	CHANNEL ASSEM. (Includes)	1
2	9F2978	NUT	6
3	9K6034	LUG	1
4	S1594	BOLT	3
5	5M2894	WASHER	10
6	6J488	SCREW	4
7	6P5386	COVER	1
8	1A2029	BOLT	2
9	3P3934	BRACKET ASSEM. (Includes)	1
	9F5647	BEARING	2
10	S1571	BOLT	1
	1D4717	NUT	1
11	3P3676	CLAMP	1
12	2L6267	LOCKNUT	1
13	5P8166	FILM--(Dozer Control Instruction)	1
14	6J2214	SCREW	4

235225

235225 P

5063

7G0085 LINKAGE GP-IMPLEMENT-PART 1 OF 2

Type 1. 8A Bulldozer-Top View

Part Of 9P9077,9P9078,9P9082 Control Ars-Hydraulic An Attachment

REF. NO.	PART NUMBER	DESCRIPTION	QTY.
1	3P4219	COVER	1
2	9P1438	LEVER ASSEM. (Includes)	1
	9F5647	BEARING	2
3	2A1736	HANDLE	1
4	9P9799	LEVER ASSEM.	1
5	5J5315	ROD END	2
6	1B4203	NUT	2
7	7D9722	SPRING	1
8	9G8024	ROD ASSEM. (Includes)	1
9	9K6034	LUG	1
10	3P3937	SHAFT	1
11	9G1240	SEAL	1
12	6P5207	SEAL	1
13	6P5209	COVER	1
14	6P5208	GUIDE	1
15	2J7295	SPRING	1
16	7L811	DOWEL	1

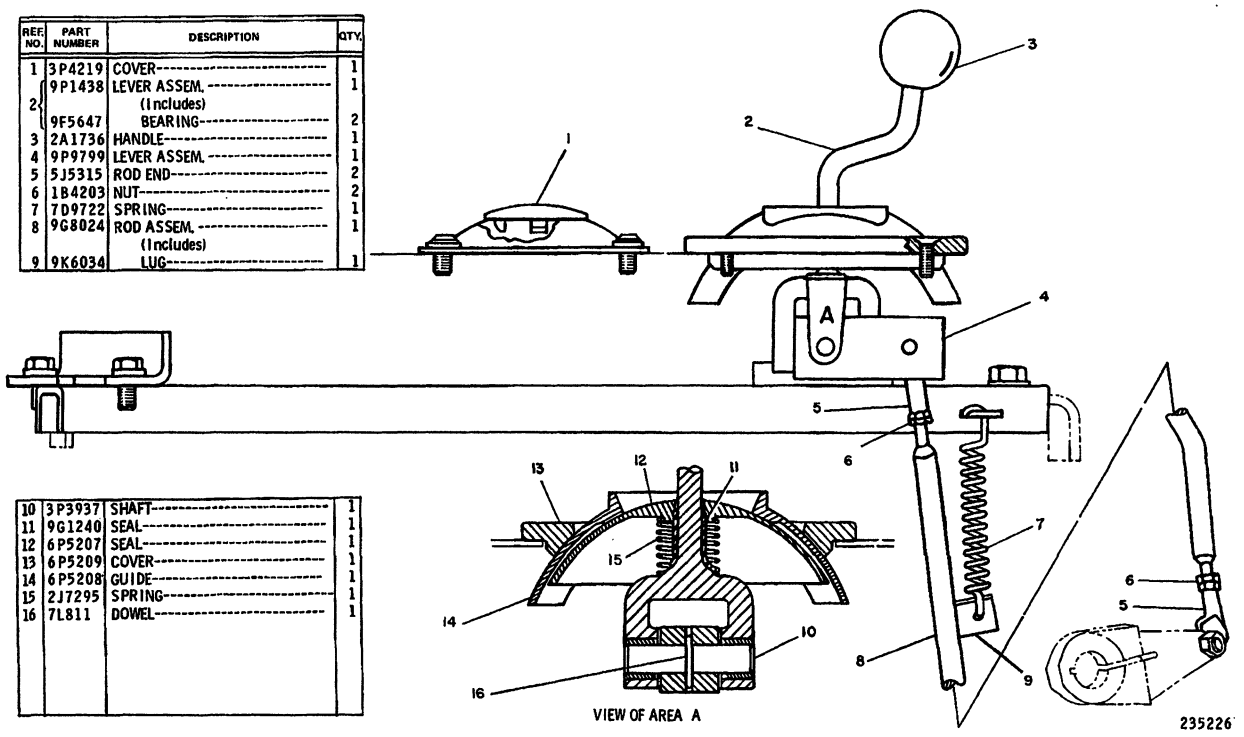

235226 P

5063 **7G0085 LINKAGE GP-IMPLEMENT-PART 2 OF 2**

Type 1. 8A Bulldozer-Side View

Part Of 9P9077,9P9078,9P9082 Control Ars-Hydraulic An Attachment

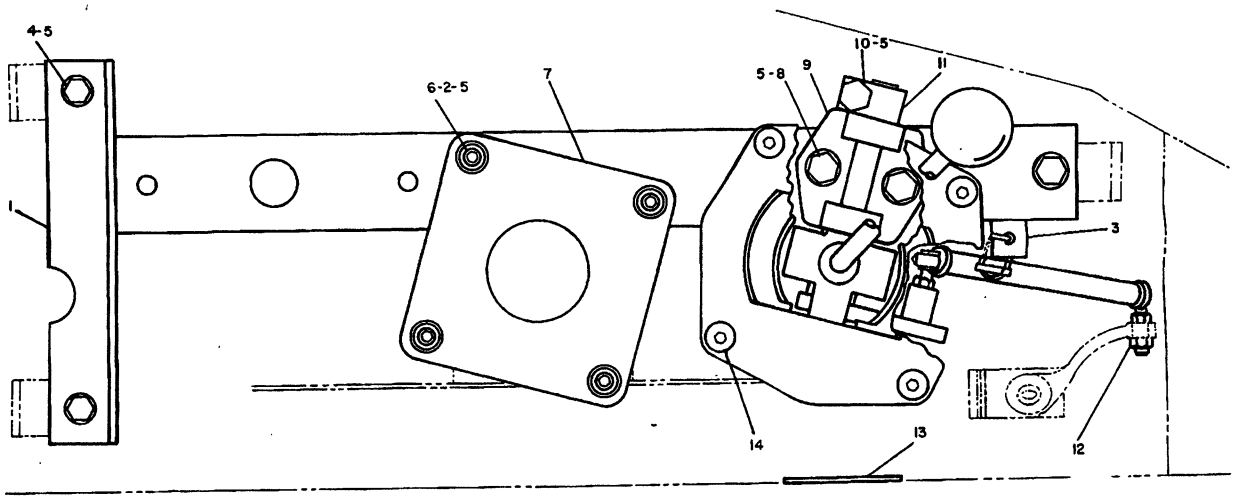

NOTE	REF NO	PART NUMBER	QTY	DESCRIPTION
	1	3T1880	1	CHANNEL ASSEM.
	2	9F2978	6	NUT
	3	9K6034	1	LUG
	4	S1594	3	BOLT
	5	5M2894	10	WASHER
	6	6J488	4	SCREW
	7	6P5386	1	COVER
	8	1A2029	2	BOLT
	9	3P3934	1	BRACKET ASSEM.
		9F5647	2	BEARING
	10	S1571	1	BOLT
		1D4717	1	NUT
	11	3P3676	1	CLAMP
	12	2L6267	1	LOCKNUT
	13	5P8166	1	FILM (DOZER CONTROL INSTRUCTION)
	14	6J2214	4	SCREW

307203

307203 P

5063 **7G0085 LINKAGE GP-IMPLEMENT-PART 1 OF 2**

Type 2. 8A Bulldozer-Top View

Part Of 9P9077,9P9078,9P9082 Control Ars-Hydraulic

An Attachment

NOTE	REF NO	PART NUMBER	QTY	DESCRIPTION
	1	3P4219	1	COVER
	2	9P1438	1	LEVER ASSEM.
		9F5647	2	BEARING
	3	2A1736	1	HANDLE
	4	9P9799	1	LEVER ASSEM.
C	5	5J5315	1	ROD END
C	6	1B4203	1	NUT
	7	7D9722	1	SPRING
C	8	6T3703	1	ROD ASSEM.
C		4K8972	1	ROD
C		5J5315	1	ROD END
C		1B4203	1	NUT
	9	9K6034	1	LUG

C INDICATES CHANGE

	10	3P3937	1	SHAFT
	11	9G1240	1	SEAL
	12	6P5207	1	SEAL
	13	6P5209	1	COVER
	14	6P5208	1	GUIDE
	15	2J7295	1	SPRING
	16	7L811	1	DOWEL
C	17	6T4341	1	PLATE ASSEM.
C	18	S1594	1	BOLT
C		1D4717	1	NUT
C		5M2894	1	WASHER

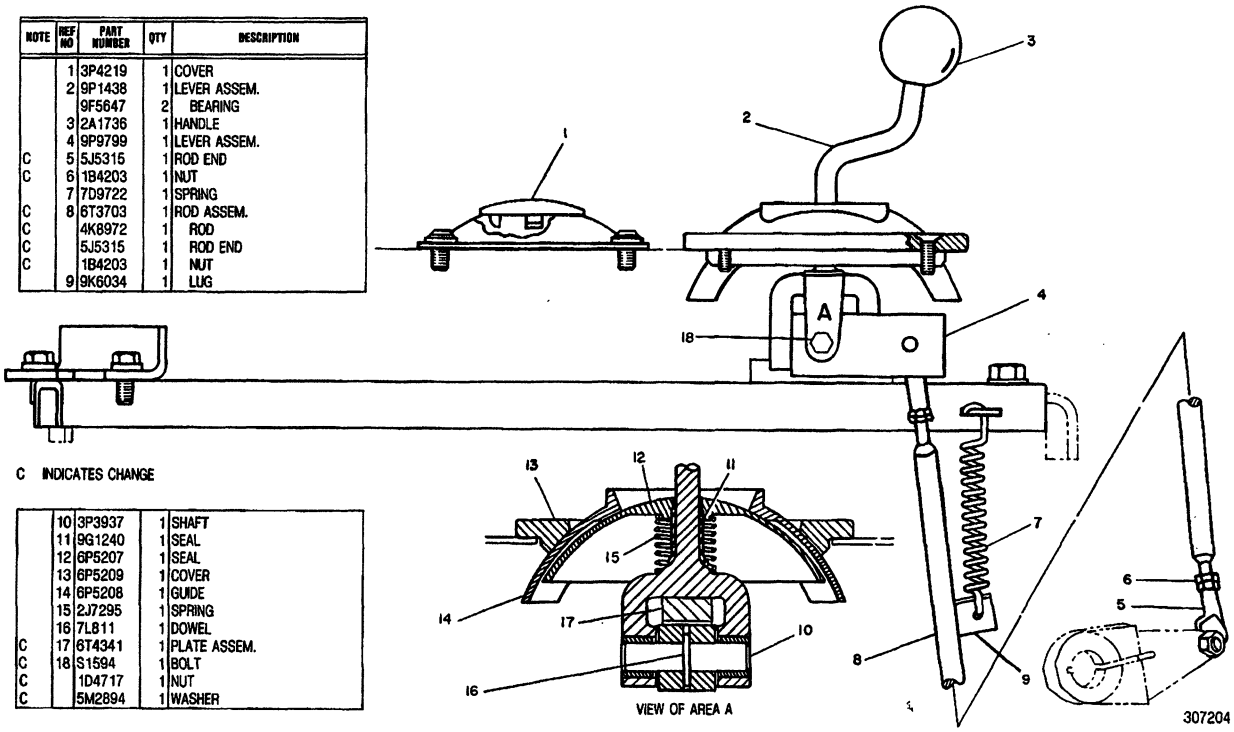

307204 P

5063 **7G0085 LINKAGE GP-IMPLEMENT-PART 2 OF 2**

Type 2. 8A Bulldozer-Side View
Part Of 9P9077,9P9078,9P9082 Control Ars-Hydraulic
An Attachment

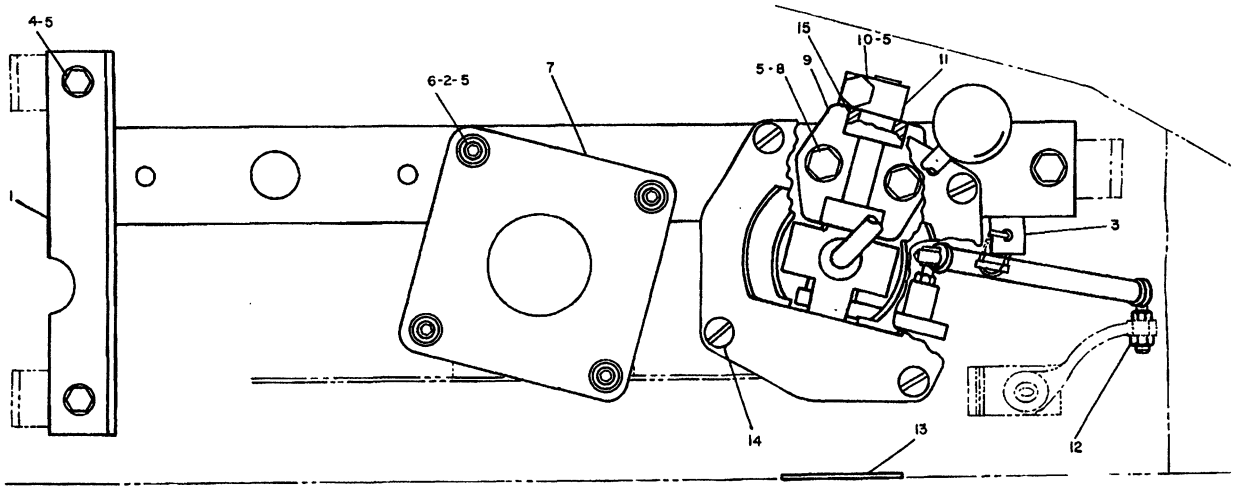

NOTE	REF NO	PART NUMBER	QTY	DESCRIPTION
	1	3T1880	1	CHANNEL ASSEM.
	2	9F2978	6	NUT
	3	9K6034	1	LUG
	4	S1594	3	BOLT
	5	5M2894	10	WASHER
	6	6J488	4	SCREW
	7	6P5386	1	COVER
	8	1A2029	2	BOLT
C	9	3T9345	1	BRACKET
	10	S1571	1	BOLT
		1D4717	1	NUT
	11	3P3676	1	CLAMP
	12	2L6267	1	LOCKNUT
	13	5P8166	1	FILM (DOZER CONTROL INSTRUCTION)
C	14	4B1291	4	SCREW
C	15	4J3044	2	BEARING
C		8T0741	4	SEAL

C INDICATES CHANGE

334723

334723 P

5063 **7G0085 LINKAGE GP-IMPLEMENT-PART 1 OF 2**

Type 3. 8A Bulldozer-Top View

Part Of 9P9077,9P9078,9P9082 Control Ars-Hydraulic An Attachment

NOTE	REF NO	PART NUMBER	QTY	DESCRIPTION
	1	3P4219	1	COVER
C	2	3T9350	1	LEVER
	3	2A1736	1	HANDLE
C	4	6T6952	1	LEVER ASSEM.
	5	5J5315	1	ROD END
	6	1B4203	1	NUT
	7	7D9722	1	SPRING
	8	6T3703	1	ROD ASSEM.
		4K8972	1	ROD
		5J5315	1	ROD END
		1B4203	1	NUT
	9	9K6034	1	LUG
C	10	3T9351	1	SHAFT
	11	9G1240	1	SEAL
	12	6P5207	1	SEAL
	13	6P5209	1	COVER
	14	6P5208	1	GUIDE
	15	2J7295	1	SPRING
C	16	8T2637	1	PIN
C	17	6V3294	2	BOOT
C	18	7F0192	1	BOLT
C		1B2578	1	NUT (JAM)
C		2K4973	1	LOCKNUT
C	19	4J3044	2	BEARING
C		8T0741	4	SEAL

C INDICATES CHANGE

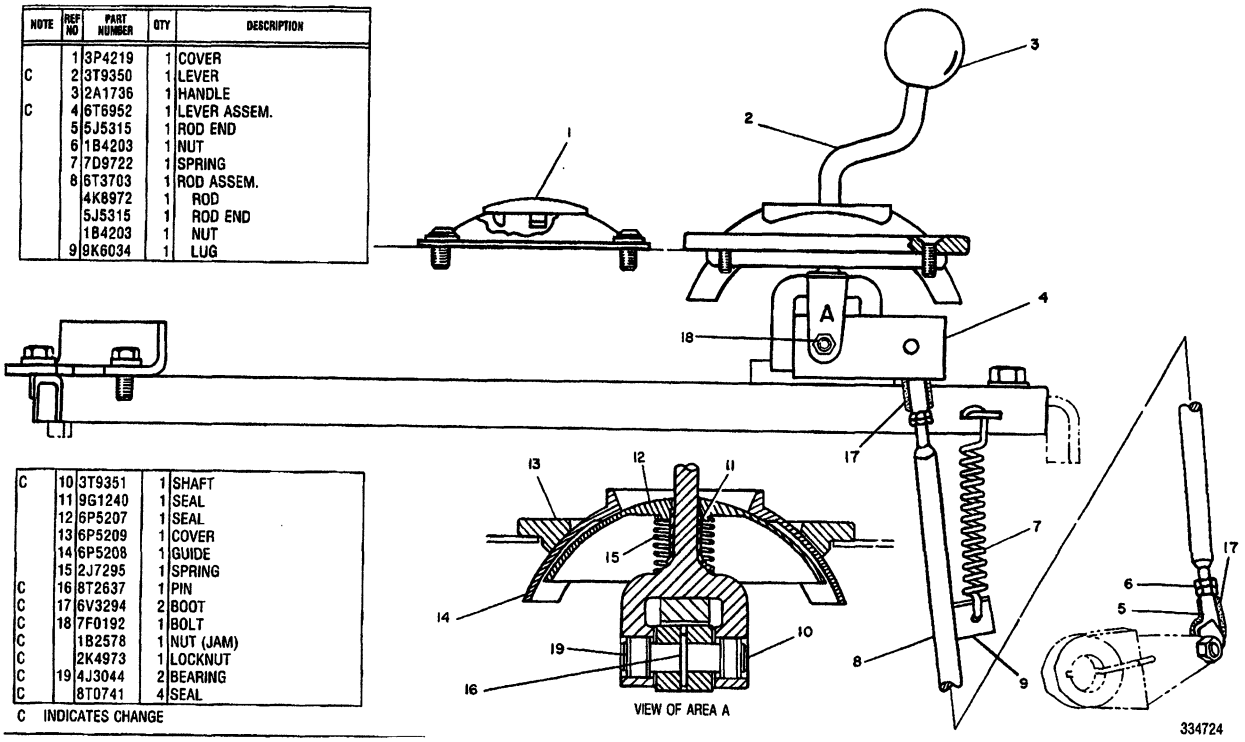

334724 P

5063 **7G0085 LINKAGE GP-IMPLEMENT-PART 2 OF 2**

Type 3. 8A Bulldozer-Top View

Part Of 9P9077,9P9078,9P9082 Control Ars-Hydraulic An Attachment

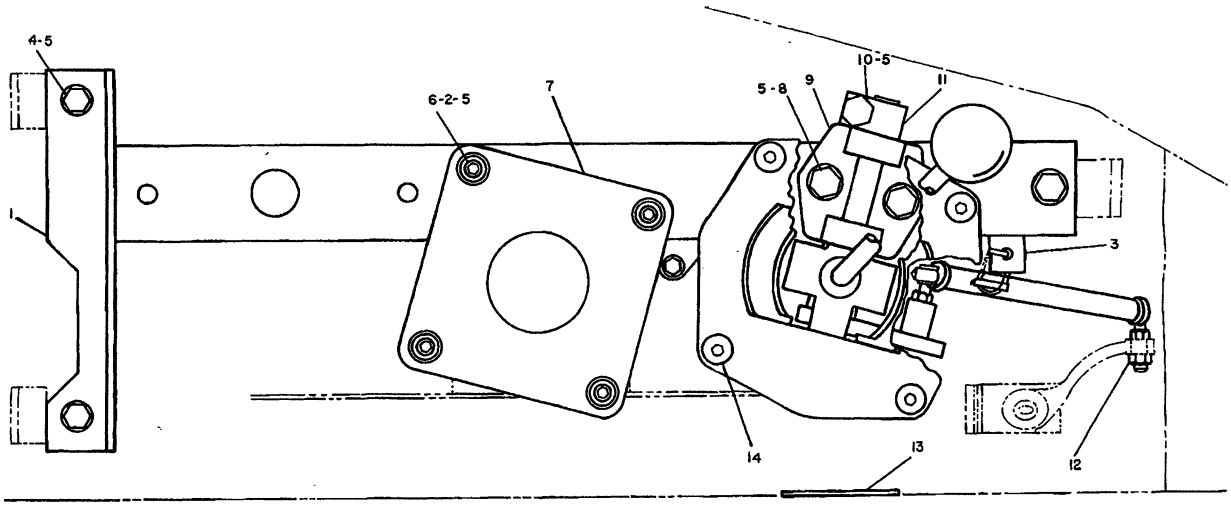

REF. NO.	PART NUMBER	DESCRIPTION	QTY.
1	3T1880	CHANNEL ASSEM. (Includes)	1
2	9F2978	NUT	6
3	9K6034	LUG	1
4	S1594	BOLT	3
5	5M2894	WASHER	10
6	6J488	SCREW	4
7	6P5386	COVER	1
8	1A2029	BOLT	2
9	3P3934	BRACKET ASSEM. (Includes)	1
	9F5647	BEARING	2
10	S1571	BOLT	1
	1D4717	NUT	1
11	3P3676	CLAMP	1
12	2L6267	LOCKNUT	2
13	5P8161	FILM--(Dozer Control Instruction)	1
14	6J2214	SCREW	4

235253

235253 P

5063

8P0903 LINKAGE GP-IMPLEMENT-PART 1 OF 2

Type 1. 8S Or 8U Bulldozer

Part Of 9P9079,9P9080,9P9081 Control Ars-Hydraulic

An Attachment

REF. NO.	PART NUMBER	DESCRIPTION	QTY.
1	3P4219	COVER	1
2	9P1438	LEVER ASSEM. (Includes)	1
	9F5647	BEARING	2
3	2A1736	HANDLE	1
4	9P9799	LEVER ASSEM.	1
5	5J5315	ROD END	3
6	1B4203	NUT	3
7	7D9722	SPRING	1
8	9G8024	ROD ASSEM. (Includes)	1
9	9K6034	LUG	1
10	3P3937	SHAFT	1
11	9G1240	SEAL	1
12	6P5207	SEAL	1
13	6P5209	COVER	1
14	6P5208	GUIDE	1
15	2J7295	SPRING	1
16	7L811	DOWEL	1
17	3T2592	ROD	1
18	9P3697	BOOT	1
19	9P7361	FLANGE	1
20	9S1303	PIN	1
	3B4607	COTTER PIN	1

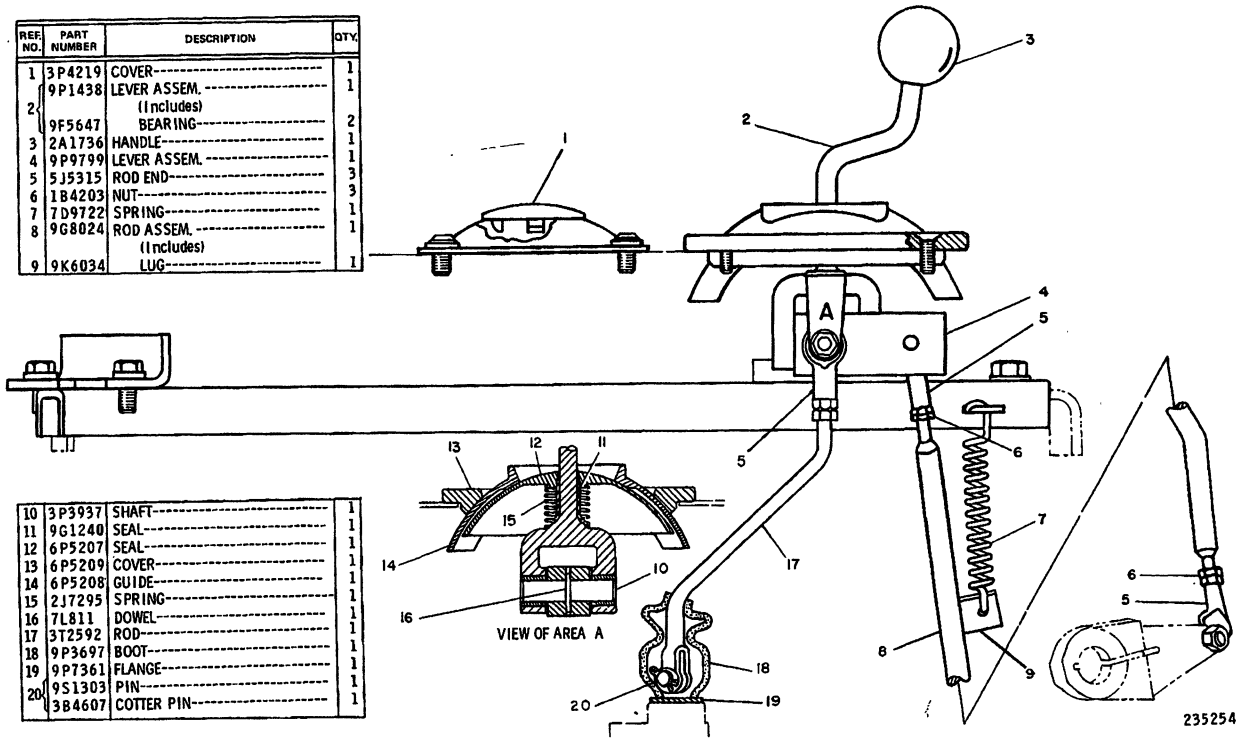

235254 P

5063 **8P0903 LINKAGE GP-IMPLEMENT-PART 2 OF 2**

Type 1. 8S Or 8U Bulldozer

Part Of 9P9079,9P9080,9P9081 Control Ars-Hydraulic

An Attachment

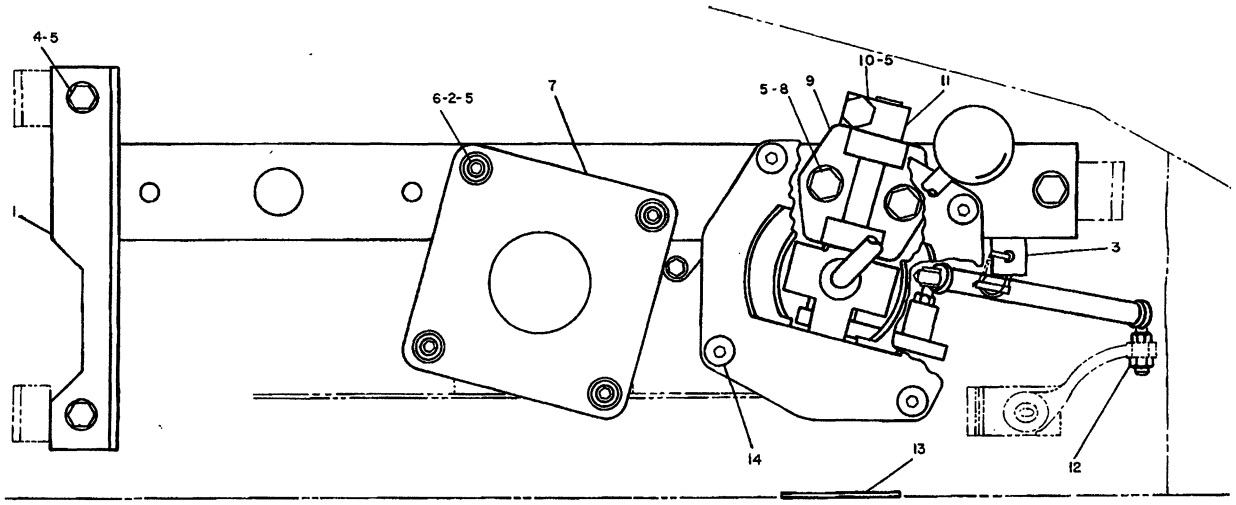

REF. NO.	PART NUMBER	DESCRIPTION	QTY.
1	3T1880	CHANNEL ASSEM. (Includes)	1
2	9F2978	NUT	6
3	9K6034	LUG	1
4	S1594	BOLT	3
5	5M2894	WASHER	10
6	6J488	SCREW	4
7	6P5386	COVER	1
8	1A2029	BOLT	2
9	3P3934	BRACKET ASSEM. (Includes)	1
	9F5647	BEARING	2
10	S1571	BOLT	1
	1D4717	NUT	1
11	3P3676	CLAMP	1
12	2L6267	LOCKNUT	2
13	5P8161	FILM--(Dozer Control Instruction)	1
14	6J2214	SCREW	4

235253

235253 P

5063

8P0903 LINKAGE GP-IMPLEMENT-PART 1 OF 2

Type 2. 8S Or 8U Bulldozer

Part Of 9P9079,9P9080,9P9081 Control Ars-Hydraulic An Attachment

NOTE	REF NO	PART NUMBER	QTY	DESCRIPTION
	1	3P4219	1	COVER
	2	9P1438	1	LEVER AS.
		9F5647	2	BEARING
	3	2A1736	1	HANDLE
	4	9P9799	1	LEVER AS.
C	5	5J5315	2	ROD END
C	6	1B4203	2	NUT
	7	7D9722	1	SPRING
C	8	6T3703	1	ROD AS.
	9	5J5315	1	ROD END
	10	1B4203	1	NUT
	11	9G1240	1	SEAL
	12	6P5207	1	SEAL
	13	6P5209	1	COVER
	14	6P5208	1	GUIDE
	15	2J7295	1	SPRING
	16	7L811	1	DOWEL
	17	3T2592	1	ROD
	18	9P3697	1	BOOT
	19	9P7361	1	FLANGE
	20	9S1303	1	PIN
		3B4607	1	COTTER PIN
	21	3P3937	1	SHAFT

C INDICATES CHANGE

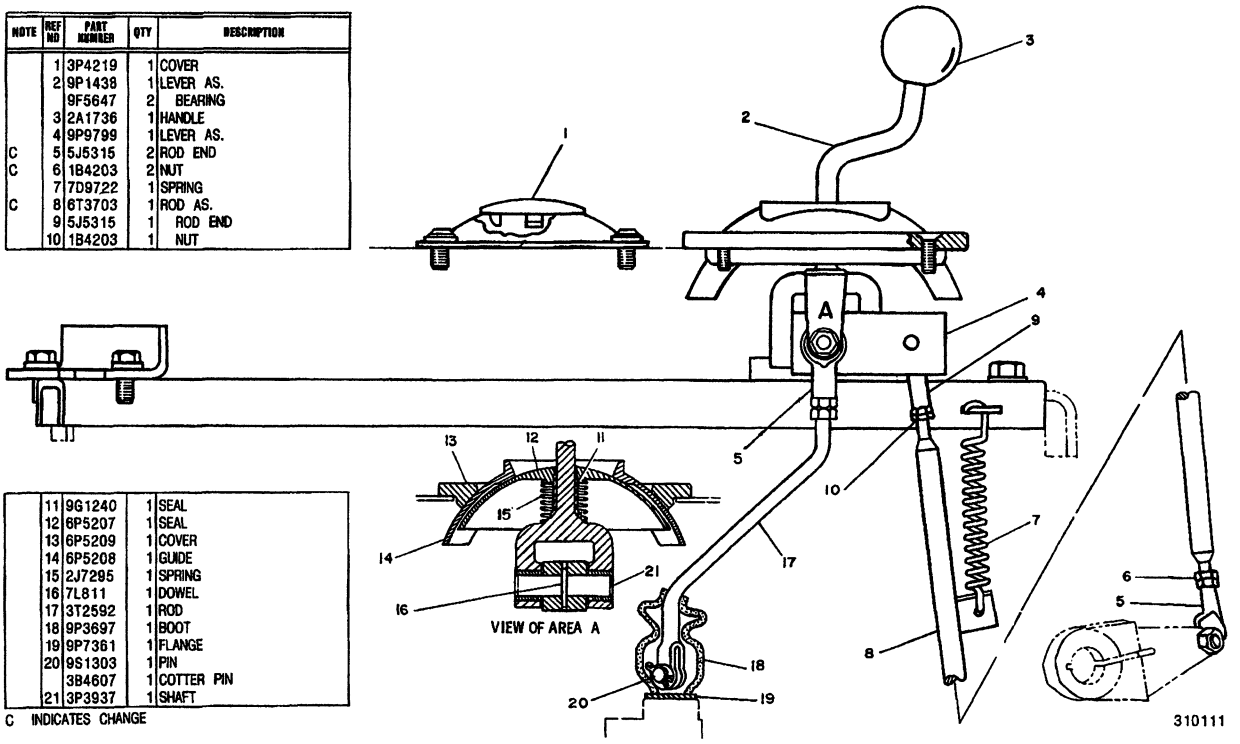

310111 P

5063 **8P0903 LINKAGE GP-IMPLEMENT-PART 2 OF 2**

Type 2. 8S Or 8U Bulldozer
Part Of 9P9079,9P9080,9P9081 Control Ars-Hydraulic
An Attachment

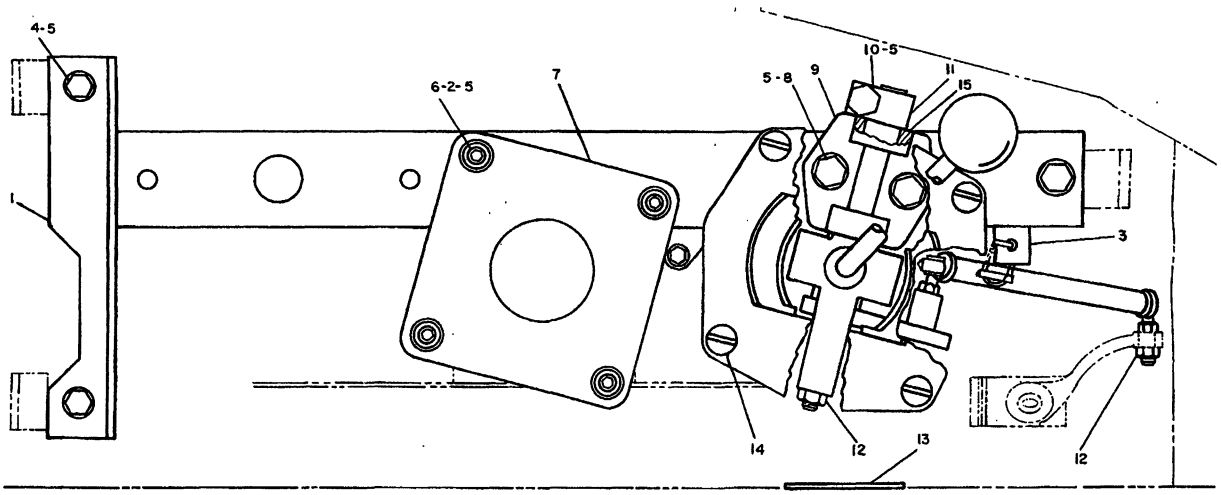

NOTE	REF NO	PART NUMBER	QTY	DESCRIPTION
	1	3T1880	1	CHANNEL AS.
	2	9F2978	6	NUT
	3	9K6034	1	LUG
	4	0S1594	3	BOLT
	5	5M2894	10	WASHER
	6	6J0488	4	SCREW
	7	6P5386	1	COVER
	8	1A2029	2	BOLT
C	9	3T9345	1	BRACKET
	10	0S1571	1	BOLT
		1D4717	1	NUT
	11	3P3676	1	CLAMP
	12	2L6267	2	LOCKNUT
	13	5P8161	1	FILM (DOZER CONT. INSTRUCTION)
C	14	4B1291	4	SCREW
C	15	4J3044	2	BEARING
C		8T0741	4	SEAL

C INDICATES CHANGE

334801

334801 P

5063

8P0903 LINKAGE GP-IMPLEMENT-PART 1 OF 2

Type 3. 8S Or 8U Bulldozer

Part Of 9P9079,9P9080,9P9081 Control Ars-Hydraulic An Attachment

NOTE	REF NO	PART NUMBER	QTY	DESCRIPTION
	1	3P4219	1	COVER
C	2	3T9350	1	LEVER
	3	2A1736	1	HANDLE
C	4	6T6952	1	LEVER AS.
	5	5J5315	2	ROD END
	6	1B4203	2	NUT
	7	7D9722	1	SPRING
	8	6T3703	1	ROD AS.
	9	5J5315	1	ROD END
	10	1B4203	1	NUT
	11	9G1240	1	SEAL
	12	6P5207	1	SEAL
	13	6P5209	1	COVER
	14	6P5208	1	GUIDE
	15	2J7295	1	SPRING
C	16	8T2637	1	PIN
	17	3T2592	1	ROD
	18	9P3697	1	BOOT
	19	9P7361	1	FLANGE
	20	9S1303	1	PIN
		3B4607	1	COTTER PIN
C	21	3T9351	1	SHAFT
C	22	6V3294	3	BOOT
C	23	8T0741	4	SEAL
C	24	4J3044	2	BEARING

C INDICATES CHANGE

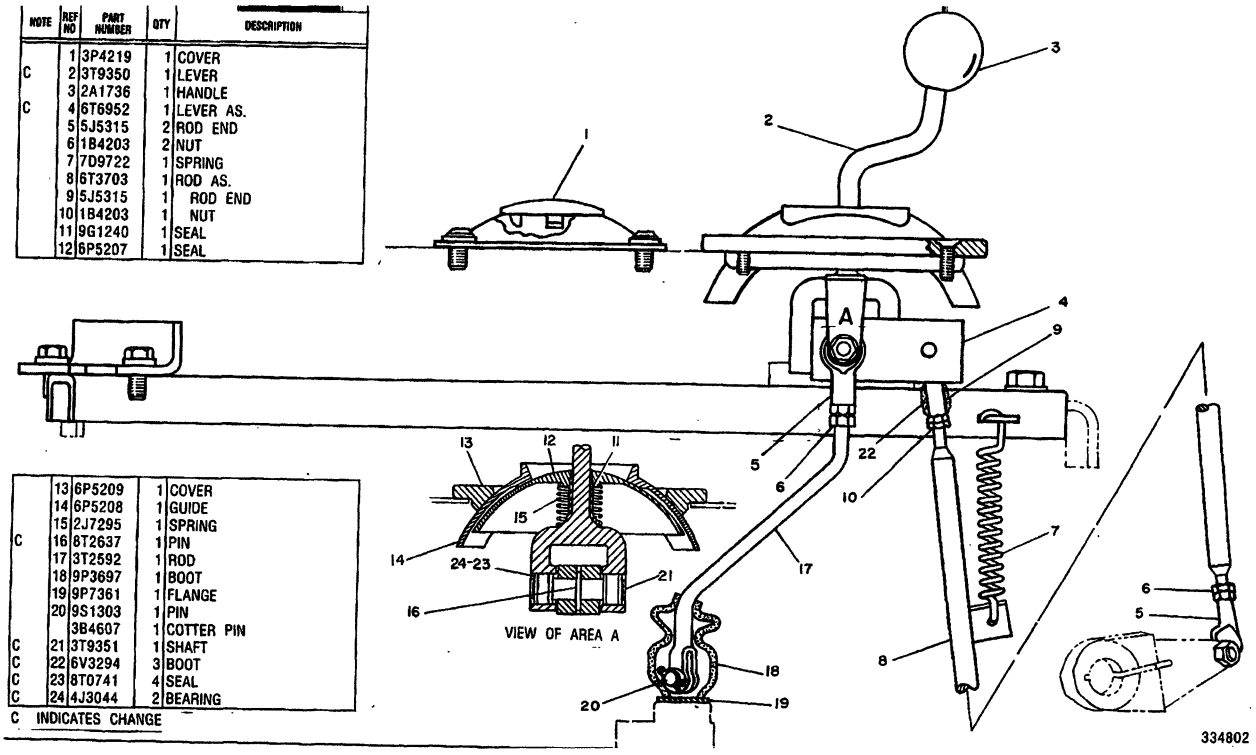

334802 P

5063 **8P0903 LINKAGE GP-IMPLEMENT-PART 2 OF 2**

Type 3. 8S Or 8U Bulldozer
Part Of 9P9079,9P9080,9P9081 Control Ars-Hydraulic
An Attachment

HYDRAULIC SYSTEM

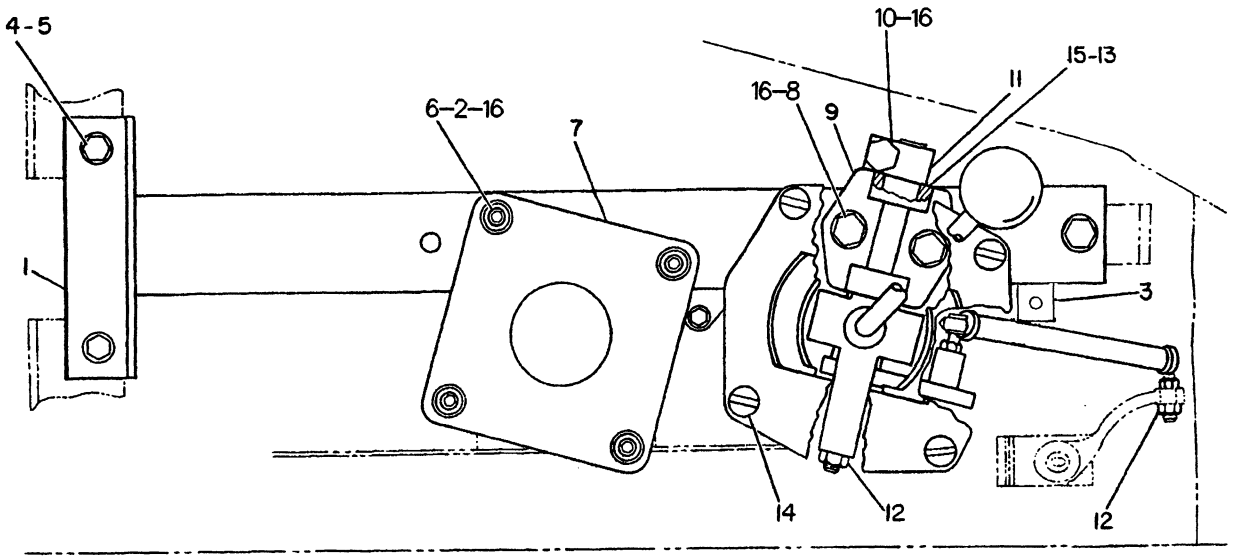

NOTE	REF NO	PART NUMBER	QTY	PART NAME	NOTE	REF NO	PART NUMBER	QTY	PART NAME
	1	7T0145	1	CHANNEL AS					
	2	9F2978	6	NUT-WELD					
	3	9K6034	1	LUG					
	4	4L6454	3	BOLT					
	5	5P1075	3	WASHER-HARD					
	6	6J0488	4	SCREW-HEAD					
	7	6P5386	1	COVER					
	8	8T2502	2	BOLT					
	9	3T9345	1	BRACKET					
	10	5S7383	1	BOLT					
		6V8801	1	NUT					
	11	3P3676	1	CLAMP					
	12	2L6267	2	LOCKNUT					
	13	8T0741	4	SEAL-LIP					
	14	307571	4	BOLT					
	15	4J3044	2	BEARING-NEEDLE					
	16	8T4896	7	WASHER-HARD					

R-492316 EP

5063 **7T4740 LINKAGE GP-IMPLEMENT-PART 1 OF 2**

Bulldozer & Tilt

An Attachment

HYDRAULIC SYSTEM

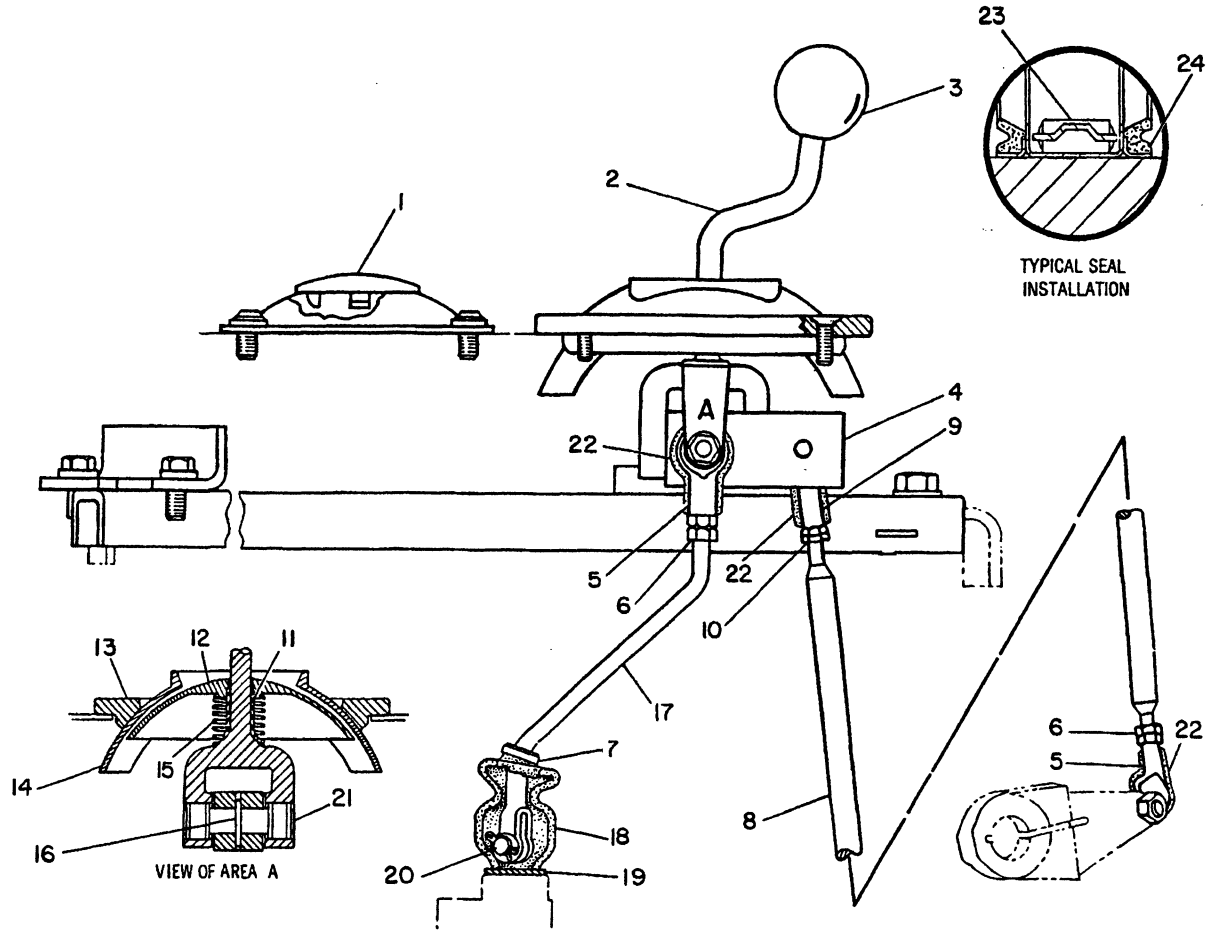

NOTE	REF NO	PART NUMBER	QTY	PART NAME	NOTE	REF NO	PART NUMBER	QTY	PART NAME
	1	3P4219	1	COVER-PROTECTION					
	2	3T9350	1	LEVER					
	3	2A1736	1	HANDLE					
	4	6T6952	1	LEVER AS					
	5	5J5315	2	END-ROD					
	6	6V8183	2	NUT-FULL					
C	7	1S9593	1	STRAP-CABLE					
	8	6T3703	1	ROD AS					
	9	5J5315	1	END-ROD					
	10	1B4203	1	NUT-FULL					
	11	9G1240	1	SEAL					
C	12	7T8144	1	SEAL-DOMED					
	13	6P5209	1	COVER					
C	14	7T8145	1	GUIDE-CONTROL					
	15	6Y2044	1	SPRING					
	16	8T2637	1	PIN-SPRING					
	17	3T2592	1	ROD					
	18	9P3697	1	BOOT					
	19	9P7361	1	FLANGE					
	20	9S1303	1	PIN					
		3B4607	1	COTTER					
	21	3T9351	1	SHAFT-GOVERNOR CONTROL					
	22	6V3294	3	BOOT-ROD END					
	23	4J3044	2	BEARING-NEEDLE					
	24	8T0741	4	SEAL-LIP					

C-CHANGE FROM PREVIOUS TYPE

R-520295 EP

5063 **7T4740 LINKAGE GP-IMPLEMENT-PART 2 OF 2**

Bulldozer & Tilt

An Attachment

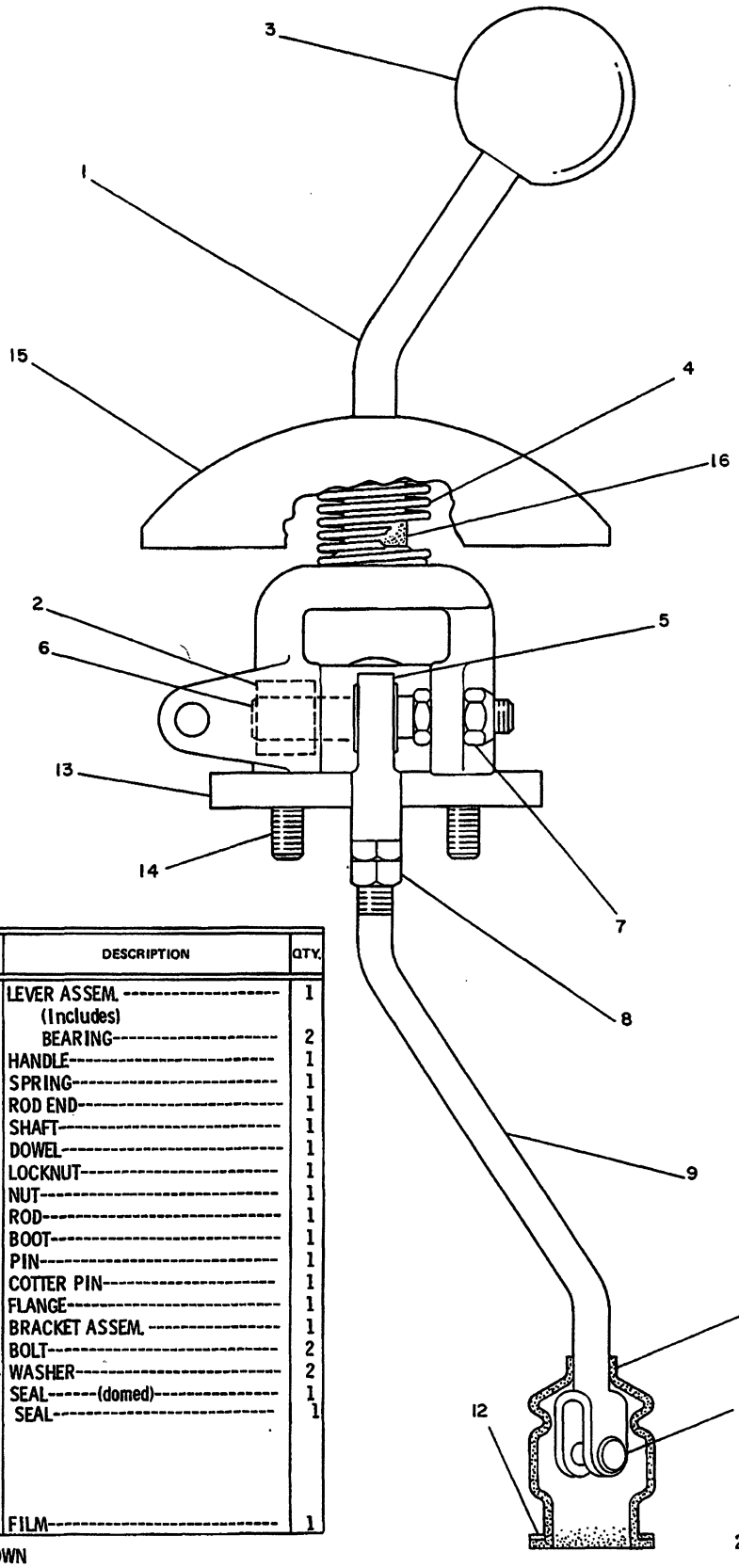

REF. NO.	PART NUMBER	DESCRIPTION	QTY.
1	9P1437	LEVER ASSEM. (Includes)	1
2	9F5647	BEARING	2
3	2A1736	HANDLE	1
4	2J7295	SPRING	1
5	5J5315	ROD END	1
6	3P3937	SHAFT	1
	7L811	DOWEL	1
7	2L6267	LOCKNUT	1
8	1B4203	NUT	1
9	3T2592	ROD	1
10	9P3697	BOOT	1
11	9S1303	PIN	1
	3B4607	COTTER PIN	1
12	9P7361	FLANGE	1
13	8P753	BRACKET ASSEM.	1
14	1A2029	BOLT	2
	5M2894	WASHER	2
15	6P5207	SEAL------(domed)	1
16	9G1240	SEAL	1
▲	5P8165	FILM	1

▲ NOT SHOWN

235227 P

5063

3T2593 LINKAGE GP-IMPLEMENT

Type 1. Ripper With Solid Link
Part Of 9P9077,9P9080 Control Ars-Hydraulic
An Attachment

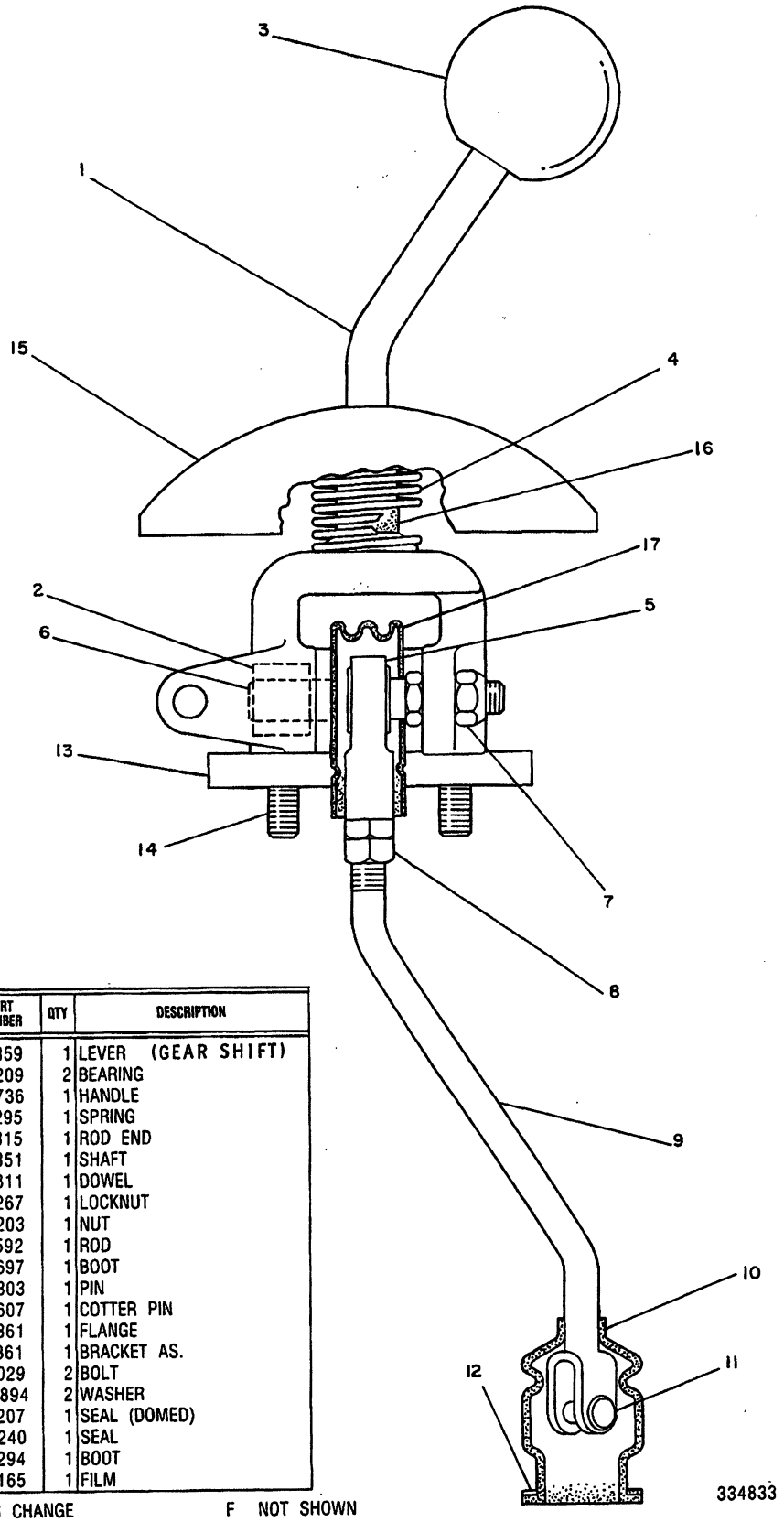

NOTE	REF NO	PART NUMBER	QTY	DESCRIPTION
C	1	3T9359	1	LEVER (GEAR SHIFT)
C	2	5P9209	2	BEARING
	3	2A1736	1	HANDLE
	4	2J7295	1	SPRING
	5	5J5315	1	ROD END
C	6	3T9351	1	SHAFT
		7L0811	1	DOWEL
	7	2L6267	1	LOCKNUT
	8	1B4203	1	NUT
	9	3T2592	1	ROD
	10	9P3697	1	BOOT
	11	9S1303	1	PIN
		3B4607	1	COTTER PIN
	12	9P7361	1	FLANGE
C	13	3T9361	1	BRACKET AS.
	14	1A2029	2	BOLT
		5M2894	2	WASHER
	15	6P5207	1	SEAL (DOMED)
	16	9G1240	1	SEAL
C	17	6V3294	1	BOOT
F		5P8165	1	FILM

C INDICATES CHANGE F NOT SHOWN

334833 P

5063

3T2593 LINKAGE GP-IMPLEMENT
Type 2. Ripper With Solid Link
Part Of 9P9077,9P9080 Control Ars-Hydraulic
An Attachment

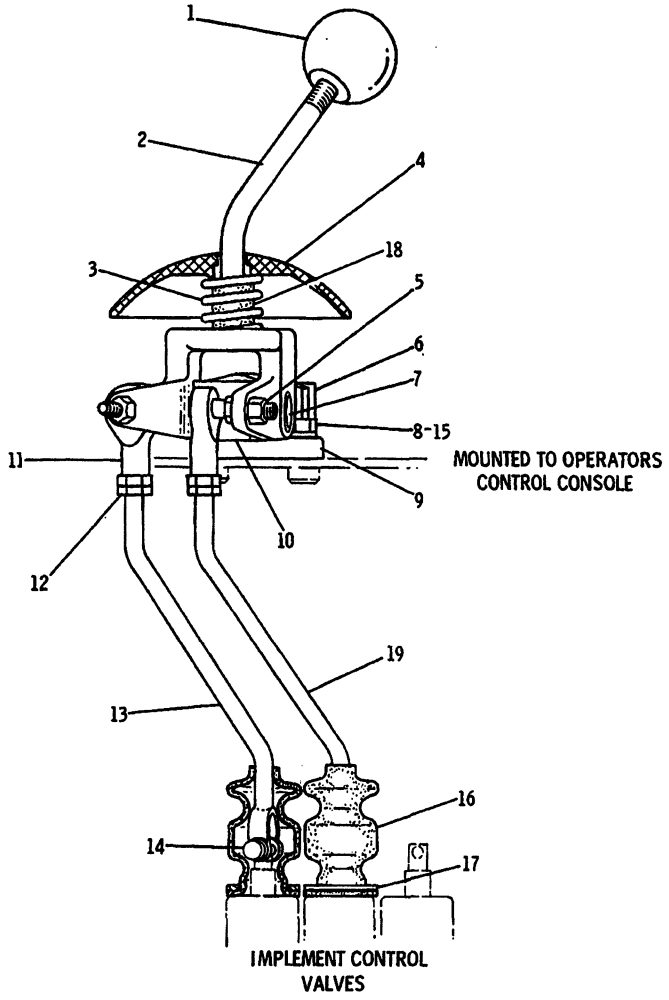

REF. NO.	PART NUMBER	DESCRIPTION	QTY
1	2A1736	HANDLE	1
2	9P1437	LEVER ASSEM. (Includes)	1
	9F5647	BEARING	2
3	2J7295	SPRING	1
4	6P5207	SEAL	1
5	2L6267	LOCKNUT	2
6	3P3676	CLAMP	1
	S1591	BOLT	1
	1D4717	NUT	1
7	3P3937	SHAFT	1
	7L811	DOWEL	1
8	1A2029	BOLT	2
9	3P3934	BRACKET ASSEM. (Includes)	1
	9F5647	BEARING	2
10	3P3949	SHAFT ASSEM.	1
11	5J5315	ROD END	2
12	1B4203	NUT	2
13	6P7072	ROD	1
14	9S1303	PIN	2
	3B4607	COTTER PIN	2
15	5M2894	WASHER	2
16	9P3697	BOOT	2
17	9P7361	FLANGE	2
18	9G1240	SEAL	1
19	3T2592	ROD	1

235935 235935 P

5063

3T2594 LINKAGE GP-IMPLEMENT
Type 1. Adjustable Ripper
Part Of 9P9079,9P9082,9W0574 Control Ars-Hydraulic
An Attachment

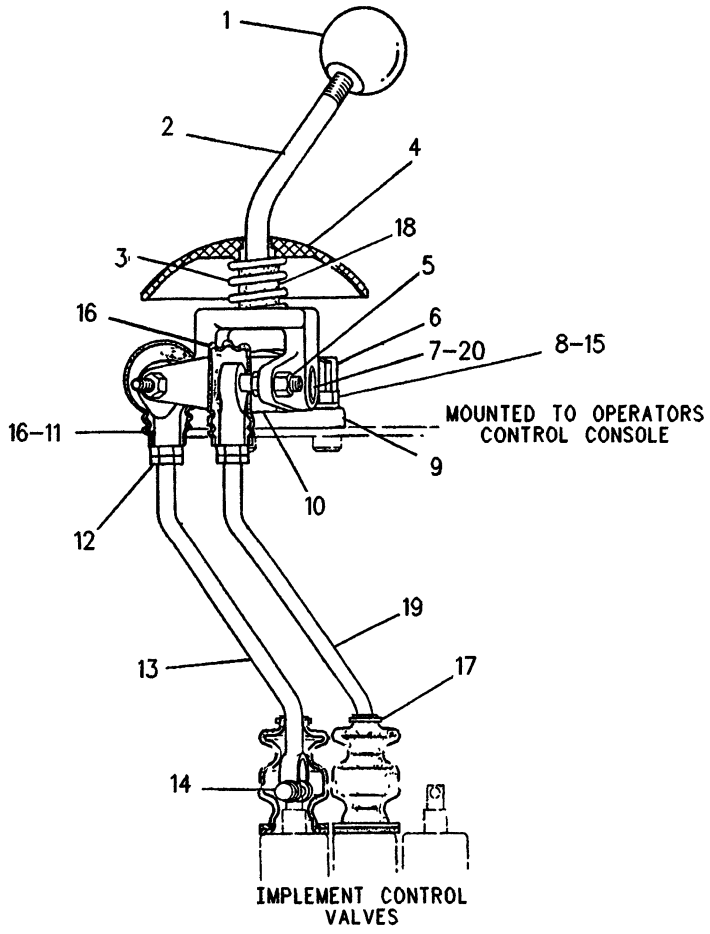

NOTE	REF NO	PART NUMBER	QTY	PART NAME
	1	2A1736	1	HANDLE (RIPPER CONTROL)
C	2	3T9359	1	LEVER
	3	6Y2044	1	SPRING
	4	6P5207	1	SEAL-DOMED
	5	2L6267	2	LOCKNUT
	6	3P3676	1	CLAMP
		4L9337	1	BOLT
		6V8801	1	NUT
C	7	3T9351	1	SHAFT-GOVERNOR CONTROL
		8T2637	1	PIN-SPRING
	8	8T2502	2	BOLT
C	9	3T9345	1	BRACKET
C	10	3T9358	1	SHAFT AS
	11	5J5315	2	END-ROD
	12	6V8183	2	NUT-FULL
	13	6P7072	1	ROD
	14	9S1303	2	PIN
		3B4607	2	COTTER
	15	8T4896	2	WASHER-HARD
C	16	6V3294	2	BOOT-ROD END
C	17	1S9593	2	STRAP-CABLE
	18	9G1240	1	SEAL
	19	3T2592	1	ROD
C	20	5P9209	4	BEARING-ROLLER
CF		5P8168	1	FILM-INSTRUCTION (MOUNTED ON PLASTIC AIR DUCT)

C-CHANGE FROM PREVIOUS TYPE
F-NOT SHOWN

R-581970 EP

5063 **3T2594 LINKAGE GP-IMPLEMENT**

Type 2 Adjustable Ripper
Part Of 9P9079,9P9082,9W0574 Control Ars-Hydraulic
An Attachment

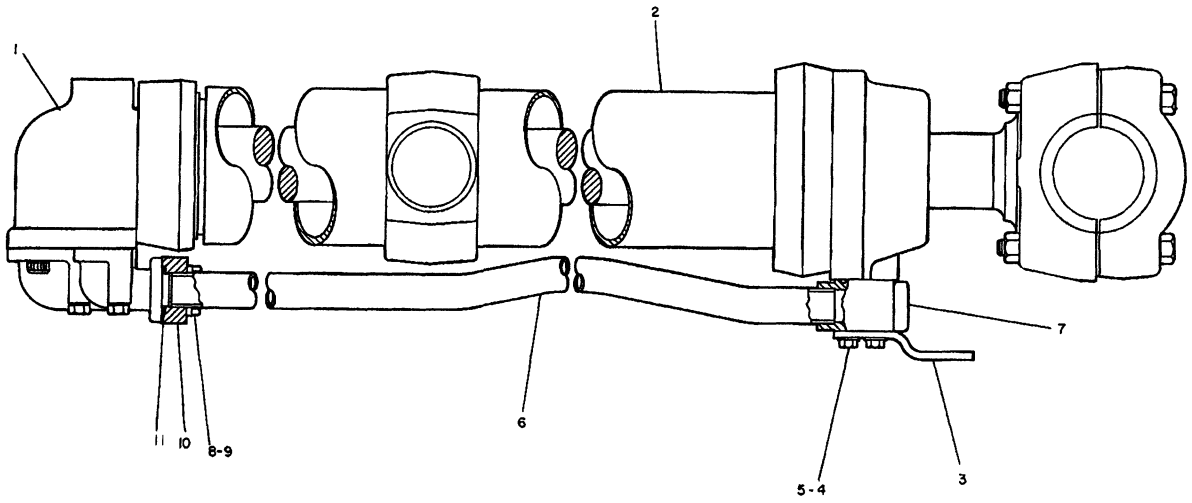

NOTE	REF NO	PART NUMBER	QTY	PART NAME
Y	1	4T4204	1	VALVE GP
Y	2	3G8537	1	CYLINDER GP-LIFT
C	3	7T4890	1	PLATE
C	4	0S1619	4	BOLT
C	5	5P1075	4	WASHER
	6	9P8514	1	TUBE AS
	7	6V0422	1	PLUG
	8	0T0768	4	BOLT 44 45MM(1 75IN) LG
				-OR-
C		0T0319	4	BOLT 50 8MM (2 002IN) LG
	9	5P8244	4	WASHER
	10	1P5761	2	FLANGE-HALF
	11	1P3704	2	SEAL-RECTANGULAR

C INDICATES CHANGE

Y SEPARATE ILLUSTRATION

B-409763 P

5102 **6P8988 CYLINDER GP-VALVE-RH (CHANGES 01-10)**

4T4204-Page 246,3G8537-Page 247

Part Of 3G6088,3G6090,3G6092 Bulldozer Ars

An Attachment

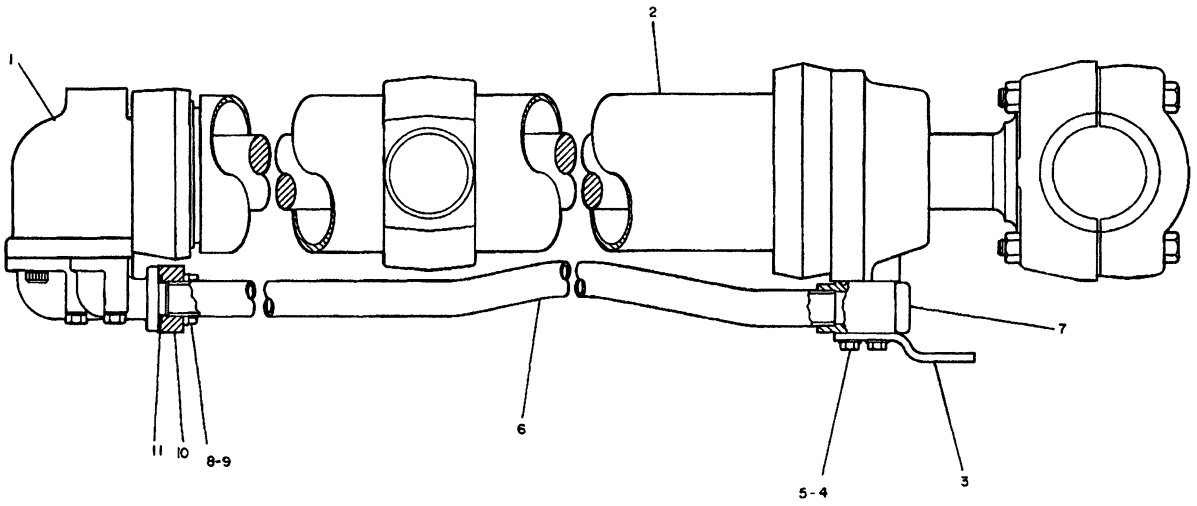

NOTE	REF NO	PART NUMBER	QTY	PART NAME
Y	1	4T4204	1	VALVE GP
Y	2	3G8537	1	CYLINDER GP-LIFT
C	3	7T4890	1	PLATE
	4	0S1619	4	BOLT
C	5	5P1075	4	WASHER
	6	7G4844	1	TUBE AS
	7	6V0422	1	PLUG
	8	0T0768	4	BOLT 44 45MM(1 75IN) LG
				-OR-
C		0T0319	4	BOLT 50 8MM(2 002IN) LG
C	9	5P8244	4	WASHER
	10	1P5761	2	FLANGE-HALF
	11	1P3704	2	SEAL-RECTANGULAR

C-INDICATES CHANGE

Y-SEPARATE ILLUSTRATION

409764

B- 409764 P

5102

6P8989 CYLINDER GP-VALVE-LH (CHANGES 02-11)

4T4204-Page 246, 3G8537-Page 247

Part Of 3G6088, 3G6090, 3G6092 Bulldozer Ars

An Attachment

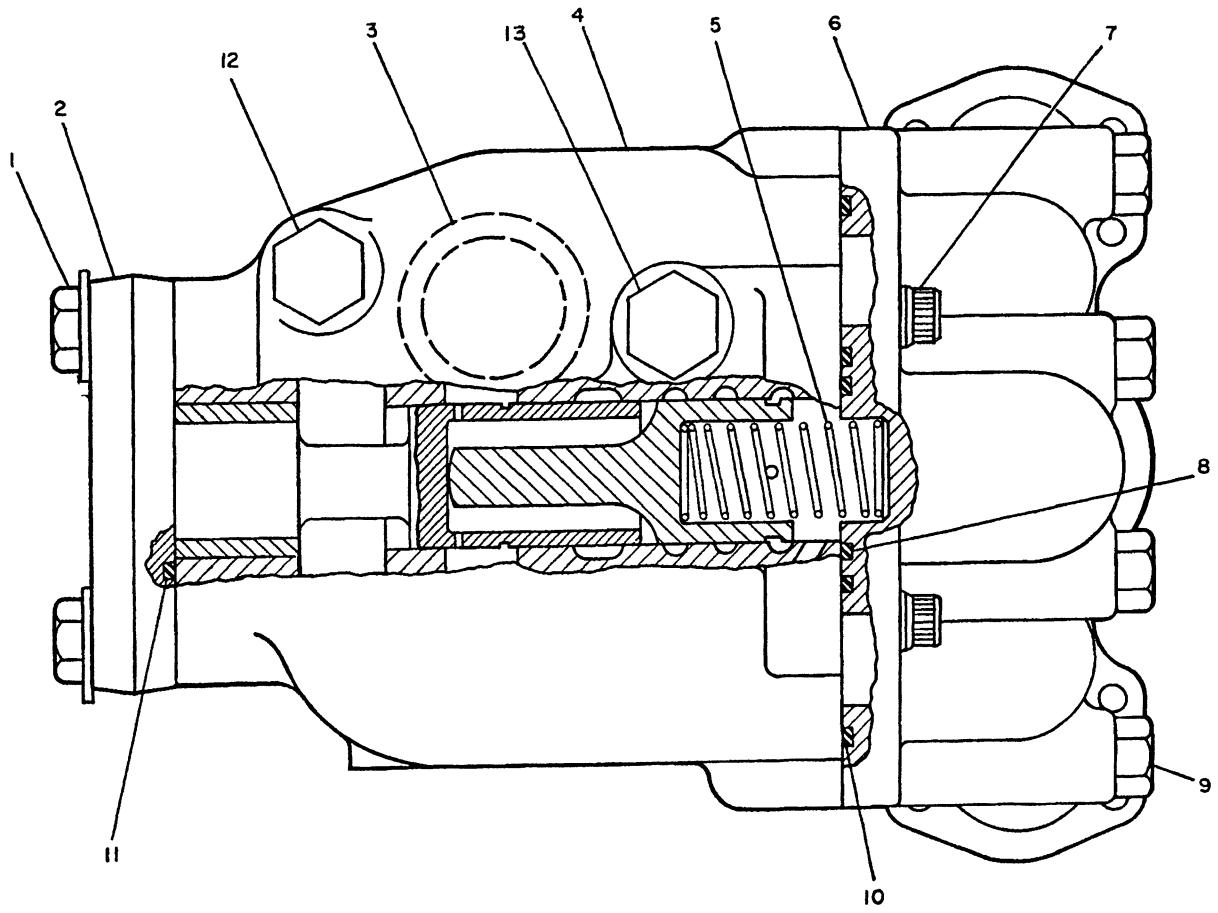

NOTE	REF NO	PART NUMBER	QTY	PART NAME	NOTE	REF NO	PART NUMBER	QTY	PART NAME
C	1	0S1587	2	BOLT					
C		5P1076	2	WASHER-HARD					
	2	6V1849	1	COVER					
C	3	4J0526	1	SEAL-O-RING					
	4	4T4202	1	VALVE GP					
		4T4207	1	PLUG-ORIFICE					
	5	7M1297	1	SPRING					
C	6	9T4733	1	MANIFOLD					
	7	8M2530	2	BOLT-12 POINT HEAD					
C	8	4J5573	1	SEAL-O-RING					
	9	1D4566	5	BOLT					
C	10	4J0522	3	SEAL					
C	11	4J0525	1	SEAL-O-RING					
	12	0S1569	1	BOLT					
	13	1D4593	1	BOLT					

C-CHANGE FROM PREVIOUS TYPE

B-558714 EP

5110

4T4204 VALVE GP-QUICK DROP
Part Of 6P8988,6P8989 Cylinders
An Attachment

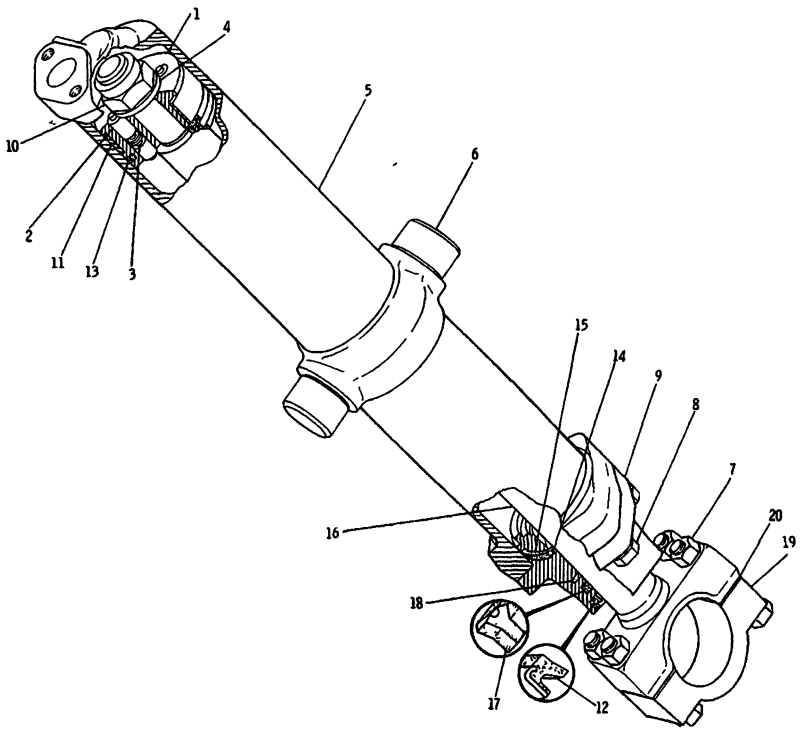

	REF NO	PART NUMBER	DESCRIPTION	QTY
	1	3G8193	PISTON ASSEM ---------- (Includes)	1
	2	5J2529	INSERT----------	4
	3	5J2528	PLUNGER----------	2
	4	3G8191	WASHER----------	1
C	5	3G8194	CYLINDER ASSEM. ---------- (Includes)	1
	6	5J1192	BEARING----------	2
	7	9S1322	BOLT----------	4
		2J3505	NUT----------	4
	8	1D4610	BOLT----------	4
		5P8248	WASHER----------	4
	9	3G8186	HEAD----------	1
	10	5J5731	NUT----------	1
	11	9J7978	RING----------	1
	12	2J1411	SEAL----------	1
	13	5J7234	SEAL ASSEM. ----------	1
	14	2J7767	RING----------	1
	15	5F3106	SEAL----------	1
	16	3G8192	ROD ASSEM ----------	1
	17	5J8300	SEAL----------	1
	18	6J6915	SEAL----------	1
	19	3G910	CAP----------	1
	20	3G911	SHIM----------	12

C INDICATES CHANGE

238075

238075 P

5102 **3G8537 CYLINDER GP-LIFT (CHANGES 01-03)**

Type 1
133.35MM (5.25IN) Bore X 1535MM (60IN) Stroke
Part Of 6P8988,6P8989 Cylinders
An Attachment

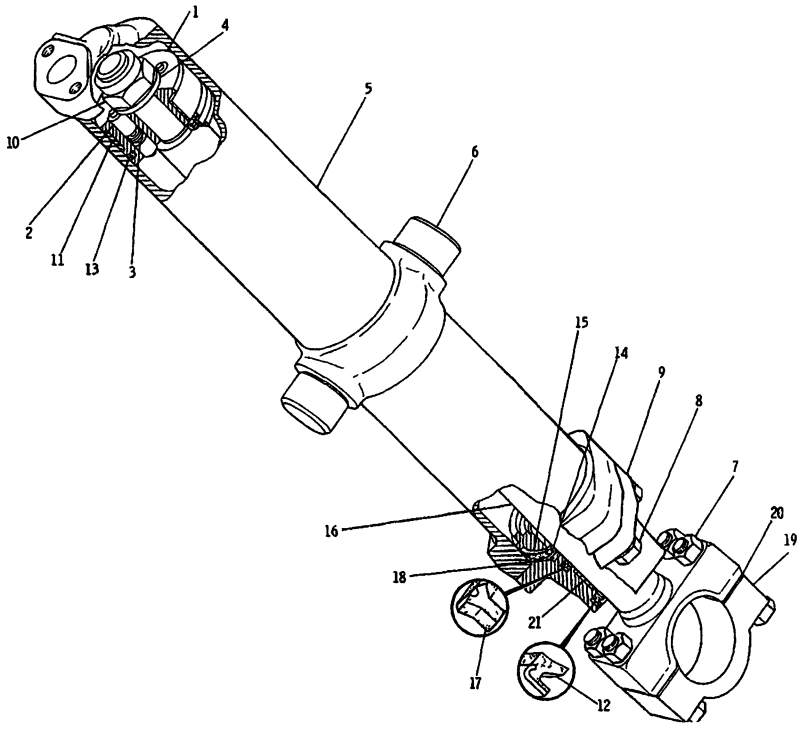

NOTE	REF NO	PART NUMBER	QTY	DESCRIPTION
	1	3G8193	1	PISTON AS
	2	5J2529	4	INSERT
	3	5J2528	2	PLUNGER
	4	3G8191	1	WASHER
	5	3G8194	1	CYLINDER AS
	6	5J1192	2	BEARING
	7	9S1322	4	BOLT
		2J3505	4	NUT
	8	1D4610	4	BOLT
		5P8248	4	WASHER
C	9	9T2828	1	HEAD
	10	5J5731	1	NUT
	11	9J7978	1	RING
	12	2J1411	1	SEAL
	13	5J7234	1	SEAL AS
	14	2J7767	1	RING
	15	5F3106	1	SEAL
C	16	4T0406	1	ROD AS
	17	5J8300	1	SEAL
	18	6J6915	1	SEAL
	19	3G0910	1	CAP
	20	3G0911	12	SHIM
C	21	8T1714	1	RING

C INDICATES CHANGE

351836

351836 P

5102

3G8537 CYLINDER GP-LIFT (CHANGES 04-06)
Type 2. 133.35MM (5.25IN) Bore X 1535MM (60IN) Stroke
Part Of 6P8988,6P8999 Cylinders
An Attachment

MEMORANDA

			PAGE
1	3G6087	BULLDOZER AR-STRAIGHT	248
1	9J7623	MOUNTING GP-CYLINDER	237
1	6P8988	CYLINDER GP-VALVE-RH	244
1	6P8989	CYLINDER GP-VALVE-LH	245
1	3T8686	LINES GP-LIFT CYLINDER	231B

108030 P

6060

3G6088 BULLDOZER AR-STRAIGHT
Type 1
An Attachment

			PAGE
1	9J9638	BLADE GP-STRAIGHT	250B
		4Y1-1939,2055,2087	
		OR	
1	4T9585	BLADE GP-STRAIGHT	251A
		4Y1940,2054,2088-UP	
1	9J9640	TRUNNION GP-BULLDOZER	258
1	3G0527	PUSH ARM GP-STABILIZER	260
		4Y1-1939,2055,2087	
		OR	
1	4T9524	PUSH ARM GP-STABILIZER	260A
		4Y1940,2054,2088-UP	
1	3G1550	LINES GP-TILT CYLINDER	227
1	5P4020	PLATE-BULLDOZER S/N	
		BACK OF MOLDBOARD-NEAR TOP AT RH END	
2	4B4158	SCREW DRIVE	
		-OR-	
1	8A8492	PLATE-BULLDOZER S/N	
		UNDER RH DEFLECTOR PLATE	
2	4B4159	SCREW DRIVE	

108025 P

6060

3G6087 BULLDOZER AR-STRAIGHT
8S Bulldozer S/N 4Y1-Up,51M1-Up
Also Part Of 3G6088 Bulldozer Ar

			PAGE
1	3Y9506	BULLDOZER AR.	248A
1	9J7623	MOUNTING GP-CYLINDER.	237
1	6P8988	CYLINDER GP-VALVE-RH	244
1	6P8989	CYLINDER GP-VALVE-LH	245
1	3T8686	LINES GP-LIFT CYLINDER	231B

3Y9507 BULLDOZER AR-STRAIGHT
Japan Market
An Attachment

			PAGE
1	3Y951O	BLADE GP-STRAIGHT	251B
1	9J964O	TRUNNION GP-BULLDOZER	258
1	3GO527	PUSH ARM GP-STABILIZER.....	26O
1	3G155O	LINES GP-TILT CYLINDER.	227
1		PLATE-SERIAL NUMBER	
2	4B4158	SCREW DRIVE	

3Y9506 BULLDOZER AR-STRAIGHT
Japan Market
8S Bulldozer S/N 74M1-Up

			PAGE
1	4T7701	BLADE GP-STRAIGHT	251A.04
		OR	
1	4T9595	BLADE GP-STRAIGHT	251A.02
1	3G0527	PUSH ARM GP-STABILIZER	260
		OR	
1	4T9524	PUSH ARM GP-STABILIZER	260A
1	9J9640	TRUNNION GP-BULLDOZER	258
1	3G1550	LINES GP-TILT CYLINDER	227

332845 P

6060 **4T7702 BULLDOZER AR-STRAIGHT**
Bulldozer S/N 4Y1-Up

			PAGE
1	7T3465	BLADE GP-STRAIGHT	251A.03
1	4T9524	PUSH ARM GP-STABILIZER	260A
1	9J9640	TRUNNION GP-BULLDOZER	258
1	3G1550	LINES GP-TILT CYLINDER	227

335186 P

6051 **7T3639 BULLDOZER AR-STRAIGHT**
Wear Plated
For Use With 4T9568 Blade
An Attachment

			PAGE
1	9TO044	GUARD GP-ROCK	248D
1	7T3464	PLATE GP-WEAR	253A.02
1	4T9568	BLADE AS	

335287 P

6051 **9W0800 BLADE AS-STRAIGHT**
With Rock Guard And Wear Plates
An Attachment

			PAGE
1	9TO018	GUARD GP-ROCK	248E
1	4T9489	BLADE AS	

335289 P

6053 **9W0801 BLADE AS-UNIVERSAL**
An Attachment

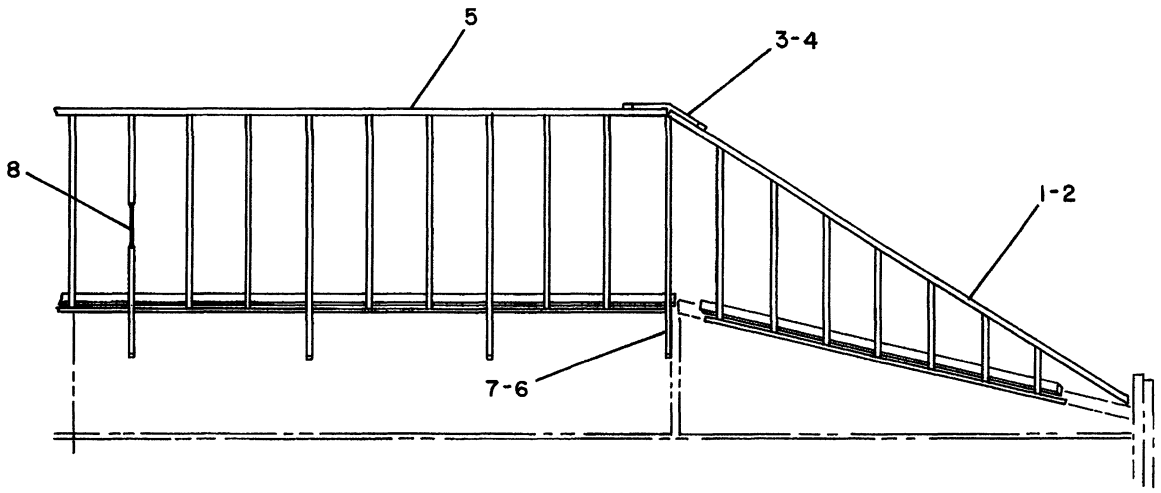

NOTE	REF NO	PART NUMBER	QTY	DESCRIPTION
	1	9T0054	1	GUARD AS. (L.H.)
	2	9T0055	1	GUARD AS (R H)
	3	7T2843	1	REINFORCEMENT (R H)
	4	7T2842	1	REINFORCEMENT (L.H)
	5	9T0021	1	GUARD AS
	6	9T0015	1	PLATE (R.H)
	7	9T0014	1	PLATE (L H)
	8	9T0001	6	GUSSET

332576

332576 P

7182

9T0044 GUARD GP-ROCK-FACTORY INSTALLED
Bulldozer S/N 4Y1940-Up,53Y2765-Up
Part Of 9W0800 Blade As
An Attachment

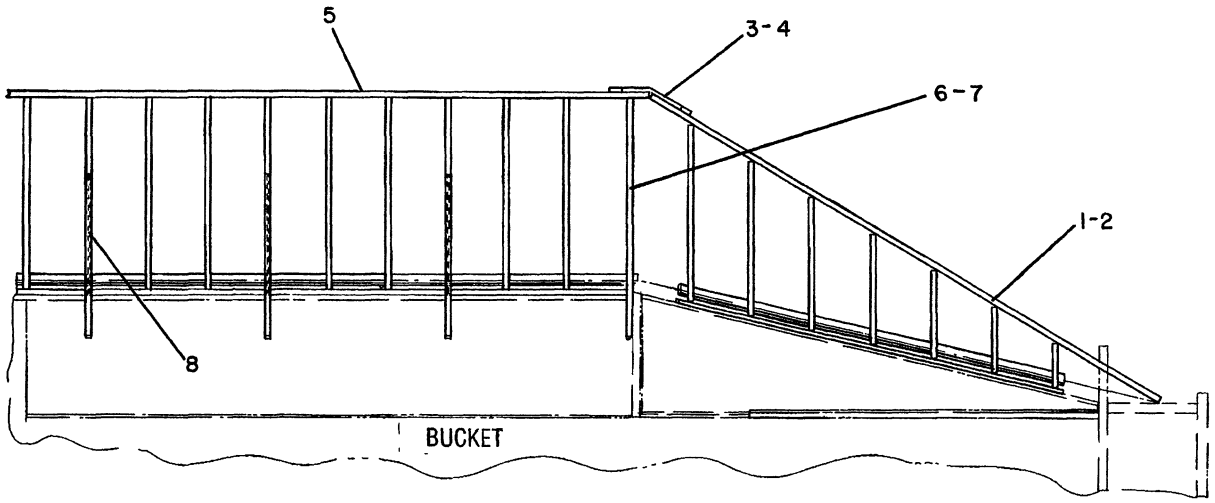

NOTE	REF NO	PART NUMBER	QTY	DESCRIPTION
	1	9T0020	1	GUARD AS (L H)
	2	9T0019	1	GUARD AS (R H)
	3	9T0016	1	REINFORCEMENT (R H)
	4	9T0017	1	REINFORCEMENT (L H)
	5	9T0021	1	GUARD AS.
	6	9T0015	1	PLATE (R H)
	7	9T0014	1	PLATE (L H)
	8	9T0001	6	GUSSET

332575

332575 P

7182

9T0018 GUARD GP-ROCK
Part Of 9W0801 Blade As
An Attachment

MEMORANDA

			PAGE
1	3G6089	BULLDOZER AR-ANGLING	249
1	9J7623	MOUNTING GP-CYLINDER	237
1	6P8989	CYLINDER GP-VALVE-LH	245
1	6P8988	CYLINDER GP-VALVE-RH	244
1	3T8686	LINES GP-LIFT CYLINDER	231B

107524 P

6060 **3G6090 BULLDOZER AR-ANGLING**
Type 1
An Attachment

			PAGE
1	3G6096	BLADE GP.	252
1	9J9640	TRUNNION GP-BULLDOZER	258
1	9J9157	BRACE GP-BULLDOZER	261
1	3G5531	C-FRAME GP	258B
1	5P4020	PLATE-BULLDOZER S/N BACK OF MOLDBOARD-NEAR TOP AT R H END	
2	4B4158	SCREW DRIVE	

107525 P

6060 **3G6089 BULLDOZER AR-ANGLING**
8A Bulldozer S/N 5Y1-Up
Also Part Of 3G6090 Bulldozer Ar

			PAGE
1	3G6091	BULLDOZER AR-UNIVERSAL.	250
1	9J7623	MOUNTING GP-CYLINDER.	237
1	6P8988	CYLINDER GP-VALVE-RH	244
1	6P8989	CYLINDER GP-VALVE-LH.	245
1	3T8686	LINES GP-LIFT CYLINDER	231B

108031 P

6060

3G6092 BULLDOZER AR-UNIVERSAL
Type 1
An Attachment

			PAGE
1	9J9661	BLADE GP-UNIVERSAL	253.01
1	9J9640	TRUNNION GP-BULLDOZER	258
1	3G0527	PUSH ARM GP-STABILIZER	260
1	3G1550	LINES GP-TILT CYLINDER	227
1	5P4020	PLATE-BULLDOZER S/N BACK OF MOLDBOARD-NEAR TOP AT RH END	
2	4B4158	SCREW DRIVE	

108187 P

6060

3G6091 BULLDOZER AR-UNIVERSAL
8U Bulldozer S/N 6Y1-1395
Also Part Of 3G6092 Bulldozer Ar

			PAGE
1	9J9661	BLADE GP-UNIVERSAL..	253 01
		-OR-	
1	4T9499	BLADE GP-UNIVERSAL	253.02
1	9J9640	TRUNNION GP-BULLDOZER...	258
1	3G0527	PUSH ARM GP-STABILIZER	260
		-OR-	
1	4T9524	PUSH ARM GP-STABILIZER	260A
1	3G1550	LINES GP-TILT CYLINDER. . .. .. ,.	227
1	5P4020	PLATE-BULLDOZER S/N	
		BACK OF MOLDBOARD-NEAR TOP AT RH END	
2	4B4158	SCREW DRIVE	

347644 P

6060 **3G6091 BULLDOZER AR-UNIVERSAL**
8U Bulldozer S/N 6Y1396-Up
Also Part Of 3G6092 Bulldozer Ar

MEMORANDA

			PAGE
1	3Y9508	BULLDOZER AR	250A
1	9J7623	MOUNTING GP-CYLINDER	237
1	6P8988	CYLINDER GP-VALVE-RH	244
1	6P8989	CYLINDER GP-VALVE-LH	245
1	3T8686	LINES GP-LIFT CYLINDER	231B

3Y9509 BULLDOZER AR-UNIVERSAL
Japan Market
An Attachment

			PAGE
1	3Y9478	BLADE GP-UNIVERSAL	253B
1	9J9640	TRUNNION GP-BULLDOZER	258
1	3G0527	PUSH ARM GP-STABILIZER	260
1	3G1550	LINES GP-TILT CYLINDER	227
1		PLATE-SERIAL NUMBER	
2	4B4158	SCREW DRIVE	

3Y9508 BULLDOZER AR-UNIVERSAL
Japan Market
8U Bulldozer S/N 82M1-Up

			PAGE
1	4T9499	BLADE GP-UNIVERSAL	253.02
1	4T9524	PUSH ARM GP-STABILIZER	260A
1	9J9640	TRUNNION GP-BULLDOZER	258
1	3G1550	LINES GP-TILT CYLINDER	227
1	9J7623	MOUNTING GP-CYLINDER	237
1	6P8988	CYLINDER GP-VALVE-RH	244
1	6P8989	CYLINDER GP-VALVE-LH	245
1	3T8686	LINES GP-LIFT CYLINDER	231B

334719 P

6060 **3G6092 BULLDOZER AR-UNIVERSAL**
Type 2
An Attachment

			PAGE
1	3G6096	BLADE GP	252
1	9J9157	BRACE GP-BULLDOZER	261
1	3G5531	C-FRAME GP	258B
1	9J9640	TRUNNION GP-BULLDOZER	258
1	9J7623	MOUNTING GP-CYLINDER	237
1	6P8989	CYLINDER GP-VALVE-LH	245
1	6P8988	CYLINDER GP-VALVE-RH	244
1	3T8686	LINES GP-LIFT CYLINDER	231B

334717 P

6060 **3G6090 BULLDOZER AR-ANGLING**
Type 2
An Attachment

			PAGE
1	4T9585	BLADE GP-STRAIGHT	251A
1	4T9524	PUSH ARM GP-STABILIZER	260A
1	9J9640	TRUNNION GP-BULLDOZER	258
1	3G1550	LINES GP-TILT CYLINDER	227
1	9J7623	MOUNTING GP-CYLINDER	237
1	6P8988	CYLINDER GP-VALVE-RH	244
1	6P8989	CYLINDER GP-VALVE-LH	245
1	3T8686	LINES GP-LIFT CYLINDER	231B

334716 P

6060 **3G6088 BULLDOZER AR-STRAIGHT**
Type 2
An Attachment

			PAGE
1	1U3373	CYLINDER GP	232
1	9W3727	LINES GP-ATTACHMENT	233B
1	4T0140	PULLER GP-PIN	236

350272 P

5354 **9W3728 PULLER AR-PIN**
Part Of 7T9593 Ripper Ar
An Attachment

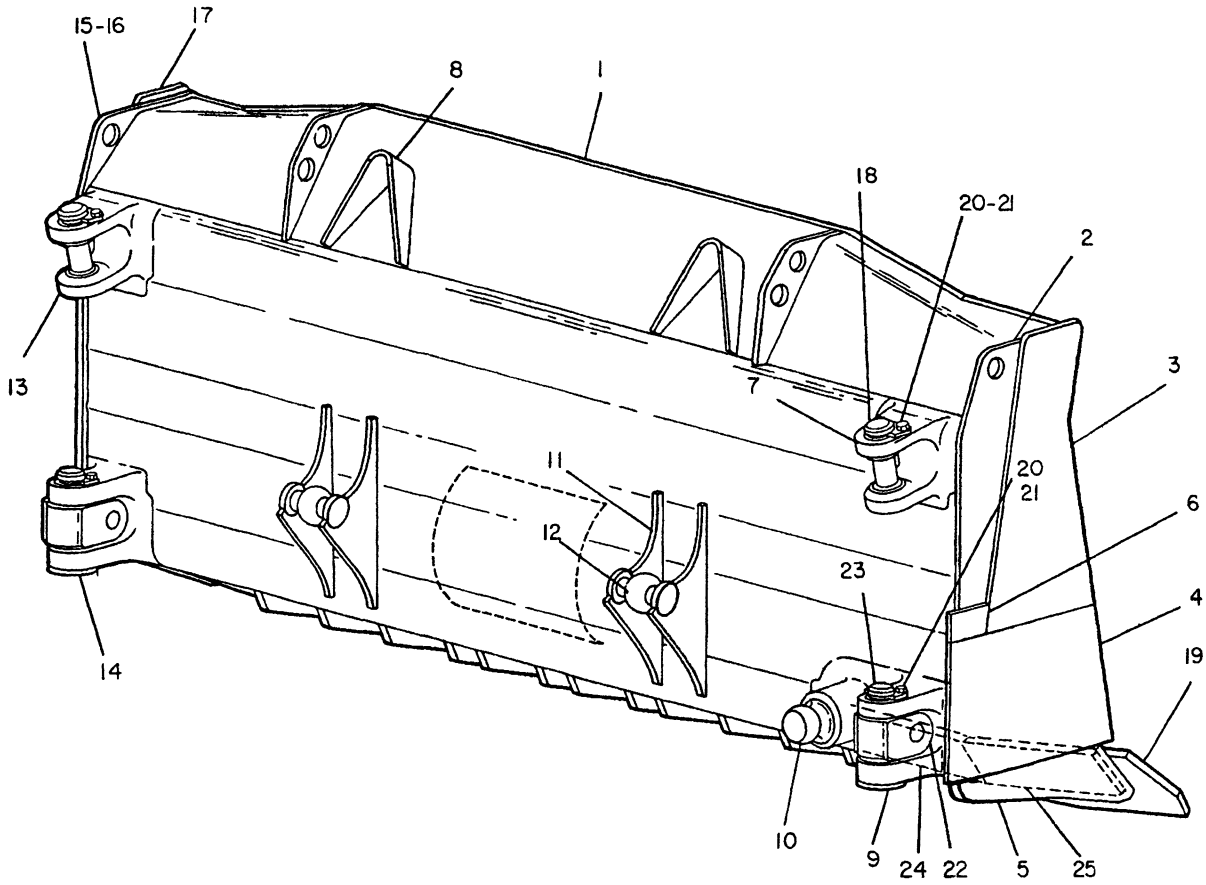

NOTE	REF NO	PART NUMBER	QTY	PART NAME	NOTE	REF NO	PART NUMBER	QTY	PART NAME
	1	3G6699	1	BLADE AS		20	2H3757	8	BOLT
	2	3G6611	1	PLATE AS-RH		21	6J5179	4	RETAINER
	3	3G6619	1	BIT		22	5J0697	2	CONNECTOR
	4	4T1353	1	BIT	C	23	4T7534	2	PIN
	5	3G6403	1	SHOE-TRACK-RH		24	3G6416	1	SUPPORT
C	6	4T3694	1	BIT		25	3G6415	2	SUPPORT
	7	3G6123	1	BRACKET-RH	F		1U4417	5	PLATE-WEAR
	8	9J7423	2	DEFLECTOR	F		6J9248	1	PLATE-PUSH
	9	3G9595	1	BRACKET AS					
C		4T4386	1	RETAINER					
		3G9598	2	BEARING-SLEEVE					
	10	7G4858	1	TRUNNION					
	11	3G6420	2	BRACKET AS (EACH INCLUDES)					
	12	9J0123	1	TRUNNION					
	13	1U0272	1	BRACKET-LH					
	14	3G6418	1	BRACKET AS (L.H)					
C		4T4386	1	RETAINER					
		3G9598	2	BEARING-SLEEVE					
	15	3G6612	1	PLATE AS-LH					
	16	4T1353	1	BIT					
		3G6404	1	SHOE-TRACK-LH					
	17	3G6619	1	BIT					
C		4T3694	1	BIT					
	18	1U2472	2	PIN					
Y	19	9J9605	1	BIT & CUTTING EDGE GP					

C-CHANGE FROM PREVIOUS TYPE
F-NOT SHOWN
Y-SEPARATE ILLUSTRATION

B-453484 P

6051 **9J9638 BLADE GP-STRAIGHT**

8S Bulldozer S/N 4Y1-1478,1485,1490,1539,1545,1546,1549,1551,1553-1558, 1560,1561,1562,1571-1575,1578-1585,1587,1590,1605,1607

9J9605-Page 254

Part Of 3G6087 Bulldozer Ar

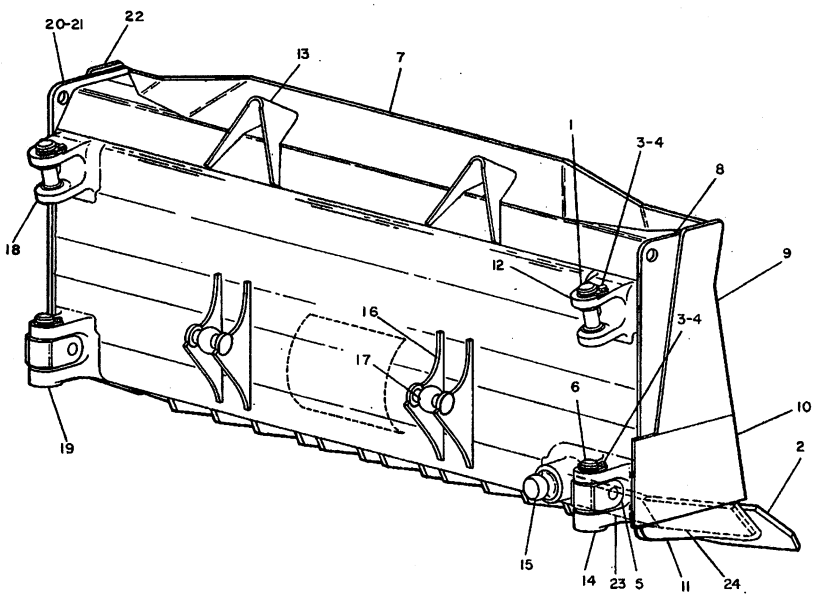

NOTE	REF NO	PART NUMBER	QTY	DESCRIPTION
	1	1U2472	2	PIN
Y	2	9J9605	1	EDGE GP.
	3	2H3757	8	BOLT
	4	6J5179	4	RETAINER
	5	5J0697	2	CONNECTOR
	6	6J4795	2	PIN
	7	3G6699	1	BLADE AS.
	8	3G6611	1	PLATE AS. (R.H.)
C	9	4T3924	1	BIT
C	10	4T3923	1	BIT
	11	3G6403	1	SHOE (R.H.)
	12	3G6123	1	BRACKET (R.H.)
C	13	4T6156	2	DEFLECTOR
	14	3G9595	1	BRACKET AS. (R.H.)
		3G9598	2	BEARING
	15	7G4858	1	TRUNNION
	16	3G6420	2	BRACKET AS. (EACH INCLUDES)
	17	9J0123	1	TRUNNION
	18	1U0272	1	BRACKET (L.H.)
	19	3G6418	1	BRACKET AS. (L.H.)
		3G9598	2	BEARING
	20	3G6612	1	PLATE AS. (L.H.)
C	21	4T3923	1	BIT
		3G6404	1	SHOE (L.H.)
C	22	4T3924	1	BIT
	23	3G6416	1	SUPPORT
C	24	3G6415	2	SUPPORT
F		1U4417	5	PLATE (WEAR)
F		6J9248	1	PLATE (PUSH)

C INDICATES CHANGE
F NOT SHOWN
Y SEPARATE ILLUSTRATION

353649

353649 P

6051 **9J9638 BLADE GP-STRAIGHT**

8S Bulldozer S/N 4Y1479-1484,1486-1489,1491-1538,1540-1544,1547,1548,1550, 1552,1559,1563-1570,1576,1577,1586,1588,1589,1591-1604,1606,1608-1939

9J9605-Page 254

Part Of 3G6087 Bulldozer Ar

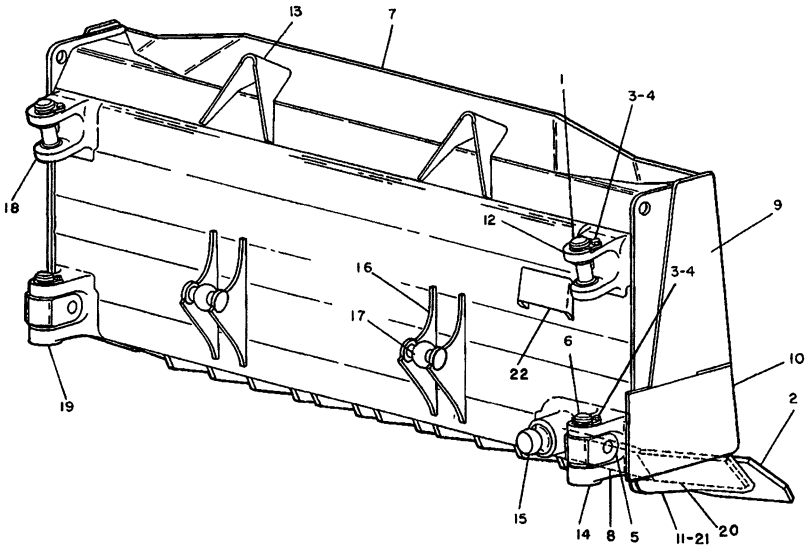

NOTE	REF NO	PART NUMBER	QTY	DESCRIPTION
	1	1U2472	2	PIN
Y	2	4T9588	1	EDGE GROUP
	3	2H3757	8	BOLT
	4	6J5179	4	RETAINER
	5	5J697	2	CONNECTOR
	6	4T7534	2	PIN
	7	4T9568	1	BLADE ASSEM
	8	4T9580	1	SUPPORT
	9	4T9570	2	BIT
	10	4T9578	2	BIT
	11	4T9583	1	SHOE (R H)
	12	3G6123	1	BRACKET (R H)
	13	4T9479	2	DEFLECTOR
	14	4T9445	1	BRACKET ASSEM (R H)
		3G9598	2	BEARING
	15	4T9439	1	TRUNNION
	16	4T9481	2	BRACKET ASSEM (EACH INCLUDES)
	17	9J123	1	TRUNNION
	18	1U272	1	BRACKET (L H)
	19	3G6418	1	BRACKET ASSEM (L H)
		3G9598	2	BEARING
	20	4T9579	2	SUPPORT
	21	4T9584	1	SHOE (L H)
	22	7T5869	1	GUARD

Y SEPARATE ILLUSTRATION

327012

327012 P

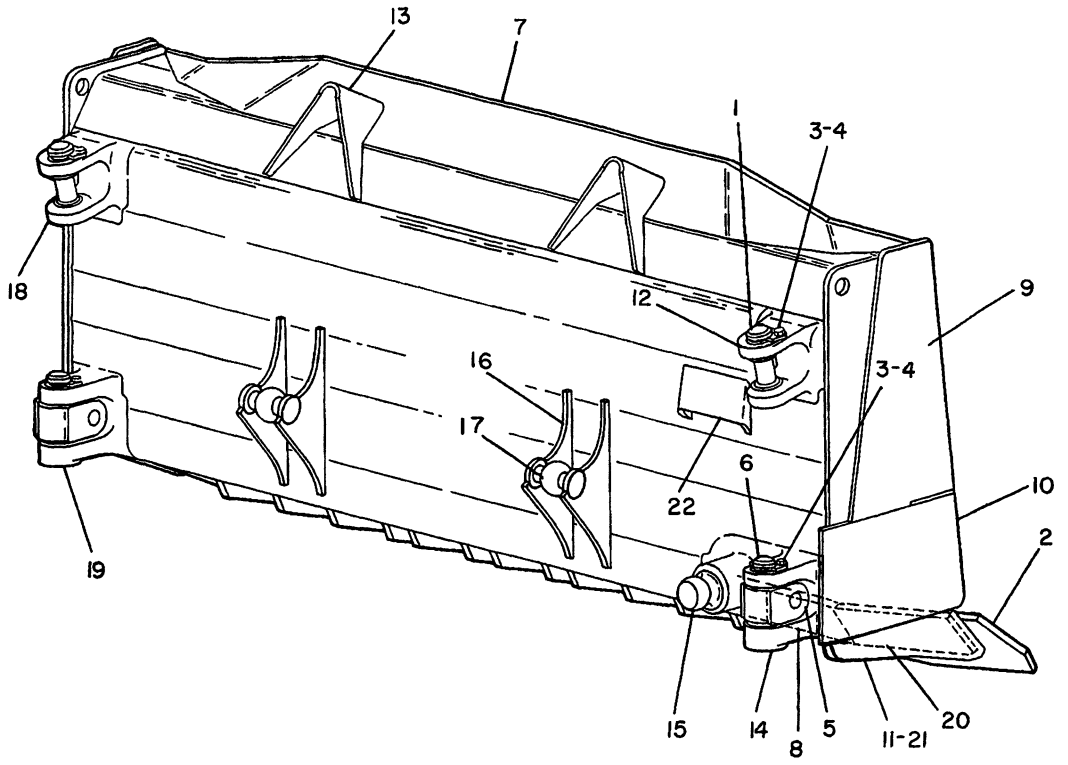

NOTE	REF NO	PART NUMBER	QTY	PART NAME
	1	1U2472	2	PIN
CY	2	4T9840	1	BIT & CUTTING EDGE GP
	3	2H3757	8	BOLT
	4	6J5179	4	RETAINER
	5	5J0697	2	CONNECTOR
	6	4T7534	2	PIN
	7	4T9568	1	BLADE AS
	8	4T9580	1	SUPPORT
	9	4T9570	2	BIT
	10	4T9578	2	BIT
	11	4T9583	1	SHOE-TRACK-RH
	12	3G6123	1	BRACKET-RH
	13	4T9479	2	DEFLECTOR
	14	4T9445	1	BRACKET AS (RH)
		3G9598	2	BEARING-SLEEVE
	15	4T9439	1	TRUNNION
	16	4T9481	2	BRACKET AS (EACH INCLUDES)
	17	9J0123	1	TRUNNION
	18	1U0272	1	BRACKET-LH
	19	3G6418	1	BRACKET AS (LH)
		3G9598	2	BEARING-SLEEVE
	20	4T9579	2	SUPPORT
	21	4T9584	1	SHOE-TRACK-LH
	22	7T5869	1	GUARD

C-CHANGE FROM PREVIOUS TYPE
Y-SEPARATE ILLUSTRATION

B-334856 EP

6051

4T9585 BLADE GP-STRAIGHT
4T9840-Page 254.01
Part Of 3G6088 Bulldozer Ar-Angling
An Attachment

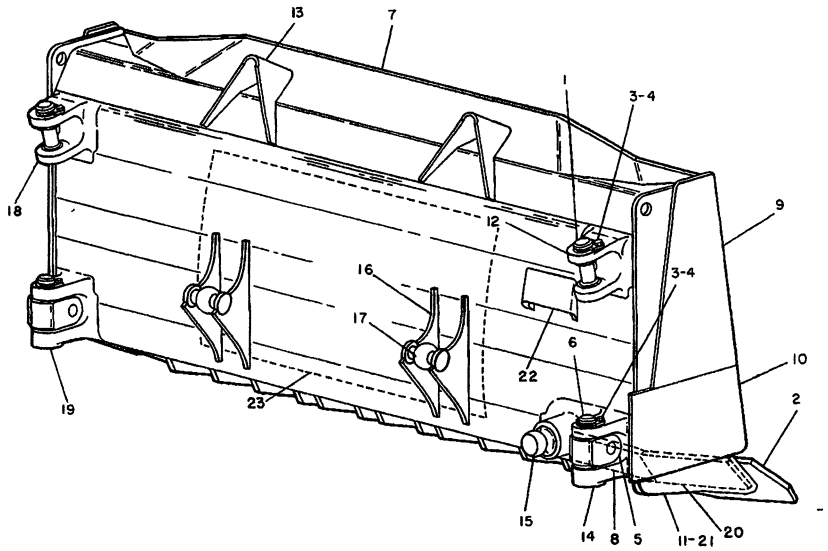

NOTE	REF NO	PART NUMBER	QTY	DESCRIPTION
	1	1U2472	2	PIN
Y	2	4T9840	1	EDGE GROUP
	3	2H3757	8	BOLT
	4	6J5179	4	RETAINER
	5	5J697	2	CONNECTOR
	6	4T7534	2	PIN
	7	4T9568	1	BLADE ASSEM
	8	4T9580	1	SUPPORT
	9	4T9570	2	BIT
	10	4T9578	2	BIT
	11	4T9583	1	SHOE (R H)
	12	3G6123	1	BRACKET (R H)
	13	4T9479	2	DEFLECTOR
	14	4T9445	1	BRACKET ASSEM (R H)
		3G9598	2	BEARING
	15	4T9439	1	TRUNNION
	16	4T9481	2	BRACKET ASSEM (EACH INCLUDES)
	17	9J123	1	TRUNNION
	18	1U272	1	BRACKET (L H)
	19	3G6418	1	BRACKET ASSEM (L H)
		3G9598	2	BEARING
	20	4T9579	2	SUPPORT
	21	4T9584	1	SHOE (L H)
	22	7T5869	1	GUARD
	23	4T9592	1	PLATE (PUSH)

Y SEPARATE ILLUSTRATION

327029

327029 P

6051 **4T9595 BLADE GP-STRAIGHT**

4T9840-Page 254 01

Part Of 4T7702 Bulldozer Ar

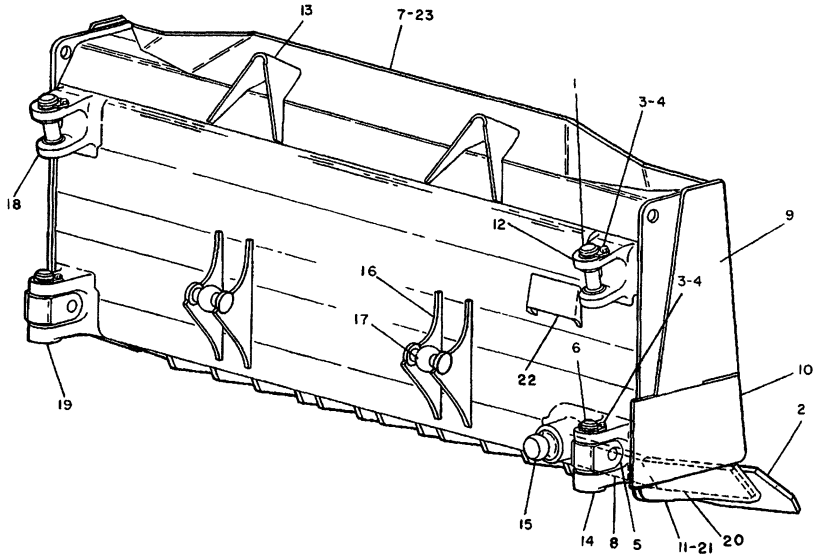

NOTE	REF NO	PART NUMBER	QTY	DESCRIPTION
	1	1U2472	2	PIN
Y	2	4T9840	1	EDGE GROUP
	3	2H3757	8	BOLT
	4	6J5179	4	RETAINER
	5	5J697	2	CONNECTOR
	6	4T7534	2	PIN
	7	4T9568	1	BLADE ASSEM
	8	4T9580	1	SUPPORT
	9	4T9570	2	BIT
	10	4T9578	1	BIT
	11	4T9583	1	SHOE (R H)
	12	3G6123	1	BRACKET (R H)
	13	4T9479	2	DEFLECTOR
	14	4T9445	1	BRACKET ASSEM (R H)
		3G9598	2	BEARING
	15	4T9439	1	TRUNNION
	16	4T9481	2	BRACKET ASSEM (EACH INCLUDES)
	17	9J123	1	TRUNNION
	18	1U272	1	BRACKET (L H)
	19	3G6418	1	BRACKET ASSEM (L H)
		3G9598	2	BEARING
	20	4T9579	2	SUPPORT
	21	4T9584	1	SHOE (L H)
	22	7T5869	1	GUARD
Y	23	7T3464	1	PLATE GP

Y SEPARATE ILLUSTRATION

335187

335187 P

6051

7T3465 BLADE GP-STRAIGHT

7T3464-Page 253A 02,4T9840-Page 254.01

Part Of 7T3639 Bulldozer Ar

An Attachment

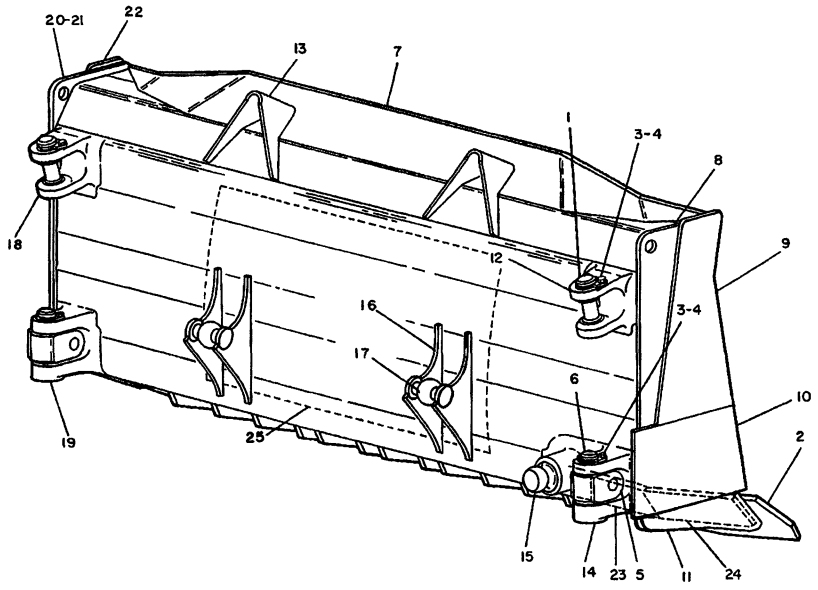

NOTE	REF NO	PART NUMBER	QTY	DESCRIPTION
	1	1U2472	2	PIN
Y	2	9J9605	1	EDGE GROUP
	3	2H3757	8	BOLT
	4	6J5179	4	RETAINER
	5	5J697	2	CONNECTOR
C	6	4T7534	2	PIN
C	7	4T9502	1	BLADE ASSEM
	8	3G6611	1	PLATE ASSEM (R H)
	9	4T3924	1	BIT
	10	4T3923	1	BIT
	11	3G6403	1	SHOE (R H)
	12	3G6123	1	BRACKET (R H)
	13	4T6156	2	DEFLECTOR
C	14	4T9445	1	BRACKET ASSEM (R H)
		3G9598	2	BEARING
C	15	4T9439	1	TRUNNION
	16	3G6420	2	BRACKET ASSEM (EACH INCLUDES)
	17	9J123	1	TRUNNION
	18	1U272	1	BRACKET (L H)
	19	3G6418	1	BRACKET ASSEM (L H)
		3G9598	2	BEARING
	20	3G6612	1	PLATE ASSEM (L H)
	21	4T3923	1	BIT
		3G6404	1	SHOE (L H)
	22	4T3924	1	BIT
	23	3G6416	1	SUPPORT
	24	3G6415	2	SUPPORT
	25	6J9248	1	PUSH PLATE

C INDICATES CHANGE
Y SEPARATE ILLUSTRATION

327027

327027 P

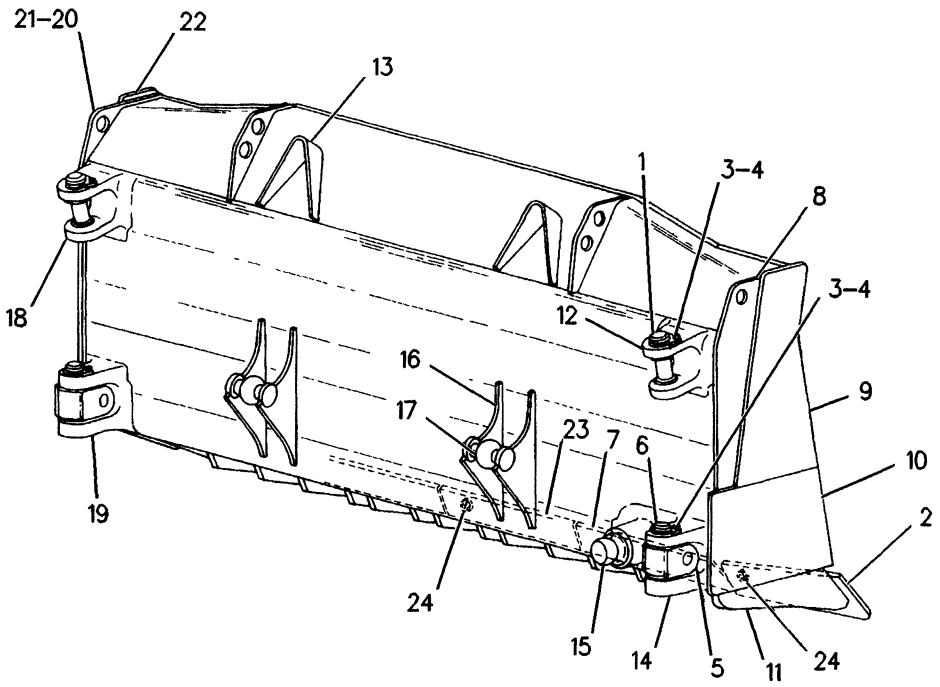

NOTE	REF NO	PART NUMBER	QTY	PART NAME
	1	1U2472	2	PIN
	2	3G8287	1	BIT-END-RH
		3G8288	1	BIT-END-LH
	3	2H3757	8	BOLT
	4	6J5179	4	RETAINER
	5	5J0697	2	CONNECTOR
	6	6J4795	2	PIN
	7	1U4929	2	EDGE-CUTTING
	8	3G6611	1	PLATE AS-RH
	9	4T3924	1	BIT
	10	4T3923	1	BIT
	11	3G6403	1	SHOE-TRACK-RH
	12	3G6123	1	BRACKET-RH
	13	9J7423	2	DEFLECTOR
	14	3G9595	1	BRACKET AS
				(EACH INCLUDES)
		3G9598	2	BEARING-SLEEVE
	15	7G4858	1	TRUNNION
	16	3G6420	2	BRACKET AS
				(EACH INCLUDES)
	17	9J0123	1	TRUNNION
	18	1U0272	1	BRACKET-LH
	19	3G6418	1	BRACKET AS
		3G9598	2	BEARING-SLEEVE
	20	3G6612	1	PLATE AS-LH
	21	4T3923	1	BIT
		3G6404	1	SHOE-TRACK-LH
	22	4T3924	1	BIT
	23	1U4930	2	EDGE-CUTTING
	24	4J9208	36	BOLT-PLOW
		2J3507	36	NUT-FULL
		3K5234	36	WASHER-HARD

R-600742 CP

6051 **3Y9510 BLADE GP-STRAIGHT**

Japan Market
8S Bulldozer S/N 74M1-Up
Part Of 3Y9506 Bulldozer Ar

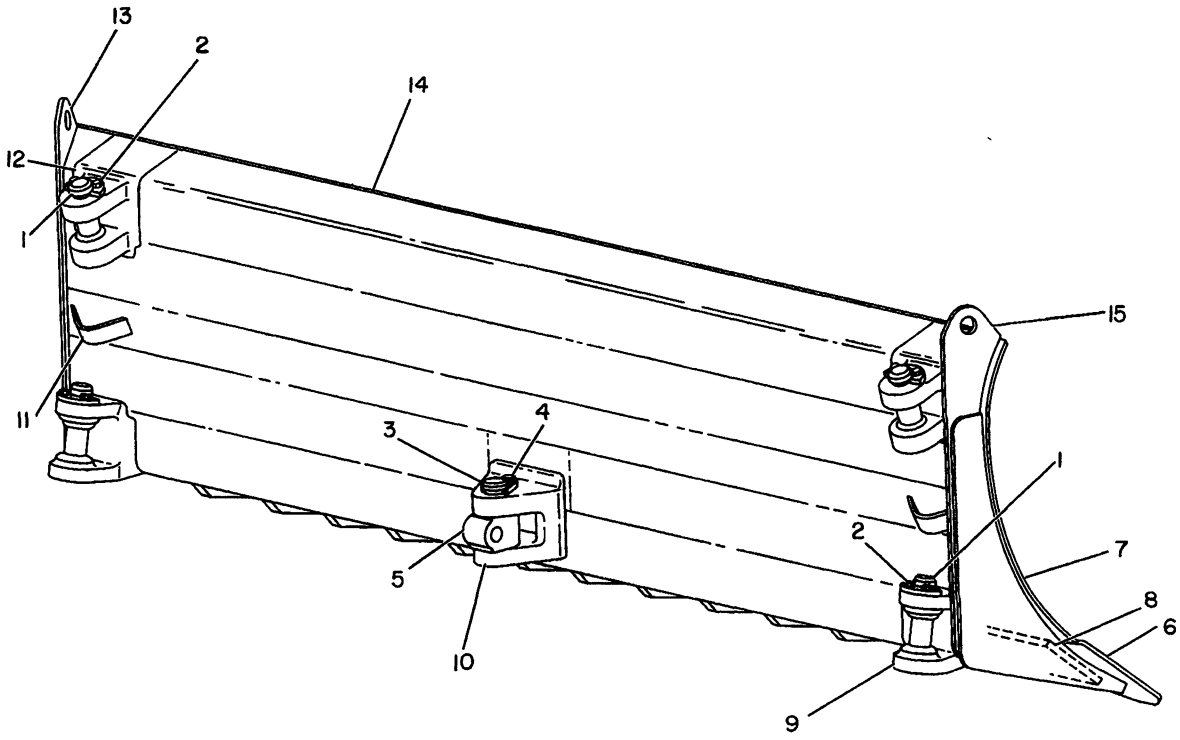

NOTE	REF NO	PART NUMBER	QTY	PART NAME
	1	1U2472	4	PIN
		5J0124	4	RETAINER
	2	0S1566	8	BOLT
	3	3G4929	1	PIN
		4J9118	1	RETAINER
	4	4B4043	1	BOLT
	5	5J5643	1	CONNECTOR
Y	6	9J9093	1	BIT & CUTTING EDGE GP
	7	3G7301	1	BLADE AS
		3G7291	1	PLATE-WEAR-RH
		3G7292	1	PLATE-WEAR-LH
		3G7290	2	PLATE-WEAR
	8	3G7289	1	SUPPORT
	9	1U2534	2	BRACKET
C	10	4T5490	1	BRACKET
	11	4T1721	2	RETAINER
	12	1U2890	2	BRACKET
	13	3G7298	1	PLATE AS-LH
		3G7294	1	SHOE-TRACK-LH
	14	3G7300	1	MOLDBOARD
	15	3G7297	1	PLATE AS-RH
		3G7293	1	SHOE-TRACK-RH

C-CHANGE FROM PREVIOUS TYPE
Y-SEPARATE ILLUSTRATION

B-311149 EP

6060 **3G6096 BLADE GP-ANGLING**
9J9093-Page 254.04
Part Of 3G6089 Bulldozer Ar

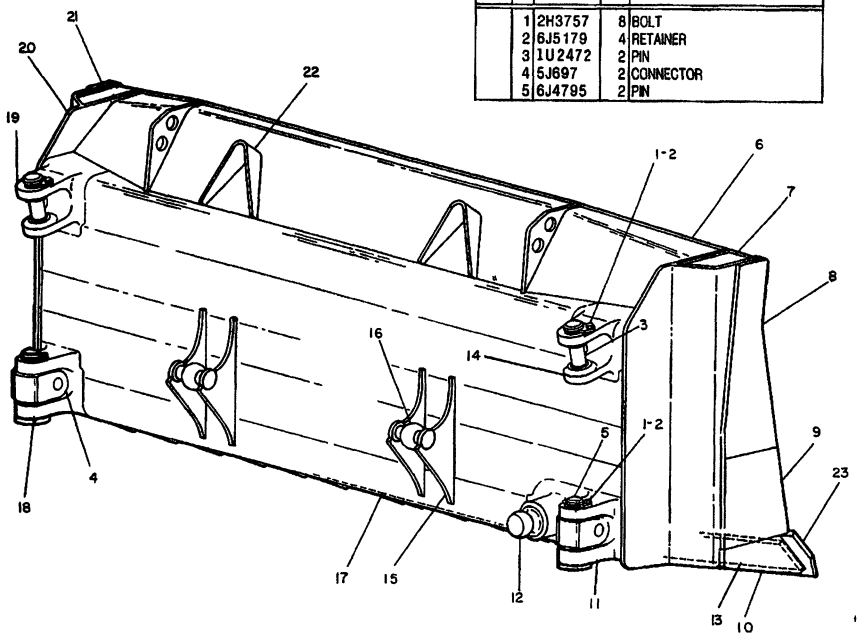

NOTE	REF NO	PART NUMBER	QTY	DESCRIPTION
	1	2H3757	8	BOLT
	2	6J5179	4	RETAINER
	3	1U2472	2	PIN
	4	5J697	2	CONNECTOR
	5	6J4795	2	PIN
	6	3G6704	1	BLADE ASSEM
	7	3G7039	1	PLATE ASSEM (R H)
	8	3G6619	1	BIT
	9	3G6728	1	BIT
	10	1U745	1	SHOE (R H)
	11	3G9595	1	BRACKET ASSEM
		3G9598	2	BEARING
C		4T4386	1	RETAINER
	12	7G4858	1	TRUNNION
	13	3G6986	2	REINFORCEMENT
	14	3G6123	1	BRACKET (R H)
	15	3G6420	2	BRACKET ASSEM (EACH INCLUDES)
	16	9J123	1	TRUNNION
	17	3G6985	1	REINFORCEMENT
	18	3G6418	1	BRACKET ASSEM (L H)
		3G9598	2	BEARING
C		4T4386	1	RETAINER
	19	1U272	1	BRACKET (L H)
	20	3G7040	1	PLATE ASSEM (L.H)
		1U746	1	SHOE (L H)
	21	3G6619	1	BIT (LARGE)
		3G6728	1	BIT (SMALL)
	22	9J7423	2	DEFLECTOR
Y	23	3G1043	1	EDGE GROUP
AF		1U4417	6	WEAR PLATE

A NOT PART OF THIS GROUP
C INDICATES CHANGE
F NOT SHOWN
Y SEPARATE ILLUSTRATION

334949

334949 P

6053

9J9661 BLADE GP-UNIVERSAL
S/N 6Y1-1394
3G1043-Page 255
Part Of 3G6091 Bulldozer Ar

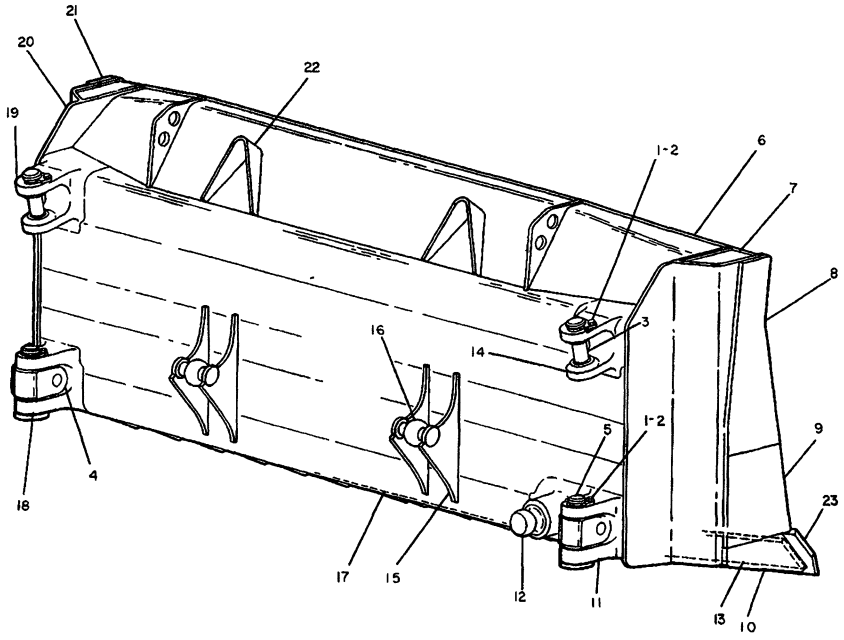

NOTE	REF NO	PART NUMBER	QTY	DESCRIPTION
	1	2H3757	8	BOLT
	2	6J5179	4	RETAINER
	3	1U2478	2	PIN
	4	5J0697	2	CONNECTOR
C	5	4T7534	2	PIN
	6	3G6704	1	BLADE ASSEM
	7	3G7039	1	PLATE ASSEM (R H)
	8	3G6619	1	BIT
	9	3G6728	1	BIT
	10	1U0745	1	SHOE (R H)
	11	3G9595	1	BRACKET ASSEM
		3G9598	2	BEARING
	12	7G4858	1	TRUNNION
	13	3G6986	2	REINFORCEMENT
	14	3G6123	1	BRACKET (R H)
	15	3G6420	2	BRACKET ASSEM (EACH INCLUDES)
	16	9J0123	1	TRUNNION
	17	3G6985	1	REINFORCEMENT
	18	3G6418	1	BRACKET ASSEM (L H)
		3G9598	2	BEARING
	19	1U0272	1	BRACKET (L H)
	20	3G7040	1	PLATE ASSEM (L H)
		1U0746	1	SHOE (L H)
	21	3G6619	1	BIT (LARGE)
		3G6728	1	BIT (SMALL)
	22	9J7423	2	DEFLECTOR
Y	23	3G1043	1	EDGE GROUP
AF		1U4417	6	WEAR PLATE

A NOT PART OF THIS GROUP
C INDICATES CHANGE
F NOT SHOWN
Y SEPARATE ILLUSTRATION

327598

327598 P

6053 **9J9661 BLADE GP-UNIVERSAL**
S/N 6Y1395
3G1043-Page 255
Part Of 3G6091 Bulldozer Ar

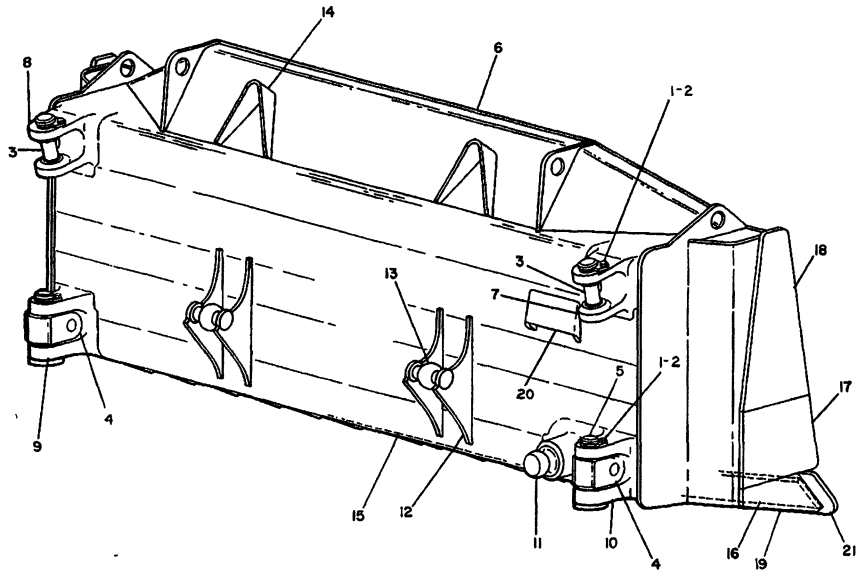

NOTE	REF NO	PART NUMBER	QTY	DESCRIPTION
	1	2H3757	8	BOLT
	2	6J5179	4	RETAINER
	3	1U2472	2	PIN
	4	5J0697	2	CONNECTOR
	5	4T7534	2	PIN
	6	4T9489	1	BLADE AS
	7	3G6123	1	BRACKET (R H)
	8	1U0272	1	BRACKET (L H)
	9	3G6418	1	BRACKET AS
		3G9598	2	BEARING
	10	4T9445	1	BRACKET AS
		3G9598	2	BEARING
	11	4T9439	1	TRUNNION
	12	4T9481	2	BRACKET AS (EACH INCLUDES)
	13	9J0123	1	TRUNNION
	14	4T9479	2	DEFLECTOR
	15	4T9484	1	SUPPORT
	16	4T9485	2	SUPPORT
	17	4T9474	2	BIT
	18	4T9483	2	BIT
	19	4T9487	1	SHOE (R H)
		4T9488	1	SHOE (L H)
	20	7T5869	1	GUARD
Y	21	4T9500	1	EDGE GP

Y SEPARATE ILLUSTRATION

327599

327599 P

6053

4T9499 BLADE GP-UNIVERSAL
S/N 6Y1396-1454
4T9500-Page 255 01
Part Of 3G6092 Bulldozer Ar

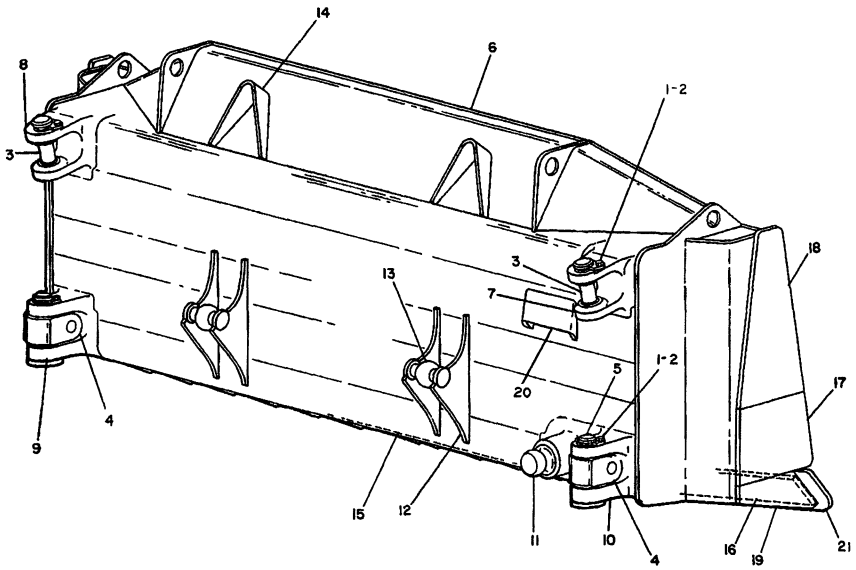

NOTE	REF NO	PART NUMBER	QTY	DESCRIPTION
	1	2H3757	8	BOLT
	2	6J5179	4	RETAINER
	3	1U2472	2	PIN
	4	5J0697	2	CONNECTOR
	5	4T7534	2	PIN
	6	4T9489	1	BLADE AS
	7	3G6123	1	BRACKET (R H)
	8	1U0272	1	BRACKET (L H)
	9	3G6418	1	BRACKET AS
		3G9598	2	BEARING
	10	4T9445	1	BRACKET AS
		3G9598	2	BEARING
	11	4T9439	1	TRUNNION
	12	4T9481	2	BRACKET AS (EACH INCLUDES)
	13	9J0123	1	TRUNNION
	14	4T9479	2	DEFLECTOR
	15	4T9484	1	SUPPORT
	16	4T9485	2	SUPPORT
	17	4T9474	2	BIT
	18	4T9483	2	BIT
	19	4T9487	1	SHOE (R H)
		4T9488	1	SHOE (L H)
	20	7T5869	1	GUARD
CY	21	4T9839	1	EDGE GP

C INDICATES CHANGE

Y SEPARATE ILLUSTRATION

330615

330615 P

6053

4T9499 BLADE GP-UNIVERSAL

4T9839-Page 255.04

Part Of 3G6092 Bulldozer Ar-Universal

MEMORANDA

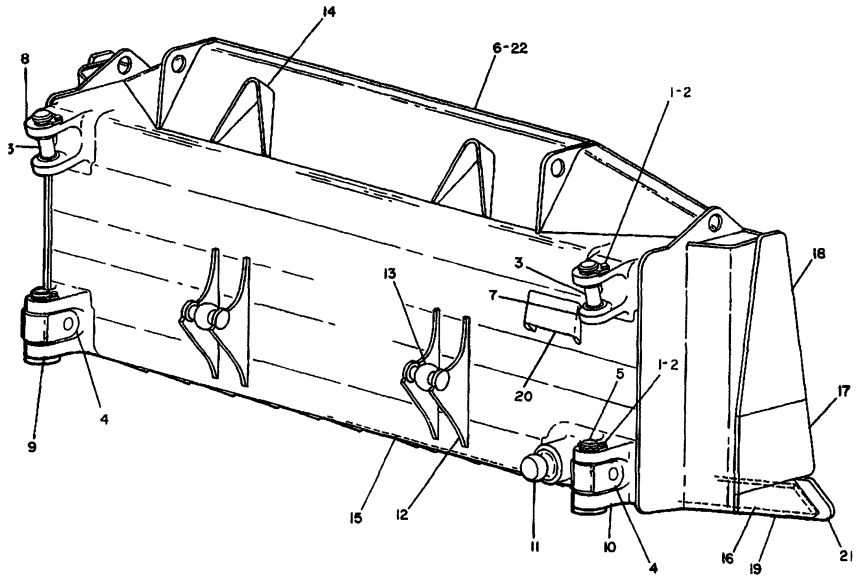

NOTE	REF NO	PART NUMBER	QTY	DESCRIPTION
	1	2H3757	8	BOLT
	2	6J5179	4	RETAINER
	3	1U2472	2	PIN
	4	5J0697	2	CONNECTOR
	5	4T7534	2	PIN
	6	4T9489	1	BLADE AS
	7	3G6123	1	BRACKET (R H)
	8	1U0272	1	BRACKET (L H)
	9	3G6418	1	BRACKET AS
		3G9598	2	BEARING
	10	4T9445	1	BRACKET AS
		3G9598	2	BEARING
	11	4T9439	1	TRUNNION
	12	4T9481	2	BRACKET AS (EACH INCLUDES)
	13	9J0123	1	TRUNNION
	14	4T9479	2	DEFLECTOR
	15	4T9484	1	SUPPORT
	16	4T9485	2	SUPPORT
	17	4T9474	2	BIT
	18	4T9483	2	BIT
	19	4T9487	1	SHOE (R H)
		4T9488	1	SHOE (L H)
	20	7T5869	1	GUARD
Y	21	4T9839	1	EDGE GP
Y	22	7T3463	1	PLATE GP

Y SEPARATE ILLUSTRATION

335180

335180 P

6053

7T3466 BLADE GP-UNIVERSAL

7T3463-Page 253A.01,4T9839-Page 255.04

Part Of 7T3460 Bulldozer Ar

An Attachment

PAGE

1 7T3466 BLADE GP-UNIVERSAL. 253A
1 4T9524 PUSH ARM GP-STABILIZER 260A
1 9J9640 TRUNNION GP-BULLDOZER. 258
1 3G1550 LINES GP-TILT CYLINDER 227

335178 P

6053 **7T3460 BULLDOZER AR-UNIVERSAL**
Wear Plated
An Attachment

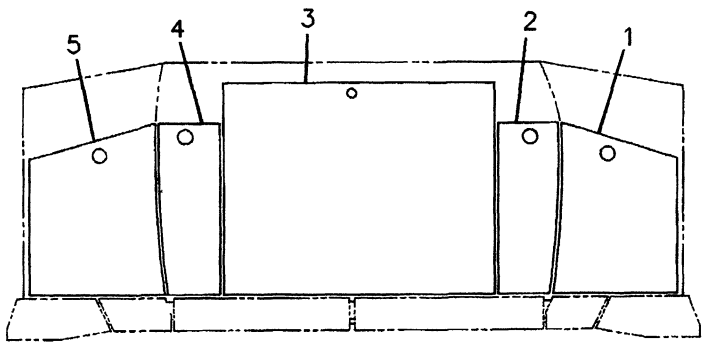

NOTE	REF NO	PART NUMBER	QTY	PART NAME
	1	9T0253	1	PLATE-WEAR-RH (L H)
	2	9T0255	1	PLATE-WEAR-RH (L.H)
	3	4T9592	1	PLATE-PUSH
	4	9T0256	1	PLATE-WEAR-LH (R.H)
	5	9T0254	1	PLATE-WEAR-LH (R H.)

R-517339 P

6820 **7T3463 PLATE GP-WEAR**
Part Of 7T3466 Blade
An Attachment

NOTE	REF NO	PART NUMBER	QTY	DESCRIPTION
	1	9T0249	1	PLATE (R.H)
	2	9T0251	1	PLATE (R.H.)
	3	4T9592	1	PLATE
	4	9T0252	1	PLATE (L H)
	5	9T0250	1	PLATE (L.H.)

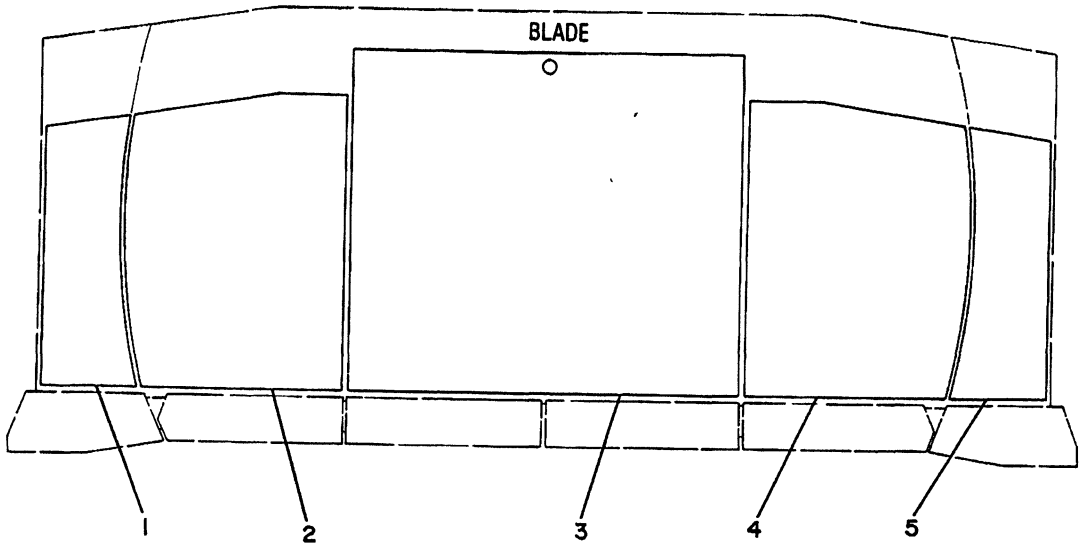

335288

335288 P

6820

7T3464 PLATE GP-WEAR
Part Of 7T3465,9W0800 Blade As
An Attachment

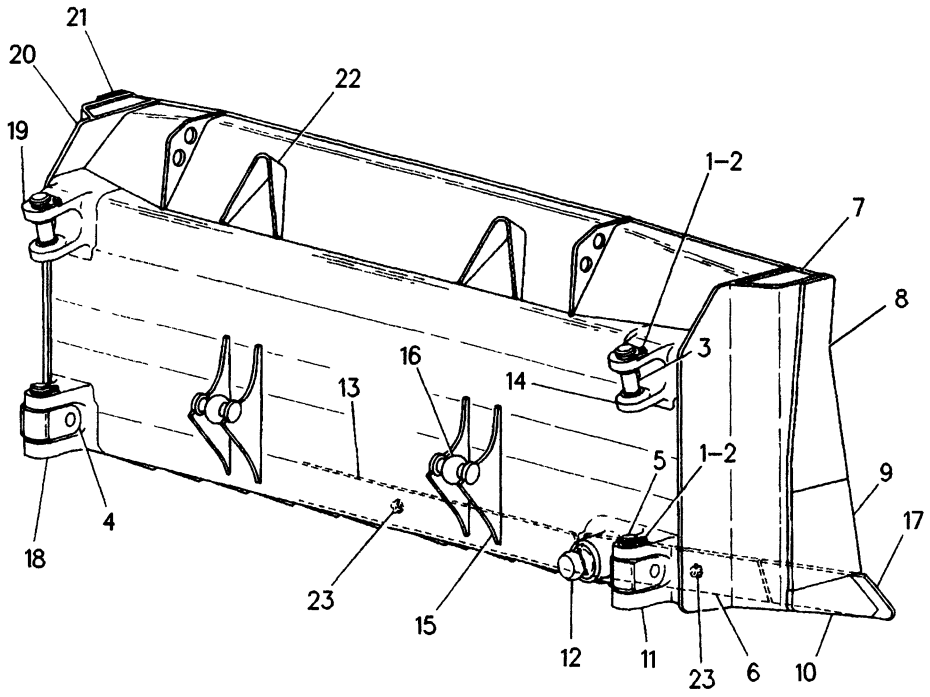

NOTE	REF NO	PART NUMBER	QTY	PART NAME	NOTE	REF NO	PART NUMBER	QTY	PART NAME
	1	2H3757	8	BOLT		22	9J7423	2	DEFLECTOR
	2	6J5179	4	RETAINER		23	4J9208	38	BOLT-PLOW
	3	1U2479	2	BRACKET AS			2J3507	38	NUT-FULL
	4	5J0697	2	CONNECTOR			3K5234	38	WASHER-HARD
	5	6J4795	2	PIN					
	6	1U4929	2	EDGE-CUTTING					
	7	3G7039	1	PLATE AS					
	8	3G6619	1	BIT					
	9	3G6728	1	BIT					
	10	1U0745	1	SHOE					
	11	3G9595	1	BRACKET AS					
		3G9598	2	BEARING-SLEEVE					
	12	7G4858	1	TRUNNION					
	13	1U4931	2	EDGE-CUTTING					
	14	3G6123	1	BRACKET-RH					
	15	3G6420	2	BRACKET AS					
	16	9J0123	1	TRUNNION					
	17	3G8287	1	BIT-END-RH					
		3G8288	1	BIT-END-LH					
	18	3G6418	1	BRACKET AS					
		3G9598	2	BEARING-SLEEVE					
	19	1U0272	1	BRACKET-LH					
	20	3G7040	1	PLATE AS					
		1U0746	1	SHOE					
		3G6728	1	BIT					
	21	3G6619	2	BIT					

R-602946 CP

6053 **3Y9478 BLADE GP-UNIVERSAL**

Japan Market
8U Bulldozer S/N 82M1-Up
Part Of 3Y9508 Bulldozer Ar

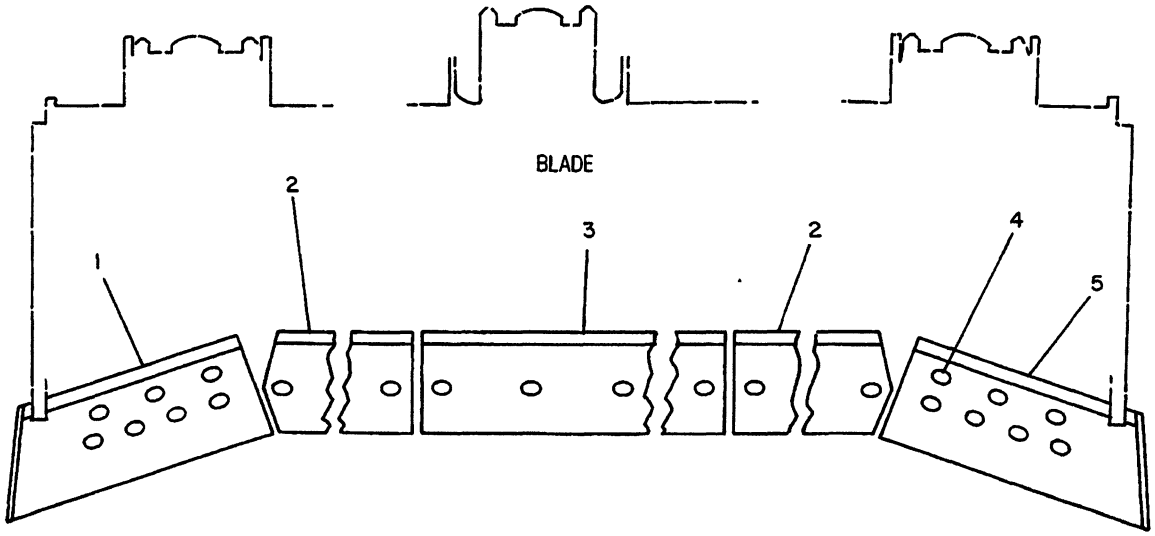

NOTE	REF NO	PART NUMBER	QTY	DESCRIPTION
	1	1U4183	1	BIT (STANDARD-R.H.)
J		9J1477	1	BIT (FORGED)
J		3G8317	1	BIT (HOT-CUPPED)
J		9J1539	1	BIT (PENETRATION)
C	2	4T3417	2	EDGE
C	3	4T3423	2	EDGE
C	4	4J9058	36	BOLT
		2J3507	36	NUT
		3K5234	36	WASHER

C INDICATES CHANGE
J NOT PART OF 9J9605 GROUP

	5	1U4184	1	BIT (STANDARD-L.H.)
J		9J1478	1	BIT (FORGED)
J		3G8318	1	BIT (HOT CUPPED)
J		9J1540	1	BIT (PENETRATION)

311159

311159 P

6801

9J9605 BIT & CUTTING EDGE GP
S/N 4Y1-1939
Part Of 9J9638,4T7701 Blades

IMPLEMENTS

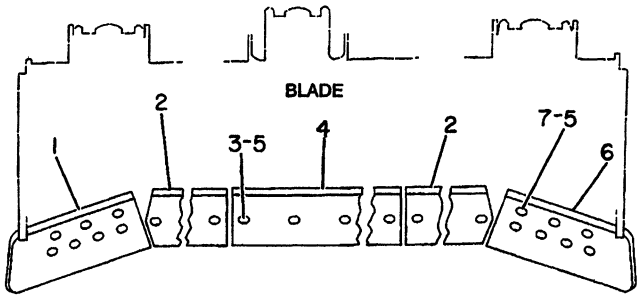

NOTE	REF NO	PART NUMBER	QTY	PART NAME
	1	3G8283	1	BIT-END-RH
CA		3G8291	1	BIT-END-RH (HOT CUPPED)
	2	4T9838	2	EDGE-CUTTING 35MM(1.37IN)THK
CA		4T9587	2	EDGE-CUTTING 28 5MM(1 12IN)THK
	3	4J9058	21	BOLT-PLOW
	4	4T9836	1	EDGE-CUTTING 35MM(1 37IN)THK
CA		4T9586	1	EDGE-CUTTING 28.5MM(1 12IN)THK
	5	2J3507	35	NUT-FULL
		3K5234	35	WASHER-HARD
	6	3G8284	1	BIT-END-LH
CA		3G8292	1	BIT-END-LH (HOT CUPPED)
	7	4J9208	14	BOLT-PLOW

A-NOT PART OF THIS GROUP
C-CHANGE FROM PREVIOUS TYPE

B-334860 EP

6801 **4T9840 BIT & CUTTING EDGE GP**

Part Of 4T9585,4T9595,7T3465 Blades
An Attachment

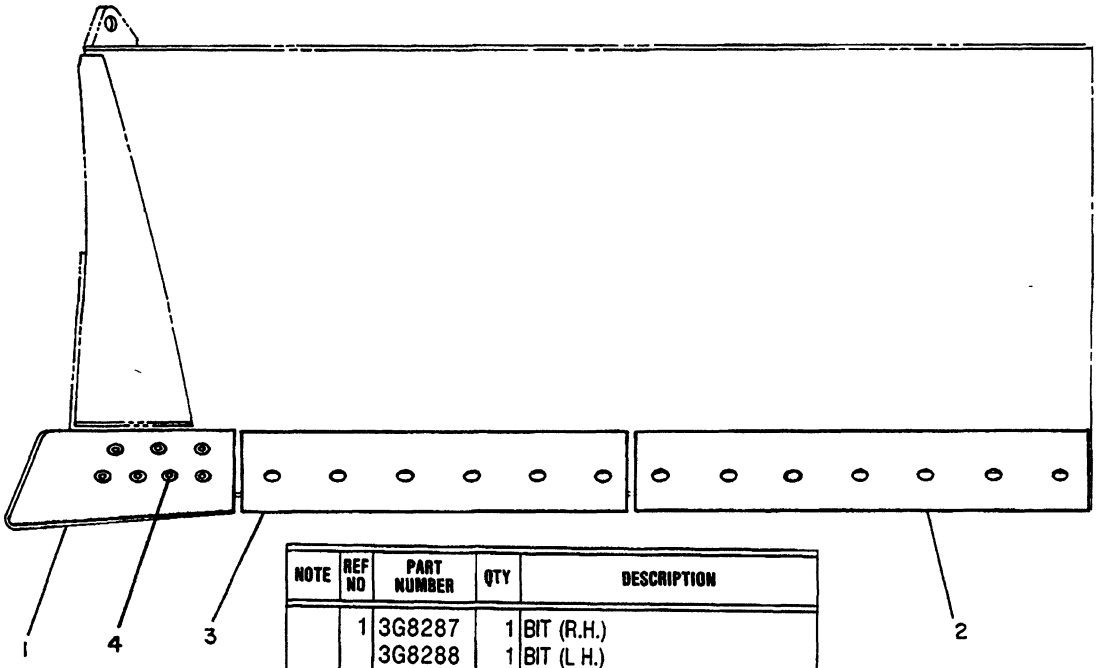

NOTE	REF NO	PART NUMBER	QTY	DESCRIPTION
	1	3G8287	1	BIT (R.H.)
		3G8288	1	BIT (L H.)
	2	1U4933	2	EDGE
	3	1U4932	2	EDGE
C	4	4J9208	14	BOLT

C INDICATES CHANGE

311197

311197 P

6801

4T0034 BIT & CUTTING EDGE GP

8A Bulldozer S/N 5Y1-Up

Provides Thicker Edge And End Bits To Extend Wear Life

An Attachment

IMPLEMENTS

1 7T4352 CUTTING EDGE

1 7T4353 CUTTING EDGE

CUTTING EDGES
Bulldozer S/N 5Y1-Up

IMPLEMENTS

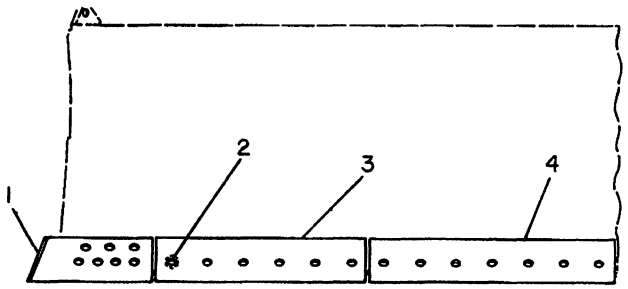

NOTE	REF NO	PART NUMBER	QTY	PART NAME
	1	1U4183	1	BIT-END-RH
		1U4184	1	BIT-END-LH
				-OR-
A		9J1477	1	BIT-END (RH FORGED)
A		9J1478	1	BIT-END (LH FORGED)
				-OR-
A		9J1539	1	BIT-END-RH (PENETRATION)
A		9J1540	1	BIT-END-LH (PENETRATION)
				-OR-
A		3G8317	1	BIT-END-RH (HOT CUPPED)
A		3G8318	1	BIT-END-LH (HOT CUPPED)
C	2	4J9058	40	BOLT-PLOW
		2J3507	40	NUT-FULL
		3K5234	40	WASHER-HARD
C	3	4T2987	2	EDGE-CUTTING
C	4	4T2988	2	EDGE-CUTTING

A-NOT PART OF THIS GROUP
C-CHANGE FROM PREVIOUS TYPE

B-311165 EP

6801 **9J9093 BIT & CUTTING EDGE GP**
Part Of 3G6096 Blade-Angling

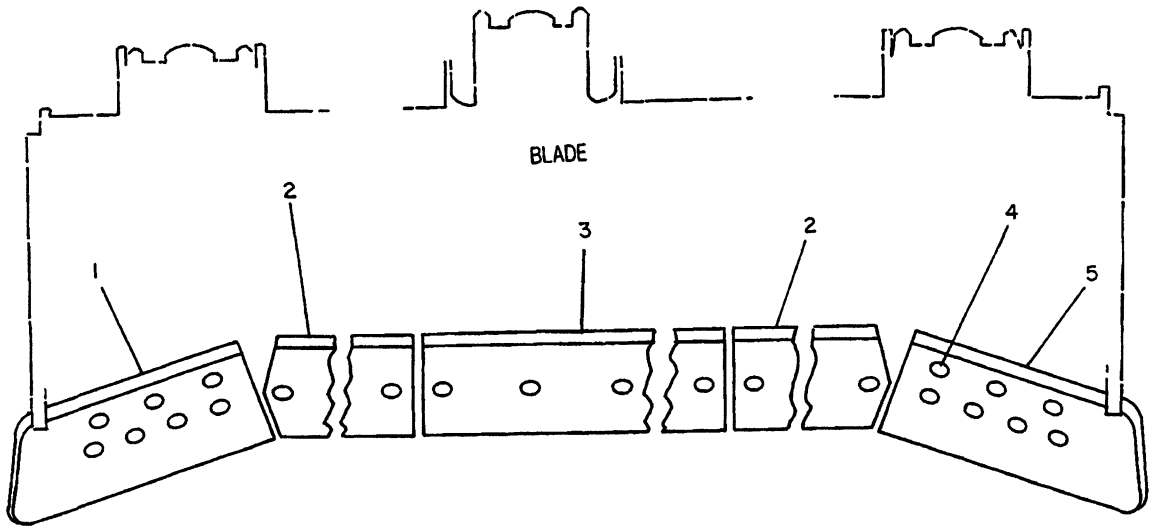

NOTE	REF NO	PART NUMBER	QTY	DESCRIPTION
	1	3G8291	1	BIT (END - R.H)
	2	4T9587	2	EDGE
	3	4T9586	1	EDGE
	4	4J9058	35	BOLT
		2J3507	35	NUT
		5P8250	35	WASHER
	5	3G8292	1	BIT (END - L.H)

327017

327017 P

6801 **4T9588 BIT & CUTTING EDGE GP**
S/N 4Y1940-Up
Part Of 4T9585 Blade

IMPLEMENTS

1 7T4345 CUTTING EDGE-RIGHT HAND

1 7T4346 CUTTING EDGE-LEFT HAND

1 7T4347 CUTTING EDGE

CUTTING EDGES
Bulldozer S/N 4Y1-Up

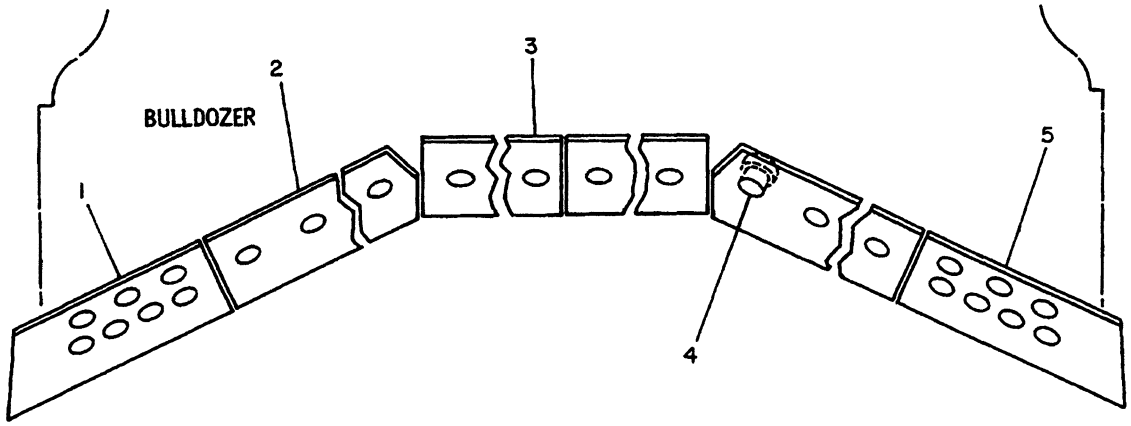

REF. NO.	PART NUMBER	DESCRIPTION	QTY.
1	1U4183	BIT-------(R. H.)----------	1
2	3G6289	EDGE----------	2
3	3G1041	EDGE----------	2
4	4J9208	BOLT----------	38
	2J3507	NUT----------	38
	3K5234	WASHER----------	38
5	1U4184	BIT----------(L. H.)----------	1

▲	3G8317	END BIT----(R. H.)-(Hot Cupped)--	1
▲	3G8318	END BIT---(L. H.)--(Hot Cupped)--	1
▲	9J1477	END BIT--(R. H.)--(Forged)--------	1
▲	9J1478	END BIT--(L. H.)--(Forged)-------	1
▲	9J1539	END BIT--(R. H.)--(Penetration)--	1
▲	9J1540	END BIT--(L. H.)--(Penetration)--	1

▲ NOT SHOWN-NOT PART OF BIT & CUTTING EDGE GROUP

235208

235208 P

6801

3G1043 BIT & CUTTING EDGE GP
S/N 6Y1-1395
Part Of 9J9661 Blade

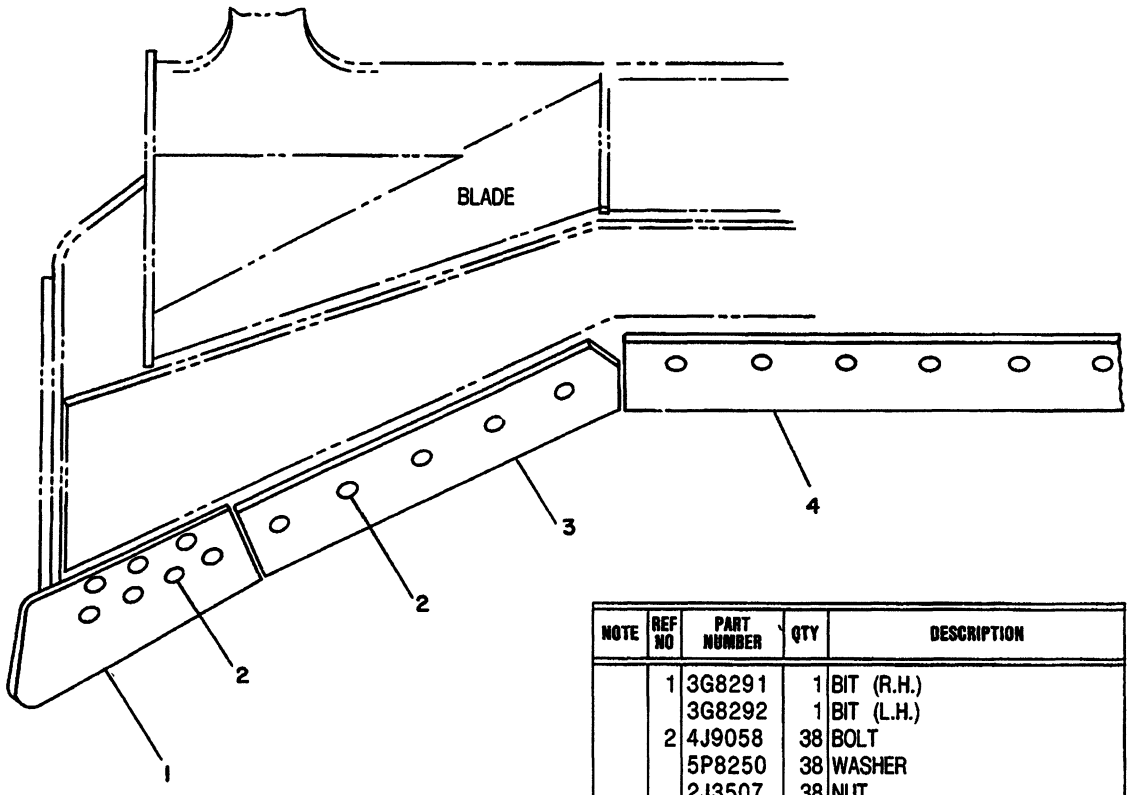

NOTE	REF NO	PART NUMBER	QTY	DESCRIPTION
	1	3G8291	1	BIT (R.H.)
		3G8292	1	BIT (L.H.)
	2	4J9058	38	BOLT
		5P8250	38	WASHER
		2J3507	38	NUT
	3	4T9587	2	EDGE
	4	4T9590	1	EDGE

327596

327596 P

6801

4T9500 BIT & CUTTING EDGE GP
S/N 6Y1396-1454
Part Of 4T9499 Blade-Universal

IMPLEMENTS

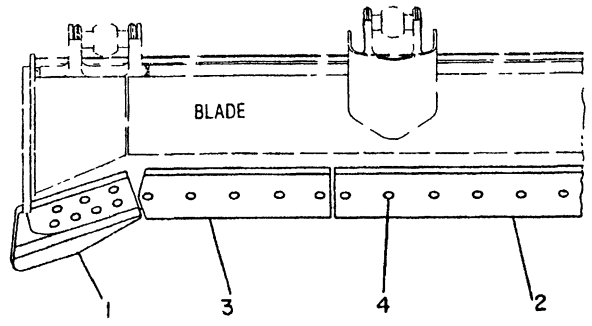

TOP VIEW

NOTE	REF NO	PART NUMBER	QTY	PART NAME
	1	8E4539	1	BIT-END-RH
		8E4540	1	BIT-END-LH
	2	9W3926	1	EDGE-CUTTING
	3	9W3927	2	EDGE-CUTTING
	4	4J9058	38	BOLT-PLOW
		5P8250	38	WASHER
		2J3507	38	NUT-FULL

B- 522693 P

6801 **9W5649 BIT & CUTTING EDGE GP**
Field Installation

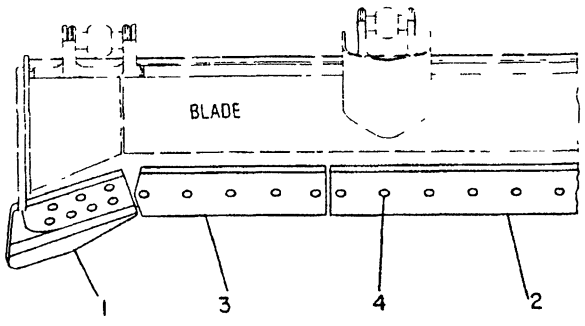

TOP VIEW

NOTE	REF NO	PART NUMBER	QTY	PART NAME
	1	8E4539	1	BIT-END-RH
		8E4540	1	BIT-END-LH
	2	9W3925	1	EDGE-CUTTING
	3	9W3927	2	EDGE-CUTTING
	4	4J9058	35	BOLT-PLOW
		5P8250	35	WASHER
		2J3507	35	NUT-FULL

B- 522670 P

6801 **9W5648 BIT & CUTTING EDGE GP**
Field Installation

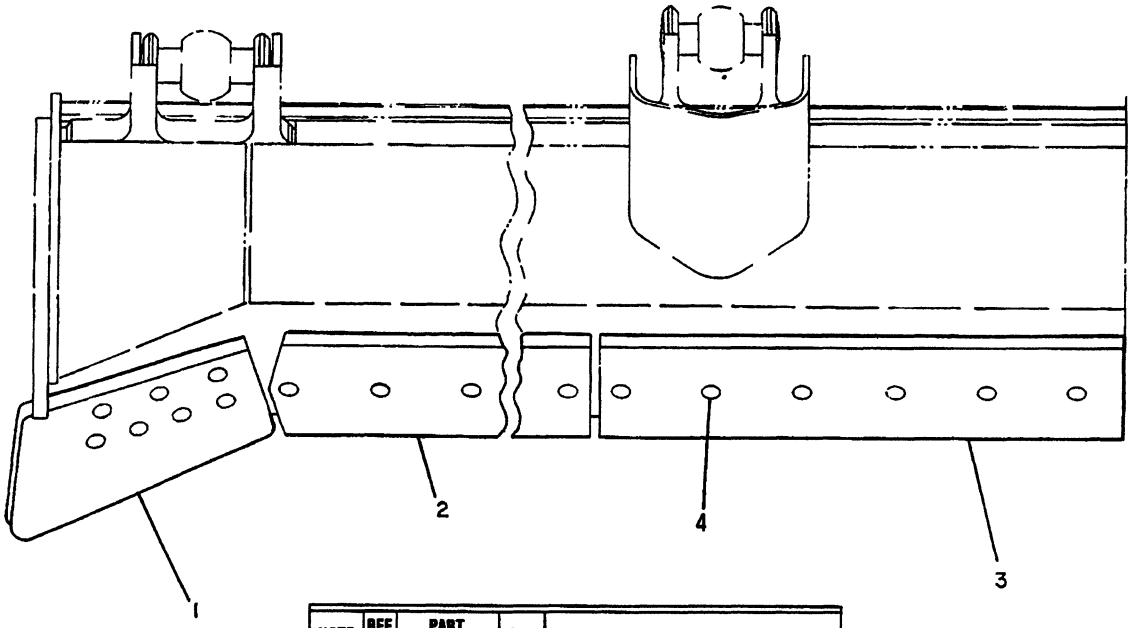

NOTE	REF NO	PART NUMBER	QTY	DESCRIPTION
	1	3G8287	1	BIT (R.H.)
		3G8288	1	BIT (L.H.)
C	2	4T6302	2	EDGE
C	3	4T3445	2	EDGE
C	4	4J9208	14	BOLT

C INDICATES CHANGE

311201

311201 P

6800

1U4296 BIT & CUTTING EDGE GP

8S Bulldozer S/N 4Y1-Up,51M1-Up

Provides Thicker Edge And End Bits To Extend Wear Life

An Attachment

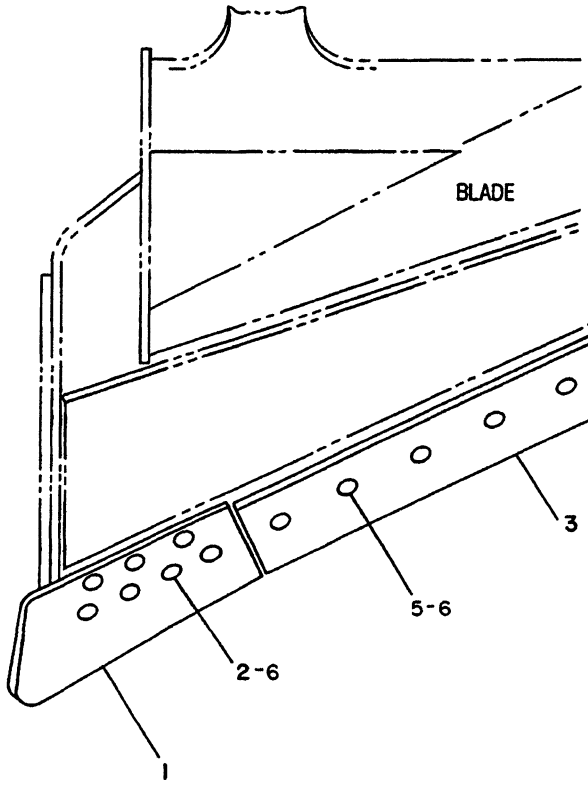

NOTE	REF NO	PART NUMBER	QTY	DESCRIPTION
	1	3G8283	1	BIT (RH)35MM(1 38IN)THK
		3G8284	1	BIT (LH)35MM(1.38IN)THK
CA		3G8291	1	BIT (RH)28 5MM(1 12IN)THK
CA		3G8292	1	BIT (LH)28 5MM(1 12IN)THK
	2	4J9208	14	BOLT
	3	4T9838	2	EDGE 35MM(1.38IN)THK
CA		4T9587	2	EDGE 28.5MM(1 12IN)THK
	4	4T9837	1	EDGE 35MM(1.38IN)THK.
CA		4T9590	1	EDGE 28 5MM(1 12IN)THK
	5	4J9058	24	BOLT
	6	5P8250	38	WASHER
		2J3507	38	NUT

A NOT PART OF THIS GROUP

C INDICATES CHANGE

334859

334859 P

6801 **4T9839 BIT & CUTTING EDGE GP**

S/N 6Y1455-Up

Part Of 4T9499,7T3466 Blades-Universal

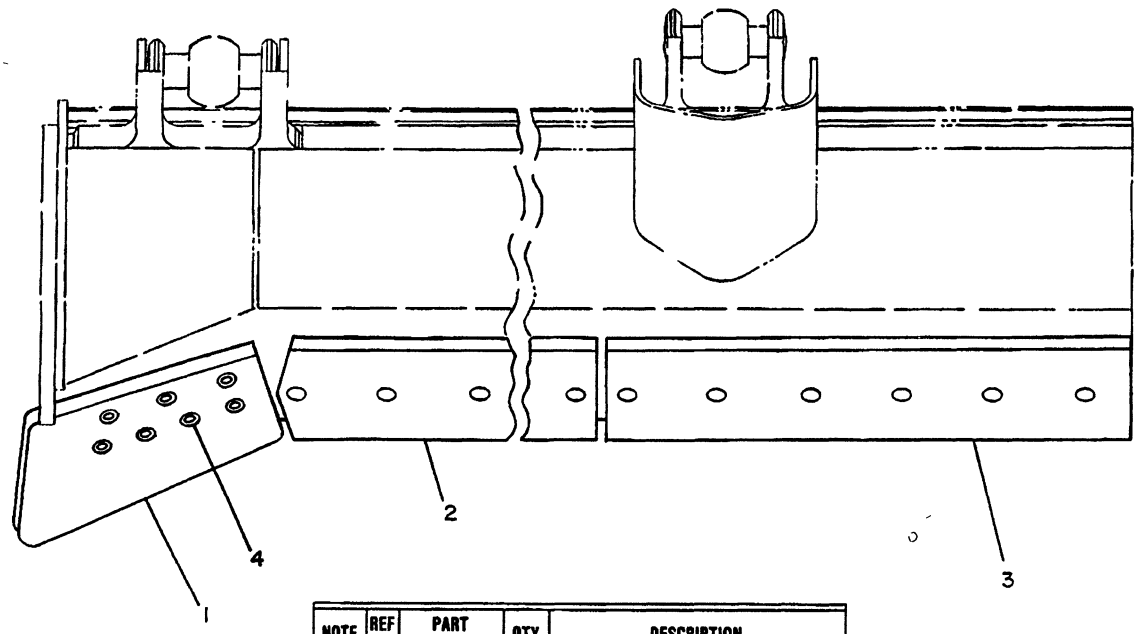

NOTE	REF NO	PART NUMBER	QTY	DESCRIPTION
	1	3G8287	1	BIT (R H)
		3G8288	1	BIT (L H)
	2	1U4929	2	EDGE
	3	1U4930	2	EDGE
C	4	4J9208	14	BOLT

C INDICATES CHANGE

311199

311199 P

6801 **4T0033 BIT & CUTTING EDGE GP**

8S Bulldozer S/N 4Y1-Up,51M1-Up
Provides Thicker Edge And End Bits To Extend Wear Life
An Attachment

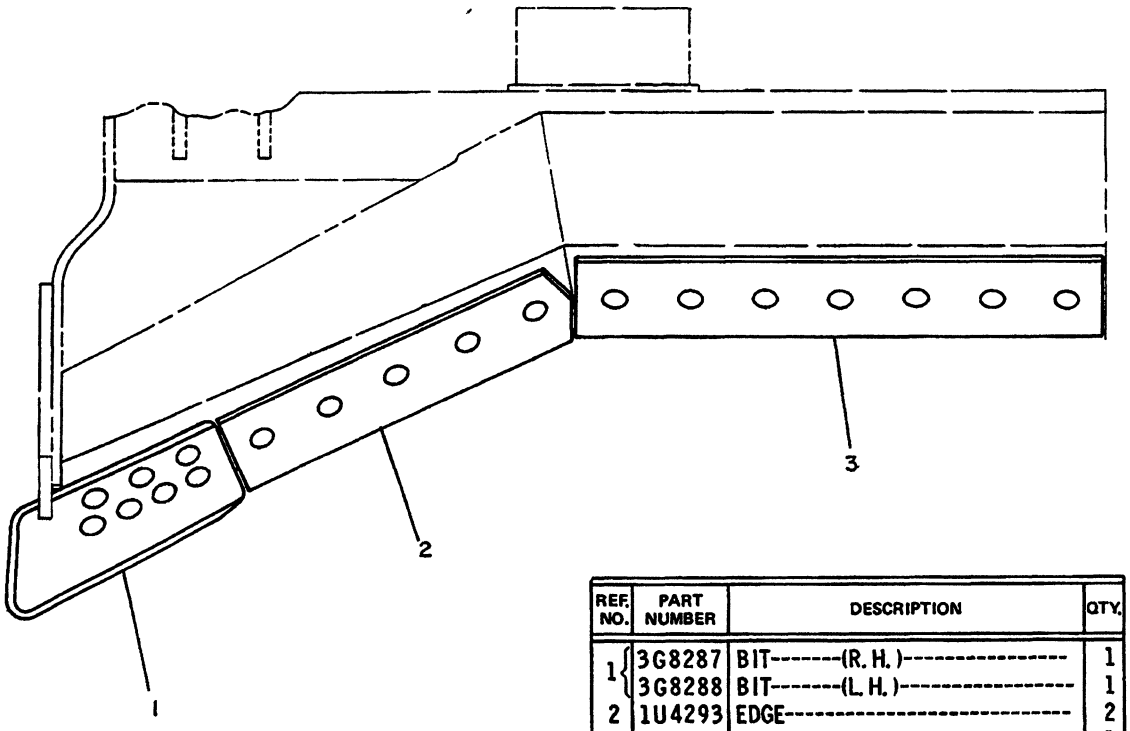

REF. NO.	PART NUMBER	DESCRIPTION	QTY.
1	3G8287	BIT-------(R. H.)----------	1
	3G8288	BIT-------(L. H.)----------	1
2	1U4293	EDGE----------	2
3	1U4294	EDGE----------	1

235966

235966 P

6801

1U4298 BIT & CUTTING EDGE GP

8U Bulldozer S/N 6Y1-Up

Provides Thicker Edge And End Bits To Extend Wear Life

An Attachment

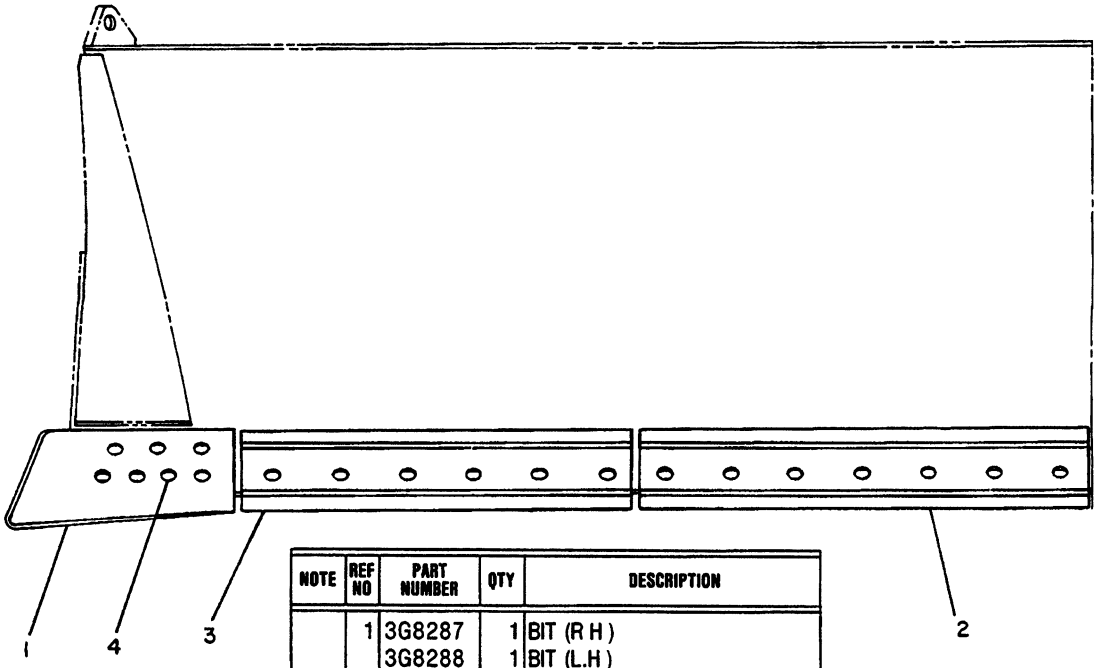

NOTE	REF NO	PART NUMBER	QTY	DESCRIPTION
	1	3G8287	1	BIT (R H)
		3G8288	1	BIT (L.H)
C	2	4T6301	2	EDGE
C	3	4T6303	2	EDGE
C	4	4J9208	14	BOLT

C INDICATES CHANGE

311195

311195 P

6801

1U4297 BIT & CUTTING EDGE GP

8A Bulldozer S/N 5Y1-Up

Provides Thicker Edge And End Bits To Extend Wear Life

An Attachment

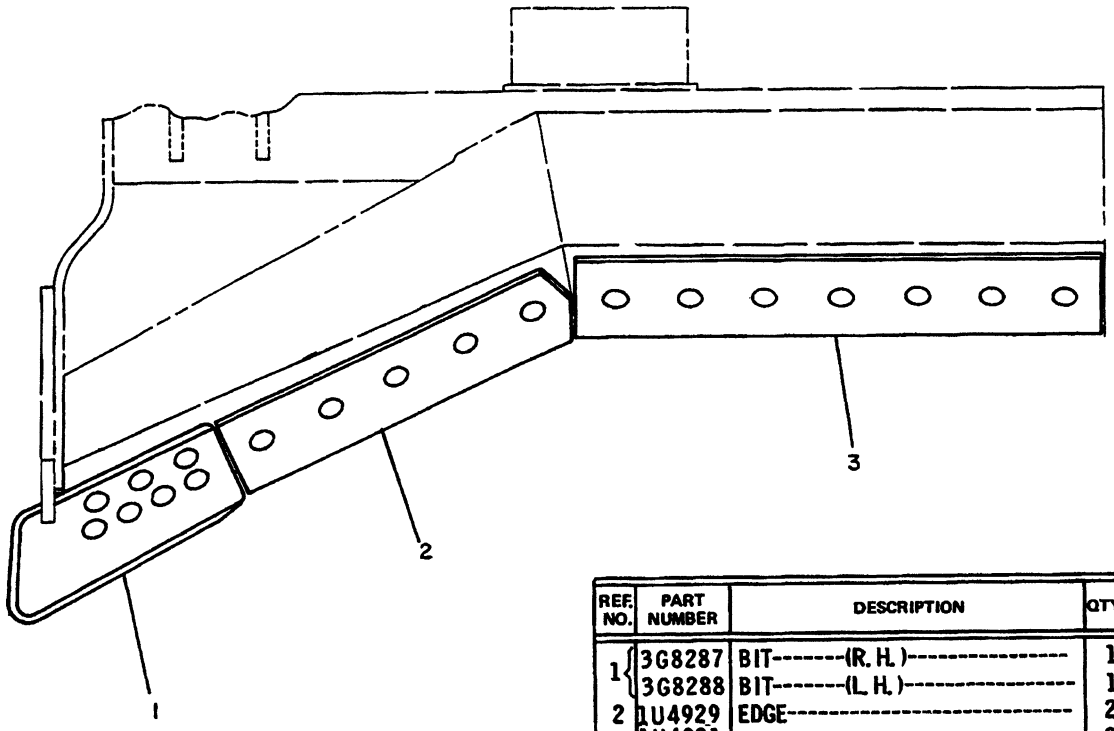

REF. NO.	PART NUMBER	DESCRIPTION	QTY.
1	3G8287	BIT-------(R. H.)----------	1
	3G8288	BIT-------(L. H.)----------	1
2	1U4929	EDGE----------	2
3	1U4931	EDGE----------	2

235962

235962 P

6801

4T0032 BIT & CUTTING EDGE GP

8U Bulldozer S/N 6Y1-Up

Provides Thicker Edge And End Bits To Extend Wear Life

An Attachment

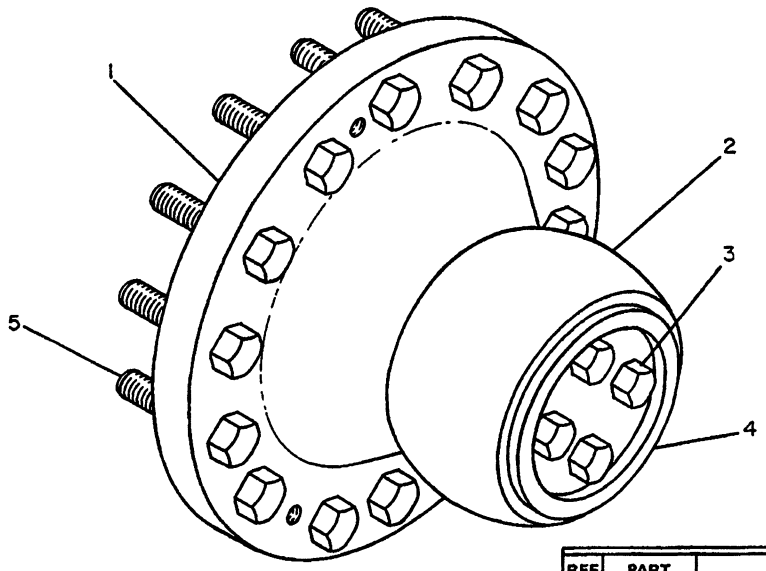

REF. NO.	PART NUMBER	DESCRIPTION	QTY.
1	1U211	TRUNNION ASSEM. ---------- (Each Includes)	2
2	1U210	BEARING----------	1
3	6H1717	BOLT----------	4
4	1U209	RETAINER----------	1
5	1D4635	BOLT----------	28

235186

235186 P

6069

9J9640 TRUNNION GP-BULLDOZER

Bulldozer S/N 4Y1-820,5Y1-823,6Y1-916
Part Of 3G6087,3G6089,4T7792,7T3639,3G6092,7T3460 Bulldozer Ars
For Use With A E.M Dozer Equipment

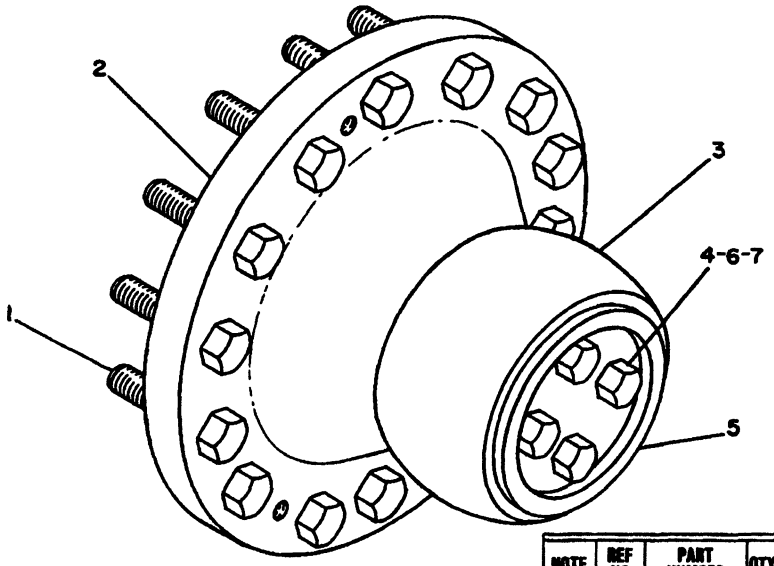

NOTE	REF NO	PART NUMBER	QTY	DESCRIPTION
	1	1D4635	28	BOLT
	2	1U211	2	TRUNNION ASSEM. (EACH INCLUDES)
	3	1U210	1	BEARING
C	4	S1595	4	BOLT
	5	1U209	1	RETAINER
C	6	5P8245	4	WASHER
C	7	4T4487	1	SHIM

C INDICATES CHANGE

306433

306433 P

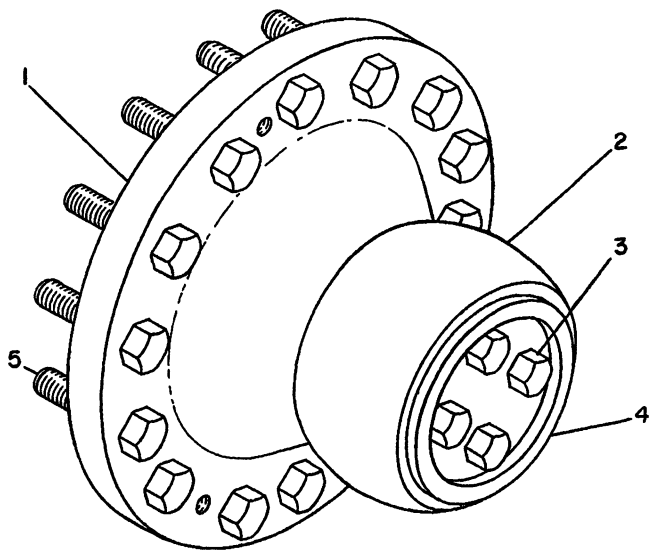

NOTE	REF NO	PART NUMBER	QTY	PART NAME
	1	7T2879	2	TRUNNION AS (EACH INCLUDES)
	2	1U0210	1	BEARING
	3	7X0346	4	BOLT
	4	7T2654	1	RETAINER
	5	7X0404	28	BOLT

B-488674 EP

6069 **9J9640 TRUNNION GP-BULLDOZER**

Bulldozer S/N 4Y895-Up,5Y841-Up,6Y947-Up,74M1-Up,82M1-Up
Part Of 3G6087,3Y9506,3G6089,3G6091,3Y9508 Bulldozer Ars
For Use With A.E.M. Dozer Equipment

IMPLEMENTS

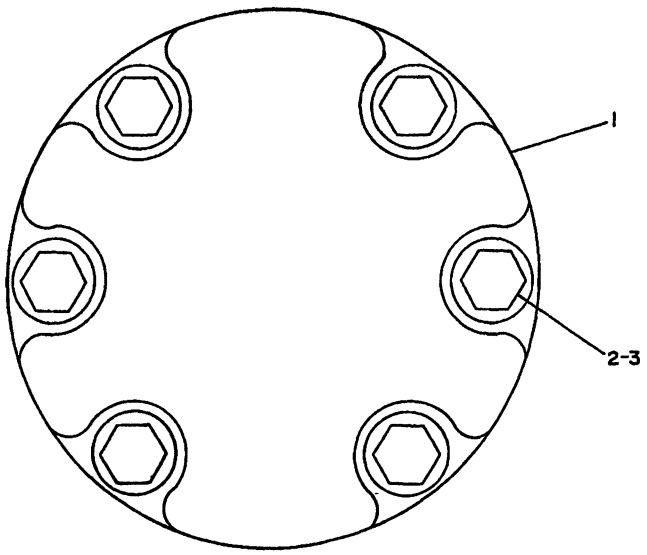

NOTE	REF NO	PART NUMBER	QTY	PART NAME
	1	6P8901	2	COVER
	2	7X0403	12	BOLT
	3	8T5361	12	WASHER

B-559568 EP

6069 **7T6040 COVER GP-TRUNNION**

Cannot Be Used With Bulldozer Trunnions
An Attachment

REF NO	PART NUMBER	DESCRIPTION	QTY
1	1U212	CAP	2
2	6B388	BOLT	4
	3K9770	NUT	4

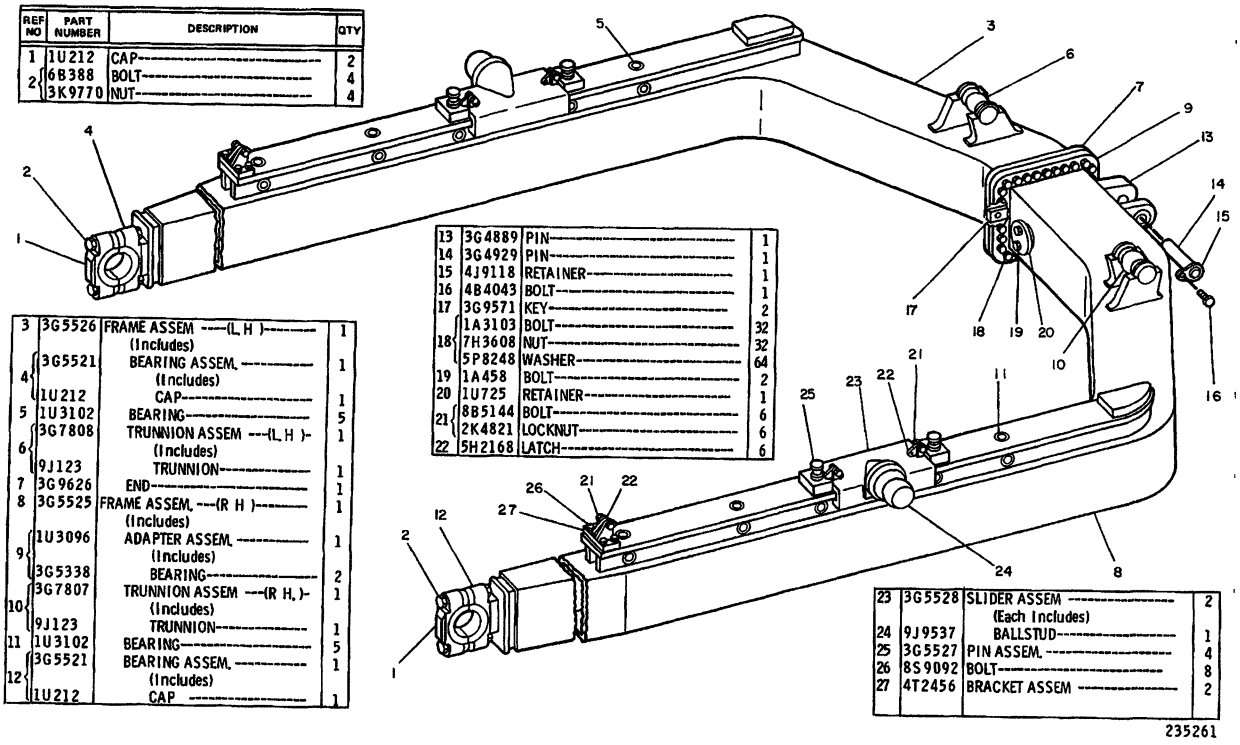

3	3G5526	FRAME ASSEM. ----(L. H.)---------- (Includes)	1
4	3G5521	BEARING ASSEM. ---------- (Includes)	1
	1U212	CAP----------	1
5	1U3102	BEARING----------	5
6	3G7808	TRUNNION ASSEM ---(L. H.)- (Includes)	1
	9J123	TRUNNION----------	1
7	3G9626	END----------	1
8	3G5525	FRAME ASSEM. ----(R. H.)---------- (Includes)	1
9	1U3096	ADAPTER ASSEM. ---------- (Includes)	1
	3G5338	BEARING----------	2
10	3G7807	TRUNNION ASSEM ---(R. H.)- (Includes)	1
	9J123	TRUNNION----------	1
11	1U3102	BEARING----------	5
12	3G5521	BEARING ASSEM. ---------- (Includes)	1
	1U212	CAP ----------	1

13	3G4889	PIN----------	1
14	3G4929	PIN----------	1
15	4J9118	RETAINER----------	1
16	4B4043	BOLT----------	1
17	3G9571	KEY----------	2
18	1A3103	BOLT----------	32
	7H3608	NUT----------	32
	5P8248	WASHER----------	64
19	1A458	BOLT----------	2
20	1U725	RETAINER----------	1
21	8B5144	BOLT----------	6
	2K4821	LOCKNUT----------	6
22	5H2168	LATCH----------	6

23	3G5528	SLIDER ASSEM. ---------- (Each Includes)	2
24	9J9537	BALLSTUD----------	1
25	3G5527	PIN ASSEM. ----------	4
26	8S9092	BOLT----------	8
27	4T2456	BRACKET ASSEM ----------	2

235261

235261 P

6063

3G5531 C-FRAME GP
Bulldozer S/N 5Y1-823
Part Of 3G6089 Bulldozer Ar

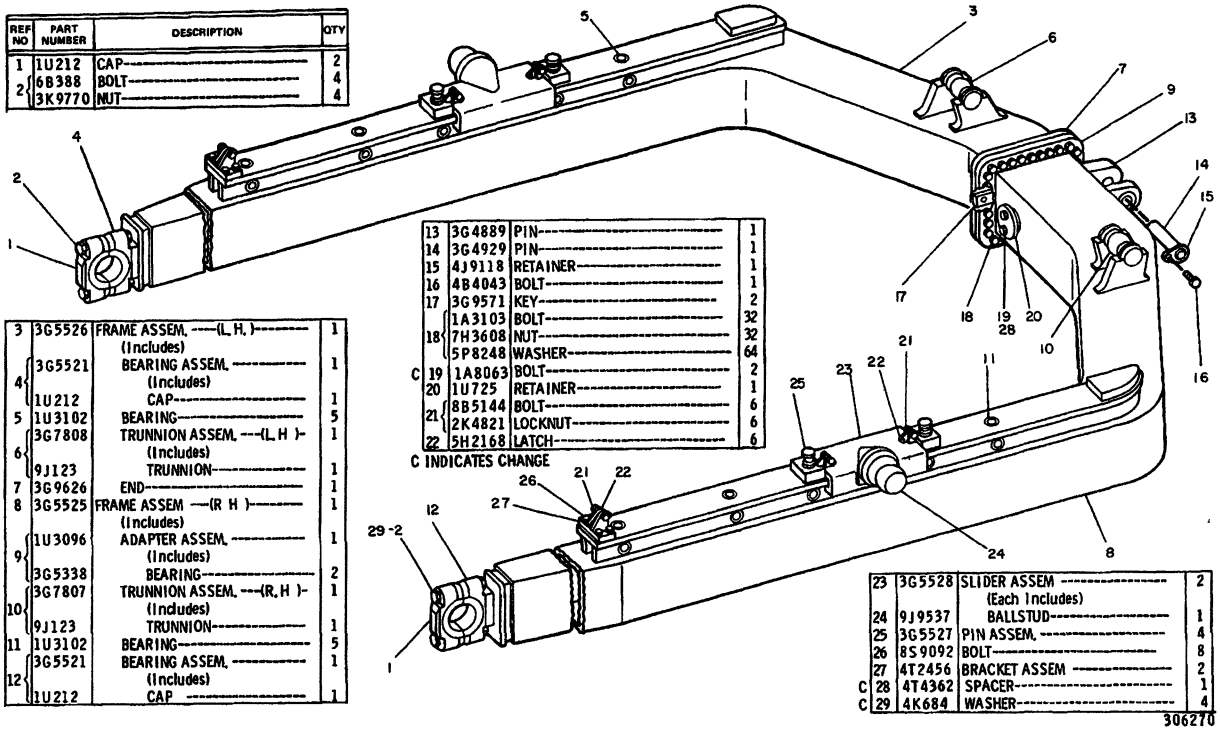

REF NO	PART NUMBER	DESCRIPTION	QTY
1	1U212	CAP	2
2	6B388	BOLT	4
	3K9770	NUT	4
3	3G5526	FRAME ASSEM. ----(L. H.)---------- (Includes)	1
4	3G5521	BEARING ASSEM. ---------- (Includes)	1
	1U212	CAP	1
5	1U3102	BEARING	5
6	3G7808	TRUNNION ASSEM. ---(L. H)- (Includes)	1
	9J123	TRUNNION	1
7	3G9626	END	1
8	3G5525	FRAME ASSEM ---(R H)------- (Includes)	1
9	1U3096	ADAPTER ASSEM. ---------- (Includes)	1
	3G5338	BEARING	2
10	3G7807	TRUNNION ASSEM. ---(R. H)- (Includes)	1
	9J123	TRUNNION	1
11	1U3102	BEARING	5
12	3G5521	BEARING ASSEM. ---------- (Includes)	1
	1U212	CAP	1
13	3G4889	PIN	1
14	3G4929	PIN	1
15	4J9118	RETAINER	1
16	4B4043	BOLT	1
17	3G9571	KEY	2
18	1A3103	BOLT	32
	7H3608	NUT	32
	5P8248	WASHER	64
C 19	1A8063	BOLT	2
20	1U725	RETAINER	1
21	8B5144	BOLT	6
	2K4821	LOCKNUT	6
22	5H2168	LATCH	6

C INDICATES CHANGE

23	3G5528	SLIDER ASSEM ---------- (Each Includes)	2
24	9J9537	BALLSTUD	1
25	3G5527	PIN ASSEM.	4
26	8S9092	BOLT	8
27	4T2456	BRACKET ASSEM	2
C 28	4T4362	SPACER	1
C 29	4K684	WASHER	4

306270

306270 P

6063

3G5531 C-FRAME GP
8A Bulldozer S/N 5Y824-Up
Part Of 3G6089 Bulldozer Ar

NOTE	REF NO	PART NUMBER	QTY	DESCRIPTION
C	1	7T2450	2	CAP
	2	6B0388	4	BOLT
		3K9770	4	NUT

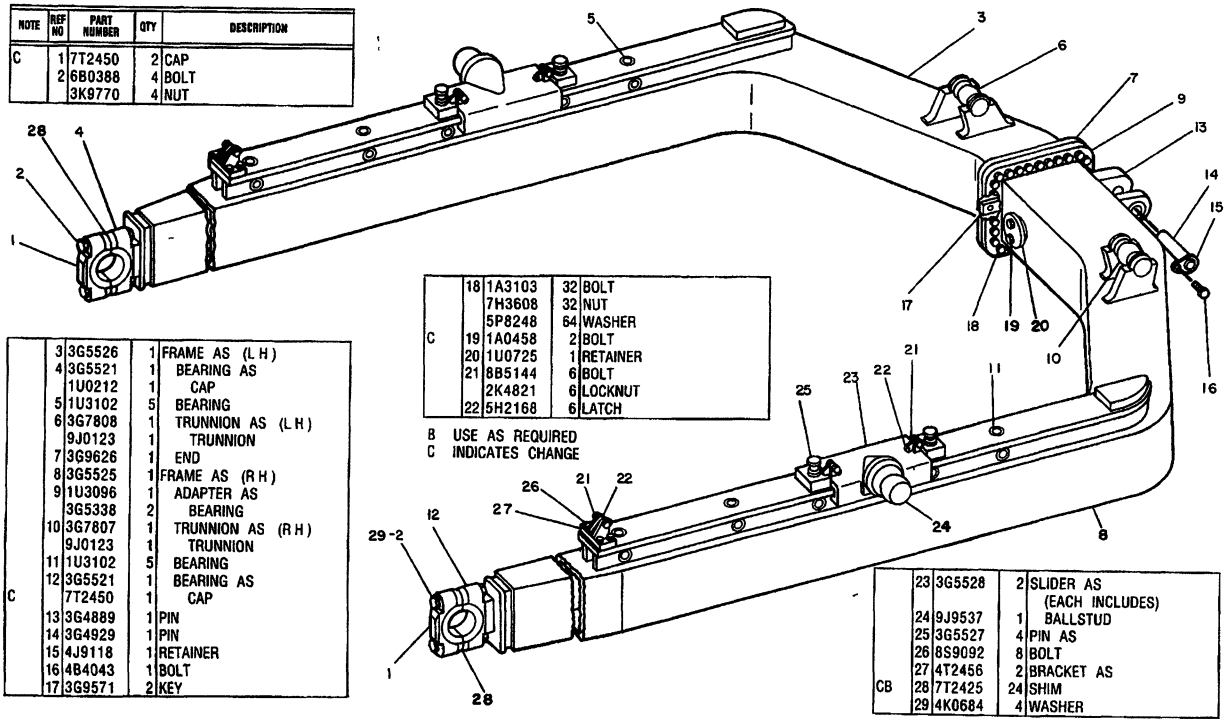

	3	3G5526	1	FRAME AS (LH)
	4	3G5521	1	BEARING AS
		1U0212	1	CAP
	5	1U3102	5	BEARING
	6	3G7808	1	TRUNNION AS (LH)
		9J0123	1	TRUNNION
	7	3G9626	1	END
	8	3G5525	1	FRAME AS (RH)
	9	1U3096	1	ADAPTER AS
		3G5338	2	BEARING
	10	3G7807	1	TRUNNION AS (RH)
		9J0123	1	TRUNNION
	11	1U3102	5	BEARING
	12	3G5521	1	BEARING AS
C		7T2450	1	CAP
	13	3G4889	1	PIN
	14	3G4929	1	PIN
	15	4J9118	1	RETAINER
	16	4B4043	1	BOLT
	17	3G9571	2	KEY

	18	1A3103	32	BOLT
		7H3608	32	NUT
		5P8248	64	WASHER
C	19	1A0458	2	BOLT
	20	1U0725	1	RETAINER
	21	8B5144	6	BOLT
		2K4821	6	LOCKNUT
	22	5H2168	6	LATCH

B USE AS REQUIRED
C INDICATES CHANGE

	23	3G5528	2	SLIDER AS (EACH INCLUDES)
	24	9J9537	1	BALLSTUD
	25	3G5527	4	PIN AS
	26	8S9092	8	BOLT
	27	4T2456	2	BRACKET AS
CB	28	7T2425	24	SHIM
	29	4K0684	4	WASHER

350389

350389 P

6063

3G5531 C-FRAME GP
Type 1
Part Of 3G6090 Bulldozer Ar

NOTE	REF NO	PART NUMBER	QTY	DESCRIPTION
C	1	7T3560	2	CAP
	2	6B0388	4	BOLT
		3K9770	4	NUT

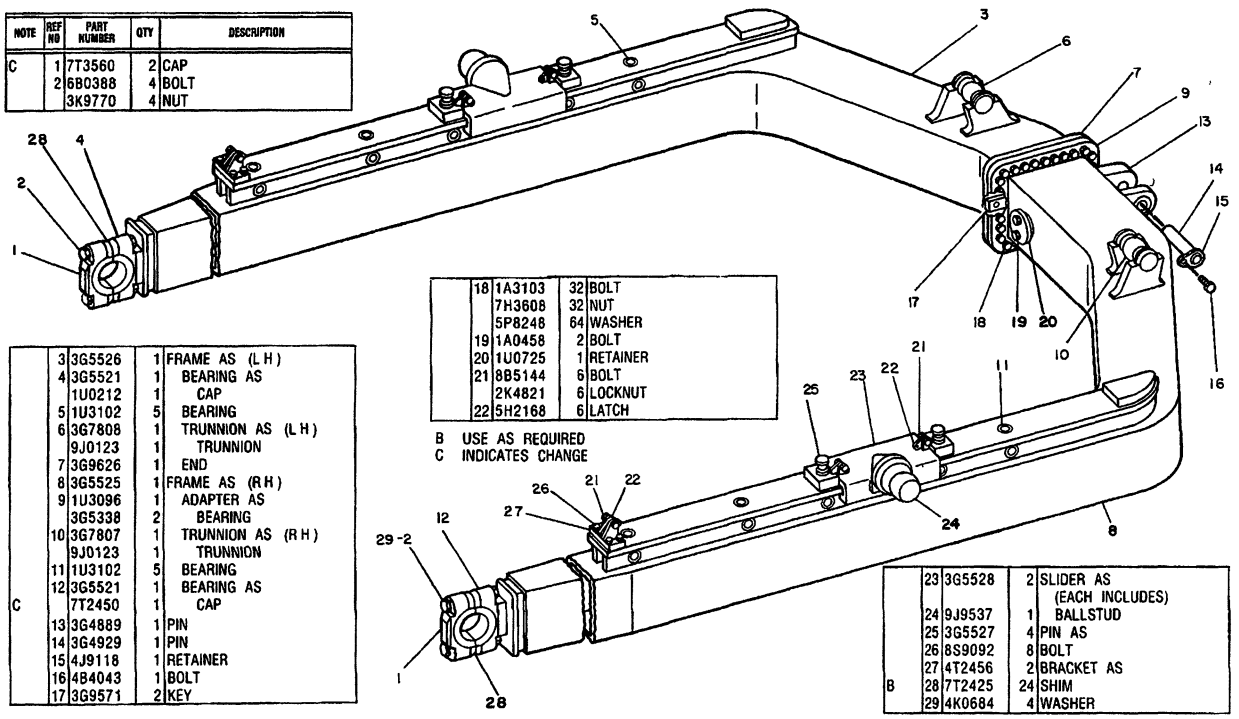

	3	3G5526	1	FRAME AS (L H)
	4	3G5521	1	BEARING AS
		1U0212	1	CAP
	5	1U3102	5	BEARING
	6	3G7808	1	TRUNNION AS (L H)
		9J0123	1	TRUNNION
	7	3G9626	1	END
	8	3G5525	1	FRAME AS (R H)
	9	1U3096	1	ADAPTER AS
		3G5338	2	BEARING
	10	3G7807	1	TRUNNION AS (R H)
		9J0123	1	TRUNNION
	11	1U3102	5	BEARING
	12	3G5521	1	BEARING AS
C		7T2450	1	CAP
	13	3G4889	1	PIN
	14	3G4929	1	PIN
	15	4J9118	1	RETAINER
	16	4B4043	1	BOLT
	17	3G9571	2	KEY

	18	1A3103	32	BOLT
		7H3608	32	NUT
		5P8248	64	WASHER
	19	1A0458	2	BOLT
	20	1U0725	1	RETAINER
	21	8B5144	6	BOLT
		2K4821	6	LOCKNUT
	22	5H2168	6	LATCH

B USE AS REQUIRED
C INDICATES CHANGE

	23	3G5528	2	SLIDER AS (EACH INCLUDES)
	24	9J9537	1	BALLSTUD
	25	3G5527	4	PIN AS
	26	8S9092	8	BOLT
	27	4T2456	2	BRACKET AS
B	28	7T2425	24	SHIM
	29	4K0684	4	WASHER

350394

350394 P

6063

3G5531 C-FRAME GP
Type 2
Part Of 3G6090 Bulldozer Ar

REF NO	PART NUMBER	DESCRIPTION	QTY
1	3G6995	ARM GROUP-----(L. H.)---------- (Separate Illustration)	1
2	6J5179	RETAINER----------	4
3	3G6744	BRACE GROUP---------- (Separate Illustration)	1
4	3G7016	PIN----------	2
5	2H3757	BOLT----------	8
6	6J4795	PIN----------	2
7	3G6765	LINK GROUP---------- (Separate Illustration)	1
8	3G5707	CYLINDER GROUP---------- (Separate Illustration)	1
9	3G6991	ARM GROUP-----(R H.)---------- (Separate Illustration)	1

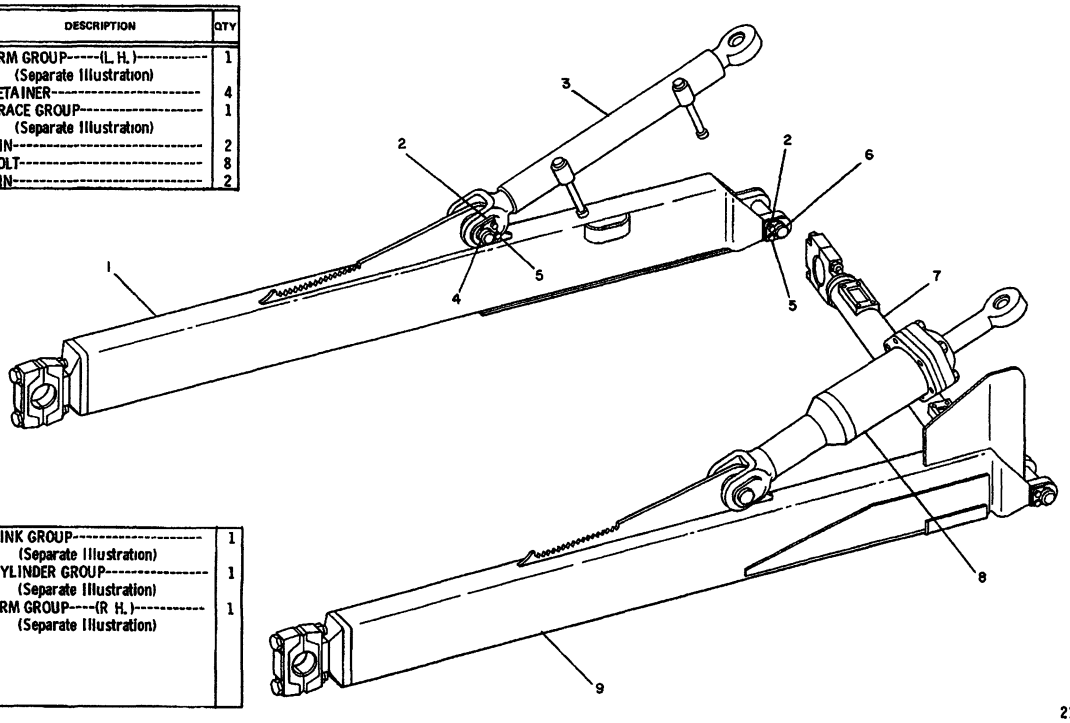

235187

235187 P

6061

3G0527 PUSH ARM GP-STABILIZER

3G6744-Page 262A,3G6765-Page 263,3G5707-Page 264,
3G6991-Page 265,3G6995-Page 266
Part Of 4T7702,3G6091,3G6087 Bulldozer Ars
Also An Attachment

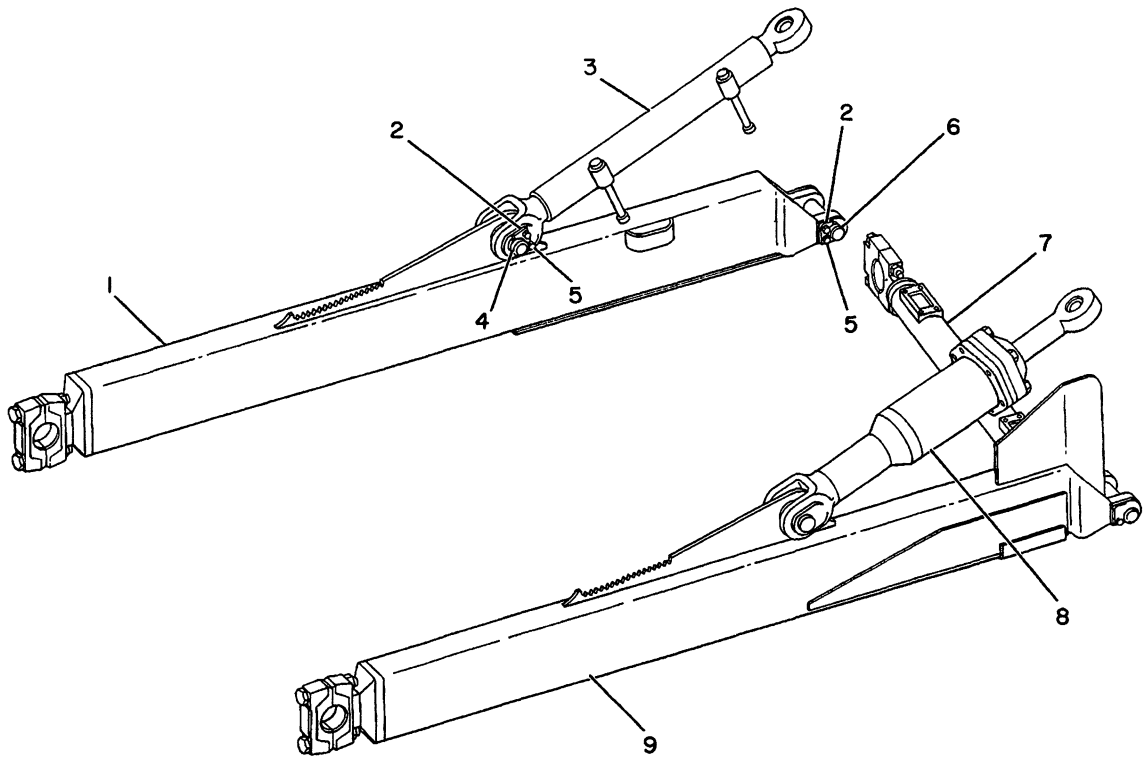

NOTE	REF NO	PART NUMBER	QTY	PART NAME	NOTE	REF NO	PART NUMBER	QTY	PART NAME
Y	1	3G6995	1	PUSH ARM GP-LH					
	2	6J5179	4	RETAINER					
Y	3	3G6744	1	BRACE GP-BULLDOZER					
	4	3G7016	2	PIN					
	5	2H3757	8	BOLT					
	6	4T7534	2	PIN					
Y	7	4T9447	1	LINK GP-STABILIZER					
Y	8	3G5707	1	CYLINDER GP-TILT					
Y	9	3G6991	1	PUSH ARM GP-RH (RH)					

Y-SEPARATE ILLUSTRATION

B-327018 EP

6061

4T9524 PUSH ARM GP-STABILIZER

3G6744-Page 262A,4T9447-Page 262B,3G5707-Page 264,
3G6991-Page 265,3G6995-Page 266
Part Of 3G6087,4T7702,7T3639,3G6092,3G6091,7T3460,3G6088 Bulldozer Ars
Also An Attachment

MEMORANDA

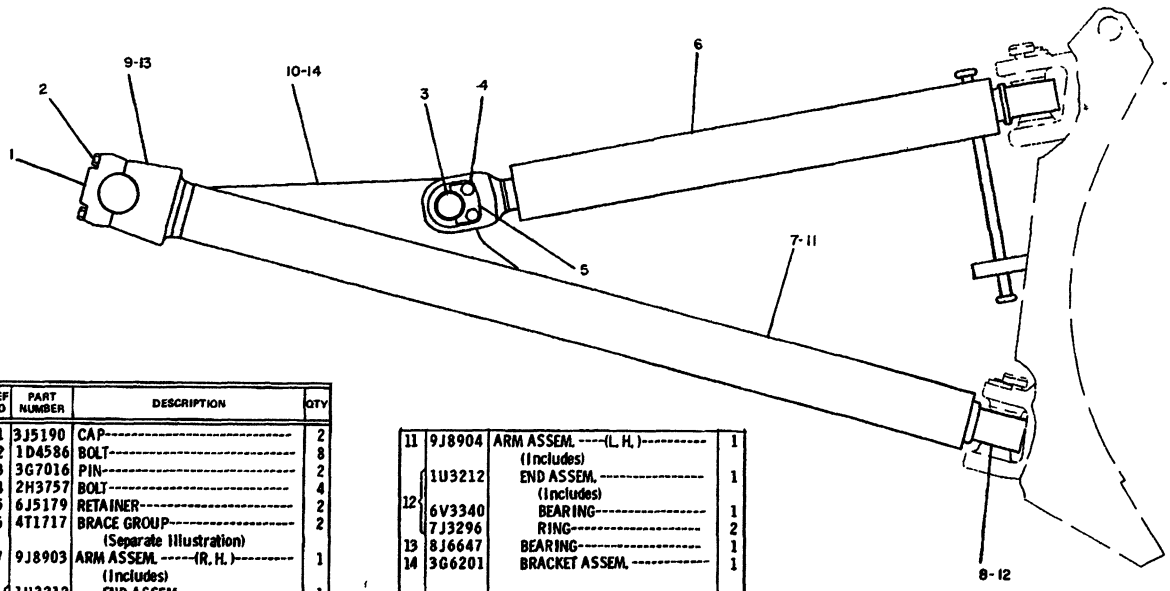

REF NO	PART NUMBER	DESCRIPTION	QTY
1	3J5190	CAP	2
2	1D4586	BOLT	8
3	3G7016	PIN	2
4	2H3757	BOLT	4
5	6J5179	RETAINER	2
6	4T1717	BRACE GROUP (Separate Illustration)	2
7	9J8903	ARM ASSEM. -----(R. H.) (Includes)	1
8	1U3212	END ASSEM. (Includes)	1
	6V3340	BEARING	1
	7J3296	RING	2
9	8J6647	BEARING	1
10	3G6201	BRACKET ASSEM.	1
11	9J8904	ARM ASSEM. -----(L. H.) (Includes)	1
12	1U3212	END ASSEM. (Includes)	1
	6V3340	BEARING	1
	7J3296	RING	2
13	8J6647	BEARING	1
14	3G6201	BRACKET ASSEM.	1

235184

235184 P

6074 **9J9157 BRACE GP-BULLDOZER**

4T1717-Page 262

Part Of 3G6089 Bulldozer Ar

REF. NO.	PART NUMBER	DESCRIPTION	QTY.
1	3G6487	SEAL	2
2	4T1716	BRACE ASSEM. (Includes)	1
3	8J4867	LUG	1
4	9J2272	HANDLE	1
5	1U2492	SCREW ASSEM. (Includes)	1
6	6V3340	BEARING	1
	7J3296	RING	2
7	3B8489	FITTING	2

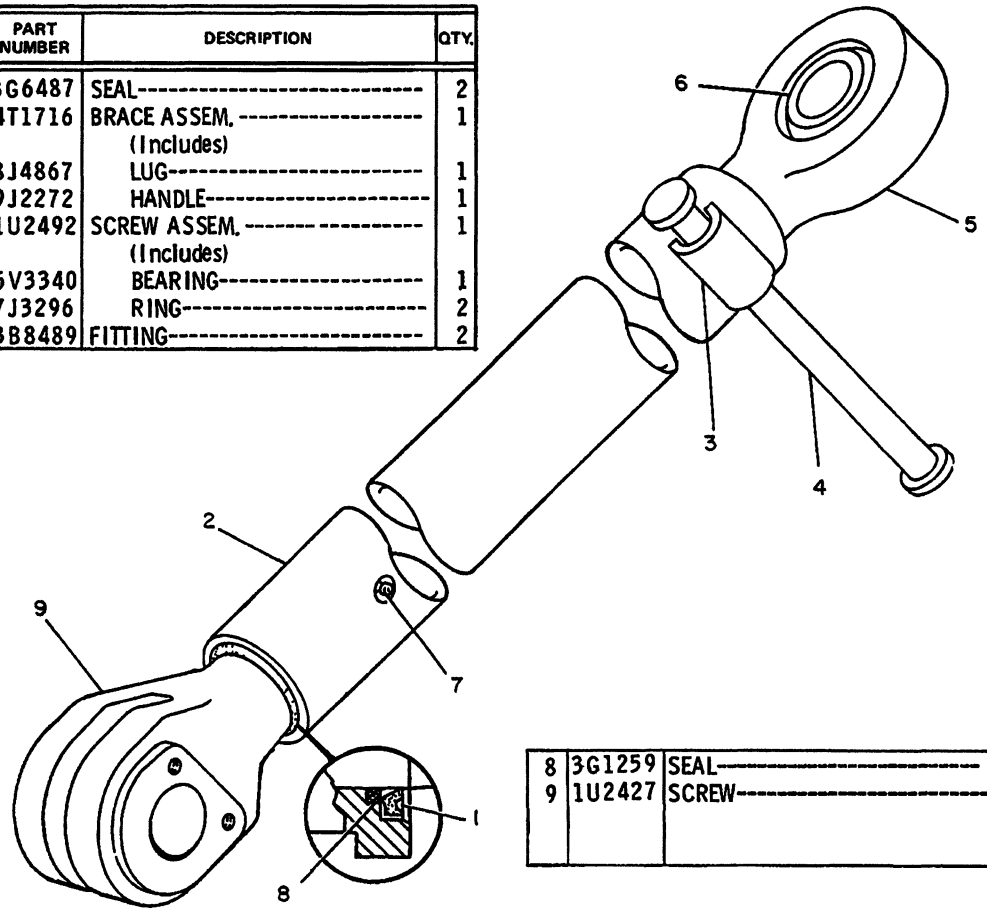

8	3G1259	SEAL	2
9	1U2427	SCREW	1

235185

235185 P

6074 **4T1717 BRACE GP-BULLDOZER**

Manual Tilt

8A Bulldozer S/N 5Y1-854,870,873,896,897,900,901,912,972

Part Of 9J9157 Brace

IMPLEMENTS

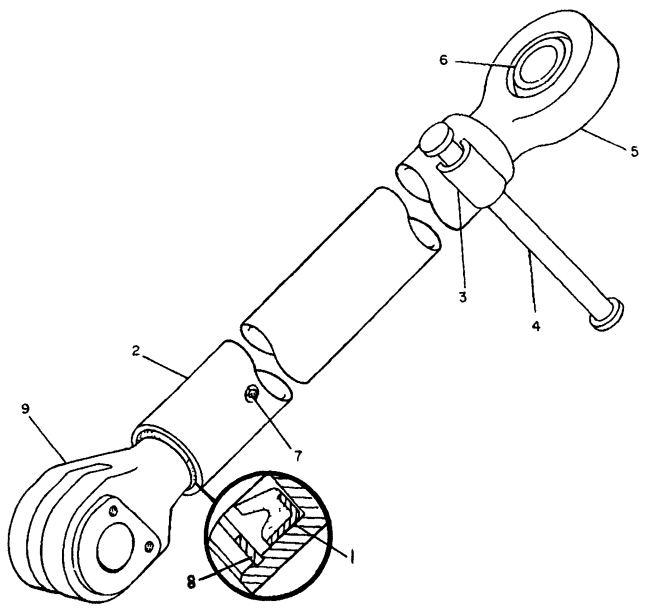

NOTE	REF NO	PART NUMBER	QTY	PART NAME
	1	3G6487	2	SEAL-LIP
	2	4T1716	1	BRACE AS-TILT
	3	8J4867	1	LUG
	4	9J2272	1	HANDLE
	5	1U2492	1	SCREW AS
	6	6V3340	1	BEARING-SPHERICAL
		7J3296	2	LOCKRING
	7	3B8489	2	FITTING-GREASE
C	8	67235	2	RING
	9	1U2477	1	SCREW

C-CHANGE FROM PREVIOUS TYPE

B-458987 EP

6074 **4T1717 BRACE GP-BULLDOZER**

Manual Tilt

8A Bulldozer S/N 5Y855-869,871,872,874-895,898,899,902-911,913-971,973-Up

Part Of 9J9157 Brace

MEMORANDA

REF. NO.	PART NUMBER	DESCRIPTION	QTY.
1	3G6487	SEAL	2
2	3G6743	BRACE ASSEM.	1
		(Includes)	
3	8J4867	LUG	1
4	9J2272	HANDLE	1
5	1U2492	SCREW ASSEM.	1
		(Includes)	
6	6V3340	BEARING	1
	7J3296	RING	2
7	3B8489	FITTING	2

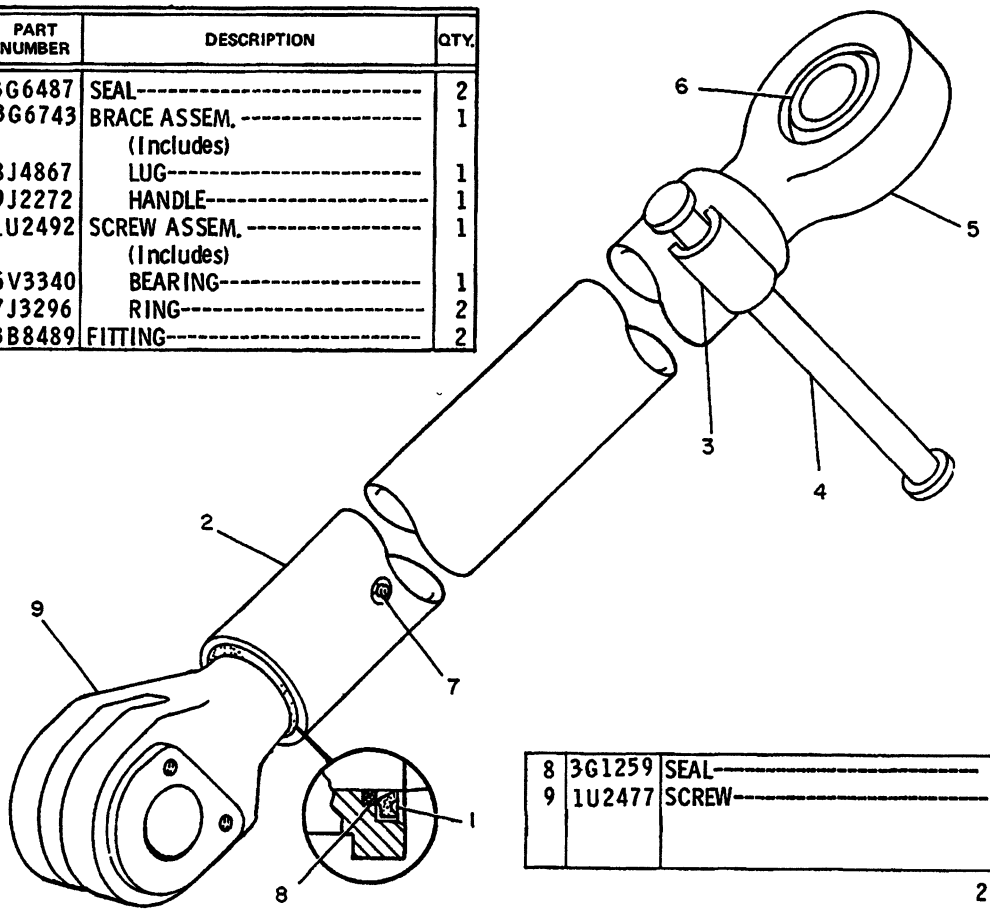

8	3G1259	SEAL	2
9	1U2477	SCREW	1

235189

235189 P

3G6744 BRACE GP-BULLDOZER
Manual Tilt
For S/N Refer To Page 262B 01
Part Of 3G0527 Push Arm

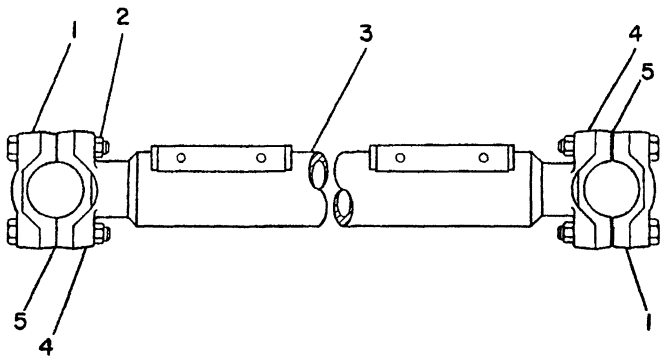

NOTE	REF NO	PART NUMBER	QTY	PART NAME
	1	4T8087	2	CAP-BEARING
	2	7X0395	8	BOLT
		7X0449	8	NUT-FULL
	3	4T9446	1	LINK AS
	4	4T8086	2	BEARING
B	5	4T9470	52	SHIM 60MM(023IN.)THICK

B-USE AS REQUIRED

B-516268 EP

6071 **4T9447 LINK GP-STABILIZER**
Part Of 4T9524 Push Arm

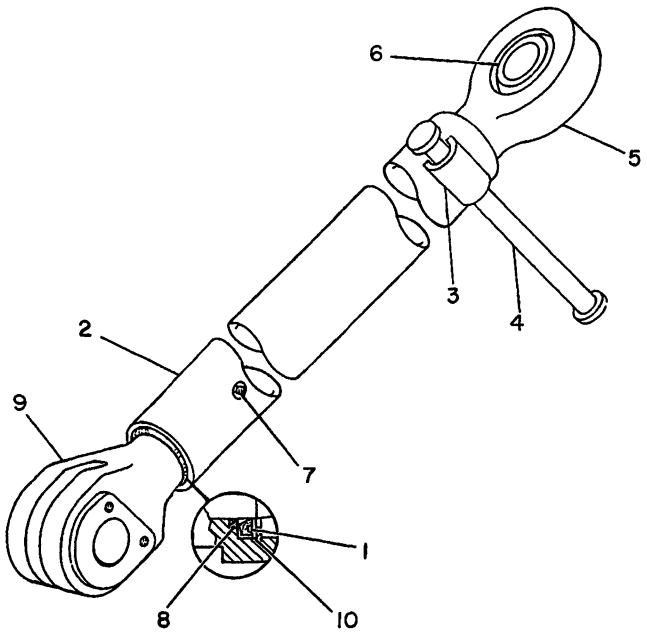

NOTE	REF NO	PART NUMBER	QTY	PART NAME
	1	3G6487	2	SEAL-LIP
	2	3G6743	1	BRACE AS-TILT
	3	8J4867	1	LUG
	4	9J2272	1	HANDLE
	5	1U2492	1	SCREW AS
	6	6V3340	1	BEARING-SPHERICAL
		7J3296	2	LOCKRING
	7	3B8489	2	FITTING-GREASE
	8	3G1259	2	SEAL-RING
	9	1U2477	1	SCREW
C	10	67235	2	RING

C-CHANGE FROM PREVIOUS TYPE

B-311161 EP

6074 **3G6744 BRACE GP-BULLDOZER**
Manual Tilt
For S/N Refer To Page 262B.02

IMPLEMENTS

SERIAL NO
8S & 8U BULLDOZER SERIAL NO 4Y1 TO
971, 973 TO 1032, 1034 TO 1038, 1041
TO 1058, 1060 TO 1073, 1075 TO 1081,
1083 TO 1094, 1096 TO 1142, 1144 TO
1147, 1150, 1153, 1155 TO 1166, 1168
TO 1194, 1196 TO 1210, 1212 TO 1336,
1338 TO 1400, 1402 TO 1406, 1408 TO
1419, 1421 TO 1465, 1467 TO 1488,
1490, 1497 TO 1499, 1531, 1534, 1535,
1537, 1539 TO 1544, 1547 TO 1556,
1558, 1560 TO 1562, 1565 TO 1570, 1572,
1573, 1575 TO 1577, 1582, 1614, 1637,
1641, 1645 TO 1652, 1655 TO 1658,
1669 TO 1678 TO 1703, 1706, 1710,
1715 TO 1726, 1733, 1734, 1739, 1741,
1742, 1746, 1747, 1750, 1752, 1787,
1800, 1801, 1808 TO 1811, 1825, 1826
1831 TO 1835 AND 4Y1839 INCLUSIVE AND
6Y1 TO 1065,1069 TO 1094,1096 TO 1099
1101,1102,1104,1105,1109 TO 1137,1144,
1147,1155,1183,1184,1188,1190,1191,1193
TO 1195,1197 TO 1201 & 6Y1203 INCLUSIVE

3G6744 BRACE GP-BULLDOZER
Manual Tilt
For Illustration Refer To Page 262A

IMPLEMENTS

SERIAL NO
8S & 8U BULLDOZER SERIAL NO 4Y972, 1033
1036, 1039, 1040, 1059, 1074, 1082, 1095
1143, 1148, 1149, 1151, 1152, 1154, 1167
1195, 1211, 1337, 1401, 1407, 1420, 1466
1489, 1491 TO 1496, 1500 TO 1530, 1532,
1533, 1536, 1538, 1545, 1546, 1557, 1559
1563, 1564, 1571, 1574, 1578 TO 1581,
1583 TO 1613, 1615 TO 1636, 1638 TO 1640
1642 TO 1644, 1653 TO 1654, 1659 TO 1668
1679 TO 1697, 1704, 1705, 1707 TO 1709,
1711 TO 1714, 1727 TO 1732, 1735 TO 1738
1740, 1743 TO 1745, 1748, 1749, 1751,
1753 TO 1786, 1788 TO 1799 1802 TO 1807,
1812 TO 1824, 1827 TO 1830, 1836 TO 1838
AND 4Y1840-UP AND 6Y1066 TO 1068, 1095
1100, 1103, 1106 TO 1108, 1138 TO 1143,
1145, 1146, 1148 TO 1154, 1156 TO 1182,
1185 TO 1187, 1189, 1192, 1196 TO 1202
AND 6Y1204-UP

3G6744 BRACE GP-BULLDOZER
Manual Tilt
For Illustration Refer To Page 262B

REF. NO.	PART NUMBER	DESCRIPTION	QTY.
1	3G6487	SEAL	2
2	3G6743	BRACE ASSEM.	1
		(Includes)	
3	8J4867	LUG	1
4	9J2272	HANDLE	1
5	1U2492	SCREW ASSEM.	1
		(Includes)	
6	6V3340	BEARING	1
6	7J3296	RING	2
7	3B8489	FITTING	2

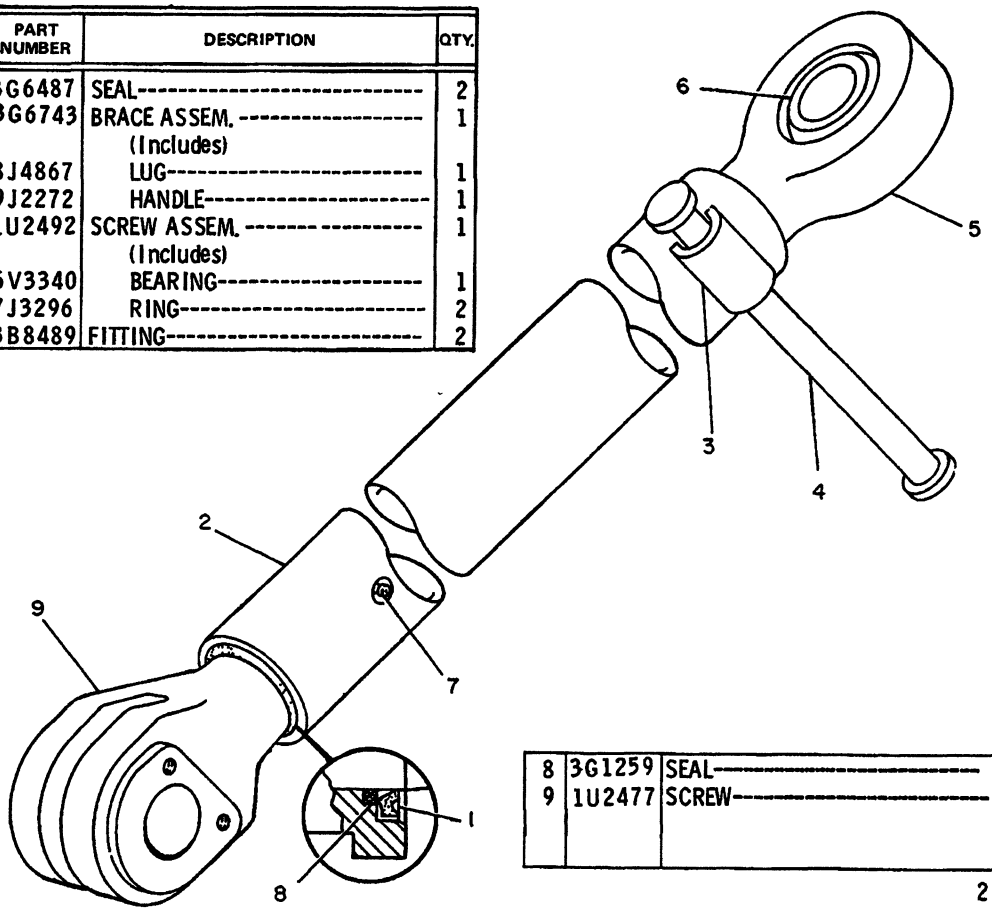

8	3G1259	SEAL	2
9	1U2477	SCREW	1

235189

235189 P

6074

3G6744 BRACE GP-BULLDOZER
Manual Tilt
Japan Market
Part Of 3G0527 Push Arm

IMPLEMENTS

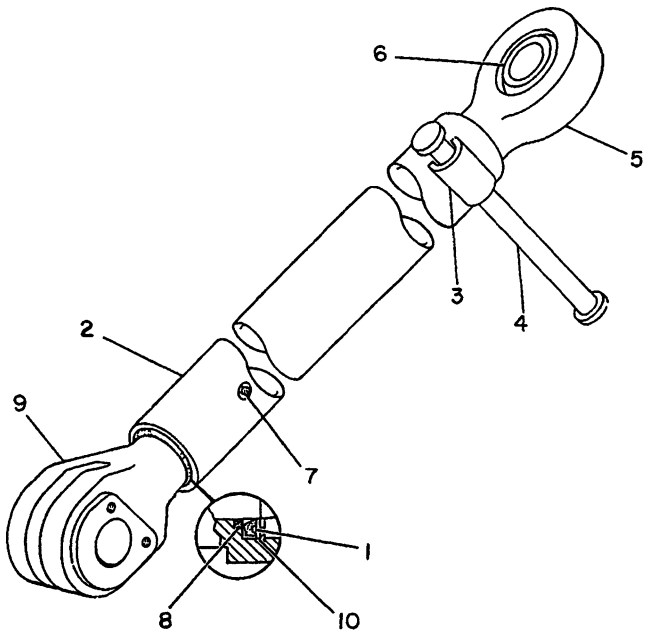

NOTE	REF NO	PART NUMBER	QTY	PART NAME
	1	3G6487	2	SEAL-LIP
	2	3G6743	1	BRACE AS-TILT
	3	8J4867	1	LUG
	4	9J2272	1	HANDLE
	5	1U2492	1	SCREW AS
	6	6V3340	1	BEARING-SPHERICAL
		7J3296	2	LOCKRING
	7	3B8489	2	FITTING-GREASE
	8	3G1259	2	SEAL-RING
	9	1U2477	1	SCREW
C	10	67235	2	RING

C-CHANGE FROM PREVIOUS TYPE

B-311161 EP

6074 **3G6744 BRACE GP-BULLDOZER**
Manual Tilt
Japan Market
Part Of 3G0527 Push Arm

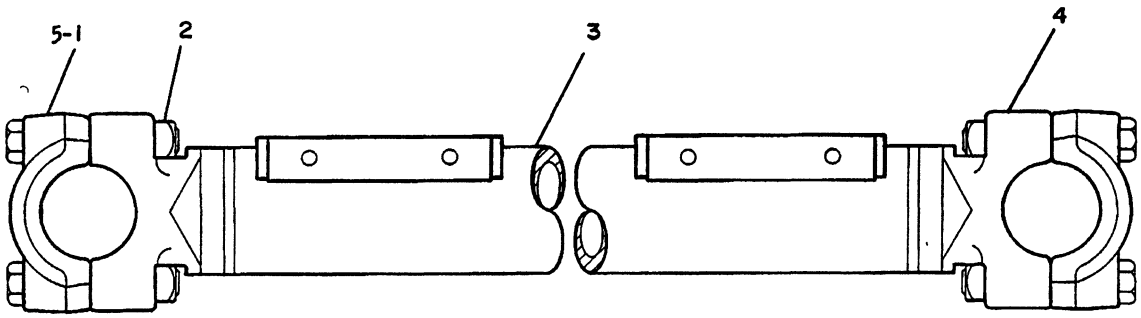

B USE AS REQUIRED
C INDICATES CHANGE

NOTE	REF NO	PART NUMBER	QTY	DESCRIPTION
	1	6F2905	2	CAP
	2	5F9338	4	BOLT
		4F1204	4	NUT 22.9MM(.903IN.)THICK
				-OR-
C		4J5626	4	NUT 21 8MM(.858IN.)THICK
	3	3G6766	1	LINK ASSEM
	4	1U714	2	BEARING
CB	5	4T4866	24	SHIM 60MM(023IN)THICK

311162

311162 P

6071 **3G6765 LINK GP-STABILIZER**
Part Of 3G0527 Push Arm

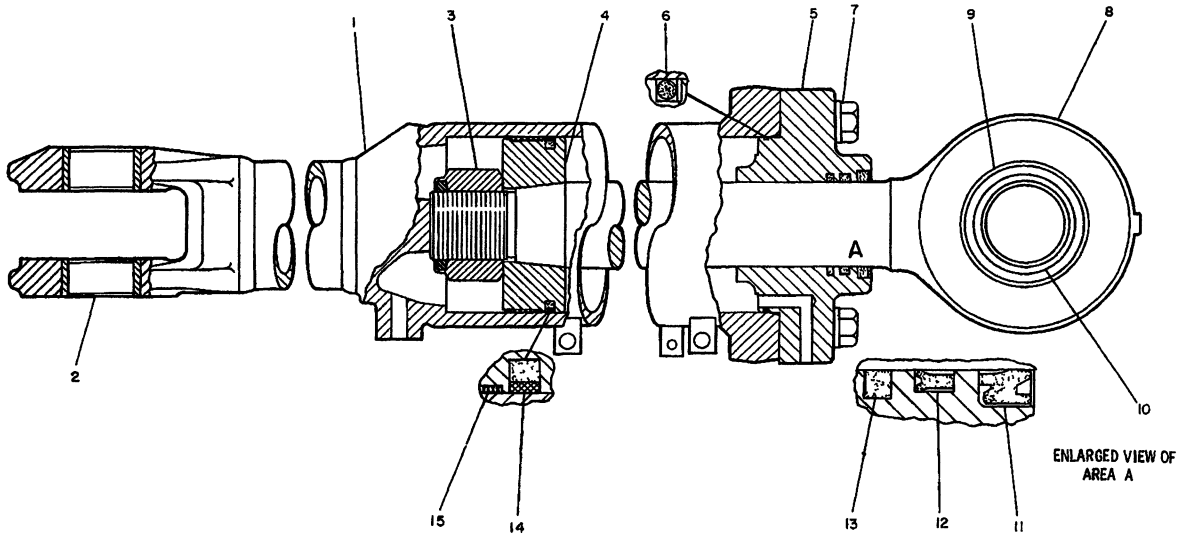

REF NO	PART NUMBER	DESCRIPTION	QTY
1	3G5706	CYLINDER ASSEM. (Includes)	1
2	1U2182	BEARING	2
3	4J6888	NUT	1
4	6J1553	PISTON	1
5	1U3248	HEAD	1
6	8J4386	SEAL	1
	3G3747	RING	1
7	5M544	BOLT	6
	3S1349	WASHER	6
8	1U2183	ROD ASSEM. (Includes)	1
9	7J3296	RING	2
10	6V3340	BEARING	1
11	4J8981	SEAL	1
12	5J8350	SEAL	1
13	6J6736	SEAL	1
14	5J5559	SEAL ASSEM.	1
15	4J7376	RING	1

235188

235188 P

5104

3G5707 CYLINDER GP (CHANGE 03)

Type 1. 209.5MM (8.25IN) Bore X 188MM (7.40IN) Stroke
Part Of 3G0527 Push Arm
An Attachment

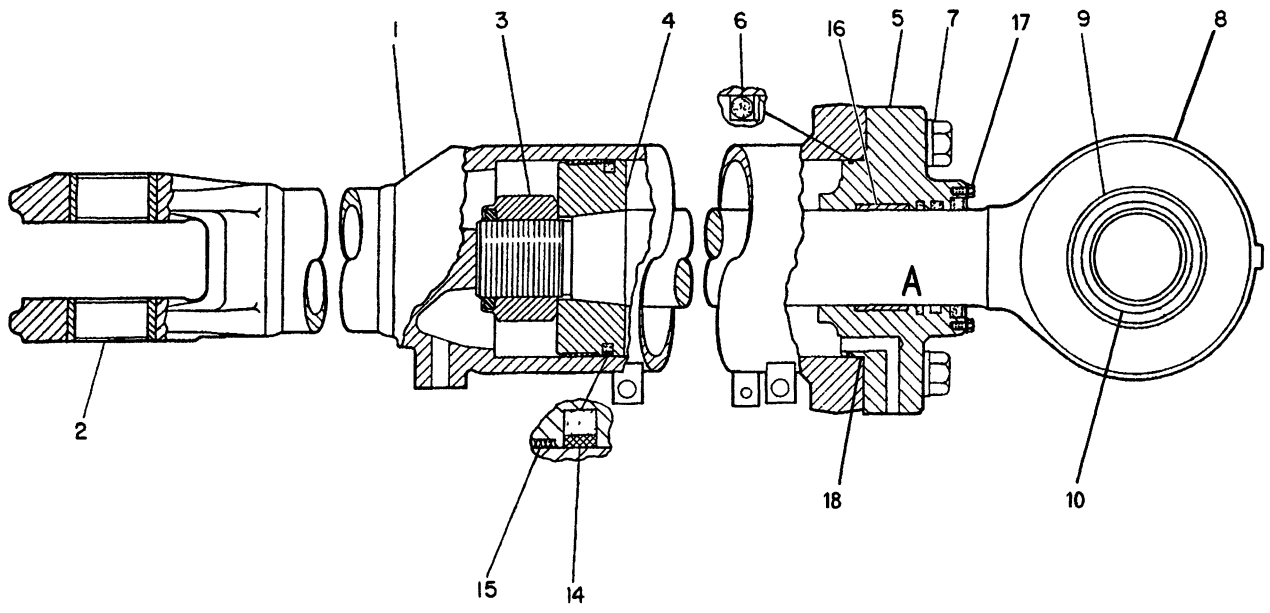

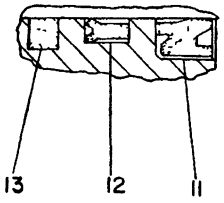

VIEW OF AREA A

NOTE	REF NO	PART NUMBER	QTY	PART NAME	NOTE	REF NO	PART NUMBER	QTY	PART NAME
R	1	3G5706	1	CYLINDER AS					
	2	1U2182	2	BEARING-SLEEVE					
	3	4J6888	1	LOCKNUT					
	4	6J1553	1	PISTON					
C	5	9T5283	1	HEAD					
	6	8J4386	1	SEAL-O-RING					
		3G3747	1	RING-BACKUP					
	7	5M0544	6	BOLT					
		3S1349	6	WASHER					
R	8	6E2190	1	ROD AS					
	9	5J9454	1	RING-RETAINING					
	10	6V3340	1	BEARING-SPHERICAL					
	11	8C5219	1	SEAL-LIP					
	12	5J8350	1	SEAL					
	13	8C9127	1	SEAL AS					
	14	5J5559	1	SEAL AS					
	15	4J7376	1	RING-WEAR					
C	16	8T3329	1	RING-WEAR					
	17	2H3755	4	BOLT					
		7S6369	4	WASHER					
	18	8T8382	1	SEAL-HEAD					

C-CHANGE FROM PREVIOUS TYPE
R-REMFG PART MAY BE AVAILABLE

R-558723 EP

5104 **3G5707 CYLINDER GP (CHANGE 04-07)**

Type 2. 209.5MM (8.25IN) Bore X 188MM (7.40IN) Stroke
Part Of 3G0527 Push Arm
An Attachment

MEMORANDA

REF. NO.	PART NUMBER	DESCRIPTION	QTY.
1	1D4649	BOLT	2
	3K9770	NUT	2
2	1U212	CAP	1

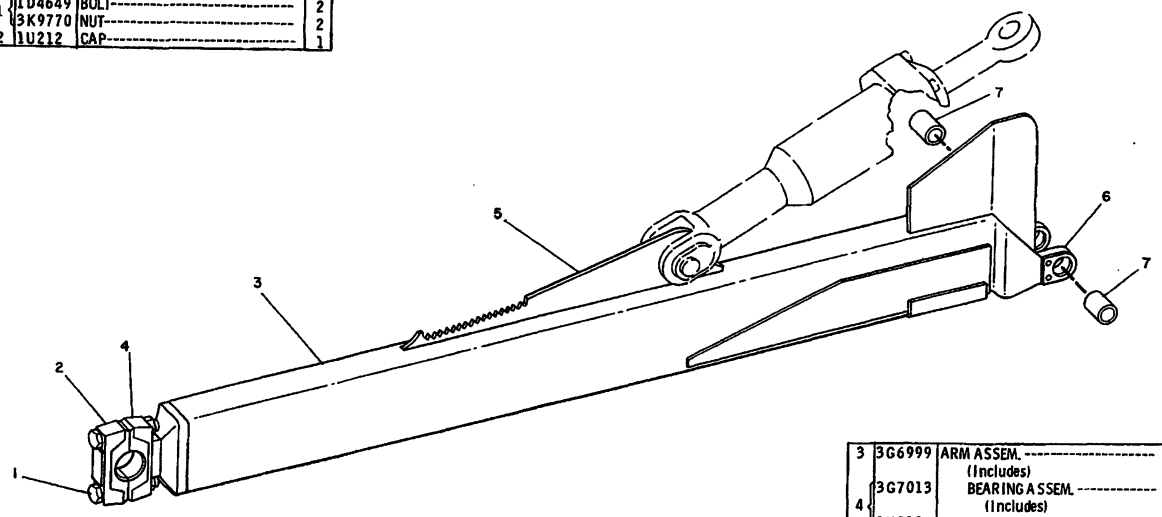

3	3G6999	ARM ASSEM. (Includes)	1
4	3G7013	BEARING ASSEM. (Includes)	1
	1U212	CAP	1
5	3G7000	BRACKET ASSEM.	1
6	3G6997	BRACKET ASSEM. (Includes)	1
7	3G9598	BEARING	2

235191

235191 P

6061 **3G6991 ARM GP-PUSH-RH**

Type 1

Part Of 3G0527 Push Arm

NOTE	REF NO	PART NUMBER	QTY	DESCRIPTION
	1	1D4649	2	BOLT
		3K9770	2	NUT
C	2	7T2450	1	CAP

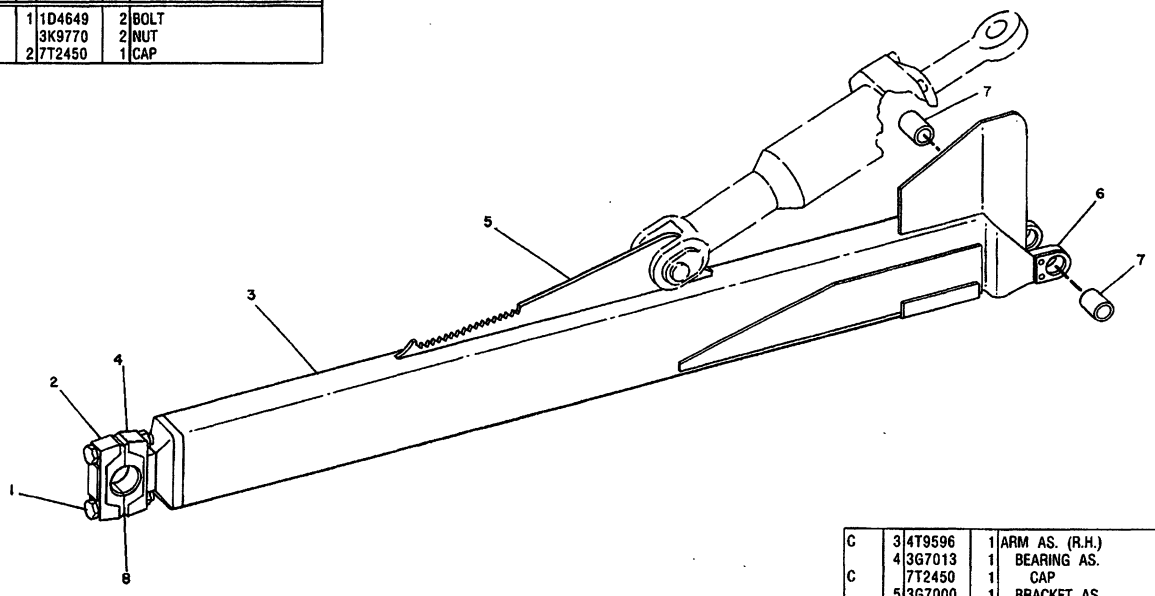

C	3	4T9596	1	ARM AS. (R.H.)
	4	3G7013	1	BEARING AS.
C		7T2450	1	CAP
	5	3G7000	1	BRACKET AS.
	6	3G6997	1	BRACKET AS. (R.H.)
	7	3G9598	2	BEARING
CB	8	7T2425	12	SHIM

B USE AS REQUIRED
C INDICATES CHANGE

350397

350397 P

6061

3G6991 ARM GP-PUSH-RH
Type 2
Part Of 3G0527 Push Arm

NOTE	REF NO	PART NUMBER	QTY	DESCRIPTION
	1	1D4649	2	BOLT
		3K9770	2	NUT
C	2	7T3560	1	CAP

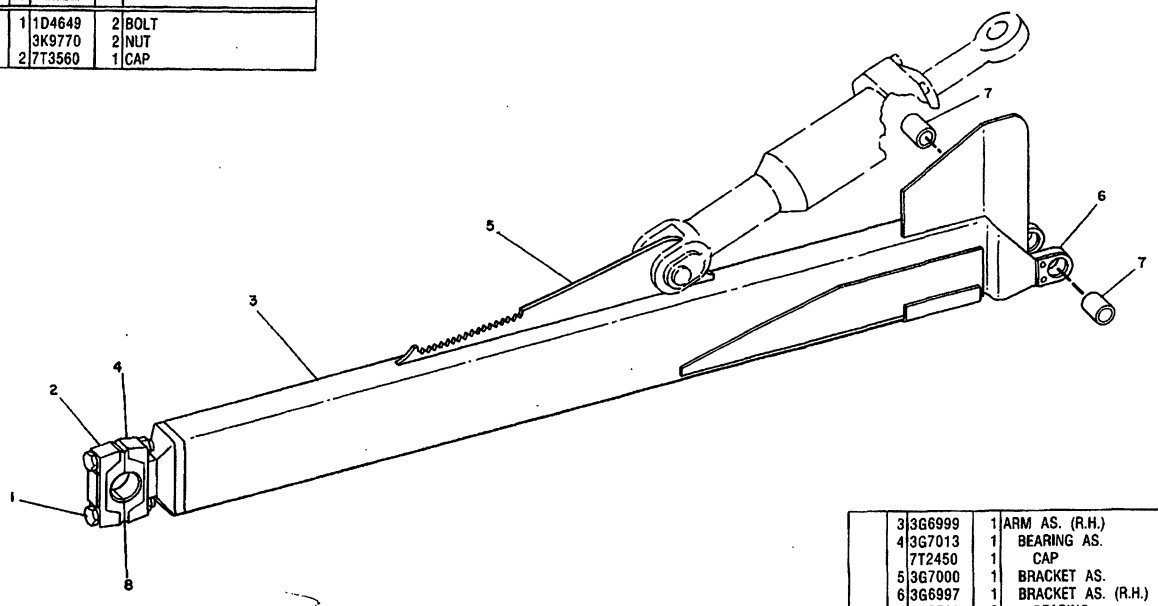

	3	3G6999	1	ARM AS. (R.H.)
	4	3G7013	1	BEARING AS.
		7T2450	1	CAP
	5	3G7000	1	BRACKET AS.
	6	3G6997	1	BRACKET AS. (R.H.)
	7	3G9598	2	BEARING
B	8	7T2425	12	SHIM

B USE AS REQUIRED
C INDICATES CHANGE

350398

350398 P

6061

3G6991 ARM GP-PUSH-RH
Type 3
Part Of 3G0527 Push Arm

REF. NO.	PART NUMBER	DESCRIPTION	QTY.
1	3G6996	ARM ASSEM. ----(L. H.)---------- (Includes)	1
2	3G7000	BRACKET ASSEM. ----------	1
3	3G6998	BRACKET ASSEM. ---------- (Includes)	1
4	3G9598	BEARING----------	2
5	3G7013	BEARING ASSEM. ---------- (Includes)	1
	1U212	CAP----------	1

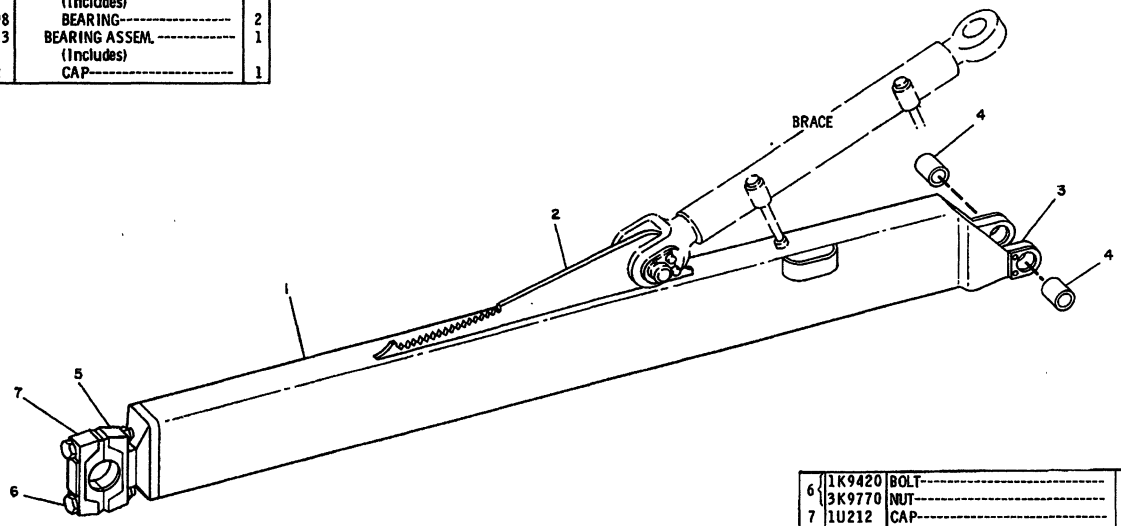

6	1K9420	BOLT----------	2
	3K9770	NUT----------	2
7	1U212	CAP----------	1

235192

235192 P

6061

3G6995 ARM GP-PUSH-LH

Type 1

Part Of 3G0527 Push Arm

NOTE	REF NO	PART NUMBER	QTY	DESCRIPTION
C	1	4T9597	1	ARM AS. (L.H.)
	2	3G7000	1	BRACKET AS.
	3	3G6998	1	BRACKET AS. (L.H.)
	4	3G9598	2	BEARING
	5	3G7013	1	BEARING AS.
C		7T2450	1	CAP

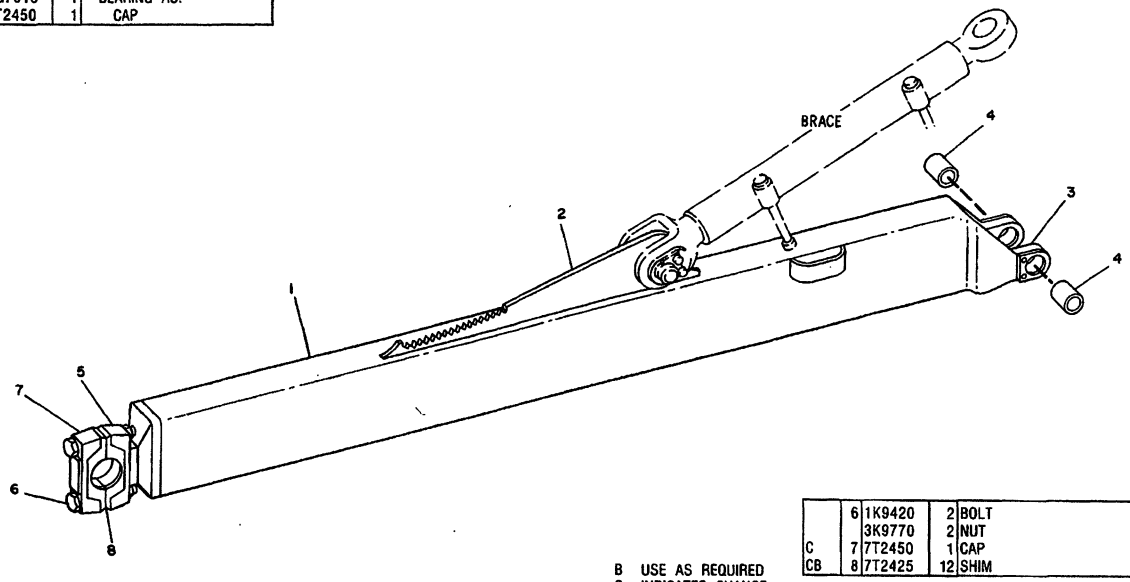

	6	1K9420	2	BOLT
		3K9770	2	NUT
C	7	7T2450	1	CAP
CB	8	7T2425	12	SHIM

B USE AS REQUIRED
C INDICATES CHANGE

350385

350385 P

6061

3G6995 ARM GP-PUSH-LH

Type 2
Part Of 3G0527 Push Arm

NOTE	REF NO	PART NUMBER	QTY	DESCRIPTION
	1	4T9597	1	ARM AS. (L.H.)
	2	3G7000	1	BRACKET AS.
	3	3G6998	1	BRACKET AS. (L.H.)
	4	3G9598	2	BEARING
	5	3G7013	1	BEARING AS.
		7T2450	1	CAP

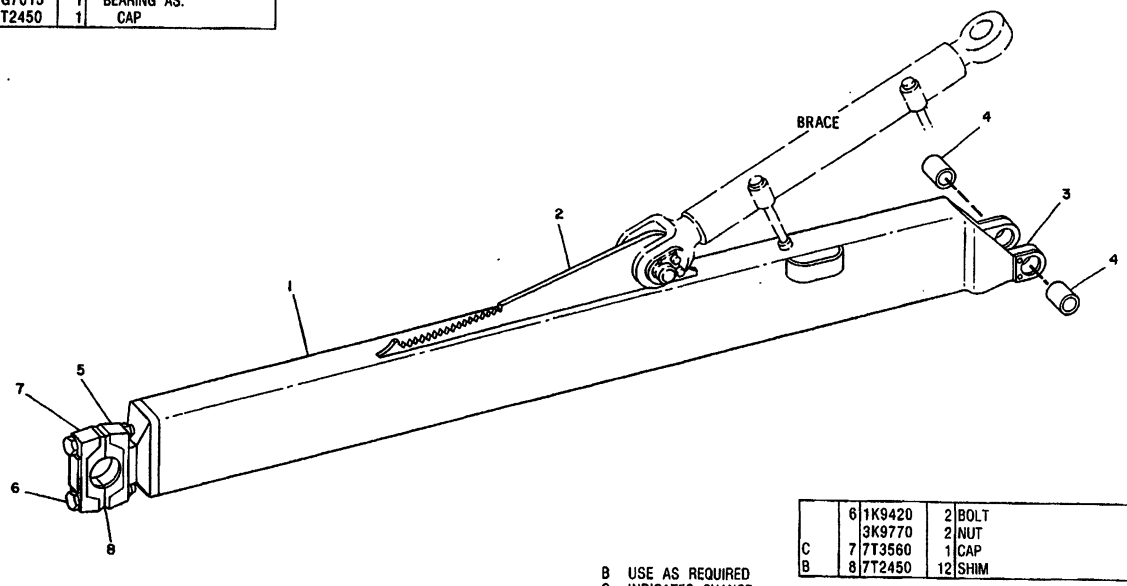

	6	1K9420	2	BOLT
		3K9770	2	NUT
C	7	7T3560	1	CAP
B	8	7T2450	12	SHIM

B USE AS REQUIRED
C INDICATES CHANGE

350386

350386 P

6061

3G6995 ARM GP-PUSH-LH

Type 3

Part Of 3G0527 Push Arm

		PAGE
1	4TO148 RIPPER AR	267
1	9P9906 CONTROL AR-HYDRAULIC PIN PULLER	195
1	4TO137 TOOTH GP	273

108200 P

6312 **4T0147 RIPPER AR-SINGLE SHANK**
Adjustable-Deep Ripping
S/N 53Y2235-2764
An Attachment

		PAGE
4	3G6457 CYLINDER GP	230
1	4TO151 RIPPER AR	269
1	4T3553 FRAME GP-RIPPER	272A
1	4TO201 LINES GP-RIPPER	224
1	4TO200 MOUNTING GP-RIPPER	271A

108201 P

6312 **4T0148 RIPPER AR-SINGLE SHANK**
Adjustable Radial Ripper
An Attachment

		PAGE
1	4T9465 RIPPER ARRANGEMENT	267.01
1	4TO137 TOOTH GROUP	273
1	9P9906 PIN PULLER ARRANGEMENT	195

324398 P

6312

4T9467 RIPPER AR-DEEP RIPPING-SINGLE SHANK
Adjustable Radial Ripper-Merchandising
S/N 53Y2765-Up
An Attachment

		PAGE
1	4TO151 RIPPER AR	269
4	3G6457 CYLINDER GP	230
1	4T3553 FRAME GP-RIPPER	271D
1	4TO201 LINES GP-RIPPER	224
1	4T9086 MOUNTING GP-RIPPER	270B

324388 P

6312

4T9465 RIPPER AR
Adjustable Radial Single Shank
Part Of 4T9467 Ripper
An Attachment

MEMORANDA

	CONSISTS OF:	PAGE
1	4T0106 RIPPER GROUP	270
1	5P1327 PLATE-SERIAL NUMBER ON CYLINDER TOWER	
2	4B4158 DRIVE SCREW	

108199 P

6312

4T0149 RIPPER AR
Ulti-Shank-Heavy Duty
Ripper S/N 9N1-Up
Also Part Of 4T0150,7T6949 Rippers

	CONSISTS OF:	PAGE
4	3G6457 CYLINDER GROUP	230
1	4T0149 RIPPER ARRANGEMENT	268
1	4T3553 RIPPER FRAME GROUP	272A
1	4T0201 RIPPER LINES GROUP	224
1	4T0200 RIPPER MOUNTING GROUP	271A

108198 P

6312

4T0150 RIPPER AR
Multi-Shank-Adustable Radial
An Attachment

		CONSISTS OF:	PAGE
1	4T0146	RIPPER GROUP	270
1	5P1327	PLATE-SERIAL NUMBER ON CYLINDER TOWER	
2	4B4158	DRIVE SCREW	

108202 P

6312

4T0151 RIPPER AR-SINGLE SHANK
Adjustable Ripper-Heavy Duty
Ripper S/N 88M1-Up
Also Part Of 4T0148,7T6939 Rippers

		CONSISTS OF:	PAGE
1	4T0198	LINK GROUP	225
1	4T0199	LINES GROUP	225

108208 P

6313

4T0197 LINK AR-RIPPER-STIFF LINK
Ripper S/N 88M1-Up,9N1-Up
An Attachment

IMPLEMENTS

CONSISTS OF:

1	4T0151	RIPPER ARRANGEMENT	269
1	4T3553	FRAME GROUP-RIPPER	271D
1	4T9086	RIPPER MOUNTING GROUP	270B
4	3G6457	CYLINDER GROUP	230
1	7T5137	RIPPER LINES GROUP	224B

335154 P

6312 **7T6939 RIPPER AR-ONE SHANK**
Type 1
Part Of 7T9593 Ripper
An Attachment

CONSISTS OF:

1	4T0146	RIPPER GROUP	270.01
1	4T3553	RIPPER FRAME GROUP	271D
1	4T9086	RIPPER MOUNTING GROUP	270B
4	3G6457	CYLINDER GROUP	230
1	7T5137	RIPPER LINES GROUP	224B

335154 P

6312 **7T6939 RIPPER AR-ONE SHANK**
Type 2
Part Of 7T9593 Ripper
An Attachment

		CONSISTS OF:	PAGE
1	4TO106	RIPPER TOOTH GROUP.....	271C
1		NOT SERV. PLATE-SERIAL NUMBER	
2	7B3028	DRIVE SCREW	

108199 P

6312

4T0149 RIPPER AR
Multi-Shank-Heavy Duty
Japan Market
Ripper S/N 31N1-Up

		CONSISTS OF:	PAGE
1	4TO149	RIPPER ARRANGEMENT-BASIC.....	269B
4	3G6457	RIPPER CYLINDER GROUP.....	230
1	4T3553	RIPPER FRAME GROUP.....	271D
1	4TO200	RIPPER MOUNTING GROUP.....	271B
1	4TO201	RIPPER LINES GROUP.....	224A

108198 P

6312

4T0150 RIPPER AR
Multi-Shank-Adustable Radial
Japan Market
An Attachment

IMPLEMENTS

		PAGES
1	4TO149 RIPPER AR	268
1	4T3553 FRAME GP-RIPPER	271D
1	4T9086 MOUNTING GP-RIPPER	270B
1	4TO201 LINES GP-RIPPER	224A
4	3G6457 CYLINDER GP-RIPPER	230

349369 P

6312 **4T9466 RIPPER AR-THREE SHANK**
Type 1. S/N 53Y2235-2764
Adjustable Radial Multi-Shank Ripper

		PAGES
1	4T3553 FRAME GP-RIPPER	271D
4	3G6457 CYLINDER GP-RIPPER	230
1	4TO200 MOUNTING GP-RIPPER	271B
1	7T5137 LINES GP-RIPPER	224B
1	4TO106 RIPPER GP	270

349370 P

6312 **4T9466 RIPPER AR-THREE SHANK**
Type 2. S/N 53Y2235-2764
Adjustable Radial Multi-Shank Ripper-Merchandising

MEMORANDA

IMPLEMENTS

CONSISTS OF:

1	4TO149	RIPPER ARRANGEMENT	O268
1	4T3553	RIPPER FRAME GROUP	271D
1	4T9086	RIPPER MOUNTING GROUP	270B
4	3G6457	CYLINDER GROUP	230
1	7T5137	RIPPER LINES GROUP	224B

335153 P

6312 **7T6940 RIPPER AR-THREE SHANK**
Type 1
An Attachment

CONSISTS OF:

1	4TO106	RIPPER GROUP	270A
1	4T3553	RIPPER FRAME GROUP	271D
1	4T9086	RIPPER MOUNTINGGROUP	270B
4	3G6457	CYLINDER GROUP	230
1	7T5137	RIPPER LINES GROUP	224B

335153 P

6312 **7T6940 RIPPER AR-THREE SHANK**
Type 2
An Attachment

		PAGE
1	7T6939 RIPPER AR	269A
1	4TO137 TOOTH GP	273
1	9P9906 PULLER GP-PIN	195

335273 P

6312 **7T9593 RIPPER AR-DEEP RIP**
Type 1
An Attachment

		PAGE
1	7T6939 RIPPER AR	269A
1	4TO137 TOOTH GP	273
1	9W3728 PULLER GP-PIN	250A.02

351632 P

6312 **7T9593 RIPPER AR-DEEP RIP**
Type 2
An Attachment

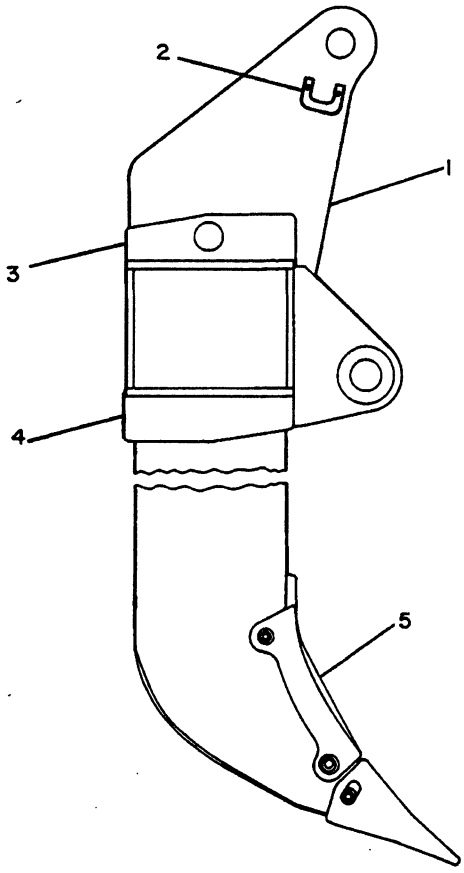

REF. NO.	PART NUMBER	DESCRIPTION	QTY.
1	4T105	BEAM ASSEM.	1
		(Includes)	
	5J1208	STRIP	4
2	2J1227	RETAINER	4
3	7J9509	BLOCK	3
4	8J733	BLOCK	3
5	4T139	TOOTH GROUP	1
		(Separate Illustration)	

235256

235256 P

6312

4T0106 RIPPER GP-MULTI SHANK-HEAVY DUTY

Type 1. 4T0139-Page 271
Part Of 7T6939,7T6940 Rippers
To Provide Additional Shank Protection During Ripping Operations
1U4410 Protector Is Available

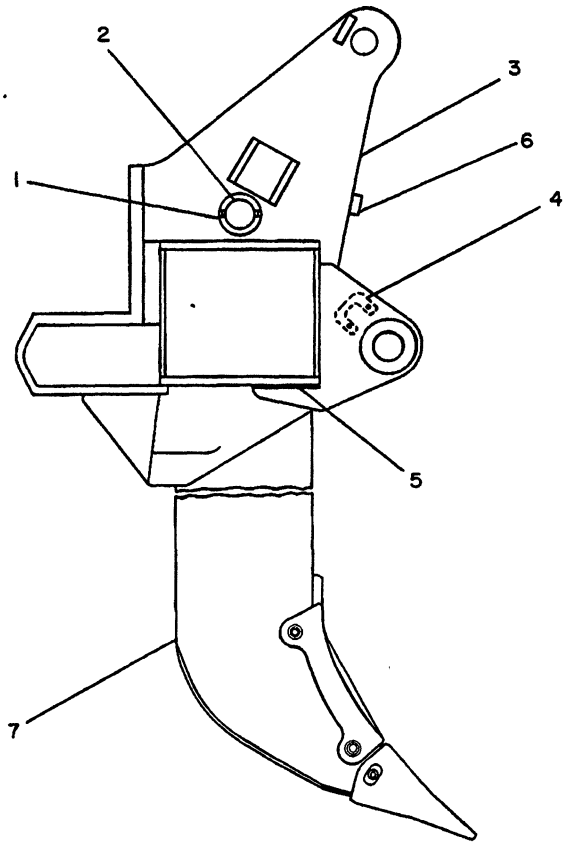

NOTE	REF NO	PART NUMBER	QTY	DESCRIPTION
C	1	4T2479	2	PIN AS.
	2	6J6720	1	PIN
	3	4T130	1	BEAM AS.
	4	2J1227	4	RETAINER
	5	5J1208	4	STRIP
C	6	4T4914	1	BLOCK
Y	7	4T138	1	TOOTH GROUP

C INDICATES CHANGE
Y SEPARATE ILLUSTRATION

312202

312202 P

6312

4T0146 RIPPER GP-SINGLE SHANK
Type 2. 4T0138-Page 272D
Part Of 7T6939 Ripper
To Provide Additional Shank Protection During Ripping Operations
1U4410 Protector Is Available

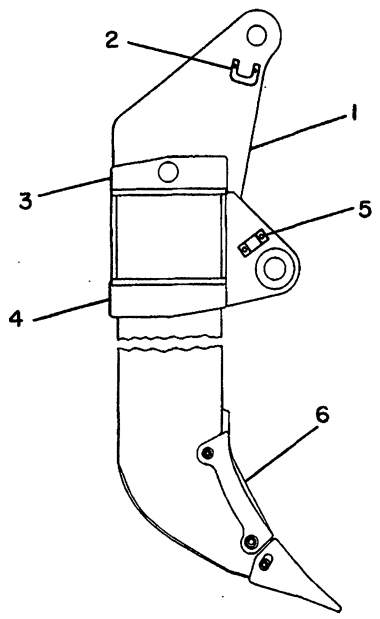

NOTE	REF NO	PART NUMBER	QTY	PART NAME
	1	4T0105	1	BEAM AS
		5J1208	4	STRIP
C	2	2J1227	2	RETAINER
	3	7J9509	3	BLOCK
	4	8J0733	3	BLOCK
C	5	3G1877	2	RETAINER
Y	6	4T0139	1	TOOTH GP-RIPPER

C-CHANGE FROM PREVIOUS TYPE
Y-SEPARATE ILLUSTRATION

B-312796 EP

6312 **4T0106 RIPPER GP-MULTI SHANK-HEAVY DUTY**

Type 3. 4T0139-Page 271
Note: To Provide Additional Shank Protection During Ripping Operations
1U4410 Protector Is Available

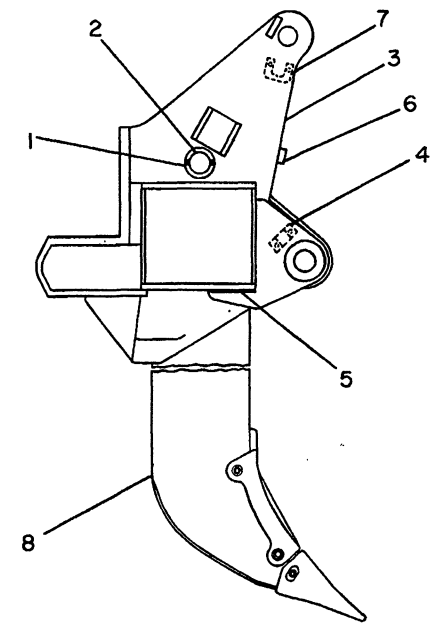

NOTE	REF NO	PART NUMBER	QTY	PART NAME
	1	4T2479	2	PIN AS
	2	6J6720	1	PIN
	3	4T0130	1	BEAM AS
C	4	2J1227	2	RETAINER
	5	5J1208	4	STRIP
	6	4T4914	1	BLOCK
C	7	3G1877	2	RETAINER
Y	8	4T0138	1	TOOTH GP-RIPPER

C-CHANGE FROM PREVIOUS TYPE
Y-SEPARATE ILLUSTRATION

B-312797 EP

6312 **4T0146 RIPPER GP-SINGLE SHANK-TYPE 4**

4T0138-Page 273. Part Of 7T6939,7T6940 Rippers
To Provide Additional Shank Protection During Ripping Operations
1U4410 Protector Is Available

MEMORANDA

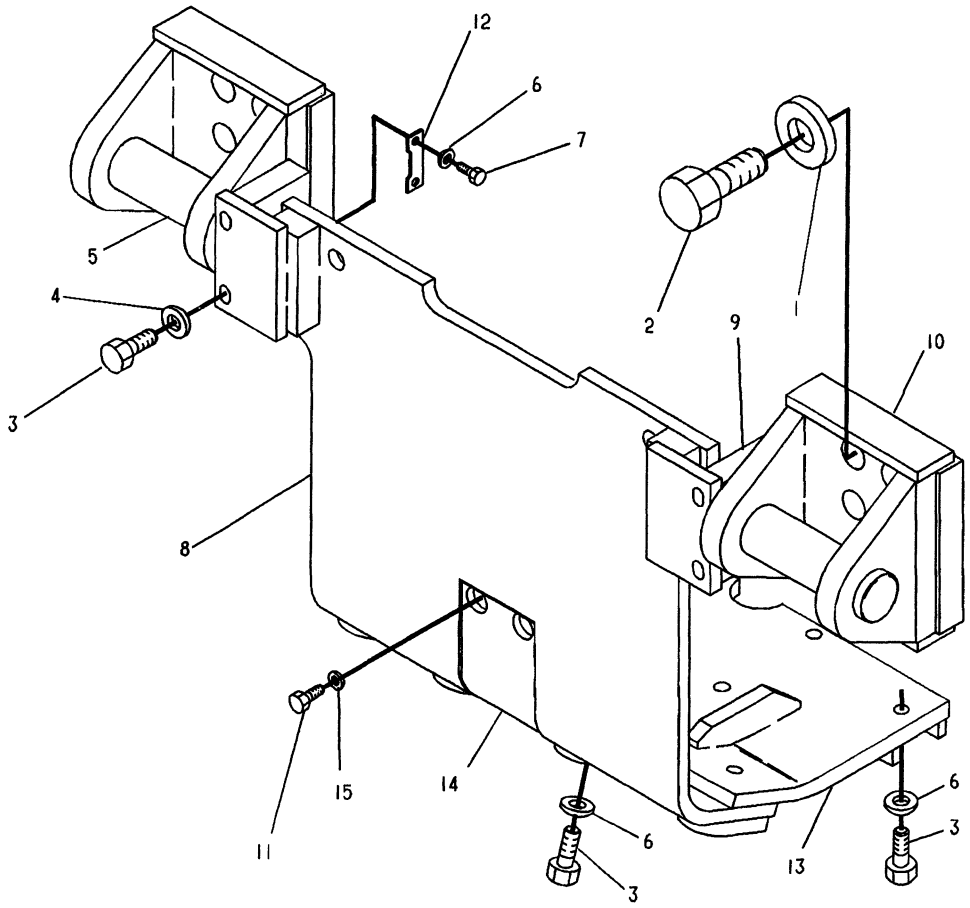

NOTE	REF NO	PART NUMBER	QTY	PART NAME	NOTE	REF NO	PART NUMBER	QTY	PART NAME
	1	3S6162	12	WASHER-HARD					
	2	6V8536	12	BOLT					
	3	2A1538	14	BOLT					
	4	5P6652	4	WASHER					
	5	4T5282	2	PIN					
	6	5P8248	14	WASHER-HARD					
	7	OS1626	4	BOLT					
	8	6T2140	1	GUARD AS					
	9	6T2134	2	BLOCK					
	10	4T3552	2	PLATE AS					
	11	OS1594	4	BOLT					
	12	6T5261	2	BAR					
	13	6T2139	1	GUARD AS					
	14	6T2137	1	PLATE					
	15	5P1076	4	WASHER-HARD					

A-324473 EP

6324 **4T9086 MOUNTING GP-RIPPER**

Part Of 7T6939,7T6940 Rippers

An Attachment

IMPLEMENTS

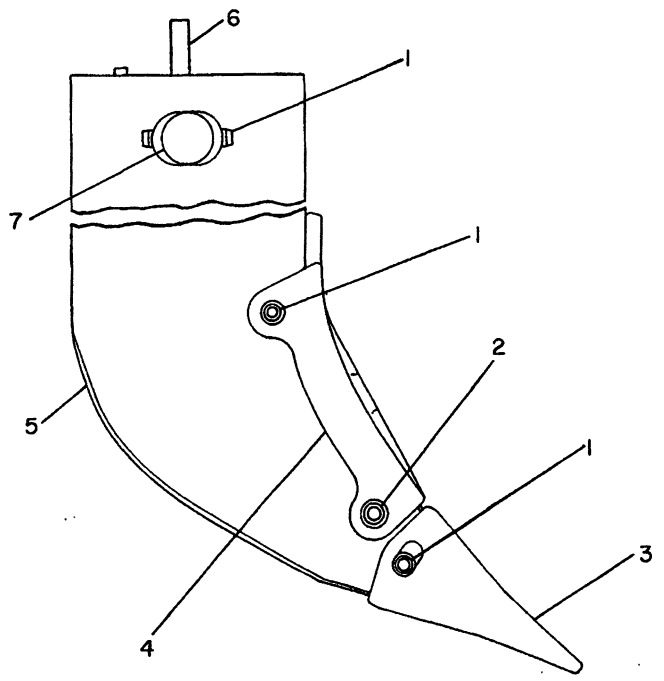

NOTE	REF NO	PART NUMBER	QTY	PART NAME
	1	4T2479	4	PIN AS (EACH INCLUDES)
		5J3576	1	SPRING
	2	6J8811	1	PIN AS
	4	6J8814	1	PROTECTOR
C	5	4T0136	1	SHANK AS-RIPPER
	6	3G5596	1	LUG
	7	6J6680	1	PIN

C-CHANGE FROM PREVIOUS TYPE

B-324539 EP

6810 **4T0139 TOOTH GP-RIPPER**
Part Of 4T0106 Ripper

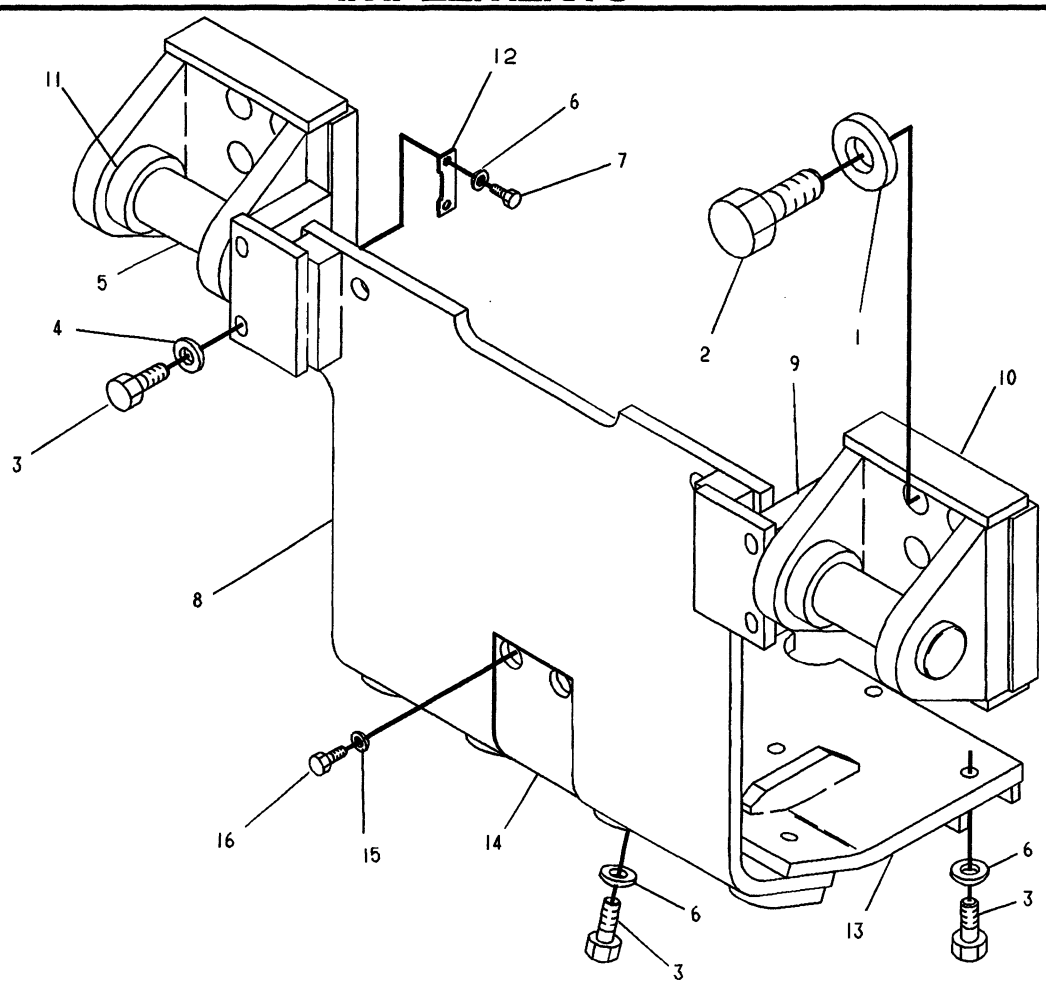

NOTE	REF NO	PART NUMBER	QTY	PART NAME	NOTE	REF NO	PART NUMBER	QTY	PART NAME
	1	3S6162	12	WASHER-HARD					
	2	1F6762	12	BOLT					
C	3	2A1538	14	BOLT					
C	4	5P6652	4	WASHER					
C	5	4T5282	2	PIN					
C	6	5P8248	14	WASHER-HARD					
C	7	OS1626	4	BOLT					
C	8	6T2140	1	GUARD AS					
C	9	6T2134	2	BLOCK					
C	10	4T3552	2	PLATE AS					
	11	4T1843	4	TUBE					
C	12	6T5261	2	BAR					
C	13	6T2139	1	GUARD AS					
C	14	6T2137	1	PLATE					
C	15	5P1076	4	WASHER-HARD					
C	16	OS1594	4	BOLT					

C-CHANGE FROM PREVIOUS TYPE

C-355236 P

6324 **4T0200 MOUNTING GP-RIPPER**
An Attachment

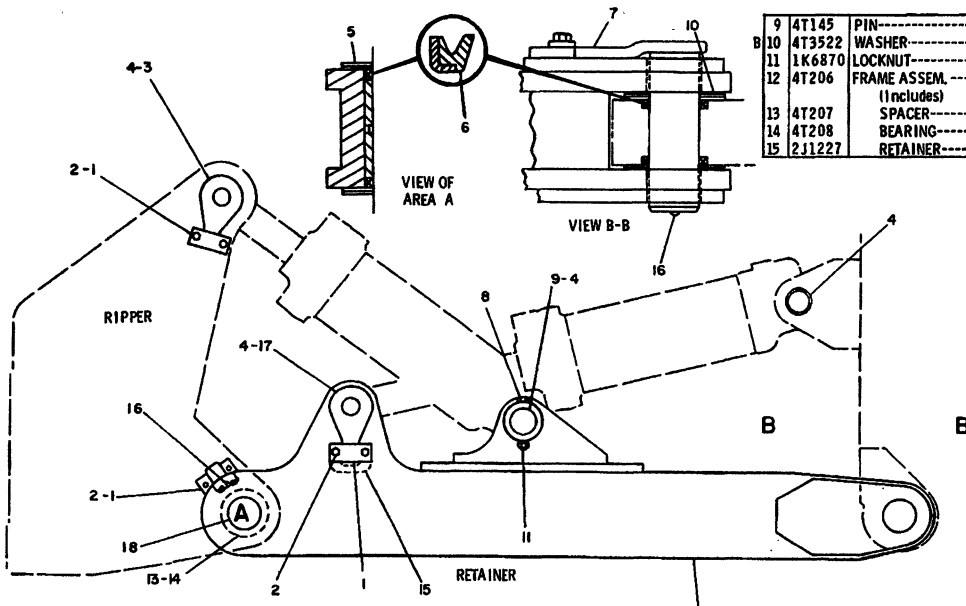

B	9	4T145	PIN	2
	10	4T3522	WASHER	8
	11	1K6870	LOCKNUT	2
	12	4T206	FRAME ASSEM. (Includes)	1
	13	4T207	SPACER	2
	14	4T208	BEARING	4
	15	2J1227	RETAINER	4

REF. NO.	PART NUMBER	DESCRIPTION	QTY.
1	3J6034	PLATE	8
2	S1583	BOLT	16
3	4T202	PIN ASSEM.	2

B	4	5P4061	SEAL	16
	5	9J4449	WASHER	8
	6	4J8981	SEAL	8
	7	4T205	PIN ASSEM.	2
	8	1D4615	BOLT	2

B USE AS REQUIRED

16	3B8489	FITTING	4
17	4T203	PIN ASSEM.	2
18	4T204	PIN ASSEM.	2

307922

307922 P

7067

4T3553 FRAME GP-RIPPER
Japan Market. Type 1
An Attachment

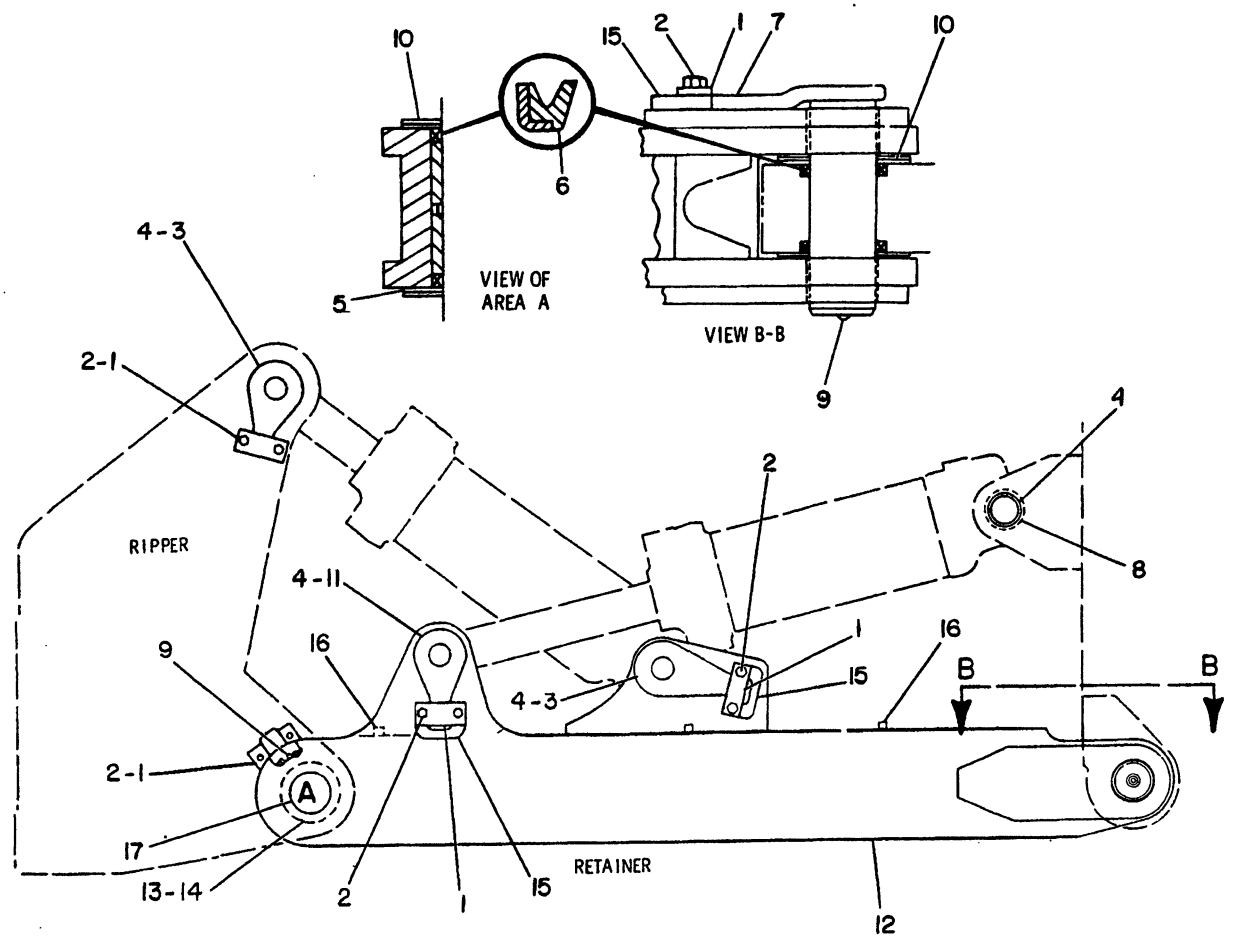

NOTE	REF NO	PART NUMBER	QTY	PART NAME
C	1	3J6034	10	PLATE
C	2	0S1626	20	BOLT
C		5P8248	20	WASHER-HARD
C	3	4T0202	4	PIN AS
	4	5P4061	16	SEAL-LIP
CB	5	9J4449	4	WASHER 24.13CM(9.50IN.)OD
	6	4J8981	8	SEAL-LIP
	7	4T0205	2	PIN AS
C	8	4T1843	4	TUBE
	9	3B8489	4	FITTING-GREASE
CB	10	4T3522	12	WASHER 17CM(6.69IN.)OD
	11	4T0203	2	PIN AS
C	12	4T8480	1	FRAME AS
	13	4T0207	2	SPACER
	14	4T0208	4	BEARING-SLEEVE
	15	2J1227	6	RETAINER
	16	3S5275	3	BLOCK
	17	4T0204	2	PIN AS

B-USE AS REQUIRED
C-CHANGE FROM PREVIOUS TYPE

B-406655 P

7067 **4T3553 FRAME GP-RIPPER**
Japan Market. Type 2
An Attachment

MEMORANDA

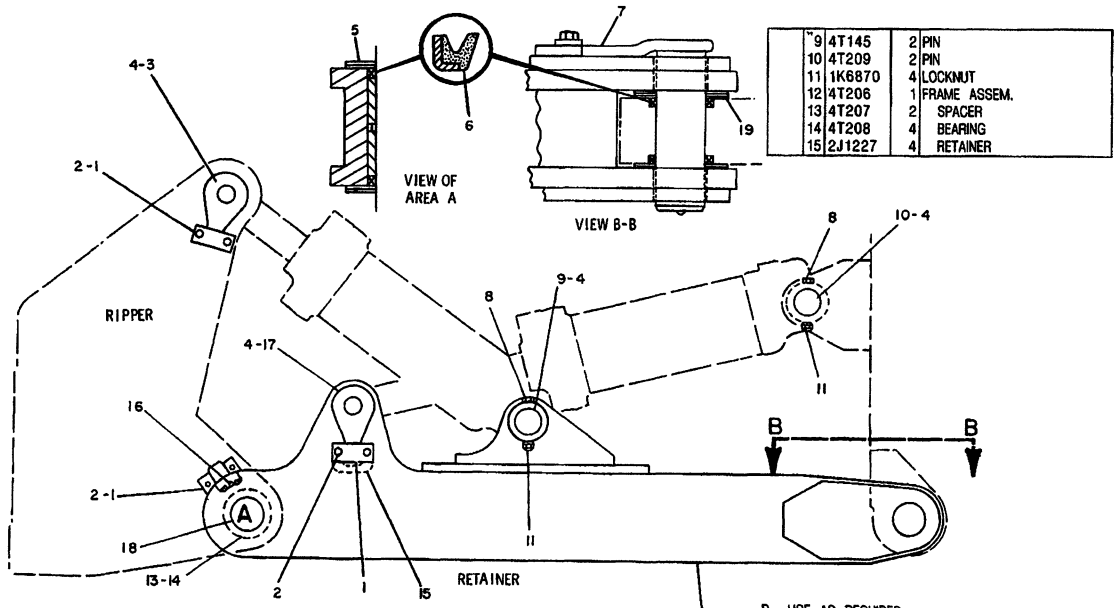

	9	4T145	2	PIN
	10	4T209	2	PIN
	11	1K6870	4	LOCKNUT
	12	4T206	1	FRAME ASSEM.
	13	4T207	2	SPACER
	14	4T208	4	BEARING
	15	2J1227	4	RETAINER

NOTE	REF NO	PART NUMBER	QTY	DESCRIPTION
	1	3J6034	8	PLATE
	2	S1583	16	BOLT
	3	4T202	2	PIN ASSEM.

	4	5P4061	16	SEAL
	5	9J4449	8	WASHER
	6	4J8981	8	SEAL
	7	4T205	2	PIN ASSEM.
	8	1D4615	4	BOLT

B USE AS REQUIRED
C INDICATES CHANGE

	16	3B8489	4	FITTING
	17	4T203	2	PIN ASSEM.
	18	4T204	2	PIN ASSEM.
CB	19	4T3522	8	WASHER

312212

312212 P

7067

4T0125 FRAME GP-RIPPER

Part Of 4T0148,4T0150 Ripper Ars
An Attachment

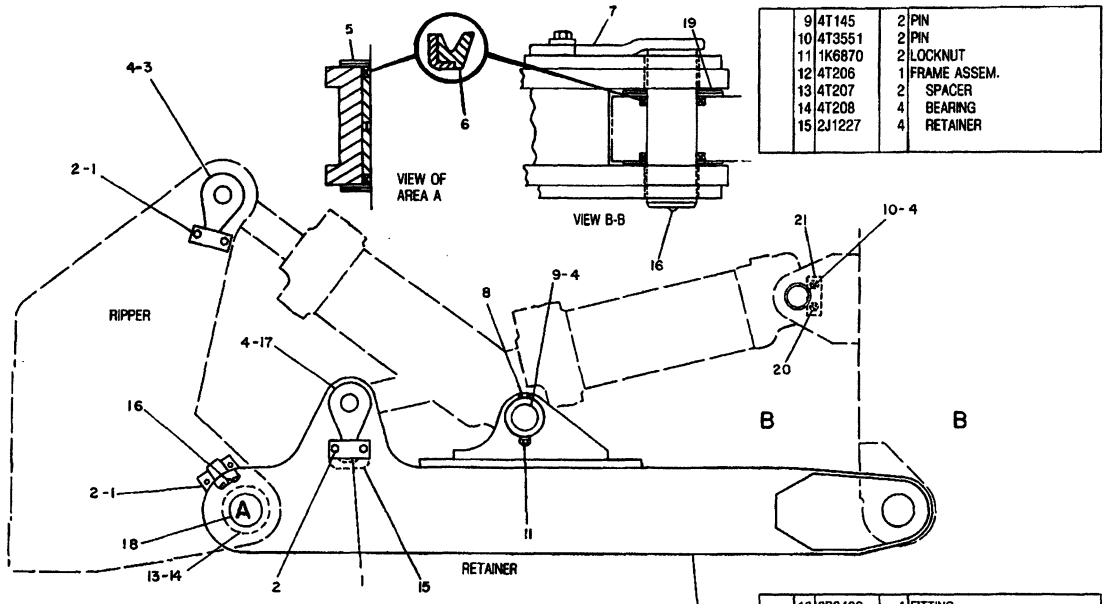

NOTE	REF NO	PART NUMBER	QTY	DESCRIPTION
	1	3J6034	8	PLATE
	2	S1583	16	BOLT
	3	4T202	2	PLATE ASSEM.
B	4	5P4061	16	SEAL
B	5	9J4449	8	WASHER
	6	4J8981	8	SEAL
	7	4T205	2	PIN ASSEM.
	8	1D4615	2	BOLT
	9	4T145	2	PIN
	10	4T3551	2	PIN
	11	1K6870	2	LOCKNUT
	12	4T206	1	FRAME ASSEM.
	13	4T207	2	SPACER
	14	4T208	4	BEARING
	15	2J1227	4	RETAINER
	16	3B8489	4	FITTING
	17	4T203	2	PIN ASSEM.
	18	4T204	2	PIN ASSEM.
B	19	4T3522	8	WASHER
	20	S1621	4	BOLT
	21	5K2266	2	BAR

B USE AS REQUIRED

307921

307921 P

7067 **4T3553 FRAME GP-RIPPER**

Type 1

An Attachment

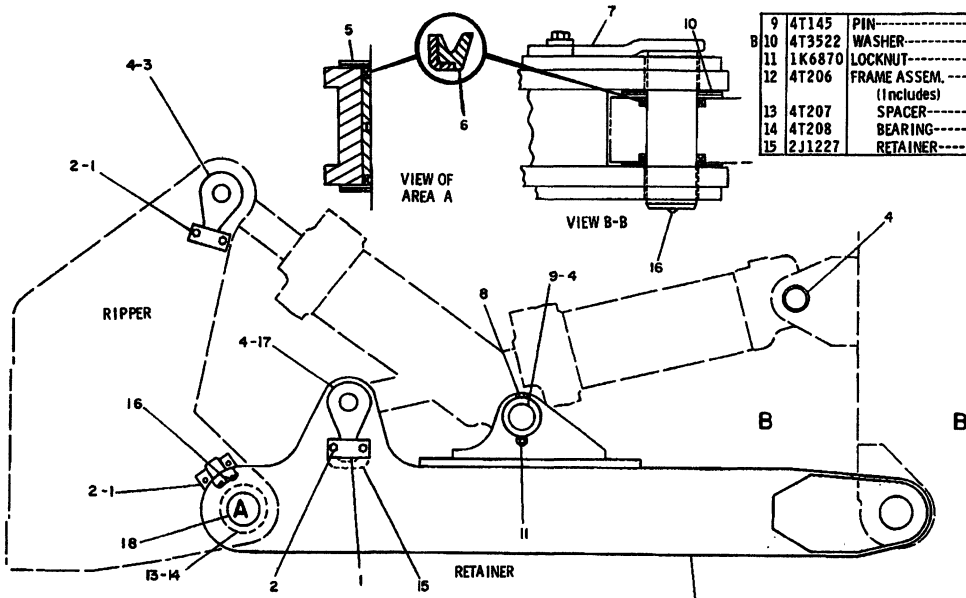

REF. NO.	PART NUMBER	DESCRIPTION	QTY.
1	3J6034	PLATE	8
2	S1583	BOLT	16
3	4T202	PIN ASSEM.	2
B 4	5P4061	SEAL	16
B 5	9J4449	WASHER	8
6	4J8981	SEAL	8
7	4T205	PIN ASSEM.	2
8	1D4615	BOLT	2
B 9	4T145	PIN	2
B 10	4T3522	WASHER	8
11	1K6870	LOCKNUT	2
12	4T206	FRAME ASSEM. (Includes)	1
13	4T207	SPACER	2
14	4T208	BEARING	4
15	2J1227	RETAINER	4
16	3B8489	FITTING	4
17	4T203	PIN ASSEM.	2
18	4T204	PIN ASSEM.	2

B USE AS REQUIRED

307922

307922 P

7067

4T3553 FRAME GP-RIPPER
Type 2
An Attachment

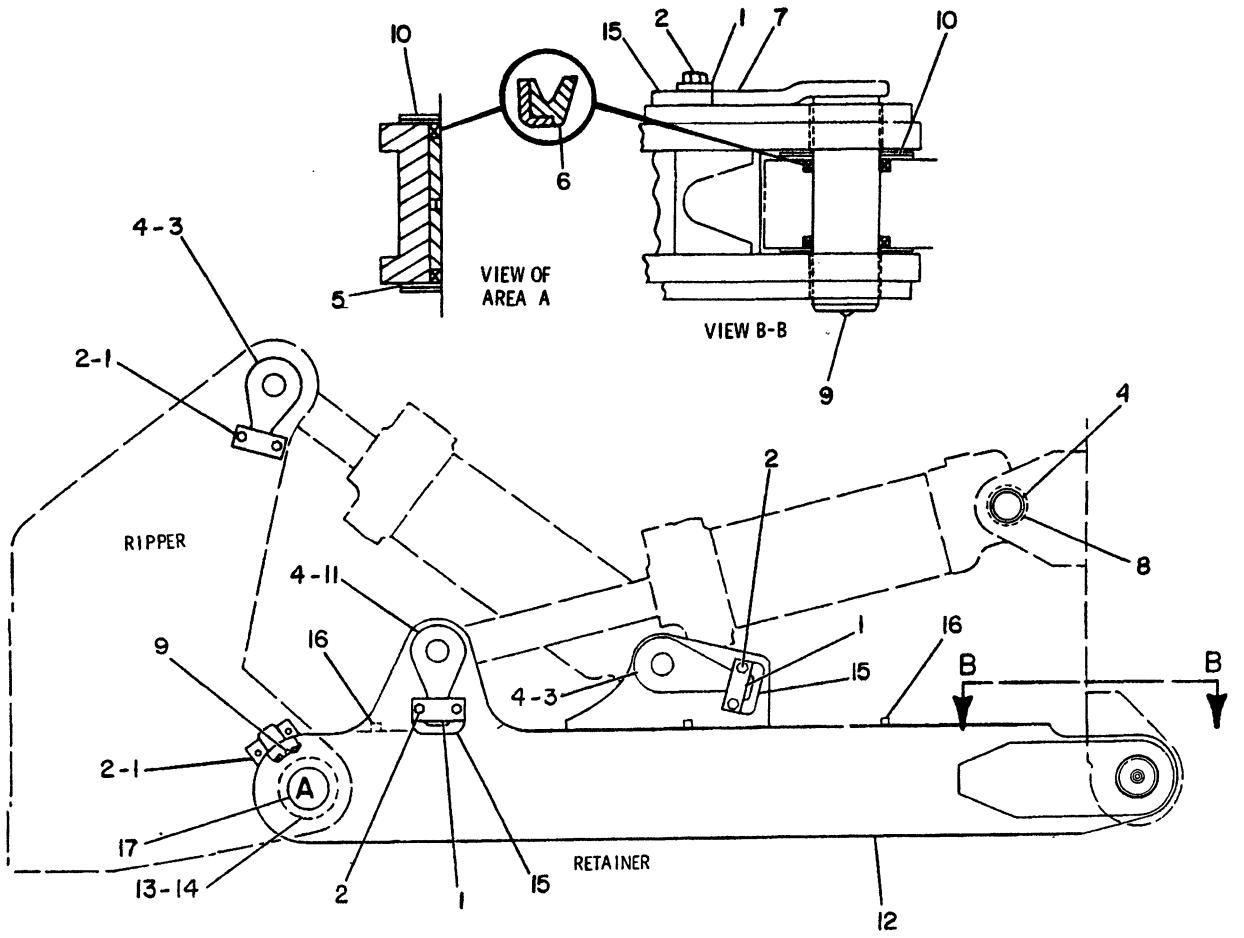

NOTE	REF NO	PART NUMBER	QTY	PART NAME	NOTE	REF NO	PART NUMBER	QTY	PART NAME
C	1	3J6034	10	PLATE					
C	2	0S1626	20	BOLT					
C		5P8248	20	WASHER-HARD					
C	3	4T0202	4	PIN AS					
	4	5P4061	16	SEAL-LIP TYPE					
CB	5	9J4449	4	WASHER 24.13CM(9.50IN.)OD					
	6	4J8981	8	SEAL-LIP TYPE					
	7	4T0205	2	PIN AS					
C	8	4T1843	4	TUBE					
	9	3B8489	4	FITTING-GREASE					
CB	10	4T3522	12	WASHER 17CM(6.69IN.)OD					
	11	4T0203	2	PIN AS					
C	12	4T8480	1	FRAME AS					
	13	4T0207	2	SPACER					
	14	4T0208	4	BEARING-SLEEVE					
	15	2J1227	6	RETAINER					
	16	3S5275	3	BLOCK					
	17	4T0204	2	PIN AS					

B-USE AS REQUIRED
C-CHANGE FROM PREVIOUS TYPE

B- 406655 P

7067 **4T3553 FRAME GP-RIPPER**
Type 3
An Attachment

IMPLEMENTS

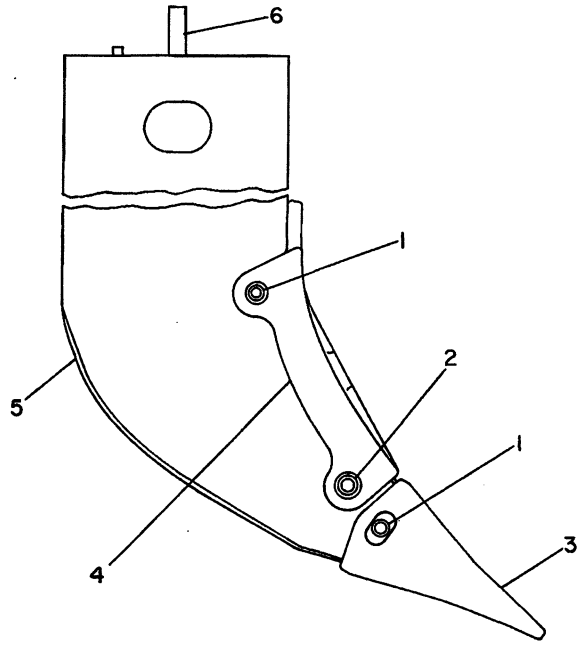

NOTE	REF NO	PART NUMBER	QTY	PART NAME
C	1	4T2479	2	PIN AS
				(EACH INCLUDES)
		5J3576	1	SPRING
	2	6J8811	1	PIN AS
		6J8809	1	SPRING
C	3	9W2451	1	TIP-RIPPER
	4	8E1848	1	PROTECTOR
	5	4T0135	1	SHANK AS-RIPPER
	6	3G5596	1	LUG

C-CHANGE FROM PREVIOUS TYPE

B-514022 P

6810 **4T0138 TOOTH GP-RIPPER**

Part Of 4T0146 Ripper

IMPLEMENTS

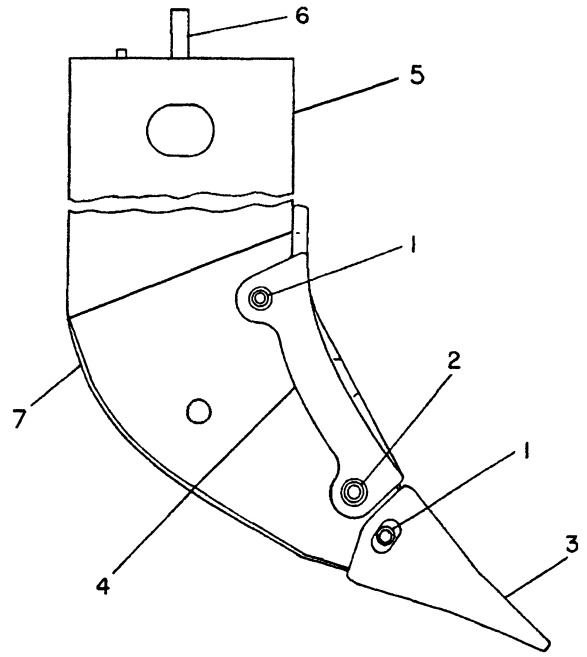

NOTE	REF NO	PART NUMBER	QTY	PART NAME
C	1	4T2479	2	PIN AS
				(EACH INCLUDES)
		5J3576	1	SPRING
	2	6J8811	1	PIN AS
		6J8809	1	SPRING
C	3	9W2451	1	TIP-RIPPER
	4	8E1848	1	PROTECTOR
	5	4T0134	1	SHANK AS-RIPPER
	6	3G5596	1	LUG
	7	4T8315	1	ADAPTER

C-CHANGE FROM PREVIOUS TYPE

R-524162 EP

6810 **4T0137 TOOTH GP-DEEP RIPPING SHANK**
Part Of 4T0147 Ripper Ar
An Attachment

	CONSISTS OF:	PAGE
1	8N7507 ACCESSORY GEAR GROUP	287
1	7G6788 GEAR PUMP GROUP	282
1	7G1189 WINCH ARRANGEMENT-TOWING	274
1	3T8358 WINCH CONTROL GROUP	284
1	6P8840 WINCH LINES GROUP	290
1	7G1194 WINCH MOUNTING GROUP	282

7G1188 WINCH AR
S/N 53Y1-2764
An Attachment

	CONSISTS OF:	PAGE
1	7G1190 CLUTCH AND GEAR GROUP	276
1	7G1180 COVERS AND CASE GROUP	288
1	7G4786 MAGNETIC SCREEN GROUP	283
1	3T4993 WINCH CONTROL GROUP	286
1	7G1265 WINCH LINES GROUP	291
1	7G1181 SHIPPING COVERS GROUP	296
1	6V0527 PLATE-SERIAL NUMBER-WINCH L.H. SIDE OF WINCH-FORWARD EDGE	
4	4B4158 DRIVE SCREW	

5163

7G1189 WINCH AR-TOWING
Winch S/N 83Y1-Up,8XB1-Up
Also Part Of 7G1188,6T0071,6T8412 Winch Ars

CONSISTS OF:

1 7T0408 WINCH INSTALLATION ARRANGEMENT..... 274.01

1 7G1189 WINCH ARRANGEMENT-TOWING..... 274

334887 P

5163 **6T8412 WINCH AR**
S/N 53Y2765-Up

PAGE

1 6T8414 WINCH MOUNTING GROUP..... 282.01

1 7G6788 GEAR PUMP GROUP..... 282

1 8N7507 ACCESSORY GEAR GROUP..... 287

1 6P8840 WINCH LINES GROUP..... 290

1 3T8358 WINCH CONTROL GROUP..... 284
S/N 53Y2765-3484

1 7T5461 WINCH CONTROL GROUP..... 285.01
S/N 53Y3485-UP

1 1J2859 SEAL

1 4F9653 SEAL

453724 P

6312 **7T0408 INSTALLATION AR-WINCH**
Part Of 6T8412 Winch

MEMORANDA

CONSISTS OF:

1 1P2179 INPUT GEAR-UPPER

1 8P1083 INPUT GEAR-LOWER

107618 P

5165 **7G5666 CONVERSION GP-WINCH-SLOW SPEED**
Winch S/N 83Y1-Up. Part Of 6T0071 Winch Ar
Must Be Used With 7G1188 Winch Ar
An Attachment

CONSISTS OF: PAGE

1 7G1189 WINCH ARRANGEMENT..... 274

1 7G5666 WINCH CONVERSION GROUP..... 275

305607 P

5163 **6T0071 WINCH AR-POWER SHIFT-LOW SPEED**
Winch S/N 83Y1-Up
An Attachment

REFER TO ALL ILLUSTRATIONS OF THIS GROUP FOR AUXILIARY VIEWS

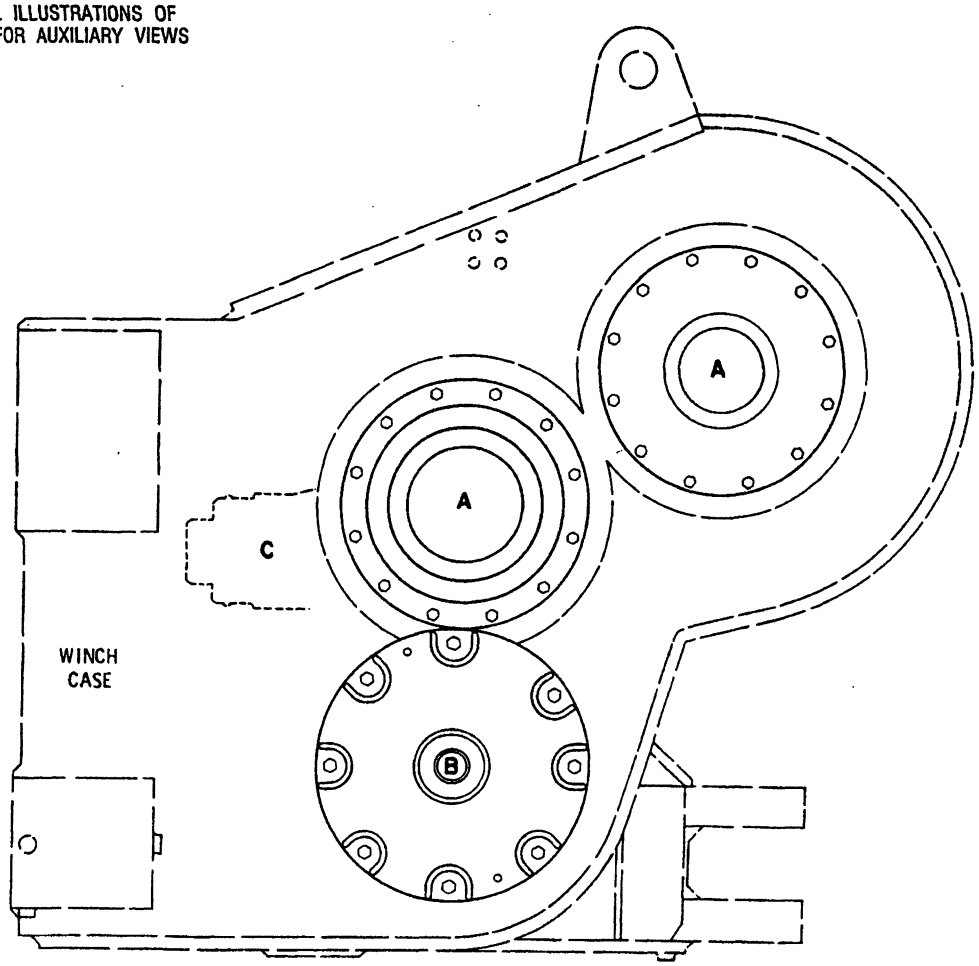

NOTE	REF NO	PART NUMBER	QTY	PART NAME	NOTE	REF NO	PART NUMBER	QTY	PART NAME
				REFER TO ALL ILLUSTRATIONS OF THIS GROUP FOR SERVICEABLE PARTS.					

B-235196 EP

5167

7G1190 CLUTCH & GEAR GP-PART 1 OF 6

S/N 83Y1-473

Part Of 7G1189 Winch

Note: 2P9287 & 2P9292 Available To Convert To An Underwind Winch

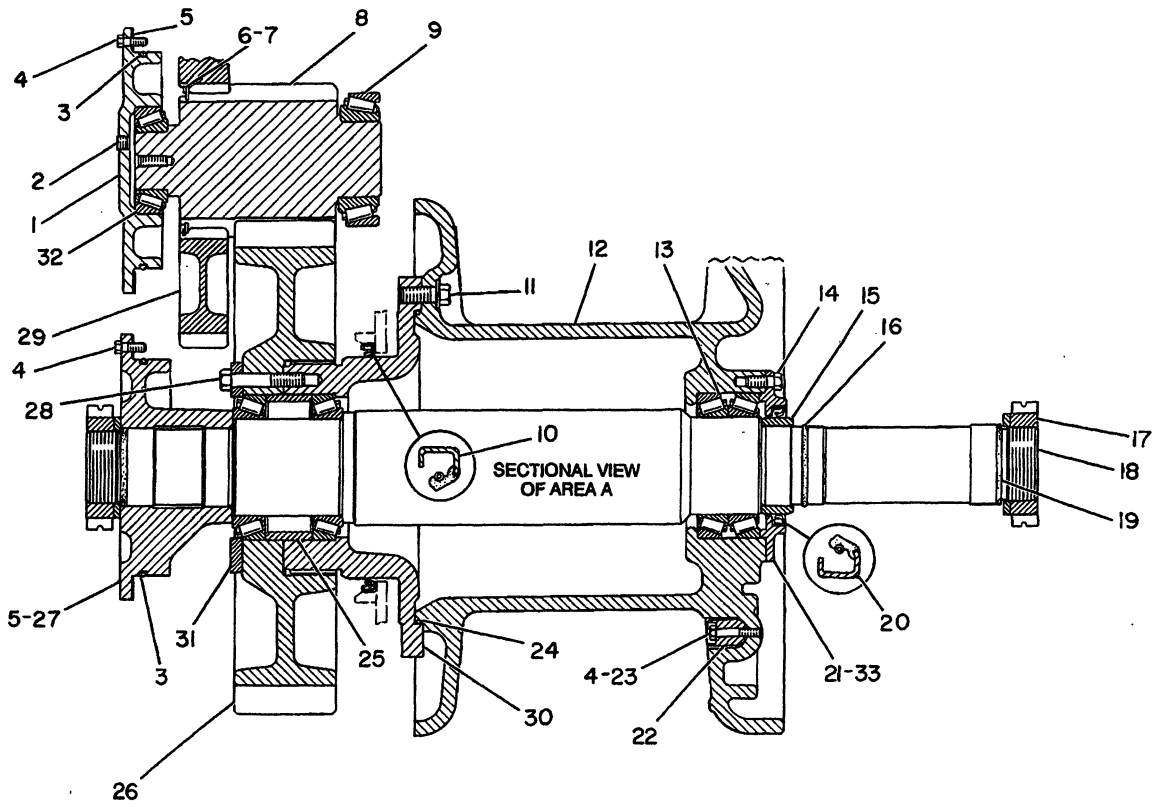

NOTE	REF NO	PART NUMBER	QTY	PART NAME	NOTE	REF NO	PART NUMBER	QTY	PART NAME
	1	7G0378	1	CAGE-BEARING		22	1P4106	1	CLAMP
	2	4B4845	1	PLUG		23	0S1590	1	BOLT 5.08CM(2IN)LONG
	3	1J2890	2	SEAL-O-RING		24	4D6695	1	SEAL-O-RING
	4	1A2029	25	BOLT 2.85CM(1.125IN)LONG		25	1P3276	1	SPACER
B	5	1P6181	4	SHIM PACK		26	2P1992	1	GEAR (52 TEETH)
	6	2P1994	2	PLATE		27	8P0847	1	FLANGE
	7	2M3827	1	RING-RETAINING		28	1D4585	8	BOLT
	8	2P1993	1	GEAR-PINION (14 TEETH)		29	1P5273	1	GEAR (14 TEETH)
	9	1P5420	1	CUP-ROLLER BEARING		30	7G1264	1	SUPPORT
		1P5419	1	CONE-ROLLER BEARING		31	1P3240	1	RING
	10	1S5347	1	SEAL-LIP		32	6S2828	1	CUP-ROLLER BEARING
	11	0S1589	18	BOLT			6S2829	1	CONE-ROLLER BEARING
		5P8247	18	WASHER-HARD	B	33	7M7260		GASKET-LIQUID
	12	1P2553	1	DRUM AS					
	13	8S9076	4	CUP-BEARING					
		8S9075	4	CONE-BEARING					
	14	0S1595	6	BOLT					
	15	1P6754	1	SPACER					
	16	2H6184	1	SEAL-O-RING					
	17	5M2130	2	NUT					
		3P0719	2	WASHER					
	18	7G1256	1	SHAFT AS-DRUM					
		4B9783	1	BALL					
	19	5H2824	2	SEAL-O-RING					
	20	3F1395	1	SEAL-LIP					
	21	1P4105	1	RETAINER-SEAL					

B-USE AS REQUIRED

B- 235197 P

5167 **7G1190 CLUTCH & GEAR GP-PART 2 OF 6**

S/N 83Y1-473

Part Of 7G1189 Winch

Note: 2P9287 & 2P9292 Available To Convert To An Underwind Winch

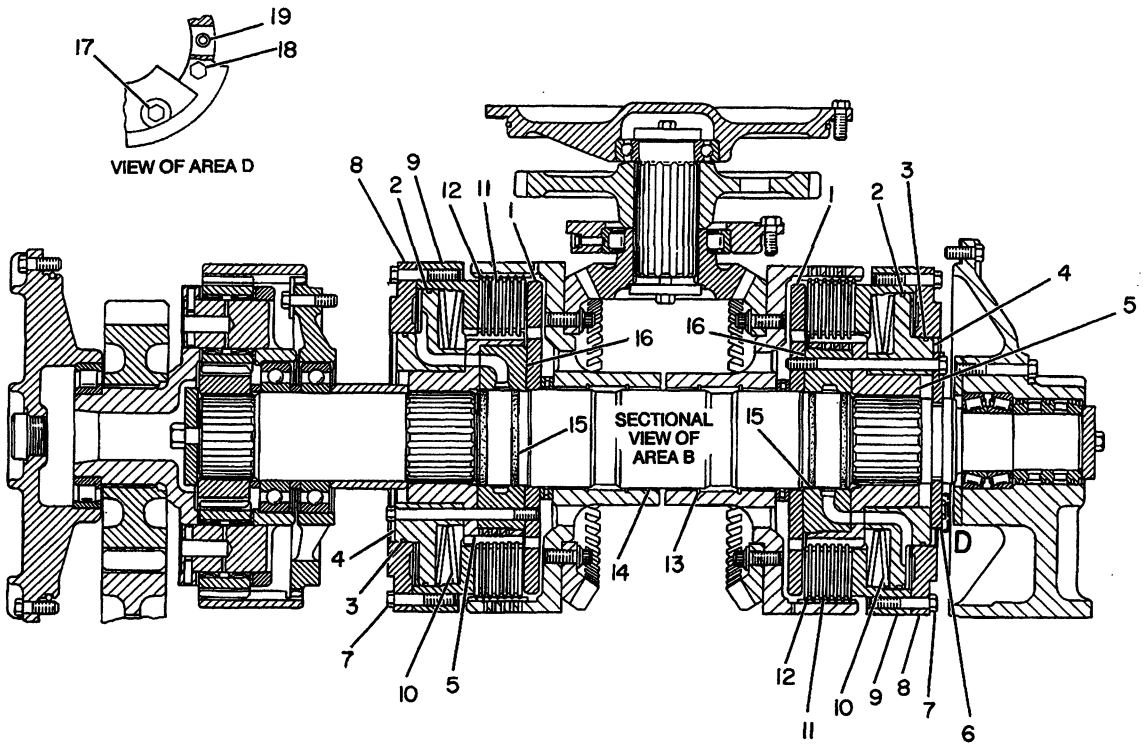

NOTE	REF NO	PART NUMBER	QTY	PART NAME	NOTE	REF NO	PART NUMBER	QTY	PART NAME
	1	1P6167	2	PLATE					
	2	8S3371	2	RING-SEAL					
	3	1S9497	2	RING-SEAL					
	4	1P6158	2	MANIFOLD					
	5	1P6155	2	HUB-CLUTCH					
	6	1P6176	2	PLATE-LOCKING					
	7	0S1590	16	BOLT					
	8	1P6153	2	PLATE					
	9	1P6179	2	HUB AS-CLUTCH					
	10	6P3767	4	SPRING-DISC					
	11	2P4370	12	PLATE-CLUTCH					
	12	2P4371	14	DISC-FRICTION					
	13	3J8903	4	RING-RETAINING					
	14	2P1005	4	BEARING-SLEEVE					
	15	6H3977	4	SEAL-O-RING					
	16	1P5294	2	MANIFOLD					
	17	5B2638	6	BOLT 13.3CM(5.25IN)LONG					
	18	5B9603	10	BOLT 12.7CM(5IN)LONG					
	19	3S4346	4	BOLT-12 POINT HEAD (12 POINT)					

B-235198 P

5167 **7G1190 CLUTCH & GEAR GP-PART 3 OF 6**

S/N 83Y1-473

Part Of 7G1189 Winch

Note: 2P9287 & 2P9292 Available To Convert To An Underwind Winch

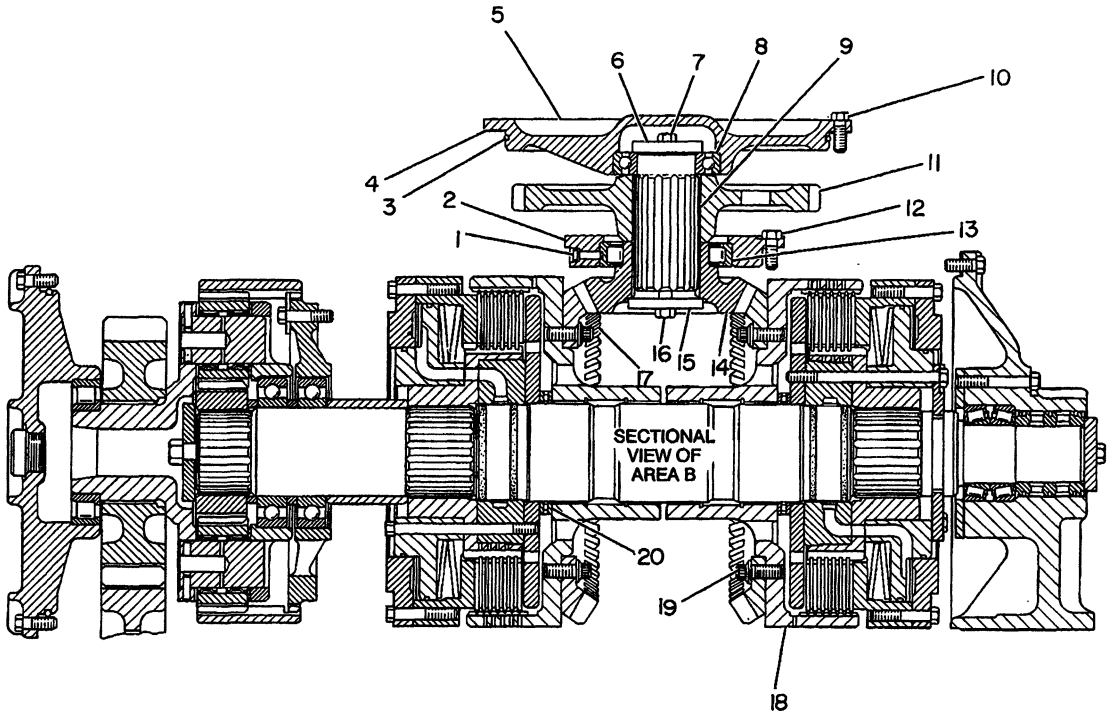

NOTE	REF NO	PART NUMBER	QTY	PART NAME	NOTE	REF NO	PART NUMBER	QTY	PART NAME
	1	0L1026	1	PLUG-CUP					
		4M1712	1	DOWEL					
	2	1P6173	1	CAGE-BEARING					
	3	5H4909	1	SEAL-O-RING					
B	4	1P6175	4	SHIM PACK					
	5	3T2176	1	CAGE-BEARING					
	6	5S3552	1	PLATE					
	7	1A2209	1	BOLT					
	8	1T0043	1	BALL BEARING					
	9	3P7238	1	SHAFT-PINION					
	10	0L1351	6	BOLT					
	11	7G1259	1	GEAR (59 TEETH)					
	12	0S1594	4	BOLT					
	13	1J9227	1	BEARING (OUTER)					
	14	3P7237	1	PINION-BEVEL					
	15	3S4388	1	WASHER-RETAINER					
	16	0L0139	1	BOLT					
	17	1P5269	2	GEAR-BEVEL (58 TEETH)					
	18	1P5292	2	HOUSING					
	19	9M6590	12	BOLT-12 POINT HEAD					
	20	1P6071	4	RACE-THRUST BEARING					
		1P6070	2	BEARING-THRUST					

B-USE AS REQUIRED

B-235199 P

5167 **7G1190 CLUTCH & GEAR GP-PART 4 OF 6**

S/N 83Y1-473

Part Of 7G1189 Winch

Note: 2P9287 & 2P9292 Available To Convert To An Underwind Winch

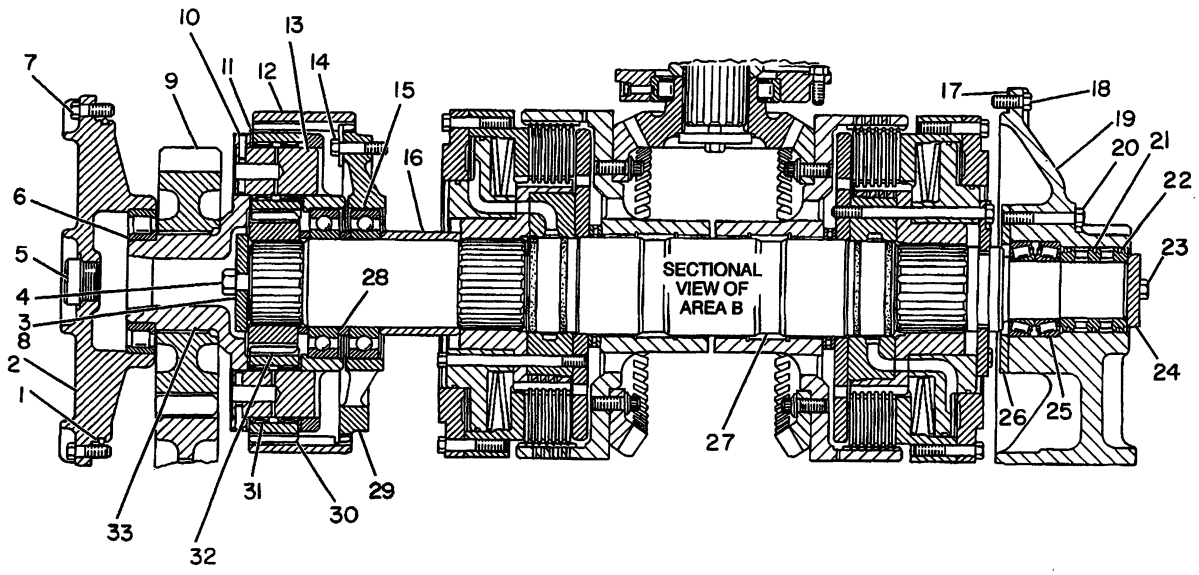

NOTE	REF NO	PART NUMBER	QTY	PART NAME	NOTE	REF NO	PART NUMBER	QTY	PART NAME
	1	5H4909	1	SEAL-O-RING		23	0S1588	2	BOLT
	2	8P3741	1	CAGE-BEARING		24	1P6180	1	WASHER-RETAINER
	3	2S6408	1	WASHER-RETAINING		25	9S3581	2	CUP-ROLLER BEARING
	4	0L2315	1	BOLT			9S3582	2	CONE-ROLLER BEARING
	5	4J4742	1	BODY AS-GAUGE		26	1P4232	1	RETAINER
		4J4809	1	WASHER		27	7G1257	1	SHAFT AS-CLUTCH
		7M8485	1	SEAL-O-RING			4B9784	1	BALL (LARGE)
	6	5S5729	1	RACE-BEARING INNER			4B9783	1	BALL (SMALL)
		2D5173	1	BEARING		28	2P1990	2	SPACER
	7	1A2029	8	BOLT		29	1P6209	1	CAGE-BEARING
B	8	2P1985	1	SHIM PACK		30	7G2500	4	GEAR-PLANETARY (23 TEETH)
	9	1P4233	1	GEAR (28 TEETH)					
	10	3S2708	4	PIN-SPRING		31	4M3915	8	BEARING-CAGED
	11	7G0896	8	DISC-THRUST		32	1P6182	1	GEAR-SUN (35 TEETH)
	12	2P1981	1	GEAR-RING (81 TEETH)		33	2P1984	1	CARRIER AS
	13	1P4056	4	SHAFT-PLANETARY					
	14	2A4639	8	BOLT					
		1P6188	4	PLATE-LOCKING					
	15	8B8439	2	BALL BEARING					
	16	7G0362	1	SPACER					
B	17	1P6178	2	SHIM PACK					
	18	0S1594	9	BOLT					
	19	1P5290	1	MANIFOLD-OIL					
	20	0L1143	4	BOLT					
	21	9F7378	3	RING-SEAL					
	22	1P6172	1	SLEEVE-SEAL RING					

B-USE AS REQUIRED

B-235200 P

5167

7G1190 CLUTCH & GEAR GP-PART 5 OF 6

S/N 83Y1-473

Part Of 7G1189 Winch

Note: 2P9287 & 2P9292 Available To Convert To An Underwind Winch

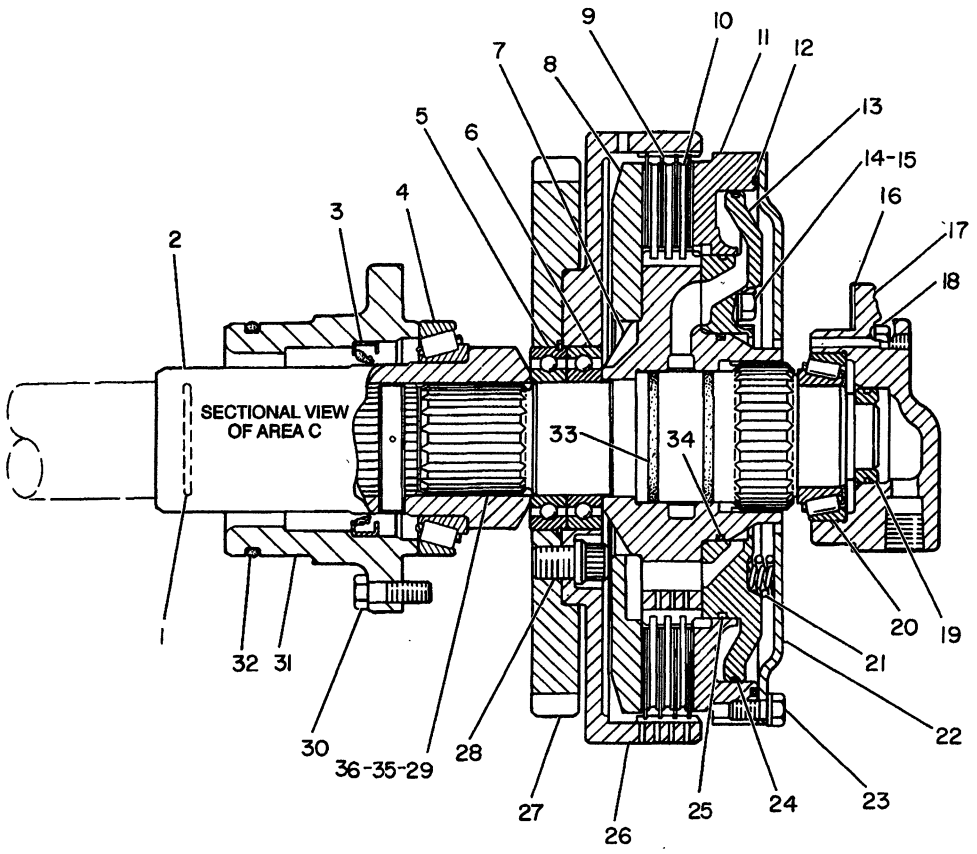

NOTE	REF NO	PART NUMBER	QTY	PART NAME	NOTE	REF NO	PART NUMBER	QTY	PART NAME
	1	6V2859	1	SEAL-O-RING		23	0S0509	12	BOLT
	2	7G1254	1	COUPLING AS			5S3618	6	LOCK
	3	4B8024	1	SEAL-LIP		24	1S9498	1	RING-SEAL
	4	9S7949	1	CUP-ROLLER BEARING		25	1S9497	1	RING-SEAL
		9S7950	1	CONE-ROLLER BEARING		26	1P2176	1	HUB-OUTER CLUTCH
	5	3K0526	1	BALL BEARING		27	7G1259	1	GEAR (59 TEETH)
	6	9M1997	1	BALL BEARING		28	1S9808	12	BOLT-12 POINT HEAD
	7	2P1986	1	HUB-CLUTCH		29	3T4580	1	SHAFT-CLUTCH
	8	1P2178	1	PLATE-REACTION		30	0S1588	6	BOLT
	9	2P9343	4	DISC-FRICTION		31	7G1263	1	RETAINER-SEAL
	10	2P4370	3	PLATE-CLUTCH		32	1J2859	1	SEAL
	11	2P1976	1	PISTON-CLUTCH		33	8F6711	2	SEAL-O-RING
	12	5S3676	1	SEAL-O-RING		34	1H8128	1	SEAL-O-RING
	13	2P3566	1	MANIFOLD-OIL		35	3T4968	1	PLUG-ORIFICE
	14	0L1143	6	BOLT	C	36	1S1638	1	RING-RETAINING
	15	5M2894	6	WASHER					
B	16	6P4685	2	SHIM PACK					
	17	6P4684	1	CAGE-BEARING					
	18	0S1594	4	BOLT					
	19	5S0969	1	CARRIER-RING					
		2K5957	1	RING-SEALING					
	20	9S3581	1	CUP-ROLLER BEARING					
		9S3582	1	CONE-ROLLER BEARING					
	21	2P2934	6	SPRING (OUTER)					
		2P2935	6	SPRING (INNER)					
	22	5S3664	1	PISTON-BALANCE					

B-USE AS REQUIRED
C-CHANGE FROM PREVIOUS TYPE

B- 305388 P

5167 **7G1190 CLUTCH & GEAR GP-PART 6 OF 6**

S/N 83Y1-473

Part Of 7G1189 Winch

Note: 2P9287 & 2P9292 Available To Convert To An Underwind Winch

REFER TO ALL ILLUSTRATIONS OF THIS GROUP FOR AUXILIARY VIEWS

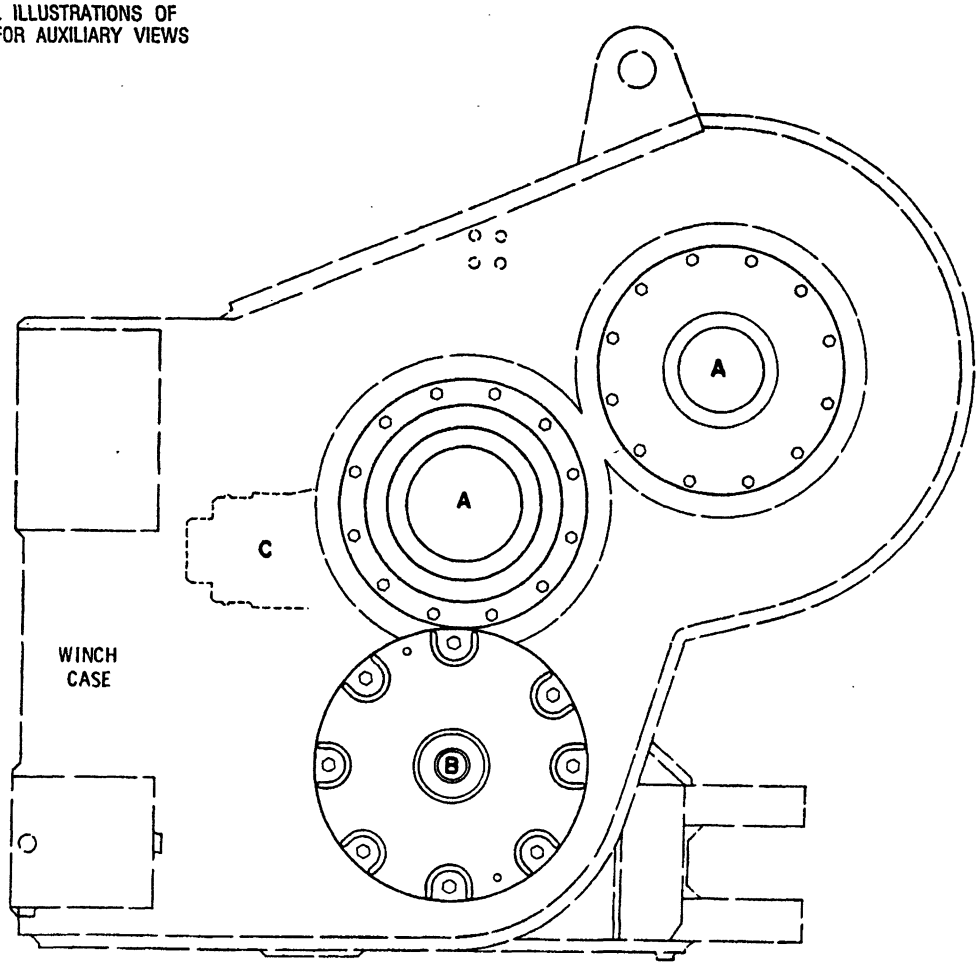

NOTE	REF NO	PART NUMBER	QTY	PART NAME	NOTE	REF NO	PART NUMBER	QTY	PART NAME
				REFER TO ALL ILLUSTRATIONS OF THIS GROUP FOR SERVICEABLE PARTS.					

B-235196 EP

5167

7G1190 CLUTCH & GEAR GP-PART 1 OF 6

S/N 83Y474-Up

Part Of 7G1189 Winch

Note: 2P9287 & 2P9292 Available To Convert To An Underwind Winch

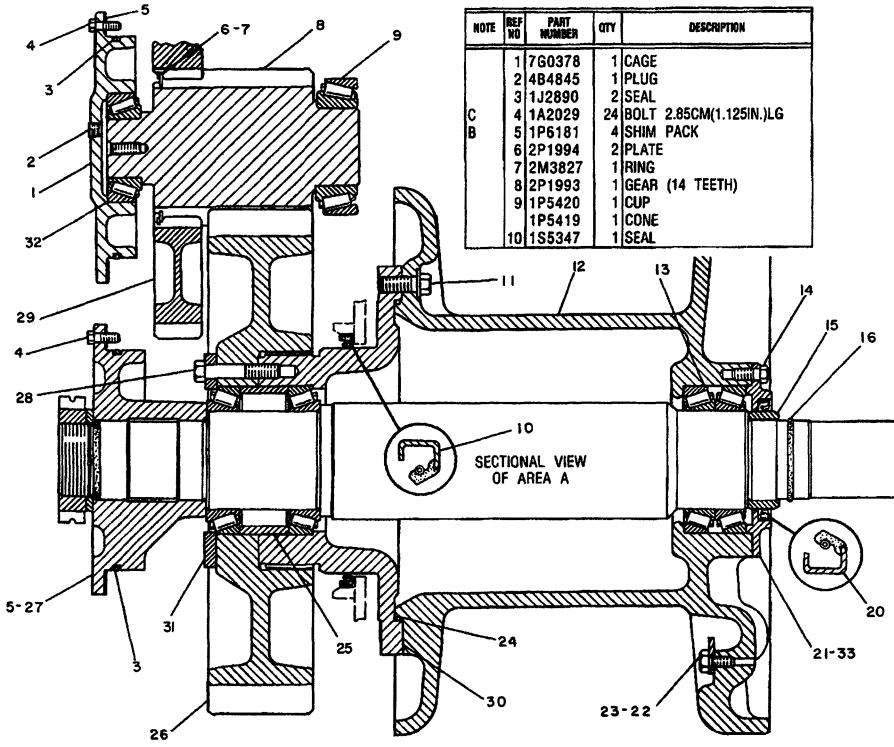

NOTE	REF NO	PART NUMBER	QTY	DESCRIPTION
	1	7G0378	1	CAGE
	2	4B4845	1	PLUG
	3	1J2890	2	SEAL
C	4	1A2029	24	BOLT 2.85CM(1.125IN.)LG
B	5	1P6181	4	SHIM PACK
	6	2P1994	2	PLATE
	7	2M3827	1	RING
	8	2P1993	1	GEAR (14 TEETH)
	9	1P5420	1	CUP
		1P5419	1	CONE
	10	1S5347	1	SEAL
	11	0S1589	18	BOLT
		5P8247	18	WASHER
C	12	3T9196	1	DRUM AS.
	13	8S9076	4	CUP
		8S9075	4	CONE
	14	0S1595	6	BOLT
	15	1P6754	1	SPACER
	16	2H6184	1	SEAL
	17	5M2130	2	NUT
		3P0719	2	WASHER
	18	7G1256	1	SHAFT AS.
		4B9783	1	BALL
	19	5H2824	2	SEAL
	20	3F1395	1	SEAL
	21	1P4105	1	RETAINER
C	22	6G0773	1	LUG
C	23	0S1621	1	BOLT
	24	4D6695	1	SEAL
	25	1P3276	1	SPACER
	26	2P1992	1	GEAR (52 TEETH)

B USE AS REQUIRED

	27	8P0847	1	FLANGE
	28	1D4585	8	BOLT
	29	1P5273	1	GEAR (14 TEETH)
	30	7G1264	1	SUPPORT
	31	1P3240	1	RING
	32	6S2828	1	CUP
		6S2829	1	CONE
B	33	7M7260		LIQUID GASKET

C INDICATES CHANGE

330020

330020 P

5167 **7G1190 CLUTCH & GEAR GP-PART 2 OF 6**

S/N 83Y474-Up

Part Of 7G1189 Winch

Note: 2P9287 & 2P9292 Available To Convert To An Underwind Winch

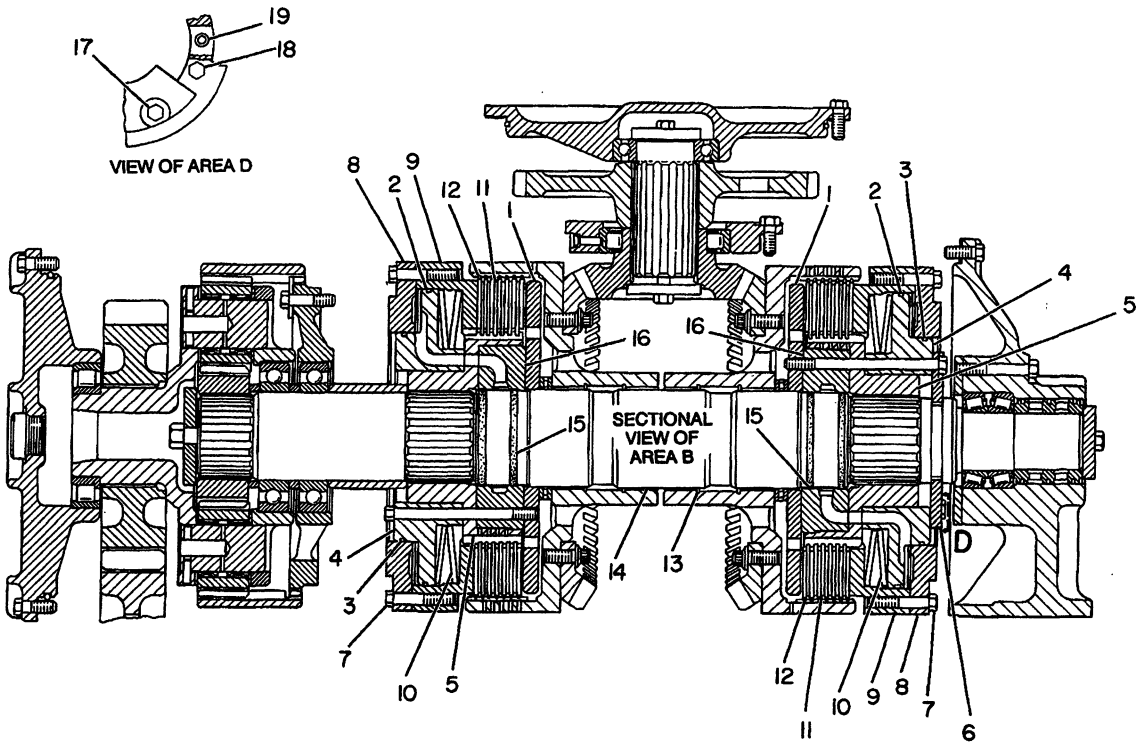

NOTE	REF NO	PART NUMBER	QTY	PART NAME	NOTE	REF NO	PART NUMBER	QTY	PART NAME
	1	1P6167	2	PLATE					
	2	8S3371	2	RING-SEAL					
	3	1S9497	2	RING-SEAL					
	4	1P6158	2	MANIFOLD					
	5	1P6155	2	HUB-CLUTCH					
	6	1P6176	2	PLATE-LOCKING					
	7	0S1590	16	BOLT					
	8	1P6153	2	PLATE					
	9	1P6179	2	HUB AS-CLUTCH					
	10	6P3767	4	SPRING-DISC					
	11	2P4370	12	PLATE-CLUTCH					
	12	2P4371	14	DISC-FRICTION					
	13	3J8903	4	RING-RETAINING					
	14	2P1005	4	BEARING-SLEEVE					
	15	6H3977	4	SEAL-O-RING					
	16	1P5294	2	MANIFOLD					
	17	5B2638	6	BOLT 13.3CM(5.25IN)LONG					
	18	5B9603	10	BOLT 12.7CM(5IN)LONG					
	19	3S4346	4	BOLT-12 POINT HEAD (12 POINT)					

B-235198 P

5167

7G1190 CLUTCH & GEAR GP-PART 3 OF 6

S/N 83Y474-Up

Part Of 7G1189 Winch

Note: 2P9287 & 2P9292 Available To Convert To An Underwind Winch

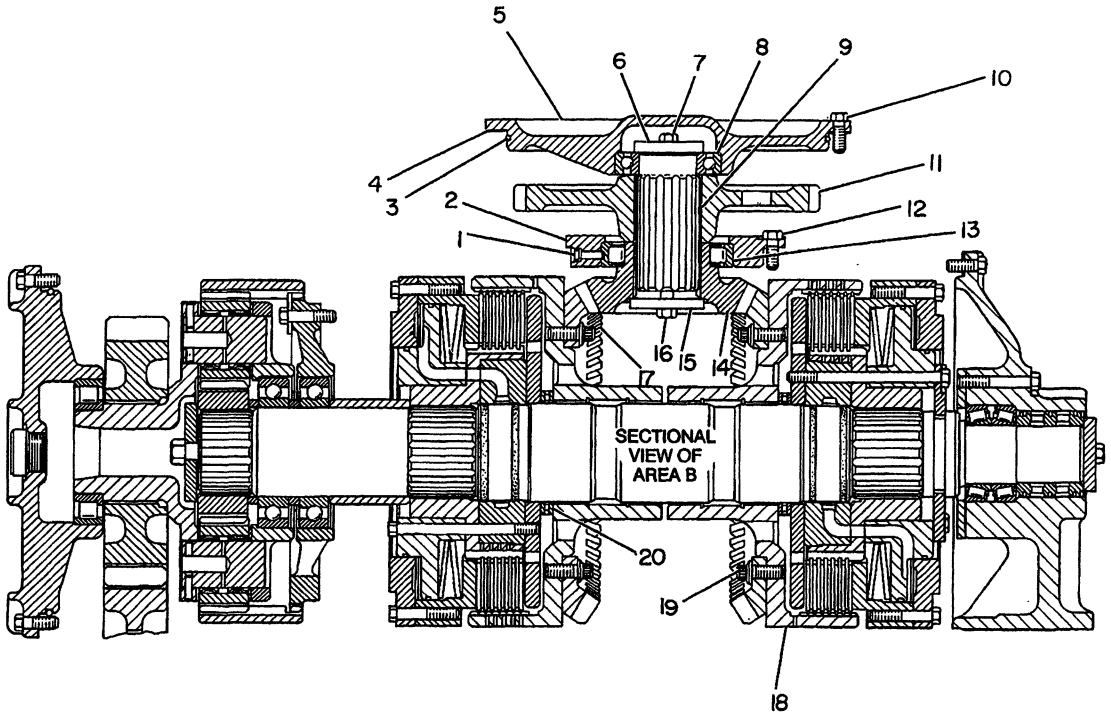

NOTE	REF NO	PART NUMBER	QTY	PART NAME	NOTE	REF NO	PART NUMBER	QTY	PART NAME
	1	0L1026	1	PLUG-CUP					
		4M1712	1	DOWEL					
	2	1P6173	1	CAGE-BEARING					
	3	5H4909	1	SEAL-O-RING					
B	4	1P6175	4	SHIM PACK					
	5	3T2176	1	CAGE-BEARING					
	6	5S3552	1	PLATE					
	7	1A2209	1	BOLT					
	8	1T0043	1	BALL BEARING					
	9	3P7238	1	SHAFT-PINION					
	10	0L1351	6	BOLT					
	11	7G1259	1	GEAR (59 TEETH)					
	12	0S1594	4	BOLT					
	13	1J9227	1	BEARING (OUTER)					
	14	3P7237	1	PINION-BEVEL					
	15	3S4388	1	WASHER-RETAINER					
	16	0L0139	1	BOLT					
	17	1P5269	2	GEAR-BEVEL (58 TEETH)					
	18	1P5292	2	HOUSING					
	19	9M6590	12	BOLT-12 POINT HEAD					
	20	1P6071	4	RACE-THRUST BEARING					
		1P6070	2	BEARING-THRUST					

B-USE AS REQUIRED

B-235199 P

5167 **7G1190 CLUTCH & GEAR GP-PART 4 OF 6**

S/N 83Y474-Up

Part Of 7G1189 Winch

Note: 2P9287 & 2P9292 Available To Convert To An Underwind Winch

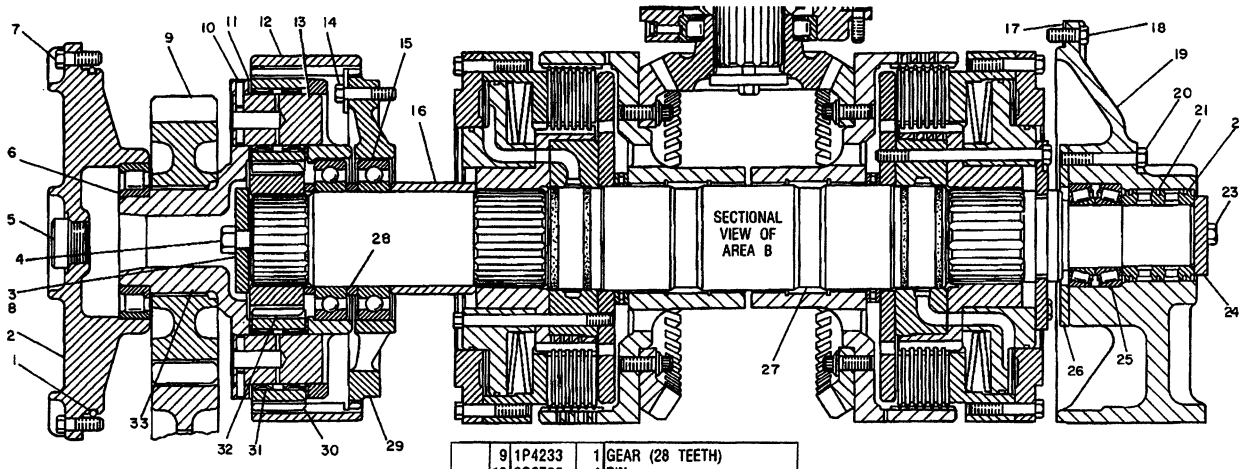

NOTE	REF NO	PART NUMBER	QTY	DESCRIPTION
	1	5H4909	1	SEAL
	2	8P3741	1	CAGE
	3	2S6408	1	WASHER
	4	0L2315	1	BOLT
	5	4J4742	1	BODY AS.
		4J4809	1	WASHER
		7M8485	1	SEAL
	6	5S5729	1	RACE
		2D5173	1	BEARING
	7	1A2029	8	BOLT
B	8	2P1985	1	SHIM PACK
	9	1P4233	1	GEAR (28 TEETH)
	10	3S2708	4	PIN
C	11	3T5834	8	WASHER (THRUST)
	12	2P1981	1	GEAR (81 TEETH)
	13	1P4056	4	SHAFT
	14	2A4639	8	BOLT
		1P6188	4	PLATE
	15	8B8439	2	BEARING
	16	7G0362	1	SPACER
B	17	1P6178	2	SHIM PACK
	18	0S1594	9	BOLT
	19	1P5290	1	MANIFOLD
	20	0L1143	4	BOLT
	21	9F7378	3	RING
	22	1P6172	1	SLEEVE
	23	0S1588	2	BOLT
	24	1P6180	1	WASHER
	25	9S3581	2	CUP
		9S3582	2	CONE
	26	1P4232	1	RETAINER
	27	7G1257	1	SHAFT AS.
		4B9784	1	BALL (LARGE)
		4B9783	1	BALL (SMALL)
	28	2P1990	2	SPACER
	29	1P6209	1	CAGE
	30	7G2500	4	GEAR (23 TEETH)
	31	4M3915	8	BEARING
	32	1P6182	1	GEAR (35 TEETH)
	33	2P1984	1	CARRIER AS.

B USE AS REQUIRED

C INDICATES CHANGE

330022

330022 P

5167

7G1190 CLUTCH & GEAR GP-PART 5 OF 6

S/N 83Y474-Up

Part Of 7G1189 Winch

Note: 2P9287 & 2P9292 Available To Convert To An Underwind Winch

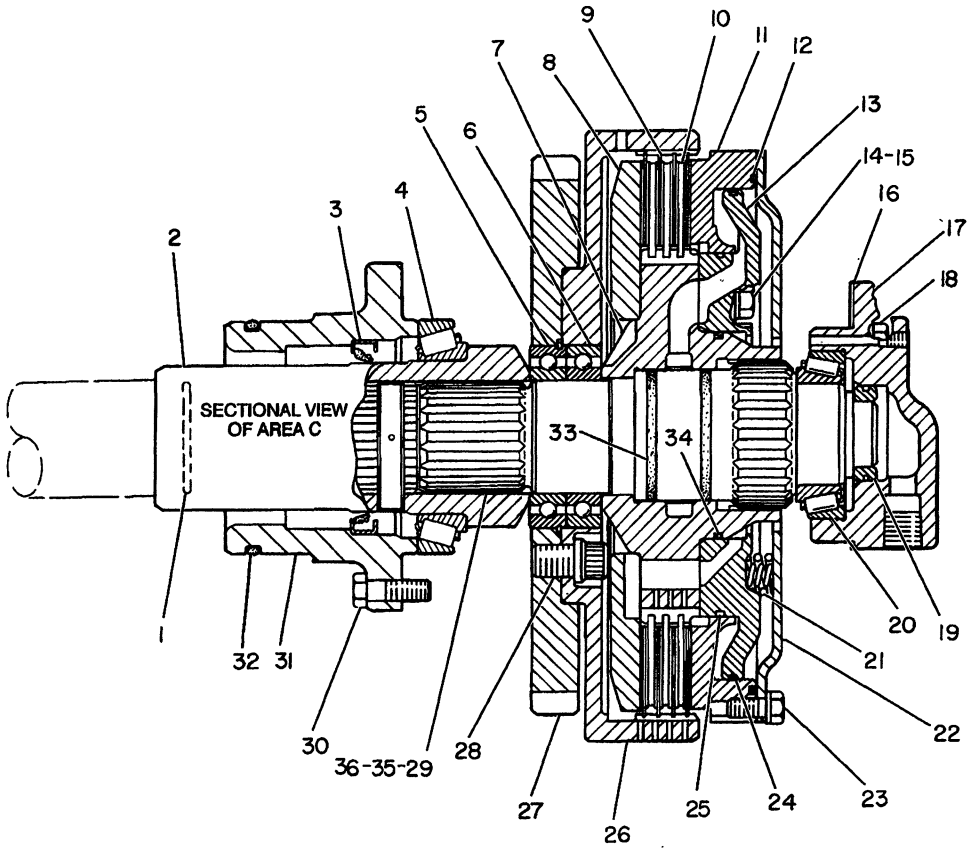

NOTE	REF NO	PART NUMBER	QTY	PART NAME	NOTE	REF NO	PART NUMBER	QTY	PART NAME
	1	6V2859	1	SEAL-O-RING		23	0S0509	12	BOLT
	2	7G1254	1	COUPLING AS			5S3618	6	LOCK
	3	4B8024	1	SEAL-LIP		24	1S9498	1	RING-SEAL
	4	9S7949	1	CUP-ROLLER BEARING		25	1S9497	1	RING-SEAL
		9S7950	1	CONE-ROLLER BEARING		26	1P2176	1	HUB-OUTER CLUTCH
	5	3K0526	1	BALL BEARING		27	7G1259	1	GEAR (59 TEETH)
	6	9M1997	1	BALL BEARING		28	1S9808	12	BOLT-12 POINT HEAD
	7	2P1986	1	HUB-CLUTCH		29	3T4580	1	SHAFT-CLUTCH
	8	1P2178	1	PLATE-REACTION		30	0S1588	6	BOLT
	9	2P9343	4	DISC-FRICTION		31	7G1263	1	RETAINER-SEAL
	10	2P4370	3	PLATE-CLUTCH		32	1J2859	1	SEAL
	11	2P1976	1	PISTON-CLUTCH		33	8F6711	2	SEAL-O-RING
	12	5S3676	1	SEAL-O-RING		34	1H8128	1	SEAL-O-RING
	13	2P3566	1	MANIFOLD-OIL		35	3T4968	1	PLUG-ORIFICE
	14	0L1143	6	BOLT	C	36	1S1638	1	RING-RETAINING
	15	5M2894	6	WASHER					
B	16	6P4685	2	SHIM PACK					
	17	6P4684	1	CAGE-BEARING					
	18	0S1594	4	BOLT					
	19	5S0969	1	CARRIER-RING					
		2K5957	1	RING-SEALING					
	20	9S3581	1	CUP-ROLLER BEARING					
		9S3582	1	CONE-ROLLER BEARING					
	21	2P2934	6	SPRING (OUTER)					
		2P2935	6	SPRING (INNER)					
	22	5S3664	1	PISTON-BALANCE					

B-USE AS REQUIRED
C-CHANGE FROM PREVIOUS TYPE

B- 305388 P

5167 **7G1190 CLUTCH & GEAR GP-PART 6 OF 6**

S/N 83Y474-Up

Part Of 7G1189 Winch

Note: 2P9287 & 2P9292 Available To Convert To An Underwind Winch

REFER TO ALL ILLUSTRATIONS OF THIS GROUP FOR AUXILIARY VIEWS

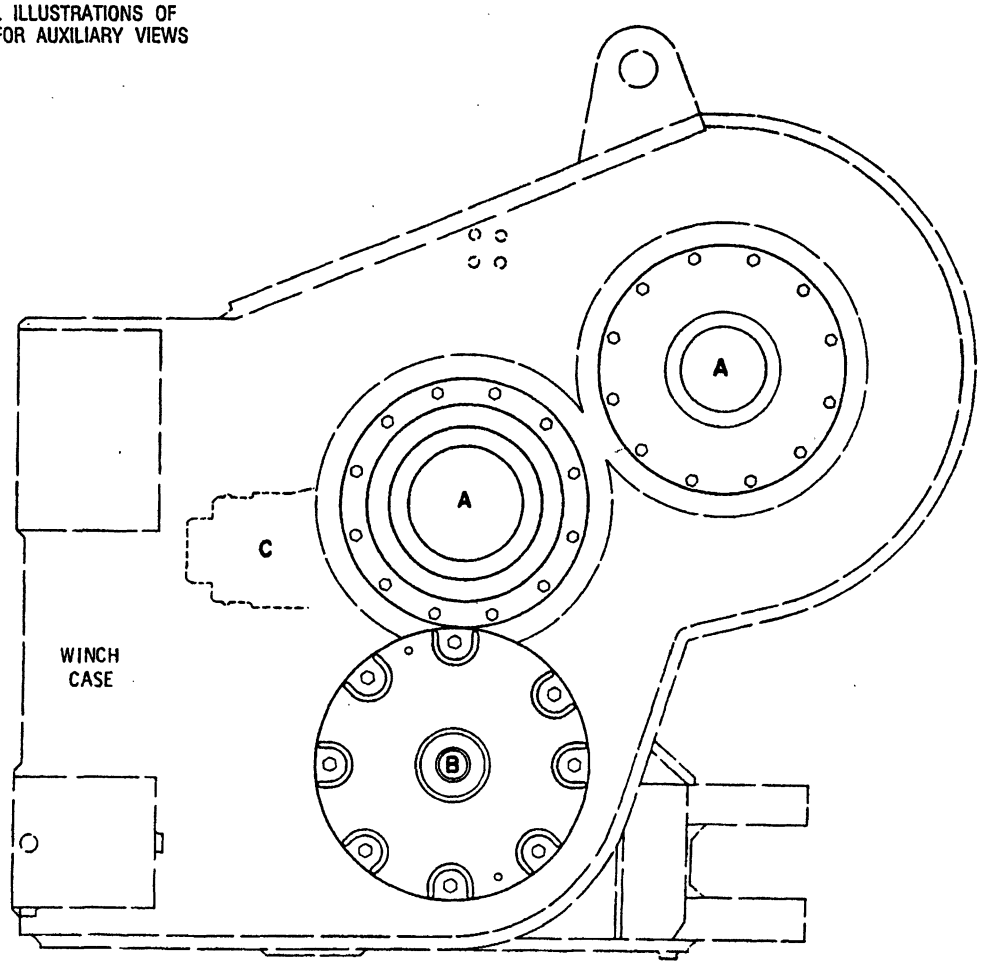

NOTE	REF NO	PART NUMBER	QTY	PART NAME	NOTE	REF NO	PART NUMBER	QTY	PART NAME
				REFER TO ALL ILLUSTRATIONS OF THIS GROUP FOR SERVICEABLE PARTS.					

B-235196 EP

5167

7G1190 CLUTCH & GEAR GP-PART 1 OF 6

S/N 8XB1-Up

Part Of 7G1189 Winch. Note: 2P9287 & 2P9292 Conversion Gps Are Available To Convert To An Underwind Winch Also An Attachment

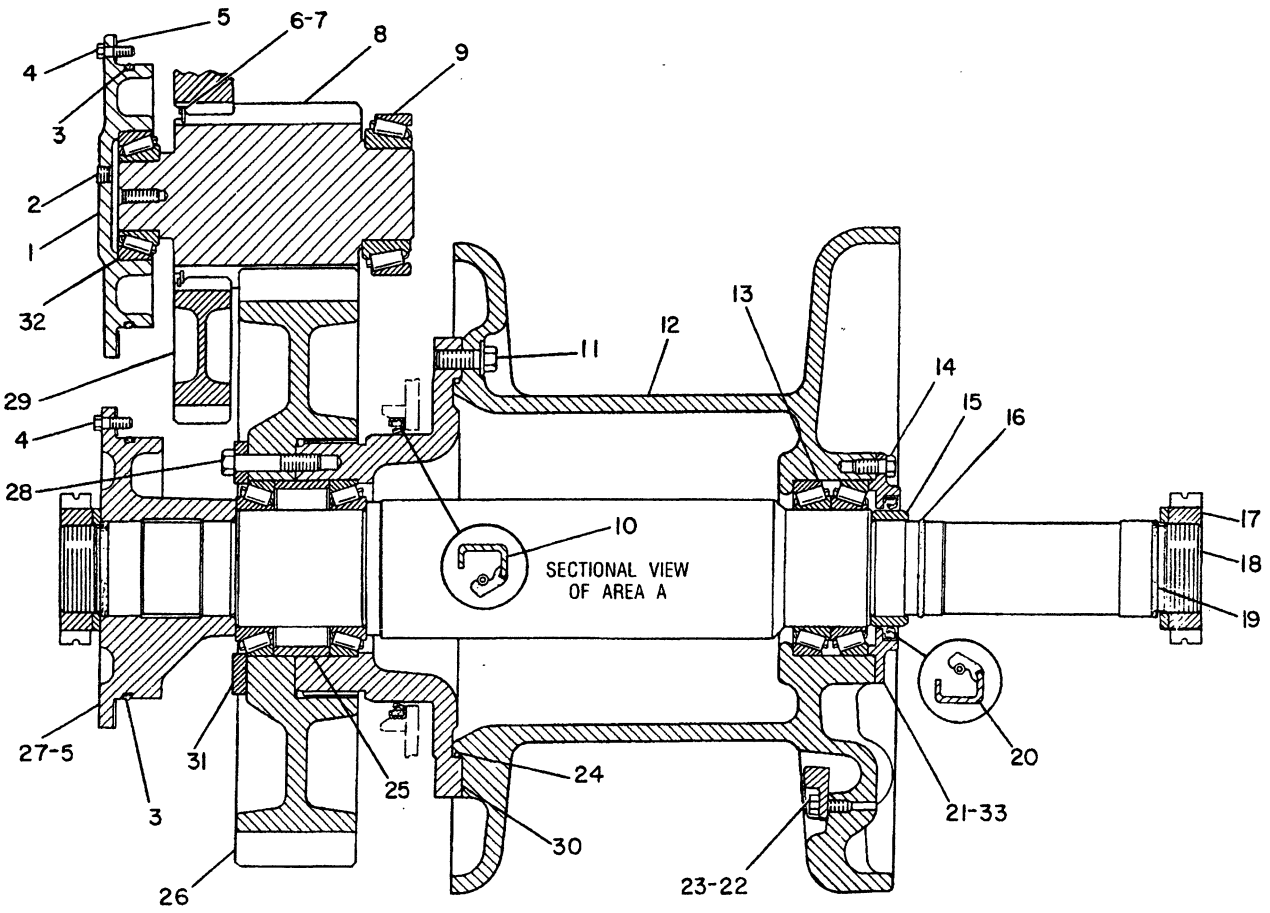

NOTE	REF NO	PART NUMBER	QTY	PART NAME	NOTE	REF NO	PART NUMBER	QTY	PART NAME
	1	7G0378	1	CAGE-BEARING		21	1P4105	1	RETAINER-SEAL
	2	4B4845	1	PLUG	C	22	6Y0762	1	RETAINER
	3	1J2890	2	SEAL-O-RING	C	23	0S1585	1	BOLT
	4	1A2029	24	BOLT 2.85CM(1.125IN.)LG		24	4D6695	1	SEAL-O-RING
B	5	1P6181	4	SHIM PACK		25	1P3276	1	SPACER
				(EA INCLS 6 SHIM)		26	2P1992	1	GEAR (52 TEETH)
	6	2P1994	2	PLATE		27	8P0847	1	FLANGE
	7	2M3827	1	RING-RETAINING		28	1D4585	8	BOLT
	8	2P1993	1	GEAR-PINION (14 TEETH)		29	1P5273	1	GEAR (14 TEETH)
	9	1P5420	1	CUP-ROLLER BEARING		30	7G1264	1	SUPPORT
		1P5419	1	CONE-ROLLER BEARING		31	1P3240	1	RING
	10	1S5347	1	SEAL-LIP TYPE		32	6S2828	1	CUP-ROLLER BEARING
	11	0S1589	18	BOLT			6S2829	1	CONE-ROLLER BEARING
		5P8247	18	WASHER-HARD	B	33	7M7260		GASKET-LIQUID
	12	3T9196	1	DRUM AS					
	13	8S9076	4	CUP-BEARING					
		8S9075	4	CONE-BEARING					
	14	0S1595	6	BOLT					
	15	1P6754	1	SPACER					
	16	2H6184	1	SEAL-O-RING					
	17	5M2130	2	NUT					
		3P0719	2	WASHER					
	18	7G1256	1	SHAFT AS-DRUM					
		4B9783	1	BALL					
	19	5H2824	2	SEAL-O-RING					
	20	3F1395	1	SEAL-LIP TYPE					

B-USE AS REQUIRED
C-CHANGE FROM PREVIOUS TYPE

B-455121 EP

5167 **7G1190 CLUTCH & GEAR GP-PART 2 OF 6**

S/N 8XB1-Up

Part Of 7G1189 Winch. Note: 2P9287 & 2P9292 Conversion Gps Are Available To Convert To An Underwind Winch

Also An Attachment

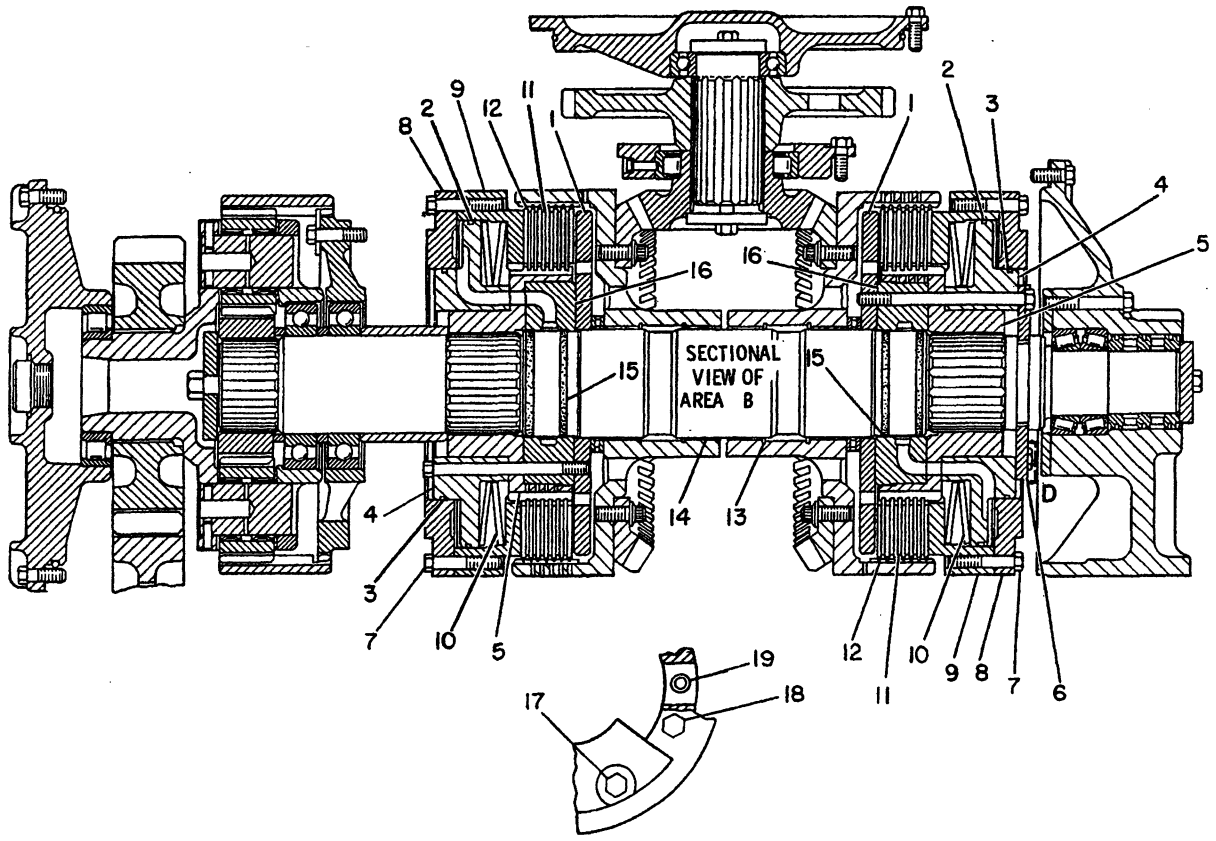

NOTE	REF NO	PART NUMBER	QTY	PART NAME	NOTE	REF NO	PART NUMBER	QTY	PART NAME
	1	1P6167	2	PLATE					
	2	8S3371	2	RING-SEAL					
	3	1S9497	2	RING-SEAL					
	4	1P6158	2	MANIFOLD					
	5	1P6155	2	HUB-CLUTCH					
	6	1P6176	2	PLATE-LOCKING					
	7	0S1590	16	BOLT					
	8	1P6153	2	PLATE					
	9	1P6179	2	HUB AS-CLUTCH					
	10	6P3767	4	SPRING-DISC					
	11	2P4370	12	PLATE-CLUTCH					
C	12	6T4944	14	DISC-FRICTION					
	13	3J8903	4	RING-RETAINING					
	14	2P1005	4	BEARING-SLEEVE					
	15	6H3977	4	SEAL-O-RING					
	16	1P5294	2	MANIFOLD					
	17	5B2638	6	BOLT 13.3CM(5.25IN.)LG.					
	18	5B9603	10	BOLT 12.7CM(5IN.)LG.					
	19	3S4346	4	BOLT-12 POINT HEAD					

C-CHANGE FROM PREVIOUS TYPE

B-346388 EP

5167 **7G1190 CLUTCH & GEAR GP-PART 3 OF 6**

S/N 8XB1-Up

Part Of 7G1189 Winch. Note: 2P9287 & 2P9292 Conversion Gps Are Available To Convert To An Underwind Winch Also An Attachment

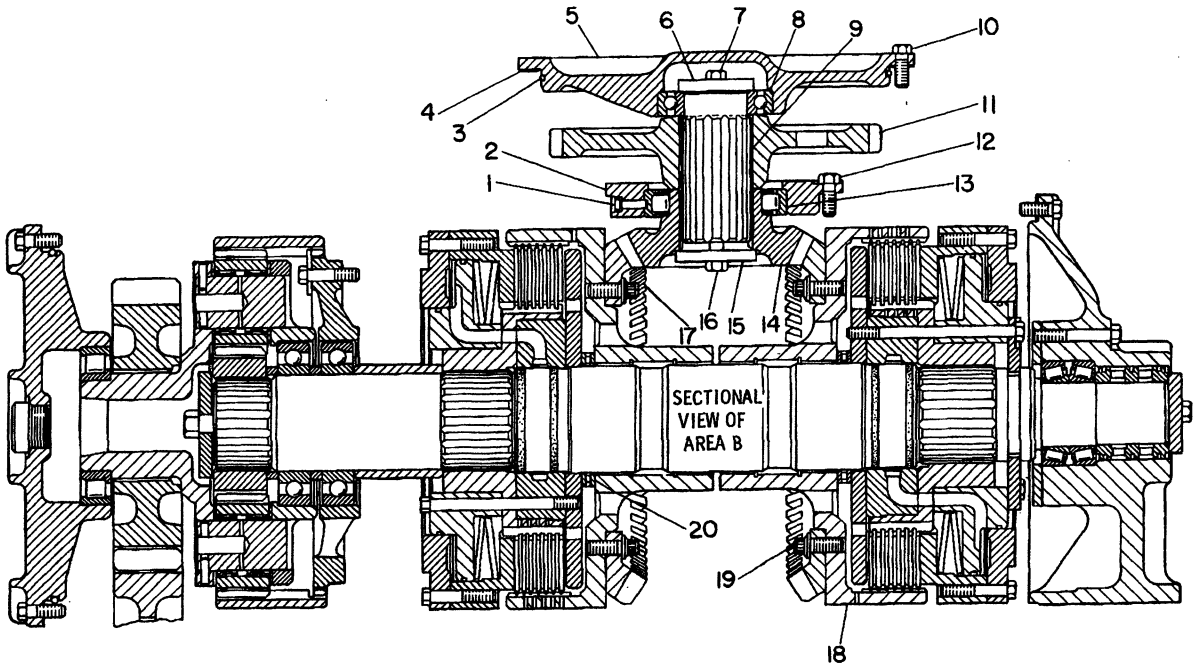

NOTE	REF NO	PART NUMBER	QTY	PART NAME	NOTE	REF NO	PART NUMBER	QTY	PART NAME
	1	0L1026	1	PLUG-CUP					
		4M1712	1	DOWEL					
	2	1P6173	1	CAGE-BEARING					
	3	5H4909	1	SEAL-O-RING					
B	4	1P6175	4	SHIM PACK					
	5	3T2176	1	CAGE-BEARING					
	6	5S3552	1	PLATE					
	7	1A2209	1	BOLT					
	8	1T0043	1	BALL BEARING					
	9	3P7238	1	SHAFT-PINION					
	10	0L1351	6	BOLT					
	11	7G1259	1	GEAR (59 TEETH)					
	12	0S1594	4	BOLT					
	13	1J9227	1	BEARING (OUTER)					
C	14	7T8341	1	PINION-BEVEL					
	15	3S4388	1	WASHER-RETAINER					
	16	0L0139	1	BOLT					
C	17	7T8342	2	GEAR-BEVEL (59 TEETH)					
	18	1P5292	2	HOUSING					
	19	9M6590	12	BOLT-12 POINT HEAD					
	20	1P6071	4	RACE-THRUST BEARING					
		1P6070	2	BEARING-THRUST					

B-USE AS REQUIRED
C-CHANGE FROM PREVIOUS TYPE

B-346389 EP

5167 **7G1190 CLUTCH & GEAR GP-PART 4 OF 6**

S/N 8XB1-Up

Part Of 7G1189 Winch. Note: 2P9287 & 2P9292 Conversion Gps Are Available To Convert To An Underwind Winch

Also An Attachment

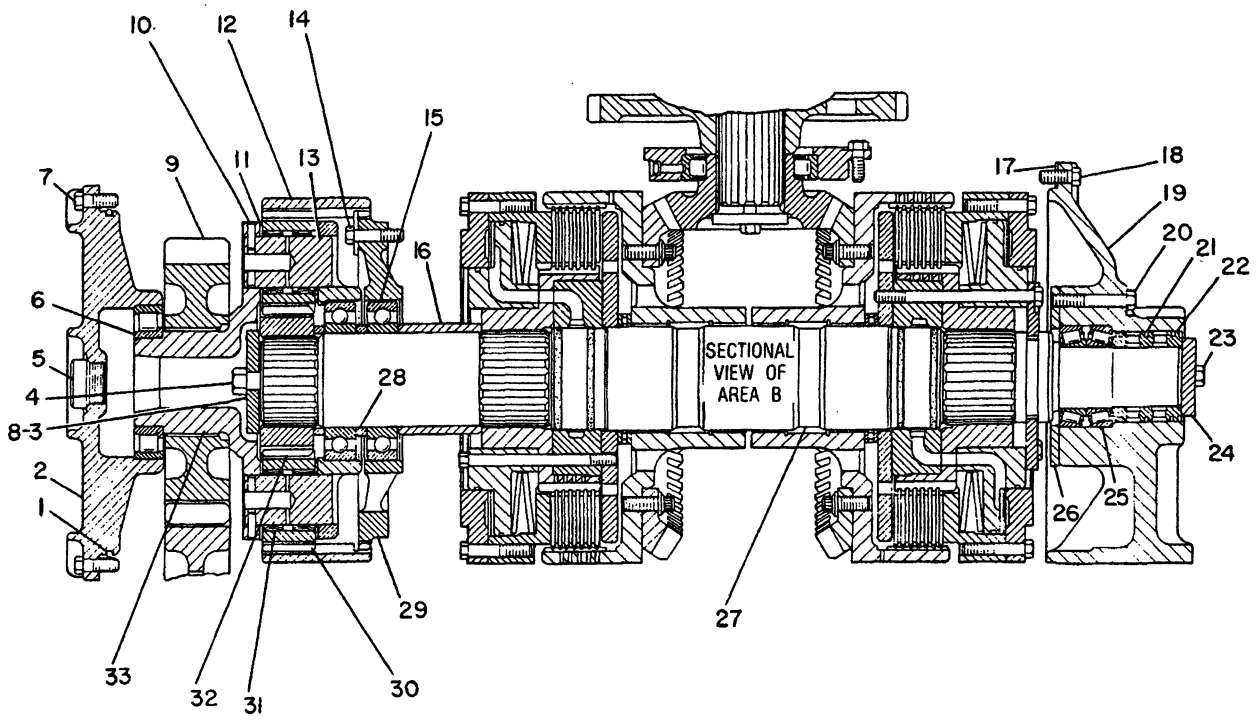

NOTE	REF NO	PART NUMBER	QTY	PART NAME	NOTE	REF NO	PART NUMBER	QTY	PART NAME
	1	5H4909	1	SEAL-O-RING		22	1P6172	1	SLEEVE-SEAL RING
	2	8P3741	1	CAGE-BEARING		23	0S1588	2	BOLT
	3	2S6408	1	WASHER-RETAINING		24	1P6180	1	WASHER-RETAINER
	4	0L2315	1	BOLT		25	9S3581	2	CUP-ROLLER BEARING
	5	9W0992	1	BODY AS-GAUGE			9S3582	2	CONE-ROLLER BEARING
		7M8485	1	SEAL-O-RING		26	1P4232	1	RETAINER
	6	5S5729	1	RACE-BEARING INNER		27	7G1257	1	SHAFT AS-CLUTCH
		2D5173	1	BEARING			4B9784	1	BALL (LARGE)
	7	1A2029	8	BOLT			4B9783	1	BALL (SMALL)
B	8	2P1985	1	SHIM PACK (INCLS 2 SHIM)		28	2P1990	2	SPACER
						29	1P6209	1	CAGE-BEARING
	9	1P4233	1	GEAR (28 TEETH)		30	7G2500	4	GEAR-PLANET (23 TEETH)
	10	3S2708	4	PIN-SPRING		31	4M3915	8	BEARING-CAGED
C	11	7T3143	8	DISC-THRUST		32	1P6182	1	GEAR-SUN (35 TEETH)
	12	2P1981	1	GEAR-RING (81 TEETH)		33	2P1984	1	CARRIER AS
	13	1P4056	4	SHAFT-PLANET					
	14	2A4639	8	BOLT					
		1P6188	4	PLATE-LOCKING					
	15	8B8439	2	BALL BEARING					
	16	7G0362	1	SPACER					
B	17	1P6178	2	SHIM PACK (EA INCLS 5 SHIM)					
	18	0S1594	9	BOLT					
	19	1P5290	1	MANIFOLD-OIL					
	20	0L1143	4	BOLT					
	21	9F7378	3	RING-SEAL					

B-USE AS REQUIRED
C-CHANGE FROM PREVIOUS TYPE

B-455122 EP

5167 **7G1190 CLUTCH & GEAR GP-PART 5 OF 6**

S/N 8XB1-Up

Part Of 7G1189 Winch. Note: 2P9287 & 2P9292 Conversion Gps Are Available To Convert To An Underwind Winch Also An Attachment

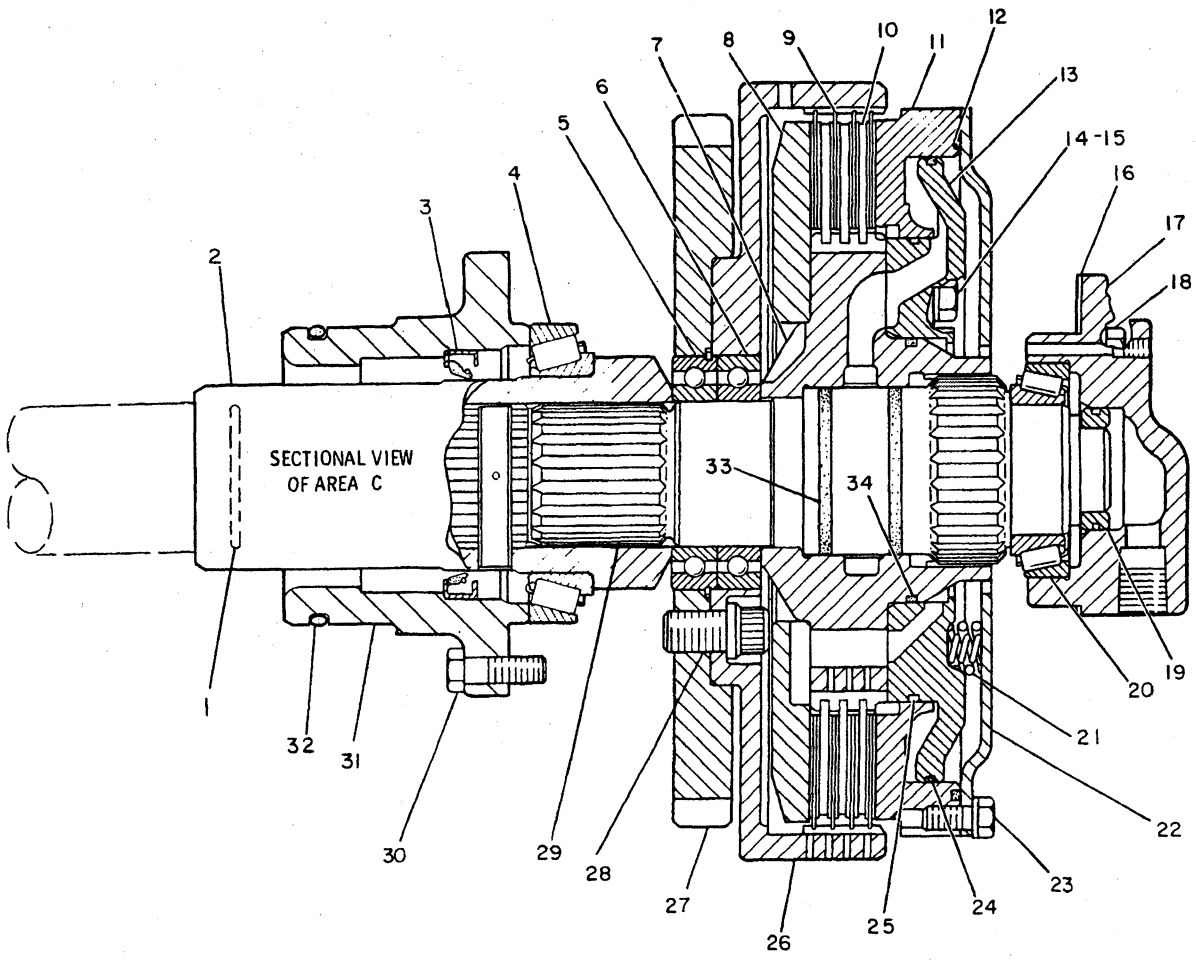

NOTE	REF NO	PART NUMBER	QTY	PART NAME
C	1	4F9653	1	SEAL-O-RING
	2	7G1254	1	COUPLING AS
	3	4B8024	1	SEAL-LIP TYPE
	4	9S7949	1	CUP-ROLLER BEARING
		9S7950	1	CONE-ROLLER BEARING
	5	3K0526	1	BALL BEARING
	6	9M1997	1	BALL BEARING
	7	2P1986	1	HUB-CLUTCH
	8	1P2178	1	PLATE-REACTION
	9	2P9343	4	DISC-FRICTION
	10	2P4370	3	PLATE-CLUTCH
	11	2P1976	1	PISTON-CLUTCH
C	12	8T7328	1	SEAL-FACE
	13	2P3566	1	MANIFOLD-OIL
	14	0L1143	6	BOLT
	15	5M2894	6	WASHER
B	16	6P4685	2	SHIM PACK (EA INCLS 7 SHIM)
	17	6P4684	1	CAGE-BEARING
	18	0S1594	4	BOLT
	19	5S0969	1	CARRIER-RING
		2K5957	1	RING-SEALING
	20	9S3581	1	CUP-ROLLER BEARING
		9S3582	1	CONE-ROLLER BEARING
	21	2P2934	6	SPRING (OUTER)
		2P2935	6	SPRING (INNER)
	22	5S3664	1	PISTON-BALANCE
	23	0S0509	12	BOLT
		5S3618	6	LOCK
	24	1S9498	1	RING-SEAL
	25	1S9497	1	RING-SEAL
	26	1P2176	1	HUB-OUTER CLUTCH
	27	7G1258	1	GEAR-INPUT (63 TEETH)
C	28	9S8889	12	BOLT-12 POINT HEAD
	29	3T5233	1	SHAFT AS
		3T4968	1	PLUG-ORIFICE
		1S1638	1	RING-RETAINING
	30	0S1588	6	BOLT
	31	7G1263	1	RETAINER-SEAL
	32	1J2859	1	SEAL
	33	8F6711	2	SEAL-O-RING
	34	1H8128	1	SEAL-O-RING

B-USE AS REQUIRED
C-CHANGE FROM PREVIOUS TYPE

B-470309 EP

5167 **7G1190 CLUTCH & GEAR GP-PART 6 OF 6**

S/N 8XB1-Up

Part Of 7G1189 Winch. Note: 2P9287 & 2P9292 Conversion Gps Are Available To Convert To An Underwind Winch Also An Attachment

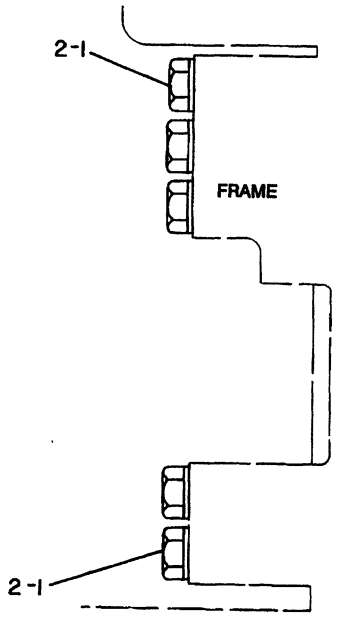

NOTE	REF NO	PART NUMBER	QTY	PART NAME
	1	5F3492	10	BOLT
	2	3S6162	14	WASHER-HARD

B-235195 P

5163 **7G1194 MOUNTING GP-WINCH**
S/N 53Y1-2764
Part Of 7G1188 Winch Ar
An Attachment

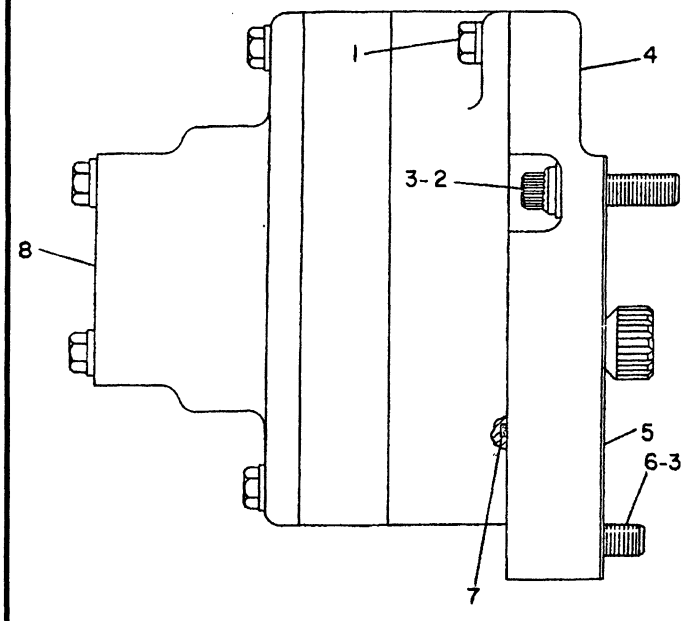

NOTE	REF NO	PART NUMBER	QTY	PART NAME
	1	1A2029	2	BOLT
		5M2894	2	WASHER
	2	5J5793	2	BOLT-12 POINT HEAD
	3	7S9203	3	WASHER
	4	6P1272	1	ADAPTER AS
		1H0974	2	DOWEL
	5	2S4080	1	GASKET-ADAPTER
	6	4K5175	1	BOLT-12 POINT HEAD
	7	8M5252	1	SEAL-O-RING
Y	8	7G6787	1	PUMP GP-GEAR

Y-SEPARATE ILLUSTRATION

B-231009 EP

5164 **7G6788 PUMP GP-GEAR**
7G6787-Page 283
Part Of 7G1188,7T0408 Winch Ars
An Attachment

IMPLEMENTS

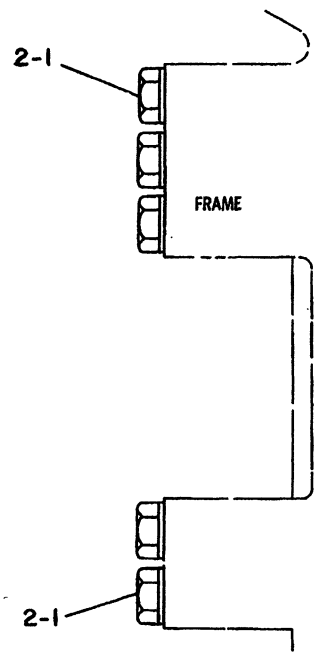

NOTE	REF NO	PART NUMBER	QTY	PART NAME
	1	6V8954	10	BOLT
	2	3S6162	10	WASHER-HARD

B-328555 EP

5163

6T8414 MOUNTING GP-WINCH
S/N 53Y2765-Up
Part Of 7T0408 Winch Ar
An Attachment

MEMORANDA

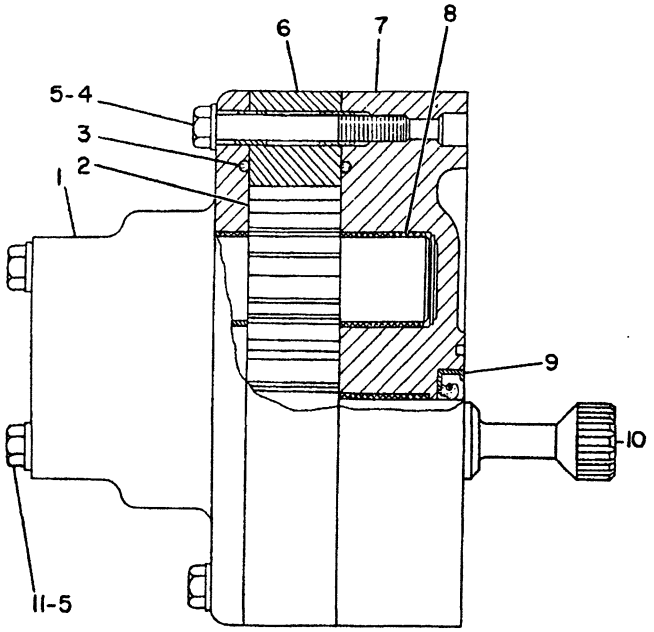

NOTE	REF NO	PART NUMBER	QTY	PART NAME
	1	7G6786	1	MANIFOLD AS-PUMP
		5M3320	2	BEARING
	2	9M2200	1	GEAR AS-PUMP (12 TEETH)
	3	2D8009	2	SEAL-O-RING
	4	OL1143	2	BOLT
	5	3S0004	6	WASHER
	6	9M2209	1	BODY-OIL PUMP
		8M8489	4	DOWEL
	7	2P1014	1	COVER AS-PUMP
	8	5M3320	2	BEARING
	9	5S6622	1	SEAL-LIP
	10	7G6784	1	GEAR AS-PUMP (12 TEETH)
	11	OS1608	4	BOLT

B-558644 EP

5164 **7G6787 PUMP GP-GEAR**
Single Section
Part Of 7G6788 Pump
An Attachment

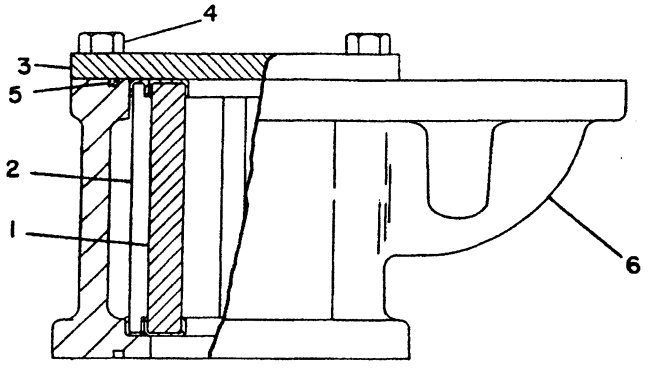

NOTE	REF NO	PART NUMBER	QTY	PART NAME
	1	8S9129	1	FILTER-MAGNETIC
	2	8S9130	1	SCREEN-SUCTION
	3	1P3262	1	COVER
	4	OS1594	4	BOLT
	5	2H6338	1	SEAL-O-RING
	6	7G5403	1	HOUSING-FILTER

B-484464 EP

5163 **7G4786 SCREEN GP-MAGNETIC**
Part Of 7G1189 Winch Ar

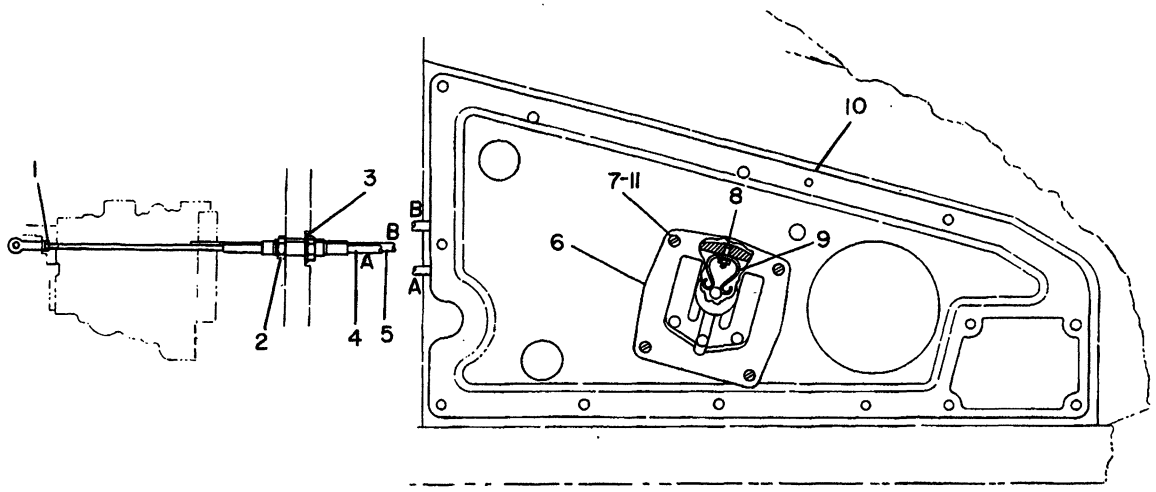

NOTE	REF NO	PART NUMBER	QTY	PART NAME	NOTE	REF NO	PART NUMBER	QTY	PART NAME
	1	1B4201	3	NUT-FULL					
	2	9S1354	4	NUT					
	3	1V6341	2	SEAL					
	4	3T8357	1	CABLE AS					
	5	3T8356	1	CABLE AS					
	6	6P5661	1	GUIDE					
	7	4B1291	4	SCREW-MACHINE					
	8	4B1284	1	SCREW-MACHINE					
		1B4330	1	NUT					
		5P0537	1	WASHER					
	9	3P5938	1	SPRING					
	10	3T8354	1	COVER AS					
	11	9F2978	8	NUT-WELD					

B-182581 P

5161

3T8358 CONTROL GP-WINCH-TOWING-PART 1 OF 2

S/N 53Y2765-3484

Part Of 7G1188,7T0408 Winch Ars

An Attachment

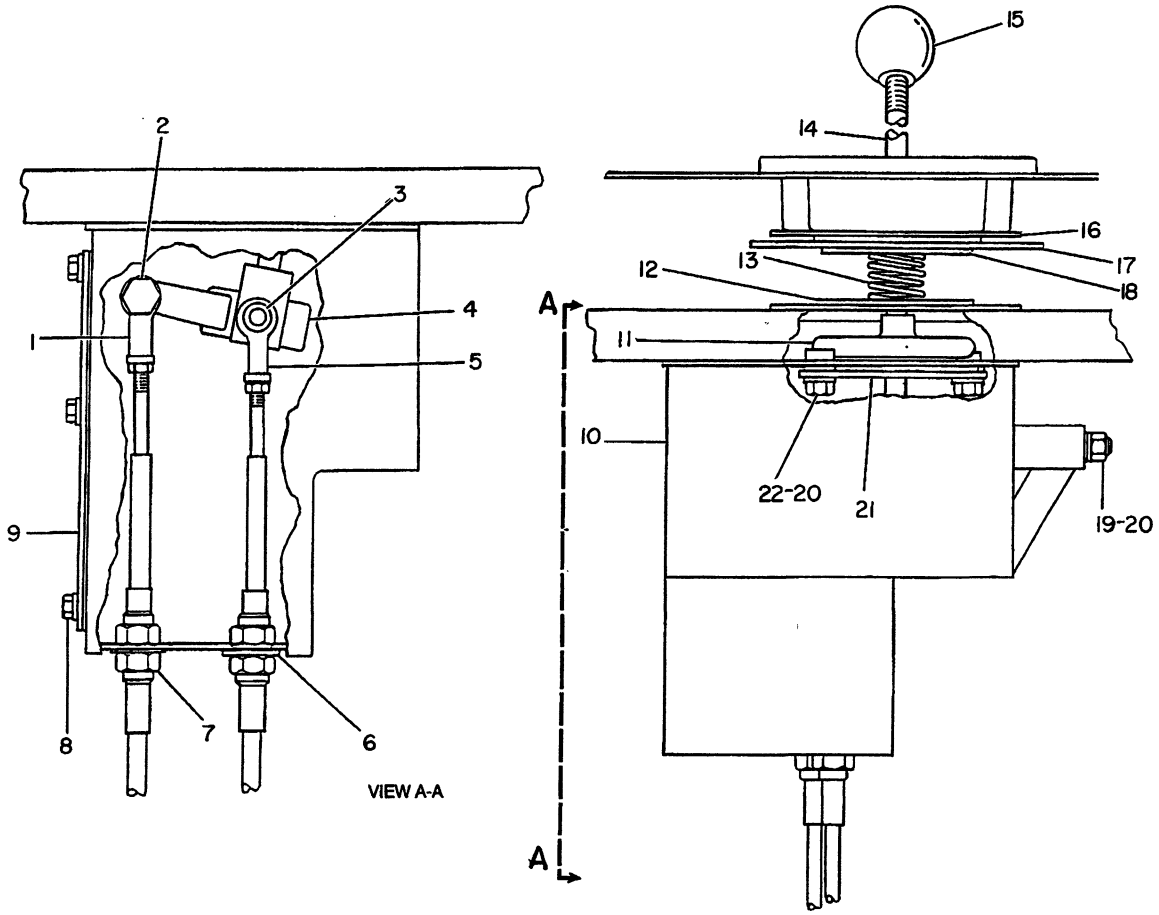

NOTE	REF NO	PART NUMBER	QTY	PART NAME	NOTE	REF NO	PART NUMBER	QTY	PART NAME
	1	6L7751	2	END-ROD		20	5M2894	5	WASHER (HARD)
	2	OS1597	2	BOLT		21	3T8340	1	PLATE
		2L9038	2	LOCKNUT		22	OSO509	2	BOLT
	3	2H2525	1	PIN-SPRING					
		2P6008	1	SHAFT-GOVERNOR CONTROL					
	4	3T8343	1	BELLCRANK AS					
		9H2400	2	BEARING (SLEEVE)					
	5	8S7048	1	END-ROD					
	6	1V6341	4	SEAL					
	7	9S1354	8	NUT (JAM)					
	8	2A0762	5	BOLT					
		5PO537	6	WASHER (HARD)					
	9	3T8349	1	COVER					
		3T8339	1	GASKET					
	10	3T8352	1	CHANNEL AS					
C		5P4887	2	BEARING-ROLLER					
	11	3T8341	1	BOOT					
	12	3T5231	1	PLATE					
	13	2J7295	1	SPRING					
	14	3T8250	1	LEVER AS					
	15	2A1736	1	HANDLE (LEVER)					
	16	6P8863	1	PLATE					
		4B1282	2	SCREW-MACHINE					
	17	6P8861	1	PLATE					
	18	6P8862	1	PLATE					
	19	2K4973	1	LOCKNUT					

C-CHANGE FROM PREVIOUS TYPE

B- 343597 P

5161 **3T8358 CONTROL GP-WINCH-TOWING-PART 2 OF 2**

S/N 53Y2765-3484

Part Of 7G1188,7T0408 Winch Ars

An Attachment

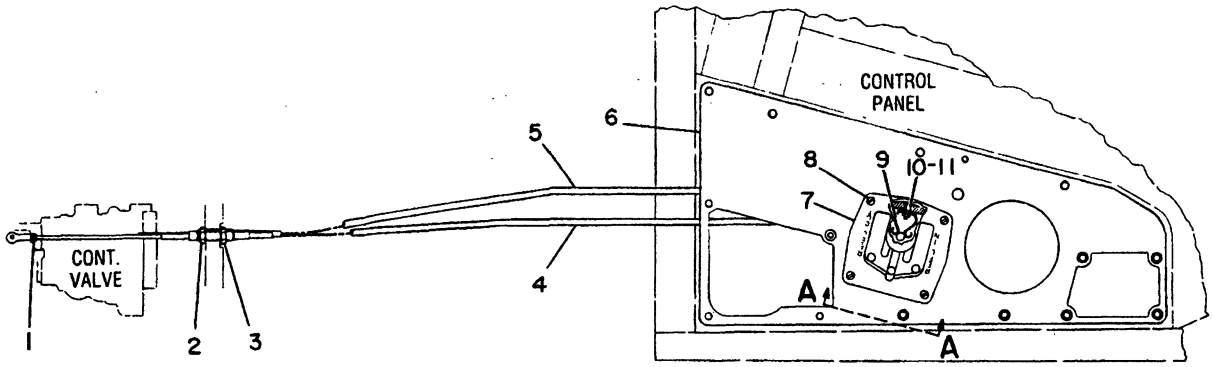

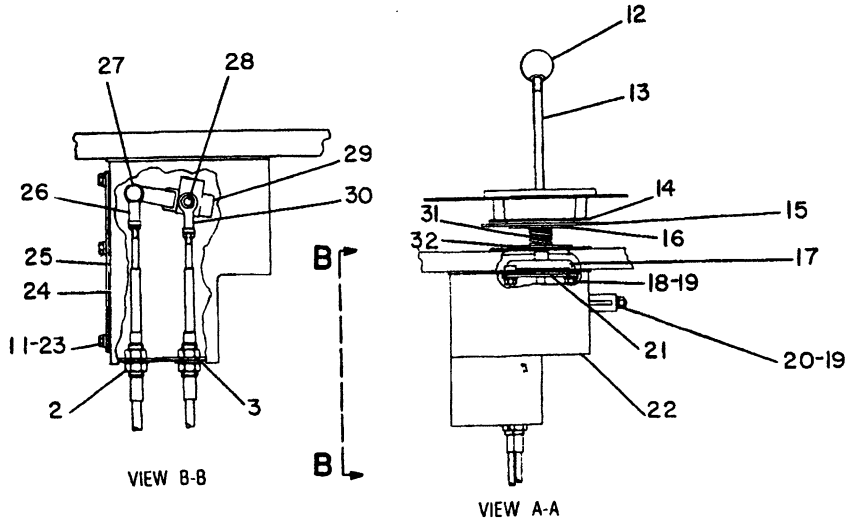

NOTE	REF NO	PART NUMBER	QTY	PART NAME	NOTE	REF NO	PART NUMBER	QTY	PART NAME
	1	1B4201	3	NUT-FULL		22	7T5463	1	CHANNEL AS
	2	9S1354	8	NUT			5P4887	2	BEARING-ROLLER
	3	1V6341	4	SEAL			9F2978	4	NUT-WELD (WELD-SQR)
	4	3T8357	1	CABLE AS			5P3270	1	GUSSET
	5	3T8356	1	CABLE AS			9F6445	5	NUT (WELD-HEX.)
	6	7T5462	1	COVER AS			9K6034	1	LUG
		9F2978	8	NUT-WELD (WELD)		23	2A0762	5	BOLT
C	7	6P5661	1	GUIDE		24	3T8339	1	GASKET
	8	4B1291	4	SCREW-MACHINE		25	3T8349	1	COVER
	9	3P5938	1	SPRING		26	6L7751	2	END-ROD
	10	4B1284	1	SCREW-MACHINE		27	0S1597	2	BOLT
		1B4330	1	NUT			2L9038	2	LOCKNUT
	11	5P0537	6	WASHER		28	2H2525	1	PIN-SPRING
	12	2A1736	1	HANDLE			2P6008	1	SHAFT-GOVERNOR CONTROL
	13	3T8250	1	LEVER AS		29	3T8343	1	BELLCRANK AS
	14	6P8863	1	PLATE			2P6000	1	BELLCRANK
		4B1282	2	SCREW-MACHINE			9H2400	2	BEARING
	15	6P8861	1	PLATE		30	8S7048	1	END-ROD
	16	6P8862	1	PLATE		31	2J7295	1	SPRING
	17	3T8341	1	BOOT		32	3T5231	1	PLATE
	18	0S0509	2	BOLT					
	19	5M2894	5	WASHER					
	20	2K4973	1	LOCKNUT					
	21	3T8340	1	PLATE					

C-CHANGE FROM PREVIOUS TYPE

B-458315 P

5161

7T5461 CONTROL GP-WINCH-TOWING
S/N 53Y3485-Up
Part Of 7T0408 Winch Ar
An Attachment

MEMORANDA

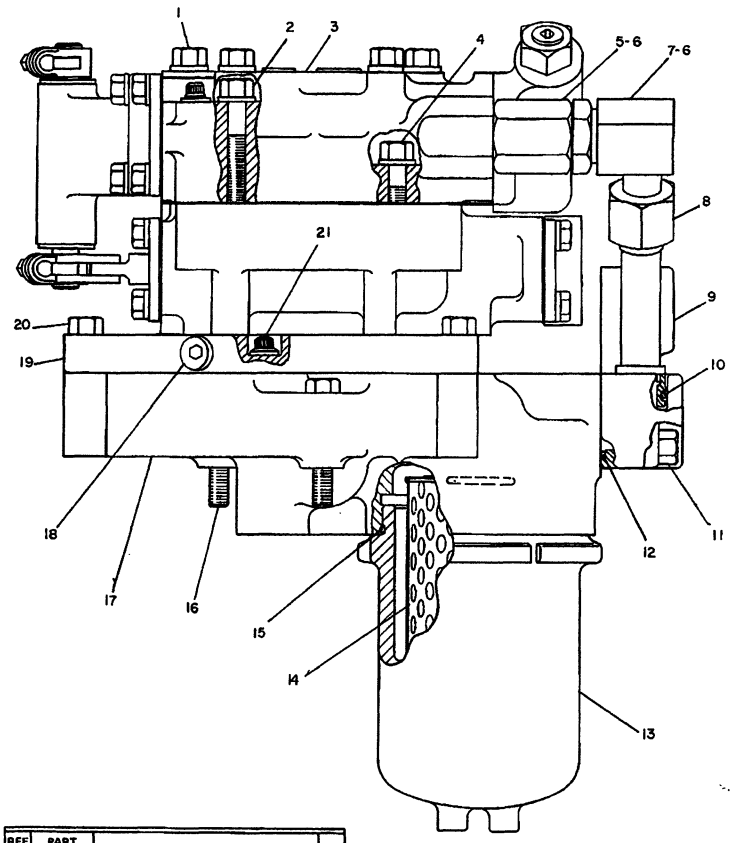

REF. NO.	PART NUMBER	DESCRIPTION	QTY.
1	7F3425	BOLT	4
	5M2894	WASHER	6
2	5B2638	BOLT	1
3	2P3640	VALVE GROUP (Separate Illustration)	1
4	8S9191	BOLT	1
5	3T4965	ADAPTER	1
6	3D2824	SEAL	2
7	307950	ELBOW	1
8	3T4969	TUBE ASSEM.	1
9	7G1360	ELBOW	1
10	8M4435	SEAL	1
11	S1591	BOLT	3
12	82103	SEAL	2
13	7G7714	HOUSING	1
14	2P5834	ELEMENT	1
15	2M2561	SEAL	1
16	L2070	BOLT	3
17	3T5036	BYPASS GROUP (Separate Illustration)	1
18	9S8004	PLUG	4
	3J1907	SEAL	4
19	3T5016	MANIFOLD	1
20	S1588	BOLT	2
21	1T822	BOLT	1

235204

235204 P

5163

3T4993 CONTROL GP-WINCH
Winch S/N 83Y1-390
3T5036-Page 292, 2P3640-Page 292
Part Of 7G1189 Winch Ar

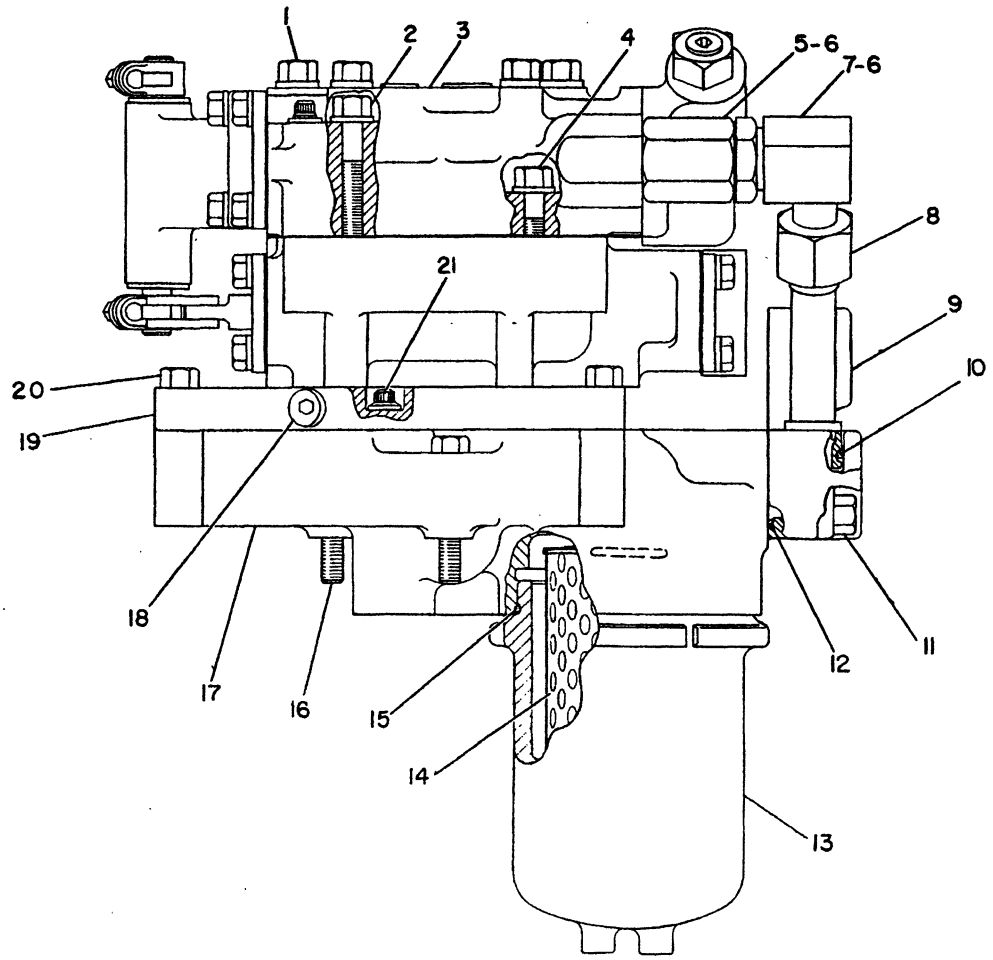

NOTE	REF NO	PART NUMBER	QTY	PART NAME
	1	7F3425	4	BOLT
		5M2894	6	WASHER
	2	5B2638	1	BOLT
CY	3	3T8650	1	VALVE GP
	4	8S9191	1	BOLT
	5	3T4965	1	ADAPTER-O-RING
	6	3D2824	2	SEAL-O-RING
	7	3O7950	1	ELBOW
	8	3T4969	1	TUBE AS
	9	7G1360	1	ELBOW
	10	8M4435	1	SEAL
	11	OS1591	3	BOLT
	12	82103	2	SEAL-O-RING
	13	7G7714	1	HOUSING-FILTER
	14	2P5834	1	ELEMENT-FILTER
	15	2M2561	1	SEAL-O-RING
	16	OL2070	3	BOLT
Y	17	3T5036	1	BYPASS GP-FILTER
	18	9S8004	4	PLUG-O-RING
		3J1907	4	SEAL-O-RING
	19	3T5016	1	MANIFOLD
	20	OS1588	2	BOLT
	21	1TO822	1	BOLT-12 POINT HEAD

C-CHANGE FROM PREVIOUS TYPE
Y-SEPARATE ILLUSTRATION

B-307555 EP

5163

3T4993 CONTROL GP-WINCH
Winch S/N 83Y391-Up
3T5036-Page 292D,3T8650-Page 292A
Part Of 7G1189 Winch Ar

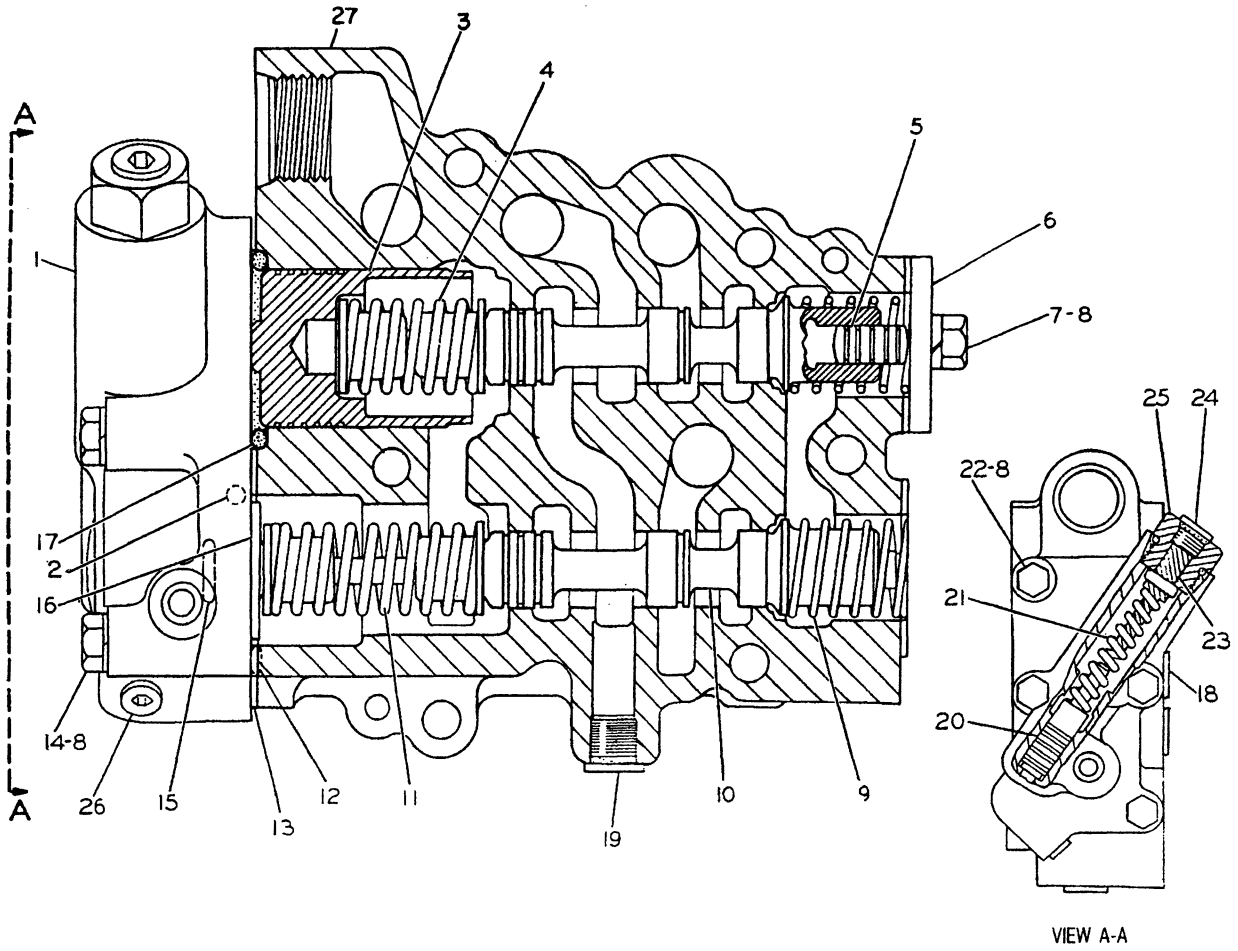

VIEW A-A

NOTE	REF NO	PART NUMBER	QTY	PART NAME
	1	8P0345	1	BODY AS
	2	4B9880	1	BALL
	3	2P3646	1	PISTON-LOAD
	4	3P5168	1	SPRING AS
	5	2M1168	2	SLUG-VALVE
	6	6B0830	1	COVER
		3P0218	1	GASKET
	7	2B2695	2	BOLT
	8	3B4505	6	LOCKWASHER
	9	1B3216	2	SPRING
	10	3P2767	2	SPOOL
	11	3P5169	1	SPRING AS
	12	6F5559	1	SEAL-O-RING
	13	2P3644	1	GASKET
	14	2B2694	3	BOLT
	15	4K2039	1	SEAL-O-RING
	16	3P2847	1	RETAINER
	17	1H9696	1	SEAL-O-RING
	18	9S8005	1	PLUG-O-RING
		3K0360	1	SEAL-O-RING
	19	9S8004	4	PLUG-O-RING
		3J1907	4	SEAL-O-RING
	20	3P4660	1	SPOOL-VALVE
	21	8P0346	1	SPRING
	22	1B7182	1	BOLT
	23	8P0325	1	STOP AS
		5H9809	1	PIN
	24	9S8003	1	PLUG-O-RING
		1J9671	1	SEAL-O-RING
	25	6P9959	1	PLUG-ADJUSTMENT
		2M9780	1	SEAL-O-RING
	26	9S8001	1	PLUG-O-RING
		4J7533	1	SEAL-O-RING
	27	8P0015	1	BODY-WINCH MODULATING VALVE

B-305876 EP

5117

3T8649 WINCH GP-PRESSURE CONTROL
Winch S/N 83Y391-Up
Part Of 3T8650 Control

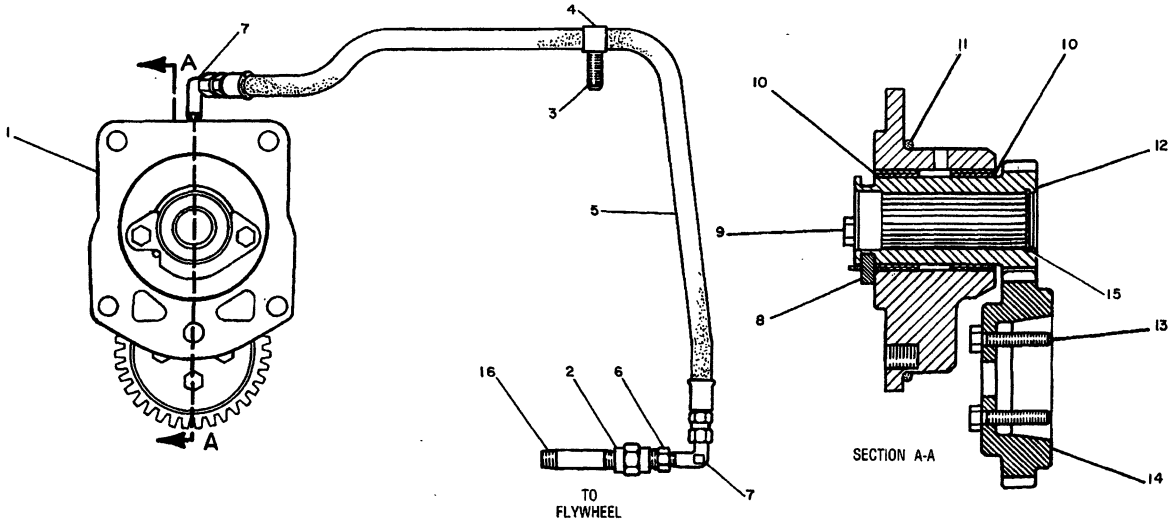

NOTE	REF NO	PART NUMBER	QTY	DESCRIPTION
	1	7N1565	1	ADAPTER
CB	2	3F2779	1	COUPLING
	3	0S1588	1	BOLT
		5M2894	1	WASHER
C	4	4K8864	1	CLIP
C	5	9G4524	1	HOSE AS.

B USE AS REQUIRED

	6	4M5317	1	BUSHING
C	7	5P4479	2	ELBOW
	8	7N1564	1	WASHER
	9	0L1351	2	BOLT
	10	4N1186	2	BEARING
	11	5F3106	1	SEAL

	12	8N0935	1	GEAR (ACCESSORY DRIVE) (22 TEETH)
	13	1A9579	4	BOLT
	14	8N0934	1	GEAR (CAMSHAFT-44 TEETH)
C	15	2D6398	1	RING
CB	16	1V2750	1	NIPPLE

C INDICATES CHANGE

335688

335688 P

5163 **8N7507 GEAR GP-ACCESSORY**

Type 1

Part Of 7G1188,7T0408 Winch Ars

An Attachment

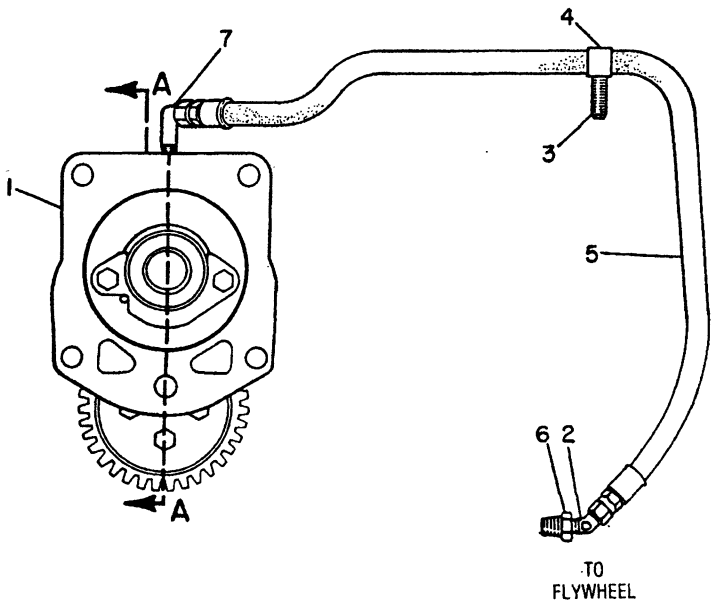

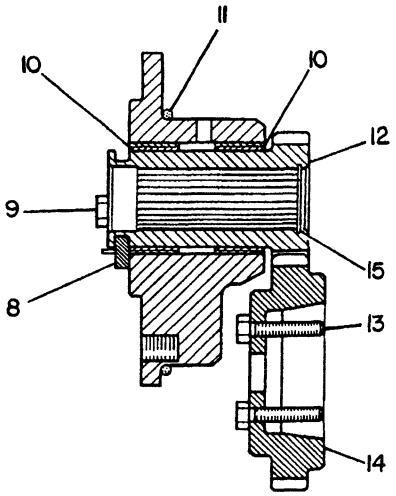

SECTION A-A

NOTE	REF NO	PART NUMBER	QTY	PART NAME	NOTE	REF NO	PART NUMBER	QTY	PART NAME
	1	7N1565	1	ADAPTER					
C	2	9L5125	1	ELBOW					
	3	0S1588	1	BOLT					
		5M2894	1	WASHER					
	4	4K8864	1	CLIP					
	5	9G4524	1	HOSE AS					
	6	4M5317	1	BUSHING-TERMINAL					
C	7	5P4479	1	ELBOW					
	8	7N1564	1	WASHER-THRUST					
	9	0L1351	2	BOLT					
	10	4N1186	2	BEARING-SLEEVE					
	11	5F3106	1	SEAL-O-RING					
	12	8N0935	1	GEAR (ACC DRIVE)					
	13	1A9579	4	BOLT					
	14	8N0934	1	GEAR-CAMSHAFT (44 TEETH)					
	15	2D6398	1	RING-RETAINING					

C-CHANGE FROM PREVIOUS TYPE

B-350198 EP

5163

8N7507 GEAR GP-ACCESSORY

Type 2

Part Of 7G1188,7T0408 Winch Ars

An Attachment

MEMORANDA

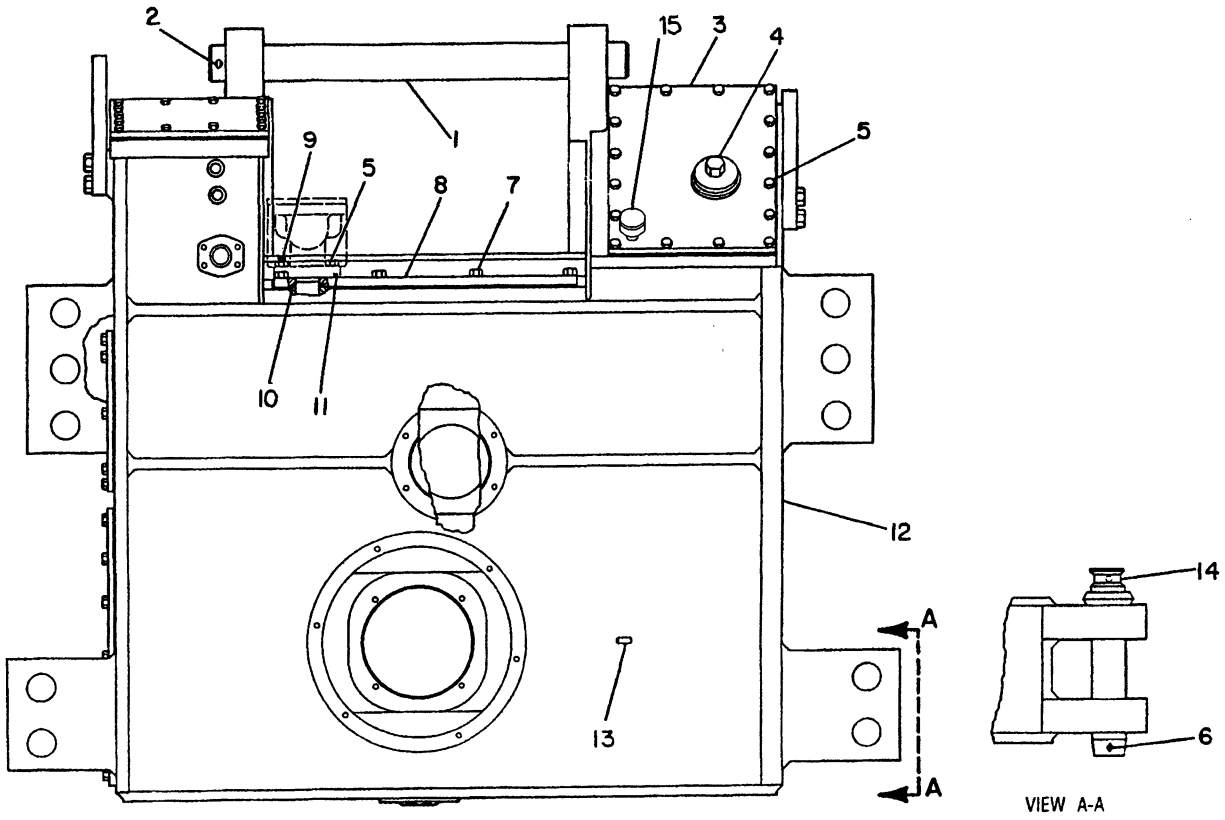

NOTE	REF NO	PART NUMBER	QTY	PART NAME	NOTE	REF NO	PART NUMBER	QTY	PART NAME
	1	1P9265	1	SHAFT-GOVERNOR CONTROL					
	2	3B5325	2	COTTER					
	3	7G1078	1	COVER AS					
		7G0645	1	GASKET					
	4	5H7110	1	PLUG-DRAIN					
		OL1124	1	GASKET-PLUG					
	5	OS1594	18	BOLT					
C	6	3B5324	1	COTTER					
	7	OS1588	9	BOLT					
	8	7G3317	1	COVER					
		7G3316	1	GASKET					
	9	1D4717	2	NUT (FULL)					
		8M1871	2	STUD-TAPERLOCK					
	10	5M5860	1	SEAL-O-RING					
	11	2H6184	1	SEAL-O-RING					
	12	7G0603	1	CASE AS-WINCH					
	13	8B1312	2	DOWEL					
	14	3R6716	1	PIN AS-DRAWBAR					
	15	2Y7359	1	BREATHER					

C-CHANGE FROM PREVIOUS TYPE

R-508191 EP

5163 **7G1180 CASE & COVERS GP-WINCH-PART 1 OF 2**

Part Of 7G1189 Winch Ar

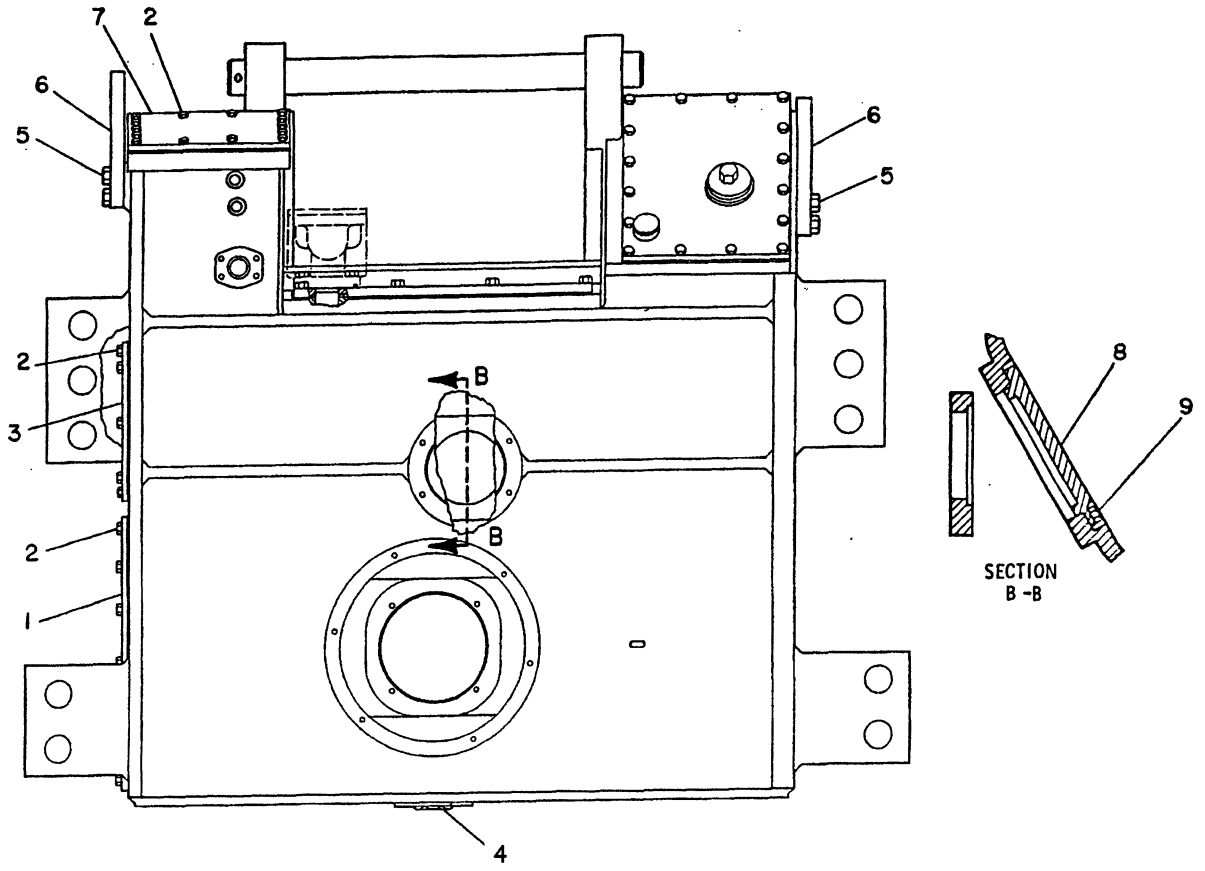

NOTE	REF NO	PART NUMBER	QTY	PART NAME	NOTE	REF NO	PART NUMBER	QTY	PART NAME
	1	7G0611	1	COVER					
		7G0610	1	GASKET					
C	2	0S1594	38	BOLT					
	3	7G0613	1	COVER					
		7G0612	1	GASKET					
	4	5P4483	1	PLUG-O-RING					
		7M8485	1	SEAL-O-RING					
	5	7B3235	8	BOLT					
	6	7G9998	2	PLATE					
	7	7G0615	1	PLATE					
		7G0614	1	GASKET					
	8	8P0976	1	COVER					
		6P4677	1	GASKET					
	9	0S0509	9	BOLT					

C-CHANGE FROM PREVIOUS TYPE

R-475402 EP

5163 **7G1180 CASE & COVERS GP-WINCH-PART 2 OF 2**

Part Of 7G1189 Winch Ar

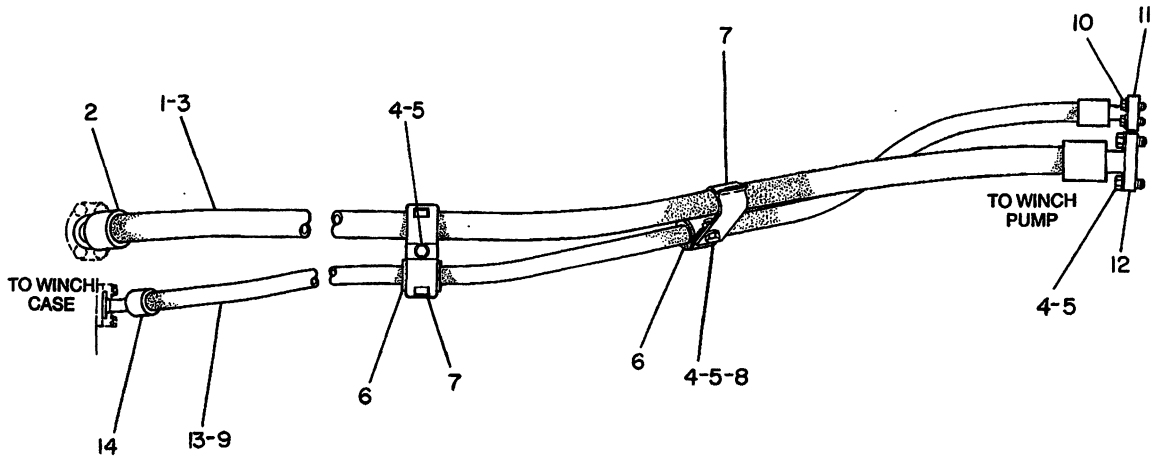

NOTE	REF NO	PART NUMBER	QTY	PART NAME	NOTE	REF NO	PART NUMBER	QTY	PART NAME
I	1	9G1434	1	HOSE AS					
G		8S9348		HOSE 8.7IN(22.2CM)					
		8S1396	1	STEM AS-COLLET (30 DEGREE)					
		5S3779	1	STEM AS (STRAIGHT)					
	2	3S7116	2	SLEEVE					
	3	4J0524	2	SEAL					
	4	0S1585	6	BOLT					
	5	5P8245	7	WASHER					
	6	5P8112	2	GROMMET					
	7	5P7466	4	CLIP (SLOT)					
		5P7467	4	CLIP (TAB)					
	8	1D4719	1	NUT					
	9	4J0520	2	SEAL					
	10	3B1915	4	BOLT					
		5M2894	4	WASHER					
	11	1P4577	2	FLANGE-HALF					
	12	1P4579	2	FLANGE-HALF					
I	13	9G1433	1	HOSE AS					
G		9S0247		HOSE 8.9IN(22.7CM)					
		8S4591	1	STEM AS-COLLET (60 DEGREE)					
		5S5283	1	STEM AS-COLLET (STRAIGHT)					
	14	3S7166	2	SLEEVE					

G-ORDER BY THE INCH
I-SEE HOSE FABRICATION GUIDE

B-235194 P

5163 **6P8840 LINES GP-WINCH**

Type 1
Part Of 7G1188,7T0408 Winch Ars
An Attachment

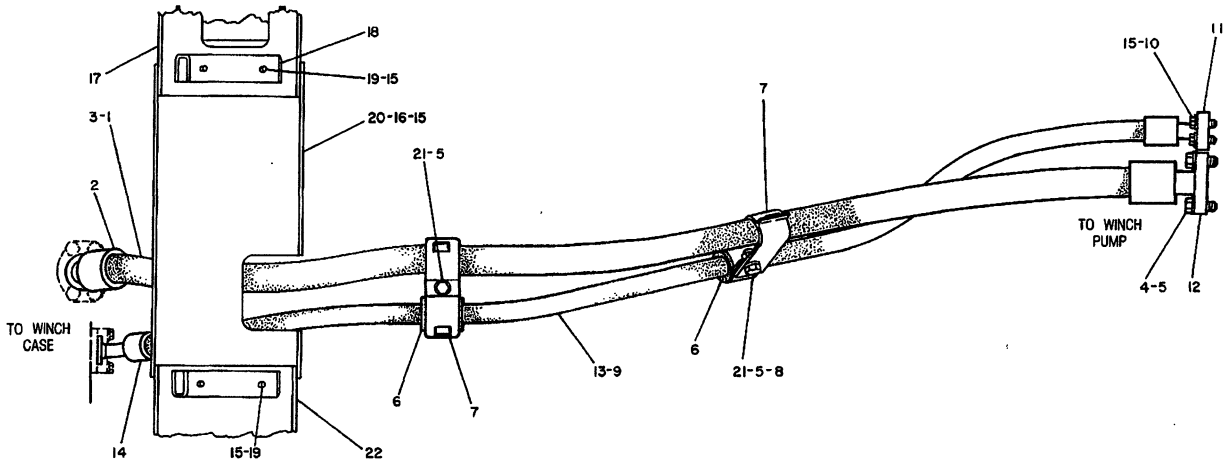

NOTE	REF NO	PART NUMBER	QTY	DESCRIPTION
	1	9G1434	1	HOSE AS.
BG		8S9348		HOSE
		8S1396	1	STEM AS. (30°)
		5S3779	1	STEM AS. (STRAIGHT)
	2	3S7116	2	SLEEVE
	3	4J0524	2	SEAL
C	4	0S1585	4	BOLT
	5	5P8245	7	WASHER
	6	5P8112	2	GROMMET
	7	5P7466	4	CLIP (SLOT)
		5P7467	4	CLIP (TAB)
	8	1F4719	1	NUT
	9	4J0520	2	SEAL
	10	3B1915	4	BOLT
	11	1P4577	2	FLANGE
	12	1P4579	2	FLANGE
	13	9G1433	1	HOSE AS.
BG		9S0247		HOSE
		8S4591	1	STEM AS. (60°)
		5S5283	1	STEM AS. (STRAIGHT)
	14	3S7166	2	SLEEVE
C	15	5M2894	12	WASHER 17.5MM(.685IN.)O.D.
C	16	0S1594	4	BOLT
C		7K4743	4	WASHER 25.4MM(1 IN.)O.D.
C	17	6T4064	1	COVER AS.
		9F2978	2	NUT
C	18	6T4067	2	BRACKET AS.
				(EACH INCLUDES)
		7G4928	2	SPACER
C	19	0S0509	4	BOLT
C	20	6T8982	1	PLATE
C	21	0S1595	2	BOLT
C	22	6T4065	1	PLATE

B USE AS REQUIRED

C INDICATES CHANGE

G ORDER BY THE INCH

327731

327731 P

6P8840 LINES GP-WINCH

Type 2

Part Of 7G1188,7T0408 Winch Ars

An Attachment

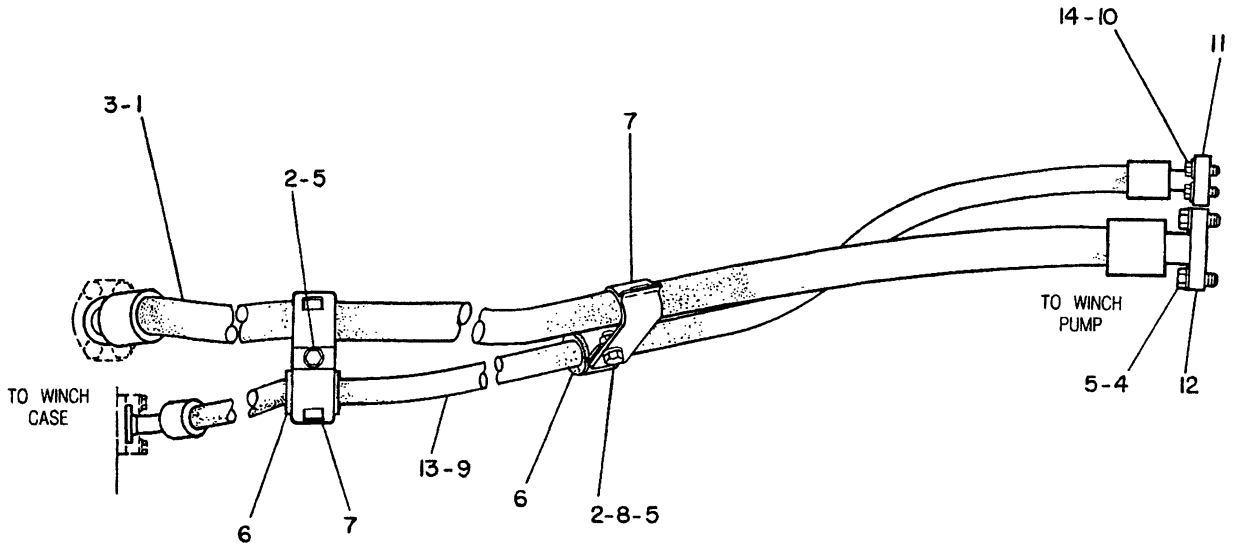

NOTE	REF NO	PART NUMBER	QTY	PART NAME	NOTE	REF NO	PART NUMBER	QTY	PART NAME
I	1	9G1434	1	HOSE AS					
	2	8T8917	2	BOLT					
C	3	4J0524	2	SEAL					
	4	5P2566	4	BOLT					
	5	8T4223	7	WASHER-HARD					
	6	5P8112	2	GROMMET					
	7	5P7466	4	CLIP (SLOT)					
		5P7467	4	CLIP (TAB)					
	8	6V8188	1	NUT					
C	9	4J0520	2	SEAL					
	10	5S7382	4	BOLT					
	11	1P4577	2	FLANGE-HALF					
	12	1P4579	2	FLANGE-HALF					
I	13	9G1433	1	HOSE AS					
C	14	8T4896	4	WASHER-HARD					

C-CHANGE FROM PREVIOUS TYPE
I-SEE HOSE FABRICATION GUIDE

B-559463 EP

5163

6P8840 LINES GP-WINCH
Type 3
Part Of 7G1188,7T0408 Winch Ars
An Attachment

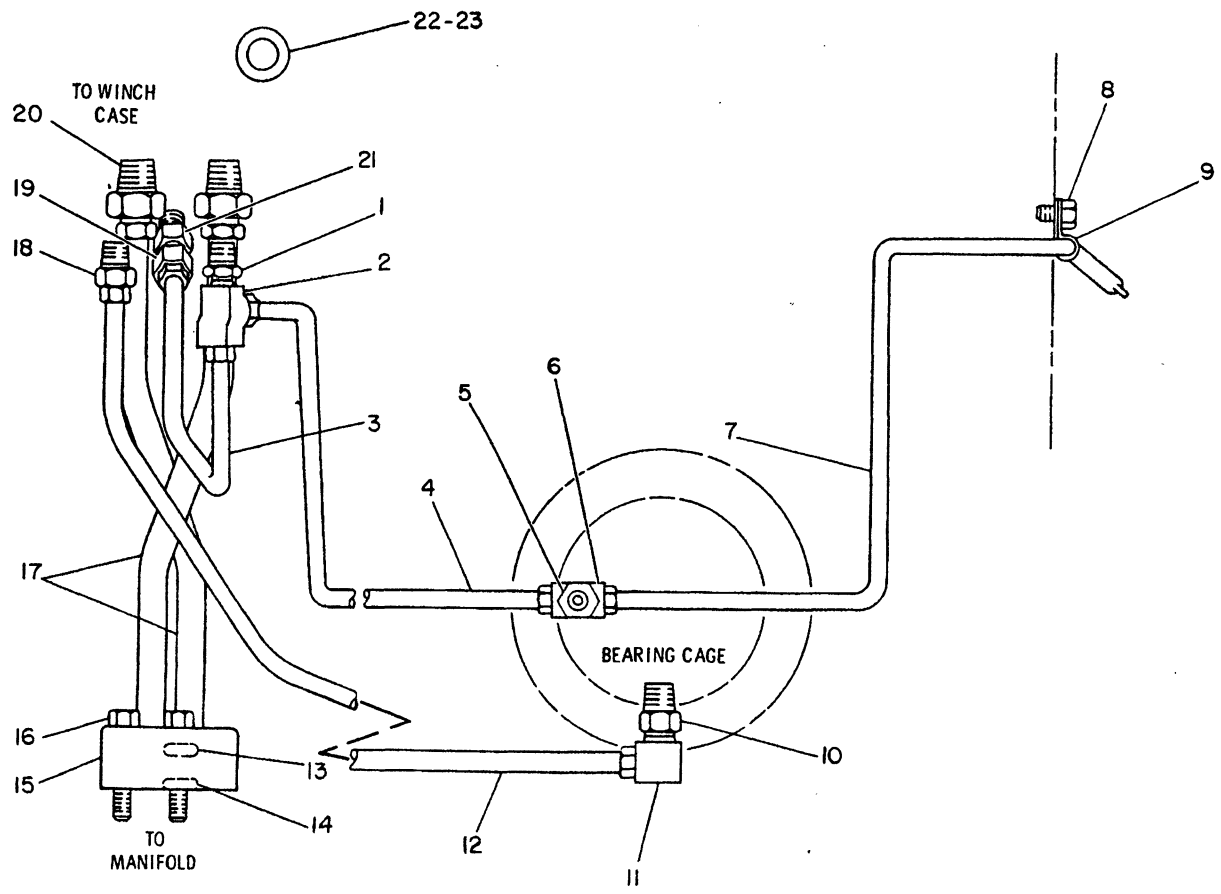

NOTE	REF NO	PART NUMBER	QTY	PART NAME	NOTE	REF NO	PART NUMBER	QTY	PART NAME
C	1	3B7764	1	BUSHING-TERMINAL					
	2	6K8498	1	TEE-FLARED					
	3	7G1270	1	TUBE AS					
	4	7G1269	1	TUBE AS					
	5	5H8936	1	ADAPTER					
	6	5K9989	1	TEE-FLARED					
	7	7G1268	1	TUBE AS					
	8	4F4879	1	BOLT					
		5M2894	1	WASHER					
	9	1F7567	1	CLIP					
	10	3B7255	1	BUSHING-TERMINAL					
	11	5K9244	1	ELBOW-FLARED					
	12	7G1271	1	TUBE AS					
	13	4J5351	2	SEAL					
	14	5H2767	2	SEAL-O-RING					
	15	2P1053	1	FLANGE					
	16	0S1590	2	BOLT					
	17	7G1267	2	TUBE AS					
	18	5K9238	1	CONNECTOR-FLARED					
	19	5K9246	1	CONNECTOR-FLARED					
	20	6K8079	2	CONNECTOR-FLARED					
C	21	2P4439	1	ADAPTER-ORIFICE					
	22	2S4958	1	SLEEVE					
	23	8M4435	2	SEAL					

C-CHANGE FROM PREVIOUS TYPE

B-182125 EP

5163 **7G1265 LINES GP-WINCH**

Part Of 7G1189 Winch Ar

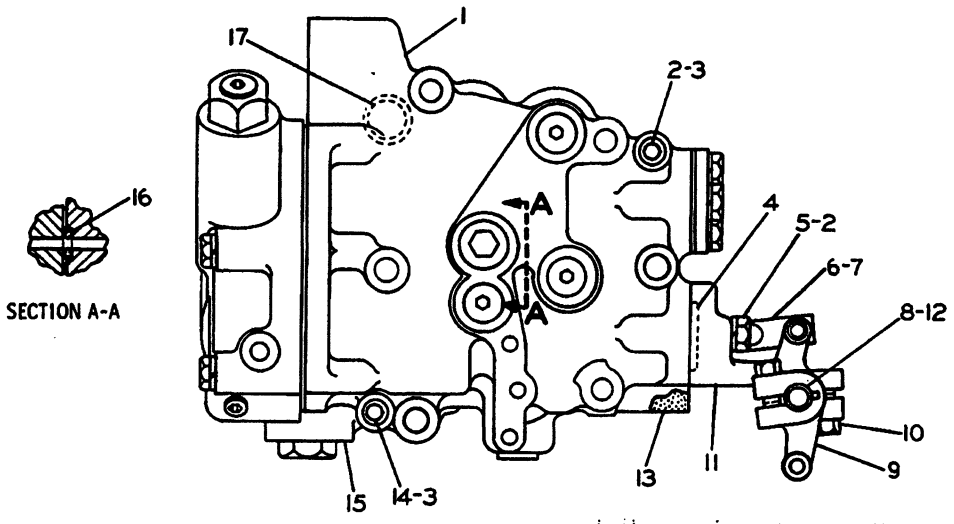

	REF. NO.	PART NUMBER	DESCRIPTION	QTY
C	1	8P1392	VALVE GROUP-----(Pressure)----- (Separate Illustration)	1
	2	3S4346	BOLT----------	1
	3	9M1974	WASHER----------	4
	4	3D2992	SEAL----------	1
	5	1B7182	BOLT----------	2
	6	1P5130	LINK----------	2
	7	9S1303	PIN----------	2
		3B4607	COTTER PIN----------	2
	8	2P6969	SHAFT----------	1
		1B8702	KEY----------	2
	9	6P9367	LEVER----------	2
	10	2B2695	BOLT----------	2
	11	2P6971	BRACKET ASSEM. ----------	1
		9H2400	BEARING----------	2
	12	4B4280	WASHER----------	2
	13	2P3650	GASKET----------	1
	14	6L4783	BOLT----------	1
	15	3P4121	VALVE GROUP-----(Selector)------ (Separate Illustration)	1
	16	2H5001	SEAL----------	1
	17	5F7054	SEAL----------	4

C INDICATES CHANGE 168275

168275 EP

5163

2P3640 VALVE GP

Selector & Pressure Control
3P4121-Page 293, 8P1392-Page 294
Part Of 3T4993 Control-Winch

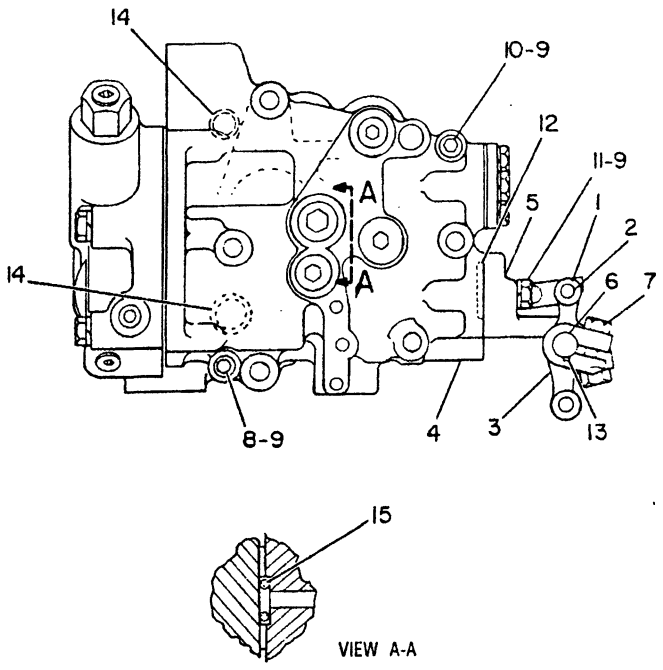

NOTE	REF NO	PART NUMBER	QTY	PART NAME
	1	1P5130	2	LINK
	2	9S1303	2	PIN
		3B4607	2	COTTER
	3	6P9367	2	LEVER
Y	4	3P4121	1	VALVE GP-SELECTOR
		2P3650	1	GASKET
Y		3T8649	1	VALVE GP-PRESSURE CONTROL
	5	2P6971	1	BRACKET AS
		4B4280	2	WASHER
	6	2P6969	1	SHAFT-GOVERNOR CONTROL
	7	2B2695	2	BOLT
	8	6L4783	1	BOLT-12 POINT HEAD
	9	9M1974	4	WASHER-HARD
	10	3S4346	1	BOLT-12 POINT HEAD
	11	1B7182	2	BOLT
	12	3D2992	1	SEAL
	13	1B8702	2	KEY-WOODRUFF
	14	5F7054	4	SEAL-O-RING
	15	2H5001	1	SEAL

Y-SEPARATE ILLUSTRATION

B-305875 EP

5051 **3T8650 VALVE GP-SELECTOR & PRESSURE CONTROL**
Winch S/N 83Y391-Up
3T8649-Page 286A, 3P4121-Page 293
Part Of 3T4993 Control

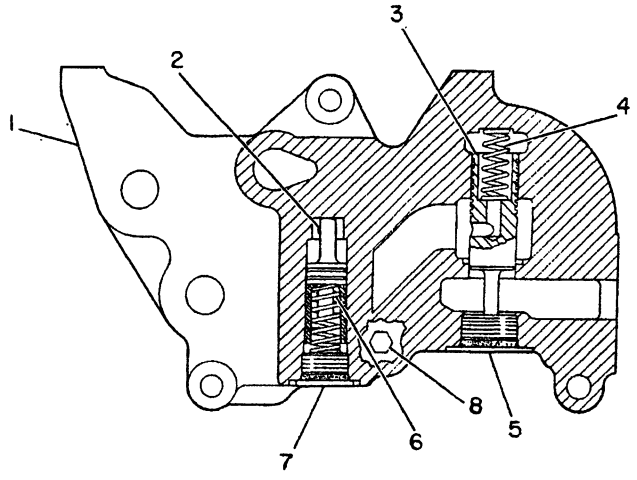

NOTE	REF NO	PART NUMBER	QTY	PART NAME
	1	3T4992	1	MANIFOLD
	2	9P9282	1	PLUNGER
	3	9P1508	1	SPOOL
	4	9M1986	1	SPRING
	5	9S8008	1	PLUG-O-RING
		3D2824	1	SEAL-O-RING
	6	8F0394	1	SPRING
	7	9S8006	1	PLUG-O-RING
		2M9780	1	SEAL-O-RING
	8	5M6214	1	PLUG-PIPE

B-235205 EP

5163 **3T5036 BYPASS GP-FILTER**
Part Of 3T4993 Control-Winch

MEMORANDA

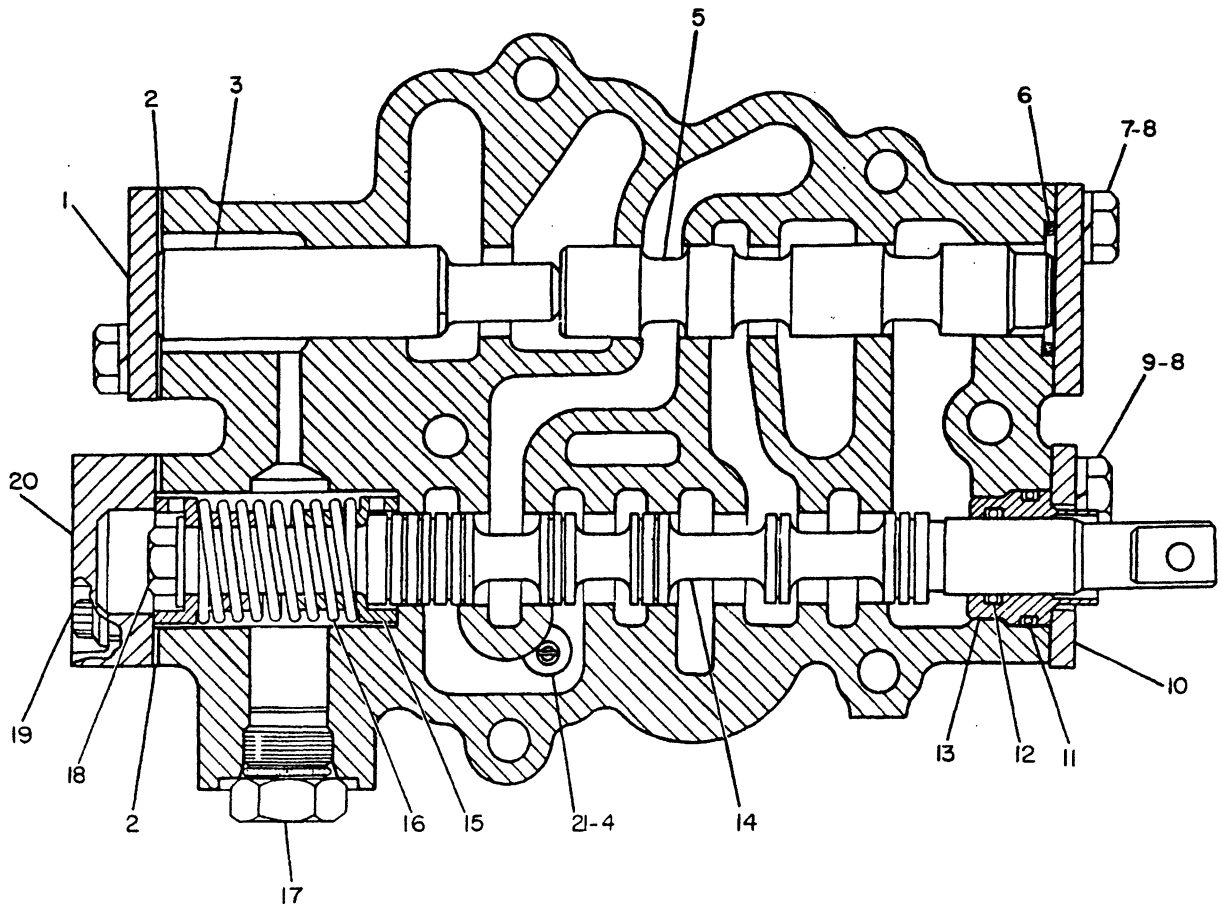

NOTE	REF NO	PART NUMBER	QTY	PART NAME	NOTE	REF NO	PART NUMBER	QTY	PART NAME
	1	6B0830	2	COVER	FC		3K5762	1	PLUG
	2	3P0218	2	GASKET					
	3	2P3683	2	STOP					
	4	5F9144	1	SEAL-O-RING					
	5	2P3639	1	SPOOL-INCHING					
	6	3H0107	1	SEAL-O-RING					
	7	2B2695	4	BOLT					
C	8	3B4505	6	LOCKWASHER					
	9	0S1617	2	BOLT					
	10	1P6217	1	FLANGE					
	11	4D9986	1	SEAL-O-RING					
	12	8M5260	1	SEAL-O-RING					
	13	3S2682	1	BUSHING-SEAL					
	14	2P3617	1	SPOOL-SELECTOR					
	15	9W4023	2	RETAINER					
	16	3P3202	1	SPRING					
C	17	9S8005	1	PLUG-O-RING					
		3K0360	1	SEAL-O-RING					
	18	0S1618	1	BOLT					
		1T0738	1	WASHER					
C	19	1T0414	2	BOLT-12 POINT HEAD					
C	20	8P4299	1	COVER					
	21	3P4117	1	VALVE AS-CHECK					
		1L5316	1	PIN-SPRING					
		5B9318	1	BALL					

C-CHANGE FROM PREVIOUS TYPE
F-NOT SHOWN

B-503319 EP

5065 **3P4121 VALVE GP-SELECTOR**
Part Of 2P3640,3T8650 Valves

REF. NO.	PART NUMBER	DESCRIPTION	QTY
1	8P345	BODY ASSEM. (Includes)	1
2	4B9880	BALL	1
3	2P3646	PISTON	1

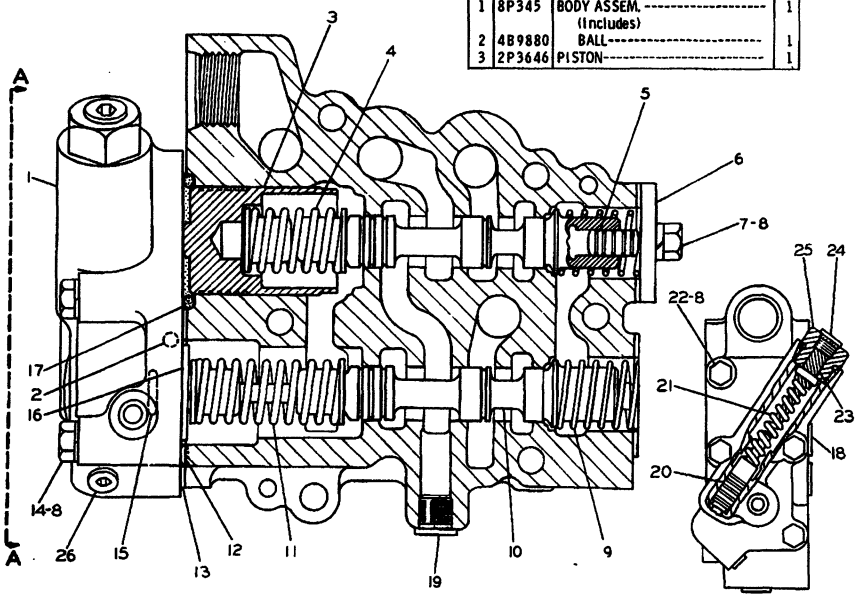

VIEW A-A

4	3P5168	SPRING ASSEM.	1
5	2M1168	SLUG	2
6	6B830	COVER	1
	3P218	GASKET	1
7	2B2695	BOLT	2
8	3B4505	LOCKWASHER	6
9	1P3216	SPRING	2
10	3P2767	SPOOL	2
11	3P5169	SPRING ASSEM.	1
12	6F5559	SEAL	1
13	2P3644	GASKET	1
14	2B2694	BOLT	3
15	4K2039	SEAL	1
16	3P2847	RETAINER	1
17	1H9696	SEAL	1
18	9S8005	PLUG	1
	3K360	SEAL	1
19	9S8004	PLUG	4
	3J1907	SEAL	4
20	3P4660	SPOOL	1
21	8P346	SPRING	1
22	1B7182	BOLT	1
23	8P325	STOP ASSEM. (Includes)	1
	5H9809	DOWEL	1
24	9S8003	PLUG	1
	1J9671	SEAL	1
25	6P9959	PLUG	1
	2M9780	SEAL	1
26	9S8001	PLUG	1
	4J7533	SEAL	1
	SMHS6709	FORM (Installation Instructions for Body Assem.)	1

208955

208955 EP

5163

8P1392 VALVE GP

Selector & Pressure Control
Part Of 2P3640 Valve

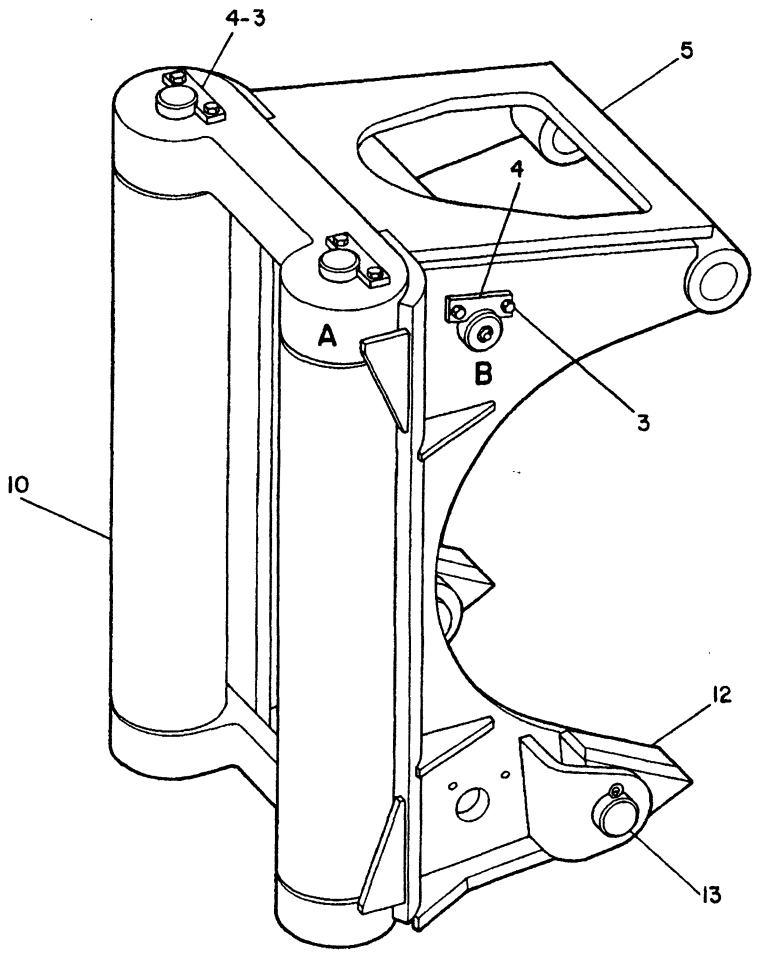

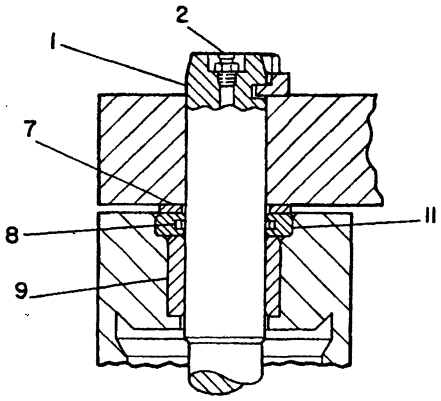

VIEW OF AREA A

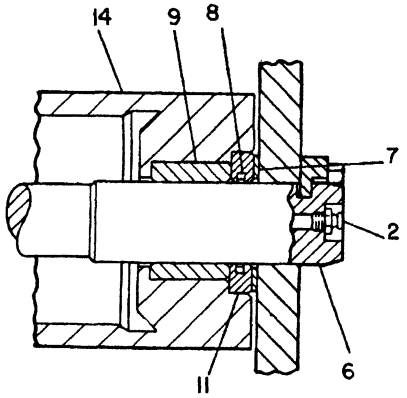

VIEW OF AREA B

NOTE	REF NO	PART NUMBER	QTY	PART NAME	NOTE	REF NO	PART NUMBER	QTY	PART NAME
	1	6P3470	2	SHAFT-GOVERNOR CONTROL					
	2	3B8489	6	FITTING-GREASE					
C	3	7S9372	6	BOLT					
C	4	9G8253	3	CLIP					
	5	9P7526	1	FRAME AS					
	6	6P3471	1	SHAFT-GOVERNOR CONTROL					
	7	9P9726	6	WASHER					
	8	3D2898	6	SEAL-O-RING 48.8MM(1.925IN.)I.D.					
		5P8476	6	SEAL-RING 44.07MM(1.735IN.)I.D.					
	9	7J6250	6	BEARING-SLEEVE					
	10	6P3473	2	ROLLER AS					
	11	9P7453	6	CARRIER-SEAL					
	12	9P7523	2	SUPPORT					
	13	1P7545	2	PIN					
		3B5325	2	COTTER					
	14	9P7452	1	ROLLER AS					

C-CHANGE FROM PREVIOUS TYPE

B-451308 EP

6305 **9P7728 FAIRLEAD GP-WINCH**
An Attachment

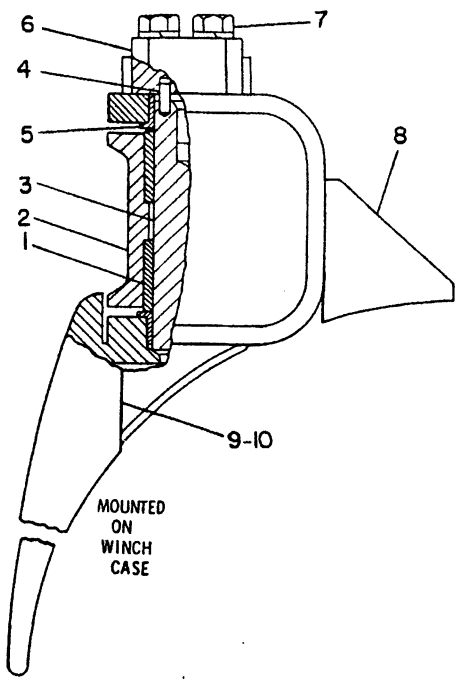

NOTE	REF NO	PART NUMBER	QTY	PART NAME
	1	7J9884	4	BEARING
	2	8P2933	2	ROLLER-CABLE GUIDE
	3	2P3559	2	SHAFT AS
				(EACH INCLUDES)
	4	9S1307	1	DOWEL
	5	2P3558	4	SLEEVE
	6	2P2026	1	BAR AS
	7	0S1625	4	BOLT
		3B4510	4	LOCKWASHER
	8	2P1999	2	GUSSET
	9	8P2392	1	SUPPORT AS-RH
	10	8P2391	1	SUPPORT AS-LH
		2P2949	1	GUSSET

B-159640 EP

5180 **8P2398 GUIDE GP-ROLLER**
An Attachment

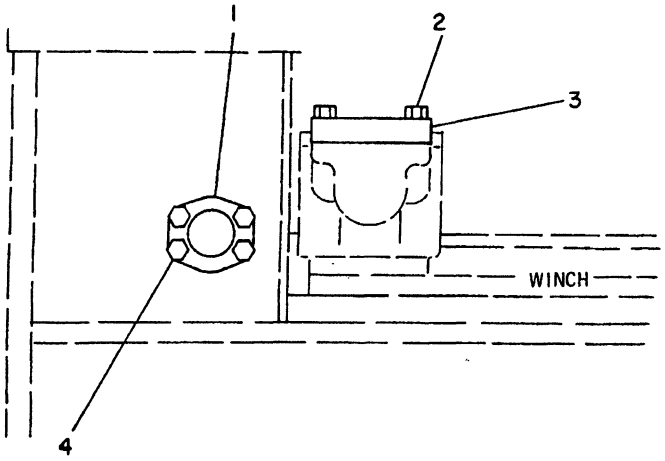

NOTE	REF NO	PART NUMBER	QTY	PART NAME
	1	1P4577	2	FLANGE-HALF
		8M4987	1	SEAL-O-RING
	2	7B3235	4	BOLT
C		5P8245	4	WASHER
	3	1P4579	2	FLANGE-HALF
		4J0524	1	SEAL
	4	0S1588	4	BOLT
C		5M2894	4	WASHER

C-CHANGE FROM PREVIOUS TYPE

B-485015 EP

7505 **7G1181 COVERS GP-SHIPPING-WINCH**
Part Of 7G1189 Winch Ar

CAB, GAUGES AND ACCESSORIES

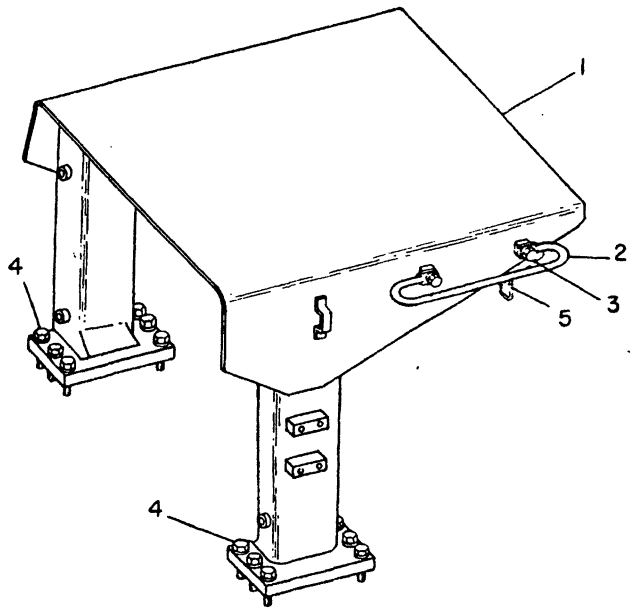

NOTE	REF NO	PART NUMBER	QTY	PART NAME
	1	9G8436	1	ROPS AS
	2	8P8542	2	HANDHOLD
	3	OS1621	4	BOLT
		3B4508	4	LOCKWASHER
	4	1D4639	12	BOLT
		5P8250	12	WASHER
Y	5	9P1896	1	MIRROR GP-REAR VIEW

Y-SEPARATE ILLUSTRATION

B-235095 EP

7323 **9P8195 ROPS GP**

9P1896-Page 298

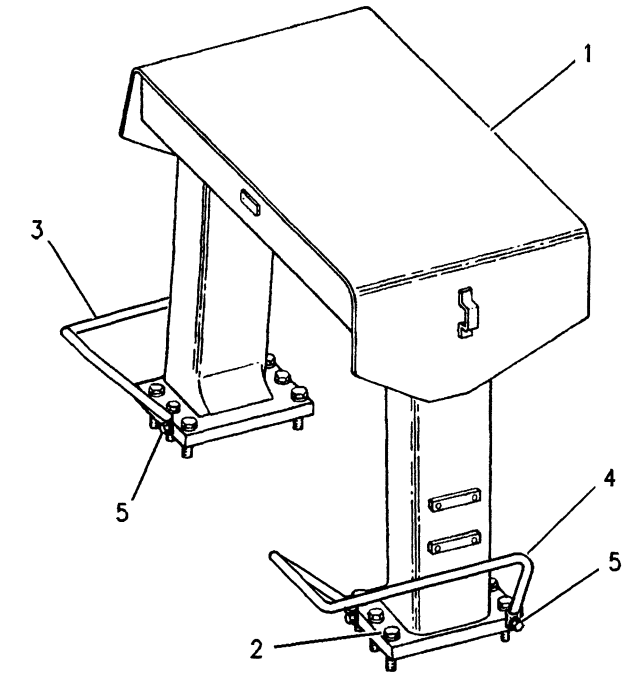

NOTE	REF NO	PART NUMBER	QTY	PART NAME
	1	9G7849	1	ROPS AS
	2	1D4639	12	BOLT
		8T5361	12	WASHER
	3	9U9956	1	HANDHOLD-RH
	4	9U9957	1	HANDHOLD-LH
	5	5C6565	4	BOLT
		5P1076	4	WASHER-HARD

R-569930 EP

7323 **9P8194 ROPS GP**

Part Of 3T0639,6T8696,7T2563 Cabs
An Attachment

CAB, GAUGES AND ACCESSORIES

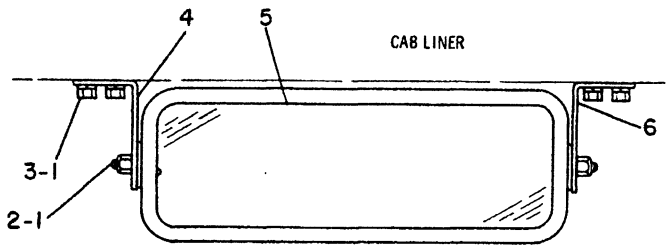

NOTE	REF NO	PART NUMBER	QTY	PART NAME
	1	5M3062	6	BOLT
	2	2K4973	2	LOCKNUT
	3	8T4896	4	WASHER-HARD
	4	9P1535	1	BRACKET
	5	5P6871	1	MIRROR
	6	9P1536	1	BRACKET

B-511858 EP

7319

9P1896 MIRROR GP-REAR VIEW
Part Of 9P8195 ROPS

		CONSISTS OF:	PAGE
1	7G9750	ALTERNATOR GP	102
1	3T0635	CAB AR	299
		-OR-	
1	3T8102	CAB AR	299B
1	3T3810	LINER GP-CAB	310
		-OR-	
1	3T8104	LINER GP-CAB	310A
1	3T7252	MOUNTING GP-CAB	176
1	3T7284	PRESSURIZER GP-CAB	304
1	9P9392	MIRROR GP-REAR VIEW	310.01
1	9P8194	ROLL-OVER PROTECTIVE GP	297
1	4V9830	COVER GP-SEAT	320
1	9G9277	WASHER GP	306
		-OR-	
1	3T6371	WASHER GP	307A
1	6V5365	PLATE-CERTIFICATION (ROPS)	
1	6V3619	PLATE-CERTIFICATION (ROPS)	
8	7K6536	RIVET	

7301

3T0639 CAB AR
Replaced By 6T8696-Page 299A
An Attachment

CAB, GAUGES AND ACCESSORIES

	CONSISTS OF:	PAGE
1	3T0634 CAB GROUP	300
1	3T0637 WIPER GROUP	308

107508 P

7301 **3T0635 CAB AR**
An Attachment

CAB, GAUGES AND ACCESSORIES

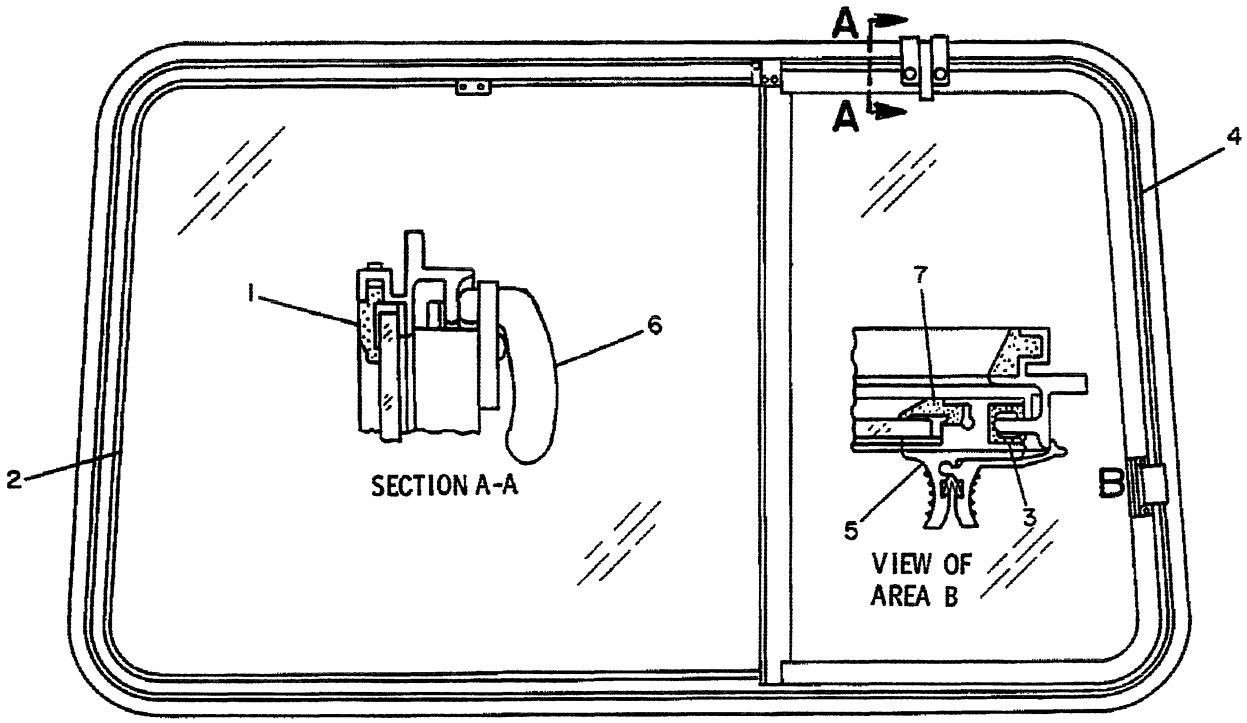

NOTE	REF NO	PART NUMBER	QTY	PART NAME	NOTE	REF NO	PART NUMBER	QTY	PART NAME
CD	1	5P5680		SEAL 2.6M(102.4IN.)					
C	2	9P7855	1	GLASS (TINTED)					
D	3	5P8918		SEAL 1.4M(55.12IN.)					
	4	9P7858	1	SLIDE AS					
	5	9P7860	1	LOCK AS					
C		9P7859	2	SCREW					
C	6	3T1121	1	LOCK AS					
C		2H6622	2	SCREW-MACHINE					
CD	7	5P5680		SEAL 1.85M(72.6IN.)					

C-CHANGE FROM PREVIOUS TYPE
D-ORDER BY THE METER

R-527217 EP

7301

9P7233 WINDOW AS-SLIDING
Replaced By 6T5008
Part Of 3T0634,3T8103 Cabs
An Attachment

MEMORANDA

CAB, GAUGES AND ACCESSORIES

	CONSISTS OF:	PAGE
1	7G9750 ALTERNATOR GROUP	102
1	3T8102 CAB ARRANGEMENT	299B
1	6T8698 CAB HEATER GROUP	327C
1	3T8104 CAB LINER GROUP	310A
1	3T7252 CAB MOUNTING GROUP	176
1	9P9392 REAR VIEW MIRROR GROUP	310
1	9P8194 ROLL-OVER PROTECTIVE SYSTEM GROUP	297
1	4V9830 SEAT COVER GROUP	320
1	3T6371 WASHER GROUP	307A
1	6V5365 PLATE--CERTIFICATION (ROPS)	
1	6V3619 PLATE--CERTIFICATION (ROPS)	
8	7K6536 RIVET	

317124 P

7301

6T8696 CAB AR
S/N 53Y1-3484

	CONSISTS OF:	
1	7G9750 ALTERNATOR GROUP	102
1	7T1071 CAB ARRANGEMENT	299B
1	7T2427 CAB HEATER GROUP	327G
1	7T1351 CAB LINER GROUP	310A
1	7T1350 CAB MOUNTING GROUP	177.01
1	9P9392 REAR VIEW MIRROR GROUP	310
1	9P8194 ROLL-OVER PROTECTIVE SYSTEM GROUP	297
1	4V9830 SEAT COVER GROUP	320
1	3T3984 WASHER GROUP	307C
1	7T1421 HOUSING GROUP	332B
1	6V5365 PLATE-CERTIFICATION (ROPS)	
1	8T3558 PLATE	
1	8T5426 PLATE-CERTIFICATION (ROPS)	
1	9N1995 RIVET	

335120 P

7301

7T2563 CAB AR
S/N 53Y3485-Up

CAB, GAUGES AND ACCESSORIES

	CONSISTS OF:	PAGE
1	3T8103 CAB GROUP	301C
1	3T9139 WIPER GROUP	309A

310518 P

7301 **3T8102 CAB AR**
S/N 53Y1-3484
Part Of 6T8696 Cab

CONSISTS OF:

1	7T0972 CAB GROUP	301E
1	7T1072 WIPER GROUP	309 L

335114 P

7301 **7T1071 CAB AR**
S/N 53Y3485-Up
Part Of 7T2563 Cab

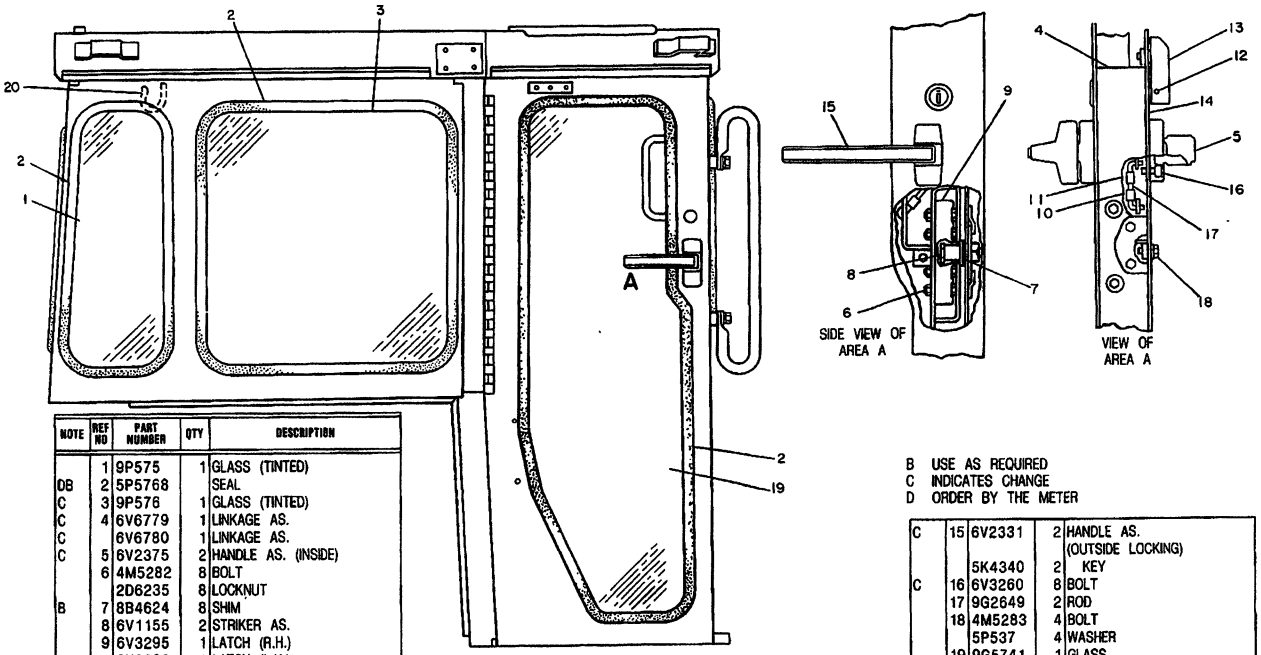

NOTE	REF NO	PART NUMBER	QTY	DESCRIPTION
	1	9P575	1	GLASS (TINTED)
DB	2	5P5768		SEAL
C	3	9P576	1	GLASS (TINTED)
C	4	6V6779	1	LINKAGE AS.
C		6V6780	1	LINKAGE AS.
C	5	6V2375	2	HANDLE AS. (INSIDE)
	6	4M5282	8	BOLT
		2D6235	8	LOCKNUT
B	7	8B4624	8	SHIM
	8	6V1155	2	STRIKER AS.
	9	6V3295	1	LATCH (R.H.)
		6V3296	1	LATCH (L.H.)
	10	25819	2	CLIP (L.H.)
	11	22264	2	CLIP (R.H.)
C	12	9L9596	4	SCREW

NOTE	REF NO	PART NUMBER	QTY	DESCRIPTION
C	13	9G2771	2	LEVER
	14	9G4182	1	COVER (R.H.)
		9G4183	1	COVER (L.H.)

B USE AS REQUIRED
C INDICATES CHANGE
D ORDER BY THE METER

NOTE	REF NO	PART NUMBER	QTY	DESCRIPTION
C	15	6V2331	2	HANDLE AS. (OUTSIDE LOCKING)
		5K4340	2	KEY
C	16	6V3260	8	BOLT
	17	9G2649	2	ROD
	18	4M5283	4	BOLT
		5P537	4	WASHER
	19	9G5741	1	GLASS
	20	6P8431	1	HOOK
		4B1273	2	SCREW
		3F1147	2	LOCKWASHER

316782

316782 P

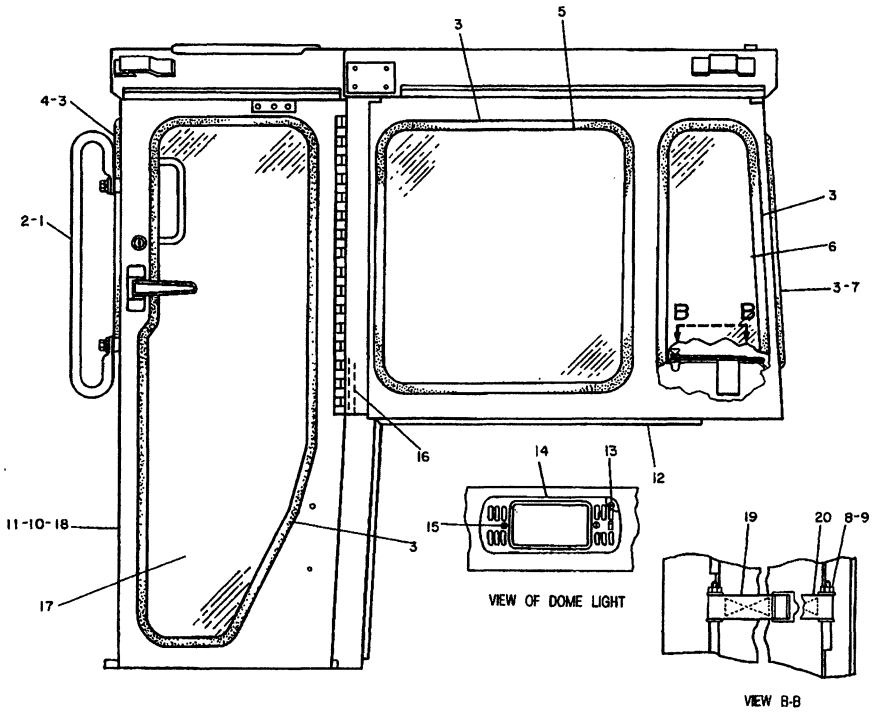

B USE AS REQUIRED
D ORDER BY THE METER
Y SEPARATE ILLUSTRATION

NOTE	REF NO	PART NUMBER	QTY	DESCRIPTION
	1	8P8542	2	GRAB IRON
	2	S1621	4	BOLT
		5P1076	4	WASHER
DB	3	5P5768		SEAL
	4	7G2454	1	GLASS
	5	9P576	1	GLASS (TINTED)
	6	9P575	1	GLASS (TINTED)
Y	7	9P7233	1	WINDOW AS. (SLIDING)
	8	2D6235	2	LOCKNUT
	9	4B4276	4	WASHER
DB	10	5P5747		SEAL
	11	S1594	12	BOLT
		5P1075	12	WASHER
	12	3T1146	1	CAB AS.
	13	1H2203	3	SCREW AS.
	14	7N8043	1	LAMP GROUP
		7N9943	1	LAMP
		7N8305	2	DOOR AS.
	15	6L7159	2	SCREW
DB	16	6V702		SEAL
	17	9G5741	1	GLASS
	18	9G6580	1	DOOR AS. (L.H.)
		9G6594	1	DOOR AS. (R.H.)
	19	7G4824	1	STRAP
	20	7G4823	1	STRAP

310567

310567 P

7301 **3T0634 CAB GP-PART 2 OF 2**
Type 1
9P7233-Page 299
An Attachment

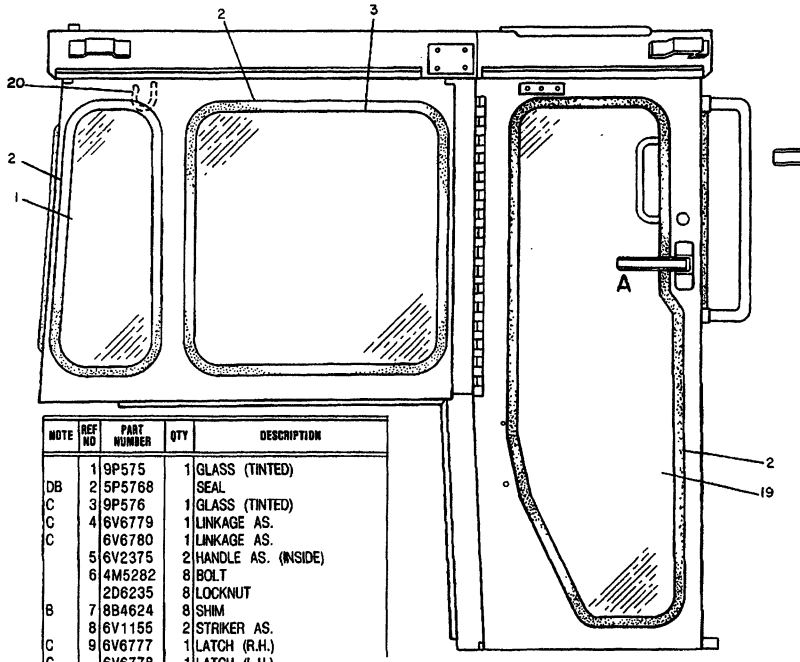

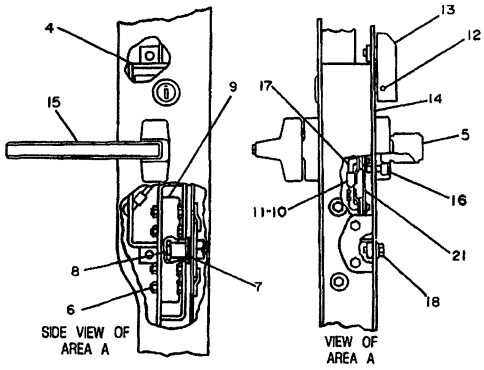

NOTE	REF NO	PART NUMBER	QTY	DESCRIPTION
	1	9P575	1	GLASS (TINTED)
DB	2	5P5768		SEAL
C	3	9P576	1	GLASS (TINTED)
C	4	6V6779	1	LINKAGE AS.
C		6V6780	1	LINKAGE AS.
	5	6V2375	2	HANDLE AS. (INSIDE)
	6	4M5282	8	BOLT
		2D6235	8	LOCKNUT
B	7	8B4624	8	SHIM
	8	6V1155	2	STRIKER AS.
C	9	6V6777	1	LATCH (R.H.)
C		6V6778	1	LATCH (L.H.)
C	10	6T3116	2	CLIP (L.H.)
C	11	6T3117	2	CLIP (R.H.)
	12	9L9596	4	SCREW
	13	9G2771	2	LEVER
	14	9G4182	1	COVER (R.H.)
		9G4183	1	COVER (L.H.)

B USE AS REQUIRED
C INDICATES CHANGE
D ORDER BY THE METER
J NOTE: NOT PART OF THIS ASSEM.

NOTE	REF NO	PART NUMBER	QTY	DESCRIPTION
	15	6V2331	2	HANDLE AS. (OUTSIDE LOCKING)
J		5K4340	2	KEY
	16	6V3260	8	BOLT
C	17	6T361	2	ROD
	18	4M5283	4	BOLT
		5P537	4	WASHER
	19	9G5741	1	GLASS
	20	6P8431	1	HOOK
		4B1273	2	SCREW
		3F1147	2	LOCKWASHER
C	21	6T1757	2	PLATE

316783

316783 P

3T0634 CAB GP-PART 1 OF 2
Type 2
An Attachment

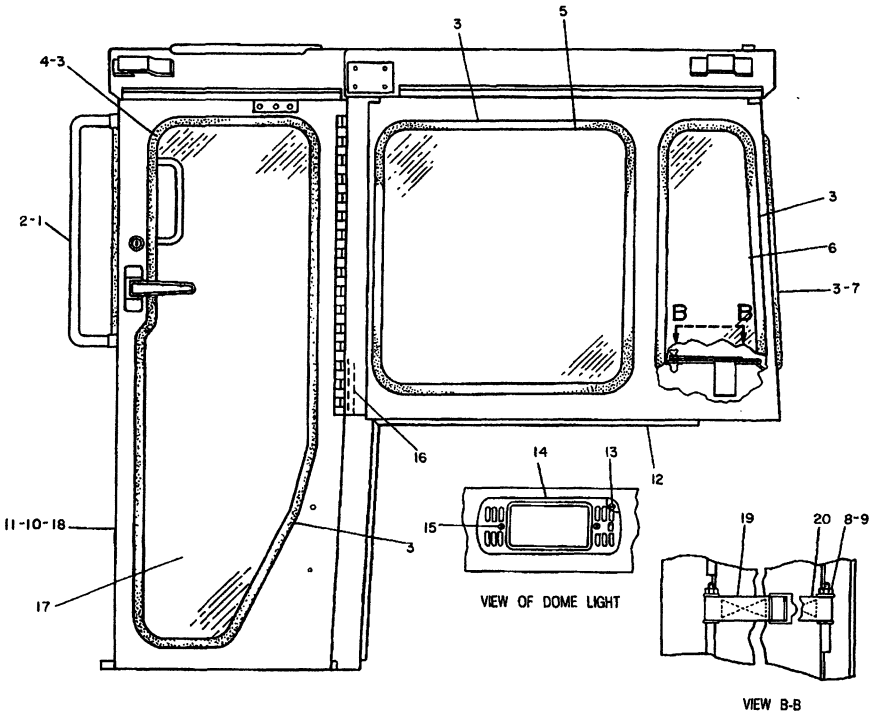

B USE AS REQUIRED
C INDICATES CHANGE
D ORDER BY THE METER
Y SEPARATE ILLUSTRATION

NOTE	REF NO	PART NUMBER	QTY	DESCRIPTION
C	1	9G992	2	HANDLE
	2	S1621	4	BOLT
		5P1076	4	WASHER
DB	3	5P5768		SEAL
	4	7G2454	1	GLASS
	5	9P576	1	GLASS (TINTED)
	6	9P575	1	GLASS (TINTED)
Y	7	9P7233	1	WINDOW ASSEM. (SLIDING)
	8	2D6235	2	LOCKNUT
	9	4B4276	4	WASHER
DB	10	5P5747		SEAL
	11	S1594	12	BOLT
		5P1075	12	WASHER
	12	3T1146	1	CAB ASSEM.
	13	1H2203	3	SCREW ASSEM.
	14	7N8043	1	LAMP GROUP
		7N9943	1	LAMP
		7N8305	2	DOOR ASSEM.
	15	6L7159	2	SCREW
DB	16	6V702		SEAL
	17	9G5741	1	GLASS
	18	9G6580	1	DOOR ASSEM. (L.H.)
		9G6594	1	DOOR ASSEM. (R.H.)
	19	7G4824	1	STRAP
	20	7G4823	1	STRAP

310619

310619 P

7301 **3T0634 CAB GP-PART 2 OF 2**
Type 2
9P7233-Page 299
An Attachment

CAB, GAUGES AND ACCESSORIES

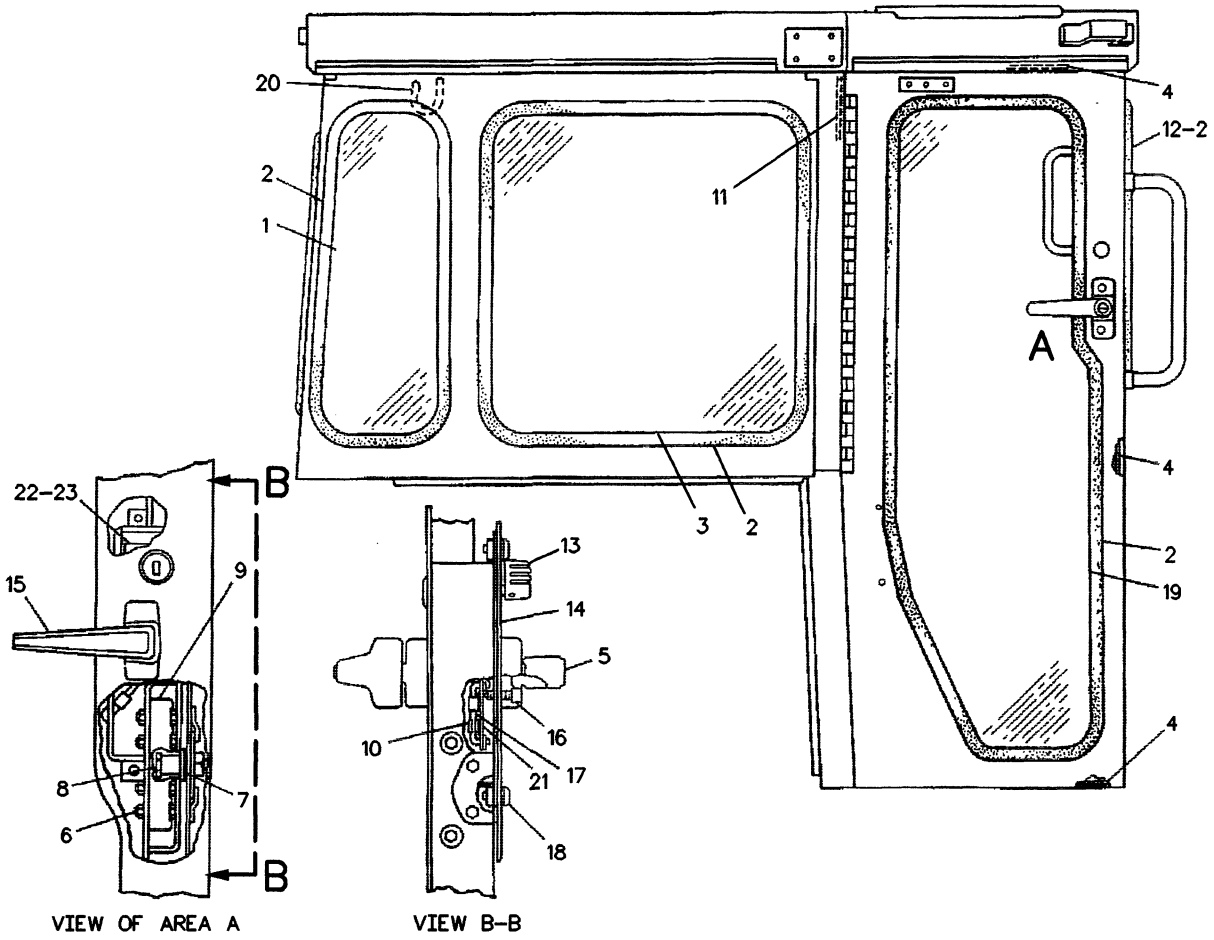

NOTE	REF NO	PART NUMBER	QTY	PART NAME	NOTE	REF NO	PART NUMBER	QTY	PART NAME
	1	9P0575	1	GLASS (TINTED)		21	6T1757	1	PLATE
BD	2	5P5768		SEAL		22	6V6779	1	LINKAGE AS (L.H.)
C	3	9P0576	1	GLASS (TINTED)		23	6V6780	1	LINKAGE AS (R.H.)
BD	4	5P5747		SEAL					
	5	6V2375	2	HANDLE AS-INSIDE					
	6	4M5282	8	BOLT					
		2D6235	8	LOCKNUT					
B	7	8B4624	8	SHIM .81MM(.032IN)THK					
	8	6V1155	2	STRIKER AS					
	9	6V6778	1	LATCH AS-DOOR (L.H.)					
		6V6777	1	LATCH AS-DOOR (R.H.)					
	10	6T3117	2	CLIP-ROD END (R.H.)					
		6T3116	2	CLIP-ROD END (L.H.)					
BD	11	6V0702		SEAL					
	12	7G2454	1	GLASS (FRONT)					
	13	6V7190	2	LEVER AS					
	14	9G4182	1	COVER (R.H.)					
		9G4183	1	COVER (L.H.)					
	15	6V2331	2	HANDLE AS (NON-LOCKING)					
	16	6V3260	8	BOLT-SOCKET HEAD					
	17	6T0361	2	ROD					
	18	6V3884	4	SCREW-HEX SOCKET					
	19	9G5741	1	GLASS					
	20	6P8431	1	HOOK					
		4B1273	2	SCREW-MACHINE					
		3F1147	2	LOCKWASHER-TOOTH					

B-USE AS REQUIRED
C-CHANGE FROM PREVIOUS TYPE
D-ORDER BY THE METER

R-534429 EP

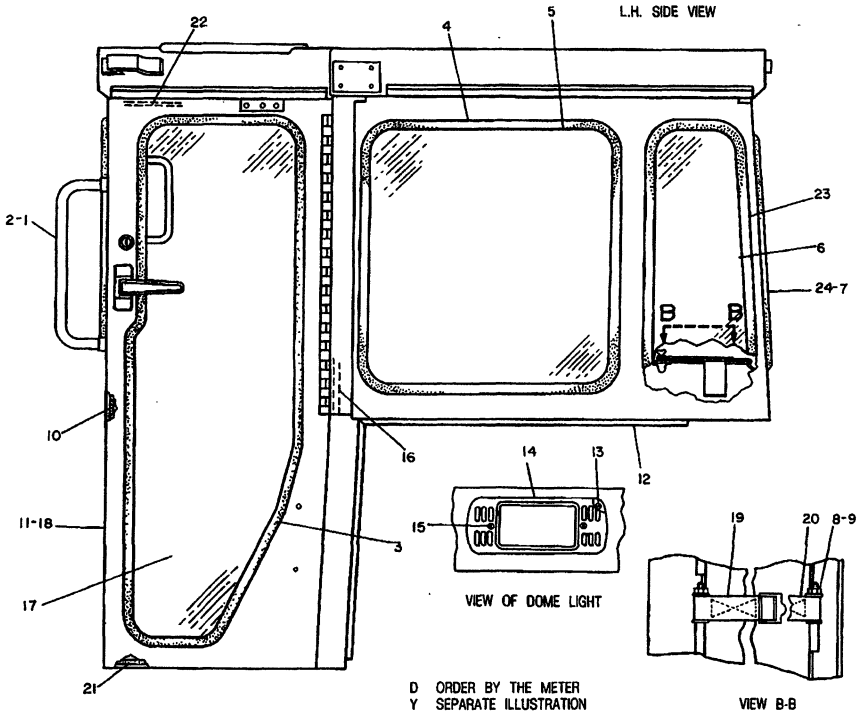

NOTE	REF NO	PART NUMBER	QTY	DESCRIPTION
	1	9G992	2	HANDLE
	2	S1621	4	BOLT
		5P1076	4	WASHER
D	3	5P5768		SEAL 3.17M(124.8IN.)
D	4	5P5768		SEAL 2.57M(101.18IN.)
	5	9P576	1	GLASS (TINTED)
	6	9P575	1	GLASS (TINTED)
Y	7	9P7233	1	WINDOW AS. (SLIDING)
	8	2D6235	2	LOCKNUT
	9	4B4276	4	WASHER
D	10	5P5747		SEAL 1.48M(58.27IN.)
	11	S1594	12	BOLT
		5P1075	12	WASHER
	12	3T8570	1	CAB AS.
	13	1H2203	3	SCREW AS.
	14	7N8043	1	LAMP GROUP
		7N9943	1	LAMP
		7N8305	2	DOOR AS.
	15	6L7159	2	SCREW
D	16	6V702		SEAL 1.5M(59.05IN.)
	17	9G5741	1	GLASS
	18	9G6580	1	DOOR AS. (L.H.)
		9G6594	1	DOOR AS. (R.H.)
	19	7G4824	1	STRAP
	20	7G4823	1	STRAP
D	21	5P5747		SEAL .62M(24.41IN.)
D	22	5P5747		SEAL .65M(25.59IN.)
D	23	5P5768		SEAL 1.75M(68.90IN.)
D	24	5P5768		SEAL 3.51M(138.19IN.)

310531

310531 P

7301

3T8103 CAB GP-PART 2 OF 2

Type 1
S/N 53Y1-3484
9P7233-Page 299
Part Of 3T8102 Cab. An Attachment

CAB, GAUGES AND ACCESSORIES

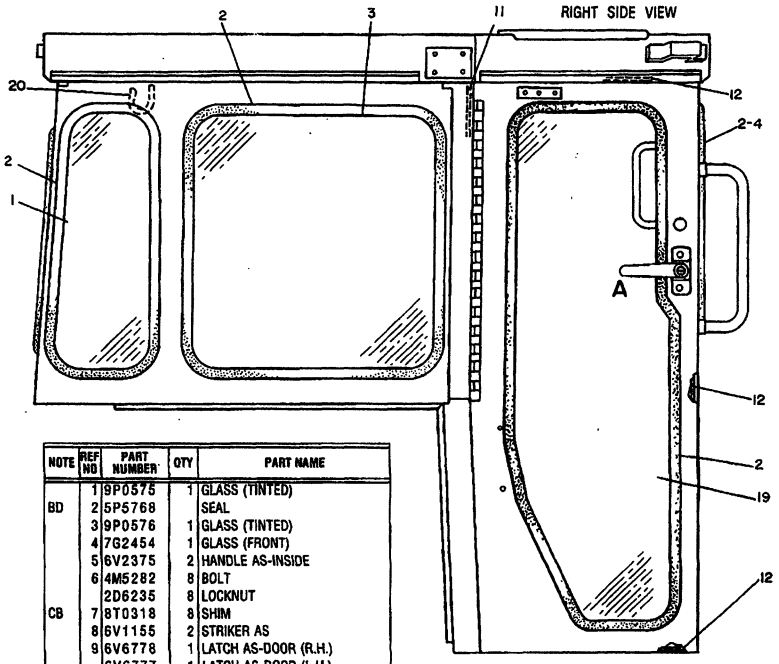

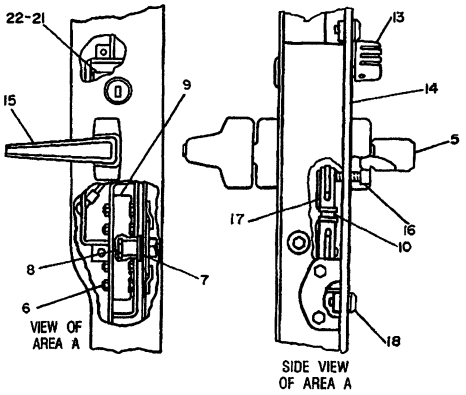

NOTE	REF NO	PART NUMBER	QTY	PART NAME
	1	9P0575	1	GLASS (TINTED)
BD	2	5P5768		SEAL
	3	9P0576	1	GLASS (TINTED)
	4	7G2454	1	GLASS (FRONT)
	5	6V2375	2	HANDLE AS-INSIDE
	6	4M5282	8	BOLT
		2D6235	8	LOCKNUT
CB	7	8T0318	8	SHIM
	8	6V1155	2	STRIKER AS
	9	6V6778	1	LATCH AS-DOOR (R.H.)
		6V6777	1	LATCH AS-DOOR (L.H.)
C	10	6V8073	2	LINK-CONNECTING
BD	11	6V0702		SEAL
BD	12	5P5747		SEAL
	13	6V7190	2	LEVER AS
	14	9G4182	1	COVER (R.H.)
		9G4183	1	COVER (L.H.)
	15	6V2331	2	HANDLE AS (NON-LOCKING)
	16	6V3260	8	BOLT-SOCKET HEAD
C	17	6V7636	4	PIN AS-SPRING
	18	6V3884	4	SCREW-HEX SOCKET
	19	9G5741	1	GLASS
	20	6P8431	1	HOOK
		4B1273	2	SCREW-MACHINE
		3F1147	2	LOCKWASHER-TOOTH
C	21	8T1980	1	LINKAGE AS (R.H.)
C	22	8T1979	1	LINKAGE AS (L.H.)

B USE AS REQUIRED

C INDICATES CHANGE

D ORDER BY THE METER

403252

403252 P

CAB, GAUGES AND ACCESSORIES

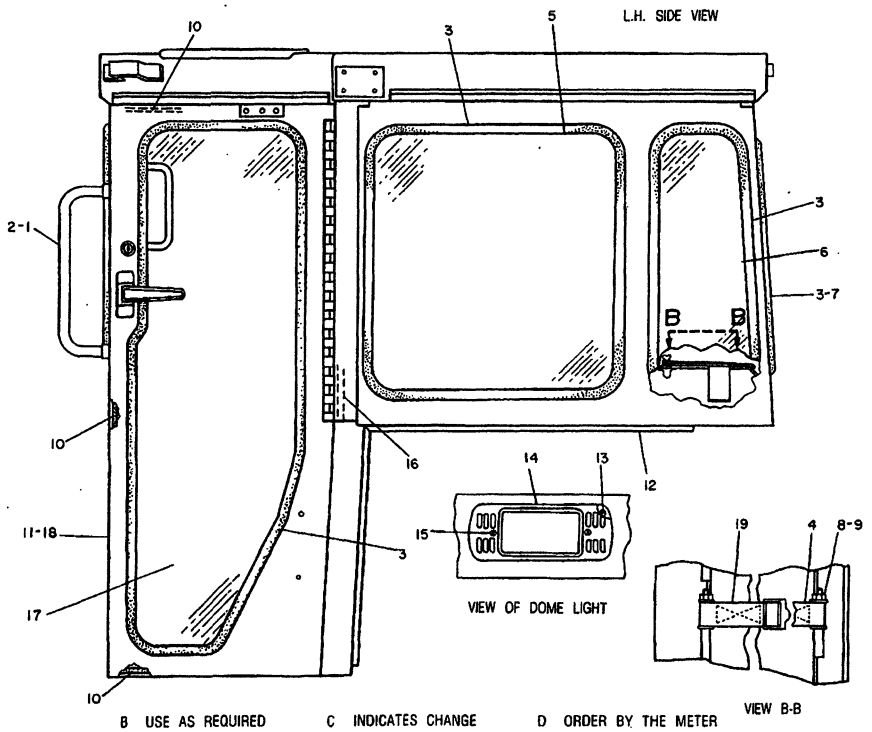

NOTE	REF NO	PART NUMBER	QTY	DESCRIPTION
	1	9G0992	2	HANDLE
C	2	5P2228	4	BOLT
		5P1076	4	WASHER
BD	3	5P5768		SEAL
	4	7G4823	1	STRAP
	5	9P0576	1	GLASS (TINTED)
	6	9P0575	1	GLASS (TINTED)
CY	7	6T5008	1	WINDOW AS. (SLIDING)
	8	2D6235	2	LOCKNUT
	9	4B4276	4	WASHER
BD	10	5P5747		SEAL
C	11	4L6454	12	BOLT
		5P1075	12	WASHER
	12	3T8570	1	CAB AS.
	13	1H2203	3	SCREW AS.
	14	7N8043	1	LAMP GP.
		7N9943	1	LAMP
		7N8305	2	DOOR AS.
	15	6L7159	2	SCREW
BD	16	6V0702		SEAL
	17	9G5741	1	GLASS
	18	9G6580	1	DOOR AS. (L.H.)
		9G6594	1	DOOR AS. (R.H.)
	19	7G4824	1	STRAP

B USE AS REQUIRED C INDICATES CHANGE D ORDER BY THE METER Y SEPARATE ILLUSTRATION 334849

334849 P

CAB, GAUGES AND ACCESSORIES

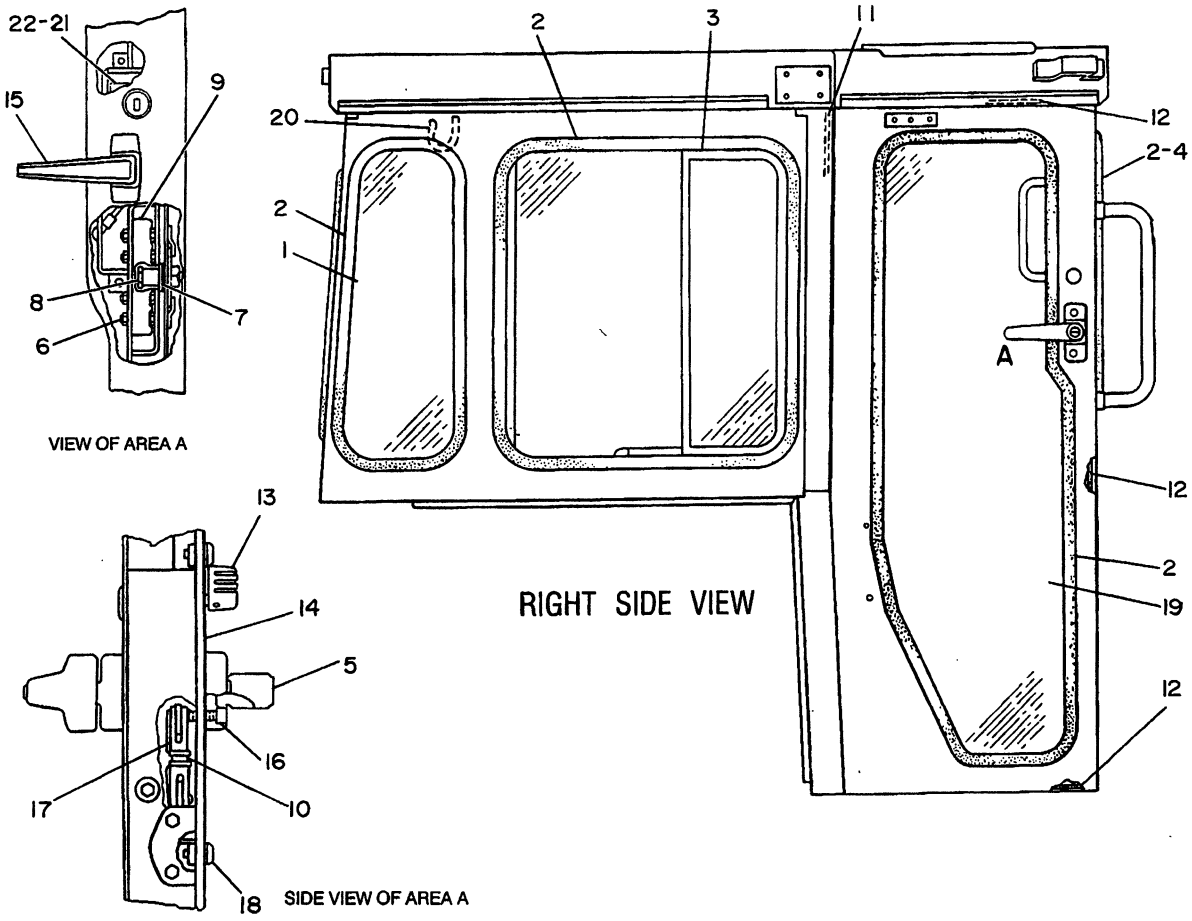

NOTE	REF NO	PART NUMBER	QTY	PART NAME
	1	9P0575	1	GLASS (TINTED)
BD	2	5P5768		SEAL
Y	3	6T8402	1	WINDOW GP-CAB
	4	7G2454	1	GLASS (FRONT)
	5	6V2375	2	HANDLE AS-INSIDE
	6	4M5282	8	BOLT
		2D6235	8	LOCKNUT
B	7	8T0318	8	SHIM
	8	6V1155	2	STRIKER AS
	9	6V6778	1	LATCH AS-DOOR (LH)
		6V6777	1	LATCH AS-DOOR (RH)
	10	6V8073	2	LINK-CONNECTING
BD	11	5P7211		SEAL
BD	12	6V3671		SEAL
	13	6V7190	2	LEVER AS
	14	7T1036	1	COVER (RH)
		7T1035	1	COVER (LH)
	15	6V2331	2	HANDLE AS (NON-LOCKING)
	16	6V3260	8	BOLT-SOCKET HEAD
	17	6V7636	4	PIN AS-SPRING
	18	6V3884	4	SCREW-HEX SOCKET
	19	7T0601	1	GLASS
	20	6V8928	1	HOOK-COAT
		4V6981	1	SCREW-BUTTON HEAD
	21	8T1980	1	LINKAGE AS (RH)
C		8T8914	1	SEAL-LINKAGE
	22	8T1979	1	LINKAGE AS (LH)
C		8T8914	1	SEAL-LINKAGE

B-USE AS REQUIRED
C-CHANGE FROM PREVIOUS TYPE
D-ORDER BY THE METER
Y-SEPARATE ILLUSTRATION

B-534420 P

7301

7T0972 CAB GP-PART 1 OF 2
S/N 53Y3485-Up
6T8402-Page 305A
Part Of 7T1071 Cab
An Attachment

SEBP1356

CAB, GAUGES AND ACCESSORIES

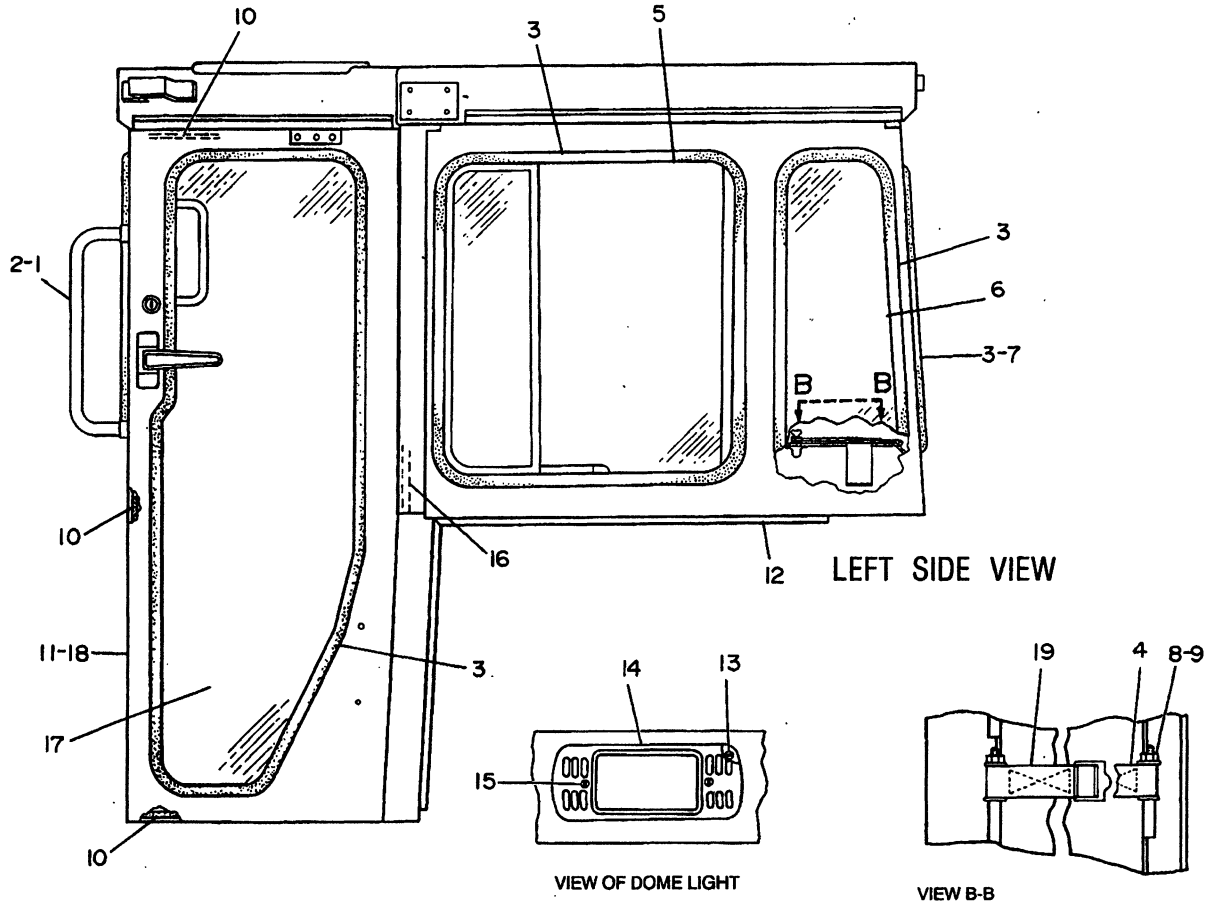

NOTE	REF NO	PART NUMBER	QTY	PART NAME	NOTE	REF NO	PART NUMBER	QTY	PART NAME
	1	9G0992	2	HANDHOLD					
	2	5P2228	4	BOLT					
		5P1076	4	WASHER-HARD					
BD	3	5P5768		SEAL					
	4	7G4823	1	STRAP					
Y	5	6T8403	1	WINDOW GP-CAB					
	6	9P0575	1	GLASS (TINTED)					
Y	7	6T5008	1	WINDOW GP-CAB					
	8	2D6235	2	LOCKNUT					
	9	4B4276	4	WASHER					
BD	10	6V3671		SEAL					
	11	4L6454	16	BOLT					
		5P1075	16	WASHER-HARD					
	12	7T0973	1	CAB AS					
	13	1H2203	3	SCREW AS-MACHINE					
	14	7N8043	1	LAMP GP-DOME					
		7N9943	1	LAMP-MINIATURE (24V)					
		7N8305	2	DOOR AS-LAMP					
	15	6L7159	2	SCREW-MACHINE					
BD	16	5P7211		SEAL					
	17	7T0601	1	GLASS					
	18	7T0583	1	DOOR AS (LH)					
		7T0584	1	DOOR AS (RH)					
	19	7G4824	1	STRAP					
F		8T3561	1	PLATE-IDENTIFICATION					
F		9N1995	2	RIVET-POP					

B-USE AS REQUIRED
D-ORDER BY THE METER
F-NOT SHOWN
Y-SEPARATE ILLUSTRATION

B-334853 EP

CAB, GAUGES AND ACCESSORIES

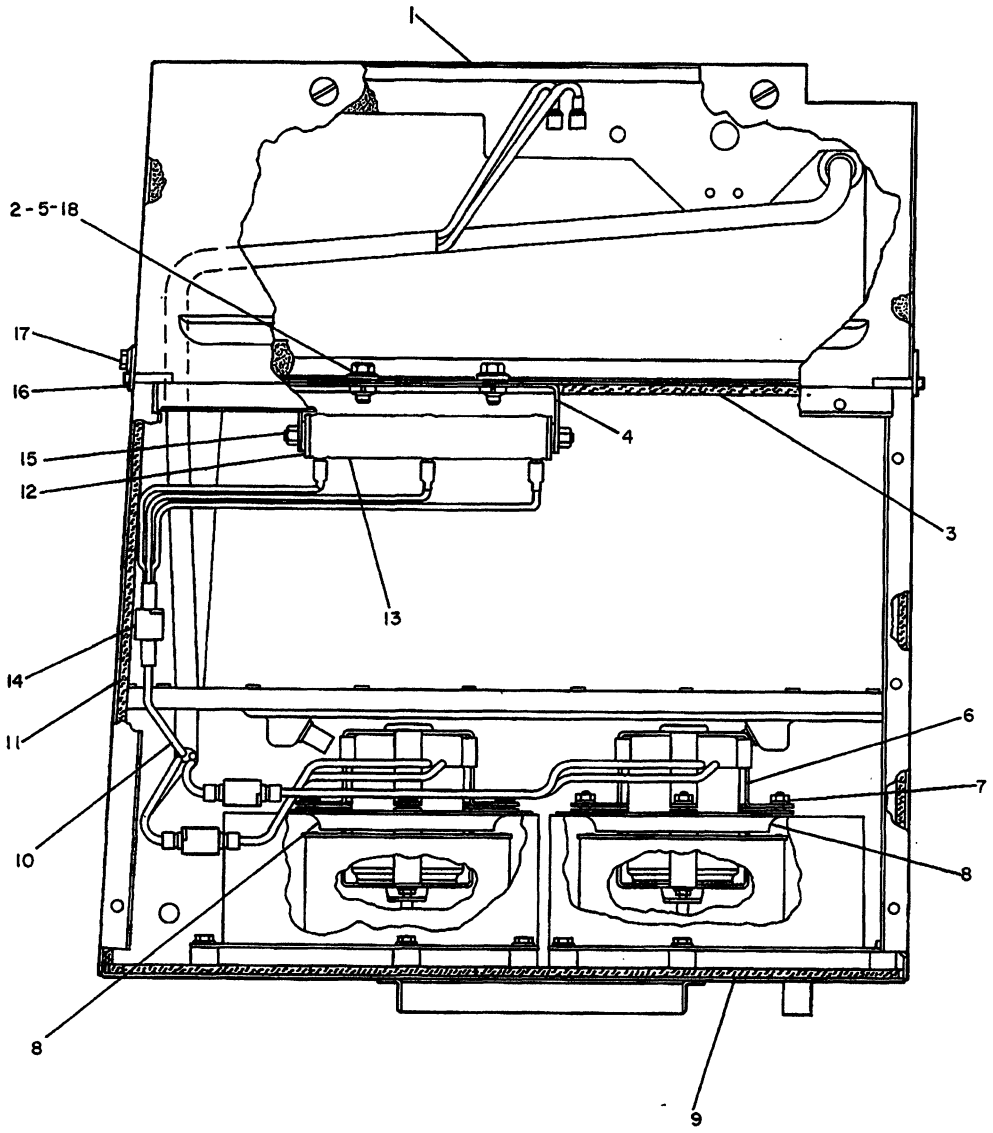

REF. NO.	PART NUMBER	DESCRIPTION	QTY.
1	7G8846	CASE ASSEM.	1
2	5P1075	WASHER	2
3	9G8160	INSULATION	1
4	9G8762	BRACKET ASSEM. (Includes)	1
5	9F2978	NUT	2
6	2G415	BRACKET	2
7	1B4330	NUT	6
	1H3338	LOCKWASHER	6
8	7G942	PLATE	2
9	9G8164	INSULATION	1
10	3T6898	HARNESS ASSEM. (Separate Illustration)	1
11	9G8161	INSULATION	1
12	8G901	INSULATOR	2

	REF. NO.	PART NUMBER	DESCRIPTION	QTY.
▲	13	9G8696	RESISTOR ASSEM. (Includes)	1
		5P5624	WIRE-----.51 m(20.08 in.)	
		9G1950	RESISTOR	1
	14	7N7782	HOUSING	1
		7N7779	SOCKET	2
		7N7780	PIN	1
	15	8G241	ROD	1
		7H8909	LOCKNUT	2
		6V1668	WASHER	2
	16	7G9395	PLATE	1
	17	S1614	BOLT	2
		5P4115	WASHER	2
	18	S509	BOLT	2

▲ ORDER BY THE METER

235939 235939 P

7311

3T6899 PRESSURIZER GP-CAB-PART 1 OF 2

Type 1

3T6898-Page 305

Part Of 3T7284 Pressurizer, 3T6900 Heater

An Attachment

SEBP1356

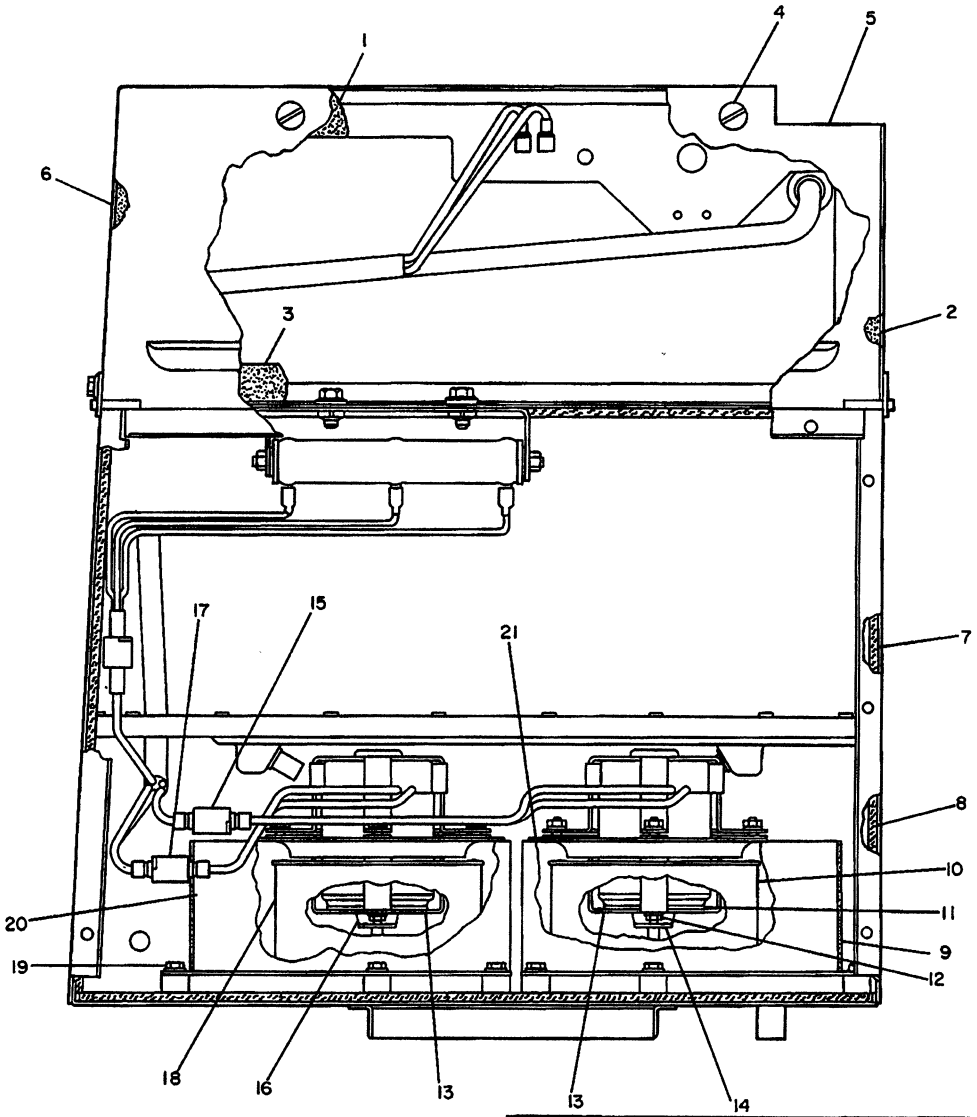

REF. NO.	PART NUMBER	DESCRIPTION	QTY.
1	3T5363	SEAL	1
2	3T5366	SEAL	1
3	3T5364	SEAL	1
4	6P6926	SCREW	2
	2R2376	WASHER	2
5	7G8866	DOOR ASSEM.	1
6	3T5365	SEAL	1
7	9G8159	INSULATION	1
8	9G8162	INSULATION	1
▲ 9	5P5643	SEAL--.34m(13.40 in.)	
10	7G661	WHEEL	1
		(Includes)	
	3B9191	SETSCREW	1
11	4D6624	WASHER	2
12	1M1230	NUT	4
	4B4274	WASHER	4
13	2G416	BRACKET	2
14	9G8697	MOTOR ASSEM.	1
		(Includes)	
	9G398	BRUSH KIT	1
15	7N9737	HOUSING-----(plug)	1
	7N7779	SOCKET	1
	7N7780	PIN	1
16	9G8693	MOTOR ASSEM.	1
		(Includes)	
	9G398	BRUSH KIT	1
17	7N9738	HOUSING	1
	7N7779	SOCKET	1
	7N7780	PIN	1
18	7G660	WHEEL	1
		(Includes)	
	3B9191	SETSCREW	1
19	S1614	BOLT	6
	5P537	WASHER	6
20	7G8192	HOUSING ASSEM.	1
21	7G8272	HOUSING ASSEM.	1

▲ ORDER BY THE METER-USE AS REQUIRED

235940

235940 P

7311

3T6899 PRESSURIZER GP-CAB-PART 2 OF 2

Type 1

Part Of 3T7284 Pressurizer, 3T6900 Heater

An Attachment

CAB, GAUGES AND ACCESSORIES

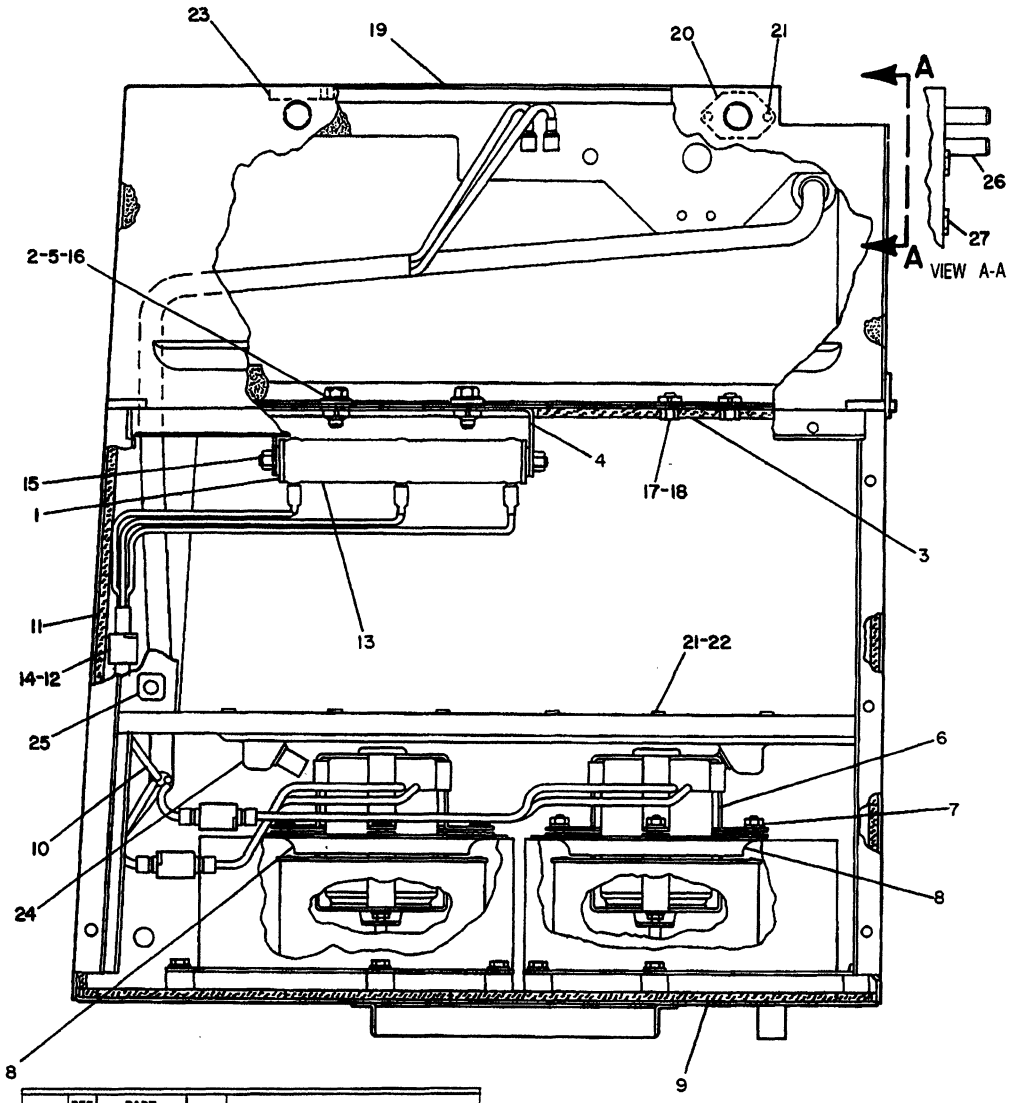

NOTE	REF NO	PART NUMBER	QTY	DESCRIPTION
C	1	6T6708	2	WASHER
	2	5P1075	2	WASHER
	3	9G8160	1	INSULATION
	4	9G8762	1	BRACKET AS.
	5	9F2978	2	NUT
	6	2G0415	2	BRACKET
	7	1B4330	6	NUT
		1H3338	6	LOCKWASHER
	8	7G0942	2	PLATE
	9	9G8164	1	INSULATION
Y	10	3T6898	1	HARNESS AS.
	11	9G8161	1	INSULATION
C	12	3T3045	1	CLIP
	13	9G8696	1	RESISTOR AS.
BD		5P5624		WIRE (14 GAUGE)
		9G1950	1	RESISTOR
	14	7N7782	1	HOUSING
		7N7779	2	SOCKET
		7N7780	1	PIN

C INDICATES CHANGE
Y SEPARATE ILLUSTRATION
B USE AS REQUIRED
D ORDER BY THE METER

	15	8G0241	1	ROD
		7H8909	2	LOCKNUT
		6V1668	2	WASHER
	16	0S0509	2	BOLT
	17	0S1614	4	BOLT
	18	5P4115	4	WASHER
C	19	6T2102	1	CASE AS.
	20	6T2103	2	RECEPTACLE
	21	9N1995	10	RIVET
	22	6K3274	6	PLATE
	23	306751	2	LUG
	24	7G8864	1	PAN AS.
	25	9F2978	6	NUT
	26	6T6686	2	PIN
	27	9F6445	4	NUT

312708

312708 P

7311

3T6899 PRESSURIZER GP-CAB-PART 1 OF 2

Type 2

3T6898-Page 305

Part Of 3T7284 Pressurizer,3T6900 Heater

An Attachment

SEBP1356

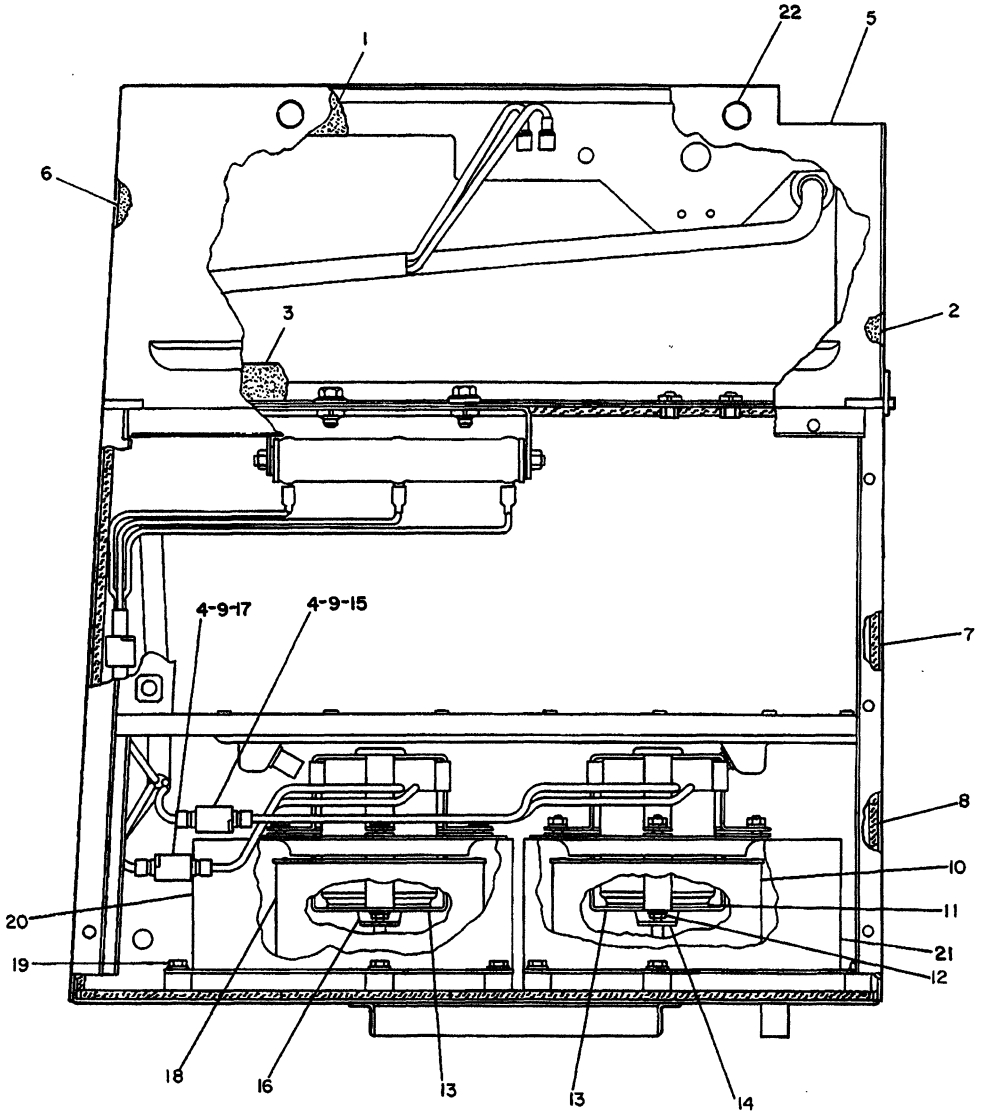

NOTE	REF NO	PART NUMBER	QTY	DESCRIPTION
	1	3T5363	1	SEAL
	2	3T5366	1	SEAL
	3	3T5364	1	SEAL
C	4	9G9150	2	CLIP
C	5	6T2622	1	DOOR AS.
		9F6445	4	NUT
	6	3T5365	1	SEAL
	7	9G8159	1	INSULATION
	8	9G8162	1	INSULATION
C	9	5P4115	2	WASHER
	10	7G0661	1	WHEEL
		3B9191	1	SETSCREW
	11	4D6624	2	WASHER
	12	1M1230	4	NUT
		4B4274	4	WASHER
C	13	9G1182	2	BRACKET
	14	9G8697	1	MOTOR AS.
		9G0398	1	BRUSH KIT
	15	7N9737	1	HOUSING (PLUG)
		7N7779	1	SOCKET
		7N7780	1	PIN
	16	9G8693	1	MOTOR AS.
		9G0398	1	BRUSH KIT
	17	7N9738	1	HOUSING
		7N7779	1	SOCKET
		7N7780	1	PIN
	18	7G0660	1	WHEEL
		3B9191	1	SETSCREW
	19	0S1614	6	BOLT
		5P0537	6	WASHER
	20	7G8192	1	HOUSING AS.
	21	7G8272	1	HOUSING AS.
C	22	6T1951	2	STUD AS.
C		1V3346	2	RING
C		6T1241	2	GROMMET

C INDICATES CHANGE

312709

312709 P

7311

3T6899 PRESSURIZER GP-CAB-PART 2 OF 2

Type 2

Part Of 3T7284 Pressurizer,3T6900 Heater

An Attachment

CAB, GAUGES AND ACCESSORIES

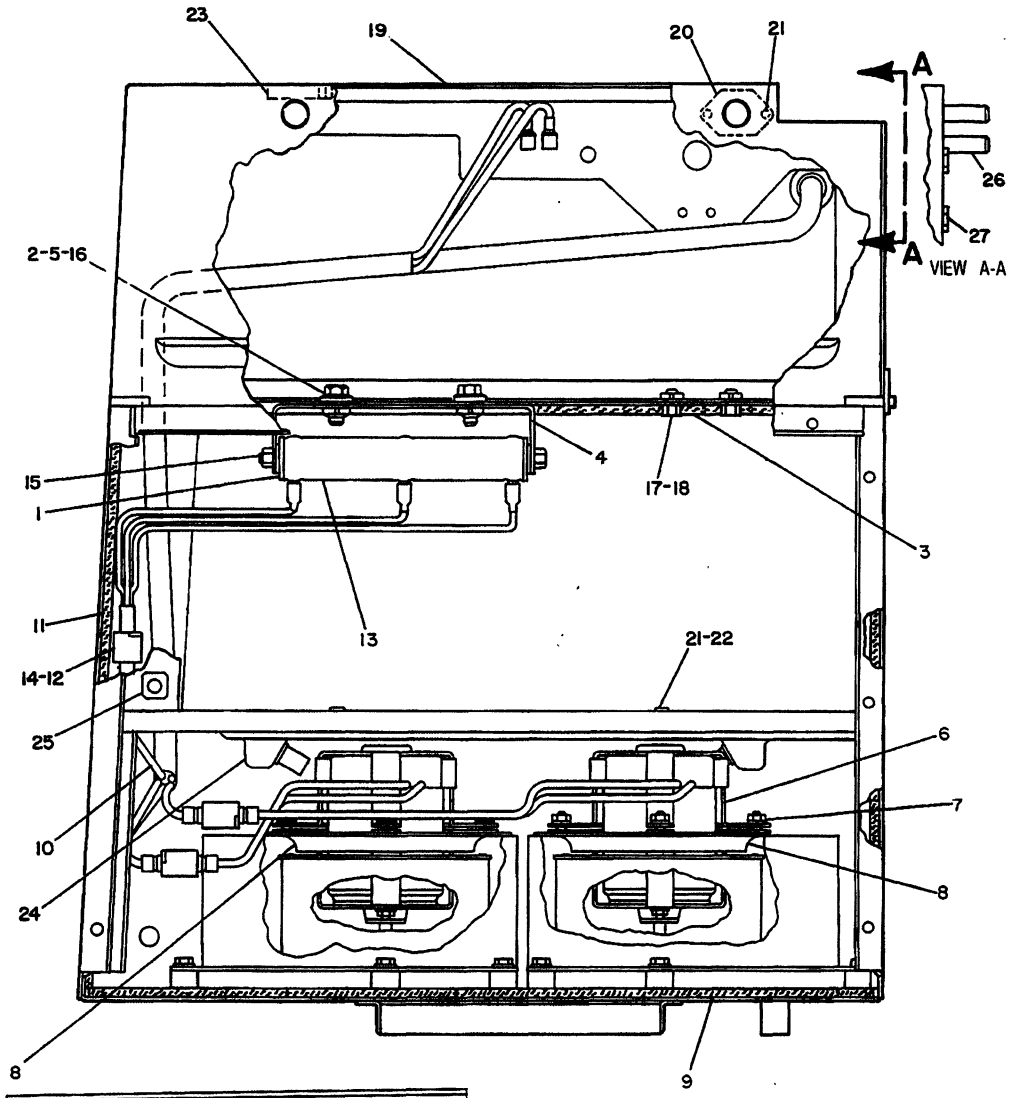

NOTE	REF NO	PART NUMBER	QTY	DESCRIPTION
	1	6T6708	2	WASHER
	2	5P1075	2	WASHER
	3	9G8160	1	INSULATION
C	4	7T4568	1	BRACKET AS.
	5	9F2978	2	NUT
	6	2G0415	2	BRACKET
	7	1B4330	6	NUT
		1H3338	6	LOCKWASHER
	8	7G0942	2	PLATE
	9	9G8164	1	INSULATION
Y	10	3T6898	1	HARNESS AS.
	11	9G8161	1	INSULATION
	12	3T3045	1	CLIP
	13	9G8696	1	RESISTOR AS.
BD		5P5624		WIRE (14 GAUGE)
		9G1950	1	RESISTOR
	14	7N7782	1	HOUSING
		7N7779	2	SOCKET
		7N7780	1	PIN

B USE AS REQUIRED
C INDICATES CHANGE
D ORDER BY THE METER
Y SEPARATE ILLUSTRATION

C	15	6V3320	1	SCREW
C		7H8909	1	LOCKNUT
		6V1668	2	WASHER
	16	0S0509	2	BOLT
	17	0S1614	4	BOLT
	18	5P4115	4	WASHER
	19	6T2102	1	CASE AS.
	20	6T2103	2	RECEPTACLE
C	21	9N1995	6	RIVET
C	22	6K3274	2	PLATE
	23	306751	2	LUG
	24	7G8864	1	PAN AS.
	25	9F2978	6	NUT
	26	6T6686	2	PIN
	27	9F6445	4	NUT

334835

334835 P

7311

3T6899 PRESSURIZER GP-CAB-PART 1 OF 2

Type 3
3T6898-Page 305
An Attachment

SEBP1356

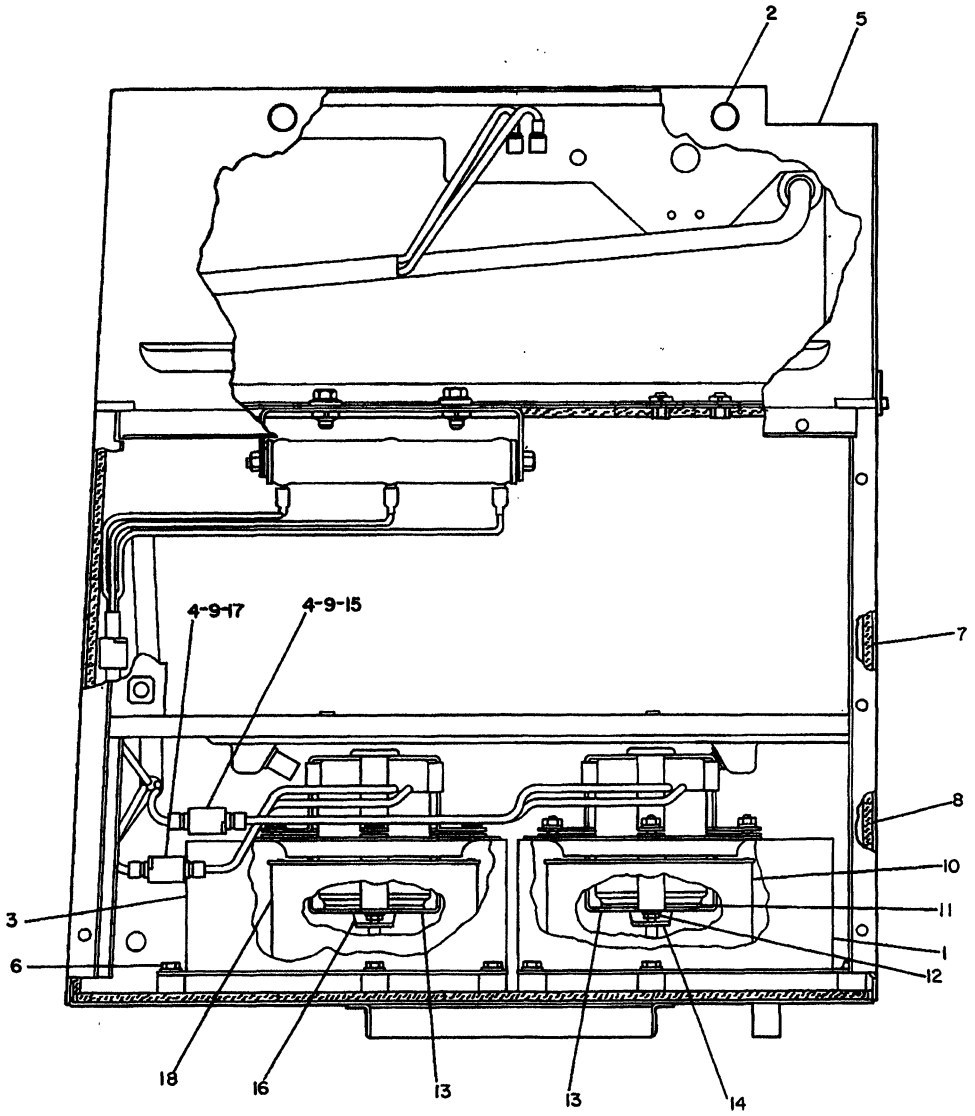

NOTE	REF NO	PART NUMBER	QTY	DESCRIPTION
	1	7G8272	1	HOUSING AS.
	2	6T1951	2	STUD AS.
		1V3346	2	RING
		6T1241	2	GROMMET
	3	7G8192	1	HOUSING AS.
	4	9G9150	2	CLIP
	5	6T2622	1	DOOR AS.
		9F6445	4	NUT
	6	0S1614	6	BOLT
C		5P4115	6	WASHER
	7	9G8159	1	INSULATION
	8	9G8162	1	INSULATION
	9	5P4115	2	WASHER
	10	7G0661	1	WHEEL
		3B9191	1	SETSCREW
	11	4D6624	2	WASHER
	12	1M1230	4	NUT
		4B4274	4	WASHER
	13	9G1182	2	BRACKET
	14	9G8697	1	MOTOR AS.
		9G0398	1	BRUSH KIT
	15	7N9737	1	HOUSING (PLUG)
		7N7779	1	SOCKET
		7N7780	1	PIN
	16	9G8693	1	MOTOR AS.
		9G0398	1	BRUSH KIT
	17	7N9738	1	HOUSING
		7N7779	1	SOCKET
		7N7780	1	PIN
	18	7G0660	1	WHEEL
		3B9191	1	SETSCREW

C INDICATES CHANGE

334836

334836 P

7311

3T6899 PRESSURIZER GP-CAB-PART 2 OF 2

Type 3

An Attachment

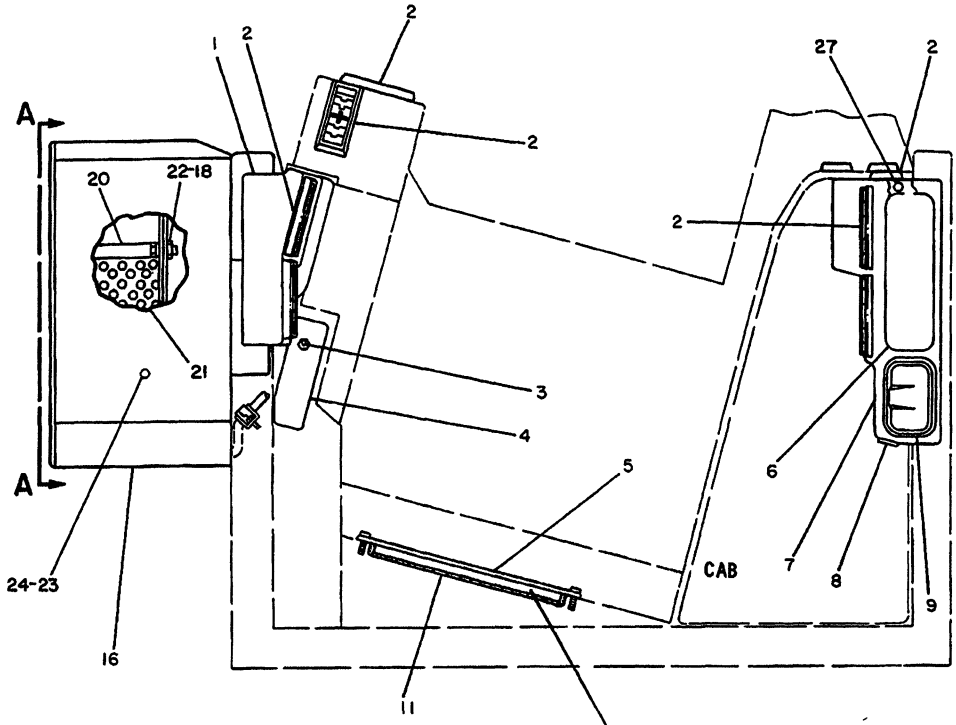

C INDICATES CHANGE
D ORDER BY THE METER
Y SEPARATE ILLUSTRATION

NOTE	REF NO	PART NUMBER	QTY	DESCRIPTION
	1	7G8447	1	DUCT AS.
C		6V6849	1	PLATE (WARNING)
C		6N8155	6	RIVET
C		4B5324	6	WASHER
	2	7G2172	11	LOUVER AS.
				(EACH INCLUDES)
		6P8690	1	BEZEL
		6P8689	1	LOUVER
	3	4V9037	1	SWITCH AS. (BLOWER)
	4	3T8751	1	PLATE
	5	9G344	1	PLATE AS.
	6	7G2013	1	BOX
	7	7G2944	1	DUCT
	8	7P4749	1	LOUVER AS.
	9	5P5454	1	ASHTRAY
		5P5824	1	HOLDER
	10	9P5174	1	FILTER AS.
C	11	6T1647	1	SEAL
	12	5F9757	2	GROMMET
Y	13	3T6912	1	HARNESS AS.
D	14	5P5954		SEAL .88M(34.65IN.)
C	15	4D7794	1	CLIP
Y	16	3T6899	1	PRESSURIZER GROUP
	17	S1616	14	BOLT
	18	5P4115	22	WASHER
	19	7G8221	1	COVER
		7G8222	1	GASKET
	20	7G8290	1	PLATE AS.
	21	7G8116	3	FILTER AS.
	22	2A762	8	BOLT
C	23	S509	3	BOLT
C	24	5P1075	2	WASHER
C	25	5M2894	1	WASHER
C	26	9G9152	1	CLIP
C	27	308535	6	BOLT

312213

312213 P

7311

3T7284 PRESSURIZER GP-CAB
3T6899-Page 302,3T6912-Page 305
Part Of 3T0639 Cab Ar
An Attachment

CAB, GAUGES AND ACCESSORIES

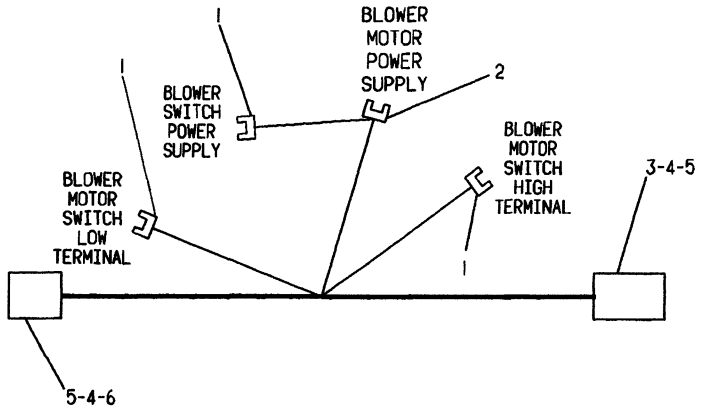

NOTE	REF NO	PART NUMBER	QTY	PART NAME
	1	5P2321	3	TERMINAL
	2	7N7978	1	TERMINAL
	3	7N7781	1	HOUSING-RECEPTACLE
	4	7N7779	3	SOCKET
	5	7N7780	4	PIN-CONNECTOR
	6	7N8204	1	HOUSING-RECEPTACLE
				THE FOLLOWING WIRE IS AVAILABLE:
D		5P5624		WIRE (14 GAUGE)

D-ORDER BY THE METER

A-312190 P

7311 **3T6912 HARNESS AS**
Part Of 3T7284 Pressurizer,6T8698 Cab
An Attachment

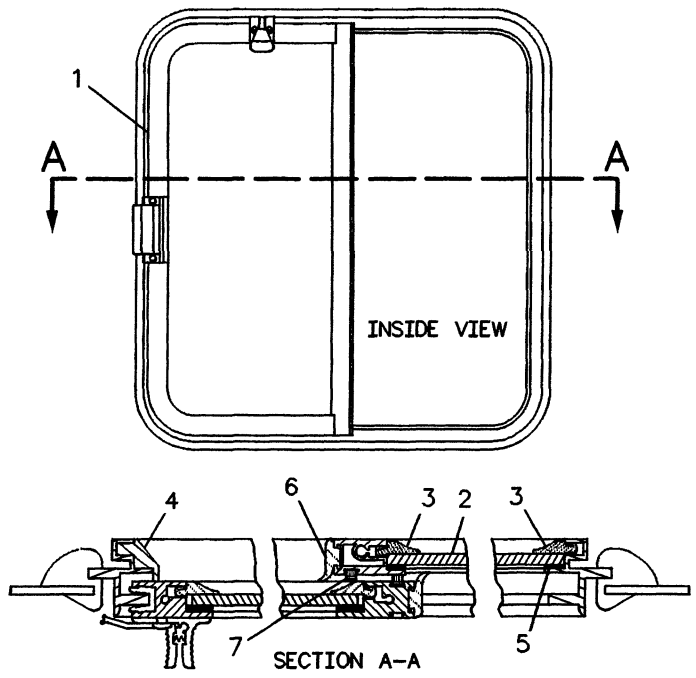

NOTE	REF NO	PART NUMBER	QTY	PART NAME
Y	1	7T1068	1	WINDOW GP
	2	7T1330	1	GLASS (TINTED)
DB	3	5P5680		SEAL (2 M)
DB	4	8T0687		FILLER
EB	5	9X6268		TAPE
DB	6	6V5833		SEAL (1 M)
EB	7	8Y6839		SEAL (64 CM)

B-USE AS REQUIRED
D-ORDER BY THE METER
E-ORDER BY THE CENTIMETER
Y-SEPARATE ILLUSTRATION

F-594143 EP

7310 **6T8402 WINDOW GP-CAB-RH-SLIDING**
S/N 53Y3485-Up
Part Of 7T0972 Cab
An Attachment

MEMORANDA

REF. NO.	PART NUMBER	DESCRIPTION	QTY.
1	7N9738	HOUSING----------	1
2	7N7780	PIN----------	5
	7N7779	SOCKET----------	5
3	7N9737	HOUSING----------	1
4	7N7781	HOUSING----------	1
5	687723	TERMINAL----------	2
6	3T6774	GROMMET----------	1
7	7N8205	HOUSING----------	1
8	9G3695	PLUG----------	1
		THE FOLLOWING WIRE IS AVAILABLE:	
▲	5P5624	WIRE----------(14 gauge)	

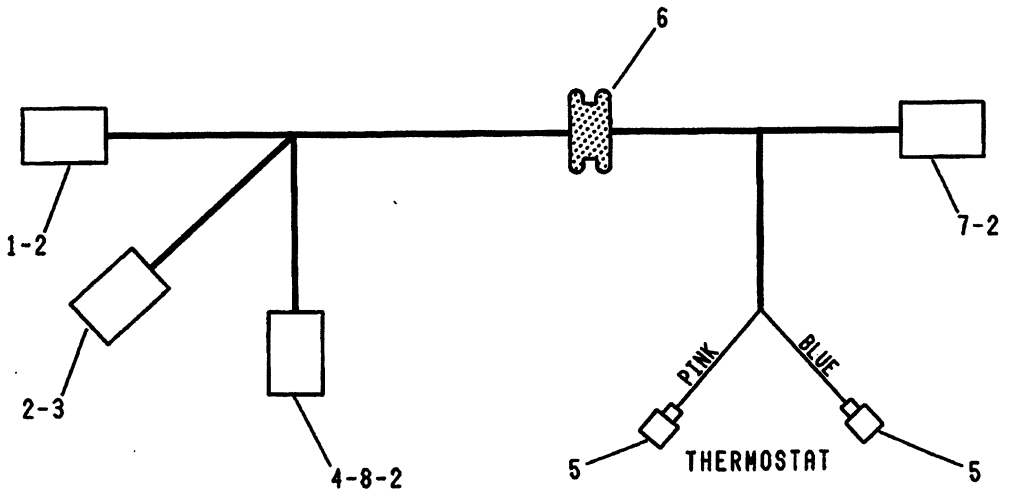

▲ ORDER BY THE METER

235941

A-235941 P

7311

3T6898 HARNESS AS

Type 1

Part Of 3T6899 Pressurizer

An Attachment

CAB, GAUGES AND ACCESSORIES

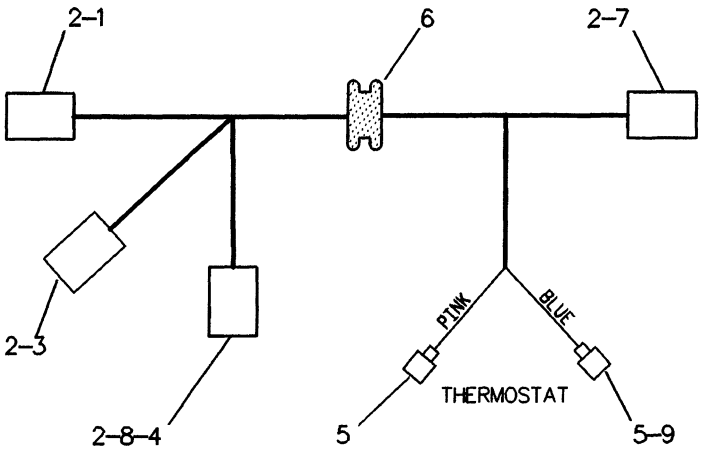

NOTE	REF NO	PART NUMBER	QTY	PART NAME
	1	7N9738	1	HOUSING-RECEPTACLE
	2	7N7780	5	PIN-CONNECTOR
		7N7779	5	SOCKET
	3	7N9737	1	HOUSING-PLUG
	4	7N7781	1	HOUSING-RECEPTACLE
C	5	6T6506	2	TERMINAL
	6	3T6774	1	GROMMET
	7	7N8205	1	HOUSING-PLUG
	8	9G3695	1	PLUG-SEAL
C	9	6T6505	2	HOUSING-RECEPTACLE
				THE FOLLOWING WIRE IS AVAILABLE:
BD		5P5624		WIRE (14 GAUGE)

B-USE AS REQUIRED
C-CHANGE FROM PREVIOUS TYPE
D-ORDER BY THE METER

F-527232 EP

7311

3T6898 HARNESS AS
Type 2
Part Of 3T6899 Pressurizer
An Attachment

CAB, GAUGES AND ACCESSORIES

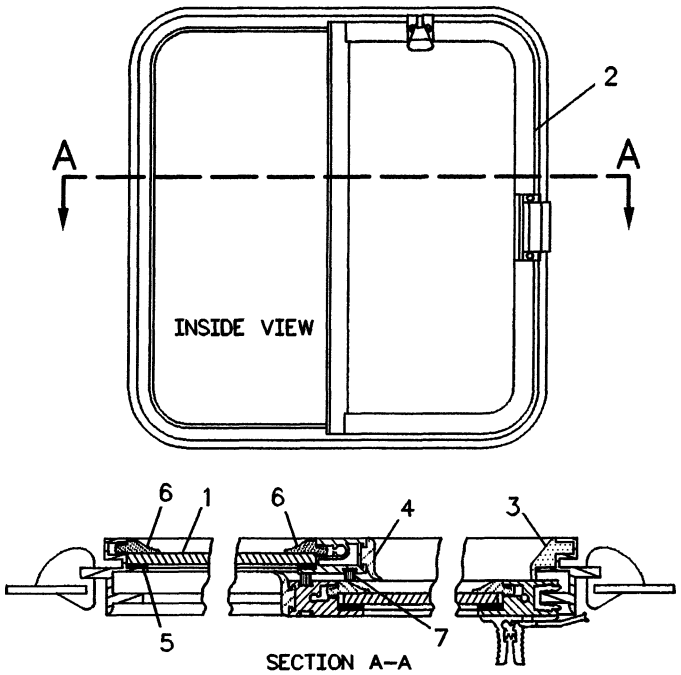

NOTE	REF NO	PART NUMBER	QTY	PART NAME
	1	7T1330	1	GLASS (TINTED)
Y	2	7T1069	1	WINDOW GP
DB	3	8T0687		FILLER
DB	4	6V5833		SEAL (1 M)
EB	5	9X6268		TAPE
DB	6	5P5680		SEAL (2 M)
EB	7	8Y6839		SEAL (64 CM)

B-USE AS REQUIRED
D-ORDER BY THE METER
E-ORDER BY THE CENTIMETER
Y-SEPARATE ILLUSTRATION F-594153 EP

7310 **6T8403 WINDOW AS-LH-SLIDING**
S/N 53Y3485-Up
Part Of 7T0972 Cab
An Attachment

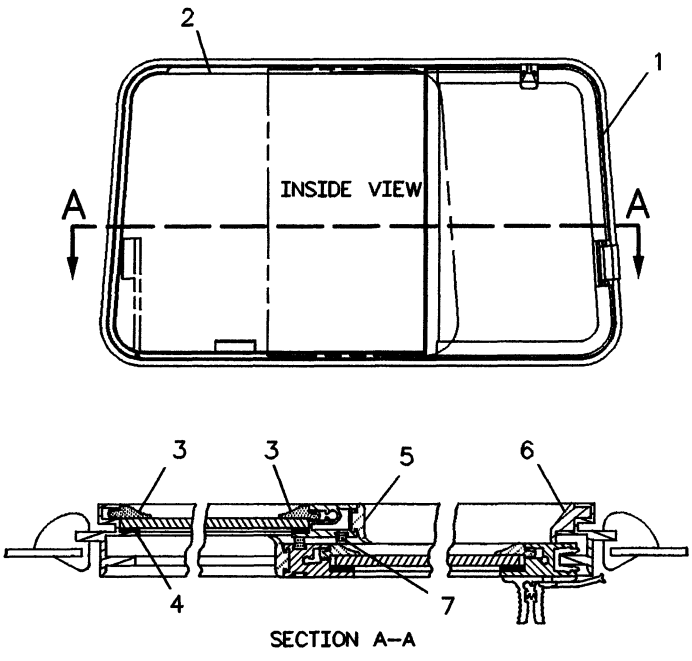

NOTE	REF NO	PART NUMBER	QTY	PART NAME
Y	1	6T5005	1	WINDOW GP
	2	9P7855	1	GLASS (TINTED)
DB	3	5P5680		SEAL (3 M)
EB	4	9X6268		TAPE
DB	5	6V5833		SEAL (1 M)
DB	6	8T0687		FILLER
EB	7	8Y6839		SEAL (64 CM)

B-USE AS REQUIRED
D-ORDER BY THE METER
E-ORDER BY THE CENTIMETER
Y-SEPARATE ILLUSTRATION F-594126 EP

7310 **6T5008 WINDOW AS-REAR-SLIDING**
S/N 53Y1-Up
Part Of 3T8103,7T0972 Cabs
An Attachment

CAB, GAUGES AND ACCESSORIES

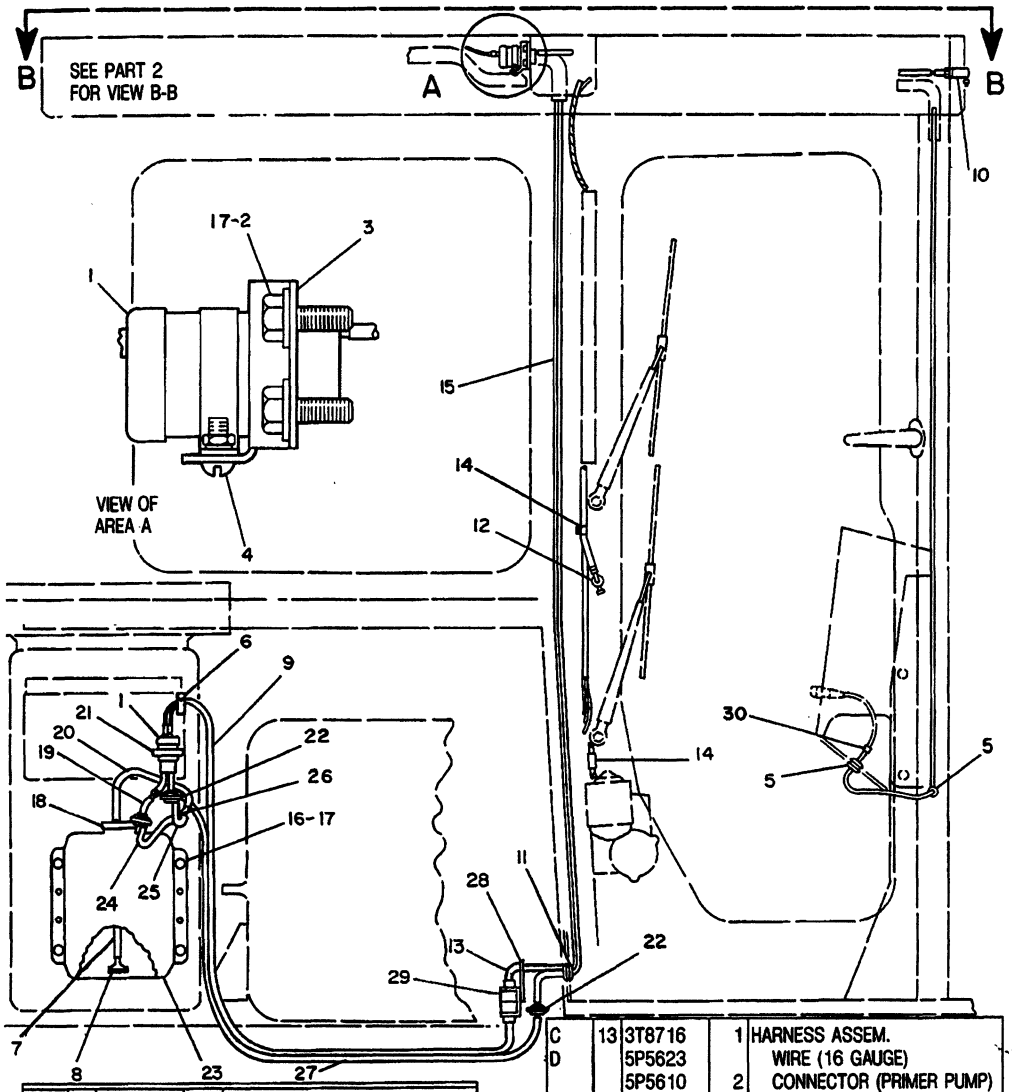

NOTE	REF NO	PART NUMBER	QTY	DESCRIPTION
	1	9G8963	5	PUMP ASSEM.
	2	S1615	4	BOLT
	3	3T1116	1	BRACKET
	4	7H3986	8	SCREW
		4B2047	8	NUT
		9F8125	8	LOCKWASHER
	5	9D3768	2	GROMMET
C	6	S1594	1	BOLT
C		5M2894	1	WASHER
C		1D4717	1	NUT
C		4D7794	1	CLIP
D	7	5P5992		HOSE .22M(8.67IN.)
	8	9D6896	1	STRAINER
C	9	3T8717	1	HARNESS ASSEM.
D		5P5623		WIRE (16 GAUGE)
		7N9737	1	HOUSING
		7N7780	1	PIN
		7N7779	1	SOCKET
	10	9P2369	2	JET ASSEM.
	11	3P9554	1	GROMMET
	12	9G5747	2	JET ASSEM.
C	13	3T8716	1	HARNESS ASSEM.
D		5P5623		WIRE (16 GAUGE)
		5P5610	2	CONNECTOR (PRIMER PUMP)
		2L8077	1	TERMINAL
		7N7778	1	HOUSING
		7N7780	1	PIN
		7N7779	1	SOCKET
C	14	2V3216	6	CLIP
C		2P4437	4	SCREW
D	15	5P5992		HOSE 2.3M(95.52IN.)
	16	S1614	4	BOLT
	17	5P537	8	WASHER
	18	5P9539	1	CAP
D	19	5P5992	3	HOSE .035M(1.38IN.)
D	20	5P5992		HOSE .12M(4.73IN.)
	21	1H2204	2	SCREW ASSEM.
	22	9P7865	3	VALVE ASSEM.
	23	9D4616	1	BOTTLE
D	24	5P5992		HOSE .1M(3.94IN.)
D	25	5P5992		HOSE .07M(2.76IN.)
	26	6K9632	2	TEE
CD	27	5P5992		HOSE 1.6M(62.4IN.)
C	28	3T3048	1	CLIP ASSEM.
C	29	7N9738	1	HOUSING
	30	7N9737	1	HOUSING
C		9G3695	1	PLUG

C INDICATES CHANGE D ORDER BY THE METER 306431 306431 P

7306

9G9277 WASHER GP-PART 1 OF 2

Part Of 3T0639 Cab Ar

An Attachment

CAB, GAUGES AND ACCESSORIES

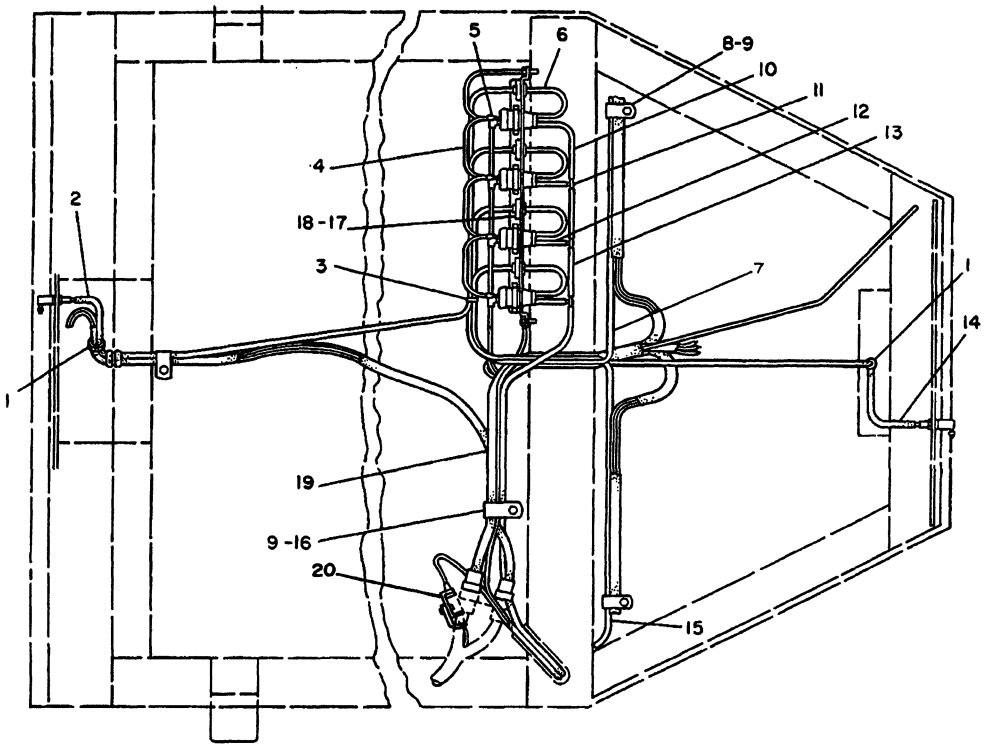

VIEW B-B

NOTE	REF NO	PART NUMBER	QTY	DESCRIPTION
	1	8K1433	3	GROMMET
D	2	5P5992		HOSE 1.55M (61.03 IN.)
	3	8L8413	1	STRAP
	4	3T1347	1	WIRE ASSEM.
D		5P5623		WIRE .745M (29.34 IN.)
		2L8077	1	TERMINAL
	5	7K4475	4	CONNECTOR ASSEM.
D	6	5P5992	4	HOSE .140M (5.52 IN.) EACH
D	7	5P5992		HOSE 2.40M (94.49 IN.)
	8	6D3479	3	CLIP
	9	1D4717	4	NUT
		5P1075	4	WASHER
D	10	5P5992		HOSE .150M (5.91 IN.)
	11	6K9632	3	TEE
D	12	5P5992	3	HOSE .055M (2.17 IN.) EACH
D	13	5P5992	2	HOSE .085M (3.35 IN.) EACH
D	14	5P5992		HOSE 1.25M (49.22 IN.)
D	15	5P5992		HOSE 2.40M (49.22 IN.)
	16	1S994	1	CLIP
	17	9P7865	4	VALVE ASSEM.
	18	9G7619	4	CLIP
Y	19	3T1349	1	HARNESS ASSEM.
C	20	3T3049	1	CLIP ASSEM.

C INDICATES CHANGE
D ORDER BY THE METER
Y SEPARATE ILLUSTRATION

306432

306432 P

7306 **9G9277 WASHER GP-PART 2 OF 2**

3T1349-Page 310B
Part Of 3T0639 Cab Ar
An Attachment

CAB, GAUGES AND ACCESSORIES

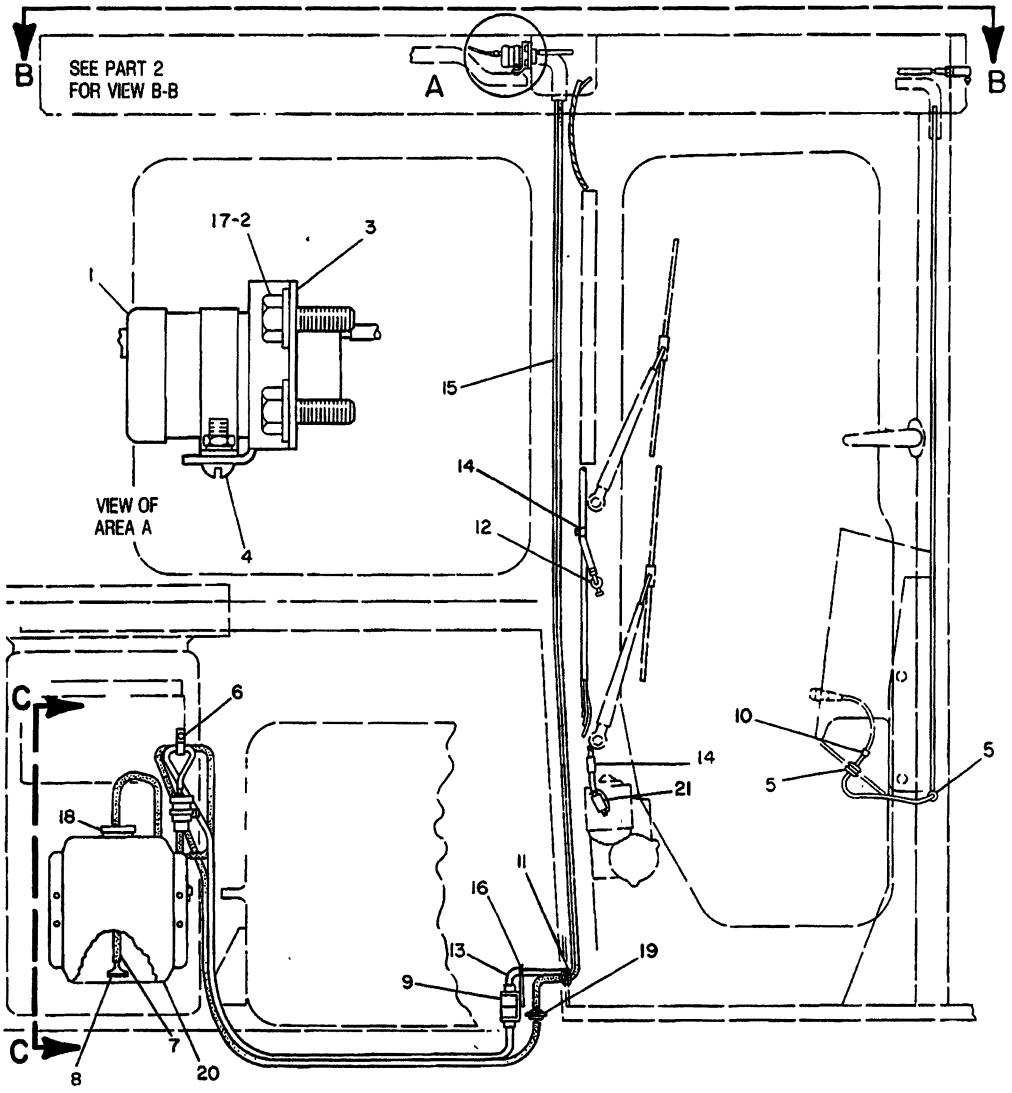

NOTE	REF NO	PART NUMBER	QTY	DESCRIPTION
	1	9G8963	4	PUMP ASSEM.
	2	S1615	4	BOLT
	3	3T1116	1	BRACKET
	4	7H3986	8	SCREW
		4B2047	8	NUT
		9F8125	8	LOCKWASHER
	5	9D3768	2	GROMMET
	6	S1594	1	BOLT
		5M2894	2	WASHER
		1D4717	1	NUT
		4D7794	1	CLIP
D	7	5P5992		HOSE .22M(8.67IN.)
	8	9D6896	1	STRAINER
	9	7N9738	1	HOUSING
	10	7N9737	1	HOUSING
	11	3P9554	1	GROMMET
	12	9G5747	2	JET ASSEM.
	13	3T8716	1	HARNESS ASSEM.
D		5P5623		WIRE (16 GAUGE)
		5P5610	2	CONNECTOR (PRIMER PUMP)
		2L8077	1	TERMINAL
		7N7778	1	HOUSING
		7N7780	1	PIN
		7N7779	1	SOCKET
	14	2V3216	6	CLIP
		2P4337	4	SCREW
D	15	5P5992		HOSE 2.3M(95.52IN.)
	16	3T3048	1	CLIP ASSEM.
	17	5P537	4	WASHER
	18	5P9539	1	CAP
	19	9P7865	1	VALVE ASSEM.
	20	9D4616	1	BOTTLE
	21	3T4045	2	CLIP ASSEM.

D ORDER BY THE METER

310538 310538 P

7306

3T6371 WASHER GP-PART 1 OF 2

S/N 53Y1-3484

Part Of 6T8696 Cab

An Attachment

CAB, GAUGES AND ACCESSORIES

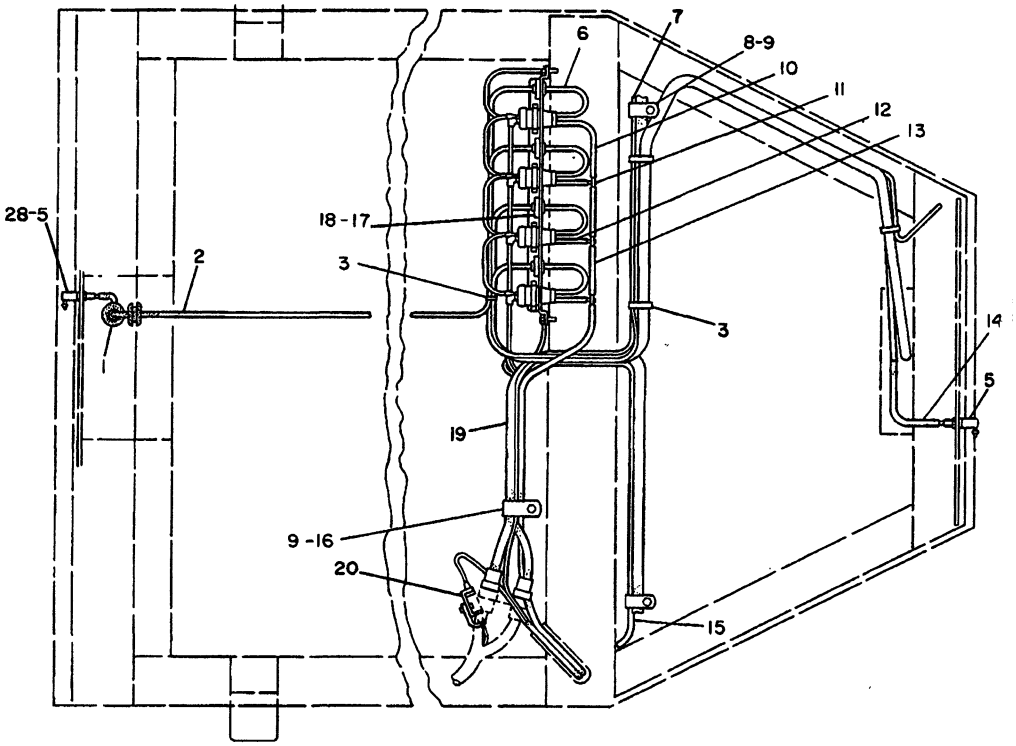

VIEW B-B

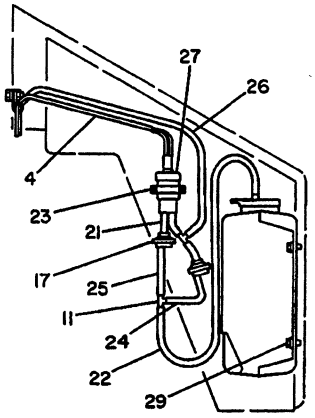

VIEW C-C

NOTE	REF NO	PART NUMBER	QTY	DESCRIPTION
	1	9D3768	2	GROMMET
D	2	5P5992		HOSE 1.55M(61.03IN.)
	3	8L8413	4	STRAP
	4	3T8717	1	HARNESS ASSEM.
D		5P5623		WIRE (16 GAUGE)
		7N9737	1	HOUSING
		7N7780	1	PIN
		7N7779	1	SOCKET
	5	9P2369	2	JET ASSEM.
D	6	5P5992	4	HOSE .140M(5.52IN.)EACH
D	7	5P5992		HOSE 2.40M(94.49IN.)
	8	6D3479	3	CLIP
	9	1D4717	4	NUT
		5P1075	4	WASHER
D	10	5P5992		HOSE .150M(5.91IN.)
	11	6K9632	5	TEE
D	12	5P5992	3	HOSE .055M(2.17IN.)EACH
D	13	5P5992	2	HOSE .085M(3.35IN.)EACH
D	14	5P5992		HOSE 1.90M(74.80IN.)
D	15	5P5992		HOSE 2.40M(94.49IN.)
	16	1S994	1	CLIP
	17	9P7865	6	VALVE ASSEM.
	18	9G7619	4	CLIP
Y	19	3T6411	1	HARNESS ASSEM.
	20	3T3049	1	CLIP ASSEM.
D	21	5P5992	3	HOSE .035M(1.38IN.)EACH

D ORDER BY THE METER
Y SEPARATE ILLUSTRATION

D	22	5P5992		HOSE .5M(19.69IN.)
	23	1H2204	2	SCREW ASSEM.
D	24	5P5992		HOSE .1M(3.94IN.)
D	25	5P5992		HOSE .07M(2.76IN.)
D	26	5P5992		HOSE 1.6M(62.4IN.)
	27	9G8963	1	PUMP ASSEM.
	28	3H9348	1	BOSS
	29	S1614	4	BOLT
		5P537	4	WASHER

310539

310539 P

CAB, GAUGES AND ACCESSORIES

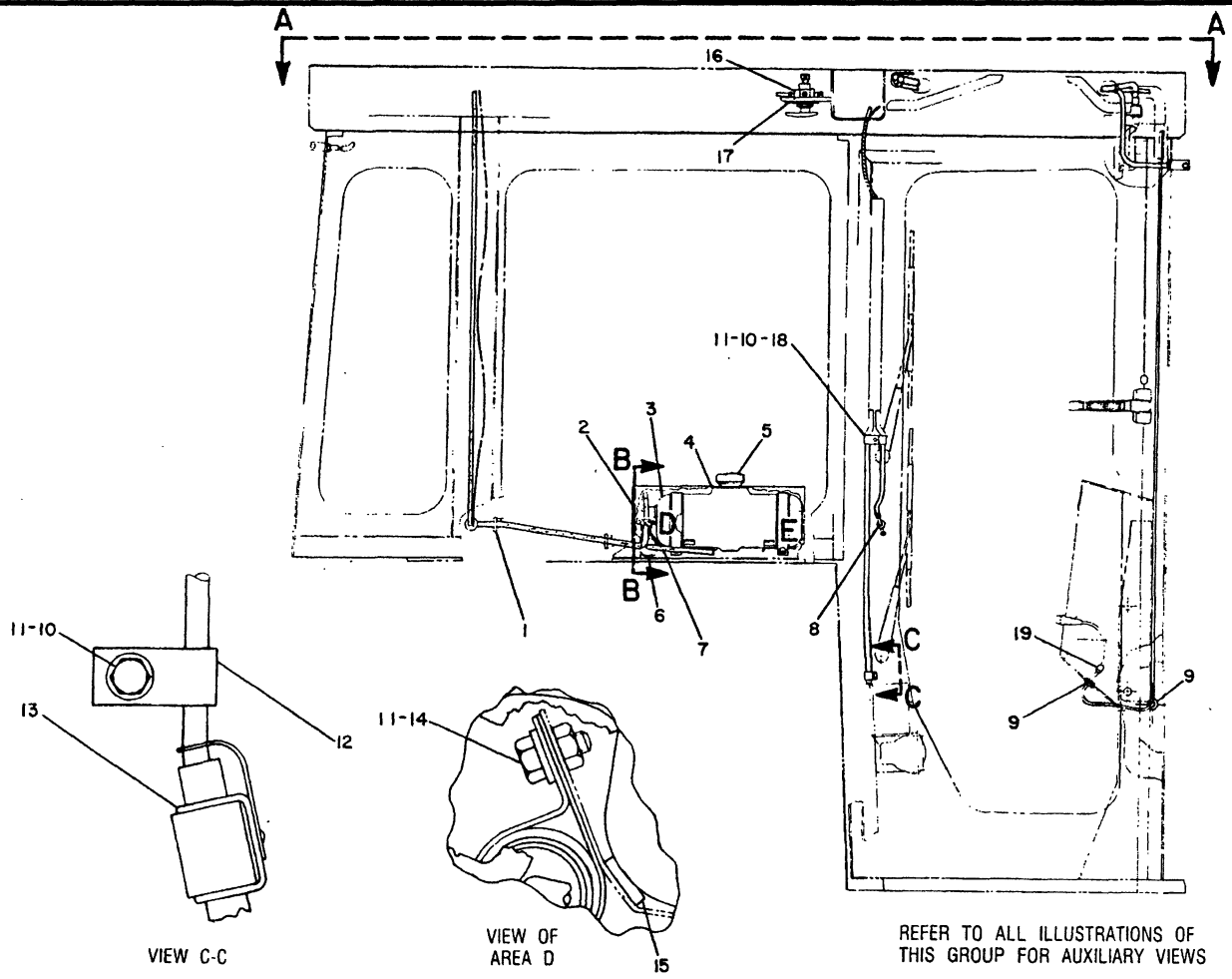

NOTE	REF NO	PART NUMBER	QTY	PART NAME	NOTE	REF NO	PART NUMBER	QTY	PART NAME
	1	8L8413	2	STRAP-CABLE					
	2	9W0118	1	COVER AS					
	3	9W0111	1	BOTTLE AS					
	4	9W0178	1	SEAL					
	5	9W0112	1	CAP-VENTED					
	6	2S2053	1	CLIP					
CD	7	5P5992		HOSE (.24M)					
	8	9G5747	2	JET AS-WASHER					
	9	9D3768	2	GROMMET					
	10	2P4337	4	SCREW-TAPPING					
C	11	8T4205	5	WASHER-HARD					
	12	4D7794	2	CLIP					
	13	3T3045	2	CLIP AS					
C	14	8T9364	1	BOLT					
BD	15	6V2496		SEAL					
	16	6V2151	1	VALVE-BALL					
C		3B3359	1	WASHER					
	17	8T4903	1	FILM-INSTRUCTION					
	18	2V3216	4	CLIP					
	19	7N9737	1	HOUSING-PLUG					

B-USE AS REQUIRED
C-CHANGE FROM PREVIOUS TYPE
D-ORDER BY THE METER

B-531464 EP

7306 **3T3984 WASHER GP-PART 1 OF 2**
S/N 53Y3485-Up
Part Of 7T2563 Cab

CAB, GAUGES AND ACCESSORIES

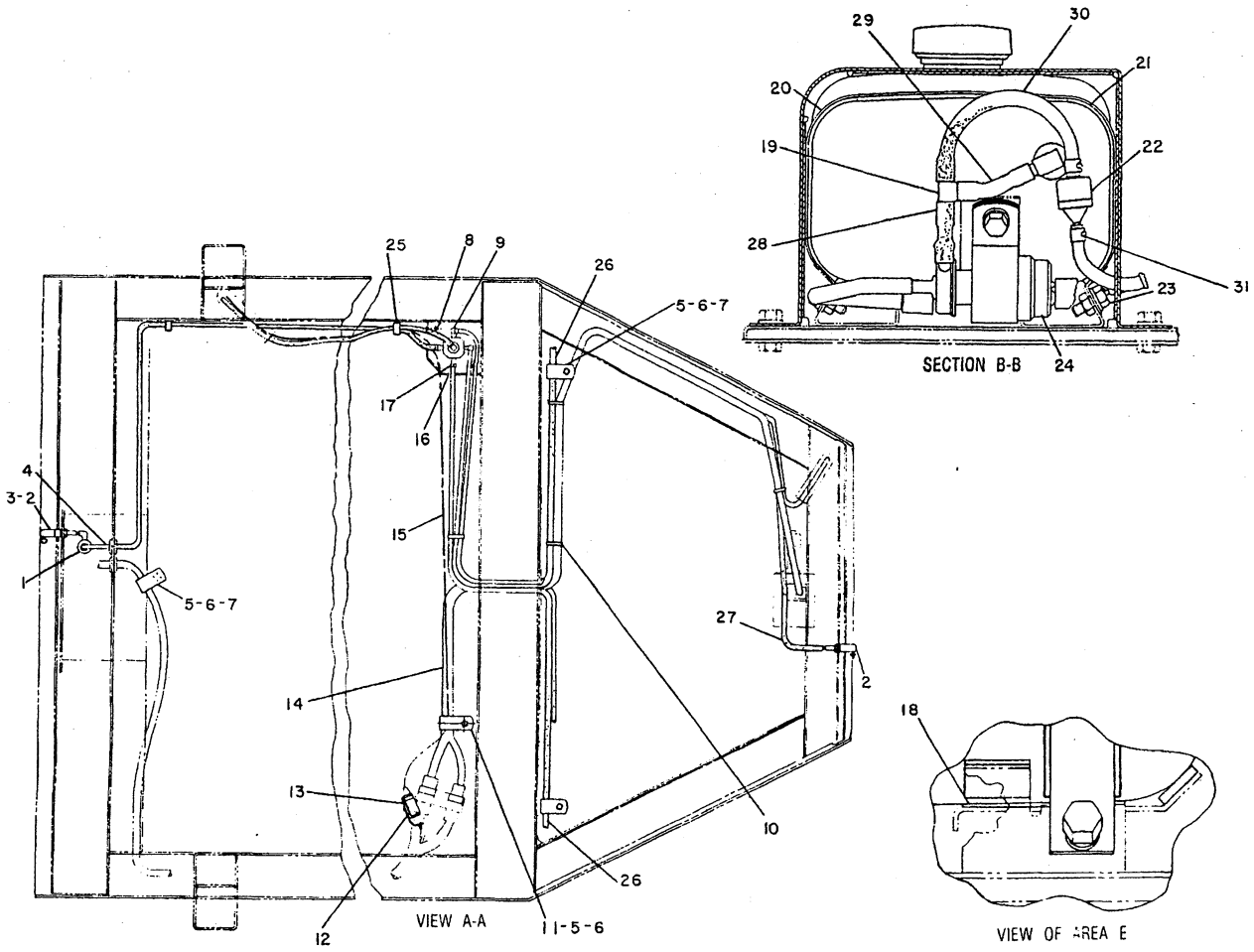

NOTE	REF NO	PART NUMBER	QTY	PART NAME	NOTE	REF NO	PART NUMBER	QTY	PART NAME
	1	9D3768	2	GROMMET	D	26	5P5992	2	HOSE (2.5M EA)
	2	9P2369	2	JET AS-WASHER	D	27	5P5992		HOSE (2.0M)
	3	3H9348	1	BOSS	D	28	5P5992		HOSE (.034M)
D	4	5P5992		HOSE (2.53M)	D	29	5P5992		HOSE (.042M)
	5	6D3479	3	CLIP	D	30	5P5992		HOSE (.17M)
C	6	6V8801	4	NUT		31	8T3993	2	CLAMP-HOSE
	7	5P1075	4	WASHER-HARD					
	8	6V3884	2	SCREW-HEX SOCKET					
	9	7T9235	3	ELBOW					
	10	8L8413	4	STRAP-CABLE					
	11	1S0994	1	CLIP					
	12	7N7778	1	HOUSING-PLUG					
	13	3T3049	1	CLIP AS					
	14	7T9222	1	HARNESS AS					
	15	9W0179	1	HARNESS AS					
	16	7T9237	1	PLATE					
	17	7T9234	2	FITTING					
BD	18	6V2495		SEAL					
	19	6K9632	1	TEE					
	20	9W0114	2	STRAP					
BD	21	8T6936		SEAL					
	22	8T5383	1	VALVE AS-CHECK					
C	23	8T9364	4	BOLT					
C		8T4205	4	WASHER-HARD					
	24	7T8891	1	PUMP AS-WASHER					
C	25	8C4395	2	CLIP					

B-USE AS REQUIRED
C-CHANGE FROM PREVIOUS TYPE
D-ORDER BY THE METER

B-531465 EP

7306 **3T3984 WASHER GP-PART 2 OF 2**

S/N 53Y3485-Up

Part Of 7T2563 Cab

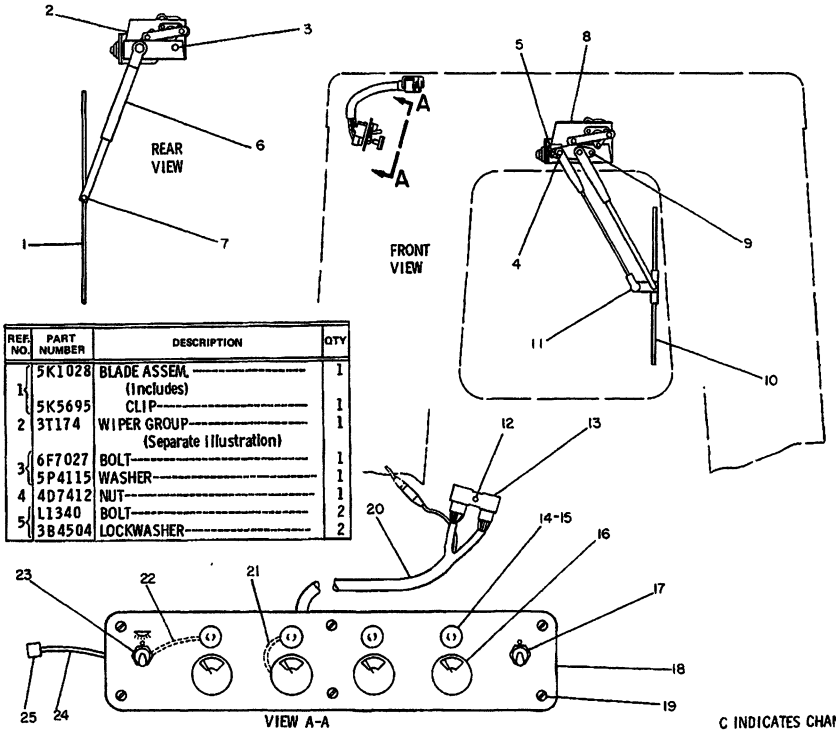

REF. NO.	PART NUMBER	DESCRIPTION	QTY
1	5K1028	BLADE ASSEM. (Includes)	1
	5K5695	CLIP	1
2	3T174	WIPER GROUP (Separate Illustration)	1
3	6F7027	BOLT	1
	5P4115	WASHER	1
4	4D7412	NUT	1
5	L1340	BOLT	2
	3B4504	LOCKWASHER	2

	REF. NO.	PART NUMBER	DESCRIPTION	QTY
	6	2R519	ARM ASSEM. (Includes)	1
	7	2A5926	SCREW	1
		3K9089	NUT	1
	8	3T175	WIPER GROUP (Separate Illustration)	1
	9	9K7021	PIVOT	1
		9K7022	GASKET	1
	10	9D1242	BLADE ASSEM. (Includes)	1
C		5K5695	CLIP	1
	11	9P2621	ARM ASSEM.	1
	12	1D4717	NUT	1
		5M2894	WASHER	1
	13	3T1221	CLIP	1
	14	4K5122	HOLDER (Each Includes)	4
		7N2867	CAP	1
	15	2S6024	FUSE---(5 amp)	4
	16	1V7362	SWITCH---(wiper washer)	4
	17	7N8001	SWITCH---(washer primer)	1
	18	9G7284	PANEL	1
	19	1H2203	SCREW ASSEM.	6
	20	3T1350	HARNESS ASSEM. (Separate Illustration)	1
	21	9G9301	WIRE ASSEM. (Each Includes)	2
▲		5P5624	WIRE---.12m(4.72 in.)	
		5P4571	TERMINAL	1
	22	9G7282	WIRE ASSEM. (Each Includes)	2
▲		5P5623	WIRE---.32m(12.59 in.)	
		2L8074	TERMINAL---(ring)	1
		5P5618	TERMINAL---(blade)	1
	23	7N8000	SWITCH---(dome light)	1
	24	9G7285	WIRE ASSEM. (Includes)	1
▲		5P5623	WIRE---.11m(4.33 in.)	
		2L8074	TERMINAL	1
	25	5P4571	TERMINAL	1

C INDICATES CHANGE

▲ ORDER BY THE METER

235213

235213 P

7305

3T0637 WIPER GP-PART 1 OF 2

Part Of 3T0635 Cab Ar

3T1350-Page 308,3T0174-Page 313,3T0175-Page 312D

An Attachment

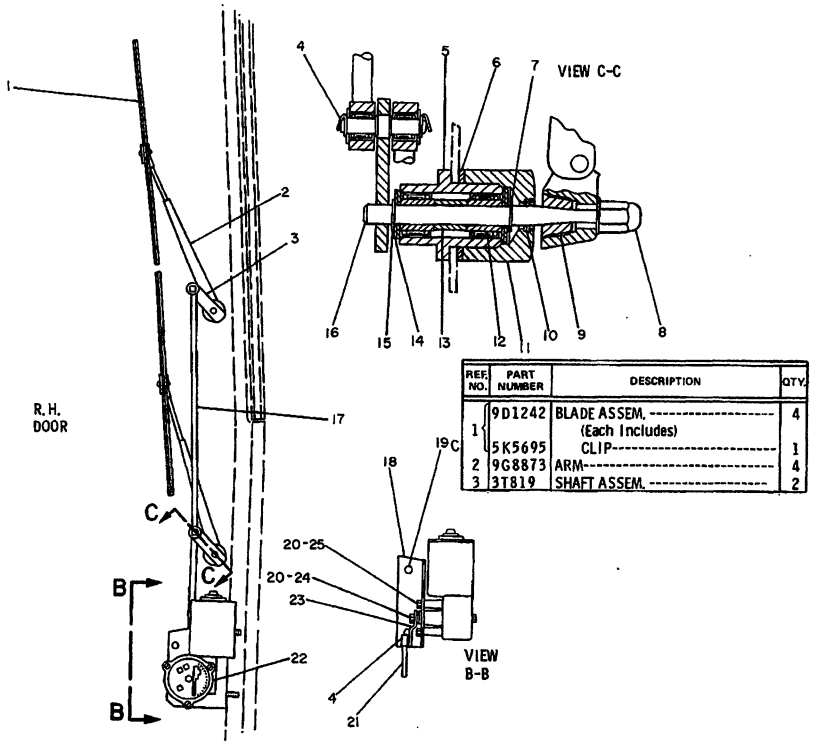

REF. NO.	PART NUMBER	DESCRIPTION	QTY.
1	9D1242	BLADE ASSEM.	4
		(Each Includes)	
	5K5695	CLIP	1
2	9G8873	ARM	4
3	3T819	SHAFT ASSEM.	2

4	4D7411	CLIP	8
	4D7416	WASHER	8
5	3T1403	PIVOT ASSEM.	4
		(Each Includes)	
	6V3545	BEARING	2
6	1K4709	WASHER	4
7	8D297	WASHER	4
8	3K9081	NUT	4
	3F9556	LOCKWASHER	4
9	3K9079	DRIVER	4
10	3I0909	SEAL	4
11	3T1404	NUT	4
12	6V3544	RACE	8
13	3T1416	SPACER	4
14	3T1406	WASHER	16
15	6V2456	RING	8
16	3T817	SHAFT ASSEM.	2
17	3T814	ROD ASSEM.	2
		(Each Includes)	
	6V2319	BEARING	2
18	9G8683	BRACKET ASSEM.	2
		(Each Includes)	
	9F6445	NUT	1
19	L1351	BOLT	4
	5P1075	WASHER	4
20	5P537	WASHER-------(spring)--------	8
21	9G6512	ROD ASSEM.	2
		(Each Includes)	
	6V2319	BEARING	2
22	9G8972	MOTOR	2
23	3T815	PLATE ASSEM.	2
24	1B4201	NUT	2
	4D7421	WASHER	2
25	S1570	BOLT	6
	1H3338	LOCKWASHER	6

C INDICATES CHANGE 235214

235214 P

7305 **3T0637 WIPER GP-PART 2 OF 2**

Part Of 3T0635 Cab Ar

An Attachment

CAB, GAUGES AND ACCESSORIES

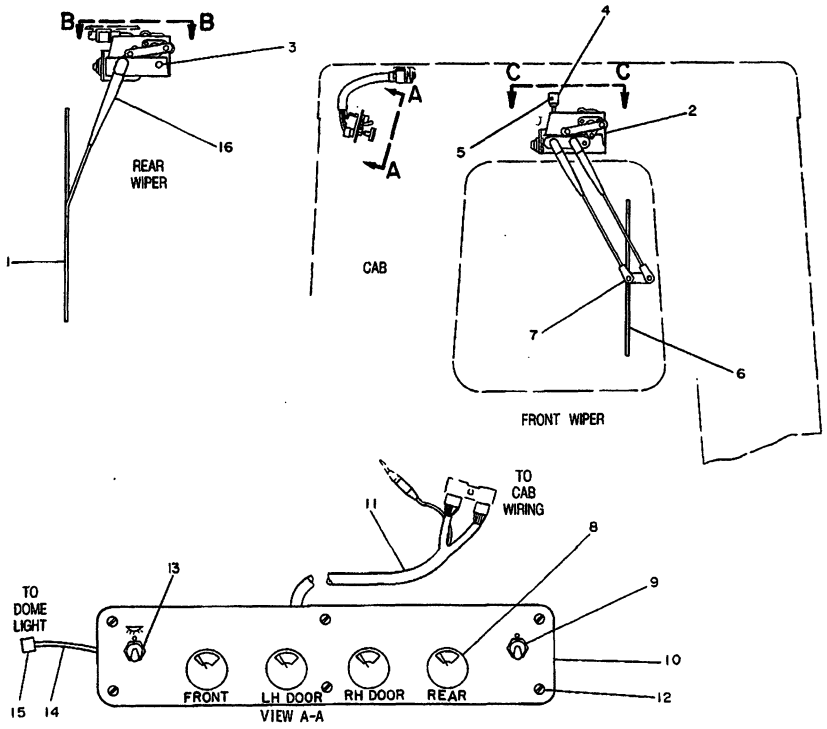

NOTE	REF NO	PART NUMBER	QTY	DESCRIPTION
	1	6V5853	1	BLADE AS.
Y	2	3T7057	1	WIPER GROUP
	3	6F7027	1	BOLT
		5P4115	1	WASHER
	4	9G9153	2	CLIP
	5	2N2258	2	RIVET
	6	6V5851	1	BLADE AS.
	7	6V5850	1	ARM AS.
	8	3T6655	4	SWITCH (WIPER WASHER)
	9	7N8001	1	SWITCH (WASHER PRIMER)
	10	3T6323	1	PANEL
Y	11	3T6375	1	HARNESS AS.
	12	1H2203	6	SCREW AS.
	13	7N8000	1	SWITCH (DOME LIGHT)
	14	9G7285	1	WIRE AS.
BD		5P5623		WIRE (16 GAUGE)
		2L8074	1	TERMINAL
	15	5P4571	1	TERMINAL
	16	6V5852	1	ARM AS.

B USE AS REQUIRED
D ORDER BY THE METER
Y SEPARATE ILLUSTRATION

REFER TO ALL PARTS OF THIS GROUP FOR AUXILIARY VIEWS

345754

345754 P

CAB, GAUGES AND ACCESSORIES

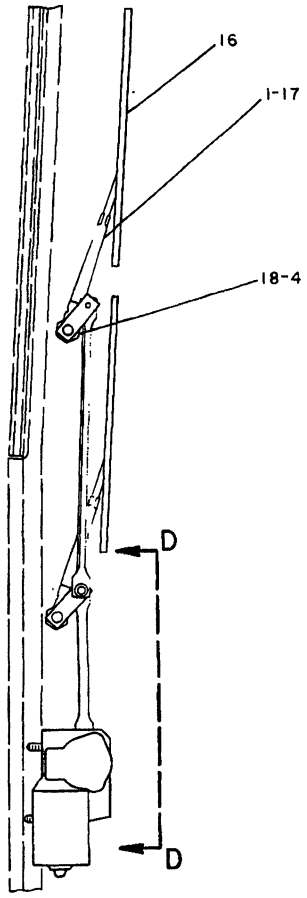

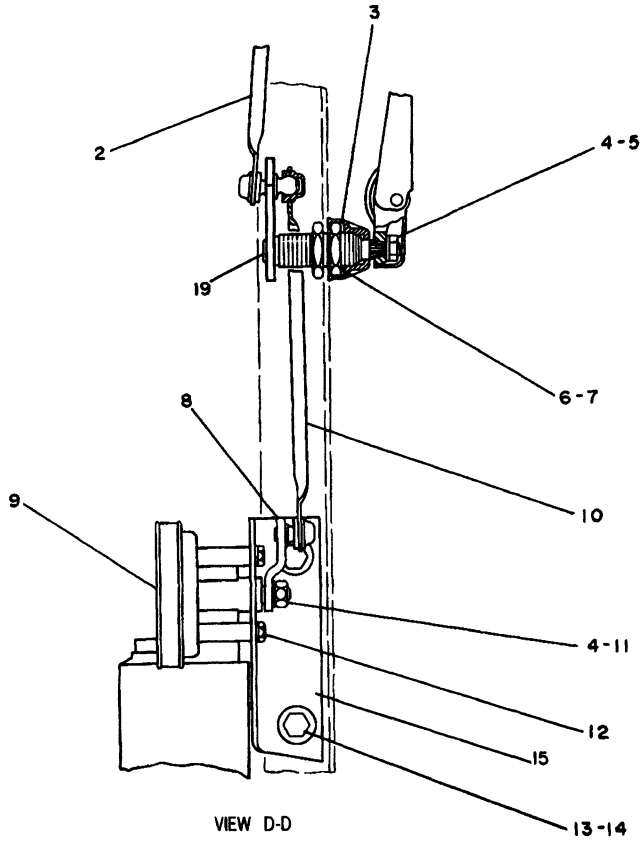

VIEW D-D

NOTE	REF NO	PART NUMBER	QTY	PART NAME
	1	6V5847	2	ARM AS-WIPER (R.H. DOOR)
	2	6T0304	2	LINK AS
	3	6V6209	7	CAP
M	4	5C7267	7	NUT
	5	6A9718	5	WASHER
M	6	6V6213	6	NUT
	7	6V6214	6	WASHER
	8	6T0303	2	CRANK-DRIVE
	9	3T0189	2	MOTOR AS-WIPER (R.H. & L.H. DOOR)
		7N8204	1	HOUSING-RECEPTACLE
		7N7780	2	PIN-CONNECTOR
		7N7779	2	SOCKET
M		5C7267	1	NUT
		5C7268	1	WASHER
	10	6T0302	2	LINK AS
	11	5C7268	2	WASHER
M	12	5C9553	6	BOLT
	13	5S7379	4	BOLT
	14	5P1075	4	WASHER-HARD
C	15	3T6333	2	BRACKET AS
	16	6V5849	4	BLADE AS-WIPER
	17	6V5848	2	ARM AS-WIPER (L.H. DOOR)
	18	6V6212	2	SHAFT AS-DRIVE (R.H. & L.H. DOOR)
	19	6V6211	2	SHAFT AS-DRIVE (R.H. & L.H. DOOR)

C-CHANGE FROM PREVIOUS TYPE
M-METRIC PART

B-465277 P

7305

3T9139 WIPER GP-PART 2 OF 3
Type 1. S/N 53Y1-3483
Part Of 3T8102 Cab
An Attachment

MEMORANDA

CAB, GAUGES AND ACCESSORIES

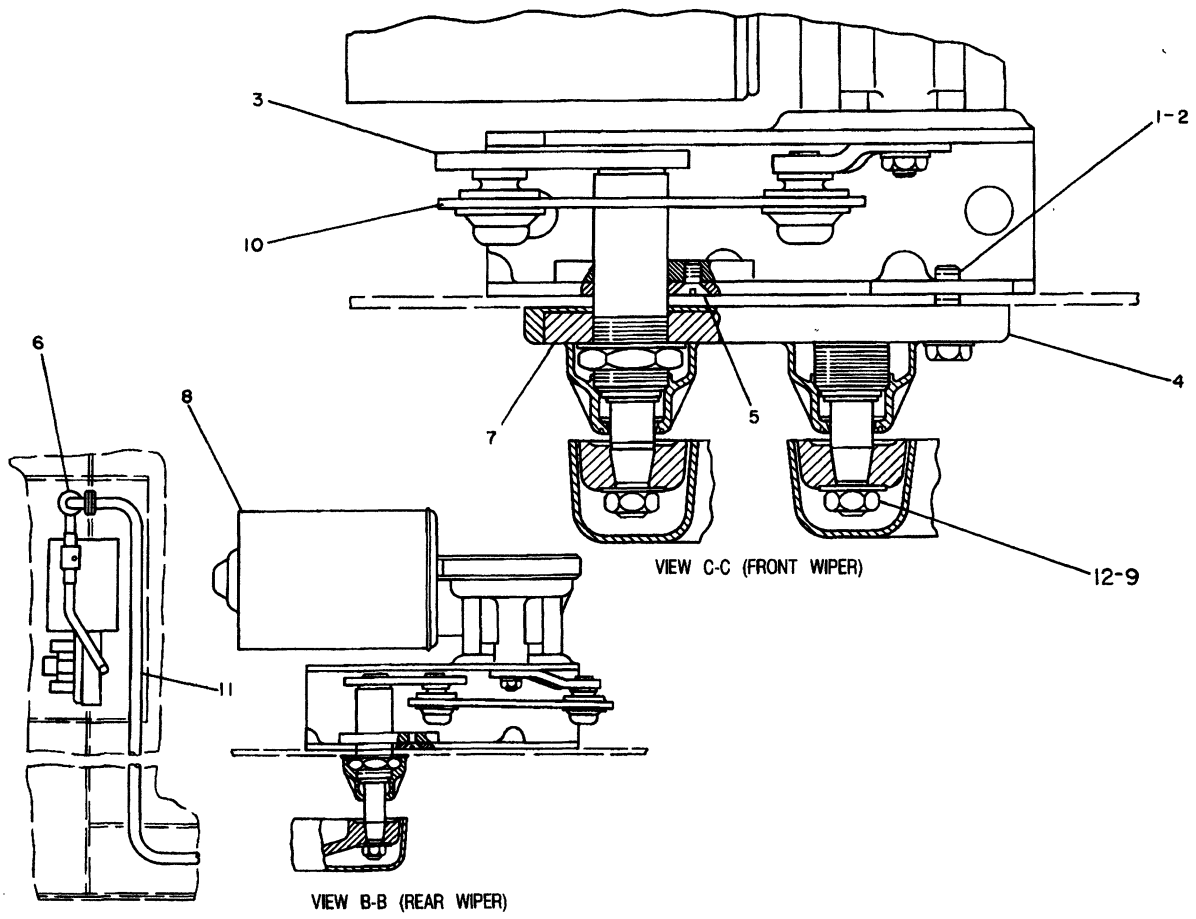

NOTE	REF NO	PART NUMBER	QTY	PART NAME	NOTE	REF NO	PART NUMBER	QTY	PART NAME
	1	6V3960	1	BOLT					
	2	3B4504	1	LOCKWASHER					
	3	6V6206	2	SHAFT AS-DRIVE					
	4	6V6210	1	GASKET-SHAFT					
	5	6V6215	8	SHAFT AS-DRIVE					
	6	9D3768	2	GROMMET					
	7	6V6207	1	SHAFT AS-PIVOT					
Y	8	3T7058	1	WIPER GP					
	9	6A9718	2	WASHER					
	10	6V6208	2	LINK-CONNECTING					
Y	11	3T6373	1	HARNESS AS					
M	12	5C7267	2	NUT					

M-METRIC PART
Y-SEPARATE ILLUSTRATION

B- 465278 P

7305

3T9139 WIPER GP-PART 3 OF 3
Type 1. S/N 53Y1-3484
3T6373-Page 312C,3T7058-Page 313.02
Part Of 3T8102 Cab
An Attachment

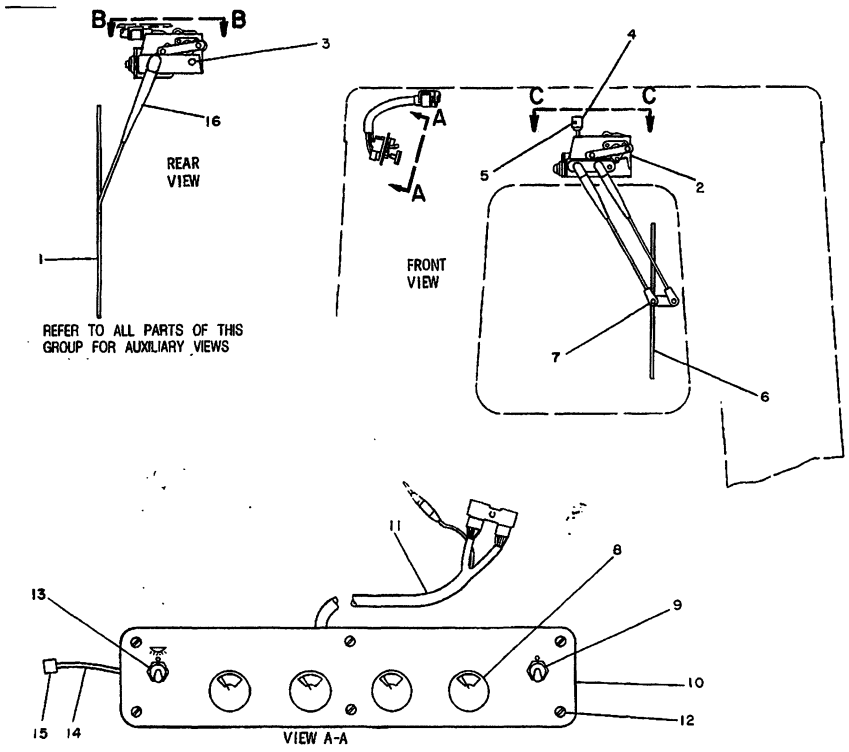

NOTE	REF NO	PART NUMBER	QTY	DESCRIPTION
	1	6V5853	1	BLADE AS.
Y	2	3T7064	1	WIPER GP.
	3	6F7027	1	BOLT
		5P4115	1	WASHER
	4	9G9153	2	CLIP
	5	2N2258	2	RIVET
	6	6V5851	1	BLADE AS.
	7	6V5850	1	ARM AS.
	8	3T6655	4	SWITCH (WIPER WASHER) (EACH INCLUDES)
		6V8369	1	NUT
		2H3920	1	LOCKWASHER
	9	7N8001	1	SWITCH AS. (WIPER PRIMER)
		6T3631	2	NUT
		6T3632	1	LOCKWASHER (LARGE)
		6T3633	1	RING
		6V8374	2	SCREW
		3L8187	2	LOCKWASHER (SMALL)
	10	3T6323	1	PANEL
Y	11	3T6375	1	HARNESS AS.
	12	1H2203	6	SCREW AS.
Y	13	7N8000	1	SWITCH (DOME LIGHT)
	14	9G7285	1	WIRE AS.
BD		5P5624		WIRE (14 GAUGE)
		2L8074	1	TERMINAL
	15	5P4571	1	TERMINAL
	16	6V5852	1	ARM AS.

B USE AS REQUIRED
D ORDER BY THE METER
Y SEPARATE ILLUSTRATION

345755

345755 P

CAB, GAUGES AND ACCESSORIES

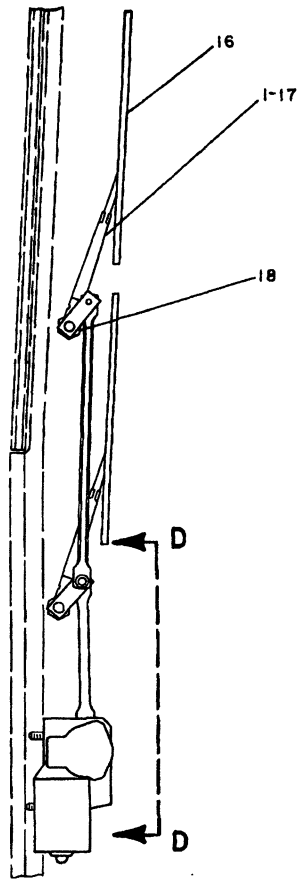

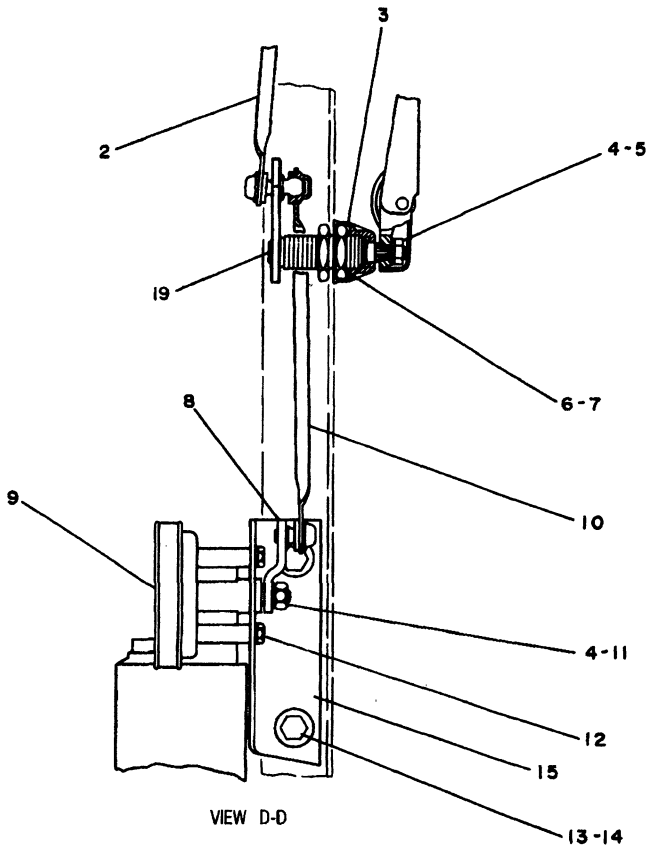

VIEW D-D

NOTE	REF NO	PART NUMBER	QTY	PART NAME
	1	6V5847	2	ARM AS-WIPER (R.H. DOOR)
	2	6T0304	2	LINK AS
C	3	6V6209	4	CAP
CM	4	6V6889	6	NUT
C	5	6A9718	4	WASHER
CM	6	6V6213	4	NUT
C	7	6V6214	4	WASHER
	8	6T0303	2	CRANK-DRIVE
	9	3T0189	2	MOTOR AS-WIPER
		7N8204	1	HOUSING-RECEPTACLE
		7N7780	2	PIN-CONNECTOR
		7N7779	2	SOCKET
M		5C7267	1	NUT
		5C7268	1	WASHER
	10	6T0302	2	LINK AS
C	11	6V6888	2	WASHER-SPRING
M	12	5C9553	6	BOLT
	13	5S7379	4	BOLT
	14	5P1075	4	WASHER-HARD
	15	3T6333	2	BRACKET AS
	16	6V5849	4	BLADE AS-WIPER
	17	6V5848	2	ARM AS-WIPER (L.H. DOOR)
	18	6V6212	2	SHAFT AS-DRIVE (L.H. & R.H. DOOR)
	19	6V6211	2	SHAFT AS-DRIVE (L.H. & R.H. DOOR)

C-CHANGE FROM PREVIOUS TYPE
M-METRIC PART

B- 465282 P

7305

3T9139 WIPER GP-PART 2 OF 3
Type 2. S/N 53Y1-3484
Part Of 3T8102 Cab
An Attachment

CAB, GAUGES AND ACCESSORIES

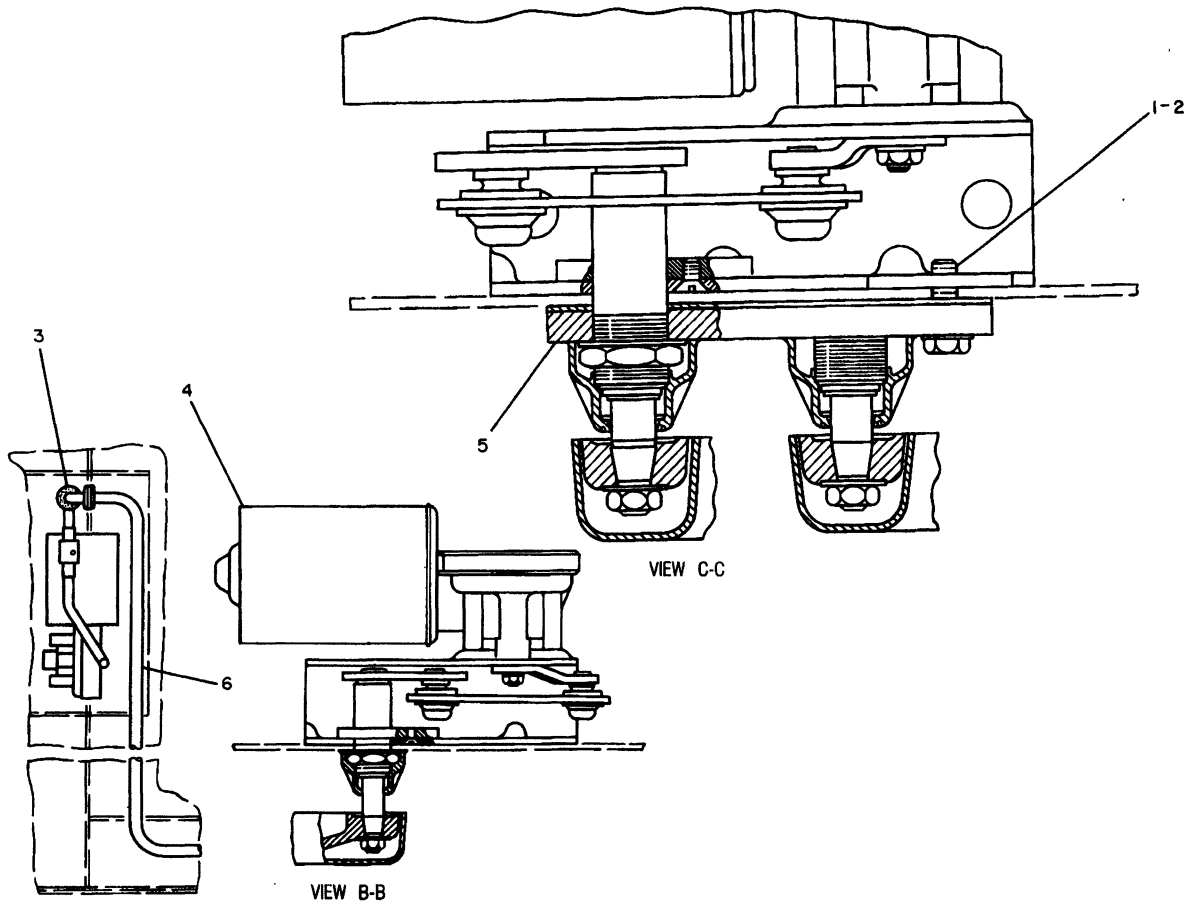

NOTE	REF NO	PART NUMBER	QTY	PART NAME	NOTE	REF NO	PART NUMBER	QTY	PART NAME
	1	6V3960	1	BOLT					
	2	3B4504	1	LOCKWASHER					
	3	9D3768	2	GROMMET					
CY	4	3T7063	1	WIPER GP					
CY	5	6V6561	1	WIPER PIVOT GP					
Y	6	3T6373	1	HARNESS AS					

C-CHANGE FROM PREVIOUS TYPE
Y-SEPARATE ILLUSTRATION

B-465283 P

7305

3T9139 WIPER GP-PART 3 OF 3

Type 2. S/N 53Y1-3484
3T6373-Page 312C,6V6561-Page 312D,3T7063-Page 313C
Part Of 3T8102 Cab
An Attachment

CAB, GAUGES AND ACCESSORIES

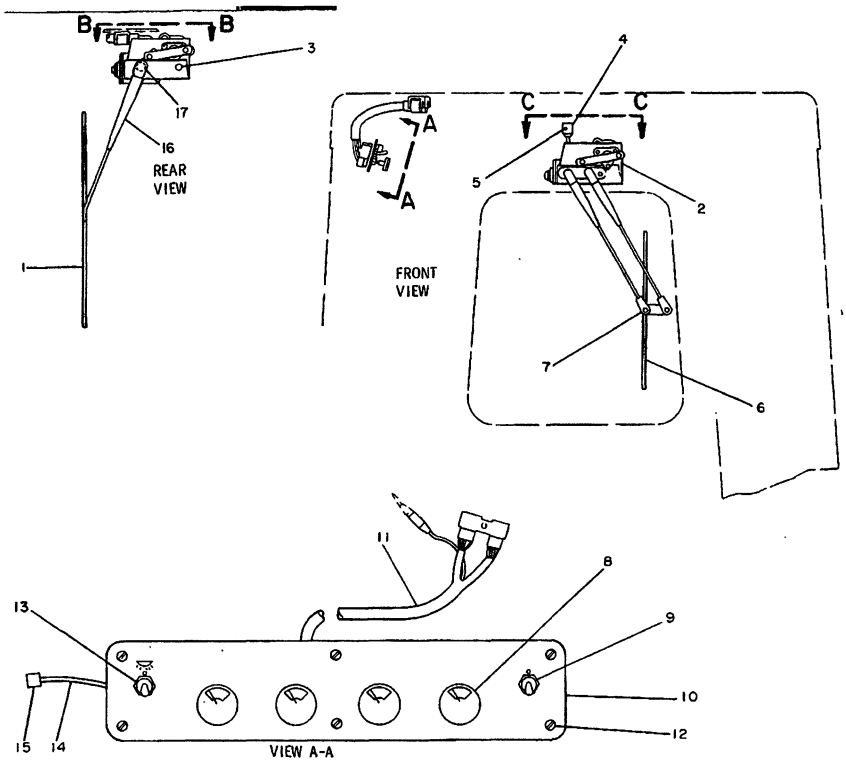

REFER TO ALL PARTS OF THIS GROUP FOR AUXILIARY VIEWS

NOTE	REF NO	PART NUMBER	QTY	DESCRIPTION
	1	6V5853	1	BLADE AS.
Y	2	3T7064	1	WIPER GP.
	3	6F7027	1	BOLT
		5P4115	1	WASHER
	4	9G9153	2	CLIP
	5	2N2258	2	RIVET
	6	6V5851	1	BLADE AS.
	7	6V5850	1	ARM AS.
	8	3T6655	4	SWITCH (WIPER WASHER) (EACH INCLUDES)
		6V8369	1	NUT
		2H3920	1	LOCKWASHER
	9	7N8001	1	SWITCH AS. (WIPER PRIMER)
		6T3631	2	NUT
		6T3632	1	LOCKWASHER (LARGE)
		6T3633	1	RING
		6V8374	2	SCREW
		3L8187	2	LOCKWASHER (SMALL)
	10	3T6323	1	PANEL
Y	11	3T6375	1	HARNESS AS.
	12	1H2203	6	SCREW AS.
Y	13	7N8000	1	SWITCH (DOME LIGHT)
	14	9G7285	1	WIRE AS.
BD		5P5624		WIRE (14 GAUGE)
		2L8074	1	TERMINAL
	15	5P4571	1	TERMINAL
	16	6V5852	1	ARM AS.
	17	8T1739	2	WASHER

B USE AS REQUIRED
D ORDER BY THE METER
Y SEPARATE ILLUSTRATION

345756

345756 P

CAB, GAUGES AND ACCESSORIES

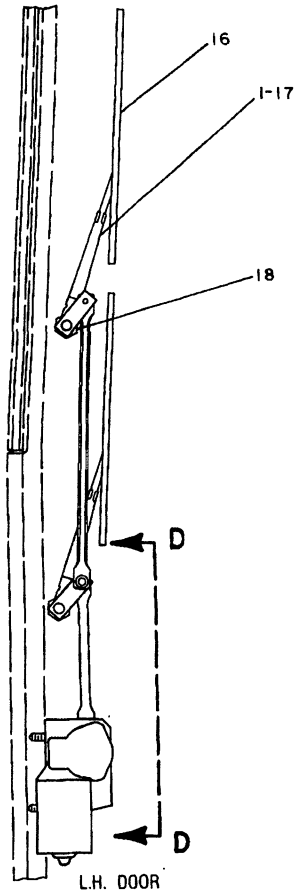

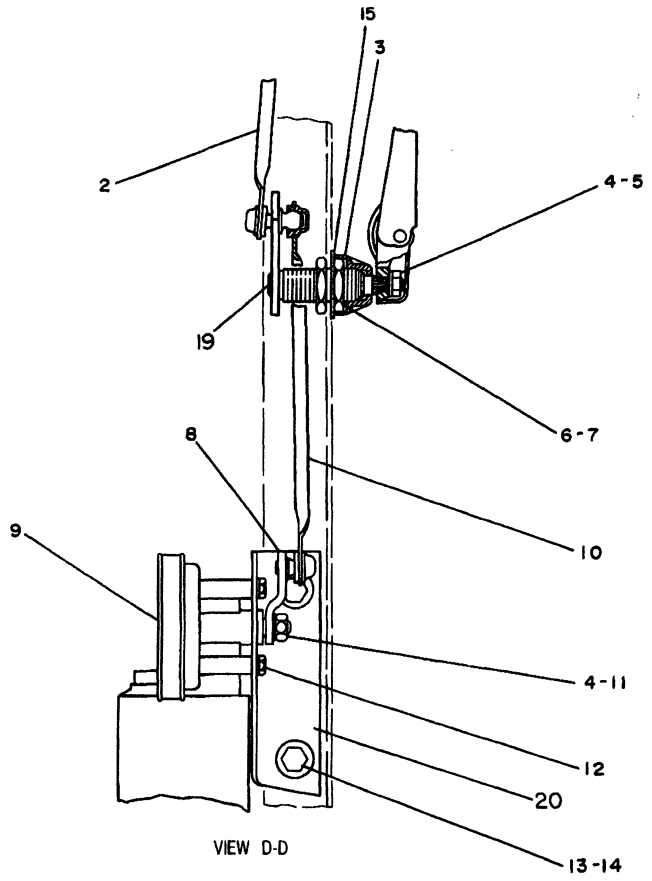

NOTE	REF NO	PART NUMBER	QTY	PART NAME	NOTE	REF NO	PART NUMBER	QTY	PART NAME
	1	6V5847	2	ARM AS-WIPER (L.H. DOOR)					
	2	6T0304	2	LINK AS					
	3	6V6209	4	CAP					
M	4	6V6889	6	NUT					
	5	6A9718	4	WASHER					
M	6	6V6213	4	NUT					
	7	6V6214	4	WASHER					
	8	6T0303	2	CRANK-DRIVE					
	9	6T6216	2	MOTOR AS-WIPER (EACH INCLUDES)					
		7N8204	1	HOUSING-RECEPTACLE					
		7N7780	2	PIN-CONNECTOR					
		7N7779	2	SOCKET					
	10	6T0302	2	LINK AS					
	11	6V6888	2	WASHER-SPRING					
M	12	5C9553	6	BOLT					
	13	5S7379	4	BOLT					
	14	5P1075	4	WASHER-HARD					
	15	8T2174	4	GASKET-SPACER					
	16	6V5849	4	BLADE AS-WIPER					
	17	6V5848	2	ARM AS-WIPER (R.H. DOOR)					
	18	6V6212	2	SHAFT AS-DRIVE (L.H. & R.H. DOOR)					
	19	6V6211	2	SHAFT AS-DRIVE (L.H. & R.H. DOOR)					
	20	3T6333	2	BRACKET AS					

M-METRIC PART

B-465285 P

7305

3T9139 WIPER GP-PART 2 OF 3
Type 3. S/N 53Y1-3484
Part Of 3T8102 Cab
An Attachment

CAB, GAUGES AND ACCESSORIES

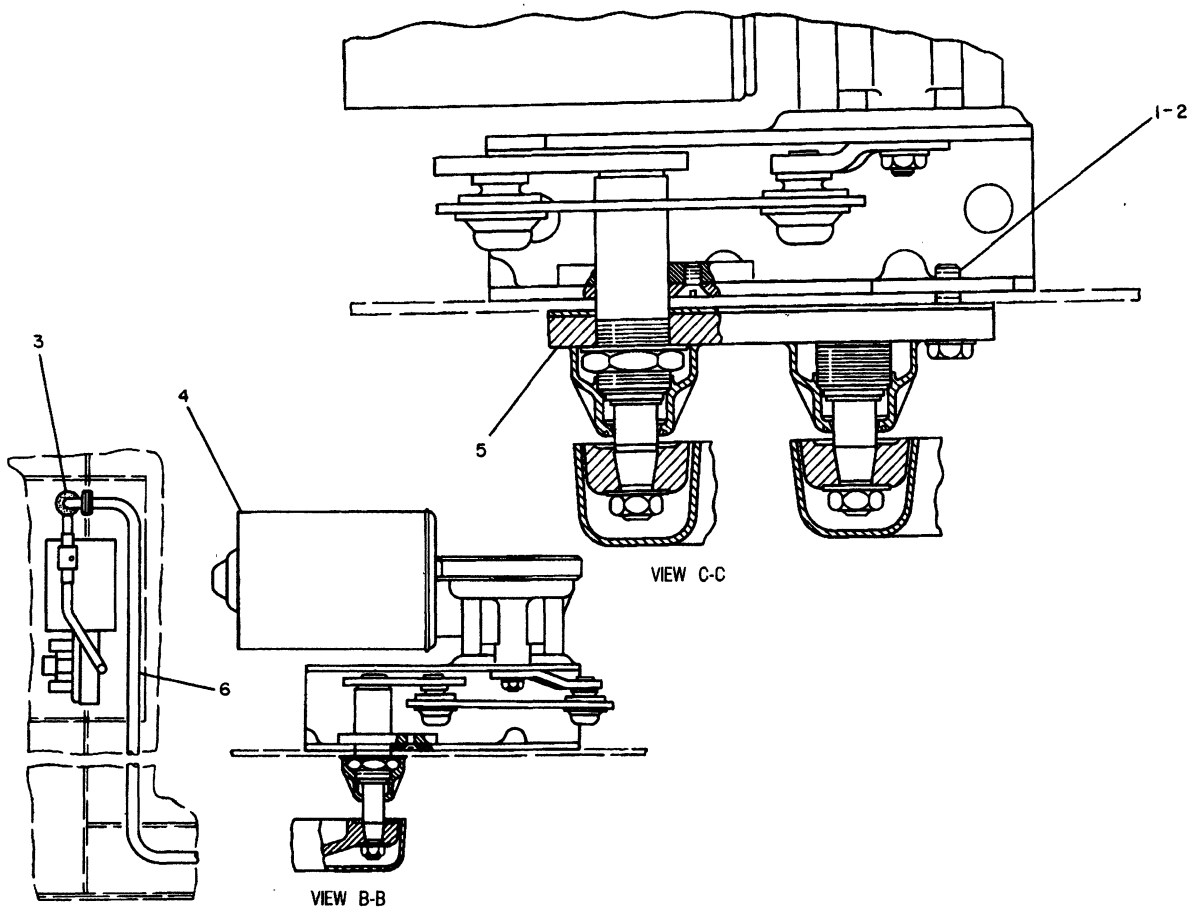

NOTE	REF NO	PART NUMBER	QTY	PART NAME	NOTE	REF NO	PART NUMBER	QTY	PART NAME
	1	6V3960	1	BOLT					
	2	3B4504	1	LOCKWASHER					
	3	9D3768	2	GROMMET					
CY	4	3T7063	1	WIPER GP					
CY	5	6V6561	1	WIPER PIVOT GP					
Y	6	3T6373	1	HARNESS AS					

C-CHANGE FROM PREVIOUS TYPE
Y-SEPARATE ILLUSTRATION

B- 465283 P

7305

3T9139 WIPER GP-PART 3 OF 3
Type 3. S/N 53Y1-3484
3T6373-Page 312C,6V6561-Page 312D,3T7063-Page 313C
Part Of 3T8102 Cab
An Attachment

CAB, GAUGES AND ACCESSORIES

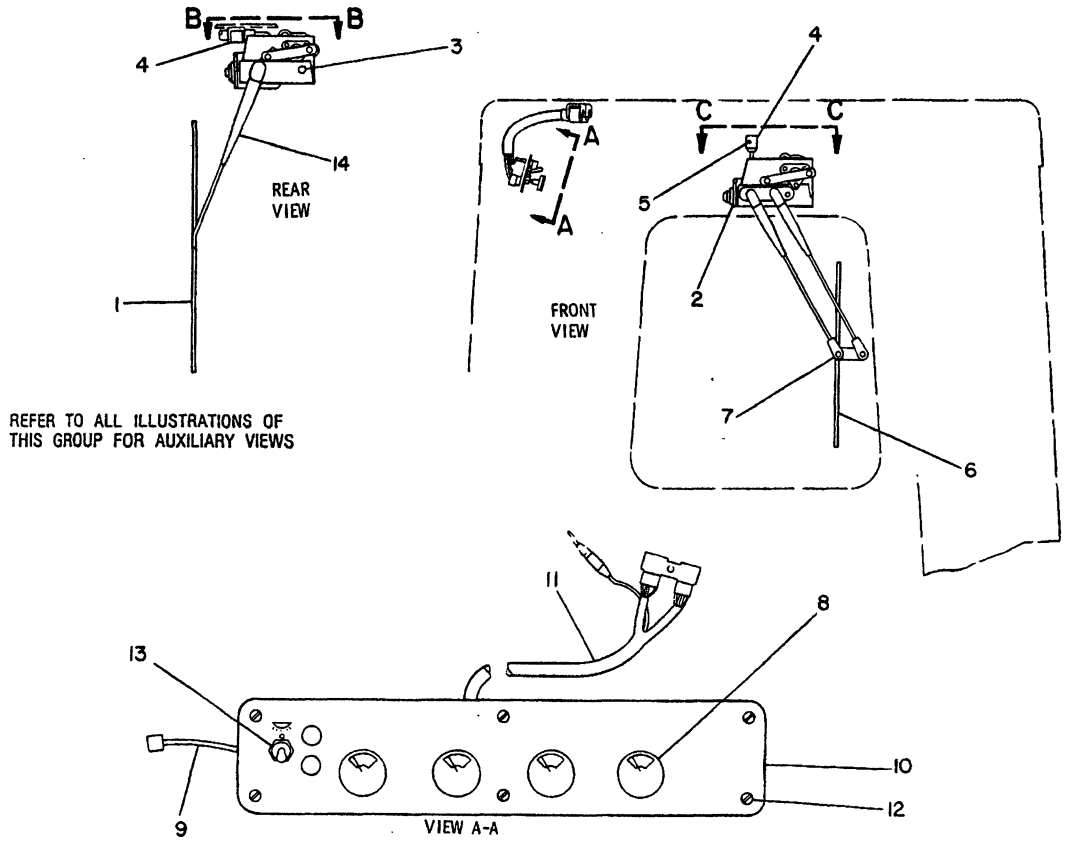

REFER TO ALL ILLUSTRATIONS OF
THIS GROUP FOR AUXILIARY VIEWS

NOTE	REF NO	PART NUMBER	QTY	PART NAME
	1	6V5853	1	BLADE AS-WIPER
Y	2	3T7064	1	WIPER GP
C	3	8C4437	1	BOLT
		5P4115	1	WASHER
	4	9G9153	2	CLIP
	5	2N2258	1	RIVET-POP
	6	6V5851	1	BLADE AS-WIPER
	7	6V5850	1	ARM AS-WIPER
	8	3T6655	4	SWITCH AS-ROTARY (WIPER WASHER)
				(EACH INCLUDES)
		6V8369	1	NUT
		2H3920	1	LOCKWASHER
	9	9G7285	1	WIRE AS
	10	7T9223	1	PANEL
	11	7T9218	1	HARNESS AS
	12	1H2203	6	SCREW AS-MACHINE
Y	13	7N8000	1	SWITCH AS-TOGGLE (DOME LIGHT)
	14	6V5852	1	ARM AS-WIPER

C-CHANGE FROM PREVIOUS TYPE
Y-SEPARATE ILLUSTRATION

V-411471 EP

CAB, GAUGES AND ACCESSORIES

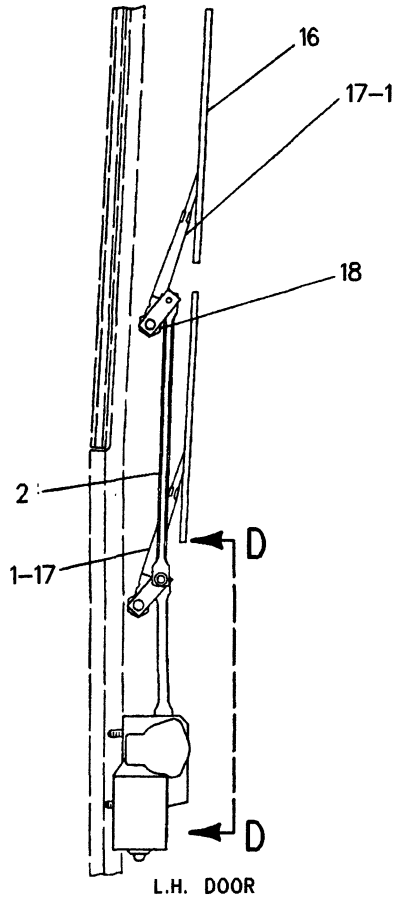

L.H. DOOR

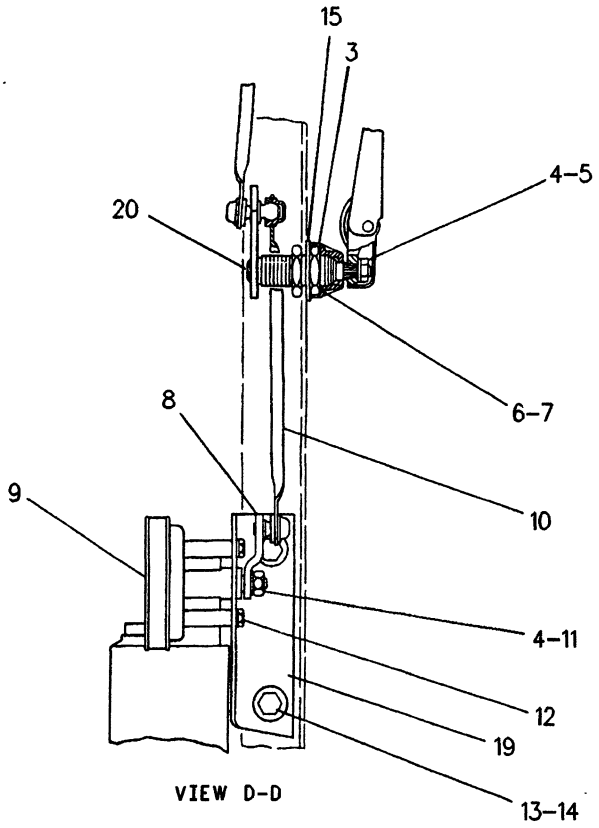

VIEW D-D

NOTE	REF NO	PART NUMBER	QTY	PART NAME
	1	8T0319	2	ARM AS-WIPER (RH DOOR)
	2	7T1078	1	LINK AS-LH (DOOR)
		7T4761	1	LINK AS-RH (DOOR)
	3	6V6209	4	CAP
M	4	6V6889	6	NUT
	5	6A9718	4	WASHER
M	6	6V6213	4	NUT
	7	6V6214	4	WASHER
	8	6T0303	2	CRANK-DRIVE
	9	6T6216	2	MOTOR AS-WIPER
				(EACH INCLUDES)
		7N8204	1	HOUSING-RECEPTACLE
		7N7780	2	PIN-CONNECTOR
		7N7779	2	SOCKET
	10	6T0302	2	LINK AS
	11	6V6888	2	WASHER-SPRING
M	12	5C9553	6	BOLT
	13	5S7379	4	BOLT
	14	5P1075	4	WASHER-HARD
	15	8T2174	4	GASKET-SPACER
	16	6V5849	4	BLADE AS-WIPER
	17	8T0320	2	ARM AS-WIPER (LH DOOR)
	18	6V6212	2	SHAFT AS-DRIVE
	19	7T0942	2	BRACKET AS
	20	6V6211	2	SHAFT AS-DRIVE

M-METRIC PART

R-551417 EP

7305 **7T1072 WIPER GP-PART 2 OF 3**

S/N 53Y3485-Up

Part Of 7T1071 Cab

An Attachment

CAB, GAUGES AND ACCESSORIES

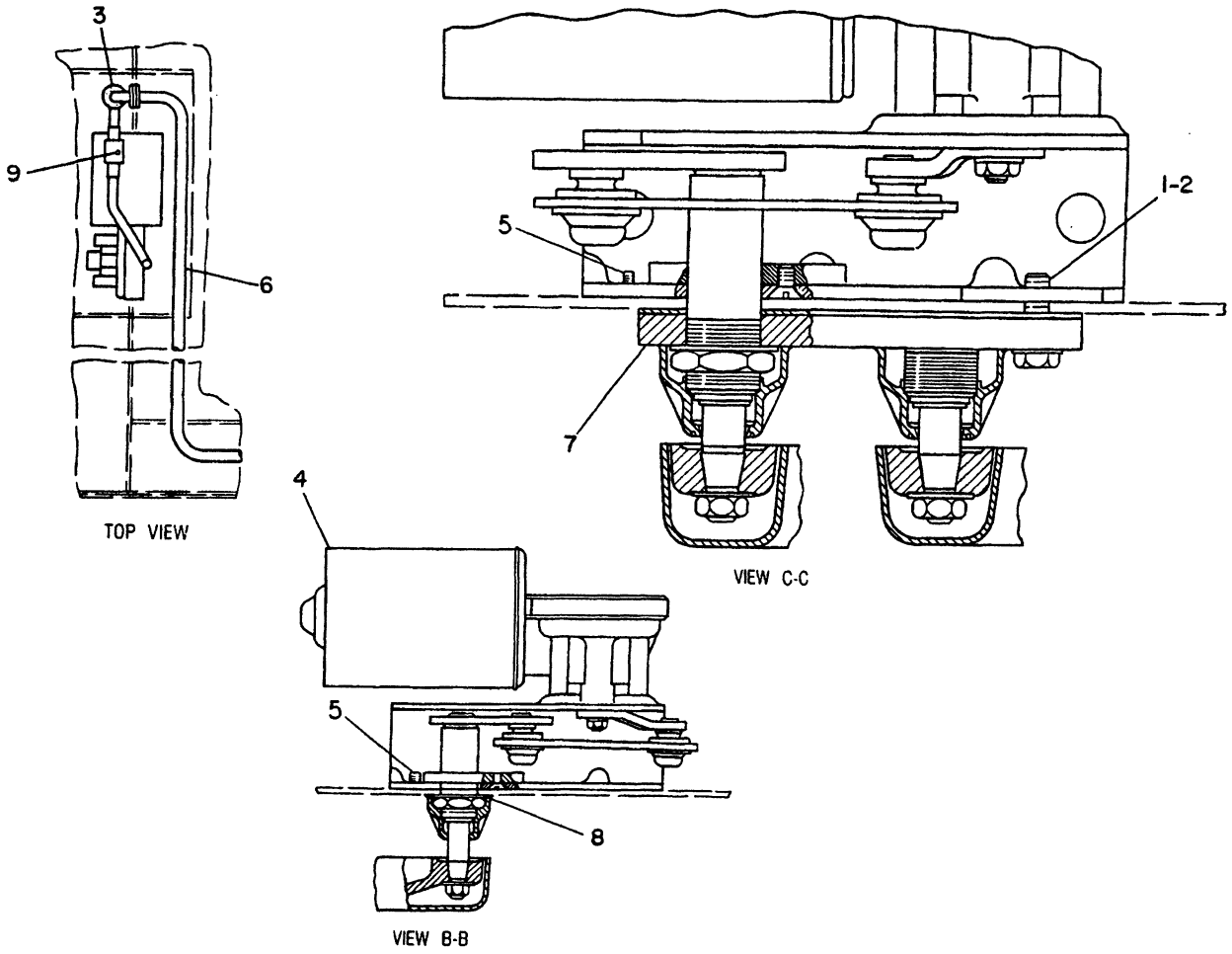

NOTE	REF NO	PART NUMBER	QTY	PART NAME	NOTE	REF NO	PART NUMBER	QTY	PART NAME
	1	6V3960	1	BOLT					
C	2	6N7523	1	WASHER					
	3	9D3768	2	GROMMET					
Y	4	3T7063	1	WIPER GP					
C	5	3H7180	2	SETSCREW					
	6	3T6373	1	HARNESS AS					
Y	7	6V6561	1	WIPER PIVOT GP					
	8	8T1739	2	WASHER-HARD					
	9	2N2258	1	RIVET-POP					

C-CHANGE FROM PREVIOUS TYPE
Y-SEPARATE ILLUSTRATION

R-551418 EP

7305

7T1072 WIPER GP-PART 3 OF 3
S/N 53Y3485-Up
3T7064-Page 313C,6V6561-Page 312D
An Attachment

MEMORANDA

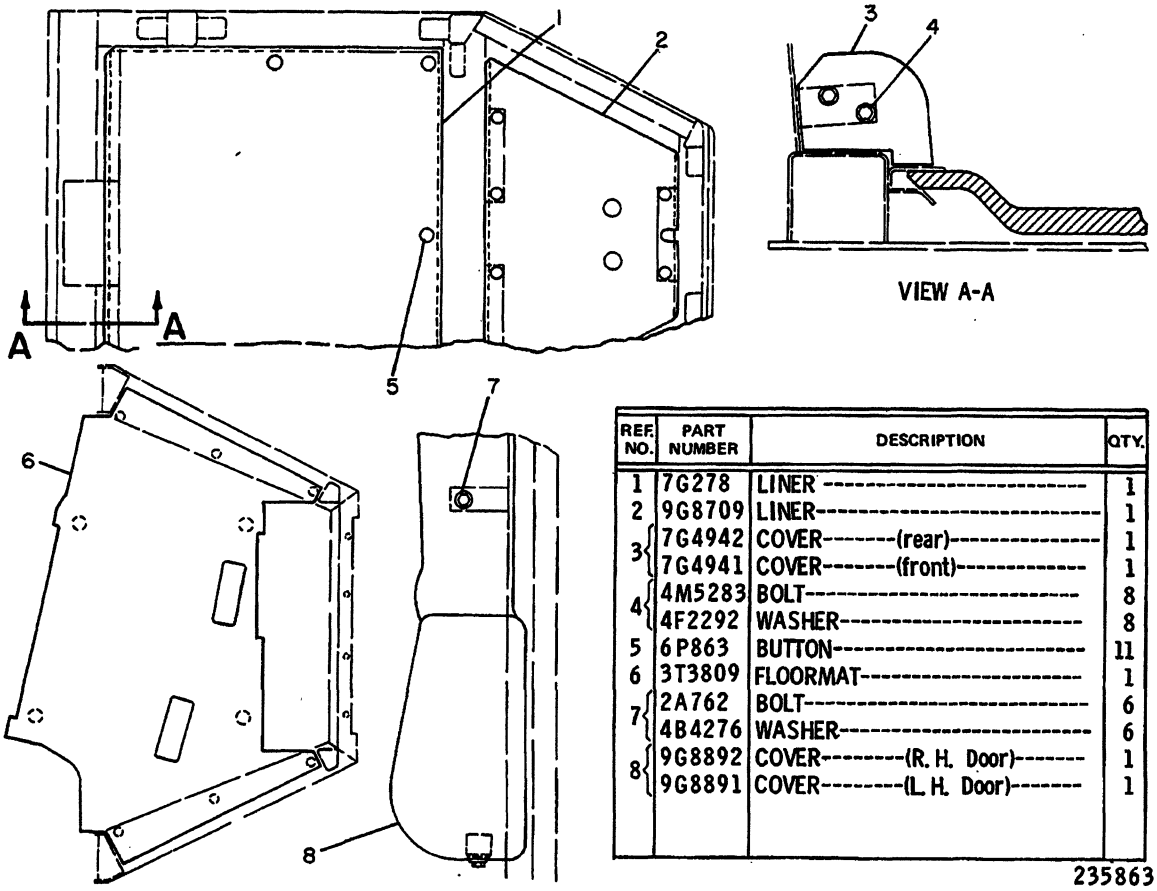

REF. NO.	PART NUMBER	DESCRIPTION	QTY.
1	7G278	LINER	1
2	9G8709	LINER	1
3	7G4942	COVER-------(rear)----------	1
	7G4941	COVER-------(front)----------	1
4	4M5283	BOLT----------	8
	4F2292	WASHER----------	8
5	6P863	BUTTON----------	11
6	3T3809	FLOORMAT----------	1
7	2A762	BOLT----------	6
	4B4276	WASHER----------	6
8	9G8892	COVER--------(R. H. Door)-------	1
	9G8891	COVER--------(L. H. Door)-------	1

235863

235863 P

7329

3T3810 LINER GP-CAB
Part Of 3T0639 Cab
An Attachment

CAB, GAUGES AND ACCESSORIES

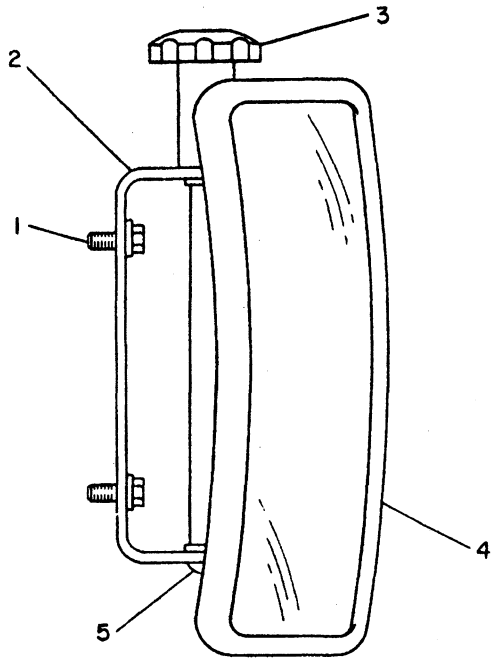

NOTE	REF NO	PART NUMBER	QTY	PART NAME
	1	5S7379	2	BOLT
		5P1075	2	WASHER-HARD
	2	9P9390	1	BRACKET
	3	9P9388	1	KNOB
	4	5P6874	1	MIRROR
	5	5K9179	1	BOLT-ROUND HEAD

B-481470 EP

7319 **9P9392 MIRROR GP-REAR VIEW**

Part Of 3T0639,6T8696,7T2563 Cabs
An Attachment

CAB, GAUGES AND ACCESSORIES

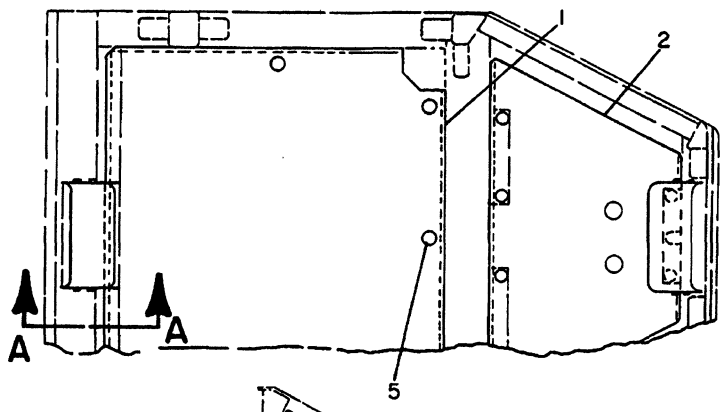

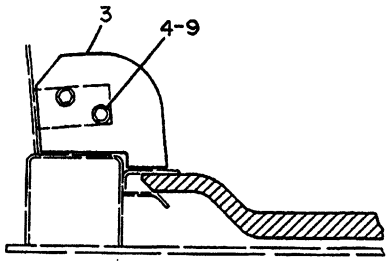

VIEW A-A

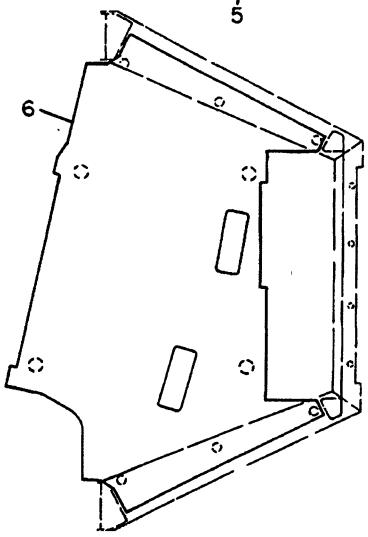

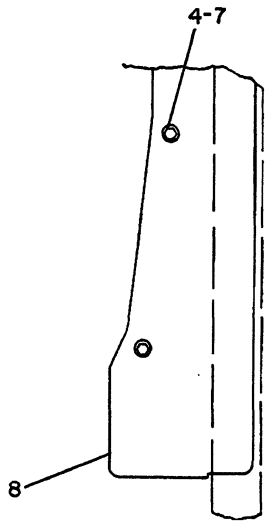

NOTE	REF NO	PART NUMBER	QTY	PART NAME	NOTE	REF NO	PART NUMBER	QTY	PART NAME
	1	9W0186	1	LINER					
	2	9G8709	1	LINER					
	3	7G4942	1	COVER (REAR)					
		7G4941	1	COVER (FRONT)					
C	4	310243	14	SCREW					
	5	7T4762	11	BUTTON					
	6	7T0150	1	FLOOR MAT					
	7	4B4276	6	WASHER					
	8	7T1196	1	COVER (R.H. DOOR)					
		7T1190	1	COVER (L.H. DOOR)					
	9	4F2292	8	WASHER					

C-CHANGE FROM PREVIOUS TYPE

B-404890 EP

7329 **7T1351 LINER GP-CAB-SOUND SUPPRESSION**

Type 1. S/N 53Y3485-Up
Part Of 7T2563 Cab Ar
An Attachment

CAB, GAUGES AND ACCESSORIES

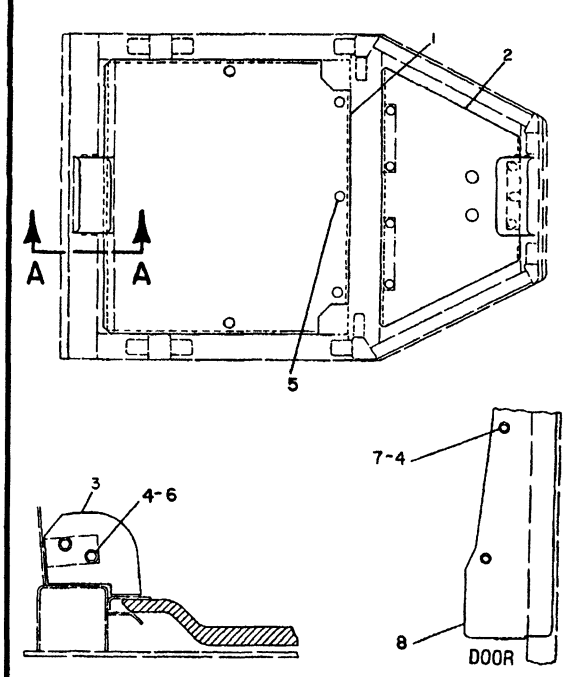

VIEW A-A

NOTE	REF NO	PART NUMBER	QTY	PART NAME
	1	9W0186	1	LINER
	2	9G8709	1	LINER
	3	7G4942	1	COVER (REAR)
		7G4941	1	COVER (FRONT)
	4	310243	14	SCREW
	5	7T4762	11	BUTTON
	6	4F2292	8	WASHER
	7	4B4276	6	WASHER
	8	7T1196	1	COVER (R.H. DOOR)
		7T1190	1	COVER (L.H. DOOR)

B-413940 EP

7329 **7T1351 LINER GP-CAB-SOUND SUPPRESION**
Type 2. S/N 53Y3485-Up
Part Of 7T2563 Cab Ar
An Attachment

CAB, GAUGES AND ACCESSORIES

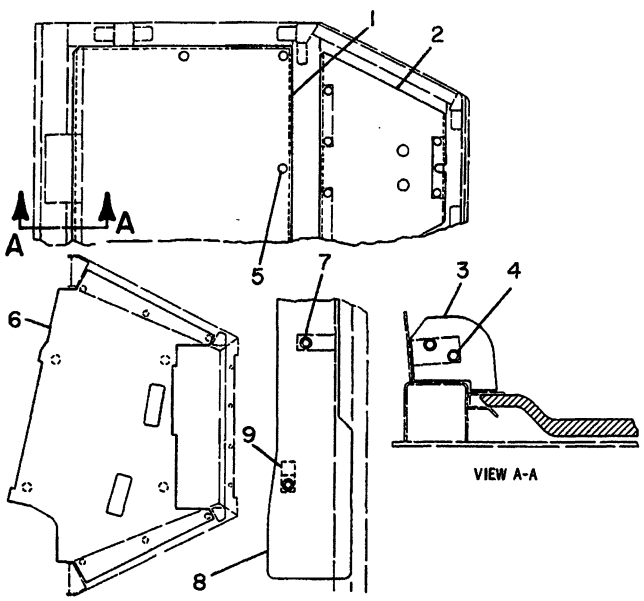

NOTE	REF NO	PART NUMBER	QTY	PART NAME
	1	7G0278	1	LINER
	2	9G8709	1	LINER
	3	7G4942	1	COVER (REAR)
		7G4941	1	COVER (FRONT)
	4	4M5283	8	BOLT
		4F2292	8	WASHER
	5	6P0863	11	BUTTON
	6	3T3809	1	FLOOR MAT
	7	2A0762	8	BOLT
		4B4276	8	WASHER
	8	3T6969	1	COVER (RH DOOR)
		3T6968	1	COVER (LH DOOR)
	9	3T6970	2	BRACKET AS
		9F6445	1	NUT

B-310556 P

7329 **3T8104 LINER GP-CAB-SOUND SUPPRESSION**

S/N 53Y1-3484

Part Of 6T8696 Cab

For Use With 3T8102 Cab-Page 299B. An Attachment

MEMORANDA

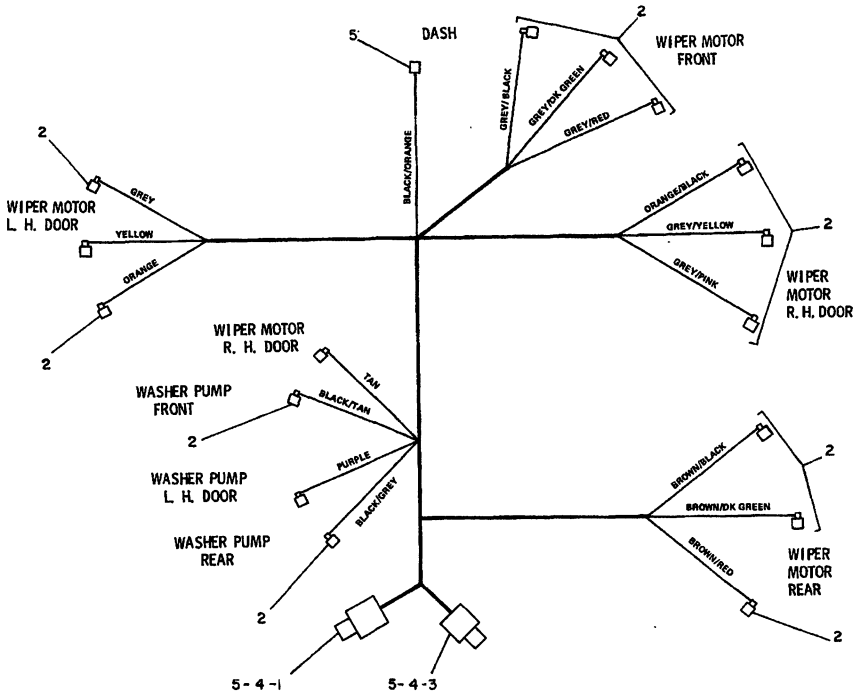

	REF. NO.	PART NUMBER	DESCRIPTION	QTY.
C	1	9G3667	HOUSING	1
	2	9G9314	TERMINAL	16
	3	9G3670	HOUSING	1
	4	7N7779	SOCKET	8
C	5	7N7780	PIN	10
			THE FOLLOWING WIRES ARE AVAILABLE:	
▲		5P5623	WIRE----------(14 gauge)	
▲		5P5624	WIRE----------(16 gauge)	

C INDICATES CHANGE
▲ ORDER BY THE METER

235944

235944 P

7305 **3T1349 HARNESS AS**

Type 1
Part Of 9G9277 Washer
An Attachment

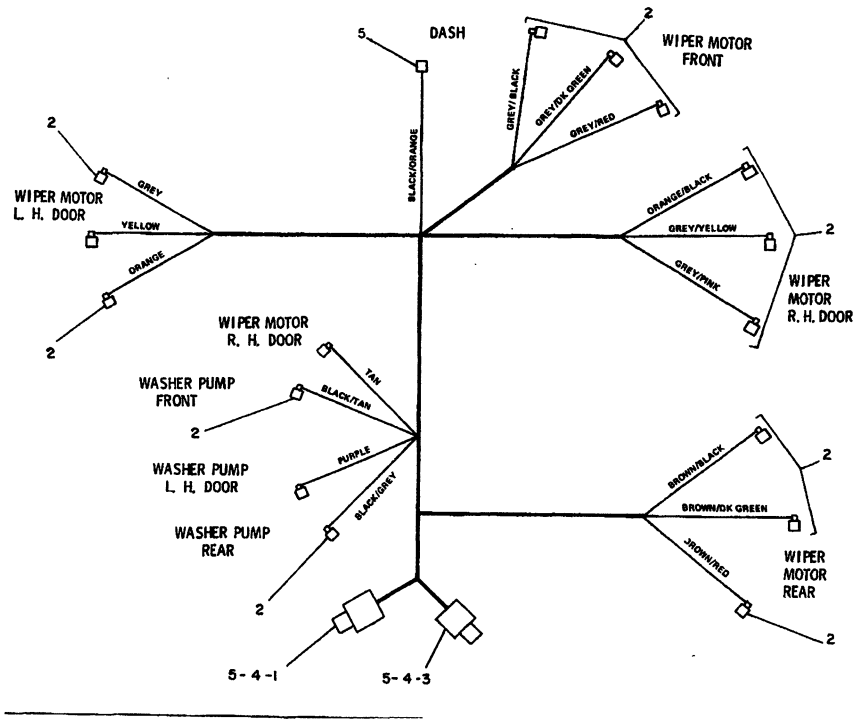

	REF. NO.	PART NUMBER	DESCRIPTION	QTY.
C	1	9G3667	HOUSING	1
	2	9G9314	TERMINAL	16
	3	9G3670	HOUSING	1
C	4	7N7779	SOCKET	9
C	5	7N7780	PIN	9
			THE FOLLOWING WIRES ARE AVAILABLE:	
▲		5P5623	WIRE--(14 gauge)	
▲		5P5624	WIRE--(16 gauge)	

C INDICATES CHANGE
▲ ORDER BY THE METER

306344

306344 P

7305 **3T1349 HARNESS AS**

Type 2
Part Of 9G9277 Washer
An Attachment

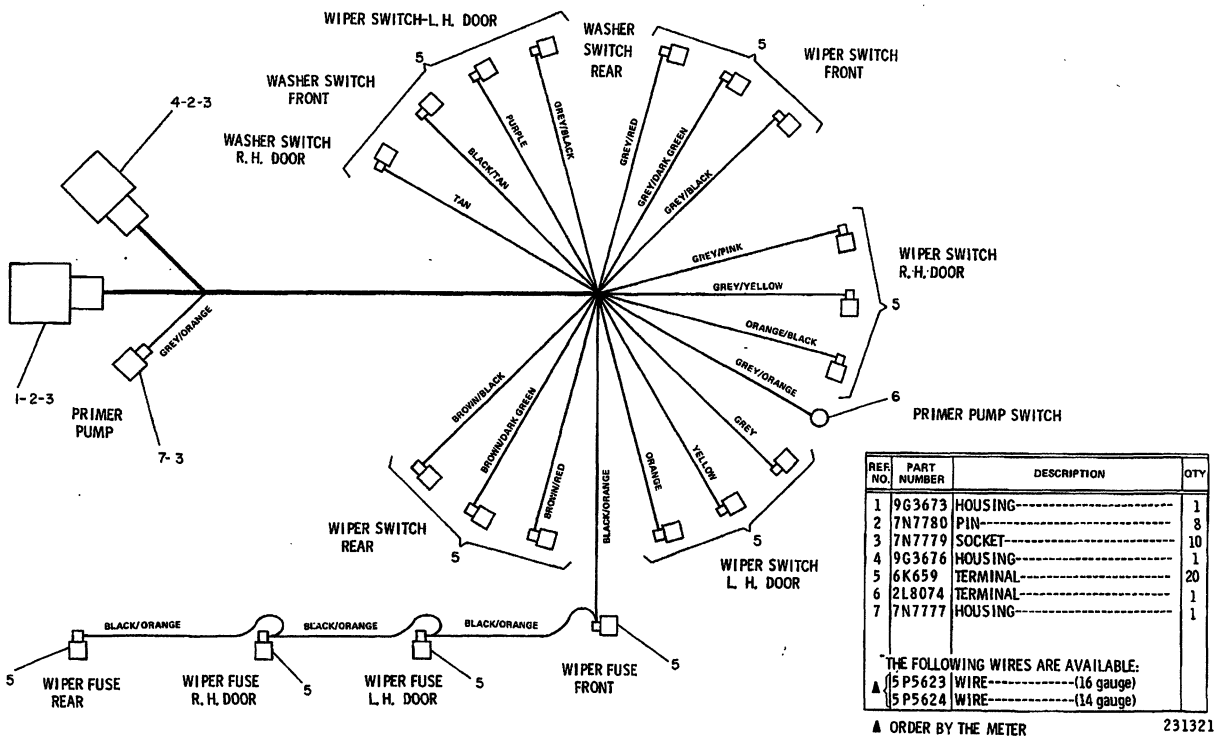

REF. NO.	PART NUMBER	DESCRIPTION	QTY
1	9G3673	HOUSING----------	1
2	7N7780	PIN----------	8
3	7N7779	SOCKET----------	10
4	9G3676	HOUSING----------	1
5	6K659	TERMINAL----------	20
6	2L8074	TERMINAL----------	1
7	7N7777	HOUSING----------	1
		THE FOLLOWING WIRES ARE AVAILABLE:	
▲	5P5623	WIRE----------(16 gauge)	
▲	5P5624	WIRE----------(14 gauge)	

▲ ORDER BY THE METER

231321

231321 P

7305 **3T1350 HARNESS AS**

Part Of 3T0637 Wiper
An Attachment

CAB, GAUGES AND ACCESSORIES

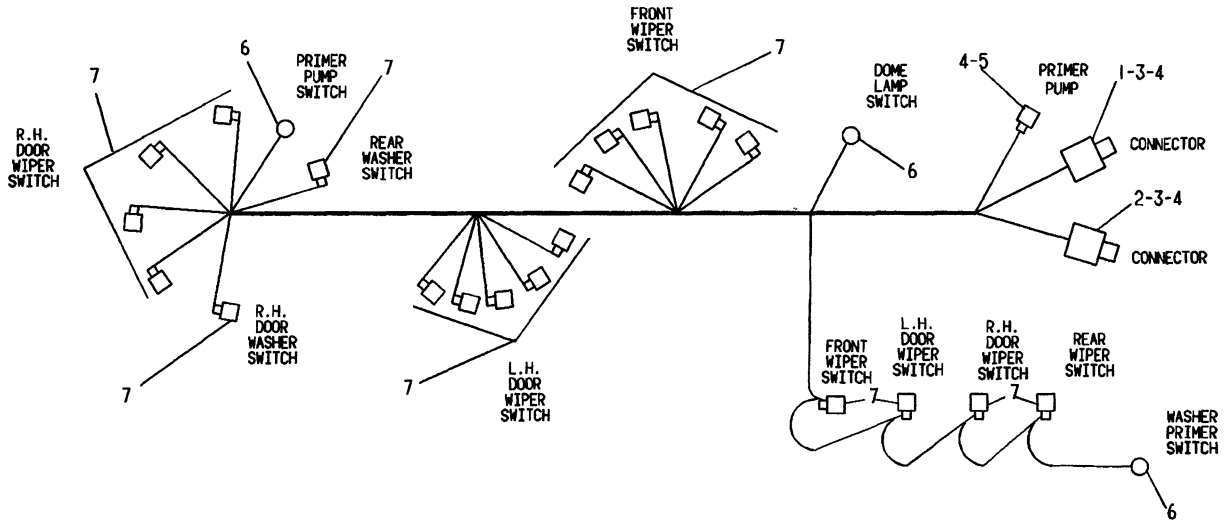

NOTE	REF NO	PART NUMBER	QTY	PART NAME	NOTE	REF NO	PART NUMBER	QTY	PART NAME
	1	9G3667	1	HOUSING-PLUG					
	2	9G3669	1	HOUSING-PLUG					
	3	7N7780	9	PIN-CONNECTOR					
	4	7N7779	10	SOCKET					
	5	7N7777	1	HOUSING-RECEPTACLE					
	6	2L8074	3	TERMINAL					
	7	6K0659	20	TERMINAL-BLADE					
				THE FOLLOWING WIRE IS AVAILABLE:					
D		5P5624		WIRE (14 GAUGE)					

D-ORDER BY THE METER

A- 310526 P

7305

3T6375 HARNESS AS
Part Of 3T9139 Wiper
An Attachment

CAB, GAUGES AND ACCESSORIES

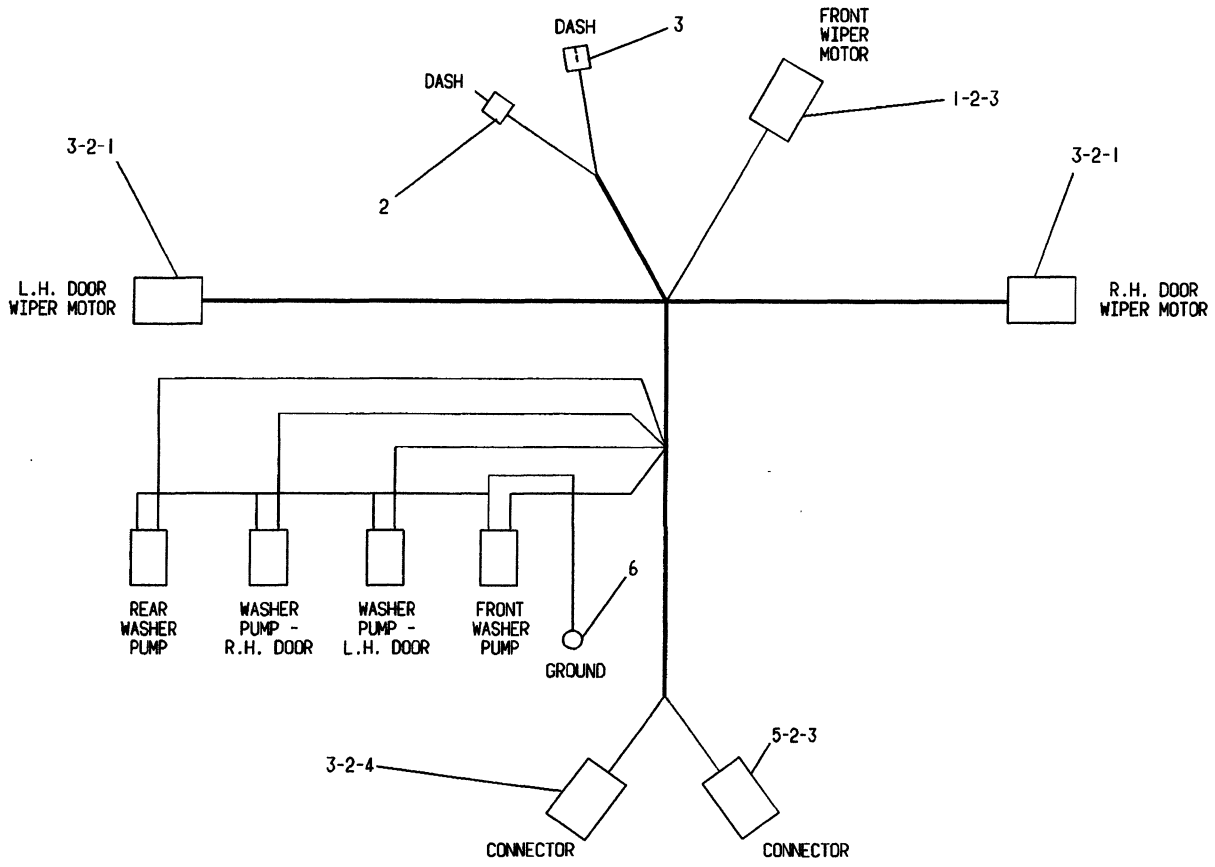

NOTE	REF NO	PART NUMBER	QTY	PART NAME	NOTE	REF NO	PART NUMBER	QTY	PART NAME
	1	7N8205	3	HOUSING-PLUG					
	2	7N7780	16	PIN-CONNECTOR					
	3	7N7779	16	SOCKET					
	4	9G3673	1	HOUSING-RECEPTACLE					
	5	9G3675	1	HOUSING-RECEPTACLE					
	6	2L8077	1	TERMINAL					
				THE FOLLOWING WIRE IS AVAILABLE:					
D		5P5624		WIRE (14 GAUGE)					

D-ORDER BY THE METER

A-310542 P

7305 **3T6411 HARNESS AS**

Part Of 3T6371 Washer
An Attachment

CAB, GAUGES AND ACCESSORIES

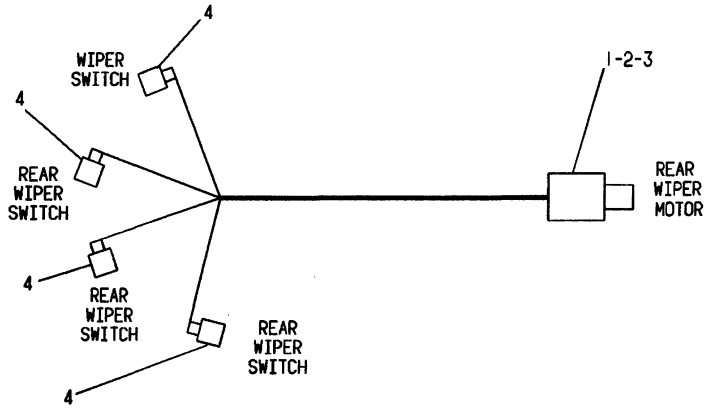

NOTE	REF NO	PART NUMBER	QTY	PART NAME
	1	7N8205	1	HOUSING-PLUG
	2	7N7780	2	PIN-CONNECTOR
	3	7N7779	2	SOCKET
	4	6K0659	4	TERMINAL-BLADE
				THE FOLLOWING WIRE IS AVAILABLE:
D		5P5624		WIRE (14 GAUGE)

D-ORDER BY THE METER

A-310525 P

7305

3T6373 HARNESS AS
Part Of 3T9139 Wiper
An Attachment

CAB, GAUGES AND ACCESSORIES

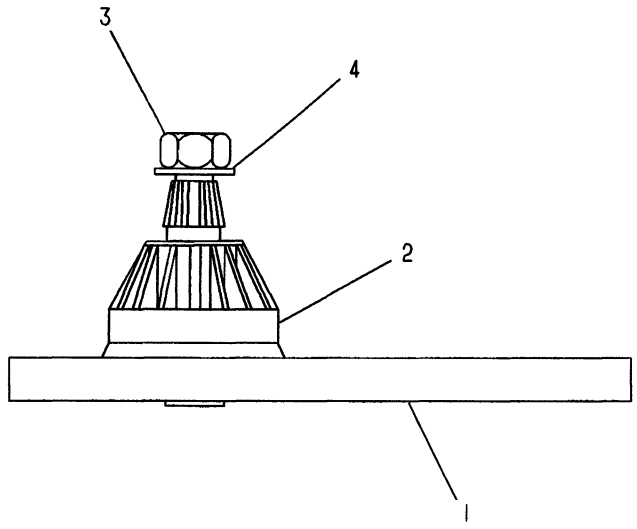

NOTE	REF NO	PART NUMBER	QTY	PART NAME
	1	6V6207	1	SHAFT AS-PIVOT
	2	6V6209	1	CAP
M	3	5C7267	1	NUT (M6X1 THD)
				-OR-
M		6V6889	1	NUT (M8X1.25 THD)
C		6V6210	1	GASKET-SHAFT
	4	6A9718	1	WASHER

C-CHANGE FROM PREVIOUS TYPE
M-METRIC PART

A-525430 EP

7305 **6V6561 WIPER PIVOT GP**
Part Of 3T9139 Wiper
An Attachment

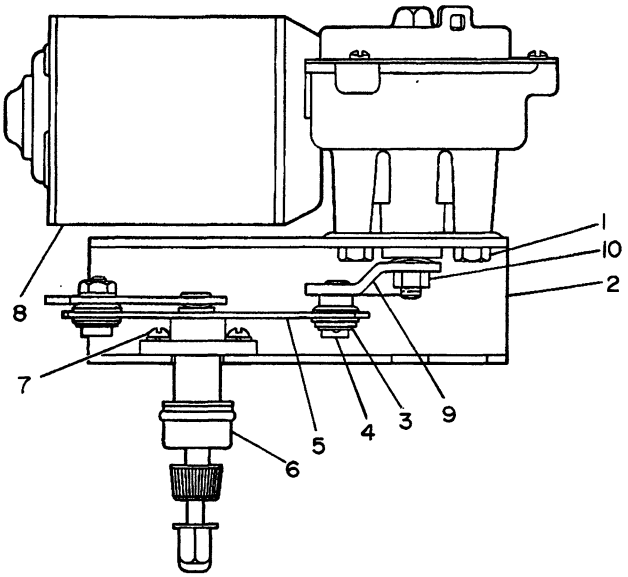

NOTE	REF NO	PART NUMBER	QTY	PART NAME
	1	0S1570	3	BOLT
		1H3338	3	LOCKWASHER
	2	4D7417	1	BRACKET
	3	4D7416	2	WASHER
	4	4D7411	2	CLIP-SPRING
	5	4D7408	1	LINK-CONNECTING
Y	6	9K0682	1	SHAFT & LINK AS
	7	8F1315	2	SCREW AS-MACHINE
	8	9G9316	1	MOTOR AS-WIPER
C	9	6K5499	1	ARM-DRIVE
	10	1B4201	1	NUT-FULL
		7F9223	1	LOCKWASHER
		4D7421	1	WASHER-SPRING

C-CHANGE FROM PREVIOUS TYPE
Y-SEPARATE ILLUSTRATION

B-306527 EP

7305 **3T0175 WIPER GP-FRONT-24 VOLT**
9K0682-Page 314. Part Of 3T0637 Wiper
For Field Replacement Order 6T7295-Page 313.02.
An Attachment

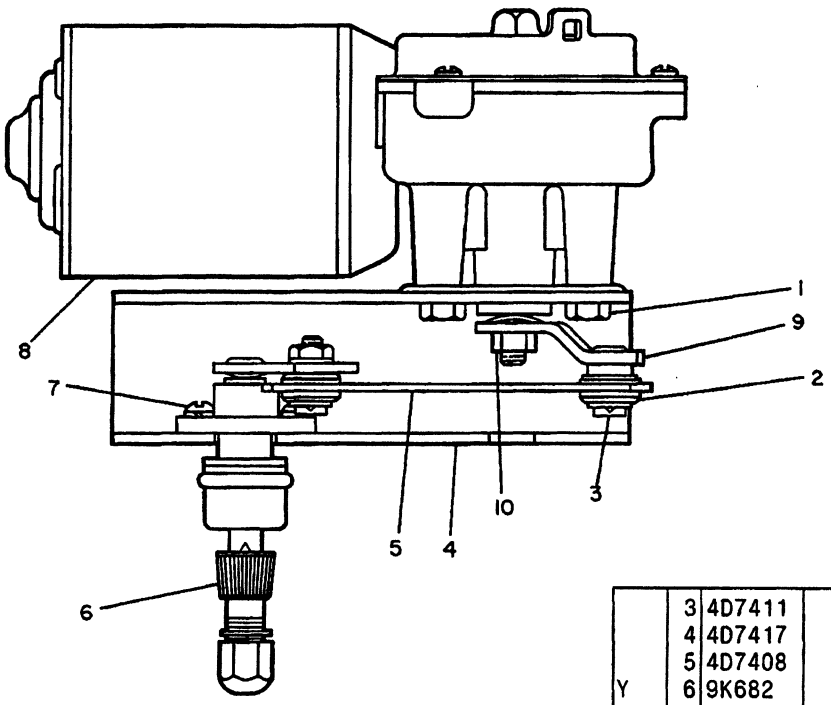

NOTE	REF NO	PART NUMBER	QTY	DESCRIPTION
	1	S1570	3	BOLT
		1H3338	3	LOCKWASHER
	2	4D7416	2	WASHER
	3	4D7411	2	CLIP
	4	4D7417	1	BRACKET
	5	4D7408	1	LINK
Y	6	9K682	1	SHAFT & PIVOT AS.
	7	8F1315	2	SCREW AS.
	8	9G9316	1	MOTOR AS.
C	9	6K5499	1	ARM
	10	1B4201	1	NUT
		7F9223	1	LOCKWASHER
		4D7421	1	WASHER

C INDICATES CHANGE

Y SEPARATE ILLUSTRATION

315848

315848 EP

7305

3T0174 WIPER GP-REAR-24 VOLT

9K0682-Page 314. Part Of 3T0637 Wiper
Field Replacement Order 6T7295-Page 313.02
An Attachment

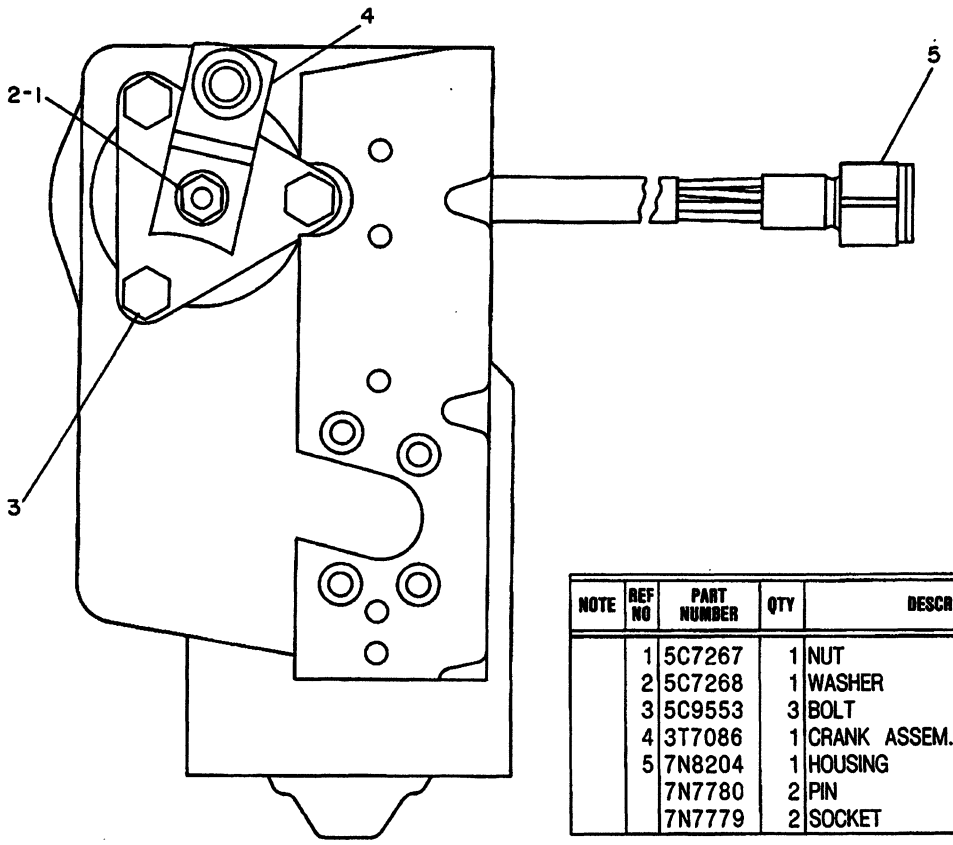

NOTE	REF NO	PART NUMBER	QTY	DESCRIPTION
	1	5C7267	1	NUT
	2	5C7268	1	WASHER
	3	5C9553	3	BOLT
	4	3T7086	1	CRANK ASSEM.
	5	7N8204	1	HOUSING
		7N7780	2	PIN
		7N7779	2	SOCKET

310523

310523 P

7305

3T7057 WIPER GP-24 VOLT-FRONT-PARK POSITION

Replaced By 3T7064-Page 313C
Part Of 3T9139 Wiper
An Attachment

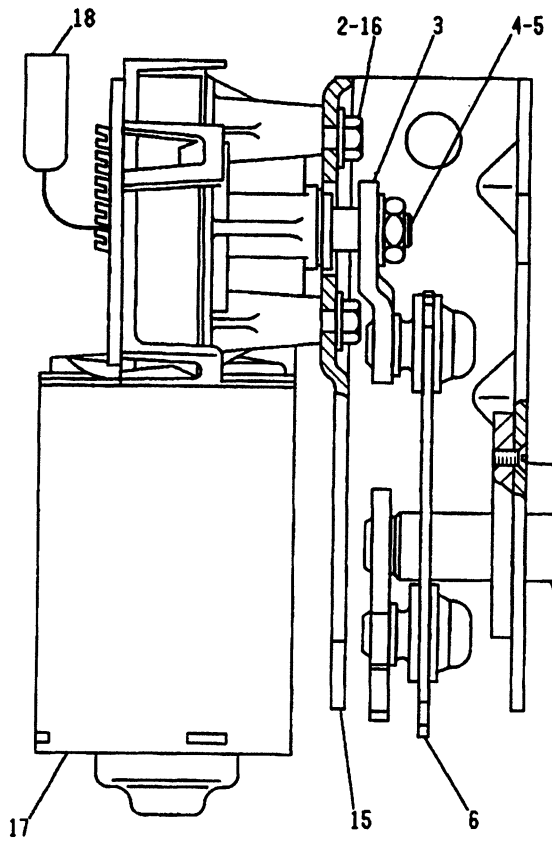

NOTE	REF NO	PART NUMBER	QTY	DESCRIPTION
	1	1V3658	1	DRIVER
	2	5C9553	3	BOLT
	3	3T7086	1	CRANK AS.
	4	6V6889	1	NUT
	5	6V6888	1	WASHER
	6	6V6208	1	LINK
	7	3C1884	4	SCREW
	8	6T6712	1	SHAFT AS. (DRIVE)
	9	1V3657	1	CAP
	10	1V3656	1	NUT
	11	4B1550	1	WASHER
	12	9S8016	1	GASKET
	13	8D237	1	NUT
	14	9F5644	1	LOCKWASHER
	15	3T7059	1	BRACKET
	16	5P537	3	WASHER
	17	6T6217	1	MOTOR AS. (WIPER-24 VOLT)
	18	7K4475	3	TERMINAL AS.

315850

A-315850 EP

7305

6T7295 WIPER GP-24 VOLT

Field Replacement For 3T0174-Page 313
3T0175-Page 312D

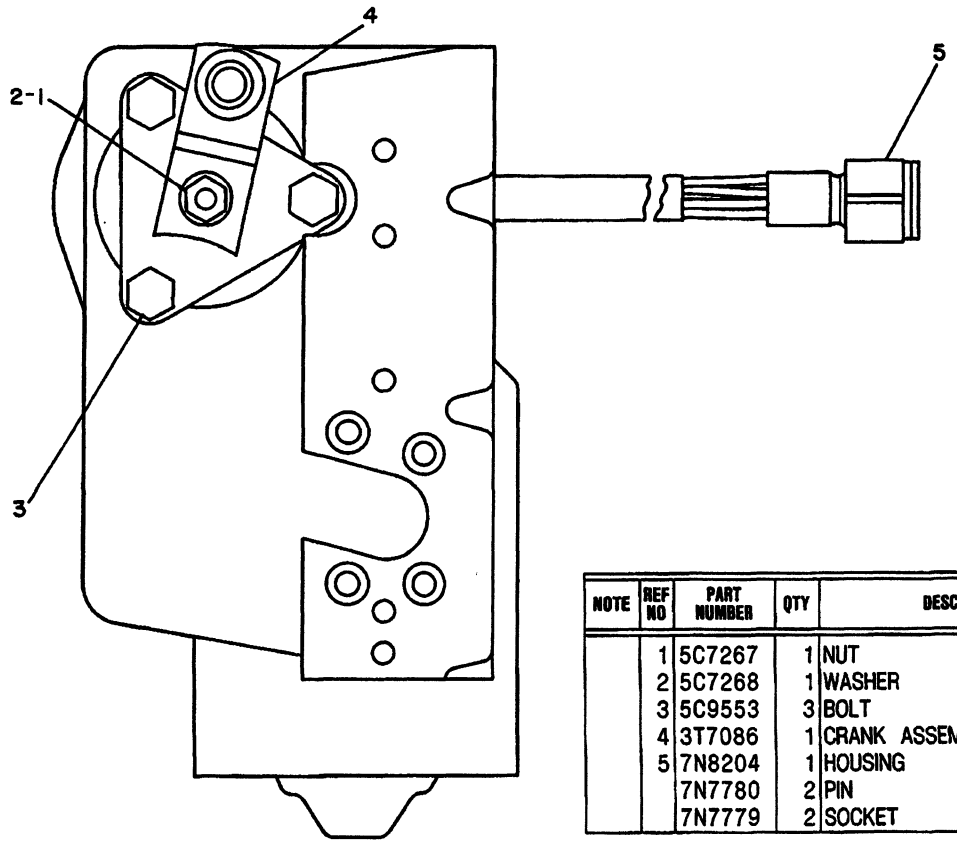

NOTE	REF NO	PART NUMBER	QTY	DESCRIPTION
	1	5C7267	1	NUT
	2	5C7268	1	WASHER
	3	5C9553	3	BOLT
	4	3T7086	1	CRANK ASSEM.
	5	7N8204	1	HOUSING
		7N7780	2	PIN
		7N7779	2	SOCKET

310524

310524 P

7305

3T7058 WIPER GP-24 VOLT-PARK POSITION

Replaced By 3T7063-Page 313B
Part Of 3T9139 Wiper
An Attachment

NOTE	REF NO	PART NUMBER	QTY	DESCRIPTION
	1	6V6889	1	NUT
	2	6A9718	1	WASHER

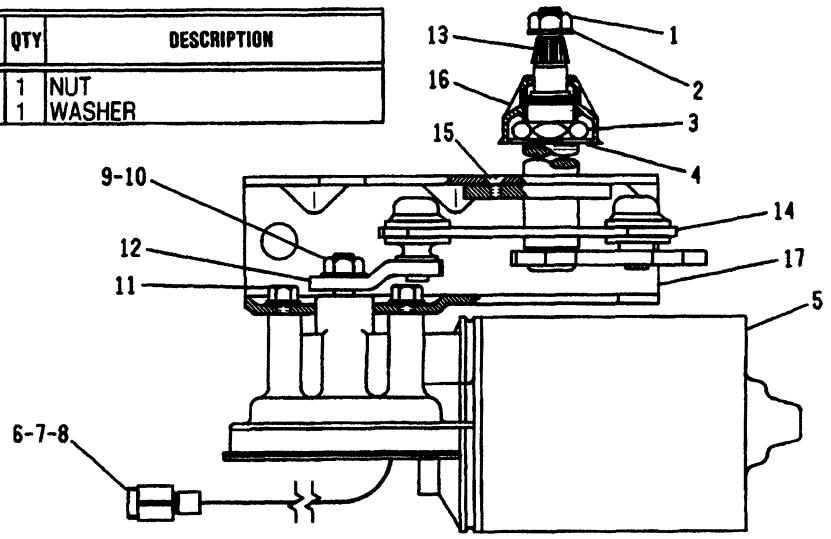

	3	6V6213	1	NUT
	4	6V6214	1	WASHER
	5	3T189	1	MOTOR ASSEM.
	6	7N8204	1	HOUSING
	7	7N7780	2	PIN
	8	7N7779	2	SOCKET
	9	6V6889	1	NUT
	10	6V6888	1	WASHER

	11	5C9553	3	BOLT
	12	3T7086	1	CRANK ASSEM.
	13	6V6206	1	SHAFT ASSEM.
	14	6V6208	1	LINK ASSEM.
	15	3C1884	4	SCREW
	16	6V6209	1	CAP
	17	3T7059	1	BRACKET

* 312847

A- 312847 P

7305 **3T7063 WIPER GP-24 VOLT-FRONT**

Type 1
Part Of 3T9139 Wiper
An Attachment

CAB, GAUGES AND ACCESSORIES

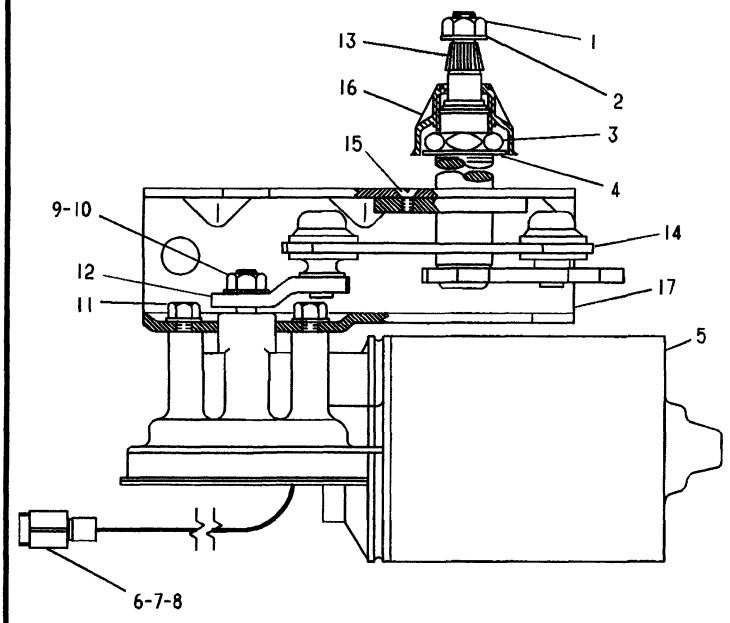

NOTE	REF NO	PART NUMBER	QTY	PART NAME
M	1	6V6889	1	NUT
	2	6A9718	1	WASHER
M	3	6V6213	1	NUT
	4	6V6214	1	WASHER
	5	3T0189	1	MOTOR AS-WIPER
	6	7N8204	1	HOUSING-RECEPTACLE
	7	7N7780	2	PIN-CONNECTOR
	8	7N7779	2	SOCKET
M	9	6V6889	1	NUT
	10	6V6888	1	WASHER-SPRING
M	11	5C9553	3	BOLT
	12	3T7086	1	CRANK AS
	13	6V6206	1	SHAFT AS-DRIVE
	14	6V6208	1	LINK-CONNECTING
M	15	3C1884	4	SCREW-MACHINE
	16	6V6209	1	CAP
	17	3T7059	1	BRACKET

M-METRIC PART

A-312848 EP

7305 **3T7064 WIPER GP-24 VOLT**

Type 1
Part Of 3T9139 Wiper
An Attachment

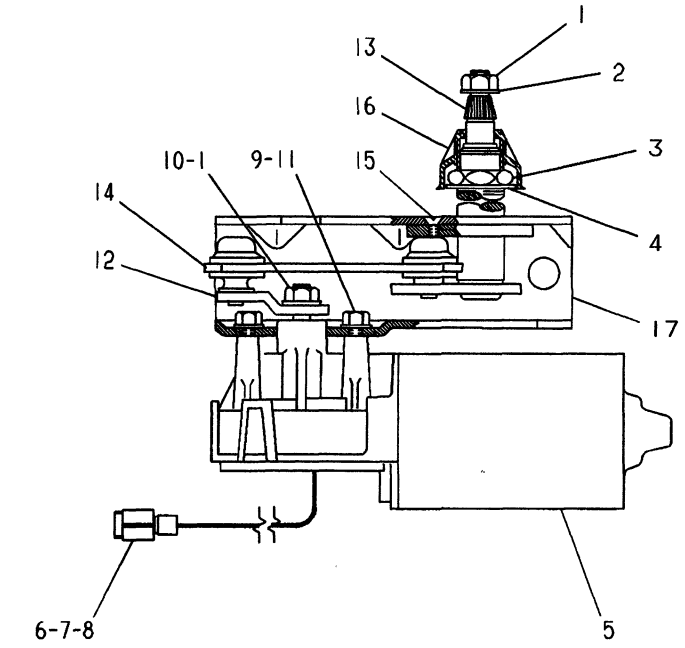

NOTE	REF NO	PART NUMBER	QTY	PART NAME
	1	6V6889	2	NUT
	2	6A9718	1	WASHER
	3	6V6213	1	NUT
	4	6V6214	1	WASHER
C	5	6T6216	1	MOTOR AS-WIPER
	6	7N8204	1	HOUSING-RECEPTACLE
	7	7N7780	2	PIN-CONNECTOR
	8	7N7779	2	SOCKET
C	9	5P0537	3	WASHER
	10	6V6888	1	WASHER-SPRING
	11	5C9553	3	BOLT
	12	3T7086	1	CRANK AS
	13	6V6206	1	SHAFT AS-DRIVE
	14	6V6208	1	LINK-CONNECTING
	15	3C1884	4	SCREW-MACHINE
	16	6V6209	1	CAP
	17	3T7059	1	BRACKET

C-CHANGE FROM PREVIOUS TYPE

A-325533 EP

7305 **3T7063 WIPER GP-24 VOLT-FRONT**

Type 2
Part Of 3T9139 Wiper
An Attachment

PAGE

1 7X1982 WIPER GP..... 313E

1 7X1983 WIPER GP..... 313E

470871 P

7305

3T7064 WIPER GP-SENSOR-24 VOLT

Type 2

Part Of 3T9139 Wiper

An Attachment

CAB, GAUGES AND ACCESSORIES

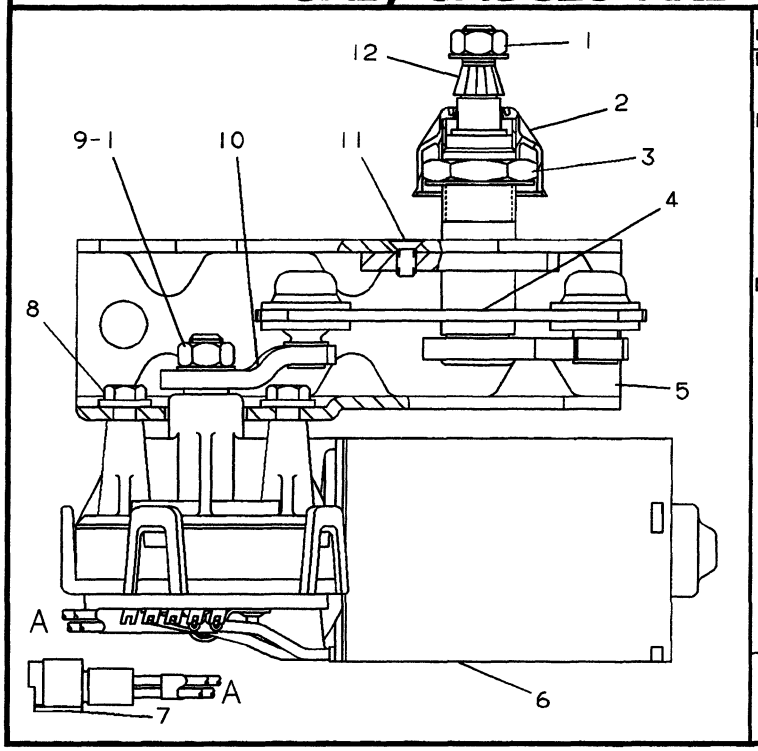

NOTE	REF NO	PART NUMBER	QTY	PART NAME
M	1	6V6889	2	NUT
		6A9718	1	WASHER
	2	6V6209	1	CAP
M	3	6V6213	1	NUT
		6V6214	1	WASHER
	4	6V6208	1	LINK-CONNECTING
	5	3T7059	1	BRACKET
	6	6T6216	1	MOTOR AS-WIPER
	7	7N8204	1	HOUSING-RECEPTACLE
		7N7780	2	PIN-CONNECTOR
		7N7779	2	SOCKET
M	8	5C9553	3	BOLT
		5P0537	3	WASHER
	9	6V6888	1	WASHER-SPRING
	10	3T7086	1	CRANK AS
	11	3C1884	4	SCREW-MACHINE
	12	6V6206	1	SHAFT AS-DRIVE

M-METRIC PART

C-470863 EP

7305 **7X1982 WIPER GP**
24 Volt
Part Of 3T7064 Wiper-Sensor

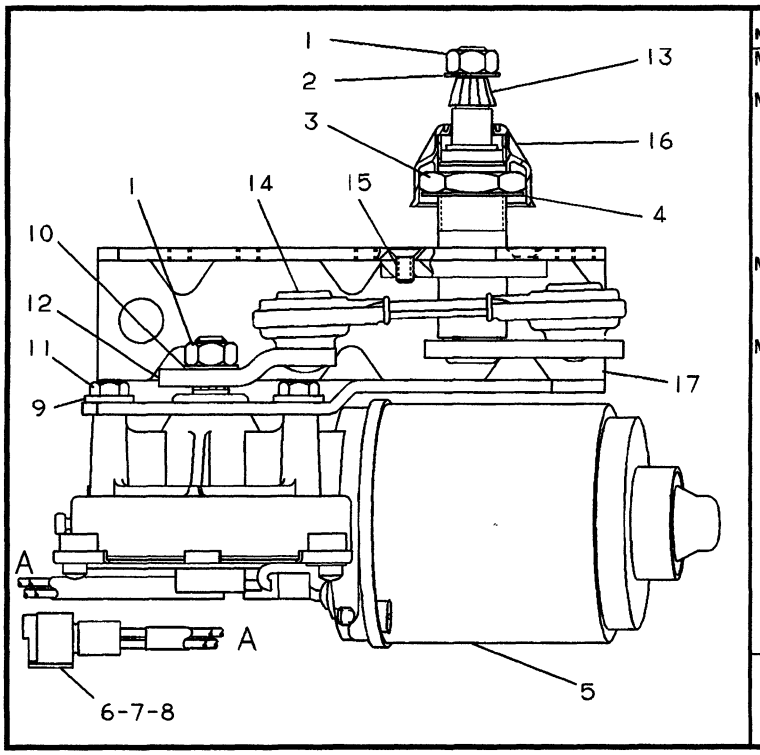

NOTE	REF NO	PART NUMBER	QTY	PART NAME
M	1	6V6889	2	NUT
	2	6A9718	1	WASHER
M	3	6V6213	1	NUT
	4	6V6214	1	WASHER
	5	7X1984	1	MOTOR AS-WIPER
	6	7N8204	1	HOUSING-RECEPTACLE
	7	7N7780	2	PIN-CONNECTOR
	8	7N7779	2	SOCKET
	9	5P0537	3	WASHER
	10	6V6888	1	WASHER-SPRING
M	11	5C9553	3	BOLT
	12	7X1986	1	CRANK AS
	13	7X6145	1	SHAFT AS-DRIVE
	14	7X6146	1	LINK-CONNECTING
M	15	3C1884	4	SCREW-MACHINE
	16	9W0760	1	CAP
	17	7X1985	1	BRACKET

M-METRIC PART

C-470864 EP

7305 **7X1983 WIPER GP**
24 Volt
Part Of 3T7064 Wiper-Sensor

MEMORANDA

CAB, GAUGES AND ACCESSORIES

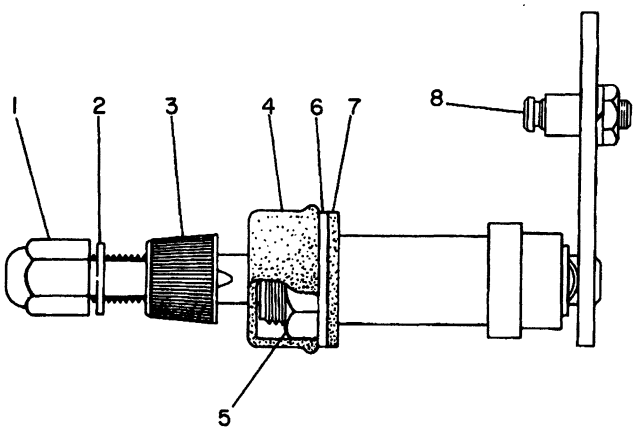

NOTE	REF NO	PART NUMBER	QTY	PART NAME
	1	8D0237	1	NUT-ACORN
	2	9F5644	1	LOCKWASHER
	3	1V3658	1	DRIVER
	4	1V3657	1	CAP
	5	1V3656	1	NUT
	6	4B1550	1	WASHER
	7	9S8016	1	GASKET
	8	1V3655	1	STUD-CRANK
		9M1311	1	NUT-JAM
		1H3244	1	LOCKWASHER

B-119884 EP

7305

9K0682 SHAFT & LINK AS
Part Of 3T0174,3T0175 Wipers
An Attachment

CAB, GAUGES AND ACCESSORIES

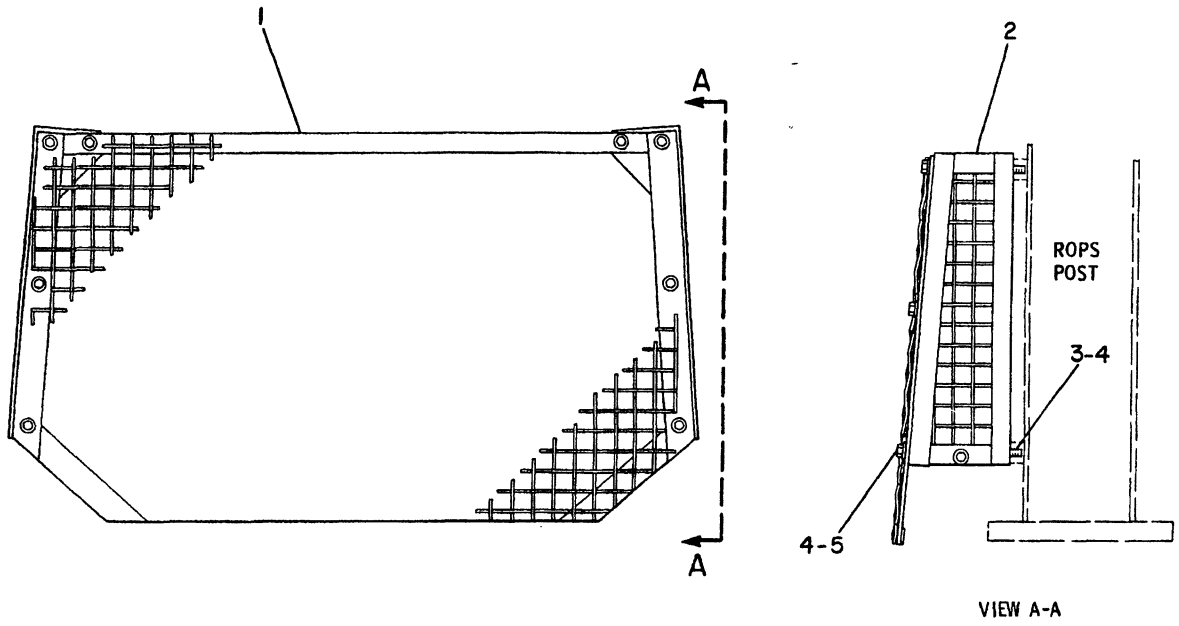

NOTE	REF NO	PART NUMBER	QTY	PART NAME	NOTE	REF NO	PART NUMBER	QTY	PART NAME
	1	3T2596	1	SCREEN AS					
	2	3T2598	1	BRACKET AS (RH)					
		3T2597	1	BRACKET AS (LH)					
	3	0S1626	4	BOLT					
	4	5P8248	20	WASHER-HARD					
	5	1A0458	8	BOLT					
		1B4331	8	NUT					

B-350125 EP

7165 **3T2595 SCREEN GP-CAB PROTECTIVE**
An Attachment

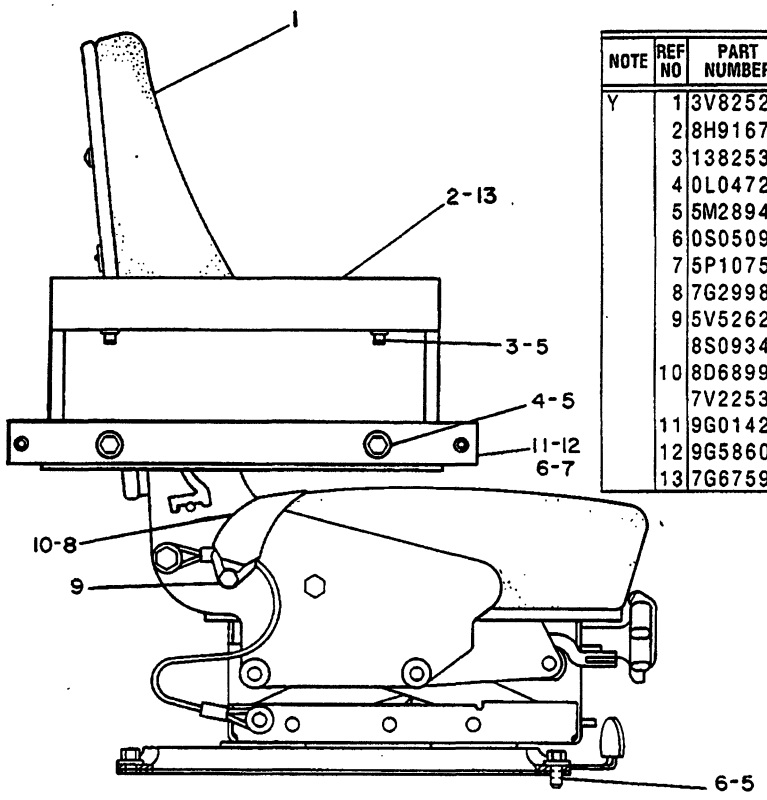

NOTE	REF NO	PART NUMBER	QTY	PART NAME
Y	1	3V8252	1	SEAT GP-SUSPENSION
	2	8H9167	1	CUSHION AS-SIDE (R.H.)
	3	138253	4	BOLT-SOCKET HEAD
	4	0L0472	4	BOLT
	5	5M2894	12	WASHER
	6	0S0509	8	BOLT
	7	5P1075	4	WASHER
	8	7G2998	1	BELT GP-SEAT
	9	5V5262	2	BOLT-SHOULDER
		8S0934	2	LOCKNUT-FLANGE
	10	8D6899	1	SEAT BELT GP
		7V2253	2	SLIDE
	11	9G0142	1	PLATE 40MM(1.6IN)WIDE
	12	9G5860	1	PLATE 80MM(3.2IN)WIDE
	13	7G6759	1	CUSHION AS-SIDE (L.H.)

Y SEPARATE ILLUSTRATION

355737

355737 P

7312

7G6824 SEAT GP-CUSHION

Refer To Page 316.01 For S/N
3V8252-Page 317

53Y1-1458,1460-1469,1471,1475-1481,1483,
1485-1487,1489,1490,1492,1493,1495-1500,
1502,1503,1505-1507,1509-1511,1513-1515,
1517-1521,1524-1526,1528-1530,1532,1535,
1536,1544,1547,1551,1554,1557,1561,1565,
1567,1574,1579,1580,1582,1585,1587,1594,
1599,1615,1616,1619,1624,1632,1642,1659

REFER TO PAGE 316 UPPER FOR ILLUSTRATION

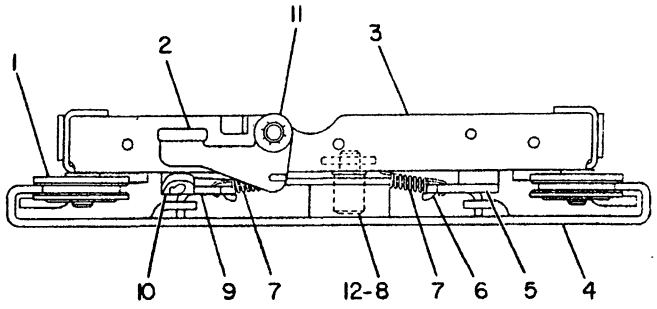

NOTE	REF NO	PART NUMBER	QTY	PART NAME
	1	4V7861	4	ROLLER AS (EACH INCLUDES)
		8D4146	1	BALL BEARING
	2	4V7860	1	LEVER
	3	4V7851	1	HOUSING AS-LOWER
	4	4V7850	1	PLATE-SLIDE TRACK
	5	4V7855	1	LATCH AS
	6	4V7881	1	ROD-LATCH
	7	4V8256	2	SPRING
C	8	138289	1	BOLT
	9	4V7859	1	ROD-LATCH
	10	4V7857	1	LATCH AS
	11	5V1497	7	RETAINER
C	12	1B6182	1	SPACER

C-CHANGE FROM PREVIOUS TYPE

B-233469 EP

7312 **4V7849 SEAT GP-ADUSTABLE SUSPENSION**
Refer To Page 319B.01 For S/N
Part Of 5V4861 Seat Suspension

MEMORANDA

CAB, GAUGES AND ACCESSORIES

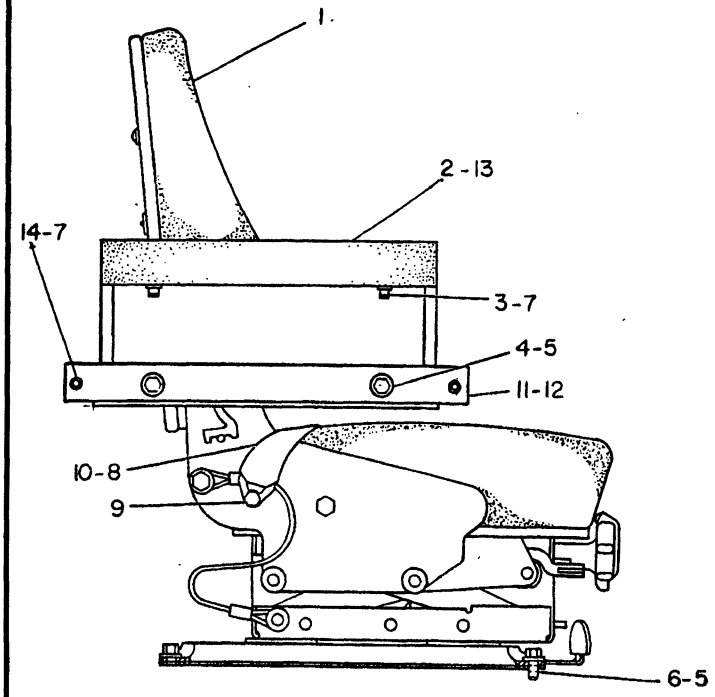

NOTE	REF NO	PART NUMBER	QTY	PART NAME
Y	1	3V8252	1	SEAT GP-SUSPENSION
C	2	6T0069	1	CUSHION AS-BACKREST (RH)
	3	138253	4	BOLT-SOCKET HEAD
	4	0L0472	4	BOLT
C	5	5M2894	8	WASHER
	6	0S0509	4	BOLT
C	7	5P1075	8	WASHER-HARD
	8	7G2998	1	SEAT BELT GP
	9	5V5262	2	BOLT-SHOULDER
		8S0934	2	LOCKNUT-FLANGE
	10	8D6899	1	SEAT BELT GP
		7V2253	2	SLIDE
	11	9G0142	1	PLATE 40MM(1.6 IN)WIDE
	12	9G5860	1	PLATE 80MM(3.2 IN)WIDE
C	13	3T4920	1	CUSHION AS-BACKREST (LH)
C	14	0T0102	4	BOLT

C-CHANGE FROM PREVIOUS TYPE
Y-SEPARATE ILLUSTRATION

B-355759 EP

7312 **7G6824 SEAT GP**

Refer To Page 316A Lower For S/N
3V8252-Page 317

53Y1459,1470,1472-1474,1482,1484,1488,
1491,1494,1501,1504,1508,1512,1516,1522,
1523,1527,1531,1533,1534,1537-1543,1545,
1546,154801550,1552,1553,1555,1556,1558-
1560,1562-1564,1566,1568-1573,1575-1578,
1581,1583,1584,1586,1588-1593,1595-1598,
1600-1614,1617,1618,1620-1623,1625-1631,
1633,1633-1641,1643-1658,1660-4492,4494-
4510,4512-4536,4538-4540,4542-4544,4546-
4548,4550-4555,4558-4574,4576,4578,4580-
4582,4584,4585,4587,4588,4590-4593,4595-
4598,4600-4612,4614-4616,4620,4621,4624,
4625,4628,4629,4631,4633,4634,4636,4639-
4641,4645,4648,4650-4652,4654-4659,4665,
4669-4671,4673-4675,4677,4679-4683,4685-
4689,4691,4693-4695,4699,4701,4703-4718

REFER TO PAGE 316A UPPER FOR ILLUSTRATION

CAB, GAUGES AND ACCESSORIES

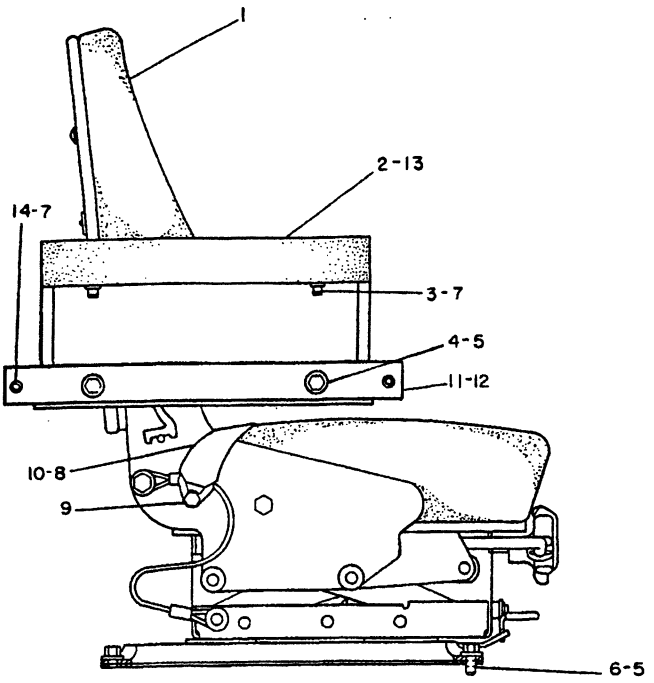

NOTE	REF NO	PART NUMBER	QTY	PART NAME
CY	1	6W9744	1	SEAT GP-SUSPENSION
C	2	6T0069	1	CUSHION AS-BACKREST (RH)
C	3	8C3992	4	BOLT-SOCKET HEAD
C	4	8T8906	4	BOLT
C	5	8T4896	8	WASHER-HARD
C	6	5M3062	4	BOLT
C	7	5P1075	8	WASHER-HARD
	8	7G2998	1	SEAT BELT GP
	9	5V5262	2	BOLT-SHOULDER
		8S0934	2	LOCKNUT-FLANGE
	10	8D6899	1	SEAT BELT GP
		7V2253	2	SLIDE
	11	9G0142	1	PLATE 40MM(1.6 IN)WIDE
	12	9G5860	1	PLATE 80MM(3.2 IN)WIDE
C	13	3T4920	1	CUSHION AS-BACKREST (LH)
C	14	5P8167	4	BOLT

C-CHANGE FROM PREVIOUS TYPE
Y-SEPARATE ILLUSTRATION

B-355765 EP

7312

7G6824 SEAT GP

Refer To Page 315B Lower For S/N
6W9744-Page 317.02

53Y4493,4511,4537,4541,4545,4549,4556,
5667,4575,4577,4579,4583,4586,4589,
4594,4599, 4613,4617-4619,4622,4623,
4626,4627,4630,4632,4635,4637,4638,4642-
4644,4646,4647,4649,4653,4660-4664,4666-
4668,4672,4676,4678,4684,4690, 4692,4696
-4698,4700,5702 & 4719

REFER TO PAGE 316B UPPER FOR ILLUSTRATION

CAB, GAUGES AND ACCESSORIES

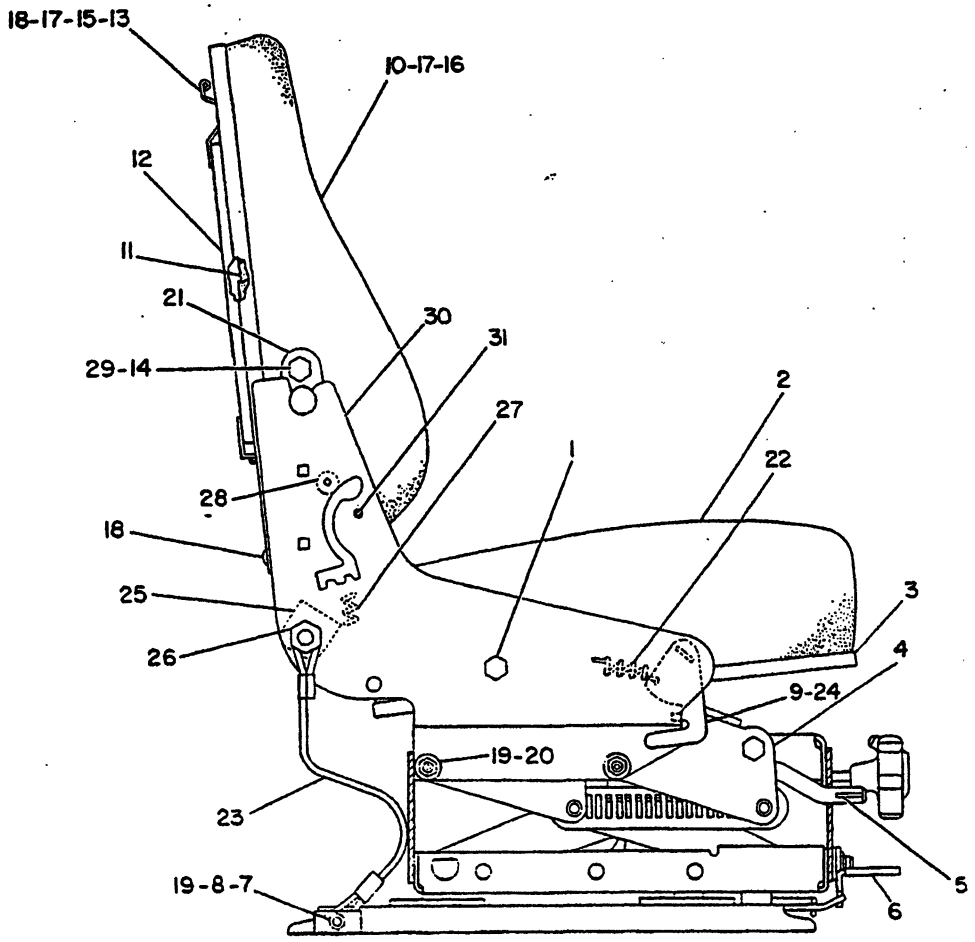

NOTE	REF NO	PART NUMBER	QTY	PART NAME
	1	5P2566	2	BOLT (1/2-13X1.50IN)
		4V8586	2	SPACER
	2	4V8271	1	CUSHION AS-SEAT
		8V2065	1	PAD AS
	3	4V8579	1	CLIP
Y	4	5V4861	1	SUSPENSION GP-SEAT
	5	4V7896	1	CAP
	6	4V7865	1	CAP
	7	5S7379	2	BOLT (3/8-16X.875IN)
	8	4V8605	2	SPACER
	9	7V3728	1	LATCH AS
	10	4V8259	1	CUSHION AS-BACKREST
C		8V2063	1	PAD AS
C		5P7957	1	LANYARD
		5V1496	19	RETAINER
BD	11	6V1584		SEAL
	12	4V7902	1	PAN AS
		4V7903	1	PAN
		4V8023	1	LID
	13	4V8585	1	LATCH
	14	5V1584	4	NUT-CLINCH
	15	8V0725	1	CLIP
	16	5V0017	9	RIVET-FLAT HEAD
	17	7K6536	14	RIVET-POP
	18	4V8579	1	CLIP
	19	2K4973	6	LOCKNUT (3/8-16 THD)
	20	4B4278	4	WASHER (1.6MM THK)
	21	4V7904	1	PLATE AS-RH
		4V7908	1	PLATE AS-LH
	22	4V8256	2	SPRING
	23	4V8032	2	CABLE
	24	4V8035	1	CAP
	25	4V8033	1	BAR
	26	4V8034	2	BOLT
		5V1499	2	NUT-CLINCH
		4B4281	2	WASHER 16MM(.625IN)BOLT
		4B4280	2	WASHER 18MM(.50IN)BOLT
	27	4V8031	2	SPRING
	28	5V1498	2	LOCKNUT
		307571	2	BOLT
	29	5M3062	2	BOLT (3/8-16X.750IN)
	30	4V8029	1	BRACKET AS-RH
		4V8026	1	BRACKET AS-LH
	31	1A2036	1	DOWEL
AF		5P7958	1	SLEEVE-CABLE SPLICE

A-NOT PART OF THIS GROUP
B-USE AS REQUIRED
C-CHANGE FROM PREVIOUS TYPE
D-ORDER BY THE METER
F-NOT SHOWN
Y-SEPARATE ILLUSTRATION

R-320841 EP

7312 **3V8252 SEAT GP-SUSPENSION-VINYL**

Refer To Page 317.01 For S/N
5V4861-Page 318
Part Of 7G6824 Seat & Cushion

CAB, GAUGES AND ACCESSORIES

53Y1-4492,4494-1510,4512-4536,4538-4540,
4542-4544,4546-4548,4550-4555,4558-4574,
4576,4578,4580-4582,4584,4585,4587,4588,
4590-4593,4595-4598,4600-4612,4614-46116
,46204621,4624,4625,4628,4629,4631,4633,
4634,4636,4639-4641,4645,4648,4650-4652,
4654-4659,4665,4669-4671,4673-4675,4677,
4679-4683,4685-4689,4691,4693-4695,4699,
4701,4703-4718

REFER TO PAGE 317 FOR ILLUSTRATION

CAB, GAUGES AND ACCESSORIES

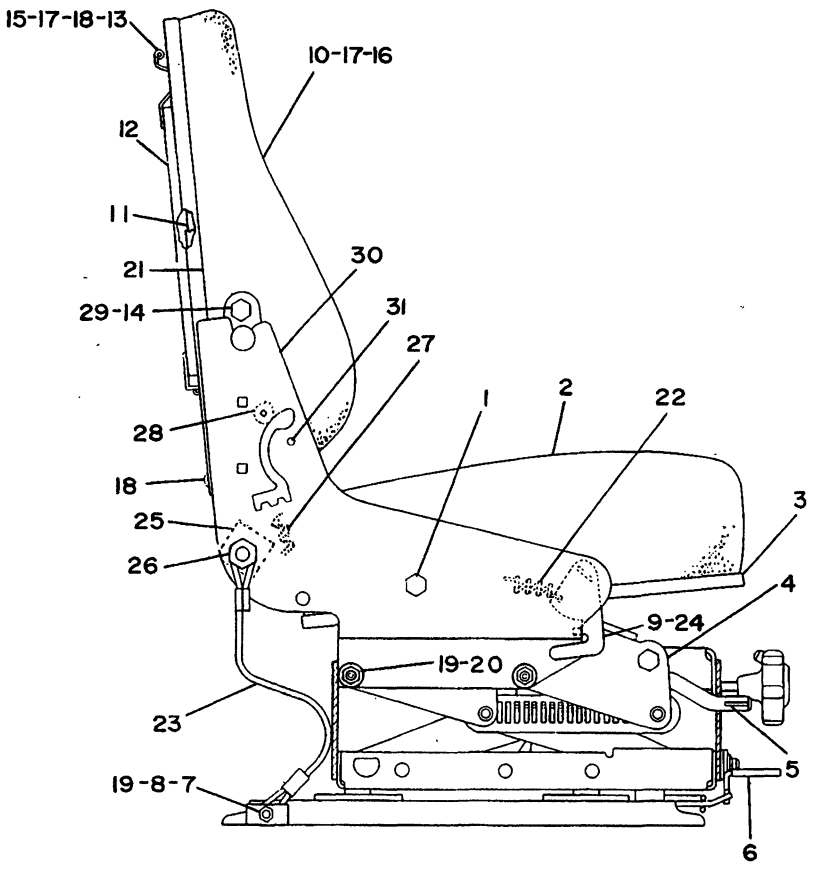

NOTE	REF NO	PART NUMBER	QTY	PART NAME
	1	5P2566	2	BOLT (1/2-13X1.50IN)
		4V8586	2	SPACER
	2	4V8271	1	CUSHION AS-SEAT
		8V2065	1	PAD AS
	3	4V8579	1	CLIP
Y	4	6W8502	1	SUSPENSION GP-SEAT
	5	4V7896	1	CAP
	6	4V7865	1	CAP
	7	5S7379	2	BOLT (3/8-16X.875IN)
	8	4V8605	2	SPACER
	9	7V3728	1	LATCH AS
	10	4V8259	1	CUSHION AS-BACKREST
		8V2063	1	PAD AS
		5P7957	1	LANYARD
		5V1496	19	RETAINER
BD	11	6V1584		SEAL
	12	4V7902	1	PAN AS
		4V7903	1	PAN
		4V8023	1	LID
	13	4V8585	1	LATCH
	14	5V1584	4	NUT-CLINCH
	15	8V0725	1	CLIP
	16	5V0017	9	RIVET-FLAT HEAD
	17	7K6536	14	RIVET-POP
	18	4V8579	1	CLIP
	19	2K4973	6	LOCKNUT (3/8-16 THD)
	20	4B4278	4	WASHER (1.6MM THK)
	21	4V7904	1	PLATE AS-RH
		4V7908	1	PLATE AS-LH
	22	4V8256	2	SPRING
	23	4V8032	2	CABLE
	24	4V8035	1	CAP
	25	4V8033	1	BAR
	26	4V8034	2	BOLT
		5V1499	2	NUT-CLINCH
		4B4281	2	WASHER 16MM(.625IN)
		4B4280	2	WASHER 18MM(.50IN)
	27	4V8031	2	SPRING
	28	5V1498	2	LOCKNUT
		307571	2	BOLT
	29	5M3062	2	BOLT (3/8-16X.750IN)
	30	4V8029	1	BRACKET AS-RH
		4V8026	1	BRACKET AS-LH
	31	1A2036	1	DOWEL
AF		5P7958	1	SLEEVE-CABLE SPLICE

A-NOT PART OF THIS GROUP
B-USE AS REQUIRED
D-ORDER BY THE METER
F-NOT SHOWN
Y-SEPARATE ILLUSTRATION

B-349948 EP

7324 **6W9744 SEAT GP-SUSPENSION-VINYL**

Refer To Page 315B Lower For S/N
6W8502-Page
Part Of 7G6824 Seat

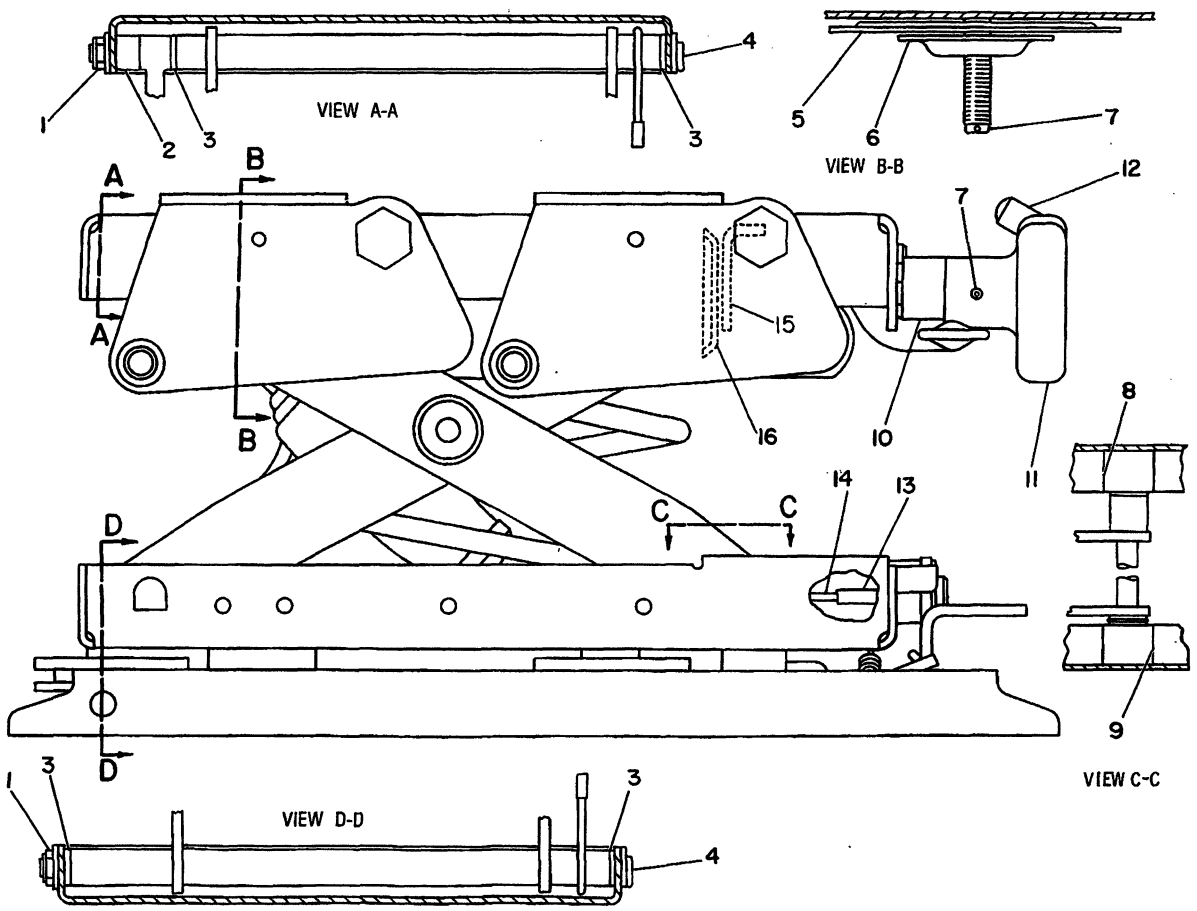

NOTE	REF NO	PART NUMBER	QTY	PART NAME	NOTE	REF NO	PART NUMBER	QTY	PART NAME
	1	5V1839	2	LOCKNUT					
	2	4V7884	1	BEARING					
	3	4V8577	4	BEARING					
	4	4V8576	2	SHAFT-GOVERNOR CONTROL					
	5	4V8566	1	GEAR AS					
		4V8561	1	WASHER					
	6	4V8562	1	PLATE AS					
	7	3K8584	2	PIN-GROOVED					
	8	4V8583	1	BLOCK					
	9	4V8257	1	BLOCK					
C	10	7V5191	1	SPACER					
	11	4V7872	1	KNOB AS-ADJUSTMENT					
		4V7873	1	KNOB					
		5V1483	1	PIN-GROOVED					
		4V7877	1	SPRING					
	12	4V7874	1	HANDLE AS					
		5V1474	1	SCREW-FORMING					
		4V7876	1	SLEEVE					
		4V7875	1	HANDLE					
	13	5H3193	1	PIN-SPRING					
	14	4V8565	1	INDICATOR					
	15	4V8554	1	BRACKET					
C	16	7V5190	1	GEAR AS					

C-CHANGE FROM PREVIOUS TYPE

B-232181 EP

7324 **5V4861 SEAT GP-SUSPENSION-PART 1 OF 2**

Type 1

Refer To Page 319B.01 For S/N

Part Of 3V8252 Seat

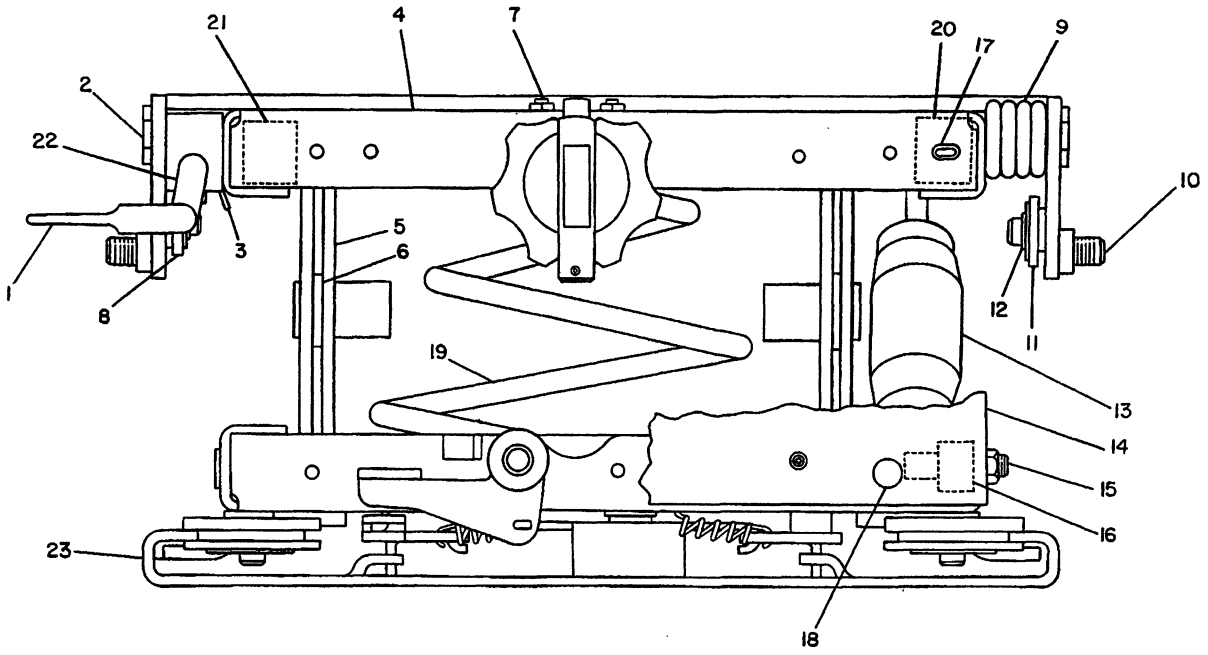

NOTE	REF NO	PART NUMBER	QTY	PART NAME	NOTE	REF NO	PART NUMBER	QTY	PART NAME
C	1	7V5507	1	LEVER					
		3L1473	1	PIN-GROOVED					
	2	5V4855	4	BOLT					
	3	4V7890	1	SPRING					
	4	4V8606	1	HOUSING AS-UPPER					
	5	5V4846	1	ARM AS					
	6	5V4845	2	BEARING					
C	7	1B2693	2	BOLT-BRAKE BAND					
		273924	2	LOCKNUT					
	8	4V8264	1	LINK					
	9	4V7895	2	SPRING					
	10	5V5233	2	LINK AS					
	11	4V8265	1	LINK					
	12	5V1497	4	RETAINER					
	13	4V7866	1	ABSORBER-SHOCK					
C	14	4V8609	1	BOOT					
	15	4V8556	1	BOLT					
		6D0047	1	LOCKNUT					
	16	4V7884	1	BEARING					
	17	4V7885	2	SLEEVE					
	18	6D4054	23	FASTENER					
	19	4V8610	1	SPRING					
	20	4V8591	1	BLOCK					
	21	4V8580	1	BLOCK					
	22	4V7891	1	LATCH AS					
Y	23	4V7849	1	ADJUSTER GP-SEAT					

C-CHANGE FROM PREVIOUS TYPE
Y-SEPARATE ILLUSTRATION

B-335039 EP

7324 **5V4861 SEAT GP-SUSPENSION-PART 2 OF 2**

Type 1

Refer To Page 319B.01 For S/N
4V7849-Page 316

Part Of 3V8252 Seat-Suspension

CAB, GAUGES AND ACCESSORIES

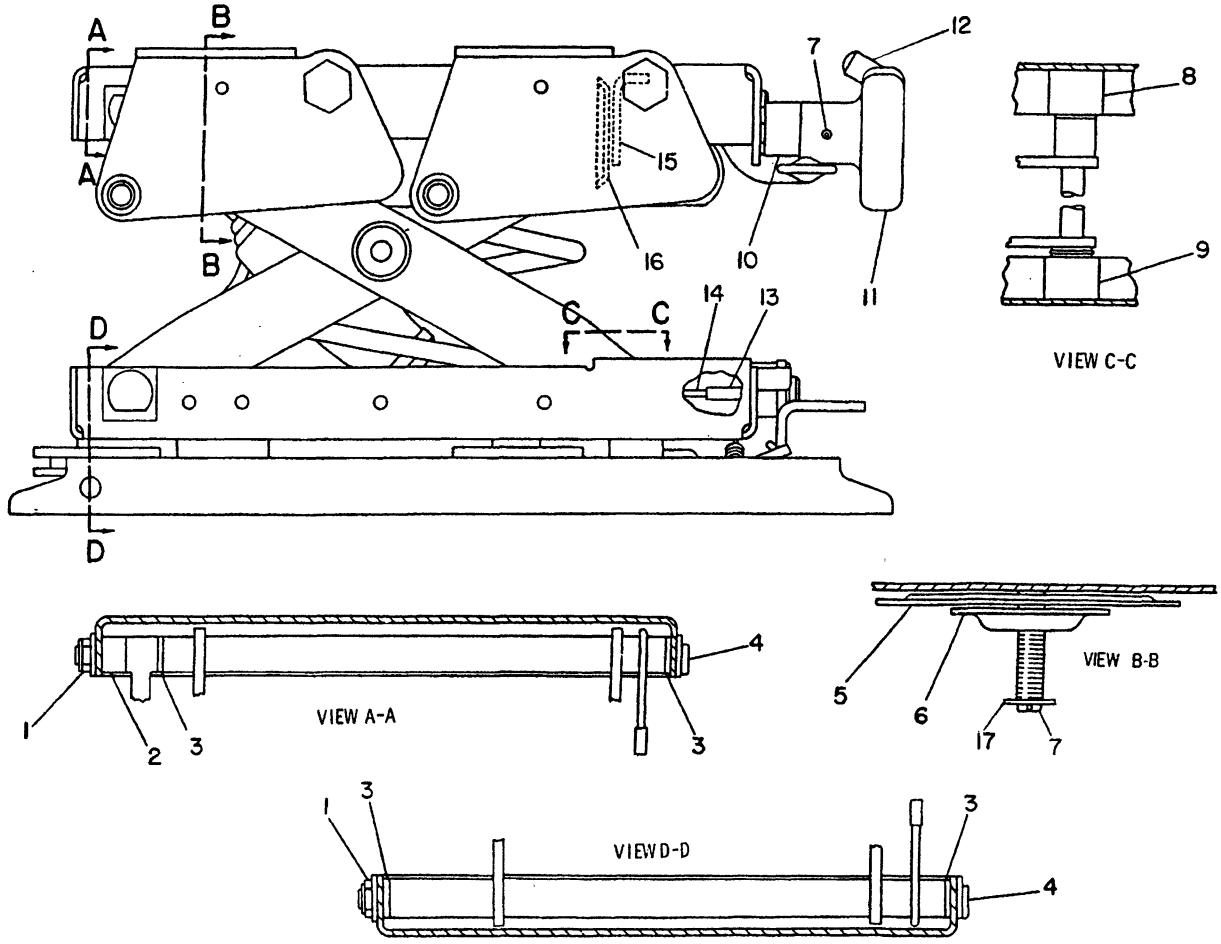

NOTE	REF NO	PART NUMBER	QTY	PART NAME
	1	5V1839	2	LOCKNUT
	2	4V7884	1	BEARING
	3	4V8577	4	BEARING
	4	4V8576	2	SHAFT-GOVERNOR CONTROL
	5	4V8566	1	GEAR AS
		4V8561	1	WASHER
	6	4V8562	1	PLATE AS
	7	3K8584	2	PIN-GROOVED
	8	4V8583	1	BLOCK
	9	4V8257	1	BLOCK
	10	7V5191	1	SPACER
	11	4V7872	1	KNOB AS-ADJUSTMENT
		4V7873	1	KNOB
		5V1483	1	PIN-GROOVED
		4V7877	1	SPRING
	12	4V7874	1	HANDLE AS
		5V1474	1	SCREW-FORMING
		4V7876	1	SLEEVE
		4V7875	1	HANDLE
	13	5H3193	1	PIN-SPRING
	14	4V8565	1	INDICATOR
	15	4V8554	1	BRACKET
	16	7V5190	1	GEAR AS
C	17	4B4281	1	WASHER

C-CHANGE FROM PREVIOUS TYPE

B-317200 EP

7324 **5V4861 SEAT GP-SUSPENSION-PART 1 OF 2**

Type 2

Refer To Page 319B.01 For S/N

Part Of 3V8252 Seat

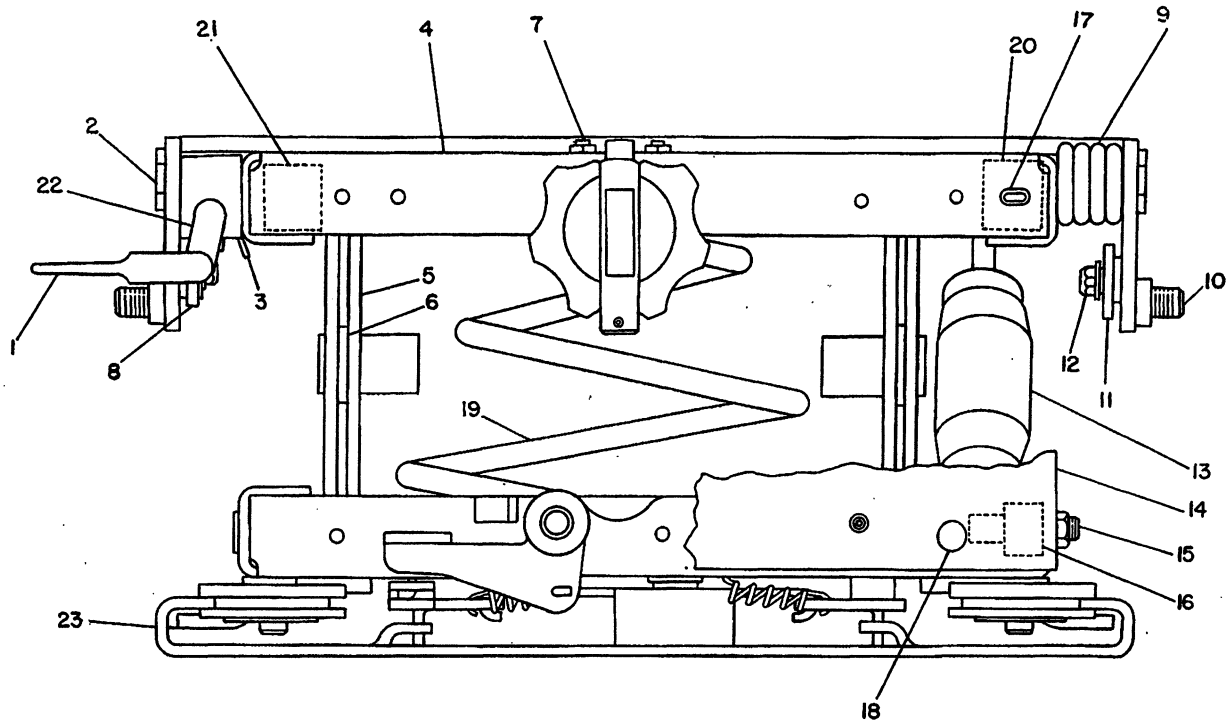

NOTE	REF NO	PART NUMBER	QTY	PART NAME	NOTE	REF NO	PART NUMBER	QTY	PART NAME
C	1	7V5507	1	LEVER (SEAT ADJ)	Y	23	4V7849	1	ADJUSTER GP-SEAT
		3L1473	1	PIN-GROOVED					
	2	5V4855	4	BOLT					
	3	4V7890	1	SPRING					
	4	4V8606	1	HOUSING AS-UPPER					
	5	5V4846	1	ARM AS					
	6	5V4845	2	BEARING					
C	7	1B2693	2	BOLT-BRAKE BAND					
		273924	2	LOCKNUT					
	8	4V8264	1	LINK					
C	9	9V7943	2	SPRING					
C	10	9V3043	2	LINK AS					
	11	4V8265	1	LINK					
C	12	2K4973	4	LOCKNUT (3/8-16 THD)					
C		4B4278	4	WASHER (1.6MM THK)					
	13	4V7866	1	ABSORBER-SHOCK					
	14	4V8609	1	BOOT					
	15	4V8556	1	BOLT					
		6D0047	1	LOCKNUT					
	16	4V7884	1	BEARING					
	17	4V8555	2	BUMPER					
C	18	9V6754	23	FASTENER					
	19	4V8610	1	SPRING					
	20	4V8591	1	BLOCK					
	21	4V8580	1	BLOCK					
	22	4V7891	1	LATCH AS					

C-CHANGE FROM PREVIOUS TYPE
Y-SEPARATE ILLUSTRATION

B-533211 EP

7324 **5V4861 SEAT GP-SUSPENSION-PART 2 OF 2**

Type 2

Refer To Page 319B.01 For S/N
4V7849-Page 316

Part Of 3V8252 Seat

CAB, GAUGES AND ACCESSORIES

53Y1-4492,4494-4510,4512-4536,4538-4540,
454204544,4546-4548,4550-4555,4558-4574,
4576,4578,4580-4582,4584,4585,4587,4588,
4590-4593,4595-4598,4600-4612,4614-4616,
4620,4621,4624,4625,4628,4629,4631,4633
4634,4636,4639-4641,4645,4648,4650-4652,
4654-4659,4665,4669-4671,4673-4675,4677,
4679-4683,4685-4689,4691,4693-4695,4699,
4701,4703-4718

REFER TO PAGES 318,319,319A,319B FOR ILLUSTRATIONS

MEMORANDA

CAB, GAUGES AND ACCESSORIES

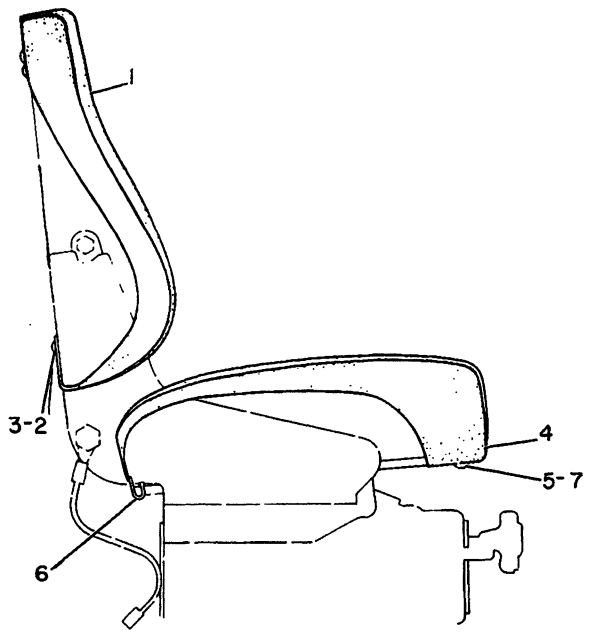

NOTE	REF NO	PART NUMBER	QTY	PART NAME
	1	4V8597	1	COVER AS
		9P6457	1	COVER (CUSHION)
	2	5V4439	6	BUTTON
	3	5V4608	6	SOCKET
	4	4V8601	1	COVER AS
		9P6458	1	COVER (CUSHION)
	5	5V4439	2	BUTTON
	6	5V0643	1	HOOK
	7	5V4608	2	SOCKET

B-174234 EP

7307 **4V9830 COVER GP-SEAT**
Type 1
Part Of 6T8696,7T2563 Cabs
An Attachment

CONSISTS OF: PAGE

1 9G5529 AIR CONDITIONER LINES GROUP..... 324

1 7N8301 CONDENSER GROUP..... 331

1 3T7286 MOUNTING AND CONDITIONER GROUP..... 321

1 9G6091 HEATER LINES GROUP..... 326

1 3T0720 REFRIGERANT COMPRESSOR GROUP..... 332

108205 P

7320 **9G2971 AIR CONDITIONER AR**
Replaced By 6T9309-Page 320A
An Attachment

CAB, GAUGES AND ACCESSORIES

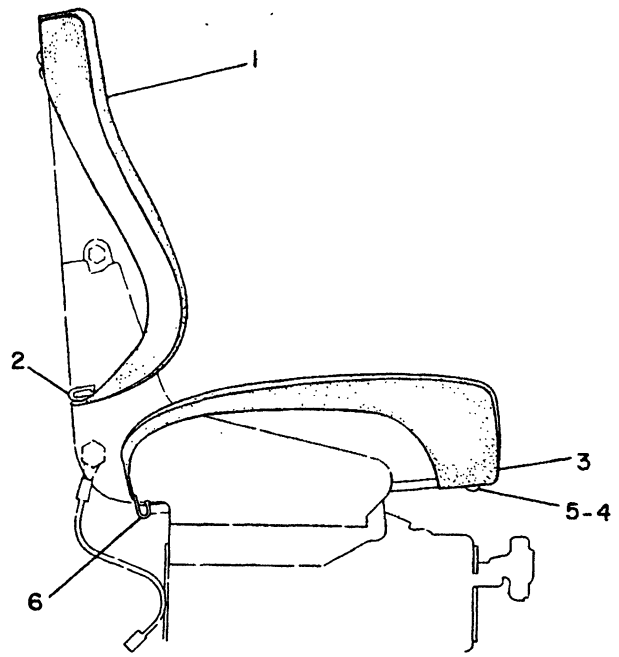

NOTE	REF NO	PART NUMBER	QTY	PART NAME
C	1	8V4880	1	COVER AS
	2	5V0643	2	HOOK
	3	4V8601	1	COVER AS
	4	5V4608	2	SOCKET
	5	5V4439	2	BUTTON
	6	5V0643	1	HOOK

C-CHANGE FROM PREVIOUS TYPE

B-342879 EP

7307 **4V9830 COVER GP-SEAT**

Type 2

Part Of 6T8696,7T2563 Cabs. For Use With 3V8252 Seat Suspension

An Attachment

PAGE

1 3T6901 AIR CONDITIONER GP..... 322
1 9G5529 LINES GP-AIR CONDITIONER..... 324
1 7N8301 CONDENSER GP..... 330B
1 3T0720 COMPRESSOR GP-REFRIGERANT..... 332
1 3T5201 BEARING--TO CONTROL PLATE
1 7G8464 ROD ASSEMBLY--TO CONTROL PLATE
CONSISTS OF:
1 3H1118 PIN
1 2V0099 KNOB--TO ROD ASSEMBLY

317288 P

7320 **6T9309 AIR CONDITIONER AR**

S/N 53Y1-3217

An Attachment

			PAGE
1	3T6901	AIR CONDITIONER GP	322
1	7T1435	LINES GP-AIR CONDITIONER	325A
1	3T0720	COMPRESSOR GP-REFRIGERANT	332
1	4W1795	RADIATOR GP	41G
1	7G8464	ROD ASSEMBLY-TO CONTROL PLATE CONSISTS OF: 1 3H1118 PIN	
1	3T5201	BEARING-TO CONTROL PLATE	
1	2V0099	KNOB-TO ROD ASSEMBLY	

317323 P

7320 **7T1442 AIR CONDITIONER AR**
S/N 53Y3218-Up
An Attachment

1	7T5182	COMPRESSOR GP	332A.01
1	6T7851	AIR CONDITIONER GP	323.01
1	7T5372	LINES GP-AIR CONDITIONER	325C
1	4W1795	RADIATOR GP	41G
1	7N8005	SWITCH	

343184 P

7320 **7T5371 AIR CONDITIONER AR**
An Attachment

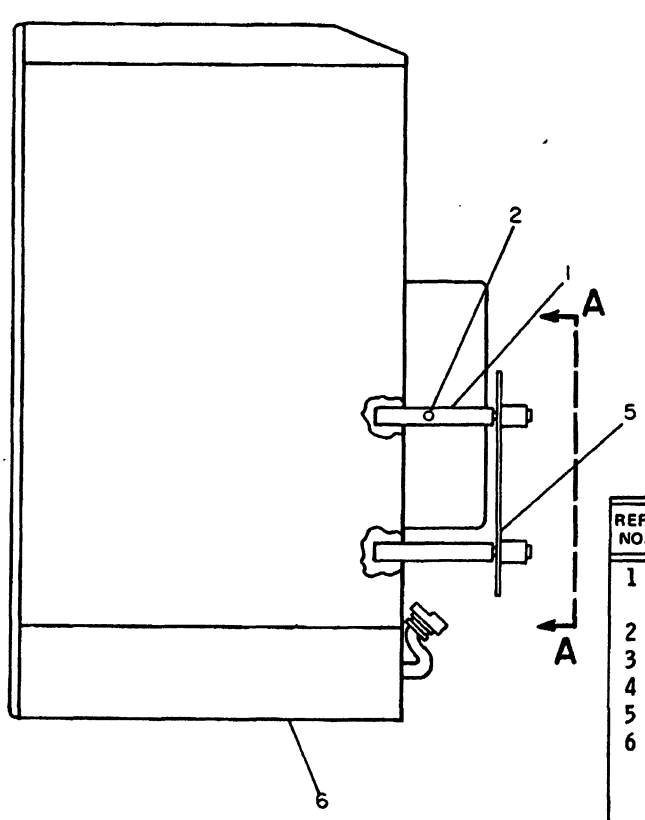

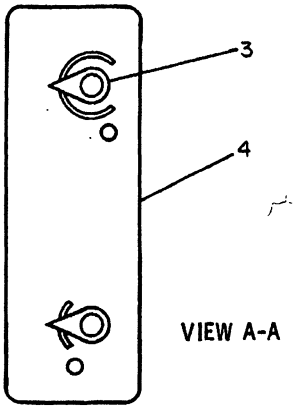

REF. NO.	PART NUMBER	DESCRIPTION	QTY.
1	7G8464	ROD ASSEM. (Each Includes)	2
2	3H1118	PIN	1
3	2V99	KNOB	2
4	7G8292	PLATE	1
5	3T5201	BEARING	2
6	3T6901	CONDITIONER GROUP (Separate Illustration)	1

235948

235948 P

7320 **3T7286 AIR CONDITIONER & MOUNTING GP**

3T6901-Page 322

Part Of 9G2971 Air Conditioner Ar

An Attachment

CAB, GAUGES AND ACCESSORIES

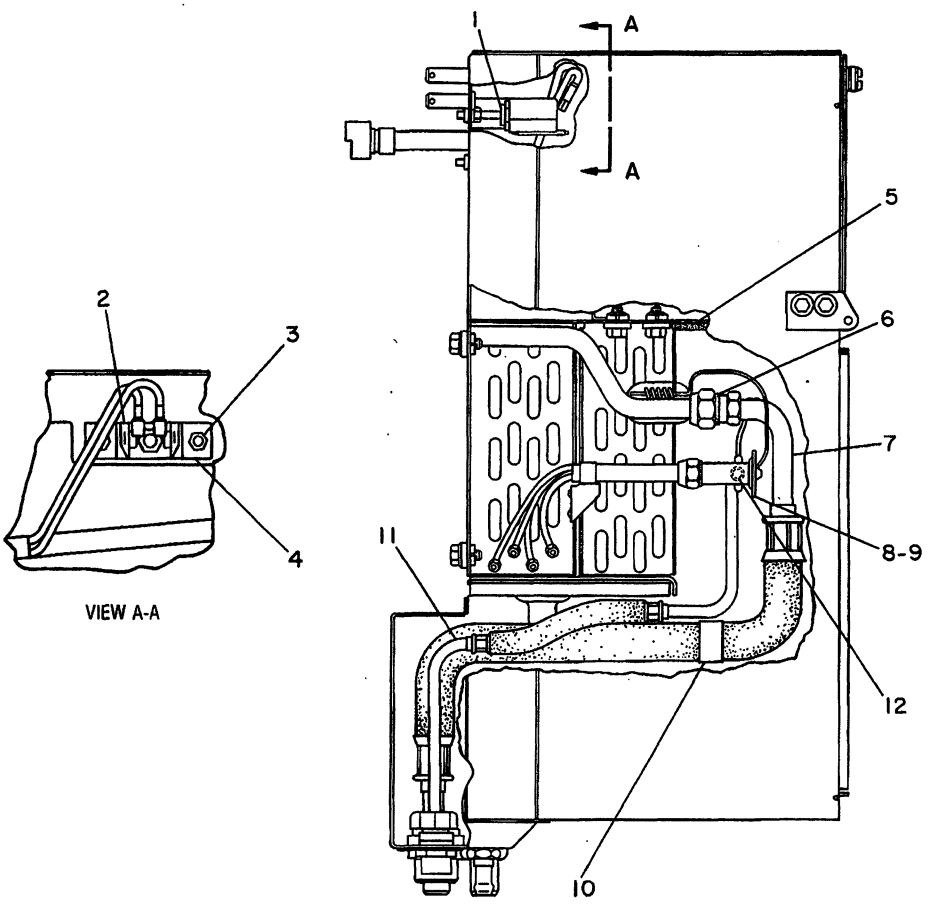

NOTE	REF NO	PART NUMBER	QTY	PART NAME	NOTE	REF NO	PART NUMBER	QTY	PART NAME
	1	2P4339	1	NUT-JAM					
	2	9P3498	1	SWITCH AS-THERMOSTAT					
	3	2A0762	2	BOLT					
		5P0537	2	WASHER					
	4	7G8202	1	BRACKET					
D	5	5P5929		SEAL .459M(18.08IN)					
	6	5L4758	1	SEAL-O-RING					
	7	3T9666	1	HOSE AS 73CM(28.75IN)					
	8	2G0401	1	VALVE					
	9	6M5062	1	SEAL-O-RING					
C	10	9M4972	1	CLIP					
C	11	6T0685	1	HOSE AS					
	12	5F9144	1	SEAL-O-RING					

C-CHANGE FROM PREVIOUS TYPE
D-ORDER BY THE METER

B-489955 P

7320 **3T6901 AIR CONDITIONER GP-PART 1 OF 2**

Part Of 6T9309,7T1142 Air Conditioners,3T7286 Mounting & Conditioner An Attachment

CAB, GAUGES AND ACCESSORIES

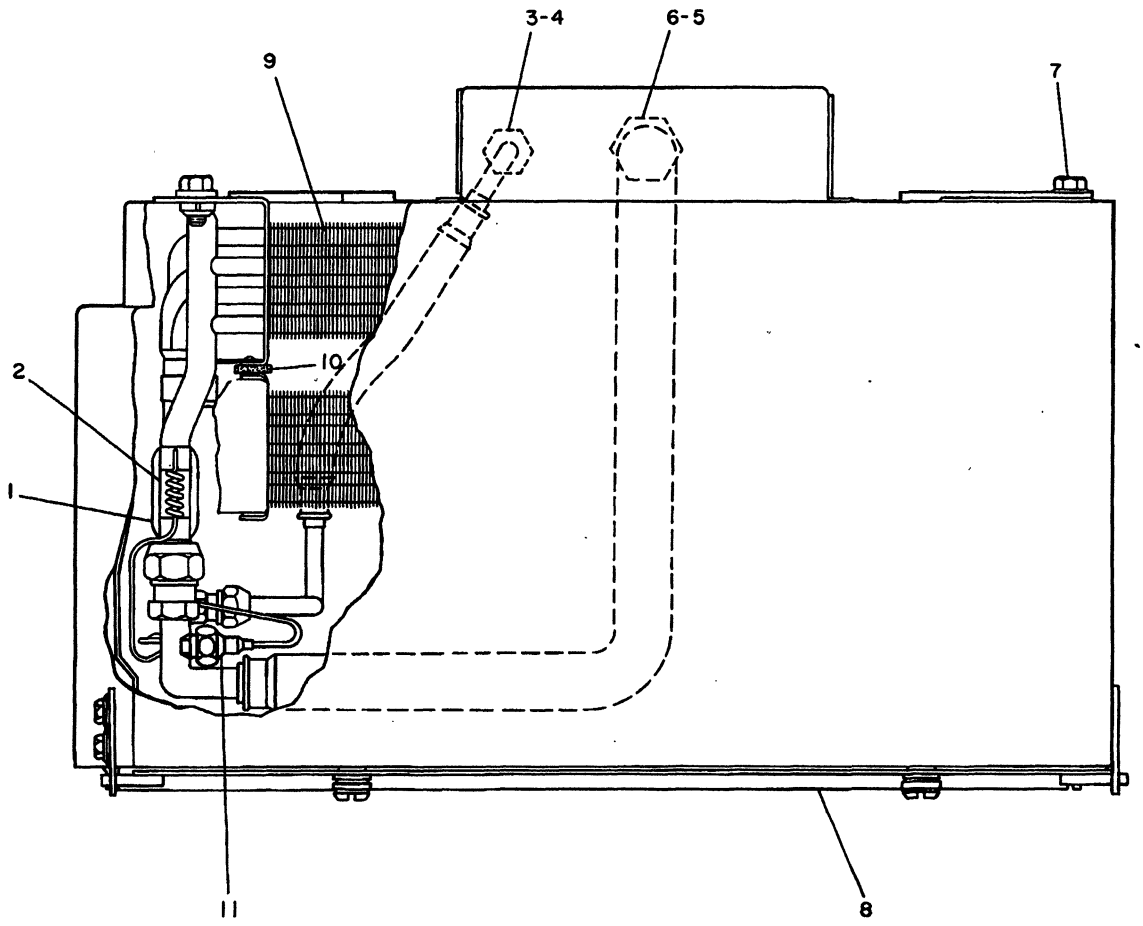

NOTE	REF NO	PART NUMBER	QTY	PART NAME	NOTE	REF NO	PART NUMBER	QTY	PART NAME
D	1	5P7070		INSULATION-STRIP .6M(23.63IN)					
	2	8P6355	1	CLIP					
	3	7K3176	1	COUPLING					
		1S8947	1	SEAL-O-RING					
	4	7K3304	1	NUT-JAM					
		2H3924	1	LOCKWASHER					
	5	5P4106	1	NUT					
		5P4107	1	WASHER					
	6	5P3928	1	COUPLING-SEALING					
		5P3944	1	SEAL-O-RING					
	7	0S0509	4	BOLT					
		5P1075	4	WASHER-HARD					
Y	8	3T6900	1	HEATER GP					
	9	7G7596	1	COIL AS-EVAPORATOR					
D	10	5P5921		SEAL .42M(16.5IN)					
	11	8F7219	1	SEAL-O-RING					

D-ORDER BY THE METER
Y-SEPARATE ILLUSTRATION

B- 489956 P

7320 **3T6901 AIR CONDITIONER GP-PART 2 OF 2**

3T6900-Page 327

Part Of 6T9309,7T1142 Air Conditioners,3T7286 Mounting & Conditioner An Attachment

CAB, GAUGES AND ACCESSORIES

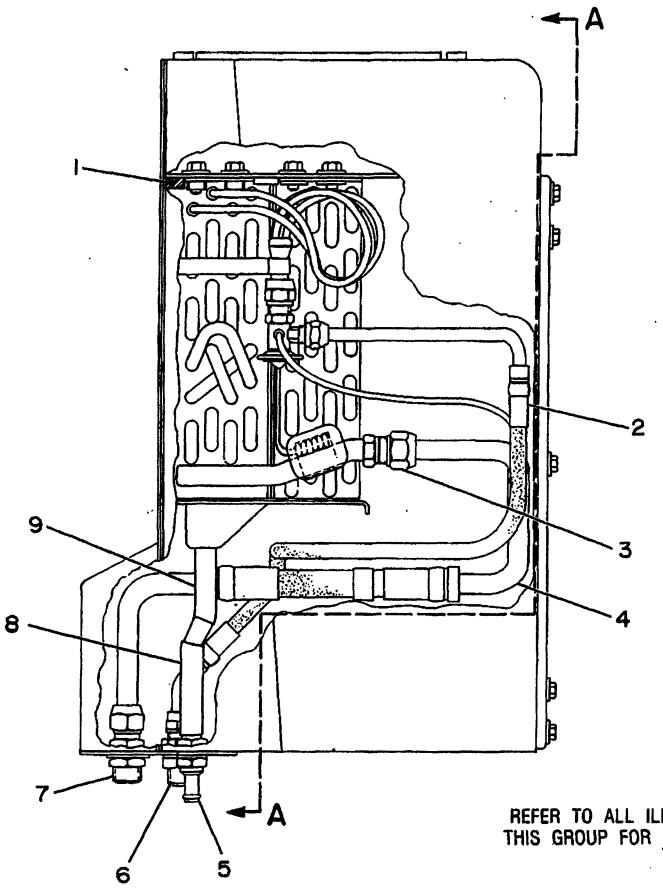

REFER TO ALL ILLUSTRATIONS OF THIS GROUP FOR AUXILIARY VIEWS

NOTE	REF NO	PART NUMBER	QTY	PART NAME	NOTE	REF NO	PART NUMBER	QTY	PART NAME
BD	1	5P5928		SEAL					
	2	7T6075	1	HOSE AS					
	3	5L4758	1	SEAL-O-RING					
	4	7T6076	1	HOSE AS					
	5	7G8638	1	FITTING AS					
		7F2050	1	LOCKNUT					
		2H3922	1	LOCKWASHER					
	6	7T6083	1	UNION-AIR CONDITIONER					
		9S1354	1	NUT					
		4K0499	1	LOCKWASHER					
	7	7G4850	1	UNION-AIR CONDITIONER					
		7F2060	1	LOCKNUT					
		2H3924	1	LOCKWASHER					
D	8	5P6129		TUBE .1M(3.9IN)					
D	9	5P6129		TUBE .08M(3.1IN)					

B-USE AS REQUIRED
D-ORDER BY THE METER

B-335258 EP

7320 **6T7851 AIR CONDITIONER GP-PART 1 OF 2**

Type 1
Part Of 7T5371 Air Conditioner
An Attachment

CAB, GAUGES AND ACCESSORIES

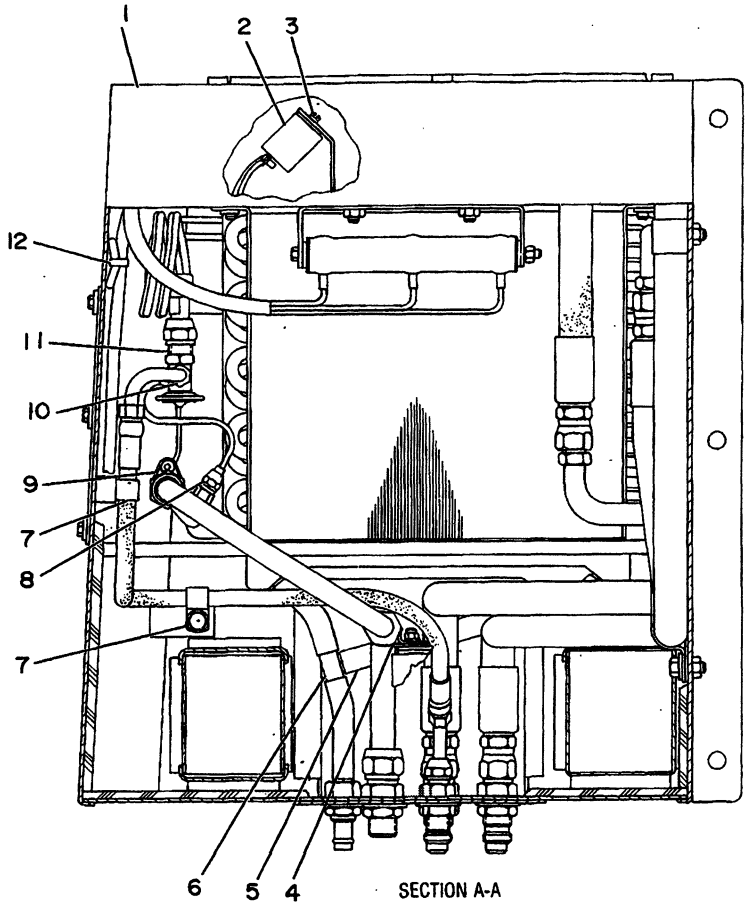

SECTION A-A

NOTE	REF NO	PART NUMBER	QTY	PART NAME	NOTE	REF NO	PART NUMBER	QTY	PART NAME
Y	1	6T7850	1	HEATER GP					
	2	7T9277	1	SWITCH AS-THERMOSTAT					
	3	8F0539	2	SCREW AS-MACHINE					
	4	9M4972	1	CLIP					
D	5	5P6129		TUBE .23M(9IN)					
	6	8G3072	1	TEE-HOSE					
	7	8M2770	2	CLIP					
		0T0102	2	BOLT					
		5M2894	2	WASHER					
	8	5P6458	1	SEAL-O-RING					
	9	8P6355	1	CLIP					
BD		5P7070		INSULATION-STRIP					
	10	5F9144	1	SEAL-O-RING					
	11	2G0401	1	VALVE					
		6M5062	1	SEAL-O-RING					
	12	3S2093	2	STRAP-CABLE					

B-USE AS REQUIRED
D-ORDER BY THE METER
Y-SEPARATE ILLUSTRATION

B-335259 EP

7320 **6T7851 AIR CONDITIONER GP-PART 2 OF 2**

Type 1
6T7850-Page 327A
Part Of 7T5371 Air Conditioner
An Attachment

CAB, GAUGES AND ACCESSORIES

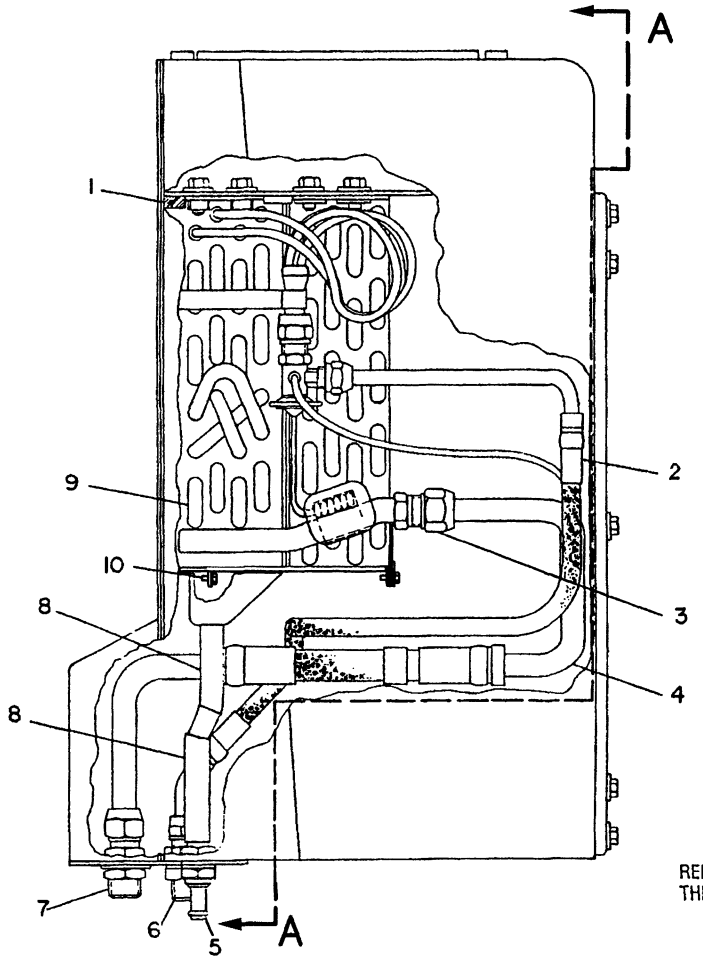

REFER TO ALL ILLUSTRATIONS OF THIS GROUP FOR AUXILIARY VIEWS

NOTE	REF NO	PART NUMBER	QTY	PART NAME	NOTE	REF NO	PART NUMBER	QTY	PART NAME
BD	1	5P5928		SEAL					
	2	7T6075	1	HOSE AS					
C	3	5L4758	2	SEAL-O-RING					
	4	7T6076	1	HOSE AS					
	5	7G8638	1	FITTING AS					
		7F2050	1	LOCKNUT					
		2H3922	1	LOCKWASHER					
	6	7T6083	1	UNION-AIR CONDITIONER					
		9S1354	1	NUT					
		4K0499	1	LOCKWASHER					
	7	7G4850	1	UNION-AIR CONDITIONER					
		7F2060	1	LOCKNUT					
		2H3923	1	LOCKWASHER					
BD	8	5P6129		TUBE					
C	9	7T6069	1	COIL-EVAPORATOR					
BDC		5P7070		INSULATION-STRIP					
C	10	4D0128	4	SCREW-TAPPING					
C		9W4803	1	RETAINER					
C		9W4804	1	SEAL					

B-USE AS REQUIRED
C-CHANGE FROM PREVIOUS TYPE
D-ORDER BY THE METER

R-485234 EP

7320 **6T7851 AIR CONDITIONER GP-PART 1 OF 2**

Type 2
Part Of 7T5371 Air Conditioner
An Attachment

CAB, GAUGES AND ACCESSORIES

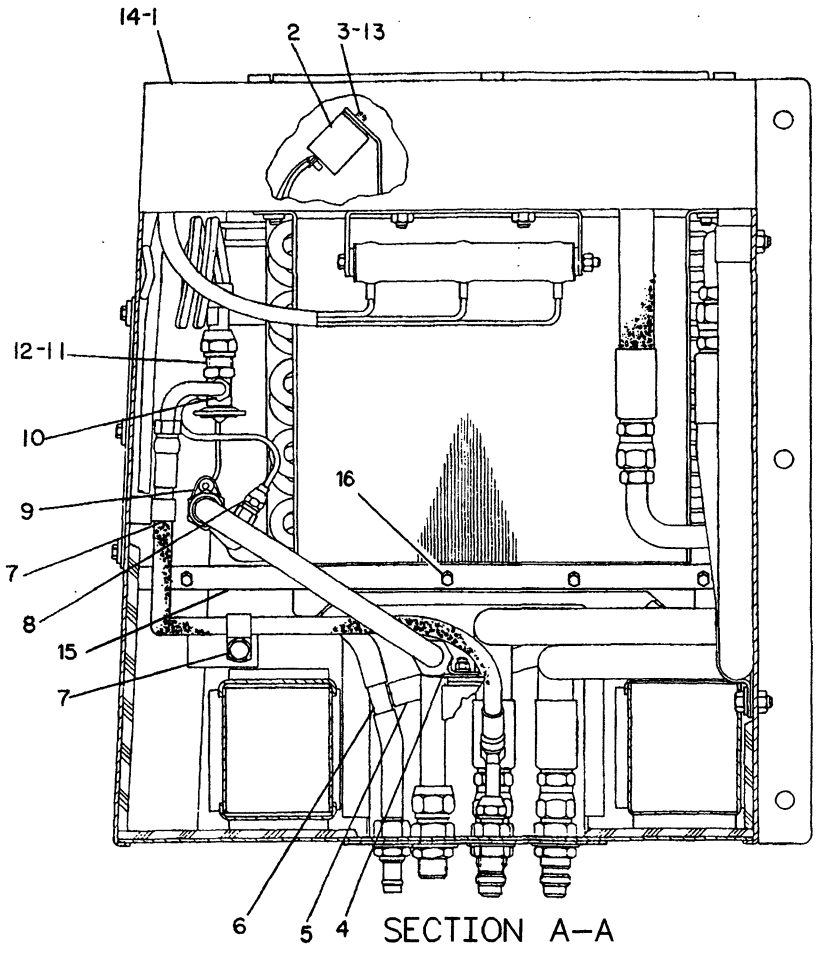

SECTION A–A

NOTE	REF NO	PART NUMBER	QTY	PART NAME	NOTE	REF NO	PART NUMBER	QTY	PART NAME
Y	1	6T7850	1	HEATER GP					
	2	3E5464	1	SWITCH AS-THERMOSTAT					
C	3	8T6631	2	SCREW-MACHINE					
C	4	918792	1	CLIP					
BD	5	5P6129		TUBE					
C	6	8C5682	1	TEE					
C	7	9M8406	2	CLIP					
C		5P8167	2	BOLT					
C		5P1075	2	WASHER-HARD					
	8	5P6458	1	SEAL-O-RING					
	9	8P6355	1	CLIP					
BD		5P7070		INSULATION-STRIP					
	10	5F9144	1	SEAL-O-RING					
	11	2G0401	1	VALVE					
		6M5062	1	SEAL-O-RING					
C	12	5F9144	1	SEAL-O-RING					
C	13	1H4393	2	LOCKWASHER					
C	14	3K8785	1	GROMMET					
	15	9X6743	1	PLATE					
BD		5P5637		SEAL					
	16	2S3745	5	SCREW-TAPPING					

B-USE AS REQUIRED
C-CHANGE FROM PREVIOUS TYPE
D-ORDER BY THE METER

Y-SEPARATE ILLUSTRATION

R-512267 EP

7320 **6T7851 AIR CONDITIONER GP-PART 2 OF 2**

Type 2
6T7850-Page 327A
Part Of 7T5371 Air Conditioner
An Attachment

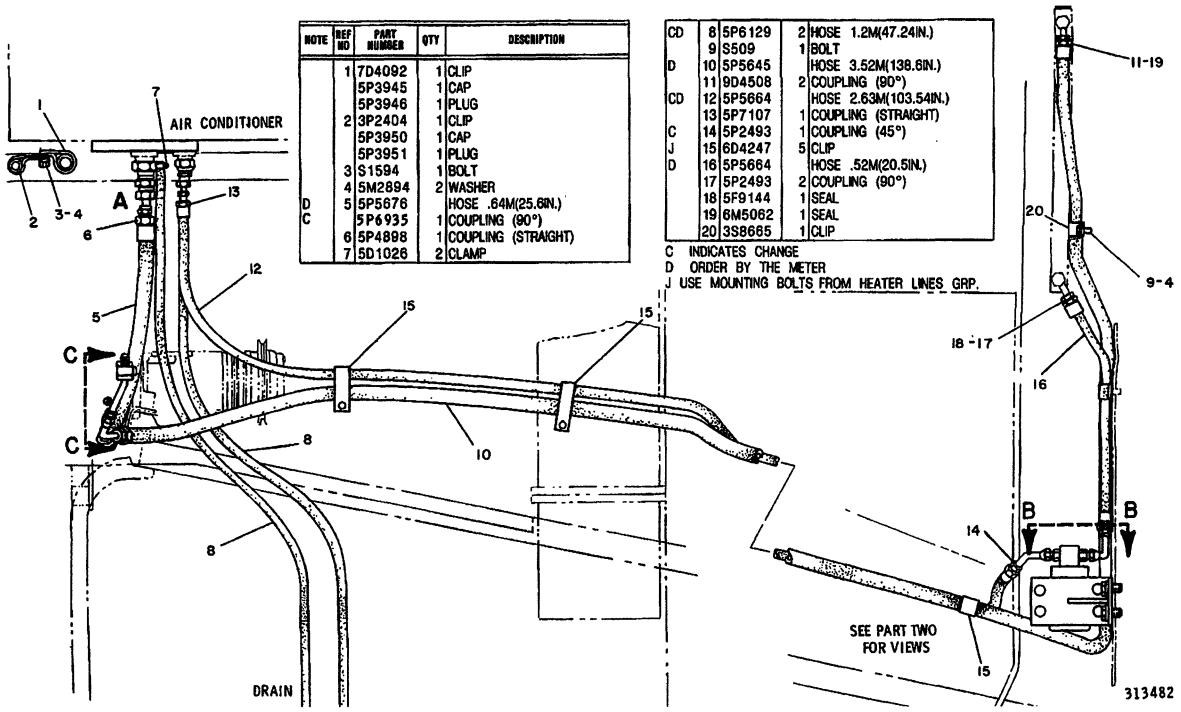

NOTE	REF NO	PART NUMBER	QTY	DESCRIPTION
	1	7D4092	1	CLIP
		5P3945	1	CAP
		5P3946	1	PLUG
	2	3P2404	1	CLIP
		5P3950	1	CAP
		5P3951	1	PLUG
	3	S1594	1	BOLT
	4	5M2894	2	WASHER
D	5	5P5676		HOSE .64M(25.6IN.)
C		5P6935	1	COUPLING (90°)
	6	5P4898	1	COUPLING (STRAIGHT)
	7	5D1026	2	CLAMP
CD	8	5P6129	2	HOSE 1.2M(47.24IN.)
	9	S509	1	BOLT
D	10	5P5645		HOSE 3.52M(138.6IN.)
	11	9D4508	2	COUPLING (90°)
CD	12	5P5664		HOSE 2.63M(103.54IN.)
	13	5P7107	1	COUPLING (STRAIGHT)
C	14	5P2493	1	COUPLING (45°)
J	15	6D4247	5	CLIP
D	16	5P5664		HOSE .52M(20.5IN.)
	17	5P2493	2	COUPLING (90°)
	18	5F9144	1	SEAL
	19	6M5062	1	SEAL
	20	3S8665	1	CLIP

C INDICATES CHANGE
D ORDER BY THE METER
J USE MOUNTING BOLTS FROM HEATER LINES GRP.

313482 P

1808 9G5529 LINES GP-AIR CONDITIONER-PART 1 OF 2

S/N 53Y1-3217
Part Of 9G2971,6T9309 Air Conditioners
An Attachment

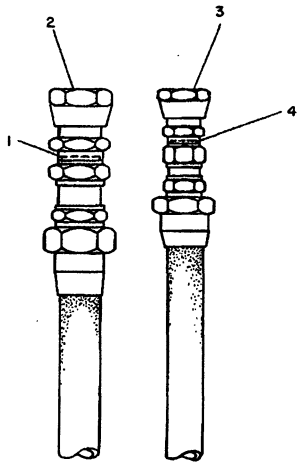

VIEW OF AREA A

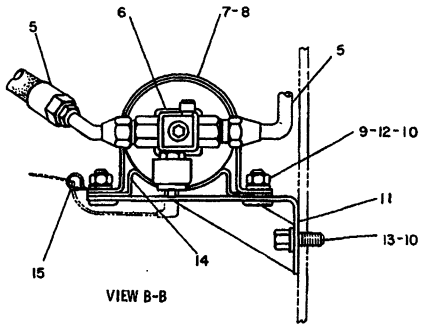

VIEW B-B

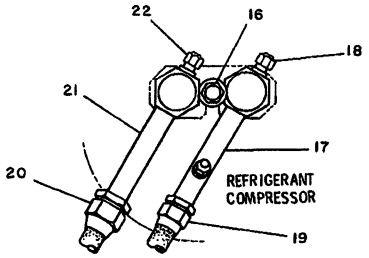

VIEW C-C

NOTE	REF NO	PART NUMBER	QTY	DESCRIPTION
	1	5P3944	1	SEAL
	2	5P3929	1	COUPLING
	3	5P3948	1	COUPLING
	4	1S8947	1	SEAL
	5	5F9144	2	SEAL
	6	9D6888	1	DRYER
	7	8P9606	1	CLAMP
D	8	5P5908		SEAL .2M(7.88IN.)
C	9	9S8752	4	NUT
	10	5M2894	6	WASHER
	11	7G6088	1	BRACKET ASSEM.
	12	7M7794	4	STUD
	13	S1594	2	BOLT
	14	8P9605	1	BRACKET
	15	4D7794	1	CLIP
	16	S1748	1	BOLT
		4B4278	1	WASHER
	17	6V879	1	FITTING ASSEM.
	18	2L1224	2	CAP
	19	6M5062	1	SEAL
	20	5L4758	1	SEAL
	21	6V880	1	FITTING ASSEM.
	22	2L1224	2	CAP

C INDICATES CHANGE
D ORDER BY THE METER

312225

312225 P

1808 **9G5529 LINES GP-AIR CONDITIONER-PART 2 OF 2**
S/N 53Y1-3217
Part Of 9G2971,6T9309 Air Conditioners
An Attachment

CAB, GAUGES AND ACCESSORIES

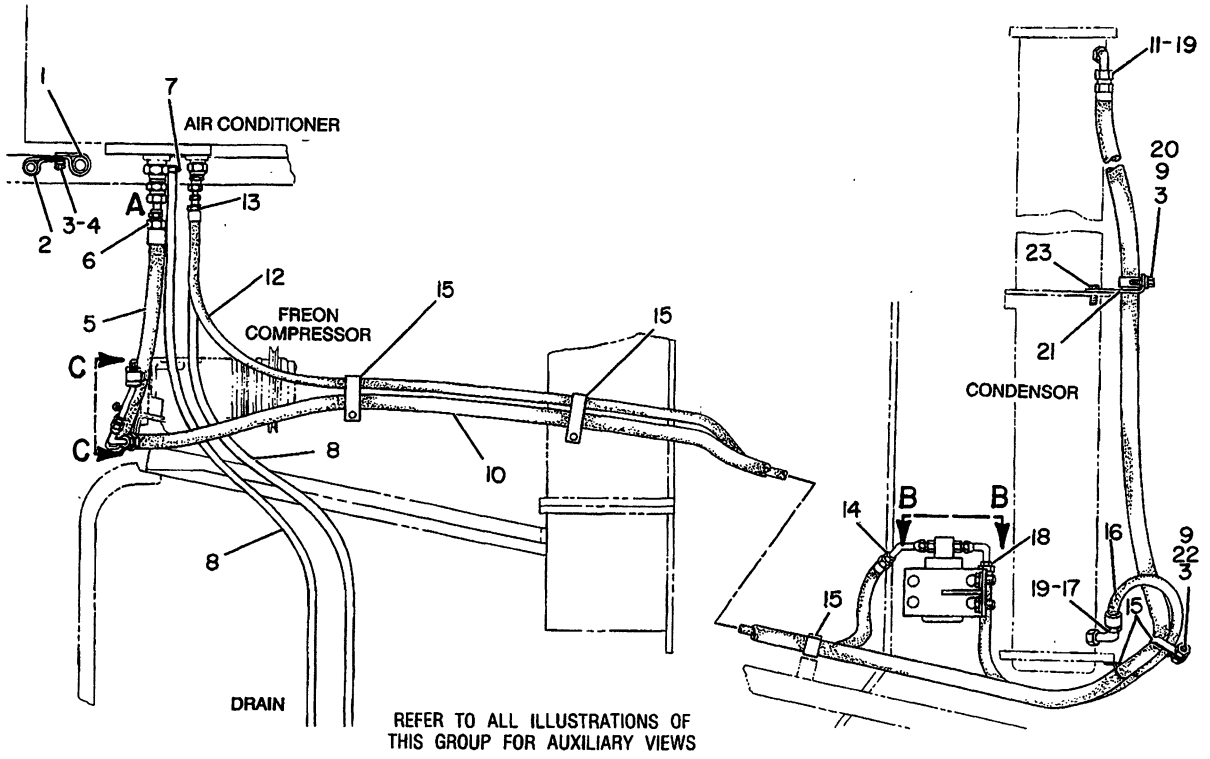

NOTE	REF NO	PART NUMBER	QTY	PART NAME
	1	7D4092	1	CLIP
		5P3946	1	PLUG
		5P3945	1	CAP
	2	3P2404	1	CLIP
		5P3951	1	PLUG
		5P3950	1	CAP
C	3	0S1594	3	BOLT
	4	5M2894	1	WASHER
BD	5	5P5676		HOSE
		5P6935	1	COUPLING
	6	5P4898	1	COUPLING
	7	5D1026	2	CLAMP-HOSE
D	8	5P6129	2	TUBE 1.2M(47.24IN)
C	9	5P1075	3	WASHER-HARD
	10	7T1437	1	HOSE AS
BD		5P5645		HOSE
	11	9D4508	2	COUPLING
BD	12	5P5664		HOSE
	13	5P7107	1	COUPLING
	14	5P2493	1	COUPLING
CJ	15	6D4247	7	CLIP
	16	7T1436	1	HOSE AS
BD		5P5664		HOSE
	17	6V2446	1	COUPLING-AIR CONDITIONER
	18	5P2493	1	COUPLING
	19	6M5062	2	SEAL-O-RING
C	20	6D4244	1	CLIP
	21	6T7529	1	BRACKET AS
	22	9S8752	1	NUT-FULL
C	23	0S1588	1	BOLT
				J-USE MOUNTING BOLT FROM HEATER LINES GP

B-USE AS REQUIRED
C-CHANGE FROM PREVIOUS TYPE
D-ORDER BY THE METER

B-335164 P

1803 **7T1435 LINES GP-AIR CONDITIONER-PART 1 OF 2**
S/N 53Y3218-3484
Part Of 7T1442 Air Conditioner
An Attachment

CAB, GAUGES AND ACCESSORIES

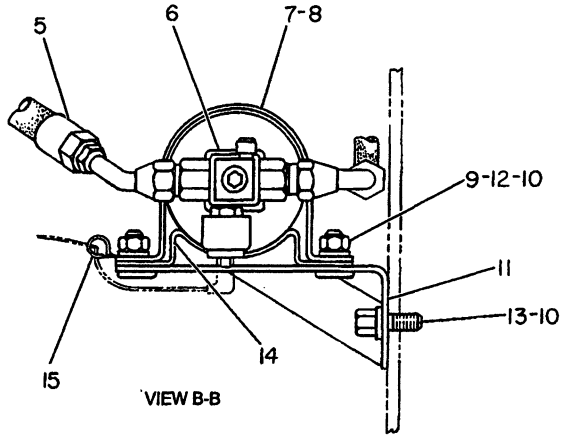

VIEW B-B

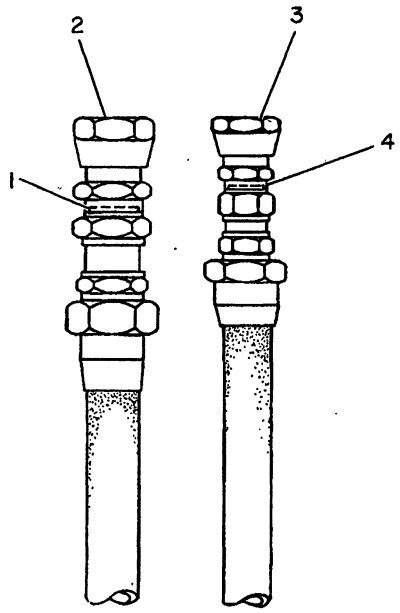

VIEW OF AREA A

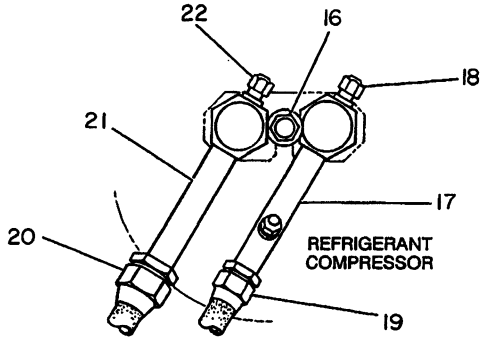

VIEW C-C

NOTE	REF NO	PART NUMBER	QTY	PART NAME	NOTE	REF NO	PART NUMBER	QTY	PART NAME
	1	5P3944	1	SEAL-O-RING					
	2	5P3929	1	COUPLING-SEALING					
	3	5P3948	1	COUPLING-SEALING					
	4	1S8947	1	SEAL-O-RING					
	5	5F9144	2	SEAL-O-RING					
	6	9D6888	1	DRYER					
	7	8P9606	1	CLAMP					
BD	8	5P5908		SEAL					
	9	9S8752	4	NUT-FULL					
	10	5M2894	6	WASHER					
	11	7G6088	1	BRACKET AS					
	12	7M7794	4	STUD-WELD					
	13	0S1594	2	BOLT					
	14	8P9605	1	BRACKET					
	15	4D7794	1	CLIP					
	16	0S1748	1	BOLT					
		4B4278	1	WASHER					
	17	6V0879	1	FITTING AS					
	18	2L1224	2	CAP-AIR CONDITIONER VALVE					
	19	6M5062	1	SEAL-O-RING					
	20	5L4758	1	SEAL-O-RING					
	21	6V0880	1	FITTING AS					
	22	2L1224	2	CAP-AIR CONDITIONER VALVE					

B-USE AS REQUIRED
D-ORDER BY THE METER

B- 317322 P

1803 **7T1435 LINES GP-AIR CONDITIONER-PART 2 OF 2**
S/N 53Y3218-3484
Part Of 7T1442 Air Conditioner
An Attachment

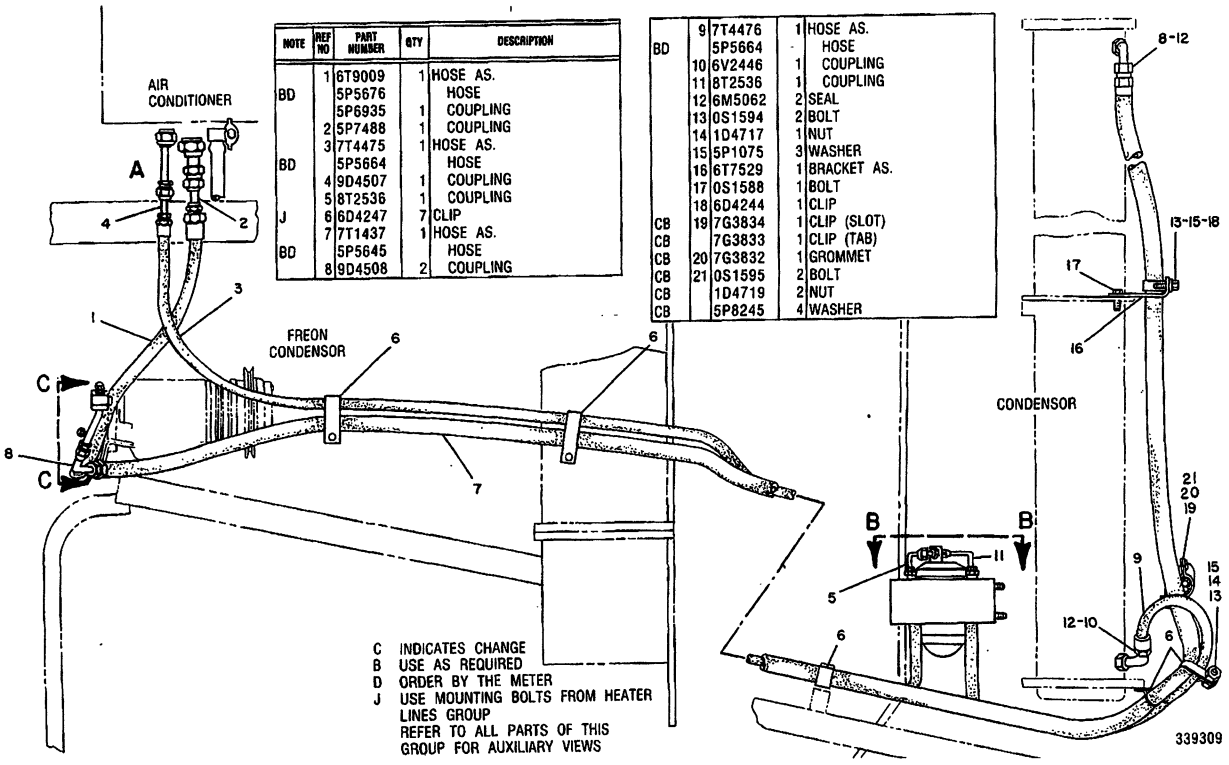

NOTE	REF NO	PART NUMBER	QTY	DESCRIPTION
	1	6T9009	1	HOSE AS.
BD		5P5676		HOSE
		5P6935	1	COUPLING
	2	5P7488	1	COUPLING
	3	7T4475	1	HOSE AS.
BD		5P5664		HOSE
	4	9D4507	1	COUPLING
	5	8T2536	1	COUPLING
J	6	6D4247	7	CLIP
	7	7T1437	1	HOSE AS.
BD		5P5645		HOSE
	8	9D4508	2	COUPLING
BD	9	7T4476	1	HOSE AS.
		5P5664		HOSE
	10	6V2446	1	COUPLING
	11	8T2536	1	COUPLING
	12	6M5062	2	SEAL
	13	0S1594	2	BOLT
	14	1D4717	1	NUT
	15	5P1075	3	WASHER
	16	6T7529	1	BRACKET AS.
	17	0S1588	1	BOLT
	18	6D4244	1	CLIP
CB	19	7G3834	1	CLIP (SLOT)
CB		7G3833	1	CLIP (TAB)
CB	20	7G3832	1	GROMMET
CB	21	0S1595	2	BOLT
CB		1D4719	2	NUT
CB		5P8245	4	WASHER

339309 P

1808 7T5372 LINES GP-AIR CONDITIONER-PART 1 OF 2

Type 1. S/N 53Y3485-Up

Part Of 7T5371 Air Conditioner

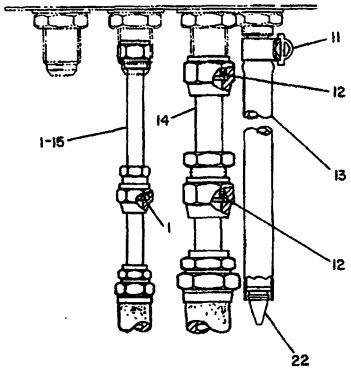

VIEW OF AREA A

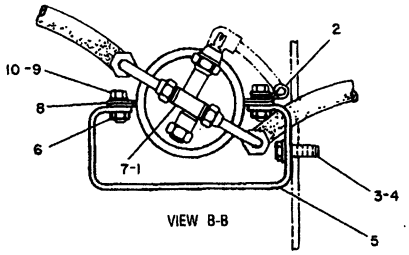

VIEW B-B

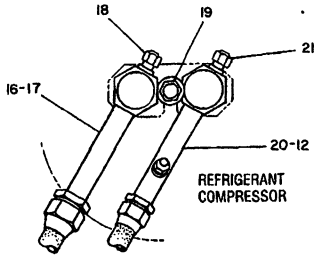

VIEW C-C

NOTE	REF NO	PART NUMBER	QTY	DESCRIPTION
	1	5F9144	4	SEAL
	2	4D7794	1	CLIP
	3	0S1594	2	BOLT
	4	5M2894	2	WASHER
	5	7T4465	1	BRACKET AS.
	6	9F2978	2	NUT (WELD)
	7	5V5698	1	RECEIVER
	8	2P4556	1	STRAP
	9	0S0509	2	BOLT
	10	5P1075	2	WASHER
	11	5D1026	1	CLAMP
	12	6M5062	3	SEAL
D	13	5P6129		TUBE 1.2M (47.24IN.)
	14	7T4404	1	TUBE AS.
	15	7T4403	1	TUBE AS.
	16	5L4758	1	SEAL
	17	6V0880	1	FITTING AS.
	18	2L1224	2	CAP
	19	0S1748	1	BOLT
		4B4278	1	WASHER
	20	6V0879	1	FITTING AS.
	21	2L1224	2	CAP
C	22	7T9793	1	VALVE

C INDICATES CHANGE
D ORDER BY THE METER

339310

339310 P

1808 7T5372 LINES GP-AIR CONDITIONER-PART 2 OF 2
Type 1. S/N 53Y3485-Up
Part Of 7T5371 Air Conditioner

CAB, GAUGES AND ACCESSORIES

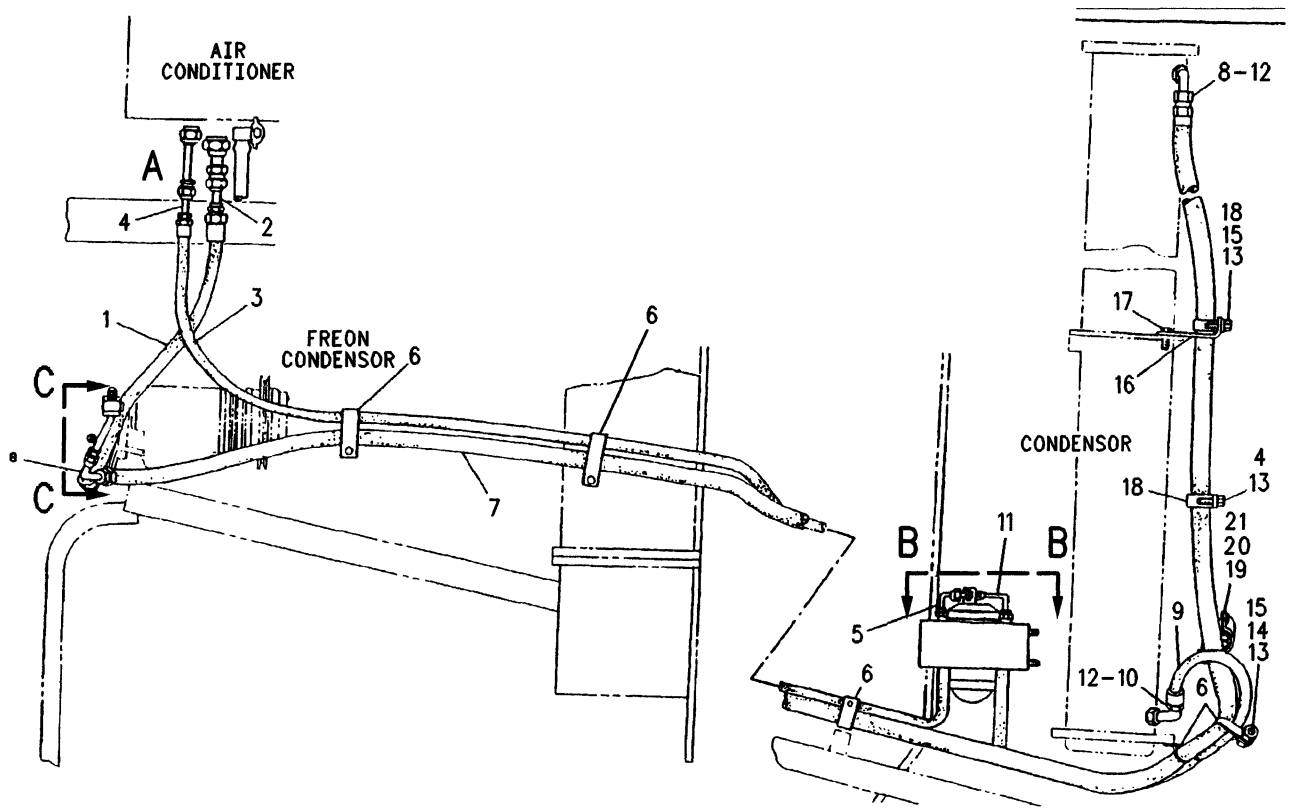

NOTE	REF NO	PART NUMBER	QTY	PART NAME	NOTE	REF NO	PART NUMBER	QTY	PART NAME
	1	6T9009	1	HOSE AS	B	20	7G3832	1	GROMMET
BD		5P5676		HOSE	B	21	0S1595	2	BOLT
		5P6935	1	COUPLING	B		1D4719	2	NUT
	2	5P7488	1	COUPLING	B		5P8245	4	WASHER
	3	7T4475	1	HOSE AS					
BD		5P5664		HOSE					
	4	9D4507	1	COUPLING					
	5	8T2536	1	COUPLING					
CJ	6	4D7733	6	CLIP					
	7	7T1437	1	HOSE AS					
BD		5P5645		HOSE					
	8	9D4508	2	COUPLING					
	9	7T4476	1	HOSE AS					
BD		5P5664		HOSE					
	10	6V2446	1	COUPLING-AIR CONDITIONER					
	11	8T2536	1	COUPLING					
C	12	5L4758	2	SEAL-O-RING					
C	13	0S1594	3	BOLT					
	14	1D4717	1	NUT					
C	15	5P1075	4	WASHER-HARD					
	16	6T7529	1	BRACKET AS					
	17	0S1588	1	BOLT					
C	18	4D7735	2	CLIP					
B	19	7G3834	1	CLIP (SLOT)					
B		7G3833	1	CLIP (TAB)					

B-USE AS REQUIRED
C-CHANGE FROM PREVIOUS TYPE
D-ORDER BY THE METER

R-580670 EP

1808 **7T5372 LINES GP-AIR CONDITIONER-PART 1 OF 2**

Type 2. S/N 53Y3485-Up
Part Of 7T5371 Air Conditioner
An Attachment

CAB, GAUGES AND ACCESSORIES

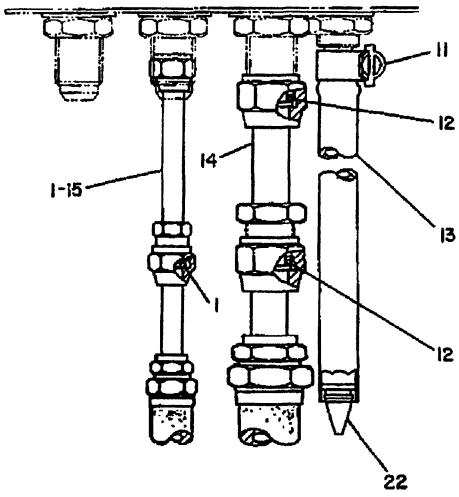

VIEW OF AREA A

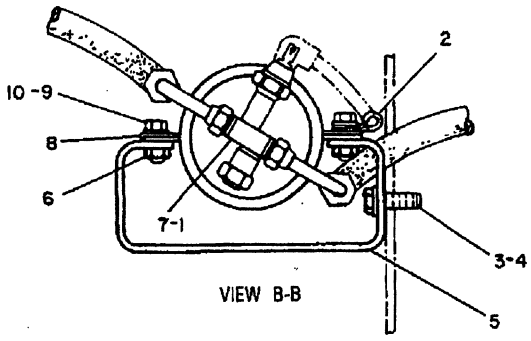

VIEW B-B

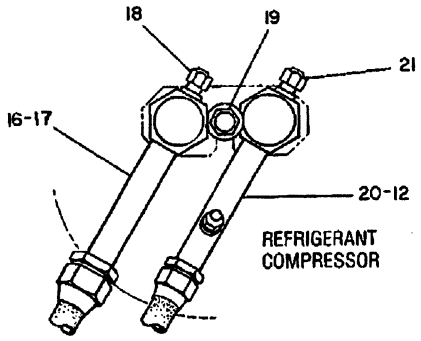

VIEW C-C

NOTE	REF NO	PART NUMBER	QTY	PART NAME
	1	5F9144	4	SEAL-O-RING
	2	4D7794	1	CLIP
	3	0S1594	2	BOLT
	4	5M2894	2	WASHER
	5	7T4465	1	BRACKET AS
	6	9F2978	2	NUT-WELD (WELD)
	7	5V5698	1	RECEIVER-DEHYDRATOR
C	8	2P4556	2	CLIP
	9	0S0509	2	BOLT
	10	5P1075	2	WASHER-HARD
	11	5D1026	1	CLAMP-HOSE
	12	6M5062	3	SEAL-O-RING
D	13	5P6129		TUBE (47.24IN.)
	14	7T4404	1	TUBE AS
	15	7T4403	1	TUBE AS
	16	5L4758	1	SEAL-O-RING
	17	6V0880	1	FITTING AS
	18	2L1224	2	CAP-AIR CONDITIONER VALVE
	19	0S1748	1	BOLT
		4B4278	1	WASHER
	20	6V0879	1	FITTING AS
	21	2L1224	2	CAP-AIR CONDITIONER VALVE
C	22	7T9793	1	VALVE

C-CHANGE FROM PREVIOUS TYPE
D-ORDER BY THE METER

R-580734 EP

1808 **7T5372 LINES GP-AIR CONDITIONER-PART 2 OF 2**
Type 2. S/N 53Y3485-Up
Part Of 7T5371 Air Conditioner
An Attachment

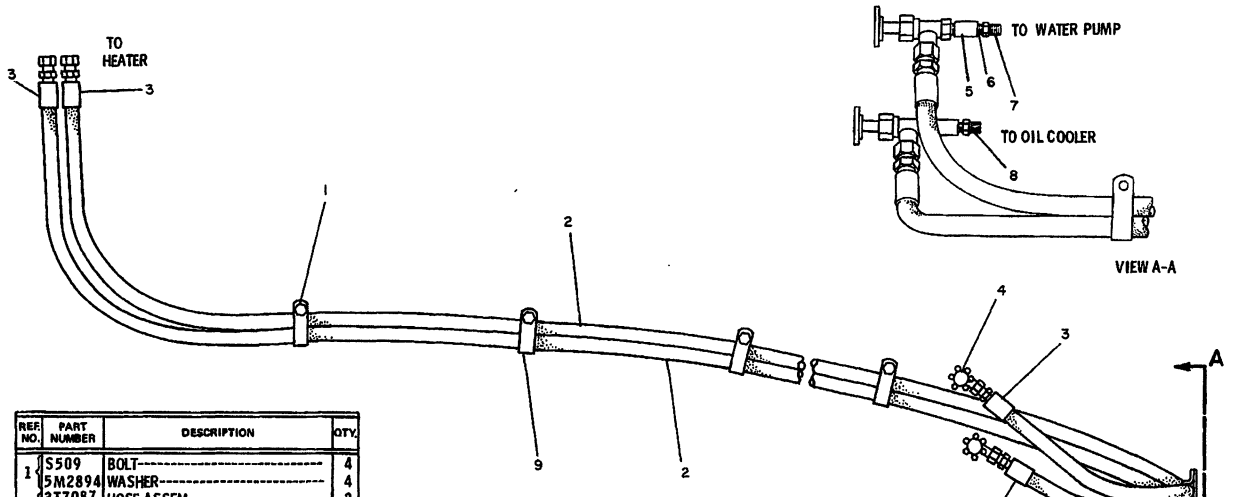

REF. NO.	PART NUMBER	DESCRIPTION	QTY.
1	S509	BOLT	4
	5M2894	WASHER	4
2	3T7087	HOSE ASSEM.	2
		(Each Includes)	
A	5P7760	HOSE---382 cm (150 in.)	
3	5P7759	COUPLING	2
4	5P7747	VALVE ASSEM.	2
5	5B1309	COUPLING	2
6	3B7742	NIPPLE	2
7	6B4661	BUSHING	1
8	3B7255	BUSHING	1
9	5P6994	CLIP	6

A ORDER BY THE CENTIMETER

235951

235951 P

7304

9G6091 LINES GP-HEATER

Type 1
Part Of 6T8698,9G5528 Heaters
An Attachment

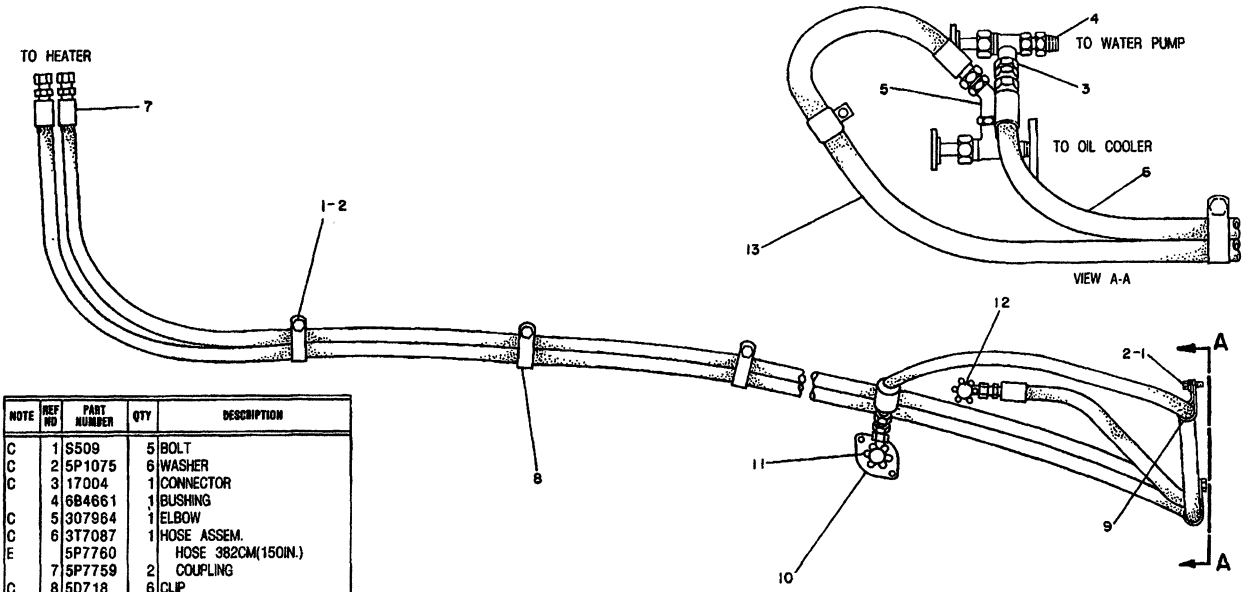

NOTE	REF NO	PART NUMBER	QTY	DESCRIPTION
C	1	S509	5	BOLT
C	2	5P1075	6	WASHER
C	3	17D04	1	CONNECTOR
	4	6B4661	1	BUSHING
C	5	3O7964	1	ELBOW
C	6	3T7087	1	HOSE ASSEM.
E		5P7760		HOSE 382CM(150IN.)
	7	5P7759	2	COUPLING
C	8	5D718	6	CLIP
C	9	9M4972	1	CLIP
C	10	6T6	1	COVER
C	11	5P7747	1	VALVE ASSEM.
C	12	9N3666	1	VALVE ASSEM.
C	13	3T3173	1	HOSE ASSEM.
E		5P7760		HOSE 430CM(169IN.)
		5P7759	2	COUPLING

C INDICATES CHANGE
E ORDER BY THE CENTIMETER

310470

310470 P

7304

9G6091 LINES GP-HEATER
Type 2
Part Of 6T8698,9G5528 Heaters
An Attachment

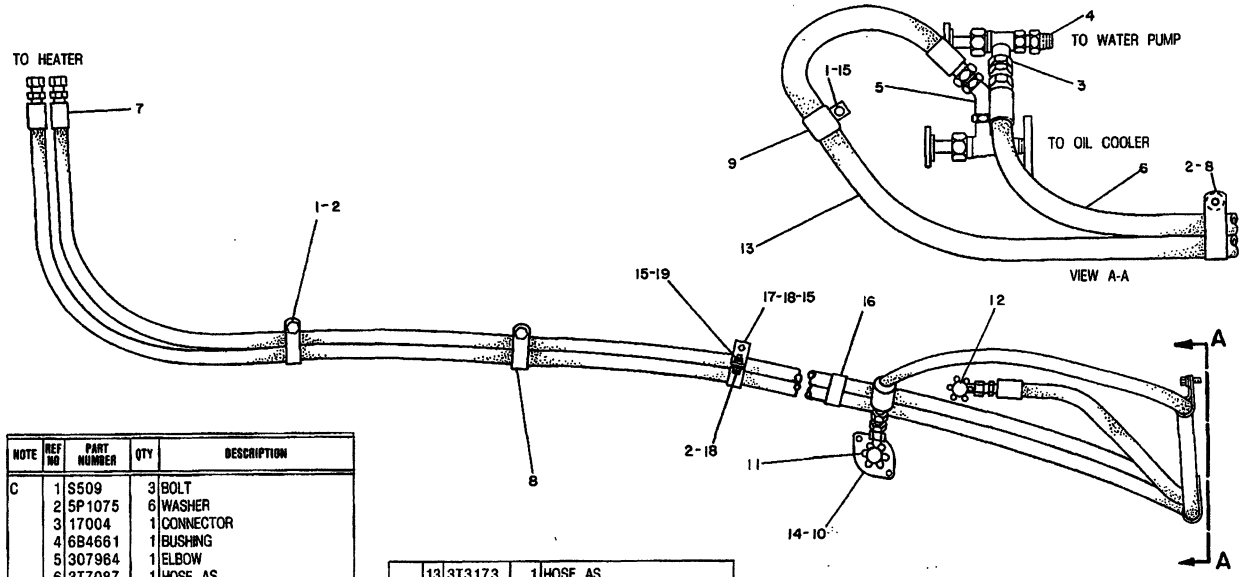

NOTE	REF NO	PART NUMBER	QTY	DESCRIPTION
C	1	S509	3	BOLT
	2	5P1075	6	WASHER
	3	17004	1	CONNECTOR
	4	6B4661	1	BUSHING
	5	307964	1	ELBOW
	6	3T7087	1	HOSE AS.
E		5P7760		HOSE 382CM(150IN.)
	7	5P7759	2	COUPLING
	8	5D718	6	CLIP
	9	9M4972	1	CLIP
B	10	6T6	1	COVER
CB		4N0790	1	GASKET
	11	5P7747	1	VALVE AS.
	12	9N3666	1	VALVE AS.
	13	3T3173	1	HOSE AS.
E		5P7760		HOSE 430CM(169IN.)
		5P7759	2	COUPLING
CB	14	3B7255	1	BUSHING
C	15	5M2894	5	WASHER
C	16	7K2828	1	CLIP
C	17	6T7529	2	BRACKET AS.
C	18	S1588	4	BOLT
C	19	9S8752	2	NUT

B USE AS REQUIRED

C INDICATES CHANGE

E ORDER BY THE CENTIMETER

324324

324324 P

7304

9G6091 LINES GP-HEATER

Type 3
Part Of 6T8698,9G5528 Heaters
An Attachment

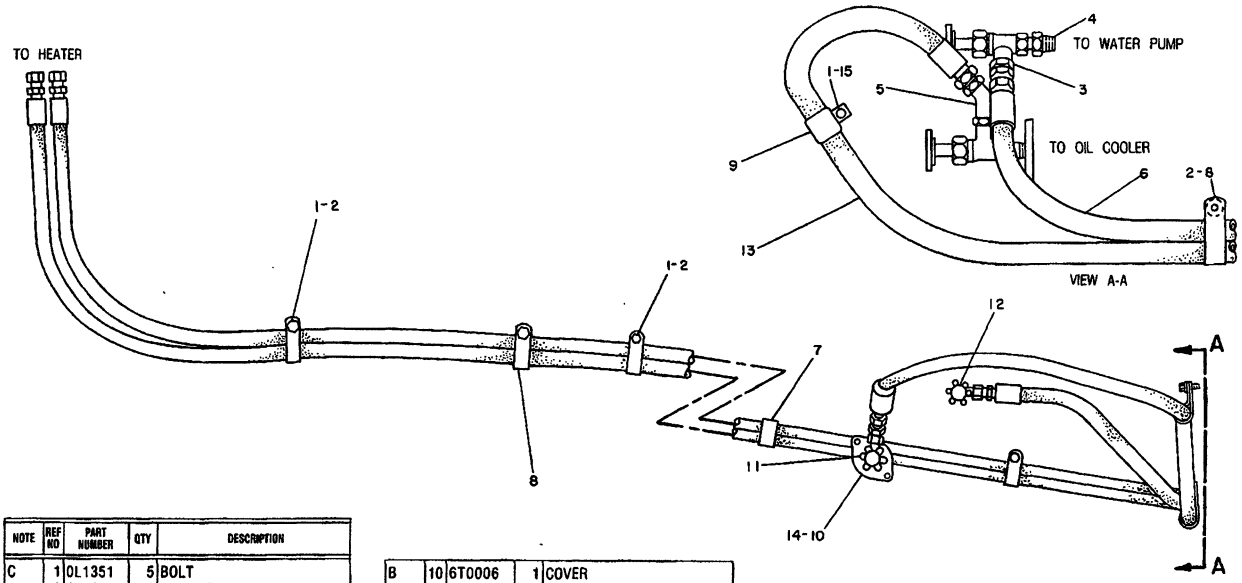

NOTE	REF NO	PART NUMBER	QTY	DESCRIPTION
C	1	0L1351	5	BOLT
	2	5P1075	6	WASHER
	3	017004	1	CONNECTOR
	4	6B4661	1	BUSHING
	5	307964	1	ELBOW
	6	3T7087	1	HOSE AS.
	7	7K2828	1	CLIP
	8	5D0718	6	CLIP
	9	9M4972	1	CLIP
B	10	6T0006	1	COVER
B		4N0790	1	GASKET
	11	5P7747	1	VALVE AS.
	12	9N3666	1	VALVE AS.
	13	3T3173	1	HOSE AS.
B	14	3B7255	1	BUSHING
C	15	5M2894	1	WASHER

B USE AS REQUIRED

C INDICATES CHANGE

352046

352046 P

7304

9G6091 LINES GP-HEATER
Type 4
Part Of 9G2971,9G5528 Heaters
An Attachment

MEMORANDA

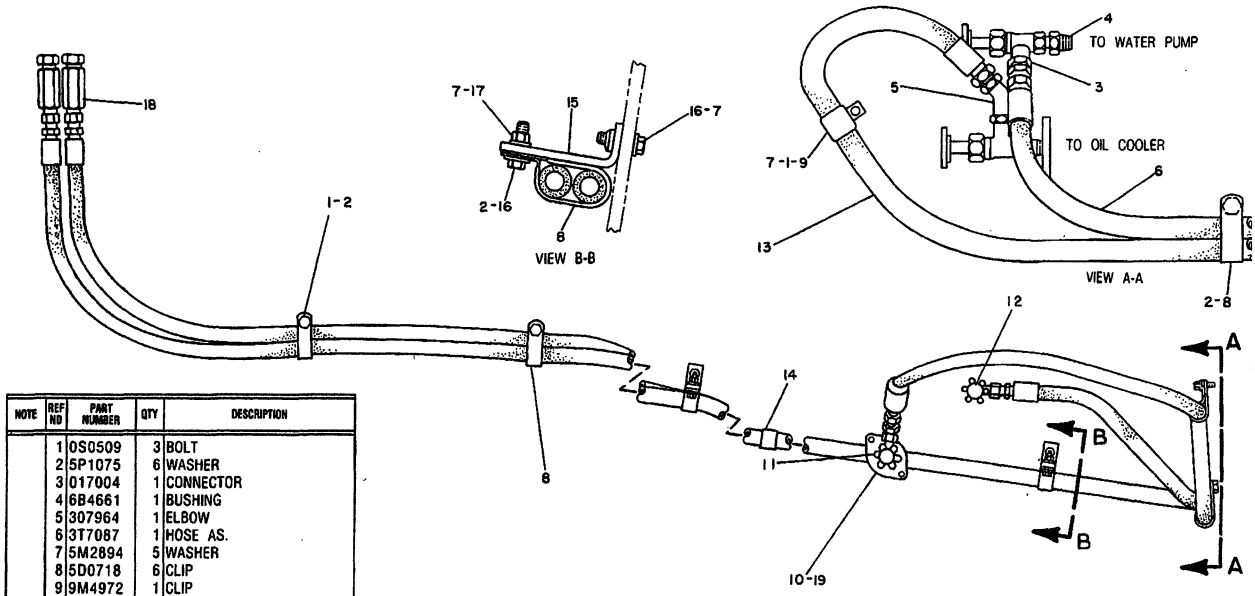

NOTE	REF NO	PART NUMBER	QTY	DESCRIPTION
	1	0S0509	3	BOLT
	2	5P1075	6	WASHER
	3	017004	1	CONNECTOR
	4	6B4661	1	BUSHING
	5	307964	1	ELBOW
	6	3T7087	1	HOSE AS.
	7	5M2894	5	WASHER
	8	5D0718	6	CLIP
	9	9M4972	1	CLIP
	10	6T0006	1	COVER
	11	5P7747	1	VALVE AS.
	12	9N3666	1	VALVE AS.
	13	3T3173	1	HOSE AS.
	14	7K2828	1	CLIP
	15	6T7529	2	BRACKET AS.
	16	0S1588	4	BOLT
	17	9S8752	2	NUT
	18	8T2270	2	CONNECTOR
B	19	4N0790	1	GASKET
B		3B7255	1	BUSHING

B USE AS REQUIRED

335136

335136 P

7304

7T4384 LINES GP-HEATER
Type 1
Part Of 7T2427 Heater
An Attachment

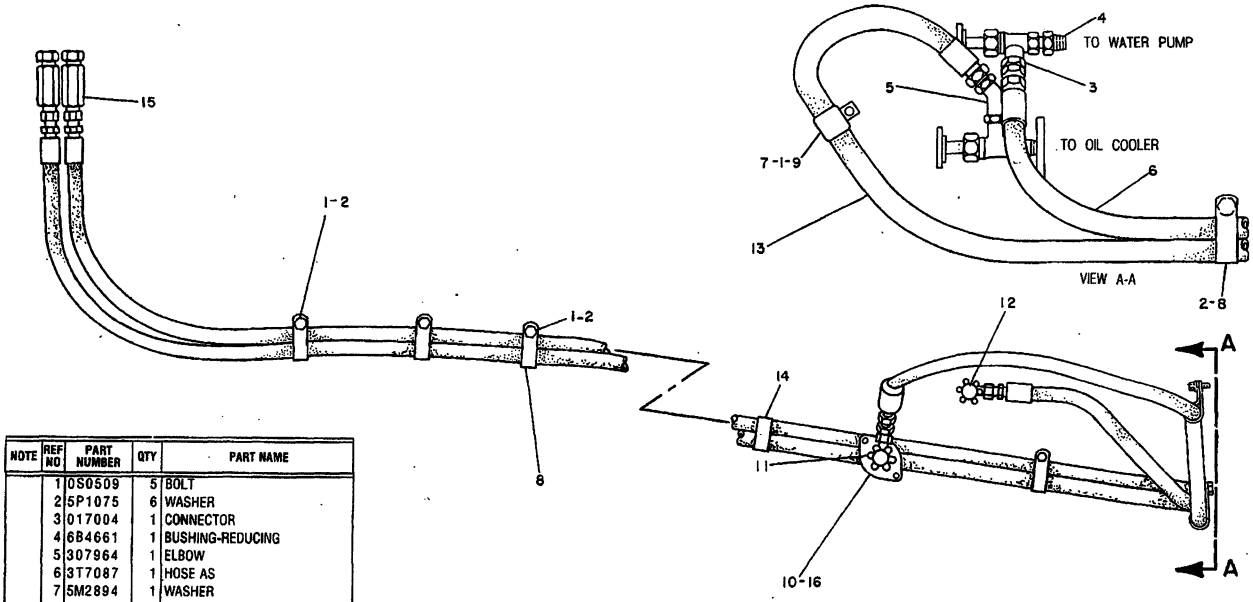

NOTE	REF NO	PART NUMBER	QTY	PART NAME
	1	0S0509	5	BOLT
	2	5P1075	6	WASHER
	3	017004	1	CONNECTOR
	4	6B4661	1	BUSHING-REDUCING
	5	307964	1	ELBOW
	6	3T7087	1	HOSE AS
	7	5M2894	1	WASHER
	8	5D0718	6	CLIP
	9	9M4972	1	CLIP
	10	6T0006	1	COVER
	11	5P7747	1	VALVE AS
	12	9N3666	1	VALVE AS
	13	3T3173	1	HOSE AS
	14	7K2828	1	CLIP
	15	8T2270	2	CONNECTOR-EXTENSION
BC	16	4N0790	2	GASKET
B		3B7255	1	BUSHING

C INDICATES CHANGE

B USE AS REQUIRED

406485

406485 P

7304

7T4384 LINES GP-HEATER
Type 2
Part Of 7T2427 Heater
An Attachment

CAB, GAUGES AND ACCESSORIES

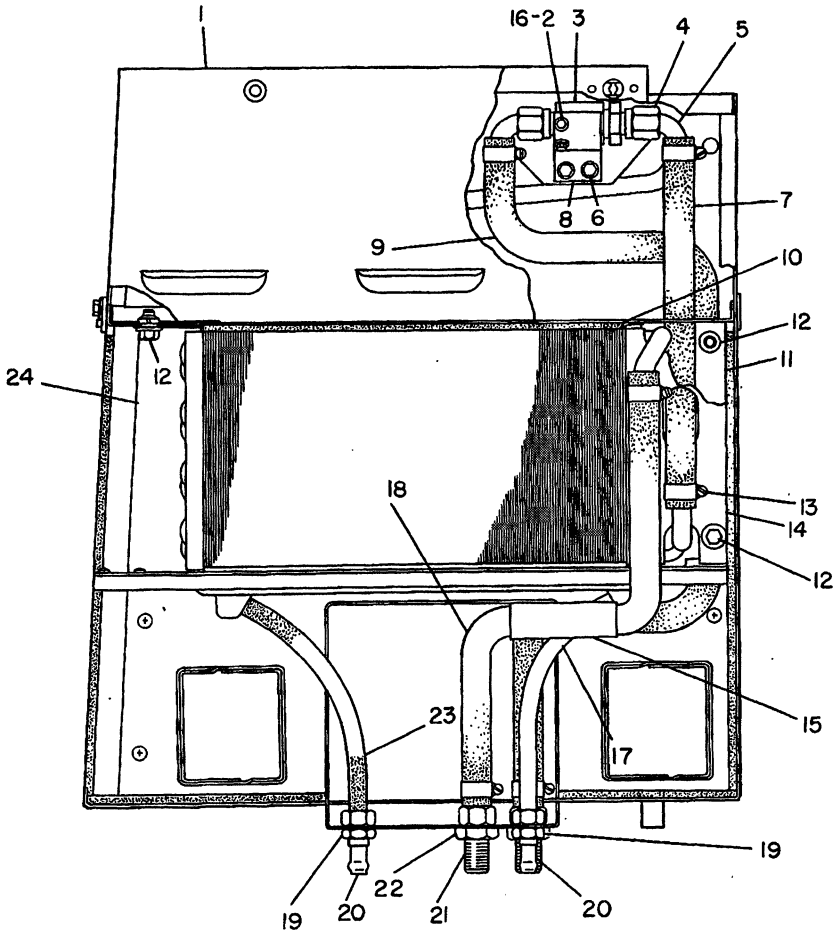

NOTE	REF NO	PART NUMBER	QTY	PART NAME	NOTE	REF NO	PART NUMBER	QTY	PART NAME
Y	1	3T6899	1	PRESSURIZER GP		22	2F5060	2	NUT
C	2	8F1315	2	SCREW AS-MACHINE			2H3923	2	LOCKWASHER
	3	7G0819	1	VALVE-WATER	D	23	5P6129		TUBE .49M(19.3IN)
	4	3T1180	2	NUT-FLARED		24	9G9087	1	PLATE
		3T1181	2	SLEEVE-FLARED					
	5	3T0556	2	TUBE					
C	6	0S1614	2	BOLT					
C		5P4115	2	WASHER					
C	7	7T0802	1	HOSE					
	8	7G8125	1	BRACKET					
C	9	7T0804	1	HOSE					
BD	10	5P5929		SEAL					
	11	9G9088	1	PLATE					
	12	0S0509	8	BOLT					
		5P1075	8	WASHER-HARD					
C	13	8T0154	6	CLAMP-HOSE					
	14	7G7597	1	COIL-HEATER					
CE	15	5P1251		HOSE 10CM(3.9IN)					
C	16	4B4274	2	WASHER					
D	17	5P6129		TUBE .43M(16.93IN)					
C	18	7T0803	1	HOSE					
	19	7F2050	2	LOCKNUT					
		2H3922	2	LOCKWASHER					
	20	7G8638	2	FITTING AS					
	21	9G6012	2	CONNECTOR AS					

B-USE AS REQUIRED
C-CHANGE FROM PREVIOUS TYPE
D-ORDER BY THE METER
E-ORDER BY THE CENTIMETER
Y-SEPARATE ILLUSTRATION

B- 324335 P

7304 **3T6900 HEATER GP**

3T6899-Page 302

Part Of 3T6901 Air Conditioner,6T8698,9G5528 Heaters
An Attachment

CAB, GAUGES AND ACCESSORIES

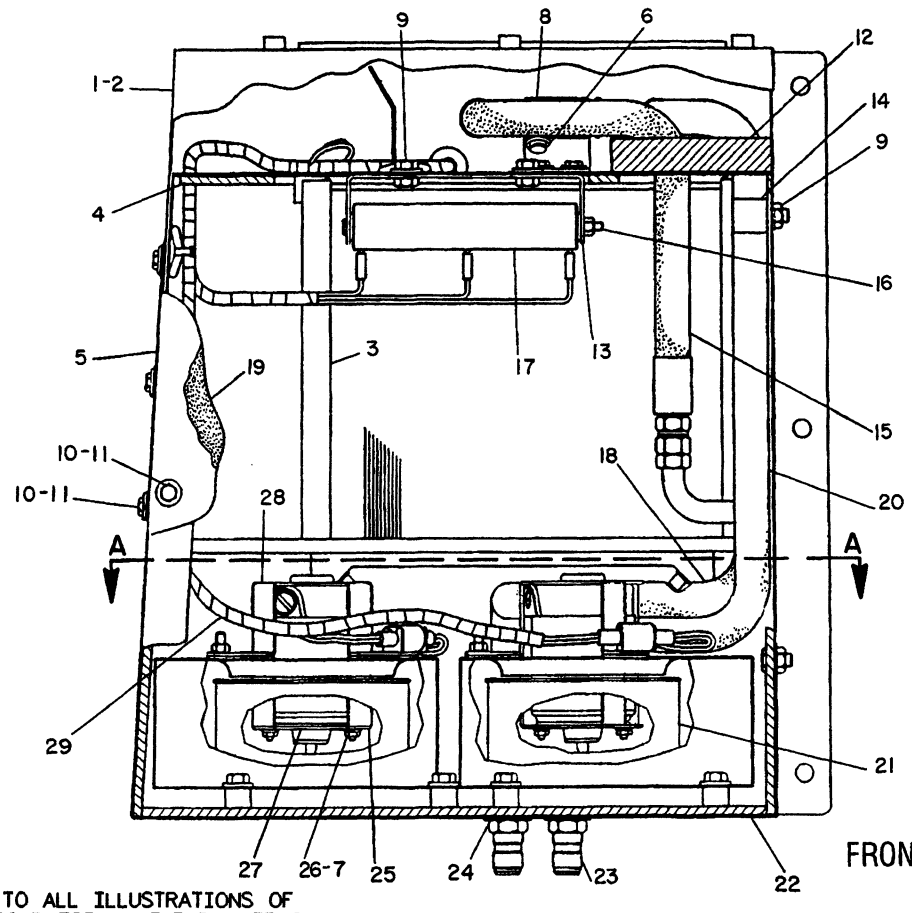

FRONT VIEW

REFER TO ALL ILLUSTRATIONS OF THIS GROUP FOR AUXILIARY VIEWS

NOTE	REF NO	PART NUMBER	QTY	PART NAME	NOTE	REF NO	PART NUMBER	QTY	PART NAME
	1	6T7849	1	CASE AS		19	7T6065	1	GASKET
		6T6686	2	PIN		20	7T6049	1	HOSE AS
		9N1995	2	RIVET-POP		21	7G0661	2	WHEEL-BLOWER
		9F6445	8	NUT		22	7T6063	1	INSULATION
C	2	8C3756	1	FILM-IDENTIFICATION		23	2P1282	2	UNION-BULKHEAD
	3	7T6052	1	COIL-HEATER	C	24	7F2060	2	LOCKNUT
	4	7T6060	1	INSULATION			2H3923	2	LOCKWASHER
	5	7T6047	1	COVER		25	9G1182	2	BRACKET
C	6	2L5317	2	SCREW-MACHINE		26	1M1230	4	NUT & LOCK AS
C		1H4393	2	LOCKWASHER		27	4D6624	2	WASHER-RUBBER
C	7	4B4274	4	WASHER		28	2G0415	2	BRACKET
C	8	7T6048	1	BRACKET		29	7T6055	1	HARNESS AS
C	9	5P8167	12	BOLT					
		5P1075	12	WASHER-HARD					
C	10	5S7349	18	BOLT					
C	11	5P4115	18	WASHER					
	12	9W0319	1	COVER					
	13	7T4568	1	BRACKET AS					
	14	4S1962	1	CLIP					
	15	7T6050	1	HOSE AS					
	16	6V3320	1	SCREW-MACHINE					
		7H8909	1	LOCKNUT					
		6V1668	2	WASHER (FLAT)					
		6T6708	2	WASHER (CURVED)					
	17	9G1950	1	RESISTOR					
	18	7T6051	1	HOSE AS					

C-CHANGE FROM PREVIOUS TYPE

R-520495 EP

7304

6T7850 HEATER GP-PART 1 OF 3
Part Of 7T2427 Heater
An Attachment

CAB, GAUGES AND ACCESSORIES

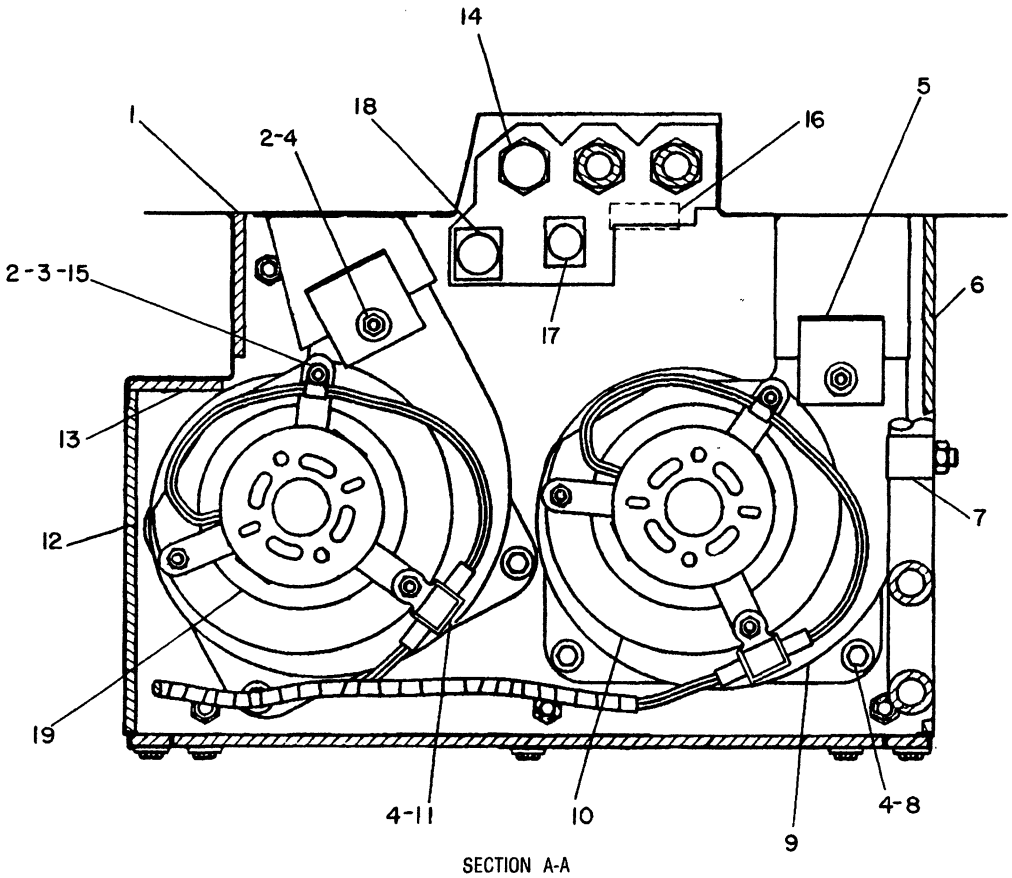

SECTION A-A

NOTE	REF NO	PART NUMBER	QTY	PART NAME	NOTE	REF NO	PART NUMBER	QTY	PART NAME
	1	7T6058	1	INSULATION					THE FOLLOWING REPAIR
C	2	6V8185	8	NUT					KIT IS AVAILABLE:
	3	1H3338	6	LOCKWASHER			9G0398	1	KIT-MOTOR BRUSH
C	4	5P4115	8	WASHER					
	5	7T6057	2	CLIP					
	6	7T6061	1	INSULATION					
	7	6D1641	1	CLIP					
C	8	5S7349	4	BOLT					
	9	7T6056	2	HOUSING AS					
	10	7G0942	2	PLATE-ORIFICE					
	11	9G9150	2	CLIP					
	12	7T6062	1	INSULATION					
C	13	9W3383	1	INSULATION					
C	14	5H4871	1	PLUG-BUTTON					
C	15	8M2771	2	CLIP					
C	16	5P6670	1	FILM-INSTRUCTION					
C	17	2M4009	1	PLUG-BUTTON					
C	18	5K3546	1	PLUG-BUTTON					
	19	9G8697	2	MOTOR AS					
				(EACH INCLUDES)					
		7N9737	1	HOUSING-PLUG					
		7N7780	1	PIN-CONNECTOR					
		7N7779	1	SOCKET					

C-CHANGE FROM PREVIOUS TYPE

F-455977 EP

7304 **6T7850 HEATER GP-PART 2 OF 3**

Part Of 7T2427 Heater

An Attachment

CAB, GAUGES AND ACCESSORIES

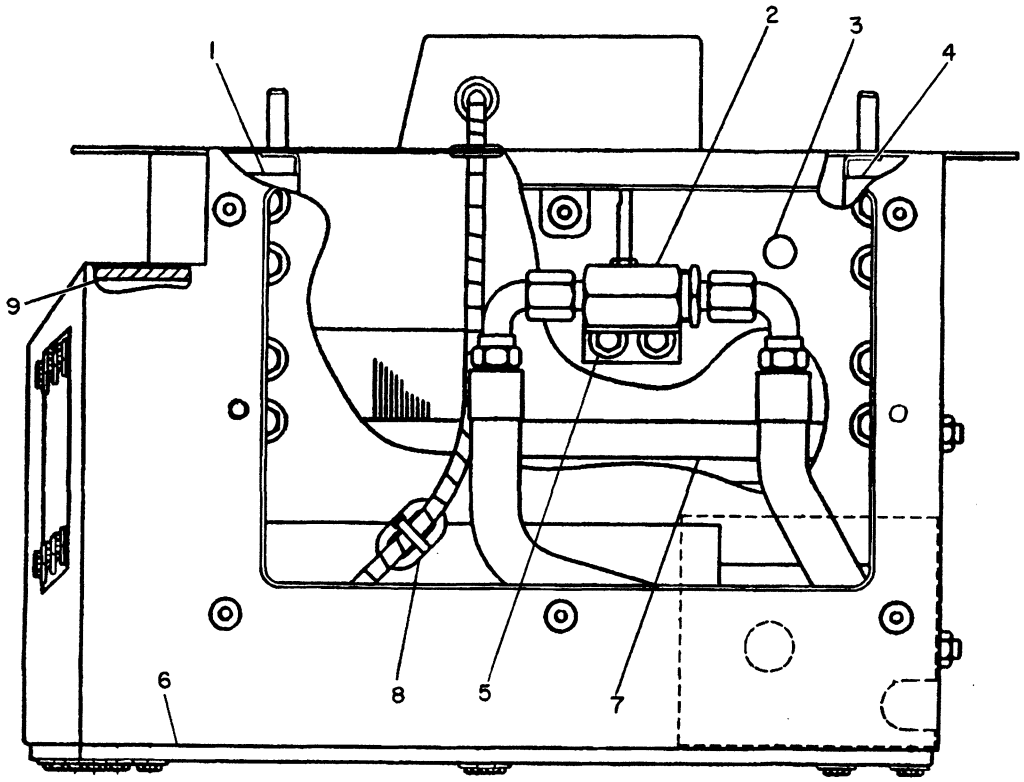

TOP VIEW

NOTE	REF NO	PART NUMBER	QTY	PART NAME	NOTE	REF NO	PART NUMBER	QTY	PART NAME
	1	7T6068	1	BRACKET AS					
	2	7G0819	1	VALVE-WATER					
C	3	3L4566	1	PLUG-BUTTON					
	4	7T6067	1	BRACKET AS					
C	5	5S7349	2	BOLT					
		5P4115	2	WASHER					
	6	7T6064	1	COVER					
CBD	7	5P5928		SEAL					
C	8	3S2093	2	STRAP-CABLE					
	9	7T6059	1	INSULATION					

B-USE AS REQUIRED
C-CHANGE FROM PREVIOUS TYPE
D-ORDER BY THE METER

B-456545 EP

7304

6T7850 HEATER GP-PART 3 OF 3
Part Of 7T2427 Heater
An Attachment

MEMORANDA

CAB, GAUGES AND ACCESSORIES

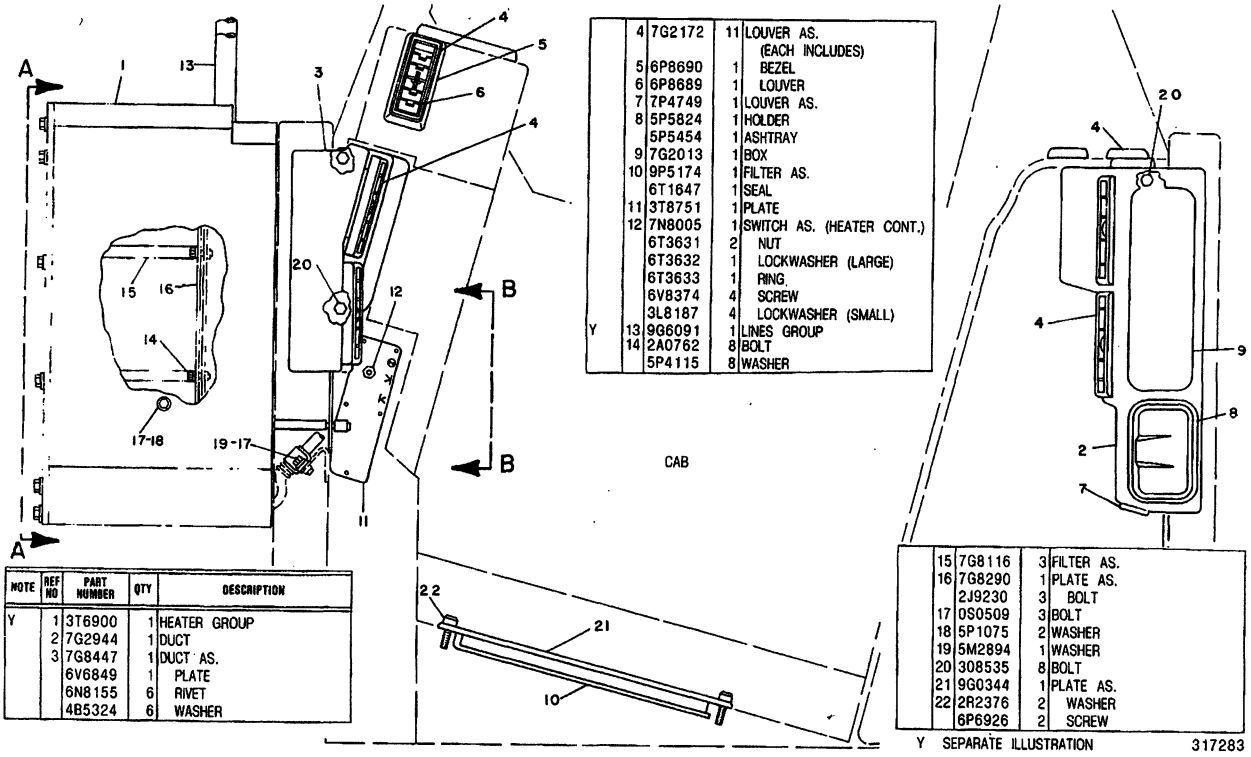

	4	7G2172	11	LOUVER AS. (EACH INCLUDES)
	5	6P8690	1	BEZEL
	6	6P8689	1	LOUVER
	7	7P4749	1	LOUVER AS.
	8	5P5824	1	HOLDER
		5P5454	1	ASHTRAY
	9	7G2013	1	BOX
	10	9P5174	1	FILTER AS.
		6T1647	1	SEAL
	11	3T8751	1	PLATE
	12	7N8005	1	SWITCH AS. (HEATER CONT.)
		6T3631	2	NUT
		6T3632	1	LOCKWASHER (LARGE)
		6T3633	1	RING
		6V8374	4	SCREW
		3L8187	4	LOCKWASHER (SMALL)
Y	13	9G6091	1	LINES GROUP
	14	2A0762	8	BOLT
		5P4115	8	WASHER

NOTE	REF NO	PART NUMBER	QTY	DESCRIPTION
Y	1	3T6900	1	HEATER GROUP
	2	7G2944	1	DUCT
	3	7G8447	1	DUCT AS.
		6V6849	1	PLATE
		6N8155	6	RIVET
		4B5324	6	WASHER

	15	7G8116	3	FILTER AS.
	16	7G8290	1	PLATE AS.
		2J9230	3	BOLT
	17	0S0509	3	BOLT
	18	5P1075	2	WASHER
	19	5M2894	1	WASHER
	20	308535	8	BOLT
	21	9G0344	1	PLATE AS.
	22	2R2376	2	WASHER
		6P6926	2	SCREW

Y SEPARATE ILLUSTRATION

317283

317283 P

7304

6T8698 HEATER GP-CAB-PART 1 OF 2

Type 1. S/N 53Y1-3484

9G6091-Page 326,3T6900-Page 327

Part Of 6T8696 Cab. 7T7358 Air Filter Is Available An Attachment

CAB, GAUGES AND ACCESSORIES

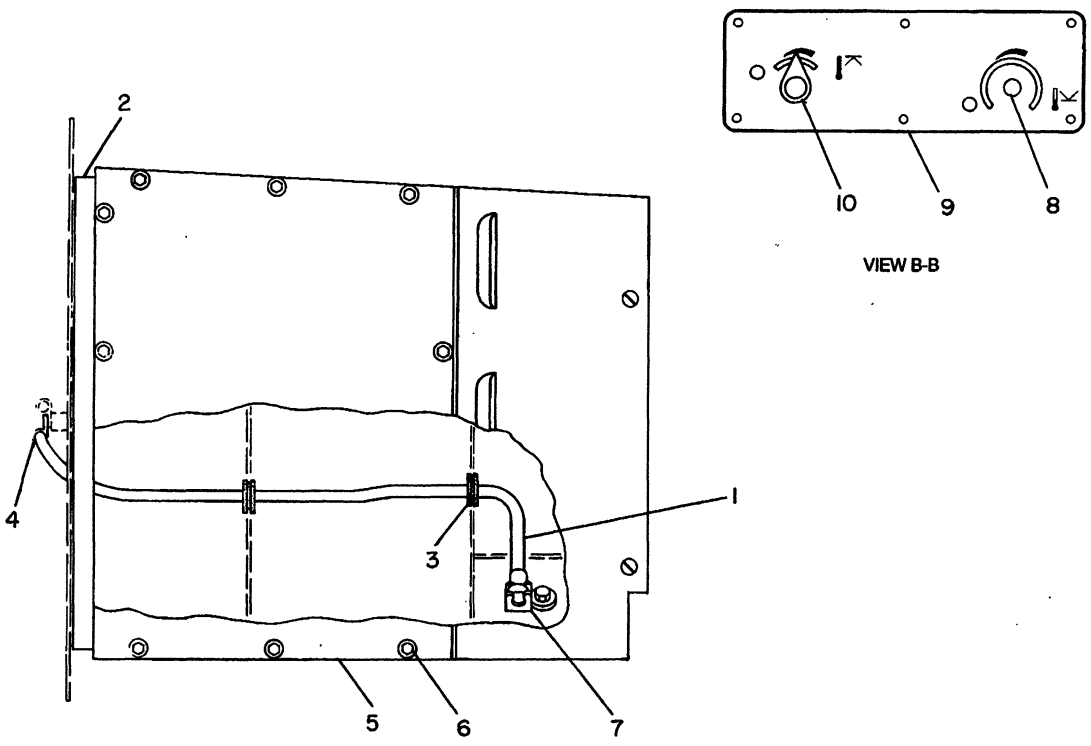

NOTE	REF NO	PART NUMBER	QTY	PART NAME	NOTE	REF NO	PART NUMBER	QTY	PART NAME
Y	1	3T6912	1	HARNESS AS					
BD	2	5P5954		SEAL					
	3	5F9757	2	GROMMET					
	4	4D7794	1	CLIP					
	5	7G8221	1	COVER					
		7G8222	1	GASKET					
	6	0S1616	14	BOLT					
		5P4115	14	WASHER					
	7	9G9152	1	CLIP					
	8	7L6479	1	PLUG-BUTTON					
		3T5201	1	BEARING					
	9	7G8292	1	PLATE-CONTROL					
		7G8464	1	ROD AS					
		3H1118	1	PIN-SPRING					
	10	2V0099	1	KNOB (HEATER TEMPERATURE)					

B-USE AS REQUIRED
D-ORDER BY THE METER
Y-SEPARATE ILLUSTRATION

B- 317284 P

7304 **6T8698 HEATER GP-CAB-PART 2 OF 2**

Type 1. S/N 53Y1-3484
3T6912-Page 305
Part Of 6T8696 Cab. 7T7358 Air Filter Is Available
An Attachment

CAB, GAUGES AND ACCESSORIES

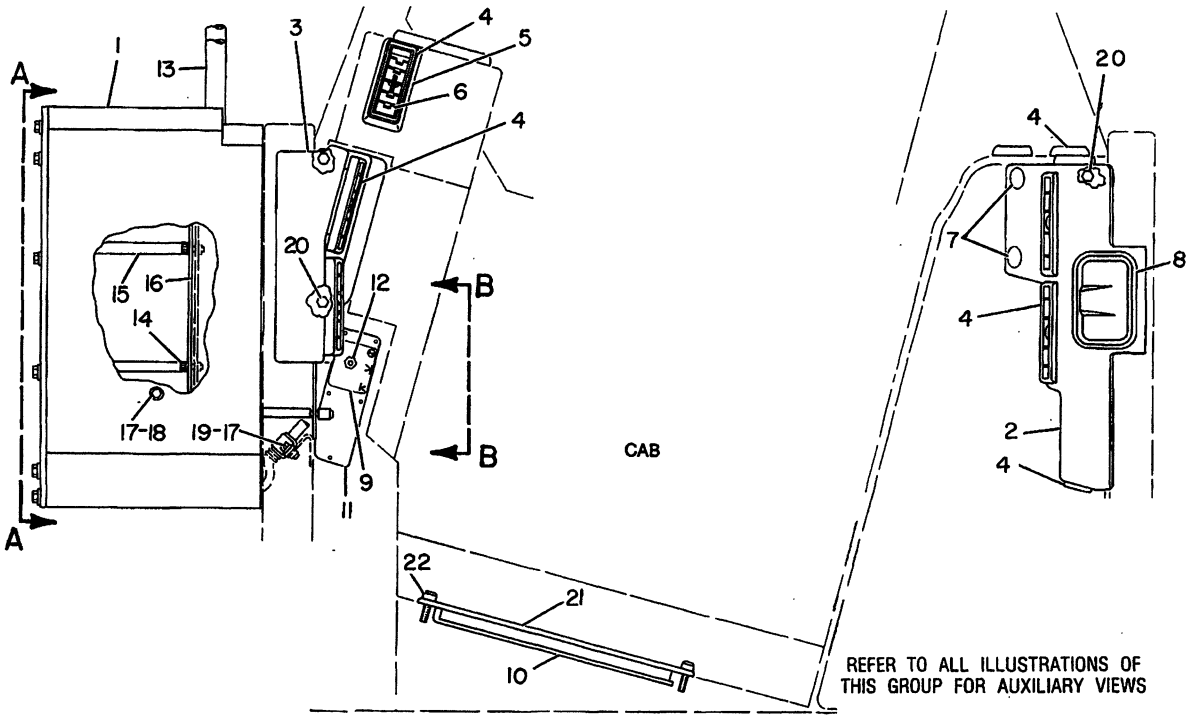

NOTE	REF NO	PART NUMBER	QTY	PART NAME
Y	1	3T6900	1	HEATER GP
C	2	7G2944	1	DUCT-AIR
	3	7G8447	1	DUCT AS
		6V6849	1	PLATE-WARNING
		6N8155	6	RIVET-POP
		4B5324	6	WASHER
C	4	7G2172	11	LOUVER AS
				(EACH INCLUDES)
	5	6P8690	1	BEZEL
	6	6P8689	1	LOUVER
C	7	4F8711	1	PLUG
	8	5P5824	1	HOLDER-ASH TRAY
		5P5454	1	ASHTRAY
C	9	8T1756	1	FILM-INSTRUCTION
	10	9P5174	1	FILTER AS
		6T1647	1	SEAL-FILTER
	11	3T8751	1	PLATE-CONTROL
	12	7N8005	1	SWITCH AS
				(HEATER CONTROL)
		6T3631	2	NUT-HEX
		6T3632	1	LOCKWASHER (LARGE)
		6T3633	1	LOCKRING
		6V8374	4	SCREW-MACHINE
		3L8187	4	LOCKWASHER (SMALL)
Y	13	9G6091	1	LINES GP-HEATER
	14	2A0762	8	BOLT
		5P4115	8	WASHER
	15	7G8116	3	FILTER AS
	16	7G8290	1	PLATE AS
		2J9230	3	BOLT
	17	0S0509	3	BOLT
	18	5P1075	2	WASHER-HARD
	19	5M2894	1	WASHER
	20	308535	8	BOLT-LOCKING
	21	9G0344	1	PLATE AS
	22	2R2376	2	WASHER
		6P6926	2	SCREW-KNURLED
CF		8T1755	1	FILM-INSTRUCTION

C-CHANGE FROM PREVIOUS TYPE
F-NOT SHOWN
Y-SEPARATE ILLUSTRATION

B-335131 P

6T8698 HEATER GP-CAB-PART 1 OF 2

S/N 53Y1-3484

9G6091-Page 326,3T6900-Page 327

Part Of 6T8696 Cab. 7T7358 Air Filter Is Available An Attachment

CAB, GAUGES AND ACCESSORIES

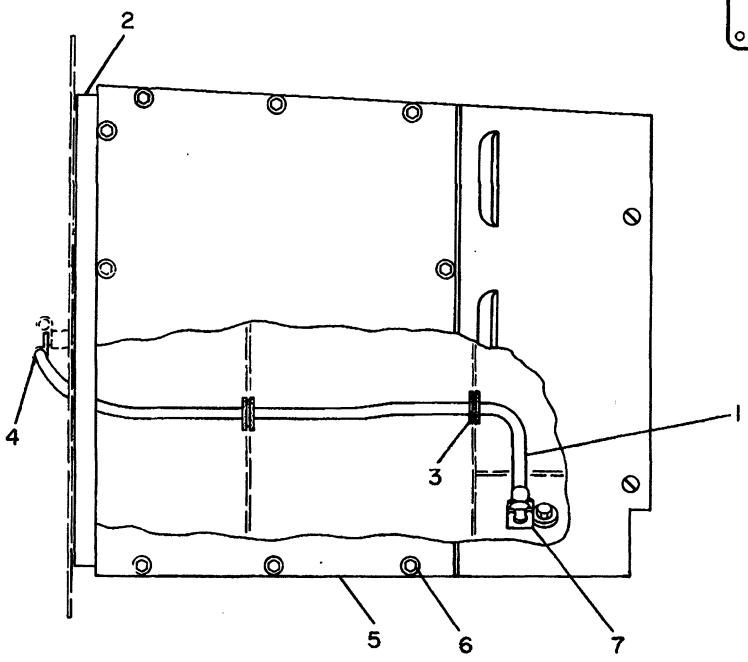

VIEW A-A

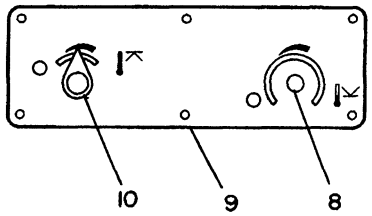

VIEW B-B

NOTE	REF NO	PART NUMBER	QTY	PART NAME
Y	1	3T6912	1	HARNESS AS
BD	2	5P5954		SEAL
	3	5F9757	2	GROMMET
	4	4D7794	1	CLIP
	5	7G8221	1	COVER
		7G8222	1	GASKET
	6	OS1616	14	BOLT
		5P4115	14	WASHER
	7	9G9152	1	CLIP
	8	7L6479	1	PLUG-BUTTON
		3T5201	1	BEARING
	9	7G8292	1	PLATE-CONTROL
		7G8464	1	ROD AS
		3H1118	1	PIN-SPRING
	10	2V0099	1	KNOB (HEATER TEMPERATURE)

B-USE AS REQUIRED
D-ORDER BY THE METER
Y-SEPARATE ILLUSTRATION

B- 317284 P

7304 **6T8698 HEATER GP-CAB-PART 2 OF 2**

Type 2. S/N 53Y1-3484

3T6912-Page 305

Part Of 6T8696 Cab. 7T7358 Air Filter Is Available An Attachment

CAB, GAUGES AND ACCESSORIES

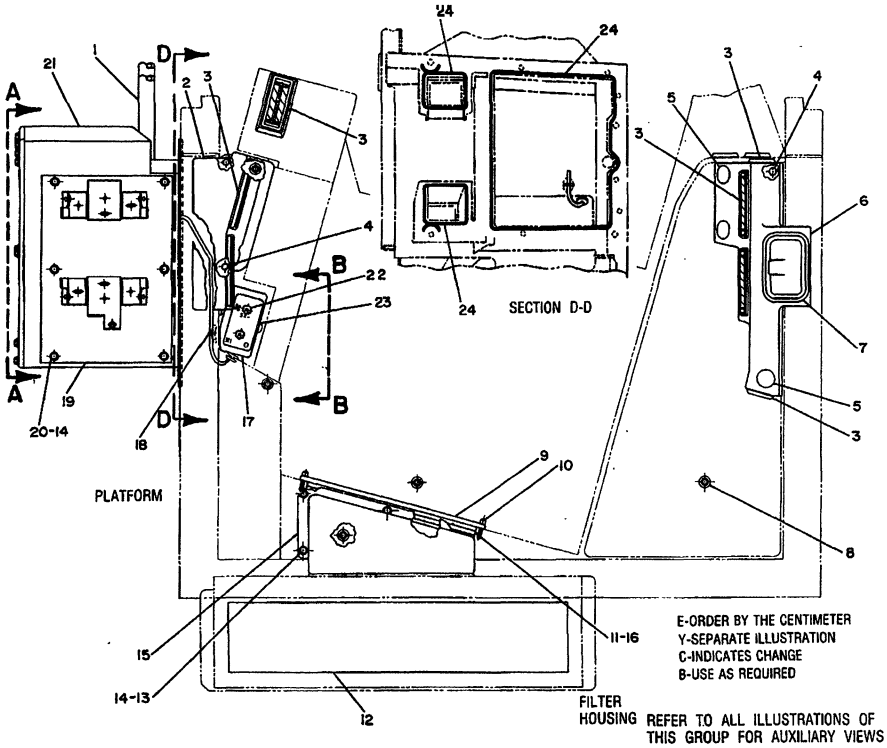

NOTE	REF NO	PART NUMBER	QTY	PART NAME
Y	1	7T4384	1	LINES GP-HEATER
	2	7G8447	1	DUCT AS
		4B5324	6	WASHER
		6N8155	6	RIVET-POP
		6V6849	1	PLATE-WARNING
	3	7T4306	11	LOUVER AS
	4	308535	7	BOLT-SELF LOCKING
	5	4F8711	3	PLUG
	6	7T0113	1	DUCT-AIR
	7	5P5824	1	HOLDER-ASHTRAY
		5P5454	1	ASHTRAY
	8	6K4936	5	BOLT-LOCKING
		6B2882	5	SPACER
	9	9G0344	1	PLATE AS
	10	6P6926	2	SCREW-KNURLED
		2R2376	2	WASHER
	11	9P5174	1	FILTER AS
	12	7T1890	1	FILTER-AIR
	13	4M5283	4	BOLT
	14	5P4115	10	WASHER-HARD
	15	6T9441	1	DUCT-AIR
	16	6T1647	1	SEAL-FILTER
	17	6T9902	1	PLATE-CONTROL
	18	3S2093	1	STRAP
	19	9W0117	1	COVER AS
		7T3801	1	COVER
		7T3800	1	GASKET
		9F6445	5	NUT
	20	0S1614	6	BOLT
Y	21	6T7850	1	HEATER GP
	22	7T3946	1	SWITCH AS (BLOWER)
		6T3633	1	RING-LOCKING
		6T3632	1	LOCKWASHER (LARGE)
		6T3631	2	NUT-HEXAGON
		6V8374	6	SCREW-MACHINE
		3L8187	6	LOCKWASHER (SMALL)
	23	8T4227	1	FILM-INSTRUCTION
CBE	24	8C8717		SEAL

410523-

V-410523 P

7304

7T2427 HEATER GP-CAB-PART 1 OF 2

S/N 53Y3485-Up

7T4384-Page 326C,6T7850-Page 327A

Part Of 7T2563 Cab. 7T7358 Air Filter Is Available An Attachment

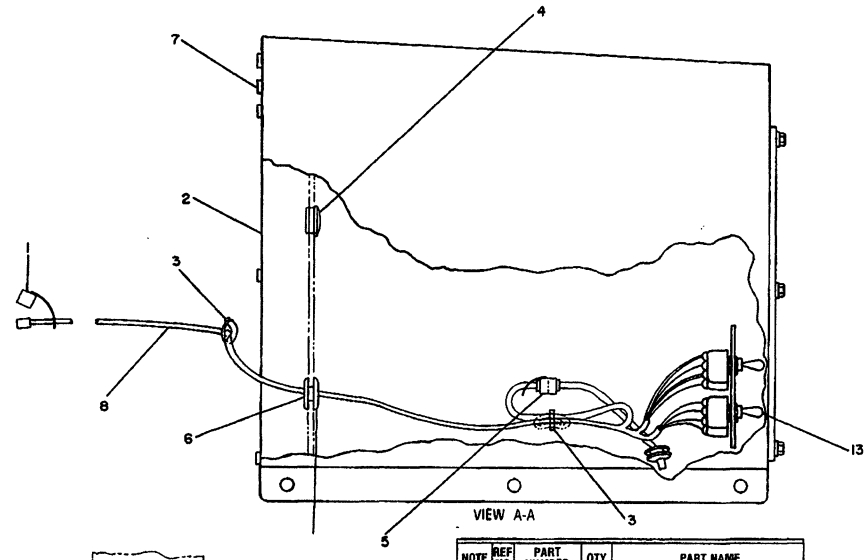

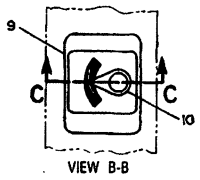

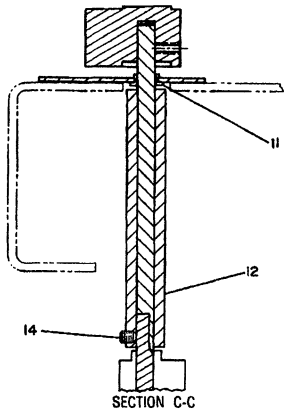

NOTE	REF NO	PART NUMBER	QTY	PART NAME
	1	3T3045	1	CLIP AS
	2	7T5061	1	SEAL
	3	3S2093	2	STRAP
	4	9P6571	1	PLUG
	5	3T3047	1	CLIP AS
	6	5F9757	2	GROMMET
	7	4H0408	5	PLUG-PROTECTIVE
	8	7T8208	1	HARNESS AS-AIR CONDITION
	9	9W3429	1	PLATE-CONTROL
	10	2V0099	1	KNOB
	11	3T5201	1	BEARING
	12	7G8464	1	ROD AS
		3H1118	1	PIN-SPRING
	13	3T1730	1	SWITCH AS (HEATER)
		6T3633	1	RING-LOCKING
		6T3632	1	LOCKWASHER (LARGE)
		6T3631	2	NUT-HEXAGON
		6V8374	4	SCREW-MACHINE
		3L8187	4	LOCKWASHER (SMALL)
C	14	9L9596	1	SETSCREW-SOCKET

C-INDICATES CHANGE

410524

V- 410524 P

7304 **7T2427 HEATER GP-CAB-PART 2 OF 2**

S/N 53Y3485-Up

Part Of 7T2563 Cab. 7T7358 Air Filter Is Available An Attachment

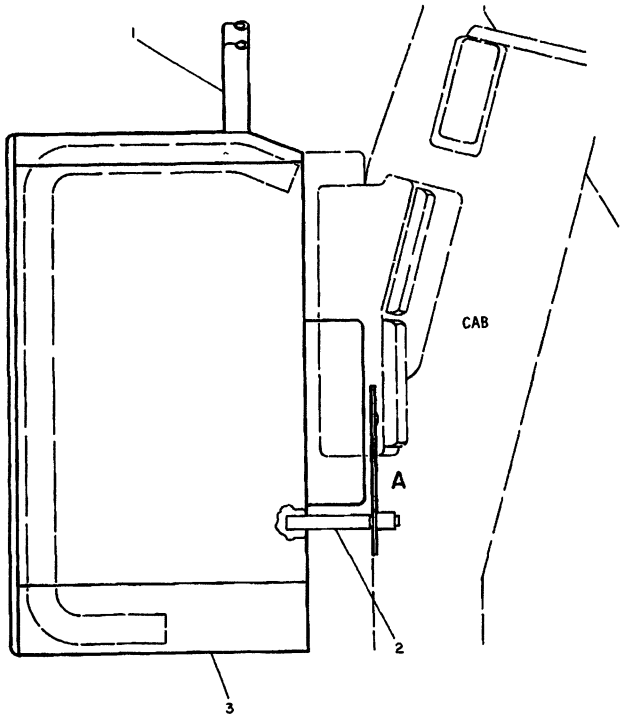

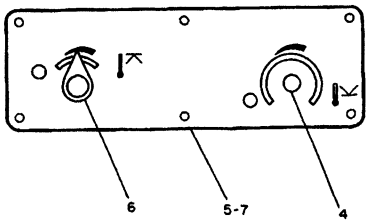

VIEW OF AREA A

REF. NO.	PART NUMBER	DESCRIPTION	QTY.
1	9G6091	LINES GROUP---------- (Separate Illustration)	1
2	7G8464	ROD ASSEM.----------	1
3	3T6900	HEATER GROUP---------- (Separate Illustration)	1
4	7L6479	PLUG----------	1
5	7G8292	PLATE----------	1
6	2V99	KNOB----------	1
7	3T5201	BEARING----------	1

235950

235950 P

7304

9G5528 HEATER GP-CAB

9G6091-Page 326, 3T6900-Page 327

An Attachment

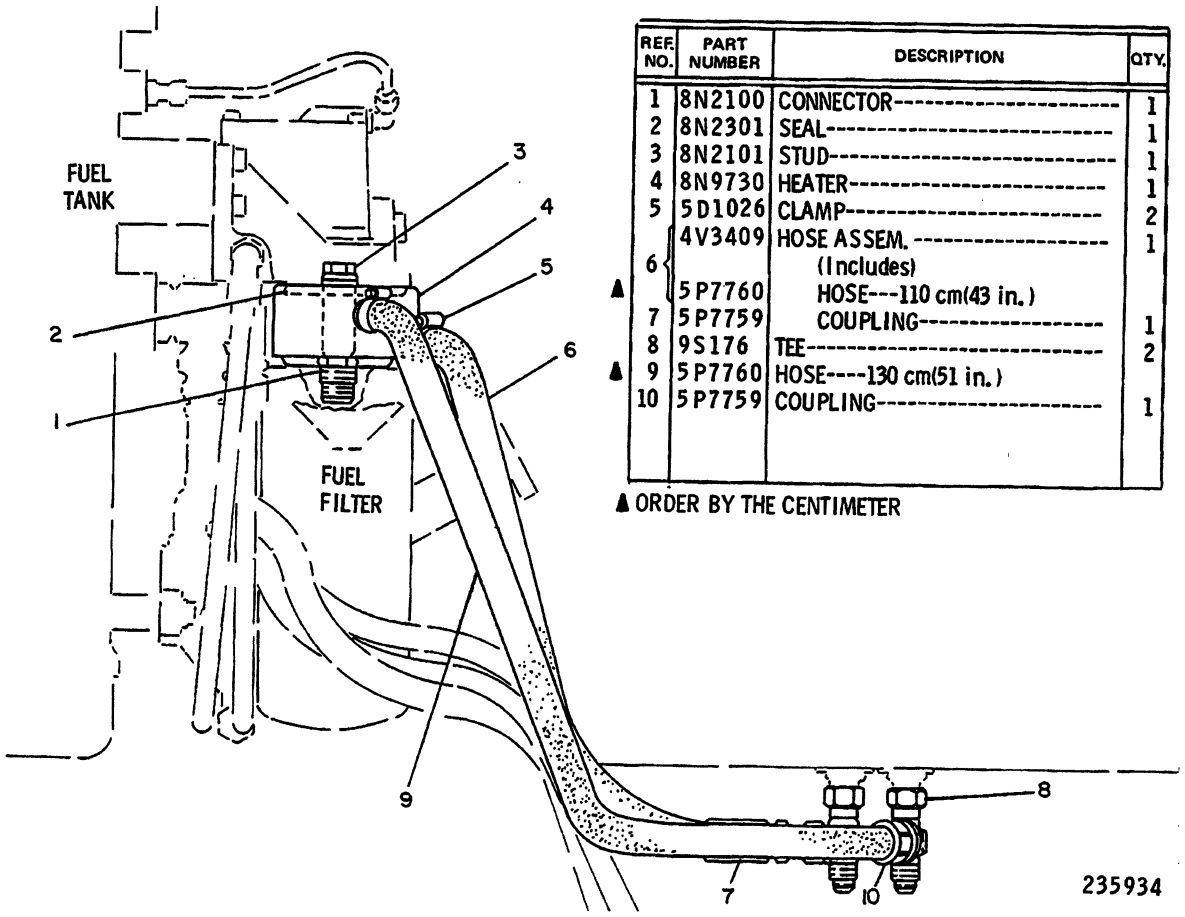

REF. NO.	PART NUMBER	DESCRIPTION	QTY.
1	8N2100	CONNECTOR	1
2	8N2301	SEAL	1
3	8N2101	STUD	1
4	8N9730	HEATER	1
5	5D1026	CLAMP	2
6	4V3409	HOSE ASSEM. (Includes)	1
▲	5P7760	HOSE---110 cm(43 in.)	
7	5P7759	COUPLING	1
8	9S176	TEE	2
▲ 9	5P7760	HOSE----130 cm(51 in.)	
10	5P7759	COUPLING	1

▲ ORDER BY THE CENTIMETER

235934 P

1296 **3T1356 HEATER GP-FUEL-DIESEL**
With Cab Heater
Type 1
An Attachment

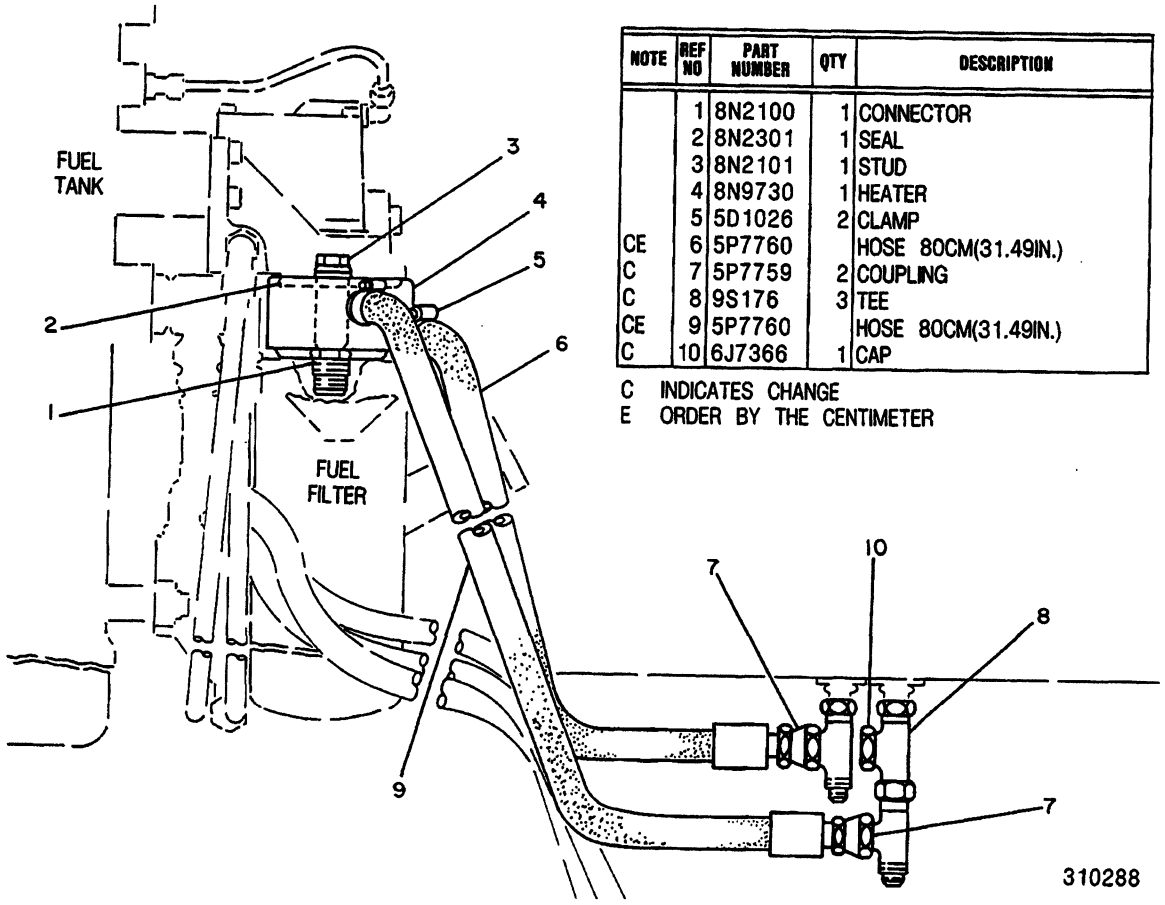

NOTE	REF NO	PART NUMBER	QTY	DESCRIPTION
	1	8N2100	1	CONNECTOR
	2	8N2301	1	SEAL
	3	8N2101	1	STUD
	4	8N9730	1	HEATER
	5	5D1026	2	CLAMP
CE	6	5P7760		HOSE 80CM(31.49IN.)
C	7	5P7759	2	COUPLING
C	8	9S176	3	TEE
CE	9	5P7760		HOSE 80CM(31.49IN.)
C	10	6J7366	1	CAP

C INDICATES CHANGE
E ORDER BY THE CENTIMETER

310288 P

3T1356 HEATER GP-CAB-DIESEL
With Cab Heater
Type 2
An Attachment

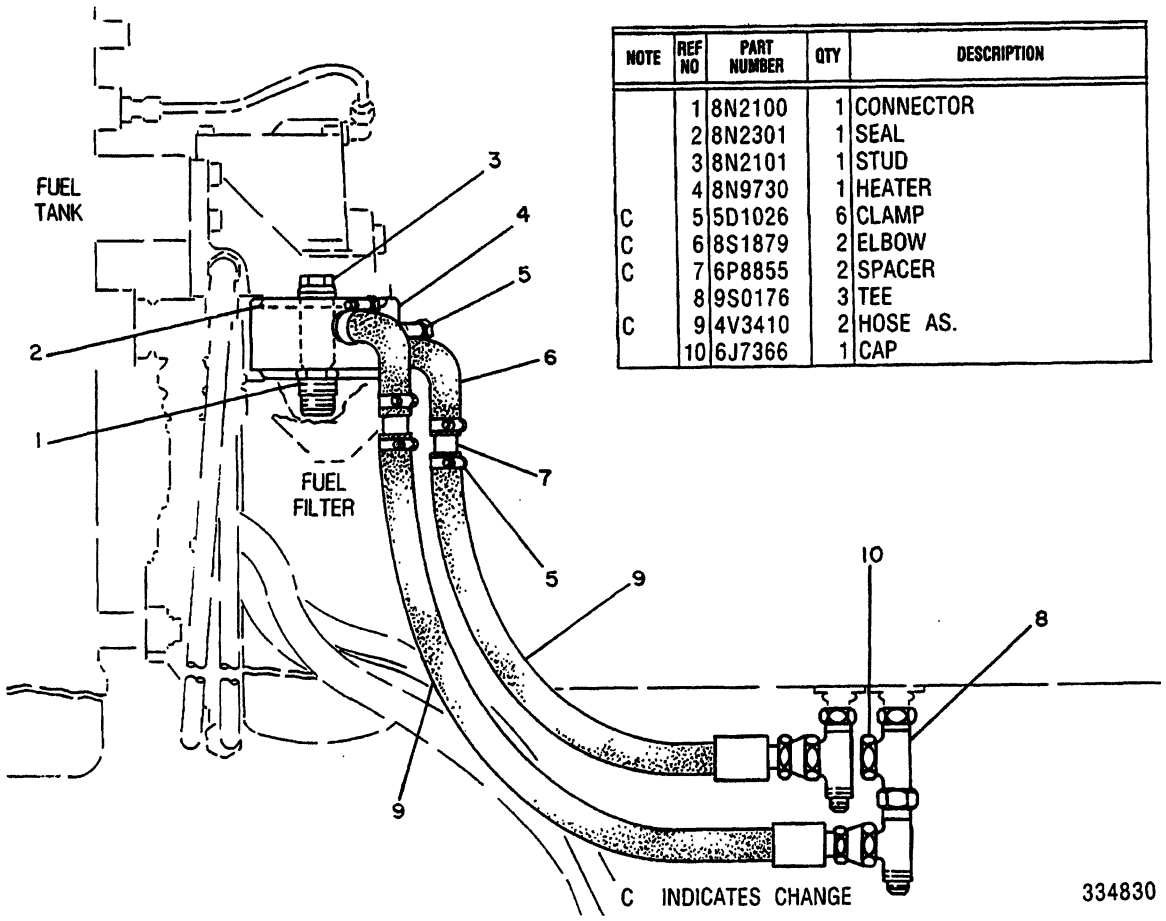

NOTE	REF NO	PART NUMBER	QTY	DESCRIPTION
	1	8N2100	1	CONNECTOR
	2	8N2301	1	SEAL
	3	8N2101	1	STUD
	4	8N9730	1	HEATER
C	5	5D1026	6	CLAMP
C	6	8S1879	2	ELBOW
C	7	6P8855	2	SPACER
	8	9S0176	3	TEE
C	9	4V3410	2	HOSE AS.
	10	6J7366	1	CAP

334830 P

1296 **3T1356 HEATER GP-FUEL-DIESEL**
With Cab Heater
Type 3
An Attachment

CAB, GAUGES AND ACCESSORIES

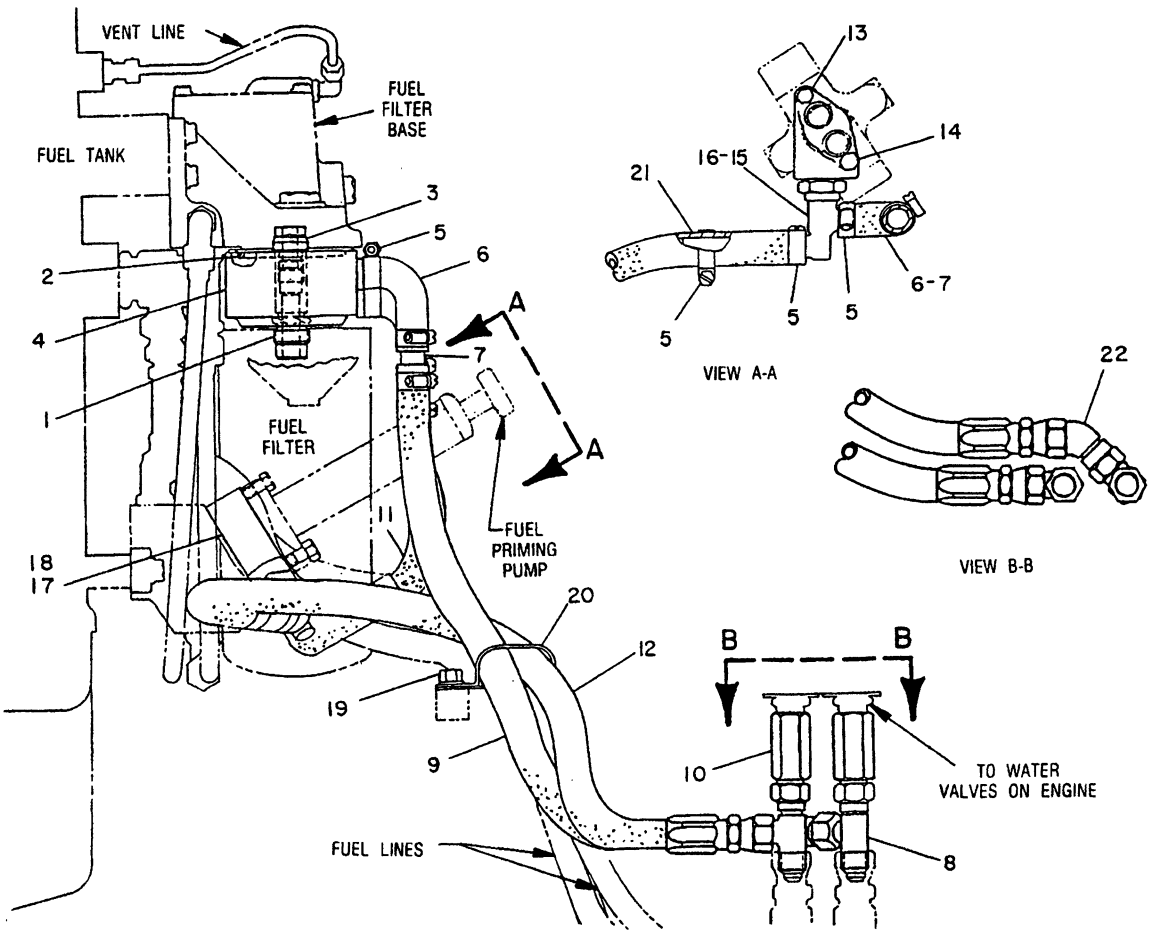

NOTE	REF NO	PART NUMBER	QTY	PART NAME	NOTE	REF NO	PART NUMBER	QTY	PART NAME
	1	8N2100	1	CONNECTOR					
	2	8N2301	1	SEAL					
	3	8N2101	1	STUD-HOLLOW					
	4	8N9730	1	HEATER-FUEL					
C	5	5D1026	11	CLAMP-HOSE					
C	6	8S1879	3	ELBOW-HOSE					
C	7	6P8855	3	SPACER					
C	8	9S0176	2	TEE-SWIVEL					
C	9	4V3410	1	HOSE AS					
C	10	8T2270	2	CONNECTOR-EXTENSION					
CE	11	5P7760		HOSE 18CM(7.09 IN)					
C	12	9W6321	1	HOSE AS					
C	13	1B2714	1	BOLT					
C	14	1D4539	1	BOLT					
C	15	8N9707	1	REGULATOR-FUEL TEMPERATURE					
C	16	2M9780	1	SEAL-O-RING					
C	17	8N9584	1	ADAPTER					
C	18	1P0436	2	GASKET					
C	19	1A2029	1	BOLT					
C	20	5D0718	1	CLIP					
C	21	9W8394	1	ORIFICE					
C	22	307964	1	ELBOW					

C-CHANGE FROM PREVIOUS TYPE
E-ORDER BY THE CENTIMETER

M-410752 EP

3T1356 HEATER GP-FUEL-DIESEL
With Cab Heater
Type 4
An Attachment

MEMORANDA

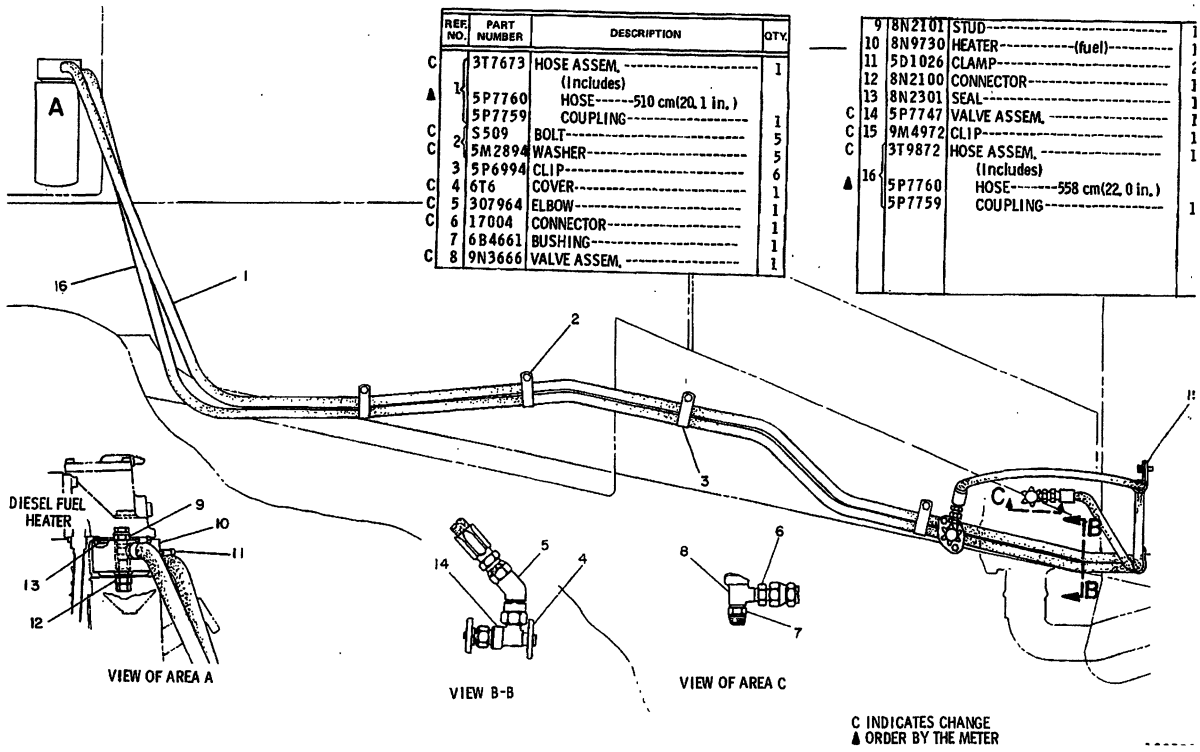

REF. NO.	PART NUMBER	DESCRIPTION	QTY.
C	3T7673	HOSE ASSEM.	1
		(Includes)	
▲ 1	5P7760	HOSE------510 cm(20.1 in.)	
	5P7759	COUPLING	1
C	S509	BOLT	1
C 2	5M2894	WASHER	5
3	5P6994	CLIP	5
C 4	6T6	COVER	6
C 5	307964	ELBOW	1
C 6	17004	CONNECTOR	1
7	6B4661	BUSHING	1
C 8	9N3666	VALVE ASSEM.	1
9	8N2101	STUD	1
10	8N9730	HEATER----------(fuel)	1
11	5D1026	CLAMP	2
12	8N2100	CONNECTOR	1
13	8N2301	SEAL	1
C 14	5P7747	VALVE ASSEM.	1
C 15	9M4972	CLIP	1
C	3T9872	HOSE ASSEM.	1
		(Includes)	
▲ 16	5P7760	HOSE-------558 cm(22.0 in.)	
	5P7759	COUPLING	1

C INDICATES CHANGE
▲ ORDER BY THE METER

182578 P

1296

3T6833 HEATER GP-DIESEL
Without Cab Heater
Type 1
An Attachment

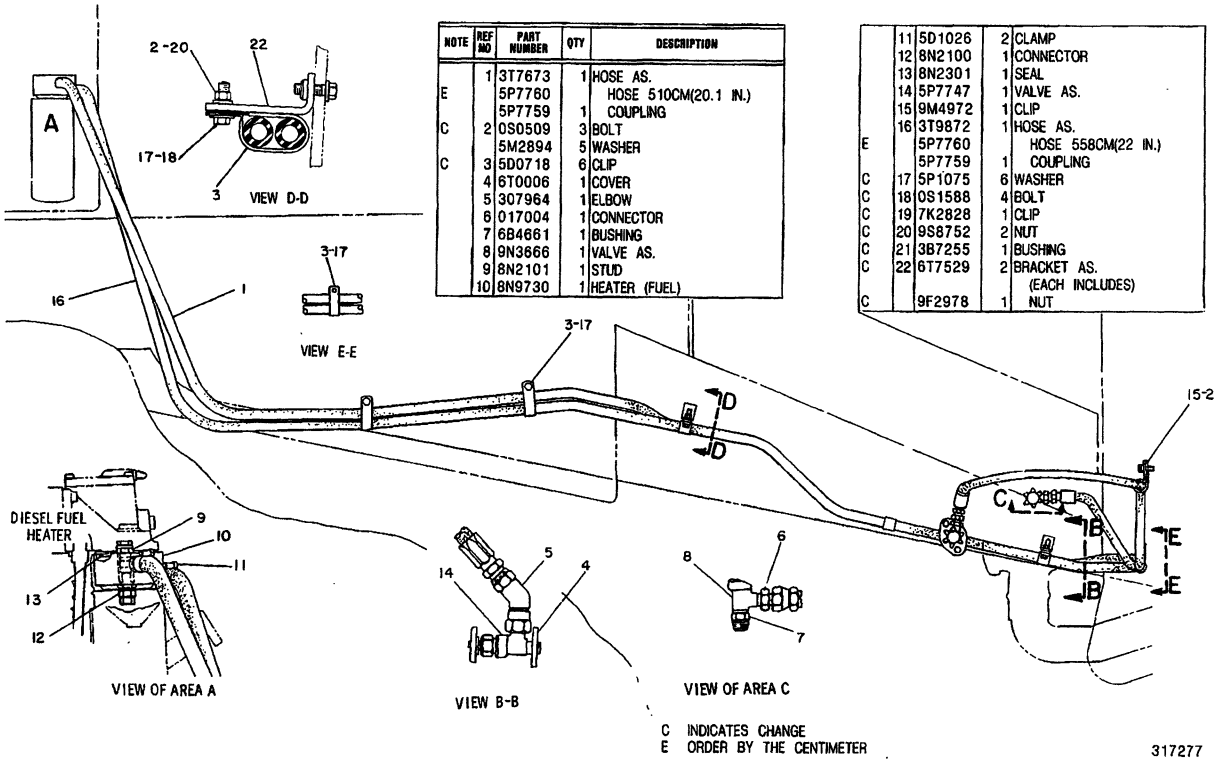

NOTE	REF NO	PART NUMBER	QTY	DESCRIPTION
	1	3T7673	1	HOSE AS.
E		5P7760		HOSE 510CM(20.1 IN.)
		5P7759	1	COUPLING
C	2	0S0509	3	BOLT
		5M2894	5	WASHER
C	3	5D0718	6	CLIP
	4	6T0006	1	COVER
	5	3O7964	1	ELBOW
	6	0I7004	1	CONNECTOR
	7	6B4661	1	BUSHING
	8	9N3666	1	VALVE AS.
	9	8N2101	1	STUD
	10	8N9730	1	HEATER (FUEL)
	11	5D1026	2	CLAMP
	12	8N2100	1	CONNECTOR
	13	8N2301	1	SEAL
	14	5P7747	1	VALVE AS.
	15	9M4972	1	CLIP
	16	3T9872	1	HOSE AS.
E		5P7760		HOSE 558CM(22 IN.)
		5P7759	1	COUPLING
C	17	5P1075	6	WASHER
C	18	0S1588	4	BOLT
C	19	7K2828	1	CLIP
C	20	9S8752	2	NUT
C	21	3B7255	1	BUSHING
C	22	6T7529	2	BRACKET AS. (EACH INCLUDES)
C		9F2978	1	NUT

C INDICATES CHANGE
E ORDER BY THE CENTIMETER

317277

317277 P

1296

3T6833 HEATER GP-DIESEL
Without Cab Heater
Type 2
An Attachment

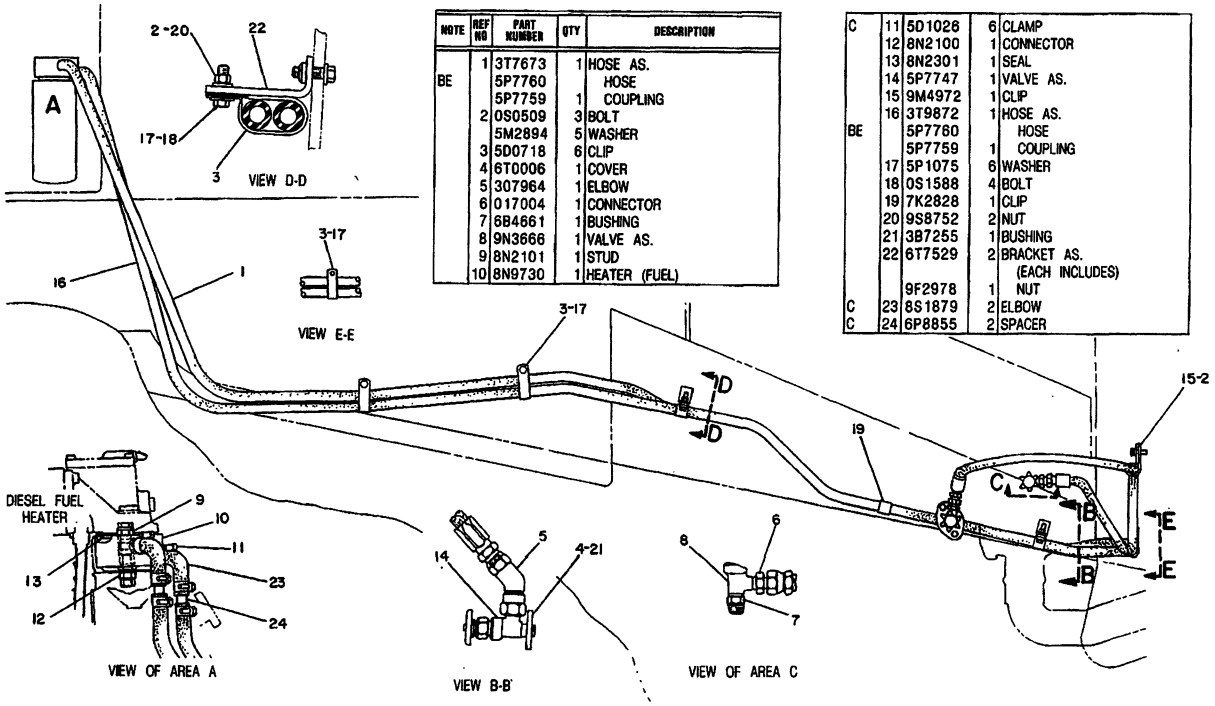

NOTE	REF NO	PART NUMBER	QTY	DESCRIPTION
	1	3T7673	1	HOSE AS.
BE		5P7760		HOSE
		5P7759	1	COUPLING
	2	0S0509	3	BOLT
		5M2894	5	WASHER
	3	5D0718	6	CLIP
	4	6T0006	1	COVER
	5	3O7964	1	ELBOW
	6	017004	1	CONNECTOR
	7	6B4661	1	BUSHING
	8	9N3666	1	VALVE AS.
	9	8N2101	1	STUD
	10	8N9730	1	HEATER (FUEL)
C	11	5D1026	6	CLAMP
	12	8N2100	1	CONNECTOR
	13	8N2301	1	SEAL
	14	5P7747	1	VALVE AS.
	15	9M4972	1	CLIP
	16	3T9872	1	HOSE AS.
BE		5P7760		HOSE
		5P7759	1	COUPLING
	17	5P1075	6	WASHER
	18	0S1588	4	BOLT
	19	7K2828	1	CLIP
	20	9S8752	2	NUT
	21	3B7255	1	BUSHING
	22	6T7529	2	BRACKET AS. (EACH INCLUDES)
		9F2978	1	NUT
C	23	8S1879	2	ELBOW
C	24	6P8855	2	SPACER

B USE AS REQUIRED

C INDICATES CHANGE

E ORDER BY THE CENTIMETER

328140

328140 P

3T6833 HEATER GP-FUEL-DIESEL
Without Cab Heater
Type 3
An Attachment

MEMORANDA

CAB, GAUGES AND ACCESSORIES

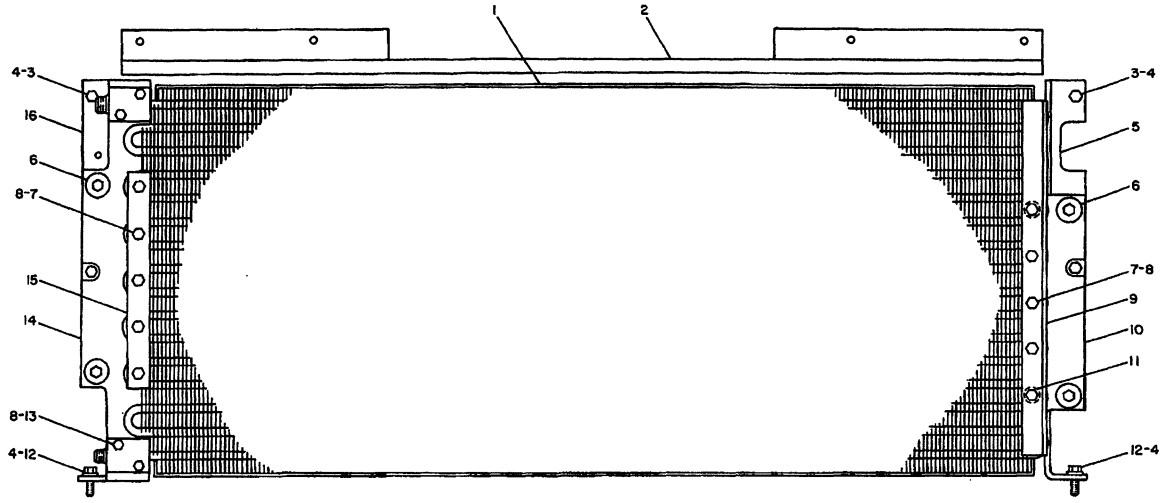

NOTE	REF NO	PART NUMBER	QTY	DESCRIPTION
	1	7N8355	1	CONDENSER AS.
	2	7N8357	1	PLATE
C	3	S1588	4	BOLT
	4	5M2894	10	WASHER
	5	7N8361	2	BRACKET (R.H.)
	6	S1590	4	BOLT
		2S6160	12	WASHER
		6N8744	4	GROMMET AS.
		1D4717	4	NUT
	7	2B2694	10	BOLT
C	8	9M1974	14	WASHER
C	9	4W533	1	ANGLE AS.
C	10	4W534	1	PLATE AS.
	11	8K3826	2	BUSHING
	12	S1594	2	BOLT
C	13	1H5514	4	BOLT
	14	8N5394	1	PLATE
C	15	7N8366	1	STRIP
	16	7N8360	1	BRACKET (L.H.)

C INDICATES CHANGE

308571

308571 P

1805

7N8301 CONDENSER & MOUNTING GP

Type 1. S/N 53Y1-3217
Part Of 9G2971,6T9309 Air Conditioners
An Attachment

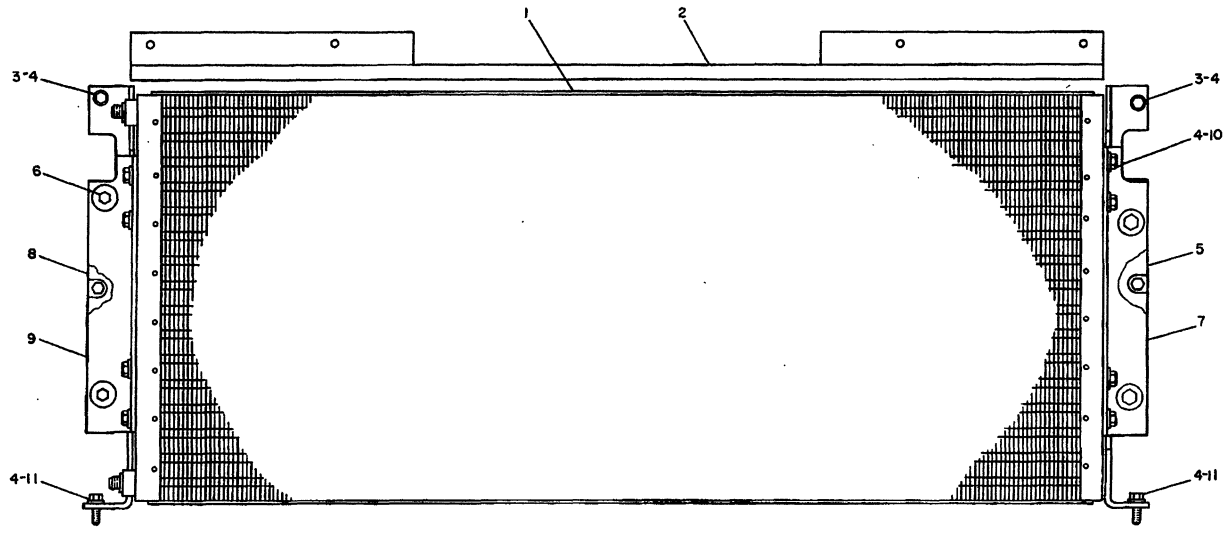

NOTE	REF NO	PART NUMBER	QTY	PART NAME
C	1	2W1652	1	CONDENSER AS
	2	7N8357	1	PLATE
C	3	0S1588	4	BOLT
	4	5M2894	14	WASHER
C	5	2W2385	1	BRACKET (R.H.)
	6	0S1590	4	BOLT
C		2S6160	16	WASHER-HARD
		6N8744	4	GROMMET AS
		1D4717	4	NUT-FULL
C	7	2W2386	1	BRACKET (R.H.)
C	8	2W2384	1	BRACKET (L.H.)
C	9	2W2387	1	BRACKET (L.H.)
C	10	0S0509	8	BOLT
	11	0S1594	2	BOLT

C INDICATES CHANGE

355046

355046 P

1805

7N8301 MOUNTING & CONDENSER GP
Type 2. S/N 53Y1-3217
Part Of 9G2971,6T3909 Air Conditioners
An Attachment

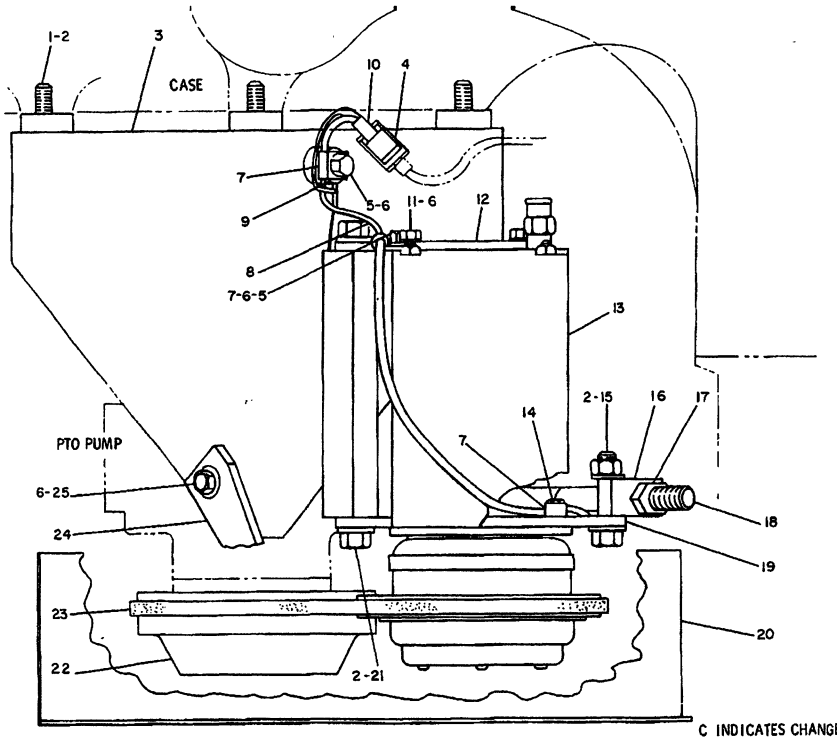

	REF. NO.	PART NUMBER	DESCRIPTION	QTY.
	1	L1329	BOLT	3
	2	5P8245	WASHER	6
	3	9G9692	BRACKET ASSEM.	1
	4	3T3049	CLIP ASSEM.	1
C	5	T102	BOLT	2
C	6	5M2894	WASHER	6
C	7	8M2772	CLIP	3
	8	3T1255	WIRE ASSEM.	1
			(Includes)	
▲		5P5624	WIRE-----.83m(32.68 in.)	
		5P6271	CONNECTOR ASSEM.	
	9	2L8079	TERMINAL	1
	10	7N7777	HOUSING	1
		7N7779	SOCKET	1
	11	L1351	BOLT	2
	12	6P4053	PLATE	1
	13	7N4296	COMPRESSOR GROUP	1
			(Separate Illustration)	
C	14	2H3737	BOLT	3
C		9M1974	WASHER	3
	15	1A1460	BOLT	1
		1D4719	NUT	1
	16	8S5383	BLOCK	1
	17	1D5118	NUT	2
	18	3T137	ROD END	1
		S1589	BOLT	1
		5P8247	WASHER	1
	19	6P4054	PLATE	1
	20	3T140	GUARD ASSEM.	1
	21	S1595	BOLT	2
	22	3T135	PULLEY	1
		L2070	BOLT	3
	23	6L3408	BELT	1
	24	9G9690	PLATE	1
	25	S1594	BOLT	2
		1D4717	NUT	2

C INDICATES CHANGE

▲ ORDER BY THE METER

301465

301465 P

1802

3T0720 COMPRESSOR GP-REFRIGERANT

Type 1. 7N4296-Page 333

Part Of 9G2971,6T9309,7T1442 Air Conditioners

An Attachment

CAB, GAUGES AND ACCESSORIES

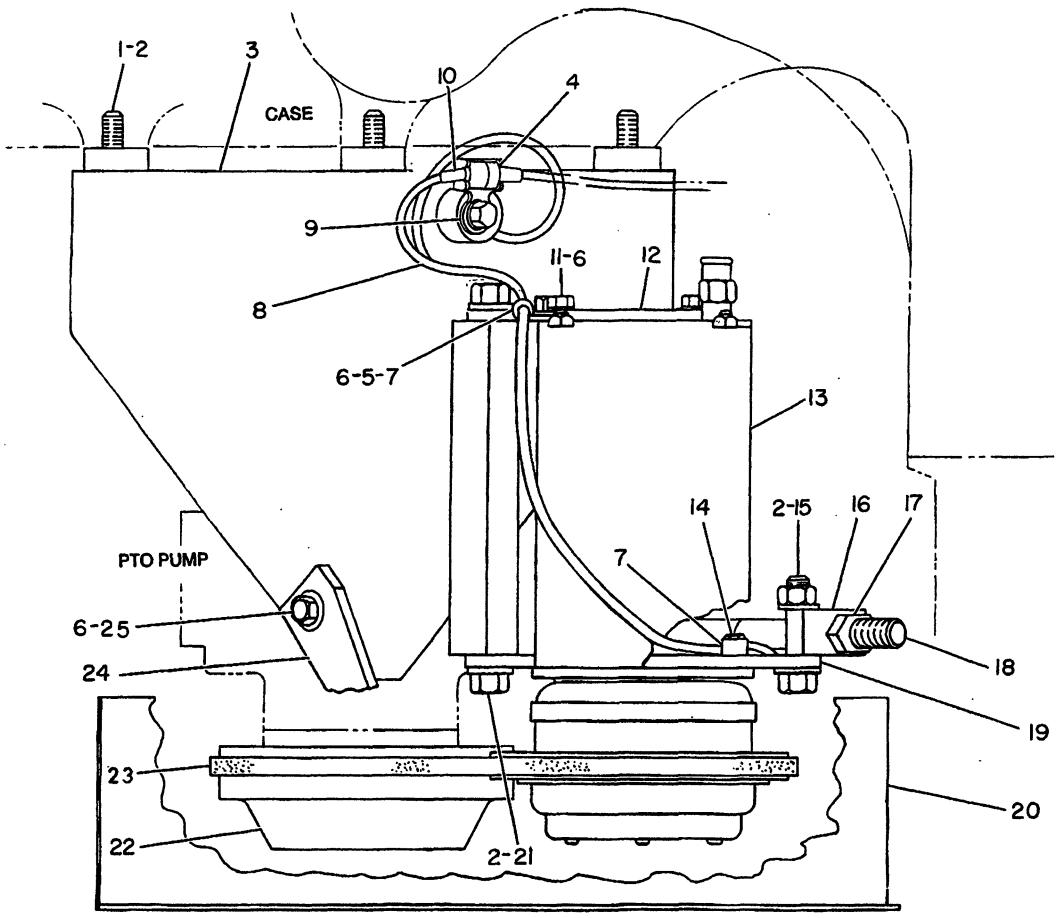

NOTE	REF NO	PART NUMBER	QTY	PART NAME
	1	0L1329	3	BOLT
	2	5P8245	6	WASHER
	3	9G9692	1	BRACKET AS
C	4	9G9150	1	CLIP
	5	0T0102	2	BOLT
	6	5M2894	6	WASHER
C	7	4D7794	2	CLIP
C	8	8P9938	1	WIRE AS
D		5P5624		WIRE 1.4M(55.12IN)
		5P6271	1	CONNECTOR AS
		9G3695	1	PLUG-SEAL
	9	2L8081	1	TERMINAL
	10	7N9738	1	HOUSING-RECEPTACLE
		7N7779	1	SOCKET
	11	0L1351	2	BOLT
	12	6P4053	1	PLATE
RY	13	7N4296	1	COMPRESSOR GP-CLUTCH & REFRIG
	14	2H3737	3	BOLT
		9M1974	3	WASHER-HARD
	15	1A1460	1	BOLT
		1D4719	1	NUT
	16	8S5383	1	BLOCK
	17	1D5118	2	NUT-JAM
	18	3T0137	1	END-ROD
		0S1589	1	BOLT
		5P8247	1	WASHER-HARD
	19	6P4054	1	PLATE
	20	3T0140	1	GUARD AS
	21	0S1595	2	BOLT
	22	3T0135	1	PULLEY
		0L2070	3	BOLT
	23	6L3408	1	V-BELT
	24	9G9690	1	PLATE
	25	0S1594	2	BOLT
		1D4717	2	NUT

C-CHANGE FROM PREVIOUS TYPE
D-ORDER BY THE METER
R-REMFG PART MAY BE AVAILABLE
Y-SEPARATE ILLUSTRATION

B- 310464 P

1802 **3T0720 COMPRESSOR GP-REFRIGERANT**

Type 2. 7N4296-Page 333
Part Of 9G2971,6T9309,7T1442 Air Conditioners
An Attachment

CAB, GAUGES AND ACCESSORIES

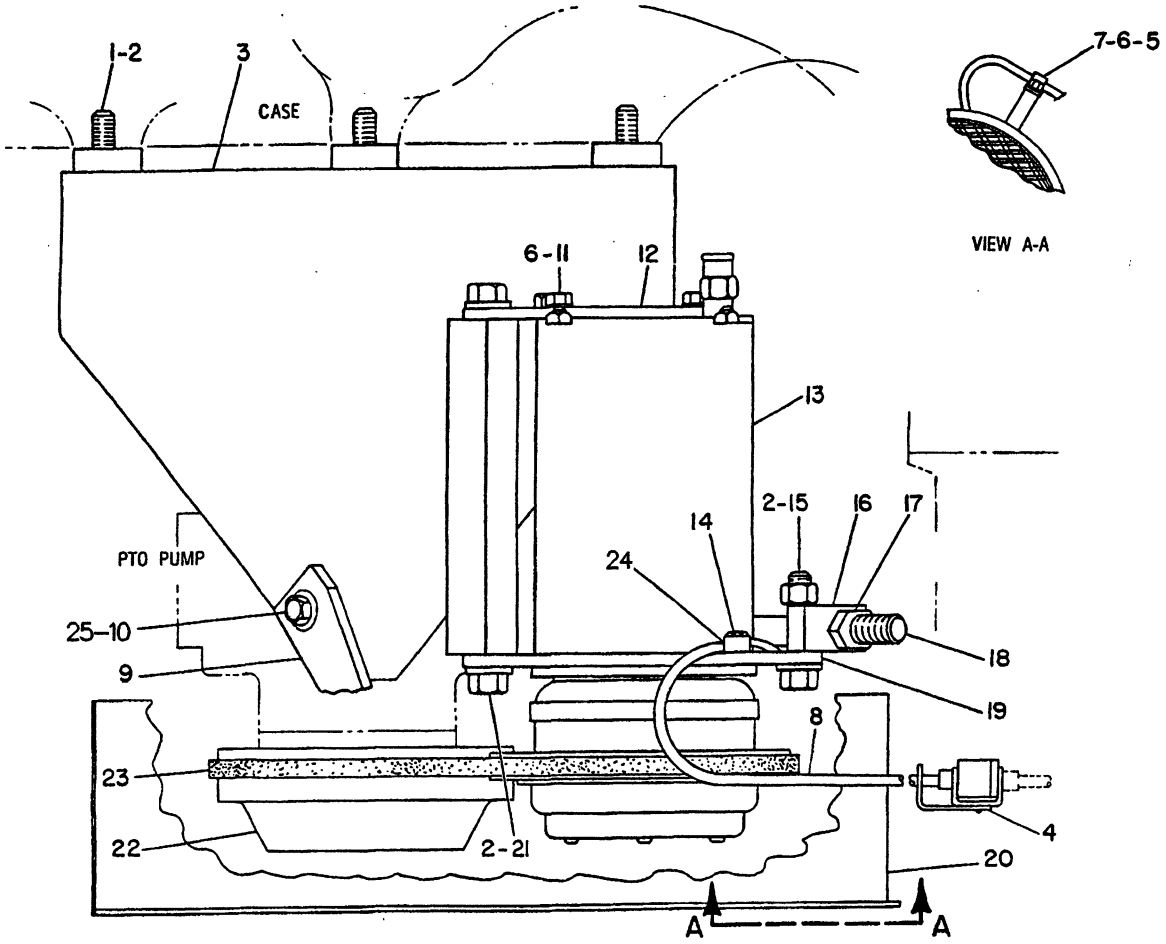

NOTE	REF NO	PART NUMBER	QTY	PART NAME	NOTE	REF NO	PART NUMBER	QTY	PART NAME
	1	7X0326	3	BOLT		21	8T8917	2	BOLT
	2	8T4223	6	WASHER-HARD		22	3T0135	1	PULLEY
	3	9G9692	1	BRACKET AS			8T9377	3	BOLT
	4	3T3048	1	CLIP AS	C	23	1W2934	1	V-BELT
C	5	5M3062	1	BOLT		24	338248	1	CLIP
C	6	8T4896	3	WASHER-HARD		25	5P1075	4	WASHER-HARD
	7	4D7794	1	CLIP					
	8	7T5181	1	HARNESS AS					
	9	9G9690	1	PLATE					
	10	4L6454	2	BOLT					
		1D4717	2	NUT					
	11	5S7379	2	BOLT					
	12	6P4053	1	PLATE					
YR	13	7N4297	1	COMPRESSOR GP-CLUTCH & REFRIG					
	14	2H3737	3	BOLT					
		8T4224	3	WASHER-HARD					
	15	8T4835	1	BOLT					
		6V8188	1	NUT					
	16	8S5383	1	BLOCK					
	17	7X0448	2	NUT					
	18	3T0137	1	END-ROD					
		7X0345	1	BOLT					
		8T4122	1	WASHER					
	19	6P4054	1	PLATE					
	20	3T0140	1	GUARD AS					

C-CHANGE FROM PREVIOUS TYPE
R-REMFG PART MAY BE AVAILABLE
Y-SEPARATE ILLUSTRATION

R-556556 EP

1802

7T5182 COMPRESSOR GP-REFRIGERANT
7N4297-Page 332A.02
Part Of 7T5371 Air Conditioner
An Attachment

CAB, GAUGES AND ACCESSORIES

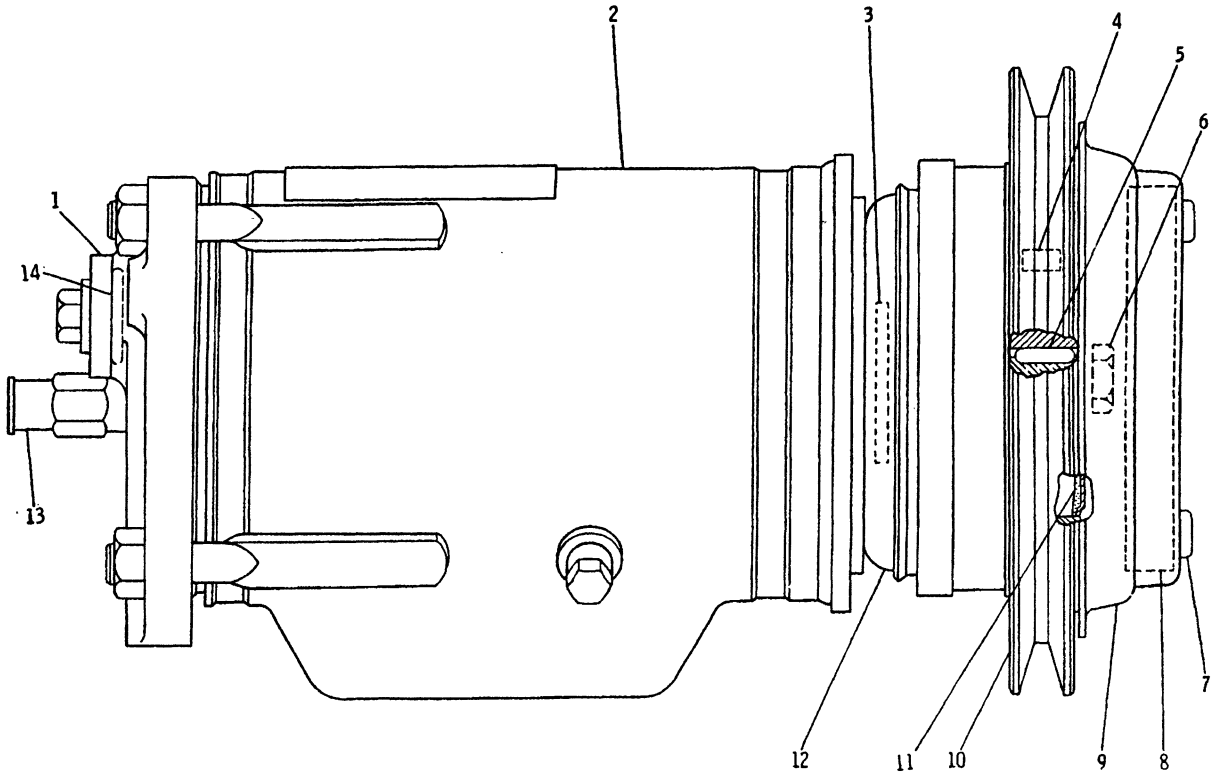

NOTE	REF NO	PART NUMBER	QTY	PART NAME	NOTE	REF NO	PART NUMBER	QTY	PART NAME
	1	1P6356	1	PLATE					
	2	1P6416	1	COMPRESSOR AS					
C	3	1P6357	1	KIT-SEAL REFRIGERANT (INCLUDES RETAINER, RINGS AND SEALS)					
C	4	1P6360	1	BALL BEARING					
	5	7N0809	1	KEY					
C	6	9P8750	1	NUT					
	7	145111	3	SCREW					
C	8	1P6361	1	DRIVE AS-CLUTCH					
	9	6N1116	1	KIT-DUST COVER (INCLUDES COVER AND SCREWS)					
C	10	7N4300	1	PULLEY AS-COMPRESSOR (REFRIGERANT)					
	11	7N4291	1	KIT-DUST SEAL (INCLUDES SHIELD GROUP, SEALS, KEY, NUT, RINGS AND SLEEVE)					
C	12	7N4287	1	COIL AS-CLUTCH					
	13	1P6355	1	VALVE AS-RELIEF					
	14	1H8171	2	SEAL-O-RING					

C-CHANGE FROM PREVIOUS TYPE

B-306020 EP

1802 **7N4297 COMPRESSOR GP-CLUTCH & REFRIGERANT*R**

Part Of 7T5182 Compressor

An Attachment

CAB, GAUGES AND ACCESSORIES

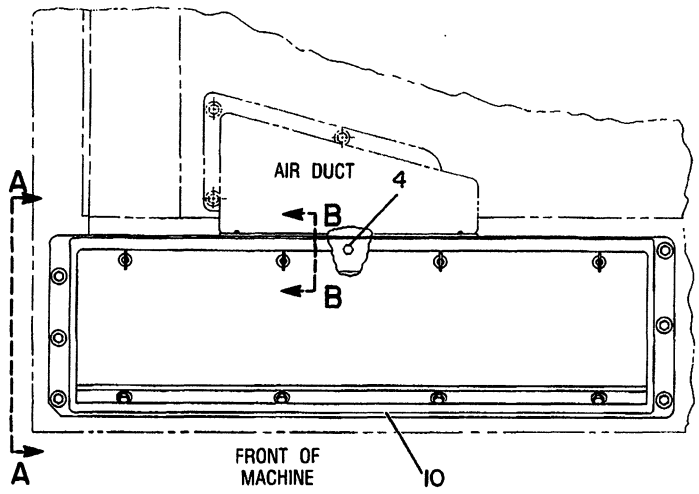

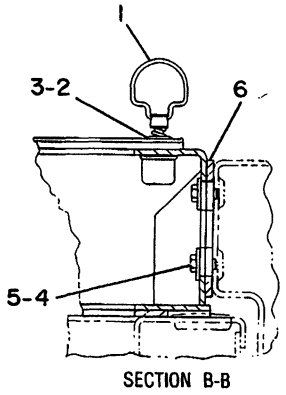

SECTION B-B

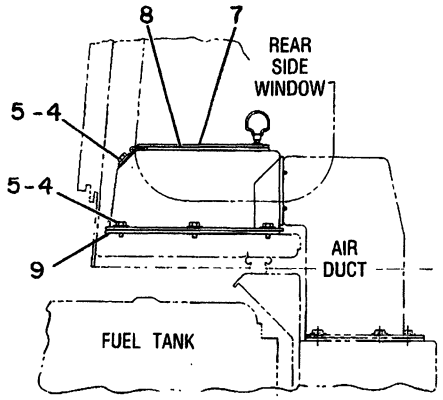

REAR R.H. SIDE VIEW OF CAB SHELF

VIEW A-A

NOTE	REF NO	PART NUMBER	QTY	PART NAME	NOTE	REF NO	PART NUMBER	QTY	PART NAME
	1	8T0430	4	HANDLE-FOLDING					
	2	1V3345	4	GROMMET					
	3	1V3346	4	RING-SNAP					
C	4	310243	26	SCREW					
C	5	5P4115	25	WASHER					
	6	7T0782	1	GASKET					
	7	7T0781	1	DOOR AS					
	8	7T0783	1	GASKET					
	9	7T0788	1	GASKET					
	10	7T0789	1	BOX AS					

C-CHANGE FROM PREVIOUS TYPE

B-404915 EP

7342 **7T1421 HOUSING GP-FILTER**
Type 1. S/N 53Y3485-Up
Part Of 7T2563 Cab Ar

CAB, GAUGES AND ACCESSORIES

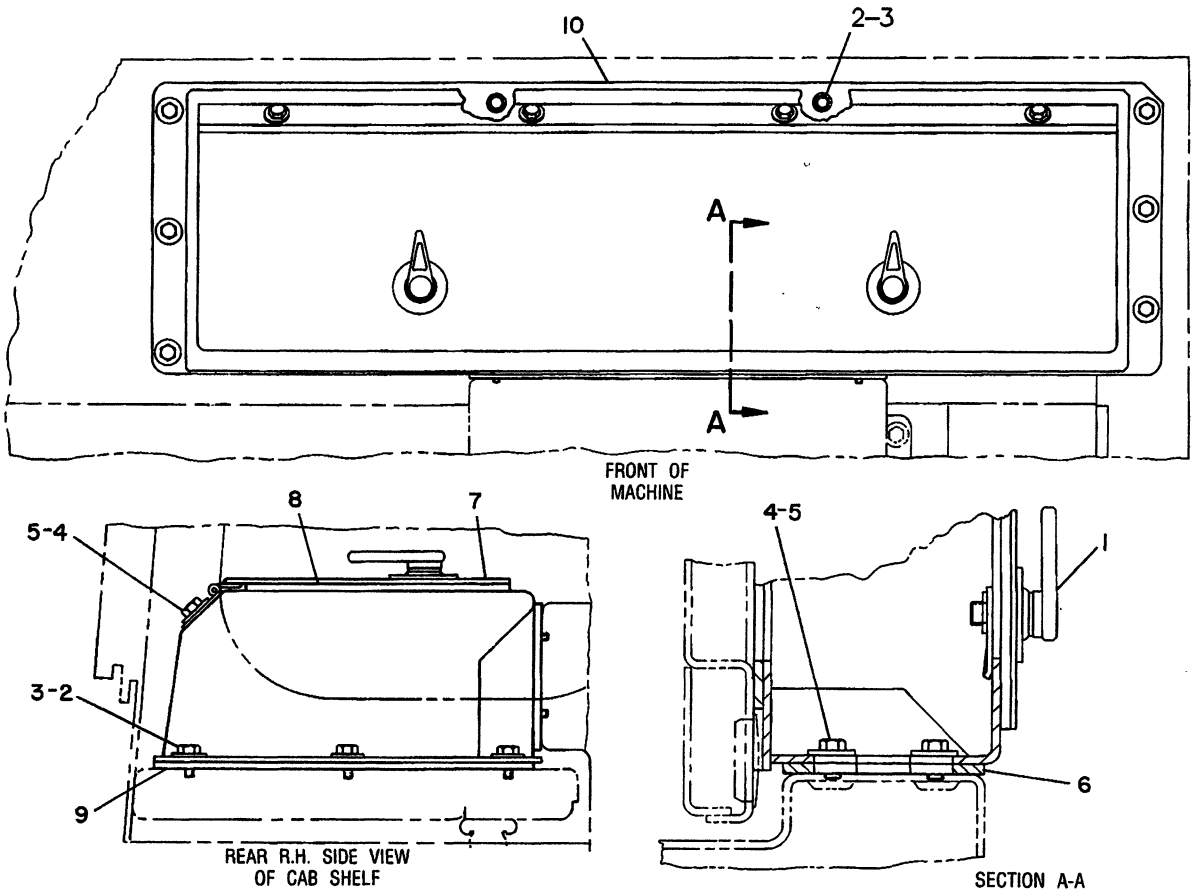

NOTE	REF NO	PART NUMBER	QTY	PART NAME	NOTE	REF NO	PART NUMBER	QTY	PART NAME
C	1	3V7689	2	HANDLE AS					
	2	1T0822	10	BOLT-12 POINT HEAD					
C	3	8T4896	10	WASHER-HARD					
C	4	310243	10	SCREW					
C	5	5P4115	10	WASHER					
	6	7T0782	1	GASKET					
C	7	6Y0136	1	DOOR AS					
C	8	6Y2700	1	GASKET					
C	9	6Y2699	1	GASKET					
C	10	6Y0132	1	BOX AS					

C-CHANGE FROM PREVIOUS TYPE

R-523864 EP

7342

7T1421 HOUSING GP-FILTER
Type 2. S/N 53Y3485-Up
Part Of 7T2563 Cab Ar

MEMORANDA

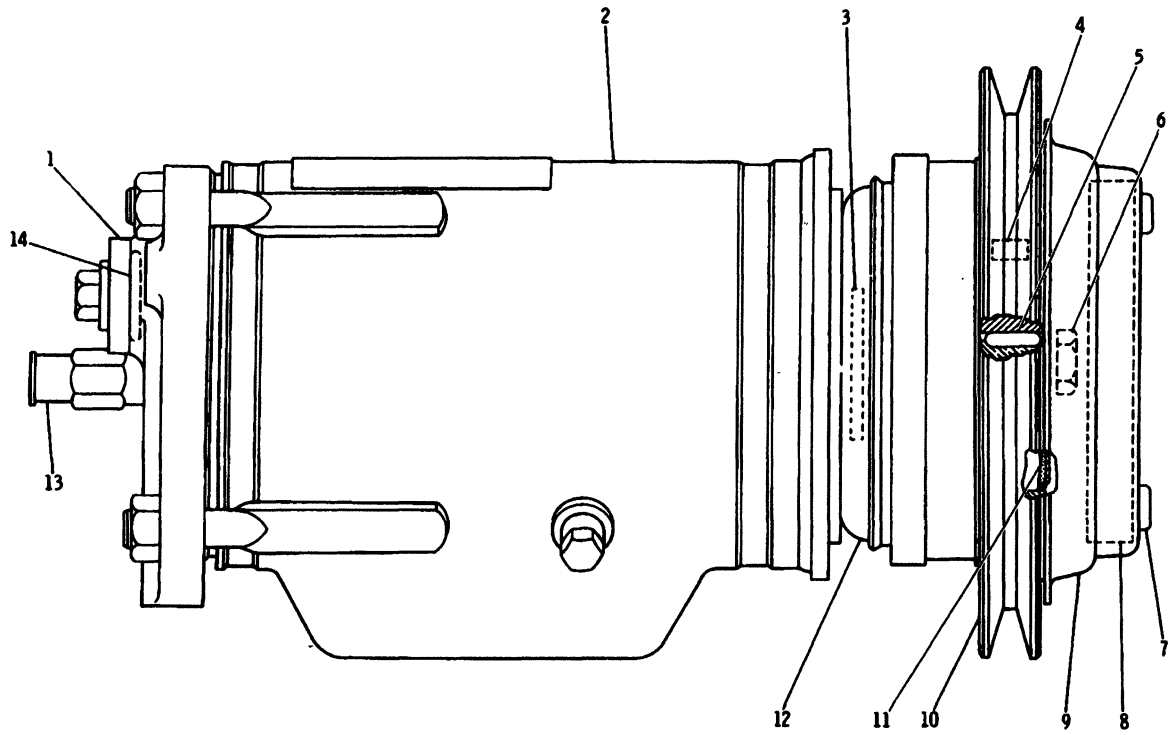

NOTE	REF NO	PART NUMBER	QTY	PART NAME
	1	1P6356	1	PLATE
	2	2P8232	1	COMPRESSOR AS
	3	7N4293	1	KIT-SEAL (REFRIGERANT) (INCLUDES SHIELD AS, RINGS,SEALS, NUT, KEY & SLEEVE)
	4	7N4289	1	KIT-BEARING (INCLUDES BEARING, SEALS, RINGS, NUT, KEY, SLEEVE & SHIELD GP)
	5	7N0809	1	KEY
C	6	9P8750	1	NUT
	7	145111	3	SCREW
	8	7N4294	1	KIT-CLUTCH DRIVE (INCLUDES DRIVE AS, NUT, KEY, SHIELD AS, RINGS, SEALS & SLEEVE)
	9	6N1116	1	KIT-DUST COVER (INCL COVER & SCREWS)
	10	7N4290	1	KIT-PULLEY (INCLUDES PULLEY AS, SEALS, SHIELD GP, RINGS, NUT, KEY & SLEEVE)
	11	7N4291	1	KIT-DUST SEAL (INCLUDES SHIELD GP, SEALS, KEY, NUT, RINGS & SLEEVE)
	12	7N4292	1	KIT-COIL (INCLUDES COIL AS, SHIELD AS, SEALS, RINGS, NUT, KEY & SLEEVE)
	13	1P6355	1	VALVE AS-RELIEF
	14	1H8171	2	SEAL-O-RING

C-CHANGE FROM PREVIOUS TYPE

B-215392 EP

1802 **7N4296 COMPRESSOR GP-CLUTCH & REFRIGERANT*R**

Part Of 3T0720 Compressor
An Attachment

CAB, GAUGES AND ACCESSORIES

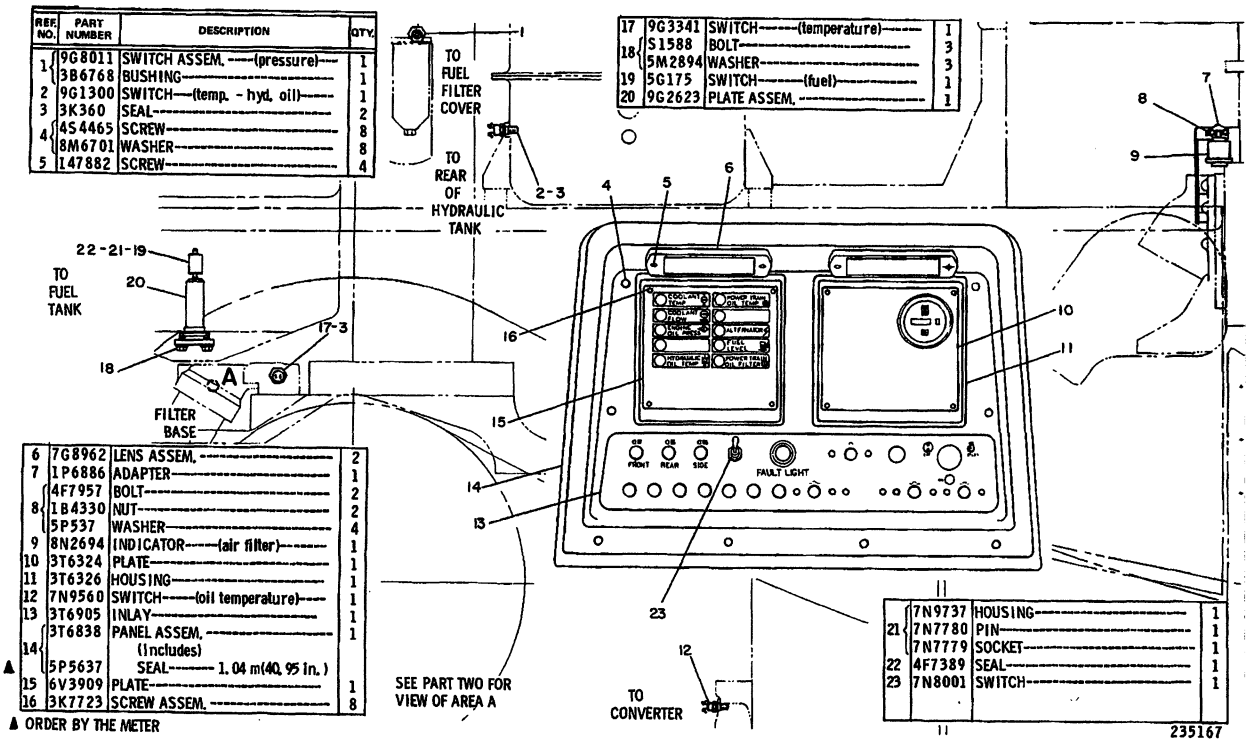

REF. NO.	PART NUMBER	DESCRIPTION	QTY.
1	9G8011	SWITCH ASSEM. ----(pressure)----	1
	3B6768	BUSHING	1
2	9G1300	SWITCH---(temp. - hyd. oil)----	1
3	3K360	SEAL	2
4	4S4465	SCREW	8
	8M6701	WASHER	8
5	147882	SCREW	4
6	7G8962	LENS ASSEM.	2
7	1P6886	ADAPTER	1
8	4F7957	BOLT	2
	1B4330	NUT	2
	5P537	WASHER	4
9	8N2694	INDICATOR-----(air filter)----	1
10	3T6324	PLATE	1
11	3T6326	HOUSING	1
12	7N9560	SWITCH-----(oil temperature)----	1
13	3T6905	INLAY	1
14	3T6838	PANEL ASSEM. (Includes)	1
▲	5P5637	SEAL---- 1.04 m(40.95 in.)	
15	6V3909	PLATE	1
16	3K7723	SCREW ASSEM.	8

▲ ORDER BY THE METER

17	9G3341	SWITCH-----(temperature)----	1
18	S1588	BOLT	3
	5M2894	WASHER	3
19	5G175	SWITCH-----(fuel)----	1
20	9G2623	PLATE ASSEM.	1

21	7N9737	HOUSING	1
	7N7780	PIN	1
	7N7779	SOCKET	1
22	4F7389	SEAL	1
23	7N8001	SWITCH	1

235167 P

7451 **7G9705 INSTRUMENT GP-PART 1 OF 2**
S/N 53Y1-797

REF. NO.	PART NUMBER	DESCRIPTION	QTY.
1	2B2695	BOLT	2
	9M1974	WASHER	2
2	6N5284	SWITCH ASSEM. -----(coolant flow)	1
	4N3841	GASKET	1
3	7N9785	SWITCH-------(coolant)---------	1
4	9F9920	BUSHING	2

5	7N1996	LAMP	1
	7N1995	LENS	1
	7N1994	BASE	1

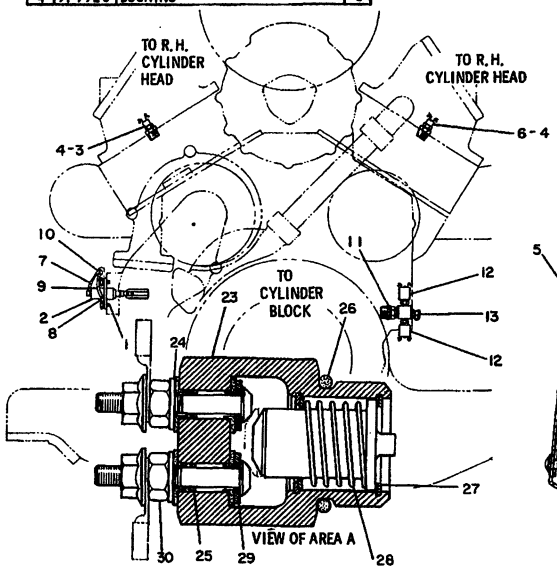

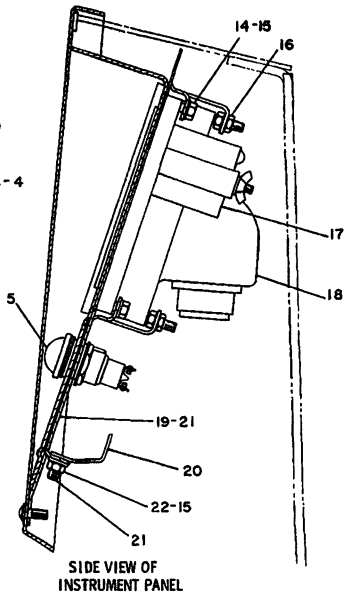

6	8N1693	SWITCH	1
7	9G9172	WIRE ASSEM.	1
		(Includes)	
▲	5P5623	WIRE-------, 24 m(9.45 in.)	
8	2L8078	TERMINAL	1
9	2L8075	TERMINAL	1
10	7N9737	HOUSING	1
	7N7780	PIN	1
	7N7779	SOCKET	1
11	6V952	ADAPTER	1
	2M9780	SEAL	1
12	9G8010	SWITCH ASSEM. -----(pressure)---	2
13	6V3966	NIPPLE ASSEM.	1
	6V852	CAP	1
14	S1614	BOLT	4
15	5P537	WASHER	4
16	2D6235	LOCKNUT	4
17	9G8574	METER ASSEM.	1
		(Includes)	
	7N9737	HOUSING	1
	7N7780	PIN	1
	7N7779	SOCKET	1
18	3T1321	MONITOR GROUP	1
19	3T7093	PLATE ASSEM.	1
20	3T6663	PLATE ASSEM.	1
		(Each Includes)	
21	3P3604	STUD	2
22	1B4330	NUT	2
23	9G3548	SWITCH GROUP----(filter bypass)--	2
		(Each Includes)	
24	4B4863	WASHER	2
25	5P9262	SEAL	4
26	3D2824	SEAL	1
27	1S8517	RETAINER	2
28	3N7848	SPRING	1
29	4B4273	WASHER	2
30	4B2043	NUT	2

▲ ORDER BY THE METER

235252

235252 P

7451 **7G9705 INSTRUMENT GP-PART 2 OF 2**
S/N 53Y1-797

CAB, GAUGES AND ACCESSORIES

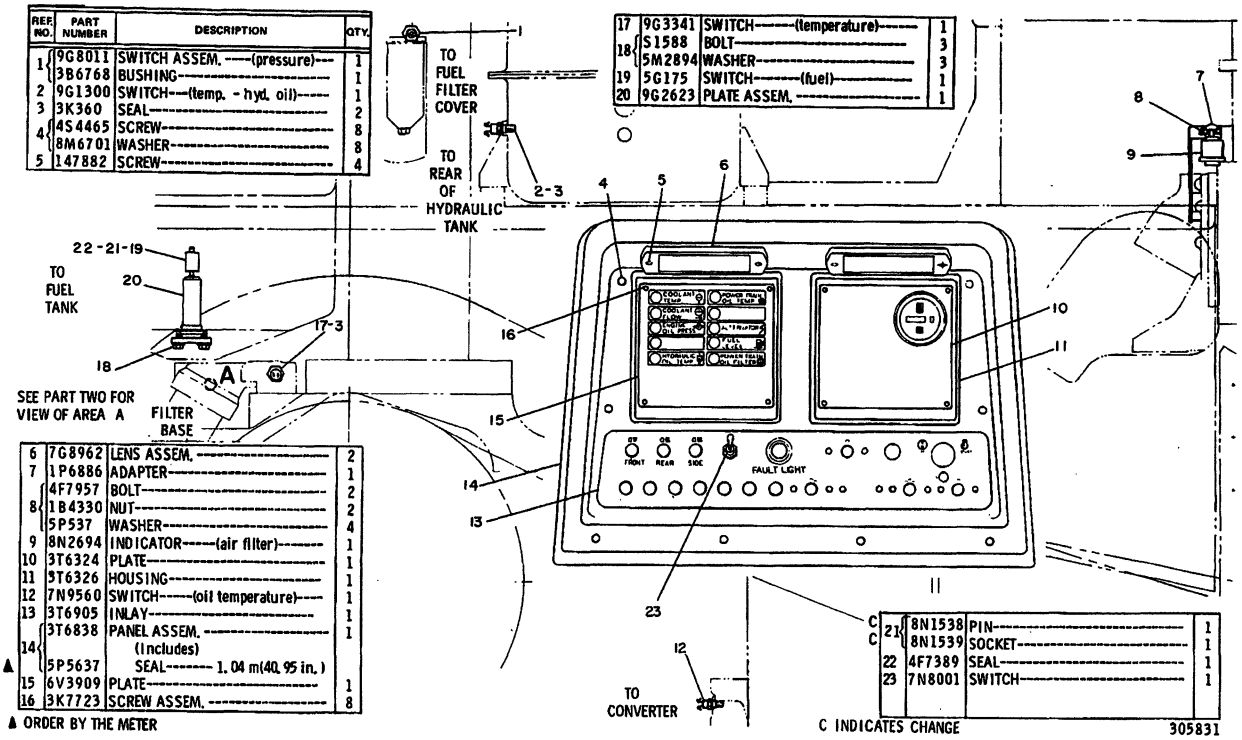

REF. NO.	PART NUMBER	DESCRIPTION	QTY.
1	9G8011	SWITCH ASSEM. ----(pressure)---	1
	3B6768	BUSHING	1
2	9G1300	SWITCH---(temp. - hyd. oil)----	1
3	3K360	SEAL	2
4	4S4465	SCREW	8
	8M6701	WASHER	8
5	147882	SCREW	4
6	7G8962	LENS ASSEM.	2
7	1P6886	ADAPTER	1
8	4F7957	BOLT	2
	1B4330	NUT	2
	5P537	WASHER	4
9	8N2694	INDICATOR-----(air filter)------	1
10	3T6324	PLATE	1
11	3T6326	HOUSING	1
12	7N9560	SWITCH-----(oil temperature)----	1
13	3T6905	INLAY	1
14	3T6838	PANEL ASSEM. (Includes)	1
▲	5P5637	SEAL------- 1.04 m(40.95 in.)	
15	6V3909	PLATE	1
16	3K7723	SCREW ASSEM.	8
17	9G3341	SWITCH-------(temperature)------	1
18	S1588	BOLT	3
	5M2894	WASHER	3
19	5G175	SWITCH--------(fuel)----------	1
20	9G2623	PLATE ASSEM.	1
C C 21	8N1538	PIN	1
	8N1539	SOCKET	1
22	4F7389	SEAL	1
23	7N8001	SWITCH	1

▲ ORDER BY THE METER

C INDICATES CHANGE

305831

305831 P

REF. NO.	PART NUMBER	DESCRIPTION	QTY.
1	2B2695	BOLT	2
	9M1974	WASHER	2
2	6N5284	SWITCH ASSEM. ----(coolant flow)	1
	4N3841	GASKET	1
3	7N9785	SWITCH-------(coolant)---------	1
C 4	9F9920	BUSHING	1

5	7N1996	LAMP	1
	7N1995	LENS	1
	7N1994	BASE	1

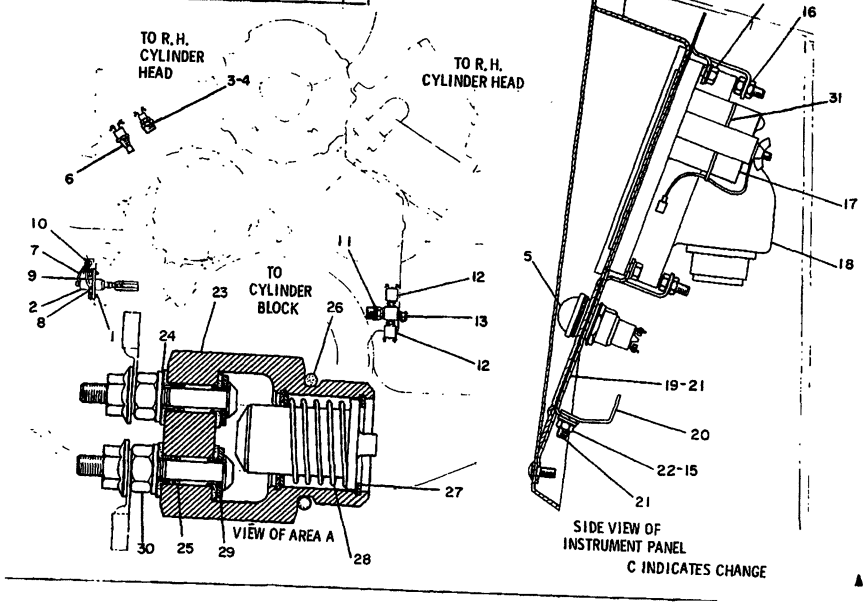

	6	8N1693	SWITCH
	7	9G9172	WIRE ASSEM. (Includes)
▲		5P5623	WIRE-------. 24 m(9. 45 in.)
	8	2L8078	TERMINAL
	9	2L8075	TERMINAL
	10	7N9737	HOUSING
		7N7780	PIN
		7N7779	SOCKET
	11	6V952	ADAPTER
		2M9780	SEAL
	12	9G8010	SWITCH ASSEM. ----(pressure)---
	13	6V3966	NIPPLE ASSEM.
		6V852	CAP
	14	S1614	BOLT
	15	5P537	WASHER
	16	2D6235	LOCKNUT
	17	9G8574	METER ASSEM. (Includes)
		7N9737	HOUSING
		7N7780	PIN
		7N7779	SOCKET
	18	3T1321	MONITOR GROUP
	19	3T7093	PLATE ASSEM.
	20	3T6663	PLATE ASSEM. (Each Includes)
	21	3P3604	STUD
	22	1B4330	NUT
	23	9G3548	SWITCH GROUP----(filter bypass)-- (Each Includes)
	24	4B4863	WASHER
	25	5P9262	SEAL
	26	3D2824	SEAL
	27	1S8517	RETAINER
	28	3N7848	SPRING
	29	4B4273	WASHER
	30	4B2043	NUT
	31	3S2093	STRAP

	6	8N1693	1
	7	9G9172	1
▲		5P5623	
	8	2L8078	1
	9	2L8075	1
	10	7N9737	1
		7N7780	1
		7N7779	1
	11	6V952	1
		2M9780	1
	12	9G8010	2
	13	6V3966	1
		6V852	1
	14	S1614	4
	15	5P537	4
	16	2D6235	4
	17	9G8574	1
		7N9737	1
		7N7780	1
		7N7779	1
	18	3T1321	1
	19	3T7093	1
	20	3T6663	1
	21	3P3604	2
	22	1B4330	2
	23	9G3548	2
	24	4B4863	2
	25	5P9262	4
	26	3D2824	1
	27	1S8517	2
	28	3N7848	1
	29	4B4273	2
	30	4B2043	2
	31	3S2093	1

▲ ORDER BY THE METER

305832

305832 P

7451 **7G9705 INSTRUMENT GP-PART 2 OF 2**
S/N 53Y798-1800

CAB, GAUGES AND ACCESSORIES

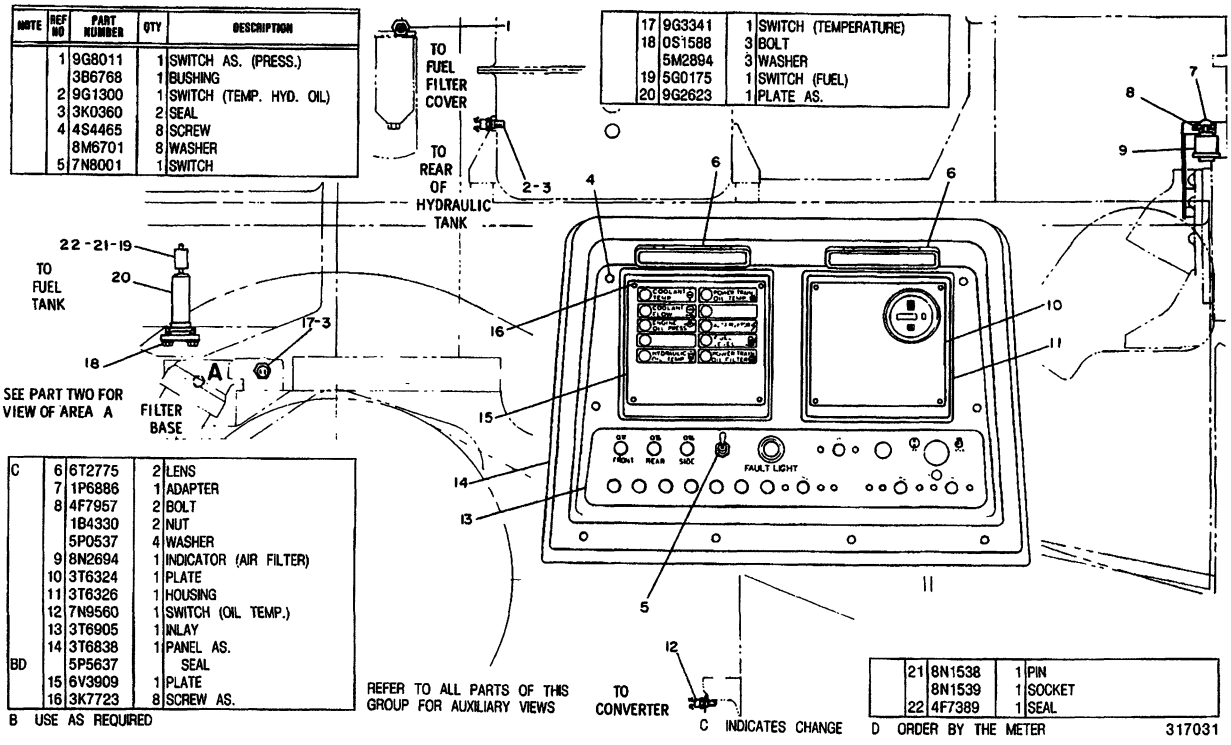

NOTE	REF NO	PART NUMBER	QTY	DESCRIPTION
	1	9G8011	1	SWITCH AS. (PRESS.)
		3B6768	1	BUSHING
	2	9G1300	1	SWITCH (TEMP. HYD. OIL)
	3	3K0360	2	SEAL
	4	4S4465	8	SCREW
		8M6701	8	WASHER
	5	7N8001	1	SWITCH
	17	9G3341	1	SWITCH (TEMPERATURE)
	18	0S1588	3	BOLT
		5M2894	3	WASHER
	19	5G0175	1	SWITCH (FUEL)
	20	9G2623	1	PLATE AS.
C	6	6T2775	2	LENS
	7	1P6886	1	ADAPTER
	8	4F7957	2	BOLT
		1B4330	2	NUT
		5P0537	4	WASHER
	9	8N2694	1	INDICATOR (AIR FILTER)
	10	3T6324	1	PLATE
	11	3T6326	1	HOUSING
	12	7N9560	1	SWITCH (OIL TEMP.)
	13	3T6905	1	INLAY
	14	3T6838	1	PANEL AS.
BD		5P5637		SEAL
	15	6V3909	1	PLATE
	16	3K7723	8	SCREW AS.
	21	8N1538	1	PIN
		8N1539	1	SOCKET
	22	4F7389	1	SEAL

B USE AS REQUIRED

C INDICATES CHANGE

D ORDER BY THE METER

317031

317031 P

7451 **7G9705 INSTRUMENT GP-PART 1 OF 2**
S/N 53Y1801-1809

NOTE	REF NO	PART NUMBER	QTY	DESCRIPTION
	1	2B2695	2	BOLT
		9M1974	2	WASHER
	2	6N5284	1	SWITCH AS.(COOL.FLOW)
		6V8376	1	SCREW
		4N3841	1	GASKET
	3	7N9785	1	SWITCH (COOLANT)
	4	9F9920	1	BUSHING
	5	7N1996	1	LAMP
		7N1995	1	LENS
		7N1994	1	BASE
	6	8N1693	1	SWITCH

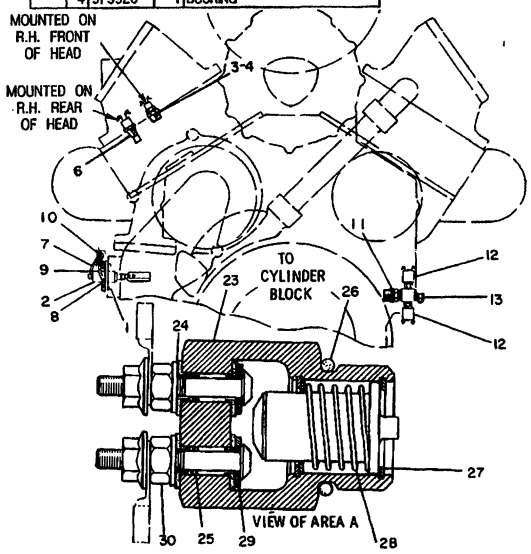

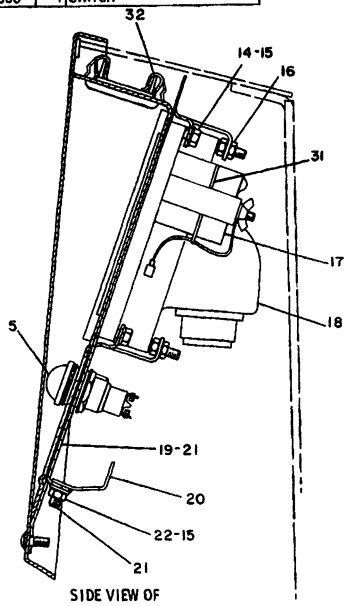

	7	9G9172	1	WIRE AS.
BD		5P5623		WIRE (16 GAUGE)
	8	2L8078	1	TERMINAL
	9	2L8075	1	TERMINAL
	10	7N9737	1	HOUSING
		7N7780	1	PIN
		7N7779	1	SOCKET
	11	6V0952	1	ADAPTER
		2M9780	1	SEAL
	12	9G8010	2	SWITCH AS. (PRESSURE)
	13	6V3966	1	NIPPLE AS.
		6V0852	1	CAP
	14	0S1614	4	BOLT
	15	5P0537	4	WASHER
	16	2D6235	4	LOCKNUT
	17	9G8574	1	METER AS.
		7N9737	1	HOUSING
		7N7780	1	PIN
		7N7779	1	SOCKET
	18	3T1321	1	MONITOR GROUP
	19	3T7093	1	PLATE AS.
	20	3T6663	1	PLATE AS.
				(EA. PLATE AS. INCL.)
	21	3P3604	2	STUD
	22	1B4330	2	NUT
	23	9G3548	2	SWITCH GP.
				(FILTER BY-PASS)
				(EACH INCLUDES)
	24	4B4863	2	WASHER
	25	5P9262	4	SEAL
	26	3D2824	1	SEAL
	27	1S8517	2	RETAINER
	28	3N7848	1	SPRING
	29	4B4273	2	WASHER
	30	4B2043	2	NUT
	31	3S2093	1	STRAP
C	32	6T2774	8	CLIP

B USE AS REQUIRED
C INDICATES CHANGE
D ORDER BY THE METER

317032

317032 P

7451 **7G9705 INSTRUMENT GP-PART 2 OF 2**
S/N 53Y1801-1809

CAB, GAUGES AND ACCESSORIES

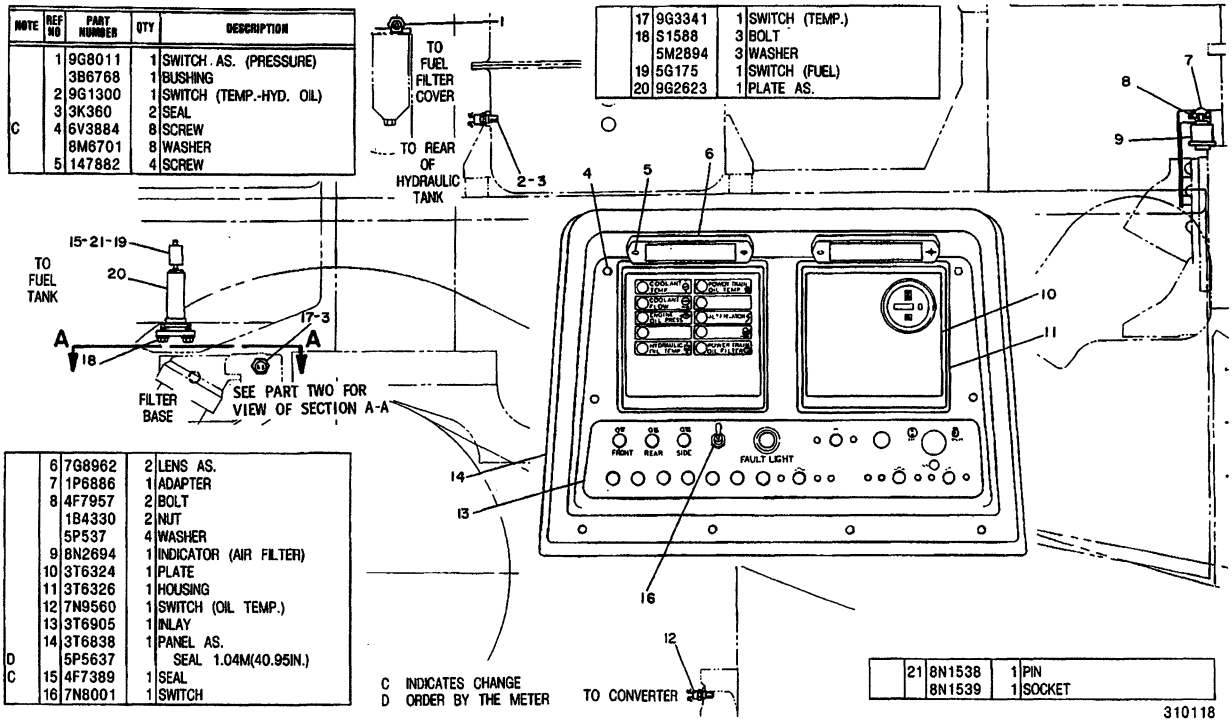

NOTE	REF NO	PART NUMBER	QTY	DESCRIPTION
	1	9G8011	1	SWITCH AS. (PRESSURE)
		3B6768	1	BUSHING
	2	9G1300	1	SWITCH (TEMP.-HYD. OIL)
	3	3K360	2	SEAL
C	4	6V3884	8	SCREW
		8M6701	8	WASHER
	5	147882	4	SCREW
	6	7G8962	2	LENS AS.
	7	1P6886	1	ADAPTER
	8	4F7957	2	BOLT
		1B4330	2	NUT
		5P537	4	WASHER
	9	8N2694	1	INDICATOR (AIR FILTER)
	10	3T6324	1	PLATE
	11	3T6326	1	HOUSING
	12	7N9560	1	SWITCH (OIL TEMP.)
	13	3T6905	1	INLAY
	14	3T6838	1	PANEL AS.
D		5P5637		SEAL 1.04M(40.95IN.)
C	15	4F7389	1	SEAL
	16	7N8001	1	SWITCH
	17	9G3341	1	SWITCH (TEMP.)
	18	S1588	3	BOLT
		5M2894	3	WASHER
	19	5G175	1	SWITCH (FUEL)
	20	9G2623	1	PLATE AS.
	21	8N1538	1	PIN
		8N1539	1	SOCKET

310118 P

NOTE	REF NO	PART NUMBER	QTY	DESCRIPTION
	1	2B2695	2	BOLT
		9M1974	2	WASHER
	2	6N5284	1	SWITCH AS. (COOLANT FLOW)
		4N3841	1	GASKET
	3	7N9785	1	SWITCH (COOLANT)
	4	9F9920	1	BUSHING

	5	7N1996	1	LAMP
		7N1995	1	LENS
		7N1994	1	BASE

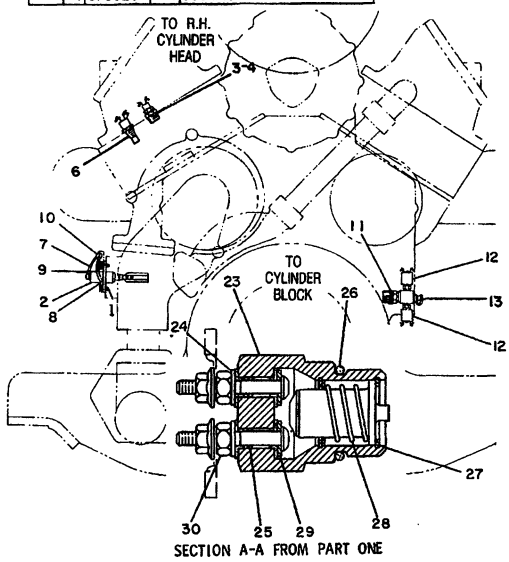

SECTION A-A FROM PART ONE

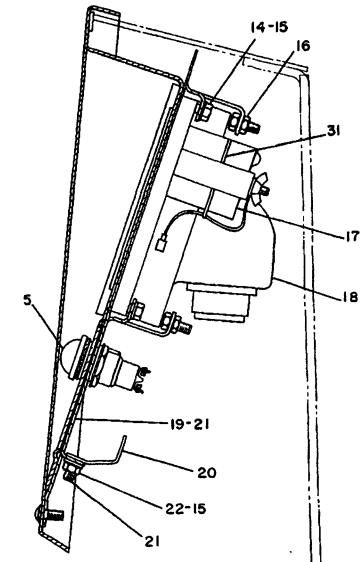

SIDE VIEW OF INSTRUMENT PANEL

C INDICATES CHANGE
D ORDER BY THE METER

NOTE	REF NO	PART NUMBER	QTY	DESCRIPTION
	6	8N1693	1	SWITCH
	7	9G9172	1	WIRE AS.
D		5P5623		WIRE .24M(9.45IN.)
	8	2L8078	1	TERMINAL
	9	2L8075	1	TERMINAL
	10	7N9737	1	HOUSING
		7N7780	1	PIN
		7N7779	1	SOCKET
	11	6V952	1	ADAPTER
		2M9780	1	SEAL
	12	9G8010	2	SWITCH AS. (PRESSURE)
	13	6V3966	1	NIPPLE AS.
		6V852	1	CAP
	14	S1614	4	BOLT
	15	5P537	4	WASHER
	16	2D6235	4	LOCKNUT
C	17	3T8325	1	METER AS.
		7N9737	1	HOUSING
		7N7780	1	PIN
		7N7779	1	SOCKET
C	18	3T9100	1	CONTROL GROUP
	19	3T7093	1	PLATE AS.
	20	3T6663	1	PLATE AS. (EACH PLATE AS. INCL.)
	21	3P3604	2	STUD
	22	1B4330	2	NUT
C	23	3T9343	2	SWITCH GROUP (FILTER BYPASS) (EACH INCLUDES)
	24	4B4863	2	WASHER
	25	5P9262	4	SEAL
	26	3D2824	1	SEAL
	27	1S8517	2	RETAINER
	28	3N7848	1	SPRING
	29	4B4273	2	WASHER
	30	4B2043	2	NUT
	31	3S2093	1	STRAP

310119

310119 P

CAB, GAUGES AND ACCESSORIES

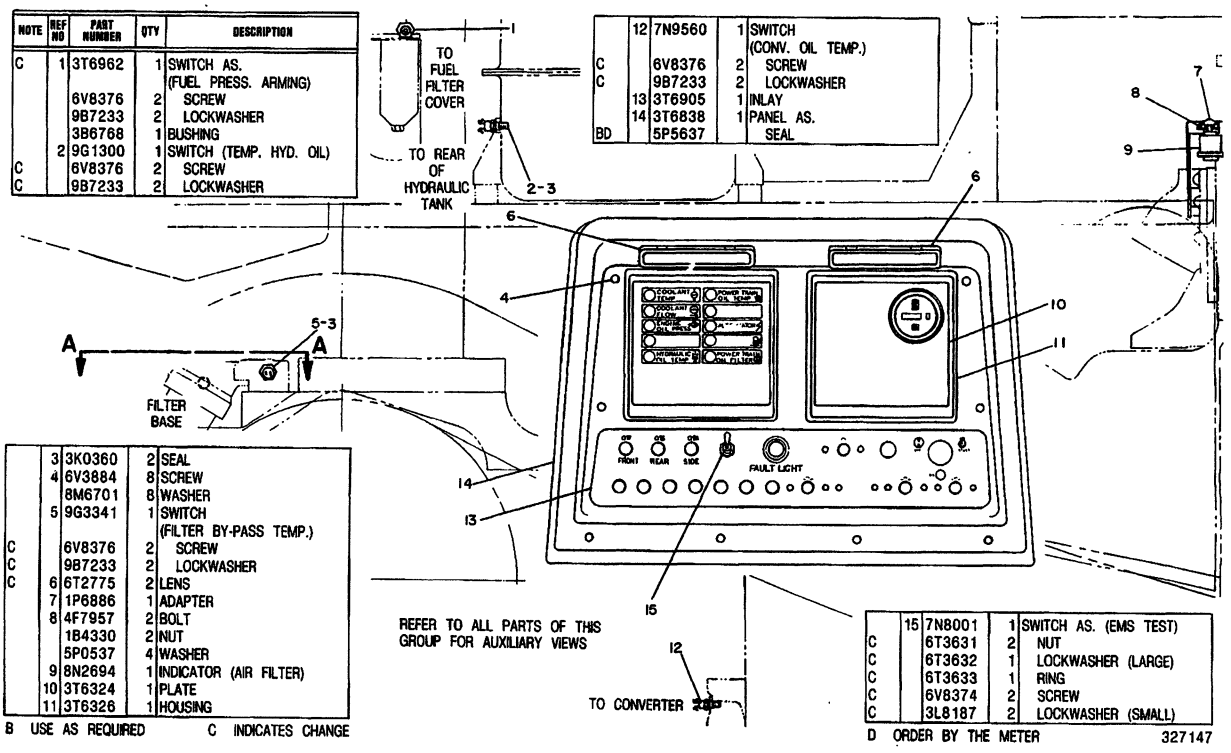

NOTE	REF NO	PART NUMBER	QTY	DESCRIPTION
C	1	3T6962	1	SWITCH AS. (FUEL PRESS. ARMING)
		6V8376	2	SCREW
		9B7233	2	LOCKWASHER
		3B6768	1	BUSHING
	2	9G1300	1	SWITCH (TEMP. HYD. OIL)
C		6V8376	2	SCREW
C		9B7233	2	LOCKWASHER
	3	3K0360	2	SEAL
	4	6V3884	8	SCREW
		8M6701	8	WASHER
	5	9G3341	1	SWITCH (FILTER BY-PASS TEMP.)
C		6V8376	2	SCREW
C		9B7233	2	LOCKWASHER
C	6	6T2775	2	LENS
	7	1P6886	1	ADAPTER
	8	4F7957	2	BOLT
		1B4330	2	NUT
		5P0537	4	WASHER
	9	8N2694	1	INDICATOR (AIR FILTER)
	10	3T6324	1	PLATE
	11	3T6326	1	HOUSING
	12	7N9560	1	SWITCH (CONV. OIL TEMP.)
C		6V8376	2	SCREW
C		9B7233	2	LOCKWASHER
	13	3T6905	1	INLAY
	14	3T6838	1	PANEL AS.
BD		5P5637		SEAL
	15	7N8001	1	SWITCH AS. (EMS TEST)
C		6T3631	2	NUT
C		6T3632	1	LOCKWASHER (LARGE)
C		6T3633	1	RING
C		6V8374	2	SCREW
C		3L8187	2	LOCKWASHER (SMALL)

B USE AS REQUIRED C INDICATES CHANGE

D ORDER BY THE METER

327147

327147 P

NOTE	REF NO	PART NUMBER	QTY	DESCRIPTION
	1	2B2695	2	BOLT
		9M1974	2	WASHER
	2	6N5284	1	SWITCH AS. (COOLANT FLOW)
C		6V8376	1	SCREW
		4N3841	1	GASKET
	3	7N9785	1	SWITCH (COOLANT)
C		6V8376	2	SCREW
C		9B7233	2	LOCKWASHER
	4	9F9920	1	BUSHING
	5	7N1996	1	LAMP
		7N1995	1	LENS
		7N1994	1	BASE AS.
C		6V8372	1	NUT
C		2H3924	1	LOCKWASHER
C		6V8373	2	SCREW
	6	8N1693	1	SWITCH
C		6V8376	2	SCREW
C		9B7233	2	LOCKWASHER
	7	9G9172	1	WIRE AS.
BD		5P5623		WIRE (16 GAUGE)
	8	2L8078	1	TERMINAL
	9	2L8075	1	TERMINAL
	10	7N9737	1	HOUSING
		7N7780	1	PIN
		7N7779	1	SOCKET
C	11	3T9660	1	FITTING
		2M9780	1	SEAL
C	12	6T4949	2	SWITCH AS. (PRESSURE) (EACH INCLUDES)
		7N9738	1	HOUSING
		7N7780	1	PIN
		7N7779	1	SOCKET
	13	6V3965	1	NIPPLE AS.
		6V0852	1	CAP
	14	0S1614	4	BOLT
	15	5P0537	4	WASHER
	16	2D6235	4	LOCKNUT
	17	3T8325	1	METER AS.
	18	3T9100	1	CONTROL GROUP
	19	3T7093	1	PLATE AS.
	20	3T6663	1	PLATE AS. (EA. PLATE AS. INCL.)
	21	3P3604	2	STUD
	22	1B4330	2	NUT
	23	3T9343	2	SWITCH GROUP (FILTER BYPASS) (EACH INCLUDES)
	24	4B4863	2	WASHER
	25	5P9262	4	SEAL
	26	3D2824	1	SEAL
	27	1S8517	2	RETAINER
	28	3N7848	1	SPRING
	29	4B4273	2	WASHER
	30	4B2043	2	NUT
	31	3S2093	1	STRAP
C	32	3J1907	3	SEAL
C	33	6V0484	1	ADAPTER
C	34	6T2774	8	CLIP (V. TYPE)

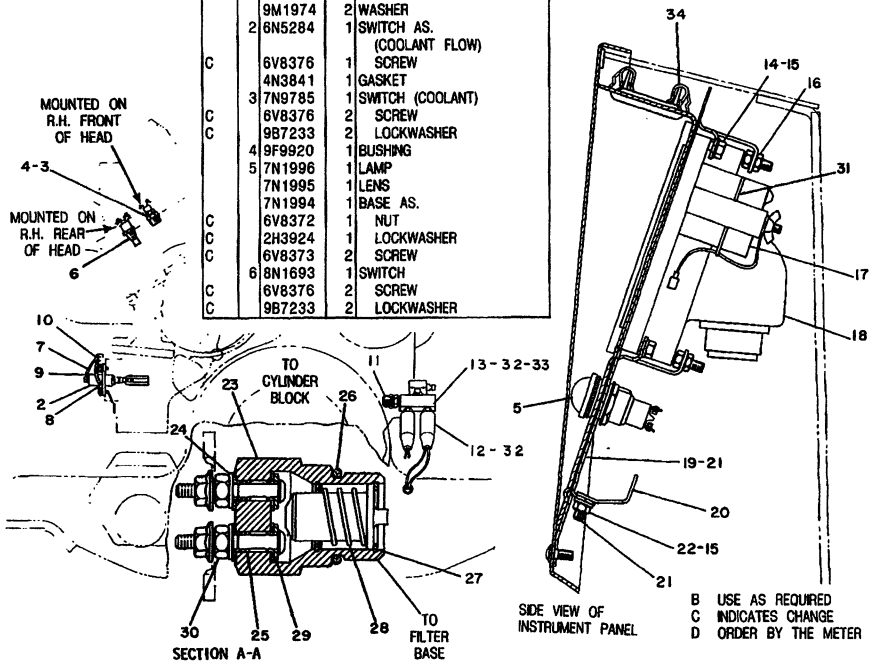

B USE AS REQUIRED
C INDICATES CHANGE
D ORDER BY THE METER

327148

327148 P

7451 **7G9705 INSTRUMENT GP-PART 2 OF 2**
S/N 53Y2235-2679

CAB, GAUGES AND ACCESSORIES

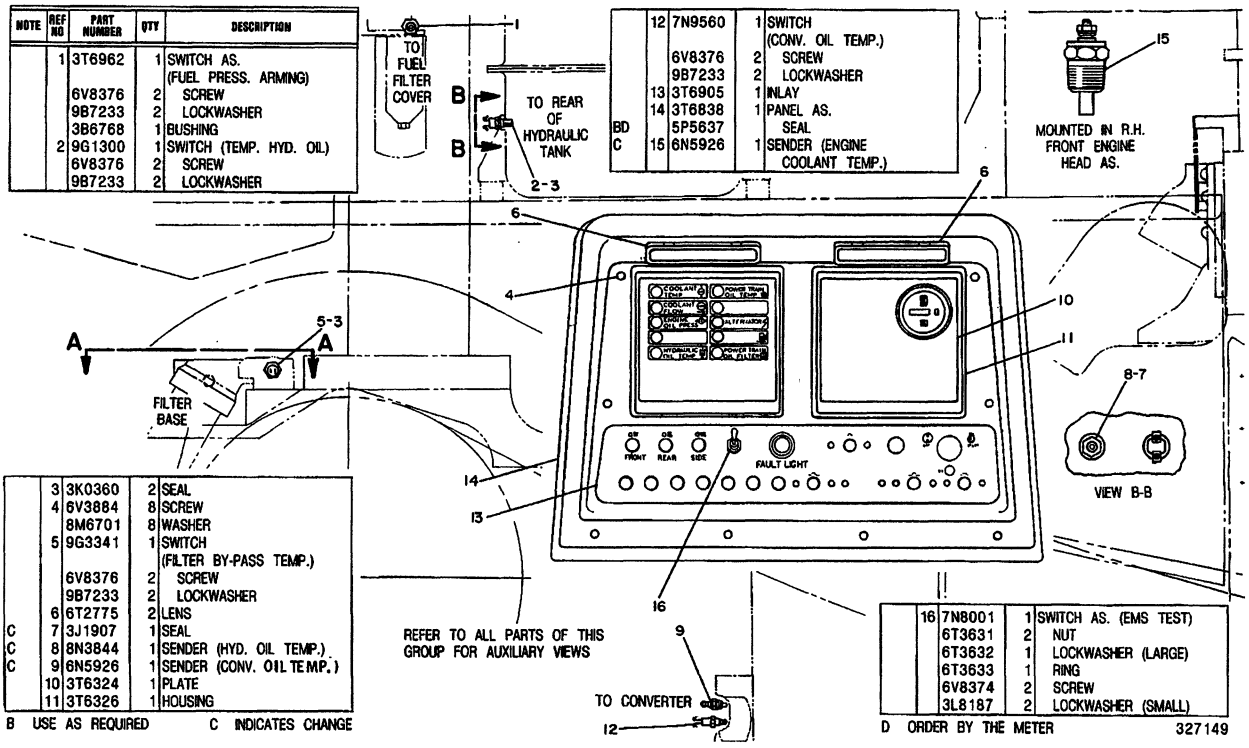

NOTE	REF NO	PART NUMBER	QTY	DESCRIPTION
	1	3T6962	1	SWITCH AS. (FUEL PRESS. ARMING)
		6V8376	2	SCREW
		9B7233	2	LOCKWASHER
		3B6768	1	BUSHING
	2	9G1300	1	SWITCH (TEMP. HYD. OIL)
		6V8376	2	SCREW
		9B7233	2	LOCKWASHER
	3	3K0360	2	SEAL
	4	6V3884	8	SCREW
		8M6701	8	WASHER
	5	9G3341	1	SWITCH (FILTER BY-PASS TEMP.)
		6V8376	2	SCREW
		9B7233	2	LOCKWASHER
	6	6T2775	2	LENS
C	7	3J1907	1	SEAL
C	8	8N3844	1	SENDER (HYD. OIL TEMP.)
C	9	6N5926	1	SENDER (CONV. OIL TEMP.)
	10	3T6324	1	PLATE
	11	3T6326	1	HOUSING
	12	7N9560	1	SWITCH (CONV. OIL TEMP.)
		6V8376	2	SCREW
		9B7233	2	LOCKWASHER
	13	3T6905	1	INLAY
	14	3T6838	1	PANEL AS.
BD		5P5637		SEAL
C	15	6N5926	1	SENDER (ENGINE COOLANT TEMP.)
	16	7N8001	1	SWITCH AS. (EMS TEST)
		6T3631	2	NUT
		6T3632	1	LOCKWASHER (LARGE)
		6T3633	1	RING
		6V8374	2	SCREW
		3L8187	2	LOCKWASHER (SMALL)

B USE AS REQUIRED C INDICATES CHANGE

D ORDER BY THE METER

327149

327149 P

7451 **7G9705 INSTRUMENT GP-PART 1 OF 2**
S/N 53Y2680-2726

NOTE	REF NO	PART NUMBER	QTY	DESCRIPTION
	1	2B2695	2	BOLT
		9M1974	2	WASHER
	2	6N5284	1	SWITCH AS. (COOLANT FLOW)
		6V8376	1	SCREW
		4N3841	1	GASKET
	3	7N9785	1	SWITCH (COOLANT)
		6V8376	2	SCREW
		9B7233	2	LOCKWASHER
	4	9F9920	1	BUSHING
	5	7N1996	1	LAMP
		7N1995	1	LENS
		7N1994	1	BASE AS.
		6V8372	1	NUT
		2H3924	1	LOCKWASHER
		6V8373	2	SCREW
	6	8N1693	1	SWITCH
		6V8376	2	SCREW
		9B7233	2	LOCKWASHER

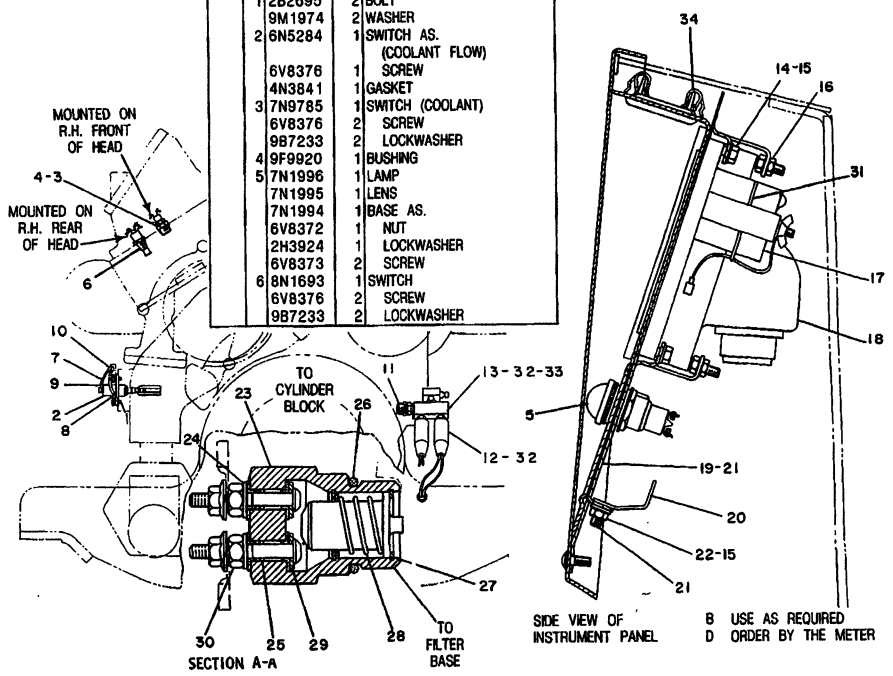

B USE AS REQUIRED
D ORDER BY THE METER

	7	9G9172	1	WIRE AS.
BD		5P5623		WIRE (16 GAUGE)
	8	2L8078	1	TERMINAL
	9	2L8075	1	TERMINAL
	10	7N9737	1	HOUSING
		7N7780	1	PIN
		7N7779	1	SOCKET
	11	3T9660	1	FITTING
		2M9780	1	SEAL
	12	6T4949	2	SWITCH AS. (PRESSURE) (EACH INCLUDES)
		7N9738	1	HOUSING
		7N7780	1	PIN
		7N7779	1	SOCKET
	13	6V3965	1	NIPPLE AS.
		6V0852	1	CAP
	14	0S1614	4	BOLT
	15	5P0537	4	WASHER
	16	2D6235	4	LOCKNUT
	17	3T8325	1	METER AS.
	18	3T9100	1	CONTROL GROUP
	19	3T7093	1	PLATE AS.
	20	3T6663	1	PLATE AS. (EA. PLATE AS. INCL.)
	21	3P3604	2	STUD
	22	1B4330	2	NUT
	23	3T9343	2	SWITCH GROUP (FILTER BYPASS) (EACH INCLUDES)
	24	4B4863	2	WASHER
	25	5P9262	4	SEAL
	26	3D2824	1	SEAL
	27	1S8517	2	RETAINER
	28	3N7848	1	SPRING
	29	4B4273	2	WASHER
	30	4B2043	2	NUT
	31	3S2093	1	STRAP
	32	3J1907	3	SEAL
	33	6V0484	1	ADAPTER
	34	6T2774	8	CLIP (V. TYPE)

327150

327150 P

7451 **7G9705 INSTRUMENT GP-PART 2 OF 2**
S/N 53Y2680-2726

CAB, GAUGES AND ACCESSORIES

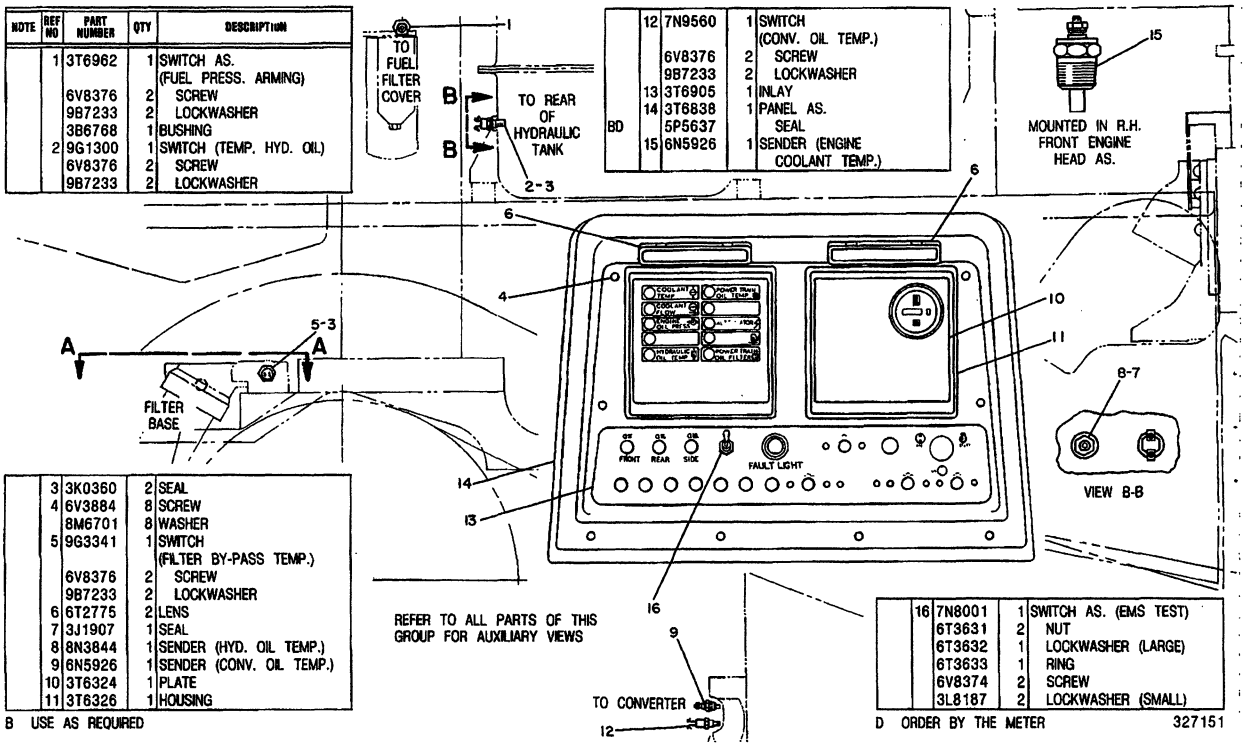

NOTE	REF NO	PART NUMBER	QTY	DESCRIPTION
	1	3T6962	1	SWITCH AS. (FUEL PRESS. ARMING)
		6V8376	2	SCREW
		9B7233	2	LOCKWASHER
		3B6768	1	BUSHING
	2	9G1300	1	SWITCH (TEMP. HYD. OIL)
		6V8376	2	SCREW
		9B7233	2	LOCKWASHER
	3	3K0360	2	SEAL
	4	6V3884	8	SCREW
		8M6701	8	WASHER
	5	9G3341	1	SWITCH (FILTER BY-PASS TEMP.)
		6V8376	2	SCREW
		9B7233	2	LOCKWASHER
	6	6T2775	2	LENS
	7	3J1907	1	SEAL
	8	8N3844	1	SENDER (HYD. OIL TEMP.)
	9	6N5926	1	SENDER (CONV. OIL TEMP.)
	10	3T6324	1	PLATE
	11	3T6326	1	HOUSING
	12	7N9560	1	SWITCH (CONV. OIL TEMP.)
		6V8376	2	SCREW
		9B7233	2	LOCKWASHER
	13	3T6905	1	INLAY
	14	3T6838	1	PANEL AS.
BD		5P5637		SEAL
	15	6N5926	1	SENDER (ENGINE COOLANT TEMP.)
	16	7N8001	1	SWITCH AS. (EMS TEST)
		6T3631	2	NUT
		6T3632	1	LOCKWASHER (LARGE)
		6T3633	1	RING
		6V8374	2	SCREW
		3L8187	2	LOCKWASHER (SMALL)

B USE AS REQUIRED

D ORDER BY THE METER

327151

327151 P

NOTE	REF NO	PART NUMBER	QTY	DESCRIPTION
	1	2B2695	2	BOLT
		9M1974	2	WASHER
	2	6N5284	1	SWITCH AS. (COOLANT FLOW)
		6V8376	1	SCREW
		4N3841	1	GASKET
	3	7N9785	1	SWITCH (COOLANT)
		6V8376	2	SCREW
		9B7233	2	LOCKWASHER
	4	9F9920	1	BUSHING
	5	7N1996	1	LAMP
		7N1995	1	LENS
		7N1994	1	BASE AS.
		6V8372	1	NUT
		2H3924	1	LOCKWASHER
		6V8373	2	SCREW
	6	8N1693	1	SWITCH
		6V8376	2	SCREW
		9B7233	2	LOCKWASHER
	7	9G9172	1	WIRE AS.
BD		5P5623		WIRE (16 GAUGE)
	8	2L8078	1	TERMINAL
	9	2L8075	1	TERMINAL
	10	7N9737	1	HOUSING
		7N7780	1	PIN
		7N7779	1	SOCKET
	11	3T9660	1	FITTING
		2M9780	1	SEAL
	12	6T4949	2	SWITCH AS. (PRESSURE) (EACH INCLUDES)
		7N9738	1	HOUSING
		7N7780	1	PIN
		7N7779	1	SOCKET
	13	6V3965	1	NIPPLE AS.
		6V0852	1	CAP
	14	0S1614	4	BOLT
	15	5P0537	4	WASHER
	16	2D6235	4	LOCKNUT
	17	3T8325	1	METER AS.
	18	3T9100	1	CONTROL GROUP
	19	3T7093	1	PLATE AS.
	20	3T6663	1	PLATE AS. (EA. PLATE AS. INCL.)
	21	3P3604	2	STUD
	22	1B4330	2	NUT
C	23	3T9343	1	SWITCH GROUP (FILTER BYPASS)
	24	4B4863	2	WASHER
	25	5P9262	4	SEAL
	26	3D2824	1	SEAL
	27	1S8517	2	RETAINER
	28	3N7848	1	SPRING
	29	4B4273	2	WASHER
	30	4B2043	2	NUT
	31	3S2093	1	STRAP
	32	3J1907	3	SEAL
	33	6V0484	1	ADAPTER
	34	6T2774	8	CLIP (V. TYPE)

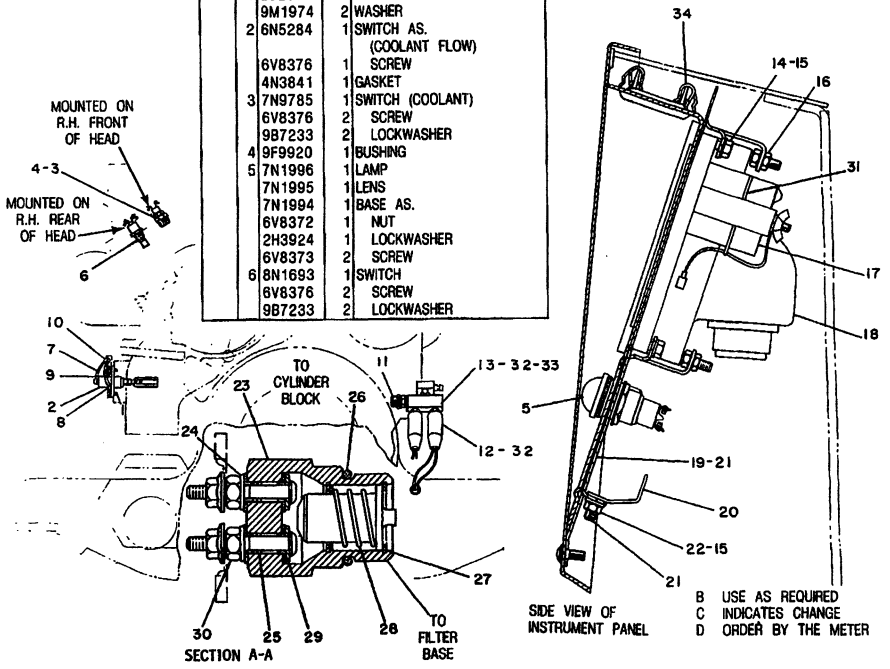

B USE AS REQUIRED
C INDICATES CHANGE
D ORDER BY THE METER

327152

327152 P

CAB, GAUGES AND ACCESSORIES

NOTE	REF NO	PART NUMBER	QTY	DESCRIPTION
	1	3T6962	1	SWITCH AS. (FUEL PRESS. ARMING)
		6V8376	2	SCREW
		9B7233	2	LOCKWASHER
		3B6768	1	BUSHING
	2	9G1300	1	SWITCH (TEMP. HYD. OIL)
		6V8376	2	SCREW
		9B7233	2	LOCKWASHER

	3	3K0360	2	SEAL
	4	6V3884	8	SCREW
		8M6701	8	WASHER
	5	9G3341	1	SWITCH (FILTER BY-PASS TEMP.)
		6V8376	2	SCREW
		9B7233	2	LOCKWASHER
	6	6T2775	2	LENS
	7	3J1907	1	SEAL
	8	8N3844	1	SENDER (HYD. OIL TEMP.)
	9	6N5926	1	SENDER (CONV. OIL TEMP.)
	10	3T6324	1	PLATE
	11	3T6326	1	HOUSING

B USE AS REQUIRED

	12	7N9560	1	SWITCH (CONV. OIL TEMP.)
		6V8376	2	SCREW
		9B7233	2	LOCKWASHER
	13	3T6905	1	INLAY
	14	3T6838	1	PANEL AS.
BD		5P5637		SEAL
	15	6N5926	1	SENDER (ENGINE COOLANT TEMP.)

	16	7N8001	1	SWITCH AS. (EMS TEST)
		6T3631	2	NUT
		6T3632	1	LOCKWASHER (LARGE)
		6T3633	1	RING
		6V8374	2	SCREW
		3L8187	2	LOCKWASHER (SMALL)

D ORDER BY THE METER

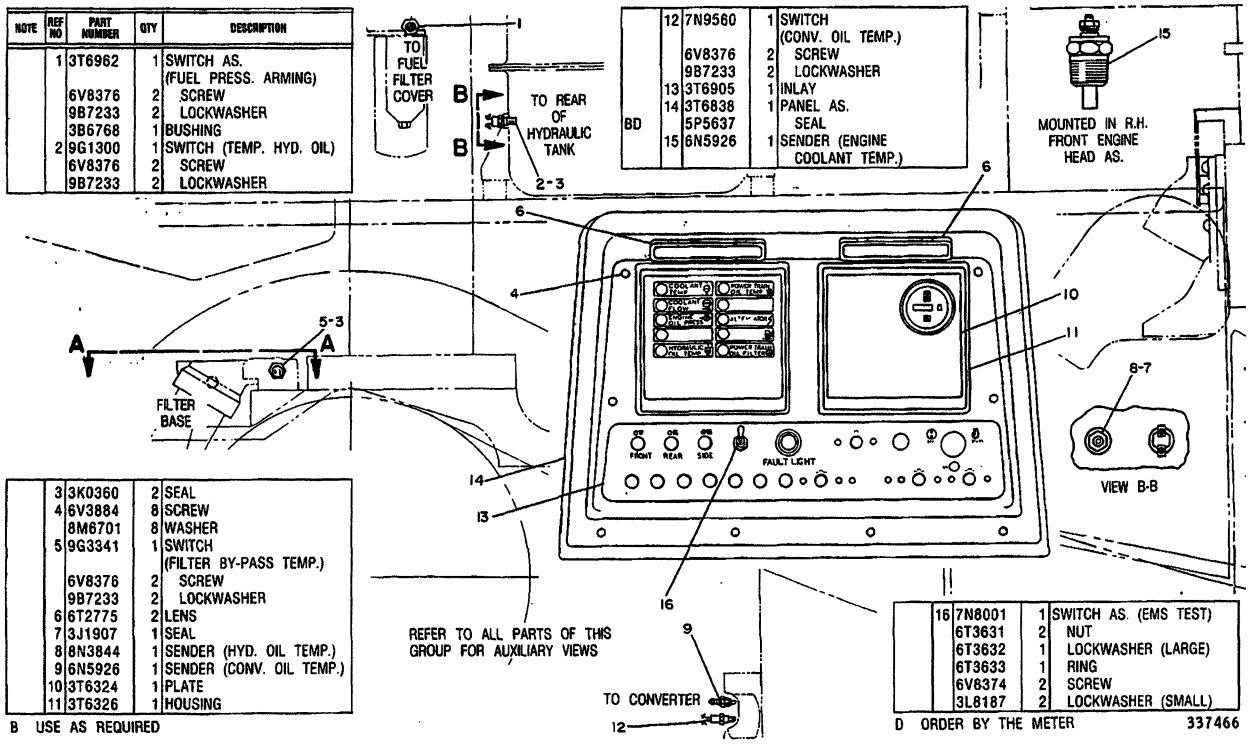

337466 P

NOTE	REF NO	PART NUMBER	QTY	DESCRIPTION
	1	2B2695	2	BOLT
		9M1974	2	WASHER
C	2	6T9315	1	SWITCH AS. (COOLANT FLOW)
		4N3841	1	GASKET
	3	7N9785	1	SWITCH (COOLANT)
		6V8376	2	SCREW
		9B7233	2	LOCKWASHER

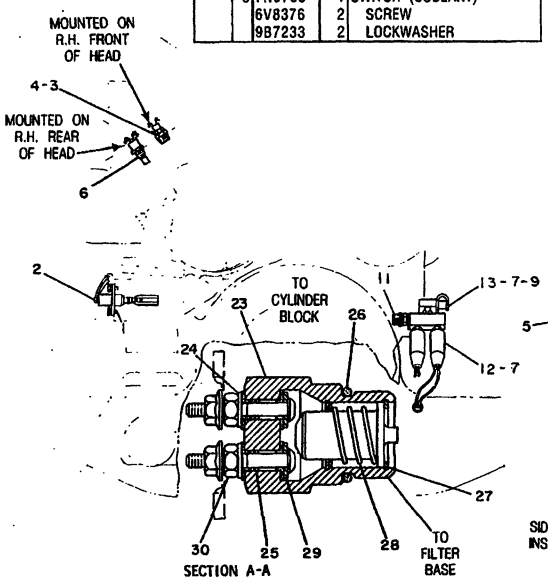

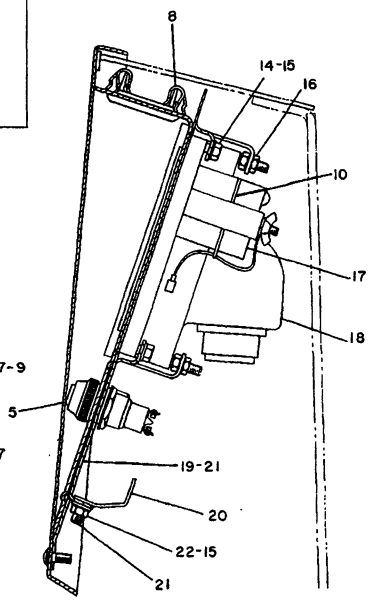

	4	9F9920	1	BUSHING
	5	7N1996	1	LAMP
C		6T7058	1	LENS
C		3T0304	1	BASE
	6	8N1693	1	SWITCH
		6V8376	2	SCREW
		9B7233	2	LOCKWASHER
C	7	3J1907	4	SEAL
	8	6T2774	8	CLIP (V. TYPE)
	9	6V0484	1	ADAPTER
	10	3S2093	1	STRAP
	11	3T9660	1	FITTING
		2M9780	1	SEAL
	12	6T4949	2	SWITCH AS. (PRESSURE) (EACH INCLUDES)
		7N9738	1	HOUSING
		7N7780	1	PIN
		7N7779	1	SOCKET
	13	6V3965	1	NIPPLE AS.
		6V0852	1	CAP
	14	0S1614	4	BOLT
	15	5P0537	6	WASHER
	16	2D6235	4	LOCKNUT
	17	3T8325	1	METER AS.
	18	3T9100	1	CONTROL GROUP
	19	3T7093	1	PLATE AS.
	20	3T6663	1	PLATE AS. (EA. PLATE AS. INCL.)
	21	3P3604	2	STUD
	22	1B4330	2	NUT
	23	3T9343	1	SWITCH GROUP (FILTER BYPASS)
	24	4B4863	2	WASHER
	25	5P9262	4	SEAL
	26	3D2824	1	SEAL
	27	1S8517	2	RETAINER
	28	3N7848	1	SPRING
	29	4B4273	2	WASHER
	30	4B2043	2	NUT

C INDICATES CHANGE

334728

334728 P

7451 **7G9705 INSTRUMENT GP-PART 2 OF 2**
S/N 53Y3239-4092

CAB, GAUGES AND ACCESSORIES

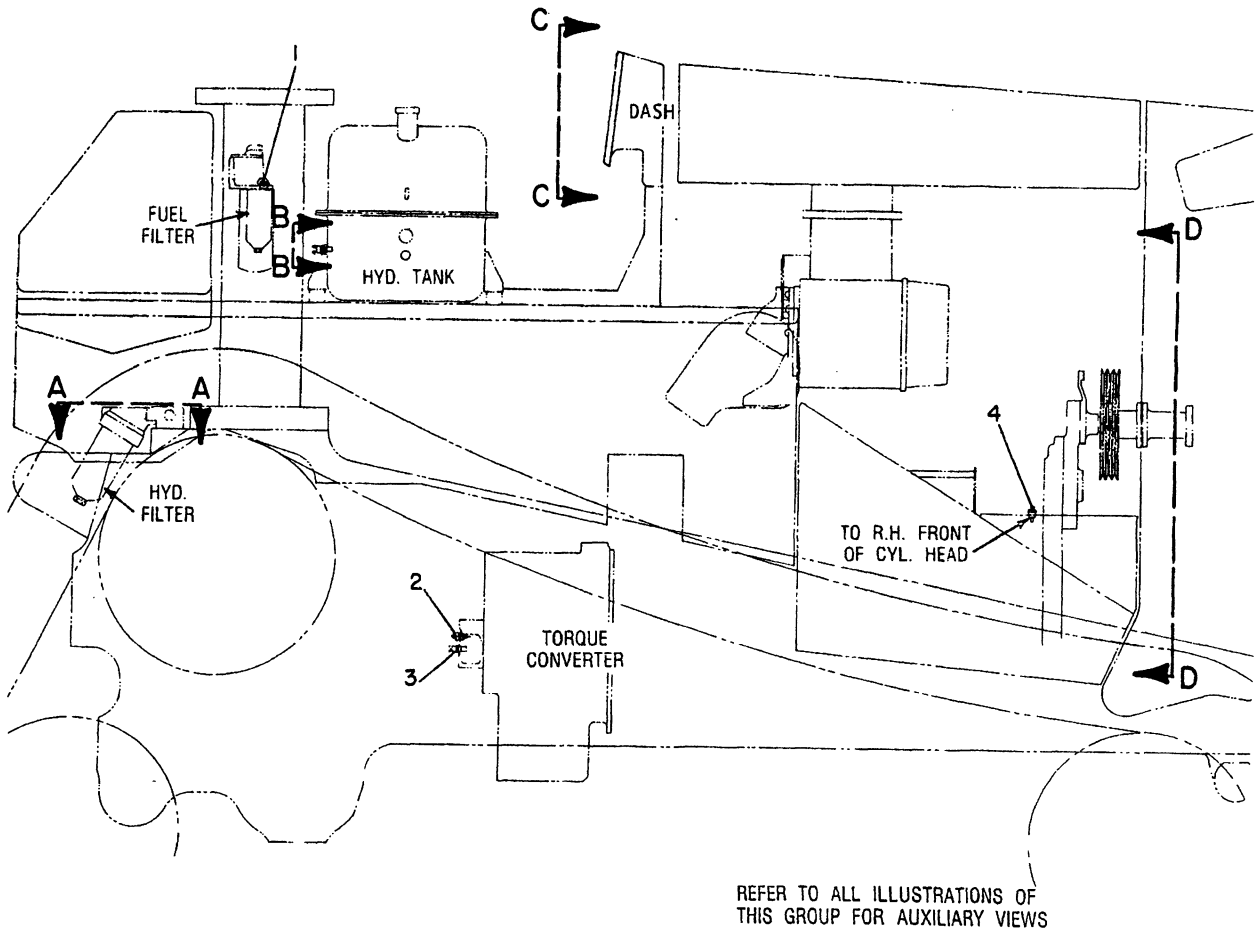

NOTE	REF NO	PART NUMBER	QTY	PART NAME
	1	9W3187	1	SWITCH AS-PRESSURE (FUEL)
		6V8376	2	SCREW-MACHINE (8-32X.25IN)
		9B7233	2	LOCKWASHER (NO.8)
		3B6768	1	BUSHING-REDUCER
	2	6N5926	1	SENDER-TEMPERATURE (OIL)
	3	7N9560	1	SWITCH AS-TEMPERATURE (OIL)
		6V8376	2	SCREW-MACHINE (8-32X.25IN)
		9B7233	2	LOCKWASHER (NO.8)
	4	6N5926	1	SENDER-TEMPERATURE (COOLANT)

B-351934 P

7451 **7G9705 INSTRUMENT GP-PART 1 OF 3**
S/N 53Y4093-Up

CAB, GAUGES AND ACCESSORIES

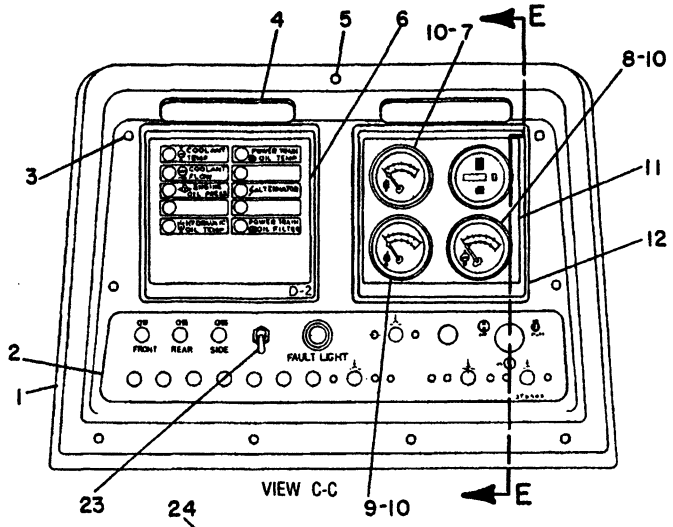

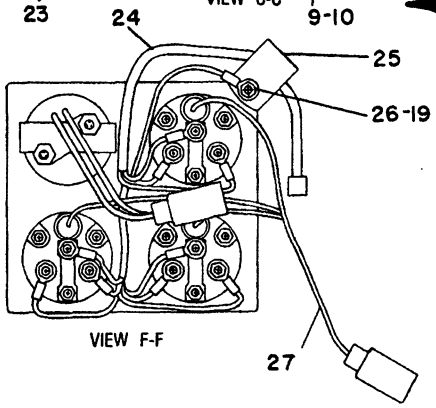

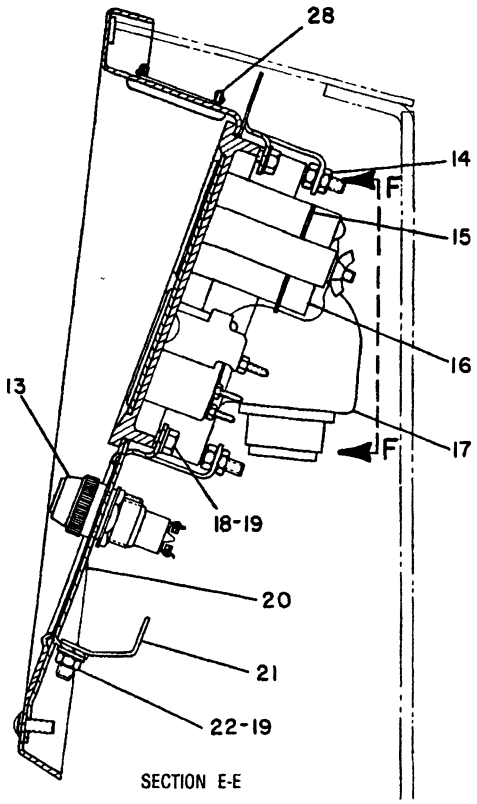

NOTE	REF NO	PART NUMBER	QTY	PART NAME
	1	3T6838	1	PANEL AS-DASH
BDC		5P5672		SEAL
	2	3T6905	1	INLAY
	3	6V3884	8	SCREW-HEX SOCKET
		5P4115	8	WASHER
	4	6T2775	2	LENS
	5	6J0488	1	SCREW-HEAD
		5P1075	1	WASHER-HARD
	6	6V6523	1	FILM-FACE
	7	4W0485	1	INDICATOR AS-CONV OIL TEMP (CONV. OIL TEMP.)
	8	4W0483	1	INDICATOR-COOLANT TEMPERATURE (COOLANT TEMP)
	9	4W1129	1	INDICATOR AS-HYD OIL TEMP (HYD.OIL TEMP)
	10	6V3507	3	SEAL-RECTANGULAR
		5D0019	3	LAMP-MINIATURE
	11	3T6326	1	HOUSING
	12	3T6325	1	FILM-FACE
	13	7N1996	1	LAMP
		6T7058	1	LENS-RED
		3T0304	1	BASE-INDICATOR LIGHT
	14	2D6235	4	LOCKNUT
	15	3S2093	1	STRAP-CABLE
C	16	9W1495	1	KIT-SERVICE METER
	17	3T9100	1	MONITOR GP-OPERATOR
	18	0S1614	3	BOLT
	19	5P0537	6	WASHER
	20	3T7093	1	PLATE AS
		3P3604	2	STUD-WELD
	21	3T6663	1	PLATE AS
		3P3604	2	STUD-WELD
	22	1B4330	2	NUT
Y	23	7N8001	1	SWITCH AS-TOGGLE (EMS TEST)
	24	3T7147	1	HARNESS AS
	25	8J1256	1	CLIP
	26	2A0762	1	BOLT
	27	6T2666	1	HARNESS AS
	28	6T2774	8	CLIP (V TYPE)

B-USE AS REQUIRED
C-CHANGE FROM PREVIOUS TYPE
D-ORDER BY THE METER
Y-SEPARATE ILLUSTRATION

B- 455169 P

7451 **7G9705 INSTRUMENT GP-PART 2 OF 3**
S/N 53Y4093-Up
7N8001-Page 335P.04

CAB, GAUGES AND ACCESSORIES

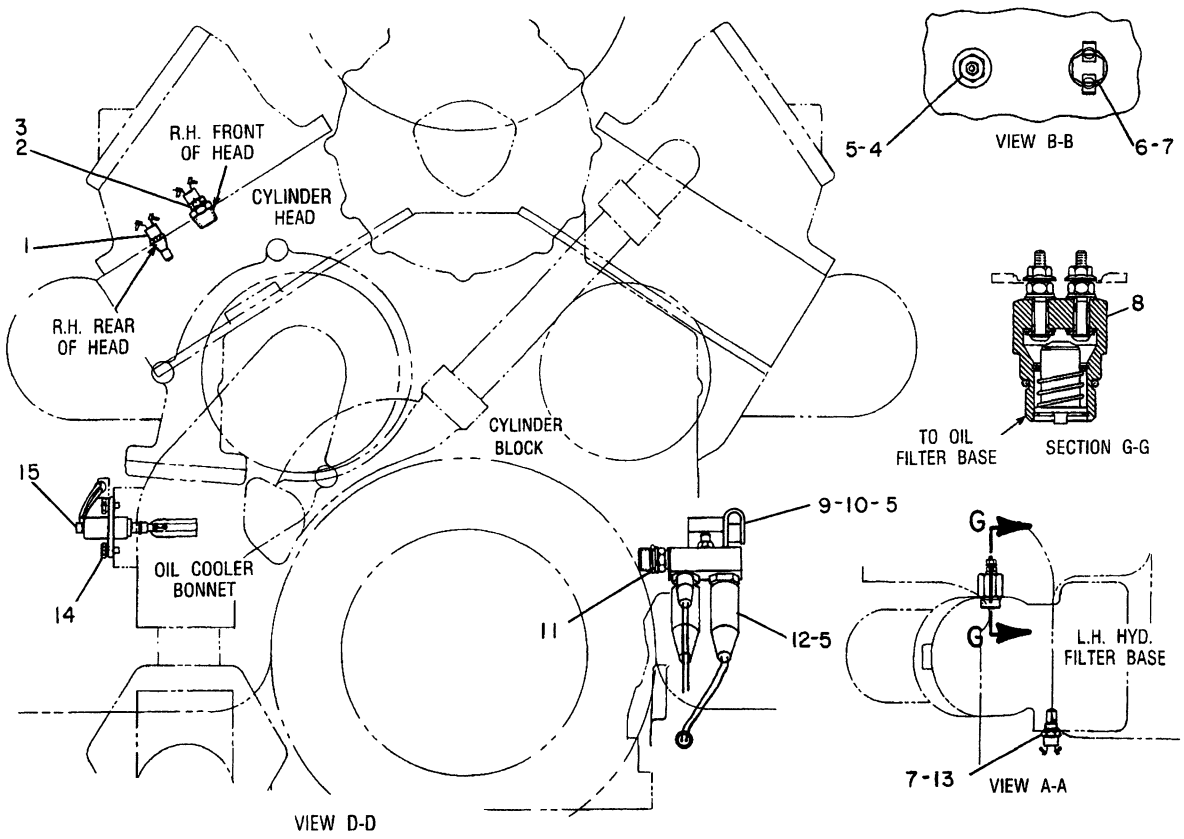

NOTE	REF NO	PART NUMBER	QTY	PART NAME	NOTE	REF NO	PART NUMBER	QTY	PART NAME
	1	8N1693	1	SWITCH-TEMPERATURE (TEMP. ETHER AID ACTIVATOR)		12	6T4949	2	SWITCH AS (PRESSURE) (EACH INCLUDES)
		6V8376	2	SCREW-MACHINE			7N9738	1	HOUSING-RECEPTACLE
		9B7233	2	LOCKWASHER			7N7780	1	PIN-CONNECTOR
	2	7N9785	1	SWITCH-TEMPERATURE (COOLANT TEMP. IND.)			7N7779	1	SOCKET
		6V8376	2	SCREW-MACHINE		13	9G3341	1	SWITCH AS-TEMPERATURE (FILTER BY-PASS TEMP.)
		9B7233	2	LOCKWASHER			6V8376	2	SCREW-MACHINE
	3	9F9920	1	BUSHING-REDUCER			9B7233	2	LOCKWASHER
	4	8N3844	1	SENDER-TEMPERATURE (HYD. OIL TEMP)		14	2B2695	2	BOLT
	5	3J1907	5	SEAL-O-RING			9M1974	2	WASHER-HARD
	6	9G1300	1	SWITCH-TEMPERATURE (TEMP. HYD. OIL)		15	9W2343	1	SWITCH AS (COOLANT FLOW)
		6V8376	2	SCREW-MACHINE			4N3841	1	GASKET
		9B7233	2	LOCKWASHER					
	7	3K0360	2	SEAL-O-RING					
Y	8	3T9343	1	SWITCH GP-FILTER BYPASS (FILTER BYPASS)					
	9	6V3965	1	NIPPLE AS					
		6V0852	1	CAP-DUST					
	10	6V0484	1	ADAPTER-O-RING					
	11	3T9660	1	FITTING-O-RING					
		2M9780	1	SEAL-O-RING					

Y-SEPARATE ILLUSTRATION

B-455179 P

7451 **7G9705 INSTRUMENT GP-PART 3 OF 3**

S/N 53Y4093-Up

3T9343-Page 335P.04

CAB, GAUGES AND ACCESSORIES

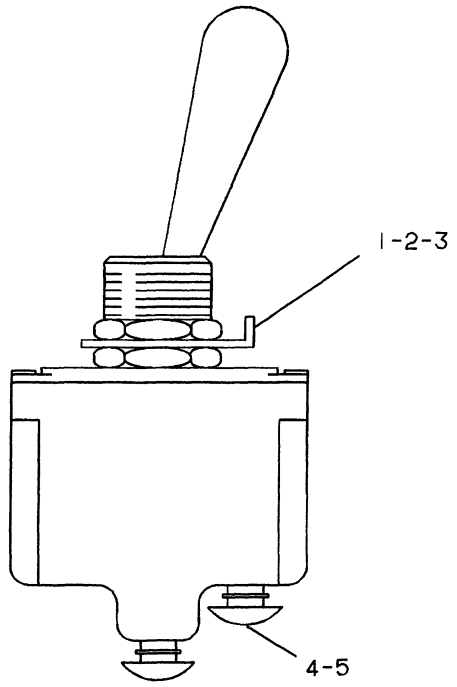

NOTE	REF NO	PART NUMBER	QTY	PART NAME
	1	6T3631	2	NUT-HEX
	2	6T3632	1	LOCKWASHER
	3	6T3633	1	LOCKRING
	4	6V8374	2	SCREW-MACHINE
	5	3L8187	2	LOCKWASHER

C-407550 EP

7332 **7N8001 SWITCH AS**
Part Of 7G9705 Instrument

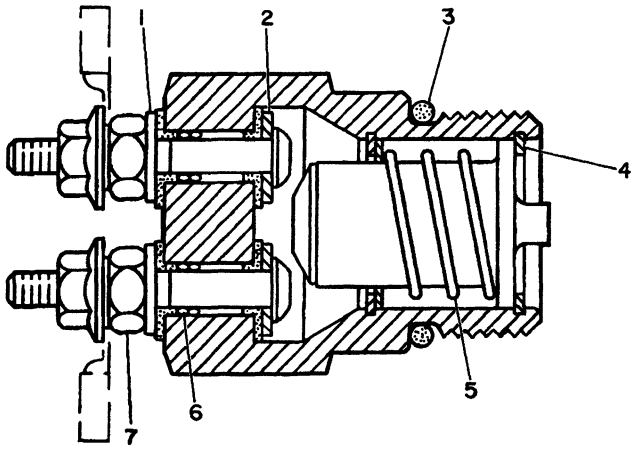

NOTE	REF NO	PART NUMBER	QTY	PART NAME
	1	4B4863	2	WASHER
	2	9W1461	2	WASHER
	3	3D2824	1	SEAL-O-RING
	4	1S8517	2	RING-RETAINING
	5	3N7848	1	SPRING
	6	5P9262	4	SEAL
	7	4B2043	2	NUT

B-511039 EP

1408 **3T9343 SWITCH GP-FILTER BY-PASS**
S/N 53Y1810-Up
Part Of 7G9705 Instrument

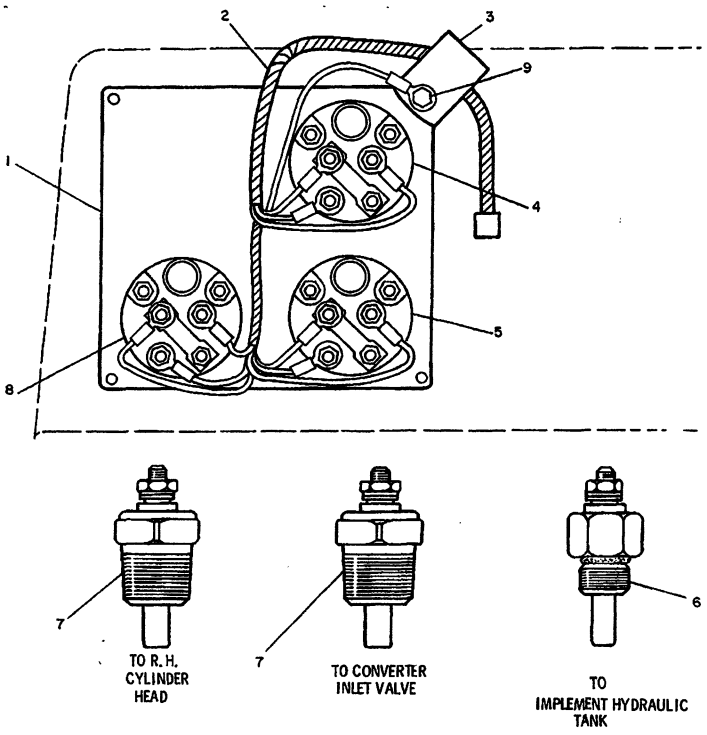

REF. NO.	PART NUMBER	DESCRIPTION	QTY
1	3T6325	PLATE	1
2	3T7147	HARNESS ASSEM, (Separate Illustration)	1
3	2V3216	CLIP	1
4	8N2982	INDICATOR-(hydraulic oil temp)-	1
5	8N2977	INDICATOR-(powertrain oil temp.)-	1
6	8N3844	SENDER-(temperature)	1
	3J1907	SEAL	1
7	6N5926	SENDER-(temperature)	1
8	8N2976	INDICATOR-(coolant oil temp.)-	1
C 9	2A762	BOLT	1

C INDICATES CHANGE

182580

182580 P

7450

3T7146 GAUGE GP
Type 1
3T7147-Page 337
An Attachment

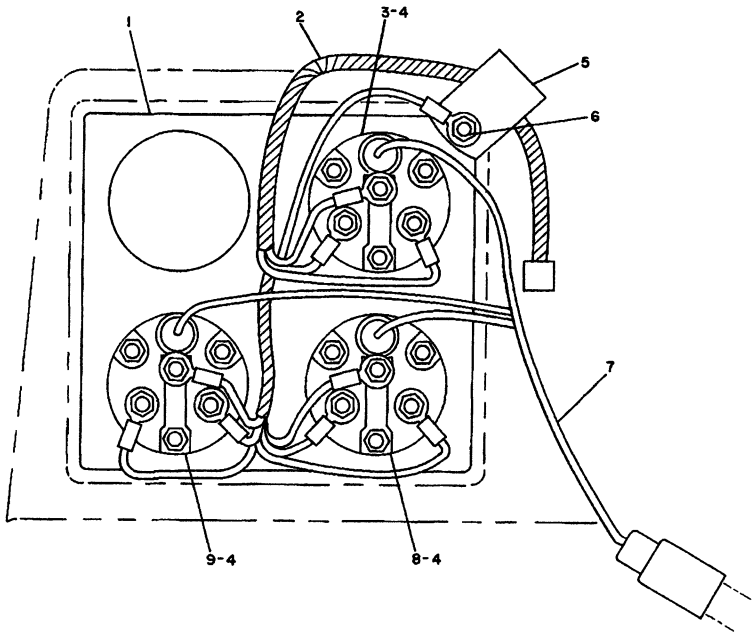

NOTE	REF NO	PART NUMBER	QTY	DESCRIPTION
	1	3T6325	1	PLATE
	2	3T7147	1	HARNESS AS.
C	3	4W1129	1	INDICATOR (HYD. OIL TEMP.)
C	4	5D0019	3	LAMP
C		6V3507	3	SEAL
C	5	8J1256	1	CLIP
	6	2A0762	1	BOLT
C	7	6T2666	1	HARNESS AS.
C	8	4W0485	1	INDICATOR (POWERTRAIN OIL TEMP.)
C	9	4W0483	1	INDICATOR (COOLANT OIL TEMP.)

C INDICATES CHANGE

328141

328141 P

7450

3T7146 GAUGE GP
Type 2
An Attachment

MEMORANDA

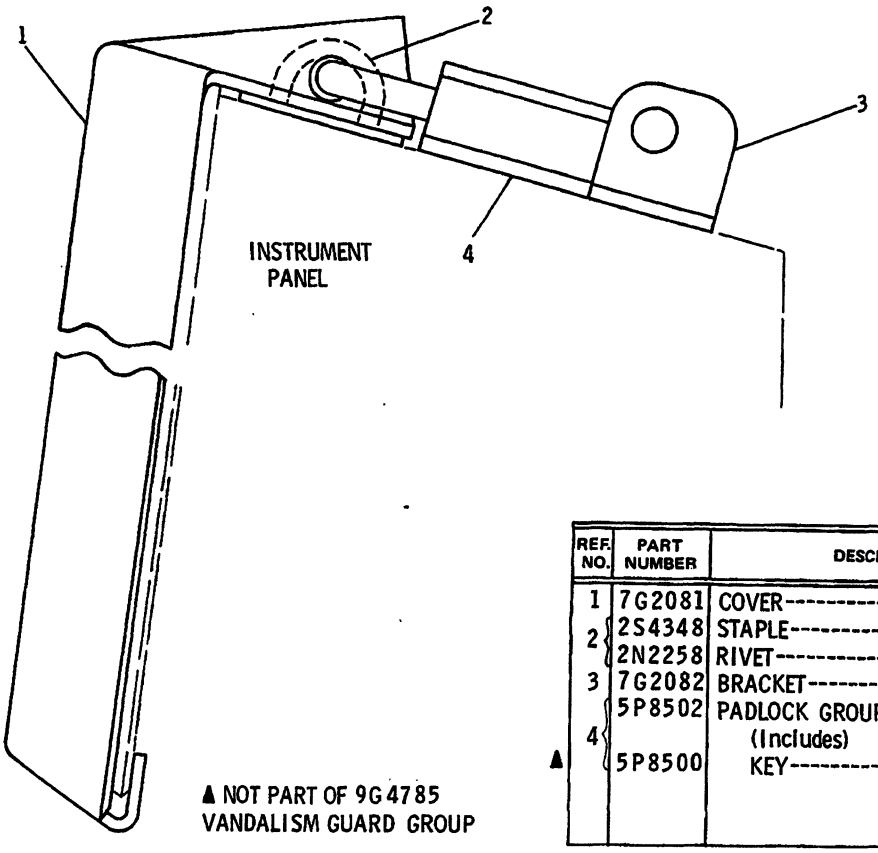

▲ NOT PART OF 9G4785
VANDALISM GUARD GROUP

REF. NO.	PART NUMBER	DESCRIPTION	QTY
1	7G2081	COVER	1
2	2S4348	STAPLE	1
	2N2258	RIVET	4
3	7G2082	BRACKET	1
4	5P8502	PADLOCK GROUP (Includes)	1
▲	5P8500	KEY	2

231016

231016 P

7315 **9G4785 GUARD GP-VANDALISM-INSTRUMENT PANEL**
Replaced By 6T4209-Page 337B
Not For Use With Cab
An Attachment

CAB, GAUGES AND ACCESSORIES

CONSISTS OF:

1 1W6238 PULLEY

335265 P

7401 **7T5949 SUPPRESSION AR-SOUND-EXTERIOR**
S/N 53Y3218-3307
An Attachment

CONSISTS OF:

1 2W5078 PULLEY

335266 P

1090 **7T5950 SUPPRESSION AR-SOUND-EXTERIOR**
S/N 53Y3308-Up
An Attachment

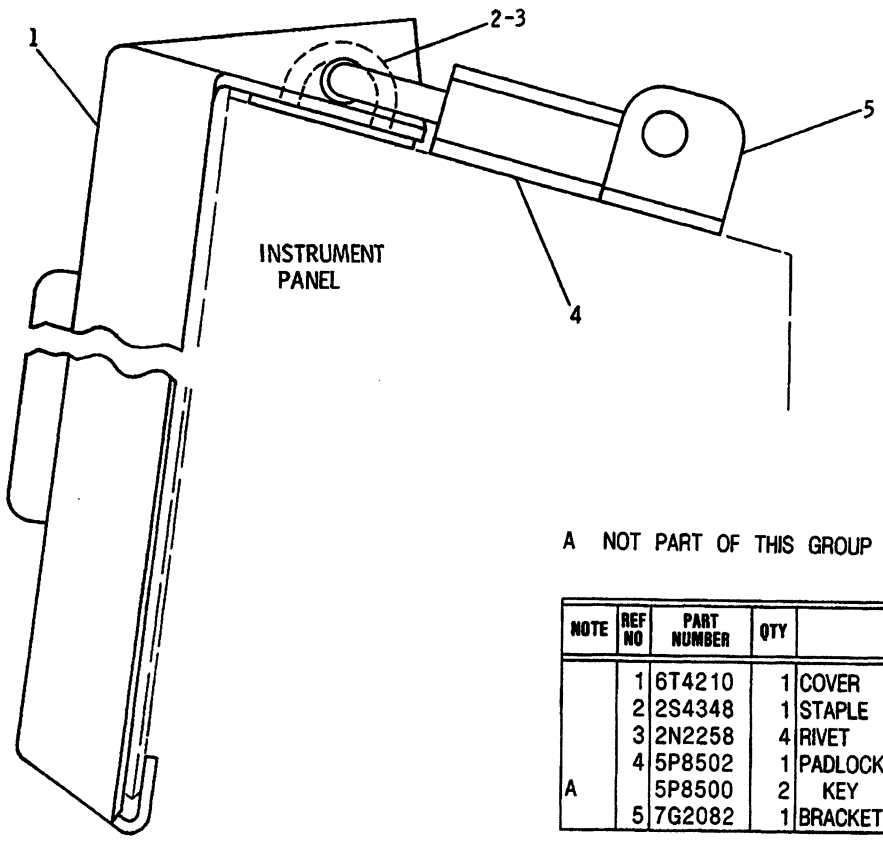

A NOT PART OF THIS GROUP

NOTE	REF NO	PART NUMBER	QTY	DESCRIPTION
	1	6T4210	1	COVER
	2	2S4348	1	STAPLE
	3	2N2258	4	RIVET
	4	5P8502	1	PADLOCK GROUP
A		5P8500	2	KEY
	5	7G2082	1	BRACKET

312251

312251 EP

7315 **6T4209 GUARD GP-VANDALISM-INSTRUMENT PANEL**
For Use On Machines Without Cab
An Attachment

CAB, GAUGES AND ACCESSORIES

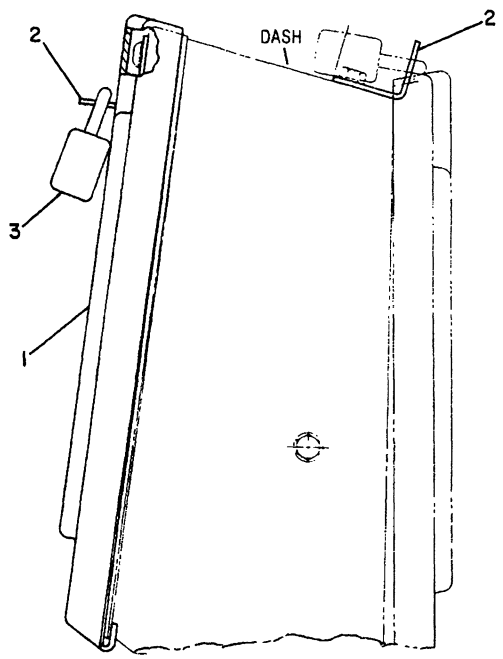

NOTE	REF NO	PART NUMBER	QTY	PART NAME
	1	9W3562	1	COVER
	2	7T2035	3	ANGLE
	3	5P8502	1	PADLOCK GP
A		5P8500	2	KEY
A		6V5874	1	COVER

A-NOT PART OF THIS GROUP

B-350336 P

7315 **9W3648 GUARD GP-VANDALISM**
An Attachment

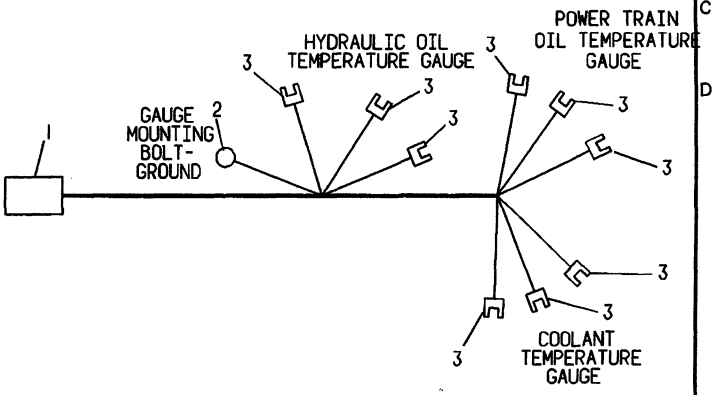

NOTE	REF NO	PART NUMBER	QTY	PART NAME
	1	7N8204	1	HOUSING-RECEPTACLE
		7N7779	2	SOCKET
		7N7780	2	PIN-CONNECTOR
C	2	2L8077	1	TERMINAL
C	3	3T5456	9	TERMINAL AS
				THE FOLLOWING REPAIR KIT IS AVAILABLE:
D		5P5623		WIRE (16 GAUGE)

C-CHANGE FROM PREVIOUS TYPE
D-ORDER BY THE METER

A-182579 EP

1408 **3T7147 HARNESS AS**
Part Of 3T7146 Gauge
An Attachment

			PAGE
1	9G9288	COVER GP-PROTECTION-HYDRAULIC TANK CAP.....	198
1	1N3599	COVER GP-PROTECTION-RADIATOR CAP.....	37
1	7N9187	PROTECTION GP-VANDALISM-OIL FILLER.....	30
1	1W4368	PROTECTION GP-VANDALISM-OIL LEVEL GAUGE.....	29
5	5P8501	PADLOCK GP	

USAGE: FUEL TANK DRAIN COVER
FUEL FILTER DOOR
POWERTRAIN OIL FILLER & DIPSTICK COVER
TRANSMISSION SAFETY LEVER
FUEL TANK FILL CAP

INCLUDES:
2 5P8500 KEY

406445 P

7315 **6T6957 LOCK GP-VANDALISM**
An Attachment

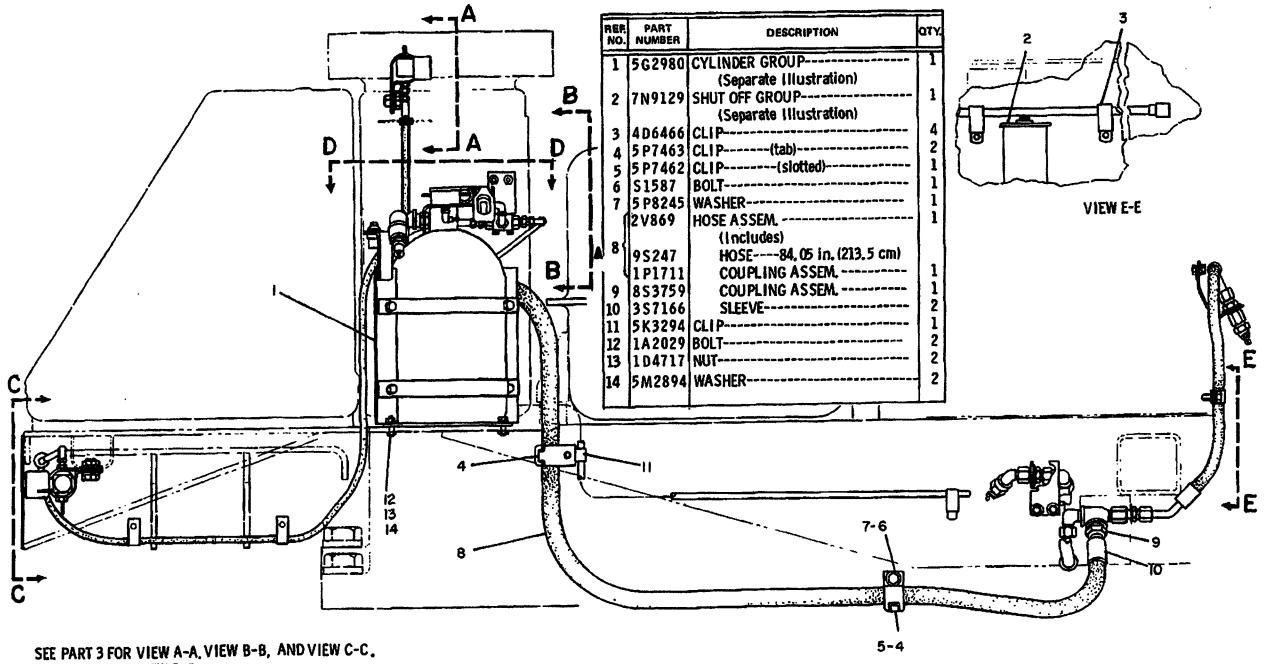

REF. NO.	PART NUMBER	DESCRIPTION	QTY.
1	5G2980	CYLINDER GROUP (Separate Illustration)	1
2	7N9129	SHUT OFF GROUP (Separate Illustration)	1
3	4D6466	CLIP	4
4	5P7463	CLIP-(tab)	2
5	5P7462	CLIP-(slotted)	1
6	S1587	BOLT	1
7	5P8245	WASHER	1
8	2V869	HOSE ASSEM. (Includes)	1
	9S247	HOSE-84.05 in. (213.5 cm)	
	1P1711	COUPLING ASSEM.	1
9	8S3759	COUPLING ASSEM.	1
10	3S7166	SLEEVE	2
11	5K3294	CLIP	1
12	1A2029	BOLT	2
13	1D4717	NUT	2
14	5M2894	WASHER	2

SEE PART 3 FOR VIEW A-A, VIEW B-B, AND VIEW C-C.
SEE PART 4 FOR VIEW D-D.

▲ ORDER BY THE INCH

235245

235245 P

7401 **3T1338 SUPPRESSION GP-FIRE-DRY CHEMICAL-PART 1 OF 4**
Type 1. S/N 53Y1-3484
When Used For Woods Application
7N9129-Page 346,5G2980-Page 347
An Attachment

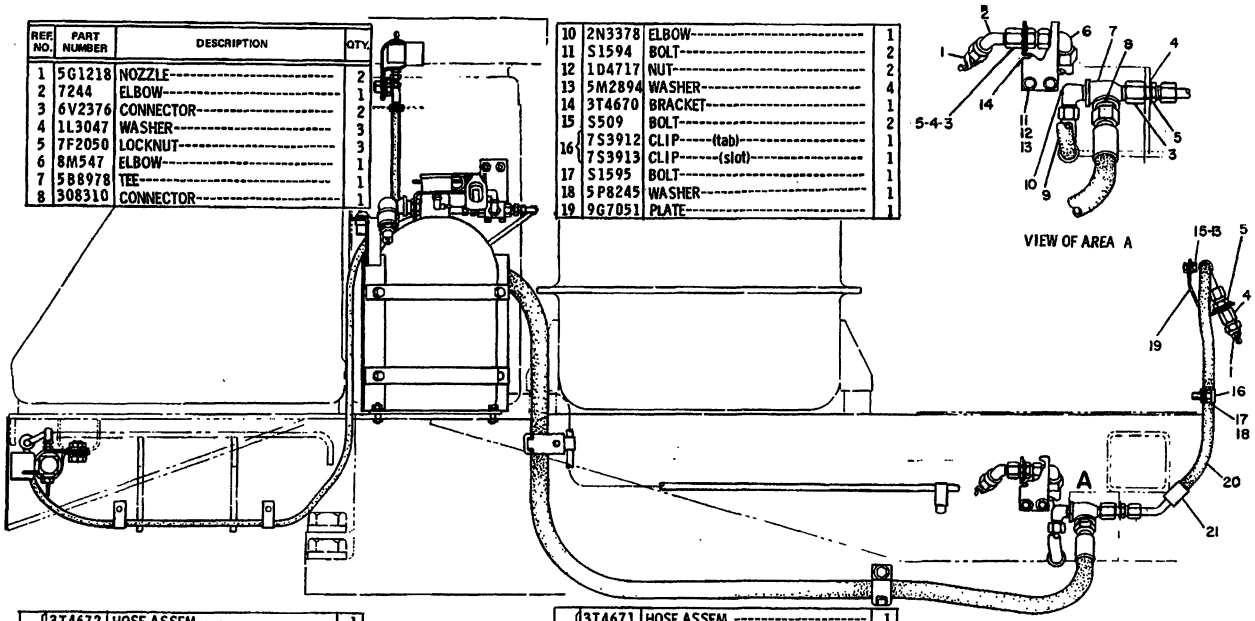

REF. NO.	PART NUMBER	DESCRIPTION	QTY.
1	5G1218	NOZZLE	2
2	7244	ELBOW	1
3	6V2376	CONNECTOR	2
4	1L3047	WASHER	3
5	7F2050	LOCKNUT	3
6	8M547	ELBOW	1
7	5B8978	TEE	1
8	308310	CONNECTOR	1
10	2N3378	ELBOW	1
11	S1594	BOLT	2
12	1D4717	NUT	2
13	5M2894	WASHER	4
14	3T4670	BRACKET	1
15	S509	BOLT	2
16	7S3912	CLIP-----(tab)	1
	7S3913	CLIP-----(slot)	1
17	S1595	BOLT	1
18	5P8245	WASHER	1
19	9G7051	PLATE	1

▲ 9	3T4672	HOSE ASSEM. (Includes)	1
	9S671	HOSE--12.6 in. (32 cm)	
	3S8606	SLEEVE	2
	8S4055	COUPLING ASSEM.-(straight)-	1
	8S6391	COUPLING ASSEM.-(90°)	1

▲ 20	3T4671	HOSE ASSEM. (Includes)	1
	9S671	HOSE---27.56 in. (70 cm)	
	8S6391	COUPLING ASSEM.--(90°)----	1
	9S9727	COUPLING ASSEM.--(45°)----	1
21	3S8606	SLEEVE	2

▲ ORDER BY THE INCH

235246

235246 P

7401 3T1338 SUPPRESSION GP-FIRE-DRY CHEMICAL-PART 2 OF 4

Type 1. S/N 53Y1-3484
When Used For Woods Application
An Attachment

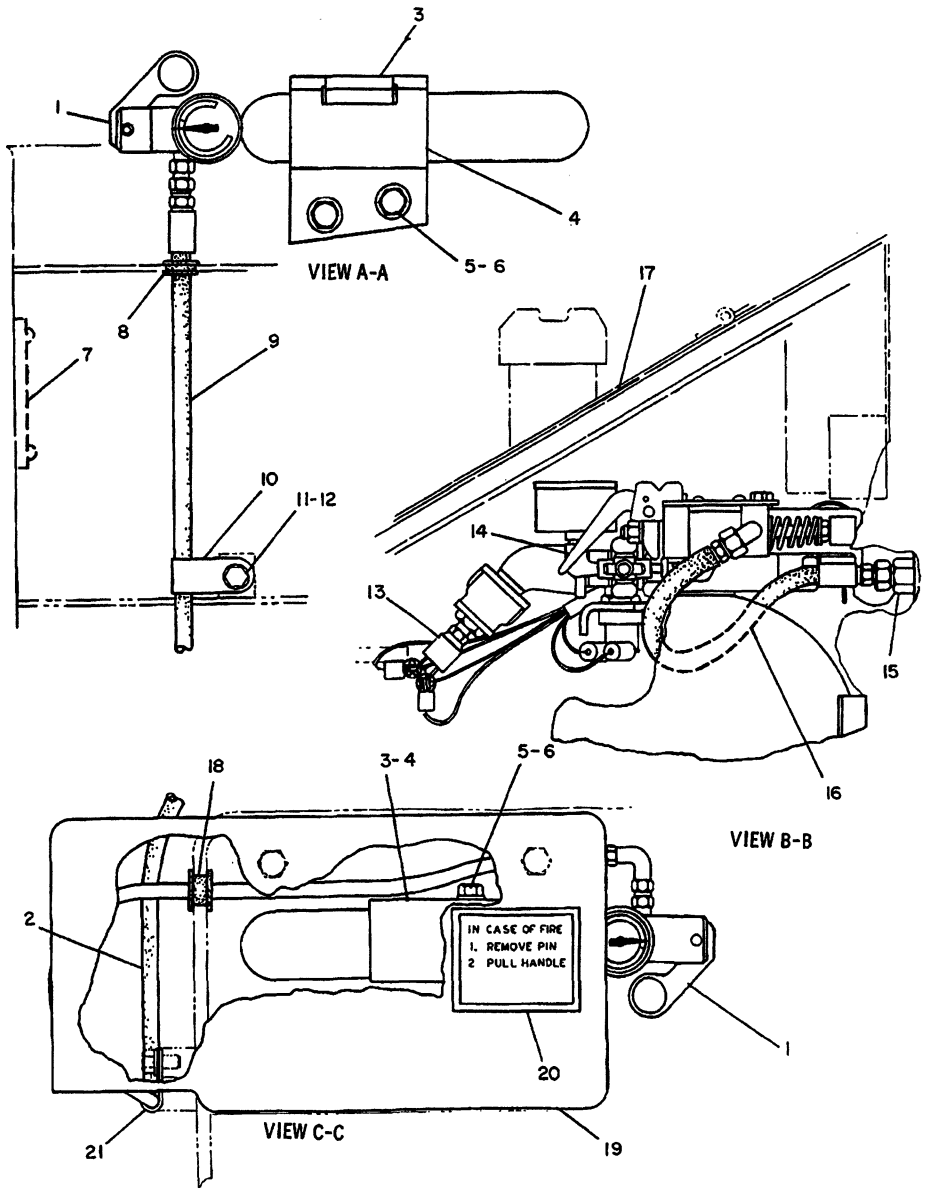

NOTE	REF NO	PART NUMBER	QTY	DESCRIPTION
CY	1	5G3015	2	CARTRIDGE & VALVE AS.
	2	9G4237	1	HOSE AS. 183CM(72.05IN.)
	3	7G4487	2	CLIP (TAB)
	4	7G4488	2	CLIP (SLOT)
	5	S1621	4	BOLT
	6	5P8245	4	WASHER
	7	6V1384	1	PLATE
	8	9D3768	1	GROMMET
	9	9G4235	1	HOSE AS. 118CM(46.46IN.)
	10	7B7501	1	CLIP
	11	4F4879	1	BOLT
	12	5M2894	1	WASHER
	13	9G8010	1	SWITCH AS. (PRESSURE)
	14	3B6552	1	ELBOW
	15	2P1314	1	CONNECTOR
		3J1907	1	SEAL
	16	3T3848	1	HOSE AS. 33CM(13IN.)
	17	6V3368	1	FILM
	18	5D7635	1	GROMMET
	19	3T2989	1	COVER AS.
		9F2978	1	NUT (WELD)
	20	5P8782	2	FILM
	21	5D6523	2	CLIP

C INDICATES CHANGE
Y SEPARATE ILLUSTRATION

310429

310429 P

7401

3T1338 SUPPRESSION GP-FIRE-DRY CHEMICAL-PART 3 OF 4
Type 1. S/N 53Y1-3484
When Used For Woods Application
5G3015-Page 346A
An Attachment

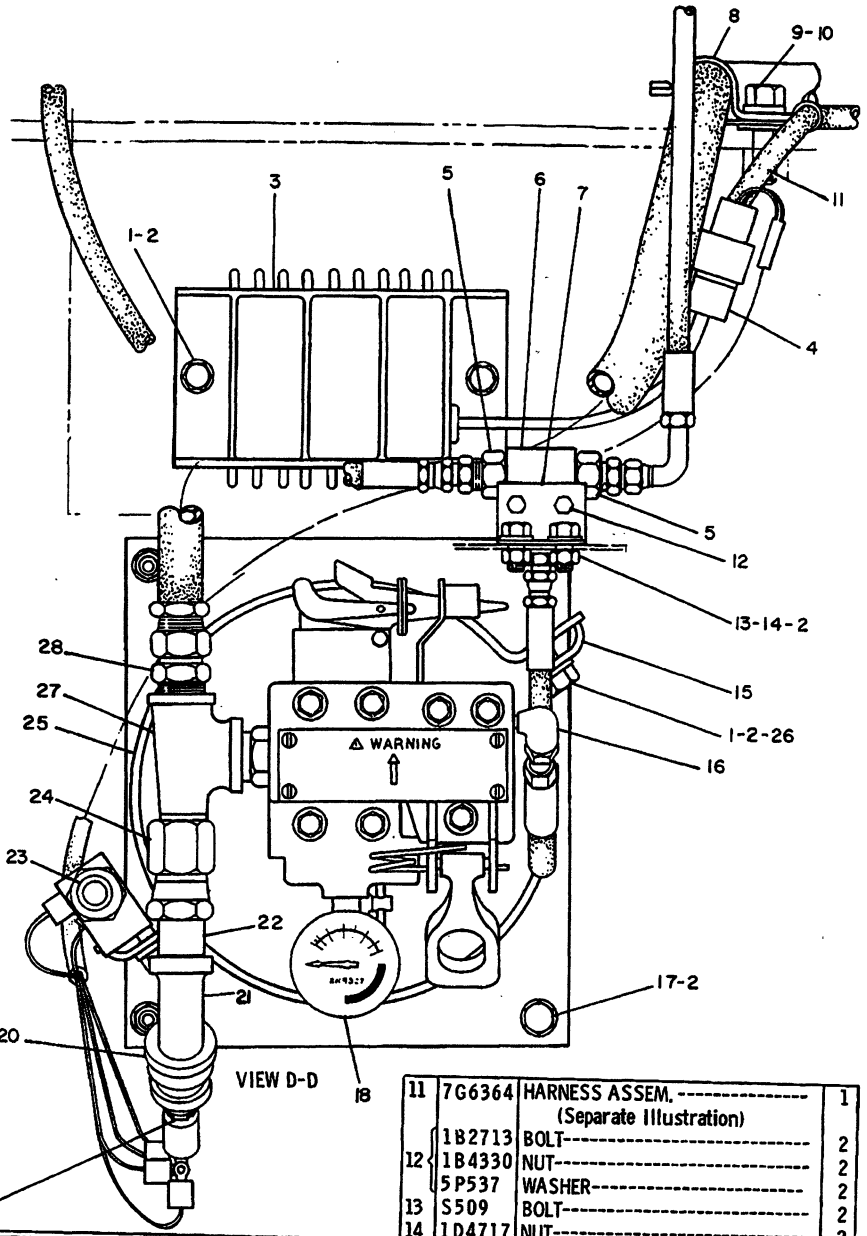

REF. NO.	PART NUMBER	DESCRIPTION	QTY.
1	S1594	BOLT	6
2	5M2894	WASHER	10
3	9G9287	CONTROL ASSEM. (Includes)	1
4	9G3670	HOUSING	1
	7N7779	SOCKET	1
	7N7780	PIN	1
5	2P1314	CONNECTOR	2
	3J1907	SEAL	2
6	8J6875	VALVE ASSEM. --(shuttle)	1
7	3T3849	BRACKET	1
8	5P7462	CLIP	1
9	S1587	BOLT	1
10	5P8245	WASHER	1
11	7G6364	HARNESS ASSEM. (Separate Illustration)	1
12	1B2713	BOLT	2
	1B4330	NUT	2
	5P537	WASHER	2
13	S509	BOLT	2
14	1D4717	NUT	2
15	9G1171	BRACKET	2
16	2N1287	ELBOW	1
17	1A2029	BOLT	2
18	8N9387	GAUGE	1
19	2H5547	BUSHING	1
20	1F6711	COUPLING	1
21	3B7732	ELBOW	1
22	3B7270	NIPPLE	1
23	3F1006	SWITCH ASSEM.	1
24	1L2702	CONNECTOR	1
25	9G4241	BRACKET ASSEM. (Includes)	1
26	9F2978	NUT--(weld)	4
27	1N8559	TEE	1
28	4S6678	CONNECTOR	1

236464 236464 P

7401 **3T1338 SUPPRESSION GP-FIRE-DRY CHEMICAL-PART 4 OF 4**
Type 1. S/N 53Y1-3484
When Used For Woods Application
7G6364-Page 346
An Attachment

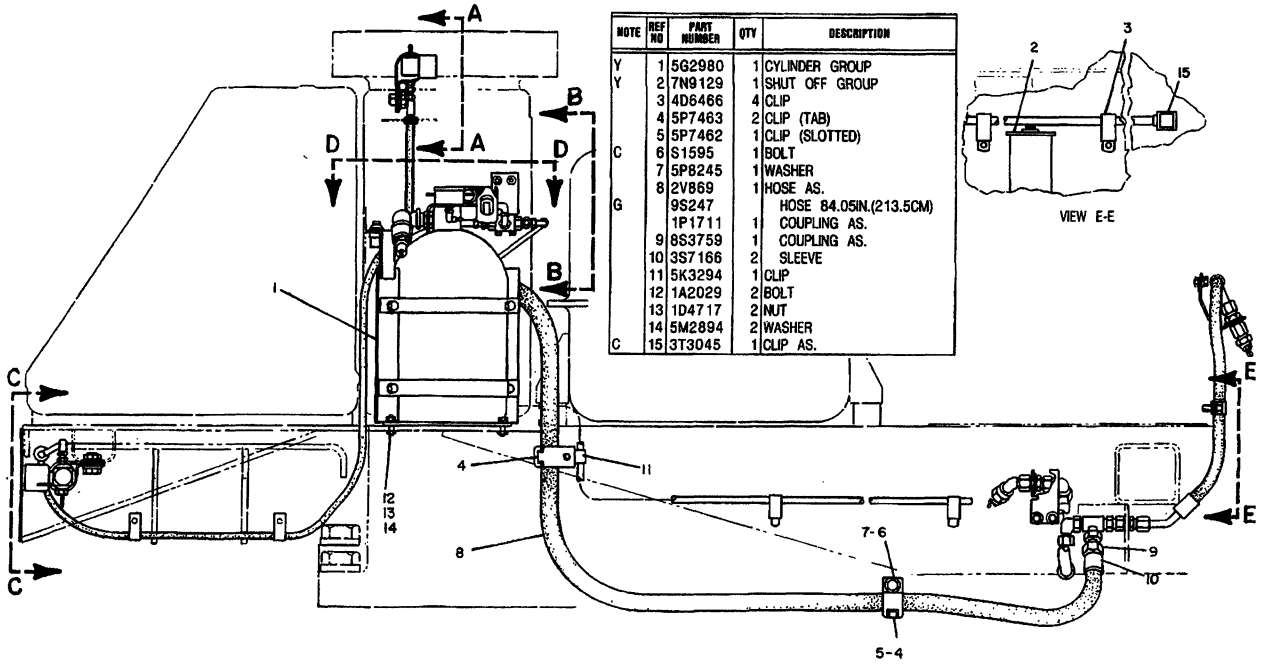

NOTE	REF NO	PART NUMBER	QTY	DESCRIPTION
Y	1	5G2980	1	CYLINDER GROUP
Y	2	7N9129	1	SHUT OFF GROUP
	3	4D6466	4	CLIP
	4	5P7463	2	CLIP (TAB)
	5	5P7462	1	CLIP (SLOTTED)
C	6	S1595	1	BOLT
	7	5P8245	1	WASHER
	8	2V869	1	HOSE AS.
G		9S247		HOSE 84.05IN.(213.5CM)
		1P1711	1	COUPLING AS.
	9	8S3759	1	COUPLING AS.
	10	3S7166	2	SLEEVE
	11	5K3294	1	CLIP
	12	1A2029	2	BOLT
	13	1D4717	2	NUT
	14	5M2894	2	WASHER
C	15	3T3045	1	CLIP AS.

REFER TO ALL PARTS OF THIS GROUP FOR AUXILIARY VIEWS

C INDICATES CHANGE
G ORDER BY THE INCH
Y SEPARATE ILLUSTRATION

312381

312381 P

7401 **3T1338 SUPPRESSION GP-FIRE-DRY CHEMICAL-PART 1 OF 4**

Type 2. S/N 53Y1-3484
When Used For Woods Application
7N9129-Page 346,5G2980-Page 347
An Attachment

NOTE	REF NO	PART NUMBER	QTY	DESCRIPTION
	1	5G1218	2	NOZZLE
	2	7244	1	ELBOW
	3	6V2376	2	CONNECTOR
	4	1L3047	3	WASHER
	5	7F2050	3	LOCKNUT
C	6	8M547	2	ELBOW
C	7	6S5693	1	TEE
C	8	5P9789	1	REDUCER

C INDICATES CHANGE
G ORDER BY THE INCH

C	10	2P1281	1	UNION
	11	S1594	2	BOLT
	12	1D4717	2	NUT
	13	5M2894	4	WASHER
	14	3T4670	1	BRACKET
C	15	T102	2	BOLT
	16	7S3912	1	CLIP (TAB)
		7S3913	1	CLIP (SLOT)
	17	S1595	1	BOLT
	18	5P8245	1	WASHER
	19	9G7051	1	PLATE

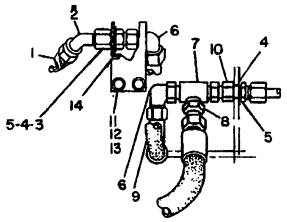

VIEW OF AREA A

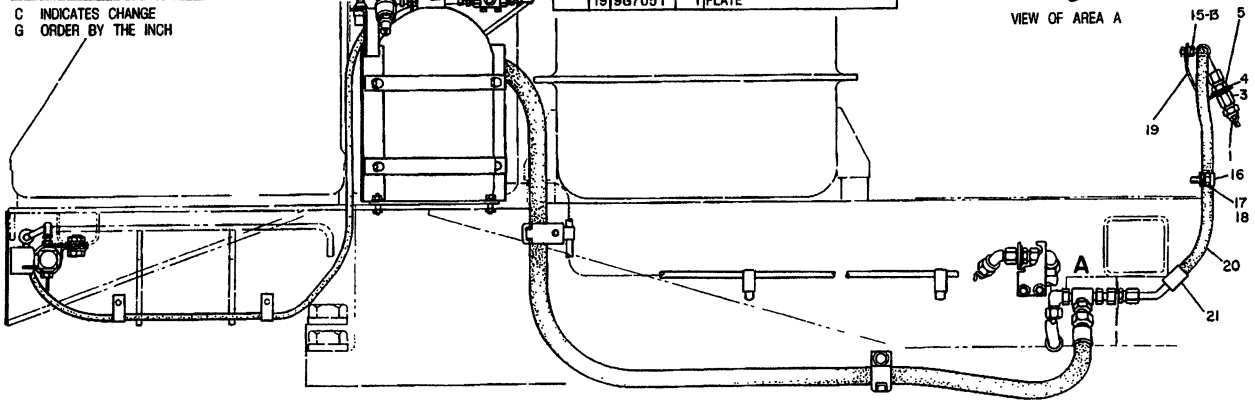

G	9	3T4672	1	HOSE AS.
		9S671		HOSE 12.6IN.(32CM)
		3S8606	2	SLEEVE
		8S4055	1	COUPLING AS. (STRAIGHT)
		8S6391	1	COUPLING AS. (90°)

G	20	3T4671	1	HOSE AS.
		9S671		HOSE 27.56IN.(70CM)
		8S6391	1	COUPLING AS. (90°)
		9S9727	1	COUPLING AS. (45°)
	21	3S8606	2	SLEEVE

310458

310458 P

7401 3T1338 SUPPRESSION GP-FIRE-DRY CHEMICAL-PART 2 OF 4
Type 2. S/N 53Y1-3484
When Used For Woods Application
An Attachment

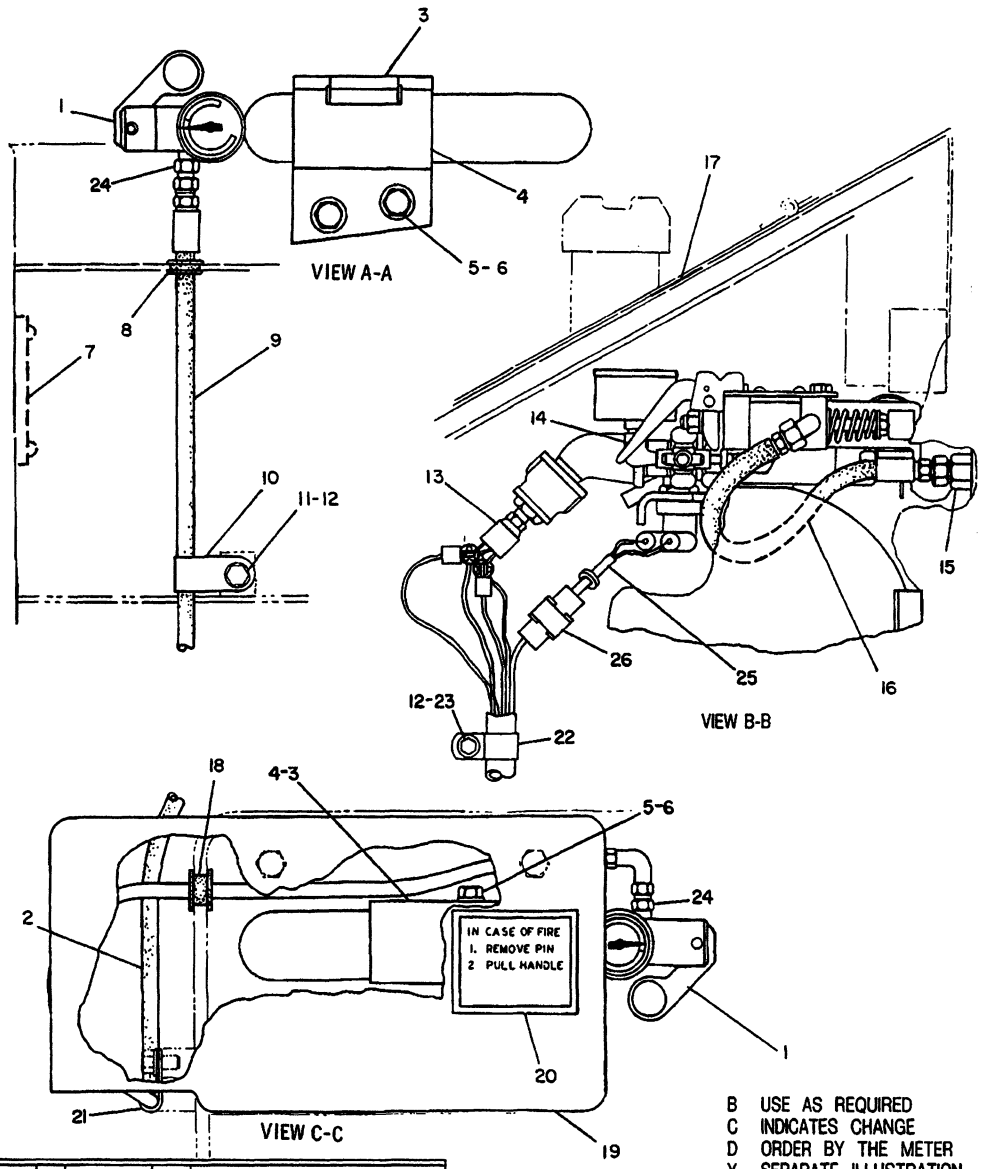

NOTE	REF NO	PART NUMBER	QTY	DESCRIPTION
Y	1	5G3015	2	CARTRIDGE & VALVE AS.
	2	9G4237	1	HOSE AS. 183CM(72.05IN.)
	3	7G4487	2	CLIP (TAB)
	4	7G4488	2	CLIP (SLOT)
	5	S1621	4	BOLT
	6	5P8245	4	WASHER
	7	6V1384	1	PLATE
	8	9D3768	1	GROMMET
	9	9G4235	1	HOSE AS. 118CM(46.46IN.)
	10	7B7501	1	CLIP
	11	4F4879	1	BOLT
C	12	5M2894	2	WASHER
	13	9G8010	1	SWITCH AS. (PRESSURE)
	14	3B6552	1	ELBOW
	15	2P1314	1	CONNECTOR
		3J1907	1	SEAL
	16	3T3848	1	HOSE AS. 33CM(13IN.)
	17	6V3368	1	FILM
C	18	9G4191	1	GROMMET
	19	3T2989	1	COVER AS.
		9F2978	1	NUT (WELD)
	20	5P8782	2	FILM
	21	5D6523	2	CLIP
C	22	1S994	1	CLIP
	23	S509	1	BOLT
C	24	8L6557	2	CONNECTOR
C	25	8V538	1	HARNESS AS.
BD		5P5624		WIRE (14 GAUGE)
		2L8076	2	TERMINAL
		7N9737	1	HOUSING
		7N7780	1	PIN
		7N7779	1	SOCKET
C	26	3T3048	1	CLIP AS.

B USE AS REQUIRED
C INDICATES CHANGE
D ORDER BY THE METER
Y SEPARATE ILLUSTRATION

310459

310459 P

7401 **3T1338 SUPPRESSION GP-FIRE-DRY CHEMICAL-PART 3 OF 4**
Type 2. S/N 53Y1-3484
When Used For Woods Application
5G3015-Page 346A
An Attachment

CAB, GAUGES AND ACCESSORIES

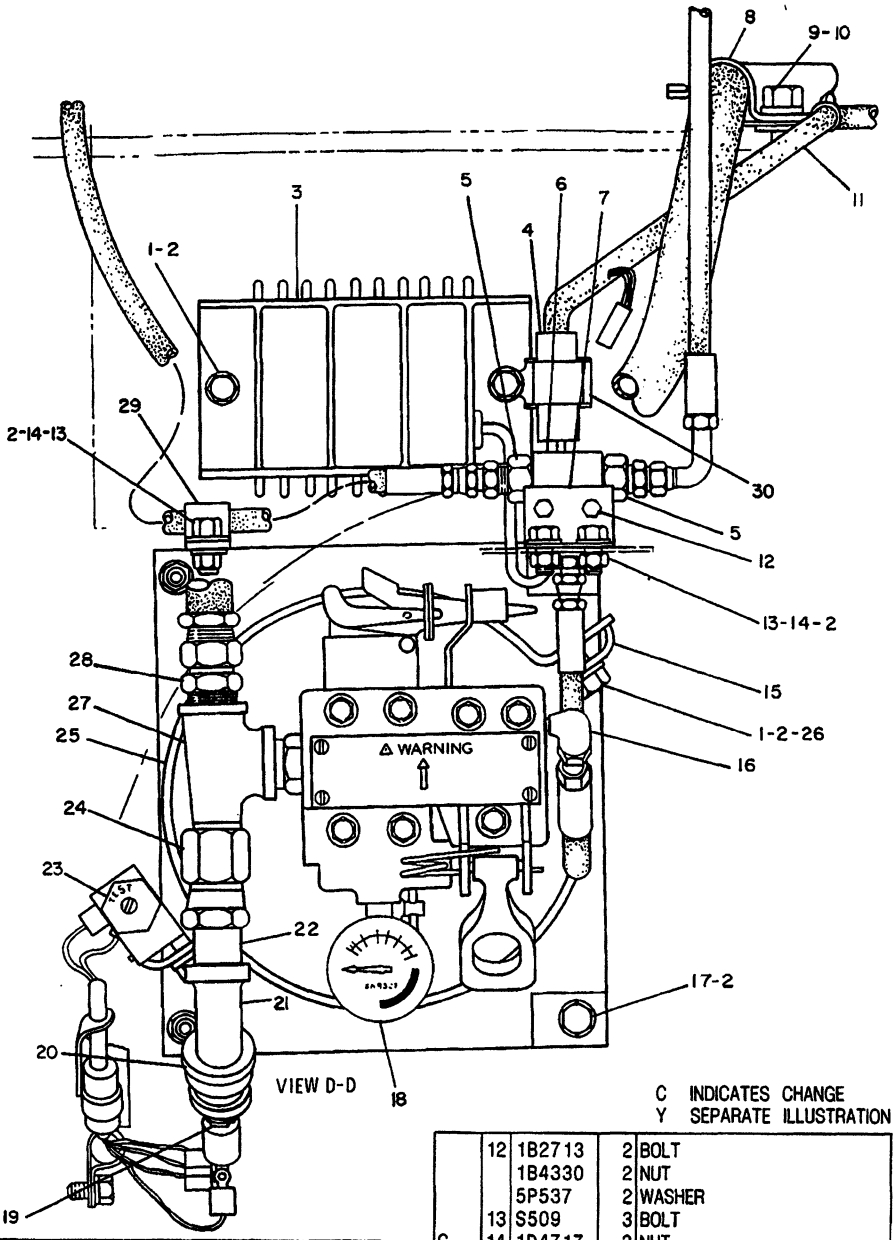

C INDICATES CHANGE
Y SEPARATE ILLUSTRATION

NOTE	REF NO	PART NUMBER	QTY	DESCRIPTION
	1	S1594	6	BOLT
C	2	5M2894	11	WASHER
	3	9G9287	1	CONTROL AS.
	4	9G3670	1	HOUSING
		7N7779	1	SOCKET
		7N7780	1	PIN
	5	2P1314	2	CONNECTOR
		3J1907	2	SEAL
	6	8J6875	1	VALVE AS. (SHUTTLE)
	7	3T3849	1	BRACKET
	8	5P7462	1	CLIP
	9	S1587	1	BOLT
	10	5P8245	1	WASHER
Y	11	7G6364	1	HARNESS AS.
	12	1B2713	2	BOLT
		1B4330	2	NUT
		5P537	2	WASHER
	13	S509	3	BOLT
C	14	1D4717	3	NUT
	15	9G1171	2	BRACKET
	16	2N1287	1	ELBOW
	17	1A2029	2	BOLT
	18	8N9387	1	GAUGE
	19	2H5547	1	BUSHING
	20	1F6711	1	COUPLING
	21	3B7732	1	ELBOW
	22	3B7270	1	NIPPLE
C	23	3T8514	1	SWITCH AS.
	24	1L2702	1	CONNECTOR
	25	9G4241	1	BRACKET AS.
	26	9F2978	4	NUT (WELD)
	27	1N8559	1	TEE
	28	4S6678	1	CONNECTOR
C	29	5D6523	1	CLIP
C	30	3T50	1	CLIP

310460 310460 P

7401 **3T1338 SUPPRESSION GP-FIRE-DRY CHEMICAL-PART 4 OF 4**
Type 2. S/N 53Y1-3484
When Used For Woods Application
7G6364-Page 346
An Attachment

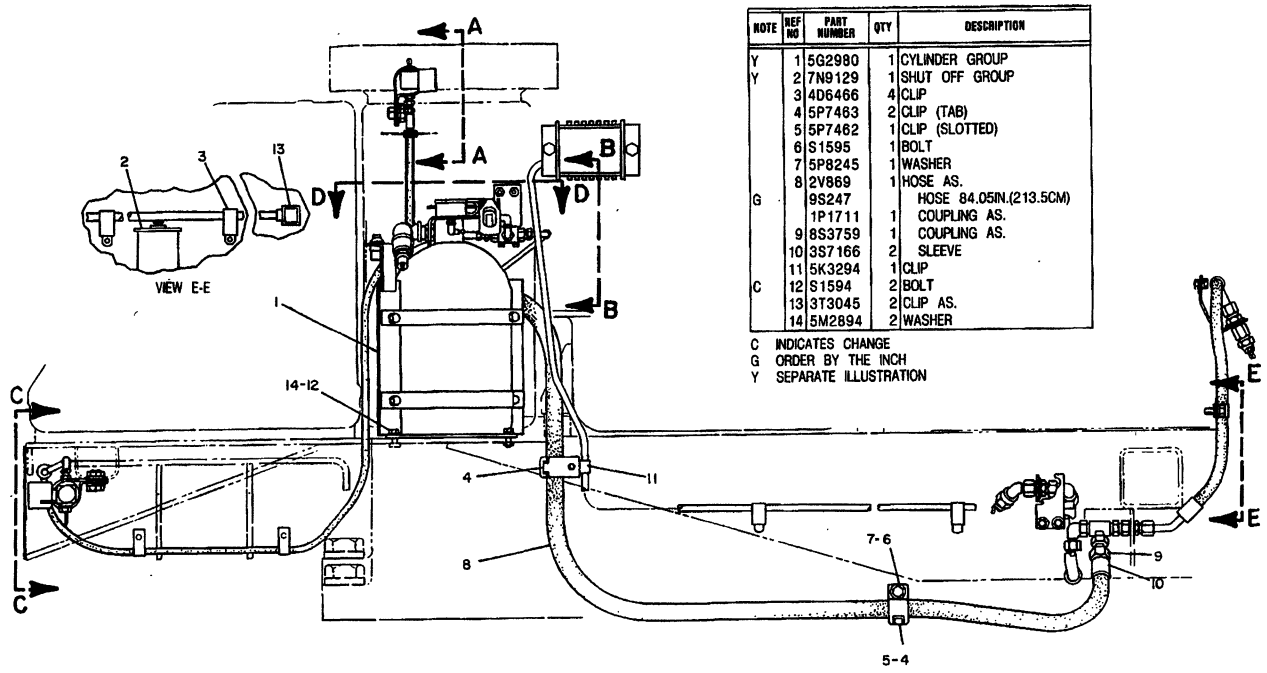

NOTE	REF NO	PART NUMBER	QTY	DESCRIPTION
Y	1	5G2980	1	CYLINDER GROUP
Y	2	7N9129	1	SHUT OFF GROUP
	3	4D6466	4	CLIP
	4	5P7463	2	CLIP (TAB)
	5	5P7462	1	CLIP (SLOTTED)
	6	S1595	1	BOLT
	7	5P8245	1	WASHER
	8	2V869	1	HOSE AS.
G		9S247		HOSE 84.05IN.(213.5CM)
		1P1711	1	COUPLING AS.
	9	8S3759	1	COUPLING AS.
	10	3S7166	2	SLEEVE
	11	5K3294	1	CLIP
C	12	S1594	2	BOLT
	13	3T3045	2	CLIP AS.
	14	5M2894	2	WASHER

C INDICATES CHANGE
G ORDER BY THE INCH
Y SEPARATE ILLUSTRATION

REFER TO ALL PARTS OF THIS GROUP FOR AUXILIARY VIEWS

310501

310501 P

7401 **3T1338 SUPPRESSION GP-FIRE-DRY CHEMICAL-PART 1 OF 4**

Type 3. S/N 53Y1-3484
When Used For Woods Application
7N9129-Page 346,5G2980-Page 347
An Attachment

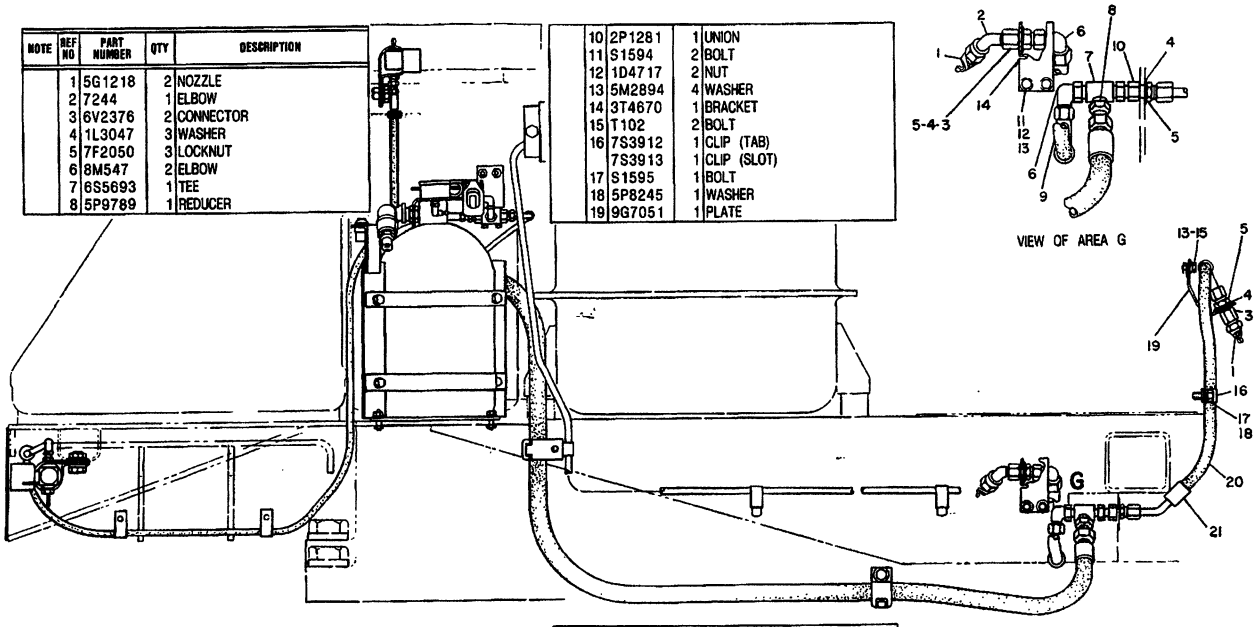

NOTE	REF NO	PART NUMBER	QTY	DESCRIPTION
	1	5G1218	2	NOZZLE
	2	7244	1	ELBOW
	3	6V2376	2	CONNECTOR
	4	1L3047	3	WASHER
	5	7F2050	3	LOCKNUT
	6	8M547	2	ELBOW
	7	6S5693	1	TEE
	8	5P9789	1	REDUCER

	10	2P1281	1	UNION
	11	S1594	2	BOLT
	12	1D4717	2	NUT
	13	5M2894	4	WASHER
	14	3T4670	1	BRACKET
	15	T102	2	BOLT
	16	7S3912	1	CLIP (TAB)
		7S3913	1	CLIP (SLOT)
	17	S1595	1	BOLT
	18	5P8245	1	WASHER
	19	9G7051	1	PLATE

	9	3T4672	1	HOSE AS.
G		9S671		HOSE 12.6IN.(32CM)
		3S8606	2	SLEEVE
		8S4055	1	COUPLING AS. (STRAIGHT)
		8S6391	1	COUPLING AS. (90°)

	20	3T4671	1	HOSE AS.
G		9S671		HOSE 27.56IN.(70CM)
		8S6391	1	COUPLING AS. (90°)
		9S9727	1	COUPLING AS. (45°)
	21	3S8606	2	SLEEVE

310502 P

7401 3T1338 SUPPRESSION GP-FIRE-DRY CHEMICAL-PART 2 OF 4
Type 3. S/N 53Y1-3484
When Used For Woods Application
An Attachment

CAB, GAUGES AND ACCESSORIES

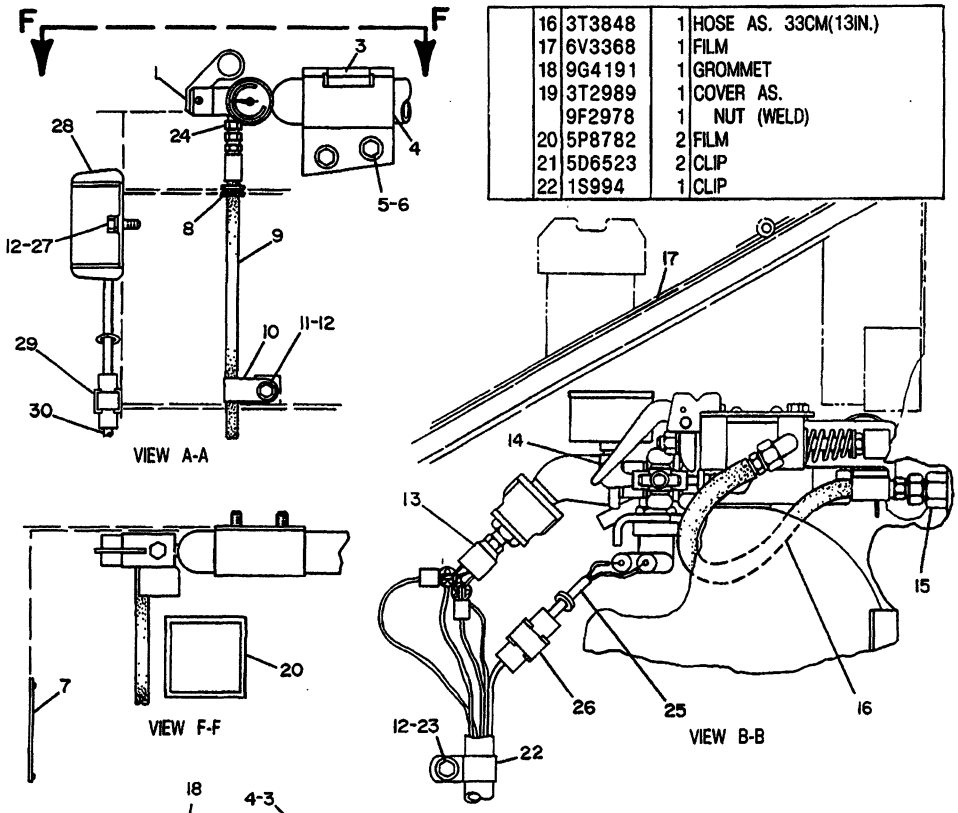

	16	3T3848	1	HOSE AS. 33CM(13IN.)
	17	6V3368	1	FILM
	18	9G4191	1	GROMMET
	19	3T2989	1	COVER AS.
		9F2978	1	NUT (WELD)
	20	5P8782	2	FILM
	21	5D6523	2	CLIP
	22	1S994	1	CLIP

B USE AS REQUIRED
C INDICATES CHANGE
D ORDER BY THE METER
Y SEPARATE ILLUSTRATION

NOTE	REF NO	PART NUMBER	QTY	DESCRIPTION
Y	1	5G3015	2	CARTRIDGE & VALVE AS.
	2	9G4237	1	HOSE AS. 183CM(72.05IN.)
	3	7G4487	2	CLIP (TAB)
	4	7G4488	2	CLIP (SLOT)
	5	S1621	4	BOLT
	6	5P8245	4	WASHER
	7	6V1384	1	PLATE
	8	9D3768	1	GROMMET
	9	9G4235	1	HOSE AS. 118CM(46.46IN.)
	10	7B7501	1	CLIP
	11	4F4879	1	BOLT
	12	5M2894	4	WASHER
	13	9G8010	1	SWITCH AS. (PRESSURE)
	14	3B6552	1	ELBOW
	15	2P1314	1	CONNECTOR
		3J1907	1	SEAL

	23	S509	1	BOLT
	24	8L6557	2	CONNECTOR
C	25	6T887	1	HARNESS AS.
BD		5P5623		WIRE (16 GAUGE)
		7N7780	1	PIN
		7N7779	1	SOCKET
		7N9737	1	HOUSING
		2L8076	2	TERMINAL
	26	3T3048	1	CLIP AS.
C	27	S1594	2	BOLT
	28	9G9287	1	CONTROL AS.
		9G3670	1	HOUSING
		7N7779	1	SOCKET
		7N7780	1	PIN
C	29	3T3046	1	CLIP AS.
Y	30	7G6364	1	HARNESS AS.

310503 310503 P

7401 **3T1338 SUPPRESSION GP-FIRE-DRY CHEMICAL-PART 3 OF 4**
Type 3. S/N 53Y1-3484
When Used For Woods Application
7G6364-Page 346,5G3015-Page 346A
An Attachment

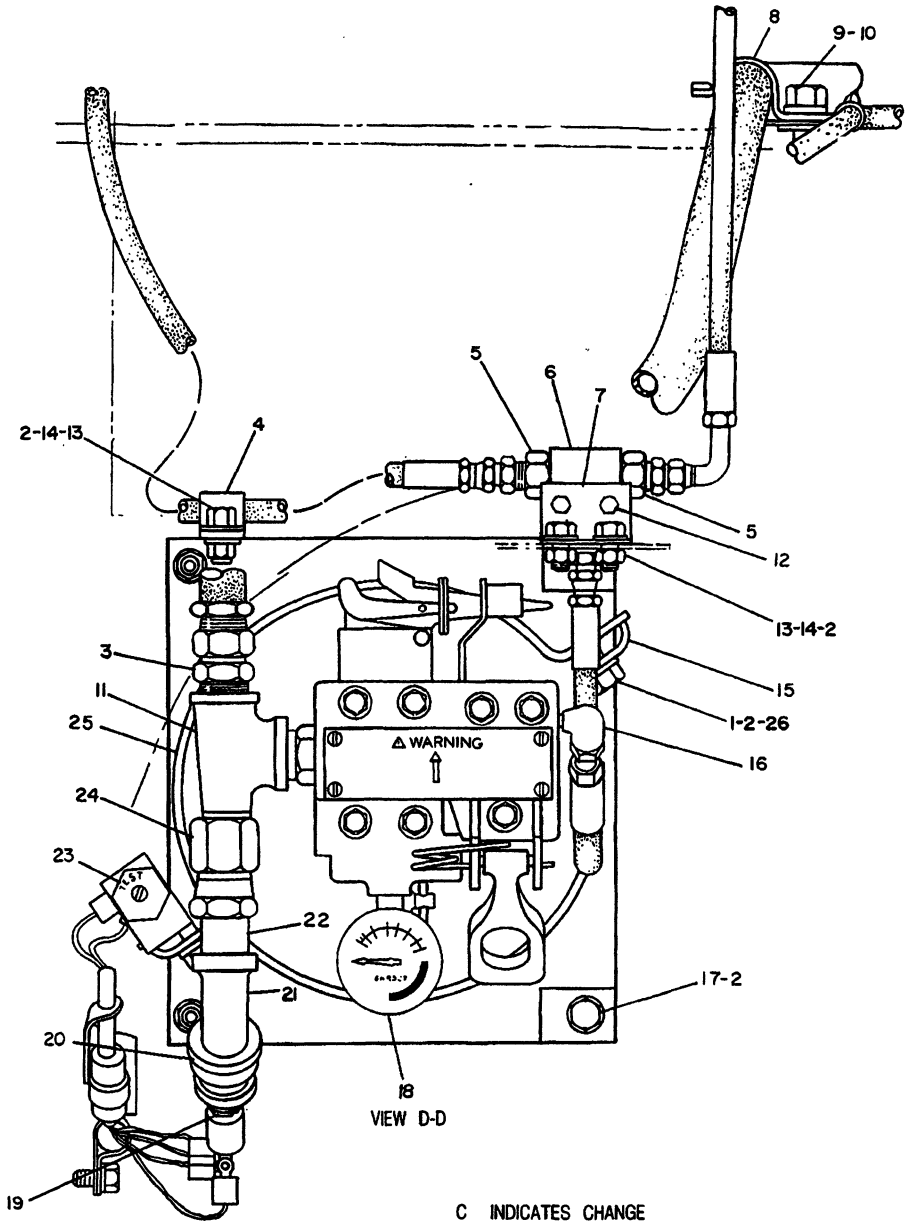

NOTE	REF NO	PART NUMBER	QTY	DESCRIPTION
	1	S1594	4	BOLT
	2	5M2894	9	WASHER
	3	4S6678	1	CONNECTOR
	4	5D6523	1	CLIP
	5	2P1314	2	CONNECTOR
		3J1907	2	SEAL
	6	8J6875	1	VALVE AS. (SHUTTLE)
	7	3T3849	1	BRACKET
	8	5P7462	1	CLIP
	9	S1587	1	BOLT
	10	5P8245	1	WASHER
	11	1N8559	1	TEE

C INDICATES CHANGE

	12	1B2713	2	BOLT
		1B4330	2	NUT
		5P537	2	WASHER
	13	S509	3	BOLT
	14	1D4717	3	NUT
	15	9G1171	2	BRACKET
	16	2N1287	1	ELBOW
C	17	S1591	2	BOLT
	18	8N9387	1	GAUGE
	19	2H5547	1	BUSHING
	20	1F6711	1	COUPLING
	21	3B7732	1	ELBOW
	22	3B7270	1	NIPPLE
	23	3T8514	1	SWITCH AS.
	24	1L2702	1	CONNECTOR
	25	9G4241	1	BRACKET AS.
	26	9F2978	4	NUT (WELD)

310504 310504 P

7401 **3T1338 SUPPRESSION GP-FIRE-DRY CHEMICAL-PART 4 OF 4**

Type 3. S/N 53Y1-3484

When Used For Woods Application

An Attachment

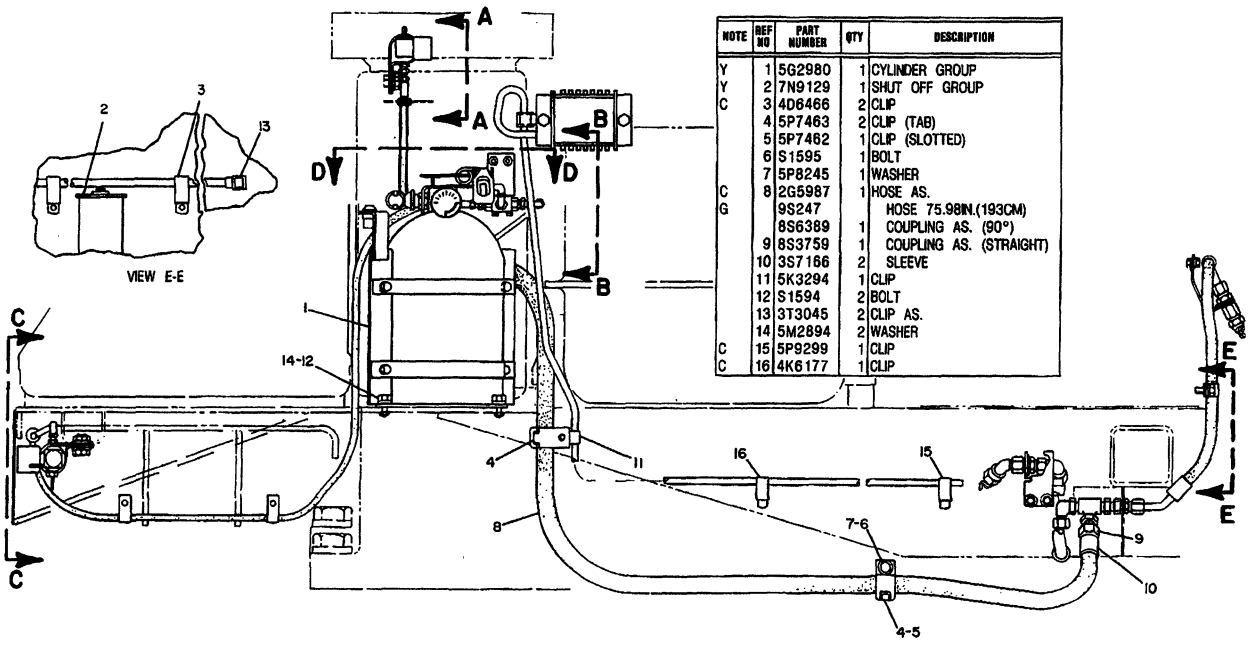

NOTE	REF NO	PART NUMBER	QTY	DESCRIPTION
Y	1	5G2980	1	CYLINDER GROUP
Y	2	7N9129	1	SHUT OFF GROUP
C	3	4D6466	2	CLIP
	4	5P7463	2	CLIP (TAB)
	5	5P7462	1	CLIP (SLOTTED)
	6	S1595	1	BOLT
	7	5P8245	1	WASHER
C	8	2G5987	1	HOSE AS.
G		9S247		HOSE 75.98IN.(193CM)
		8S6389	1	COUPLING AS. (90°)
	9	8S3759	1	COUPLING AS. (STRAIGHT)
	10	3S7166	2	SLEEVE
	11	5K3294	1	CLIP
	12	S1594	2	BOLT
	13	3T3045	2	CLIP AS.
	14	5M2894	2	WASHER
C	15	5P9299	1	CLIP
C	16	4K6177	1	CLIP

REFER TO ALL PARTS OF THIS GROUP FOR AUXILIARY VIEWS

C INDICATES CHANGE
G ORDER BY THE INCH
Y SEPARATE ILLUSTRATION

310534

310534 P

7401 **3T1338 SUPPRESSION GP-FIRE-DRY CHEMICAL-PART 1 OF 4**

Type 4. S/N 53Y1-3484
When Used For Woods Application
7N9129-Page 346,5G2980-Page 347
An Attachment

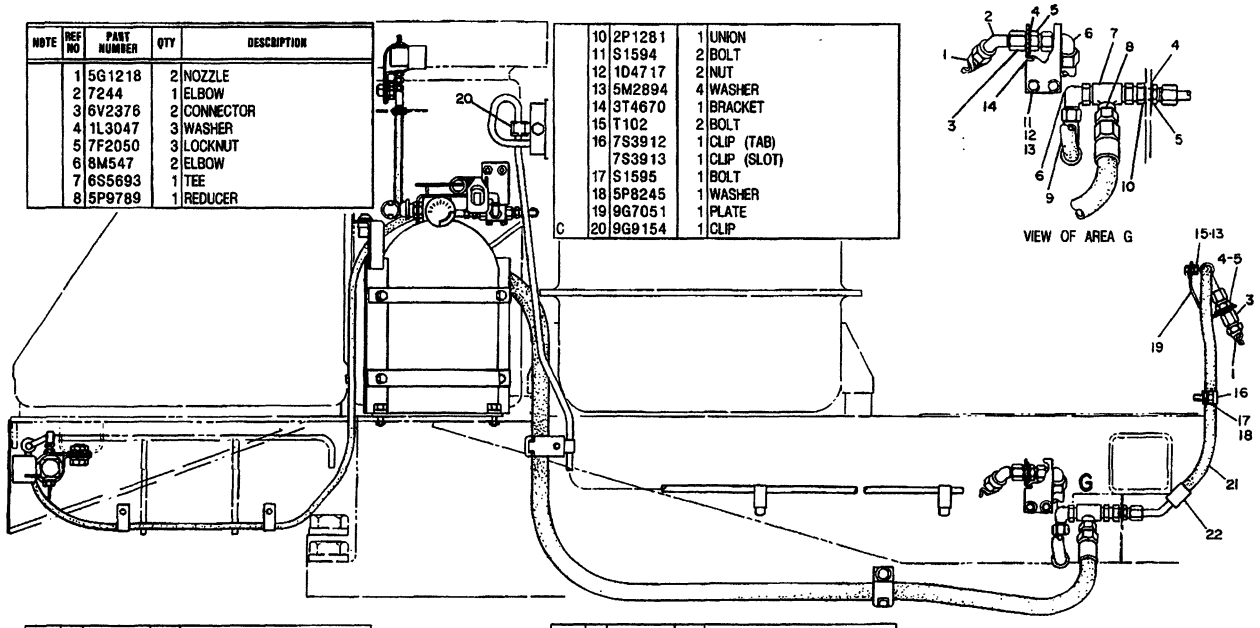

NOTE	REF NO	PART NUMBER	QTY	DESCRIPTION
	1	5G1218	2	NOZZLE
	2	7244	1	ELBOW
	3	6V2376	2	CONNECTOR
	4	1L3047	3	WASHER
	5	7F2050	3	LOCKNUT
	6	8M547	2	ELBOW
	7	6S5693	1	TEE
	8	5P9789	1	REDUCER
	10	2P1281	1	UNION
	11	S1594	2	BOLT
	12	1D4717	2	NUT
	13	5M2894	4	WASHER
	14	3T4670	1	BRACKET
	15	T102	2	BOLT
	16	7S3912	1	CLIP (TAB)
		7S3913	1	CLIP (SLOT)
	17	S1595	1	BOLT
	18	5P8245	1	WASHER
	19	9G7051	1	PLATE
C	20	9G9154	1	CLIP

VIEW OF AREA G

G	9	3T4672	1	HOSE AS.
		9S671		HOSE 12.6IN.(32CM)
		3S8606	2	SLEEVE
		8S4055	1	COUPLING AS. (STRAIGHT)
		8S6391	1	COUPLING AS. (90°)

C INDICATES CHANGE

G	21	3T4671	1	HOSE AS.
		9S671		HOSE 27.56IN.(70CM)
		8S6391	1	COUPLING AS. (90°)
		9S9727	1	COUPLING AS. (45°)
	22	3S8606	2	SLEEVE

G ORDER BY THE INCH

310535

310535 P

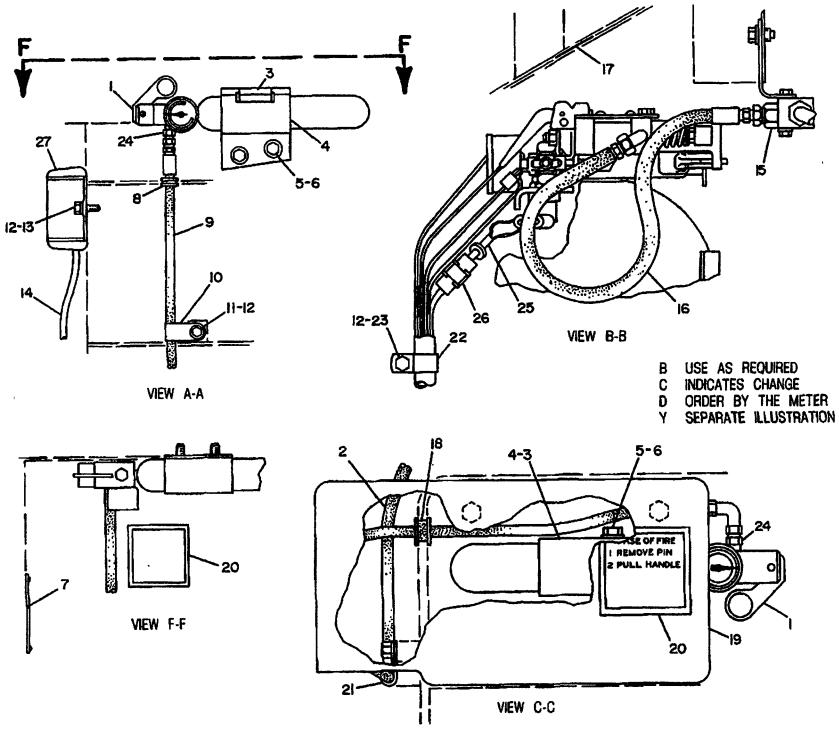

NOTE	REF NO	PART NUMBER	QTY	DESCRIPTION
Y	1	5G3015	2	CARTRIDGE & VALVE AS.
	2	9G4237	1	HOSE AS. 183CM(72.05IN.)
	3	7G4487	2	CLIP (TAB)
	4	7G4488	2	CLIP (SLOT)
	5	S1621	4	BOLT
	6	5P8245	4	WASHER
	7	6V1384	1	PLATE
	8	9D3768	1	GROMMET
	9	9G4235	1	HOSE AS. 118CM(46.46IN.)
	10	7B7501	1	CLIP
	11	4F4879	1	BOLT
	12	5M2894	4	WASHER
	13	S1594	2	BOLT
Y	14	7G6364	1	HARNESS AS.
	15	2P1314	1	CONNECTOR
		3J1907	1	SEAL
	16	3T3848	1	HOSE AS. 33CM(13IN.)
	17	6V3368	1	FILM
	18	9G4191	1	GROMMET
	19	3T2989	1	COVER AS.
		9F2978	1	NUT (WELD)
C	20	6V6630	2	FILM
	21	5D6523	2	CLIP
	22	1S994	1	CLIP
	23	S509	1	BOLT
	24	8L6557	2	CONNECTOR
	25	6T887	1	HARNESS AS.
BD		5P5623		WIRE (16 GAUGE)
		7N7780	1	PIN
		7N7779	1	SOCKET
		7N9737	1	HOUSING
		2L8076	1	TERMINAL
	26	3T3048	1	CLIP AS.
	27	9G9287	1	CONTROL AS.
		9G3670	1	HOUSING
		7N7779	1	SOCKET
		7N7780	1	PIN
C		9G3635	1	PLUG

319488

319488 P

7401 **3T1338 SUPPRESSION GP-FIRE-DRY CHEMICAL-PART 3 OF 4**

Type 4. S/N 53Y1-3484
When Used For Woods Application
7G6364-Page 346,5G3015-Page 346A
An Attachment

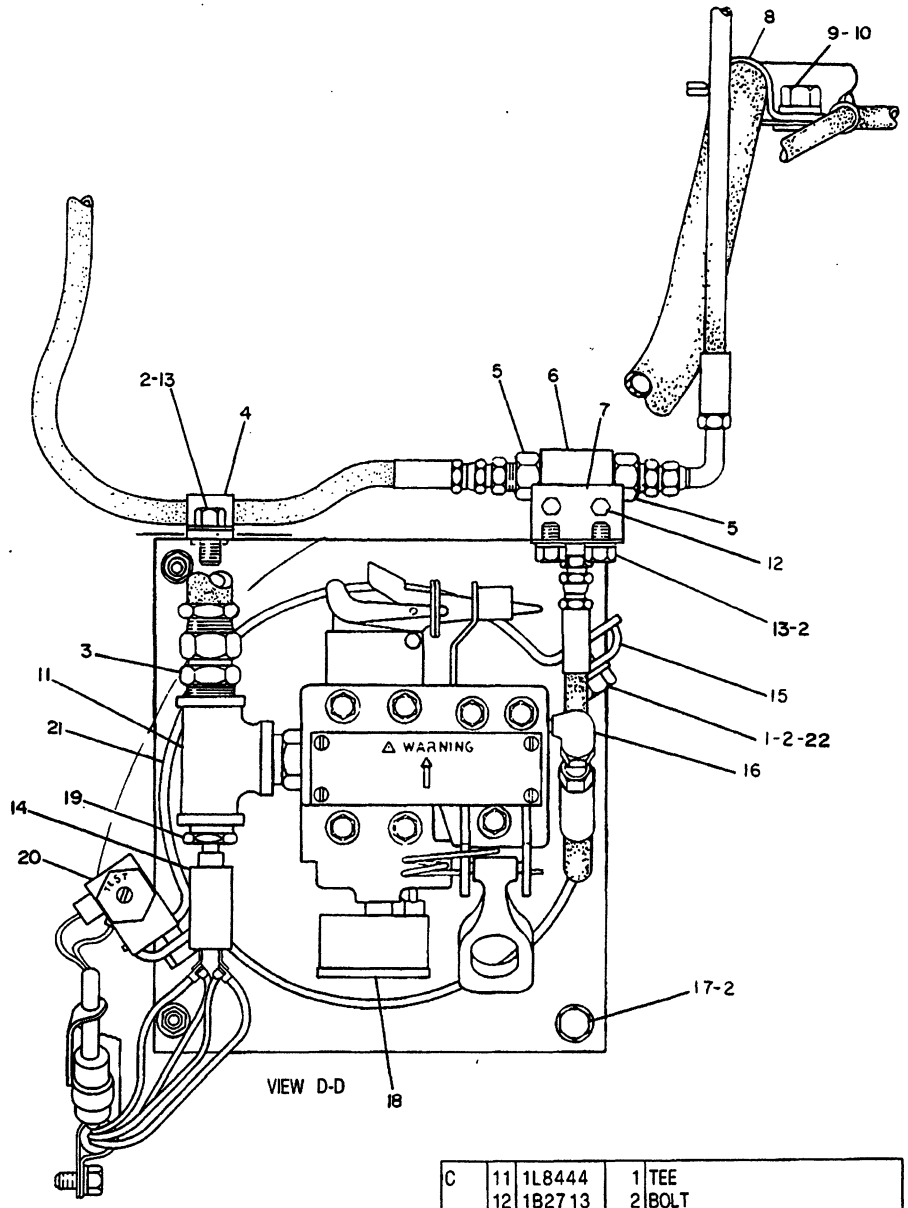

C INDICATES CHANGE

NOTE	REF NO	PART NUMBER	QTY	DESCRIPTION
	1	S1594	4	BOLT
	2	5M2894	9	WASHER
	3	4S6678	1	CONNECTOR
	4	5D6523	1	CLIP
	5	2P1314	2	CONNECTOR
		3J1907	2	SEAL
	6	8J6875	1	VALVE AS. (SHUTTLE)
	7	3T3849	1	BRACKET
	8	5P7462	1	CLIP
	9	S1587	1	BOLT
	10	5P8245	1	WASHER
C	11	1L8444	1	TEE
	12	1B2713	2	BOLT
		1B4330	2	NUT
		5P537	2	WASHER
	13	S509	3	BOLT
C	14	3T4418	1	SWITCH AS. (PRESSURE)
C		6V8376	2	SCREW
C		9B7233	2	LOCKWASHER
	15	9G1171	2	BRACKET
	16	2N1287	1	ELBOW
	17	S1591	2	BOLT
C	18	8N9611	1	GAUGE
C	19	7B2176	1	BUSHING
	20	3T8514	1	SWITCH AS.
C		6V8370	1	NUT
C		6V8363	2	SCREW
C		8F1434	2	LOCKWASHER (SMALL)
C		2H3922	1	LOCKWASHER (LARGE)
	21	9G4241	1	BRACKET AS.
	22	9F2978	4	NUT (WELD)

319489 319489 P

7401 3T1338 SUPPRESSION GP-FIRE-DRY CHEMICAL-PART 4 OF 4
Type 4. S/N 53Y1-3484
When Used For Woods Application
An Attachment

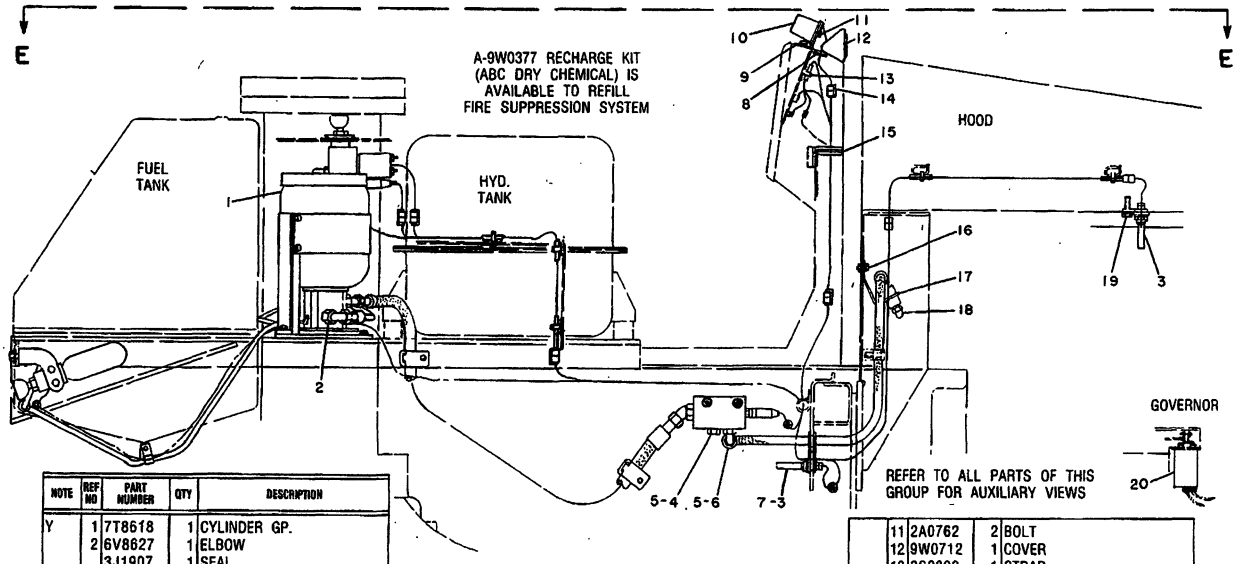

NOTE	REF NO	PART NUMBER	QTY	DESCRIPTION
Y	1	7T8618	1	CYLINDER GP.
	2	6V8627	1	ELBOW
		3J1907	1	SEAL
	3	7T4785	2	SWITCH AS. (FIRE SENSOR) (EACH INCLUDES)
		6V8371	1	NUT
		2H3923	1	LOCKWASHER
		9G3671	1	HOUSING (PLUG)
		7N7779	2	SOCKET
		7N7780	2	PIN
		9G3695	2	PLUG

Y SEPARATE ILLUSTRATION

	4	9S4185	1	PLUG
	5	3K0360	2	SEAL
	6	6V8625	1	ELBOW
C	7	2D1290	1	GROMMET
	8	9G2673	1	GROMMET
	9	6T8835	1	BRACKET AS.
		9F6445	2	NUT
Y	10	6T5618	1	CONTROL GP.

A NOT PART OF THIS GROUP

	11	2A0762	2	BOLT
	12	9W0712	1	COVER
	13	3S2093	1	STRAP
	14	9G3658	1	CLIP
	15	7T2412	1	GROMMET
	16	0T0102	2	BOLT
		5M2894	2	WASHER
	17	7T4451	1	PLATE AS.
	18	5G1218	1	NOZZLE
	19	0S1587	1	BOLT
Y	20	7N9129	1	SHUT-OFF GP.

C INDICATES CHANGE

348765

348765 P

7401

7T4696 SUPPRESSION AR-FIRE-DRY CHEMICAL-PART 1 OF 4

Type 1. S/N 53Y3485-Up

6T5618-Page 100C,7N9129-Page 346,8T9687-Page 346.03

An Attachment

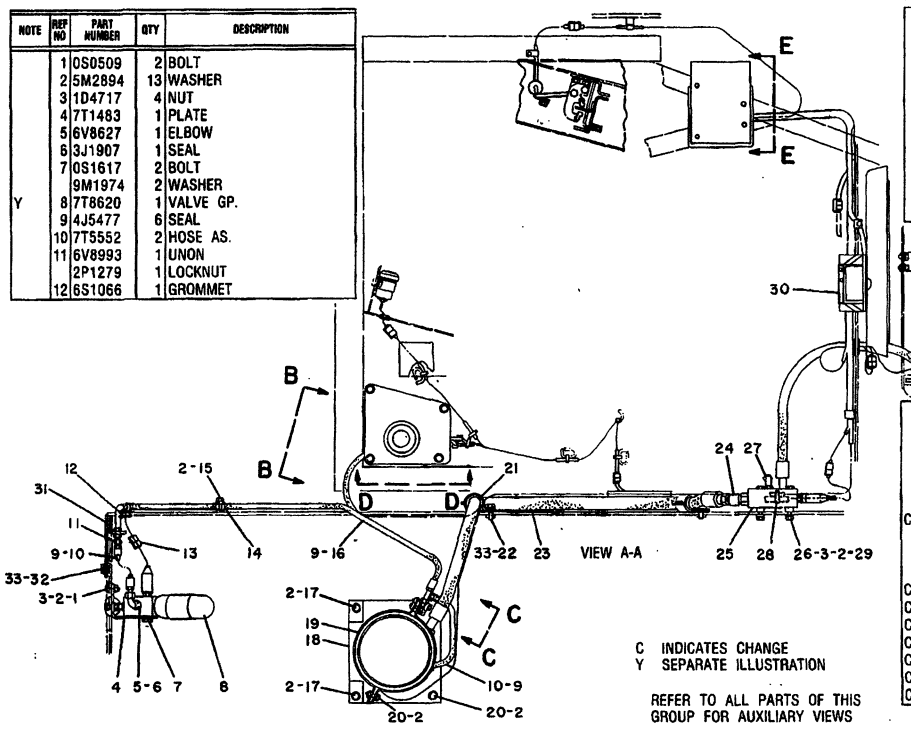

NOTE	REF NO	PART NUMBER	QTY	DESCRIPTION
	1	0S0509	2	BOLT
	2	5M2894	13	WASHER
	3	1D4717	4	NUT
	4	7T1483	1	PLATE
	5	6V8627	1	ELBOW
	6	3J1907	1	SEAL
	7	0S1617	2	BOLT
		9M1974	2	WASHER
Y	8	7T8620	1	VALVE GP.
	9	4J5477	6	SEAL
	10	7T5552	2	HOSE AS.
	11	6V8993	1	UNON
		2P1279	1	LOCKNUT
	12	6S1066	1	GROMMET

	13	3T3048	1	CLIP AS.
	14	4D7794	1	CLIP (SMALL)
		7B7501	1	CLIP (LARGE)
	15	0T0102	1	BOLT
	16	7T5553	1	HOSE AS.
	17	0S1591	2	BOLT
	18	7T1486	1	BRACKET AS.
	19	6T9285	1	BRACKET
	20	0S1594	6	BOLT
	21	5P7466	2	CLIP (SLOT)
		5P7467	2	CLIP (TAB)
		5P8112	2	GROMMET

	22	0S1595	2	BOLT
	23	7T5556	1	HOSE AS.
		6V9746	2	SEAL
	24	6V9004	2	ELBOW
		3D2824	2	SEAL
	25	7T2346	1	MANIFOLD
C	26	0T0065	2	BOLT
	27	6V8549	1	ELBOW
		5G1218	1	NOZZLE
		3K0360	1	SEAL
C	28	3S2093	1	STRAP
C	29	4S5719	2	SPACER
C	30	6T9236	1	FILM
C	31	9W3718	1	PLATE
C	32	2B0947	1	BOLT
C		2V8974	1	SPACER
C	33	5P8245	3	WASHER

C INDICATES CHANGE
Y SEPARATE ILLUSTRATION

REFER TO ALL PARTS OF THIS GROUP FOR AUXILIARY VIEWS

348766

348766 P

7401 **7T4696 SUPPRESSION AR-FIRE-DRY CHEMICAL-PART 2 OF 4**
Type 1. S/N 53Y3485-Up
7T8620-Page 346C
An Attachment

CAB, GAUGES AND ACCESSORIES

NOTE	REF NO	PART NUMBER	QTY	DESCRIPTION
	1	7T5554	1	HOSE AS.
		4J5477	2	SEAL
	2	8T3629	1	PLATE
	3	4B4158	4	SCREW
	4	3T3048	3	CLIP AS.
	5	3S2093	8	STRAP
	6	8T3631	1	FILM (INSTRUCTION)
	7	5F9757	1	GROMMET
Y	8	9G9813	1	ALARM GP.
	9	7T5568	1	HARNESS AS.
	10	3T3047	5	CLIP AS.
	11	7T5555	1	HOSE AS.
		6V8398	2	SEAL
	12	8S7583	1	GROMMET
	13	5P7464	1	CLIP (SLOT)
		5P7465	1	CLIP (TAB)
		6V1249	1	GROMMET
	14	0S1595	1	BOLT
		5P8245	1	WASHER
	15	7T5570	1	HARNESS AS.
	16	7T3712	1	PLATE
	17	3J1907	1	SEAL
	18	7T4371	1	SWITCH AS. (DISCHARGE DETECTION)
BD		8T5677		SLEEVE
		7N8205	1	HOUSING
		7N7780	2	PIN
		7N7779	2	SOCKET
	19	3T3045	3	CLIP AS.
	20	9M4972	3	CLIP
	21	7T8629	1	HARNESS AS.
	22	7T5569	1	HARNESS AS.
	23	7T5095	1	BRACKET AS.
	24	4D7794	3	CLIP
	25	7T5094	1	BRACKET AS.

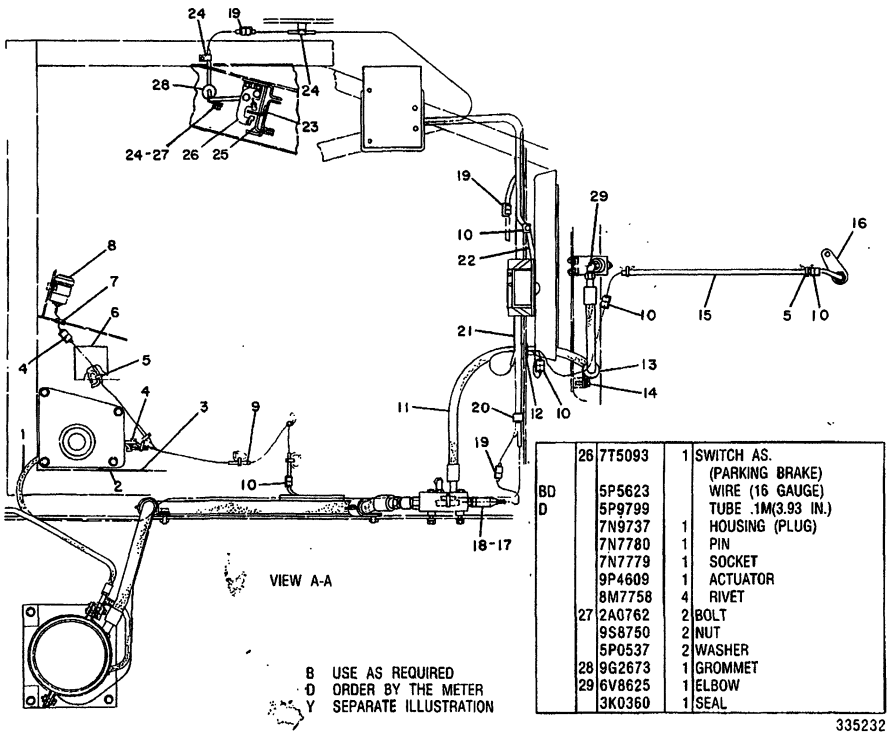

	26	7T5093	1	SWITCH AS. (PARKING BRAKE)
BD		5P5623		WIRE (16 GAUGE)
D		5P9799		TUBE .1M(3.93 IN.)
		7N9737	1	HOUSING (PLUG)
		7N7780	1	PIN
		7N7779	1	SOCKET
		9P4609	1	ACTUATOR
		8M7758	4	RIVET
	27	2A0762	2	BOLT
		9S8750	2	NUT
		5P0537	2	WASHER
	28	9G2673	1	GROMMET
	29	6V8625	1	ELBOW
		3K0360	1	SEAL

335232

335232 P

7401 **7T4696 SUPPRESSION AR-FIRE-DRY CHEMICAL-PART 3 OF 4**

Type 1. S/N 53Y3485-Up

9G9813-Page 100A

An Attachment

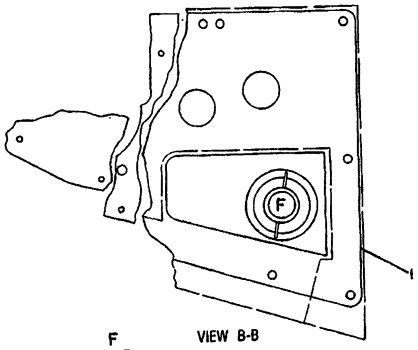

VIEW B-B

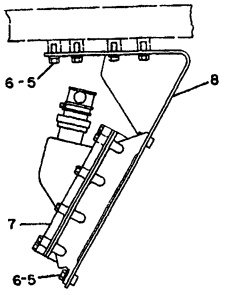

VIEW E-E

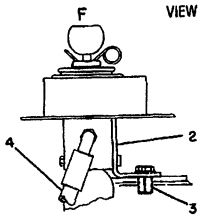

OPTIONAL MOUNTING

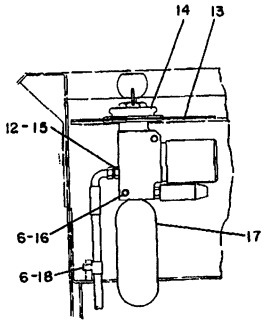

VIEW D-D

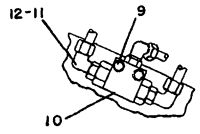

VIEW C-C

NOTE	REF NO	PART NUMBER	QTY	DESCRIPTION
B	1	7T8550	1	COVER AS.
B	2	7T8546	1	BRACKET AS.
B	3	0S1588	2	BOLT
B		5M2894	2	WASHER
B	4	7T5553	1	HOSE AS.
	5	0L1351	8	BOLT
	6	5M2894	11	WASHER
Y	7	6T5619	1	CONTROL GP.
	8	7T9139	1	BRACKET AS.
	9	1B2713	2	BOLT
		5P0537	2	WASHER
	10	8J6875	1	VALVE AS. (SHUTTLE)
	11	6V8627	3	ELBOW
	12	3J1907	4	SEAL
	13	9W0183	1	COVER
	14	7T0148	1	BOOT
	15	6V8641	1	CONNECTOR
	16	0L1352	2	BOLT
Y	17	7T8619	1	VALVE GP.
	18	0S0509	1	BOLT
		7B7501	1	CLIP
F		8T3630	1	FILM (INSTRUCTION) (MOUNTED ON FUEL TANK)

B USE AS REQUIRED
F NOT SHOWN
Y SEPARATE ILLUSTRATION

335233

335233 P

7401 7T4696 SUPPRESSION AR-FIRE-DRY CHEMICAL-PART 4 OF 4
Type 1. S/N 53Y3485-Up
6T5619-Page 100C,7T8619-Page 346B
An Attachment

CAB, GAUGES AND ACCESSORIES

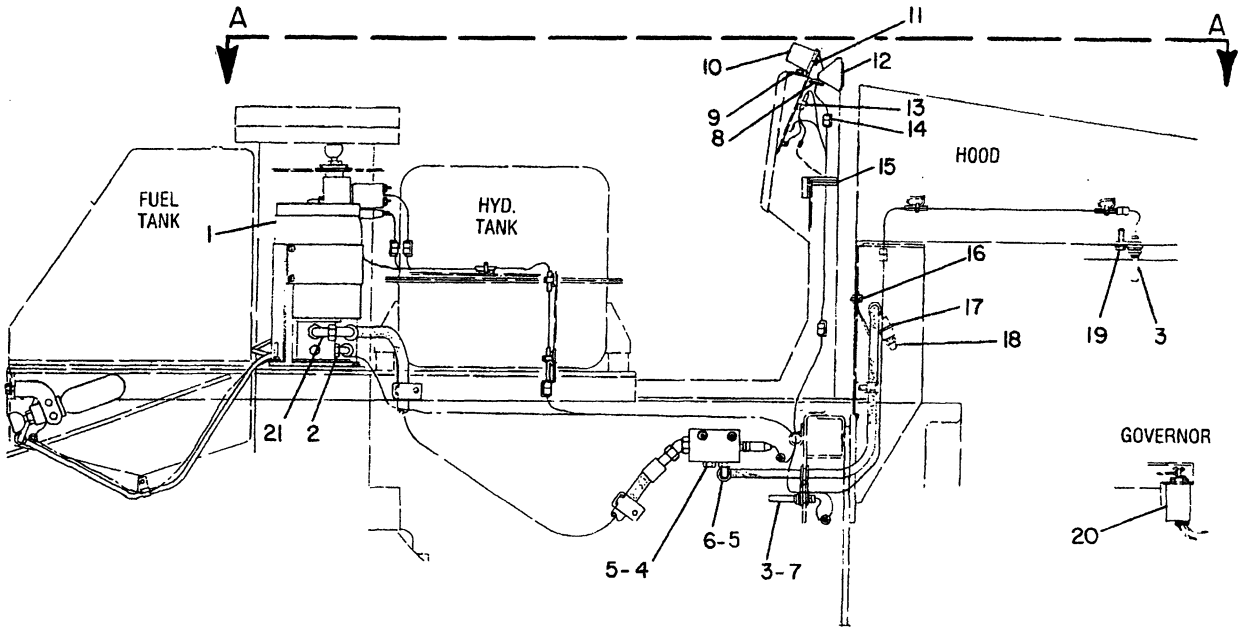

RIGHT SIDE VIEW

REFER TO ALL ILLUSTRATIONS OF THIS GROUP FOR AUXILIARY VIEWS

NOTE	REF NO	PART NUMBER	QTY	PART NAME
CY	1	8T9687	1	VALVE & CYLINDER GP
	2	6V8627	1	ELBOW
		3J1907	1	SEAL-O-RING
	3	7T4785	2	SWITCH AS-FIRE SENSOR (FIRE)
				(EACH INCLUDES)
		6V8371	1	NUT-HEX
		2H3923	1	LOCKWASHER
		9G3671	1	HOUSING-PLUG
		7N7779	2	SOCKET
		7N7780	2	PIN-CONNECTOR
		9G3695	2	PLUG-SEAL
	4	9S4185	1	PLUG-O-RING
	5	3K0360	2	SEAL-O-RING
	6	6V8625	1	ELBOW-FACE SEAL
	7	2D1290	1	GROMMET
	8	9G2673	1	GROMMET
	9	6T8835	1	BRACKET AS
		9F6445	2	NUT
Y	10	6T5618	1	CONTROL GP-ELECTRONIC
	11	2A0762	2	BOLT
	12	9W0712	1	COVER
	13	3S2093	1	STRAP-CABLE
	14	9G3658	1	CLIP
	15	7T2412	1	GROMMET
	16	0T0102	2	BOLT
		5M2894	2	WASHER
	17	7T4451	1	PLATE AS
	18	5G1218	1	NOZZLE
	19	0S1587	1	BOLT
Y	20	7N9129	1	SHUTOFF GP-ELECTRICAL
C	21	6V9007	1	ELBOW-90 DEGREE
		9W0377	1	KIT-RECHARGE (ABC DRY CHEMICAL) IS AVAILABLE TO REFILL FIRE SUPPRESSION SYSTEM

C-CHANGE FROM PREVIOUS TYPE
Y-SEPARATE ILLUSTRATION

B-455249 P

7401 **7T4696 SUPPRESSION AR-FIRE-DRY CHEMICAL-PART 1 OF 4**

Type 2. S/N 53Y3485-Up

6T5618-Page 100C,7N9129-Page 346,8T9687-Page 346.03

An Attachment

CAB, GAUGES AND ACCESSORIES

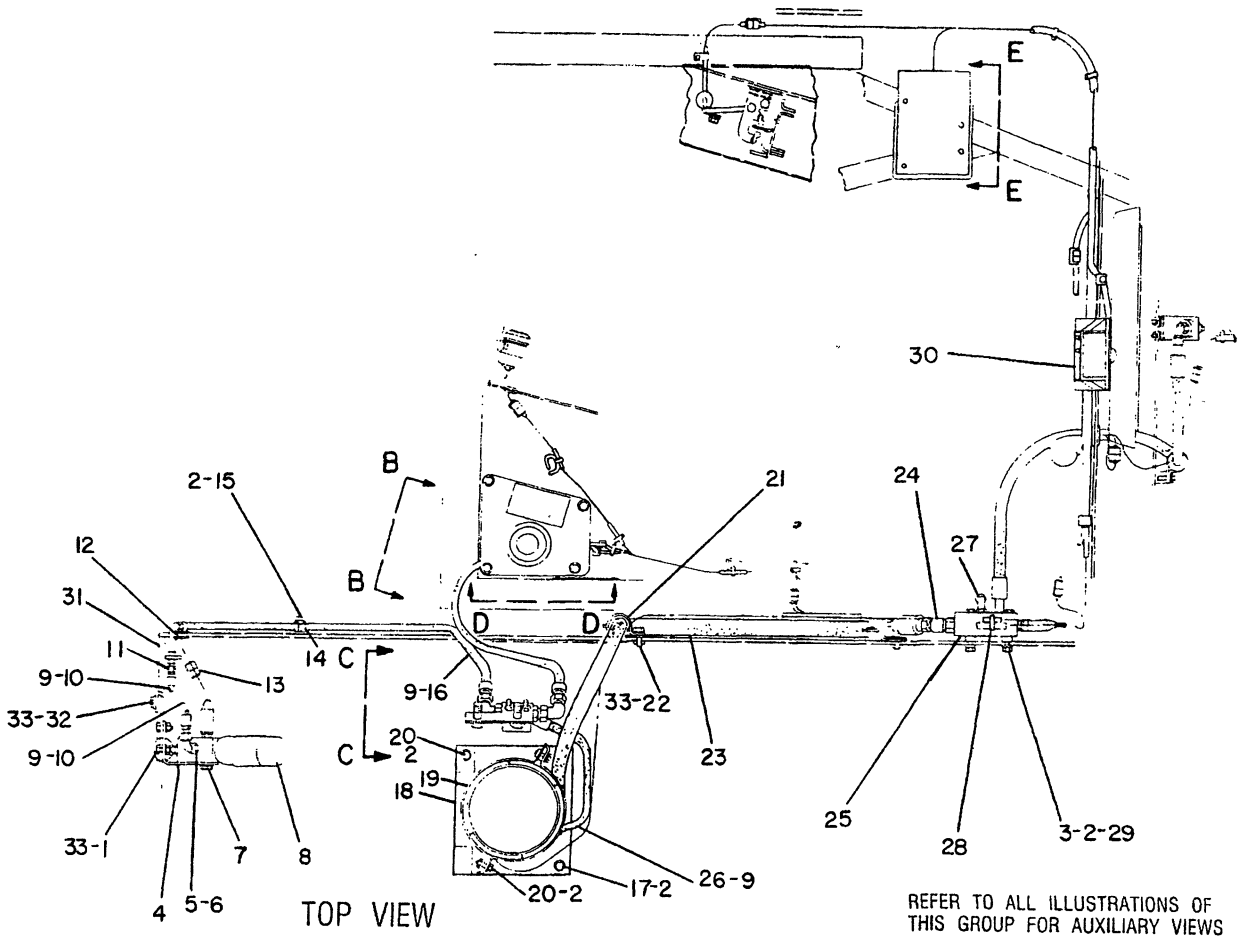

NOTE	REF NO	PART NUMBER	QTY	PART NAME	NOTE	REF NO	PART NUMBER	QTY	PART NAME
C	1	0S1621	2	BOLT		21	5P7466	2	CLIP (SLOT)
C	2	5M2894	11	WASHER			5P7467	2	CLIP (TAB)
	3	0T0065	2	BOLT			5P8112	2	GROMMET
C		1D4717	2	NUT	C	22	0S1585	2	BOLT
C	4	9W4322	1	PLATE AS		23	7T5556	1	HOSE AS
	5	6V8627	1	ELBOW			6V9746	2	SEAL-O-RING
	6	3J1907	1	SEAL-O-RING	C	24	6V9004	1	ELBOW-SEAL
	7	0S1617	2	BOLT			3D2824	2	SEAL-O-RING
		9M1974	2	WASHER-HARD		25	7T2346	1	MANIFOLD
Y	8	7T8620	1	VALVE GP-ACTUATOR RELEASE	C	26	7T1159	1	HOSE AS
						27	6V8549	1	ELBOW
	9	4J5477	6	SEAL-O-RING			5G1218	1	NOZZLE
C	10	7T5552	1	HOSE AS			3K0360	1	SEAL-O-RING
	11	6V8993	1	UNION		28	3S2093	1	STRAP-CABLE
		2P1279	1	LOCKNUT		29	4S5719	2	SPACER
	12	6S1066	1	GROMMET		30	6T9236	1	FILM-FIRE SUPPRESSION
	13	3T3048	1	CLIP AS		31	9W3718	1	PLATE
	14	4D7794	1	CLIP (SMALL)		32	2B0947	1	BOLT
		7B7501	1	CLIP (LARGE)			2V8974	1	SPACER
	15	0T0102	1	BOLT	C	33	5P8245	5	WASHER
	16	7T5553	1	HOSE AS					
	17	0S1591	2	BOLT					
	18	7T1486	1	BRACKET AS					
	19	6T9285	1	BRACKET					
C		9W6154	2	PAD					
C	20	0S1594	5	BOLT					

C-CHANGE FROM PREVIOUS TYPE
Y-SEPARATE ILLUSTRATION

B- 455599 P

7401 **7T4696 SUPPRESSION AR-FIRE-DRY CHEMICAL-PART 2 OF 4**
Type 2. S/N 53Y3485-Up
7T8620-Page 346C
An Attachment

CAB, GAUGES AND ACCESSORIES

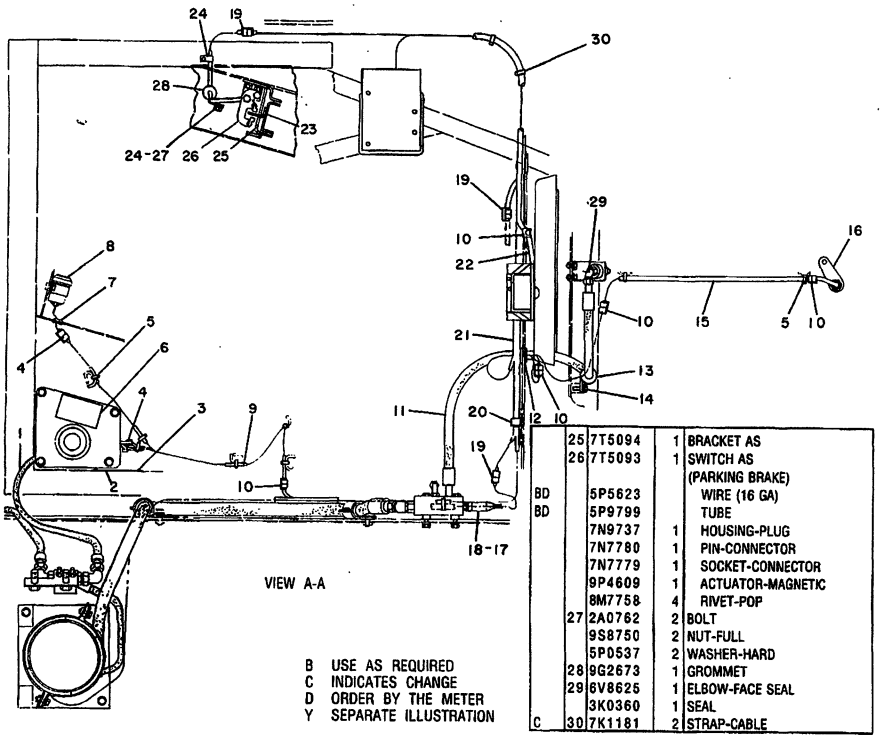

NOTE	REF NO	PART NUMBER	QTY	PART NAME
B	1	7T5554	1	HOSE AS
		4J5477	2	SEAL-O RING
	2	8T3629	1	PLATE-WARNING
	3	4B4158	4	SCREW-DRIVE
	4	3T3048	3	CLIP AS
C	5	3S2093	11	STRAP-CABLE
C	6	8T7589	1	FILM-INSTRUCTION
C	7	2D0388	1	GROMMET
Y	8	9G9813	1	ALARM GP-FAULT
	9	7T5568	1	HARNESS AS-SUPPRESSION
	10	3T3047	5	CLIP AS
	11	7T5555	1	HOSE AS
		6V8398	2	SEAL
	12	8S7583	1	GROMMET
	13	5P7464	1	CLIP (SLOT)
		5P7465	1	CLIP (TAB)
		6V1249	1	GROMMET
	14	0S1595	1	BOLT
		5P8245	1	WASHER
	15	7T5570	1	HARNESS AS-SUPPRESSION
	16	7T3712	1	PLATE
	17	3J1907	1	SEAL
	18	7T4371	1	SWITCH AS-PRESSURE (DISCHARGE DETECTION)
BD		8T5677		SLEEVE
		7N8205	1	HOUSING-PLUG
		7N7780	2	PIN-CONNECTOR
		7N7779	2	SOCKET-CONNECTOR
	19	3T3045	3	CLIP AS
	20	9M4972	3	CLIP
	21	7T8629	1	HARNESS AS-SUPPRESSION
	22	7T5569	1	HARNESS AS-SUPPRESSION
	23	7T5095	1	BRACKET AS
C	24	4D7794	2	CLIP
	25	7T5094	1	BRACKET AS
	26	7T5093	1	SWITCH AS (PARKING BRAKE)
BD		5P5623		WIRE (16 GA)
BD		5P9799		TUBE
		7N9737	1	HOUSING-PLUG
		7N7780	1	PIN-CONNECTOR
		7N7779	1	SOCKET-CONNECTOR
		9P4609	1	ACTUATOR-MAGNETIC
		8M7758	4	RIVET-POP
	27	2A0762	2	BOLT
		9S8750	2	NUT-FULL
		5P0537	2	WASHER-HARD
	28	9G2673	1	GROMMET
	29	6V8625	1	ELBOW-FACE SEAL
		3K0360	1	SEAL
C	30	7K1181	2	STRAP-CABLE

B USE AS REQUIRED
C INDICATES CHANGE
D ORDER BY THE METER
Y SEPARATE ILLUSTRATION

355823 P

7401 **7T4696 SUPPRESSION AR-FIRE-DRY CHEMICAL-PART 3 OF 4**
Type 2. S/N 53Y3485-Up
9G9813-Page 100A
An Attachment

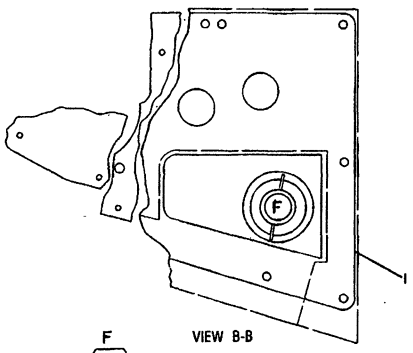

VIEW B-B

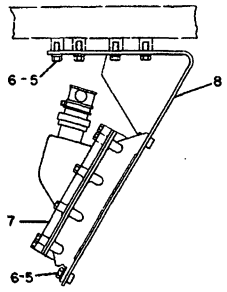

VIEW E-E

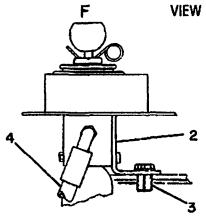

OPTIONAL MOUNTING

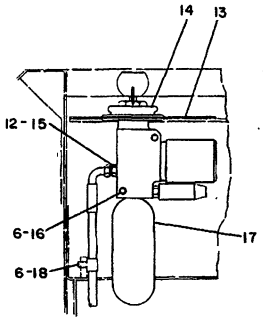

VIEW D-D

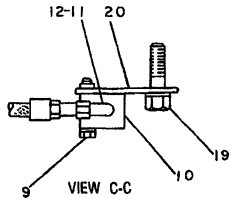

VIEW C-C

NOTE	REF NO	PART NUMBER	QTY	DESCRIPTION
B	1	7T8550	1	COVER AS.
B	2	7T8546	1	BRACKET AS.
B	3	0S1588	2	BOLT
B		5M2894	2	WASHER
B	4	7T5553	1	HOSE AS.
	5	0L1351	8	BOLT
	6	5M2894	11	WASHER
Y	7	6T5619	1	CONTROL GP.
	8	7T9139	1	BRACKET AS.
	9	1B2713	2	BOLT
		5P0537	2	WASHER
	10	8J6875	1	VALVE AS. (SHUTTLE)
	11	6V8627	3	ELBOW
	12	3J1907	4	SEAL
	13	9W0183	1	COVER
	14	7T0148	1	BOOT
	15	6V8641	1	CONNECTOR
	16	0L1352	2	BOLT
Y	17	7T8619	1	VALVE GP.
	18	0S0509	1	BOLT
		7B7501	1	CLIP
C	19	1A1460	2	BOLT
C	20	9W4323	1	PLATE AS.
F		8T3630	1	FILM (INSTRUCTION) (MOUNTED ON FUEL TANK)

B USE AS REQUIRED
C INDICATES CHANGE
F NOT SHOWN
Y SEPARATE ILLUSTRATION

352010

352010 P

7401 7T4696 SUPPRESSION AR-FIRE-DRY CHEMICAL-PART 4 OF 4
Type 2. S/N 53Y3485-Up
6T5619-Page 100C,7T8619-Page 346B
An Attachment

CAB, GAUGES AND ACCESSORIES

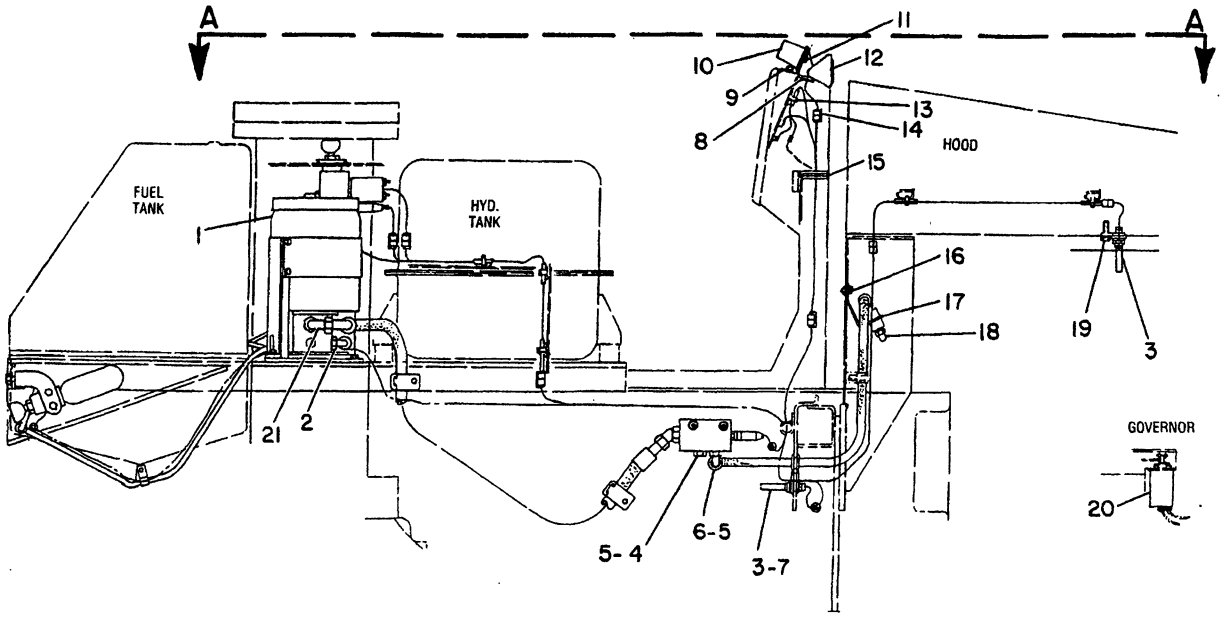

RIGHT SIDE VIEW

REFER TO ALL ILLUSTRATIONS OF
THIS GROUP FOR AUXILIARY VIEWS

NOTE	REF NO	PART NUMBER	QTY	PART NAME
CY	1	8C4594	1	VALVE & CYLINDER GP
C	2	6V8724	1	ELBOW
		3J1907	1	SEAL-O-RING
	3	7T4785	2	SWITCH AS-FIRE SENSOR (FIRE)
				(EACH INCLUDES)
		6V8371	1	NUT-HEX
		2H3923	1	LOCKWASHER
		9G3671	1	HOUSING-PLUG
		7N7779	2	SOCKET
		7N7780	2	PIN-CONNECTOR
		9G3695	2	PLUG-SEAL
	4	9S4185	1	PLUG-O-RING
	5	3K0360	2	SEAL-O-RING
	6	6V8625	1	ELBOW-FACE SEAL
	7	2D1290	1	GROMMET
	8	9G2673	1	GROMMET
	9	6T8835	1	BRACKET AS
		9F6445	2	NUT
Y	10	6T5618	1	CONTROL GP-ELECTRONIC
	11	2A0762	2	BOLT
	12	9W0712	1	COVER
	13	3S2093	1	STRAP-CABLE
	14	9G3658	1	CLIP
	15	7T2412	1	GROMMET
	16	0T0102	2	BOLT
		5M2894	2	WASHER
	17	7T4451	1	PLATE AS
C	18	9W3191	1	NOZZLE
	19	0S1587	1	BOLT
Y	20	7N9129	1	SHUTOFF GP-ELECTRICAL
C	21	6V9853	1	ELBOW-SWIVEL
C		8C8417	1	CONNECTOR
C		6V9746	1	SEAL-O-RING
A		9W0377	1	KIT-RECHARGE (ABC DRY CHEMICAL) IS AVAILABLE TO REFILL FIRE SUPPRESSION SYSTEM

A-NOT PART OF THIS GROUP
C-CHANGE FROM PREVIOUS TYPE
Y-SEPARATE ILLUSTRATION

V-451262 P

7401 **7T4696 SUPPRESSION GP-FIRE-ABC DRY CHEMICAL-PART 1 OF 4**

Type 3. S/N 53Y3485-Up

6T5618-Page 100C,7N9129-Page 346,8C4594-Page 346.04

An Attachment

CAB, GAUGES AND ACCESSORIES

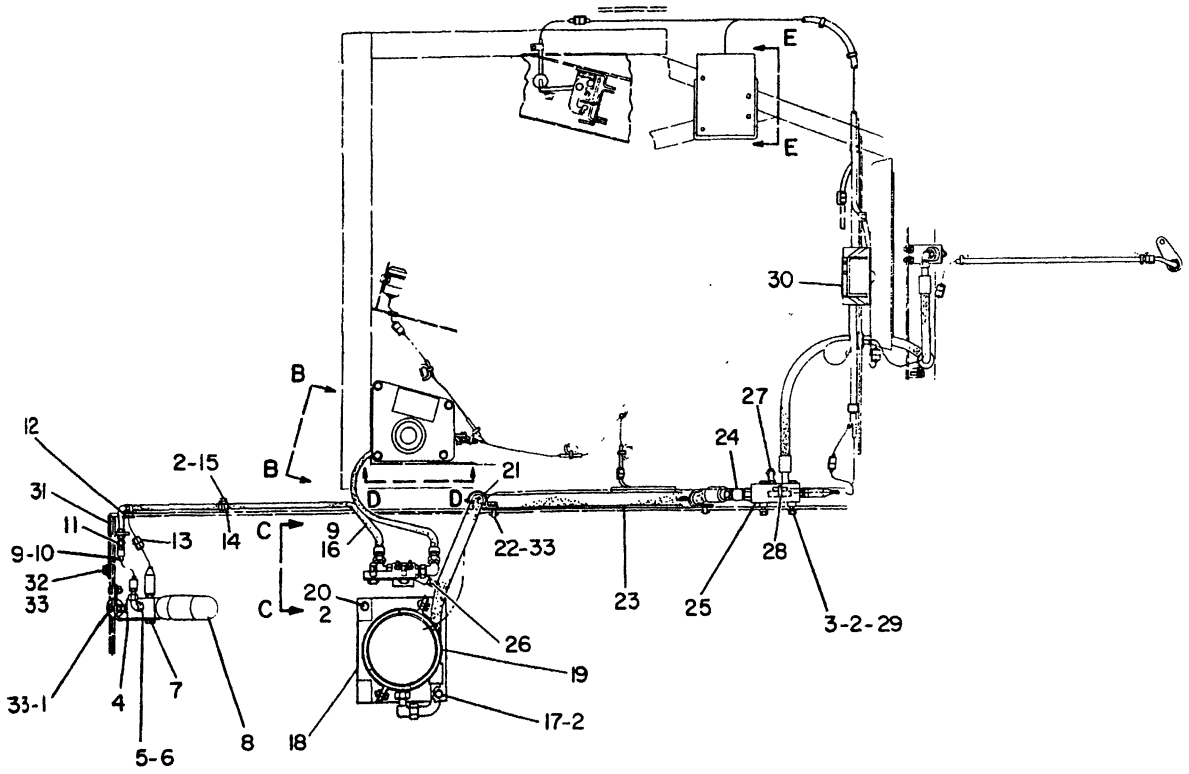

TOP VIEW

REFER TO ALL ILLUSTRATIONS OF THIS GROUP FOR AUXILIARY VIEWS

NOTE	REF NO	PART NUMBER	QTY	PART NAME	NOTE	REF NO	PART NUMBER	QTY	PART NAME
	1	0S1621	2	BOLT		21	5P7466	2	CLIP (SLOT)
	2	5M2894	11	WASHER			5P7467	2	CLIP (TAB)
	3	0T0065	2	BOLT			5P8112	2	GROMMET
		1D4717	2	NUT		22	0S1585	2	BOLT
	4	9W4322	1	PLATE AS	C	23	6Y0054	1	HOSE AS
	5	6V8627	1	ELBOW			6V9746	2	SEAL-O-RING
	6	3J1907	1	SEAL-O-RING		24	6V9004	1	ELBOW-SEAL
	7	0S1617	2	BOLT			3D2824	2	SEAL-O-RING
		9M1974	2	WASHER-HARD		25	7T2346	1	MANIFOLD
Y	8	7T8620	1	VALVE GP-ACTUATOR	C	26	6Y0594	1	HOSE AS
				RELEASE	C		6V8397	2	SEAL-O-RING
C	9	4J5477	4	SEAL-O-RING		27	6V8549	1	ELBOW
	10	7T5552	1	HOSE AS	C		9W3191	1	NOZZLE
	11	6V8993	1	UNION			3K0360	1	SEAL-O-RING
		2P1279	1	LOCKNUT		28	3S2093	1	STRAP-CABLE
	12	6S1066	1	GROMMET		29	4S5719	2	SPACER
	13	3T3048	1	CLIP AS		30	6T9236	1	FILM-FIRE SUPPRESSION
	14	4D7794	1	CLIP (SMALL)		31	9W3718	1	PLATE
		7B7501	1	CLIP (LARGE)		32	2B0947	1	BOLT
	15	0T0102	1	BOLT			2V8974	1	SPACER
	16	7T5553	1	HOSE AS		33	5P8245	5	WASHER
	17	0S1591	2	BOLT					
	18	7T1486	1	BRACKET AS					
	19	6T9285	1	BRACKET					
		9W6154	2	PAD					
	20	0S1594	5	BOLT					

C-CHANGE FROM PREVIOUS TYPE
Y-SEPARATE ILLUSTRATION

V- 451263 P

7401 7T4696 SUPPRESSION GP-FIRE-ABC DRY CHEMICAL-PART 2 OF 4
Type 3. S/N 53Y3485-Up
7T8620-Page 346C
An Attachment

CAB, GAUGES AND ACCESSORIES

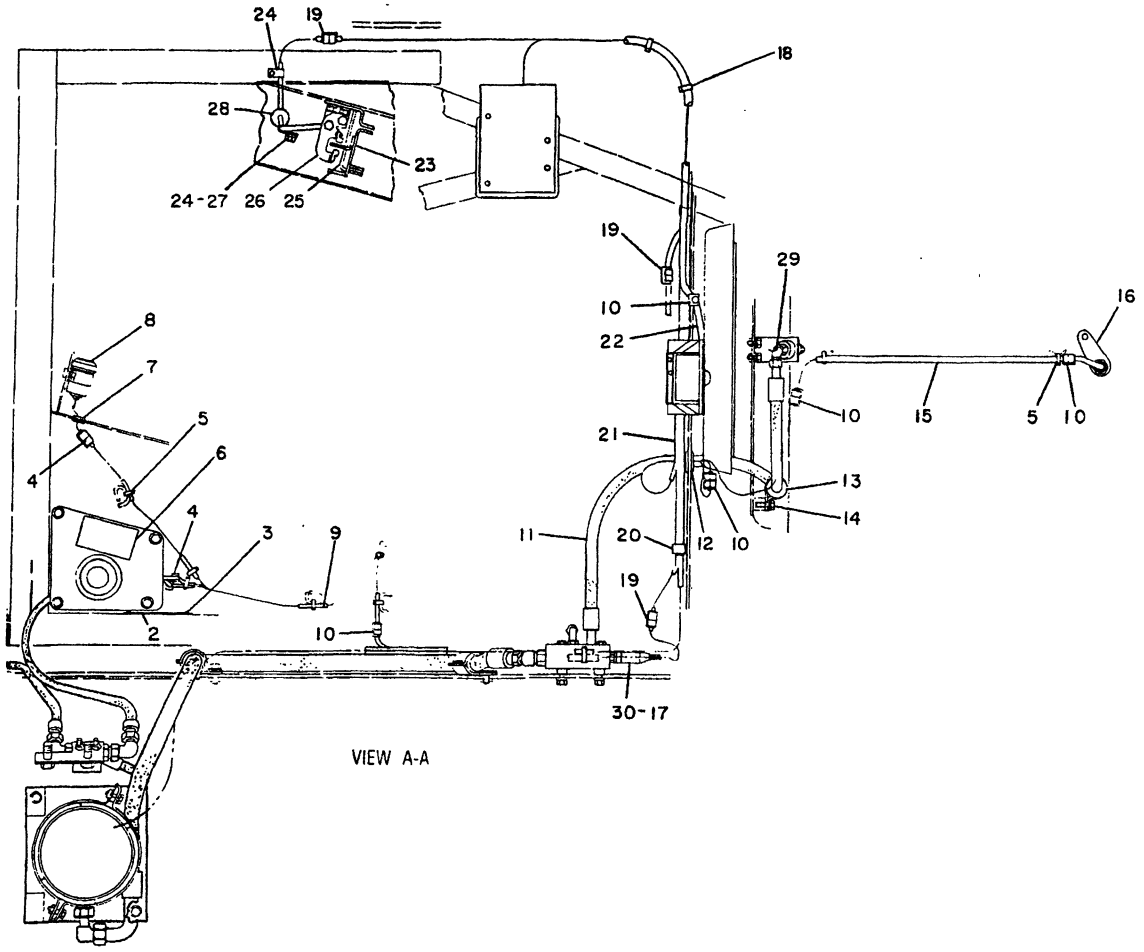

NOTE	REF NO	PART NUMBER	QTY	PART NAME	NOTE	REF NO	PART NUMBER	QTY	PART NAME
B	1	7T5554	1	HOSE AS		22	7T5569	1	HARNESS AS-SUPPRESSION
		4J5477	2	SEAL-O-RING		23	7T5095	1	BRACKET AS
	2	8T3629	1	PLATE-WARNING		24	4D7794	2	CLIP
	3	4B4158	4	SCREW		25	7T5094	1	BRACKET AS
	4	3T3048	3	CLIP AS		26	7T5093	1	SWITCH AS (PARK BRAKE)
	5	3S2093	11	STRAP-CABLE	BD		5P5623		WIRE (16 GA)
	6	8T7589	1	FILM-INSTRUCTION	BD		5P9799		TUBE
	7	2D0388	1	GROMMET			7N9737	1	HOUSING-PLUG
Y	8	9G9813	1	ALARM GP			7N7780	1	PIN-CONNECTOR
	9	7T5568	1	HARNESS AS-SUPPRESSION			7N7779	1	SOCKET
	10	3T3047	5	CLIP AS			9P4609	1	ACTUATOR-MAGNETIC
	11	7T5555	1	HOSE AS			8M7758	4	RIVET-POP
		6V8398	2	SEAL-O-RING		27	2A0762	2	BOLT
	12	8S7583	1	GROMMET			9S8750	2	NUT-FULL
	13	5P7464	1	CLIP (SLOT)			5P0537	2	WASHER
		5P7465	1	CLIP (TAB)		28	9G2673	1	GROMMET
		6V1249	1	GROMMET		29	6V8625	1	ELBOW-FACE SEAL
	14	0S1595	1	BOLT			3K0360	1	SEAL-O-RING
		5P8245	1	WASHER		30	7T4371	1	SWITCH AS
	15	7T5570	1	HARNESS AS-SUPPRESSION					(DISCHARGE DETECTION)
	16	7T3712	1	PLATE	BD		8T5677		SLEEVE
	17	3J1907	1	SEAL-O-RING			7N8205	1	HOUSING-PLUG
	18	7K1181	2	STRAP-CABLE			7N7780	2	PIN-CONNECTOR
	19	3T3045	3	CLIP AS			7N7779	2	SOCKET
	20	9M4972	3	CLIP					
	21	7T8629	1	HARNESS AS-SUPPRESSION					

B-USE AS REQUIRED
D-ORDER BY THE METER
Y-SEPARATE ILLUSTRATION

V-451264 P

7401 7T4696 SUPPRESSION GP-FIRE-ABC DRY CHEMICAL-PART 3 OF 4
Type 3. S/N 53Y3485-Up
9G9813-Page 100A
An Attachment

CAB, GAUGES AND ACCESSORIES

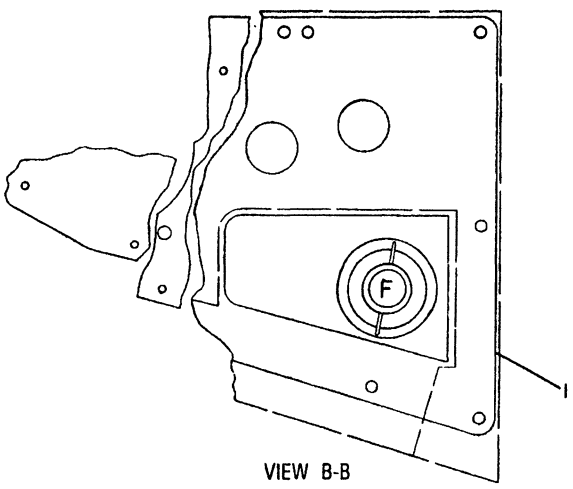

VIEW B-B

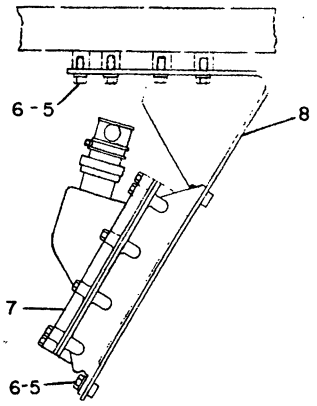

VIEW E-E

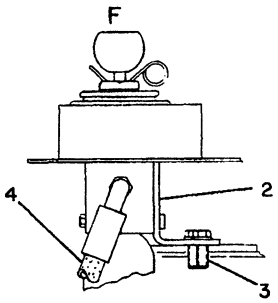

OPTIONAL MOUNTING

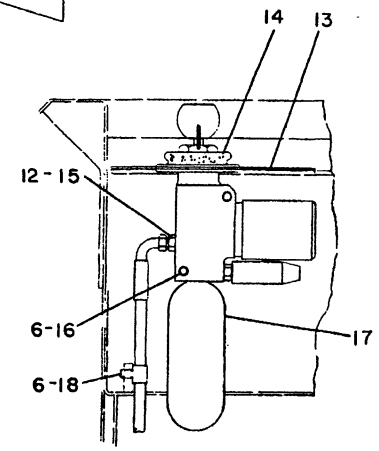

VIEW D-D

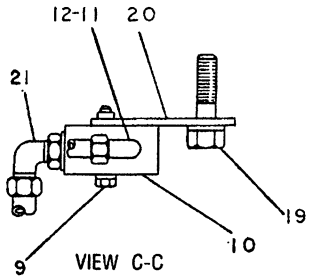

VIEW C-C

NOTE	REF NO	PART NUMBER	QTY	PART NAME	NOTE	REF NO	PART NUMBER	QTY	PART NAME
B	1	7T8550	1	COVER AS	F		8T3630	1	FILM-INSTRUCTION (MOUNTED ON FUEL TANK)
B	2	7T8546	1	BRACKET AS					
B	3	0S1588	2	BOLT					
B		5M2894	2	WASHER					
B	4	7T5553	1	HOSE AS					
	5	0L1351	8	BOLT					
	6	5M2894	11	WASHER					
YR	7	6T5619	1	CONTROL GP-ELECTRONIC					
	8	7T9139	1	BRACKET AS					
	9	1B2713	2	BOLT					
		5P0537	2	WASHER					
C	10	8C5915	1	VALVE AS					
	11	6V8627	2	ELBOW					
C	12	3J1907	3	SEAL-O-RING					
	13	9W0183	1	COVER					
	14	7T0148	1	BOOT					
	15	6V8641	1	CONNECTOR-SEAL					
	16	0L1352	2	BOLT					
Y	17	7T8619	1	VALVE GP-ACTUATOR RELEASE					
	18	0S0509	1	BOLT					
		7B7501	1	CLIP					
	19	1A1460	2	BOLT					
	20	9W4323	1	PLATE AS					
C	21	6V8723	1	ELBOW					
C		3K0360	1	SEAL-O-RING					

B-USE AS REQUIRED
C-CHANGE FROM PREVIOUS TYPE
F-NOT SHOWN
R-REMFG PART MAY BE AVAILABLE
Y-SEPARATE ILLUSTRATION

V-451265 P

7401 7T4696 SUPPRESSION GP-FIRE-ABC DRY CHEMICAL-PART 4 OF 4

Type 3. S/N 53Y3485-Up
6T5619-Page 100C,7T8619-Page 346B
An Attachment

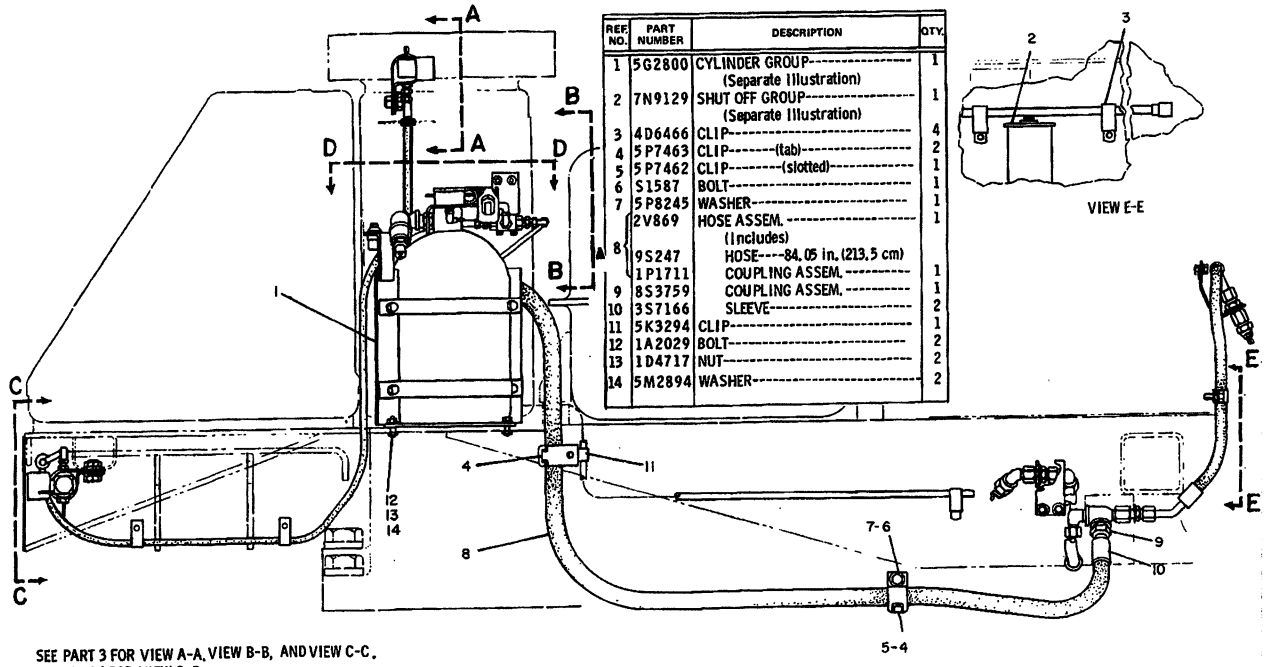

REF NO.	PART NUMBER	DESCRIPTION	QTY.
1	5G2800	CYLINDER GROUP (Separate Illustration)	1
2	7N9129	SHUT OFF GROUP (Separate Illustration)	1
3	4D6466	CLIP	4
4	5P7463	CLIP-----(tab)	2
5	5P7462	CLIP-----(slotted)	1
6	S1587	BOLT	1
7	5P8245	WASHER	1
▲ 8	2V869	HOSE ASSEM. (Includes)	1
	9S247	HOSE----84.05 in. (213.5 cm)	
	1P1711	COUPLING ASSEM.	1
9	8S3759	COUPLING ASSEM.	1
10	3S7166	SLEEVE	2
11	5K3294	CLIP	1
12	1A2029	BOLT	2
13	1D4717	NUT	2
14	5M2894	WASHER	2

SEE PART 3 FOR VIEW A-A, VIEW B-B, AND VIEW C-C.
SEE PART 4 FOR VIEW D-D.

▲ ORDER BY THE INCH

235249

235249 P

7401

7G1858 SUPPRESSION GP-FIRE-PART 1 OF 4
Type 1. S/N 53Y1-3484
7N9129-Page 346, 5G2800-Page 348
An Attachment

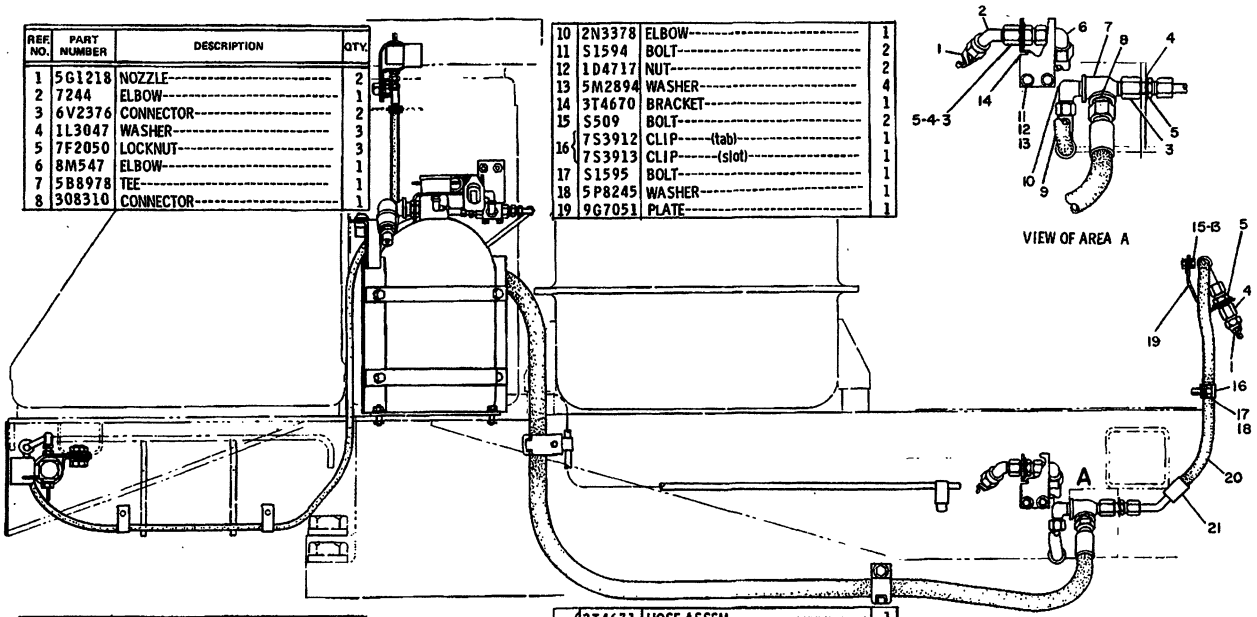

REF. NO.	PART NUMBER	DESCRIPTION	QTY.
1	5G1218	NOZZLE	2
2	7244	ELBOW	1
3	6V2376	CONNECTOR	2
4	1L3047	WASHER	3
5	7F2050	LOCKNUT	3
6	8M547	ELBOW	1
7	5B8978	TEE	1
8	308310	CONNECTOR	1
10	2N3378	ELBOW	1
11	S1594	BOLT	2
12	1D4717	NUT	2
13	5M2894	WASHER	4
14	3T4670	BRACKET	1
15	S509	BOLT	2
16	7S3912	CLIP-----(tab)	1
	7S3913	CLIP-----(slot)	1
17	S1595	BOLT	1
18	5P8245	WASHER	1
19	9G7051	PLATE	1
▲ 9	3T4672	HOSE ASSEM. (Includes)	1
	9S671	HOSE--12.6 in. (32 cm)	
	3S8606	SLEEVE	2
	8S4055	COUPLING ASSEM. -(straight)-	1
	8S6391	COUPLING ASSEM. -(90°)	1
▲ 20	3T4671	HOSE ASSEM. (Includes)	1
	9S671	HOSE---27.56 in. (70 cm)	
	8S6391	COUPLING ASSEM. --(90°)	1
	9S9727	COUPLING ASSEM. --(45°)	1
21	3S8606	SLEEVE	2

235250 P

7401 **7G1858 SUPPRESSION GP-FIRE-PART 2 OF 4**
Type 1. S/N 53Y1-3484
An Attachment

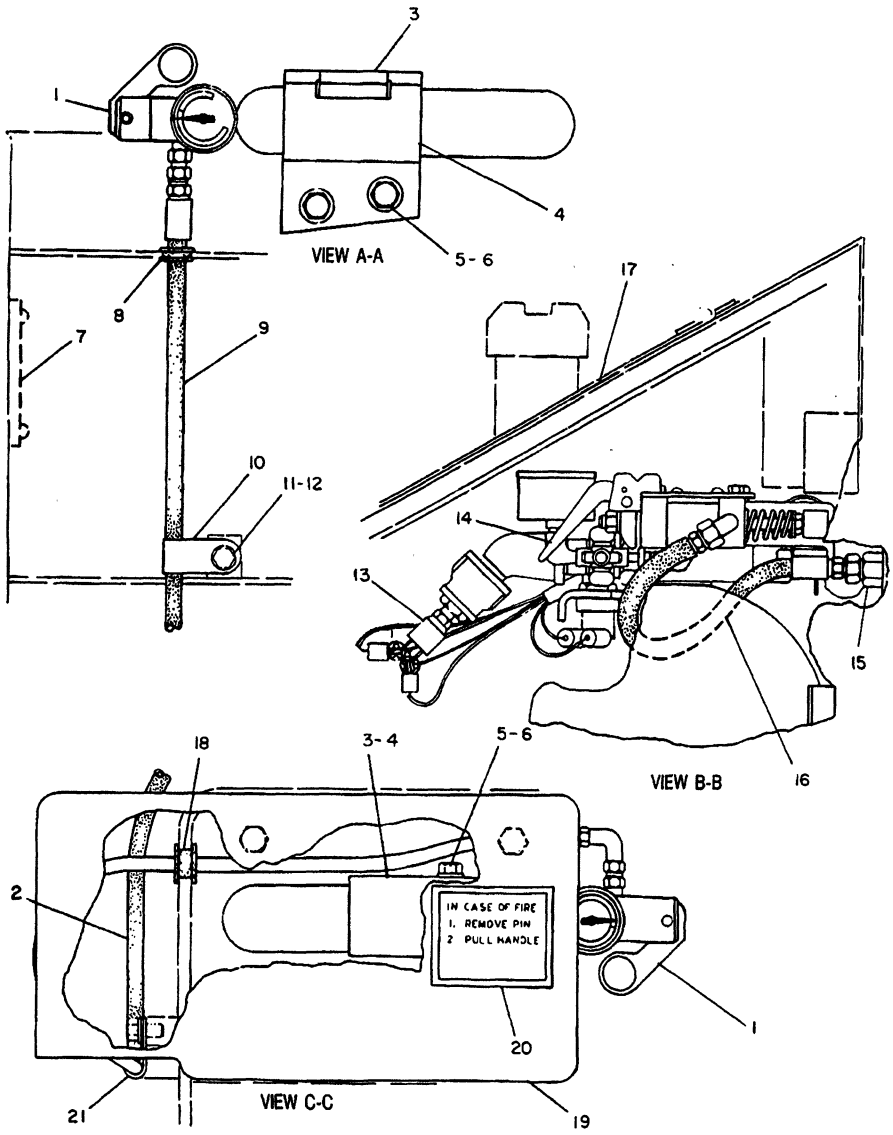

NOTE	REF NO	PART NUMBER	QTY	DESCRIPTION
CY	1	5G3015	2	CARTRIDGE & VALVE ASSEM.
	2	9F4237	1	HOSE ASSEM. 183CM(72.05IN.)
	3	7G4487	2	CLIP (TAB)
	4	7G4488	2	CLIP (SLOT)
	5	S1621	4	BOLT
	6	5P8245	4	WASHER
	7	6V1384	1	PLATE
	8	9D3768	1	GROMMET
	9	9G4235	1	HOSE ASSEM. 118CM(46.46IN.)
	10	7B7501	1	CLIP
	11	4F4879	1	BOLT
	12	5M2894	1	WASHER
	13	9G8010	1	SWITCH ASSEM. (PRESSURE)
	14	3B6552	1	ELBOW
	15	2P1314	1	CONNECTOR
		3J1907	1	SEAL
	16	3T3848	1	HOSE ASSEM. 33CM(13IN.)
	17	6V3368	1	FILM
	18	5D7635	1	GROMMET
	19	3T2989	1	COVER ASSEM.
		9F2978	1	NUT (WELD)
	20	5P8782	2	FILM
	21	5D6523	2	CLIP

C INDICATES CHANGE
Y SEPARATE ILLUSTRATION

310431

310431 P

7401 **7G1858 SUPPRESSION GP-FIRE-PART 3 OF 4**
Type 1. S/N 53Y1-3484
5G3015-Page 346A
An Attachment

CAB, GAUGES AND ACCESSORIES

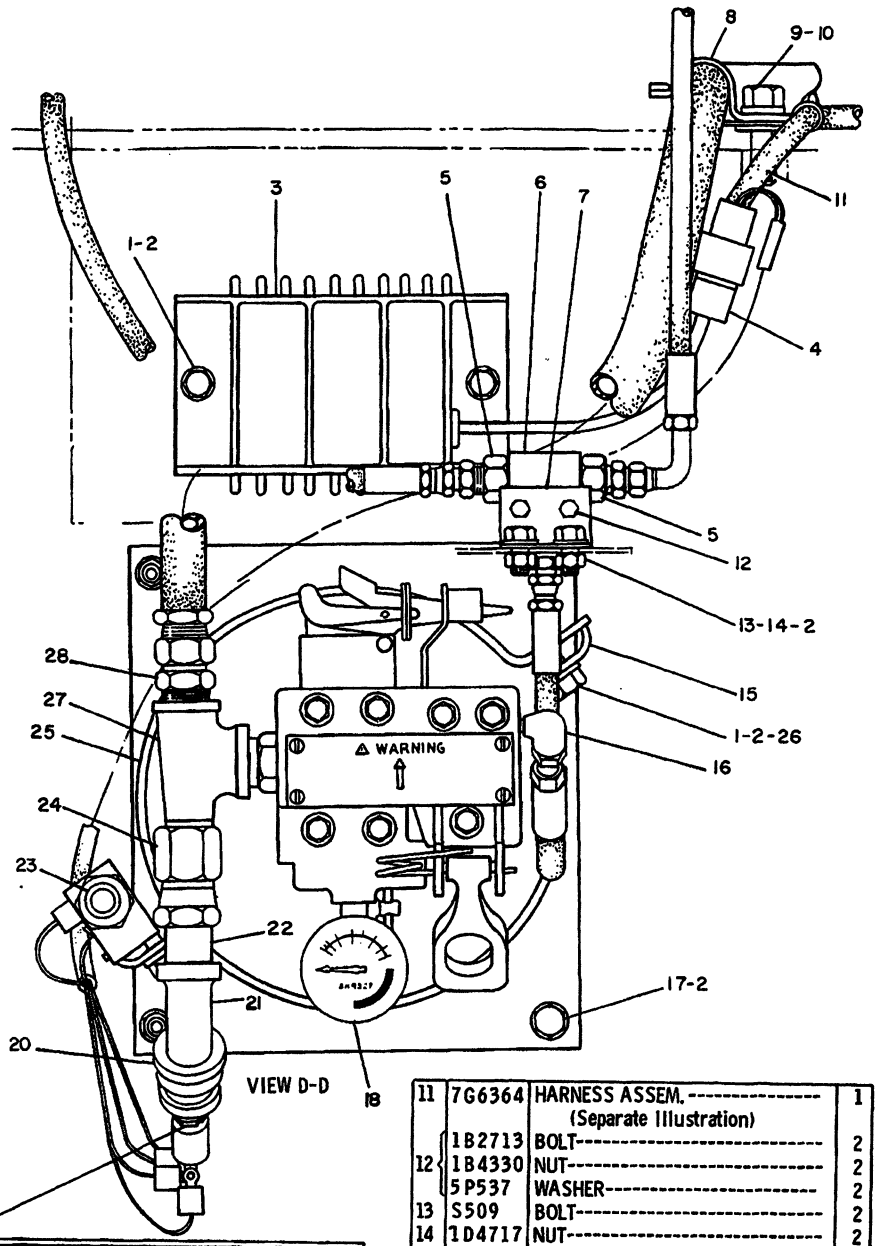

REF. NO.	PART NUMBER	DESCRIPTION	QTY.
1	S1594	BOLT	6
2	5M2894	WASHER	10
3	9G9287	CONTROL ASSEM. (Includes)	1
4	9G3670	HOUSING	1
	7N7779	SOCKET	1
	7N7780	PIN	1
5	2P1314	CONNECTOR	2
	3J1907	SEAL	2
6	8J6875	VALVE ASSEM. --(shuttle)	1
7	3T3849	BRACKET	1
8	5P7462	CLIP	1
9	S1587	BOLT	1
10	5P8245	WASHER	1

11	7G6364	HARNESS ASSEM. (Separate Illustration)	1
12	1B2713	BOLT	2
	1B4330	NUT	2
	5P537	WASHER	2
13	S509	BOLT	2
14	1D4717	NUT	2
15	9G1171	BRACKET	2
16	2N1287	ELBOW	1
17	1A2029	BOLT	2
18	8N9387	GAUGE	1
19	2H5547	BUSHING	1
20	1F6711	COUPLING	1
21	3B7732	ELBOW	1
22	3B7270	NIPPLE	1
23	3F1006	SWITCH ASSEM.	1
24	1L2702	CONNECTOR	1
25	9G4241	BRACKET ASSEM. (Includes)	1
26	9F2978	NUT------(weld)	4
27	1N8559	TEE	1
28	4S6678	CONNECTOR	1

235985 235985 P

7401 **7G1858 SUPPRESSION GP-FIRE-PART 4 OF 4**

Type 1. S/N 53Y1-3484

7G6364-Page 346

An Attachment

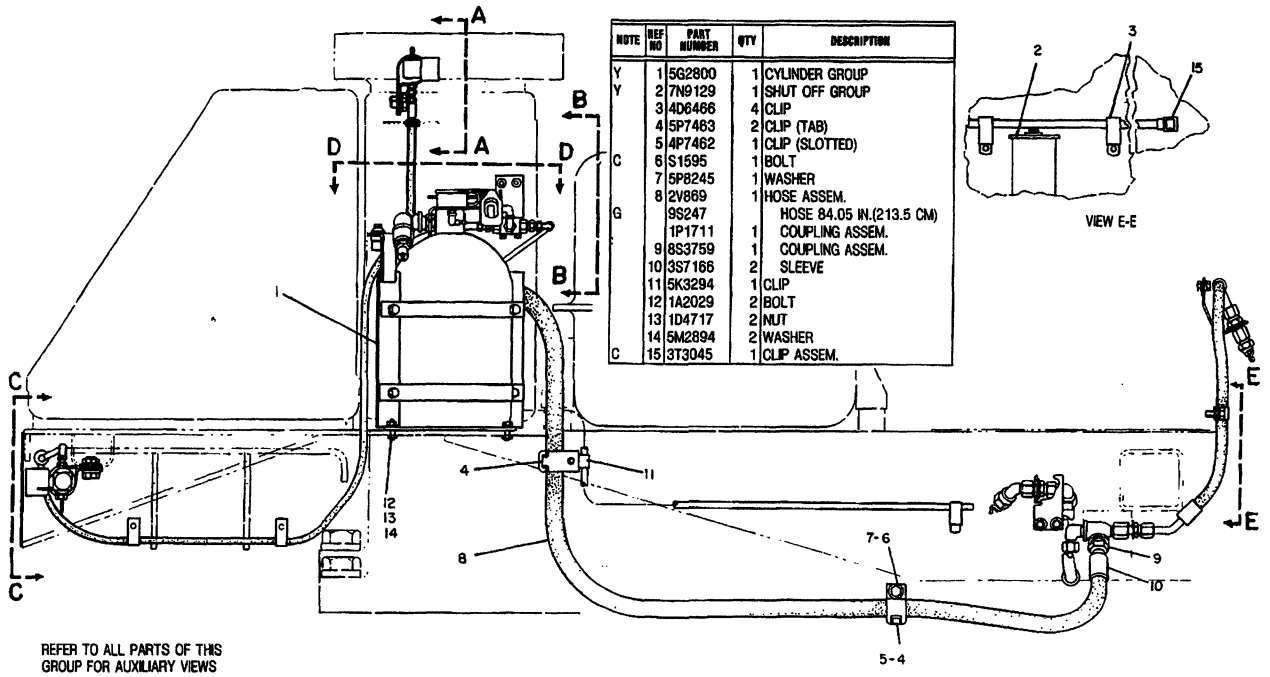

NOTE	REF NO	PART NUMBER	QTY	DESCRIPTION
Y	1	5G2800	1	CYLINDER GROUP
Y	2	7N9129	1	SHUT OFF GROUP
	3	4D6466	4	CLIP
	4	5P7463	2	CLIP (TAB)
	5	4P7462	1	CLIP (SLOTTED)
C	6	S1595	1	BOLT
	7	5P8245	1	WASHER
	8	2V869	1	HOSE ASSEM.
G		9S247		HOSE 84.05 IN.(213.5 CM)
		1P1711	1	COUPLING ASSEM.
	9	8S3759	1	COUPLING ASSEM.
	10	3S7166	2	SLEEVE
	11	5K3294	1	CLIP
	12	1A2029	2	BOLT
	13	1D4717	2	NUT
	14	5M2894	2	WASHER
C	15	3T3045	1	CLIP ASSEM.

REFER TO ALL PARTS OF THIS GROUP FOR AUXILIARY VIEWS

C INDICATES CHANGE
Y SEPARATE ILLUSTRATION
G ORDER BY THE INCH

307207

307207 P

7401

7G1858 SUPPRESSION GP-FIRE-PART 1 OF 4
Type 2. S/N 53Y1-3484
7N9129-Page 346,5G2800-Page 348
An Attachment

NOTE	REF NO	PART NUMBER	QTY	DESCRIPTION
	1	5G1218	2	NOZZLE
	2	7244	1	ELBOW
C	3	6B2376	2	CONNECTOR
	4	1L3047	3	WASHER
	5	7F2050	3	LOCKNUT
C	6	8M547	2	ELBOW
C	7	6S5693	1	TEE
C	8	5P9789	1	REDUCER
C	10	2P1281	1	UNION
	11	S1594	2	BOLT
	12	1D4717	2	NUT
	13	5M2894	4	WASHER
	14	3T4670	1	BRACKET
C	15	T102	2	BOLT
	16	7S3912	1	CLIP (TAB)
		7S3913	1	CLIP (SLOT)
	17	S1595	1	BOLT
	18	5P8245	1	WASHER
	19	9G7051	1	PLATE
	9	3T4672	1	HOSE ASSEM.
G		9S671		HOSE 12.6 IN.(32 CM)
		3S8606	2	SLEEVE
		8S4055	1	COUPLING ASSEM. (STRAIGHT)
		8S6391	1	COUPLING ASSEM. (90°)
	20	3T4671	1	HOSE ASSEM.
G		9S671		HOSE 27.56 IN.(70 CM)
		8S6391	1	COUPLING ASSEM. (90°)
		9S9727	1	COUPLING ASSEM. (45°)
	21	3S8606	2	SLEEVE

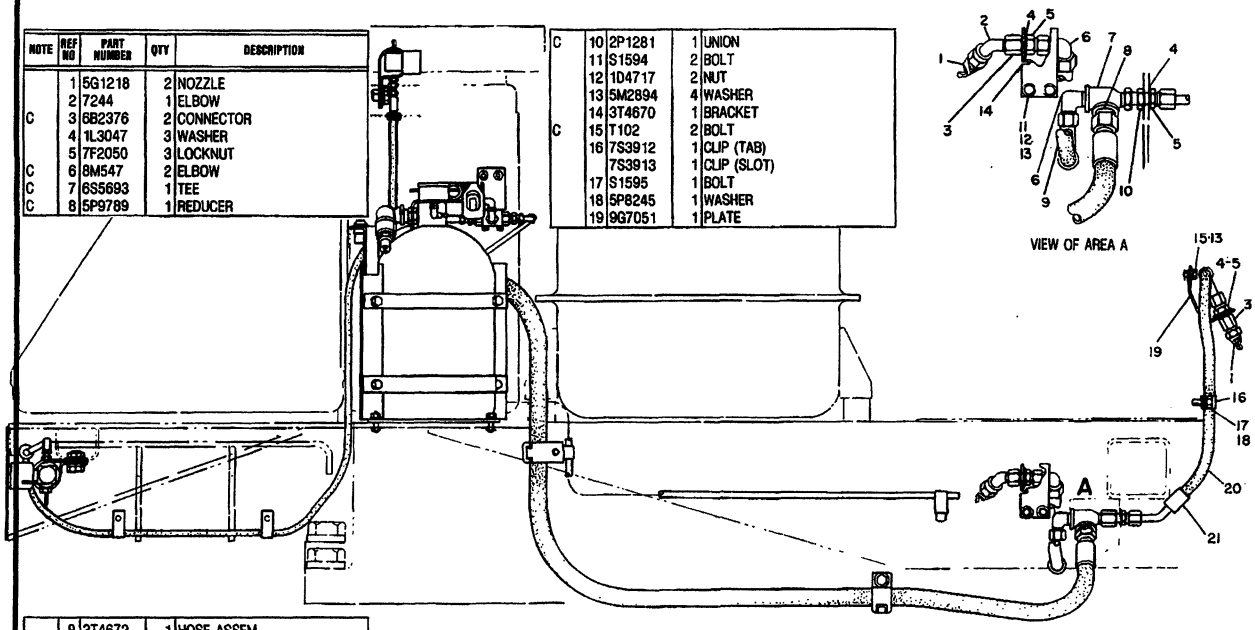

C INDICATES CHANGE

G ORDER BY THE INCH

307208

307208 P

7401 **7G1858 SUPPRESSION GP-FIRE-PART 2 OF 4**
Type 2. S/N 53Y1-3484
An Attachment

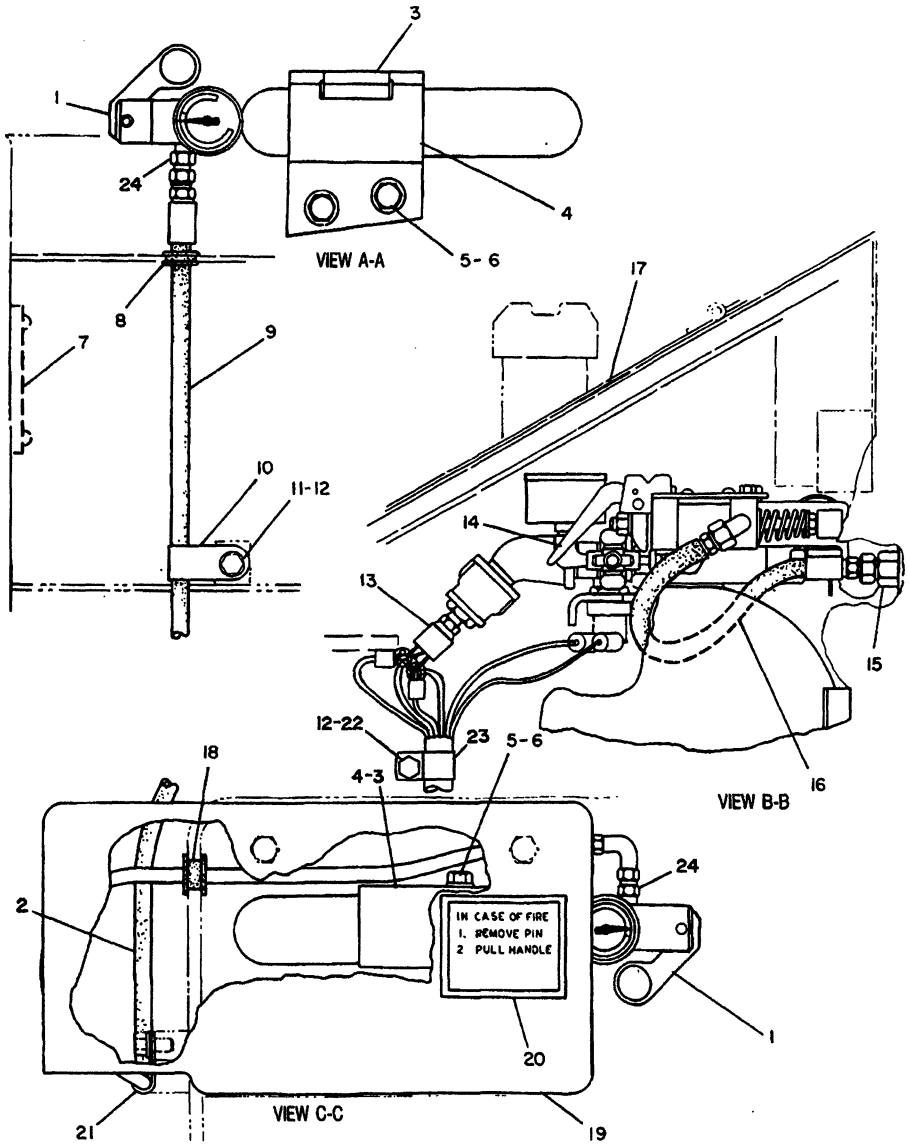

NOTE	REF NO	PART NUMBER	QTY	DESCRIPTION
Y	1	5G3015	2	CARTRIDGE & VALVE ASSEM.
	2	9F4237	1	HOSE ASSEM. 183 CM(72.05 IN.)
	3	7G4487	2	CLIP (TAB)
	4	7G4488	2	CLIP (SLOT)
	5	S1621	4	BOLT
	6	5P8245	4	WASHER
	7	6V1384	1	PLATE
	8	9D3768	1	GROMMET
	9	9G4235	1	HOSE ASSEM. 118 CM(46.46 IN)
	10	7B7501	1	CLIP
	11	4F4879	1	BOLT
C	12	5M2894	2	WASHER
	13	9G8010	1	SWITCH ASSEM. (PRESSURE)
	14	3B6552	1	ELBOW
	15	2P1314	1	CONNECTOR
		3J1907	1	SEAL
	16	3T3848		HOSE ASSEM. 33CM(13 IN.)
	17	6V3368	1	FILM
C	18	9G4191	1	GROMMET
	19	3T2989	1	COVER ASSEM.
		9F2978	1	NUT (WELD)
	20	5P8782	2	FILM
	21	5D6523	2	CLIP
	22	S509	1	BOLT
C	23	1S994	1	CLIP
C	24	8L6557	2	CONNECTOR

C INDICATES CHANGE
Y SEPARATE ILLUSTRATION

307209

307209 P

7401

7G1858 SUPPRESSION GP-FIRE-PART 3 OF 4
Type 2. S/N 53Y1-3484
5G3015-Page 346A
An Attachment

CAB, GAUGES AND ACCESSORIES

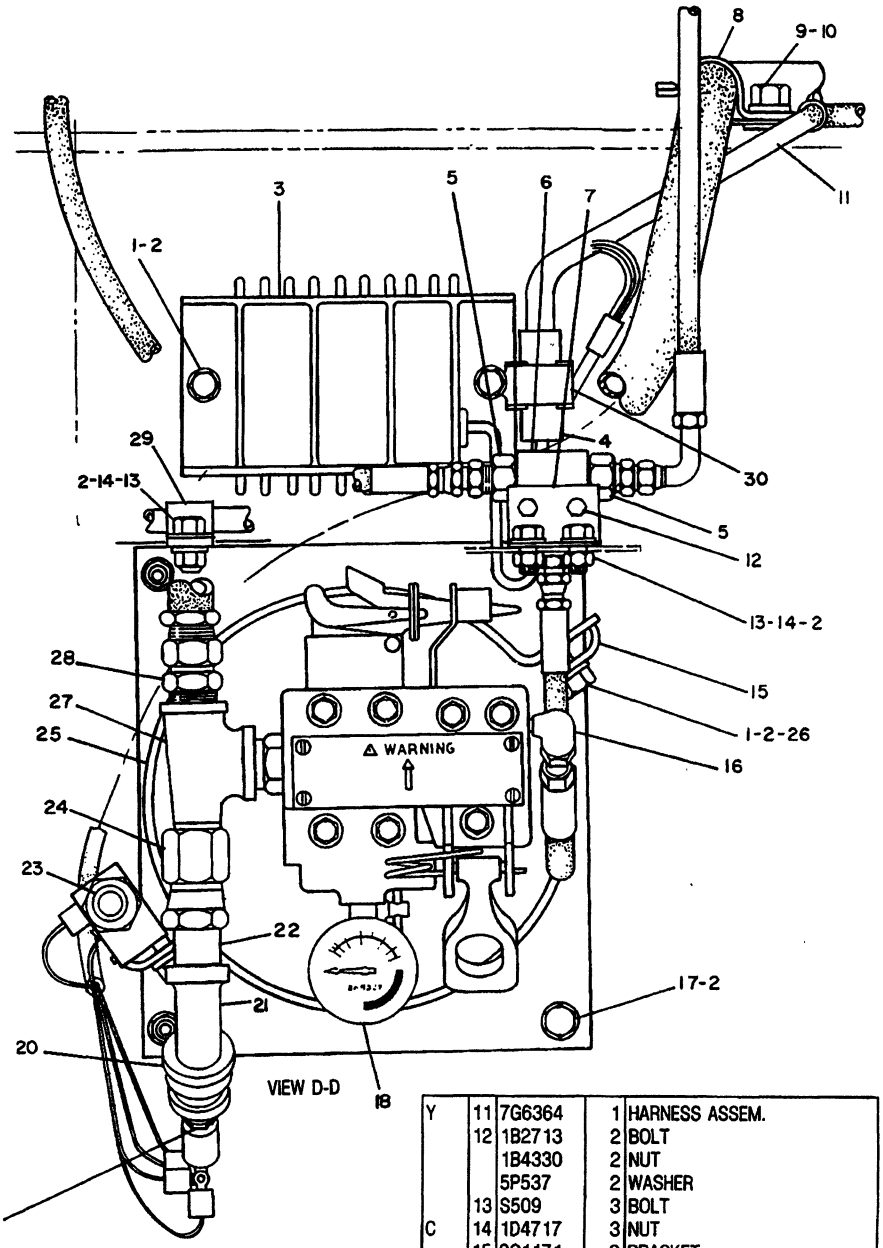

NOTE	REF NO	PART NUMBER	QTY	DESCRIPTION
	1	S1594	6	BOLT
C	2	5M2894	11	WASHER
	3	9G9287	1	CONTROL ASSEM.
	4	9G3670	1	HOUSING
		7N7779	1	SOCKET
		7N7780	1	PIN
	5	2P1314	2	CONNECTOR
		3J1907	2	SEAL
	6	8J6875	1	VALVE ASSEM. (SHUTTLE)
	7	3T3849	1	BRACKET
	8	5P7462	1	CLIP
	9	S1587	1	BOLT
	10	5P8245	1	WASHER

C INDICATES CHANGE

NOTE	REF NO	PART NUMBER	QTY	DESCRIPTION
Y	11	7G6364	1	HARNESS ASSEM.
	12	1B2713	2	BOLT
		1B4330	2	NUT
		5P537	2	WASHER
	13	S509	3	BOLT
C	14	1D4717	3	NUT
	15	9G1171	2	BRACKET
	16	2N1287	1	ELBOW
	17	1A2029	2	BOLT
	18	8N9387	1	GAUGE
	19	2H5547	1	BUSHING
	20	1F6711	1	COUPLING
	21	3B7732	1	ELBOW
	22	3B7270	1	NIPPLE
C	23	3T8514	1	SWITCH ASSEM.
	24	1L2702	1	CONNECTOR
	25	9G4241	1	BRACKET ASSEM.
	26	9F2978	4	NUT (WELD)
	27	1N8559	1	TEE
	28	4S6678	1	CONNECTOR
C	29	5D6523	1	CLIP
C	30	3T50	1	CLIP

Y SEPARATE ILLUSTRATION

307210

307210 P

7401 **7G1858 SUPPRESSION GP-FIRE-PART 4 OF 4**

Type 2. S/N 53Y1-3484

7G6364-Page 346

An Attachment

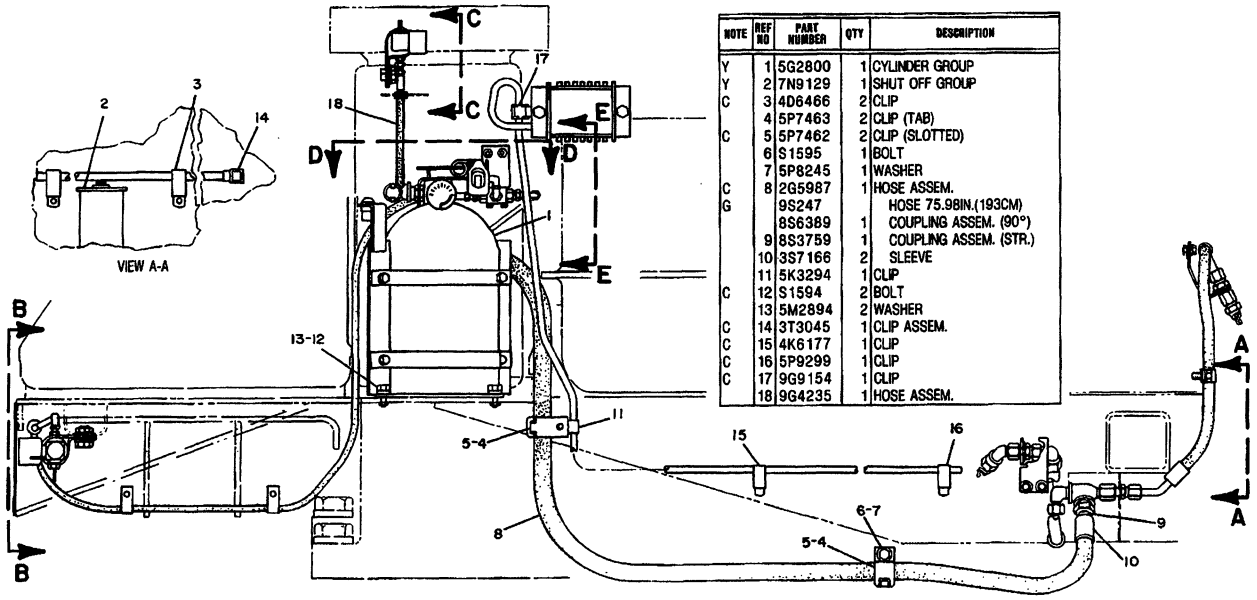

NOTE	REF NO	PART NUMBER	QTY	DESCRIPTION
Y	1	5G2800	1	CYLINDER GROUP
Y	2	7N9129	1	SHUT OFF GROUP
C	3	4D6466	2	CLIP
	4	5P7463	2	CLIP (TAB)
C	5	5P7462	2	CLIP (SLOTTED)
	6	S1595	1	BOLT
	7	5P8245	1	WASHER
C	8	2G5987	1	HOSE ASSEM.
G		9S247		HOSE 75.98IN.(193CM)
		8S6389	1	COUPLING ASSEM. (90°)
	9	8S3759	1	COUPLING ASSEM. (STR.)
	10	3S7166	2	SLEEVE
	11	5K3294	1	CLIP
C	12	S1594	2	BOLT
	13	5M2894	2	WASHER
C	14	3T3045	1	CLIP ASSEM.
C	15	4K6177	1	CLIP
C	16	5P9299	1	CLIP
C	17	9G9154	1	CLIP
	18	9G4235	1	HOSE ASSEM.

REFER TO ALL PARTS OF THIS GROUP FOR AUXILIARY VIEWS

C INDICATES CHANGE
Y SEPARATE ILLUSTRATION
G ORDER BY THE INCH

310474

310474 P

7401

7G1858 SUPPRESSION GP-FIRE-PART 1 OF 4
Type 3. S/N 53Y1-3484
7N9129-Page 346,5G2800-Page 348
An Attachment

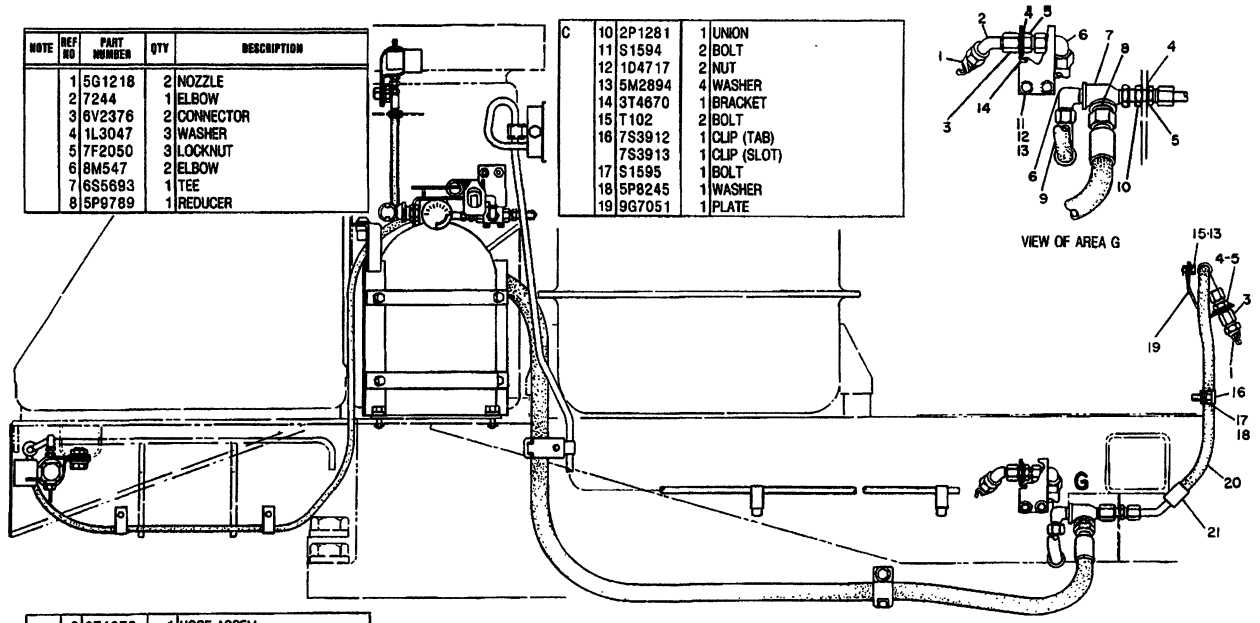

NOTE	REF NO	PART NUMBER	QTY	DESCRIPTION
	1	5G1218	2	NOZZLE
	2	7244	1	ELBOW
	3	6V2376	2	CONNECTOR
	4	1L3047	3	WASHER
	5	7F2050	3	LOCKNUT
	6	8M547	2	ELBOW
	7	6S5693	1	TEE
	8	5P9789	1	REDUCER

C	10	2P1281	1	UNION
	11	S1594	2	BOLT
	12	1D4717	2	NUT
	13	5M2894	4	WASHER
	14	3T4670	1	BRACKET
	15	T102	2	BOLT
	16	7S3912	1	CLIP (TAB)
		7S3913	1	CLIP (SLOT)
	17	S1595	1	BOLT
	18	5P8245	1	WASHER
	19	9G7051	1	PLATE

VIEW OF AREA G

G	9	3T4672	1	HOSE ASSEM.
		9S671		HOSE 12.6 IN.(32 CM)
		3S8606	2	SLEEVE
		8S4055	1	COUPLING ASSEM. (STRAIGHT)
		8S6391	1	COUPLING ASSEM. (90°)

G	20	3T4671	1	HOSE ASSEM.
		9S671		HOSE 27.56 IN.(70 CM)
		8S6391	1	COUPLING ASSEM. (90°)
		9S9727	1	COUPLING ASSEM. (45°)
	21	3S8606	2	SLEEVE

G ORDER BY THE INCH

310475

310475 P

B USE AS REQUIRED
C INDICATES CHANGE
F NOT SHOWN
D ORDER BY THE METER
Y SEPARATE ILLUSTRATION

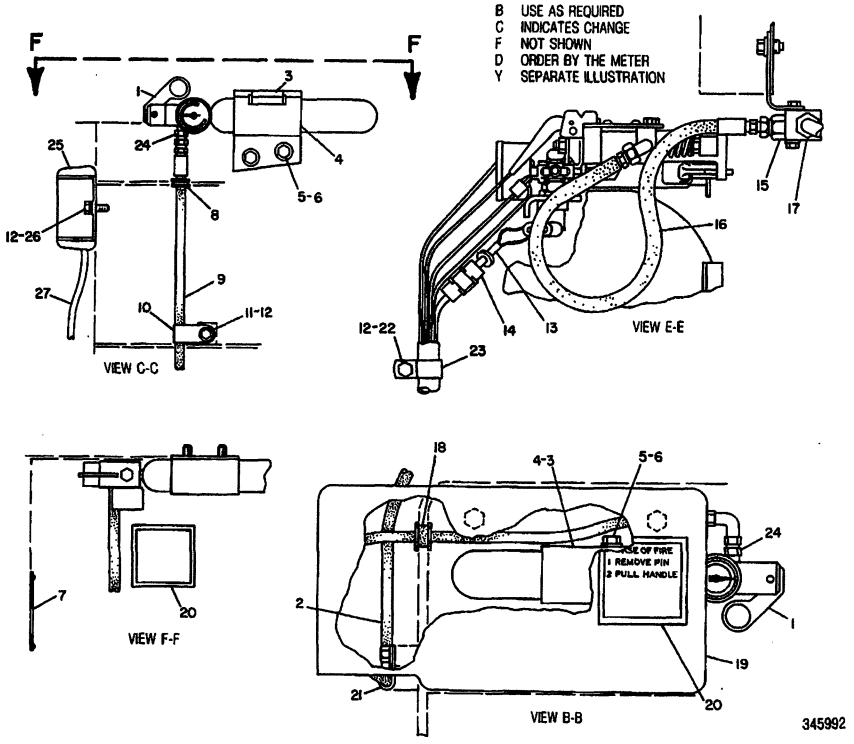

NOTE	REF NO	PART NUMBER	QTY	DESCRIPTION
Y	1	5G3015	2	CARTRIDGE & VALVE AS.
	2	9F4237	1	HOSE AS. 183CM(72.05IN.)
	3	7G4487	2	CLIP (TAB)
	4	7G4488	2	CLIP (SLOT)
	5	0S1621	4	BOLT
	6	5P8245	4	WASHER
	7	6V1384	1	PLATE
	8	9D3768	1	GROMMET
	9	9G4235	1	HOSE AS. 118CM(46.46IN.)
	10	7B7501	1	CLIP
	11	4F4879	1	BOLT
	12	5M2894	4	WASHER
C	13	6T0887	1	HARNESS AS.
		7N7780	1	PIN
		7N7779	1	SOCKET
		7N9737	1	HOUSING
		2L8076	2	TERMINAL
BD		5P5623		WIRE (16 GAUGE)
C	14	3T3048	1	CLIP AS.
	15	2P1314	1	CONNECTOR
		3J1907	1	SEAL
	16	3T3848		HOSE AS. 33CM(13 IN.)
	17	8J6875	1	VALVE AS. (SHUTTLE)
C	18	9G4191	1	GROMMET
	19	3T2989	1	COVER AS.
		9F2978	1	NUT (WELD)
C	20	6V6630	2	FILM
C	21	5P9299	2	CLIP
	22	0S0509	1	BOLT
C	23	1S0994	1	CLIP
C	24	8L6557	2	CONNECTOR
	25	9G9287	1	CONTROL AS.
		9G3670	1	HOUSING
C		7N7779	2	SOCKET
C		7N7780	4	PIN
C		9G3695	1	PLUG
C	26	0S1594	2	BOLT
Y	27	7G6364	1	HARNESS AS.
F		6V3368	1	FILM

345992 P

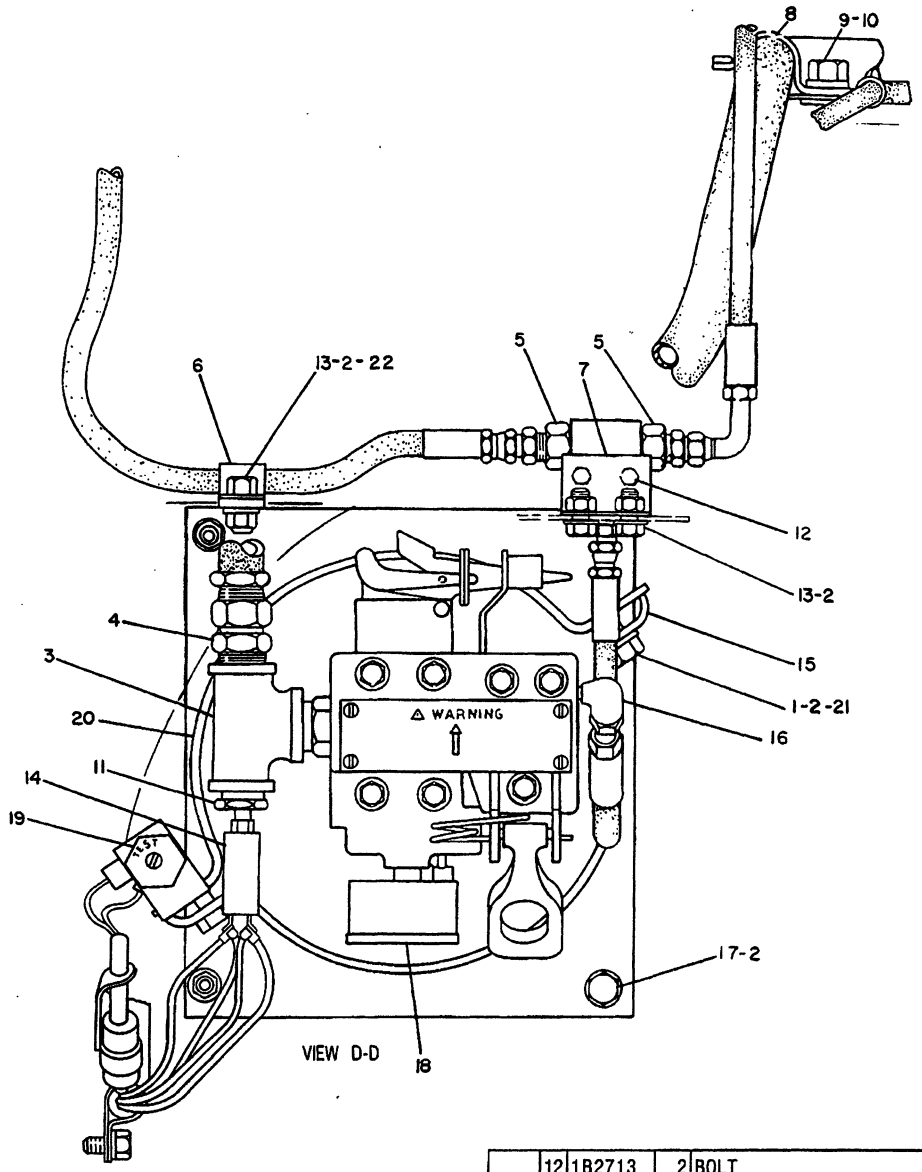

NOTE	REF NO	PART NUMBER	QTY	DESCRIPTION
C	1	0S1594	4	BOLT
C	2	5M2894	9	WASHER
C	3	1L8444	1	TEE
	4	4S6678	1	CONNECTOR
	5	2P1314	2	CONNECTOR
		3J1907	2	SEAL
C	6	5P9299	1	CLIP
	7	3T3849	1	BRACKET
	8	5P7462	1	CLIP
	9	0S1587	1	BOLT
	10	5P8245	1	WASHER
C	11	7B2176	1	BUSHING
	12	1B2713	2	BOLT
		1B4330	2	NUT
		5P0537	2	WASHER
	13	0S0509	3	BOLT
C	14	3T4418	1	SWITCH AS. (PRESSURE)
C		6V8376	2	SCREW
C		9B7233	2	LOCKWASHER
	15	9G1171	2	BRACKET
	16	2N1287	1	ELBOW
C	17	0S1591	2	BOLT
	18	8N9387	1	GAUGE
	19	3T8514	1	SWITCH AS.
C		6V8370	1	NUT
C		6V8363	2	SCREW
C		8F1434	2	LOCKWASHER (SMALL)
C		2H3922	1	LOCKWASHER (LARGE)
	20	9G4241	1	BRACKET AS.
	21	9F2978	4	NUT (WELD)
C	22	1D4717	1	NUT

C INDICATES CHANGE

346167

346167 P

7401

7G1858 SUPPRESSION GP-FIRE-PART 4 OF 4
Type 3. S/N 53Y1-3484
An Attachment

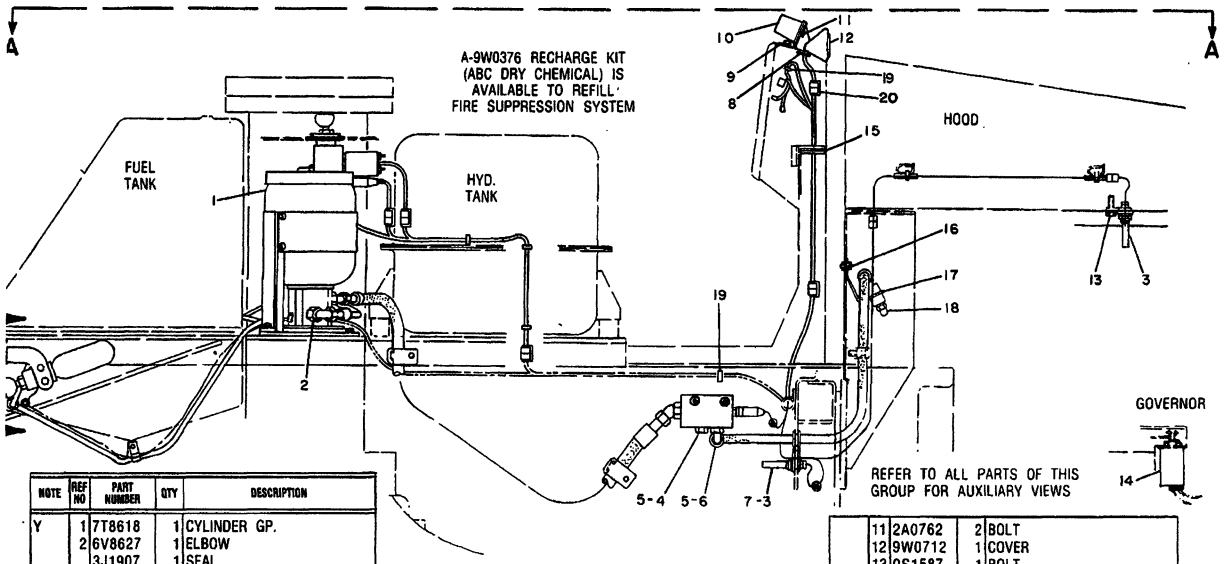

NOTE	REF NO	PART NUMBER	QTY	DESCRIPTION
Y	1	7T8618	1	CYLINDER GP.
	2	6V8627	1	ELBOW
		3J1907	1	SEAL
	3	7T4785	2	SWITCH AS. (FIRE SENSOR) (EACH INCLUDES)
		6V8371	1	NUT
		2H3923	1	LOCKWASHER
		9G3671	1	HOUSING (PLUG)
		7N7779	2	SOCKET
		7N7780	2	PIN
		9G3695	2	PLUG.

C INDICATES CHANGE

	4	9S4185	1	PLUG
	5	3K0360	2	SEAL
	6	6V8625	1	ELBOW
C	7	2D1290	1	GROMMET
	8	9G2673	1	GROMMET
	9	6T8835	1	BRACKET AS.
		9F6445	2	NUT
Y	10	6T5618	1	CONTROL GP.

A NOT PART OF THIS GROUP

	11	2A0762	2	BOLT
	12	9W0712	1	COVER
	13	0S1587	1	BOLT
Y	14	7N9129	1	SHUT-OFF GP.
	15	7T2412	1	GROMMET
	16	0T0102	2	BOLT
		5M2894	2	WASHER
	17	7T4451	1	PLATE AS.
	18	6T7677	1	NOZZLE
C	19	3S2093	2	STRAP
C	20	9G3658	1	CLIP

Y SEPARATE ILLUSTRATION

350689

350689 P

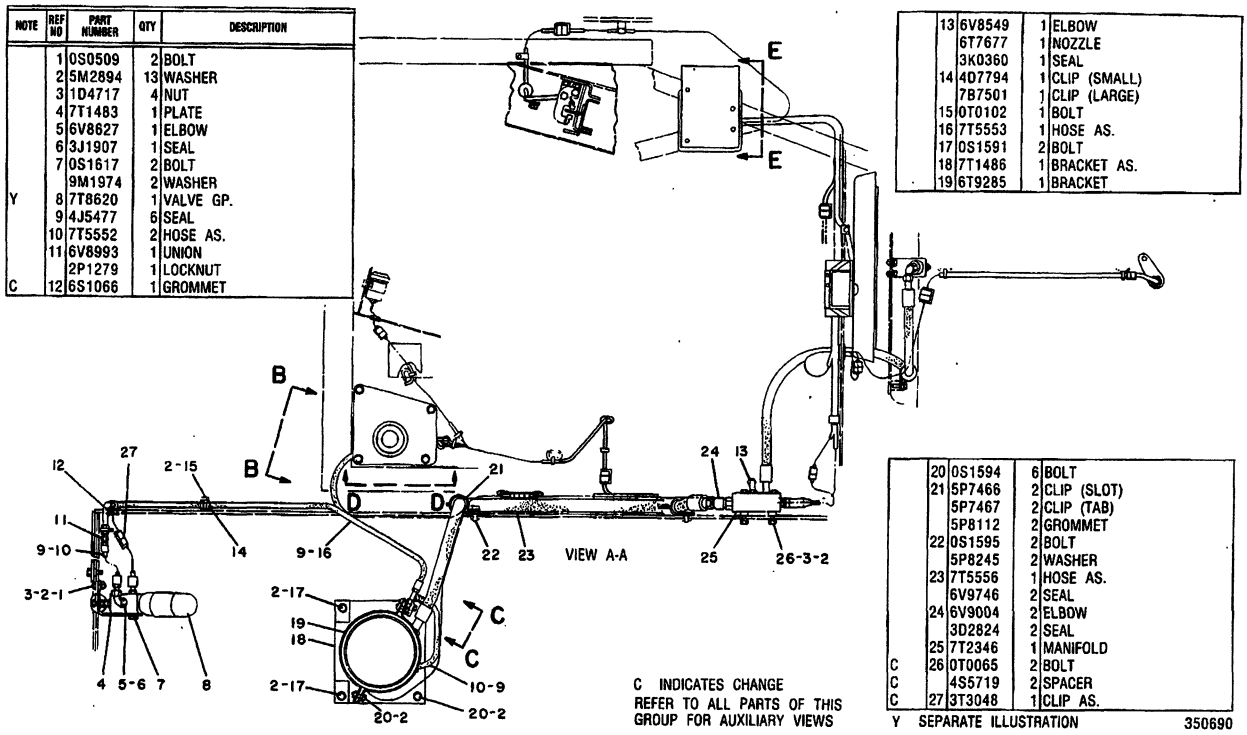

NOTE	REF NO	PART NUMBER	QTY	DESCRIPTION
	1	0S0509	2	BOLT
	2	5M2894	13	WASHER
	3	1D4717	4	NUT
	4	7T1483	1	PLATE
	5	6V8627	1	ELBOW
	6	3J1907	1	SEAL
	7	0S1617	2	BOLT
		9M1974	2	WASHER
Y	8	7T8620	1	VALVE GP.
	9	4J5477	6	SEAL
	10	7T5552	2	HOSE AS.
	11	6V8993	1	UNION
		2P1279	1	LOCKNUT
C	12	6S1066	1	GROMMET

	13	6V8549	1	ELBOW
		6T7677	1	NOZZLE
		3K0360	1	SEAL
	14	4D7794	1	CLIP (SMALL)
		7B7501	1	CLIP (LARGE)
	15	0T0102	1	BOLT
	16	7T5553	1	HOSE AS.
	17	0S1591	2	BOLT
	18	7T1486	1	BRACKET AS.
	19	6T9285	1	BRACKET

	20	0S1594	6	BOLT
	21	5P7466	2	CLIP (SLOT)
		5P7467	2	CLIP (TAB)
		5P8112	2	GROMMET
	22	0S1595	2	BOLT
		5P8245	2	WASHER
	23	7T5556	1	HOSE AS.
		6V9746	2	SEAL
	24	6V9004	2	ELBOW
		3D2824	2	SEAL
	25	7T2346	1	MANIFOLD
C	26	0T0065	2	BOLT
C		4S5719	2	SPACER
C	27	3T3048	1	CLIP AS.

C INDICATES CHANGE
REFER TO ALL PARTS OF THIS GROUP FOR AUXILIARY VIEWS

Y SEPARATE ILLUSTRATION

350690

350690 P

7401 **7T4695 SUPPRESSION AR-FIRE-PART 2 OF 4**

Type 1. S/N 53Y3485-Up
7T8620-Page 346C
An Attachment

CAB, GAUGES AND ACCESSORIES

NOTE	REF NO	PART NUMBER	QTY	DESCRIPTION
	1	7T5554	1	HOSE AS.
		4J5477	2	SEAL
	2	8T3629	1	PLATE
	3	4B4158	4	SCREW
	4	2A0762	2	BOLT
		9S8750	2	NUT
		5P0537	2	WASHER
	5	3S2093	8	STRAP
	6	8T3631	1	FILM (INSTRUCTION)
	7	5F9757	1	GROMMET
Y	8	9G9813	1	ALARM GP.
	9	7T5568	1	HARNESS AS.
	10	9G2673	1	GROMMET
	11	7T5555	1	HOSE AS.
		6V8398	2	SEAL
	12	8S7583	1	GROMMET
	13	5P7464	1	CLIP (SLOT)
		5P7465	1	CLIP (TAB)
		6V1249	1	GROMMET
	14	0S1595	1	BOLT
		5P8245	1	WASHER
	15	7T5570	1	HARNESS AS.
	16	7T3712	1	PLATE
	17	3J1907	1	SEAL
	18	7T4371	1	SWITCH AS. (DISCHARGE DETECTION)
BD		8T5677		SLEEVE
		7N8205	1	HOUSING
		7N7780	2	PIN
		7N7779	2	SOCKET
	19	6V8625	1	ELBOW
		3K0360	1	SEAL
	20	9M4972	3	CLIP
	21	7T8629	1	HARNESS AS.
	22	7T5569	1	HARNESS AS.
	23	7T5095	1	BRACKET AS.
	24	4D7794	3	CLIP
	25	7T5094	1	BRACKET AS.

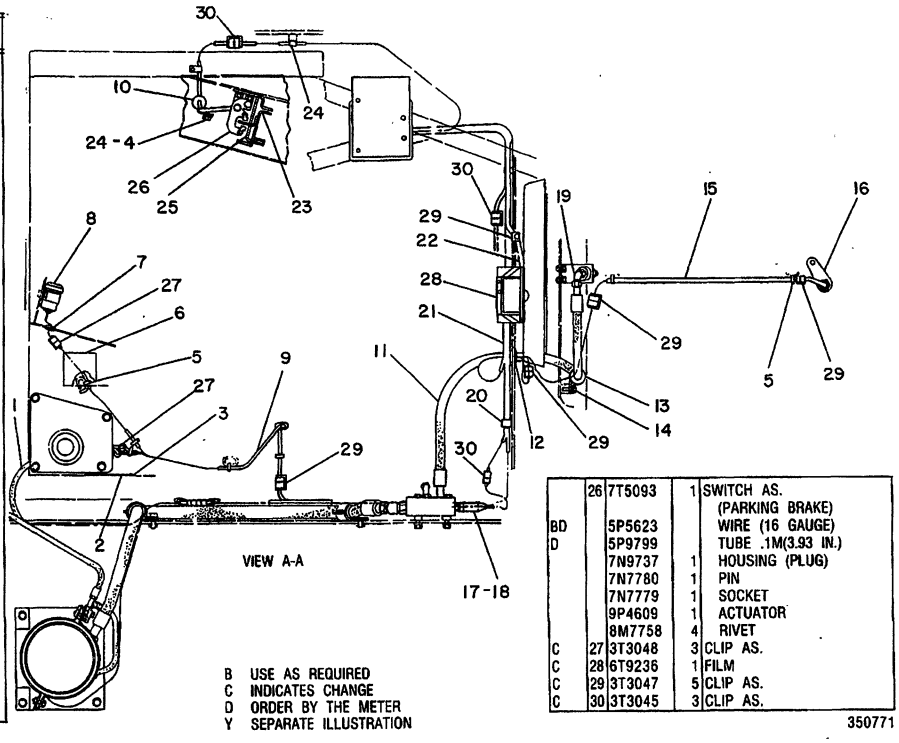

	26	7T5093	1	SWITCH AS. (PARKING BRAKE)
BD		5P5623		WIRE (16 GAUGE)
D		5P9799		TUBE .1M(3.93 IN.)
		7N9737	1	HOUSING (PLUG)
		7N7780	1	PIN
		7N7779	1	SOCKET
		9P4609	1	ACTUATOR
		8M7758	4	RIVET
C	27	3T3048	3	CLIP AS.
C	28	6T9236	1	FILM
C	29	3T3047	5	CLIP AS.
C	30	3T3045	3	CLIP AS.

B USE AS REQUIRED
C INDICATES CHANGE
D ORDER BY THE METER
Y SEPARATE ILLUSTRATION

350771

350771 P

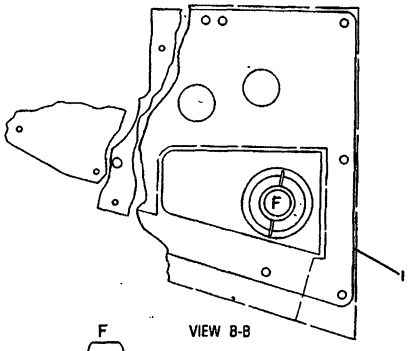

VIEW B-B

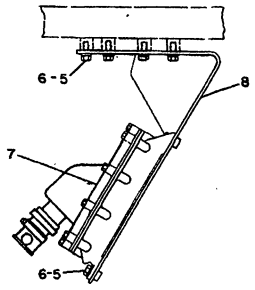

VIEW E-E

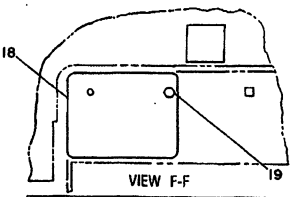

VIEW F-F

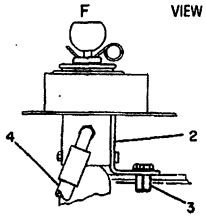

OPTIONAL MOUNTING

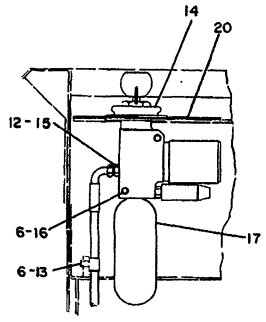

VIEW D-D

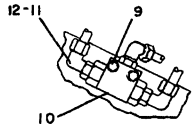

VIEW C-C

B USE AS REQUIRED
C INDICATES CHANGE
F NOT SHOWN
Y SEPARATE ILLUSTRATION

NOTE	REF NO	PART NUMBER	QTY	DESCRIPTION
B	1	7T8550	1	COVER AS.
B	2	7T8546	1	BRACKET AS.
B	3	0S1588	2	BOLT
B		5M2894	2	WASHER
B	4	7T5553	1	HOSE AS.
	5	0L1351	8	BOLT
	6	5M2894	11	WASHER
Y	7	6T5619	1	CONTROL GP.
	8	7T9139	1	BRACKET AS.
	9	1B2713	2	BOLT
		5P0537	2	WASHER
	10	8J6875	1	VALVE AS. (SHUTTLE)
	11	6V8627	3	ELBOW
	12	3J1907	4	SEAL
	13	0S0509	1	BOLT
		7B7501	1	CLIP
	14	7T0148	1	BOOT
	15	6V8641	1	CONNECTOR
	16	0L1352	2	BOLT
Y	17	7T8619	1	VALVE GP.
C	18	9W3718	1	PLATE
C	19	2B0947	1	BOLT
C		2V8974	1	SPACER
C		5P8245	1	WASHER
C	20	9W0183	1	COVER
F		8T3630	1	FILM (INSTRUCTION) (MOUNTED ON FUEL TANK)

350772

350772 P

7T4695 SUPPRESSION AR-FIRE-PART 4 OF 4
Type 1. S/N 53Y3485-Up
6T5619-Page 100C,7T8619-Page 346B
An Attachment

CAB, GAUGES AND ACCESSORIES

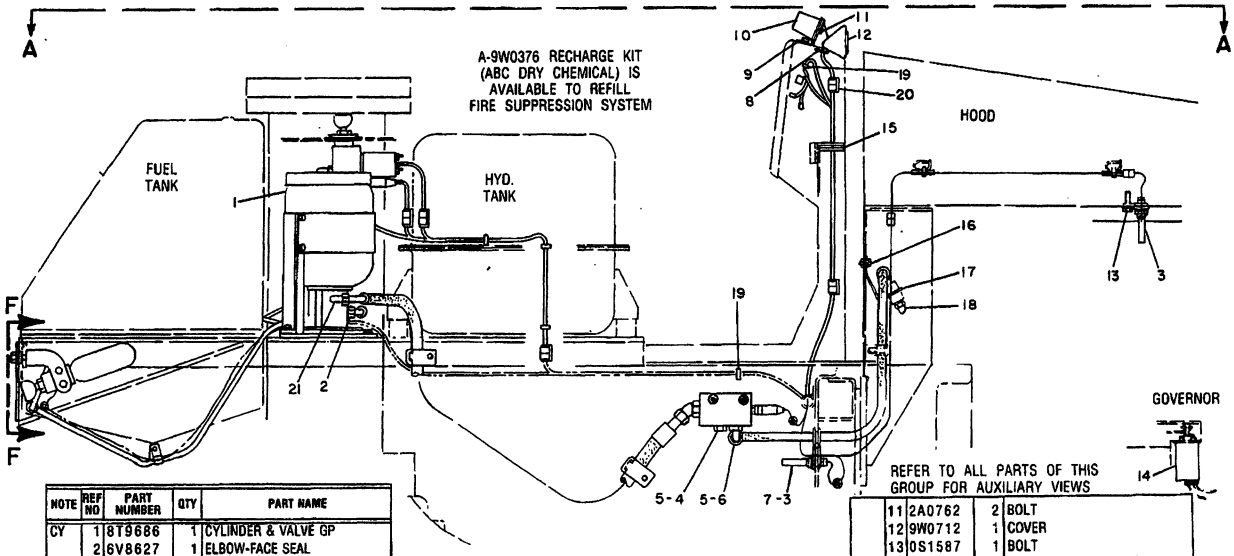

NOTE	REF NO	PART NUMBER	QTY	PART NAME
CY	1	8T9686	1	CYLINDER & VALVE GP
	2	6V8627	1	ELBOW-FACE SEAL
		3J1907	1	SEAL
	3	7T4785	2	SWITCH AS-SENSOR (FIRE) (EACH INCLUDES)
		6V8371	1	NUT-HEXAGON
		2H3923	1	LOCKWASHER
		9G3671	1	HOUSING-PLUG
		7N7779	2	SOCKET-CONNECTOR
		7N7780	2	PIN-CONNECTOR
		9G3695	2	PLUG-SEALING

C INDICATES CHANGE

	4	9S4185	1	PLUG-O-RING
	5	3K0360	2	SEAL
	6	6V8625	1	ELBOW-FACE SEAL
	7	2D1290	1	GROMMET
	8	9G2673	1	GROMMET
	9	6T8835	1	BRACKET AS
		9F6445	2	NUT
Y	10	6T5618	1	CONTROL GP-ELECTRONIC

A NOT PART OF THIS GROUP

REFER TO ALL PARTS OF THIS GROUP FOR AUXILIARY VIEWS

	11	2A0762	2	BOLT
	12	9W0712	1	COVER
	13	0S1587	1	BOLT
Y	14	7N9129	1	SHUTOFF GP-SOLENOID
	15	7T2412	1	GROMMET
	16	0T0102	2	BOLT
		5M2894	2	WASHER
	17	7T4451	1	PLATE AS
	18	6T7677	1	NOZZLE
	19	3S2093	2	STRAP-CABLE
	20	9G3658	1	CLIP
C	21	6V9007	1	ELBOW-90 DEGREE

Y SEPARATE ILLUSTRATION

401149

401149 P

7401

7T4695 SUPPRESSION AR-FIRE-PART 1 OF 4

Type 2. S/N 53Y3485-Up

6T5618-Page 100C,7N9129-Page 346,8T9686-Page 346.02

An Attachment

NOTE	REF NO	PART NUMBER	QTY	PART NAME
C	1	0S1621	2	BOLT
C	2	5M2894	11	WASHER
C	3	1D4717	2	NUT-FULL
C	4	9W4322	1	PLATE AS
	5	6V8627	1	ELBOW-FACE SEAL
	6	3J1907	1	SEAL
	7	0S1617	2	BOLT
		9M1974	2	WASHER
Y	8	7T8620	1	VALVE GP
	9	4J5477	6	SEAL-O RING
C	10	7T5552	1	HOSE AS
	11	6V8993	1	UNION-BULKHEAD
		2P1279	1	LOCKNUT-BULKHEAD
	12	6S1066	1	GROMMET

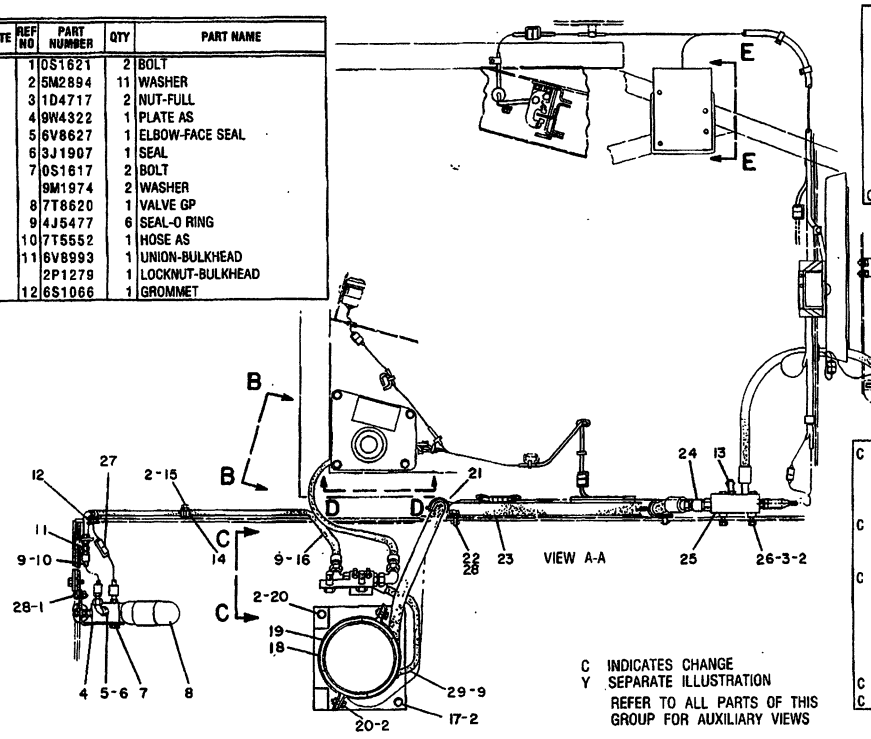

C INDICATES CHANGE
Y SEPARATE ILLUSTRATION
REFER TO ALL PARTS OF THIS GROUP FOR AUXILIARY VIEWS

	13	6V8549	1	ELBOW
		6T7677	1	NOZZLE
		3K0360	1	SEAL
	14	4D7794	1	CLIP (SMALL)
		7B7501	1	CLIP (LARGE)
	15	0T0102	1	BOLT
	16	7T5553	1	HOSE AS
	17	0S1591	2	BOLT
	18	7T1486	1	BRACKET AS
	19	6T9285	1	BRACKET
C		9W6154	2	PAD

C	20	0S1594	5	BOLT
	21	5P7466	2	CLIP (SLOT)
		5P7467	2	CLIP (TAB)
		5P8112	2	GROMMET
C	22	0S1585	2	BOLT
	23	7T5556	1	HOSE AS
		6V9746	2	SEAL
C	24	6V9004	1	ELBOW-SEAL
		3D2824	2	SEAL
	25	7T2346	1	MANIFOLD
	26	0T0065	2	BOLT
		4S5719	2	SPACER
	27	3T3048	1	CLIP AS
C	28	5P8245	4	WASHER
C	29	7T1159	1	HOSE AS

355846

355846 P

7401

7T4695 SUPPRESSION AR-FIRE-PART 2 OF 4
Type 2. S/N 53Y3485-Up
7T8620-Page 346C
An Attachment

NOTE	REF NO	PART NUMBER	QTY	PART NAME
	1	7T5554	1	HOSE AS
		4J5477	2	SEAL-O RING
	2	8T3629	1	PLATE-WARNING
	3	4B4158	4	SCREW-DRIVE
	4	2A0762	2	BOLT
		9S8750	2	NUT-FULL
		5P0537	2	WASHER-HARD
C	5	3S2093	11	STRAP-CABLE
C	6	8T7589	1	FILM-INSTRUCTION
C	7	2D0388	1	GROMMET
Y	8	9G9813	1	ALARM GP-FAULT
	9	7T5568	1	HARNESS AS-SUPPRESSION
	10	9G2673	1	GROMMET
	11	7T5555	1	HOSE AS
		6V8398	2	SEAL
	12	8S7583	1	GROMMET
	13	5P7464	1	CLIP (SLOT)
		5P7465	1	CLIP (TAB)
		6V1249	1	GROMMET
	14	0S1595	1	BOLT
		5P8245	1	WASHER
	15	7T5570	1	HARNESS AS-SUPPRESSION
	16	7T3712	1	PLATE
	17	3J1907	1	SEAL
	18	7T4371	1	SWITCH AS-PRESSURE (DISCHARGE DETECTION)
BD		8T5677		SLEEVE
		7N8205	1	HOUSING-PLUG
		7N7780	2	PIN-CONNECTOR
		7N7779	2	SOCKET-CONNECTOR
	19	6V8625	1	ELBOW-FACE SEAL
		3K0360	1	SEAL
	20	9M4972	3	CLIP
	21	7T8629	1	HARNESS AS-SUPPRESSION
	22	7T5569	1	HARNESS AS-SUPPRESSION
	23	7T5095	1	BRACKET AS
	24	4D7794	3	CLIP
	25	7T5094	1	BRACKET AS

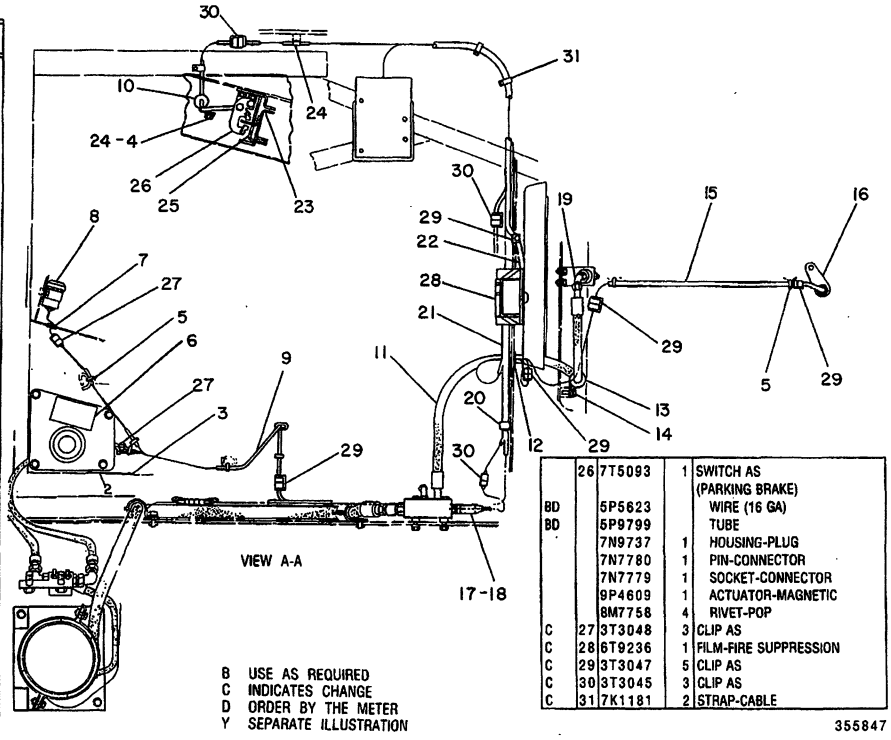

	26	7T5093	1	SWITCH AS (PARKING BRAKE)
BD		5P5623		WIRE (16 GA)
BD		5P9799		TUBE
		7N9737	1	HOUSING-PLUG
		7N7780	1	PIN-CONNECTOR
		7N7779	1	SOCKET-CONNECTOR
		9P4609	1	ACTUATOR-MAGNETIC
		8M7758	4	RIVET-POP
C	27	3T3048	3	CLIP AS
C	28	6T9236	1	FILM-FIRE SUPPRESSION
C	29	3T3047	5	CLIP AS
C	30	3T3045	3	CLIP AS
C	31	7K1181	2	STRAP-CABLE

B USE AS REQUIRED
C INDICATES CHANGE
D ORDER BY THE METER
Y SEPARATE ILLUSTRATION

355847

355847 P

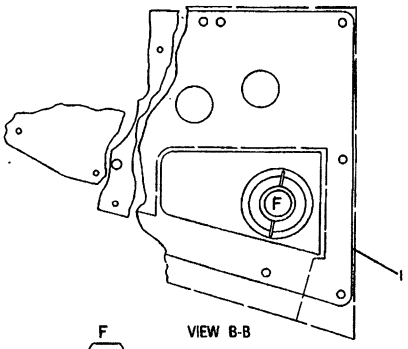

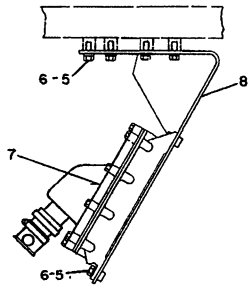

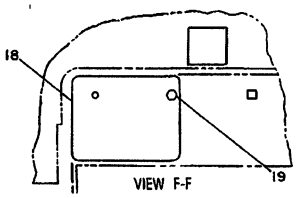

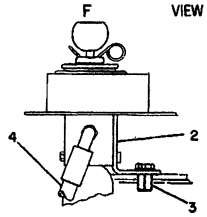

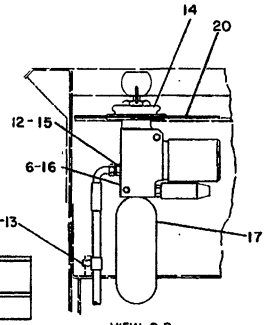

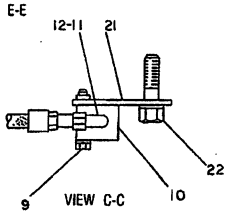

NOTE	REF NO	PART NUMBER	QTY	DESCRIPTION
B	1	7T8550	1	COVER AS.

B USE AS REQUIRED
C INDICATES CHANGE
F NOT SHOWN
Y SEPARATE ILLUSTRATION

B	2	7T8546	1	BRACKET AS.
B	3	0S1588	2	BOLT
B		5M2894	2	WASHER
B	4	7T5553	1	HOSE AS.
	5	0L1351	8	BOLT
	6	5M2894	11	WASHER
Y	7	6T5619	1	CONTROL GP.
	8	7T9139	1	BRACKET AS.
	9	1B2713	2	BOLT
		5P0537	2	WASHER
	10	8J6875	1	VALVE AS. (SHUTTLE)
	11	6V8627	3	ELBOW
	12	3J1907	4	SEAL
	13	0S0509	1	BOLT
		7B7501	1	CLIP
	14	7T0148	1	BOOT
	15	6V8641	1	CONNECTOR
	16	0L1352	2	BOLT
Y	17	7T8619	1	VALVE GP.
	18	9W3718	1	PLATE
	19	2B0947	1	BOLT
		2V8974	1	SPACER
		5P8245	1	WASHER
	20	9W0183	1	COVER
C	21	9W4323	1	PLATE AS.
C	22	1A1460	2	BOLT
F		8T3630	1	FILM (INSTRUCTION) (MOUNTED ON FUEL TANK)

351980

351980 P

CAB, GAUGES AND ACCESSORIES

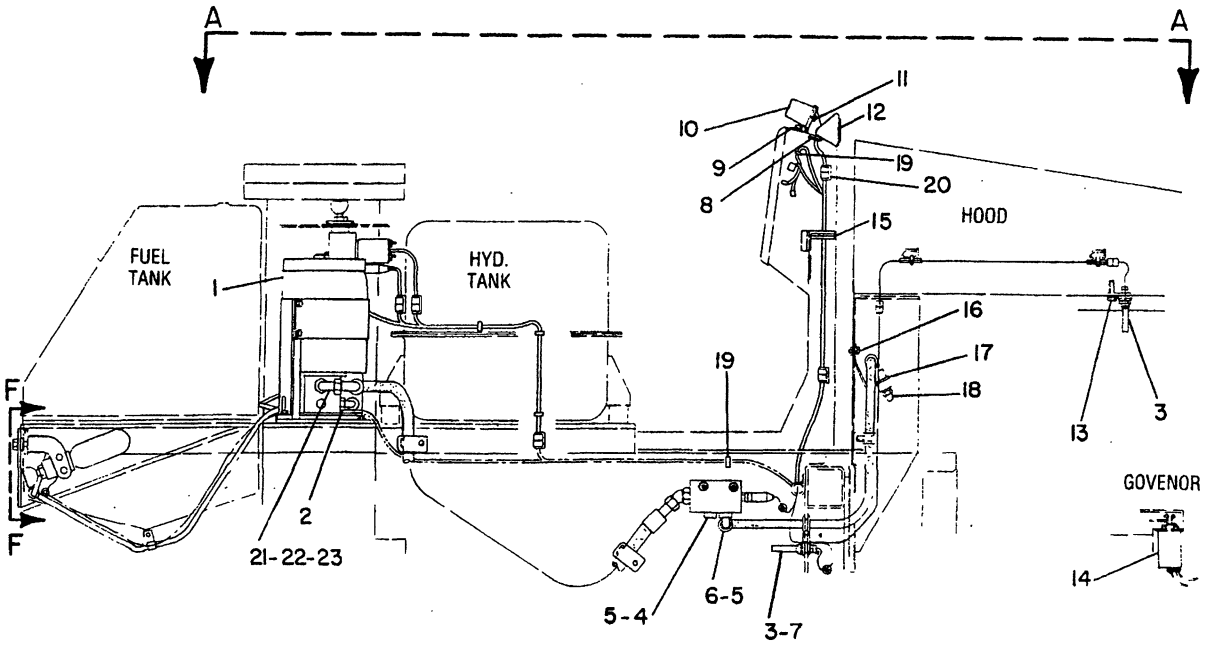

RIGHT SIDE VIEW

REFER TO ALL ILLUSTRATIONS OF THIS GROUP FOR AUXILIARY VIEWS

NOTE	REF NO	PART NUMBER	QTY	PART NAME	NOTE	REF NO	PART NUMBER	QTY	PART NAME
CY	1	8C4593	1	VALVE & CYLINDER GP		16	0T0102	2	BOLT
C	2	6V8724	1	ELBOW			5M2894	2	WASHER
		3J1907	1	SEAL-O-RING		17	7T4451	1	PLATE AS
	3	7T4785	2	SWITCH AS-FIRE SENSOR (FIRE)		18	6T7677	1	NOZZLE
						19	3S2093	2	STRAP-CABLE
				(EACH INCLUDES)		20	9G3658	1	CLIP
		6V8371	1	NUT-HEX	C	21	6V9853	1	ELBOW-SWIVEL
		2H3923	1	LOCKWASHER	C	22	6V9746	1	SEAL-O-RING
		9G3671	1	HOUSING-PLUG	C	23	8C8417	1	CONNECTOR
		7N7779	2	SOCKET					
		7N7780	2	PIN-CONNECTOR					THE FOLLOWING RECHARGE
		9G3695	2	PLUG-SEAL					KIT IS AVAILABLE:
	4	9S4185	1	PLUG-O-RING			9W0376	1	KIT-RECHARGE
	5	3K0360	2	SEAL-O-RING					(INCLUDES)
	6	6V8625	1	ELBOW-FACE SEAL					SEALS,PLUG AS.,
	7	2D1290	1	GROMMET					DISC AS.,PIN,& AGENT
	8	9G2673	1	GROMMET					
	9	6T8835	1	BRACKET AS					
		9F6445	2	NUT					
Y	10	6T5618	1	CONTROL GP-ELECTRONIC					
	11	2A0762	2	BOLT					
	12	9W0712	1	COVER					
	13	0S1587	1	BOLT					
Y	14	7N9129	1	SHUTOFF GP-ELECTRICAL					
	15	7T2412	1	GROMMET					

C-CHANGE FROM PREVIOUS TYPE
Y-SEPARATE ILLUSTRATION

V-451423 P

7401 **7T4695 SUPPRESSION GP-FIRE-HALON 2402-PART 1 OF 4**

Type 3. S/N 53Y3485-Up

6T5618-Page 100C,7N9129-Page 346,8C4593-Page 346.06

An Attachment

CAB, GAUGES AND ACCESSORIES

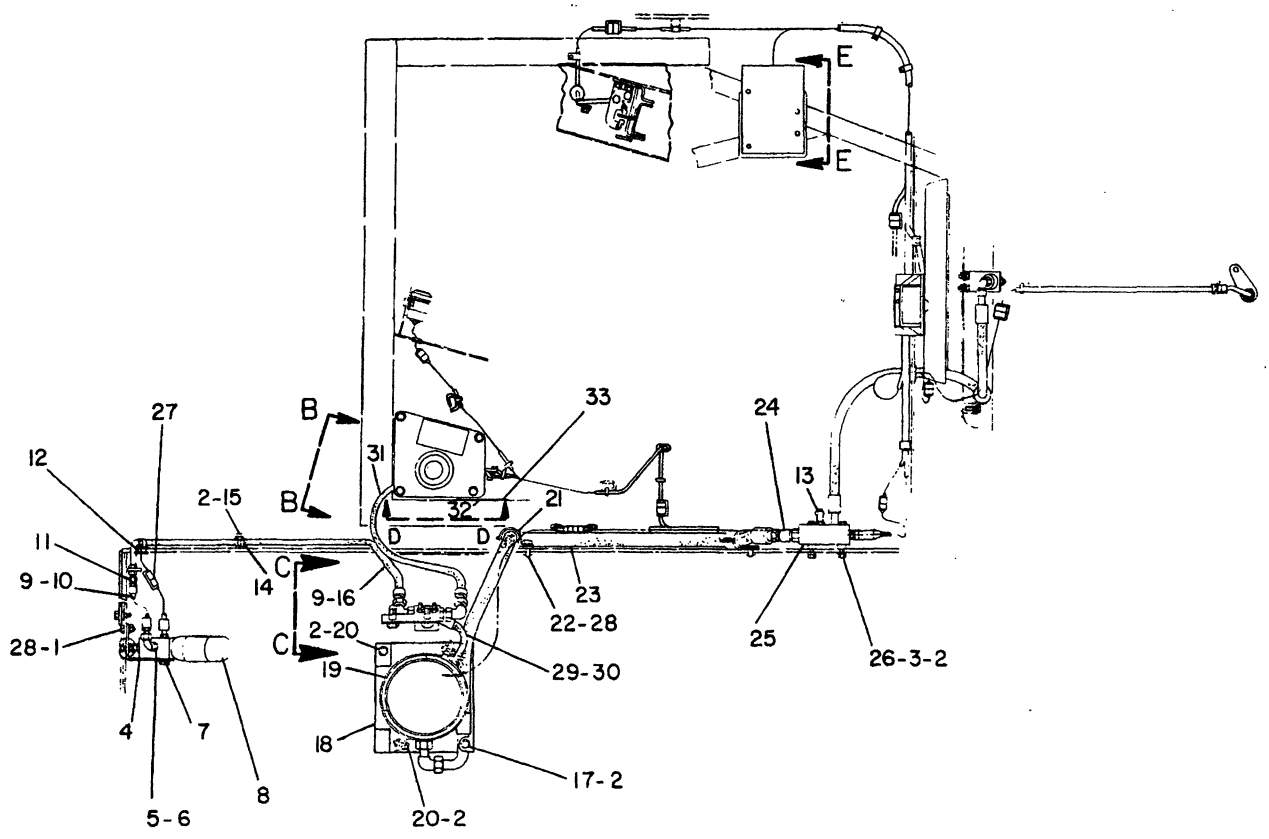

TOP VIEW

REFER TO ALL ILLUSTRATIONS OF THIS GROUP FOR AUXILIARY VIEWS

NOTE	REF NO	PART NUMBER	QTY	PART NAME	NOTE	REF NO	PART NUMBER	QTY	PART NAME
	1	0S1621	2	BOLT		18	7T1486	1	BRACKET AS
	2	5M2894	11	WASHER			7V5793	1	BAR
	3	1D4717	2	NUT		19	6T9285	1	BRACKET
	4	9W4322	1	PLATE AS			9W6154	2	PAD
		1F0748	2	NUT		20	0S1594	5	BOLT
		7T1483	1	PLATE		21	5P7466	2	CLIP (SLOT)
	5	6V8627	1	ELBOW			5P7467	2	CLIP (TAB)
	6	3J1907	1	SEAL-O-RING			5P8112	2	GROMMET
	7	0S1617	2	BOLT		22	0S1585	2	BOLT
		9M1974	2	WASHER-HARD	C	23	6Y0054	1	HOSE AS
CY	8	7T8620	1	VALVE GP-ACTUATOR			6V9746	2	SEAL-O-RING
				RELEASE		24	6V9004	1	ELBOW-SEAL
C	9	4J5477	4	SEAL-O-RING			3D2824	2	SEAL-O-RING
	10	7T5552	1	HOSE AS		25	7T2346	1	MANIFOLD
	11	6V8993	1	UNION		26	0T0065	2	BOLT
		2P1279	1	LOCKNUT			4S5719	2	SPACER
	12	6S1066	1	GROMMET		27	3T3048	1	CLIP AS
	13	6V8549	1	ELBOW		28	5P8245	4	WASHER
		6T7677	1	NOZZLE	C	29	6Y0594	1	HOSE AS
		3K0360	1	SEAL-O-RING	C	30	6V8397	2	SEAL-O-RING
	14	4D7794	1	CLIP (SMALL)		31	7T5554	1	HOSE AS
		7B7501	1	CLIP (LARGE)			4J5477	2	SEAL-O-RING
	15	0T0102	1	BOLT		32	8T3629	1	PLATE-WARNING
	16	7T5553	1	HOSE AS		33	4B4158	4	SCREW
	17	0S1591	2	BOLT					

C-CHANGE FROM PREVIOUS TYPE
Y-SEPARATE ILLUSTRATION

V- 451424 P

7401 **7T4695 SUPPRESSION GP-FIRE-HALON 2402-PART 2 OF 4**

Type 3. S/N 53Y3485-Up
7T8620-Page 346C
An Attachment

CAB, GAUGES AND ACCESSORIES

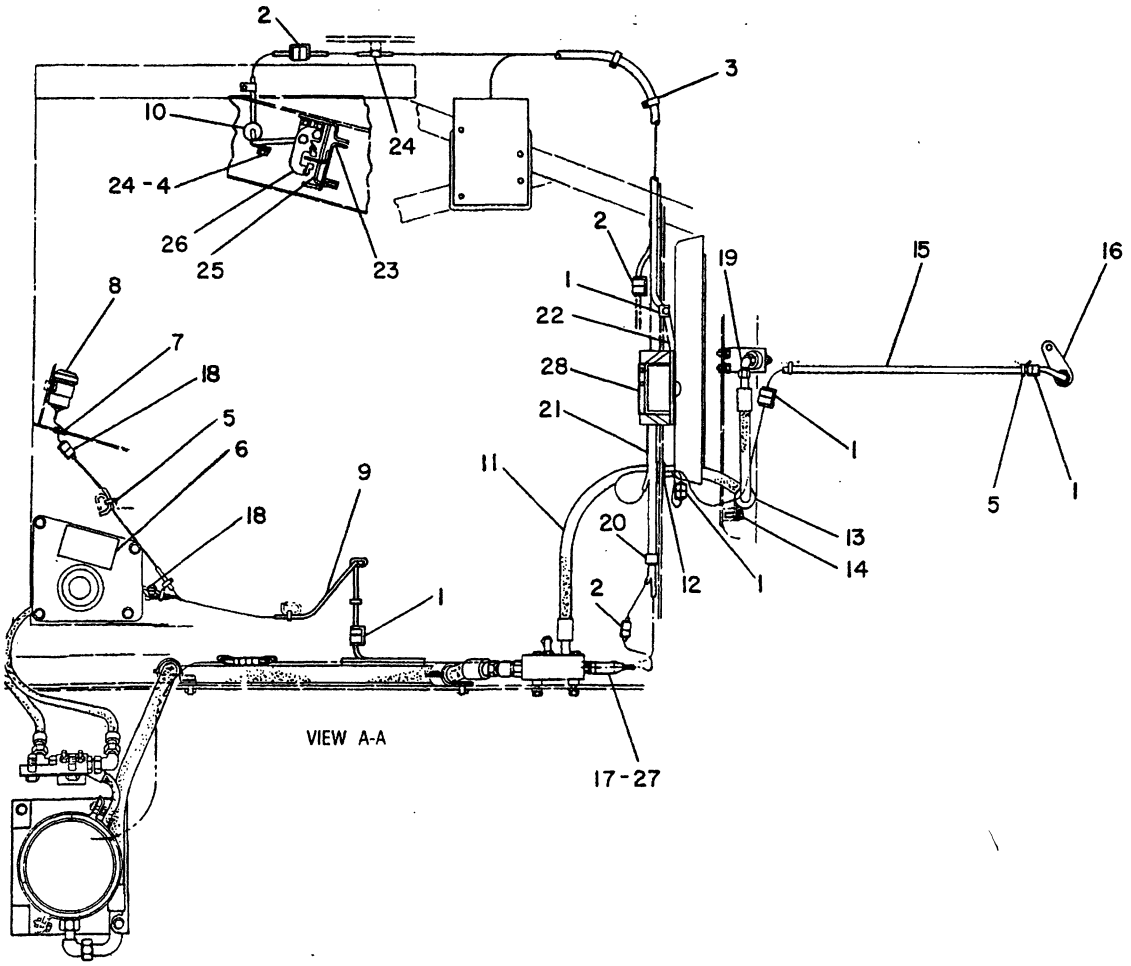

NOTE	REF NO	PART NUMBER	QTY	PART NAME	NOTE	REF NO	PART NUMBER	QTY	PART NAME
	1	3T3047	5	CLIP AS			3K0360	1	SEAL-O-RING
	2	3T3045	3	CLIP AS		20	9M4972	3	CLIP
	3	7K1181	2	STRAP-CABLE		21	7T8629	1	HARNESS AS-SUPPRESSION
	4	2A0762	2	BOLT		22	7T5569	1	HARNESS AS-SUPPRESSION
		9S8750	2	NUT-FULL		23	7T5095	1	BRACKET AS
		5P0537	2	WASHER		24	4D7794	3	CLIP
	5	3S2093	11	STRAP-CABLE		25	7T5094	1	BRACKET AS
	6	8T7589	1	FILM-INSTRUCTION		26	7T5093	1	SWITCH AS (PARKING BRAKE)
	7	2D0388	1	GROMMET					
Y	8	9G9813	1	ALARM GP	C		3S2093	5	STRAP-CABLE
	9	7T5568	1	HARNESS AS-SUPPRESSION	C		9G3695	1	PLUG-SEAL
	10	9G2673	1	GROMMET	C		7N7782	1	HOUSING-PLUG
	11	7T5555	1	HOSE AS			7N7780	1	PIN-CONNECTOR
		6V8398	2	SEAL-O-RING			7N7779	1	SOCKET
	12	8S7583	1	GROMMET			9P4609	1	ACTUATOR-MAGNETIC
	13	5P7464	1	CLIP (SLOT)			8M7758	4	RIVET-POP
		5P7465	1	CLIP (TAB)		27	7T4371	1	SWITCH AS (DISCHARGE DETECTION)
		6V1249	1	GROMMET					
	14	0S1595	1	BOLT	BD		8T5677		SLEEVE
		5P8245	1	WASHER			7N8205	1	HOUSING-PLUG
	15	7T5570	1	HARNESS AS-SUPPRESSION			7N7780	2	PIN-CONNECTOR
	16	7T3712	1	PLATE			7N7779	2	SOCKET
	17	3J1907	1	SEAL-O-RING		28	6T9236	1	FILM-FIRE SUPPRESSION
	18	3T3048	3	CLIP AS					
	19	6V8625	1	ELBOW-FACE SEAL					

B-USE AS REQUIRED
C-CHANGE FROM PREVIOUS TYPE
D-ORDER BY THE METER

Y-SEPARATE ILLUSTRATION

V-451425 P

7401 **7T4695 SUPPRESSION GP-FIRE-HALON 2402-PART 3 OF 4**

Type 3. S/N 53Y3485-Up
9G9813-Page 100A
An Attachment

CAB, GAUGES AND ACCESSORIES

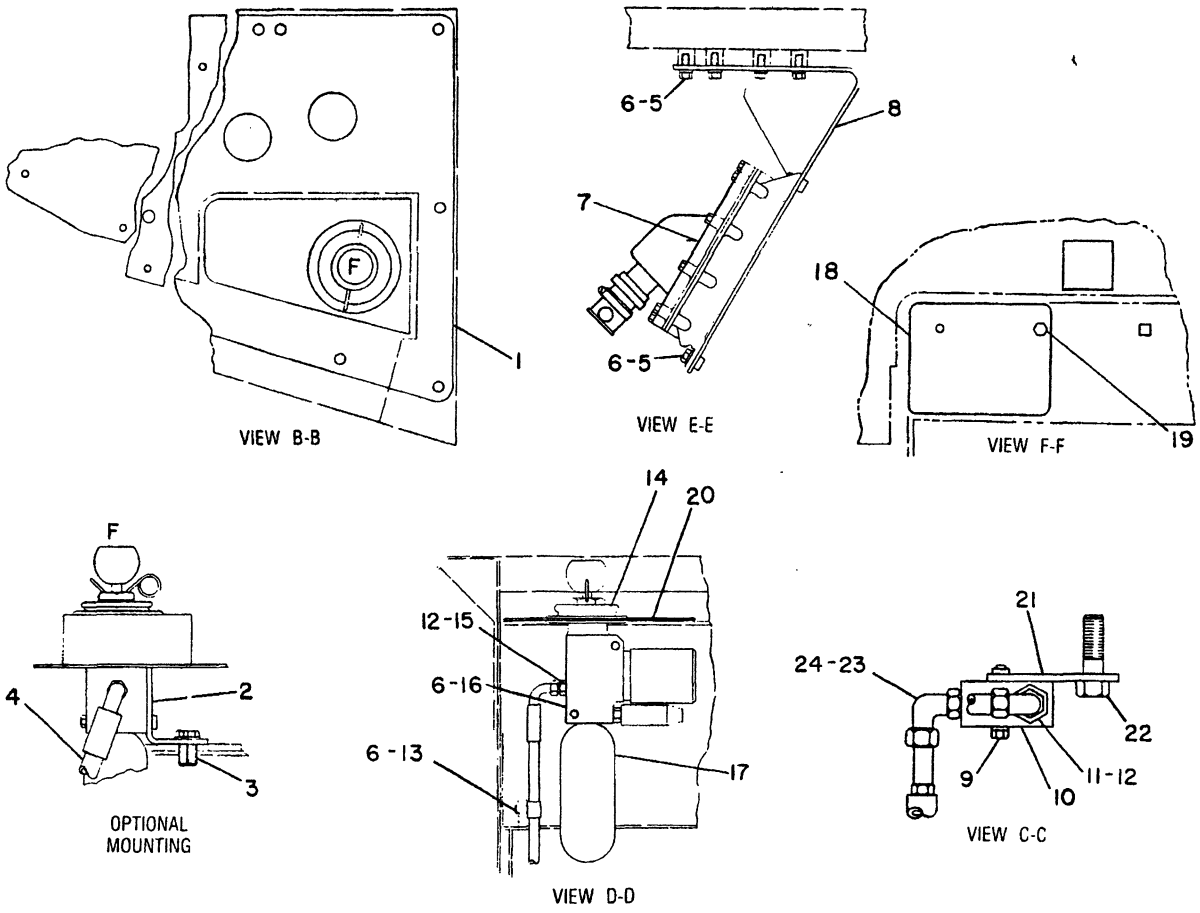

NOTE	REF NO	PART NUMBER	QTY	PART NAME	NOTE	REF NO	PART NUMBER	QTY	PART NAME
B	1	7T8550	1	COVER AS		21	9W4323	1	PLATE AS
B	2	7T8546	1	BRACKET AS		22	1A1460	2	BOLT
B	3	0S1588	2	BOLT	C	23	6V8723	1	ELBOW
B		5M2894	2	WASHER	C	24	3K0360	1	SEAL-O-RING
B	4	7T5553	1	HOSE AS					
	5	0L1351	8	BOLT					
	6	5M2894	11	WASHER	F		8T3630	1	FILM-INSTRUCTION (MOUNTED ON FUEL TANK)
YR	7	6T5619	1	CONTROL GP-ELECTRONIC					
	8	7T9139	1	BRACKET AS					
	9	1B2713	2	BOLT					
		5P0537	2	WASHER					
C	10	8C5915	1	VALVE AS					
C	11	6V8627	2	ELBOW					
C	12	3J1907	3	SEAL-O-RING					
	13	0S0509	1	BOLT					
		7B7501	1	CLIP					
	14	7T0148	1	BOOT					
	15	6V8641	1	CONNECTOR-SEAL					
	16	0L1352	2	BOLT					
Y	17	7T8619	1	VALVE GP-ACTUATOR RELEASE					
	18	9W3718	1	PLATE					
	19	2B0947	1	BOLT					
		2V8974	1	SPACER					
		5P8245	1	WASHER					
	20	9W0183	1	COVER					

B-USE AS REQUIRED
C-CHANGE FROM PREVIOUS TYPE
F-NOT SHOWN
R-REMFG PART MAY BE AVAILABLE
Y-SEPARATE ILLUSTRATION

V- 451426 P

7401 7T4695 SUPPRESSION GP-FIRE-HALON 2402-PART 4 OF 4

Type 3. S/N 53Y3485-Up
6T5619-Page 100C,7T8619-Page 346B
An Attachment

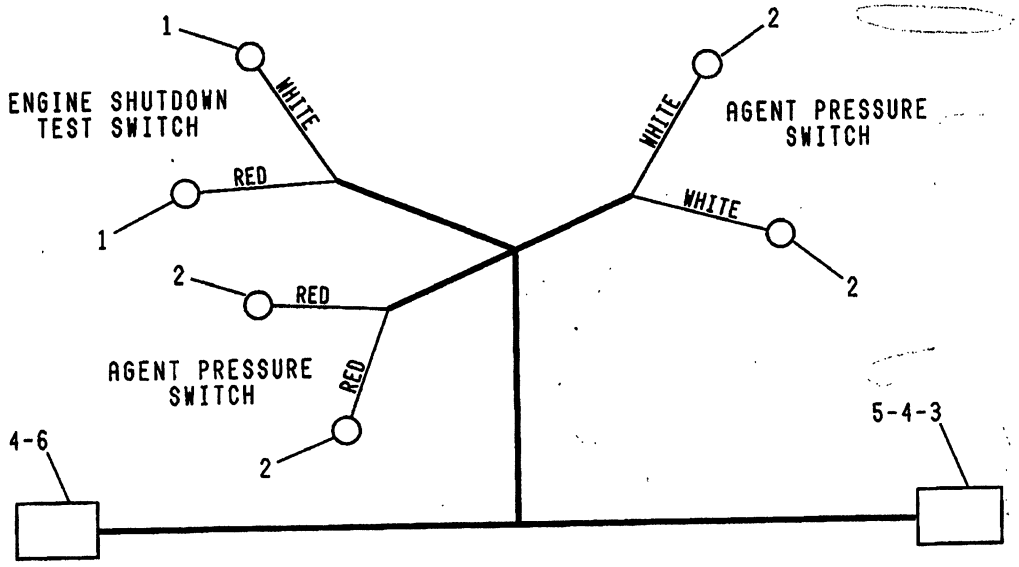

REF. NO.	PART NUMBER	DESCRIPTION	QTY.
1	2L8076	TERMINAL----------	2
2	2L8075	TERMINAL----------	4
3	9G3676	HOUSING----------	1

▲ ORDER BY THE METER

4	7N7779	SOCKET----------	5
	7N7780	PIN----------	4
5	9G3695	PLUG----------	2
6	7N8204	HOUSING----------	1
	THE FOLLOWING WIRES ARE AVAILABLE:		
▲	5P5624	WIRE----------(14 gauge)	
▲	5P5623	WIRE----------(16 gauge)	

235241

A-235248 P

7401

7G6364 HARNESS AS

Type 1

Part Of 3T1338,7G1858 Fire Suppression An Attachment

CAB, GAUGES AND ACCESSORIES

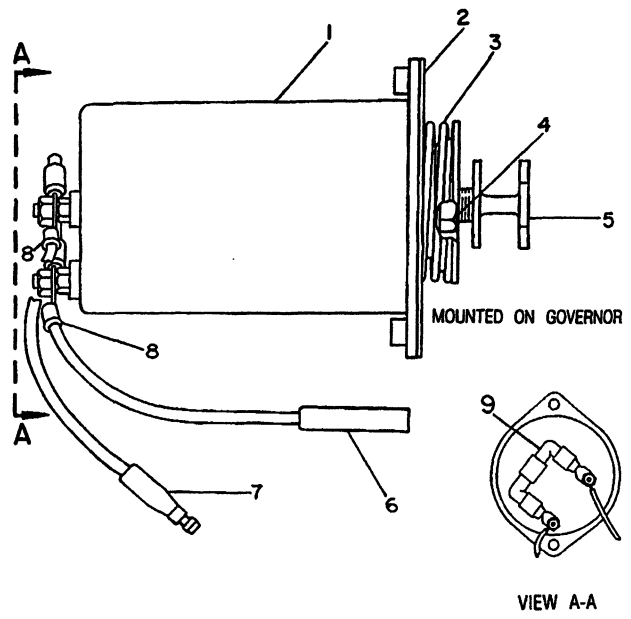

VIEW A-A

NOTE	REF NO	PART NUMBER	QTY	PART NAME
	1	9G0111	1	SOLENOID AS
	2	8L3873	1	GASKET
	3	7N9845	1	SPRING
	4	5B9079	1	NUT-JAM
	5	6N4241	1	SHAFT-SHUTOFF
	6	5P4278	1	CONNECTOR AS
	7	5P6725	1	CONNECTOR AS
	8	2L8076	2	TERMINAL-CRIMP
C	9	1W9070	1	DIODE AS
BD		6V2689	1	TUBE-SHRINKABLE
		9G3186	2	TERMINAL-SPADE

B-USE AS REQUIRED
C-CHANGE FROM PREVIOUS TYPE
D-ORDER BY THE METER

B-317459 EP

7401 **7N9129 SHUTOFF GP-ELECTRICAL**

Type 2

Part Of 3T1338,7G1858,7T4696,7T4695 Fire Suppressions

An Attachment

CAB, GAUGES AND ACCESSORIES

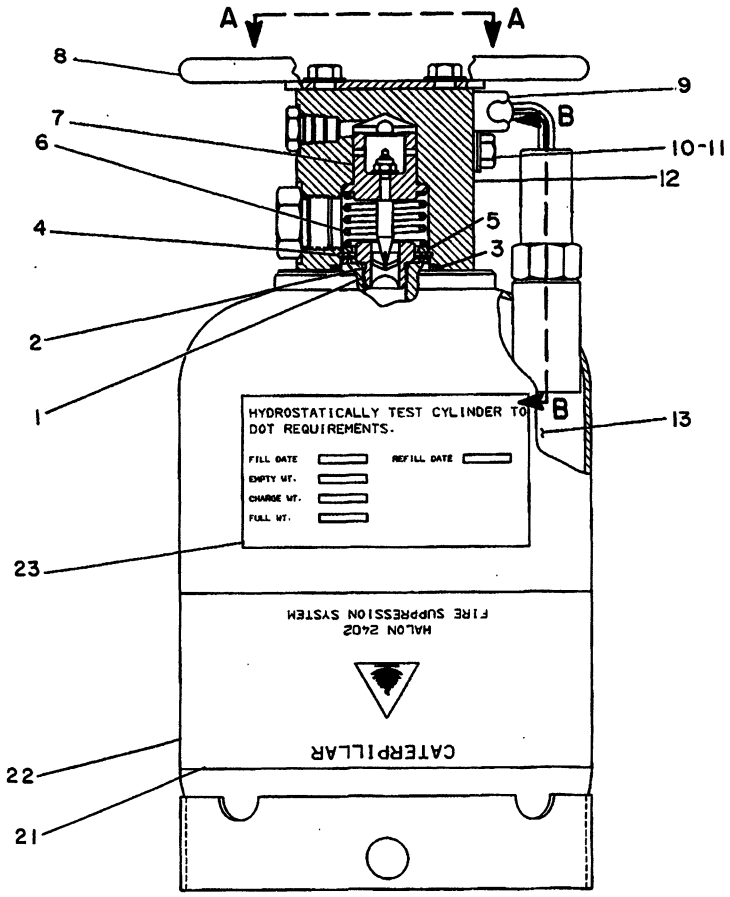

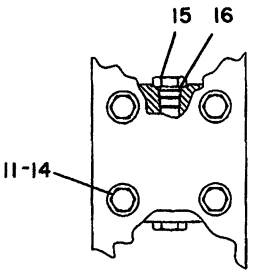

VIEW A-A

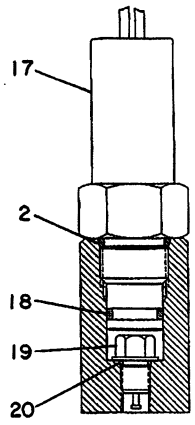

SECTION B-B

NOTE	REF NO	PART NUMBER	QTY	PART NAME
	1	6T6061	1	DISC AS-RUPTURE
	2	2M9780	2	SEAL-O-RING
	3	8T7273	1	SEAL
	4	6T2130	1	RING-RETAINING
	5	6T1516	1	WASHER
	6	6T2157	1	SPRING
	7	3T8833	1	PLUNGER AS
		3T8832	1	PISTON
		4B4274	1	WASHER
		4L1250	1	NUT
	8	3T8835	1	BRACKET AS-SUPPORT
	9	9G9150	1	CLIP
	10	5P8167	1	BOLT
	11	4B4278	5	WASHER
	12	3T0690	1	HOUSING
	13	7T8621	1	AGENT
	14	8T2557	4	BOLT
	15	5P4482	3	PLUG-O-RING
	16	3J1907	3	SEAL-O-RING
	17	3T9342	1	SWITCH AS (FIRE SUPPRESSION ACTIVATOR)
		7N7780	1	PIN-CONNECTOR
		7N9737	1	HOUSING-PLUG
		7N7779	1	SOCKET
	18	6F4855	1	SEAL-O-RING
	19	6T5915	1	BODY AS
		6T1533	1	CORE AS
	20	7J0204	1	SEAL-O-RING
	21	8C3172	1	FILM-INSTRUCTION
	22	8T9702	1	CYLINDER AS
		1P1429	2	PLUG-SEAL
	23	8C3173	1	FILM (CYLINDER DATA)

B-350374 EP

7401

8T9686 CYLINDER & VALVE GP

S/N 53Y3485-Up

Part Of 7T4695 Suppression Ar

Field Replacement Order 7T8618-Page 346D Or 8C4595-Page 346.05

An Attachment

CAB, GAUGES AND ACCESSORIES

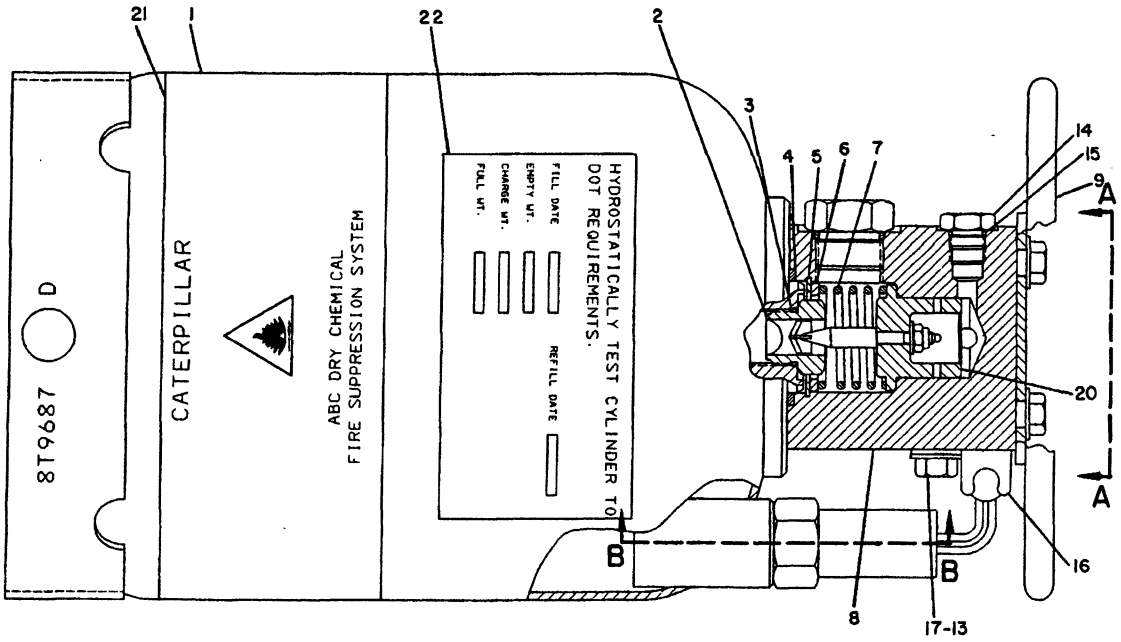

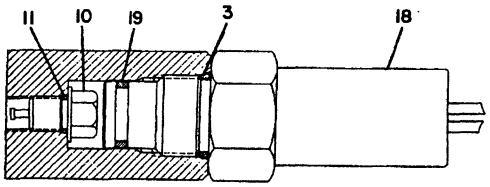

VIEW B-B

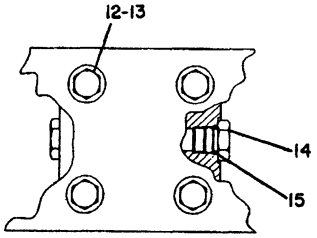

VIEW A-A

NOTE	REF NO	PART NUMBER	QTY	PART NAME	NOTE	REF NO	PART NUMBER	QTY	PART NAME
	1	8T9702	1	CYLINDER AS		20	3T8833	1	PLUNGER AS
	2	6T6061	1	DISC AS-RUPTURE			3T8832	1	PISTON
	3	2M9780	2	SEAL-O-RING			4B4274	1	WASHER
	4	8T7273	1	SEAL			4L1250	1	NUT
	5	6T2130	1	RING-RETAINING		21	8C3171	1	FILM-INSTRUCTION
	6	6T1516	1	WASHER		22	8C3173	1	FILM -INSTRUCTION
	7	6T2157	1	SPRING					
	8	3T0690	1	HOUSING					
	9	3T8835	1	BRACKET AS-SUPPORT					
	10	6T5915	1	BODY AS					
		6T1533	1	CORE AS					
	11	7J0204	1	SEAL-O-RING					
	12	8T2557	4	BOLT					
	13	4B4278	5	WASHER					
	14	5P4482	3	PLUG-O-RING					
	15	3J1907	3	SEAL-O-RING					
	16	9G9150	1	CLIP					
	17	5P8167	1	BOLT					
	18	3T9342	1	SWITCH AS					
		7N7779	1	SOCKET					
		7N7780	1	PIN-CONNECTOR					
		7N9737	1	HOUSING-PLUG					
	19	6F4855	1	SEAL-O-RING					

B-342660 EP

7401 **8T9687 CYLINDER & VALVE GP**

S/N 53Y3485-Up

Part Of 7T4696 Suppression Ar

Field Replacement Order 7T8618-Page 346D Or 8C4595-Page 346.05

An Attachment

CAB, GAUGES AND ACCESSORIES

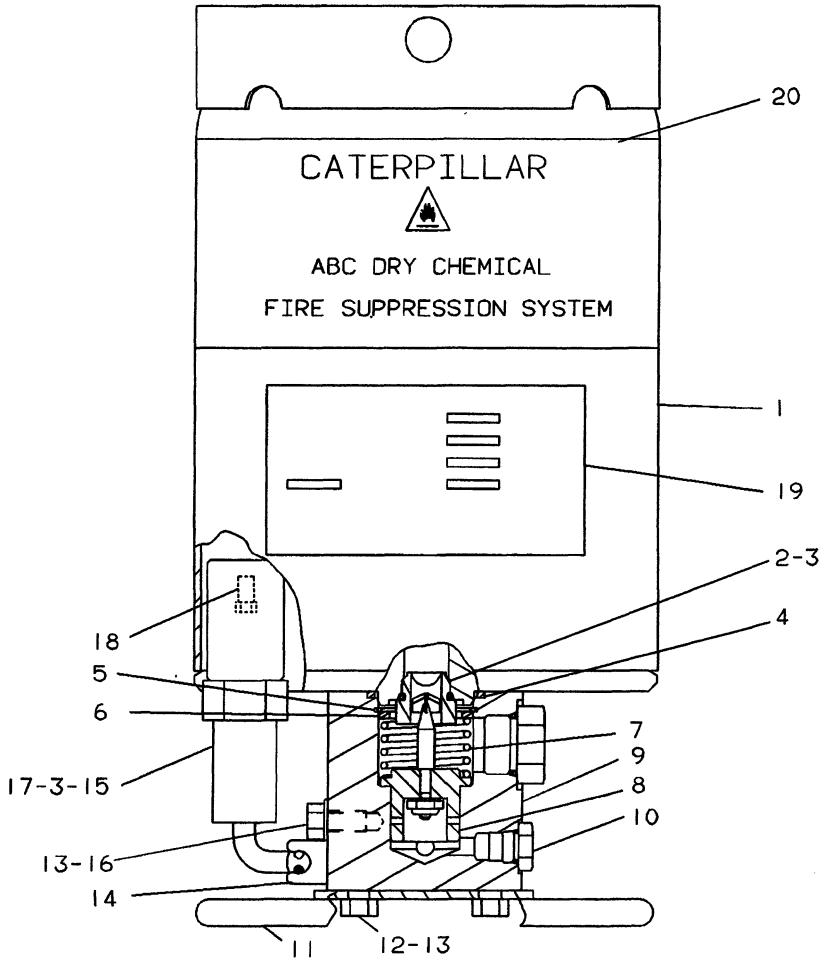

NOTE	REF NO	PART NUMBER	QTY	PART NAME	NOTE	REF NO	PART NUMBER	QTY	PART NAME
	1	8C4592	1	CYLINDER AS		18	6T5915	1	BODY AS
		7T8622	1	AGENT			6T1533	1	CORE AS
J	2	6T6061	1	DISC AS-RUPTURE			7J0204	1	SEAL-O-RING
J	3	2M9780	2	SEAL-O-RING (LARGE)		19	8C3173	1	FILM
	4	7F8267	1	SEAL-O-RING		20	8C3171	1	FILM-INSTRUCTION
	5	6T2130	1	RING-RETAINING					
	6	6T1516	1	WASHER					THE FOLLOWING
	7	6T2157	1	SPRING					SERVICE REPAIR KIT
	8	3T8833	1	PLUNGER AS					IS AVAILABLE:
		3T8832	1	PISTON			9W0377	1	KIT-RECHARGE
		4B4274	1	WASHER					(INCLUDES PARTS
		4L1250	1	NUT					MARKED J)
	9	3T0690	1	HOUSING					
	10	5P4482	3	PLUG-O-RING					
		3J1907	3	SEAL-O-RING					
	11	3T8835	1	BRACKET AS-SUPPORT					
	12	8T2557	4	BOLT					
	13	4B4278	5	WASHER					
	14	9G9150	1	CLIP					
	15	8C5436	1	SWITCH AS-PRESSURE					
		7N9737	1	HOUSING-PLUG					
		7N7779	1	SOCKET					
		7N7780	1	PIN-CONNECTOR					
B		9X1386	3	SLEEVE					
	16	5P8167	1	BOLT					
J	17	6F4855	1	SEAL-O-RING (SMALL)					

B-USE AS REQUIRED

C-492086 EP

7401

8C4594 CYLINDER & VALVE GP-ABC DRY CHEMICAL
Part Of 7T4696 Fire Suppression
Field Replacement Order 8C4595-Page 346.05
An Attachment

CAB, GAUGES AND ACCESSORIES

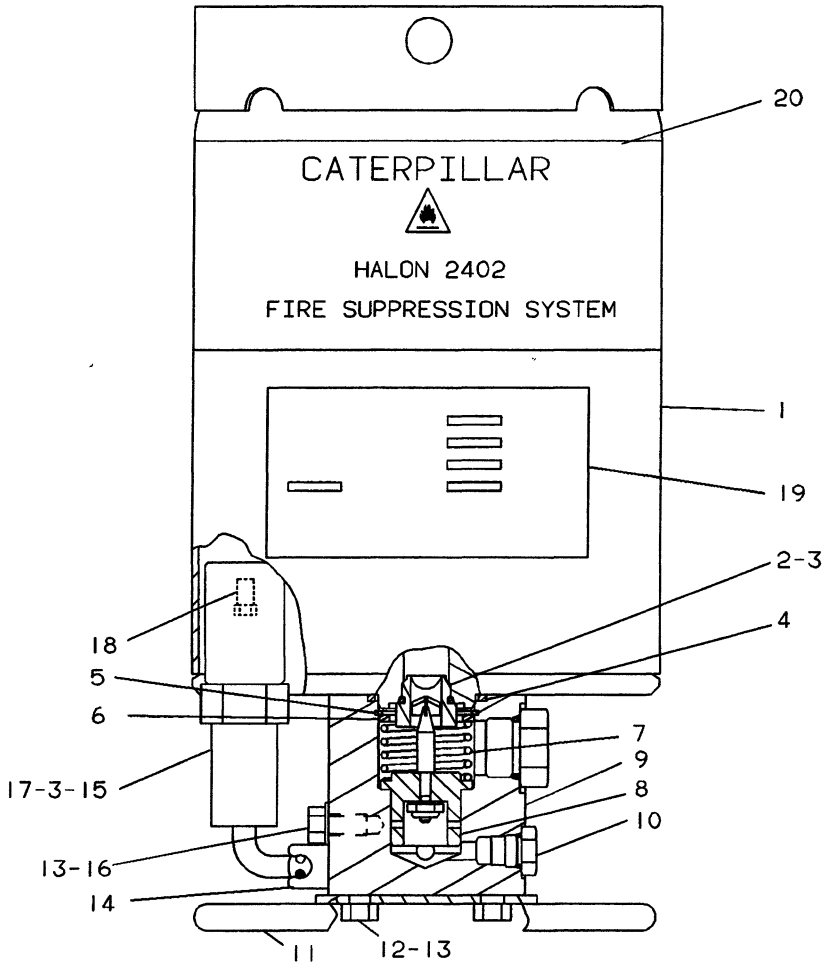

NOTE	REF NO	PART NUMBER	QTY	PART NAME	NOTE	REF NO	PART NUMBER	QTY	PART NAME
	1	8C4592	1	CYLINDER AS		18	6T5915	1	BODY AS
		7T8621	1	AGENT			6T1533	1	CORE AS
J	2	6T6061	1	DISC AS-RUPTURE			7J0204	1	SEAL-O-RING
J	3	2M9780	2	SEAL-O-RING (LARGE)		19	8C3173	1	FILM
	4	7F8267	1	SEAL-O-RING		20	8C3172		FILM-INSTRUCTION
	5	6T2130	1	RING-RETAINING					
	6	6T1516	1	WASHER					THE FOLLOWING
	7	6T2157	1	SPRING					SERVICE REPAIR
	8	3T8833	1	PLUNGER AS					KIT IS AVAILABLE:
		3T8832	1	PISTON			9W0376	1	KIT-RECHARGE
		4B4274	1	WASHER					(INCLUDES PARTS
		4L1250	1	NUT					MARKED J)
	9	3T0690	1	HOUSING					
	10	5P4482	3	PLUG-O-RING					
		3J1907	3	SEAL-O-RING					
	11	3T8835	1	BRACKET AS-SUPPORT					
	12	8T2557	4	BOLT					
	13	4B4278	5	WASHER					
	14	9G9150	1	CLIP					
	15	8C5436	1	SWITCH AS-PRESSURE					
		7N9737	1	HOUSING-PLUG					
		7N7779	1	SOCKET					
		7N7780	1	PIN-CONNECTOR					
B		9X1386	3	SLEEVE					
	16	5P8167	1	BOLT					
J	17	6F4855	1	SEAL-O-RING (SMALL)					

B-USE AS REQUIRED

C-492085 EP

7401 **8C4593 CYLINDER & VALVE GP-HALON 2402**

Part Of 7T4695 Fire Suppression
Field Replacement Order 8C4595-Page 346.05
An Attachment

CAB, GAUGES AND ACCESSORIES

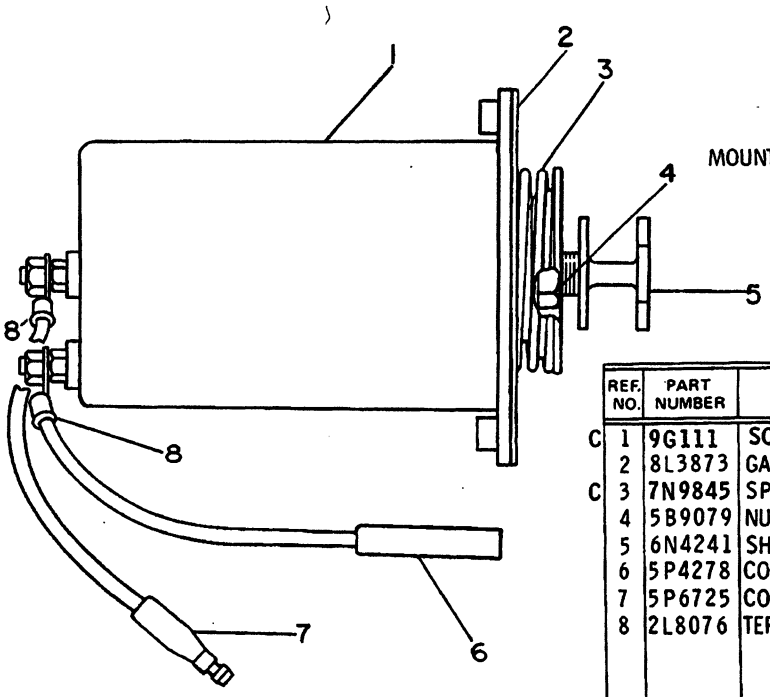

	REF. NO.	PART NUMBER	DESCRIPTION	QTY
C	1	9G111	SOLENOID ASSEM.	1
	2	8L3873	GASKET	1
C	3	7N9845	SPRING	1
	4	5B9079	NUT	1
	5	6N4241	SHAFT	1
	6	5P4278	CONNECTOR ASSEM.	1
	7	5P6725	CONNECTOR ASSEM.	1
	8	2L8076	TERMINAL	2

C INDICATES CHANGE

231315

231315 P

7401

7N9129 SHUTOFF GP-ELECTRICAL

Type 1

Part Of 3T1338,7G1858,7T4696,7T4695 Fire Suppressions

An Attachment

CAB, GAUGES AND ACCESSORIES

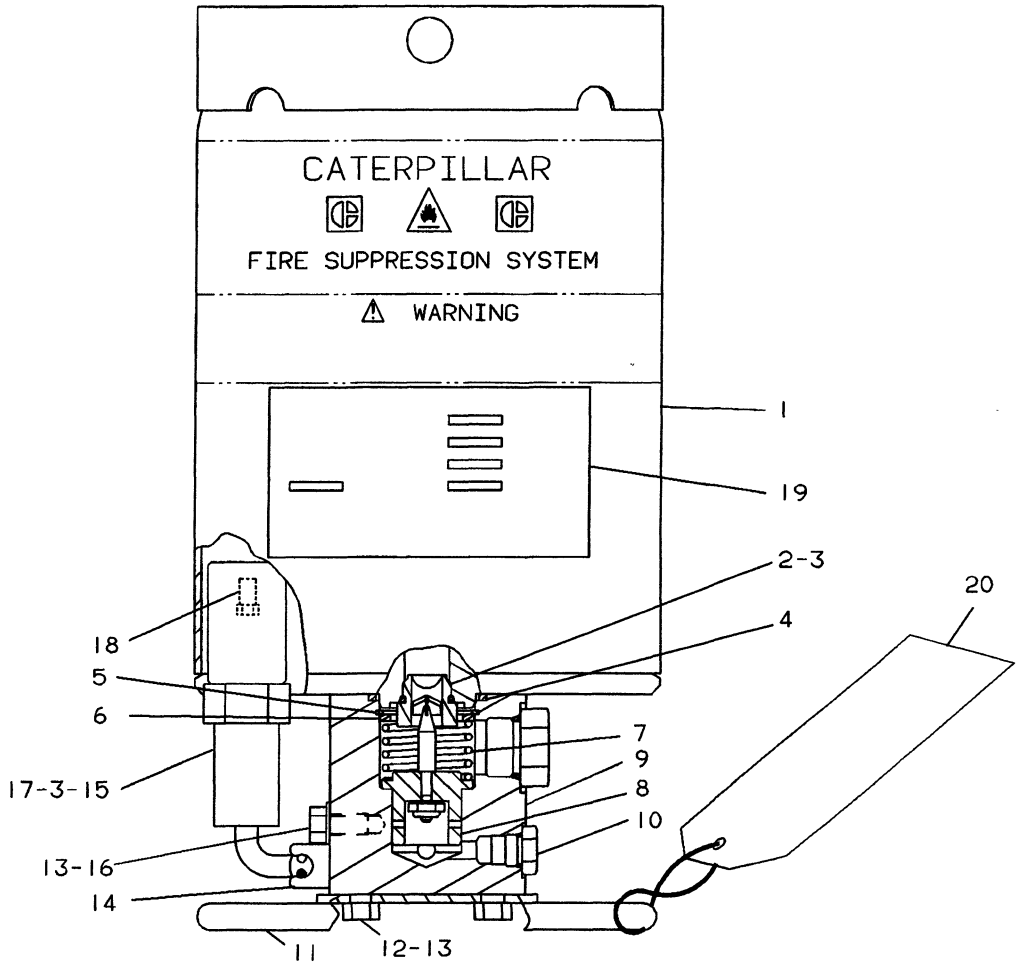

NOTE	REF NO	PART NUMBER	QTY	PART NAME	NOTE	REF NO	PART NUMBER	QTY	PART NAME
	1	8C4592	1	CYLINDER AS		18	6T5915	1	BODY AS
	2	6T6061	1	DISC AS-RUPTURE			6T1533	1	CORE AS
	3	2M9780	2	SEAL-O-RING (LARGE)			7J0204	1	SEAL-O-RING
	4	7F8267	1	SEAL-O-RING		19	8C3173	1	FILM-DATA (CYLINDER)
	5	6T2130	1	RING-RETAINING	C	20	6V0977	1	TAG-NOTICE
	6	6T1516	1	WASHER					
	7	6T2157	1	SPRING					
	8	3T8833	1	PLUNGER AS					
		3T8832	1	PISTON					
		4B4274	1	WASHER					
		4L1250	1	NUT					
	9	3T0690	1	HOUSING					
	10	5P4482	3	PLUG-O-RING					
		3J1907	3	SEAL-O-RING					
	11	3T8835	1	BRACKET AS-SUPPORT					
	12	8T2557	4	BOLT					
	13	4B4278	5	WASHER					
	14	9G9150	1	CLIP					
	15	8C5436	1	SWITCH AS-PRESSURE					
		7N9737	1	HOUSING-PLUG					
		7N7779	1	SOCKET					
		7N7780	1	PIN-CONNECTOR					
B		9X1386	3	SLEEVE					
	16	5P8167	1	BOLT					
	17	6F4855	1	SEAL-O-RING (SMALL)					

B-USE AS REQUIRED
C-CHANGE FROM PREVIOUS TYPE

C-492087 EP

7401 **8C4595 CYLINDER GP-VALVE-UNCHARGED**

S/N 53Y3485-Up

Field Replacement For 8T9686-Page 346.02,8T9687-Page 346.03, 8C4594-Page 346.04,8C4593-Page 346.04.01

CAB, GAUGES AND ACCESSORIES

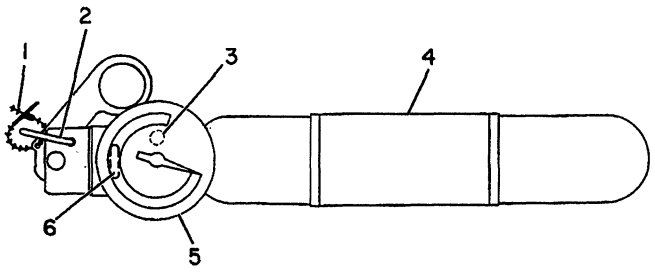

NOTE	REF NO	PART NUMBER	QTY	PART NAME
	1	6T0005	1	SEAL-FLAG
C	2	6T6170	1	LOCKPIN
C	3	100866	2	SCREW-MACHINE
C	4	5G3127	1	FILM-INSTRUCTION
	5	8N9612	1	GAUGE-PRESSURE
	6	3H0442	1	SEAL-O-RING

C-CHANGE FROM PREVIOUS TYPE

B-323486 EP

7401

5G3015 ACTUATOR AS

Part Of 3T1338,7G1858 Fire Suppressions
An Attachment

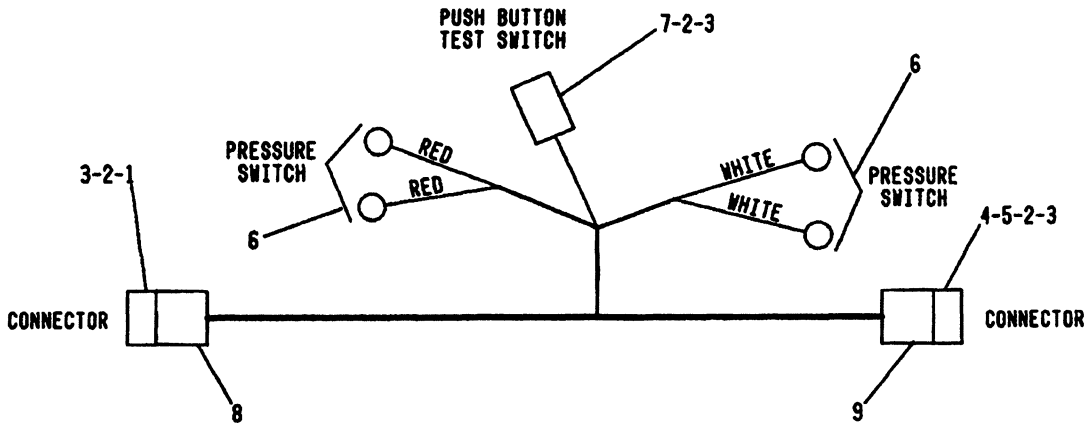

NOTE	REF NO	PART NUMBER	QTY	DESCRIPTION
	1	7N8204	1	HOUSING
	2	7N7780	5	PIN
	3	7N7779	6	SOCKET
	4	9G3676	1	HOUSING
	5	9G3695	2	PLUG
	6	2L8075	4	TERMINAL
	7	7N9738	1	HOUSING
D	8	5P9799		TUBE .1M (3.93IN.)
D	9	6V2722		TUBE .1M (3.93IN.)
				THE FOLLOWING WIRE
				IS AVAILABLE:
D		5P5624		WIRE (14 GAUGE)

D-ORDER BY THE METER

* 312293

A- 312293 P

7401

7G6364 HARNESS AS

Type 2

Part Of 3T1338,7G1858 Fire Suppressions

An Attachment

CAB, GAUGES AND ACCESSORIES

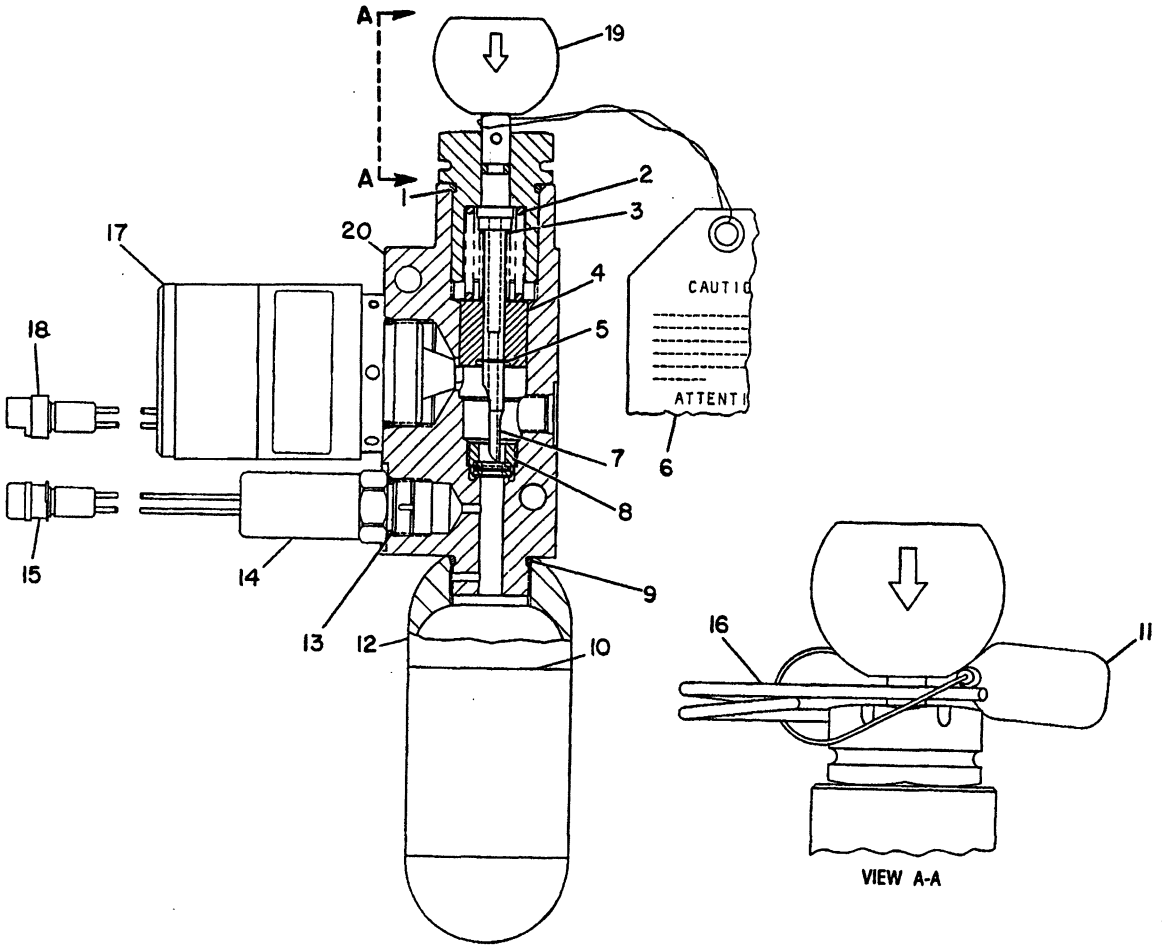

NOTE	REF NO	PART NUMBER	QTY	PART NAME	NOTE	REF NO	PART NUMBER	QTY	PART NAME
	1	5P5874	1	SEAL-O-RING					
	2	7T1878	1	SPRING					
	3	8S3194	1	SPRING					
	4	6T9469	1	PISTON					
	5	3P3547	1	RING-RETAINING					
	6	6V0977	1	TAG-NOTICE					
	7	6T9467	1	PLUNGER					
	8	3T9384	1	PLUG AS-BURST DISC					
	9	4K1388	1	SEAL-O-RING					
	10	6V6795	1	FILM-INSTRUCTION					
CB	11	6T0005	3	SEAL-FLAG					
	12	6T6098	1	CARTRIDGE					
	13	2M9780	1	SEAL-O-RING					
	14	6T6085	1	SWITCH AS (ACTIVATOR)					
	15	7N9737	1	HOUSING-PLUG					
		7N7780	1	PIN-CONNECTOR					
		7N7779	1	SOCKET					
	16	7T8775	1	LOCKPIN					
C	17	8T8590	1	SOLENOID AS					
	18	7N9738	1	HOUSING-RECEPTACLE					
		7N7780	1	PIN-CONNECTOR					
		7N7779	1	SOCKET					
C	19	8T9630	1	PLUNGER & KNOB AS					
	20	6T9471	1	HOUSING					

B-USE AS REQUIRED
C-CHANGE FROM PREVIOUS TYPE

R-492108 EP

7401 **7T8619 VALVE GP-ACTUATOR RELEASE**
Part Of 7T4696,7T4695 Fire Suppressions
An Attachment

CAB, GAUGES AND ACCESSORIES

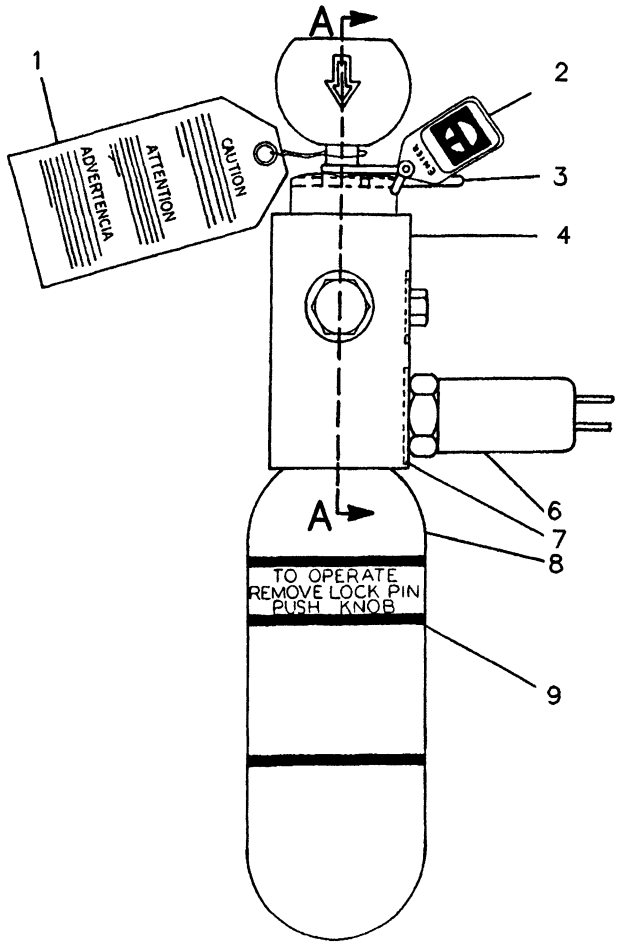

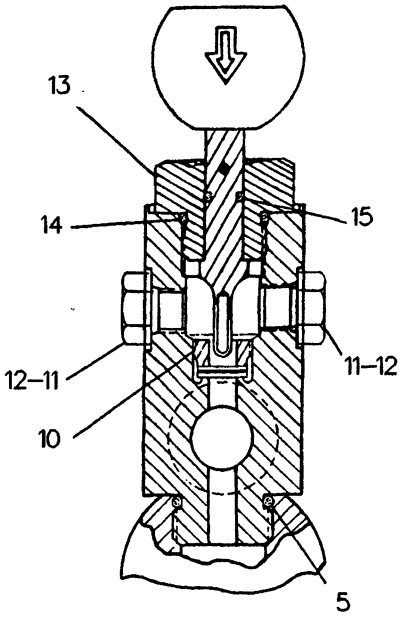

SECTION A–A

NOTE	REF NO	PART NUMBER	QTY	PART NAME	NOTE	REF NO	PART NUMBER	QTY	PART NAME
	1	6V0977	1	TAG-NOTICE					
CJ	2	6T0005	3	SEAL-FLAG					
J	3	7T8775	1	LOCKPIN					
	4	3T9385	1	BODY-VALVE					
	5	4K1388	1	SEAL-O-RING					
	6	6T6085	1	SWITCH AS (AIR PRESSURE)					
		7N9737	1	HOUSING-PLUG					
		7N7780	1	PIN-CONNECTOR					
		7N7779	1	SOCKET					
	7	2M9780	1	SEAL-O-RING					
	8	6T6098	1	CARTRIDGE					
	9	6V6795	1	FILM-INSTRUCTION					
J	10	3T9384	1	PLUG AS-BURST DISC					
	11	9S4191	2	PLUG-O-RING					
C	12	3J1907	2	SEAL-O-RING					
	13	9X0362	1	KNOB & PLUNGER AS					
J	14	3D2824	1	SEAL-O-RING (O-RING)					
	15	5H6005	1	SEAL-O-RING					
				THE FOLLOWING REPAIR KIT IS AVAILABLE:					
		9X3498	1	KIT-RECHARGE (INCLUDES PARTS MARKED J)					

C-CHANGE FROM PREVIOUS TYPE

R-511872 EP

7401 **7T8620 VALVE GP-ACTUATOR RELEASE**

Part Of 7T4696,7T4695 Fire Suppressions
An Attachment

CAB, GAUGES AND ACCESSORIES

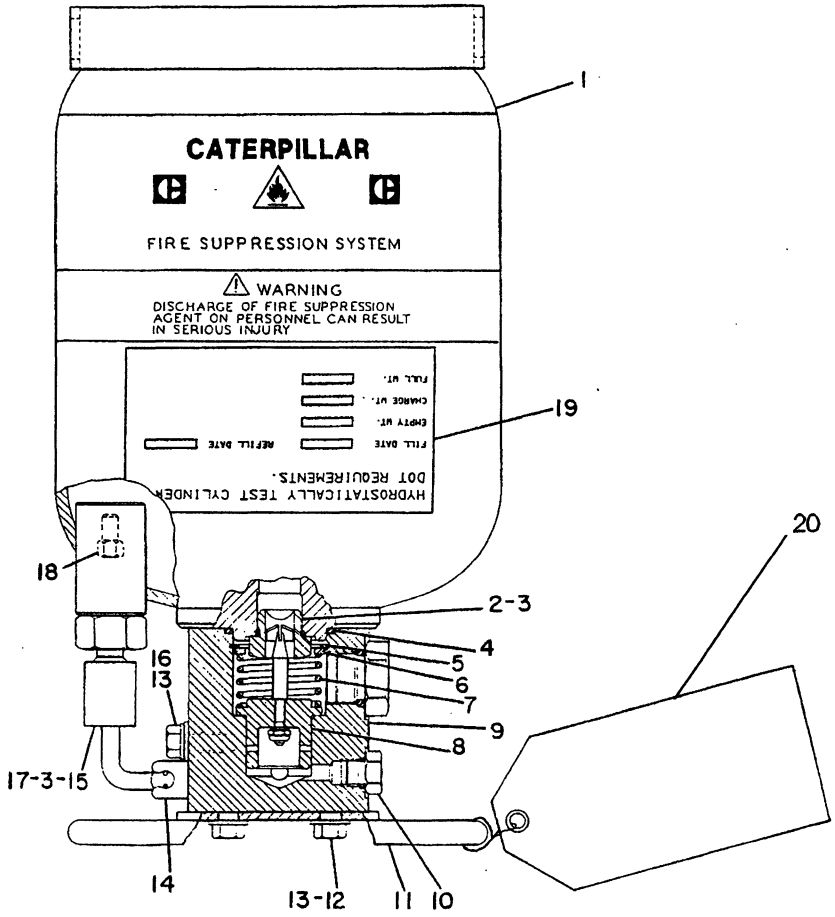

NOTE	REF NO	PART NUMBER	QTY	PART NAME	NOTE	REF NO	PART NUMBER	QTY	PART NAME
C	1	8T9702	1	CYLINDER AS		18	6T5915	1	BODY AS
	2	6T6061	1	DISC AS-RUPTURE			6T1533	1	CORE AS
	3	2M9780	2	SEAL-O-RING (LARGE)			7J0204	1	SEAL-O-RING
C	4	8T7273	1	SEAL	C	19	8C3173	1	FILM-DATA (CYLINDER)
	5	6T2130	1	RING-RETAINING		20	6V0977	1	TAG-NOTICE
	6	6T1516	1	WASHER					
	7	6T2157	1	SPRING					
	8	3T8833	1	PLUNGER AS					
		3T8832	1	PISTON					
		4B4274	1	WASHER					
		4L1250	1	NUT					
	9	3T0690	1	HOUSING					
	10	5P4482	3	PLUG-O-RING					
		3J1907	3	SEAL-O-RING					
	11	3T8835	1	BRACKET AS-SUPPORT					
	12	8T2557	4	BOLT					
	13	4B4278	5	WASHER					
	14	9G9150	1	CLIP					
C	15	3T9342	1	SWITCH AS					
		7N9737	1	HOUSING-PLUG					
		7N7779	1	SOCKET					
		7N7780	1	PIN-CONNECTOR					
	16	5P8167	1	BOLT					
	17	6F4855	1	SEAL-O-RING (SMALL)					

C-CHANGE FROM PREVIOUS TYPE

R-504506 EP

7401

7T8618 CYLINDER GP-VALVE
S/N 53Y3485-Up
8T9687-Page 346.03
Field Replacement For 8T9686-Page 346.02

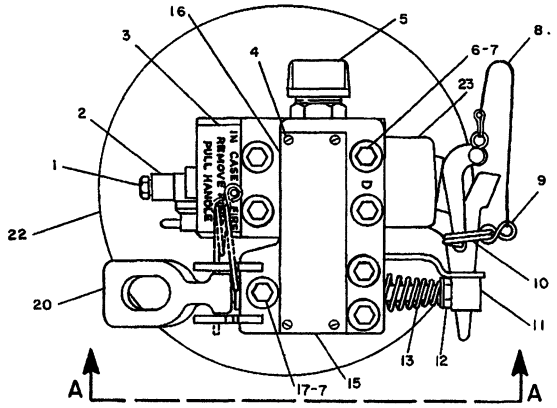

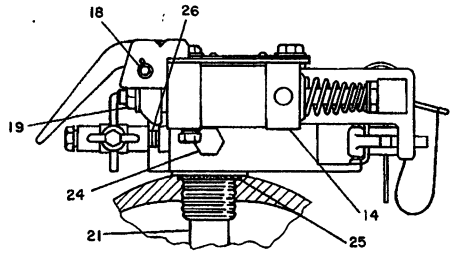

VIEW A-A

B-USE AS REQUIRED

D-ORDER BY THE METER

F-NOT SHOWN

NOTE	REF NO	PART NUMBER	QTY	PART NAME
	1	127950	1	PLUG
	2	5G2944	1	VALVE-SHUT OFF
	3	6V1477	1	FILM-INSTRUCTION
	4	7B3028	4	SCREW-DRIVE
	5	5G3124	1	CAP-SAFETY
		5G0956	1	UNION-FIRE,SYSTEM
	6	2A5546	2	BOLT
	7	5P4115	7	WASHER-HARD
BD	8	6V1361		CHAIN-FLAT LINK
	9	5G3045	2	LINK
	10	5G2883	1	PIN-SAFETY
	11	5G3583	1	HOOK AS
	12	9L9089	1	NUT
		4B4278	1	WASHER
	13	5G2754	1	SPRING-CONICAL
	14	5G2758	1	CYLINDER
		8S7374	1	FILTER-AIR
	15	5G2759	1	PLATE AS
	16	6V2282	1	PLATE-WARNING
	17	310214	5	BOLT-LOCKING
	18	5G2881	1	SHAFT
		6H5829	2	RING-RETAINING
	19	9P8750	1	NUT
	20	5G2757	1	LEVER
	21	5G3736	1	TUBE-SYPHON
	22	5G3746	1	CYLINDER
	23	5G3748	1	VALVE-FIRE SUPPRESSION
	24	6T0027	1	GASKET
		6T0028	1	DISC-RUPTURE
		6T0030	1	PLUG-DISC
	25	6F6673	1	SEAL-O RING
	26	5K5068	1	NIPPLE-PIPE
F		6V5631	1	FILM-INSTRUCTION

344710

344710 EP

7401

5G2980 VALVE & CYLINDER GP
Dry Chemical Agent
Part Of 3T1338 Fire Suppression
An Attachment

CAB, GAUGES AND ACCESSORIES

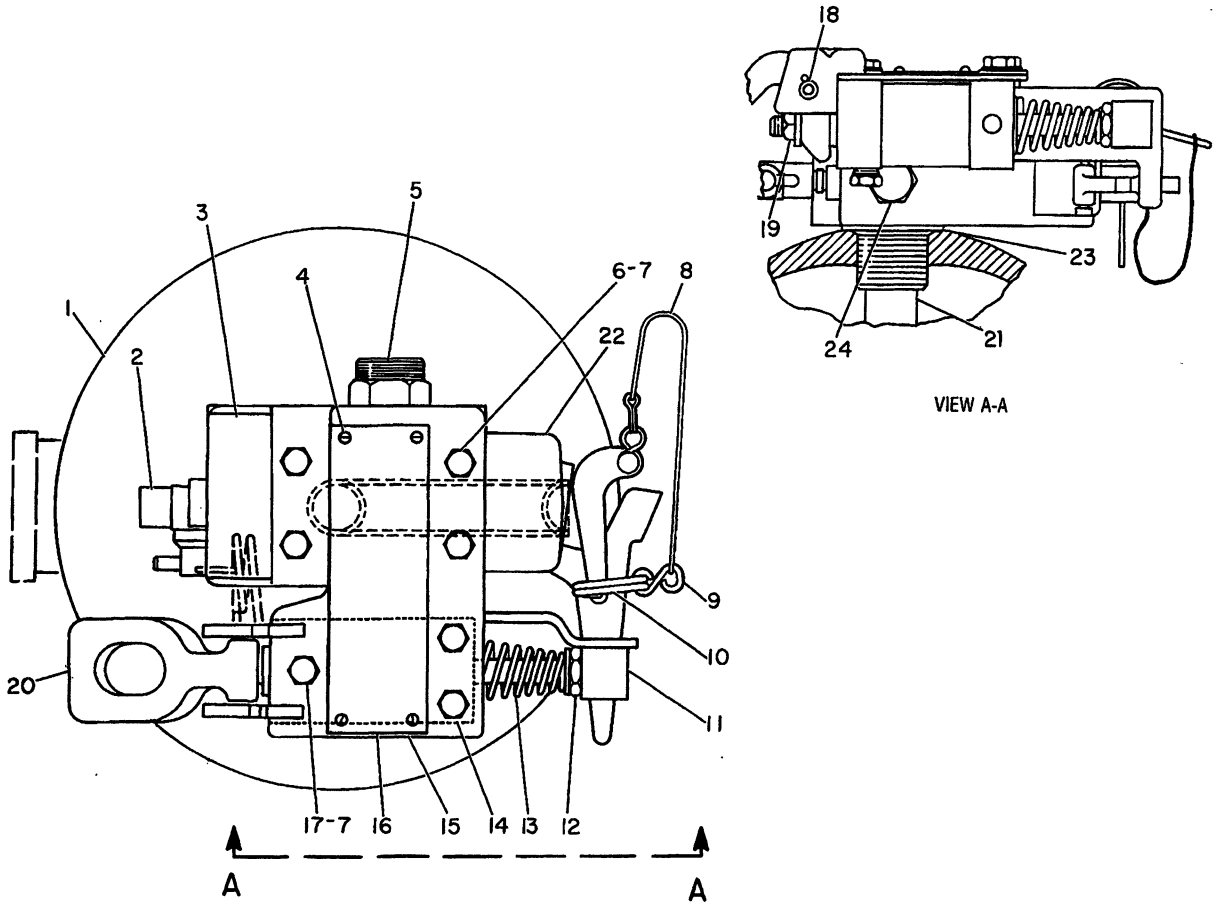

NOTE	REF NO	PART NUMBER	QTY	PART NAME
	1	5G3746	1	CYLINDER
	2	5G2944	1	VALVE-SHUTOFF
		5K5068	1	NIPPLE
	3	6V1477	1	FILM-INSTRUCTION
	4	7B3028	4	SCREW-DRIVE
	5	5G0956	1	UNION-FIRE SYSTEM
	6	2A5546	2	BOLT
	7	5P4115	7	WASHER (HARD)
BD	8	6V1361		CHAIN-FLAT LINK
	9	5G3045	2	LINK
	10	5G2883	1	PIN
	11	5G3583	1	HOOK AS
	12	9L9089	1	NUT
		4B4278	1	WASHER
	13	5G2754	1	SPRING-CONICAL
	14	5G2758	1	CYLINDER
		8S7374	1	FILTER-AIR
	15	5G2759	1	PLATE AS
	16	6V2282	1	PLATE-WARNING
	17	3I0214	5	BOLT-SELF LOCKING
	18	5G2881	1	SHAFT-GOVERNOR CONTROL
		6H5829	2	RING-RETAINING
	19	9P8750	1	NUT
	20	5G2757	1	LEVER
	21	5G3749	1	TUBE
	22	5G3748	1	VALVE-FIRE SUPPRESSION
F		6V4338	1	FILM-INSTRUCTION
	23	6F6673	1	SEAL-O-RING
	24	6T0030	1	PLUG-DISC
		6T0028	1	DISC-RUPTURE
		6T0027	1	GASKET

B-USE AS REQUIRED
D-ORDER BY THE METER
F-NOT SHOWN

B-344526 EP

7401

5G2800 VALVE & CYLINDER GP
Part Of 7G1858 Fire Suppression
An Attachment

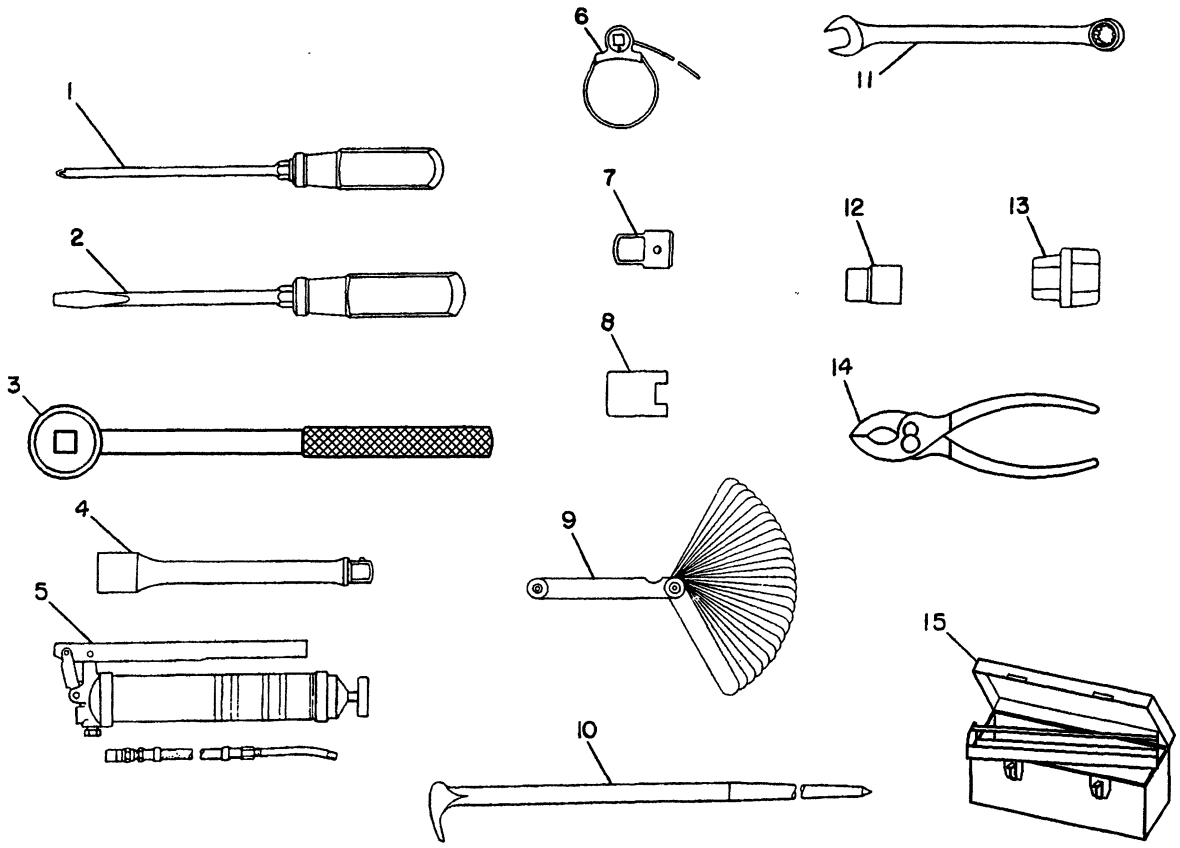

NOTE	REF NO	PART NUMBER	QTY	PART NAME
	1	1U7267	1	SCREWDRIVER (NO. 2 PHILLIPS)
	2	1U7264	1	SCREWDRIVER
	3	1U7115	1	RATCHET-REVERSE
	4	1U7118	1	EXTENSION (SOCKET-10 IN LG)
		1U7119	1	EXTENSION (SOCKET-5 IN LG)
Y	5	8F9866	1	GREASE GUN AS (LEVER)
	6	2P8250	1	WRENCH AS-STRAP
	7	5S9568	1	SOCKET-DRAIN PLUG
C	8	5P1763	1	SOCKET-PETCOCK
	9	1U7234	1	GAUGE-FEELER
	10	5F4764	1	BAR-PRY
	11	1U7053	1	WRENCH (5/16 OPENING)
		1U7054	1	WRENCH (3/8 OPENING)
		1U7056	1	WRENCH (1/2 OPENING)
		1U7057	1	WRENCH (9/16 OPENING)
		1U7058	1	WRENCH (5/8 OPENING)
		1U7060	1	WRENCH (3/4 OPENING)
		1U7062	1	WRENCH (7/8 OPENING)
		1U7064	1	WRENCH (1IN OPENING)
C	12	1U7099	1	SOCKET (1/2 OPENING)
		1U7102	1	SOCKET (9/16 OPENING)
		1U7107	1	SOCKET (7/8 OPENING)
		1U7108	1	SOCKET (15/16 OPENING)
		1U7109	1	SOCKET (1IN OPENING)
		1U7111	1	SOCKET (1-1/8 OPENING)
	13	5S9569	1	SOCKET (DRAIN PLUG)
	14	9U7509	1	PLIERS
	15	9U6219	1	TOOL BOX

C-CHANGE FROM PREVIOUS TYPE
Y-SEPARATE ILLUSTRATION

R-623900 CP

0600 **9S7977 HAND TOOL GP**

8F9866 Grease Gun-Page 350C
Tools To Perform Routine Maintenance And Adjustment
An Attachment

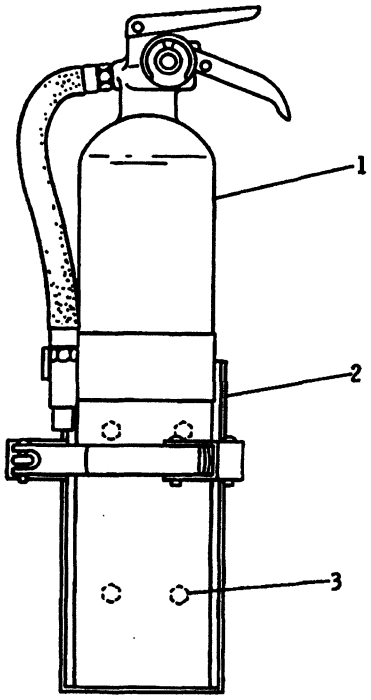

REF. NO.	PART NUMBER	DESCRIPTION	QTY
1	8K4738	EXTINGUISHER------(fire)-------	1
2	8K4737	BRACKET----------	1
3	S509	BOLT----------	4
	3B4506	LOCKWASHER----------	4

202887

202887 EP

7419 **8K4748 FIRE EXTINGUISHER GP**

Type 1

Note: 8K4738 Fire Extinguisher Must Be Procurred Locally

An Attachment

SERVICE EQUIPMENT AND SUPPLIES

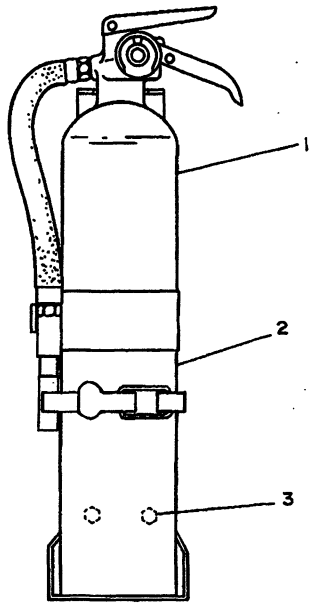

NOTE	REF NO	PART NUMBER	QTY	PART NAME
	1	8K4738	1	FIRE EXTINGUISHER (FIRE)
C		6T5940	1	NOZZLE
CY	2	3T8432	1	MOUNTING GP-FIRE EXTINGUISHER
C	3	4L6454	4	BOLT
C		8T4896	4	WASHER-HARD

C-CHANGE FROM PREVIOUS TYPE
Y-SEPARATE ILLUSTRATION

B-487875 EP

7419 **8K4748 FIRE EXTINGUISHER GP**
Type 2
Note: 8K4738 Fire Extinguisher Must Be Procured Locally
An Attachment

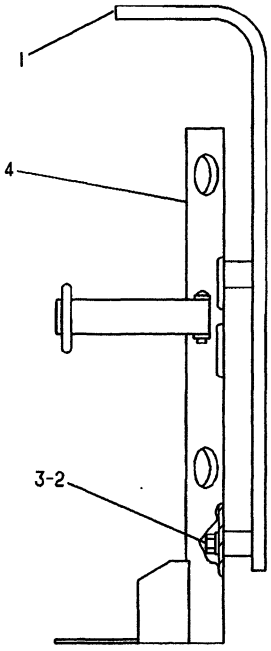

NOTE	REF NO	PART NUMBER	QTY	PART NAME
	1	3T6974	1	BRACKET AS
	2	5M3062	4	BOLT
	3	8T4896	4	WASHER-HARD
	4	3T7409	1	BRACKET

A-505984 EP

7419 **3T8432 MOUNTING GP-FIRE EXTINGUISHER**
An Attachment

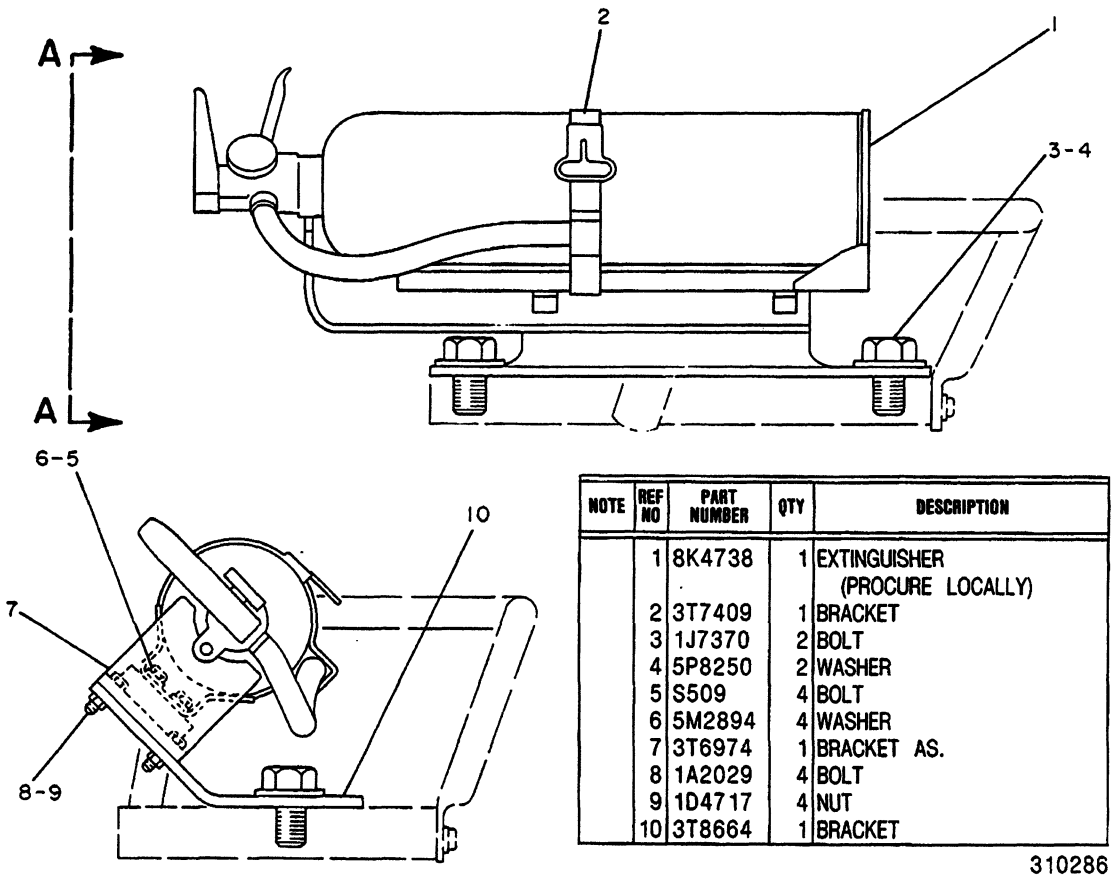

NOTE	REF NO	PART NUMBER	QTY	DESCRIPTION
	1	8K4738	1	EXTINGUISHER (PROCURE LOCALLY)
	2	3T7409	1	BRACKET
	3	1J7370	2	BOLT
	4	5P8250	2	WASHER
	5	S509	4	BOLT
	6	5M2894	4	WASHER
	7	3T6974	1	BRACKET AS.
	8	1A2029	4	BOLT
	9	1D4717	4	NUT
	10	3T8664	1	BRACKET

310286

310286 P

7419

3T9010 FIRE EXTINGUISHER GP
For Use Without ROPS Or Cab
An Attachment

SERVICE EQUIPMENT AND SUPPLIES

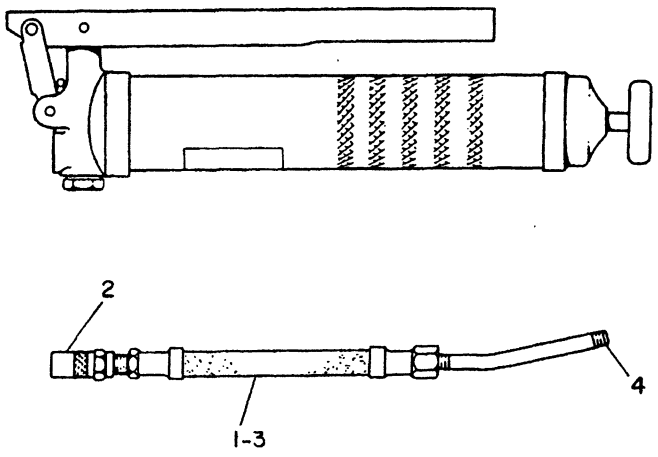

NOTE	REF NO	PART NUMBER	QTY	PART NAME
	1	9F2636	1	NOZZLE AS
	2	2M2689	1	COUPLER AS
	3	9F2638	1	HOSE AS
	4	9F2637	1	NIPPLE

B-108355 EP

0600

8F9866 GREASE GUN GP
Part Of 9S7977 Hand Tool
An Attachment

MEMORANDA

ENGINE GASKET KITS

6V5914 VALVE GRINDING

6V5915 VALVE GRINDING-SINGLE HEAD

6V5905 CENTRAL AND LOWER STRUCTURE

6V5916 FRONT STRUCTURE

5P8057 SINGLE CYLINDER LINER

6V5928 WATER PUMP

6V5927 WATER LINES-FOR NEW OR EXCHANGE WATER PUMP

6V5918 TURBOCHARGER MOUNTING

LVK.U.OIL COOLER AND LINES

6V5920 FUEL SYSTEM

8T3388 REAR STRUCTURE

OTHER GASKET KITS

6V5923 PARTS AND CASE

6V5921 PLANETARY TRANSMISSION

6V5922 HYDRAULIC CONTROL

6V5926 TORQUE CONVERTER

6V5924 PUMP

6V5925 POWER TRAIN OIL LINES

2	8C0608	PLATE--CORPORATE SYMBOL
1	9L6531	PLATE--INFORMATION INSTALL AT CENTER OF RH VALVE COVER
1	3N3790	PLATE-SERIAL NUMBER (ENGINE) ON L.H. SIDE OF CYLINDER BLOCK
1	5P9466	PLATE--WARNING (UNIVERSAL) ON UPPER L.H. CONSOLE SIDE
1	6V5360	PLATE-(ROPS) TOP LEFT CORNER ON ROPS ROLL-OVER ASSEMBLY
1	6V6636	PLATE-PRODUCT IDENIFICATION NUMBER ON OUTSIDE OF L.H. CASE PLATE AT LOWER REAR EDGE OF FENDER
1	6V6847	PLATE-SERVICE INFORMATION NUMBER ON UPPER L.H. OF OPERATORS STATION
8	4B4158	DRIVE SCREW
8	4B5324	WASHER WITH RIVETS USED TO MOUNT ROPS PLATE & WARNING PLATE
8	9N1995	RIVET TO ROPS PLATE & WARNING PLATE
2	8C3307	FILM-CAT
1	5P8161	FILM TO UPPER R.H. CONSOLE SIDE
1	5P9675	FILM-TRANSMISSION & PARKING BRAKE LOCK ON RIGHT SIDE OF SAFETY LEVER GUARD
1	5P9884	FILM--HYDRAULIC OIL ON TOP OF HYDRAULIC TANK ADJACENT TO FILLER SPOUT
1	8T0431	FILM--INSTRUCTION ON PIVOT SHAFT LUBRICATION BOTTLE
1	6V3270	TRANSFER GROUP CONSISTS OF:
2	1P9876	FILM-CAT ON EACH SIDE OF HOOD
1	8S8958	FILM-CATERPILLAR ON FRONT OF RADIATOR
1	8S8974	FILM-CATERPILLAR ON BACK OF FUEL TANK
2	6V7374	FILM-D8L ON EACH SIDE OF FUEL TANK

NAME PLATES & FILMS

PART NUMBER INDEX

Number	Page	Number	Page	Number	Page	Number	Page
			279		325D.02		41J
0			281.04		327		41K
			281.10		327E		42.02
OL0139	279		287.01		341R.08		45.01
	281.04		332A		345M.08		45.02
	281.10		341R.08	OS1347	81B		79F
OL0472	316A		345M.08	OS1566	24		90Z.34
OL1022	15.01	OL1352	13A		252		133F
OL1026 ..	155B.02		13A.01	OS1569	246		184D
	279		13A.04	OS1570	312D		184F
	281.04		13A.05.01	OS1571	20		203J.01
	281.10		20		28.01		221.05
OL1124	288		20.01		40		224A
OL1143	18.01		25A		41A		224B
	20		35A		61.01		224D
	20.01		133F		133F		224D.01
	29.02		216		155G		280
	32		217E		155H		281
	41A		341R.08		203J.01		281.06
	45.01		345M.08		228		281.11
	61.01	OL2070	35B	OS1573	19.02		281.12
	280		36A		41F		286A
	281		155B.02		155G		287.01
	281.06		224B	OS1585	12		288
	281.11		286A		42.02		296
	281.12		332A		116		325A
	283	OL2315	280		155B.02		325D.01
OL1178	184D		281.11		173		341R.08
	184E	OS0484	142		173.02		345M.08
	184E.01		143A		175.05	OS1589	22
	184F	OS0509	11		197D		121
	184G		41E.01		217F		121.01
	184G.01		41E.02		228		216
OL1329	127.02		41J		281.08		217E
	217F		41K		290		217F
	332A		75		341R.02		277
OL1340 ..	111C.09		77D.01		341R.06		281.08
OL1351	6A		83		345M.06		332A
	6A.02		90Z.07	OS1587	28.01	OS1590	25A
	35A		90Z.12		61.01		32
	41E.01		90Z.17		61.02		41E.01
	41J		90Z.22		127.01		41E.02
	41K		90Z.28		138D		177.02
	75		90Z.29		155B.02		227
	77D.01		90Z.31		173.03		227B
	90Z.29		90Z.34		211		277
	90Z.31		133G		217F		278
	90Z.33		228		246		281.03
	90Z.34		235B		341R.01		281.09
	112C		281		341R.05		291
	129		281.06		345M.05	OS1591	13A
	129.01		281.12	OS1588	25A		13A.01
	144		285		29.04		13A.04
	158G		285.01		32		13A.05
	175.05		289		35A		13A.05.02
	221.05		316A		41E.02		35A
	233B		323		41F		35B

PART NUMBER INDEX

Number	Page	Number	Page	Number	Page	Number	Page
	41E.01		289		45.01		1
	42.02		325A		62.01		
	43		325B		224B	1A0168	139
	43.01		325D.01	OS1620	216	1A0458	138D
	76A		325D.02		217E		173
	76B		332A	OS1621	175.05		221.05
	76B.01		341R.02		203J.04		315
	119B		341R.06		233B	1A1135	43
	216		345M.06		235A		43.01
	217E	OS1595	27C		297		216
	228		35A		341R.02		217E
	229		50B		341R.06	1A1460	18.01
	286A		221.05		345M.06		49.02
	341R.02		227	OS1625	296		133F
	341R.06		227B	OS1626	270B		173
	345M.06		228		271A		173.02
OS1594	6A		277		271E		332A
	6A.02		281.08		272C		341R.08
	21B		325D.01		315		345M.08
	21B.01		332A	OS1748	325B	1A1898	236
	28.01		341R.07		325D.02	1A2029	21B
	32.01		345M.07	OT0065	35B		21B.01
	35A	OS1597	285		45.02		25A
	35B		285.01		125.10		27C
	41E.02	OS1608	13A.05.01		341R.02		27D
	41J		21B		341R.06		32.01
	41K		21B.01		345M.06		45.02
	42.02		35A	OT0102 ..	90Z.07		49.02
	43		90Z.22		90Z.12		90Z.29
	43.01		90Z.28		90Z.17		117
	45.01		125.12		90Z.22		118
	48A.01		133F		90Z.28		133F
	61.01		283		144		133G
	62.01	OS1614	52A		316A		139
	73.03		327		323.02		155B.02
	79F		335P.02		332A		155G
	90Z.34	OS1615	81B		341R.01		197C
	128B	OS1616	53		341R.02		235B
	137		53.01		341R.05		277
	144		327D		341R.06		280
	197C		327F		345M.05		281.08
	197D	OS1617	63		345M.06		281.11
	203J.01		63A	OT0320	221.05		282
	221.05		67	OT0573	21B		329.03
	235A		293		21B.01	1A2036	317
	270B		341R.02	OT0690	227		317.02
	271A		341R.06		227B	1A2209	279
	279		345M.06		228		281.04
	280	OS1618	41K	OT0768	35A		281.10
	281		69B	OT0772 ..	203J.04	1A2935	15.01
	281.04		69B.02		217F	1A3203	16
	281.06		74			1A5183	13A
	281.10		74A				13A.01
	281.11		158J				13A.04
	281.12		293				13A.05
	283	OS1619	25A				13A.05.01
	288		29.02				13A.05.02

PART NUMBER INDEX

Number	Page
1A5822	118
	119B
	173
	173.02
1A5964	25A
	45.02
	140
1A9579	48A.01
	158J
	221.05
	287.01
1B2578	194.01
1B2693	319
	319B
1B2713	341R.08
	345M.08
1B2714	73.04
	329.03
1B2790	41K
	77D.01
1B3216	286B
1B3867	43
	43.01
1B4201	73.04
	133G
	284
	285.01
	312D
1B4203	90Z.34
	133G
	241F
1B4330	73.04
	90Z.33
	90Z.34
	235A
	284
	285.01
	335P.02
1B4331	315
1B4367	116
1B5170	42B.01
1B5174	13A
	13A.01
	13A.05
	13A.05.02
1B5354	61.01
	76A
	76B
1B5675	139
1B6182	316.01
1B7182	43
	43.01
	80
	286B
	292A
1B8702	292A
1B8705	11
	20
	106
	106.01
	107
1B8706	133F
1B8707	211
1B8736	140
1B9575	73.04
1C2251	40
	41A
	76B.01
1D4539	128B
	329.03
1D4540	73.03
1D4566	18.01
	27D
	49.02
	50B
	173.03
	203J.04
	246
1D4569	19.02
1D4585	277
	281.08
1D4586	127.02
1D4588	217F
1D4593	246
1D4599	219
	227
	227B
1D4602	18.01
1D4612	85C
	236
1D4627	22
	230.01
1D4628	229C
1D4629	229C
1D4630	230.01
1D4631	22
1D4639	297
1D4642	181
1D4644	181
1D4706	33C
1D4717	21B
	28.01
	29.04
	32.01
	41E.01
	41E.02
	43
	43.01
	61.01
	90Z.34
	133F
	133G
	177.01
	184D
	184E
	184E.01
	184F
	184G
	184G.01
	235B
	288
	325D.01
	332A
	332A.01
	341R.02
	341R.06
	345M.06
1D4719	90Z.31
	173
	173.02
	216
	217E
	290
	325D.01
	332A
1D4720	227
	227B
1D5118	332A
1D5119	236
1F0748	138D
	138E
	173
	173.02
	175.05
	180.06
	345M.06
1F0750	144
1F2417	41E.01
	41J
1F5842	207
1F6762	271A
1F7567	291
1H0974	282
1H1023	76B.01
	111B
	111C.06
1H2203	301F
	309L
1H2629	111B
	111C.04
1H3244	90Z.33
	106.01
	314
1H3338	312D
	327B
1H4106	182A.02
1H4393	323.04
	327A
1H5728	83
	85C
1H7459	90Z.28
1H8128	232
	281
	281.06
	281.12
1H8171	332A.02
	333
1H8720	203J.04
1H9696	203J.04
	286B
1J2176	230.01
1J2859	274.01
	281
	281.06
	281.12
1J2890	277
	281.08
1J5353	131
1J7468	228
1J7647	228
1J9227	279
	281.04
	281.10
1J9671	66E
	67
	286B
1K4703	73.03
1K6872	133F
1L3162	137
1L3769	80
1L4789	109
	111B
1L5072	198
1L5081	29.02
	184E
	184E.01
	184G
	184G.01
1L5316	293
1L9048	106
1M0644	33A
	33C
	133F
1M1077	68
1M1230	327A
1M1882	114
1M3506	71A
	71B
1M5898	114
1M5928	114
1M6119	90Z.31
	112C
	112E
1M6120	90Z.31
	112C
	112E
1M8649	37
1M9968	111B

PART NUMBER INDEX

Number	Page
	111C.06
1M9971	111B
	111C.06
1N3246	33A
1N3300	61.01
1N3599	37
	337B.02
1N3751	53
1N4310	4
	5.01
	75
1N4656	73.03
1N4734	61.01
1N4848	101
1P0232	70A
1P0234	70A
1P0436	81
	329.03
1P1120	53
	53.01
1P1376	235A
	235B
1P1429	346.02
1P2176	281
	281.06
	281.12
1P2178	281
	281.06
	281.12
1P2179	275
1P2298	66E
	67
1P2553	277
1P3240	277
	281.08
1P3262	283
1P3276	277
	281.08
1P3321	235B
1P3703	224B
1P3705	35A
1P3864	41A
1P4056	280
	281.11
1P4105	277
	281.08
1P4106	277
1P4232	280
	281.11
1P4233	280
	281.11
1P4576	49.02
	227
	227B
	228
	229
1P4577	49.02
	203J.01
	217F
	224A
	224B
	224D
	224D.01
	229
	290
	290.02
	296
1P4578 ..	203J.01
	217F
1P4579	217F
	290
	290.02
	296
1P4582	197D
1P4584	217F
1P4585	217F
1P4908 ..	90Z.29
1P5130	292A
1P5269	279
	281.04
1P5273	277
	281.08
1P5290	280
	281.11
1P5292	279
	281.04
	281.10
1P5294	278
	281.03
	281.09
1P5419	277
	281.08
1P5420	277
	281.08
1P6070	279
	281.04
	281.10
1P6071	279
	281.04
	281.10
1P6153	278
	281.03
	281.09
1P6155	278
	281.03
	281.09
1P6158	278
	281.03
	281.09
1P6167	278
	281.03
	281.09
1P6172	280
	281.11
1P6173	279
	281.04
	281.10
1P6175	279
	281.04
	281.10
1P6176	278
	281.03
	281.09
1P6178	280
	281.11
1P6179	278
	281.03
	281.09
1P6180	280
	281.11
1P6181	277
	281.08
1P6182	280
	281.11
1P6188	280
	281.11
1P6209	280
	281.11
1P6217	293
1P6355 ..	332A.02
	333
1P6356 ..	332A.02
	333
1P6357 ..	332A.02
1P6360 ..	332A.02
1P6361 ..	332A.02
1P6416 ..	332A.02
1P6452 ..	70B.02
	70B.03
1P6754	277
	281.08
1P6908	224A
	224D
1P6909	76A
	76B
1P7346	20
	177.02
	184D
	184E
	184E.01
	184F
	184G
	184G.01
1P7545	295
1P7832 ..	111C.08
1P7919	36A
1P8116	131
1P9261	125.10
1P9265	288
1P9876	352
1P9919	235B
1P9958 ..	70B.02
	70B.03
1R0749	80
1S0004	36A
	76A
	76B
	76B.01
1S0812	100C
1S0994 ..	90Z.29
	90Z.31
	112E
	307D
1S0996	112C
1S1015	49.02
1S1638	158H
	281
	281.06
	281.12
1S1770	53
	53.01
1S2121	129
1S2244 ..	90Z.31
	112E
1S4295	52A
1S4915 ..	90Z.29
	90Z.31
	112C
	112E
1S5347	277
	281.08
1S5440	74
	74A
	74B
1S7251 ..	90Z.29
	90Z.31
	112C
	112E
1S7252	112C
	112E
1S7592	71B
1S7984	73.03
1S8517 ..	335P.04
1S8947	323
	325B
1S9110	117
	118.02
1S9209	18.01
1S9497	278
	281
	281.03
	281.06
	281.09
	281.12
1S9498	281
	281.06
	281.12
1S9593	198

PART NUMBER INDEX

Number	Page	Number	Page	Number	Page	Number	Page
	208		262B	1U7058	349	1W4640	74A
	241F		262D	1U7060	349		74B
	243	1U2479	253B	1U7062	349	1W4642	74A
1S9808	281	1U2492	262.01	1U7064	349		74B
	281.06		262B	1U7099	349	1W4664	76A
1T0043	279		262D	1U7102	349	1W4795	52A
	281.04	1U2534	252	1U7107	349		53.01
	281.10	1U2583	229C	1U7108	349	1W4797	82
1T0068	185B	1U2666	218.02	1U7109	349	1W5009	9.02
1T0141	117		219	1U7111	349	1W5010	5
1T0229	118	1U2669	219	1U7115	349		9.02
1T0241	118	1U2827	197D	1U7118	349	1W5058	11
1T0242	118	1U2890	252	1U7119	349	1W5081 ..	6A.01
1T0278	118	1U3243	212	1U7234	349		7A
	118.02		213	1U7264	349	1W5082	5
1T0284	68	1U3373	195	1U7267	349		6A.01
	69A		232	1V3345	332B	1W5084	7B
	69B.01		233	1V3346	332B	1W5163	46A
1T0414	293		250A.02	1V3655	314	1W5207	13A
1T0416	76A	1U3374	232	1V3656	314		13A.01
1T0550	27C	1U3557	227	1V3657	314		13A.05
1T0610	118		227B	1V3658	314		13A.05.02
	118.02	1U3558	227	1V6341	284	1W5252	9
1T0720	27D		227B		285		9.01
	186.02	1U3587	227		285.01	1W5283	14C
1T0738	293		227B	1W0380	101.01	1W5518	41F
1T0822	286A	1U3883	219	1W0762	46A	1W5813	28.01
	332B.01	1U3937	219	1W0998	2	1W5814	28.01
1U0210	258.02	1U4099	229		16	1W5817	28.01
1U0272	250B	1U4164	224A	1W1115	62.01	1W5992	35A
	251A.01		224D	1W1116	35B	1W5994	33C
	251B	1U4165	195	1W1608	5	1W5996	35A
	253B		233A		25A	1W6001	3
1U0367	218.01	1U4166	228	1W1850	4		5.01
1U0372	236	1U4171	229		83		33
1U0373	236	1U4172	228	1W2484	19		33A
1U0374	236	1U4176	228		19.01		33B
1U0375	236	1U4177	228	1W2567	82		33C
1U0379	219	1U4178	228	1W2709	23	1W6012	35A
1U0380	219	1U4179	228	1W2934 ..	332A.01	1W6056 ..	41E.01
1U0745	253B	1U4180	229	1W3014	19.02	1W6177	66E
1U0746	253B	1U4181	229	1W3116	29.02	1W6185	61.02
1U1097	197C	1U4183	254.04	1W3136	25A	1W6209	9.01
1U1205	236	1U4184	254.04	1W3189	25A	1W6238	337A
1U1760 ..	203J.04	1U4296	255.03	1W3840	52A	1W6987	71A
	211	1U4297	256.02	1W3859	14A	1W7241	33A
1U1799 ..	203J.03	1U4298	256.01	1W3860 ..	13A.06		33C
1U1808	230.01	1U4417	250B		14A	1W7242	33A
1U2182	229C	1U4717	207	1W3862	30.01		33C
	264.01	1U4929	251B	1W4050	3	1W7345	49.02
1U2218	229C		253B		25	1W7524	10
1U2332	229	1U4930	251B	1W4319	23	1W7885	13A
1U2472	250B	1U4931	253B	1W4368	29.03	1W8616	76A
	251A.01	1U7053	349		29.04	1W8620	62.01
	251B	1U7054	349		337B.02	1W8795	35A
	252	1U7056	349	1W4383	29.04	1W8922	10A
1U2477	262.01	1U7057	349	1W4564	18.01	1W9070	346.01

PART NUMBER INDEX

Number	Page	Number	Page	Number	Page	Number	Page
1W9168 ..	76B.02		13A.05.02		111C.05		341R.01
1W9169 ..	76B.02	2B0947	216	2F5060	327		341R.05
1W9171	71A		217E	2F6678	111B		345M.05
1W9386	42A		219		111C.06	2H3924	323
1W9387	41A		341R.02	2F8616	67		323.01
	41B		341R.06	2G0401	322	2H3931 ..	111C.09
1W9390	39A		345M.08		323.02		139
	39B	2B2006	119B		323.04		217F
1W9460	10A	2B2471 ..	21B.01	2G0415	327A	2H5001	292A
1W9799	14A	2B2694	66E	2G0493	85C	2H6184	121
	14B		67	2G4561 ..	48A.01		121.01
	14D		286B	2G8957	84		277
1W9800	14B	2B2695	20	2G9000	83		281.08
1W9802 ..	13A.01		66E		84		288
	14A		73.03	2H1193	46A	2H6338	217F
1Y0462	158J		131	2H1537 ..	182A.02		283
			286B	2H2525	285	2H6488	25A
2			292A		285.01	2H6622	299.01
			293	2H2995	131	2J0157	73.03
2A0762	285		335P.03	2H3429	80	2J0744	230.01
	285.01	2B7218	181		128B	2J1227	270.02
	310A.01		182A.03	2H3737	332A		271E
	322	2D0388 ..	341R.07		332A.01		272C
	327E		345M.07	2H3743	185A	2J3118	121.01
	335P.02	2D1290 ..	341R.01	2H3750	13A		177.02
	341R.01		341R.05		13A.01		221.05
	341R.05		345M.05		13A.04	2J3506	237.01
	341R.07	2D2285	133F		13A.05.01	2J3507	181
	345M.05		133G	2H3755	61.01		251B
	345M.07	2D2751 ..	90Z.31		264.01		253B
2A1162	25A	2D4295	138D	2H3757	250B		254.01
2A1538	22		173.02		251A.01		254.04
	270B		173.03		251B		255.02
	271A		175.05		253B	2J4672	128B
2A1736	241F	2D5173	280		260A	2J5907	49.02
	243		281.11	2H3855 ..	90Z.07	2J6089 ..	203J.03
	285	2D5658	118.01		90Z.12	2J6356	138
	285.01		125.12		90Z.17		138B
2A3348	158J	2D6235 ..	90Z.33		90Z.22	2J7295	285
2A3746	117		301C		90Z.28		285.01
	131		301E		90Z.29	2J7761	198
2A4429 ..	13A.06		301F	2H3880 ..	111C.08	2J8163	111B
	14		335P.02	2H3920	106.01		111C.05
	14A	2D6392	111B		309L		111C.06
2A4639	40		111C.06	2H3922 ..	90Z.07		111C.08
	158J	2D6398	287.01		90Z.12		111C.09
	203J.01	2D6533	116		90Z.17	2J8168	219
	280	2D6642	15.01		90Z.22	2J8172	219
	281.11		125.12		90Z.28	2J8239	138E
2A4996	211	2D8009	283		90Z.33	2J9230	327E
2A5328	74	2D8576	67		100	2K1606	236
	74A	2D9457	118		323.01	2K2773	133G
2A5546	348		118.02		323.03	2K2794	138D
2A5885 ..	203J.03	2F0808	52A		327		138E
2B0858	13A		53	2H3923	323.03	2K4821	104
	13A.01		53.01		327		106
	13A.05	2F2860	111B		327A		106.01

PART NUMBER INDEX

Number	Page	Number	Page	Number	Page	Number	Page
	107	2M2689	350C	2N2766	52A		281.08
	109	2M3530	180.06		59	2P1994	277
2K4973	62.01	2M3827	277	2N4386	73.04		281.08
	90Z.34		281.08	2N5775 ..	13A.06	2P1999	296
	112C	2M3974	139		14	2P2026	296
	133F	2M4009	327B		14A	2P2525	228
	133G	2M4208	68		14B	2P2541	114
	194.01		69A		14C	2P2772	6A
	197D		69B.01		14D		6A.02
	235E	2M4209	68	2N5842	15		21B
	285		69A	2N6210	6A		21B.01
	285.01		69B.01		7		25A
	298	2M4210	68	2N7029 ..	203J.02	2P2817	10
	317		69A	2N7228	15.01		10A
	317.02		69B.01	2N7229	15.01	2P2934	281
	319B	2M4211	68	2N7942	43		281.06
2K5103	118.01		69A		43.01		281.12
	127.02		69B.01	2N8037	41F	2P2935	281
2K5254	116	2M4212	68	2N8109	31		281.06
	118.02		69A		31A		281.12
2K5830	211		69B.01	2N8220	3	2P2949	296
2K5957	281	2M4314	68		5.01	2P2975 ..	90Z.31
	281.06		69A		31	2P3203	28.01
	281.12	2M4453 ..	203J.04	2P0911	61.01	2P3204	28.01
2K6830	232	2M5282	114	2P0942 ..	70B.03	2P3230	37
2K8199	212	2M5284	114	2P1005	278	2P3558	296
	213	2M5407	28.01		281.03	2P3559	296
2K8257	139	2M7041	129		281.09	2P3566	281
2L1224	325B		129.01	2P1014	283		281.06
	325D.02		131	2P1053	291		281.12
2L3650	118	2M7167	133F	2P1279 ..	341R.02	2P3617	293
2L5271	43	2M9780 ..	6A.01		341R.06	2P3639	293
	43.01		7B		345M.06	2P3640	292
	219		36A	2P1282	327A	2P3644	286B
2L5317	327A		79F	2P1373	118.01	2P3646	286B
2L6267	241E		155B.02		127.02	2P3650	292A
	243		203J.03	2P1374	118.01	2P3683	293
2L6679	111B		217F		127.02	2P3696	43
	111C.05		286B	2P1974	21B		43.01
2L8052	111		292A		21B.01	2P4005	36A
2L8054	111		329.03	2P1976	281	2P4337	307C
2L8066 ..	111C.05		335P.03		281.06	2P4339	322
2L8071 ..	111C.05		346.02		281.12	2P4370	278
2L8074	312A		346.03	2P1981	280		281
2L8075 ..	90Z.07		346.04		281.11		281.03
	90Z.12		346.04.01	2P1984	280		281.06
	90Z.17		346.05		281.11		281.09
2L8076	346.01		346B	2P1985	280		281.12
2L8077	312B		346C		281.11	2P4371	278
	337B.01		346D	2P1986	281		281.03
2L8081	332A	2N0828 ..	66C.03		281.06	2P4439	291
2L9038	285	2N1287	49.02		281.12	2P4538	137
	285.01		81	2P1990	280	2P4556 ..	325D.02
2M0849	139		81A		281.11	2P5616	109
2M1168	286B	2N2258	309L	2P1992	277	2P5711	137
2M1656	28.01		309N		281.08	2P5834	286A
2M2561	286A	2N2765	52A	2P1993	277	2P5943	235A

PART NUMBER INDEX

Number	Page	Number	Page	Number	Page	Number	Page
	235B	2S0736	8B	2V6166 ..	90Z.29	2W6000	7A
2P6000	285.01	2S0795	50B	2V8974 ..	341R.02	2W6167	42.02
2P6008	285	2S1654	173		341R.06	2W6296	58.01
	285.01		173.02		345M.08	2W6298	62.01
2P6969	292A		173.03	2V9053	112E	2W6537	3
2P6971	292A		180.06	2W0108	5		5.01
2P7211	235A	2S2053	32		5.01		31A
2P7468	114.01		32.01	2W0219	36A	2W6694	31A
2P8225	81B		35A	2W0298	41A	2W7264 ..	76B.02
	82		307C	2W0865	10A	2W7610	27D
2P8226	81B	2S2251	13A	2W1008	48	2W7611	27C
	82		13A.01	2W1010	35A	2W7614	27C
2P8232	333	2S2760	33A	2W1071	40	2W7615	27C
2P8234	81B		33C	2W1072	40	2W7980	11
2P8250	349	2S2846	37		41A	2W7984 ..	13A.01
2P8384 ..	77D.01	2S3440	79F		41E.01		13A.04
2P8421	218.01	2S3745	323.04	2W1073	40	2W8025	5
	235A	2S3770	59		41A		24
	235E	2S4078	120		41E.01	2W8026	24
2P8630	74		121.01	2W1230	76A	2W8142	76A
	74A		203J.03	2W1491	73.04		76B
	74B		217F	2W1545	41J	2W8225	36A
2P8643 ..	66C.03	2S4080	282	2W1652 ..	41E.02	2W8655	50B
	81	2S4663	218.01	2W1733	9.01	2W9053	10A
	81A	2S4787	114		9.02	2W9054	2
2P8669	73.04	2S4872	131	2W1734	9.01		5
2P8679	73.04	2S4958	291		9.02		10A
2P8697	73.04	2S5925	184D	2W1815	2	2W9269	3
2P8707	73.03		184E		16A		5.01
2P8801	81B		184E.01	2W2094	4		48A
2P8803	81B		184F		5.01		48A.01
	82		184G		63A	2W9757 ..	13A.01
2P8804	81B		184G.01	2W2384 ..	41E.02	2W9780	73.04
2P8817 ..	111C.09	2S5926	184D	2W2385 ..	41E.02	2W9978 ..	50B.01
2P8825 ..	111C.09		184E	2W2386 ..	41E.02	2Y7359	288
2P8867 ..	111C.09		184E.01	2W2387 ..	41E.02	2Y8749	180.06
2P8875	81B		184F	2W2605	81		
	82		184G	2W2622 ..	13A.06		
2P8939	81B		184G.01	2W3156	82		
	82	2S6097	37	2W3157	81A	3B0551	18.01
2P9343	281	2S6408	280		82		28.01
	281.06		281.11	2W3294	66E	3B0623	14
	281.12	2S7316	74	2W3815	6A		14B
2P9556 ..	66C.03		74A		6A.01		14C
2P9743	173		74B	2W4116 ..	42B.01		158J
	173.02	2S7391 ..	70B.02	2W4640	8A	3B0645 ..	6A.01
	173.03		70B.03	2W4693	76A		7B
2P9845	15	2S7593	15.02	2W5078	337A		8A
2R2376	327E	2S8439	138	2W5082	42.02		14
2R4330	46A		138B	2W5083	42.01		14B
2R6806	216	2V0099	320A		42.02		14C
	235A		320B	2W5088	17.01	3B1915	13A.05.01
	235B		327D	2W5090	18.01		28.01
2S0007	74		327F	2W5094	18.01		40
	74A	2V1821	216	2W5095	18.01		41E.01
	74B	2V3216	307C	2W5097	18.01		49.02
2S0696	131	2V5924	235A	2W5542	41K		77D.01

3

PART NUMBER INDEX

Number	Page	Number	Page	Number	Page	Number	Page
	184E		271E		250	3G5638	192
	184E.01		272C		250.01		193
	184G		295		250A		194
	184G.01	3C1884	313C		260		201
	217F		313E	3G1043	255		202
	227	3D2824	68	3G1258 ..	203J.02		203
	227B		69A	3G1259	262B		203A
	228		69B.01		262D		203B
	229		73.04	3G1264	219		203C
	290		74	3G1550	227		203D
3B2460 ..	90Z.34		74A		227A		203E
3B2968	22		74B		227B		203F
	221.05		79F		248		203G
3B3359	307C		138		248A		203H
3B4501 ..	90Z.33		138B		248B		203J
	90Z.34		155H		250	3G5706	264.01
3B4502	109		158G		250.01	3G5707	260A
	111D		216		250A		264
	111D.01		217E		250A.01		264.01
3B4504	105		218.01		250A.02	3G5766 ..	203J.04
	309D		235A		253A.01	3G5806	197C
	309G		235E	3G1820	219	3G5900	192
	309K		286A	3G1877	270.02		193
3B4505	81		292A	3G2192	218.02		194
	81A		335P.04	3G2193	218.02		196
	286B		341R.02	3G2292	20		197
	293		341R.06		27D		197A
3B4506	137		345M.06	3G2731	197C		197B
3B4508	297		346C	3G3094	208		197C
3B4510	296	3D2871	25A	3G3126	218.01		197D
3B4604	235B	3D2891 ..	203J.01	3G3159	193	3G5999	230.01
3B4607	235B	3D2898	295		194.01	3G6087	248
	241F	3D2992	69A		194.02	3G6088	248
	243		292A		208		250A.02
	292A	3D8012 ..	182A.02	3G3475 ..	203J.03	3G6089	249
3B4609	112E	3D8241	116	3G3747	264.01	3G6090	249
3B4610	133F	3D8317	129	3G3916	158J		250A.01
	133G		129.01	3G4929	252	3G6091	250
	138E		131	3G5087	197C		250.01
	175.05	3D9799 ..	90Z.33	3G5091	194	3G6092	250
3B4611	197C	3E4880	142		207		250A.01
3B4617	177.01	3E5454	104	3G5092	193	3G6096	249
3B4639	236	3E5464	323.04		206		250A.01
3B5313	236	3E8086	29.02	3G5093	192		252
3B5324	288	3F0379	111B		205	3G6123	250B
3B5325	288		111C.04	3G5094	194		251A.01
	295	3F1147	301C		204		251B
3B6768 ..	335P.01	3F1395	277	3G5379	207		253B
3B7255	291		281.08	3G5531	249	3G6155	195
3B7764	291	3F3442	121		250A.01	3G6403	250B
3B8428	217F		121.01		258B		251B
3B8489	180.06	3F4134	85C		259	3G6404	250B
	230.01	3F4479 ..	203J.03		259.01		251B
	237.01	3F9556	73.03		259.02	3G6415	250B
	262.01	3G0527	248	3G5596	271	3G6416	250B
	262B		248A		272D	3G6418	250B
	262D		248B		273		251A.01

PART NUMBER INDEX

Number	Page	Number	Page	Number	Page	Number	Page
	251B	3G7292	252	3G9182 ..	203J.04		120
	253B	3G7293	252	3G9194	219		121.01
3G6420	250B	3G7294	252	3G9367	236		128B
	251B	3G7297	252	3G9595	250B		137
	253B	3G7298	252		251B		138
3G6457	230	3G7300	252		253B		138B
	230.01	3G7301	252	3G9598	250B		140
	267	3G7326	227		251A.01		158G
	267.01		227B		251B		197C
	268	3G7451	227		253B		197D
	269A		227B	3G9668	235B		203J.01
	269B	3G7452	227		236		203J.02
	269B.01		227B	3G9768	192		203J.04
	269C	3G7547	218.01		193		207
3G6487	262.01	3G7669	207		199		208
	262B		208	3G9769	209		210.01
	262D	3G7806	227	3G9771	193		216
3G6611	250B		227B		194		217E
	251B	3G8030	195		200		217F
3G6612	250B		228	3G9895	216		218.01
	251B		229		217E		221.05
3G6619	250B	3G8054	221.05		218.01		233B
	253B		233B	3H0107	293		235A
3G6699	250B		235B	3H0442	346.06		235B
3G6728	253B	3G8057	221.05	3H1118	327D		235E
3G6743	262B		233B		327F		286A
	262D		235B	3H1489	67		286B
3G6744	260A	3G8148 ..	203J.04	3H3680	111B		335P.03
	262A	3G8149 ..	203J.04		111C.04		341R.01
	262B	3G8163 ..	203J.03		111C.05		341R.02
	262C	3G8164 ..	203J.03		111D		341R.05
	262D	3G8165 ..	203J.03		111D.01		341R.06
3G6765	263	3G8283	254.01	3H3681	111B		341R.07
3G6815	211	3G8284	254.01		111C.04		341R.08
3G6827	230.01	3G8287	251B		111C.05		345M.05
3G6828	230.01		253B		111C.08		345M.06
3G6859	208	3G8288	251B		115.01		345M.07
3G6991	260A		253B	3H3697	111B		345M.08
	265	3G8291	254.01	3H5368 ..	203J.01		346.02
	265.01	3G8292	254.01	3H6660	138D		346.03
	265.02	3G8317	254.04		173.02		346.04
3G6995	260A	3G8318	254.04		173.03		346.04.01
	266	3G8415 ..	203J.01		175.05		346.05
	266.01	3G8463	210.01	3H7180	309N		346C
	266.02	3G8537	247	3H9348	307D		346D
3G7016	260A		247.01	3J1805 ..	182A.02	3J4278	180.06
3G7039	253B	3G8628	210	3J1907	49.02	3J5169	173.02
3G7040	253B	3G8693	207		50B	3J5389	7
3G7168	227		208		66E		7B
	227B		213		68		13A
3G7172	227	3G8695	208		69A		13A.01
	227B		212		69B.01		46A
3G7242	219	3G8696	213		77D.01	3J5390	13A
3G7250	197D	3G8698	212		79F		13A.01
3G7289	252	3G8710 ..	203J.03		83		41F
3G7290	252	3G9037	212		116	3J5552	211
3G7291	252		213		118	3J6034	271E

PART NUMBER INDEX

Number	Page	Number	Page	Number	Page	Number	Page
	272C	3K8584	318		346B		281.03
3J7352	79F		319A	3P3604 ..	335P.02		281.09
3J7354	66E	3K8782 ..	90Z.33	3P3676	241E		292A
	73.04	3K8785	323.04		243	3S4388	279
	79F	3L1473	319	3P3707	125.10		281.04
	203J.04		319B	3P3708	125.10		281.10
	207	3L1704	173.03	3P3738	125.10	3S5275	271E
	208	3L3380	111B	3P4117	293		272C
3J7470 ..	203J.03		111C.04	3P4121	292A	3S6049 ..	90Z.31
3J7473 ..	203J.03	3L4566 ..	327B.01		293		112C
3J7582	211	3L6789 ..	90Z.34	3P4219	241F		112E
3J8903	278	3L8187	100B	3P4660	286B	3S6050 ..	90Z.31
	281.03		235E	3P5168	286B		112C
	281.09		327E	3P5169	286B		112E
3K0360	69B		335P.04	3P5668	235B	3S6162 ..	182A.02
	69B.02	3N3763	111B	3P5669	235B		270B
	79F		111C.05	3P5938	284		271A
	158G	3N3790	352		285.01		282
	158J	3N4082	105	3P7237	279		282.01
	208	3N7848 ..	335P.04		281.04	3S6605 ..	6A.01
	210.01	3P0009	73.03	3P7238	279		7B
	216	3P0218	286B		281.04		8A
	217E		293		281.10	3S7005	158J
	221.05	3P0719	277	3P7447	125.10	3S7116	290
	233B		281.08	3P7489	125.12	3S7165	227
	286B	3P0747	140	3R2704 ..	77D.01		227B
	293	3P0887	138	3R6716	288	3S7166	49.02
	335P.03		138B	3R8801 ..	111C.06		224A
	341R.01	3P1323	7	3S0004	140		224D
	341R.02		7A		283		227
	341R.05		7B	3S0036	25A		227B
	341R.06		8A	3S0602 ..	70B.02		228
	341R.07	3P1979	81B	3S1349	180.06		229
	341R.08	3P2179 ..	90Z.31		182A.02		290
	345M.05		112C		264.01	3S8360	229
	345M.06		112E	3S1356	180.06	3S8361	228
	345M.07	3P2298	79F	3S2093 ..	90Z.28	3S8362	227
	345M.08	3P2404	325A		90Z.29		227B
3K0526	281	3P2558	118.01		90Z.31	3S8363	227
	281.06		127.01		112C		227B
	281.12	3P2685	125.12		112E		228
3K0810	74	3P2767	286B		323.02		229
	74A	3P2768	125.10		327B.01	3S8606	227
	74B	3P2791	125.12		335P.02		227B
3K1787 ..	90Z.34	3P2792	125.10		341R.01	3S8652	138
3K2889 ..	182A.02	3P2793	125.10		341R.02		138B
3K3256	20	3P2794	125.10		341R.05	3S8664 ..	90Z.33
	20.01	3P2847	286B		341R.06		90Z.34
	21B.01	3P3059	125.12		341R.07	3S9233 ..	203J.03
3K5234	185B	3P3096	125.12		345M.05	3S9432	49.02
	251B	3P3098	125.10		345M.07	3S9454	227
	253B	3P3103	125.12	3S2682	293		227B
	254.01	3P3202	158H	3S2708	117	3S9643	45.01
	254.04		293		125.12		46A
3K5762	293	3P3245	125.10		280	3S9669	118.01
3K8460	66E	3P3321	125.12		281.11		127.01
	67	3P3547	158J	3S4346	278	3T0135	332A

PART NUMBER INDEX

Number	Page	Number	Page	Number	Page	Number	Page
	332A.01	3T1180	327	3T2539 ..	90Z.33	3T3049	307D
3T0137	332A	3T1181	327	3T2569	95	3T3106	111B
	332A.01	3T1338	338		95B		111C.05
3T0140	332A		339	3T2570	112E	3T3142	221.05
	332A.01		340	3T2592	241F	3T3370	111D
3T0142	144		341		243	3T3418	111B
3T0145	144		341A	3T2593	192		111C.04
3T0149	144		341B		193	3T3420	111B
3T0151	144		341C		242		111C.06
3T0174	313		341D		242.01	3T3421	111D
3T0175	312D		341E	3T2594	193	3T3422	111B
3T0189	309B		341F		194		111C.05
	309F		341G		194.01	3T3423	111B
	313C		341H		194.02		111C.04
3T0253	235A		341J		242.02		111C.06
3T0254	235B		341K		243	3T3424	111B
3T0300	139		341L	3T2595	315		111C.04
	141		341M	3T2596	315		111C.06
3T0301	139	3T1349	310B	3T2597	315		111C.09
3T0304 ..	335P.02		311	3T2598	315	3T3433	111B
3T0376 ..	90Z.34	3T1350	312	3T2662 ..	90Z.33		111C.06
3T0556	327	3T1356	329	3T2784	111	3T3434	111B
3T0634	299		329.01		111A		111C.06
	300		329.02		111B	3T3453 ..	90Z.33
	301		329.03	3T2792	102	3T3494	131
	301A	3T1501 ..	90Z.31	3T3045 ..	90Z.07	3T3505	137
	301B	3T1723	216		90Z.12	3T3601 ..	155B.02
3T0635	298	3T1729 ..	90Z.28		90Z.17	3T3602 ..	155B.02
	299		115.01		90Z.22	3T3771	129
3T0637	299	3T1783	127.01		90Z.28		129.01
	308	3T1790	127.02		90Z.31	3T3772	129
	309	3T1815 ..	90Z.07		90Z.34		129.01
3T0639	298		90Z.12		235E	3T3809 ..	310A.01
3T0646	158H		90Z.17		307C	3T3810	298
3T0647	158H		90Z.22		341R.07		310
3T0688	138		90Z.28		345M.07	3T3811	118
3T0690	346.02	3T1885	107	3T3046 ..	90Z.34	3T3984	299A
	346.03	3T1886	107	3T3047 ..	90Z.28		307C
	346.04	3T1887	106		90Z.31		307D
	346.04.01		107		90Z.34	3T4215	131
	346.05	3T1888	103		341R.07	3T4403	128B
	346D		108		345M.07	3T4575	121
3T0717	112		109	3T3048 ..	90Z.07	3T4577	121
	112A	3T2139	125.12		90Z.12		121.01
	112B	3T2176	279		90Z.17	3T4580	281
	112C		281.04		90Z.22		281.06
	112D		281.10		90Z.28	3T4615	180.06
	112E	3T2273	127.01		90Z.29	3T4616	180.06
3T0718	115	3T2280	142		90Z.31	3T4709	111B
	115.01	3T2357 ..	90Z.07		90Z.34		111C.05
3T0719	144		90Z.12		115.01	3T4710 ..	111C.05
3T0720	320		90Z.17		332A.01	3T4717 ..	155B.02
	320A		90Z.22		341R.02	3T4920	316A
	320B		90Z.28		341R.06		316B
	332	3T2522 ..	90Z.33		341R.07	3T4965	286A
	332A	3T2523 ..	90Z.33		345M.06	3T4968	281
3T1121	299.01	3T2524 ..	90Z.33		345M.07		281.06

PART NUMBER INDEX

Number	Page	Number	Page	Number	Page	Number	Page
	281.12		307B		309K		301D.02
3T4969	286A	3T6373	309D		309N	3T8104	298
3T4992	292A		309G		313B		299A
3T4993	274		309K		313C		310A.01
	286		309N	3T7064	309L	3T8250	285
	286A		312C		313C		285.01
3T5016	286A	3T6375	312A		313D	3T8339	285
3T5017	128B	3T6411	312B	3T7086	313C		285.01
	130	3T6457	128B		313E	3T8340	285
3T5018	130	3T6465	158G	3T7093 ..	335P.02		285.01
	131	3T6466	158G	3T7139	49.02	3T8341	285
3T5020	131	3T6519	158J	3T7140	49.02		285.01
3T5022	177.02	3T6520	158J	3T7141	48B	3T8343	285
3T5031	177.01	3T6521	158J		49		285.01
3T5036	286A	3T6543	181		49.01	3T8349	285
	292A	3T6655	309L		49.02		285.01
3T5051	111B	3T6661 ..	90Z.33	3T7146	336	3T8352	285
3T5201	320A	3T6663 ..	335P.02		336.01	3T8354	284
	320B	3T6679 ..	90Z.33	3T7147 ..	335P.02	3T8356	284
	327D	3T6680 ..	90Z.33		337B.01		285.01
	327F	3T6774	305A	3T7252	176	3T8357	284
3T5231	285	3T6821 ..	90Z.34		177		285.01
	285.01	3T6833	330		298	3T8358	274
3T5233	281.12		330A		299A		274.01
3T5284	142		330A.01	3T7255	49.02		284
3T5304	181	3T6838 ..	335P.02	3T7256	49.02		285
3T5306	181	3T6877	221.05	3T7284	298	3T8432	350A
3T5309	181	3T6898	305		304	3T8635 ..	111C.08
3T5345	111B		305A	3T7286	320		111D
	111C.06	3T6899	302		321	3T8649	286B
3T5355	139		303	3T7292	133F		292A
3T5456 ..	337B.01		303A	3T7394	96	3T8650	286A
3T5681	158J		303B		97		292A
3T5829	127.02		303C		98	3T8686	231B
3T5830	119B		303D		98A		231C
3T5962 ..	111C.08		327		98B		231D
3T6219	158J	3T6900	323		98C		248
3T6224	138D		327	3T7409	350A		248A
	138E		327E	3T7566 ..	182A.02		249
	173	3T6901	320A	3T7567 ..	182A.02		250
3T6225	173		320B	3T7709 ..	90Z.34		250A
3T6230	173		322	3T7728 ..	90Z.07		250A.01
3T6240	148		323		90Z.12		250A.02
	149	3T6905 ..	335P.02		90Z.17	3T8700	155C
3T6264	36A	3T6912	304.01		90Z.22		155D
3T6325 ..	335P.02		327D		94		155E
3T6326 ..	335P.02		327F	3T7729 ..	90Z.33		155F
3T6333	309B	3T6968 ..	310A.01		94.01		155G
	309F	3T6969 ..	310A.01		94.02		155H
	309J	3T6970 ..	310A.01	3T7870 ..	90Z.33	3T8710	182A
3T6352	102	3T6974	350A	3T8102	298		182A.01
	104	3T7057	313.01		299A	3T8730 ..	90Z.33
	105	3T7058	309D		299B	3T8751	327E
3T6354	105		313A	3T8103	299B	3T8791 ..	182A.02
3T6371	298	3T7059	313C		301C	3T8792 ..	182A.02
	299A		313E		301D	3T8816	156
	307A	3T7063	309G		301D.01		157

PART NUMBER INDEX

Number	Page
	158
3T8832	346.02
	346.03
	346.04
	346.04.01
	346.05
	346D
3T8833	346.02
	346.03
	346.04
	346.04.01
	346.05
	346D
3T8835	346.02
	346.03
	346.04
	346.04.01
	346.05
	346D
3T8951 ..	111C.01
	111C.02
	111C.03
	111C.10
3T9010	350B
3T9100 ..	335P.02
3T9118	191
3T9139	299B
	309A
	309B
	309D
	309E
	309F
	309G
	309H
	309J
	309K
3T9196	281.08
3T9342	346.02
	346.03
	346D
3T9343 ..	335P.03
	335P.04
3T9345	241E
	243
3T9350	241F
3T9351	241F
	243
3T9358	243
3T9359	243
3T9384	346B
	346C
3T9385	346C
3T9486	221.05
3T9494 ..	111C.05
3T9524 ..	111C.05
3T9525 ..	111C.05
3T9637	221.05
3T9660 ..	335P.03
3T9666	322
3V3308	177.02
3V7689 ..	332B.01
3V8252	316A
	317
3Y9478	250A
	253B
3Y9506	248A
3Y9507	248A
3Y9508	250A
3Y9509	250A
3Y9510	248A
	251B
	4
4B1230 ..	111C.08
4B1256	133G
4B1273	301C
4B1282	285
	285.01
4B1284	284
	285.01
4B1291	284
	285.01
4B1550	314
4B2043 ..	90Z.34
	105
	109
	335P.04
4B2047 ..	76B.02
4B2049	111D
	111D.01
4B3057	235B
4B3388	81B
	82
	211
4B4043	252
4B4158	68
	248
	248A
	249
	250
	250.01
	250A
	268
	269
	274
	341R.07
	345M.06
	352
4B4159	248
4B4161	36A
4B4274 ..	76B.01
	76B.02
	111D
	111D.01
	235B
	327
	327A
	346.02
	346.03
	346.04
	346.04.01
	346.05
	346D
4B4276 ..	90Z.33
	111C.08
	301F
	310.02
	310A
	310A.01
4B4277	61.02
4B4278	177.02
	317
	317.02
	319B
	325B
	325D.02
	346.02
	346.03
	346.04
	346.04.01
	346.05
	346D
	348
4B4280	111D
	111D.01
	175.05
	292A
	317
	317.02
4B4281	317
	317.02
	319A
4B4336	29.04
4B4845	277
	281.08
4B4863	66E
	109
	335P.04
4B5324	327E
	352
4B5423	85C
4B5949	85C
4B8024	281
	281.06
	281.12
4B9747	73.04
4B9782	197D
4B9783	277
	280
	281.08
	281.11
4B9784	280
	281.11
4B9785	121
	121.01
4B9880	15.01
	129.01
	131
	158H
	286B
4D0128	323.03
4D3704	16
	24
4D4064	133G
4D6082	138E
4D6624	327A
4D6695	277
	281.08
4D7388 ..	90Z.31
4D7408	312D
4D7411	312D
4D7416	312D
4D7417	312D
4D7421	312D
4D7733	79F
	325D.01
4D7735 ..	325D.01
4D7794 ..	90Z.07
	90Z.12
	90Z.17
	90Z.22
	90Z.28
	90Z.29
	90Z.31
	90Z.34
	235E
	307C
	325B
	325D.02
	327D
	327F
	332A
	332A.01
	341R.02
	341R.06
	341R.07
	345M.06
	345M.07
4D8123 ..	90Z.34
4D9986	293
4F2041	118
	118.02
4F2129 ..	155B.02
4F2292	310.02
	310A
	310A.01
4F2294 ..	90Z.34

PART NUMBER INDEX

Number	Page	Number	Page	Number	Page	Number	Page
4F4879	291		241F	4K5122 ..	90Z.33	4M5274	111D
4F7387	48	4J4742	280	4K5175	282		111D.01
4F7389 ..	155B.02	4J4809	280	4K6297 ..	77D.01	4M5281	212
	155G	4J5267	49.02	4K8864	112C		213
4F7390	31		227		287.01	4M5282	301C
	31A		227B	4L1250	346.02		301E
4F7957 ..	70B.02		228		346.03	4M5283 ..	310A.01
	70B.03		229		346.04	4M5285	219
4F8503	142	4J5351	291		346.04.01	4M5317	287.01
4F8711	177.02	4J5477 ..	341R.02		346.05	4M5858 ..	155B.02
	327E		341R.06		346D	4M5912	218.01
4F8965	35B		341R.07	4L6454	37	4M6646	53
4F9653	274.01		345M.06		41E		53.01
	281.12	4J5573	246		116	4M8239	137
4H0408	208	4J6555	158J		177.02	4M8303	63
4H1394	128B	4J6888	229C		241E		63A
4H1641	138D		264.01		301F	4M8363	21B
	173	4J7376	230.01		332A.01	4M8910	116
	173.02		264.01		350A	4N0342	11
	173.03	4J7385	218.01	4L6459	101.01	4N0513	33A
	175.05	4J7386	218.01	4L7124 ..	90Z.33		33C
4H3283	101.01	4J7533	73.03	4L9337	243	4N0614	7
4H4737	129		207	4M1336	43	4N0683	6A
	129.01		208		43.01		6A.01
4H5440	116		210.01	4M1474	70A		19.02
4H6520	229C		212	4M1712	279	4N0684	9.01
4H6730	155G		213		281.04		9.02
4H8878	83		286B		281.10		10
	83A	4J8251	197C	4M1815	111D		27C
	127.02	4J8252	197C		111D.01	4N0685	7
4H9027	85C	4J8265 ..	90Z.31	4M1827	111B		7A
4J0520	49.02		112E		111C.06		7B
	194.01		197C	4M1828	111B		8A
	217F	4J8979	232		111C.06	4N0693 ..	6A.01
	218.01	4J8981	229C	4M1829	111B		7B
	224A		271E		111C.06		8A
	224B		272C	4M1831	111B	4N0729	3
	224D	4J8996 ..	203J.02		111C.04		5
	229	4J8997 ..	203J.03		111C.06		5.01
	290	4J9058	254.01	4M1833	111B		48
	290.02		254.04		111C.06	4N0775	70A
4J0522	49.02		255.02	4M1851	111B	4N0776	69B
	203J.02	4J9118	252		111C.06		69B.02
	217F	4J9208	251B	4M1853	111B	4N0790	6A
	246		253B		111C.06		6A.02
4J0523 ..	203J.03		254.01	4M1854	111B	4N0794	6A
4J0524	49.02	4J9535	210.01		111C.06		6A.02
	217F	4K0413	219	4M1896	111B		45.02
	290	4K0415	219		111C.06	4N0824	69B
	290.02	4K0499	323.01	4M2381	129		69B.02
	296		323.03		129.01	4N0848	27D
4J0525	246	4K0684	180.06		131	4N0851	16
4J0526	246		182A.02		158H		16B
4J0527	217F		236	4M3217 ..	111C.08	4N0861	35B
4J2506	81B	4K1388	346B	4M3915	280	4N0864	6A
	82		346C		281.11		6A.02
4J3044	241E	4K2039	286B	4M4983 ..	90Z.29		37

PART NUMBER INDEX

Number	Page	Number	Page	Number	Page	Number	Page
	45.02		69B.01		15	4N8346 ..	70B.01
4N0865	35B	4N1625	20	4N4299	2	4N8410	35B
4N0898	74	4N1650	6A		16	4N8478	21B
	74A		6A.01	4N4307	6A	4N8816	33A
	74B	4N1682	6A	4N4405 ..	111C.09	4N9404 ..	111C.08
4N0899	70A		6A.02	4N4668	31	4N9753	35B
4N0900	68	4N1683	6A	4N4957	16	4P0513	28.01
	69A		6A.02		16B	4P0519	28.01
	69B.01	4N1684	6A	4N5226	2	4P0520	28.01
4N0901	68		6A.02		5	4P3429	53.01
	69A	4N1718	15		20	4P3864	45.01
	69B.01		15.01		20.01	4P8260 ..	76B.02
4N0905	69B	4N1720	27D	4N5339	33A	4P8487 ..	76B.02
	69B.02	4N1751	43		33C	4S1936 ..	90Z.07
4N0913	35A	4N1779	6A	4N5611	15		90Z.12
4N0914	35A	4N1799	45.01	4N5612	15		90Z.17
4N0932	13A	4N1807	75	4N5614	15.01		90Z.22
	13A.01	4N1816	2	4N5654	14		90Z.28
	13A.05		13	4N5834	43	4S1962	327A
	13A.05.02		13A		43.01	4S5414	235A
4N0933	6A		13A.01	4N5835	43		235B
	6A.02	4N1820	13A	4N5858	7A	4S5719 ..	341R.02
	21B	4N1868 ..	66C.03		7B		341R.06
	21B.01	4N1870	73.04		8A		345M.06
	25A	4N1946	45.02	4N5893	14	4S5898	43
4N0951	73.03	4N1948	43		14B		43.01
4N0952	70A		43.01		14C		101.01
4N0955	11	4N1956	43	4N5906 ..	13A.06	4S6137	13A
	15.01	4N1960	2		14		13A.01
4N0963	2		5		14A		13A.05
	5		6A	4N6556	43		13A.05.02
	11	4N2088	4	4N6658	7	4S6680	36A
4N0999	29.02		76		7A	4S8537	125.12
4N1091	67	4N2109	15.02		7B	4S8546	118.01
4N1098	67		16		8A		125.12
4N1101	67	4N2269	13A	4N6866	2	4S8898	14
4N1102	67	4N2294 ..	90Z.34		6A.02		14B
4N1104 ..	66C.03	4N2481	3	4N6876	3	4S8899	14
4N1105	66E		5.01		5		14B
	67		32		24	4S8902	14
4N1106	15.01	4N2514	23	4N7183	27D		14B
4N1111	67		24	4N7253	13A	4S8903	14
4N1114	24	4N2555	76A		13A.01		14B
4N1116	67		76B		13A.05	4T0032	257
4N1119	66E	4N2803 ..	13A.06		13A.05.02	4T0033	256
	67		14	4N7357	66E	4T0034	254.02
4N1120	67		14A		67	4T0105	270.02
4N1151	28.01		14B	4N7437	66E	4T0106	268
4N1156	45.01		14C		67		269B
4N1186	287.01		14D	4N7465	66E		269B.01
4N1232	27D	4N3841 ..	335P.03		67		269C
4N1235	27C	4N3887	74	4N7498	43		270
4N1294	29.02	4N4178	6A		43.01		270.02
4N1418 ..	41E.01	4N4218 ..	70B.02	4N8112	81	4T0125	272
4N1419 ..	41E.01		70B.03		81A	4T0130	270.02
4N1572	68	4N4298	2	4N8221	101.01	4T0134	273
	69A		5	4N8225	101.01	4T0135	272D

PART NUMBER INDEX

Number	Page	Number	Page	Number	Page	Number	Page
4T0136	271	4T0207	271E	4T4202	246	4T9499	250.01
4T0137	267		272C	4T4204	246		250A.01
	267.01	4T0208	271E	4T4207	246		253.02
	269D		272C	4T4386	250B		253.03
	273	4T0221	224A	4T4874	237.01	4T9500	255.01
4T0138	270.02		224D	4T4875	237.01	4T9524	248
	272D	4T0251	224A	4T4914	270.02		248B
4T0139	270.02		224D	4T5282	270B		250.01
	271	4T0252	224A		271A		250A.01
4T0140	195		224D	4T5490	252		250A.02
	236	4T0533	224A	4T5899	209.01		253A.01
	250A.02		224D	4T5900	192		260A
4T0142	236	4T0534	224A		193	4T9568	248C
4T0146	269		224D		198B		251A.01
	269A	4T0876	197C	4T5901	193	4T9570 ..	251A.01
	270.01	4T1023	197D		194	4T9578 ..	251A.01
	270.02	4T1213	236		194.01	4T9579 ..	251A.01
4T0147	267	4T1314	83		194.02	4T9580 ..	251A.01
4T0148	267	4T1353	250B		200A	4T9583 ..	251A.01
4T0149	268	4T1716	262.01	4T6838	229C	4T9584 ..	251A.01
	269B	4T1717	262	4T7466	224B	4T9585	248
	269B.01		262.01	4T7534	250B		250A.02
	269C	4T1721	252		251A.01		251A
4T0150	268	4T1843	271A		260A		251A.01
	269B		271E	4T7701	248B	4T9586	254.01
4T0151	267		272C		251A.04	4T9587	254.01
	267.01	4T1864	218.01	4T7702	248B	4T9588	254.05
	269	4T1865	218	4T8086	262B	4T9592 ..	253A.01
	269A	4T2142	235A	4T8087	262B	4T9595	248B
4T0197	269	4T2479	270.02	4T8315	273		251A.02
4T0198	225.02		271	4T8480	271E	4T9650	224B
	269		272D		272C		224D.01
4T0199	225		273	4T8594	211	4T9651	224B
	225.01	4T2987	254.04	4T8698	197C		224D.01
	269	4T2988	254.04	4T8699	197C	4T9836	254.01
4T0200	267	4T3107	229C	4T9086	267.01	4T9838	254.01
	268	4T3131	138		269A	4T9839	255.04
	269B		138B		269B.01	4T9840 ..	251A.01
	269B.01	4T3522	271E		269C		254.01
	271A		272C		270B	4V3410	329.03
4T0201	224	4T3552	270B	4T9293	197C	4V6981	301E
	224A		271A	4T9294	197C	4V7849	316.01
	224C	4T3553	267	4T9295	197C		319
	224D		267.01	4T9302	197C		319B
	267		268	4T9303	197C	4V7850	316.01
	267.01		269A	4T9439 ..	251A.01	4V7851	316.01
	268		269B	4T9445 ..	251A.01	4V7855	316.01
	269B		269B.01	4T9446	262B	4V7857	316.01
	269B.01		269C	4T9447	260A	4V7859	316.01
4T0202	271E		271B		262B	4V7860	316.01
	272C		271E	4T9465	267.01	4V7861	316.01
4T0203	271E		272A	4T9466 ..	269B.01	4V7865	317
	272C		272B	4T9467	267.01		317.02
4T0204	271E		272C	4T9470	262B	4V7866	319
	272C	4T3694	250B	4T9479 ..	251A.01		319B
4T0205	271E	4T3923	251B	4T9481 ..	251A.01	4V7872	318
	272C	4T3924	251B	4T9489	248C		319A

PART NUMBER INDEX

Number	Page	Number	Page	Number	Page	Number	Page
4V7873	318		319B	4W0972	41E	4W6012 ..	66C.03
	319A	4V8271	317		41K		69A
4V7874	318		317.02	4W0973	41E		69B
	319A	4V8554	318		41K		69B.01
4V7875	318		319A	4W1055 ..	13A.01		69B.02
	319A	4V8555	319B		13A.05	4W6061 ..	6A.01
4V7876	318	4V8556	319		13A.05.02	4W6310	4
	319A		319B	4W1075	41E		5.01
4V7877	318	4V8561	318		41J		76A
	319A		319A	4W1129 ..	335P.02		76B
4V7881	316.01	4V8562	318	4W1141	41K	4W6311	76A
4V7884	318		319A	4W1297	41F		76B
	319	4V8565	318	4W1299	42B	4W6312	76A
	319A		319A	4W1330	8B		76B
	319B	4V8566	318	4W1336	45.01	4W6313	76A
4V7885	319		319A	4W1795	41G		76B
4V7890	319	4V8576	318		41H	4W6314	76A
	319B		319A		41J		76B
4V7891	319	4V8577	318		41K	4W6315	76A
	319B		319A		320B		76B
4V7895	319	4V8579	317	4W1796	41E	4W6316	76A
4V7896	317		317.02	4W1881	41E		76B
	317.02	4V8580	319	4W1883	41E	4W6317	76A
4V7902	317		319B	4W1886	41E		76B
	317.02	4V8583	318	4W1887	41E	4W6318	76A
4V7903	317		319A	4W2169	74B		76B
	317.02	4V8585	317	4W2357	41K	4W6538	63A
4V7904	317		317.02	4W2455	41K	4W6822	16B
	317.02	4V8586	317	4W2456	41K	4W6827	2
4V7908	317		317.02	4W3820	41J		5
	317.02	4V8591	319	4W3861	41J		16B
4V8023	317		319B	4W3864	43.01	4W7005	2
	317.02	4V8597	320	4W4495 ..	77D.01		5
4V8026	317	4V8601	320	4W4588 ..	6A.01		13A.02
	317.02		320A	4W4590 ..	77D.01		13A.04
4V8029	317	4V8605	317	4W4591 ..	77D.01		13A.05
	317.02		317.02	4W4592 ..	77D.01		13A.05.01
4V8031	317	4V8606	319	4W4794	45.01		13A.05.02
	317.02		319B	4W4806	5.01	4W7018	76B
4V8032	317	4V8609	319		77C		76B.01
	317.02		319B		77D		76C
4V8033	317	4V8610	319		77D.01	4W7057	4
	317.02		319B	4W5478	66E		5.01
4V8034	317	4V9830	298	4W5479	66E		66C.02
	317.02		299A	4W5492	9.01		66C.03
4V8035	317		320		9.02	4W7374	73.04
	317.02		320A	4W5698	9.02		74B
4V8256	316.01	4W0101	69A	4W5699	9.02	4W7416 ..	66C.03
	317		71A	4W5700	9.02		73.03
	317.02	4W0462	41E	4W5701	9.02		73.04
4V8257	318		41J	4W5702	10A	4W7504	5.01
	319A	4W0483 ..	335P.02	4W5703	10A		51A
4V8259	317	4W0485 ..	335P.02	4W5904	41E	4W7653	74B
	317.02	4W0752	18.01	4W5973	2	4W7654	73.04
4V8264	319	4W0810	101.01		5	4W8089	15.02
	319B	4W0811	41F		15.02		16
4V8265	319	4W0839	8B	4W5998	15	4W8140 ..	69B.01

PART NUMBER INDEX

Number	Page	Number	Page	Number	Page	Number	Page
4W8485	58.01		325D.02		15		264.01
4W8724	5.01		329.03	5H2068	35B	5J5643	252
	36A	5D1911	198		49.02	5J5793	63
4W9104	52A	5D1972	237.01	5H2767	291		63A
4W9987	63A	5D5958	219	5H2824	277		282
		5D7635 ..	90Z.07		281.08	5J7154	232
5			90Z.12	5H3193	318	5J8150	232
			90Z.17		319A	5J8325	230.01
5B0639	133G		90Z.22	5H3895	133F	5J8350	229C
5B1484	76A	5D9514	127.02	5H4019	194.01		264.01
	76B	5F0304	25A	5H4020	217F	5J9454	229C
	76B.01	5F2101	101.01	5H4279	139		264.01
5B2638	13A	5F3106	216	5H4871	327B	5K3546	327B
	13A.01		217E	5H4909	279	5K4778 ..	90Z.31
	13A.04		287.01		280	5K5068	348
	13A.05	5F3492	282		281.04	5K5120	121
	13A.05.01	5F4764	349		281.10		121.01
	13A.05.02	5F4899	33A		281.11	5K5338 ..	90Z.33
	278		33C	5H5672	43	5K9065	27D
	281.03	5F7054	292A		43.01	5K9107	121
	281.09	5F9144 ..	41E.02	5H6005 ..	203J.01		121.01
	286A		69B		346C		125.10
5B5620	158J		69B.02	5H6467	111B	5K9179	310.01
5B9079	346.01		293	5H7110	288	5K9235	121
5B9318	70A		322	5H7153 ..	13A.05		121.01
	293		323.02		13A.05.02	5K9238	291
5B9603	21B		323.04	5H8038	80	5K9243	127.02
	21B.01		325B	5H8624	18.01	5K9244	291
	45.01		325D.02	5H8853	131	5K9246	291
	115.01	5F9757	327D	5H8936	291	5K9989	121
	278		327F	5H8985	43		121.01
	281.03	5G0683	216		43.01		291
	281.09	5G0956	348		117	5L1761	130
5B9628	177.01	5G1218 ..	341R.01	5H9394	235A	5L2683	23
5C2874	106		341R.02	5H9809	286B		24
	107	5G2754	348	5J0124	252	5L4426	105
5C6565	85C	5G2757	348	5J0697	250B	5L4751	180.06
	297	5G2758	348		251A.01	5L4758	322
5C7267	309B	5G2759	348		251B		323.01
	309D	5G2800	348		253B		323.03
	309F	5G2881	348	5J1208	270.02		325B
	312D	5G2883	348	5J1389 ..	203J.01		325D.01
5C7268	309B	5G2944	348	5J3241	211		325D.02
	309F	5G2980	347	5J3306	197C	5L5032	43
5C9553	309B	5G3015	346.06	5J3488	230.01		43.01
	309F	5G3045	348	5J3576	271	5L6688	236
	309J	5G3127	346.06		272D	5L7200 ..	90Z.33
	309M	5G3583	348		273	5L8991	73.04
	313C	5G3746	348	5J4664 ..	203J.03	5L8992	73.04
	313E	5G3748	348	5J5314	66E	5M0544 ..	182A.02
5D0019 ..	335P.02	5G3749	348		67		264.01
5D0353	121	5H0135	35B		218.01	5M2057	197D
	121.01	5H1351	73.04	5J5315	241F	5M2130	277
	177.02	5H1504	13A		243		281.08
5D0718	79F		13A.01	5J5400	232	5M2691	68
	329.03		13A.04	5J5402	232		69A
5D1026	325A		13A.05.01	5J5559	230.01		69B.01

PART NUMBER INDEX

Number	Page	Number	Page	Number	Page	Number	Page
5M2697	68		119B	5M3062	41E	5P0063	13A
	69A		125.10		177.02		13A.01
	69B.01		128B		235E		13A.05
5M2894	6A		133F		298		13A.05.02
	6A.02		133G		316B	5P0537	52A
	13A		139		317		73.04
	13A.01		144		317.02		90Z.33
	13A.04		155B.02		332A.01		90Z.34
	13A.05		155G		350A		235A
	13A.05.01		155H	5M3320	283		284
	13A.05.02		158J	5M4741	50B		285
	20		197C	5M5860	288		285.01
	20.01		203J.01	5M6126	118.01		313C
	21B		216		125.10		313E
	21B.01		217E	5M6187	125.12		322
	25A		217F	5M6213	40		335P.02
	27C		221.05		41A		341R.07
	27D		224A		41E.01		341R.08
	28.01		224B		45.01		345M.07
	29.02		224D		67		345M.08
	29.04		224D.01	5M6214	7B	5P0597	62.01
	32		227		13A	5P0695 ..	90Z.29
	32.01		227B		13A.01		90Z.31
	33A		228		13A.05		112C
	33C		229		13A.05.02		112E
	35A		233B		43	5P0747 ..	90Z.29
	35B		235A		67		90Z.31
	40		235B		69B		112C
	41A		281		69B.02		112E
	41E.01		281.06		130	5P0761 ..	90Z.29
	41E.02		281.12		292A		112E
	41F		282	5M6228	73.03	5P0796	73.03
	42.02		285	5M6668	114	5P1075	32.01
	45.02		285.01	5M7900	125.10		41E
	48A.01		286A	5M7925	118.01		41J
	49.02		287.01		125.10		41K
	59		290	5M9204 ..	90Z.31		62.01
	61.01		291		112C		79F
	75		296		112E		90Z.31
	76A		316A	5M9205 ..	90Z.31		101.01
	76B		323.02		112C		112C
	76B.01		325A		112E		112E
	77D.01		325B	5M9548	137		133G
	79F		325D.02	5M9622	129.01		175.05
	83		327E		131		177.01
	90Z.07		332A		137		177.02
	90Z.12		341R.01		158H		221.05
	90Z.17		341R.02	5M9623	129.01		235A
	90Z.22		341R.05		131		241E
	90Z.28		341R.06		137		301F
	90Z.29		341R.08		158H		307D
	90Z.31		345M.05	5M9624	129		309B
	90Z.33		345M.06		129.01		309F
	90Z.34		345M.08		131		309J
	112C	5M3034	111B		137		309M
	117		111C.06		158H		310.01
	118		111C.09	5N0093 ..	6A.01		316A

PART NUMBER INDEX

Number	Page	Number	Page	Number	Page	Number	Page
	316B	5P3928	323		337B.01		325D.02
	323	5P3929	325B		341R.07		327
	323.04	5P3944	323	5P5624 ..	90Z.07	5P6254	118.01
	325A		325B		90Z.12		125.10
	325D.01	5P3945	325A		90Z.17	5P6271	332A
	325D.02	5P3946	325A		115.01	5P6298 ..	111C.05
	327	5P3948	325B		304.01		111C.09
	327A	5P3950	325A		305A	5P6393	118
	327E	5P3951	325A		312A	5P6438	133G
	332A.01	5P4020	248		312B	5P6458	323.02
	335P.02		249		312C		323.04
5P1076	58.01		250		332A	5P6652	85C
	175.05		250.01	5P5637	323.04		270B
	246	5P4061	271E	5P5639	175.05		271A
	270B		272C	5P5645 ..	41E.02	5P6670	327B
	271A	5P4106	323		325A	5P6719	210.01
	297	5P4107	323		325D.01	5P6721	118.01
	301F	5P4115 ..	90Z.34	5P5664 ..	41E.02		125.12
5P1251	327		309L		325A	5P6725	346.01
5P1255	32		327		325D.01	5P6871	298
	32.01		327A	5P5672 ..	335P.02	5P6874	310.01
5P1327	268		327B	5P5675	111	5P6920	104
	269		327B.01	5P5676	325A	5P6935	325A
5P1370	27D		327D		325D.01		325D.01
5P1404	217F		327E	5P5677 ..	90Z.29	5P6944	158G
5P1471	62.01		327F		100C		217E
5P1475 ..	90Z.07		332B	5P5678	16		221.05
	90Z.12		332B.01		16B	5P6945	73.04
	90Z.17		335P.02	5P5680	299.01	5P7070	323
	115.01		348		304.01		323.02
5P1695	79F	5P4116	41K		305B		323.03
5P1705	155G		77D.01	5P5747	301C		323.04
5P1713	43	5P4130	145	5P5755	177.02	5P7107	325A
5P1763	349	5P4278	346.01	5P5768	301C	5P7211	301E
5P2228	301F	5P4479	287.01		301E		301F
5P2235	197C	5P4482	346.02		301F	5P7213	142
5P2321	304.01		346.03	5P5824	327E		143A
5P2493 ..	41E.02		346.04	5P5855	119B	5P7458	235E
	325A		346.04.01	5P5874	346B	5P7459	235E
5P2546	183		346.05	5P5908	325B	5P7462	221.05
	183.01		346D	5P5921	323	5P7463	221.05
	183.01.01	5P4483	289	5P5928	323.01	5P7464 ..	341R.07
5P2566	116	5P4887	285		323.03		345M.07
	138E		285.01		327B.01	5P7465 ..	341R.07
	182A.02	5P4898	325A	5P5929	322		345M.07
	290.02	5P4939 ..	76B.02		327	5P7466	290
	317	5P5297 ..	155B.02	5P5954	327D		290.02
	317.02	5P5405	117		327F		341R.02
5P3108	207		118.02	5P5992	307C		341R.06
	208	5P5454	327E		307D		345M.06
5P3149	197D	5P5520	237.01	5P6011	83	5P7467	290
5P3150	125.10	5P5601	74		83A		290.02
5P3270	285.01		74A	5P6129	323.01		341R.02
5P3272	73.03		74B		323.02		341R.06
5P3414	127.01	5P5621 ..	111C.05		323.03		345M.06
5P3418	109	5P5623	100		323.04	5P7488 ..	325D.01
5P3419	109		133G		325A	5P7513	177.01

PART NUMBER INDEX

Number	Page
5P7514 ..	41E.01
5P7705	175.05
5P7760	329.03
5P7807	109
5P7892 ..	203J.04
5P7957	317
	317.02
5P7958	317
	317.02
5P8057	351
5P8112	290
	290.02
	341R.02
	341R.06
	345M.06
5P8119	76A
	76B
	76B.01
5P8132	218.01
5P8161	352
5P8167	316B
	323.04
	327A
	346.02
	346.03
	346.04
	346.04.01
	346.05
	346D
5P8168	243
5P8189	173
	173.02
	173.03
5P8233	84
5P8244	35B
	49.02
	203J.01
	217F
	221.05
5P8245	12
	25A
	27C
	35A
	41F
	42.02
	49.02
	61.01
	61.02
	90Z.07
	90Z.12
	90Z.17
	90Z.22
	90Z.28
	90Z.29
	115.01
	116
	118
	119B
	125.10
	127.01
	138D
	144
	155B.02
	155G
	173
	173.02
	173.03
	175.05
	180.06
	197C
	197D
	216
	217E
	217F
	221.05
	227
	227B
	228
	229
	233B
	235A
	290
	296
	325D.01
	332A
	341R.02
	341R.06
	341R.07
	345M.06
	345M.07
	345M.08
5P8247	22
	23
	24
	106
	106.01
	107
	121
	121.01
	127.02
	155G
	216
	217E
	217F
	227
	227B
	277
	281.08
	332A
5P8248	22
	127.01
	138D
	173
	221.05
	270B
	271A
	271E
	272C
	315
5P8249	22
	185B
	227
	227B
	228
	229C
	230.01
5P8250	180.06
	181
	185A
	255.02
	297
5P8429	27D
5P8476	295
5P8500	29.04
	30.01
	37
	85C
	198
	337B.01
5P8501 ..	337B.02
5P8502	29.04
	30.01
	37
	85C
	198
	337B.01
5P8782	173
	173.02
5P8918	299.01
5P8998	121
	121.01
5P9085 ..	90Z.07
	90Z.12
	90Z.17
	90Z.22
	90Z.28
5P9119	197C
5P9209	243
5P9262 ..	335P.04
5P9294	66E
	67
5P9295	67
5P9297 ..	77D.01
	133G
5P9298 ..	77D.01
5P9299 ..	77D.01
5P9466	352
5P9504	118.01
	127.02
5P9519	119B
	121
	121.01
5P9675	352
5P9757	75
5P9799	133G
	341R.07
5P9884	352
5P9959	61.02
5R0939	216
	217E
5R0940	216
	217E
5R7755	111
5S0969	281
	281.06
	281.12
5S3552	279
	281.04
	281.10
5S3618	281
	281.06
	281.12
5S3664	281
	281.06
	281.12
5S3676	281
	281.06
5S3779	290
5S4437	129
	129.01
5S4629 ..	41E.01
5S5283	49.02
	224A
	224D
	290
5S5287	224A
	224D
5S5729	280
	281.11
5S6102	224A
	224D
5S6622	283
5S7189	68
	69A
	69B.01
5S7349	327A
	327B
	327B.01
5S7379	41E
	112E
	116
	177.02
	309B
	309F
	309J
	309M
	310.01
	317

PART NUMBER INDEX

Number	Page	Number	Page	Number	Page	Number	Page
	317.02		6	6F7024	15.02		260A
	332A.01			6F7027	46A	6J6680	271
5S7382	290.02	6A9718	309B	6F7045	100	6J6720	270.02
5S7383	142		309D	6H0190	133F	6J6736	229C
	241E		309F	6H1717	58.01	6J7836 ..	155B.02
5S8711	229		309J		118	6J8809	272D
5S8712	229		309M		144		273
5S9088	102		312D		180.06	6J8811	271
	103		313C		197C		272D
5S9568	349		313E		216		273
5S9569	349	6B0830	286B		217E	6J8814	271
5S9593	227		293	6H3615	175.05	6J9248	250B
	227B	6B0933	29.02	6H3622	111B	6J9733	232
5T4896 ..	182A.02	6B1557	128B		111C.04	6K0659	312A
5T8592	83	6B2882	112E	6H3956	46A		312C
5V0017	317	6B4594 ..	41E.01		118	6K5499	312D
	317.02	6B6863	125.12	6H3957	18.01	6K8079	291
5V0643	320	6B9194	180.06	6H3977	278	6K8420	36A
	320A		185A		281.03	6K8498	291
5V1474	318	6D0047	319		281.09	6K9194 ..	77D.01
	319A		319B	6H5139	197D		235A
5V1483	318	6D0679	235B	6H5829	348	6K9632	307D
	319A	6D1641	327B	6H9361	197D	6L1597	73.04
5V1496	317	6D1746	175.05	6I0030 ..	76B.01	6L3408	332A
	317.02	6D2928	81		76B.02	6L3616	125.10
5V1497	316.01	6D3479 ..	90Z.07	6I0031 ..	76B.02	6L4428	6A
	319		90Z.12	6I0032 ..	76B.02		6A.01
5V1498	317		90Z.17	6I0033 ..	76B.02	6L4783	292A
	317.02		90Z.22	6I0034 ..	76B.02	6L4784	139
5V1499	317		90Z.28	6I0036 ..	76B.02	6L5766	81B
	317.02		90Z.29	6I0038 ..	76B.02		82
5V1584	317		90Z.31	6I0862	43.01	6L5897	69B
	317.02		112E	6I0863	43.01		69B.02
5V1839	318		307D	6I1936	65.01	6L6560	117
	319A	6D4054	319	6I2318 ..	76B.02	6L7159	301F
5V4439	320	6D4244	79F	6I2319 ..	76B.02	6L7751	285
	320A		325A	6I4434	75		285.01
5V4608	320	6D4246 ..	48A.01	6I4613 ..	6A.01	6L8598	158H
	320A	6D4247 ..	90Z.29	6J0488	133G	6L9284	119B
5V4845	319		325A		241E		121
	319B	6D5974	133F		335P.02		121.01
5V4846	319	6D9953 ..	155B.02	6J1038 ..	203J.04	6L9777 ..	48A.01
	319B	6E2190	264.01	6J1553	264.01	6L9781	41F
5V4855	319	6F0156	125.12	6J2419	66E	6M5062 ..	41E.02
	319B	6F0253	100C		67		322
5V4861	317	6F4855	346.02	6J2561 ..	203J.03		323.02
	318		346.03	6J2680	217F		323.04
	319		346.04	6J3134 ..	203J.03		325A
	319A		346.04.01		207		325B
	319B		346.05		208		325D.02
5V5233	319		346D		210.01	6N0008	45.02
5V5262	316A	6F5559	286B	6J4795	251B	6N0024	71B
	316B	6F6673	131		253B	6N0139	43
5V5698 ..	325D.02		348	6J5179	250B	6N0265	73.04
		6F6977	133F		251A.01	6N0493	63
		6F7012	20		251B	6N0513	81B
			21B		253B		82

PART NUMBER INDEX

Number	Page	Number	Page	Number	Page	Number	Page
6N0515	81B	6N3169	81	6N7142	20	6P3473	295
	82		81A	6N7145	45.02	6P3767	278
6N0593	81B	6N3175	74	6N7148	81B		281.03
6N0608	76A		74A		82		281.09
	76B		74B	6N7154	14A	6P3901	117
6N0651	81	6N3189	63	6N7174 ..	13A.06	6P3904	118
	81B	6N3190	63		14	6P4053	332A
6N1069	66E	6N3191	63		14A		332A.01
	67	6N3195	4	6N7175 ..	13A.06	6P4054	332A
6N1116 ..	332A.02		63		14		332A.01
	333	6N3279	111B		14A	6P4677	289
6N1277	76A		111C.05	6N7266	70A	6P4684	281
	76B	6N3504	73.04	6N7523	309N		281.06
6N1379	22	6N3826	111B	6N7692	58		281.12
6N1410	45.01		111C.06	6N7695	69B	6P4685	281
6N1411	45.01	6N3896	22		69B.02		281.06
6N1412	45.01	6N3897	22	6N7818	74		281.12
6N1480	68	6N3927	63		74A	6P4938	131
6N1572	22	6N4090	69B		74B	6P4940	131
6N1604	37		69B.02	6N7828	71A	6P4971	131
6N1872	105	6N4165	69B	6N7959	52A	6P5207	243
6N1931	33A		69B.02	6N7962	53	6P5209	241F
	33C	6N4241	346.01		53.01	6P5317 ..	155B.02
6N1947	74	6N4606	53	6N7987	114.01		155G
	74A	6N4914	2	6N7988	114.01	6P5355	41F
	74B		21	6N7989	114.01	6P5386	241E
	75	6N5004	53		115.01	6P5404	155H
6N2056	4		53.01	6N8155	327E	6P5661	284
	66	6N5156	63	6N8171	4		285.01
	66A	6N5650	36A		5.01	6P5751	125.10
	66B	6N5654	63		63A	6P6359	154
	66C	6N5787	3	6N8195	74		155
	66C.01		5		74A		155A
6N2199	33A		28		74B		155B
6N2206	31A	6N5885	2	6N8441	70A	6P6739	125.10
6N2343	33A		5	6N8589 ..	90Z.33	6P6876	128
	33C		22	6N8629	74		128A
6N2438	16	6N5926 ..	335P.01	6N8744 ..	41E.02		128B
	16B	6N6209	4	6N8780	73.04	6P6877	130
6N2469	28.01		5.01	6N8783	74	6P6926	327E
6N2501	74		81		74A	6P7072	243
	74A		81A		74B	6P7324	170
6N2504 ..	70B.03	6N6223	58	6N8793	73.04		171
6N2508	21B	6N6444	58	6N8863 ..	41E.02		172
	21B.01	6N6460	58	6N8942	10		172.01
6N2509	21B	6N6731	13A		10A		172.02
	21B.01		13A.01	6N9040	73.04		172.03
6N2522	16		13A.04	6N9133	6A	6P7325	162
6N2523	63		13A.05.01		6A.01		163
6N2533	63	6N6732	13A	6N9294	101.01		164
6N2751	76A		13A.01		102		164A
	76B		13A.05	6N9655	69A		164B
6N2754	76A		13A.05.02	6P0863 ..	310A.01		164C
	76B	6N6872	15	6P1272	282		164D
6N2944	76A	6N6955	68	6P3458	125.12		164E
	76B		69B.01	6P3470	295		164F
6N2985	16	6N6967	101.01	6P3471	295		164G

PART NUMBER INDEX

Number	Page	Number	Page	Number	Page	Number	Page
	164H		90Z.02		189H		250A.01
	164J		90Z.03		189J		250A.02
6P7326	168		90Z.04		189K	6P9156	150
	169		90Z.05		189L		151
	169A		90Z.06		189M		152
	169B		90Z.07		189M.01		153
	169B.03		90Z.08		189M.02		153A
	169B.04		90Z.09	6P7345	180.06		153B
	169B.05		90Z.10	6P7346	190		153C
	169B.06		90Z.11		190A		153D
	169B.07		90Z.12		190B		153E
	169B.08		90Z.13	6P7379	125.10		153F
	169B.08.01		90Z.14	6P7564	125.12		153G
	169B.08.02		90Z.15	6P7985	125.10		153H
6P7327	85		90Z.16	6P8138	191	6P9163	118
	85A		90Z.17	6P8339	116	6P9245	167
	85B		90Z.18	6P8340	116	6P9337	113
6P7328	78		90Z.19	6P8369	180.06	6P9367	292A
	79		90Z.20	6P8431	301C	6P9785	131
	79A		90Z.21	6P8689	327E	6P9959	286B
	79B		90Z.22	6P8690	327E	6S1066 ..	90Z.28
	79C		90Z.23	6P8789	127.02		341R.02
	79D		90Z.24	6P8829	181		341R.06
	79D.01		90Z.25	6P8840	274		345M.06
	79D.02		90Z.26		274.01	6S1753	125.12
6P7329	64	6P7331	159		290	6S2274	49.02
	65		159A		290.01	6S2828	277
6P7330	86	6P7333	165		290.02		281.08
	87		165.01	6P8855	329.03	6S2829	277
	88		165.02	6P8861	285		281.08
	89	6P7335	142		285.01	6S6646	128B
	90	6P7340	132	6P8862	285	6T0005	346.06
	90A		133		285.01		346B
	90B		133A	6P8863	285		346C
	90C		133B		285.01	6T0027	348
	90D		133C	6P8865	192	6T0028	348
	90E		133D		193	6T0030	348
	90F		133E		194	6T0069	316A
	90G		133F		231		316B
	90H		133G		231A	6T0071	275
	90J		133H		231A.01	6T0208	184D
	90K	6P7342	146	6P8901	258A		184E
	90L		147	6P8912	186.02		184E.01
	90M	6P7343	184	6P8988	244		184F
	90N		184A		248		184G
	90P		184B		248A		184G.01
	90Q		184C		249	6T0209	184D
	90R		184C.01		250		184E
	90S	6P7344	188		250A		184E.01
	90T		189		250A.01		184F
	90U		189A		250A.02		184G
	90V		189B	6P8989	245		184G.01
	90W		189C		248	6T0234 ..	155B.02
	90X		189D		248A	6T0235 ..	155B.02
	90Y		189E		249	6T0237 ..	155B.02
	90Z		189F		250	6T0241 ..	155B.02
	90Z.01		189G		250A	6T0243 ..	155B.02

PART NUMBER INDEX

Number	Page	Number	Page	Number	Page	Number	Page
6T0244	155B.02	6T1119	111D		189N	6T3948	221.05
6T0247	155B.02		111D.01		189P	6T3949	221.05
6T0248	155B.02	6T1120	111D		189Q	6T4072	173.02
6T0252	155B.02		111D.01		189R	6T4073	173.02
6T0257	155B.02	6T1121	111D		189S	6T4189	155B.02
6T0302	309B	6T1139	185B		189T	6T4199	133F
	309F	6T1140	185B		189T.01	6T4209	337B
	309J	6T1141	185B		189T.02	6T4249	221.05
	309M	6T1142	185A	6T2542	185A	6T4320	133G
6T0303	309B		185B		189U	6T4504	185B
	309F	6T1150	177.02		189V	6T4531	198
	309J	6T1171	158G		189W		235E
	309M		158H		189X	6T4871	186.02
6T0304	309B		158J		189Y	6T4944	281.09
	309F	6T1310	158H		189Z	6T4949	335P.03
	309J	6T1516	346.02		189Z.01	6T4964	185B
6T0361	301C		346.03		189Z.02	6T5005	305B
6T0362	111D		346.04	6T2544	185A	6T5008	301F
	111D.01		346.04.01	6T2545	185A		305B
6T0363	111C.05		346.05	6T2647	184D	6T5247	183
6T0371	111C.05		346D		184E		183.01
6T0372	111C.05	6T1533	346.02		184E.01		183.01.01
6T0463	90Z.29		346.03		185A	6T5261	270B
6T0481	184D		346.04	6T2648	184F		271A
	184E		346.04.01		184G	6T5618	100C
	184E.01		346.05		184G.01		341R.01
	184F		346D		185A		341R.05
	184G	6T1647	327E	6T2658	185A		345M.05
	184G.01	6T1698	85C		190C	6T5619	100C
6T0489	191	6T1757	301C		190D		341R.08
6T0490	145	6T1997	41E.01	6T2666	335P.02		345M.08
6T0594	111C.09	6T2037	155B.02	6T2774	335P.02	6T5915	346.02
6T0621	111C.09	6T2130	346.02	6T2775	335P.02		346.03
6T0622	111C.09		346.03	6T2818	127.02		346.04
6T0623	111C.09		346.04	6T2819	155B.01		346.04.01
6T0624	111C.09		346.04.01	6T3116	301C		346.05
6T0626	111C.09		346.05	6T3117	301C		346D
6T0627	111C.08		346D	6T3121	185A	6T5940	350A
6T0628	111C.09	6T2134	270B	6T3122	185A	6T6058	158G
6T0629	111C.09		271A	6T3381	198	6T6061	346.02
6T0631	111C.09	6T2137	270B	6T3382	198		346.03
6T0632	111C.09		271A	6T3383	198		346.04
6T0634	111C.09	6T2139	270B	6T3631	100B		346.04.01
6T0635	111C.09		271A		235E		346.05
6T0636	111C.08	6T2140	270B		327E		346D
6T0637	111C.08		271A		335P.04	6T6085	346B
6T0638	111C.08	6T2157	346.02	6T3632	100B		346C
6T0639	111C.09		346.03		235E	6T6098	346B
6T0643	111		346.04		327E		346C
	111C.10		346.04.01		335P.04	6T6170	346.06
6T0645	111C.08		346.05	6T3633	100B	6T6216	309J
6T0646	111C.08		346D		235E		309M
	111C.09	6T2217	90Z.29		327E		313C
	111C.10	6T2307	129.01		335P.04		313E
6T0685	322	6T2313	128B	6T3701	111D	6T6505	305A
6T0861	158J		129.01	6T3703	241F	6T6506	305A
6T0918	177.02	6T2541	185A	6T3720	125.10	6T6686	327A

PART NUMBER INDEX

Number	Page	Number	Page	Number	Page	Number	Page
6T6708	327A	6T8835 ..	341R.01		218.01	6V2495	307D
6T6869	167.01		341R.05		335P.03	6V2496	307C
6T6952	241F		345M.05	6V0879	325B	6V2627	81B
6T6957 ..	337B.02	6T8880	180.01		325D.02		82
6T6970	235E		180.02	6V0880	325B	6V2689	346.01
6T7058 ..	335P.02		180.03		325D.02	6V2700	183
6T7295	313.02		180.04	6V0884 ..	111C.08		183.01
6T7326 ..	189Z.03		180.05	6V0974	221.05		183.01.01
6T7511	172.04	6T9009 ..	325D.01		233B	6V2701	186.02
	172.05	6T9013	184D		235B	6V2712	61.01
	172.06		184F	6V0977	346.05	6V2859	281
	172.07	6T9014	184D		346B		281.06
	172.08		184F		346C	6V3260	301C
	172.09	6T9134	221.05		346D		301E
6T7529	325A	6T9222	138B	6V1050	208	6V3270	352
	325D.01	6T9223	138B	6V1071	127.01	6V3294	241F
6T7677 ..	345M.05	6T9236 ..	341R.02	6V1155	301C		243
	345M.06		341R.06		301E	6V3319	27D
6T7773	79E		345M.07	6V1193	177.02	6V3320	327A
	79F	6T9239	182	6V1197	218.02	6V3340	229C
6T7774	79F		182.01	6V1249 ..	341R.07		262.01
6T7785	85C		182.02		345M.07		262B
6T7789	79F	6T9285 ..	341R.02	6V1361	348		262D
6T7797	85C		341R.06	6V1477	348		264.01
6T7798	85C		345M.06	6V1542	133F	6V3364	229
6T7799	118.01	6T9309	320A	6V1584	317	6V3507 ..	335P.02
	125.10	6T9442	100C		317.02	6V3619	298
6T7800	118.02	6T9467	346B	6V1668	327A		299A
6T7849	327A	6T9469	346B	6V1720	125.10	6V3671	301E
6T7850	323.02	6T9471	346B	6V1723	191.01		301F
	323.04	6T9559	198		191.02	6V3830	28.01
	327A	6T9732	184D		191.03		35A
	327B		184F	6V1724	191		35B
	327B.01	6T9818	158J	6V1725	191	6V3884	301C
6T7851	320B	6V0326	173	6V1849	246		301E
	323.01		173.02	6V1889 ..	90Z.29		307D
	323.02		173.03	6V1898	125.12		335P.02
	323.03	6V0457	118.01	6V1949	212	6V3960	309D
	323.04		127.02		213		309G
6T7862 ..	155B.02	6V0458	118.01	6V1982	211		309K
6T7863 ..	155B.02		127.02	6V2151	307C		309N
6T8115 ..	90Z.33	6V0484	83	6V2202	104	6V3965	120
6T8248	158H		335P.03	6V2282	348		121.01
6T8263 ..	90Z.34	6V0527	274	6V2331	301C		137
6T8402	301E	6V0683	221.05		301E		158G
	304.01	6V0702	301C	6V2360	184D		217F
6T8403	301F	6V0709 ..	155B.02		184E		218.01
	305B	6V0745	227		184E.01		335P.03
6T8412	274.01		227B		184F	6V4253	211
6T8414	274.01		228		184G	6V4314	76B
	282.01		229		184G.01		76B.01
6T8696	299A	6V0836	125.12	6V2375	301C	6V4338	348
6T8698	299A	6V0852	120		301E	6V4415	133F
	327C		121.01	6V2376	37	6V4589	27C
	327D		137	6V2383	115.01	6V4611	112E
	327E		158G	6V2446	325A	6V4665	49.02
	327F		217F		325D.01	6V5360	352

PART NUMBER INDEX

Number	Page	Number	Page	Number	Page	Number	Page
6V5365	298		309F	6V7374	352	6V8536	270B
	299A		309J	6V7416	133G	6V8549 ..	341R.02
6V5701	158J		309M	6V7423	27D		341R.06
6V5833	304.01	6V6212	309B	6V7607	158J		345M.06
	305B		309F	6V7636	301E	6V8553 ..	203J.04
6V5847	309B		309J	6V8073	301E	6V8625 ..	341R.01
	309F		309M	6V8121	118.01		341R.05
	309J	6V6213	309B		127.01		341R.07
6V5848	309B		309F	6V8183	241F		345M.05
	309F		309J		243		345M.07
	309J		309M	6V8185	106.01	6V8626	79F
6V5849	309B		313C		327B	6V8627 ..	341R.01
	309F		313E	6V8188	290.02		341R.02
	309J	6V6214	309B		332A.01		341R.06
	309M		309F	6V8260	143A		341R.08
6V5850	309L		309J	6V8358	79F		345M.06
6V5851	309L		309M	6V8362	100A		345M.08
6V5852	309L		313C	6V8363 ..	90Z.07	6V8634	233B
6V5853	309L		313E		90Z.12	6V8636	79F
6V5859	185A	6V6215	309D		90Z.17		217E
6V5874	29.04	6V6523 ..	335P.02		90Z.22		217F
	30.01	6V6561	309G		90Z.28		221.05
	85C		309K		90Z.33		235E
	198		309N	6V8369	309L	6V8639	79F
	337B.01		312D	6V8370 ..	90Z.07	6V8641 ..	341R.08
6V5905	351	6V6636	352		90Z.12		345M.08
6V5914	351	6V6640	21B		90Z.17	6V8723 ..	341R.08
6V5915	351		21B.01		90Z.22		345M.08
6V5916	351	6V6777	301C		90Z.28	6V8724	217E
6V5918	351		301E		90Z.33		221.05
6V5920	351	6V6778	301C	6V8371 ..	341R.01		233B
6V5921	351		301E		341R.05		235E
6V5922	351	6V6779	301C		345M.05		341R.05
6V5923	351	6V6780	301C	6V8374	100B		345M.05
6V5924	351	6V6795	346B		235E	6V8781	49.02
6V5925	351		346C		327E	6V8801	41E
6V5926	351	6V6847	352		335P.04		101.01
6V5927	351	6V6849	327E	6V8376 ..	90Z.33		112E
6V5928	351	6V6888	309F		114.01		241E
6V6206	309D		309J		335P.01		243
	313C		309M		335P.03		307D
	313E		313C	6V8378 ..	90Z.33	6V8918	81
6V6207	309D		313E		90Z.34	6V8928	301E
	312D	6V6889	309F	6V8397	49.02	6V8954	282.01
6V6208	309D		309J		79F	6V8970 ..	182A.02
	313C		309M.		203J.04	6V8977	66E
	313E		312D		217E	6V8993 ..	341R.02
6V6209	309B		313C		217F		341R.06
	309F		313E		218.01		345M.06
	309J	6V6900	184D		221.05	6V9001	217E
	309M		184E		233B		217F
	312D		184E.01		235E		218.01
	313C		184F		341R.06		235E
	313E		184G		345M.06	6V9004 ..	341R.02
6V6210	309D		184G.01	6V8398	79F		341R.06
	312D	6V7190	301C		341R.07		345M.06
6V6211	309B		301E		345M.07	6V9007 ..	341R.01

PART NUMBER INDEX

Number	Page	Number	Page	Number	Page	Number	Page
6V9176	117		138D		76B.01		223E
	118.02		289	7E7308	13A.05.01		223F
6V9192	32.01		296	7E8940	73.03	7G0108	174
6V9200 ..	203J.04	7B7501 ..	341R.02	7E8941	73.03		175
6V9355 ..	203J.04		341R.06	7E9262	9.02		175.01
6V9490 ..	90Z.34		341R.08	7E9493	53.01		175.02
6V9746 ..	341R.02		345M.06	7F0192	194.01	7G0179	184K
	341R.05		345M.08	7F0548	173.02	7G0278 ..	310A.01
	341R.06	7C0307	45.01	7F0560 ..	90Z.29	7G0362	280
	345M.05		45.02	7F2050	323.01		281.11
	345M.06	7C1067	43.01		323.03	7G0378	277
6V9829 ..	203J.04	7C1177	21B		327		281.08
6V9850	49.02		21B.01	7F2060	323.01	7G0530 ..	90Z.07
	221.05	7C1652	43.01		323.03		90Z.12
	233B	7C3039	48		327A		90Z.17
6V9853 ..	341R.05	7C4843	20.01	7F3425	286A		90Z.22
	345M.05	7C5022	5.01	7F3488	111B		90Z.28
6W8502	317.02		29.02		111C.04	7G0537 ..	90Z.34
6W9744	316B	7C5278	71A	7F3491	111B		91
	317.02	7C5287	101.01		111C.05	7G0538 ..	90Z.07
6Y0054 ..	341R.06	7C6287	63A	7F3494	111B		90Z.12
	345M.06	7C6514	16B		111C.04		90Z.17
6Y0132 ..	332B.01	7C6525 ..	76B.01		111C.05		90Z.22
6Y0136 ..	332B.01		76B.02	7F3512	111B		99
6Y0296	118.01	7C6589 ..	76B.01	7F3513	111B		99B
	125.12		76B.02	7F3520	111B	7G0539	92
6Y0594 ..	341R.06	7C6591 ..	76B.02	7F3522	111B		93
	345M.06	7C7407 ..	6A.01	7F3525	111B		93A
6Y0762	281.08	7C7747 ..	76B.02		111C.05		93B
6Y2044	241F	7C9614 ..	6A.01	7F5711 ..	182A.02	7G0603	288
	243		7B	7F6112	180.06	7G0610	289
6Y2319	131		8A	7F7611	111B	7G0611	289
6Y2336	158J	7C9621	16B	7F7621	104	7G0612	289
6Y2651	237.01	7C9635	16B		109	7G0613	289
6Y2655	133F	7D1089 ..	90Z.31	7F8267	346.04	7G0614	289
6Y2699 ..	332B.01		112C		346.04.01	7G0615	289
6Y2700 ..	332B.01		112E		346.05	7G0645	288
6Y3007	133F	7D1649	127.02	7F9223	312D	7G0661	327A
6Y3299	138E		138D	7G0084	192	7G0819	327
6Y3549	180.06		173		214		327B.01
6Y5793	118		173.02		215	7G0896	280
6Y5888	117		173.03	7G0085	192	7G0942	327B
		7D1677	118.01		194	7G1078	288
7			142		238	7G1180	274
		7D4092	325A		239		288
7B1251 ..	90Z.28	7D4856	133G		239A		289
	90Z.31	7D4903	37		239B	7G1181	274
7B2002	85C	7D9749 ..	203J.03		239C		296
7B3028	125.10	7E3203	59		239D	7G1188	274
	131	7E3204	59	7G0087	192	7G1189	274
	155B.02	7E5085 ..	69B.01		193		274.01
	203J.04	7E5346	81		222		275
	207	7E5661	20		223	7G1190	274
	269B	7E6479 ..	6A.01		223A		276
	348		7B		223B		277
7B3039	197D		8A		223C		278
7B3235	125.10	7E6847	5.01		223D		279

PART NUMBER INDEX

Number	Page	Number	Page	Number	Page	Number	Page
	280	7G1786	177.01		325D.01	7G5612	216
	281	7G1858	342	7G3945	41J	7G5622	117
	281.01		343	7G4291	131	7G5666	275
	281.02		344	7G4332	191	7G5671	118
	281.03		345	7G4408	183	7G5680	130
	281.04		345A		183.01	7G5685	191
	281.05		345B		183.01.01	7G5686	191
	281.06		345C		186.02	7G5746	125.12
	281.07		345D		191	7G5751	121
	281.08		345E	7G4786	274		121.01
	281.09		345F		283	7G5755	121.01
	281.10		345G	7G4817	125.10	7G5756	121
	281.11		345H	7G4818	125.12		121.01
	281.12	7G2172	327E	7G4823	301F		133G
7G1194	274	7G2176	33C	7G4824	301F	7G5828	120
	282	7G2243	140	7G4842	131		121
7G1214	133G	7G2244	140	7G4850	323.01	7G5963	128B
7G1215	133G	7G2248	139		323.03	7G5964	128B
7G1216	133F	7G2256	140	7G4858	250B	7G6021	191
7G1217	133F	7G2257	140		251B	7G6022	191
7G1254	281	7G2259	140		253B	7G6023	191
	281.06	7G2262	139	7G4873	144	7G6024	191
	281.12		140	7G4941	310.02	7G6059	118
7G1256	277	7G2325	127.01		310A	7G6088	325B
	281.08	7G2443	138		310A.01	7G6114	118
7G1257	280		138B	7G4942	310.02	7G6115	118
	281.11	7G2454	301C		310A	7G6364	346
7G1258	281.12		301E		310A.01		346A
7G1259	279	7G2476	125.10	7G5124	234	7G6441	191
	281	7G2500	280		235	7G6442	191.01
	281.04		281.11		235A		191.02
	281.06	7G2862	121		235B		191.03
	281.10		121.01		235C	7G6447	191.02
7G1263	281	7G2944	327E		235D	7G6448	191.02
	281.06	7G2998	316A	7G5125	192	7G6453	191.01
	281.12		316B		193	7G6454	191.01
7G1264	277	7G3035	158J		194	7G6623 ..	182A.02
	281.08	7G3036	158J		216	7G6679	191
7G1265	274	7G3046	158H		217	7G6698	155H
	291	7G3137	138		217A	7G6771	133G
7G1267	291		138B		217B	7G6784	283
7G1268	291	7G3177	158H		217C	7G6786	283
7G1269	291	7G3265	142		217D	7G6787	282
7G1270	291		143A	7G5126	134		283
7G1271	291	7G3316	288		135	7G6788	274
7G1292	133G	7G3317	288		136		274.01
7G1319	133F	7G3413	221.05		136A		282
7G1360	286A	7G3414	221.05		136B	7G6824	316
7G1369	133F	7G3415	221.05		136C		316A
7G1502	133G	7G3435	125.10		136C.01		316B
7G1515	166	7G3441	116		136C.02	7G6923	155H
	166A	7G3457	125.10		136C.03	7G7009	142
	166B	7G3832	49.02	7G5403	283	7G7014	143A
7G1539	133F		325D.01	7G5578	118	7G7363	191
7G1548	133F	7G3833	49.02	7G5603	217F	7G7594	186
7G1744	177.01		325D.01	7G5604	217F		186.01
7G1785	177.01	7G3834	49.02	7G5608	216	7G7595	186B

PART NUMBER INDEX

Number	Page
	187
7G7596	323
7G7597	327
7G7714	286A
7G8115	127.01
7G8116	327E
7G8125	327
7G8202	322
7G8211	125.12
7G8221	327D
	327F
7G8222	327D
	327F
7G8282	184D
	184E
	184E.01
	184F
	184G
	184G.01
7G8290	327E
7G8292	327D
	327F
7G8447	327E
7G8464	320A
	320B
	327D
	327F
7G8638	323.01
	323.03
	327
7G8920	125.12
7G8994	100
7G9203	173
	173.01
7G9204	173
	173.02
7G9211	173
	173.02
7G9215	173
7G9463	90Z.33
7G9465	90Z.33
7G9476	131
7G9562	131
7G9569	131
7G9592	138E
7G9705	334
	335
	335A
	335B
	335C
	335D
	335E
	335F
	335G
	335H
	335J
	335K
	335L
	335M
	335N
	335P
	335P.01
	335P.02
	335P.03
7G9750	102
	298
	299A
7G9998	289
7H1447	197C
7H2079	109
	111B
7H3171	7B
	80
	155G
7H3608	145
7H7628	118.01
	127.02
7H7658	125.12
7H8909	90Z.34
	327A
7H9678	80
7H9899	63A
7J0204	66E
	67
	346.02
	346.03
	346.04
	346.04.01
	346.05
	346D
7J0670	197C
7J1277	197C
7J1592	203J.04
7J1965	230.01
7J2596	211
7J3296	262.01
	262B
	262D
7J5225	197C
7J5544	197C
7J5639	232
7J6084	232
7J6250	295
7J6525	125.10
7J6580	184D
	184E
	184E.01
	184F
	184G
	184G.01
7J7844	212
	213
7J7983	232
7J7984	232
7J9108	79F
7J9509	270.02
7J9884	296
7K1181	41F
	90Z.28
	90Z.34
	112E
	115.01
	235E
	341R.07
	345M.07
7K2507	185A
7K3176	323
7K3304	323
7K4129	77D.01
	235B
7K4363	182A.03
7K4370	127.02
7K6536	298
	299A
	317
	317.02
7L2894	111B
	111C.04
	111C.06
7L3111	116
7L6210	74
	74A
7L6479	327D
	327F
7L8696	69B
	69B.02
7M0324	111B
	111C.04
7M0325	111B
	111C.04
7M0326	111B
	111C.04
7M0327	111B
	111C.04
7M0329	111B
7M0330	111B
7M0331	111B
7M0332	111B
7M0336	111B
	111C.06
7M0475	119B
7M0706	133F
7M1297	246
7M1599	16
7M4824	111C.09
7M5130	125.12
7M7193	74
	74A
	74B
7M7219	74
	74A
7M7260	67
	277
	281.08
7M7316	73.04
7M7410	7B
7M7794	41E
	41E.01
	41J
	325B
7M8480	121
	121.01
	125.10
7M8485	28.01
	36A
	158H
	203J.03
	280
	281.11
	289
7M8651	111B
	111C.04
7M9831	76B.01
7M9910	76B.02
7M9918	52A
7N0037	37
7N0060	90Z.31
	112C
	112E
7N0129	109
7N0174	109
7N0209	81B
	82
7N0210	37
7N0242	70A
7N0579	74
	74A
	74B
7N0654	76A
	76B
7N0665	76A
	76B
7N0667	76A
	76B
7N0668	76A
	76B
7N0671	76A
	76B
7N0672	76A
	76B
7N0719	90Z.31
	100
7N0809	332A.02
	333
7N0815	76A
	76B
7N0839	15.01

PART NUMBER INDEX

Number	Page
7N0851	6A
	7
7N0853	7
	8
7N0857	13A
	14
7N0858	14
	14D
7N0943	6A
	7
7N1066	71A
	71B
7N1183	71B
7N1185	68
	71B
7N1192	9
7N1193	9
7N1194	9
7N1195	9
7N1198	15.01
7N1208	71A
7N1210	19.02
7N1275	18.01
7N1330	17
7N1346	2
	5
	19.02
7N1564	287.01
7N1565	287.01
7N1628	80
7N1751	12
7N1996	335P.02
7N1999	9
	9.01
7N2010	2
	3
	4
7N2018	18
7N2023	38
	39
	39C
	39D
	39D.01
	39D.02
7N2112	50
	50A
	50B
7N2155	33A
	33C
7N2156	33A
	33C
7N2213	33C
7N2230	22
7N2351	74
	74A
	74B
7N2443	20
7N2483	20
7N2693	68
	69A
	69B.01
7N2694	68
	69A
	69B.01
7N2840	2
	5
	20
7N2851	42.02
7N2867	90Z.33
7N2957	37
7N3112	40
	41A
	41E.01
7N3193	53
	53.01
7N3194	53
	53.01
7N3407	9
	10
7N3410	2
	9
	9.01
7N3518	2
	10
7N3718	90Z.29
7N3759	53
	53.01
7N3860	41E.01
7N3926	41A
7N4076	63
7N4232	41E.01
7N4233	40
	41A
	41E.01
7N4235	40
	41A
	41E.01
7N4251	41E.01
7N4282	41E.01
7N4284	40
	41E.01
7N4287	332A.02
7N4289	333
7N4290	333
7N4291	332A.02
	333
7N4292	333
7N4293	333
7N4294	333
7N4296	332A
	333
7N4297	332A.01
	332A.02
7N4300	332A.02
7N4410	80
7N4411	80
7N4415	79F
	80
7N4416	79F
	81
7N4477	40
	41A
	41E.01
7N4482	41E
	41J
7N4554	74
	74A
7N4555	74
	74A
7N4574	68
	69A
	69B.01
	70
	70A
7N4580	14
7N4686	4
	63
7N5274	90Z.31
	112C
	112E
7N5565	37
7N5715	81B
	82
7N5876	90Z.33
7N6128	66E
	67
7N6251	35A
7N6252	35B
7N6253	35A
7N6255	35A
7N6494	111
7N6697	22
7N6700	3
	5.01
	34
	35
	35A
	35B
7N6867	72
	73
	73.01
	73.02
7N6886	29.02
7N7020	3
	5.01
	29
7N7021	3
	30.02
7N7022	3
	5.01
	44
	45
	45.01
	45.02
7N7023	46B
	47
	47.01
7N7024	4
	77
	77B
7N7026	56
	56.01
7N7027	3
	52
7N7029	3
	51
7N7032	60
	61
	61.01
	61.02
7N7033	32
7N7034	57
7N7036	62
7N7037	42
7N7038	58.02
7N7049	111
7N7078	10
	10A
7N7099	71
7N7122	105
7N7498	32
	32.01
7N7510	40
	41
	41C
	41D
7N7586	20
7N7591	9.01
	9.02
	10
7N7628	48A.01
7N7688	45.01
7N7689	45.01
7N7777	312A
7N7778	307D
7N7779	90Z.07
	90Z.12
	90Z.17
	90Z.29
	100
	100A
	100C
	133G
	198
	304.01
	305A
	309B
	309F

PART NUMBER INDEX

Number	Page	Number	Page	Number	Page	Number	Page
	309J		346.05	7N8301	320		346.04
	309M		346B		320A		346.04.01
	312A		346C		330B		346.05
	312B		346D		331		346B
	312C	7N7781	304.01	7N8305	301F		346C
	313C		305A	7N8345	11		346D
	313E	7N7782 ..	345M.07	7N8357 ..	41E.02	7N9738	305A
	327B	7N7795	104	7N8512	82		332A
	332A	7N7796	105	7N9021	105		335P.03
	335P.03	7N7798	105	7N9023	105		346B
	337B.01	7N7800	104	7N9024	104	7N9785 ..	335P.03
	341R.01	7N7801	105	7N9129 ..	341R.01	7N9845	346.01
	341R.05	7N7802	105		341R.05	7N9943	301F
	341R.07	7N7804	104		345M.05	7S1912	112C
	345M.05	7N7805	104		346.01	7S2042	138D
	345M.07	7N7806	104		346.04.02		173.02
	346.02	7N7807	105	7N9187	30		173.03
	346.03	7N7808	105		30.01	7S2043	138D
	346.04	7N7809	104		337B.02		173
	346.04.01	7N7810	104	7N9560 ..	335P.01		173.02
	346.05	7N7811	105	7N9572	3		173.03
	346B	7N7876	45.02		23	7S4244	133G
	346C	7N7878 ..	48A.01	7N9573 ..	42B.01	7S4408	133F
	346D	7N7978	304.01	7N9574	3		133G
7N7780 ..	90Z.07	7N8000 ..	90Z.33		5	7S4433	66E
	90Z.12		100B		26		67
	90Z.17		309L		27	7S4440	66E
	90Z.29	7N8001 ..	335P.02		27A		67
	100		335P.04		27B	7S4607	131
	100A	7N8005 ..	90Z.33		27C	7S5003	62.01
	100C		320B		27D	7S5005	9.01
	115.01		327E	7N9578	3		9.02
	133G	7N8028	70B		5.01		10
	198	7N8043	301F		59	7S5833 ..	41E.01
	304.01	7N8139	32	7N9579	3	7S6369	264.01
	305A	7N8188	53		5.01	7S6745	138
	309B	7N8190	53		54		138B
	309F	7N8204	304.01		55	7S9203	282
	309J		309B	7N9681	2	7S9323	80
	309M		309F		6	7S9372	295
	312A		309J		6A	7T0145	241E
	312B		309M	7N9720	102	7T0148 ..	341R.08
	312C		313C		106		345M.08
	313C		313E	7N9737 ..	90Z.07	7T0150	310.02
	313E		337B.01		90Z.12	7T0158	186.02
	327B	7N8205	198		90Z.17	7T0159	183
	335P.03		305A		90Z.29		183.01
	337B.01		312B		100		183.01.01
	341R.01		312C		100A	7T0347	177.02
	341R.05		341R.07		115.01	7T0351	177.02
	341R.07		345M.07		133G	7T0353	177.01
	345M.05	7N8220	42.02		305A	7T0354	177.01
	345M.07	7N8222	42.02		307C	7T0392	79F
	346.02	7N8223	42.02		327B	7T0408	274.01
	346.03	7N8224	42.02		341R.07	7T0583	301F
	346.04	7N8243	5.01		346.02	7T0584	301F
	346.04.01		83A		346.03	7T0601	301E

PART NUMBER INDEX

Number	Page	Number	Page	Number	Page	Number	Page
	301F	7T1078	309M	7T2166	125.10	7T2803	106.01
7T0621	217E	7T1111	158H	7T2169	125.12	7T2804	106.01
	217F	7T1112	158H	7T2170	125.12	7T2805	106.01
7T0624	217F	7T1114	158H	7T2263 ..	90Z.28	7T2816	106.01
7T0625	217F	7T1115	158H		90Z.29	7T2879	258.02
7T0626	217E	7T1117	158H		90Z.30	7T3096 ..	155B.02
7T0627	49.02	7T1118	158H		90Z.31	7T3097 ..	155B.02
7T0628	217E	7T1124	125.12		90Z.32	7T3131 ..	155B.02
7T0629	217E	7T1159 ..	341R.02		90Z.33	7T3143	281.11
7T0630	217E	7T1190	310.02		90Z.34	7T3145	118.01
7T0631	217F		310A	7T2346 ..	341R.02		125.10
7T0632	217F	7T1196	310.02		341R.06	7T3460 ..	253A.01
7T0633	217F		310A		345M.06	7T3463 ..	253A.01
7T0634	217F	7T1330	304.01	7T2390	191.02	7T3464	248C
7T0781	332B		305B	7T2391	191.02		253A.02
7T0782	332B	7T1346	155G	7T2392	191.03	7T3465	248B
	332B.01	7T1350	177.01	7T2393	191.03		251A.03
7T0783	332B		177.02	7T2412 ..	341R.01	7T3466	253A
7T0788	332B		299A		341R.05		253A.01
7T0789	332B	7T1351	299A		345M.05	7T3639	248B
7T0802	327		310.02	7T2427	299A	7T3712 ..	341R.07
7T0803	327		310A		327G		345M.07
7T0804	327	7T1360	159B		327H	7T4050	125.10
7T0816	106		159B.01	7T2476	125.12	7T4053	125.12
7T0837	175.03	7T1377 ..	90Z.34	7T2563	299A	7T4155	118.01
	175.04	7T1421	299A	7T2615	153J		125.12
7T0852	175.05		332B		153K	7T4345	254.06
7T0853	175.05		332B.01		153L	7T4346	254.06
7T0942	309M	7T1435	320B		153M	7T4347	254.06
7T0969 ..	90Z.34		325A		153M.01	7T4352	254.03
7T0970 ..	90Z.34		325B		153M.02	7T4353	254.03
7T0972	299B	7T1436	325A		153M.03	7T4371 ..	341R.07
	301E	7T1437	325A		153M.04		345M.07
	301F		325D.01	7T2654	258.02	7T4383	184H
7T0973	301F	7T1442	320B	7T2753	191.01		184J
7T1017	173.03	7T1483 ..	345M.06		191.02	7T4384	326C
7T1018	138D	7T1486 ..	341R.02		191.03		326D
	138E		341R.06		191.04	7T4385	175.05
7T1019	138D		345M.06	7T2755	191.02	7T4403 ..	325D.02
	138E	7T1532	100C	7T2757	191.02	7T4404 ..	325D.02
7T1021	138D	7T1693 ..	182A.02	7T2758	191.03	7T4413	235E
	138E	7T1694 ..	182A.03	7T2759	191.03	7T4414	235E
7T1022	138D	7T1708 ..	182A.02	7T2760	191.01	7T4451 ..	341R.01
	138E	7T1709 ..	182A.02	7T2764	191.01		341R.05
7T1025	173.03		182A.03	7T2790	106.01		345M.05
7T1027	173.03	7T1711 ..	182A.02	7T2791	106.01	7T4465 ..	325D.02
7T1029	173.03	7T1784	137	7T2792	106.01	7T4475 ..	325D.01
7T1035	301E	7T1847	136D	7T2793	106.01	7T4476 ..	325D.01
7T1036	301E	7T1878	346B	7T2794	106.01	7T4536	224B
7T1068	304.01	7T1885 ..	155B.02	7T2795	106.01		224D.01
7T1069	305B	7T2009	85C	7T2796	106.01	7T4537	224B
7T1071	299A	7T2018	186.02	7T2797	106.01		224D.01
	299B	7T2035 ..	337B.01	7T2798	106.01	7T4556	158J
7T1072	299B	7T2036	85C	7T2799	106.01	7T4568	327A
	309L	7T2037	85C	7T2800	106.01	7T4623	158J
	309M	7T2048	183.01	7T2801	106.01	7T4627	158J
	309N	7T2050	183.01	7T2802	106.01	7T4695	345J

PART NUMBER INDEX

Number	Page	Number	Page	Number	Page	Number	Page
	345K	7T5463	285.01	7T6940	269C	7T9793 ..	325D.02
	345L	7T5466 ..	90Z.33	7T6994 ..	155B.02	7V2253	316A
	345M	7T5552 ..	341R.02	7T7120	158J		316B
	345M.01		341R.06	7T7628	235E	7V3728	317
	345M.02		345M.06	7T7768 ..	90Z.29		317.02
	345M.03	7T5553 ..	341R.02	7T7777 ..	90Z.29	7V4240	228
	345M.04		341R.06	7T7778 ..	90Z.31	7V5190	318
	345M.05		341R.08	7T8144	241F		319A
	345M.06		345M.06	7T8145	241F	7V5191	318
	345M.07		345M.08	7T8336	155H		319A
	345M.08	7T5554 ..	341R.07	7T8337	155G	7V5507	319
7T4696	341N		345M.06	7T8341	281.10		319B
	341P	7T5555 ..	341R.07	7T8342	281.10	7V5793 ..	345M.06
	341Q		345M.07	7T8546 ..	341R.08	7W0182	71A
	341R	7T5556 ..	341R.02		345M.08	7W0205	50B
	341R.01	7T5568 ..	341R.07	7T8550 ..	341R.08	7W0561 ..	69B.01
	341R.02		345M.07		345M.08		71A
	341R.03	7T5569 ..	341R.07	7T8568	158H	7W0831	3
	341R.04		345M.07	7T8618	346D		5.01
	341R.05	7T5570 ..	341R.07	7T8619 ..	341R.08		52A
	341R.06		345M.07		345M.08	7W0971	5
	341R.07	7T5617	125.12		346B		21A
	341R.08	7T5620	155H	7T8620 ..	341R.02	7W1208	62.01
7T4740	241E	7T5869 ..	251A.01		341R.06	7W1821	43.01
	241F	7T5949	337A		345M.06	7W1927	71A
7T4761	309M	7T5950	337A		346C	7W2124	112E
7T4762	310.02	7T6040	258A	7T8621	346.02	7W2206	5
	310A	7T6047	327A		346.04.01		48
7T4785 ..	341R.01	7T6048	327A	7T8622	346.04	7W2208 ..	169B.09
	341R.05	7T6049	327A	7T8629 ..	341R.07	7W2223 ..	13A.06
	345M.05	7T6050	327A		345M.07		14C
7T5028 ..	186A.01	7T6051	327A	7T8775	346B	7W2224 ..	13A.04
7T5029 ..	186A.02	7T6052	327A		346C		13A.05.01
7T5030	183.02	7T6055	327A	7T8854 ..	111C.04		13A.06
7T5067	175.05	7T6056	327B		111D.01	7W2225	14C
7T5093 ..	341R.07	7T6057	327B	7T8891	307D	7W2291	101.01
	345M.07	7T6058	327B	7T9052	175.05	7W2315	76B
7T5094 ..	341R.07	7T6059 ..	327B.01	7T9123 ..	111D.01		76B.01
	345M.07	7T6060	327A	7T9139 ..	341R.08	7W2338	15.02
7T5095 ..	341R.07	7T6061	327B		345M.08	7W2368	53.01
	345M.07	7T6062	327B	7T9162 ..	111C.04	7W2478	62.01
7T5137	224B	7T6063	327A		111C.05	7W2813 ..	41E.01
	269A	7T6064 ..	327B.01		111C.06	7W3447	121.01
	269B.01	7T6065	327A		111C.10	7W4482	76C
	269C	7T6067 ..	327B.01	7T9218	309L	7W4990 ..	6A.01
7T5181 ..	332A.01	7T6068 ..	327B.01	7T9222	307D		7B
7T5182	320B	7T6069	323.03	7T9223	309L		8A
	332A.01	7T6075	323.01	7T9234	307D	7W5313	58
7T5371	320B		323.03	7T9235	307D	7W5435 ..	13A.05
7T5372	320B	7T6076	323.01	7T9237	307D		13A.05.02
	325C		323.03	7T9277	323.02	7W5442	32.01
	325D	7T6083	323.01	7T9461	183.01.01	7W5443	32.01
	325D.01		323.03	7T9511	183.01.01	7W5454	32.01
	325D.02	7T6349 ..	90Z.28	7T9517 ..	90Z.33	7W5497	36A
7T5461	274.01	7T6799	100A	7T9593	269D	7W5524	62.01
	285.01	7T6939	269A	7T9611	235E	7W5854	143A
7T5462	285.01		269D	7T9612	235E	7W6381	5

PART NUMBER INDEX

Number	Page	Number	Page	Number	Page	Number	Page
	28.01		**8**	8C9121	230.01		350C
7W6382	28.01			8C9127	264.01	8G3072	323.02
7W6491	5.01	8A8492	248	8D0237	314	8H0333	63
	29.01	8B1312	125.10	8D4146	316.01	8H0878	109
7W6492	7A		288	8D4348	155G	8H2778	80
	8A	8B2377	235A	8D5898	221.05	8H2808	80
7W6528	33C	8B4132	158J	8D6899	316A	8H2810	80
7W6534 ..	6A.01	8B4624	301C		316B	8H3497	85C
	8A	8B8255	18.01	8E1848	272D	8H5303	100
7W6649	41K	8B8439	280		273	8H5306	100
7W6650	41K		281.11	8E4164	180.06	8H8175	128B
7W6651	41K	8B8679	184D	8E4539	255.02	8H8648 ..	90Z.31
7W6809	21B		184F	8E4540	255.02	8H8769	207
7W6810	5	8C0608	352	8E5450	180.06	8H9181	73.04
	21B	8C3075	116	8E7838	116	8H9189	18.01
	21B.01		127.02	8E8316	117	8H9204	68
7W7067 ..	77D.01	8C3078	218.02	8E9289 ..	182A.02		69A
7W7129	74B	8C3079	219	8F0394	292A		69B.01
7W7141	33C	8C3100	43.01	8F0539	323.02		73.03
7W8071	13A.05.01	8C3171	346.03	8F0908 ..	90Z.34	8H9299	71A
7W9544 ..	77D.01		346.04	8F1315	312D	8H9804	67
7W9546 ..	77D.01	8C3172	346.02		327	8J0733	270.02
7W9547 ..	77D.01		346.04.01	8F1326	109	8J1256 ..	90Z.34
7X0282	208	8C3173	346.02	8F1434 ..	90Z.07		335P.02
7X0301	218.01		346.03		90Z.12	8J1688	76A
7X0326 ..	332A.01		346.04		90Z.17	8J1699	207
7X0343	143A		346.04.01		90Z.22		208
7X0345 ..	332A.01		346.05		90Z.28	8J2073	232
7X0346	258.02		346D		90Z.33	8J2076	232
7X0349 ..	182A.02	8C3307	352		104	8J4351	35A
7X0395	262B	8C3441	177.01		105		218.02
7X0403	258A	8C3442	177.01		107	8J4361	197C
7X0404	258.02	8C3756	327A	8F1959 ..	155B.02	8J4386	264.01
7X0414 ..	182A.02	8C3992	316B	8F4397	197C	8J4867	262.01
7X0447	106.01	8C4395	307D	8F5838	180.06		262B
	107	8C4436	138E	8F6058	66E		262D
7X0448	101.01	8C4437	309L		67	8J5912	232
	332A.01	8C4592	346.04	8F6350	21B	8J5914	120
7X0449	262B		346.04.01		21B.01		121.01
7X0550	138E		346.05	8F6437	216		217F
7X0590	138E	8C4593 ..	345M.05		217E	8J6910	197C
7X0620	106		346.04.01	8F6711	281	8J6913	197C
	107	8C4594 ..	341R.05		281.06	8J7360 ..	203J.03
7X1982	313D		346.04		281.12	8J7366 ..	203J.02
	313E	8C4595	346.05	8F7219 ..	111C.08	8J7415	232
7X1983	313D	8C5196	16B		323	8J7462 ..	203J.03
	313E	8C5219	264.01	8F7242	81	8J7466 ..	203J.03
7X1984	313E	8C5436	346.04		81A	8J7467 ..	203J.04
7X1985	313E		346.04.01		81B	8J8322	117
7X1986	313E		346.05		82	8J8782	197C
7X2623	116	8C5682	323.04	8F8544	125.10	8J8783	197D
7X6145	313E	8C5915 ..	341R.08	8F8733	117	8K2692	125.12
7X6146	313E		345M.08	8F9516	183	8K4738	350A
7X7731	45.01	8C8417 ..	341R.05		183.01	8K4748	350
			345M.05		183.01.01		350A
		8C9040	118.01	8F9836	22	8L3441	10
		8C9042	118.02	8F9866	349		10A

PART NUMBER INDEX

Number	Page	Number	Page	Number	Page	Number	Page
8L3873	346.01	8M5266	125.10	8N1496	10	8N7007	76A
8L4154	73.04	8M5661	125.12	8N1523 ..	90Z.31	8N7139	41E
8L4155	73.04	8M5817	80	8N1537 ..	90Z.31		41K
8L4175	73.03	8M6393	74	8N1594	61.01	8N7257 ..	41E.01
8L4308	73.03		74A	8N1608	10	8N7295	10
8L6565	70A		74B		10A		10A
8L8413	307C	8M7145	41E	8N1614	61.01	8N7507	274
	307D		41J	8N1616	61.01		274.01
8M0506 ..	77D.01		41K	8N1619	61.01		287
8M0744	235A		177.02	8N1620	61.01		287.01
8M0755 ..	48A.01	8M7758	133G	8N1622	61.01	8N7600 ..	41E.01
8M0874	67		341R.07	8N1626	66E	8N7806	27C
8M1013	129		345M.07	8N1628	66E	8N7953	61.01
	129.01	8M8157	128B	8N1629 ..	66D.01		61.02
	131		158J	8N1630 ..	66C.03	8N7954	61.02
8M1871	21B	8M8283	6A		66D	8N8138	32
	21B.01		6A.01		66E	8N8157	46A
	288	8M8403	73.03	8N1693 ..	335P.03	8N8183	46A
8M2530	120	8M8457	100C	8N1725 ..	90Z.31	8N8208	46
	121.01	8M8489	33A		112C		46A
	246		33C		112E	8N8584	12
8M2537	137		140	8N1728	10	8N8585	2
8M2770 ..	90Z.07		283		10A		5
	90Z.12	8M8739	74	8N2018	10		12
	90Z.17		74A		10A	8N8978	18.01
	90Z.22		74B	8N2100	329.03	8N8979	18.01
	90Z.28	8M8948 ..	90Z.33	8N2101	329.03	8N9103	52A
	90Z.34	8M9062 ..	70B.02	8N2104	35A	8N9104	52A
	323.02		70B.03	8N2301	329.03	8N9584	329.03
8M2771	327B	8M9124	25A	8N2368	61.01	8N9612	346.06
8M2772 ..	90Z.07	8N0031	80	8N3052	81	8N9707	329.03
	90Z.34	8N0198	143	8N3154	73.03	8N9730	329.03
8M2773	41F		143A	8N3844 ..	335P.03	8N9904 ..	39D.03
8M4389 ..	155B.02	8N0502	10	8N4150	58		39D.04
	155G	8N0560	69B	8N4535	49.02		39D.04.01
8M4390	125.12		69B.02	8N5025 ..	42B.01		39D.04.02
8M4432	121	8N0561	69B	8N5045	76A	8P0015	286B
	121.01		69B.02		76B	8P0021	183
	128B	8N0605	27C	8N5046	76A		183.01
8M4433	116	8N0615	3		76B		183.01.01
8M4435	286A		36	8N5118	76A	8P0034	183
	291	8N0616	3		76B		183.01
8M4436	197D		47.02	8N5130	41E		183.01.01
8M4969	112C	8N0744	49.02		41K	8P0056	125.10
	112E		50B	8N5421	9	8P0058	121
8M4986	128B		50B.01	8N5427	10		121.01
	137	8N0788 ..	48A.01	8N5428	10	8P0311	129
8M4987	296	8N0822	10	8N5543	45.01		129.01
8M4989	116	8N0869 ..	90Z.29	8N6287	81	8P0325	286B
8M4992	36A		90Z.31	8N6553	52A	8P0345	286B
8M5127	158J		112E		53.01	8P0346	286B
8M5248	139	8N0934	287.01	8N6739	35A	8P0408	85C
8M5249	158J	8N0935	287.01	8N6740	35A	8P0847	277
8M5251	46A	8N1189	66E	8N6979	75		281.08
8M5252	282	8N1415	71A	8N6981	69A	8P0903	193
8M5253	117	8N1447	52.01		69B.01		194
8M5260	293	8N1448	53	8N6983	75		240

PART NUMBER INDEX

Number	Page	Number	Page	Number	Page	Number	Page
	241	8P7719	155G	8S7803	65.01	8T1980	301E
	241A	8P7769	155G	8S8023	111D	8T2174	309J
	241B	8P7780	155G	8S8024	111D		309M
	241C	8P7786	155G	8S8075 ..	111C.09	8T2225	112C
	241D	8P7787	155G	8S8820	121	8T2230	143A
8P0976	289	8P7788	155G	8S8821	43	8T2270	329.03
8P1083	275	8P7836	155G	8S8958	352	8T2501	142
8P1253	193	8P8357	155G	8S8974	173	8T2502	241E
	194	8P8360 ..	155B.02		173.02		243
	226		155G		173.03	8T2536 ..	325D.01
	226.01	8P8365	155G		352	8T2557	346.02
8P1392	294	8P8405	125.12	8S9075	277		346.03
8P1601	112C	8P8542	297		281.08		346.04
8P2252	193	8P8780	118	8S9076	277		346.04.01
	194	8P8843	142		281.08		346.05
	194.01	8P9265	118	8S9104	125.10		346D
	220	8P9266	118	8S9129	283	8T2637	241F
	221	8P9379	155G	8S9130	116		243
	221.01	8P9605	325B		121	8T3329	264.01
	221.02	8P9606	325B		121.01	8T3388	351
	221.03	8P9749	131		283	8T3518 ..	90Z.29
	221.04	8P9938	332A	8S9191	13A	8T3558	299A
8P2391	296	8S0934	316A		13A.01	8T3561	301F
8P2392	296		316B		13A.04	8T3629 ..	341R.07
8P2398	296	8S1396	290		13A.05		345M.06
8P2933	296	8S1527	111D		13A.05.02	8T3630	173.03
8P3741	280	8S1528	111D		28.01		341R.08
	281.11	8S1535 ..	111C.09		90Z.07		345M.08
8P4047	125.12	8S1571 ..	111C.08		90Z.12	8T3993	307D
8P4299	293	8S1879	329.03		90Z.17	8T4122	101.01
8P4316 ..	155B.02	8S1925	67		221.05		332A.01
	155H	8S2225 ..	111C.09		286A	8T4205	81
8P4617	125.12	8S2226 ..	111C.09	8S9348	290		105
8P5056	117	8S2332	8B	8T0075	221.05		212
8P5189	117		111	8T0154	327		213
8P5229	118	8S2634 ..	90Z.31	8T0318	301E		307C
8P5242	117	8S3194	346B	8T0319	309M		307D
8P5702	186.02	8S3371	278	8T0320	309M	8T4223	83
8P5703	186.02		281.03	8T0323 ..	90Z.28		85C
8P6083	116		281.09		90Z.31		101.01
8P6206	112C	8S3517 ..	155B.02	8T0328	105		116
8P6321	131	8S4211 ..	90Z.31		106		138E
8P6355	323	8S4212	30.01		107		182A.02
	323.02	8S4591	290	8T0430	332B		235E
	323.04	8S4684 ..	111C.09	8T0431	352		290.02
8P6364	133F	8S5383	332A	8T0687	304.01		332A.01
8P6400	127.02		332A.01		305B	8T4224	81
8P6817	118	8S6212	125.10	8T0741	241E		332A.01
8P6938	183	8S6393	235A		241F	8T4835 ..	332A.01
	183.01	8S6417	235A	8T1141	125.12	8T4896	37
	183.01.01		235B	8T1443	125.12		101.01
8P6986	125.10	8S7048	285	8T1444	125.12		112E
8P6997	125.10		285.01	8T1739	309N		116
8P7354	127.02	8S7374	348	8T1755	327E		142
8P7634	155H	8S7583 ..	341R.07	8T1756	327E		235E
8P7636	155G		345M.07	8T1905	233B		241E
8P7708	155G	8S7762	43	8T1979	301E		243

PART NUMBER INDEX

Number	Page	Number	Page	Number	Page	Number	Page
	290.02	8T8914	301E	9D3768	307C		112E
	298	8T8917	83		307D	9G0004 ..	90Z.31
	316B		290.02		309D		112C
	332A.01		332A.01		309G		112E
	332B.01	8T8919	101.01		309K	9G0111	346.01
	350A		116		309N	9G0142	316A
8T4903	307C		138E	9D4507 ..	325D.01		316B
8T4994	138E	8T9041 ..	203J.04	9D4508 ..	41E.02	9G0162	216
	237.01	8T9101	235E		325A		217E
8T5360	106	8T9312	237.01		325D.01	9G0344	327E
	107	8T9364	307C	9D6888	325B	9G0398	327B
8T5361 ..	182A.02		307D	9F1720	236	9G0611	184D
	258A	8T9377	142	9F2247	6A		184E
	297		332A.01		7B		184E.01
8T5383	307D	8T9384	235E		10		184F
8T5426	299A	8T9398	138E		46A		184G
8T5677 ..	341R.07	8T9630	346B	9F2636	350C		184G.01
	345M.07	8T9686	346.02	9F2637	350C	9G0623	133F
8T6631	323.04	8T9687 ..	341R.01	9F2638	350C	9G0644	133G
8T6638	79F		346.03	9F2978	35A	9G0715	133G
8T6745	230.01	8T9702	346.02		40	9G0804	36A
8T6746	229C		346.03		41A	9G0992	301F
8T6757 ..	6A.01		346D		41E	9G1049	185A
	8A	8V0725	317		41J	9G1182	327A
	9.02		317.02		42.02	9G1240	241F
8T6761	25A	8V2063	317		90Z.29		243
	45.02		317.02		144	9G1300 ..	335P.03
8T6762	45.02	8V2065	317		177.01	9G1433	290
8T6763 ..	6A.01		317.02		241E		290.02
	8A	8V3895	173.02		284	9G1434	290
8T6764 ..	6A.01	8V4880	320A		285.01		290.02
	8A	8W2598	221.05		325D.02	9G1501	79F
	25A	8Y6364	37	9F3099 ..	90Z.34	9G1696	180.06
	43.01	8Y6839	304.01	9F3788	125.12	9G1697	180.06
	45.01		305B	9F4337	111	9G1711	83
8T6765	25A			9F4976	111B	9G1815	85C
8T6936	307D		9		111C.04	9G1918	125.12
8T7008	37				111C.05	9G1919	125.10
8T7130	186.02	9B2232	63A		111C.08	9G1950	327A
8T7148	140	9B7233 ..	90Z.33		111D	9G2310	127.02
8T7163	133G		90Z.34		111D.01	9G2408	125.10
8T7183	140		100A	9F5599 ..	111C.05	9G2673 ..	90Z.07
8T7211 ..	224D.01		105	9F5644	100		90Z.12
8T7212	221.05		109		314		90Z.17
8T7273	346.02		114.01	9F6304	35B		90Z.22
	346.03		335P.01	9F6445	285.01		90Z.28
	346D		335P.03		310A.01		341R.01
8T7328	281.12	9B7237	37		327A		341R.05
8T7589 ..	341R.07		41E		341R.01		341R.07
	345M.07		112E		341R.05		345M.05
8T8382	264.01		177.01		345M.05		345M.07
8T8389	230.01	9D0624	84	9F6641	218.01	9G2790	180.06
8T8590	346B	9D0625	84	9F7378	280	9G2971	320
8T8748	100C	9D0630	83		281.11	9G3186	346.01
8T8906	316B		84	9F9920 ..	335P.03	9G3341 ..	335P.03
8T8908	212	9D0643	84	9G0003 ..	90Z.31	9G3461	127.02
	213	9D0644	84		112C	9G3464	127.02

PART NUMBER INDEX

Number	Page	Number	Page	Number	Page	Number	Page
9G3658 ..	341R.01		326B	9G8436	297		90Z.17
	341R.05		326B.01	9G8451 ..	90Z.33		90Z.22
	345M.05		327E	9G8615	121		90Z.28
9G3667	312A	9G6259 ..	90Z.07		121.01		100A
9G3669	312A		90Z.12	9G8630	133G		341R.07
9G3670	100C		90Z.17	9G8631	133G		345M.07
9G3671 ..	341R.01		90Z.22	9G8661	133G	9G9988	198
	341R.05		90Z.28	9G8697	327B	9G9994	119B
	345M.05	9G6655	37	9G8709	310.02	9H0223	158J
9G3673	312B	9G6770	111D		310A	9H1031	7
9G3675	312B		111D.01		310A.01		7A
9G3695 ..	90Z.07	9G7038	180.06	9G8909 ..	90Z.31		7B
	90Z.12	9G7127	180.06	9G9087	327		8A
	90Z.17	9G7285	309L	9G9088	327	9H2400	285
	115.01	9G7390	131	9G9150 ..	90Z.07		285.01
	305A	9G7498	121		90Z.12	9H3360 ..	155B.02
	332A		121.01		90Z.17	9H3757	111B
	341R.01	9G7516	185A		90Z.22		111C.04
	341R.05	9G7548	106		90Z.28	9H5322	155G
	345M.05		107		90Z.29	9H5537	125.10
	345M.07	9G7549	106		90Z.34	9H6454	197D
9G4101 ..	111C.04		107		327B	9J0123	250B
9G4182	301C	9G7551	106		332A		251A.01
9G4183	301C		107		346.02		251B
9G4232 ..	90Z.31	9G7552	106		346.03		253B
	112C		107		346.04	9J0791	211
	112E	9G7553	106		346.04.01	9J1302	211
9G4360 ..	90Z.31		107		346.05	9J1477	254.04
9G4367	111B	9G7554	106		346D	9J1478	254.04
9G4524	287.01		107	9G9152 ..	90Z.07	9J1539	254.04
9G4574	102	9G7555	106		90Z.12	9J1540	254.04
	106.01		107		90Z.17	9J1999 ..	203J.01
9G4785	337	9G7556	106		90Z.22	9J2272	262.01
9G4872	183		107		327D		262B
	183.01	9G7558	106		327F		262D
	183.01.01	9G7559	106	9G9153	309L	9J4449	271E
	186.02		107	9G9277	298		272C
9G5115	178	9G7560	106		306	9J4772	212
	179		107		307		213
	180	9G7561	106	9G9288	198	9J5284	237.01
9G5287	125.10	9G7562	106		337B.02	9J5498 ..	203J.03
9G5301	131		107	9G9316	312D	9J5499 ..	203J.03
9G5528	328	9G7564	107	9G9487 ..	90Z.33	9J5694	236
9G5529	320	9G7565	106	9G9538	103	9J5696	236
	320A		107		107	9J5698	236
	324	9G7566	106	9G9643	158A	9J5699	236
	325		107		158B	9J5702	236
9G5530 ..	90Z.29	9G7567	106		158C	9J5704	236
	91.01		107		158D	9J5705	236
9G5741	301C	9G7568	106		158E	9J5706	236
9G5747	307C		107		158F	9J5708	236
9G5860	316A	9G7641 ..	90Z.33	9G9690	332A	9J5753 ..	203J.02
	316B		100A		332A.01	9J5754 ..	203J.02
9G6012	327	9G7680	127.02	9G9692	332A	9J5756	210.01
9G6091	320	9G7849	297		332A.01	9J6491 ..	203J.03
	326	9G7943	49.02	9G9813 ..	90Z.07		203J.04
	326A	9G8253	295		90Z.12	9J7031	197D

PART NUMBER INDEX

Number	Page	Number	Page	Number	Page	Number	Page
9J7117	229C	9K6034	241E		341R.06	9M8915	53
9J7423	250B		285.01		345M.06		53.01
	251B	9L2137	104	9M1986	138	9M8919	53
	253B	9L2139	104		292A		53.01
9J7623	237	9L2140	104	9M1997	281	9M9647	119B
	237.01	9L4989	74		281.06		121
	248		74A		281.12		121.01
	248A		74B	9M2074	117	9M9740	138
	249	9L5125	287.01	9M2076	117		138B
	250	9L5158	41F	9M2089	74	9M9788	73.04
	250A	9L5854	6A		74A	9N0593	71B
	250A.01		7		74B	9N0943	109
	250A.02		7A	9M2200	283	9N1071 ..	70B.02
9J7625	237.01	9L6448 ..	66C.03	9M2209	283	9N1822	65.01
9J7814	219	9L6509	74	9M2341	80	9N1916	73.03
9J8277	192		74A	9M2904	32	9N1917	73.03
	193		74B		32.01	9N1995	299A
	194	9L6531	352	9M4007	118		301F
	219	9L6770 ..	90Z.29	9M4225	25A		327A
9J8588	197C		105	9M4313	137		352
9J8714	212		106	9M4355	125.12	9N2036	53
	213		106.01	9M4370	140		53.01
9J8802	195		107	9M4704	73.04	9N2038	52A
	229A		109	9M4972	322	9N2039	52A
	229B	9L6892	71B		323.02	9N2041	53
	229C	9L6893	71B		341R.07		53.01
9J8803	229C	9L7235 ..	70B.03		345M.07	9N2043	53.01
9J9093	252	9L7712	15	9M5048	197C	9N2046	53
	254.04		15.01	9M5590	45.01		53.01
9J9157	249	9L8925	16		46A	9N2047	53
	250A.01		16B	9M5884	177.01	9N2165	73.03
	261	9L9089	348	9M5894	197C	9N2505	68
9J9605	250B	9L9098	76A	9M6292 ..	70B.02	9N2583	13A
	254		76C		70B.03		13A.01
9J9638	248	9L9132	35A	9M6302	74		13A.04
	250B		42.02		74A	9N2806 ..	66C.03
	251	9L9347 ..	70B.02		74B		70B.03
9J9640	248	9L9766	70A	9M6303	74	9N3033	43
	248A	9M0766	32.01		74A		43.01
	248B	9M0853	35B		74B	9N3323	74B
	249	9M1311	314	9M6527	43	9N3324	73.03
	250	9M1503	125.12		43.01	9N3328	68
	250.01	9M1974 ..	48A.01	9M6590	279		69
	250A		61.01		281.04	9N3363	73.03
	250A.01		61.02		281.10	9N3388	104
	250A.02		63	9M7394	198	9N3645	46A
	253A.01		76A	9M7606	111B	9N3666	41F
	258		76B		111C.06	9N3668	41F
	258.01		80	9M7609	111B	9N3684	74
	258.02		128B		111C.06		74A
9J9661	250		130	9M7611	111B	9N3718	41F
	250.01		139		111C.06		45.01
	253		211	9M7657	111D	9N3735	65.01
	253.01		292A	9M8186	158J	9N3736	65.01
9K0682	312D		332A	9M8406	323.04	9N3847	69A
	314		335P.03	9M8911	53	9N5253	37
9K4430	35A		341R.02		53.01	9N6289	43

PART NUMBER INDEX

Number	Page
	43.01
9P0161	217F
9P0202	183
	183.01
	183.01.01
9P0208	183
9P0209	182B
	183
9P0387	133F
9P0389	133F
9P0391	133F
9P0575	301C
	301E
	301F
9P0576	301C
9P1485	235A
9P1503	90Z.31
9P1508	292A
9P1535	298
9P1536	298
9P1896	297
	298
9P2239	235B
9P2251	191
9P2262	177.01
9P2369	307D
9P2661	191.03
9P2662	191.03
9P2665	191.01
9P2666	191.01
9P2749	233B
	235A
9P2750	233B
	235A
9P3041	131
9P3498	322
9P3697	212
	241F
9P4057	117
9P4609	133G
	341R.07
	345M.07
9P4747	145
9P4809	143A
9P4888	117
	118
9P4889	116
	117
9P4890	116
9P5174	327E
9P5480	41E.01
9P5481	41E.01
9P5977	128B
9P6217	128B
9P6219	131
9P6220	129
9P6222	129
9P6235	126
	127
	127.01
	127.02
9P6236	122
	123
	124
	125
	125.01
	125.02
	125.03
	125.04
	125.05
	125.06
	125.07
	125.08
	125.09
	125.10
	125.11
	125.12
9P6237	119
9P6457	320
9P6458	320
9P6476	118
9P6482	127.01
9P6500	121
	121.01
9P6840	184F
	184G
	184G.01
9P6841	184D
	184E
	184E.01
	184F
	184G
	184G.01
9P6911	180.06
9P7121	85C
9P7233	299.01
9P7255	184D
	184E
	184E.01
	184F
	184G
	184G.01
9P7256	184D
	184E
	184E.01
	184F
	184G
	184G.01
9P7258	184D
	184E
	184E.01
	184F
	184G
	184G.01
9P7361	212
	241F
9P7380	184D
	184E
	184E.01
	184F
	184G
	184G.01
9P7447	184D
	184E
	184E.01
	184F
	184G
	184G.01
9P7452	295
9P7453	295
9P7523	295
9P7526	295
9P7728	295
9P7855	299.01
	305B
9P7858	299.01
9P7859	299.01
9P7860	299.01
9P8194	297
	298
	299A
9P8195	297
9P8750	332A.02
	333
	348
9P9077	192
9P9078	192
9P9079	193
9P9080	193
9P9081	194
9P9082	194
9P9088	83
9P9161	127.01
9P9202	160
	161
	161A
	161B
	161C
9P9282	292A
9P9388	310.01
9P9390	310.01
9P9392	298
	299A
	310.01
9P9692	216
	217E
9P9693	216
	217E
9P9694	216
	217E
9P9721	185
9P9726	295
9P9745	79F
9P9762	110
9P9814	130
9P9906	195
	267
	267.01
	269D
9R1685	21B
	21B.01
9S0173	90Z.33
9S0176	329.03
9S0247	49.02
	224A
	224D
	227
	227B
	228
	229
	290
9S0671	227
	227B
9S1303	241F
	243
	292A
9S1307	296
9S1343	125.12
9S1350	121.01
9S1354	133G
	198
	284
	285
	285.01
	323.01
	323.03
9S1362	127.01
9S1366	155B.02
	221.05
	229
9S2004	109
9S2005	109
9S2006	109
9S2007	109
9S2008	109
9S2009	109
9S2011	109
9S2012	109
9S2013	109
9S2014	109
9S2246	109
9S2247	109
9S2248	109
9S2250	109
9S2252	109
9S2254	109
9S2255	109
9S2256	109
9S2258	109
9S2260	109

PART NUMBER INDEX

Number	Page	Number	Page	Number	Page	Number	Page
9S2261	109		69B.01		73.04	9T3508	229C
9S2262	109		79F		74	9T3746 ..	203J.03
9S2290	109		116		74A	9T3747 ..	203J.02
9S2291	109		118		74B	9T3748 ..	203J.03
9S2292	109		120		138	9T4319 ..	203J.01
9S2299	76A		121.01		138B		203J.02
	76B		128B		155H		203J.03
9S2300	109		137		158G		203J.04
9S2301	109		138		292A	9T4733	246
9S2302	109		138B	9S8016	314	9T5041	218.02
9S2389	109		140	9S8230	138D	9T5042	219
9S2390	109		158G		173	9T5048	218.02
9S2396	109		197C		173.02	9T5050	219
9S2437	104		197D		173.03	9T5057	219
	109		207		175.05	9T5069	218.02
9S2438	109		208	9S8586	76A	9T5077	219
9S2542	109		346C		76B	9T5086	218.02
9S2544	105	9S4372	116	9S8688	111D	9T5087	219
	109	9S5279	155G	9S8750 ..	90Z.33	9T5090	218.02
9S2792	129	9S5282	81B		341R.07	9T5092	219
	129.01		82		345M.07	9T5098	218.02
9S3032	63	9S6130	120	9S8752	20.01	9T5100	219
	63A		121.01		21B.01	9T5107	219
9S3581	280	9S7583	197C		27C	9T5110	218.02
	281	9S7710	121		29.02	9T5112	219
	281.06		121.01		32	9T5283	264.01
	281.11	9S7949	281		35A	9T5483 ..	203J.03
	281.12		281.06		41F	9U6219	349
9S3582	280		281.12		41J	9U7509	349
	281	9S7950	281		325A	9U9956	297
	281.06		281.06		325B	9U9957	297
	281.11		281.12	9S8889	281.12	9V3043	319B
	281.12	9S7977	349	9S9272	36A	9V6754	319B
9S3766	41J	9S8001	73.03	9S9332	66E	9V7943	319B
9S3784	101.01		212		67	9WO111	307C
9S4160	70A		286B	9S9334	36A	9WO112	307C
9S4167	80	9S8002	207	9S9662 ..	70B.02	9WO114	307D
9S4180	207		208		70B.03	9WO118	307C
	208	9S8003	286B	9S9699	14	9WO178	307C
	210.01	9S8004 ..	203J.01		14B	9WO179	307D
	212		203J.02	9S9829	109	9WO183 ..	341R.08
	213		203J.04	9S9830	109		345M.08
9S4181	28.01		207	9S9979	37	9WO186	310.02
9S4182	66E		208	9T0018	248C		310A
	73.04		210.01		248E	9WO319	327A
9S4185	208		286A	9T0044	248C	9WO376 ..	345M.05
	341R.01		286B		248D		346.04.01
	341R.05	9S8005	158G	9T0253 ..	253A.01	9WO377 ..	341R.01
	345M.05		208	9T0254 ..	253A.01		341R.05
9S4190 ..	6A.01		210.01	9T0255 ..	253A.01		346.04
	7B		286B	9T0256 ..	253A.01	9WO574	194.01
	8A		293	9T0714	197C		194.02
9S4191	36A	9S8006 ..	155B.02	9T0993	218.01	9WO584	194.01
	50B		292A	9T1183 ..	203J.01	9WO625	100C
	66E	9S8008	68	9T1184 ..	203J.04	9WO697 ..	90Z.28
	68		69A		210.01	9WO712 ..	341R.01
	69A		69B.01	9T3505	230.01		341R.05

PART NUMBER INDEX

Number	Page	Number	Page	Number	Page	Number	Page
	345M.05		345M.08	9Y4577 ..	76B.01		**2**
9W0739 ..	90Z.31	9W4515 ..	90Z.31	9Y4578 ..	76B.02		
9W0760	313E		112E	9Y6089	24	26454	37
9W0800	248C	9W4578	115.01	9Y9497	10A	273924	319
9W0801	248C	9W4661 ..	90Z.31	9Y9929	27C		319B
9W0992	281.11		112E				
9W1189 ..	184E.01	9W4803	323.03		**1**		**3**
	184G.01	9W4804	323.03				
9W1461 ..	335P.04	9W5167	127.02	1006393 ..	29.02	304606	197C
9W1495 ..	335P.02	9W5168	127.01	100866	346.06	306936	235A
9W1544	158J	9W5357	121.01	1010523	6A.01	307335	127.02
9W1706	79F	9W5605	158H	1013374	11	307571	241E
9W1707	79F	9W5606	158H	1017788	15		317
9W1710	79F	9W5648	255.02	1043038	76B.02		317.02
9W1725	112C	9W5649	255.02	1043039	76B.02	307942	216
9W1791 ..	90Z.29	9W5768	125.10	1056138	25A	307946	79F
9W2343 ..	335P.03	9W6099	125.10	1067098	118	307947 ..	77D.01
9W2451	272D	9W6154 ..	341R.02	1067099	117		216
	273		341R.06	1085603 ..	15.01	307948	79F
9W2932	138		345M.06	1090072 ..	45.01	307949	79F
	138B	9W6191	125.12	1090073 ..	45.01	307950	286A
9W2977	125.12	9W6321	329.03	1090074 ..	45.02	307964	329.03
9W3169 ..	155B.02	9W6991	118	1090076	35B	308188	216
9W3187 ..	335P.01	9W7378	127.01		45.01	308194	27C
9W3191 ..	341R.05	9W7394	127.02	1090077	48	308535	121
	341R.06	9W7458	125.10	1090078	35A		121.01
9W3383	327B	9W7500 ..	224D.01		35B		327E
9W3413	121	9W7501 ..	224D.01	1102220	7A	309612	105
	121.01	9W7502 ..	224D.01	1104355 ..	29.02		197C
9W3562 ..	337B.01	9W8297	125.12	1114919	139	310214	348
9W3648 ..	337B.01	9W8298	125.10	1129119	105	310215	73.03
9W3718 ..	341R.02	9W8394	329.03	1129217	20	310218	127.02
	341R.06	9W8662 ..	155B.02	1131474	25A	310243	310.02
	345M.08	9X0362	346C	1142687	35B		310A
9W3719	175.05	9X1386	346.04	1143364	76C		332B
9W3720	175.05		346.04.01	1144427	8A		332B.01
9W3721	175.05		346.05	1148718	69B.01	314564	36A
	194.01	9X2836	76C	1179712	20	319831 ..	90Z.31
	194.02	9X3498	346C	1185068 ..	29.02	320676	127.02
9W3726	233B	9X6001	106	1187214	35B	321267	27C
9W3727	233B		107	1189685	50B.01	336783	79F
	250A.02	9X6268	304.01	1234207 ..	20.01	338248 ..	90Z.07
9W3728 ..	250A.02		305B	1245945	76B.02		90Z.12
	269D	9X6743	323.04	1245947	76B.02		90Z.17
9W3925	255.02	9X7371	27C	1299452	59		90Z.22
9W3926	255.02	9Y0318 ..	41E.01	1321442	21B.01		90Z.28
9W3927	255.02	9Y0319 ..	41E.02	138253	316A		90Z.34
9W4023	293	9Y1229	59	138289	316.01		221.05
9W4100	121.01	9Y1230	59	145111 ..	332A.02		332A.01
9W4201	221.05	9Y1792	33C		333	340707	145
9W4203	221.05	9Y3317	41E	178715 ..	90Z.33	344160	74B
9W4314	194.02	9Y3358 ..	76B.01			369821	111B
	221.05	9Y3368 ..	6A.01				111C.06
9W4322 ..	341R.02	9Y3764 ..	66C.03			369823	111B
	341R.06	9Y3969 ..	76B.01				111C.04
	345M.06	9Y4384	15.01				111C.06
9W4323 ..	341R.08	9Y4385	15.01				

PART NUMBER INDEX

Number Page

4

443994 .. 111C.09
454065 ..... 111D
111D.01

6

619457 219
647310 .... 218.02
647311 .... 218.02
67235 .... 262.01
262B
262D
67403 .... 15.01
688438 ..... 76A
76B
76B.01

8

82103 ..... 286A

9

918792 .... 323.04
94089 ..... 133F



© 1997 Caterpillar
All Rights Reserved

Printed in U.S.A.