CATERPILLAR®

SEBP3245
February 2001

RUTHZIL TRATOR COMERCIAL DE PEÇAS LTDA 11 97083-6812 ROLANDO CITRANGULO

Parts Manual



See "General Information" for New Parts Manual Features.

D8R Track-Type Tractor
Differential Steering

AKA1-Up (Machine)
BET1-Up (Engine)
6GY1-Up (Transmission)
3MP1-Up (Bulldozer)
BHR1-Up (Bulldozer)
BHW1-Up (Bulldozer)
CXB1-Up (Bulldozer)
CXL1-Up (Bulldozer)
BHD1-Up (Ripper)
CJA1-Up (Torque Converter)

Powered By 3406E Engine

Product and Dealer Information

Note: For product identification plate locations, see the section “Product Identification Information” in the Operation and Maintenance Manual.

Delivery Date: _____

Product Information

Model: _____

Product Identification Number: _____

Engine Serial Number: _____

Transmission Serial Number: _____

Generator Serial Number: _____

Attachment Serial Numbers: _____

Attachment Information: _____

Customer Equipment Number: _____

Dealer Equipment Number: _____

Dealer Information

Name: _____ Branch: _____

Address: _____

_____

_____

	Dealer Contact	Phone Number	Hours
Sales:	_____	_____	_____
Parts:	_____	_____	_____
Service:	_____	_____	_____

Informations produit et concessionnaire

Nota: Voir l'emplacement de la plaque signalétique du produit au chapitre "Informations produit" du guide d'utilisation et d'entretien.

Date de livraison: _____

Informations produit

Modèle: _____

Numéro d'identification produit: _____

Numéro de série du moteur: _____

Numéro de série de la boîte de vitesses: _____

Numéro de série de l'alternateur: _____

Numéros de série d'équipement: _____

Informations sur l'équipement: _____

Numéro matériel client: _____

Numéro matériel concessionnaire: _____

Informations concessionnaire

Nom: _____ Agence: _____

Adresse: _____

_____

_____

	Contact concessionnaire	Numéro de téléphone	Heures
Ventes:			
Pièces:			
Service:			

Información del Producto/Distribuidor

Nota: Para saber la ubicación de las placas de identificación del producto, ver la sección “Información sobre identificación del producto” en el Manual de Operación y Mantenimiento.

Fecha de entrega: _____

Información del producto

Modelo: _____

Número de identificación del producto: _____

Número de serie del motor: _____

Número de serie de la transmisión: _____

Número de serie del generador: _____

Números de serie de los accesorios: _____

Información sobre los accesorios: _____

Número del equipo del cliente: _____

Número del equipo del distribuidor: _____

Información del distribuidor

Nombre: _____ Sucursal: _____

Dirección: _____

_____

_____

	Comunicación con el distribuidor	Número de teléfono	Horas
Ventas:	_____	_____	_____
Piezas:	_____	_____	_____
Servicio:	_____	_____	_____

Informações Sobre Produto e Revendedor

Nota: Para localizações da placa de identificação do produto, consulte a seção, “Informações Sobre Identificação do Produto” no Manual de Operação e Manutenção.

Data de Entrega: _____

Informações Sobre o Produto

Modelo: _____

Número de Identificação do Produto: _____

Número de Série do Motor: _____

Número de Série da Transmissão: _____

Número de Série do Gerador: _____

Números de Série de Acessórios: _____

Informações Sobre Acessórios: _____

Número do Equipamento do Cliente: _____

Número do Equipamento do Revendedor: _____

Informações Sobre o Revendedor

Nome: _____ Filial: _____

Endereço: _____

_____

_____

	Contato do Revendedor	Telefone	Horas
Vendas:	_____	_____	_____
Peças:	_____	_____	_____
Serviço:	_____	_____	_____

Produkt- und Händlerinformation

Anmerkung: Für die Lage der Produkt-Identnummer und Seriennummern siehe Abschnitt “Produkt-Identinformation” im Betriebs- und Wartungshandbuch.

Lieferdatum: _____

Produkt-Identinformation

Modell: _____

Produkt-Identnummer: _____

Seriennummer des Motors: _____

Seriennummer des Getriebes: _____

Seriennummer des Generators: _____

Seriennummern der Arbeitsgeräte: _____

Arbeitsgeräteinformation: _____

Kundennummer: _____

Händlernummer: _____

Händlerinformation

Name: _____ Niederlassung: _____

Adresse: _____

_____

_____

	Kontaktperson beim Händler	Telefon	Dienststunden
Verkauf:	_____	_____	_____
Ersatzteile:	_____	_____	_____
Service:	_____	_____	_____

MEMORANDA

TABLE OF CONTENTS

Name	Page
GENERAL INFORMATION	A24
REPAIR ALTERNATIVES	A43
SUPPLEMENTAL COOLANT ADDITIVES	A48
ENGLISH-PORTUGUESE PARTS NOMENCLATURE	A53
MAINTENANCE PARTS	A61
INDEX	A88
MACHINE ARRANGEMENT	1
DISPOSAL AR-WASTE	1
ELECTRONICS AR-MACHINE	5
GAUGE AR	6
GENERAL AR	7
LANDFILL AR	8
SUPPRESSION AR-SOUND	9
WOODCHIP AR	10
ENGINE ARRANGEMENT	11
ENGINE AR-COMPLETE	11
ENGINE AR-CORE	13
INSTALLATION AR-ENGINE	14
BASIC ENGINE	15
BASE GP-VALVE COVER & INJ HARN	15
BELT TIGHTENER GP	16
CAMSHAFT GP	18
COVER GP-CYLINDER BLOCK	19
COVER GP-FLYWHEEL HOUSING	21
COVER GP-FRONT HOUSING	22
COVER GP-SOUND SUPPRESSION	23
COVER GP-VALVE MECHANISM	25
CRANKSHAFT GP	28
CYLINDER BLOCK AS	29
CYLINDER BLOCK GP	31
CYLINDER HEAD AS	34
CYLINDER HEAD GP	36
DAMPER GP	39
DRIVE GP-FAN	40
FASTENER GP-FRONT HOUSING	44
FLYWHEEL GP	46
GEAR GP-CAMSHAFT	47
GEAR GP-FRONT	48
GEAR GP-REAR	50
HOUSING GP-FLYWHEEL	52
HOUSING GP-FRONT	54
LIFTING GP-ENGINE	58
MOUNTING GP-ALTERNATOR	60
MOUNTING GP-FAN DRIVE	61
PAN GP-OIL	62
PISTON & ROD GP	66
ROCKER ARM GP	68
SUPPORT GP-ENGINE	69
TRUNNION GP-ENGINE	71
LUBRICATION SYSTEM	72
BREATHER GP	72
FASTENER GP-OIL PUMP MOUNTING	73
FILLER GP-ENGINE OIL	74
FILTER GP-ENGINE OIL	76
FUMES DISPOSAL GP	78
GAUGE GP-OIL LEVEL (DIPSTICK)	80
LINES GP-ENGINE OIL	82
LINES GP-TURBOCHARGER OIL	84
OIL CHANGE GP-HIGH SPEED	86
PRELUBRICATION AR-ENGINE	88
PUMP GP-ENGINE OIL	92
COOLING SYSTEM	93
COOLER GP-ENGINE OIL	93
CORE AS-RADIATOR	94
CORE GP-OIL COOLER	96
FAN AR-EJECTOR	97
FAN AR-VARIABLE	98
FAN GP-BLOWER	102
FAN GP-EJECTOR	103
FAN GP-REVERSIBLE	104
GUARD AS	105
LINES GP-WATER	110
PUMP GP-WATER	117
RADIATOR AR	122
RADIATOR GP	124
SWITCH GP-FLOW	136
TANK GP-COOLANT	137
TANK GP-WATER	138
AIR INLET AND EXHAUST SYSTEM	142
AFTERCOOLER GP	142
AIR CLEANER GP	144
DUST EJECTOR GP	147
INDICATOR AR-AIR CLEANER	148
LINES GP-AIR	149
MANIFOLD GP-EXHAUST	151
MOUNTING GP-AIR CLEANER	152
MUFFLER GP	153
PRECLEANER AR	156
PRECLEANER GP	159
SHIELD AR-THERMO	160
SHIELD GP-EXHAUST	161
SHIELD GP-MANIFOLD	162
TURBOCHARGER GP	164
FUEL SYSTEM	166
ADAPTER GP-FAST FILL FUEL	166

TABLE OF CONTENTS

Name	Page
ADAPTER GP-PUMP DRIVE	170
BASE GP-FUEL FILTER	171
DRIVE GP-PUMP	173
FILTER GP-FUEL	174
FILTER GP-WATER SEP & FUEL	175
INJECTOR GP-FUEL	177
LINES GP-FUEL	178
MECHANISM GP-FUEL PUMP & VALVE	182
PUMP GP-FUEL TRANSFER	183
TANK GP-FUEL	184
VALVE GP-CHECK	186
VALVE GP-FUEL BYPASS	187
ELECTRICAL AND STARTING SYSTEM	188
ALARM GP	188
ALTERNATOR GP-CHARGING	190
BATTERY & WIRING GP	202
CONTROL & MTG GP-ELECTRONIC	208
CONTROL & MTG GP-ENGINE ELEK	210
CONTROL GP-ENGINE ELECTRONIC	212
CONTROL GP-MACHINE	214
CONTROL GP-UNPROGRAMMED	215
CONVERTER GP-ELECTRICAL	216
ELECTRONICS GP-MACHINE	217
ELECTRONICS GP-MONITOR	219
HEATER GP-FUEL	220
HEATER GP-JACKET WATER	222
INSTALLATION AR-SECURITY	226
INSTALLATION GP-COMMUNICATION	227
INSTALLATION GP-SECURITY	228
LAMP GP-DOME	229
LAMP GP-FLOOD	230
LIGHTING AR	234
LIGHTING GP	241
LIGHTING GP-4 LAMP	244
LIGHTING GP-FLOOD	246
LIGHTING GP-FRONT	250
MODULE GP-DISPLAY	254
PANEL GP-RELAY	256
SENSOR & MTG GP-PRESSURE	258
SENSOR GP-POSITION	259
SENSOR GP-PRESSURE	262
SENSOR GP-SPEED	269
SENSOR GP-TEMPERATURE	272
SERVICE GP-MACHINE	273
STARTING AID GP-ETHER	274
STARTING MOTOR GP-ELECTRIC	276
STARTING MOTOR GP-PRELUB SYS	280
SWITCH GP-BYPASS	283
SWITCH GP-DISCONNECT	284
SWITCH GP-MAGNETIC	285
WIRING GP-ENGINE	286
WIRING GP-PLATFORM	288
WIRING GP-THROTTLE	291
POWER TRAIN	292
AXLE GP-POWER TRAIN	292
BRAKE & DIFFERENTIAL DRIVE GP	294
BRAKE & DRIVE GP	298
BRAKE & PLANETARY GP	300
CASE & PARTS GP-PLANETARY	302
CONTROL & MTG GP-PEDAL	305
CONTROL GP-TRANSMISSION HYD	306
DRAIN GP-ECOLOGY	308
FILTER GP-OIL	309
FINAL DRIVE GP	312
GEAR GP-BEVEL & TRANSFER	320
GUARD GP-POWER TRAIN	323
LINES GP-POWER TRAIN OIL	324
MANIFOLD & VALVE GP	329
MOUNTING GP-FINAL DRIVE	331
MOUNTING GP-TRANSMISSION	332
PEDAL GP-GOVERNOR & BRAKE	334
PLANETARY GP-TRANSMISSION	336
POWER TRAIN AR	340
PUMP GP-GEAR	341
SEGMENT GP-SPROCKET	344
SHAFT GP-MAIN DRIVE	345
TORQUE CONVERTER GP	346
TRANSMISSION AR	352
UNIVERSAL JOINT GP	353
VALVE & MTG GP-POWER TRAIN	354
VALVE GP-CONTROL	356
VALVE GP-MODULATING	360
VALVE GP-PRIORITY	362
VALVE GP-RELIEF	364
VALVE GP-SERVO	366
VALVE GP-SOLENOID	369
FRAME AND BODY	372
ACTUATOR GP-POWER	372
BATTERY BOX GP	374
CASE & FRAME GP	378
CHASSIS AR	388
CONTROL AS-REMOTE	390
COUNTERWEIGHT GP	392
COVER GP	393
COVER GP-TRUNNION	394
DOOR GP-LH	396
DOOR GP-RH	400
DRAWBAR GP	404
ENCLOSURE GP-ENGINE	406
ENCLOSURE GP-HYDRAULIC TANK	414
FENDER GP	416
GRID GP-SAND BLAST ERODING	418
GRILL GP-RADIATOR	419
GUARD AR-BOTTOM	422
GUARD AR-FINAL DRIVE	426
GUARD AR-IDLER	427
GUARD AS-RADIATOR	430

TABLE OF CONTENTS

Name	Page
GUARD GP-BOTTOM	432
GUARD GP-FINAL DRIVE	437
GUARD GP-FUEL TANK	438
GUARD GP-IDLER	442
GUARD GP-RADIATOR	444
GUARD GP-REAR	446
GUARD GP-SEAL	447
GUARD GP-TRACK ROLLER	448
HOOD & GUARD GP	450
PANEL GP-SOUND SUPPRESSION	452
PLATE GP-HITCH	453
PLATFORM GP	454
STEP GP	457
SWEEP GP	458
UNDERCARRIAGE	462
BAR AR-STRIKER	462
CAP GP-TRACK IDLER	465
CAP GP-TRACK ROLLER	468
EQUALIZER BAR AS	470
EQUALIZER BAR GP	472
FRAME AS-TRACK ROLLER	475
FRAME GP-TELESCOPING RECOIL	476
IDLER GP-TRACK	485
LINK AS-TRACK	489
LUBRICATION GP-PIVOT SHAFT	490
ROLLER AR	492
ROLLER GP-TRACK-DOUBLE FLANGE	493
ROLLER GP-TRACK-SINGLE FLANGE	494
SUSPENSION GP-BOGIE	496
TRACK ADJUSTER & RECOIL GP	498
TRACK GP	500
UNDERCARRIAGE AR	507
STEERING AND BRAKING SYSTEM	510
ADAPTER GP-MOTOR	510
CONTROL GP-PARKING BRAKE	512
CONTROL GP-STEERING	514
CONTROL GP-STEERING & TMSN	516
FILTER GP-OIL	520
HEAD GP-PUMP	522
LINES GP-STEERING	524
MOTOR GP-PISTON	530
PUMP GP-GEAR	531
PUMP GP-PISTON	532
ROTATING GP-MOTOR	534
ROTATING GP-PUMP	536
STEERING AR-HYDRAULIC	538
VALVE GP-FLUSHING	539
VALVE GP-PILOT	540
VALVE GP-PRESSURE COMPENSATOR	542
VALVE GP-PRESSURE CONTROL	544
VALVE GP-RELIEF	546
HYDRAULIC SYSTEM	548
ACTUATOR GP-PISTON PUMP	548
CONTROL AR-HYDRAULIC	549
CONTROL AR-PILOT HYDRAULIC	552
COOLER GP-HYDRAULIC OIL	555
CYLINDER & LINES GP-LIFT	556
CYLINDER & LINES GP-TILT	560
CYLINDER AR-TILT	561
CYLINDER GP-BULLDOZER LIFT	563
CYLINDER GP-BULLDOZER TILT	566
CYLINDER GP-RIPPER LIFT	570
CYLINDER GP-RIPPER PIN PULLER	572
CYLINDER GP-RIPPER TILT	574
CYLINDER GP-TILT	578
HYDRAULIC AR	584
LINES GP-BULLDOZER MANIFOLD	586
LINES GP-PILOT	588
LINES GP-PIN PULLER	604
LINES GP-PUMP	606
LINES GP-RIPPER	609
LINES GP-TILT CYLINDER	612
MANIFOLD GP-HYDRAULIC	620
MANIFOLD GP-INLET	621
MOUNTING GP-VALVE	622
PUMP GP-PISTON	624
ROTATING GP-PUMP	626
SWASHPLATE GP	627
TANK & FILTER GP-HYDRAULIC	630
VALVE & MTG GP-CONTROL	633
VALVE GP-BYPASS	634
VALVE GP-CHECK	635
VALVE GP-CONTROL	636
VALVE GP-MANIFOLD & REDUCING	650
VALVE GP-PILOT	652
VALVE GP-PILOT CARTRIDGE	660
VALVE GP-PRESS & FLOW CMPNSTR	662
VALVE GP-PRESSURE REDUCING	663
VALVE GP-QUICK-DROP	664
VALVE GP-RELIEF	666
VALVE GP-SHUTTLE	669
VALVE GP-SOLENOID	670
IMPLEMENTS	672
BLOCK GP-PUSH	672
BRACE GP-BULLDOZER	673
BULLDOZER AR	676
BULLDOZER AR-SEMI-UNIVERSAL	680
BULLDOZER AR-UNIVERSAL	681
C-FRAME GP	682
CONTROL AR-BULLDOZER & WINCH	684
FRAME GP-RIPPER	686
GUARD GP-ROCK	688
LINES GP-WINCH	690

TABLE OF CONTENTS

Name	Page
LINK GP-STABILIZER	692
MOUNTING GP-CYLINDER	693
MOUNTING GP-RIPPER	694
PULLER AR-PIN	696
PULLER GP-PIN	697
PUSH ARM GP-LH	698
PUSH ARM GP-RH	700
PUSH ARM GP-STABILIZER	701
RIPPER AR	703
TRUNNION GP-BULLDOZER	704
WORK TOOLS	705
BIT & CUTTING EDGE GP	705
BLADE & EDGE GP	708
BLADE AS	716
BLADE AS-SEMI-UNIVERSAL	718
BLADE AS-UNIVERSAL	722
BLADE GP-ANGLING	724
BLADE GP-SEMI-UNIVERSAL	725
BLADE GP-UNIVERSAL	726
EDGE GP-CUTTING	727
PLATE GP-WEAR	728
RIPPER GP	729
TOOTH GP-RIPPER	730
OPERATOR STATION	733
AIR CONDITIONER AR	733
AIR CONDITIONER GP	736
BLOWER GP-CAB	738
BOTTLE GP-WINDOW WASHER	740
CAB AR	744
CAB GP	746
COMPRESSOR GP-REFRIGERANT	749
CONDENSER & MTG GP-REFRIGERANT	752
CONDENSER GP-REFRIGERANT	754
CONTROL GP-ELECTRONIC	756
CONTROL GP-IMPLEMENT	758
COVER GP-CONSOLE	760
HANDLE GP-CONTROL	762
HANDLE GP-JOYSTICK	763
HEATER GP-CAB	764
HOUSING GP-SEAT SUSPENSION	766
INSTALLATION GP-RADIO	769
INSTRUMENT GP	770
INSTRUMENT GP-CAB	774
LINER GP-CAB	778
LINES GP-AIR CONDITIONER	782
LINES GP-HEATER	794
MIRROR GP	796
MIRROR GP-REAR VIEW	797
MODULE GP-QUAD GAUGE	799
MOTOR AS-WINDOW WIPER	800
MOTOR GP-WINDOW WIPER	802
MOUNTING GP-CAB	804
MOUNTING GP-CONTROL	805
OPERATOR AR	808
PAN GP-BACKREST	810
PAN GP-SEAT	811
PLATE GP-SLIDE	813
PLATFORM GP-CAB	814
PLUG AS	817
PRESSURIZER GP-CAB	818
RADIO GP-AM/FM/WB	821
RECLINER GP-SEAT	822
ROPS GP	824
ROPS GP-ENCLOSED	826
SCREEN GP-PROTECTION	827
SEAT AR	829
SEAT GP	830
SEAT GP-SUSPENSION	839
STEP & HANDHOLD AR	842
SUPPORT GP-ROPS	843
SUSPENSION GP-SEAT	844
WASHER GP-WINDOW	848
WINDOW AS-SLIDING	850
WINDOW GP-CAB	853
WIPER GP-WINDOW	870
WIPER PIVOT GP	872
SERVICE EQUIPMENT AND SUPPLIES	874
FILM GP	874
GREASE GUN GP	876
PLATE & FILM GP	877
TOOL GP-HAND	882
PART NUMBER INDEX	B1

TABLE DES MATIÈRES

Désignation	Page
GÉNÉRALITÉS	A27
OPTIONS DE RÉPARATION	A44
ADDITIFS POUR LIQUIDE DE REFROIDISSEMENT	A49
PIÈCES DE RECHANGE	A66
INDEX	A101
VERSION DE MACHINE	1
ÉLIMINATION DES DÉCHETS (VERSION)	1
COMPOSANTS ÉLECTRONIQUES DE LA MACHINE (VERSION)	5
INDICATEURS (VERSION)	6
VUE DU MODÈLE	7
ENFOUISSEMENT SANITAIRE (VERSION)	8
INSONORISATION (VERSION)	9
VERSION DE COPEAU DE BOIS	10
VERSION DE MOTEUR	11
MOTEUR COMPLET (VERSION)	11
MOTEUR - PARTIE CENTRALE (VERSION)	13
MONTAGE DE MOTEUR (VERSION)	14
MOTEUR STANDARD	15
SUPPORT DE CACHE-SOUPAPE ET FAISC. DE CABL. D'IN.	15
TENDEUR DE COURROIE (ASS)	16
ARBRE A CAMES (ASS)	18
BLOC-CYLINDRES - COUVERCLE (ASS)	19
COUVERCLE DE CARTER DE VOLANT (ASS)	21
COUVERCLE DE CARTER AV (ASS)	22
INSONORISATION - COUVERCLE (ASS)	23
CACHE-SOUPAPES (ASS)	25
VILEBREQUIN (ASS)	28
BLOC-CYLINDRES (ENS)	29
BLOC-CYLINDRES (ASS)	31
CULASSE (ENS)	34
CULASSE (ASS)	36
AMORTISSEUR DE VIBRATIONS (ASS)	39
ENTRAÎNEMENT DE VENTILATEUR (ASS)	40
BOULONNERIE DE CARTER AV (ASS)	44
VOLANT MOTEUR (ASS)	46
PIGNONNERIE D'ARBRE À CAME	47
PIGNONNERIE AV (ASS)	48
PIGNON AR (ASS)	50
CARTER DE VOLANT (ASS)	52
CARTER AV (ASS)	54
OEILLETONS DE LEVAGE MOTEUR (ASS)	58
MONTAGE D'ALTERNATEUR (ASS)	60
MONTAGE D'ENTRAÎNEMENT DE VENTILATEUR (ASS)	61
HUILE MOTEUR - CARTER (ASS)	62
PISTON ET BIELLE (ASS)	66
AXE DE CULBUTEUR (ASS)	68
SUPPORT DE MOTEUR (ASS)	69
TOURILLON DE MOTEUR (ASS)	71
CIRCUIT DE GRAISSAGE	72
RENIFLARD (ASS)	72
BOULONNERIE DE MONTAGE DE LA POMPE A HUILE (ASS)	73
BOUCHON DE REMPLISSAGE D'HUILE MOTEUR (ASS)	74
FILTRE À HUILE MOTEUR (ASS)	76
DISPOSITIF D'EVACUATION DES VAPEURS DE CARTER	78
JAUGE D'HUILE MOTEUR (BAIONNETTE) (ASS)	80
CANALISATIONS D'HUILE MOTEUR (ASS)	82
CANALISATIONS D'HUILE DE TURBOCOMPRESSEUR (ASS)	84
DISPOSITIF DE VIDANGE RAPIDE D'HUILE (ASS)	86
VERSION DE PRÉGRAISSAGE DE MOTEUR	88
POMPE A HUILE MOTEUR (ASS)	92
CIRCUIT DE REFROIDISSEMENT	93
REFROIDISSEUR D'HUILE MOTEUR (ASS)	93
RADIATEUR-CORPS (ENS)	94
FAISCEAU DU REFROIDISSEUR D'HUILE (ASS)	96
VENTILATEUR - ÉJECTEUR (VERSION)	97
VENTILATEUR VARIABLE (VERSION)	98
VENTILATEUR SOUFFLANT (ASS)	102
VENTILATEUR - ÉJECTEUR (ASS)	103
VENTILATEUR A PALES RÉVERSIBLES (ASS)	104
PROTECTION (ENS)	105
CANALISATIONS D'EAU (ASS)	110
POMPE A EAU (ASS)	117
RADIATEUR (VERSION)	122
RADIATEUR (ASS)	124
CONTACTEUR DE DEBIT (ASS)	136

TABLE DES MATIÈRES

Désignation	Page
RÉSERVOIR DU LIQUIDE DE REFROIDISSEMENT (ASS)	137
RÉSERVOIR D'EAU (ASS)	138
CIRCUIT D'ADMISSION D'AIR ET D'ECHAPPEMENT	142
REFROIDISSEUR D'ADMISSION (ASS)	142
FILTRE A AIR (ASS)	144
ÉJECTEUR AUTOMATIQUE DE POUSSIÈRE (ASS)	147
INDICATEUR - FILTRE À AIR (VERSION)	148
CANALISATIONS D'AIR (ASS)	149
COLLECTEUR D'ÉCHAPPEMENT (ASS)	151
MONTAGE DE FILTRE À AIR (ASS)	152
SILENCIEUX (ASS)	153
PREFILTRE (VERSION)	156
PREFILTRE (ASS)	159
ÉCRAN THERMIQUE (VERSION)	160
DEFLECTEUR D'ECHAPPEMENT (ASS)	161
ÉCRAN DE COLLECTEUR (ASS)	162
TURBOCOMPRESSEUR (ASS)	164
CIRCUIT DE CARBURANT	166
ADAPTATEUR DE REMPLIS. RAPIDE DE CARBURANT (ASS)	166
ADAPTATEUR - ENTRAÎNEMENT DE POMPE (ASS)	170
BASE DE FILTRE À CARBURANT (ASS)	171
ENTRAÎNEMENT DE POMPE (ASS)	173
FILTRE A CARBURANT (ASS)	174
FILTRE DE SÉPARATEUR D'EAU ET DE CARBURANT (ASS)	175
INJECTEUR DE CARBURANT (ASS)	177
CANALISATIONS DE CARBURANT (ASS)	178
CULBUTERIE ET POMPE A CARBURANT (ASS)	182
POMPE D'ALIMENTATION EN CARBURANT (ASS)	183
RÉSERVOIR DE CARBURANT (ASS)	184
CLAPET DE RETENUE (ENS)	186
SOUPAPE DE DÉRIVATION DE CARBURANT (ASS)	187
CIRCUIT DE DÉMARRAGE ET ÉLECTRIQUE	188
AVERTISSEUR (ASS)	188
ALTERNATEUR DE CHARGE (ASS)	190
BATTERIE ET CÂBLAGE	202
COMMANDE ELECTRONIQUE ET MONTAGE (ASS)	208
COMMANDE ET MONTAGE - MOTEUR	210
COMMANDE ELECTRONIQUE DE MOTEUR (ASS)	212
COMMANDE DE MACHINE (ASS)	214
COMMANDE NON PROGRAMMEE (ASS)	215
TRANSFORMATION ELECTRIQUE (ASS)	216
ÉLECTRONIQUE - MACHINE (ENS)	217
ÉLECTRONIQUE-MONITEUR (ASS)	219
RECHAUFFEUR DE CARBURANT (ASS)	220
EAU DES CHEMISES - RECHAUFFEUR (ASS)	222
VERSION DE MONTAGE-SÉCURITÉ	226
MONTAGE-COMMUNICATION (ASS)	227
MONTAGE-SÉCURITÉ (ASS)	228
PLAFONNIER (ASS)	229
LAMPE - PHARE (ASS)	230
ÉCLAIRAGE (VERSION)	234
ÉCLAIRAGE (ASS)	241
ECLAIRAGE - GROUPE DE 4 LAMPES	244
ÉCLAIRAGE - PROJECTEURS (ASS)	246
ECLAIRAGE AV (ASS)	250
MODULE D'AFFICHAGE (ASS)	254
RELAIS DU PANNEAU (ASS)	256
CAPTEUR DE PRESSION ET MONTAGE	258
SONDE - CIRCUIT DE CARBURANT	259
CAPTEUR DE PRESSION (ASS)	262
CAPTEUR DE VITESSE (ASS)	269
CAPTEUR DE TEMPERATURE (ASS)	272
ENTRETIEN DE LA MACHINE (ASS)	273
AUXILIAIRE DE DÉMARRAGE À L'ÉTHER	274
DÉMARREUR ÉLECTRIQUE (ASS)	276
DÉMARREUR - CIRCUIT DE PRÉGRAISSAGE	280
INTERRUPTEUR - DÉRIVATION (ASS)	283
ROBINET DE BATTERIE (ASS)	284
CONTACTEUR MAGNETIQUE (ASS)	285
CABLAGE DE MOTEUR (ASS)	286
CABLAGE - PLATE-FORME (ASS)	288
CABLAGE (ASS)-ACCELERATEUR	291
TRANSMISSION	292
ARBRE DE TRANSMISSION (ASS)	292
FREIN ET ENTRAÎNEMENT DE DIFFÉRENTIEL (ASS)	294
FREIN ET ENTRAÎNEMENT (ASS)	298
FREIN ET TRAINS PLANÉTAIRES (ASS)	300

TABLE DES MATIÈRES

Désignation	Page
TRAINS PLANÉTAIRES - CARTER ET PIÈCES	302
COMMANDE ET MONTAGE DE PÉDALE (ASS)	305
COMMANDE HYDRAULIQUE DE BOÎTE (ASS)	306
VIDANGE-ÉCOLOGIE (ASS)	308
FILTRE A HUILE (ASS)	309
RÉDUCTEURS (ASS)	312
COURONNE ET ENGRENAGES DE TRANSFERT (ASS)	320
BLINDAGE DE TRANSMISSION (ASS)	323
CANALISATIONS D'HUILE DE TRANSMISSION (ASS)	324
COLLECTEUR ET SOUPAPE (ASS)	329
MONTAGE DE RÉDUCTEURS (ASS)	331
REDUCTEUR MARIN - MONTAGE (ASS)	332
PÉDALE DE RÉGULATEUR ET DE FREIN (ASS)	334
BOÎTE PLANÉTAIRE (ASS)	336
TRANSMISSION (VERSION)	340
POMPE A ENGRENAGES (ASS)	341
SEGMENT DE BARBOTIN (ASS)	344
ARBRE D'ENTRAINEMENT PRINCIPAL	345
CONVERTISSEUR DE COUPLE (ASS)	346
BOÎTE DE VITESSES (VERSION)	352
JOINT UNIVERSEL (ASS)	353
SOUPAPE DE TRANSMISSION ET MONTAGE (ASS)	354
DISTRIBUTEUR (ASS)	356
SOUPAPE DE MODULATION (ASS)	360
SOUPAPE DE PRIORITE (ASS)	362
CLAPET DE DECHARGE (ASS)	364
SERVOVALVE (ASS)	366
SOUPAPE - SOLÉNOÏDE (ASS)	369
CHÂSSIS ET BENNE	372
MÉCANISME DE COMMANDE - PUISSANCE (ASS)	372
COFFRE DE BATTERIE (ASS)	374
CHÂSSIS ET CARTER (ASS)	378
VERSION DE CHASSIS	388
COMMANDE À DISTANCE (ENS)	390
CONTREPOIDS (ASS)	392
COUVERCLE (ASS)	393
COUVERCLE DE TOURILLON (ASS)	394
PORTIERE GAUCHE (ASS)	396
PORTIERE DROITE (ASS)	400
BARRE D'ATTELAGE (ASS)	404
CARENAGE DE MOTEUR (ASS)	406
CARENAGE - RESERVOIR HYDRAULIQUE (ASS)	414
GARDE-BOUE (ASS)	416
DEFLECTEUR PARE-SABLE (ASS)	418
GRILLE DE RADIATEUR (ASS)	419
BLINDAGE INFÉRIEUR (VERSION)	422
PROTECTEUR DE RÉDUCTEURS (VERSION)	426
PROTECTION DE ROUE LIBRE (VERSION)	427
PROTÈGE-RADIATEUR	430
BLINDAGE INFÉRIEUR (ASS)	432
PROTECTEUR DE RÉDUCTEURS (ASS)	437
PROTECTION DU RÉSERVOIR DE CARBURANT (ASS)	438
BLINDAGE DE ROUE AV (ASS)	442
PROTÈGE-RADIATEUR (ASS)	444
BLINDAGE AR	446
PROTECTION DE JOINT (ASS)	447
PROTEGE-GALETS (ASS)	448
CAPOT ET PROTECTION (ASS)	450
PANNEAU D'INSONORISATION (ASS)	452
PLAQUE - ATTELAGE (ASS)	453
PLATE-FORME (ASS)	454
MARCHEPIED (ASS)	457
ARCEAUX DE DÉBARDAGE (ASS)	458
TRAIN DE ROULEMENT	462
BARRE DÉFLECTRICE (VERSION)	462
CHAPEAU DE ROUE AV (CHAINE) (ASS)	465
CHAPEAU DE GALET INFERIEUR (ASS)	468
BALANCIER DE SUSPENSION (ENS)	470
BALANCIER DE SUSPENSION (ASS)	472
CHÂSSIS PORTEUR (ENS)	475
CARTER TELESCOPIQUE DE MECANISME AMORTISSEUR	476
ROUE AV - CHAINES (ASS)	485
MAILLON DE CHAINE (ENS)	489
GRAISSAGE DE LA TRAVERSE-PIVOT	490
GALET (VERSION)	492
GALET A BOUDIN DOUBLE (ASS)	493
GALET A BOUDIN SIMPLE (ASS)	494
SUSPENSION A BOGIES (ASS)	496
MECANISME AMORTISSEUR ET REGLAGE DE CHAINES (ASS)	498
CHAINES (ASS)	500
TRAIN DE ROULEMENT	507
CIRCUIT DE DIRECTION ET DE FREIN	510
ADAPTATEUR DE MOTEUR (ASS)	510
COMMANDE DE FREIN DE STATIONNEMENT (ASS)	512
COMMANDE DE DIRECTION (ASS)	514

TABLE DES MATIÈRES

Désignation	Page
COMMANDE DE DIRECTION ET BOITE DE VITESSES	516
FILTRE A HUILE (ASS)	520
TÊTE DE POMPE (ASS)	522
CANALISATIONS DE DIRECTION (ASS)	524
GROUPE DE MOTEUR A PISTONS	530
POMPE A ENGRENAGES (ASS)	531
POMPE A PISTONS (ASS)	532
GROUPE DE ROTATION DE MOTEUR	534
GROUPE DE ROTATION DE POMPE	536
VERSION DE DIRECTION HYDRAULIQUE	538
VANNE DE RINÇAGE (ASS)	539
SOUPAPE PILOTE (ASS)	540
SOUPAPE DE COMPENSATION DE PRESSION (ASS)	542
DISTRIBUTEUR DE PRESSION (ASS)	544
CLAPET DE DECHARGE (ASS)	546
CIRCUIT HYDRAULIQUE	548
MECANISME DE COMMANDE DE LA POMPE A PISTONS (ASS)	548
COMMANDE HYDRAULIQUE (VERSION)	549
VERSION DE COMMANDE HYDRAULIQUE PILOTE	552
REFROIDISSEUR D'HUILE HYDRAULIQUE (ASS)	555
VÉRIN DE LEVAGE ET CANALISATIONS (ASS)	556
VÉRIN ET CANALISATIONS - INCLINAISON (ASS)	560
VÉRIN D'INCLINAISON (VERSION)	561
VÉRIN DE LEVAGE DE LAME DE BULLDOZER (ASS)	563
VÉRIN D'INCLINAISON DE BULLDOZER (ASS)	566
VERIN DE LEVAGE DE RIPPER (ASS)	570
VERIN D'EXTRACTEUR DE BROCHE DE RIPPER (ASS)	572
VERIN D'INCLINAISON DU RIPPER (ASS)	574
VÉRIN D'INCLINAISON (ASS)	578
VERSION HYDRAULIQUE	584
CANALISATIONS DE COLLECTEUR DE LAME DE BULLDOZER	586
CANALISATIONS A COMMANDE PILOTE (ASS)	588
CANALISATIONS D'EXTRACTEUR DE BROCHE (ASS)	604
CANALISATIONS DE POMPE (ASS)	606
CANALISATIONS DU RIPPER (ASS)	609
CANALISATIONS DU VÉRIN D'INCLINAISON (ASS)	612
COLLECTEUR HYDRAULIQUE (ASS)	620
COLLECTEUR D'ADMISSION (ASS)	621
MONTAGE DE SOUPAPE (ASS)	622
POMPE A PISTONS (ASS)	624
GROUPE DE ROTATION DE POMPE	626
PLATEAU OSCILLANT (ASS)	627
RÉSERVOIR HYDRAULIQUE ET FILTRE (ASS)	630
DISTRIBUTEUR ET MONTAGE (ASS)	633
SOUPAPE DE DÉRIVATION (ASS)	634
CLAPET DE RETENUE (ENS)	635
DISTRIBUTEUR (ASS)	636
SOUPAPE RÉDUCTRICE ET COLLECTEUR (ASS)	650
SOUPAPE PILOTE (ASS)	652
SOUPAPE - CARTOUCHE PILOTE (ASS)	660
SOUPAPE RÉGULATRICE DE PRESSION ET DÉBIT	662
SOUPAPE RÉDUCTRICE DE PRESSION (ASS)	663
SOUPAPE D'ABAISSEMENT RAPIDE (ASS)	664
CLAPET DE DECHARGE (ASS)	666
VANNE PILOTE (ASS)	669
SOUPAPE - SOLÉNOÏDE (ASS)	670
ÉQUIPEMENTS	672
TAMPON DE POUSSÉE (ASS)	672
TIRANT DE BULLDOZER (ASS)	673
VERSION DE BULLDOZER	676
LAME DE BULLDOZER SEMI-UNIVERSELLE (VERSION)	680
LAME DE BULLDOZER UNIVERSELLE (VERSION)	681
BATI EN C (ASS)	682
VERSION DE COMMANDE DE BULLDOZER ET TREUIL	684
BATI DE RIPPER (ASS)	686
PARE-PIERRES (ASS)	688
CANALISATIONS DE TREUIL (ASS)	690
STABILISATEUR - BRAS DE POUSSEE (ASS)	692
MONTAGE DE VÉRIN (ASS)	693
MONTAGE DE RIPPER (ASS)	694
EXTRACTEUR DE BROCHE (VERSION)	696
EXTRACTEUR DE BROCHE (ASS)	697
BRAS DE POUSSEE - GAUCHE (ASS)	698
BRAS DE POUSSEE - DROITE (ASS)	700
STABILISATEUR DU BRAS DE POUSSEE (ASS)	701
RIPPER (VERSION)	703
TOURILLON DE BULLDOZER (ASS)	704

TABLE DES MATIÈRES

Désignation	Page
OUTILS DE TRAVAIL	705
EMBOUT ET LAME DE COUPE (ASS)	705
LAME DE COUPE (ASS)	708
BALAI D'ESSUIE-GLACE (ENS)	716
LAME SEMI-UNIVERSELLE (ENS)	718
LAME UNIVERSELLE (ENS)	722
LAME À ORIENTATION (ASS)	724
LAME SEMI-UNIVERSELLE (ASS)	725
LAME UNIVERSELLE (ASS)	726
LAME DE COUPE (ASS)	727
PLAQUE D'USURE (ASS)	728
RIPPER (ASS)	729
DENT DE RIPPER (ASS)	730
POSTE DE CONDUITE	733
CLIMATISEUR (VERSION)	733
CLIMATISEUR (ASS)	736
VENTILATEUR SOUFFLANT DE CABINE (ASS)	738
RÉSERVOIR DE LAVE-GLACE (ASS)	740
CABINE (VERSION)	744
CABINE (ASS)	746
COMPRESSEUR DE REFRIGERANT (ASS)	749
CONDENSATEUR ET MONTAGE (RÉFRIGÉRANT)	752
CONDENSEUR DE RÉFRIGÉRANT	754
COMMANDE ELECTRONIQUE DE BOITE (ASS)	756
COMMANDE D'EQUIPEMENT (ASS)	758
COUVERCLE DE LA CONSOLE (ASS)	760
POIGNÉE DE COMMANDE (ASS)	762
POIGNÉE DE LEVIER (ASS)	763
CHAUFFAGE DE CABINE (ASS)	764
SUSPENSION DE SIEGE - CARTER (ASS)	766
MONTAGE DE RADIO (ASS)	769
TABLEAU DE BORD (ASS)	770
INSTRUMENTS DE LA CABINE (ASS)	774
CABINE - REVÊTEMENT (ASS)	778
CANALISATIONS DE CLIMATISEUR (ASS)	782
CANALISATIONS DE CHAUFFAGE (ASS)	794
RÉTROVISEUR (ASS)	796
MODULE - QUATRE INSTRUMENTS (ASS)	799
MOTEUR ESSUIE-GLACE	800
MOTEUR D'ESSUIE-GLACE (ASS)	802
MONTAGE DE CABINE (ASS)	804
MONTAGE DE GROUPE DE COMMANDE	805
POSTE DE CONDUITE (VERSION)	808
COUVERCLE INFÉRIEUR-DOSSIER (ASS)	810
SIEGE - COUVERCLE INFERIEUR (ASS)	811
PLAQUE-GLISSIÈRE (ASS)	813
PLATE-FORME - CABINE (ASS)	814
PRISE (ENS)	817
SURPRESSEUR (ASS)	818
RADIO-AM/FM/WB (ASS)	821
SIÈGE INCLINABLE (ASS)	822
TOIT ROPS (ASS)	824
CABINE ROPS FERMÉE (ASS)	826
GRILLE DE PROTECTION (ASS)	827
SIEGE (VERSION)	829
SIÈGE (ASS)	830
SIÈGE AVEC SUSPENSION (ASS)	839
MARCHEPIED ET POIGNÉE (VERSION)	842
SUPPORT ROPS (ASS)	843
SIÈGE AVEC SUSPENSION (ASS)	844
LAVE-GLACE - VITRE (ASS)	848
VITRE COULISSANTE (ENS)	850
VITRE DE CABINE (ASS)	853
ESSUIE-GLACE (ASS)	870
PIVOT D'ESSUIE-GLACE (ASS)	872
MATÉRIEL ET FOURNITURES D'ENTRETIEN	874
PLAQUE SIGNALÉTIQUE (ASS)	874
GRAISSEUR À MAIN (ASS)	876
PLAQUES SIGNALETIQUES ET AUTOCOLLANTS (ASS)	877
OUTILS (ASS)	882
INDEX DE NUMÉROS DE PIÈCES	B1

CONTENIDO

Nombre	Página
INFORMACIÓN GENERAL	A31
ALTERNATIVAS DE REPARACIÓN	A45
ADITIVOS DE REFRIGERANTE SUPLEMENTARIOS	A50
PIEZAS DE MANTENIMIENTO	A72
INDICE	A115
CONFIGURACIÓN DE MÁQUINA	1
CONFIGURACIÓN DE ELIMINACIÓN DE BASURAS	1
CONFIGURACIÓN ELECTRÓNICA DE LA MÁQUINA	5
CONFIGURACIÓN DE INDICADORES	6
CONFIGURACIÓN GENERAL	7
RELLENOS SANITARIOS (CONFIG PARA)	8
INSONORIZADOR (CONFIG)	9
VIRUTAS DE MADERA (CONFIG)	10
CONFIGURACIÓN DE MOTOR	11
MOTOR COMPLETO (CONFIG)	11
MOTOR - NÚCLEO (CONFIG)	13
CONFIGURACIÓN DE INSTALACIÓN DEL MOTOR	14
MOTOR BÁSICO	15
BASE DE LA TAPA DE VÁLVULAS Y MAZO DE CABLES DE INYECTOR (GR)	15
AJUSTADOR DE CORREA (GR)	16
ÁRBOL DE LEVAS (GR)	18
TAPA DEL BLOQUE MOTOR (GR)	19
TAPA DE LA CAJA DE VOLANTE (GR)	21
TAPA DE LA CAJA DELANTERA (GR)	22
TAPA DEL INSONORIZADOR (GR)	23
TAPA DEL MECANISMO DE VÁLVULAS (GR)	25
CIGÜEÑAL (GR)	28
BLOQUE MOTOR (CONJ)	29
BLOQUE MOTOR (GR)	31
CULATA DE CILINDROS (CONJ)	34
CULATA DE CILINDROS (GR)	36
AMORTIGUADOR DE VIBRACIONES (GR)	39
IMPULSOR DE VENTILADOR (GR)	40
CAJA DELANTERA - TORNILLERÍA DE LA (GR)	44
VOLANTE (GR)	46
ENGRANAJE DE ARBOL DE LEVAS (GR)	47
ENGRANAJE DELANTERO (GR)	48
ENGRANAJE TRASERO (GR)	50
VOLANTE - CAJA DE (GR)	52
CAJA DELANTERA (GR)	54
CÁNCAMOS DE LEVANTAMIENTO DEL MOTOR (GR)	58
MONTAJE DEL ALTERNADOR (GR)	60
MONTAJE DEL MANDO DE VENTILADOR (GR)	61
CÁRTER - COLECTOR DEL (GR)	62
PISTÓN Y BIELA (GR)	66
BALANCÍN (GR)	68
MOTOR - SOPORTE DEL (GR)	69
MUÑÓN DEL MOTOR (GR)	71
SISTEMA DE LUBRICACIÓN	72
RESPIRADERO (GR)	72
TORNILLERÍA DE MONT. DE LA BOMBA DE ACEITE (GR)	73
TUBO DE LLENADO DE ACEITE (GR)	74
FILTRO DE ACEITE DEL MOTOR (GR)	76
ESCAPE DE GASES (GR)	78
INDICADOR DEL NIVEL DE ACEITE (VARILLA) (GR)	80
TUBERÍAS DE ACEITE DEL MOTOR (GR)	82
TURBOCOMPRESOR - TUBERÍAS DE ACEITE DEL (GR)	84
CAMBIO RÁPIDO DE ACEITE (GR)	86
PRELUBRICACION DEL MOTOR (CONFIG)	88
BOMBA DE ACEITE DEL MOTOR (GR)	92
SISTEMA DE ENFRIAMIENTO	93
ENFRIADOR DE ACEITE DEL MOTOR (GR)	93
NUCLEO DE RADIADOR (CONJ)	94
NÚCLEO DEL ENFRIADOR DE ACEITE (GR)	96
VENTILADOR EXPULSOR (CONFIG)	97
VENTILADOR VARIABLE (CONFIG)	98
SOPLADOR - VENTILADOR (GR)	102
VENTILADOR EXPULSOR (GR)	103
VENTILADOR REVERSIBLE (GR)	104
PROTECTOR (CONJ)	105
TUBERÍAS DEL AGUA (GR)	110
BOMBA DE AGUA (GR)	117
RADIADOR (CONFIG)	122
RADIADOR (GR)	124
INTERRUPTOR DE FLUJO (GR)	136
TANQUE DE REFRIGERANTE (GR)	137
TANQUE DEL AGUA (GR)	138
SISTEMA DE ADMISIÓN Y ESCAPE DE AIRE	142
POSENFRIADOR (GR)	142
FILTRO DE AIRE (GR)	144

CONTENIDO

Nombre	Página
EXPULSOR DE POLVO (GR)	147
INDICADOR DEL FILTRO DE AIRE (CONFIG)	148
AIRE - TUBERÍAS DE (GR)	149
MÚLTIPLE DE ESCAPE (GR)	151
MONTAJE DEL FILTRO DE AIRE (GR)	152
SILENCIADOR (GR)	153
ANTEFILTRO (CONFIG)	156
ANTEFILTRO (GR)	159
PROTECTOR TÉRMICO (CONFIG)	160
PROTECTOR DEL ESCAPE (GR)	161
MULTIPLE - PROTECTOR DEL	162
TURBOCOMPRESOR (GR)	164
SISTEMA DE COMBUSTIBLE	166
ADAPTADOR DE LLENADO RÁPIDO DE COMBUSTIBLE (GR)	166
ADAPTADOR DEL MANDO DE LA BOMBA	170
BASE DEL FILTRO DE COMBUSTIBLE (GR)	171
MANDO DE BOMBA (GR)	173
FILTRO DE COMBUSTIBLE (GR)	174
FILTRO DE COMBUSTIBLE Y SEPARADOR DE AGUA (GR)	175
INYECTOR DE COMBUSTIBLE (GR)	177
TUBERÍAS DE COMBUSTIBLE (GR)	178
BOMBA DE COMBUSTIBLE Y MECANISMO DE VÁLVULAS (GR)	182
BOMBA DE TRANSFERENCIA DE COMBUSTIBLE (GR)	183
COMBUSTIBLE - TANQUE DE (GR)	184
VÁLVULA DE RETENCIÓN (GR)	186
VALVULA DE DERIVACION DE COMBUSTIBLE (GR)	187
SISTEMA ELÉCTRICO Y DE ARRANQUE	188
ALARMA (GR)	188
CARGA - ALTERNADOR DE (GR)	190
BATERÍA Y CABLES (GR)	202
CONTROL ELECTRÓNICO Y MONTAJE (GR)	208
CONTROL ELECTRÓNICO DEL MOTOR Y MONTAJE	210
CONTROL ELECTRÓNICO DEL MOTOR (GR)	212
CONTROL DE MAQUINA (GR)	214
CONTROL NO PROGRAMADO (GR)	215
CONVERTIDOR ELÉCTRICO (GR)	216
ELECTRONICA DE LA MAQUINA (GR)	217
ELECTRONICA DE MONITOR (GR)	219
CALENTADOR DEL COMBUSTIBLE (GR)	220
AGUA DE LAS CAMISAS - CALENTADOR DEL (GR)	222
INSTALACION DE SEGURIDAD (CONFIG)	226
INSTALACION DE COMUNICACION (GR)	227
INSTALACION DE SEGURIDAD (GR)	228
LÁMPARA DEL TECHO (GR)	229
REFLECTOR (GR)	230
LUCES (CONFIG)	234
GRUPO DE LUCES	241
LUCES - GRUPO DE 4 LÁMPARAS	244
LUCES DE REFLECTOR (GR)	246
LUCES DELANTERAS (GR)	250
MODULO DE LA PANTALLA (GR)	254
RELÉ DEL TABLERO (GR)	256
SENSOR DE PRESIÓN Y MONTAJE (GR)	258
DETECTOR DE POSICIÓN (SISTEMA DE COMBUST.) (GR)	259
SENSOR DE PRESIÓN (GR)	262
SENSOR DE VELOCIDAD (GR)	269
SENSOR DE TEMPERATURA (GR)	272
SERVICIO DE MAQUINA (GR)	273
AUXILIAR DE ARRANQUE CON ÉTER (GR)	274
MOTOR DE ARRANQUE ELÉCTRICO (GR)	276
SISTEMA DE PRELUBRICACIÓN DEL MOTOR DE ARRANQUE (GR)	280
INTERRUPTOR DE DERIVACIÓN	283
DISYUNTOR (GR)	284
INTERRUPTOR MAGNÉTICO (GR)	285
CABLES DEL MOTOR (GR)	286
CABLES DE LA PLATAFORMA (GR)	288
ALAMBRADO DE ACELERADOR (GR)	291
TREN DE FUERZA	292
EJE DEL TREN DE FUERZA (GR)	292
FRENO Y MANDO DE DIFERENCIAL (GR)	294
FRENO Y MANDO (GR)	298
FRENO Y PLANETARIOS (GR)	300
CAJA Y PIEZAS DE LOS PLANETARIOS	302
PEDAL-GRUPO DE CONTROL Y MONTAJE	305
CONTROL HIDRÁULICO DE LA TRANSMISIÓN (GR)	306
DRENAJE DE SEGURIDAD ECOLÓGICA (GR)	308
FILTRO DE ACEITE (GR)	309
MANDO FINAL (GR)	312
ENGRANAJE DE TRANSFERENCIA Y CORONA (GR)	320

CONTENIDO

Nombre	Página
PROTECTOR DEL TREN DE FUERZA (GR)	323
TUBERÍAS DE ACEITE DEL TREN DE FUERZA (GR)	324
MÚLTIPLE Y VÁLVULA (GR)	329
MONTAJE DE MANDO FINAL (GR)	331
MONTAJE DE LA TRANSMISIÓN (GR)	332
REGULADOR Y PEDAL DEL FRENO (GR)	334
TRANSMISIÓN PLANETARIA (GR)	336
TREN DE FUERZA (CONFIG)	340
BOMBA DE ENGRANAJES (GR)	341
SEGMENTO DE RUEDA MOTRIZ (GR)	344
EJE DE MANDO PRINCIPAL (GR)	345
CONVERTIDOR DE PAR (GR)	346
TRANSMISION (CONFIG)	352
JUNTA UNIVERSAL (GR)	353
VÁLVULA DEL TREN DE FUERZA Y MONTAJE (GR)	354
VÁLVULA DE CONTROL (GR)	356
VÁLVULA DE MODULACIÓN (GR)	360
PRIORIDAD - VÁLVULA DE (GR)	362
VÁLVULA DE ALIVIO (GR)	364
VÁLVULA DE SERVOMANDO (GR)	366
VÁLVULA DE SOLENOIDE (GR)	369
BASTIDOR Y CAJA	372
ACCIONADOR DEL PROTECTOR (GR)	372
CAJA DE LA BATERÍA (GR)	374
CAJA Y BASTIDOR (GR)	378
CHASIS (CONFIG)	388
CONTROL REMOTO (CONJ)	390
CONTRAPESO (GR)	392
TAPA (GR)	393
TAPA DEL MUÑÓN (GR)	394
PUERTA IZQUIERDA (GR)	396
PUERTA DERECHA (GR)	400
BARRA DE TIRO (GR)	404
COMPARTIMIENTO DEL MOTOR (GR)	406
COMPARTIMIENTO DEL TANQUE HIDRÁULICO (GR)	414
GUARDABARROS (GR)	416
PROTECTOR CONTRA ARENA (GR)	418
REJILLA DEL RADIADOR (GR)	419
PROTECTOR INFERIOR (CONFIG)	422
PROTECTOR DE MANDO FINAL (GR)	426
PROTECTOR DE LA RUEDA GUÍA (CONFIG)	427
PROTECTOR DEL RADIADOR (CONJ)	430
PROTECTOR INFERIOR (GR)	432
PROTECTOR DE LOS MANDOS FINALES (GR)	437
PROTECTOR DEL TANQUE DE COMBUSTIBLE (GR)	438
PROTECTOR DE RUEDA GUÍA	442
PROTECTOR DEL RADIADOR (GR)	444
PROTECTOR POSTERIOR (GR)	446
PROTECTOR DE SELLO (GR)	447
PROTECTOR DE RODILLOS INFERIORES (GR)	448
CAPO Y PROTECTOR (GR)	450
PANEL DE INSONORIZACIÓN (GR)	452
PLANCHA DE ENGANCHE (GR)	453
PLATAFORMA (GR)	454
ESTRIBO DEL OPERADOR (GR)	457
PROTECTORES DE RAMAS (GR)	458
TREN DE RODAJE	462
BARRA LIMPIADORA(CONFIG)	462
TAPA DE RUEDA GUÍA (GR)	465
TAPA DE RODILLO INFERIOR	468
BARRA COMPENSADORA (CONJ)	470
BARRA COMPENSADORA (GR)	472
RODILLO INFERIOR DE BASTIDOR (CONJ)	475
BASTIDOR TELESCÓPICO DEL RESORTE TENSOR (GR)	476
RUEDA GUÍA DE CADENA (GR)	485
ESLABÓN DE CADENA (CONJ)	489
LUBRICACIÓN DE EJE PIVOTE (GR)	490
RODILLO (CONFIG)	492
RODILLOS DE PESTAÑA DOBLE (GR)	493
RODILLOS DE PESTAÑA SIMPLE (GR)	494
SOPORTE BASCULANTE (GR)	496
RESORTE TENSOR Y AJUSTADOR DE LA CADENA (GR)	498
CADENAS (GR)	500
TREN DE RODAJE (CONFIG)	507
SISTEMA DE FRENOS Y DIRECCIÓN	510
ADAPTADOR DE MOTOR (GR)	510
CONTROL DEL FRENO DE ESTACIONAMIENTO	512
CONTROL DE DIRECCIÓN (GR)	514
CONTROL DE DIRECCIÓN Y TRANSMISIÓN (GR)	516
FILTRO DE ACEITE (GR)	520
CABEZA DE BOMBA (GR)	522
TUBERÍAS DE DIRECCIÓN (GR)	524
PISTONES DEL MOTOR (GR)	530
BOMBA DE ENGRANAJES (GR)	531
BOMBA DE PISTONES (GR)	532
GRUPO DE ROTACIÓN DEL MOTOR (GR)	534
GRUPO GIRATORIO DE BOMBA	536
DIRECCION HIDRAULICA (CONFIG)	538
VÁLVULA DE DESCARGA (GR)	539
VÁLVULA PILOTO (GR)	540

CONTENIDO

Nombre	Página
VÁLVULA COMPENSADORA DE PRESIÓN (GR)	542
PRESIÓN - VÁLVULA DE CONTROL DE (GR)	544
VÁLVULA DE ALIVIO (GR)	546
SISTEMA HIDRÁULICO	548
ACCIONADOR DE BOMBA DE PISTONES (GR)	548
CONTROL HIDRÁULICO (CONFIG)	549
CONTROL PILOTO HIDRAULICO (CONFIG)	552
ENFRIADOR DEL ACEITE HIDRAULICO (GR)	555
CILINDRO DE LEVANTAMIENTO Y TUBERÍAS (GR)	556
CILINDRO DE INCLINACION Y TUBERIAS (GR)	560
CILINDRO DE INCLINACIÓN (GR)	561
CILINDRO DE LEVANTAMIENTO DE LA HOJA TOPADORA (GR)	563
CILINDRO DE INCLINACIÓN DE LA HOJA TOPADORA (GR)	566
CILINDRO DE LEVANTAMIENTO DEL DESGARRADOR (GR)	570
CILINDRO DEL EXTRACTOR DE PASADOR DEL DESGARRADOR (GR)	572
CILINDRO DE INCLINACIÓN DEL DESGARRADOR (GR)	574
INCLINACIÓN HORIZONTAL - CILINDRO DE (GR)	578
HIDRÁULICA (CONFIG)	584
TUBERÍAS DEL MÚLTIPLE DE LA HOJA TOPADORA (GR)	586
TUBERÍAS CON SERVOMANDO (GR)	588
TUBERIAS DE EXTRACTOR DE PASADORES (GR)	604
BOMBA - TUBERÍAS DE (GR)	606
TUBERÍAS DEL DESGARRADOR (GR)	609
TUBERÍAS DEL CILINDRO DE INCLINACIÓN (GR)	612
MULTIPLE HIDRAULICO (GR)	620
MÚLTIPLE DE ADMISIÓN (GR)	621
VÁLVULA - MONTAJE DE LA (GR)	622
BOMBA DE PISTONES (GR)	624
GRUPO GIRATORIO DE BOMBA	626
PLATO OSCILANTE (GR)	627
TANQUE Y FILTRO HIDRÁULICOS (GR)	630
VÁLVULA DE CONTROL Y MONTAJE (GR)	633
DERIVACIÓN - VÁLVULA DE (GR)	634
VÁLVULA DE RETENCIÓN (GR)	635
VÁLVULA DE CONTROL (GR)	636
VALVULA DISTRIBUIDORA Y REDUCTORA (GR)	650
VÁLVULA PILOTO (GR)	652
VALVULA PILOTO DE CARTUCHO (GR)	660
VÁLVULA COMPENSADORA DE FLUJO Y PRESIÓN (GR)	662
VÁLVULA REDUCTORA DE PRESIÓN (GR)	663
VÁLVULA DE CAÍDA RÁPIDA (GR)	664
VÁLVULA DE ALIVIO (GR)	666
VÁLVULA DE LANZADERA (GR)	669
VÁLVULA DE SOLENOIDE (GR)	670
IMPLEMENTOS	672
BLOQUE DE EMPUJE (GR)	672
SOPORTE DE LA HOJA TOPADORA	673
HOJA TOPADORA (CONFIG)	676
HOJA TOPADORA SEMIUNIVERSAL	680
HOJA TOPADORA UNIVERSAL (CONFIG)	681
BASTIDOR EN C (GR)	682
CONTROL DE HOJA TOPADORA Y CABRESTANTE (CONFIG)	684
BASTIDOR DEL DESGARRADOR (GR)	686
PROTECTOR CONTRA ROCAS (GR)	688
TUBERÍAS DEL MALACATE (GR)	690
ESTABILIZADOR DEL BRAZO DE EMPUJE (GR)	692
MONTAJE DE CILINDRO (GR)	693
MONTAJE DEL DESGARRADOR (GR)	694
EXTRACTOR DE PASADOR (CONFIG)	696
EXTRACTOR DE PASADOR (GR)	697
BRAZO DE EMPUJE IZQUIERDO (GR)	698
BRAZO DE EMPUJE DERECHO (GR)	700
ESTABILIZADOR DEL BRAZO DE EMPUJE (GR)	701
DESGARRADOR (CONFIG)	703
MUÑÓN DE LA HOJA TOPADORA (GR)	704
HERRAMIENTAS	705
CANTONERA Y CUCHILLA (GR)	705
HOJA Y CUCHILLA (GR)	708
HOJA DE LIMPIAPARABRISAS (CONJ)	716
HOJA SEMIUNIVERSAL (CONJ)	718
HOJA UNIVERSAL (CONJ)	722
HOJA ORIENTABLE (GR)	724
HOJA SEMIUNIVERSAL (GR)	725
HOJA UNIVERSAL (GR)	726
CUCHILLA (GR)	727
PLANCHA DE DESGASTE (GR)	728
DESGARRADOR (GR)	729

CONTENIDO

Nombre	Página
DIENTE DE DESGARRADOR (GR)	730
CABINA DEL OPERADOR	733
ACONDICIONADOR DE AIRE (CONFIG)	733
ACONDICIONADOR DE AIRE (GR)	736
VENTILADOR SOPLADOR DE LA CABINA (GR)	738
RECIPIENTE DEL LAVAPARABRISAS	740
CABINA (CONFIG)	744
CABINA (GR)	746
COMPRESOR DE REFRIGERANTE (GR)	749
CONDENSADOR DEL REFRIGERANTE Y MONTAJE (GR)	752
CONDENSADOR DE REFRIGERANTE (GR)	754
CONTROL ELECTRÓNICO (GR)	756
CONTROL DE IMPLEMENTOS (GR)	758
TAPA DE LA CONSOLA (GR)	760
PERILLA DE CONTROL (GR)	762
PALANCA DE CONTROL (GR)	763
CALEFACCIÓN DE LA CABINA (GR)	764
CAJA DE LA SUSPENSIÓN DEL ASIENTO (GR)	766
INSTALACIÓN DE RADIO (GR)	769
INSTRUMENTOS (GR)	770
INSTRUMENTOS DE CABINA (GR)	774
REVESTIMIENTO DE LA CABINA (GR)	778
TUBERÍAS DE ACONDICIONADOR DE AIRE (GR)	782
TUBERÍAS DE LA CALEFACCIÓN (GR)	794
ESPEJO (GR)	796
RETROVISOR (GR)	797
MODULO ELECTRÓNICO DE CUATRO INDICADORES (GR)	799
MOTOR DEL LIMPIADOR	800
MOTOR-LIMPIAPARABRISAS (GR)	802
GRUPO DE MONTAJE DE LA CABINA	804
MONTAJE DE CONTROL (GR)	805
COMPARTIMIENTO DEL OPERADOR (CONFIG)	808
SOPORTE DEL RESPALDO (GR)	810
CUBIERTA INFERIOR DEL ASIENTO DEL OPERADOR (GR)	811
PLANCHA CORREDERA (GR)	813
PLATAFORMA DE LA CABINA (GR)	814
ENCHUFE (CONJ)	817
PRESURIZADOR (GR)	818
RADIO AM/FM/WB (GR)	821
RECLINACION DE ASIENTO (GR)	822
ESTRUCTURA ROPS (GR)	824
CABINA ROPS CERRADA (GR)	826
REJILLA PROTECTORA (GR)	827
CONFIGURACIÓN DE ASIENTO	829
ASIENTO (GR)	830
SUSPENSIÓN - ASIENTO CON (GR)	839
ESCALERA Y AGARRADERA (CONFIG)	842
SOPORTE DE ROPS (GR)	843
ASIENTO CON SUSPENSIÓN (GR)	844
LAVAPARABRISAS DE LA VENTANA (GR)	848
VENTANA CORREDIZA (CONJ)	850
VENTANA DE LA CABINA (GR)	853
LIMPIAPARABRISAS DE LA VENTANA (GR)	870
PIVOTE DEL LIMPIADOR (GR)	872
EQUIPOS Y SUMINISTRO DE SERVICIOS	874
ETIQUETA DE ADVERTENCIA (GR)	874
PISTOLA DE ENGRASE (GR)	876
CALCOMANÍAS Y PLACAS DE IDENTIFICACIÓN (GR)	877
HERRAMIENTAS (GR)	882
INDICE DE NUMEROS DE PIEZA	B1

ÍNDICE

Designação	Página
INFORMAÇÃO GERAL	A35
ALTERNATIVAS DE REPARO	A46
ADITIVOS SUPLEMENTARES DO LÍQUIDO ARREFECEDOR	A51
NOMENCLATURA DE PEÇAS INGLÊS-PORTUGUÊS	A53
PEÇAS DE MANUTENÇÃO	A78
ÍNDICE	A129
MÁQUINA - ARRANJO	1
ATERRO SANITÁRIO	1
SISTEMA ELETRÔNICO - MÁQUINA	5
INDICADOR	6
ARRANJO GERAL	7
ATERRO SANITÁRIO - ARRANJO	8
RUÍDO - ARRANJO PARA SUPRESSÃO	9
ARRANJO PARA CAVACOS	10
MOTOR - ARRANJO	11
MOTOR COMPLETO	11
MOTOR - NÚCLEO	13
GRUPO DE INSTALAÇÃO - MOTOR	14
MOTOR BÁSICO	15
GR. BÁSICO - TAMPA DAS VÁLVULAS E CHICOTE DE INJEÇÃO	15
AJUSTADOR DE CORREIAS	16
EIXO-COMANDO DE VÁLVULA	18
TAMPA - BLOCO DO MOTOR	19
TAMPA - CAIXA DO VOLANTE	21
TAMPA - CAIXA DIANTEIRA	22
TAMPA - REDUÇÃO DE RUÍDOS	23
TAMPA - MECANISMO DAS VÁLVULAS	25
VIRABREQUIM	28
BLOCO DO MOTOR	29
CABEÇOTE DO MOTOR	34
AMORTECEDOR	39
COMANDO DO VENTILADOR	40
FIXADORES - CAIXA DIANTEIRA	44
VOLANTE DO MOTOR	46
ENGRENAGEM - EIXO-COMANDO DE VÁLVULAS	47
ENGRENAGENS DE DISTRIBUIÇÃO	48
ENGRENAGENS DE COMANDO TRASEIRO	50
CAIXA DO VOLANTE DO MOTOR	52
CAIXA DIANTEIRA	54
LEVANTAMENTO DO MOTOR	58
MONTAGEM - ALTERNADOR	60
MONTAGEM - COMANDO DO VENTILADOR	61
CÁRTER DO ÓLEO DO MOTOR	62
PISTÃO E BIELA	66
BALANCIM	68
SUPORTE DO MOTOR	69
MUNHÃO DO MOTOR	71
SISTEMA DE LUBRIFICAÇÃO	72
RESPIRO	72
FIXADORES - BOMBA DE ÓLEO DO MOTOR	73
BOCAL DE ENCHIMENTO DE ÓLEO DO MOTOR	74
FILTRO - ÓLEO DO MOTOR	76
ELIMINAÇÃO DE VAPORES DO CÁRTER	78
INDICADOR - NÍVEL DO ÓLEO (VARETA)	80
TUBOS - ÓLEO DO MOTOR	82
TUBOS - ÓLEO DO TURBOALIMENTADOR	84
ÓLEO - ARRANJO PARA TROCA RÁPIDA	86
PRÊ-LUBRIFICAÇÃO	88
BOMBA DE ÓLEO - MOTOR	92
SISTEMA DE ARREFECIMENTO	93
ARREFECEDOR - ÓLEO DO MOTOR	93
COLMEIA DO RADIADOR	94
COLMÉIA - ARREFECEDOR DE ÓLEO	96
VENTILADOR - EJETOR	97
VENTILADOR - VARIÁVEL	98
VENTILADOR DE SOPRO	102
VENTILADOR - EJETOR	103
VENTILADOR REVERSÍVEL	104
PROTETOR	105
TUBOS - ÁGUA	110
BOMBA DE ÁGUA	117
RADIADOR	122
INTERRUPTOR - FLUXO	136
TANQUE - LÍQUIDO ARREFECEDOR	137
TANQUE DE ÁGUA	138
SISTEMA DA ADMISSÃO DE AR E DE ESCAPE	142
PÓS-ARREFECEDOR	142
PURIFICADOR DE AR	144
EJETOR DE POEIRA	147
INDICADOR - PURIFICADOR DE AR	148
TUBOS - AR	149
COLETOR DE ESCAPE	151
MONTAGEM - PURIFICADOR DE AR	152

ÍNDICE

Designação	Página
SILENCIADOR	153
PRÉ-PURIFICADOR	156
PROTETOR - TÉRMICO	160
BLINDAGEM DO COLETOR DE ESCAPE	161
BLINDAGEM DO COLETOR	162
TURBOALIMENTADOR	164
SISTEMA DE COMBUSTÍVEL	166
ADAPTADOR - ABASTECIMENTO RÁPIDO DE COMBUSTÍVEL	166
ADAPTADOR DO COMANDO DA BOMBA	170
BASE DO FILTRO DE COMBUSTÍVEL	171
COMANDO DA BOMBA	173
FILTRO - COMBUSTÍVEL	174
FILTRO DE COMBUSTÍVEL E SEPARADOR DE ÁGUA	175
INJETOR DE COMBUSTÍVEL	177
TUBOS - COMBUSTÍVEL	178
MECANISMO DAS VÁLVULAS E BOMBA DE COMBUSTÍVEL	182
BOMBA DE TRANSFERÊNCIA DO COMBUSTÍVEL	183
TANQUE DE COMBUSTÍVEL	184
VÁLVULA DE RETENÇÃO	186
VÁLVULA DE DERIVAÇÃO DO COMBUSTÍVEL	187
SISTEMA ELÉTRICO E DE PARTIDA	188
ALARME	188
ALTERNADOR DE CORRENTE	190
BATERIA E CABOS / FIOS ELÉTRICOS	202
CONTROLE ELETRÔNICO E MONTAGEM	208
CONTROLE ELETRÔNICO E MONTAGEM - MOTOR	210
CONTROLE ELETRÔNICO - MOTOR	212
CONTROLE DA MÁQUINA	214
CONTROLE - NÃO PROGRAMADO	215
CONVERSOR ELÉTRICO	216
SISTEMA ELETRÔNICO - MÁQUINA	217
SISTEMA ELETRÔNICO - MONITOR	219
AQUECEDOR DO COMBUSTÍVEL	220
AQUECEDOR DA ÁGUA DO MOTOR	222
INSTALAÇÃO-SEGURANÇA	226
INSTALAÇÃO-COMUNICAÇÃO	227
INSTALAÇÃO-SEGURANÇA	228
LÂMPADA - TETO	229
LÂMPADA - FAROL	230
SISTEMA DE ILUMINAÇÃO	234
ILUMINAÇÃO	241
ILUMINAÇÃO - 4 LÂMPADAS	244
SISTEMA DE ILUMINAÇÃO - FARÓIS	246
ILUMINAÇÃO - DIANTEIRA	250
MÓDULO DO VISOR	254
PAINEL - RELÉ	256
SENSOR DE PRESSÃO E MONTAGEM	258
EMISSOR - POSIÇÃO	259
SENSOR - PRESSÃO	262
SENSOR DE VELOCIDADE	269
SENSOR - TEMPERATURA	272
GR. DE SERVIÇO - MÁQUINA	273
AUXILIAR DE PARTIDA A ÉTER	274
MOTOR ELÉTRICO DE PARTIDA	276
MOTOR DE PARTIDA - SISTEMA DE PRÉ-LUBRIFICAÇÃO	280
INTERRUPTOR DE DERIVAÇÃO	283
CHAVE GERAL	284
INTERRUPTOR - MAGNÉTICO	285
CABOS/FIOS ELÉTRICOS - MOTOR	286
CABOS/FIOS ELÉTRICOS - PLATAFORMA	288
CABOS / FIOS ELÉTRICOS-ACELERADOR	291
TREM DE FORÇA	292
SEMI-EIXO - TREM DE FORÇA	292
FREIO E COMANDO DO DIFERENCIAL	294
FREIO E COMANDO	298
FREIOS E ENGRENAGENS PLANETARIAS	300
CARCAÇA DAS ENGRENAGENS PLANETÁRIAS E COMPONENTES	302
CONTROLE DO PEDAL E MONTAGEM	305
CONTROLE HIDRÁULICO DA TRANSMISSÃO	306
DRENO - ECOLOGIA	308
FILTRO - ÓLEO	309
COMANDO FINAL	312
COROA E ENGRENAGEM DE TRANFERÊNCIA	320
PROTETOR - TREM DE FORÇA	323
TUBOS - ÓLEO DA TRANSMISSÃO	324
COLETOR E VÁLVULA	329
MONTAGEM - COMANDO FINAL	331
MONTAGEM - TRANSMISSÃO	332
PEDAL - GOVERNADOR E FREIO	334
ENGRENAGENS PLANETÁRIAS - TRANSMISSÃO	336
TREM DE FORÇA	340
BOMBA DE ENGRENAGENS	341
SEGMENTO DA RODA MOTRIZ	344
EIXO DA TRANSMISSÃO	345
CONVERSOR DE TORQUE	346
TRANSMISSÃO	352
JUNTA UNIVERSAL	353

ÍNDICE

Designação	Página
VÁLVULA DO TREM DE FORÇA E MONTAGEM	354
VÁLVULA DE CONTROLE	356
VÁLVULA DE MODULAÇÃO	360
VÁLVULA DE PRIORIDADE	362
VÁLVULA DE ALÍVIO	364
SERVO-VÁLVULA	366
VÁLVULA SOLENÓIDE	369
CHASSI E CARROCERIA	372
ACIONADOR DE POTÊNCIA	372
CAIXA DA BATERIA	374
CAIXA E CHASSI	378
CHASSI	388
CONTROLE REMOTO	390
CONTRAPESO	392
TAMPA	393
TAMPA - MUNHÃO	394
PORTA - LADO ESQUERDO	396
PORTA - LADO DIREITO	400
BARRA DE TRAÇÃO	404
COBERTURA DO MOTOR	406
COBERTURA - TANQUE HIDRÁULICO	414
PÁRA-LAMA	416
GRADE DO RADIADOR CONTRA EROSÃO	418
GRADE DO RADIADOR	419
PROTETOR - INFERIOR	422
PROTETOR - COMANDO FINAL	426
PROTETOR - RODA-GUIA	427
PROTETOR DO RADIADOR	430
PROTETOR INFERIOR	432
PROTETOR DO COMANDO FINAL	437
PROTETOR - TANQUE DE COMBUSTÍVEL	438
PROTETOR - RODA-GUIA	442
PROTETOR - RADIADOR	444
PROTETOR - TRASEIRO	446
GUIA - VEDADOR	447
PROTETOR - ROLETES DAS ESTEIRAS	448
CAPÔ E PROTETOR	450
PAINEL- REDUÇÃO DE RUÍDO	452
PLACA - ENGATE	453
PLATAFORMA	454
DEGRAU	457
BARRAS DE PROTEÇÃO DO CAPÔ	458
MATERIAL RODANTE	462
BARRA LIMPADORA DOS ROLOS	462
TAMPA DA RODA-GUIA	465
TAMPA - ROLETE DAS ESTEIRAS	468
BARRA EQUALIZADORA	470
ARMAÇÃO DOS ROLETES DA ESTEIRA	475
ARMAÇÃO TELESCÓPICA DA MOLA TENSORA	476
RODA-GUIA DAS ESTEIRAS	485
ELO DA ESTEIRA	489
EIXO PIVÔ - LUBRIFICAÇÃO	490
ROLETE	492
ROLETE DE ESTEIRA DE FLANGE DUPLO	493
ROLETE DE ESTEIRA DE FLANGE SIMPLES	494
SUSPENSÃO - TRUQUE	496
AJUSTADOR DE ESTEIRAS E MOLA TENSORA	498
ESTEIRA	500
MATERIAL RODANTE	507
SISTEMA DE DIREÇÃO E DE FREIO	510
ADAPTADOR DO MOTOR	510
CONTROLE DO FREIO DE ESTACIONAMENTO	512
CONTROLE DE DIREÇÃO	514
CONTROLE DE DIREÇÃO E TRANSMISSÃO	516
FILTRO - ÓLEO	520
CABEÇA DA BOMBA	522
TUBOS - DIREÇÃO	524
MOTOR - PISTÃO	530
BOMBA DE ENGRENAGENS	531
BOMBA DE PISTÃO	532
MOTOR DO GRUPO ROTATIVO	534
GRUPO ROTATIVO DA BOMBA	536
DIREÇÃO HIDRÁULICA	538
VÁLVULA DE ENXAGUAR	539
VÁLVULA DE CONTROLE PILOTO	540
VÁLVULA DE COMPENSAÇÃO DE PRESSÃO	542
VÁLVULA DE CONTROLE DE PRESSÃO	544
VÁLVULA DE ALÍVIO	546
SISTEMA HIDRÁULICO	548
ACIONADOR - BOMBA DE PISTÃO	548
CONTROLE HIDRÁULICO	549
CONTROLE PILOTO HIDRÁULICO	552
ARREFECEDOR DO ÓLEO HIDRÁULICO	555
CILINDRO DE LEVANTAMENTO E TUBOS	556
CILINDROS DE INCLINAÇÃO E TUBOS	560
CILINDRO DE INCLINAÇÃO	561
CILINDRO - LEVANTAMENTO DA LÂMINA	563
CILINDRO - INCLINAÇÃO DA LÂMINA	566

ÍNDICE

Designação	Página
CILINDRO DE LEVANTAMENTO DO RIPER	570
CILINDRO DO SACADOR DE PINO DO RIPER	572
CILINDRO DE INCLINAÇÃO DO RÍPER	574
CILINDRO DE INCLINAÇÃO	578
COMANDO HIDRÁULICO	584
TUBOS - COLETOR DA LÂMINA	586
TUBOS - CIRCUITO PILOTO	588
TUBOS - SACA-PINO	604
TUBOS - BOMBA	606
TUBOS - RIPER	609
TUBOS - CILINDRO DE INCLINAÇÃO	612
COLETOR HIDRÁULICO	620
COLETOR DE ADMISSÃO	621
MONTAGEM - VÁLVULA	622
BOMBA DE PISTÃO	624
GRUPO ROTATIVO DA BOMBA	626
PLACA BASCULANTE	627
TANQUE HIDRÁULICO E FILTRO	630
VÁLVULA DE CONTROLE E MONTAGEM	633
VÁLVULA DE DERIVAÇÃO	634
VÁLVULA DE RETENÇÃO	635
VÁLVULA DE CONTROLE	636
VALVULA REDUTORA E COLETOR	650
VÁLVULA DE CONTROLE PILOTO	652
VÁLVULA DO CARTUCHO PILOTO	660
VÁLVULA DE CONTROLE - PRESSÃO E COMPENSAÇÃO DE FLUXO	662
VÁLVULA DE REDUÇÃO DE PRESSÃO	663
VÁLVULA DE QUEDA RÁPIDA	664
VÁLVULA DE ALÍVIO	666
VÁLVULA DE SEPARAÇÃO	669
VÁLVULA SOLENÓIDE	670
ACESSÓRIOS	672
BLOCO DE EMPUXO	672
TIRANTE DA LÂMINA	673
LÂMINA	676
LÂMINA SEMI-UNIVERSAL	680
LÂMINA UNIVERSAL	681
ARMAÇÃO C	682
CONTROLE-LÂMINA & GUINCHO	684
ARMAÇÃO DO RIPER	686
PROTETOR - ROCHA	688
TUBOS - GUINCHO	690
ELO ESTABILIZADOR	692
MONTAGEM - CILINDRO	693
MONTAGEM - RIPER	694
SACA-PINO	696
BRAÇO DE EMPUXO - ESQUERDO	698
BRAÇO DE EMPUXO - DIREITO	700
BRAÇO DE EMPUXO - ESTABILIZADOR	701
RIPER	703
MUNHÃO DA LÂMINA	704
FERRAMENTAS DE TRABALHO	705
CANTO E BORDA CORTANTE	705
LÂMINA E BORDA CORTANTE	708
LÂMINA	716
LÂMINA SEMI-UNIVERSAL	718
LÂMINA UNIVERSAL	722
LÂMINA ANGULÁVEL	724
LÂMINA SEMI-UNIVERSAL	725
LÂMINA UNIVERSAL	726
BORDA CORTANTE	727
PLACA DE DESGASTE	728
RIPER	729
DENTE DO RÍPER	730
POSTO DO OPERADOR	733
CONDICIONADOR DE AR	733
VENTILADOR DA CABINE	738
FRASCO - LAVADOR DE JANELA	740
CABINE	744
COMPRESSOR DE REFRIGERANTE	749
CONDENSADOR DO REFRIGERANTE E MONTAGEM	752
CONDENSADOR DE REFRIGERANTE	754
CONTROLE ELETRÔNICO	756
CONTROLE DO ACESSÓRIO	758
TAMPA - CONSOLO	760
ALAVANCA DE CONTROLE	762
AQUECEDOR DA CABINE	764
CAIXA - SUSPENSÃO DO ASSENTO	766
INSTALAÇÃO DO RÁDIO	769
INSTRUMENTOS	770
INSTRUMENTOS-CABINE	774
REVESTIMENTO DA CABINE	778
TUBOS - AR CONDICIONADO	782
TUBOS - AQUECEDOR	794
ESPELHO	796
ESPELHO RETROVISOR	797
MÓDULO ELETRÔNICO DE QUATRO INDICADORES	799
MOTOR DO LIMPADOR	800
MOTOR - LIMPADOR DO VIDRO	802
MONTAGEM - CABINE	804
MONTAGEM - CONTROLE	805
CABINE	808
FUNDO - ENCOSTO	810
ASSENTO - FUNDO	811
PLACA DESLIZANTE	813
PLATAFORMA DA CABINE	814
BUJÃO	817

ÍNDICE

Designação	Página	Designação	Página
PRESSURIZADOR	818		
RÁDIO AM/FM/WB	821		
RECLINAÇÃO - ASSENTO	822		
ESTRUTURA ROPS	824		
ROPS FECHADA	826		
TELA DE PROTEÇÃO	827		
ASSENTO	829		
ASSENTO COM SUSPENSÃO	839		
DEGRAU E PEGA-MÃO	842		
SUPORTE-ROPS	843		
SUSPENSÃO - ASSENTO	844		
LAVADOR DO VIDRO	848		
JANELA DESLIZANTE	850		
JANELA DA CABINE	853		
LIMPADOR DO VIDRO	870		
PIVÔ DO LIMPADOR	872		
EQUIPAMENTO DE SERVIÇO E SUPRIMENTOS	874		
DECALQUE	874		
BOMBA MANUAL DE LUBRIFICAÇÃO	876		
PLACA E DECALQUE	877		
FERRAMENTAS	882		
ÍNDICE DE NÚMERO DE PEÇA	B1		

INHALTSVERZEICHNIS

Bezeichnung	Seite
ALLGEMEINE HINWEISE	A39
REPARATURALTERNATIVEN	A47
KÜHLMITTELZUSATZ	A52
WARTUNGSTEILE	A83
STICHWORTVERZEICHNIS	A142
MASCHINE	1
ABFALLBESEITIGUNGSMONTAGE	1
ELEKTRONIK - MASCHINE	5
ANZEIGENSATZ	6
MASCHINENAUSFÜHRUNG	7
DEPONIEAUSRÜSTUNG	8
SCHALLDÄMPFUNG	9
HOLZSPAN-AUSRÜSTUNGSSATZ	10
MOTORAUSFÜHRUNG	11
MOTOR, KOMPLETT	11
MOTORKÜHLERBLOCK	13
MOTOR-EINBAUSATZ	14
MOTOR (GRUNDAUSFÜHRUNG)	15
SOCKEL FÜR VENTILDECKEL U. EINSPRITZKABELBAUM	15
RIEMENSPANNER	16
NOCKENWELLE	18
MOTORBLOCKDECKEL	19
SCHWUNGRADGEHÄUSEDECKEL	21
STIRNRADGEHÄUSEDECKEL	22
SCHALLDÄMPFENDE VERKLEIDUNG	23
VENTILDECKEL	25
KURBELWELLE	28
MOTORBLOCK	29
ZYLINDERKOPF	34
DÄMPFER	39
LÜFTERANTRIEB	40
STIRNRADGEHÄUSE-HALTETEILE	44
SCHWUNGRAD	46
NOCKENWELLENZAHNRAD	47
STIRNRAD	48
ZAHNRADVORGELEGE	50
SCHWUNGRADGEHÄUSE	52
STIRNRADGEHÄUSE	54
MOTORHUBÖSE	58
DREHSTROMGENERATOR - BEFESTIGUNG	60
LÜFTERANTRIEBSAUFHÄNGUNG	61
ÖLWANNE	62
PLEUELSTANGE UND KOLBEN	66
VENTILKIPPHEBEL	68
MOTORAUFHÄNGUNG	69
MONTAGEZAPFEN	71
SCHMIERSYSTEM	72
ENTLÜFTER	72
ÖLPUMPEN-BEFESTIGUNGSTEILE	73
MOTORÖLEINFÜLLSTUTZEN	74
ÖLFILTER	76
ENTDUNSTER	78
ÖLMESSSTAB	80
MOTORÖLLEITUNGEN	82
TURBOLADERÖLLEITUNGEN	84
ÖLSCHNELLWECHSELANSCHLUSS	86
MOTORVORSCHMIERUNG	88
SCHMIERPUMPE	92
KÜHLSYSTEM	93
MOTORÖLKÜHLER	93
KÜHLERBLOCK	94
ÖLKÜHLERBLOCK	96
AUSWERFERLÜFTER	97
LÜFTER (VERSTELLBAR)	98
DRUCKLÜFTER	102
AUSWERFERLÜFTER	103
UMKEHRLÜFTER	104
SCHUTZVERKLEIDUNG	105
KÜHLWASSERLEITUNGEN	110
KÜHLWASSERPUMPE	117
KÜHLER	122
STRÖMUNGSSCHALTER	136
KÜHLMITTELBEHÄLTER	137
WASSERTANK	138
LUFTEINLASS- UND ABGASSYSTEM	142
LADELUFTKÜHLER	142
LUFTREINIGER	144
STAUBAUSWERFER	147
LUFTREINIGERANZEIGE	148
DRUCKLUFTLEITUNGEN	149
AUSPUFFKRÜMMER	151
LUFTREINIGER-ANBAUSATZ	152
SCHALLDÄMPFER	153
VORREINIGER	156
HITZESCHILD	160
AUSPUFFABSCHIRMUNG	161
KRÜMMERSCHILD	162
TURBOLADER	164
KRAFTSTOFFSYSTEM	166
SCHNELLBETANKUNGSANSCHLUSS	166
PUMPENANTRIEBSADAPTER	170
KRAFTSTOFFILTERSOCKEL	171
PUMPENANTRIEB	173
KRAFTSTOFFILTER	174

INHALTSVERZEICHNIS

Bezeichnung	Seite
WASSERABSCHEIDER- U. KRAFTSTOFFILTER	175
KRAFTSTOFFEINSPRITZDÜSE	177
KRAFTSTOFFLEITUNGEN	178
KRAFTOFFPUMPE UND VENTILSTEUERUNG	182
KRAFTSTOFFÖRDERPUMPE	183
KRAFTSTOFFTANK	184
SPERRVENTIL	186
KRAFTSTOFFNEBENSTROMVENTIL	187
ELEKTRISCHE ANLAGE UND STARTSYSTEM	188
WARNVORRICHTUNG	188
DREHSTROMGENERATOR	190
BATTERIE UND VERDRAHTUNG	202
ELEKTRON. STEUERUNG UND ANBAUSATZ	208
STEUERUNGSEINHEIT, ELEKTRON. FÜR MOTOR UND BEFEST.	210
MOTORSTEUERUNG, ELEKTRON.	212
MASCHINENSTEUERUNG	214
STEUERUNG - NICHT PROGRAMMIERT	215
ELEKTR. UMFORMER	216
ELEKTRONIK - MASCHINE	217
ELEKTRONIK - MONITOR	219
KRAFTSTOFFHEIZUNG	220
UMLAUFKÜHLWASSERHEIZUNG	222
SICHERHEITSEINBAUSATZ	226
EINBAUSATZ - KOMMUNIKATION	227
SICHERHEITSEINBAUSATZ	228
FAHRERHAUSBELEUCHTUNG	229
ARBEITSLEUCHTEN	230
BELEUCHTUNGSANLAGE	234
BELEUCHTUNGSANLAGE (4 LEUCHTEN)	244
ARBEITSLEUCHTEN	246
FRONTBELEUCHTUNG	250
ANZEIGEMODUL	254
RELAISTAFEL	256
DRUCKSENSOR UND BEFESTIGUNGSTEILE	258
STELLUNGSSENSOR	259
DRUCKSENSOR	262
DREHZAHLSENSOR	269
TEMPERATURSENSOR	272
ELEKTRON. WARTUNGSMODUL	273
ÄTHERSTARTHILFE	274
STARTERMOTOR	276
ANLASSMOTOR-VORSCHMIERANLAGE	280
UMGEHUNGSSCHALTER	283
TRENNSCHALTER	284
MAGNETSCHALTER	285
MOTORVERDRAHTUNG	286
FAHRERPLATTFORMVERDRAHTUNG	288
GASREGELUNG - VERDRAHTUNG	291
KRAFTÜBERTRAGUNG	292
KRAFTÜBERTRAGUNGSACHSE	292
BREMSE UND DIFFERENTIALANTRIEB	294
BREMSE U. ANTRIEB	298
BREMSE UND PLANETENGETRIEBE	300
PLANETENANTRIEBSGEHÄUSE U. TEILE	302
STEUERPEDAL U. BEFESTIGUNG	305
GETRIEBEHYDRAULIK	306
ABLASS (UMWELTFREUNDLICH)	308
ÖLFILTER	309
SEITENANTRIEB	312
TELLERRAD- UND VORGELEGERADSATZ	320
ANTRIEBSSCHUTZ	323
ÖLLEITUNGEN - KRAFTÜBERTRAGUNG	324
KRÜMMER UND VENTIL	329
SEITENANTRIEBSBEFESTIGUNG	331
GETRIEBEAUFLAGER	332
GAS- U. BREMSPEDAL	334
PLANETENGETRIEBE	336
KRAFTÜBERTRAGUNG	340
ZAHNRADPUMPE	341
KETTENRADSEGMENT	344
HAUPTANTRIEBSWELLE	345
DREHMOMENTWANDLER	346
GETRIEBE	352
KREUZGELENK	353
KRAFTÜBERTRAGUNGSVENTIL U. BEFESTIGUNGSTEILE	354
STEUERVENTIL	356
MODULATORVENTIL	360
VORRANGVENTIL	362
ÜBERDRUCKVENTIL	364
VERSTÄRKERVENTIL	366
MAGNETVENTIL	369
RAHMEN UND AUFBAU	372
STROMBETÄTIGUNG	372
BATTERIEKASTEN	374
RAHMEN UND GEHÄUSE	378
FAHRWERK	388
FERNBEDIENUNG	390
GEGENGEWICHT	392
DECKEL	393
MONTAGEZAPFENVERKLEIDUNG	394
FAHRERHAUSTÜR (LINKS)	396
FAHRERHAUSTÜR (RECHTS)	400

INHALTSVERZEICHNIS

Bezeichnung	Seite
ZUGHAKEN	404
MOTORVERKLEIDUNG	406
HYDRAULIKTANKVERKLEIDUNG	414
SCHUTZBLECHE	416
SANDSTRAHLSCHUTZGITTER	418
KÜHLERGRILL	419
PANZERWANNE	422
SEITENANTRIEBSVERKLEIDUNG	426
LEITRADSCHUTZ	427
KÜHLERVERKLEIDUNG	430
PANZERWANNE	432
SEITENANTRIEBSVERKLEIDUNG	437
KRAFTSTOFFTANKVERKLEIDUNG	438
LEITRADSCHUTZ	442
KÜHLERSCHUTZ	444
HECKVERKLEIDUNG	446
SCHUTZDICHTUNG	447
LAUFROLLENSCHUTZ	448
MOTORHAUBE UND VERKLEIDUNG	450
SCHALLDÄMPFUNG	452
ZUGVORRICHTUNGSPLATTE	453
PLATTFORM	454
STEIGLEITER	457
SCHUTZBÜGEL	458
LAUFWERK	462
ABSTREIFBALKEN	462
LEITRADAUFSATZ	465
LAUFROLLENAUFSATZ	468
QUERTRAVERSE	470
LAUFROLLENRAHMEN	475
LAUFROLLENRAHMEN (TELESKOPRÜCKLAUF)	476
LEITRAD	485
KETTENGLIEDER	489
ACHSWELLENSCHMIERUNG	490
LAUFROLLE	492
DOPPELFLANSCHROLLEN	493
EINZELFLANSCHROLLEN	494
LAUFROLLENRAHMEN-KNICKFEDERUNG	496
KETTENSPANNER UND -FEDERRÜCKLAUF	498
LAUFWERKSKETTE	500
LAUFWERKSRAHMEN	507
LENK- UND BREMSSYSTEM	510
MOTORANSCHLUSS	510
FESTSTELLBREMSGESTÄNGE	512
LENKBETÄTIGUNG	514
LENK- UND GETRIEBESTEUERUNG	516
ÖLFILTER	520
PUMPENKOPF	522
LENKÖLLEITUNGEN	524
KOLBENMOTOR	530
ZAHNRADPUMPE	531
KOLBENPUMPE	532
MOTORDREHVORRICHTUNG	534
KOLBENPUMPENUMLAUFSATZ	536
HYDRAULIKLENKUNG	538
SPÜLVENTIL	539
VORSTEUERVENTIL	540
DRUCKAUSGLEICHSVENTIL	542
DRUCKSTEUERVENTIL	544
ÜBERDRUCKVENTIL	546
HYDRAULIKSYSTEM	548
KOLBENPUMPENBETÄTIGER	548
HYDRAULIKSTEUERUNG	549
VORSTEUERHYDRAULIKSTEUERUNG	552
HYDRAULIKÖLKÜHLER	555
HUBZYLINDER U. LEITUNGEN	556
KIPPZYLINDER U. LEITUNGEN	560
KIPPZYLINDER	561
PLANIERSCHILDHUBZYLINDER	563
PLANIERSCHILDKIPPZYLINDER	566
AUFREISSERHUBZYLINDER	570
AUFREISSER-BOLZENZIEHERZYLINDER	572
AUFREISSERKIPPZYLINDER	574
KIPPZYLINDER	578
HYDRAULIKSYSTEM	584
PLANIERSCHILD-KRÜMMERLEITUNGEN	586
VORSTEUERLEITUNGEN	588
LEITUNGSBOLZENZIEHER	604
HYDRAULIKPUMPE UND LEITUNGEN	606
AUFREISSERLEITUNGEN	609
NEIGEZYLINDERLEITUNGEN	612
HYDRAULIKVERTEILER	620
ANSAUGKRÜMMER	621
VENTILAUFHÄNGUNG	622
KOLBENPUMPE	624
KOLBENPUMPENUMLAUFSATZ	626
SCHWENKSCHEIBE	627
HYDRAULIKTANK UND SCHMIERFILTER	630
STEUERVENTIL UND BEFESTIGUNGSTEILE	633
NEBENSTROMVENTIL	634
SPERRVENTIL	635
STEUERVENTIL	636
VERTEILER- UND REDUZIERVENTIL	650
VORSTEUERVENTIL	652
EINBAUVORSTEUERVENTIL	660
DRUCK- U. STROMAUSGLEICHSVENTIL	662
DRUCKREDUZIERVENTIL	663

INHALTSVERZEICHNIS

Bezeichnung	Seite
SCHNELLSENKVENTIL	664
ÜBERDRUCKVENTIL	666
PENDELVENTIL	669
MAGNETVENTIL	670
ARBEITSGERÄTE	672
SCHUBBLOCK	672
SCHILDSTREBE	673
PLANIEREINRICHTUNG	676
SU-SCHILD	680
U-PLANIERSCHILDEINRICHTUNG	681
C-RAHMEN	682
STEUERUNG - PLANIERSCHILD U. WINDE	684
AUFREISSERRAHMEN	686
STEINSCHUTZ	688
WINDEN-ÖLLEITUNGEN	690
STABILISATORGELENK	692
ZYLINDERAUFHÄNGUNG	693
AUFREISSERBEFESTIGUNG	694
BOLZENZIEHER	696
SCHUBARM, LINKS	698
SCHUBARM, RECHTS	700
SCHUBARM - STABILISATOR	701
AUFREISSER - TEILLISTE	703
MONTAGEZAPFEN (PLANIERSCHILDEINRICHTUNG)	704
ARBEITSGERÄTE	705
ECK- UND SCHNEIDMESSER	705
SCHILD UND SCHNEIDMESSER	708
SCHEIBENWISCHERBLATT	716
SU-SCHILD	718
U-SCHILD	722
SCHWENKSCHILD	724
SU-SCHILD	725
U-SCHILD	726
SCHNEIDMESSER	727
VERSCHLEISSPLATTEN	728
AUFREISSER	729
AUFREISSERZAHN	730
FAHRERHAUS	733
KLIMAANLAGE	733
FAHRERHAUS-DRUCKLÜFTER	738
SCHEIBENWASCHANLAGENBEHÄLTER	740
FAHRERHAUS	744
KÄLTEMITTELKOMPRESSOR	749
KÄLTEMITTELKONDENSATOR U. BEFESTIGUNGSTEILE	752
KÄLTEMITTELKONDENSATOR	754
STEUERUNG, ELEKTRON.	756
ARBEITSGERÄTESTEUERUNG	758
STEUERKONSOLENABDECKUNG	760
STEUERHEBEL	762
JOYSTICKGRIFF	763
FAHRERHAUSHEIZUNG	764
FAHRERSITZFEDERUNGSGEHÄUSE	766
RADIOEINBAUSATZ	769
INSTRUMENTENSATZ	770
FAHRERHAUS-INSTRUMENTENTAFEL	774
FAHRERHAUSAUSKLEIDUNG	778
KLIMAANLAGENLEITUNGEN	782
HEIZUNGSLEITUNGEN	794
SPIEGEL	796
RÜCKSPIEGEL	797
MODUL - VIER ELEKTRON. ANZEIGEN	799
SCHEIBENWISCHERMOTOR	800
FAHRERHAUSANBAUSATZ	804
GESTÄNGE UND ANBAUSATZ	805
FAHRERHAUS	808
SCHALE - RÜCKENLEHNE	810
FAHRERSITZVERKLEIDUNG	811
GLEITPLATTE	813
FAHRERPLATTFORM	814
STECKERSATZ	817
FAHRERHAUSBELÜFTUNG	818
RADIO - AM-FM-WB	821
VERSTELLBARER SITZ	822
ÜBERROLLSCHUTZ	824
ÜBERROLL-SCHUTZKABINE	826
SCHUTZGITTER	827
FAHRERSITZ	829
SCHWINGSITZ	839
STUFE U. HANDGRIFF	842
TRÄGER - ÜBERROLLSCHUTZ	843
FAHRERSITZFEDERUNG	844
SCHEIBENWASCHANLAGE	848
SCHIEBEFENSTER	850
FAHRERHAUSFENSTER	853
SCHEIBENWISCHER	870
WISCHERARM	872
WARTUNGSAUSRÜSTUNG UND -ZUBEHÖR	874
AUFKLEBER	874
FETTPRESSE	876
SCHILD UND AUFKLEBER	877
HANDWERKZEUGE	882
ERSATZTEILNUMMERNINDEX	B1

GENERAL INFORMATION

1. MACHINE IDENTIFICATION

Caterpillar machines are identified by Product Identification Numbers (PIN). Some components included in a machine may be identified by Serial Numbers (S/N). Typical components that will be serialized include engines, transmissions, bulldozers, and rippers. The machine and engine are further identified by arrangement numbers and in some cases modification numbers. These numbers are shown on the product identification plate(s) and on the master plate in the operator's compartment.

Caterpillar dealers need all of these numbers to determine accurate parts identification.

SIS ***New Feature***

Effective First Quarter 2001 the Caterpillar Product Identification Number (PIN) will change from 8 to 17 characters. In an effort to provide uniform equipment identification, Caterpillar and other construction equipment manufacturers are moving to comply with the latest version of the product identification numbering standard. Non-road machine PINs are defined by ISO 10261. The new PIN format will apply to all Caterpillar machines and generator sets. The PIN plates and frame marking will display the 17 character PIN. The new format will look like the following:

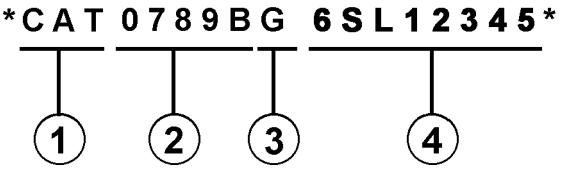

Where:

1. Caterpillar's World Manufacturing Code (characters 1-3)

2. Machine Descriptor (characters 4-8)

3. Check Character (character 9)

4. Machine Indicator Section (MIS) or Product Sequence Number (characters 10-17). These were previously referred to as the Serial Number.

Machines and generator sets produced before First Quarter 2001 will maintain their 8 character PIN format.

Components such as engines, transmissions, axles, etc. and work tools will continue to use an 8 character Serial Number (S/N).

2. ORDERING PARTS

⚠ WARNING

When replacement parts are required for this product Caterpillar recommends using Caterpillar replacement parts or parts with equivalent specifications including, but not limited to, physical dimensions, type, strength and material.

Failure to heed this warning can lead to premature failures, product damage, personal injury or death.

Quality Caterpillar replacement parts are available from Caterpillar dealers throughout the world. Their parts inventories are up to date and include all parts normally required to protect your investment in Caterpillar machines. Dealers may offer repair kits or remanufactured parts to allow selection of the most effective repair alternative for a particular situation. When ordering parts, your order should specify the quantity, part number, part name, and the serial number/product identification number of the machine for which the parts are needed.

3. PARTS MANUAL ORGANIZATION

Product information in this manual is presented as "information elements" that represent all of the components for the specific model. Engine Arrangement and Seat Group are examples of information elements. The information elements are organized alphabetically by part name and secondarily by part number within each major section of the manual.

4. TABLE OF CONTENTS

SIS ***New Feature***

A table of contents (TOC) is found at the beginning of the manual. The TOC lists each section of the manual with a complete list of all information elements organized as they appear in the manual. Page numbers are provided for quick reference to detailed parts identification illustrations and serviceable consist lists.

5. MAINTENANCE PARTS INDEX

The Maintenance Parts Index, located near the beginning of the manual, references most frequently used maintenance part numbers, providing description, quantity, usage and page number. This information is organized alphabetically by part description.

6. INDEX

The index located near the front of the manual is an alphabetical listing of all information elements included in the manual. Page numbers are provided for quick reference to detailed parts identification illustrations and serviceable consist lists.

7. PART NUMBER INDEX

A numerical index listing all part numbers and the corresponding page number(s) appears at the back of the manual.

8. CAPTIONS

Captions located at the top of each page of an information element identify the part number and part name along with additional descriptive information. PIN and S/N information found in each caption should be used to select correct information for a specific machine. Field replacement options, identification of optional attachment components, and where used ("part of") information is also provided.

SIS ***New Feature***

The first line of a caption is shown in larger type font to indicate the beginning of an information element. Captions for additional pages that may be required to illustrate an information element will be shown in standard type font and will include the term *(contd.)* .

9. NON-SERVICED PARTS

SIS ***New Feature***

In some instances it is necessary to display non-serviced parts that are a link to a lower level serviceable consist lists. These non-serviced part numbers are shown in *italic* type indicating that they are not available.

10. PARTS LIST REFERENCE NUMBERS

SIS ***New Feature***

Numbers shown in the Ref No column correspond to numbers used in the associated graphic(s). An alphabetic suffix may be added to a reference number to identify lower level consist items. Numbers shown in the Graphic Ref column refer to the graphic number identifier displayed in the lower left corner of each illustration. The Graphic Ref number may be used in combination with the item Ref No to determine the correct part number. There may be intentional omission of a Ref No in a consist list as information is updated to reflect the latest serviceable part numbers.

11. INDENTED PART NAMES

When a part name is indented in a parts list, it is part of (included in) the group or assembly under which it is indented.

12. ILLUSTRATION REFERENCE LETTERS

When necessary, illustrations contain reference letters (A, B, C etc.) that are intended to track lines and harnesses from one point to another. They are also used to show where to reconnect illustrations that have been separated.

13. ABBREVIATIONS AND SYMBOLS

O.D. – Outside Diameter
I.D. – Inside Diameter
A – Not Part Of This Group
B – Use As Required
C – Change From Previous Type
D – Order By The Meter
E – Order By The Centimeter
F – Not Shown
G – Order By The Inch
I – See Hose Fabrication Guide
M – Metric Part
R – Remfg Part May Be Available
Y – Separate Illustration
Z – Not Serviced Separately

NOTE:

Continuing improvement and advancement of product design may cause changes to your machine which may not be included in this publication. Whenever a question arises regarding your Caterpillar product or this publication, please consult your Caterpillar dealer for the latest available information.

FRAME AND BODY

8E-3299 PLATFORM GP-CAB

PIN 38K1-99999

SMCS-7283 — 100090751

NOTE	REF NO	GRAPHIC REF	PART NUMBER	QTY	PART NAME (1 2 3 4 5 6 PRODUCT LEVEL)	SEE PAGE
	1	1	3T-3953	1	PLATE AS	
	2	1	6B-3062	25	BOLT (3/8-16X.750IN)	
	3	1	6P-1075	41	WASHER-HARD (9MM THK)	
	4	1	9F-1444	2	SUPPORT AS-FOOT	
	5	1	7P-2229	19	BOLT (1/2-13X1IN)	
		1	6P-[illegible]	19	WASHER-HARD (4MM THK)	
	6	1	8E-8134	1	COVER AS-LH	
		1	9F-2979	5	NUT-WELD (3/8-16 THD)	
		1	1P-8199	1	CLIP	
	7	1	7E-3411	4	COVER	
	8		6J-0468	19	SCREW-HEAD (3/8-16X.875IN)	
	9	1	[illegible]-4674	1	COVER	
		1	8E-8972	[illegible]	GASKET	
	10	1	8E-3248	1	[illegible]	
		1	8E-3250	1	GASKET	
	11	1	3T-3939	1	HANDHOLD	
	12	1	8E-8978	1	COVER AS	
		1	9F-2978	8	NUT-WELD (3/8-16 THD)	
		1	8E-8978	1	GASKET	
	13	1	7T-0131	1	FLOORPLATE AS	
		1	1F-0748	4	NUT-WELD (1/2-13 THD)	
	14	1	7Y-8087	1	PLUG-BUTTON	
	15	1	7T-0136	1	PLATE AS	
		1	9F-2979	5	NUT-WELD (3/8-16 THD)	
	16	1	7T-8098	1	COVER	
		1	7T-0779	1	GASKET	
	17	1	3T-3951	1	PLATE AS	
	18	1	6T-8364	4	BOLT (1/4-20X.625IN)	
M		1	9T-4205	4	WASHER-HARD (2MM THK)	
	19	1	9X-8464	1	FLOOR MAT	
	20	1	8E-8946	1	MODULE AS-OPERATOR	
	21	1	3T-3934	1	HANDHOLD	
	22	1	9P-8871	2	PLUG	
	23	2	6T-8364	4	BOLT (1/4-20X.625IN)	
M		2	9T-4205	4	WASHER-HARD (2MM THK)	
	24	2	6B-3062	17	BOLT (3/8-16X.750IN)	
	25	2	6P-1075	21	WASHER-HARD (9MM THK)	
	26	2	7T-0136	1	SEAL	
	27	2	7X-0378	2	BOLT (3/4-10X5IN)	
		2	7X-0682	2	WASHER-HARD (6MM THK)	
	28	2	3T-3482	2	PLATE	
	29	2	3T-8290	1	PLATE AS	
		2	7E-4838	6	SPACER	
	30	2	3T-8291	1	SEAL	
	31	2	7E-8817	1	GASKET	
	32	2	7E-8816	1	COVER AS	
		2	2R-2376	2	WASHER	
		2	6P-8826	2	SCREW-KNURLED	
	33	2	9W-3429	1	COVER	
	34	2	8E-8697	1	COVER	
	35	2	6D-3091	8	SCREW-SOCKET HEAD	
	36	2	9W-3142	8	MOUNTING	
	37	2	9W-9027	2	PLATE	
	38	2	7X-0360	2	BOLT (7/8-9X6IN)	
		2	7X-0672	2	WASHER-HARD	
	39	2	6L-8454	4	BOLT (3/8-16X1.0IN)	
	40	2	3T-4788	1	COVER	

12 FRAME AND BODY — 1 of 4 — SELP4570-01

FRAME AND BODY

8E-3299 PLATFORM GP-CAB (contd.)

100090751

NOTE	REF NO	GRAPHIC REF	PART NUMBER	QTY	PART NAME (1 2 3 4 5 6 PRODUCT LEVEL)	SEE PAGE
	41	2	8E-2515	1	COVER	
	42	2	7T-0134	1	PLATE	
	43	2	7T-0138	1	GASKET	
	44	2	7E-8724	1	GASKET	
	45	2	7E-8723	1	COVER	
	46	[illegible]	6V-1958	2	PLUG-BUTTON	
M-METRIC PART						

SELP4570-01 — 2 of 4 — FRAME AND BODY 13

FRAME AND BODY

8E-3299 PLATFORM GP-CAB (contd.)

100090751

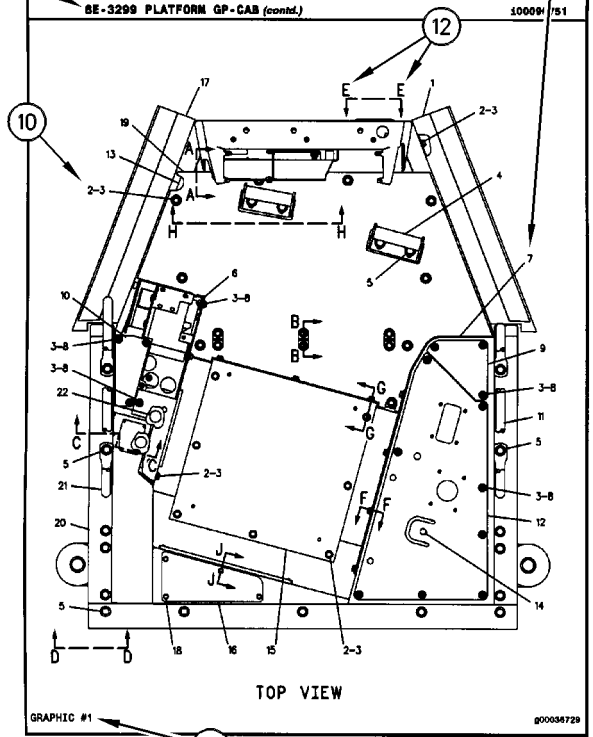

GRAPHIC #1 — g00036729

14 FRAME AND BODY — 3 of 4 — SELP4570-01

FRAME AND BODY

8E-3299 PLATFORM GP-CAB (contd.)

100090751

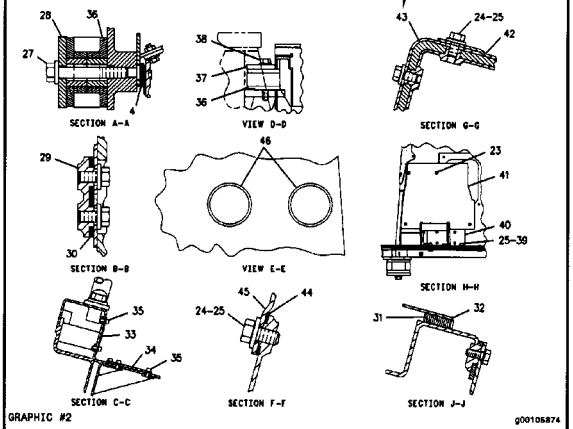

GRAPHIC #2 — g00105874

SELP4570-01 — 4 of 4 — FRAME AND BODY 16

1. IDENTIFICATION DE LA MACHINE

Toutes les machines Caterpillar portent un numéro d'identification (PIN). Certains composants des machines peuvent porter des numéros de série (S/N). En général, parmi les composants qui portent des numéros de série il y a les moteurs, les transmissions, les bulldozers et les rippers. En plus, la machine et le moteur peuvent recevoir des numéros de version, et dans certains cas, de modification. Ces numéros figurent sur les plaques de numéro de série et sur la plaque signalétique principale qui se trouve dans le poste de conduite.

Les concessionnaires Caterpillar doivent connaître tous ces numéros pour identifier correctement les pièces.

SIS *Nouvelle Caractéristique*

À partir du premier trimestre 2001, le numéro d'identification produit (PIN) Caterpillar passe de 8 à 17 caractères. Afin de permettre une identification uniforme des matériels, Caterpillar et d'autres constructeurs de machines de travaux publics s'efforcent de se conformer à la norme la plus récente portant sur les numéros d'identification des produits. Les numéros d'identification (PIN) de machines de chantier sont définis par la norme ISO 10261. Le nouveau format du numéro d'identification est valable pour toutes les machines et tous les groupes électrogènes Caterpillar. Le numéro d'identification produit (PIN) figurant sur la plaque et sur le châssis se composera de 17 caractères. Le nouveau format ressemblera à ceci:

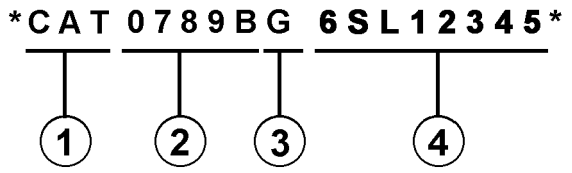

Il se décomposera de la façon suivante:

1. Code international de fabrication de Caterpillar (caractères 1 à 3)

2. Descriptif de la machine (caractères 4 à 8)

3. Contrôle (caractère 9)

4. Indicateur machine (MIS) ou numéro de séquence produit (caractères 10 à 17). Ceux-ci étaient auparavant désignés sous le terme de numéro de série.

Les machines et les groupes électrogènes construits avant le premier trimestre 2001 garderont le format à 8 caractères du numéro d'identification produit (PIN).

Les organes tels que les moteurs, les boîtes de vitesses, les essieux, etc., continueront d'être désignés par un numéro de série (S/N) à 8 caractères.

2. COMMANDE DE PIÈCES

⚠ DANGER

Lorsqu'il faut remplacer des pièces de rechange pour ce produit Caterpillar recommande d'utiliser les pièces de rechange Caterpillar ou les pièces qui ont des spécifications équivalentes dont les dimensions physiques, le type, la force et le matériau. Ces équivalences ne se limitent pas à l'énoncé précédent.

L'inobservation de cette mise en garde peut entraîner des défaillances prématurées, des dommages au produit, des blessures ou même la mort.

Les concessionnaires Caterpillar fournissent dans le monde entier des pièces de rechange de qualité Caterpillar. Leurs stocks de pièces sont constamment réapprovisionnés et comptent toutes les pièces nécessaires pour assurer la bonne marche de vos machines Caterpillar. Certains concessionnaires proposent également des kits de réparation ou des pièces rénovées, ce qui permet de choisir la solution la plus économique dans une situation donnée. Lors des commandes de pièces, mentionner la quantité, le numéro et la désignation des pièces ainsi que le numéro de série ou le numéro d'identification (PIN) de la machine pour laquelle ces pièces sont requises.

3. ORGANISATION DU CATALOGUE DE PIÈCES

Les renseignements sur les produits sont présentés sous forme de "Information element" (élément d'information) représentant tous les composants d'un modèle donné. "Engine Arrangement" (version de moteur) et "Seat Group" (assemblage de siège)" sont des exemples d'éléments d'information. Les éléments d'information sont classés par ordre alphabétique par la désignation standard des pièces et par numéros de pièces dans chaque partie importante du manuel.

4. TABLE DES MATIÈRES

Nouvelle Caractéristique

La table des matières se trouve au début du manuel. La table des matières fournit la liste de tous les chapitres du manuel avec une liste complète de tous les éléments d'information classés par ordre d'apparition dans le manuel. Les numéros de page sont fournis afin que l'utilisateur puisse trouver rapidement les illustrations détaillées concernant l'identification des pièces et les listes des pièces d'entretien.

5. INDEX DES PIÈCES D'ENTRETIEN

La rubrique "Index des pièces d'entretien" qui se trouve au début du manuel renvoie aux pièces d'entretien les plus fréquemment utilisées en précisant la désignation, la quantité, là où la pièce est utilisée et le numéro de page. Ces pièces sont classés par ordre alphabétique.

6. INDEX

L'index qui se trouve vers le début du manuel est une liste alphabétique de tous les éléments d'information du manuel. Les numéros de page sont fournis afin que l'utilisateur puisse trouver rapidement les illustrations détaillées concernant l'identification des pièces et les listes des pièces d'entretien.

7. INDEX DES NUMÉROS DE PIÈCES

Une liste numérique de tous les numéros de pièces et des pages correspondantes se trouve à la fin du manuel.

8. LÉGENDES

Nouvelle Caractéristique

Les légendes qui se trouvent en haut de chaque page de chaque élément d'information fournissent le numéro de pièce, la désignation ainsi que des renseignements supplémentaires sur les pièces. Les renseignements concernant les numéros d'identification produit (PIN) et les numéros de série (S/N) qui se trouvent dans chaque légende doivent être utilisés pour sélectionner les informations correctes pour une machine donnée. Les informations concernant les options de remplacement sur le chantier, l'identification des composants des équipements offerts en option et les lieux d'application sont aussi fournies.

9. PIÈCES NON FOURNIES

Nouvelle Caractéristique

Dans certains cas, il est nécessaire d'indiquer les pièces non fournies qui sont en aval de la liste des pièces d'entretien. Les numéros des pièces non fournies dans la liste des pièces et les légendes seront en italique pour signaler qu'ils ne sont pas disponibles.

10. NUMÉROS DE RÉFÉRENCE DE LA LISTE DES PIÈCES

Nouvelle Caractéristique

Les numéros indiqués dans la colonne des numéros de références correspondent aux numéros utilisés dans les illustrations auxquelles ils sont associés. Un suffixe alphabétique peut être ajouté à un numéro de référence pour identifier la liste des articles en aval. Les numéros indiqués dans la colonne de référence de l'illustration renvoient à l'identification du numéro affiché dans le coin inférieur gauche de chaque illustration. Le numéro de référence de l'illustration pourrait être utilisé avec le numéro de référence de l'article pour déterminer le numéro de pièce correct. Il peut y avoir une omission intentionnelle d'un numéro de référence dans une liste de pièces suite à la mise à jour des informations en vue de refléter les numéros de pièces les plus récentes.

11. DÉSIGNATIONS DE PIÈCES EN RETRAIT

Lorsqu'une désignation de pièce est en retrait, cela veut dire que l'article en regard fait partie de l'ensemble sous lequel il figure.

12. LETTRES DE RÉFÉRENCE DES ILLUSTRATIONS

Quand cela est nécessaire, les illustrations comportent des lettres de référence (A, B, C, etc.) pour montrer le trajet des canalisations et faisceaux de câbles d'un point à l'autre. Elles sont utilisées également pour indiquer où relier les illustrations séparées auparavant.

13. ABRÉVIATIONS ET SYMBOLES

O.D. – Diamètre extérieur
I.D. – Diamètre intérieur
A – Ne fait pas partie de ce groupe
B – Utiliser selon besoin
C – Modification
D – Commander par mètre
E – Commander par centimètre
F – Non représenté
G – Commander par pouce
I – Voir "Hose Fabrication Guide"
M – Pièce métrique
R – Pièce rénovée éventuellement disponible
Y – Illustration séparée
Z – Non fourni séparément

NOTA:

En raison du progrès technique et des améliorations continuelles apportées au matériel, votre machine comporte peut-être des modifications qui n'apparaissent pas dans la présente publication. En cas de doute sur un détail de votre machine Caterpillar ou sur le texte de la présente publication, adressez-vous à votre concessionnaire Caterpillar.

FRAME AND BODY

8E-3299 PLATFORM GP-CAB

PIN 38K1-99999

SMCS-7283 — 100090751

NOTE	REF NO	GRAPHIC REF	PART NUMBER	QTY	PART NAME (1 2 3 4 5 6 PRODUCT LEVEL)	SEE PAGE
	1	1	3T-3953	1	PLATE AS	
	2	1	6B-3062	25	BOLT (3/8-16X.750IN)	
	3	1	6P-1075	41	WASHER-HARD (9MM THK)	
	4	1	9F-1444	2	SUPPORT AS-FOOT	
	5	1	7P-2229	19	BOLT (1/2-13X1IN)	
		1	6P-[illegible]	19	WASHER-HARD (4MM THK)	
	6	1	8E-8194	1	COVER AS-LH	
		1	9F-2979	5	NUT-WELD (3/8-16 THD)	
		1	1P-8199	1	CLIP	
	7	1	7S-3411	4	COVER	
	8		6J-0468	19	SCREW-HEAD (3/8-16X.875IN)	
	9	1	[illegible]-4674	1	COVER	
		1	8E-8972	1	GASKET	
	10	1	8E-3248	1	[illegible]	
		1	8E-3250	1	GASKET	
	11	1	3T-3939	1	HANDHOLD	
	12	1	8E-8978	1	COVER AS	
		1	9F-2978	8	NUT-WELD (3/8-16 THD)	
		1	8E-8979	1	GASKET	
	13	1	7T-0131	1	FLOORPLATE AS	
		1	1F-0748	4	NUT-WELD (1/2-13 THD)	
	14	1	7Y-8087	1	PLUG-BUTTON	
	15	1	7T-0136	1	PLATE AS	
		1	9F-2979	5	NUT-WELD (3/8-16 THD)	
	16	1	7T-8098	1	COVER	
		1	7T-0779	1	GASKET	
	17	1	3T-3951	1	PLATE AS	
	18	1	6T-8364	4	BOLT (1/4-20X.625IN)	
M		1	9T-4205	4	WASHER-HARD (2MM THK)	
	19	1	8X-8464	1	FLOOR MAT	
	20	1	8E-8946	1	MODULE AS-OPERATOR	
	21	1	3T-3934	1	HANDHOLD	
	22	1	9P-8871	2	PLUG	
	23	2	6T-8364	4	BOLT (1/4-20X.625IN)	
M		2	9T-4205	4	WASHER-HARD (2MM THK)	
	24	2	6B-3062	17	BOLT (3/8-16X.750IN)	
	25	2	6P-1075	21	WASHER-HARD (9MM THK)	
	26	2	7T-0136	1	SEAL	
	27	2	7X-0378	2	BOLT (3/4-10X5IN)	
		2	7X-0682	2	WASHER-HARD (6MM THK)	
	28	2	3T-3482	2	PLATE	
	29	2	3T-8290	1	PLATE AS	
		2	7S-4888	6	SPACER	
	30	2	3T-8291	1	SEAL	
	31	2	7S-8017	1	GASKET	
	32	2	7S-8016	1	COVER AS	
		2	2R-2376	2	WASHER	
		2	6P-8026	2	SCREW-KNURLED	
	33	2	9W-3429	1	COVER	
	34	2	8E-8697	1	COVER	
	35	2	9D-3091	8	SCREW-SOCKET HEAD	
	36	2	9W-3142	8	MOUNTING	
	37	2	9W-9027	2	PLATE	
	38	2	7X-0360	2	BOLT (7/8-9X6IN)	
		2	7X-0672	2	WASHER-HARD	
	39	2	6L-6454	4	BOLT (3/8-16X1.0IN)	
	40	2	3T-4788	1	COVER	

12 FRAME AND BODY — 1 of 4 — SELP4570-01

FRAME AND BODY

8E-3299 PLATFORM GP-CAB (contd.)

100090751

NOTE	REF NO	GRAPHIC REF	PART NUMBER	QTY	PART NAME (1 2 3 4 5 6 PRODUCT LEVEL)	SEE PAGE
	41	2	8E-2515	1	COVER	
	42	2	7T-0134	1	PLATE	
	43	2	7T-0138	1	GASKET	
	44	2	7S-8724	1	GASKET	
	45	2	7S-8723	1	COVER	
	46	[illegible]	6V-1958	2	PLUG-BUTTON	
M-METRIC PART						

SELP4570-01 — 2 of 4 — FRAME AND BODY 13

FRAME AND BODY

8E-3299 PLATFORM GP-CAB (contd.)

100090751

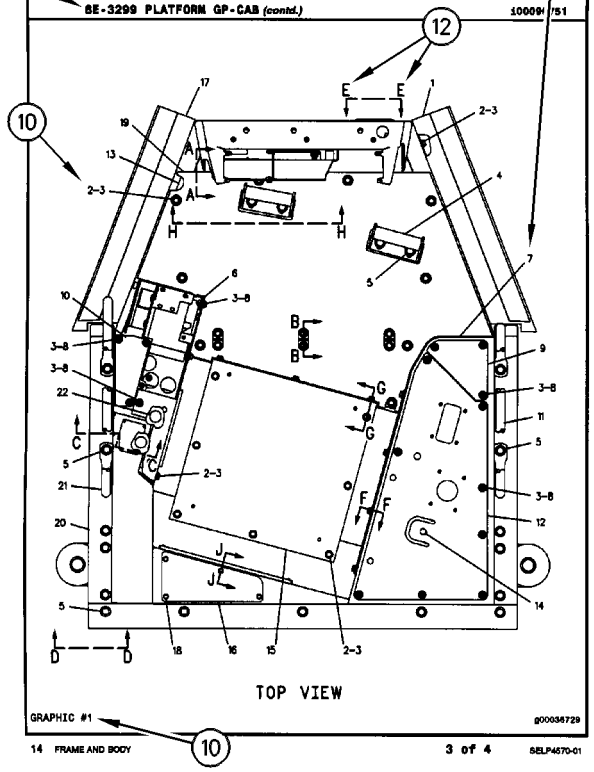

GRAPHIC #1 — g00036729

14 FRAME AND BODY — 3 of 4 — SELP4570-01

FRAME AND BODY

8E-3299 PLATFORM GP-CAB (contd.)

100090751

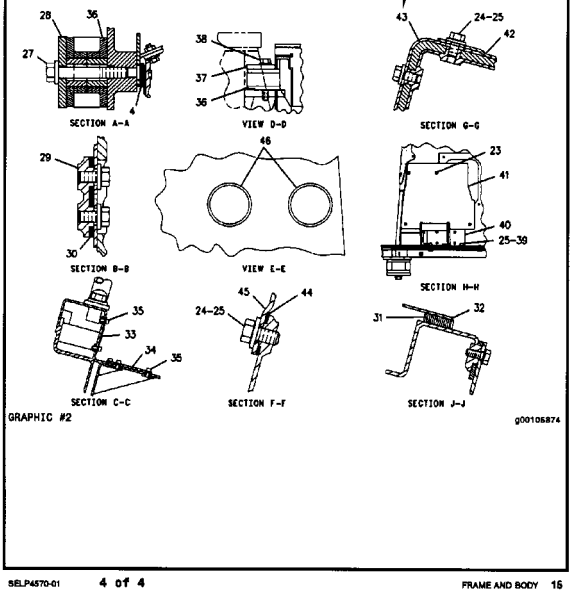

GRAPHIC #2 — g00105874

SELP4570-01 — 4 of 4 — FRAME AND BODY 16

1. MÁQUINAS

Las máquinas Caterpillar se identifican con Números de Identificación del Producto (PIN). Algunos componentes incluídos en la máquina pueden estar identificados con Números de Serie (N/S). Los componentes que tienen típicamente esta identificación incluyen motores, transmisiones, hojas topadoras y desgarradores. La máquina y el motor se identifican además con Números de Configuración y en algunos casos, Números de Modificación. Estos números están en las placas de identificación del producto o en la placa principal en la cabina del operador.

Los distribuidores Caterpillar necesitan estos números para identificar con exactitud los números de piezas de repuesto.

SIS *Nueva Característica*

A partir del primer trimestre del 2001, el Número de Identificación de Producto (PIN) de Caterpillar cambiará de 8 a 17 caracteres. Para hacer más uniforme el método de identificación de equipos, Caterpillar y otros fabricantes de equipo de construcción han tomado medidas para cumplir con la versión más reciente de la norma de numeración de identificación de productos. Los Números de Identificación de Producto para máquinas que no se operan en carreteras son definidos por la norma ISO 10261. El nuevo formato PIN corresponderá a todas las máquinas y grupos electrógenos Caterpillar. Las placas y los caracteres PIN estampados en el bastidor mostrarán el PIN de 17 caracteres. El nuevo formato tendrá la apariencia siguiente:

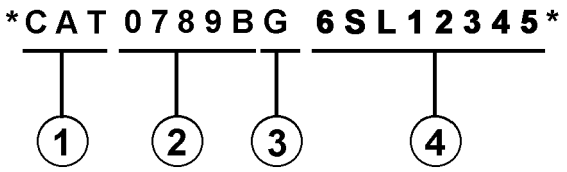

Significado de los caracteres:

1. Código de Fabricación Mundial de Caterpillar (caracteres 1-3)

2. Sección Descriptor de la Máquina (caracteres 4-8)

3. Carácter de Verificación (carácter 9)

4. Sección Indicador de la Máquina (MIS) o Número de Secuencia de Producto (caracteres 10-17). Anteriormente, estos caracteres constituían el Número de Serie.

Las máquinas y grupos electrógenos producidos antes del primer semestre del 2001 mantendrán su formato PIN de 8 caracteres.

Los componentes como motores, transmisiones, ejes, herramientas de trabajo, etc., continuarán usando un Número de Serie (S/N) de 8 caracteres.

2. COMO PEDIR REPUESTOS

⚠ ADVERTENCIA

Cuando se necesiten piezas de repuesto para este producto, Caterpillar recomienda usar piezas de repuesto Caterpillar o piezas que tengan especificaciones equivalentes incluyendo, pero sin estar limitadas a, dimensiones físicas, tipo, fortaleza y material.

El no hacer caso de esta advertencia puede llevar a fallas prematuras, daños al producto y lesiones graves o mortales.

Las piezas de repuesto Caterpillar de calidad están a la disposición de los distribuidores Caterpillar en todo el mundo. Sus existencias actualizadas incluyen todas las piezas normalmente requeridas para proteger su inversión en máquinas Caterpillar. Los distribuidores pueden tener juegos de reparación o piezas remanufacturadas para permitir la selección de la mejor alternativa de reparación en un caso en particular. Al pedir piezas de repuesto, especifique en su pedido la cantidad, el número de pieza, el nombre de la pieza y el número de serie/número de identificación del producto, de la máquina para la cual se necesitan estas piezas.

3. ORGANIZACION DEL MANUAL DE PIEZAS

La información sobre el producto, se presenta en este manual, como "elementos de información" que representan todos los componentes de un modelo específico. Las configuraciones de motores y los grupos de asientos son ejemplos de elementos de información. Los elementos de información están organizados primeramente por nombres de piezas en orden alfabético y en segundo lugar, por el número de pieza dentro de cada sección principal del manual.

4. CONTENIDO

Nueva Característica

La página de Contenido se encuentra al principio del manual. El Contenido indica cada sección del manual con una lista completa de todos los elementos de información organizados en el orden que aparecen en el manual. Los números de página proporcionan una referencia rápida a las ilustraciones detalladas de identificación de piezas y a las listas de componentes de repuesto de dichas piezas.

5. ÍNDICE DE PIEZAS DE MANTENIMIENTO

Al principio de este catálogo se encuentra un índice de los números de piezas utilizadas más frecuentemente para el mantenimiento, que incluye descripción, cantidad necesaria, lugar de utilización y número de página. Esta información está organizada alfabéticamente, por descripción de la pieza.

6. ÍNDICE

El Índice, ubicado cerca del principio del manual, es una lista en orden alfabético de todos los elementos de información incluídos en el manual. Los números de página proporcionan una referencia rápida a las ilustraciones detalladas de identificación de piezas y a las listas de componentes de repuesto de dichas piezas.

7. INDICE NUMÉRICO DE PIEZAS

Un índice numérico de piezas con el correspondiente número de página aparece al final de este catálogo.

8. TÍTULOS

Los títulos ubicados en la parte superior de cada página de elementos de información identifican el número y el nombre de la pieza junto con información descriptiva adicional para ayudar al usuario a determinar las piezas necesarias para una máquina en particular. También se suministra información sobre las opciones de reparación en el campo, la identificación de componentes de accesorios optativos y el lugar de ubicación de la pieza ("es parte de").

Nueva Característica

La primera línea del título se muestra con un tipo de letra más grande para indicar el comienzo de un elemento de información. Si se requieren páginas adicionales para ilustrar un elemento de información, los títulos se muestran con un tipo de letra normal y la continuación se indica entre paréntesis.

9. PIEZAS QUE NO SE SUMINISTRAN COMO REPUESTO

Nueva Característica

En algunos casos es necesario indicar piezas que no se suministran como repuesto pero que pueden estar conectadas a listas de componentes de otras piezas de repuesto. En tal caso, dichas piezas se muestran en cursiva para indicar que no son piezas disponibles.

10. NÚMEROS DE REFERENCIA

Nueva Característica

Los números en la columna de No. de Referencia corresponden a los números indicados en la ilustración que pertenece a ese número de pieza. Los números que tienen un sufijo alfabético identifican artículos de las listas de componentes de piezas. Los números en la columna de Referencia de la ilustración se identifican en la esquina inferior izquierda de cada ilustración. Para determinar el número de pieza correcto se puede utilizar tanto el No. de Referencia de la ilustración como el No. de Referencia del artículo. A medida que se actualiza la información para indicar los más recientes números de piezas de repuesto, puede omitirse intencionalmente un No. de Referencia en una lista de componentes de piezas.

11. NOMBRES DE PIEZA SANGRADOS

Cuando el nombre de una pieza está sangrado en una lista, significa que esta pieza forma parte del grupo o conjunto del renglón inmediatamente superior.

12. LETRAS DE REFERENCIA DE ILUSTRACIONES

Las ilustraciones contienen algunas veces letras de referencia (A, B, C etc.) cuyo propósito es seguir el trayecto de líneas y mazos de cables de un punto a otro. También se utilizan para mostrar dónde volver a unir ilustraciones que se habían separado.

13. ABREVIATURAS Y SIMBOLOS

O.D. – Diámetro exterior
I.D. – Diámetro interior
A – No es pieza de este grupo
B – Utilizado según la demanda
C – Indica cambio
D – Se pide por metro
E – Se pide por centímetro
F – No se muestra
G – Se pide por pulgada
I – Ver "Hose Fabrication Guide"
M – Pieza métrica
R – Puede estar disponible como pieza remanufacturada
Y – Ilustración separada
Z – No se suministra por separado

NOTA:

Las contínuas mejoras y adelantos en diseño podrían originar cambios a su máquina que no se incluyen en esta publicación. Cuando tenga alguna pregunta acerca de su producto Caterpillar o de esta publicación, consulte al distribuidor Caterpillar para obtener la información más reciente.

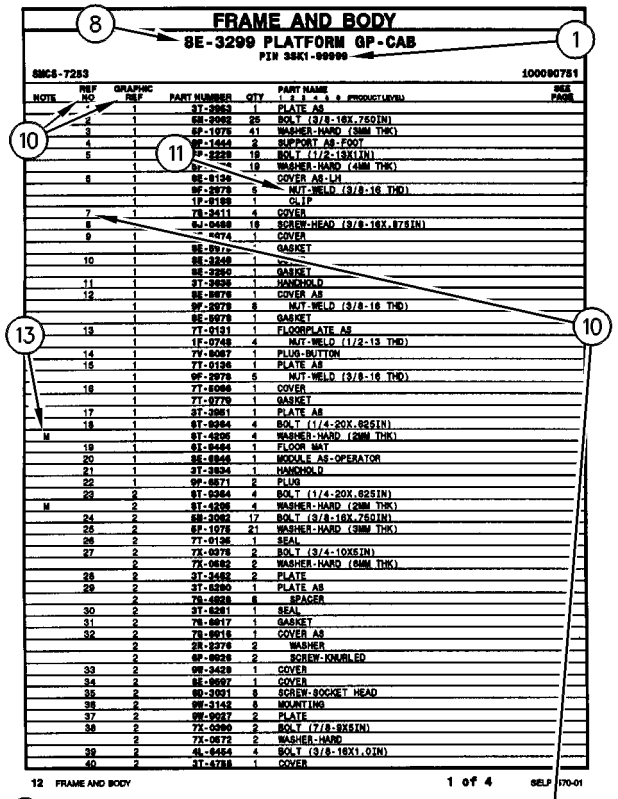

FRAME AND BODY

8E-3299 PLATFORM GP-CAB

PIN 38K1-99999

SMCS-7283 100090751

NOTE	REF NO	GRAPHIC REF	PART NUMBER	QTY	PART NAME 1 2 3 4 5 6 (PRODUCT LEVEL)	SEE PAGE
	1	1	3T-3953	1	PLATE AS	
	2	1	6B-3062	25	BOLT (3/8-16X.750IN)	
	3	1	6P-1075	41	WASHER-HARD (9MM THK)	
	4	1	9F-1444	2	SUPPORT AS-FOOT	
	5	1	7P-2229	19	BOLT (1/2-13X1IN)	
		1	6P-[illegible]	19	WASHER-HARD (4MM THK)	
	6	1	8E-8134	1	COVER AS-LH	
		1	9F-2979	5	NUT-WELD (3/8-16 THD)	
		1	1P-8188	1	CLIP	
	7	1	7S-2411	4	COVER	
	8		6J-0468	19	SCREW-HEAD (3/8-16X.875IN)	
	9	1	[illegible]-4674	1	COVER	
		1	8E-8972	1	GASKET	
	10	1	8E-3248	1	[illegible]	
		1	8E-3250	1	GASKET	
	11	1	3T-3939	1	HANDHOLD	
	12	1	8E-8978	1	COVER AS	
		1	9F-2979	8	NUT-WELD (3/8-16 THD)	
		1	8E-8978	1	GASKET	
	13	1	7T-0131	1	FLOORPLATE AS	
		1	1F-0748	4	NUT-WELD (1/2-13 THD)	
	14	1	7V-8087	1	PLUG-BUTTON	
	15	1	7T-0136	1	PLATE AS	
		1	9F-2979	5	NUT-WELD (3/8-16 THD)	
	16	1	7T-8098	1	COVER	
		1	7T-0779	1	GASKET	
	17	1	3T-3951	1	PLATE AS	
	18	1	6T-8364	4	BOLT (1/4-20X.625IN)	
M		1	6T-4205	4	WASHER-HARD (2MM THK)	
	19	1	6X-8464	1	FLOOR MAT	
	20	1	8E-8946	1	MODULE AS-OPERATOR	
	21	1	3T-3934	1	HANDHOLD	
	22	1	9P-8871	2	PLUG	
	23	2	6T-8364	4	BOLT (1/4-20X.625IN)	
M		2	6T-4205	4	WASHER-HARD (2MM THK)	
	24	2	6B-3062	17	BOLT (3/8-16X.750IN)	
	25	2	6P-1075	21	WASHER-HARD (9MM THK)	
	26	2	7T-0136	1	SEAL	
	27	2	7X-0378	2	BOLT (3/4-10X5IN)	
		2	7X-0682	2	WASHER-HARD (6MM THK)	
	28	2	3T-3482	2	PLATE	
	29	2	3T-8290	1	PLATE AS	
		2	7S-4838	6	SPACER	
	30	2	3T-8281	1	SEAL	
	31	2	7S-8817	1	GASKET	
	32	2	7S-8916	1	COVER AS	
		2	2R-2376	2	WASHER	
		2	6P-8826	2	SCREW-KNURLED	
	33	2	9W-3429	1	COVER	
	34	2	8E-8937	1	COVER	
	35	2	6D-3091	8	SCREW-SOCKET HEAD	
	36	2	9W-3142	8	MOUNTING	
	37	2	9W-9027	2	PLATE	
	38	2	7X-0360	2	BOLT (7/8-9X6IN)	
		2	7X-0672	2	WASHER-HARD	
	39	2	6L-8454	4	BOLT (3/8-16X1.0IN)	
	40	2	3T-4788	1	COVER	

12 FRAME AND BODY 1 of 4 SELP4570-01

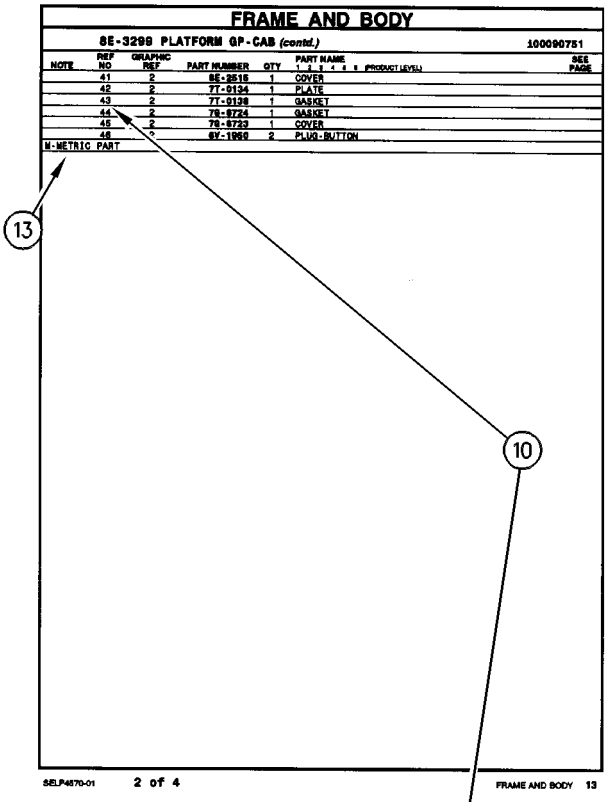

FRAME AND BODY

8E-3299 PLATFORM GP-CAB (contd.) 100090751

NOTE	REF NO	GRAPHIC REF	PART NUMBER	QTY	PART NAME 1 2 3 4 5 6 (PRODUCT LEVEL)	SEE PAGE
	41	2	8E-2515	1	COVER	
	42	2	7T-0134	1	PLATE	
	43	2	7T-0138	1	GASKET	
	44	2	7S-8724	1	GASKET	
	45	2	7S-8723	1	COVER	
	46	[illegible]	6V-1958	2	PLUG-BUTTON	
M-METRIC PART						

SELP4570-01 2 of 4 FRAME AND BODY 13

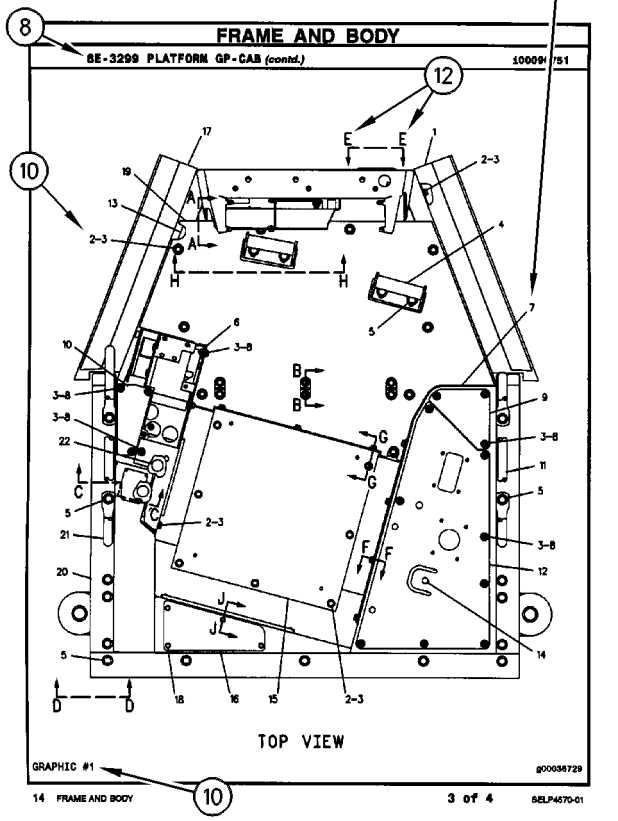

FRAME AND BODY

8E-3299 PLATFORM GP-CAB (contd.) 100090751

TOP VIEW

GRAPHIC #1 g00036729

14 FRAME AND BODY 3 of 4 SELP4570-01

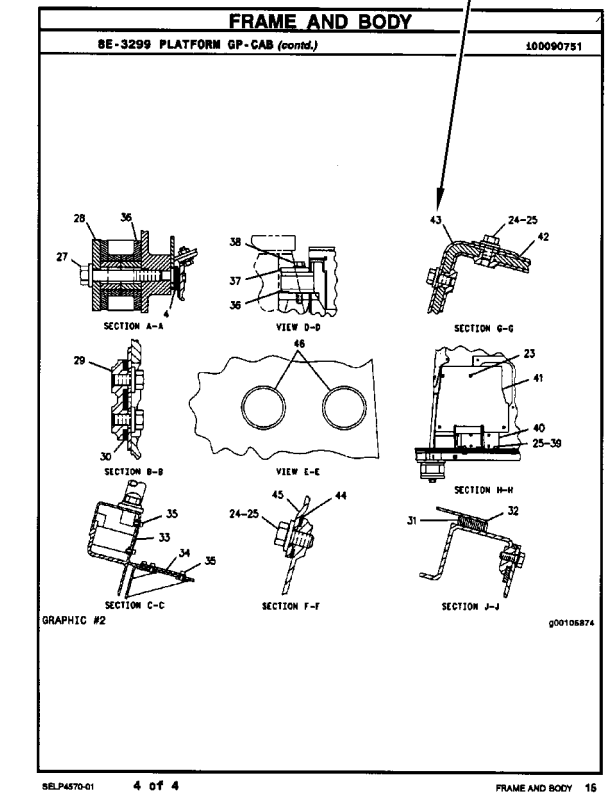

FRAME AND BODY

8E-3299 PLATFORM GP-CAB (contd.) 100090751

SECTION A-A VIEW D-D SECTION G-G

SECTION B-B VIEW E-E SECTION H-H

SECTION C-C SECTION F-F SECTION J-J

GRAPHIC #2 g00105874

SELP4570-01 4 of 4 FRAME AND BODY 16

1. IDENTIFICAÇÃO DA MÁQUINA

As máquinas Caterpillar são identificadas pelos Números de Informação do Produto (PIN). Alguns componentes incluídos numa máquina podem ser identificados por Números de Série (S/N). Componentes típicos que serão enumerados com números de série incluem motores, transmissões, lâminas e ríperes. Além do número de série, a máquina e o motor são ainda identificados por números de arranjo e, em alguns casos, números de modificações. Tais números encontram-se na(s) placa(s) de identificação do produto e na placa mestre no compartimento do operador.

Novidades

A partir do primeiro trimestre de 2001 o Número de Identificação de Produto da Caterpillar (PIN) vai mudar de 8 para 17 caracteres. Esforçando-se para fornecer uma identificação uniforme de equipamentos, a Caterpillar e outros fabricantes de equipamento de construção estão mudando para atender a versão mais atualizada do padrão de identificação de produtos. Os números de PIN para produtos de aplicações não rodoviárias são definidos pela ISO 10261. O novo formato de número PIN será adotado em todas as máquinas e grupos geradores Caterpillar. As placas e as marcações do chassi mostrarão os 17 dígitos de PIN. O novo formato terá a seguinte disposição:

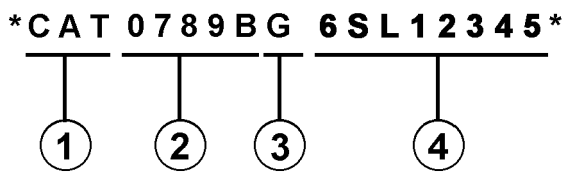

Onde:

1. Código de Fabricação Mundial da Caterpillar (dígitos 1-3)

2. Descrição da Máquina (dígitos 4-8)

3. Dígito de Verificação (dígito 9)

4. Seção de Indicador da Máquina (MIS) ou Número de Seqüência de Produto (dígitos 10-17). Estes eram anteriormente chamados de Número de Série.

Máquinas e grupos geradores produzidos antes do primeiro trimestre de 2001 manterão o formato de 8 caracteres de PIN.

Componentes como motores, transmissões, eixos, ferramentas de trabalho, etc. continuarão a usar Número de Série (S/N) com oito caracteres.

2. COMO OBTER PEÇAS

⚠ CUIDADO

Quando peças de substituição são exigidas para este produto, a Caterpillar recomenda a utilização de peças de substituição Caterpillar ou peças com as especificações equivalentes incluindo, mas não limitadas, à dimensões físicas, tipos, resistência e materiais.

A inobservância desta advertência poderá resultar em falhas prematuras, danos ao produto, ferimentos ou morte.

As Peças de Reposição de Qualidade Caterpillar encontram-se disponíveis nos revendedores Caterpillar no mundo inteiro. Seus estoques de peças são atualizados e incluem todas as peças normalmente necessárias para proteger seu investimento em máquinas Caterpillar. Alguns revendedores podem oferecer jogos de reparo ou peças de troca/remanufaturadas disponíveis como uma opção da alternativa de reparo mais eficaz para uma situação específica. Ao encomendar peças, seu pedido deve especificar a quantidade, o número e o nome da peça e o número de série/número de identificação do produto referentes à máquina para a qual as peças se destinam.

3. ORGANIZAÇÃO DO MANUAL DE PEÇAS

A informação do produto neste manual é apresentada em forma de "elementos de informação" que representam todos os componentes para o modelo específico. Arranjo de Motor e Grupo de Assento são exemplos de elementos de informação. Os elementos de informação são organizados em ordem alfabética por nome de peça ou secundariamente, por número de peça incluído em cada seção principal do manual.

4. LISTA DE CONTEÚDOS

Novidades

A Lista de Conteúdos (TOC) se encontra no princípio do manual. A Lista de Conteúdos (TOC) relaciona em cada seção do manual uma lista completa com todos os elementos de informação organizados conforme aparecem no manual. Números de página são fornecidos para que se tenha referência rápida de ilustrações de peças detalhadas e listas de conteúdos que podem receber serviço de manutenção.

5. ÍNDICE DE PEÇAS DE MANUTENÇÃO

O Índice de Peças de Manutenção, localizado perto do princípio do manual, faz referência aos números de peça de manutenção usados com maior frequência, fornecendo uma descrição, a quantidade, o uso e o número de página. Esta informação é organizada com a descrição da peça em ordem alfabética.

6. ÍNDICE

O Índice localizado perto do princípio do manual, consiste de uma lista em ordem alfabética de todos os elementos de informação incluídos no manual. Números de página são fornecidos para que se tenha referência rápida de ilustrações de peças detalhadas e listas de conteúdos que podem receber serviço de manutenção.

7. ÍNDICE DE NÚMERO DE PEÇA

Um índice numérico relacionando todos os números de peça e a(s) página(s) correspondentes, aparece no final do manual.

8. LEGENDAS

As legendas localizadas na parte de cima de cada página de um elemento de informação identifica o número de peça e o nome da peça, juntamente com informação descritiva adicional. Informações sobre o Número de Informação do Produto (PIN) e o Número de Série (S/N) encontradas em cada legenda devem ser usadas para selecionar a informação correta sobre uma máquina específica. Opções de substituição no campo, identificação de componentes de acessórios opcionais e informações sobre onde são utilizados ("parte de") são também fornecidas.

SIS ***Novidades***

A primeira linha de uma legenda é indicada em tipo maior para indicar o princípio de um elemento de informação. Legendas para páginas adicionais que podem ser necessárias para ilustrar um elemento de informação serão apresentadas em tipo padrão e incluirão o termo *(continua)* .

9. NÃO DISPONÍVEL SEPARADAMENTE

SIS ***Novidades***

Em alguns casos, é necessário mostrar peças não disponíveis separadamente que têm uma ligação com listas de conteúdos de nível inferior que podem receber serviço de manutenção. Os números de peça destes componentes não disponíveis aparecerão em *itálico* , a fim de indicar que não estão disponíveis.

10. NÙMEROS DE REFERÊNCIA À LISTA DE PEÇAS

SIS ***Novidades***

Os números indicados na coluna Ref No (No. de Referência) correspondem-se aos números usados no(s) gráfico(s) correspondente(s). Um sufixo com letras pode ser acrescentado a um número de referência para identificar itens de conteúdo de nível inferior. Os números indicados na coluna Graphic Ref (Referência de Gráfico) referem-se ao identificador de número de gráfico presente no canto esquerdo inferior de cada ilustração. O número de Referência de Gráfico pode ser usado em combinação com o item Ref No para determinar-se o número de peça correto. Poderá haver omissão intencional de um número de referência (Ref No) de uma lista de conteúdos uma vez que as informações são atualizadas para refletir os números de peça mais recentes que podem receber serviço de manutenção.

11. NOMES DE PEÇAS DESALINHADOS

Quando um nome de peça encontra-se desalinhado numa lista de peças, significa que tal item faz parte do (está incluído no) grupo ou conjunto sob o qual está relacionado.

12. LETRAS DE REFERÊNCIA NAS ILUSTRAÇÕES

Quando necessário, as ilustrações contêm letras de referência (A, B, C, etc.) que são utilizadas para seguir tubulações e cabos elétricos de um ponto a outro. Também foram utilizadas para indicar onde se pode reconectar as ilustrações que foram separadas.

13. ABREVIAÇÕES E SÍMBOLOS

O.D. – "Outside Diameter" (Diâmetro Externo)
I.D. – "Inside Diameter" (Diâmetro Interno)
A – Não faz parte deste grupo
B – Use conforme necessário
C – Indica modificação
D – Vendido por metro
E – Vendido por centímetro
F – Não ilustrado
G – Vendido por polegada
I – Consulte o seu revendedor quanto a mangueira
M – Peça métrica
R – Peça remanufaturada pode estar disponível; consulte o seu revendedor Cat
Y – Ilustração separada
Z – Não disponível separadamente

NOTA:

Os contínuos aperfeiçoamentos e avanços no projeto do produto podem ocasionar modificações em sua máquina que talvez ainda não estejam incluídas nesta publicação. Sempre que surgirem dúvidas quanto a um produto Caterpillar ou quanto à presente publicação, consulte o seu revendedor Caterpillar para obter as informações mais recentes disponíveis.

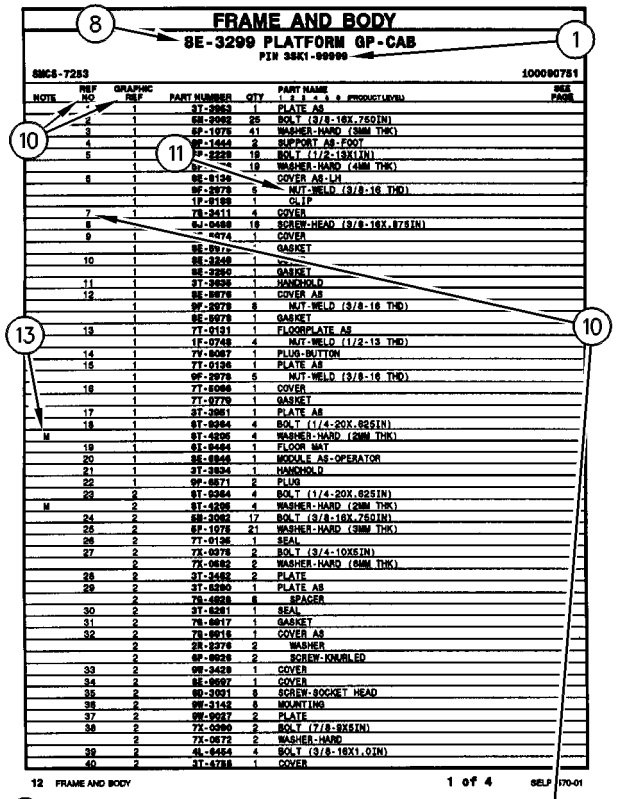

FRAME AND BODY

8E-3299 PLATFORM GP-CAB

PIN 38K1-99999

SMCS-7283 100090751

NOTE	REF NO	GRAPHIC REF	PART NUMBER	QTY	PART NAME (1 2 3 4 5 6 PRODUCT LEVEL)	SEE PAGE
	1	1	3T-3953	1	PLATE AS	
	2	1	6B-3062	25	BOLT (3/8-16X.750IN)	
	3	1	6P-1075	41	WASHER-HARD (9MM THK)	
	4	1	9F-1444	2	SUPPORT AS-FOOT	
	5	1	6P-2229	19	BOLT (1/2-13X1IN)	
		1	6P-[illegible]	19	WASHER-HARD (4MM THK)	
	6	1	8E-8134	1	COVER AS-LH	
		1	9F-2979	5	NUT-WELD (3/8-16 THD)	
		1	1P-8188	1	CLIP	
	7	1	7S-3411	4	COVER	
	8		6J-0468	19	SCREW-HEAD (3/8-16X.875IN)	
	9	1	[illegible]-4674	1	COVER	
		1	8E-8972	1	GASKET	
	10	1	8E-3248	1	[illegible]	
		1	8E-3250	1	GASKET	
	11	1	3T-3939	1	HANDHOLD	
	12	1	8E-8978	1	COVER AS	
		1	9F-2978	8	NUT-WELD (3/8-16 THD)	
		1	8E-8978	1	GASKET	
	13	1	7T-0131	1	FLOORPLATE AS	
		1	1F-0748	4	NUT-WELD (1/2-13 THD)	
	14	1	7Y-8087	1	PLUG-BUTTON	
	15	1	7T-0136	1	PLATE AS	
		1	9F-2979	5	NUT-WELD (3/8-16 THD)	
	16	1	7T-8098	1	COVER	
		1	7T-0779	1	GASKET	
	17	1	3T-3951	1	PLATE AS	
	18	1	6T-8364	4	BOLT (1/4-20X.625IN)	
M		1	6T-4205	4	WASHER-HARD (2MM THK)	
	19	1	6X-8464	1	FLOOR MAT	
	20	1	8E-8946	1	MODULE AS-OPERATOR	
	21	1	3T-3934	1	HANDHOLD	
	22	1	9P-8871	2	PLUG	
	23	2	6T-8364	4	BOLT (1/4-20X.625IN)	
M		2	6T-4205	4	WASHER-HARD (2MM THK)	
	24	2	6B-3062	17	BOLT (3/8-16X.750IN)	
	25	2	6P-1075	21	WASHER-HARD (9MM THK)	
	26	2	7T-0136	1	SEAL	
	27	2	7X-0378	2	BOLT (3/4-10X5IN)	
		2	7X-0682	2	WASHER-HARD (6MM THK)	
	28	2	3T-3482	2	PLATE	
	29	2	3T-8290	1	PLATE AS	
		2	7S-4838	6	SPACER	
	30	2	3T-8291	1	SEAL	
	31	2	7S-8817	1	GASKET	
	32	2	7S-8916	1	COVER AS	
		2	2R-2376	2	WASHER	
		2	6P-8826	2	SCREW-KNURLED	
	33	2	9W-3429	1	COVER	
	34	2	8E-8937	1	COVER	
	35	2	9D-3931	8	SCREW-SOCKET HEAD	
	36	2	9W-3142	8	MOUNTING	
	37	2	9W-9027	2	PLATE	
	38	2	7X-0360	2	BOLT (7/8-9X6IN)	
		2	7X-0672	2	WASHER-HARD	
	39	2	6L-4454	4	BOLT (3/8-16X1.0IN)	
	40	2	3T-4788	1	COVER	

12 FRAME AND BODY 1 of 4 SELP4570-01

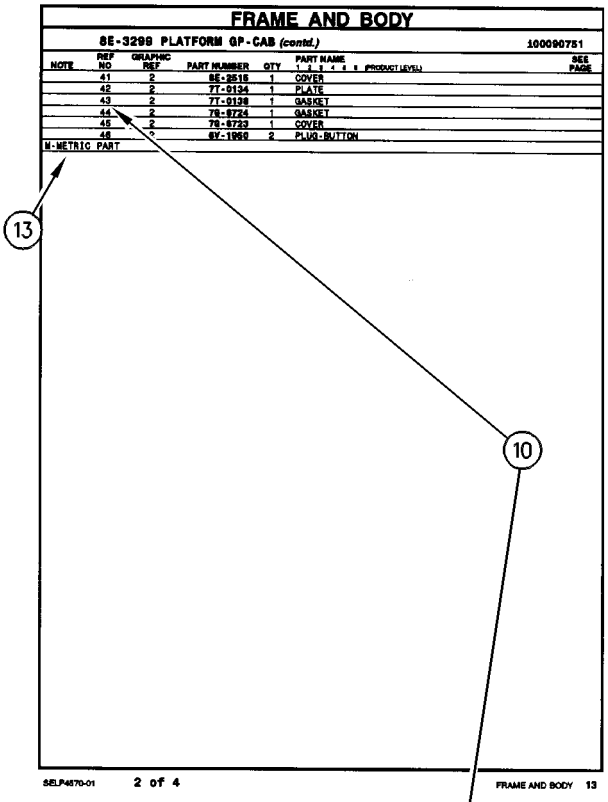

FRAME AND BODY

8E-3299 PLATFORM GP-CAB (contd.) 100090751

NOTE	REF NO	GRAPHIC REF	PART NUMBER	QTY	PART NAME (1 2 3 4 5 6 PRODUCT LEVEL)	SEE PAGE
	41	2	8E-2515	1	COVER	
	42	2	7T-0134	1	PLATE	
	43	2	7T-0138	1	GASKET	
	44	2	7S-8724	1	GASKET	
	45	2	7S-8723	1	COVER	
	46	[illegible]	6V-1958	2	PLUG-BUTTON	
M-METRIC PART						

SELP4570-01 2 of 4 FRAME AND BODY 13

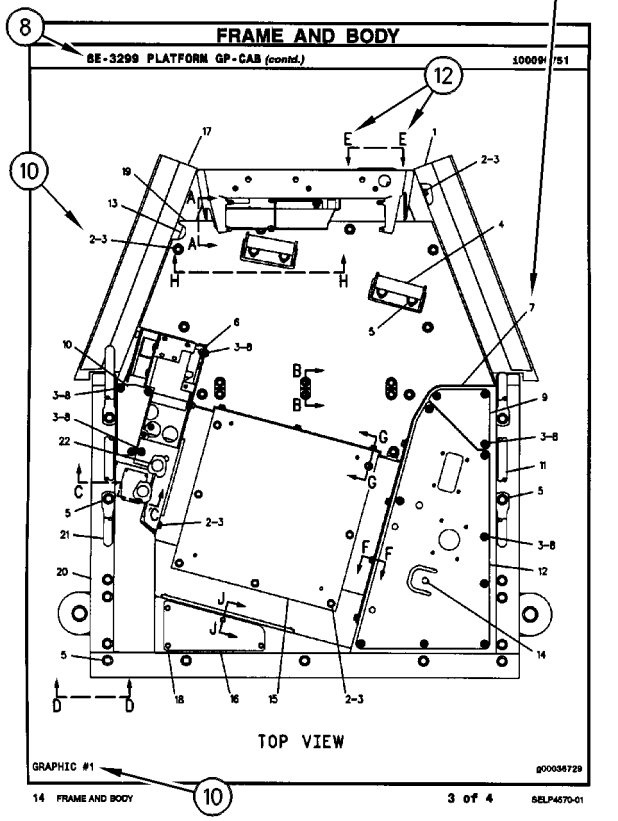

FRAME AND BODY

8E-3299 PLATFORM GP-CAB (contd.) 100090751

TOP VIEW

GRAPHIC #1 g00036729

14 FRAME AND BODY 3 of 4 SELP4570-01

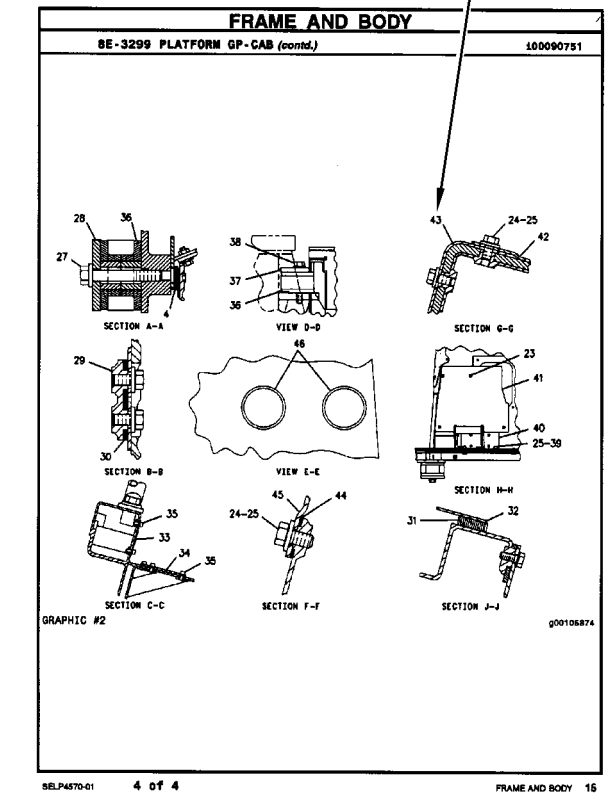

FRAME AND BODY

8E-3299 PLATFORM GP-CAB (contd.) 100090751

SECTION A-A VIEW D-D SECTION G-G

SECTION B-B VIEW E-E SECTION H-H

SECTION C-C SECTION F-F SECTION J-J

GRAPHIC #2 g00105874

SELP4570-01 4 of 4 FRAME AND BODY 16

ALLGEMEINE HINWEISE

1. MASCHINENKENNZEICHNUNG

Caterpillar-Maschinen sind mit PRODUCT IDENTIFICATION NUMBERS (PIN) (Produkt-Identnummern) gekennzeichnet. Einige Baugruppen, z.B. Motoren, Getriebe, Planierschilde und Aufreißer, sind mit SERIAL NUMBERS (S/N) (Seriennummern) gekennzeichnet. An der Maschine und am Motor befinden sich außerdem ARRANGEMENT NUMBERS (Ausrüstungsnummern) sowie in einigen Fällen MODIFICATION NUMBERS (Änderungsnummern). Sie befinden sich auf den PIN-Schildern und auf dem Typenschild im Fahrerhaus.

Bei Ersatzteilbestellungen müssen dem Händler alle diese Nummern zur Verfügung gestellt werden.

SIS ***Neu im Parts Manual***

Vom ersten Quartal 2001 ab wird die Caterpillar Produkt-Identnummer (PIN) von 8 auf 17 Zeichen geändert. Um zur Standardisierung der Produkt-Identnummer beizutragen, sind Caterpillar und andere Baumaschinenhersteller bestrebt, die aktuellste Norm zur Produkt-Identnummerierung einzuführen. Produkt-Identnummern für Baumaschinen sind durch ISO 10261 definiert. Das neue Format der Produkt-Identnummern gilt für alle Caterpillar-Maschinen und -Stromaggregate. Die Produkt-Identschilder und -Identrahmenmarkierung enthalten die aus 17 Zeichen bestehende Identnummer. Das neue Format hat folgende Abschnitte:

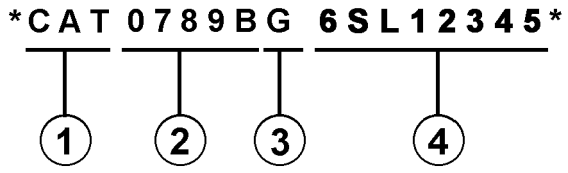

Abschnitte:

1. Caterpillars weltweiter Herstellungscode (Zeichen 1-3)

2. Modell (Zeichen 4-8)

3. Kontrollzeichen (Zeichen 9)

4. Maschinenspezifische Kennung (MIS) oder Produktsequenznummer (Zeichen 10-17). Diese wurde früher als Seriennummer bezeichnet.

Für vor dem ersten Quartal 2001 hergestellte Maschinen und Stromaggregate wird das aus 8 Zeichen bestehende PIN-Format beibehalten.

Bauteile wie z.B. Motoren, Getriebe, Achsen sowie Arbeitsgeräte werden weiterhin eine aus 8 Zeichen bestehende Seriennummer (S/N) aufweisen.

2. BESTELLEN VON ERSATZTEILEN

⚠ WARNUNG

Wenn für diese Maschine Ersatzteile benötigt werden, empfiehlt Caterpillar, ausschließlich Caterpillar-Ersatzteile oder solche zu verwenden, die die gleichen technischen Merkmale hinsichtlich Typ, Festigkeit, Werkzeugeigenschaften und die gleichen Maße aufweisen.

Bei Nichtbeachtung dieser Warnung besteht Verletzungs- oder sogar Lebensgefahr! Ferner kann Nichtbeachtung vorzeitige Ausfälle der Teile und Beschädigung der Maschine zur Folge haben.

Original Caterpillar-Ersatzteile können weltweit bei jedem Caterpillar-Händlern bestellt werden. Die umfangreichen Händlerlager enthalten normalerweise alle Teile, die Sie für Ihre Caterpillar-Maschine benötigen. Einige Händler bieten Reparatursätze, Austausch- oder werküberholte Teile an, so daß Sie eine Auswahl unter verschiedenen Reparaturmöglichkeiten treffen können. Ihre Bestellung muß folgende Angaben enthalten: Anzahl der benötigten Teile, Bestellnummer, Bezeichnung des Teils, Serien-Nr./Produkt-Ident-Nr., Ausrüstungs-Nr. und Änderungs-Nr. der Maschine, für die diese Teile benötigt werden.

3. AUFBAU DES PARTS MANUAL

Die Produktinformationen für alle Komponenten eines bestimmten Modells sind in INFORMATION ELEMENTS (Informationseinheiten) gegliedert. ENGINE ARRANGEMENT (Motorausführung) und SEAT GROUP (Fahrersitz) sind Beispiele für solche Informationseinheiten. Sie sind innerhalb jeder Gruppe alphabetisch, entsprechend der Ersatzteilbezeichnung, und zusätzlich numerisch, entsprechend der Ersatzteilnummer, geordnet.

ALLGEMEINE HINWEISE

4. INHALTSVERZEICHNIS

SIS *Neu im Parts Manual*

Das Inhaltsverzeichnis befindet sich am Anfang des Buches. Im Inhaltsverzeichnis werden die einzelnen Abschnitte des Buches aufgeführt. Die Abschnitte enthalten eine vollständige Aufstellung aller Informationseinheiten. Diese sind entsprechend ihrem Erscheinen im Buch geordnet. Das Inhaltsverzeichnis enthält Seitenangaben für Schnellverweise auf detaillierte Abbildungen und Teillisten.

5. INDEX FÜR WARTUNGSTEILE

Der Index für Wartungsteile vorn im Buch enthält die Bestellnummern, Seitenangaben, Mengenangaben und Informationen über den Einsatzbereich für die am häufigsten benötigten Ersatzteile. Die Angaben sind alphabetisch entsprechend der Teilebezeichnung geordnet.

6. INDEX

Der Index vorn im Buch enthält eine alphabetische Liste aller Informationseinheiten. Er enthält Seitenangaben für Schnellverweise auf detaillierte Abbildungen und Teillisten.

7. INDEX FÜR BESTELLNUMMERN

Hinten im Buch befindet sich ein numerischer Index, mit allen Bestellnummern und dem Hinweis auf die Seite, auf der sich die betreffende Abbildung befindet.

8. ÜBERSCHRIFTEN

Die Überschriften, die sich oben auf den Seiten der Informationseinheiten befinden, enthalten Bestellnummern, Ersatzteilbezeichnungen und zusätzliche beschreibende Informationen. Produkt-Ident- und Seriennummern in den Überschriften sollten zur Auswahl der richtigen Informationen für die betreffende Maschine verwendet werden. Die Überschriften enthalten außerdem Informationen über möglichen Außendienstersatz, mögliche Baugerätekomponenten und die Baugruppe, zu der das Teil gehört.

SIS *Neu im Parts Manual*

Die erste Zeile einer Überschrift erscheint in einer größeren Schriftart, um den Anfang einer Informationseinheit zu kennzeichnen. Überschriften für zusätzliche Seiten, die zur Erläuterung einer Informationseinheit notwendig sind, erscheinen in normaler Schriftart und enthalten den Begriff "(contd.)".

9. NICHT EINZELN LIEFERBARE TEILE

SIS *Neu im Parts Manual*

In einigen Fällen ist es notwendig nicht lieferbare Teile, die selbst mit einer eigenen Teilliste im Buch vertreten sind, aufzuführen. Die Bestellnummern dieser nicht einzeln lieferbaren Teile erscheinen kursiv, wodurch angezeigt wird, daß sie nur in Verbindung mit anderen Teilen lieferbar sind.

10. REFERENZNUMMER FÜR ERSATZTEILE

SIS *Neu im Parts Manual*

Die Zahlen, die in der Spalte "Ref No" aufgeführt sind, stimmen mit den Zahlen in den beigefügten Abbildungen überein. Ein Buchstaben-Suffix kann zu einer Referenznummer hinzugefügt werden, um zu kennzeichnen, daß das Teil mit einer eigenen Teilliste im Buch aufgeführt ist. Die in der Spalte "Graphic Ref" angeführten Zahlen verweisen auf die Identifikationsnummer der Abbildung, die sich in der linken unteren Ecke der Abbildung befindet. Diese Nummer kann zusammen mit der Referenznummer des Teils angegeben werden, um die richtige Ersatzteilnummer zu ermitteln. Referenznummern können absichtlich weggelassen werden, da die Nummern der lieferbaren Ersatzteile ständig aktualisiert werden.

11. EINGERÜCKTE BEZEICHNUNGEN

Wenn eine Bezeichnung eingerückt ist, wird dadurch angezeigt, daß das Teil zu einer Baugruppe gehört, unter deren Bezeichnung es eingerückt ist.

12. REFERENZBUCHSTABEN

Falls erforderlich sind in den Abbildungen Referenzbuchstaben enthalten (z.B. A, B, C, usw.), die Leitungen und Kabelbäume von einem Punkt zum anderen verfolgen. Außerdem geben sie die Stelle an, an der getrennte Abbildungen fortgesetzt werden.

13. ABKÜRZUNGEN UND SYMBOLE

O.D. – Außendurchmesser
I.D. – Innendurchmesser
A – kein Teil dieser Gruppe
B – nach Bedarf verwenden
C – Hinweis auf eine Änderung
D – in Meter-Länge bestellen
E – in Zentimeter-Länge bestellen
F – nicht gezeigt
G – in Zoll-Länge bestellen
I – siehe "Hose Fabrication Guide"
M – metrisches Teil
R – werküberholtes Teil unter Umständen lieferbar
Y – separate Abbildung
Z – nicht einzeln lieferbar

ANMERKUNG:

Ständig vorgenommene Verbesserungen und Weiterentwicklungen an Ihrer Maschine können Änderungen verursachen, die in der vorliegenden Ausgabe noch nicht berücksichtigt sind. Fragen zu Ihrer Caterpillar-Maschine oder diesem Ersatzteilbuch beantwortet Ihr Caterpillar-Händler.

ALLGEMEINE HINWEISE

FRAME AND BODY

8E-3299 PLATFORM GP-CAB

PIN 38K1-99999

SMCS-7283 — 100090751

NOTE	REF NO	GRAPHIC REF	PART NUMBER	QTY	PART NAME (1 2 3 4 5 6 PRODUCT LEVEL)	SEE PAGE
	1	1	3T-3953	1	PLATE AS	
	2	1	6B-3062	25	BOLT (3/8-16X.750IN)	
	3	1	6P-1075	41	WASHER-HARD (9MM THK)	
	4	1	9F-1444	2	SUPPORT AS-FOOT	
	5	1	7P-2229	19	BOLT (1/2-13X1IN)	
		1	6P-[illegible]	19	WASHER-HARD (4MM THK)	
	6	1	8E-8134	1	COVER AS-LH	
		1	9F-2979	5	NUT-WELD (3/8-16 THD)	
		1	1P-8188	1	CLIP	
	7	1	7S-2411	4	COVER	
	8		6J-0468	19	SCREW-HEAD (3/8-16X.875IN)	
	9	1	[illegible]474	1	COVER	
		1	8E-8972	[illegible]	GASKET	
	10	1	8E-3248	1	[illegible]	
		1	8E-3250	1	GASKET	
	11	1	3T-3939	1	HANDHOLD	
	12	1	8E-8978	1	COVER AS	
		1	9F-2978	8	NUT-WELD (3/8-16 THD)	
		1	8E-8978	1	GASKET	
	13	1	7T-0131	1	FLOORPLATE AS	
		1	1F-0748	4	NUT-WELD (1/2-13 THD)	
	14	1	7V-8087	1	PLUG-BUTTON	
	15	1	7T-0136	1	PLATE AS	
		1	9F-2979	5	NUT-WELD (3/8-16 THD)	
	16	1	7T-8098	1	COVER	
		1	7T-0779	1	GASKET	
	17	1	3T-3951	1	PLATE AS	
	18	1	6T-8364	4	BOLT (1/4-20X.625IN)	
M		1	9T-4205	4	WASHER-HARD (2MM THK)	
	19	1	8S-8464	1	FLOOR MAT	
	20	1	8E-8946	1	MODULE AS-OPERATOR	
	21	1	3T-3934	1	HANDHOLD	
	22	1	9P-8871	2	PLUG	
	23	2	6T-8364	4	BOLT (1/4-20X.625IN)	
M		2	9T-4205	4	WASHER-HARD (2MM THK)	
	24	2	6B-3062	17	BOLT (3/8-16X.750IN)	
	25	2	6P-1075	21	WASHER-HARD (9MM THK)	
	26	2	7T-0136	1	SEAL	
	27	2	7X-0378	2	BOLT (3/4-10X5IN)	
		2	7X-0682	2	WASHER-HARD (6MM THK)	
	28	2	3T-3482	2	PLATE	
	29	2	3T-8290	1	PLATE AS	
		2	7S-4888	6	SPACER	
	30	2	3T-8291	1	SEAL	
	31	2	7S-8817	1	GASKET	
	32	2	7S-8916	1	COVER AS	
		2	2R-2376	2	WASHER	
		2	6P-8826	2	SCREW-KNURLED	
	33	2	9W-3429	1	COVER	
	34	2	8E-8937	1	COVER	
	35	2	9D-3931	8	SCREW-SOCKET HEAD	
	36	2	9W-3142	8	MOUNTING	
	37	2	9W-9027	2	PLATE	
	38	2	7X-0360	2	BOLT (7/8-9X6IN)	
		2	7X-0672	2	WASHER-HARD	
	39	2	6L-6454	4	BOLT (3/8-16X1.0IN)	
	40	2	3T-4788	1	COVER	

12 FRAME AND BODY — 1 of 4 — SELP4570-01

FRAME AND BODY

8E-3299 PLATFORM GP-CAB (contd.)

100090751

NOTE	REF NO	GRAPHIC REF	PART NUMBER	QTY	PART NAME (1 2 3 4 5 6 PRODUCT LEVEL)	SEE PAGE
	41	2	8E-2515	1	COVER	
	42	2	7T-0134	1	PLATE	
	43	2	7T-0138	1	GASKET	
	44	2	7S-8724	1	GASKET	
	45	2	7S-8723	1	COVER	
	46	[illegible]	6V-1958	2	PLUG-BUTTON	
M-METRIC PART						

SELP4570-01 — 2 of 4 — FRAME AND BODY 13

FRAME AND BODY

8E-3299 PLATFORM GP-CAB (contd.)

100090751

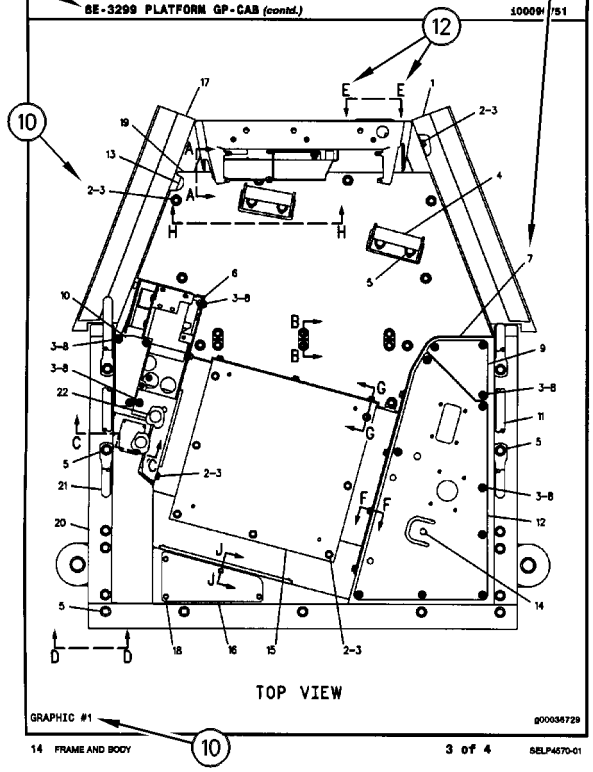

GRAPHIC #1 — g00036729

14 FRAME AND BODY — 3 of 4 — SELP4570-01

FRAME AND BODY

8E-3299 PLATFORM GP-CAB (contd.)

100090751

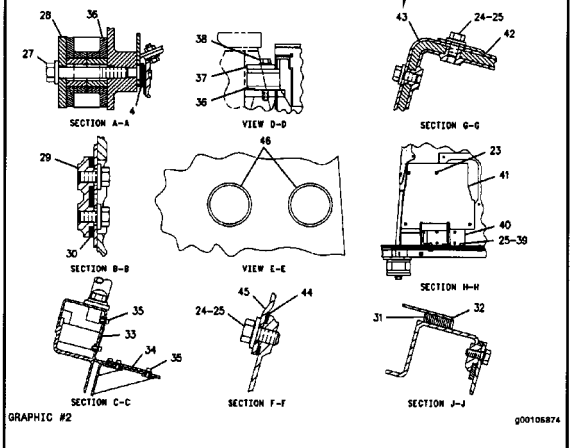

GRAPHIC #2 — g00105874

SELP4570-01 — 4 of 4 — FRAME AND BODY 16

REMANUFACTURED COMPONENTS

As an option when making repairs consider Caterpillar Remanufactured Components. Components that are available through the Caterpillar Remanufactured Program are identified three ways in the parts book:

- with the letter R in the note field of the parts list
- with an R* at the beginning of the first line of the caption
- with an *R at the end of the first line of the caption

Typical components included in the Remanufacturing Program include:

ALTERNATORS
CONNECTING RODS
CRANKSHAFTS - UNDERSIZE
CRANKSHAFTS - UPGRADE TO NEW
CYLINDER HEADS
ELECTRONIC CONTROL MODULES (ECM)
ELECTRONIC SENSORS
FUEL INJECTORS
FUEL NOZZLES
FUEL PUMPS
GOVERNORS
OIL PUMPS
PISTONS
SHORT BLOCKS
STARTERS
TURBOCHARGERS - COMPLETE
TURBOCHARGER CARTRIDGES
WATER PUMPS

Caterpillar Remanufactured engines for many engine arrangements are also available.

OPTIONS DE RÉPARATION

COMPOSANTS RÉNOVÉS

Comme option de réparation, considérer les composants rénovés Caterpillar. Les composants disponibles dans le cadre du programme Caterpillar de composants rénovés sont identifiés de trois façons dans le catalogue de pièces:

- avec la lettre "R" dans l'espace note de la liste des pièces
- avec R* au début de la première ligne des légendes
- avec *R à la fin de la première ligne des légendes

Les composants suivants figurent parmi les composants typiques du programme de rénovation:

ALTERNATEURS
BIELLES
VILEBREQUINS - SOUS-DIMENSIONNÉS
VILEBREQUINS - REMIS À NEUF
CULASSES
MODULES DE COMMANDE ÉLECTRONIQUE (ECM)
CAPTEURS ÉLECTRONIQUES
INJECTEURS
TÊTES D'INJECTEURS
POMPES À CARBURANT
RÉGULATEURS
POMPES À HUILE
PISTONS
BLOCS EMBIELLÉS
DÉMARREURS
TURBOCOMPRESSEURS - COMPLETS
CARTOUCHES DE TURBOCOMPRESSEUR
POMPES À EAU

Des moteurs rénovés sont aussi disponibles pour plusieurs versions de moteur.

ALTERNATIVAS DE REPARACIÓN

COMPONENTES REMANUFACTURADOS

Al hacer reparaciones, tenga en cuenta la opción de Componentes Remanufacturados Caterpillar. Los componentes que están disponibles por medio del programa de Productos Remanufacturados Caterpillar se identifican de tres maneras en el manual de piezas:

- con la letra R en el espacio de Nota de la lista de piezas
- con una R* al comienzo de la primera línea de la leyenda
- con una *R al final de la primera línea de la leyenda

Los componentes que se incluyen típicamente en el Programa de Productos Remanufacturados son:

ALTERNADORES
BIELAS
CIGÜEÑALES - BAJOMEDIDA
CIGÜEÑALES - REMANUFACTURADOS A NUEVO
CULATAS
MÓDULOS DE CONTROL ELECTRÓNICO (ECM)
SENSORES ELECTRONICOS
INYECTORES
BOQUILLAS
BOMBAS DE COMBUSTIBLE
REGULADORES
BOMBAS DE ACEITE
PISTONES
MONOBLOQUES
MOTORES DE ARRANQUE
TURBOCOMPRESORES - COMPLETOS
NÚCLEOS DE TURBOCOMPRESOR
BOMBAS DE AGUA

También hay disponibles motores Remanufacturados Caterpillar para muchas de las configuraciones de motores.

ALTERNATIVAS DE REPARO

COMPONENTES REMANUFATURADOS

Considere o uso de Componentes Remanufaturados Caterpillar ao efetuar reparos. Os componentes disponíveis através do Programa de Remanufatura Caterpillar são identificados de três formas no manual de peças:

- com um R na área da nota da lista de peças
- com um R* no princípio da primeira linha da legenda
- com um *R no final da primeira linha da legenda

Os componentes típicos que constam no Programa de Remanufatura incluem:

ALTERNADORES
BIELAS
VIRABREQUINS - SUBMEDIDAS
VIRABREQUINS - ATUALIZAÇÃO
CABEÇOTES
MÓDULOS DE CONTROLE ELETRÔNICO (ECM)
SENSORES ELETRÔNICOS
INJETORES DE COMBUSTÍVEL
BICOS DE ABASTECIMENTO DE COMBUSTÍVEL
BOMBAS DE COMBUSTÍVEL
GOVERNADORES
BOMBAS DE ÓLEO
PISTÕES
BLOCOS BÁSICOS DO MOTOR
MOTORES DE PARTIDA
TURBOALIMENTADORES - COMPLETOS
CARTUCHOS DE TURBOALIMENTADORES
BOMBAS D'ÁGUA

Motores Remanufaturados Caterpillar também encontram-se disponíveis para diversos arranjos de motor.

WERKÜBERHOLTE AT-PRODUKTE

Bei Reparaturen sollten werküberholte AT-Produkte von Caterpillar in Betracht gezogen werden. Die durch das AT-Programm von Caterpillar erhältlichen Teile sind im Parts Book auf drei verschiedene Arten gekennzeichnet:

- mit dem Buchstaben R in der Spalte NOTE der Ersatzteilliste
- mit einem R* am Anfang der ersten Zeile der Überschrift
- mit einem *R am Ende der ersten Zeile der Überschrift

Das AT-Programm umfaßt u.a. folgende Produkte:

DREHSTROMGENERATOREN
PLEUELSTANGEN
KURBELWELLEN - MIT UNTERMASS
KURBELWELLEN - MIT ORIGINALMASS
ZYLINDERKÖPFE
ELEKTRONISCHE STEUEREINHEITEN (EMC)
ELEKTRONISCHE SENSOREN
PUMPENDÜSEN
EINSPRITZDÜSEN
KRAFTSTOFFPUMPEN
DREHZAHLREGLER
ÖLPUMPEN
KOLBEN
TEILMOTOREN
ANLASSER
TURBOLADER - KOMPLETT
TURBOLADERLAUFZEUGE
KÜHLWASSERPUMPEN

Viele Motoren können durch werküberholte AT-Motoren von Caterpillar ersetzt werden.

SUPPLEMENTAL COOLANT ADDITIVES

CUSTOMER BENEFITS:

Protects against cavitation, foam, erosion, corrosion, and scale buildup in cooling systems.

- Provides measured coolant conditioner.

DESCRIPTION:

Additives deplete from the coolant with normal operation. For this reason, Supplemental Coolant Additives (SCA) must be added to all heavy duty coolants at regular intervals. In addition, when not using a fully formulated, pre-charged antifreeze, like Caterpillar's DEAC, an initial charge of SCA must be added to the cooling system. The amount of SCA added to the system is dependent on the capacity of the system.

The SCA for initial fill is provided as a liquid. SCA's for maintenance intervals are available in liquid form and as a spin-on element. (No Spin-on available for 3600 Family of Engines)

NOTE:

The amount of SCA added at initial fill is not the same as the amount added at maintenance intervals.

The coolant additive elements can be used with any ethylene or propylene glycol type antifreeze which meets ASTM D4985 or ASTM D5345 Specifications.

NOTE:

For use with standard heavy duty coolant only, not for use with Extended Life Coolant.

PARTS NEEDED:

Cooling System Capacity		Liquid SCA at Initial Fill	Liquid SCA at Maintenance*	Spin-on SCA Maintenance Element*
Liters	Gallons			
22-30	(6-8)	3P-2044 (1)	6V-3542 (1)	111-2370 (1)
30-38	(8-10)	3P-2044 (1) 6V-3542 (1)	111-2372 (1)	111-2369 (1)
38-49	(10-13)	3P-2044 (1) 8T-1589 (1)	111-2372 (1)	111-2369 (1)
49-64	(13-17)	3P-2044 (2)	8T-1589 (1)	9N-3368 (1)
64-83	(17-22)	3P-2044 (2) 8T-1589 (1)	111-2372 (1) 6V-3542 (1)	111-2371 (1)
83-114	(22-30)	3P-2044 (3) 8T-1589 (1)	3P-2044 (1)	9N-3718 (1)
114-163	(30-43)	3P-2044 (5)	3P-2044 (1) 6V-3542 (1)	111-2371 (2)
163-242	(43-64)	3P-2044 (8)	3P-2044 (2)	9N-3718 (2)

** Normal maintenance period is 250 hrs. See your Operation and Maintenance Manual for complete coolant maintenance instructions.*

( ) Indicates quantity required.

ADDITIFS POUR LIQUIDE DE REFROIDISSEMENT

AVANTAGES POUR LE CLIENT

L'additif protège contre la cavitation, la mousse, l'érosion, la corrosion et l'accumulation de dépôts dans le circuit de refroidissement.

- L'additif complémentaire fournit une quantité mesurée d'additif.

DESCRIPTION:

Les additifs s'épuisent pendant l'utilisation du moteur. C'est pourquoi l'on doit ajouter de l'additif au liquide de refroidissement/antigel pour moteurs diesel à intervalles réguliers. En plus, si l'on n'utilise pas de l'antigel entièrement formulé et pré-chargé comme le liquide de refroidissement/antigel Caterpillar pour moteurs diesel, une quantité initiale d'additif doit être ajoutée au circuit de refroidissement. La quantité d'additif à ajouter au circuit dépend de la contenance du circuit.

L'additif pour le remplissage initial est fourni sous forme liquide. L'additif pour l'entretien ultérieur est disponible sous forme liquide et sous forme d'élément à visser. (Il n'y a pas d'élément à visser pour les moteurs de la famille 3600).

NOTA:

La quantité d'additif à ajouter au remplissage initial diffère de la quantité à ajouter aux intervalles d'entretien.

Les éléments d'additif peuvent être utilisés avec tout antigel de type éthylène ou propylène-glycol conforme à la norme ASTM D4985 ou ASTM D5345.

NOTA:

A utiliser uniquement avec du liquide de refroidissement pour moteurs diesel et non avec le liquide de refroidissement longue durée.

PIÈCES NÉCESSAIRES:

Contenance du circuit de refroidissement		Additif liquide au remplissage initial	Additif liquide aux intervalles d'entretien*	Elément d'additif à visser aux intervalles d'entretien*
Litres	Gallons U.S.			
22-30	(6-8)	3P-2044 (1)	6V-3542 (1)	111-2370 (1)
30-38	(8-10)	3P-2044 (1) 6V-3542 (1)	111-2372 (1)	111-2369 (1)
38-49	(10-13)	3P-2044 (1) 8T-1589 (1)	111-2372 (1)	111-2369 (1)
49-64	(13-17)	3P-2044 (2)	8T-1589 (1)	9N-3368 (1)
64-83	(17-22)	3P-2044 (2) 8T-1589 (1)	111-2372 (1) 6V-3542 (1)	111-2371 (1)
83-114	(22-30)	3P-2044 (3) 8T-1589 (1)	3P-2044 (1)	9N-3718 (1)
114-163	(30-43)	3P-2044 (5)	3P-2044 (1) 6V-3542 (1)	111-2371 (2)
163-242	(43-64)	3P-2044 (8)	3P-2044 (2)	9N-3718 (2)

** L'intervalle d'entretien normal est de 250 heures-service. Voir le Guide d'utilisation et d'entretien pour de plus amples renseignements concernant l'entretien du circuit de refroidissement.*

( ) Indique la quantité exigée.

ADITIVOS DE REFRIGERANTE SUPLEMENTARIOS

VENTAJAS PARA EL USUARIO:

Protegen contra la cavitación, la formación de espuma, la corrosión y la acumulación de escamas en los sistemas de enfriamiento.

- Suministra un acondicionador dosificado de refrigerante.

DESCRIPCIÓN:

Los aditivos en el refrigerante se agotan con la operación normal. Por esta razón, se debe agregar Aditivo de refrigerante suplementario (SCA) a todos los refrigerantes para servicio pesado, a intervalos regulares. Además, cuando no se usa un anticongelante de precarga completo, tal como el DEAC de Caterpillar, es necesario agregar una cantidad de aditivo de refrigerante suplementario inicial al sistema de enfriamiento. La cantidad de aditivo que se debe agregar depende de la capacidad del sistema.

El SCA de llenado inicial es líquido. El que se usa para el mantenimiento está disponible tanto en líquido como en un elemento enroscable. (No hay elemento enroscable disponible para la Familia de Motores 3600).

NOTA:

La cantidad de aditivo de llenado inicial no es la misma que se agrega en los intervalos de mantenimiento.

Los elementos de aditivo de refrigerante se pueden usar con cualquier anticongelante de tipo glicol etilénico o propílico que esté de acuerdo con las especificaciones de las normas ASTM D4985 o ASTM D5345.

NOTA:

Se debe utilizar únicamente con refrigerante estándar para servicio pesado; no se debe usar con Refrigerante de Larga Duración.

PIEZAS NECESARIAS:

Capacidad del Sistema de Enfriamiento		SCA líquido de llenado inicial	SCA líquido de mantenimiento*	Elemento de mantenimiento enroscable*
litros	gal EE.UU.			
22-30	6-8	3P-2044 (1)	6V-3542 (1)	111-2370 (1)
30-38	8-10	3P-2044 (1) 6V-3542 (1)	111-2372 (1)	111-2369 (1)
38-49	10-13	3P-2044 (1) 8T-1589 (1)	111-2372 (1)	111-2369 (1)
49-64	13-17	3P-2044 (2)	8T-1589 (1)	9N-3368 (1)
64-83	17-22	3P-2044 (2) 8T-1589 (1)	111-2372 (1) 6V-3542 (1)	111-2371 (1)
83-114	22-30	3P-2044 (3) 8T-1589 (1)	3P-2044 (1)	9N-3718 (1)
114-163	30-43	3P-2044 (5)	3P-2044 (1) 6V-3542 (1)	111-2371 (2)
163-242	43-64	3P-2044 (8)	3P-2044 (2)	9N-3718 (2)

** El período normal de mantenimiento es de 250 horas. Para ver las instrucciones completas sobre el mantenimiento del refrigerante, consulte el Manual de Operación y Mantenimiento.*

( ) Indica la cantidad necesaria.

ADITIVOS SUPLEMENTARES DO LÍQUIDO ARREFECEDOR

BENEFÍCIOS PARA O CLIENTE:

Protege contra cavitação, espuma, erosão, corrosão e acúmulo de crostas nos sistemas de arrefecimento.

- Fornece uma quantidade pré-determinada de condicionador de arrefecimento.

DESCRIÇÃO:

Com a operação normal, os aditivos se esgotam do líquido arrefecedor. Por isso, Aditivos Suplementares do Líquido Arrefecedor (SCA) devem ser acrescentados a todos os líquidos arrefecedores para serviço pesado em intervalos regulares. Além disso, quando um anticongelante pré-carregado, totalmente formulado não for usado, como o DEAC Caterpillar, uma carga inicial de SCA deve ser acrescentada ao sistema de arrefecimento. A quantidade de SCA acrescentada ao sistema depende da capacidade do sistema.

O SCA para abastecimento inicial é fornecido em forma de líquido. Os aditivos suplementares (SCA) para intervalos de manutenção estão à disposição em forma líquida e como um elemento com roscas. (Exceto os Motores da Família 3600)

NOTA:

A quantidade de SCA adicionada no abastecimento inicial não é a mesma que a acrescentada nos intervalos de manutenção.

Os elementos do aditivo do líquido arrefecedor podem ser usados com qualquer tipo de anticongelante etileno ou propileno que satisfaz as Especificações ASTM D4985 ou ASTM D5345.

NOTA:

Para uso apenas com líquido arrefecedor para serviço pesado padrão, não deve ser usado com Líquido Arrefecedor de Vida Longa.

PEÇAS NECESSÁRIAS:

Capacidade do Sistema de Arrefecimento		Líquido SCA Durante Abastecimento Inicial	Líquido SCA Durante Manutenção*	Elemento de Manutenção de SCA com Roscas*
Litros	Galões			
22-30	6-8	3P-2044 (1)	6V-3542 (1)	111-2370 (1)
30-38	8-10	3P-2044 (1) 6V-3542 (1)	111-2372 (1)	111-2369 (1)
38-49	10-13	3P-2044 (1) 8T-1589 (1)	111-2372 (1)	111-2369 (1)
49-64	13-17	3P-2044 (2)	8T-1589 (1)	9N-3368 (1)
64-83	17-22	3P-2044 (2) 8T-1589 (1)	111-2372 (1) 6V-3542 (1)	111-2371 (1)
83-114	22-30	3P-2044 (3) 8T-1589 (1)	3P-2044 (1)	9N-3718 (1)
114-163	30-43	3P-2044 (5)	3P-2044 (1) 6V-3542 (1)	111-2371 (2)
163-242	43-64	3P-2044 (8)	3P-2044 (2)	9N-3718 (2)

** O período normal de manutenção é de 250 horas. Consulte o Manual de Operação e Manutenção para obter instruções completas quanto à manutenção do líquido arrefecedor.*

( ) Indica a quantidade exigida.

KÜHLMITTELZUSATZ

VORTEILE FÜR DEN KUNDEN:

Schutz gegen Kavitation, Schaumbildung, Erosion, Korrosion und Kesselsteinbildung in Kühlsystemen.

- Richtig dosierter Kühlmittelzusatz

BESCHREIBUNG:

Additive erschöpfen sich während des Motorbetriebs. Deshalb muß allen HD-Kühlmitteln regelmäßig Kühlmittelzusatz beigefügt werden. Wenn bei Erstfüllung kein vollwertiges Fertigkühlmittel, wie das Frostschutz- und Kühlmittel für Dieselmotoren von Caterpiller (DEAC), verwendet wird, muß bei Erstfüllung Kühlmittelzusatz beigefügt werden. Wieviel Kühlmittelzusatz beigefügt werden muß, hängt vom Inhalt des Kühlsystems ab.

Für Erstfüllung ist Kühlmittelzusatz nur in flüssiger Form erhältlich. Für Wartungsintervalle ist Kühlmittelzusatz in flüssiger Form und als Zusatzelement erhältlich. (Für die Motorbaureihe 3600 sind keine Zusatzelemente erhältlich.)

ANMERKUNG:

Die Kühlmittelmenge bei Erstfüllung ist nicht die gleiche Menge, die bei Wartungsintervallen beigefügt werden muß.

Die Kühlmittelzusatzelemente können mit allen Frostschutzmitteln auf Ethylen- oder Propylenglykolbasis verwendet werden, die den Standards nach ASTM D4985 oder ASTM D5345 entsprechen.

ANMERKUNG:

Den Kühlmittelzusatz nicht mit Langzeitkühlmittel (ELC) von Caterpillar verwenden. Der Kühlmittelzusatz ist nur für HD-Kühlmittel bestimmt.

TEILEBEZEICHNUNG:

Kühlsysteminhalt		Kühlmittelzusatz bei Erstfüllung	Flüssiger Kühlmittelzusatz bei Wartung*	Kühlmittelzusatzelement bei Wartung*
Liter	US-Gall.			
22-30	(6-8)	3P-2044 (1)	6V-3542 (1)	111-2370 (1)
30-38	(8-10)	3P-2044 (1) 6V-3542 (1)	111-2372 (1)	111-2369 (1)
38-49	(10-13)	3P-2044 (1) 8T-1589 (1)	111-2372 (1)	111-2369 (1)
49-64	(13-17)	3P-2044 (2)	8T-1589 (1)	9N-3368 (1)
64-83	(17-22)	3P-2044 (2) 8T-1589 (1)	111-2372 (1) 6V-3542 (1)	111-2371 (1)
83-114	(22-30)	3P-2044 (3) 8T-1589 (1)	3P-2044 (1)	9N-3718 (1)
114-163	(30-43)	3P-2044 (5)	3P-2044 (1) 6V-3542 (1)	111-2371 (2)
163-242	(43-64)	3P-2044 (8)	3P-2044 (2)	9N-3718 (2)

** Der normale Wartungsintervall beträgt 250 Betriebsstunden. Für vollständige Anweisungen zur Wartung des Kühlsystems, siehe Betriebs- und Wartungshandbuch.*

( ) Erforderliche Anzahl

NOMENCLATURA DE PEÇAS INGLÊS-PORTUGUÊS

INGLÊS	PORTUGUÊS
ABOVE	Acima
ABSORBER	Amortecedor
ACCESSORY	Acessório
ACTUATOR	Acionador
ADAPTER	Adaptador
ADHESIVE	Adesivo
ADJUSTER	Adjustador
AFTERCOOLER	Pós-resfriador
AIR	Ar
AIR CLEANER	Purificador de ar
AIR SYSTEM	Sistema de ar
ALARM	Alarme
ALTERNATOR	Alternador
AMMETER	Amperímetro
ANCHOR	Âncora, fixador
ANGLE	Ângulo, canto
ANVIL A.	Bigorna conj.
ARBOR	Mandril, eixo
ARM	Braço
ARMATURE	Armadura, Induzida
ARM REST	Apoio para braço
ARRESTER	Detentor
ASSEM. = ASSEMBLY	Conjunto
ATTACHMENT	Acessório
AVAILABLE	Disponível
AXLE	Eixo
AXLE SHAFT	Semi-eixo, ponta
BACK-UP ALARM	Alarme de marcha à ré
BACK-UP LIGHT	Luz da marcha à ré
BACK-UP SWITCH	Interruptor de marcha à ré
BACKBOARD	Prancha traseira
BACK CUSHION	Encosto
BACKHOE	Retroescavadeira
BAFFLE	Defletor
BAG	Saco, sacola
BAIL	Alça
BALANCER	Balanceador
BALL	Esfera
BALLCHECK ASSEMBLY	Conjunto de (válvula) de esfera de retenção
BALL JOINT	Junta esférica
BALLSTUD	Munhão esférica
BAND	Banda, cinta, tira
BAND & LINING	Banda e revestimento
BAR	Barra
BARREL	Cilindro
BARRIER	Barreira
BASE	Base
BASIN	Bacia, coletor
BATTERY	Bateria
BEAM	Barra, viga, trave
BEARING	Mancal, rolamento
BEARING BALL	Rolamento de esferas
BEARING-SLEEVE	Mancal tipo luva
BEARING-NEEDLE	Rolamento de agulha
BEARING-ROLLER	Rolamento tipo roletes
BELL	Campânula
BELLCRANK	Alavanca angular
BELLOWS	Fole
BELOW	Abaixo
BELT	Correia, cinto
BELT TIGHTENER	Ajustador de correia
BEVEL GEAR	Coroa
BIT-CUTTER	Broca, fresa
BLACK	Preto
BLADE	Lâmina
BLEEDER	Sangrador
BLOCK	Bloco, calço
BLOWER	Ventilador
BLUE	Azul
BOARD	Prancha, tábua
BODY	Corpo
BOLT	Parafuso
BONNET	Tampa
BOOM	Lança
BOOSTER	Reforçador
BOOT	Protetor contra poeira
BORE	Furo
BOSS	Ressalto
BOTH	Ambos (as)
BOTTOM	Fundo
BOWL	Caçamba
BOX	Caixa
BRACE	Tirante
BRACKET	Suporte
BRAKE	Freio
BREAKER	Interruptor
BREATHER	Respiro
BRIDGE	Braço
BROWN	Marrom
BRUSH	Escova
BUCKET	Caçamba
BULB	Bulbo
BULLDOZER	Bulldozer
BUMPER	Pára-choque
BUSHING	Bucha
BUTTON	Botão
BUZZER WARNING	Alarme sonoro
C = CHANGE	Alteração
CAB	Cabina
CABINET	Gabinete
CABLE	Cabo
CAGE	Alojamento
CALIPER	Calibrador
CAM	Excêntrico, ressalto
CAMSHAFT	Eixo-comando-de-válvulas
CANOPY	Coberta, toldo

NOMENCLATURA DE PEÇAS INGLÊS-PORTUGUÊS

INGLÊS	PORTUGUÊS
CAP	Tampa
CAPACITOR	Capacitor, condensador
CARBURETOR	Caburador
CARCASS	Carcaça
CARRIER	Suporte
CARTON	Caixa de papelão
CARTRIDGE	Cartucho
CASE	Caixa, alojamento
CASING	Invólucro, revestimento
CASTER	Rolete, roldana
CAST IRON	Ferro fundido
CATWALK	Passadiço
CENTER	Centro
CHAIN	Corrente
CHAMBER	Câmara
CHANGEOVER	Modificação
CHANNEL	Canal
CHASSIS	Chassi, armação
CHECK-VALVE	Válvula de retenção
CIRCUIT	Circuito
CIRCUIT BREAKER	Interruptor de circuito
CLAMP	Braçadeira
CLASP	Fecho, grampo
CLEANER	Purificador
CLEVIS	Forquilha, garfo
CLIP	Clipe, presilha, grampo
CLOSURE	Fecho
CLUTCH	Embreagem
COARSE	Grosso, áspero
COATING	Capa, revestimento
COCK	Torneira
COIL	Bobina, serpentina
COLLAR	Colar
COLLECTOR	Coletor
COLLET	Mandril
COLUMN	Coluna
COMPACTOR	Compactador
COMPARTMENT	Compartimento
COMPLETE	Completo
COMPOUND	Composto
COMPRESSOR	Compressor
CONCAVE	Côncavo
CONDITIONER	Condicionador
CONDUIT	Conduite, eletroduto
CONE	Cone
CONNECTING	Ligação
CONNECTED ROD	Biela
CONNECTION	Conexão
CONNECTOR	Conetor
CONSISTS OF	Consiste de
CONSOLE	Consolo
CONTACT	Contato, platinado
CONTACTOR	Contactador
CONTINUED FROM	Continuação de
CONTROL	Controle
CONVERSION	Conversão
CONVERTER	Conversor
COOLER	Arrefecedor
COOLING	Arrefecimento
CORK	Cortiça
CORE	Núcleo
CORNER	Canto
COTTER PIN	Contrapino
COUNTER	Contador, tacômetro
COUNTERWEIGHT	Contrapeso
COUPLER	Acoplador, engate
COUPLING	Acoplamento, conexão
COVER	Tampa
COWL	Capota
COWLING	Capota
CRADLE	Armação, suporte
CRANK	Manivela
CRANKCASE	Cárter
CRANKSHAFT	Virabrequim
CROSS UNION	Junta transversal
CROSSBAR	Barra transversal
CUP	Capa, anel externa
CURTAIN	Cortina
CUSHION	Almofada, amortecedor
CUTTER	Fresa, cortador
CUTTING EDGE	Borda cortante
CYLINDER	Cilindro
CYLINDER BLOCK	Bloco do motor
CYLINDER HEAD	Cabeçote
DAMPER	Amortecedor
DARK GREEN	Verde escuro
DASH	Painel
DASH PANEL	Painel de Instrumento
DECELERATOR	Desacelerador
DEFLECTOR	Defletor
DETENT	Retém, pino de trava
DIAGRAM-WIRING	Diagrama dos circuitos elétricos
DIAL	Medidor de dial
DIAPHRAGM	Diafragma
DIESEL ENGINE COMPLETE	Motor diesel completo
DIFFERENTIAL	Diferencial
DIFFUSER	Difusor
DIMMER	Redutor de luminosidade
DIODE	Diodo
DIRECTOR	Diretor
DISC	Disco
DISCONNECT	Desligar
DISPOSABLE	Disponível, substituível
DISSIPATOR	Dissipador de calor
DISTRIBUTOR	Distribuidor
DM = DECIMETER	dm = decímetro

NOMENCLATURA DE PEÇAS INGLÊS-PORTUGUÊS

INGLÊS	PORTUGUÊS
DOME LIGHT	Lâmpada do teto
DOOR	Porta
DOWEL	Pino-guia, cavilha
DOWNSHIFT	Mudança para marcha mais baixa
DOZER	Bulldozer (lâmina)
DRAIN	Dreno
DRAWBAR	Barra de tração
DRILL	Broca
DRILLED	Broqueado, perturado
DRIVE	Comando, acionamento, propulsão
DRIVER	Acionador, mecanismo propulsor
DRIVESHAFT	Eixo acionador, eixo de transmissão
DRUM	Tambor
DUCT	Conduto, canal
EACH	Cada
EDGE	Borda, canto
EFFECTIVE WITH	Efetivo a partir de
EJECTOR	Ejetor
ELBOW	Cotovelo
ELEMENT	Elemento
ENCLOSURE	Cobertura
END	Extremidade
END BIT	Canto de lâmina
END VIEW	Vista traseira
ENGINE	Motor
ENGINE ARRANGEMENT	Arranjo do motor
EXCEPT	Exceto
EXHAUST	Escape
EXHAUST PIPE	Cano de escape
EXPANDER	Expansor
EXPANSION PLUG	Bujão de expansão
EXTENSION	Extensão
EXTINGUISHER	Extintor
EXTRACTOR	Extrator
EYE	Olhal
EYEBOLT	Parafuso de olhal
FABRIC	Tecido, tela textura
FACING	Revestimento, forro
FAN	Ventilador
FASTENED	Fixo, preso
FASTENER	Fixador, prendedor
FENDER	Pára-lamas
FERRULE	Virola
FIELD COIL	Bobina indutora, ou de campo
FIELD REPLACEMENT	Reposicão ou substituicão no campo
FILLER	Bocal de enchimento
FILM	Película
FILTER	Filtro
FINAL DRIVE	Comando final
FINGER	Dedo
FIREWALL	Parede contra fogo
FITTING	Graxeira, conexão
FIXTURE	Dispositivo, Aparelho
FLANGE	Flange
FLASHER	Luz intermitente
FLOAT	Flutuar, livre
FLOOD-LAMP	Farol
FLOOR	Piso
FLOORMAT	Tapete
FLOORPLATE	Chapa do piso
FLYWEIGHT	Peso volante
FLYWHEEL	Volante
FOLLOWER	Seguidor
FOOT	Pé
FORK	Garfo
FOR USE WITH	Para usar com
FOUNDATION	Assentamento, alicerce
FRAME	Armacão, chassi
FRONT	Frente, dianteiro
FT = FOOT	Pé
FUEL INJECTION	Injecão de combustível
FUEL PUMP	Bomba de combustível
FUEL RATIO	Limitador de combustível
FUEL SYSTEM	Sistema do combustível
FUEL TANK	Tanque do combustível
FUMES DISPOSAL	Eliminação de vapores do cárter
FUSE	Fusível
G = GROUP	Grupo
GAGE	Indicador, manômetro
GAP	Folga, lacuna, intervalo
GASKET	Junta
GASKET KIT	Jogo de junta
GATE	Entrada, trava
GAUGE	Indicador, manômetro
GEAR	Engrenagem, marcha
GEAR BOX	Caixa de engrenagem
GEAR PUMP	Bomba de engrenagem
GENERATOR	Gerador
GLAND	Junta, gaxeta, vedacão sobreposta
GLASS	Vidro
GLOW PLUG	Vela incandescente
GOVERNOR	Governador
GRAB IRON	Balaústre corrimão
GRATE	Grade, grelha
GRAY	Cinza
GRID	Grade, grelha
GRILL	Grade, grelha
GRIP	Pega, garra, cabo

NOMENCLATURA DE PEÇAS INGLÊS-PORTUGUÊS

INGLÊS	PORTUGUÊS
GROMMET	Ilhós
GROUND BRUSH	Escova-terra
GROUND (ELECTRIC)	Terra (eletricidade)
GROUSER	Garra (de sapata)
GUARD	Protetor
GUIDE	Guia
GUSSET	Cantoneira
HACKSAW	Serra para metais
HALF	Metade, meio (a)
HALF LINK	Semi-elo
HAMMER	Martelo
HAND CONTROL	Controle manual
HANDLE	Cabo, alça
HANDRAIL	Corrimão, balaústre
HANGER	Suporte, dispositivo de suspensão
HARDWARE	Ferragem
HARDWARE KIT	Jogo de ferragem
HARNESS	Chicote
HEAD = HD	Cabeça
HEADER	Coletor
HEADLAMP	Farol dianteiro
HEADLIGHT	Farol dianteiro
HEAT SINK	Difusor de calor
HEATER	Aquecedor
HIGH-IDLE	Marcha acelerada em vazio
HINGE	Dobradiça, articulacão
HITCH	Engate
HOIST	Guincho, talha
HOLD	Suporte, fixador
HOLD DOWN	Fixar, reter, manter abaixado
HOLDER	Fixador, suporte
HOLE	Furo, buraco
HOOD	Capô
HOOD & DASH	Capô e painel
HOOK	Gancho
HORN	Buzina
HOSE	Mangueira
HOUSING	Alojamento
HUB	Cubo
HYDRAULIC	Hidráulico
ID = INSIDE DIAMETER	Diâmetro interno
IDLER	Roda-guia
IDLER & SHAFT	Roda-guia e eixo
IDLER GEAR	Engrenagem intermediária
IDLER PULLEY	Polia intermediária
IMPELLER	Impulsor, rotor
IN = INCH	Polegada
INCLUDES	Inclui
INDICATE	Indicam
INDICATOR	Indicador
INLAY	Incrustação
INLET	Admissão, entrada
INPUT	Entrada
INSERT	Inserção
INSTALLATION	Instalação
INSTALLED ON MODEL	Instalação no modelo
INSTRUCTION	Instrução
INSTRUMENT	Instrumento
INSULATED BRUSH	Escova isolada
INSULATION	Isolação, isolamento
INSULATOR	Isolante, isolador
INTAKE	Admissão
INTERLOCK	Trava interna
INTERMEDIATE	Intermediário
INTERNAL	Interno
INVERTER	Inversor
IRON	Ferro
JACK	Macaco
JAW	Mandíbula, garra
JET	Jato, vaporizador
JOINT	Junta, articulação
JUNCTION	Junção
KEY	Chaveta
KINGBOLT	Pino de engate
KNIFE	Faca, lâmina
KNOB	Maçaneta, botão
LADDER	Escada
LAMP	Lâmpada
LARGE	Grande
LATCH	Trinco, lingüeta
LEAD	Condutor, cabo
LEG	Perna
LENS	Lente
LEVEL	Nível
LEVER	Alavanca
L.H. = LEFT HAND	Lado esquerdo
LID	Placa, tampa
LIFT	Levantar
LIFT CYLINDER	Cilindro de levantamento
LIFTER	Tucho
LIFTING EYE	Olhal de levantamento
LIGHT GREEN	Verde claro
LIGHTING	Sistema de iluminação
LINE	Tubulação
LINER	Camisa
LINES & PUMP	Tubulação e bomba
LINES & VALVE	Tubulação e válvula
LINING	Revestimento, lona
LINK	Elo
LINKAGE	Articulação
LIP	Lábio, borda
LISTED	Relacionamento
LITERATURE	Literatura
LOCATED	Localizado

NOMENCLATURA DE PEÇAS INGLÊS-PORTUGUÊS

INGLÊS	PORTUGUÊS
LOCATOR	Localizador
LOCK	Trava
LOCKNUT	Contraporca
LOCKWASHER	Arruela de pressão
LOCKWIRE	Arame de trava
LONG	Longo
LOOM	Tubo isolador
LOW IDLE	Marcha lenta
LOUVER	Persiana
LOWER	Abaixar, inferior
LUBRICANT	Lubrificante
LUG	Ressalto, orelha
MACHINE SCREW	Parafuso de fenda
MAGNET	Imã magneto
MAIN	Principal
MAINTENANCE	Manutenção
MANIFOLD	Coletor
MARKED	Marcado (a)
MARKER	Marcador
MASTER PIN	Pino mestre
MAT	Capacho, esteira
METER	Medidor, contador
MINOR	Menor
MIRROR	Espelho
MISCELLANEOUS	Miscelânea
MODIFICATION	Modificação
MOLDBOARD	Armação da lâmina
MOTOR	Motor
MOULDING	Moldura
MOUNT	Montar
MOUNTED	Montado (a)
MOUNTING	Montagem
MUFFLER	Silenciador
NAMEPLATE	Plaqueta de identificação
N.C. (THREAD)	Rosca grossa
NEEDLE	Agulha
N.F. (THREAD)	Rosca fina
NIB	Ponta, bico
NIPPLE	Conexão
NONE	Nenhum (a)
NORMALIZING	Normalização
NOT PART OF	Não faz parte de
NOZZLE	Bocal, bico injetor
N/S = NOT SERVICED	Não vendável
NUMBER (No)	Número (No)
NUT	Porca
NUT-WING	Porca borboleta
NUT-CASTLE	Porca acastelada
NUT-WELD	Porca-soldada
NUT-CAP	Porca cega
NUT-HEX	Porca sextavada
NUT-LOCK	Contraporca
NUT-IMPERIAL	Porca imperial
NUT-JAM	Porca de trava, contraporca
NUT-LOW CROWN	Porca de meia coroa
NUT-RETAINING	Porca de retenção
NUT-SELF LOCK	Porca de autotravamento
NUT-SLOTTED	Porca fendada
NUT-SPANNER	Porca para chaves
O.D. = OUTSIDE DIAMETER	Diâmetro externo
O-RING	Anel "O"
OIL	Óleo
OILPAN	Cárter
OIL PUMP	Bomba de óleo
OIL SYSTEM	Sistema de lubrificação
OILER	Almotolia, lubrificador
ORANGE	Laranja
TO ORDER	Para pedir
ORIFICE	Orifício
OUTER	Externo
OUTER RACE	Anel externo
OUTPUT	Saída
OVERALL	Geral, total
OVERHAUL	Revisão
OVER SIZE	Sobremedida
PACKING	Embalagem, gaxeta
PAD	Coxim, calço
PADLOCK	Cadeado
PAINT	Pintura
PAN	Cárter
PANEL	Painel
PARKING BRAKE	Freio de estacionamento
PARTITION	Separacão
PARTS G	Grupo de peças
PARTS OF	Peça de
PARTS OF ALL ENGINE ARRANGEMENTS	Peças de todos os arranjos do motor exceto
PAWL	Garra
PEDAL	Pedal
PEDESTAL	Pedestal
PERFORMANCE	Desempenho
PILOT	Piloto
PIN	Pino
PIN & BUSHING	Pino e bucha
PIN-COTTER	Contrapino
PINCH BAR	Pé de cabra
PINION	Pinhão
PIPE	Tubo
PISTON	Pistão
PIVOT	Articulação, pivô
PLANETARY	Planetário
PLATE	Placa
PLATFORM	Plataforma
PLUG	Bujão
PLUNGER	Pistão, êmbolo
POINT	Ponta, ponto

NOMENCLATURA DE PEÇAS INGLÊS-PORTUGUÊS

INGLÊS	PORTUGUÊS
POINTER	Ponteiro
POLE & COIL	Polo e bobina
POLE	Polo, lança, vara
POPPET	Gatilho
POST	Poste, coluna
POTENTIOMETER	Potenciômetro
POWER TAKE OFF	Tomada de força
POWER TRAIN	Trem de força
PRE-SCREENER	Tela protetora
PRECHAMBER	Câmara de pré-combustão
PRECLEANER	Pré-purificador
PRECOMBUSTION	Pré-combustão
PRESS	Prensa
PRESS = PRESSURE	Pressão
PREVIOUS	Prévio, anterior
PRIMARY	Primário, principal
PROBE	Prova
PROJECTOR	Projeter
PROTECTION	Proteção
PROTECTOR	Proteter
PULLER	Extrator, sacador
PULLEY	Polia
PUMP	Bomba
PURPLE	Roxo
PUSHROD	Haste de empuxo
QTY = QUANTITY	Quantidade
RACE	Pista
RACE & ROLLER	Pista e rolete
RACK	Cremalheira
RADIATOR	Radiador
RAIL	Trilho, guia
RANGE TRANSM	Transmissão manual
RATCHET	Catraca
REAR	Traseiro (a)
REBORED	Escareado, alargado
REBUILD KIT	Jogo de recondicionamento
RECEPTACLE	Recipiente
RECTIFIER	Retificador
RED	Vermelho
REDUCER	Redutor
REFER	Referir
REGULATOR	Regulador
RELATED REPAIR ITEMS	Itens de reparos relacionados
RELAY	Relé
RELIEF VALVE	Válvula de alívio
REPAIR G	Grupo de reparo
REPAIR KIT	Jogo de reparo
REPAIR ITEMS	Itens de reparo
REPLACEMENT	Reposição, substituição
REQUIRED	Necessário
RESERVOIR A	Reservatôrio
RESIN	Resina
RESISTOR	Resistência
RETAINER	Fixador
RETARDER	Retardador
REVERSIBLE	Reversível
R.H. = RIGHT HAND	Lado direito
RIM	Aro
RIM & TIRE	Aro e pneu
RING	Anel
RIVET	Rebite
ROCKET	Balancim
ROD	Haste
ROD END	Extremidade da haste
ROLLER	Rolete
ROPE-STARTING	Partida à corda
ROTATOR	Girador
ROTOCHAMBER	Càmara pneumática
ROTOCOIL	Girador de válvula
ROTOR	Rotor
RUST INHIBITOR	Antioxidante
SADDLE	Sela, assento
SAFETY	Segurança
SAFETY TREAD	Tiras antiderrapante
SCRAPER	Tampa
SCREEN	Tela
SCREW	Parafuso
SCREW-HEX HD	Parafuso de cabeça hexagonal
SCREW-KIT	Jogos de parafuso
SCREW-MACHINE	Parafuso de fenda
SCREW-ROUND HD	Parafuso de cabeça redonda
SCREW-FLANGED	Parafuso com flange
SCREW-LOCKING	Parafuso de trava
SCREW-THUMB	Parafuso de orelhas
SCREWDRIVER	Chave de fenda
SEAL	Retentor
SEALED UNIT	Unidade vedada
SEALER	Vedador isolante
SEAT	Assento
SECONDARY	Secundário
SECTION	Seção
SEGMENT	Segmento
SENDER	Emissor
SENSOR	Sensor
SEPARATE	Separar, separado
SEPARATOR	Separador
SERIAL NUMBER PLATE	Placa de número de série
SERVICE	Serviço, manutenção
SERVICE KIT	Jogo de manutenção
SERVICE METER	Horômetro
SETSCREW	Parafuso de fixação
SHACKLE	Grilheto, anel, manilha
SHAFT	Eixo
SHANK	Porta-ponta do escarificador

NOMENCLATURA DE PEÇAS INGLÊS-PORTUGUÊS

INGLÊS	PORTUGUÊS
SHEAVE	Polia, roldana
SHEET	Folha, lâmina
SHELL	Invólucro, cápsula, casquilho
SHIELD	Blindagem, protetor
SHIFT	Mudança
SHIM	Calço
SHIPPING	Embarque
SHOCK ABSORBER	Amortecedor de choques
SHOCKMOUNT	Montagem a prova de choques
SHOE	Sapata
SHORT	Curto
SHOWN	Ilustrado, mostrado
SHROUD	Tampa de proteção
SHUNT	Derivação
SHUT OFF	Desligar, parada
SHUTTLE	Pistão de vaivém
SIDE	Lateral
SIDE VIEW	Vista lateral
SILICONE	Silicone
SINK	Absorvente de calor
SKIVING	Desbaste
SLACK ADJUSTER	Adjustador de folga
SLEEVE	Luva, manga, camisa
SLIDER	Cursor, deslizador
SLIDE RAIL	Trilho deslizante
SLING	Cabos, amarras, linga
SLINGER	Defletor
SLUG	Pistão de reação, pistãozinho
SMALL	Pequeno
SNAP RING	Anel de retenção, anel de pressão
SNUBBER	Amortecedor
SOCKET	Soquete, tomada
SOLENOID	Solenóide
SPACER	Espaçador
SPARE	Sobressalente
SPARK PLUG	Vela de ignição
SPECIAL	Especial
SPEEDOMETER	Velocimetro
SPIDER	Cruzeta
SPINDLE	Ponta de eixo
SPLINE	Estria
SPOOL	Carretel
SPOUT	Calha, tubo
SPRING	Mola
SPROCKET	Roda motriz, roda dentada
STABILIZER	Estabilizador
STACK	Chaminé, cano de escapamento
STAND	Suporte, cavalete
STANDPIPE	Suporte vertical de sucção
STAPLE	Grampo
STARTER	Arranque motor de partida
STATOR	Estator
STEERING	Direção
STEM	Haste
STEP	Degrau
STICK	Vareta
STOP	Parar
STORAGE	Armazenagem
STRAINER	Tela filtrante
STRAP	Tira, cinta, suporte de fixação
STREET ELL	Conexão cotovelo
STRIP	Tira, fita, listra
STROKE	Curso do pistão
STUD	Prisioneiro
SUMP	Tanque, reservatório
SUPPLY VALVE	Válvula de suprimento
SUPPORT	Suporte
SUSPENSION	Suspensão
SWITCH	Interruptor
SWIVEL	Articulação giratória
TAB	Tira, aba, lingüeta
TABLE	Mesa
TACHOGRAPH	Tacógrafo
TACHOMETER	Tacômetro
TAG	Etiqueta
TAIL LAMP	Farol traseiro
TAN	Castanho
TANG	Lingüeta
TANK	Tanque
TAP	Macho
TAPE	Fita
TAPPET	Tucho
TEE	Conexão em "T"
TEMP. = TEMPERATURE	Temperatura
TERMINAL	Terminal
TEST UNIT	Unidade de teste
TESTER	Aparelho de teste
THERMISTOR	Termistor
THERMOCOUPLE	Termopar
THERMOMETER	Termômetro
THERMOSTAT	Termostato
THERMOSWITCH	Interruptor térmico
THICK	Grosso (a) espesso (a)
TIE	Ligação, tirante
THREAD (OF NUT)	Rosca (de porca)
THROTTLE	Acelerador de
THROWER	Defletor
THRU = THROUGH	Através de
TIGHTENER	Tensor
TILT CYLINDER	Cilindro de inclinação
TIMING	Sincronização, Distribuição
TIP	Ponta

NOMENCLATURA DE PEÇAS INGLÊS-PORTUGUÊS

INGLÊS	PORTUGUÊS
TIRE	Pneu
TIRE & RIM	Pneu e aro
TONGUE	Língua, lingueta
TOOL	Ferramenta
TOOLCABINET	Armário para ferramenta
TOOTH/TEETH	Dente/dentes
TOP	Topo, parte superior
TORQUE	Torque
TORQ. CONV.	Conversor de torque
TORQ. DIVIDER	Divisor de torque
TOWER	Torre
TRACK	Esteira
TRACK PIN	Pino de esteira
TRACTOR	Trator
TRAILING UNIT	Unidade rebocada
TRANSFER	Decalcomania
TRANSFORMER	Transformador
TRANSISTOR	Transistor
TRANSMISSION	Transmissão
TRANSMISSION OVERHAUL	Revisão da transmissão
TREAD	Piso, banda de rodagem
TREADLE	Pedal
TROLLY	Carrinho
TRUCK	Caminhão
TRUNNION	Munhão
TUBE	Tubo, cano
TUBING	Tubulagem canalização
TURBINE	Turbina
TURBOCHARGER	Turboalimentador
U-BOLT	Parafuso em "U"
U-JOINT	Junta universal
UNDERSIZE	Submedida
UNION	União
UPPER	Superior
USE AS REQUIRED	Usar conforme necessitar
VALUE	Valor
VALVE	Válvula
VALVE GRINDING	Retificação das válvulas
VEE BELT	Correia "V"
VEE BELT SET	Jogo de correia em "V"
VENT	Respiro
VIEW	Vista
VISE	Morsa, torno
VISOR	Pára-sol
WALKWAY	Passadiço, corredor
WARNING G.	Grupo de alarma
WASHER	Arruela
WATER PUMP	Bomba d'água
WEARPLATE	Placa de desgaste
WEDGE	Cunha
WEIGHT	Peso
WELD	Solda
WELDNUT	Porca soldada
WHEEL	Roda
WHITE	Branco
WICK	Mecha, pavio
WINCH	Guincho
WINDOW	Janela
WINDSHIELD	Pára-brisa
WIPER	Limpador
WIRE	Fio
WIRING	Sistema elétrico
WIRING DIAGRAM	Diagrama do sistema elétrico
WITH	Com
WRAPPER	Invólucro, envoltório
WRENCH	Chave
YELLOW	Amarelo
YOKE	Garfo

MAINTENANCE PARTS

DESCRIPTION	PART NUMBER	QTY	WHERE USED	PAGE
AIR INLET AND EXHAUST SYSTEM				
ELEMENT-FILTER	7M-1674	1	LINES GP-AIR	150
FILTER ELEMENT AS-AIR (PRIMARY)	6I-2505	1	AIR CLEANER GP	146
FILTER ELEMENT AS-AIR (SECONDARY)	6I-2506	1	AIR CLEANER GP	146
GASKET-EXHAUST MANIFOLD	129-9452	6	MANIFOLD GP-EXHAUST	151
INDICATOR-AIR FILTER SERVICE	8N-2694	1	INDICATOR AR-AIR CLEANER	148
BASIC ENGINE				
FITTING-GREASE	3B-8485	1	DRIVE GP-FAN	40
	3B-8489	1	BELT TIGHTENER GP	16
		1	DRIVE GP-FAN	42
GASKET	4N-1151	2	PAN GP-OIL	64
PLUG-DRAIN	5F-0304	1	HOUSING GP-FLYWHEEL	52
PLUG-OIL DRAIN	4P-0513	1	PAN GP-OIL	62
SEAL (2.9M)	5P-5678		BASE GP-VALVE COVER & INJ HARN	15
V-BELT-BANDED	9Q-3670	1	DRIVE GP-FAN	40
V-BELT SET (INCLUDES 3 BELTS)	129-2416	1	DRIVE GP-FAN	40
		1	DRIVE GP-FAN	42
COOLING SYSTEM				
CAP	111-7421	2	TANK GP-WATER	138
CAP AS-RADIATOR	031-1119	1	TANK GP-COOLANT	137
CAP-DUST	6V-0852	1	LINES GP-WATER	114
FILTER-WATER	119-3025	1	PUMP GP-WATER	121
FILTER-WATER PUMP	136-3742	1	PUMP GP-WATER	118
HOSE	106-4572	5	RADIATOR GP	128
PLUG-DRAIN	8M-1869	1	LINES GP-WATER	114
REGULATOR-WATER TEMPERATURE (92 DEG C.)	4W-4794	1	LINES GP-WATER	110
V-BELT (A/C COMPRESSOR)	3S-3964	1	FAN AR-VARIABLE	98
V-BELT-BANDED (ENGINE FAN)	9Q-3668	1	FAN AR-VARIABLE	98

MAINTENANCE PARTS

DESCRIPTION	PART NUMBER	QTY	WHERE USED	PAGE
ELECTRICAL AND STARTING SYSTEM				
BATTERY (MAINTENANCE FREE) (12 VOLT)	3T-5760	4	BATTERY & WIRING GP	205
CAP	9L-6770	1	ALTERNATOR GP-CHARGING	190
CIRCUIT BREAKER AS (135 AMP)	171-2213	1	PANEL GP-RELAY	256
CIRCUIT BREAKER AS (15 AMP)	6T-3643	3	PANEL GP-RELAY	256
ELEMENT AS-JACKET WATER HEATER	9G-6655	1	HEATER GP-JACKET WATER	222
ELEMENT AS-JACKET WATER HEATER (240 VOLT/1500 WATT)	6T-3764	1	HEATER GP-JACKET WATER	224
FUSE (10 AMP)	9W-1442	5	PANEL GP-RELAY	256
FUSE (15 AMP)	9W-1441	11	PANEL GP-RELAY	256
FUSE (20 AMP)	9W-1446	3	PANEL GP-RELAY	256
FUSE (5 AMP)	107-0799	1	PANEL GP-RELAY	256
KEY	8H-5306	1	SWITCH GP-DISCONNECT	284
LAMP (12 VOLT)(RED/GREEN)(LED)	165-5655	1	INSTALLATION GP-SECURITY	228
LAMP (24 VOLTS)(65 WATTS)	9X-3463	1	LAMP GP-FLOOD	230
LAMP (24 VOLT)(65 WATT)	9X-3463	1	LAMP GP-FLOOD	231
LAMP (24 VOLT)(65 WATT) (FLOOD)	9X-3463	1	LAMP GP-FLOOD	232
LAMP (28 VOLT)	7N-1996	1	WIRING GP-PLATFORM	288
	7N-9943	1	LAMP GP-DOME	229
LENS AS-FLOODLAMP	158-0248	1	LAMP GP-FLOOD	231
		1	LAMP GP-FLOOD	232
LENS-DOME LAMP	7T-0020	1	LAMP GP-DOME	229
LENS-RED	6T-7058	1	WIRING GP-PLATFORM	288
V-BELT	4N-8218	1	ALTERNATOR GP-CHARGING	193
		1	ALTERNATOR GP-CHARGING	194
		1	ALTERNATOR GP-CHARGING	200
ENGINE ARRANGEMENT				
KEY	5P-8500	1	INSTALLATION AR-ENGINE	14
PADLOCK GP	5P-8502	2	INSTALLATION AR-ENGINE	14
FRAME AND BODY				
CAP	2B-0176	2	GUARD GP-RADIATOR	444
KEY	5P-8500	1	BATTERY BOX GP	374
		1	ENCLOSURE GP-ENGINE	410
		1	GUARD GP-RADIATOR	444
KEY (STARTER)	5P-8500	1	ENCLOSURE GP-HYDRAULIC TANK	414
PADLOCK GP	5P-8502	4	BATTERY BOX GP	374
		2	ENCLOSURE GP-ENGINE	410
		1	ENCLOSURE GP-HYDRAULIC TANK	414
		1	GUARD GP-RADIATOR	444

MAINTENANCE PARTS

DESCRIPTION	PART NUMBER	QTY	WHERE USED	PAGE
FUEL SYSTEM				
CAP AS-FUEL TANK	7X-7700	1	TANK GP-FUEL	184
CAP-DUST	9D-0630	1	ADAPTER GP-FAST FILL FUEL	168
FILTER AS-FUEL	1R-0749	1	FILTER GP-FUEL	174
FILTER AS (WATER SEPARATOR & FUEL)	1R-0769	1	FILTER GP-WATER SEP & FUEL	175
KEY	5P-8500	1	LINES GP-FUEL	178
		1	TANK GP-FUEL	184
PADLOCK GP	5P-8502	1	LINES GP-FUEL	178
		1	TANK GP-FUEL	184
SCREEN-SUMP (FUEL TANK)	5G-4109	1	LINES GP-FUEL	178
STRAINER-FUEL	9P-7121	1	TANK GP-FUEL	184
HYDRAULIC SYSTEM				
CAP-DUST	6V-0852	1	LINES GP-PILOT	588
		1	LINES GP-PILOT	594
		1	LINES GP-PUMP	606
CAP-FILLER	7H-1447	1	TANK & FILTER GP-HYDRAULIC	631
FILTER ELEMENT AS-OIL (HYDRAULIC) (HIGHER PERFORMANCE)	139-1537	1	TANK & FILTER GP-HYDRAULIC	630
FILTER ELEMENT AS-OIL (HYDRAULIC/REVERSE FLOW) (DISPOSABLE)	1R-0735	1	TANK & FILTER GP-HYDRAULIC	630
FILTER ELEMENT AS-OIL (REVERSE FLOW) (FIRE RESISTANT FLUID)	104-6931	1	TANK & FILTER GP-HYDRAULIC	630
FITTING-GREASE	3B-8489	1	CYLINDER GP-BULLDOZER TILT	566
		1	CYLINDER GP-BULLDOZER TILT	568
		2	CYLINDER GP-RIPPER LIFT	570
		2	CYLINDER GP-RIPPER TILT	574
		2	CYLINDER GP-RIPPER TILT	576
		1	CYLINDER GP-TILT	578
		1	CYLINDER GP-TILT	582
GASKET	9H-6454	1	TANK & FILTER GP-HYDRAULIC	631
KEY	5P-8500	1	LINES GP-PUMP	606
LIGHT	126-0810	1	LINES GP-PILOT	600
PADLOCK GP	5P-8502	1	LINES GP-PUMP	606
PLUG-DRAIN	9J-7031	1	TANK & FILTER GP-HYDRAULIC	630
SCREEN	6E-1752	1	TANK & FILTER GP-HYDRAULIC	630
	6E-5066	1	VALVE GP-MANIFOLD & REDUCING	650
STRAINER AS	5D-7927	1	TANK & FILTER GP-HYDRAULIC	630
IMPLEMENTS				
FITTING-GREASE	3B-8489	2	BRACE GP-BULLDOZER	673
		4	FRAME GP-RIPPER	686
FITTING-GREASE (1/8-27 THD)	3B-8489	2	MOUNTING GP-CYLINDER	693

MAINTENANCE PARTS

DESCRIPTION	PART NUMBER	QTY	WHERE USED	PAGE
LUBRICATION SYSTEM				
BREATHER AS	4N-4668	1	BREATHER GP	72
CAP AS-FILLER	4P-9579	1	FILLER GP-ENGINE OIL	74
CAP-DUST	6V-0852	1	FILTER GP-ENGINE OIL	76
	8C-3445	1	FILTER GP-ENGINE OIL	76
CAP (ENGINE OIL RECEIVER)	110-8826	1	OIL CHANGE GP-HIGH SPEED	86
CAP (POWER TRAIN OIL RECEIVER)	110-8318	1	OIL CHANGE GP-HIGH SPEED	86
FILTER AS-ENGINE OIL	1R-0716	1	FILTER GP-ENGINE OIL	76
OPERATOR STATION				
BLADE AS-WIPER (FRONT & REAR)	6V-5851	2	WIPER GP-WINDOW	870
BLADE AS-WIPER (RH & LH DOORS)	6V-5849	2	WIPER GP-WINDOW	870
CAP-AIR CONDITIONER VALVE (7/16 X 20 THD)	2L-1224	1	CONDENSER GP-REFRIGERANT	754
CAP-SEAL (AIR CONDITIONER)(HIGH SIDE)	3E-4052	1	LINES GP-AIR CONDITIONER	782
		1	LINES GP-AIR CONDITIONER	786
		1	LINES GP-AIR CONDITIONER	790
CAP-VENTED	8E-8292	1	BOTTLE GP-WINDOW WASHER	742
FILTER-AIR (CAB FRESH AIR)	6T-0988	1	PRESSURIZER GP-CAB	818
FILTER AS (CAB REC AIR)	6T-5068	1	PRESSURIZER GP-CAB	818
LAMP (24 VOLT)	3E-8825	2	AIR CONDITIONER AR	733
		2	AIR CONDITIONER AR	734
		2	AIR CONDITIONER AR	735
	115-1748	1	INSTRUMENT GP	770
		1	INSTRUMENT GP-CAB	774
LAMP (28 VOLT)	123-9294	4	INSTRUMENT GP	770
		4	INSTRUMENT GP-CAB	774
LIGHT-DASH PANEL	159-9257	1	INSTRUMENT GP	770
		1	INSTRUMENT GP-CAB	774
V-BELT (AIR CONDITIONER COMPRESSOR)	2S-9506	1	COMPRESSOR GP-REFRIGERANT	750
POWER TRAIN				
BREATHER AS (POWER TRAIN)	185-6684	1	LINES GP-POWER TRAIN OIL	324
CAP AS-FILLER (POWER TRAIN OIL)	6N-2985	1	LINES GP-POWER TRAIN OIL	324
CAP-DUST	6V-0852	2	CASE & PARTS GP-PLANETARY	302
		1	FILTER GP-OIL	310
		3	LINES GP-POWER TRAIN OIL	324
		1	VALVE GP-CONTROL	358
		1	VALVE GP-RELIEF	365
	8C-3447	1	LINES GP-POWER TRAIN OIL	324
FILTER ELEMENT AS-OIL (HYDRAULIC)	1R-0778	1	FILTER GP-OIL	310
	132-8876	1	FILTER GP-OIL	309
PLUG-DRAIN	4B-7739	1	TORQUE CONVERTER GP	350
PLUG-O-RING	9S-8008	2	VALVE GP-CONTROL	358
SCREEN AS (POWER TRAIN OIL PUMP INLET)	9P-0214	1	LINES GP-POWER TRAIN OIL	324
SCREEN AS (TORQUE CONVERTER SCAVENGE)	3T-6471	1	LINES GP-POWER TRAIN OIL	324
SCREEN-SUCTION	8S-9130	1	CASE & PARTS GP-PLANETARY	302

MAINTENANCE PARTS

DESCRIPTION	PART NUMBER	QTY	WHERE USED	PAGE
STEERING AND BRAKING SYSTEM				
CAP-DUST	6V-0852	1	FILTER GP-OIL	520
		8	LINES GP-STEERING	524
	8C-3451	1	FILTER GP-OIL	520
FILTER AS-OIL	102-2828	1	FILTER GP-OIL	520
FITTING AS (QUICK DISCONNECT)	6V-3965	1	FILTER GP-OIL	520
UNDERCARRIAGE				
BREATHER	9G-5127	1	LUBRICATION GP-PIVOT SHAFT	490
CAP AS-OIL LEVEL	8E-3410	1	LUBRICATION GP-PIVOT SHAFT	490
FITTING-GREASE	3B-8489	2	EQUALIZER BAR GP	472
		2	EQUALIZER BAR GP	474
PLUG-DRAIN	4T-2069	6	FRAME GP-TELESCOPING RECOIL	476
		6	FRAME GP-TELESCOPING RECOIL	478
		6	FRAME GP-TELESCOPING RECOIL	482

PIÈCES DE RECHANGE

DESCRIPTION	NUMÉRO DE PIECÈS	QTÉ	DOMAINE D'APPLICATION	PAGE
CHÂSSIS ET BENNE				
CADENAS (ASS)	5P-8502	1	CARENAGE - RESERVOIR HYDRAULIQUE (ASS)	414
		2	CARENAGE DE MOTEUR (ASS)	410
		4	COFFRE DE BATTERIE (ASS)	374
		1	PROTÈGE-RADIATEUR (ASS)	444
CHAPEAU	2B-0176	2	PROTÈGE-RADIATEUR (ASS)	444
CLÉ	5P-8500	1	CARENAGE DE MOTEUR (ASS)	410
		1	COFFRE DE BATTERIE (ASS)	374
		1	PROTÈGE-RADIATEUR (ASS)	444
CLÉ (DÉMARREUR)	5P-8500	1	CARENAGE - RESERVOIR HYDRAULIQUE (ASS)	414
CIRCUIT D'ADMISSION D'AIR ET D'ECHAPPEMENT				
ÉLÉMENT DE FILTRE	7M-1674	1	CANALISATIONS D'AIR (ASS)	150
ÉLÉMENT DE FILTRE À AIR (ENS) (PRINCIPAL)	6I-2505	1	FILTRE A AIR (ASS)	146
ÉLÉMENT DE FILTRE À AIR (ENS) (SECONDAIRE)	6I-2506	1	FILTRE A AIR (ASS)	146
INDICATEUR DE COLMATAGE DE FILTRE A AIR	8N-2694	1	INDICATEUR - FILTRE À AIR (VERSION)	148
JOINT PLAT DU COLLECTEUR D'ECHAPPEMENT	129-9452	6	COLLECTEUR D'ÉCHAPPEMENT (ASS)	151
CIRCUIT DE CARBURANT				
BOUCHON DE RÉSERVOIR DE CARBURANT (ENS)	7X-7700	1	RÉSERVOIR DE CARBURANT (ASS)	184
CADENAS (ASS)	5P-8502	1	CANALISATIONS DE CARBURANT (ASS)	178
		1	RÉSERVOIR DE CARBURANT (ASS)	184
CLÉ	5P-8500	1	CANALISATIONS DE CARBURANT (ASS)	178
		1	RÉSERVOIR DE CARBURANT (ASS)	184
FILTRE À CARBURANT	9P-7121	1	RÉSERVOIR DE CARBURANT (ASS)	184
FILTRE A CARBURANT (ENS)	1R-0749	1	FILTRE A CARBURANT (ASS)	174
FILTRE (ENS) (SÉPARATEUR D'EAU ET CARBURANT)	1R-0769	1	FILTRE DE SÉPARATEUR D'EAU ET DE CARBURANT (ASS)	175
PARE-POUSSIERE	9D-0630	1	ADAPTATEUR DE REMPLIS. RAPIDE DE CARBURANT (ASS)	168
TAMIS DE CARTER (RÉSERVOIR DE CARBURANT)	5G-4109	1	CANALISATIONS DE CARBURANT (ASS)	178

PIÈCES DE RECHANGE

DESCRIPTION	NUMÉRO DE PIECÈS	QTÉ	DOMAINE D'APPLICATION	PAGE
CIRCUIT DE DÉMARRAGE ET ÉLECTRIQUE				
AMPOULE (12 VOLTS)(ROUGE/VERT)(DEL)	165-5655	1	MONTAGE-SÉCURITÉ (ASS)	228
AMPOULE (24 VOLTS) (65 WATTS)	9X-3463	1	LAMPE - PHARE (ASS)	230
AMPOULE (24 VOLTS)(65 WATTS)	9X-3463	1	LAMPE - PHARE (ASS)	231
AMPOULE (24 VOLTS)(65 WATTS) (PROJECTEUR)	9X-3463	1	LAMPE - PHARE (ASS)	232
AMPOULE (28 VOLTS)	7N-1996	1	CABLAGE - PLATE-FORME (ASS)	288
	7N-9943	1	PLAFONNIER (ASS)	229
BATTERIE (SANS ENTRETIEN) (12 VOLTS)	3T-5760	4	BATTERIE ET CÂBLAGE	205
CHAPEAU	9L-6770	1	ALTERNATEUR DE CHARGE (ASS)	190
CLÉ	8H-5306	1	ROBINET DE BATTERIE (ASS)	284
COURROIE TRAPEZOIDALE	4N-8218	1	ALTERNATEUR DE CHARGE (ASS)	193
		1	ALTERNATEUR DE CHARGE (ASS)	194
		1	ALTERNATEUR DE CHARGE (ASS)	200
DISJONCTEUR (ENS) (135A)	171-2213	1	RELAIS DU PANNEAU (ASS)	256
DISJONCTEUR (ENS) (15A)	6T-3643	3	RELAIS DU PANNEAU (ASS)	256
ÉLÉMENT DU RÉCHAUFFEUR D'EAU DES CHEMISES (ENS)	9G-6655	1	EAU DES CHEMISES - RECHAUFFEUR (ASS)	222
ÉLÉMENT DU RÉCHAUFFEUR D'EAU DES CHEMISES (ENS) (240 VOLTS/1500 WATTS)	6T-3764	1	EAU DES CHEMISES - RECHAUFFEUR (ASS)	224
FUSIBLE (10A)	9W-1442	5	RELAIS DU PANNEAU (ASS)	256
FUSIBLE (15A)	9W-1441	11	RELAIS DU PANNEAU (ASS)	256
FUSIBLE (20 A)	9W-1446	3	RELAIS DU PANNEAU (ASS)	256
FUSIBLE (5A)	107-0799	1	RELAIS DU PANNEAU (ASS)	256
LENTILLE DE PLAFONNIER	7T-0020	1	PLAFONNIER (ASS)	229
LENTILLE DE PROJECTEUR (ENS)	158-0248	1	LAMPE - PHARE (ASS)	231
		1	LAMPE - PHARE (ASS)	232
LENTILLE ROUGE	6T-7058	1	CABLAGE - PLATE-FORME (ASS)	288
CIRCUIT DE DIRECTION ET DE FREIN				
FILTRE À HUILE (ENS)	102-2828	1	FILTRE A HUILE (ASS)	520
GRAISSEUR (ENS) (DÉBRANCHEMENT RAPIDE)	6V-3965	1	FILTRE A HUILE (ASS)	520
PARE-POUSSIERE	6V-0852	8	CANALISATIONS DE DIRECTION (ASS)	524
		1	FILTRE A HUILE (ASS)	520
	8C-3451	1	FILTRE A HUILE (ASS)	520
CIRCUIT DE GRAISSAGE				
BOUCHON DE GOULOTTE DE REMPLISSAGE (ENS)	4P-9579	1	BOUCHON DE REMPLISSAGE D'HUILE MOTEUR (ASS)	74
CHAPEAU (RECEPTEUR D'HUILE DE TRANSMISSION)	110-8318	1	DISPOSITIF DE VIDANGE RAPIDE D'HUILE (ASS)	86
CHAPEAU (RECEPTEUR D'HUILE MOTEUR)	110-8826	1	DISPOSITIF DE VIDANGE RAPIDE D'HUILE (ASS)	86
FILTRE A HUILE MOTEUR (ENS)	1R-0716	1	FILTRE À HUILE MOTEUR (ASS)	76
PARE-POUSSIERE	6V-0852	1	FILTRE À HUILE MOTEUR (ASS)	76
	8C-3445	1	FILTRE À HUILE MOTEUR (ASS)	76
RENIFLARD (ENS)	4N-4668	1	RENIFLARD (ASS)	72

PIÈCES DE RECHANGE

DESCRIPTION	NUMÉRO DE PIECÈS	QTÉ	DOMAINE D'APPLICATION	PAGE
CIRCUIT DE REFROIDISSEMENT				
BOUCHON DE RADIATEUR (ENS)	031-1119	1	RÉSERVOIR DU LIQUIDE DE REFROIDISSEMENT (ASS)	137
BOUCHON DE VIDANGE	8M-1869	1	CANALISATIONS D'EAU (ASS)	114
CHAPEAU	111-7421	2	RÉSERVOIR D'EAU (ASS)	138
COURROIE TRAPEZOIDALE (COMPRESSEUR DE CLIMATISEUR)	3S-3964	1	VENTILATEUR VARIABLE (VERSION)	98
COURROIE TRAPÉZOÏDALE EN BANDE (VENTILATEUR DE MOTEUR)	9Q-3668	1	VENTILATEUR VARIABLE (VERSION)	98
FILTRE -EAU	119-3025	1	POMPE A EAU (ASS)	121
FILTRE DE POMPE À EAU	136-3742	1	POMPE A EAU (ASS)	118
FLEXIBLE	106-4572	5	RADIATEUR (ASS)	128
PARE-POUSSIERE	6V-0852	1	CANALISATIONS D'EAU (ASS)	114
THERMOSTAT-TEMPÉRATURE D'EAU (92 DEGRÉS C)	4W-4794	1	CANALISATIONS D'EAU (ASS)	110

PIÈCES DE RECHANGE

DESCRIPTION	NUMÉRO DE PIECÈS	QTÉ	DOMAINE D'APPLICATION	PAGE
CIRCUIT HYDRAULIQUE				
BOUCHON DE GOULOTTE DE REMPLISSAGE	7H-1447	1	RÉSERVOIR HYDRAULIQUE ET FILTRE (ASS)	631
BOUCHON DE VIDANGE	9J-7031	1	RÉSERVOIR HYDRAULIQUE ET FILTRE (ASS)	630
CADENAS (ASS)	5P-8502	1	CANALISATIONS DE POMPE (ASS)	606
CLÉ	5P-8500	1	CANALISATIONS DE POMPE (ASS)	606
CREPINE (ENS)	5D-7927	1	RÉSERVOIR HYDRAULIQUE ET FILTRE (ASS)	630
ÉCLAIRAGE	126-0810	1	CANALISATIONS A COMMANDE PILOTE (ASS)	600
ÉCRAN	6E-1752	1	RÉSERVOIR HYDRAULIQUE ET FILTRE (ASS)	630
	6E-5066	1	SOUPAPE RÉDUCTRICE ET COLLECTEUR (ASS)	650
ÉLÉMENT DE FILTRE À HUILE (ENS) (DÉBIT HYDRAULIQUE/RETOUR DE DÉBIT) (JETABLE)	1R-0735	1	RÉSERVOIR HYDRAULIQUE ET FILTRE (ASS)	630
ÉLÉMENT DE FILTRE À HUILE (ENS) (HYDRAULIQUE) (HAUTES PERFORMANCES)	139-1537	1	RÉSERVOIR HYDRAULIQUE ET FILTRE (ASS)	630
ÉLÉMENT DE FILTRE À HUILE (ENS) (RETOUR DE DÉBIT) (LIQUIDE RÉSISTANT AU FEU)	104-6931	1	RÉSERVOIR HYDRAULIQUE ET FILTRE (ASS)	630
GRAISSEUR	3B-8489	2	VERIN DE LEVAGE DE RIPPER (ASS)	570
		1	VÉRIN D'INCLINAISON (ASS)	578
		1	VÉRIN D'INCLINAISON (ASS)	582
		1	VÉRIN D'INCLINAISON DE BULLDOZER (ASS)	566
		1	VÉRIN D'INCLINAISON DE BULLDOZER (ASS)	568
		2	VERIN D'INCLINAISON DU RIPPER (ASS)	574
		2	VERIN D'INCLINAISON DU RIPPER (ASS)	576
JOINT PLAT	9H-6454	1	RÉSERVOIR HYDRAULIQUE ET FILTRE (ASS)	631
PARE-POUSSIERE	6V-0852	1	CANALISATIONS A COMMANDE PILOTE (ASS)	588
		1	CANALISATIONS A COMMANDE PILOTE (ASS)	594
		1	CANALISATIONS DE POMPE (ASS)	606
ÉQUIPEMENTS				
GRAISSEUR	3B-8489	4	BATI DE RIPPER (ASS)	686
		2	TIRANT DE BULLDOZER (ASS)	673
GRAISSEUR (FILET 1/8-27)	3B-8489	2	MONTAGE DE VÉRIN (ASS)	693

PIÈCES DE RECHANGE

DESCRIPTION	NUMÉRO DE PIECÈS	QTÉ	DOMAINE D'APPLICATION	PAGE
MOTEUR STANDARD				
BOUCHON DE VIDANGE	5F-0304	1	CARTER DE VOLANT (ASS)	52
BOUCHON DE VIDANGE D'HUILE	4P-0513	1	HUILE MOTEUR - CARTER (ASS)	62
BOURRELET D'ÉTANCHÉITÉ (2,9M)	5P-5678		SUPPORT DE CACHE-SOUPAPE ET FAISC. DE CABL. D'IN.	15
COURROIE TRAPÉZOÏDALE EN BANDE	9Q-3670	1	ENTRAÎNEMENT DE VENTILATEUR (ASS)	40
GRAISSEUR	3B-8485	1	ENTRAÎNEMENT DE VENTILATEUR (ASS)	40
	3B-8489	1	ENTRAÎNEMENT DE VENTILATEUR (ASS)	42
		1	TENDEUR DE COURROIE (ASS)	16
JEU DE COURROIES TRAPEZOIDALES (COMPREND 3 COURROIES)	129-2416	1	ENTRAÎNEMENT DE VENTILATEUR (ASS)	40
		1	ENTRAÎNEMENT DE VENTILATEUR (ASS)	42
JOINT PLAT	4N-1151	2	HUILE MOTEUR - CARTER (ASS)	64
POSTE DE CONDUITE				
AMPOULE (24 VOLTS)	3E-8825	2	CLIMATISEUR (VERSION)	733
		2	CLIMATISEUR (VERSION)	734
		2	CLIMATISEUR (VERSION)	735
	115-1748	1	INSTRUMENTS DE LA CABINE (ASS)	774
		1	TABLEAU DE BORD (ASS)	770
AMPOULE (28 VOLTS)	123-9294	4	INSTRUMENTS DE LA CABINE (ASS)	774
		4	TABLEAU DE BORD (ASS)	770
BALAI D'ESSUIE-GLACE (ENS) (AVANT ET ARRIERE)	6V-5851	2	ESSUIE-GLACE (ASS)	870
BALAI D'ESSUIE-GLACE (ENS) (PORTIERES DROITE ET GAUCHE)	6V-5849	2	ESSUIE-GLACE (ASS)	870
BOUCHON À ÉVENT	8E-8292	1	RÉSERVOIR DE LAVE-GLACE (ASS)	742
BOUCHON D'ÉTANCHÉITÉ (CLIMATISEUR)(CÔTÉ ÉLEVÉ)	3E-4052	1	CANALISATIONS DE CLIMATISEUR (ASS)	782
		1	CANALISATIONS DE CLIMATISEUR (ASS)	786
		1	CANALISATIONS DE CLIMATISEUR (ASS)	790
CHAPEAU DE SOUPAPE DE CLIMATISEUR (FILET 7/16 X 20)	2L-1224	1	CONDENSEUR DE RÉFRIGÉRANT	754
COURROIE TRAPEZOIDALE (COMPRESSEUR DE CLIMATISEUR)	2S-9506	1	COMPRESSEUR DE REFRIGERANT (ASS)	750
ECLAIRAGE TABLEAU DE BORD	159-9257	1	INSTRUMENTS DE LA CABINE (ASS)	774
		1	TABLEAU DE BORD (ASS)	770
FILTRE À AIR (AIR FRAIS DE CABINE)	6T-0988	1	SURPRESSEUR (ASS)	818
FILTRE (ENS) (RECIRCULATION D'AIR DE CABINE)	6T-5068	1	SURPRESSEUR (ASS)	818

PIÈCES DE RECHANGE

DESCRIPTION	NUMÉRO DE PIECÈS	QTÉ	DOMAINE D'APPLICATION	PAGE
TRAIN DE ROULEMENT				
BOUCHON DE CONTROLE DE NIVEAU D'HUILE (ENS)	8E-3410	1	GRAISSAGE DE LA TRAVERSE-PIVOT	490
BOUCHON DE VIDANGE	4T-2069	6	CARTER TELESCOPIQUE DE MECANISME AMORTISSEUR	476
		6	CARTER TELESCOPIQUE DE MECANISME AMORTISSEUR	478
		6	CARTER TELESCOPIQUE DE MECANISME AMORTISSEUR	482
GRAISSEUR	3B-8489	2	BALANCIER DE SUSPENSION (ASS)	472
		2	BALANCIER DE SUSPENSION (ASS)	474
RENIFLARD	9G-5127	1	GRAISSAGE DE LA TRAVERSE-PIVOT	490
TRANSMISSION				
BOUCHON DE GOULOTTE DE REMPLISSAGE (ENS) (HUILE DE TRANSMISSION)	6N-2985	1	CANALISATIONS D'HUILE DE TRANSMISSION (ASS)	324
BOUCHON DE VIDANGE	4B-7739	1	CONVERTISSEUR DE COUPLE (ASS)	350
BOUCHON-JOINT TORIQUE	9S-8008	2	DISTRIBUTEUR (ASS)	358
ÉCRAN (ENS) (ADMISSION DE POMPE À HUILE DE TRANSMISSION)	9P-0214	1	CANALISATIONS D'HUILE DE TRANSMISSION (ASS)	324
ÉCRAN (ENS) (GAVAGE DU CONVERTISSEUR DE COUPLE)	3T-6471	1	CANALISATIONS D'HUILE DE TRANSMISSION (ASS)	324
ÉLÉMENT DE FILTRE À HUILE (ENS) (HYDRAULIQUE)	1R-0778	1	FILTRE A HUILE (ASS)	310
	132-8876	1	FILTRE A HUILE (ASS)	309
PARE-POUSSIERE	6V-0852	3	CANALISATIONS D'HUILE DE TRANSMISSION (ASS)	324
		1	CLAPET DE DECHARGE (ASS)	365
		1	DISTRIBUTEUR (ASS)	358
		1	FILTRE A HUILE (ASS)	310
		2	TRAINS PLANÉTAIRES - CARTER ET PIÈCES	302
	8C-3447	1	CANALISATIONS D'HUILE DE TRANSMISSION (ASS)	324
RENIFLARD (ENS) (TRANSMISSION)	185-6684	1	CANALISATIONS D'HUILE DE TRANSMISSION (ASS)	324
TAMIS D'ASPIRATION	8S-9130	1	TRAINS PLANÉTAIRES - CARTER ET PIÈCES	302
VERSION DE MOTEUR				
CADENAS (ASS)	5P-8502	2	MONTAGE DE MOTEUR (VERSION)	14
CLÉ	5P-8500	1	MONTAGE DE MOTEUR (VERSION)	14

PIEZAS DE MANTENIMIENTO

DESCRIPCION	NUMERO DE PIEZA	CANT	SE UTILIZA EN	PAGINA
BASTIDOR Y CAJA				
CANDADO (GR)	5P-8502	4	CAJA DE LA BATERÍA (GR)	374
		2	COMPARTIMIENTO DEL MOTOR (GR)	410
		1	COMPARTIMIENTO DEL TANQUE HIDRÁULICO (GR)	414
		1	PROTECTOR DEL RADIADOR (GR)	444
LLAVE	5P-8500	1	CAJA DE LA BATERÍA (GR)	374
		1	COMPARTIMIENTO DEL MOTOR (GR)	410
		1	PROTECTOR DEL RADIADOR (GR)	444
LLAVE (MOTOR DE ARRANQUE)	5P-8500	1	COMPARTIMIENTO DEL TANQUE HIDRÁULICO (GR)	414
TAPA	2B-0176	2	PROTECTOR DEL RADIADOR (GR)	444
CABINA DEL OPERADOR				
CORREA TRAPEZOIDAL (COMPRESOR DE AIRE ACONDICIONADO)	2S-9506	1	COMPRESOR DE REFRIGERANTE (GR)	750
FILTRO (CONJ) (AIRE RECIRCULADO DE LA CABINA)	6T-5068	1	PRESURIZADOR (GR)	818
FILTRO DE AIRE (AIRE FRESCO PARA LA CABINA)	6T-0988	1	PRESURIZADOR (GR)	818
HOJA DE LIMPIAPARABRISAS (CONJ) (DELANTERO Y TRASERO)	6V-5851	2	LIMPIAPARABRISAS DE LA VENTANA (GR)	870
HOJA DE LIMPIAPARABRISAS (CONJ) (PUERTAS DE LADOS DERECHO E IZQ.)	6V-5849	2	LIMPIAPARABRISAS DE LA VENTANA (GR)	870
LÁMPARA (24 VOLTIOS)	3E-8825	2	ACONDICIONADOR DE AIRE (CONFIG)	733
		2	ACONDICIONADOR DE AIRE (CONFIG)	734
		2	ACONDICIONADOR DE AIRE (CONFIG)	735
	115-1748	1	INSTRUMENTOS DE CABINA (GR)	774
		1	INSTRUMENTOS (GR)	770
LÁMPARA (28 VOLTIOS)	123-9294	4	INSTRUMENTOS DE CABINA (GR)	774
		4	INSTRUMENTOS (GR)	770
LUZ DE TABLERO DE INSTRUMENTOS	159-9257	1	INSTRUMENTOS DE CABINA (GR)	774
		1	INSTRUMENTOS (GR)	770
TAPA CON RESPIRADERO	8E-8292	1	RECIPIENTE DEL LAVAPARABRISAS	742
TAPA DE SELLO (ACONDICIONADOR DE AIRE)(LADO ALTO)	3E-4052	1	TUBERÍAS DE ACONDICIONADOR DE AIRE (GR)	782
		1	TUBERÍAS DE ACONDICIONADOR DE AIRE (GR)	786
		1	TUBERÍAS DE ACONDICIONADOR DE AIRE (GR)	790
TAPA DE VÁLVULA DEL ACONDICIONADOR DE AIRE (ROSCA 7/16 X 20)	2L-1224	1	CONDENSADOR DE REFRIGERANTE (GR)	754
CONFIGURACIÓN DE MOTOR				
CANDADO (GR)	5P-8502	2	CONFIGURACIÓN DE INSTALACIÓN DEL MOTOR	14
LLAVE	5P-8500	1	CONFIGURACIÓN DE INSTALACIÓN DEL MOTOR	14

PIEZAS DE MANTENIMIENTO

DESCRIPCION	NUMERO DE PIEZA	CANT	SE UTILIZA EN	PAGINA
IMPLEMENTOS				
CONEXIÓN DE ENGRASE	3B-8489	4	BASTIDOR DEL DESGARRADOR (GR)	686
		2	SOPORTE DE LA HOJA TOPADORA	673
CONEXIÓN DE ENGRASE (ROSCA DE 1/8-27)	3B-8489	2	MONTAJE DE CILINDRO (GR)	693
MOTOR BÁSICO				
CONEXIÓN DE ENGRASE	3B-8485	1	IMPULSOR DE VENTILADOR (GR)	40
	3B-8489	1	AJUSTADOR DE CORREA (GR)	16
		1	IMPULSOR DE VENTILADOR (GR)	42
EMPAQUETADURA	4N-1151	2	CÁRTER - COLECTOR DEL (GR)	64
JUEGO DE CORREAS TRAPEZOIDALES (INCLUYE 3 CORREAS)	129-2416	1	IMPULSOR DE VENTILADOR (GR)	40
		1	IMPULSOR DE VENTILADOR (GR)	42
SELLO (2,9M)	5P-5678		BASE DE LA TAPA DE VÁLVULAS Y MAZO DE CABLES DE INYECTOR (GR)	15
TAPÓN DE DRENAJE	5F-0304	1	VOLANTE - CAJA DE (GR)	52
TAPON DE DRENAJE DE ACEITE	4P-0513	1	CÁRTER - COLECTOR DEL (GR)	62
VENDADO CON CINTURÓN TRAPECIAL	9Q-3670	1	IMPULSOR DE VENTILADOR (GR)	40
SISTEMA DE ADMISIÓN Y ESCAPE DE AIRE				
ELEMENTO DE FILTRO	7M-1674	1	AIRE - TUBERÍAS DE (GR)	150
ELEMENTO DEL FILTRO DE AIRE (CONJ) (PRIMARIO)	6I-2505	1	FILTRO DE AIRE (GR)	146
ELEMENTO DEL FILTRO DE AIRE (CONJ) (SECUNDARIO)	6I-2506	1	FILTRO DE AIRE (GR)	146
EMPAQUETADURA DE MULTIPLE DE ESCAPE	129-9452	6	MÚLTIPLE DE ESCAPE (GR)	151
INDICADOR DE SERVICIO DEL FILTRO DE AIRE	8N-2694	1	INDICADOR DEL FILTRO DE AIRE (CONFIG)	148
SISTEMA DE COMBUSTIBLE				
CANDADO (GR)	5P-8502	1	COMBUSTIBLE - TANQUE DE (GR)	184
		1	TUBERÍAS DE COMBUSTIBLE (GR)	178
COLADOR DE COMBUSTIBLE	9P-7121	1	COMBUSTIBLE - TANQUE DE (GR)	184
FILTRO (CONJ) (SEPARADOR DE AGUA Y COMBUSTIBLE)	1R-0769	1	FILTRO DE COMBUSTIBLE Y SEPARADOR DE AGUA (GR)	175
FILTRO DE COMBUSTIBLE (CONJ)	1R-0749	1	FILTRO DE COMBUSTIBLE (GR)	174
LLAVE	5P-8500	1	COMBUSTIBLE - TANQUE DE (GR)	184
		1	TUBERÍAS DE COMBUSTIBLE (GR)	178
REJILLA DE SUMIDERO (TANQUE DE COMBUSTIBLE)	5G-4109	1	TUBERÍAS DE COMBUSTIBLE (GR)	178
TAPA CONTRA EL POLVO	9D-0630	1	ADAPTADOR DE LLENADO RÁPIDO DE COMBUSTIBLE (GR)	168
TAPA DEL TANQUE DE COMBUSTIBLE (CONJ)	7X-7700	1	COMBUSTIBLE - TANQUE DE (GR)	184

PIEZAS DE MANTENIMIENTO

DESCRIPCION	NUMERO DE PIEZA	CANT	SE UTILIZA EN	PAGINA
SISTEMA DE ENFRIAMIENTO				
CORREA TRAPEZOIDAL (COMPRESOR DEL ACONDICIONADOR DE AIRE)	3S-3964	1	VENTILADOR VARIABLE (CONFIG)	98
FILTRO DE AGUA	119-3025	1	BOMBA DE AGUA (GR)	121
FILTRO DE LA BOMBA DE AGUA	136-3742	1	BOMBA DE AGUA (GR)	118
MANGUERA	106-4572	5	RADIADOR (GR)	128
REGULADOR DE TEMPERATURA DEL AGUA (92 GR C)	4W-4794	1	TUBERÍAS DEL AGUA (GR)	110
TAPA	111-7421	2	TANQUE DEL AGUA (GR)	138
TAPA CONTRA EL POLVO	6V-0852	1	TUBERÍAS DEL AGUA (GR)	114
TAPA DE RADIADOR (CONJ)	031-1119	1	TANQUE DE REFRIGERANTE (GR)	137
TAPÓN DE DRENAJE	8M-1869	1	TUBERÍAS DEL AGUA (GR)	114
VENDADO CON CINTURÓN TRAPECIAL (VENTILADOR DE MOTOR)	9Q-3668	1	VENTILADOR VARIABLE (CONFIG)	98
SISTEMA DE FRENOS Y DIRECCIÓN				
CONEXION (CONJ) (DESCONEXION RAPIDA)	6V-3965	1	FILTRO DE ACEITE (GR)	520
FILTRO DE ACEITE (CONJ)	102-2828	1	FILTRO DE ACEITE (GR)	520
TAPA CONTRA EL POLVO	6V-0852	1	FILTRO DE ACEITE (GR)	520
		8	TUBERÍAS DE DIRECCIÓN (GR)	524
	8C-3451	1	FILTRO DE ACEITE (GR)	520
SISTEMA DE LUBRICACIÓN				
FILTRO DE ACEITE DEL MOTOR (CONJ)	1R-0716	1	FILTRO DE ACEITE DEL MOTOR (GR)	76
RESPIRADERO (CONJ)	4N-4668	1	RESPIRADERO (GR)	72
TAPA CONTRA EL POLVO	6V-0852	1	FILTRO DE ACEITE DEL MOTOR (GR)	76
	8C-3445	1	FILTRO DE ACEITE DEL MOTOR (GR)	76
TAPA DE LLENADO (CONJ)	4P-9579	1	TUBO DE LLENADO DE ACEITE (GR)	74
TAPA (RECEPTOR DE ACEITE DE MOTOR)	110-8826	1	CAMBIO RÁPIDO DE ACEITE (GR)	86
TAPA (RECEPTOR DE ACEITE DE TREN DE FUERZA)	110-8318	1	CAMBIO RÁPIDO DE ACEITE (GR)	86

PIEZAS DE MANTENIMIENTO

DESCRIPCION	NUMERO DE PIEZA	CANT	SE UTILIZA EN	PAGINA
SISTEMA ELÉCTRICO Y DE ARRANQUE				
BATERÍA (LIBRE DE MANTENIMIENTO)(12 VOLTIOS)	3T-5760	4	BATERÍA Y CABLES (GR)	205
CORREA TRAPEZOIDAL	4N-8218	1	CARGA - ALTERNADOR DE (GR)	193
		1	CARGA - ALTERNADOR DE (GR)	194
		1	CARGA - ALTERNADOR DE (GR)	200
DISYUNTOR (CONJ) (135 AMP)	171-2213	1	RELÉ DEL TABLERO (GR)	256
DISYUNTOR (CONJ) (15 A)	6T-3643	3	RELÉ DEL TABLERO (GR)	256
ELEMENTO DEL CALENTADOR DEL AGUA DE LAS CAMISAS	9G-6655	1	AGUA DE LAS CAMISAS - CALENTADOR DEL (GR)	222
ELEMENTO DEL CALENTADOR DEL AGUA DE LAS CAMISAS (240 VOLTIOS/1500 VATIOS)	6T-3764	1	AGUA DE LAS CAMISAS - CALENTADOR DEL (GR)	224
FUSIBLE (10 A)	9W-1442	5	RELÉ DEL TABLERO (GR)	256
FUSIBLE (15 A)	9W-1441	11	RELÉ DEL TABLERO (GR)	256
FUSIBLE (20 A)	9W-1446	3	RELÉ DEL TABLERO (GR)	256
FUSIBLE (5 AMP)	107-0799	1	RELÉ DEL TABLERO (GR)	256
LÁMPARA (12 VOLTIOS)(ROJO/VERDE)(DIODO LUMIN.)	165-5655	1	INSTALACION DE SEGURIDAD (GR)	228
LÁMPARA (24 VOLTIOS)(65 VATIOS)	9X-3463	1	REFLECTOR (GR)	231
LÁMPARA ((24 VOLTIOS)(65 VATIOS))	9X-3463	1	REFLECTOR (GR)	230
LÁMPARA (24 VOLTIOS)(65 VATIOS) (REFLECTOR)	9X-3463	1	REFLECTOR (GR)	232
LÁMPARA (28 VOLTIOS)	7N-1996	1	CABLES DE LA PLATAFORMA (GR)	288
	7N-9943	1	LÁMPARA DEL TECHO (GR)	229
LENTE DE LAMPARA DEL TECHO	7T-0020	1	LÁMPARA DEL TECHO (GR)	229
LENTE DE REFLECTOR (CONJ)	158-0248	1	REFLECTOR (GR)	231
		1	REFLECTOR (GR)	232
LENTE-ROJO	6T-7058	1	CABLES DE LA PLATAFORMA (GR)	288
LLAVE	8H-5306	1	DISYUNTOR (GR)	284
TAPA	9L-6770	1	CARGA - ALTERNADOR DE (GR)	190

PIEZAS DE MANTENIMIENTO

DESCRIPCION	NUMERO DE PIEZA	CANT	SE UTILIZA EN	PAGINA
SISTEMA HIDRÁULICO				
CANDADO (GR)	5P-8502	1	BOMBA - TUBERÍAS DE (GR)	606
COLADOR (CONJ)	5D-7927	1	TANQUE Y FILTRO HIDRÁULICOS (GR)	630
CONEXIÓN DE ENGRASE	3B-8489	1	CILINDRO DE INCLINACIÓN DE LA HOJA TOPADORA (GR)	566
		1	CILINDRO DE INCLINACIÓN DE LA HOJA TOPADORA (GR)	568
		2	CILINDRO DE INCLINACIÓN DEL DESGARRADOR (GR)	574
		2	CILINDRO DE INCLINACIÓN DEL DESGARRADOR (GR)	576
		2	CILINDRO DE LEVANTAMIENTO DEL DESGARRADOR (GR)	570
		1	INCLINACIÓN HORIZONTAL - CILINDRO DE (GR)	578
		1	INCLINACIÓN HORIZONTAL - CILINDRO DE (GR)	582
ELEMENTO DE FILTRO DE ACEITE (CONJ) (FLUJO INVERSO) (FLUÍDO RESISTENTE AL FUEGO)	104-6931	1	TANQUE Y FILTRO HIDRÁULICOS (GR)	630
ELEMENTO DE FILTRO DE ACEITE (CONJ) (HIDRAULICO) (RENDIMIENTO SUPERIOR)	139-1537	1	TANQUE Y FILTRO HIDRÁULICOS (GR)	630
ELEMENTO DE FILTRO DE ACEITE (CONJ) (HIDRAULICO/FLUJO INVERSO) (DESECHABLE)	1R-0735	1	TANQUE Y FILTRO HIDRÁULICOS (GR)	630
EMPAQUETADURA	9H-6454	1	TANQUE Y FILTRO HIDRÁULICOS (GR)	631
LLAVE	5P-8500	1	BOMBA - TUBERÍAS DE (GR)	606
LUZ	126-0810	1	TUBERÍAS CON SERVOMANDO (GR)	600
REJILLA	6E-1752	1	TANQUE Y FILTRO HIDRÁULICOS (GR)	630
	6E-5066	1	VALVULA DISTRIBUIDORA Y REDUCTORA (GR)	650
TAPA CONTRA EL POLVO	6V-0852	1	BOMBA - TUBERÍAS DE (GR)	606
		1	TUBERÍAS CON SERVOMANDO (GR)	588
		1	TUBERÍAS CON SERVOMANDO (GR)	594
TAPA DEL TUBO DE LLENADO	7H-1447	1	TANQUE Y FILTRO HIDRÁULICOS (GR)	631
TAPÓN DE DRENAJE	9J-7031	1	TANQUE Y FILTRO HIDRÁULICOS (GR)	630

PIEZAS DE MANTENIMIENTO

DESCRIPCION	NUMERO DE PIEZA	CANT	SE UTILIZA EN	PAGINA
TREN DE FUERZA				
ELEMENTO DE FILTRO DE ACEITE (CONJ) (HIDRAULICO)	1R-0778	1	FILTRO DE ACEITE (GR)	310
	132-8876	1	FILTRO DE ACEITE (GR)	309
PANTALLA (CONJ) (BARRIDO DE CONVERTIDOR DE PAR)	3T-6471	1	TUBERÍAS DE ACEITE DEL TREN DE FUERZA (GR)	324
PANTALLA (CONJ) (ENTRADA DE BOMBA DE ACEITE DE TREN DE FUERZA)	9P-0214	1	TUBERÍAS DE ACEITE DEL TREN DE FUERZA (GR)	324
REJILLA DE SUCCIÓN	8S-9130	1	CAJA Y PIEZAS DE LOS PLANETARIOS	302
RESPIRADERO (CONJ) (TREN DE FUERZA)	185-6684	1	TUBERÍAS DE ACEITE DEL TREN DE FUERZA (GR)	324
TAPA CONTRA EL POLVO	6V-0852	2	CAJA Y PIEZAS DE LOS PLANETARIOS	302
		1	FILTRO DE ACEITE (GR)	310
		3	TUBERÍAS DE ACEITE DEL TREN DE FUERZA (GR)	324
		1	VÁLVULA DE ALIVIO (GR)	365
		1	VÁLVULA DE CONTROL (GR)	358
	8C-3447	1	TUBERÍAS DE ACEITE DEL TREN DE FUERZA (GR)	324
TAPA DE LLENADO (CONJ) (ACEITE DEL TREN DE FUERZA)	6N-2985	1	TUBERÍAS DE ACEITE DEL TREN DE FUERZA (GR)	324
TAPÓN	9S-8008	2	VÁLVULA DE CONTROL (GR)	358
TAPÓN DE DRENAJE	4B-7739	1	CONVERTIDOR DE PAR (GR)	350
TREN DE RODAJE				
CONEXIÓN DE ENGRASE	3B-8489	2	BARRA COMPENSADORA (GR)	472
		2	BARRA COMPENSADORA (GR)	474
RESPIRADERO	9G-5127	1	LUBRICACIÓN DE EJE PIVOTE (GR)	490
TAPA DE NIVEL DE ACEITE (CONJ)	8E-3410	1	LUBRICACIÓN DE EJE PIVOTE (GR)	490
TAPÓN DE DRENAJE	4T-2069	6	BASTIDOR TELESCÓPICO DEL RESORTE TENSOR (GR)	476
		6	BASTIDOR TELESCÓPICO DEL RESORTE TENSOR (GR)	478
		6	BASTIDOR TELESCÓPICO DEL RESORTE TENSOR (GR)	482

PEÇAS DE MANUTENÇÃO

DESCRIÇÃO	NÚMERO DE PEÇA	QUANT	UTILIZADA EM	PÁGINA
ACESSÓRIOS				
GRAXEIRA	3B-8489	4	ARMAÇÃO DO RIPER	686
		2	TIRANTE DA LÂMINA	673
GRAXEIRA (ROSCA 1/8-27 POL)	3B-8489	2	MONTAGEM - CILINDRO	693
CHASSI E CARROCERIA				
CADEADO	5P-8502	4	CAIXA DA BATERIA	374
		1	COBERTURA - TANQUE HIDRÁULICO	414
		2	COBERTURA DO MOTOR	410
		1	PROTETOR - RADIADOR	444
CHAVE	5P-8500	1	CAIXA DA BATERIA	374
		1	COBERTURA DO MOTOR	410
		1	PROTETOR - RADIADOR	444
CHAVE (MOTOR DE PARTIDA)	5P-8500	1	COBERTURA - TANQUE HIDRÁULICO	414
TAMPA	2B-0176	2	PROTETOR - RADIADOR	444
MATERIAL RODANTE				
BUJÃO DO DRENO	4T-2069	6	ARMAÇÃO TELESCÓPICA DA MOLA TENSORA	476
		6	ARMAÇÃO TELESCÓPICA DA MOLA TENSORA	478
		6	ARMAÇÃO TELESCÓPICA DA MOLA TENSORA	482
GRAXEIRA	3B-8489	2	BARRA EQUALIZADORA	472
		2	BARRA EQUALIZADORA	474
RESPIRO	9G-5127	1	EIXO PIVÔ - LUBRIFICAÇÃO	490
TAMPA - NÍVEL DO ÓLEO	8E-3410	1	EIXO PIVÔ - LUBRIFICAÇÃO	490
MOTOR - ARRANJO				
CADEADO	5P-8502	2	GRUPO DE INSTALAÇÃO - MOTOR	14
CHAVE	5P-8500	1	GRUPO DE INSTALAÇÃO - MOTOR	14
MOTOR BÁSICO				
BUJÃO - DRENAGEM DO ÓLEO	4P-0513	1	CÁRTER DO ÓLEO DO MOTOR	62
BUJÃO DO DRENO	5F-0304	1	CAIXA DO VOLANTE DO MOTOR	52
GRAXEIRA	3B-8485	1	COMANDO DO VENTILADOR	40
	3B-8489	1	AJUSTADOR DE CORREIAS	16
		1	COMANDO DO VENTILADOR	42
JOGO DE CORREIAS COM TIRAS	9Q-3670	1	COMANDO DO VENTILADOR	40
JOGO DE CORREIAS EM V (INCLUI 3 CORREIAS)	129-2416	1	COMANDO DO VENTILADOR	40
		1	COMANDO DO VENTILADOR	42
JUNTA	4N-1151	2	CÁRTER DO ÓLEO DO MOTOR	64
RETENTOR (2,9M)	5P-5678		GR. BÁSICO - TAMPA DAS VÁLVULAS E CHICOTE DE INJEÇÃO	15

PEÇAS DE MANUTENÇÃO

DESCRIÇÃO	NÚMERO DE PEÇA	QUANT	UTILIZADA EM	PÁGINA
POSTO DO OPERADOR				
CORREIA EM V (COMPRESSOR DO AR CONDICIONADO)	2S-9506	1	COMPRESSOR DE REFRIGERANTE	750
FILTRO - AR (CABINE - AR LIVRE)	6T-0988	1	PRESSURIZADOR	818
FILTRO (AR DE RECIRCULAÇÃO DA CABINE)	6T-5068	1	PRESSURIZADOR	818
LÂMINA DO LIMPADOR DE PÁRA-BRISA (DIANTEIRO E TRASEIRO)	6V-5851	2	LIMPADOR DO VIDRO	870
LÂMINA DO LIMPADOR DE PÁRA-BRISA (PORTAS-LADO DIREITO & LADO ESQUERDO)	6V-5849	2	LIMPADOR DO VIDRO	870
LÂMPADA (24 V)	3E-8825	2	CONDICIONADOR DE AR	733
		2	CONDICIONADOR DE AR	734
		2	CONDICIONADOR DE AR	735
	115-1748	1	INSTRUMENTOS	770
		1	INSTRUMENTOS-CABINE	774
LÂMPADA (28 V)	123-9294	4	INSTRUMENTOS	770
		4	INSTRUMENTOS-CABINE	774
LUZ DO PAINEL DE INSTRUMENTOS	159-9257	1	INSTRUMENTOS	770
		1	INSTRUMENTOS-CABINE	774
TAMPA - CONDICIONADOR DE AR (ROSCA DE 7/16 X 20)	2L-1224	1	CONDENSADOR DE REFRIGERANTE	754
TAMPA - RETENTOR (CONDICIONADOR DE AR)(ALTO LADO)	3E-4052	1	TUBOS - AR CONDICIONADO	782
		1	TUBOS - AR CONDICIONADO	786
		1	TUBOS - AR CONDICIONADO	790
TAMPA COM RESPIRO	8E-8292	1	FRASCO - LAVADOR DE JANELA	742
SISTEMA DA ADMISSÃO DE AR E DE ESCAPE				
ELEMENTO - FILTRANTE	7M-1674	1	TUBOS - AR	150
ELEMENTO DO FILTRO DE AR (PRIMÁRIO)	6I-2505	1	PURIFICADOR DE AR	146
ELEMENTO DO FILTRO DE AR (SECUNDÁRIO)	6I-2506	1	PURIFICADOR DE AR	146
INDICADOR - LIMPEZA DO FILTRO DE AR	8N-2694	1	INDICADOR - PURIFICADOR DE AR	148
JUNTA - COLETOR DE ESCAPE	129-9452	6	COLETOR DE ESCAPE	151
SISTEMA DE ARREFECIMENTO				
BUJÃO DO DRENO	8M-1869	1	TUBOS - ÁGUA	114
CORREIA EM V (COMPRESSOR DO CONDICIONADOR DE AR)	3S-3964	1	VENTILADOR - VARIÁVEL	98
FILTRO - ÁGUA	119-3025	1	BOMBA DE ÁGUA	121
FILTRO - BOMBA DE ÁGUA	136-3742	1	BOMBA DE ÁGUA	118
JOGO DE CORREIAS COM TIRAS (VENTILADOR DO MOTOR)	9Q-3668	1	VENTILADOR - VARIÁVEL	98
MANGUEIRA	106-4572	5	RADIADOR	128
REGULADOR DE TEMPERATURA DA ÁGUA (92 GRAUS CENTÍGRADOS)	4W-4794	1	TUBOS - ÁGUA	110
TAMPA	111-7421	2	TANQUE DE ÁGUA	138
TAMPA - RADIADOR	031-1119	1	TANQUE - LÍQUIDO ARREFECEDOR	137
TAMPA CONTRA POEIRA	6V-0852	1	TUBOS - ÁGUA	114

PEÇAS DE MANUTENÇÃO

DESCRIÇÃO	NÚMERO DE PEÇA	QUANT	UTILIZADA EM	PÁGINA
SISTEMA DE COMBUSTÍVEL				
CADEADO	5P-8502	1	TANQUE DE COMBUSTÍVEL	184
		1	TUBOS - COMBUSTÍVEL	178
CHAVE	5P-8500	1	TANQUE DE COMBUSTÍVEL	184
		1	TUBOS - COMBUSTÍVEL	178
FILTRO - COMBUSTÍVEL	1R-0749	1	FILTRO - COMBUSTÍVEL	174
	9P-7121	1	TANQUE DE COMBUSTÍVEL	184
FILTRO (SEPARADOR DE ÁGUA E COMBUSTÍVEL)	1R-0769	1	FILTRO DE COMBUSTÍVEL E SEPARADOR DE ÁGUA	175
TAMPA CONTRA POEIRA	9D-0630	1	ADAPTADOR - ABASTECIMENTO RÁPIDO DE COMBUSTÍVEL	168
TAMPA DO TANQUE DE COMBUSTÍVEL	7X-7700	1	TANQUE DE COMBUSTÍVEL	184
TELA - RESERVATÓRIO (TANQUE DE COMBUSTÍVEL)	5G-4109	1	TUBOS - COMBUSTÍVEL	178
SISTEMA DE DIREÇÃO E DE FREIO				
CONEXÃO (DESCONEXÃO RÁPIDA)	6V-3965	1	FILTRO - ÓLEO	520
FILTRO - ÓLEO	102-2828	1	FILTRO - ÓLEO	520
TAMPA CONTRA POEIRA	6V-0852	1	FILTRO - ÓLEO	520
		8	TUBOS - DIREÇÃO	524
	8C-3451	1	FILTRO - ÓLEO	520
SISTEMA DE LUBRIFICAÇÃO				
FILTRO - ÓLEO DO MOTOR	1R-0716	1	FILTRO - ÓLEO DO MOTOR	76
RESPIRO	4N-4668	1	RESPIRO	72
TAMPA - BOCAL DE ENCHIMENTO	4P-9579	1	BOCAL DE ENCHIMENTO DE ÓLEO DO MOTOR	74
TAMPA CONTRA POEIRA	6V-0852	1	FILTRO - ÓLEO DO MOTOR	76
	8C-3445	1	FILTRO - ÓLEO DO MOTOR	76
TAMPA (TANQUE DE ÓLEO DO MOTOR)	110-8826	1	ÓLEO - ARRANJO PARA TROCA RÁPIDA	86
TAMPA (TANQUE DE ÓLEO DO TREM DE FORÇA)	110-8318	1	ÓLEO - ARRANJO PARA TROCA RÁPIDA	86

PEÇAS DE MANUTENÇÃO

DESCRIÇÃO	NÚMERO DE PEÇA	QUANT	UTILIZADA EM	PÁGINA
SISTEMA ELÉTRICO E DE PARTIDA				
BATERIA (LIVRE DE MANUTENÇÃO)(12 VOLTS)	3T-5760	4	BATERIA E CABOS / FIOS ELÉTRICOS	205
CHAVE	8H-5306	1	CHAVE GERAL	284
CORREIA EM V	4N-8218	1	ALTERNADOR DE CORRENTE	193
		1	ALTERNADOR DE CORRENTE	194
		1	ALTERNADOR DE CORRENTE	200
DISJUNTOR AUTOMÁTICO DE CIRCUITO (135 AMP.)	171-2213	1	PAINEL - RELÉ	256
DISJUNTOR AUTOMÁTICO DE CIRCUITO (15 A)	6T-3643	3	PAINEL - RELÉ	256
ELEMENTO - AQUECEDOR DE ÁGUA DA CAMISA	9G-6655	1	AQUECEDOR DA ÁGUA DO MOTOR	222
ELEMENTO - AQUECEDOR DE ÁGUA DA CAMISA (240 VOLT, 1500 WATT)	6T-3764	1	AQUECEDOR DA ÁGUA DO MOTOR	224
FUSÍVEL (10 A)	9W-1442	5	PAINEL - RELÉ	256
FUSÍVEL (15 A)	9W-1441	11	PAINEL - RELÉ	256
FUSÍVEL (20 A)	9W-1446	3	PAINEL - RELÉ	256
FUSÍVEL (5 AMP)	107-0799	1	PAINEL - RELÉ	256
LÂMPADA (12 VOLT)(VERMELHA/VERDE)(LED)	165-5655	1	INSTALAÇÃO-SEGURANÇA	228
LÂMPADA (24 VOLTS)(65 WATTS)	9X-3463	1	LÂMPADA - FAROL	230
		1	LÂMPADA - FAROL	231
LÂMPADA (24 VOLTS)(65 WATTS) (FAROL)	9X-3463	1	LÂMPADA - FAROL	232
LÂMPADA (28 V)	7N-1996	1	CABOS/FIOS ELÉTRICOS - PLATAFORMA	288
	7N-9943	1	LÂMPADA - TETO	229
LENTE - FAROL	158-0248	1	LÂMPADA - FAROL	231
		1	LÂMPADA - FAROL	232
LENTE DA LÂMPADO DO TETO	7T-0020	1	LÂMPADA - TETO	229
LENTE VERMELHA	6T-7058	1	CABOS/FIOS ELÉTRICOS - PLATAFORMA	288
TAMPA	9L-6770	1	ALTERNADOR DE CORRENTE	190

PEÇAS DE MANUTENÇÃO

DESCRIÇÃO	NÚMERO DE PEÇA	QUANT	UTILIZADA EM	PÁGINA
SISTEMA HIDRÁULICO				
BUJÃO DO DRENO	9J-7031	1	TANQUE HIDRÁULICO E FILTRO	630
CADEADO	5P-8502	1	TUBOS - BOMBA	606
CHAVE	5P-8500	1	TUBOS - BOMBA	606
ELEMENTO FILTRANTE - ÓLEO (FLUXO HIDRÁULICO/REVERSO) (DESCARTÁVEL)	1R-0735	1	TANQUE HIDRÁULICO E FILTRO	630
ELEMENTO FILTRANTE - ÓLEO (FLUXO INVERSO) (FLUIDO RESISTENTE A FOGO)	104-6931	1	TANQUE HIDRÁULICO E FILTRO	630
ELEMENTO FILTRANTE - ÓLEO (HIDRÁULICO) (MAIOR DESEMPENHO)	139-1537	1	TANQUE HIDRÁULICO E FILTRO	630
GRAXEIRA	3B-8489	1	CILINDRO - INCLINAÇÃO DA LÂMINA	566
		1	CILINDRO - INCLINAÇÃO DA LÂMINA	568
		1	CILINDRO DE INCLINAÇÃO	578
		1	CILINDRO DE INCLINAÇÃO	582
		2	CILINDRO DE INCLINAÇÃO DO RÍPER	574
		2	CILINDRO DE INCLINAÇÃO DO RÍPER	576
		2	CILINDRO DE LEVANTAMENTO DO RIPER	570
JUNTA	9H-6454	1	TANQUE HIDRÁULICO E FILTRO	631
LUZ	126-0810	1	TUBOS - CIRCUITO PILOTO	600
TAMPA - BOCAL DE ENCHIMENTO	7H-1447	1	TANQUE HIDRÁULICO E FILTRO	631
TAMPA CONTRA POEIRA	6V-0852	1	TUBOS - BOMBA	606
		1	TUBOS - CIRCUITO PILOTO	588
		1	TUBOS - CIRCUITO PILOTO	594
TELA FILTRANTE	5D-7927	1	TANQUE HIDRÁULICO E FILTRO	630
	6E-1752	1	TANQUE HIDRÁULICO E FILTRO	630
	6E-5066	1	VALVULA REDUTORA E COLETOR	650
TREM DE FORÇA				
BUJÃO - ANEL O	9S-8008	2	VÁLVULA DE CONTROLE	358
BUJÃO DO DRENO	4B-7739	1	CONVERSOR DE TORQUE	350
ELEMENTO FILTRANTE - ÓLEO (HIDRÁULICO)	1R-0778	1	FILTRO - ÓLEO	310
	132-8876	1	FILTRO - ÓLEO	309
RESPIRO (TREM DE FORÇA)	185-6684	1	TUBOS - ÓLEO DA TRANSMISSÃO	324
TAMPA - BOCAL DE ENCHIMENTO (ÓLEO DO TREM DE FORÇA)	6N-2985	1	TUBOS - ÓLEO DA TRANSMISSÃO	324
TAMPA CONTRA POEIRA	6V-0852	2	CARCAÇA DAS ENGRENAGENS PLANETÁRIAS E COMPONENTES	302
		1	FILTRO - ÓLEO	310
		3	TUBOS - ÓLEO DA TRANSMISSÃO	324
		1	VÁLVULA DE ALÍVIO	365
		1	VÁLVULA DE CONTROLE	358
	8C-3447	1	TUBOS - ÓLEO DA TRANSMISSÃO	324
TELA DE SUCÇÃO	8S-9130	1	CARCAÇA DAS ENGRENAGENS PLANETÁRIAS E COMPONENTES	302
TELA FILTRANTE (ENTRADA DA BOMBA DE ÓLEO DO TREM DE FORÇA)	9P-0214	1	TUBOS - ÓLEO DA TRANSMISSÃO	324
TELA FILTRANTE (RETORNO DO CONVERSOR DE TORQUE)	3T-6471	1	TUBOS - ÓLEO DA TRANSMISSÃO	324

WARTUNGSTEILE

BESCHREIBUNG	ERSATZTEIL-NUMMER	MENGE	VERWENDET IN	SEITE
ARBEITSGERÄTE				
SCHMIERNIPPEL	3B-8489	4	AUFREISSERRAHMEN	686
		2	SCHILDSTREBE	673
SCHMIERNIPPEL (1/8-27-GEWINDE)	3B-8489	2	ZYLINDERAUFHÄNGUNG	693
ELEKTRISCHE ANLAGE UND STARTSYSTEM				
ARBEITSLEUCHTEN-ABDECKGLAS	158-0248	1	ARBEITSLEUCHTEN	231
		1	ARBEITSLEUCHTEN	232
BATTERIE (WARTUNGSFREI) (12 V)	3T-5760	4	BATTERIE UND VERDRAHTUNG	205
FAHRERHAUSLEUCHTENLINSE	7T-0020	1	FAHRERHAUSBELEUCHTUNG	229
KAPPE	9L-6770	1	DREHSTROMGENERATOR	190
KEILRIEMEN	4N-8218	1	DREHSTROMGENERATOR	193
		1	DREHSTROMGENERATOR	194
		1	DREHSTROMGENERATOR	200
LEUCHTE (12 V)(ROT/GRÜN)(LED)	165-5655	1	SICHERHEITSEINBAUSATZ	228
LEUCHTE (24 V)(65 W)	9X-3463	1	ARBEITSLEUCHTEN	230
		1	ARBEITSLEUCHTEN	231
LEUCHTE (24 V)(65 W) (ARBEITSSCHEINWERFER)	9X-3463	1	ARBEITSLEUCHTEN	232
LEUCHTE (28 V)	7N-9943	1	FAHRERHAUSBELEUCHTUNG	229
	7N-1996	1	FAHRERPLATTFORMVERDRAHTUNG	288
LINSE - ROT	6T-7058	1	FAHRERPLATTFORMVERDRAHTUNG	288
SCHLÜSSEL	8H-5306	1	TRENNSCHALTER	284
SICHERUNG (10 A)	9W-1442	5	RELAISTAFEL	256
SICHERUNG (15 A)	9W-1441	11	RELAISTAFEL	256
SICHERUNG (20 A)	9W-1446	3	RELAISTAFEL	256
SICHERUNG (5 A)	107-0799	1	RELAISTAFEL	256
UMLAUFKÜHLWASSERHEIZUNGS-ELEMENT	9G-6655	1	UMLAUFKÜHLWASSERHEIZUNG	222
UMLAUFKÜHLWASSERHEIZUNGS-ELEMENT (240 V/1500 W)	6T-3764	1	UMLAUFKÜHLWASSERHEIZUNG	224
UNTERBRECHER (135 A)	171-2213	1	RELAISTAFEL	256
UNTERBRECHER (15 A)	6T-3643	3	RELAISTAFEL	256

WARTUNGSTEILE

BESCHREIBUNG	ERSATZTEIL-NUMMER	MENGE	VERWENDET IN	SEITE
FAHRERHAUS				
DICHTUNGSKAPPE (KLIMAANLAGE)(OBERE SEITE)	3E-4052	1	KLIMAANLAGENLEITUNGEN	782
		1	KLIMAANLAGENLEITUNGEN	786
		1	KLIMAANLAGENLEITUNGEN	790
FILTERSATZ (FAHRERHAUS-UM-LUFTFILTER)	6T-5068	1	FAHRERHAUSBELÜFTUNG	818
INSTRUMENTENTAFELBELEUCHTUNG	159-9257	1	FAHRERHAUS-INSTRUMENTENTAFEL	774
		1	INSTRUMENTENSATZ	770
KAPPE MIT ENTLÜFTER	8E-8292	1	SCHEIBENWASCHANLAGENBE-HÄLTER	742
KEILRIEMEN (KLIMAANLAGEN-KOMRESSOR)	2S-9506	1	KÄLTEMITTELKOMPRESSOR	750
KLIMAANLAGEN-VENTILKAPPE (7/16 X 20 GEWINDE)	2L-1224	1	KÄLTEMITTELKONDENSATOR	754
LEUCHTE (24 V)	3E-8825	2	KLIMAANLAGE	733
		2	KLIMAANLAGE	734
		2	KLIMAANLAGE	735
	115-1748	1	FAHRERHAUS-INSTRUMENTENTAFEL	774
		1	INSTRUMENTENSATZ	770
LEUCHTE (28 V)	123-9294	4	FAHRERHAUS-INSTRUMENTENTAFEL	774
		4	INSTRUMENTENSATZ	770
LUFTFILTER (FAHRERHAUS-FRI-SCHLUFTFILTER)	6T-0988	1	FAHRERHAUSBELÜFTUNG	818
SCHEIBENWISCHERBLATT (RECHTE U. LINKE TÜREN)	6V-5849	2	SCHEIBENWISCHER	870
SCHEIBENWISCHERBLATT (VORNE U. HINTEN)	6V-5851	2	SCHEIBENWISCHER	870

WARTUNGSTEILE

BESCHREIBUNG	ERSATZTEIL-NUMMER	MENGE	VERWENDET IN	SEITE
HYDRAULIKSYSTEM				
ABLASSSTOPFEN	9J-7031	1	HYDRAULIKTANK UND SCHMIERFILTER	630
DICHTUNG	9H-6454	1	HYDRAULIKTANK UND SCHMIERFILTER	631
EINFÜLLSTUTZENKAPPE	7H-1447	1	HYDRAULIKTANK UND SCHMIERFILTER	631
FILTERSIEB	5D-7927	1	HYDRAULIKTANK UND SCHMIERFILTER	630
LEUCHTE	126-0810	1	VORSTEUERLEITUNGEN	600
ÖLFILTERELEMENT (HYDRAULIK/STROMUMKEHRUNG) (NICHT WIEDERVERWENDBAR)	1R-0735	1	HYDRAULIKTANK UND SCHMIERFILTER	630
ÖLFILTERELEMENT (HYDRAULISCH) (HOCHLEISTUNG)	139-1537	1	HYDRAULIKTANK UND SCHMIERFILTER	630
ÖLFILTERELEMENT (RÜCKFLUSS) (SCHWER ENTFLAMMBARE FLÜSSIGKEIT)	104-6931	1	HYDRAULIKTANK UND SCHMIERFILTER	630
SCHLÜSSEL	5P-8500	1	HYDRAULIKPUMPE UND LEITUNGEN	606
SCHMIERNIPPEL	3B-8489	2	AUFREISSERHUBZYLINDER	570
		2	AUFREISSERKIPPZYLINDER	574
		2	AUFREISSERKIPPZYLINDER	576
		1	KIPPZYLINDER	578
		1	KIPPZYLINDER	582
		1	PLANIERSCHILDKIPPZYLINDER	566
		1	PLANIERSCHILDKIPPZYLINDER	568
SCREEN	6E-1752	1	HYDRAULIKTANK UND SCHMIERFILTER	630
	6E-5066	1	VERTEILER- UND REDUZIERVENTIL	650
STAUBKAPPE	6V-0852	1	HYDRAULIKPUMPE UND LEITUNGEN	606
		1	VORSTEUERLEITUNGEN	588
		1	VORSTEUERLEITUNGEN	594
VORHÄNGESCHLOSS	5P-8502	1	HYDRAULIKPUMPE UND LEITUNGEN	606
KRAFTSTOFFSYSTEM				
FILTERSATZ (WASSERABSCHEIDER U. KRAFTSTOFFILTER)	1R-0769	1	WASSERABSCHEIDER- U. KRAFTSTOFFILTER	175
KRAFTSTOFFILTER	1R-0749	1	KRAFTSTOFFILTER	174
KRAFTSTOFFSIEB	9P-7121	1	KRAFTSTOFFTANK	184
KRAFTSTOFFTANKKAPPE	7X-7700	1	KRAFTSTOFFTANK	184
SCHLÜSSEL	5P-8500	1	KRAFTSTOFFLEITUNGEN	178
		1	KRAFTSTOFFTANK	184
STAUBKAPPE	9D-0630	1	SCHNELLBETANKUNGSANSCHLUSS	168
SUMPFSIEB (KRAFTSTOFFTANK)	5G-4109	1	KRAFTSTOFFLEITUNGEN	178
VORHÄNGESCHLOSS	5P-8502	1	KRAFTSTOFFLEITUNGEN	178
		1	KRAFTSTOFFTANK	184

WARTUNGSTEILE

BESCHREIBUNG	ERSATZTEIL-NUMMER	MENGE	VERWENDET IN	SEITE
KRAFTÜBERTRAGUNG				
ABLASSSTOPFEN	4B-7739	1	DREHMOMENTWANDLER	350
ANSAUGSIEB	8S-9130	1	PLANETENANTRIEBSGEHÄUSE U. TEILE	302
EINFÜLLKAPPE (KRAFTÜBERTRAGUNGSÖL)	6N-2985	1	ÖLLEITUNGEN - KRAFTÜBERTRAGUNG	324
ENTLÜFTER (KRAFTÜBERTRAGUNG)	185-6684	1	ÖLLEITUNGEN - KRAFTÜBERTRAGUNG	324
O-RING-STOPFEN	9S-8008	2	STEUERVENTIL	358
ÖLFILTERELEMENT (HYDRAULISCH)	1R-0778	1	ÖLFILTER	310
	132-8876	1	ÖLFILTER	309
SIEB (KRAFTÜBERTRAGUNGSÖLPUMPENEINLASS)	9P-0214	1	ÖLLEITUNGEN - KRAFTÜBERTRAGUNG	324
SIEB (WANDLERRÜCKLAUFSIEB)	3T-6471	1	ÖLLEITUNGEN - KRAFTÜBERTRAGUNG	324
STAUBKAPPE	6V-0852	1	ÖLFILTER	310
		3	ÖLLEITUNGEN - KRAFTÜBERTRAGUNG	324
		2	PLANETENANTRIEBSGEHÄUSE U. TEILE	302
		1	STEUERVENTIL	358
		1	ÜBERDRUCKVENTIL	365
	8C-3447	1	ÖLLEITUNGEN - KRAFTÜBERTRAGUNG	324
KÜHLSYSTEM				
ABLASSSTOPFEN	8M-1869	1	KÜHLWASSERLEITUNGEN	114
KAPPE	111-7421	2	WASSERTANK	138
KEILRIEMEN (KLIMAANLAGEN-KOMPRESSOR)	3S-3964	1	LÜFTER (VERSTELLBAR)	98
KEILRIEMEN (VERSTÄRKT) (MOTORLÜFTER)	9Q-3668	1	LÜFTER (VERSTELLBAR)	98
KÜHLERKAPPE	031-1119	1	KÜHLMITTELBEHÄLTER	137
SCHLAUCHLEITUNG	106-4572	5	KÜHLER	128
STAUBKAPPE	6V-0852	1	KÜHLWASSERLEITUNGEN	114
WASSERFILTER	119-3025	1	KÜHLWASSERPUMPE	121
WASSERPUMPENFILTER	136-3742	1	KÜHLWASSERPUMPE	118
WASSERTEMPERATURREGLER (92 GRAD CELSIUS)	4W-4794	1	KÜHLWASSERLEITUNGEN	110
LAUFWERK				
ABLASSSTOPFEN	4T-2069	6	LAUFROLLENRAHMEN (TELESKOPRÜCKLAUF)	476
		6	LAUFROLLENRAHMEN (TELESKOPRÜCKLAUF)	478
		6	LAUFROLLENRAHMEN (TELESKOPRÜCKLAUF)	482
ENTLÜFTER	9G-5127	1	ACHSWELLENSCHMIERUNG	490
ÖLSTANDKAPPE	8E-3410	1	ACHSWELLENSCHMIERUNG	490
SCHMIERNIPPEL	3B-8489	2	QUERTRAVERSE	472
		2	QUERTRAVERSE	474

WARTUNGSTEILE

BESCHREIBUNG	ERSATZTEIL-NUMMER	MENGE	VERWENDET IN	SEITE
LENK- UND BREMSSYSTEM				
ANSCHLUSSSTÜCK (SCHNELLWECHSELANSCHLUSS)	6V-3965	1	ÖLFILTER	520
ÖLFILTER	102-2828	1	ÖLFILTER	520
STAUBKAPPE	6V-0852	8	LENKÖLLEITUNGEN	524
		1	ÖLFILTER	520
	8C-3451	1	ÖLFILTER	520
LUFTEINLASS- UND ABGASSYSTEM				
ABGASKRÜMMERDICHTUNG	129-9452	6	AUSPUFFKRÜMMER	151
FILTER	7M-1674	1	DRUCKLUFTLEITUNGEN	150
LUFTFILTER (HAUPTFILTER)	6I-2505	1	LUFTREINIGER	146
LUFTFILTER (SICHERHEITSFILTER)	6I-2506	1	LUFTREINIGER	146
LUFTFILTER-WARTUNGSANZEIGE	8N-2694	1	LUFTREINIGERANZEIGE	148
MOTOR (GRUNDAUSFÜHRUNG)				
ABLASSSTOPFEN	5F-0304	1	SCHWUNGRADGEHÄUSE	52
DICHTUNG	4N-1151	2	ÖLWANNE	64
DICHTUNG (2,9 M)	5P-5678		SOCKEL FÜR VENTILDECKEL U. EINSPRITZKABELBAUM	15
KEILRIEMEN (VERSTÄRKT)	9Q-3670	1	LÜFTERANTRIEB	40
KEILRIEMENSATZ (EINSCHL. 3 RIEMEN)	129-2416	1	LÜFTERANTRIEB	40
		1	LÜFTERANTRIEB	42
ÖLABLASSSCHRAUBE	4P-0513	1	ÖLWANNE	62
SCHMIERNIPPEL	3B-8485	1	LÜFTERANTRIEB	40
	3B-8489	1	LÜFTERANTRIEB	42
		1	RIEMENSPANNER	16
MOTORAUSFÜHRUNG				
SCHLÜSSEL	5P-8500	1	MOTOR-EINBAUSATZ	14
VORHÄNGESCHLOSS	5P-8502	2	MOTOR-EINBAUSATZ	14
RAHMEN UND AUFBAU				
KAPPE	2B-0176	2	KÜHLERSCHUTZ	444
SCHLÜSSEL	5P-8500	1	BATTERIEKASTEN	374
		1	KÜHLERSCHUTZ	444
		1	MOTORVERKLEIDUNG	410
SCHLÜSSEL (STARTER)	5P-8500	1	HYDRAULIKTANKVERKLEIDUNG	414
VORHÄNGESCHLOSS	5P-8502	4	BATTERIEKASTEN	374
		1	HYDRAULIKTANKVERKLEIDUNG	414
		1	KÜHLERSCHUTZ	444
		2	MOTORVERKLEIDUNG	410
SCHMIERSYSTEM				
EINFÜLLKAPPE	4P-9579	1	MOTORÖLEINFÜLLSTUTZEN	74
ENTLÜFTER	4N-4668	1	ENTLÜFTER	72
KAPPE (KRAFTÜBERTRAGUNGSÖL-AUFNAHME)	110-8318	1	ÖLSCHNELLWECHSELANSCHLUSS	86
KAPPE (MOTORÖLAUFNAHME)	110-8826	1	ÖLSCHNELLWECHSELANSCHLUSS	86
ÖLFILTER	1R-0716	1	ÖLFILTER	76
STAUBKAPPE	6V-0852	1	ÖLFILTER	76
	8C-3445	1	ÖLFILTER	76

INDEX

Name	Page
A	
ACCUMULATOR GP-PILOT OIL	588, 594, 601
ACCUMULATOR-REFRIGERANT	782, 786, 790
ACTUATOR GP-PISTON PUMP	548
ACTUATOR GP-POWER	372
ACTUATOR GP-POWER (BOTTOM GUARDS)	422
ADAPTER GP-FAST FILL FUEL	166, 168
ADAPTER GP-MOTOR	510
ADAPTER GP-PUMP DRIVE	170
AFTERCOOLER GP	142
AIR CLEANER GP	144, 146
AIR CONDITIONER AR	733, 734, 735
AIR CONDITIONER GP	736
ALARM AS-BACKUP	202
ALARM GP	288
ALARM GP–ACTION	188
ALTERNATOR GP-CHARGING	190, 193, 194, 196, 197, 198, 200
ASHTRAY	760
AXLE GP-POWER TRAIN	292, 293
B	
BAR AR-STRIKER	462, 464
BASE GP-FUEL FILTER	171, 172
BASE GP-VALVE COVER & INJ HARN	15
BATTERY & WIRING GP	202
BATTERY BOX GP	374, 376
BATTERY (MAINTENANCE FREE) (12 VOLT)	205
BELT TIGHTENER GP	16
BIT & CUTTING EDGE GP	705, 706, 707
BLADE & EDGE GP	708, 709, 710, 711, 712, 713, 714, 715
BLADE AS	716, 717
BLADE AS-SEMI-UNIVERSAL	718, 720, 721
BLADE AS-UNIVERSAL	722, 723
BLADE AS-WIPER (FRONT & REAR)	870
BLADE AS-WIPER (RH & LH DOORS)	870
BLADE GP-ANGLING	724
BLADE GP-SEMI-UNIVERSAL	725
BLADE GP-UNIVERSAL	726
BLOCK GP-PUSH	672
BLOWER GP-CAB	738, 818
BOTTLE GP-WINDOW WASHER	742
BOTTLE GP-WINDOW WASHER–WINDSHIELD WASHER	740
BRACE GP-BULLDOZER	673, 674
BRAKE & DIFFERENTIAL DRIVE GP	294
BRAKE & DRIVE GP	298, 299
BRAKE & PLANETARY GP	300
BREATHER	490
BREATHER AS	72
BREATHER AS (POWER TRAIN)	324
BREATHER GP	72
BULLDOZER AR	676, 677, 678, 679
BULLDOZER AR-SEMI-UNIVERSAL	680
BULLDOZER AR-UNIVERSAL	681
C	
C-FRAME GP	682
CAB AR	744, 745
CAB GP	746
CAMSHAFT GP	18
CAP	138, 190, 444
CAP-AIR CONDITIONER VALVE (7/16 X 20 THD)	754
CAP AS-FILLER	74
CAP AS-FILLER (POWER TRAIN OIL)	324
CAP AS-FUEL TANK	184
CAP AS-OIL LEVEL	490

INDEX

Name	Page
CAP AS-RADIATOR	137
CAP-DUST	76
	114
	168
	302
	310
	324
	358
	365
	520
	524
	588
	594
	606
CAP (ENGINE OIL RECEIVER)	86
CAP-FILLER	631
CAP GP-TRACK IDLER	465
	466
	467
CAP GP-TRACK ROLLER	468
	469
CAP (POWER TRAIN OIL RECEIVER)	86
CAP-PUSH ON	410
	818
CAP-SEAL (AIR CONDITIONER)(HIGH SIDE)	782
	786
	790
CAP-VENTED	742
CARTRIDGE GP-TURBOCHARGER	164
CASE & FRAME GP	378
	380
	386
CASE & PARTS GP-PLANETARY	302
CHASSIS AR	388
CIRCUIT BREAKER AS (135 AMP)	256
CIRCUIT BREAKER AS (15 AMP)	216
	256
CLAMP-BOOT	280
	281
COMPRESSOR GP-REFRIGERANT	749
	750
CONDENSER & MTG GP-REFRIGERANT	752
CONDENSER GP-REFRIGERANT	754
CONTROL & MTG GP-ELECTRONIC	208
CONTROL & MTG GP-ENGINE ELEK	210
CONTROL & MTG GP-PEDAL	305
CONTROL AR-BULLDOZER & WINCH	684
CONTROL AR-HYDRAULIC	549
	550
CONTROL AR-PILOT HYDRAULIC	552
	553
	554
CONTROL AS-REMOTE	390
CONTROL AS-REMOTE (POWERED BOTTOM GUARDS)	422
CONTROL GP-COMMUNICATION (PRODUCT LINK)	227
CONTROL GP-ELECTRONIC	756
	757
CONTROL GP-ENGINE ELECTRONIC	212
	213
CONTROL GP-IMPLEMENT	758
CONTROL GP-MACHINE	214
CONTROL GP-MONITOR (CATERPILLAR MONITORING SYSTEM)	770
	774
CONTROL GP-PARKING BRAKE	512
CONTROL GP-STEERING	514
CONTROL GP-STEERING & TMSN	516
	518
CONTROL GP-TRANSMISSION HYD	306
CONTROL GP-UNPROGRAMMED	208
	215
	757
CONVERTER GP-ELECTRICAL	216
COOLANT HEATER LINES	794
COOLER GP-ENGINE OIL	93
COOLER GP-HYDRAULIC OIL	555
CORE AS-RADIATOR	94
	95
CORE GP-OIL COOLER	96
COUNTERWEIGHT GP	392
COUPLING AS-REFRIGERANT	782
COVER GP	393
COVER GP-CONSOLE	760
COVER GP-CYLINDER BLOCK	19
	20
COVER GP-FLYWHEEL HOUSING	21
COVER GP-FRONT HOUSING	22
COVER GP-SOUND SUPPRESSION	23
	24
COVER GP-TRUNNION	394
COVER GP-VALVE MECHANISM	25
	26
	27
COVER-SPEAKER	780
CRANKSHAFT GP	28
CYLINDER & LINES GP-LIFT–LH	556
CYLINDER & LINES GP-LIFT–RH	558
CYLINDER & LINES GP-TILT	560
CYLINDER AR-TILT	561
	562
CYLINDER AS (ETHER)	274
CYLINDER BLOCK AS	29
	30
CYLINDER BLOCK GP	31
	32
CYLINDER GP-BULLDOZER LIFT	563
	564
CYLINDER GP-BULLDOZER TILT	566

INDEX

Name	Page
	568
CYLINDER GP-RIPPER LIFT	570
CYLINDER GP-RIPPER PIN PULLER	572
CYLINDER GP-RIPPER TILT–LH	574
CYLINDER GP-RIPPER TILT–RH	576
CYLINDER GP-TILT	578
	580
	582
CYLINDER HEAD AS	34
CYLINDER HEAD GP	36
	38

D

DAMPER GP	39
DIFFERENTIAL & BEVEL BRAKE	294
DISPOSAL AR-WASTE	1
	2
	4
DOOR GP-LH	396
	398
DOOR GP-RH	400
	402
DRAIN GP-ECOLOGY	308
DRAWBAR GP	404
DRIVE GP-FAN	40
	42
DRIVE GP-PUMP	173
DUST EJECTOR GP	147

E

EDGE GP-CUTTING	727
ELECTRONICS AR-MACHINE	5
ELECTRONICS GP-MACHINE	217
	218
ELECTRONICS GP-MONITOR	219
ELEMENT AS-JACKET WATER HEATER	222
ELEMENT AS-JACKET WATER HEATER (240 VOLT/1500 WATT)	224
ELEMENT-FILTER	150
ENCLOSURE GP-ENGINE	406
	410
ENCLOSURE GP-HYDRAULIC TANK	414
ENGINE AR-COMPLETE	11
	12
ENGINE AR-CORE	13
EQUALIZER BAR AS	470
EQUALIZER BAR GP	472
	474
EXTENSION GP-BACKREST	838
EXTENSION GP-BACKREST (CLOTH)	834

F

FAN AR-EJECTOR	97
FAN AR-VARIABLE	98
FAN GP-BLOWER	102
FAN GP-EJECTOR	103
FAN GP-REVERSIBLE	104
FASTENER GP-FRONT HOUSING	44
	45
FASTENER GP-OIL PUMP MOUNTING	73
FENDER GP	416
FILLER GP-ENGINE OIL	74
FILM-AIR CLEANER (RADIAL SEAL)	146
FILM-CATERPILLAR	745
FILM GP	874
FILM-IDENTIFICATION	228
	256
	770
	774
	780
	880
	881
FILM-IDENTIFICATION (CLEANING)	98
FILM-IDENTIFICATION (DOZER)	585
FILM-IDENTIFICATION (GROUP & SEQUENCE NO.)	738
	754
FILM-IDENTIFICATION (LOW SPEED WINCH LIGHT)	684
FILM-IDENTIFICATION (WINCH CONTROL)	684
FILM-INSTRUCTION	256
	550
FILM-INSTRUCTION (SEAT ADJUSTMENT)	844
FILM (LH SIDE)(D8R)	440
FILM-NOTICE	880
FILM-NOTICE (PRE-LUBRICATION PUMP)	88
FILM-NOTICE (RADIO)	769
FILM (RH SIDE)(D8R)	440
FILM-STRIPE	874
FILM-STRIPE (REAR)(LH SIDE)	438
	440
FILM-STRIPE (REAR)(RH SIDE)	438
	440
FILM-WARNING	227
FILM-WARNING (RECOIL SPRING)	476
	478
	482
FILM-WASTE HANDLER	2
FILM-WOODCHIP AR	10
FILTER-AIR (CAB FRESH AIR)	818
FILTER AS (CAB REC AIR)	818
FILTER AS-ENGINE OIL	76
FILTER AS-FUEL	174
FILTER AS-OIL	520
FILTER AS (WATER SEPARATOR & FUEL)	175

INDEX

Name	Page
FILTER ELEMENT AS-AIR (PRIMARY)	146
FILTER ELEMENT AS-AIR (SECONDARY)	146
FILTER ELEMENT AS-OIL (HYDRAULIC)	309
	310
FILTER ELEMENT AS-OIL (HYDRAULIC) (HIGHER PERFORMANCE)	630
FILTER ELEMENT AS-OIL (HYDRAULIC/REVERSE FLOW) (DISPOSABLE)	630
FILTER ELEMENT AS-OIL (REVERSE FLOW) (FIRE RESISTANT FLUID)	630
FILTER GP-ENGINE OIL	76
FILTER GP-FUEL	174
FILTER GP-OIL	309
	310
	520
FILTER GP-WATER SEP & FUEL	175
	176
FILTER-WATER	121
FILTER-WATER PUMP	118
FINAL DRIVE GP	312
	316
	318
FITTING AS (QUICK DISCONNECT)	520
FITTING-GREASE	16
	40
	42
	472
	474
	566
	568
	570
	574
	576
	578
	582
	673
	686
FITTING-GREASE (1/8-27 THD)	693
FLOOR MAT	760
	808
	814
FLYWHEEL GP	46
FRAME AS-TRACK ROLLER	475
FRAME GP-RIPPER	686
FRAME GP-TELESCOPING RECOIL	476
	478
	482
FUMES DISPOSAL GP	78
FUSE (10 AMP)	256
FUSE (15 AMP)	256
FUSE (20 AMP)	256
FUSE (5 AMP)	256

G

Name	Page
GASKET	64
	631
GASKET-EXHAUST MANIFOLD	151
GASKET-OUTLET	114
GAUGE AR	6
GAUGE AS-OIL LEVEL (DIPSTICK)	80
GAUGE GP-OIL LEVEL (DIPSTICK)	80
GEAR GP-BEVEL & TRANSFER	320
GEAR GP-CAMSHAFT	47
GEAR GP-FRONT	48
GEAR GP-REAR	50
GENERAL AR	7
GLASS	746
GLASS-FIXED-LH (TINTED)	860
GLASS-FIXED REAR (TINTED)	868
GLASS-FIXED-RH (TINTED)	859
GLASS-REAR SLIDER (TINTED)	866
GLASS (TINTED)	746
	855
	856
GREASE GUN GP	876
GRID GP-SAND BLAST ERODING	418
GRILL GP-RADIATOR	419
	420
GUARD AR-BOTTOM	422
GUARD AR-FINAL DRIVE	426
GUARD AR-IDLER	427
	428
GUARD AS	105
	106
	107
	108
GUARD AS-RADIATOR	430
GUARD GP-BOTTOM	432
	434
GUARD GP-FINAL DRIVE	437
GUARD GP-FUEL TANK	438
	440
GUARD GP-IDLER	442
GUARD GP-POWER TRAIN	323
GUARD GP-RADIATOR	444
GUARD GP-REAR	446
GUARD GP-ROCK	688
	689
GUARD GP-SEAL	447
GUARD GP-TRACK ROLLER	448
GUIDE AS-GAUGE	80

H

Name	Page
HANDLE GP-CONTROL	762
HANDLE GP-CONTROL (WINCH)	654
HANDLE GP-JOYSTICK	763

INDEX

Name	Page
HEAD GP-PUMP	522
HEATER GP-CAB	764
HEATER GP-FUEL	220
HEATER GP-JACKET WATER	222
	224
HOOD & GUARD GP	450
HORN AS (24 VOLT)(HIGH TONE)	204
HORN AS (24 VOLT)(LOW TONE)	205
HOSE	128
HOUSING GP-FLYWHEEL	52
HOUSING GP-FRONT	54
	56
HOUSING GP-SEAT SUSPENSION	766
HYDRAULIC AR	584
	585

I

IDLER GP-TRACK	485
	486
	487
	488
INDICATOR-AIR FILTER SERVICE	148
INDICATOR AR-AIR CLEANER	148
INDICATOR AS	770
	774
INJECTOR GP-FUEL	177
INSTALLATION AR-ENGINE	14
INSTALLATION AR-SECURITY	226
INSTALLATION GP-COMMUNICATION	227
INSTALLATION GP-RADIO	769
INSTALLATION GP-SECURITY	228
INSTRUMENT GP	770
INSTRUMENT GP-CAB	774

K

KEY	14
	178
	184
	284
	374
	410
	444
	606
KEY (STARTER)	414
KIT-BEARING	280
	534
	767
KIT-BELT TETHER	844
KIT-BIAS PISTON	624
KIT-BLADE	99
KIT-BUMPER	766
KIT-CAP FILTER (FUEL TANK)	184
KIT-CATCH	862
	866
KIT-CATCH (INCL CATCH AS & 2 SCREWS)	864
KIT-CATCH (INCLUDES CATCH AS & 2 SCREWS)	862
KIT-CONNECTING PLUG (12 PIN)	205
	228
	286
	518
	588
	594
	600
KIT-CONNECTING PLUG (2 PIN)	88
	98
	203
	204
	234
	236
	238
	244
	252
	286
	288
	289
	550
	588
	594
	600
	654
	690
	738
	754
	771
	775
KIT-CONNECTING PLUG (3 PIN)	98
	202
	203
	262
	263
	264
	265
	266
	267
	268
	288
	289
	518
	550
	588
	594
	600
	690
	770
	775
	782
KIT-CONNECTING PLUG (4 PIN)	98

INDEX

Name	Page
	203
	216
	288
	289
	550
	588
	594
	601
	771
	775
KIT-CONNECTING PLUG (6 PIN)	88
	289
	518
	771
	775
	848
KIT-CONNECTING PLUG (8 PIN)	227
	288
	289
	291
	388
	770
	775
	817
KIT-DIAL SENSOR	184
KIT-DIODE JUNCTION STUD	190
KIT-FASTENER (SEAT SUSPENSION)	846
KIT-FOLLOWER	766
KIT-GASKET (WATER PUMP)	118
KIT-HYDRAULIC CYLINDER SEAL	580
KIT-INDICATOR	766
KIT-KNOB	821
KIT-LEAF SPRING	859
	860
	868
KIT-OUTPUT TERMINAL	190
KIT-PISTON	624
KIT-POSITIVE DIODE	191
KIT-PUMP REBUILD (WATER)	118
KIT-RECEPTACLE	802
KIT-RECEPTACLE (12 PIN)	205
	228
	289
	512
	518
KIT-RECEPTACLE (2 PIN)	88
	98
	136
	188
	202
	203
	204
	230
	234
	238
	244
	252
	269
	270
	271
	274
	283
	286
	288
	289
	369
	422
	520
	550
	588
	594
	600
	652
	654
	658
	738
	754
	770
	774
	782
	786
	790
KIT-RECEPTACLE (3 PIN)	88
	98
	110
	142
	171
	172
	202
	203
	204
	229
	259
	260
	261
	272
	286
	288
	289
	518
	550
	588
	594
	600
	754
	770
	774
KIT-RECEPTACLE (4 PIN)	98
	203
	289

INDEX

Name	Page
	370
	588
	594
	600
	670
	671
	770
	774
KIT-RECEPTACLE (6 PIN)	254
	340
	422
	738
	742
	774
	799
	800
	801
	803
KIT-RECEPTACLE (8 PIN)	203
	227
	289
	770
	774
	775
	821
KIT-RELAY TERMINAL	190
KIT-RETAINING BOLT	213
	215
KIT-ROLLER	846
KIT-RUNNER GUIDE	862
	866
KIT-RUNNER GUIDE (INCL GUIDE & SCREW)	864
KIT-RUNNER GUIDE (INCLUDES GUIDE & SCREW)	862
KIT-SEAL	369
	370
	522
	668
	670
	671
KIT-SLIDER BLOCK	839
	840
	841
KIT-SPRING	766
KIT-STARTING MOTOR GEAR	281
KIT-STOP RAIL	868
KIT-SUSPENSION BOOT	844
KIT-SUSPENSION KNOB	766
KIT-SUSPENSION ROLLER	844
KIT-TERMINAL	277
	280
KIT-TETHER	846
KIT-WIPER BLADE	870
KIT-WIRING HARNESS	846
KNOB (ARMREST ADJUSTMENT)	830
KNOB AS	600
KNOB AS (IMPLEMENT LOCKOUT)	588
	594
KNOB-CONTROL	770
	774
KNOB-HORN	288
KNOB-LUMBAR	811
	812

L

LAMP GP-DOME	229
LAMP GP-DOME (24 VOLT)(WITH SWITCH)	780
LAMP GP-FLOOD	230
	231
	232
LAMP GP-FLOOD (24 VOLT)	236
LAMP GP-FLOOD (24 VOLT)(SUSPENDED)	236
	238
	240
	241
	242
	244
	247
LAMP GP-FLOOD (24 VOLT)(VERTICAL)	248
LAMP (12 VOLT)(RED/GREEN)(LED)	228
LAMP (24 VOLT)	733
	734
	735
	770
	774
LAMP (24 VOLTS)(65 WATTS)	230
LAMP (24 VOLT)(65 WATT)	231
LAMP (24 VOLT)(65 WATT) (FLOOD)	232
LAMP (28 VOLT)	229
	288
	770
	774
LANDFILL AR	8
LENS AS-FLOODLAMP	231
	232
LENS-DOME LAMP	229
LENS-RED	288
LIFTING GP-ENGINE	58
	59
LIGHT	600
LIGHT-DASH PANEL	770
	774
LIGHTING AR	236
	238
LIGHTING AR–RIPPER	240
LIGHTING AR–4 LAMP	234
LIGHTING GP	241
	242

INDEX

Name	Page
LIGHTING GP-FLOOD	246
	247
	248
LIGHTING GP-FRONT	250
	252
LIGHTING GP-4 LAMP	244
LINER GP-CAB	778
	780
LINES GP-AIR	149
	150
LINES GP-AIR CONDITIONER	782
	786
	790
LINES GP-BULLDOZER MANIFOLD	586
LINES GP-ENGINE OIL	82
LINES GP-FUEL	178
	180
LINES GP-HEATER	794
LINES GP-PILOT	588
	594
	600
LINES GP-PIN PULLER	604
LINES GP-POWER TRAIN OIL	324
LINES GP-PUMP	606
LINES GP-RIPPER	609
	610
LINES GP-STEERING	524
LINES GP-TILT CYLINDER	612
	614
	616
	618
LINES GP-TURBOCHARGER OIL	84
LINES GP-WATER	110
	112
	114
	116
LINES GP-WINCH	690
LINK AS-TRACK	489
LINK GP-STABILIZER	692
LUBRICATION GP-PIVOT SHAFT	490

M

MANIFOLD & VALVE GP	329
	330
MANIFOLD GP-EXHAUST	151
MANIFOLD GP-HYDRAULIC	620
MANIFOLD GP-INLET	621
MANIFOLD GP-INLET (DOZER/WINCH BANK VALVE)	638
	640
	646
MECHANISM GP-FUEL PUMP & VALVE	182
MIRROR GP	796
MIRROR GP-REAR VIEW	797
	798
MODULE GP-DISPLAY	254
MODULE GP-QUAD GAUGE	799
MOTOR AS-WINDOW WIPER	800
	801
MOTOR AS-WINDOW WIPER (LH DOOR)	870
MOTOR AS-WINDOW WIPER (RH DOOR)	870
MOTOR GP-PISTON	530
MOTOR GP-WINDOW WIPER	802
	803
MOUNTING GP-AIR CLEANER	152
MOUNTING GP-ALTERNATOR	60
MOUNTING GP-ANTENNA (PRODUCT LINK)	227
MOUNTING GP-CAB	804
MOUNTING GP-CONTROL	805
	806
MOUNTING GP-CYLINDER	693
MOUNTING GP-FAN DRIVE	61
MOUNTING GP-FINAL DRIVE	331
MOUNTING GP-RIPPER	694
MOUNTING GP-TRANSMISSION	332
MOUNTING GP-VALVE	622
MUFFLER GP	153
	154

O

OIL CHANGE GP-HIGH SPEED	86
OPERATOR AR	808

P

PADLOCK GP	14
	178
	184
	374
	410
	414
	444
	606
PAINT GP	10
PAN GP-BACKREST	810
PAN GP-OIL	62
	64
PAN GP-SEAT	812
PAN GP-SEAT–CLOTH	811
PANEL GP-RELAY	256
PANEL GP-SOUND SUPPRESSION	452
PEDAL GP-GOVERNOR & BRAKE	334
PISTON & ROD GP	66
PLANETARY GP-TRANSMISSION	336
PLATE & FILM GP	877
	878
	880
PLATE GP-HITCH	453

INDEX

Name	Page
PLATE GP-SLIDE	813
PLATE GP-WEAR	728
PLATE-INSTRUCTION (AIR CONDITIONER)	733
	734
	735
PLATE-WARNING (ENGINE FAN)	98
PLATE-WARNING (RECOIL SPRING OIL)	478
	482
PLATFORM GP	454
PLATFORM GP-CAB	814
PLUG AS	817
PLUG-DRAIN	52
	114
	350
	476
	478
	482
	630
PLUG-O-RING	358
PLUG-OIL DRAIN	62
PLUG-SEAL	821
	848
PLUNGER AS (POWER TRAIN OIL LEVEL/DIPSTICK)	324
POWER TRAIN AR	340
PRECLEANER AR	156
	158
PRECLEANER AR–TURBINE	157
PRECLEANER GP	158
	159
PRELUBRICATION AR-ENGINE	88
PRESSURIZER GP-CAB	818
PULLER AR-PIN	696
PULLER GP-PIN	697
PUMP GP-ENGINE OIL	92
PUMP GP-FUEL TRANSFER	183
PUMP GP-GEAR	341
	342
	531
PUMP GP-GEAR (POWER TRAIN OIL)	324
PUMP GP-PISTON	532
	624
PUMP GP-WATER	117
	118
	120
	121
PUSH ARM GP-LH	698
	699
PUSH ARM GP-RH	700
PUSH ARM GP-STABILIZER	701
	702

R

Name	Page
RADIATOR AR	122
RADIATOR GP	124
	126
	128
	130
	132
	134
RADIO GP-AM/FM/WB	821
RECEIVER DRYER AS (AIR CONDITIONER)	782
	786
	790
RECEPTACLE AS-POWER (12 VOLT)	288
RECLINER GP-SEAT	822
REGULATOR-FUEL TEMPERATURE	220
REGULATOR-WATER TEMPERATURE (92 DEG C.)	110
RIPPER AR	703
RIPPER GP	729
ROCKER ARM GP	68
ROLLER AR–CARRIER	492
ROLLER GP-TRACK-DOUBLE FLANGE	493
ROLLER GP-TRACK-SINGLE FLANGE	494
ROPS GP	824
ROPS GP-ENCLOSED	826
ROTATING GP-MOTOR	534
ROTATING GP-PUMP	536
	626

S

Name	Page
SCREEN	630
	650
SCREEN AS (POWER TRAIN OIL PUMP INLET)	324
SCREEN AS (TORQUE CONVERTER SCAVENGE)	324
SCREEN GP-PROTECTION	828
SCREEN GP-PROTECTION–REAR	827
SCREEN-SUCTION	302
SCREEN-SUMP (FUEL TANK)	178
SEAL GP-CRANKSHAFT	28
SEAL (2.9M)	15
SEAT AR	829
SEAT BELT GP	834
	838
SEAT GP	830
	831
	836
	838
SEAT GP–CLOTH	834
SEAT GP–FABRIC	832
SEAT GP-SUSPENSION	840
	841
SEAT GP-SUSPENSION–VINYL	839
SEGMENT GP-SPROCKET	344
SENDER AS-FUEL	184

INDEX

Name	Page
SENDER-TEMPERATURE	202
SENSOR & MTG GP-PRESSURE	258
SENSOR GP-POSITION	259
	260
	261
SENSOR GP-PRESSURE	262
	263
	264
	265
	266
	267
	268
SENSOR GP-PRESSURE (AIR)	36
SENSOR GP-PRESSURE (OIL)	32
SENSOR GP-SPEED	202
	204
	269
	270
	271
	337
SENSOR GP-SPEED (PRIMARY ENGINE)	54
SENSOR GP-SPEED (PRIMARY ENGINE TIMING)	56
SENSOR GP-SPEED (SECONDARY ENGINE)	54
SENSOR GP-SPEED (SECONDARY ENGINE TIMING)	56
SENSOR GP-TEMPERATURE	172
	202
	272
SENSOR GP-TEMPERATURE (FUEL)	171
SENSOR GP-TEMPERATURE (INLET AIR)	142
SENSOR GP-TEMPERATURE (WATER)	110
SERVICE GP-MACHINE	273
SHAFT GP-MAIN DRIVE	345
SHIELD AR-THERMO	160
SHIELD GP-EXHAUST	161
SHIELD GP-MANIFOLD	162
SLIDE	853
	857
	858
SOFTWARE GP	217
SOFTWARE GP (ELECTRONIC)	757
SOFTWARE GP-MACHINE	273
SOFTWARE GP-MACHINE (SECURITY SYSTEM)	273
SOFTWARE GP-MACHINE (SECURITY SYSTEM) (SOFTWARE ONLY)	218
SOFTWARE GP-MONITOR	219
	756
STARTING AID GP-ETHER	274
STARTING MOTOR GP-ELECTRIC	276
	279
STARTING MOTOR GP-PRELUB SYS	280
STEERING AR-HYDRAULIC	538
STEP & HANDHOLD AR	842
STEP GP	457
STRAINER AS	630
STRAINER-FUEL	184
SUPPORT GP-ENGINE	69
	70
SUPPORT GP-ROPS	843
SUPPRESSION AR-SOUND	9
SUSPENSION GP-BOGIE	496
SUSPENSION GP-SEAT	844
	846
SWASHPLATE GP	627
	628
SWEEP GP	458
	460
SWITCH AS	600
	733
	734
	735
SWITCH AS (AIR CONDITIONING)	240
SWITCH AS (BLOWER)	774
SWITCH AS-HORN	288
SWITCH AS (IMPLEMENT LOCKOUT)	588
	594
SWITCH AS-KEY START	770
	774
SWITCH AS (LIGHTS)	770
	774
SWITCH AS-LIMIT	334
	600
SWITCH AS-LIMIT (IMPLEMENT LOCKOUT)	588
	594
SWITCH AS-LIMIT (PARKING BRAKE)	516
SWITCH AS-MAGNETIC (PRE-LUBRICATION TIMER)	88
SWITCH AS-PRESSURE	790
SWITCH AS-PRESSURE (AIR CONDITIONER HIGH/LOW)	782
SWITCH AS-PRESSURE (ENGINE OIL)	88
SWITCH AS-PRESSURE (HIGH/LOW)	786
SWITCH AS-PRESSURE (OIL)	520
SWITCH AS-PUSH BUTTON	770
	774
SWITCH AS-PUSH BUTTON (ELECTRONIC-DOWNSHIFT)	516
SWITCH AS-PUSH BUTTON (ELECTRONIC-UPSHIFT)	516
SWITCH AS-PUSH BUTTON (TEMPERATURE CONTROL)	98
SWITCH AS-ROCKER	733
	734
	735
SWITCH AS-ROTARY (WIPER/WASHER) (FRONT)	780

INDEX

Name	Page
SWITCH AS-ROTARY (WIPER/WASHER) (LH DOOR)	780
SWITCH AS-ROTARY (WIPER/WASHER) (REAR)	780
SWITCH AS-ROTARY (WIPER/WASHER) (RH DOOR)	780
SWITCH AS-THERMOSTAT	736
SWITCH AS-TOGGLE (LOCKING)	550
SWITCH AS-TOGGLE (ON/OFF)	390
SWITCH AS (24 VOLT)(ILLUMINATED)	289
SWITCH GP-BYPASS	203
	283
SWITCH GP-DISCONNECT–BATTERY	284
SWITCH GP-DISCONNECT (BATTERY)	202
SWITCH GP-FLOW	136
SWITCH GP-MAGNETIC	256
	285
SWITCH GP-TOGGLE (2 POLE) (GUARD UP\DOWN)	390

T

TANK & FILTER GP-HYDRAULIC	630
TANK GP-COOLANT	137
TANK GP-FUEL	184
TANK GP-WATER	138
TERMINAL (HORN)	190
TIMER	88
TOOL GP-HAND	882
TOOTH GP-RIPPER	730
	731
	732
TORQUE CONVERTER GP	346
	348
	350
TRACK ADJUSTER & RECOIL GP	498
TRACK GP	504
	505
TRACK GP–2 REQUIRED	500
	501
	502
	506
TRACK GP–2 REQUIRED	503
TRANSMISSION AR	352
TRUNNION GP-BULLDOZER	704
TRUNNION GP-ENGINE	71
TURBOCHARGER GP	164
	165

U

UNDERCARRIAGE AR	507
	508
	509
UNIVERSAL JOINT GP	353

V

V-BELT	193
	194
	200
V-BELT (A/C COMPRESSOR)	98
V-BELT (AIR CONDITIONER COMPRESSOR)	750
V-BELT-BANDED	40
V-BELT-BANDED (ENGINE FAN)	98
V-BELT SET (INCLUDES 3 BELTS)	40
	42
VALVE & MTG GP-CONTROL	633
VALVE & MTG GP-POWER TRAIN	354
VALVE AS (AIR CONDITIONER)	782
VALVE AS-AIR CONDITIONER (HIGH SIDE)	782
	786
	790
VALVE AS-CHECK (WIPER/WASHER SYSTEM)	740
VALVE AS-ETHER START	274
VALVE AS-FLUID SAMPLING	76
	326
	520
VALVE AS-WATER	764
VALVE-BALL (DRAIN)	178
VALVE-BREAKER RELIEF	606
VALVE (CHECK)	787
	790
VALVE (CHECK) (A/C EVAPORATOR DRAIN)	783
VALVE-DRAIN	378
	380
	386
VALVE (FILL)	498
VALVE GP-BALL	600
VALVE GP-BALL (IMPLEMENT SHUTOFF)	588
	594
VALVE GP-BYPASS	524
	634
VALVE GP-CHECK	172
	186
	544
	635
VALVE GP-CHECK (REVERSE FLOW)	621
VALVE GP-CONTROL	356
	358
	636
	638
	640
	642
	644
	646
	648
VALVE GP-CONTROL (DOZER LIFT)	638
	640
	646

INDEX

Name	Page
VALVE GP-CONTROL (DOZER TILT)	638, 640, 646
VALVE GP-CONTROL (RIPPER LIFT)	638
VALVE GP-CONTROL (RIPPER TIP)	638
VALVE GP-CONTROL (WINCH)	646
VALVE GP-FLUSHING	539
VALVE GP-FUEL BYPASS	187
VALVE GP-MANIFOLD & REDUCING	650
VALVE GP-MODULATING	360
VALVE GP-PILOT	540, 652, 654, 656, 658
VALVE GP-PILOT CARTRIDGE	660, 661
VALVE GP-PILOT CARTRIDGE (DOZER LOWER)	652, 658
VALVE GP-PILOT CARTRIDGE (DOZER RAISE)	652, 658
VALVE GP-PILOT CARTRIDGE (DOZER TILT LEFT)	652, 658
VALVE GP-PILOT CARTRIDGE (DOZER TILT RIGHT)	652, 658
VALVE GP-PILOT CARTRIDGE (RIPPER LIFT)	656
VALVE GP-PILOT CARTRIDGE (RIPPER LOWER)	656
VALVE GP-PILOT CARTRIDGE (RIPPER TIP-IN)	656
VALVE GP-PILOT CARTRIDGE (RIPPER TIP-OUT)	656
VALVE GP-PILOT CARTRIDGE (WINCH-FREE SPOOL)	654
VALVE GP-PILOT CARTRIDGE (WINCH SPOOL-IN)	654
VALVE GP-PILOT CARTRIDGE (WINCH SPOOL-OUT)	654
VALVE GP-PILOT (DOZER)	552, 554
VALVE GP-PILOT (WINCH)	554
VALVE GP-PRESS & FLOW CMPNSTR	662
VALVE GP-PRESSURE COMPENSATOR	542
VALVE GP-PRESSURE CONTROL	544
VALVE GP-PRESSURE REDUCING	650, 663
VALVE GP-PRIORITY	362
VALVE GP-PRIORITY (PUMP AND LUBE FLOW)	324
VALVE GP-QUICK-DROP	664
VALVE GP-RELIEF	364, 365, 522, 546, 547, 650, 666, 667, 668
VALVE GP-RELIEF (CHARGE)	621
VALVE GP-RELIEF (CONVERTER PRESSURE)	324
VALVE GP-RELIEF (MAIN)	621
VALVE GP-SERVO	366, 368, 548
VALVE GP-SHUTTLE	669
VALVE GP-SHUTTLE (BALL RESOLVER)	636, 642, 644, 648
VALVE GP-SOLENOID	369, 370, 371, 670, 671
VALVE GP-SOLENOID (VARIABLE BLADE PITCH)	98
VALVE GP-SOLENOID (24 VOLT DC)	362
VALVE (LOAD CHECK)	636
VALVE MECHANISM	182
VALVE (RELIEF)	498
VALVE-SAMPLING	114
VALVE-SHUTOFF	794

W

WASHER GP-WINDOW	848
WEATHERSTRIP	859, 860, 866
WEATHERSTRIP (68CM)	868
WINDOW AS-SLIDING–LH	852
WINDOW AS-SLIDING–REAR	850
WINDOW AS-SLIDING–RH	851
WINDOW AS-SLIDING (LH)	746
WINDOW AS-SLIDING (REAR)	746
WINDOW AS-SLIDING (RH)	746
WINDOW GP-CAB–LH	856, 858, 860, 862
WINDOW GP-CAB–REAR	853, 854, 866

INDEX

Name	Page	Name	Page
	868		
WINDOW GP-CAB–RH	855		
	857		
	859		
	864		
WINDOW GP-CAB (LH)	856		
WINDOW GP-CAB (RH)	855		
	859		
WIPER GP-WINDOW	870		
WIPER PIVOT GP	872		
WIRING GP-ENGINE	286		
WIRING GP-PLATFORM	288		
WIRING GP-THROTTLE	291		
WOODCHIP AR	10		

INDEX

Désignation	Page

A

ACCUMULATEUR - HUILE PILOTE (ASS)	594
	601
ACCUMULATEUR - HUILE PILOTE (ASS)	588
ACCUMULATEUR - RÉFRIGÉRANT	782
	786
	790
ADAPTATEUR - ENTRAÎNEMENT DE POMPE (ASS)	170
ADAPTATEUR DE MOTEUR (ASS)	510
ADAPTATEUR DE REMPLIS. RAPIDE DE CARBURANT (ASS)	166
	168
ALTERNATEUR DE CHARGE (ASS)	193
	194
	196
	197
	198
	200
ALTERNATEUR DE CHARGE (ASS)	190
AMORTISSEUR DE VIBRATIONS (ASS)	39
AMPOULE (12 VOLTS)(ROUGE/VERT)(DEL)	228
AMPOULE (24 VOLTS)	733
	734
	735
	770
	774
AMPOULE (24 VOLTS) (65 WATTS)	230
AMPOULE (24 VOLTS)(65 WATTS)	231
AMPOULE (24 VOLTS)(65 WATTS) (PROJECTEUR)	232
AMPOULE (28 VOLTS)	229
	288
	770
	774
ARBRE A CAMES (ASS)	18
ARBRE DE TRANSMISSION (ASS)	292
	293
ARBRE D'ENTRAINEMENT PRINCIPAL	345
ARCEAUX DE DÉBARDAGE (ASS)	458
	460
AUTOCOLLANT - CATERPILLAR	745
AUTOCOLLANT - ÉQUIPEMENT DE MANUTENTION DE DÉCHET	2
AUTOCOLLANT-COPEAU DE BOIS (VERSION)	10
AUTOCOLLANT (CÔTÉ DROIT)(D8R)	440
AUTOCOLLANT (CÔTÉ GAUCHE)(D8R)	440
AUTOCOLLANT DE FILTRE A AIR (JOINT RADIAL)	146
AUTOCOLLANT DE MISE EN GARDE	227
AUTOCOLLANT DE MISE EN GARDE (RESSORT AMORTISSEUR)	476
	478
	482
AUTOCOLLANT D'IDENTIFICATION	228
	256
	770
	774
	780
	880
	881
AUTOCOLLANT D'IDENTIFICATION (ASSEMBLAGE ET NO DE SÉQUENCE)	738
	754
AUTOCOLLANT D'IDENTIFICATION (BULLDOZER)	585
AUTOCOLLANT D'IDENTIFICATION (COMMANDE DE TREUIL)	684
AUTOCOLLANT D'IDENTIFICATION (ÉCLAIRAGE DE TREUIL BASSE VITESSE)	684
AUTOCOLLANT D'IDENTIFICATION (NETTOYAGE)	98
AUXILIAIRE DE DÉMARRAGE À L'ÉTHER	274
AVERTISSEUR (ASS)	188
	288
AVERTISSEUR DE RECUL (ENS)	202
AXE DE CULBUTEUR (ASS)	68

B

BALAI D'ESSUIE-GLACE (ENS)	716
	717
BALAI D'ESSUIE-GLACE (ENS) (AVANT ET ARRIERE)	870
BALAI D'ESSUIE-GLACE (ENS) (PORTIERES DROITE ET GAUCHE)	870
BALANCIER DE SUSPENSION (ASS)	472
	474
BALANCIER DE SUSPENSION (ENS)	470
BANDE AUTOCOLLANTE	874
BANDE AUTOCOLLANTE (ARRIERE)(COTE DROIT)	438
	440
BANDE AUTOCOLLANTE (ARRIERE)(COTE GAUCHE)	438
	440
BANDE MÉTÉOROLOGIQUE	859
	860
	866
BANDE MÉTÉOROLOGIQUE (68CM)	868
BARRE D'ATTELAGE (ASS)	404
BARRE DÉFLECTRICE (VERSION)	462
	464
BASE DE FILTRE À CARBURANT (ASS)	171
BASE DE FILTRE À CARBURANT (ASS)	172
BATI DE RIPPER (ASS)	686
BATI EN C (ASS)	682

INDEX

Désignation	Page
BATTERIE ET CÂBLAGE	202
BATTERIE (SANS ENTRETIEN) (12 VOLTS)	205
BLINDAGE AR	446
BLINDAGE DE ROUE AV (ASS)	442
BLINDAGE DE TRANSMISSION (ASS)	323
BLINDAGE INFÉRIEUR (ASS)	432
	434
BLINDAGE INFÉRIEUR (VERSION)	422
BLOC-CYLINDRES - COUVERCLE (ASS)	19
	20
BLOC-CYLINDRES (ASS)	31
	32
BLOC-CYLINDRES (ENS)	29
	30
BOÎTE DE VITESSES (VERSION)	352
BOÎTE PLANÉTAIRE (ASS)	336
BORNE (KLAXON)	190
BOUCHON À ÉVENT	742
BOUCHON À VISSER	410
	818
BOUCHON DE CONTROLE DE NIVEAU D'HUILE (ENS)	490
BOUCHON DE GOULOTTE DE REMPLISSAGE	631
BOUCHON DE GOULOTTE DE REMPLISSAGE (ENS)	74
BOUCHON DE GOULOTTE DE REMPLISSAGE (ENS) (HUILE DE TRANSMISSION)	324
BOUCHON DE RADIATEUR (ENS)	137
BOUCHON DE REMPLISSAGE D'HUILE MOTEUR (ASS)	74
BOUCHON DE RÉSERVOIR DE CARBURANT (ENS)	184
BOUCHON DE VIDANGE	52
	114
	350
	476
	478
	482
	630
BOUCHON DE VIDANGE D'HUILE	62
BOUCHON D'ÉTANCHÉITÉ (CLIMATISEUR)(CÔTÉ ÉLEVÉ)	782
	786
	790
BOUCHON-JOINT	821
	848
BOUCHON-JOINT TORIQUE	358
BOULONNERIE DE CARTER AV (ASS)	44
	45
BOULONNERIE DE MONTAGE DE LA POMPE A HUILE (ASS)	73
BOURRELET D'ÉTANCHÉITÉ (2,9M)	15
BOUTON-AVERTISSEUR	288
BOUTON DE COMMANDE	770
	774
BOUTON-LOMBAIRE	811
	812
BOUTON (RÉGLAGE DE L'ACCOUDOIR)	830
BRAS DE POUSSEE - DROITE (ASS)	700
BRAS DE POUSSEE - GAUCHE (ASS)	698
	699

C

Désignation	Page
CABINE - REVÊTEMENT (ASS)	778
	780
CABINE (ASS)	746
CABINE ROPS FERMÉE (ASS)	826
CABINE (VERSION)	744
	745
CABLAGE - PLATE-FORME (ASS)	288
CABLAGE (ASS)-ACCELERATEUR	291
CABLAGE DE MOTEUR (ASS)	286
CACHE-SOUPAPES (ASS)	25
	26
	27
CADENAS (ASS)	14
	178
	184
	374
	410
	414
	444
	606
CANALISATIONS A COMMANDE PILOTE (ASS)	600
CANALISATIONS A COMMANDE PILOTE (ASS)	588
CANALISATIONS A COMMANDE PILOTE (ASS)	594
CANALISATIONS D'AIR (ASS)	149
	150
CANALISATIONS DE CARBURANT (ASS)	178
CANALISATIONS DE CARBURANT (ASS)	180
CANALISATIONS DE CHAUFFAGE (ASS)	794
CANALISATIONS DE CLIMATISEUR (ASS)	782
	790
CANALISATIONS DE CLIMATISEUR (ASS)	786
CANALISATIONS DE COLLECTEUR DE LAME DE BULLDOZER	586
CANALISATIONS DE DIRECTION (ASS)	524
CANALISATIONS DE POMPE (ASS)	606
CANALISATIONS DE RÉCHAUFFEUR DE LIQUIDE DE REFROIDISSEMENT	794
CANALISATIONS DE TREUIL (ASS)	690
CANALISATIONS D'EAU (ASS)	110
CANALISATIONS D'EAU (ASS)	112
	114
	116

INDEX

Désignation	Page
CANALISATIONS D'EXTRACTEUR DE BROCHE (ASS)	604
CANALISATIONS D'HUILE DE TRANSMISSION (ASS)	324
CANALISATIONS D'HUILE DE TURBOCOMPRESSEUR (ASS)	84
CANALISATIONS D'HUILE MOTEUR (ASS)	82
CANALISATIONS DU RIPPER (ASS)	609
	610
CANALISATIONS DU VÉRIN D'INCLINAISON (ASS)	612
	614
	616
	618
CAPOT ET PROTECTION (ASS)	450
CAPTEUR DE PRESSION (ASS)	263
	264
	265
	266
	267
	268
CAPTEUR DE PRESSION (ASS)	262
CAPTEUR DE PRESSION (ASS) (AIR)	36
CAPTEUR DE PRESSION (ASS) (HUILE)	32
CAPTEUR DE PRESSION ET MONTAGE	258
CAPTEUR DE TEMPERATURE (ASS)	202
CAPTEUR DE TEMPERATURE (ASS)	272
CAPTEUR DE TEMPERATURE (ASS)	172
CAPTEUR DE TEMPERATURE (ASS) (ADMISION D'AIR)	142
CAPTEUR DE TEMPERATURE (ASS) (CARBURANT)	171
CAPTEUR DE TEMPERATURE (ASS) (EAU)	110
CAPTEUR DE VITESSE (ASS)	202
	204
	269
	270
	271
	337
CAPTEUR DE VITESSE (ASS) (CALAGE PRINCIPAL DU MOTEUR)	56
CAPTEUR DE VITESSE (ASS) (CALAGE SECONDAIRE DU MOTEUR)	56
CAPTEUR DE VITESSE (ASS) (MOTEUR PRINCIPAL)	54
CAPTEUR DE VITESSE (ASS) (MOTEUR SECONDAIRE)	54
CARENAGE - RESERVOIR HYDRAULIQUE (ASS)	414
CARENAGE DE MOTEUR (ASS)	406
	410
CARTER AV (ASS)	54
	56
CARTER DE VOLANT (ASS)	52
CARTER TELESCOPIQUE DE MECANISME AMORTISSEUR	476
	478
	482
CEINTURE DE SECURITE (ASS)	834
	838
CENDRIER	760
CHAINES (ASS)	500
	501
	502
	503
	504
	505
	506
CHAPEAU	138
	190
	444
CHAPEAU DE GALET INFERIEUR (ASS)	468
	469
CHAPEAU DE ROUE AV (CHAINE) (ASS)	465
	466
	467
CHAPEAU DE SOUPAPE DE CLIMATISEUR (FILET 7/16 X 20)	754
CHAPEAU (RECEPTEUR D'HUILE DE TRANSMISSION)	86
CHAPEAU (RECEPTEUR D'HUILE MOTEUR)	86
CHÂSSIS ET CARTER (ASS)	378
	380
	386
CHÂSSIS PORTEUR (ENS)	475
CHAUFFAGE DE CABINE (ASS)	764
CLAPET A BILLE (VIDANGE)	178
CLAPET (CONTRÔLE)	787
	790
CLAPET (CONTRÔLE DE CHARGE)	636
CLAPET (CONTRÔLE) (VIDANGE EVAPORATEUR DE CLIMATISEUR)	783
CLAPET DE DECHARGE (ASS)	364
	365
	522
	650
	666
	667
	668
CLAPET DE DECHARGE (ASS)	546
	547
CLAPET DE DECHARGE (ASS) (CHARGE)	621
CLAPET DE DECHARGE (ASS) (PRESSION DU CONVERTISSEUR)	324
CLAPET DE DECHARGE (ASS) (PRINCIPAL)	621
CLAPET DE DÉCHARGE HYDRAULIQUE	606
CLAPET DE RETENUE (ENS)	172
	186
	544

INDEX

Désignation	Page
CLAPET DE RETENUE (ENS)	635
CLAPET DE RETENUE (ENS) (RETOUR DE DÉBIT)	621
CLAPET DE RETENUE (ENS) (SYSTÈME D'ESSUIE GLACE/LAVE-GLACE)	740
CLAPET (DÉTENTE)	498
CLAPET (ENS) (CLIMATISEUR)	782
CLAPET (REMPLISSAGE)	498
CLÉ	14
	178
	184
	284
	374
	410
	444
	606
CLÉ (DÉMARREUR)	414
CLIMATISEUR (ASS)	736
CLIMATISEUR (VERSION)	733
CLIMATISEUR (VERSION)	734
	735
COFFRE DE BATTERIE (ASS)	374
	376
COLLECTEUR D'ADMISSION (ASS)	621
COLLECTEUR D'ADMISSION (ASS) (SOUPAPE DE DISTRIBUTEUR DE BULLDOZER/TREUIL)	638
	640
	646
COLLECTEUR D'ÉCHAPPEMENT (ASS)	151
COLLECTEUR ET SOUPAPE (ASS)	329
	330
COLLECTEUR HYDRAULIQUE (ASS)	620
COLLIER-GAINE	280
	281
COMMANDE À DISTANCE (ENS)	390
COMMANDE À DISTANCE (ENS) (BLINDAGES HYDRAULIQUES INFÉRIEURS)	422
COMMANDE DE COMMUNICATION (ASS) (LIAISON DE PRODUIT)	227
COMMANDE DE DIRECTION (ASS)	514
COMMANDE DE DIRECTION ET BOITE DE VITESSES	516
	518
COMMANDE DE FREIN DE STATIONNEMENT (ASS)	512
COMMANDE DE MACHINE (ASS)	214
COMMANDE D'EQUIPEMENT (ASS)	758
COMMANDE ELECTRONIQUE DE BOITE (ASS)	756
COMMANDE ELECTRONIQUE DE BOITE (ASS)	757
COMMANDE ELECTRONIQUE DE MOTEUR (ASS)	212
	213
COMMANDE ELECTRONIQUE ET MONTAGE (ASS)	208
COMMANDE ET MONTAGE - MOTEUR	210
COMMANDE ET MONTAGE DE PÉDALE (ASS)	305
COMMANDE HYDRAULIQUE DE BOÎTE (ASS)	306
COMMANDE HYDRAULIQUE (VERSION)	549
	550
COMMANDE NON PROGRAMMEE (ASS)	208
	215
	757
COMPOSANTS ÉLECTRONIQUES DE LA MACHINE (VERSION)	5
COMPRESSEUR DE REFRIGERANT (ASS)	749
	750
CONDENSATEUR ET MONTAGE (RÉFRIGÉRANT)	752
CONDENSEUR DE RÉFRIGÉRANT	754
CONTACTEUR DE DEBIT (ASS)	136
CONTACTEUR DE DÉMARRAGE À CLÉ (ENS)	770
	774
CONTACTEUR (ENS)	600
	733
	734
	735
CONTACTEUR (ENS) (CLIMATISATION)	240
CONTACTEUR (ENS) (ÉCLAIRAGE)	770
	774
CONTACTEUR (ENS) (SOUFFLANT)	774
CONTACTEUR (ENS) (VERROUILLAGE D'ÉQUIPEMENT)	588
	594
CONTACTEUR (ENS) (24 VOLTS) (ILLUMINÉ)	289
CONTACTEUR MAGNETIQUE (ASS)	256
	285
CONTACTEUR MAGNETIQUE (ASS)	256
CONTACTEUR MAGNETIQUE (ENS) (MINUTERIE DE PREGRAISSAGE)	88
CONTREPOIDS (ASS)	392
CONVERTISSEUR DE COUPLE (ASS)	346
	348
	350
COURONNE ET ENGRENAGES DE TRANSFERT (ASS)	320
COURROIE TRAPEZOIDALE	193
	194
	200
COURROIE TRAPEZOIDALE (COMPRESSEUR DE CLIMATISEUR)	98
	750
COURROIE TRAPÉZOÏDALE EN BANDE	40
COURROIE TRAPÉZOÏDALE EN BANDE (VENTILATEUR DE MOTEUR)	98

INDEX

Désignation	Page
COUVERCLE (ASS)	393
COUVERCLE DE CARTER AV (ASS)	22
COUVERCLE DE CARTER DE VOLANT (ASS)	21
COUVERCLE DE LA CONSOLE (ASS)	760
COUVERCLE DE TOURILLON (ASS)	394
COUVERCLE-HAUT PARLEUR	780
COUVERCLE INFÉRIEUR-DOSSIER (ASS)	810
CREPINE (ENS)	630
CULASSE (ASS)	36, 38
CULASSE (ENS)	34
CULBUTERIE	182
CULBUTERIE ET POMPE A CARBURANT (ASS)	182

D

Désignation	Page
DEFLECTEUR D'ECHAPPEMENT (ASS)	161
DEFLECTEUR PARE-SABLE (ASS)	418
DÉMARREUR - CIRCUIT DE PRÉGRAISSAGE	280
DÉMARREUR ÉLECTRIQUE (ASS)	276, 279
DENT DE RIPPER (ASS)	730, 731, 732
DISJONCTEUR DE SECURITE (ENS)	334, 600
DISJONCTEUR DE SECURITE (ENS) (FREIN DE STATIONNEMENT)	516
DISJONCTEUR DE SECURITE (ENS) (VERROUILLAGE D'ÉQUIPEMENT)	588, 594
DISJONCTEUR (ENS) (135A)	256
DISJONCTEUR (ENS) (15A)	216, 256
DISPOSITIF DE VIDANGE RAPIDE D'HUILE (ASS)	86
DISPOSITIF D'EVACUATION DES VAPEURS DE CARTER	78
DISTRIBUTEUR (ASS)	640, 644, 646
DISTRIBUTEUR (ASS)	356, 358, 636, 638
DISTRIBUTEUR (ASS)	642, 648
DISTRIBUTEUR (ASS) (INCLINAISON DE BULLDOZER)	638, 640, 646
DISTRIBUTEUR (ASS) (LEVAGE DE BULLDOZER)	638, 640, 646
DISTRIBUTEUR (ASS) (LEVAGE DE RIPPER)	638
DISTRIBUTEUR (ASS) (POINTE DE RIPPER)	638
DISTRIBUTEUR (ASS) (TREUIL)	646
DISTRIBUTEUR DE PRESSION (ASS)	544
DISTRIBUTEUR ET MONTAGE (ASS)	633

E

Désignation	Page
EAU DES CHEMISES - RECHAUFFEUR (ASS)	222, 224
ÉCLAIRAGE	600
ECLAIRAGE - GROUPE DE 4 LAMPES	244
ÉCLAIRAGE - PROJECTEURS (ASS)	246, 247, 248
ÉCLAIRAGE (ASS)	241
ÉCLAIRAGE (ASS)	242
ECLAIRAGE AV (ASS)	250, 252
ECLAIRAGE TABLEAU DE BORD	770, 774
ÉCLAIRAGE (VERSION)	234, 236, 240
ÉCLAIRAGE (VERSION)	238
ÉCRAN	630, 650
ÉCRAN DE COLLECTEUR (ASS)	162
ÉCRAN (ENS) (ADMISSION DE POMPE À HUILE DE TRANSMISSION)	324
ÉCRAN (ENS) (GAVAGE DU CONVERTISSEUR DE COUPLE)	324
ÉCRAN THERMIQUE (VERSION)	160
ÉJECTEUR AUTOMATIQUE DE POUSSIÈRE (ASS)	147
ÉLECTRONIQUE - MACHINE (ENS)	217, 218
ÉLECTRONIQUE-MONITEUR (ASS)	219
ÉLÉMENT DE FILTRE	150
ÉLÉMENT DE FILTRE À AIR (ENS) (PRINCIPAL)	146
ÉLÉMENT DE FILTRE À AIR (ENS) (SECONDAIRE)	146
ÉLÉMENT DE FILTRE À HUILE (ENS) (DÉBIT HYDRAULIQUE/RETOUR DE DÉBIT) (JETABLE)	630
ÉLÉMENT DE FILTRE À HUILE (ENS) (HYDRAULIQUE)	309, 310

INDEX

Désignation	Page
ÉLÉMENT DE FILTRE À HUILE (ENS) (HYDRAULIQUE) (HAUTES PERFORMANCES)	630
ÉLÉMENT DE FILTRE À HUILE (ENS) (RETOUR DE DÉBIT) (LIQUIDE RÉSISTANT AU FEU)	630
ÉLÉMENT DU RÉCHAUFFEUR D'EAU DES CHEMISES (ENS)	222
ÉLÉMENT DU RÉCHAUFFEUR D'EAU DES CHEMISES (ENS) (240 VOLTS/1500 WATTS)	224
ÉLIMINATION DES DÉCHETS (VERSION)	4
ÉLIMINATION DES DÉCHETS (VERSION)	1 2
EMBOUT ET LAME DE COUPE (ASS)	705 706 707
ENFOUISSEMENT SANITAIRE (VERSION)	8
ENTRAÎNEMENT DE POMPE (ASS)	173
ENTRAÎNEMENT DE VENTILATEUR (ASS)	42
ENTRAÎNEMENT DE VENTILATEUR (ASS)	40
ENTRETIEN DE LA MACHINE (ASS)	273
ESSUIE-GLACE (ASS)	870
EXTRACTEUR DE BROCHE (ASS)	697
EXTRACTEUR DE BROCHE (VERSION)	696

F

Désignation	Page
FAISCEAU DU REFROIDISSEUR D'HUILE (ASS)	96
FILTRE -EAU	121
FILTRE À AIR (AIR FRAIS DE CABINE)	818
FILTRE A AIR (ASS)	144 146
FILTRE À CARBURANT	184
FILTRE A CARBURANT (ASS)	174
FILTRE A CARBURANT (ENS)	174
FILTRE A HUILE (ASS)	309 310
FILTRE A HUILE (ASS)	520
FILTRE À HUILE (ENS)	520
FILTRE À HUILE MOTEUR (ASS)	76
FILTRE A HUILE MOTEUR (ENS)	76
FILTRE DE POMPE À EAU	118
FILTRE DE SÉPARATEUR D'EAU ET DE CARBURANT (ASS)	176
FILTRE DE SÉPARATEUR D'EAU ET DE CARBURANT (ASS)	175
FILTRE (ENS) (RECIRCULATION D'AIR DE CABINE)	818
FILTRE (ENS) (SÉPARATEUR D'EAU ET CARBURANT)	175
FLEXIBLE	128
FREIN - DIFFÉRENTIEL ET COUPLE CONIQUE	294
FREIN ET ENTRAÎNEMENT (ASS)	298 299
FREIN ET ENTRAÎNEMENT DE DIFFÉRENTIEL (ASS)	294
FREIN ET TRAINS PLANÉTAIRES (ASS)	300
FUSIBLE (10A)	256
FUSIBLE (15A)	256
FUSIBLE (20 A)	256
FUSIBLE (5A)	256

G

Désignation	Page
GALET A BOUDIN DOUBLE (ASS)	493
GALET A BOUDIN SIMPLE (ASS)	494
GALET (VERSION)	492
GARDE-BOUE (ASS)	416
GLISSIÈRE	853 857 858
GRAISSAGE DE LA TRAVERSE-PIVOT	490
GRAISSEUR	16 40 42 472 474 566 568 570 574 576 578 582 673 686
GRAISSEUR À MAIN (ASS)	876
GRAISSEUR (ENS) (DÉBRANCHEMENT RAPIDE)	520
GRAISSEUR (FILET 1/8-27)	693
GRILLE DE PROTECTION (ASS)	827 828
GRILLE DE RADIATEUR (ASS)	419 420
GROUPE DE CONTROLE (SYSTÈME DE SURVEILLANCE CATERPILLAR)	770 774
GROUPE DE MOTEUR A PISTONS	530
GROUPE DE ROTATION DE MOTEUR	534
GROUPE DE ROTATION DE POMPE	536 626
GUIDE DE JAUGE (ENS)	80

H

Désignation	Page
HUILE MOTEUR - CARTER (ASS)	62 64

INDEX

Désignation	Page

I

INDICATEUR - FILTRE À AIR (VERSION)	148
INDICATEUR DE COLMATAGE DE FILTRE A AIR	148
INDICATEUR (ENS)	770, 774
INDICATEURS (VERSION)	6
INJECTEUR DE CARBURANT (ASS)	177
INSONORISATION - COUVERCLE (ASS)	23, 24
INSONORISATION (VERSION)	9
INSTRUMENTS DE LA CABINE (ASS)	774
INTERRUPTEUR - BOUTON-POUSSOIR (ENS)	770, 774
INTERRUPTEUR - BOUTON-POUSSOIR (ENS) (COMMANDE DE TEMPÉRATURE)	98
INTERRUPTEUR - BOUTON-POUSSOIR (ENS) (MONTÉE EN VITESSE - INTERR. ÉLECTRON.)	516
INTERRUPTEUR - BOUTON-POUSSOIR (ENS) (RÉTROGRADATION - INTERR. ÉLECTRON.)	516
INTERRUPTEUR - DÉRIVATION (ASS)	203, 283
INTERRUPTEUR À BASCULE (ASS) (2 PÔLES) (PROTECTION SUP/INF)	390
INTERRUPTEUR À BASCULE (ENS) (MARCHE-ARRÊT)	390
INTERRUPTEUR À BASCULE (ENS) (VERROUILLAGE)	550
INTERRUPTEUR BALANCIER (ENS)	733, 734, 735
INTERRUPTEUR DE KLAXON (ENS)	288
INTERRUPTEUR DE THERMOSTAT (ENS)	736
INTERRUPTEUR ROTATIF (ENS) (ESSUIE-GLACE/LAVE-GLACE) (ARRIÈRE)	780
INTERRUPTEUR ROTATIF (ENS) (ESSUIE-GLACE/LAVE-GLACE) (AVANT)	780
INTERRUPTEUR ROTATIF (ENS) (ESSUIE-GLACE/LAVE-GLACE) (PORTE GAUCHE)	780
INTERRUPTEUR ROTATIF (ENS) (ESSUIE-GLACE/LAVE-GLACE) (PORTIERE DROITE)	780

J

JAUGE D'HUILE MOTEUR (BAIONNETTE) (ASS)	80
JAUGE D'HUILE MOTEUR (BAÏONNETTE) (ENS)	80
JEU DE COURROIES TRAPEZOIDALES (COMPREND 3 COURROIES)	40, 42
JOINT DE VILEBREQUIN (ASS)	28
JOINT PLAT	64, 631
JOINT PLAT DU COLLECTEUR D'ECHAPPEMENT	151
JOINT-SORTIE	114
JOINT UNIVERSEL (ASS)	353

K

KIT D'ATTACHE	846
KIT D'ATTACHE DE CEINTURE DE SECURITE	844
KIT DE BALAI D'ESSUIE-GLACE	870
KIT DE BEC	862, 866
KIT DE BEC (COMPREND LOQUET ET 2 VIS)	864
KIT DE BEC (COMPREND LOQUET ET 2 VIS (ENS))	862
KIT DE BLOC COULISSANT	839, 840, 841
KIT DE BORNE	277, 280
KIT DE BORNE DE RELAIS	190
KIT DE BORNE DE SORTIE	190
KIT DE BOUGIE (12 BROCHES)	205, 228, 286, 518, 588, 594, 600
KIT DE BOUGIE (2 BROCHES)	88, 98, 203, 204, 234, 236, 238, 244, 252, 286, 288, 289, 550, 588, 594, 600, 654, 690, 738

INDEX

Désignation	Page
	754
	771
	775
KIT DE BOUGIE (3 BROCHES)	98
	202
	203
	262
	263
	264
	265
	266
	267
	268
	288
	289
	518
	550
	588
	594
	600
	690
	770
	775
	782
KIT DE BOUGIE (4 BROCHES)	98
	203
	216
	288
	289
	550
	588
	594
	601
	771
	775
KIT DE BOUGIE (6 BROCHES)	88
	289
	518
	771
	775
	848
KIT DE BOUGIE (8 BROCHES)	227
	288
	289
	291
	388
	770
	775
	817
KIT DE BOULONNERIE (SUSPENSION DU SIÈGE)	846
KIT DE BOUTON	766
	821
KIT DE BUTÉE	868
KIT DE CAPTEUR À CADRAN	184
KIT DE CHAPEAU DE FILTRE (RÉSERVOIR DE CARBURANT)	184
KIT DE COUSSINET	280
	534
	767
KIT DE DIODE POSITIF	191
KIT DE FAISCEAU DE CABLAGE	846
KIT DE GAINE	844
KIT DE GUIDE	862
	866
KIT DE GUIDE (COMPREND GUIDE ET ÉCROU)	862
	864
KIT DE JOINT DE VERIN HYDRAULIQUE	580
KIT DE JOINTS	369
	370
	522
	668
	670
	671
KIT DE LAME	99
KIT DE PARE-CHOCS	766
KIT DE PISTON	624
KIT DE PISTON EXCENTRIQUE	624
KIT DE PLOT DE CONNEXION DE DIODE	190
KIT DE POUSSOIR	766
KIT DE PRISE FEMELLE	802
KIT DE PRISE FEMELLE (12 BROCHES)	205
	228
	289
	512
	518
KIT DE PRISE FEMELLE (2 BROCHES)	88
	98
	136
	188
	202
	203
	204
	230
	234
	238
	244
	252
	269
	270
	271
	274
	283
	286
	288
	289
	369
	422
	520

INDEX

Désignation	Page
	550
	588
	594
	600
	652
	654
	658
	738
	754
	770
	774
	782
	786
	790
KIT DE PRISE FEMELLE (3 BROCHES)	88
	98
	110
	142
	171
	172
	202
	203
	204
	229
	259
	260
	261
	272
	286
	288
	289
	518
	550
	588
	594
	600
	754
	770
	774
KIT DE PRISE FEMELLE (4 BROCHES)	98
	203
	289
	370
	588
	594
	600
	670
	671
	770
	774
KIT DE PRISE FEMELLE (6 BROCHES)	254
	340
	422
	738
	742
	774
	799
	800
	801
	803
KIT DE PRISE FEMELLE (8 BROCHES)	203
	227
	289
	770
	774
	775
	821
KIT DE RÉNOVATION DE LA POMPE À EAU (EAU)	118
KIT DE RESSORT	859
	860
	868
KIT DE RESSORTS	766
KIT DE ROULEAU	844
	846
KIT DE VIS DE RETENUE	213
	215
KIT D'ENGRENAGE DE DÉMARREUR	281
KIT D'INDICATEUR	766
KIT (JOINT CHASSIS PORTEUR) (POMPE À EAU)	118
KLAXON (ENS) (24 VOLTS)(TON FAIBLE)	205
KLAXON (ENS) (24 VOLTS)(TON FORT)	204

L

LAME À ORIENTATION (ASS)	724
LAME DE BULLDOZER SEMI-UNIVERSELLE (VERSION)	680
LAME DE BULLDOZER UNIVERSELLE (VERSION)	681
LAME DE COUPE (ASS)	708
	709
	710
	711
	712
	713
	714
	715
	727
LAME SEMI-UNIVERSELLE (ASS)	725
LAME SEMI-UNIVERSELLE (ENS)	718
	720
	721
LAME UNIVERSELLE (ASS)	726
LAME UNIVERSELLE (ENS)	722
	723
LAMPE - PHARE (ASS)	230
	231
	232

INDEX

Désignation	Page
LAMPE - PHARE (ASS) (24 VOLTS)	236
LAMPE - PHARE (ASS) (24 VOLTS)(SUSPENDU)	236, 238, 240, 241, 242, 244, 247
LAMPE - PHARE (ASS) (24 VOLTS)(VERTICAL)	248
LAVE-GLACE - VITRE (ASS)	848
LENTILLE DE PLAFONNIER	229
LENTILLE DE PROJECTEUR (ENS)	231, 232
LENTILLE ROUGE	288
LOGICIEL - ÉLECTROMODULE (ASS)	219, 756
LOGICIEL - MACHINE (ENS) (SYSTEME DE SECURITE)	273
LOGICIEL - MACHINE (ENS) (SYSTEME DE SECURITE) (LOGICIEL SEULEMENT)	218
LOGICIEL (ASS)	217
LOGICIEL (ASS) (ÉLECTRONIQUE)	757
LOGICIEL-MACHINE (ASS)	273
LOGICIEL-MONITEUR (ASS)	219
MAILLON DE CHAINE (ENS)	489
MANOCONTACT (ENS)	790
MANOCONTACT (ENS) (CLIMATISEUR-REGLAGE ELEVE/BAS)	782
MANOCONTACT (ENS) (GRANDE/PETITE)	786
MANOCONTACT (ENS) (HUILE)	520
MANOCONTACT (ENS) (HUILE MOTEUR)	88
MARCHEPIED (ASS)	457
MARCHEPIED ET POIGNÉE (VERSION)	842
MECANISME AMORTISSEUR ET REGLAGE DE CHAINES (ASS)	498
MÉCANISME DE COMMANDE - PUISSANCE (ASS)	372
MÉCANISME DE COMMANDE - PUISSANCE (ASS) (BLINDAGES INFÉRIEURS)	422
MECANISME DE COMMANDE DE LA POMPE A PISTONS (ASS)	548
MINUTERIE	88
MODULE - QUATRE INSTRUMENTS (ASS)	799
MODULE D'AFFICHAGE (ASS)	254
MONTAGE-ANTENNE (ASS) (LIAISON DE PRODUIT)	227
MONTAGE-COMMUNICATION (ASS)	227
MONTAGE D'ALTERNATEUR (ASS)	60
MONTAGE DE CABINE (ASS)	804
MONTAGE DE FILTRE À AIR (ASS)	152
MONTAGE DE GROUPE DE COMMANDE	805, 806
MONTAGE DE MOTEUR (VERSION)	14
MONTAGE DE RADIO (ASS)	769
MONTAGE DE RÉDUCTEURS (ASS)	331
MONTAGE DE RIPPER (ASS)	694
MONTAGE DE SOUPAPE (ASS)	622
MONTAGE DE VÉRIN (ASS)	693
MONTAGE D'ENTRAÎNEMENT DE VENTILATEUR (ASS)	61
MONTAGE-SÉCURITÉ (ASS)	228
MOTEUR - PARTIE CENTRALE (VERSION)	13
MOTEUR COMPLET (VERSION)	11, 12
MOTEUR D'ESSUIE-GLACE (ASS)	802, 803
MOTEUR ESSUIE-GLACE	800, 801
MOTEUR ESSUIE-GLACE (PORTE GAUCHE)	870
MOTEUR ESSUIE-GLACE (PORTIERE DROITE)	870
OEILLETONS DE LEVAGE MOTEUR (ASS)	58, 59
OUTILS (ASS)	882
PANNEAU D'INSONORISATION (ASS)	452
PARE-PIERRES (ASS)	688, 689
PARE-POUSSIERE	76, 114, 168, 302, 310, 324, 358, 365, 520, 524, 588, 594, 606
PÉDALE DE RÉGULATEUR ET DE FREIN (ASS)	334
PEINTURE (ASS)	10
PIGNON AR (ASS)	50
PIGNONNERIE AV (ASS)	48
PIGNONNERIE D'ARBRE À CAME	47
PISTON (ENS) (NIVEAU D'HUILE DE TRANSMISSON/ JAUGE BAÎONNETTE)	324

M

O

P

INDEX

Désignation	Page
PISTON ET BIELLE (ASS)	66
PIVOT D'ESSUIE-GLACE (ASS)	872
PLAFONNIER (ASS)	229
PLAFONNIER (ASS) (24 VOLTS)(AVEC INTERRUPTEUR)	780
PLAQUE - ATTELAGE (ASS)	453
PLAQUE - AVERTISSEMENT (HUILE DE RESSORT AMORTISSEUR)	478
	482
PLAQUE - AVERTISSEMENT (VENTILATEUR DE MOTEUR)	98
PLAQUE D'INSTRUCTIONS (CLIMATISEUR)	733
	734
	735
PLAQUE D'USURE (ASS)	728
PLAQUE-GLISSIÈRE (ASS)	813
PLAQUE SIGNALÉTIQUE (ASS)	874
PLAQUE SIGNALÉTIQUE (REMARQUE)	880
PLAQUE SIGNALÉTIQUE (REMARQUE) (POMPE DE PRÉ-GRAISSAGE)	88
PLAQUE SIGNALÉTIQUE (REMARQUE) (RADIO)	769
PLAQUES SIGNALETIQUES ET AUTOCOLLANTS (ASS)	877
	878
	880
PLATE-FORME - CABINE (ASS)	814
PLATE-FORME (ASS)	454
PLATEAU OSCILLANT (ASS)	627
	628
POIGNEE	600
POIGNÉE DE COMMANDE (ASS)	762
POIGNÉE DE COMMANDE (ASS) (TREUIL)	654
POIGNÉE DE LEVIER (ASS)	763
POIGNEE (VERROUILLAGE D'ÉQUIPEMENT)	588
	594
POMPE A EAU (ASS)	117
	118
	120
	121
POMPE A ENGRENAGES (ASS)	341
	342
	531
POMPE A ENGRENAGES (ASS) (HUILE DE TRANSMISSION)	324
POMPE A HUILE MOTEUR (ASS)	92
POMPE A PISTONS (ASS)	532
	624
POMPE D'ALIMENTATION EN CARBURANT (ASS)	183
PORTIERE DROITE (ASS)	400
	402
PORTIERE GAUCHE (ASS)	396
	398
POSTE DE CONDUITE (VERSION)	808
PREFILTRE (ASS)	158
	159
PREFILTRE (VERSION)	156
	157
	158
PRISE DE COURANT (ENS) (12 VOLTS)	288
PRISE (ENS)	817
PROTECTEUR DE RÉDUCTEURS (ASS)	437
PROTECTEUR DE RÉDUCTEURS (VERSION)	426
PROTECTION DE JOINT (ASS)	447
PROTECTION DE ROUE LIBRE (VERSION)	427
	428
PROTECTION DU RÉSERVOIR DE CARBURANT (ASS)	438
PROTECTION DU RÉSERVOIR DE CARBURANT (ASS)	440
PROTECTION (ENS)	105
	106
	107
	108
PROTEGE-GALETS (ASS)	448
PROTÈGE-RADIATEUR	430
PROTÈGE-RADIATEUR (ASS)	444

R

RACCORD DE RÉFRIGÉRANT (ENS)	782
RADIATEUR (ASS)	124
	126
	128
	130
	132
	134
RADIATEUR-CORPS (ENS)	94
	95
RADIATEUR (VERSION)	122
RADIO-AM/FM/WB (ASS)	821
RALLONGE DU DOSSIER DE SIEGE	838
RALLONGE DU DOSSIER DE SIEGE (TOILE)	834
RÉCEPTEUR-DÉSHYDRATEUR (ENS) (CLIMATISEUR)	782
	786
	790
RECHAUFFEUR DE CARBURANT (ASS)	220
REDUCTEUR MARIN - MONTAGE (ASS)	332
RÉDUCTEURS (ASS)	312
	316
	318
REFROIDISSEUR D'ADMISSION (ASS)	142
REFROIDISSEUR D'HUILE HYDRAULIQUE (ASS)	555
REFROIDISSEUR D'HUILE MOTEUR (ASS)	93

INDEX

Désignation	Page
REGULATEUR DE TEMPERATURE DE CARBURANT	220
RELAIS DU PANNEAU (ASS)	256
RENIFLARD	490
RENIFLARD (ASS)	72
RENIFLARD (ENS)	72
RENIFLARD (ENS) (TRANSMISSION)	324
RÉSERVOIR DE CARBURANT (ASS)	184
RÉSERVOIR DE LAVE-GLACE (ASS)	740
RÉSERVOIR DE LAVE-GLACE (ASS)	742
RÉSERVOIR D'EAU (ASS)	138
RÉSERVOIR DU LIQUIDE DE REFROIDISSEMENT (ASS)	137
RÉSERVOIR HYDRAULIQUE ET FILTRE (ASS)	630
RÉTROVISEUR (ASS)	796
	797
	798
RIPPER (ASS)	729
RIPPER (VERSION)	703
ROBINET DE BATTERIE (ASS)	284
ROBINET DE BATTERIE (ASS) (BATTERIE)	202
ROBINET-ÉCHANTILLON DE LIQUIDE (ENS)	326
ROBINET-ÉCHANTILLON DE LIQUIDE (ENS)	520
ROBINET-ÉCHANTILLON DE LIQUIDE (ENS)	76
ROTATION DE LA ROUE DU VENTILATEUR SOUFFLANT	256
	550
ROTATION DE LA ROUE DU VENTILATEUR SOUFFLANT (RÉGLAGE DU SIÈGE)	844
ROUE AV - CHAINES (ASS)	485
	486
	487
	488

S

Désignation	Page
SEGMENT DE BARBOTIN (ASS)	344
SERVOVALVE (ASS)	366
	368
	548
SIEGE - COUVERCLE INFERIEUR (ASS)	811
	812
SIÈGE (ASS)	830
	831
	832
	834
	836
	838
SIÈGE AVEC SUSPENSION (ASS)	846
SIÈGE AVEC SUSPENSION (ASS)	844
SIÈGE AVEC SUSPENSION (ASS)	839
	840
	841
SIÈGE INCLINABLE (ASS)	822
SIEGE (VERSION)	829
SILENCIEUX (ASS)	153
	154
SONDE - CIRCUIT DE CARBURANT	259
	260
	261
SONDE CARBURANT (ENS)	184
SONDE THERMIQUE	202
SOUPAPE - CARTOUCHE PILOTE (ASS)	660
	661
SOUPAPE - CARTOUCHE PILOTE (ASS) (ABAISSEMENT DU BULLDOZER)	652
	658
SOUPAPE - CARTOUCHE PILOTE (ASS) (INCLINAISON À DROITE DU BULLDOZER)	652
	658
SOUPAPE - CARTOUCHE PILOTE (ASS) (INCLINAISON À GAUCHE DU BULLDOZER)	652
	658
SOUPAPE - CARTOUCHE PILOTE (ASS) (LEVAGE DE RIPPER)	656
SOUPAPE - CARTOUCHE PILOTE (ASS) (POINTE DE RIPPER-RENTREE)	656
SOUPAPE - CARTOUCHE PILOTE (ASS) (POINTE DE RIPPER-SORTIE)	656
SOUPAPE - CARTOUCHE PILOTE (ASS) (RELEVAGE DE BULLDOZER)	652
	658
SOUPAPE - CARTOUCHE PILOTE (ASS) (RIPPER-ABAISSEMENT)	656
SOUPAPE - CARTOUCHE PILOTE (ASS) (TIROIR DE TREUIL RENTRÉ)	654
SOUPAPE - CARTOUCHE PILOTE (ASS) (TIROIR DE TREUIL SORTI)	654
SOUPAPE - CARTOUCHE PILOTE (ASS) (TREUIL-POSITION LIBRE DU TIROIR)	654
SOUPAPE - CLIMATISEUR (ENS) (COTÉ ÉLEVÉ)	782
	786
	790
SOUPAPE - EAU	764
SOUPAPE - SOLÉNOÏDE (ASS)	370
	371
	671
SOUPAPE - SOLÉNOÏDE (ASS)	369
	670
SOUPAPE - SOLÉNOÏDE (ASS) (PAS DE LAME VARIABLE)	98
SOUPAPE - SOLÉNOÏDE (ASS) (24 VOLT DC)	362
SOUPAPE D'ABAISSEMENT RAPIDE (ASS)	664
SOUPAPE D'ARRÊT	794
SOUPAPE DE COMPENSATION DE PRESSION (ASS)	542

INDEX

Désignation	Page
SOUPAPE DE DÉRIVATION (ASS)	524, 634
SOUPAPE DE DÉRIVATION DE CARBURANT (ASS)	187
SOUPAPE DE MODULATION (ASS)	360
SOUPAPE DE PRIORITE (ASS)	362
SOUPAPE DE PRIORITE (ASS) (POMPE ET DÉBIT DE GRAISSAGE)	324
SOUPAPE DE TRANSMISSION ET MONTAGE (ASS)	354
SOUPAPE DE VIDANGE	378, 380, 386
SOUPAPE-DÉMARRAGE À L'ÉTHER (ENS)	274
SOUPAPE-ÉCHANTILLON	114
SOUPAPE PILOTE (ASS)	540, 654, 656, 658
SOUPAPE PILOTE (ASS)	652
SOUPAPE PILOTE (ASS) (BULLDOZER)	552, 554
SOUPAPE PILOTE (ASS) (TREUIL)	554
SOUPAPE RÉDUCTRICE DE PRESSION (ASS)	650, 663
SOUPAPE RÉDUCTRICE ET COLLECTEUR (ASS)	650
SOUPAPE RÉGULATRICE DE PRESSION ET DÉBIT	662
SOUPAPE SPHÉRIQUE (ASS)	600
SOUPAPE SPHÉRIQUE (ASS) (ARRET EQUIPEMENT)	588, 594
STABILISATEUR - BRAS DE POUSSEE (ASS)	692
STABILISATEUR DU BRAS DE POUSSEE (ASS)	701, 702
SUPPORT DE CACHE-SOUPAPE ET FAISC. DE CABL. D'IN.	15
SUPPORT DE MOTEUR (ASS)	69, 70
SUPPORT ROPS (ASS)	843
SURPRESSEUR (ASS)	818
SUSPENSION A BOGIES (ASS)	496
SUSPENSION DE SIEGE - CARTER (ASS)	766

T

Désignation	Page
TABLEAU DE BORD (ASS)	770
TAMIS D'ASPIRATION	302
TAMIS DE CARTER (RÉSERVOIR DE CARBURANT)	178
TAMPON DE POUSSÉE (ASS)	672
TAPIS DE PLANCHER	760, 808, 814
TENDEUR DE COURROIE (ASS)	16
TÊTE DE POMPE (ASS)	522
THERMOSTAT-TEMPÉRATURE D'EAU (92 DEGRÉS C)	110
TIRANT DE BULLDOZER (ASS)	673, 674
TOIT ROPS (ASS)	824
TOURILLON DE BULLDOZER (ASS)	704
TOURILLON DE MOTEUR (ASS)	71
TRAIN DE ROULEMENT	507, 508, 509
TRAINS PLANÉTAIRES - CARTER ET PIÈCES	302
TRANSFORMATION ELECTRIQUE (ASS)	216
TRANSMISSION (VERSION)	340
TURBOCOMPRESSEUR - CARTOUCHE (ASS)	164
TURBOCOMPRESSEUR (ASS)	164, 165

V

Désignation	Page
VANNE DE RINÇAGE (ASS)	539
VANNE PILOTE (ASS)	669
VANNE PILOTE (ASS) (CYLINDRE ENROULEUR)	636, 642, 644, 648
VENTILATEUR - ÉJECTEUR (ASS)	103
VENTILATEUR - ÉJECTEUR (VERSION)	97
VENTILATEUR A PALES RÉVERSIBLES (ASS)	104
VENTILATEUR SOUFFLANT (ASS)	102
VENTILATEUR SOUFFLANT DE CABINE (ASS)	738
VENTILATEUR SOUFFLANT DE CABINE (ASS)	818
VENTILATEUR VARIABLE (VERSION)	98
VÉRIN DE LEVAGE DE LAME DE BULLDOZER (ASS)	563, 564
VERIN DE LEVAGE DE RIPPER (ASS)	570
VÉRIN DE LEVAGE ET CANALISATIONS (ASS)	556, 558
VERIN D'EXTRACTEUR DE BROCHE DE RIPPER (ASS)	572
VÉRIN D'INCLINAISON (ASS)	578, 580, 582

INDEX

Désignation	Page
VÉRIN D'INCLINAISON DE BULLDOZER (ASS)	566
	568
VERIN D'INCLINAISON DU RIPPER (ASS)	574
	576
VÉRIN D'INCLINAISON (VERSION)	561
	562
VERIN (ENS) (ÉTHER)	274
VÉRIN ET CANALISATIONS - INCLINAISON (ASS)	560
VERSION DE BULLDOZER	676
	677
	678
	679
VERSION DE CHASSIS	388
VERSION DE COMMANDE DE BULLDOZER ET TREUIL	684
VERSION DE COMMANDE HYDRAULIQUE PILOTE	552
	553
	554
VERSION DE COPEAU DE BOIS	10
VERSION DE DIRECTION HYDRAULIQUE	538
VERSION DE MONTAGE-SÉCURITÉ	226
VERSION DE PRÉGRAISSAGE DE MOTEUR	88
VERSION HYDRAULIQUE	584
	585
VIDANGE-ÉCOLOGIE (ASS)	308
VILEBREQUIN (ASS)	28
VITRE	746
VITRE ARRIÈRE FIXE (TEINTÉ)	868
VITRE COULISSANTE (ENS)	850
	851
	852
VITRE COULISSANTE (ENS) (ARRIÈRE)	746
VITRE COULISSANTE (ENS) (DROITE)	746
VITRE COULISSANTE (ENS) (GAUCHE)	746
VITRE DE CABINE (ASS)	856
	857
	858
	859
VITRE DE CABINE (ASS)	853
	854
	855
	860
	862
	864
	866
VITRE DE CABINE (ASS)	868
VITRE DE CABINE (ASS) (DROITE)	855
	859
VITRE DE CABINE (ASS) (GAUCHE)	856
VITRE-FIXE-DROITE (TEINTÉ)	859
VITRE-FIXE-GAUCHE (TEINTÉ)	860
VITRE-PATIN ARRIÈRE (TEINTÉ)	866
VITRE (TEINTÉ)	746
	855
	856
VOLANT MOTEUR (ASS)	46
VUE DU MODÈLE	7

INDICE

Nombre	Página
A	
ABRAZADERA DE FUNDA	280
	281
ACCIONADOR DE BOMBA DE PISTONES (GR)	548
ACCIONADOR DEL PROTECTOR (GR)	372
ACCIONADOR DEL PROTECTOR (GR) (PROTECTORES INFERIORES)	422
ACONDICIONADOR DE AIRE (CONFIG)	734
	735
ACONDICIONADOR DE AIRE (CONFIG)	733
ACONDICIONADOR DE AIRE (GR)	736
ACUMULADOR DE ACEITE PILOTO (GR)	588
ACUMULADOR DE ACEITE PILOTO (GR)	594
	601
ACUMULADOR DE REFRIGERANTE	782
	786
	790
ADAPTADOR DE LLENADO RÁPIDO DE COMBUSTIBLE (GR)	166
	168
ADAPTADOR DE MOTOR (GR)	510
ADAPTADOR DEL MANDO DE LA BOMBA	170
AGUA DE LAS CAMISAS - CALENTADOR DEL (GR)	222
	224
AIRE - TUBERÍAS DE (GR)	149
	150
AJUSTADOR DE CORREA (GR)	16
ALAMBRADO DE ACELERADOR (GR)	291
ALARMA DE RETROCESO (CONJ)	202
ALARMA (GR)	188
	288
ALFOMBRILLA DEL PISO	760
	808
	814
AMORTIGUADOR DE VIBRACIONES (GR)	39
ANTEFILTRO (CONFIG)	156
	157
	158
ANTEFILTRO (GR)	158
	159
ÁRBOL DE LEVAS (GR)	18
ASIENTO CON SUSPENSIÓN (GR)	846
ASIENTO CON SUSPENSIÓN (GR)	844
ASIENTO (GR)	830
	836
	838
ASIENTO (GR)	831
	832
	834
AUXILIAR DE ARRANQUE CON ÉTER (GR)	274

Nombre	Página
B	
BALANCÍN (GR)	68
BARRA COMPENSADORA (CONJ)	470
BARRA COMPENSADORA (GR)	472
	474
BARRA DE TIRO (GR)	404
BARRA LIMPIADORA(CONFIG)	462
	464
BASE DE LA TAPA DE VÁLVULAS Y MAZO DE CABLES DE INYECTOR (GR)	15
BASE DEL FILTRO DE COMBUSTIBLE (GR)	171
BASE DEL FILTRO DE COMBUSTIBLE (GR)	172
BASTIDOR DEL DESGARRADOR (GR)	686
BASTIDOR EN C (GR)	682
BASTIDOR TELESCÓPICO DEL RESORTE TENSOR (GR)	476
BASTIDOR TELESCÓPICO DEL RESORTE TENSOR (GR)	478
	482
BATERÍA (LIBRE DE MANTENIMIENTO)(12 VOLTIOS)	205
BATERÍA Y CABLES (GR)	202
BLOQUE DE EMPUJE (GR)	672
BLOQUE DESLIZANTE-JUEGO	839
	840
	841
BLOQUE MOTOR (CONJ)	29
	30
BLOQUE MOTOR (GR)	31
	32
BOCINA (CONJ) (24 VOLTIOS)(TONO ALTO)	204
BOCINA (CONJ) (24 VOLTIOS)(TONO BAJO)	205
BOLA DE VÁLVULA (GR)	600
BOLA DE VÁLVULA (GR) (CORTE DE IMPLEMENTO)	588
	594
BOMBA - TUBERÍAS DE (GR)	606
BOMBA DE ACEITE DEL MOTOR (GR)	92
BOMBA DE AGUA (GR)	117
	118
	120
	121
BOMBA DE COMBUSTIBLE Y MECANISMO DE VÁLVULAS (GR)	182
BOMBA DE ENGRANAJES (GR)	341
	342
BOMBA DE ENGRANAJES (GR)	531
BOMBA DE ENGRANAJES (GR) (ACEITE DEL TREN DE FUERZA)	324
BOMBA DE PISTONES (GR)	532
	624
BOMBA DE TRANSFERENCIA DE COMBUSTIBLE (GR)	183
BRAZO DE EMPUJE DERECHO (GR)	700

INDICE

Nombre	Página
BRAZO DE EMPUJE IZQUIERDO (GR)	698
	699
C	
CABEZA DE BOMBA (GR)	522
CABINA (CONFIG)	744
	745
CABINA (GR)	746
CABINA ROPS CERRADA (GR)	826
CABLES DE LA PLATAFORMA (GR)	288
CABLES DEL MOTOR (GR)	286
CADENAS (GR)	500
	501
	502
	503
	504
	505
	506
CAJA DE LA BATERÍA (GR)	374
	376
CAJA DE LA SUSPENSIÓN DEL ASIENTO (GR)	766
CAJA DELANTERA - TORNILLERÍA DE LA (GR)	44
	45
CAJA DELANTERA (GR)	56
CAJA DELANTERA (GR)	54
CAJA Y BASTIDOR (GR)	378
	380
	386
CAJA Y PIEZAS DE LOS PLANETARIOS	302
CALCOMANÍA DE ADVERTENCIA	227
	256
	550
	880
CALCOMANÍA DE ADVERTENCIA (ASIENTO AJUSTABLE)	844
CALCOMANÍA DE ADVERTENCIA (BOMBA DE PRELUBRICACION)	88
CALCOMANÍA DE ADVERTENCIA (RADIO)	769
CALCOMANÍA DE ADVERTENCIA (RESORTE DE AMORTIGUACION)	476
	478
	482
CALCOMANÍA DE IDENTIFICACIÓN	228
	256
	770
	774
	780
	880
	881
CALCOMANÍA DE IDENTIFICACIÓN (CONTROL DE CABRESTANTE)	684

Nombre	Página
CALCOMANÍA DE IDENTIFICACIÓN (HOJA TOPADORA)	585
CALCOMANÍA DE IDENTIFICACIÓN (LIMPIEZA)	98
CALCOMANÍA DE IDENTIFICACIÓN (LUZ DE CABRESTANTE DE VELOCIDAD BAJA)	684
CALCOMANÍA DE IDENTIFICACIÓN (NUMERO DE GRUPO Y SECUENCIA)	738
	754
CALCOMANÍA DE MANIPULADOR DE BASURAS	2
CALCOMANÍA DE RAYAS	874
CALCOMANÍA DE RAYAS (PARTE TRASERA)(LADO DERECHO)	438
	440
CALCOMANÍA DE RAYAS (PARTE TRASERA)(LADO IZQ.)	438
	440
CALCOMANÍA (LADO DERECHO)(D8R)	440
CALCOMANÍA (LADO IZQ.)(D8R)	440
CALCOMANÍAS Y PLACAS DE IDENTIFICACIÓN (GR)	877
	878
	880
CALEFACCIÓN DE LA CABINA (GR)	764
CALENTADOR DEL COMBUSTIBLE (GR)	220
CAMBIO RÁPIDO DE ACEITE (GR)	86
CÁNCAMOS DE LEVANTAMIENTO DEL MOTOR (GR)	58
	59
CANDADO (GR)	14
	178
	184
	374
	410
	414
	444
	606
CANTONERA Y CUCHILLA (GR)	705
	706
	707
CAPO Y PROTECTOR (GR)	450
CARGA - ALTERNADOR DE (GR)	193
	194
	196
	197
	198
	200
CARGA - ALTERNADOR DE (GR)	190
CÁRTER - COLECTOR DEL (GR)	62
	64
CENICERO	760
CHASIS (CONFIG)	388
CIGÜEÑAL (GR)	28
CILINDRO (CONJ) (ETER)	274

INDICE

Nombre	Página
CILINDRO DE INCLINACIÓN DE LA HOJA TOPADORA (GR)	566, 568
CILINDRO DE INCLINACIÓN DEL DESGARRADOR (GR)	574, 576
CILINDRO DE INCLINACIÓN (GR)	561, 562
CILINDRO DE INCLINACION Y TUBERIAS (GR)	560
CILINDRO DE LEVANTAMIENTO DE LA HOJA TOPADORA (GR)	563, 564
CILINDRO DE LEVANTAMIENTO DEL DESGARRADOR (GR)	570
CILINDRO DE LEVANTAMIENTO Y TUBERÍAS (GR)	556, 558
CILINDRO DEL EXTRACTOR DE PASADOR DEL DESGARRADOR (GR)	572
CINTA AISLANTE	859, 860, 866
CINTA AISLANTE (68CM)	868
CINTURÓN DE SEGURIDAD (GR)	834, 838
COLADOR (CONJ)	630
COLADOR DE COMBUSTIBLE	184
COMBUSTIBLE - TANQUE DE (GR)	184
COMPARTIMIENTO DEL MOTOR (GR)	406, 410
COMPARTIMIENTO DEL OPERADOR (CONFIG)	808
COMPARTIMIENTO DEL TANQUE HIDRÁULICO (GR)	414
COMPRESOR DE REFRIGERANTE (GR)	749, 750
CONDENSADOR DE REFRIGERANTE (GR)	754
CONDENSADOR DEL REFRIGERANTE Y MONTAJE (GR)	752
CONEXION (CONJ) (DESCONEXION RAPIDA)	520
CONEXIÓN DE ENGRASE	16, 40, 42, 472, 474, 566, 568, 570, 574, 576, 578, 582, 673, 686
CONEXIÓN DE ENGRASE (ROSCA DE 1/8-27)	693
CONFIGURACIÓN DE ASIENTO	829
CONFIGURACIÓN DE ELIMINACIÓN DE BASURAS	1, 2, 4
CONFIGURACIÓN DE INDICADORES	6
CONFIGURACIÓN DE INSTALACIÓN DEL MOTOR	14
CONFIGURACIÓN ELECTRÓNICA DE LA MÁQUINA	5
CONFIGURACIÓN GENERAL	7
CONJUNTO DE VÁLVULA DEL ACONDICIONADOR DE AIRE (LADO ALTO)	782, 786, 790
CONTRAPESO (GR)	392
CONTROL DE COMUNICACION (GR) (ESLABON DE PRODUCTO)	227
CONTROL DE DIRECCIÓN (GR)	514
CONTROL DE DIRECCIÓN Y TRANSMISIÓN (GR)	518
CONTROL DE DIRECCIÓN Y TRANSMISIÓN (GR)	516
CONTROL DE HOJA TOPADORA Y CABRESTANTE (CONFIG)	684
CONTROL DE IMPLEMENTOS (GR)	758
CONTROL DE LA PERILLA	770, 774
CONTROL DE MAQUINA (GR)	214
CONTROL DE MONITOR (GR) (SISTEMA MONITOR CATERPILLAR)	770, 774
CONTROL DEL FRENO DE ESTACIONAMIENTO	512
CONTROL ELECTRÓNICO DEL MOTOR (GR)	212, 213
CONTROL ELECTRÓNICO DEL MOTOR Y MONTAJE	210
CONTROL ELECTRÓNICO (GR)	756, 757
CONTROL ELECTRÓNICO Y MONTAJE (GR)	208
CONTROL HIDRÁULICO (CONFIG)	549, 550
CONTROL HIDRÁULICO DE LA TRANSMISIÓN (GR)	306
CONTROL NO PROGRAMADO (GR)	208, 215
CONTROL NO PROGRAMADO (GR)	757
CONTROL PILOTO HIDRAULICO (CONFIG)	553, 554

INDICE

Nombre	Página
CONTROL PILOTO HIDRAULICO (CONFIG)	552
CONTROL REMOTO (CONJ)	390
CONTROL REMOTO (CONJ) (PROTECTORES INFERIORES IMPULSADOS)	422
CONVERTIDOR DE PAR (GR)	346 348 350
CONVERTIDOR ELÉCTRICO (GR)	216
CORREA TRAPEZOIDAL	193 194 200
CORREA TRAPEZOIDAL (COMPRESOR DE AIRE ACONDICIONADO)	750
CORREA TRAPEZOIDAL (COMPRESOR DEL ACONDICIONADOR DE AIRE)	98
CUBIERTA INFERIOR DEL ASIENTO DEL OPERADOR (GR)	811 812
CUCHILLA (GR)	727
CULATA DE CILINDROS (CONJ)	34
CULATA DE CILINDROS (GR)	36 38

D

Nombre	Página
DERIVACIÓN - VÁLVULA DE (GR)	524 634
DESGARRADOR (CONFIG)	703
DESGARRADOR (GR)	729
DESLIZANTE	853 857 858
DETECTOR DE POSICIÓN (SISTEMA DE COMBUST.) (GR)	259
DETECTOR DE POSICIÓN (SISTEMA DE COMBUST.) (GR)	260 261
DETECTOR DE TEMPERATURA	202
DIENTE DE DESGARRADOR (GR)	730 731 732
DIFERENCIAL Y CORONA	294
DIRECCION HIDRAULICA (CONFIG)	538
DISYUNTOR (CONJ) (135 AMP)	256
DISYUNTOR (CONJ) (15 A)	216 256
DISYUNTOR (GR)	284
DISYUNTOR (GR) (BATERÍA)	202
DRENAJE DE SEGURIDAD ECOLÓGICA (GR)	308

E

Nombre	Página
EJE DE MANDO PRINCIPAL (GR)	345
EJE DEL TREN DE FUERZA (GR)	292 293
ELECTRONICA DE LA MAQUINA (GR)	217 218
ELECTRONICA DE MONITOR (GR)	219
ELEMENTO DE FILTRO	150
ELEMENTO DE FILTRO DE ACEITE (CONJ) (FLUJO INVERSO) (FLUÍDO RESISTENTE AL FUEGO)	630
ELEMENTO DE FILTRO DE ACEITE (CONJ) (HIDRAULICO)	309 310
ELEMENTO DE FILTRO DE ACEITE (CONJ) (HIDRAULICO) (RENDIMIENTO SUPERIOR)	630
ELEMENTO DE FILTRO DE ACEITE (CONJ) (HIDRAULICO/FLUJO INVERSO) (DESECHABLE)	630
ELEMENTO DEL CALENTADOR DEL AGUA DE LAS CAMISAS	222
ELEMENTO DEL CALENTADOR DEL AGUA DE LAS CAMISAS (240 VOLTIOS/1500 VATIOS)	224
ELEMENTO DEL FILTRO DE AIRE (CONJ) (PRIMARIO)	146
ELEMENTO DEL FILTRO DE AIRE (CONJ) (SECUNDARIO)	146
EMBOLO (CONJ) (NIVEL DE ACEITE DE TREN DE FUERZA/VARILLA DE MEDICION)	324
EMISOR DE COMBUSTIBLE (CONJ)	184
EMPAQUETADURA	64 631
EMPAQUETADURA DE MULTIPLE DE ESCAPE	151
EMPAQUETADURA DE SALIDA	114
ENCHUFE (CONJ)	817
ENFRIADOR DE ACEITE DEL MOTOR (GR)	93
ENFRIADOR DEL ACEITE HIDRAULICO (GR)	555
ENGRANAJE DE ARBOL DE LEVAS (GR)	47
ENGRANAJE DE TRANSFERENCIA Y CORONA (GR)	320
ENGRANAJE DELANTERO (GR)	48
ENGRANAJE TRASERO (GR)	50
ESCALERA Y AGARRADERA (CONFIG)	842
ESCAPE DE GASES (GR)	78
ESLABÓN DE CADENA (CONJ)	489
ESPEJO (GR)	796
ESTABILIZADOR DEL BRAZO DE EMPUJE (GR)	701 702
ESTABILIZADOR DEL BRAZO DE EMPUJE (GR)	692
ESTRIBO DEL OPERADOR (GR)	457
ESTRUCTURA ROPS (GR)	824
ETIQUETA DE ADVERTENCIA (GR)	874

INDICE

Nombre	Página
ETIQUETA DE VIRUTAS DE MADERA (CONFIG)	10
EXPULSOR DE POLVO (GR)	147
EXTENSIÓN DEL RESPALDO (GR)	838
EXTENSIÓN DEL RESPALDO (GR) (DE TELA)	834
EXTRACTOR DE PASADOR (CONFIG)	696
EXTRACTOR DE PASADOR (GR)	697

F

FILTRO (CONJ) (AIRE RECIRCULADO DE LA CABINA)	818
FILTRO (CONJ) (SEPARADOR DE AGUA Y COMBUSTIBLE)	175
FILTRO DE ACEITE (CONJ)	520
FILTRO DE ACEITE DEL MOTOR (CONJ)	76
FILTRO DE ACEITE DEL MOTOR (GR)	76
FILTRO DE ACEITE (GR)	520
FILTRO DE ACEITE (GR)	309
	310
FILTRO DE AGUA	121
FILTRO DE AIRE (AIRE FRESCO PARA LA CABINA)	818
FILTRO DE AIRE (GR)	144
	146
FILTRO DE COMBUSTIBLE (CONJ)	174
FILTRO DE COMBUSTIBLE (GR)	174
FILTRO DE COMBUSTIBLE Y SEPARADOR DE AGUA (GR)	176
FILTRO DE COMBUSTIBLE Y SEPARADOR DE AGUA (GR)	175
FILTRO DE LA BOMBA DE AGUA	118
FRENO Y MANDO DE DIFERENCIAL (GR)	294
FRENO Y MANDO (GR)	298
	299
FRENO Y PLANETARIOS (GR)	300
FUSIBLE (10 A)	256
FUSIBLE (15 A)	256
FUSIBLE (20 A)	256
FUSIBLE (5 AMP)	256

G

GRUPO DE LUCES	241
	242
GRUPO DE MONTAJE DE LA CABINA	804
GRUPO DE ROTACIÓN DEL MOTOR (GR)	534
GRUPO GIRATORIO DE BOMBA	536
	626
GUARDABARROS (GR)	416
GUIA DE MEDIDOR (CONJ)	80

H

HERRAMIENTAS (GR)	882
HIDRÁULICA (CONFIG)	584
	585
HOJA DE LIMPIAPARABRISAS (CONJ)	716
	717
HOJA DE LIMPIAPARABRISAS (CONJ) (DELANTERO Y TRASERO)	870
HOJA DE LIMPIAPARABRISAS (CONJ) (PUERTAS DE LADOS DERECHO E IZQ.)	870
HOJA ORIENTABLE (GR)	724
HOJA SEMIUNIVERSAL (CONJ)	718
	720
	721
HOJA SEMIUNIVERSAL (GR)	725
HOJA TOPADORA (CONFIG)	676
	677
	678
	679
HOJA TOPADORA SEMIUNIVERSAL	680
HOJA TOPADORA UNIVERSAL (CONFIG)	681
HOJA UNIVERSAL (CONJ)	722
	723
HOJA UNIVERSAL (GR)	726
HOJA Y CUCHILLA (GR)	708
	709
	710
	711
	712
	713
	714
	715

I

IMPULSOR DE VENTILADOR (GR)	40
	42
INCLINACIÓN HORIZONTAL - CILINDRO DE (GR)	578
	580
	582
INDICADOR (CONJ)	770
	774
INDICADOR DE SERVICIO DEL FILTRO DE AIRE	148
INDICADOR DEL FILTRO DE AIRE (CONFIG)	148
INDICADOR DEL NIVEL DE ACEITE (VARILLA) (GR)	80
INDICADOR DEL NIVEL DEL ACEITE (VARILLA) (CONJ)	80
INSONORIZADOR (CONFIG)	9
INSTALACION DE COMUNICACION (GR)	227
INSTALACIÓN DE RADIO (GR)	769
INSTALACION DE SEGURIDAD (CONFIG)	226

INDICE

Nombre	Página
INSTALACION DE SEGURIDAD (GR)	228
INSTRUMENTOS DE CABINA (GR)	774
INSTRUMENTOS (GR)	770
INTERRUPTOR (CONJ)	600
	733
	734
	735
INTERRUPTOR (CONJ) (ACONDICIONADOR DE AIRE)	240
INTERRUPTOR (CONJ) (ILUMINADO CON 24 VOLTIOS)	289
INTERRUPTOR (CONJ) (IMPLEMENTO DE LA TRABA)	588
	594
INTERRUPTOR (CONJ) (LUCES)	770
	774
INTERRUPTOR (CONJ) (VENTILADOR SOPLADOR)	774
INTERRUPTOR DE ARRANQUE CON LLAVE (CONJ)	770
	774
INTERRUPTOR DE DERIVACIÓN	203
	283
INTERRUPTOR DE FLUJO (GR)	136
INTERRUPTOR DE LA BOCINA (CONJ)	288
INTERRUPTOR DE LÍMITE (CONJ)	334
INTERRUPTOR DE LÍMITE (CONJ)	600
INTERRUPTOR DE LÍMITE (CONJ) (FRENO DE ESTACIONAMIENTO)	516
INTERRUPTOR DE LÍMITE (CONJ) (IMPLEMENTO DE LA TRABA)	588
	594
INTERRUPTOR DE PRESIÓN (CONJ)	790
INTERRUPTOR DE PRESIÓN (CONJ) (ACEITE)	520
INTERRUPTOR DE PRESIÓN (CONJ) (ACEITE DEL MOTOR)	88
INTERRUPTOR DE PRESIÓN (CONJ) (ACOND. DE AIRE ALTO/BAJO)	782
INTERRUPTOR DE PRESIÓN (CONJ) (ALTO/BAJO)	786
INTERRUPTOR DE VOLQUETE (CONJ)	733
	734
	735
INTERRUPTOR DE VOLQUETE (CONJ) (APAGADO/ENCENDIDO)	390
INTERRUPTOR DE VOLQUETE (CONJ) (TRABA)	550
INTERRUPTOR DE VOLQUETE (GR) (2 POLOS) (PROTECTOR ARRIBA/ABAJO)	390
INTERRUPTOR DEL TERMOSTATO (CONJ)	736
INTERRUPTOR MAGNÉTICO (CONJ) (SINCRONIZADOR DE PRELUBRICACION)	88
INTERRUPTOR MAGNÉTICO (GR)	256
INTERRUPTOR MAGNÉTICO (GR)	256
INTERRUPTOR MAGNÉTICO (GR)	285
INTERRUPTOR PULSADOR (CONJ)	770
	774
INTERRUPTOR PULSADOR (CONJ) (CAMBIO ASCENDENTE ELECTRÓNICO)	516
INTERRUPTOR PULSADOR (CONJ) (CAMBIO ELECTRÓNICO DESCENDENTE)	516
INTERRUPTOR PULSADOR (CONJ) (CONTROL DE TEMPERATURA)	98
INTERRUPTOR ROTATIVO (CONJ) (LIMPIA/LAVAPARABRISAS) (FRENTE)	780
INTERRUPTOR ROTATIVO (CONJ) (LIMPIA/LAVAPARABRISAS) (PARTE TRASERA)	780
INTERRUPTOR ROTATIVO (CONJ) (LIMPIA/LAVAPARABRISAS) (PUERTA DE LADO DERECHO)	780
INTERRUPTOR ROTATIVO (CONJ) (LIMPIA/LAVAPARABRISAS) (PUERTA IZQUIERDA)	780
INYECTOR DE COMBUSTIBLE (GR)	177

J

JUEGO DE ALDABA	862
	866
JUEGO DE ALDABA (INC TRABA Y 2 TORNILLOS)	864
JUEGO DE ALDABA (INCLUYE EL CONJUNTO DE PESTILLO Y 2 TORNILLOS)	862
JUEGO DE ATADURA	846
JUEGO DE BOTÓN	766
	821
JUEGO DE COJINETES	280
	534
	767
JUEGO DE CORREAS TRAPEZOIDALES (INCLUYE 3 CORREAS)	40
	42
JUEGO DE DIODO POSITIVO	191
JUEGO DE DIODOS DEL PRISIONERO DE EMPALME	190
JUEGO DE EMPAQUETADURA (BOMBA DE AGUA)	118
JUEGO DE ENCHUFE (12 PASADORES)	205
	228
	286
	518
	588
	594
	600
JUEGO DE ENCHUFE (2 CLAVIJAS)	88
	98
	203

INDICE

Nombre	Página
	204
	234
	236
	238
	244
	252
	286
	288
	289
	550
	588
	594
	600
	654
	690
	738
	754
	771
	775
JUEGO DE ENCHUFE (3 CLAVIJAS)	98
	202
	203
	262
	263
	264
	265
	266
	267
	268
	288
	289
	518
	550
	588
	594
	600
	690
	770
	775
	782
JUEGO DE ENCHUFE (4 PASADORES)	98
	203
	216
	288
	289
	550
	588
	594
	601
	771
	775
JUEGO DE ENCHUFE (6 PASADORES)	88
	289
	518
	771

Nombre	Página
	775
	848
JUEGO DE ENCHUFE (8 PASADORES)	227
	288
	289
	291
	388
	770
	775
	817
JUEGO DE ENGRANAJE DEL MOTOR DE ARRANQUE	281
JUEGO DE FILTRO DE TAPA (TANQUE DE COMBUSTIBLE)	184
JUEGO DE FUNDA DE LA SUSPENSIÓN DEL ASIENTO	844
JUEGO DE GUÍA	862
	866
JUEGO DE GUÍA (INCLUYE GUÍA Y TORNILLO)	864
JUEGO DE GUÍA (INCLUYE TORNILLO Y GUÍA)	862
JUEGO DE HOJA	99
JUEGO DE HOJA DE LIMPIAPARABRISAS	870
JUEGO DE INDICADOR	766
JUEGO DE MAZO DE CABLES	846
JUEGO DE PARAGOLPES	766
JUEGO DE PERNO RETENEDOR	213
	215
JUEGO DE PISTÓN	624
JUEGO DE RECEPTÁCULO	802
JUEGO DE RECEPTÁCULO (12 PASADORES)	205
	228
	289
	512
	518
JUEGO DE RECEPTÁCULO (2 CLAVIJAS)	88
	98
	136
	188
	202
	203
	204
	230
	234
	238
	244
	252
	269
	270
	271
	274
	283
	286

INDICE

Nombre	Página
	288
	289
	369
	422
	520
	550
	588
	594
	600
	652
	654
	658
	738
	754
	770
	774
	782
	786
	790
JUEGO DE RECEPTÁCULO (3 CLAVIJAS)	88
	98
	110
	142
	171
	172
	202
	203
	204
	229
	259
	260
	261
	272
	286
	288
	289
	518
	550
	588
	594
	600
	754
	770
	774
JUEGO DE RECEPTÁCULO (4 PASADORES) . . .	98
	203
	289
	370
	588
	594
	600
	670
	671
	770
	774
JUEGO DE RECEPTÁCULO (6 PASADORES) . . .	254
	340
	422
	738
	742
	774
	799
	800
	801
	803
JUEGO DE RECEPTÁCULO (8 PASADORES) . . .	203
	227
	289
	770
	774
	775
	821
JUEGO DE RECONSTRUCCIÓN DE LA BOMBA (AGUA)	118
JUEGO DE RESORTE DE HOJA DE BALLESTA	859
	860
	868
JUEGO DE RESORTES	766
JUEGO DE RESTRICCIÓN DEL CINTURÓN	844
JUEGO DE RIEL DE TOPE	868
JUEGO DE RODILLO	844
	846
JUEGO DE SEGUIDOR	766
JUEGO DE SELLO DE CILINDRO HIDRAULICO	580
JUEGO DE SELLOS	369
	370
	522
	668
	670
	671
JUEGO DE SENSOR DE DIAL	184
JUEGO DE TERMINAL	277
	280
JUEGO DE TERMINAL DE RELÉ	190
JUEGO DE TERMINAL DE SALIDA	190
JUEGO DE TORNILLERÍA (SUSPENSION DE ASIENTO)	846
JUNTA UNIVERSAL (GR)	353

L

LÁMPARA DEL TECHO (GR)	229
LÁMPARA DEL TECHO (GR) (24 VOLTIOS)(CON INTERRUPTOR)	780
LÁMPARA (12 VOLTIOS)(ROJO/VERDE)(DIODO LUMIN.)	228
LÁMPARA (24 VOLTIOS)	733
	734

INDICE

Nombre	Página
	735
	770
	774
LÁMPARA (24 VOLTIOS)(65 VATIOS)	231
LÁMPARA ((24 VOLTIOS)(65 VATIOS))	230
LÁMPARA (24 VOLTIOS)(65 VATIOS) (REFLECTOR)	232
LÁMPARA (28 VOLTIOS)	229
	288
	770
	774
LAVAPARABRISAS DE LA VENTANA (GR)	848
LENTE DE LAMPARA DEL TECHO	229
LENTE DE REFLECTOR (CONJ)	231
	232
LENTE-ROJO	288
LIMPIAPARABRISAS DE LA VENTANA (GR)	870
LLAVE	14
	178
	184
	284
	374
	410
	444
	606
LLAVE (MOTOR DE ARRANQUE)	414
LUBRICACIÓN DE EJE PIVOTE (GR)	490
LUCES - GRUPO DE 4 LÁMPARAS	244
LUCES (CONFIG)	238
LUCES (CONFIG)	234
	236
	240
LUCES DE REFLECTOR (GR)	246
	247
	248
LUCES DELANTERAS (GR)	250
	252
LUZ	600
LUZ DE TABLERO DE INSTRUMENTOS	770
	774

M

MANDO DE BOMBA (GR)	173
MANDO FINAL (GR)	312
	316
	318
MANGUERA	128
MECANISMO DE VÁLVULA	182
MODULO DE LA PANTALLA (GR)	254
MODULO ELECTRÓNICO DE CUATRO INDICADORES (GR)	799
MONTAJE DE ANTENA (GR) (ESLABON DE PRODUCTO)	227
MONTAJE DE CILINDRO (GR)	693
MONTAJE DE CONTROL (GR)	805
	806
MONTAJE DE LA TRANSMISIÓN (GR)	332
MONTAJE DE MANDO FINAL (GR)	331
MONTAJE DEL ALTERNADOR (GR)	60
MONTAJE DEL DESGARRADOR (GR)	694
MONTAJE DEL FILTRO DE AIRE (GR)	152
MONTAJE DEL MANDO DE VENTILADOR (GR)	61
MOTOR - NÚCLEO (CONFIG)	13
MOTOR - SOPORTE DEL (GR)	69
	70
MOTOR COMPLETO (CONFIG)	11
	12
MOTOR DE ARRANQUE ELÉCTRICO (GR)	276
	279
MOTOR DEL LIMPIADOR	800
	801
MOTOR DEL LIMPIADOR (PUERTA DE LADO DERECHO)	870
MOTOR DEL LIMPIADOR (PUERTA IZQUIERDA)	870
MOTOR-LIMPIAPARABRISAS (GR)	802
	803
MULTIPLE - PROTECTOR DEL	162
MÚLTIPLE DE ADMISIÓN (GR)	621
MÚLTIPLE DE ADMISIÓN (GR) (GRUPO DE VALVULAS DE HOJA TOPAD./CABRESTANTE)	638
	640
	646
MÚLTIPLE DE ESCAPE (GR)	151
MULTIPLE HIDRAULICO (GR)	620
MÚLTIPLE Y VÁLVULA (GR)	329
	330
MUÑÓN DE LA HOJA TOPADORA (GR)	704
MUÑÓN DEL MOTOR (GR)	71

N

NUCLEO DE RADIADOR (CONJ)	94
	95
NÚCLEO DE TURBOCOMPRESOR (GR)	164
NÚCLEO DEL ENFRIADOR DE ACEITE (GR)	96

P

PALANCA DE CONTROL (GR)	763
PANEL DE INSONORIZACIÓN (GR)	452
PANTALLA (CONJ) (BARRIDO DE CONVERTIDOR DE PAR)	324
PANTALLA (CONJ) (ENTRADA DE BOMBA DE ACEITE DE TREN DE FUERZA)	324
PEDAL-GRUPO DE CONTROL Y MONTAJE	305
PERILLA (AJUSTE DEL POSABRAZOS)	830

INDICE

Nombre	Página
PERILLA (CONJ)	600
PERILLA (CONJ) (IMPLEMENTO DE LA TRABA)	588, 594
PERILLA DE BOCINA	288
PERILLA DE CONTROL (GR)	762
PERILLA DE CONTROL (GR) (MALACATE)	654
PERILLA LUMBAR	811, 812
PINTURA (GR)	10
PISTOLA DE ENGRASE (GR)	876
PISTÓN Y BIELA (GR)	66
PISTONES DEL MOTOR (GR)	530
PIVOTE DEL LIMPIADOR (GR)	872
PLACA-CATERPILLAR	745
PLACA DE ADVERTENCIA (ACEITE DE RESORTE TENSOR)	478, 482
PLACA DE ADVERTENCIA (VENTILADOR DE MOTOR)	98
PLACA DE INSTRUCCIONES (ACONDICIONADOR DE AIRE)	733, 734, 735
PLACA DEL FILTRO DE AIRE (SELLO RADIAL)	146
PLANCHA CORREDERA (GR)	813
PLANCHA DE DESGASTE (GR)	728
PLANCHA DE ENGANCHE (GR)	453
PLATAFORMA DE LA CABINA (GR)	814
PLATAFORMA (GR)	454
PLATO OSCILANTE (GR)	627, 628
POSENFRIADOR (GR)	142
PRELUBRICACION DEL MOTOR (CONFIG)	88
PRESIÓN - VÁLVULA DE CONTROL DE (GR)	544
PRESURIZADOR (GR)	818
PRIORIDAD - VÁLVULA DE (GR)	362
PRIORIDAD - VÁLVULA DE (GR) (BOMBA Y FLUJO DE LUBRICACION)	324
PROTECTOR (CONJ)	105, 106, 107, 108
PROTECTOR CONTRA ARENA (GR)	418
PROTECTOR CONTRA ROCAS (GR)	688, 689
PROTECTOR DE LA RUEDA GUÍA (CONFIG)	427, 428
PROTECTOR DE LOS MANDOS FINALES (GR)	437
PROTECTOR DE MANDO FINAL (GR)	426
PROTECTOR DE RODILLOS INFERIORES (GR)	448
PROTECTOR DE RUEDA GUÍA	442
PROTECTOR DE SELLO (GR)	447
PROTECTOR DEL ESCAPE (GR)	161
PROTECTOR DEL RADIADOR (CONJ)	430
PROTECTOR DEL RADIADOR (GR)	444
PROTECTOR DEL TANQUE DE COMBUSTIBLE (GR)	438
PROTECTOR DEL TANQUE DE COMBUSTIBLE (GR)	440
PROTECTOR DEL TREN DE FUERZA (GR)	323
PROTECTOR INFERIOR (CONFIG)	422
PROTECTOR INFERIOR (GR)	432, 434
PROTECTOR POSTERIOR (GR)	446
PROTECTOR TÉRMICO (CONFIG)	160
PROTECTORES DE RAMAS (GR)	458, 460
PUERTA DERECHA (GR)	400, 402
PUERTA IZQUIERDA (GR)	396, 398

R

Nombre	Página
RADIADOR (CONFIG)	122
RADIADOR (GR)	124, 126, 128, 130, 132, 134
RADIO AM/FM/WB (GR)	821
RECEPTACULO DE POTENCIA (CONJ) (12 VOLTIOS)	288
RECIPIENTE DEL LAVAPARABRISAS	740, 742
RECLINACION DE ASIENTO (GR)	822
REFLECTOR (GR)	230, 231, 232
REFLECTOR (GR) (24 VOLTIOS)	236
REFLECTOR (GR) (24 VOLTIOS)(SUSPENDIDA)	236, 238, 240, 241, 242, 244, 247
REFLECTOR (GR) (24 VOLTIOS)(VERTICAL)	248
REFRIGERANTE DEL ACOPLAMIENTO (CONJ)	782
REGULADOR DE TEMPERATURA DEL AGUA (92 GR C)	110
REGULADOR DE TEMPERATURA DEL COMBUSTIBLE	220

INDICE

Nombre	Página
REGULADOR Y PEDAL DEL FRENO (GR)	334
REJILLA	630 650
REJILLA DE SUCCIÓN	302
REJILLA DE SUMIDERO (TANQUE DE COMBUSTIBLE)	178
REJILLA DEL RADIADOR (GR)	419 420
REJILLA PROTECTORA (GR)	827 828
RELÉ DEL TABLERO (GR)	256
RELLENOS SANITARIOS (CONFIG PARA)	8
RESORTE TENSOR Y AJUSTADOR DE LA CADENA (GR)	498
RESPIRADERO	490
RESPIRADERO (CONJ)	72
RESPIRADERO (CONJ) (TREN DE FUERZA)	324
RESPIRADERO (GR)	72
RETROVISOR (GR)	797 798
REVESTIMIENTO DE LA CABINA (GR)	778 780
RODILLO (CONFIG)	492
RODILLO INFERIOR DE BASTIDOR (CONJ)	475
RODILLOS DE PESTAÑA DOBLE (GR)	493
RODILLOS DE PESTAÑA SIMPLE (GR)	494
RUEDA GUÍA DE CADENA (GR)	485 486 487 488

S

Nombre	Página
SECADOR DE RECEPTOR (CONJ) (ACONDICIONADOR DE AIRE)	782 786 790
SEGMENTO DE RUEDA MOTRIZ (GR)	344
SELLO DE CIGÜEÑAL (GR)	28
SELLO (2,9M)	15
SENSOR DE PRESIÓN (GR)	262
SENSOR DE PRESIÓN (GR)	263 264 265 266 267 268
SENSOR DE PRESIÓN (GR) (ACEITE)	32
SENSOR DE PRESIÓN (GR) (AIRE)	36
SENSOR DE PRESIÓN Y MONTAJE (GR)	258
SENSOR DE TEMPERATURA (GR)	202
SENSOR DE TEMPERATURA (GR)	172
SENSOR DE TEMPERATURA (GR)	272
SENSOR DE TEMPERATURA (GR) (AGUA)	110
SENSOR DE TEMPERATURA (GR) (AIRE DE ADMISIÓN)	142
SENSOR DE TEMPERATURA (GR) (COMBUSTIBLE)	171
SENSOR DE VELOCIDAD (GR)	202 204 269 270 271
SENSOR DE VELOCIDAD (GR)	337
SENSOR DE VELOCIDAD (GR) (PRIMARIO DE MOTOR)	54
SENSOR DE VELOCIDAD (GR) (SECUNDARIO DE MOTOR)	54
SENSOR DE VELOCIDAD (GR) (SINCRONIZACION PRIMARIA DEL MOTOR)	56
SENSOR DE VELOCIDAD (GR) (SINCRONIZACION SECUNDARIA DEL MOTOR)	56
SERVICIO DE MAQUINA (GR)	273
SILENCIADOR (GR)	153 154
SINCRONIZADOR	88
SISTEMA DE PRELUBRICACIÓN DEL MOTOR DE ARRANQUE (GR)	280
SOFTWARE DE LA MAQUINA (GR)	273
SOFTWARE DE MONITOR (GR)	219
SOFTWARE DEL MONITOR (GR)	219 756
SOFTWARE (GR)	217
SOFTWARE (GR) (ELECTRONICO)	757
SOFTWARE PARA LA MAQUINA (GR) (SISTEMA DE SEGURIDAD)	273
SOFTWARE PARA LA MAQUINA (GR) (SISTEMA DE SEGURIDAD) (SOLAMENTE SOFTWARE)	218
SOPLADOR - VENTILADOR (GR)	102
SOPORTE BASCULANTE (GR)	496
SOPORTE DE LA HOJA TOPADORA	673 674
SOPORTE DE ROPS (GR)	843
SOPORTE DEL RESPALDO (GR)	810
SUSPENSIÓN - ASIENTO CON (GR)	839 840 841

T

Nombre	Página
TANQUE DE REFRIGERANTE (GR)	137
TANQUE DEL AGUA (GR)	138
TANQUE Y FILTRO HIDRÁULICOS (GR)	630
TAPA	138 190 444

INDICE

Nombre	Página
TAPA CON RESPIRADERO	742
TAPA CONTRA EL POLVO	76
	114
	168
	302
	310
	324
	358
	365
	520
	524
	588
	594
	606
TAPA DE ALTAVOZ	780
TAPA DE LA CAJA DE VOLANTE (GR)	21
TAPA DE LA CAJA DELANTERA (GR)	22
TAPA DE LA CONSOLA (GR)	760
TAPA DE LLENADO (CONJ)	74
TAPA DE LLENADO (CONJ) (ACEITE DEL TREN DE FUERZA)	324
TAPA DE NIVEL DE ACEITE (CONJ)	490
TAPA DE RADIADOR (CONJ)	137
TAPA DE RODILLO INFERIOR	468
	469
TAPA DE RUEDA GUÍA (GR)	465
	466
	467
TAPA DE SELLO (ACONDICIONADOR DE AIRE)(LADO ALTO)	782
	786
	790
TAPA DE VÁLVULA DEL ACONDICIONADOR DE AIRE (ROSCA 7/16 X 20)	754
TAPA DEL BLOQUE MOTOR (GR)	19
	20
TAPA DEL INSONORIZADOR (GR)	23
	24
TAPA DEL MECANISMO DE VÁLVULAS (GR)	25
	26
	27
TAPA DEL MUÑÓN (GR)	394
TAPA DEL TANQUE DE COMBUSTIBLE (CONJ)	184
TAPA DEL TUBO DE LLENADO	631
TAPA ENROSCABLE	410
	818
TAPA (GR)	393
TAPA (RECEPTOR DE ACEITE DE MOTOR)	86
TAPA (RECEPTOR DE ACEITE DE TREN DE FUERZA)	86
TAPÓN	358
TAPÓN DE DRENAJE	52
	114
	350
	476
	478
	482
	630
TAPON DE DRENAJE DE ACEITE	62
TAPON DE SELLO	821
	848
TERMINAL (BOCINA)	190
TORNILLERÍA DE MONT. DE LA BOMBA DE ACEITE (GR)	73
TRANSMISION (CONFIG)	352
TRANSMISIÓN PLANETARIA (GR)	336
TREN DE FUERZA (CONFIG)	340
TREN DE RODAJE (CONFIG)	507
	508
	509
TUBERÍAS CON SERVOMANDO (GR)	588
	594
	600
TUBERÍAS DE ACEITE DEL MOTOR (GR)	82
TUBERÍAS DE ACEITE DEL TREN DE FUERZA (GR)	324
TUBERÍAS DE ACONDICIONADOR DE AIRE (GR)	786
TUBERÍAS DE ACONDICIONADOR DE AIRE (GR)	782
TUBERÍAS DE ACONDICIONADOR DE AIRE (GR)	790
TUBERIAS DE CALEFACCION	794
TUBERÍAS DE COMBUSTIBLE (GR)	180
TUBERÍAS DE COMBUSTIBLE (GR)	178
TUBERÍAS DE DIRECCIÓN (GR)	524
TUBERIAS DE EXTRACTOR DE PASADORES (GR)	604
TUBERÍAS DE LA CALEFACCIÓN (GR)	794
TUBERÍAS DEL AGUA (GR)	110
	116
TUBERÍAS DEL AGUA (GR)	112
	114
TUBERÍAS DEL CILINDRO DE INCLINACIÓN (GR)	612
	614
	616
	618
TUBERÍAS DEL DESGARRADOR (GR)	609
	610
TUBERÍAS DEL MALACATE (GR)	690
TUBERÍAS DEL MÚLTIPLE DE LA HOJA TOPADORA (GR)	586
TUBO DE LLENADO DE ACEITE (GR)	74
TURBOCOMPRESOR - TUBERÍAS DE ACEITE DEL (GR)	84
TURBOCOMPRESOR (GR)	164
	165

INDICE

Nombre	Página
V	
VÁLVULA - ESFERA (DRENAJE)	178
VÁLVULA - MONTAJE DE LA (GR)	622
VÁLVULA COMPENSADORA DE FLUJO Y PRESIÓN (GR)	662
VÁLVULA COMPENSADORA DE PRESIÓN (GR)	542
VÁLVULA (COMPROBACIÓN DE LA CARGA)	636
VÁLVULA (CONJ) (AIRE ACONDICIONADO)	782
VÁLVULA DE ACTIVACIÓN DEL ÉTER	274
VÁLVULA DE AGUA (CONJ)	764
VÁLVULA DE ALIVIO DEL FRENO	606
VÁLVULA DE ALIVIO (GR)	650
	666
	667
	668
VÁLVULA DE ALIVIO (GR)	364
	365
	522
	546
	547
VÁLVULA DE ALIVIO (GR) (CARGA)	621
VÁLVULA DE ALIVIO (GR) (PRESION DE CONVERTIDOR)	324
VÁLVULA DE ALIVIO (GR) (PRINCIPAL)	621
VÁLVULA DE CAÍDA RÁPIDA (GR)	664
VÁLVULA DE CONTROL (GR)	356
	358
	636
	638
	642
	644
	646
	648
VÁLVULA DE CONTROL (GR)	640
VÁLVULA DE CONTROL (GR) (HOJA TOPADORA DE INCLINATION)	638
	640
	646
VÁLVULA DE CONTROL (GR) (LEVANTAMIENTO DE LA HOJA TOPADORA)	638
	640
	646
VÁLVULA DE CONTROL (GR) (MALACATE)	646
VÁLVULA DE CONTROL (GR) (PUNTA DE DESGARRADOR)	638
VÁLVULA DE CONTROL (GR) (SUBIR EL DESGARRADOR)	638
VÁLVULA DE CONTROL Y MONTAJE (GR)	633
VÁLVULA DE CORTE	794
VALVULA DE DERIVACION DE COMBUSTIBLE (GR)	187
VÁLVULA DE DESCARGA (GR)	539
VÁLVULA DE DRENAJE	378
	380
	386
VÁLVULA DE LANZADERA (GR)	669
VÁLVULA DE LANZADERA (GR) (RESOLVEDOR DE BOLA)	636
	642
	644
	648
VÁLVULA DE MODULACIÓN (GR)	360
VALVULA DE MUESTRA DE FLUIDO (CONJ)	76
	326
	520
VALVULA DE MUESTREAR	114
VÁLVULA DE RETENCIÓN (CONJ) (SISTEMA DE LIMPIA/LAVAPARABRISAS)	740
VÁLVULA DE RETENCIÓN (GR)	544
VÁLVULA DE RETENCIÓN (GR)	186
	635
VÁLVULA DE RETENCIÓN (GR)	172
VÁLVULA DE RETENCIÓN (GR) (FLUJO INVERSO)	621
VÁLVULA DE SERVOMANDO (GR)	548
VÁLVULA DE SERVOMANDO (GR)	366
	368
VÁLVULA DE SOLENOIDE (GR)	369
VÁLVULA DE SOLENOIDE (GR)	670
VÁLVULA DE SOLENOIDE (GR)	370
	371
	671
VÁLVULA DE SOLENOIDE (GR) (PASO DE LA HOJA VARIABLE)	98
VÁLVULA DE SOLENOIDE (GR) (24 VOLTIOS CC)	362
VÁLVULA DEL TREN DE FUERZA Y MONTAJE (GR)	354
VALVULA DISTRIBUIDORA Y REDUCTORA (GR)	650
VÁLVULA (LLENADO)	498
VALVULA PILOTO DE CARTUCHO (GR)	660
	661
VALVULA PILOTO DE CARTUCHO (GR) (BAJADA DE DESGARRADOR)	656
VALVULA PILOTO DE CARTUCHO (GR) (BAJAR HOJA TOPADORA)	652
	658
VALVULA PILOTO DE CARTUCHO (GR) (CABRESTANTE-CARRETE LIBRE)	654
VALVULA PILOTO DE CARTUCHO (GR) (CARRETE DE CABRESTANTE-HACIA ADENTRO)	654
VALVULA PILOTO DE CARTUCHO (GR) (CARRETE DE CABRESTANTE-HACIA AFUERA)	654

INDICE

Nombre	Página
VALVULA PILOTO DE CARTUCHO (GR) (INCLINAR-DESGARRADOR HACIA ADENTRO)	656
VALVULA PILOTO DE CARTUCHO (GR) (INCLINAR-DESGARRADOR HACIA AFUERA)	656
VALVULA PILOTO DE CARTUCHO (GR) (INCLINAR HOJA TOPADORA HACIA DERECHO)	652
VALVULA PILOTO DE CARTUCHO (GR) (INCLINAR HOJA TOPADORA HACIA DERECHO)	658
VALVULA PILOTO DE CARTUCHO (GR) (INCLINAR HOJA TOPADORA HACIA IZQ.)	652
VALVULA PILOTO DE CARTUCHO (GR) (INCLINAR HOJA TOPADORA HACIA IZQ.)	658
VALVULA PILOTO DE CARTUCHO (GR) (LEVANTAR HOJA TOPADORA)	652
VALVULA PILOTO DE CARTUCHO (GR) (LEVANTAR HOJA TOPADORA)	658
VALVULA PILOTO DE CARTUCHO (GR) (SUBIR EL DESGARRADOR)	656
VÁLVULA PILOTO (GR)	540
	654
	656
	658
VÁLVULA PILOTO (GR)	652
VÁLVULA PILOTO (GR) (HOJA TOPADORA)	552
	554
VÁLVULA PILOTO (GR) (MALACATE)	554
VÁLVULA REDUCTORA DE PRESIÓN (GR)	650
	663
VÁLVULA (RETENCIÓN)	787
	790
VÁLVULA (RETENCIÓN) (DRENAJE DE EVAPORADOR DE ACOND. DE AIRE)	783
VÁLVULA (VACIADO)	498
VENDADO CON CINTURÓN TRAPECIAL	40
VENDADO CON CINTURÓN TRAPECIAL (VENTILADOR DE MOTOR)	98
VENTANA CORREDIZA (CONJ)	850
	851
	852
VENTANA CORREDIZA (CONJ) (LADO DERECHO)	746
VENTANA CORREDIZA (CONJ) (LADO IZQUIERDO)	746
VENTANA CORREDIZA (CONJ) (PARTE TRASERA)	746
VENTANA DE LA CABINA (GR)	862
	864
	866
	868
VENTANA DE LA CABINA (GR)	853
	854
	855
VENTANA DE LA CABINA (GR)	860
VENTANA DE LA CABINA (GR)	856
	857
	858
	859
VENTANA DE LA CABINA (GR) (LADO DERECHO)	855
	859
VENTANA DE LA CABINA (GR) (LADO IZQUIERDO)	856
VENTILADOR EXPULSOR (CONFIG)	97
VENTILADOR EXPULSOR (GR)	103
VENTILADOR REVERSIBLE (GR)	104
VENTILADOR SOPLADOR DE LA CABINA (GR)	818
VENTILADOR SOPLADOR DE LA CABINA (GR)	738
VENTILADOR VARIABLE (CONFIG)	98
VIDRIO	746
VIDRIO (AHUMADO)	746
	855
	856
VIDRIO-DESLIZANTE TRASERO (AHUMADO)	866
VIDRIO-FIJO-DERECHO (AHUMADO)	859
VIDRIO-FIJO-LADO IZQUIERDO (AHUMADO)	860
VIDRIO-FIJO TRASERO (AHUMADO)	868
VIRUTAS DE MADERA (CONFIG)	10
VOLANTE - CAJA DE (GR)	52
VOLANTE (GR)	46

ÍNDICE

Designação	Página

A

ABRAÇADEIRA DO PROTETOR 280, 281
ACIONADOR - BOMBA DE PISTÃO 548
ACIONADOR DE POTÊNCIA 372
ACIONADOR DE POTÊNCIA (PROTETORES INFERIORES) 422
ACOPLAMENTO - REFRIGERANTE 782
ACUMULADOR - REFRIGERANTE 782, 786, 790
ACUMULADOR D ÓLEO - PILOTO 588, 594, 601
ADAPTADOR - ABASTECIMENTO RÁPIDO DE COMBUSTÍVEL 166, 168
ADAPTADOR DO COMANDO DA BOMBA 170
ADAPTADOR DO MOTOR 510
AJUSTADOR DE CORREIAS 16
AJUSTADOR DE ESTEIRAS E MOLA TENSORA 498
ALARME 188, 288
ALARME DE MARCHA À RÉ 202
ALAVANCA DE CONTROLE 762, 763
ALAVANCA DE CONTROLE (GUINCHO) 654
ALTERNADOR DE CORRENTE 190, 193, 194, 196, 197, 198, 200
AMORTECEDOR 39
AQUECEDOR DA ÁGUA DO MOTOR 222, 224
AQUECEDOR DA CABINE 764
AQUECEDOR DO COMBUSTÍVEL 220
ARMAÇÃO C 682
ARMAÇÃO DO RIPER 686
ARMAÇÃO DOS ROLETES DA ESTEIRA 475
ARMAÇÃO TELESCÓPICA DA MOLA TENSORA 476, 478, 482
ARRANJO GERAL 7
ARRANJO PARA CAVACOS 10
ARREFECEDOR - ÓLEO DO MOTOR 93
ARREFECEDOR DO ÓLEO HIDRÁULICO 555
ASSENTO 829, 830, 831, 832, 834, 836, 838
ASSENTO - FUNDO 811, 812
ASSENTO COM SUSPENSÃO 839, 840, 841
ATERRO SANITÁRIO 1, 2, 4
ATERRO SANITÁRIO - ARRANJO 8
AUXILIAR DE PARTIDA A ÉTER 274

B

BALANCIM 68
BARRA DE TRAÇÃO 404
BARRA EQUALIZADORA 470, 472, 474
BARRA LIMPADORA DOS ROLOS 462, 464
BARRAS DE PROTEÇÃO DO CAPÔ 458, 460
BASE DO FILTRO DE COMBUSTÍVEL 171, 172
BATERIA E CABOS / FIOS ELÉTRICOS 202
BATERIA (LIVRE DE MANUTENÇÃO)(12 VOLTS) 205
BLINDAGEM DO COLETOR 162
BLINDAGEM DO COLETOR DE ESCAPE 161
BLOCO DE EMPUXO 672
BLOCO DO MOTOR 29, 30, 31, 32
BOCAL DE ENCHIMENTO DE ÓLEO DO MOTOR 74
BOMBA DE ÁGUA 117, 118, 120, 121
BOMBA DE ENGRENAGENS 341, 342, 531
BOMBA DE ENGRENAGENS (ÓLEO DO TREM DE FORÇA) 324
BOMBA DE ÓLEO - MOTOR 92
BOMBA DE PISTÃO 532, 624
BOMBA DE TRANSFERÊNCIA DO COMBUSTÍVEL 183
BOMBA MANUAL DE LUBRIFICAÇÃO 876

ÍNDICE

Designação	Página
BORDA CORTANTE	727
BOTÃO	600
BOTÃO - CHICOTE	288
BOTÃO - LOMBAR	811
	812
BOTÃO (TRAVA DO ACESSÓRIO)	588
	594
BRAÇO DE EMPUXO - DIREITO	700
BRAÇO DE EMPUXO - ESQUERDO	698
	699
BRAÇO DE EMPUXO - ESTABILIZADOR	701
	702
BUJÃO	817
BUJÃO - ANEL O	358
BUJÃO - DRENAGEM DO ÓLEO	62
BUJÃO DO DRENO	52
	114
	350
	476
	478
	482
	630
BUJÃO-RETENTOR	821
	848
BUZINA (24 VOLTS - ALTA TONALIDADE)	204
BUZINA (24 VOLTS)(TONALIDADE BAIXA)	205

C

CABEÇA DA BOMBA	522
CABEÇOTE DO MOTOR	34
	36
	38
CABINE	744
	745
	746
	808
CABO - CONTROLE	770
	774
CABOS / FIOS ELÉTRICOS-ACELERADOR	291
CABOS/FIOS ELÉTRICOS - MOTOR	286
CABOS/FIOS ELÉTRICOS - PLATAFORMA	288
CADEADO	14
	178
	184
	374
	410
	414
	444
	606
CAIXA - SUSPENSÃO DO ASSENTO	766
CAIXA DA BATERIA	374
	376
CAIXA DIANTEIRA	54
	56
CAIXA DO VOLANTE DO MOTOR	52
CAIXA E CHASSI	378
	380
	386
CANTO E BORDA CORTANTE	705
	706
	707
CAPÔ E PROTETOR	450
CARCAÇA DAS ENGRENAGENS PLANETÁRIAS E COMPONENTES	302
CÁRTER DO ÓLEO DO MOTOR	62
	64
CARTUCHO DO TURBOALIMENTADOR	164
CHASSI	388
CHAVE	14
	178
	184
	284
	374
	410
	444
	606
CHAVE GERAL	284
CHAVE GERAL (BATERIA)	202
CHAVE INTERRUPTORA DE PARTIDA	770
	774
CHAVE (MOTOR DE PARTIDA)	414
CILINDRO - INCLINAÇÃO DA LÂMINA	566
	568
CILINDRO - LEVANTAMENTO DA LÂMINA	563
	564
CILINDRO DE INCLINAÇÃO	561
	562
	578
	580
	582
CILINDRO DE INCLINAÇÃO DO RÍPER	574
	576
CILINDRO DE LEVANTAMENTO DO RIPER	570
CILINDRO DE LEVANTAMENTO E TUBOS	556
	558
CILINDRO DO SACADOR DE PINO DO RIPER	572
CILINDRO (ÉTER)	274
CILINDROS DE INCLINAÇÃO E TUBOS	560
CINTO DE SEGURANÇA	834
	838
CINZEIRO	760
COBERTURA - TANQUE HIDRÁULICO	414
COBERTURA DO MOTOR	406
	410
COLETOR DE ADMISSÃO	621
COLETOR DE ADMISSÃO (GRUPO DE VÁLVULAS-LÂMINA/GUINCHO)	638
	640

ÍNDICE

Designação	Página
	646
COLETOR DE ESCAPE	151
COLETOR E VÁLVULA	329
	330
COLETOR HIDRÁULICO	620
COLMÉIA - ARREFECEDOR DE ÓLEO	96
COLMEIA DO RADIADOR	94
	95
COMANDO DA BOMBA	173
COMANDO DO VENTILADOR	40
	42
COMANDO FINAL	312
	316
	318
COMANDO HIDRÁULICO	584
	585
COMPRESSOR DE REFRIGERANTE	749
	750
CONDENSADOR DE REFRIGERANTE	754
CONDENSADOR DO REFRIGERANTE E MONTAGEM	752
CONDICIONADOR DE AR	733
	734
	735
	736
CONEXÃO (DESCONEXÃO RÁPIDA)	520
CONJUNTO DESLIZADOR	853
	857
	858
CONTRAPESO	392
CONTROLE - NÃO PROGRAMADO	208
	215
	757
CONTROLE-COMUNICAÇÃO (PRODUCT LINK)	227
CONTROLE DA MÁQUINA	214
CONTROLE DE DIREÇÃO	514
CONTROLE DE DIREÇÃO E TRANSMISSÃO	516
	518
CONTROLE DO ACESSÓRIO	758
CONTROLE DO FREIO DE ESTACIONAMENTO	512
CONTROLE DO PAINEL MONITOR (SISTEMA DE MONITORIZAÇÃO CATERPILLAR)	770
	774
CONTROLE DO PEDAL E MONTAGEM	305
CONTROLE ELETRÔNICO	756
	757
CONTROLE ELETRÔNICO - MOTOR	212
	213
CONTROLE ELETRÔNICO E MONTAGEM	208
CONTROLE ELETRÔNICO E MONTAGEM - MOTOR	210
CONTROLE HIDRÁULICO	549
	550
CONTROLE HIDRÁULICO DA TRANSMISSÃO	306
CONTROLE-LÂMINA & GUINCHO	684
CONTROLE PILOTO HIDRÁULICO	552
	553
	554
CONTROLE REMOTO	390
CONTROLE REMOTO (PROTETORES INFERIORES ACIONADOS)	422
CONVERSOR DE TORQUE	346
	348
	350
CONVERSOR ELÉTRICO	216
COROA E ENGRENAGEM DE TRANFERÊNCIA	320
CORREIA EM V	193
	194
	200
CORREIA EM V (COMPRESSOR DO AR CONDICIONADO)	750
CORREIA EM V (COMPRESSOR DO CONDICIONADOR DE AR)	98

D

DECALCQUE-ARRANJO PARA CAVACOS	10
DECALQUE	874
DECALQUE - ADVERTÊNCIA	227
DECALQUE - ADVERTÊNCIA (MOLA TENSORA)	476
	478
	482
DECALQUE - AVISO	880
DECALQUE - AVISO (BOMBA DE PRÉ-LUBRIFICAÇÃO)	88
DECALQUE - AVISO (RADIO)	769
DECALQUE - CATERPILLAR	745
DECALQUE - IDENTIFICAÇÃO	228
	256
	770
	774
	780
	880
	881
DECALQUE - IDENTIFICAÇÃO (CONTROLE DO GUINCHO)	684
DECALQUE - IDENTIFICAÇÃO (LÂMINA)	585
DECALQUE - IDENTIFICAÇÃO (LIMPEZA)	98
DECALQUE - IDENTIFICAÇÃO (LUZ DE GUINCHO DE VELOCIDADE BAIXA)	684
DECALQUE - IDENTIFICAÇÃO (NO. DE SEQÜÊNCIA E GRUPO)	738
	754
DECALQUE - INSTRUÇÃO	256
	550

ÍNDICE

Designação	Página
DECALQUE - INSTRUÇÃO (AJUSTE DO ASSENTO)	844
DECALQUE - MANUSEADOR DE DETRITOS	2
DECALQUE - PURIFICADOR DE AR (RETENTOR RADIAL)	146
DECALQUE - TIRA	874
DECALQUE - TIRA (TRASEIRO)(LADO DIREITO)	438 440
DECALQUE - TIRA (TRASEIRO)(LADO ESQUERDO)	438 440
DECALQUE (LADO DIREITO)(D8R)	440
DECALQUE (LADO ESQUERDO)(D8R)	440
DEGRAU	457
DEGRAU E PEGA-MÃO	842
DENTE DO RÍPER	730 731 732
DIREÇÃO HIDRÁULICA	538
DISJUNTOR AUTOMÁTICO DE CIRCUITO (135 AMP.)	256
DISJUNTOR AUTOMÁTICO DE CIRCUITO (15 A)	216 256
DRENO - ECOLOGIA	308
ÊMBOLO (NÍVEL DE ÓLEO DO TREM DE FORÇA/INDICADOR)	324
EMISSOR - COMBUSTÍVEL	184
EMISSOR - POSIÇÃO	259 260 261
EMISSOR - TEMPERATURA	202
ENGRENAGEM - EIXO-COMANDO DE VÁLVULAS	47
ENGRENAGENS DE COMANDO TRASEIRO	50
ENGRENAGENS DE DISTRIBUIÇÃO	48
ENGRENAGENS PLANETÁRIAS - TRANSMISSÃO	336
ESPELHO	796
ESPELHO RETROVISOR	797 798
ESTEIRA	500 501 502 503 504 505 506
ESTRUTURA ROPS	824
EXTENSÃO - ENCOSTO	838
EXTENSÃO - ENCOSTO (TECIDO)	834

E

EIXO-COMANDO DE VÁLVULA	18
EIXO DA TRANSMISSÃO	345
EIXO PIVÔ - LUBRIFICAÇÃO	490
EJETOR DE POEIRA	147
ELEMENTO - AQUECEDOR DE ÁGUA DA CAMISA	222
ELEMENTO - AQUECEDOR DE ÁGUA DA CAMISA (240 VOLT, 1500 WATT)	224
ELEMENTO - FILTRANTE	150
ELEMENTO DO FILTRO DE AR (PRIMÁRIO)	146
ELEMENTO DO FILTRO DE AR (SECUNDÁRIO)	146
ELEMENTO FILTRANTE - ÓLEO (FLUXO HIDRÁULICO/REVERSO) (DESCARTÁVEL)	630
ELEMENTO FILTRANTE - ÓLEO (FLUXO INVERSO) (FLUIDO RESISTENTE A FOGO)	630
ELEMENTO FILTRANTE - ÓLEO (HIDRÁULICO)	309 310
ELEMENTO FILTRANTE - ÓLEO (HIDRÁULICO) (MAIOR DESEMPENHO)	630
ELIMINAÇÃO DE VAPORES DO CÁRTER	78
ELO DA ESTEIRA	489
ELO ESTABILIZADOR	692

F

FERRAMENTAS	882
FILTRO - ÁGUA	121
FILTRO - AR (CABINE - AR LIVRE)	818
FILTRO - BOMBA DE ÁGUA	118
FILTRO - COMBUSTÍVEL	174 184
FILTRO - ÓLEO	309 310 520
FILTRO - ÓLEO DO MOTOR	76
FILTRO (AR DE RECIRCULAÇÃO DA CABINE)	818
FILTRO DE COMBUSTÍVEL E SEPARADOR DE ÁGUA	175 176
FILTRO (SEPARADOR DE ÁGUA E COMBUSTÍVEL)	175
FIXADORES - BOMBA DE ÓLEO DO MOTOR	73
FIXADORES - CAIXA DIANTEIRA	44 45
FRASCO - LAVADOR DE JANELA	740 742
FREIO DO DIFERENCIAL E COROA CÔNICA	294
FREIO E COMANDO	298 299
FREIO E COMANDO DO DIFERENCIAL	294

ÍNDICE

Designação	Página
FREIOS E ENGRENAGENS PLANETARIAS	300
FUNDO - ENCOSTO	810
FUSÍVEL (10 A)	256
FUSÍVEL (15 A)	256
FUSÍVEL (20 A)	256
FUSÍVEL (5 AMP)	256

G

GR. BÁSICO - TAMPA DAS VÁLVULAS E CHICOTE DE INJEÇÃO	15
GR. DE SERVIÇO - MÁQUINA	273
GRADE DO RADIADOR	419 420
GRADE DO RADIADOR CONTRA EROSÃO	418
GRAXEIRA	16 40 42 472 474 566 568 570 574 576 578 582 673 686
GRAXEIRA (ROSCA 1/8-27 POL)	693
GRUPO DE INSTALAÇÃO - MOTOR	14
GRUPO ROTATIVO DA BOMBA	536 626
GUIA - VEDADOR	447
GUIA-INDICADOR	80

I

ILUMINAÇÃO	241 242
ILUMINAÇÃO - DIANTEIRA	250 252
ILUMINAÇÃO - 4 LÂMPADAS	244
INDICADOR	6 770 774
INDICADOR - LIMPEZA DO FILTRO DE AR	148
INDICADOR - NÍVEL DO ÓLEO (VARETA)	80
INDICADOR - PURIFICADOR DE AR	148
INDICADOR - VARETA DO NÍVEL DE ÓLEO	80
INJETOR DE COMBUSTÍVEL	177
INSTALAÇÃO-COMUNICAÇÃO	227
INSTALAÇÃO DO RÁDIO	769
INSTALAÇÃO-SEGURANÇA	226 228
INSTRUMENTOS	770
INSTRUMENTOS-CABINE	774
INTERRUPTOR	600 733 734 735
INTERRUPTOR - BALANCIM	733 734 735
INTERRUPTOR - BALANCIM (LIGAR/DESLIGAR)	390
INTERRUPTOR - BALANCIM (TRAVAMENTO)	550
INTERRUPTOR - BALANCIM (2 POLOS) (PROTETOR - PARA CIMA/PARA BAIXO)	390
INTERRUPTOR - BOTÃO	770 774
INTERRUPTOR - BOTÃO (CONTROLE DE TEMPERATURA)	98
INTERRUPTOR - BOTÃO (MUDANÇA ELETRÔNICA MARCHA MAIS ALTA)	516
INTERRUPTOR - BOTÃO (MUDANÇA ELETRÔNICA MARCHA MAIS BAIXA)	516
INTERRUPTOR - BUZINA	288
INTERRUPTOR - FLUXO	136
INTERRUPTOR - LIMITADOR	334 600
INTERRUPTOR - LIMITADOR (FREIO DE ESTACIONAMENTO)	516
INTERRUPTOR - LIMITADOR (TRAVA DO ACESSÓRIO)	588 594
INTERRUPTOR - MAGNÉTICO	256 285
INTERRUPTOR - MAGNÉTICO (SINCRONIZADOR DE PRÉ-LUBRIFICAÇÃO)	88
INTERRUPTOR - PRESSÃO	790
INTERRUPTOR - PRESSÃO (ALTO/BAIXO)	786
INTERRUPTOR - PRESSÃO (AR CONDICIONADO ALTO/BAIXO)	782
INTERRUPTOR - PRESSÃO (ÓLEO)	520
INTERRUPTOR - PRESSÃO (ÓLEO DO MOTOR)	88
INTERRUPTOR - ROTATIVO (LIMPADOR / LAVADOR) (DIANTEIRO)	780
INTERRUPTOR - ROTATIVO (LIMPADOR / LAVADOR) (PORTA - LADO ESQUERDO)	780
INTERRUPTOR - ROTATIVO (LIMPADOR / LAVADOR) (PORTA-LADO DIREITO)	780
INTERRUPTOR - ROTATIVO (LIMPADOR / LAVADOR) (TRASEIRO)	780
INTERRUPTOR - TERMOSTATO	736
INTERRUPTOR (AR CONDICIONADO)	240

ÍNDICE

Designação	Página
INTERRUPTOR DE DERIVAÇÃO	203
	283
INTERRUPTOR (LUZES)	770
	774
INTERRUPTOR (TRAVA DO ACESSÓRIO)	588
	594
INTERRUPTOR (VENTILADOR)	774
INTERRUPTOR (24 VOLT)(ILUMINADO)	289
J	
JANELA DA CABINE	853
	854
	855
	856
	857
	858
	859
	860
	862
	864
	866
	868
JANELA DA CABINE (DIREITO)	855
	859
JANELA DA CABINE (ESQUERDO)	856
JANELA DESLIZANTE	850
	851
	852
JANELA DESLIZANTE (DIREITO)	746
JANELA DESLIZANTE (ESQUERDO)	746
JANELA DESLIZANTE (TRASEIRO)	746
JOGO DE ACONDICIONAMENTO DA BOMBA D'ÁGUA (ÁGUA)	118
JOGO DE BLOCO DESLIZADOR	839
	840
	841
JOGO DE BOTÃO DE SUSPENSÃO	766
JOGO DE CHICOTE	846
JOGO DE COIFA DE SUSPENSÃO	844
JOGO DE CORDÃO	846
JOGO DE CORREIAS COM TIRAS	40
JOGO DE CORREIAS COM TIRAS (VENTILADOR DO MOTOR)	98
JOGO DE CORREIAS EM V (INCLUI 3 CORREIAS)	40
	42
JOGO DE DIODO POSITIVO	191
JOGO DE ENGRENAGENS DO MOTOR DE PARTIDA	281
JOGO DE FILTRO DA TAMPA (TANQUE DE COMBUSTÍVEL)	184
JOGO DE FIXADOR DE CORREIA	844
JOGO DE FIXADORES (SUSPENSÃO DO ASSENTO)	846
JOGO DE GUIA DE TRILHO	862
	866
JOGO DE GUIA DE TRILHO (INCLUI GUIA E PARAFUSO)	862
	864
JOGO DE INDICADOR	766
JOGO DE JUNTAS (BOMBA DE ÁGUA)	118
JOGO DE LÂMINA DO LIMPADOR DE PÁRA-BRISA	870
JOGO DE MAÇANETA	821
JOGO DE MANCAL	280
	534
	767
JOGO DE MOLA	766
JOGO DE MOLA DE FOLHA	859
	860
	868
JOGO DE PÁRA-CHOQUE	766
JOGO DE PARAFUSO DE RETENÇÃO	213
	215
JOGO DE PISTÃO	624
JOGO DE PRISIONEIRO - DIODO DE JUNÇÃO	190
JOGO DE RECEPTÁCULO	802
JOGO DE RECEPTÁCULO (12 PINOS)	205
	228
	289
	512
	518
JOGO DE RECEPTÁCULO (2 PINOS)	88
	98
	136
	188
	202
	203
	204
	230
	234
	238
	244
	252
	269
	270
	271
	274
	283
	286
	288
	289
	369
	422
	520
	550
	588
	594

ÍNDICE

Designação	Página
	600
	652
	654
	658
	738
	754
	770
	774
	782
	786
	790
JOGO DE RECEPTÁCULO (3 PINOS)	88
	98
	110
	142
	171
	172
	202
	203
	204
	229
	259
	260
	261
	272
	286
	288
	289
	518
	550
	588
	594
	600
	754
	770
	774
JOGO DE RECEPTÁCULO (4 PINOS)	98
	203
	289
	370
	588
	594
	600
	670
	671
	770
	774
JOGO DE RECEPTÁCULO (6 PINOS)	254
	340
	422
	738
	742
	774
	799
	800
	801
	803
JOGO DE RECEPTÁCULO (8 PINOS)	203
	227
	289
	770
	774
	775
	821
JOGO DE RETENTOR	369
	370
	522
	668
	670
	671
JOGO DE RETENTOR DO CILINDRO HIDRÁULICO	580
JOGO DE ROLETE DE SUSPENSÃO	844
JOGO DE ROLO	846
JOGO DE SEGUIDOR	766
JOGO DE SENSOR DE DIAL	184
JOGO DE TERMINAL	277
	280
JOGO DE TERMINAL DE SAÍDA	190
JOGO DE TERMINAL RELÉ	190
JOGO DE TOMADA DE CONEXÃO (12 PINOS)	205
	228
	286
	518
	588
	594
	600
JOGO DE TOMADA DE CONEXÃO (2 PINOS)	88
	98
	203
	204
	234
	236
	238
	244
	252
	286
	288
	289
	550
	588
	594
	600
	654
	690
	738
	754
	771
	775

ÍNDICE

Designação	Página
JOGO DE TOMADA DE CONEXÃO (3 PINOS)	98, 202, 203, 262, 263, 264, 265, 266, 267, 268, 288, 289, 518, 550, 588, 594, 600, 690, 770, 775, 782
JOGO DE TOMADA DE CONEXÃO (4 PINOS)	98, 203, 216, 288, 289, 550, 588, 594, 601, 771, 775
JOGO DE TOMADA DE CONEXÃO (6 PINOS)	88, 289, 518, 771, 775, 848
JOGO DE TOMADA DE CONEXÃO (8 PINOS)	227, 288, 289, 291, 388, 770, 775, 817
JOGO DE TRILHO DE PARADA	868
JOGO DE TRINCO	862, 866
JOGO DE TRINCO (INCLUI CONJ. DO TRINCO E 2 PARAFUSOS)	862
JOGO DE TRINCO (INCLUI TRINCO E 2 PARAFUSOS)	864
JUNTA	64, 631
JUNTA - COLETOR DE ESCAPE	151
JUNTA - SAÍDA	114
JUNTA UNIVERSAL	353

K

KIT - LÂMINA	99

L

LÂMINA	676, 677, 678, 679, 716, 717
LÂMINA ANGULÁVEL	724
LÂMINA DO LIMPADOR DE PÁRA-BRISA (DIANTEIRO E TRASEIRO)	870
LÂMINA DO LIMPADOR DE PÁRA-BRISA (PORTAS-LADO DIREITO & LADO ESQUERDO)	870
LÂMINA E BORDA CORTANTE	708, 709, 710, 711, 712, 713, 714, 715
LÂMINA SEMI-UNIVERSAL	680, 718, 720, 721, 725
LÂMINA UNIVERSAL	681, 722, 723, 726
LÂMPADA - FAROL	230, 231, 232
LÂMPADA - FAROL (24 V)	236
LÂMPADA - FAROL (24 VOLT)(SUSPENSO)	236, 238, 240, 241, 242, 244, 247
LÂMPADA - FAROL (24 VOLTS)(VERTICAL)	248
LÂMPADA - TETO	229
LÂMPADA - TETO (24 VOLTS - COM INTERRUPTOR)	780

ÍNDICE

Designação	Página
LÂMPADA (12 VOLT)(VERMELHA/VERDE)(LED)	228
LÂMPADA (24 V)	733 734 735 770 774
LÂMPADA (24 VOLTS)(65 WATTS)	230 231
LÂMPADA (24 VOLTS)(65 WATTS) (FAROL)	232
LÂMPADA (28 V)	229 288 770 774
LAVADOR DO VIDRO	848
LENTE - FAROL	231 232
LENTE DA LÂMPADO DO TETO	229
LENTE VERMELHA	288
LEVANTAMENTO DO MOTOR	58 59
LIMPADOR DO VIDRO	870
LUZ	600
LUZ DO PAINEL DE INSTRUMENTOS	770 774
MAÇANETA (AJUSTE DO BRAÇO DO ASSENTO)	830
MANGUEIRA	128
MATERIAL RODANTE	507 508 509
MECANISMO DAS VÁLVULAS	182
MECANISMO DAS VÁLVULAS E BOMBA DE COMBUSTÍVEL	182
MÓDULO DO VISOR	254
MÓDULO ELETRÔNICO DE QUATRO INDICADORES	799
MONITOR - SOFTWARE	219
MONTAGEM - ALTERNADOR	60
MONTAGEM - CABINE	804
MONTAGEM - CILINDRO	693
MONTAGEM - COMANDO DO VENTILADOR	61
MONTAGEM - COMANDO FINAL	331
MONTAGEM - CONTROLE	805 806
MONTAGEM - PURIFICADOR DE AR	152
MONTAGEM - RIPER	694
MONTAGEM - TRANSMISSÃO	332
MONTAGEM - VÁLVULA	622
MONTAGEM-ANTENA (PRODUCT LINK)	227
MOTOR - LIMPADOR DO VIDRO	802 803
MOTOR - NÚCLEO	13
MOTOR - PISTÃO	530
MOTOR COMPLETO	11 12
MOTOR DE PARTIDA - SISTEMA DE PRÉ-LUBRIFICAÇÃO	280
MOTOR DO GRUPO ROTATIVO	534
MOTOR DO LIMPADOR	800 801
MOTOR DO LIMPADOR (PORTA - LADO ESQUERDO)	870
MOTOR DO LIMPADOR (PORTA-LADO DIREITO)	870
MOTOR ELÉTRICO DE PARTIDA	276 279
MUNHÃO DA LÂMINA	704
MUNHÃO DO MOTOR	71
ÓLEO - ARRANJO PARA TROCA RÁPIDA	86
PAINEL - RELÉ	256
PAINEL- REDUÇÃO DE RUÍDO	452
PÁRA-LAMA	416
PEDAL - GOVERNADOR E FREIO	334
PINTURA	10
PISTÃO E BIELA	66
PIVÔ DO LIMPADOR	872
PLACA - ENGATE	453
PLACA BASCULANTE	627 628
PLACA DE ADVERTÊNCIA (ÓLEO DE MOLA TENSORA)	478 482
PLACA DE ADVERTÊNCIA (VENTILADOR DO MOTOR)	98
PLACA DE DESGASTE	728
PLACA DE INSTRUÇÃO (CONDICIONADOR DE AR)	733 734 735
PLACA DESLIZANTE	813
PLACA E DECALQUE	877 878 880
PLATAFORMA	454
PLATAFORMA DA CABINE	814
PORTA - LADO DIREITO	400 402
PORTA - LADO ESQUERDO	396 398
PÓS-ARREFECEDOR	142

M

O

P

ÍNDICE

Designação	Página
PRÊ-LUBRIFICAÇÃO	88
PRÉ-PURIFICADOR	156
	157
	158
	159
PRESSURIZADOR	818
PROTETOR	105
	106
	107
	108
PROTETOR - COMANDO FINAL	426
PROTETOR - INFERIOR	422
PROTETOR - RADIADOR	444
PROTETOR - ROCHA	688
	689
PROTETOR - RODA-GUIA	427
	428
	442
PROTETOR - ROLETES DAS ESTEIRAS	448
PROTETOR - TANQUE DE COMBUSTÍVEL	438
	440
PROTETOR - TÉRMICO	160
PROTETOR - TRASEIRO	446
PROTETOR - TREM DE FORÇA	323
PROTETOR DO COMANDO FINAL	437
PROTETOR DO RADIADOR	430
PROTETOR INFERIOR	432
	434
PURIFICADOR DE AR	144
	146

R

RADIADOR	122
	124
	126
	128
	130
	132
	134
RÁDIO AM/FM/WB	821
RECEPTÁCULO PARA ENERGIA (12 V)	288
RECEPTOR SECADOR (CONDICIONADOR DE AR)	782
	786
	790
RECLINAÇÃO - ASSENTO	822
REGULADOR DE TEMPERATURA DA ÁGUA (92 GRAUS CENTÍGRADOS)	110
REGULADOR DE TEMPERATURA DO COMBUSTÍVEL	220
RESPIRO	72
	490
RESPIRO (TREM DE FORÇA)	324
RETENTOR DO VIRABREQUIM	28
RETENTOR (2,9M)	15
REVESTIMENTO DA CABINE	778
	780
RIPER	703
	729
RODA-GUIA DAS ESTEIRAS	485
	486
	487
	488
ROLETE	492
ROLETE DE ESTEIRA DE FLANGE DUPLO	493
ROLETE DE ESTEIRA DE FLANGE SIMPLES	494
ROPS FECHADA	826
RUÍDO - ARRANJO PARA SUPRESSÃO	9

S

SACA-PINO	696
	697
SEGMENTO DA RODA MOTRIZ	344
SEMI-EIXO - TREM DE FORÇA	292
	293
SENSOR - PRESSÃO	262
	263
	264
	265
	266
	267
	268
SENSOR - PRESSÃO (AR)	36
SENSOR - PRESSÃO (ÓLEO)	32
SENSOR - TEMPERATURA	172
	202
	272
SENSOR - TEMPERATURA (ÁGUA)	110
SENSOR - TEMPERATURA (COMBUSTÍVEL)	171
SENSOR - TEMPERATURA (ENTRADA DO AR)	142
SENSOR DE PRESSÃO E MONTAGEM	258
SENSOR DE VELOCIDADE	202
	204
	269
	270
	271
	337
SENSOR DE VELOCIDADE (MOTOR PRINCIPAL)	54
SENSOR DE VELOCIDADE (MOTOR SECUNDÁRIO)	54
SENSOR DE VELOCIDADE (REGULAGEM PRIMÁRIA DO MOTOR)	56
SENSOR DE VELOCIDADE (REGULAGEM SECUNDÁRIA DO MOTOR)	56
SERVO-VÁLVULA	366
	368

ÍNDICE

Designação	Página
	548
SILENCIADOR	153
	154
SINCRONIZADOR	88
SISTEMA DE ILUMINAÇÃO	234
	236
	238
	240
SISTEMA DE ILUMINAÇÃO - FARÓIS	246
	247
	248
SISTEMA ELETRÔNICO - MÁQUINA	5
	217
	218
SISTEMA ELETRÔNICO - MONITOR	219
SOFTWARE	217
SOFTWARE - MÁQUINA	273
SOFTWARE - MÁQUINA (SISTEMA DE SEGURANÇA)	273
SOFTWARE - MÁQUINA (SISTEMA DE SEGURANÇA) (APENAS SOFTWARE)	218
SOFTWARE - MONITOR	219
	756
SOFTWARE (SISTEMA ELETRÔNICO)	757
SUPORTE DO MOTOR	69
	70
SUPORTE-ROPS	843
SUSPENSÃO - ASSENTO	844
	846
SUSPENSÃO - TRUQUE	496

T

TAMPA	138
	190
	393
	444
TAMPA - ALTO-FALANTE	780
TAMPA - BLOCO DO MOTOR	19
	20
TAMPA - BOCAL DE ENCHIMENTO	74
	631
TAMPA - BOCAL DE ENCHIMENTO (ÓLEO DO TREM DE FORÇA)	324
TAMPA - CAIXA DIANTEIRA	22
TAMPA - CAIXA DO VOLANTE	21
TAMPA - CONDICIONADOR DE AR (ROSCA DE 7/16 X 20)	754
TAMPA - CONSOLO	760
TAMPA - MECANISMO DAS VÁLVULAS	25
	26
	27
TAMPA - MUNHÃO	394
TAMPA - NÍVEL DO ÓLEO	490
TAMPA - RADIADOR	137
TAMPA - REDUÇÃO DE RUÍDOS	23
	24
TAMPA - RETENTOR (CONDICIONADOR DE AR)(ALTO LADO)	782
	786
	790
TAMPA - ROLETE DAS ESTEIRAS	468
	469
TAMPA COM RESPIRO	742
TAMPA CONTRA POEIRA	76
	114
	168
	302
	310
	324
	358
	365
	520
	524
	588
	594
	606
TAMPA DA RODA-GUIA	465
	466
	467
TAMPA DO TANQUE DE COMBUSTÍVEL	184
TAMPA SEM ROSCAS	410
	818
TAMPA (TANQUE DE ÓLEO DO MOTOR)	86
TAMPA (TANQUE DE ÓLEO DO TREM DE FORÇA)	86
TANQUE - LÍQUIDO ARREFECEDOR	137
TANQUE DE ÁGUA	138
TANQUE DE COMBUSTÍVEL	184
TANQUE HIDRÁULICO E FILTRO	630
TAPETE	760
	808
	814
TELA - RESERVATÓRIO (TANQUE DE COMBUSTÍVEL)	178
TELA DE PROTEÇÃO	827
	828
TELA DE SUCÇÃO	302
TELA FILTRANTE	630
	650
TELA FILTRANTE (ENTRADA DA BOMBA DE ÓLEO DO TREM DE FORÇA)	324
TELA FILTRANTE (RETORNO DO CONVERSOR DE TORQUE)	324
TERMINAL ELÊTRICO (BUZINA)	190
TIRA	859
	860
	866
TIRA (68CM)	868

ÍNDICE

Designação	Página
TIRANTE DA LÂMINA	673
	674
TRANSMISSÃO	352
TREM DE FORÇA	340
TUBOS - ÁGUA	110
	112
	114
	116
TUBOS - AQUECEDOR	794
TUBOS - AR	149
	150
TUBOS - AR CONDICIONADO	782
	786
	790
TUBOS - BOMBA	606
TUBOS - CILINDRO DE INCLINAÇÃO	612
	614
	616
	618
TUBOS - CIRCUITO PILOTO	588
	594
	600
TUBOS - COLETOR DA LÂMINA	586
TUBOS - COMBUSTÍVEL	178
	180
TUBOS - DIREÇÃO	524
TUBOS - GUINCHO	690
TUBOS - ÓLEO DA TRANSMISSÃO	324
TUBOS - ÓLEO DO MOTOR	82
TUBOS - ÓLEO DO TURBOALIMENTADOR	84
TUBOS - RIPER	609
	610
TUBOS - SACA-PINO	604
TUBOS DO AQUECEDOR	794
TURBOALIMENTADOR	164
	165

V

Designação	Página
VÁLVULA - AMOSTRA DE FLUIDOS	76
	326
	520
VÁLVULA - CONDICIONADOR DE AR (LADO ALTO)	782
	786
	790
VÁLVULA - ESFERA (DRENO)	178
VÁLVULA - PARTIDA A ÉTER	274
VÁLVULA (ABASTECIMENTO)	498
VÁLVULA (ALÍVIO)	498
VÁLVULA (AR CONDICIONADO)	782
VÁLVULA DE ÁGUA	764
VÁLVULA DE ALÍVIO	364
	365
	522
	546
	547
	650
	666
	667
	668
VÁLVULA DE ALÍVIO (CARGA)	621
VÁLVULA DE ALÍVIO (PRESSÃO DO CONVERSOR)	324
VÁLVULA DE ALÍVIO (PRINCIPAL)	621
VÁLVULA DE AMOSTRAGEM	114
VÁLVULA DE COMPENSAÇÃO DE PRESSÃO	542
VÁLVULA DE CONTROLE	356
	358
	636
	638
	640
	642
	644
	646
	648
VÁLVULA DE CONTROLE - PRESSÃO E COMPENSAÇÃO DE FLUXO	662
VÁLVULA DE CONTROLE DE PRESSÃO	544
VÁLVULA DE CONTROLE E MONTAGEM	633
VÁLVULA DE CONTROLE (GUINCHO)	646
VÁLVULA DE CONTROLE (INCLINAMENTO DA LÂMINA)	638
	640
	646
VÁLVULA DE CONTROLE (LEVANTAMENTO DA LÂMINA)	638
	640
	646
VÁLVULA DE CONTROLE (LEVANTAMENTO DO RÍPER)	638
VÁLVULA DE CONTROLE PILOTO	540
	652
	654
	656
	658
VÁLVULA DE CONTROLE PILOTO (GUINCHO)	554
VÁLVULA DE CONTROLE PILOTO (LÂMINA)	552
	554
VÁLVULA DE CONTROLE (TOMBAMENTO DO RIPER)	638
VÁLVULA DE DERIVAÇÃO	524
	634
VÁLVULA DE DERIVAÇÃO DO COMBUSTÍVEL	187
VÁLVULA DE DRENAGEM	378
	380
	386

ÍNDICE

Designação	Página
VÁLVULA DE ENXAGUAR	539
VÁLVULA DE MODULAÇÃO	360
VÁLVULA DE PARADA	794
VÁLVULA DE PRIORIDADE	362
VÁLVULA DE PRIORIDADE (BOMBA E FLUXO DA LUBRIFICAÇÃO)	324
VÁLVULA DE QUEDA RÁPIDA	664
VÁLVULA DE REDUÇÃO DE PRESSÃO	650
	663
VÁLVULA DE RETENÇÃO	172
	186
	544
	635
VÁLVULA DE RETENÇÃO (FLUXO INVERSO)	621
VÁLVULA DE RETENÇÃO (SISTEMA DO LAVADOR E LIMPADOR)	740
VÁLVULA DE SEPARAÇÃO	669
VÁLVULA DE SEPARAÇÃO (RESOLVEDOR DA ESFERA)	636
	642
	644
	648
VÁLVULA DISJUNTORA	606
VÁLVULA DO CARTUCHO PILOTO	660
	661
VÁLVULA DO CARTUCHO PILOTO (ABAIXAMENTO DA LÂMINA)	652
	658
VÁLVULA DO CARTUCHO PILOTO (BAIXAR RIPER)	656
VÁLVULA DO CARTUCHO PILOTO (CARRETEL DO GUINCHO-PARA DENTRO)	654
VÁLVULA DO CARTUCHO PILOTO (CARRETEL DO GUINCHO-PARA FORA)	654
VÁLVULA DO CARTUCHO PILOTO (GUINCHO-CARRETEL LIVRE)	654
VÁLVULA DO CARTUCHO PILOTO (INCLINAÇÃO DA LÂMINA-DIREITA)	652
	658
VÁLVULA DO CARTUCHO PILOTO (INCLINAÇÃO DA LÂMINA-ESQUERDA)	652
	658
VÁLVULA DO CARTUCHO PILOTO (LEVANTAMENTO DA LÂMINA)	652
	658
VÁLVULA DO CARTUCHO PILOTO (LEVANTAMENTO DO RÍPER)	656
VÁLVULA DO CARTUCHO PILOTO (RIPER PARA FORA)	656
VÁLVULA DO CARTUCHO PILOTO (RIPPER PARA DENTRO)	656
VÁLVULA DO TREM DE FORÇA E MONTAGEM	354
VÁLVULA ESFÉRICA	600
VÁLVULA ESFÉRICA (ACESSÓRIO-DESLIGAMENTO)	588
	594
VALVULA REDUTORA E COLETOR	650
VÁLVULA (RETENÇÃO DE CARGA)	636
VÁLVULA SOLENÓIDE	369
	370
	371
	670
	671
VÁLVULA SOLENÓIDE (PASSO DA LÂMINA VARIÁVEL)	98
VÁLVULA SOLENÓIDE (24 VOLT DC)	362
VÁLVULA (VERIFICAR)	787
	790
VÁLVULA (VERIFICAR) (DRENO DO EVAPORADOR DO AR CONDITIONADO)	783
VENTILADOR - EJETOR	97
	103
VENTILADOR - VARIÁVEL	98
VENTILADOR DA CABINE	738
	818
VENTILADOR DE SOPRO	102
VENTILADOR REVERSÍVEL	104
VIDRO	746
VIDRO - DESLIZADOR TRASEIRO (MATIZADO)	866
VIDRO - FIXADO NA PARTE TRASEIRA (MATIZADO)	868
VIDRO FIXO - LADO DIREITO (MATIZADO)	859
VIDRO FIXO - LADO ESQUERDO (MATIZADO)	860
VIDRO (MATIZADO)	746
	855
	856
VIRABREQUIM	28
VOLANTE DO MOTOR	46

STICHWORTVERZEICHNIS

Bezeichnung	Seite
A	
ABFALLBESEITIGUNGSMONTAGE	1, 2, 4
ABGASKRÜMMERDICHTUNG	151
ABLASS (UMWELTFREUNDLICH)	308
ABLASSSTOPFEN	52, 114, 350, 476, 478, 482, 630
ABLASSVENTIL	378, 380, 386
ABSPERRVENTIL	794
ABSTREIFBALKEN	462, 464
ACHSWELLENSCHMIERUNG	490
ANLASSMOTOR-VORSCHMIERANLAGE	280
ANSAUGKRÜMMER	621
ANSAUGKRÜMMER (PLANIERSCHILD-/ WINDENVENTILANORDNUNG)	638, 640, 646
ANSAUGSIEB	302
ANSCHLUSS (WARNHORN)	190
ANSCHLUSSKLEMMENSATZ	277, 280
ANSCHLUSSSTÜCK (SCHNELLWECHSELAN-SCHLUSS)	520
ANSTRICH	10
ANTENNENBEFESTIGUNG (PRODUCT LINK)	227
ANTRIEBSSCHUTZ	323
ANZEIGE	770, 774
ANZEIGEMODUL	254
ANZEIGEN-EINBAUSATZ	766
ANZEIGENSATZ	6
ANZUGSLEINE	846
ARBEITSGERÄTESTEUERUNG	758
ARBEITSLEUCHTEN	230, 231, 232, 246, 247, 248
ARBEITSLEUCHTEN-ABDECKGLAS	231, 232
ARBEITSLEUCHTEN (24 V)	236
ARBEITSLEUCHTEN (24 VOLT)(HÄNGEND)	236, 238, 240, 241, 242, 244, 247
ARBEITSLEUCHTEN (24 V)(SENKRECHT)	248
ARRETIERUNGSEINBAUSATZ	862, 866
ARRETIERUNGSEINBAUSATZ (EINSCHL. ARRETIERUNG U. 2 SCHRAUBEN)	864
ARRETIERUNGSEINBAUSATZ (EINSCHL. RIEGEL UND 2 SCHRAUBEN)	862
ASCHENBECHER	760
ÄTHERSTARTHILFE	274
ÄTHERSTARTHILFEVENTIL	274
AUFKLEBER	874, 880
AUFKLEBER - CATERPILLAR	745
AUFKLEBER - HOLZSPAN-AUSRÜSTUNGS-SATZ	10
AUFKLEBER - LUFTREINIGER (RINGDICHTUNG)	146
AUFKLEBER - MÜLLVERTEILSCHILD	2
AUFKLEBER (HINTEN)(LINKS)	438, 440
AUFKLEBER (HINTEN)(RECHTS)	438, 440
AUFKLEBER (LINKE SEITE)(D8R)	440
AUFKLEBER (RADIO)	769
AUFKLEBER (RECHTE SEITE)(D8R)	440
AUFKLEBER (VORSCHMIERPUMPE)	88
AUFREISSER	729
AUFREISSER - TEILLISTE	703
AUFREISSER-BOLZENZIEHERZYLINDER	572
AUFREISSERBEFESTIGUNG	694
AUFREISSERHUBZYLINDER	570
AUFREISSERKIPPZYLINDER	574, 576
AUFREISSERLEITUNGEN	609, 610
AUFREISSERRAHMEN	686
AUFREISSERZAHN	730, 731, 732
AUSGANGS-ANSCHLUSSKLEMMENSATZ	190
AUSLASSDICHTUNG	114
AUSPUFFABSCHIRMUNG	161
AUSPUFFKRÜMMER	151
AUSWERFERLÜFTER	97, 103
B	
BATTERIE UND VERDRAHTUNG	202
BATTERIE (WARTUNGSFREI) (12 V)	205

STICHWORTVERZEICHNIS

Bezeichnung	Seite
BATTERIEKASTEN	374, 376
BEFESTIGUNGSSCHRAUBENSATZ	213, 215
BELEUCHTUNGSANLAGE	234, 236, 238, 240, 241, 242
BELEUCHTUNGSANLAGE (4 LEUCHTEN)	244
BLATTFEDERSATZ	859, 860, 868
BOLZENZIEHER	696, 697
BREMSE U. ANTRIEB	298, 299
BREMSE UND DIFFERENTIALANTRIEB	294
BREMSE UND PLANETENGETRIEBE	300
C	
C-RAHMEN	682
D	
DÄMPFER	39
DECKEL	393
DEPONIEAUSRÜSTUNG	8
DICHTUNG	64, 631, 859, 860, 866
DICHTUNG (2,9 M)	15
DICHTUNG (68CM)	868
DICHTUNGSKAPPE (KLIMAANLAGE)(OBERE SEITE)	782, 786, 790
DICHTUNGSSATZ	369, 370, 522, 668, 670, 671
DICHTUNGSSATZ (WASSERPUMPE)	118
DICHTUNGSSTOPFEN	821, 848
DIODE (ANSCHLUSSSTEHBOLZEN)	190
DOPPELFLANSCHROLLEN	493
DREHKNOPFSCHALTER (SCHEIBENWISCH- UND WASCHANLAGE) (HINTEN)	780
DREHKNOPFSCHALTER (SCHEIBENWISCH- UND WASCHANLAGE) (LINKE TÜR)	780
DREHKNOPFSCHALTER (SCHEIBENWISCH- UND WASCHANLAGE) (RECHTE TÜRY)	780
DREHKNOPFSCHALTER (SCHEIBENWISCH- UND WASCHANLAGE) (VORNE)	780
DREHMOMENTWANDLER	346, 348, 350
DREHSTROMGENERATOR	190, 193, 194, 196, 197, 198, 200
DREHSTROMGENERATOR - BEFESTIGUNG	60
DREHZAHLSENSOR	202, 204, 269, 270, 271, 337
DREHZAHLSENSOR (HAUPTSENSOR)	54
DREHZAHLSENSOR (HAUPTZÜNDZEITPUNKT-EINSTELLUNG)	56
DREHZAHLSENSOR (NEBENZÜNDZEIT-PUNKT-EINSTELLUNG)	56
DREHZAHLSENSOR (SICHERHEITSSEN-SOR)	54
DRUCK- U. STROMAUSGLEICHSVENTIL	662
DRUCKAUSGLEICHSVENTIL	542
DRUCKKNOPFSCHALTER	770, 774
DRUCKKNOPFSCHALTER (ELEKTRON. - HERUNTERSCHALTEN)	516
DRUCKKNOPFSCHALTER (ELEKTRON. - HOCHSCHALTEN)	516
DRUCKKNOPFSCHALTER (TEMPERATURRE-GELUNG)	98
DRUCKLÜFTER	102
DRUCKLUFTLEITUNGEN	149, 150
DRUCKREDUZIERVENTIL	650, 663
DRUCKSCHALTER	790
DRUCKSCHALTER (HOCH/NIEDRIG)	786
DRUCKSCHALTER (KLIMAANLAGE HOCH/NIEDRIG)	782
DRUCKSCHALTER (MOTORÖL)	88
DRUCKSCHALTER (ÖL)	520
DRUCKSENSOR	262, 263, 264, 265

STICHWORTVERZEICHNIS

Bezeichnung	Seite
	266
	267
	268
DRUCKSENSOR (DRUCKLUFT)	36
DRUCKSENSOR (ÖL)	32
DRUCKSENSOR UND BEFESTIGUNGSTEILE	258
DRUCKSTEUERVENTIL	544

E

ECK- UND SCHNEIDMESSER	705
	706
	707
EINBAUSATZ - KOMMUNIKATION	227
EINBAUVORSTEUERVENTIL	660
	661
EINBAUVORSTEUERVENTIL (AUFREISSER ABSENKEN)	656
EINBAUVORSTEUERVENTIL (AUFREISSER ANHEBEN)	656
EINBAUVORSTEUERVENTIL (AUFREISSER-ZAHNSPITZE - AUSFAHREN)	656
EINBAUVORSTEUERVENTIL (AUFREISSER-ZAHNSPITZE - EINFAHREN)	656
EINBAUVORSTEUERVENTIL (SCHILD ABSENKEN)	652
	658
EINBAUVORSTEUERVENTIL (SCHILD ANHEBEN)	652
	658
EINBAUVORSTEUERVENTIL (SCHILD NACH LINKS NEIGEN)	652
	658
EINBAUVORSTEUERVENTIL (SCHILD NACH RECHTS NEIGEN)	652
	658
EINBAUVORSTEUERVENTIL (WINDE - FREILAUF)	654
EINBAUVORSTEUERVENTIL (WINDENTROMMEL - AUSROLLEN)	654
EINBAUVORSTEUERVENTIL (WINDENTROMMEL - EINROLLEN)	654
EINFÜLLKAPPE	74
EINFÜLLKAPPE (KRAFTÜBERTRAGUNGS-ÖL)	324
EINFÜLLSTUTZENKAPPE	631
EINZELFLANSCHROLLEN	494
ELEKTR. UMFORMER	216
ELEKTRON. STEUERUNG UND ANBAUSATZ	208
ELEKTRON. WARTUNGSMODUL	273
ELEKTRONIK - MASCHINE	5
	217
	218
ELEKTRONIK - MONITOR	219
ENDSCHALTER	334
	600
ENDSCHALTER (ARBEITSGERÄTESPERRE)	588
ENDSCHALTER (ARBEITSGERÄTESPERRE)	594
ENDSCHALTER (FESTSTELLBREMSE)	516
ENTDUNSTER	78
ENTLÜFTER	72
	490
ENTLÜFTER (KRAFTÜBERTRAGUNG)	324

F

FAHRERHAUS	744
	745
	746
	808
FAHRERHAUS-DRUCKLÜFTER	738
	818
FAHRERHAUS-INSTRUMENTENTAFEL	774
FAHRERHAUSANBAUSATZ	804
FAHRERHAUSAUSKLEIDUNG	778
	780
FAHRERHAUSBELEUCHTUNG	229
FAHRERHAUSBELEUCHTUNG (24 V)(MIT SCHALTER)	780
FAHRERHAUSBELÜFTUNG	818
FAHRERHAUSFENSTER	853
	854
	855
	856
	857
	858
	859
	860
	862
	864
	866
	868
FAHRERHAUSFENSTER (LINKS)	856
FAHRERHAUSFENSTER (RECHTS)	855
FAHRERHAUSFENSTER (RECHTS)	859
FAHRERHAUSHEIZUNG	764
FAHRERHAUSLEUCHTENLINSE	229
FAHRERHAUSTÜR (LINKS)	396
	398
FAHRERHAUSTÜR (RECHTS)	400
	402
FAHRERPLATTFORM	814
FAHRERPLATTFORMVERDRAHTUNG	288
FAHRERSITZ	829
	830
	831
	832

STICHWORTVERZEICHNIS

Bezeichnung	Seite
	834
	836
	838
FAHRERSITZFEDERUNG	844
	846
FAHRERSITZFEDERUNGSGEHÄUSE	766
FAHRERSITZVERKLEIDUNG	811
	812
FAHRWERK	388
FEDER-EINBAUSATZ	766
FEDERUNGS-EINBAUSATZ (EINSTELL-KNOPF)	766
FEDERUNGS-EINBAUSATZ (MANSCHETTE)	844
FEDERUNGS-EINBAUSATZ (ROLLE)	844
FERNBEDIENUNG	390
FERNBEDIENUNG (ANGETRIEBENES UNTERBODENSCHUTZBLECH)	422
FESTE VERGLASUNG, HINTEN (GETÖNT)	868
FESTSTELLBREMSGESTÄNGE	512
FETTPRESSE	876
FILTER	150
FILTERSATZ (FAHRERHAUS-UMLUFTFILTER)	818
FILTERSATZ (WASSERABSCHEIDER U. KRAFTSTOFFILTER)	175
FILTERSIEB	630
FLÜGELEINBAUSATZ	99
FRONTBELEUCHTUNG	250
	252
FUSSMATTE	760
	808
	814
HANDWERKZEUGE	882
HAUPTANTRIEBSWELLE	345
HECKVERKLEIDUNG	446
HEIZUNGSLEITUNGEN	794
HINTERES GLASSCHIEBEFENSTER (GETÖNT)	866
HITZESCHILD	160
HOLZSPAN-AUSRÜSTUNGSSATZ	10
HUBZYLINDER U. LEITUNGEN	556
	558
HYDRAULIKLENKUNG	538
HYDRAULIKÖLKÜHLER	555
HYDRAULIKPUMPE UND LEITUNGEN	606
HYDRAULIKSTEUERUNG	549
	550
HYDRAULIKSYSTEM	584
	585
HYDRAULIKTANK UND SCHMIERFILTER	630
HYDRAULIKTANKVERKLEIDUNG	414
HYDRAULIKVERTEILER	620
HYDRAULIKZYLINDER-DICHTUNGSSATZ	580
IDENTIFIZIERUNGS-AUFKLEBER	228
	256
	770
	774
	780
	880
	881
IDENTIFIZIERUNGS-AUFKLEBER (GRUPPEN- U. SEQUENZNR.)	738
	754
IDENTIFIZIERUNGS-AUFKLEBER (PLANIERSCHILD)	585
IDENTIFIZIERUNGS-AUFKLEBER (REINIGUNG)	98
IDENTIFIZIERUNGS-AUFKLEBER (WINDENLEUCHTE - NIEDRIGE WINDENGESCHWINDIGKEIT)	684
IDENTIFIZIERUNGS-AUFKLEBER (WINDENSTEUERUNG)	684
INSTRUKTIONS-AUFKLEBER	256
	550
INSTRUKTIONS-AUFKLEBER (FÜR SITZVERSTELLUNG)	844
INSTRUKTONSSCHILD (KLIMAANLAGE)	733
	734
	735
INSTRUMENTENSATZ	770
INSTRUMENTENTAFELBELEUCHTUNG	770
	774
GAS- U. BREMSPEDAL	334
GASREGELUNG - VERDRAHTUNG	291
GEGENGEWICHT	392
GESTÄNGE UND ANBAUSATZ	805
	806
GETRIEBE	352
GETRIEBEAUFLAGER	332
GETRIEBEHYDRAULIK	306
GLAS	746
GLAS (GETÖNT)	746
	855
	856
GLEITPLATTE	813
GLEITSCHIENENBLOCK-EINBAUSATZ	839
	840
	841
HALTETEILESATZ (SITZFEDERUNG)	846

G

H

I

STICHWORTVERZEICHNIS

Bezeichnung	Seite
J	
JOYSTICKGRIFF	763
K	
KÄLTEMITTEL-DRUCKSPEICHER	782, 786, 790
KÄLTEMITTELANSCHLUSS	782
KÄLTEMITTELKOMPRESSOR	749, 750
KÄLTEMITTELKONDENSATOR	754
KÄLTEMITTELKONDENSATOR U. BEFESTIGUNGSTEILE	752
KAPPE	138, 190, 444
KAPPE (KRAFTÜBERTRAGUNGSÖLAUFNAHME)	86
KAPPE MIT ENTLÜFTER	742
KAPPE (MOTORÖLAUFNAHME)	86
KAPPENFILTERSATZ (KRAFTSTOFFTANK)	184
KEILRIEMEN	193, 194, 200
KEILRIEMEN (KLIMAANLAGEN-KOMPRESSOR)	98
KEILRIEMEN (KLIMAANLAGENKOMRESSOR)	750
KEILRIEMEN (VERSTÄRKT)	40
KEILRIEMEN (VERSTÄRKT) (MOTORLÜFTER)	98
KEILRIEMENSATZ (EINSCHL. 3 RIEMEN)	40, 42
KETTENGLIEDER	489
KETTENRADSEGMENT	344
KETTENSPANNER UND -FEDERRÜCKLAUF	498
KIPPSCHALTER	733, 734, 735
KIPPSCHALTER (EIN/AUS)	390
KIPPSCHALTER (SPERRSCHALTER)	550
KIPPSCHALTER (ZWEIPOLIG) (PANNZERWANNE HOCH/RUNTER)	390
KIPPZYLINDER	561, 562, 578, 580, 582
KIPPZYLINDER U. LEITUNGEN	560
KLIMAANLAGE	733, 734, 735, 736
KLIMAANLAGEN-VENTILKAPPE (7/16 X 20 GEWINDE)	754
KLIMAANLAGENLEITUNGEN	782, 786, 790
KLIMAANLAGENVENTIL (OBERE SEITE)	782, 786, 790
KNOPF (ARMLEHNENEINSTELLUNG)	830
KNOPFSATZ	600
KNOPFSATZ (ARBEITSGERÄTESPERRE)	588, 594
KOLBENMOTOR	530
KOLBENPUMPE	532, 624
KOLBENPUMPENBETÄTIGER	548
KOLBENPUMPENUMLAUFSATZ	536, 626
KOLBENSATZ	624
KRAFTOFFPUMPE UND VENTILSTEUERUNG	182
KRAFTSTOFFEINSPRITZDÜSE	177
KRAFTSTOFFHEIZUNG	220
KRAFTSTOFFILTER	174
KRAFTSTOFFILTERSOCKEL	171, 172
KRAFTSTOFFLEITUNGEN	178, 180
KRAFTSTOFFNEBENSTROMVENTIL	187
KRAFTSTOFFÖRDERPUMPE	183
KRAFTSTOFFSIEB	184
KRAFTSTOFFSTANDGEBER	184
KRAFTSTOFFTANK	184
KRAFTSTOFFTANKKAPPE	184
KRAFTSTOFFTANKVERKLEIDUNG	438, 440
KRAFTSTOFFTEMPERATURREGLER	220
KRAFTÜBERTRAGUNG	340
KRAFTÜBERTRAGUNGSACHSE	292, 293
KRAFTÜBERTRAGUNGSVENTIL U. BEFESTIGUNGSTEILE	354
KREUZGELENK	353
KRÜMMER UND VENTIL	329, 330
KRÜMMERSCHILD	162
KUGELVENTIL	600
KUGELVENTIL (ABLASSEN)	178
KUGELVENTIL (ARBEITSGERÄTEABSPERRVENTIL)	588, 594
KÜHLER	122, 124, 126, 128

STICHWORTVERZEICHNIS

Bezeichnung	Seite
	130
	132
	134
KÜHLERBLOCK	94
	95
KÜHLERGRILL	419
	420
KÜHLERKAPPE	137
	410
	818
KÜHLERSCHUTZ	444
KÜHLERVERKLEIDUNG	430
KÜHLMITTELBEHÄLTER	137
KÜHLWASSERLEITUNGEN	110
	112
	114
	116
KÜHLWASSERPUMPE	117
	118
	120
	121
KÜHLWASSERPUMPEN-REGENERIERSATZ (WASSER)	118
KURBELWELLE	28
KURBELWELLENDICHTUNG	28

L

LADELUFTKÜHLER	142
LAGERSATZ	280
	534
	767
LAUFFÜHRUNGSSATZ	862
	866
LAUFFÜHRUNGSSATZ (EINSCHL. FÜHRUNG UND SCHRAUBE)	862
LAUFFÜHRUNGSSATZ (EINSCHL. FÜHRUNG UND SCHRAUBE)	864
LAUFROLLE	492
LAUFROLLENAUFSATZ	468
	469
LAUFROLLENRAHMEN	475
LAUFROLLENRAHMEN-KNICKFEDERUNG	496
LAUFROLLENRAHMEN (TELESKOPRÜCK-LAUF)	476
	478
	482
LAUFROLLENSCHUTZ	448
LAUFWERKSKETTE	500
	501
	502
	503
	504
	505
	506
LAUFWERKSRAHMEN	507
	508
	509
LAUTSPRECHERABDECKUNG	780
LEITRAD	485
	486
	487
	488
LEITRADAUFSATZ	465
	466
	467
LEITRADSCHUTZ	427
	428
	442
LEITUNGSBOLZENZIEHER	604
LENK- UND GETRIEBESTEUERUNG	516
	518
LENKBETÄTIGUNG	514
LENKÖLLEITUNGEN	524
LEUCHTE	600
LEUCHTE (12 V)(ROT/GRÜN)(LED)	228
LEUCHTE (24 V)	733
	734
	735
	770
	774
LEUCHTE (24 V)(65 W)	230
	231
LEUCHTE (24 V)(65 W) (ARBEITSSCHEINWER-FER)	232
LEUCHTE (28 V)	229
	288
	770
	774
LINSE - ROT	288
LÜFTER (VERSTELLBAR)	98
LÜFTERANTRIEB	40
	42
LÜFTERANTRIEBSAUFHÄNGUNG	61
LUFTFILTER (FAHRERHAUS-FRISCHLUFTFIL-TER)	818
LUFTFILTER (HAUPTFILTER)	146
LUFTFILTER (SICHERHEITSFILTER)	146
LUFTFILTER-WARTUNGSANZEIGE	148
LUFTREINIGER	144
	146
LUFTREINIGER-ANBAUSATZ	152
LUFTREINIGERANZEIGE	148

M

MAGNETSCHALTER	256
	285
MAGNETSCHALTER (VORSCHMIERUNGSEIN-STELLUNG)	88

STICHWORTVERZEICHNIS

Bezeichnung	Seite
MAGNETVENTIL	369, 370, 371, 670, 671
MAGNETVENTIL (VARAIBLE SCHILDNEIGUNG)	98
MAGNETVENTIL (24V DC)	362
MANSCHETTENKLEMME	280, 281
MASCHINENAUSFÜHRUNG	7
MASCHINENSOFTWARE	273
MASCHINENSTEUERUNG	214
MESSSTABFÜHRUNG	80
MODUL - VIER ELEKTRON. ANZEIGEN	799
MODULATORVENTIL	360
MONITOR - SOFTWARE	219, 756
MONITOR-SOFTWARE	219
MONITORSTEUERUNG (CATERPILLAR ÜBERWACHUNGSSYSTEM)	770, 774
MONTAGEZAPFEN	71
MONTAGEZAPFEN (PLANIERSCHILDEINRICHTUNG)	704
MONTAGEZAPFENVERKLEIDUNG	394
MOTOR-EINBAUSATZ	14
MOTOR, KOMPLETT	11, 12
MOTORANSCHLUSS	510
MOTORAUFHÄNGUNG	69, 70
MOTORBLOCK	29, 30, 31, 32
MOTORBLOCKDECKEL	19, 20
MOTORDREHVORRICHTUNG	534
MOTORHAUBE UND VERKLEIDUNG	450
MOTORHUBÖSE	58, 59
MOTORKÜHLERBLOCK	13
MOTORÖLEINFÜLLSTUTZEN	74
MOTORÖLKÜHLER	93
MOTORÖLLEITUNGEN	82
MOTORSTEUERUNG, ELEKTRON.	212, 213
MOTORVERDRAHTUNG	286
MOTORVERKLEIDUNG	406, 410
MOTORVORSCHMIERUNG	88

N

NEBENSTROMVENTIL	524, 634
NEIGEZYLINDERLEITUNGEN	612, 614, 616, 618
NOCKENWELLE	18
NOCKENWELLENZAHNRAD	47

O

O-RING-STOPFEN	358
ÖLABLASSSCHRAUBE	62
ÖLFILTER	76, 309, 310, 520
ÖLFILTERELEMENT (HYDRAULIK/STROMUMKEHRUNG) (NICHT WIEDERVERWENDBAR)	630
ÖLFILTERELEMENT (HYDRAULISCH)	309, 310
ÖLFILTERELEMENT (HYDRAULISCH) (HOCHLEISTUNG)	630
ÖLFILTERELEMENT (RÜCKFLUSS) (SCHWER ENTFLAMMBARE FLÜSSIGKEIT)	630
ÖLKÜHLERBLOCK	96
ÖLLEITUNGEN - KRAFTÜBERTRAGUNG	324
ÖLMESSSTAB	80
ÖLPUMPEN-BEFESTIGUNGSTEILE	73
ÖLSCHNELLWECHSELANSCHLUSS	86
ÖLSTANDKAPPE	490
ÖLWANNE	62, 64

P

PANZERWANNE	422, 432, 434
PENDELVENTIL	669
PENDELVENTIL (KUGELWECHSELVENTIL)	636, 642, 644, 648
PLANETENANTRIEBSGEHÄUSE U. TEILE	302
PLANETENGETRIEBE	336
PLANIEREINRICHTUNG	676, 677, 678, 679
PLANIERSCHILD-KRÜMMERLEITUNGEN	586
PLANIERSCHILDHUBZYLINDER	563

STICHWORTVERZEICHNIS

Bezeichnung	Seite
	564
PLANIERSCHILDKIPPZYLINDER	566
	568
PLATTFORM	454
PLEUELSTANGE UND KOLBEN	66
PLUS-DIODEN-EINBAUSATZ	191
PROBEENTNAHMEVENTIL	114
PROBEENTNAHMEVENTIL F. WARTUNGS-FL.	76
	326
	520
PUMPENANTRIEB	173
PUMPENANTRIEBSADAPTER	170
PUMPENKOPF	522

Q

QUERTRAVERSE	470
	472
	474

R

RADIO - AM-FM-WB	821
RADIOEINBAUSATZ	769
RAHMEN UND GEHÄUSE	378
	380
	386
RELAISANSCHLUSSKLEMMENSATZ	190
RELAISTAFEL	256
RIEMENSPANNER	16
ROLLENSATZ	846
RÜCKENSTÜTZEN-EINSTELLKNOPF	811
	812
RÜCKFAHRWARNHORN	202
RÜCKLEHNENVERLÄNGERUNG	838
RÜCKLEHNENVERLÄNGERUNG (STOFF)	834
RÜCKSCHLAGVENTIL (GEGEN VAKUUM)	606
RÜCKSPIEGEL	797
	798

S

SANDSTRAHLSCHUTZGITTER	418
SCHALE - RÜCKENLEHNE	810
SCHALLDÄMPFENDE VERKLEIDUNG	23
	24
SCHALLDÄMPFER	153
	154
SCHALLDÄMPFUNG	9
	452
SCHALTER	600
	733
	734
	735
SCHALTER (ARBEITSGERÄTESPERRE)	588
	594
SCHALTER (KLIMAANLAGE)	240
SCHALTER (LEUCHTEN)	770
	774
SCHALTER (LÜFTER)	774
SCHALTER (24 V)(ERLEUCHTET)	289
SCHALTKNOPFEINBAUSATZ	821
SCHEIBENWASCHANLAGE	848
SCHEIBENWASCHANLAGENBEHÄLTER	740
	742
SCHEIBENWISCHER	870
SCHEIBENWISCHERBLATT	716
	717
SCHEIBENWISCHERBLATT (RECHTE U. LINKE TÜREN)	870
SCHEIBENWISCHERBLATT (VORNE U. HINTEN)	870
SCHEIBENWISCHERBLATTSATZ	870
SCHEIBENWISCHERMOTOR	800
	801
	802
	803
SCHEIBENWISCHERMOTOR (LINKE TÜR)	870
SCHEIBENWISCHERMOTOR (RECHTE TÜRY)	870
SCHIEBEFENSTER	850
	851
	852
	853
	857
	858
SCHIEBEFENSTER (HINTEN)	746
SCHIEBEFENSTER (LINKS)	746
SCHIEBEFENSTER (RECHTS)	746
SCHILD UND AUFKLEBER	877
	878
	880
SCHILD UND SCHNEIDMESSER	708
	709
	710
	711
	712
	713
	714
	715
SCHILDSTREBE	673
	674
SCHLAUCHLEITUNG	128
SCHLÜSSEL	14
	178
	184
	284
	374
	410

STICHWORTVERZEICHNIS

Bezeichnung	Seite
	444
	606
SCHLÜSSEL (STARTER)	414
SCHMIERNIPPEL	16
	40
	42
	472
	474
	566
	568
	570
	574
	576
	578
	582
	673
	686
SCHMIERNIPPEL (1/8-27-GEWINDE)	693
SCHMIERPUMPE	92
SCHNEIDMESSER	727
SCHNELLBETANKUNGSANSCHLUSS	166
	168
SCHNELLSENKVENTIL	664
SCHRÄGKOLBEN-EINBAUSATZ	624
SCHUBARM - STABILISATOR	701
	702
SCHUBARM, LINKS	698
	699
SCHUBARM, RECHTS	700
SCHUBBLOCK	672
SCHUTZBLECHE	416
SCHUTZBÜGEL	458
	460
SCHUTZDICHTUNG	447
SCHUTZGITTER	827
	828
SCHUTZVERKLEIDUNG	105
	106
	107
	108
SCHWENKSCHEIBE	627
	628
SCHWENKSCHILD	724
SCHWINGSITZ	839
	840
	841
SCHWUNGRAD	46
SCHWUNGRADGEHÄUSE	52
SCHWUNGRADGEHÄUSEDECKEL	21
SCREEN	630
	650
SEITENANTRIEB	312
	316
	318
SEITENANTRIEBSBEFESTIGUNG	331
SEITENANTRIEBSVERKLEIDUNG	426
	437
SENSORANSCHLUSSSATZ (12POLIG)	205
	228
	286
	518
	588
	594
	600
SENSORANSCHLUSSSATZ (2POLIG)	88
	98
	203
	204
	234
	238
	244
	252
	286
	288
	289
	550
	588
	594
	600
	654
	738
	754
	771
	775
SENSORANSCHLUSSSATZ (2POLIG)	236
	690
SENSORANSCHLUSSSATZ (3POLIG)	98
	202
	203
	262
	263
	264
	265
	266
	267
	268
	288
	289
	518
	550
	588
	594
	600
	770
	775
	782
SENSORANSCHLUSSSATZ (3POLIG)	690
SENSORANSCHLUSSSATZ (4 POLIG)	98
	216
	288

STICHWORTVERZEICHNIS

Bezeichnung	Seite
SENSORANSCHLUSSSATZ (4 POLIG)	203
	289
	550
	588
	594
	601
	771
	775
SENSORANSCHLUSSSATZ (6POLIG)	88
	289
	518
	771
	775
	848
SENSORANSCHLUSSSATZ (8POLIG)	227
	288
	289
	291
	388
	770
	775
	817
SICHERHEITSEINBAUSATZ	226
	228
SICHERHEITSGURT	834
	838
SICHERUNG (10 A)	256
SICHERUNG (15 A)	256
SICHERUNG (20 A)	256
SICHERUNG (5 A)	256
SIEB (KRAFTÜBERTRAGUNGSÖLPUMPENEIN-LASS)	324
SIEB (WANDLERRÜCKLAUFSIEB)	324
SITZGURT-HALTESEIL	844
SOCKEL FÜR VENTILDECKEL U. EINSPRITZKABELBAUM	15
SOFTWARE	217
SOFTWARE - MASCHINE (SICHERHEITSSY-STEM)	273
SOFTWARE - MASCHINE (SICHERHEITSSY-STEM) (NUR SOFTWARE)	218
SOFTWARE (ELEKTRON.)	757
SPERRSCHIENENSATZ	868
SPERRVENTIL	172
	186
	544
	635
SPERRVENTIL (RÜCKFLUSS)	621
SPERRVENTIL (SCHEIBENWISCHER- U. -WASCHERANLAGE)	740
SPIEGEL	796
SPÜLVENTIL	539
STABILISATORGELENK	692
STARTERMOTOR	276
	279
STARTERMOTORZAHNRAD	281
STARTSCHLÜSSELSCHALTER	770
	774
STAUBAUSWERFER	147
STAUBKAPPE	76
	114
	168
	302
	310
	324
	358
	365
	520
	524
	588
	594
	606
STECKDOSEN - EINBAUSATZ	802
STECKDOSEN - EINBAUSATZ (12POLIG)	228
STECKDOSEN - EINBAUSATZ (12POLIG)	205
	289
	512
	518
STECKDOSEN - EINBAUSATZ (2POLIG)	98
	136
	188
	202
	203
	204
	230
	234
	238
	252
	269
	270
	271
	274
	283
	286
	369
	422
	520
	550
	588
	594
	600
	652
	654
	658
	738
	754
	770
	774
	782
	786

STICHWORTVERZEICHNIS

Bezeichnung	Seite
	790
STECKDOSEN - EINBAUSATZ (2POLIG)	244
	288
	289
STECKDOSEN - EINBAUSATZ (2POLIG)	88
STECKDOSEN - EINBAUSATZ (3POLIG)	88
	98
	110
	142
	171
	172
	202
	203
	204
	229
	259
	260
	261
	272
	286
	518
	550
	588
	594
	600
	754
	770
	774
STECKDOSEN - EINBAUSATZ (3POLIG)	288
	289
STECKDOSEN - EINBAUSATZ (4 POLIG)	670
	671
STECKDOSEN - EINBAUSATZ (4 POLIG)	98
	203
	289
	370
	588
	594
	600
	770
	774
STECKDOSEN - EINBAUSATZ (6POLIG)	254
	340
	422
	738
	742
	774
	799
	800
	801
	803
STECKDOSEN - EINBAUSATZ (8POLIG)	203
	227
	289
	770

Bezeichnung	Seite
	774
	775
	821
STECKERSATZ	817
STEIGLEITER	457
STEINSCHUTZ	688
	689
STELLUNGSSENSOR	259
	260
	261
STEUERHEBEL	762
STEUERHEBEL (SEILWINDE)	654
STEUERKNOPF	770
	774
STEUERKONSOLENABDECKUNG	760
STEUERPEDAL U. BEFESTIGUNG	305
STEUERUNG - NICHT PROGRAMMIERT	208
	215
	757
STEUERUNG - PLANIERSCHILD U. WINDE	684
STEUERUNG, ELEKTRON.	756
	757
STEUERUNGSEINHEIT, ELEKTRON. FÜR MOTOR UND BEFEST.	210
STEUERVENTIL	356
	358
	636
	638
	640
	642
	644
	646
	648
STEUERVENTIL (AUFREISSER ANHEBEN)	638
STEUERVENTIL (AUFREISSERZAHNSPITZE)	638
STEUERVENTIL (PLANIERSCHILD ANHEBEN)	638
	646
STEUERVENTIL (PLANIERSCHILD ANHEBEN)	640
STEUERVENTIL (PLANIERSCHILD NEIGEN)	638
	640
	646
STEUERVENTIL (SEILWINDE)	646
STEUERVENTIL UND BEFESTIGUNGSTEILE	633
STIRNRAD	48
STIRNRADGEHÄUSE	54
	56
STIRNRADGEHÄUSE-HALTETEILE	44
	45
STIRNRADGEHÄUSEDECKEL	22
STÖSSEL (KRAFTÜBERTRAGUNGSÖLSTAND/MESSSTAB)	324

STICHWORTVERZEICHNIS

Bezeichnung	Seite
STOSSSTANGEN-EINBAUSATZ	766
STROMANSCHLUSS-STECKDOSE (12 V)	288
STROMBETÄTIGUNG	372
STROMBETÄTIGUNG (UNTERBODENSCHUTZ-BLECH)	422
STRÖMUNGSSCHALTER	136
STUFE U. HANDGRIFF	842
SU-SCHILD	680
	718
	720
	721
	725
SUMPFSIEB (KRAFTSTOFFTANK)	178
T	
TELLERRAD- UND VORGELEGERADSATZ	320
TEMPERATURGEBER	202
TEMPERATURSENSOR	172
	202
	272
TEMPERATURSENSOR (ANSAUGLUFT)	142
TEMPERATURSENSOR (KRAFTSTOFF)	171
TEMPERATURSENSOR (WASSER)	110
THERMOSTATSCHALTER	736
TRÄGER - ÜBERROLLSCHUTZ	843
TRENNSCHALTER	284
TRENNSCHALTER (BATTERIE)	202
TROCKNERSAMMLER (KLIMAANLAGE)	782
	790
TROCKNERSAMMLER (KLIMAANLAGE)	786
TURBOLADER	164
	165
TURBOLADEREINSATZ	164
TURBOLADERÖLLEITUNGEN	84
U	
U-PLANIERSCHILDEINRICHTUNG	681
U-SCHILD	722
	723
	726
ÜBERDRUCKVENTIL	364
	365
	522
	546
	547
	650
	666
	667
	668
ÜBERDRUCKVENTIL (FÜLLVENTIL)	621
ÜBERDRUCKVENTIL (HAUPTUNTERBRECHER)	621
ÜBERDRUCKVENTIL (WANDERDRUCK)	324
ÜBERROLL-SCHUTZKABINE	826
ÜBERROLLSCHUTZ	824
ÜBERTRAGUNGSSTEUERUNG (PRODUCT LINK)	227
UMGEHUNGSSCHALTER	203
	283
UMKEHRLÜFTER	104
UMLAUFKÜHLWASSERHEIZUNG	222
	224
UMLAUFKÜHLWASSERHEIZUNGS-ELEMENT	222
UMLAUFKÜHLWASSERHEIZUNGS-ELEMENT (240 V/1500 W)	224
UNTERBRECHER (135 A)	256
UNTERBRECHER (15 A)	216
	256
V	
VENTIL (DRUCKBEGRENZUNG)	498
VENTIL (FÜLLEN)	498
VENTIL (KLIMAANLAGE)	782
VENTIL (LASTHALTEVENTIL)	636
VENTIL (RÜCKSCHLAGVENTIL)	787
	790
VENTIL (RÜCKSCHLAGVENTIL) (KLIMAANLAGE - VERDAMPFERABLASS)	783
VENTILAUFHÄNGUNG	622
VENTILDECKEL	25
	26
	27
VENTILKIPPHEBEL	68
VENTILSTEUERUNG	182
VENTILSTÖSSELSATZ	766
VERDRAHTUNGSSATZ	846
VERGLASUNG, LINKS (GETÖNT)	860
VERGLASUNG, RECHTS (GETÖNT)	859
VERSCHLEISSPLATTEN	728
VERSTÄRKERVENTIL	366
	368
	548
VERSTELLBARER SITZ	822
VERTEILER- UND REDUZIERVENTIL	650
VORHÄNGESCHLOSS	14
	178
	184
	374
	410
	414
	444
	606
VORRANGVENTIL	362
VORRANGVENTIL (PUMPEN- U. SCHMIERMITTELFLUSS)	324
VORREINIGER	156

STICHWORTVERZEICHNIS

Bezeichnung	Seite
	157
	158
	159
VORSTEUERHYDRAULIKSTEUERUNG	552
	553
	554
VORSTEUERLEITUNGEN	588
	594
	600
VORSTEUERÖLDRUCKSAMMLER	588
	594
	601
VORSTEUERVENTIL	540
	652
	654
	656
	658
VORSTEUERVENTIL (PLANIERSCHILD)	552
	554
VORSTEUERVENTIL (SEILWINDE)	554

W

WÄHLSENSOR	184
WARNAUFKLEBER	227
WARNAUFKLEBER (KETTENSPANNFEDER)	476
	478
	482
WARNHORN (24 VOLT)(HOCHTON)	204
WARNHORN (24V)(NIEDERTON)	205
WARNHORNKNOPF	288
WARNHORNSCHALTER	288
WARNSCHILD (KETTENSPANNFEDERÖL)	478
	482
WARNSCHILD (MOTORLÜFTER)	98
WARNVORRICHTUNG	188
	288
WASSERABSCHEIDER- U. KRAFTSTOFFILTER	175
	176
WASSERFILTER	121
WASSERPUMPENFILTER	118
WASSERTANK	138
WASSERTEMPERATURREGLER (92 GRAD CELSIUS)	110
WASSERVENTIL	764
WINDEN-ÖLLEITUNGEN	690
WISCHERARM	872

Z

ZAHNRADPUMPE	341
	342
	531
ZAHNRADPUMPE (KRAFTÜBERTRAGUNGS-ÖL)	324
ZAHNRADVORGELEGE	50
ZEITGEBER	88
ZUGHAKEN	404
ZUGVORRICHTUNGSPLATTE	453
ZYLINDER (ÄTHER)	274
ZYLINDERAUFHÄNGUNG	693
ZYLINDERKOPF	34
	36
	38

MACHINE ARRANGEMENT

143-7721 DISPOSAL AR-WASTE

S/N: AKA1-UP

FOR USE WITH LIFT CYLINDERS FOR MOUNTING LIGHTS, ENGINE ENCLOSURES AND FUEL TANK GUARD ATTACHMENTS.

SMCS-7000 **i01488443**

NOTE	PART NUMBER	QTY	PART NAME 1 2 3 4 5 6 (PRODUCT LEVEL)	SEE PAGE
Y	*143-7722*	1	DISPOSAL AR-WASTE	2
Y	**170-5758**	2	FRAME AS-TRACK ROLLER	475
Y	*159-8838*	1	GUARD AR-FINAL DRIVE	426
Y	*166-4428*	1	GUARD AR-IDLER	428
Y	*160-1809*	1	LIGHTING AR	238

Y-SEPARATE ILLUSTRATION

MACHINE ARRANGEMENT

143-7722 DISPOSAL AR-WASTE

S/N: AKA1-UP

PART OF 143-7721, 199-0818 DISPOSAL AR-WASTE

SMCS-7000 **i01488449**

NOTE	REF NO	GRAPHIC REF	PART NUMBER	QTY	PART NAME 1 2 3 4 5 6 (PRODUCT LEVEL)	SEE PAGE
Y	1	1	*119-5125*	1	LANDFILL AR	8
	2	1	**202-1331**	1	PLATE AS	
		1	**1Q-2446**	2	BAR	
Y	3	1	*118-7442*	1	GRILL GP-RADIATOR	420
Y	4	1	*159-5984*	1	GUARD GP-BOTTOM	434
Y	5	1	*118-7441*	1	GUARD AS-RADIATOR	430
BD	6	1	**5P-7211**	1	SEAL	
	7	1	**176-0841**	1	PLATE AS-LH	
					(EAH PLATE AS INCLUDES)	
		1	**1Z-9277**	1	BAR	
		1	**1F-0750**	8	NUT-WELD (3/8-16 THD)	
	8	1	**9Z-9129**	2	BAR	
	9	1	**109-5196**	2	FILM-WASTE HANDLER	
	10	1	**9Z-9128**	2	BAR	
	11	1	**1Z-9278**	2	BAR	
	12	1	**9Z-9127**	2	BAR	
	13	1	**1Z-9277**	2	BAR	
	14	1	**1Q-2983**	1	BAR	
	15	1	**1Q-3000**	1	BAR	
	16	1	**1Q-3685**	2	PLATE	
	17	1	**1Q-2423**	2	HANDLE AS	
	18	1	**8T-4835**	6	BOLT (1/2-13X2 IN)	
	19	1	**8T-4223**	6	WASHER-HARD (13.5X25.5X3MM THK)	
	20	1	**1Q-2130**	1	HANDLE AS	
	21	1	**176-0840**	1	PLATE AS-RH	
FY		1	*183-7648*	1	ALTERNATOR GP-CHARGING	198
FY		1	*1Z-0746*	1	GUARD GP-SEAL	447
F		1	**8S-2385**	1	STACK AS-AIR	

B-USE AS REQUIRED
D-ORDER BY THE METER
F-NOT SHOWN
Y-SEPARATE ILLUSTRATION

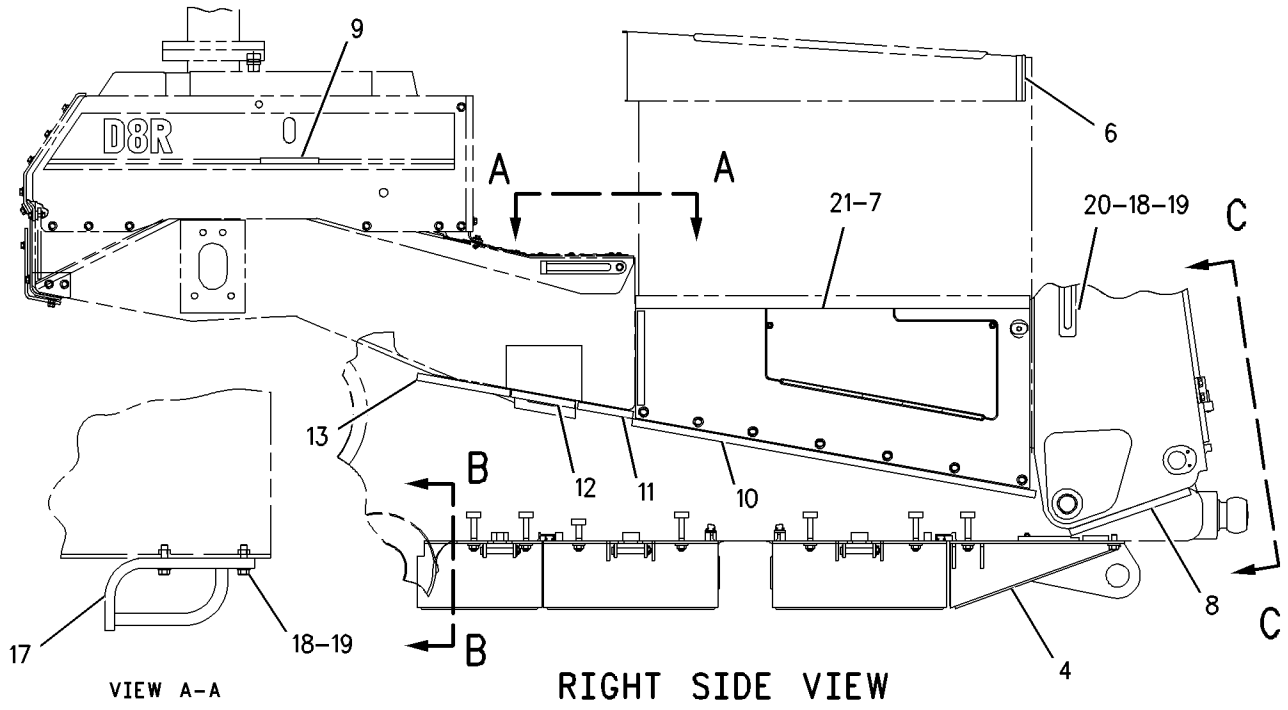

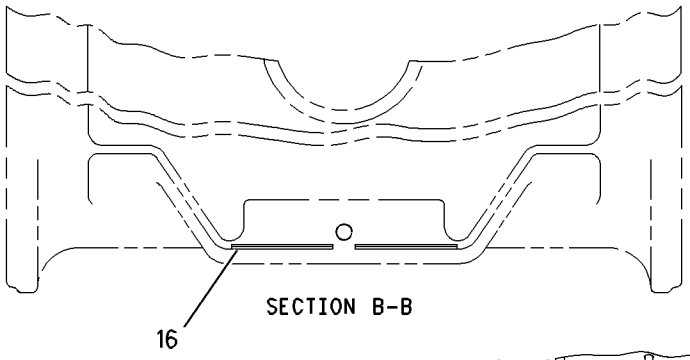

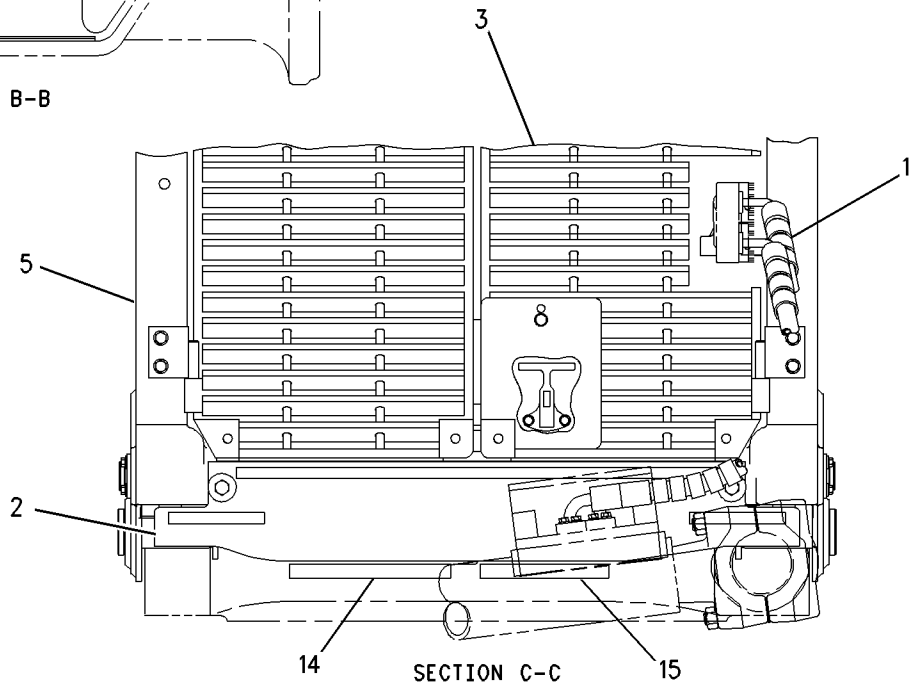

GRAPHIC #1 g00777804

MACHINE ARRANGEMENT

199-0818 DISPOSAL AR-WASTE

S/N: AKA1-UP

SMCS-7000 **i01489140**

NOTE	PART NUMBER	QTY	PART NAME 1 2 3 4 5 6 (PRODUCT LEVEL)	SEE PAGE
Y	*198-9754*	1	CASE & FRAME GP	386
Y	*143-7722*	1	DISPOSAL AR-WASTE	2
Y	*128-0302*	2	FINAL DRIVE GP	312
Y	*129-1330*	1	GAUGE AR	6
Y	*166-4427*	1	GUARD AR-IDLER	427
Y	*160-1809*	1	LIGHTING AR	238

Y-SEPARATE ILLUSTRATION

MACHINE ARRANGEMENT

157-1740 ELECTRONICS AR-MACHINE

S/N: AKA1-UP

PART OF 157-0818 GENERAL AR

SMCS-7000 **i01429656**

NOTE	PART NUMBER	QTY	PART NAME 1 2 3 4 5 6 (PRODUCT LEVEL)	SEE PAGE
Y	**159-9035**	1	ELECTRONICS GP-MACHINE	217
Y	**195-5200**	1	ELECTRONICS GP-MONITOR	219

Y-SEPARATE ILLUSTRATION

MACHINE ARRANGEMENT

129-1330 GAUGE AR

S/N: AKA1-UP

LGP

PART OF 199-0818 DISPOSAL AR-WASTE

SMCS-7000 **i01323267**

NOTE	PART NUMBER	QTY	PART NAME 1 2 3 4 5 6 (PRODUCT LEVEL)	SEE PAGE
Y	*1Q-3056*	1	AXLE GP-POWER TRAIN	292
	1Q-3136	1	EQUALIZER BAR AS	
	117-4013	2	BEARING-SELF ALIGNING	
	130-3139	2	BEARING-SLEEVE	
	5L-4751	4	RING-RETAINING	
	7G-8664	1	SEAL (80.46MM ID)	
	7G-8666	1	SEAL (79.87MM ID)	
	1Q-3039	2	RETAINER AS	
	7T-1153	1	PLATE	
	7T-1151	1	SEAL	
	9X-7505	4	SEAL AS	
	1Q-3042	1	SHAFT-PIVOT	

Y-SEPARATE ILLUSTRATION

MACHINE ARRANGEMENT

157-0818 GENERAL AR

S/N: AKA1-UP

SMCS-7000 **i01429480**

NOTE	PART NUMBER	QTY	PART NAME 1 2 3 4 5 6 (PRODUCT LEVEL)	SEE PAGE
Y	**157-0819**	1	CHASSIS AR	388
Y	**157-1740**	1	ELECTRONICS AR-MACHINE	5
Y	**157-7195**	1	ENGINE AR-COMPLETE	11
Y	**157-0821**	1	HYDRAULIC AR	584
Y	**159-5908**	1	INSTALLATION AR-ENGINE	14
Y	**157-0820**	1	POWER TRAIN AR	340
Y	**156-5684**	1	UNDERCARRIAGE AR	507

Y-SEPARATE ILLUSTRATION

MACHINE ARRANGEMENT

119-5125 LANDFILL AR

S/N: AKA1-UP

PART OF 143-7722 DISPOSAL AR-WASTE

SMCS-7000 **i01223764**

NOTE	PART NUMBER	QTY	PART NAME 1 2 3 4 5 6 (PRODUCT LEVEL)	SEE PAGE
	165-0020	2	HOSE	
			84CM LENGTH EACH	
			1-90 DEGREE & 1-60 DEGREE COUPLING	
I	**119-5154**	1	HOSE AS	
			97 CM LENGTH	
			90 DEGREE COUPLING EACH END	
I	**119-5153**	1	HOSE AS	
			91 CM LENGTH	
			90 DEGREE COUPLING EACH END	

I-SEE HOSE FABRICATION GUIDE

MACHINE ARRANGEMENT

157-8035 SUPPRESSION AR-SOUND

S/N: AKA1-UP
113 DECIBEL. EEC
FOR USE WITH CAB EQUIPPED MACHINES

SMCS-7000 **i01491462**

NOTE	PART NUMBER	QTY	PART NAME 1 2 3 4 5 6 (PRODUCT LEVEL)	SEE PAGE
Y	*160-2394*	1	ENCLOSURE GP-ENGINE	410
Y	**157-7196**	1	ENGINE AR-COMPLETE	12
Y	*202-1345*	1	MUFFLER GP	154
Y	**195-8711**	1	PLUG AS	817
	130-5158	1	FILM	
	130-5101	1	FILM-OPERATOR SOUND	

Y-SEPARATE ILLUSTRATION

MACHINE ARRANGEMENT

143-7740 WOODCHIP AR

S/N: AKA1-UP

SMCS-7000 **i01488536**

NOTE	PART NUMBER	QTY	PART NAME 1 2 3 4 5 6 (PRODUCT LEVEL)	SEE PAGE
Y	*158-6439*	1	AIR CONDITIONER AR	735
Y	*202-9780*	1	ALTERNATOR GP-CHARGING	200
Y	**163-4061**	7	CORE AS-RADIATOR	94
Y	**163-4062**	2	CORE AS-RADIATOR	95
Y	*118-7442*	1	GRILL GP-RADIATOR	420
Y	*118-7441*	1	GUARD AS-RADIATOR	430
Y	*160-1809*	1	LIGHTING AR	238
Y	**160-7442**	1	PRECLEANER AR	158
	160-7443	1	HOOD AS	
	1F-0750	18	NUT-WELD (3/8-16 THD)	
	1F-0748	7	NUT-WELD (1/2-13 THD)	
	3J-5169	1	NUT (5/8-11 THD)	
	126-1074	2	HANDHOLD	
	109-5197	2	FILM-WOODCHIP AR	
	1Z-0886	1	PAINT GP	

Y-SEPARATE ILLUSTRATION

ENGINE ARRANGEMENT

157-7195 ENGINE AR-COMPLETE

S/N: BET1-UP

PART OF 157-0818 GENERAL AR

SMCS-1000 **i01474211**

NOTE	PART NUMBER	QTY	PART NAME 1 2 3 4 5 6 (PRODUCT LEVEL)	SEE PAGE
Y	*160-1122*	1	AFTERCOOLER GP	142
Y	*9Y-2989*	1	BREATHER GP	72
Y	*186-2169*	1	CONTROL & MTG GP-ENGINE ELEK	210
Y	*7W-2206*	1	COOLER GP-ENGINE OIL	93
YR	**4W-9822**	1	CORE GP-OIL COOLER	96
Y	*107-6737*	1	COVER GP-CYLINDER BLOCK	19
Y	*170-4672*	1	COVER GP-CYLINDER BLOCK	20
Y	*1W-8341*	1	COVER GP-FLYWHEEL HOUSING	21
Y	*150-4278*	1	COVER GP-FRONT HOUSING	22
Y	*160-7451*	1	COVER GP-VALVE MECHANISM	26
Y	*4P-5893*	1	DAMPER GP	39
Y	*160-0566*	1	ENGINE AR-CORE	13
Y	*150-3345*	1	FASTENER GP-FRONT HOUSING	45
Y	*162-1587*	1	FILLER GP-ENGINE OIL	74
Y	*7C-4941*	1	FILTER GP-ENGINE OIL	76
Y	*161-3202*	1	FILTER GP-FUEL	174
Y	*185-9978*	1	FILTER GP-WATER SEP & FUEL	176
Y	*159-9019*	1	FLYWHEEL GP	46
Y	*161-2423*	1	GAUGE GP-OIL LEVEL (DIPSTICK)	80
Y	*9Y-2187*	1	GEAR GP-REAR	50
Y	*100-2879*	1	HOUSING GP-FLYWHEEL	52
Y	*161-1509*	1	HOUSING GP-FRONT	54
Y	*200-1302*	1	LIFTING GP-ENGINE	59
Y	*160-5569*	1	LIFTING GP-ENGINE	58
Y	*156-8543*	1	LINES GP-AIR	149
Y	*4W-3821*	1	LINES GP-ENGINE OIL	82
Y	*161-1507*	1	LINES GP-FUEL	180
Y	*156-8544*	1	LINES GP-TURBOCHARGER OIL	84
Y	*160-4934*	1	LINES GP-WATER	110
Y	*161-2427*	1	LINES GP-WATER	112
Y	*167-0114*	1	LINES GP-WATER	116
Y	*157-7087*	1	MANIFOLD GP-EXHAUST	151
Y	*160-0569*	1	MOUNTING GP-ALTERNATOR	60
Y	*170-4674*	1	MOUNTING GP-FAN DRIVE	61
Y	*7W-0158*	1	PAN GP-OIL	62
Y	*162-1622*	1	PUMP GP-FUEL TRANSFER	183
Y	*100-9347*	1	PUMP GP-WATER	117
Y	*160-3916*	1	PUMP GP-WATER	120
Y	*102-7664*	1	SENSOR & MTG GP-PRESSURE	258
Y	*4N-2473*	1	SUPPORT GP-ENGINE	69
Y	*192-0542*	1	TRUNNION GP-ENGINE	71
Y	*161-1503*	1	WIRING GP-ENGINE	286

GASKET KITS WILL BE PROVIDED WHEN AVAILABLE

R-REMFG PART MAY BE AVAILABLE
Y-SEPARATE ILLUSTRATION

ENGINE ARRANGEMENT

157-7196 ENGINE AR-COMPLETE

S/N: BET1-UP

PART OF 157-8035 SUPPRESSION AR-SOUND

SMCS-1000 **i01474231**

NOTE	PART NUMBER	QTY	PART NAME 1 2 3 4 5 6 (PRODUCT LEVEL)	SEE PAGE
Y	*160-1122*	1	AFTERCOOLER GP	142
Y	*9Y-2989*	1	BREATHER GP	72
Y	*186-2169*	1	CONTROL & MTG GP-ENGINE ELEK	210
Y	*7W-2206*	1	COOLER GP-ENGINE OIL	93
YR	**4W-9822**	1	CORE GP-OIL COOLER	96
Y	*107-6737*	1	COVER GP-CYLINDER BLOCK	19
Y	*170-4672*	1	COVER GP-CYLINDER BLOCK	20
Y	*1W-8341*	1	COVER GP-FLYWHEEL HOUSING	21
Y	*104-4825*	1	COVER GP-SOUND SUPPRESSION	23
Y	*161-8400*	1	COVER GP-SOUND SUPPRESSION	24
Y	*160-7451*	1	COVER GP-VALVE MECHANISM	26
Y	*4P-5893*	1	DAMPER GP	39
Y	*160-0566*	1	ENGINE AR-CORE	13
Y	*150-3345*	1	FASTENER GP-FRONT HOUSING	45
Y	*162-1587*	1	FILLER GP-ENGINE OIL	74
Y	*7C-4941*	1	FILTER GP-ENGINE OIL	76
Y	*161-3202*	1	FILTER GP-FUEL	174
Y	*185-9978*	1	FILTER GP-WATER SEP & FUEL	176
Y	*159-9019*	1	FLYWHEEL GP	46
Y	*161-2423*	1	GAUGE GP-OIL LEVEL (DIPSTICK)	80
Y	*9Y-2187*	1	GEAR GP-REAR	50
Y	*100-2879*	1	HOUSING GP-FLYWHEEL	52
Y	*161-8414*	1	HOUSING GP-FRONT	56
Y	*200-1302*	1	LIFTING GP-ENGINE	59
Y	*160-5569*	1	LIFTING GP-ENGINE	58
Y	*156-8543*	1	LINES GP-AIR	149
Y	*4W-3821*	1	LINES GP-ENGINE OIL	82
Y	*161-1507*	1	LINES GP-FUEL	180
Y	*156-8544*	1	LINES GP-TURBOCHARGER OIL	84
Y	*160-4934*	1	LINES GP-WATER	110
Y	*161-2427*	1	LINES GP-WATER	112
Y	*167-0114*	1	LINES GP-WATER	116
Y	*157-7087*	1	MANIFOLD GP-EXHAUST	151
Y	*160-0569*	1	MOUNTING GP-ALTERNATOR	60
Y	*170-4674*	1	MOUNTING GP-FAN DRIVE	61
Y	*107-7378*	1	PAN GP-OIL	64
Y	*162-2516*	1	PANEL GP-SOUND SUPPRESSION	452
Y	*162-1622*	1	PUMP GP-FUEL TRANSFER	183
Y	*100-9347*	1	PUMP GP-WATER	117
Y	*160-3916*	1	PUMP GP-WATER	120
Y	*102-7664*	1	SENSOR & MTG GP-PRESSURE	258
Y	*4N-2473*	1	SUPPORT GP-ENGINE	69
Y	*192-0542*	1	TRUNNION GP-ENGINE	71
Y	*161-1503*	1	WIRING GP-ENGINE	286
			GASKET KITS WILL BE PROVIDED WHEN AVAILABLE	

R-REMFG PART MAY BE AVAILABLE
Y-SEPARATE ILLUSTRATION

ENGINE ARRANGEMENT

160-0566 ENGINE AR-CORE

S/N: BET1-UP

PART OF 157-7195, 157-7196 ENGINE AR-COMPLETE

SMCS-1000 **i01446085**

NOTE	PART NUMBER	QTY	PART NAME 1 2 3 4 5 6 (PRODUCT LEVEL)	SEE PAGE
Y	*122-1248*	1	BASE GP-VALVE COVER & INJ HARN	15
Y	*185-9699*	1	CAMSHAFT GP	18
Y	*4N-0741*	1	CRANKSHAFT GP	28
Y	*146-2741*	1	CYLINDER BLOCK GP	32
Y	*160-7402*	1	CYLINDER HEAD GP	36
Y	*6I-3638*	1	DRIVE GP-PUMP	173
	161-4178	1	ELECTRONICS GP	
Y	*4P-6846*	1	FASTENER GP-FRONT HOUSING	44
Y	*4N-2481*	1	FASTENER GP-OIL PUMP MOUNTING	73
Y	*137-5921*	1	GEAR GP-FRONT	48
Y	*6I-1940*	1	MECHANISM GP-FUEL PUMP & VALVE	182
Y	*176-5745*	6	PISTON & ROD GP	66
YR	**161-4112**	1	PUMP GP-ENGINE OIL	92
Y	*128-8510*	6	INJECTOR GP-FUEL	177
Y	*183-6925*	1	TURBOCHARGER GP	165

R-REMFG PART MAY BE AVAILABLE
Y-SEPARATE ILLUSTRATION

ENGINE ARRANGEMENT

159-5908 INSTALLATION AR-ENGINE

S/N: AKA1-UP

PART OF 157-0818 GENERAL AR

SMCS-1000 **i01387928**

NOTE	PART NUMBER	QTY	PART NAME 1 2 3 4 5 6 (PRODUCT LEVEL)	SEE PAGE
Y	*161-2430*	1	AIR CLEANER GP	144
Y	*172-0335*	1	ALTERNATOR GP-CHARGING	197
Y	*161-2435*	1	BELT TIGHTENER GP	16
Y	*109-9677*	1	COOLER GP-HYDRAULIC OIL	555
Y	*159-9429*	1	DRIVE GP-FAN	42
Y	*122-3347*	1	DUST EJECTOR GP	147
Y	*160-7005*	1	FAN GP-BLOWER	102
Y	*161-2428*	1	FUMES DISPOSAL GP	78
Y	*161-2431*	1	LINES GP-AIR	150
Y	*167-0113*	1	LINES GP-WATER	114
Y	*164-2553*	1	MOUNTING GP-AIR CLEANER	152
Y	*156-8539*	1	MUFFLER GP	153
	5P-8502	2	PADLOCK GP	
			(EACH INCLUDES)	
A	**5P-8500**	1	KEY	
A	**8Y-6364**	1	SLEEVE	
Y	*161-2424*	1	RADIATOR GP	128
Y	*186-3720*	1	SHIELD GP-EXHAUST	161
Y	*159-6160*	1	STARTING AID GP-ETHER	274
Y	*186-0067*	1	STARTING MOTOR GP-ELECTRIC	279
Y	*9Y-8837*	1	SUPPORT GP-ENGINE	70
Y	*171-1283*	1	TANK GP-WATER	138

A-NOT PART OF THIS GROUP
Y-SEPARATE ILLUSTRATION

122-1248 BASE GP-VALVE COVER & INJ HARN

S/N: BET1-UP

PART OF 160-0566 ENGINE AR-CORE

SMCS-1120, 1408 **i01446097**

NOTE	REF NO	GRAPHIC REF	PART NUMBER	QTY	PART NAME 1 2 3 4 5 6 (PRODUCT LEVEL)	SEE PAGE
	1	1	**8H-3127**	6	BOLT (1/4-20X3/4 IN)	
	2	1	**4F-7957**	2	BOLT (1/4-20X.875 IN)	
	3	1	**5P-0537**	8	WASHER-HARD (7.2X14.5X2MM THK)	
	4	1	**7E-6508**	6	CAP AS	
	5	1	**122-1486**	1	HARNESS AS-WIRING	
	6	1	**100-5218**	3	CLIP	
	7	1	**100-5219**	3	CLIP	
	8	1	**177-4152**	1	BASE-VALVE COVER	
	9	1	**9L-8925**	14	BOLT (5/16-18X1.25IN)	
D	10	1	**5P-5678**		SEAL (2.9M)	
	11	1	**122-1472**	1	BOLT	
	12	1	**6V-0128**	1	SEAL-CONNECTOR	
	13	1	**123-3202**	2	STRAP-CABLE	

D-ORDER BY THE METER

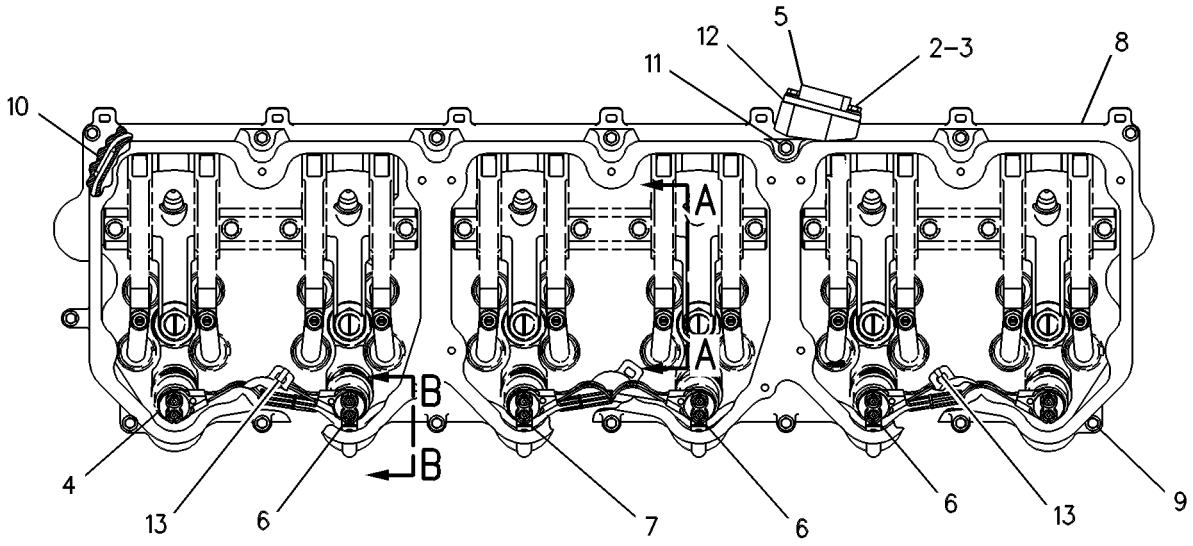

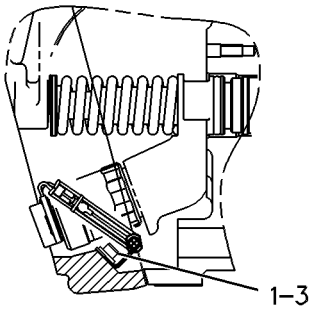

SECTION B-B

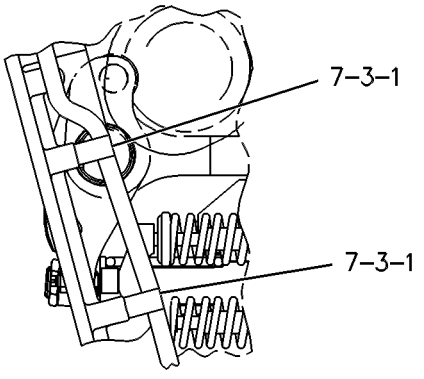

VIEW A-A

GRAPHIC #1 g00257337

161-2435 BELT TIGHTENER GP

S/N: AKA1-UP

PART OF 159-5908 INSTALLATION AR-ENGINE

SMCS-1358 **i01392387**

NOTE	REF NO	GRAPHIC REF	PART NUMBER	QTY	PART NAME 1 2 3 4 5 6 (PRODUCT LEVEL)	SEE PAGE
	1	1	**0S-0175**	1	PIN-CLEVIS	
	2	1	**3B-4617**	1	COTTER	
	3	1	**2W-2169**	1	ARM AS-BELT	
		1	**4S-5367**	1	BUSHING AS	
	3A	1	**2S-6196**	1	SHAFT-PULLEY	
	3B	1	**4N-0955**	1	DOWEL	
	4	1	**2M-2742**	1	PLATE-RETAINER	
	5	1	**0L-1351**	1	BOLT (3/8-16X.875 IN)	
	6	1	**5M-2894**	1	WASHER-HARD (10.2X18.5X2.5MM THK)	
	7	1	**2S-6151**	1	GASKET	
	8	1	**2S-6150**	1	COVER-PULLEY	
	9	1	**2S-6160**	1	WASHER-HARD (10.2X32X5MM THK)	
	10	1	**4M-6425**	4	BOLT (5/16-18X1 IN)	
	11	1	**4N-2697**	1	PULLEY-TIGHTENER	
	12	1	**4N-2690**	1	SHAFT AS	
		1	**4N-0955**	1	DOWEL	
	13	1	**7N-5959**	1	SPRING	
	14	1	**2W-3376**	1	SCREW	
	15	1	**4L-9337**	4	BOLT (3/8-16X1.5 IN)	
	16	1	**5M-9735**	1	SEAL-LIP	
	17	1	**6B-1124**	2	BALL BEARING	
	18	1	**1S-8687**	1	SPACER	
	19	1	**8B-2327**	1	RING-RETAINING	
	20	1	**5S-7379**	1	BOLT (3/8-16X.875 IN)	
	21	1	**8T-4896**	2	WASHER-HARD (10.2X18.5X2.5MM THK)	
	22	1	**3B-6552**	1	ELBOW	
	24	1	**5P-9297**	2	CLIP	
	25	1	**3B-8489**	1	FITTING-GREASE	
	26	1	**8L-6557**	1	CONNECTOR	
	27	1	**9G-0682**	1	HOSE AS	
	28	1	**5M-3062**	1	BOLT (3/8-16X.75 IN)	

161-2435 **BELT TIGHTENER GP** *(contd.)* **i01392387**

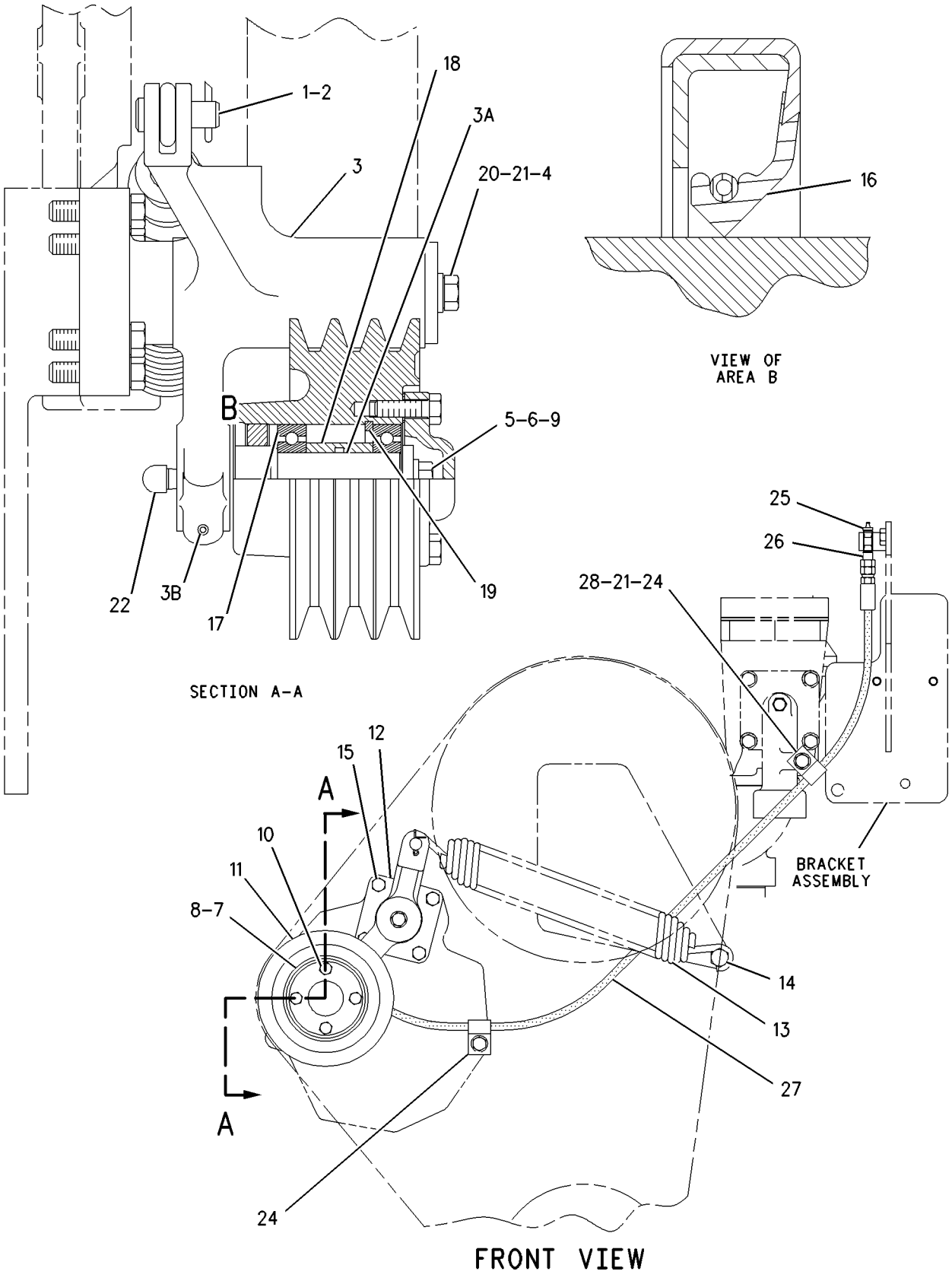

GRAPHIC #1 g00749134

BASIC ENGINE

185-9699 CAMSHAFT GP

S/N: BET1-UP

PART OF 160-0566 ENGINE AR-CORE

SMCS-1210, 1211, 1212 **i01446110**

NOTE	REF NO	GRAPHIC REF	PART NUMBER	QTY	PART NAME 1 2 3 4 5 6 (PRODUCT LEVEL)	SEE PAGE
	1	1	**102-9089**	1	COVER	
	2	1	**119-0036**	3	SCREW-FLAT HEAD	
R	3	1	**185-6349**	1	CAMSHAFT	
	4	1	**6V-1197**	1	SEAL-O-RING (98.02MM ID)	

R-REMFG PART MAY BE AVAILABLE

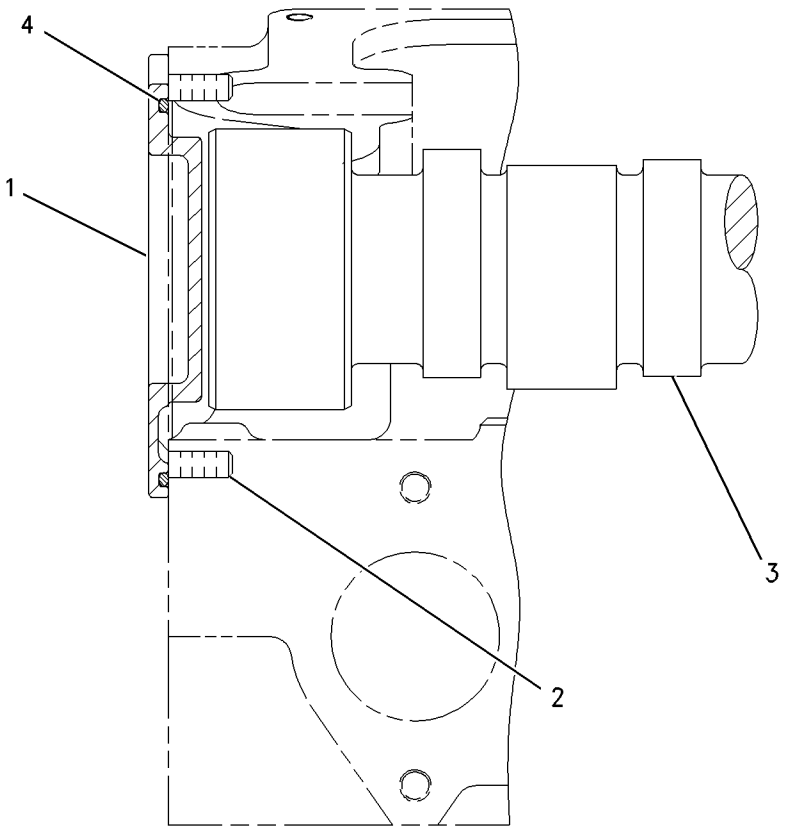

RIGHT SIDE VIEW

GRAPHIC #1 g00687973

107-6737 COVER GP-CYLINDER BLOCK

S/N: BET1-UP

PART OF 157-7195, 157-7196 ENGINE AR-COMPLETE

FOR USE WITH LOW OR MID MOUNTED TURBO LOCATION OR BRAKESAVER. CANNOT BE USED WITH RIGHT HAND OIL FILLER

SMCS-1201 **i01444687**

NOTE	REF NO	GRAPHIC REF	PART NUMBER	QTY	PART NAME 1 2 3 4 5 6 (PRODUCT LEVEL)	SEE PAGE
	1	1	**0S-1594**	2	BOLT (3/8-16X1 IN)	
	2	1	**5M-2894**	2	WASHER-HARD (10.2X18.5X2.5MM THK)	
	3	1	**8T-6767**	1	PLUG-PIPE	
	4	1	**4N-0699**	1	GASKET	
	5	1	**9L-1937**	1	FLANGE	

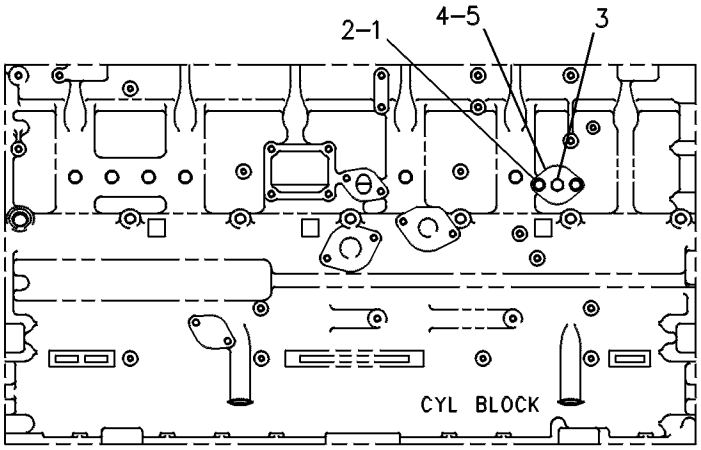

LEFT SIDE VIEW

GRAPHIC #1 g00237922

170-4672 COVER GP-CYLINDER BLOCK

S/N: BET1-UP

PART OF 157-7195, 157-7196 ENGINE AR-COMPLETE

SMCS-1201 **i01439894**

NOTE	REF NO	GRAPHIC REF	PART NUMBER	QTY	PART NAME 1 2 3 4 5 6 (PRODUCT LEVEL)	SEE PAGE
	1	1	**7W-5444**	1	COVER	
	2	1	**030-7571**	2	BOLT (3/8-16X1.0IN)	
	3	1	**4N-0699**	1	GASKET	

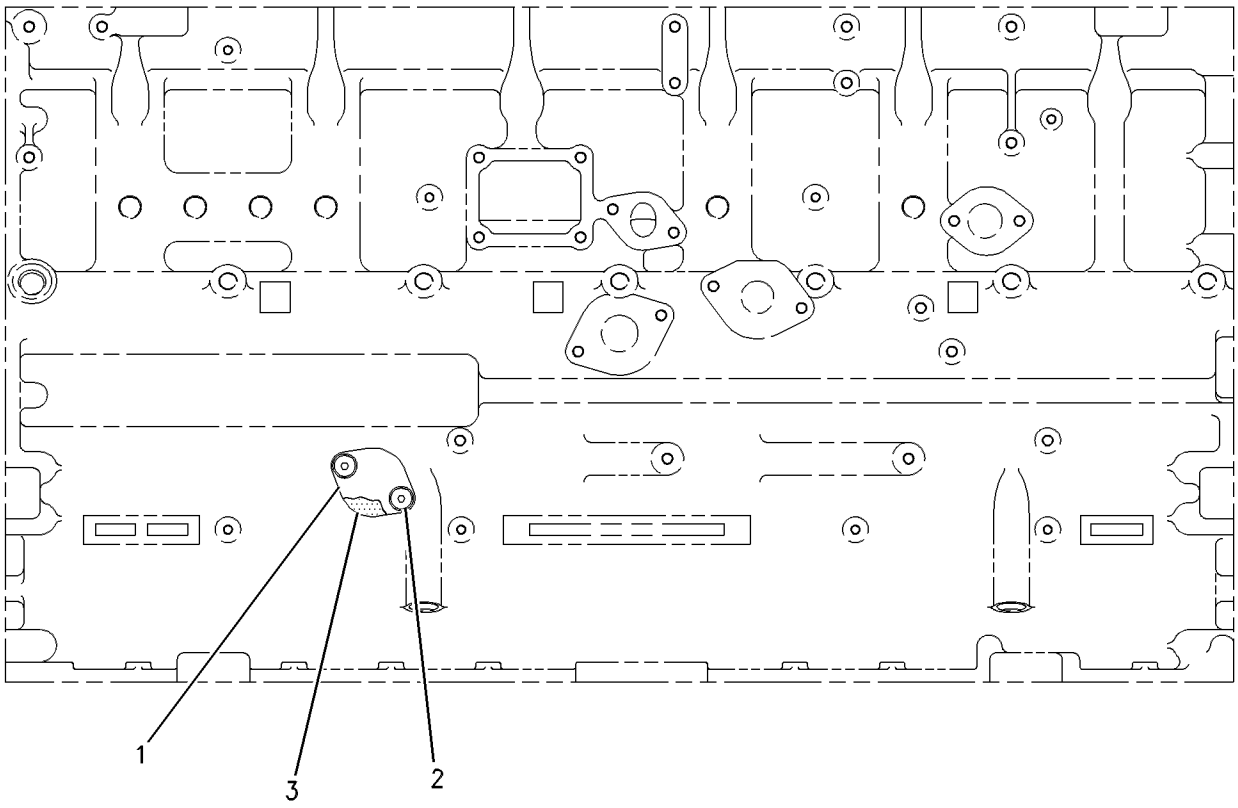

RIGHT SIDE VIEW

GRAPHIC #1 g00661276

BASIC ENGINE

1W-8341 COVER GP-FLYWHEEL HOUSING

S/N: BET1-UP

PART OF 157-7195, 157-7196 ENGINE AR-COMPLETE

SMCS-1157 **i01370591**

NOTE	REF NO	GRAPHIC REF	PART NUMBER	QTY	PART NAME 1 2 3 4 5 6 (PRODUCT LEVEL)	SEE PAGE
	1	1	**0S-1594**	2	BOLT (3/8-16X1 IN)	
	2	1	**5M-2894**	2	WASHER-HARD (10.2X18.5X2.5MM THK)	
	3	1	**1M-0130**	1	COVER	
	4	1	**4M-6480**	1	GASKET	

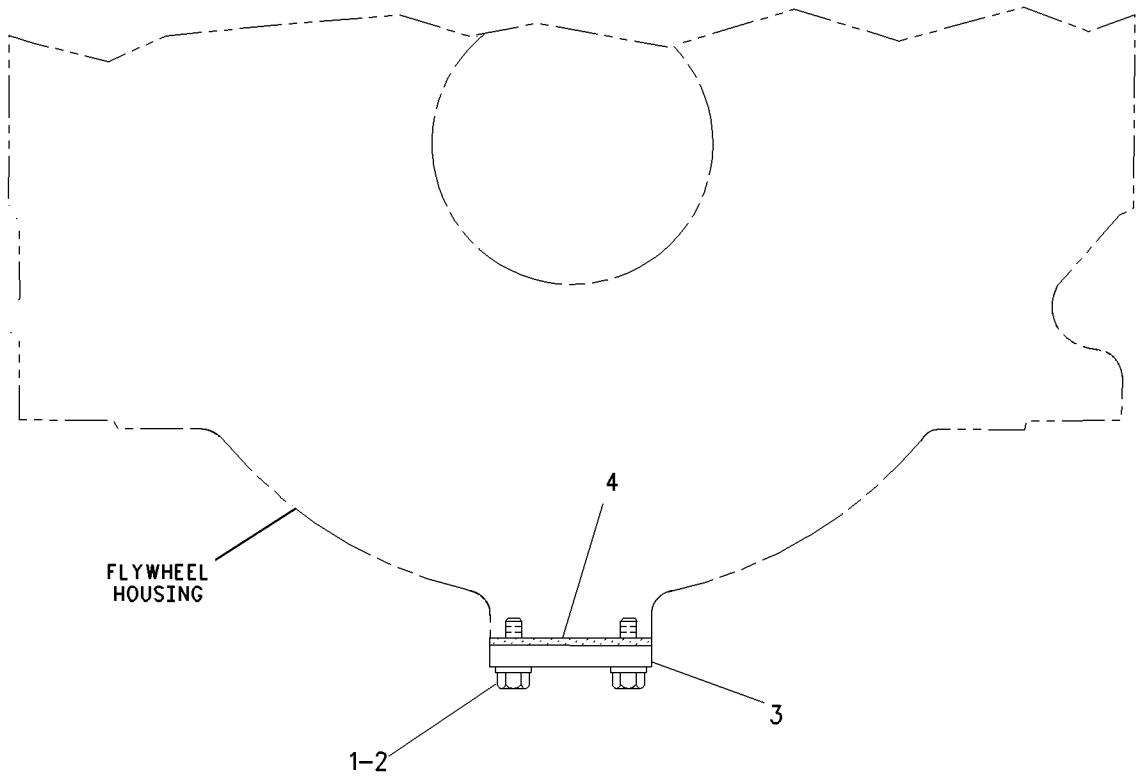

GRAPHIC #1 g00728617

150-4278 COVER GP-FRONT HOUSING

S/N: BET1-UP

PART OF 157-7195 ENGINE AR-COMPLETE

SMCS-1151, 1162, 1166 **i01444797**

NOTE	REF NO	GRAPHIC REF	PART NUMBER	QTY	PART NAME 1 2 3 4 5 6 (PRODUCT LEVEL)	SEE PAGE
	1	1	**146-2601**	1	COVER	
	2	1	**2B-2695**	3	BOLT (5/16-18X0.875 IN)	
	3	1	**9M-1974**	5	WASHER-HARD (8.8X16X2MM THK)	
	4	1	**146-8438**	3	SCREW-BUTTON HEAD	
	5	1	**103-6045**	1	SEAL-ACCESSORY COVER	
	6	1	**5S-0003**	2	NUT (5/16-18 THD)	
	7	1	**3K-6175**	2	STUD	
	8	1	**4B-3388**	2	BOLT (5/16-18X1.125 IN)	
	9	1	**3E-4352**	2	WASHER-HARD (8.8X20.5X2.5MM THK)	

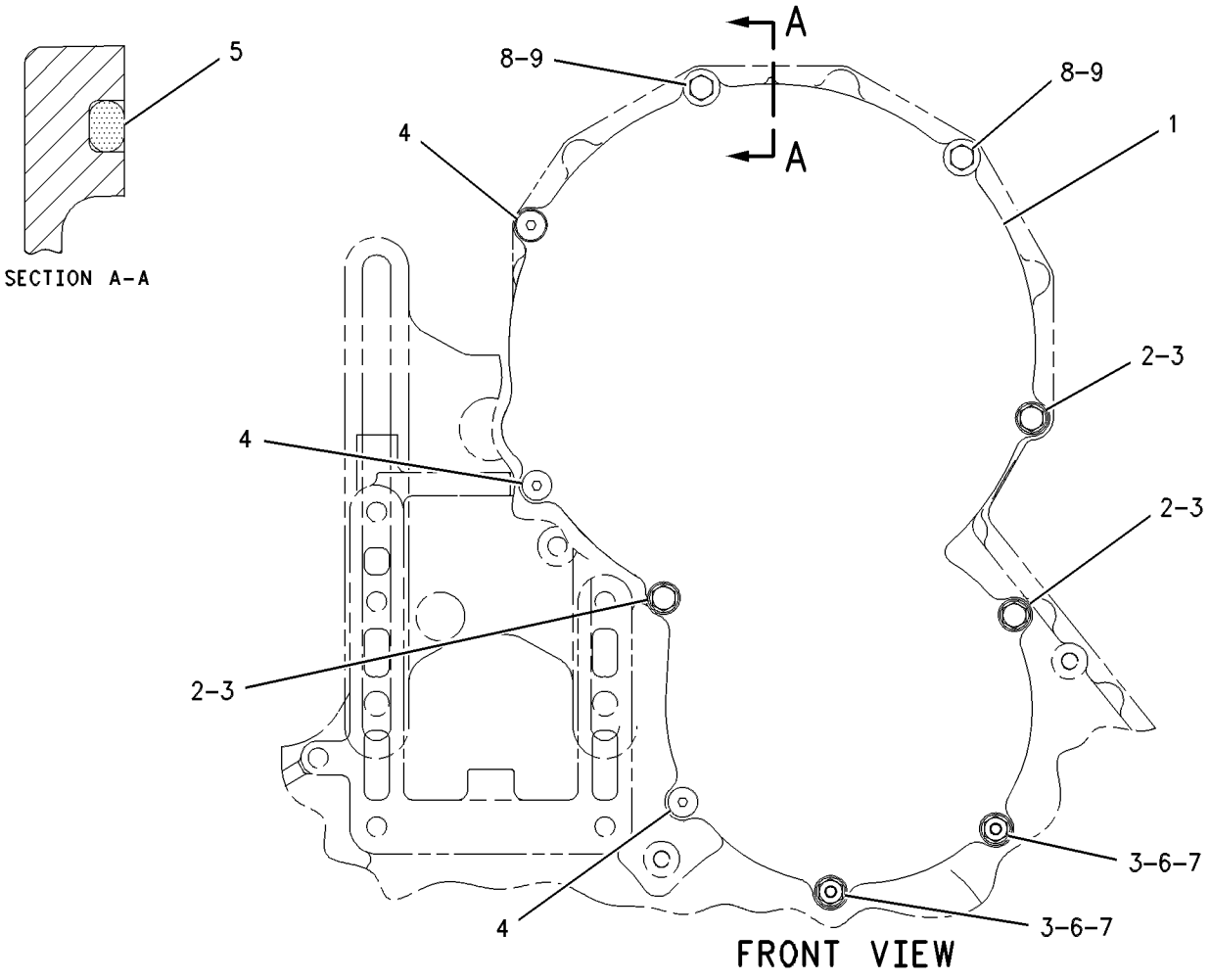

GRAPHIC #1 g00311762

104-4825 COVER GP-SOUND SUPPRESSION

S/N: BET1-UP

PART OF 157-7196 ENGINE AR-COMPLETE

SMCS-1801 **i01230993**

NOTE	REF NO	GRAPHIC REF	PART NUMBER	QTY	PART NAME 1 2 3 4 5 6 (PRODUCT LEVEL)	SEE PAGE
	1	1	**104-4820**	1	PANEL AS-SOUND SUPPRESSION	
		1	**9N-6108**	8	SPACER	
	2	1	**0L-1143**	8	BOLT (3/8-16X2.50IN)	
	3	1	**5M-2894**	8	WASHER (2.5MM THK)	
	4	1	**100-4853**	6	BRACKET	

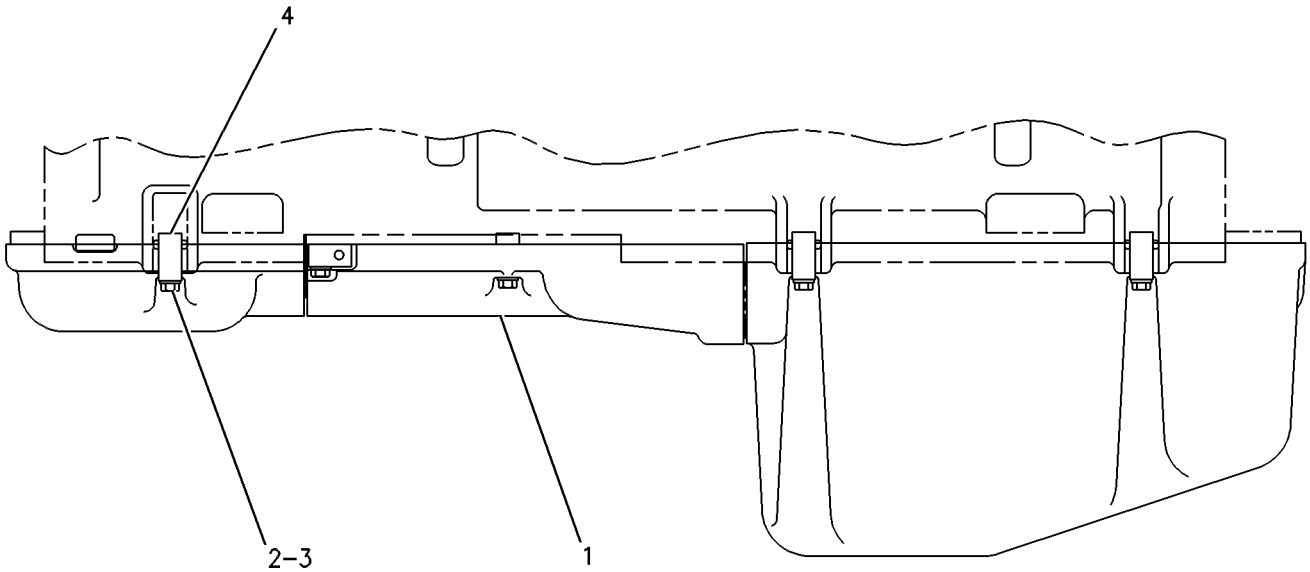

GRAPHIC #1 g00249593

161-8400 COVER GP-SOUND SUPPRESSION

S/N: BET1-UP

PART OF 157-7196 ENGINE AR-COMPLETE

SMCS-1801 **i01448339**

NOTE	REF NO	GRAPHIC REF	PART NUMBER	QTY	PART NAME 1 2 3 4 5 6 (PRODUCT LEVEL)	SEE PAGE
	1	1	**146-8438**	3	SCREW-BUTTON HEAD	
	2	1	**1A-9579**	5	BOLT (5/16-18X1.5 IN)	
	3	1	**5P-4116**	7	WASHER-HARD (8.8X20.5X2MM THK)	
	4	1	**146-2601**	1	COVER	
	5	1	**103-6045**	1	SEAL-ACCESSORY COVER	
	6	1	**5S-0003**	2	NUT (5/16-18 THD)	
	7	1	**161-8399**	1	COVER AS-SOUND SUPPRESSION	
	8	1	**008-1430**	2	STUD	

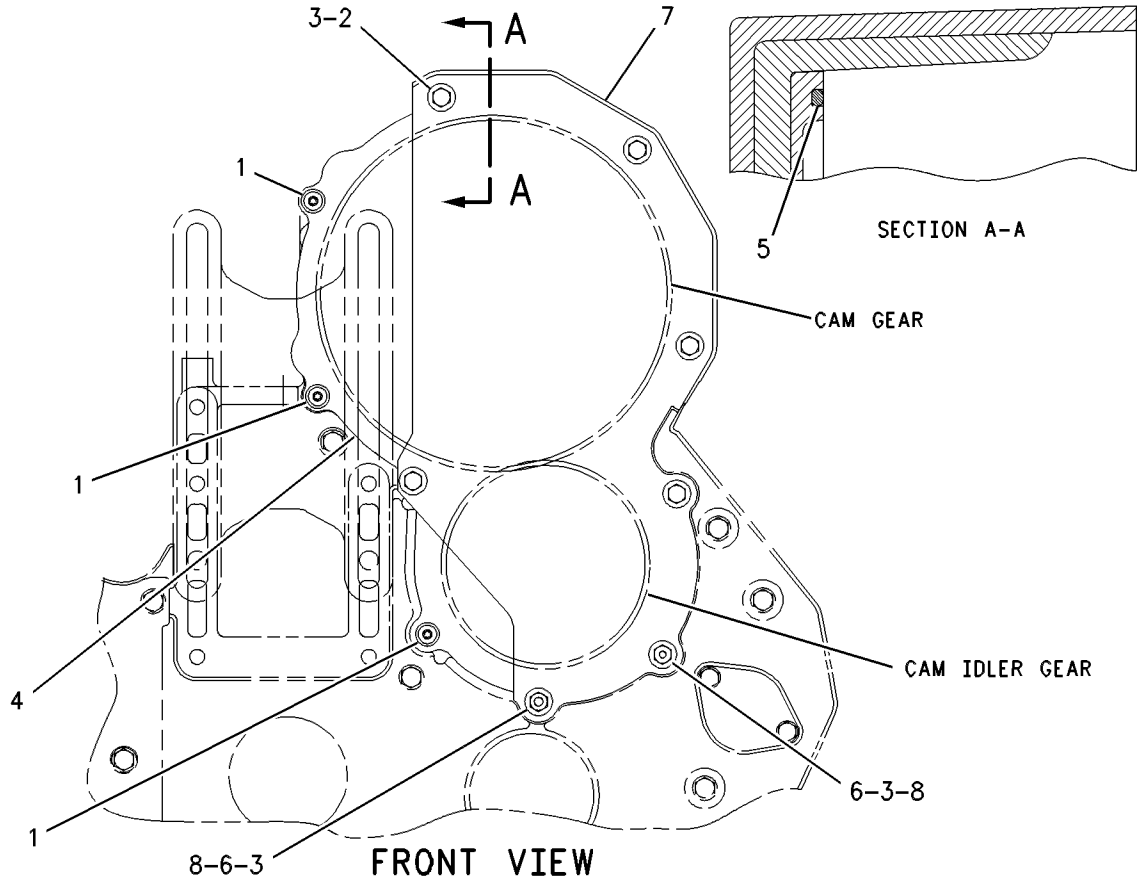

GRAPHIC #1 g00662431

150-3135 COVER GP-VALVE MECHANISM

S/N: BET1-UP

PART OF 160-7451 COVER GP-VALVE MECHANISM

SMCS-1107, 1120 **i01444965**

NOTE	REF NO	GRAPHIC REF	PART NUMBER	QTY	PART NAME 1 2 3 4 5 6 (PRODUCT LEVEL)	SEE PAGE
	1	1	**150-2557**	1	COVER-VALVE MECH	
	2	1	**172-8027**	1	SEAL	
	3	1	**173-2390**	6	FASTENER AS	

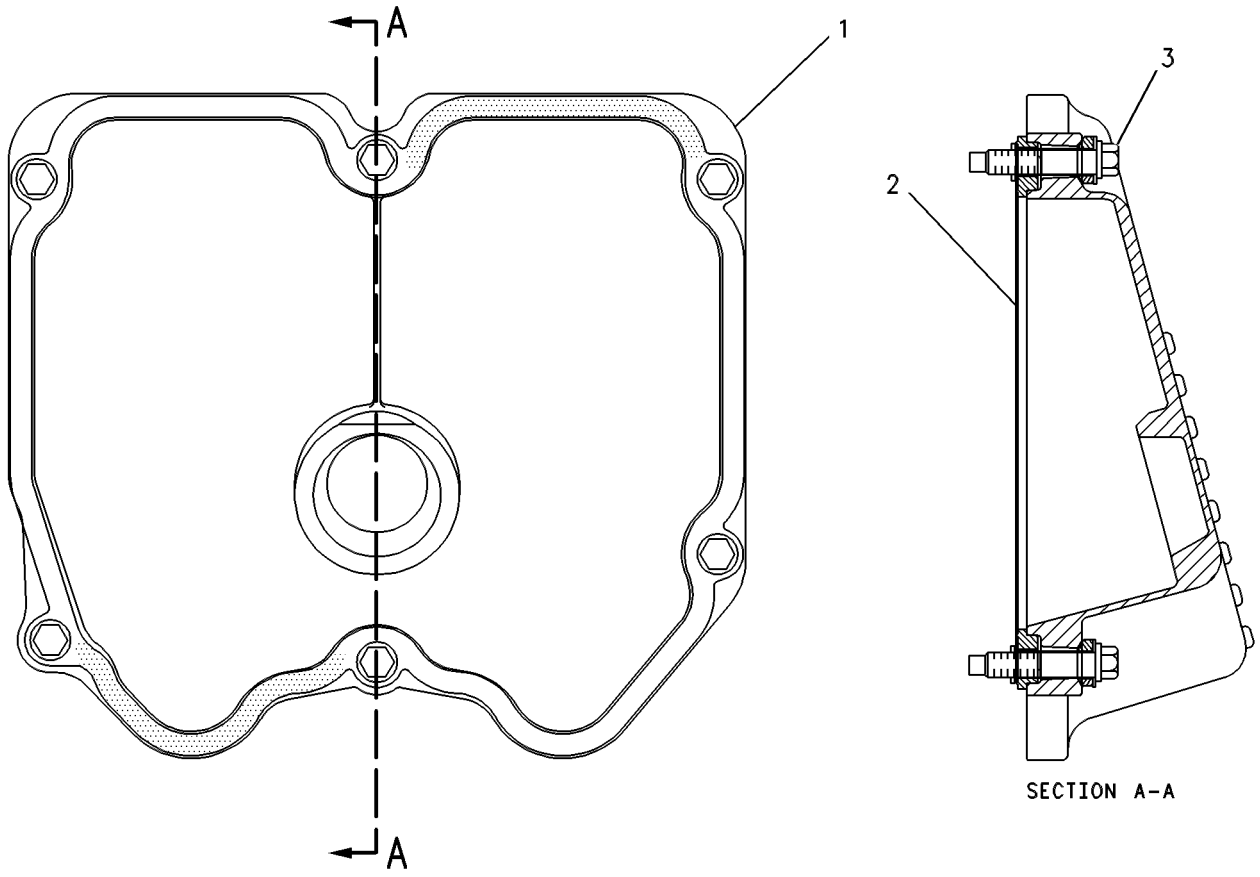

GRAPHIC #1 g00620207

160-7451 COVER GP-VALVE MECHANISM

S/N: BET1-UP

PART OF 157-7195, 157-7196 ENGINE AR-COMPLETE

SMCS-1107, 1120 **i01444964**

NOTE	REF NO	GRAPHIC REF	PART NUMBER	QTY	PART NAME 1 2 3 4 5 6 (PRODUCT LEVEL)	SEE PAGE
Y	1	1	*150-3135*	2	COVER GP-VALVE MECHANISM	25
Y	2	1	*160-7452*	1	COVER GP-VALVE MECHANISM	27

Y-SEPARATE ILLUSTRATION

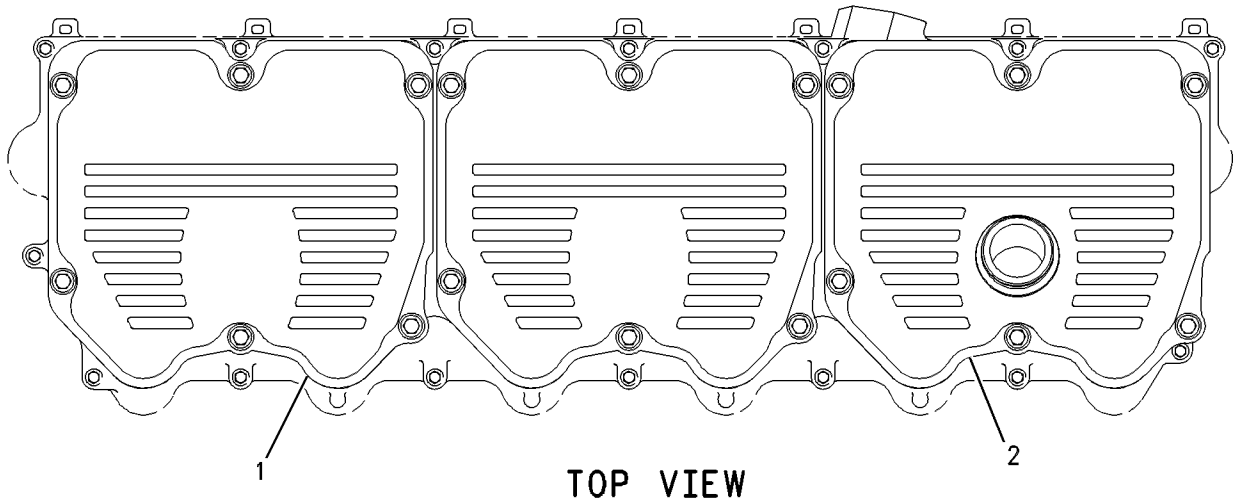

TOP VIEW

GRAPHIC #1 g00536600

160-7452 COVER GP-VALVE MECHANISM

S/N: BET1-UP

PART OF 160-7451 COVER GP-VALVE MECHANISM

SMCS-1107, 1120 **i01444969**

NOTE	REF NO	GRAPHIC REF	PART NUMBER	QTY	PART NAME 1 2 3 4 5 6 (PRODUCT LEVEL)	SEE PAGE
	1	1	**150-3136**	1	COVER AS-VALVE MECHANISM	
	1A	1	**6V-5100**	1	SEAL-O-RING (53.64MM ID)	
	1B	1	**7C-6514**	1	ADAPTER	
	2	1	**173-2390**	6	FASTENER AS	
	3	1	**172-8027**	1	SEAL	

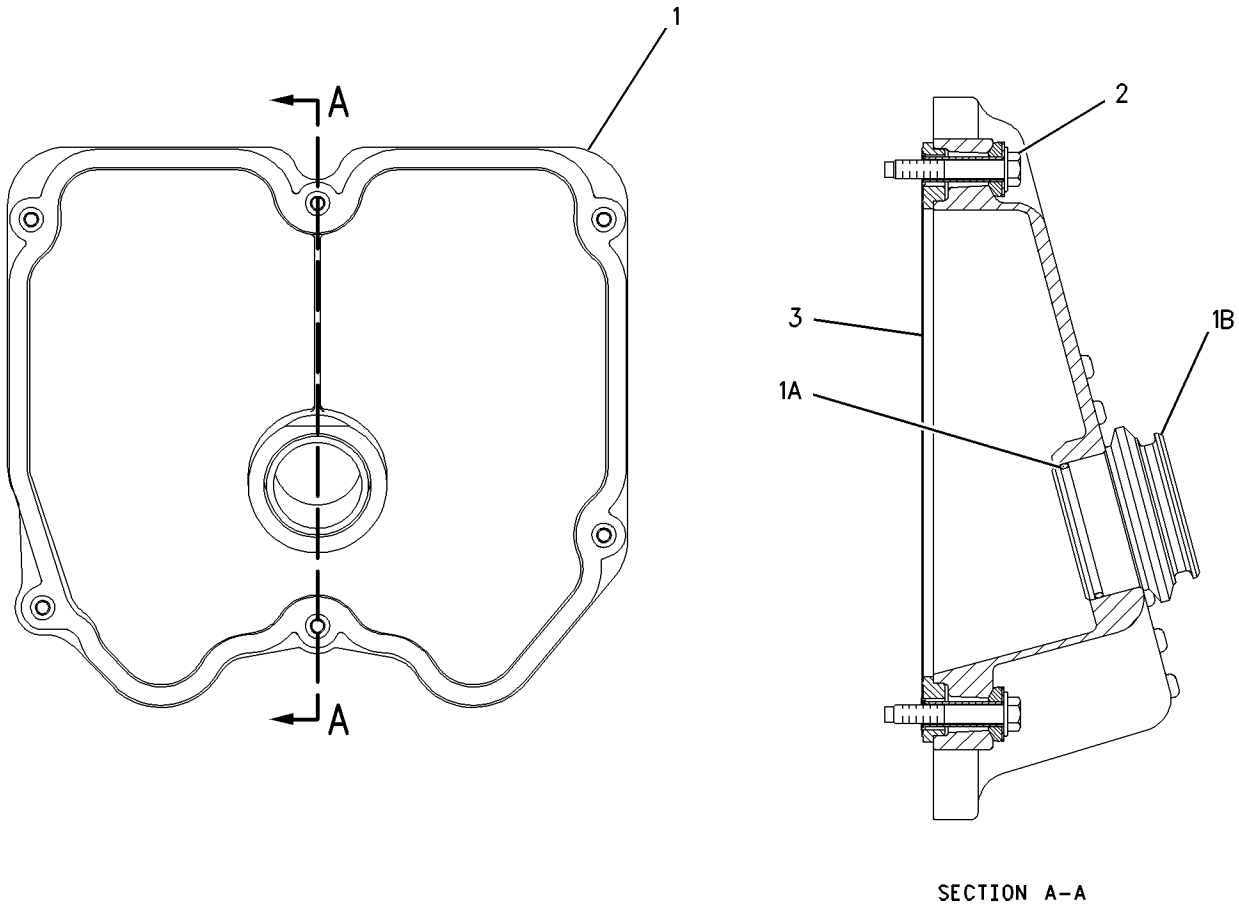

SECTION A-A

GRAPHIC #1 g00632472

4N-0741 CRANKSHAFT GP

S/N: BET1-UP

PART OF 160-0566 ENGINE AR-CORE

SMCS-1202, 1203, 1204, 1230, 1231, 1232 **i01502183**

NOTE	REF NO	GRAPHIC REF	PART NUMBER	QTY	PART NAME 1 2 3 4 5 6 (PRODUCT LEVEL)	SEE PAGE
	1	1	**2W-1734**	1	SEAL GP-CRANKSHAFT	
	2	1	**2W-1733**	1	SEAL GP-CRANKSHAFT	
	3	1	**4W-5492**	7	BEARING-MAIN (STANDARD)	
A		1	**4W-5698**	7	BEARING-MAIN (.025IN US)	
A		1	**4W-5699**	7	BEARING-MAIN (.050IN US)	
A		1	**4W-5700**	7	BEARING-MAIN (.025IN OS)	
A		1	**4W-5701**	7	BEARING-MAIN (.025IN US,.025IN OS)	
	4	1	**7E-9262**	2	PLATE-THRUST	
R	5	1	**6I-1453**	1	CRANKSHAFT AS	
	5A	1	**1W-9302**	1	GEAR-CRANKSHAFT (80 TEETH)	
		1	**7S-5005**	1	DOWEL	
	5B	1	**4N-0684**	1	DOWEL	

A-NOT PART OF THIS GROUP
R-REMFG PART MAY BE AVAILABLE

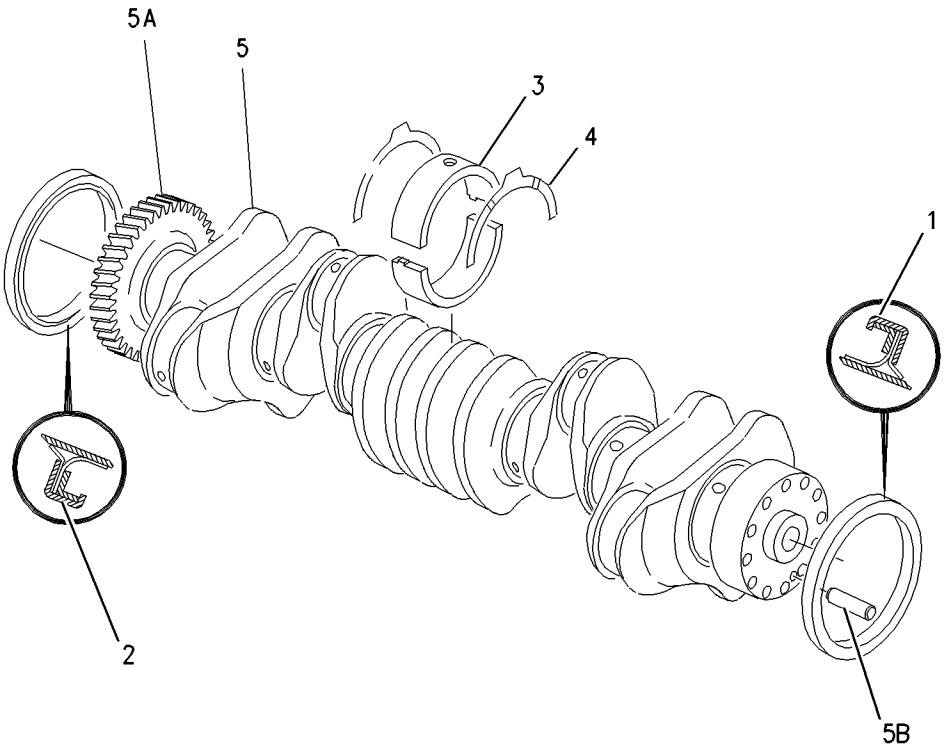

GRAPHIC #1 g00725396

BASIC ENGINE

137-8467 CYLINDER BLOCK AS

S/N: BET1-UP

PART OF 146-2741 CYLINDER BLOCK GP

SMCS-1117, 1201, 1211, 1216, 1217, 1221, 1222, 1223, 1224, 1238, 1239, 1240, 1331

i01447423

NOTE	REF NO	GRAPHIC REF	PART NUMBER	QTY	PART NAME 1 2 3 4 5 6 (PRODUCT LEVEL)	SEE PAGE
	1	1	**2W-6000**	6	LINER-CYLINDER	
	2	1	**9L-5854**	6	BAND-FILLER (5.125MM ID)	
	3	1	**110-2220**	6	SEAL-LINER (141MM ID)	
	4	1	**3P-1323**	14	BOLT (BEARING CAP)	
	5	1	**9H-1031**	14	WASHER-HARD (24X41.5X6MM THK)	
	6	1	**4N-5857**	7	CAP-CRANKSHAFT BEARING	
	7	1	**142-7072**	6	SEAL-LINER (140.20MM ID)	
	8	1	**142-6217**	6	SEAL-LINER (140.20MM ID)	

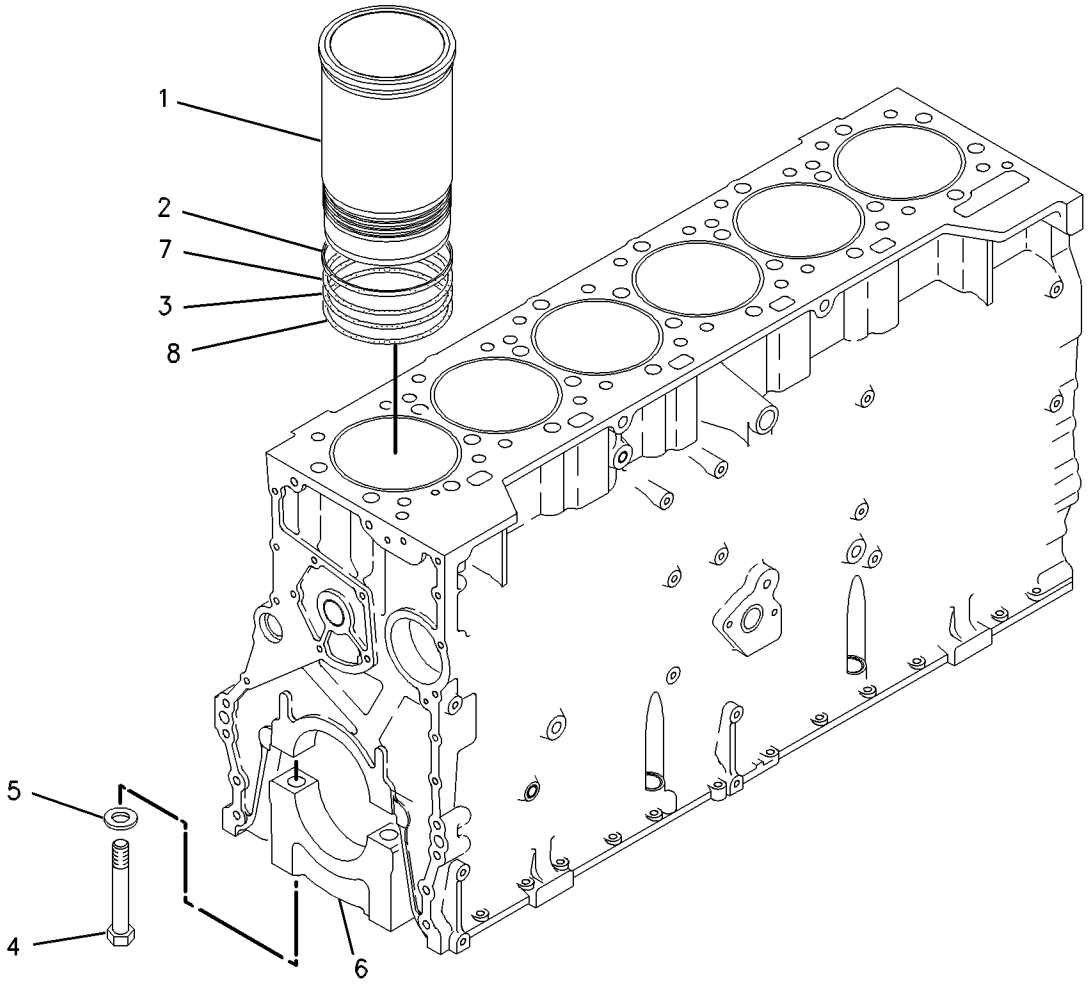

GRAPHIC #1

g00501345

BASIC ENGINE

137-8468 CYLINDER BLOCK AS

S/N: BET1-UP

PART OF 137-8469 CYLINDER BLOCK GP

SMCS-1117, 1201, 1211, 1216, 1217, 1221, 1222, 1223, 1224, 1238, 1239, 1240, 1331 **i01501396**

NOTE	REF NO	GRAPHIC REF	PART NUMBER	QTY	PART NAME 1 2 3 4 5 6 (PRODUCT LEVEL)	SEE PAGE
	1	1	**3P-1323**	14	BOLT (BEARING CAP)	
	2	1	**9H-1031**	14	WASHER-HARD (24X41.5X6MM THK)	
	3	1	**4N-5857**	7	CAP-CRANKSHAFT BEARING	

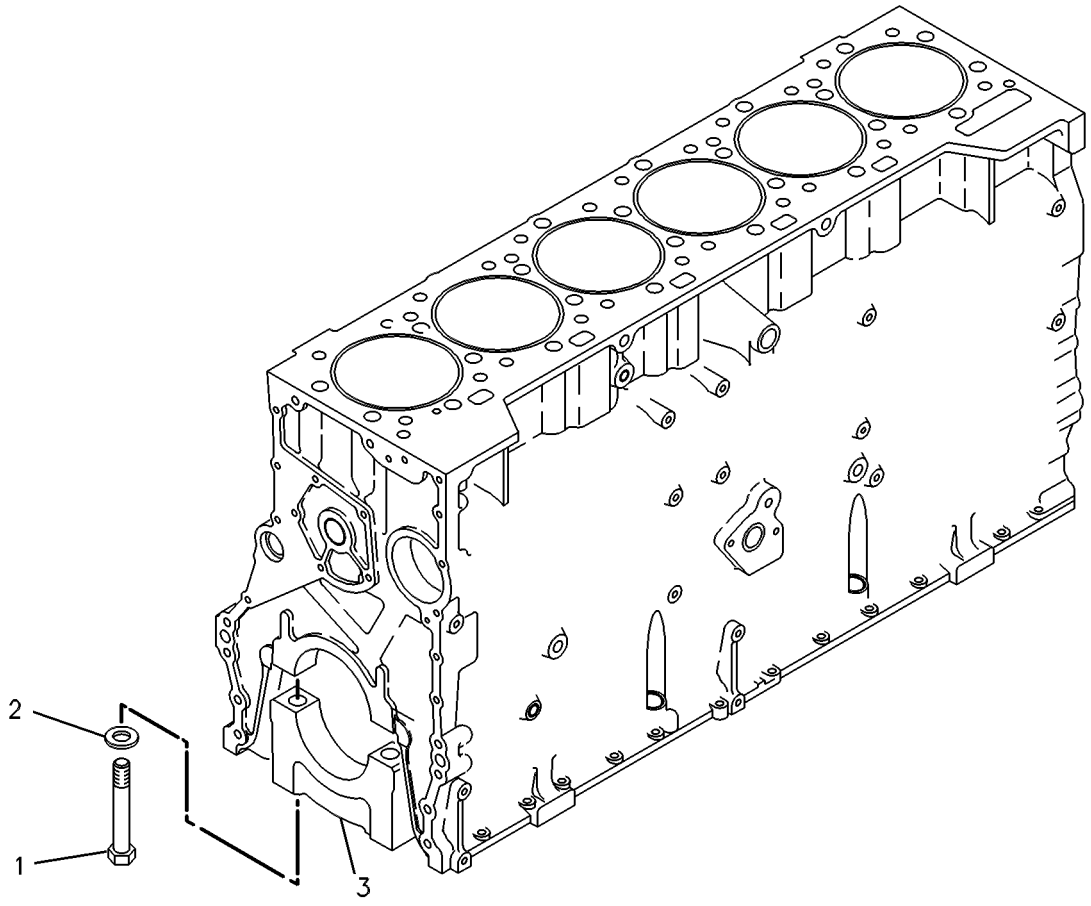

GRAPHIC #1 g00265763

BASIC ENGINE

137-8469 CYLINDER BLOCK GP

S/N: BET1-UP

FIELD REPLACEMENT FOR 146-2741—PAGE 32

SMCS-1201 **i01501367**

NOTE	REF NO	GRAPHIC REF	PART NUMBER	QTY	PART NAME 1 2 3 4 5 6 (PRODUCT LEVEL)	SEE PAGE
	1	1	**8T-6757**	1	PLUG-PIPE	
	2	1	**3E-6747**	2	SEAL-O-RING	
	3	1	**7W-6492**	4	PLUG-PIPE	
	4	1	**8S-9094**	1	PLUG-ORIFICE	
	5	1	**9S-4190**	1	PLUG-O-RING	
	6	1	**114-4427**	1	SEAL-O-RING	
	7	1	**7X-7732**	6	PLUG-PIPE	
	8	1	**9S-4182**	1	PLUG-O-RING	
	9	1	**9X-7378**	1	SEAL-O-RING	
	10	1	**100-7399**	2	PLUG	
Y	11	1	*137-8468*	1	CYLINDER BLOCK AS	30

Y-SEPARATE ILLUSTRATION

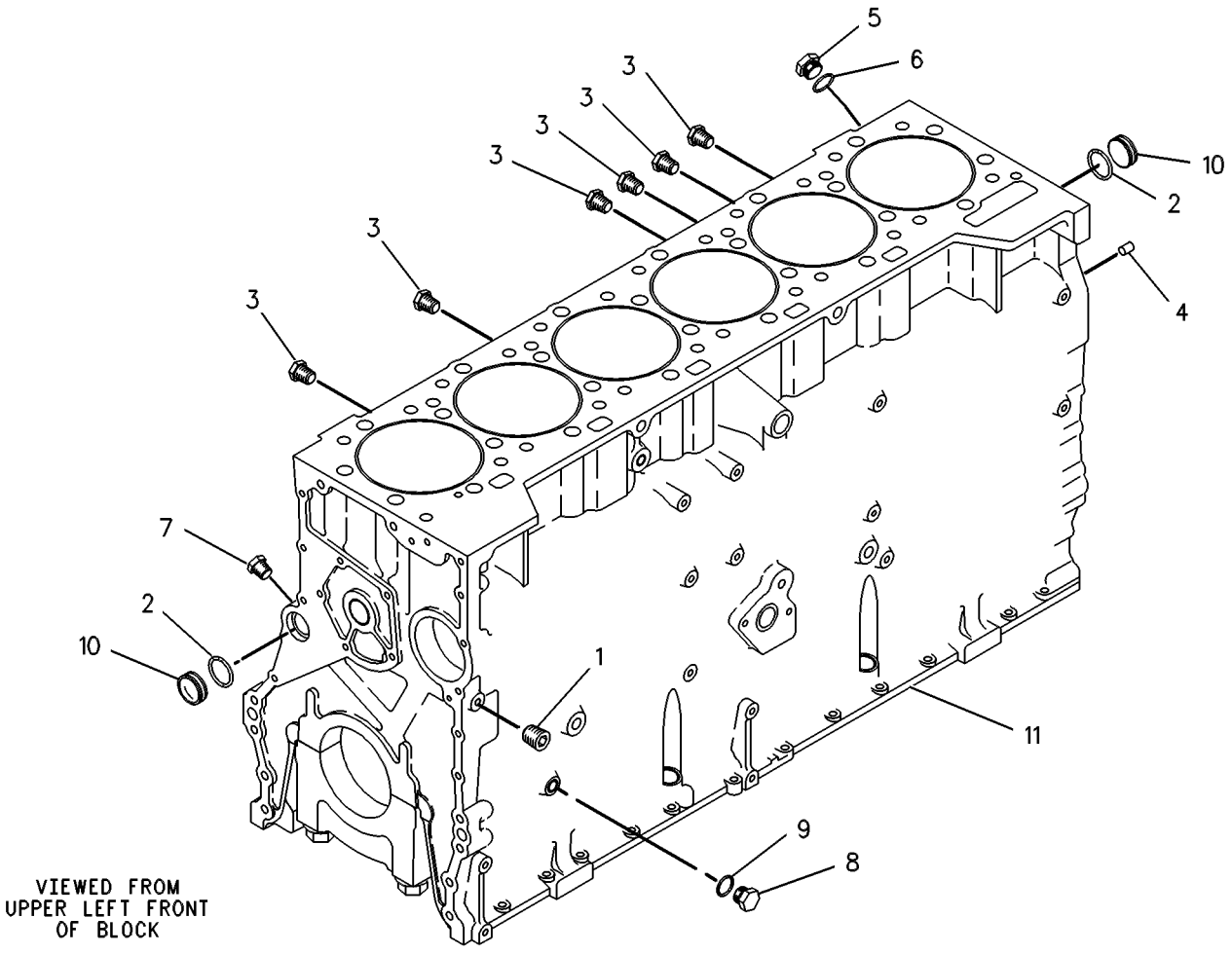

GRAPHIC #1 g00265762

146-2741 CYLINDER BLOCK GP

S/N: BET1-UP

PART OF 160-0566 ENGINE AR-CORE

FIELD REPLACEMENT ORDER 137-8469—PAGE 31

SMCS-1201 **i01447417**

NOTE	REF NO	GRAPHIC REF	PART NUMBER	QTY	PART NAME 1 2 3 4 5 6 (PRODUCT LEVEL)	SEE PAGE
	1	1	**142-2329**	1	SEAL-DRAINBACK	
Y	2	1	**137-8467**	1	CYLINDER BLOCK AS	29
	3	1	**1S-9540**	1	DOWEL (30.23 MM X 9.37 MM)	
	4	1	**5P-0840**	1	SEAL-O-RING (12.29MM ID)	
	5	1	**7W-6492**	4	PLUG-PIPE (1/2-14 NPTF)	
	6	1	**6I-1055**	1	DOWEL	
	7	1	**4N-0683**	4	DOWEL	
	8	1	**4N-1650**	1	DOWEL (1.25 IN LG X.376 DIA)	
	9	1	**6I-4421**	1	PLATE-SPACER	
	10	1	**180-5734**	1	GASKET-PLATE	
	11	1	**8S-9094**	1	PLUG-ORIFICE	
	12	1	**9S-4190**	1	PLUG-O-RING	
	13	1	**114-4427**	1	SEAL-O-RING (19.18MM ID)	
	14	1	**7X-7732**	5	PLUG-PIPE	
	15	1	**3E-6747**	2	SEAL-O-RING (32.99MM ID)	
Y	16	1	**161-9931**	1	SENSOR GP-PRESSURE (OIL)	265
	17	1	**100-7399**	2	PLUG	
	18	1	**9X-7378**	1	SEAL-O-RING (8.92MM ID)	
	19	1	**6V-5048**	1	SEAL-O-RING (8.92MM ID)	
	20	1	**9S-4182**	1	PLUG-O-RING	
	21	1	**3E-7448**	1	CONNECTOR	

Y-SEPARATE ILLUSTRATION

146-2741 **CYLINDER BLOCK GP** *(contd.)* **i01447417**

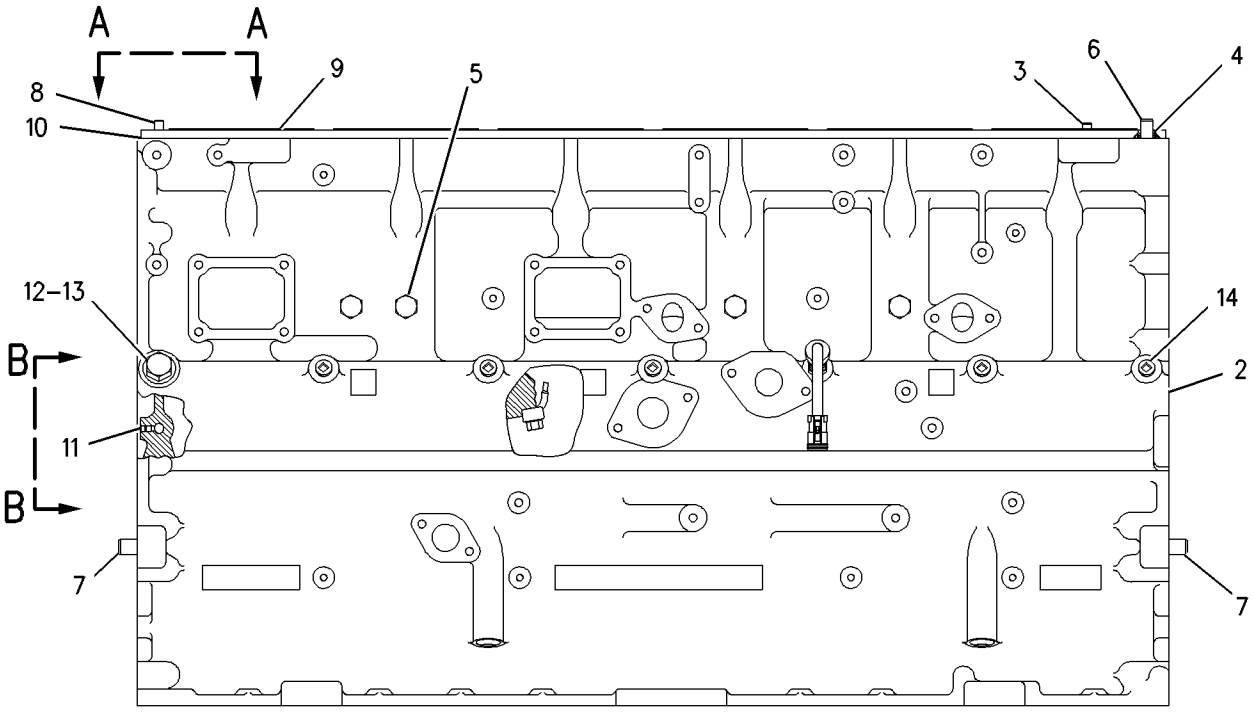

RIGHT SIDE VIEW

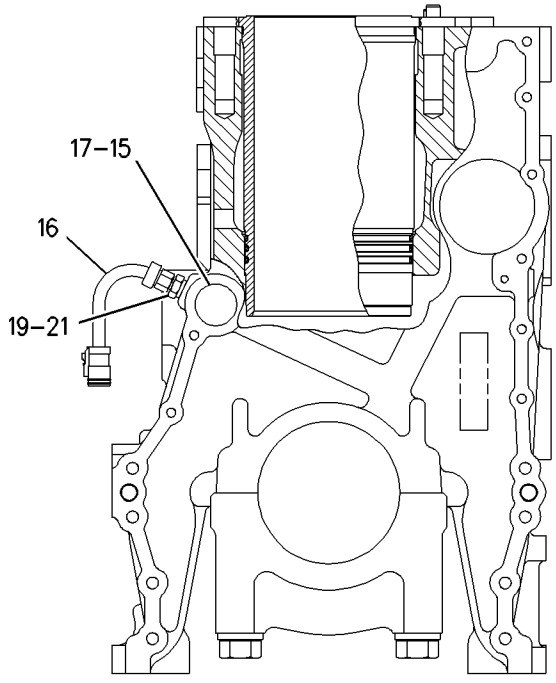

FRONT VIEW

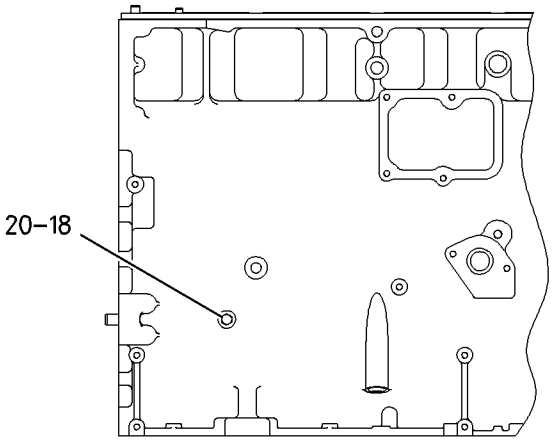

LEFT SIDE VIEW

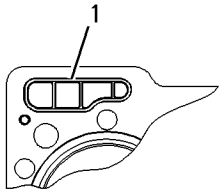

VIEW A–A

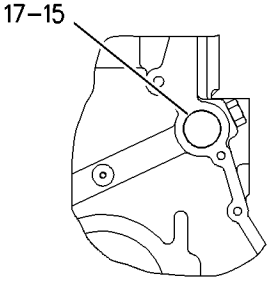

VIEW B–B

GRAPHIC #1

g00752462

BASIC ENGINE

176-9918 CYLINDER HEAD AS*R

S/N: BET1-UP

PART OF 183-5296 CYLINDER HEAD GP

SMCS-1100, 1101, 1103, 1104, 1105, 1106, 1108, 1109, 1115, 1117, 1121, 1124, 1125 **i01447376**

NOTE	REF NO	GRAPHIC REF	PART NUMBER	QTY	PART NAME 1 2 3 4 5 6 (PRODUCT LEVEL)	SEE PAGE
	1	1	**8T-6757**	3	PLUG-PIPE	
B	2	1	**134-5251**	7	BEARING-CAMSHAFT (STANDARD)	
AB		1	**150-4793**	7	BEARING-CAMSHAFT (0.254MM O.S.)	
AB		1	**160-8151**	7	BEARING-CAMSHAFT (0.762MM O.S.)	
	3	1	**166-3739**	6	SLEEVE-INJECTOR	
	4	1	**3B-0645**	20	PLUG-CUP (32.08MM AVG OD)	
	5	1	**3B-0623**	17	PLUG-CUP (25.73MM OD)	
B	6	1	**122-7375**	24	GUIDE-VALVE (STANDARD)	
AB		1	**122-8612**	24	GUIDE-VALVE (0.13 MM O.S.)	
AB		1	**122-0447**	24	GUIDE-VALVE (0.51 MM O.S.)	
	7	1	**166-2903**	6	SEAL-O-RING (34.59MM ID)	
	8	1	**166-2904**	6	SEAL-O-RING (34.59MM ID)	
	9	1	**9X-7430**	6	SEAL-O-RING (25.63MM ID)	
B	10	1	**152-7582**	12	INSERT-VALVE SEAT (EXHAUST)	
AB		1	**167-0642**	12	INSERT-VALVE SEAT (0.76 MM O.S.)	
AB		1	**170-4737**	12	INSERT-VALVE SEAT (0.51 MM O.S.)	
B	11	1	**175-3617**	12	INSERT-VALVE SEAT (INLET)	
AB		1	**167-0643**	12	INSERT-VALVE SEAT (0.76 MM O.S.)	
AB		1	**170-4738**	12	INSERT-VALVE SEAT (0.51 MM O.S.)	

A-NOT PART OF THIS GROUP
B-USE AS REQUIRED

176-9918 **CYLINDER HEAD AS** ***(contd.)*** **i01447376**

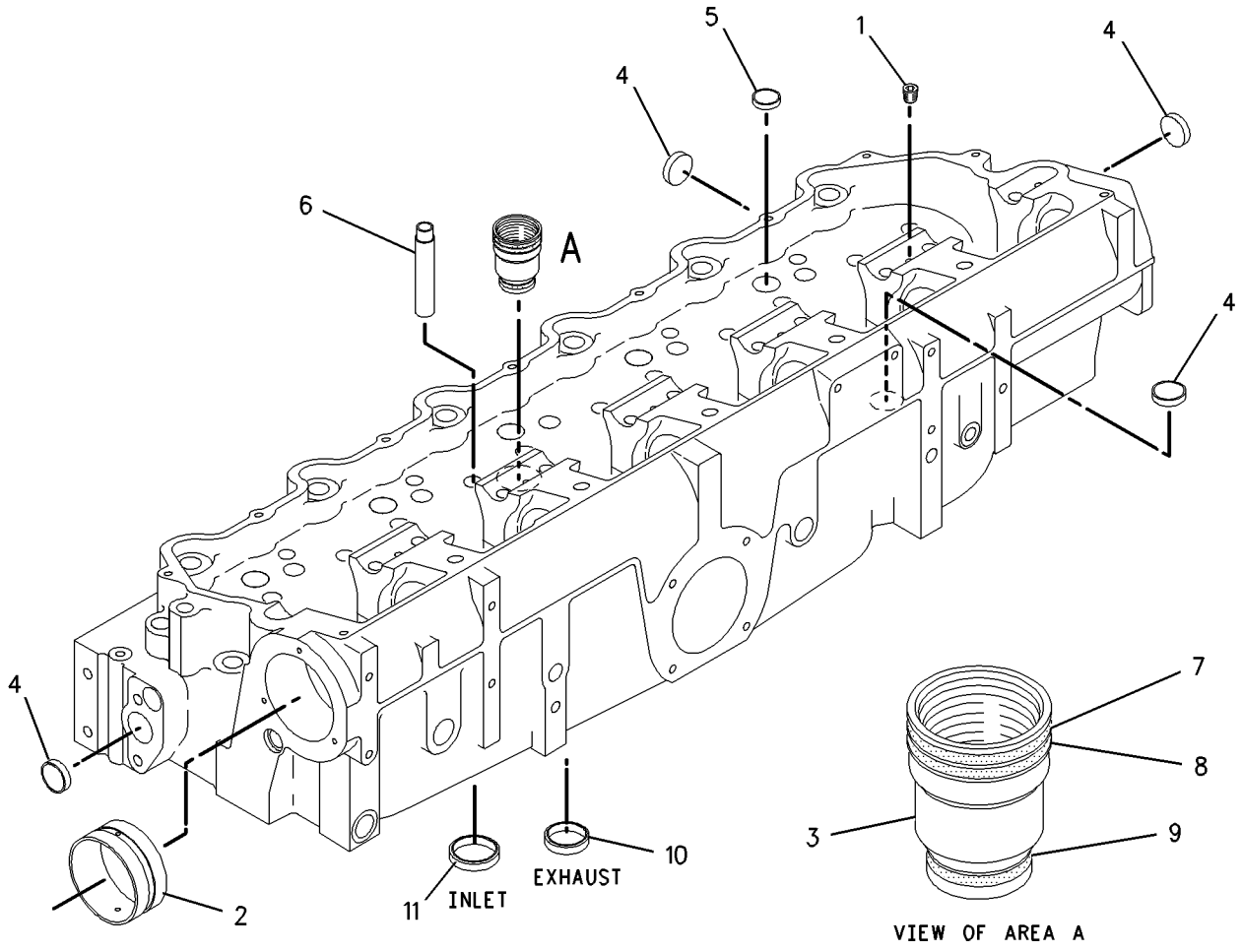

GRAPHIC #1 g00673861

160-7402 CYLINDER HEAD GP

S/N: BET1-UP

PART OF 160-0566 ENGINE AR-CORE

SMCS-1100, 1103, 1104, 1105, 1106, 1108, 1109, 1115, 1117, 1121, 1124, 1125 **i01447354**

NOTE	REF NO	GRAPHIC REF	PART NUMBER	QTY	PART NAME 1 2 3 4 5 6 (PRODUCT LEVEL)	SEE PAGE
	1	1	**030-3978**	1	CONNECTOR	
	2	1	**9S-8005**	1	PLUG	
	3	1	**8T-6763**	2	PLUG-PIPE	
	4	1	**153-9653**	1	GASKET-CYLINDER HEAD	
Y	5	1	**161-9929**	1	SENSOR GP-PRESSURE (AIR)	264
	6	1	**194-8124**	6	SLEEVE AS (EXHAUST PORT)	
	7	1	**3E-6772**	24	SEAL-WATER	
	8	1	**5H-1504**	26	WASHER-HARD (20X33.5X5MM THK)	
	8A	1	**124-1855**	16	BOLT-12 POINT HEAD (3/4-16X194MM)	
	9	1	**6V-5049**	5	SEAL-O-RING (11.89MM ID)	
	10	1	**124-1854**	10	BOLT-12 POINT HEAD (3/4-16X216MM)	
	11	1	**2B-0858**	1	PLUG-PIPE	
	12	1	**8L-2786**	1	SEAL-O-RING (16.36MM ID)	
	13	1	**9S-8004**	4	PLUG (9/16-18 THD)	
	14	1	**5P-0840**	1	SEAL-O-RING (12.29MM ID)	
	15	1	**6V-3251**	1	SEAL-O-RING (19.18MM ID)	
	16	1	**8T-6765**	1	PLUG-PIPE	
	17	1	**9S-4190**	1	PLUG-O-RING	
	18	1	**6V-5050**	1	SEAL-O-RING (23.47MM ID)	
	19	1	**6V-5048**	1	SEAL-O-RING (8.92MM ID)	
	20	1	**008-6817**	1	ELBOW	
	21	1	**2P-8421**	1	ADAPTER-O-RING	
YR	22	1	**183-5296**	1	CYLINDER HEAD GP	38

R-REMFG PART MAY BE AVAILABLE
Y-SEPARATE ILLUSTRATION

160-7402 **CYLINDER HEAD GP** *(contd.)* **i01447354**

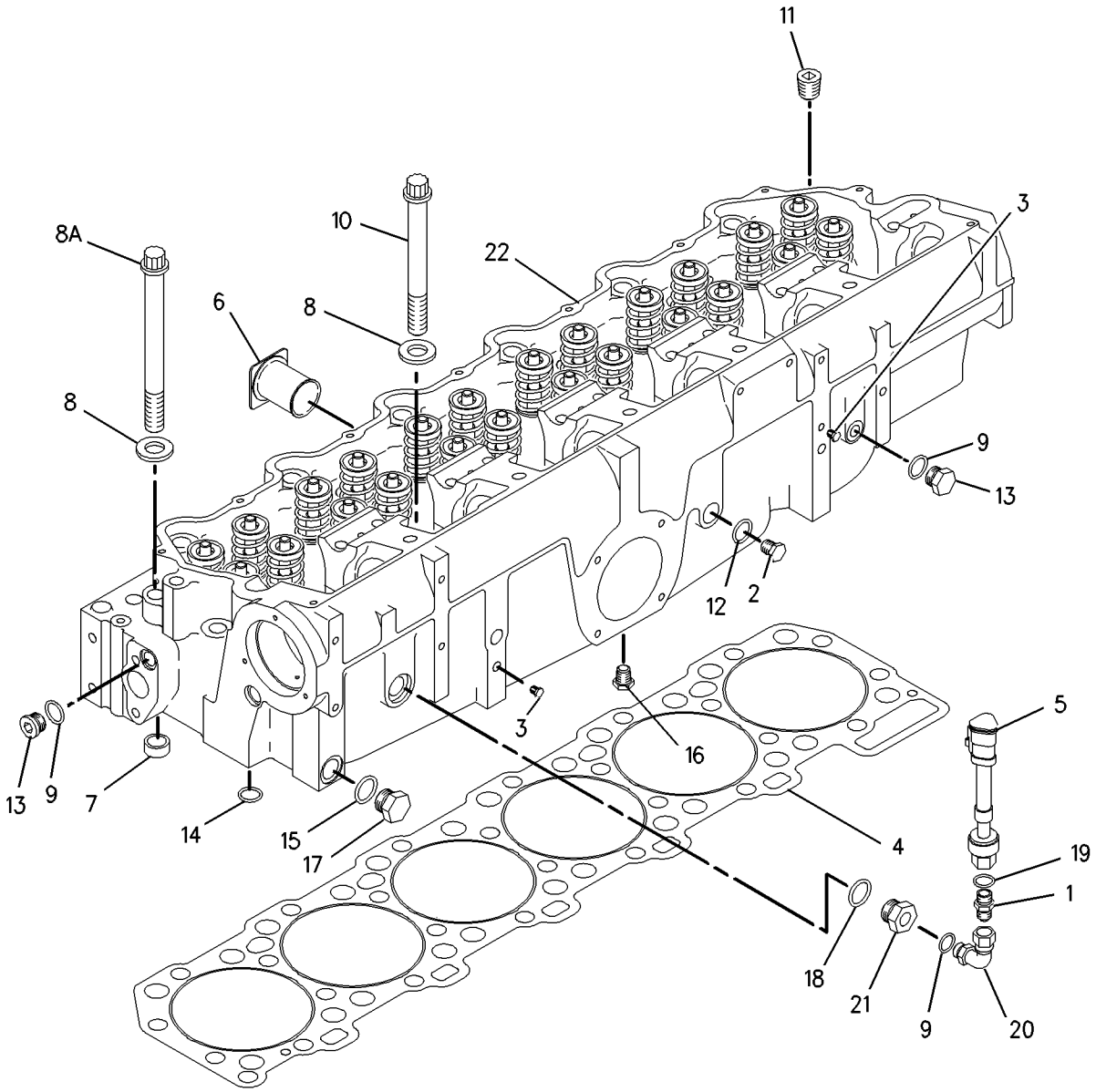

GRAPHIC #1 g00751847

183-5296 CYLINDER HEAD GP*R

S/N: BET1-UP

PART OF 160-7402 CYLINDER HEAD GP

SMCS-1100, 1103, 1104, 1105, 1106, 1108, 1109, 1115, 1117, 1121, 1124, 1125 **i01447370**

NOTE	REF NO	GRAPHIC REF	PART NUMBER	QTY	PART NAME 1 2 3 4 5 6 (PRODUCT LEVEL)	SEE PAGE
YR	1	1	**176-9918**	1	CYLINDER HEAD AS	34
	2	1	**153-7023**	12	VALVE-INLET	
	3	1	**153-7024**	12	VALVE-EXHAUST	
	4	1	**6I-0928**	24	WASHER	
	5	1	**186-2001**	24	ROTOCOIL AS	
	6	1	**175-7523**	24	SPRING-VALVE (INNER)	
	7	1	**2A-4429**	48	LOCK-RETAINER	
	8	1	**102-6229**	24	SEAL-VALVE STEM	
	9	1	**175-7526**	24	SPRING-VALVE (OUTER)	

R-REMFG PART MAY BE AVAILABLE
Y-SEPARATE ILLUSTRATION

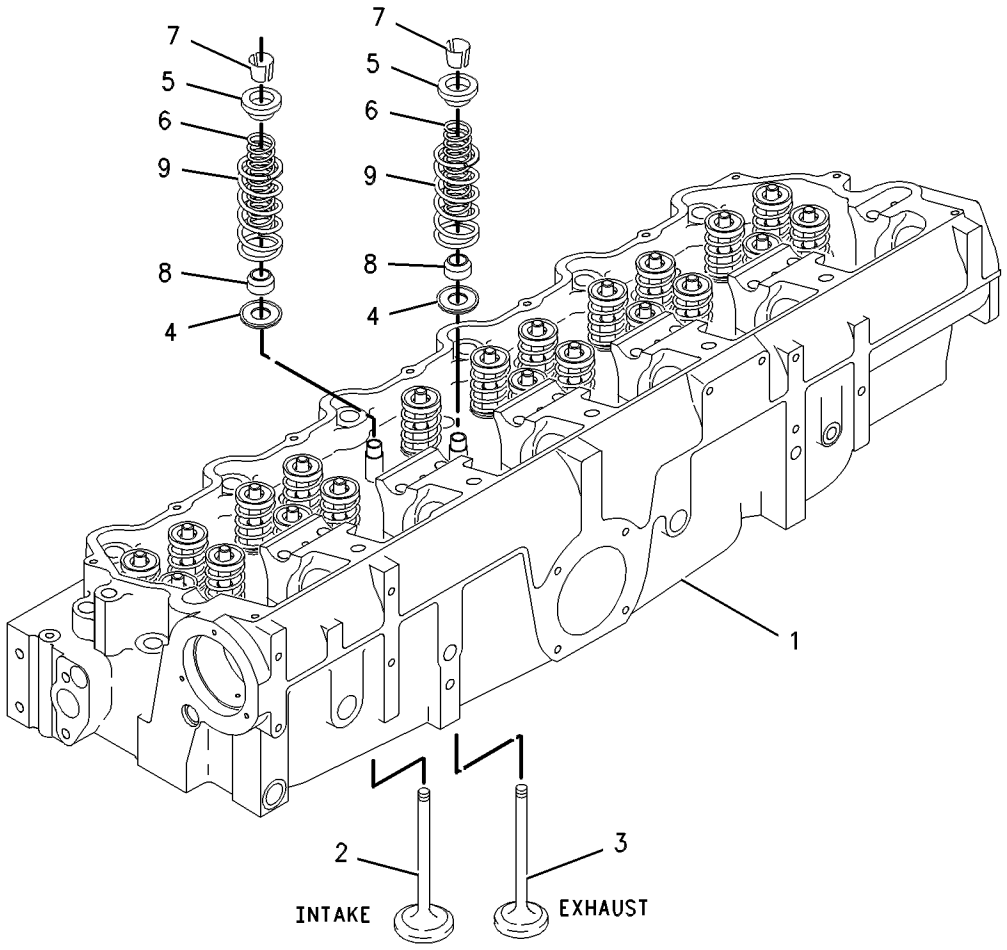

GRAPHIC #1 g00631688

4P-5893 DAMPER GP

S/N: BET1-UP

PART OF 157-7195, 157-7196 ENGINE AR-COMPLETE

SMCS-1205 **i01502950**

NOTE	REF NO	GRAPHIC REF	PART NUMBER	QTY	PART NAME 1 2 3 4 5 6 (PRODUCT LEVEL)	SEE PAGE
	1	1	**167-8126**	1	DAMPER AS	
	2	1	**1A-3203**	6	BOLT (5/8-18X4.75IN)	
	3	1	**4N-2109**	1	ADAPTER-DAMPER	
	4	1	**168-2100**	1	SPACER	

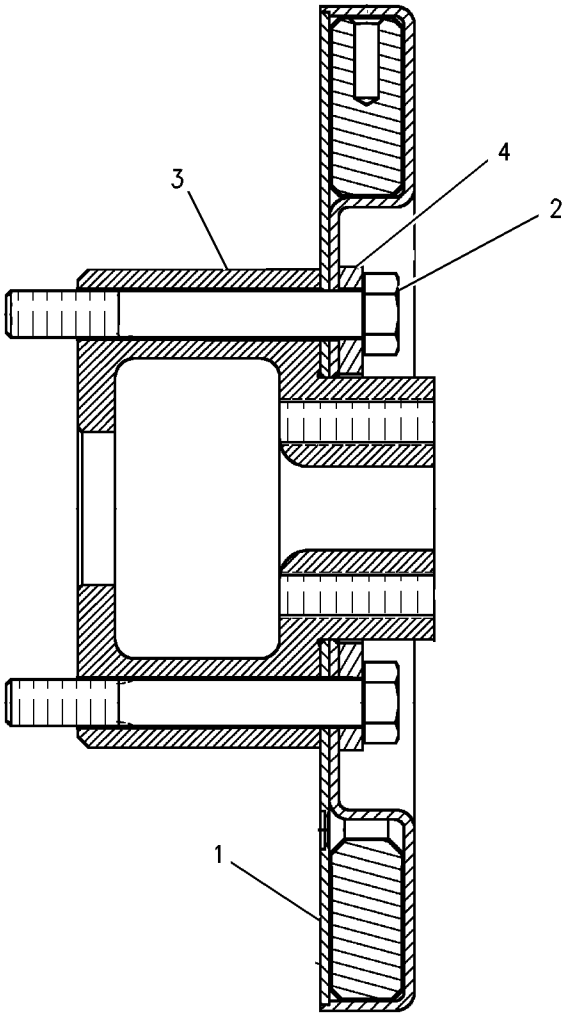

GRAPHIC #1 g00643655

BASIC ENGINE

125-8523 DRIVE GP-FAN

S/N: AKA1-UP

PART OF 124-4818 FAN AR-EJECTOR

SMCS-1357, 1358, 1359, 1390 **i01488409**

NOTE	REF NO	GRAPHIC REF	PART NUMBER	QTY	PART NAME 1 2 3 4 5 6 (PRODUCT LEVEL)	SEE PAGE
	1	1	**4W-8595**	1	PULLEY-CRANKSHAFT	
	2	1	**4P-3877**	1	BRACKET AS-FAN	
		1	**4P-3875**	1	SHAFT-FAN	
	3	1	**4N-8596**	1	PULLEY-FAN DRIVE	
	4	1	**0S-1566**	4	BOLT (5/8-11X1.5 IN)	
	5	1	**129-2416**	1	V-BELT SET (INCLUDES 3 BELTS)	
					(STANDARD APPLICATIONS)	
					—OR—	
A		1	**9Q-3670**	1	V-BELT-BANDED	
					(DEBRIS LADEN APPLICATIONS)	
	6	1	**1D-4602**	1	BOLT (5/8-11X9.5 IN)	
	7	1	**5F-0149**	1	SEAL-O-RING	
	8	1	**4P-3878**	1	HUB-FAN PULLEY	
	9	1	**1W-4564**	1	WASHER-RETAINING	
	10	1	**3B-1915**	6	BOLT (3/8-16X1.37 IN)	
	11	1	**9W-3620**	2	CONE-BEARING	
	12	1	**4P-3874**	1	SPACER	
	13	1	**110-6936**	1	SUPPORT	
	14	1	**8T-8919**	2	BOLT (1/2-13X1.75 IN)	
	15	1	**6V-8188**	2	NUT (1/2-13 THD)	
	16	1	**9W-3621**	2	CUP-BEARING	
	17	1	**8T-4835**	4	BOLT (1/2-13X2 IN)	
	18	1	**8B-8255**	1	SEAL-LIP	
	19	1	**0S-1588**	6	BOLT (3/8-16X1.25 IN)	
	20	1	**5M-8009**	1	PIN-SPRING	
	21	1	**9Y-7889**	1	SPACER	
	22	1	**8S-2388**	1	HOSE AS-FLEXIBLE	
	23	1	**119-4763**	1	ADAPTER	
	24	1	**3B-8485**	1	FITTING-GREASE	
	25	1	**8L-6557**	1	CONNECTOR	
	26	1	**5P-9297**	1	CLIP	
	27	1	**5M-3062**	1	BOLT (3/8-16X0.75 IN)	
	28	1	**8T-4896**	1	WASHER-HARD (10.2X18.5X2.5MM THK)	

A-NOT PART OF THIS GROUP

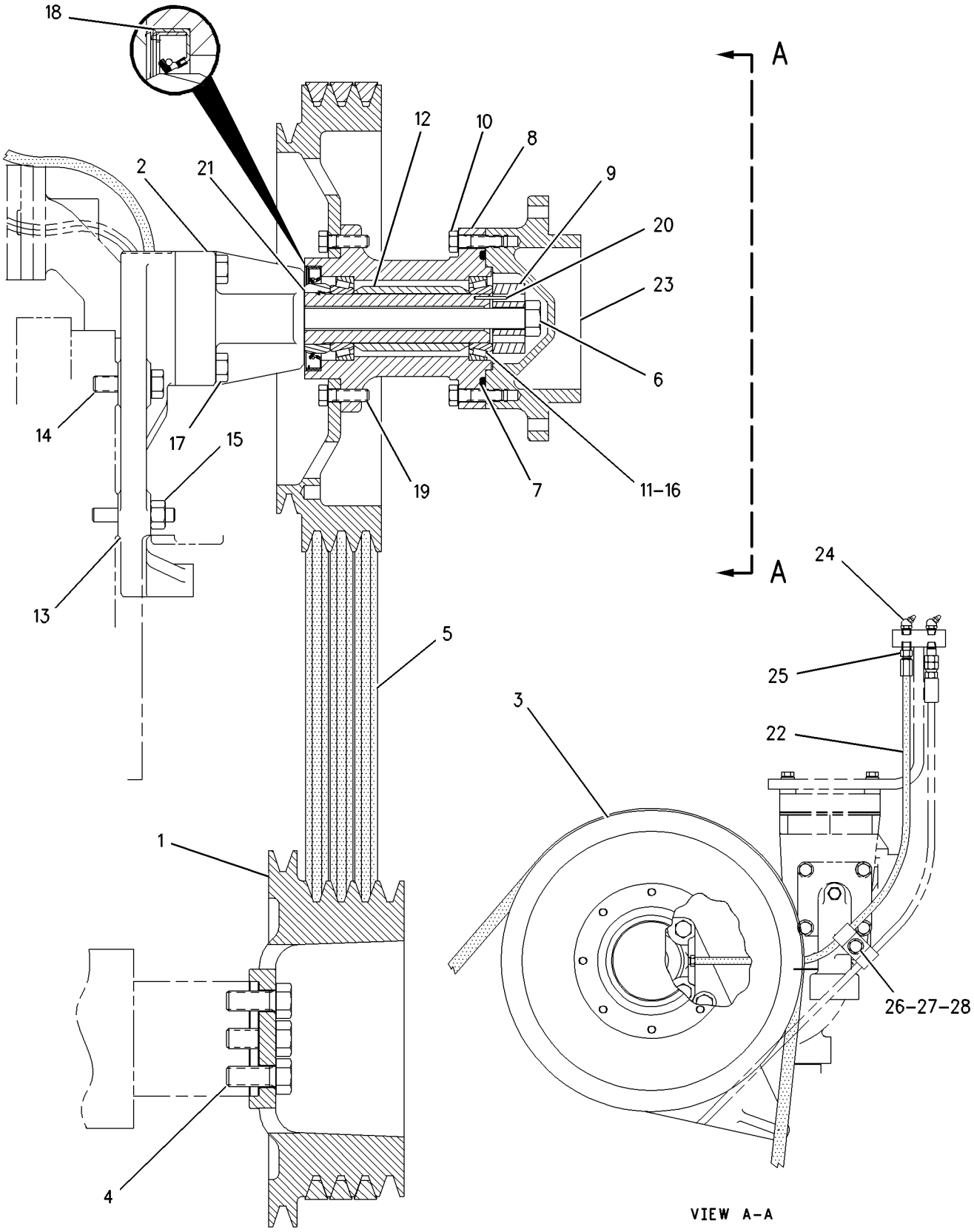

GRAPHIC #1 g00690338

BASIC ENGINE

159-9429 DRIVE GP-FAN

S/N: AKA1-UP

PART OF 159-5908 INSTALLATION AR-ENGINE

SMCS-1357, 1358, 1359, 1390 **i01446985**

NOTE	REF NO	GRAPHIC REF	PART NUMBER	QTY	PART NAME 1 2 3 4 5 6 (PRODUCT LEVEL)	SEE PAGE
	1	1	**4N-8596**	1	PULLEY-FAN DRIVE (3 GROOVE)	
	2	1	**4P-3877**	1	BRACKET AS-FAN	
		1	**4P-3875**	1	SHAFT-FAN	
	3	1	**4W-8595**	1	PULLEY-CRANKSHAFT (5 GROOVE)	
	4	1	**0S-1566**	4	BOLT (5/8-11X1.5 IN)	
	5	1	**129-2416**	1	V-BELT SET (INCLUDES 3 BELTS)	
	6	1	**1D-4602**	1	BOLT (5/8-11X9.5 IN)	
	7	1	**5F-0149**	1	SEAL-O-RING (91.44MM ID)	
	8	1	**4P-3878**	1	HUB-FAN PULLEY	
	9	1	**1W-4564**	1	WASHER-RETAINING	
	10	1	**3B-1915**	6	BOLT (3/8-16X1.37 IN)	
	11	1	**9W-3620**	2	CONE-BEARING	
	12	1	**4P-3874**	1	SPACER	
	13	1	**9W-3621**	2	CUP-BEARING	
	14	1	**8T-9389**	4	BOLT (1/2-13X2.75 IN)	
	15	1	**8B-8255**	1	SEAL-LIP	
	16	1	**0S-1588**	6	BOLT (3/8-16X1.25 IN)	
	17	1	**5M-8009**	1	PIN-SPRING	
	18	1	**9Y-7889**	1	SPACER	
	19	1	**8S-2387**	1	HOSE AS-FLEXIBLE	
	20	1	**3B-8489**	1	FITTING-GREASE	
	21	1	**8L-6557**	1	CONNECTOR	
	22	1	**119-4763**	1	ADAPTER	
	23	1	**159-9376**	1	PLATE	
	24	1	**8T-4223**	4	WASHER-HARD (13.5X25.5X3MM THK)	

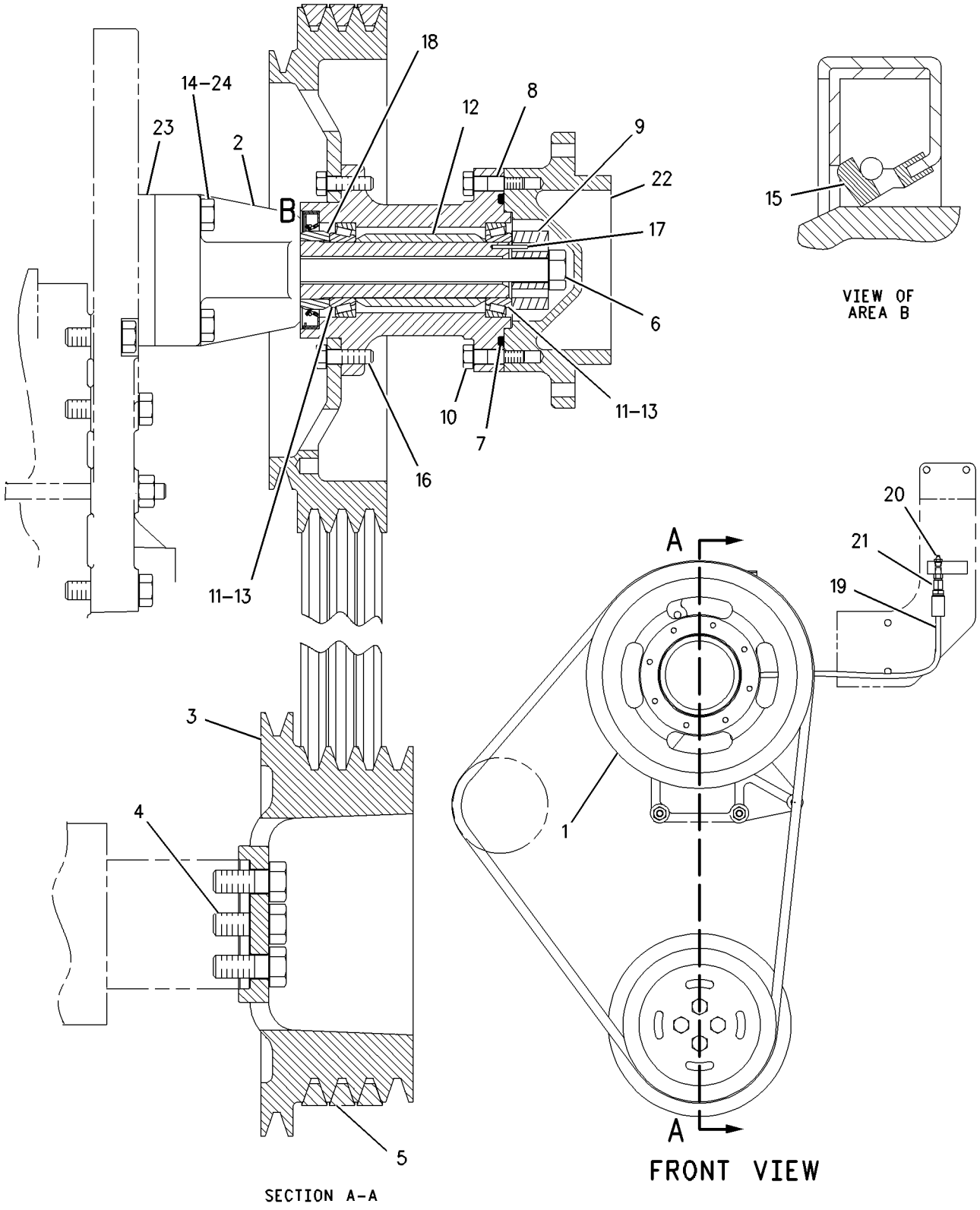

GRAPHIC #1 g00680065

4P-6846 FASTENER GP-FRONT HOUSING

S/N: BET1-UP

PART OF 160-0566 ENGINE AR-CORE

SMCS-1151 **i01446183**

NOTE	REF NO	GRAPHIC REF	PART NUMBER	QTY	PART NAME 1 2 3 4 5 6 (PRODUCT LEVEL)	SEE PAGE
	1	1	**7N-0452**	1	PLATE	
	2	1	**0S-1594**	2	BOLT (3/8-16X1 IN)	
	3	1	**5M-2894**	2	WASHER-HARD (10.2X18.5X2.5MM THK)	

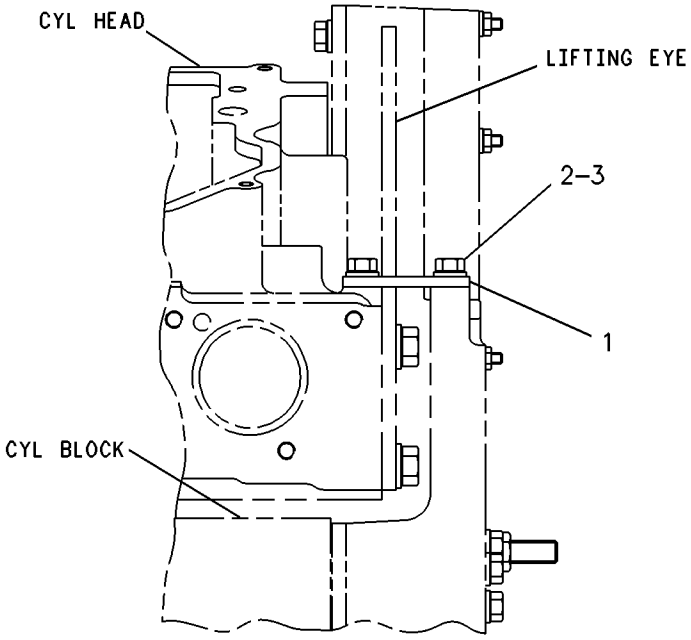

RIGHT SIDE VIEW

GRAPHIC #1 g00231021

150-3345 FASTENER GP-FRONT HOUSING

S/N: BET1-UP

PART OF 157-7195, 157-7196 ENGINE AR-COMPLETE

SMCS-1151 **i01445123**

NOTE	REF NO	GRAPHIC REF	PART NUMBER	QTY	PART NAME 1 2 3 4 5 6 (PRODUCT LEVEL)	SEE PAGE
	1	1	**5M-3062**	1	BOLT (3/8-16X0.75 IN)	
	2	1	**8T-4896**	1	WASHER-HARD (10.2X18.5X2.5MM THK)	

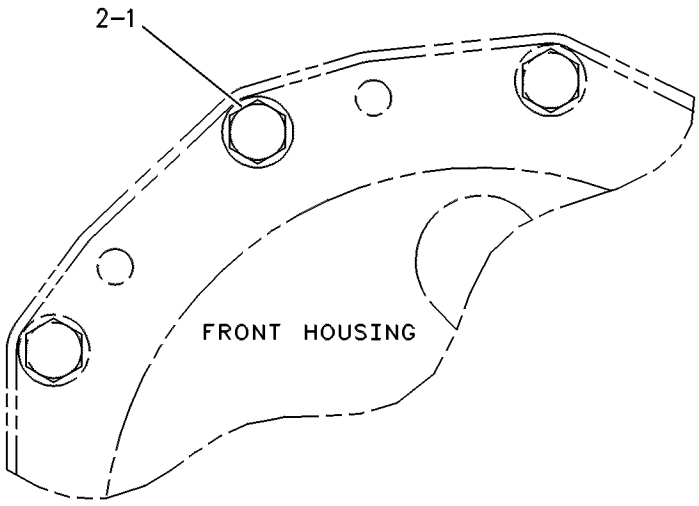

FRONT VIEW

GRAPHIC #1 g00238155

BASIC ENGINE

159-9019 FLYWHEEL GP

S/N: BET1-UP

PART OF 157-7195, 157-7196 ENGINE AR-COMPLETE

SMCS-1156, 1158 **i01444990**

NOTE	REF NO	GRAPHIC REF	PART NUMBER	QTY	PART NAME 1 2 3 4 5 6 (PRODUCT LEVEL)	SEE PAGE
	1	1	**159-8866**	1	FLYWHEEL AS	
	1A	1	**4N-2514**	1	GEAR (113 TEETH)	
	2	1	**0S-1602**	12	BOLT (5/8-18X3.5IN)	
	3	1	**4D-3704**	12	WASHER-HARD (17X30X5MM THK)	

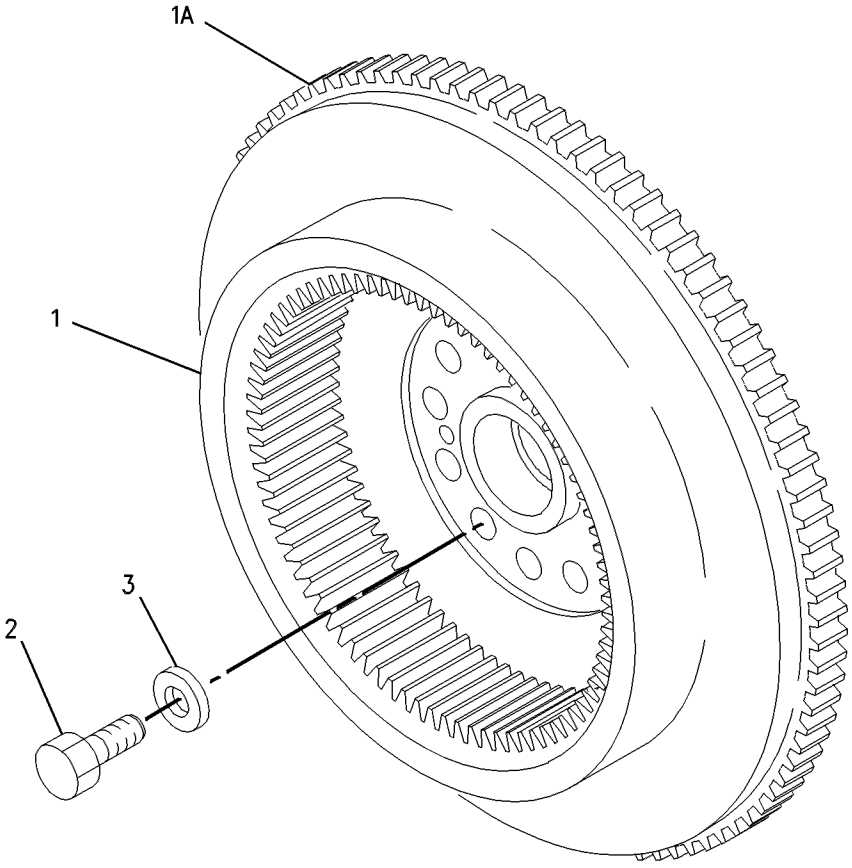

GRAPHIC #1 g00531310

BASIC ENGINE

136-9419 GEAR GP-CAMSHAFT

S/N: BET1-UP

PART OF 137-5921 GEAR GP-FRONT

SMCS-1206 **i01446819**

NOTE	REF NO	GRAPHIC REF	PART NUMBER	QTY	PART NAME 1 2 3 4 5 6 (PRODUCT LEVEL)	SEE PAGE
	1	1	**9X-8872**	8	BOLT-LOCKING (3/8-16X0.875 IN)	

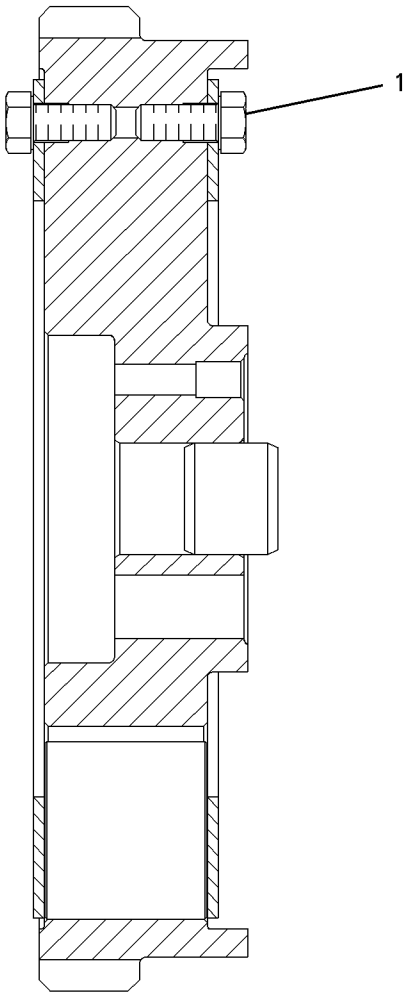

GRAPHIC #1 g00529031

BASIC ENGINE

137-5921 GEAR GP-FRONT

S/N: BET1-UP

PART OF 160-0566 ENGINE AR-CORE

SMCS-1206 **i01446811**

NOTE	REF NO	GRAPHIC REF	PART NUMBER	QTY	PART NAME 1 2 3 4 5 6 (PRODUCT LEVEL)	SEE PAGE
	1	1	**0S-1571**	1	BOLT (3/8-16X1.75 IN)	
	2	1	**2J-3118**	5	BOLT-LOCKING (3/8-16X1.25 IN)	
	3	1	**5P-4142**	2	BOLT-LOCKING	
	4	1	**1B-8705**	1	KEY-WOODRUFF	
	5	1	**1P-7346**	1	WASHER-HARD (10.2X35X6MM THK)	
	6	1	**126-1756**	10	BOLT-LOCKING	
	7	1	**112-9217**	1	PLATE-THRUST	
	8	1	**130-4701**	1	GEAR AS (56 TEETH)	
	9	1	**151-5966**	1	SHAFT AS-STUB	
		1	**6I-3623**	1	DOWEL	
	10	1	**6I-3624**	2	PLATE-THRUST	
	11	1	**6I-3625**	1	GEAR AS (71 TEETH)	
		1	**101-8468**	1	BEARING-SLEEVE	
	12	1	**128-2659**	1	GEAR AS (63/105 TEETH)(CLUSTER)	
		1	**1B-8705**	1	KEY-WOODRUFF	
	13	1	**6I-3632**	1	SHAFT-STUB	
	14	1	**158-3416**	1	STUBSHAFT	
	15	1	**031-3185**	6	BOLT-12 POINT HEAD (76.2MM)	
	16	1	**7E-5661**	1	GEAR-OIL PUMP DRIVE (69 TEETH)	
	17	1	**9S-8752**	10	NUT-FULL (3/8-16 THD)	
	18	1	**9X-6458**	12	WASHER-HARD (10.2X22.5X3MM THK)	
	19	1	**117-8801**	1	SEAL-O-RING (126.67MM ID)	
	20	1	**5E-8771**	1	SEAL-O-RING	
	21	1	**117-8557**	1	PLATE-SEAL	
	22	1	**128-8853**	1	ADAPTER AS	
		1	**6V-3677**	1	DOWEL	
	23	1	**102-5861**	1	PLATE-THRUST	
	24	1	**107-0583**	3	BOLT-LOCKING (1/4-20 X 0.87IN)	
Y	25	1	**136-9419**	1	GEAR GP-CAMSHAFT (96 TEETH)	47

Y-SEPARATE ILLUSTRATION

137-5921 **GEAR GP-FRONT** *(contd.)* **i01446811**

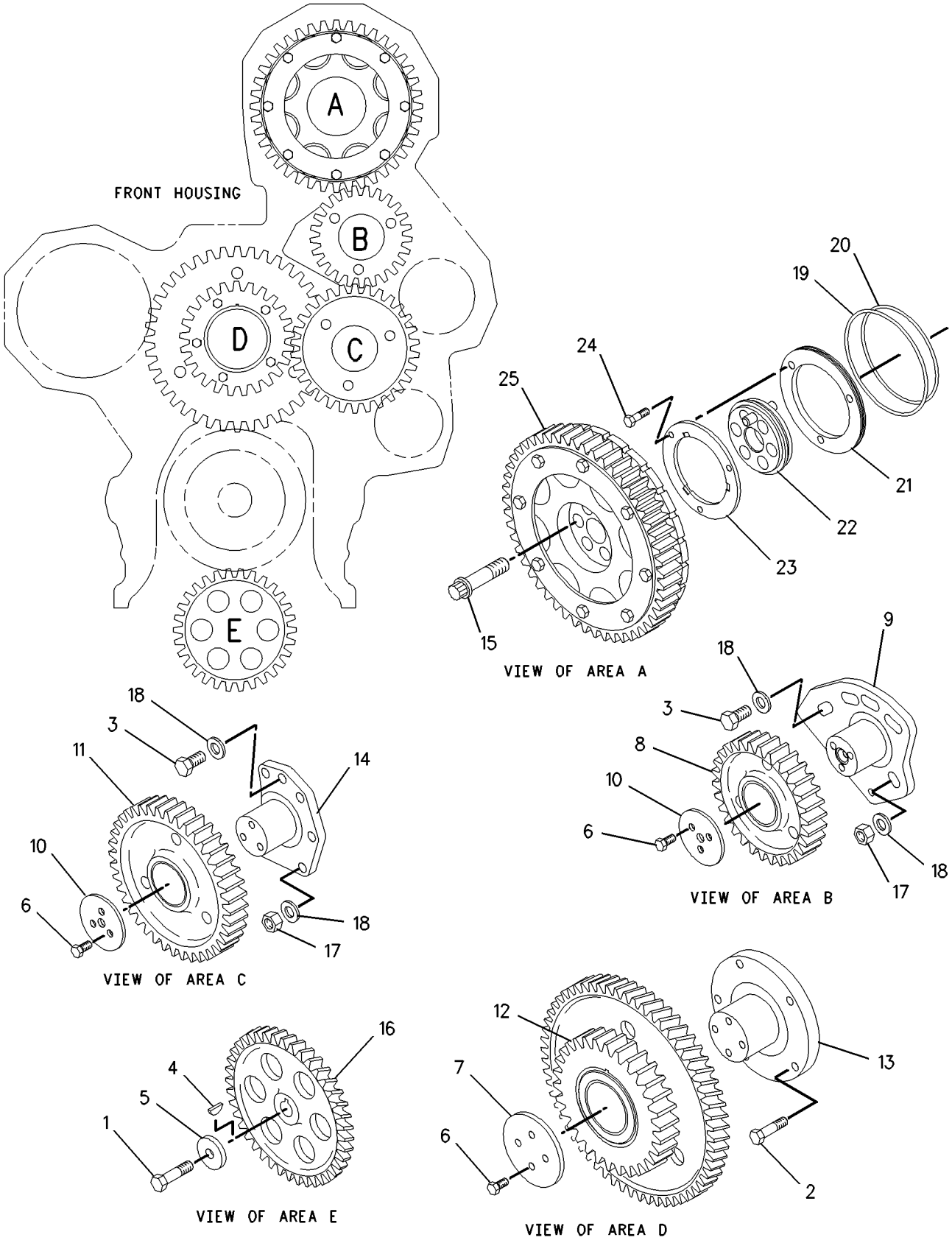

GRAPHIC #1 g00682671

BASIC ENGINE

9Y-2187 GEAR GP-REAR

S/N: BET1-UP

PART OF 157-7195, 157-7196 ENGINE AR-COMPLETE

SMCS-1204 **i00569712**

NOTE	REF NO	GRAPHIC REF	PART NUMBER	QTY	PART NAME 1 2 3 4 5 6 (PRODUCT LEVEL)	SEE PAGE
	1	1	**132-3201**	1	ADAPTER AS-PUMP	
	2	1	**8M-9315**	1	BEARING-SLEEVE	
	3	1	**131-8674**	1	GEAR AS-DRIVE (57 TEETH)	
	4	1	**4F-6024**	1	PIN	
	5	1	**6V-5141**	1	SEAL-O-RING	
	6	1	**0S-1588**	6	BOLT (3/8-16X1.25IN)	
	7	1	**101-3670**	1	ADAPTER AS-PUMP	
	8	1	**8M-9315**	1	BEARING-SLEEVE	
	9	1	**9Y-5618**	1	GEAR AS-DRIVE (68 TEETH)	
	10	1	**4F-6024**	1	PIN	
	11	1	**9Y-1985**	1	GEAR AS-IDLER (55 TEETH)	
	12	1	**1W-4738**	1	BEARING-SLEEVE	
	13	1	**9Y-1981**	1	GEAR AS-IDLER (78 TEETH)	
	14	1	**1W-4738**	1	BEARING-SLEEVE	
	15	1	**9Y-2092**	2	RETAINER-IDLER	
	16	1	**3B-1915**	6	BOLT (3/8-16X1.375IN)	
	17	1	**9Y-2094**	1	GEAR AS-CRANKSHAFT (68 TEETH)	
	18	1	**4N-0684**	1	DOWEL	
	19	1	**3F-1547**	1	SEAL-O-RING	
	20	1	**1A-1460**	6	BOLT (1/2-13X2IN)	

9Y-2187 **GEAR GP-REAR** *(contd.)* **i00569712**

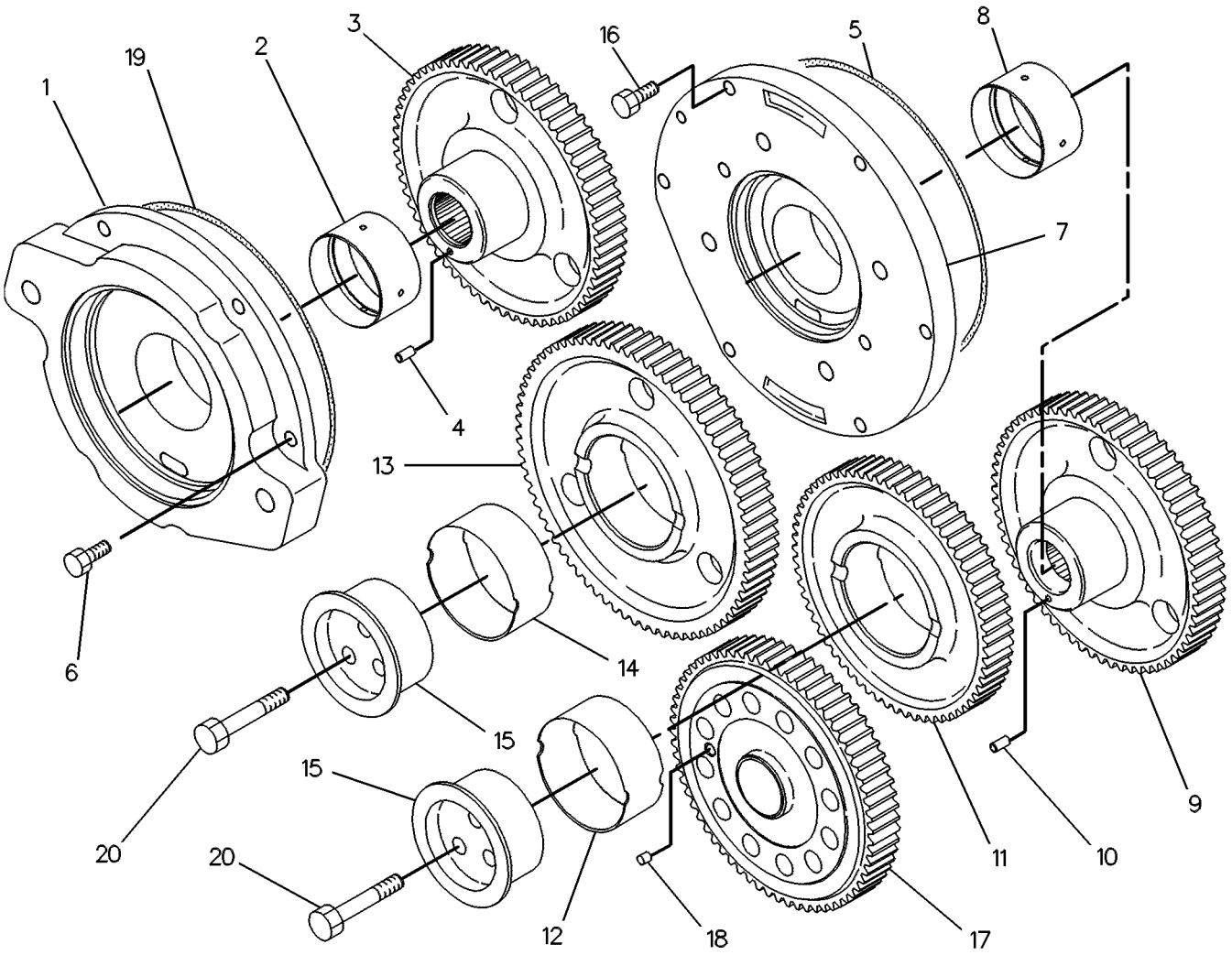

GRAPHIC #1 g00234914

BASIC ENGINE

100-2879 HOUSING GP-FLYWHEEL

S/N: BET1-UP

PART OF 157-7195, 157-7196 ENGINE AR-COMPLETE

SMCS-1157 **i01502954**

NOTE	REF NO	GRAPHIC REF	PART NUMBER	QTY	PART NAME 1 2 3 4 5 6 (PRODUCT LEVEL)	SEE PAGE
	1	1	**100-2878**	1	HOUSING AS-FLYWHEEL	
	2	1	**8M-9315**	2	BEARING-SLEEVE	
	3	1	**9S-8005**	2	PLUG	
	4	1	**3K-0360**	4	SEAL-O-RING	
	5	1	**8T-6765**	2	PLUG-PIPE	
	6	1	**9S-4182**	4	PLUG-O-RING	
	7	1	**3J-7354**	4	SEAL-O-RING	
	8	1	**9S-4185**	2	PLUG-O-RING	
	9	1	**1W-3136**	1	BAFFLE	
	10	1	**5M-2894**	2	WASHER-HARD (10.2X18.5X2.5MM THK)	
	11	1	**0S-1594**	1	BOLT (3/8-16X1 IN)	
	12	1	**9K-7290**	8	BOLT-12 POINT HEAD (1/2-13X3.25IN)	
	13	1	**155-5619**	1	GASKET-FLYWHEEL	
	14	1	**165-3930**	6	BOLT-HEX HEAD (3/8-16X1.625IN)	
	15	1	**165-3932**	5	BOLT-HEX HEAD (3/8-16X2IN)	
	16	1	**5J-5793**	1	BOLT-12 POINT HEAD (1/2-13X1.75 IN)	
	17	1	**165-3936**	2	BOLT-HEX HEAD (3/8-16X4.5IN)	
	18	1	**4M-0189**	1	SEAL-O-RING	
	19	1	**116-3046**	1	COVER	
	20	1	**0S-1585**	2	BOLT (1/2-13X1.50 IN)	
	21	1	**5P-8245**	11	WASHER-HARD (13.5X25.5X3MM THK)	
	22	1	**5P-8286**	1	SEAL-O-RING	
	23	1	**101-3934**	1	COVER	
	24	1	**4B-4043**	2	BOLT (5/8-11X1.375 IN)	
	25	1	**5P-8247**	2	WASHER-HARD (17X32X3.5MM THK)	
	26	1	**2P-2772**	1	COVER	
	27	1	**4N-0933**	1	GASKET	
	28	1	**0S-1619**	1	BOLT (3/8-16X3 IN)	
	29	1	**2A-1162**	1	GASKET	
	30	1	**5F-0304**	1	PLUG-DRAIN	

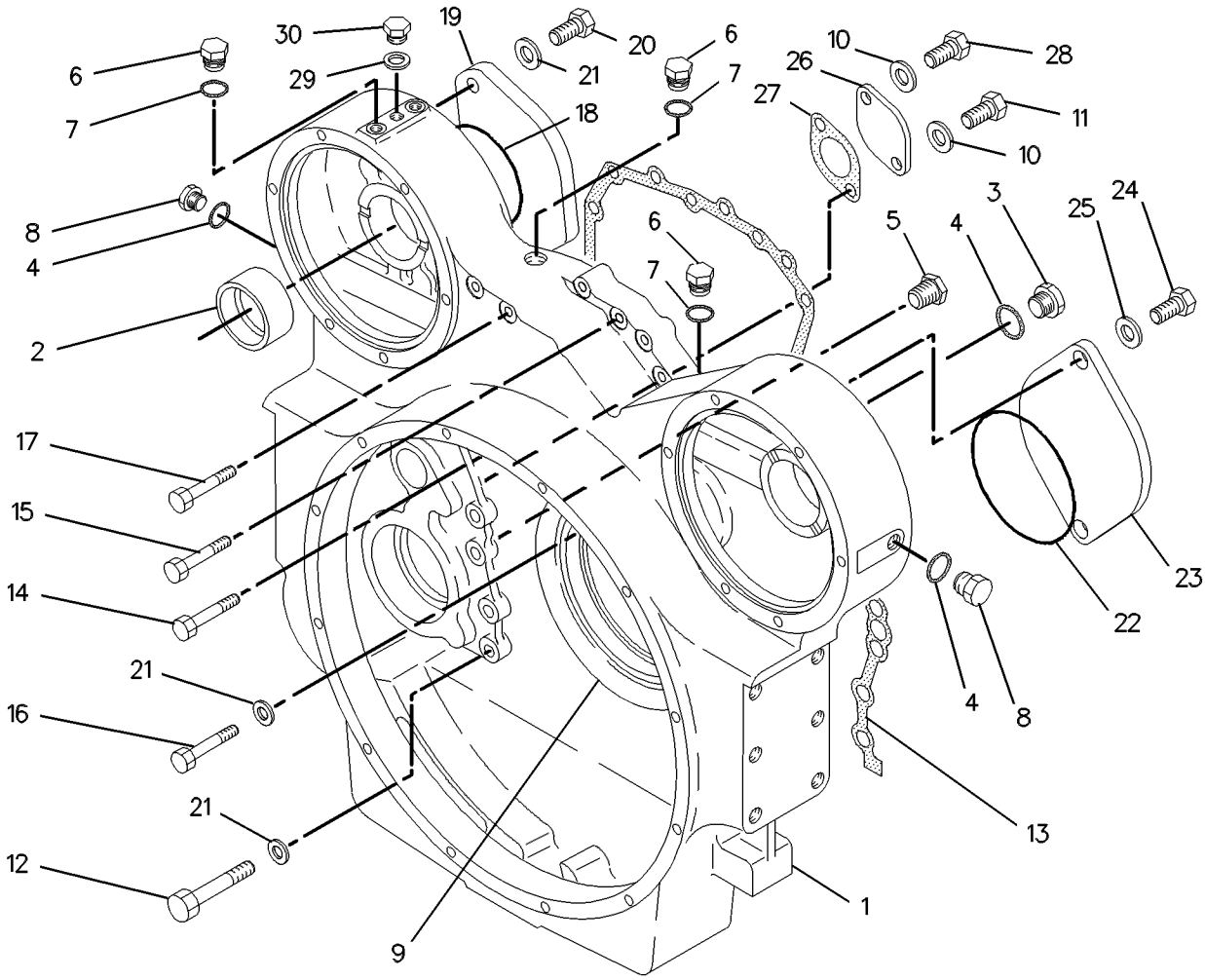

GRAPHIC #1 g00638618

BASIC ENGINE

161-1509 HOUSING GP-FRONT

S/N: BET1-UP

PART OF 157-7195 ENGINE AR-COMPLETE

SMCS-1151, 1162, 1166 **i01436506**

NOTE	REF NO	GRAPHIC REF	PART NUMBER	QTY	PART NAME 1 2 3 4 5 6 (PRODUCT LEVEL)	SEE PAGE
	1	1	**196-9011**	1	HOUSING AS-FRONT	
		1	**191-3026**	1	STUD	
	2	1	**5P-4255**	8	BOLT-LOCKING (3/8-16 X 1 IN)	
	3	1	**5M-2894**	27	WASHER-HARD (10.2X18.5X2.5MM THK)	
	4	1	**0S-1588**	11	BOLT (3/8-16X1.25 IN)	
	5	1	**120-9243**	2	STUD-BRAKE	
	6	1	**166-9144**	1	GASKET	
	7	1	**155-9820**	1	PLATE AS-FRONT	
		1	**153-1025**	2	DOWEL	
	8	1	**155-3629**	1	GASKET	
	9	1	**0L-2070**	1	BOLT (3/8-16X2.25 IN)	
	10	1	**0T-0055**	6	BOLT (3/8-16X4.25 IN)	
	11	1	**9S-8752**	2	NUT-FULL (3/8-16 THD)	
	12	1	**126-1757**	12	WASHER-SEAL	
	13	1	**129-5428**	12	STUD	
	14	1	**129-5427**	2	WASHER (14X27X1.27MM THK)	
	15	1	**161-1508**	1	BRACKET AS	
	16	1	**0S-1591**	3	BOLT (3/8-16X1.5 IN)	
	17	1	**0S-1571**	3	BOLT (3/8-16X1.75 IN)	
	18	1	**101-3120**	2	SPACER (10.5X25X20MM THK)	
	19	1	**3P-1155**	2	SEAL-O-RING (24.99MM ID)	
	20	1	**8S-9191**	1	BOLT (3/8-16X4 IN)	
	21	1	**9S-4191**	1	PLUG-STRAIGHT THREAD (9/16-18)	
	22	1	**6V-5049**	1	SEAL-O-RING (11.89MM ID)	
Y	23	1	**142-8394**	1	SENSOR GP-SPEED (PRIMARY ENGINE)	270
	24	1	**9S-4185**	2	PLUG-O-RING (3/4-16)	
	25	1	**8L-2786**	2	SEAL-O-RING (16.36MM ID)	
	26	1	**117-1385**	2	SEAL-O-RING (13.94MM ID)	
	27	1	**132-9770**	1	SPACER AS	
		1	**1W-6448**	2	DOWEL	
	28	1	**2H-3755**	2	BOLT (5/16-18X0.62 IN)	
	29	1	**9M-1974**	2	WASHER-HARD (8.8X16X2MM THK)	
	30	1	**147-3801**	1	SPACER AS	
		1	**1W-6448**	1	DOWEL	
Y	31	1	**142-8393**	1	SENSOR GP-SPEED (SECONDARY ENGINE)	269
	32	1	**9X-6458**	8	WASHER-HARD (10.2X22.5X3MM THK)	
	33	1	**7X-4805**	2	SEAL-O-RING (9.12MM ID)	
	34	1	**4M-8548**	2	STUD-TAPERLOCK	

Y-SEPARATE ILLUSTRATION

161 - 1509 **HOUSING GP - FRONT** *(contd.)* **i01436506**

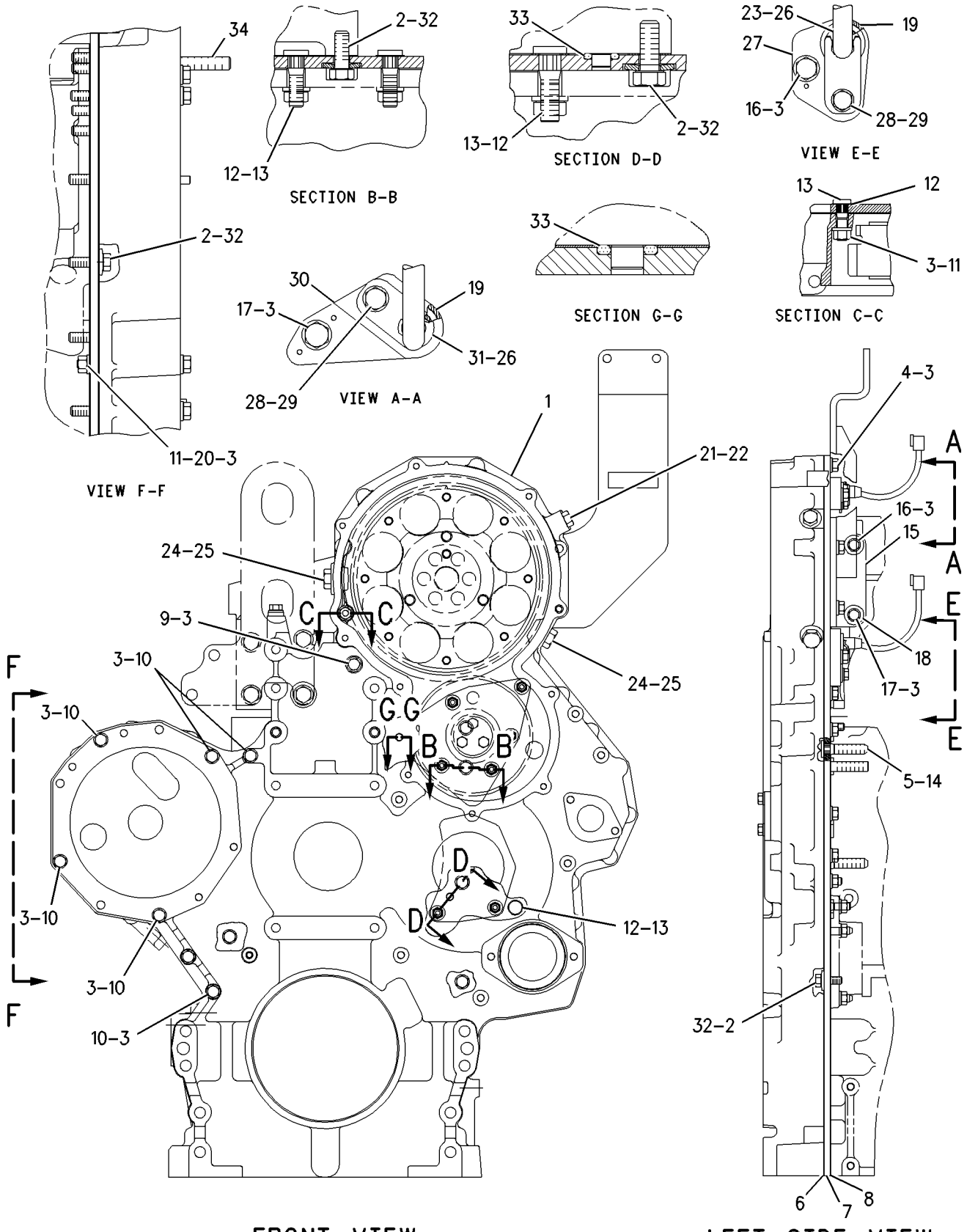

GRAPHIC #1

g00758318

BASIC ENGINE

161-8414 HOUSING GP-FRONT

S/N: BET1-UP

PART OF 157-7196 ENGINE AR-COMPLETE

SMCS-1151, 1162, 1166 **i01435748**

NOTE	REF NO	GRAPHIC REF	PART NUMBER	QTY	PART NAME 1 2 3 4 5 6 (PRODUCT LEVEL)	SEE PAGE
	1	1	**196-9011**	1	HOUSING AS-FRONT	
		1	**191-3026**	1	STUD	
	2	1	**5P-4255**	8	BOLT-LOCKING (3/8-16 X 1 IN)	
	3	1	**5M-2894**	23	WASHER-HARD (10.2X18.5X2.5MM THK)	
	4	1	**0S-1588**	16	BOLT (3/8-16X1.25 IN)	
	5	1	**120-9243**	2	STUD-BRAKE	
	6	1	**166-9144**	1	GASKET	
	7	1	**155-9820**	1	PLATE AS-FRONT	
		1	**153-1025**	2	DOWEL	
	8	1	**155-3629**	1	GASKET	
	9	1	**0L-2070**	1	BOLT (3/8-16X2.25 IN)	
	10	1	**0T-0055**	3	BOLT (3/8-16X4.25 IN)	
	11	1	**9S-8752**	2	NUT-FULL (3/8-16 THD)	
	12	1	**126-1757**	12	WASHER-SEAL	
	13	1	**129-5428**	12	STUD	
	14	1	**129-5427**	2	WASHER (14X27X1.27MM THK) (SEALING)	
	15	1	**161-1508**	1	BRACKET AS	
	16	1	**0S-1591**	3	BOLT (3/8-16X1.5 IN)	
	17	1	**0S-1571**	3	BOLT (3/8-16X1.75 IN)	
	18	1	**101-3120**	2	SPACER (10.5X25X20MM THK)	
	19	1	**3P-1155**	2	SEAL-O-RING (24.99MM ID)	
	20	1	**1A-5964**	4	BOLT (3/8-16X4.5 IN)	
	21	1	**9S-4191**	1	PLUG	
	22	1	**6V-5049**	1	SEAL-O-RING (11.89MM ID)	
Y	23	1	**142-8394**	1	SENSOR GP-SPEED (PRIMARY ENGINE TIMING)	270
	24	1	**9S-4185**	2	PLUG	
	25	1	**8L-2786**	2	SEAL-O-RING (16.36MM ID)	
	26	1	**117-1385**	2	SEAL-O-RING (13.94MM ID)	
	27	1	**132-9770**	1	SPACER AS	
		1	**1W-6448**	2	DOWEL	
	28	1	**2H-3755**	2	BOLT (5/16-18X0.62 IN)	
	29	1	**9M-1974**	4	WASHER-HARD (8.8X16X2MM THK)	
	30	1	**147-3801**	1	SPACER AS	
		1	**1W-6448**	1	DOWEL	
Y	31	1	**142-8393**	1	SENSOR GP-SPEED (SECONDARY ENGINE TIMING)	269
	33	1	**7X-4805**	2	SEAL-O-RING (9.12MM ID)	
	34	1	**4M-8548**	2	STUD-TAPERLOCK	
	35	1	**0S-1594**	2	BOLT (3/8-16X1 IN)	
	36	1	**9X-6458**	19	WASHER-HARD (10.2X22.5X3MM THK)	
	37	1	**161-8415**	1	COVER AS	

Y-SEPARATE ILLUSTRATION

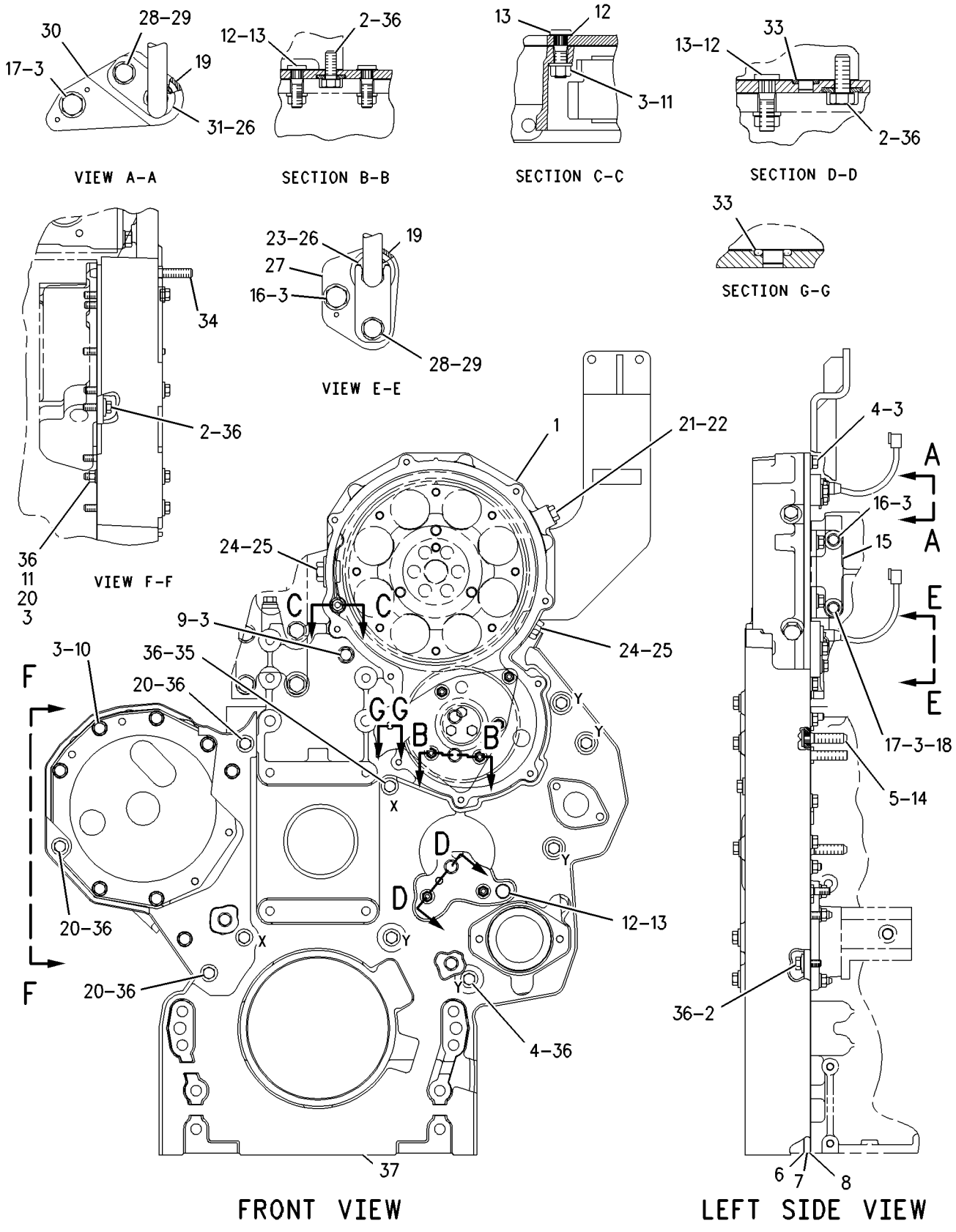

GRAPHIC #1 g00708327

160-5569 LIFTING GP-ENGINE

S/N: BET1-UP

PART OF 157-7195, 157-7196 ENGINE AR-COMPLETE

SMCS-1122 **i01445060**

NOTE	REF NO	GRAPHIC REF	PART NUMBER	QTY	PART NAME 1 2 3 4 5 6 (PRODUCT LEVEL)	SEE PAGE
	1	1	**109-9985**	1	EYE-LIFTING	
	2	1	**172-9383**	1	SUPPORT	
	3	1	**3B-1915**	8	BOLT (3/8-16X1.37 IN)	
	4	1	**5M-2894**	8	WASHER-HARD (10.2X18.5X2.5MM THK)	

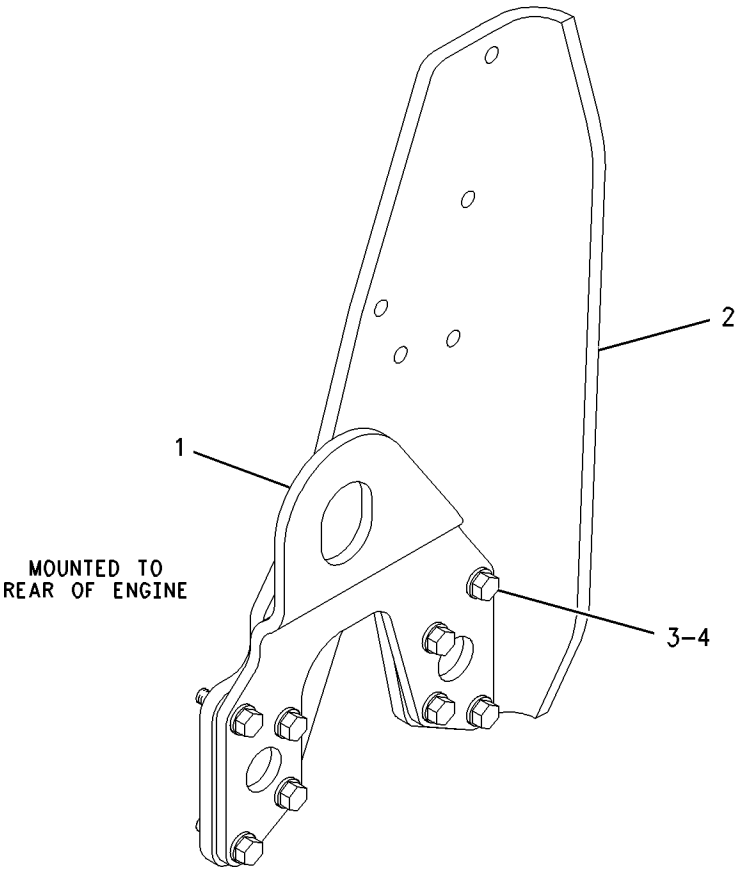

GRAPHIC #1 g00665192

200-1302 LIFTING GP-ENGINE

S/N: BET1-UP
FRONT
PART OF 157-7195, 157-7196 ENGINE AR-COMPLETE

SMCS-1122 **i01474167**

NOTE	REF NO	GRAPHIC REF	PART NUMBER	QTY	PART NAME 1 2 3 4 5 6 (PRODUCT LEVEL)	SEE PAGE
	1	1	**200-1172**	1	SUPPORT AS	
	1A	1	**1F-0750**	3	NUT-WELD (3/8-16 THD)	
	1B	1	**7T-1099**	4	LINK	
	2	1	**0S-1595**	4	BOLT (1/2-13X1.25 IN)	
	3	1	**5P-8245**	4	WASHER-HARD (13.5X25.5X3MM THK)	

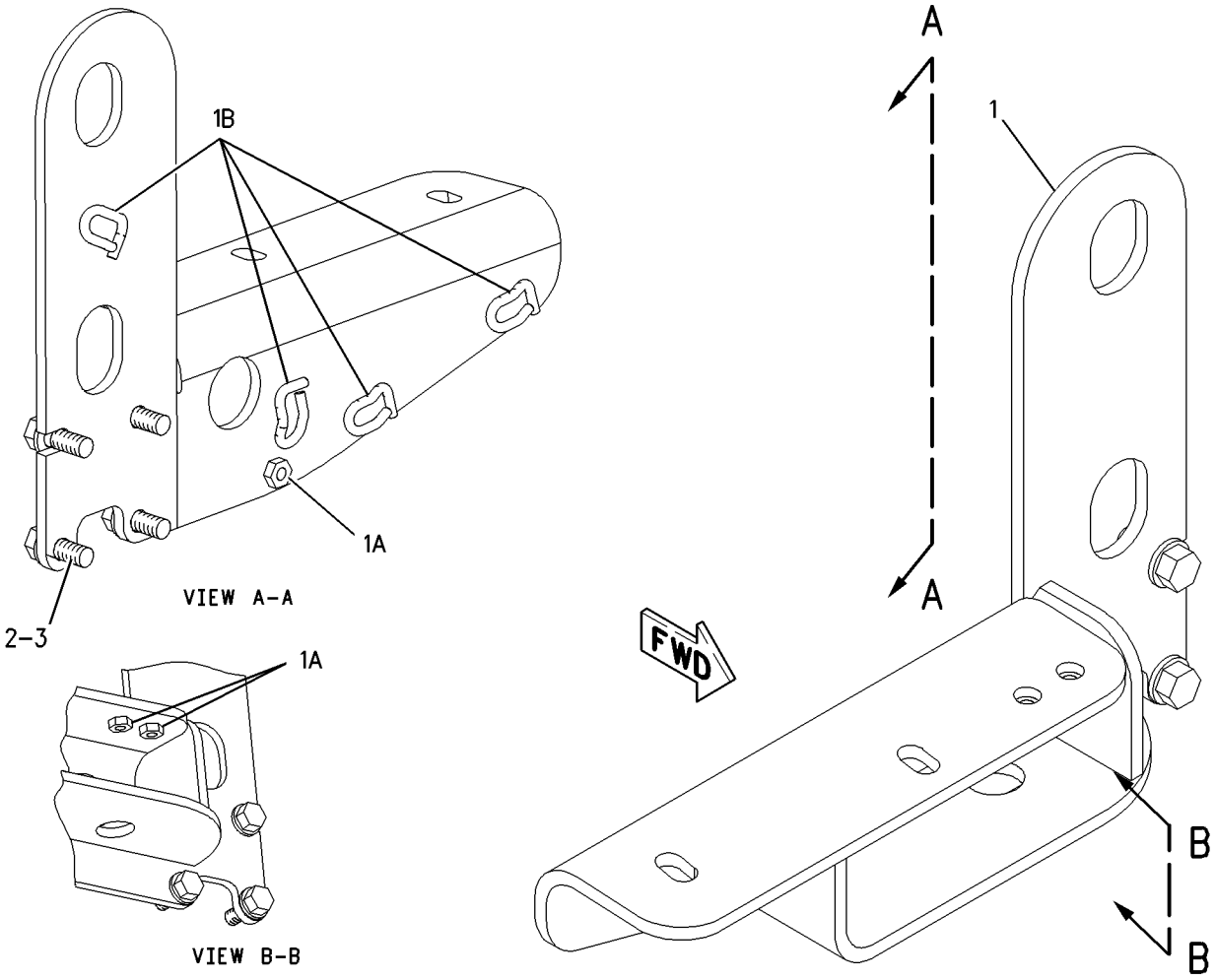

GRAPHIC #1 g00769218

BASIC ENGINE

160-0569 MOUNTING GP-ALTERNATOR

S/N: BET1-UP

PART OF 157-7195, 157-7196 ENGINE AR-COMPLETE

SMCS-1405 **i01445077**

NOTE	REF NO	GRAPHIC REF	PART NUMBER	QTY	PART NAME 1 2 3 4 5 6 (PRODUCT LEVEL)	SEE PAGE
	1	1	**159-9379**	1	BRACKET-MOUNTING	
	2	1	**0S-1591**	4	BOLT (3/8-16X1.5 IN)	
	3	1	**5B-9603**	2	BOLT (3/8-16X5 IN)	
	4	1	**7F-3425**	1	BOLT (3/8-16X5.75IN)	

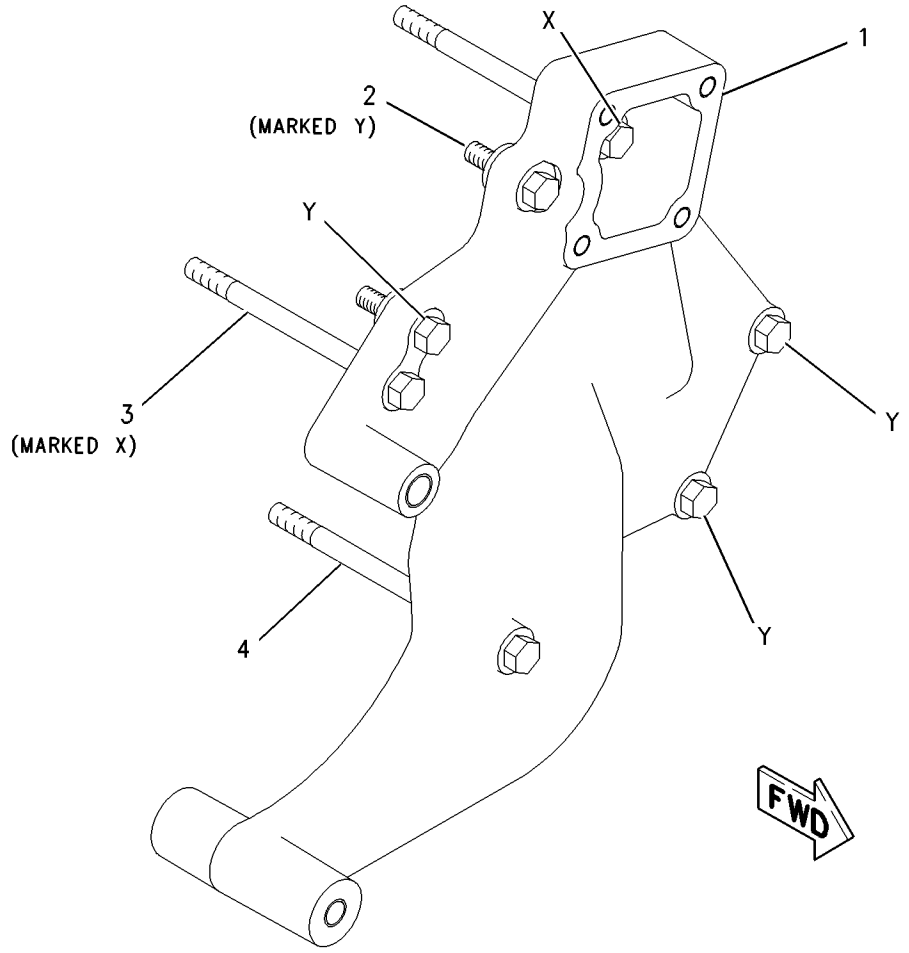

GRAPHIC #1 g00709371

BASIC ENGINE

170-4674 MOUNTING GP-FAN DRIVE

S/N: BET1-UP

PART OF 157-7195, 157-7196 ENGINE AR-COMPLETE

SMCS-1359 **i01461985**

NOTE	REF NO	GRAPHIC REF	PART NUMBER	QTY	PART NAME 1 2 3 4 5 6 (PRODUCT LEVEL)	SEE PAGE
	1	1	**198-7740**	1	BRACKET AS	
	2	1	**200-3905**	1	SUPPORT-FAN	
	3	1	**0S-1591**	3	BOLT (3/8-16X1.5 IN)	
	4	1	**1F-7958**	4	NUT-FULL (1/2-13 THD)	
	5	1	**5P-8245**	10	WASHER-HARD (13.5X25.5X3MM THK)	
	6	1	**9S-1366**	4	BOLT (1/2-13X2.5 IN)	
	7	1	**9X-6458**	3	WASHER-HARD (10.2X22.5X3MM THK)	
	8	1	**9X-8874**	2	BOLT (1/2-13X3 IN)	

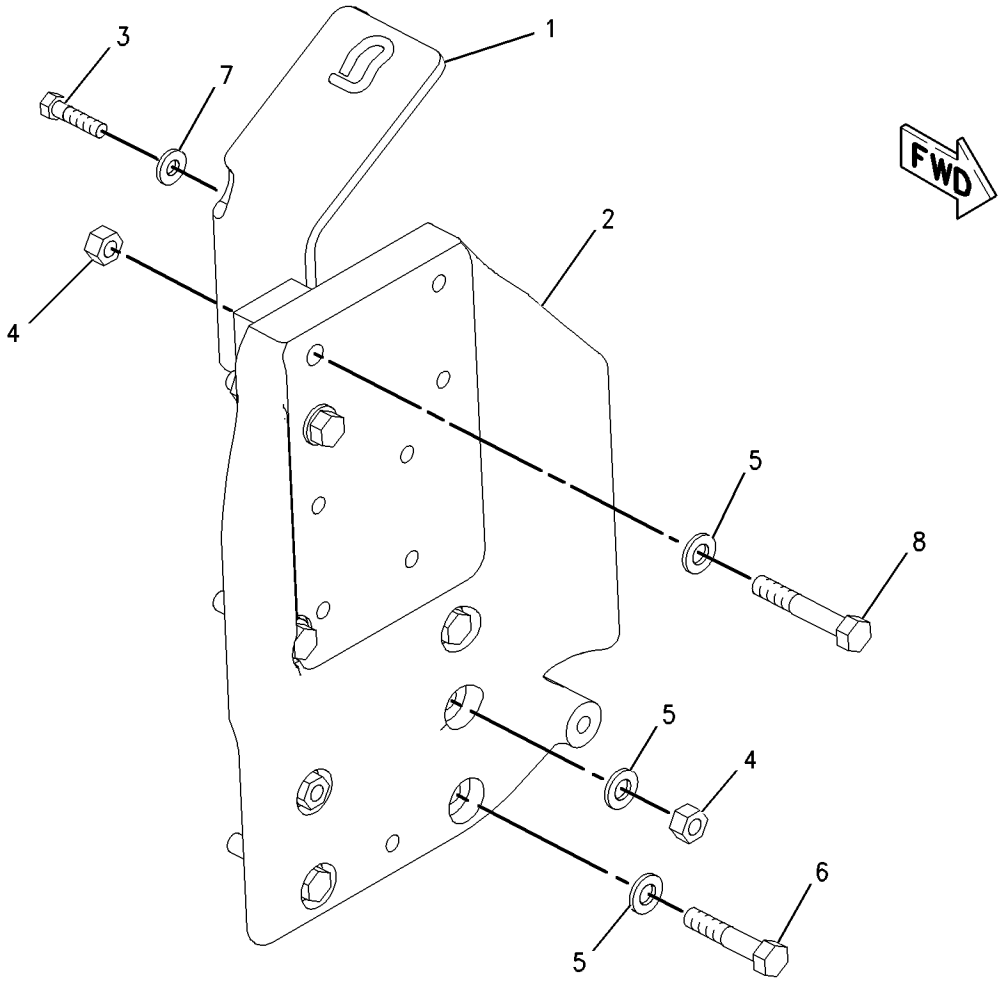

GRAPHIC #1 g00764644

BASIC ENGINE

7W-0158 PAN GP-OIL

S/N: BET1-UP

PART OF 157-7195 ENGINE AR-COMPLETE

SMCS-1302 **i01502967**

NOTE	REF NO	GRAPHIC REF	PART NUMBER	QTY	PART NAME 1 2 3 4 5 6 (PRODUCT LEVEL)	SEE PAGE
	1	1	**4N-3661**	2	GASKET-OIL PAN	
	2	1	**6V-3830**	1	SEAL-O-RING	
	3	1	**116-7885**	1	PAN-FRONT OIL	
	4	1	**4N-7266**	1	GASKET-OIL PAN	
	5	1	**7W-0844**	1	PAN-CENTER OIL	
	6	1	**0S-1591**	8	BOLT (3/8-16X1.5 IN)	
	7	1	**5M-2894**	14	WASHER-HARD (10.2X18.5X2.5MM THK)	
	8	1	**7W-0845**	1	GASKET	
	9	1	**7W-0843**	1	PAN-REAR OIL	
	10	1	**0S-1588**	6	BOLT (3/8-16X1.25 IN)	
	11	1	**2P-3203**	39	BOLT-WASHER HEAD (3/8-16X1.25 IN)	
	12	1	**4P-0519**	1	ADAPTER AS-DRAIN	
	13	1	**4P-0513**	1	PLUG-OIL DRAIN	
	14	1	**0S-1587**	2	BOLT (1/2-13X1.75 IN)	
	15	1	**1W-6632**	1	PLATE AS-OIL PAN	
	16	1	**9F-2978**	5	NUT-WELD (3/8-16 THD)	
	17	1	**7M-8485**	1	SEAL-O-RING	
	18	1	**9S-4181**	1	PLUG-STRAIGHT THREAD	
	19	1	**3B-0551**	1	PLUG-PIPE	

7W-0158 **PAN GP-OIL** ***(contd.)*** **i01502967**

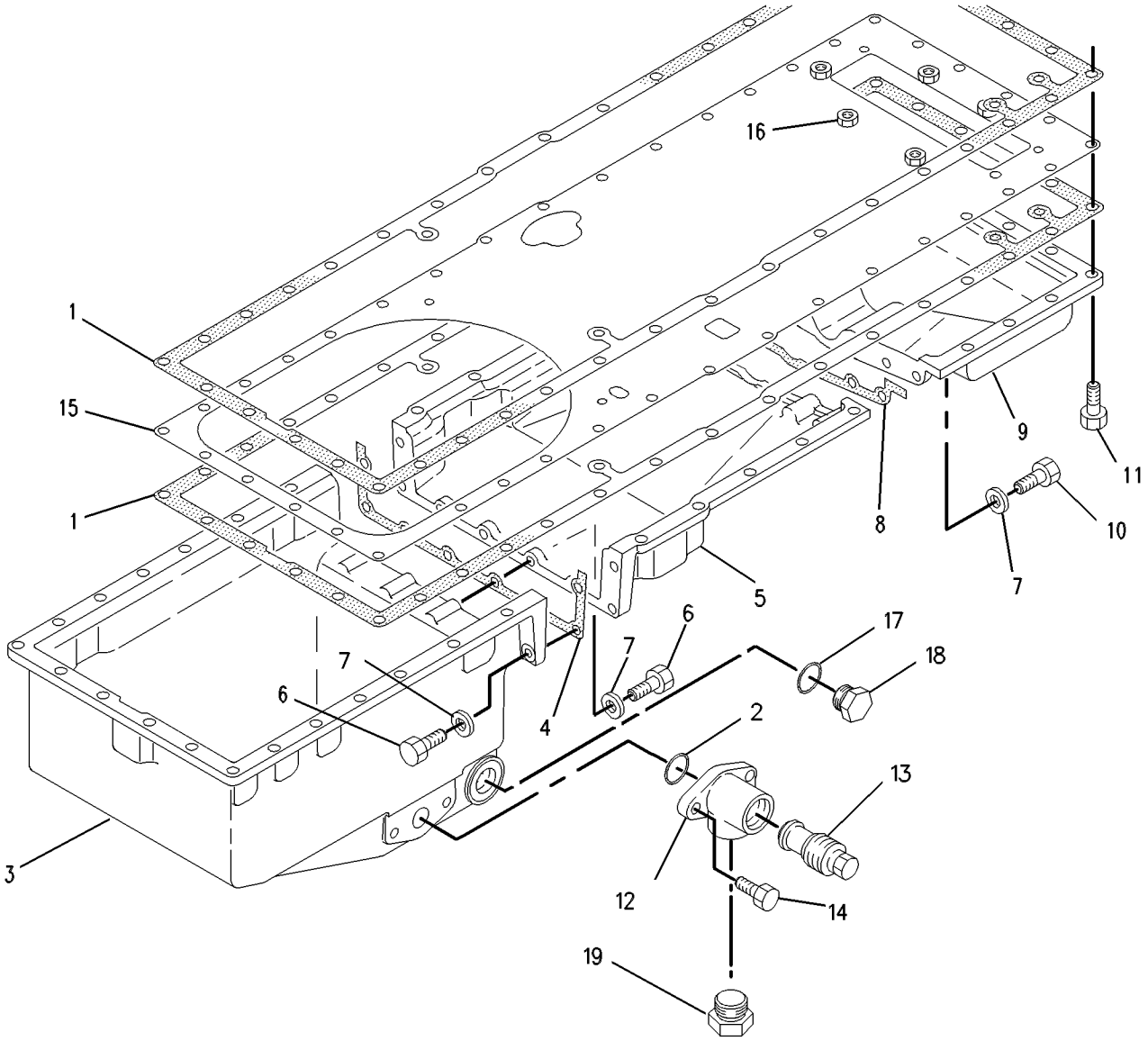

GRAPHIC #1 g00590371

BASIC ENGINE

107-7378 PAN GP-OIL

S/N: BET1-UP

PART OF 157-7196 ENGINE AR-COMPLETE

SMCS-1302 **i01230888**

NOTE	REF NO	GRAPHIC REF	PART NUMBER	QTY	PART NAME 1 2 3 4 5 6 (PRODUCT LEVEL)	SEE PAGE
	1	1	**4N-1151**	2	GASKET	
	2	1	**6V-3830**	1	SEAL-O-RING (34.29MM ID)	
	3	1	**116-7885**	1	PAN-FRONT OIL	
	4	1	**4N-7266**	1	GASKET-OIL PAN	
	5	1	**7W-0844**	1	PAN-CENTER OIL	
	6	1	**0S-1591**	8	BOLT (3/8-16X1.5 IN)	
	7	1	**5M-2894**	14	WASHER (2.5MM THK)	
	8	1	**7W-0845**	1	GASKET	
	9	1	**7W-0843**	1	PAN-REAR OIL	
	10	1	**0S-1588**	6	BOLT (3/8-16X1.25IN)	
	11	1	**2P-3203**	31	BOLT-WASHER HEAD (3/8 X 1.25)	
	12	1	**4P-0519**	1	ADAPTER AS-DRAIN	
	13	1	**109-5839**	1	PLUG-OIL DRAIN	
		1	**109-5840**	1	ADAPTER-PLUG	
	14	1	**0S-1587**	2	BOLT (1/2-13X1.75IN)	
	15	1	**1W-6632**	1	PLATE AS-OIL PAN	
	16	1	**1F-0750**	5	NUT-WELD (3/8-16 THD)	
	17	1	**7M-8485**	1	SEAL-O-RING (29.74MM ID)	
	18	1	**9S-4181**	1	PLUG-STRAIGHT THREAD (1-5/16-12 THD)	
	19	1	**090-9019**	1	PLUG-PIPE	

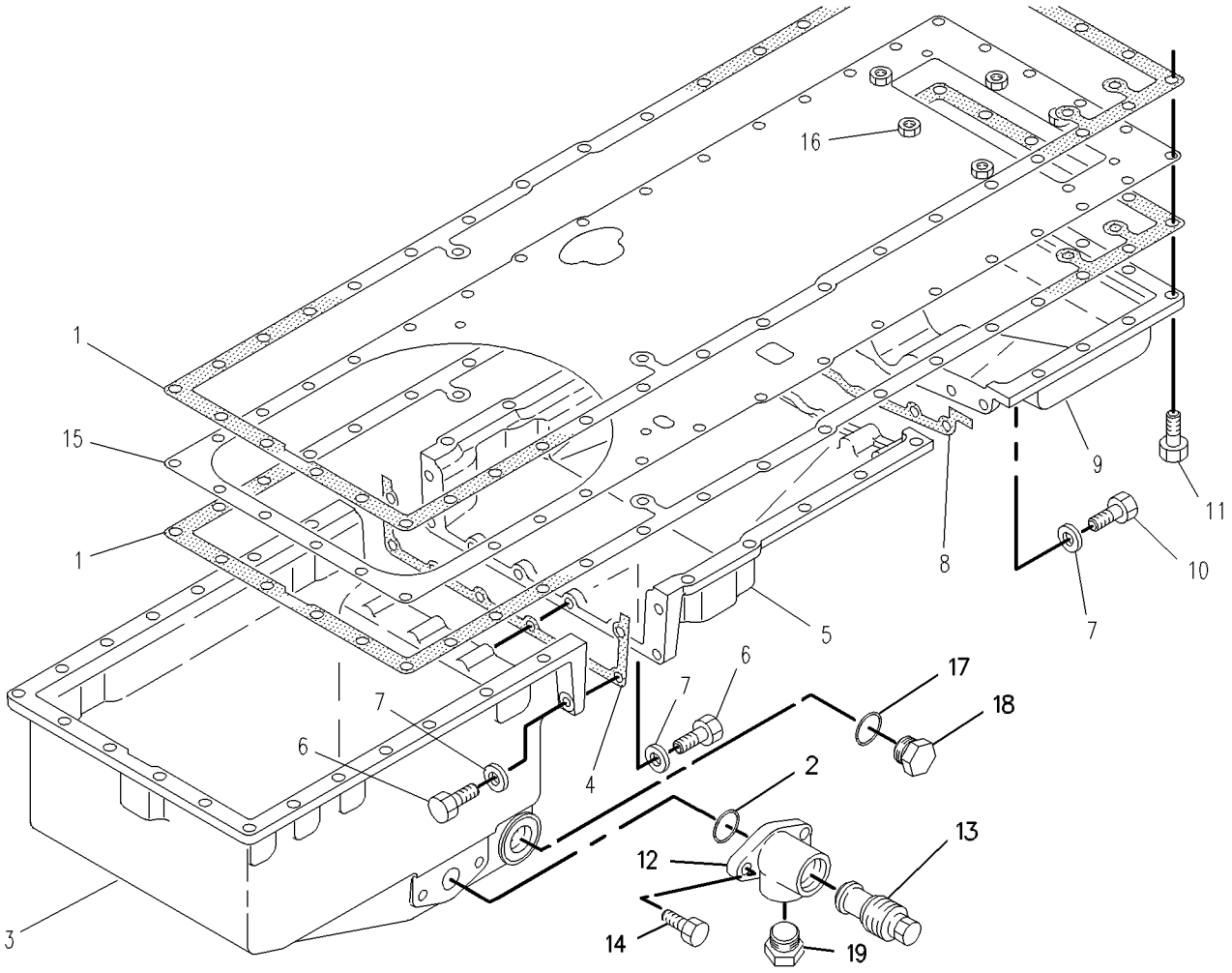

GRAPHIC #1 g00591630

176-5745 PISTON & ROD GP

S/N: BET1-UP
16.25:1 RATIO
PART OF 160-0566 ENGINE AR-CORE

SMCS-1213, 1214, 1215, 1218, 1219, 1225, 1239 **i01446895**

NOTE	REF NO	GRAPHIC REF	PART NUMBER	QTY	PART NAME 1 2 3 4 5 6 (PRODUCT LEVEL)	SEE PAGE
	1	1	**176-5744**	1	CROWN AS-PISTON	
	2	1	**132-6663**	1	SKIRT-PISTON	
	3	1	**168-7246**	1	PIN-PISTON	
	4	1	**7E-1177**	2	RETAINER-PIN	
R	5	1	**9Y-6054**	1	ROD AS-CONNECTING	
M	5A	1	**7E-4195**	2	BOLT-CONNECTING ROD	
	5B	1	**7N-2043**	2	DOWEL	
	5C	1	**4P-7377**	1	BEARING-SLEEVE	
	6	1	**9Y-7735**	1	BEARING-ROD (STANDARD)	
A		1	**7E-0558**	1	BEARING-ROD (.635 MM US)	
A		1	**7E-0559**	1	BEARING-ROD (1.27 MM US)	
	7	1	**177-7496**	1	RING-PISTON (TOP)	
	8	1	**176-5749**	1	RING-PISTON (INTERMEDIATE)	
	9	1	**189-9771**	1	RING-PISTON (OIL CONTROL)	
	10	1	**168-4539**	1	TUBE AS-OIL JET	
	11	1	**151-5925**	1	BOLT-OIL JET	

A-NOT PART OF THIS GROUP
M-METRIC PART
R-REMFG PART MAY BE AVAILABLE

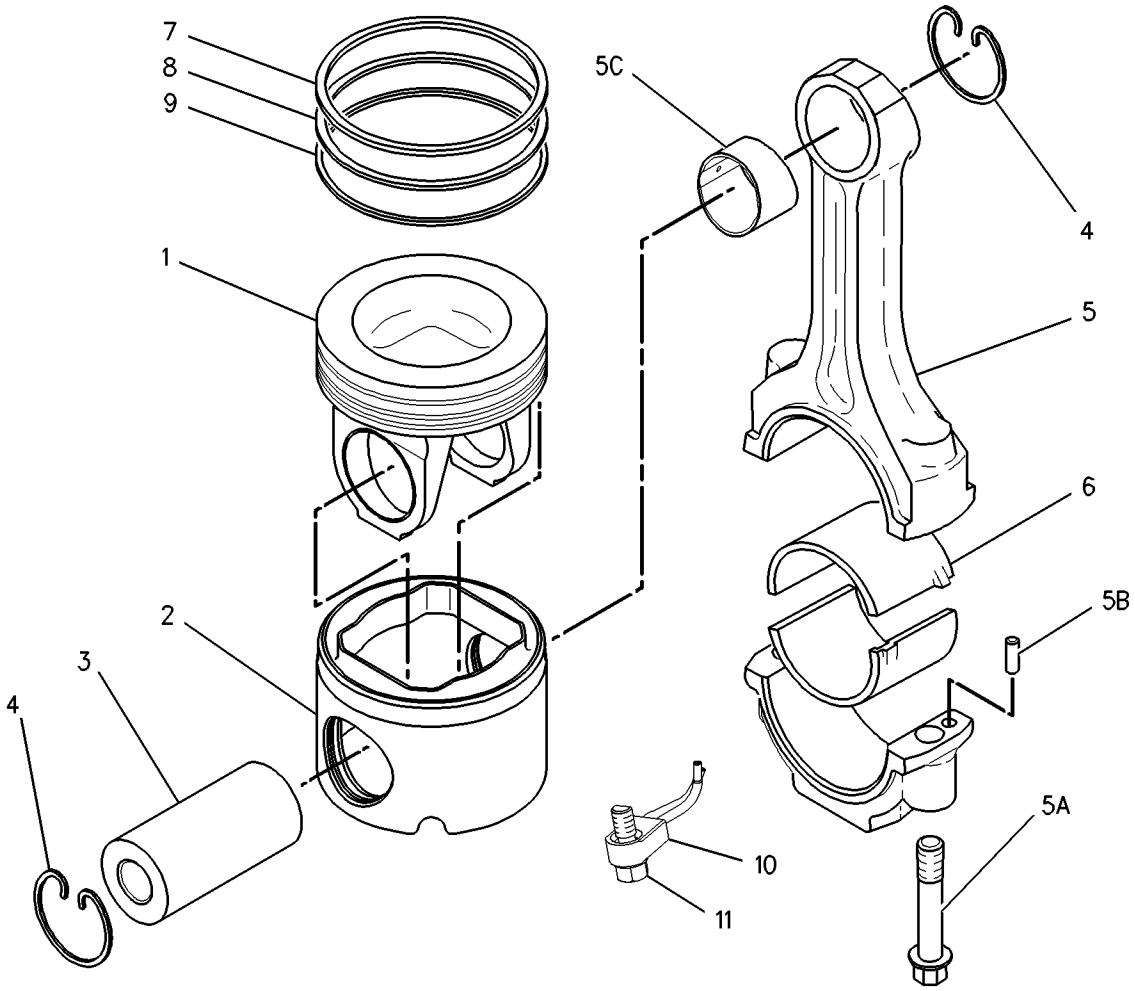

GRAPHIC #1 g00679535

BASIC ENGINE

163-7381 ROCKER ARM GP

S/N: BET1-UP

PART OF 6I-1940 MECHANISM GP-FUEL PUMP & VALVE

SMCS-1102, 1123 **i01446915**

NOTE	REF NO	GRAPHIC REF	PART NUMBER	QTY	PART NAME 1 2 3 4 5 6 (PRODUCT LEVEL)	SEE PAGE
	1	1	**4P-4278**	2	SCREW-UNIT INJ ADJUSTMENT	
	2	1	**4P-4279**	2	NUT-JAM	
	3	1	**4P-7371**	2	BUTTON-ROCKER ARM	
	4	1	**6I-0901**	1	SHAFT AS-ROCKER ARM	
		1	**4B-9782**	2	BALL	
	5	1	**9L-7712**	4	NUT (3/8-24 THD)	
	6	1	**104-9270**	4	BUTTON	
R	7	1	**162-9174**	2	ROCKER ARM AS (UNIT INJECTOR)	
R	8	1	**162-9175**	2	ROCKER ARM AS (EXHAUST)	
	9	1	**170-8661**	2	ROCKER ARM AS (INLET)	
	10	1	**183-7547**	4	SCREW-ROCKER ARM	
	11	1	**032-9313**	2	SEAL-O-RING (12.37MM ID)	
	12	1	**8L-2777**	4	SEAL-O-RING (10.8MM ID)	

R-REMFG PART MAY BE AVAILABLE

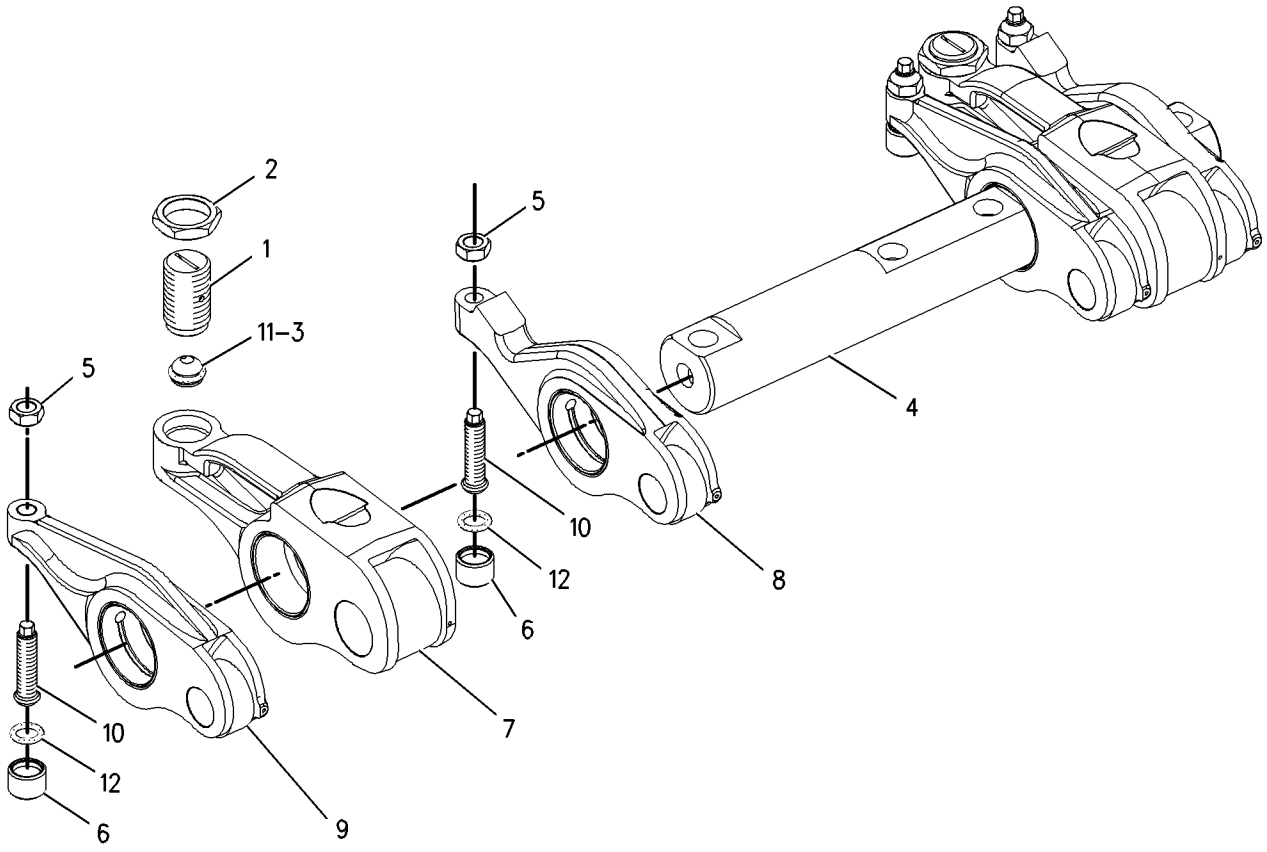

GRAPHIC #1 g00749873

4N-2473 SUPPORT GP-ENGINE

S/N: BET1-UP

PART OF 157-7195, 157-7196 ENGINE AR-COMPLETE

SMCS-1152, 1153, 1154 **i01065459**

NOTE	REF NO	GRAPHIC REF	PART NUMBER	QTY	PART NAME 1 2 3 4 5 6 (PRODUCT LEVEL)	SEE PAGE
	1	1	**4N-4631**	1	SUPPORT AS-ENGINE	
	2	1	**0S-1589**	4	BOLT (5/8-11X1.75IN)	
		1	**4D-3704**	4	WASHER-HARD (5MM THK)	

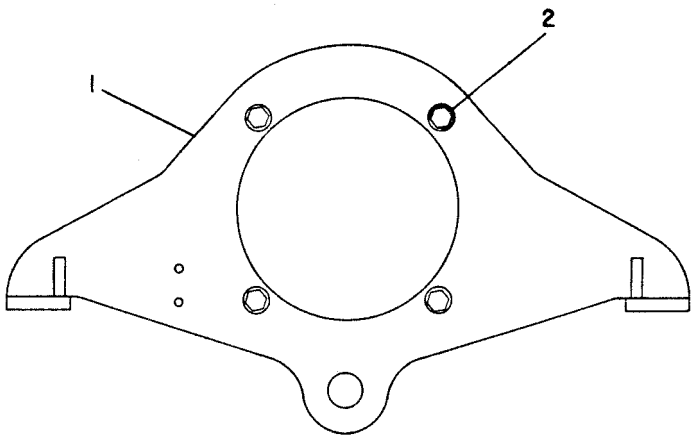

GRAPHIC #1 g00141591

BASIC ENGINE

9Y-8837 SUPPORT GP-ENGINE

S/N: AKA1-UP

PART OF 159-5908 INSTALLATION AR-ENGINE

SMCS-1152, 1153, 1154 **i00569719**

NOTE	REF NO	GRAPHIC REF	PART NUMBER	QTY	PART NAME 1 2 3 4 5 6 (PRODUCT LEVEL)	SEE PAGE
	1	1	**6Y-2065**	2	MOUNT AS	
	2	1	**7E-0658**	2	SUPPORT-ENGINE	
	3	1	**0S-1589**	18	BOLT (5/8-11X1.75IN)	
		1	**5P-8247**	18	WASHER-HARD (3.5MM THK)	
	4	1	**1D-5976**	4	BOLT (7/8-9X7IN)	
		1	**5P-8249**	4	WASHER (4.0MM THK)	
	5	1	**7E-0660**	2	CAP	
	6	1	**7E-0659**	2	SUPPORT	

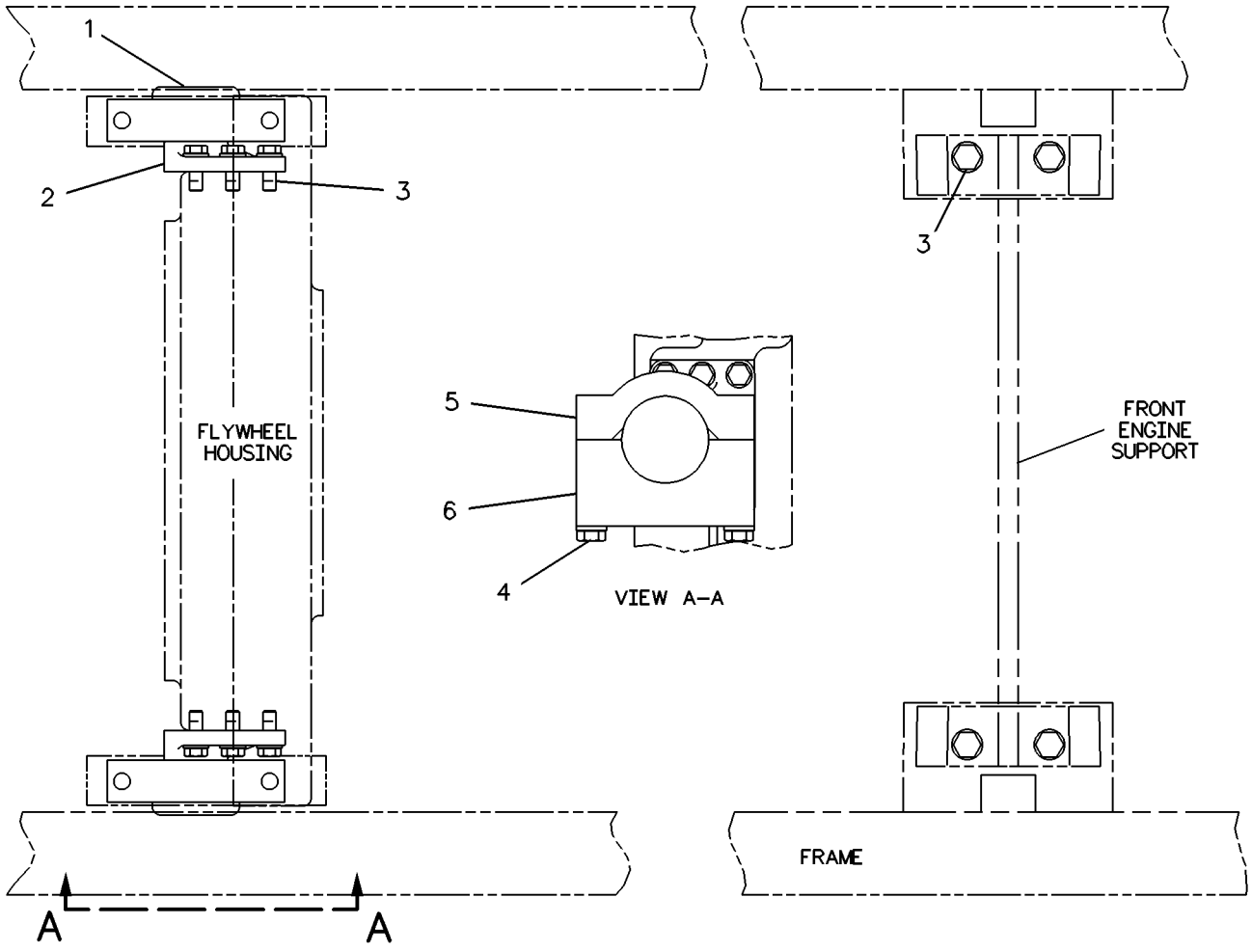

GRAPHIC #1 g00222306

BASIC ENGINE

192-0542 TRUNNION GP-ENGINE

S/N: BET1-UP

PART OF 157-7195, 157-7196 ENGINE AR-COMPLETE

SMCS-1152, 1153, 1154 **i01370417**

NOTE	REF NO	GRAPHIC REF	PART NUMBER	QTY	PART NAME 1 2 3 4 5 6 (PRODUCT LEVEL)	SEE PAGE
	1	1	**1W-3014**	1	ADAPTER AS	
	1A	1	**4N-0683**	2	DOWEL (15.88 X 31.88MM)	
	2	1	**7N-1210**	1	MOUNT AS	
	3	1	**9X-8876**	8	BOLT (1/2-13X4.75 IN)	

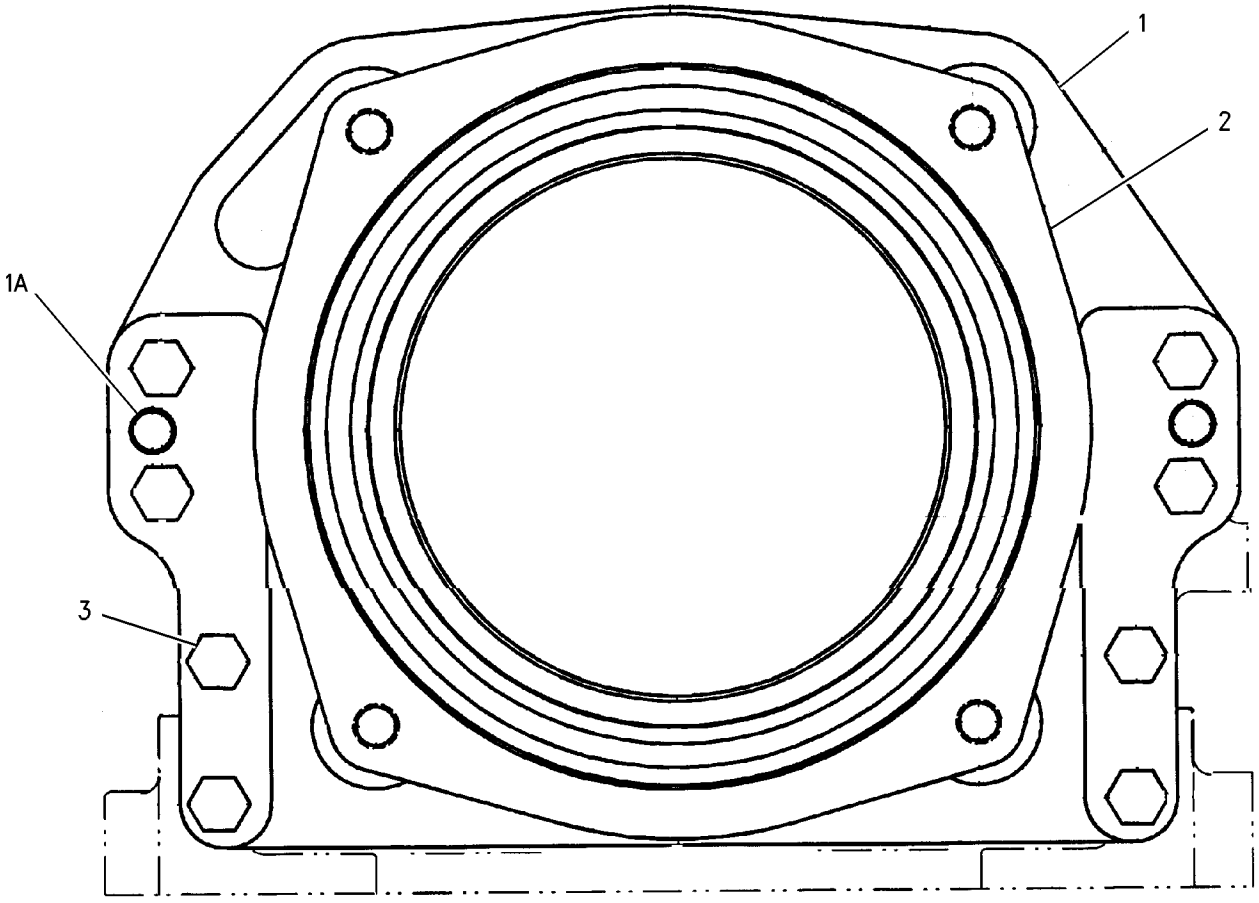

GRAPHIC #1 g00712631

LUBRICATION SYSTEM

9Y-2989 BREATHER GP

S/N: BET1-UP

PART OF 157-7195, 157-7196 ENGINE AR-COMPLETE

SMCS-1317 **i00143885**

NOTE	REF NO	GRAPHIC REF	PART NUMBER	QTY	PART NAME 1 2 3 4 5 6 (PRODUCT LEVEL)	SEE PAGE
	1	1	**2N-8109**	1	CLAMP	
	2	1	**4F-7390**	1	SEAL (53.34MM ID)	
	3	1	**4N-4668**	1	BREATHER AS	

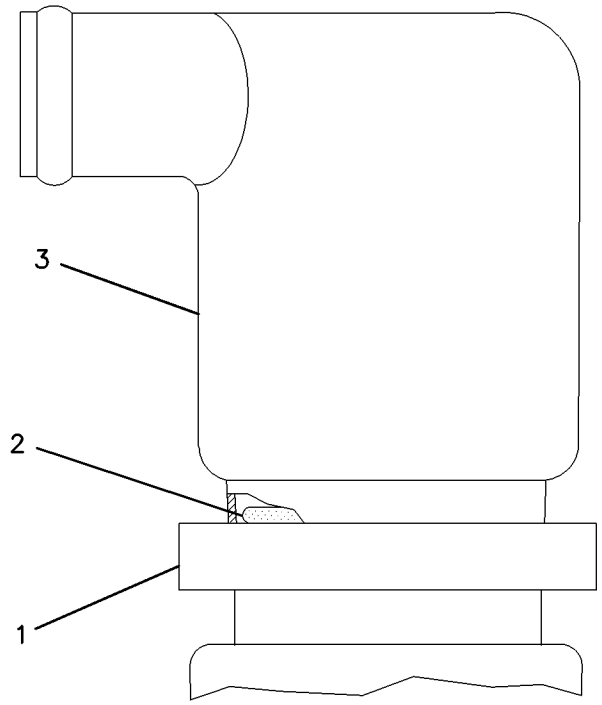

GRAPHIC #1 g00099372

4N-2481 FASTENER GP-OIL PUMP MOUNTING

S/N: BET1-UP

PART OF 160-0566 ENGINE AR-CORE

SMCS-1304 **i01502981**

NOTE	REF NO	GRAPHIC REF	PART NUMBER	QTY	PART NAME 1 2 3 4 5 6 (PRODUCT LEVEL)	SEE PAGE
	1	1	**0L-1143**	2	BOLT (3/8-16X2.50 IN)	
	2	1	**0S-1590**	1	BOLT (3/8-16X2 IN)	
	3	1	**5M-2894**	3	WASHER-HARD (10.2X18.5X2.5MM THK)	

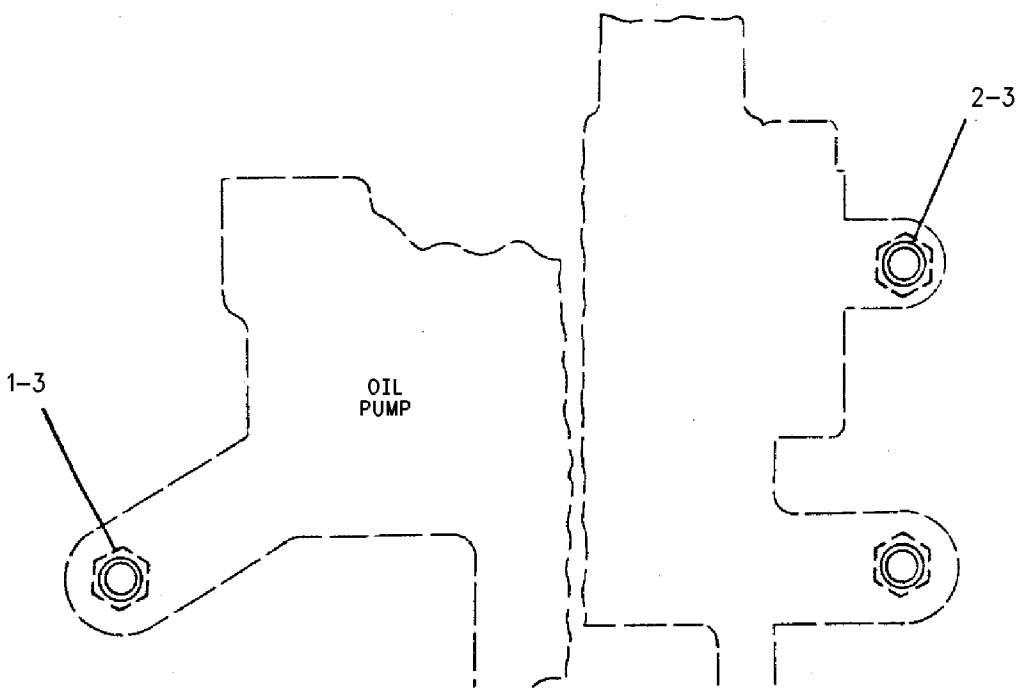

GRAPHIC #1 g00604525

162-1587 FILLER GP-ENGINE OIL

S/N: BET1-UP

PART OF 157-7195, 157-7196 ENGINE AR-COMPLETE

SMCS-1316 **i01503030**

NOTE	REF NO	GRAPHIC REF	PART NUMBER	QTY	PART NAME 1 2 3 4 5 6 (PRODUCT LEVEL)	SEE PAGE
	1	1	**162-1590**	1	TUBE AS-FILLER	
	1A	1	**8S-4212**	1	RIVET	
	1B	1	**162-3285**	1	HASP-OIL FILLER	
	1C	1	**4P-9579**	1	CAP AS-FILLER	
	1D	1	**6L-2609**	1	SEAL-RUBBER	
	2	1	**061-9455**	1	SEAL-O-RING	
	3	1	**0S-1588**	1	BOLT (3/8-16X1.25 IN)	
	4	1	**9S-4185**	2	PLUG-O-RING	
	4A	1	**3K-0360**	2	SEAL-O-RING	
	5	1	**1D-4539**	2	BOLT (5/16-18X2.5 IN)	
	6	1	**9M-1974**	2	WASHER-HARD (8.8X16X2MM THK)	
	7	1	**9X-6458**	1	WASHER-HARD (10.2X22.5X3MM THK)	

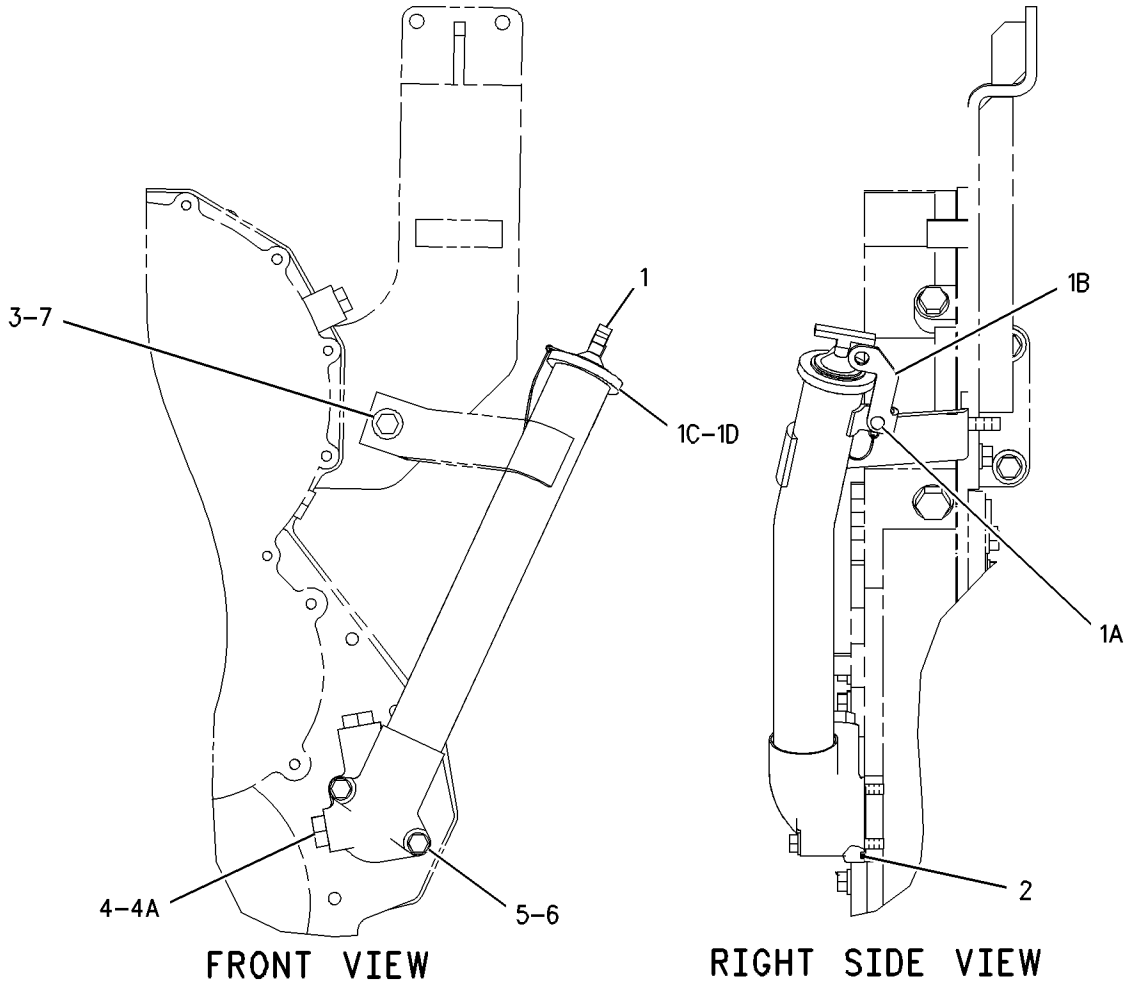

GRAPHIC #1 g00757633

MEMORANDA

7C-4941 FILTER GP-ENGINE OIL

S/N: BET1-UP

PART OF 157-7195, 157-7196 ENGINE AR-COMPLETE

SMCS-1306, 1308, 1318 **i01502936**

NOTE	REF NO	GRAPHIC REF	PART NUMBER	QTY	PART NAME 1 2 3 4 5 6 (PRODUCT LEVEL)	SEE PAGE
	1	1	**2B-0941**	1	SPACER (10.5X19X19MM THK)	
	2	1	**2P-3760**	1	GASKET	
	3	1	**2P-4305**	2	GASKET	
	4	1	**4N-7082**	1	SHIELD-OIL FILTER	
	5	1	**4N-8150**	1	SPRING	
	6	1	**7C-4038**	1	COVER	
	7	1	**8C-3445**	1	CAP-DUST	
	8	1	**8C-3446**	1	VALVE AS-FLUID SAMPLING	
	9	1	**9M-0853**	1	PLUNGER-RELIEF VALVE	
	10	1	**0S-1571**	4	BOLT (3/8-16X1.75 IN)	
	11	1	**0S-1588**	6	BOLT (3/8-16X1.25 IN)	
	12	1	**0S-1594**	4	BOLT (3/8-16X1 IN)	
	13	1	**0S-1619**	1	BOLT (3/8-16X3 IN)	
	14	1	**1R-0716**	1	FILTER AS-ENGINE OIL	
	15	1	**2P-3761**	1	COVER	
	16	1	**2P-4301**	1	BASE AS	
		1	**2P-4304**	1	STUD-TAPERLOCK	
	17	1	**3J-1907**	1	SEAL-O-RING	
	18	1	**3J-7354**	1	SEAL-O-RING	
	19	1	**4N-0827**	1	ADAPTER-FILTER	
	20	1	**5M-2894**	14	WASHER-HARD (10.2X18.5X2.5MM THK)	
	21	1	**6V-0852**	1	CAP-DUST	
	22	1	**6V-3965**	1	FITTING AS (QUICK DISCONNECT)	
	23	1	**7F-9090**	2	SCREW-DRIVE (NO 8X3/8 IN)	
	24	1	**9S-8752**	4	NUT-FULL (3/8-16 THD)	

7C-4941 **FILTER GP-ENGINE OIL** ***(contd.)*** **i01502936**

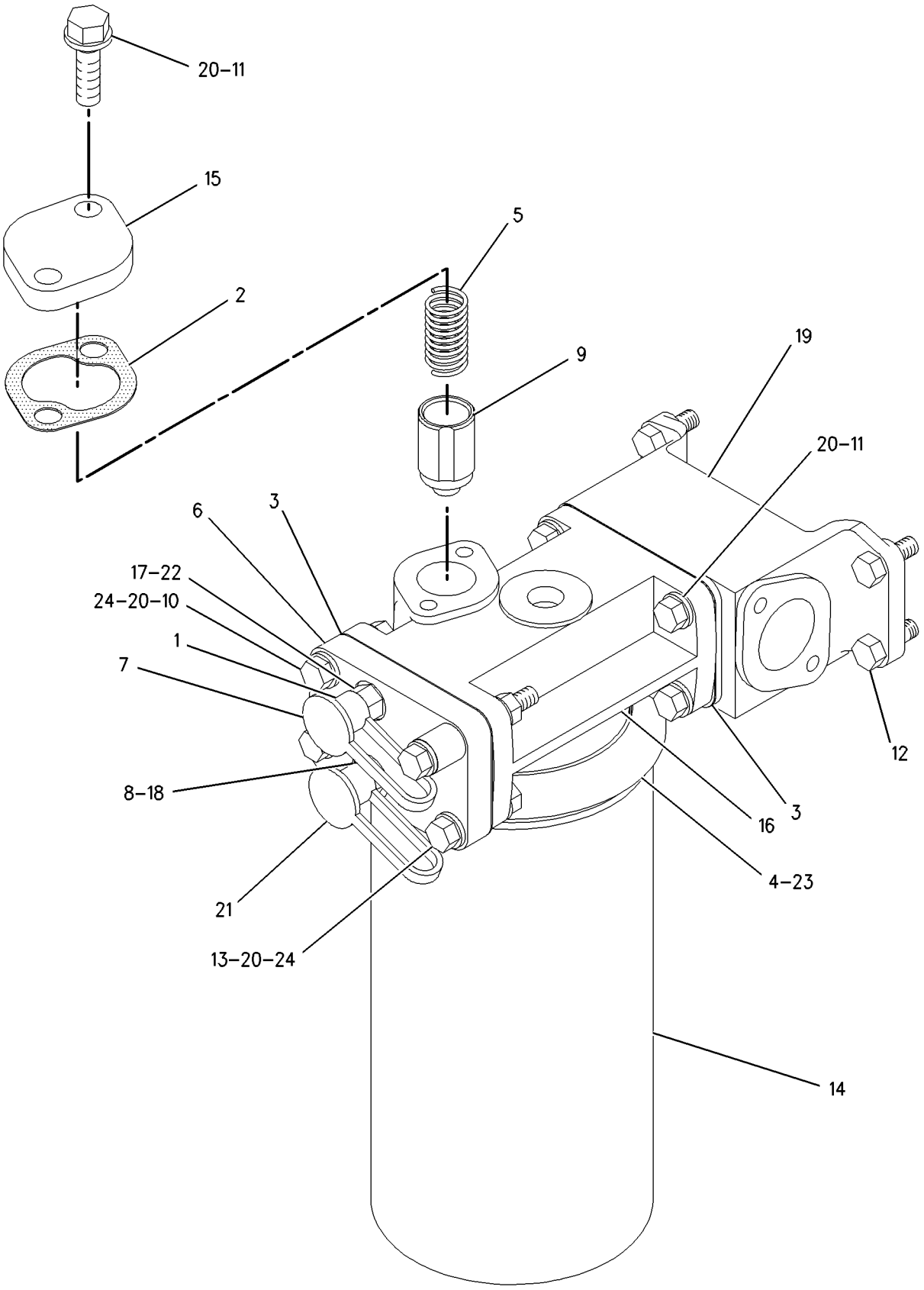

GRAPHIC #1 g00737689

LUBRICATION SYSTEM

161-2428 FUMES DISPOSAL GP

S/N: AKA1-UP

PART OF 159-5908 INSTALLATION AR-ENGINE

SMCS-1317 **i01442997**

NOTE	REF NO	GRAPHIC REF	PART NUMBER	QTY	PART NAME 1 2 3 4 5 6 (PRODUCT LEVEL)	SEE PAGE
E	1	1	**5P-1255**		HOSE (9CM)	
	2	1	**2F-4967**	1	SPACER (5.54MM LG X 19.05MM DIA)	
	3	1	**4N-7250**	1	SUPPORT	
	4	1	**8T-4983**	3	CLAMP-HOSE	
	5	1	**161-3928**	1	TUBE	
	6	1	**161-6612**	2	BRACKET	
	7	1	**4D-7388**	3	CLIP	
	8	1	**4L-6454**	3	BOLT (3/8-16X1 IN)	
	9	1	**5P-1075**	8	WASHER-HARD (10.2X22.5X3MM THK)	
	10	1	**6K-8178**	1	CLIP	
	11	1	**6V-8801**	4	NUT (3/8-16 THD)	
	12	1	**7D-1553**	1	CLIP	
	13	1	**9B-7237**	1	BOLT (3/8-16X1.25 IN)	
E	14	1	**5P-1255**		HOSE (63CM)	

E-ORDER BY THE CENTIMETER

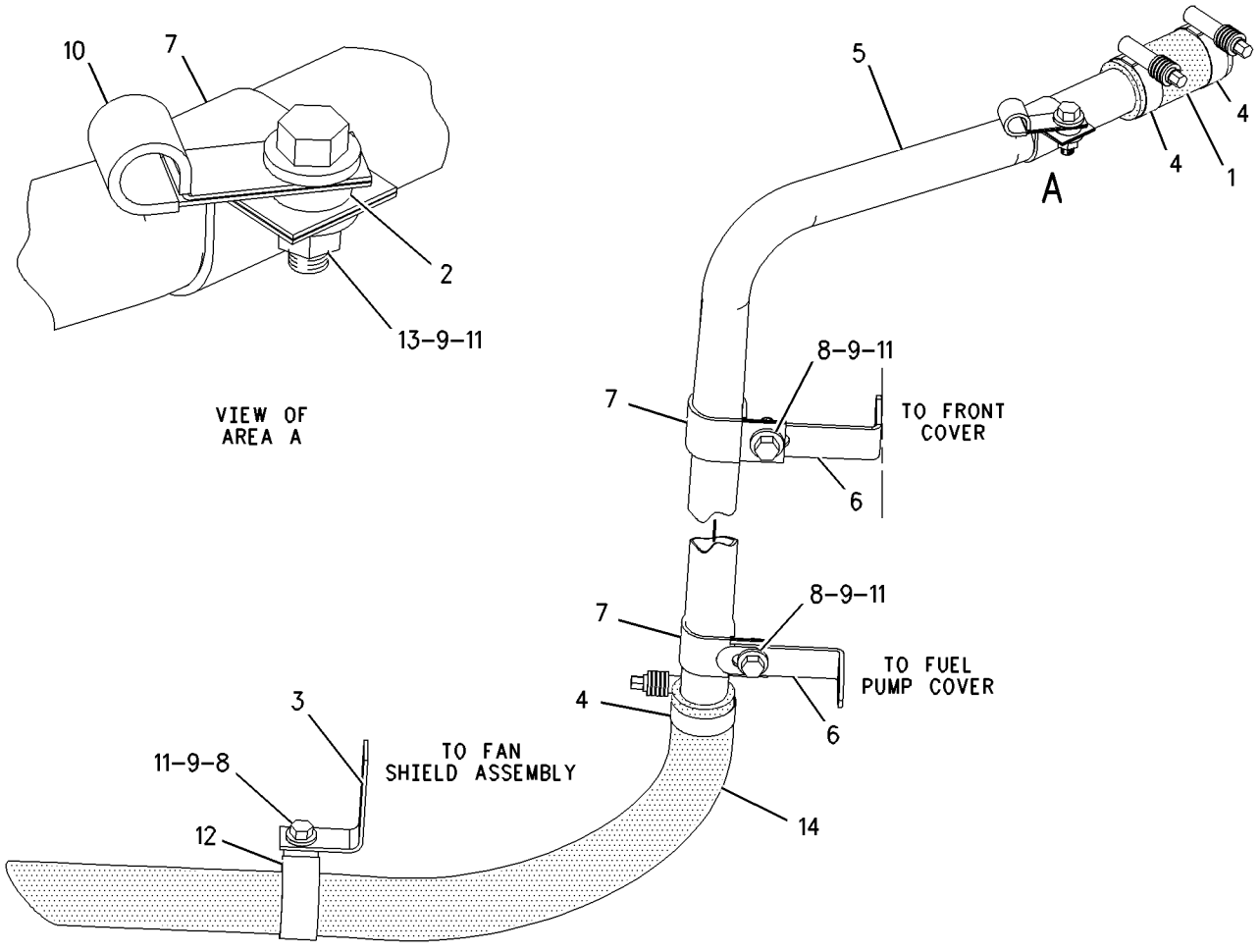

GRAPHIC #1 g00756480

MEMORANDA

161-2423 GAUGE GP-OIL LEVEL (DIPSTICK)

S/N: BET1-UP

PART OF 157-7195, 157-7196 ENGINE AR-COMPLETE

SMCS-1326 **i01488639**

NOTE	REF NO	GRAPHIC REF	PART NUMBER	QTY	PART NAME 1 2 3 4 5 6 (PRODUCT LEVEL)	SEE PAGE
J	1	1	**165-6170**	3	PLUG	
	2	1	**199-4028**	1	BRACKET AS	
		1	**1F-0750**	2	NUT-WELD (3/8-16 THD)	
		1	**4K-9097**	1	NUT-WELD (5/16-18 THD)	
	3	1	**0S-0509**	1	BOLT (3/8-16X0.75 IN)	
	4	1	**118-5068**	1	SEAL-O-RING	
	5	1	**1D-4538**	2	BOLT (5/16-18X2.25IN)	
	6	1	**202-9750**	1	GAUGE AS-OIL LEVEL (DIPSTICK)	
	7	1	**202-9751**	1	GUIDE AS-GAUGE	
	8	1	**5M-2894**	2	WASHER-HARD (10.2X18.5X2.5MM THK)	
	9	1	**8M-2770**	1	CLIP	
	10	1	**9M-1974**	2	WASHER-HARD (8.8X16X2MM THK)	

J-USE TO PLUG OPTIONAL DIPSTICK LOCATIONS

161-2423 **GAUGE GP-OIL LEVEL (DIPSTICK)** ***(contd.)*** **i01488639**

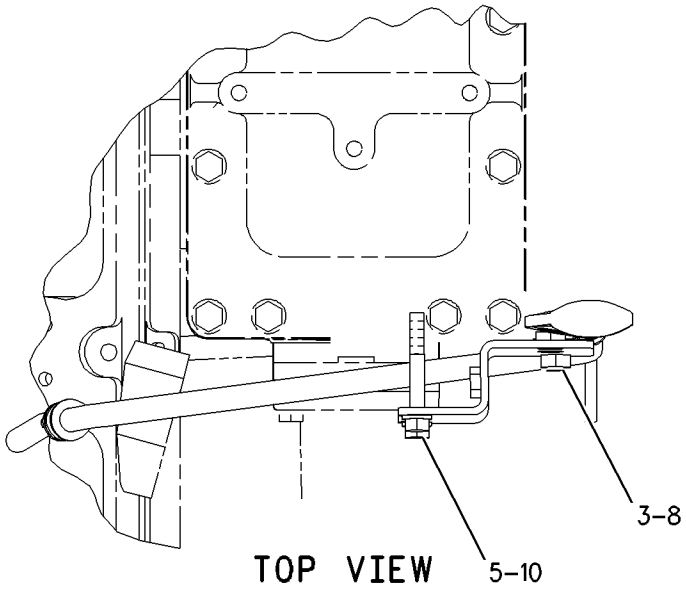

TOP VIEW

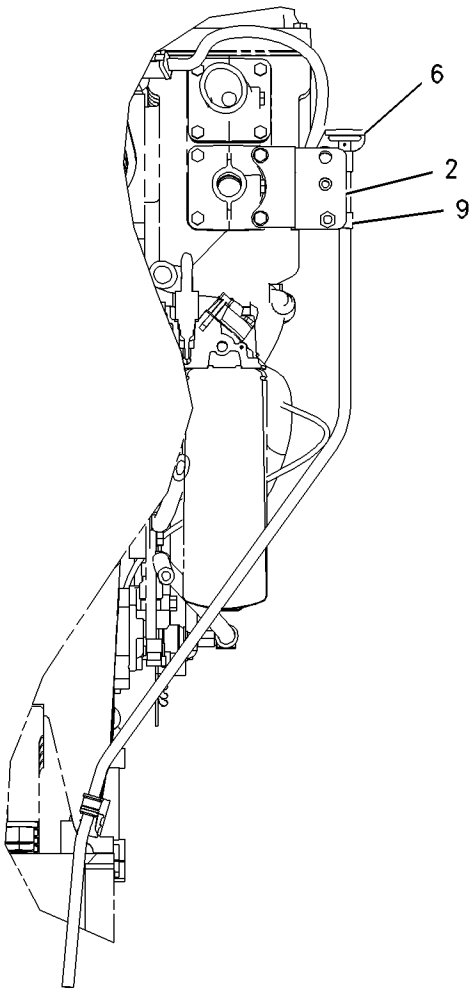

FRONT VIEW

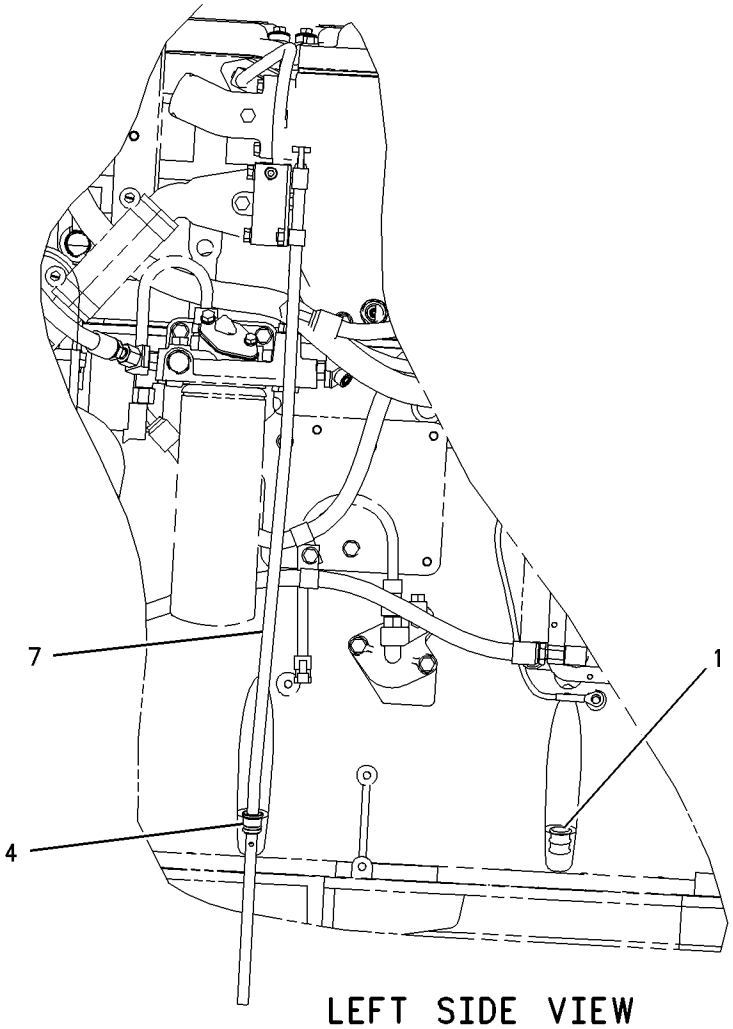

LEFT SIDE VIEW

GRAPHIC #1

g00774005

LUBRICATION SYSTEM

4W-3821 LINES GP-ENGINE OIL

S/N: BET1-UP

PART OF 157-7195, 157-7196 ENGINE AR-COMPLETE

SMCS-1307 **i00570539**

NOTE	REF NO	GRAPHIC REF	PART NUMBER	QTY	PART NAME 1 2 3 4 5 6 (PRODUCT LEVEL)	SEE PAGE
	1	1	**0S-1594**	12	BOLT (3/8-16X1IN)	
	2	1	**1W-6135**	1	TUBE AS-OIL FILTER INLET	
	3	1	**4N-0933**	1	GASKET	
	4	1	**2P-3761**	1	COVER	
	5	1	**2P-3760**	1	GASKET	
	6	1	**109-0078**	4	SEAL-O-RING (33.47MM ID)	
	7	1	**4N-8150**	1	SPRING	
	8	1	**1P-1367**	1	PLUNGER	
	9	1	**109-0076**	2	SEAL-O-RING (50.17MM ID)	
	10	1	**0L-1351**	2	BOLT (3/8-16X.875IN)	
	11	1	**109-0072**	1	SEAL-O-RING (40.64MM ID)	
	12	1	**9X-6458**	2	WASHER-HARD (3MM THK)	
	13	1	**4N-7489**	1	SCREEN-INLET	
	14	1	**4N-7497**	1	TUBE AS-INLET	
	15	1	**4N-0914**	1	CLIP (SUCTION SCREEN)	
	16	1	**4N-0913**	1	SCREEN AS-BELL	
	17	1	**8N-2104**	1	BELL AS-SUCTION	
		1	**9F-2978**	2	NUT-WELD (3/8-16 THD)	
	18	1	**4N-6229**	1	SUPPORT-BELL	
	19	1	**4N-0995**	1	TUBE AS	
	20	1	**0S-1591**	8	BOLT (3/8-16X1.5IN)	
	21	1	**4N-1215**	1	BODY-COOLER BYPASS	
	22	1	**2N-3350**	2	SEAL-O-RING	
	23	1	**4N-1216**	1	TUBE-COOLER BYPASS	
	24	1	**4N-0826**	1	ELBOW-COOLER INLET	
	25	1	**109-0073**	2	SEAL-O-RING (43.82MM ID)	
	26	1	**1W-6137**	1	TUBE AS	
	27	1	**0S-1588**	2	BOLT (3/8-16X1.25IN)	
	28	1	**5M-6213**	2	PLUG	
	29	1	**4N-6228**	1	PIPE AS-PUMP SUCTION	
	30	1	**5M-2894**	6	WASHER (2.5MM THK)	
	31	1	**1A-2029**	2	BOLT (3/8-16X1.125IN)	
	32	1	**0S-1590**	2	BOLT (3/8-16X2IN)	

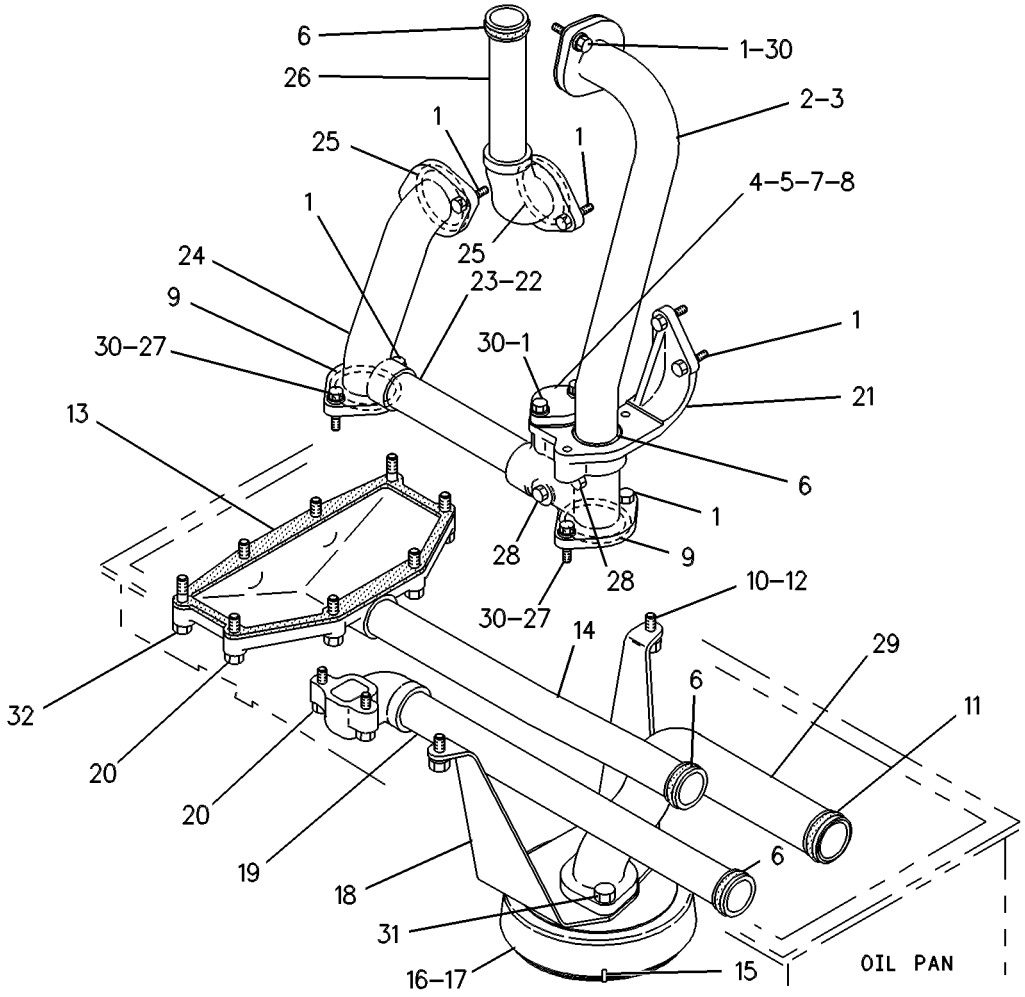

GRAPHIC #1

g00255085

LUBRICATION SYSTEM

156-8544 LINES GP-TURBOCHARGER OIL

S/N: BET1-UP

PART OF 157-7195, 157-7196 ENGINE AR-COMPLETE

SMCS-1052, 1307 **i01445066**

NOTE	REF NO	GRAPHIC REF	PART NUMBER	QTY	PART NAME 1 2 3 4 5 6 (PRODUCT LEVEL)	SEE PAGE
	1	1	**4H-9541**	1	GASKET	
	2	1	**4N-2040**	1	ELBOW-DRAIN	
	3	1	**7N-7559**	1	GASKET	
	4	1	**156-8560**	1	TUBE AS	
	5	1	**156-8562**	1	TUBE AS	
	6	1	**156-9270**	1	PLATE AS	
		1	**1F-0750**	1	NUT-WELD (3/8-16 THD)	
	7	1	**030-7972**	1	ELBOW	
	8	1	**0L-1143**	2	BOLT (3/8-16X2.50 IN)	
	9	1	**0S-1571**	3	BOLT (3/8-16X1.75 IN)	
	10	1	**0S-1619**	1	BOLT (3/8-16X3 IN)	
	11	1	**114-2687**	1	SEAL-O-RING (23.16MM ID)	
	12	1	**4L-6454**	1	BOLT (3/8-16X1 IN)	
	13	1	**4N-0699**	1	GASKET	
	14	1	**5P-1075**	1	WASHER-HARD (10.2X22.5X3MM THK)	
	15	1	**8T-4223**	1	WASHER-HARD (13.5X25.5X3MM THK)	
	16	1	**8T-9391**	1	BOLT (1/2-13X3.75IN)	
	17	1	**9M-6522**	1	CONNECTOR-FLARED	
	18	1	**9R-1004**	1	CLIP (TAB)	
	19	1	**9R-1005**	1	CLIP (SLOT)	

156-8544 **LINES GP-TURBOCHARGER OIL** ***(contd.)*** **i01445066**

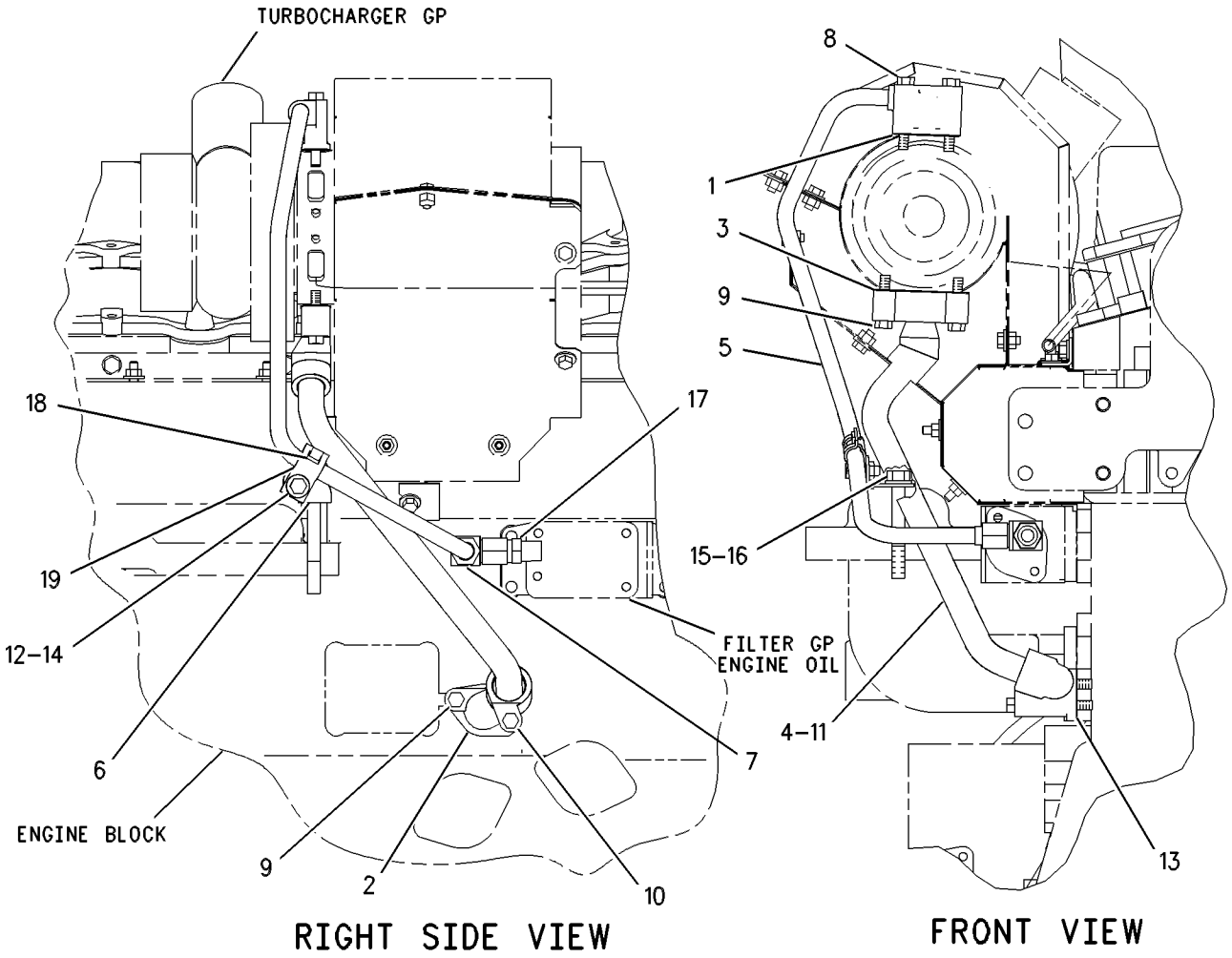

GRAPHIC #1 g00531962

LUBRICATION SYSTEM

159-6161 OIL CHANGE GP-HIGH SPEED

S/N: AKA1-UP

SMCS-1325 **i01475971**

NOTE	REF NO	GRAPHIC REF	PART NUMBER	QTY	PART NAME 1 2 3 4 5 6 (PRODUCT LEVEL)	SEE PAGE
	1	1	**2P-1286**	1	LOCKNUT-BULKHEAD (1-5/16-12 THD)	
	2	1	**2V-2043**	1	LOCKNUT-FLARED (1-5/8-12 THD)	
	3	1	**8B-0544**	1	SPACER (1 IN THK)	
	4	1	**9X-2235**	1	TEE-SWIVEL	
	5	1	**110-8319**	1	RECEIVER AS (POWER TRAIN OIL)	
		1	**110-8318**	1	CAP (POWER TRAIN OIL RECEIVER)	
	6	1	**110-8827**	1	RECEIVER AS (ENGINE OIL)	
		1	**110-8826**	1	CAP (ENGINE OIL RECEIVER)	
	7	1	*148-8317*	1	CONNECTOR GP	
		1	**3D-2824**	1	SEAL-O-RING	
		1	**5K-9090**	1	SEAL-O-RING	
		1	**6V-8714**	1	CONNECTOR	
	8	1	*148-8355*	1	ELBOW GP	
		1	**5K-9090**	1	SEAL-O-RING	
		1	**6V-9005**	1	ELBOW	
		1	**7M-8485**	1	SEAL-O-RING	
I	9	1	**162-7122**	1	HOSE AS	
	10	1	**162-7586**	1	BRACKET	
	11	1	**195-8510**	1	TUBE AS	
	12	1	**0S-1590**	1	BOLT (3/8-16X2 IN)	
	13	1	**142-0038**	1	ELBOW	
	14	1	*148-8339*	2	CONNECTOR GP	
					(EACH INCLUDES)	
		1	**6V-8716**	1	CONNECTOR	
		1	**6V-9746**	1	SEAL-O-RING	
		1	**7M-8485**	1	SEAL-O-RING	
	15	1	*148-8392*	2	ELBOW GP	
					(EACH INCLUDES)	
		1	**6V-9746**	1	SEAL-O-RING	
		1	**6V-9853**	1	ELBOW-SWIVEL	
	16	1	**4L-6454**	2	BOLT (3/8-16X1 IN)	
	17	1	**4L-6459**	2	BOLT (3/8-16X2.5 IN)	
	18	1	**5K-9090**	2	SEAL-O-RING	
	19	1	**5K-9660**	1	CLIP	
	20	1	**5M-2894**	3	WASHER-HARD (10.2X18.5X2.5MM THK)	
	21	1	**6V-2381**	2	CLIP (SLOT)	
	22	1	**6V-2382**	2	CLIP (TAB)	
	23	1	**6V-9746**	1	SEAL-O-RING	
	24	1	**6V-9833**	1	CAP AS	
	25	1	**8T-4896**	2	WASHER-HARD (10.2X18.5X2.5MM THK)	

I-SEE HOSE FABRICATION GUIDE

159-6161 **OIL CHANGE GP-HIGH SPEED** *(contd.)* **i01475971**

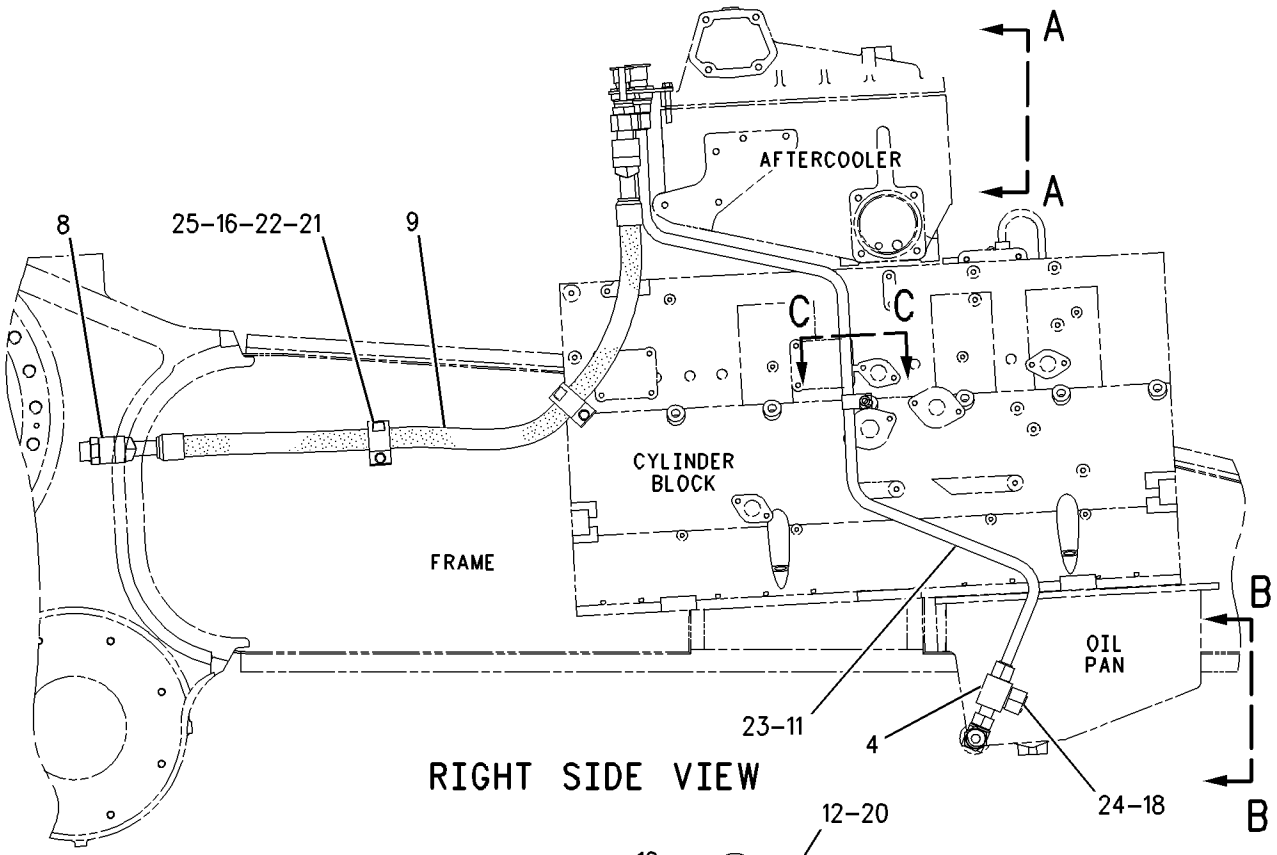

RIGHT SIDE VIEW

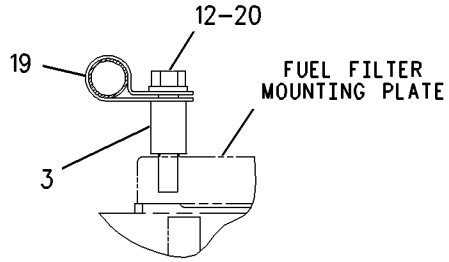

SECTION C-C

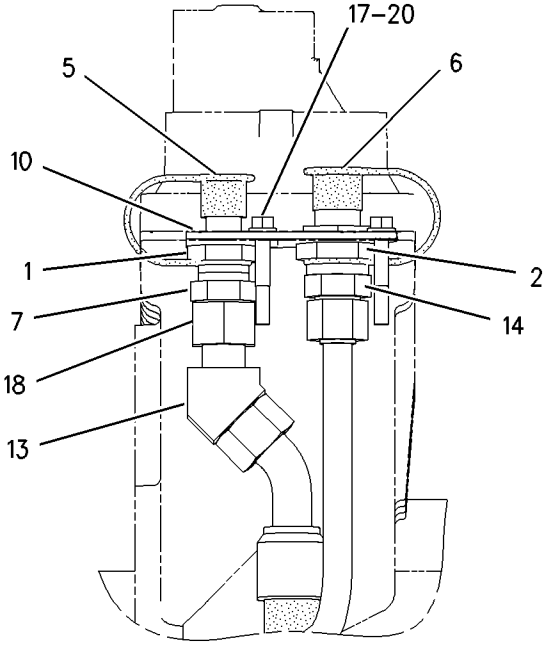

VIEW A-A

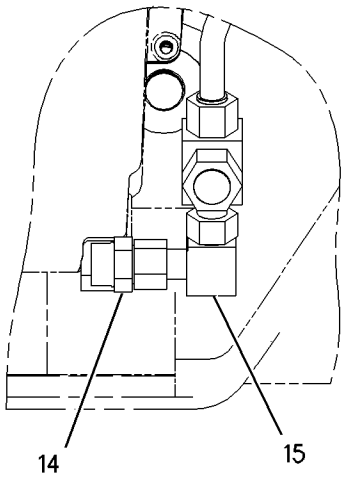

VIEW B-B

GRAPHIC #1

g00758995

LUBRICATION SYSTEM

161-8142 PRELUBRICATION AR-ENGINE

S/N: AKA1-UP

SMCS-1319 **i01496638**

NOTE	REF NO	GRAPHIC REF	PART NUMBER	QTY	PART NAME 1 2 3 4 5 6 (PRODUCT LEVEL)	SEE PAGE
	1	1	**2P-4305**	1	GASKET	
	2	1	**4N-1059**	1	GASKET	
	3	1	**9X-2235**	1	TEE-SWIVEL	
	4	2	**9X-6772**	11	STRAP-CABLE	
	5	1	**105-9152**	1	SWITCH AS-PRESSURE (ENGINE OIL)	
		1	**102-8802**	1	KIT-RECEPTACLE (2 PIN)	
					(INCLUDES RECEPTACLE AS & WEDGE)	
		1	**3E-3365**	1	WEDGE-RECEPTACLE LOCK (2 PIN)	
		1	**8T-8729**	2	PIN-CONNECTOR	
I		1	**186-4087**	1	HOSE AS	
	6	1	**123-5150**	1	VALVE-CHECK (ENGINE OIL TEMPERATURE)	
Y	7	1	**124-9780**	1	STARTING MOTOR GP-PRELUB SYS	280
	8	2	**125-0473**	1	FILM-NOTICE (PRE-LUBRICATION PUMP)	
	9	1	**127-5084**	1	COVER	
	10	1	**129-2327**	1	ELBOW	
	11	2	**140-3108**	1	TIMER	
	12	2	**177-4308**	1	PLATE AS	
		2	**9F-6445**	6	NUT-WELD (1/4-20 THD)	
	13	2	**179-0006**	1	SWITCH AS-MAGNETIC (PRE-LUBRICATION TIMER)	
		2	**1B-2578**	2	NUT (3/8-16 THD)	
		2	**4D-1326**	2	LOCKWASHER	
		2	**4L-6499**	2	WASHER (0.38X0.88X0.02 IN THK)	
		2	**6V-8378**	2	NUT (10-32 THD)	
		2	**7X-0620**	2	WASHER-HARD (5.5X13X1.6MM THK)	
		2	**8F-1434**	2	LOCKWASHER	
	14	1	**183-8374**	1	HARNESS AS (PRELUBE)	
		1	**102-8803**	1	KIT-RECEPTACLE (3 PIN)	
					(INCLUDES RECEPTACLE AS & WEDGE)	
		1	**155-2270**	1	KIT-CONNECTING PLUG (2 PIN)	
		1	**155-2274**	1	KIT-CONNECTING PLUG (6 PIN)	
					(EACH KIT INCLUDES PLUG AS, WEDGE & INTERFACE SEAL)	
	15	1	**195-8666**	1	HOSE AS	
	16	1	**195-8667**	1	HOSE AS	
	17	1	**195-9324**	1	BRACKET AS	
		1	**1F-0750**	1	NUT-WELD (3/8-16 THD)	
	18	2	**3S-2093**	2	STRAP-CABLE	
	19	1	**0S-1571**	2	BOLT (3/8-16X1.75 IN)	
	20	1	**0S-1590**	4	BOLT (3/8-16X2 IN)	
	21	1	*148-8339*	1	CONNECTOR GP	
		1	**6V-8716**	1	CONNECTOR	
		1	**6V-9746**	1	SEAL-O-RING	
		1	**7M-8485**	1	SEAL-O-RING	
	22	1	*148-8392*	1	ELBOW GP	
		1	**6V-9746**	1	SEAL-O-RING	
		1	**6V-9853**	1	ELBOW-SWIVEL	
	23	2	*150-4048*	1	ELBOW AS	
		2	**3K-0360**	1	SEAL-O-RING	
		2	**7J-9108**	1	SEAL-O-RING	
		2	**6V-8722**	1	ELBOW	
	24	2	*153-6230*	1	CONNECTOR GP	
		2	**2M-9780**	1	SEAL-O-RING	
		2	**5K-9090**	1	SEAL-O-RING	
		2	**8T-9386**	1	CONNECTOR	
	25	1	**2M-9780**	2	SEAL-O-RING	
	26	1	**3B-7721**	1	BUSHING-REDUCER	
	27	2	**4M-5281**	4	BOLT (1/4-20X0.750 IN)	

161-8142 **PRELUBRICATION AR-ENGINE** *(contd.)* **i01496638**

NOTE	REF NO	GRAPHIC REF	PART NUMBER	QTY	PART NAME 1 2 3 4 5 6 (PRODUCT LEVEL)	SEE PAGE
	28	2	**4P-7581**	3	CLIP	
	29	2	**4P-8134**	1	CLIP	
	30	1	**5K-9090**	1	SEAL-O-RING	
	31	1,2	**5M-3062**	5	BOLT (3/8-16X0.75 IN)	
	32	2	**5P-4115**	2	WASHER-HARD (7.2X19X2MM THK)	
	33	1	**5P-8167**	1	BOLT (3/8-16X0.625 IN)	
	34	1	**6D-4244**	2	CLIP	
	35	1	**6V-9746**	1	SEAL-O-RING	
	36	1	**6V-9832**	1	CAP AS	
	37	1	**7J-9108**	1	SEAL-O-RING	
	38	1	**8M-2772**	1	CLIP	
	39	1	**8S-2332**	3	BOLT-12 POINT HEAD (5/8-11X1.75 IN)	
	40	2	**8T-4205**	4	WASHER-HARD (7.2X14.5X2MM THK)	
	41	1,2	**8T-4896**	3	WASHER-HARD (10.2X18.5X2.5MM THK)	
	42	2	**8T-9367**	2	BOLT (1/4-20X2 IN)	
	43	1	**9X-6458**	2	WASHER-HARD (10.2X22.5X3MM THK)	
	44	2	**9X-6772**	1	STRAP-CABLE	

I-SEE HOSE FABRICATION GUIDE
Y-SEPARATE ILLUSTRATION

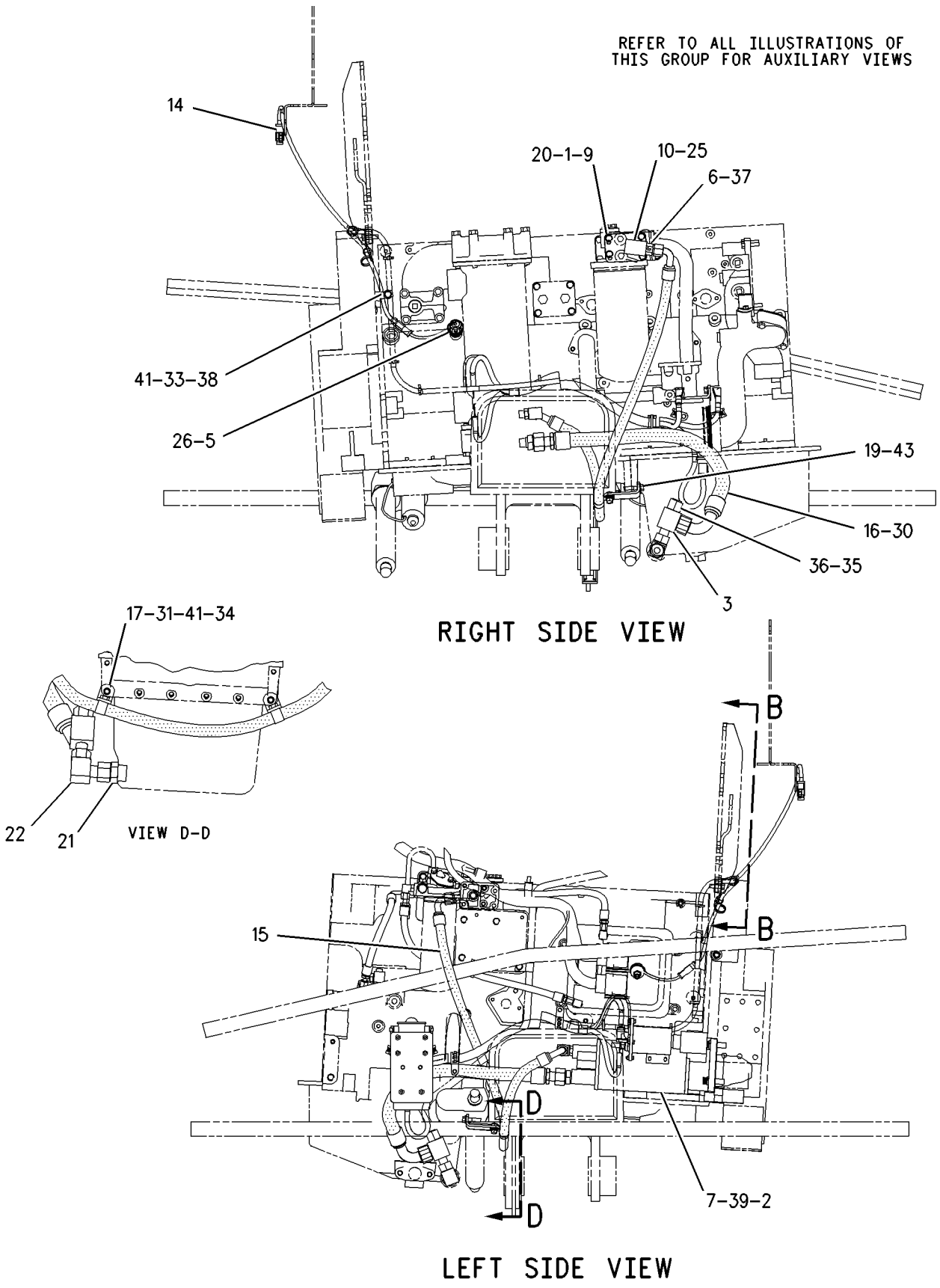

GRAPHIC #1 g00758784

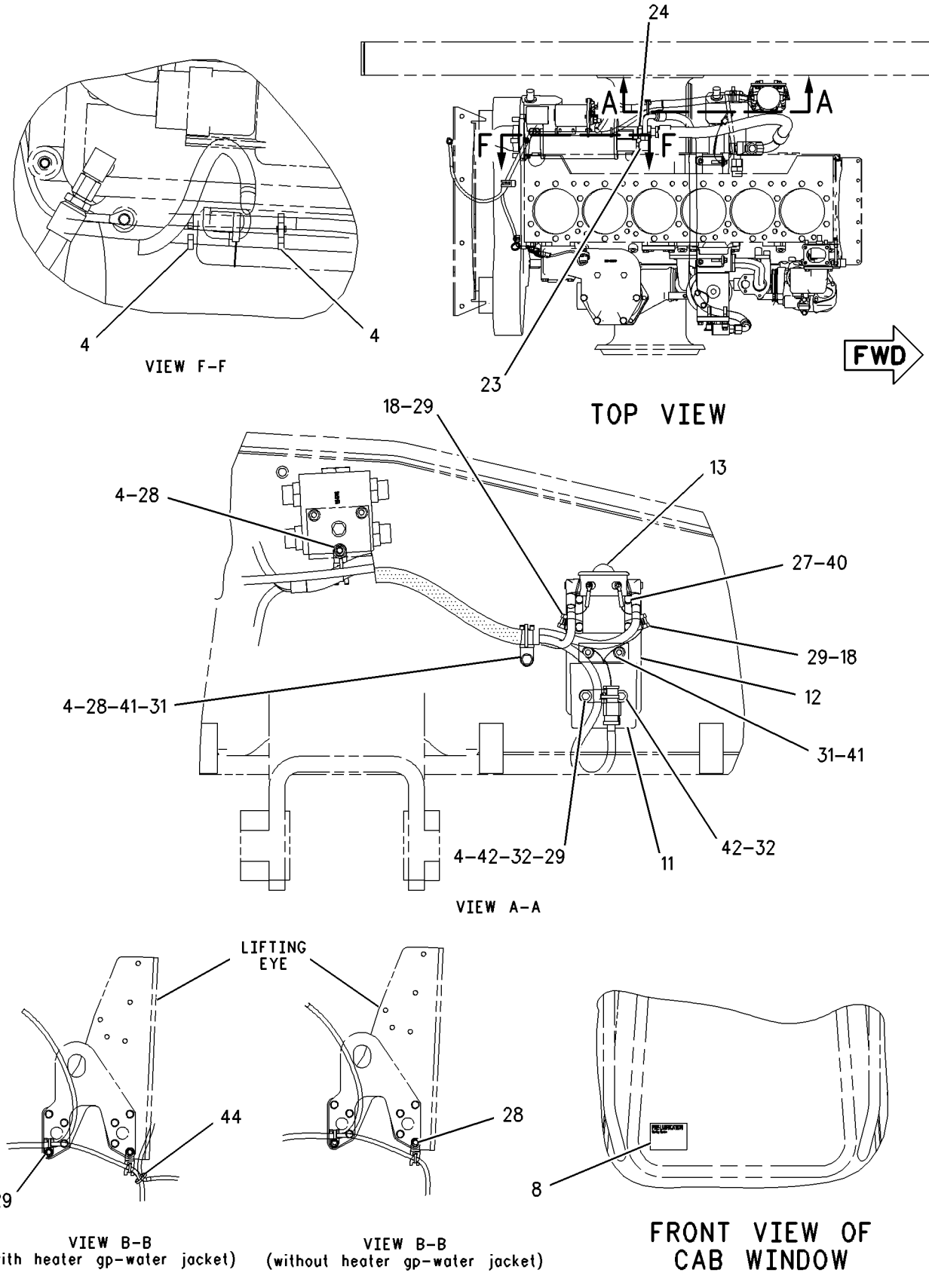

GRAPHIC #2 g00759241

LUBRICATION SYSTEM

161-4112 PUMP GP-ENGINE OIL

S/N: BET1-UP

PART OF 160-0566 ENGINE AR-CORE

SMCS-1304, 1315 **i01223987**

NOTE	REF NO	GRAPHIC REF	PART NUMBER	QTY	PART NAME 1 2 3 4 5 6 (PRODUCT LEVEL)	SEE PAGE
	1	1	**4N-0513**	1	BODY AS-OIL PUMP	
		1	**7N-2156**	2	BEARING-SLEEVE (27.013MM OD)	
		1	**8M-8489**	2	DOWEL (12.54MM DIA)	
	2	1	**1M-0644**	2	BOLT (3/8-16X2-1/4 IN)	
	3	1	**5M-2894**	2	WASHER (2.5MM THK)	
	4	1	**5F-4899**	4	BOLT (3/8-16X5.5IN)	
	5	1	**9Y-1800**	1	RETAINER	
	6	1	**2S-2760**	1	SPRING	
	7	1	**6N-1931**	1	PLUNGER-RELIEF	
	8	1	**162-2679**	1	SHAFT AS-PUMP	
	9	1	**162-2682**	1	SHAFT AS-PUMP	
	10	1	**4N-5339**	1	SPACER AS-OIL PUMP	
	11	1	**4N-0587**	1	BODY AS-PUMP	
	12	1	**7W-6529**	1	GEAR	
	13	1	**7W-7142**	1	GEAR	

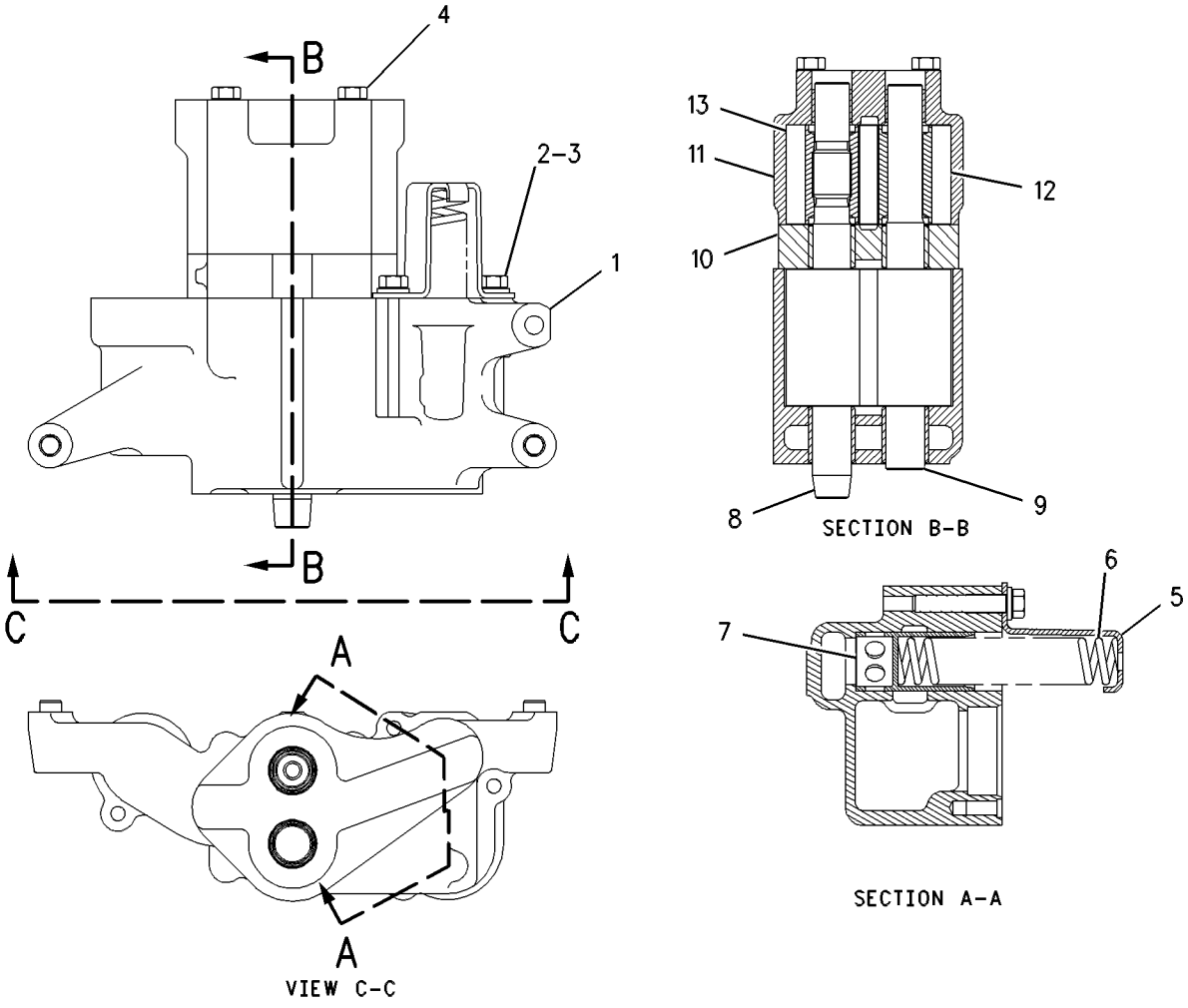

GRAPHIC #1 g00547589

7W-2206 COOLER GP-ENGINE OIL

S/N: BET1-UP

PART OF 157-7195, 157-7196 ENGINE AR-COMPLETE

SMCS-1378 **i01503055**

NOTE	REF NO	GRAPHIC REF	PART NUMBER	QTY	PART NAME 1 2 3 4 5 6 (PRODUCT LEVEL)	SEE PAGE
R	1	1	**7C-3039**	1	CORE AS	
	2	1	**109-0077**	2	SEAL-O-RING	

R-REMFG PART MAY BE AVAILABLE

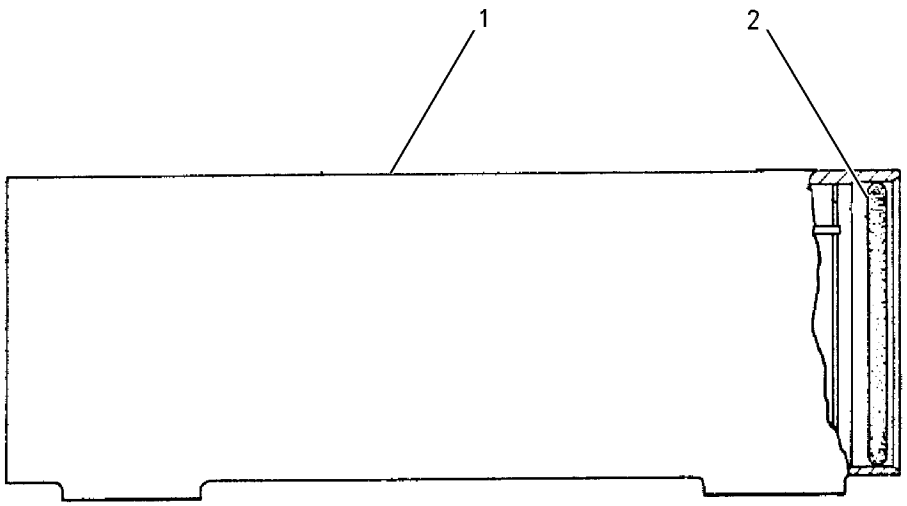

GRAPHIC #1 g00604532

COOLING SYSTEM

163-4061 CORE AS-RADIATOR

S/N: AKA1-UP

PART OF 189-0971 RADIATOR AR, 143-7740 WOODCHIP AR

SMCS-1353 **i01488565**

NOTE	REF NO	GRAPHIC REF	PART NUMBER	QTY	PART NAME 1 2 3 4 5 6 (PRODUCT LEVEL)	SEE PAGE
					(NO SERVICED PARTS)	

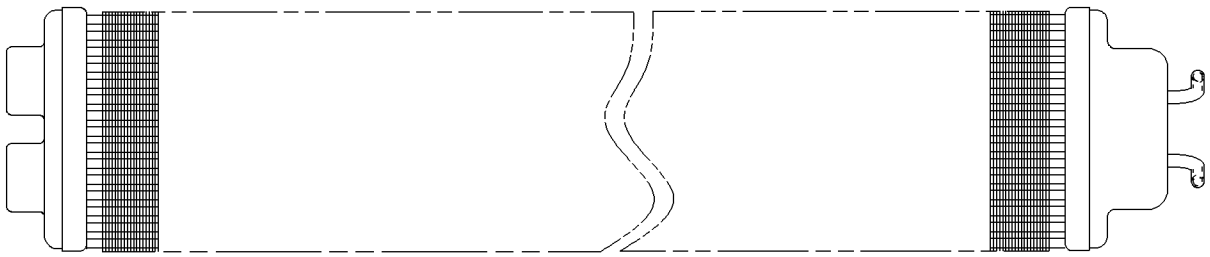

GRAPHIC #1 g00694696

COOLING SYSTEM

163-4062 CORE AS-RADIATOR

S/N: AKA1-UP

6 ROW

PART OF 189-0971 RADIATOR AR, 143-7740 WOODCHIP AR

SMCS-1353 **i01488571**

NOTE	REF NO	GRAPHIC REF	PART NUMBER	QTY	PART NAME 1 2 3 4 5 6 (PRODUCT LEVEL)	SEE PAGE
					(NO SERVICED PARTS)	

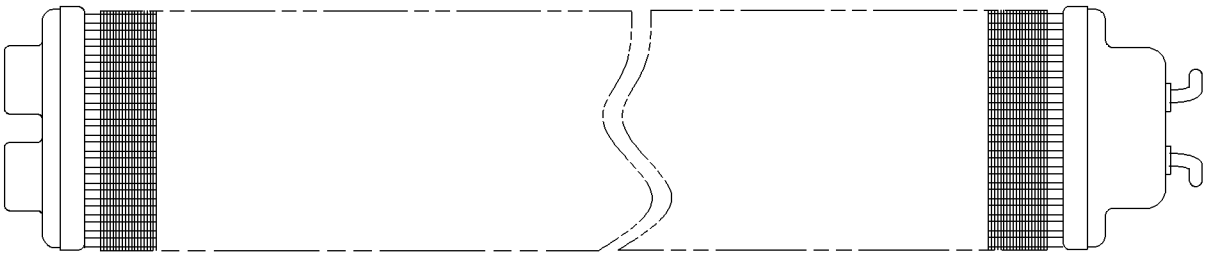

GRAPHIC #1 g00694706

4W-9822 CORE GP-OIL COOLER*R

S/N: BET1-UP

PART OF 157-7195, 157-7196 ENGINE AR-COMPLETE

SMCS-1374, 1375, 1378 **i00570568**

NOTE	REF NO	GRAPHIC REF	PART NUMBER	QTY	PART NAME 1 2 3 4 5 6 (PRODUCT LEVEL)	SEE PAGE
	1	1	**5M-6214**	1	PLUG-PIPE (1/8-27 THD)	

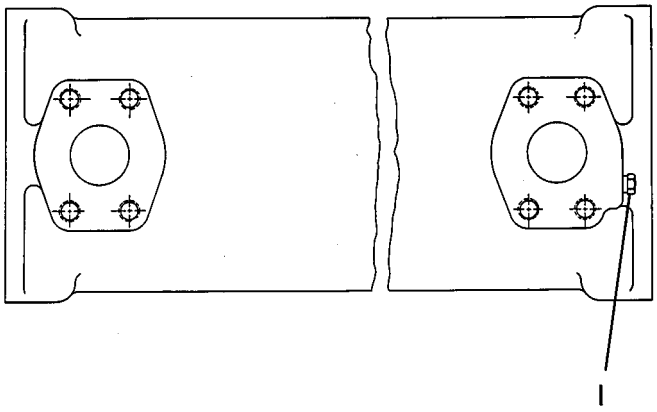

GRAPHIC #1 g00177858

COOLING SYSTEM

124-4818 FAN AR-EJECTOR

S/N: AKA1-UP

SMCS-1356 **i01223561**

NOTE	PART NUMBER	QTY	PART NAME 1 2 3 4 5 6 (PRODUCT LEVEL)	SEE PAGE
Y	*125-8523*	1	DRIVE GP-FAN	40
Y	*124-7521*	1	FAN GP-EJECTOR	103
Y	*124-7520*	1	RADIATOR GP	124

Y-SEPARATE ILLUSTRATION

COOLING SYSTEM

143-7770 FAN AR-VARIABLE

S/N: AKA1-UP

PART OF 189-0971 RADIATOR AR

SMCS-1356 **i01488588**

NOTE	REF NO	GRAPHIC REF	PART NUMBER	QTY	PART NAME 1 2 3 4 5 6 (PRODUCT LEVEL)	SEE PAGE
	1	1	**1Q-3613**	2	PLATE-WARNING (ENGINE FAN)	
Y	2	2	**3E-9205**	1	VALVE GP-SOLENOID (VARIABLE BLADE PITCH)	671
B	3	1	**3S-3964**	1	V-BELT (A/C COMPRESSOR)	
	4	1	**4P-8221**	2	BRACKET AS	
					(EACH INCLUDES)	
		1	**1F-0750**	1	NUT-WELD (3/8-16 THD)	
	5	1	**4W-8595**	1	PULLEY-CRANKSHAFT	
	6	2	**7I-1189**	1	ORIFICE AS	
	7	2	**6T-9559**	1	MANIFOLD	
	8	1	**7C-8246**	3	SPACER (10.5X20X24MM THK)	
	9	1	**8T-9530**	8	TACK-FASTENER	
	10	1	**8T-2501**	2	BOLT (3/8-16X2 IN)	
	11	1	**9Q-3668**	1	V-BELT-BANDED (ENGINE FAN)	
	12	2	**8T-4223**	4	WASHER-HARD (13.5X25.5X3MM THK)	
	13	1	**114-4698**	32	BOLT (3/8-16X1 IN)	
	14	1	**133-9405**	1	SWITCH AS-PUSH BUTTON (TEMPERATURE CONTROL)	
		1	**3E-3371**	1	WEDGE-RECEPTACLE LOCK (3 PIN)	
		1	**3K-0835**	1	NUT (5/8-24 THD)	
		1	**6F-0253**	1	LOCKWASHER	
		1	**8T-8729**	3	PIN-CONNECTOR	
		1	**102-8803**	1	KIT-RECEPTACLE (3 PIN)	
					(INCLUDES RECEPTACLE AS & WEDGE)	
J	15	1	**194-6835**	8	BLADE AS	
	16	2	**157-7017**	1	BRACKET AS	
		2	**1F-0750**	4	NUT-WELD (3/8-16 THD)	
		2	**7T-1099**	1	LINK	
	17	1	**159-9376**	1	PLATE	
	18	1	**157-2389**	1	HUB AS	
I	19	1	**143-7772**	1	HOSE AS (DRAIN)	
I	20	1	**164-2963**	1	HOSE AS (PRESSURE)	
	21	2	**157-7122**	1	TUBE AS	
	22	2	**157-7022**	1	TUBE AS	
	23	1	**173-3207**	1	HARNESS AS	
		1	**102-8802**	1	KIT-RECEPTACLE (2 PIN)	
					(INCLUDES RECEPTACLE AS & WEDGE)	
		1	**102-8804**	1	KIT-RECEPTACLE (4 PIN)	
					(INCLUDES RECEPTACLE AS & WEDGE)	
		1	**155-2271**	1	KIT-CONNECTING PLUG (4 PIN)	
					(INCLUDES PLUG AS, WEDGE & INTERFACE SEAL)	
	24	1	**173-3208**	1	WIRE AS	
		1	**155-2260**	1	KIT-CONNECTING PLUG (3 PIN)	
					(INCLUDES PLUG AS, WEDGE & INTERFACE SEAL)	
		1	**155-2270**	1	KIT-CONNECTING PLUG (2 PIN)	
					(INCLUDES PLUG AS, WEDGE & INTERFACE SEAL)	
I	25	1	**173-3209**	1	HOSE AS	
	26	1	**192-9742**	1	FILM-IDENTIFICATION (CLEANING)	
	27	2	**191-8280**	1	TUBE AS	
	28	2	**191-8281**	1	TUBE AS	
	29	2	**191-8282**	1	PLATE	
	30	1	**0S-1566**	4	BOLT (5/8-11X1.5 IN)	
	31	2	*148-8336*	2	CONNECTOR GP	
					(EACH INCLUDES)	
		2	**3J-1907**	1	SEAL-O-RING	
		2	**6V-8397**	1	SEAL-O-RING	
		2	**6V-8636**	1	CONNECTOR	
	32	2	*148-8361*	1	ELBOW GP	

143-7770 **FAN AR-VARIABLE** *(contd.)* **i01488588**

NOTE	REF NO	GRAPHIC REF	PART NUMBER	QTY	PART NAME 1 2 3 4 5 6 (PRODUCT LEVEL)	SEE PAGE
		2	**3J-7354**	1	SEAL-O-RING	
		2	**6V-8397**	1	SEAL-O-RING	
		2	**6V-9200**	1	ELBOW (90 DEGREE)	
	33	2	**8T-4896**	4	WASHER-HARD (10.2X18.5X2.5MM THK)	
	34	2	*148-8378*	1	ELBOW GP	
		2	**3J-1907**	1	SEAL-O-RING	
		2	**6V-8397**	1	SEAL-O-RING	
		2	**6V-8724**	1	ELBOW	
	35	2	*148-8444*	1	TEE AS-ORFS	
		2	**6V-8398**	2	SEAL-O-RING	
		2	**6V-9837**	1	TEE-SWIVEL	
	36	2	*149-5452*	2	UNION AS	
					(EACH INCLUDES)	
		2	**6V-8397**	2	SEAL-O-RING	
		2	**6V-8994**	1	UNION-BULKHEAD	
	37	2	*150-4037*	1	TEE GP	
		2	**6V-8398**	2	SEAL-O-RING	
		2	**6V-9844**	1	TEE-SWIVEL	
	38	2	*164-7908*	1	ELBOW GP	
		2	**3J-7354**	1	SEAL-O-RING	
		2	**6V-8397**	1	SEAL-O-RING	
		2	**8T-7546**	1	ELBOW	
	39	2	**1K-4649**	1	SPACER (.516X1X1 IN THK)	
	40	2	**8T-9389**	1	BOLT (1/2-13X2.75 IN)	
	41	2	**3J-1907**	1	SEAL-O-RING	
	42	1	**4L-6454**	6	BOLT (3/8-16X1 IN)	
	43	1	**5K-5338**	7	CLIP	
	45	1,2	**5P-1075**	11	WASHER-HARD (10.2X22.5X3MM THK)	
	46	2	**5P-1076**	1	WASHER-HARD (13.5X30X4MM THK)	
	47	2	**2D-8155**	4	STUD-TAPERLOCK	
	48	2	**8T-2502**	2	BOLT (3/8-16X1.125 IN)	
	49	1	**5S-7383**	1	BOLT (3/8-16X1.75 IN)	
	50	2	**6V-8188**	4	NUT (1/2-13 THD)	
	51	2	**6V-8397**	1	SEAL-O-RING	
	52	2	**8T-9101**	4	BOLT (3/8-16X2.75 IN)	
	53	1	**6V-9168**	2	NUT (11/16-16 THD)	
	54	2	**7S-4244**	1	CLIP	
	55	1	**9G-2673**	1	GROMMET	
BF		1	**7K-1181**	10	STRAP-CABLE	
					AVAILABLE REPAIR KIT(S):	
J			**194-7005**	1	KIT-BLADE	
					(INCLUDES 2 BLADE AS & 8 BOLTS	

B-USE AS REQUIRED
F-NOT SHOWN
I-SEE HOSE FABRICATION GUIDE
J-REPAIR KIT MARKED J AVAILABLE FOR PART MARKED J
Y-SEPARATE ILLUSTRATION

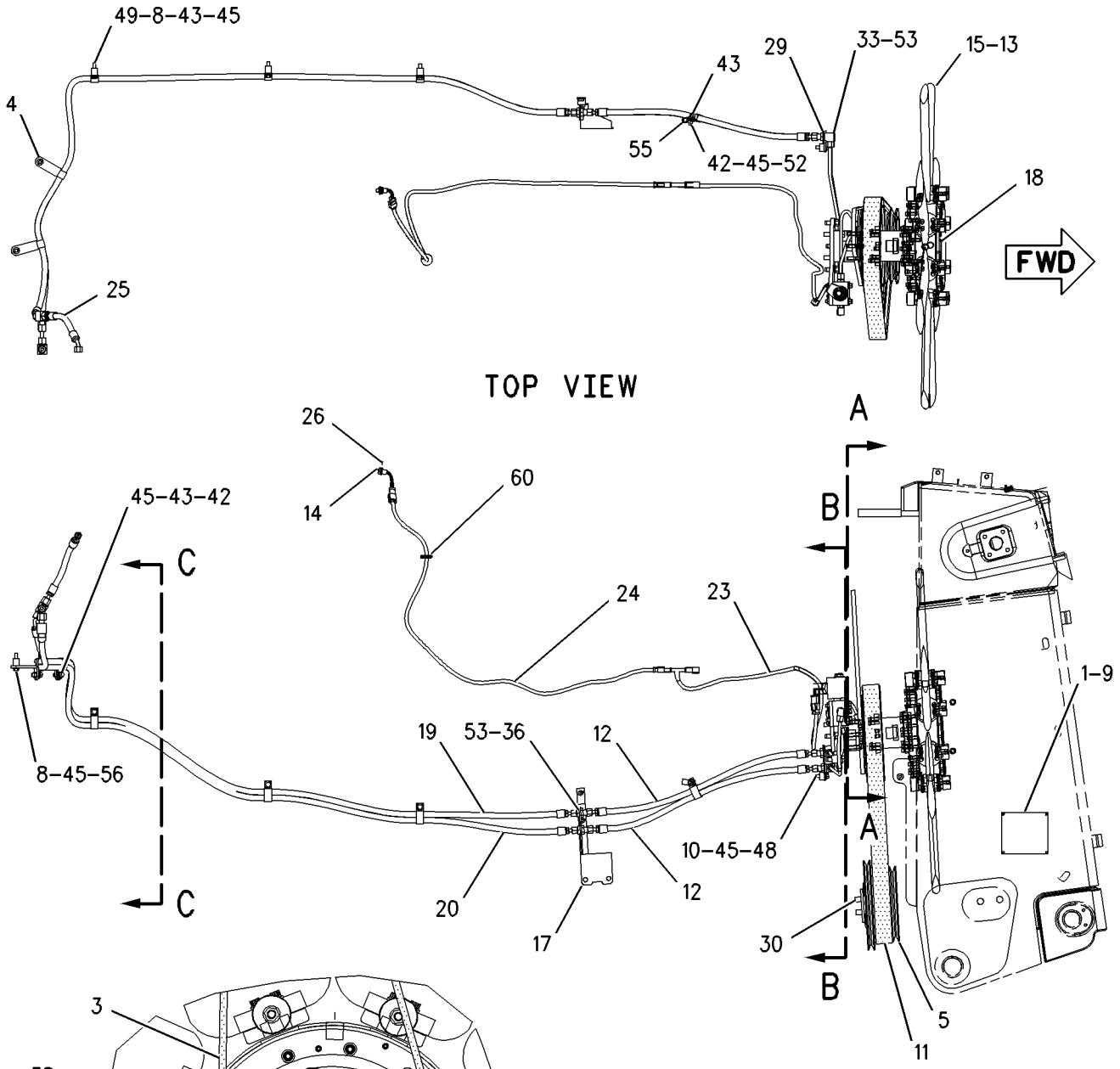

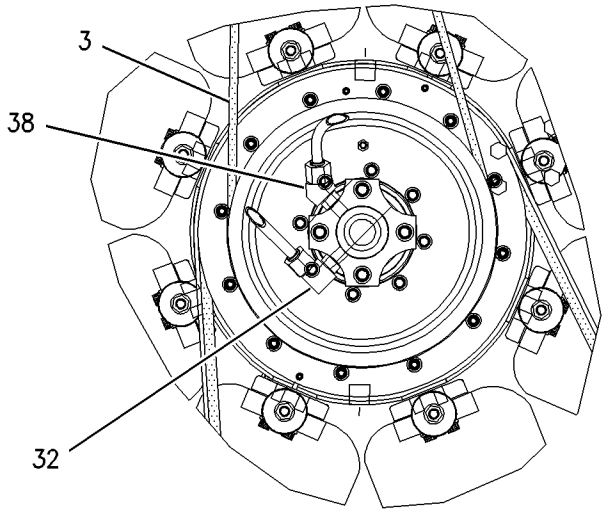

SECTION A-A

REFER TO ALL ILLUSTRATIONS OF THIS GROUP FOR AUXILIARY VIEWS

GRAPHIC #1

g00741436

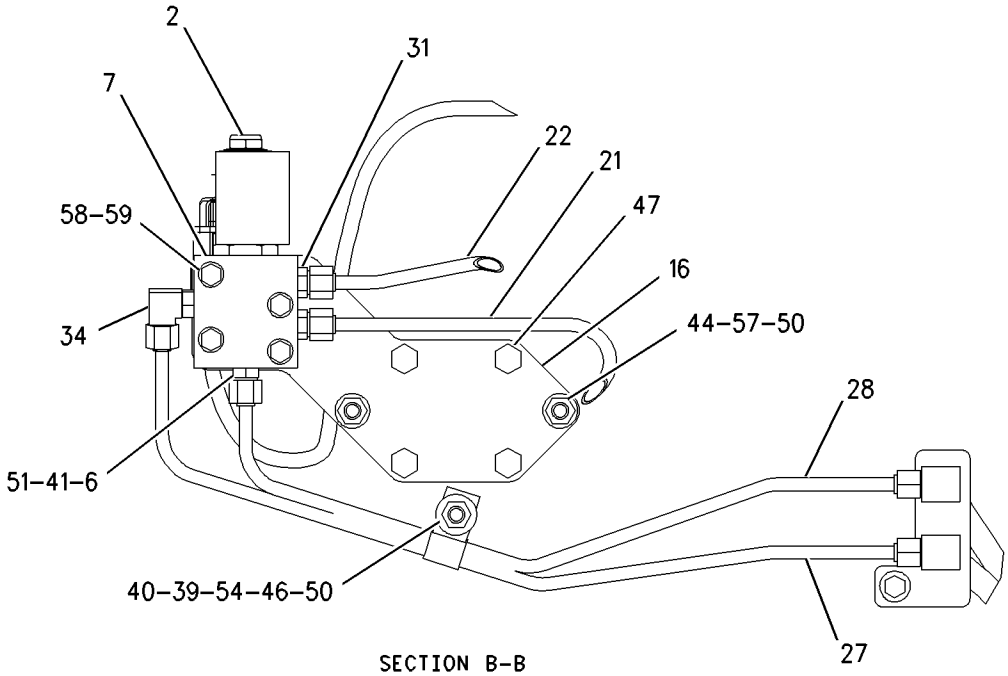

SECTION B-B

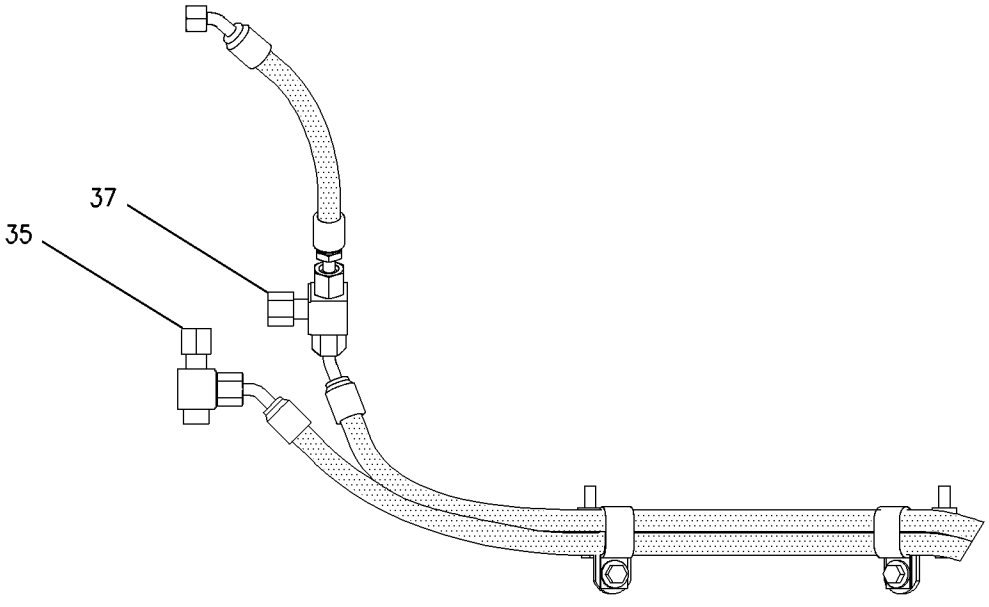

SECTION C-C

GRAPHIC #2 g00741480

COOLING SYSTEM

160-7005 FAN GP-BLOWER

S/N: AKA1-UP

PART OF 159-5908 INSTALLATION AR-ENGINE

SMCS-1356, 1360 **i01503346**

NOTE	REF NO	GRAPHIC REF	PART NUMBER	QTY	PART NAME 1 2 3 4 5 6 (PRODUCT LEVEL)	SEE PAGE
	1	1	**9L-8781**	2	WASHER (0.406X1.5X0.188 IN THK)	
Y	2	1	*165-7021*	1	GUARD AS	105
Y	3	1	*165-7022*	1	GUARD AS	106
Y	4	1	*165-7023*	1	GUARD AS	107
	5	1	**169-0908**	2	MOUNT AS	
	6	1	**173-0419**	1	SPIDER AS-FAN (8 BLADE)	
	7	1	**4L-6454**	4	BOLT (3/8-16X1 IN)	
	8	1	**5P-1075**	12	WASHER-HARD (10.2X22.5X3MM THK)	
	9	1	**5S-7383**	8	BOLT (3/8-16X1.75 IN)	
	10	1	**6V-8801**	3	NUT (3/8-16 THD)	
	11	1	**8T-2501**	4	BOLT (3/8-16X2 IN)	
	12	1	**8T-4896**	14	WASHER-HARD (10.2X18.5X2.5MM THK)	
	13	1	**8T-9377**	1	BOLT (3/8-16X2.25 IN)	
	14	1	**9B-7237**	8	BOLT (3/8-16X1.25 IN)	

Y-SEPARATE ILLUSTRATION

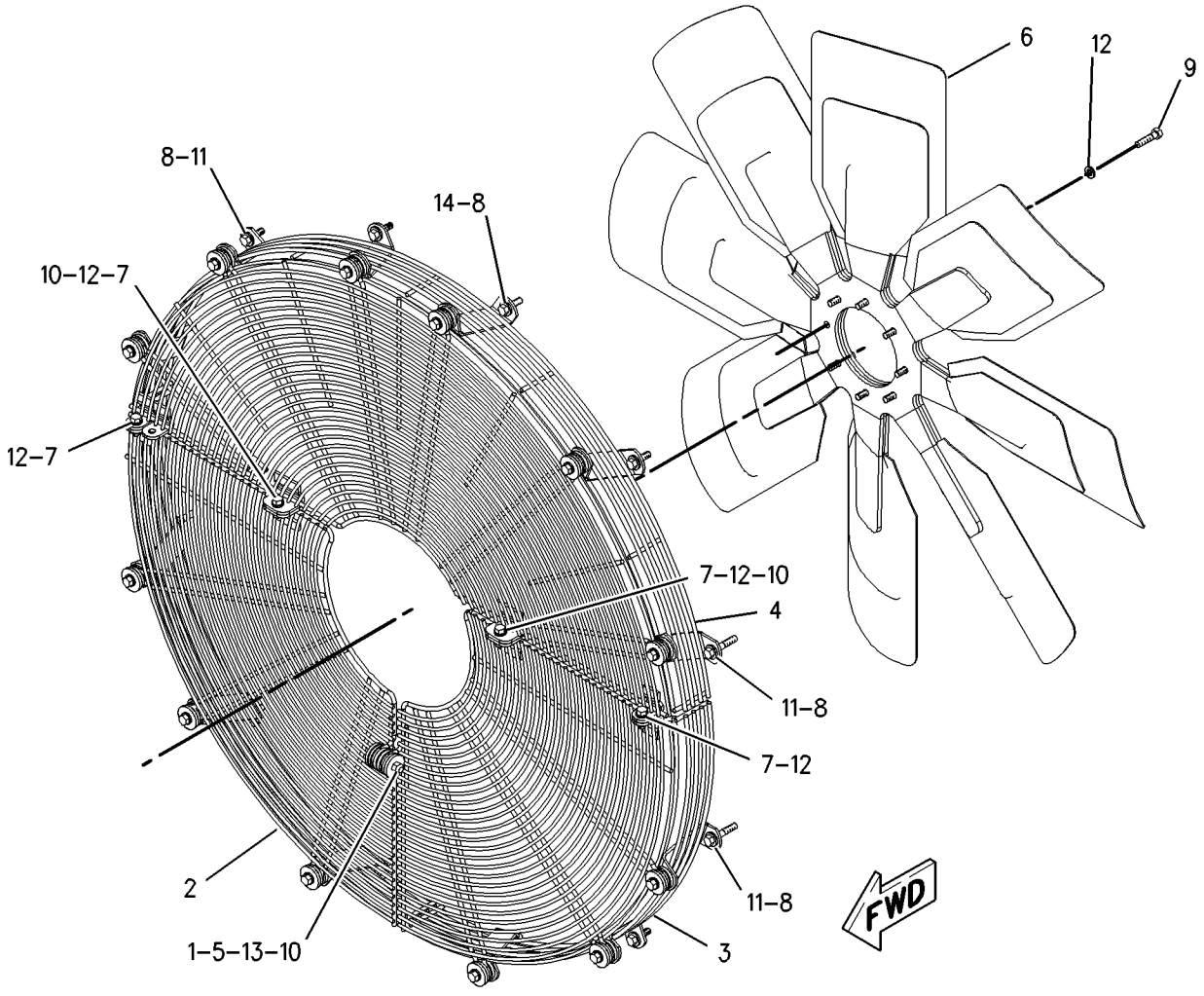

GRAPHIC #1 g00692601

124-7521 FAN GP-EJECTOR

S/N: AKA1-UP

PART OF 124-4818 FAN AR-EJECTOR

SMCS-1356, 1360 **i01223596**

NOTE	REF NO	GRAPHIC REF	PART NUMBER	QTY	PART NAME 1 2 3 4 5 6 (PRODUCT LEVEL)	SEE PAGE
	1	1	**114-2031**	1	GUARD AS-FAN	
	2	1	**114-2032**	1	GUARD AS-FAN	
		1	**1F-0750**	2	NUT-WELD (3/8-16 THD)	
	3	1	**114-2033**	1	GUARD AS-FAN	
		1	**1F-0750**	1	NUT-WELD (3/8-16 THD)	
	4	1	**125-3949**	1	SPIDER AS-FAN	
	5	1	**5P-1075**	12	WASHER-HARD (3MM THK)	
	6	1	**9B-7237**	8	BOLT (3/8-16X1.25IN)	
	7	1	**8T-2501**	4	BOLT (3/8-16X2.0IN)	
	8	1	**8T-4896**	15	WASHER-HARD (2.5MM THK)	
	9	1	**4L-6454**	5	BOLT (3/8-16X1 IN)	
	10	1	**5S-7383**	8	BOLT (3/8-16X1.75IN)	
	11	1	**6V-8801**	2	NUT (3/8-16 THD)	

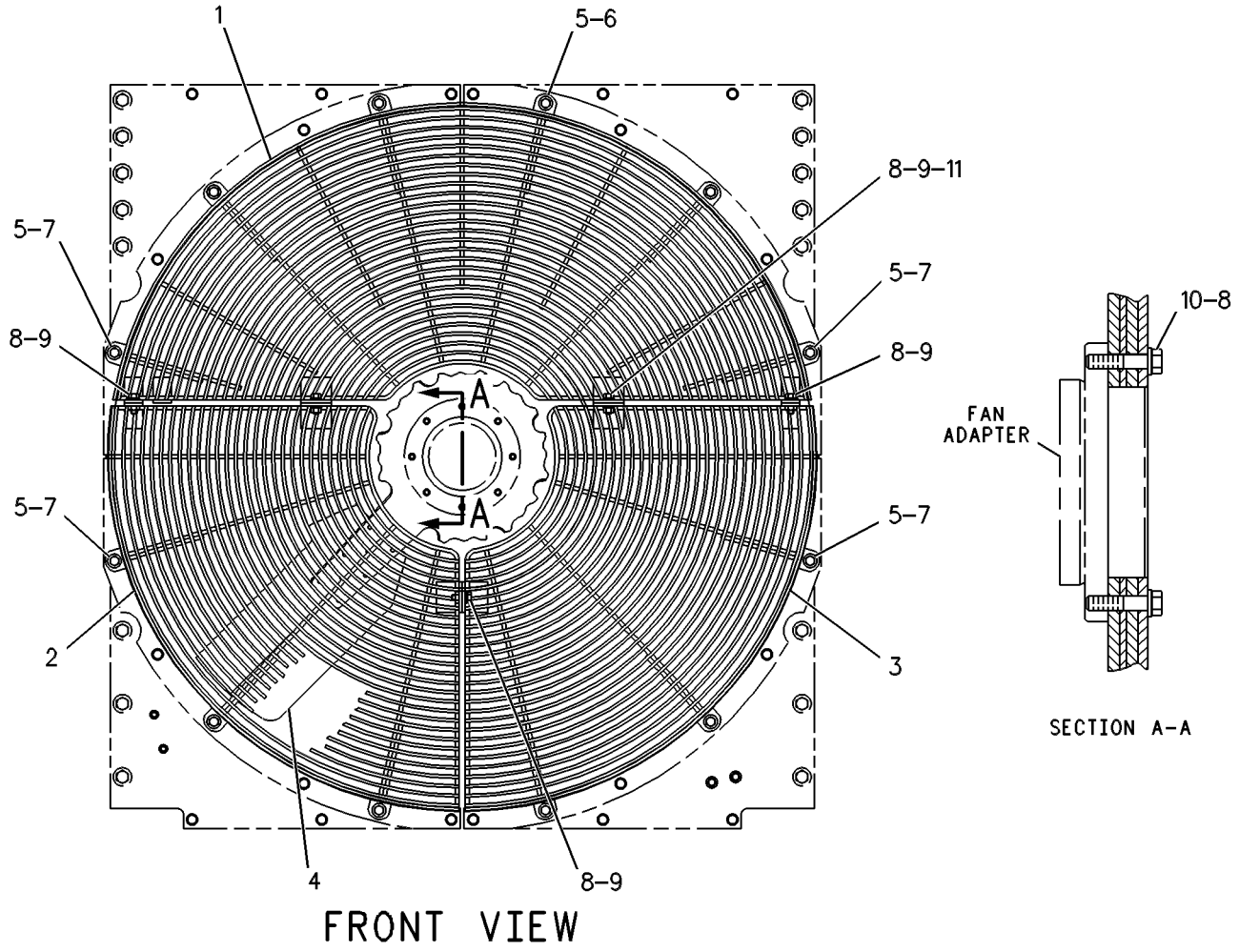

GRAPHIC #1 g00249947

COOLING SYSTEM

160-7008 FAN GP-REVERSIBLE

S/N: AKA1-UP

SMCS-1356, 1360 **i01486221**

NOTE	REF NO	GRAPHIC REF	PART NUMBER	QTY	PART NAME 1 2 3 4 5 6 (PRODUCT LEVEL)	SEE PAGE
	1	1	**2W-5825**	1	PLATE	
	2	1	**134-3937**	1	GUARD AS-FAN	
		1	**1F-0750**	2	NUT-WELD (3/8-16 THD)	
	3	1	**147-9672**	1	FAN AS-REVERSIBLE (8 BLADE)	
Y	4	1	*169-4893*	1	GUARD AS	108
	5	1	**4L-6454**	1	BOLT (3/8-16X1 IN)	
	6	1	**5P-1075**	3	WASHER-HARD (10.2X22.5X3MM THK)	
	7	1	**5S-7379**	2	BOLT (3/8-16X0.875 IN)	
	8	1	**0S-1590**	8	BOLT (3/8-16X2 IN)	
	9	1	**8T-4896**	8	WASHER-HARD (10.2X18.5X2.5MM THK)	

Y-SEPARATE ILLUSTRATION

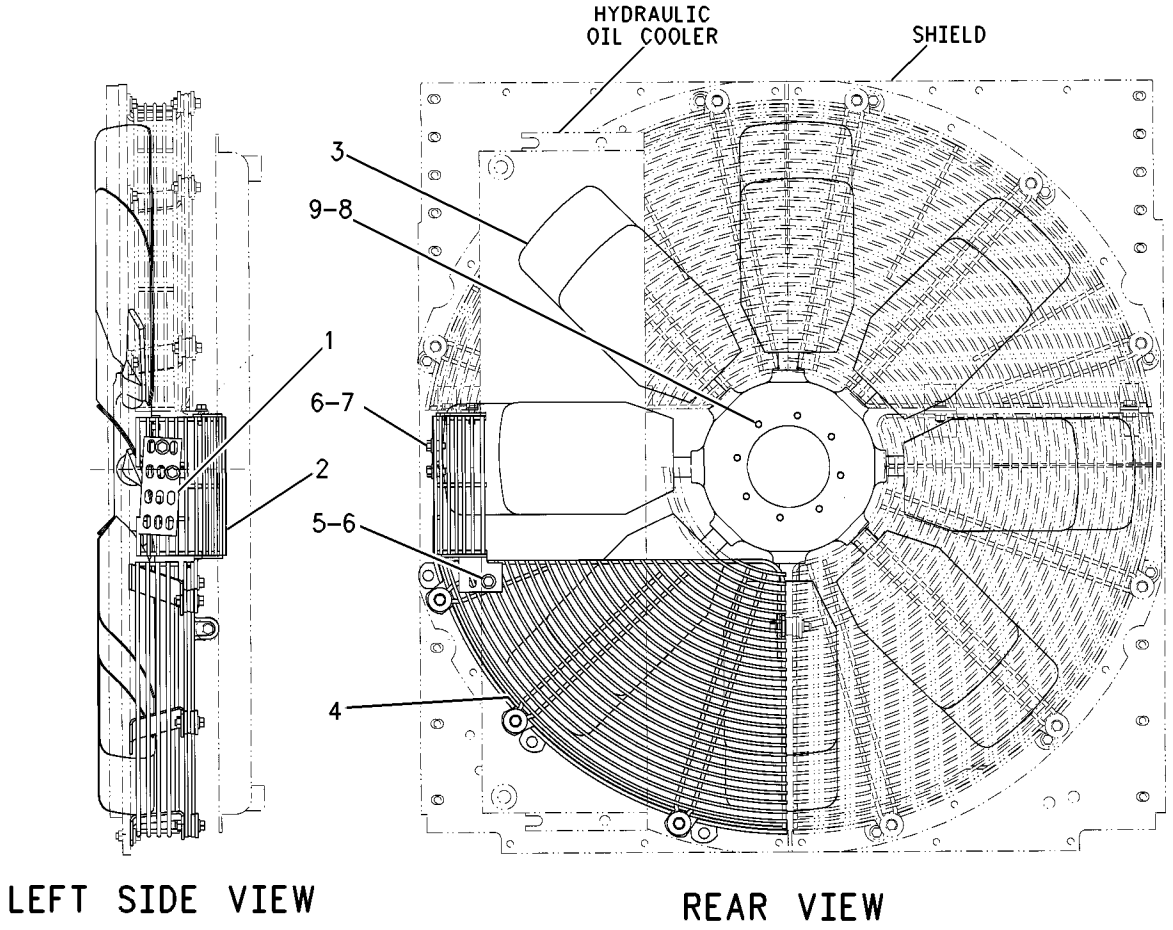

GRAPHIC #1 g00758426

COOLING SYSTEM

165-7021 GUARD AS

S/N: AKA1-UP

PART OF 160-7005 FAN GP-BLOWER

SMCS-7150 **i01390213**

NOTE	REF NO	GRAPHIC REF	PART NUMBER	QTY	PART NAME 1 2 3 4 5 6 (PRODUCT LEVEL)	SEE PAGE
	1	1	**9L-8781**	3	WASHER (.406X1.5X.188 IN THK)	
	2	1	**160-7003**	1	GUARD AS-FAN	
	3	1	**160-7004**	1	GUARD AS-FAN	
		1	**1F-0750**	1	NUT-WELD (3/8-16 THD)	
	4	1	**169-0908**	3	MOUNT AS	
	5	1	**4L-9337**	3	BOLT (3/8-16X1.5 IN)	
	6	1	**8T-4896**	3	WASHER-HARD (10.2X18.5X2.5MM THK)	

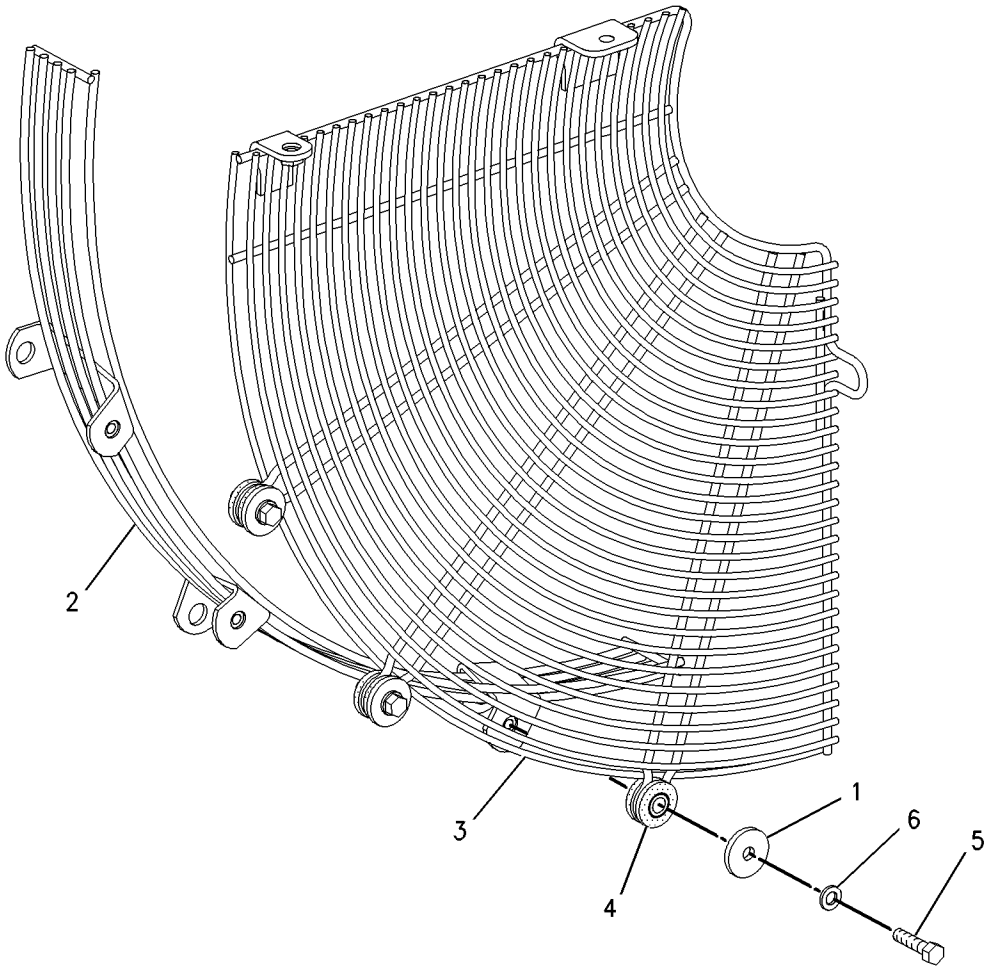

GRAPHIC #1 g00733967

165-7022 GUARD AS

S/N: AKA1-UP

PART OF 160-7005 FAN GP-BLOWER

SMCS-7150 **i01390210**

NOTE	REF NO	GRAPHIC REF	PART NUMBER	QTY	PART NAME 1 2 3 4 5 6 (PRODUCT LEVEL)	SEE PAGE
	1	1	**9L-8781**	3	WASHER (.406X1.5X.188 IN THK)	
	2	1	**160-7001**	1	GUARD AS-FAN (RISER)	
	3	1	**160-7002**	1	GUARD AS-FAN (FLAT)	
		1	**1F-0750**	1	NUT-WELD (3/8-16 THD)	
	4	1	**169-0908**	3	MOUNT AS	
	5	1	**4L-9337**	3	BOLT (3/8-16X1.5 IN)	
	6	1	**8T-4896**	3	WASHER-HARD (10.2X18.5X2.5MM THK)	

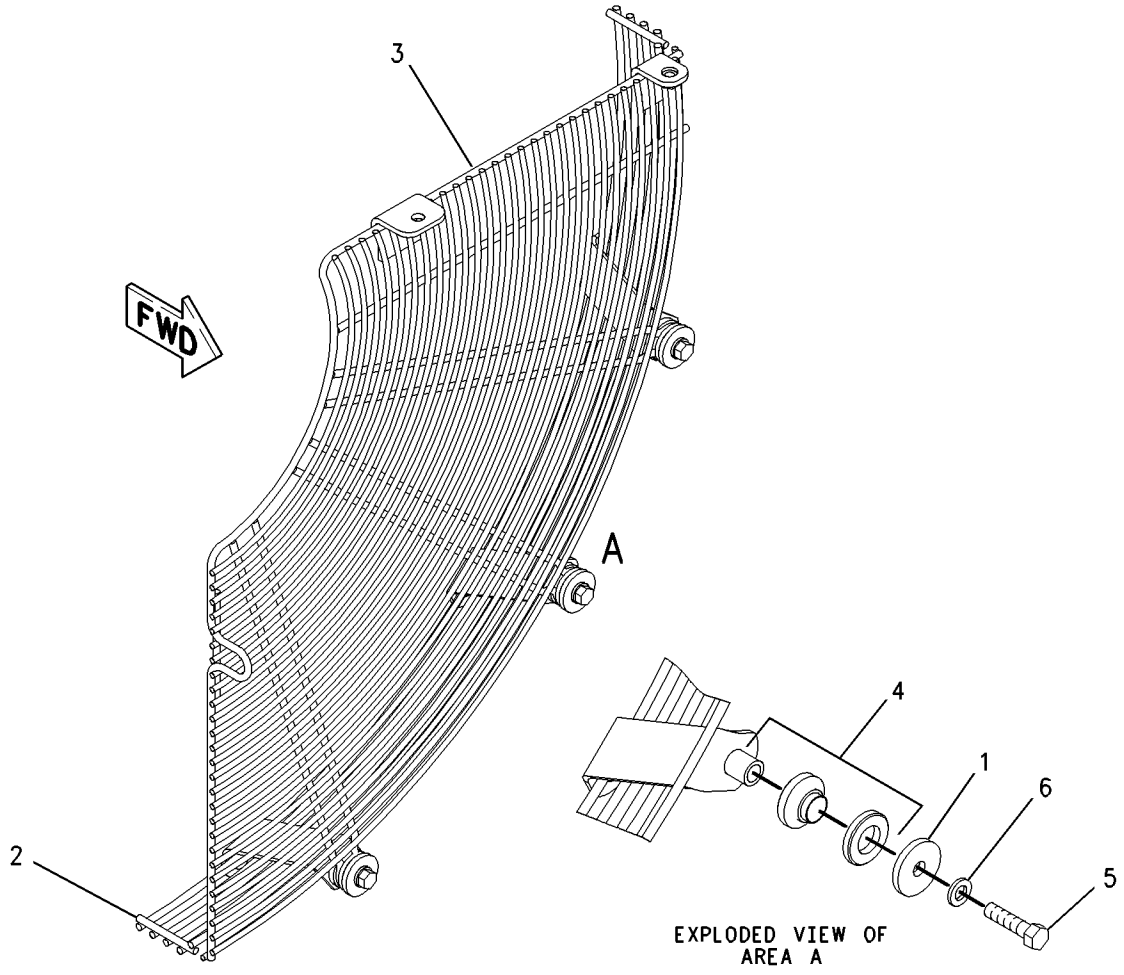

GRAPHIC #1 g00733809

COOLING SYSTEM

165-7023 GUARD AS

S/N: AKA1-UP

PART OF 160-7005 FAN GP-BLOWER

SMCS-7150 **i01390200**

NOTE	REF NO	GRAPHIC REF	PART NUMBER	QTY	PART NAME 1 2 3 4 5 6 (PRODUCT LEVEL)	SEE PAGE
	1	1	**9L-8781**	6	WASHER (.406X1.5X.188 IN THK)	
	2	1	**160-6999**	1	GUARD AS-FAN (RISER)	
	3	1	**160-7000**	1	GUARD AS-FAN (FLAT)	
	4	1	**169-0908**	6	MOUNT AS	
	5	1	**4L-9337**	6	BOLT (3/8-16X1.5 IN)	
	6	1	**8T-4896**	6	WASHER-HARD (10.2X18.5X2.5MM THK)	

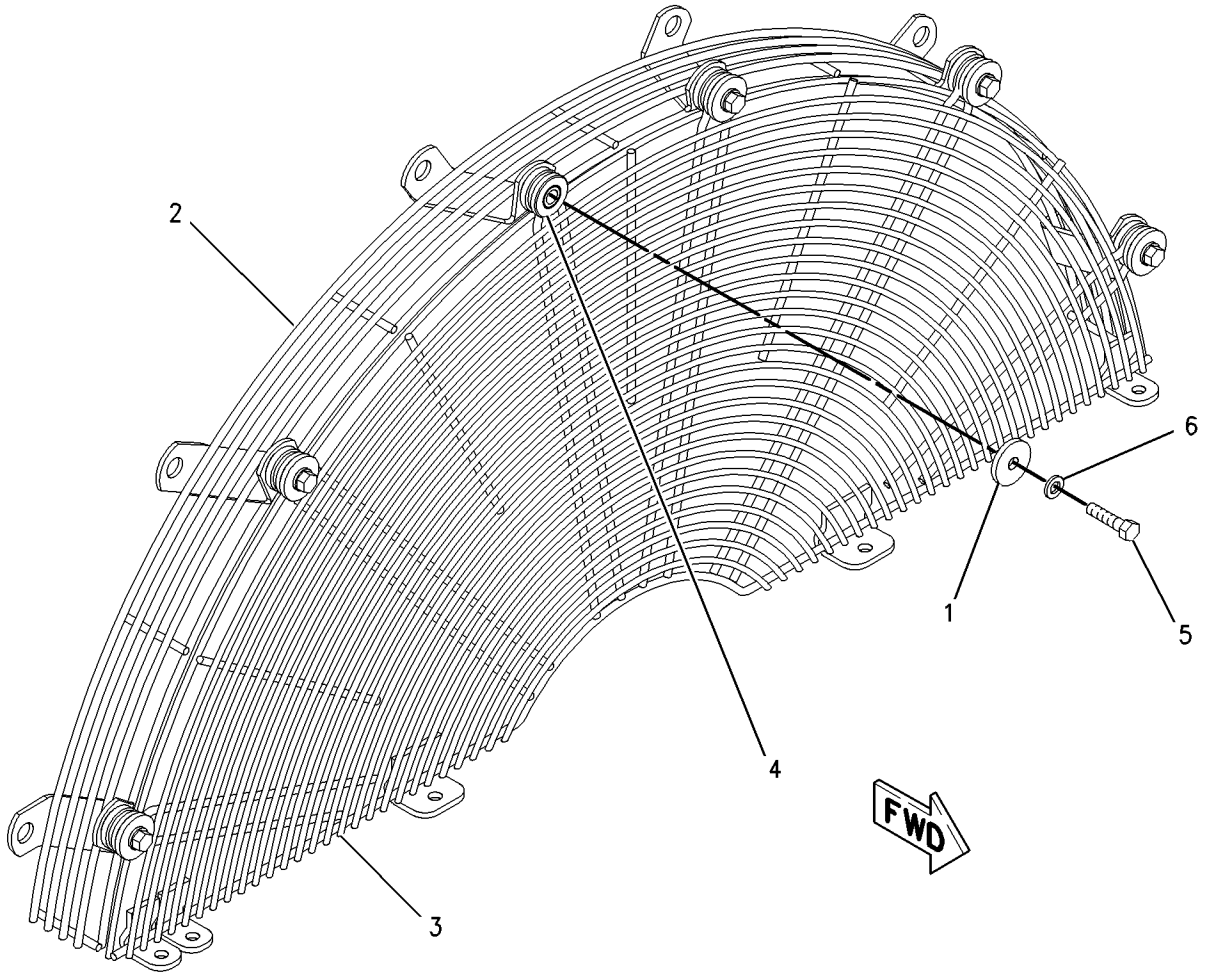

GRAPHIC #1 g00733874

169-4893 GUARD AS

S/N: AKA1-UP

PART OF 160-7008 FAN GP-REVERSIBLE

SMCS-7150 **i01390279**

NOTE	REF NO	GRAPHIC REF	PART NUMBER	QTY	PART NAME 1 2 3 4 5 6 (PRODUCT LEVEL)	SEE PAGE
	1	1	**9L-8781**	3	WASHER (.406X1.5X.188 IN THK)	
	2	1	**160-7006**	1	GUARD AS (FLAT)	
	3	1	**160-7007**	1	GUARD AS (RISER)	
	4	1	**169-0908**	3	MOUNT AS	
	5	1	**4L-9337**	3	BOLT (3/8-16X1.5 IN)	
	6	1	**8T-4896**	3	WASHER-HARD (10.2X18.5X2.5MM THK)	

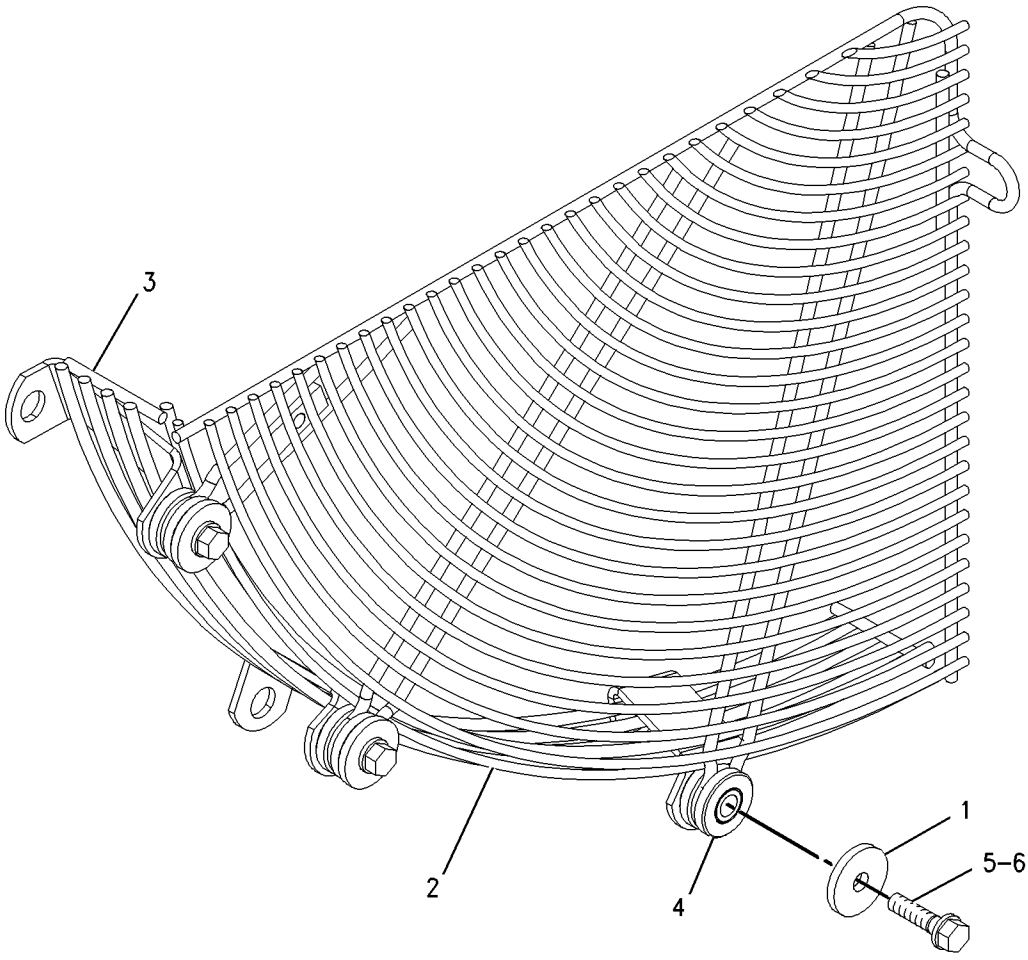

GRAPHIC #1 g00733859

MEMORANDA

COOLING SYSTEM

160-4934 LINES GP-WATER

S/N: BET1-UP

PART OF 157-7195, 157-7196 ENGINE AR-COMPLETE

SMCS-1355, 1380, 1393 **i01436926**

NOTE	REF NO	GRAPHIC REF	PART NUMBER	QTY	PART NAME 1 2 3 4 5 6 (PRODUCT LEVEL)	SEE PAGE
	1	1	**159-9350**	1	BONNET-OUTLET	
	2	1	**159-9351**	1	BONNET-COOLER INLET	
	3	1	**160-1773**	1	PLATE-BRACKET	
	4	1	**170-4673**	1	BONNET-OIL COOLER INLET	
	5	1	**160-4213**	1	COVER AS-HOUSING	
	5A	1	**2H-1193**	1	FERRULE	
	5B	1	**3S-9643**	1	SEAL-LIP	
	5C	1	**8T-6765**	1	PLUG-PIPE	
	6	1	**7W-3587**	1	ELBOW-BYPASS	
	7	1	**7N-1572**	1	COVER-WATER PUMP	
	8	1	**4N-0641**	1	GASKET	
	9	1	**0S-1594**	3	BOLT (3/8-16X1 IN)	
	10	1	**8T-6761**	1	PLUG-PIPE	
	11	1	**9X-8875**	4	BOLT (1/2-13X3.5IN)	
	12	1	**9X-8873**	2	BOLT (1/2-13X2.25 IN)	
	13	1	**2S-0795**	2	GASKET	
	14	1	**0S-1595**	2	BOLT (1/2-13X1.25 IN)	
	15	1	**9X-8874**	2	BOLT (1/2-13X3IN)	
	16	1	**1D-4569**	2	BOLT (1/2-13X4.25 IN)	
	17	1	**5P-8245**	2	WASHER-HARD (13.5X25.5X3MM THK)	
	18	1	**5M-2894**	8	WASHER-HARD (10.2X18.5X2.5MM THK)	
	19	1	**0S-1590**	1	BOLT (3/8-16X2 IN)	
	20	1	**0L-1351**	2	BOLT (3/8-16X.875 IN)	
	21	1	**4N-1199**	2	CLIP	
	23	1	**109-0077**	1	SEAL-O-RING (100.97MM ID)	
	24	1	**4N-6257**	1	ADAPTER	
	25	1	**8T-6767**	1	PLUG-PIPE	
	26	1	**7C-0307**	1	GASKET	
	27	1	**4W-4794**	1	REGULATOR-WATER TEMPERATURE (92 DEG C.)	
	28	1	**4N-1156**	1	GASKET-REGULATOR COVER	
	29	1	**0S-1619**	3	BOLT (3/8-16X3 IN)	
	30	1	**109-0076**	1	SEAL-O-RING (50.17MM ID)	
	31	1	**0S-1591**	4	BOLT (3/8-16X1.5 IN)	
	32	1	**7X-7731**	3	PLUG-PIPE	
	33	1	**125-0434**	1	SEAL-INTEGRAL	
	34	1	**0L-2070**	2	BOLT (3/8-16X2.25 IN)	
	35	1	**7W-0570**	1	BLOCK	
	36	1	**5B-9603**	4	BOLT (3/8-16X5 IN)	
	37	1	**102-2240**	1	SENSOR GP-TEMPERATURE (WATER)	
		1	**102-8803**	1	KIT-RECEPTACLE (3 PIN)	
					(INCLUDES RECEPTACLE AS & WEDGE)	
		1	**3E-3371**	1	WEDGE-RECEPTACLE LOCK (3 PIN)	
		1	**8T-8729**	3	PIN-CONNECTOR	
BE		1	**9X-1813**		SLEEVE	
	38	1	**112-5282**	1	SEAL-O-RING (16.36MM ID)	
Y	39	1	**134-6054**	1	SWITCH GP-FLOW (COOLANT)	136
	40	1	**2B-2695**	2	BOLT (5/16-18X0.875 IN)	
	41	1	**9M-1974**	2	WASHER-HARD (8.8X16X2MM THK)	
	42	1	**4N-3841**	1	GASKET	
	43	1	**7W-6492**	2	PLUG-PIPE (1/2-14 NPTF)	
	44	1	**145-9277**	1	COVER	
	45	1	**0S-1588**	4	BOLT (3/8-16X1.25 IN)	
	46	1	**126-4935**	1	SEAL-INTEGRAL	

B-USE AS REQUIRED
E-ORDER BY THE CENTIMETER
Y-SEPARATE ILLUSTRATION

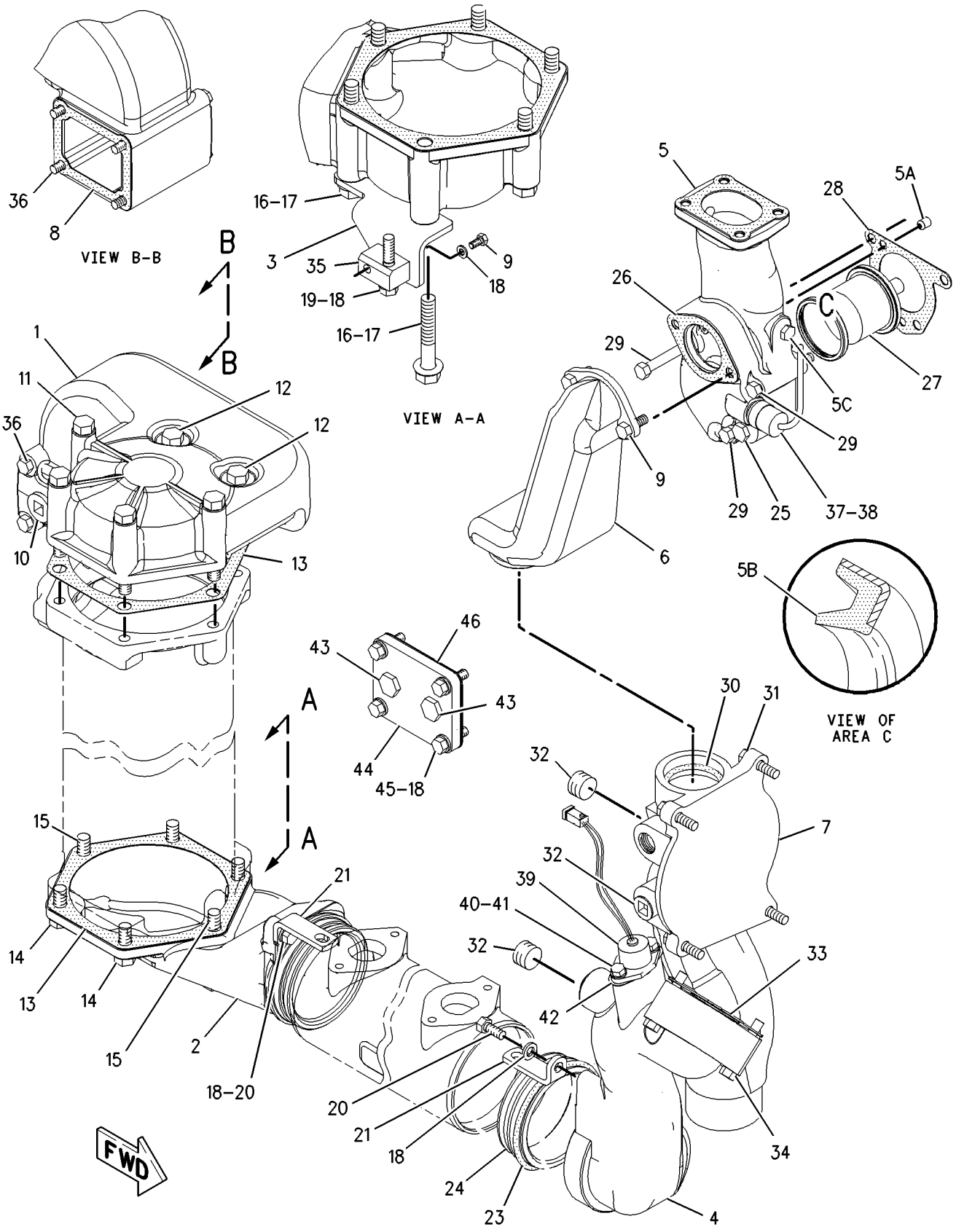

GRAPHIC #1 g00756696

COOLING SYSTEM

161-2427 LINES GP-WATER

S/N: BET1-UP

PART OF 157-7195, 157-7196 ENGINE AR-COMPLETE

SMCS-1355, 1380, 1393 **i01436051**

NOTE	REF NO	GRAPHIC REF	PART NUMBER	QTY	PART NAME 1 2 3 4 5 6 (PRODUCT LEVEL)	SEE PAGE
	1	1	**7N-7628**	4	GASKET	
	2	1	**7N-7878**	2	PLATE-COVER	
	3	1	**160-7720**	1	TUBE AS-WATER	
	4	1	**197-6223**	1	TUBE AS	
	5	1	**0S-1594**	8	BOLT (3/8-16X1 IN)	
	6	1	**5M-2894**	8	WASHER-HARD (10.2X18.5X2.5MM THK)	
	7	1	**8M-0755**	1	CONNECTOR	

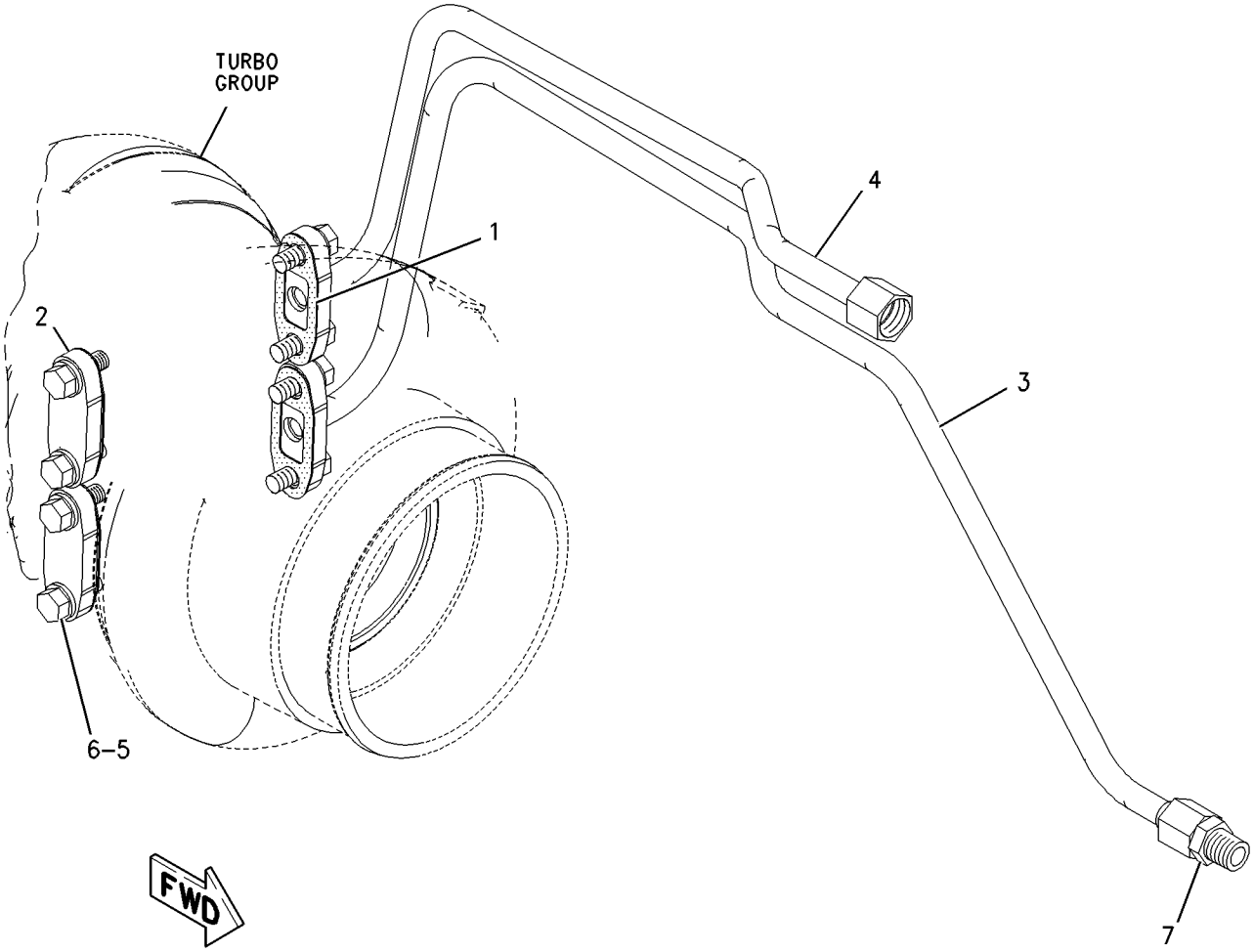

GRAPHIC #1 g00760267

MEMORANDA

COOLING SYSTEM

167-0113 LINES GP-WATER

S/N: AKA1-UP

PART OF 159-5908 INSTALLATION AR-ENGINE

SMCS-1355, 1380, 1393 **i01461306**

NOTE	REF NO	GRAPHIC REF	PART NUMBER	QTY	PART NAME 1 2 3 4 5 6 (PRODUCT LEVEL)	SEE PAGE
	1	1	**160-1008**	1	ELBOW	
	2	1	**2T-2295**	1	CONNECTOR-FLARED	
	3	1	**8M-7057**	1	ADAPTER-PLUG	
	4	1	**8P-9679**	1	SPACER (10.5X25X40MM THK)	
	5	1	**8T-4985**	4	CLAMP-HOSE	
	6	1	**8T-6703**	4	CLAMP-HOSE	
	7	1	**108-8705**	1	TUBE AS	
	8	1	**108-8708**	1	ELBOW	
	9	1	**108-8709**	1	TUBE	
	10	1	**154-9023**	1	VALVE-SAMPLING	
	11	1	**161-8426**	1	BRACKET	
	12	1	**167-6861**	1	BRACKET	
	13	1	**196-7155**	1	HOSE	
I	14	1	**033-4953**	1	HOSE AS	
	15	1	**067-2551**	1	CLIP (SLOT)	
	16	1	**108-8707**	1	ELBOW	
	17	1	**160-5723**	1	GASKET	
	18	1	**186-1733**	1	TUBE	
	19	1	**1A-2029**	4	BOLT (3/8-16X1.125 IN)	
I	20	1	**2N-1347**	1	HOSE AS-END	
	21	1	**3J-5389**	1	PLUG (1/2-14 NPT THD)	
	22	1	**3J-7354**	1	SEAL-O-RING	
	23	1	**4L-6454**	3	BOLT (3/8-16X1 IN)	
	24	1	**4L-6459**	2	BOLT (3/8-16X2.5 IN)	
	25	1	**4N-1419**	2	GASKET-OUTLET	
E	26	1	**5P-1262**		HOSE (63.5MM ID) (11.4CM EACH)	
	27	1	**5M-6214**	1	PLUG-PIPE	
	28	1	**5P-1075**	2	WASHER-HARD (10.2X22.5X3MM THK)	
	29	1	**5P-4495**	1	TEE-FLARED	
E	30	1	**5P-1265**		HOSE (76.2MM ID) (11.4CM EACH)	
	31	1	**6V-0852**	1	CAP-DUST	
	32	1	**6V-8801**	3	NUT (3/8-16 THD)	
	33	1	**7J-0482**	1	ELBOW	
	34	1	**7L-6326**	1	CLIP	
	35	1	**8M-0547**	1	ELBOW	
	36	1	**8M-0755**	1	CONNECTOR	
	37	1	**8M-1869**	1	PLUG-DRAIN	
	38	1	**8M-7066**	1	GASKET	
	39	1	**8T-4896**	11	WASHER-HARD (10.2X18.5X2.5MM THK)	
	40	1	**8T-4984**	6	CLAMP-HOSE	
	41	1	**8T-6762**	1	PLUG-PIPE	
	42	1	**8T-6767**	1	PLUG-PIPE	
	43	1	**8T-8917**	8	BOLT (1/2-13X1.25 IN)	
	44	1	**8T-9101**	1	BOLT (3/8-16X2.75 IN)	
E	45	1	**5P-1257**		HOSE (11CM)	
E	46	1	**5P-1259**		HOSE (32CM)	

E-ORDER BY THE CENTIMETER
I-SEE HOSE FABRICATION GUIDE

167-0113 **LINES GP-WATER** *(contd.)* **i01461306**

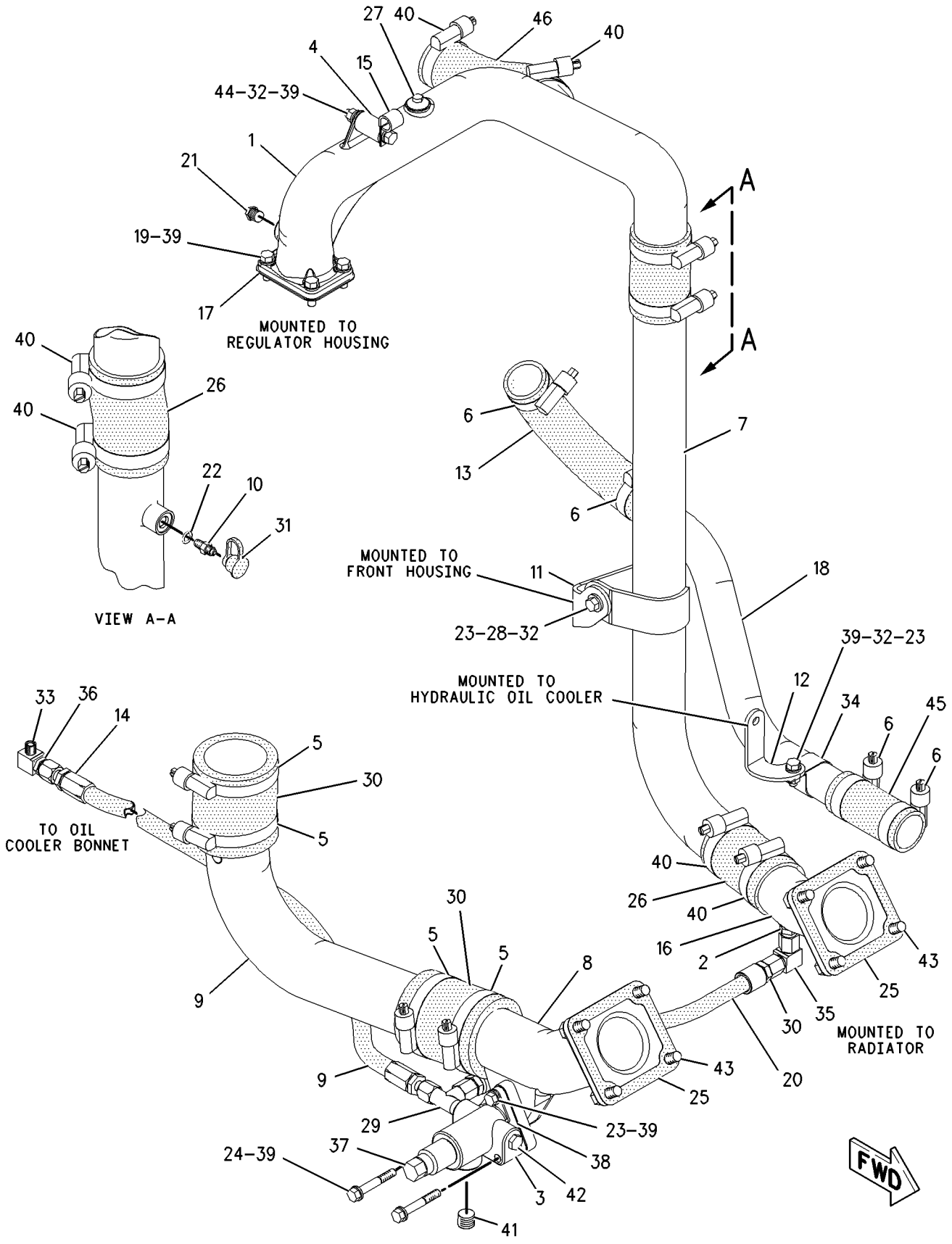

GRAPHIC #1 g00756222

167-0114 LINES GP-WATER

S/N: BET1-UP

PART OF 157-7195, 157-7196 ENGINE AR-COMPLETE

SMCS-1355, 1380, 1393 **i01440934**

NOTE	REF NO	GRAPHIC REF	PART NUMBER	QTY	PART NAME 1 2 3 4 5 6 (PRODUCT LEVEL)	SEE PAGE
E	1	1	**5P-0763**		HOSE (38.1MM ID) (15CM)	
	2	1	**8T-4983**	2	CLAMP-HOSE	
	3	1	**172-5457**	1	ADAPTER	
	4	1	**179-1979**	1	ADAPTER	
	5	1	**1H-7339**	2	SEAL-O-RING (75.79MM ID)	
	6	1	**8T-6765**	2	PLUG-PIPE	

E-ORDER BY THE CENTIMETER

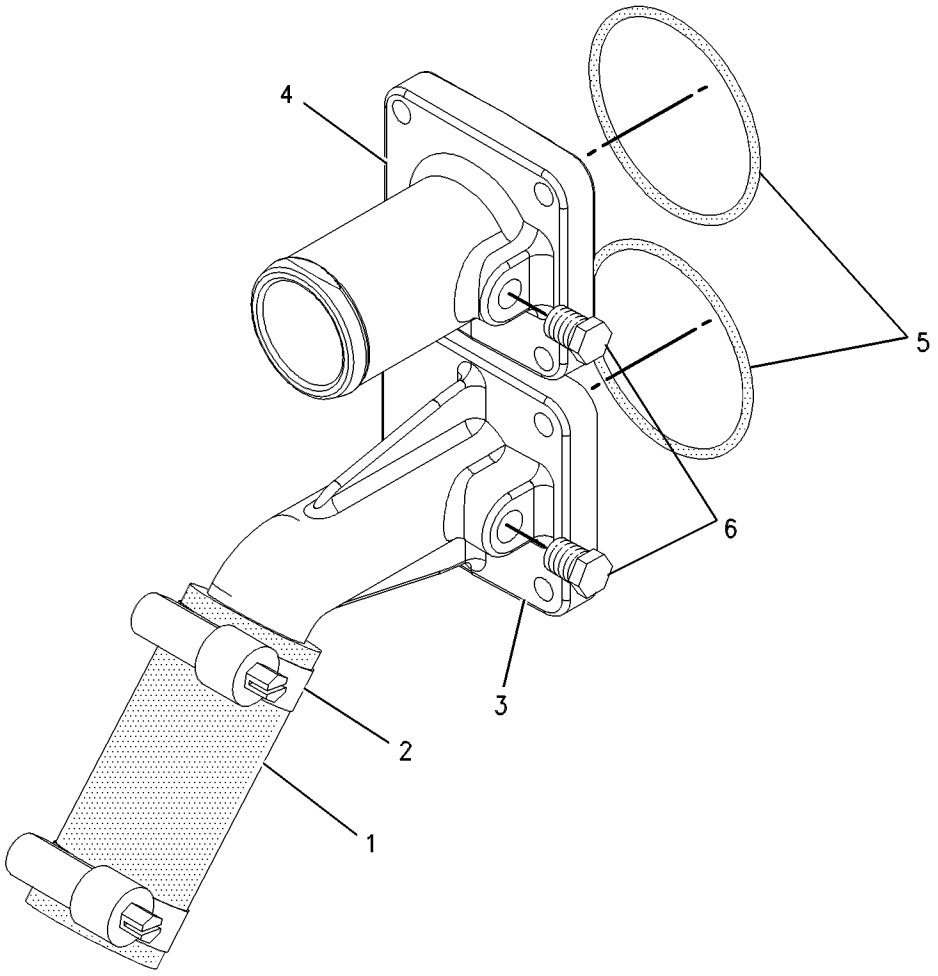

GRAPHIC #1 g00660608

100-9347 PUMP GP-WATER

S/N: BET1-UP
PROVIDES CAST IRON ADAPTER
PART OF 157-7195, 157-7196 ENGINE AR-COMPLETE

SMCS-1361, 1363, 1364, 1373, 1384, 1389, 1394 **i01448186**

NOTE	REF NO	GRAPHIC REF	PART NUMBER	QTY	PART NAME 1 2 3 4 5 6 (PRODUCT LEVEL)	SEE PAGE
YR	1	1	**135-4925**	1	PUMP GP-WATER	118
	2	1	**4P-2383**	1	ADAPTER-INLET	
	3	1	**9M-3786**	1	SEAL-O-RING (139.06MM ID)	
	4	1	**122-3772**	1	SEAL-O-RING (215.49MM ID)	
	5	1	**109-0077**	1	SEAL-O-RING (100.97MM ID)	

R-REMFG PART MAY BE AVAILABLE
Y-SEPARATE ILLUSTRATION

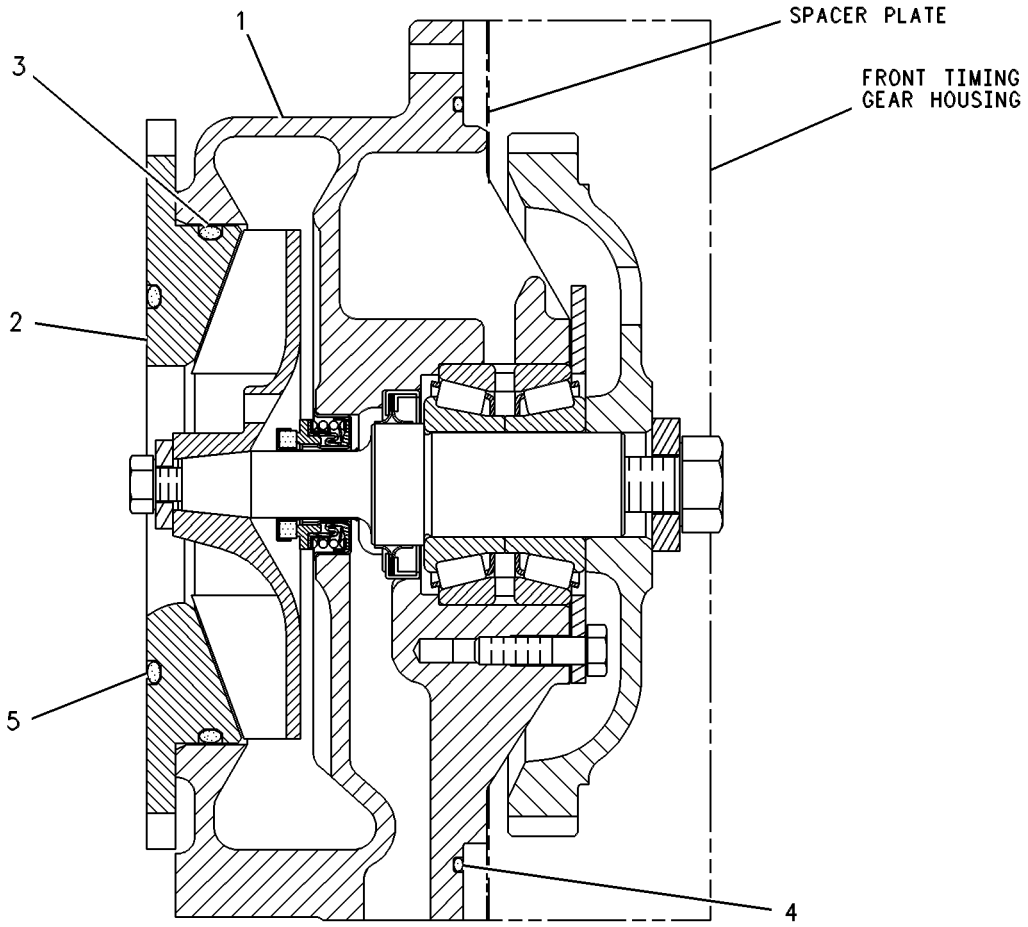

GRAPHIC #1 g00263504

COOLING SYSTEM

135-4925 PUMP GP-WATER*R

S/N: BET1-UP

PART OF 100-9347 PUMP GP-WATER

SMCS-1361, 1363, 1364, 1373, 1384, 1389, 1394 **i01448189**

NOTE	REF NO	GRAPHIC REF	PART NUMBER	QTY	PART NAME 1 2 3 4 5 6 (PRODUCT LEVEL)	SEE PAGE
	1	1	**135-4918**	1	HOUSING-WATER PUMP	
	2	1	**129-9907**	1	IMPELLER-PUMP	
W	3	1	**9M-6527**	1	WASHER-HARD (10.2X25.5X5MM THK)	
	4	1	**0S-1591**	1	BOLT (3/8-16X1.5 IN)	
	5	1	**1A-1135**	1	BOLT (5/8-11X2 IN)	
W	6	1	**128-0317**	1	SEAL GP	
	7	1	**6I-3643**	1	GEAR (74 T)	
W	8	1	**153-1256**	1	SEAL-LIP TYPE	
W	9	1	**135-4928**	1	SHAFT-WATER PUMP	
W	10	1	**5S-0581**	1	WASHER-HARD (17X38X8MM THK)	
	11	1	**1B-7182**	4	BOLT (5/16-18X1.25 IN)	
W	12	1	**108-7930**	1	BEARING AS-ROLLER	
W	13	1	**136-1107**	1	RETAINER	
W	14	1	**136-3742**	1	FILTER-WATER PUMP	
					AVAILABLE REPAIR KIT(S):	
W			**138-6744**	1	KIT-PUMP REBUILD (WATER)	
			128-2922	1	KIT-GASKET (WATER PUMP)	
					(ALSO INCLUDES O-RINGS)	

W-KIT(S) MARKED W INCLUDES PART(S) MARKED W

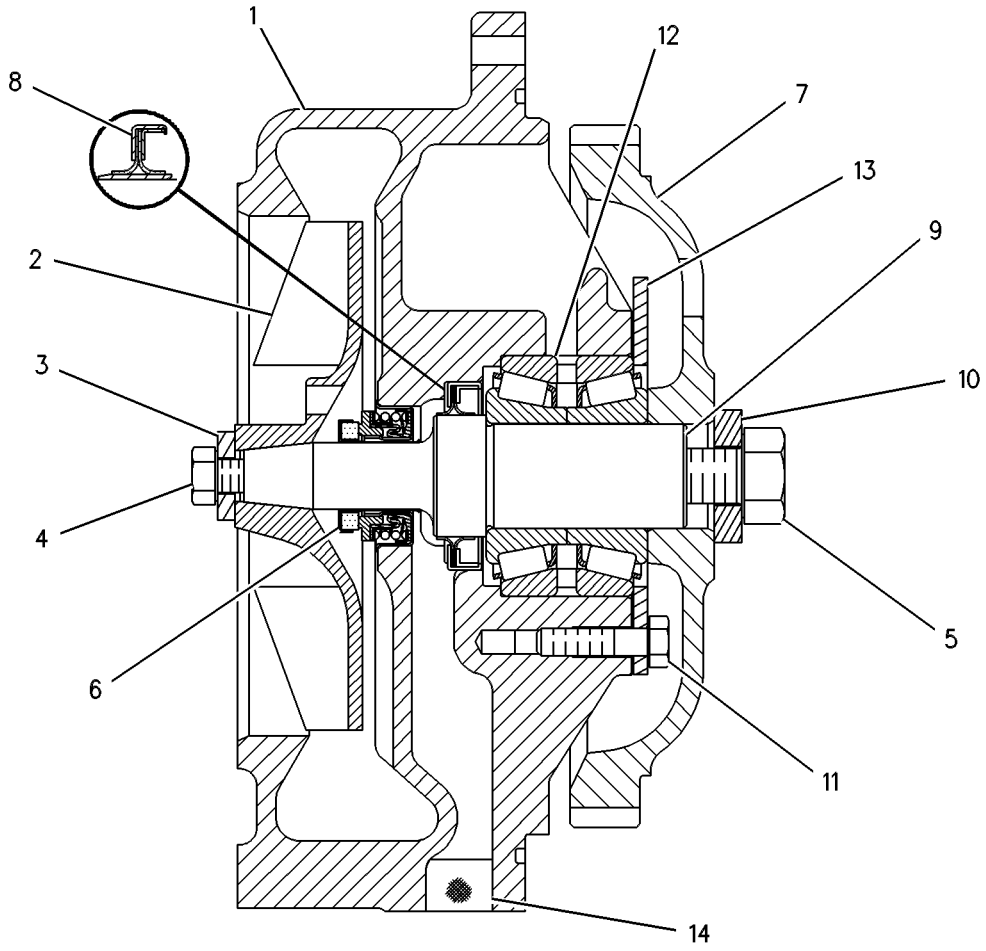

GRAPHIC #1 g00263499

COOLING SYSTEM

160-3916 PUMP GP-WATER

S/N: BET1-UP

PART OF 157-7195, 157-7196 ENGINE AR-COMPLETE

SMCS-1361, 1363, 1364, 1373, 1384, 1389, 1394 **i01503072**

NOTE	REF NO	GRAPHIC REF	PART NUMBER	QTY	PART NAME 1 2 3 4 5 6 (PRODUCT LEVEL)	SEE PAGE
	1	1	**144-6142**	1	SEAL-INTEGRAL	
	2	1	*148-8320*	1	CONNECTOR AS	
		1	**4J-5477**	1	SEAL-O-RING	
		1	**8C-6865**	1	CONNECTOR	
	3	1	*148-8337*	1	CONNECTOR AS	
		1	**4J-5477**	1	SEAL-O-RING	
		1	**8C-6866**	1	CONNECTOR	
Y	4	1	**160-3917**	1	PUMP GP-WATER	121
I	5	1	**168-7354**	1	HOSE AS	
	6	1	*148-8351*	2	ELBOW GP	
					(EACH INCLUDES)	
		1	**4J-5477**	1	SEAL-O-RING	
		1	**6V-9849**	1	ELBOW-SWIVEL	
	7	1	**1F-7958**	3	NUT-FULL (1/2-13 THD)	
	8	1	**5P-8245**	3	WASHER-HARD (13.5X25.5X3MM THK)	

I-SEE HOSE FABRICATION GUIDE
Y-SEPARATE ILLUSTRATION

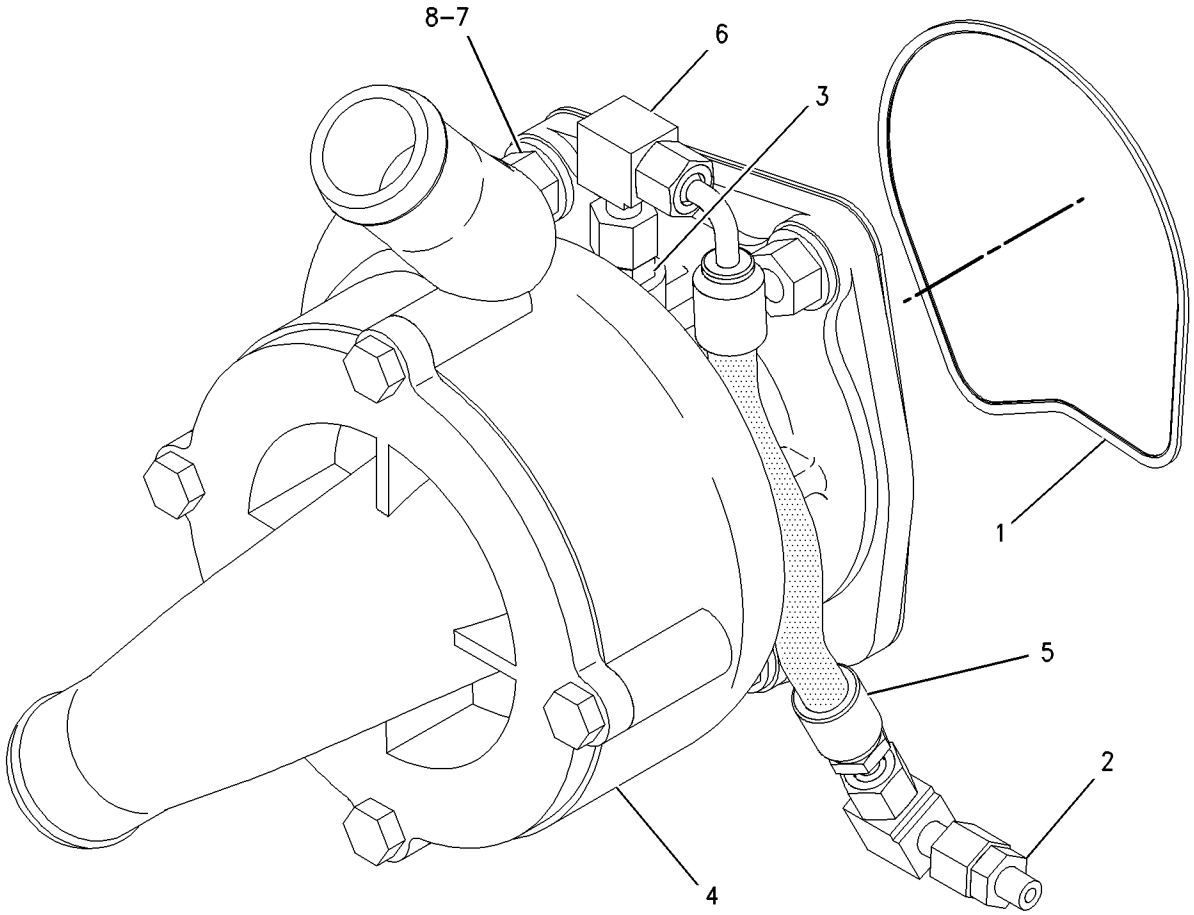

GRAPHIC #1 g00758892

COOLING SYSTEM

160-3917 PUMP GP-WATER

S/N: BET1-UP

PART OF 160-3916 PUMP GP-WATER

SMCS-1361, 1363, 1364, 1373, 1384, 1389, 1394 **i01445135**

NOTE	REF NO	GRAPHIC REF	PART NUMBER	QTY	PART NAME 1 2 3 4 5 6 (PRODUCT LEVEL)	SEE PAGE
	1	1	**161-3009**	1	HOUSING-WATER PUMP	
	2	1	**161-3006**	1	COVER	
	3	1	**161-3007**	1	SHAFT-WATER PUMP	
	4	1	**161-3008**	1	IMPELLER-PUMP	
	5	1	**147-5088**	1	SEAL AS-WATER PUMP	
	6	1	**119-3025**	1	FILTER-WATER	

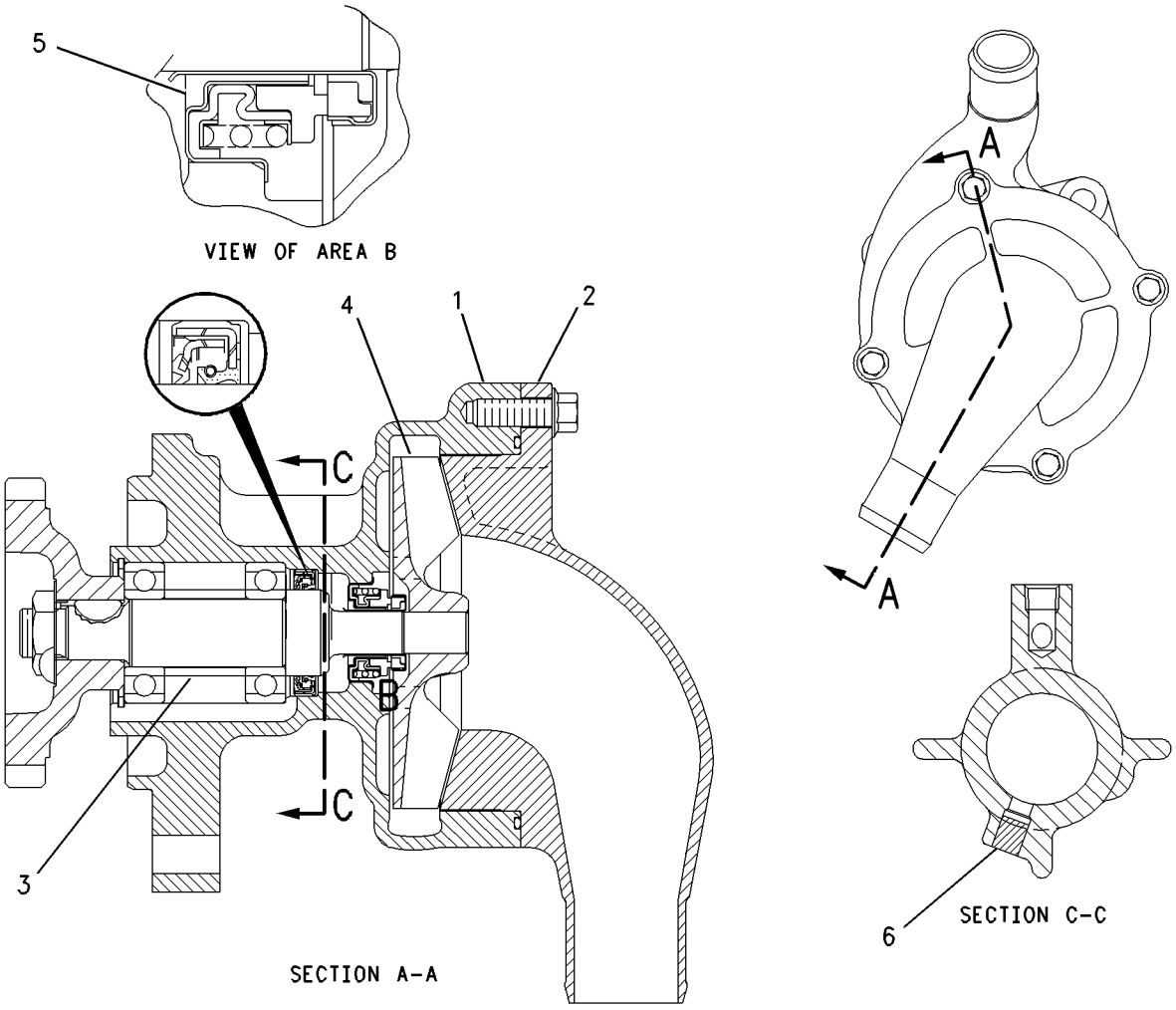

GRAPHIC #1 g00672661

COOLING SYSTEM

189-0971 RADIATOR AR

S/N: AKA1-UP

TRASH RESISTANT AMOCS

SMCS-1353 **i01489094**

NOTE	PART NUMBER	QTY	PART NAME 1 2 3 4 5 6 (PRODUCT LEVEL)	SEE PAGE
Y	**163-4061**	7	CORE AS-RADIATOR	94
Y	**163-4062**	2	CORE AS-RADIATOR	95
Y	*143-7770*	1	FAN AR-VARIABLE	98

Y-SEPARATE ILLUSTRATION

MEMORANDA

COOLING SYSTEM

124-7520 RADIATOR GP

S/N: AKA1-UP

PART OF 124-4818 FAN AR-EJECTOR

SMCS-1351 **i01223574**

NOTE	REF NO	GRAPHIC REF	PART NUMBER	QTY	PART NAME 1 2 3 4 5 6 (PRODUCT LEVEL)	SEE PAGE
Y	1	1	*125-8530*	1	RADIATOR GP	126
	2	1	**113-7336**	1	SHIELD AS-TOP	
		1	**1F-0750**	4	NUT-WELD (3/8-16 THD)	
	3	1	**113-7335**	1	SHIELD AS-TOP	
		1	**1F-0750**	4	NUT-WELD (3/8-16 THD)	
	4	1	**108-1799**	1	SHIELD AS	
		1	**1F-0748**	2	NUT-WELD (1/2-13 THD)	
		1	**1F-0750**	4	NUT-WELD (3/8-16 THD)	
	5	1	**108-1798**	1	SHIELD AS	
		1	**1F-0750**	6	NUT-WELD (3/8-16 THD)	
	6	1	**110-0285**	4	STRIP	
	7	1	**108-0957**	2	BAFFLE AS	
		1	**7G-5186**	6	SPACER	
	8	1	**108-0958**	2	BAFFLE AS	
		1	**7G-5186**	6	SPACER	
	9	1	**115-9360**	1	BAFFLE AS	
		1	**1F-0750**	7	NUT-WELD (3/8-16 THD)	
		1	**6B-4594**	16	RIVET (4.85MM DIA)	
	10	1	**109-3615**	1	BAFFLE AS	
		1	**1F-0750**	6	NUT-WELD (3/8-16 THD)	
		1	**6B-4594**	6	RIVET (4.85MM DIA)	
	11	1	**109-3614**	1	BAFFLE AS	
		1	**6B-4594**	7	RIVET (4.85MM DIA)	
	12	1	**106-4572**	6	HOSE	
	13	1	**1P-4278**	12	CLAMP (HOSE)	
	14	1	**8T-8919**	12	BOLT (1/2-13X1.75IN)	
	15	1	**5P-1076**	12	WASHER-HARD (4MM THK)	
	16	1	**4L-6454**	20	BOLT (3/8-16X1 IN)	
	17	1	**8T-4896**	20	WASHER-HARD (2.5MM THK)	
	18	1	**5S-7379**	4	BOLT (3/8-16X.875IN)	
	19	1	**5P-1075**	4	WASHER-HARD (3MM THK)	

Y-SEPARATE ILLUSTRATION

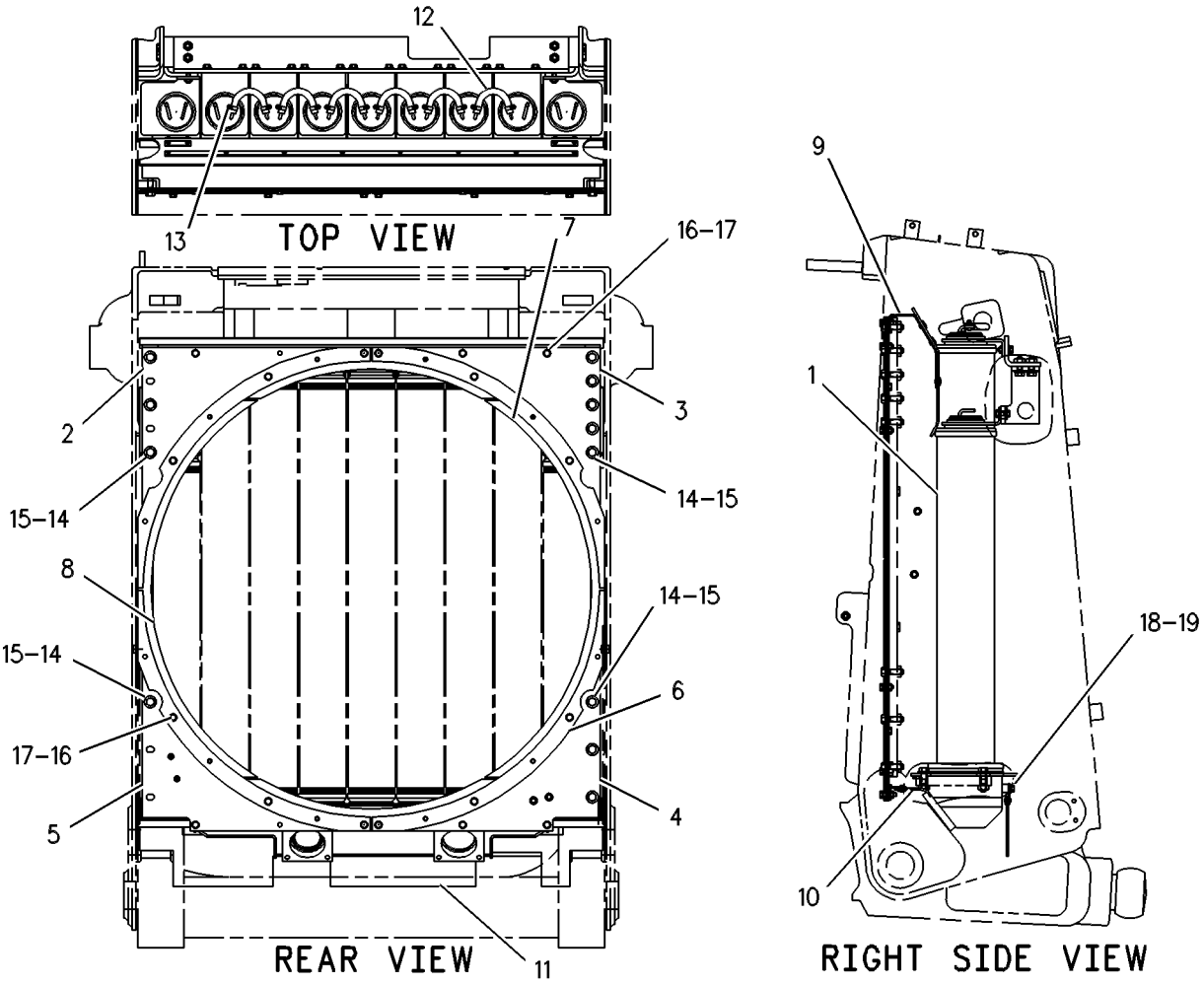

GRAPHIC #1 g00249939

COOLING SYSTEM

125-8530 RADIATOR GP

S/N: AKA1-UP

PART OF 124-7520 RADIATOR GP

SMCS-1351 **i01488407**

NOTE	REF NO	GRAPHIC REF	PART NUMBER	QTY	PART NAME 1 2 3 4 5 6 (PRODUCT LEVEL)	SEE PAGE
	1	1	**116-3749**	1	TANK AS-RADIATOR	
		1	**1F-0750**	5	NUT-WELD (3/8-16 THD)	
BE		1	**125-6743**		SEAL-RUBBER (103 CM)	
	2	1	**178-9316**	7	CORE AS-RADIATOR	
	3	1	**185-7976**	2	CORE AS-RADIATOR	
	4	1	**6I-2431**	9	SEAL	
	5	1	**109-3609**	1	RETAINER AS	
		1	**1F-0750**	1	NUT-WELD (3/8-16 THD)	
	6	1	**109-3610**	1	RETAINER AS	
		1	**1F-0750**	1	NUT-WELD (3/8-16 THD)	
	7	1	**6I-2435**	9	SPACER	
	8	1	**108-0697**	7	RETAINER AS	
		1	**1F-0750**	2	NUT-WELD (3/8-16 THD)	
	9	1	**109-3611**	1	BRACKET AS	
		1	**8T-5911**	4	NUT-WELD (1/2-13 THD)	
	10	1	**8T-2502**	14	BOLT (3/8-16X1.125 IN)	
	11	1	**5P-1075**	14	WASHER-HARD (10.2X22.5X3MM THK)	
	12	1	**5P-2566**	4	BOLT (1/2-13X1.5 IN)	
	13	1	**5P-1076**	8	WASHER-HARD (13.5X30X4MM THK)	
	14	1	**9B-7237**	2	BOLT (3/8-16X1.25 IN)	
	15	1	**8M-7145**	2	WASHER (10.2X28.5X5MM THK)	
	16	1	**8T-4835**	4	BOLT (1/2-13X2 IN)	

B-USE AS REQUIRED
E-ORDER BY THE CENTIMETER

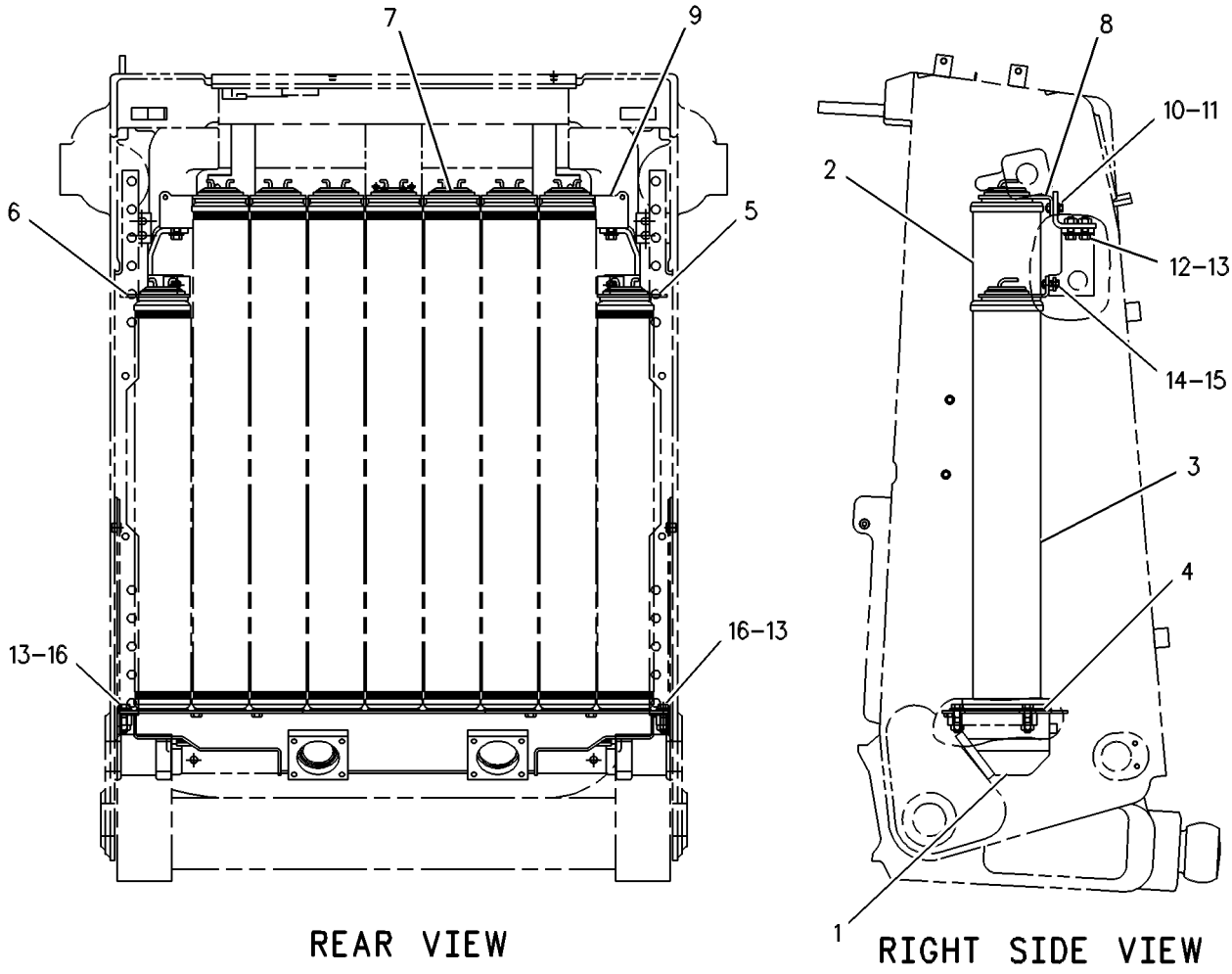

GRAPHIC #1

g00249943

COOLING SYSTEM

161-2424 RADIATOR GP

S/N: AKA1-UP

PART OF 159-5908 INSTALLATION AR-ENGINE

SMCS-1351 **i01391773**

NOTE	REF NO	GRAPHIC REF	PART NUMBER	QTY	PART NAME 1 2 3 4 5 6 (PRODUCT LEVEL)	SEE PAGE
Y	1	1	*161-3232*	1	RADIATOR GP	130
	2	1	**113-7336**	1	SHIELD AS-TOP (LH)	
		1	**1F-0750**	4	NUT-WELD (3/8-16 THD)	
	3	1	**113-7335**	1	SHIELD AS-TOP (RH)	
		1	**1F-0750**	4	NUT-WELD (3/8-16 THD)	
	4	1	**108-1799**	1	SHIELD AS (BOTTOM RH)	
		1	**1F-0748**	2	NUT-WELD (1/2-13 THD)	
		1	**1F-0750**	4	NUT-WELD (3/8-16 THD)	
	5	1	**108-1798**	1	SHIELD AS (BOTTOM LH)	
		1	**1F-0750**	6	NUT-WELD (3/8-16 THD)	
	6	1	**110-0285**	4	STRIP	
	7	1	**108-0957**	2	BAFFLE AS	
					(EACH INCLUDES)	
		1	**7G-5186**	6	SPACER (13X19X4.5MM THK)	
	8	1	**108-0958**	2	BAFFLE AS	
					(EACH INCLUDES)	
		1	**7G-5186**	6	SPACER (13X19X4.5MM THK)	
	9	1	**115-9360**	1	BAFFLE AS	
		1	**1F-0750**	8	NUT-WELD (3/8-16 THD)	
		1	**6B-4594**	16	RIVET	
	10	1	**109-3615**	1	BAFFLE AS	
	10A	1	**1F-0750**	6	NUT-WELD (3/8-16 THD)	
	10B	1	**6B-4594**	6	RIVET	
	11	1	**109-3614**	1	BAFFLE AS	
		1	**6B-4594**	7	RIVET	
	12	1	**112-3462**	2	STRIP	
	13	1	**166-3773**	2	BAFFLE AS	
					(EACH INCLUDES)	
	13A	1	**7G-5186**	5	SPACER (13X19X4.5MM THK)	
	14	1	**106-4572**	5	HOSE	
	15	1	**1P-4278**	10	CLAMP-HOSE	
	16	1	**8T-8919**	12	BOLT (1/2-13X1.75 IN)	
	17	1	**5P-1076**	20	WASHER-HARD (13.5X30X4MM THK)	
	18	1	**4L-6454**	16	BOLT (3/8-16X1 IN)	
	19	1	**8T-4896**	8	WASHER-HARD (10.2X18.5X2.5MM THK)	
	20	1	**9B-7237**	14	BOLT (3/8-16X1.25 IN)	
	21	1	**5S-7379**	6	BOLT (3/8-16X.875 IN)	
	22	1	**5P-1075**	20	WASHER-HARD (10.2X22.5X3MM THK)	

Y-SEPARATE ILLUSTRATION

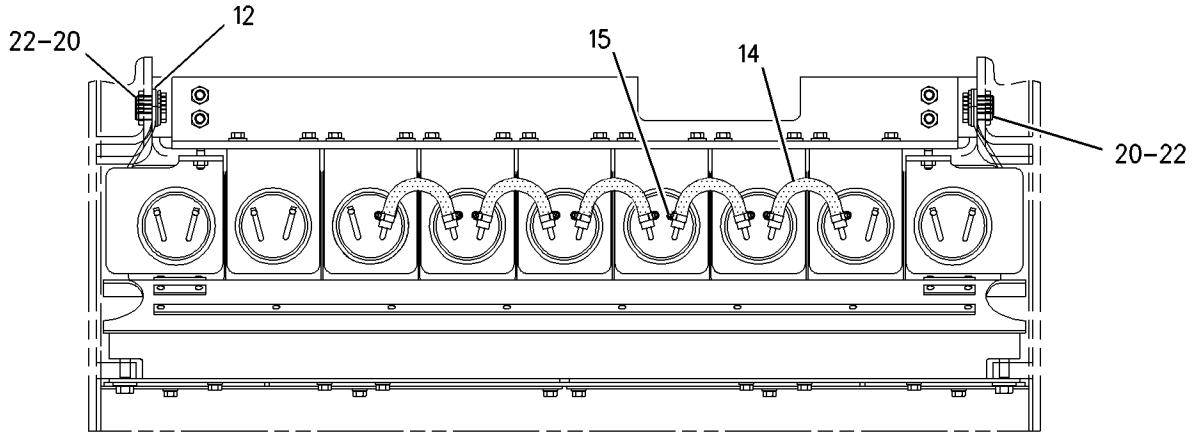

TOP VIEW

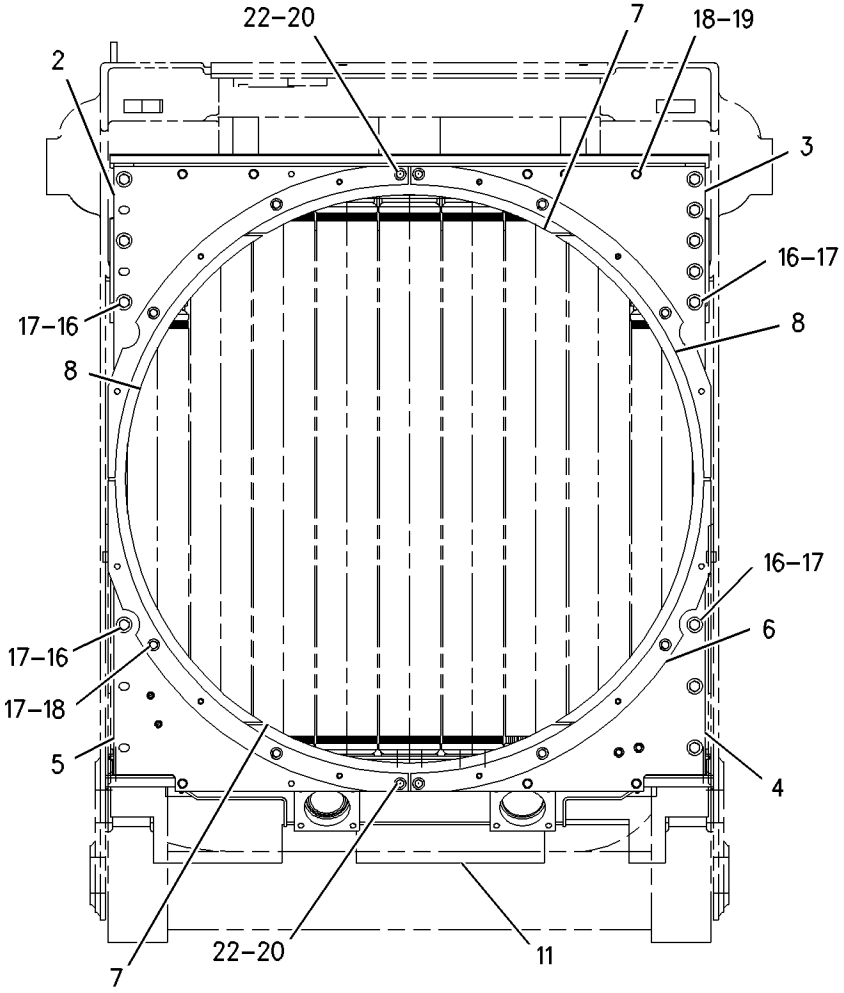

REAR VIEW

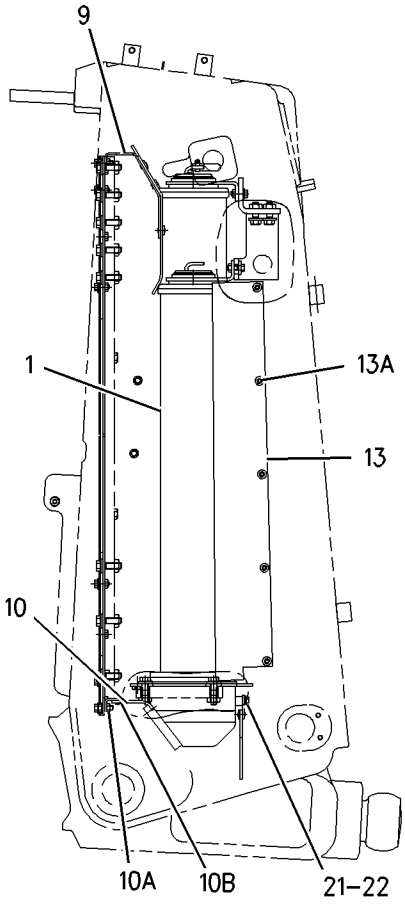

RIGHT SIDE VIEW

GRAPHIC #1 g00709232

COOLING SYSTEM

161-3232 RADIATOR GP

S/N: AKA1-UP

PART OF 161-2424 RADIATOR GP

SMCS-1351 **i01461172**

NOTE	REF NO	GRAPHIC REF	PART NUMBER	QTY	PART NAME 1 2 3 4 5 6 (PRODUCT LEVEL)	SEE PAGE
	1	1	**6I-2435**	9	SPACER	
	2	1	**108-0697**	7	RETAINER AS	
					(EACH INCLUDES)	
	2A	1	**1F-0750**	2	NUT-WELD (3/8-16 THD)	
	3	1	**109-3611**	1	BRACKET AS	
		1	**1F-0748**	4	NUT-WELD (1/2-13 THD)	
	4	1	**173-4512**	7	CORE AS-RADIATOR	
	5	1	**173-4511**	2	CORE AS-RADIATOR	
	6	1	**6I-2431**	9	SEAL	
	7	1	**166-5336**	1	TANK AS-RADIATOR	
		1	**1F-0750**	5	NUT-WELD (3/8-16 THD)	
	8	1	**109-3609**	1	RETAINER AS	
		1	**1F-0750**	1	NUT-WELD (3/8-16 THD)	
	9	1	**109-3610**	1	RETAINER AS	
		1	**1F-0750**	1	NUT-WELD (3/8-16 THD)	
	10	1	**5P-1075**	14	WASHER-HARD (10.2X22.5X3MM THK)	
	11	1	**5P-1076**	8	WASHER-HARD (13.5X30X4MM THK)	
	12	1	**5P-2566**	4	BOLT (1/2-13X1.5 IN)	
	13	1	**8T-2502**	14	BOLT (3/8-16X1.125 IN)	
	14	1	**8T-2561**	2	WASHER-HARD (10.5X28.5X5MM THK)	
	15	1	**8T-4835**	4	BOLT (1/2-13X2 IN)	
	16	1	**9B-7237**	2	BOLT (3/8-16X1.25 IN)	

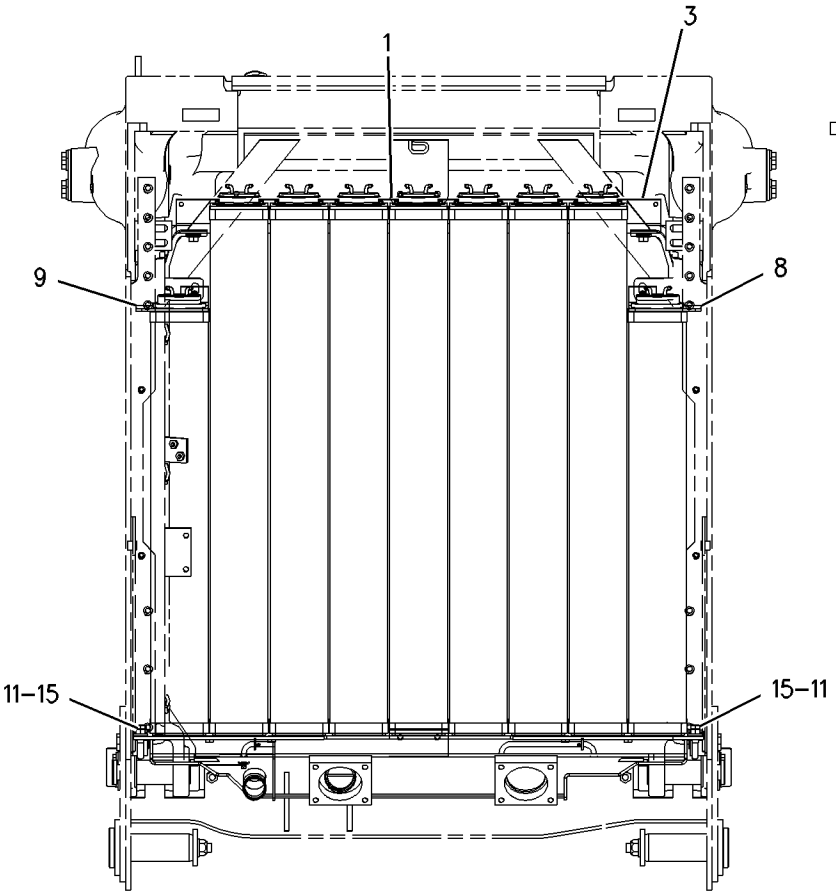

REAR VIEW

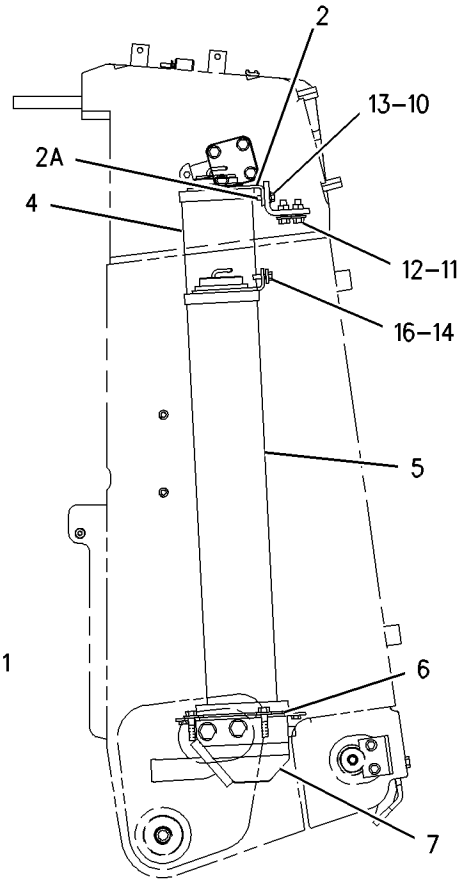

RIGHT SIDE VIEW

GRAPHIC #1

g00691976

COOLING SYSTEM

161-3233 RADIATOR GP

S/N: AKA1-UP

ADVANCED MODULAR COOLING SYSTEM/TRASH RESISTANT

SMCS-1351 **i01488996**

NOTE	REF NO	GRAPHIC REF	PART NUMBER	QTY	PART NAME 1 2 3 4 5 6 (PRODUCT LEVEL)	SEE PAGE
Y	1	1	*161-3234*	1	RADIATOR GP	134
	2	1	**113-7336**	1	SHIELD AS-TOP	
		1	**1F-0750**	4	NUT-WELD (3/8-16 THD)	
	3	1	**113-7335**	1	SHIELD AS-TOP	
		1	**1F-0750**	4	NUT-WELD (3/8-16 THD)	
	4	1	**108-1799**	1	SHIELD AS	
		1	**1F-0748**	2	NUT-WELD (1/2-13 THD)	
		1	**1F-0750**	4	NUT-WELD (3/8-16 THD)	
	5	1	**108-1798**	1	SHIELD AS	
		1	**1F-0750**	6	NUT-WELD (3/8-16 THD)	
	6	1	**110-0285**	4	STRIP	
	7	1	**108-0957**	2	BAFFLE AS	
					(EACH INCLUDES)	
		1	**7G-5186**	6	SPACER (13X19X4.5MM THK)	
	8	1	**108-0958**	2	BAFFLE AS	
					(EACH INCLUDES)	
		1	**7G-5186**	6	SPACER (13X19X4.5MM THK)	
	9	1	**115-9360**	1	BAFFLE AS	
		1	**1F-0750**	8	NUT-WELD (3/8-16 THD)	
		1	**6B-4594**	16	RIVET	
	10	1	**109-3615**	1	BAFFLE AS	
		1	**1F-0750**	6	NUT-WELD (3/8-16 THD)	
		1	**6B-4594**	6	RIVET	
	11	1	**109-3614**	1	BAFFLE AS	
		1	**6B-4594**	7	RIVET	
	12	1	**106-4572**	5	HOSE	
	13	1	**1P-4278**	10	CLAMP-HOSE	
	14	1	**8T-8919**	12	BOLT (1/2-13X1.75 IN)	
	15	1	**5P-1076**	12	WASHER-HARD (13.5X30X4MM THK)	
	16	1	**4L-6454**	20	BOLT (3/8-16X1 IN)	
	17	1	**8T-4896**	20	WASHER-HARD (10.2X18.5X2.5MM THK)	
	18	1	**5S-7379**	4	BOLT (3/8-16X0.875 IN)	
	19	1	**5P-1075**	4	WASHER-HARD (10.2X22.5X3MM THK)	

Y-SEPARATE ILLUSTRATION

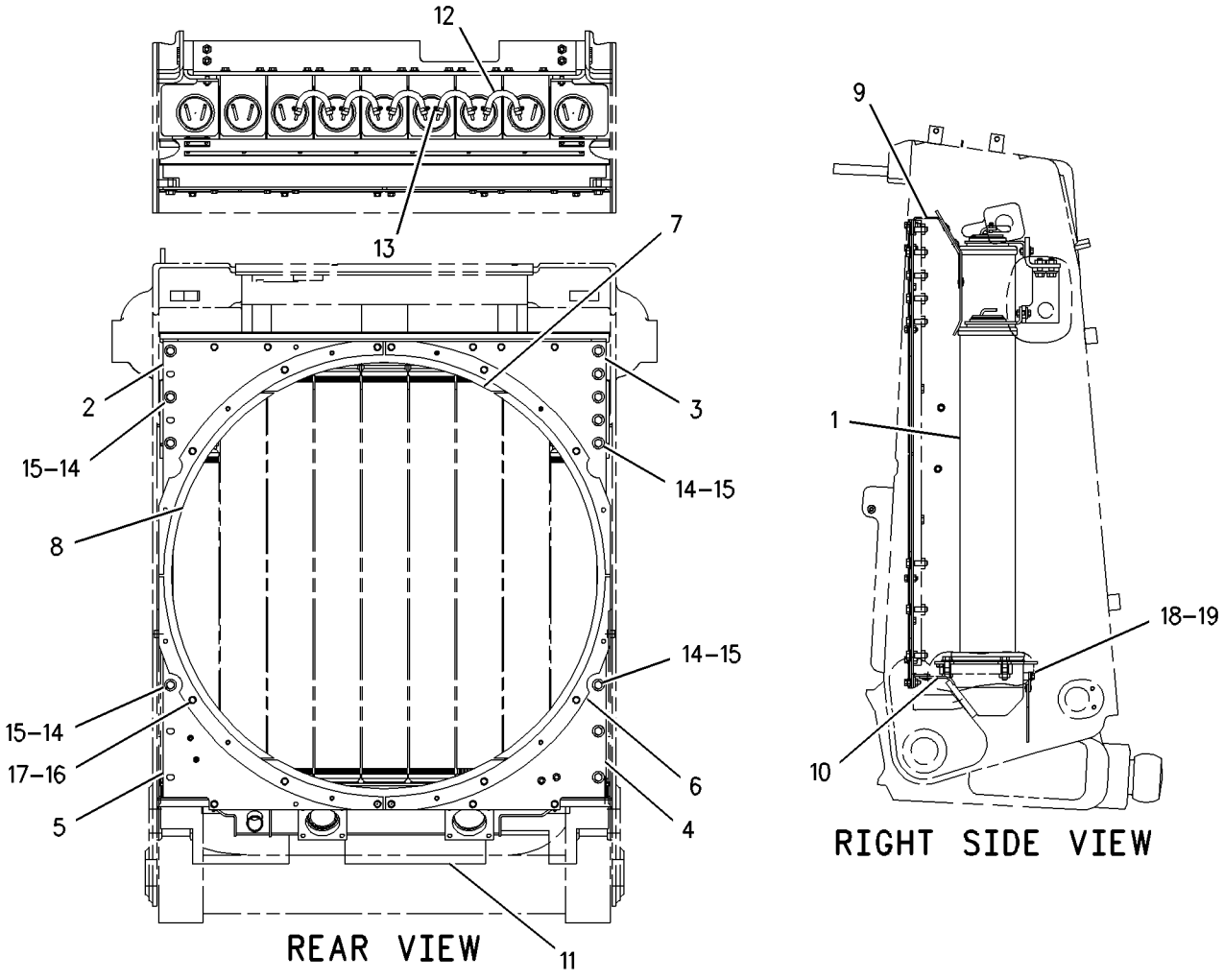

GRAPHIC #1 g00675411

COOLING SYSTEM

161-3234 RADIATOR GP

S/N: AKA1-UP
TRASH RESISTANT
PART OF 161-3233 RADIATOR GP

SMCS-1351 **i01489002**

NOTE	REF NO	GRAPHIC REF	PART NUMBER	QTY	PART NAME 1 2 3 4 5 6 (PRODUCT LEVEL)	SEE PAGE
	1	1	**166-5336**	1	TANK AS-RADIATOR	
		1	**1F-0750**	5	NUT-WELD (3/8-16 THD)	
	2	1	**178-9316**	7	CORE AS-RADIATOR	
	3	1	**185-7976**	2	CORE AS-RADIATOR	
	4	1	**6I-2431**	9	SEAL	
	5	1	**109-3609**	1	RETAINER AS	
	6	1	**109-3610**	1	RETAINER AS	
					(EACH RETAINER AS INCLUDES)	
		1	**1F-0750**	1	NUT-WELD (3/8-16 THD)	
	7	1	**6I-2435**	9	SPACER	
	8	1	**108-0697**	7	RETAINER AS	
					(EACH INCLUDES)	
		1	**1F-0750**	2	NUT-WELD (3/8-16 THD)	
	9	1	**109-3611**	1	BRACKET AS	
		1	**1F-0748**	4	NUT-WELD (1/2-13 THD)	
	10	1	**8T-2502**	14	BOLT (3/8-16X1.125 IN)	
	11	1	**5P-1075**	14	WASHER-HARD (10.2X22.5X3MM THK)	
	12	1	**5P-2566**	4	BOLT (1/2-13X1.5 IN)	
	13	1	**5P-1076**	8	WASHER-HARD (13.5X30X4MM THK)	
	14	1	**9B-7237**	2	BOLT (3/8-16X1.25 IN)	
	15	1	**8T-2561**	2	WASHER-HARD (10.5X28.5X5MM THK)	
	16	1	**8T-4835**	4	BOLT (1/2-13X2 IN)	

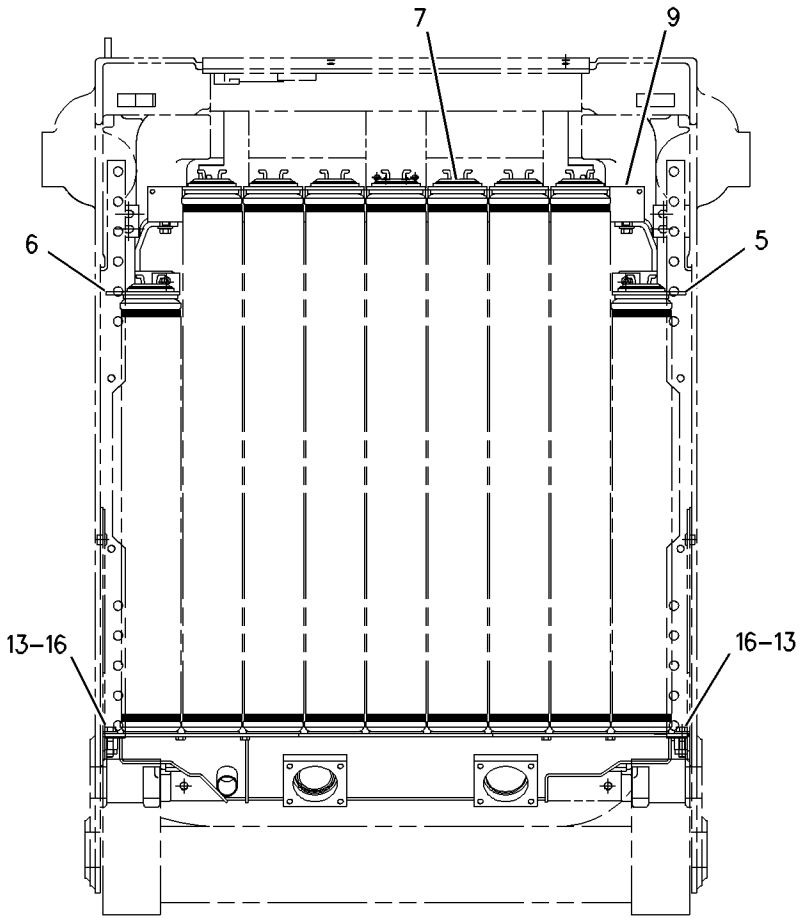

REAR VIEW

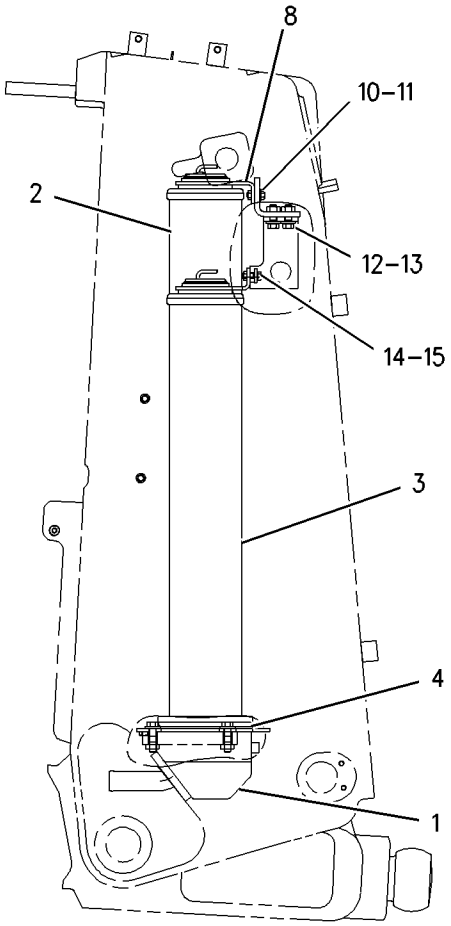

RIGHT SIDE VIEW

GRAPHIC #1 g00675421

134-6054 SWITCH GP-FLOW

S/N: BET1-UP
COOLANT
PART OF 160-4934 LINES GP-WATER

SMCS-1435 **i01436923**

NOTE	REF NO	GRAPHIC REF	PART NUMBER	QTY	PART NAME 1 2 3 4 5 6 (PRODUCT LEVEL)	SEE PAGE
	1	1	**8T-8729**	2	PIN-CONNECTOR	
	2	1	**3E-3365**	1	WEDGE-RECEPTACLE LOCK (2 PIN)	
					AVAILABLE REPAIR KIT(S):	
			102-8802	1	KIT-RECEPTACLE (2 PIN)	
					INCLUDES RECEPTACLE AS. AND WEDGE	

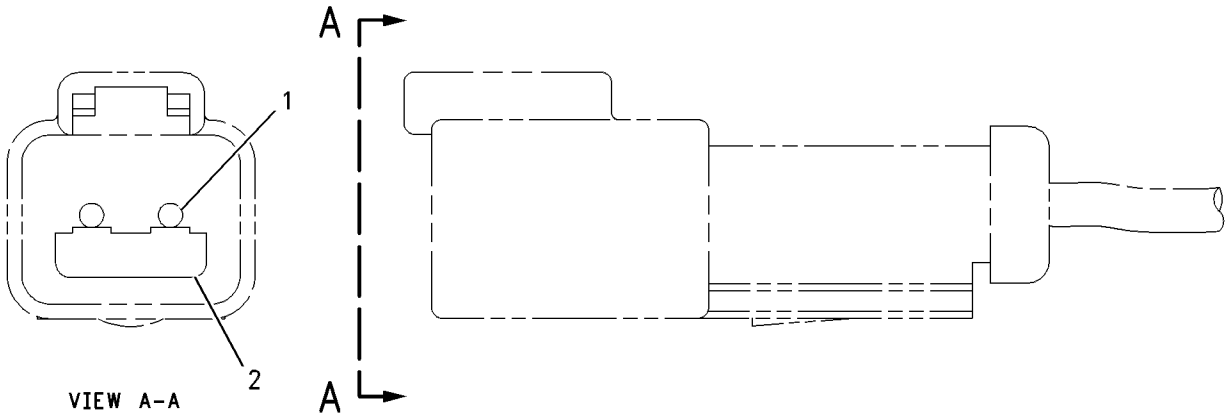

GRAPHIC #1 g00502937

COOLING SYSTEM

165-6940 TANK GP-COOLANT

S/N: AKA1-UP

PART OF 171-1283 TANK GP-WATER

SMCS-1354, 1377 **i01369585**

NOTE	REF NO	GRAPHIC REF	PART NUMBER	QTY	PART NAME 1 2 3 4 5 6 (PRODUCT LEVEL)	SEE PAGE
	1	1	**031-1119**	1	CAP AS-RADIATOR	
	2	1	**188-0755**	1	TANK AS-COOLANT	

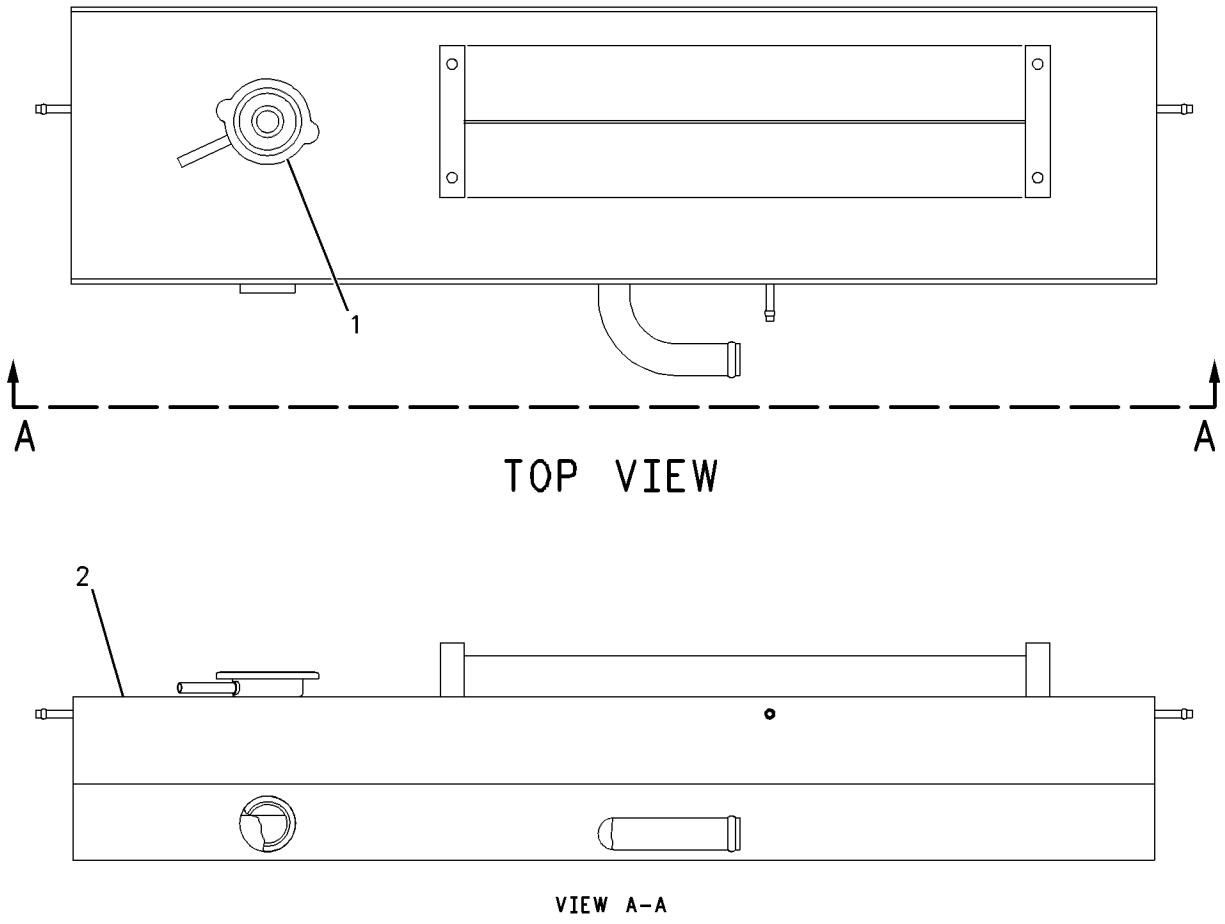

GRAPHIC #1 g00547744

COOLING SYSTEM

171-1283 TANK GP-WATER

S/N: AKA1-UP

PART OF 159-5908 INSTALLATION AR-ENGINE

SMCS-1377 **i01486164**

NOTE	REF NO	GRAPHIC REF	PART NUMBER	QTY	PART NAME 1 2 3 4 5 6 (PRODUCT LEVEL)	SEE PAGE
	1	1	**202-1205**	1	ADAPTER-PIPE	
	2	2	**1P-9328**	1	FITTING	
	3	1	**2V-4868**	1	FITTING (1/8-27 PTF)	
	5	2	**5P-2937**	1	ADAPTER-O-RING	
	6	1	**6L-2479**	1	BRACE	
	7	2	**6V-1355**	3	ELBOW	
	8	2	**7K-1181**	2	STRAP-CABLE	
	9	2	**7M-8485**	1	SEAL-O-RING	
	10	1	**7N-1277**	1	BRACKET AS	
	11	1	**7W-1890**	1	ELBOW	
J	12	1	**9X-6772**	2	STRAP-CABLE	
	12A	1	**9X-6772**	1	STRAP-CABLE	
	13	2	**9Y-9236**	1	BODY AS-GAUGE	
	14	2	**106-4572**	1	HOSE	
	15	1	**110-2445**	2	CLAMP-HOSE	
	16	2	**111-7421**	2	CAP	
	17	1	**113-6364**	2	BAFFLE AS	
					(EACH INCLUDES)	
		1	**7G-5186**	2	SPACER (13X19X4.5MM THK)	
	18	2	**164-3759**	1	HOSE	
Y	19	1	*165-6940*	1	TANK GP-COOLANT	137
	20	2	**192-5425**	1	TEE	
	21	1	**197-2679**	1	HOSE AS	
	22	1	**067-2551**	1	CLIP (SLOT)	
	23	1	**113-6363**	2	STRIP	
	24	1	**1P-4278**	16	CLAMP-HOSE	
	25	2	**3J-7354**	5	SEAL-O-RING	
	27	1	**4L-6454**	4	BOLT (3/8-16X1 IN)	
	28	1	**4P-7429**	2	CLIP	
	29	1	**4P-8134**	1	CLIP	
	30	1	**5P-1075**	4	WASHER-HARD (10.2X22.5X3MM THK)	
	31	1	**5S-7379**	1	BOLT (3/8-16X0.875 IN)	
	32	1	**6V-8397**	2	SEAL-O-RING	
	33	1	**6V-8398**	1	SEAL-O-RING	
	34	1	**6V-8737**	1	UNION-FACE SEAL	
	35	2	**6V-9872**	1	CONNECTOR	
	36	1	**7D-7233**	1	CLIP	
	37	1	**8T-2502**	4	BOLT (3/8-16X1.125 IN)	
	38	1	**8T-4121**	2	WASHER-HARD (11X21X2.5MM THK)	
M	39	1	**8T-4133**	1	NUT (M10X1.5 THD)	
M	40	1	**8T-4136**	1	BOLT (M10X1.5X25MM)	
	41	1	**8T-4896**	5	WASHER-HARD (10.2X18.5X2.5MM THK)	
E	42	1	**5P-1251**		HOSE (145CM)	
E	43	1	**8C-3681**		HOSE (180CM)	
E	44A	2	**5P-1465**		HOSE (30CM)	
E	44B	2	**5P-1465**		HOSE (71CM)	
E	44C	2	**5P-1465**	2	HOSE (38CM EACH)	
E	44D	2	**5P-1465**		HOSE (40CM)	

E-ORDER BY THE CENTIMETER
J-LOCATION TO CLAMP HOSE MAY VARY WITH ATTACHMENTS TO AVOID GETTING PINCHED OR WORN
M-METRIC PART
Y-SEPARATE ILLUSTRATION

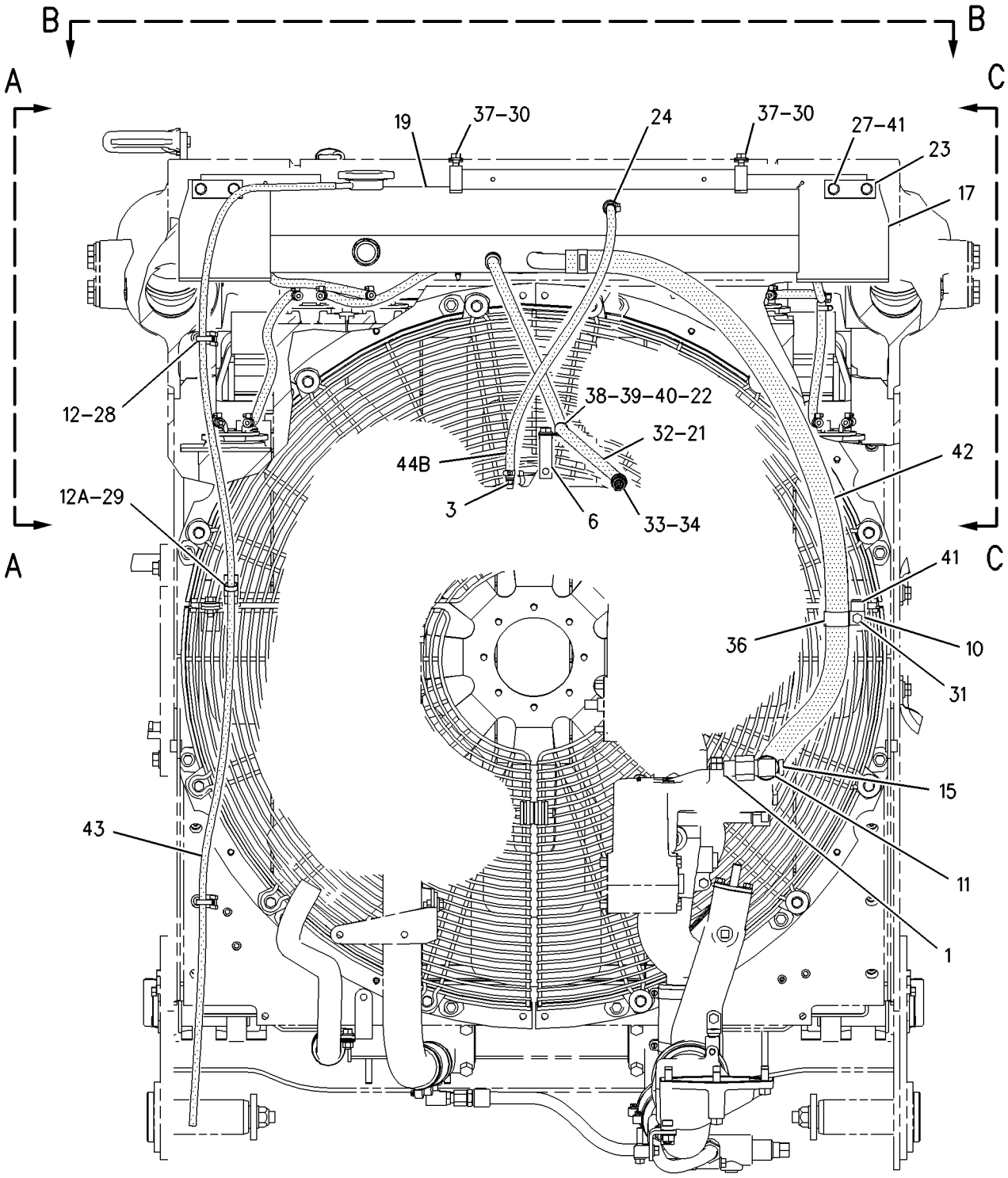

REAR VIEW

REFER TO ALL ILLUSTRATIONS OF THIS GROUP FOR AUXILIARY VIEWS

GRAPHIC #1

g00772780

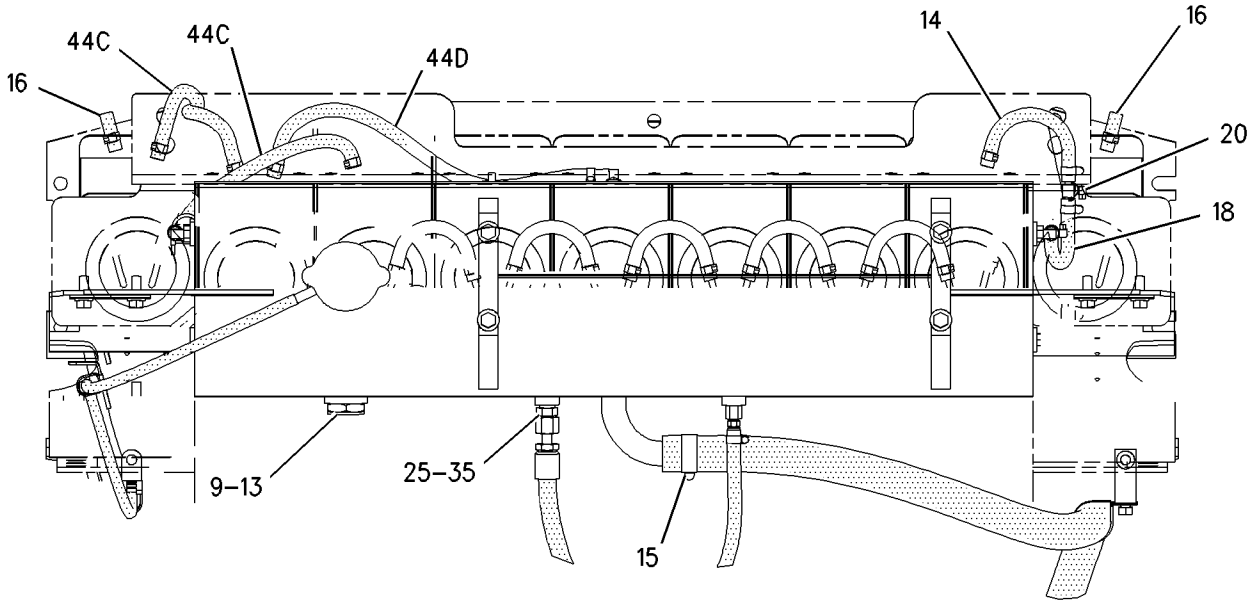

TOP VIEW

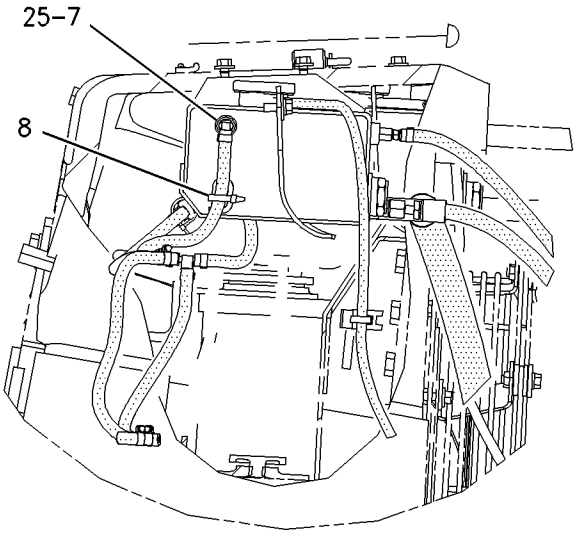

VIEW A–A

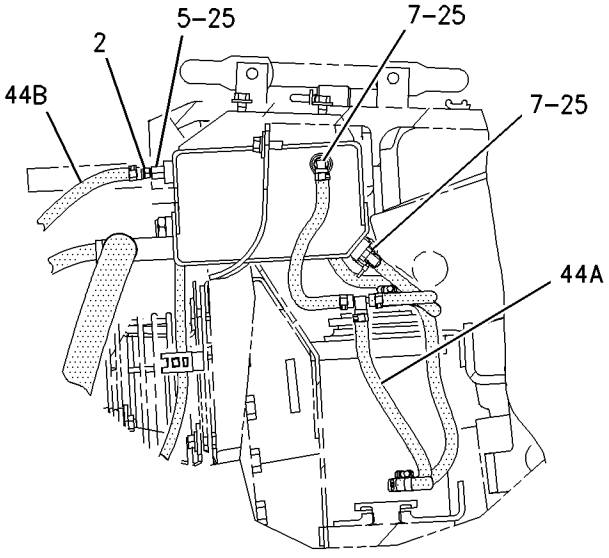

VIEW B–B

GRAPHIC #2 g00772779

MEMORANDA

AIR INLET AND EXHAUST SYSTEM

160-1122 AFTERCOOLER GP

S/N: BET1-UP

PART OF 157-7195, 157-7196 ENGINE AR-COMPLETE

SMCS-1063, 1064, 1079 **i01444645**

NOTE	REF NO	GRAPHIC REF	PART NUMBER	QTY	PART NAME 1 2 3 4 5 6 (PRODUCT LEVEL)	SEE PAGE
	1	1	**159-0226**	1	CORE AS-AFTERCOOLER	
	2	1	**159-1868**	1	BASE-AFTERCOOLER	
	3	1	**159-1869**	1	COVER-AFTERCOOLER	
	4	1	**161-6291**	2	GASKET	
	5	1	**165-4489**	1	BRACKET AS	
		1	**1F-0750**	4	NUT-WELD (3/8-16 THD)	
	6	1	**185-7444**	1	BRACKET AS	
	7	1	**0S-1590**	21	BOLT (3/8-16X2 IN)	
	8	1	**107-8618**	1	SENSOR GP-TEMPERATURE (INLET AIR)	
		1	**102-8803**	1	KIT-RECEPTACLE (3 PIN)	
					(INCLUDES RECEPTACLE AS & WEDGE)	
		1	**3E-3371**	1	WEDGE-RECEPTACLE LOCK (3 PIN)	
		1	**8T-8729**	3	PIN-CONNECTOR	
BE		1	**112-4550**		SLEEVE	
	9	1	**109-0078**	2	SEAL-O-RING (33.47MM ID)	
	10	1	**1A-5964**	2	BOLT (3/8-16X4.5 IN)	
	11	1	**1H-7339**	2	SEAL-O-RING (75.79MM ID)	
	12	1	**2B-2694**	8	BOLT (5/16-18X2 IN)	
	13	1	**3B-1915**	1	BOLT (3/8-16X1.37 IN)	
	14	1	**3J-1907**	1	SEAL-O-RING (11.89MM ID)	
	15	1	**3J-7354**	1	SEAL-O-RING (8.92MM ID)	
	16	1	**4N-4193**	2	ADAPTER	
	17	1	**4W-4775**	2	ADAPTER	
	18	1	**5M-2894**	32	WASHER-HARD (10.2X18.5X2.5MM THK)	
	19	1	**5P-7204**	2	SEAL-O-RING (34.29 ID)	
	20	1	**6V-4365**	6	SEAL-O-RING (9.19MM ID)	
	21	1	**7D-7111**	1	SEAL-O-RING (110.49MM ID)	
	22	1	**7W-0688**	1	GASKET-ADAPTER	
	23	1	**8L-2786**	1	SEAL-O-RING (16.36MM ID)	
	24	1	**8N-8100**	1	ADAPTER	
	25	1	**9F-2773**	2	BOLT (3/8-16X8.5 IN)	
	26	1	**9F-8999**	2	BOLT (3/8-16X7IN)	
	27	1	**9S-8002**	1	PLUG-O-RING	
N	28	1	**9S-8004**	1	PLUG	
	29	1	**9S-8752**	4	NUT-FULL (3/8-16 THD)	

B-USE AS REQUIRED
E-ORDER BY THE CENTIMETER
N-NEW PART

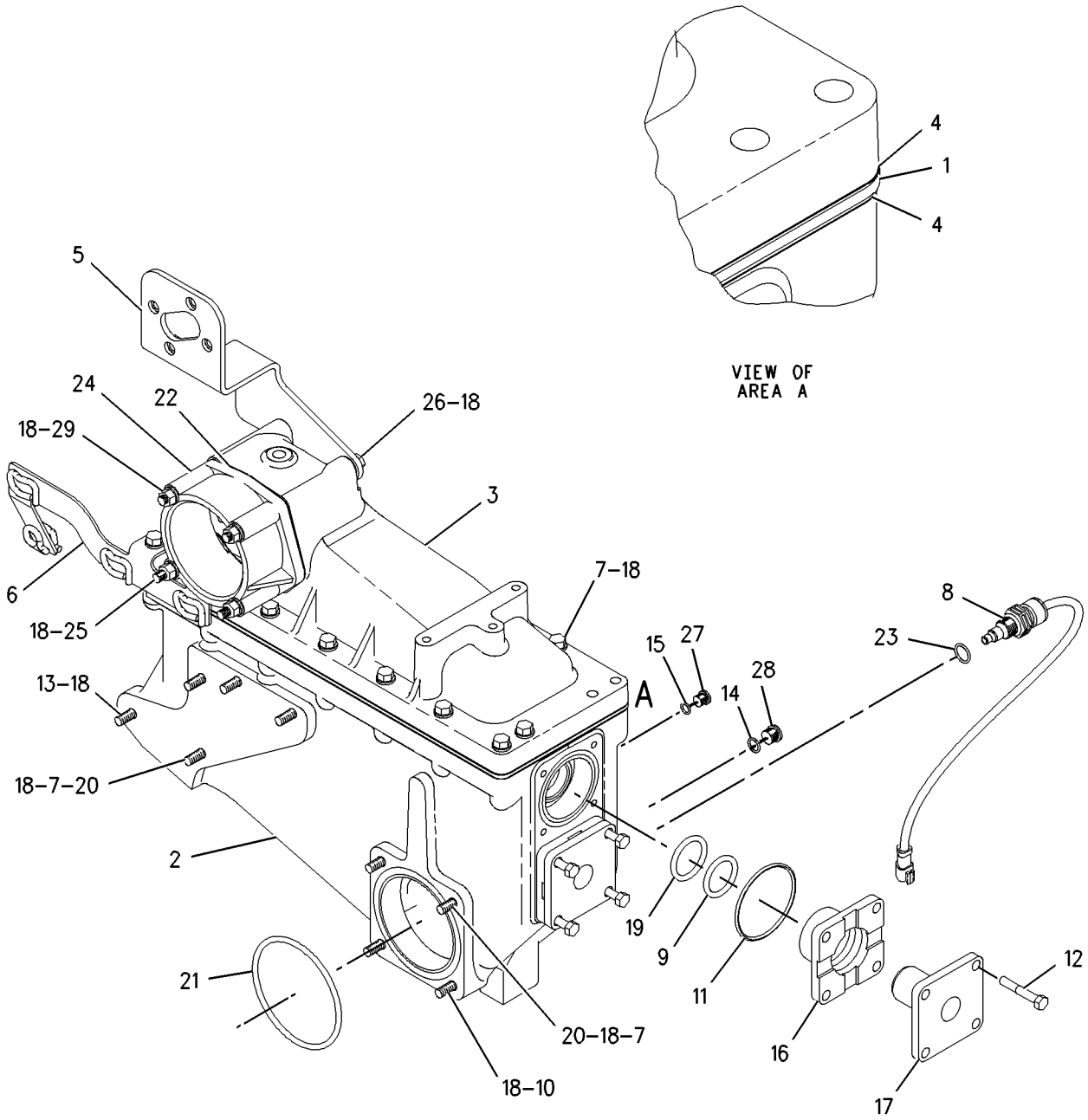

GRAPHIC #1

g00750572

AIR INLET AND EXHAUST SYSTEM

161-2430 AIR CLEANER GP

S/N: AKA1-UP

PART OF 159-5908 INSTALLATION AR-ENGINE

SMCS-1051, 1054 **i01391876**

NOTE	REF NO	GRAPHIC REF	PART NUMBER	QTY	PART NAME 1 2 3 4 5 6 (PRODUCT LEVEL)	SEE PAGE
	1	1	**1P-9390**	1	GASKET-OUTLET	
	2	1	**7S-8817**	1	PRECLEANER AS	
		1	**0S-1591**	1	BOLT (3/8-16X1.5 IN)	
		1	**6V-8801**	1	NUT (3/8-16 THD)	
	3	1	**9M-2904**	4	CLAMP-HOSE	
	4	1	**121-4865**	1	BODY AS	
	5	1	**164-9760**	2	HOSE	
Y	6	1	**164-9761**	1	AIR CLEANER GP	146
	7	1	**165-2524**	1	TUBE	
	8	1	**2K-4973**	10	LOCKNUT (3/8-16 THD)	
	9	1	**5M-3062**	4	BOLT (3/8-16X.75 IN)	
	10	1	**8T-4896**	14	WASHER-HARD (10.2X18.5X2.5MM THK)	

Y-SEPARATE ILLUSTRATION

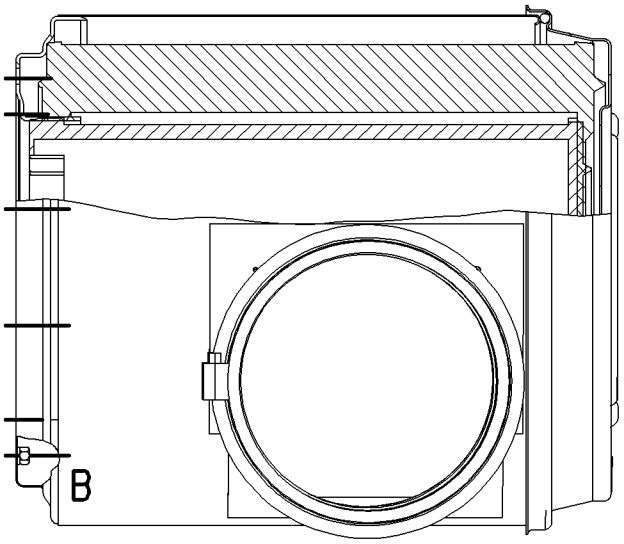

SECTION A-A

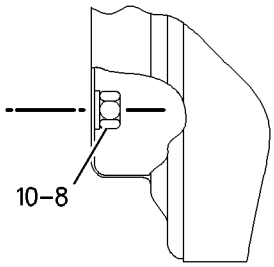

VIEW OF
AREA B

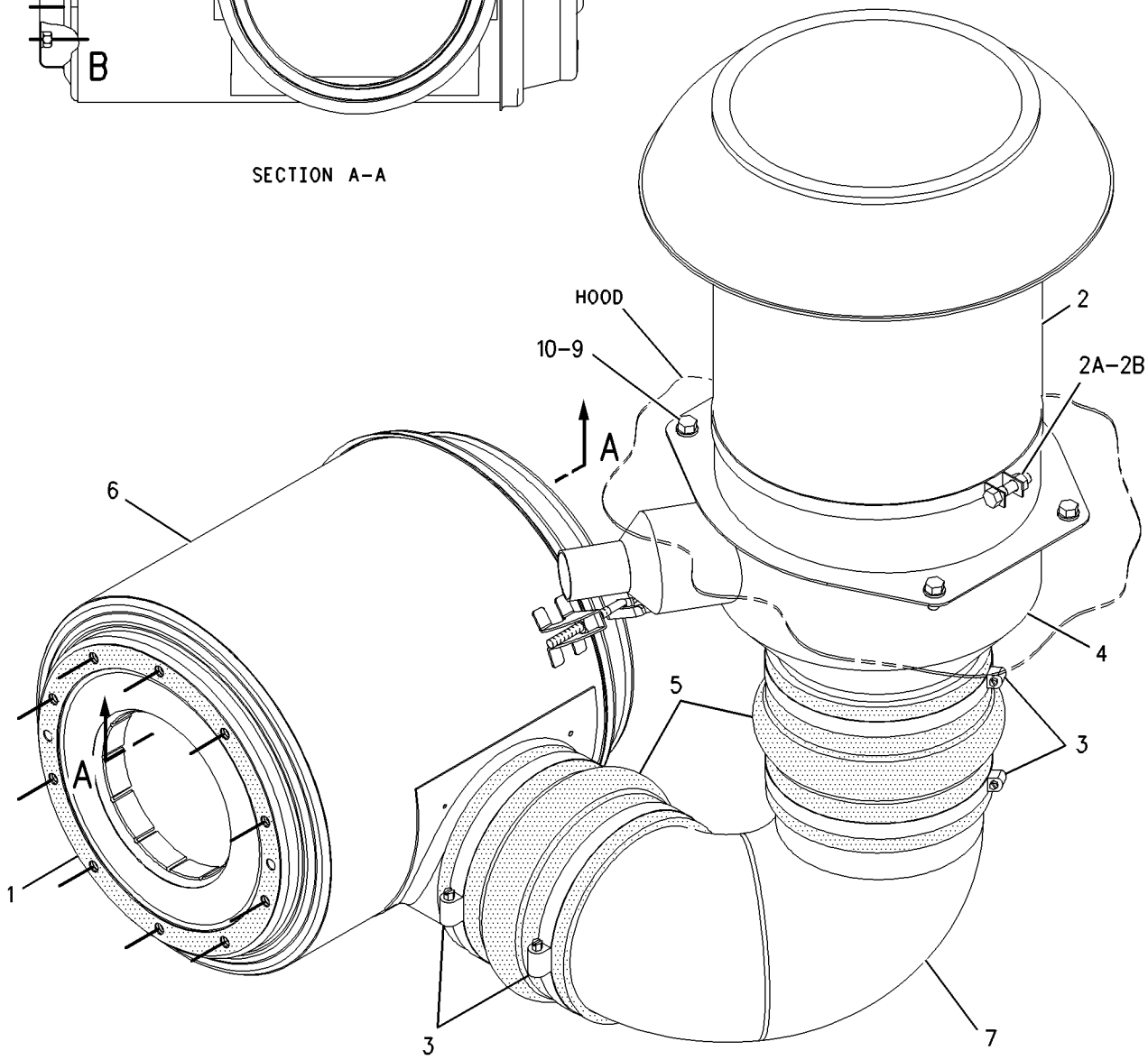

GRAPHIC #1

g00726337

AIR INLET AND EXHAUST SYSTEM

164-9761 AIR CLEANER GP

S/N: AKA1-UP

BASIC

PART OF 161-2430 AIR CLEANER GP

SMCS-1051, 1054 **i01391873**

NOTE	REF NO	GRAPHIC REF	PART NUMBER	QTY	PART NAME 1 2 3 4 5 6 (PRODUCT LEVEL)	SEE PAGE
	1	1	**6I-2505**	1	FILTER ELEMENT AS-AIR (PRIMARY)	
	2	1	**6I-2506**	1	FILTER ELEMENT AS-AIR (SECONDARY)	
	3	1	**6I-4465**	1	COVER AS-AIR CLEANER	
		1	**101-2850**	1	FILM-AIR CLEANER (RADIAL SEAL)	

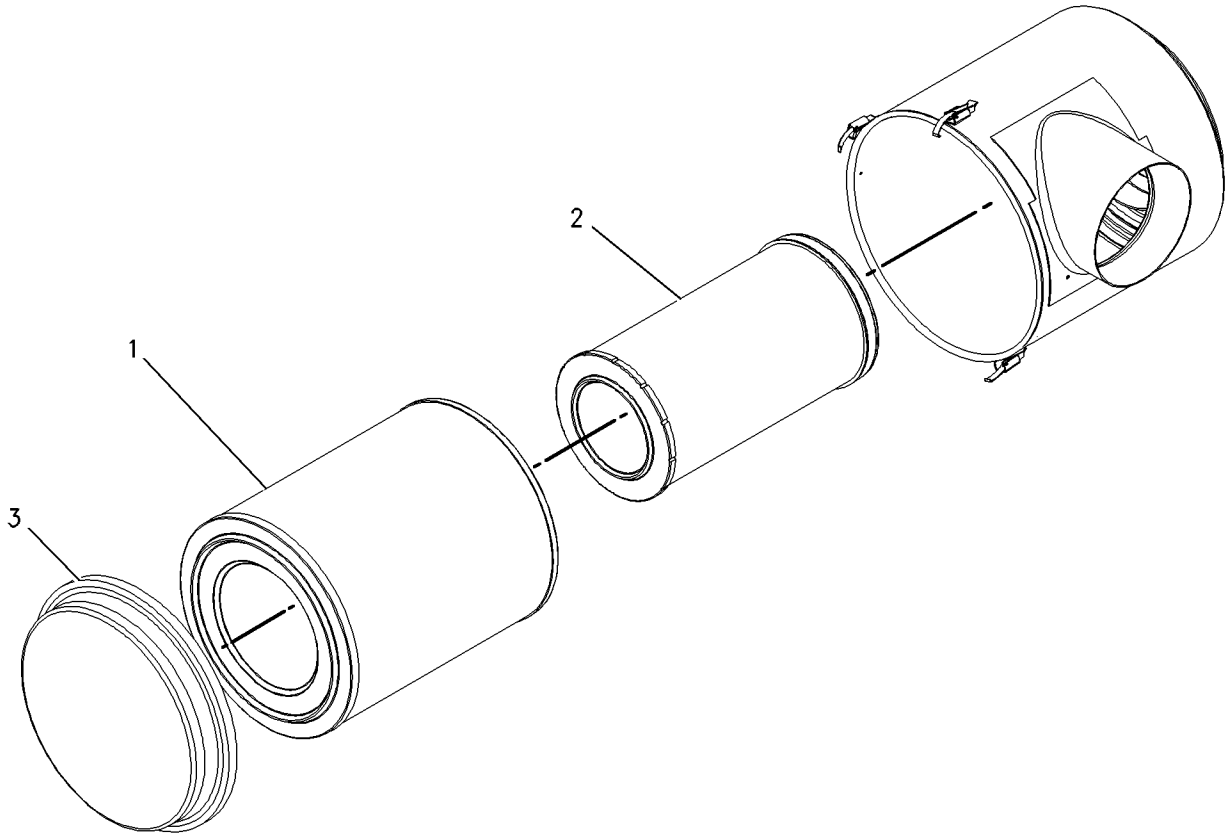

GRAPHIC #1 g00726461

AIR INLET AND EXHAUST SYSTEM

122-3347 DUST EJECTOR GP

S/N: AKA1-UP

PART OF 159-5908 INSTALLATION AR-ENGINE

SMCS-1068 **i01341049**

NOTE	REF NO	GRAPHIC REF	PART NUMBER	QTY	PART NAME 1 2 3 4 5 6 (PRODUCT LEVEL)	SEE PAGE
	1	1	**7W-2735**	1	GASKET	
	2	1	**9M-2904**	2	CLAMP-HOSE	
	3	1	**122-4490**	1	ADAPTER AS-HOSE	
	4	1	**0S-1594**	2	BOLT (3/8-16X1 IN)	
	5	1	**5M-2894**	2	WASHER-HARD (10.2X18.5X2.5MM THK)	
BE	6	1	**5P-2817**		HOSE	

B-USE AS REQUIRED
E-ORDER BY THE CENTIMETER

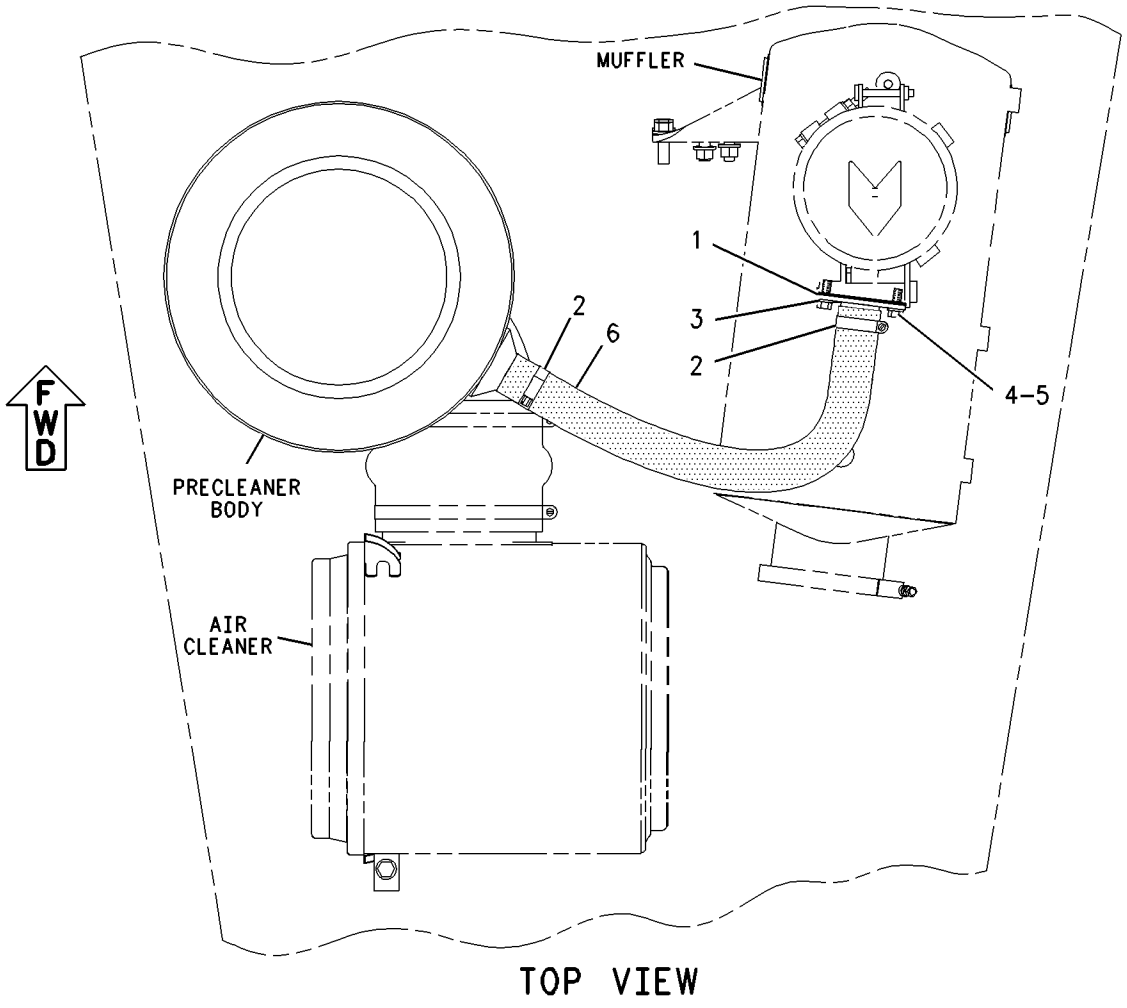

GRAPHIC #1 g00709941

AIR INLET AND EXHAUST SYSTEM

102-4360 INDICATOR AR-AIR CLEANER

S/N: AKA1-UP
AIR CLEANER (DASH MOUNTED) OPEN ROPS
PART OF 123-6615 PRECLEANER AR

SMCS-7452 **i01248491**

NOTE	REF NO	GRAPHIC REF	PART NUMBER	QTY	PART NAME 1 2 3 4 5 6 (PRODUCT LEVEL)	SEE PAGE
	1	1	**8N-2694**	1	INDICATOR-AIR FILTER SERVICE	
	2	1	**3B-6552**	1	ELBOW (90 DEGREES)	
	3	1	**103-4916**	1	PIPE AS	
	4	1	**3B-6487**	1	COUPLING	
	5	1	**5P-7907**	1	CONNECTOR	
	6	1	**5P-6313**	2	NUT-FLARELESS	
	7	1	**5P-6314**	2	SLEEVE-FLARELESS	
BD	8	1	**5P-5630**		TUBE (1.9M)	
	9	1	**4V-6981**	1	SCREW-BUTTON HEAD (1/4-20X.75IN)	
	10	1	**8T-4205**	1	WASHER-HARD (2MM THK)	
	11	1	**6V-8185**	1	NUT (1/4-20 THD)	
	12	1	**103-3711**	1	RETAINER	
	13	1	**2V-1937**	1	GROMMET	
B	14	1	**7K-1181**	5	STRAP-CABLE (4IN DIA)	
	15	1	**1Q-3770**	1	PLATE AS	
	16	1	**5P-6315**	1	ELBOW-FLARELESS	

B-USE AS REQUIRED
D-ORDER BY THE METER

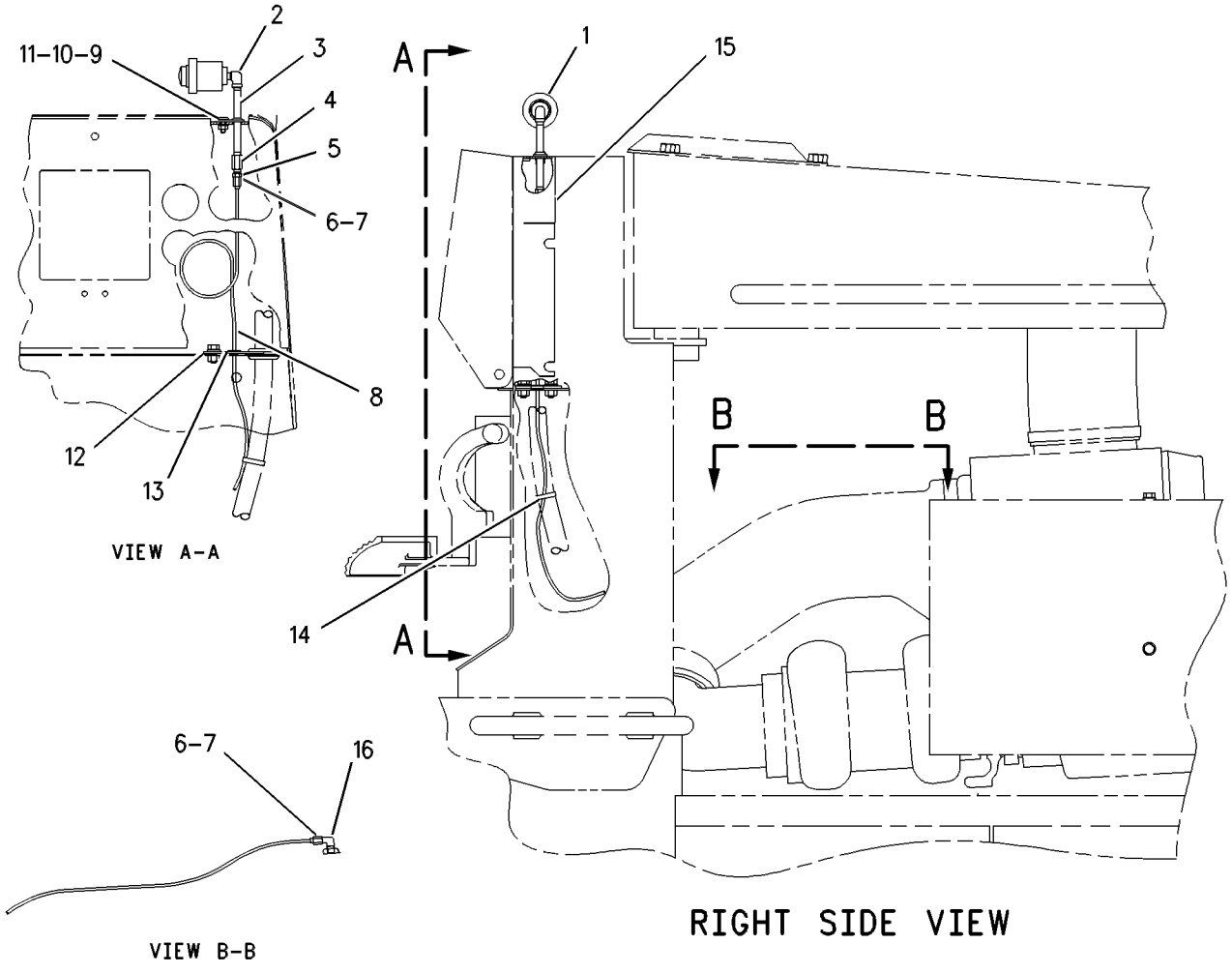

GRAPHIC #1 g00505612

AIR INLET AND EXHAUST SYSTEM

156-8543 LINES GP-AIR

S/N: BET1-UP

PART OF 157-7195, 157-7196 ENGINE AR-COMPLETE

SMCS-1058 **i01445120**

NOTE	REF NO	GRAPHIC REF	PART NUMBER	QTY	PART NAME 1 2 3 4 5 6 (PRODUCT LEVEL)	SEE PAGE
	1	1	**2N-2765**	2	BOLT-HIGH TEMPERATURE (3/8-16X1.75IN)	
	2	1	**2N-2766**	2	LOCKNUT	
	3	1	**4L-8337**	2	SEAL-O-RING (81MM ID)	
	4	1	**5L-8854**	2	RING-SEALING	
	5	1	**5S-1188**	2	SEAL-O-RING (88.26MM ID)	
	6	1	**9L-5839**	1	COUPLING-EXHAUST	
	7	1	**156-8073**	1	SUPPORT-EXHAUST PIPE	
	8	1	**159-1870**	1	ELBOW	
	9	1	**0S-1588**	2	BOLT (3/8-16X1.25 IN)	
	10	1	**5M-2894**	2	WASHER-HARD (10.2X18.5X2.5MM THK)	
	11	1	**8N-8571**	2	RETAINER	

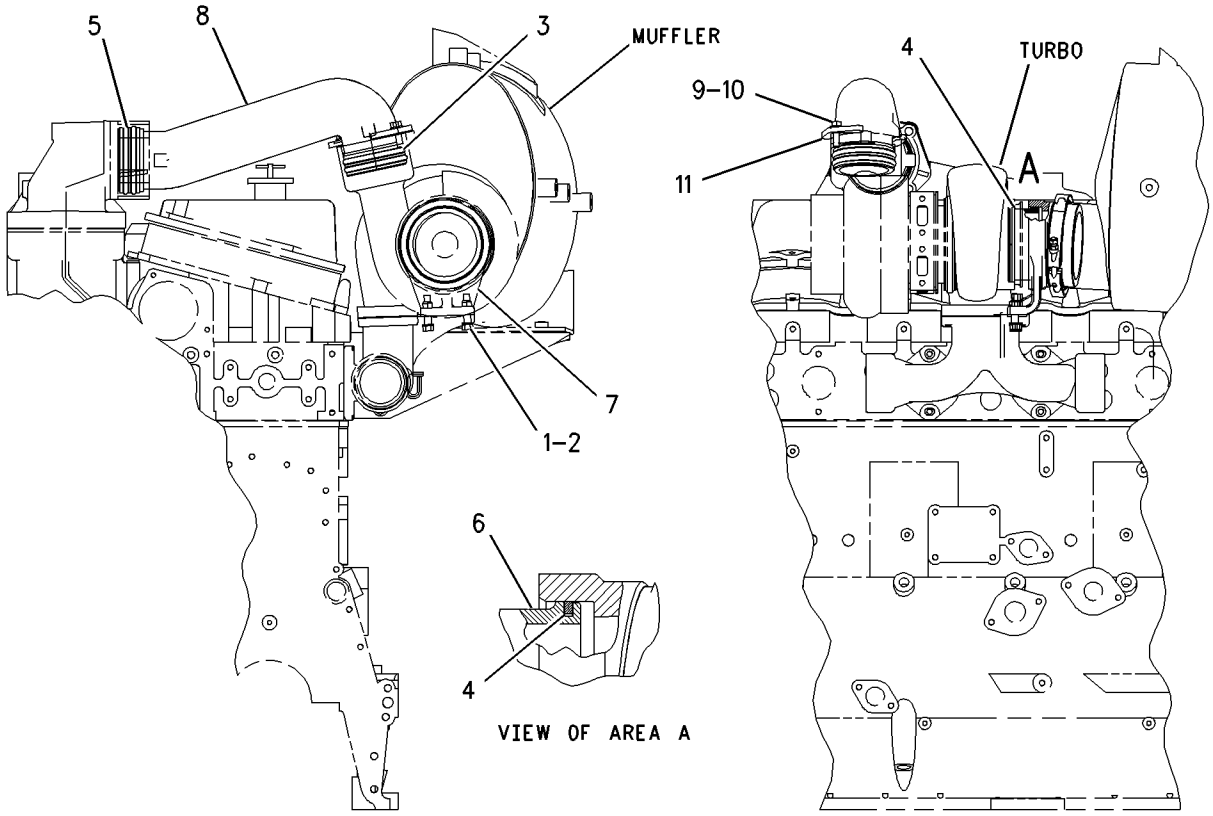

REAR VIEW

RIGHT SIDE VIEW

GRAPHIC #1

g00665661

AIR INLET AND EXHAUST SYSTEM

161-2431 LINES GP-AIR

S/N: AKA1-UP

PART OF 159-5908 INSTALLATION AR-ENGINE

SMCS-1058 **i01392646**

NOTE	REF NO	GRAPHIC REF	PART NUMBER	QTY	PART NAME 1 2 3 4 5 6 (PRODUCT LEVEL)	SEE PAGE
	1	1	**7N-6908**	1	ELBOW	
	2	1	**121-4862**	1	SUPPORT	
	3	1	**160-4713**	1	PIPE AS-AIR TRANSFER	
		1	**2M-1538**	10	STUD-TAPERLOCK	
		1	**7M-1674**	1	ELEMENT-FILTER	
		1	**8T-6764**	1	PLUG-PIPE	
	4	1	**2M-5173**	4	SEAL-O-RING (126.36MM ID)	
	5	1	**3K-0360**	1	SEAL-O-RING (16.36MM ID)	
	6	1	**4L-9337**	6	BOLT (3/8-16X1.5 IN)	
	7	1	**5P-1075**	4	WASHER-HARD (10.2X22.5X3MM THK)	
	8	1	**5S-7383**	1	BOLT (3/8-16X1.75 IN)	
	9	1	**6V-8801**	1	NUT (3/8-16 THD)	
	10	1	**8T-4896**	3	WASHER-HARD (10.2X18.5X2.5MM THK)	
	11	1	**9S-4185**	1	PLUG-O-RING	

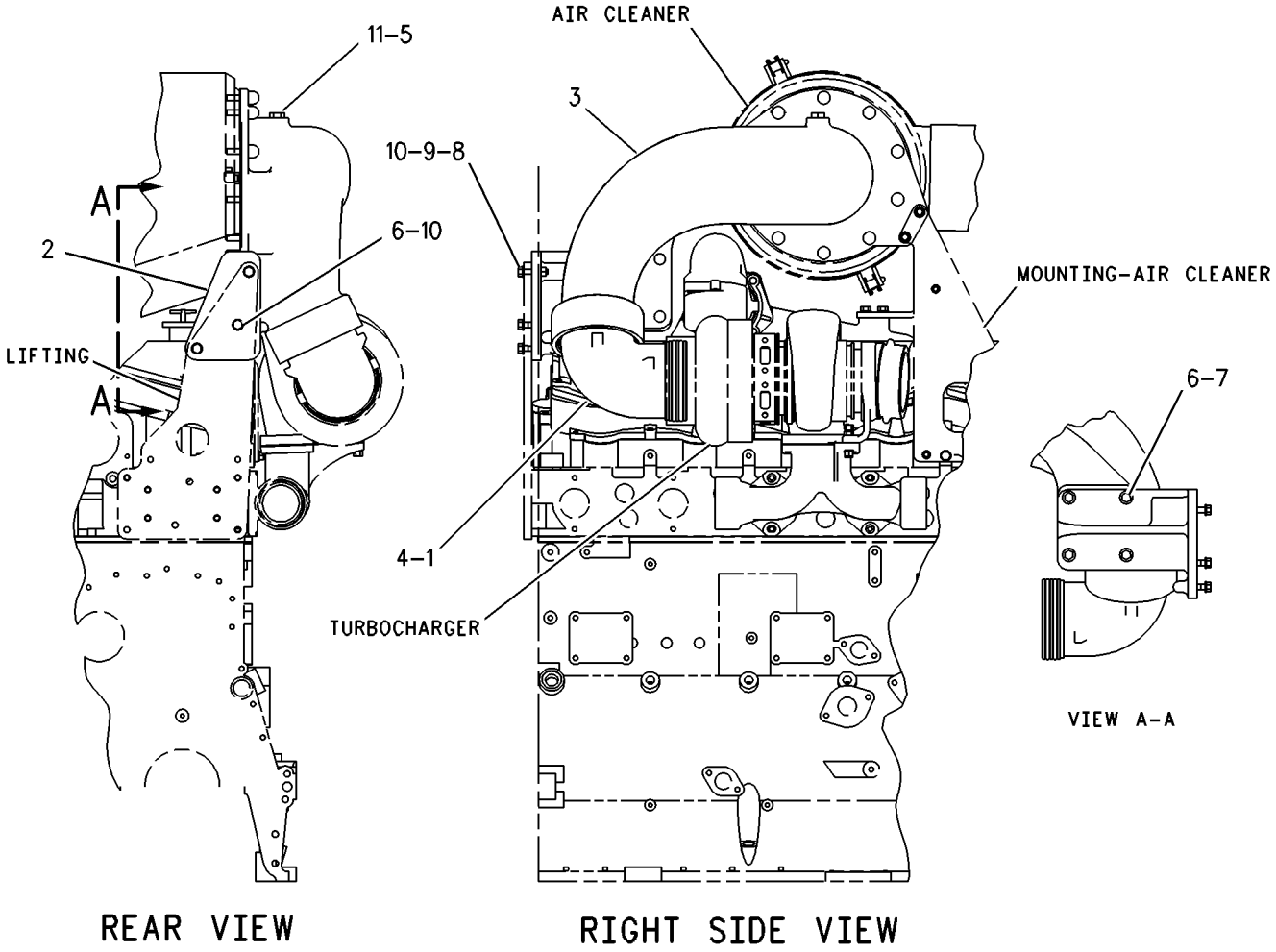

GRAPHIC #1 g00649383

AIR INLET AND EXHAUST SYSTEM

157-7087 MANIFOLD GP-EXHAUST

S/N: BET1-UP

PART OF 157-7195, 157-7196 ENGINE AR-COMPLETE

SMCS-1059 **i01445074**

NOTE	REF NO	GRAPHIC REF	PART NUMBER	QTY	PART NAME 1 2 3 4 5 6 (PRODUCT LEVEL)	SEE PAGE
	1	1	**157-7086**	1	MANIFOLD-EXHAUST	
	2	1	**102-8608**	2	MANIFOLD-EXHAUST	
	3	1	**2N-2766**	12	LOCKNUT	
	4	1	**5M-2894**	12	WASHER-HARD (10.2X18.5X2.5MM THK)	
	5	1	**108-3612**	12	SPACER (53MM THK)	
	6	1	**129-9452**	6	GASKET-EXHAUST MANIFOLD	
	7	1	**106-1792**	12	STUD-TAPERLOCK (3/8-16X3.93IN)	

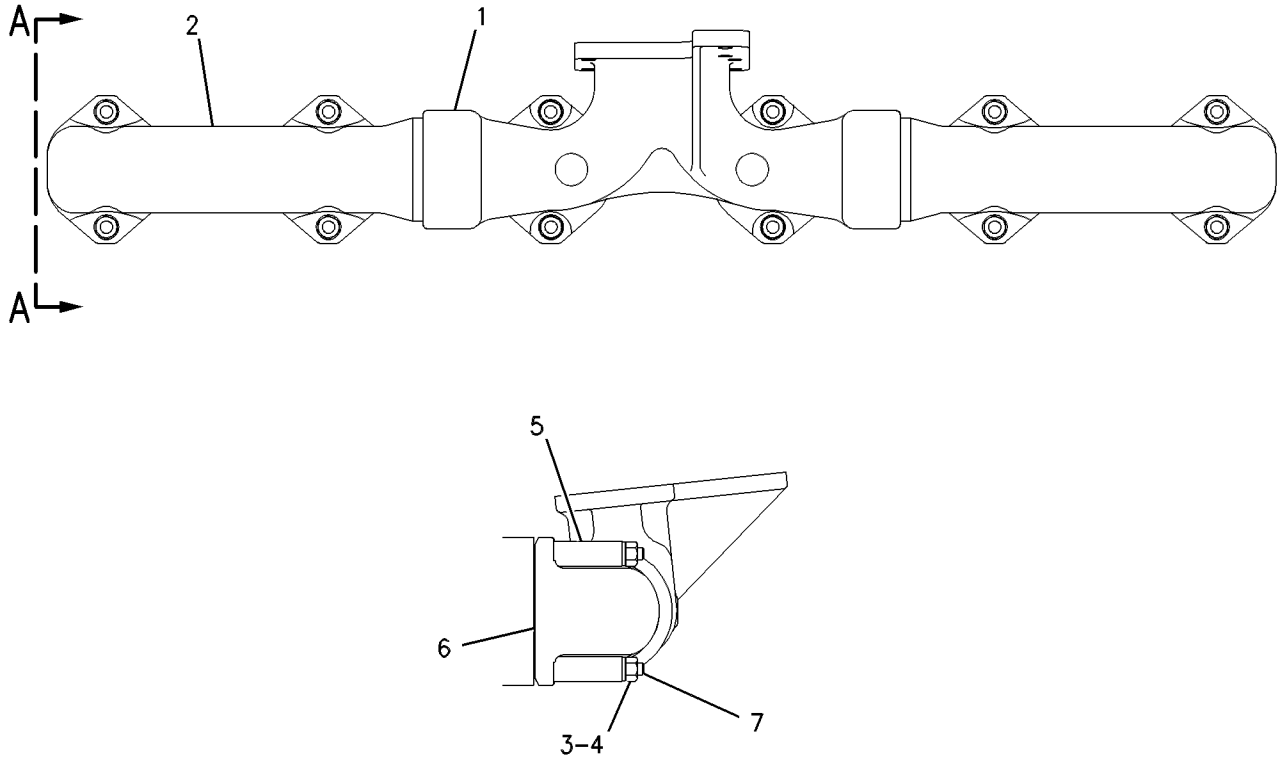

VIEW A-A

GRAPHIC #1 g00532183

AIR INLET AND EXHAUST SYSTEM

164-2553 MOUNTING GP-AIR CLEANER

S/N: AKA1-UP

PART OF 159-5908 INSTALLATION AR-ENGINE

SMCS-1051 **i01456181**

NOTE	REF NO	GRAPHIC REF	PART NUMBER	QTY	PART NAME 1 2 3 4 5 6 (PRODUCT LEVEL)	SEE PAGE
	1	1	**4P-0706**	2	CLAMP AS	
	2	1	**8L-5423**	1	SPACER (0.712 IN THK)	
	3	1	**163-0895**	1	BRACKET AS	
		1	**1F-0750**	2	NUT-WELD (3/8-16 THD)	
	4	1	**0S-1588**	3	BOLT (3/8-16X1.25 IN)	
	5	1	**0S-1594**	2	BOLT (3/8-16X1 IN)	
	6	1	**0T-0065**	1	BOLT (3/8-16X3.5 IN)	
	7	1	**5M-2894**	6	WASHER-HARD (10.2X18.5X2.5MM THK)	
	8	1	**5P-1075**	1	WASHER-HARD (10.2X22.5X3MM THK)	
	9	1	**8T-4896**	2	WASHER-HARD (10.2X18.5X2.5MM THK)	
	10	1	**9B-7237**	2	BOLT (3/8-16X1.25 IN)	
	11	1	**9S-8752**	1	NUT-FULL (3/8-16 THD)	

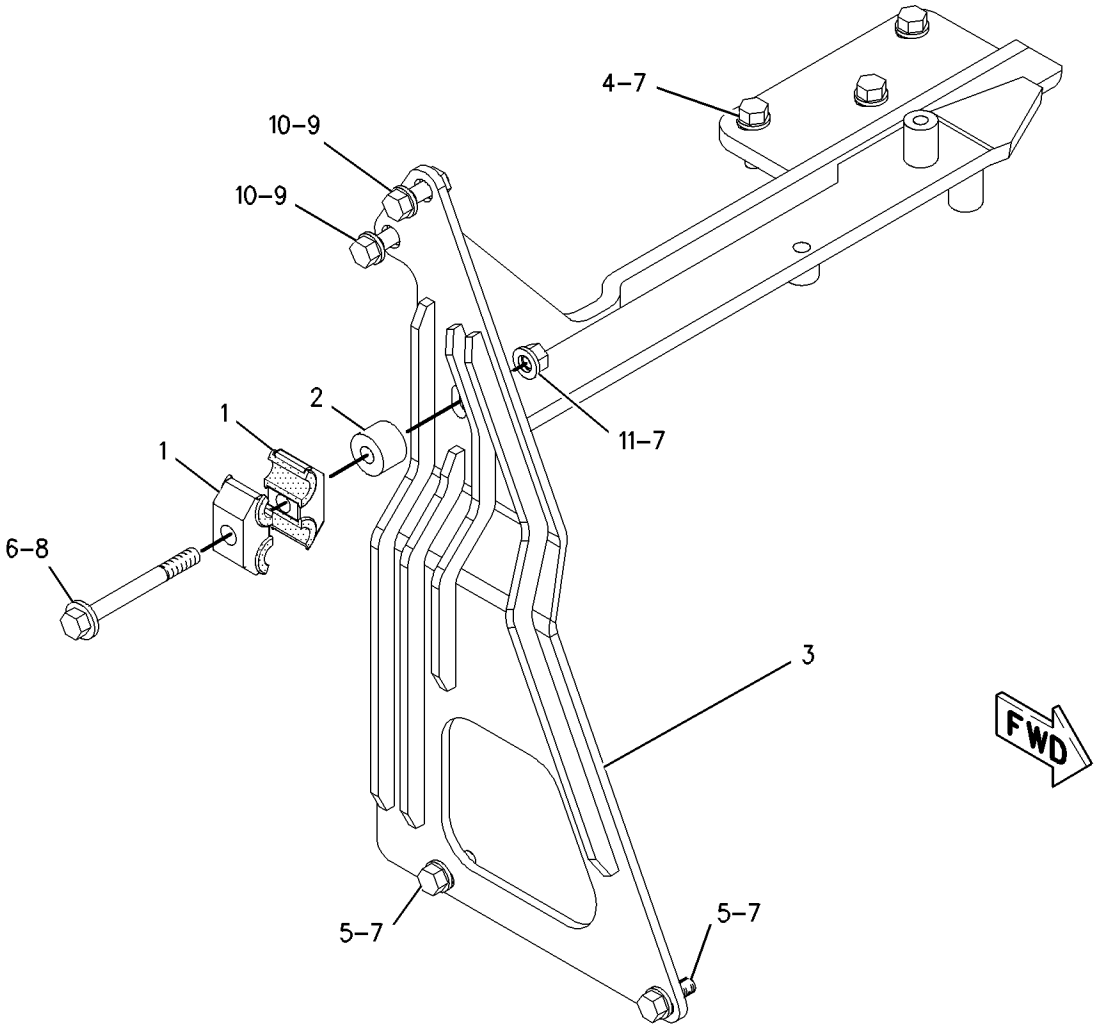

GRAPHIC #1 g00758014

AIR INLET AND EXHAUST SYSTEM

156-8539 MUFFLER GP

S/N: AKA1-UP

PART OF 159-5908 INSTALLATION AR-ENGINE

SMCS-1062 **i01486037**

NOTE	REF NO	GRAPHIC REF	PART NUMBER	QTY	PART NAME 1 2 3 4 5 6 (PRODUCT LEVEL)	SEE PAGE
	1	1	**1B-5355**	1	NUT-FULL (3/8-16THD)	
	2	1	**1W-3088**	1	CLAMP	
	3	1	**7C-2991**	1	EJECTOR AS	
	4	1	**7N-5686**	1	CLAMP	
	5	1	**7S-4411**	1	CAP AS-RAIN	
	6	1	**164-9633**	1	MUFFLER AS	
	7	1	**0S-1608**	1	BOLT (3/8-16X3.75 IN)	
	8	1	**1A-2029**	2	BOLT (3/8-16X1.125 IN)	
	9	1	**5M-2894**	2	WASHER-HARD (10.2X18.5X2.5MM THK)	
	10	1	**9L-9132**	2	WASHER (10.2X25.5X2.5MM THK)	

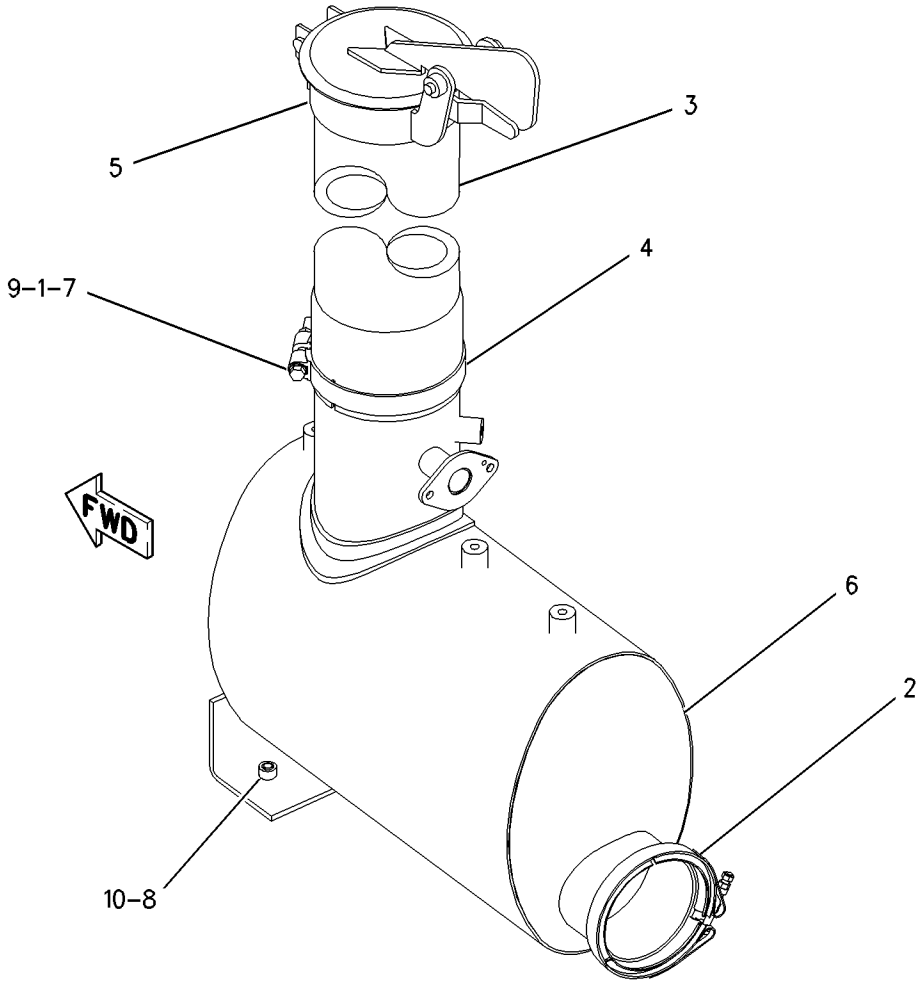

GRAPHIC #1 g00772678

AIR INLET AND EXHAUST SYSTEM

202-1345 MUFFLER GP

S/N: AKA1-UP

THERMO

PART OF 160-4366 SHIELD AR-THERMO, 157-8035 SUPPRESSION AR-SOUND

SMCS-1062 **i01480851**

NOTE	REF NO	GRAPHIC REF	PART NUMBER	QTY	PART NAME 1 2 3 4 5 6 (PRODUCT LEVEL)	SEE PAGE
	1	1	**1W-3088**	1	CLAMP	
	1A	1	**8T-0122**	1	NUT-FULL (HIGH TEMPERATURE)	
	2	1	**7C-1175**	1	EJECTOR AS	
	3	1	**7N-5686**	1	CLAMP	
	4	1	**7S-4411**	1	CAP AS-RAIN	
	5	1	**200-3200**	1	MUFFLER AS	
	6	1	**0S-1608**	1	BOLT (3/8-16X3.75 IN)	
	7	1	**1A-2029**	2	BOLT (3/8-16X1.125 IN)	
	8	1	**1B-5355**	1	NUT-FULL (3/8-16THD)	
	9	1	**5M-2894**	2	WASHER-HARD (10.2X18.5X2.5MM THK)	
	10	1	**9L-9132**	2	WASHER (10.2X25.5X2.5MM THK)	

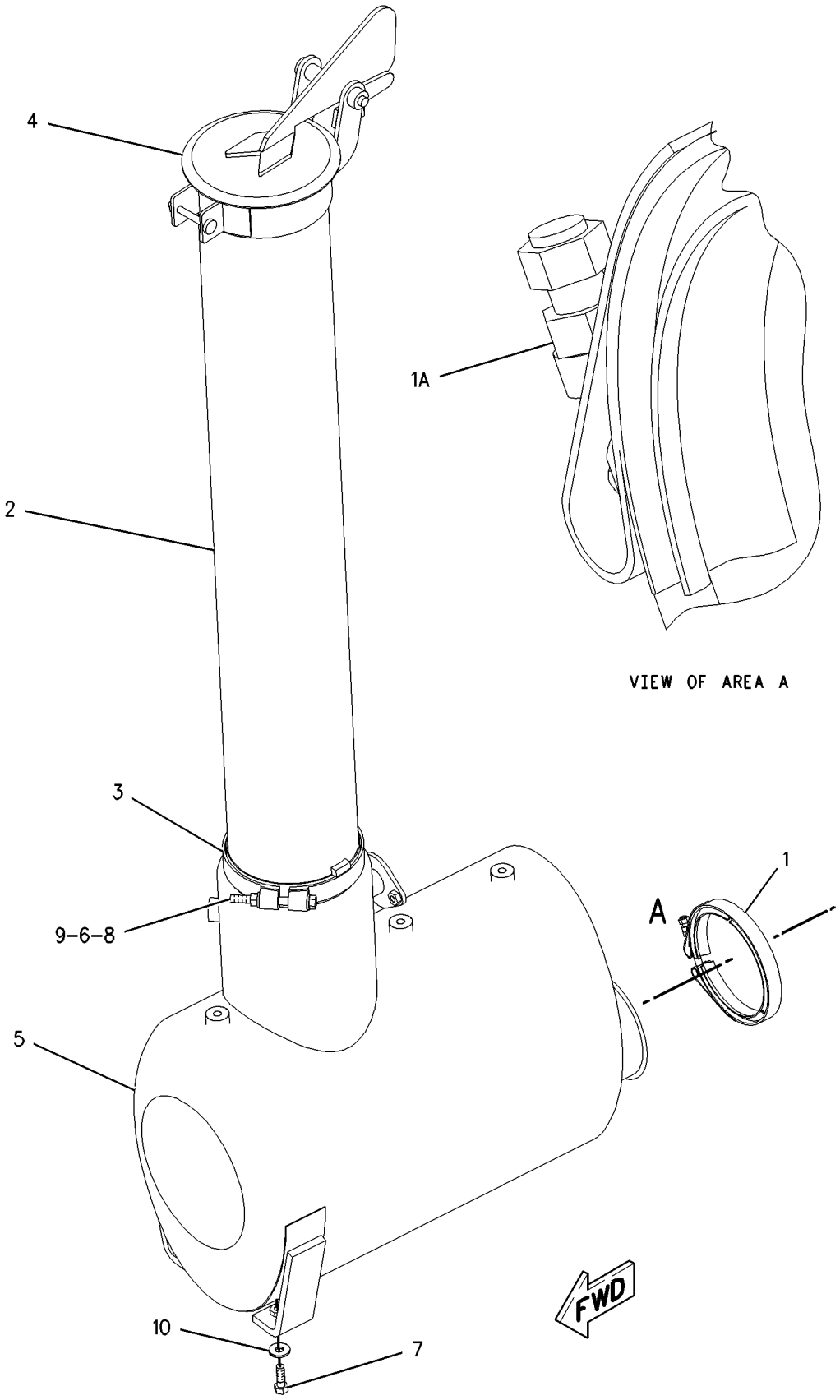

GRAPHIC #1 g00769921

AIR INLET AND EXHAUST SYSTEM

123-6615 PRECLEANER AR

S/N: AKA1-UP
TURBINE (NO SCREEN) OPEN ROPS
CANNOT BE USED WITH CAB ARRANGEMENT

SMCS-1055 **i01248490**

NOTE	REF NO	GRAPHIC REF	PART NUMBER	QTY	PART NAME 1 2 3 4 5 6 (PRODUCT LEVEL)	SEE PAGE
	1	1	**8T-4896**	4	WASHER-HARD (2.5MM THK)	
Y	2	1	*102-4360*	1	INDICATOR AR-AIR CLEANER	148
	3	1	**4L-6454**	4	BOLT (3/8-16X1 IN)	
	4	1	**143-1224**	1	PRECLEANER AS	
	5	1	**107-7495**	1	DAMPER	
	6	1	**145-5985**	1	HOOD AS	

Y-SEPARATE ILLUSTRATION

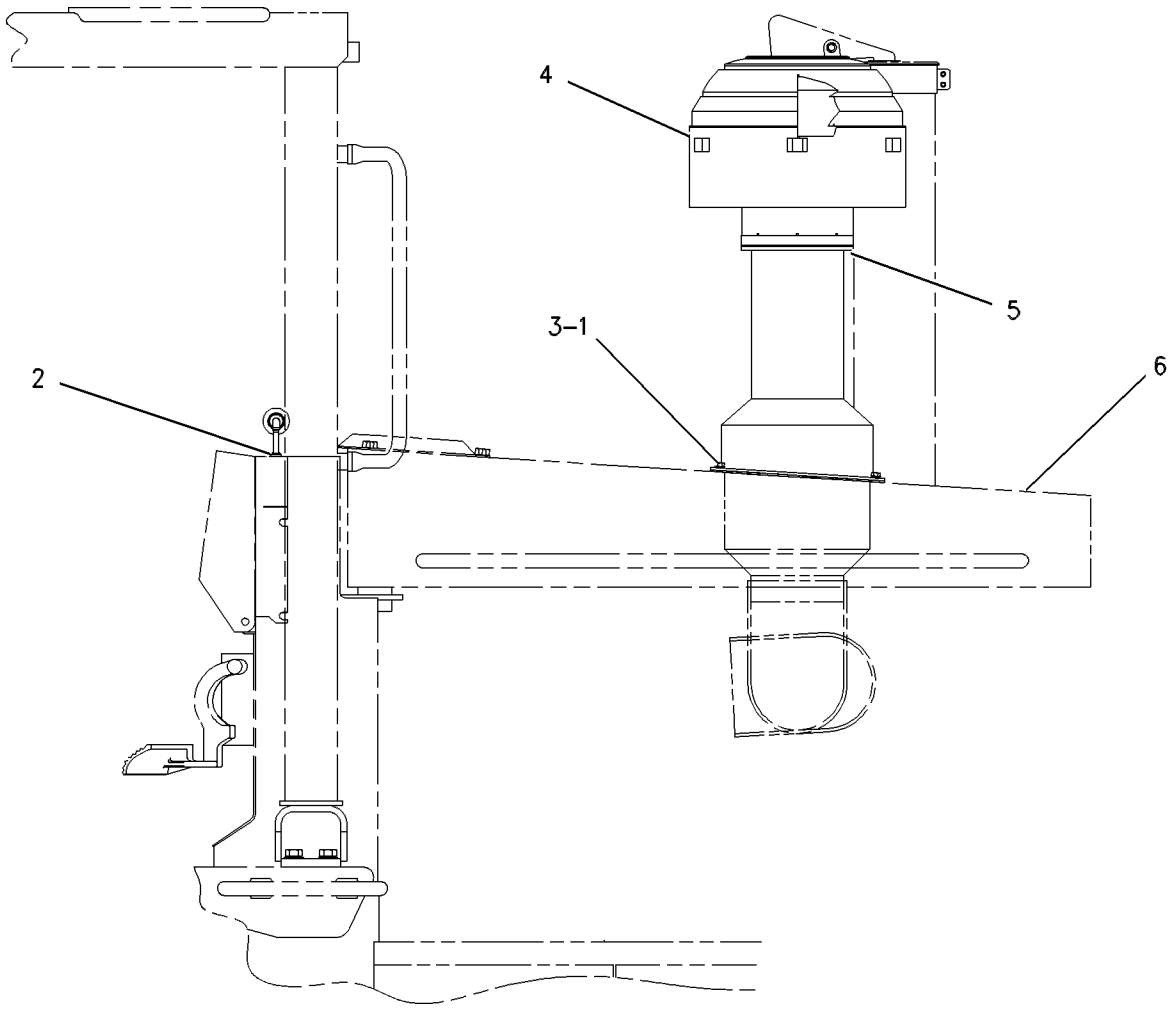

GRAPHIC #1 g00505603

AIR INLET AND EXHAUST SYSTEM

160-7441 PRECLEANER AR–TURBINE

S/N: AKA1-UP
NO SCREEN

SMCS-1055 **i01488979**

NOTE	REF NO	GRAPHIC REF	PART NUMBER	QTY	PART NAME 1 2 3 4 5 6 (PRODUCT LEVEL)	SEE PAGE
	1	1	**7W-2735**	1	GASKET	
	2	1	**203-6550**	1	PRECLEANER AS	
	3	1	**107-7495**	1	DAMPER	
	4	1	**160-7443**	1	HOOD AS	
		1	**1F-0748**	7	NUT-WELD (1/2-13 THD)	
		1	**1F-0750**	18	NUT-WELD (3/8-16 THD)	
		1	**3J-5169**	1	NUT (5/8-11 THD)	
		1	**126-1074**	2	HANDHOLD	
	5	1	**8T-4896**	2	WASHER-HARD (10.2X18.5X2.5MM THK)	
	6	1	**9B-7237**	4	BOLT (3/8-16X1.25 IN)	
	7	1	**4L-6454**	2	BOLT (3/8-16X1 IN)	
	8	1	**5P-1075**	4	WASHER-HARD (10.2X22.5X3MM THK)	
	9	1	**6H-5852**	1	COVER	
Z	10	1		1	PIPE AS	

Z-NOT SERVICED SEPARATELY

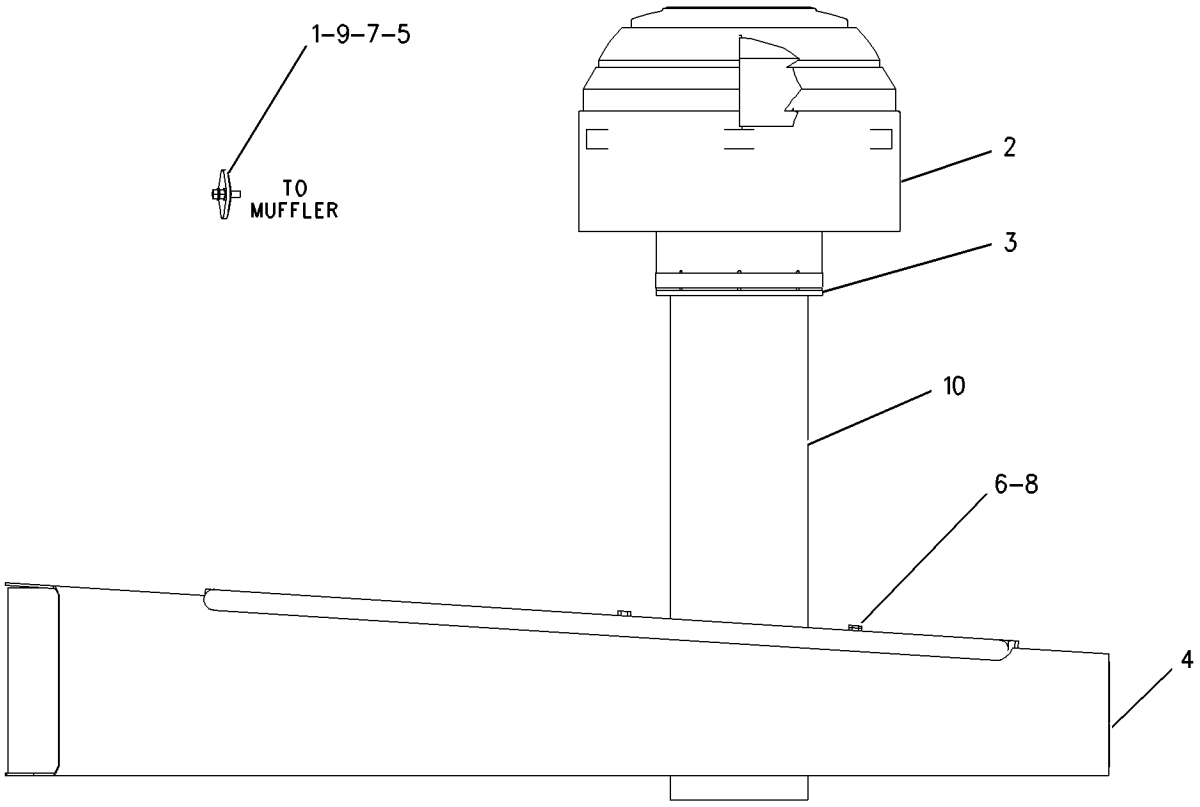

RIGHT SIDE VIEW

GRAPHIC #1 g00774904

AIR INLET AND EXHAUST SYSTEM

160-7442 PRECLEANER AR

S/N: AKA1-UP

PART OF 143-7740 WOODCHIP AR

SMCS-1055 **i01488554**

NOTE	REF NO	GRAPHIC REF	PART NUMBER	QTY	PART NAME 1 2 3 4 5 6 (PRODUCT LEVEL)	SEE PAGE
Q	1	1	**7W-2735**	1	GASKET	
JQ	2	1	**107-7495**	2	DAMPER	
Y	3	1	**130-3281**	1	PRECLEANER GP	159
JZ	4	1		1	PRESCREEN AS	
J	5	1	**145-6669**	6	SCREW-SELF-TAPPING	
Q	6	1	**8T-4896**	2	WASHER-HARD (10.2X18.5X2.5MM THK)	
Q	7	1	**9B-7237**	4	BOLT (3/8-16X1.25 IN)	
Q	8	1	**4L-6454**	2	BOLT (3/8-16X1 IN)	
Q	9	1	**5P-1075**	4	WASHER-HARD (10.2X22.5X3MM THK)	
Q	10	1	**6H-5852**	1	COVER	
Z	11	1		1	PIPE AS	
Z	12	1		1	PIPE AS	
					AVAILABLE REPAIR KIT(S):	
J			**153-1278**	1	KIT-SCREEN (TURBINE PRECLEANER)	
Q			**163-5748**	1	KIT-INSTALLATION (TURBINE PRECLEANER)	

J-KIT MARKED J SERVICES PARTS MARKED J
Q-KIT MARKED Q SERVICES PARTS MARKED Q
Y-SEPARATE ILLUSTRATION
Z-NOT SERVICED SEPARATELY

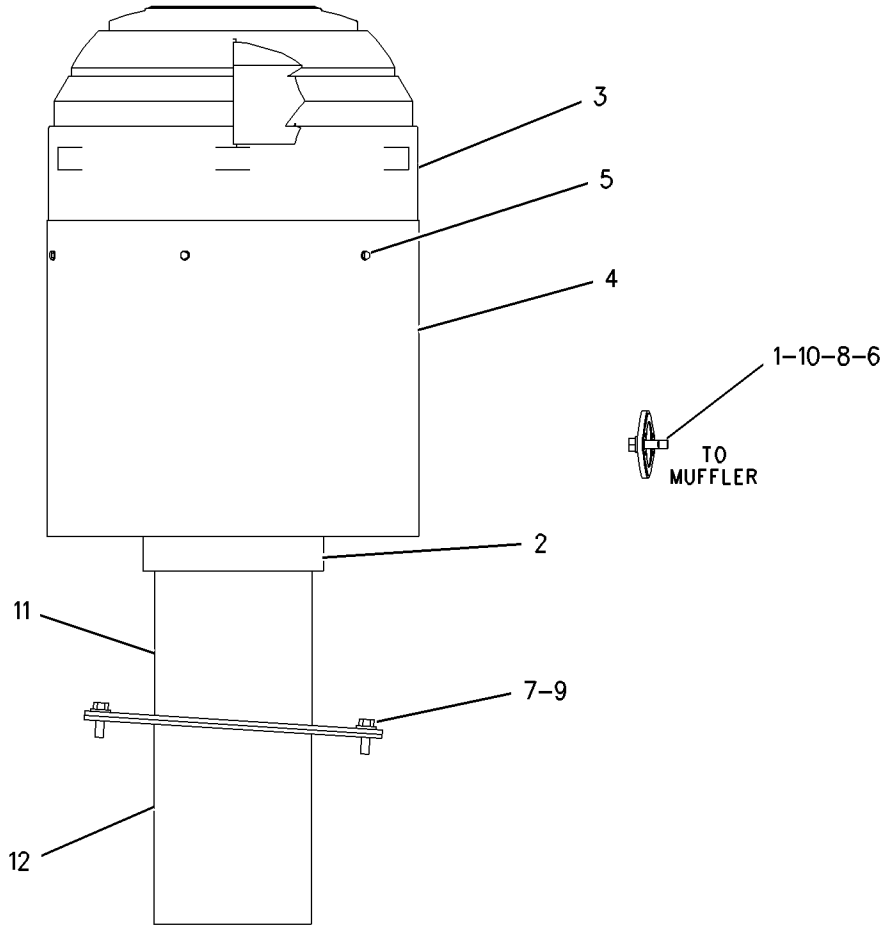

RIGHT SIDE VIEW

GRAPHIC #1 g00740839

AIR INLET AND EXHAUST SYSTEM

130-3281 PRECLEANER GP

S/N: AKA1-UP
AIR-TURBINE
PART OF 160-7442 PRECLEANER AR

SMCS-1055 **i01472843**

NOTE	REF NO	GRAPHIC REF	PART NUMBER	QTY	PART NAME 1 2 3 4 5 6 (PRODUCT LEVEL)	SEE PAGE
	1	1	**174-4895**	2	CLAMP	

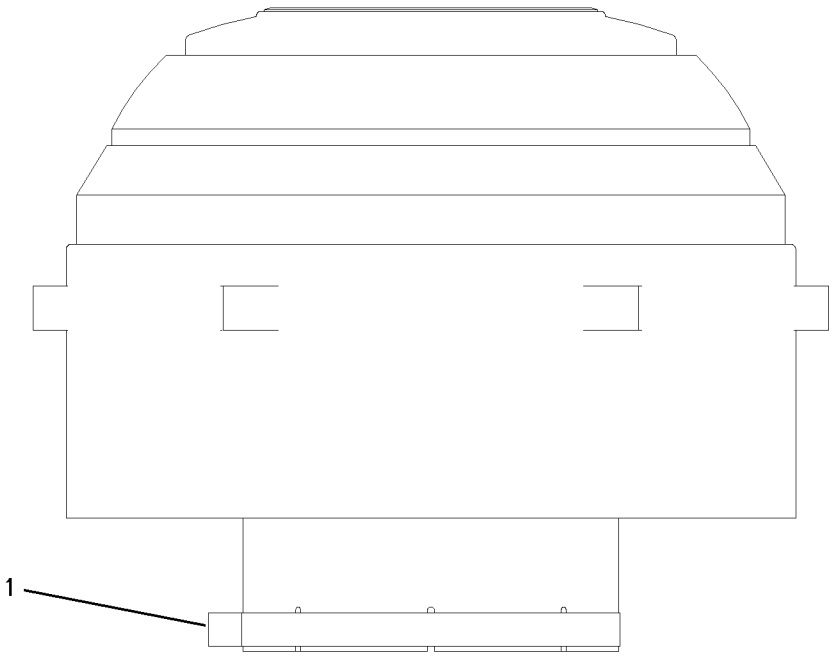

GRAPHIC #1 g00658715

AIR INLET AND EXHAUST SYSTEM

160-4366 SHIELD AR-THERMO

S/N: AKA1-UP

SMCS-1067, 1073 **i01488865**

NOTE	PART NUMBER	QTY	PART NAME 1 2 3 4 5 6 (PRODUCT LEVEL)	SEE PAGE
Y	*202-1345*	1	MUFFLER GP	154
Y	*157-2473*	1	SHIELD GP-MANIFOLD	162
	200-1912	1	SHIELD-HEAT	

Y-SEPARATE ILLUSTRATION

AIR INLET AND EXHAUST SYSTEM

186-3720 SHIELD GP-EXHAUST

S/N: AKA1-UP

PART OF 159-5908 INSTALLATION AR-ENGINE

SMCS-1067 **i01392079**

NOTE	REF NO	GRAPHIC REF	PART NUMBER	QTY	PART NAME 1 2 3 4 5 6 (PRODUCT LEVEL)	SEE PAGE
	1	1	**7C-1187**	1	SHIELD	
	2	1	**186-1457**	1	SHIELD AS	
	3	1	**0T-0102**	8	BOLT (3/8-16X0.625 IN)	
	4	1	**6N-8863**	8	WASHER (2.5MM THK)	

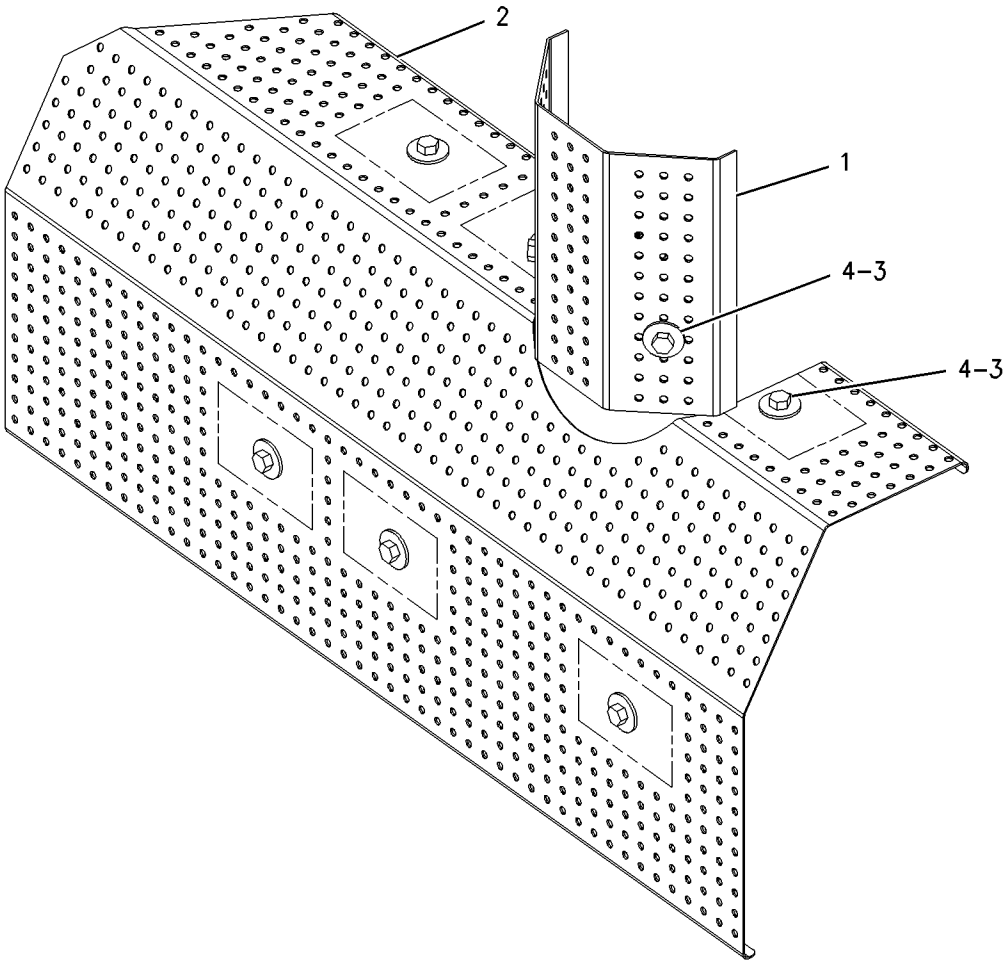

GRAPHIC #1 g00708876

AIR INLET AND EXHAUST SYSTEM

157-2473 SHIELD GP-MANIFOLD

S/N: AKA1-UP

PART OF 160-4366 SHIELD AR-THERMO

SMCS-1067 **i01393867**

NOTE	REF NO	GRAPHIC REF	PART NUMBER	QTY	PART NAME 1 2 3 4 5 6 (PRODUCT LEVEL)	SEE PAGE
	1	1	**157-2474**	1	SHIELD AS-TURBOCHARGER	
		1	**6V-5044**	3	NUT-WELD (5/16-18 THD)	
	2	1	**157-2475**	1	SHIELD AS-TURBOCHARGER	
		1	**6V-5044**	1	NUT-WELD (5/16-18 THD)	
	3	1	**157-2476**	1	SHIELD AS-MANIFOLD	
		1	**6V-5044**	4	NUT-WELD (5/16-18 THD)	
	4	1	**157-2477**	1	SHIELD AS-MANIFOLD	
		1	**6V-5044**	7	NUT-WELD (5/16-18 THD)	
	6	1	**157-2479**	2	PLATE	
	7	1	**157-2480**	1	SHIELD AS-TURBOCHARGER	
		1	**6V-5044**	3	NUT-WELD (5/16-18 THD)	
	8	1	**157-2481**	1	PLATE AS	
	9	1	**5K-0906**	4	BOLT (5/16-18X0.63 IN)	
	10	1	**5M-3062**	2	BOLT (3/8-16X.75 IN)	
	11	1	**5P-1075**	4	WASHER-HARD (10.2X22.5X3MM THK)	
	12	1	**5P-4116**	18	WASHER-HARD (8.8X20.5X2MM THK)	
	13	1	**5S-7379**	2	BOLT (3/8-16X.875 IN)	
	14	1	**6V-2712**	13	STUD	
	15	1	**6V-8189**	13	NUT (5/16-18 THD)	
	16	1	**8T-5391**	1	BOLT (5/16-18X.5 IN)	

157-2473 **SHIELD GP-MANIFOLD** *(contd.)* **i01393867**

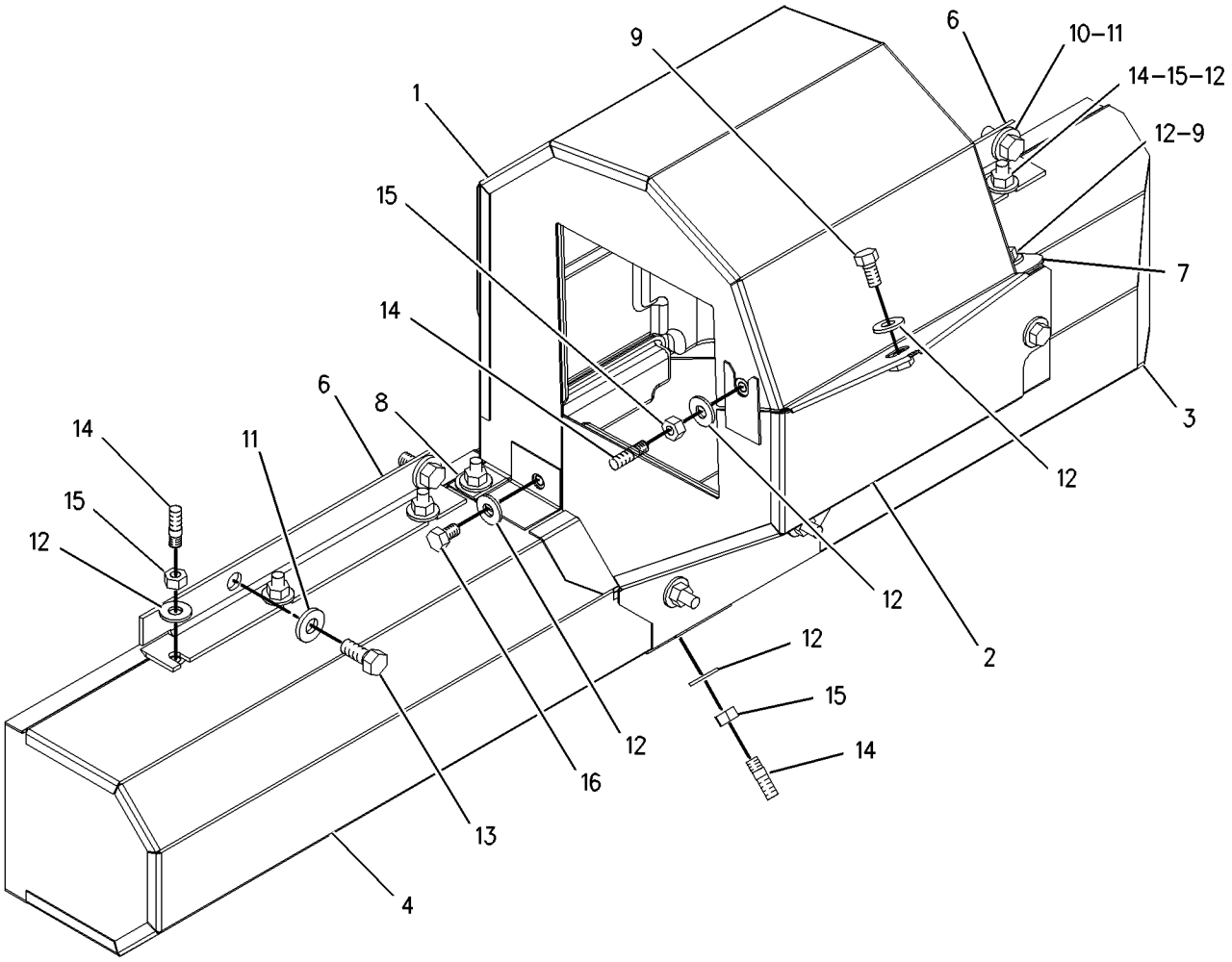

GRAPHIC #1 g00749640

AIR INLET AND EXHAUST SYSTEM

178-9572 TURBOCHARGER GP

S/N: BET1-UP

PART OF 183-6925 TURBOCHARGER GP

SMCS-1052, 1053, 1056, 1060, 1065, 1066, 1077 **i01371212**

NOTE	REF NO	GRAPHIC REF	PART NUMBER	QTY	PART NAME 1 2 3 4 5 6 (PRODUCT LEVEL)	SEE PAGE
	1	1	**7N-7672**	2	PLATE	
	2	1	**7N-7673**	2	PLATE	
	3	1	**9N-2038**	1	CLAMP AS (TURBINE)	
	4	1	**178-9573**	1	COVER-COMPRESSOR	
	5	1	**137-4550**	1	CLAMP AS-COMPRESSOR	
	6	1	**148-9104**	1	HOUSING-TURBINE	
	7	1	**167-9270**	1	CARTRIDGE GP-TURBOCHARGER	
	8	1	**2A-0762**	4	BOLT (1/4-20X.625IN)	
	9	1	**5P-0537**	4	WASHER-HARD (7.2X14.5X2MM THK)	

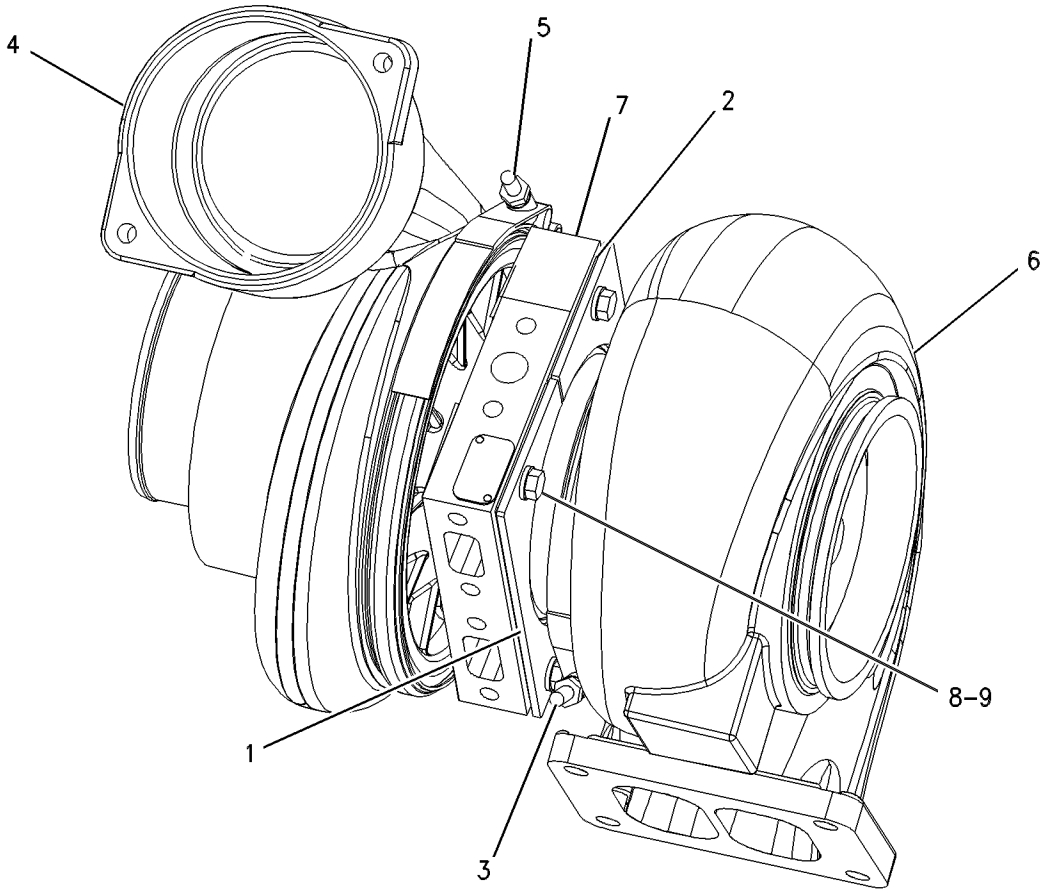

GRAPHIC #1 g00661224

AIR INLET AND EXHAUST SYSTEM

183-6925 TURBOCHARGER GP

S/N: BET1-UP

PART OF 160-0566 ENGINE AR-CORE

SMCS-1052, 1053, 1056, 1060, 1065, 1066, 1077 **i01446148**

NOTE	REF NO	GRAPHIC REF	PART NUMBER	QTY	PART NAME 1 2 3 4 5 6 (PRODUCT LEVEL)	SEE PAGE
Y	1	1	**178-9572**	1	TURBOCHARGER GP	164
	2	1	**2N-2765**	4	BOLT-HIGH TEMPERATURE (3/8-16X1.75IN)	
	3	1	**2N-2766**	4	LOCKNUT	
	4	1	**1S-4295**	1	GASKET-TURBOCHARGER	
AB		1	**4C-5598**		COMPOUND-ANTI-SEIZE	

A-NOT PART OF THIS GROUP
B-USE AS REQUIRED
Y-SEPARATE ILLUSTRATION

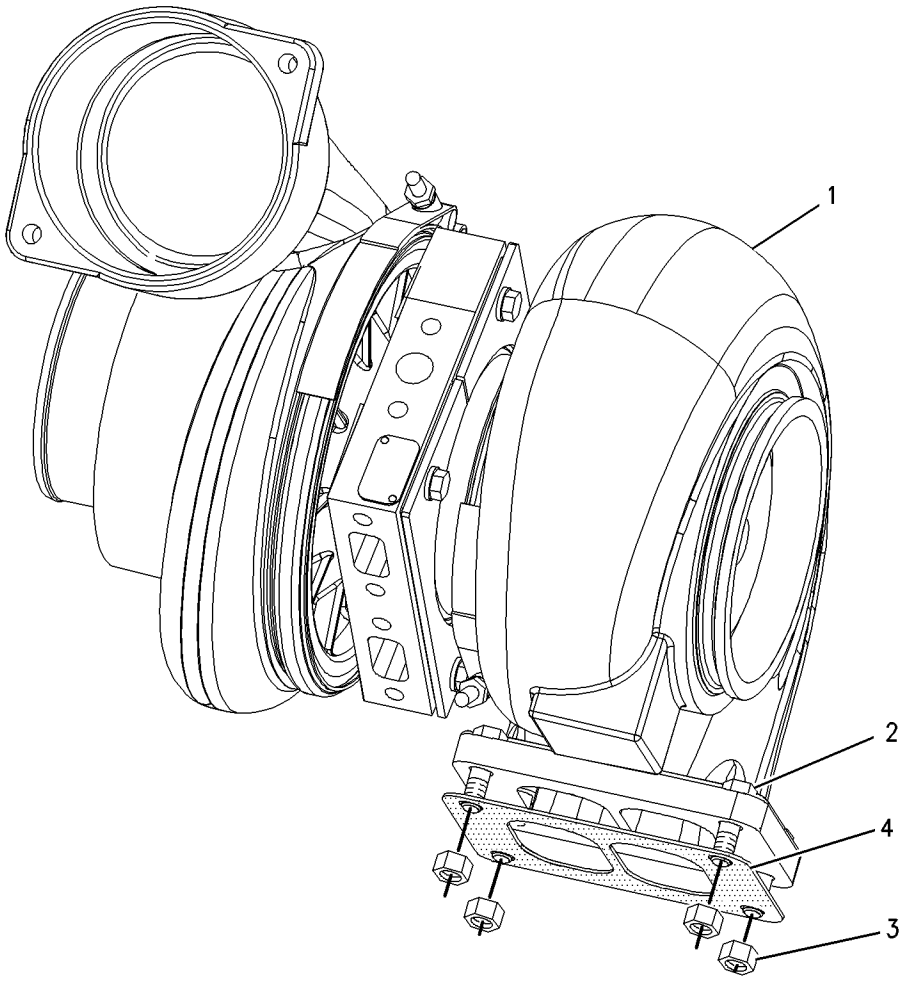

GRAPHIC #1 g00674966

2G-9000 ADAPTER GP-FAST FILL FUEL

S/N: AKA1-UP

PART OF 187-5276 ADAPTER GP-FAST FILL FUEL

SMCS-1710 **i01489087**

NOTE	REF NO	GRAPHIC REF	PART NUMBER	QTY	PART NAME 1 2 3 4 5 6 (PRODUCT LEVEL)	SEE PAGE
Z	1	1		1	PLUNGER	
Z	2	1		1	RING-RETAINING	
Z	3	1		1	SPRING	

Z-NOT SERVICED SEPARATELY

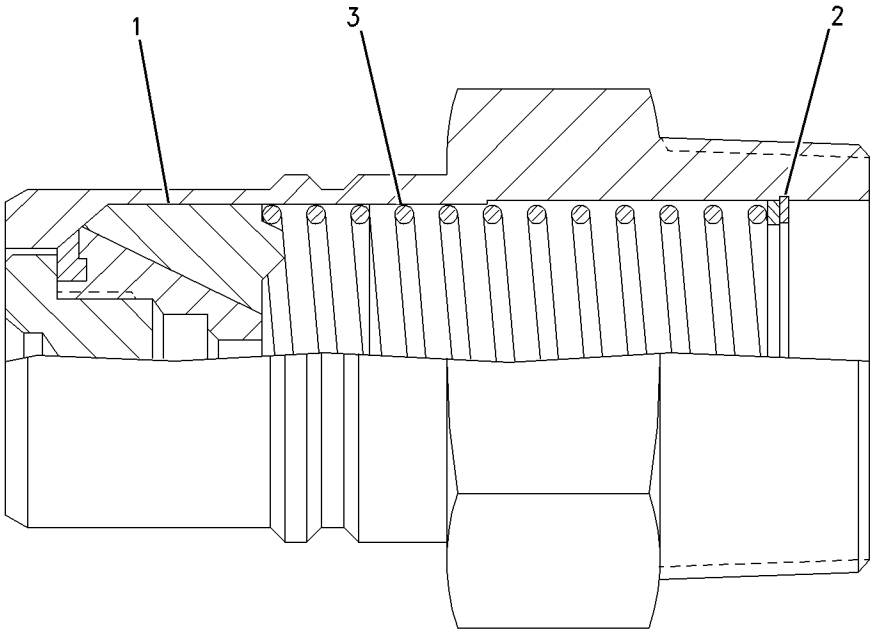

GRAPHIC #1 g00735689

MEMORANDA

187-5276 ADAPTER GP-FAST FILL FUEL

S/N: AKA1-UP

SMCS-1710 **i01489078**

NOTE	REF NO	GRAPHIC REF	PART NUMBER	QTY	PART NAME 1 2 3 4 5 6 (PRODUCT LEVEL)	SEE PAGE
Y	1	1	**2G-9000**	1	ADAPTER GP-FAST FILL FUEL	166
	2	1	**6Y-8556**	1	DOOR	
	3	1	**9D-0630**	1	CAP-DUST	
	4	1	**163-5455**	1	VALVE AS	
	5	1	**188-5095**	1	VENT AS	
	6	1	**193-1598**	1	ELBOW	
I	7	1	**193-5768**	1	HOSE AS	
	8	1	**1H-8128**	1	SEAL-O-RING	
	9	1	**1J-9671**	2	SEAL-O-RING	
	10	1	**2D-4534**	6	BOLT-SOCKET HEAD (3/8-16X1 IN)	
	11	1	**4J-0527**	1	SEAL-O-RING	
	12	1	**4L-6454**	10	BOLT (3/8-16X1 IN)	
	13	1	**5H-6734**	1	SEAL-O-RING	
	14	1	**5P-1075**	4	WASHER-HARD (10.2X22.5X3MM THK)	
	15	1	**5P-2618**	2	CONNECTOR	
	16	1	**8T-4223**	4	WASHER-HARD (13.5X25.5X3MM THK)	
	17	1	**8T-4896**	12	WASHER-HARD (10.2X18.5X2.5MM THK)	
	18	1	**8T-9389**	4	BOLT (1/2-13X2.75 IN)	

I-SEE HOSE FABRICATION GUIDE
Y-SEPARATE ILLUSTRATION

187-5276 **ADAPTER GP-FAST FILL FUEL** ***(contd.)*** **i01489078**

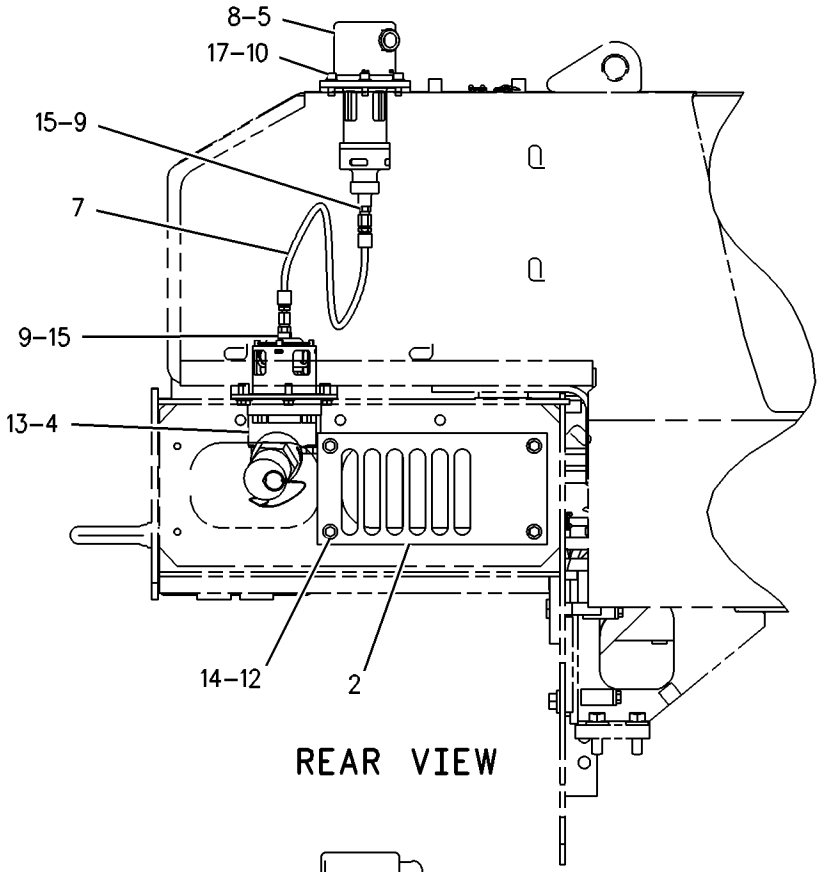

REAR VIEW

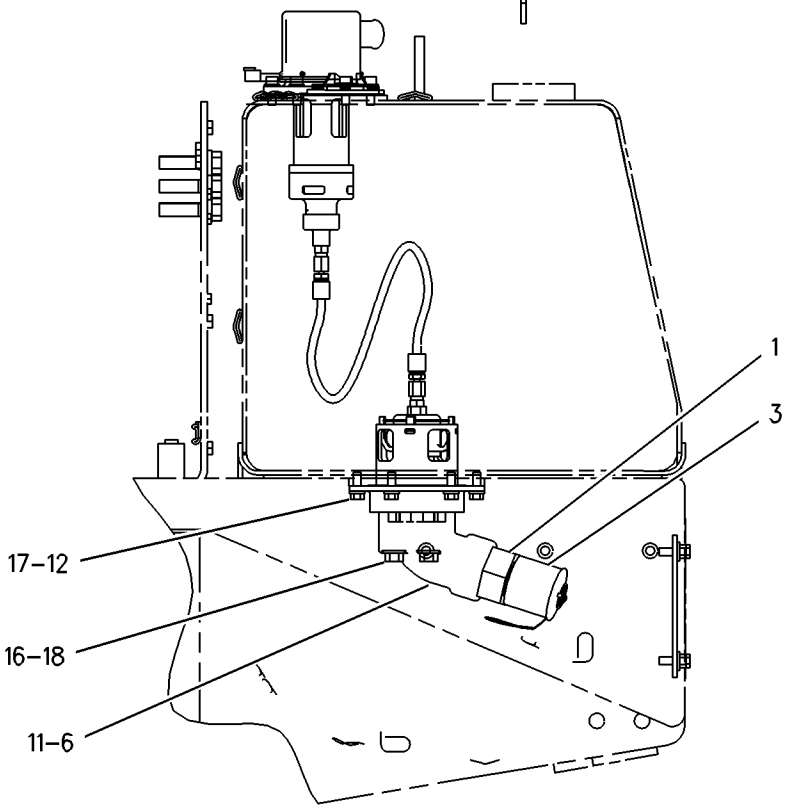

LEFT SIDE VIEW

GRAPHIC #1 g00758396

133-9907 ADAPTER GP-PUMP DRIVE

S/N: BET1-UP

PART OF 6I-3638 DRIVE GP-PUMP

SMCS-1251 **i01447320**

NOTE	REF NO	GRAPHIC REF	PART NUMBER	QTY	PART NAME 1 2 3 4 5 6 (PRODUCT LEVEL)	SEE PAGE
	1	1	**1B-3867**	2	BALL BEARING	
	2	1	**4F-7957**	3	BOLT (1/4-20X0.875 IN)	
	3	1	**6I-4575**	1	GEAR (34 TEETH)	
	4	1	**9X-2038**	3	WASHER (7X19X2MM THK)	
	5	1	**133-9906**	1	ADAPTER	
	6	1	**1H-8647**	1	RING-SNAP	

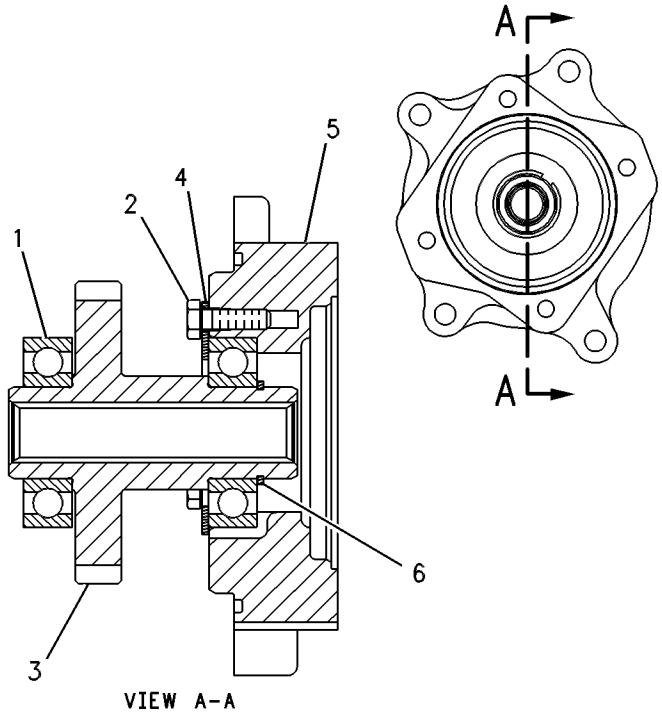

GRAPHIC #1 g00263602

139-6941 BASE GP-FUEL FILTER

S/N: BET1-UP

PART OF 161-3202 FILTER GP-FUEL

SMCS-1261, 1262 **i01444859**

NOTE	REF NO	GRAPHIC REF	PART NUMBER	QTY	PART NAME 1 2 3 4 5 6 (PRODUCT LEVEL)	SEE PAGE
	1	1	**136-5017**	1	BASE AS-FUEL FILTER	
	1A	1	**9S-4167**	1	STUD-HOLLOW	
	2	1	**9S-8004**	1	PLUG	
	3	1	**6V-5049**	1	SEAL-O-RING (11.89MM ID)	
Y	4	1	**139-6873**	1	VALVE GP-FUEL BYPASS	187
Y	5	1	**156-5783**	1	VALVE GP-CHECK	186
	6	1	**6V-4589**	2	SEAL-O-RING (19.18MM ID)	
	7	1	**102-2240**	1	SENSOR GP-TEMPERATURE (FUEL)	
		1	**3E-3371**	1	WEDGE-RECEPTACLE LOCK (3 PIN)	
		1	**8T-8729**	3	PIN-CONNECTOR	
BE		1	**9X-1813**		SLEEVE	
		1	**102-8803**	1	KIT-RECEPTACLE (3 PIN)	
					(INCLUDES RECEPTACLE AS & WEDGE)	
	8	1	**143-2933**	1	FITTING	
	9	1	**8L-2786**	2	SEAL-O-RING (16.36MM ID)	
	10	1	**8L-2779**	1	SEAL-O-RING (9.25MM ID)	

B-USE AS REQUIRED
E-ORDER BY THE CENTIMETER
Y-SEPARATE ILLUSTRATION

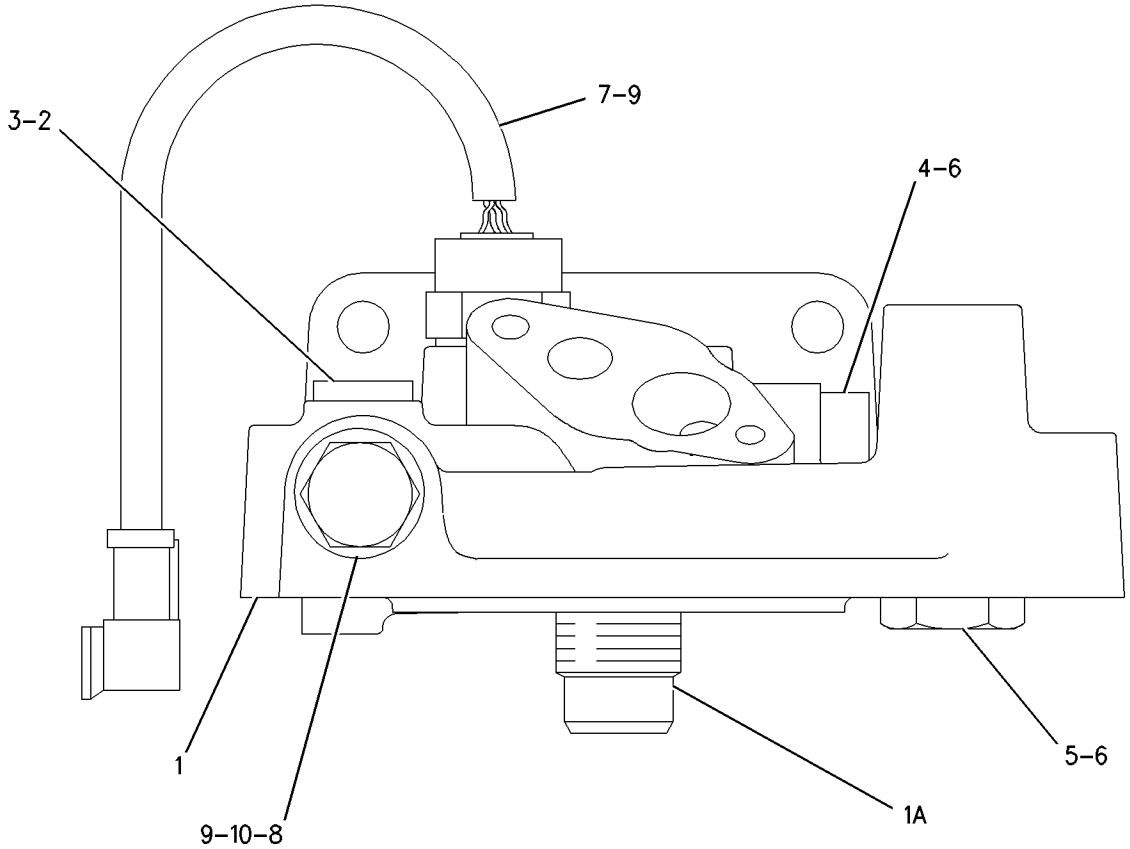

GRAPHIC #1 g00678484

FUEL SYSTEM

183-4346 BASE GP-FUEL FILTER

S/N: AKA1-UP

PART OF 160-7827 HEATER GP-FUEL

SMCS-1261, 1262 **i01491387**

NOTE	REF NO	GRAPHIC REF	PART NUMBER	QTY	PART NAME 1 2 3 4 5 6 (PRODUCT LEVEL)	SEE PAGE
	1	1	**102-2240**	1	SENSOR GP-TEMPERATURE	
		1	**102-8803**	1	KIT-RECEPTACLE (3 PIN)	
					(INCLUDES RECEPTACLE AS & WEDGE)	
		1	**3E-3371**	1	WEDGE-RECEPTACLE LOCK (3 PIN)	
		1	**8T-8729**	3	PIN-CONNECTOR	
E		1	**9X-1813**		SLEEVE	
Y	2	1	**139-6873**	1	VALVE GP-FUEL BYPASS	187
	3	1	**143-2933**	1	FITTING	
Y	4	1	**156-5783**	1	VALVE GP-CHECK	186
	5	1	**162-5497**	1	BASE AS-FUEL HEATER	
		1	**8N-2101**	1	STUD-HOLLOW	
	6	1	**6V-4589**	2	SEAL-O-RING	
	7	1	**6V-5049**	1	SEAL-O-RING	
	8	1	**8L-2779**	1	SEAL-O-RING	
	9	1	**8L-2786**	2	SEAL-O-RING	
	10	1	**9S-8004**	1	PLUG	

E-ORDER BY THE CENTIMETER
Y-SEPARATE ILLUSTRATION

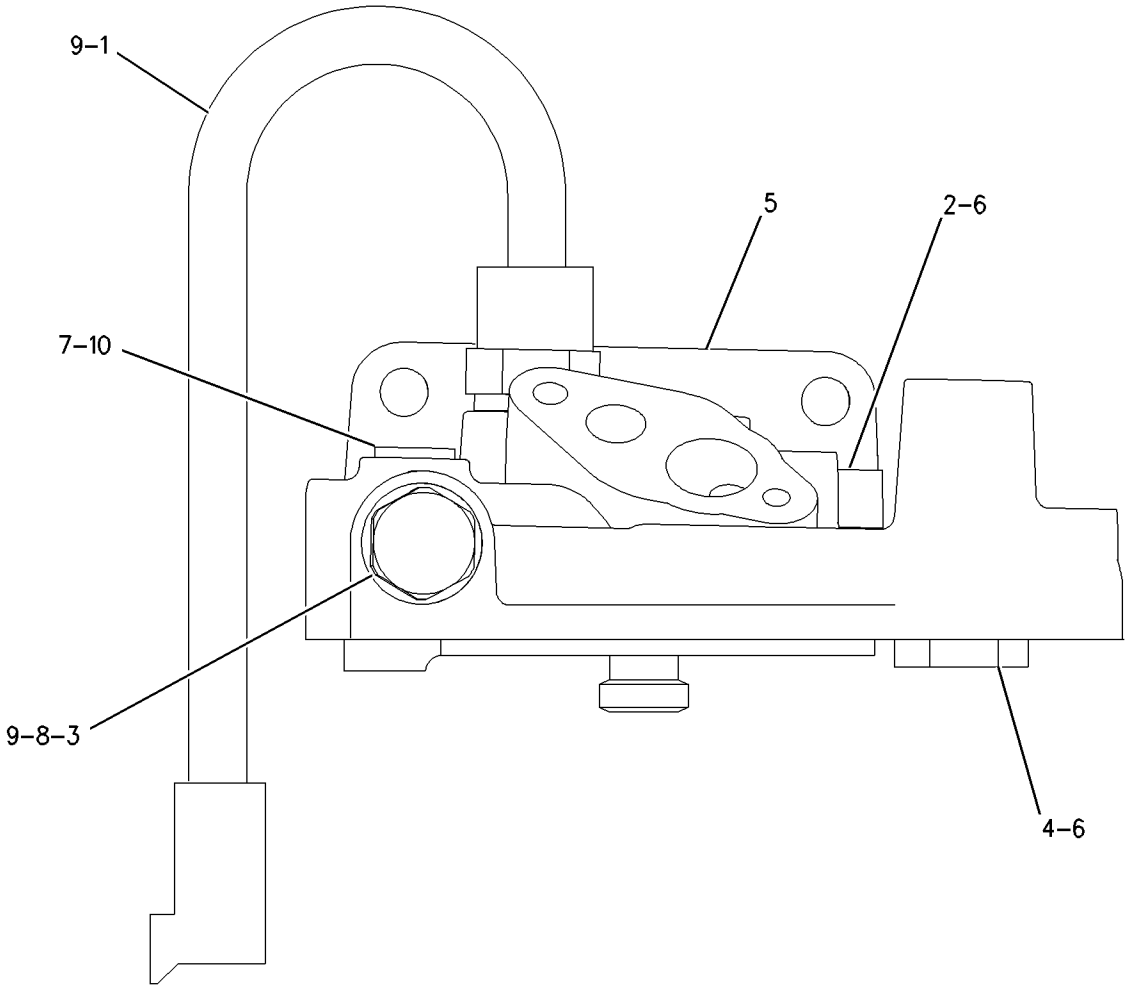

GRAPHIC #1 g00676470

FUEL SYSTEM

6I-3638 DRIVE GP-PUMP

S/N: BET1-UP

PART OF 160-0566 ENGINE AR-CORE

SMCS-1714 **i01447316**

NOTE	REF NO	GRAPHIC REF	PART NUMBER	QTY	PART NAME 1 2 3 4 5 6 (PRODUCT LEVEL)	SEE PAGE
	1	1	**0S-1590**	3	BOLT (3/8-16X2 IN)	
	2	1	**8T-9527**	1	SEAL-O-RING (110.72MM ID)	
Y	3	1	*133-9907*	1	ADAPTER GP-PUMP DRIVE	170
	4	1	**5M-2894**	4	WASHER-HARD (10.2X18.5X2.5MM THK)	
	5	1	**9S-8752**	1	NUT-FULL (3/8-16 THD)	

Y-SEPARATE ILLUSTRATION

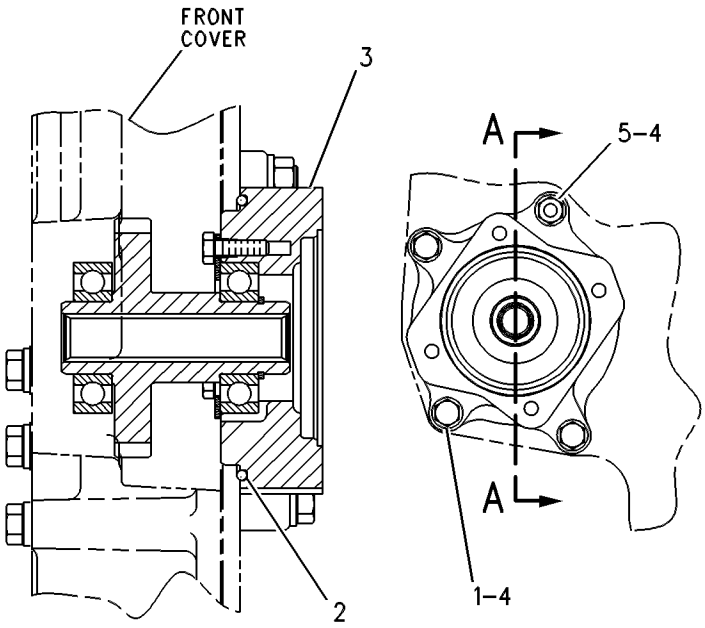

VIEW A-A

GRAPHIC #1 g00263601

161-3202 FILTER GP-FUEL

S/N: BET1-UP

PART OF 157-7195, 157-7196 ENGINE AR-COMPLETE

SMCS-1261 **i01444856**

NOTE	REF NO	GRAPHIC REF	PART NUMBER	QTY	PART NAME 1 2 3 4 5 6 (PRODUCT LEVEL)	SEE PAGE
	1	1	**1B-2790**	1	BOLT (5/16-18X1.375 IN)	
	2	1	**1P-0436**	1	GASKET (FUEL PRIMING PUMP)	
	3	1	**1R-0749**	1	FILTER AS-FUEL	
	4	1	**6N-4414**	1	COVER-FILTER BASE	
	5	1	**5P-0537**	1	WASHER-HARD (7.2X14.5X2MM THK)	
	6	1	**7B-2742**	1	BOLT (1/4-20X1.25 IN)	
	7	1	**9M-1974**	1	WASHER-HARD (8.8X16X2MM THK)	
Y	8	1	*139-6941*	1	BASE GP-FUEL FILTER	171
	9	1	**161-2853**	1	COVER-CYLINDER BLOCK	
	10	1	**109-7425**	1	SEAL-COVER	
	11	1	**0S-1588**	2	BOLT (3/8-16X1.25 IN)	
	12	1	**5M-2894**	6	WASHER-HARD (10.2X18.5X2.5MM THK)	
	13	1	**0S-1591**	4	BOLT (3/8-16X1.5 IN)	

Y-SEPARATE ILLUSTRATION

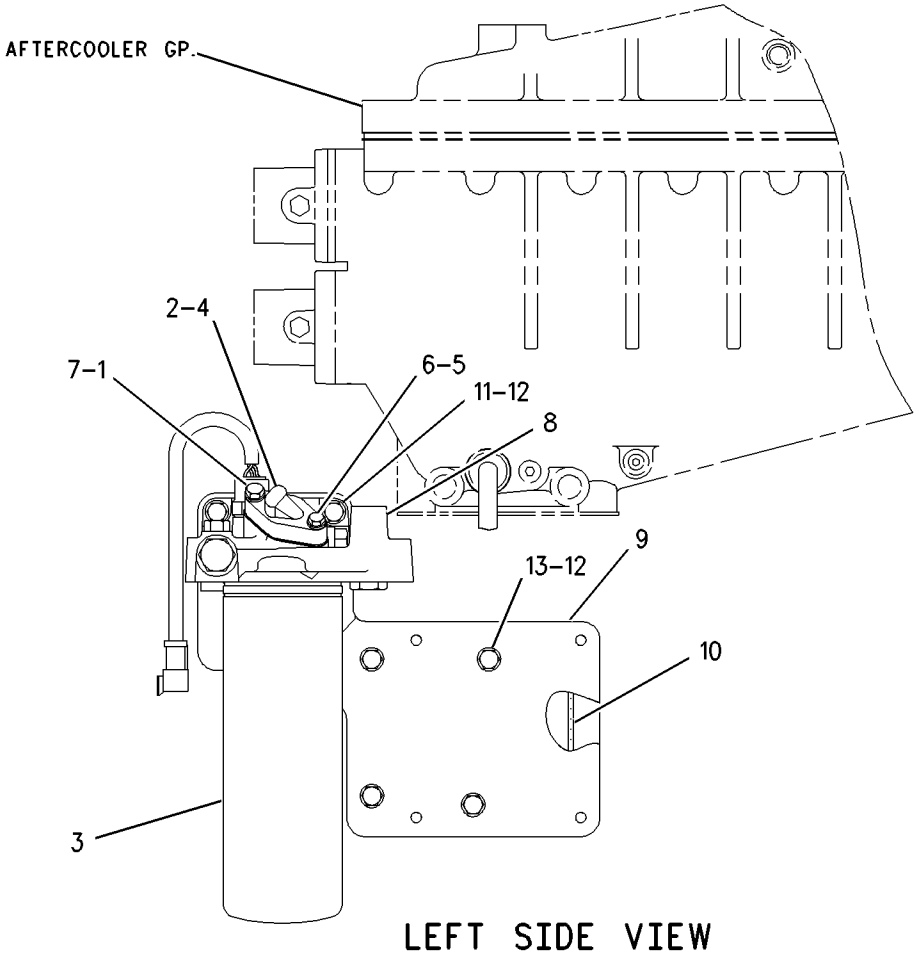

LEFT SIDE VIEW

GRAPHIC #1 g00664829

176-5618 FILTER GP-WATER SEP & FUEL

S/N: BET1-UP

PART OF 185-9978 FILTER GP-WATER SEP & FUEL

SMCS-1261, 1263 **i01369570**

NOTE	REF NO	GRAPHIC REF	PART NUMBER	QTY	PART NAME 1 2 3 4 5 6 (PRODUCT LEVEL)	SEE PAGE
	1	1	**1R-0769**	1	FILTER AS (WATER SEPARATOR & FUEL)	
	2	1	**173-7126**	1	BOWL AS	
		1	**5F-9144**	1	SEAL-O-RING (7.65MM ID)	
		1	**6V-5049**	1	SEAL-O-RING (11.89MM ID)	

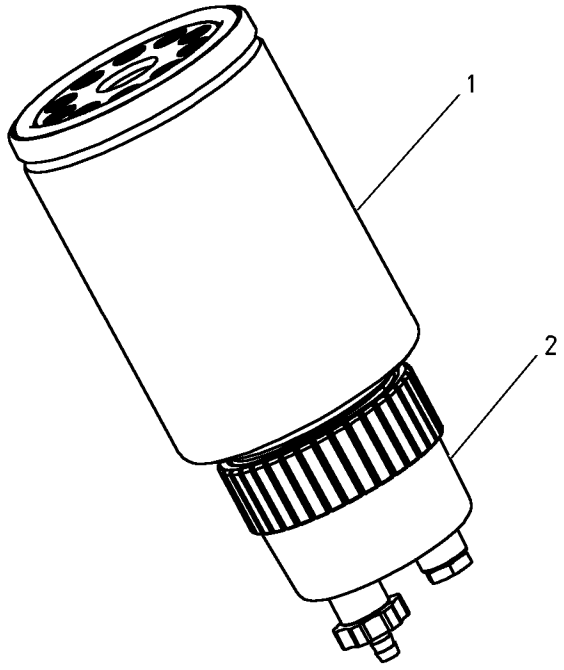

GRAPHIC #1 g00691582

185-9978 FILTER GP-WATER SEP & FUEL

S/N: BET1-UP

PART OF 157-7195, 157-7196 ENGINE AR-COMPLETE

SMCS-1261, 1263 **i01444616**

NOTE	REF NO	GRAPHIC REF	PART NUMBER	QTY	PART NAME 1 2 3 4 5 6 (PRODUCT LEVEL)	SEE PAGE
	1	1	**1P-0436**	1	GASKET (FUEL PRIMING PUMP)	
	2	1	**127-0291**	1	BASE AS	
	2A	1	**9S-4167**	1	STUD-HOLLOW	
Y	3	1	*176-5618*	1	FILTER GP-WATER SEP & FUEL	175
	4	1	**137-5541**	1	PUMP AS-FUEL PRIMING	
	5	1	**1B-7182**	1	BOLT (5/16-18X1.25 IN)	
	6	1	**5P-0537**	1	WASHER-HARD (7.2X14.5X2MM THK)	
	7	1	**6V-5048**	4	SEAL-O-RING (8.92MM ID)	
	8	1	**7B-2742**	1	BOLT (1/4-20X1.25 IN)	
	9	1	**9M-1974**	1	WASHER-HARD (8.8X16X2MM THK)	
	10	1	**9S-8002**	4	PLUG-O-RING	

Y-SEPARATE ILLUSTRATION

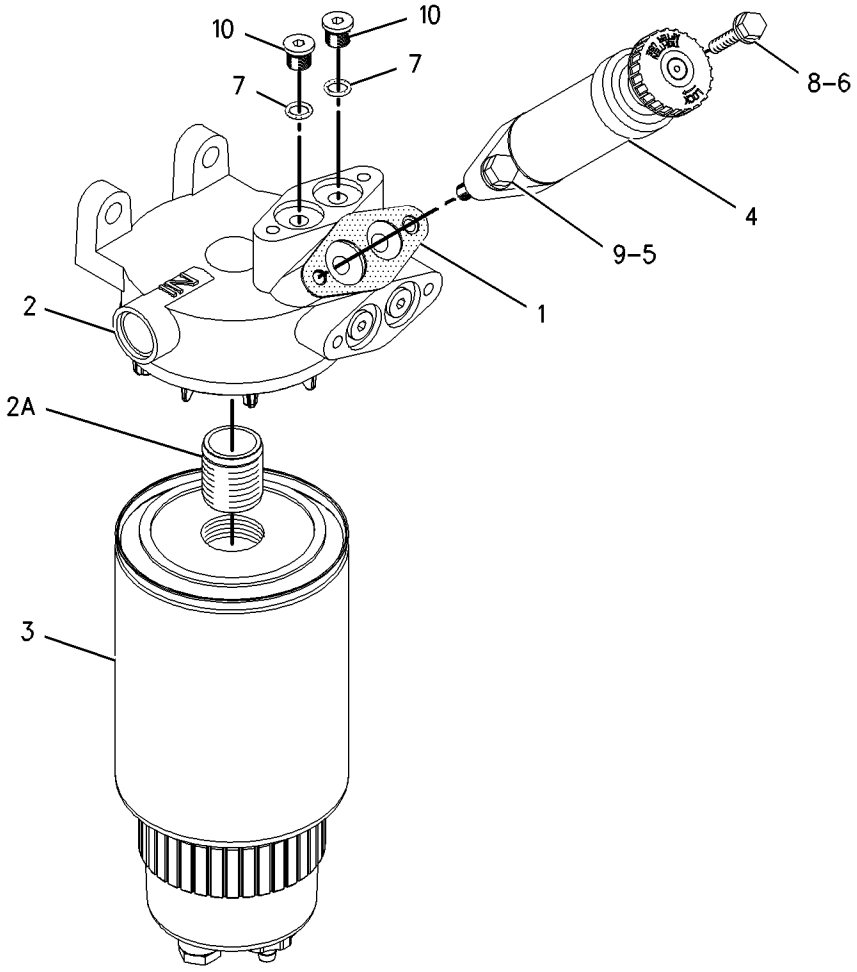

GRAPHIC #1 g00751704

128-8510 INJECTOR GP-FUEL

S/N: BET1-UP

PART OF 160-0566 ENGINE AR-CORE

SMCS-1254, 1290, 1713 **i01446851**

NOTE	REF NO	GRAPHIC REF	PART NUMBER	QTY	PART NAME 1 2 3 4 5 6 (PRODUCT LEVEL)	SEE PAGE
	1	1	**6I-0213**	1	CLAMP	
	2	1	**8S-9191**	1	BOLT (3/8-16X4 IN)	
	3	1	**100-5072**	1	SPACER	
R	4	1	**191-3005**	1	INJECTOR GP-FUEL	
	4A	1	**9X-7317**	1	SEAL-O-RING (9.6MM ID)	
	4B	1	**9X-7418**	1	SEAL-O-RING (32.99MM ID)	
	4C	1	**9X-7419**	1	SEAL-O-RING (36.09MM ID)	

R-REMFG PART MAY BE AVAILABLE

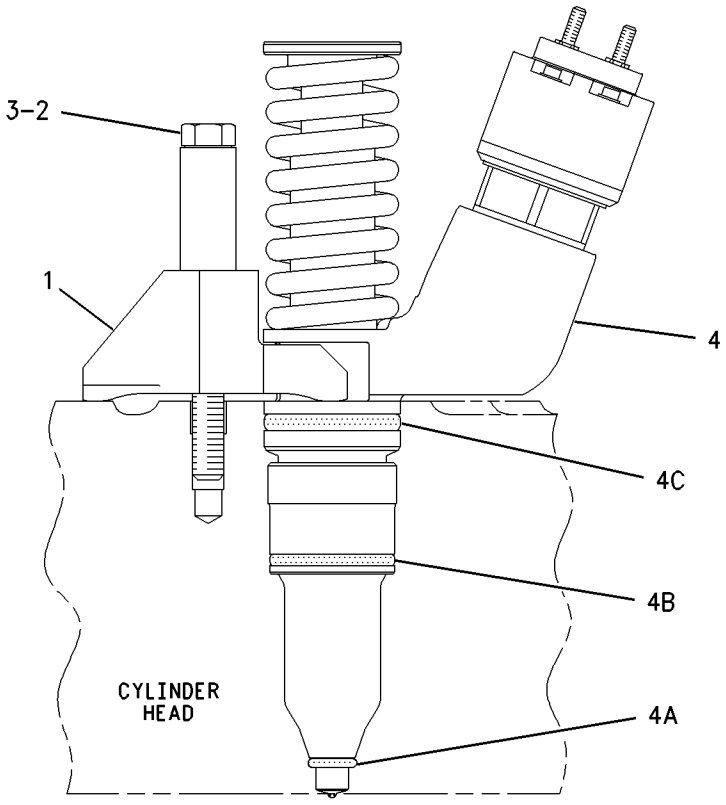

REAR VIEW

GRAPHIC #1 g00665501

FUEL SYSTEM

159-6018 LINES GP-FUEL

S/N: AKA1-UP

PART OF 157-0819 CHASSIS AR

SMCS-1274 **i01434714**

NOTE	REF NO	GRAPHIC REF	PART NUMBER	QTY	PART NAME 1 2 3 4 5 6 (PRODUCT LEVEL)	SEE PAGE
	1	1	**5G-4109**	1	SCREEN-SUMP (FUEL TANK)	
	2	1	**5P-8502**	1	PADLOCK GP	
A		1	**5P-8500**	1	KEY	
A		1	**8Y-6364**	1	SLEEVE	
	3	1	**8T-0081**	1	VALVE-BALL (SUPPLY)	
	4	1	**8T-0119**	1	ELBOW	
	5	1	**8T-6639**	1	VALVE-BALL (DRAIN)	
	6	1	*148-8361*	1	ELBOW GP	
		1	**6V-9200**	1	ELBOW (90 DEGREE)	
		1	**3J-7354**	1	SEAL-O-RING	
	7	1	*148-8364*	1	ELBOW GP	
		1	**6V-8625**	1	ELBOW	
		1	**6V-8398**	1	SEAL-O-RING	
		1	**3K-0360**	1	SEAL-O-RING	
	8	1	*150-3024*	1	ELBOW AS	
		1	**5P-4924**	1	ELBOW	
		1	**3J-1907**	1	SEAL-O-RING	
I	9	1	**159-6120**	1	HOSE AS	
	10	1	**199-4025**	1	HOSE AS	
	11	1	**033-6028**	1	SEAL-O-RING	
	12	1	*148-8313*	1	ADAPTER GP	
		1	**5P-6944**	1	ADAPTER-STRAIGHT THREAD	
		1	**3K-0360**	1	SEAL-O-RING	
	13	1	**1S-0994**	3	CLIP	
	14	1	**3K-0360**	3	SEAL-O-RING	
	15	1	**5K-5338**	4	CLIP	
	16	1	**5M-3062**	7	BOLT (3/8-16X0.75 IN)	
	17	1	**6V-5758**	1	SEAL-O-RING	
	18	1	**6V-8625**	1	ELBOW	
	19	1	**8M-2773**	2	CLIP	
	20	1	**8T-4896**	7	WASHER-HARD (10.2X18.5X2.5MM THK)	
E	21	1	**5P-1442**		HOSE (50CM)	

A-NOT PART OF THIS GROUP
E-ORDER BY THE CENTIMETER
I-SEE HOSE FABRICATION GUIDE

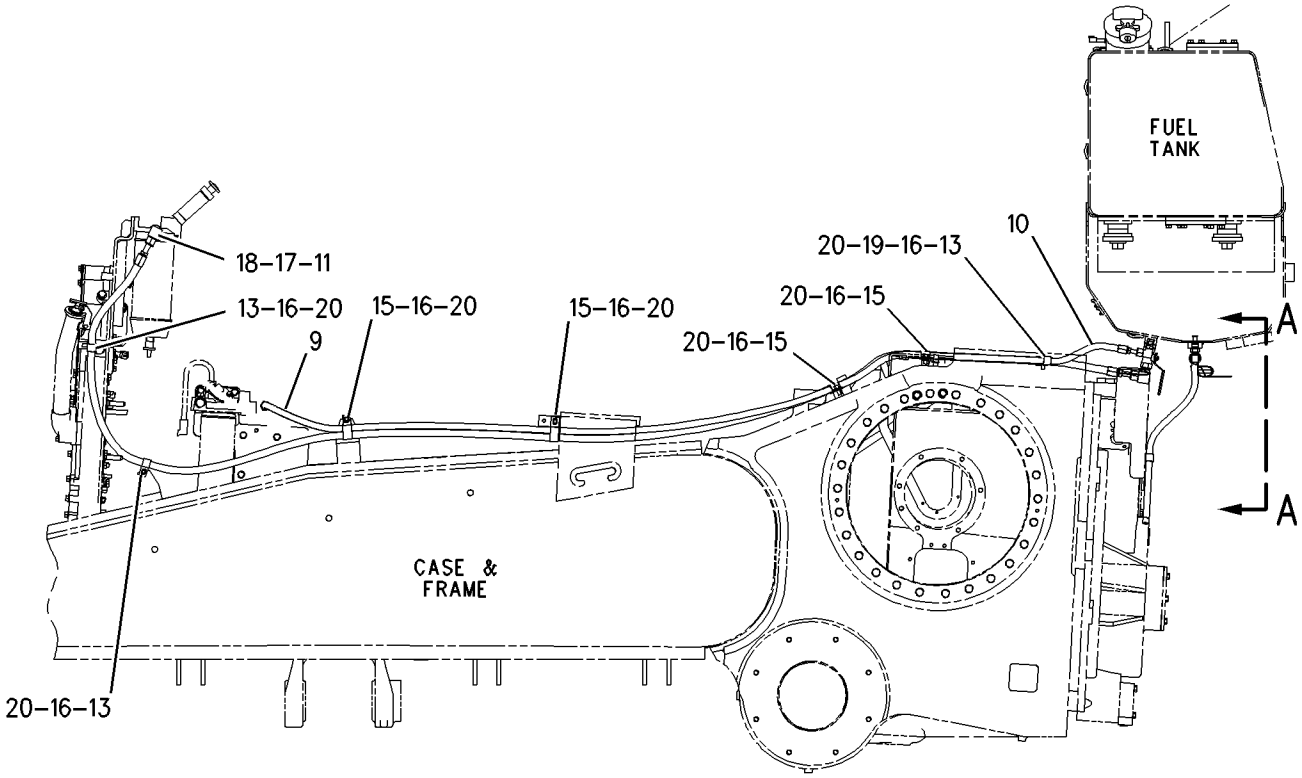

LEFT SIDE VIEW

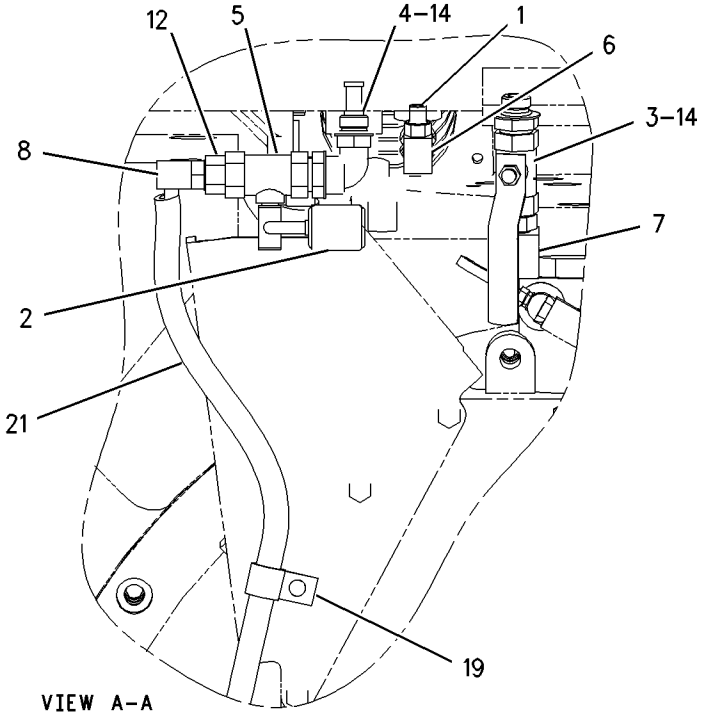

GRAPHIC #1 g00759030

FUEL SYSTEM

161-1507 LINES GP-FUEL

S/N: BET1-UP

PART OF 157-7195, 157-7196 ENGINE AR-COMPLETE

SMCS-1274 **i01488577**

NOTE	REF NO	GRAPHIC REF	PART NUMBER	QTY	PART NAME 1 2 3 4 5 6 (PRODUCT LEVEL)	SEE PAGE
	1	1	**8P-9679**	1	SPACER (10.5X25X40MM THK)	
I	2	1	**163-7217**	1	HOSE AS	
	3	1	**163-7219**	1	HOSE AS	
	4	1	**163-7220**	1	HOSE AS	
	5	1	**198-1335**	1	HOSE AS	
	6	1	**199-6321**	1	BRACKET AS	
	7	1	**067-2551**	6	CLIP (SLOT)	
	8	1	**0S-0509**	2	BOLT (3/8-16X0.75 IN)	
	9	1	**0S-1591**	2	BOLT (3/8-16X1.5 IN)	
	10	1	**0S-1594**	2	BOLT (3/8-16X1 IN)	
	11	1	**0S-1619**	1	BOLT (3/8-16X3 IN)	
	12	1	*148-8353*	2	ELBOW GP	
					(EACH INCLUDES)	
		1	**3J-1907**	1	SEAL-O-RING	
		1	**6V-8397**	1	SEAL-O-RING	
		1	**6V-9001**	1	ELBOW	
	13	1	*148-8374*	1	ELBOW GP	
		1	**3K-0360**	1	SEAL-O-RING	
		1	**6V-8397**	1	SEAL-O-RING	
		1	**6V-8723**	1	ELBOW	
	14	1	*148-8378*	3	ELBOW GP	
					(EACH INCLUDES)	
		1	**3J-1907**	1	SEAL-O-RING	
		1	**6V-8397**	1	SEAL-O-RING	
		1	**6V-8724**	1	ELBOW	
	15	1	*150-3036*	1	ELBOW GP	
		1	**3J-1907**	1	SEAL-O-RING	
		1	**6V-8397**	1	SEAL-O-RING	
		1	**8T-1905**	1	ELBOW	
	16	1	*164-9869*	1	CONNECTOR AS	
		1	**3J-1907**	1	SEAL-O-RING	
		1	**6V-8397**	1	SEAL-O-RING	
		1	**9X-2297**	1	CONNECTOR	
I	17	1	**189-5762**	1	HOSE AS	
	18	1	**1P-7009**	1	CLIP	
	19	1	**2M-9780**	1	SEAL-O-RING	
	20	1	**5M-2894**	10	WASHER-HARD (10.2X18.5X2.5MM THK)	
	21	1	**6K-8178**	2	CLIP	
	22	1	**6K-9194**	2	ELBOW	
	23	1	**6V-8397**	1	SEAL-O-RING	
	24	1	**9S-8752**	3	NUT-FULL (3/8-16 THD)	
	25	1	**9X-2134**	1	ELBOW	

I-SEE HOSE FABRICATION GUIDE

161-1507 **LINES GP-FUEL** *(contd.)* **i01488577**

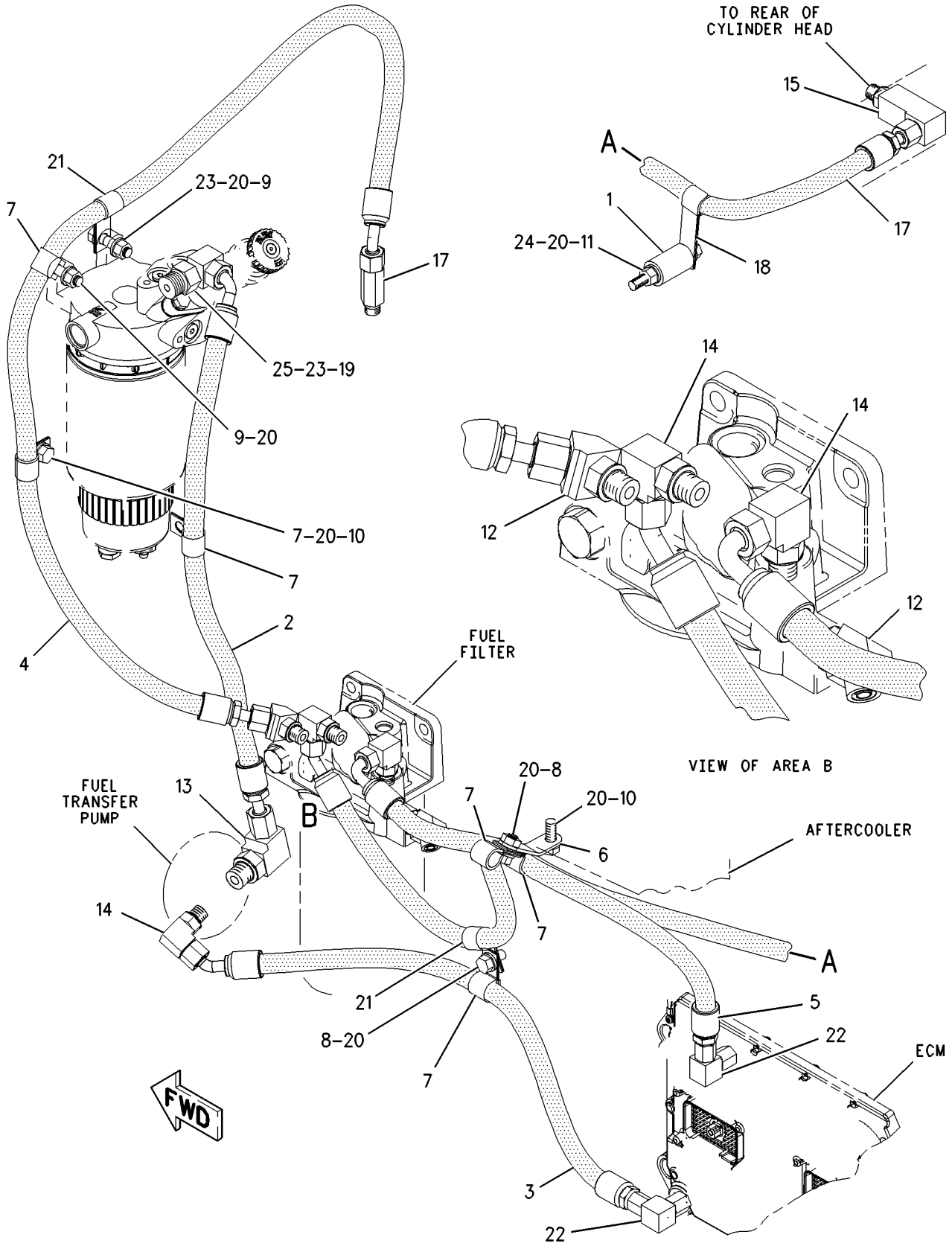

GRAPHIC #1 g00773294

6I-1940 MECHANISM GP-FUEL PUMP & VALVE

S/N: BET1-UP

PART OF 160-0566 ENGINE AR-CORE

FOR USE WITH A FASTENER GP FOR NON-JAKE BRAKE APPLICATIONS

SMCS-1251, 1254 **i01446911**

NOTE	REF NO	GRAPHIC REF	PART NUMBER	QTY	PART NAME 1 2 3 4 5 6 (PRODUCT LEVEL)	SEE PAGE
Y	1	1	*163-7381*	3	ROCKER ARM GP	68
	2	1	**6I-1458**	12	BRIDGE-VALVE	

Y-SEPARATE ILLUSTRATION

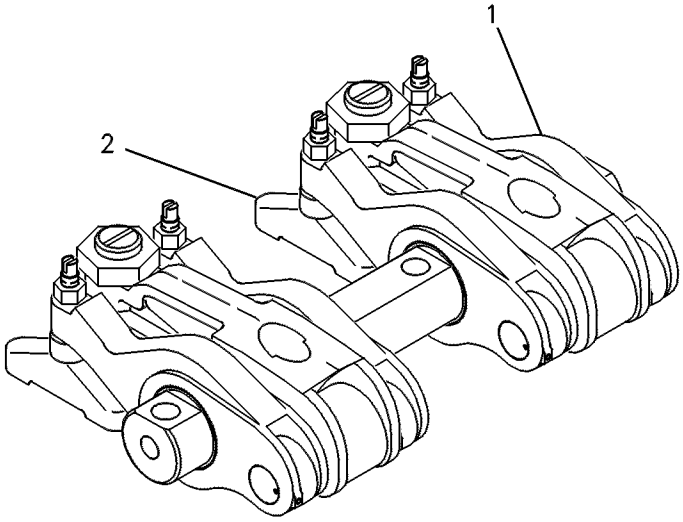

GRAPHIC #1 g00238186

FUEL SYSTEM

162-1622 PUMP GP-FUEL TRANSFER

S/N: BET1-UP

PART OF 157-7195, 157-7196 ENGINE AR-COMPLETE

SMCS-1255, 1256 **i01487953**

NOTE	REF NO	GRAPHIC REF	PART NUMBER	QTY	PART NAME 1 2 3 4 5 6 (PRODUCT LEVEL)	SEE PAGE
	1	1	**133-9116**	1	COVER	
	2	1	**190-3443**	1	PUMP GP-FUEL TRANSFER	
	3	1	**107-5769**	2	SEAL-O-RING	
	4	1	**1T-0765**	2	BOLT (3/8-16X1 IN)	
	5	1	**3K-3256**	1	STUD	
	6	1	**5M-2894**	2	WASHER-HARD (10.2X18.5X2.5MM THK)	
	7	1	**7H-0847**	1	STUD (3/8IN)	
	8	1	**9S-8752**	2	NUT-FULL (3/8-16 THD)	

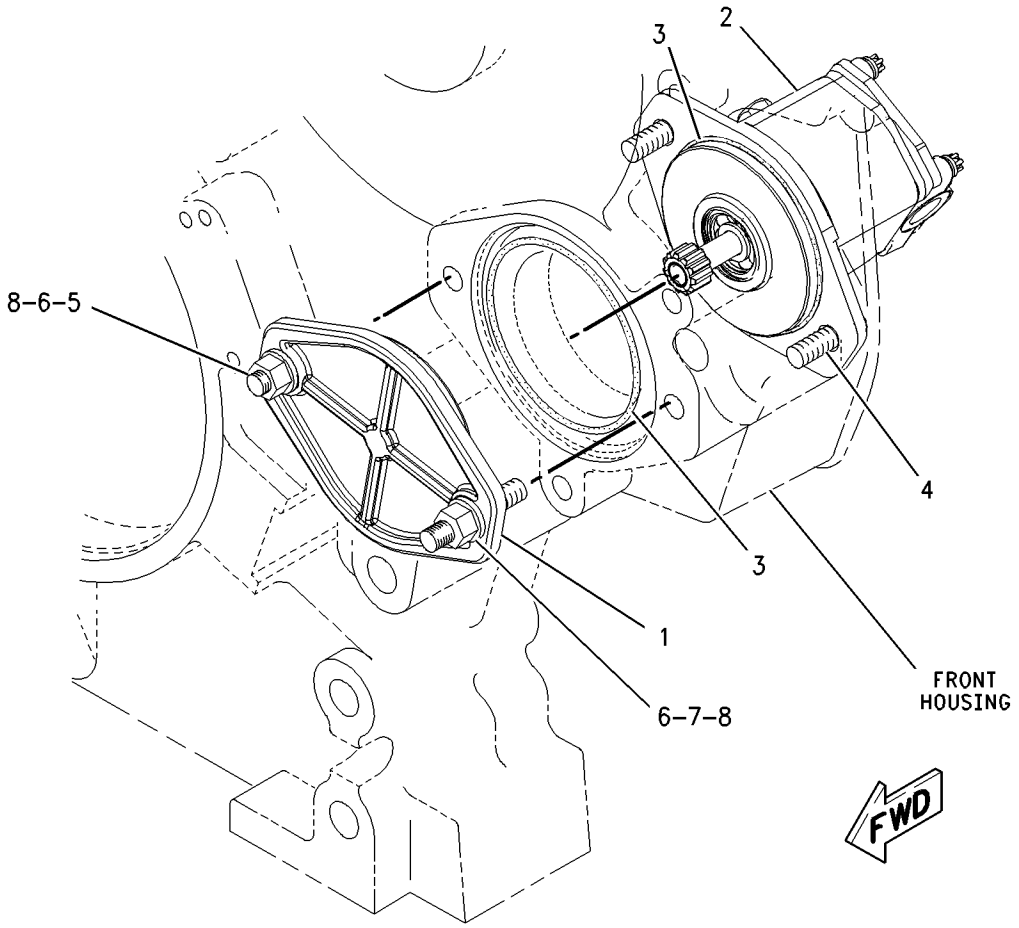

GRAPHIC #1 g00773293

FUEL SYSTEM

159-8106 TANK GP-FUEL

S/N: AKA1-UP

PART OF 157-0819 CHASSIS AR

SMCS-1273 **i01434996**

NOTE	REF NO	GRAPHIC REF	PART NUMBER	QTY	PART NAME 1 2 3 4 5 6 (PRODUCT LEVEL)	SEE PAGE
	1	1	**2G-0493**	4	WASHER-RETAINING (20X82.55X11MM THK)	
	2	1	**5P-8502**	1	PADLOCK GP	
A		1	**5P-8500**	1	KEY	
A		1	**8Y-6364**	1	SLEEVE	
	3	1	**6C-3060**	1	GASKET	
	4	1	**9P-7121**	1	STRAINER-FUEL	
	5	1	**6N-7523**	6	WASHER (6.48X11.9X1.57MM THK)	
	6	1	**164-3417**	1	COVER	
L	7	1	**160-1823**	1	SENDER AS-FUEL	
N	8	1	**164-3414**	1	TANK AS	
		1	**5J-8225**	1	SEAL-U-CUP (54.70MM ID)	
		1	**6G-7724**	1	FLANGE	
		1	**6T-6221**	1	BOSS	
		1	**6Y-2119**	1	TUBE AS	
		1	**7T-2853**	1	FITTING	
		1	**7T-1099**	15	LINK	
	9	1	**187-1679**	1	COVER	
	10	1	**1H-8128**	1	SEAL-O-RING (94.84MM ID)	
	11	1	**4L-6454**	4	BOLT (3/8-16X1 IN)	
	12	1	**6T-1698**	8	MOUNTING	
	13	1	**7X-0582**	4	WASHER-HARD (20X44.5X6MM THK)	
J	14	1	**7X-7700**	1	CAP AS-FUEL TANK	
		1	**9X-8600**	1	SEAL-O-RING (110.49MM ID)	
	15	1	**8C-8842**	4	BOLT (3/4-10X4 IN)	
	16	1	**5H-6734**	1	SEAL-O-RING (113.89MM ID)	
	17	1	**8T-9364**	6	BOLT (1/4-20X.625 IN)	
	18	1	**8T-4896**	12	WASHER-HARD (10.2X18.5X2.5MM THK)	
					AVAILABLE REPAIR KIT(S):	
J			**9X-2205**	1	KIT-CAP FILTER (FUEL TANK)	
					(INCLUDES FILTER, SCREWS, GASKETS & VALVE)	
L			**138-0444**	1	KIT-DIAL SENSOR	
					(INCLUDES SENSOR, SCREWS, RECEPTACLE, PINS & WEDGE)	

A-NOT PART OF THIS GROUP
J-REPAIR KIT MARKED J AVAILABLE FOR PART MARKED J
L-REPAIR KIT MARKED L AVAILABLE FOR PART MARKED L
N-NEW PART

159-8106 **TANK GP-FUEL** ***(contd.)*** **i01434996**

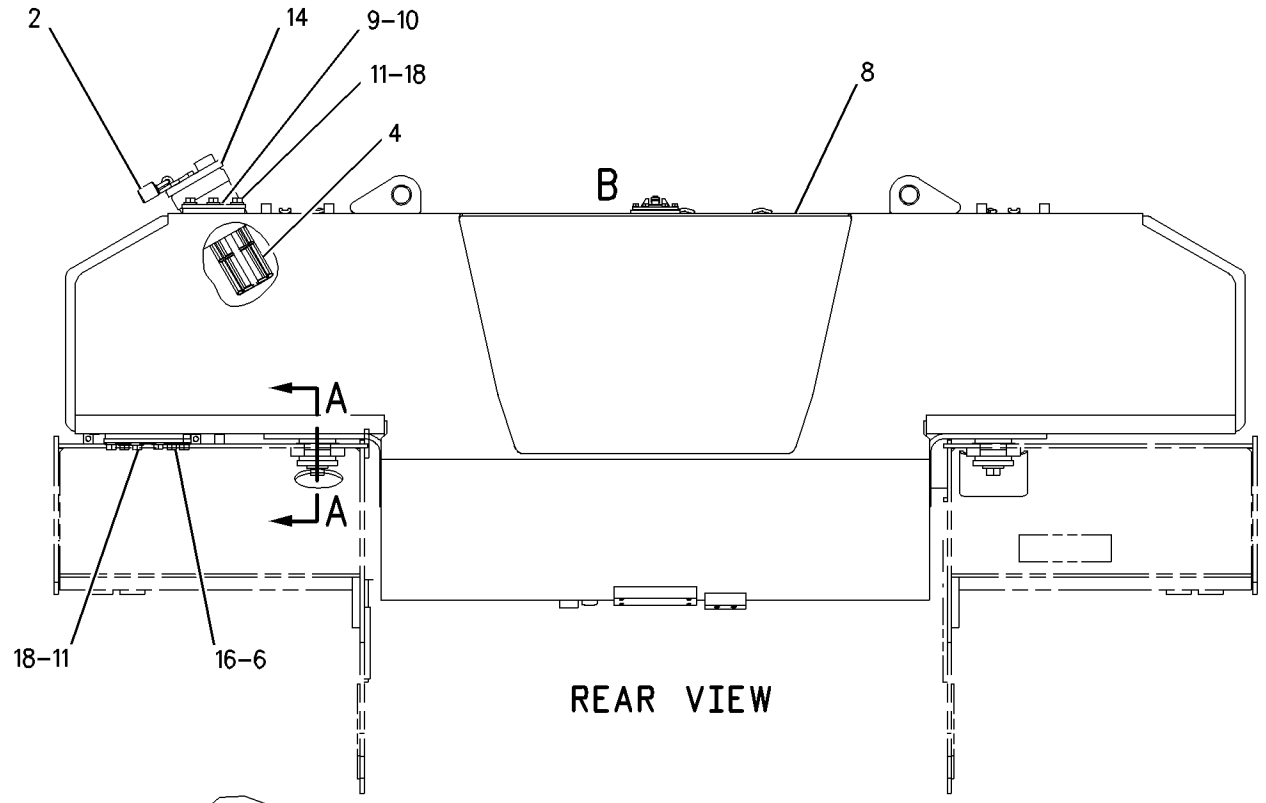

REAR VIEW

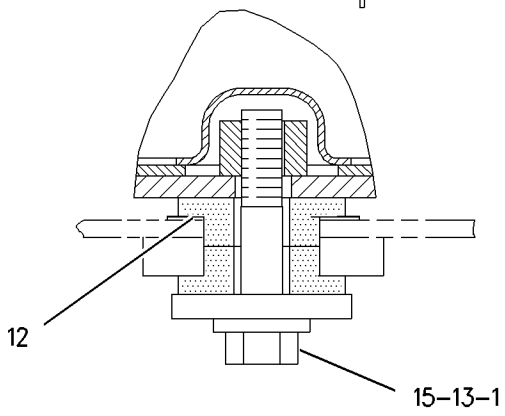

SECTION A-A

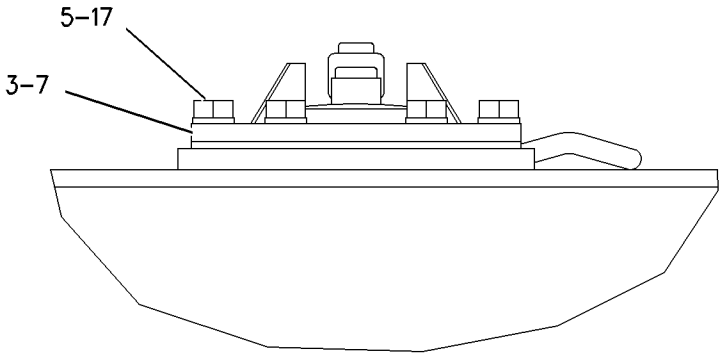

VIEW OF AREA B

GRAPHIC #1 g00749329

156-5783 VALVE GP-CHECK

S/N: AKA1-UP; BET1-UP

PART OF 139-6941, 183-4346 BASE GP-FUEL FILTER

SMCS-1250, 1251, 1261, 1262, 1274 **i01444875**

NOTE	REF NO	GRAPHIC REF	PART NUMBER	QTY	PART NAME 1 2 3 4 5 6 (PRODUCT LEVEL)	SEE PAGE
	1	1	**6V-6923**	1	RING-BACKUP (13.16MM ID)	
	2	1	**033-6033**	1	SEAL-O-RING (12.42MM ID)	

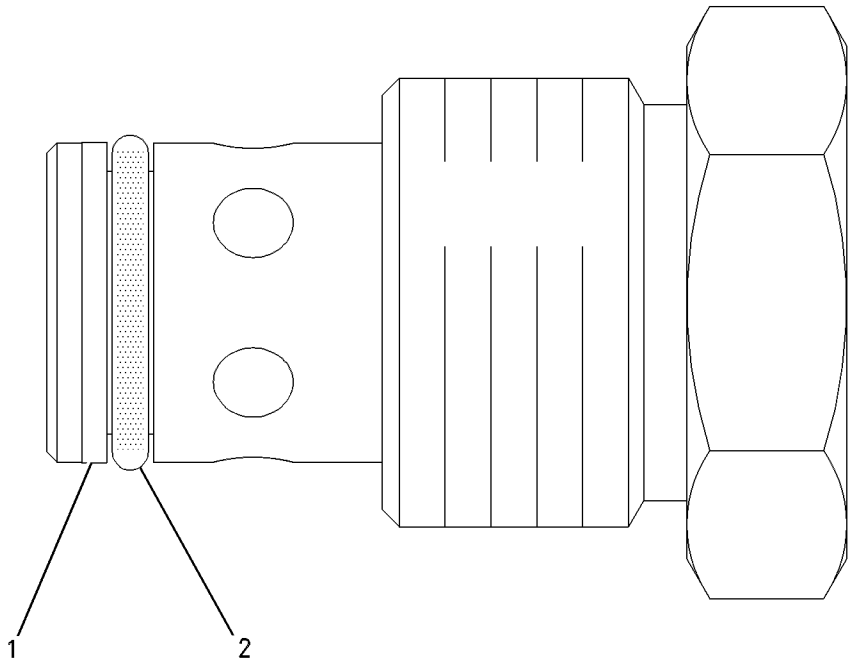

GRAPHIC #1 g00655663

139-6873 VALVE GP-FUEL BYPASS

S/N: AKA1-UP; BET1-UP

PART OF 139-6941, 183-4346 BASE GP-FUEL FILTER

SMCS-1250 **i01444878**

NOTE	REF NO	GRAPHIC REF	PART NUMBER	QTY	PART NAME 1 2 3 4 5 6 (PRODUCT LEVEL)	SEE PAGE
	1	1	**2P-2975**	1	SEAL-O-RING (17.17MM ID)	

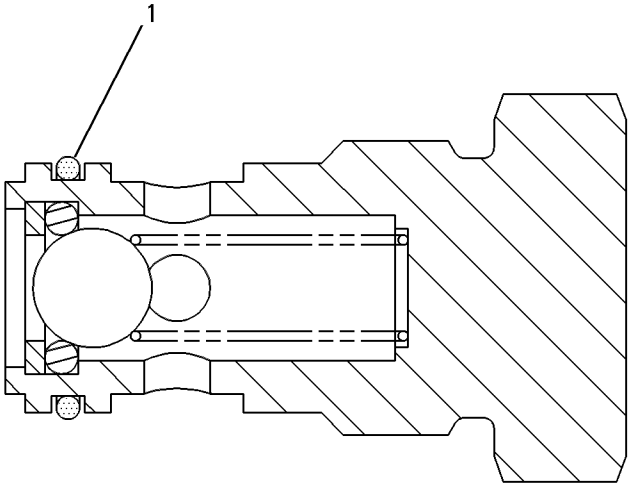

GRAPHIC #1 g00266124

3E-6328 ALARM GP–ACTION

S/N: AKA1-UP
24 VOLT
PART OF 159-9264 WIRING GP-PLATFORM

SMCS-7402 **i01487980**

NOTE	REF NO	GRAPHIC REF	PART NUMBER	QTY	PART NAME 1 2 3 4 5 6 (PRODUCT LEVEL)	SEE PAGE
	1	1	**102-8802**	1	KIT-RECEPTACLE (2 PIN)	
					(INCLUDES RECEPTACLE AS & WEDGE)	
	2	1	**186-3735**	2	PIN-CONNECTOR	

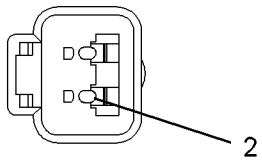

VIEW A–A

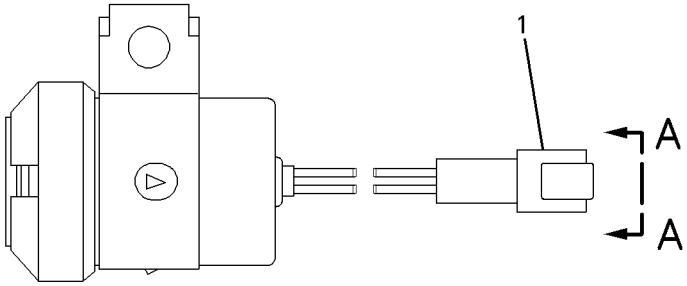

GRAPHIC #1 g00697818

MEMORANDA

3E-7577 ALTERNATOR GP-CHARGING*R

S/N: AKA1-UP
24 VOLT, 75 AMP
PART OF 160-0567 ALTERNATOR GP-CHARGING

SMCS-1405, 1410, 1425 **i01052311**

NOTE	REF NO	GRAPHIC REF	PART NUMBER	QTY	PART NAME 1 2 3 4 5 6 (PRODUCT LEVEL)	SEE PAGE
	1	1	**9S-2011**	1	SCREW-MACHINE	
	2	1	**1H-3244**	1	LOCKWASHER (NO.14)	
	3	1	**2K-4821**	1	LOCKNUT (5/8-18 THD)	
	4	1	**7F-7621**	1	WASHER	
	5	1	**9S-2260**	1	PLATE-COVER	
	6	1	**9S-2255**	1	COVER	
	7	1	**9S-2262**	1	GASKET	
	8	1	**9S-2544**	6	SCREW-HEX HEAD	
	9	1	**9B-7233**	10	LOCKWASHER (NO.8)	
	10	1	**9S-2437**	5	SCREW-TAPPING	
	11	1	**8F-1434**	5	LOCKWASHER (0.51MM THK)	
	12	1	**5P-3418**	1	BEARING-ROLLER	
	13	1	**5P-3419**	1	RACE-BEARING INNER	
	14	1	**9S-2396**	1	BUSHING-TERMINAL	
	15	1	**9S-2393**	3	DIODE-NEGATIVE	
	16	1	**9N-0943**	1	PLUG-BEARING WELL	
	17	1	**9F-2247**	1	PLUG-PIPE	
	18	1	**9S-2292**	1	HEAT SINK AS	
	19	1	**100-6656**	1	DIODE AS-ALTERNATOR	
	20	1	**9S-9830**	4	SCREW-FORMING	
	21	1	**8C-9660**	4	WASHER (0.8MM THK)	
	22	1	**9S-2300**	4	INSULATOR	
	23	1	**9S-2301**	1	INSULATION	
	24	1	**9S-2248**	1	COIL & SUPPORT AS	
	25	1	**9N-3388**	3	LOCKSCREW	
	26	1	**3T-6354**	1	REGULATOR AS	
	27	1	**7N-9023**	1	SCREW AS	
	28	1	**6N-1872**	2	SCREW AS	
	29	1	**4B-2043**	4	NUT (8-32 THD)	
	30	1	**100-6657**	1	PLATE-ALTERNATOR	
	31	1	**9S-2302**	1	ROTOR AS	
	32	1	**9S-2005**	1	GROMMET	
	33	1	**2L-8075**	3	TERMINAL (HORN)	
	34	1	**100-6658**	1	WIRE AS-ALTERNATOR	
	35	1	**9S-2389**	1	STUD AS	
	36	1	**9L-6770**	1	CAP	
	37	1	**2P-5616**	1	FRAME-DRIVE END	
	38	1	**9S-2390**	1	RETAINER	
	39	1	**9X-2500**	4	SCREW-HEX FLANGE	
	40	1	**9S-2009**	4	SCREW-HEAD	
	41	1	**100-6532**	1	COLLAR-ALTERNATOR	
	42	1	**5P-7807**	1	BALL BEARING	
	43	1	**100-6531**	1	FAN-ALTERNATOR	
	44	1	**9S-3451**	1	STATOR AS	
	45	1	**9S-2006**	1	INSULATOR	
	46	1	**9S-2005**	1	GROMMET	
	47	1	**9S-2014**	3	CLIP	
					AVAILABLE REPAIR KIT(S):	
			9S-2013	1	KIT-RELAY TERMINAL	
					(INCL BUSHING, O-RING & HARDWARE)	
			9S-2012	1	KIT-OUTPUT TERMINAL	
					(INCL GASKETS,TERMINALS & HARDWARE)	
			9S-2290	3	KIT-DIODE JUNCTION STUD	
					(INCL INSULATOR & STUD)	

3E-7577 ALTERNATOR GP-CHARGING *(contd.)* i01052311

NOTE	REF NO	GRAPHIC REF	PART NUMBER	QTY	PART NAME 1 2 3 4 5 6 (PRODUCT LEVEL)	SEE PAGE
			9S-2291	3	KIT-POSITIVE DIODE	
					(INCLUDES DIODE)	

3E-7577 ALTERNATOR GP-CHARGING *(contd.)* i01052311

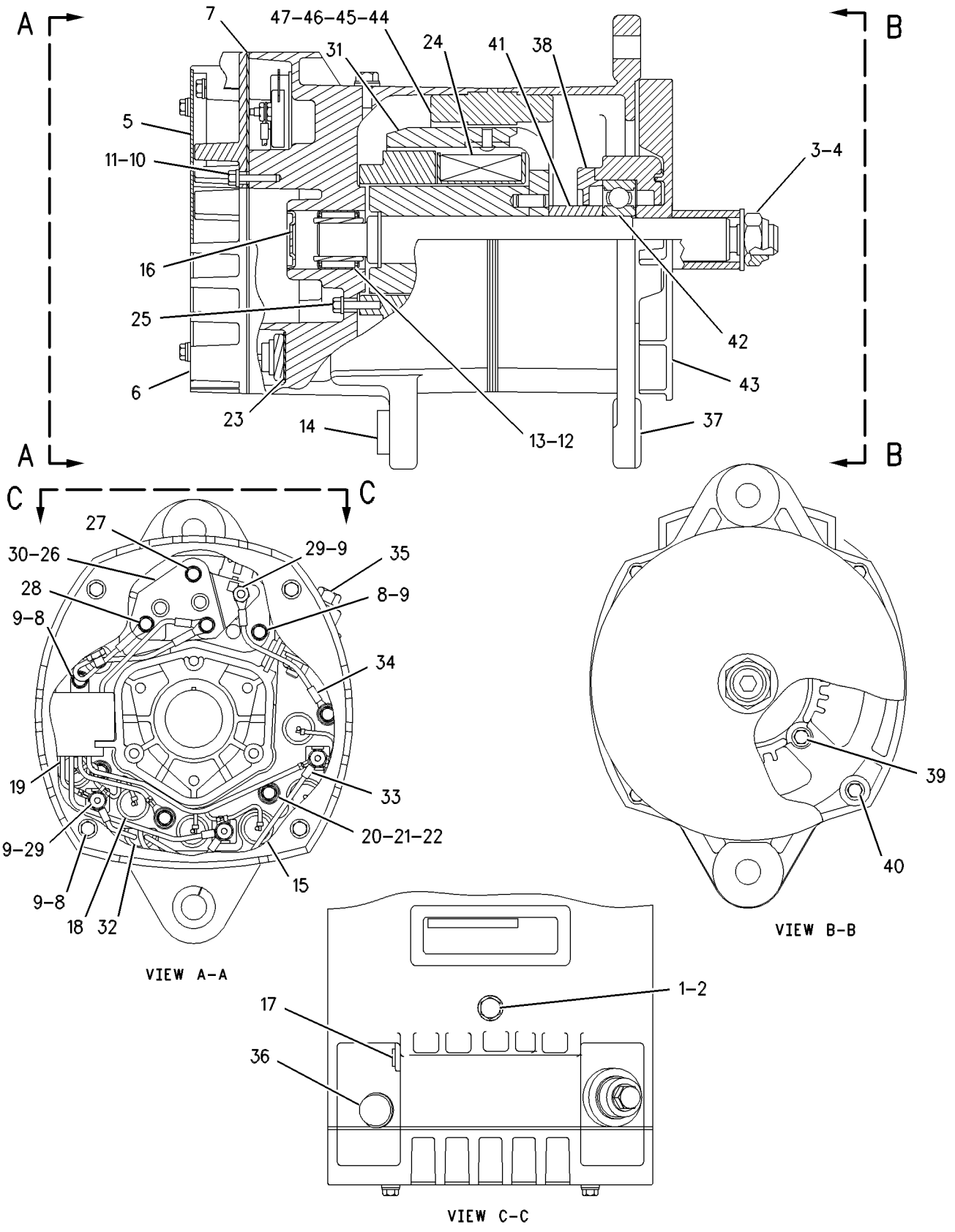

GRAPHIC #1 g00545706

160-0567 ALTERNATOR GP-CHARGING

S/N: AKA1-UP
24 VOLT, 75 AMPERE

SMCS-1405, 1410, 1425 **i01488821**

NOTE	REF NO	GRAPHIC REF	PART NUMBER	QTY	PART NAME 1 2 3 4 5 6 (PRODUCT LEVEL)	SEE PAGE
YR	1	1	**3E-7577**	1	ALTERNATOR GP-CHARGING	190
	2	1	**4L-6459**	1	BOLT (3/8-16X2.5 IN)	
	3	1	**8Q-1963**	1	PULLEY-ALTERNATOR	
	4	1	**4N-8218**	1	V-BELT	
	5	1	**5P-2566**	1	BOLT (1/2-13X1.5 IN)	
	6	1	**8T-8919**	1	BOLT (1/2-13X1.75 IN)	
	7	1	**8T-4223**	2	WASHER-HARD (13.5X25.5X3MM THK)	
	8	1	**9S-3784**	1	BLOCK	
	9	1	**7X-0448**	2	NUT (5/8-11 THD)	
	10	1	**6V-8801**	1	NUT (3/8-16 THD)	
	11	1	**8T-4896**	2	WASHER-HARD (10.2X18.5X2.5MM THK)	
	12	1	**8T-4122**	1	WASHER-HARD (17X32X3.5MM THK)	
	13	1	**185-6392**	1	WIRE AS	
	14	1	**1S-4589**	1	ROD	
	15	1	**7X-0345**	1	BOLT (5/8-11X1.75 IN)	

R-REMFG PART MAY BE AVAILABLE
Y-SEPARATE ILLUSTRATION

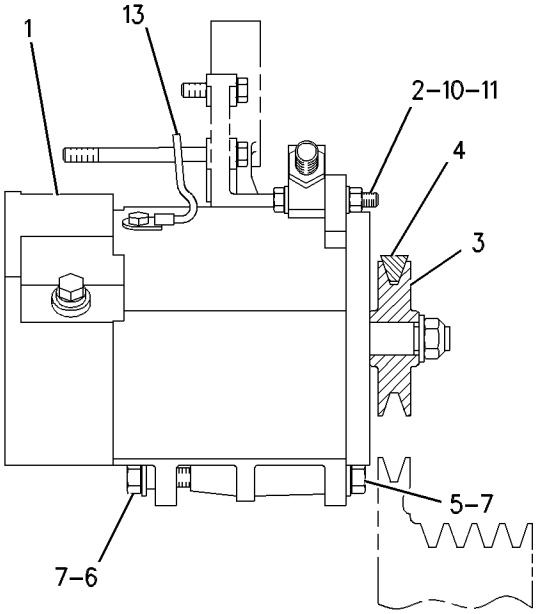

RIGHT SIDE VIEW

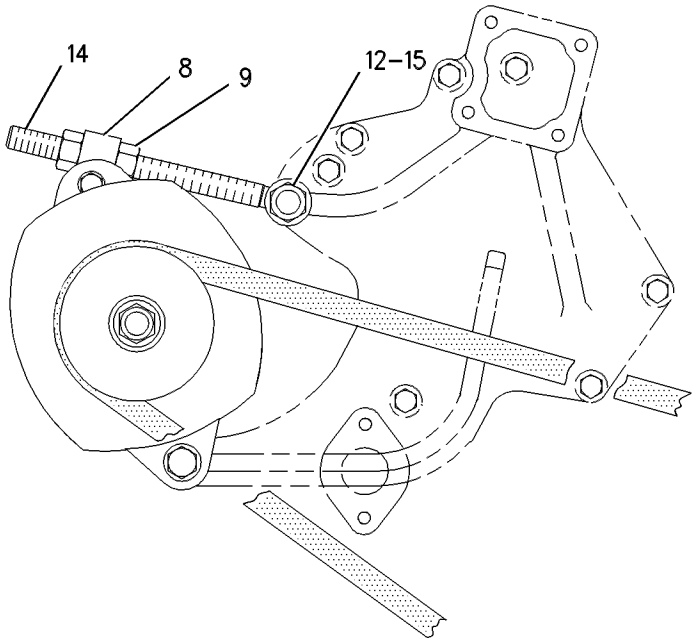

FRONT VIEW

GRAPHIC #1 g00547789

ELECTRICAL AND STARTING SYSTEM

160-4921 ALTERNATOR GP-CHARGING

S/N: AKA1-UP
24 VOLT/100 AMP

SMCS-1405, 1410, 1425 **i01485966**

NOTE	REF NO	GRAPHIC REF	PART NUMBER	QTY	PART NAME 1 2 3 4 5 6 (PRODUCT LEVEL)	SEE PAGE
	1	1	**1S-4589**	1	ROD	
	2	1	**4N-8218**	1	V-BELT	
	3	1	**8Q-1963**	1	PULLEY-ALTERNATOR (1 GROOVE)	
	4	1	**9S-3784**	1	BLOCK	
YR	5	1	**165-5140**	1	ALTERNATOR GP-CHARGING	196
	6	1	**185-6392**	1	WIRE AS	
	7	1	**192-7468**	1	STRAP	
	8	1	**192-7469**	1	ADAPTER	
	9	1	**197-4980**	1	BRACKET AS	
	10	1	**4L-6459**	1	BOLT (3/8-16X2.5 IN)	
	11	1	**4M-5281**	1	BOLT (1/4-20X0.750 IN)	
	12	1	**5P-2566**	1	BOLT (1/2-13X1.5 IN)	
	13	1	**6V-8801**	1	NUT (3/8-16 THD)	
	14	1	**7X-0345**	1	BOLT (5/8-11X1.75 IN)	
	15	1	**7X-0448**	2	NUT (5/8-11 THD)	
	16	1	**8T-4122**	1	WASHER-HARD (17X32X3.5MM THK)	
	17	1	**8T-4205**	1	WASHER-HARD (7.2X14.5X2MM THK)	
	18	1	**8T-4223**	2	WASHER-HARD (13.5X25.5X3MM THK)	
	19	1	**8T-4896**	2	WASHER-HARD (10.2X18.5X2.5MM THK)	
	20	1	**8T-8919**	1	BOLT (1/2-13X1.75 IN)	

R-REMFG PART MAY BE AVAILABLE
Y-SEPARATE ILLUSTRATION

160-4921 **ALTERNATOR GP-CHARGING** ***(contd.)*** **i01485966**

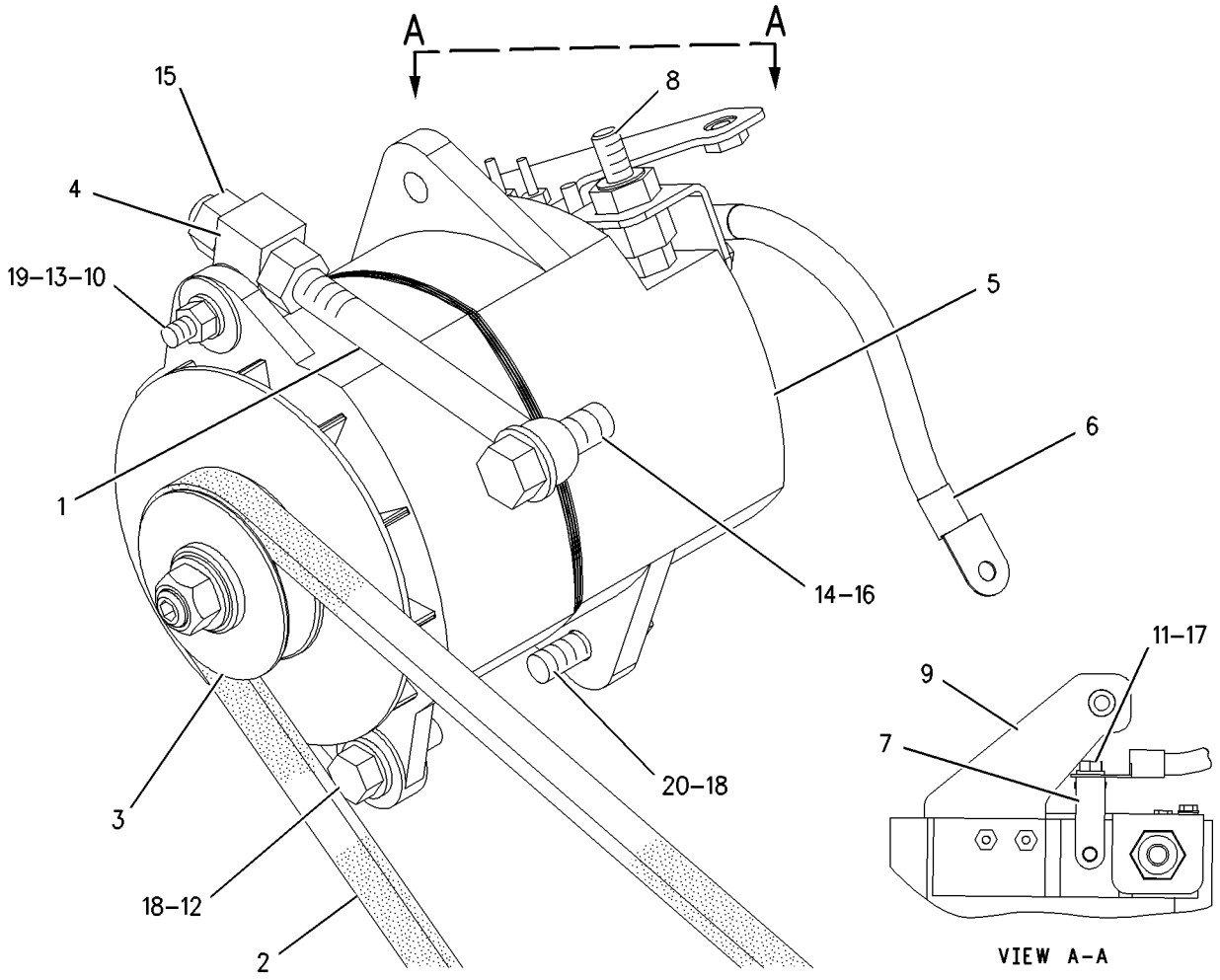

GRAPHIC #1

g00760115

ELECTRICAL AND STARTING SYSTEM

165-5140 ALTERNATOR GP-CHARGING*R

S/N: AKA1-UP
24 VOLT, 100 AMPERE
PART OF 160-4921 ALTERNATOR GP-CHARGING

SMCS-1405, 1410, 1425 **i01469295**

NOTE	PART NUMBER	QTY	PART NAME 1 2 3 4 5 6 (PRODUCT LEVEL)	SEE PAGE
			(NO SERVICED PARTS)	

172-0335 ALTERNATOR GP-CHARGING

S/N: AKA1-UP
24 VOLT/70 AMP
PART OF 159-5908 INSTALLATION AR-ENGINE

SMCS-1405, 1410, 1425 **i01443740**

NOTE	REF NO	GRAPHIC REF	PART NUMBER	QTY	PART NAME 1 2 3 4 5 6 (PRODUCT LEVEL)	SEE PAGE
	1	1	**1S-4589**	1	ROD	
	2	1	**4N-8218**	1	V-BELT	
	3	1	**8Q-1963**	1	PULLEY-ALTERNATOR (1 GROOVE)	
	4	1	**9S-3784**	1	BLOCK	
	5	1	**184-5498**	1	BRACKET AS	
		1	**1F-0750**	1	NUT-WELD (3/8-16 THD)	
	6	1	**185-5294**	1	ALTERNATOR GP-CHARGING	
	7	1	**185-6392**	1	WIRE AS	
	8	1	**4L-6459**	1	BOLT (3/8-16X2.5 IN)	
	9	1	**5P-2566**	1	BOLT (1/2-13X1.5 IN)	
	10	1	**6V-8801**	1	NUT (3/8-16 THD)	
	11	1	**7X-0345**	1	BOLT (5/8-11X1.75 IN)	
	12	1	**7X-0448**	2	NUT (5/8-11 THD)	
	13	1	**8T-4122**	1	WASHER-HARD (17X32X3.5MM THK)	
	14	1	**8T-4223**	2	WASHER-HARD (13.5X25.5X3MM THK)	
	15	1	**8T-4896**	2	WASHER-HARD (10.2X18.5X2.5MM THK)	
	16	1	**8T-8919**	1	BOLT (1/2-13X1.75 IN)	

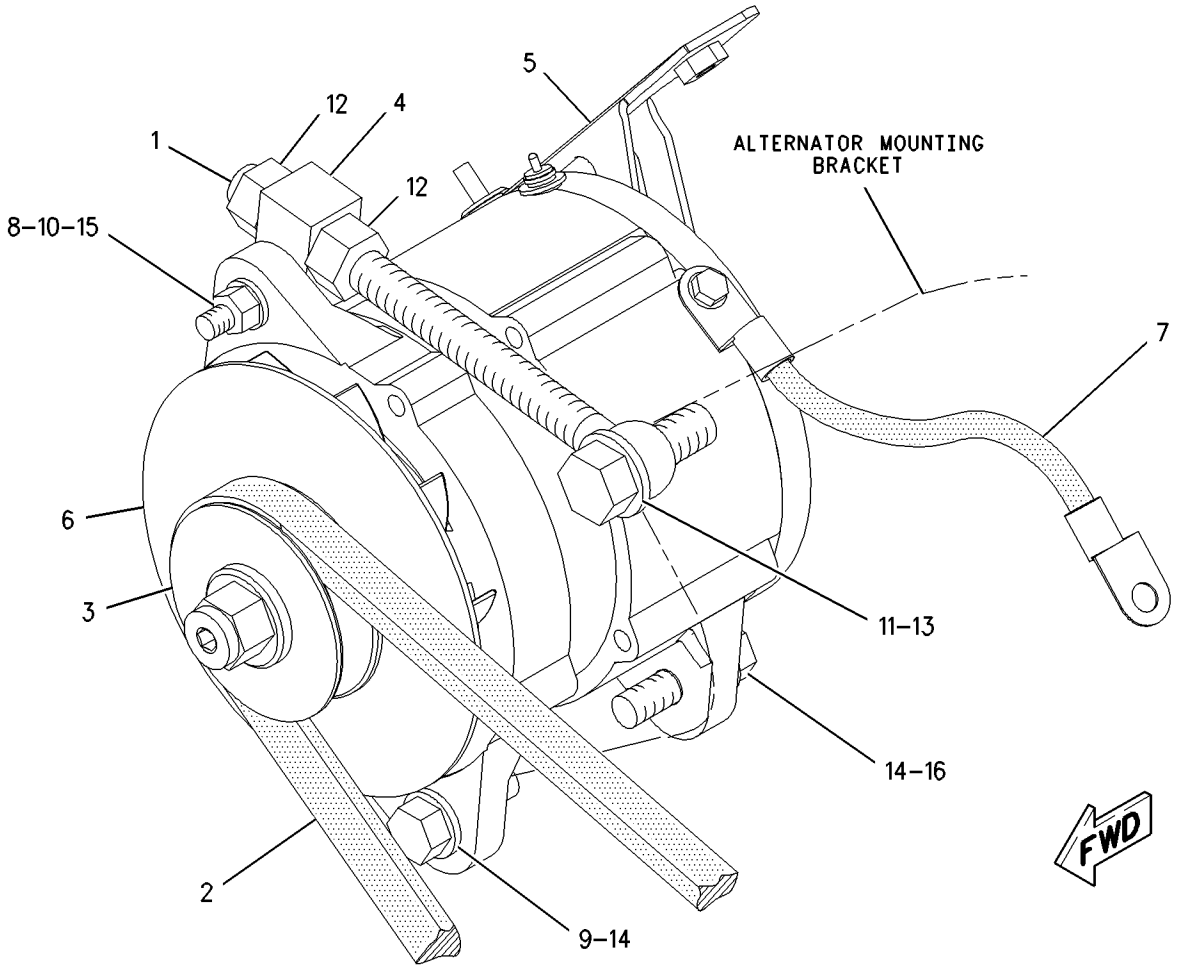

GRAPHIC #1 g00756787

ELECTRICAL AND STARTING SYSTEM

183-7648 ALTERNATOR GP-CHARGING

S/N: AKA1-UP

PART OF 202-9780 ALTERNATOR GP-CHARGING, 143-7722 DISPOSAL AR-WASTE

SMCS-1405, 1410, 1425 **i01488502**

NOTE	PART NUMBER	QTY	PART NAME 1 2 3 4 5 6 (PRODUCT LEVEL)	SEE PAGE
			(NO SERVICE PARTS)	

MEMORANDA

ELECTRICAL AND STARTING SYSTEM

202-9780 ALTERNATOR GP-CHARGING

S/N: AKA1-UP

PART OF 143-7740 WOODCHIP AR

SMCS-1405, 1410, 1425 **i01491014**

NOTE	REF NO	GRAPHIC REF	PART NUMBER	QTY	PART NAME 1 2 3 4 5 6 (PRODUCT LEVEL)	SEE PAGE
	1	1	**1S-4589**	1	ROD	
	2	1	**4N-8218**	1	V-BELT	
	3	1	**8Q-1963**	1	PULLEY-ALTERNATOR	
	4	1	**9S-3784**	1	BLOCK	
Y	5	1	**183-7648**	1	ALTERNATOR GP-CHARGING	198
	6	1	**185-6392**	1	WIRE AS	
	7	1	**192-7468**	1	STRAP	
	8	1	**192-7469**	1	ADAPTER	
	9	1	**197-4980**	1	BRACKET AS	
	10	1	**4L-6459**	1	BOLT (3/8-16X2.5 IN)	
	11	1	**4M-5281**	1	BOLT (1/4-20X0.750 IN)	
	12	1	**5P-2566**	1	BOLT (1/2-13X1.5 IN)	
	13	1	**6V-8801**	1	NUT (3/8-16 THD)	
	14	1	**7X-0345**	1	BOLT (5/8-11X1.75 IN)	
	15	1	**7X-0448**	2	NUT (5/8-11 THD)	
	16	1	**8T-4122**	1	WASHER-HARD (17X32X3.5MM THK)	
	17	1	**8T-4205**	1	WASHER-HARD (7.2X14.5X2MM THK)	
	18	1	**8T-4223**	2	WASHER-HARD (13.5X25.5X3MM THK)	
	19	1	**8T-4896**	2	WASHER-HARD (10.2X18.5X2.5MM THK)	
	20	1	**8T-8919**	1	BOLT (1/2-13X1.75 IN)	

Y-SEPARATE ILLUSTRATION

202-9780 **ALTERNATOR GP-CHARGING** ***(contd.)*** **i01491014**

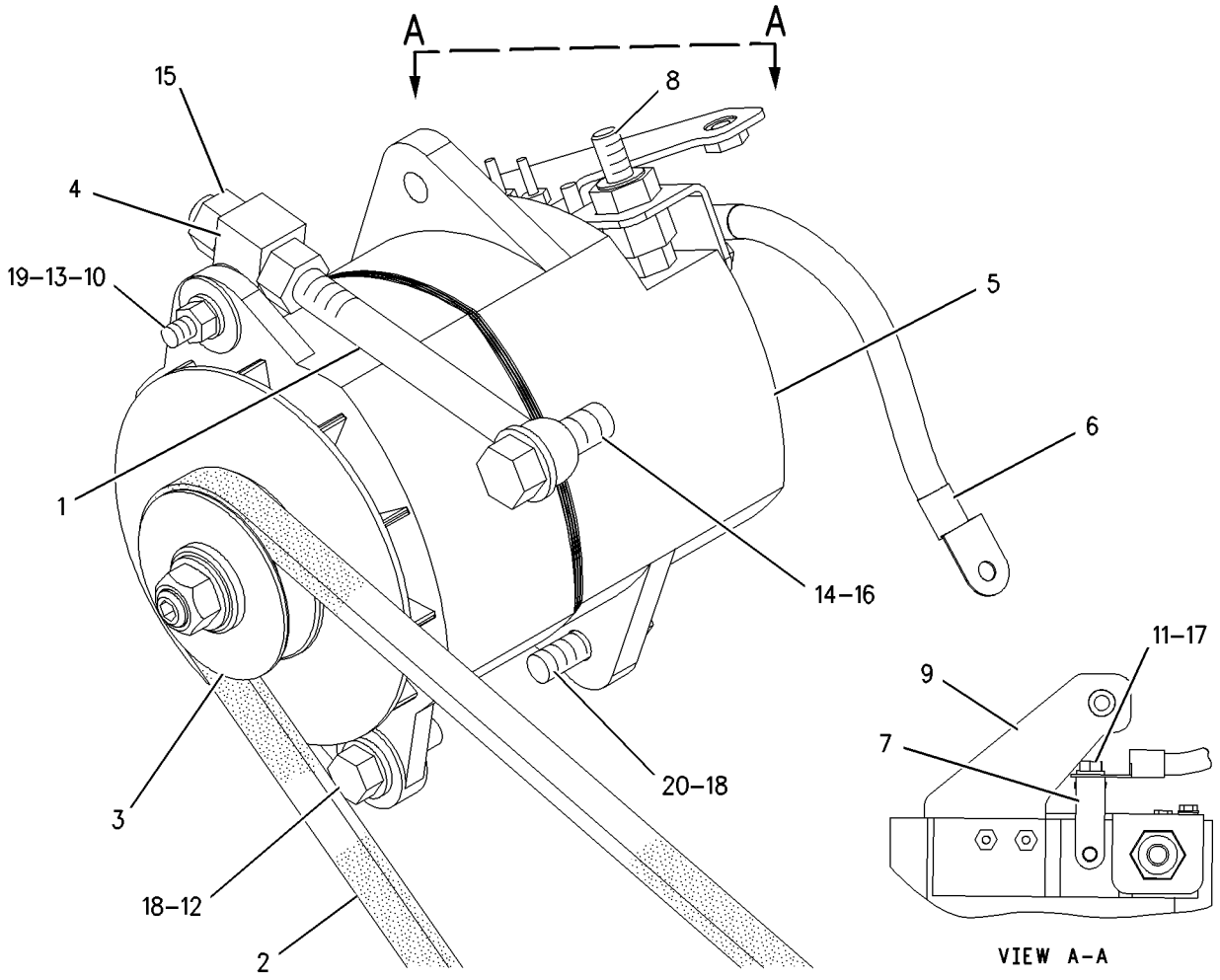

GRAPHIC #1 g00760115

ELECTRICAL AND STARTING SYSTEM

159-9263 BATTERY & WIRING GP

S/N: AKA1-UP

PART OF 157-0819 CHASSIS AR

SMCS-1401, 1402, 1408 **i01486719**

NOTE	REF NO	GRAPHIC REF	PART NUMBER	QTY	PART NAME 1 2 3 4 5 6 (PRODUCT LEVEL)	SEE PAGE
	1	1	**2V-6166**	1	CABLE AS	
		1	**1S-7251**	2	TERMINAL-RING (FOR 1/2 IN BOLT)	
E		1	**5P-0747**		CABLE (00GA)(BLACK) (41CM)	
	2	1	**4W-9972**	2	SENDER-TEMPERATURE	
					(EACH INCLUDES)	
		1	**4B-2049**	1	NUT (10-32 THD)	
		1	**8F-1434**	1	LOCKWASHER	
BE		1	**8T-0328**	1	WASHER-HARD (5.5X10X1MM THK)	
	3	1	**6V-2455**	1	SENSOR GP-SPEED	
		1	**102-8802**	1	KIT-RECEPTACLE (2 PIN)	
					(INCLUDES RECEPTACLE AS & WEDGE)	
		1	**3E-3365**	1	WEDGE-RECEPTACLE LOCK (2 PIN)	
		1	**8T-8729**	2	PIN-CONNECTOR	
BE		1	**9X-1386**		SLEEVE	
	4	1,2	**7K-1181**	120	STRAP-CABLE	
Y	5	2	**7N-0718**	1	SWITCH GP-DISCONNECT (BATTERY)	284
	6	2	**7Y-5497**	1	GROMMET	
	7	2	**7Y-5546**	1	CABLE AS	
E		2	**5P-0747**		CABLE (00GA)(BLACK) (25CM)	
		2	**7N-5274**	1	COVER-TERMINAL (BLACK)	
		2	**8N-1725**	1	COVER-TERMINAL (RED)	
		2	**3S-6050**	1	TERMINAL AS-BATTERY (NEGATIVE)	
		2	**3S-6049**	1	TERMINAL AS-BATTERY (POSITIVE)	
					(EACH TERMINAL AS INCLUDES)	
		2	**1M-6119**	1	BOLT-BATTERY TERMINAL (5/16-18X1.375 IN)	
		2	**1M-6120**	1	NUT-BATTERY TERMINAL (5/16-18 THD)	
	8	1	**8S-2634**	1	COVER AS	
		1	**2P-2975**	2	SEAL-O-RING	
	9	2	**9C-9743**	1	CABLE AS	
E		2	**5P-0747**		CABLE (00GA)(BLACK) (40CM)	
		2	**7N-5274**	1	COVER-TERMINAL (BLACK)	
		2	**8N-1725**	1	COVER-TERMINAL (RED)	
		2	**3S-6050**	1	TERMINAL AS-BATTERY (NEGATIVE)	
		2	**3S-6049**	1	TERMINAL AS-BATTERY (POSITIVE)	
					(EACH TERMINAL AS INCLUDES)	
		2	**1M-6119**	1	BOLT-BATTERY TERMINAL (5/16-18X1.375 IN)	
		2	**1M-6120**	1	NUT-BATTERY TERMINAL (5/16-18 THD)	
	10	1	**9M-4136**	1	SPACER (12.7MM THK)	
	11	1	**117-0067**	1	ELBOW	
	12	2	**118-6365**	1	PLATE AS	
Y	13	1	**118-7226**	1	SENSOR GP-TEMPERATURE	272
	14	2	**121-2844**	1	HARNESS AS (CRANK WITHOUT INJECTION)	
		2	**102-8803**	2	KIT-RECEPTACLE (3 PIN)	
					(EACH INCLUDES RECEPTACLE AS & WEDGE)	
		2	**155-2260**	1	KIT-CONNECTING PLUG (3 PIN)	
					(INCLUDES PLUG AS, WEDGE & INTERFACE SEAL)	
	15	1	**123-6449**	1	ALARM AS-BACKUP	
		1	**102-8802**	1	KIT-RECEPTACLE (2 PIN)	
					(INCLUDES RECEPTACLE AS & WEDGE)	
		1	**8T-8729**	2	PIN-CONNECTOR	
BD		1	**5P-5677**		WIRE (18 GA)	
BE		1	**9X-1813**		SLEEVE	
	16	1	**159-7614**	1	HARNESS AS (FUEL TANK)	
		1	**102-8802**	2	KIT-RECEPTACLE (2 PIN)	
		1	**102-8803**	1	KIT-RECEPTACLE (3 PIN)	

159-9263 **BATTERY & WIRING GP** ***(contd.)*** **i01486719**

NOTE	REF NO	GRAPHIC REF	PART NUMBER	QTY	PART NAME 1 2 3 4 5 6 (PRODUCT LEVEL)	SEE PAGE
		1	**102-8806**	1	KIT-RECEPTACLE (8 PIN)	
					(EACH RECEPTACLE KIT INCLUDES RECEPTACLE AS & WEDGE)	
		1	**155-2260**	1	KIT-CONNECTING PLUG (3 PIN)	
		1	**155-2270**	3	KIT-CONNECTING PLUG (2 PIN)	
					(EACH PLUG KIT INCLUDES PLUG AS, WEDGE & INTERFACE SEAL)	
	17	1	**160-5570**	1	HARNESS AS (ENGINE)	
		1	**102-8802**	5	KIT-RECEPTACLE (2 PIN)	
		1	**102-8803**	1	KIT-RECEPTACLE (3 PIN)	
		1	**102-8804**	1	KIT-RECEPTACLE (4 PIN)	
					(EACH RECEPTACLE KIT INCLUDES RECEPTACLE AS & WEDGE)	
		1	**155-2260**	4	KIT-CONNECTING PLUG (3 PIN)	
		1	**155-2270**	10	KIT-CONNECTING PLUG (2 PIN)	
		1	**155-2271**	1	KIT-CONNECTING PLUG (4 PIN)	
					(EACH PLUG KIT INCLUDES PLUG AS, WEDGE & INTERFACE SEAL)	
	18	1	**160-5579**	1	HARNESS AS (RH FENDER)	
		1	**102-8803**	1	KIT-RECEPTACLE (3 PIN)	
		1	**102-8806**	1	KIT-RECEPTACLE (8 PIN)	
					(EACH RECEPTACLE KIT INCLUDES RECEPTACLE AS & WEDGE)	
		1	**155-2260**	1	KIT-CONNECTING PLUG (3 PIN)	
		1	**155-2270**	3	KIT-CONNECTING PLUG (2 PIN)	
					(EACH PLUG KIT INCLUDES PLUG AS, WEDGE & INTERFACE SEAL)	
Y	19	1	**161-9926**	1	SENSOR GP-PRESSURE	263
	20	1	**164-3744**	2	WIRE AS	
					(EACH INCLUDES)	
		1	**102-8802**	1	KIT-RECEPTACLE (2 PIN)	
					(INCLUDES RECEPTACLE AS & WEDGE)	
		1	**3E-3365**	1	WEDGE-RECEPTACLE LOCK (2 PIN)	
BD		1	**5P-5677**		WIRE (18 GA)	
		1	**9G-3695**	1	PLUG (GROMMET SEALING)	
E		1	**5P-1476**	1	TERMINAL (BLADE) (72CM)	
		1	**9X-3401**	1	PIN-CONNECTOR	
					(FOR 16-18 GA WIRE)	
					—OR—	
		1	**126-1767**	1	CONNECTOR-PIN	
					(FOR 14 GA WIRE)	
Y	21	1	**164-7577**	2	SWITCH GP-BYPASS	283
	22	1	**164-8102**	1	CABLE AS	
		1	**1M-4986**	1	TERMINAL-RING (FOR 1/2IN BOLT)	
		1	**1S-4915**	2	LINER-CONDUIT	
E		1	**5P-0695**		CONDUIT (328CM)	
E		1	**5P-0760**		CABLE (0 GA) (339CM)	
		1	**8N-0869**	1	COVER-TERMINAL (RED)	
E		1	**8T-2225**		TUBE-SHRINKABLE (16CM)	
		1	**9X-0195**	1	TERMINAL (CABLE)	
		1	**9X-9120**	1	BOOT (RED)	
	23	2	**164-8128**	1	CABLE AS	
		2	**1S-7251**	1	TERMINAL-RING (FOR 1/2 IN BOLT)	
		2	**1S-7252**	1	TERMINAL-RING (FOR 3/8IN BOLT)	
		2	**8S-3020**	1	TERMINAL-CABLE	
E		2	**5P-0747**		CABLE (OOGA)(BLACK) (122CM)	
		2	**6T-0465**	1	COVER-TERMINAL (BLACK)	
	24	1	**167-4224**	1	PLATE AS	
		1	**7T-1099**	2	LINK	
	25	2	**168-4629**	1	CABLE AS	

159-9263 **BATTERY & WIRING GP** *(contd.)* **i01486719**

NOTE	REF NO	GRAPHIC REF	PART NUMBER	QTY	PART NAME 1 2 3 4 5 6 (PRODUCT LEVEL)	SEE PAGE
E		2	**5P-0747**		CABLE (00GA)(BLACK) (121CM)	
		2	**7N-5274**	2	COVER-TERMINAL (BLACK)	
		2	**8S-3020**	1	TERMINAL-CABLE	
		2	**9X-5699**	1	BOOT	
		2	**3S-6050**	1	TERMINAL AS-BATTERY (NEGATIVE)	
		2	**1M-6119**	1	BOLT-BATTERY TERMINAL (5/16-18X1.375 IN)	
		2	**1M-6120**	1	NUT-BATTERY TERMINAL (5/16-18 THD)	
	26	2	**172-4864**	1	GUARD	
	27	1	**174-7875**	1	HORN AS (24 VOLT)(HIGH TONE)	
	28	2	**178-9580**	1	PLATE	
	29	1	**179-0787**	1	HARNESS AS (BACKUP ALARM)	
		1	**102-8802**	1	KIT-RECEPTACLE (2 PIN)	
					(INCLUDES RECEPTACLE AS & WEDGE)	
		1	**155-2270**	1	KIT-CONNECTING PLUG (2 PIN)	
					(INCLUDES PLUG AS, WEDGE & INTERFACE SEAL	
	30	2	**179-6444**	1	HOLD-DOWN AS	
		2	**189-9240**	2	LINK	
	31	2	**179-6445**	1	HOLD-DOWN AS	
		2	**7T-1099**	5	LINK	
	32	2	**179-9557**	1	WIRE AS	
		2	**102-8802**	1	KIT-RECEPTACLE (2 PIN)	
					(INCLUDES RECEPTACLE AS & WEDGE)	
		2	**3E-3365**	1	WEDGE-RECEPTACLE LOCK (2 PIN)	
BD		2	**5P-5677**		WIRE (18 GA)	
		2	**9G-3695**	1	PLUG (GROMMET SEALING)	
		2	**2L-8079**	1	TERMINAL (14-16 GA,.375IN/9.52MM SCREW)	
		2	**9X-3401**	1	PIN-CONNECTOR	
					(FOR 16-18 GA WIRE)	
					-OR-	
		2	**126-1767**	1	CONNECTOR-PIN	
					(FOR 14 GA WIRE)	
	33	1	**183-3441**	1	HARNESS AS (RADIATOR GUARD)	
		1	**102-8803**	1	KIT-RECEPTACLE (3 PIN)	
					(INCLUDES RECEPTACLE AS & WEDGE)	
		1	**155-2270**	1	KIT-CONNECTING PLUG (2 PIN)	
					(INCLUDES PLUG AS, WEDGE & INTERFACE SEAL)	
	34	1	**184-7425**	1	PLATE	
	35	1	**190-2840**	1	CABLE AS	
		1	**1S-4915**	2	LINER-CONDUIT	
		1	**1S-7251**	1	TERMINAL-RING (FOR 1/2 IN BOLT)	
E		1	**5P-0695**		CONDUIT (178CM)	
E		1	**5P-0761**		CABLE (00GA)(RED) (207CM)	
		1	**7N-2708**	1	TERMINAL (CABLE)	
		1	**8N-0869**	1	COVER-TERMINAL (RED)	
E		1	**8T-2225**		TUBE-SHRINKABLE (20CM)	
	36	2	**191-8693**	1	CABLE AS	
		2	**1S-4915**	2	LINER-CONDUIT	
		2	**9G-0004**	1	COVER-TERMINAL (RED)	
E		2	**5P-0695**		CONDUIT (5CM)	
E		2	**5P-0761**		CABLE (00GA)(RED) (59CM)	
		2	**8C-5917**	1	TERMINAL AS-BATTERY (POSITIVE)	
					(EACH INCLUDES)	
		2	**1M-6119**	1	BOLT-BATTERY TERMINAL (5/16-18X1.375 IN)	
		2	**1M-6120**	1	NUT-BATTERY TERMINAL (5/16-18 THD)	
		2	**8L-8413**	1	STRAP-CABLE	
		2	**9G-0002**	1	COVER-TERMINAL	
		2	**190-3848**	1	TERMINAL-RING	
E		1	**8T-2225**		TUBE-SHRINKABLE (8CM)	
Y	37	1	**193-2550**	1	SENSOR GP-SPEED	271

159-9263 **BATTERY & WIRING GP** *(contd.)* **i01486719**

NOTE	REF NO	GRAPHIC REF	PART NUMBER	QTY	PART NAME 1 2 3 4 5 6 (PRODUCT LEVEL)	SEE PAGE
	38	2	**194-7664**	1	HARNESS AS	
		2	**102-8801**	1	KIT-RECEPTACLE (12 PIN)	
					(INCLUDES RECEPTACLE AS & WEDGE)	
		2	**155-2255**	1	KIT-CONNECTING PLUG (12 PIN)	
					(INCLUDES PLUG AS, WEDGE & INTERFACE SEAL)	
	39	2	**195-0417**	1	PLATE AS	
	40	1	**198-2694**	1	PLATE AS	
	41	1	**199-1192**	1	RECEPTACLE AS	
		1	**1S-4915**	4	LINER-CONDUIT	
		1	**1S-7251**	2	TERMINAL-RING (FOR 1/2 IN BOLT)	
E		1	**5P-0695**		CONDUIT (220CM)	
E		1	**5P-0747**		CABLE (00GA)(BLACK) (128CM)	
E		1	**5P-0761**		CABLE (00GA)(RED) (168CM)	
E		1	**8T-2225**		TUBE-SHRINKABLE (37CM)	
	42	1	**200-2183**	1	ANGLE AS	
	43	1	**132-5789**	1	CLIP	
	44	1	**174-7876**	1	HORN AS (24 VOLT)(LOW TONE)	
	45	1	**1S-0996**	1	CLIP	
	46	1	**1S-1015**	2	CLIP	
	47	1	**3J-7354**	2	SEAL-O-RING	
	48	1	**3K-0360**	2	SEAL-O-RING	
	49	2	**3T-5760**	4	BATTERY (MAINTENANCE FREE) (12 VOLT)	
	50	2	**4K-8864**	1	CLIP	
	51	1	**4P-7428**	2	CLIP	
	52	1	**4P-7429**	1	CLIP	
	53	1,2	**4P-7581**	13	CLIP	
	54	1	**4P-8134**	17	CLIP	
	55	2	**4S-1962**	1	CLIP (25.4MM ID)	
	56	1,2	**5M-3062**	10	BOLT (3/8-16X0.75 IN)	
	57	2	**5P-1075**	10	WASHER-HARD (10.2X22.5X3MM THK)	
	58	1	**5P-2566**	1	BOLT (1/2-13X1.5 IN)	
	59	1	**5P-4295**	11	CLIP	
	60	2	**5P-9938**	4	BOLT-LOCKING (3/8-16X1.375 IN)	
	61	1,2	**5S-7379**	23	BOLT (3/8-16X0.875 IN)	
	62	2	**6D-4247**	2	CLIP	
	63	2	**6V-7191**	2	BOLT	
	64	1,2	**6V-8188**	2	NUT (1/2-13 THD)	
	65	1	**7X-0291**	2	BOLT (3/8-16X3.75 IN)	
	66	2	**7X-0304**	4	BOLT	
	67	1	**8M-2769**	1	CLIP (25.4MM ID)	
	68	1	**8S-0948**	2	CLIP	
	69	1	**8T-0323**	1	GROMMET (12.70MM ID)	
	70	1,2	**8T-4223**	3	WASHER-HARD (13.5X25.5X3MM THK)	
	71	1,2	**8T-4896**	36	WASHER-HARD (10.2X18.5X2.5MM THK)	
	72	1	**8T-9375**	1	BOLT (3/8-16X1.75 IN)	

B-USE AS REQUIRED
D-ORDER BY THE METER
E-ORDER BY THE CENTIMETER
Y-SEPARATE ILLUSTRATION

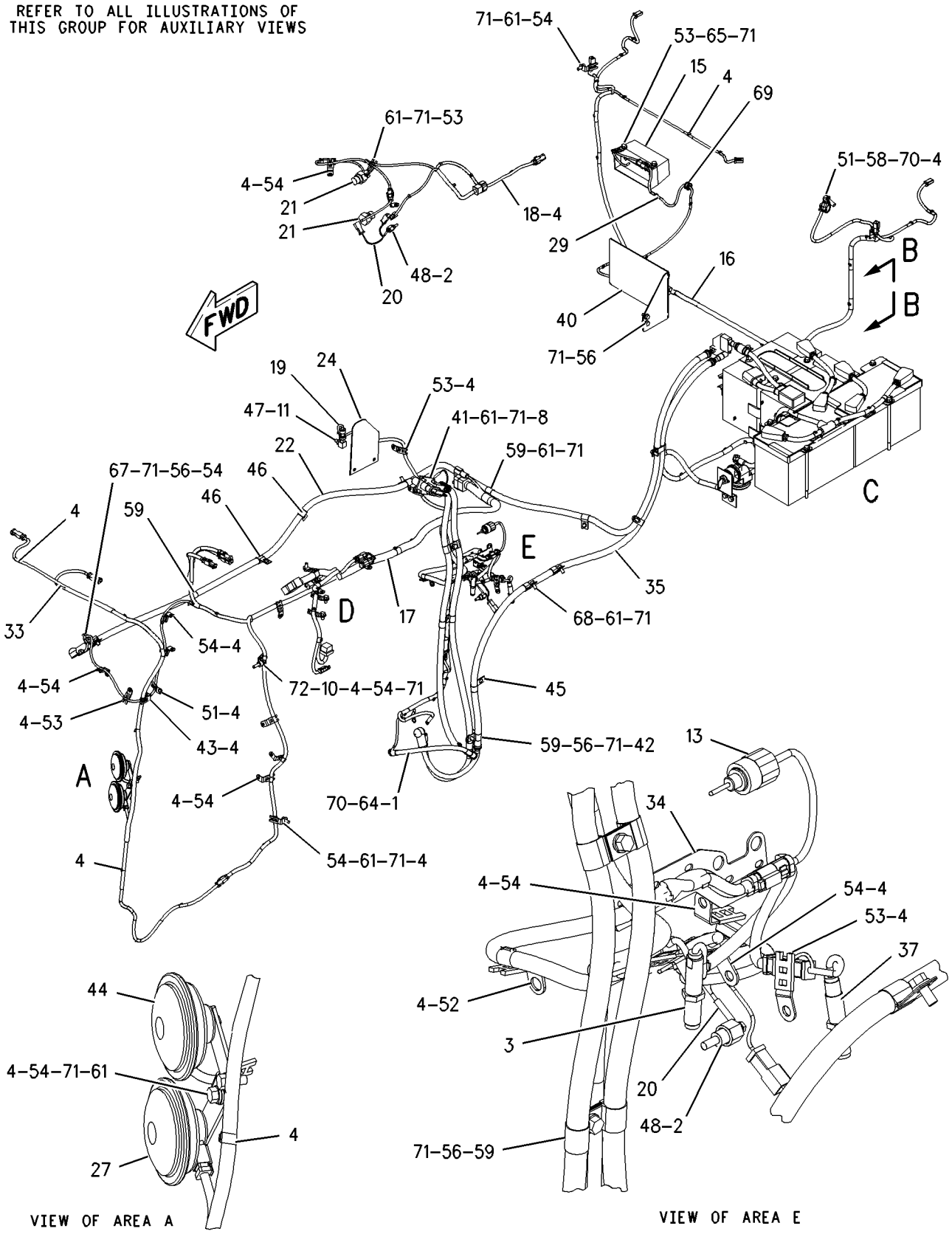

GRAPHIC #1

g00769605

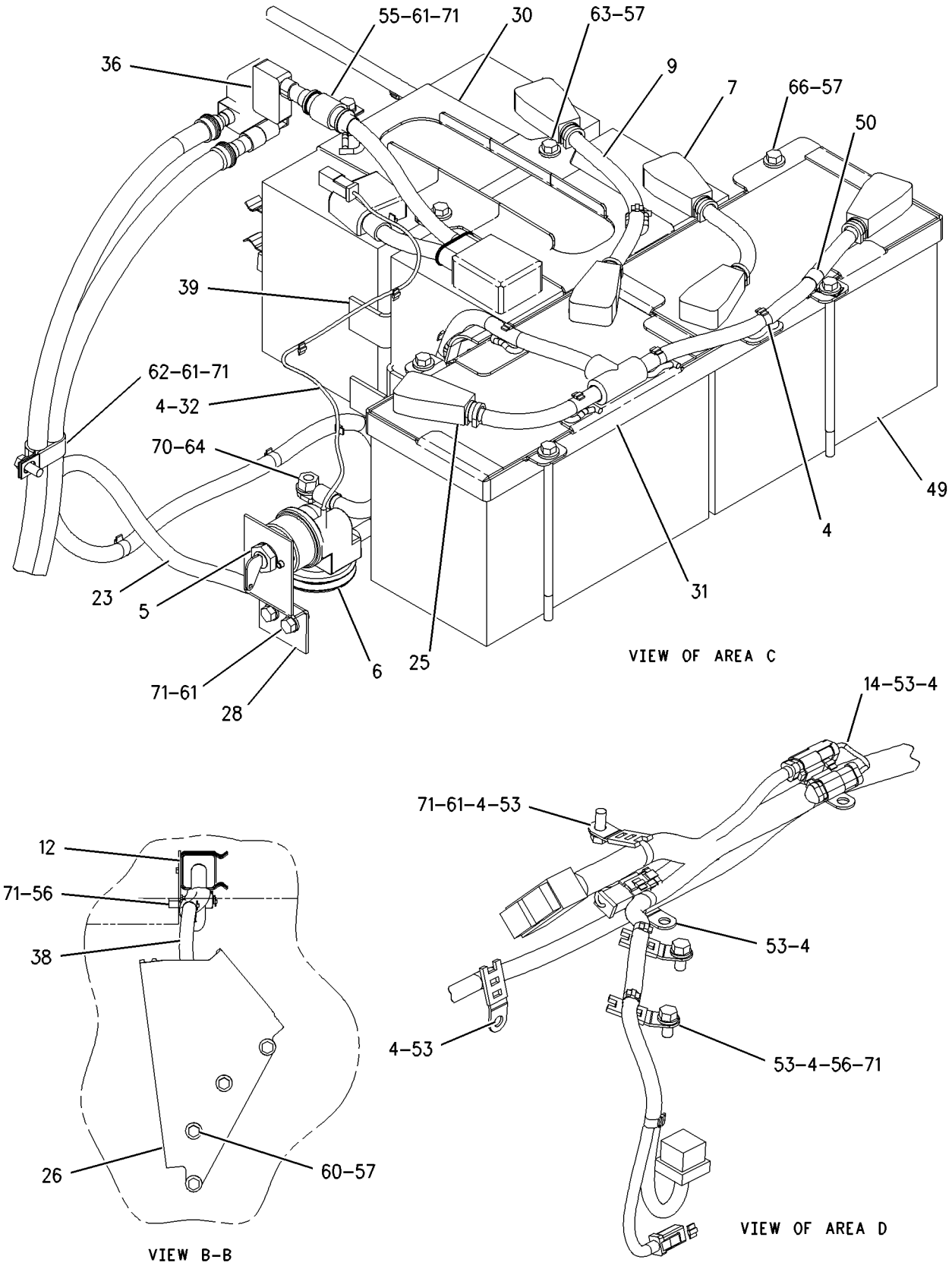

GRAPHIC #2

g00769606

158-8077 CONTROL & MTG GP-ELECTRONIC

S/N: AKA1-UP

PART OF 157-0820 POWER TRAIN AR

SMCS-1901 **i01430545**

NOTE	REF NO	GRAPHIC REF	PART NUMBER	QTY	PART NAME 1 2 3 4 5 6 (PRODUCT LEVEL)	SEE PAGE
	1	1	**6I-1418**	4	SPACER (7.48X12.7X28.7MM THK)	
	2	1	**8T-9655**	8	MOUNT (ISOLATION)	
CY	3	1	**172-9389**	1	CONTROL GP-UNPROGRAMMED	215
	4	1	**8T-4224**	1	WASHER-HARD (8.8X16X2MM THK)	
	5	1	**9N-0869**	4	WASHER-HARD (8.8X25.5X2MM THK)	
M	6	1	**7X-0818**	4	BOLT (M8X1.25X45MM)	

C-CHANGE FROM PREVIOUS TYPE
M-METRIC PART
Y-SEPARATE ILLUSTRATION

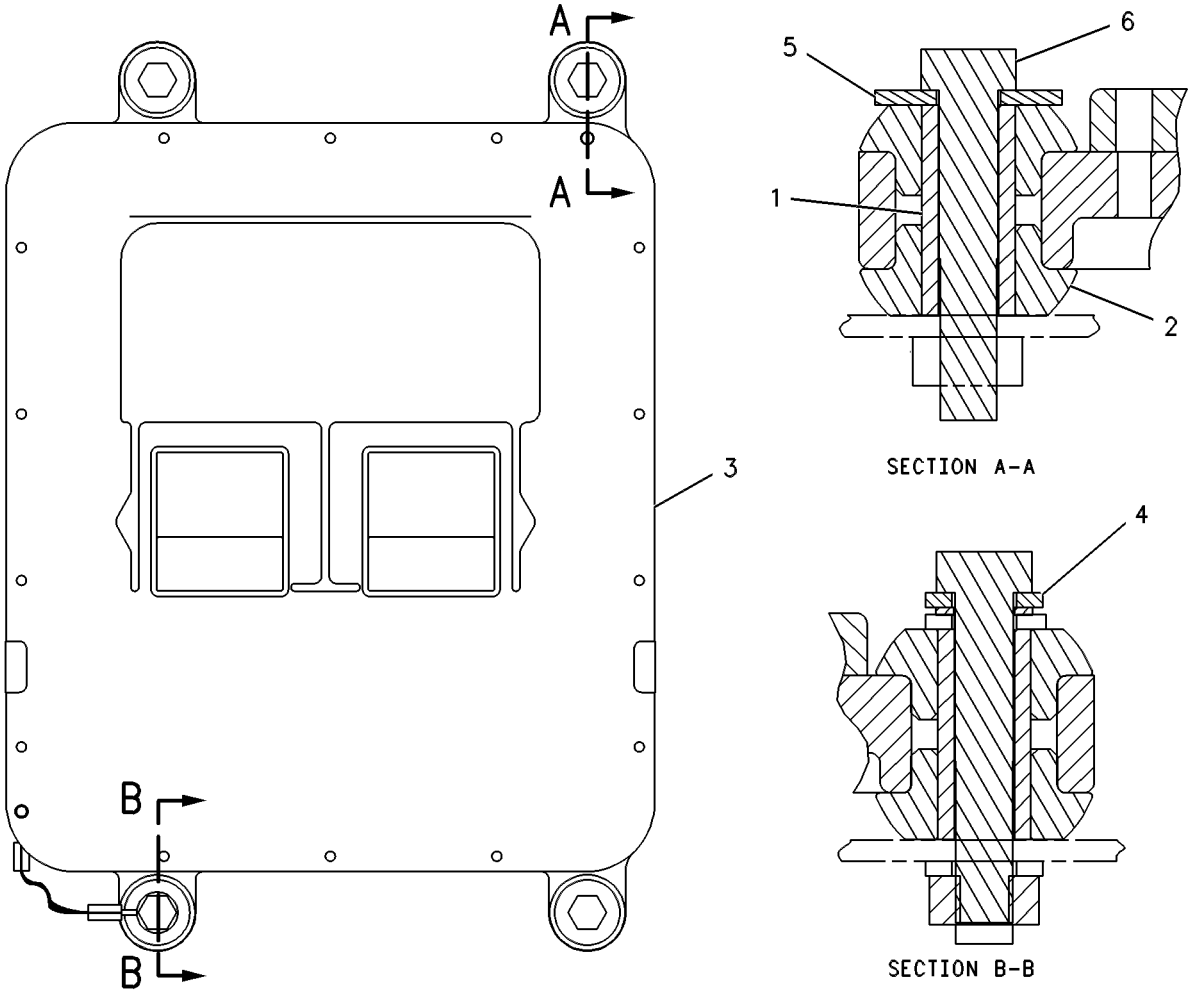

GRAPHIC #1 g00258550

MEMORANDA

186-2169 CONTROL & MTG GP-ENGINE ELEK

S/N: BET1-UP

PART OF 157-7195, 157-7196 ENGINE AR-COMPLETE

SMCS-1901 **i01488035**

NOTE	REF NO	GRAPHIC REF	PART NUMBER	QTY	PART NAME 1 2 3 4 5 6 (PRODUCT LEVEL)	SEE PAGE
	1	1	**6I-1418**	4	SPACER (7.48X12.7X28.7MM THK)	
	2	1	**9M-1974**	4	WASHER-HARD (8.8X16X2MM THK)	
Y	3	1	*115-3055*	1	CONTROL GP-ENGINE ELECTRONIC	212
	4	1	**127-1991**	4	SPACER (15MM THK)	
	5	1	**185-7445**	1	BRACKET AS	
	6	1	**127-1570**	1	STUD-BOLT	
	7	1	**144-6284**	1	PLATE	
	8	1	**1D-4539**	3	BOLT (5/16-18X2.5 IN)	
	9	1	**3E-4352**	5	WASHER-HARD (8.8X20.5X2.5MM THK)	
	10	1	**4B-3388**	3	BOLT (5/16-18X1.125 IN)	
	11	1	**5S-0003**	1	NUT (5/16-18 THD)	
	12	1	**8T-9655**	8	MOUNT (ISOLATION)	
	13	1	**9N-0869**	8	WASHER-HARD (8.8X25.5X2MM THK)	

Y-SEPARATE ILLUSTRATION

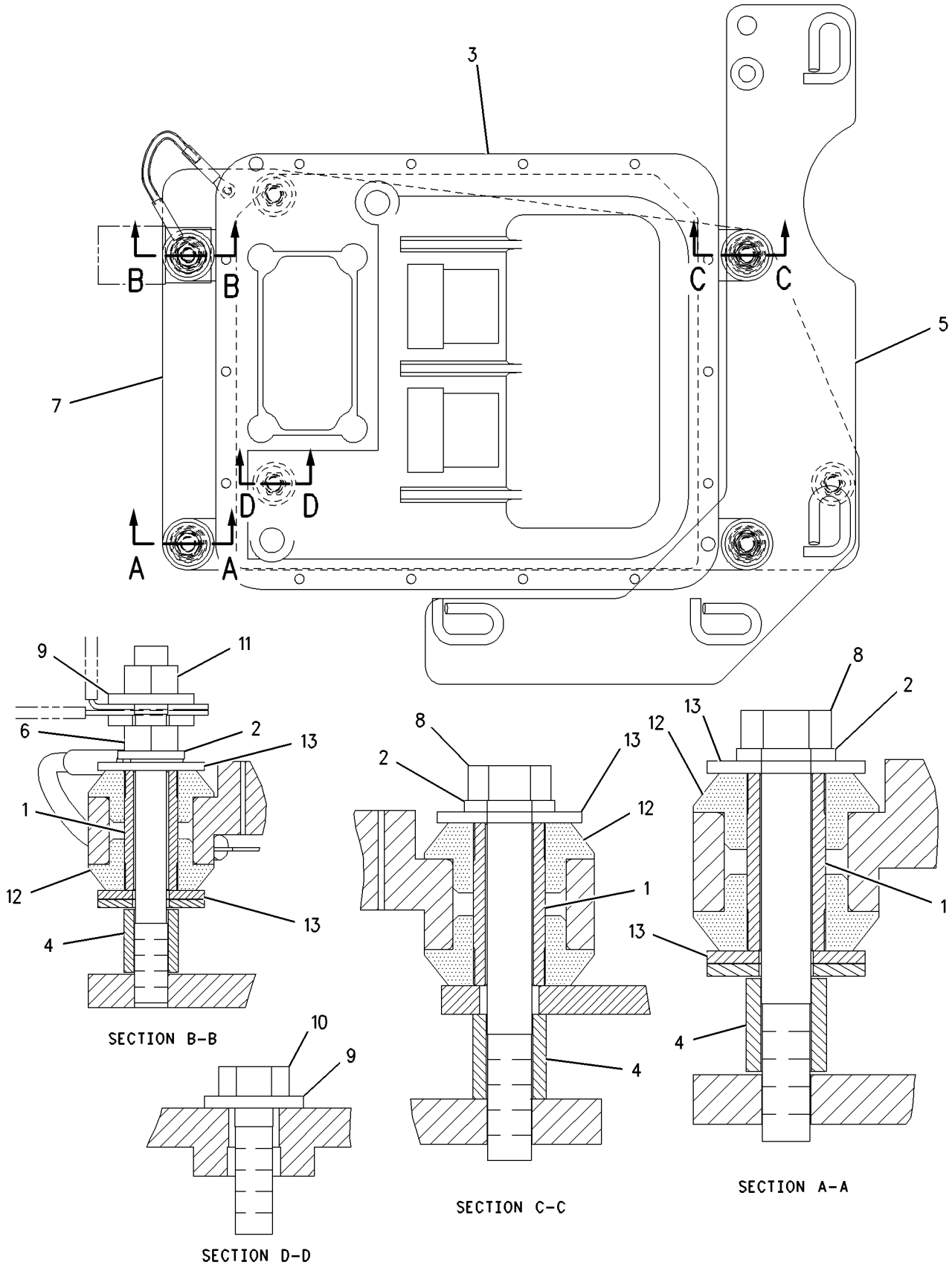

GRAPHIC #1

g00773569

ELECTRICAL AND STARTING SYSTEM

115-3055 CONTROL GP-ENGINE ELECTRONIC

S/N: BET1-UP

PART OF 186-2169 CONTROL & MTG GP-ENGINE ELEK

SMCS-1901 **i01440855**

NOTE	REF NO	GRAPHIC REF	PART NUMBER	QTY	PART NAME 1 2 3 4 5 6 (PRODUCT LEVEL)	SEE PAGE
Y	1	1	*145-7806*	1	CONTROL GP-ENGINE ELECTRONIC	213

Y-SEPARATE ILLUSTRATION

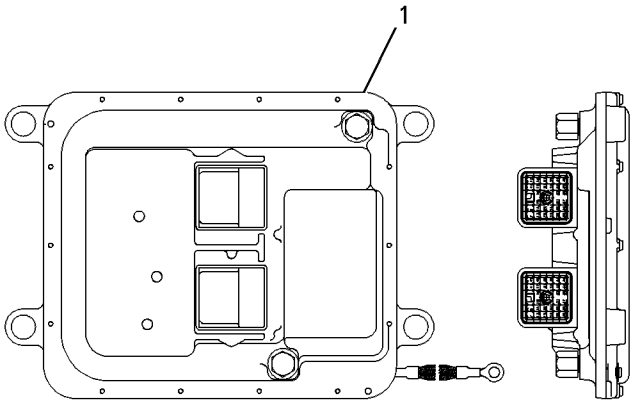

GRAPHIC #1 g00282085

145-7806 CONTROL GP-ENGINE ELECTRONIC

S/N: BET1-UP

PART OF 115-3055 CONTROL GP-ENGINE ELECTRONIC

SMCS-1901 **i01440859**

NOTE	REF NO	GRAPHIC REF	PART NUMBER	QTY	PART NAME 1 2 3 4 5 6 (PRODUCT LEVEL)	SEE PAGE
	1	1	**126-7574**	1	SCREW-PAN HEAD	
	2	1	**7X-6315**	1	STRAP-GROUNDING	
					AVAILABLE REPAIR KIT(S):	
M			**6V-6703**	2	KIT-RETAINING BOLT	
					(EACH INCLUDES BOLT, RETAINING RING AND 4 O-RING SEALS)	

M-METRIC PART

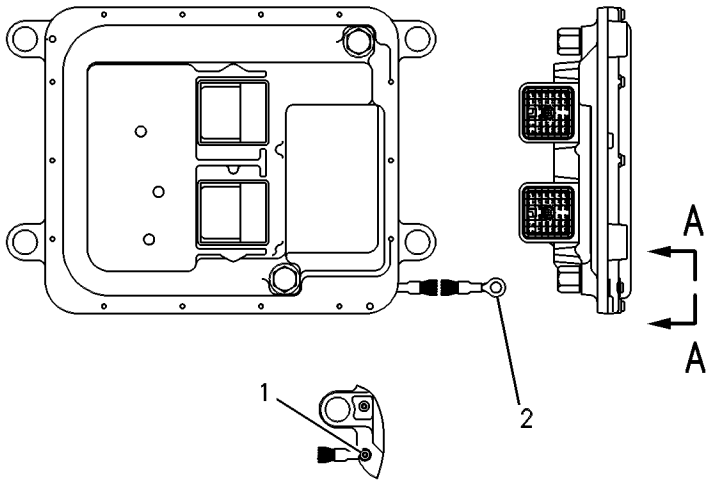

VIEW A-A

GRAPHIC #1 g00262561

193-8550 CONTROL GP-MACHINE

S/N: AKA1-UP

PART OF 180-5051 INSTALLATION GP-SECURITY, 194-9351 SERVICE GP-MACHINE

i01489122

NOTE	REF NO	GRAPHIC REF	PART NUMBER	QTY	PART NAME 1 2 3 4 5 6 (PRODUCT LEVEL)	SEE PAGE
	1	1	**193-8549**	1	CONTROL AS-ELECTRONIC	
	2	1	**7X-6315**	1	STRAP-GROUNDING	
	3	1	**184-2472**	1	SCREW-PAN HEAD (LUBRICATED)	
	4	1	**134-4126**	1	WASHER (4.52X8.28X.76MM THK)	

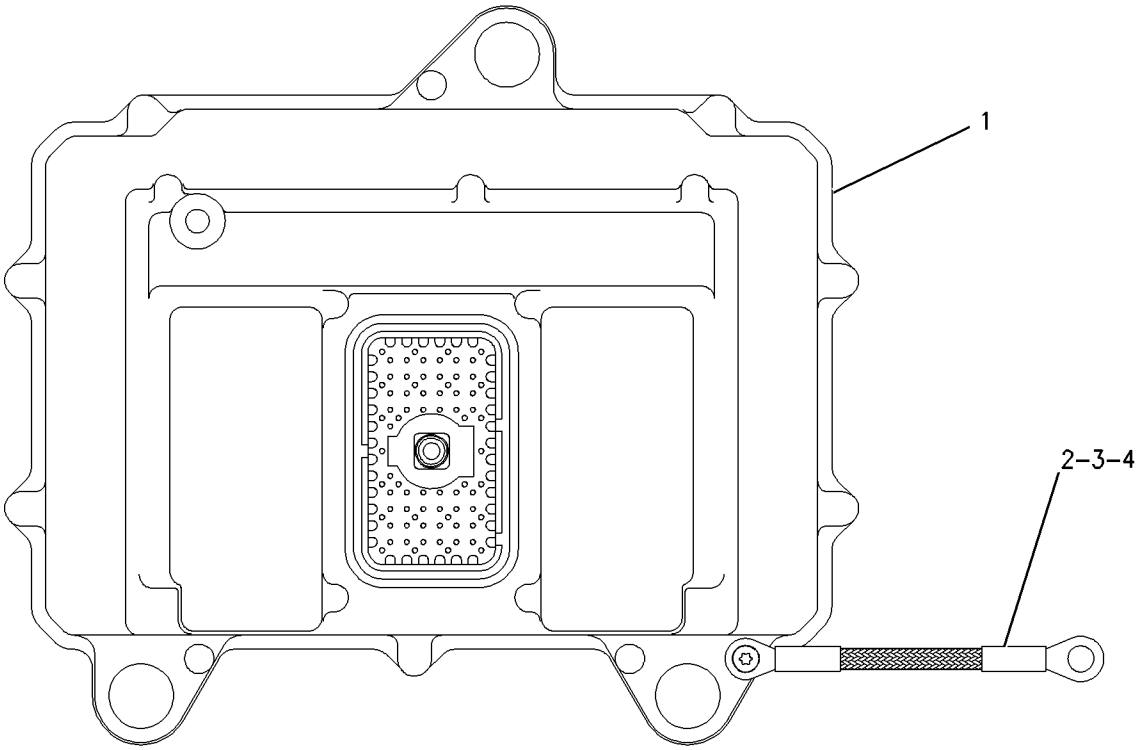

GRAPHIC #1

g00728621

172-9389 CONTROL GP-UNPROGRAMMED

S/N: AKA1-UP

PART OF 158-8077 CONTROL & MTG GP-ELECTRONIC, 192-9800 CONTROL GP-ELECTRONIC

SMCS-3030 **i01310423**

NOTE	REF NO	GRAPHIC REF	PART NUMBER	QTY	PART NAME 1 2 3 4 5 6 (PRODUCT LEVEL)	SEE PAGE
	1	1	**7X-6315**	1	STRAP-GROUNDING	
	2	1	**101-0852**	1	SCREW-PAN HEAD (NO 8 X 3/8 IN)	
M	3	1	**6V-6703**	2	KIT-RETAINING BOLT	
					(EACH INCLUDES BOLT, RING, AND SEALS)	
					FOR SOFTWARE, SEE ELECTRONICS GP	

M-METRIC PART

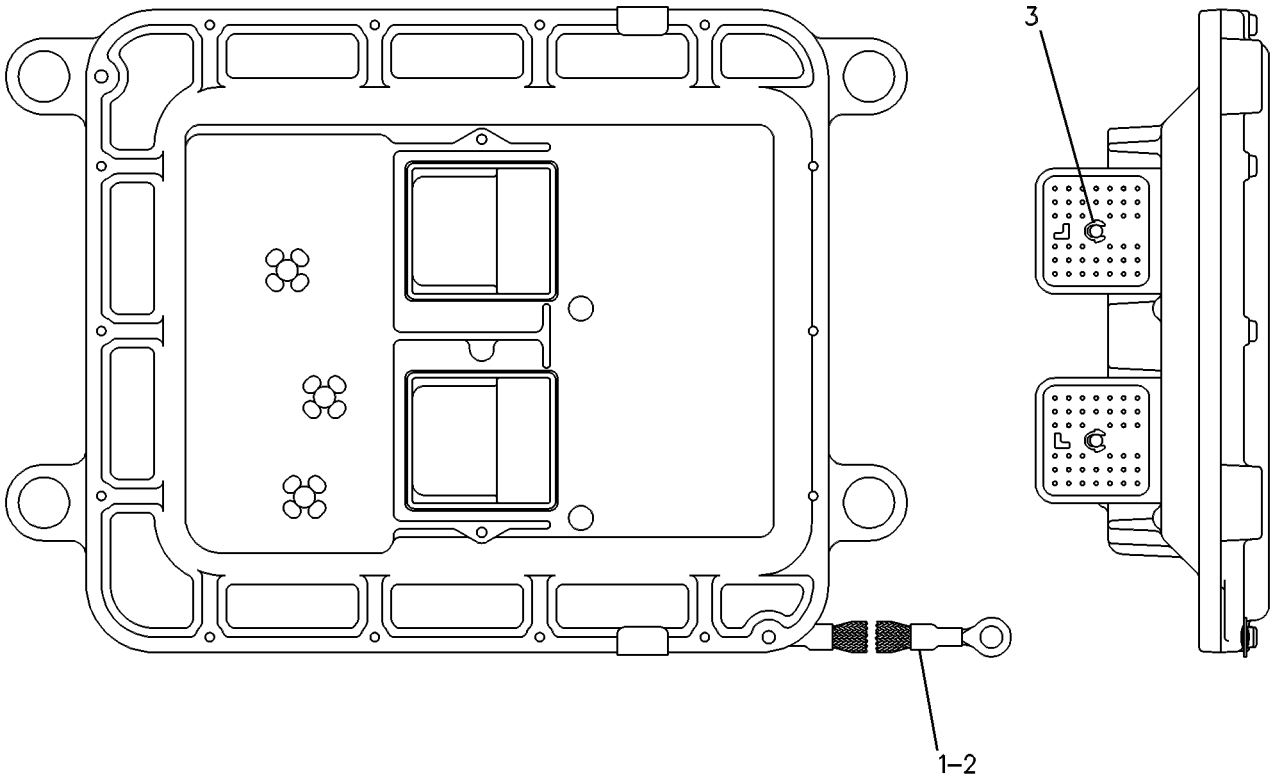

GRAPHIC #1 g00087166

ELECTRICAL AND STARTING SYSTEM

167-7630 CONVERTER GP-ELECTRICAL

S/N: AKA1-UP

SMCS-1421 **i01489023**

NOTE	REF NO	GRAPHIC REF	PART NUMBER	QTY	PART NAME 1 2 3 4 5 6 (PRODUCT LEVEL)	SEE PAGE
	1	1	**7K-1181**	6	STRAP-CABLE	
	2	1	**184-3579**	1	CONVERTER-POWER (20 AMP)	
	3	1	**185-5628**	1	HARNESS AS	
		1	**177-9656**	1	KIT-CONNECTING PLUG (4 PIN)	
					(INCLUDES PLUG AS & WEDGE)	
	4	1	**192-4209**	1	PLATE	
	5	1	**068-4209**	4	SCREW (8-32X0.75 IN)	
M	6	1	**107-3786**	8	BOLT (M4X.7X12MM)	
	7	1	**3T-2662**	2	CIRCUIT BREAKER AS (15 AMP)	
					(EACH INCLUDES)	
		1	**6V-8376**	2	SCREW-MACHINE (8-32X0.25 IN)	
		1	**9B-7233**	2	LOCKWASHER	
	8	1	**8T-0328**	8	WASHER-HARD (5.5X10X1MM THK)	

M-METRIC PART

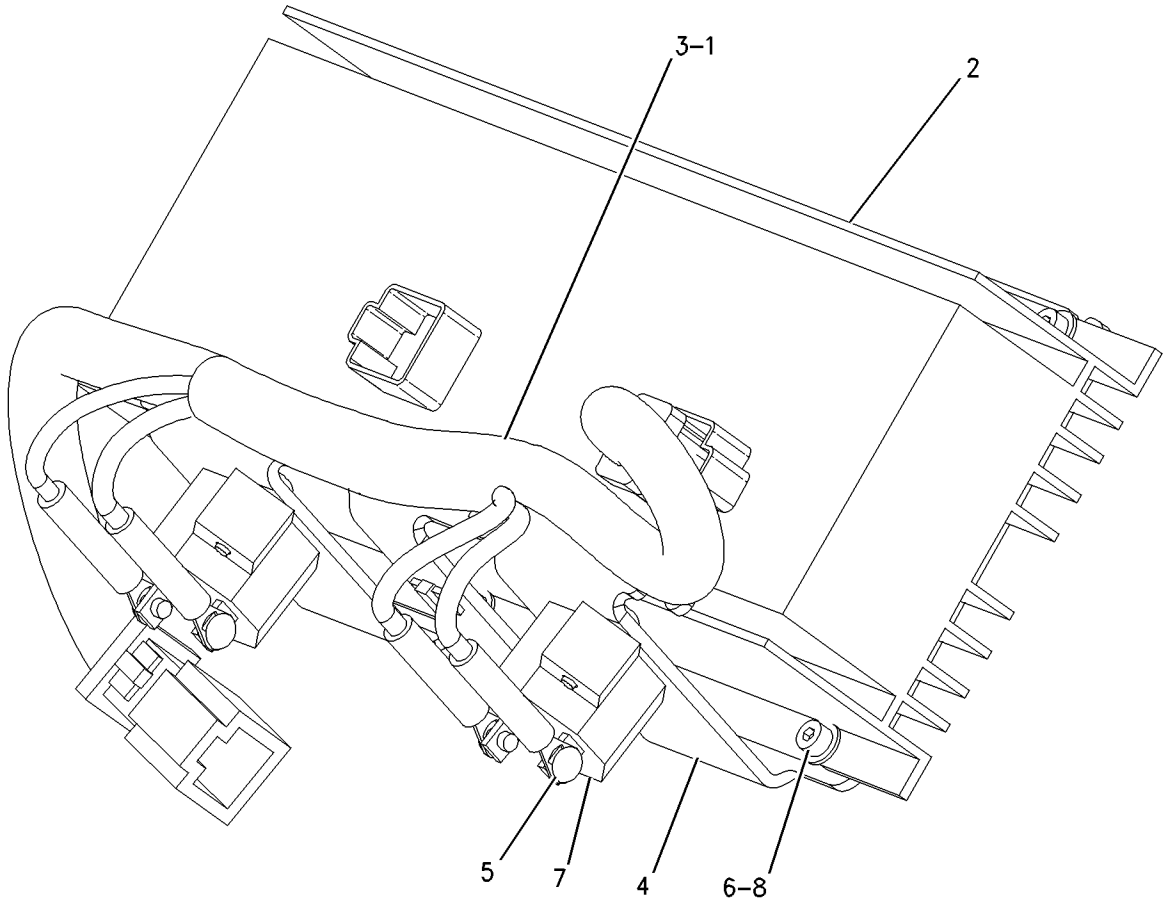

GRAPHIC #1 g00777738

159-9035 ELECTRONICS GP-MACHINE

S/N: AKA1-UP

PART OF 157-1740 ELECTRONICS AR-MACHINE

SMCS-7000 **i01432796**

NOTE	PART NUMBER	QTY	PART NAME 1 2 3 4 5 6 (PRODUCT LEVEL)	SEE PAGE
	192-9799	1	SOFTWARE GP	
			(SOFTWARE ONLY)	
			—OR—	
Y	**192-9800**	1	CONTROL GP-ELECTRONIC	757
			(OPTIONAL SERVICE REPLACEMENT) (INCLUDES SOFTWARE)	

Y-SEPARATE ILLUSTRATION

ELECTRICAL AND STARTING SYSTEM

195-5202 ELECTRONICS GP-MACHINE

S/N: AKA1-UP

PART OF 195-5236 INSTALLATION AR-SECURITY

SMCS-7000 **i01489127**

NOTE	PART NUMBER	QTY	PART NAME 1 2 3 4 5 6 (PRODUCT LEVEL)	SEE PAGE
	194-9350	1	SOFTWARE GP-MACHINE (SECURITY SYSTEM) (SOFTWARE ONLY)	
			—OR—	
Y	**194-9351**	1	SERVICE GP-MACHINE (SECURITY SYSTEM) (INCLUDES SOFTWARE)	273
			(OPTIONAL SERVICE REPLACEMENT)	

Y-SEPARATE ILLUSTRATION

195-5200 ELECTRONICS GP-MONITOR

S/N: AKA1-UP

PART OF 157-1740 ELECTRONICS AR-MACHINE

SMCS-7490, 7601, 7603, 7620 **i01432909**

NOTE	PART NUMBER	QTY	PART NAME 1 2 3 4 5 6 (PRODUCT LEVEL)	SEE PAGE
	186-0928	1	SOFTWARE GP-MONITOR	
			(SOFTWARE ONLY)	
			—OR—	
Y	**186-0929**	1	CONTROL GP-ELECTRONIC	756
			(OPTIONAL SERVICE REPLACEMENT) (INCLUDES SOFTWARE)	

Y-SEPARATE ILLUSTRATION

ELECTRICAL AND STARTING SYSTEM

160-7827 HEATER GP-FUEL

S/N: AKA1-UP

SMCS-1296 **i01488987**

NOTE	REF NO	GRAPHIC REF	PART NUMBER	QTY	PART NAME 1 2 3 4 5 6 (PRODUCT LEVEL)	SEE PAGE
	1	1	**1P-0436**	2	GASKET (FUEL PRIMING PUMP)	
	2	1	**3K-7928**	2	ELBOW	
	3	1	**5D-1026**	6	CLAMP-HOSE	
	4	1	**6H-0853**	2	BUSHING-TERMINAL	
	5	1	**7C-7368**	1	HEATER AS-FUEL	
	6	1	**7C-7397**	1	CONNECTOR	
	7	1	**8N-9707**	1	REGULATOR-FUEL TEMPERATURE	
	8	1	**9L-6331**	1	BRACKET	
	9	1	**9N-1394**	1	BRACKET	
	10	1	**170-4666**	1	ADAPTER	
Y	11	1	*183-4346*	1	BASE GP-FUEL FILTER	172
	12	1	**0S-1594**	2	BOLT (3/8-16X1 IN)	
	13	1	**1D-4541**	1	BOLT (5/16-18X3 IN)	
	14	1	**2M-9780**	1	SEAL-O-RING	
	15	1	**4B-9365**	1	BOLT (1/4-20X3 IN)	
	16	1	**5M-2894**	4	WASHER-HARD (10.2X18.5X2.5MM THK)	
	17	1	**5P-0537**	1	WASHER-HARD (7.2X14.5X2MM THK)	
	18	1	**6B-4661**	2	BUSHING-REDUCER	
	19	1	**6D-1641**	2	CLIP	
	20	1	**6D-4636**	5	CLIP	
	21	1	**7C-7398**	1	SEAL	
	22	1	**8S-0948**	2	CLIP	
	23	1	**8T-4223**	2	WASHER-HARD (13.5X25.5X3MM THK)	
	24	1	**8T-9389**	2	BOLT (1/2-13X2.75 IN)	
	25	1	**9M-1974**	1	WASHER-HARD (8.8X16X2MM THK)	
	26	1	**9S-8752**	2	NUT-FULL (3/8-16 THD)	
E	27	1	**5P-0767**		HOSE (31.8CM)	
E	28	1	**5P-0767**		HOSE (180.5CM)	
E	29	1	**5P-0767**		HOSE (194CM)	

E-ORDER BY THE CENTIMETER
Y-SEPARATE ILLUSTRATION

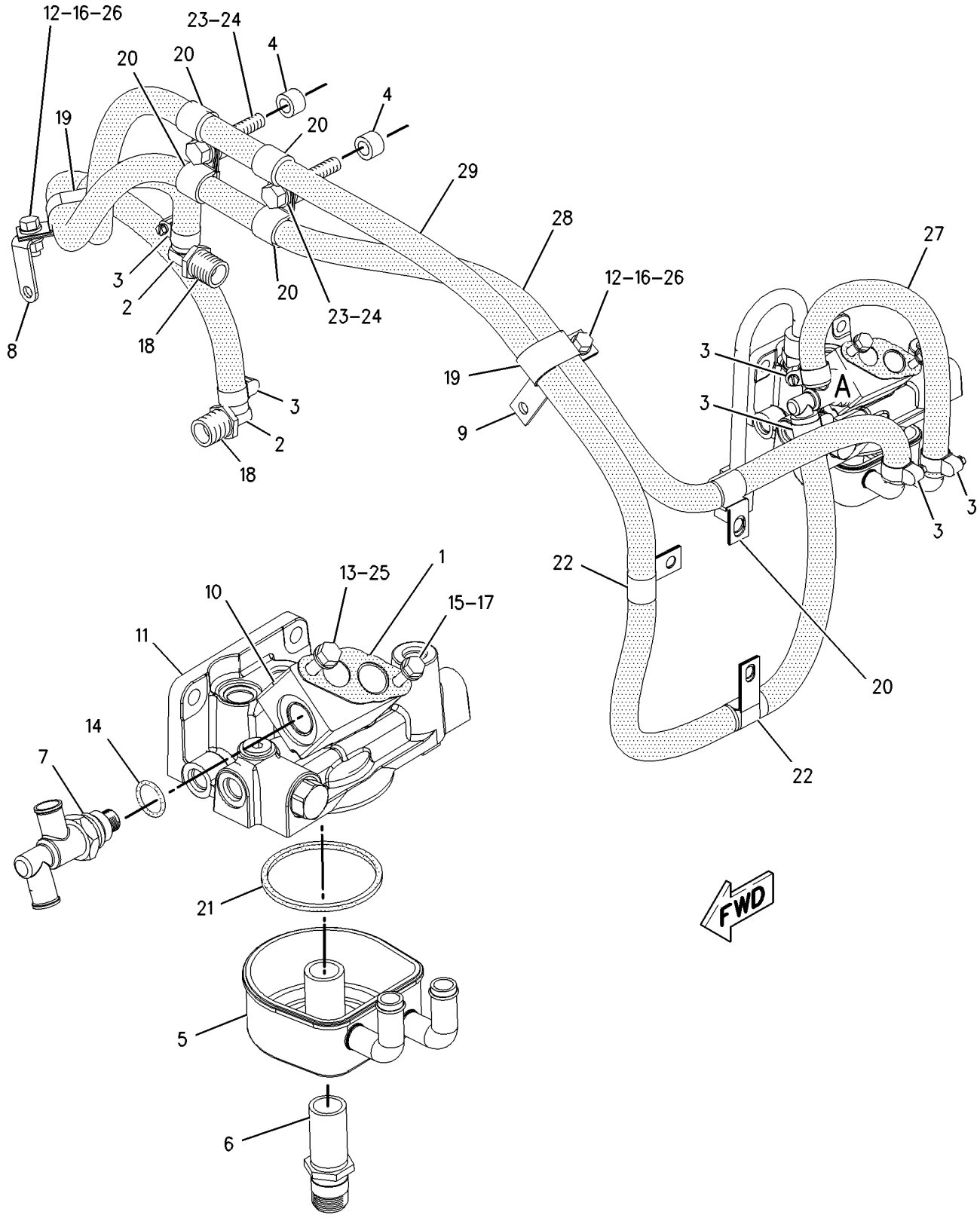

GRAPHIC #1 g00758576

161-1189 HEATER GP-JACKET WATER

S/N: AKA1-UP
120 VOLT/1500 WATT

SMCS-1383 **i01488990**

NOTE	REF NO	GRAPHIC REF	PART NUMBER	QTY	PART NAME 1 2 3 4 5 6 (PRODUCT LEVEL)	SEE PAGE
	1	1	**6T-2724**	1	BRACKET AS	
		1	**1F-0750**	1	NUT-WELD (3/8-16 THD)	
	2	1	**9G-6655**	1	ELEMENT AS-JACKET WATER HEATER	
	3	1	**6V-8927**	2	BOLT-SOCKET HEAD (6-32X0.5 IN)	
	4	1	**9X-6772**	7	STRAP-CABLE	
	5	1	**199-5128**	1	RECEPTACLE AS	
	6	1	**197-6281**	1	CORD AS	
	7	1	**096-6166**	2	WASHER-HARD (4.5X9X1MM THK)	
	8	1	**4P-7581**	3	CLIP	
	9	1	**4P-8134**	1	CLIP	
	10	1	**5M-3062**	1	BOLT (3/8-16X0.75 IN)	
	11	1	**5P-1075**	1	WASHER-HARD (10.2X22.5X3MM THK)	

161-1189 **HEATER GP-JACKET WATER** ***(contd.)*** **i01488990**

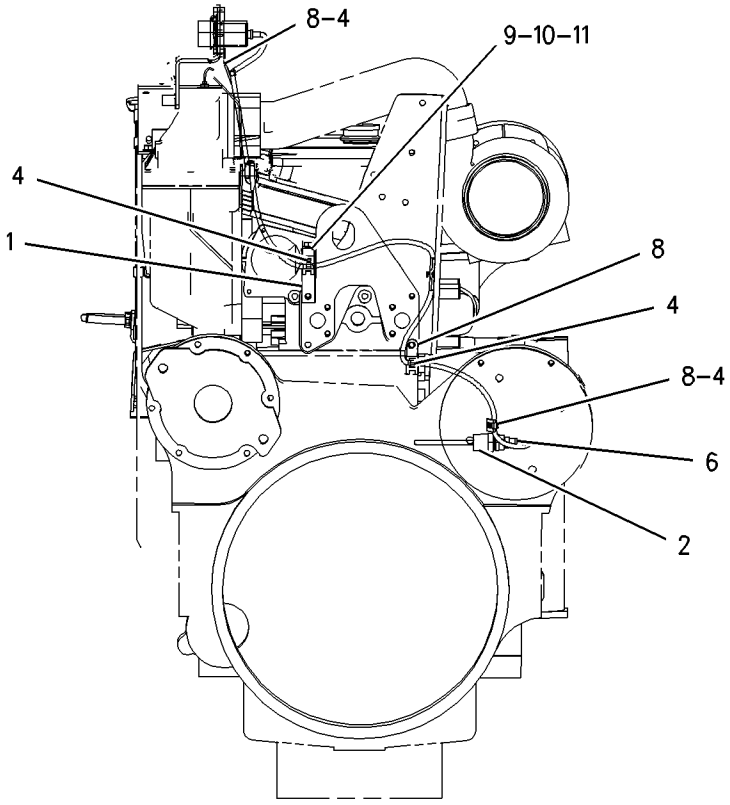

REAR VIEW

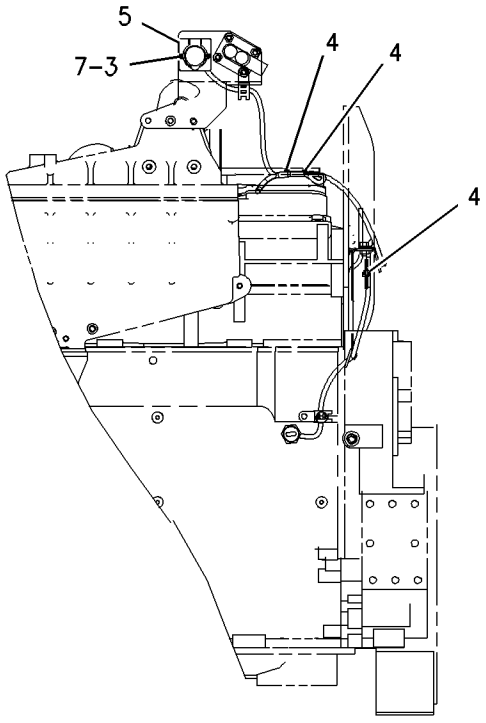

LEFT SIDE VIEW

GRAPHIC #1 g00758775

161-3617 HEATER GP-JACKET WATER

S/N: AKA1-UP
240 VOLT/1500 WATT

SMCS-1383 **i01486287**

NOTE	REF NO	GRAPHIC REF	PART NUMBER	QTY	PART NAME 1 2 3 4 5 6 (PRODUCT LEVEL)	SEE PAGE
	1	1	**6T-2724**	1	BRACKET AS	
		1	**1F-0750**	1	NUT-WELD (3/8-16 THD)	
	2	1	**6T-3764**	1	ELEMENT AS-JACKET WATER HEATER (240 VOLT/1500 WATT)	
	3	1	**6V-8927**	2	BOLT-SOCKET HEAD (6-32X0.5 IN)	
	4	1	**9X-6772**	7	STRAP-CABLE	
	5	1	**199-5128**	1	RECEPTACLE AS	
	6	1	**199-5142**	1	CORD AS-JACKET WATER HEATER (240 VOLT/15 AMP)	
	7	1	**096-6166**	2	WASHER-HARD (4.5X9X1MM THK)	
	8	1	**4P-7581**	3	CLIP	
	9	1	**4P-8134**	1	CLIP	
	10	1	**5M-3062**	1	BOLT (3/8-16X0.75 IN)	
	11	1	**5P-1075**	1	WASHER-HARD (10.2X22.5X3MM THK)	

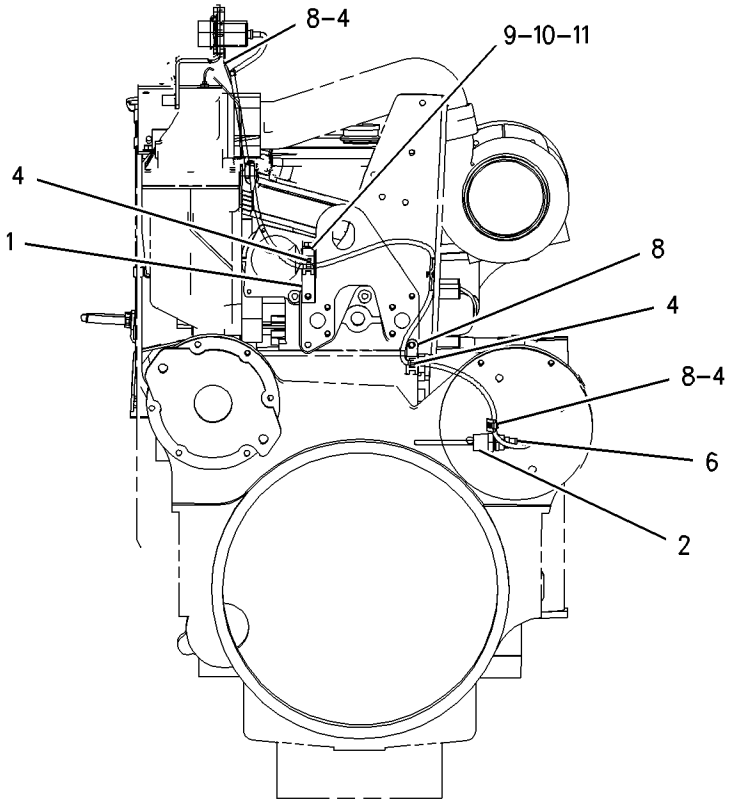

REAR VIEW

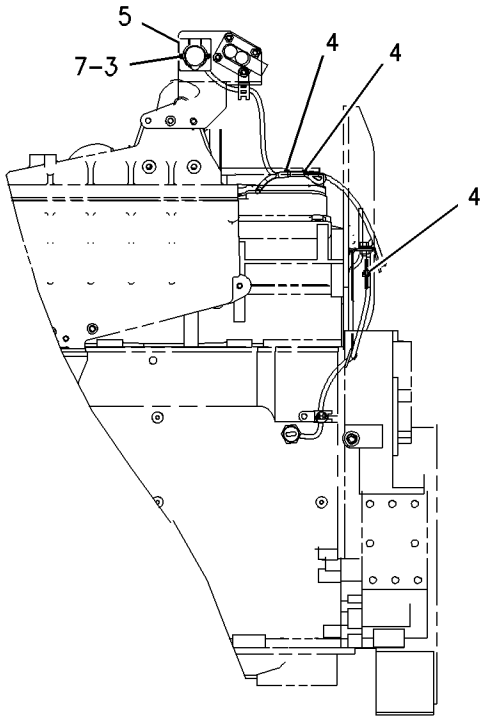

LEFT SIDE VIEW

GRAPHIC #1 g00758771

195-5236 INSTALLATION AR-SECURITY

S/N: AKA1-UP

SMCS-7631 **i01489105**

NOTE	PART NUMBER	QTY	PART NAME 1 2 3 4 5 6 (PRODUCT LEVEL)	SEE PAGE
Y	*180-5051*	1	INSTALLATION GP-SECURITY	228
Y	*195-5202*	1	ELECTRONICS GP-MACHINE (SECURITY SYSTEM)	218

Y-SEPARATE ILLUSTRATION

180-3835 INSTALLATION GP-COMMUNICATION

S/N: AKA1-UP

SMCS-7602 **i01496619**

NOTE	PART NUMBER	QTY	PART NAME 1 2 3 4 5 6 (PRODUCT LEVEL)	SEE PAGE
	4E-8266	7	BOSS	
M	**6V-7357**	3	BOLT (M6X1.0X25MM)	
M	**6V-7728**	4	BOLT (M6X1.0X45MM)	
	8C-5607	8	MOUNT (ISOLATION)	
	8C-5608	4	SPACER (6.5X9.5X25.4MM THK)	
M	**8T-0639**	4	BOLT (M6X1.00X12MM)	
	9X-6165	4	WASHER (6.5X22X2.5MM THK)	
	115-8109	2	SPLICE-WIRE	
E	**125-7876**		TUBE-SHRINKABLE (10CM)	
	153-2325	1	CONTROL GP-COMMUNICATION (PRODUCT LINK)	
	170-7142	1	HARNESS AS-CONTROL (PRODUCT LINK)	
	102-8806	1	KIT-RECEPTACLE (8 PIN)	
			(INCLUDES RECEPTACLE AS & WEDGE)	
	7X-6222	1	PLUG AS-CONNECTOR (24 PIN)	
	3E-4367	1	RING-RETAINING	
M	**3E-8558**	1	BOLT	
	9X-3265	2	SEAL-CONNECTOR	
	155-2265	1	KIT-CONNECTING PLUG (8 PIN)	
			(INCLUDES PLUG AS & WEDGE)	
	170-9198	2	PLATE	
	179-0600	1	MOUNTING GP-ANTENNA (PRODUCT LINK)	
	180-3837	1	CABLE AS	
	185-7141	1	FILM-WARNING	
	199-9785	1	WIRE AS	

E-ORDER BY THE CENTIMETER
M-METRIC PART

180-5051 INSTALLATION GP-SECURITY

S/N: AKA1-UP

PART OF 195-5236 INSTALLATION AR-SECURITY

SMCS-7631 **i01489110**

NOTE	REF NO	GRAPHIC REF	PART NUMBER	QTY	PART NAME 1 2 3 4 5 6 (PRODUCT LEVEL)	SEE PAGE
	1	1	**165-5655**	1	LAMP (12 VOLT)(RED/GREEN)(LED)	
		1	**186-3735**	3	PIN-CONNECTOR	
	2	1	**180-5052**	1	HARNESS AS	
		1	**102-8801**	1	KIT-RECEPTACLE (12 PIN)	
					(INCLUDES RECEPTACLE AS & WEDGE)	
		1	**155-2255**	1	KIT-CONNECTING PLUG (12 PIN)	
					(INCLUDES PLUG AS & WEDGE)	
	3	1	**192-9734**	1	FILM-IDENTIFICATION	
	4	1	**193-3973**	3	TIE-WRAP	
Y	5	1	**193-8550**	1	CONTROL GP-MACHINE	214
	6	1	**195-0759**	1	COIL AS	
	7	1	**195-5857**	1	BRACKET AS	
		1	**189-9240**	2	LINK	
	8	1	**130-5300**	1	CLIP	
M	9	1	**7X-0818**	1	BOLT (M8X1.25X45MM)	
	10	1	**8T-4224**	3	WASHER-HARD (8.8X16X2MM THK)	
M	11	1	**8T-6912**	2	BOLT (M8X1.25X50MM)	

M-METRIC PART
Y-SEPARATE ILLUSTRATION

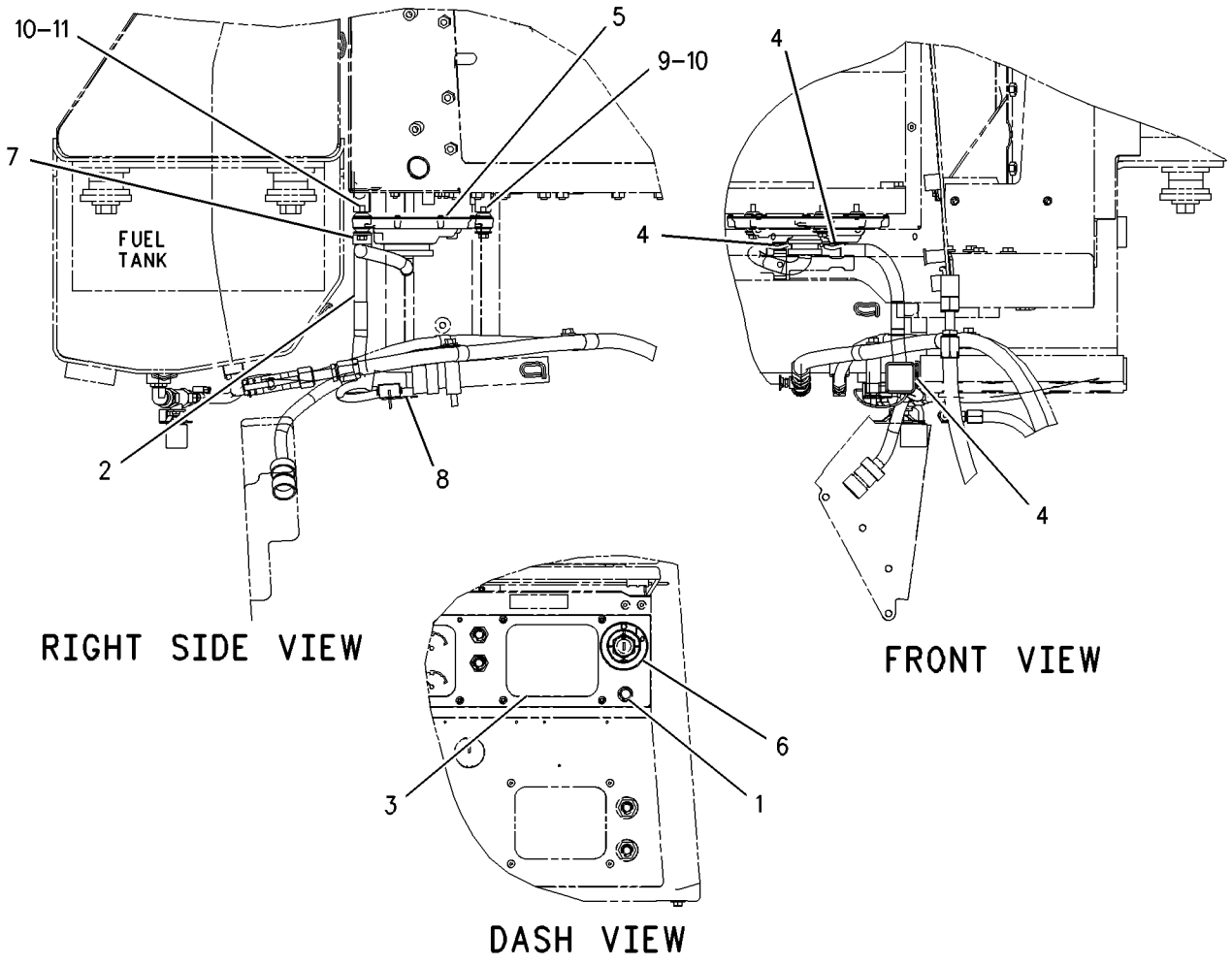

GRAPHIC #1 g00728838

3E-6389 LAMP GP-DOME

S/N: AKA1-UP
24 VOLT. WITH SWITCH
PART OF 161-1096 LINER GP-CAB

SMCS-1429 **i01501995**

NOTE	REF NO	GRAPHIC REF	PART NUMBER	QTY	PART NAME 1 2 3 4 5 6 (PRODUCT LEVEL)	SEE PAGE
	1	1	**7N-9943**	1	LAMP (28 VOLT)	
	2	1	**102-8803**	1	KIT-RECEPTACLE (3 PIN)	
					(INCLUDES RECEPTACLE AS & WEDGE)	
		1	**3E-3371**	1	WEDGE-RECEPTACLE LOCK (3 PIN)	
		1	**8T-8729**	3	PIN-CONNECTOR	
	3	1	**7T-0020**	1	LENS-DOME LAMP	

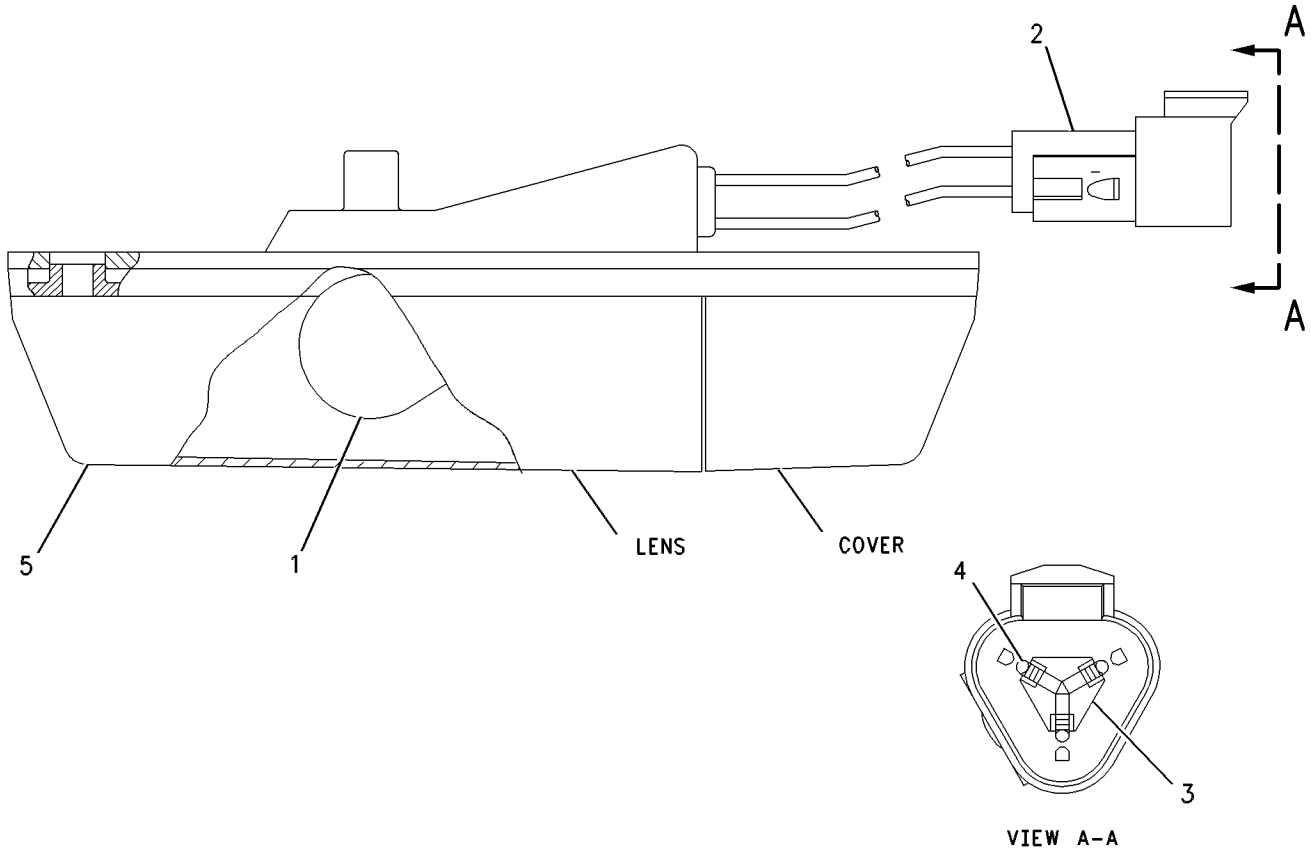

GRAPHIC #1 g00647928

135-5549 LAMP GP-FLOOD

S/N: AKA1-UP

PART OF 186-3718 LIGHTING GP-FLOOD

SMCS-1434 **i01110336**

NOTE	REF NO	GRAPHIC REF	PART NUMBER	QTY	PART NAME 1 2 3 4 5 6 (PRODUCT LEVEL)	SEE PAGE
	1	1	**9X-3463**	1	LAMP (24 VOLTS)(65 WATTS)	
	2	1	**102-8802**	1	KIT-RECEPTACLE (2 PIN)	
					(INCLUDES RECEPTACLE AS & WEDGE)	
	3	1	**8T-8729**	2	PIN-CONNECTOR	
	4	1	**3E-3365**	1	WEDGE	
	5	1	**144-5744**	1	BODY AS	
	6	1	**144-5282**	2	SCREW	
	7	1	**144-5283**	1	SEAL	
	8	1	**144-5284**	1	LENS AS	
	9	1	**164-7556**	1	CLIP	

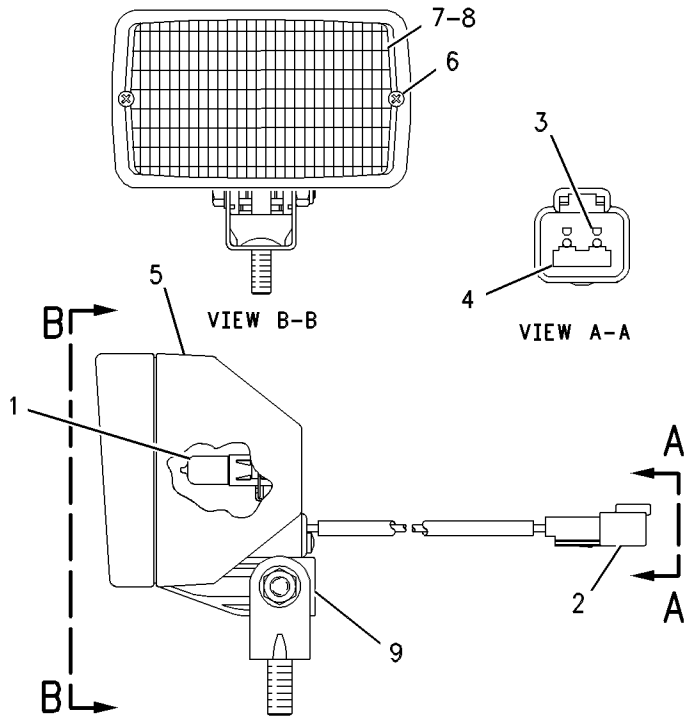

GRAPHIC #1 g00533250

147-0319 LAMP GP-FLOOD

S/N: AKA1-UP; CXB1-UP; BHR1-UP; BHW1-UP

PART OF 160-1058, 160-1809, 160-2710 LIGHTING AR, 152-8427, 167-1885 LIGHTING GP, 159-7590 LIGHTING GP-4 LAMP, 125-2001, 183-4652 LIGHTING GP-FLOOD

SMCS-1434 **i01434582**

NOTE	REF NO	GRAPHIC REF	PART NUMBER	QTY	PART NAME 1 2 3 4 5 6 (PRODUCT LEVEL)	SEE PAGE
	1	1	**9X-3463**	1	LAMP (24 VOLT)(65 WATT)	
	2	1	**158-0250**	1	BODY AS-LAMP	
	3	1	**158-0248**	1	LENS AS-FLOODLAMP	
	4	1	**158-0252**	1	BEZEL	
	5	1	**188-8849**	2	CLAMP	

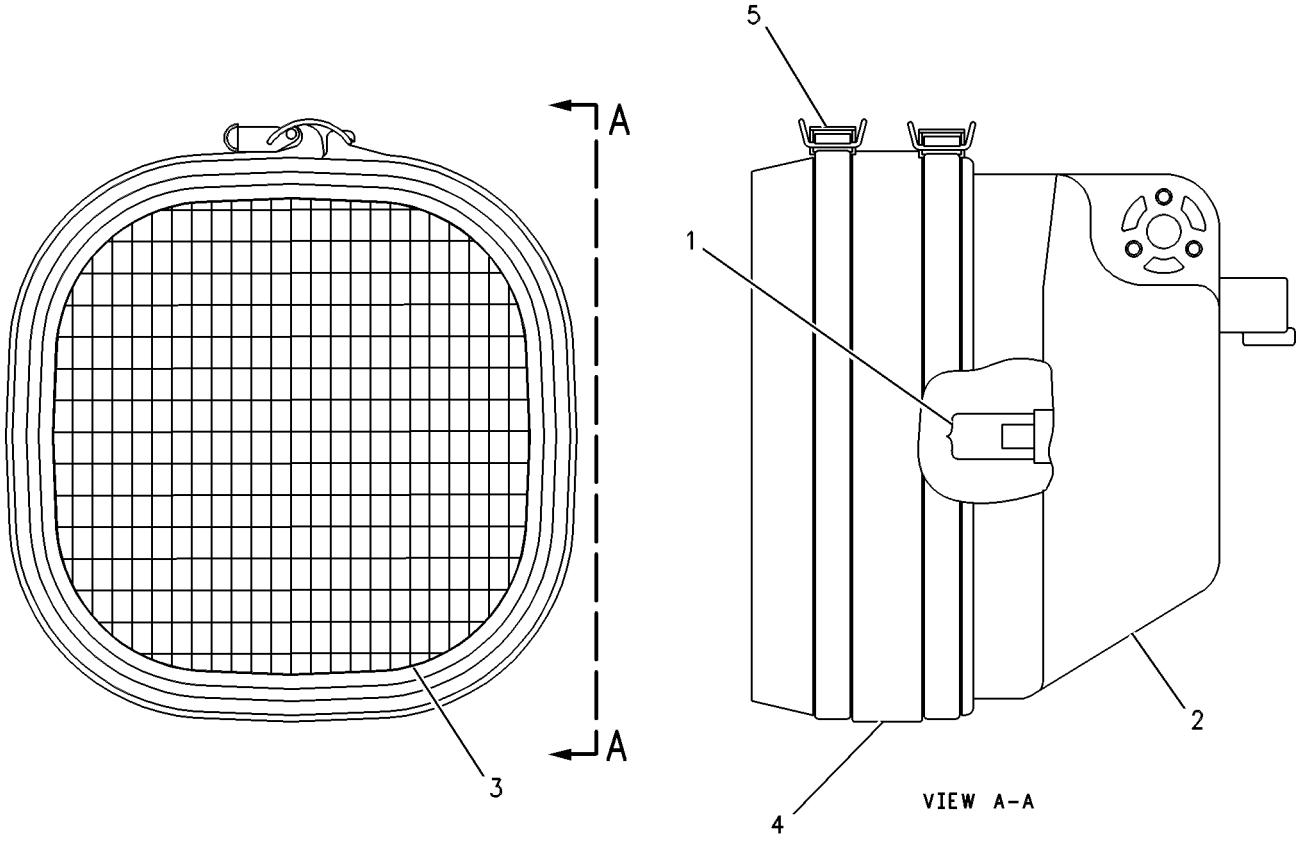

GRAPHIC #1 g00458549

153-2073 LAMP GP-FLOOD

S/N: AKA1-UP
24 VOLT. VERTICAL
PART OF 160-1058 LIGHTING AR

SMCS-1434 **i01447088**

NOTE	REF NO	GRAPHIC REF	PART NUMBER	QTY	PART NAME 1 2 3 4 5 6 (PRODUCT LEVEL)	SEE PAGE
	1	1	**9X-3463**	1	LAMP (24 VOLT)(65 WATT) (FLOOD)	
	2	1	**158-0250**	1	BODY AS-LAMP	
	3	1	**158-0248**	1	LENS AS-FLOODLAMP	
	4	1	**158-0252**	1	BEZEL	
	5	1	**188-8849**	2	CLAMP	

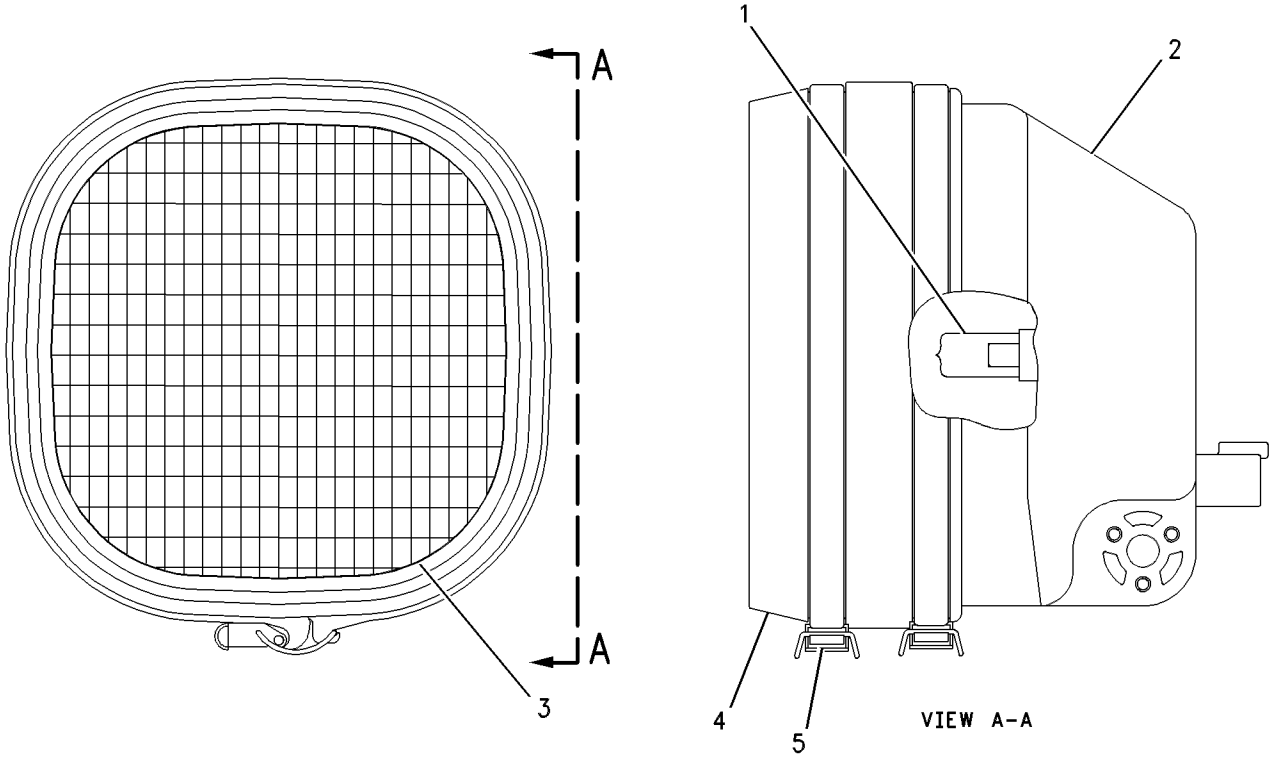

GRAPHIC #1 g00449633

MEMORANDA

160-0262 LIGHTING AR–4 LAMP

S/N: AKA1-UP
CYLINDER MOUNTED
FOR USE WITH WASTE DISPOSAL AR, CAB OR OROPS

SMCS-1429 **i01478859**

NOTE	REF NO	GRAPHIC REF	PART NUMBER	QTY	PART NAME 1 2 3 4 5 6 (PRODUCT LEVEL)	SEE PAGE
	1	1	**6S-4039**	2	GROMMET	
	2	1	**9X-6772**	8	STRAP-CABLE	
	3	1	**115-1027**	2	BRACKET	
	4	1	**160-0265**	2	HARNESS AS	
					(EACH INCLUDES)	
		1	**102-8802**	2	KIT-RECEPTACLE (2 PIN)	
					(EACH INCLUDES RECEPTACLE AS & WEDGE)	
		1	**155-2270**	2	KIT-CONNECTING PLUG (2 PIN)	
					(EACH INCLUDES PLUG AS, WEDGE & INTERFACE SEAL)	
Y	5	1	*183-4652*	2	LIGHTING GP-FLOOD	247
	6	1	**147-0385**	2	CLIP	
	7	1	**4D-7794**	6	CLIP	
	8	1	**4L-6454**	18	BOLT (3/8-16X1 IN)	
	9	1	**5P-1075**	32	WASHER-HARD (10.2X22.5X3MM THK)	
	10	1	**5P-8522**	2	GROMMET	
	11	1	**6K-4934**	4	CLIP	
	12	1	**6K-4935**	4	BRACKET	
	13	1	**6V-8801**	18	NUT (3/8-16 THD)	
	14	1	**8T-4896**	4	WASHER-HARD (10.2X18.5X2.5MM THK)	

Y-SEPARATE ILLUSTRATION

160-0262 **LIGHTING AR** ***(contd.)*** **i01478859**

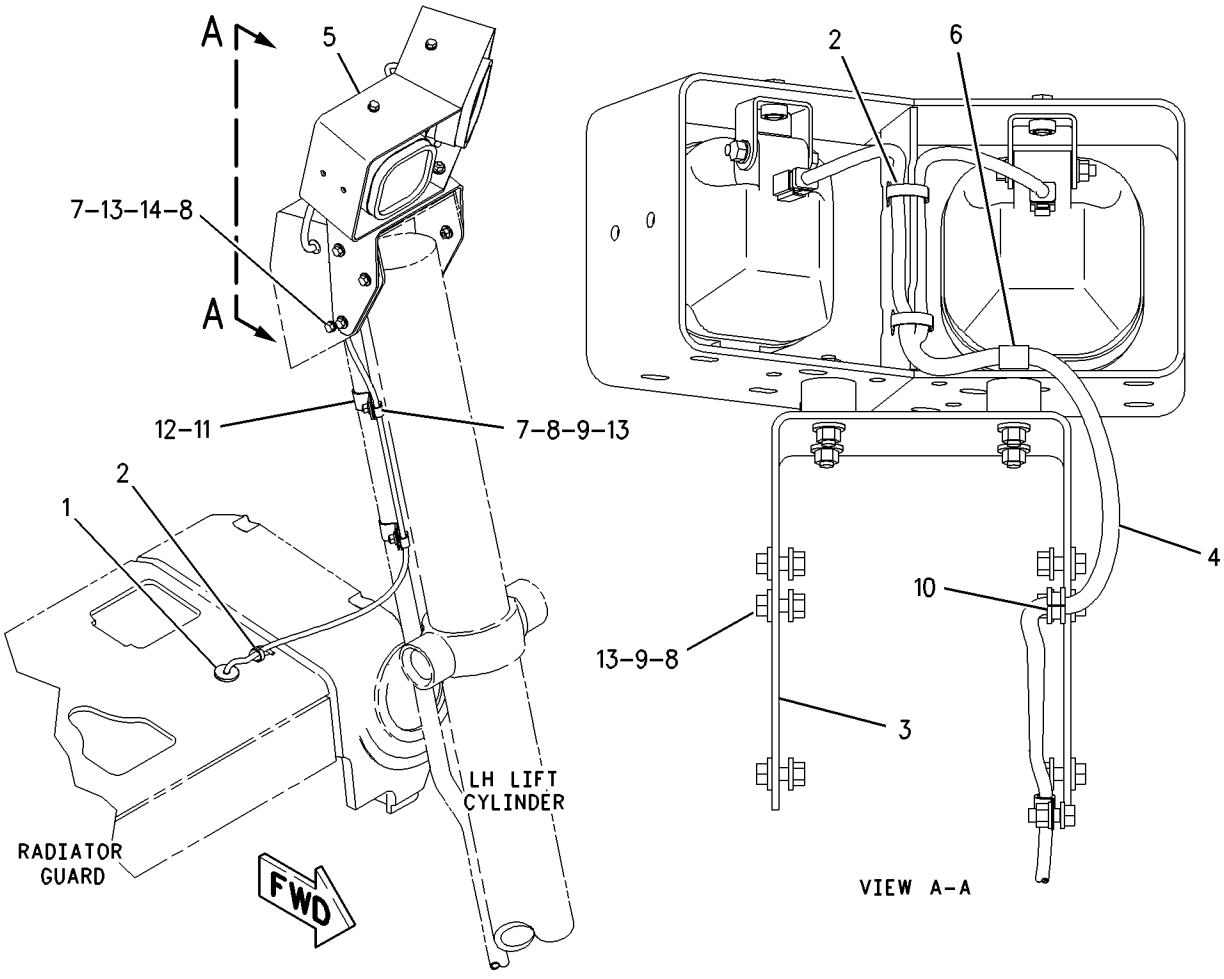

GRAPHIC #1 g00764448

160-1058 LIGHTING AR

S/N: AKA1-UP
RELOCATION-WITH SWEEPS
FOR USE WITH SWEEPS & WASTE DISPOSAL AR

SMCS-1429 **i01488830**

NOTE	REF NO	GRAPHIC REF	PART NUMBER	QTY	PART NAME 1 2 3 4 5 6 (PRODUCT LEVEL)	SEE PAGE
	1	1	**9X-6772**	20	STRAP-CABLE	
	2	1	**111-8314**	4	BRACKET AS	
	3	1	**167-1884**	2	GUARD	
	4	1	**129-8331**	2	PLATE AS	
					(EACH INCLUDES)	
		1	**7T-1099**	4	LINK	
Y	5	1	**147-0319**	2	LAMP GP-FLOOD (24 VOLT)(SUSPENDED)	231
Y	6	1	*150-1958*	1	SWEEP GP	460
	7	1	**160-1061**	2	HARNESS AS	
					(EACH INCLUDES)	
		1	**155-2270**	2	KIT-CONNECTING PLUG (2 PIN)	
					(EACH INCLUDES PLUG AS & WEDGE)	
Y	8	1	**153-2073**	2	LAMP GP-FLOOD (24 VOLT)	232
	9	1	**4D-1212**	2	GROMMET	
	10	1	**5M-3062**	4	BOLT (3/8-16X0.75 IN)	
	11	1	**5P-1075**	8	WASHER-HARD (10.2X22.5X3MM THK)	
	12	1	**5P-2955**	4	BOLT (5/16-18X2.50 IN)	
	13	1	**5S-7379**	8	BOLT (3/8-16X0.875 IN)	
	14	1	**6V-8189**	4	NUT (5/16-18 THD)	
	15	1	**7X-0365**	4	BOLT (3/4-10X1.5 IN)	
	16	1	**7X-0582**	4	WASHER-HARD (20X44.5X6MM THK)	
	17	1	**8T-4224**	8	WASHER-HARD (8.8X16X2MM THK)	
	18	1	**8T-4896**	4	WASHER-HARD (10.2X18.5X2.5MM THK)	

Y-SEPARATE ILLUSTRATION

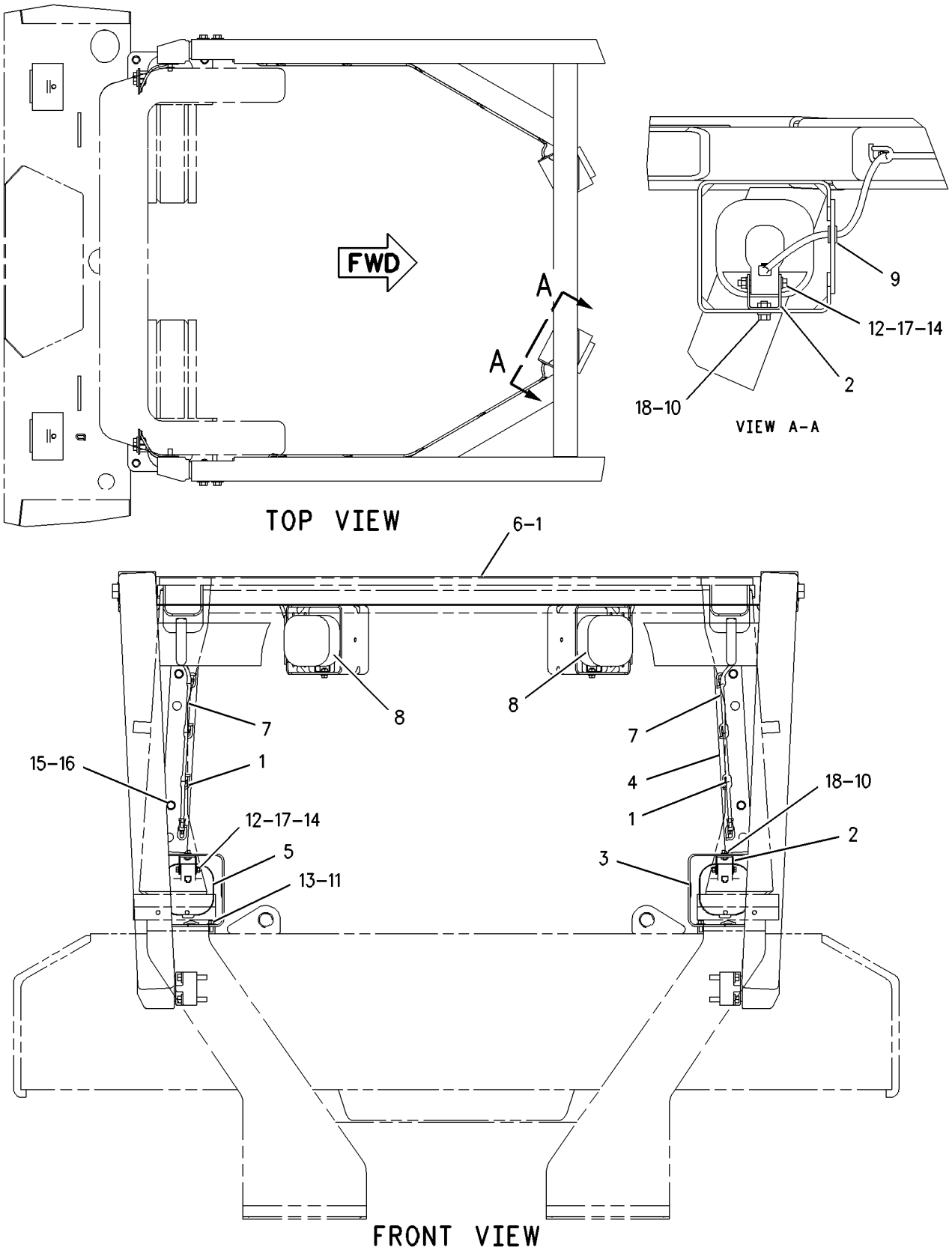

GRAPHIC #1 g00672950

ELECTRICAL AND STARTING SYSTEM

160-1809 LIGHTING AR

S/N: AKA1-UP

PART OF 143-7721, 199-0818 DISPOSAL AR-WASTE, 143-7740 WOODCHIP AR

SMCS-1429 **i01488509**

NOTE	REF NO	GRAPHIC REF	PART NUMBER	QTY	PART NAME 1 2 3 4 5 6 (PRODUCT LEVEL)	SEE PAGE
	1	1	**9X-6772**	12	STRAP-CABLE	
	2	1	**111-8314**	2	BRACKET AS	
	3	1	**114-2368**	2	GUARD AS	
					(EACH INCLUDES)	
		1	**7T-1099**	1	LINK	
	4	1	**115-1024**	1	BRACKET AS-RH	
		1	**1F-0750**	2	NUT-WELD (3/8-16 THD)	
	5	1	**115-1025**	1	BRACKET AS-LH	
		1	**1F-0750**	2	NUT-WELD (3/8-16 THD)	
	6	1	**129-8331**	2	PLATE AS	
					(EACH INCLUDES)	
		1	**7T-1099**	4	LINK	
	7	1	**130-3232**	1	PLATE-RH	
	8	1	**130-3233**	1	PLATE-LH	
Y	9	1	**147-0319**	2	LAMP GP-FLOOD (24 VOLT)(SUSPENDED)	231
Y	10	1	*152-8427*	2	LIGHTING GP	241
	11	1	**159-7615**	2	HARNESS AS	
					(EACH INCLUDES)	
		1	**102-8802**	1	KIT-RECEPTACLE (2 PIN)	
					(INCLUDES RECEPTACLE AS & WEDGE)	
		1	**155-2270**	3	KIT-CONNECTING PLUG (2 PIN)	
					(EACH INCLUDES PLUG AS, WEDGE & INTERFACE SEAL)	
	12	1	**4P-7581**	2	CLIP	
	13	1	**5M-3062**	2	BOLT (3/8-16X0.75 IN)	
	14	1	**5P-1075**	8	WASHER-HARD (10.2X22.5X3MM THK)	
	15	1	**5P-2955**	2	BOLT (5/16-18X2.50 IN)	
	16	1	**5P-8522**	2	GROMMET	
	17	1	**5S-7379**	12	BOLT (3/8-16X0.875 IN)	
	18	1	**6H-4005**	2	GROMMET	
	19	1	**6V-8189**	2	NUT (5/16-18 THD)	
	20	1	**7X-0365**	4	BOLT (3/4-10X1.5 IN)	
	21	1	**7X-0582**	4	WASHER-HARD (20X44.5X6MM THK)	
	22	1	**8T-4224**	4	WASHER-HARD (8.8X16X2MM THK)	
	23	1	**8T-4896**	6	WASHER-HARD (10.2X18.5X2.5MM THK)	
	24	1	**8T-4994**	2	WASHER-HARD (20X36.5X3.5MM THK)	
	25	1	**8T-9399**	2	BOLT (3/4-10X2.25 IN)	

Y-SEPARATE ILLUSTRATION

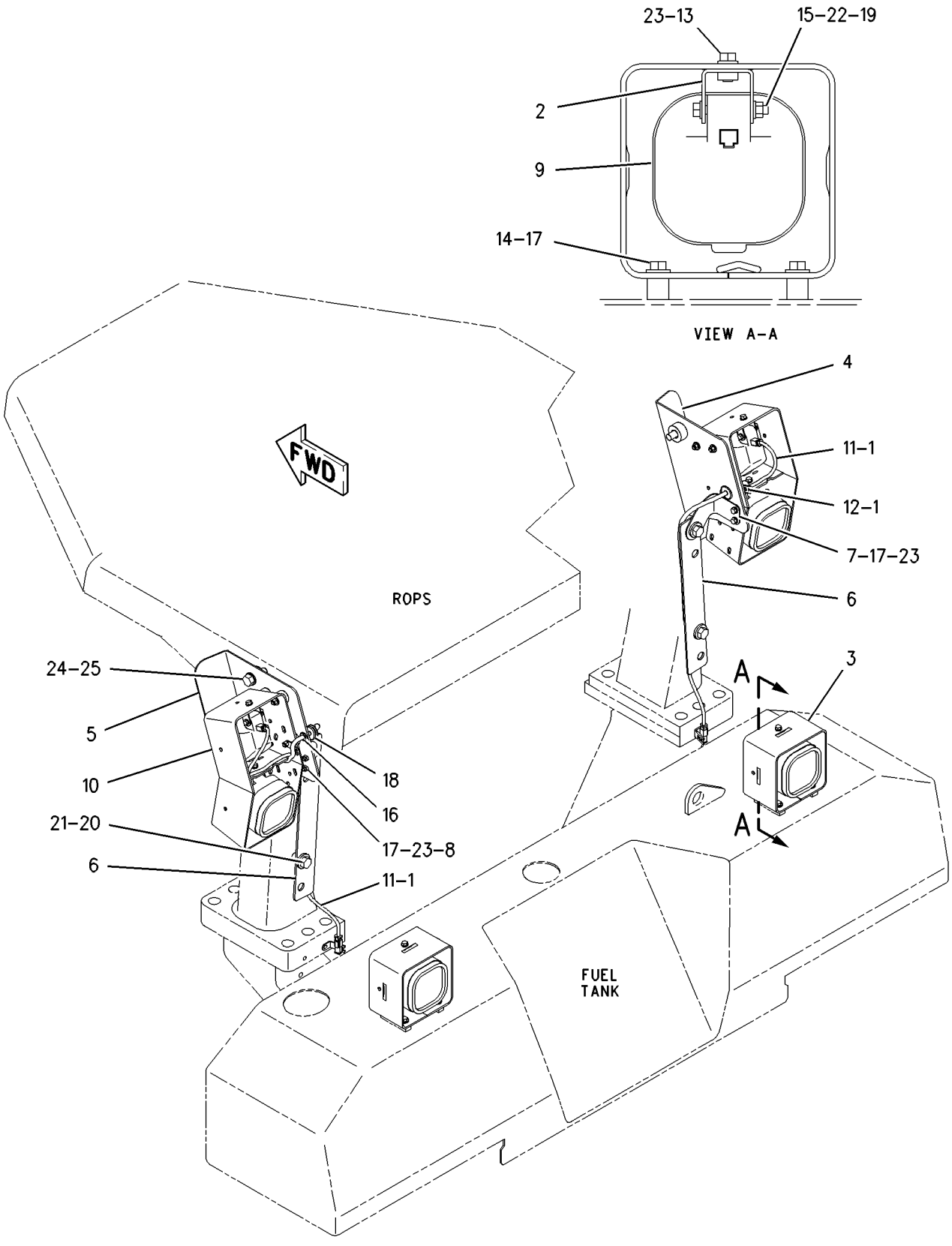

GRAPHIC #1 g00764956

160-2710 LIGHTING AR–RIPPER

S/N: AKA1-UP

SMCS-1429 **i01488837**

NOTE	REF NO	GRAPHIC REF	PART NUMBER	QTY	PART NAME 1 2 3 4 5 6 (PRODUCT LEVEL)	SEE PAGE
	1	1	**9X-6772**	7	STRAP-CABLE	
Y	2	1	**147-0319**	1	LAMP GP-FLOOD (24 VOLT)(SUSPENDED)	231
	3	1	**160-8769**	1	HARNESS AS	
	4	1	**164-8101**	1	BRACKET	
	5	1	**4P-8134**	3	CLIP	
	6	1	**5M-3062**	1	BOLT (3/8-16X0.75 IN)	
	7	1	**5P-1075**	1	WASHER-HARD (10.2X22.5X3MM THK)	
	8	1	**5P-2955**	1	BOLT (5/16-18X2.50 IN)	
	9	1	**6V-8189**	1	NUT (5/16-18 THD)	
	10	1	**8T-4224**	2	WASHER-HARD (8.8X16X2MM THK)	
	11	1	**3E-8857**	1	SWITCH AS (AIR CONDITIONING)	
		1	**3E-8790**	1	ACTUATOR-ROCKER	

Y-SEPARATE ILLUSTRATION

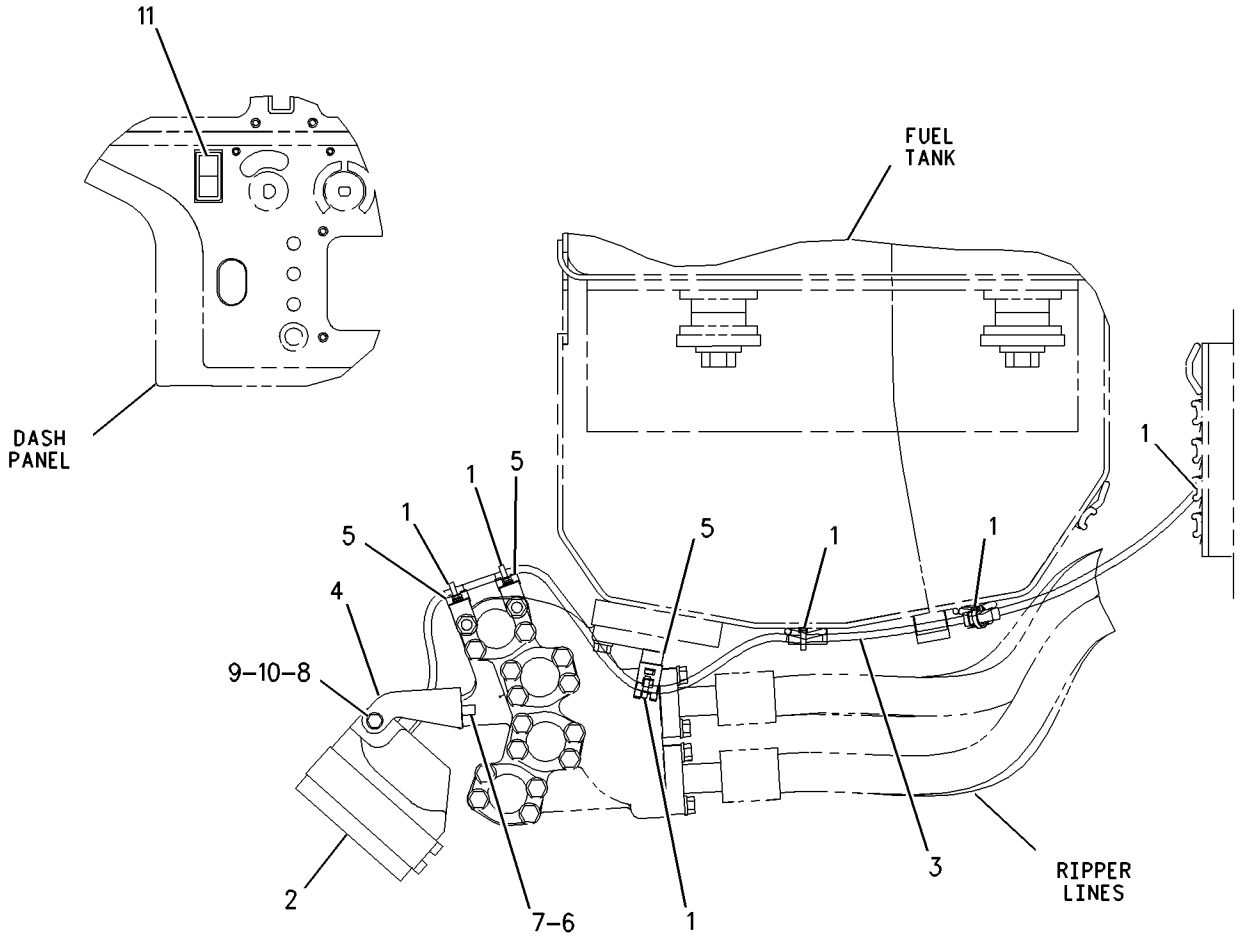

RIGHT SIDE VIEW

GRAPHIC #1 g00753172

152-8427 LIGHTING GP

S/N: AKA1-UP

PART OF 160-1809 LIGHTING AR

SMCS-1429 **i01223537**

NOTE	REF NO	GRAPHIC REF	PART NUMBER	QTY	PART NAME 1 2 3 4 5 6 (PRODUCT LEVEL)	SEE PAGE
	1	1	**9W-4361**	4	MOUNT	
	2	1	**8T-4896**	2	WASHER-HARD (2.5MM THK)	
	3	1	**8T-4224**	4	WASHER-HARD (8.8X16X2MM THK)	
Y	4	1	**147-0319**	2	LAMP GP-FLOOD (24 VOLT)(SUSPENDED)	231
	5	1	**5M-3062**	2	BOLT (3/8-16X.75IN)	
	6	1	**5P-1075**	8	WASHER-HARD (3MM THK)	
	7	1	**5P-2955**	2	BOLT (5/16-18X2.50IN)	
	8	1	**6V-8189**	2	NUT (5/16-18 THD)	
	9	1	**6V-8801**	8	NUT (3/8-16 THD)	
	10	1	**114-9363**	1	GUARD AS	
	11	1	**7T-1099**	2	LINK	
	12	1	**111-8314**	2	BRACKET AS	

Y-SEPARATE ILLUSTRATION

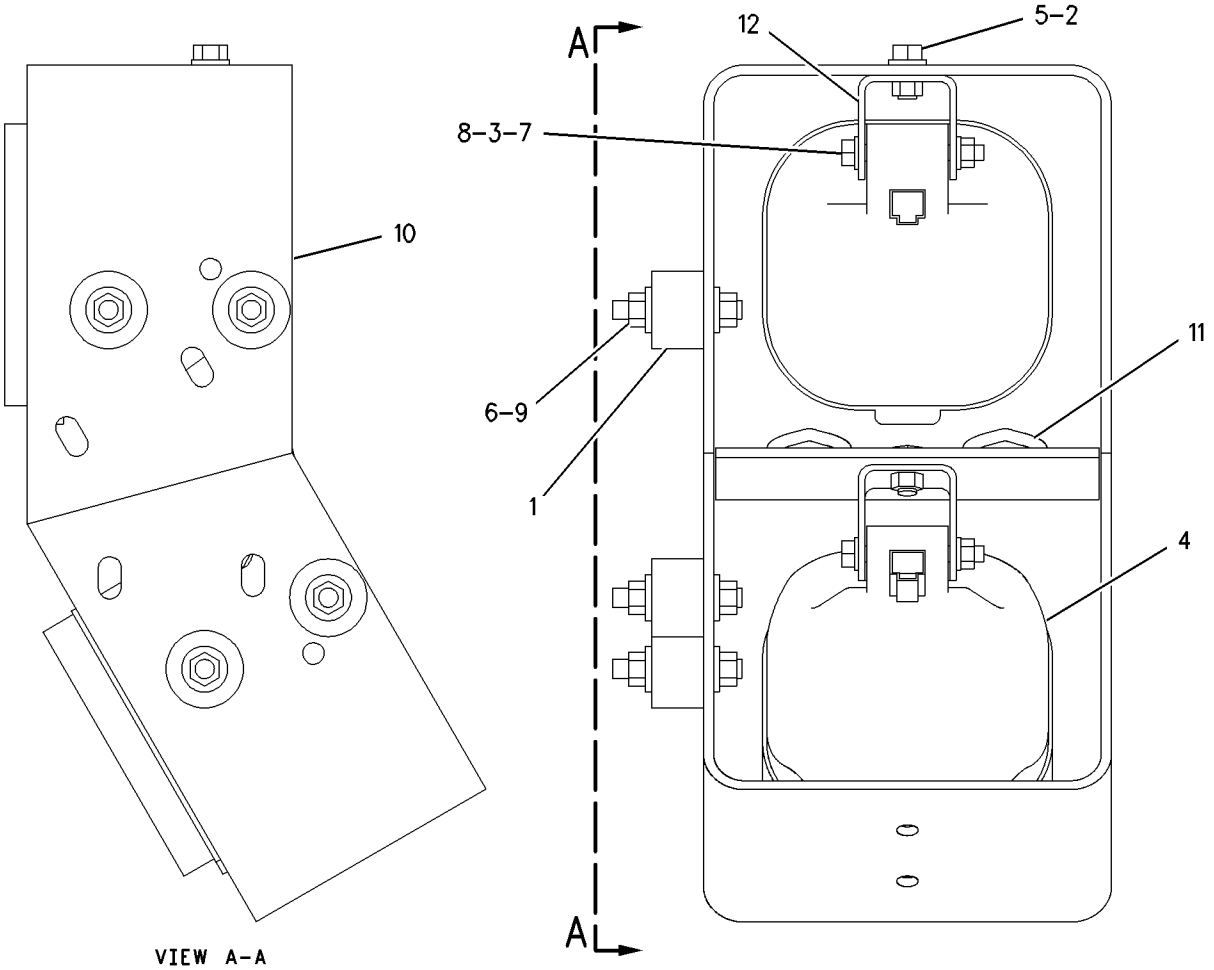

GRAPHIC #1 g00651682

167-1885 LIGHTING GP

S/N: AKA1-UP; CXB1-UP; BHR1-UP; BHW1-UP

PART OF 159-7590 LIGHTING GP-4 LAMP, 159-0068 LIGHTING GP-FRONT

SMCS-1429 **i01434600**

NOTE	REF NO	GRAPHIC REF	PART NUMBER	QTY	PART NAME 1 2 3 4 5 6 (PRODUCT LEVEL)	SEE PAGE
	1	1	**9W-4361**	4	MOUNT	
	2	1	**111-8314**	1	BRACKET AS	
Y	3	1	**147-0319**	1	LAMP GP-FLOOD (24 VOLT)(SUSPENDED)	231
	4	1	**167-1884**	1	GUARD	
	5	1	**5M-3062**	1	BOLT (3/8-16X0.75 IN)	
	6	1	**5P-1075**	11	WASHER-HARD (10.2X22.5X3MM THK)	
	7	1	**5P-2955**	1	BOLT (5/16-18X2.50 IN)	
	8	1	**6V-8189**	1	NUT (5/16-18 THD)	
	9	1	**6V-8801**	8	NUT (3/8-16 THD)	

Y-SEPARATE ILLUSTRATION

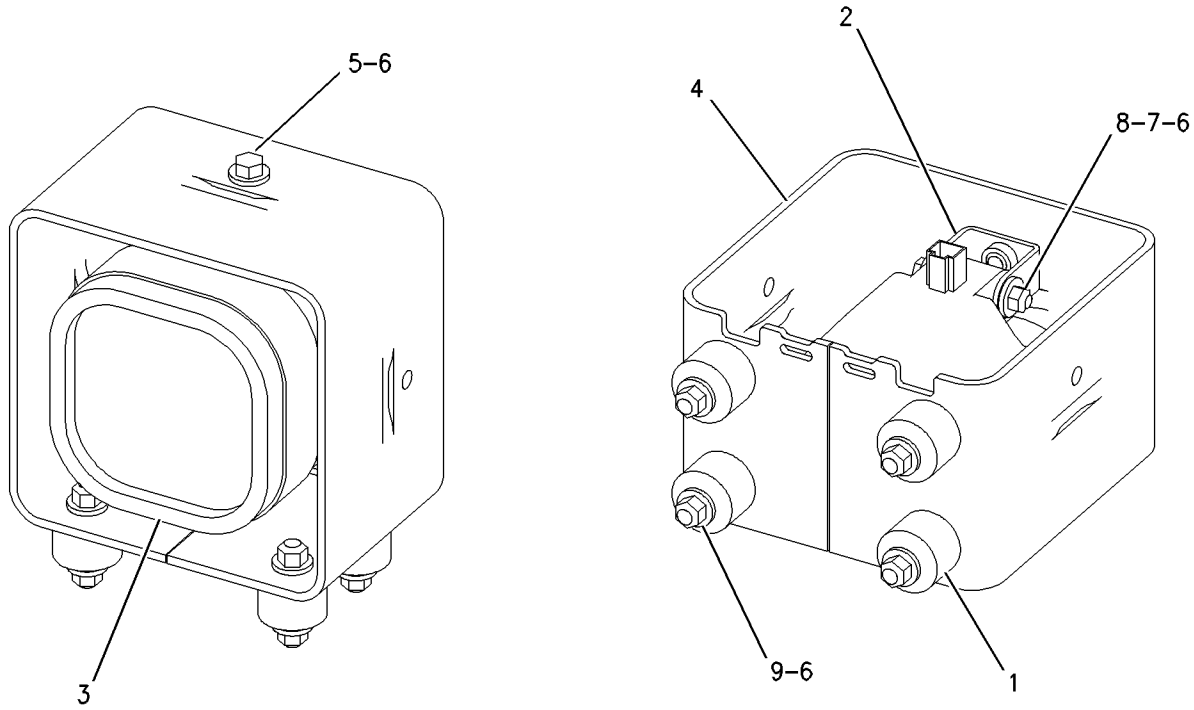

GRAPHIC #1 g00726610

MEMORANDA

ELECTRICAL AND STARTING SYSTEM

159-7590 LIGHTING GP-4 LAMP

S/N: AKA1-UP

PART OF 157-0819 CHASSIS AR

SMCS-1429 **i01486704**

NOTE	REF NO	GRAPHIC REF	PART NUMBER	QTY	PART NAME 1 2 3 4 5 6 (PRODUCT LEVEL)	SEE PAGE
	1	1	**115-1024**	1	BRACKET AS-RH	
	2	1	**1F-0750**	2	NUT-WELD (3/8-16 THD)	
	3	1	**167-1884**	2	GUARD	
Y	4	1	*167-1885*	2	LIGHTING GP	242
	5	1	**8T-4994**	2	WASHER-HARD (20X36.5X3.5MM THK)	
	6	1	**115-1025**	1	BRACKET AS-LH	
	7	1	**1F-0750**	2	NUT-WELD (3/8-16 THD)	
	8	1	**159-7615**	2	HARNESS AS	
		1	**102-8802**	1	KIT-RECEPTACLE (2 PIN)	
					(INCLUDES RECEPTACLE AS & WEDGE)	
		1	**9G-3695**	2	PLUG (GROMMET SEALING)	
		1	**155-2270**	3	KIT-CONNECTING PLUG (2 PIN)	
					(INCLUDES PLUG AS, WEDGE & INTERFACE SEAL)	
	9	1	**9X-6772**	10	STRAP-CABLE	
	10	1	**5P-1075**	8	WASHER-HARD (10.2X22.5X3MM THK)	
	11	1	**129-8331**	2	PLATE AS	
					(EACH INCLUDES)	
	12	1	**7T-1099**	4	LINK	
	13	1	**7X-0582**	4	WASHER-HARD (20X44.5X6MM THK)	
	14	1	**8T-9399**	2	BOLT (3/4-10X2.25 IN)	
	15	1	**130-3233**	1	PLATE-LH	
	16	1	**5M-3062**	2	BOLT (3/8-16X0.75 IN)	
	17	1	**130-3232**	1	PLATE-RH	
	18	1	**5P-2955**	2	BOLT (5/16-18X2.50 IN)	
	19	1	**6V-8189**	2	NUT (5/16-18 THD)	
Y	20	1	**147-0319**	2	LAMP GP-FLOOD (24 VOLT)(SUSPENDED)	231
	21	1	**8P-8540**	2	GROMMET	
	22	1	**7X-0365**	4	BOLT (3/4-10X1.5 IN)	
	23	1	**5S-7379**	12	BOLT (3/8-16X0.875 IN)	
	24	1	**8T-4224**	4	WASHER-HARD (8.8X16X2MM THK)	
	25	1	**8T-4896**	6	WASHER-HARD (10.2X18.5X2.5MM THK)	
	26	1	**111-8314**	2	BRACKET AS	
					(EACH INCLUDES)	
		1	**1F-0750**	1	NUT-WELD (3/8-16 THD)	
	27	1	**6H-4005**	2	GROMMET	

Y-SEPARATE ILLUSTRATION

159-7590 **LIGHTING GP-4 LAMP** ***(contd.)*** **i01486704**

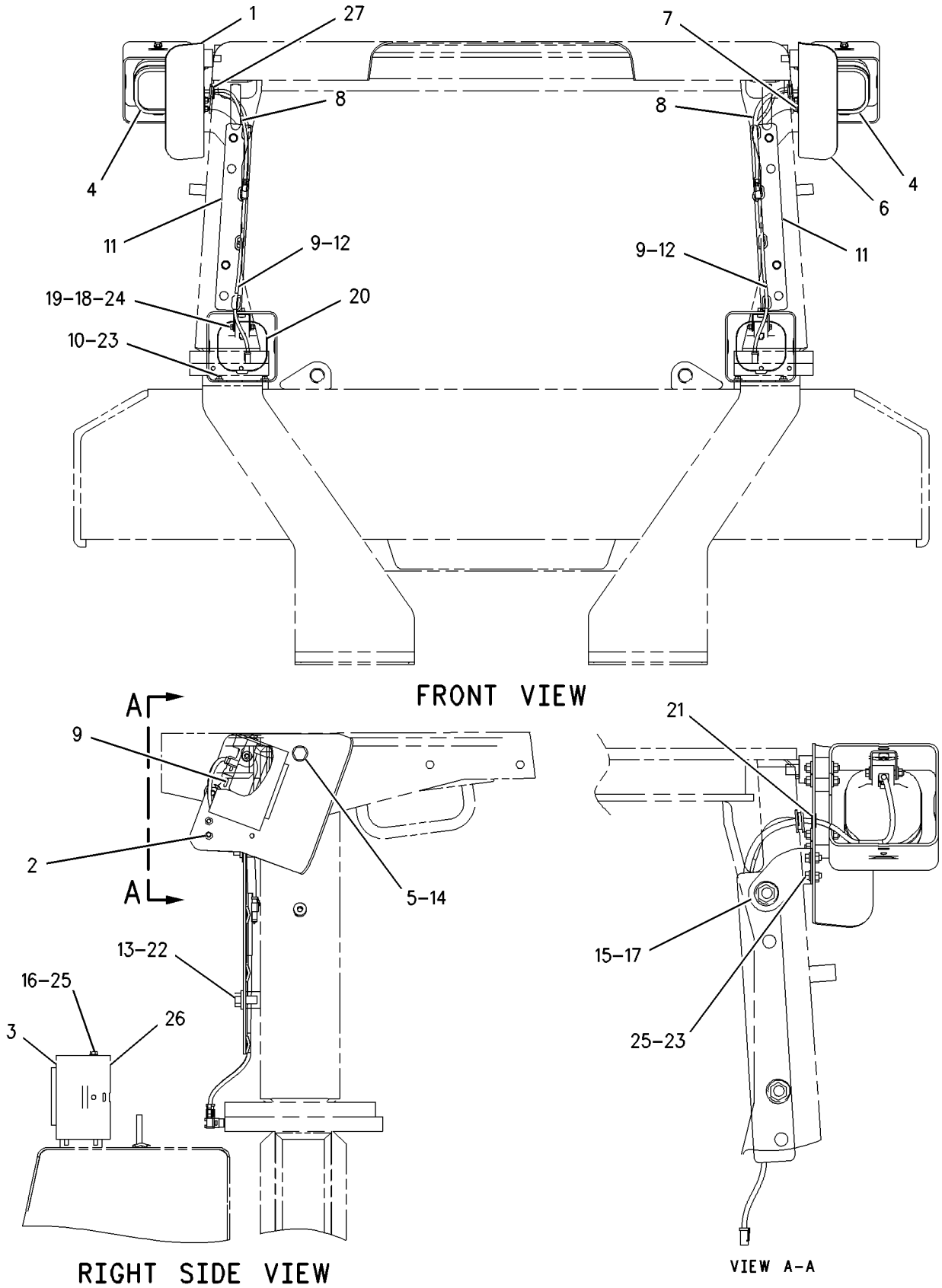

GRAPHIC #1 g00763625

125-2001 LIGHTING GP-FLOOD

S/N: AKA1-UP

PART OF 102-4395 LIGHTING GP-FRONT

SMCS-1429 **i01011450**

NOTE	REF NO	GRAPHIC REF	PART NUMBER	QTY	PART NAME 1 2 3 4 5 6 (PRODUCT LEVEL)	SEE PAGE
	1	1	**9W-4361**	4	MOUNT	
	2	1	**111-8314**	1	BRACKET AS	
		1	**1F-0750**	1	NUT-WELD (3/8-16 THD)	
	3	1	**114-2368**	1	GUARD AS	
		1	**7T-1099**	1	LINK	
Y	4	1	**147-0319**	1	LAMP GP-FLOOD	231
	5	1	**5M-3062**	1	BOLT (3/8-16X.75IN)	
	6	1	**5P-1075**	9	WASHER-HARD (3MM THK)	
	7	1	**5P-2955**	1	BOLT (5/16-18X2.50IN)	
	8	1	**6V-8189**	1	NUT (5/16-18 THD)	
	9	1	**6V-8801**	8	NUT (3/8-16 THD)	
	10	1	**8T-4224**	2	WASHER-HARD (2MM THK)	

Y-SEPARATE ILLUSTRATION

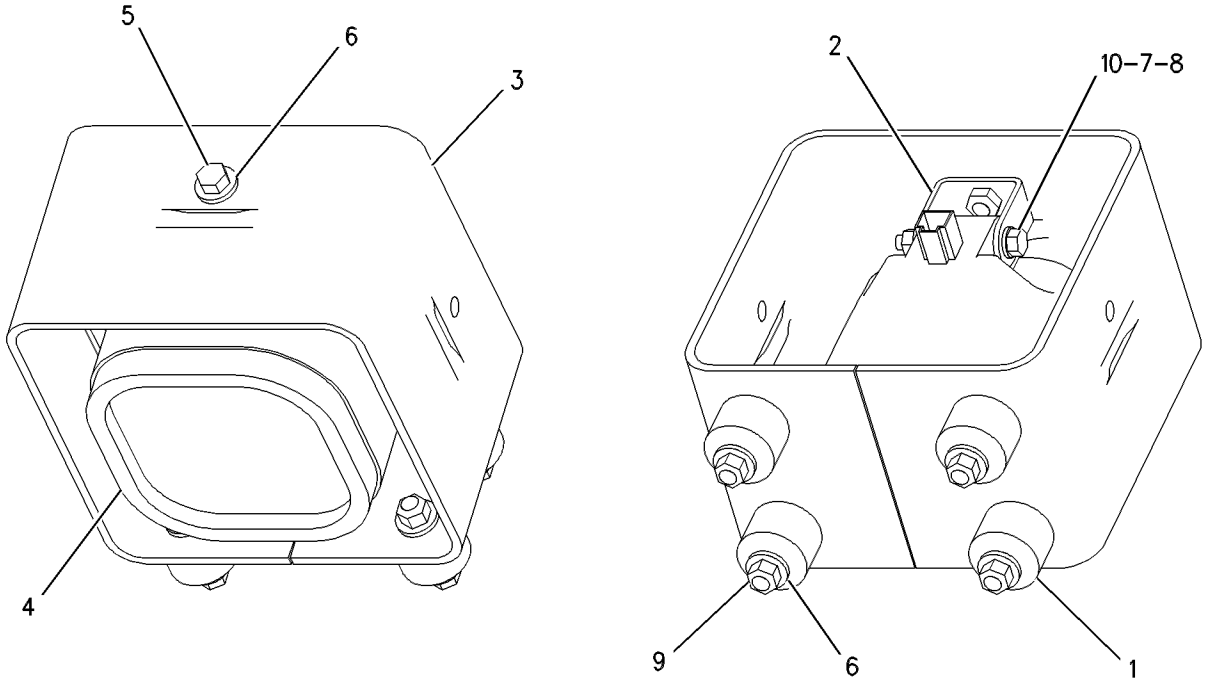

GRAPHIC #1 g00546282

183-4652 LIGHTING GP-FLOOD

S/N: AKA1-UP

PART OF 160-0262 LIGHTING AR

SMCS-1429 **i01478880**

NOTE	REF NO	GRAPHIC REF	PART NUMBER	QTY	PART NAME 1 2 3 4 5 6 (PRODUCT LEVEL)	SEE PAGE
	1	1	**9W-4361**	4	MOUNT	
	2	1	**111-8314**	2	BRACKET AS	
Y	3	1	**147-0319**	2	LAMP GP-FLOOD (24 VOLT)(SUSPENDED)	231
	4	1	**183-4503**	1	GUARD AS	
	5	1	**5M-3062**	2	BOLT (3/8-16X0.75 IN)	
	6	1	**5P-1075**	8	WASHER-HARD (10.2X22.5X3MM THK)	
	7	1	**5P-2955**	2	BOLT (5/16-18X2.50 IN)	
	8	1	**6V-8189**	2	NUT (5/16-18 THD)	
	9	1	**6V-8801**	8	NUT (3/8-16 THD)	
	10	1	**8T-4224**	4	WASHER-HARD (8.8X16X2MM THK)	
	11	1	**8T-4896**	2	WASHER-HARD (10.2X18.5X2.5MM THK)	

Y-SEPARATE ILLUSTRATION

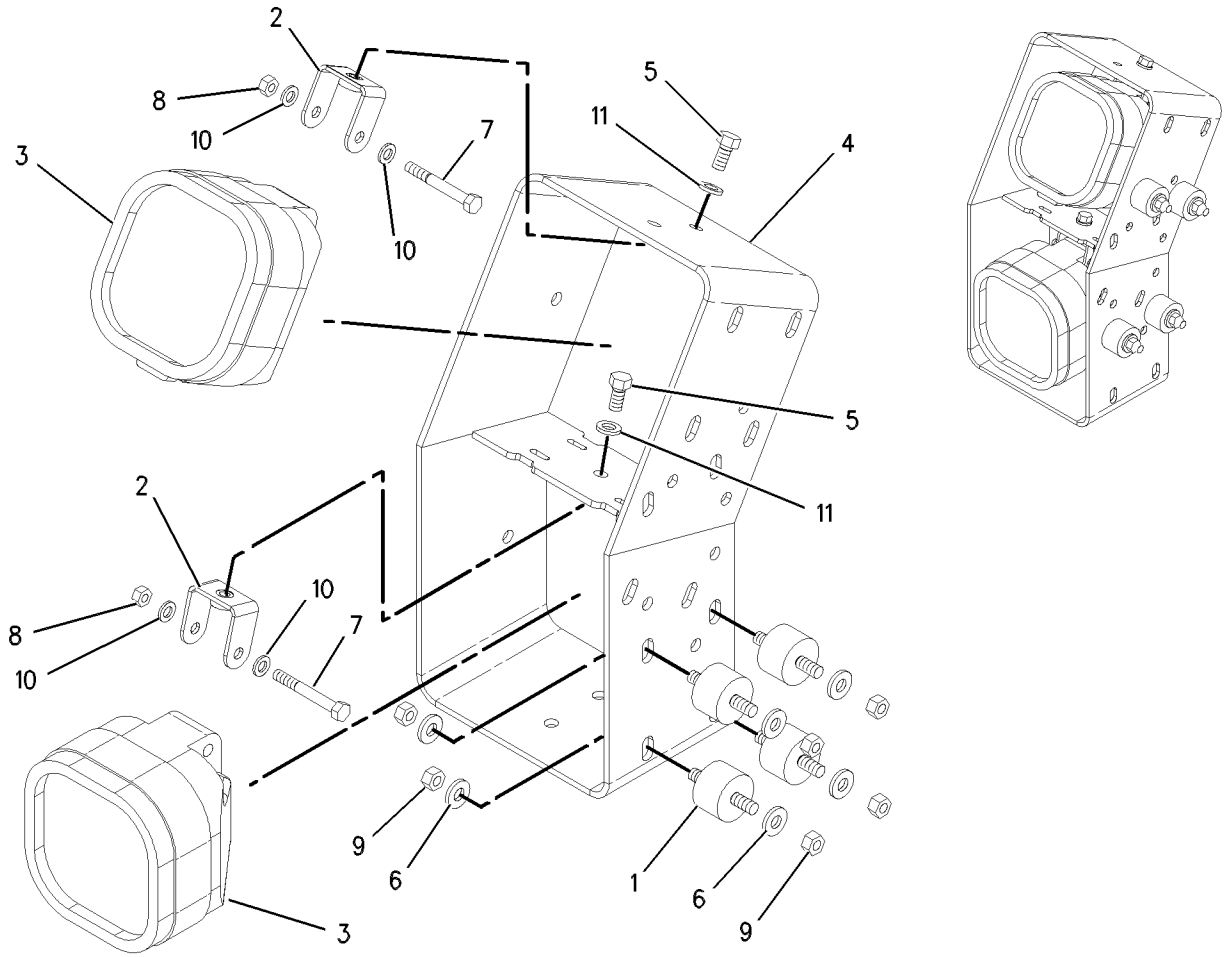

GRAPHIC #1 g00645895

ELECTRICAL AND STARTING SYSTEM

186-3718 LIGHTING GP-FLOOD

S/N: AKA1-UP

2 LAMP

SMCS-1429 **i01489068**

NOTE	REF NO	GRAPHIC REF	PART NUMBER	QTY	PART NAME 1 2 3 4 5 6 (PRODUCT LEVEL)	SEE PAGE
	1	1	**5P-1075**	2	WASHER-HARD (10.2X22.5X3MM THK)	
	2	1	**8C-5607**	12	MOUNT (ISOLATION)	
	3	1	**8C-5608**	6	SPACER (6.5X9.5X25.4MM THK)	
	4	1	**9X-6165**	6	WASHER (6.5X22X2.5MM THK)	
	5	1	**9X-6772**	2	STRAP-CABLE	
	6	1	**132-6545**	2	HARNESS AS (SIDE LIGHTS)	
	7	1	**134-2804**	1	BRACKET AS-RH	
		1	**1F-0750**	1	NUT-WELD (3/8-16 THD)	
		1	**6V-2360**	2	WASHER-HARD (20X32X3MM THK)	
	8	1	**134-2805**	1	BRACKET AS-LH	
		1	**1F-0750**	1	NUT-WELD (3/8-16 THD)	
		1	**6V-2360**	2	WASHER-HARD (20X32X3MM THK)	
	9	1	**134-2967**	2	GUARD	
	10	1	**134-4447**	2	BRACKET AS	
		1	**1F-0750**	2	NUT-WELD (3/8-16 THD)	
	11	1	**134-4492**	2	PLATE	
Y	12	1	**135-5549**	2	LAMP GP-FLOOD (24 VOLT)(VERTICAL)	230
	13	1	**4L-6454**	6	BOLT (3/8-16X1 IN)	
	14	1	**4P-8134**	2	CLIP	
	15	1	**5C-6565**	4	BOLT (1/2-13X1.25 IN)	
	16	1	**5P-1076**	4	WASHER-HARD (13.5X30X4MM THK)	
M	17	1	**6V-7743**	6	LOCKNUT	
M	18	1	**6V-7744**	2	LOCKNUT (M10X1.5 THD)	
	19	1	**8T-4121**	2	WASHER-HARD (11X21X2.5MM THK)	
	20	1	**8T-4896**	4	WASHER-HARD (10.2X18.5X2.5MM THK)	
M	21	1	**9X-2480**	6	BOLT (M6X1.0X45MM)	
	22	1	**9X-8256**	6	WASHER (6.6X12X2MM THK)	

M-METRIC PART
Y-SEPARATE ILLUSTRATION

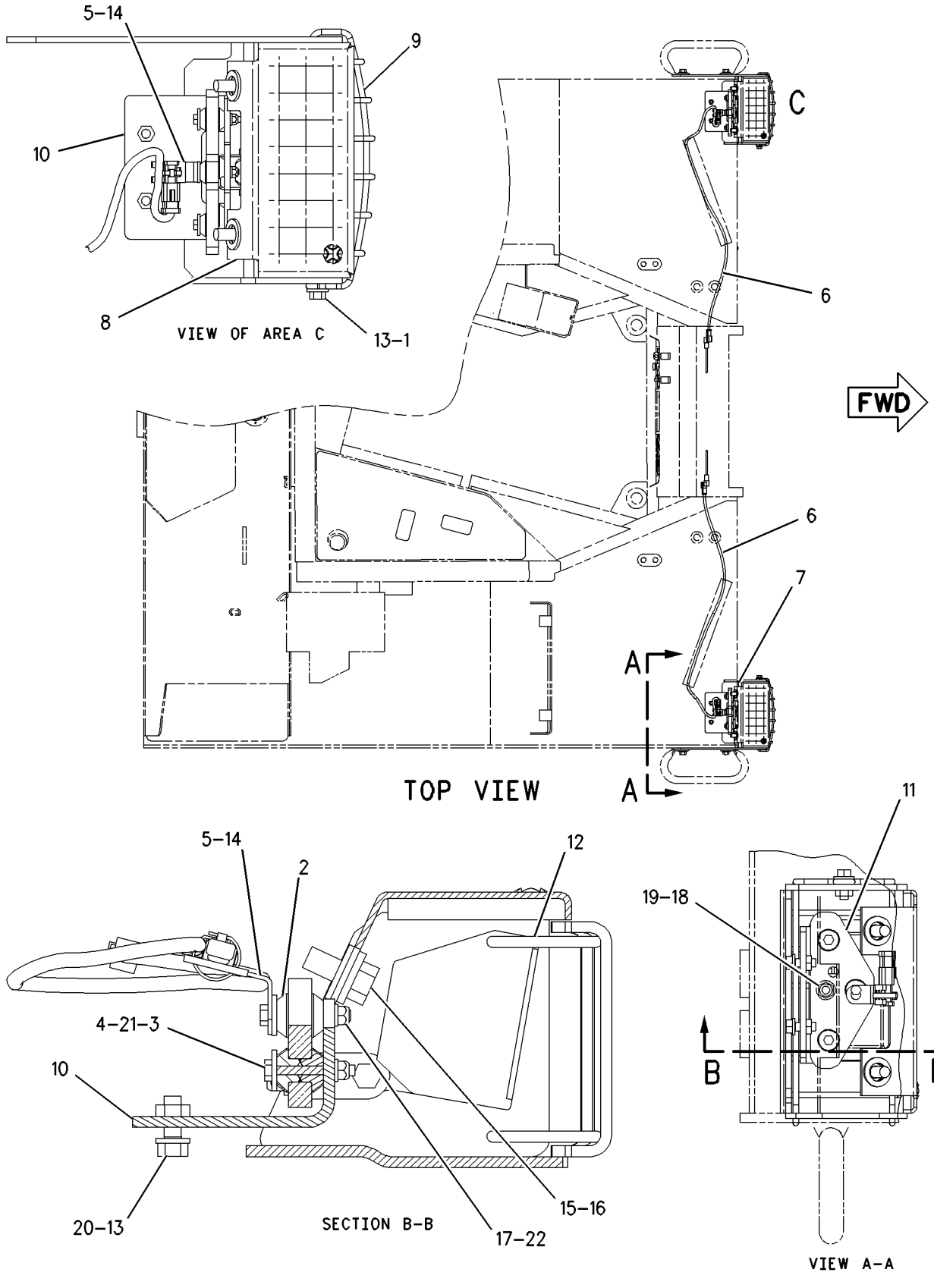

GRAPHIC #1 g00680386

102-4395 LIGHTING GP-FRONT

S/N: AKA1-UP
2 LAMP
FOR USE WITH BULLDOZER LIFT CYLINDERS

SMCS-1429 **i01441090**

NOTE	REF NO	GRAPHIC REF	PART NUMBER	QTY	PART NAME 1 2 3 4 5 6 (PRODUCT LEVEL)	SEE PAGE
	1	1	**5P-8522**	2	GROMMET	
					(FOR USE ON D10R, D11R, & D11R CARRY DOZER)	
	2	1	**9D-3768**	2	GROMMET (14.29MM ID) (14.29MM ID)	
					(FOR USE ON D9R)	
	3	1	**5P-8522**	2	GROMMET (9.5MM ID)	
					(FOR USE ON D8R)	
YC	4	1	*125-2001*	2	LIGHTING GP-FLOOD	246
	5	1	**9X-6772**	2	STRAP-CABLE	

C-CHANGE FROM PREVIOUS TYPE
Y-SEPARATE ILLUSTRATION

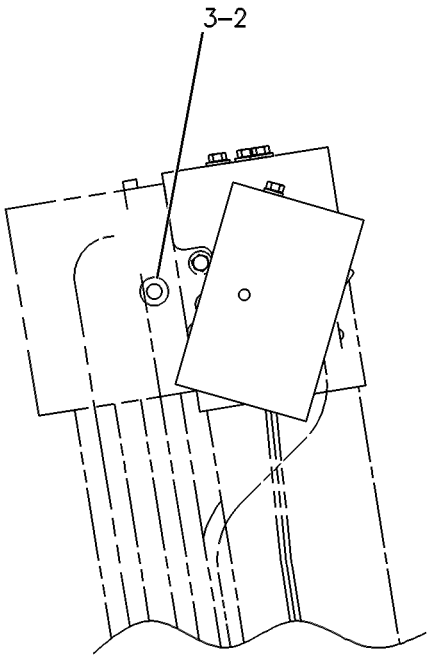

RIGHT SIDE VIEW

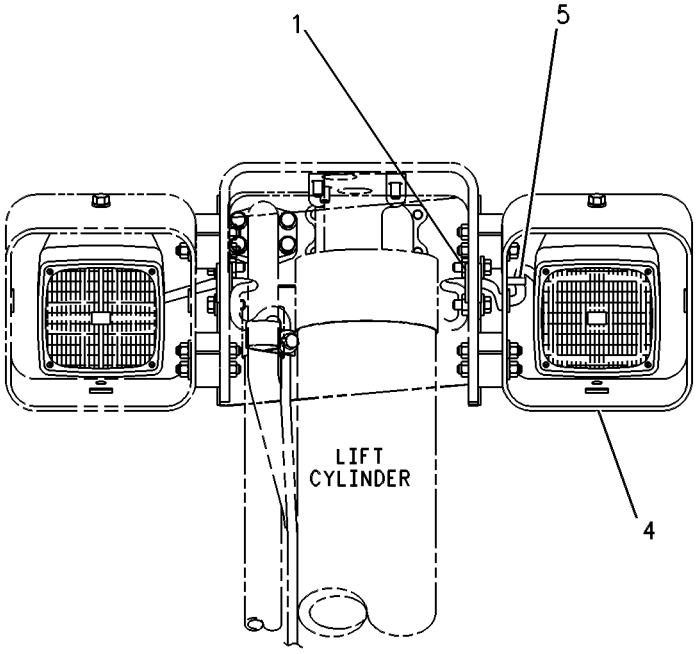

FRONT VIEW

GRAPHIC #1 g00453511

MEMORANDA

159-0068 LIGHTING GP-FRONT

S/N: AKA1-UP; CXB1-UP; BHR1-UP; BHW1-UP

PART OF 159-8377 BULLDOZER AR, 159-1628 BULLDOZER AR-SEMI-UNIVERSAL, 159-1629 BULLDOZER AR-UNIVERSAL

SMCS-1429 **i01446520**

NOTE	REF NO	GRAPHIC REF	PART NUMBER	QTY	PART NAME 1 2 3 4 5 6 (PRODUCT LEVEL)	SEE PAGE
	1	1	**5P-8522**	2	GROMMET	
	2	1	**6K-4934**	4	CLIP	
	3	1	**6K-4935**	4	BRACKET	
	4	1	**6S-4039**	2	GROMMET	
	5	1	**9X-6772**	8	STRAP-CABLE	
	6	1	**151-4854**	2	HARNESS AS	
					(EACH INCLUDES)	
		1	**155-2270**	2	KIT-CONNECTING PLUG (2 PIN)	
					(EACH INCLUDES PLUG AS, WEDGE & SEAL INTERFACE)	
		1	**102-8802**	2	KIT-RECEPTACLE (2 PIN)	
					(EACH INCLUDES RECEPTACLE AS & WEDGE)	
Y	7	1	*167-1885*	2	LIGHTING GP	242
	8	1	**4D-7794**	6	CLIP	
	9	1	**4L-6454**	6	BOLT (3/8-16X1 IN)	
	10	1	**5P-1075**	8	WASHER-HARD (10.2X22.5X3MM THK)	
	11	1	**6V-8801**	6	NUT (3/8-16 THD)	
	12	1	**8T-4896**	4	WASHER-HARD (10.2X18.5X2.5MM THK)	

Y-SEPARATE ILLUSTRATION

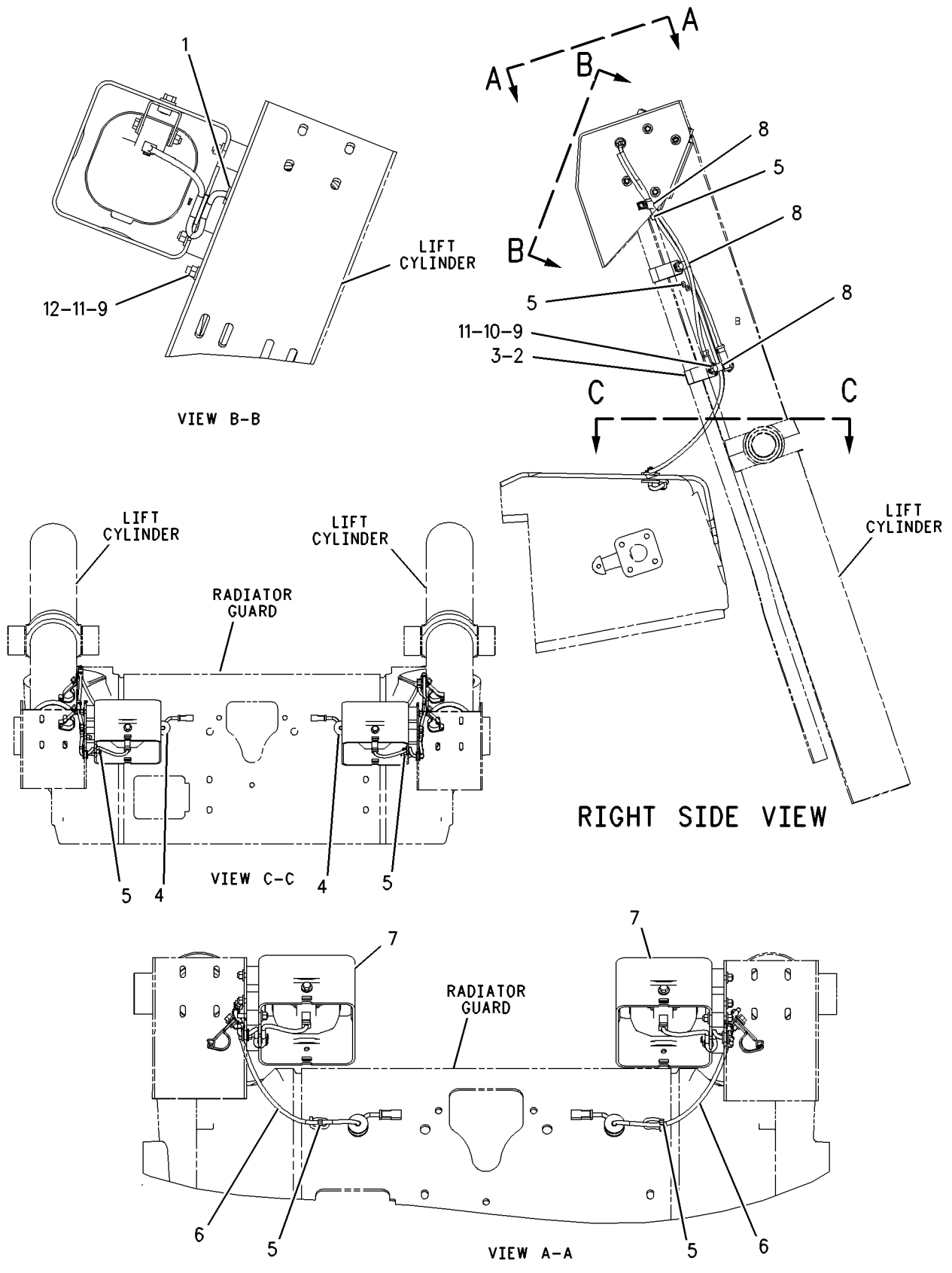

GRAPHIC #1

g00758871

168-0369 MODULE GP-DISPLAY

S/N: AKA1-UP

DISPLAYS THE GEAR, RPM & WARNING INDICATORS

PART OF 156-1667 INSTRUMENT GP, 156-0244 INSTRUMENT GP-CAB

SMCS-7490 **i01434433**

NOTE	REF NO	GRAPHIC REF	PART NUMBER	QTY	PART NAME 1 2 3 4 5 6 (PRODUCT LEVEL)	SEE PAGE
	1	1	**102-8805**	1	KIT-RECEPTACLE (6 PIN)	
					(INCLUDES RECEPTACLE AS & WEDGE)	
	2	1	**3E-3383**	1	WEDGE-RECEPTACLE LOCK	
	3	1	**8T-8729**	6	PIN-CONNECTOR	
	4	1	**179-6874**	1	CONTROL AS-ELECTRONIC	

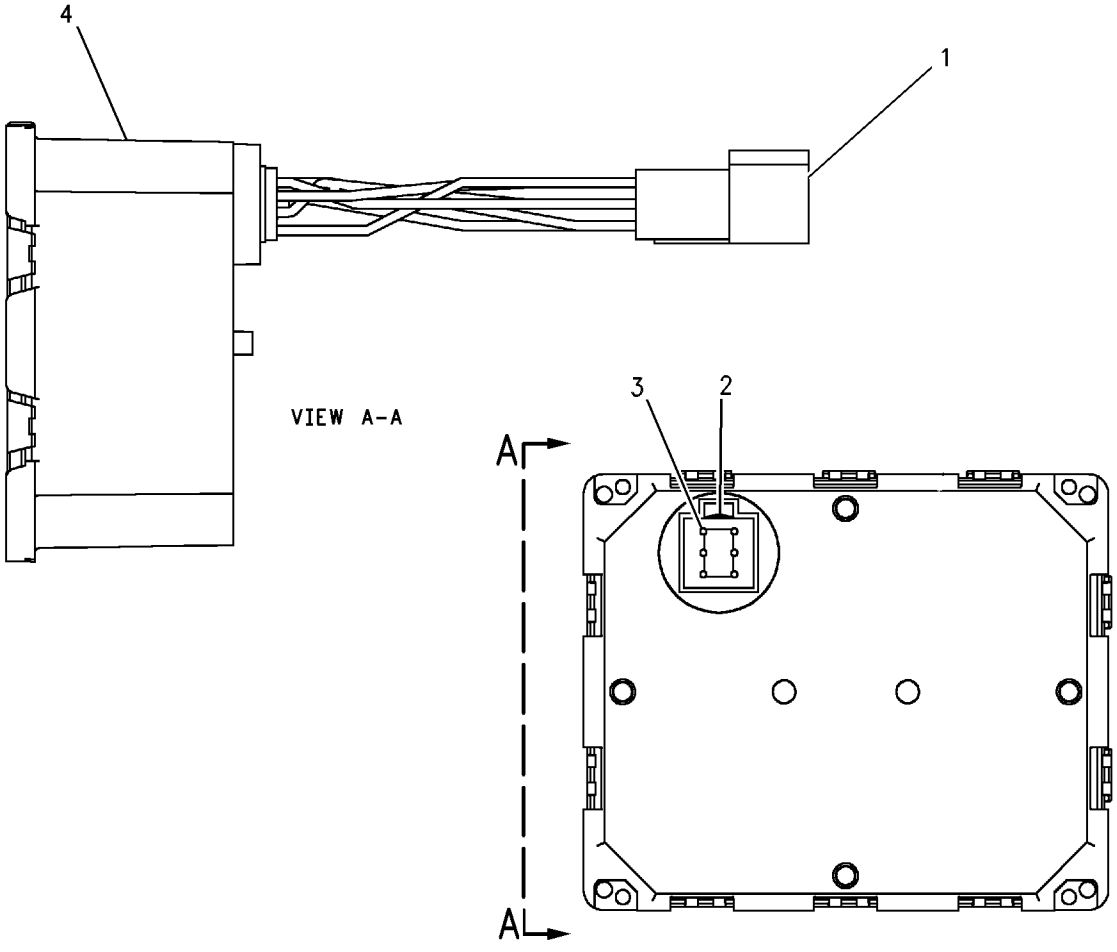

GRAPHIC #1 g00638395

MEMORANDA

175-7017 PANEL GP-RELAY

S/N: AKA1-UP

PART OF 159-9264 WIRING GP-PLATFORM

SMCS-1422 **i01498042**

NOTE	REF NO	GRAPHIC REF	PART NUMBER	QTY	PART NAME 1 2 3 4 5 6 (PRODUCT LEVEL)	SEE PAGE
	1	1	**7K-1181**	6	STRAP-CABLE	
	2	1	**9W-1441**	11	FUSE (15 AMP)	
	3	1	**9W-1442**	5	FUSE (10 AMP)	
	4	1	**9W-1446**	3	FUSE (20 AMP)	
	5	1	**107-0799**	1	FUSE (5 AMP)	
	6	1	**125-1302**	1	SWITCH GP-MAGNETIC	
	7	1	**159-4698**	1	FILM-IDENTIFICATION	
Y	8	1	**167-0138**	1	SWITCH GP-MAGNETIC	285
	9	1	**171-2213**	1	CIRCUIT BREAKER AS (135 AMP)	
		1	**1H-3244**	2	LOCKWASHER	
		1	**6V-8187**	2	NUT (1/4-28 THD)	
		1	**8T-4205**	2	WASHER-HARD (7.2X14.5X2MM THK)	
	10	1	**172-4863**	1	JUNCTION BLOCK	
	11	1	**175-7018**	1	PANEL AS	
		1	**5D-9629**	1	ROD	
M		1	**6V-9632**	3	NUT-WELD (M6X1 THD)	
		1	**7T-1099**	3	LINK	
	12	1	**175-7020**	1	STRAP	
	13	1	**175-7021**	1	STRAP	
	14	1	**175-7022**	1	STRAP	
	15	1	**175-7023**	1	STRIP	
	16	1	**175-7024**	1	STRAP	
	17	1	**175-7025**	1	HARNESS AS	
	18	1	**175-7026**	1	FILM-INSTRUCTION	
	19	1	**190-1030**	1	BLOCK AS-FUSE (20 POLE)	
	20	1	**068-4209**	10	SCREW (8-32X0.75 IN)	
	21	1	**4B-4863**	4	WASHER (4.7X11X1.2MM THK)	
	22	1	**6D-5801**	4	NUT (8-32 THD)	
	23	1	**6T-3643**	3	CIRCUIT BREAKER AS (15 AMP)	
		1	**6V-8376**	2	SCREW-MACHINE (8-32X0.25 IN)	
		1	**9B-7233**	2	LOCKWASHER	
	24	1	**6V-5645**	6	SCREW-MACHINE (10-32X0.87 IN)	
M	25	1	**6V-5683**	3	BOLT (M6X1X16MM)	
	26	1	**6V-8185**	4	NUT (1/4-20 THD)	
M	27	1	**7X-2548**	1	BOLT (M12X1.75X16MM)	
	28	1	**8T-4121**	2	WASHER-HARD (11X21X2.5MM THK)	
M	29	1	**8T-4191**	2	BOLT (M10X1.5X16MM)	
	30	1	**8T-4205**	4	WASHER-HARD (7.2X14.5X2MM THK)	
	31	1	**8T-4223**	2	WASHER-HARD (13.5X25.5X3MM THK)	
	32	1	**8T-4224**	1	WASHER-HARD (8.8X16X2MM THK)	
M	33	1	**8T-4179**	1	BOLT (M12X1.75X20MM)	

M-METRIC PART
Y-SEPARATE ILLUSTRATION

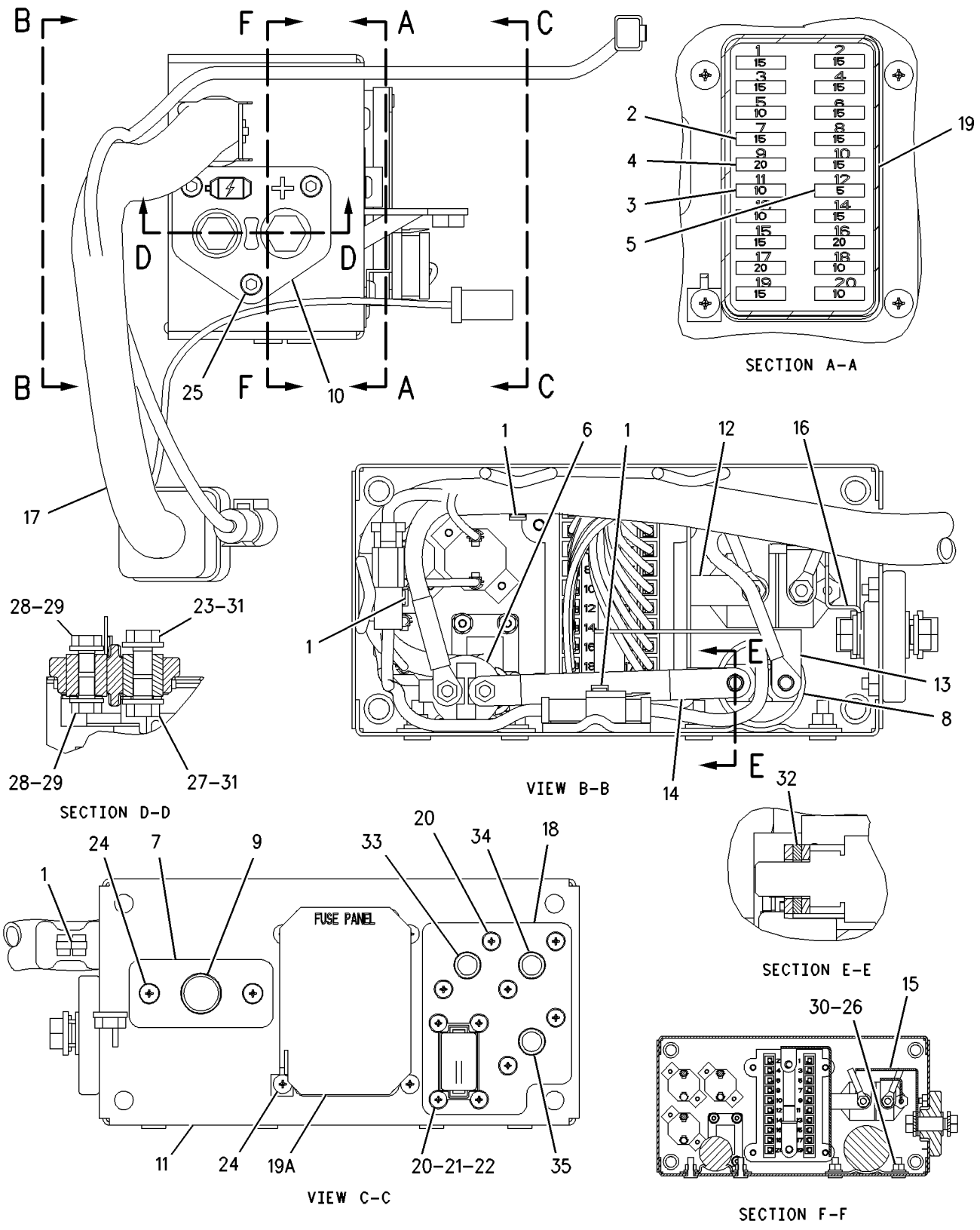

GRAPHIC #1 g00762585

102-7664 SENSOR & MTG GP-PRESSURE

S/N: BET1-UP

ATMOSPHERIC PRESSURE. MOUNTS TO LH SIDE OF CYLINDER BLOCK

PART OF 157-7195, 157-7196 ENGINE AR-COMPLETE

SMCS-1408 **i01448297**

NOTE	REF NO	GRAPHIC REF	PART NUMBER	QTY	PART NAME 1 2 3 4 5 6 (PRODUCT LEVEL)	SEE PAGE
	1	1	**103-6037**	1	ADAPTER	
	2	1	**6V-5048**	2	SEAL-O-RING (8.92MM ID)	
Y	3	1	**161-9925**	1	SENSOR GP-PRESSURE (ATMOSPHERIC)	262
	4	1	**9S-4182**	2	PLUG-O-RING	
	5	1	**0S-1588**	2	BOLT (3/8-16X1.25 IN)	
	6	1	**5M-2894**	2	WASHER-HARD (10.2X18.5X2.5MM THK)	
	7	1	**6V-3683**	1	SEAL-O-RING (23.39MM ID)	
	8	1	**8J-4351**	1	SEAL-O-RING (44.04MM ID)	
	9	1	**6V-5049**	1	SEAL-O-RING (11.89MM ID)	

Y-SEPARATE ILLUSTRATION

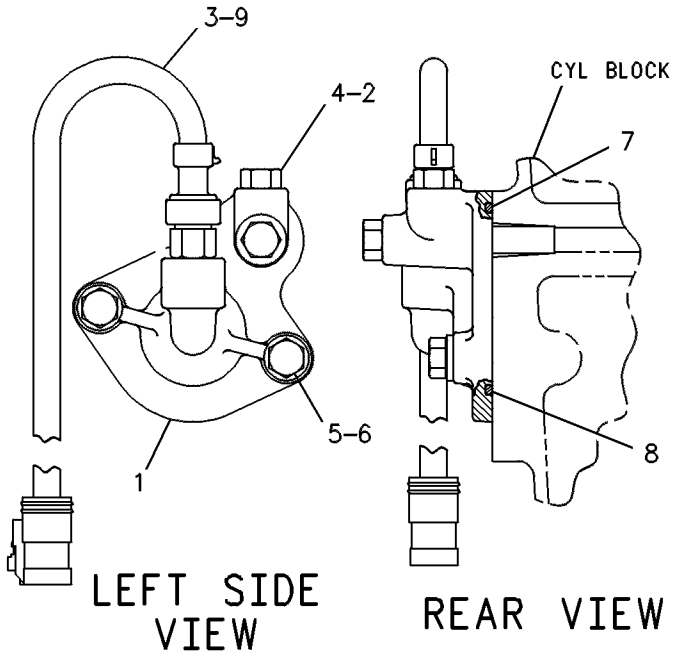

GRAPHIC #1 g00237894

147-1680 SENSOR GP-POSITION

S/N: AKA1-UP

PART OF 158-8079 PEDAL GP-GOVERNOR & BRAKE

SMCS-1408 **i01502157**

NOTE	REF NO	GRAPHIC REF	PART NUMBER	QTY	PART NAME 1 2 3 4 5 6 (PRODUCT LEVEL)	SEE PAGE
	1	1	**102-8803**	1	KIT-RECEPTACLE (3 PIN)	
					(INCLUDES RECEPTACLE AS & WEDGE)	
	2	1	**8T-8729**	3	PIN-CONNECTOR	

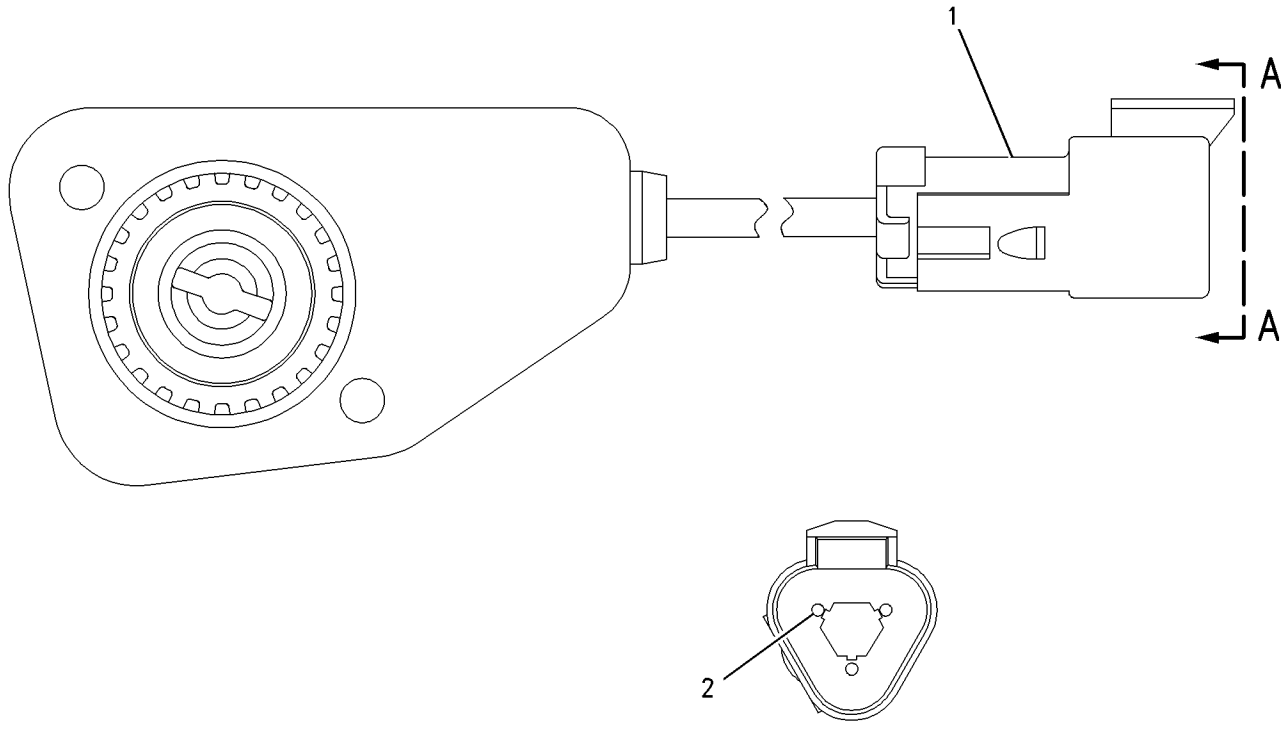

VIEW A-A

GRAPHIC #1 g00711081

160-2443 SENSOR GP-POSITION

S/N: AKA1-UP
ROTARY
PART OF 158-8079 PEDAL GP-GOVERNOR & BRAKE

SMCS-1408 **i01431988**

NOTE	REF NO	GRAPHIC REF	PART NUMBER	QTY	PART NAME 1 2 3 4 5 6 (PRODUCT LEVEL)	SEE PAGE
	1	1	**102-8803**	1	KIT-RECEPTACLE (3 PIN)	
					(INCLUDES RECEPTACLE AS & WEDGE)	
	2	1	**8T-8729**	3	PIN-CONNECTOR	
	3	1	**3E-3371**	1	WEDGE-RECEPTACLE LOCK (3 PIN)	

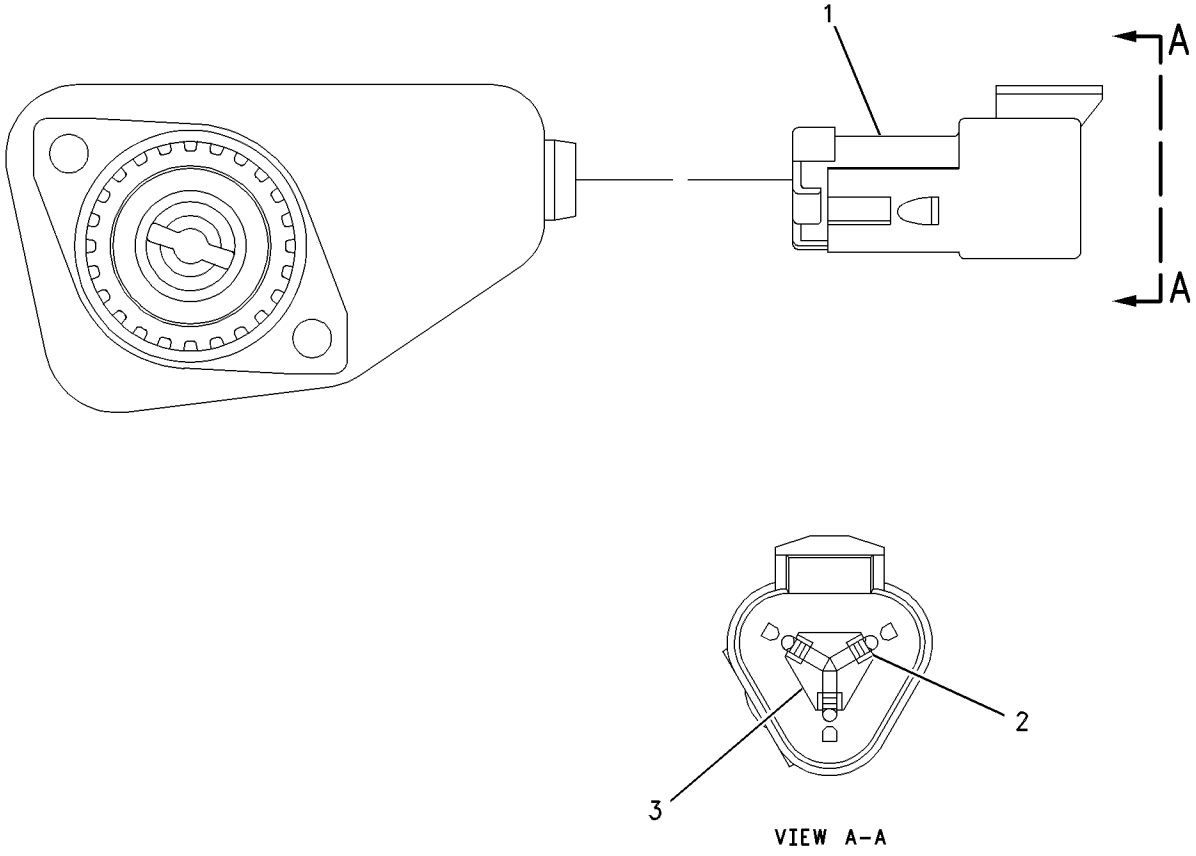

GRAPHIC #1 g00637818

161-8979 SENSOR GP-POSITION

S/N: AKA1-UP

PART OF 112-4820 CONTROL GP-STEERING & TMSN

SMCS-1408 **i01145558**

NOTE	REF NO	GRAPHIC REF	PART NUMBER	QTY	PART NAME 1 2 3 4 5 6 (PRODUCT LEVEL)	SEE PAGE
	1	1	**102-8803**	1	KIT-RECEPTACLE (3 PIN)	
					(INCLUDES RECEPTACLE AS & WEDGE)	
	2	1	**8T-8729**	3	PIN-CONNECTOR	
	3	1	**3E-3371**	1	WEDGE-RECEPTACLE LOCK	

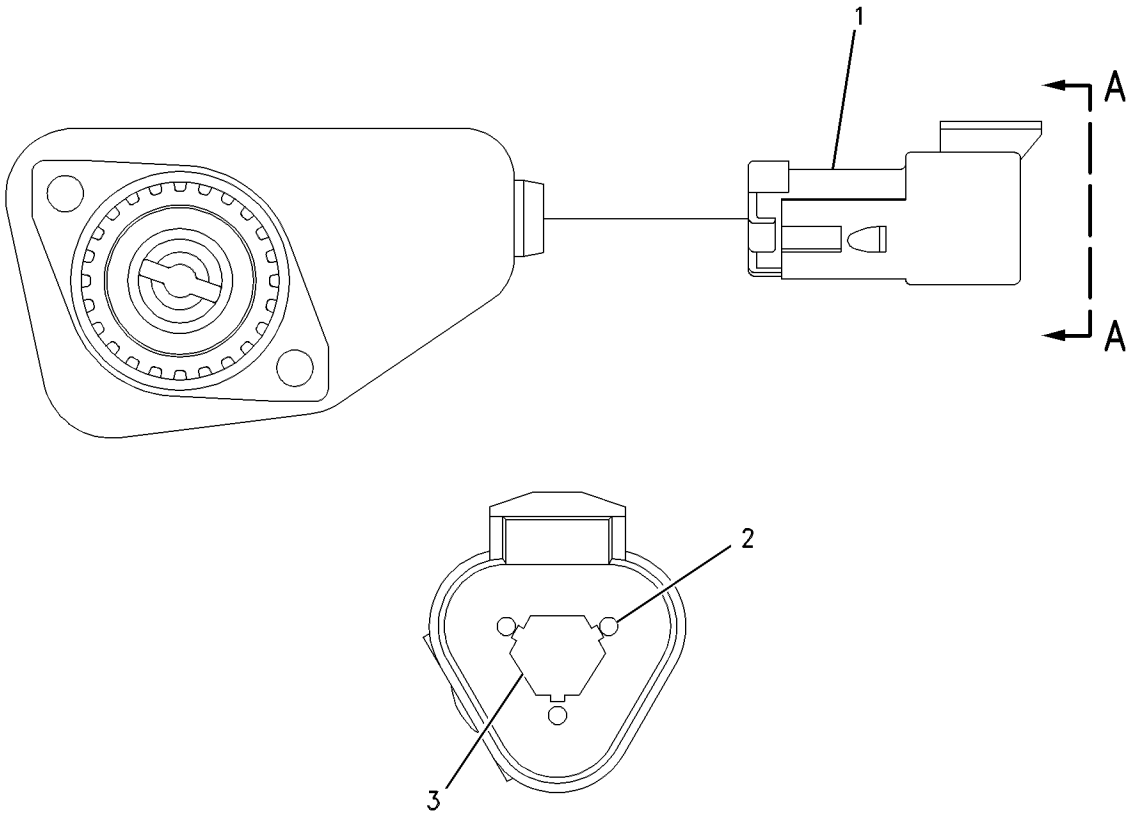

VIEW A-A

GRAPHIC #1 g00550816

161-9925 SENSOR GP-PRESSURE

S/N: BET1-UP
PART OF 102-7664 SENSOR & MTG GP-PRESSURE
FIELD REPLACEMENT ORDER 194-6722–PAGE 266

SMCS-1408 **i01448306**

NOTE	REF NO	GRAPHIC REF	PART NUMBER	QTY	PART NAME 1 2 3 4 5 6 (PRODUCT LEVEL)	SEE PAGE
BE	1	1	**9X-1813**		SLEEVE	
	2	1	**155-2260**	1	KIT-CONNECTING PLUG (3 PIN)	
					(INCLUDES PLUG AS & WEDGE)	
	3	1	**102-8813**	1	SEAL-INTERFACE	
	4	1	**3E-3368**	1	WEDGE-PLUG LOCK	
	5	1	**8T-8730**	3	SOCKET-CONNECTOR	

B-USE AS REQUIRED
E-ORDER BY THE CENTIMETER

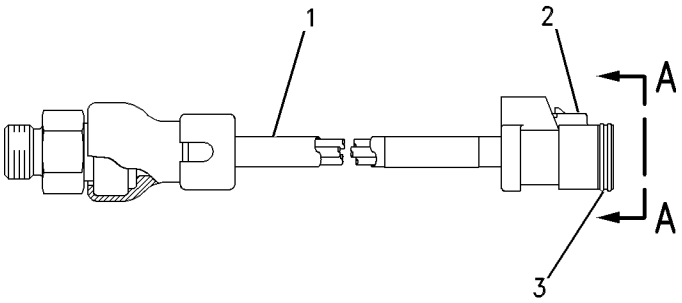

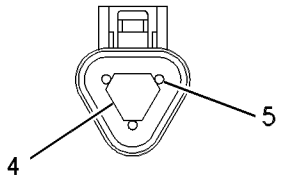

VIEW A-A

GRAPHIC #1 g00545805

161-9926 SENSOR GP-PRESSURE

S/N: AKA1-UP

PART OF 159-9263 BATTERY & WIRING GP

SMCS-1408 **i01426986**

NOTE	REF NO	GRAPHIC REF	PART NUMBER	QTY	PART NAME 1 2 3 4 5 6 (PRODUCT LEVEL)	SEE PAGE
E	1	1	**9X-1813**		SLEEVE (34CM)	
	2	1	**155-2260**	1	KIT-CONNECTING PLUG (3 PIN)	
					(INCLUDES PLUG AS & WEDGE)	
	3	1	**9X-3402**	1	SOCKET-CONNECTOR	
					(FOR 16-18 GA WIRE)	
					—OR—	
		1	**126-1768**	1	SOCKET-CONNECTOR	
					(FOR 14 GA WIRE)	
	4	1	**3E-3368**	1	WEDGE-PLUG LOCK	
E-ORDER BY THE CENTIMETER						

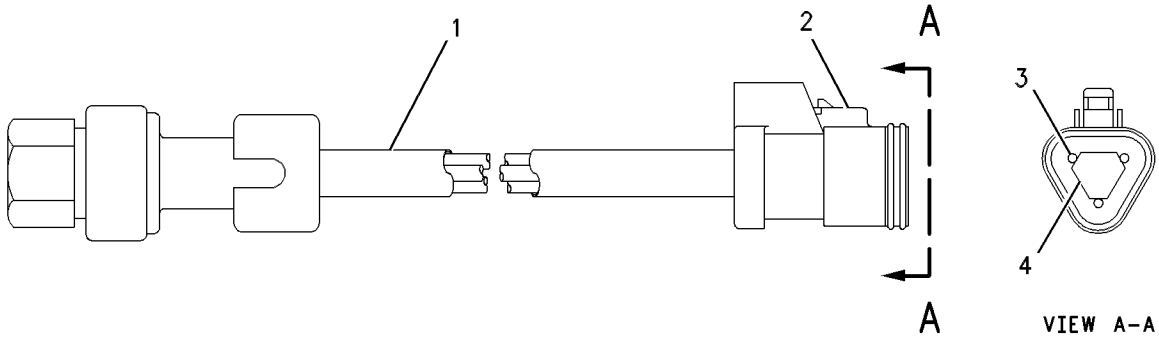

GRAPHIC #1 g00513129

161-9929 SENSOR GP-PRESSURE

S/N: BET1-UP
PART OF 160-7402 CYLINDER HEAD GP
FIELD REPLACEMENT ORDER 194-6724–PAGE 267

SMCS-1408 **i01502158**

NOTE	REF NO	GRAPHIC REF	PART NUMBER	QTY	PART NAME 1 2 3 4 5 6 (PRODUCT LEVEL)	SEE PAGE
E	1	1	**138-3094**		SLEEVE (34CM)	
	2	1	**155-2260**	1	KIT-CONNECTING PLUG (3 PIN)	
					(INCLUDES PLUG AS AND WEDGE)	
	3	1	**8T-8730**	3	SOCKET-CONNECTOR	
	4	1	**3E-3368**	1	WEDGE-PLUG LOCK	

E-ORDER BY THE CENTIMETER

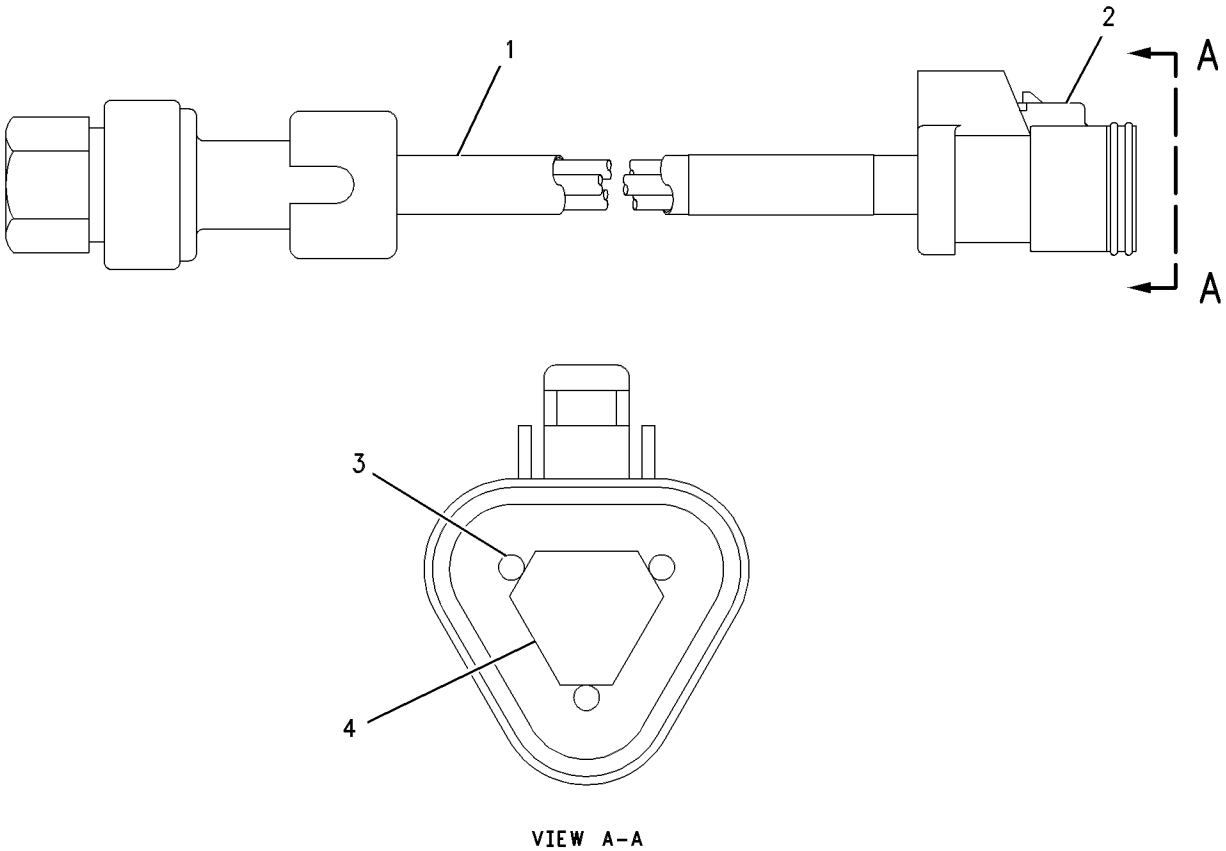

VIEW A-A

GRAPHIC #1 g00468388

161-9931 SENSOR GP-PRESSURE

S/N: BET1-UP
PART OF 146-2741 CYLINDER BLOCK GP
FIELD REPLACEMENT ORDER 194-6725—PAGE 268

SMCS-1408 **i01355488**

NOTE	REF NO	GRAPHIC REF	PART NUMBER	QTY	PART NAME 1 2 3 4 5 6 (PRODUCT LEVEL)	SEE PAGE
BE	1	1	**9X-1813**		SLEEVE	
	2	1	**155-2260**	1	KIT-CONNECTING PLUG (3 PIN)	
					(INCLUDES PLUG AS & WEDGE)	
	3	1	**102-8813**	1	SEAL-INTERFACE	
	4	1	**8T-8730**	3	SOCKET-CONNECTOR	
	5	1	**3E-3368**	1	WEDGE-PLUG LOCK	

B-USE AS REQUIRED
E-ORDER BY THE CENTIMETER

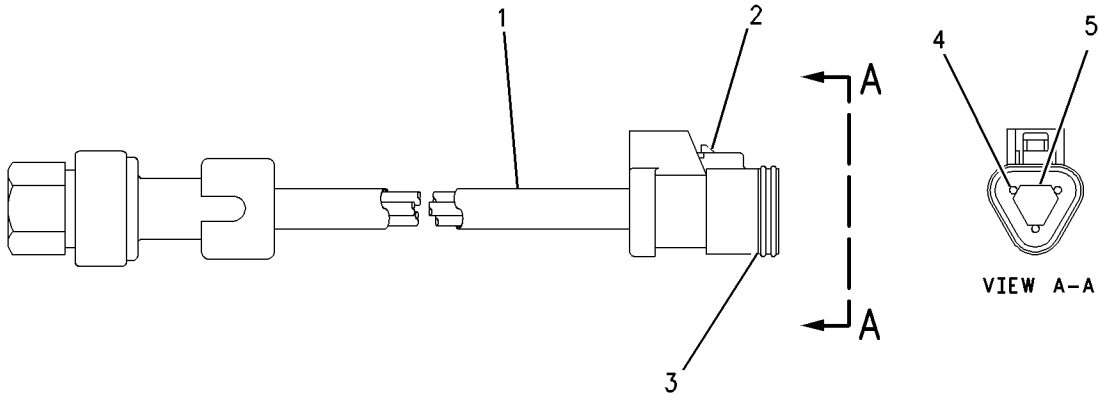

GRAPHIC #1 g00715446

194-6722 SENSOR GP-PRESSURE

S/N: BET1-UP

FIELD REPLACEMENT FOR 161-9925—PAGE 262

SMCS-1408 **i01448300**

NOTE	REF NO	GRAPHIC REF	PART NUMBER	QTY	PART NAME 1 2 3 4 5 6 (PRODUCT LEVEL)	SEE PAGE
BE	1	1	**9X-1813**		SLEEVE	
	2	1	**155-2260**	1	KIT-CONNECTING PLUG (3 PIN)	
					(INCLUDES PLUG AS AND WEDGE)	
	3	1	**180-9340**	3	SOCKET-CONNECTOR	
	4	1	**3E-3368**	1	WEDGE-PLUG LOCK	
	5	1	**102-8813**	1	SEAL-INTERFACE	

B-USE AS REQUIRED
E-ORDER BY THE CENTIMETER

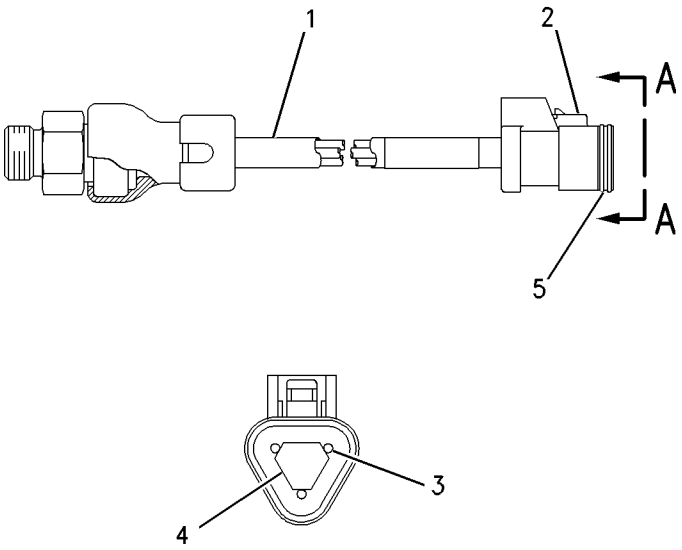

VIEW A-A

GRAPHIC #1 g00755959

194-6724 SENSOR GP-PRESSURE

S/N: BET1-UP

FIELD REPLACEMENT FOR 161-9929—PAGE 264

SMCS-1408 **i01449050**

NOTE	REF NO	GRAPHIC REF	PART NUMBER	QTY	PART NAME 1 2 3 4 5 6 (PRODUCT LEVEL)	SEE PAGE
E	1	1	**138-3094**		SLEEVE (34CM)	
	2	1	**155-2260**	1	KIT-CONNECTING PLUG (3 PIN)	
					(INCLUDES PLUG AS AND WEDGE)	
	3	1	**180-9340**	3	SOCKET-CONNECTOR	
	4	1	**3E-3368**	1	WEDGE-PLUG LOCK	

E-ORDER BY THE CENTIMETER

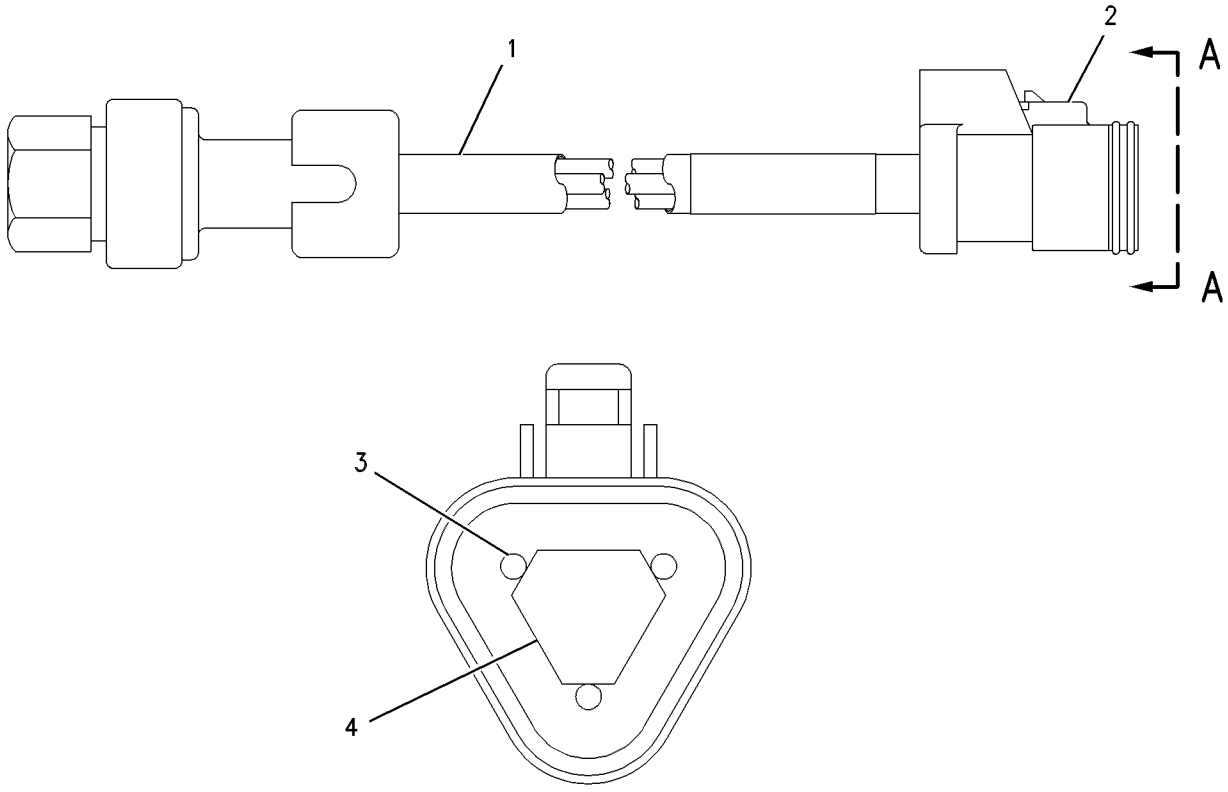

VIEW A-A

GRAPHIC #1 g00468388

194-6725 SENSOR GP-PRESSURE

S/N: BET1-UP

FIELD REPLACEMENT FOR 161-9931—PAGE 265

SMCS-1408 **i01448832**

NOTE	REF NO	GRAPHIC REF	PART NUMBER	QTY	PART NAME 1 2 3 4 5 6 (PRODUCT LEVEL)	SEE PAGE
BE	1	1	**9X-1813**		SLEEVE	
	2	1	**155-2260**	1	KIT-CONNECTING PLUG (3 PIN)	
					(INCLUDES PLUG AS & WEDGE)	
	3	1	**102-8813**	1	SEAL-INTERFACE	
	4	1	**180-9340**	3	SOCKET-CONNECTOR	
	5	1	**3E-3368**	1	WEDGE-PLUG LOCK	

B-USE AS REQUIRED
E-ORDER BY THE CENTIMETER

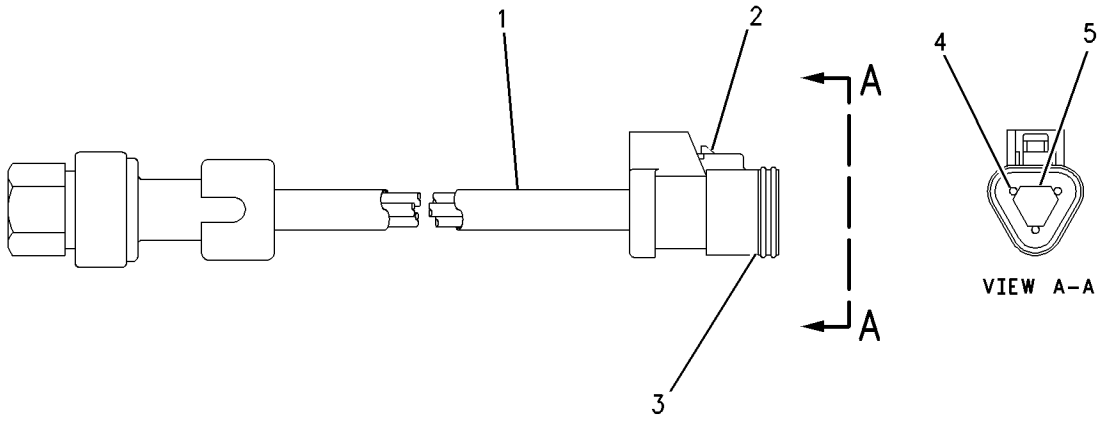

GRAPHIC #1 g00715453

142-8393 SENSOR GP-SPEED

S/N: BET1-UP
ENGINE SPEED-TIMING
PART OF 161-1509, 161-8414 HOUSING GP-FRONT

SMCS-1408 **i01435898**

NOTE	REF NO	GRAPHIC REF	PART NUMBER	QTY	PART NAME 1 2 3 4 5 6 (PRODUCT LEVEL)	SEE PAGE
	1	1	**133-0260**	1	BRACKET	
	2	1	*142-8395*	1	HARNESS AS	
		1	**102-8802**	1	KIT-RECEPTACLE (2 PIN)	
					(INCLUDES RECEPTACLE AS AND WEDGE)	
		1	**100-3320**	1	PLUG AS-CONNECTOR	
		1	**126-5011**	1	SEAL-CONNECTOR	

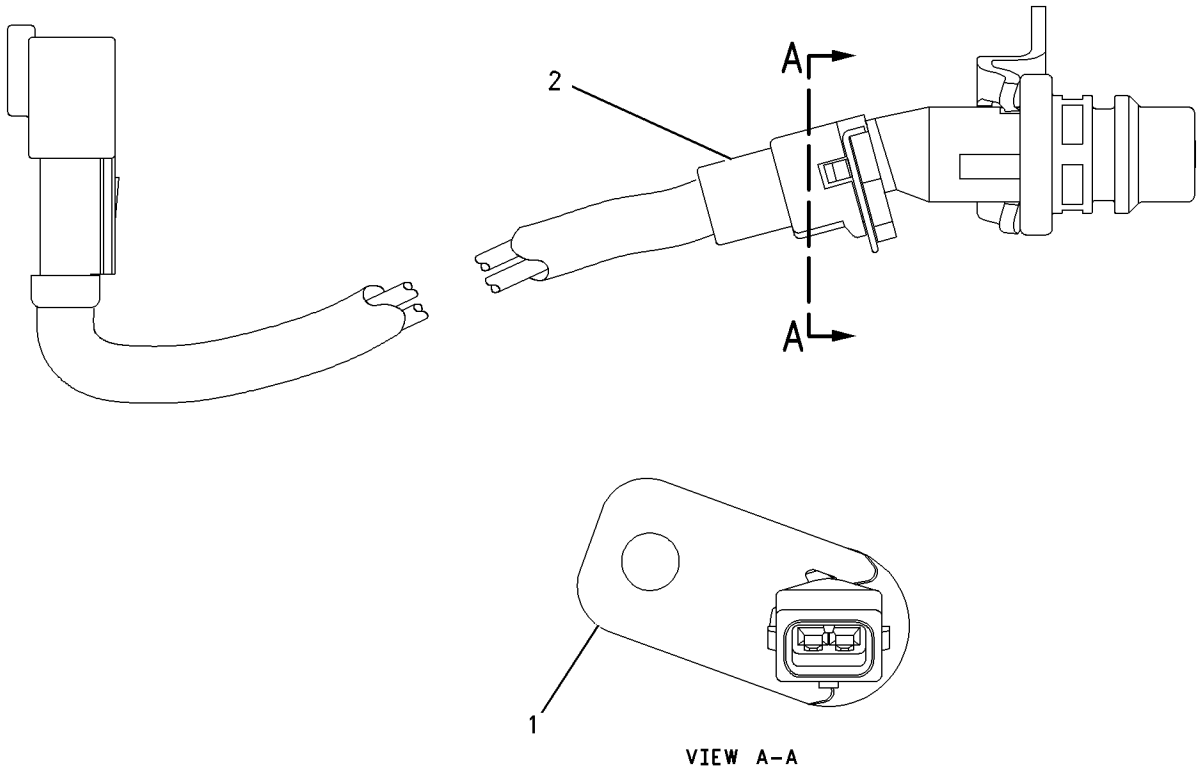

GRAPHIC #1 g00752148

142-8394 SENSOR GP-SPEED

S/N: BET1-UP
ENGINE SPEED-TIMING
PART OF 161-1509, 161-8414 HOUSING GP-FRONT

SMCS-1408 **i01435838**

NOTE	REF NO	GRAPHIC REF	PART NUMBER	QTY	PART NAME 1 2 3 4 5 6 (PRODUCT LEVEL)	SEE PAGE
	1	1	**133-0261**	1	BRACKET	
	2	1	**142-8396**	1	HARNESS AS	
		1	**102-8802**	1	KIT-RECEPTACLE (2 PIN)	
					(INCLUDES RECEPTACLE AS AND WEDGE)	
		1	**111-2416**	1	PLUG AS-CONNECTOR	
		1	**126-5011**	1	SEAL-CONNECTOR	

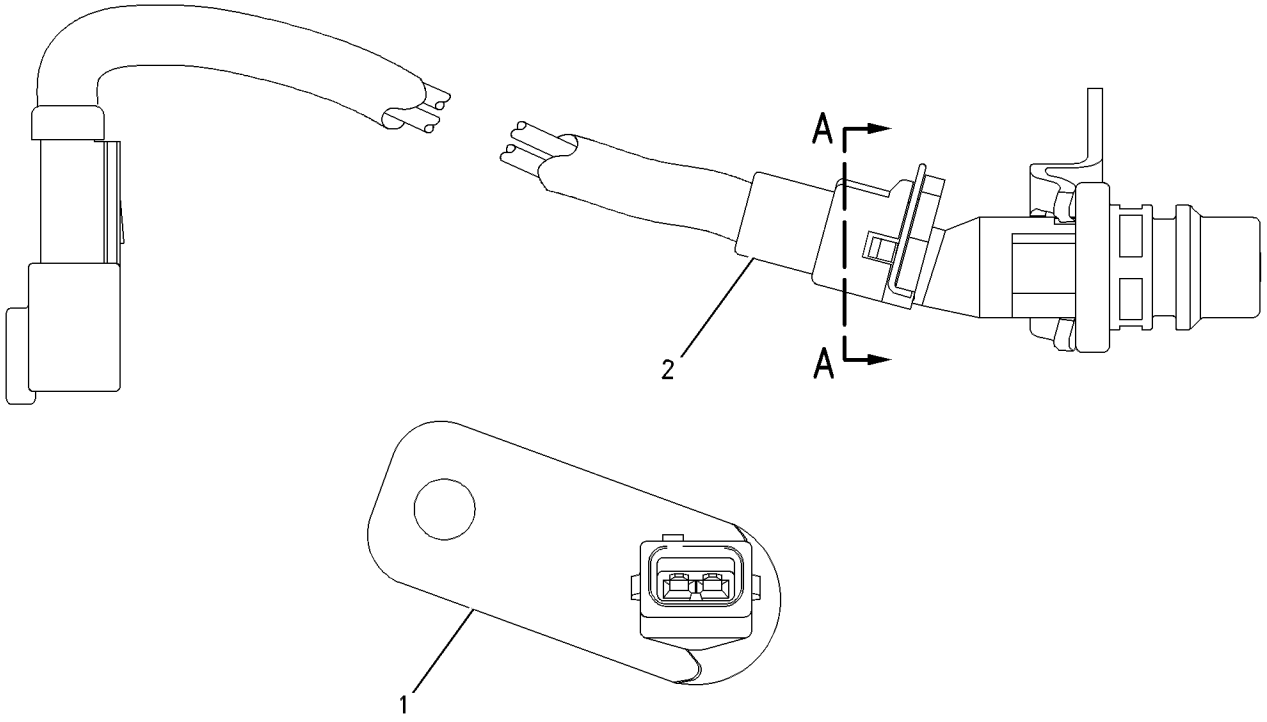

VIEW A-A

GRAPHIC #1 g00310568

193-2550 SENSOR GP-SPEED

S/N: AKA1-UP; 6GY1-UP

PART OF 159-9263 BATTERY & WIRING GP, 128-2722 PLANETARY GP-TRANSMISSION

SMCS-1408 **i01479454**

NOTE	REF NO	GRAPHIC REF	PART NUMBER	QTY	PART NAME 1 2 3 4 5 6 (PRODUCT LEVEL)	SEE PAGE
	1	1	**171-5349**	1	STRAP-MARKER	
	2	1	**102-8802**	1	KIT-RECEPTACLE (2 PIN)	
					(INCLUDES RECEPTACLE AS & WEDGE)	
	3	1	**8T-8729**	2	PIN-CONNECTOR	
	4	1	**3E-3365**	1	WEDGE-RECEPTACLE LOCK (2 PIN)	
E	5	1	**9X-1813**		SLEEVE (14CM)	

E-ORDER BY THE CENTIMETER

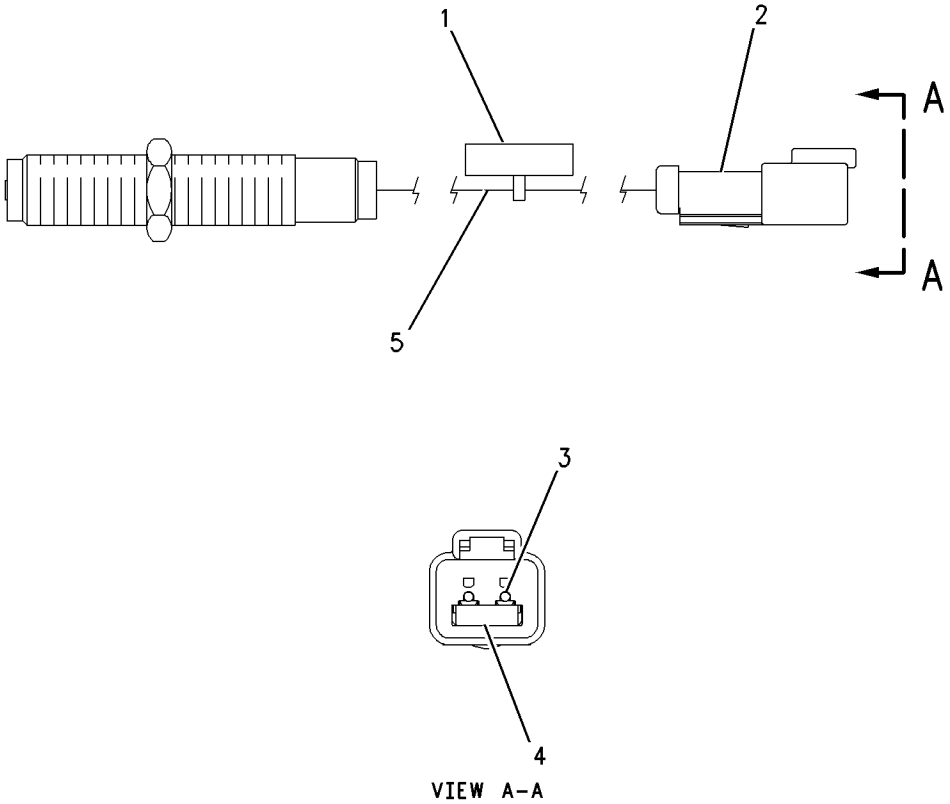

GRAPHIC #1 g00690327

118-7226 SENSOR GP-TEMPERATURE

S/N: AKA1-UP
8 VOLT. PULSE WIDTH MODULATION
PART OF 159-9263 BATTERY & WIRING GP

SMCS-1408, 1906, 1921, 1922, 7400 **i01147923**

NOTE	REF NO	GRAPHIC REF	PART NUMBER	QTY	PART NAME 1 2 3 4 5 6 (PRODUCT LEVEL)	SEE PAGE
BE	1	1	**9X-1813**		SLEEVE	
	2	1	**102-8803**	1	KIT-RECEPTACLE (3 PIN)	
					(INCLUDES WEDGE & RECEPTACLE AS)	
	3	1	**8T-8729**	3	PIN-CONNECTOR	
	4	1	**3E-3371**	1	WEDGE-RECEPTACLE LOCK	

B-USE AS REQUIRED
E-ORDER BY THE CENTIMETER

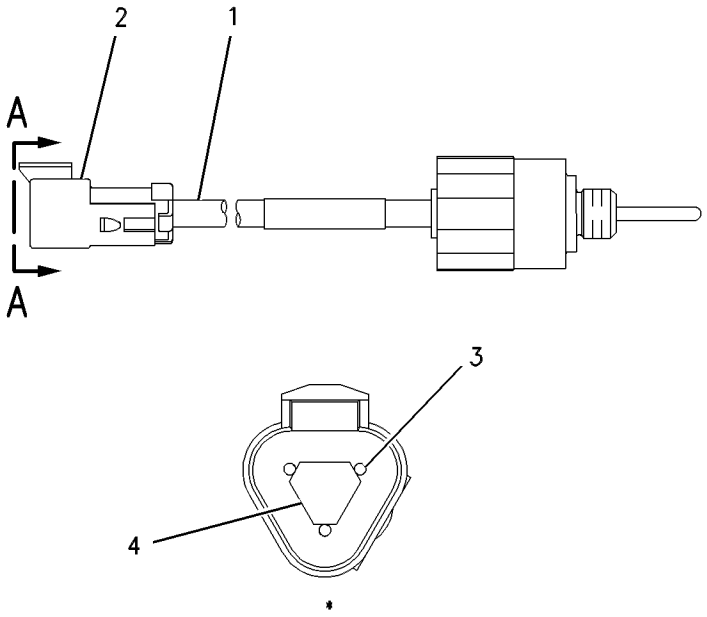

GRAPHIC #1 g00609258

194-9351 SERVICE GP-MACHINE

S/N: AKA1-UP

PART OF 195-5202 ELECTRONICS GP-MACHINE

SMCS-7610 **i01489135**

NOTE	REF NO	GRAPHIC REF	PART NUMBER	QTY	PART NAME 1 2 3 4 5 6 (PRODUCT LEVEL)	SEE PAGE
Y	1	1	**193-8550**	1	CONTROL GP-MACHINE	214
F		1	**194-9350**	1	SOFTWARE GP-MACHINE (SECURITY SYSTEM)	

F-NOT SHOWN
Y-SEPARATE ILLUSTRATION

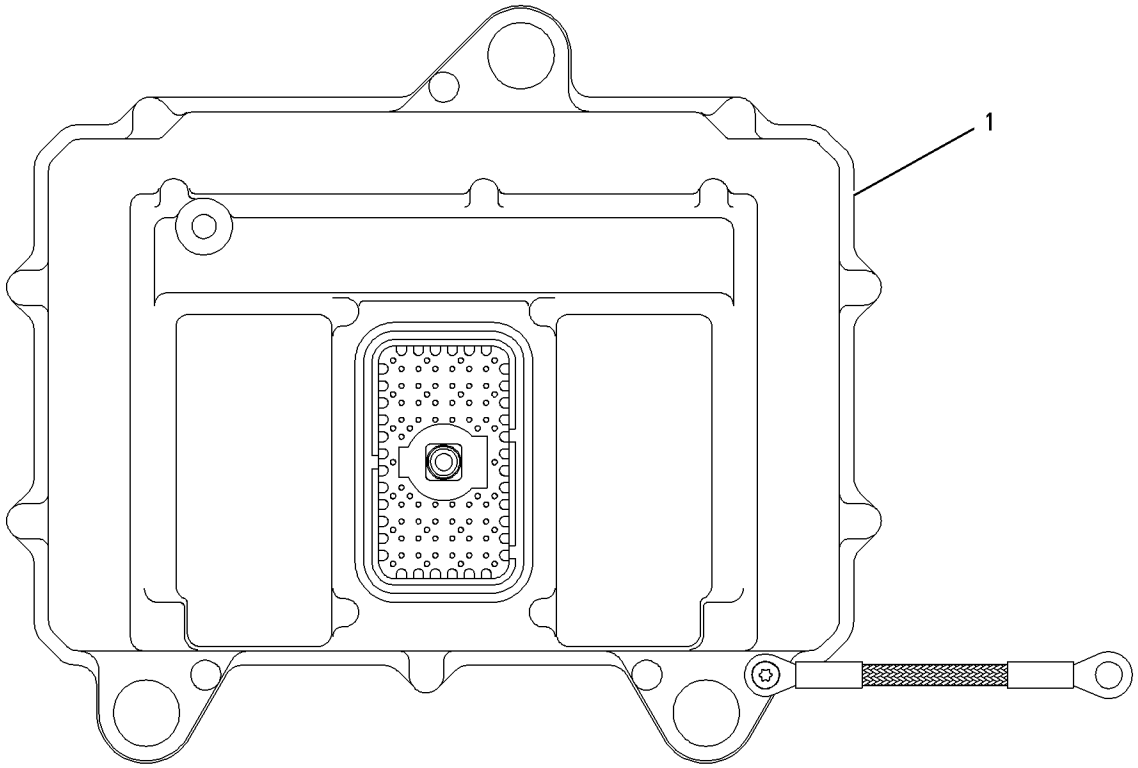

GRAPHIC #1 g00728629

ELECTRICAL AND STARTING SYSTEM

159-6160 STARTING AID GP-ETHER

S/N: AKA1-UP

PART OF 159-5908 INSTALLATION AR-ENGINE

SMCS-1456 **i01503214**

NOTE	REF NO	GRAPHIC REF	PART NUMBER	QTY	PART NAME 1 2 3 4 5 6 (PRODUCT LEVEL)	SEE PAGE
	1	1	**3E-5239**	1	RELAY AS (24 VOLT)	
	2	1	**5P-6313**	1	NUT-FLARELESS (5/16-24 THD)	
	3	1	**5P-6314**	1	SLEEVE	
	4	1	**5P-6315**	1	ELBOW-FLARELESS	
J	5	1	**6N-7672**	1	ATOMIZER AS	
	6	1	**7N-2059**	1	CLAMP AS-CYLINDER	
	7	1	**162-7578**	1	TUBE AS	
	8	1	**199-3202**	1	BRACKET AS	
		1	**1F-0750**	2	NUT-WELD (3/8-16 THD)	
		1	**4K-9097**	3	NUT-WELD (5/16-18 THD)	
		1	**9F-6445**	1	NUT-WELD (1/4-20 THD)	
	9	1	**0L-1143**	2	BOLT (3/8-16X2.50 IN)	
	10	1	**0L-2070**	3	BOLT (3/8-16X2.25 IN)	
	11	1	**3E-6332**	1	VALVE AS-ETHER START	
		1	**3E-3365**	1	WEDGE-RECEPTACLE LOCK (2 PIN)	
		1	**8T-8729**	2	PIN-CONNECTOR	
		1	**7N-9801**	1	GASKET	
		1	**102-8802**	1	KIT-RECEPTACLE (2 PIN)	
					(INCLUDES RECEPTACLE AS & WEDGE)	
	12	1	**4M-5281**	1	BOLT (1/4-20X0.750 IN)	
	13	1	**4M-6425**	1	BOLT (5/16-18X1 IN)	
	14	1	**4P-7581**	1	CLIP	
	15	1	**5K-0906**	3	BOLT (5/16-18X0.63 IN)	
	16	1	**5M-2894**	5	WASHER-HARD (10.2X18.5X2.5MM THK)	
	17	1	**6V-2686**	3	CLIP	
	18	1	**8T-4205**	1	WASHER-HARD (7.2X14.5X2MM THK)	
	19	1	**8T-4224**	4	WASHER-HARD (8.8X16X2MM THK)	
	20	1	**4P-8134**	1	CLIP	
A		1	**7N-0296**	1	CYLINDER AS (ETHER)	
					(MUST BE PROCURED LOCALLY FROM YOUR CATERPILLAR DEALER)	

A-NOT PART OF THIS GROUP
J-INSTALL WITH ORIFICE DIRECTED DOWN

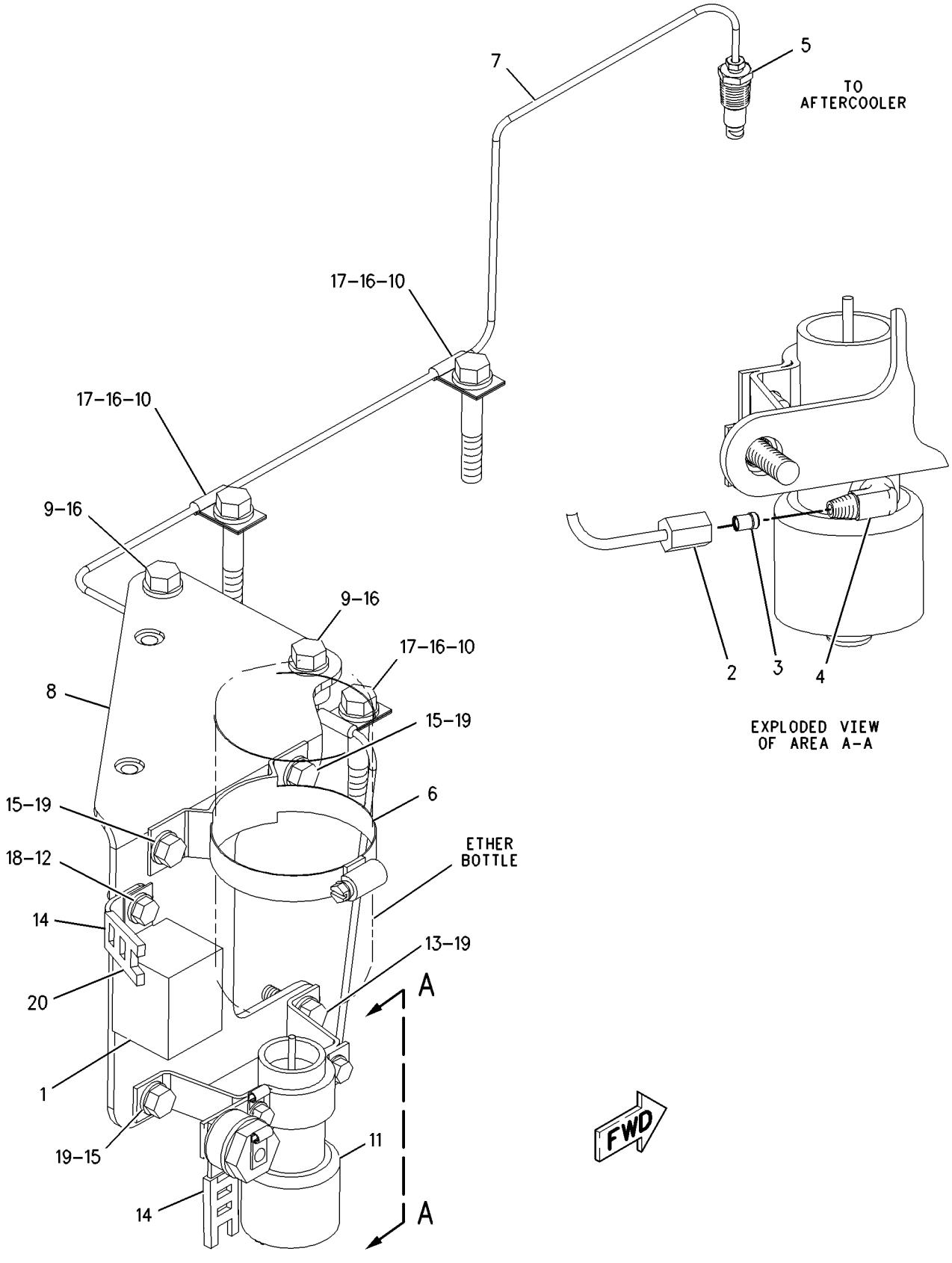

GRAPHIC #1 g00779865

ELECTRICAL AND STARTING SYSTEM

6V-0890 STARTING MOTOR GP-ELECTRIC

S/N: AKA1-UP

24 VOLT

PART OF 186-0067 STARTING MOTOR GP-ELECTRIC

SMCS-1453, 1454, 1465 **i00149184**

NOTE	REF NO	GRAPHIC REF	PART NUMBER	QTY	PART NAME 1 2 3 4 5 6 (PRODUCT LEVEL)	SEE PAGE
	1	1	**7M-0326**	1	CONNECTOR	
	2	1	**9H-3757**	2	WASHER (3/32IN THK)	
	3	1	**1S-7446**	3	SCREW-MACHINE (8-32 THD)	
	4	1	**8C-9660**	3	WASHER (0.8MM THK)	
	5	1	**9S-2544**	9	SCREW-HEX HEAD	
	6	1	**7M-0327**	1	WASHER-THRUST	
	7	1	**3T-3418**	1	FRAME AS-END	
		1	**3T-3423**	1	CUP	
		1	**9G-4101**	1	BUSHING-END	
		1	**3T-3424**	1	PLUG-FELT	
	8	1	**3T-9525**	1	PLATE AS-BRUSH	
		1	**6T-0371**	1	INSULATOR	
		1	**5P-6298**	12	SCREW-MACHINE (10-32X0.5IN)	
		1	**9F-5599**	12	LOCKWASHER	
		1	**6T-0372**	1	PLATE	
		1	**6T-0363**	6	HOLDER AS-BRUSH	
					(EACH INCLUDES)	
		1	**3T-9494**	1	SPRING-BRUSH	
		1	**2L-6679**	3	PLATE-INSULATOR	
		1	**3T-4709**	3	PLATE	
		1	**3T-4710**	3	PLATE	
		1	**7F-3525**	6	WASHER-BUSHING	
	9	1	**7F-3491**	2	WASHER (3/32IN THK)	
	10	1	**3T-3422**	1	WIRE AS	
	11	1	**2J-8163**	2	SEAL-O-RING (117.07MM ID)	
	12	1	**7X-3373**	1	BOLT (5/16-18X.88IN)	
	13	1	**3T-3434**	6	PLUG (12.7MM OD SPHERE)	
	14	1	**5J-5314**	5	BOLT (5/16-18X1.5IN)	
	15	1	**3L-3380**	1	BUSHING-TERMINAL	
	16	1	**036-9821**	1	WASHER	
	17	1	**4M-1828**	1	RETAINER-SPRING	
	18	1	**4M-1829**	1	BOOT-RUBBER	
	19	1	**9M-7606**	1	PLUNGER AS	
	20	1	**9M-7609**	1	SPRING	
	21	1	**4M-1827**	1	RETAINER-SPRING	
	22	1	**8C-3089**	1	SEAL-O-RING (82.22MM ID)	
	23	1	**4M-1853**	1	LEVER AS-SHIFT	
	24	1	**5M-3034**	1	LOCKNUT (5/16-24 THD)	
	25	1	**7L-2894**	4	GASKET	
	26	1	**4M-1831**	4	PLUG-LEVER HOUSING	
	27	1	**4M-1854**	1	SHAFT-LEVER	
	28	1	**1H-1023**	1	SEAL-O-RING (9.25MM ID)	
	29	1	**2D-6392**	1	SEAL-O-RING (6.07MM ID)	
	30	1	**7T-3974**	1	HOUSING AS-DRIVE	
	31	1	**6N-3826**	1	DRIVE AS-MOTOR	
	32	1	**2H-3429**	2	RING-RETAINING	
	33	1	**6V-1322**	4	BOLT (1/4-20X.375 IN)	
	34	1	**8T-4205**	4	WASHER-HARD (2MM THK)	
	35	1	**6N-3279**	1	INSULATOR	
	36	1	**036-9823**	13	BOLT	
	37	1	**1M-9971**	1	SPACER	
	38	1	**1H-2629**	3	STRIP-INSULATION	
	39	1	**7M-0324**	1	COIL AS-FIELD	
	40	1	**3F-0379**	12	SCREW-POLE SHOE	
	41	1	**7F-3488**	6	SHOE-POLE	

6V-0890 STARTING MOTOR GP-ELECTRIC *(contd.)* i00149184

NOTE	REF NO	GRAPHIC REF	PART NUMBER	QTY	PART NAME 1 2 3 4 5 6 (PRODUCT LEVEL)	SEE PAGE
	42	1	**7M-8651**	1	ARMATURE AS	
	43	1	**7M-0325**	1	INSULATOR-COIL	
	44	1	**3T-9524**	6	BRUSH AS	
	45	1	**125-6537**	1	INSULATOR	
	46	1	**8F-1434**	2	LOCKWASHER (5MM ID)	
	47	1	**6V-8188**	6	NUT (1/2-13 THD)	
	48	1	**7X-0562**	6	WASHER-HARD (0.8MM THK)	
	49	1	**4B-2049**	6	NUT (10-32 THD)	
	50	1	**8T-0328**	10	WASHER-HARD (1MM THK)	
	51	1	**3T-9494**	6	SPRING-BRUSH	
	52	1	**3E-7771**	1	HOUSING AS	
	53	1	**9G-4101**	1	BUSHING-END	
	54	1	**3T-3424**	3	PLUG-FELT	
	55	1	**3T-3423**	3	CUP	
	56	1	**1M-9968**	1	BUSHING	
	57	1	**2F-6678**	1	SEAL-LIP	
	58	1	**4L-2729**	1	WASHER	
	59	1	**4M-1896**	1	BUSHING-TERMINAL	
	60	1	**045-4065**	4	SCREW-MACHINE (10-32X.75IN)	
	61	1	**6V-8373**	3	SCREW-MACHINE (6-32X.187IN)	
	62	1	**9G-6770**	1	CONTACT AS	
	63	1	**6T-1120**	1	BUSHING-TERMINAL	
	64	1	**4M-1815**	1	SPRING-CONTACT	
	65	1	**125-6535**	1	COVER-STARTING MOTOR	
	66	1	**7T-9123**	1	GASKET-PLATE	
	67	1	**125-6533**	1	SOLENOID AS	
		1	**3R-8801**	1	CLAMP-BOOT	
	68	1	**125-6536**	1	TERMINAL AS	
					AVAILABLE REPAIR KIT(S):	
			3N-3763	1	KIT-TERMINAL	
					(INCLUDES INSULATOR,BUSHINGS & WASHER)	

6V-0890 STARTING MOTOR GP-ELECTRIC *(contd.)* i00149184

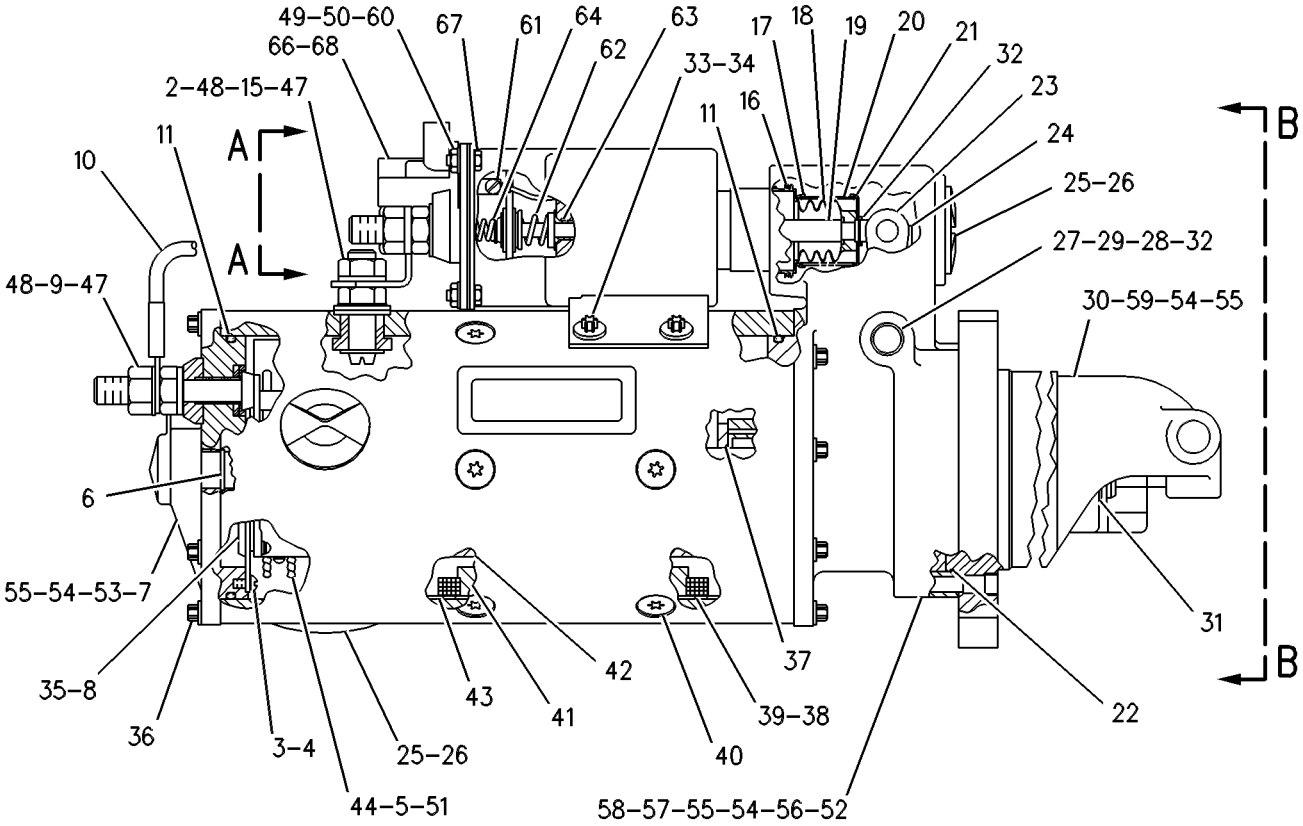

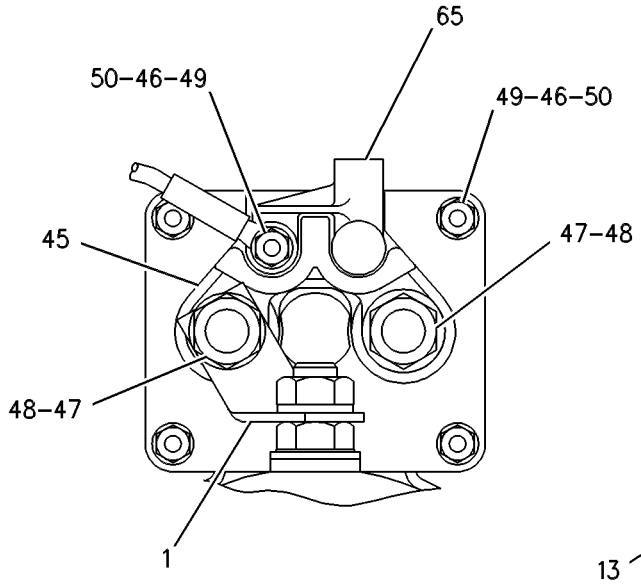

VIEW A-A

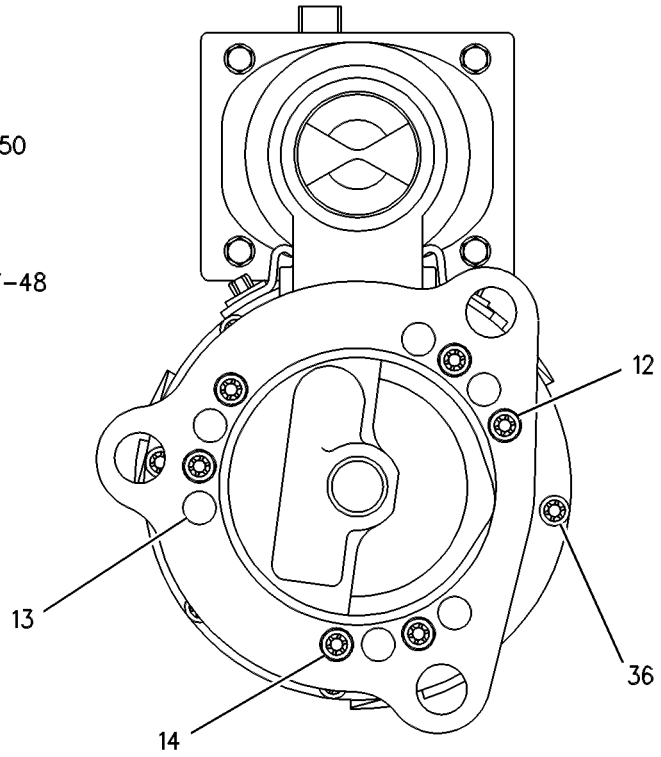

VIEW B-B

GRAPHIC #1 g00066598

186-0067 STARTING MOTOR GP-ELECTRIC

S/N: AKA1-UP

PART OF 159-5908 INSTALLATION AR-ENGINE

SMCS-1453, 1454, 1465 **i01392441**

NOTE	REF NO	GRAPHIC REF	PART NUMBER	QTY	PART NAME 1 2 3 4 5 6 (PRODUCT LEVEL)	SEE PAGE
	1	1	**8S-2332**	3	BOLT-12 POINT HEAD (5/8-11X1.75IN)	
YR	2	1	**6V-0890**	1	STARTING MOTOR GP-ELECTRIC	276
	3	1	**4N-1059**	1	GASKET	
	4	1	**185-6393**	1	WIRE AS	

R-REMFG PART MAY BE AVAILABLE
Y-SEPARATE ILLUSTRATION

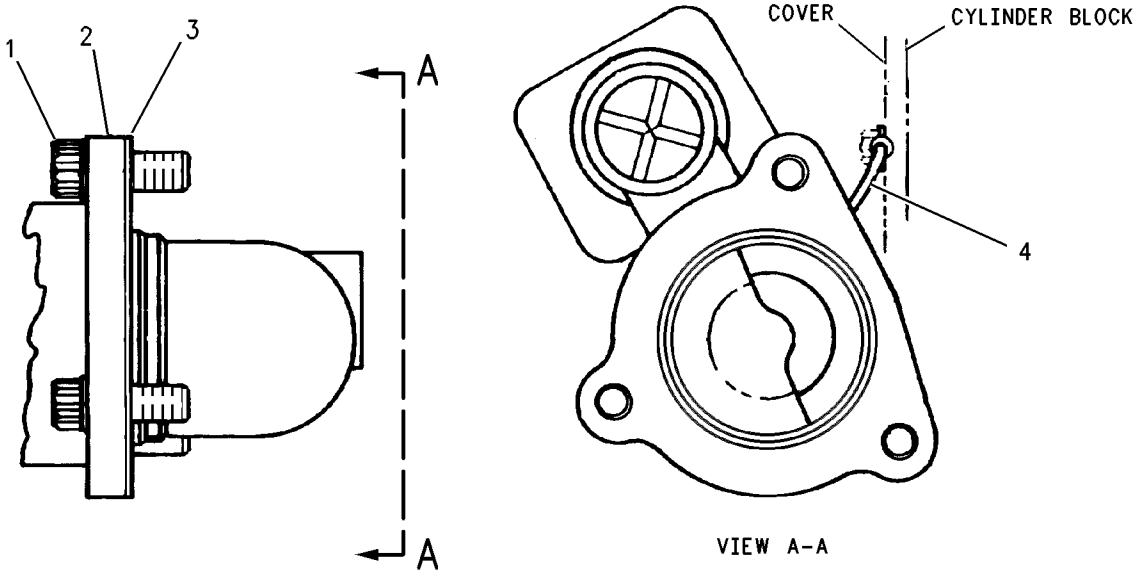

GRAPHIC #1 g00705201

ELECTRICAL AND STARTING SYSTEM

124-9780 STARTING MOTOR GP-PRELUB SYS

S/N: AKA1-UP

PART OF 161-8142 PRELUBRICATION AR-ENGINE

SMCS-1453 **i01496644**

NOTE	REF NO	GRAPHIC REF	PART NUMBER	QTY	PART NAME 1 2 3 4 5 6 (PRODUCT LEVEL)	SEE PAGE
	1	1	**7M-0326**	1	CONNECTOR	
	2	1	**9H-3757**	2	WASHER (0.516X1X0.094 IN THK)	
	3	1	**1S-7446**	3	SCREW-MACHINE (8-32X0.437 THD)	
	4	1	**8C-9660**	3	WASHER (4.6X7.9X0.8MM THK)	
	5	1	**9S-2544**	9	SCREW-HEX HEAD (8-32X11.13MM) (#8)	
	6	1	**4L-7124**	4	BOLT (1/4-20X1.25 IN)	
	7	1	**117-0610**	1	KIT-BEARING	
	8	1	**3T-9525**	1	PLATE AS-BRUSH	
		1	**5P-6298**	12	SCREW-MACHINE (10-32X0.5 IN)	
		1	**6T-0363**	6	HOLDER AS-BRUSH	
					(EACH INCLUDES)	
		1	**3T-9494**	1	SPRING-BRUSH	
		1	**6T-0371**	1	INSULATOR	
		1	**7F-3525**	6	WASHER-BUSHING	
		1	**9F-5599**	12	LOCKWASHER	
	9	1	**7F-3491**	2	WASHER (0.516X1X0.094 IN THK)	
	10	1	**3T-3422**	1	WIRE AS	
	11	1	**2J-8163**	2	SEAL-O-RING	
	12	1	**7X-3373**	1	BOLT (5/16-18X0.88 IN)	
	13	1	**3T-3434**	6	PLUG	
	14	1	**5J-5314**	5	BOLT (5/16-18X1.5 IN)	
	15	1	**3L-3380**	1	BUSHING-TERMINAL	
	16	1	**036-9821**	1	WASHER	
	17	1	**4M-1828**	1	RETAINER-SPRING	
	18	1	**4M-1829**	1	BOOT-RUBBER	
	19	1	**9M-7606**	1	PLUNGER AS	
	20	1	**9M-7609**	1	SPRING	
	21	1	**4M-1827**	1	RETAINER-SPRING	
	22	1	**8C-3089**	1	SEAL-O-RING	
	23	1	**4M-1853**	1	LEVER AS-SHIFT	
	24	1	**5M-3034**	1	LOCKNUT	
	25	1	**7L-2894**	4	GASKET	
	26	1	**4M-1831**	4	PLUG-LEVER HOUSING	
	27	1	**4M-1854**	1	SHAFT-LEVER	
	28	1	**1H-1023**	1	SEAL-O-RING	
	29	1	**2D-6392**	1	SEAL-O-RING	
	30	1	**7T-3974**	1	HOUSING AS-DRIVE	
	31	1	**6N-3826**	1	DRIVE AS-MOTOR	
	32	1	**2H-3429**	2	RING-RETAINING	
	33	1	**6V-1322**	4	BOLT (1/4-20X0.375 IN)	
	34	1	**8T-4205**	4	WASHER-HARD (7.2X14.5X2MM THK)	
	35	1	**6N-3279**	1	INSULATOR	
	36	1	**036-9823**	13	BOLT	
	37	1	**111-9862**	1	COVER-STARTING MOTOR	
	38	1	**1H-2629**	3	STRIP-INSULATION	
	39	1	**7M-0324**	1	COIL AS-FIELD	
	40	1	**3F-0379**	12	SCREW-POLE SHOE	
	41	1	**7F-3488**	6	SHOE-POLE	
	42	1	**111-9864**	1	GASKET	
	43	1	**7M-0325**	1	INSULATOR-COIL	
	44	1	**3T-9524**	6	BRUSH AS	
	45	1	**3N-3763**	1	KIT-TERMINAL	
	46	1	**125-6537**	1	INSULATOR	
	47	1	**3R-8801**	1	CLAMP-BOOT	
	48	1	**8F-1434**	2	LOCKWASHER	
	49	1	**6V-8188**	6	NUT (1/2-13 THD)	

124-9780 **STARTING MOTOR GP-PRELUB SYS** *(contd.)* **i01496644**

NOTE	REF NO	GRAPHIC REF	PART NUMBER	QTY	PART NAME 1 2 3 4 5 6 (PRODUCT LEVEL)	SEE PAGE
	50	1	**7X-0562**	6	WASHER-HARD (13.5X19X0.8MM THK)	
	51	1	**4B-2049**	6	NUT (10-32 THD)	
	52	1	**8T-0328**	10	WASHER-HARD (5.5X10X1MM THK)	
	53	1	**3T-9494**	6	SPRING-BRUSH	
	54	1	**123-9776**	1	ARMATURE AS-STARTING MOTOR	
	55	1	**123-9773**	1	HOUSING AS-STARTING MOTOR	
	56	1	**3T-3424**	2	PLUG-FELT	
	57	1	**3T-3423**	2	CUP	
	58	1	**1M-9968**	1	BUSHING	
	59	1	**2F-6678**	1	SEAL-LIP	
	60	1	**4M-1896**	1	BUSHING-TERMINAL	
	61	1	**045-4065**	4	SCREW-MACHINE (10-32X0.75 IN)	
	62	1	**6V-8373**	3	SCREW-MACHINE (6-32X0.187 IN)	
	63	1	**9G-6770**	1	CONTACT AS	
	64	1	**6T-1120**	1	BUSHING-TERMINAL	
	65	1	**4M-1815**	1	SPRING-CONTACT	
	66	1	**125-6535**	1	COVER-STARTING MOTOR	
	67	1	**7T-9123**	1	GASKET-PLATE	
	68	1	**125-6533**	1	SOLENOID AS	
		1	**3R-8801**	1	CLAMP-BOOT	
	69	1	**125-6536**	1	TERMINAL AS	
	70	1	**111-9866**	1	KIT-STARTING MOTOR GEAR	
	71	1	**147-0633**	1	HOUSING AS	

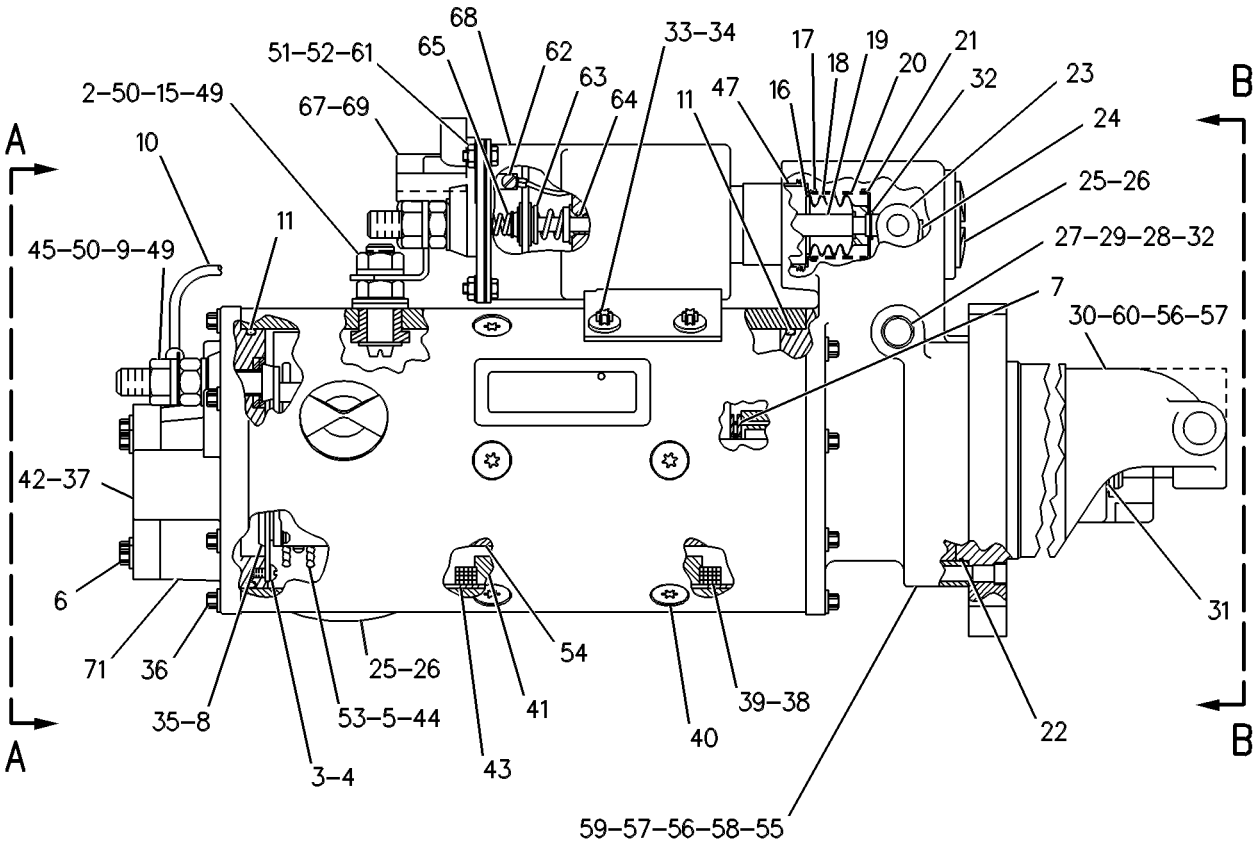

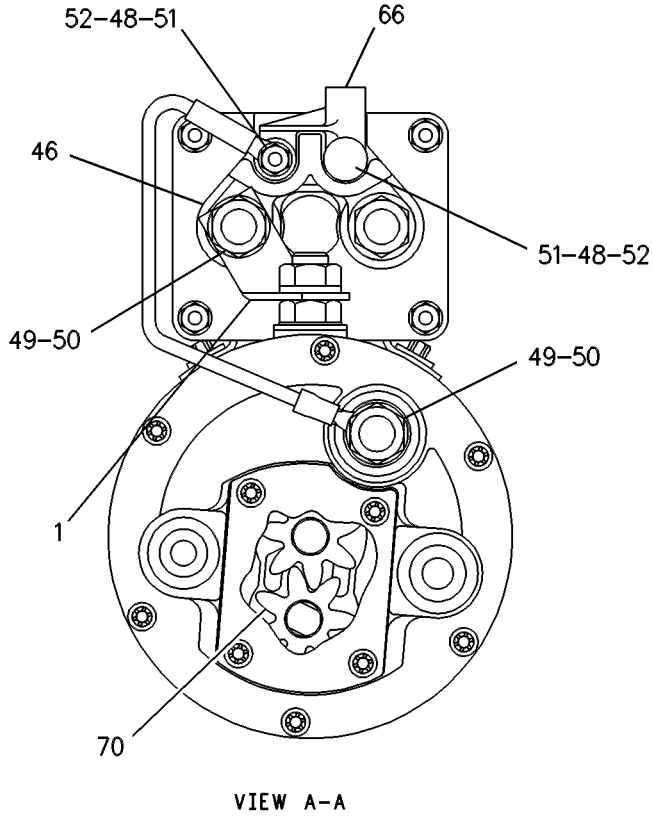

VIEW A-A

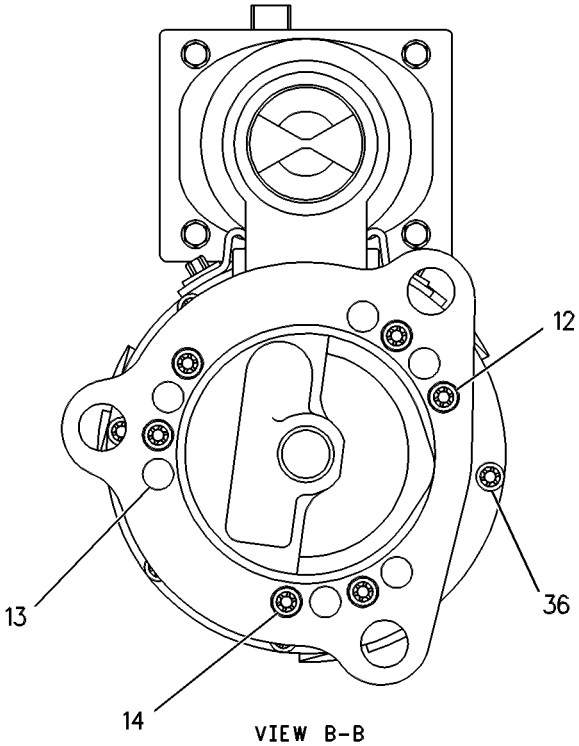

VIEW B-B

GRAPHIC #1

g00327004

164-7577 SWITCH GP-BYPASS

S/N: AKA1-UP

PART OF 159-9263 BATTERY & WIRING GP

SMCS-1408 **i01431493**

NOTE	REF NO	GRAPHIC REF	PART NUMBER	QTY	PART NAME 1 2 3 4 5 6 (PRODUCT LEVEL)	SEE PAGE
BE	1	1	**9X-1813**		SLEEVE	
	2	1	**102-8802**	1	KIT-RECEPTACLE (2 PIN)	
					(INCLUDES RECEPTACLE AS & WEDGE)	
	3	1	**186-3735**	2	PIN-CONNECTOR	
	4	1	**3E-3365**	1	WEDGE-RECEPTACLE LOCK (2 PIN)	
	5	1	**3D-2824**	1	SEAL-O-RING (23.47MM ID)	
Z	6	1		1	SWITCH AS	

B-USE AS REQUIRED
E-ORDER BY THE CENTIMETER
Z-NOT SERVICED SEPARATELY

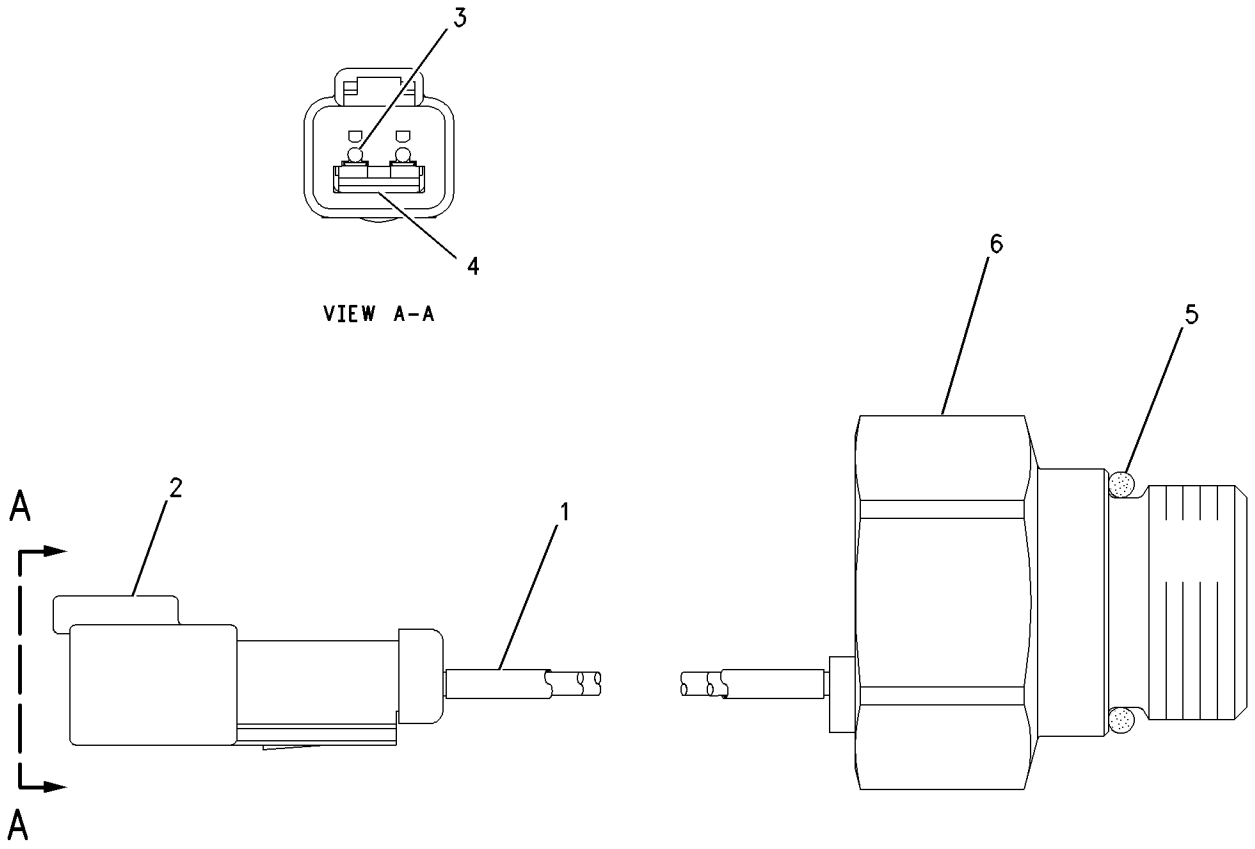

GRAPHIC #1 g00750019

7N-0718 SWITCH GP-DISCONNECT–BATTERY

S/N: AKA1-UP

PART OF 159-9263 BATTERY & WIRING GP

SMCS-1411 **i01502159**

NOTE	REF NO	GRAPHIC REF	PART NUMBER	QTY	PART NAME 1 2 3 4 5 6 (PRODUCT LEVEL)	SEE PAGE
	1	1	**8H-5306**	1	KEY	
	2	1	**8H-5303**	1	NUT (3/4-16 THD)	
	3	1	**2H-3922**	2	LOCKWASHER	
	4	1	**9F-5644**	2	LOCKWASHER	
	5	1	**6F-7045**	2	NUT-FULL (3/8X24 THD)	

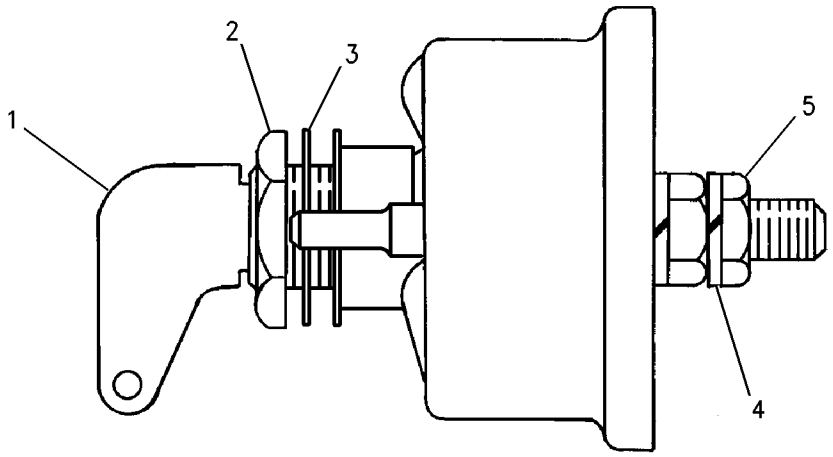

GRAPHIC #1 g00715584

167-0138 SWITCH GP-MAGNETIC

S/N: AKA1-UP

PART OF 175-7017 PANEL GP-RELAY

SMCS-7499 **i01502161**

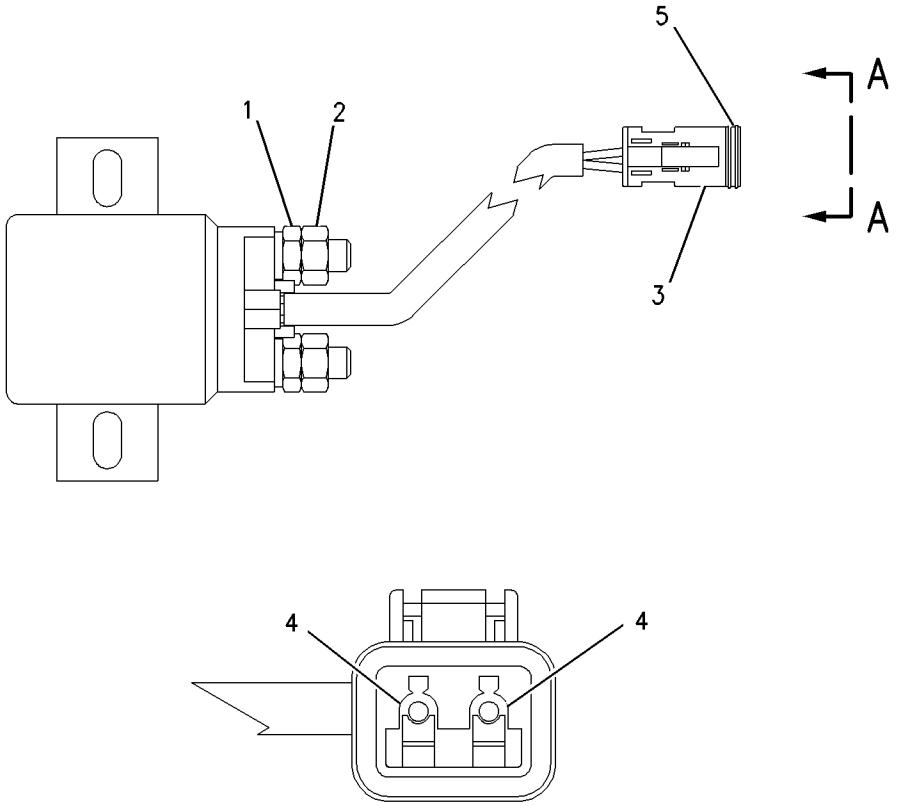

VIEW A-A

GRAPHIC #1 g00725773

161-1503 WIRING GP-ENGINE

S/N: BET1-UP

PART OF 157-7195, 157-7196 ENGINE AR-COMPLETE

SMCS-1403, 1408 **i01481046**

NOTE	REF NO	GRAPHIC REF	PART NUMBER	QTY	PART NAME 1 2 3 4 5 6 (PRODUCT LEVEL)	SEE PAGE
	1	1	**145-3850**	1	HARNESS AS-ENGINE	
		1	**155-2270**	4	KIT-CONNECTING PLUG (2 PIN)	
					(INCLUDES PLUG AS & WEDGE)	
		1	**102-8802**	1	KIT-RECEPTACLE (2 PIN)	
					(INCLUDES RECEPTACLE AS & WEDGE)	
		1	**102-8803**	3	KIT-RECEPTACLE (3 PIN)	
					(INCLUDES RECEPTACLE AS & WEDGE)	
		1	**155-2255**	1	KIT-CONNECTING PLUG (12 PIN)	
					(INCLUDES PLUG AS & WEDGE)	
		1	**102-8812**	4	SEAL-INTERFACE	
		1	**102-8817**	1	SEAL-INTERFACE	
	2	1	**4P-7581**	6	CLIP	
	3	1	**4P-8134**	10	CLIP	
	4	1	**3S-2093**	28	STRAP-CABLE	
	5	1	**0S-0509**	4	BOLT (3/8-16X0.75 IN)	
	6	1	**5M-2894**	5	WASHER-HARD (10.2X18.5X2.5MM THK)	
	7	1	**2H-3755**	1	BOLT (5/16-18X0.62 IN)	
	8	1	**3E-4352**	1	WASHER-HARD (8.8X20.5X2.5MM THK)	
	9	1	**9M-3296**	1	STUD-TAPERLOCK	
	10	1	**6V-8801**	2	NUT (3/8-16 THD)	
	11	1	**8T-4896**	2	WASHER-HARD (10.2X18.5X2.5MM THK)	
	12	1	**2S-3770**	1	SPACER (33.5MM THK)	
	13	1	**0L-2070**	1	BOLT (3/8-16X2.25 IN)	
	14	1	**9X-6258**	4	SCREW-MACHINE (6-32X.50 IN)	
	15	1	**4B-5324**	4	WASHER (3.9X9.6X1.2MM THK)	
	16	1	**0L-1351**	1	BOLT (3/8-16X0.875 IN)	
	17	1	**175-2221**	1	BRACKET	
	18	1	**4D-7388**	1	CLIP	
	19	1	**104-6202**	2	CLIP	
	20	1	**178-1780**	1	CLIP	
	21	1	**8X-6439**	1	SPACER	
	22	1	**5L-2683**	1	BOLT	
	23	1	**5P-8247**	2	WASHER-HARD (17X32X3.5MM THK)	
	24	1	**9R-9733**	1	BOSS	
	25	1	**0S-1576**	1	BOLT (5/8-18X2IN)	
	26	1	**0S-1588**	1	BOLT (3/8-16X1.25 IN)	
	27	1	**0S-1590**	1	BOLT (3/8-16X2 IN)	

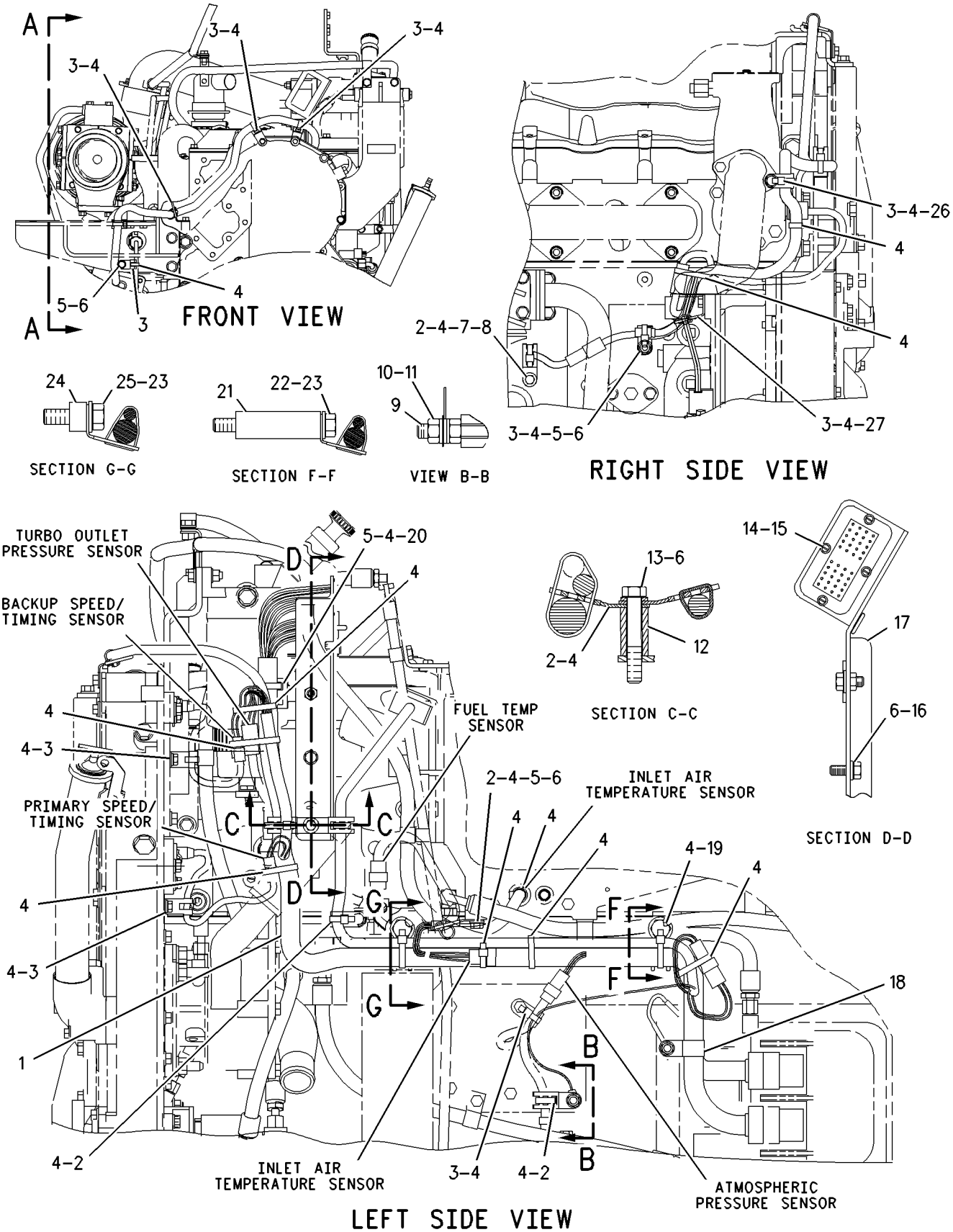

GRAPHIC #1 g00771081

159-9264 WIRING GP-PLATFORM

S/N: AKA1-UP

PART OF 157-0819 CHASSIS AR

SMCS-1408 **i01486743**

NOTE	REF NO	GRAPHIC REF	PART NUMBER	QTY	PART NAME 1 2 3 4 5 6 (PRODUCT LEVEL)	SEE PAGE
Y	1	1	**3E-6328**	1	ALARM GP	188
	2	1	**4K-9429**	5	RIVET-POP	
	3	1	**6T-7058**	1	LENS-RED	
B	4	1	**7K-1181**		STRAP-CABLE	
	5	1	**7N-1996**	1	LAMP (28 VOLT)	
	6	1	**117-2311**	2	RECEPTACLE AS-POWER (12 VOLT)	
	7	1	**128-6157**	1	PLATE	
	8	1	**158-6632**	1	SWITCH AS-HORN	
		1	**2H-3922**	1	LOCKWASHER	
		1	**3B-4501**	1	LOCKWASHER	
		1	**3E-3365**	1	WEDGE-RECEPTACLE LOCK (2 PIN)	
		1	**5L-7200**	1	SCREW (8-32X0.375 IN)	
		1	**6V-8370**	1	NUT-HEX (3/4-32 THD)	
		1	**7T-9515**	1	KNOB-HORN	
		1	**9X-0199**	1	BOOT-SWITCH	
		1	**9X-3401**	2	PIN-CONNECTOR	
		1	**102-8802**	1	KIT-RECEPTACLE (2 PIN)	
					(INCLUDES RECEPTACLE AS & WEDGE)	
	9	1	**159-1549**	1	CONVERTER-POWER (24 VOLTS TO 12 VOLTS)	
	10	1	**160-5574**	1	HARNESS AS (THROTTLE)	
		1	**102-8811**	1	KIT-CONNECTING PLUG (8 PIN)	
					(INCLUDES PLUG AS, SEAL-INTERFACE & WEDGE)	
	11	1	**170-3461**	1	BASE AS-LIGHT	
		1	**102-8802**	1	KIT-RECEPTACLE (2 PIN)	
					(INCLUDES RECEPTACLE AS & WEDGE)	
		1	**3E-3365**	1	WEDGE-RECEPTACLE LOCK (2 PIN)	
		1	**3T-0304**	1	BASE-INDICATOR LIGHT	
		1	**6V-8374**	2	SCREW-MACHINE (6-32X0.25 IN)	
BD		1	**5P-5623**		WIRE (16 GA)	
BD		1	**6V-2689**		TUBE-SHRINKABLE	
		1	**8T-8729**	2	PIN-CONNECTOR	
E		1	**9X-1813**		SLEEVE (8CM)	
	12	1	**173-1566**		CAP AS	
BD		1	**5P-3075**		WIRE	
BE		1	**125-7875**		TUBE-SHRINKABLE	
		1	**155-2262**	1	WEDGE-PLUG LOCK	
		1	**155-2271**	1	KIT-CONNECTING PLUG (4 PIN)	
					(INCLUDES PLUG AS & WEDGE)	
	13	1	**175-7016**	1	PLATE AS	
Y	14	1	**175-7017**	1	PANEL GP-RELAY	256
	15	1	**180-8066**	1	PLATE AS	
		1	**6V-6716**	2	RIVET-TRUSS HEAD	
		1	**109-1645**	1	CLIP	
B	16	1	**193-3973**		TIE-WRAP	
	17	1	**194-9380**	1	HARNESS AS (RH CONSOLE)	
		1	**102-8803**	1	KIT-RECEPTACLE (3 PIN)	
					(INCLUDES RECEPTACLE AS & WEDGE)	
		1	**155-2265**	1	KIT-CONNECTING PLUG (8 PIN)	
		1	**155-2260**	1	KIT-CONNECTING PLUG (3 PIN)	
		1	**155-2270**	1	KIT-CONNECTING PLUG (2 PIN)	
					(EACH CONNECTING PLUG INCLUDES PLUG AS & WEDGE)	
	18	1	**195-9354**	1	WIRE AS	
	19	1	**196-8946**	1	STRIP	
	20	1	**196-8950**	1	PLATE	
	21	1	**197-4628**	1	PLATE AS	
		1	**6V-6716**	2	RIVET-TRUSS HEAD	

159-9264 **WIRING GP-PLATFORM** ***(contd.)*** **i01486743**

NOTE	REF NO	GRAPHIC REF	PART NUMBER	QTY	PART NAME 1 2 3 4 5 6 (PRODUCT LEVEL)	SEE PAGE
		1	**109-1645**	1	CLIP	
	22	1	**199-4010**	1	SPACER	
	23	1	**199-9798**	1	HARNESS AS (PLATFORM)	
		1	**102-8802**	9	KIT-RECEPTACLE (2 PIN)	
		1	**102-8803**	2	KIT-RECEPTACLE (3 PIN)	
		1	**102-8804**	1	KIT-RECEPTACLE (4 PIN)	
		1	**102-8806**	2	KIT-RECEPTACLE (8 PIN)	
		1	**102-8801**	2	KIT-RECEPTACLE (12 PIN)	
		1	**177-9653**	1	KIT-RECEPTACLE	
					(EACH RECEPTACLE KIT INCLUDES RECEPTACLE AS & WEDGE)	
		1	**155-2265**	2	KIT-CONNECTING PLUG (8 PIN)	
		1	**155-2260**	2	KIT-CONNECTING PLUG (3 PIN)	
		1	**155-2270**	11	KIT-CONNECTING PLUG (2 PIN)	
		1	**155-2271**	2	KIT-CONNECTING PLUG (4 PIN)	
		1	**155-2274**	1	KIT-CONNECTING PLUG (6 PIN)	
		1	**177-9656**	1	KIT-CONNECTING PLUG (4 PIN)	
					(EACH PLUG KIT INCLUDES PLUG AS, WEDGE & INTERFACE SEAL)	
	24	1	**130-5300**	1	CLIP	
	25	1	**141-4976**	4	SCREW-WASHER HEAD	
	26	1	**2G-1133**	1	GROMMET	
	27	1	**2N-3476**	4	SCREW-MACHINE (6-32X0.75 IN)	
	28	1	**105-9149**	1	SWITCH AS (24 VOLT)(ILLUMINATED)	
	29	1	**4P-7581**	2	CLIP	
	30	1	**4P-8134**	2	CLIP	
	31	1	**5F-9757**	1	GROMMET	
	32	1	**7D-6922**	2	LOCKNUT	
M	33	1	**7X-2538**	4	BOLT (M8X1.25X100MM)	
M	34	1	**107-3786**	6	BOLT (M4X.7X12MM)	
	35	1	**8T-0328**	6	WASHER-HARD (5.5X10X1MM THK)	
	36	1	**8T-4121**	15	WASHER-HARD (11X21X2.5MM THK)	
M	37	1	**8T-4136**	4	BOLT (M10X1.5X25MM)	
M	38	1	**8T-4137**	8	BOLT (M10X1.5X20MM)	
M	39	1	**8T-4189**	4	BOLT (M8X1.25X20MM)	
M	40	1	**8T-4191**	3	BOLT (M10X1.5X16MM)	
	41	1	**8T-4224**	8	WASHER-HARD (8.8X16X2MM THK)	
	42	1	**9G-2673**	1	GROMMET	
	43	1	**9X-6258**	2	SCREW-MACHINE (6-32X.50 IN)	

B-USE AS REQUIRED
D-ORDER BY THE METER
E-ORDER BY THE CENTIMETER
M-METRIC PART
Y-SEPARATE ILLUSTRATION

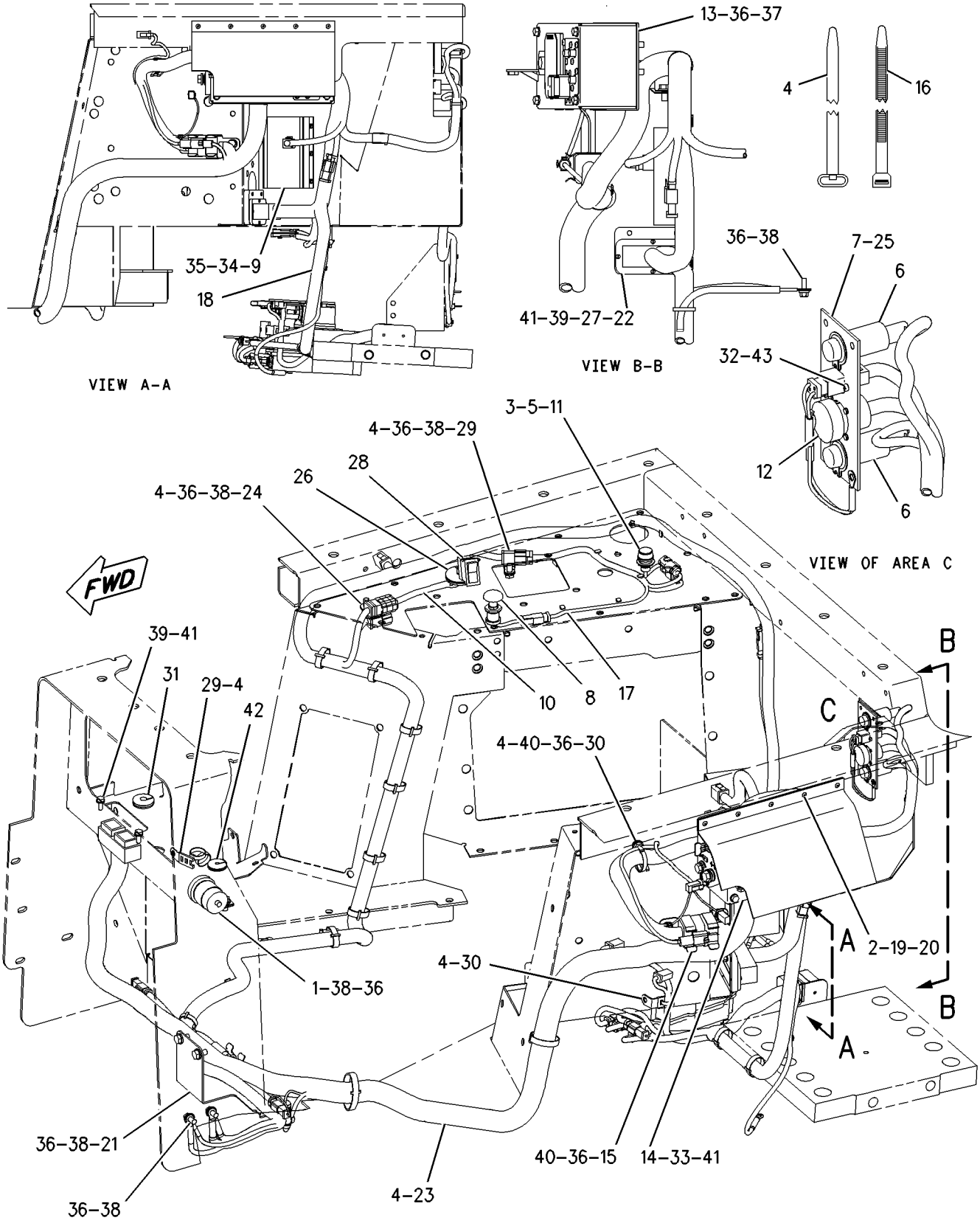

GRAPHIC #1

g00765441

194-4269 WIRING GP-THROTTLE

S/N: AKA1-UP
ENCLOSED ROPS
PART OF 159-8367 CAB AR

SMCS-1408 **i01448455**

NOTE	REF NO	GRAPHIC REF	PART NUMBER	QTY	PART NAME 1 2 3 4 5 6 (PRODUCT LEVEL)	SEE PAGE
	1	1	**194-1094**	1	HARNESS AS (EROPS THROTTLE JUMPER)	
		1	**155-2265**	1	KIT-CONNECTING PLUG (8 PIN)	
					(INCLUDES PLUG AS & WEDGE)	
	2	1	**194-4268**	1	PLATE AS	
M		1	**6V-9632**	2	NUT-WELD (M6X1 THD)	
	3	1	**068-4209**	4	SCREW (8-32X0.75 IN)	
	4	1	**4B-4863**	4	WASHER (4.7X11X1.2MM THK)	
M	5	1	**5C-9553**	2	BOLT (M6X1X16MM)	
	6	1	**6D-5801**	4	NUT (8-32 THD)	
	7	1	**9X-8256**	2	WASHER (6.6X12X2MM THK)	

M-METRIC PART

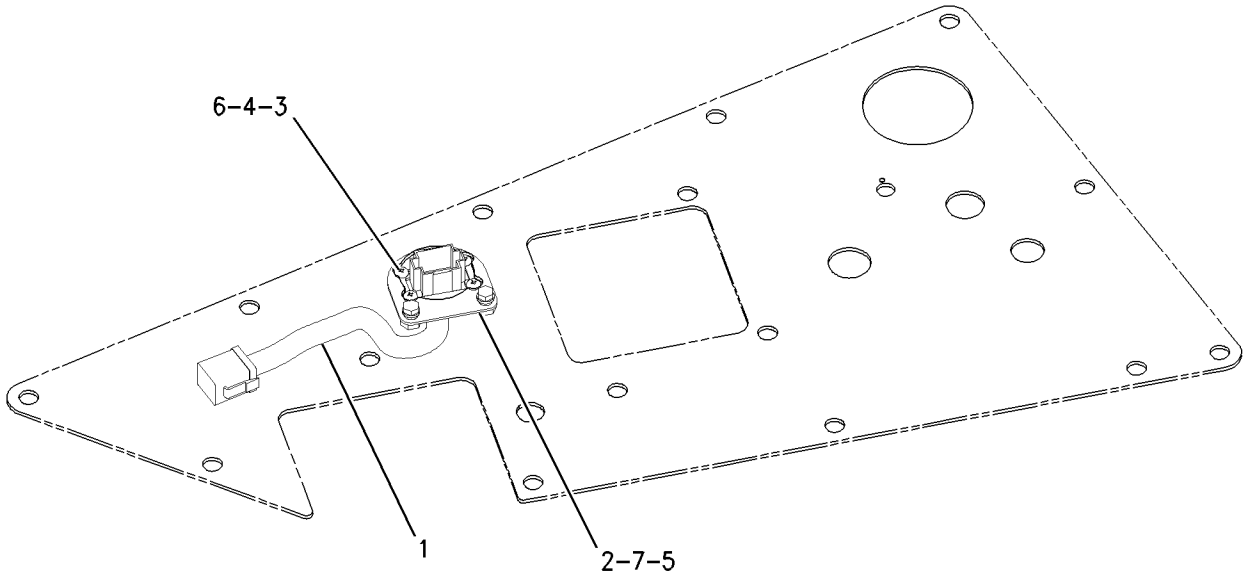

GRAPHIC #1 g00722595

1Q-3056 AXLE GP-POWER TRAIN

S/N: AKA1-UP

PART OF 129-1330 GAUGE AR

SMCS-3013, 3259, 3278 **i01323276**

NOTE	REF NO	GRAPHIC REF	PART NUMBER	QTY	PART NAME 1 2 3 4 5 6 (PRODUCT LEVEL)	SEE PAGE
	1	1	**1Q-3059**	1	SHAFT AS-LH	
	2	1	**8E-0618**	1	BEARING-THRUST	
	3	1	**3T-5851**	1	SHAFT	
	4	1	**1Q-3057**	1	SHAFT AS-RH	
	5	1	**8E-0618**	1	BEARING-THRUST	

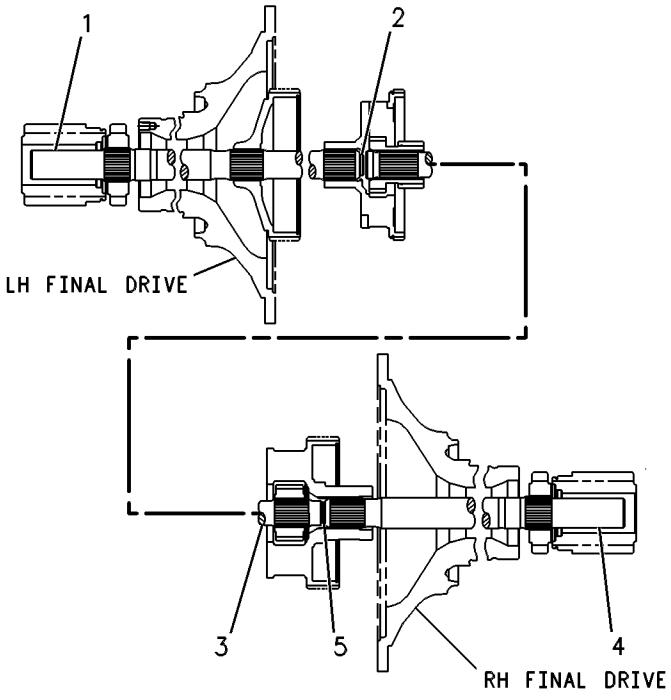

GRAPHIC #1 g00255005

7T-8148 AXLE GP-POWER TRAIN

S/N: AKA1-UP

PART OF 157-0820 POWER TRAIN AR

SMCS-3013, 3259, 3278 **i01065806**

NOTE	REF NO	GRAPHIC REF	PART NUMBER	QTY	PART NAME 1 2 3 4 5 6 (PRODUCT LEVEL)	SEE PAGE
	1	1	**8E-3519**	1	SHAFT AS-LH	
		1	**8E-0618**	1	BEARING-THRUST	
	2	1	**8E-3518**	1	SHAFT AS-RH	
		1	**8E-0618**	1	BEARING-THRUST	
	3	1	**3T-5851**	1	SHAFT	

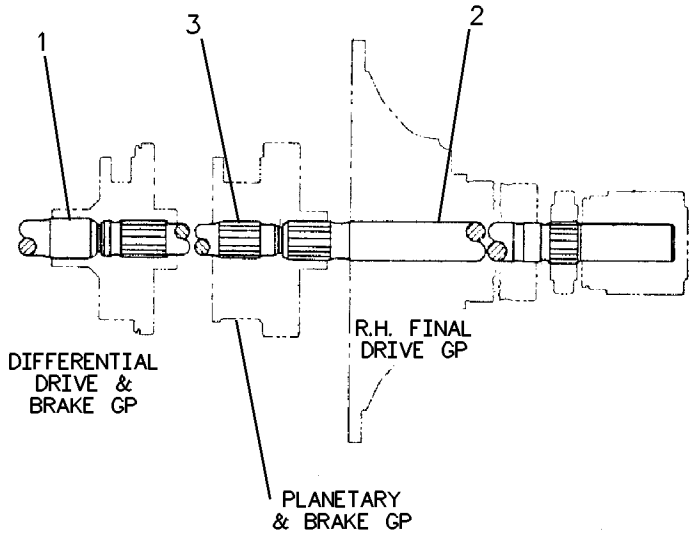

GRAPHIC #1 g00215398

POWER TRAIN

6Y-3587 BRAKE & DIFFERENTIAL DRIVE GP

S/N: AKA1-UP

PART OF 159-2542 BRAKE & DRIVE GP

SMCS-4131 **i00963683**

NOTE	REF NO	GRAPHIC REF	PART NUMBER	QTY	PART NAME 1 2 3 4 5 6 (PRODUCT LEVEL)	SEE PAGE
	1	1	**0S-1614**	3	BOLT	
	2	1	**7T-6994**	3	PLATE-CLUTCH & BRAKE	
	3	1	**7T-9832**	1	RETAINER	
	4	1	**6Y-9373**	4	DISC-FRICTION	
	5	1	**7T-1885**	1	RING	
	6	1	**6Y-3979**	1	HUB	
B	7	1	**3T-9272**	1	SHIM PACK (INCL 8 SHIMS)	
	8	1	**1A-2029**	7	BOLT (3/8-16X1.125IN)	
	9	1	**5M-2894**	7	WASHER (2.5MM THK)	
	10	1	**7T-9837**	1	PLATE	
	11	1	**2K-9295**	1	CONE-ROLLER BEARING	
	12	1	**3B-4124**	1	CUP-ROLLER BEARING	
	13	1	**2B-0947**	6	BOLT (1/2-13X2.25IN)	
	14	1	**5P-8245**	6	WASHER (3MM THK)	
	15	1	**6T-0850**	2	WASHER-THRUST	
	16	1	**6T-7863**	1	SLEEVE	
	17	1	**6V-7646**	3	WASHER-HARD (2MM THK)	
	18	1	**9W-6577**	1	SPOOL	
	19	1	**9S-8005**	2	PLUG-O-RING (3/4-16 THD)	
	20	1	**6J-7836**	1	RING-SNAP	
	21	1	**6D-9953**	1	PIN-SPRING	
	22	1	**6Y-3986**	1	PISTON	
	23	1	**3T-3601**	1	RING-SPACER	
	24	1	**6Y-2704**	1	SPRING-DISC	
	25	1	**2A-4639**	1	BOLT (3/8-16X1.625IN)	
	26	1	**136-1596**	1	HOUSING-ROTATING	
	27	1	**6Y-2574**	1	GEAR-BEVEL (97 TEETH)	
	28	1	**0L-1143**	21	BOLT (3/8X2.50IN)	
	29	1	**9L-9132**	3	WASHER (2.5MM THK)	
	30	1	**6P-5317**	1	RING-SEAL	
	31	1	**6Y-4003**	1	RING-SEAL	
	32	1	**3K-0360**	2	SEAL-O-RING (16.36MM ID)	
	33	2	**8E-8307**	6	DISC-THRUST	
	34	1	**6Y-2576**	1	PINION-BEVEL (27 TEETH)	
	35	1	**005-4834**	2	CONE-ROLLER BEARING	
	36	1	**6Y-3982**	1	CARRIER	
	37	1	**6P-1736**	1	WASHER-TONGUE	
	38	1	**9B-0576**	1	LOCKNUT-BEARING	
	39	1	**6P-1735**	1	LOCKWASHER	
	40	1	**7H-4566**	2	CUP-ROLLER BEARING	
	41	1	**6V-0855**	1	CONE-ROLLER BEARING	
	42	1	**2K-5069**	1	CUP-ROLLER BEARING	
	43	1	**9W-6770**	1	PLUG-CUP	
	44	1	**8M-4438**	1	SEAL-O-RING (17.12M ID)	
B	45	1	**9W-2853**	1	SHIM PACK (INCL 21 SHIMS)	
	46	1	**7W-6534**	4	PLUG-PIPE (3/8-18 NPTF THD)	
	47	1	**6Y-3991**	1	RETAINER	
	48	1	**6Y-3984**	1	HOUSING AS	
	49	1	**1A-1460**	12	BOLT (1/2-13X2IN)	
	50	1	**5P-8245**	12	WASHER (3MM THK)	
	51	1	**1A-2223**	2	DOWEL	
	52	2	**3S-2708**	7	PIN-SPRING	
	53	2	**6Y-0926**	3	GEAR-PLANETARY (23 TEETH)	
	54	2	**5M-0578**	3	BEARING	
	55	2	**8E-8310**	8	DISC-THRUST	
	56	2	**5M-7925**	4	BEARING-ROLLER	

6Y-3587 **BRAKE & DIFFERENTIAL DRIVE GP** *(contd.)* **i00963683**

NOTE	REF NO	GRAPHIC REF	PART NUMBER	QTY	PART NAME 1 2 3 4 5 6 (PRODUCT LEVEL)	SEE PAGE
	57	2	**6T-0064**	4	SHAFT-PLANETARY	
	58	2	**3T-4824**	4	GEAR-PLANETARY (30 TEETH)	
	59	2	**9W-3939**	1	LOCKRING	
	60	2	**3T-4715**	1	GEAR-SUN (30/24 TEETH)	
	61	2	**9W-3937**	1	SPACER	
	62	2	**3T-5021**	1	CARRIER-PLANETARY	
	63	2	**9W-1571**	1	SLINGER	
B		2	**1U-8846**		SEALANT	
	64	2	**030-2135**	4	BOLT-LOCKING	
	65	2	**7G-1596**	1	RING-RETAINING	
	66	2	**9W-6102**	1	GEAR-RING (84 TEETH)	
	67	2	**9W-6103**	1	RING-THRUST	
	68	2	**3T-6963**	1	SEAL-RING	
	69	2	**6I-8724**	1	LOCKRING	
	70	2	**6Y-0984**	1	GEAR-RING (42 TEETH)	
	71	2	**6T-0062**	1	PLATE	
	72	2	**5K-9107**	3	BOLT-LOCKING (3/8-16X0.75IN)	
	73	2	**3T-5200**	1	CARRIER-PLANETARY	
	74	2	**7T-8130**	1	RING-RETAINING	
	75	2	**3T-4568**	3	SHAFT-PLANETARY	

B-USE AS REQUIRED

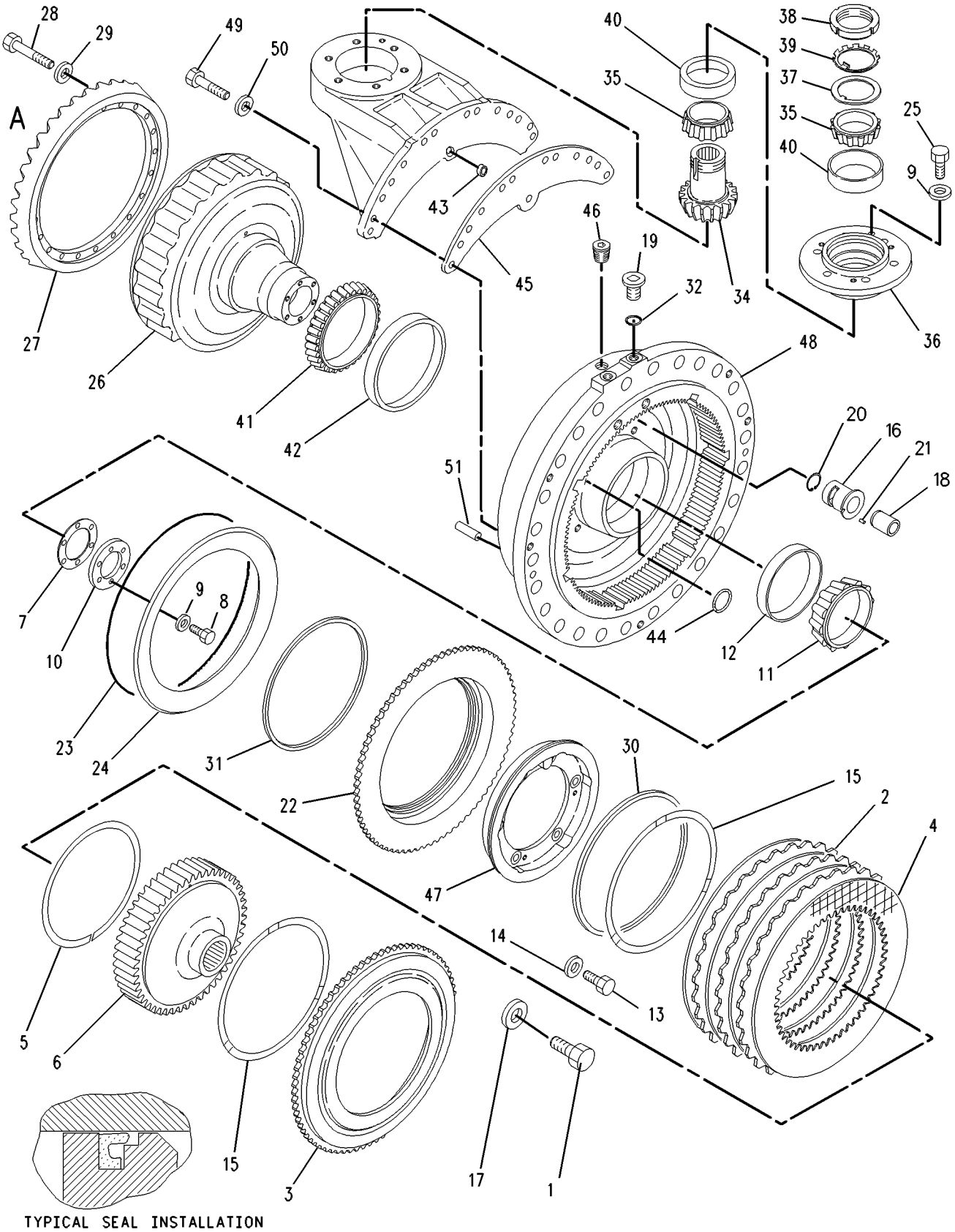

TYPICAL SEAL INSTALLATION

GRAPHIC #1 g00491069

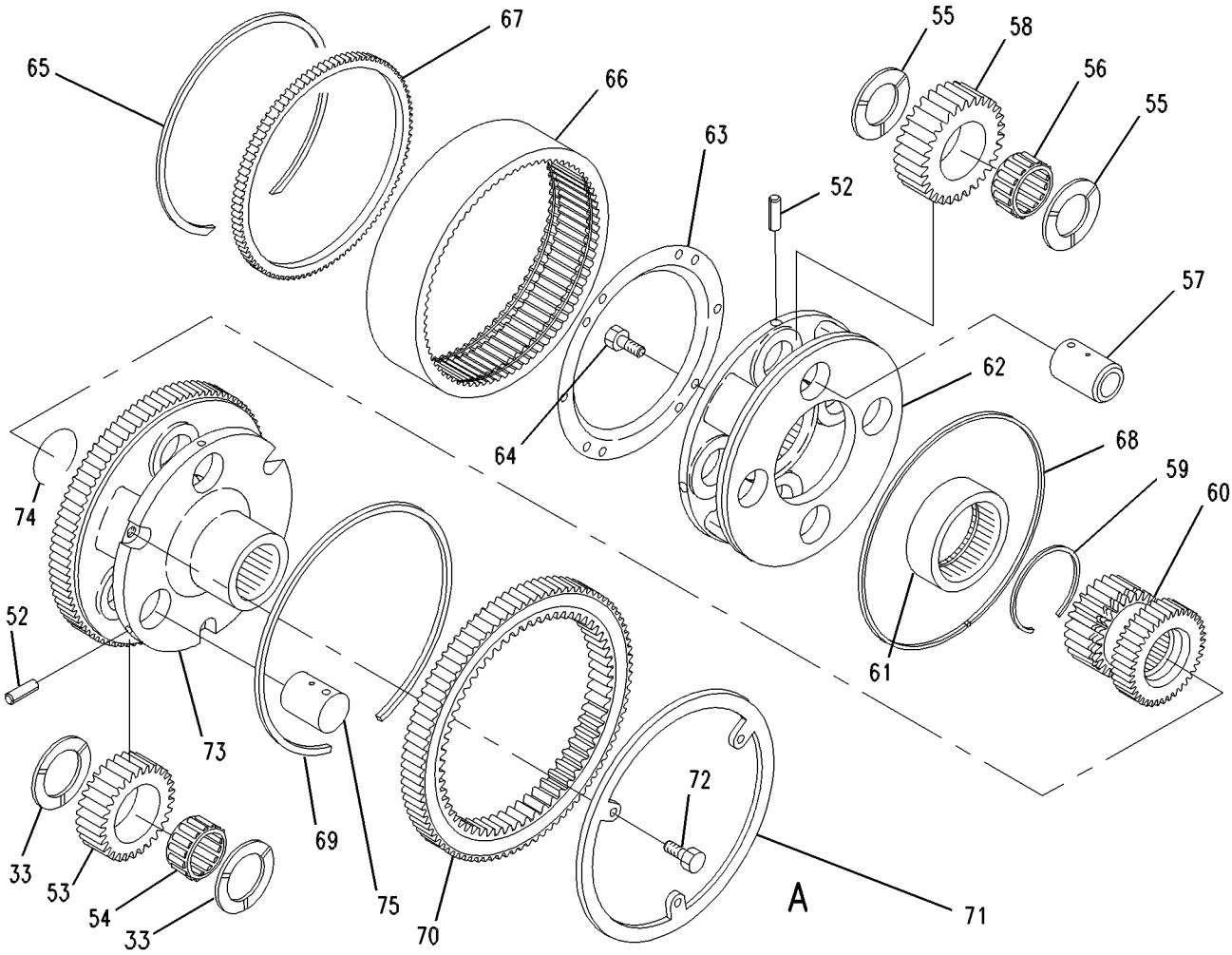

GRAPHIC #2 g00491070

157-5073 BRAKE & DRIVE GP

S/N: AKA1-UP
PLANETARY
PART OF 157-0820 POWER TRAIN AR

SMCS-4050, 4132 **i01430440**

NOTE	REF NO	GRAPHIC REF	PART NUMBER	QTY	PART NAME 1 2 3 4 5 6 (PRODUCT LEVEL)	SEE PAGE
YR	1	1	*6Y-3588*	1	BRAKE & PLANETARY GP	300
	2	1	**8T-4223**	2	WASHER-HARD (13.5X25.5X3MM THK)	
YR	3	1	**157-5072**	1	FINAL DRIVE GP	316
	4	1	**8T-8919**	2	BOLT (1/2-13X1.75 IN)	

R-REMFG PART MAY BE AVAILABLE
Y-SEPARATE ILLUSTRATION

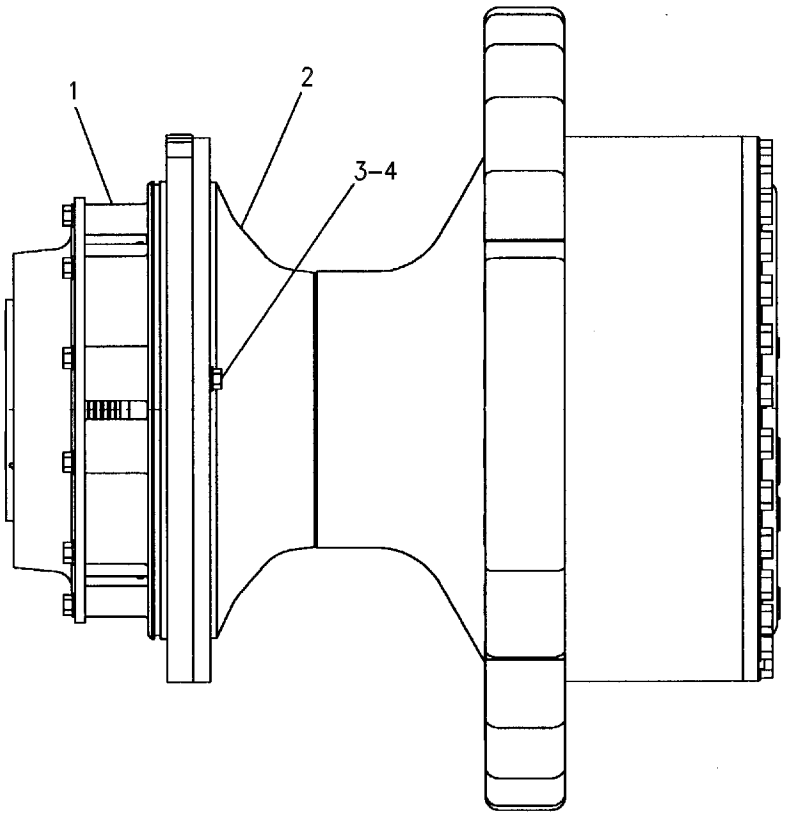

GRAPHIC #1 g00533505

159-2542 BRAKE & DRIVE GP

S/N: AKA1-UP
DIFFERENTIAL
PART OF 157-0820 POWER TRAIN AR

SMCS-4050, 4132 **i01431419**

NOTE	PART NUMBER	QTY	PART NAME 1 2 3 4 5 6 (PRODUCT LEVEL)	SEE PAGE
YR	*6Y-3587*	1	BRAKE & DIFFERENTIAL DRIVE GP	294
YR	**157-5072**	1	FINAL DRIVE GP	316
	8T-8919	2	BOLT (1/2-13X1.75 IN)	
	8T-4223	2	WASHER-HARD (13.5X25.5X3MM THK)	

R-REMFG PART MAY BE AVAILABLE
Y-SEPARATE ILLUSTRATION

POWER TRAIN

6Y-3588 BRAKE & PLANETARY GP*R

S/N: AKA1-UP

PART OF 157-5073 BRAKE & DRIVE GP

SMCS-4050, 4132 **i00570481**

NOTE	REF NO	GRAPHIC REF	PART NUMBER	QTY	PART NAME 1 2 3 4 5 6 (PRODUCT LEVEL)	SEE PAGE
	1	1	**6Y-3981**	1	HOUSING	
	2	1	**3T-3601**	1	RING-SPACER	
	3	1	**6Y-2704**	1	SPRING-DISC	
	4	1	**6P-5317**	1	RING-SEAL	
	5	1	**6Y-4003**	1	RING-SEAL	
	6	1	**7T-9837**	1	PLATE	
	7	1	**6Y-3980**	1	CARRIER-PLANETARY	
	8	1	**1C-0569**	6	BOLT (5/16-18X.5IN)	
	9	1	**0S-1585**	12	BOLT (1/2-13X1.50IN)	
	10	1	**5P-8245**	18	WASHER (3MM THK)	
	11	1	**6Y-3986**	1	PISTON	
	12	1	**9W-7926**	2	CUP-ROLLER BEARING	
	13	1	**2B-0947**	6	BOLT (1/2-13X2.25IN)	
	14	1	**7T-6994**	3	PLATE-CLUTCH & BRAKE	
	15	1	**6Y-9373**	4	DISC-FRICTION	
	16	1	**8E-4051**	1	HUB-BRAKE	
	17	1	**8E-8307**	6	DISC-THRUST	
	18	1	**3S-2708**	3	PIN-SPRING	
	19	1	**7T-8136**	3	SHAFT-PLANETARY	
	20	1	**6T-7863**	1	SLEEVE	
	21	1	**9W-3940**	1	GEAR AS (30 TEETH)	
	22	1	**9W-6577**	1	SPOOL	
	23	1	**6J-7836**	1	RING-SNAP	
	24	1	**6D-9953**	1	PIN-SPRING	
	25	1	**5M-0578**	6	BEARING	
	26	1	**9W-7481**	3	GEAR (23 TEETH)	
	27	1	**7T-1885**	1	RING	
	28	1	**8E-4052**	1	GEAR-RING (75 TEETH)	
	29	1	**3W-1852**	1	RING-RETAINER	
	30	1	**9S-8005**	2	PLUG-O-RING (3/4-16 THD)	
	31	1	**3K-0360**	2	SEAL-O-RING (16.36MM ID)	
	32	1	**3T-5807**	1	SLINGER	
B		1	**1U-8846**		GASKET-LIQUID	
	33	1	**9W-7925**	2	CONE-ROLLER BEARING	
	34	1	**8M-4438**	1	SEAL-O-RING (17.12M ID)	
	35	1	**5M-2894**	6	WASHER (2.5MM THK)	
	36	1	**1A-2029**	6	BOLT (3/8-16X1.125IN)	
	37	1	**6Y-4039**	1	RETAINER AS	
	38	1	**8S-0527**	1	PLUG-CUP	

B-USE AS REQUIRED

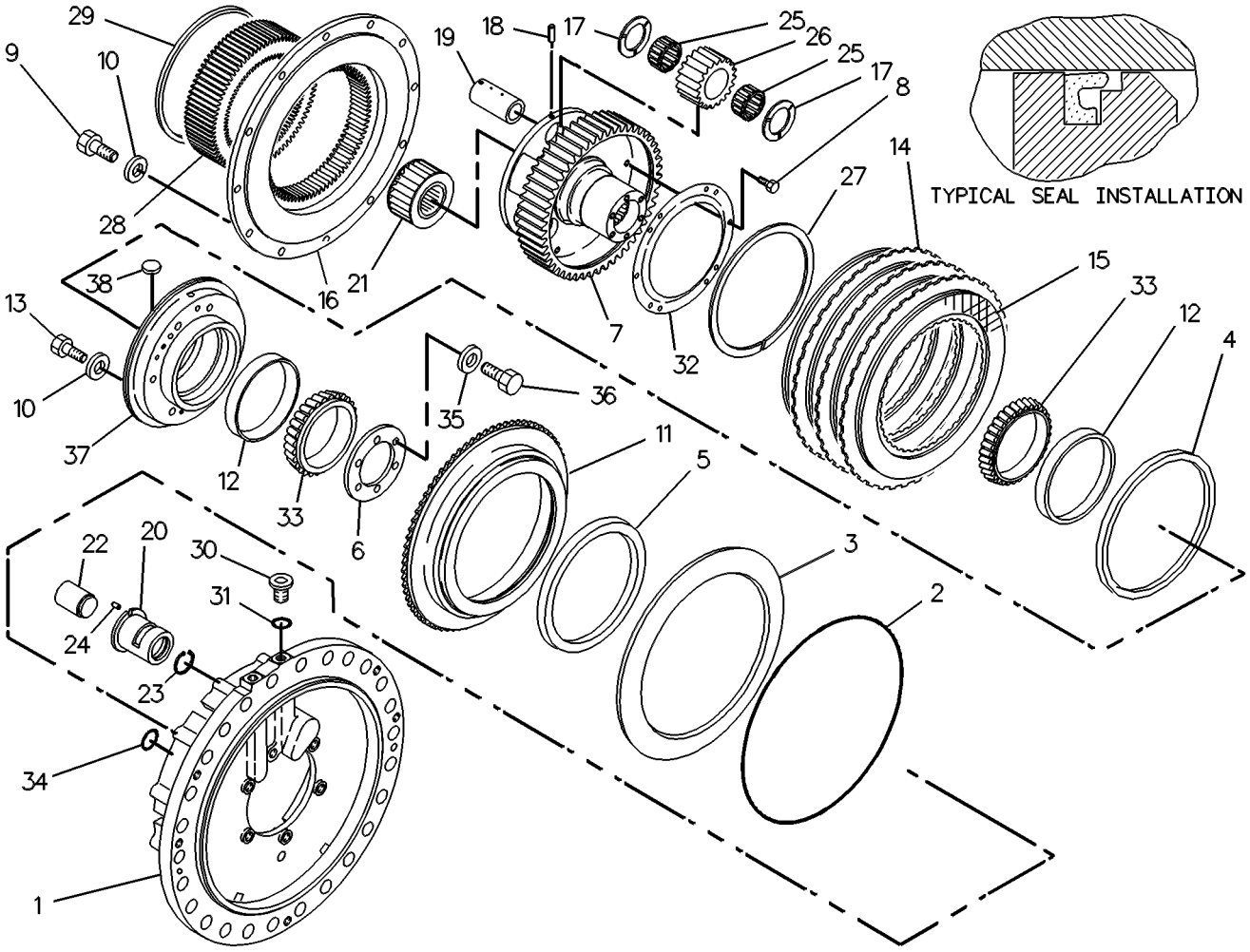

GRAPHIC #1 g00257817

128-2723 CASE & PARTS GP-PLANETARY

S/N: 6GY1-UP

PART OF 164-0234 TRANSMISSION AR

SMCS-3064 **i01486887**

NOTE	REF NO	GRAPHIC REF	PART NUMBER	QTY	PART NAME 1 2 3 4 5 6 (PRODUCT LEVEL)	SEE PAGE
	1	1	**9S-6130**	3	PLUG-O-RING	
	2	1	**2S-4078**	3	SEAL-O-RING	
	3	1	**3J-1907**	3	SEAL-O-RING	
	4	1	**6V-3965**	2	FITTING AS (QUICK DISCONNECT)	
	5	1	**6V-0852**	2	CAP-DUST	
	6	1	**9S-4190**	1	PLUG-O-RING	
	7	1	**2M-9780**	1	SEAL-O-RING	
	8	1	**8M-2530**	4	BOLT-12 POINT HEAD (1/2-13X1.25 IN)	
	9	1	**200-5370**	1	COVER (TRANSMISSION CASE)	
	10	1	**030-8535**	23	BOLT-LOCKING (3/8-16X0.875 IN)	
	11	1	**3T-9922**	1	GASKET-COVER	
	12	1	**108-7747**	1	COVER-TRANSMISSION	
	13	1	**6V-0484**	1	ADAPTER-O-RING	
	14	1	**9M-9647**	3	SEAL-O-RING	
	15	1	**5P-8998**	1	FITTING (1/4-18 NPTF THD)	
	16	1	**9S-7710**	1	ELBOW-FLARED	
	17	1	**7T-8875**	1	TUBE AS	
	18	1	**5K-9988**	1	TEE-INVERTED FLARED	
	19	1	**9P-1475**	1	SLEEVE	
	20	1	**7T-8876**	1	TUBE AS	
	21	1	**5K-9246**	1	CONNECTOR-FLARED	
	22	1	**9W-5334**	1	TUBE AS	
	23	1	**6K-8498**	1	TEE-FLARED	
	24	1	**7J-8611**	1	ELBOW	
	25	1	**9W-4159**	1	TUBE AS	
	26	1	**0T-0102**	1	BOLT (3/8-16X0.625 IN)	
	27	1	**5M-2894**	1	WASHER-HARD (10.2X18.5X2.5MM THK)	
	28	1	**8H-1603**	1	CLIP	
	29	1	**5P-8245**	21	WASHER-HARD (13.5X25.5X3MM THK)	
	30	1	**0S-1585**	21	BOLT (1/2-13X1.50 IN)	
	31	1	**5P-4057**	1	SEAL-O-RING	
	32	1	**8M-5661**	1	SEAL-O-RING	
	33	1	**8S-9130**	1	SCREEN-SUCTION	
	34	1	**8T-6762**	1	PLUG-PIPE	
Y	35	1	**106-4150**	1	DRAIN GP-ECOLOGY	308
	36	1	**6L-9965**	1	SEAL-O-RING	
	37	1	**8T-2501**	4	BOLT (3/8-16X2 IN)	
	38	1	**8P-0058**	1	GASKET-COVER	
	39	1	**9G-8615**	1	COVER	
	40	1	**8M-4432**	2	SEAL-O-RING	
	41	1	**5K-5120**	1	STRIP	
	42	1	**031-0218**	1	BOLT-LOCKING	
	43	2	**190-2278**	1	CASE AS	
	44	2	**4B-9785**	1	BALL	
	45	2	**1A-2610**	1	DOWEL	
	46	2	**7M-1201**	1	DOWEL	
	47	2	**3F-3442**	2	DOWEL	
	48	2	**4B-9782**	1	BALL	
	49	2	**146-6669**	1	GASKET	
	50	2	**146-6670**	1	COVER	
	51	2	**9X-6458**	6	WASHER-HARD (10.2X22.5X3MM THK)	
	52	2	**0S-1594**	6	BOLT (3/8-16X1 IN)	

Y-SEPARATE ILLUSTRATION

128-2723 **CASE & PARTS GP-PLANETARY** ***(contd.)*** **i01486887**

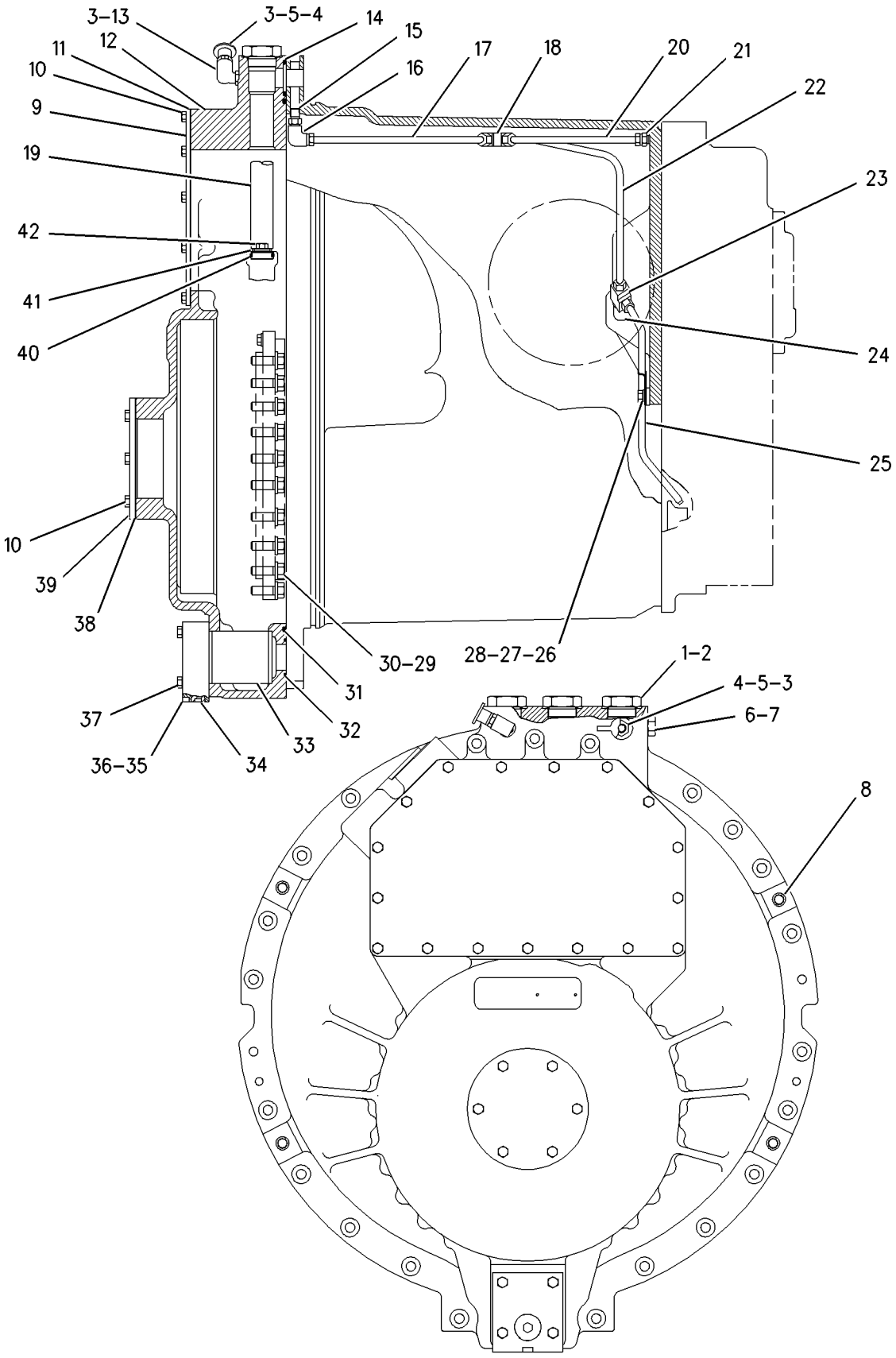

GRAPHIC #1 g00750641

128-2723 **CASE & PARTS GP-PLANETARY** ***(contd.)*** **i01486887**

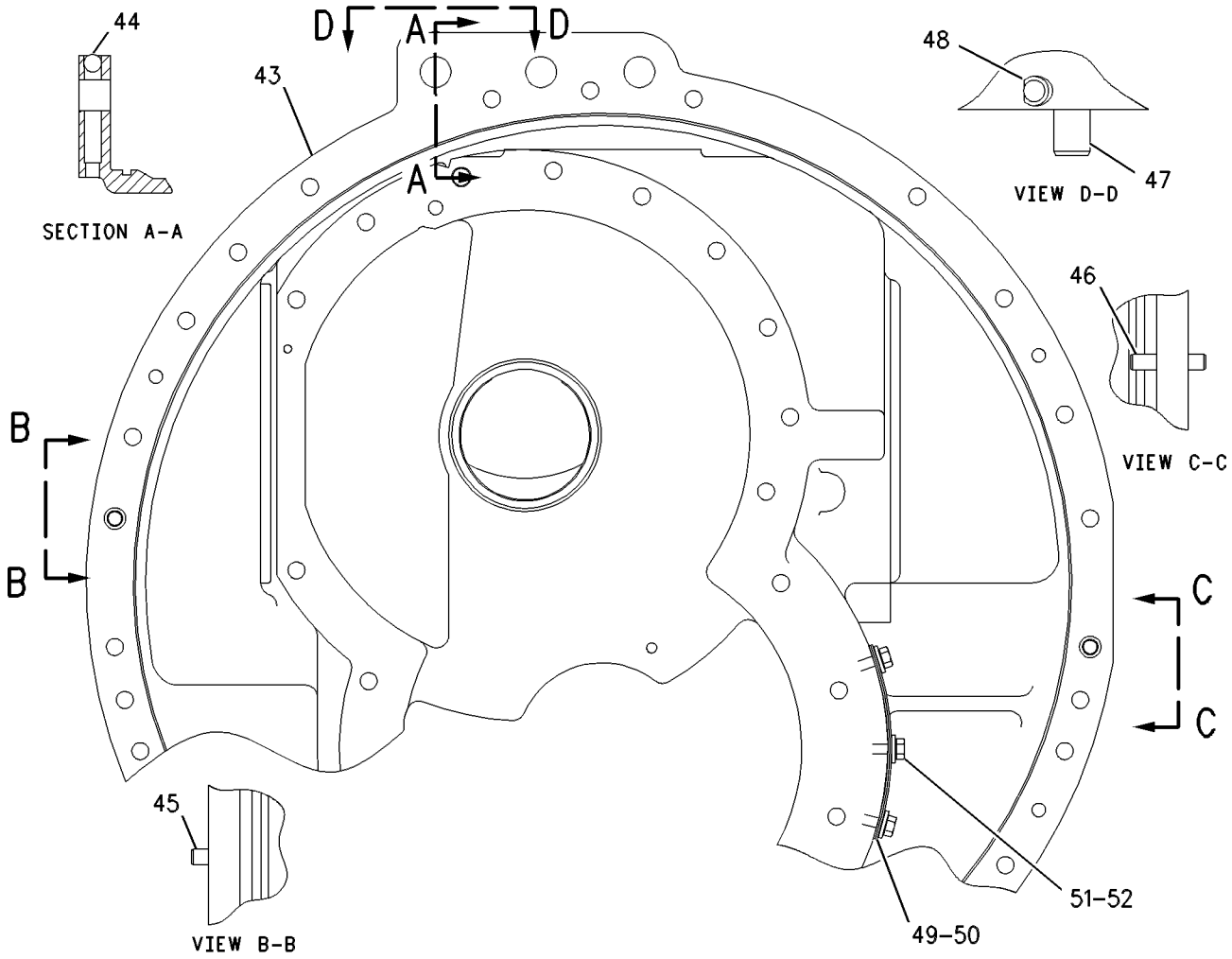

GRAPHIC #2 g00528747

172-5262 CONTROL & MTG GP-PEDAL

S/N: AKA1-UP

PART OF 157-0820 POWER TRAIN AR

SMCS-1276 **i01431842**

NOTE	REF NO	GRAPHIC REF	PART NUMBER	QTY	PART NAME 1 2 3 4 5 6 (PRODUCT LEVEL)	SEE PAGE
N	1	1	**171-7077**	2	ROD-THREADED	
M		1	**8T-4133**	2	NUT (M10X1.5 THD)	
Y	2	1	*158-8079*	1	PEDAL GP-GOVERNOR & BRAKE	334
M	3	1	**8T-4195**	2	BOLT (M10X1.5X30MM)	
	4	1	**8T-4121**	4	WASHER-HARD (11X21X2.5MM THK)	

M-METRIC PART
N-NEW PART
Y-SEPARATE ILLUSTRATION

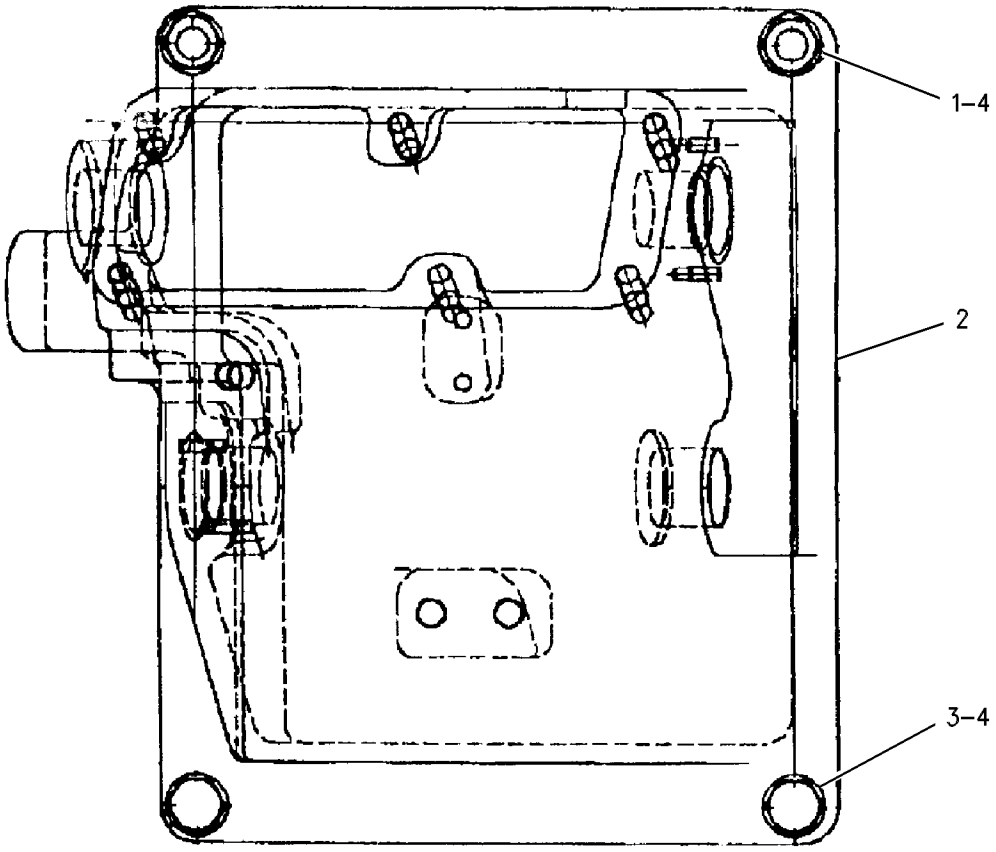

GRAPHIC #1 g00569736

163-5641 CONTROL GP-TRANSMISSION HYD

S/N: 6GY1-UP

PART OF 164-0234 TRANSMISSION AR

SMCS-3073 **i01486893**

NOTE	REF NO	GRAPHIC REF	PART NUMBER	QTY	PART NAME 1 2 3 4 5 6 (PRODUCT LEVEL)	SEE PAGE
	1	1	**5K-5120**	2	STRIP	
	2	1	**104-6729**	1	RETAINER	
	3	1	**104-6730**	1	GASKET	
Y	4	1	**109-4365**	1	VALVE GP-RELIEF	364
	5	1	**110-2836**	2	SLEEVE	
	6	1	**124-5332**	1	ELBOW	
	7	1	**144-7871**	1	HARNESS AS	
Y	8	1	**160-8408**	5	VALVE GP-MODULATING	360
	9	1	**167-6834**	1	HARNESS AS	
	10	1	**031-0218**	2	BOLT-LOCKING	
	11	1	**0S-0509**	2	BOLT (3/8-16X0.75 IN)	
	12	1	**0S-1594**	2	BOLT (3/8-16X1 IN)	
	13	1	**0S-1619**	4	BOLT (3/8-16X3 IN)	
	14	1	**0T-0065**	3	BOLT (3/8-16X3.5 IN)	
	15	1	**1D-4540**	10	BOLT (5/16-18X2.75 IN)	
	16	1	**2H-3932**	2	SEAL-O-RING	
	17	1	**5M-2894**	9	WASHER-HARD (10.2X18.5X2.5MM THK)	
	18	1	**8M-4432**	4	SEAL-O-RING	
	19	1	**9M-1974**	10	WASHER-HARD (8.8X16X2MM THK)	

Y-SEPARATE ILLUSTRATION

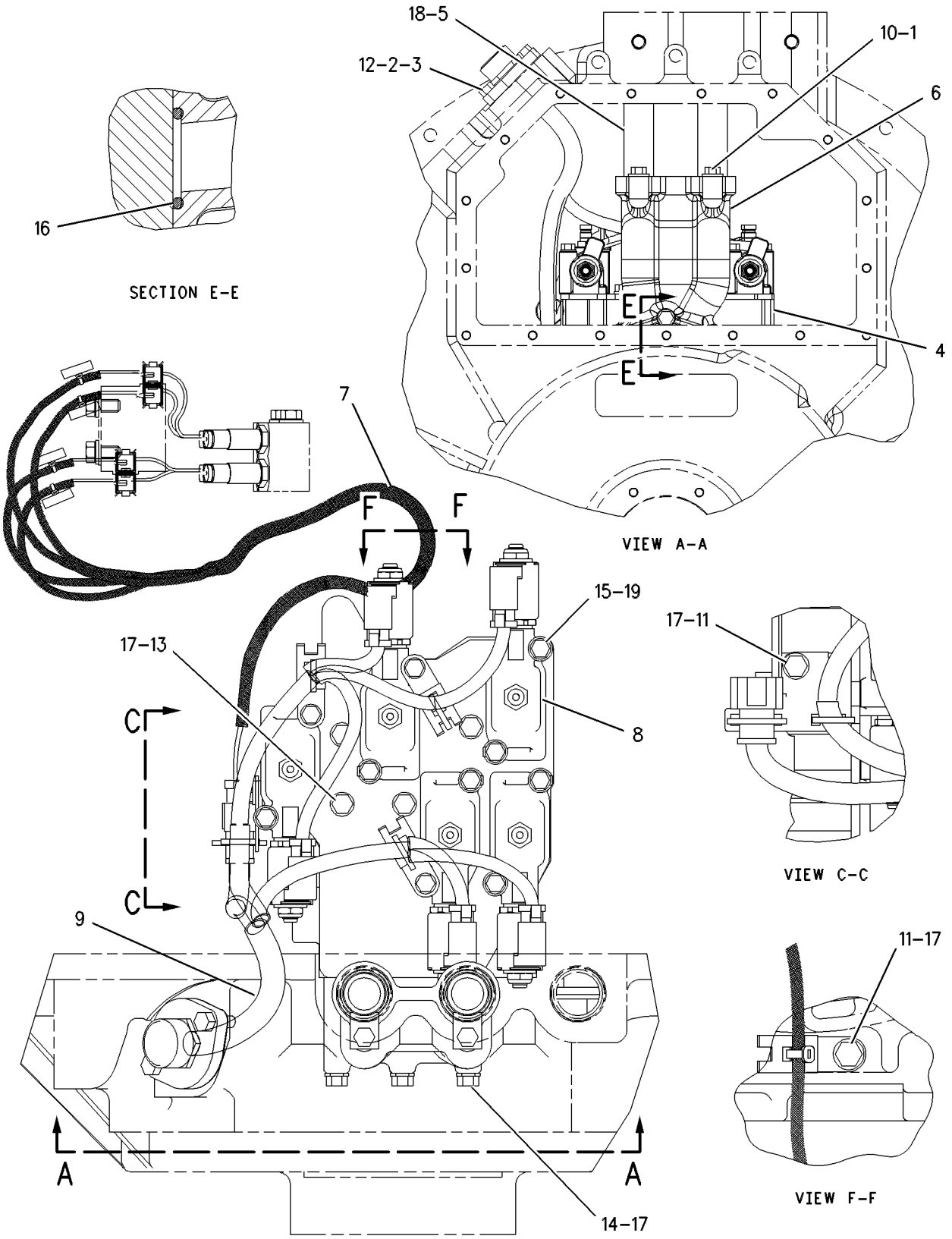

GRAPHIC #1 g00570512

106-4150 DRAIN GP-ECOLOGY

S/N: 6GY1-UP
ECOLOGY
PART OF 128-2723 CASE & PARTS GP-PLANETARY

SMCS-3100 **i01065592**

NOTE	REF NO	GRAPHIC REF	PART NUMBER	QTY	PART NAME 1 2 3 4 5 6 (PRODUCT LEVEL)	SEE PAGE
	1	1	**4N-3808**	1	PIN-SPRING	
	2	1	**5P-9658**	1	SEAL-O-RING	
A	3	1	**2H-3931**	1	SEAL-O-RING (82.14MM ID)	

A-NOT PART OF THIS GROUP

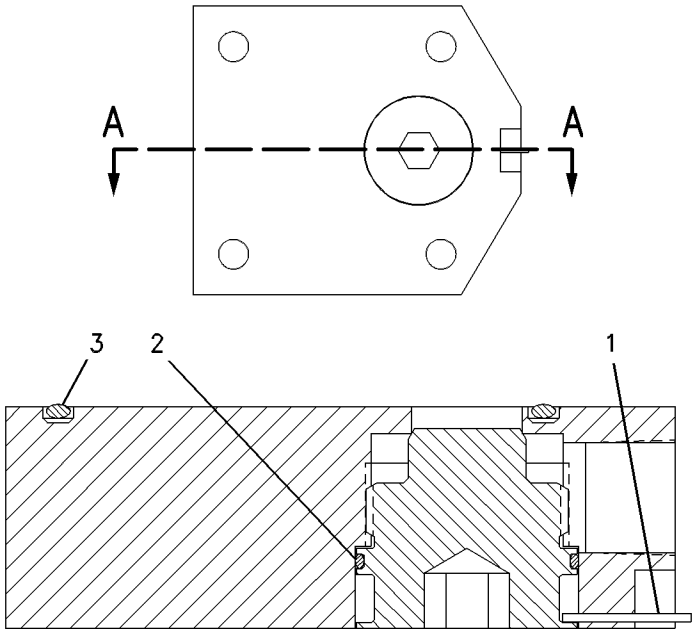

SECTION A-A

GRAPHIC #1 g00543496

POWER TRAIN

178-0568 FILTER GP-OIL

S/N: AKA1-UP

PART OF 156-2542 LINES GP-POWER TRAIN OIL

SMCS-3004 **i01486855**

NOTE	REF NO	GRAPHIC REF	PART NUMBER	QTY	PART NAME 1 2 3 4 5 6 (PRODUCT LEVEL)	SEE PAGE
	1	1	**3J-1907**	2	SEAL-O-RING	
	2	1	**3S-8652**	1	SPRING	
	3	1	**5P-3620**	1	SEAL-O-RING	
	4	1	**6T-9222**	1	SPOOL	
	5	1	**8M-6393**	1	RING-RETAINING	
	6	1	**132-8876**	1	FILTER ELEMENT AS-OIL (HYDRAULIC)	
	7	1	**133-1279**	1	HOUSING AS-OIL FILTER	
	8	1	**133-2199**	1	SPRING	
	9	1	**155-5745**	1	BASE-FILTER	
	10	1	**165-8079**	1	RETAINER	
	11	1	**9S-4191**	1	PLUG-STRAIGHT THREAD	

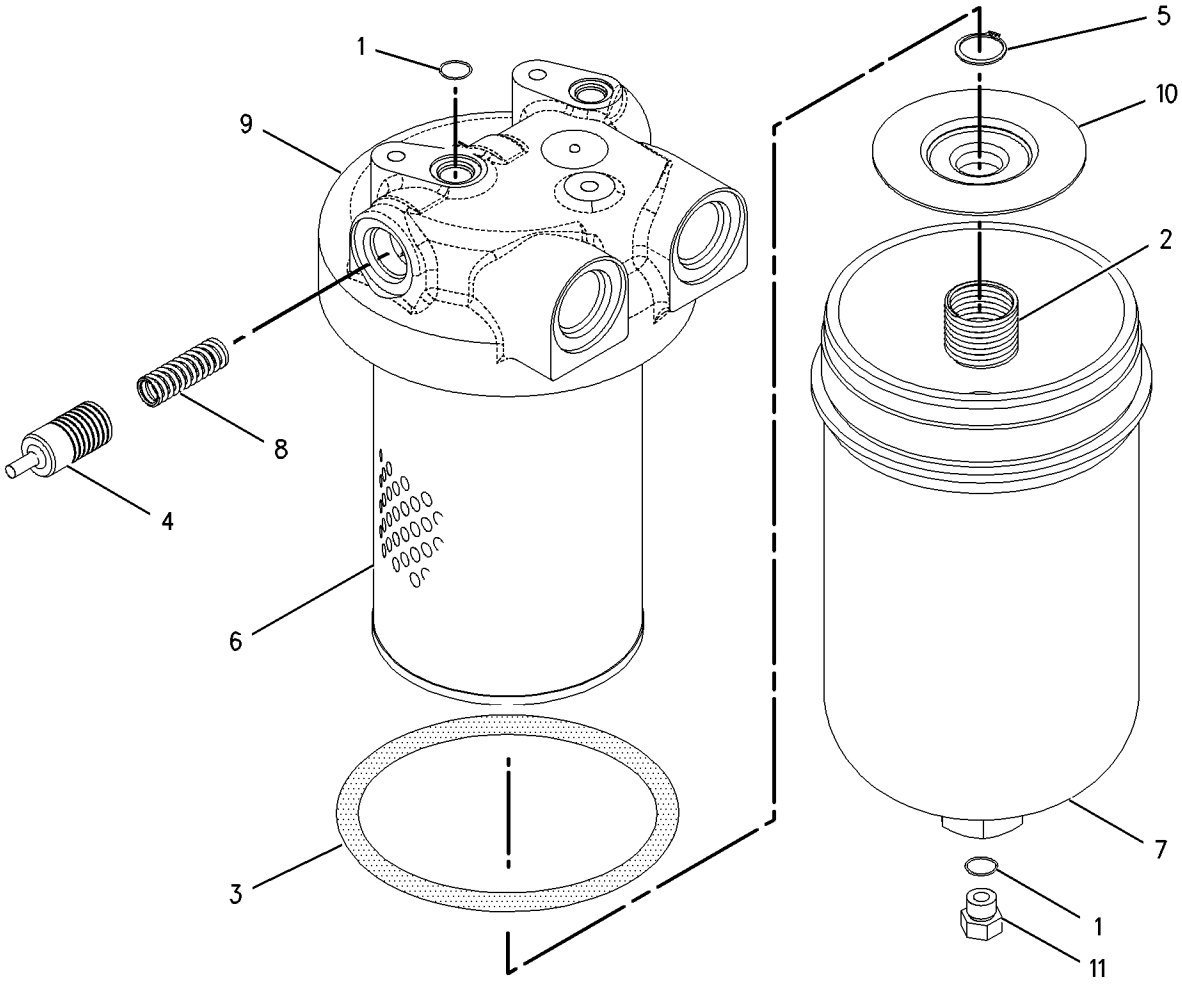

GRAPHIC #1 g00770456

186-2379 FILTER GP-OIL

S/N: AKA1-UP

PART OF 156-2542 LINES GP-POWER TRAIN OIL

SMCS-3004 **i01486844**

NOTE	REF NO	GRAPHIC REF	PART NUMBER	QTY	PART NAME 1 2 3 4 5 6 (PRODUCT LEVEL)	SEE PAGE
	1	1	**1R-0778**	1	FILTER ELEMENT AS-OIL (HYDRAULIC)	
	2	1	**3J-1907**	2	SEAL-O-RING	
	3	1	**3S-8652**	1	SPRING	
	4	1	**3T-0688**	1	SPOOL	
	5	1	**5P-3620**	1	SEAL-O-RING	
	6	1	**6P-5332**	1	RETAINER	
	7	1	**6V-0852**	1	CAP-DUST	
	8	1	**6V-3965**	1	FITTING AS (QUICK DISCONNECT)	
	9	1	**9S-4191**	1	PLUG-STRAIGHT THREAD	
	10	1	**9G-8629**	1	HOUSING AS-OIL FILTER	
	11	1	**9M-1986**	1	SPRING	
	12	1	**155-5745**	1	BASE-FILTER	
	13	1	**2J-6356**	1	RING-RETAINING	

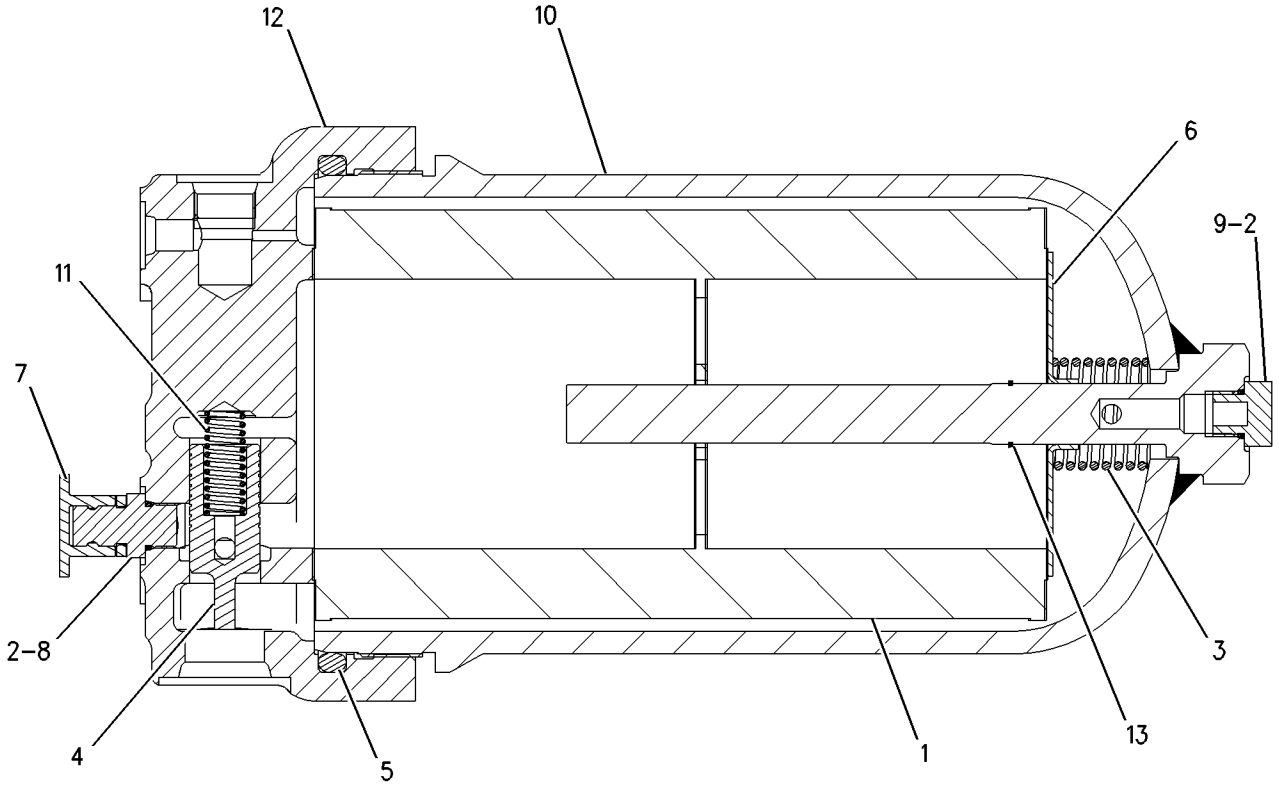

GRAPHIC #1 g00679654

MEMORANDA

POWER TRAIN

128-0302 FINAL DRIVE GP

S/N: AKA1-UP

PART OF 199-0818 DISPOSAL AR-WASTE

SMCS-4050 **i01489167**

NOTE	REF NO	GRAPHIC REF	PART NUMBER	QTY	PART NAME 1 2 3 4 5 6 (PRODUCT LEVEL)	SEE PAGE
	1	1	**136-6820**	1	HUB AS-SUPPORT	
		1	**136-6821**	1	HUB-SUPPORT	
		1	**137-4489**	1	GUARD	
	2	1	**133-0526**	1	SEAL GP-DUO-CONE	
	3	1	**6V-0663**	1	CONE-ROLLER BEARING	
	4	1	**6V-0662**	1	CUP-ROLLER BEARING	
	5	1	**6V-0664**	1	CONE-ROLLER BEARING	
	6	1	**5F-2465**	1	CUP-ROLLER BEARING	
	7	1	**5K-8454**	15	BOLT (1/2-13X1.12 IN)	
	8	1	**8E-7533**	4	SHAFT-PLANETARY (21 TEETH)	
	9	1	**137-4492**	1	HUB AS	
		1	**137-4488**	1	GUARD	
Y	10	1	*156-5341*	1	SEGMENT GP-SPROCKET	344
	11	1	**1M-7911**	8	CUP-ROLLER BEARING	
	12	1	**157-5075**	4	GEAR (21 TEETH)	
	13	1	**1M-7912**	8	CONE-ROLLER BEARING	
	14	1	**9W-9393**	1	GEAR (62 TEETH)	
	15	1	**9W-3372**	4	GEAR (21 TEETH)	
	16	1	**7T-9526**	8	CONE-ROLLER BEARING	
	17	1	**7T-9527**	8	CUP-ROLLER BEARING	
	18	1	**7X-0366**	29	BOLT (3/4-10X2 IN)	
	19	1	**8T-4994**	29	WASHER-HARD (20X36.5X3.5MM THK)	
	20	1	**9H-0846**	1	SEAL-O-RING	
	21	1	**9W-3377**	4	SHAFT-GOVERNOR CONTROL	
	22	1	**3D-2895**	4	SEAL-QUAD RING	
	23	1	**9W-3378**	4	COVER	
	24	1	**034-3557**	16	BOLT-LOCKING (3/8-16X1.125 IN)	
	25	1	**8T-4896**	8	WASHER-HARD (10.2X18.5X2.5MM THK)	
	26	1	**8J-1665**	1	SEAL-O-RING	
	27	1	**9W-3373**	1	GEAR (18 TEETH)	
	28	1	**9W-3232**	1	RETAINER	
	29	1	**9W-9394**	1	COVER	
	30	1	**8T-8917**	4	BOLT (1/2-13X1.25 IN)	
	31	1	**8T-4223**	4	WASHER-HARD (13.5X25.5X3MM THK)	
	32	1	**9W-9392**	1	CARRIER-PLANETARY	
	33	1	**6V-3298**	1	PLUG-MAGNETIC	
	34	1	**2S-4078**	1	SEAL-O-RING	
	35	1	**9S-4185**	1	PLUG-O-RING	
	36	1	**3K-0360**	1	SEAL-O-RING	
	37	1	**5F-7054**	1	SEAL-O-RING	
	38	1	**6Y-1336**	1	CARRIER-PLANETARY	
	39	1	**5P-8472**	1	RING-RETAINING	
	40	1	**7T-2524**	1	GEAR (18 TEETH)	
	41	1	**7T-2530**	2	RING-THRUST	
	42	1	**7G-5832**	1	RETAINER	
	43	1	**7G-5831**	1	RING-RETAINING	
	44	1	**8E-7532**	1	HUB-REACTION	
	45	1	**3T-5923**	1	RETAINER	
	46	1	**6T-2173**	15	PIN	
	47	1	**7X-4777**	1	SEAL-LIP	
	48	1	**2R-0098**	1	SEAL-O-RING	
	49	1	**137-4490**	2	RETAINER	
	50	1	**8T-4224**	16	WASHER-HARD (8.8X16X2MM THK)	
	51	1	**8E-7534**	4	RETAINER	
	52	1	**137-9810**	2	SEAL-PACKING	
	53	1	**8C-6561**	16	BOLT (5/16-18X1.375 IN)	

Y-SEPARATE ILLUSTRATION

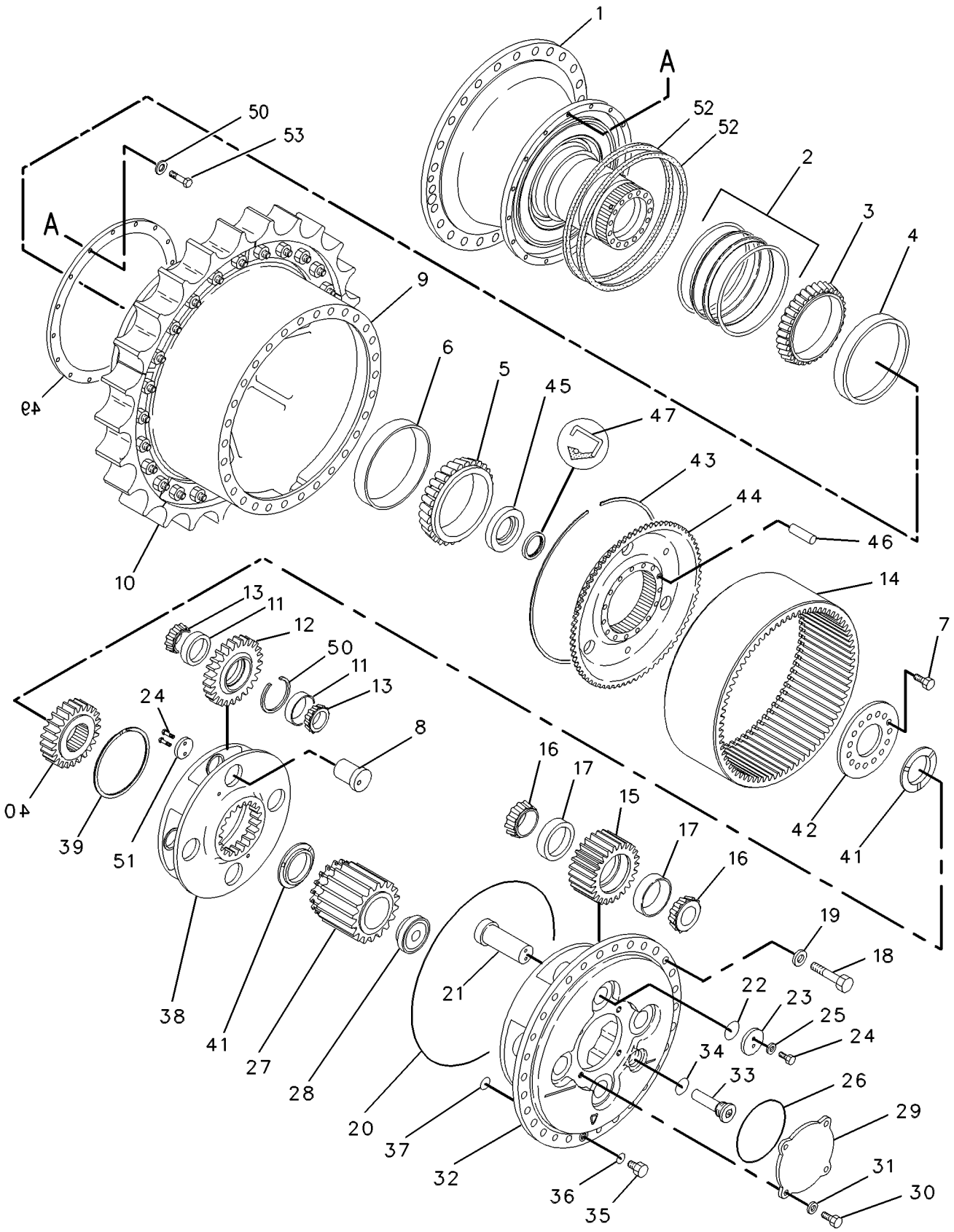

GRAPHIC #1 g00543848

MEMORANDA

POWER TRAIN

157-5072 FINAL DRIVE GP*R

S/N: AKA1-UP

PART OF 157-5073, 159-2542 BRAKE & DRIVE GP

SMCS-4050 **i01430460**

NOTE	REF NO	GRAPHIC REF	PART NUMBER	QTY	PART NAME 1 2 3 4 5 6 (PRODUCT LEVEL)	SEE PAGE
	1	1	**1M-7911**	8	CUP-ROLLER BEARING	
	2	1	**1M-7912**	8	CONE-ROLLER BEARING	
	3	1	**3T-5923**	1	RETAINER	
	4	1	**5F-2465**	1	CUP-ROLLER BEARING	
	5	1	**5K-8454**	15	BOLT (1/2-13X1.12 IN)	
	6	1	**6T-2173**	15	PIN	
	7	1	**6V-0662**	1	CUP-ROLLER BEARING	
	8	1	**6V-0663**	1	CONE-ROLLER BEARING	
	9	1	**6V-0664**	1	CONE-ROLLER BEARING	
	10	1	**6V-3298**	1	PLUG-MAGNETIC	
	11	1	**6Y-0860**	1	SEAL GP-DUO-CONE	
	12	1	**6Y-1336**	1	CARRIER-PLANETARY	
	13	1	**7G-5831**	1	RING-RETAINING	
	14	1	**7G-5832**	1	RETAINER	
	15	1	**7T-2524**	1	GEAR (18 TEETH)	
	16	1	**7T-2530**	2	RING-THRUST	
R	17	1	**7T-8001**	1	HUB-SPINDLE	
	18	1	**7T-9526**	8	CONE-ROLLER BEARING	
	19	1	**7T-9527**	8	CUP-ROLLER BEARING	
	20	1	**7X-4777**	1	SEAL-LIP	
	21	1	**8E-2481**	1	HUB-SPROCKET	
	22	1	**8E-7532**	1	HUB-REACTION	
	23	1	**8E-7533**	4	SHAFT-PLANETARY (21 TEETH)	
	24	1	**8E-7534**	4	RETAINER	
	25	1	**8T-4223**	4	WASHER-HARD (13.5X25.5X3MM THK)	
	26	1	**9W-3232**	1	RETAINER	
	27	1	**9W-3372**	4	GEAR (21 TEETH)	
	28	1	**9W-3373**	1	GEAR (18 TEETH)	
	29	1	**9W-3377**	4	SHAFT-GOVERNOR CONTROL	
	30	1	**9W-3378**	4	COVER	
	31	1	**9W-9392**	1	CARRIER-PLANETARY	
	32	1	**9W-9393**	1	GEAR (62 TEETH)	
	33	1	**9W-9394**	1	COVER	
	34	1	**034-3557**	16	BOLT-LOCKING (3/8-16X1.125 IN)	
Y	35	1	**156-5341**	1	SEGMENT GP-SPROCKET	344
	36	1	**157-5075**	4	GEAR (21 TEETH) (21 TEETH)	
	37	1	**2R-0098**	1	SEAL-O-RING (456.06MM ID)	
	38	1	**2S-4078**	1	SEAL-O-RING (37.46MM ID)	
	39	1	**3D-2895**	4	SEAL-QUAD RING	
	40	1	**3K-0360**	1	SEAL-O-RING (16.36MM ID)	
	41	1	**5F-7054**	1	SEAL-O-RING (18.64MM ID)	
	42	1	**5P-8472**	1	RING-RETAINING	
	43	1	**7X-0366**	29	BOLT (3/4-10X2 IN)	
	44	1	**8J-1665**	1	SEAL-O-RING (164.46MM ID)	
	45	1	**8T-4896**	8	WASHER-HARD (10.2X18.5X2.5MM THK)	
	46	1	**8T-4994**	29	WASHER-HARD (20X36.5X5MM THK)	
	47	1	**8T-8917**	4	BOLT (1/2-13X1.25 IN)	
	48	1	**9H-0846**	1	SEAL-O-RING (494.66MM ID)	
	49	1	**9S-4185**	1	PLUG	

R-REMFG PART MAY BE AVAILABLE
Y-SEPARATE ILLUSTRATION

157-5072 FINAL DRIVE GP *(contd.)* **i01430460**

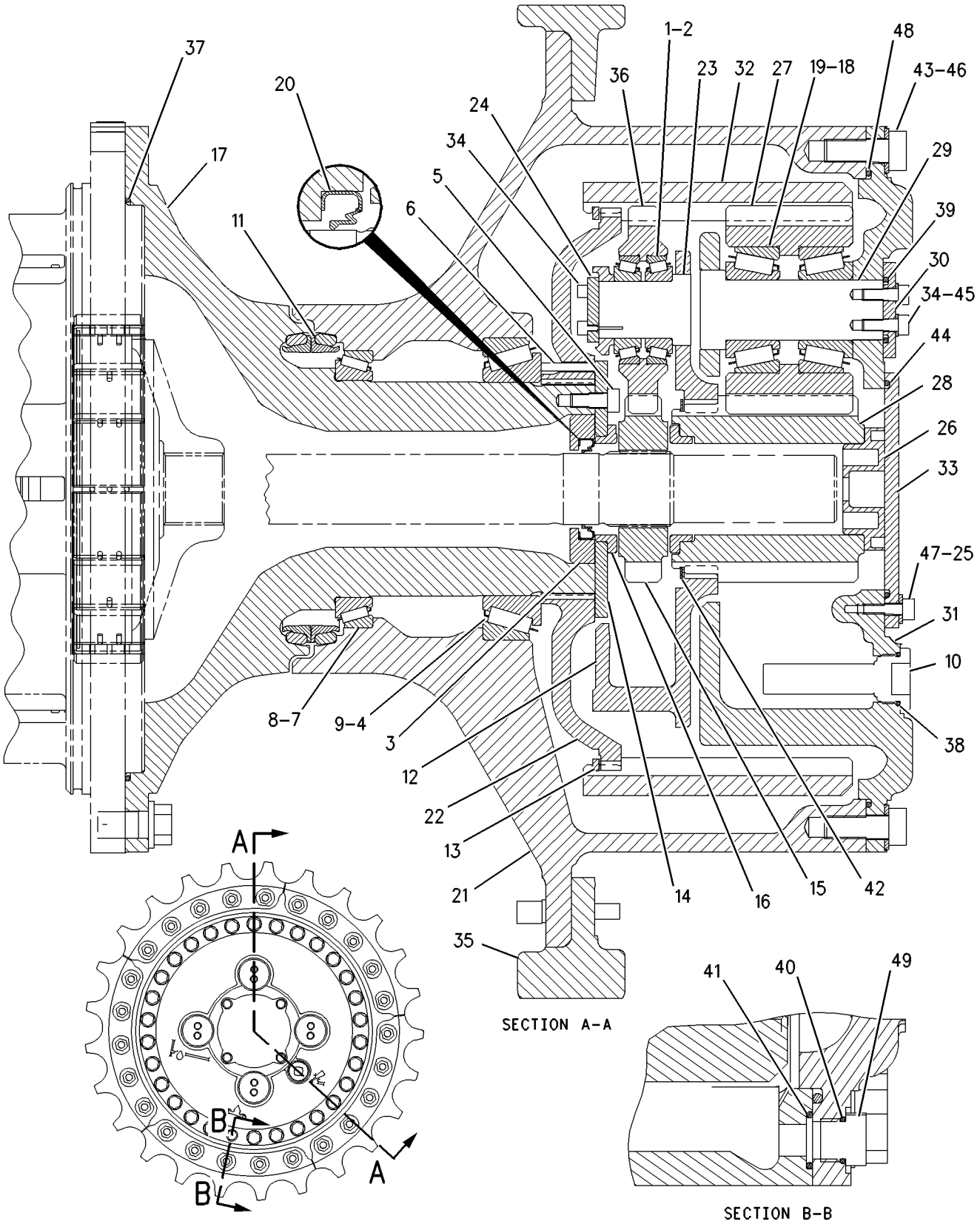

GRAPHIC #1

g00532268

POWER TRAIN

159-7941 FINAL DRIVE GP

S/N: AKA1-UP

PART OF 159-8838 GUARD AR-FINAL DRIVE

SMCS-4050 **i01488525**

NOTE	REF NO	GRAPHIC REF	PART NUMBER	QTY	PART NAME 1 2 3 4 5 6 (PRODUCT LEVEL)	SEE PAGE
	1	1	**137-4491**	1	HUB AS	
		1	**137-4489**	1	GUARD	
	2	1	**6Y-0860**	1	SEAL GP-DUO-CONE	
	3	1	**6V-0663**	1	CONE-ROLLER BEARING	
	4	1	**6V-0662**	1	CUP-ROLLER BEARING	
	5	1	**6V-0664**	1	CONE-ROLLER BEARING	
	6	1	**5F-2465**	1	CUP-ROLLER BEARING	
	7	1	**5K-8454**	15	BOLT (1/2-13X1.12 IN)	
	8	1	**157-5075**	4	GEAR (21 TEETH)	
	9	1	**137-4492**	1	HUB AS	
		1	**137-4488**	1	GUARD	
Y	10	1	*156-5341*	1	SEGMENT GP-SPROCKET	344
	11	1	**1M-7911**	8	CUP-ROLLER BEARING	
	12	1	**8E-7534**	4	RETAINER	
	13	1	**8E-7533**	4	SHAFT-PLANETARY (21 TEETH)	
	14	1	**9W-9393**	1	GEAR (62 TEETH)	
	15	1	**9W-3372**	4	GEAR (21 TEETH)	
	16	1	**7T-9526**	8	CONE-ROLLER BEARING	
	17	1	**7T-9527**	8	CUP-ROLLER BEARING	
	18	1	**7X-0366**	29	BOLT (3/4-10X2 IN)	
	19	1	**8T-4994**	29	WASHER-HARD (20X36.5X3.5MM THK)	
	20	1	**9H-0846**	1	SEAL-O-RING	
	21	1	**9W-3377**	4	SHAFT-GOVERNOR CONTROL	
	22	1	**3D-2895**	4	SEAL-QUAD RING	
	23	1	**9W-3378**	4	COVER	
	24	1	**034-3557**	16	BOLT-LOCKING (3/8-16X1.125 IN)	
	25	1	**8T-4896**	8	WASHER-HARD (10.2X18.5X2.5MM THK)	
	26	1	**8J-1665**	1	SEAL-O-RING	
	27	1	**9W-3373**	1	GEAR (18 TEETH)	
	28	1	**9W-3232**	1	RETAINER	
	29	1	**9W-9394**	1	COVER	
	30	1	**8T-8917**	4	BOLT (1/2-13X1.25 IN)	
	31	1	**8T-4223**	4	WASHER-HARD (13.5X25.5X3MM THK)	
	32	1	**9W-9392**	1	CARRIER-PLANETARY	
	33	1	**6V-3298**	1	PLUG-MAGNETIC	
	34	1	**2S-4078**	1	SEAL-O-RING	
	35	1	**9S-4185**	1	PLUG-O-RING	
	36	1	**3K-0360**	1	SEAL-O-RING	
	37	1	**5F-7054**	1	SEAL-O-RING	
	38	1	**8E-7532**	1	HUB-REACTION	
	39	1	**5P-8472**	1	RING-RETAINING	
	40	1	**7T-2524**	1	GEAR (18 TEETH)	
	41	1	**7T-2530**	2	RING-THRUST	
	42	1	**7G-5832**	1	RETAINER	
	43	1	**7G-5831**	1	RING-RETAINING	
	44	1	**6Y-1336**	1	CARRIER-PLANETARY	
	45	1	**3T-5923**	1	RETAINER	
	46	1	**6T-2173**	15	PIN	
	47	1	**7X-4777**	1	SEAL-LIP	
	48	1	**2R-0098**	1	SEAL-O-RING	
	49	1	**8T-4224**	16	WASHER-HARD (8.8X16X2MM THK)	
	50	1	**1M-7912**	8	CONE-ROLLER BEARING	
	51	1	**137-9810**	2	SEAL-PACKING	
	52	1	**137-4490**	2	RETAINER	
	53	1	**8C-6561**	16	BOLT (5/16-18X1.375 IN)	

Y-SEPARATE ILLUSTRATION

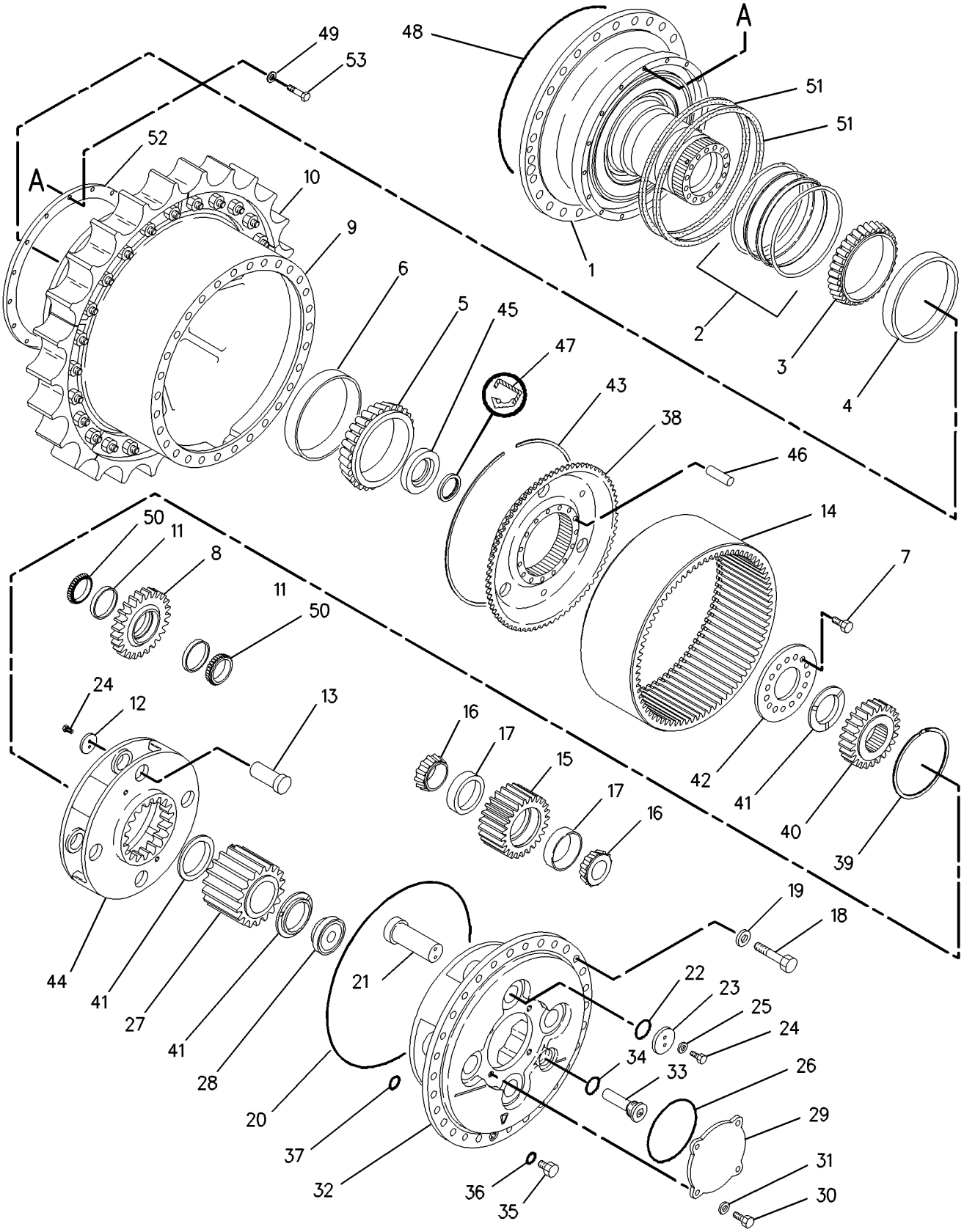

GRAPHIC #1 g00774956

POWER TRAIN

156-9780 GEAR GP-BEVEL & TRANSFER

S/N: 6GY1-UP

PART OF 164-0234 TRANSMISSION AR

SMCS-3011 **i01431143**

NOTE	REF NO	GRAPHIC REF	PART NUMBER	QTY	PART NAME 1 2 3 4 5 6 (PRODUCT LEVEL)	SEE PAGE
	1	1	**190-2277**	1	CASE AS	
		1	**2D-6642**	1	BALL	
	2	1	**160-3588**	1	GEAR (34 TEETH)	
B	3	1	**9P-1922**	1	SHIM PACK (INCLUDES 14 SHIMS)	
	4	1	**9W-2992**	1	CAGE-BEARING	
	5	1	**3T-6742**	1	RETAINER	
	6	1	**0S-1569**	1	BOLT (5/8-11X4 IN)	
	7	2	**7D-1649**	2	WASHER-HARD (13.5X32X5MM THK)	
	8	1	**7H-7628**	1	BEARING-RACE & ROLLER	
	9	1	**0S-1591**	4	BOLT (3/8-16X1.5 IN)	
	10	1	**5M-2894**	4	WASHER-HARD (10.2X18.5X2.5MM THK)	
	11	1	**6I-8507**	1	PLATE-RETAINER	
	12	1	**6I-8511**	1	CAGE-BEARING	
B	13	1	**9P-1921**	1	SHIM PACK (INCLUDES 14 SHIMS)	
	14	1	**8C-3075**	1	SEAL-LIP	
	15	1	**160-3585**	1	GEAR-TRANSFER (43 TEETH)	
	16	1	**8D-1817**	2	CUP-ROLLER BEARING	
	17	1	**8D-1819**	2	CONE-ROLLER BEARING	
	18	1	**6S-2829**	2	CONE-ROLLER BEARING	
	19	1	**6S-2828**	2	CUP-ROLLER BEARING	
	20	1	**155-4325**	1	PINION-BEVEL (50 TEETH)	
	21	1,2	**7B-3235**	24	BOLT (1/2-13X1.375 IN)	
	22	1,2	**5P-8245**	24	WASHER-HARD (13.5X25.5X3MM THK)	
	23	1	**0L-1169**	12	BOLT (5/8-11X3.75 IN)	
	24	1,2	**5P-8247**	16	WASHER-HARD (17X32X3.5MM THK)	
	25	2	**9W-1570**	1	CAGE AS-BEARING	
		2	**9W-1569**	1	PLUG-ORIFICE	
		2	**4B-9880**	1	BALL	
B	26	2	**9P-1478**	2	SHIM PACK (INCLUDES 14 SHIMS)	
	27	2	**1L-6957**	1	LOCKNUT-BEARING	
	28	2	**6T-0364**	1	RING-RETAINING	
	29	2	**9W-8612**	1	SPACER-CONE	
	30	2	**1P-3934**	2	CUP-ROLLER BEARING	
	31	2	**1P-3935**	2	CONE-ROLLER BEARING	
	32	2	**9W-9982**	1	SHAFT-BEVEL GEAR (50 TEETH)	
	33	2	**1A-0075**	12	BOLT (3/4-16X1.75 IN)	
	34	2	**155-4327**	1	GEAR-BEVEL (31 TEETH)	
	35	2	**9G-0832**	1	DOWEL	
	36	2	**7T-9946**	1	CAGE-BEARING	
	37	2	**6J-3473**	1	RING-SNAP	
	38	2	**5P-7592**	1	RACE-ROLLER BEARING	
	39	2	**4H-0019**	1	RACE & ROLLER AS	
	40	2	**9P-7072**	1	WASHER-TONGUE	
	41	2	**6V-2404**	1	LOCKWASHER-BEARING	
	42	2	**6T-3853**	2	SLEEVE	
	43	2	**1A-5822**	2	BOLT (1/2-13X2.75 IN)	
	44	2	**6T-3852**	2	ROLLER	
	45	2	**7T-1475**	1	BRACKET-ROLLER	
	46	2	**7T-1474**	1	BRACKET-ROLLER	
	47	2	**1D-4601**	4	BOLT (5/8-11X8.5 IN)	

B-USE AS REQUIRED

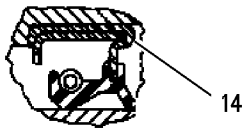

VIEW OF AREA B

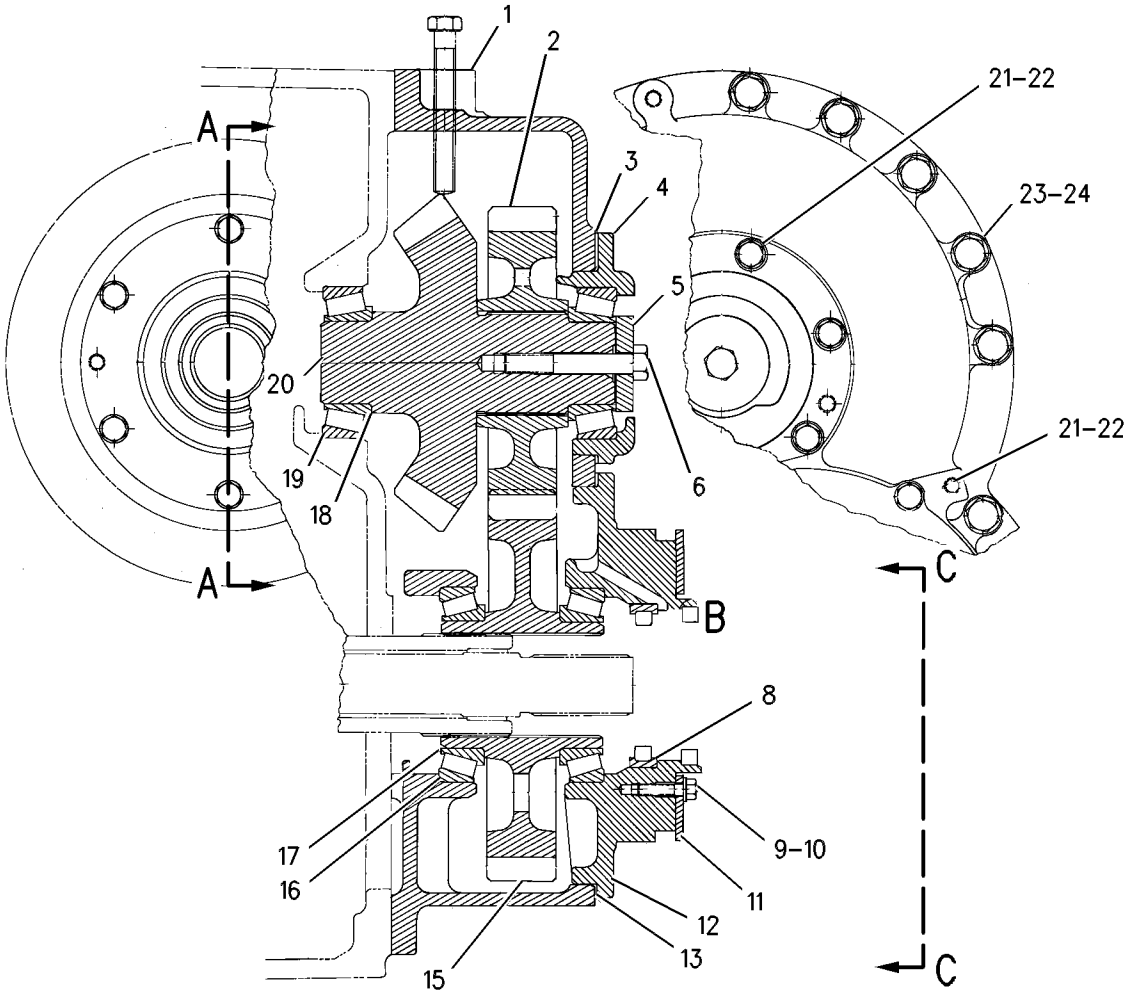

REFER TO ALL ILLUSTRATIONS OF
THIS GROUP FOR AUXILIARY VIEWS

GRAPHIC #1 g00605994

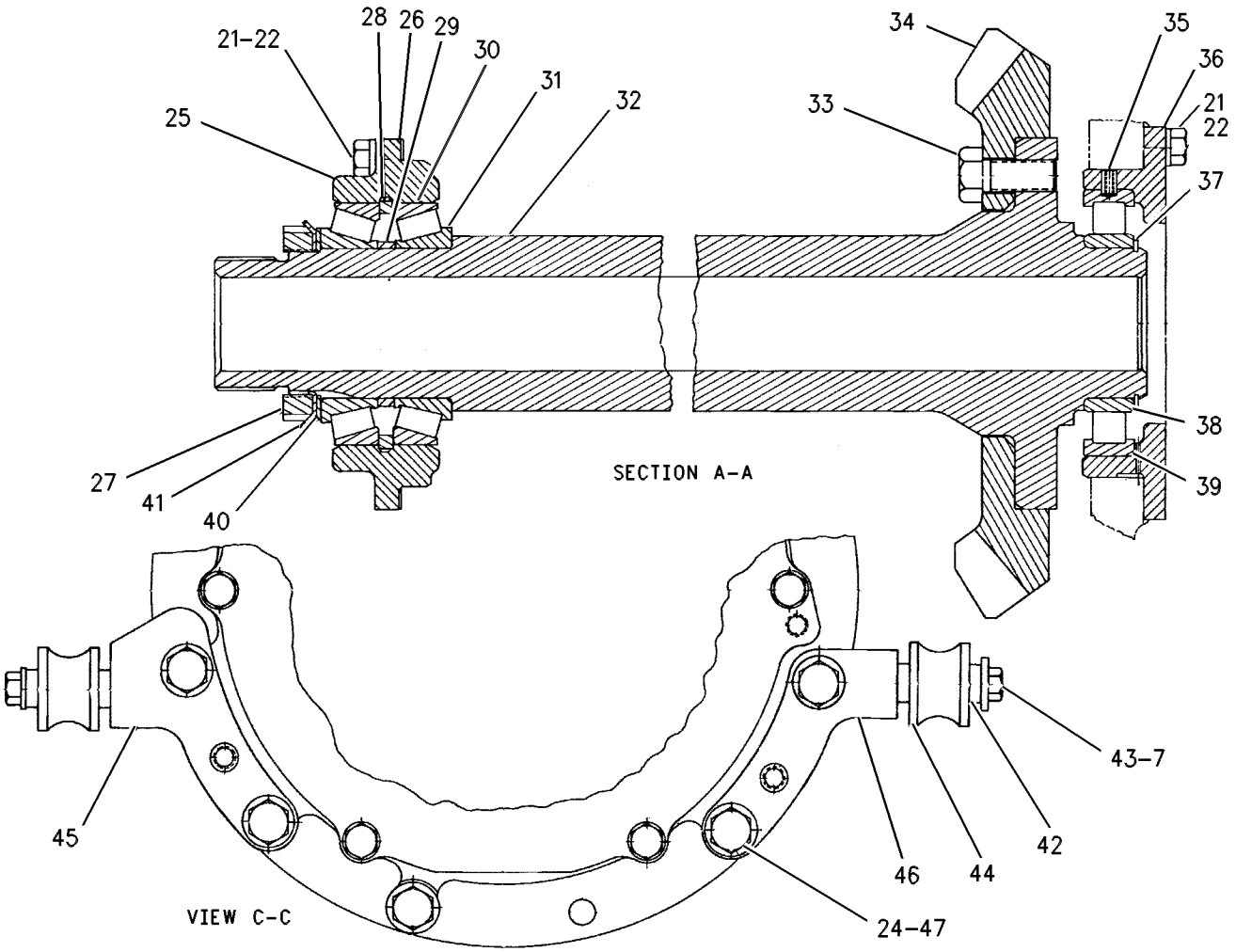

GRAPHIC #2 g00605995

7T-6915 GUARD GP-POWER TRAIN

S/N: AKA1-UP

SMCS-7153 **i01211784**

NOTE	REF NO	GRAPHIC REF	PART NUMBER	QTY	PART NAME 1 2 3 4 5 6 (PRODUCT LEVEL)	SEE PAGE
	1	1	**7T-6916**	1	PLATE AS	
	2	1	**7T-6918**	2	BLOCK	
	3	1	**7T-6922**	1	PLATE AS-LH	
	4	1	**7T-6923**	1	PLATE AS-RH	
	5	1	**7T-6924**	1	PLATE	
	6	1	**4L-6454**	4	BOLT (3/8-16X1 IN)	
	7	1	**6V-8182**	10	NUT (3/4-10 THD)	
	8	1	**7X-0366**	2	BOLT (3/4-10X2IN)	
	9	1	**7X-0368**	2	BOLT (3/4-10X3IN)	
	10	1	**7X-0370**	2	BOLT (3/4-10X3.50IN)	
	11	1	**8C-8842**	2	BOLT (3/4-10X4.0IN)	
	12	1	**8T-4896**	4	WASHER-HARD (2.5MM THK)	
	13	1	**8T-4994**	24	WASHER (5MM THK)	
	14	1	**8T-8924**	6	BOLT (3/4-10X2.50IN)	

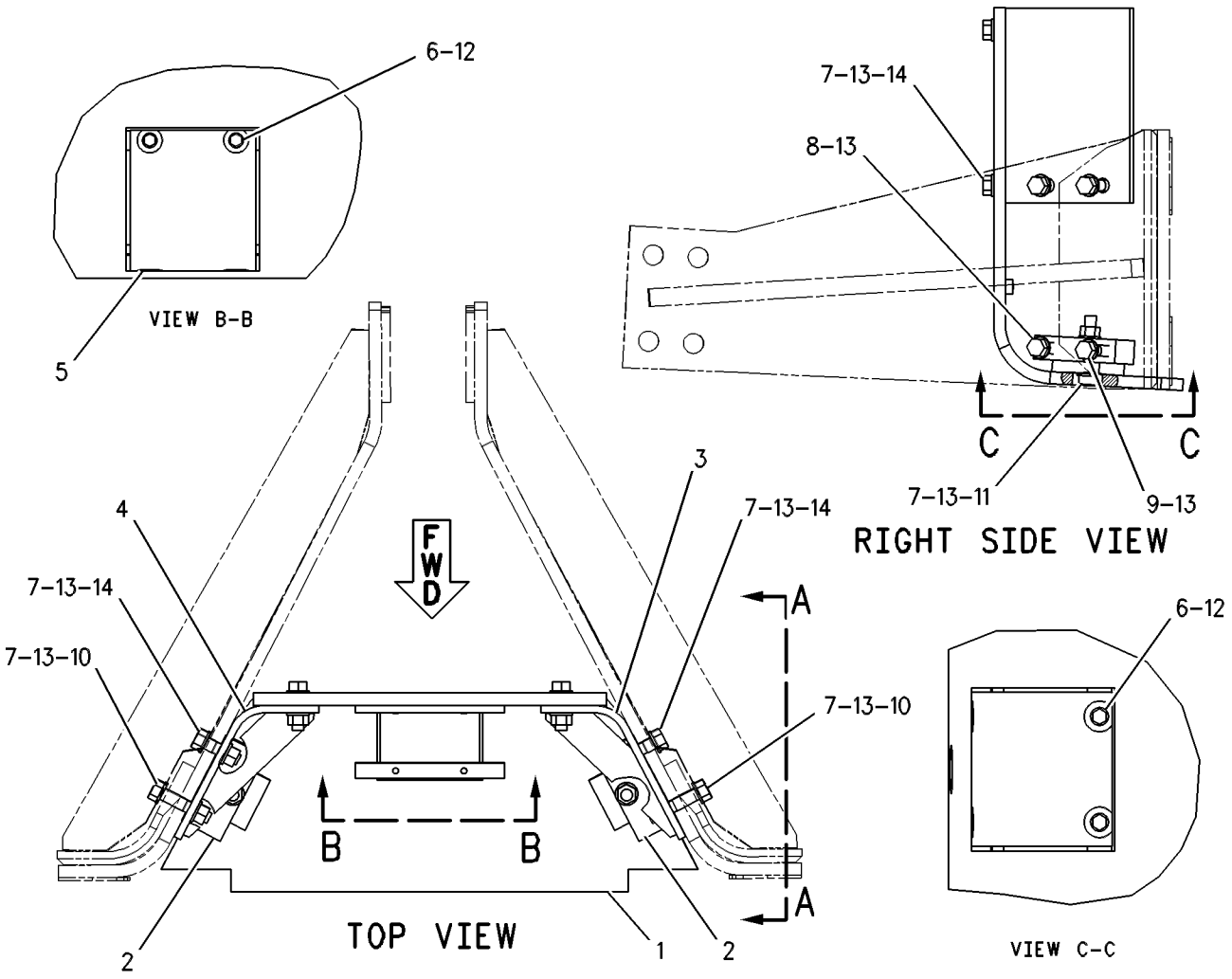

GRAPHIC #1 g00648082

POWER TRAIN

156-2542 LINES GP-POWER TRAIN OIL

S/N: AKA1-UP

PART OF 157-0820 POWER TRAIN AR

SMCS-3016 **i01430370**

NOTE	REF NO	GRAPHIC REF	PART NUMBER	QTY	PART NAME 1 2 3 4 5 6 (PRODUCT LEVEL)	SEE PAGE
	1	1	**1V-3713**	1	ANGLE	
	2	2	**3T-6471**	1	SCREEN AS (TORQUE CONVERTER SCAVENGE)	
	3	2	**6N-2985**	1	CAP AS-FILLER (POWER TRAIN OIL)	
	4	1	**6T-3714**	1	GASKET	
	5	1	**6V-0852**	3	CAP-DUST	
	6	1	**6V-5387**	1	PLATE-ORIFICE	
I	7	1	**6Y-2549**	1	HOSE AS	
	8	1	**6Y-4687**	1	BRACKET AS	
		1	**1F-0750**	2	NUT-WELD (3/8-16 THD)	
		1	**8A-2615**	2	SPACER	
	9	2	**6Y-5439**	1	FLANGE	
	10	2	**8C-3447**	1	CAP-DUST	
	11	1	**8T-9358**	2	CONNECTOR	
	12	2	**9P-0214**	1	SCREEN AS (POWER TRAIN OIL PUMP INLET)	
	13	2	**9R-3141**	3	MOUNT AS	
	14	1	**9W-1686**	1	SPACER	
	15	2	**107-2498**	1	PLUNGER AS (POWER TRAIN OIL LEVEL/DIPSTICK)	
	16	1	**110-9734**	1	VALVE	
	17	2	**126-0814**	1	NIPPLE AS	
	18	1	**140-2964**	1	RETAINER AS	
	19	2	*148-8360*	2	ELBOW GP	
					(EACH INCLUDES)	
		1	**6V-9746**	1	SEAL-O-RING	
		1	**7M-8485**	1	SEAL-O-RING	
		1	**6V-9182**	1	ELBOW	
	20	2	**151-7413**	1	COUPLING	
I	21	2	**156-2546**	1	HOSE AS	
	22	1	**156-2548**	1	TUBE AS	
	23	1	**156-2551**	1	TUBE AS	
I	24	1	**159-6128**	1	HOSE AS	
I	25	1	**159-6132**	1	HOSE AS	
I	26	2	**159-6133**	1	HOSE AS	
Y	27	2	**160-1834**	1	PUMP GP-GEAR (POWER TRAIN OIL)	341
Y	28	2	**161-5793**	1	VALVE GP-RELIEF (CONVERTER PRESSURE)	365
Y	29	2	**161-9667**	1	VALVE GP-PRIORITY (PUMP AND LUBE FLOW)	362
	30	2	**162-6157**	1	MANIFOLD	
I	31	1	**164-2910**	1	HOSE AS	
	32	1,2	**164-2924**	2	PLATE AS	
		1,2	**1F-0750**	2	NUT-WELD (3/8-16 THD)	
	33	1	**164-4459**	1	TUBE AS	
I	34	2	**165-0486**	1	HOSE AS	
I	35	1	**169-8761**	1	HOSE AS	
	36	1	**177-1491**	1	ELBOW	
	37	1	**185-6684**	1	BREATHER AS (POWER TRAIN)	
Y	38	1	*186-2379*	1	FILTER GP-OIL (HYDRAULIC) (POWER TRAIN)	310
	39	2	**192-0158**	1	TUBE AS	
	40	1	**198-6868**	1	PLATE	
I	41	1	**199-4013**	1	HOSE AS	
I	42	1	**199-4014**	1	HOSE AS	
	43	1	**199-4024**	1	PLATE	
	44	2	**200-2423**	1	TUBE AS	
	45	2	**200-6567**	1	HOSE AS	
I	46	2	**200-6568**	1	HOSE AS	
I	47	2	**200-6569**	1	HOSE AS	
I	48	2	**200-6570**	1	HOSE AS	
I	49	2	**200-6571**	1	HOSE AS	

156-2542 LINES GP-POWER TRAIN OIL *(contd.)* i01430370

NOTE	REF NO	GRAPHIC REF	PART NUMBER	QTY	PART NAME 1 2 3 4 5 6 (PRODUCT LEVEL)	SEE PAGE
	50	1	*148-8318*	3	CONNECTOR GP	
					(EACH INCLUDES)	
		1	**6V-8397**	1	SEAL-O-RING	
		1	**3K-0360**	1	SEAL-O-RING	
		1	**6V-8634**	1	CONNECTOR	
	51	2	*148-8323*	1	CONNECTOR GP	
		2	**2S-4078**	1	SEAL-O-RING	
		2	**5K-9090**	1	SEAL-O-RING	
		2	**6V-9875**	1	CONNECTOR	
	52	1	*148-8335*	1	CONNECTOR GP	
		1	**5K-9090**	1	SEAL-O-RING	
		1	**7M-8485**	1	SEAL-O-RING	
		1	**6V-8635**	1	CONNECTOR	
	53	2	*148-8357*	1	ELBOW GP	
		2	**5K-9090**	1	SEAL-O-RING	
		2	**7M-8485**	1	SEAL-O-RING	
		2	**6V-9008**	2	ELBOW	
	54	1	*148-8378*	1	ELBOW GP	
		1	**3J-1907**	1	SEAL-O-RING	
		1	**6V-8397**	1	SEAL-O-RING	
		1	**6V-8724**	1	ELBOW	
	55	1	*148-8407*	1	PLUG GP	
		1	**3J-1907**	1	SEAL-O-RING	
		1	**9S-4191**	1	PLUG-STRAIGHT THREAD	
	56	2	*148-8458*	1	UNION GP	
		2	**6V-8397**	2	SEAL-O-RING	
		2	**6V-9807**	1	UNION	
	57	2	**152-9840**	2	ELBOW	
	58	2	*164-4180*	1	PLUG GP	
		1	**7M-8485**	1	SEAL-O-RING	
		1	**9S-4181**	1	PLUG-STRAIGHT THREAD	
	59	2	*164-5549*	1	COUPLING GP	
					(EACH INCLUDES)	
		1	**3J-1907**	1	SEAL-O-RING	
		1	**4I-6287**	1	COUPLING AS	
Y	60	1	**178-0568**	1	FILTER GP-OIL (POWER TRAIN)	309
	61	2	**1H-7339**	1	SEAL-O-RING	
	62	1	**1P-3705**	3	SEAL-RECTANGULAR	
	63	2	**1P-4576**	2	FLANGE	
	64	1,2	**1P-4577**	8	FLANGE-HALF	
	65	1	**1P-4578**	10	FLANGE-HALF	
	66	2	**1P-4579**	2	FLANGE-HALF	
	67	2	**1P-4584**	2	FLANGE-HALF	
	68	1	**1V-7753**	1	SPACER (.546X.841X1.75IN THK)	
	69	2	**2H-6184**	1	SEAL-O-RING	
	70	1	**2S-4078**	1	SEAL-O-RING	
	71	1	**3G-4214**	3	CLIP (SLOT)	
	72	1	**3G-4218**	3	CLIP (TAB)	
	73	1	**3J-1907**	1	SEAL-O-RING	
	74	2	**3J-7354**	1	SEAL-O-RING	
	75	1	**3P-0572**	1	CLIP (TAB)	
	76	1	**3P-0574**	1	CLIP (SLOT)	
	77	1,2	**4J-0520**	6	SEAL-O-RING	
	78	1,2	**4J-0522**	9	SEAL-O-RING	
	79	2	**4J-0524**	1	SEAL-O-RING	
	80	2	**4J-0527**	1	SEAL-O-RING	
	81	2	**4J-5267**	2	SEAL-O-RING	
	82	1	**4J-5477**	2	SEAL-O-RING	
	83	1	**4J-5573**	1	SEAL-O-RING	

156-2542 LINES GP-POWER TRAIN OIL *(contd.)* i01430370

NOTE	REF NO	GRAPHIC REF	PART NUMBER	QTY	PART NAME 1 2 3 4 5 6 (PRODUCT LEVEL)	SEE PAGE
	84	1,2	**4L-6454**	5	BOLT (3/8-16X1 IN)	
	85	1	**5C-6565**	2	BOLT (1/2-13X1.25 IN)	
	86	1,2	**5M-3062**	2	BOLT (3/8-16X0.75 IN)	
	87	1,2	**5P-1075**	5	WASHER-HARD (10.2X22.5X3MM THK)	
	88	1	**5P-1076**	2	WASHER-HARD (13.5X30X4MM THK)	
	89	2	**5P-2424**	4	BOLT (1/2-13X2.25 IN)	
	90	1,2	**5P-2566**	7	BOLT (1/2-13X1.5 IN)	
	91	1	**5P-7468**	1	CLIP (SLOT)	
	92	1	**5P-7469**	1	CLIP (TAB)	
	93	2	**5P-8939**	1	GROMMET	
	94	2	**5S-7379**	6	BOLT (3/8-16X0.875 IN)	
	95	1,2	**5S-7382**	16	BOLT (3/8-16X1.375 IN)	
	96	1	**6J-2680**	2	SEAL-O-RING	
	97	1	**6V-3965**	1	FITTING AS (QUICK DISCONNECT)	
	98	1	**6V-4433**	2	FITTING	
	99	1,2	**6V-5185**	5	CLIP (SLOT)	
	100	1,2	**6V-5186**	5	CLIP (TAB)	
	101	1	**6V-8397**	2	SEAL-O-RING	
	102	2	**6V-8400**	2	SEAL-O-RING	
	103	1	**6V-8801**	2	NUT (3/8-16 THD)	
	104	1	**6V-9168**	2	NUT (11/16-16 THD)	
	105	1	**7G-3413**	1	CLIP (SLOT)	
	106	1	**7G-3414**	1	CLIP (TAB)	
	107	1	**7G-3415**	1	GROMMET	
	108	1	**7J-8611**	1	ELBOW	
	109	2	**7M-8485**	2	SEAL-O-RING	
	110	2	**7X-0288**	4	BOLT (3/8-16X1.625 IN)	
	111	2	**7X-0290**	3	BOLT (3/8-16X3.50 IN)	
	112	1,2	**7X-0313**	7	BOLT (7/16-14X2.75IN)	
	113	1	**7X-0326**	11	BOLT (1/2-13X3 IN)	
	114	1	**7X-0328**	1	BOLT (1/2-13X3.50 IN)	
	115	2	**7X-0618**	3	WASHER-HARD (13.5X40X5MM THK)	
	116	1	**7X-0772**	1	WASHER-HARD (10.2X25.5X2.5MM THK)	
	117	2	**8C-3446**	1	VALVE AS-FLUID SAMPLING	
	118	1	**8C-6877**	4	BOLT (7/16-14X1.75 IN)	
	119	2	**8J-4351**	1	SEAL-O-RING	
	120	1	**8M-2773**	3	CLIP	
	121	2	**8M-4447**	1	SEAL-O-RING	
	122	2	**8M-5254**	4	SEAL-O-RING	
	123	2	**8M-8157**	1	SEAL-O-RING	
	124	2	**8S-0023**	1	CLIP (SLOT)	
	125	2	**8S-0024**	1	CLIP (TAB)	
	126	2	**8T-1889**	1	CLIP (SLOT)	
	127	2	**8T-1890**	1	CLIP (TAB)	
	128	1,2	**8T-1899**	3	CLIP (SLOT)	
	129	1,2	**8T-1900**	3	CLIP (TAB)	
	130	1	**8T-2502**	4	BOLT (3/8-16X1.125 IN)	
	131	1,2	**8T-4223**	23	WASHER-HARD (13.5X25.5X3MM THK)	
	132	1,2	**8T-4896**	52	WASHER-HARD (10.2X18.5X2.5MM THK)	
	133	2	**8T-5360**	34	WASHER (12X22.5X2.5MM THK)	
	134	1	**8T-7008**	1	BOLT (3/8-16X3 IN)	
	135	1	**8T-8916**	14	BOLT (7/16-14X1.5 IN)	
	136	1,2	**9B-7237**	11	BOLT (3/8-16X1.25 IN)	
	137	2	**9X-6274**	6	WASHER (32.5X50X1.6MM THK)	

I-SEE HOSE FABRICATION GUIDE
Y-SEPARATE ILLUSTRATION

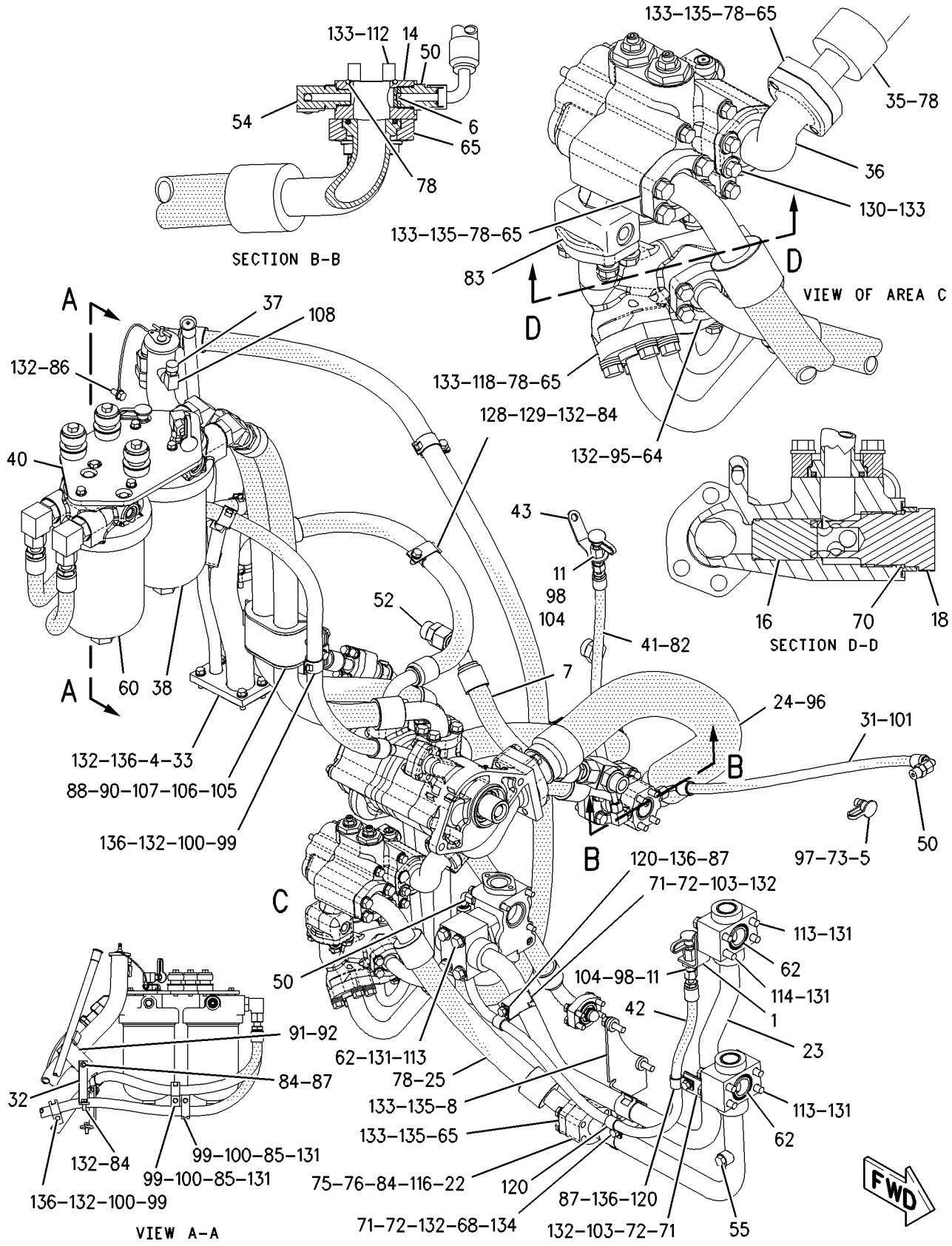

GRAPHIC #1

g00769508

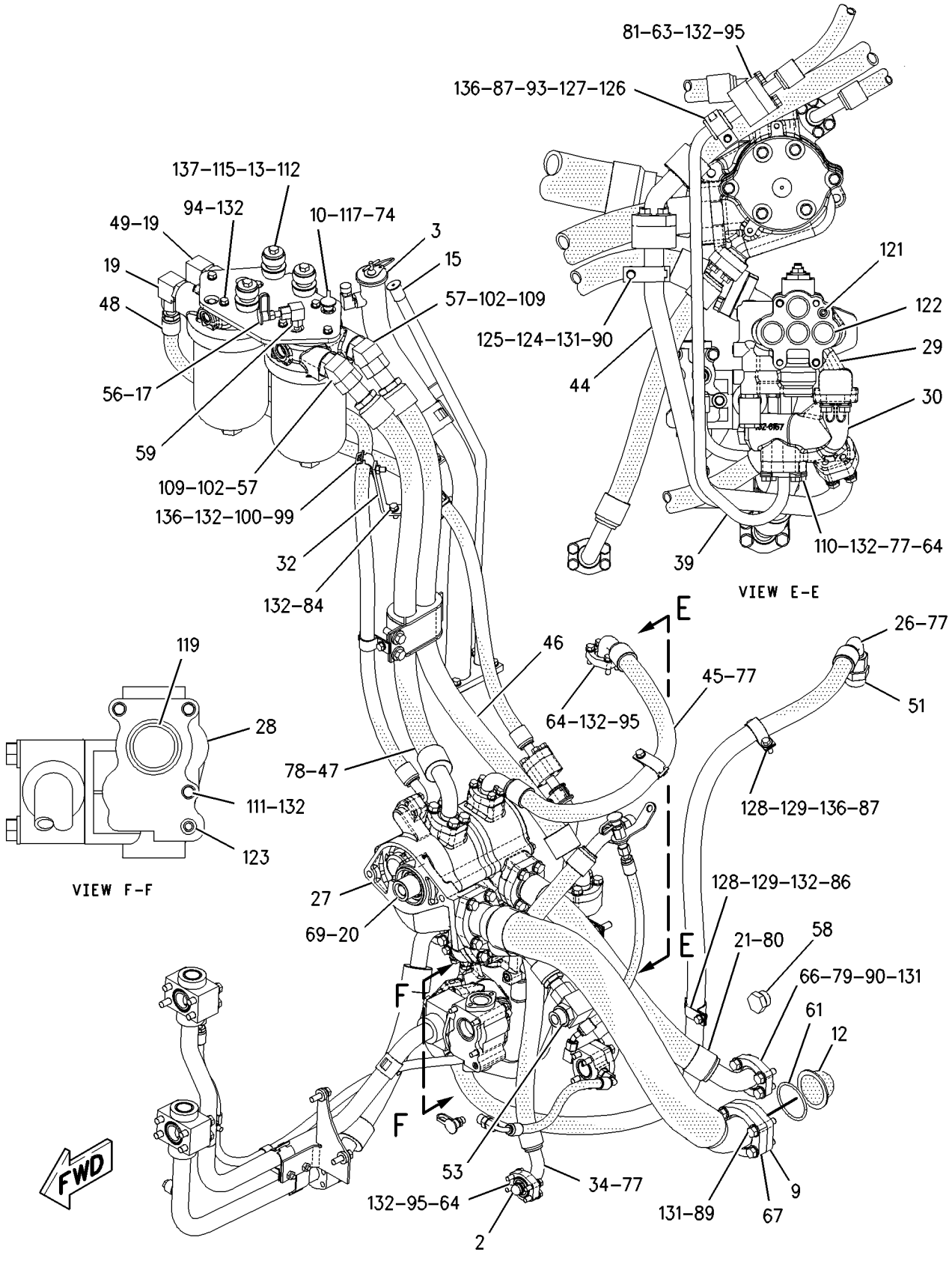

GRAPHIC #2

g00769662

162-5357 MANIFOLD & VALVE GP

S/N: AKA1-UP

PART OF 160-2456 VALVE GP-CONTROL

SMCS-4320 **i01431316**

NOTE	REF NO	GRAPHIC REF	PART NUMBER	QTY	PART NAME 1 2 3 4 5 6 (PRODUCT LEVEL)	SEE PAGE
	1	1	**9S-4190**	1	PLUG-O-RING	
	2	1	**162-5358**	1	MANIFOLD	
	3	1	**137-8794**	1	SPOOL AS	
	4	1	**5L-4758**	1	SEAL-O-RING (14MM ID)	
	5	1	**137-8793**	1	SPRING	
	6	1	**3D-7943**	1	RING-RETAINING	
Y	7	1	**174-4909**	1	VALVE GP-SOLENOID	371
	8	1	**1P-1744**	1	DOWEL	
	9	1	**2M-9780**	1	SEAL-O-RING (19.18MM ID)	

Y-SEPARATE ILLUSTRATION

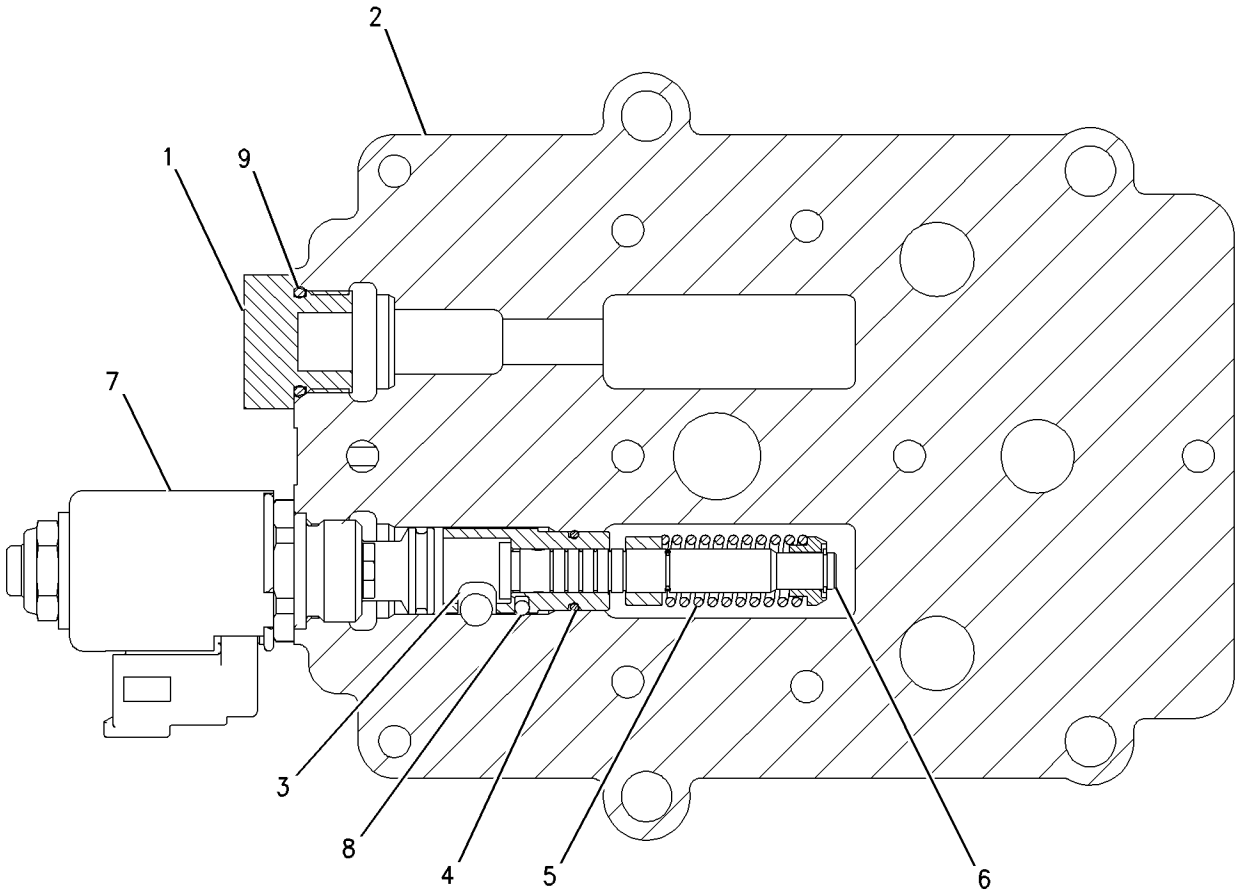

GRAPHIC #1 g00737293

175-4972 MANIFOLD & VALVE GP

S/N: AKA1-UP

PART OF 160-2456 VALVE GP-CONTROL

SMCS-4320 **i01431395**

NOTE	REF NO	GRAPHIC REF	PART NUMBER	QTY	PART NAME 1 2 3 4 5 6 (PRODUCT LEVEL)	SEE PAGE
	1	1	**132-9455**	1	MANIFOLD	
Y	2	1	*172-2392*	2	VALVE GP-SOLENOID	370

Y-SEPARATE ILLUSTRATION

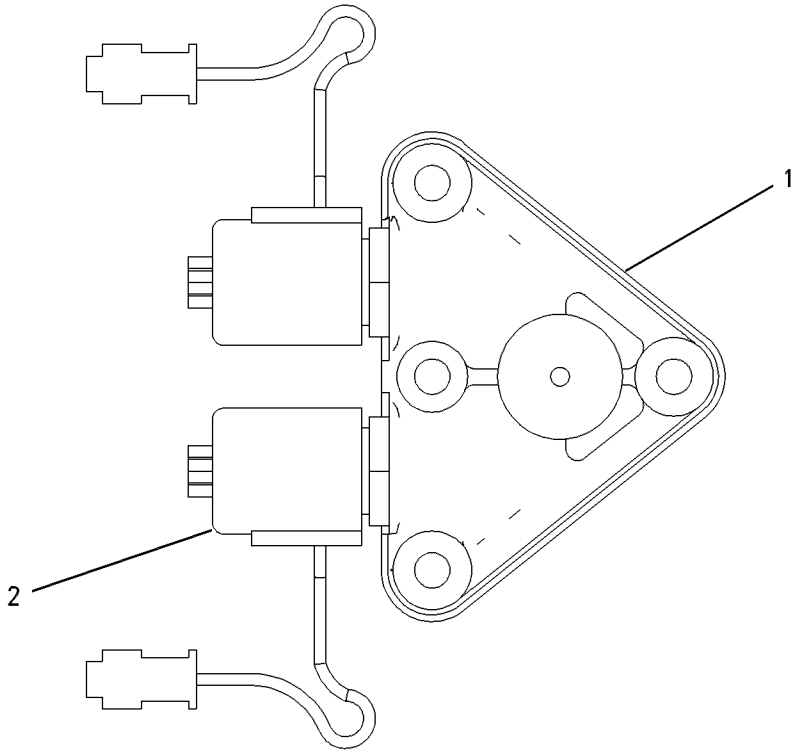

GRAPHIC #1 g00653425

109-0136 MOUNTING GP-FINAL DRIVE

S/N: AKA1-UP

PART OF 157-0820 POWER TRAIN AR

SMCS-4050 **i01065809**

NOTE	REF NO	GRAPHIC REF	PART NUMBER	QTY	PART NAME 1 2 3 4 5 6 (PRODUCT LEVEL)	SEE PAGE
	1	1	**1D-4628**	52	BOLT (7/8-9X3.25IN)	
		1	**5P-8249**	52	WASHER-HARD (4.0MM THK)	
	2	1	**8D-4771**	2	SEAL-O-RING	
	3	1	**5S-7383**	4	BOLT	
		1	**8T-4896**	4	WASHER	
	4	1	**6F-6673**	4	SEAL-O-RING (31.34MM ID)	

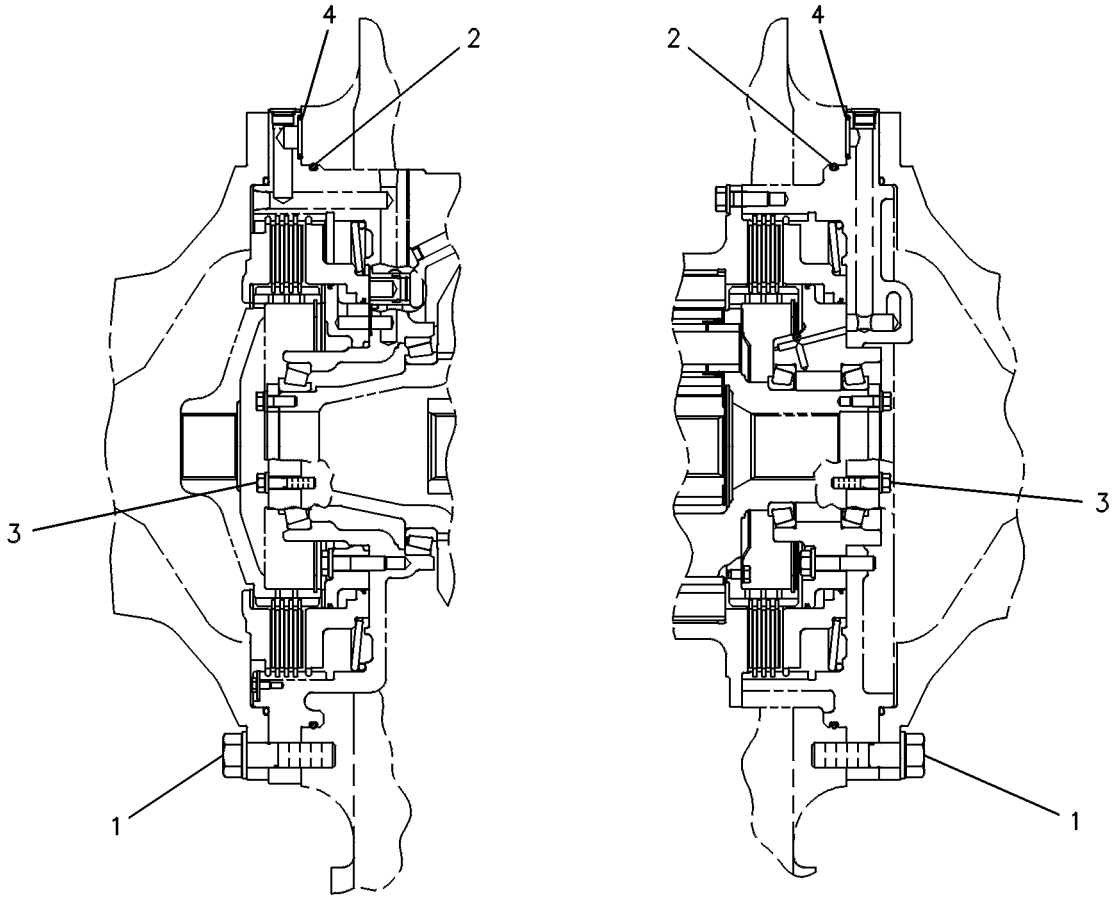

GRAPHIC #1 g00247103

6T-0009 MOUNTING GP-TRANSMISSION

S/N: AKA1-UP

PART OF 157-0820 POWER TRAIN AR

SMCS-3030 **i01065788**

NOTE	REF NO	GRAPHIC REF	PART NUMBER	QTY	PART NAME 1 2 3 4 5 6 (PRODUCT LEVEL)	SEE PAGE
	1	1	**7X-0332**	3	BOLT (1/2-13X4.50IN)	
	2	1	**7X-0325**	19	BOLT (1/2-13X0.75IN)	
	3	1	**8T-4223**	22	WASHER	
	4	1	**8M-4390**	1	SEAL-O-RING (56.74MM ID)	
	5	1	**9M-7002**	3	SEAL-O-RING (37.47MM ID)	
	6	1	**2D-6506**	1	SEAL-O-RING	
	7	1	**1M-9011**	1	RING-SEALING	
C	8	1	**9W-6359**	2	TUBE AS	
	9	1	**5S-7382**	4	BOLT	
	10	1	**7X-0772**	8	WASHER-HARD (2.5MM THK)	
	11	1	**2K-4973**	4	LOCKNUT	
	12	1	**1H-1200**	2	PIN SPRING	
	13	1	**8T-5360**	4	WASHER	
	14	1	**5S-7008**	4	SPRING	

C-CHANGE FROM PREVIOUS TYPE

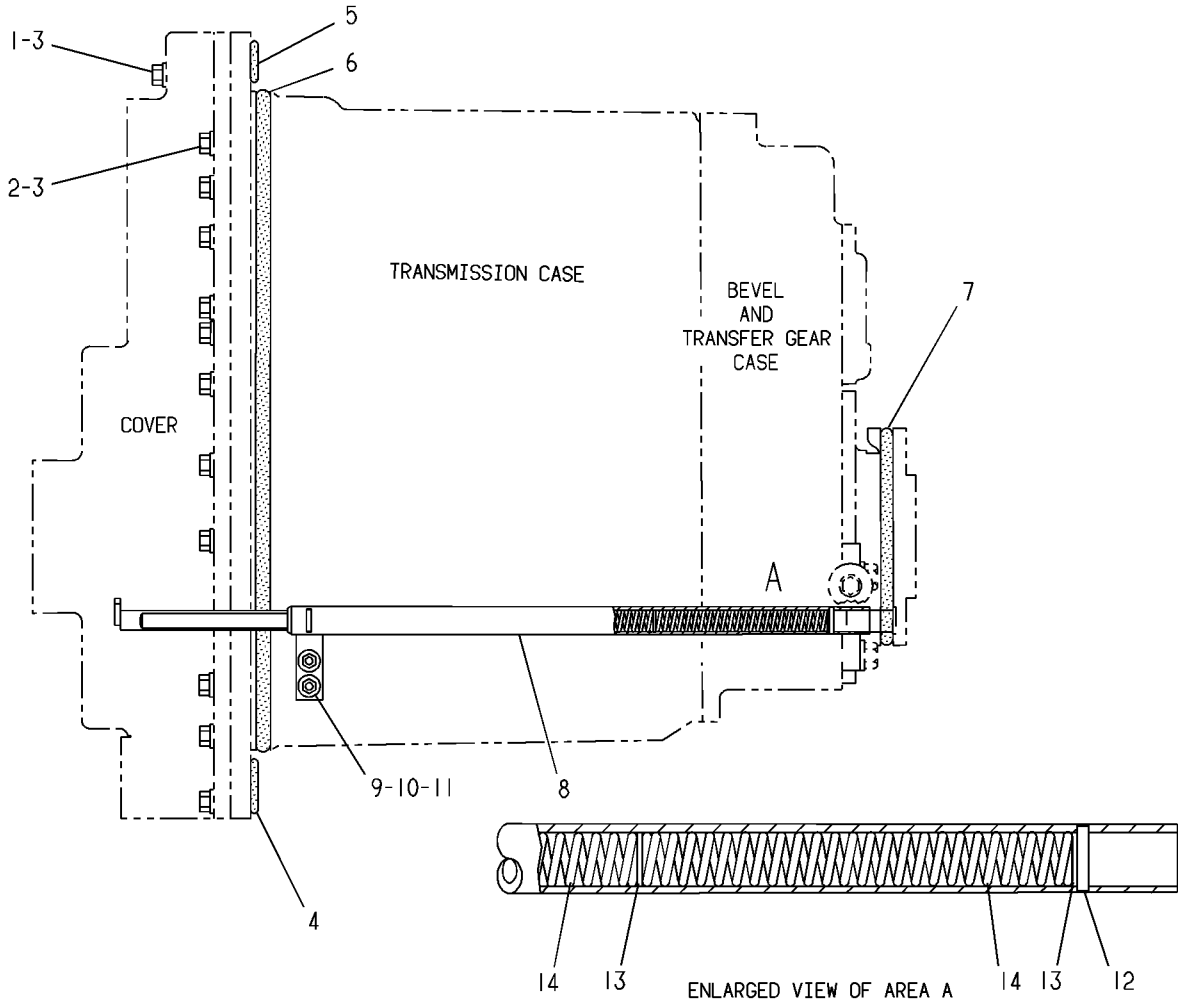

GRAPHIC #1 g00184152

MEMORANDA

158-8079 PEDAL GP-GOVERNOR & BRAKE

S/N: AKA1-UP

PART OF 172-5262 CONTROL & MTG GP-PEDAL

SMCS-4122 **i01497255**

NOTE	REF NO	GRAPHIC REF	PART NUMBER	QTY	PART NAME 1 2 3 4 5 6 (PRODUCT LEVEL)	SEE PAGE
	1	1	**1B-8706**	1	KEY-WOODRUFF	
	2	1	**1B-8714**	1	KEY-WOODRUFF	
	3	1	**7P-4190**	4	BEARING-ROLLER	
	4	1	**9M-5731**	2	RIVET-POP	
M	5	1	**9X-6615**	4	BOLT-HEX HEAD (M5X0.8X30MM)	
	6	1	**194-7034**	1	SPRING	
M	7	1	**105-3482**	6	BOLT-HEX SOCKET (M8X1.25X16MM)	
	8	1	**110-8379**	1	PEDAL	
	9	1	**111-3780**	1	SPRING	
	10	1	**111-3781**	2	BOLT-ANCHOR	
	11	1	**132-7077**	1	SWITCH AS-LIMIT	
		1	**6V-8376**	3	SCREW-MACHINE (8-32X0.25 IN)	
		1	**9B-7233**	3	LOCKWASHER	
	12	1	**145-3405**	2	SPACER	
Y	13	1	**147-1680**	1	SENSOR GP-POSITION	259
	14	1	**160-1431**	1	SHAFT	
	15	1	**160-1432**	1	SHAFT	
	16	1	**160-1433**	1	LEVER	
	17	1	**160-1434**	1	LEVER	
	18	1	**160-1435**	1	HOUSING	
Y	19	1	**160-2443**	1	SENSOR GP-POSITION	260
	20	1	**164-9541**	1	HARNESS AS	
	21	1	**165-6779**	1	GASKET	
	22	1	**165-9100**	1	LINK	
	23	1	**165-9101**	1	BRACKET AS	
	24	1	**165-9102**	1	PLATE	
	25	1	**165-9103**	1	SPRING	
	26	1	**165-9104**	1	SPACER	
	27	1	**184-8060**	1	PEDAL	
	28	1	**186-4998**	1	PAD AS-FOOT	
	29	1	**096-5962**	2	WASHER-HARD (3.4X7X0.8MM THK)	
M	30	1	**106-5472**	1	SETSCREW-HEX SOCKET	
	31	1	**111-9251**	4	WASHER-HARD (20X35X1.6MM THK)	
	32	1	**1B-2578**	1	NUT (3/8-16 THD)	
	33	1	**2J-6356**	4	RING-RETAINING	
	34	1	**4B-3609**	1	SETSCREW-SQUARE HEAD	
	35	1	**6V-0894**	2	SEAL-O-RING	
M	36	1	**6V-7357**	1	BOLT (M6X1.0X25MM)	
M	37	1	**6V-7744**	1	LOCKNUT (M10X1.5 THD)	
	38	1	**7X-7729**	2	WASHER (11X25X3MM THK)	
	39	1	**8F-7702**	2	SEAL-LIP	
	40	1	**8T-4121**	4	WASHER-HARD (11X21X2.5MM THK)	
M	41	1	**8T-4136**	2	BOLT (M10X1.5X25MM)	
M	42	1	**8T-4186**	2	BOLT (M10X1.5X40MM)	
M	43	1	**8T-4195**	2	BOLT (M10X1.5X30MM)	
	44	1	**8T-4205**	2	WASHER-HARD (7.2X14.5X2MM THK)	
M	45	1	**8T-4970**	2	BOLT (M6X1X14MM)	
	46	1	**9X-6281**	2	SCREW-MACHINE (4-40X1 IN)	
	47	1	**9X-8256**	2	WASHER (6.6X12X2MM THK)	

M-METRIC PART
Y-SEPARATE ILLUSTRATION

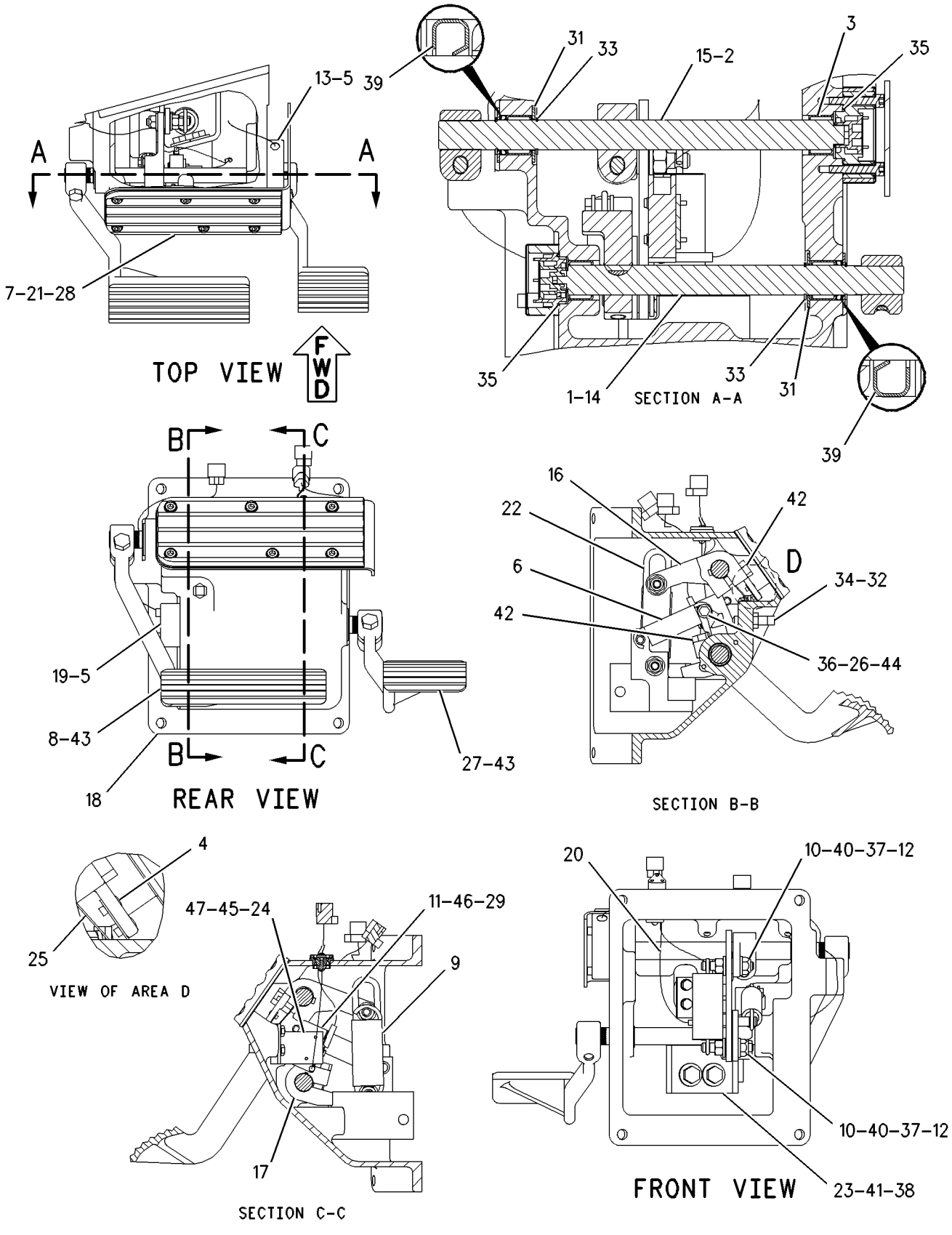

GRAPHIC #1 g00663714

POWER TRAIN

128-2722 PLANETARY GP-TRANSMISSION

S/N: 6GY1-UP

PART OF 164-0234 TRANSMISSION AR

SMCS-3155, 3160, 3169, 3170, 3187, 3189, 3190, 3304 **i01431096**

NOTE	REF NO	GRAPHIC REF	PART NUMBER	QTY	PART NAME 1 2 3 4 5 6 (PRODUCT LEVEL)	SEE PAGE
	1	1	**8M-5010**	2	SEAL-O-RING (53.57MM ID)	
	2	1	**068-8093**	2	RING-RETAINING	
	3	1	**3T-4377**	2	SEAL-RING	
	4	1	**8H-5352**	2	BALL BEARING	
	5	1	**111-7470**	1	HOUSING AS	
	6	1	**3F-5022**	1	PLUG-CUP	
	7	1	**6Y-4771**	1	COUPLING	
	8	1	**9P-7390**	10	DISC AS-FRICTION	
R	9	1	**8P-2051**	8	PLATE-CLUTCH	
	10	1	**7T-9272**	1	GEAR-SUN (34 TEETH)	
	11	1	**030-8538**	1	BOLT (1/2-13X1.25 IN)	
	12	1	**5P-8245**	12	WASHER-HARD (13.5X25.5X3MM THK)	
	13	1	**7T-6580**	1	GEAR-RING (82 TEETH)	
	14	1	**9W-0645**	1	TUBE AS	
	15	1	**6Y-4834**	1	PLATE AS	
		1	**3S-2708**	1	PIN-SPRING	
		1	**8T-1445**	2	DOWEL	
	16	1	**6V-0473**	3	RING-RETAINING	
	17	1	**7T-8816**	3	BALL BEARING	
	18	1	**6Y-0061**	1	GEAR (37 TEETH)	
	19	1	**6I-9786**	1	GEAR-RING	
	20	1	**130-8412**	1	PISTON-CLUTCH	
	21	1	**9W-2997**	1	HOUSING-CLUTCH	
	22	1	**1A-5183**	2	BOLT (3/8-16X4.75 IN)	
	23	1	**6I-8500**	3	PLATE-CLUTCH	
	24	1	**6Y-5911**	5	DISC-FRICTION	
	25	1	**9M-4355**	10	DAMPER-BOLT	
	26	1	**061-6711**	2	RING-RETAINING	
	27	1	**9P-8626**	1	GEAR-SUN (42 TEETH)	
	28	1	**8P-9507**	1	PISTON-CLUTCH	
	29	1	**144-4284**	3	LOCK RING	
	30	1	**138-3759**	1	GEAR-RING (93 TEETH)	
	31	1	**6I-9785**	1	CARRIER-PLANETARY	
	32	1	**7T-9369**	1	GEAR-SUN (50 TEETH)	
	33	1	**8M-5266**	1	SEAL-O-RING (24.77MM ID)	
	34	1	**9W-8269**	1	PLATE-REACTION	
	35	1	**5P-5296**	3	RING-RETAINING	
	36	1	**8P-1964**	3	PLATE-CLUTCH	
	37	1	**9G-0290**	1	HUB-CLUTCH	
	38	1	**7G-7724**	1	PISTON-CLUTCH	
	39	1	**9W-8270**	1	GEAR-RING (90 TEETH)	
	40	1	**144-7878**	1	MANIFOLD	
	41	1	**5P-8194**	1	RING-RETAINING	
	42	1	**9G-8020**	1	PLATE-RETAINER	
	43	1	**6I-8510**	1	HOUSING AS-CLUTCH	
	44	1	**6P-7704**	1	CARRIER-RING	
	45	1	**6B-6863**	1	PIN-SPRING	
	46	1	**7G-2830**	2	RING-SEAL	
	47	1	**8M-5255**	1	SEAL-O-RING (120.24MM ID)	
	48	1	**108-7743**	1	SHAFT AS-OUTPUT	
	49	1	**9G-6744**	1	BEARING-SLEEVE (64.71MM OD)	
	50	1	**3T-8729**	1	BEARING-SLEEVE (57.30MM OD)	
	51	1	**5P-5045**	1	BALL BEARING	
	52	1	**1L-7388**	1	RING-RETAINING	
	53	1	**8D-9739**	1	SEAL-RING	
	54	1	**8P-2023**	1	RING-SEAL	

128-2722 PLANETARY GP-TRANSMISSION *(contd.)* i01431096

NOTE	REF NO	GRAPHIC REF	PART NUMBER	QTY	PART NAME 1 2 3 4 5 6 (PRODUCT LEVEL)	SEE PAGE
	55	1	**1M-8657**	2	BOLT (1/2-13X15.69 IN)	
	56	1	**6Y-5912**	4	DISC-FRICTION	
	57	1	**4M-2442**	8	BOLT (1/2-13X12.32 IN)	
	58	1	**4M-9592**	20	SPRING	
	59	1	**8P-1892**	1	PISTON-CLUTCH	
	60	1	**8P-2019**	2	RING-SEAL	
	61	1	**5P-3930**	4	BEARING AS-ROLLER	
	62	1	**8P-1916**	4	GEAR-PLANETARY (20 TEETH)	
	63	1	**117-7826**	1	HOUSING AS-CLUTCH	
		1	**1A-2223**	4	DOWEL	
	64	1	**8E-8299**	8	DISC-THRUST	
	65	1	**8P-2022**	4	RING-SEAL	
	66	1	**9G-0289**	4	SHAFT-PLANETARY	
	67	1	**8P-2053**	1	SEAL-RING (228.6MM ID)	
	68	1	**6I-9788**	10	GEAR-PLANET (25 TEETH)	
	69	1	**8P-9569**	1	RING-SEAL	
	70	1	**112-4511**	5	PIN-SPRING	
	71	1	**8E-8304**	20	DISC-THRUST	
	72	1	**5M-6126**	10	BEARING	
	73	1	**6I-9784**	1	CARRIER-PLANETARY	
	74	1	**112-5585**	5	SHAFT-PLANETARY	
	75	1	**3S-2708**	8	PIN-SPRING	
	76	1	**7T-6578**	4	GEAR (24 TEETH)	
	77	1	**7H-7658**	10	SPRING	
	78	1	**3K-2511**	10	DOWEL-REACTION	
	79	1	**6T-0838**	1	RING-SEAL	
	80	1	**8E-8303**	8	DISC-THRUST	
	81	1	**6Y-2811**	4	BEARING	
	82	1	**131-4091**	1	SEAL-RING	
	83	1	**7T-6581**	4	SHAFT-PLANETARY	
	84	1	**6Y-4846**	1	CARRIER-PLANETARY	
	85	1	**111-7472**	1	SHAFT AS-INPUT	
	86	1	**156-4406**	1	PLUG-PIPE	
	87	1	**3T-3175**	1	ORIFICE	
	88	2	**5M-2894**	2	WASHER-HARD (10.2X18.5X2.5MM THK)	
	89	1	**144-7881**	1	ROTOR	
	90	1	**108-7749**	1	ROTOR	
	91	2	**152-1330**	1	BRACKET AS	
	92	2	**8M-8489**	2	DOWEL	
	93	1	**5G-8836**	1	RING	
	94	2	**196-8884**	1	BRACKET AS	
		2	**8C-3334**	2	RIVET-TUBULAR	
		2	**124-9401**	4	CLIP (TAB)	
	95	2	**0S-1620**	2	BOLT (1/2-13X.75 IN)	
	96	1	**9W-6186**	1	PISTON-CLUTCH	
	97	1	**7G-2343**	3	SPRING-DISC	
	98	1	**6V-2478**	1	RING-RETAINING	
	99	1	**5M-3038**	2	SEAL-O-RING (75.59MM ID)	
	100	1	**5P-5297**	1	RING-RETAINING	
	101	2	**0S-1619**	2	BOLT (3/8-16X3 IN)	
Y	102	2	**193-2550**	4	SENSOR GP-SPEED	271

R-REMFG PART MAY BE AVAILABLE
Y-SEPARATE ILLUSTRATION

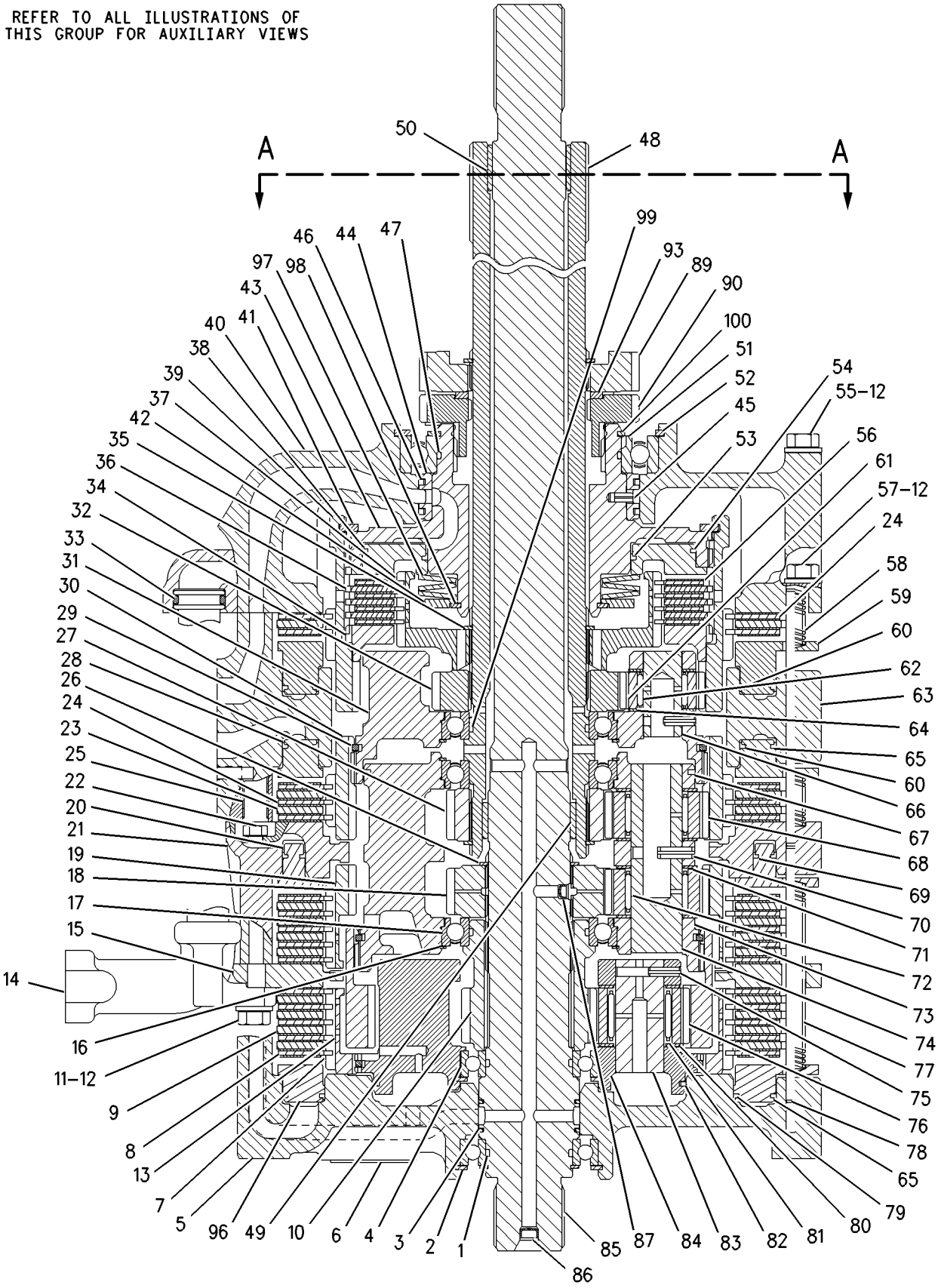

GRAPHIC #1 g00751670

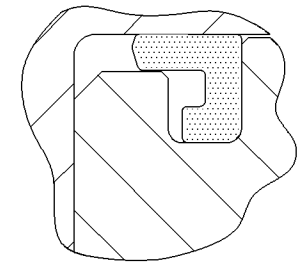

TYPICAL SEAL INSTALLATION

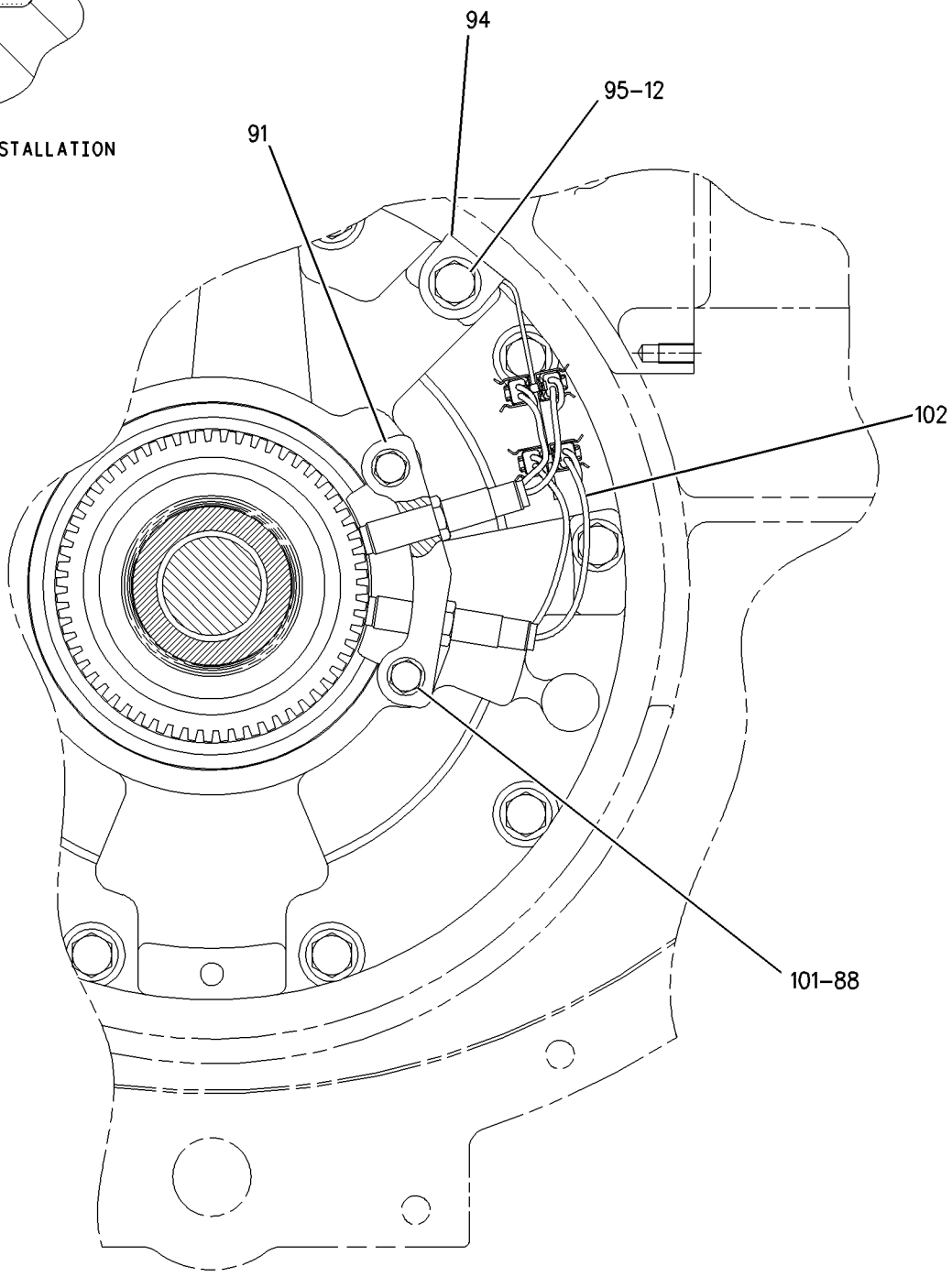

SECTION A–A

GRAPHIC #2

g00751669

157-0820 POWER TRAIN AR

S/N: AKA1-UP

PART OF 157-0818 GENERAL AR

SMCS-3000 **i01429957**

NOTE	PART NUMBER	QTY	PART NAME 1 2 3 4 5 6 (PRODUCT LEVEL)	SEE PAGE
Y	*7T-8148*	1	AXLE GP-POWER TRAIN	293
Y	*157-5073*	1	BRAKE & DRIVE GP	298
Y	*159-2542*	1	BRAKE & DRIVE GP	299
Y	*158-8077*	1	CONTROL & MTG GP-ELECTRONIC	208
Y	*156-2542*	1	LINES GP-POWER TRAIN OIL	324
Y	*109-0136*	1	MOUNTING GP-FINAL DRIVE	331
Y	*6T-0009*	1	MOUNTING GP-TRANSMISSION	332
Y	*172-5262*	1	CONTROL & MTG GP-PEDAL	305
Y	*160-9933*	1	SHAFT GP-MAIN DRIVE	345
Y	*161-3306*	1	TORQUE CONVERTER GP	350
Y	*164-0234*	1	TRANSMISSION AR	352
Y	*158-8076*	1	VALVE & MTG GP-POWER TRAIN	354
	184-0870	1	PLUG AS-WIRING (POWER TRAIN)	
	102-8805	1	KIT-RECEPTACLE (6 PIN)	
			(INCLUDES RECEPTACLE AS & WEDGE)	
	3E-3383	1	WEDGE-RECEPTACLE LOCK	
BD	**5P-5677**		WIRE (18 GA)	
	8T-8737	2	PLUG-SEAL (3.07MM ID)	
E	**119-3662**		TUBE-SHRINKABLE (7CM)	
	9X-3401	4	PIN-CONNECTOR	
			(FOR 16-18 GA WIRE)	
			—OR—	
	126-1767	4	CONNECTOR-PIN	
			(FOR 14 GA WIRE)	

B-USE AS REQUIRED
D-ORDER BY THE METER
E-ORDER BY THE CENTIMETER
Y-SEPARATE ILLUSTRATION

160-1834 PUMP GP-GEAR

S/N: AKA1-UP

PART OF 156-2542 LINES GP-POWER TRAIN OIL

SMCS-3115, 3153 **i01486802**

NOTE	REF NO	GRAPHIC REF	PART NUMBER	QTY	PART NAME 1 2 3 4 5 6 (PRODUCT LEVEL)	SEE PAGE
	1	1	**1P-4576**	2	FLANGE	
	2	1	**1P-4577**	4	FLANGE-HALF	
	3	1	**1P-4578**	2	FLANGE-HALF	
	4	1	**1P-4582**	2	FLANGE-HALF	
	5	1	**1P-4584**	2	FLANGE-HALF	
	6	1	**7B-3028**	1	SCREW-DRIVE (NO 4X3/16 IN)	
Y	7	1	**160-1835**	1	PUMP GP-GEAR	342
	8	1	**165-7833**	1	PLATE-IDENTIFICATION	
	9	1	**0S-1587**	1	BOLT (1/2-13X1.75 IN)	
	10	1	**5P-2566**	4	BOLT (1/2-13X1.5 IN)	
	11	1	**5S-7382**	12	BOLT (3/8-16X1.375 IN)	
	12	1	**7X-0308**	4	BOLT (7/16-14X1.375 IN)	
	13	1	**7X-0325**	1	BOLT (1/2-13X2.5 IN)	
	14	1	**8T-4223**	8	WASHER-HARD (13.5X25.5X3MM THK)	
	15	1	**8T-4896**	12	WASHER-HARD (10.2X18.5X2.5MM THK)	
	16	1	**8T-5360**	4	WASHER (12X22.5X2.5MM THK)	
	17	1	**8T-8919**	4	BOLT (1/2-13X1.75 IN)	

Y-SEPARATE ILLUSTRATION

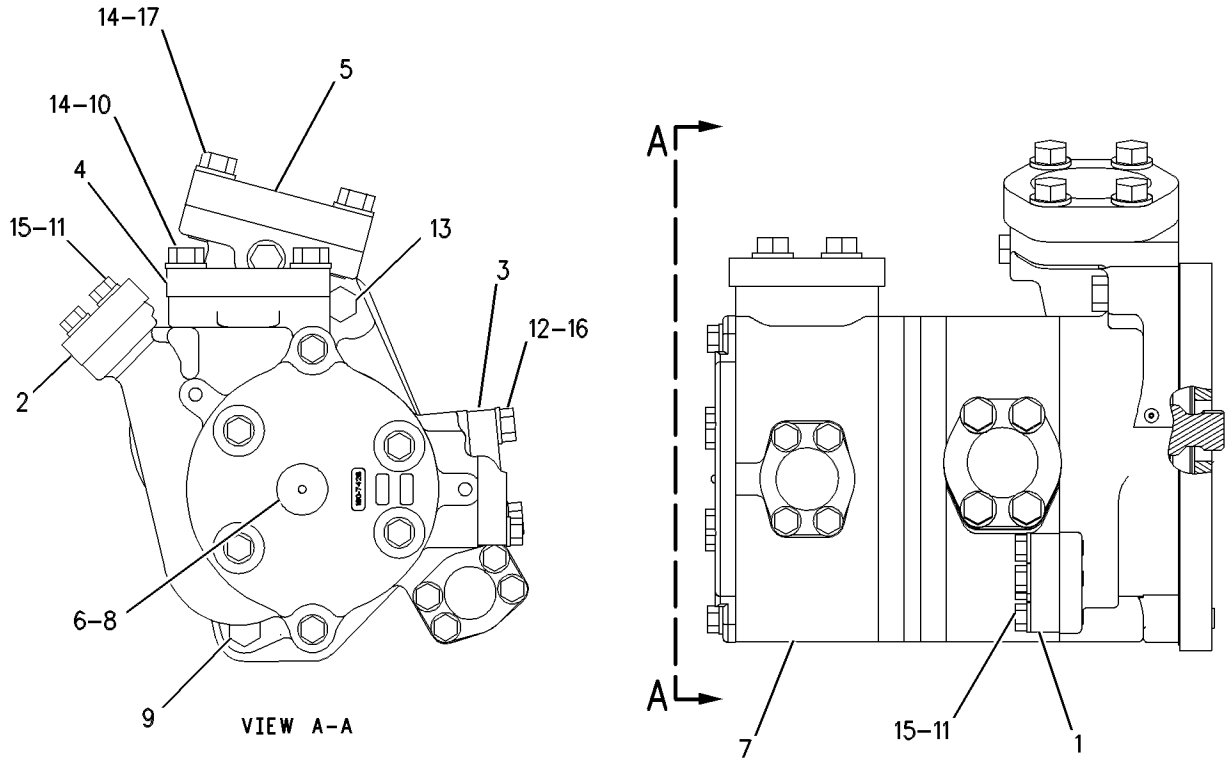

GRAPHIC #1 g00651339

160-1835 PUMP GP-GEAR

S/N: AKA1-UP

PART OF 160-1834 PUMP GP-GEAR

SMCS-3115, 3153 **i01486810**

NOTE	REF NO	GRAPHIC REF	PART NUMBER	QTY	PART NAME 1 2 3 4 5 6 (PRODUCT LEVEL)	SEE PAGE
	1	1	**1B-8705**	3	KEY-WOODRUFF	
	2	1	**3G-7242**	1	PLUG	
	3	1	**3S-0004**	6	WASHER (0.406X0.728X0.09 IN THK)	
	4	1	**7B-3028**	1	SCREW-DRIVE (NO 4X3/16 IN)	
	5	1	**9S-1018**	8	WASHER (9.73X19.05X.84MM THK)	
	6	1	**9W-3273**	1	SPACER-OIL PUMP	
	7	1	**129-1609**	6	SEAL-O-RING	
	8	1	**137-7657**	2	SEAL-LIP TYPE	
	9	1	**160-7428**	1	COVER-OIL PUMP	
	10	1	**161-4018**	1	GEAR AS-OIL PUMP	
	11	1	**161-4019**	1	GEAR AS-OIL PUMP	
	12	1	**161-9937**	1	BODY AS-OIL PUMP	
		1	**1M-3909**	2	BEARING-SLEEVE	
	13	1	**161-9938**	1	MANIFOLD AS	
		1	**2A-3746**	2	PLUG-CUP	
		1	**1M-3780**	2	BEARING-SLEEVE	
		1	**5M-4987**	2	DOWEL	
		1	**1M-3909**	2	BEARING-SLEEVE	
	14	1	**161-9939**	1	BODY AS-OIL PUMP	
		1	**1M-3780**	2	BEARING-SLEEVE	
		1	**6Y-4205**	1	ADAPTER	
	15	1	**162-2787**	2	BODY AS-OIL PUMP	
		1	**9M-4388**	2	DOWEL	
	16	1	**162-2791**	4	GEAR-OIL PUMP	
	17	1	**162-2792**	2	GEAR-OIL PUMP	
	18	1	**165-7834**	1	PLATE-IDENTIFICATION	
	19	1	**3J-8500**	1	RING-RETAINING	
	20	1	**4H-3283**	2	BOLT (3/8-16X9.5IN)	
	21	1	**5F-6044**	4	BOLT (3/8-16X9 IN)	

160-1835 **PUMP GP-GEAR** ***(contd.)*** **i01486810**

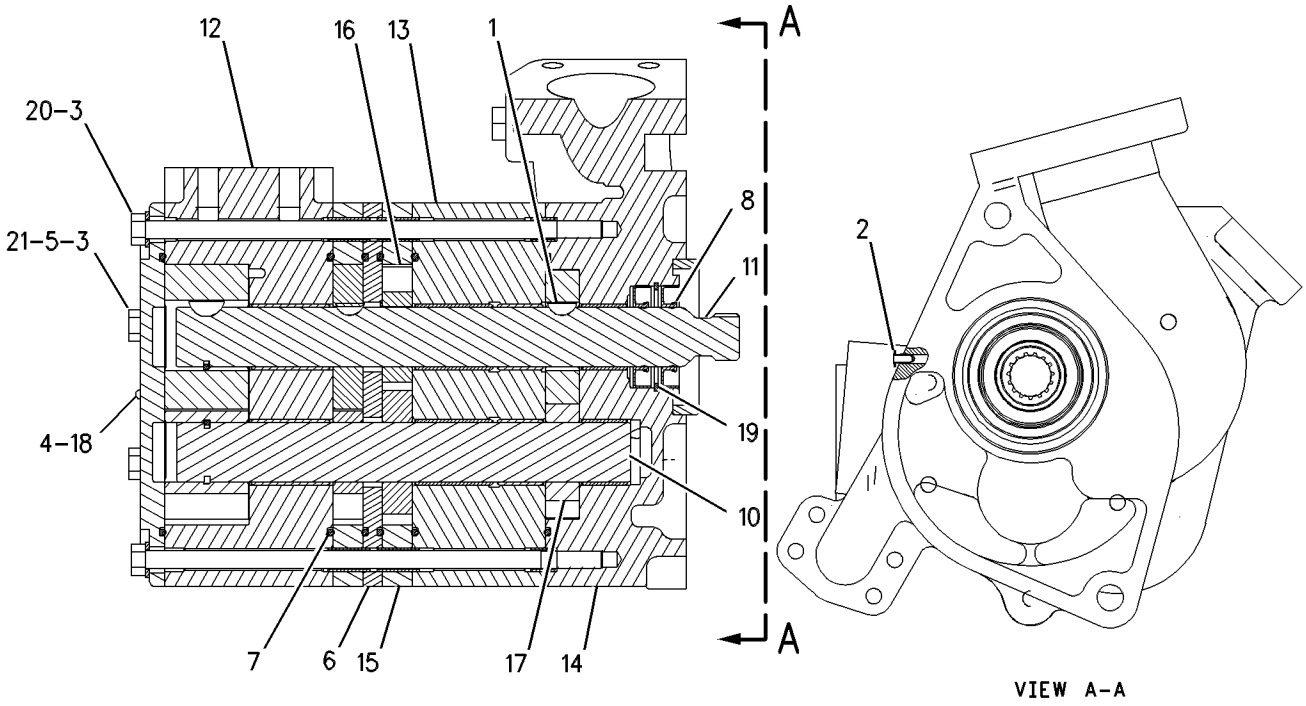

GRAPHIC #1 g00531623

156-5341 SEGMENT GP-SPROCKET

S/N: AKA1-UP

PART OF 128-0302, 157-5072, 159-7941 FINAL DRIVE GP

SMCS-4155 **i01430470**

NOTE	REF NO	GRAPHIC REF	PART NUMBER	QTY	PART NAME 1 2 3 4 5 6 (PRODUCT LEVEL)	SEE PAGE
	1	1	**173-0948**	5	SEGMENT-SPROCKET	
	2	1	**7H-3608**	25	NUT	
	3	1	**5P-7665**	25	BOLT-SPROCKET	
	4	1	**6V-5841**	25	WASHER-HARD	

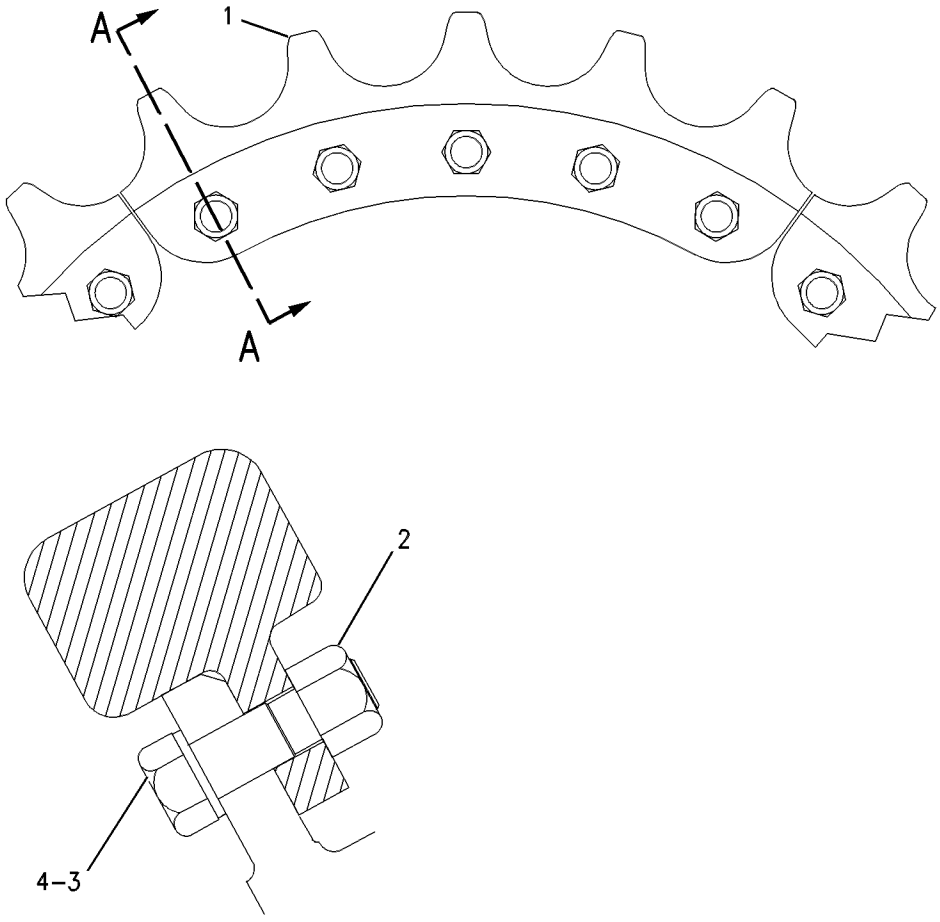

SECTION A–A

GRAPHIC #1 g00525160

160-9933 SHAFT GP-MAIN DRIVE

S/N: AKA1-UP

PART OF 157-0820 POWER TRAIN AR

SMCS-3253 **i01429920**

NOTE	REF NO	GRAPHIC REF	PART NUMBER	QTY	PART NAME 1 2 3 4 5 6 (PRODUCT LEVEL)	SEE PAGE
	1	1	**9G-1930**	1	YOKE AS	
		1	**7D-1677**	1	RACE-BEARING INNER	
		1	**8H-2768**	1	PLUG-CUP	
Y	2	1	**155-1371**	1	UNIVERSAL JOINT GP	353
	3	1	**0S-0484**	8	BOLT (1/2-20X2.25IN)	
	4	1	**5P-7213**	8	WASHER-HARD (13.5X20.5X2MM THK)	

Y-SEPARATE ILLUSTRATION

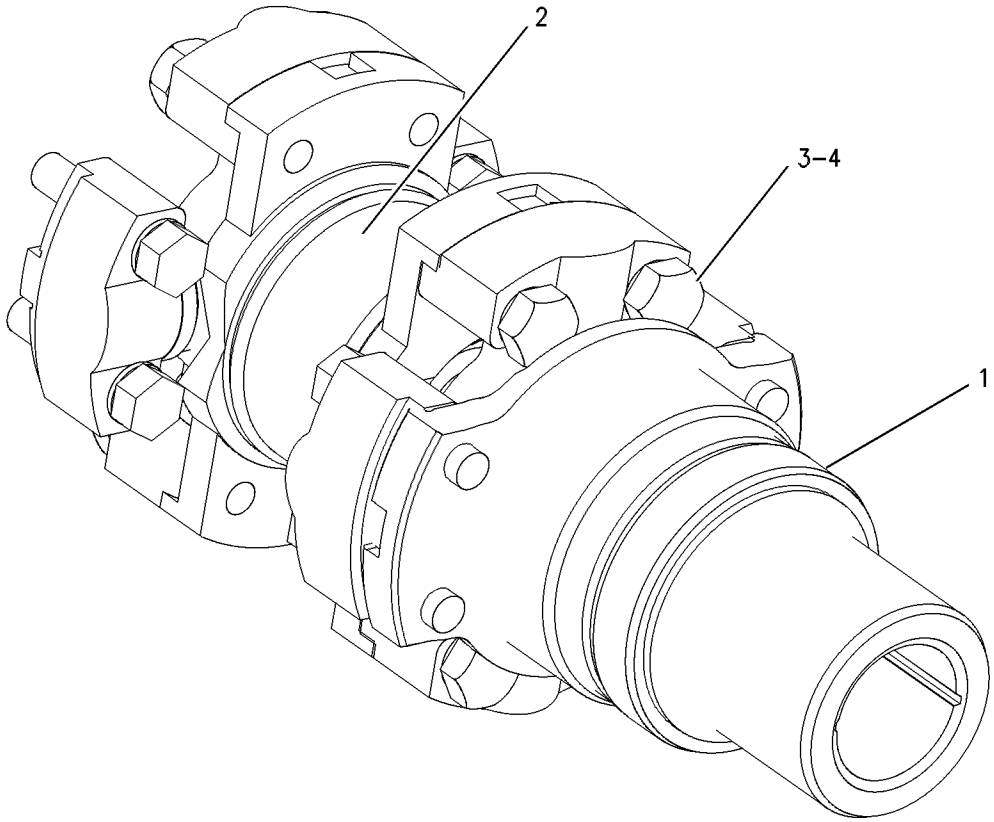

GRAPHIC #1 g00527134

161-3304 TORQUE CONVERTER GP

S/N: CJA1-UP

PART OF 161-3305 TORQUE CONVERTER GP

SMCS-3101, 3102, 3105, 3127, 3128, 3129, 3130, 3131, 3134, 3135, 3136

i01431840

NOTE	REF NO	GRAPHIC REF	PART NUMBER	QTY	PART NAME 1 2 3 4 5 6 (PRODUCT LEVEL)	SEE PAGE
	1	1	**1T-0679**	11	ROLLER-FREEWHEEL	
	2	1	**1T-0680**	11	SPRING-FREEWHEEL	
	3	1	**1T-0681**	1	CAM-FREEWHEEL	
	4	1	**1T-1278**	2	BEARING-THRUST	
	5	1	**1T-1281**	2	RETAINER-BEARING	
	6	1	**1T-1282**	2	RACE-THRUST BEARING	
	7	1	**1T-1589**	2	RACE-THRUST BEARING	
	8	1	**1T-1590**	1	RACE-FREEWHEEL	
	9	1	**2L-3650**	4	PIN-SPRING	
	10	1	**3H-7654**	8	WASHER-HARD (13.5X22.5X3MM THK)	
	11	1	**3J-1907**	2	SEAL-O-RING (11.89MM ID)	
	12	1	**9W-6990**	1	RING-SEAL	
	13	1	**7G-7541**	1	TURBINE-CONVERTER	
	14	1	**7G-8427**	1	RING-SEAL	
	15	1	**8B-7789**	2	RING-SNAP	
	16	1	**9H-0362**	1	BALL BEARING	
	17	1	**109-0119**	1	RING-RETAINING	
	18	1	**152-5221**	1	HUB-TURBINE	
	20	1	**169-4738**	1	SLEEVE-WEAR	
	21	1	**152-7141**	1	HOUSING-ROTATING	
	22	1	**169-4736**	1	FLANGE AS	
		1	**9M-4007**	2	DOWEL	
	23	1	**169-4741**	1	SUPPORT-STATOR	
	24	1	**152-7160**	1	HUB-IMPELLER	
	25	1	**153-9650**	1	CARRIER	
	26	1	**169-4739**	1	CARRIER	
	27	1	**154-2558**	1	SLEEVE	
	28	1	**169-4737**	1	PLATE-THRUST	
	29	1	**155-2821**	1	FLANGE AS-OUTPUT	
		1	**156-7485**	2	BEARING-SLEEVE	
	30	1	**155-6648**	1	CONE-BEARING	
	31	1	**155-6647**	1	CUP-BEARING	
	32	1	**156-7238**	1	IMPELLER	
	33	1	**156-7239**	1	STATOR	
	34	1	**3F-3727**	1	RING-SNAP	
M	35	1	**6V-1820**	24	BOLT (M10X1.50X30MM)	
M	36	1	**6V-3668**	8	BOLT (M12X1.75X30MM)	
M	37	1	**6V-3823**	12	BOLT (M12X1.75X60MM)	
M	38	1	**6V-4248**	20	BOLT (M10X1.50X25MM)	
	39	1	**6V-5839**	44	WASHER (11X21X2.5MM THK)	
	40	1	**9S-4191**	2	PLUG	
	41	1	**169-4740**	1	CARRIER-STATOR	

M-METRIC PART

161-3304 TORQUE CONVERTER GP *(contd.)* i01431840

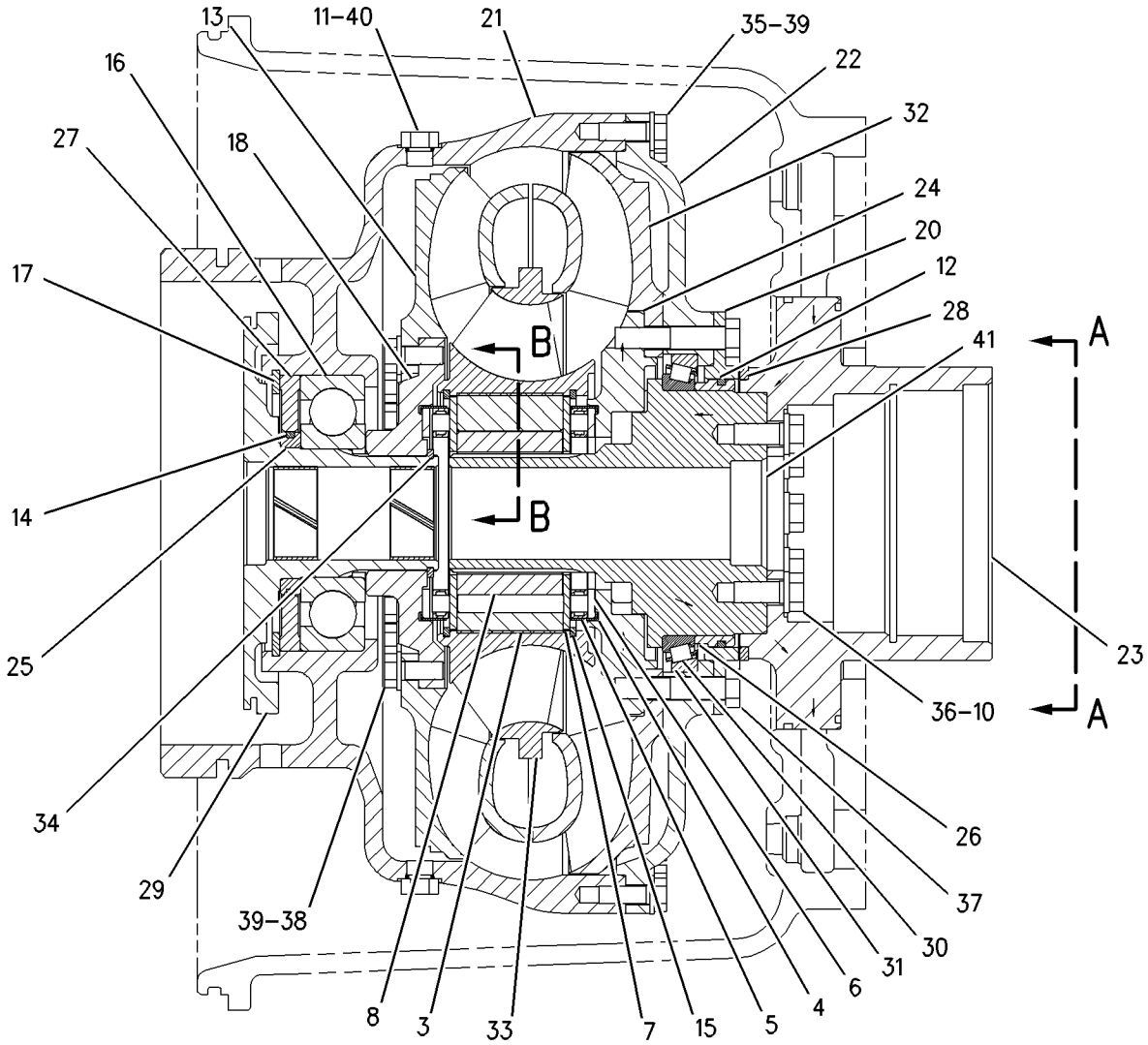

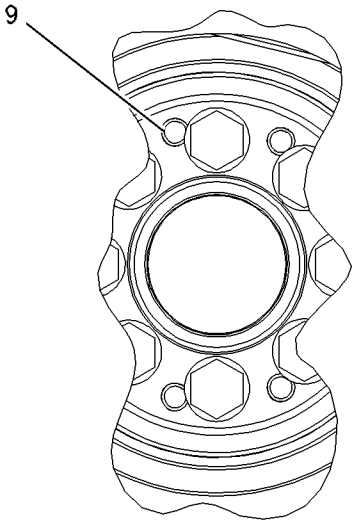

VIEW A–A

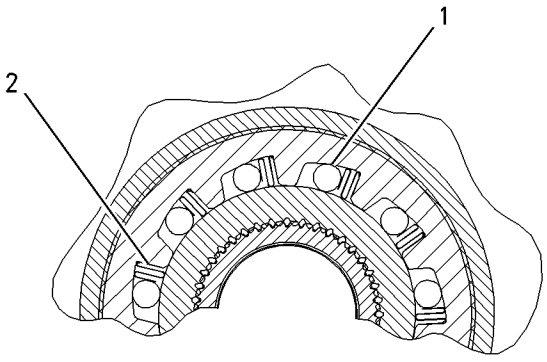

SECTION B–B

GRAPHIC #1 g00662958

161-3305 TORQUE CONVERTER GP

S/N: CJA1-UP

PART OF 161-3306 TORQUE CONVERTER GP

SMCS-3101, 3102, 3105, 3127, 3128, 3129, 3130, 3131, 3134, 3135, 3136 **i01431828**

NOTE	REF NO	GRAPHIC REF	PART NUMBER	QTY	PART NAME 1 2 3 4 5 6 (PRODUCT LEVEL)	SEE PAGE
	1	1	**2K-5986**	2	PIN-SPRING	
	2	1	**3H-1996**	1	BEARING	
	3	1	**3S-2708**	3	PIN-SPRING	
	4	1	**3T-4008**	3	GEAR-PLANETARY (23 TEETH) (23 TEETH)	
	5	1	**3T-4009**	1	GEAR-RING (82 TEETH) (82 TEETH)	
	6	1	**3T-4011**	3	SHAFT AS-PLANETARY	
	7	1	**2A-3746**	1	PLUG-CUP	
	8	1	**5P-3930**	3	BEARING AS-ROLLER	
	9	1	**5P-7679**	1	RACE-SPECIAL ROLLER BEARING	
	10	1	**8E-8300**	6	DISC-THRUST	
	11	1	**9M-2008**	1	RING-METAL SEAL	
	12	1	**002-3136**	1	RING-SNAP	
	13	1	**152-7157**	1	SHAFT AS	
		1	**5J-7386**	1	PLUG-ORIFICE (1/8-27 THD)	
	14	1	**156-5137**	1	CARRIER-PLANETARY	
	15	1	**157-0687**	1	RING-RETAINING	
	16	1	**157-0688**	1	RING-RETAINING	
	17	1	**157-1350**	1	RETAINER-CARRIER	
Y	18	1	**161-3304**	1	TORQUE CONVERTER GP	346
	19	1	**5M-7878**	1	RING-SNAP	

Y-SEPARATE ILLUSTRATION

161-3305 **TORQUE CONVERTER GP** ***(contd.)*** **i01431828**

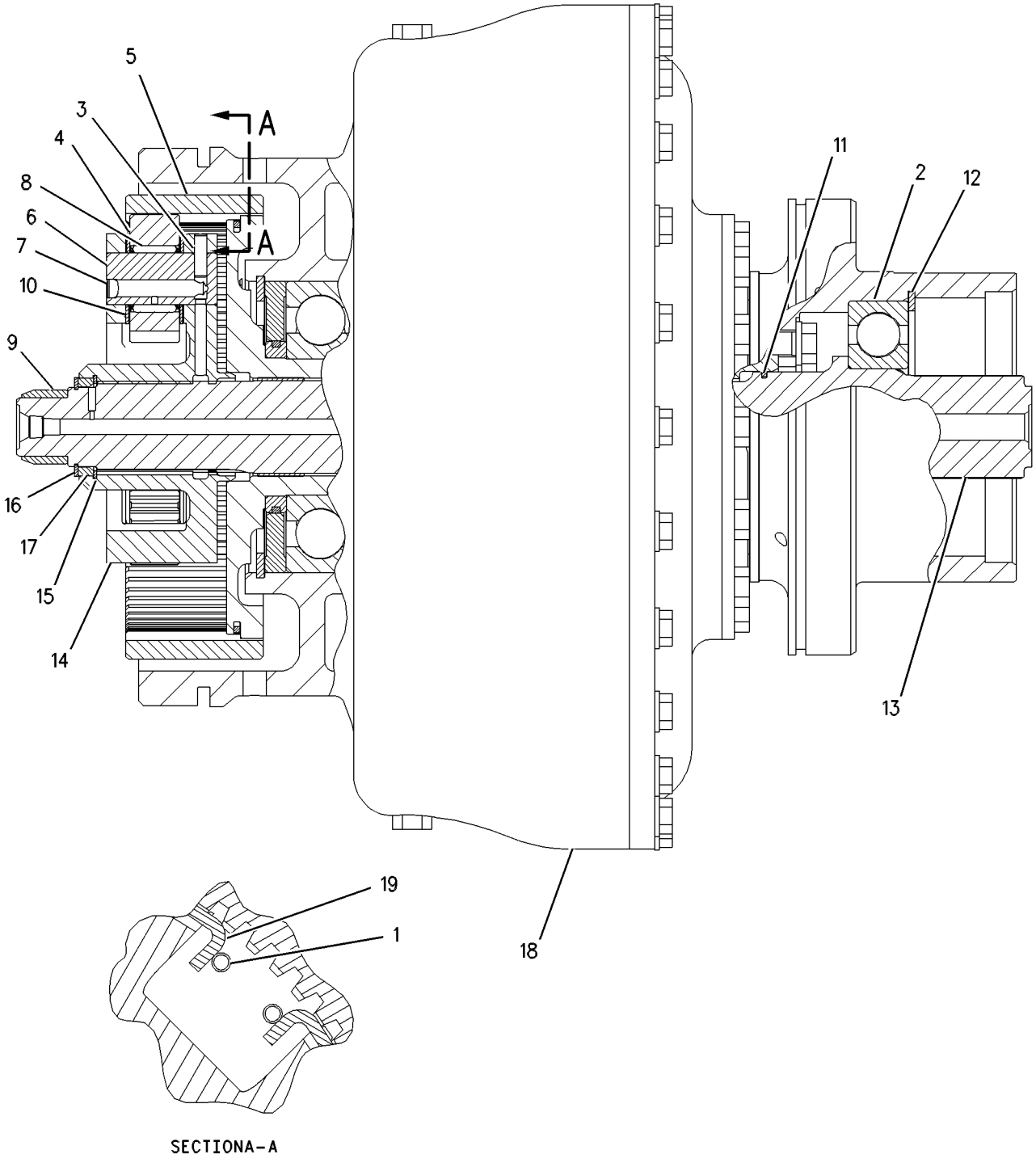

GRAPHIC #1 g00531584

POWER TRAIN

161-3306 TORQUE CONVERTER GP

S/N: AKA1-UP
WITH HOUSING
PART OF 157-0820 POWER TRAIN AR

SMCS-3101, 3102, 3105, 3127, 3128, 3129, 3130, 3131, 3134, 3135, 3136

i01431713

NOTE	REF NO	GRAPHIC REF	PART NUMBER	QTY	PART NAME 1 2 3 4 5 6 (PRODUCT LEVEL)	SEE PAGE
	1	1	**1S-9799**	1	SEAL-O-RING (36.09MM ID)	
	2	1	**1T-1402**	1	RETAINER-SHAFT	
	3	1	**2D-1523**	1	RING-RETAINING	
	4	1	**2S-2251**	1	SEAL-O-RING (43.82MM ID)	
	5	1	**4B-7739**	1	PLUG-DRAIN	
	6	1	**7G-5320**	1	ELBOW	
	7	1	**186-3075**	2	SEAL-O-RING	
	8	1	**8H-9818**	1	GASKET	
	9	1	**8H-9819**	1	ADAPTER-PLUG	
	10	1	**8M-4433**	2	SEAL-O-RING (29.74MM ID)	
	11	1	**8S-9008**	1	SLEEVE	
	12	1	**9H-0846**	1	SEAL-O-RING (494.66MM ID)	
	13	1	**9H-8712**	1	BEARING AS	
	14	1	**9M-1976**	1	RING-RETAINING	
	15	1	**9P-3709**	1	GEAR-SUN (35 TEETH)	
	16	1	**152-7162**	1	YOKE	
	17	1	**155-2725**	1	HOUSING AS-TORQUE CONVERTER	
		1	**4K-8603**	2	PLUG-CUP (25.73MM ID)	
	18	1	**155-5161**	1	SEAL-OIL	
	19	1	**156-4575**	1	SEAL-LIP TYPE	
Y	20	1	*161-3305*	1	TORQUE CONVERTER GP	348
	21	1	**0S-1588**	8	BOLT (3/8-16X1.25 IN)	
	22	1	**2B-0858**	1	PLUG-PIPE	
	23	1	**4L-6454**	4	BOLT (3/8-16X1 IN)	
	24	1	**5M-2894**	8	WASHER-HARD (10.2X18.5X2.5MM THK)	
	25	1	**7X-3188**	1	BOLT (1/2-20 THD)	
	26	1	**8T-4896**	2	WASHER-HARD (10.2X18.5X2.5MM THK)	
	27	1	**8T-5360**	10	WASHER (12X22.5X2.5MM THK)	
	28	1	**8T-9382**	10	BOLT (7/16-14X1.25 IN)	

Y-SEPARATE ILLUSTRATION

161-3306 **TORQUE CONVERTER GP** ***(contd.)*** **i01431713**

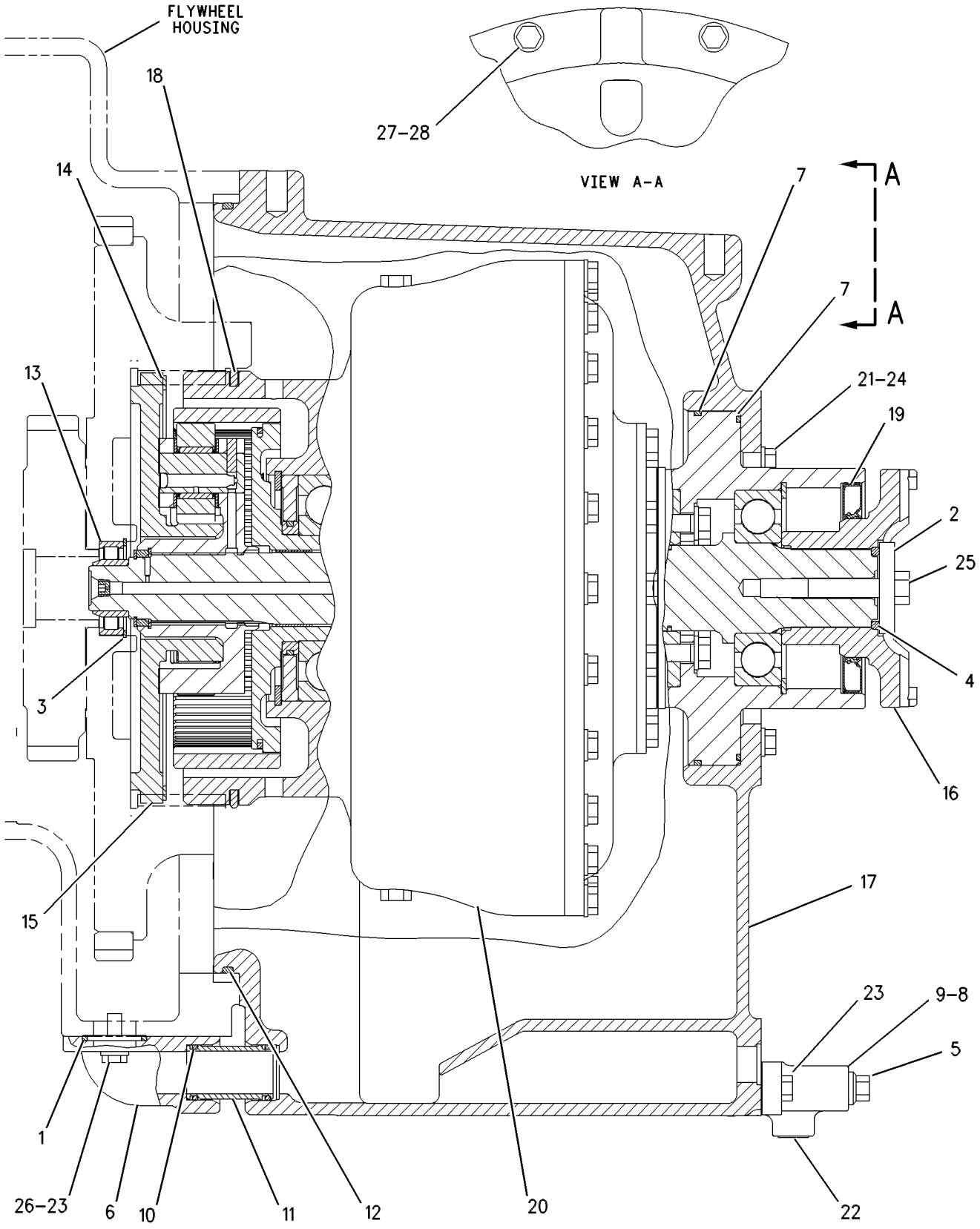

GRAPHIC #1 g00546284

164-0234 TRANSMISSION AR

S/N: 6GY1-UP

PART OF 157-0820 POWER TRAIN AR

SMCS-3030, 3060, 3160 **i01430871**

NOTE	PART NUMBER	QTY	PART NAME 1 2 3 4 5 6 (PRODUCT LEVEL)	SEE PAGE
Y	**128-2723**	1	CASE & PARTS GP-PLANETARY	302
Y	**163-5641**	1	CONTROL GP-TRANSMISSION HYD	306
Y	**156-9780**	1	GEAR GP-BEVEL & TRANSFER	320
Y	**128-2722**	1	PLANETARY GP-TRANSMISSION	336

Y-SEPARATE ILLUSTRATION

155-1371 UNIVERSAL JOINT GP

S/N: AKA1-UP

PART OF 160-9933 SHAFT GP-MAIN DRIVE

SMCS-3251, 3253 **i01429937**

NOTE	REF NO	GRAPHIC REF	PART NUMBER	QTY	PART NAME 1 2 3 4 5 6 (PRODUCT LEVEL)	SEE PAGE
	1	1	**9P-0356**	2	SPIDER & BEARING AS	
	2	1	**0S-0484**	8	BOLT (1/2-20X2.25IN)	
	3	1	**5P-7213**	8	WASHER-HARD (13.5X20.5X2MM THK)	

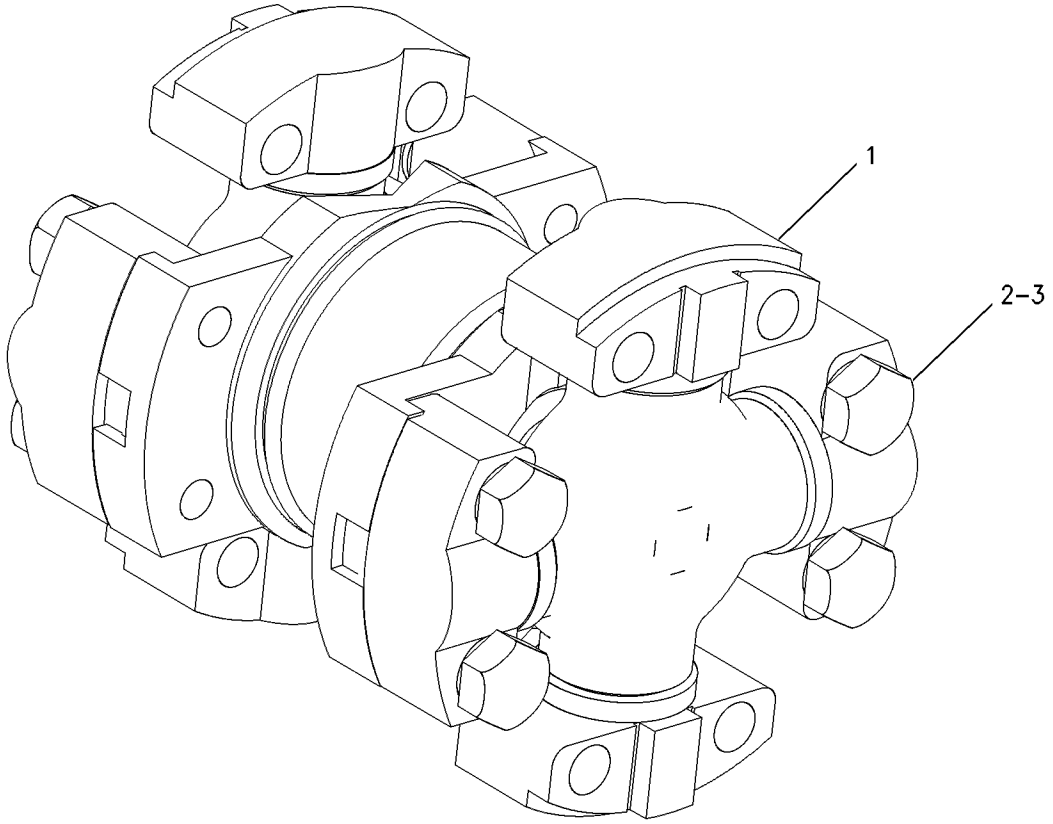

GRAPHIC #1 g00526874

158-8076 VALVE & MTG GP-POWER TRAIN

S/N: AKA1-UP

PART OF 157-0820 POWER TRAIN AR

SMCS-3073 **i01431230**

NOTE	REF NO	GRAPHIC REF	PART NUMBER	QTY	PART NAME 1 2 3 4 5 6 (PRODUCT LEVEL)	SEE PAGE
	1	1	**3S-0004**	4	WASHER (.406X.728X.09 IN THK)	
	2	1	**8M-5254**	4	SEAL-O-RING (31.34MM ID)	
	3	1	**115-4371**	1	PLATE	
Y	4	1	**160-2456**	1	VALVE GP-CONTROL	356
	5	1	**1A-5183**	4	BOLT (3/8-16X4.75 IN)	

Y-SEPARATE ILLUSTRATION

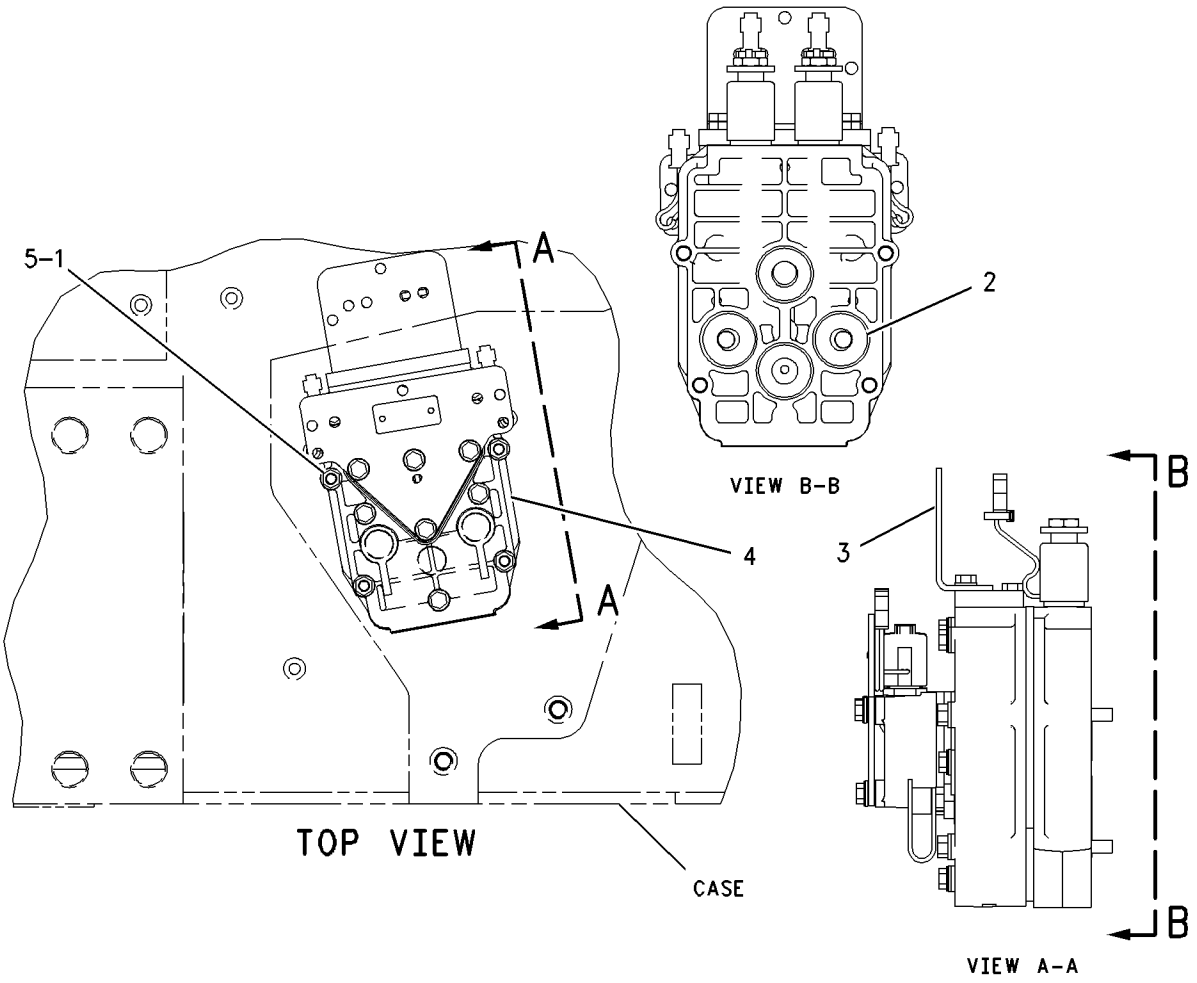

GRAPHIC #1 g00621958

MEMORANDA

160-2456 VALVE GP-CONTROL

S/N: AKA1-UP

PART OF 158-8076 VALVE & MTG GP-POWER TRAIN

SMCS-3167 **i01486930**

NOTE	REF NO	GRAPHIC REF	PART NUMBER	QTY	PART NAME 1 2 3 4 5 6 (PRODUCT LEVEL)	SEE PAGE
	1	1	**9L-9068**	4	DOWEL	
	2	1	**9P-9150**	24	WASHER (8.25X18X.84MM THK)	
Y	3	1	*162-5357*	1	MANIFOLD & VALVE GP	329
Y	4	1	**162-5367**	1	VALVE GP-CONTROL	358
Y	5	1	*175-4972*	1	MANIFOLD & VALVE GP	330
	6	1	**176-0259**	1	PLUG	
	7	1	**122-3771**	2	SEAL-O-RING	
	8	1	**132-9899**	1	PLATE	
	9	1	**132-9900**	1	PLATE	
	10	1	**134-1251**	1	PLATE-SEPARATOR	
	11	1	**185-3503**	2	SEAL-O-RING	
	12	1	**1T-0738**	10	WASHER (8.4X19X1.83MM THK)	
	13	1	**3S-2093**	4	STRAP-CABLE	
	14	1	**4J-7533**	1	SEAL-O-RING	
M	15	1	**7X-2541**	4	BOLT (M8X1.25X140MM)	
M	16	1	**8T-3647**	4	BOLT (M8X1.25X80MM)	
M	17	1	**8T-4177**	2	BOLT (M8X1.25X90MM)	

M-METRIC PART
Y-SEPARATE ILLUSTRATION

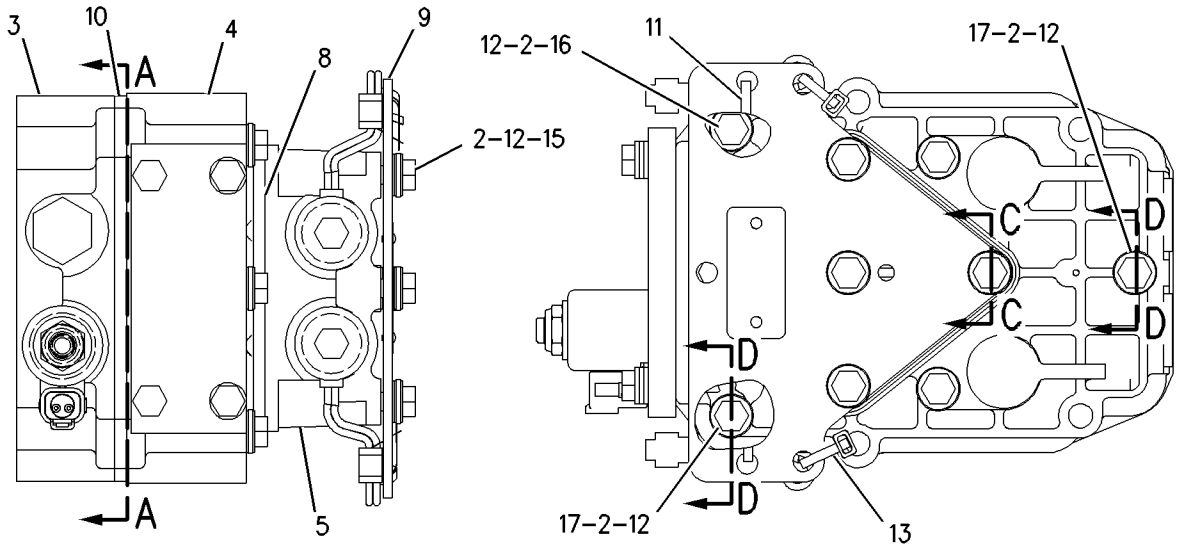

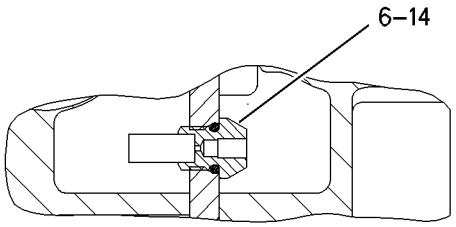

SECTION E-E

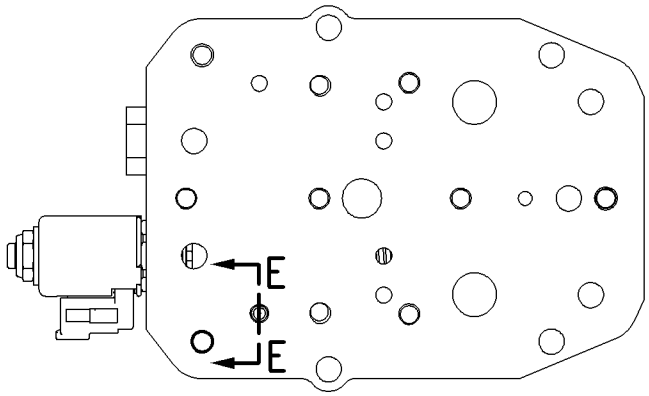

SECTION A-A

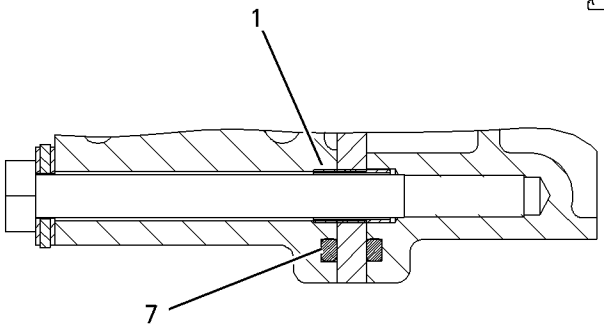

SECTION D-D

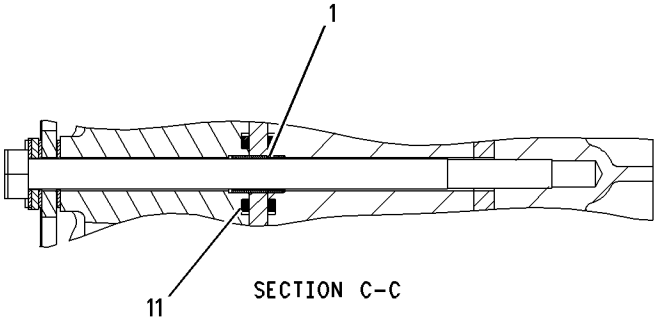

SECTION C-C

GRAPHIC #1 g00721091

162-5367 VALVE GP-CONTROL

S/N: AKA1-UP

PART OF 160-2456 VALVE GP-CONTROL

SMCS-3167 **i01486947**

NOTE	REF NO	GRAPHIC REF	PART NUMBER	QTY	PART NAME 1 2 3 4 5 6 (PRODUCT LEVEL)	SEE PAGE
	1	1	**9S-8008**	2	PLUG-O-RING	
Z	2	1		1	BODY-VALVE	
	3	1	**9S-4190**	21	PLUG-O-RING	
	4	1	**108-4429**	2	PISTON-LOAD	
	5	1	**108-4430**	2	SPRING	
	6	1	**108-4431**	2	SPRING (18.8MM OD)	
	7	1	**108-4432**	2	SPRING (30.5MM OD)	
	8	1	**110-2842**	1	PLATE-END	
	9	1	**137-6603**	2	SPOOL	
	10	1	**2M-9780**	2	SEAL-O-RING	
	11	1	**3D-2824**	2	SEAL-O-RING	
	12	1	**3J-1907**	2	SEAL-O-RING	
	13	1	**5P-1404**	1	ADAPTER-O-RING (STRAIGHT THREAD)	
	14	1	**6J-2419**	2	SEAL-O-RING	
	15	1	**6V-0484**	1	ADAPTER-O-RING	
	16	1	**6V-0852**	1	CAP-DUST	
	17	1	**6V-3965**	1	FITTING AS (QUICK DISCONNECT)	
M	18	1	**7X-2537**	2	BOLT (M8X1.25X35MM)	
	19	1	**8T-4224**	2	WASHER-HARD (8.8X16X2MM THK)	
M	20	1	**8T-7547**	2	BOLT (M8X1.25X30MM)	

M-METRIC PART
Z-NOT SERVICED SEPARATELY

162-5367 **VALVE GP-CONTROL** *(contd.)* **i01486947**

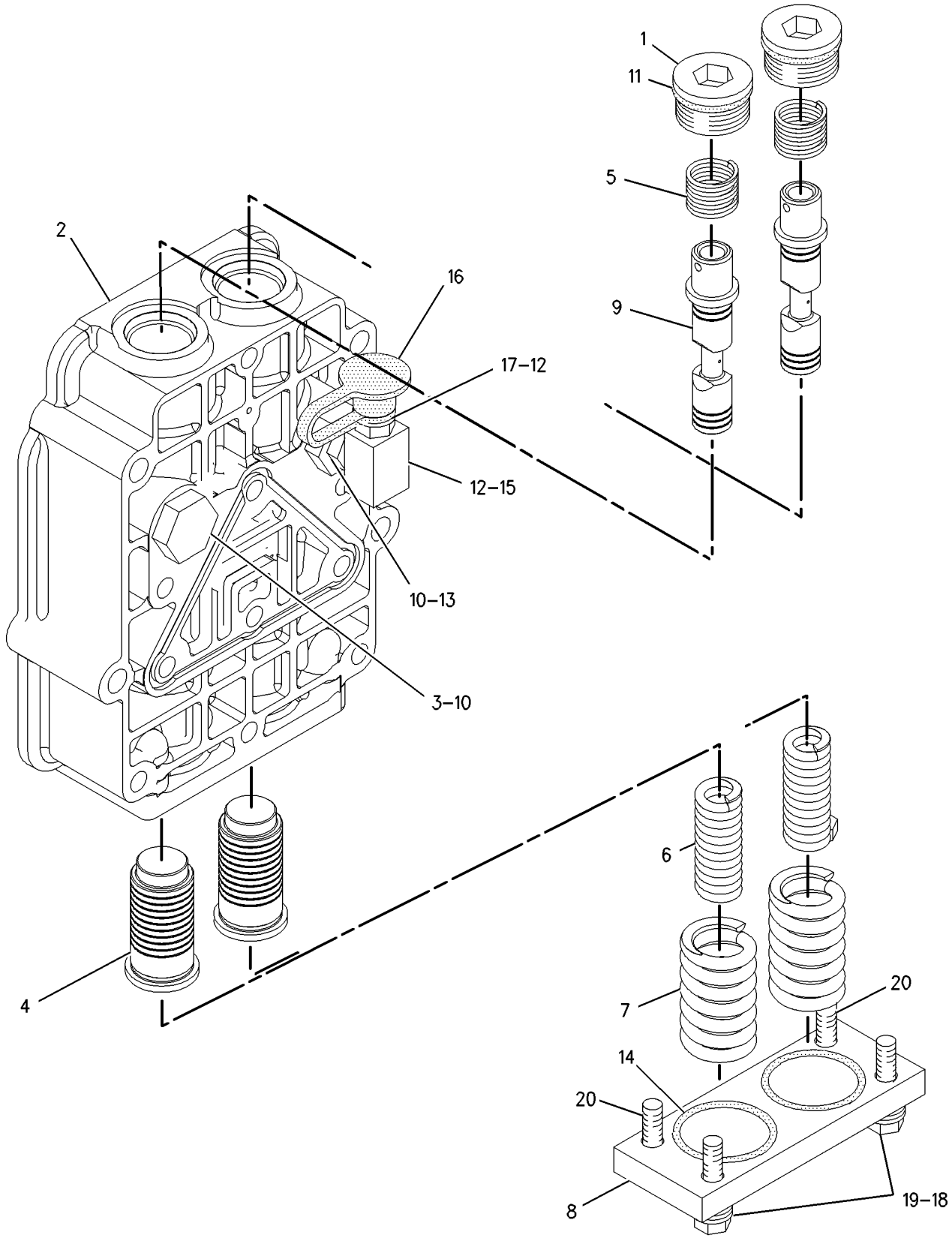

GRAPHIC #1 g00758657

160-8408 VALVE GP-MODULATING

S/N: 6GY1-UP
24 VOLT DC
PART OF 163-5641 CONTROL GP-TRANSMISSION HYD

SMCS-3139 **i01430941**

NOTE	REF NO	GRAPHIC REF	PART NUMBER	QTY	PART NAME 1 2 3 4 5 6 (PRODUCT LEVEL)	SEE PAGE
	1	1	**6V-3965**	1	FITTING AS (QUICK DISCONNECT)	
	2	1	**145-1144**	1	COIL AS	
	3	1	**3J-1907**	1	SEAL-O-RING (11.89MM ID)	
	4	1	**164-2108**	1	WASHER (2.38MM THK)	
	5	1	**167-9524**	1	NUT-SELF LOCKING (1/2-28 THD)	
Z	6	1			VALVE AS	

Z-NOT SERVICED SEPARATELY

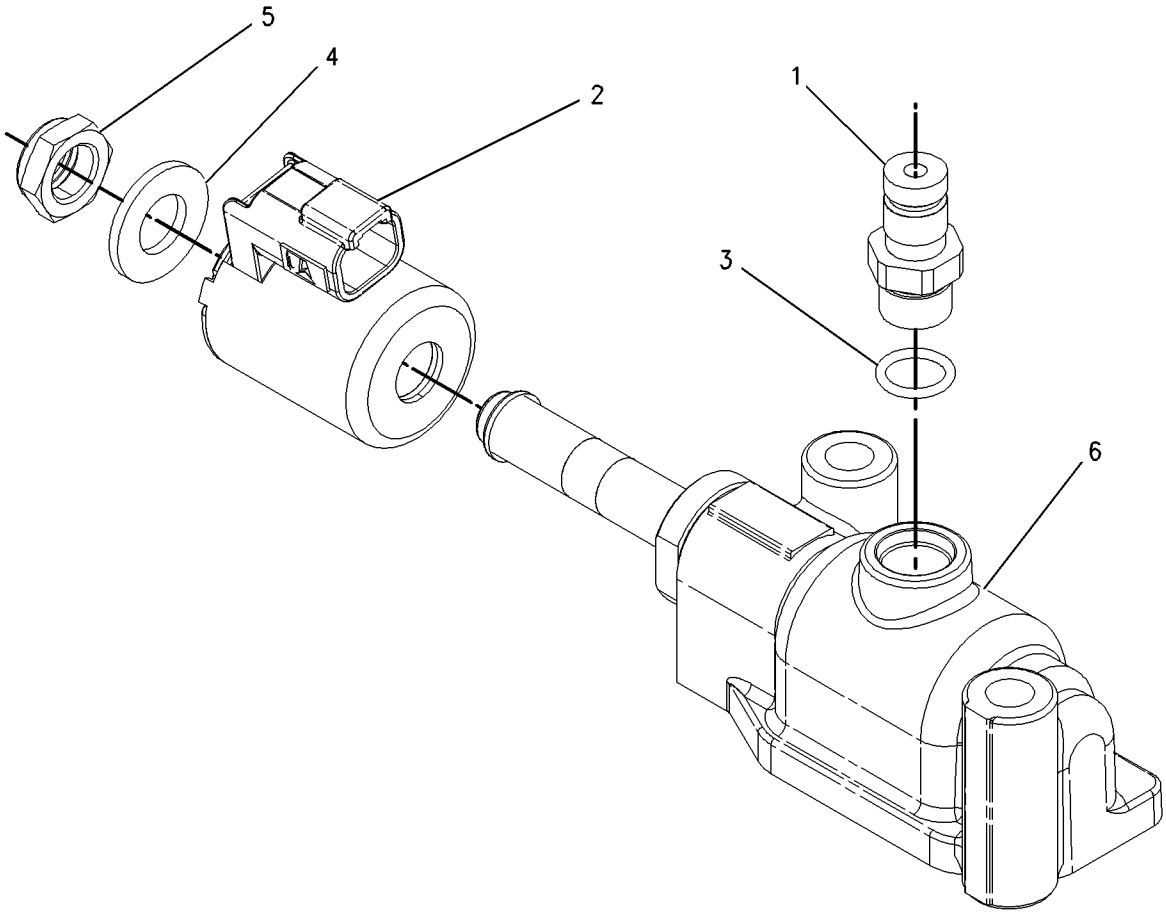

GRAPHIC #1 g00749650

MEMORANDA

161-9667 VALVE GP-PRIORITY

S/N: AKA1-UP

PART OF 156-2542 LINES GP-POWER TRAIN OIL

SMCS-3180, 4320 **i01486825**

NOTE	REF NO	GRAPHIC REF	PART NUMBER	QTY	PART NAME 1 2 3 4 5 6 (PRODUCT LEVEL)	SEE PAGE
Z	1	1		1	BODY	
	2	1	**145-5375**	1	SPOOL AS	
	2A	1	**108-8884**	1	SLEEVE	
	2B	1	**8J-6273**	1	RING-RETAINING	
	2C	1	**5M-9548**	2	SPRING	
	2D	1	**8M-2537**	2	RETAINER	
	3	1	**129-5222**	1	SPRING	
	4	1	**129-5223**	1	SPRING	
	5	1	**108-6523**	2	ADJUSTER AS	
					(EACH INCLUDES)	
	5A	1	**9U-8069**	1	PLUG	
	5B	1	**7M-8485**	1	SEAL-O-RING	
	5C	1	**4K-2039**	1	SEAL-O-RING	
	5D	1	**8T-4223**	1	WASHER-HARD (13.5X25.5X3MM THK)	
M	5E	1	**095-1207**	1	NUT (M12X1.75 THD)	
	5F	1	**101-9754**	1	SCREW-ADJUSTMENT	
	6	1	**129-5476**	2	STOP	
Y	7	1	**136-1679**	1	VALVE GP-SOLENOID (24 VOLT DC)	369
	8	1	**9S-8010**	1	PLUG-O-RING	
	9	1	**2S-4078**	1	SEAL-O-RING	
	10	1	**8P-0412**	1	SLUG	
	11	1	**4S-5983**	1	VALVE AS-RELIEF	
	11A	1	**5M-9554**	1	VALVE-CHECK	
Z	11B	1		1	VALVE-RELIEF	
	11C	1	**1L-3162**	1	RING-RETAINING	
	11D	1	**5M-9548**	1	SPRING	
	11E	1	**8M-2537**	1	RETAINER	
	12	1	**8M-8627**	1	SPRING	
	13	1	**4M-5912**	1	SPRING	
	14	1	**9S-4191**	2	PLUG-STRAIGHT THREAD	
	15	1	**3J-1907**	2	SEAL-O-RING	
	16	1	**164-0050**	1	ORIFICE	
	17	1	**164-0051**	1	ORIFICE	
	18	1	**164-0052**	1	ORIFICE	
	19	1	**9S-8007**	5	PLUG-O-RING	
	20	1	**7J-0204**	5	SEAL-O-RING	
	21	1	**7X-0301**	4	BOLT (3/8-16X7 IN)	
	22	1	**8T-4896**	4	WASHER-HARD (10.2X18.5X2.5MM THK)	
	23	1	**173-8453**	1	ORIFICE	

M-METRIC PART
Y-SEPARATE ILLUSTRATION
Z-NOT SERVICED SEPARATELY

161-9667 VALVE GP-PRIORITY *(contd.)* **i01486825**

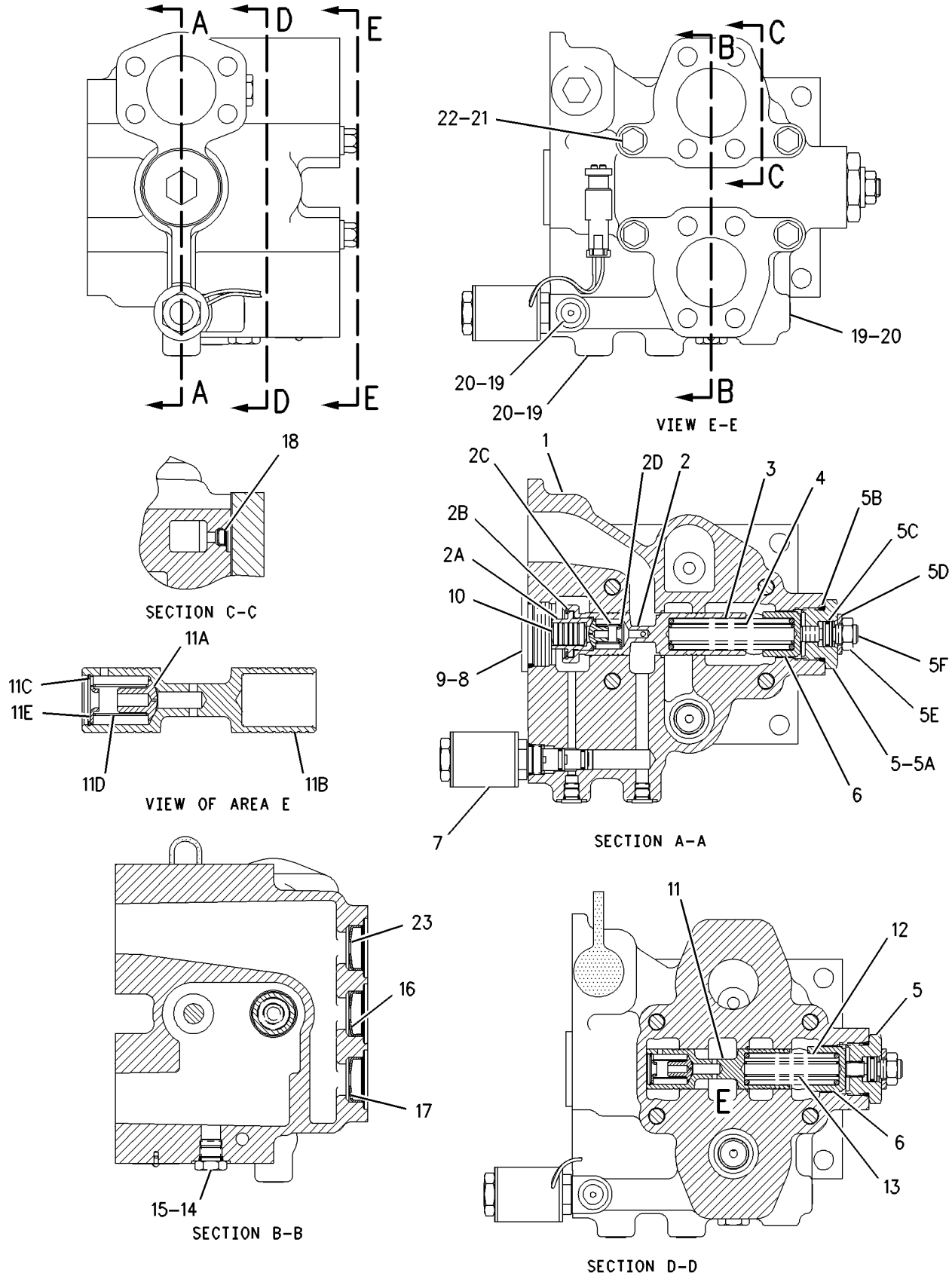

GRAPHIC #1 g00769428

109-4365 VALVE GP-RELIEF

S/N: 6GY1-UP

PART OF 163-5641 CONTROL GP-TRANSMISSION HYD

SMCS-3133, 3182 **i00600002**

NOTE	REF NO	GRAPHIC REF	PART NUMBER	QTY	PART NAME 1 2 3 4 5 6 (PRODUCT LEVEL)	SEE PAGE
	1	1	**108-2096**	1	MANIFOLD	
	2	1	**106-9214**	1	PLATE	
	3	1	**2B-2695**	6	BOLT (5/16-18X.875IN)	
	4	1	**9M-1974**	7	WASHER-HARD (2MM THK)	
	5	1	**109-3968**	1	SPOOL AS-RELIEF	
	6	1	**106-9212**	1	SPRING	
	7	1	**109-3969**	1	STOP	
	8	1	**4M-5905**	1	SCREW-ADJUSTMENT	
	9	1	**5B-3180**	1	NUT (5/16-18 THD)	
	10	1	**6Y-4638**	1	PLUG-HEX SOCKET	
	11	1	**7M-8485**	1	SEAL-O-RING (29.74MM ID)	
	12	1	**2M-7041**	1	SLUG	

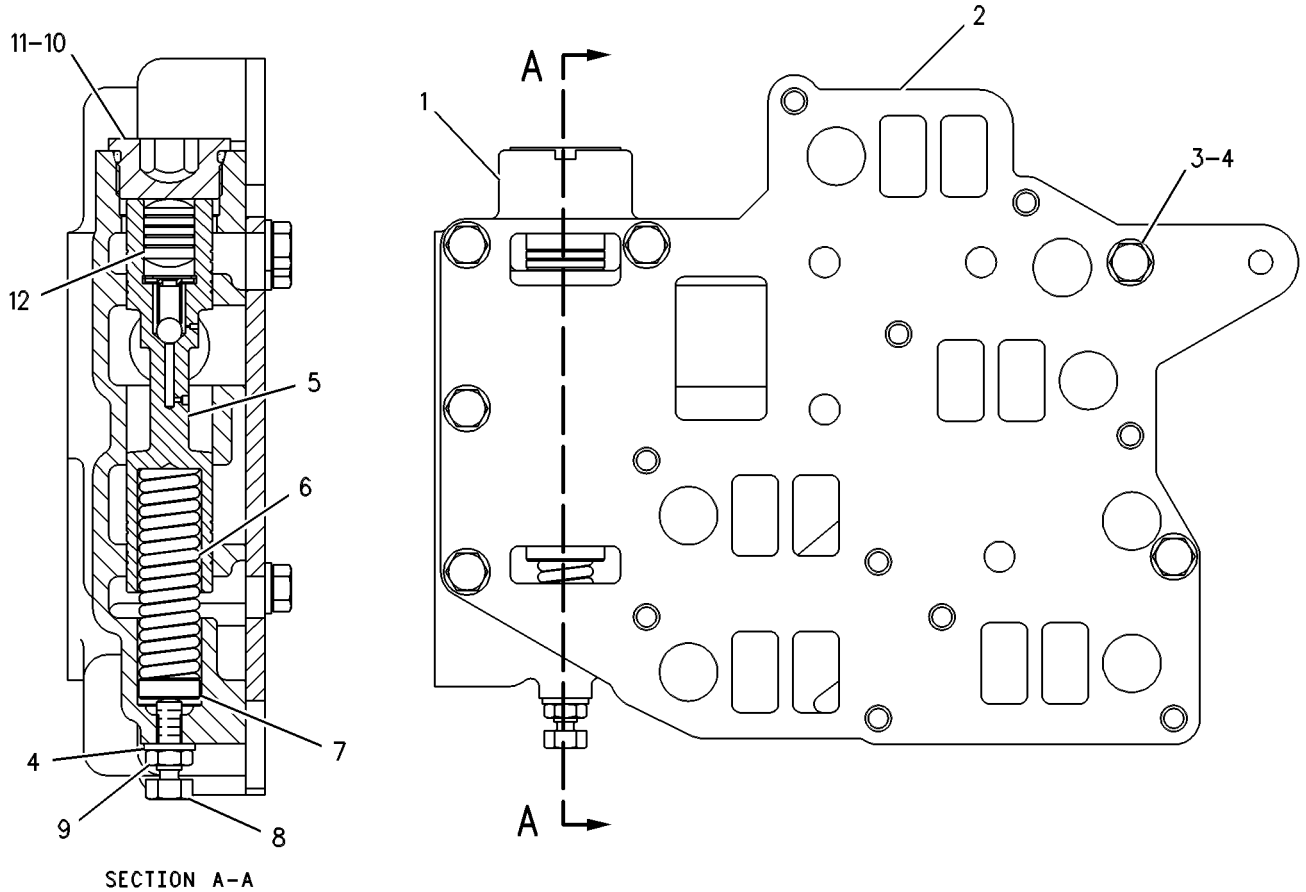

GRAPHIC #1 g00254128

161-5793 VALVE GP-RELIEF

S/N: AKA1-UP

PART OF 156-2542 LINES GP-POWER TRAIN OIL

SMCS-3133, 3182 **i01486851**

NOTE	REF NO	GRAPHIC REF	PART NUMBER	QTY	PART NAME 1 2 3 4 5 6 (PRODUCT LEVEL)	SEE PAGE
	1	1	**161-5794**	1	BODY-RELIEF VALVE	
	2	1	**4M-8239**	2	COVER	
	3	1	**0S-1594**	4	BOLT (3/8-16X1 IN)	
	4	1	**1W-9860**	1	SPRING	
	5	1	**115-3514**	1	SPRING	
B	6	1	**8J-6709**	6	SHIM (.25MM THK)	
	7	1	**115-0482**	1	SPOOL	
	8	1	**8M-4992**	2	SEAL-O-RING (40.87MM ID)	
	9	1	**9S-4191**	2	PLUG-STRAIGHT THREAD	
	10	1	**3J-1907**	3	SEAL-O-RING	
N	11	1	**161-5795**	1	PLATE-IDENTIFICATION	
	12	1	**7B-3028**	1	SCREW-DRIVE (NO 4X3/16 IN)	
	13	1	**9S-4185**	1	PLUG-O-RING	
	14	1	**3K-0360**	1	SEAL-O-RING	
	15	1	**6V-3965**	1	FITTING AS (QUICK DISCONNECT)	
	16	1	**6V-0852**	1	CAP-DUST	

B-USE AS REQUIRED
N-NEW PART

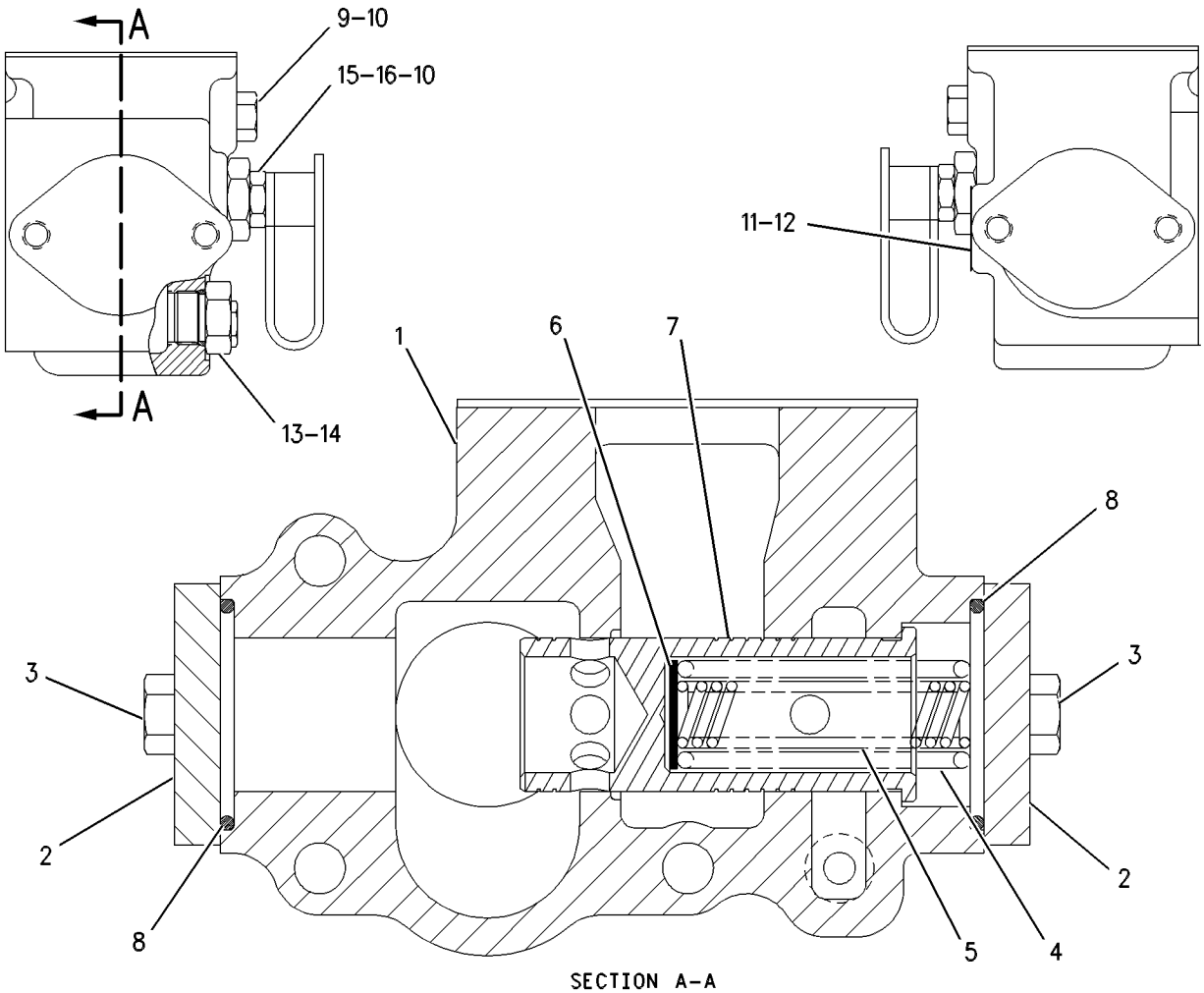

SECTION A–A

GRAPHIC #1 g00525531

183-8388 VALVE GP-SERVO

S/N: AKA1-UP

PART OF 139-4151 PUMP GP-PISTON

SMCS-3203, 3205 **i01320692**

NOTE	REF NO	GRAPHIC REF	PART NUMBER	QTY	PART NAME 1 2 3 4 5 6 (PRODUCT LEVEL)	SEE PAGE
	1	1	**183-8385**	1	PISTON AS	
	2	1	**183-8386**	1	HOUSING	
	3	1	**183-8387**	2	LEVER	
	4	1	**183-8389**	1	RETAINER-SPRING	
	5	1	**183-8390**	1	RETAINER-SPRING	
	6	1	**183-8391**	1	ADJUSTER-SPRING	
	7	1	**183-8392**	1	SPRING	
	8	1	**183-8395**	2	RETAINER-SPRING	
	9	1	**183-8396**	2	HOUSING	
	10	1	**183-8397**	2	PISTON	
	11	1	**183-8398**	2	SPRING	
	12	1	**183-8399**	2	ADJUSTER	
	13	1	**183-8400**	2	BOLT	
	14	1	**183-8401**	2	SETSCREW	
	15	1	**183-8402**	1	PIN	
	16	1	**033-5879**	5	SEAL-O-RING (11.12MM ID)	
	17	1	**111-8892**	1	PIN	
	18	1	**123-9769**	1	PLUG	
	19	1	**144-6418**	1	GASKET	
	20	1	**144-9101**	1	PLUG-BREAK OFF	
	21	1	**178-4144**	1	PLUG	
	22	1	**178-4147**	4	HEAD	
	23	1	**2Y-2347**	1	SEAL-O-RING	
	24	1	**5E-7045**	1	PIN-CYLINDER	
	25	1	**6E-1607**	1	LOCKNUT-SEALING	
M	26	1	**6E-4385**	2	LOCKNUT-SEAL (M12 THD)	
M	27	1	**8C-8580**	8	BOLT-SOCKET HEAD (M5X.8X16MM)	
M	28	1	**8T-0269**	2	BOLT-SOCKET HEAD (M6X1X20MM)	
	29	1	**9T-3853**	2	LOCKNUT (M6 THD)	
	30	1	**9X-7454**	2	SEAL-O-RING (18.77MM ID)	
	31	1	**9X-7676**	1	SEAL-O-RING (6.02MM ID)	

M-METRIC PART

183-8388 **VALVE GP-SERVO** ***(contd.)*** **i01320692**

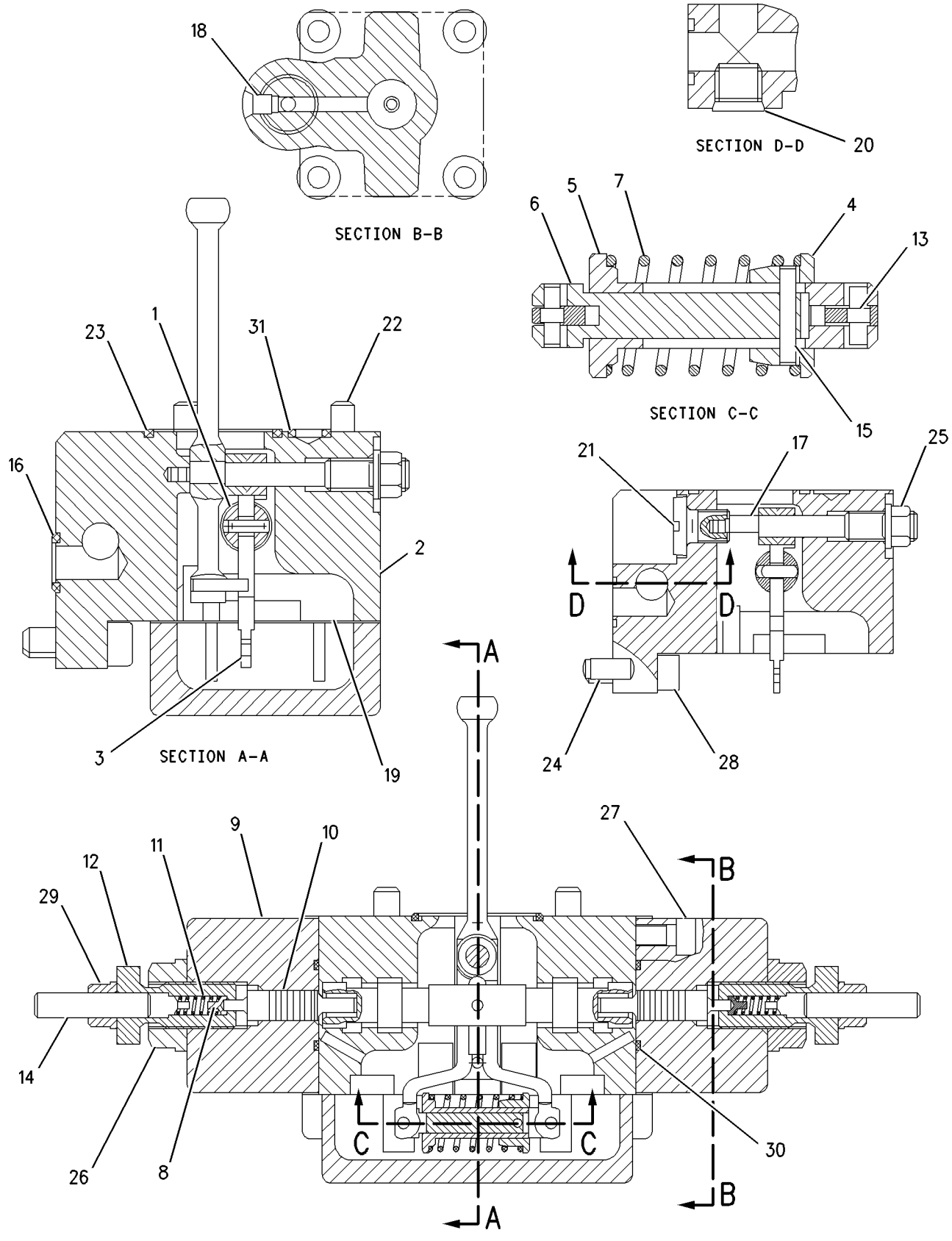

GRAPHIC #1

g00664410

183-8417 VALVE GP-SERVO

S/N: AKA1-UP

PART OF 183-8430 ACTUATOR GP-PISTON PUMP

SMCS-3203, 3205 **i01320717**

NOTE	REF NO	GRAPHIC REF	PART NUMBER	QTY	PART NAME 1 2 3 4 5 6 (PRODUCT LEVEL)	SEE PAGE
B	1	1	**183-8418**	2	SPACER (8.00 MM)	
BR	2	1	**183-8419**	1	SPACER (7.85 MM)	
B	3	1	**183-8420**	1	SPACER (7.90 MM)	
B	4	1	**183-8421**	1	SPACER (7.95 MM)	
B	5	1	**183-8423**	1	SPACER (8.05 MM)	
B	6	1	**183-8424**	1	SPACER (8.10 MM)	
B	7	1	**183-8425**	11	SPACER (7.75 MM)	
B	8	1	**183-8426**	1	SPACER (7.80 MM)	
	9	1	**183-8427**	2	SPRING	
	10	1	**183-8428**	2	SPRING	
	11	1	**183-8429**	2	RING	
	12	1	**095-0942**	2	RING-RETAINING (63.3MM ID)	
	13	1	**144-9093**	1	PISTON-STROKING	
	14	1	**144-9094**	1	ROD	
	15	1	**144-9097**	2	RETAINER	
	16	1	**144-9098**	2	RETAINER	
	17	1	**161-6149**	1	SEAL-O-RING	

B-USE AS REQUIRED
R-REMFG PART MAY BE AVAILABLE

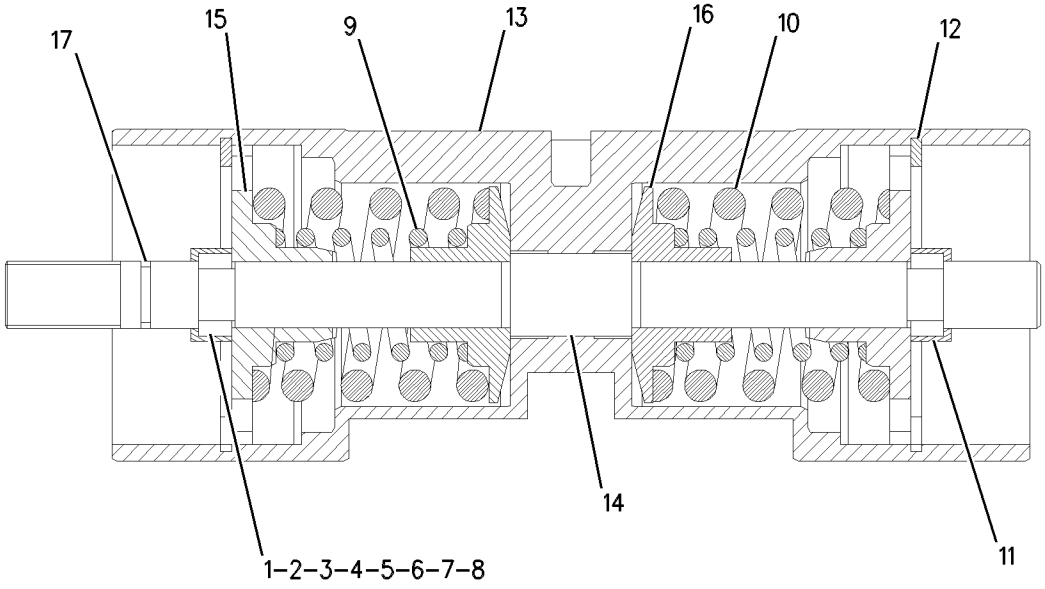

GRAPHIC #1 g00664661

136-1679 VALVE GP-SOLENOID

S/N: AKA1-UP
24 VOLTS DC
PART OF 161-9667 VALVE GP-PRIORITY

SMCS-4282, 5479 **i01486838**

NOTE	REF NO	GRAPHIC REF	PART NUMBER	QTY	PART NAME 1 2 3 4 5 6 (PRODUCT LEVEL)	SEE PAGE
	1	1	**100-4915**	1	CARTRIDGE AS	
	2	1	**104-3947**	1	LOCKNUT (5/8-11 THD)	
	3	1	**176-6496**	1	COIL AS	
	4	1	**1S-9593**	2	STRAP-CABLE	
	5	1	**102-8802**	1	KIT-RECEPTACLE (2 PIN)	
					(INCLUDES RECEPTACLE AS AND WEDGE)	
	6	1	**3E-3365**	1	WEDGE-RECEPTACLE LOCK (2 PIN)	
	7	1	**8T-8729**	2	PIN-CONNECTOR	
					AVAILABLE REPAIR KIT(S):	
			7T-4515	1	KIT-SEAL	
					(INCLUDES 3 SEALS)	

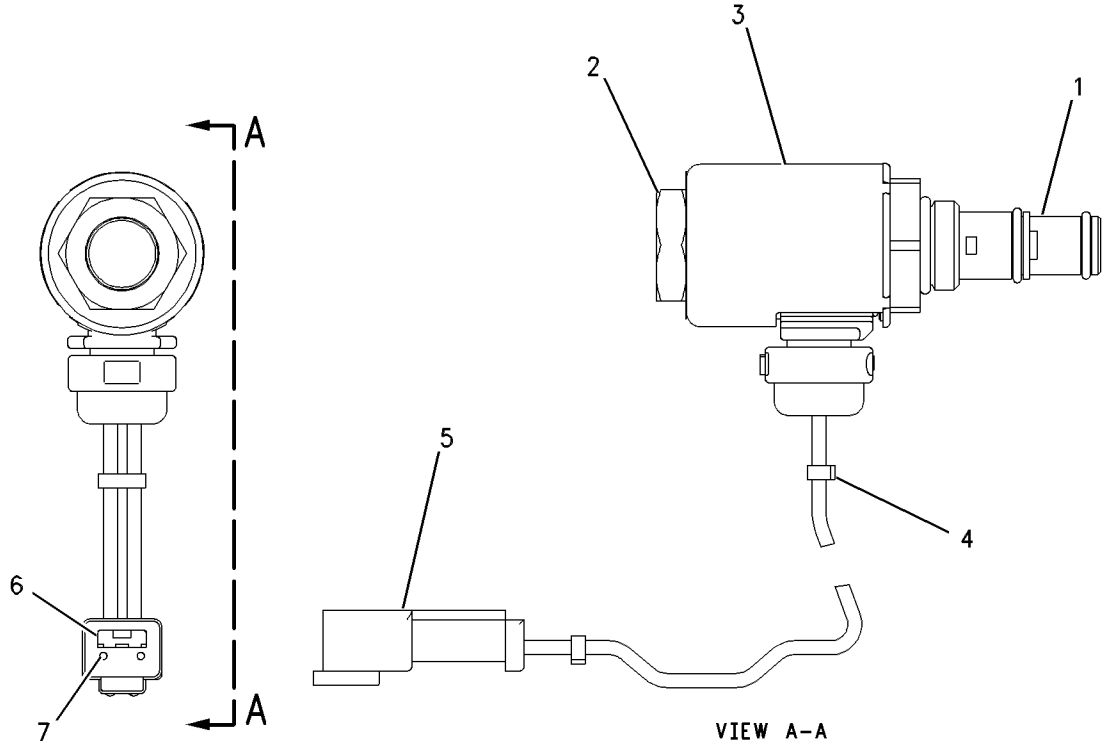

GRAPHIC #1 g00661740

172-2392 VALVE GP-SOLENOID

S/N: AKA1-UP
24 VOLT
PART OF 175-4972 MANIFOLD & VALVE GP

SMCS-4282, 5479 **i01431415**

NOTE	REF NO	GRAPHIC REF	PART NUMBER	QTY	PART NAME 1 2 3 4 5 6 (PRODUCT LEVEL)	SEE PAGE
	1	1	**156-5970**	1	NUT (1/2-20-2B THD)	
	2	1	**133-2249**	1	COIL AS	
		1	**1S-9593**	2	STRAP-CABLE	
		1	**8T-8729**	2	PIN-CONNECTOR	
		1	**8T-8737**	2	PLUG-SEAL (3.07MM ID)	
		1	**102-8804**	1	KIT-RECEPTACLE (4 PIN)	
					(INCLUDES RECEPTACLE AS & WEDGE)	
	3	1	**172-2391**	1	SPOOL AS	
		1	**156-5970**	1	NUT (1/2-20-2B THD)	
					AVAILABLE REPAIR KIT(S):	
			189-1839	1	KIT-SEAL	
					(INCLUDES SEALS & RING-BACK UP)	

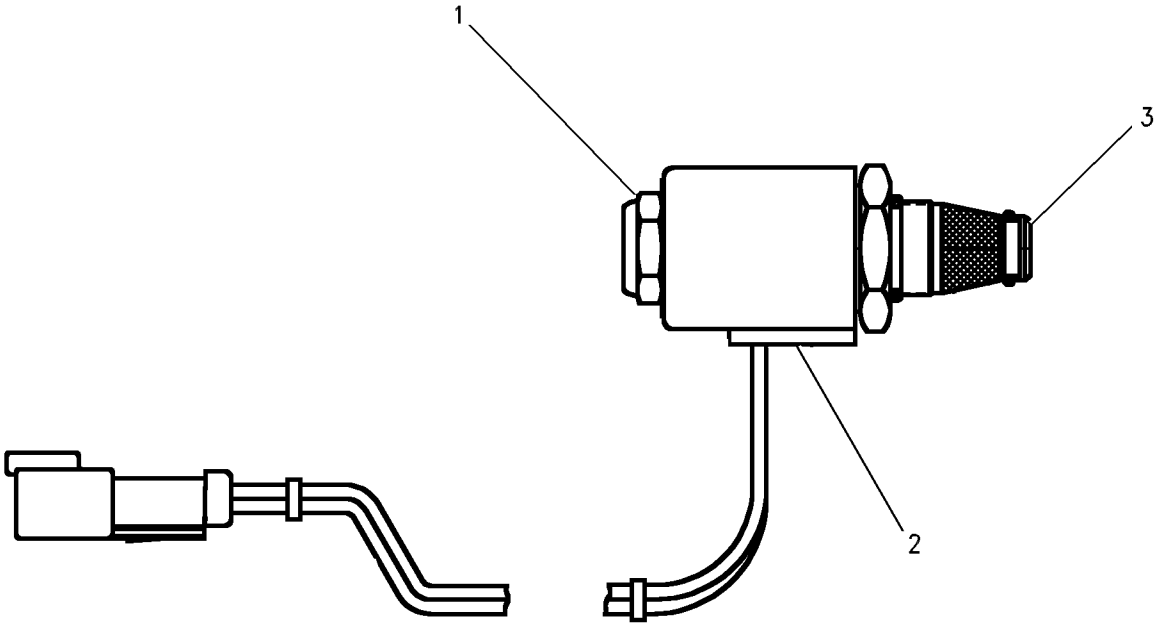

GRAPHIC #1 g00653409

174-4909 VALVE GP-SOLENOID

S/N: AKA1-UP

PART OF 162-5357 MANIFOLD & VALVE GP

SMCS-4282, 5479 **i01431369**

NOTE	REF NO	GRAPHIC REF	PART NUMBER	QTY	PART NAME 1 2 3 4 5 6 (PRODUCT LEVEL)	SEE PAGE
	1	1	**145-1144**	1	COIL AS	
	2	1	**164-2108**	1	WASHER (2.38MM THK)	
	3	1	**167-9524**	1	NUT-SELF LOCKING (1/2-28 THD)	
	4	1	**8L-2746**	1	SEAL-O-RING (15.6MM ID)	
	5	1	**6V-4589**	1	SEAL-O-RING (19.18MM ID)	

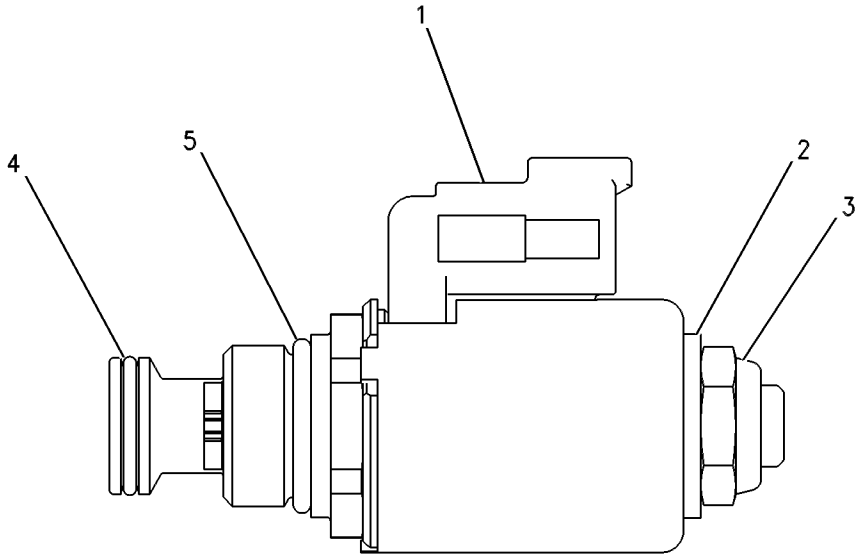

GRAPHIC #1 g00638363

102-6331 ACTUATOR GP-POWER

S/N: AKA1-UP

PART OF 143-7767 GUARD AR-BOTTOM

SMCS-7153 **i01255631**

NOTE	REF NO	GRAPHIC REF	PART NUMBER	QTY	PART NAME 1 2 3 4 5 6 (PRODUCT LEVEL)	SEE PAGE
JZ	1	1		1	GASKET-HOUSING	
JZ	2	1		1	GASKET (TUBE COVER)	
JZ	3	1		1	SEAL-MOTOR	
JZ	4	1		1	SEAL-O-RING (169.3MM ID)	
JZ	5	1		1	SEAL-LIP TYPE	
LZ	6	1		1	GEAR-INTERMEDIATE	
LZ	7	1		1	WASHER	
LZ	8	1		1	WASHER	
NZ	9	1		1	WASHER	
NZ	10	1		1	CLUTCH	
NZ	11	1		1	WASHER	
NZ	12	1		1	KEY	
PZ	13	1		1	SHAFT	
PZ	14	1		1	COVER (TUBE)	
	15	1	**115-0001**	1	MOTOR	
					AVAILABLE REPAIR KIT(S):	
J			**114-3929**	1	KIT-SEAL	
L			**114-9981**	1	GEAR SET	
N			**114-9990**	1	KIT-CLUTCH	
P			**114-9998**	1	KIT-SHAFT	
					(INCL WASHERS & KEY)	

J-KIT MARKED J INCLUDES PARTS MARKED J
L-KIT MARKED L INCLUDES PARTS MARKED L
N-KIT MARKED N INCLUDES PARTS MARKED N
P-KIT MARKED P INCLUDES PARTS MARKED P
Z-NOT SERVICED SEPARATELY

102-6331 **ACTUATOR GP-POWER** ***(contd.)*** **i01255631**

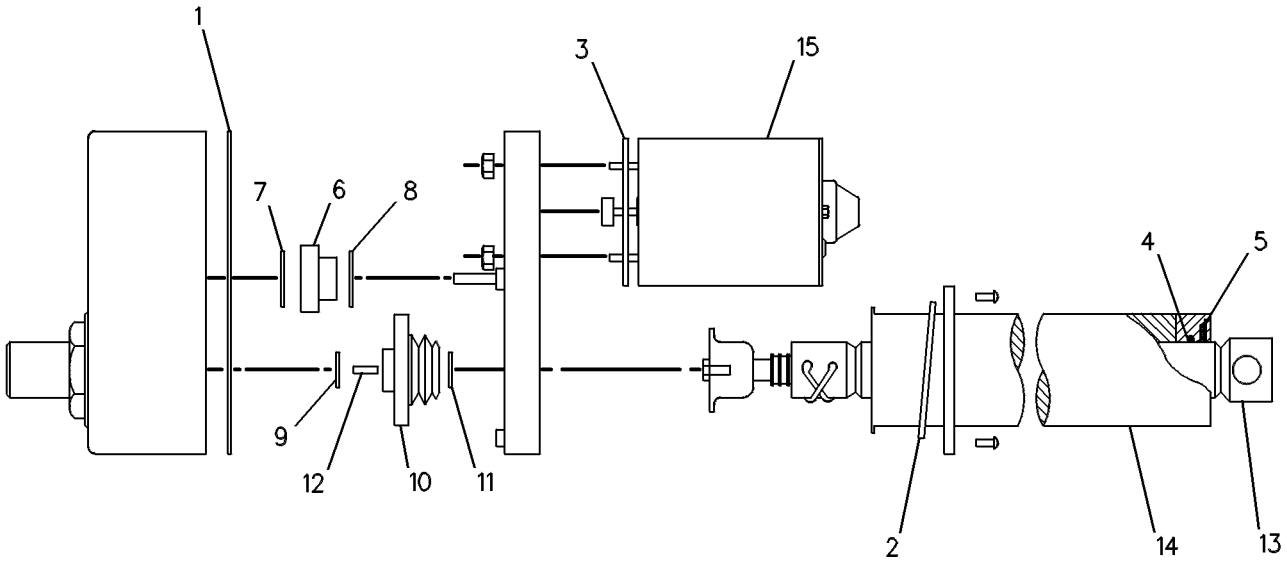

GRAPHIC #1 g00239790

160-4920 BATTERY BOX GP

S/N: AKA1-UP

PART OF 157-0819 CHASSIS AR

SMCS-7257 **i01486751**

NOTE	REF NO	GRAPHIC REF	PART NUMBER	QTY	PART NAME 1 2 3 4 5 6 (PRODUCT LEVEL)	SEE PAGE
	1	1	**5P-8502**	4	PADLOCK GP	
					(EACH INCLUDES)	
A		1	**5P-8500**	1	KEY	
A		1	**8Y-6364**	1	SLEEVE	
	2	1	**6Y-3974**	1	PLATE	
	3	1	**5S-7379**	1	BOLT (3/8-16X0.875 IN)	
	4	1	**164-9790**	1	PLATE	
	5	1	**165-3725**	1	PLATE AS	
	6	1	**177-6831**	1	PLATE AS	
					(EACH PLATE AS INCLUDES)	
		1	**1F-0750**	2	NUT-WELD (3/8-16 THD)	
	7	1	**4L-6454**	13	BOLT (3/8-16X1 IN)	
	8	1	**5M-3062**	5	BOLT (3/8-16X0.75 IN)	
	9	1	**5P-1075**	19	WASHER-HARD (10.2X22.5X3MM THK)	
Y	10	1	**164-6225**	1	BATTERY BOX GP	376

A-NOT PART OF THIS GROUP
Y-SEPARATE ILLUSTRATION

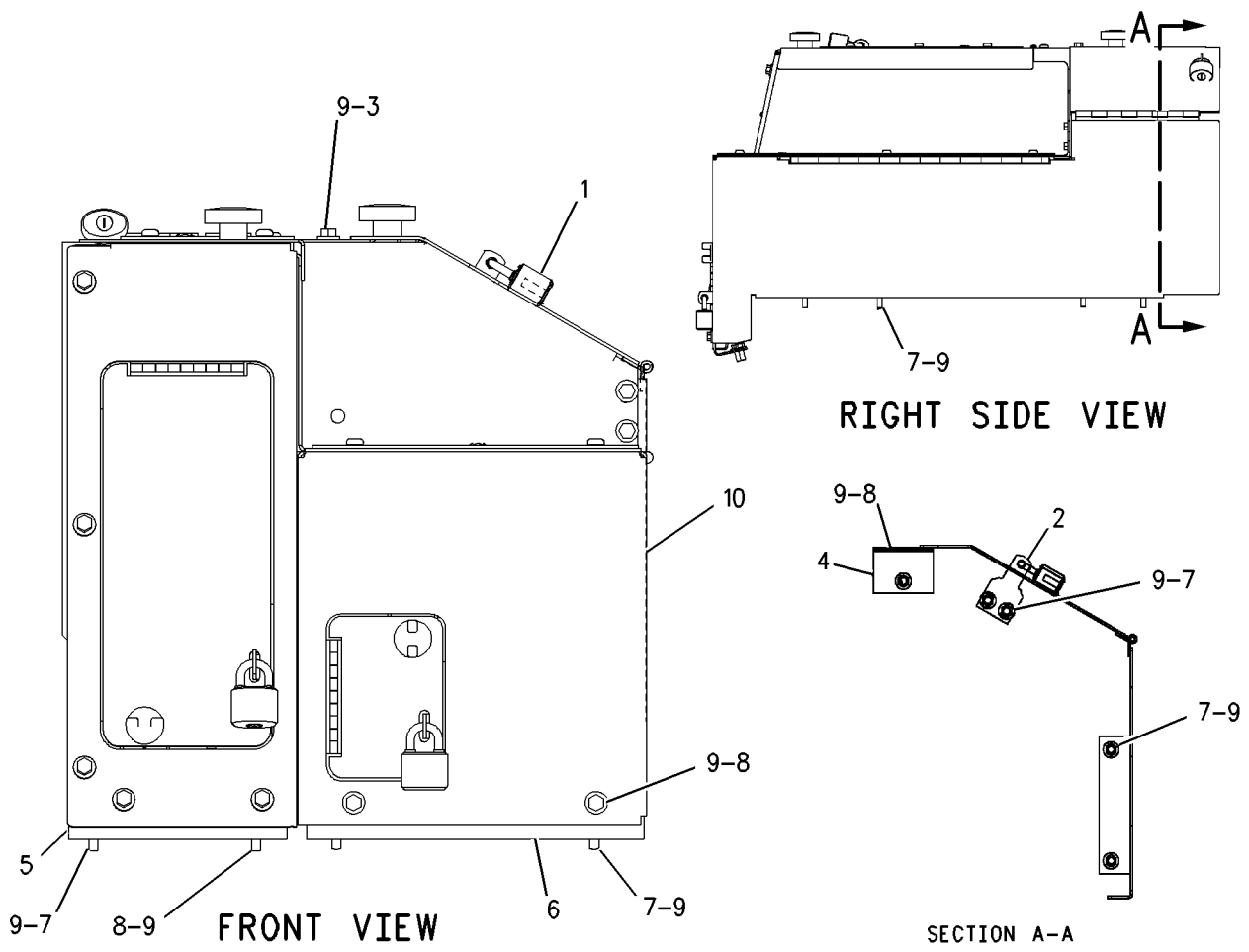

GRAPHIC #1 g00758091

MEMORANDA

FRAME AND BODY

164-6225 BATTERY BOX GP

S/N: AKA1-UP

PART OF 160-4920 BATTERY BOX GP

SMCS-7257 **i01488100**

NOTE	REF NO	GRAPHIC REF	PART NUMBER	QTY	PART NAME 1 2 3 4 5 6 (PRODUCT LEVEL)	SEE PAGE
	1	1	**1K-8850**	1	SPRING	
	2	1	**3B-4610**	2	COTTER	
	3	1	**6D-1746**	2	BOLT (1/2-13X1.32 IN)	
	4	1	**8B-4624**	2	SHIM (.032 IN THK)	
	5	1	**8E-7561**	2	KNOB AS	
					(EACH INCLUDES)	
		1	**8T-7566**	1	PIN-SPRING	
		1	**7S-2042**	1	STUD	
	6	1	**9S-8230**	2	PLATE AS	
					(EACH INCLUDES)	
		1	**1F-0750**	2	NUT-WELD (3/8-16 THD)	
	7	1	**053-6846**	1	SPRING	
	8	1	**160-2422**	1	SUPPORT AS	
		1	**1F-0750**	4	NUT-WELD (3/8-16 THD)	
	9	1	**5P-1075**	13	WASHER-HARD (10.2X22.5X3MM THK)	
	10	1	**6V-1193**	13	SCREW-HEX SOCKET (3/8-16X.625 IN)	
	11	1	**178-0612**	1	COVER	
	12	1	**5M-3062**	11	BOLT (3/8-16X0.75 IN)	
	13	1	**185-8055**	1	PLATE	
	14	1	**185-8056**	1	PLATE	
	15	1	**190-4243**	1	SUPPORT AS	
		1	**1F-0750**	1	NUT-WELD (3/8-16 THD)	
	16	1	**4L-6454**	2	BOLT (3/8-16X1 IN)	
	17	1	**193-3944**	1	PLATE	
	18	1	**4H-1641**	2	PIN-SPRING	
	19	1	**191-1738**	1	COVER AS	
	20	1	**1F-0750**	6	NUT-WELD (3/8-16 THD)	
	21	1	**190-5149**	1	HINGE	
		1	**4K-8501**	2	CLIP	
	22	1	**185-5529**	1	PLATE AS	
	23	1	**1F-0750**	3	NUT-WELD (3/8-16 THD)	
	24	1	**4D-6293**	2	BOSS	
	25	1	**164-9287**	1	SHIELD AS	
	26	1	**053-6845**	2	BRACKET	
	27	1	**159-2045**	1	HINGE	
	28	1	**1F-0748**	1	NUT-WELD (1/2-13 THD)	
	29	1	**1F-0750**	2	NUT-WELD (3/8-16 THD)	
	30	1	**7T-1099**	4	LINK	
	31	1	**160-2429**	1	COVER AS	
	32	1	**7G-4262**	1	HINGE	
	33	1	**9W-0648**	1	HINGE	
	34	1	**159-2045**	1	HINGE	
	35	1	**164-9805**	1	PLATE	
	36	1	**178-7298**	1	DOOR	
	37	1	**1F-0748**	1	NUT-WELD (1/2-13 THD)	
	38	1	**1F-0750**	9	NUT-WELD (3/8-16 THD)	
	39	1	**7T-1099**	1	LINK	

164-6225 **BATTERY BOX GP** *(contd.)* **i01488100**

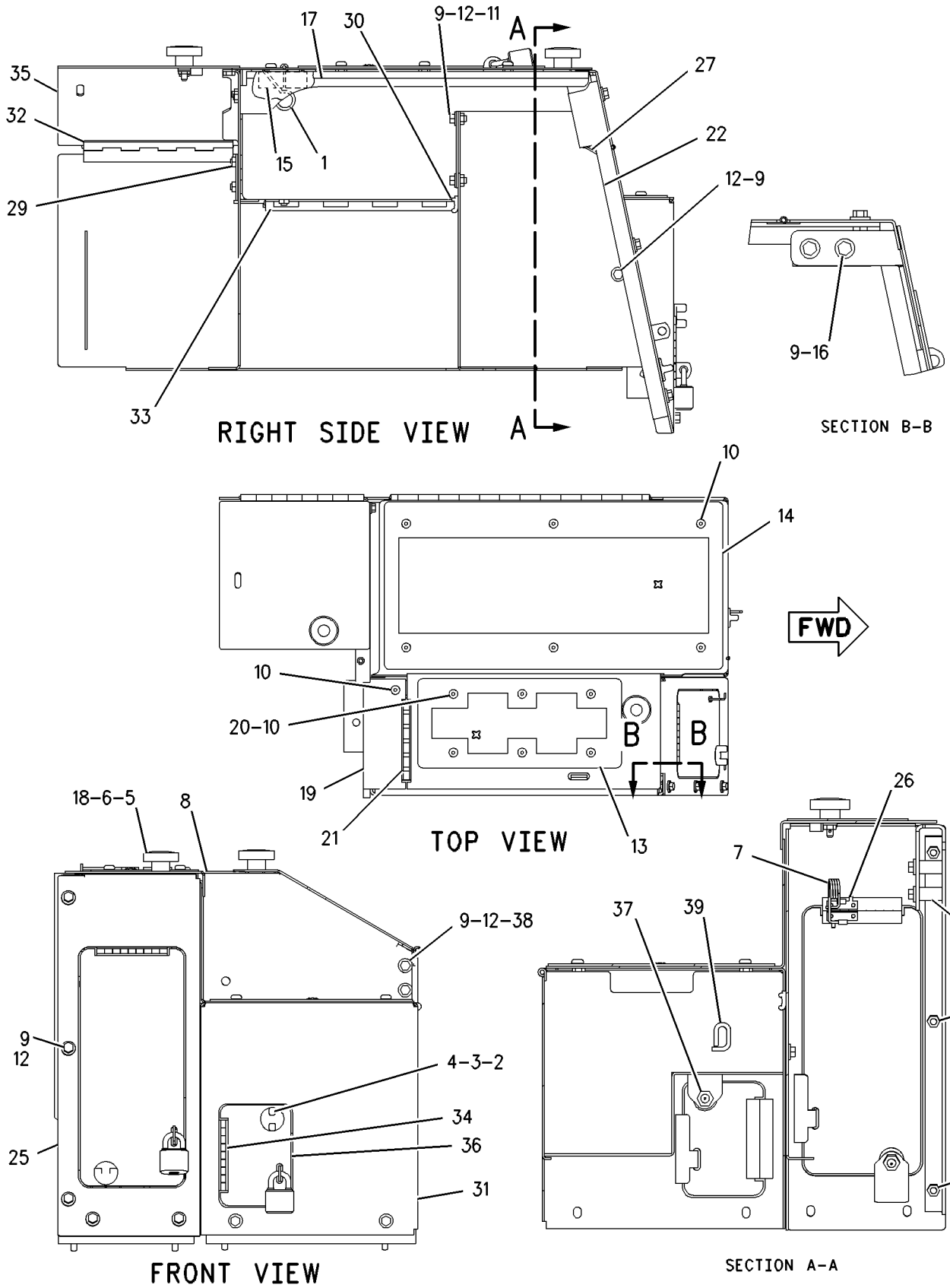

GRAPHIC #1 g00760611

FRAME AND BODY

147-1160 CASE & FRAME GP

S/N: AKA1-UP

PART OF 157-0819 CHASSIS AR

SMCS-7051 **i01436154**

NOTE	REF NO	GRAPHIC REF	PART NUMBER	QTY	PART NAME 1 2 3 4 5 6 (PRODUCT LEVEL)	SEE PAGE
	1	1	**106-8186**	1	VALVE-DRAIN	
	2	1	**106-8187**	1	PLUG	
	3	1	**9S-4191**	2	PLUG	
	4	1	**164-4180**	1	PLUG AS	
		1	**7M-8485**	1	SEAL-O-RING (29.74MM ID)	
		1	**9S-4181**	1	PLUG-STRAIGHT THREAD	
	5	1	**3J-1907**	2	SEAL-O-RING (11.89MM ID)	
	6	1	**3T-4238**	2	BEARING-SLEEVE	
	7	1	**6F-0711**	1	SEAL-O-RING (40.87MM ID)	
	8	1	**7T-5010**	2	BEARING-SLEEVE	
	9	1	**9P-1780**	2	BEARING-SLEEVE	
	10	1	**159-5860**	1	CASE & FRAME AS	
	11	1	**110-3292**	1	TRUNNION	
	12	1	**0S-1588**	1	BOLT (3/8-16X1.25 IN)	
	13	1	**1K-6872**	1	LOCKNUT (1/2-13 THD)	
	14	1	**9K-3050**	2	STUD-WELD	
	15	1	**4D-7529**	2	BOSS (3/8-16 THD)	
	16	1	**8T-4223**	3	WASHER-HARD (13.5X25.5X3MM THK)	
	17	1	**5D-0353**	4	BOLT-LOCKING (3/8-16X1 IN)	
	18	1	**5H-9394**	1	BOSS	
	19	1	**5P-1075**	3	WASHER-HARD (10.2X22.5X3MM THK)	
	20	1	**5R-0939**	2	CLIP (TAB)	
	21	1	**5R-0940**	2	CLIP (SLOT)	
	22	1	**6K-7917**	1	BOLT-LOCKING (1/2-13X1 IN)	
	23	1	**7B-3235**	1	BOLT (1/2-13X1.375 IN)	
	24	1	**8M-7145**	2	WASHER (10.2X28.5X5MM THK)	
	25	1	**8J-4916**	4	BOSS (3/8-16 THD)	
	26	1	**7S-3916**	2	CLIP (TAB)	
	27	1	**7S-3919**	2	CLIP (SLOT)	
	28	1	**7T-1099**	3	LINK	
	29	1	**8D-3508**	1	BOSS	
	30	1	**8F-9836**	3	LUG (3/8-16 THD)	
	31	1	**7S-3912**	1	CLIP (TAB)	
	32	1	**7S-3913**	1	CLIP (SLOT)	
	33	1	**8J-1196**	1	LUG (3/8-16 THD)	

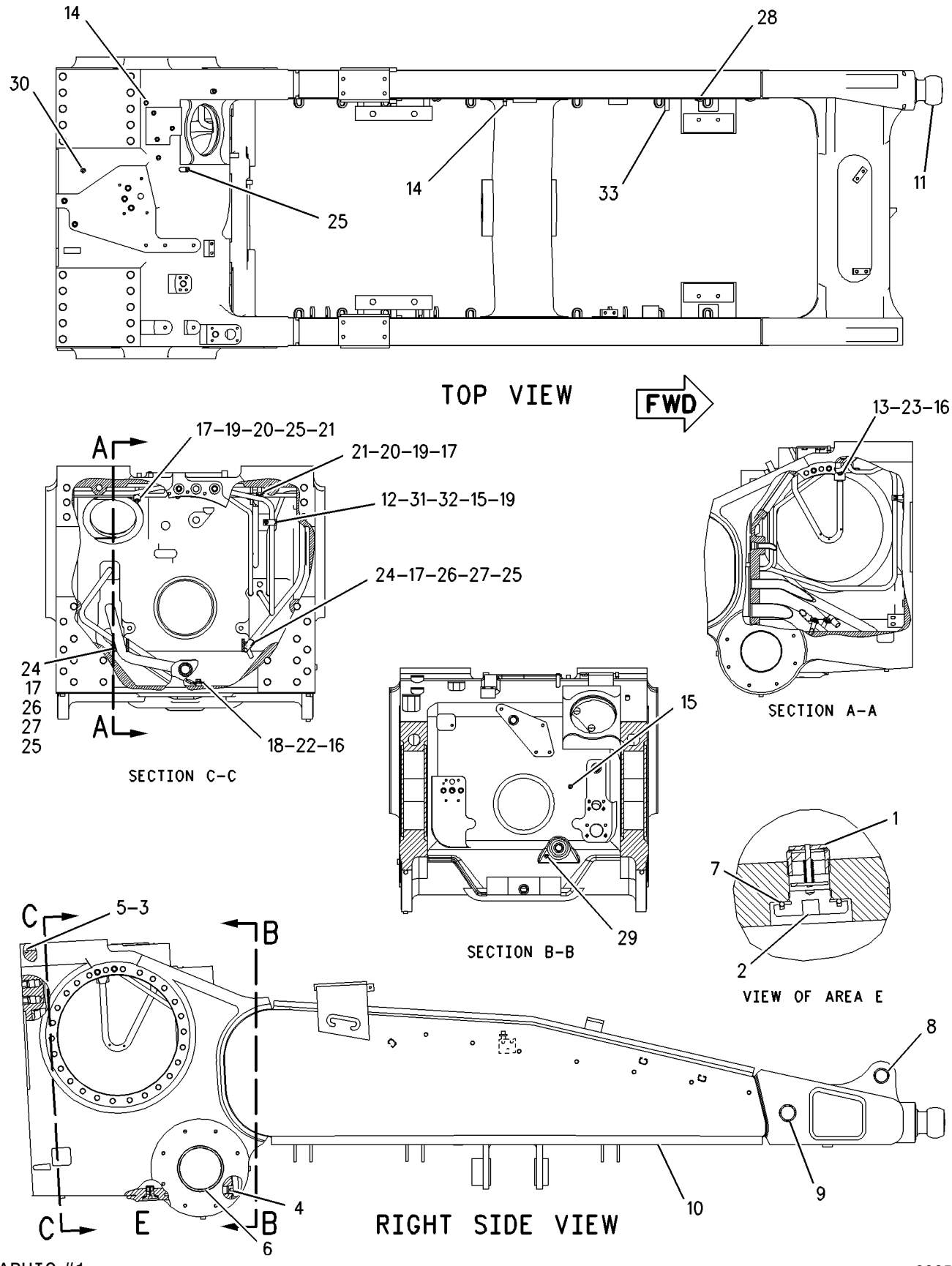

GRAPHIC #1

g00658569

FRAME AND BODY

187-0428 CASE & FRAME GP

S/N: AKA1-UP

PART OF 143-7767 GUARD AR-BOTTOM

SMCS-7051 **i01488582**

NOTE	REF NO	GRAPHIC REF	PART NUMBER	QTY	PART NAME 1 2 3 4 5 6 (PRODUCT LEVEL)	SEE PAGE
	1	1	**106-8186**	1	VALVE-DRAIN	
	2	1	**106-8187**	1	PLUG	
	3	1	**9S-4191**	2	PLUG-STRAIGHT THREAD	
	4	1	**9S-4181**	1	PLUG-STRAIGHT THREAD	
		1	**7M-8485**	1	SEAL-O-RING	
	5	1	**3J-1907**	2	SEAL-O-RING	
	6	1	**3T-4238**	2	BEARING-SLEEVE	
	7	1	**6F-0711**	1	SEAL-O-RING	
	8	1	**7T-5010**	2	BEARING-SLEEVE	
	9	1	**9P-1780**	2	BEARING-SLEEVE	
	10	1	**186-6439**	1	CASE & FRAME AS	
	11	2	**7T-1099**	6	LINK	
	12	2	**112-1345**	1	PLATE AS	
	13	2	**112-1494**	1	PLATE AS	
					(EACH PLATE AS INCLUDES)	
		2	**7T-1099**	1	LINK	
	14	3	**7G-3945**	1	PLATE	
	15	3	**8V-9885**	2	BLOCK	
	16	3	**9W-3158**	1	BRACKET AS	
	17	3	**162-8629**	1	BRACKET AS	
		3	**1F-0748**	3	NUT-WELD (1/2-13 THD)	
	18	4	**0S-1588**	1	BOLT (3/8-16X1.25 IN)	
	19	4	**1K-6872**	1	LOCKNUT (1/2-13 THD)	
	20	4	**4D-7529**	2	BOSS (3/8-16 THD)	
	21	4	**5D-0353**	4	BOLT-LOCKING (3/8-16X1 IN)	
	22	4	**5H-9394**	1	BOSS	
	23	4	**5P-1075**	3	WASHER-HARD (10.2X22.5X3MM THK)	
	24	4	**5R-0939**	2	CLIP (TAB)	
	25	4	**5R-0940**	2	CLIP (SLOT)	
	26	4	**6K-7917**	1	BOLT-LOCKING (1/2-13X1 IN)	
	27	4	**7B-3235**	1	BOLT (1/2-13X1.375 IN)	
	28	3	**7G-8947**	1	PLATE	
	29	4	**7S-3912**	1	CLIP (TAB)	
	30	4	**7S-3913**	1	CLIP (SLOT)	
	31	4	**7S-3916**	2	CLIP (TAB)	
	32	4	**7S-3919**	2	CLIP (SLOT)	
	34	3	**8F-9836**	3	LUG (3/8-16 THD)	
	35	3	**8J-1196**	1	LUG (3/8-16 THD)	
	36	3,4	**8J-4916**	5	BOSS (3/8-16 THD)	
	37	4	**8M-7145**	2	WASHER (10.2X28.5X5MM THK)	
	38	4	**8T-4223**	3	WASHER-HARD (13.5X25.5X3MM THK)	
	39	3	**9K-3050**	2	STUD-WELD	
	40	4	**9X-2029**	2	STUD-WELD	
	41	3	**110-3292**	1	TRUNNION	

187-0428 **CASE & FRAME GP** *(contd.)* **i01488582**

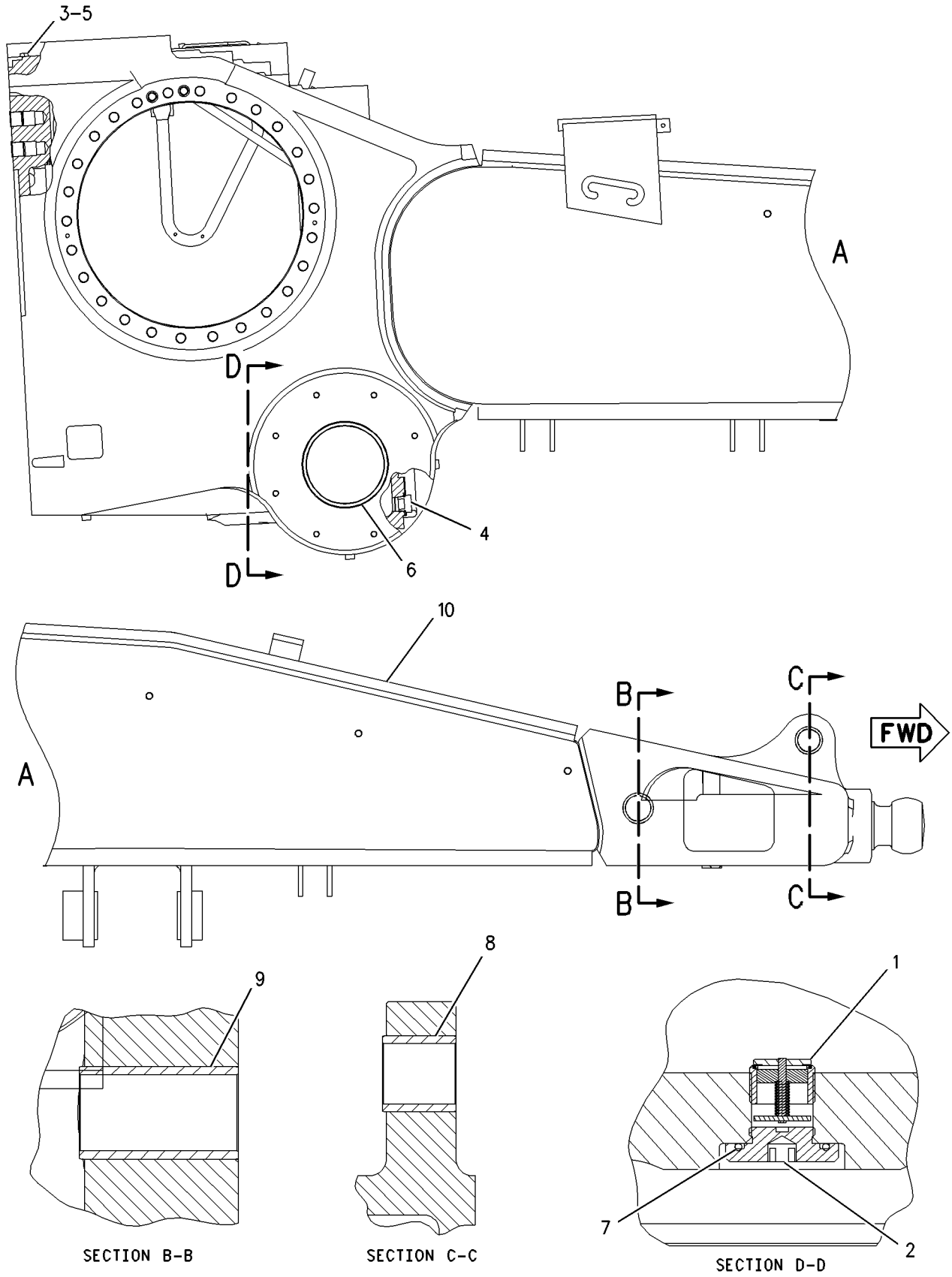

GRAPHIC #1 g00742253

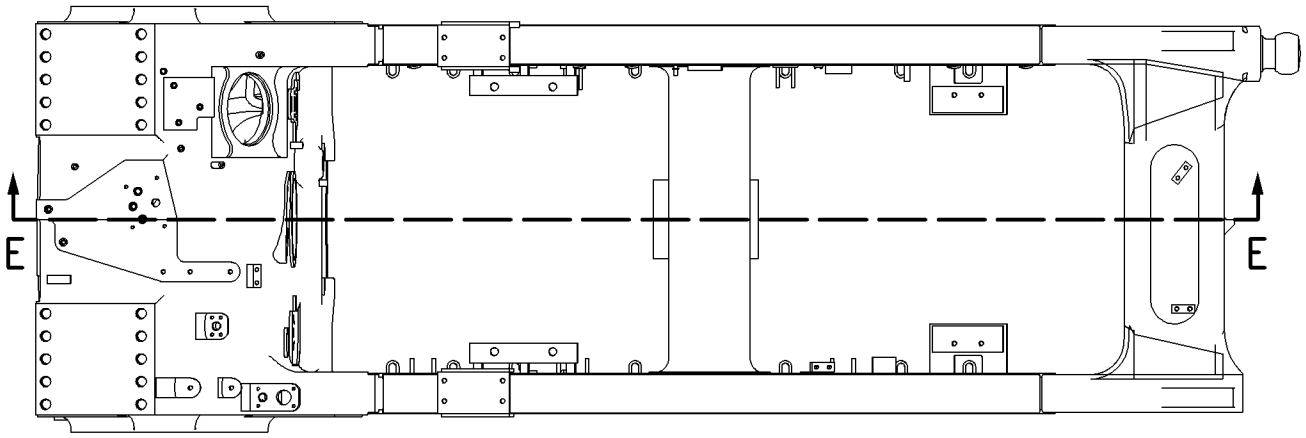

TOP VIEW

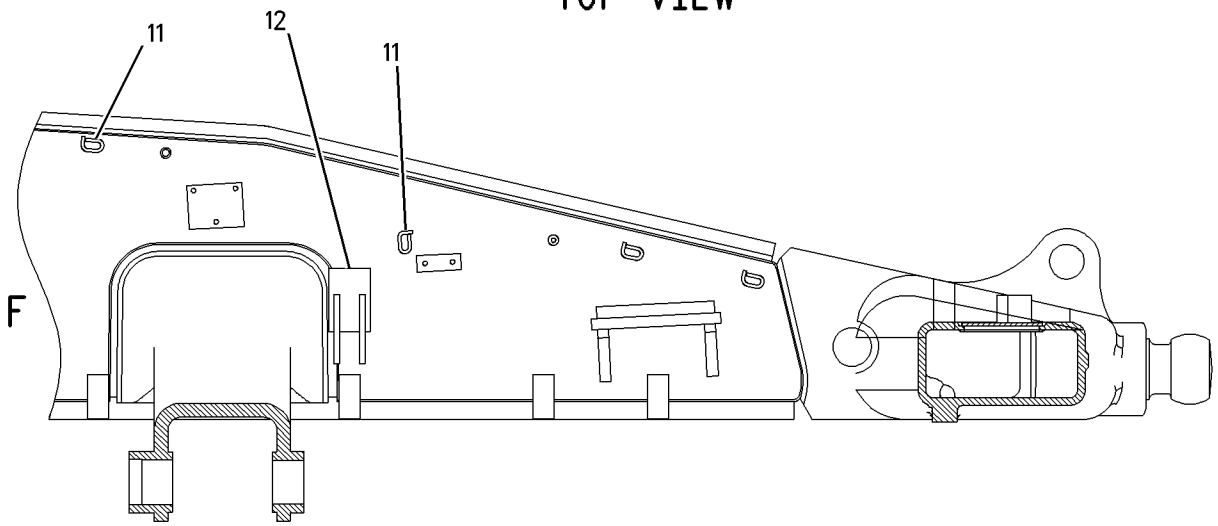

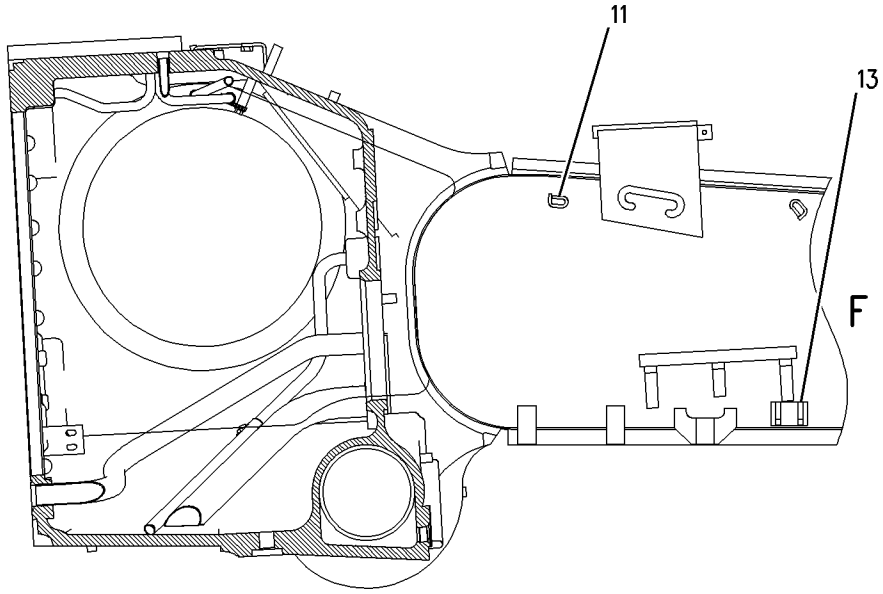

SECTION E-E

GRAPHIC #2

g00744064

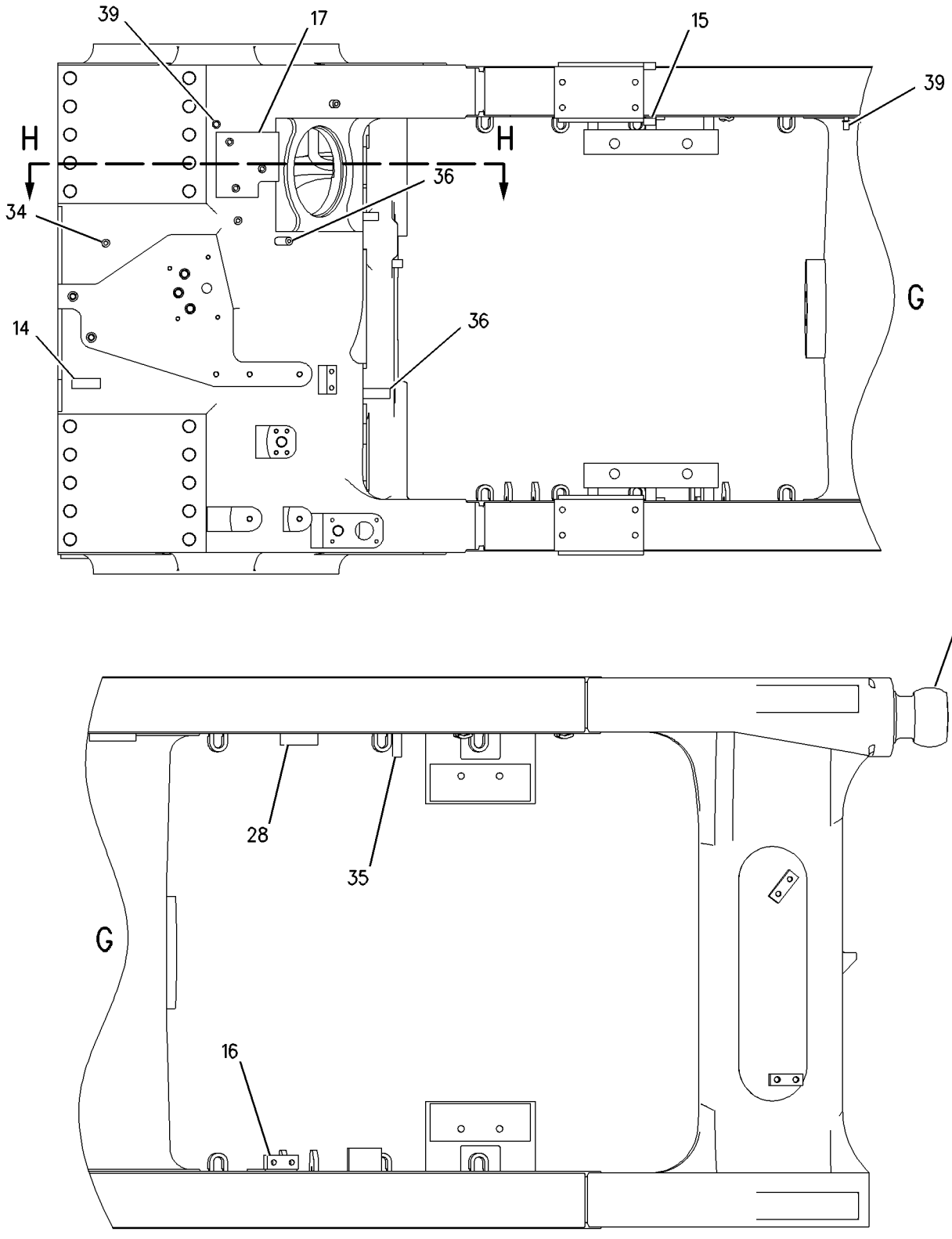

REFER TO ALL ILLUSTRATIONS OF
THIS GROUP FOR AUXILIARY VIEWS

GRAPHIC #3

g00744136

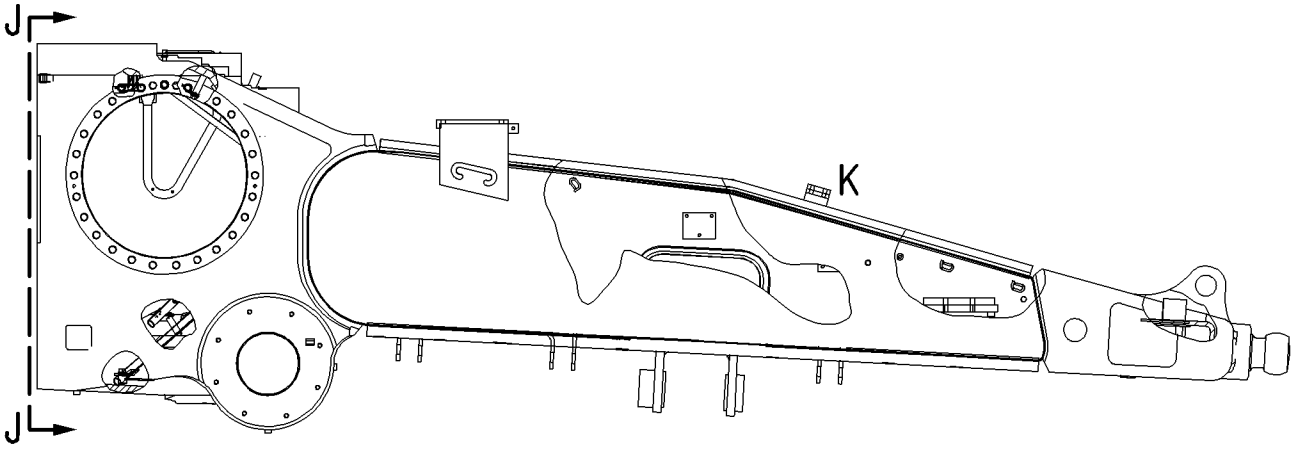

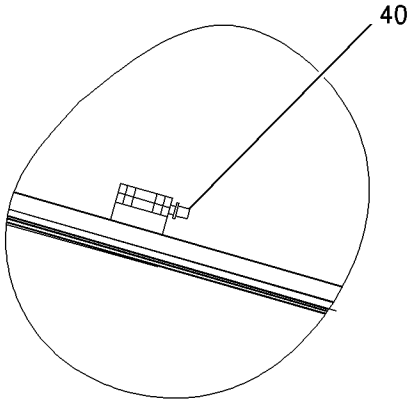

VIEW OF AREA K

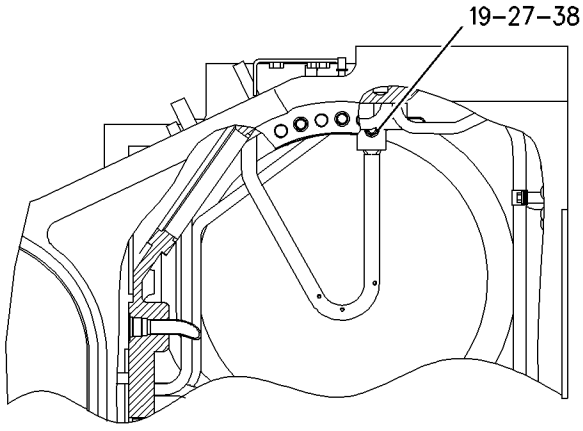

SECTION H-H

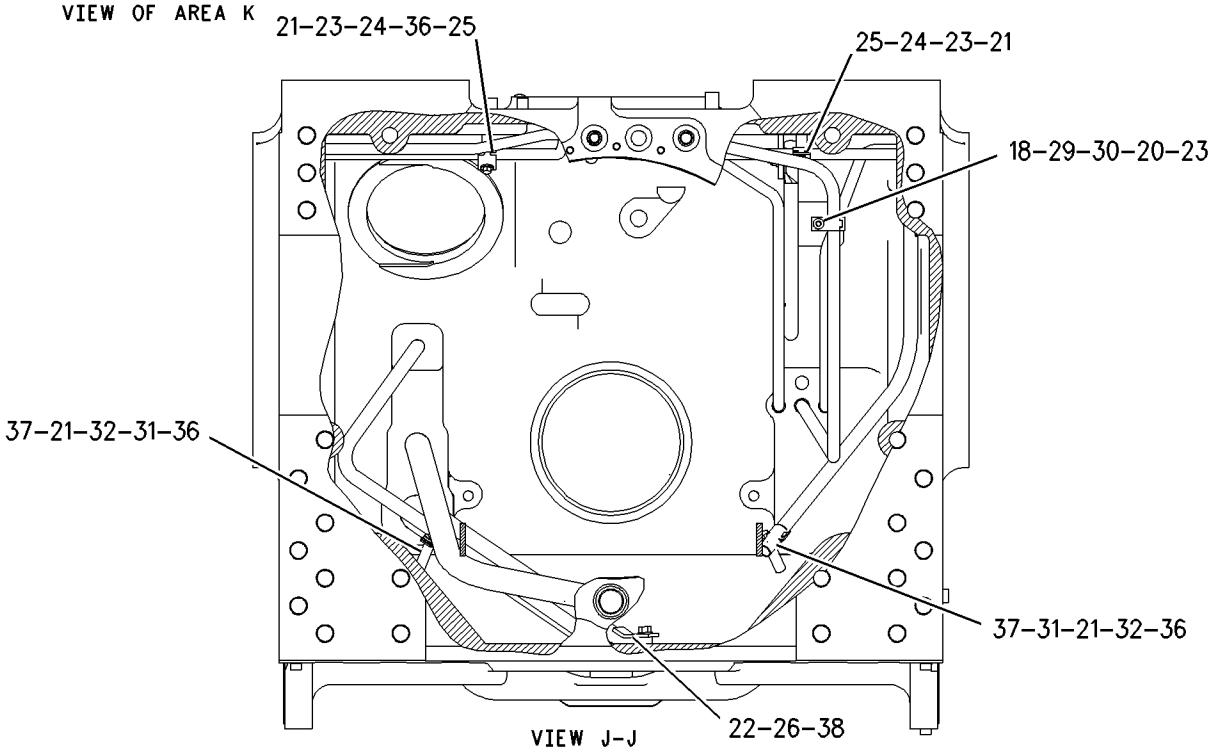

VIEW J-J

GRAPHIC #4

g00744151

MEMORANDA

FRAME AND BODY

198-9754 CASE & FRAME GP

S/N: AKA1-UP

PART OF 199-0818 DISPOSAL AR-WASTE

SMCS-7051 **i01489164**

NOTE	REF NO	GRAPHIC REF	PART NUMBER	QTY	PART NAME 1 2 3 4 5 6 (PRODUCT LEVEL)	SEE PAGE
	1	1	**106-8186**	1	VALVE-DRAIN	
	2	1	**106-8187**	1	PLUG	
	3	1	**9S-4191**	2	PLUG-STRAIGHT THREAD	
	4	1	*164-4180*	1	PLUG GP	
		1	**7M-8485**	1	SEAL-O-RING	
		1	**9S-4181**	1	PLUG-STRAIGHT THREAD	
	5	1	**3J-1907**	2	SEAL-O-RING	
	6	1	**3T-4238**	2	BEARING-SLEEVE	
	7	1	**6F-0711**	1	SEAL-O-RING	
	8	1	**7T-5010**	2	BEARING-SLEEVE	
	9	1	**9P-1780**	2	BEARING-SLEEVE	
	10	1	**198-9753**	1	CASE & FRAME AS	
	11	1	**7G-3945**	1	PLATE	
	12	1	**8V-9885**	1	BLOCK	
	13	1	**9W-3158**	1	BRACKET AS	
	14	1	**112-1345**	1	PLATE AS	
		1	**7T-1099**	1	LINK	
	15	1	**112-1494**	1	PLATE AS	
		1	**7T-1099**	1	LINK	
	16	1	**162-8629**	1	BRACKET AS	
		1	**1F-0748**	3	NUT-WELD (1/2-13 THD)	
	17	1	**197-8620**	2	BRACKET AS	
	18	1	**197-9701**	1	BOSS AS	
	19	1	**0S-1588**	1	BOLT (3/8-16X1.25 IN)	
	20	1	**1K-6872**	1	LOCKNUT (1/2-13 THD)	
	21	1	**4D-7529**	2	BOSS (3/8-16 THD)	
	22	1	**5D-0353**	4	BOLT-LOCKING (3/8-16X1 IN)	
	23	1	**5H-9394**	1	BOSS	
	24	1	**5P-1075**	3	WASHER-HARD (10.2X22.5X3MM THK)	
	25	1	**5R-0939**	2	CLIP (TAB)	
	26	1	**5R-0940**	2	CLIP (SLOT)	
	27	1	**6K-7917**	1	BOLT-LOCKING (1/2-13X1 IN)	
	28	1	**7B-3235**	1	BOLT (1/2-13X1.375 IN)	
	29	1	**7G-8947**	1	PLATE	
	30	1	**7S-3912**	1	CLIP (TAB)	
	31	1	**7S-3913**	1	CLIP (SLOT)	
	32	1	**7S-3916**	1	CLIP (TAB)	
	33	1	**7S-3919**	1	CLIP (SLOT)	
	34	1	**7T-1099**	7	LINK	
	35	1	**8D-3508**	1	BOSS	
	36	1	**8F-9836**	3	BOSS-THREADED (3/8-16X19MM THD)	
	37	1	**8G-4386**	10	SLEEVE	
	38	1	**8G-5247**	2	SLEEVE	
	39	1	**8J-1196**	3	LUG (3/8-16 THD)	
	40	1	**8J-4916**	5	BOSS (3/8-16 THD)	
	41	1	**8M-7145**	2	WASHER (10.2X28.5X5MM THK)	
	42	1	**8T-4223**	3	WASHER-HARD (13.5X25.5X3MM THK)	
	43	1	**9G-5926**	1	BOSS	
	44	1	**9K-3050**	2	STUD-WELD	
	45	1	**110-3292**	1	TRUNNION	

198-9754 **CASE & FRAME GP** *(contd.)* **i01489164**

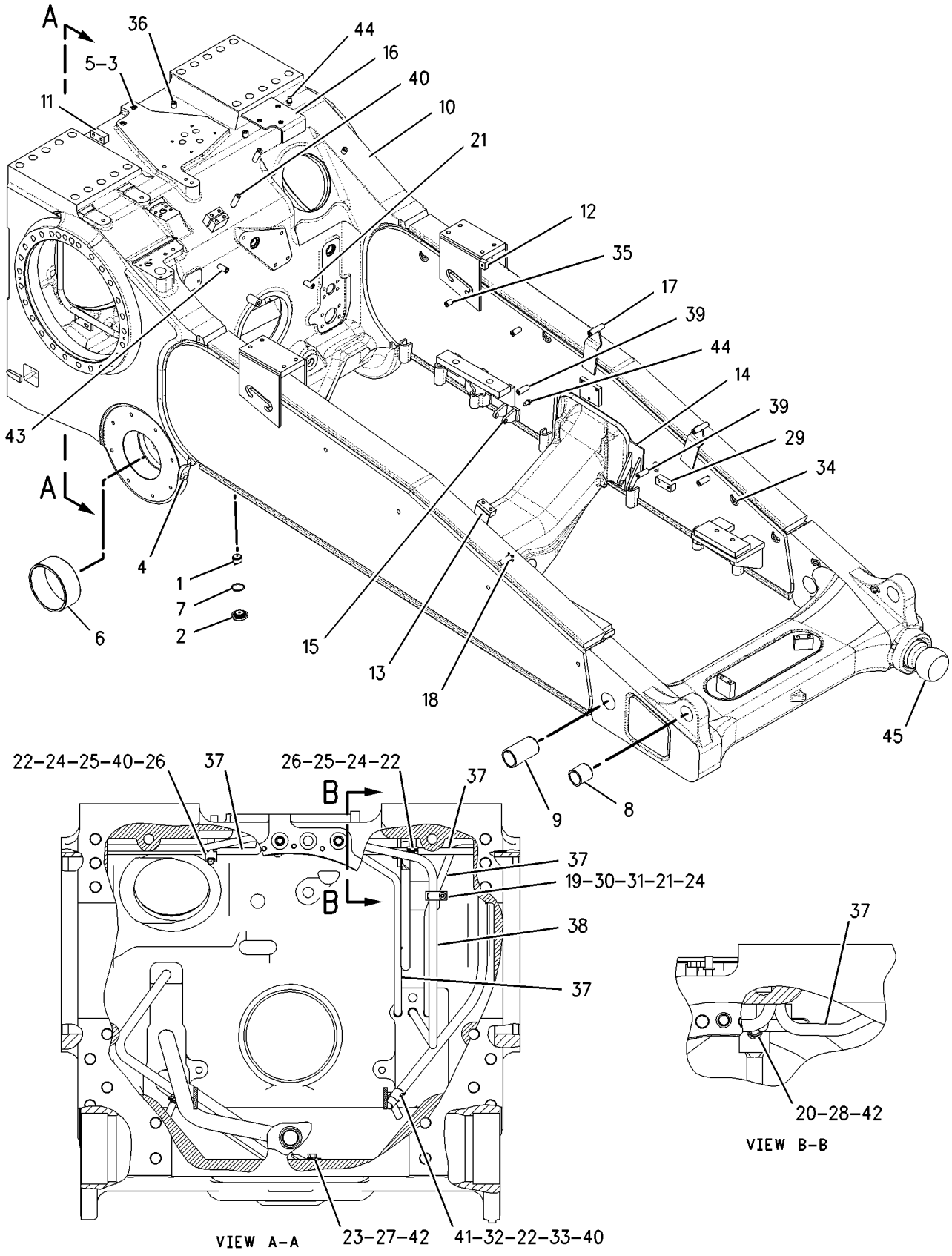

GRAPHIC #1 g00774669

FRAME AND BODY

157-0819 CHASSIS AR

S/N: AKA1-UP

PART OF 157-0818 GENERAL AR

SMCS-7000 **i01429664**

NOTE	PART NUMBER	QTY	PART NAME 1 2 3 4 5 6 (PRODUCT LEVEL)	SEE PAGE
Y	*159-9263*	1	BATTERY & WIRING GP	202
Y	*160-4920*	1	BATTERY BOX GP	374
Y	*147-1160*	1	CASE & FRAME GP	378
Y	*160-4919*	1	ENCLOSURE GP-HYDRAULIC TANK	414
Y	*156-9662*	1	FENDER GP	416
Y	*159-3878*	1	GUARD GP-BOTTOM	432
Y	*105-9803*	1	GUARD GP-RADIATOR	444
Y	*157-0264*	1	HOOD & GUARD GP	450
Y	*156-1667*	1	INSTRUMENT GP	770
Y	*159-7590*	1	LIGHTING GP-4 LAMP	244
Y	*159-6018*	1	LINES GP-FUEL	178
Y	*159-6019*	1	LUBRICATION GP-PIVOT SHAFT	490
Y	*159-8022*	1	PLATE & FILM GP	880
Y	*156-4755*	1	PLATFORM GP-CAB	814
Y	*167-2088*	1	ROPS GP	824
Y	*160-6521*	1	SEAT GP	830
Y	*156-8347*	1	SUPPORT GP-ROPS	843
Y	*159-8106*	1	TANK GP-FUEL	184
Y	*159-9264*	1	WIRING GP-PLATFORM	288
	184-8026	1	PLUG AS	
	155-2265	1	KIT-CONNECTING PLUG (8 PIN)	
			(INCLUDES PLUG AS & WEDGE)	
	155-2259	1	WEDGE-PLUG LOCK	
	9X-3402	1	SOCKET-CONNECTOR	
			(FOR 16-18 GA WIRE)	
	126-1768	1	SOCKET-CONNECTOR	
			(FOR 14 GA WIRE)	
	8T-8737	5	PLUG-SEAL (3.07MM ID)	
E	**125-7874**		TUBE-SHRINKABLE (5CM)	
BD	**5P-5677**		WIRE (18 GA)	

B-USE AS REQUIRED
D-ORDER BY THE METER
E-ORDER BY THE CENTIMETER
Y-SEPARATE ILLUSTRATION

MEMORANDA

112-8117 CONTROL AS-REMOTE

S/N: AKA1-UP

PART OF 143-7767 GUARD AR-BOTTOM

SMCS-1408 **i01255635**

NOTE	REF NO	GRAPHIC REF	PART NUMBER	QTY	PART NAME 1 2 3 4 5 6 (PRODUCT LEVEL)	SEE PAGE
	1	1	**112-8115**	1	BOX AS	
		1	**7T-1099**	1	LINK	
		1	**9D-6621**	4	NUT-WELD (10-24 THD)	
	2	1	**112-8118**	1	FILM	
	3	1	**7N-8008**	2	SWITCH GP-TOGGLE (2 POLE) (GUARD UP\DOWN)	
					(EACH INCLUDES)	
		1	**3L-8187**	6	LOCKWASHER (NO.6-INT)	
		1	**6T-3631**	2	NUT-HEX (15/32-32 THD)	
		1	**6T-3632**	1	LOCKWASHER (12MM ID)	
		1	**6T-3633**	1	LOCKRING (12.3MM ID)	
		1	**6V-8374**	6	SCREW-MACHINE (6-32X.25 IN)	
	4	1	**6T-6970**	1	SWITCH AS-TOGGLE (ON/OFF)	
		1	**3L-8187**	3	LOCKWASHER (NO.6-INT)	
		1	**6T-3631**	2	NUT-HEX (15/32-32 THD)	
		1	**6T-3632**	1	LOCKWASHER (12MM ID)	
		1	**6T-3633**	1	LOCKRING (12.3MM ID)	
		1	**6V-8374**	3	SCREW-MACHINE (6-32X.25 IN)	
	5	1	**112-8116**	1	COVER	
	6	1	**2N-3479**	4	SCREW (10-24X.5IN)	
	7	1	**9F-8125**	4	LOCKWASHER (#10-EXT.)	
	8	1	**2S-9727**	1	GROMMET	
	9	1	**112-8111**	1	HARNESS AS	
	10	1	**112-8124**	1	WIRE AS	
	11	1	**112-9416**	1	WIRE AS	
	12	1	**7K-1181**	2	STRAP-CABLE (4IN DIA)	
	13	1	**113-5819**	1	PLATE-WARNING	
	14	1	**2K-3219**	4	SCREW-DRIVE	

112-8117 **CONTROL AS-REMOTE** ***(contd.)*** **i01255635**

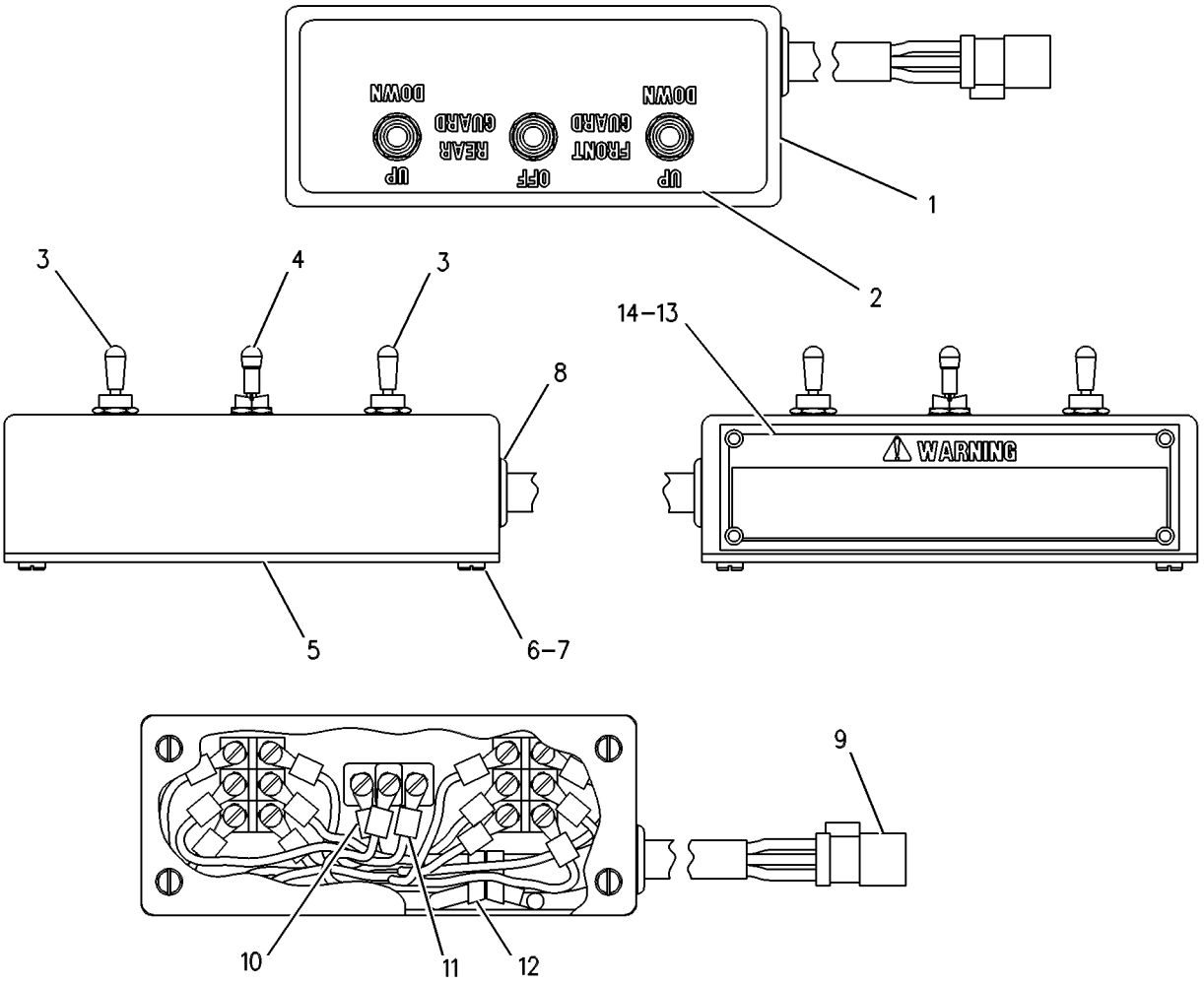

GRAPHIC #1 g00276734

FRAME AND BODY

159-8104 COUNTERWEIGHT GP

S/N: AKA1-UP

SMCS-7056 **i01446952**

NOTE	REF NO	GRAPHIC REF	PART NUMBER	QTY	PART NAME 1 2 3 4 5 6 (PRODUCT LEVEL)	SEE PAGE
	1	1	**1H-4106**	1	PIN AS-DRAWBAR	
	2	1	**6Y-0610**	1	COUNTERWEIGHT	
	3	1	**7G-6623**	1	HITCH	
	4	1	**8E-9289**	1	LATCH	
	5	1	**3K-2889**	1	LOCKNUT	
	6	1	**7X-0349**	1	BOLT (5/8-11X3 IN)	
	7	1	**7X-0429**	6	BOLT (1 1/4-7X4.50 IN)	
	8	1	**7X-0432**	8	BOLT (1 1/4-7 X 6.5IN)	
	9	1	**7X-0533**	14	WASHER-HARD (34X55X6MM THK)	

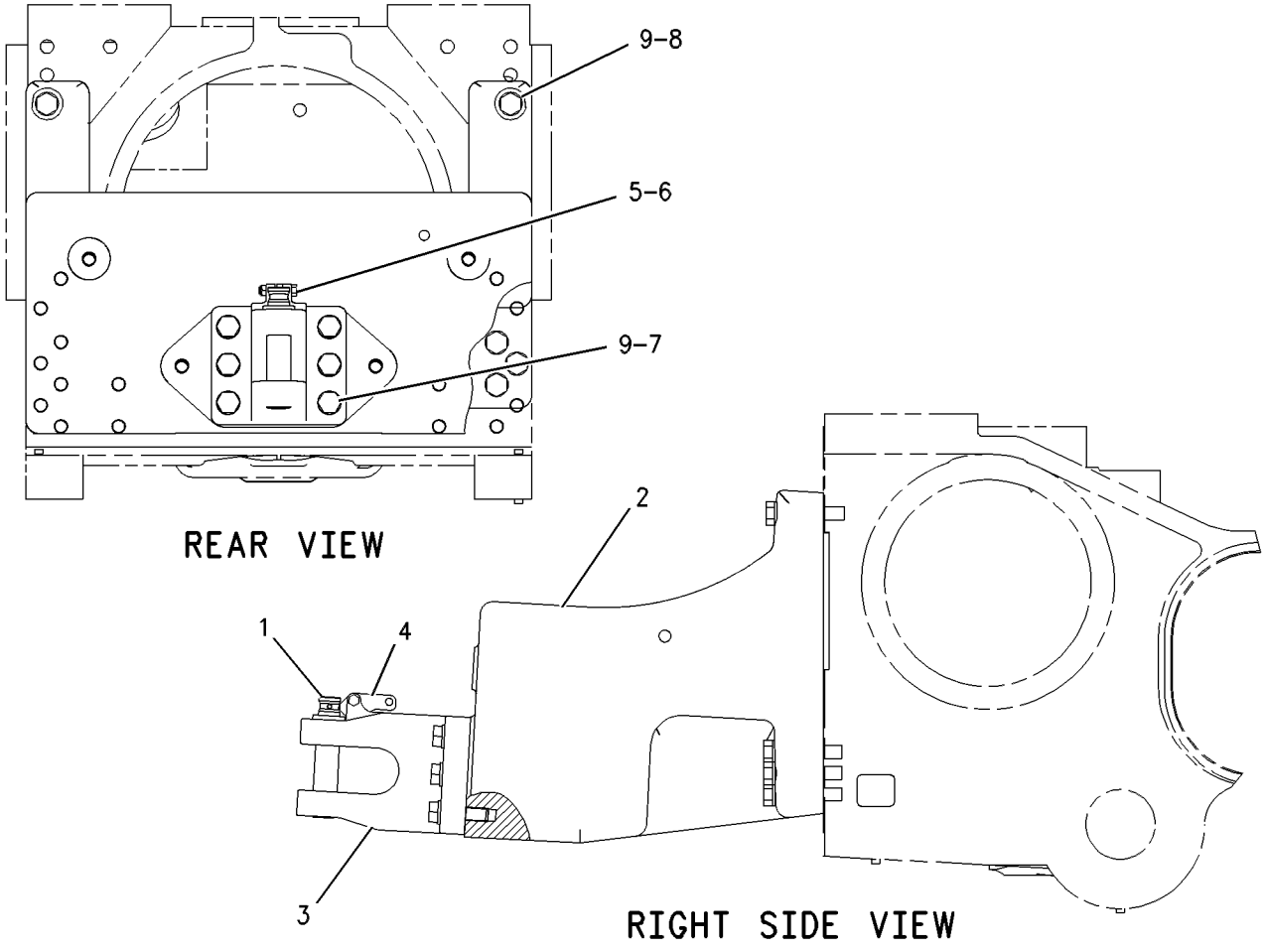

GRAPHIC #1 g00533310

FRAME AND BODY

192-3016 COVER GP

S/N: AKA1-UP

PART OF 156-4755 PLATFORM GP-CAB

SMCS-7251 **i01486770**

NOTE	REF NO	GRAPHIC REF	PART NUMBER	QTY	PART NAME 1 2 3 4 5 6 (PRODUCT LEVEL)	SEE PAGE
	1	1	**169-9639**	1	COVER AS	
	2	1	**192-3017**	2	ROLLER	
	3	1	**192-3018**	1	ROD	
	4	1	**193-7377**	2	PANEL	
	5	1	**5P-7177**	2	RETAINER	
BD	6	1	**6V-1359**		SEAL	
BD	7	1	**6V-2803**		SEAL	

B-USE AS REQUIRED
D-ORDER BY THE METER

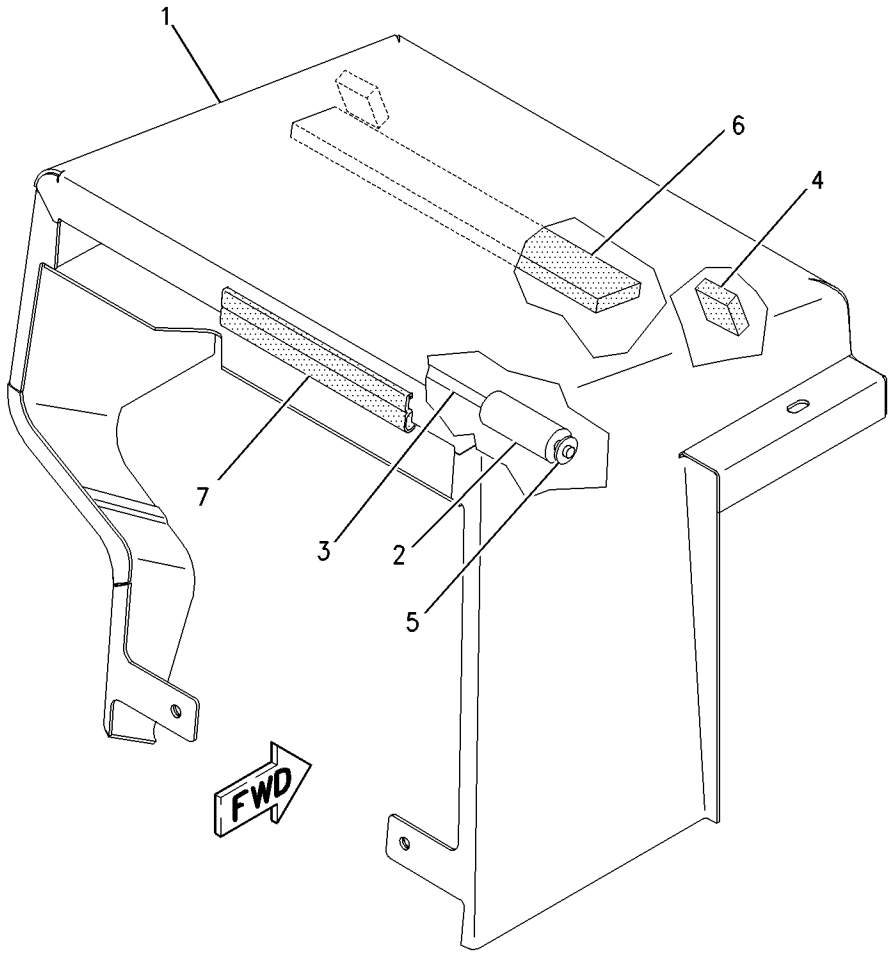

GRAPHIC #1 g00764398

6T-2202 COVER GP-TRUNNION

S/N: AKA1-UP

SMCS-7050, 7250 **i01488345**

NOTE	REF NO	GRAPHIC REF	PART NUMBER	QTY	PART NAME 1 2 3 4 5 6 (PRODUCT LEVEL)	SEE PAGE
	1	1	**9G-2787**	2	COVER	
	2	1	**8T-9393**	16	BOLT (5/8-11X1.5 IN)	
	3	1	**8T-4122**	16	WASHER-HARD (17X32X3.5MM THK)	

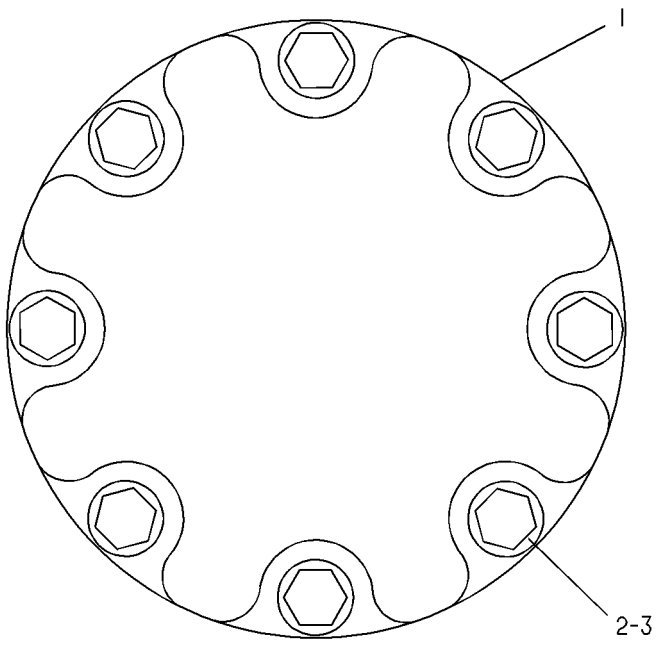

GRAPHIC #1 g00207684

MEMORANDA

165-2446 DOOR GP-LH

S/N: AKA1-UP

PART OF 160-2392 ENCLOSURE GP-ENGINE

SMCS-7263 **i01393805**

NOTE	REF NO	GRAPHIC REF	PART NUMBER	QTY	PART NAME 1 2 3 4 5 6 (PRODUCT LEVEL)	SEE PAGE
	1	1	**3V-9399**	1	ROD AS	
	2	1	**4B-4278**	1	WASHER (10.2X20.5X1.6MM THK)	
	3	1	**7T-7208**	1	DOOR AS	
		1	**1F-0750**	6	NUT-WELD (3/8-16 THD)	
	4	1	**8T-9496**	2	LOCKNUT	
	5	1	**8Y-4000**	1	LATCH AS (T-BAR/COMPARTMENT)	
	5A	1	**6H-3956**	1	PIN	
	5B	1	**7X-0766**	1	SPRING-LATCH	
	5C	1	**8Y-3966**	1	WASHER (14.7X35X1.57MM THK)	
	5D	1	**8Y-3998**	1	HANDLE-LATCH	
	5E	1	**8Y-3999**	1	BRACKET-MOUNTING	
	5F	1	**8Y-8306**	1	SHAFT-LATCH	
	6	1	**9W-8084**	1	PLATE	
	7	1	**2K-4973**	2	LOCKNUT (3/8-16 THD)	
	8	1	**3B-4605**	1	COTTER	
	9	1	**4H-2558**	1	GROMMET	
	10	1	**4L-6454**	2	BOLT (3/8-16X1 IN)	
	11	1	**4M-7470**	1	GROMMET	
	12	1	**6V-1193**	6	SCREW-HEX SOCKET (3/8-16X.625 IN)	
	13	1	**8T-4896**	2	WASHER-HARD (10.2X18.5X2.5MM THK)	
	14	1	**9W-8940**	1	PLATE	

165-2446 **DOOR GP-LH** *(contd.)* **i01393805**

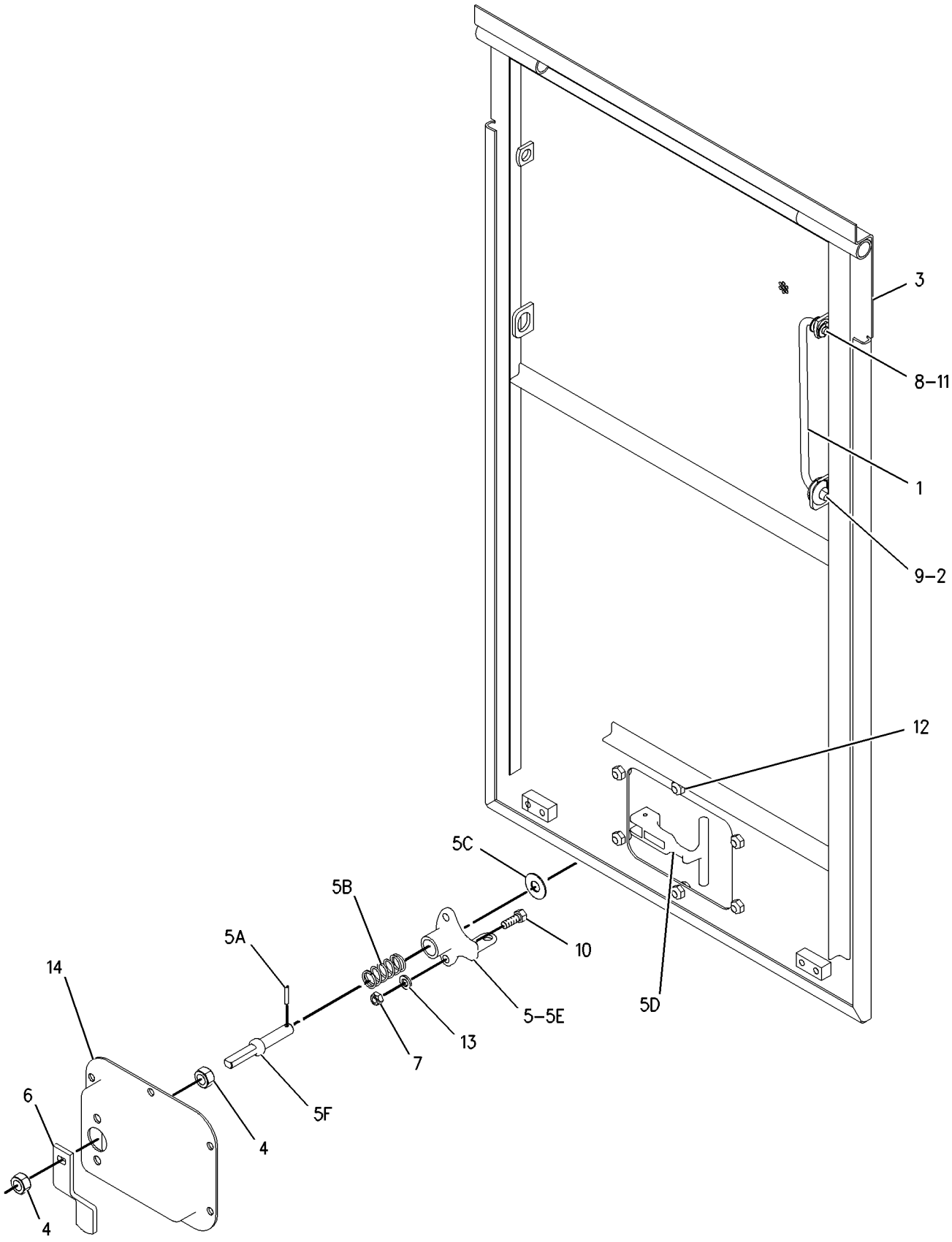

GRAPHIC #1 g00750205

165-2451 DOOR GP-LH

S/N: AKA1-UP

PART OF 160-2394 ENCLOSURE GP-ENGINE

SMCS-7263 **i01502162**

NOTE	REF NO	GRAPHIC REF	PART NUMBER	QTY	PART NAME 1 2 3 4 5 6 (PRODUCT LEVEL)	SEE PAGE
	1	1	**3V-9399**	1	ROD AS	
	2	1	**4B-4278**	1	WASHER (10.2X20.5X1.6MM THK)	
	3	1	**8T-9496**	2	LOCKNUT	
	4	1	**8Y-4000**	1	LATCH AS (T-BAR/COMPARTMENT)	
	4A	1	**6H-3956**	1	PIN	
	4B	1	**7X-0766**	1	SPRING-LATCH	
	4C	1	**8Y-3966**	1	WASHER (14.7X35X1.57MM THK)	
	4D	1	**8Y-3998**	1	HANDLE-LATCH	
	4E	1	**8Y-3999**	1	BRACKET-MOUNTING	
	4F	1	**8Y-8306**	1	SHAFT-LATCH	
	5	1	**9W-8084**	1	PLATE	
	6	1	**121-2829**	1	DOOR AS-LH	
	7	1	**2K-4973**	2	LOCKNUT (3/8-16 THD)	
	8	1	**3B-4605**	1	COTTER	
	9	1	**4H-2558**	1	GROMMET	
	10	1	**4L-6454**	2	BOLT (3/8-16X1 IN)	
	11	1	**4M-7470**	1	GROMMET	
	12	1	**6V-1193**	6	SCREW-HEX SOCKET (3/8-16X.625 IN)	
	13	1	**8T-4896**	2	WASHER-HARD (10.2X18.5X2.5MM THK)	
	14	1	**9W-8940**	1	PLATE	

165-2451 **DOOR GP-LH** *(contd.)* **i01502162**

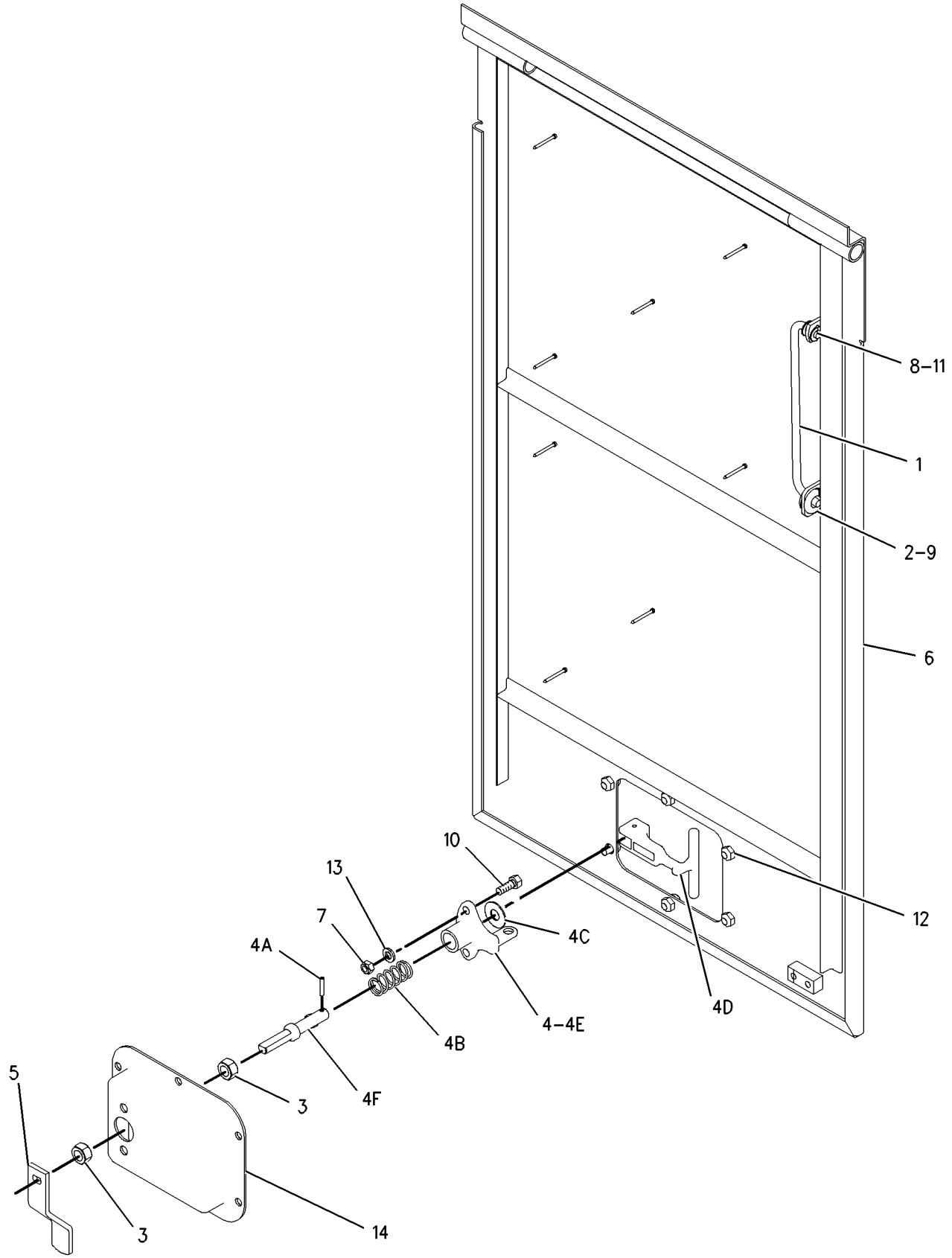

GRAPHIC #1 g00762511

165-2443 DOOR GP-RH

S/N: AKA1-UP

PART OF 160-2392 ENCLOSURE GP-ENGINE

SMCS-7263 **i01393807**

NOTE	REF NO	GRAPHIC REF	PART NUMBER	QTY	PART NAME 1 2 3 4 5 6 (PRODUCT LEVEL)	SEE PAGE
	1	1	**3V-9399**	1	ROD AS	
	2	1	**4B-4278**	1	WASHER (10.2X20.5X1.6MM THK)	
	3	1	**7T-7208**	1	DOOR AS	
		1	**1F-0750**	6	NUT-WELD (3/8-16 THD)	
	4	1	**8T-9496**	2	LOCKNUT (9/16-18 THD)	
	5	1	**8Y-4000**	1	LATCH AS (T-BAR/COMPARTMENT)	
	5A	1	**6H-3956**	1	PIN	
	5B	1	**7X-0766**	1	SPRING-LATCH	
	5C	1	**8Y-3966**	1	WASHER (14.7X35X1.57MM THK)	
	5D	1	**8Y-3998**	1	HANDLE-LATCH	
	5E	1	**8Y-3999**	1	BRACKET-MOUNTING	
	5F	1	**8Y-8306**	1	SHAFT-LATCH	
	6	1	**9W-8084**	1	PLATE	
	7	1	**2K-4973**	2	LOCKNUT (3/8-16 THD)	
	8	1	**3B-4605**	1	COTTER	
	9	1	**4H-2558**	1	GROMMET (15.88MM ID)	
	10	1	**4L-6454**	2	BOLT (3/8-16X1 IN)	
	11	1	**4M-7470**	1	GROMMET	
	12	1	**6V-1193**	6	SCREW-HEX SOCKET (3/8-16X.625 IN)	
	13	1	**8T-4896**	2	WASHER-HARD (10.2X18.5X2.5MM THK)	
	14	1	**9W-8940**	1	PLATE	

165-2443 **DOOR GP-RH** *(contd.)* **i01393807**

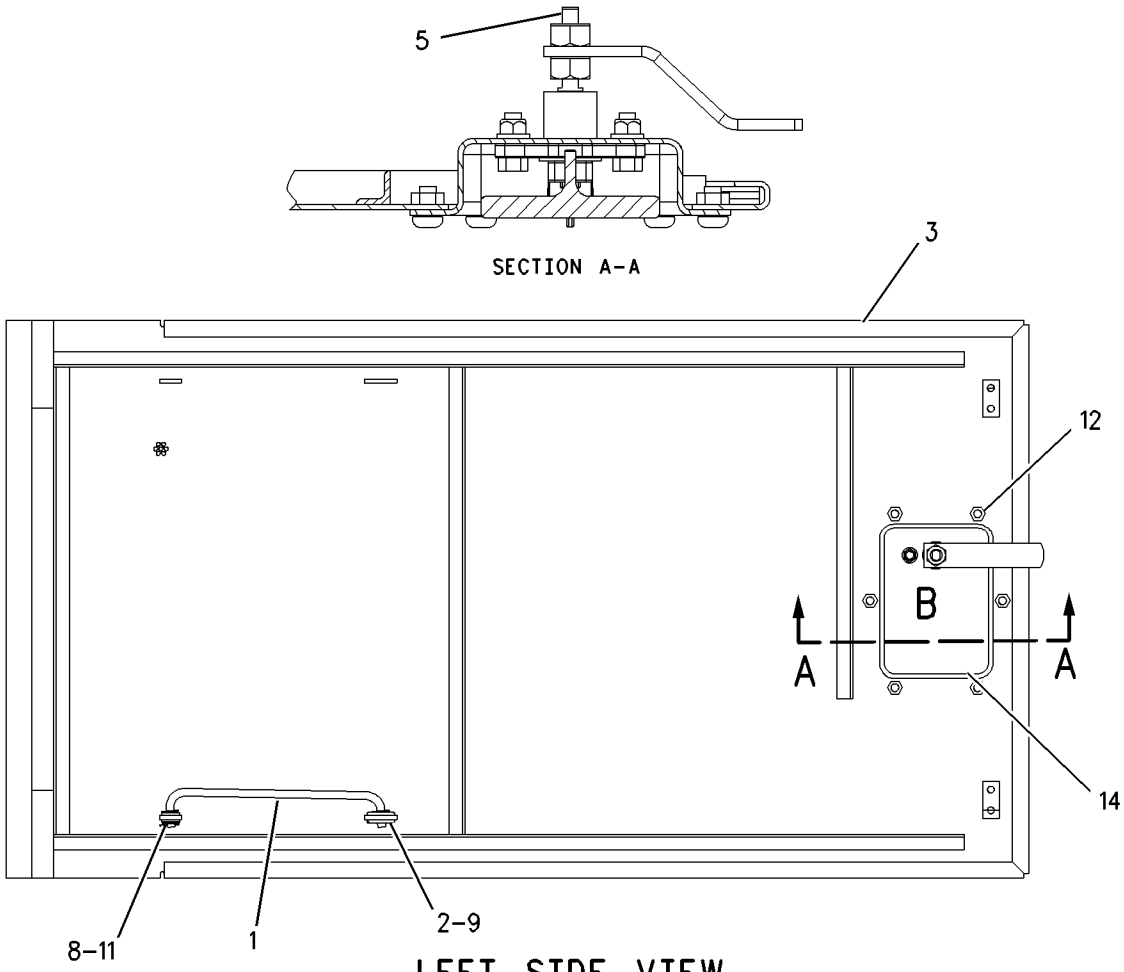

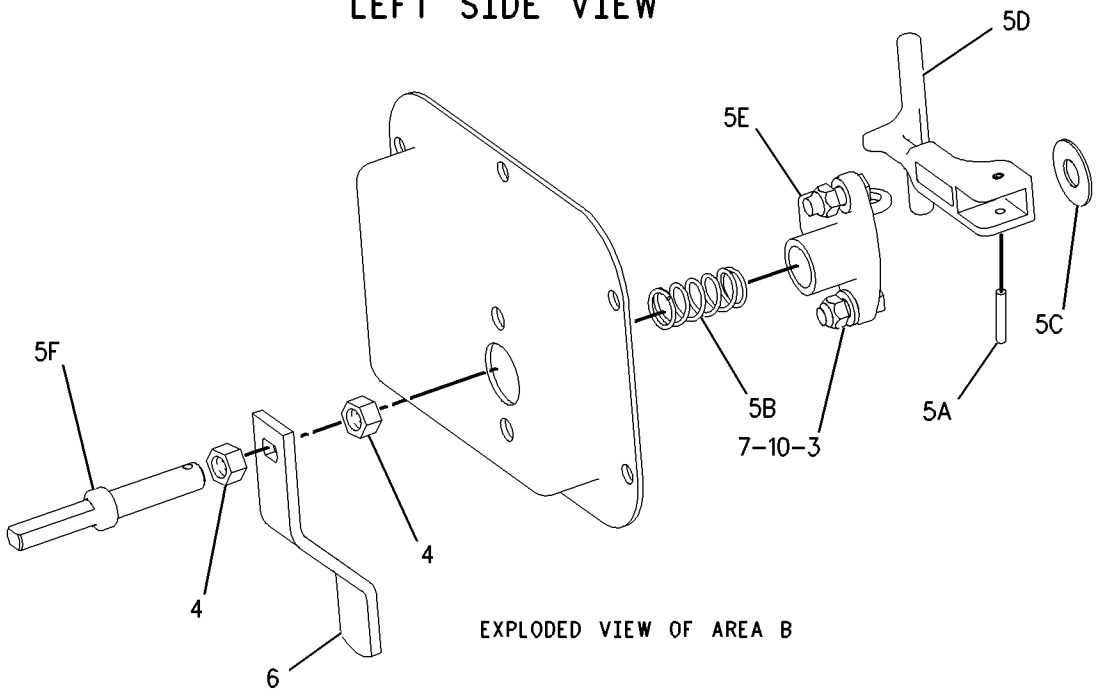

GRAPHIC #1 g00749839

165-2449 DOOR GP-RH

S/N: AKA1-UP

PART OF 160-2394 ENCLOSURE GP-ENGINE

SMCS-7263 **i01502163**

NOTE	REF NO	GRAPHIC REF	PART NUMBER	QTY	PART NAME 1 2 3 4 5 6 (PRODUCT LEVEL)	SEE PAGE
	1	1	**3V-9399**	1	ROD AS	
	2	1	**4B-4278**	1	WASHER (10.2X20.5X1.6MM THK)	
	3	1	**8T-9496**	2	LOCKNUT	
	4	1	**8Y-4000**	1	LATCH AS (T-BAR/COMPARTMENT)	
	4A	1	**6H-3956**	1	PIN	
	4B	1	**7X-0766**	1	SPRING-LATCH	
	4C	1	**8Y-3966**	1	WASHER (14.7X35X1.57MM THK)	
	4D	1	**8Y-3998**	1	HANDLE-LATCH	
	4E	1	**8Y-3999**	1	BRACKET-MOUNTING	
	4F	1	**8Y-8306**	1	SHAFT-LATCH	
	5	1	**9W-8084**	1	PLATE	
	6	1	**108-1730**	1	DOOR AS-RH	
		1	**1F-0750**	6	NUT-WELD (3/8-16 THD)	
	7	1	**2K-4973**	2	LOCKNUT (3/8-16 THD)	
	8	1	**3B-4605**	1	COTTER	
	9	1	**4H-2558**	1	GROMMET	
	10	1	**4L-6454**	2	BOLT (3/8-16X1 IN)	
	11	1	**4M-7470**	1	GROMMET	
	12	1	**6V-1193**	6	SCREW-HEX SOCKET (3/8-16X.625 IN)	
	13	1	**8T-4896**	2	WASHER-HARD (10.2X18.5X2.5MM THK)	
	14	1	**9W-8940**	1	PLATE	

165-2449 **DOOR GP-RH** *(contd.)* **i01502163**

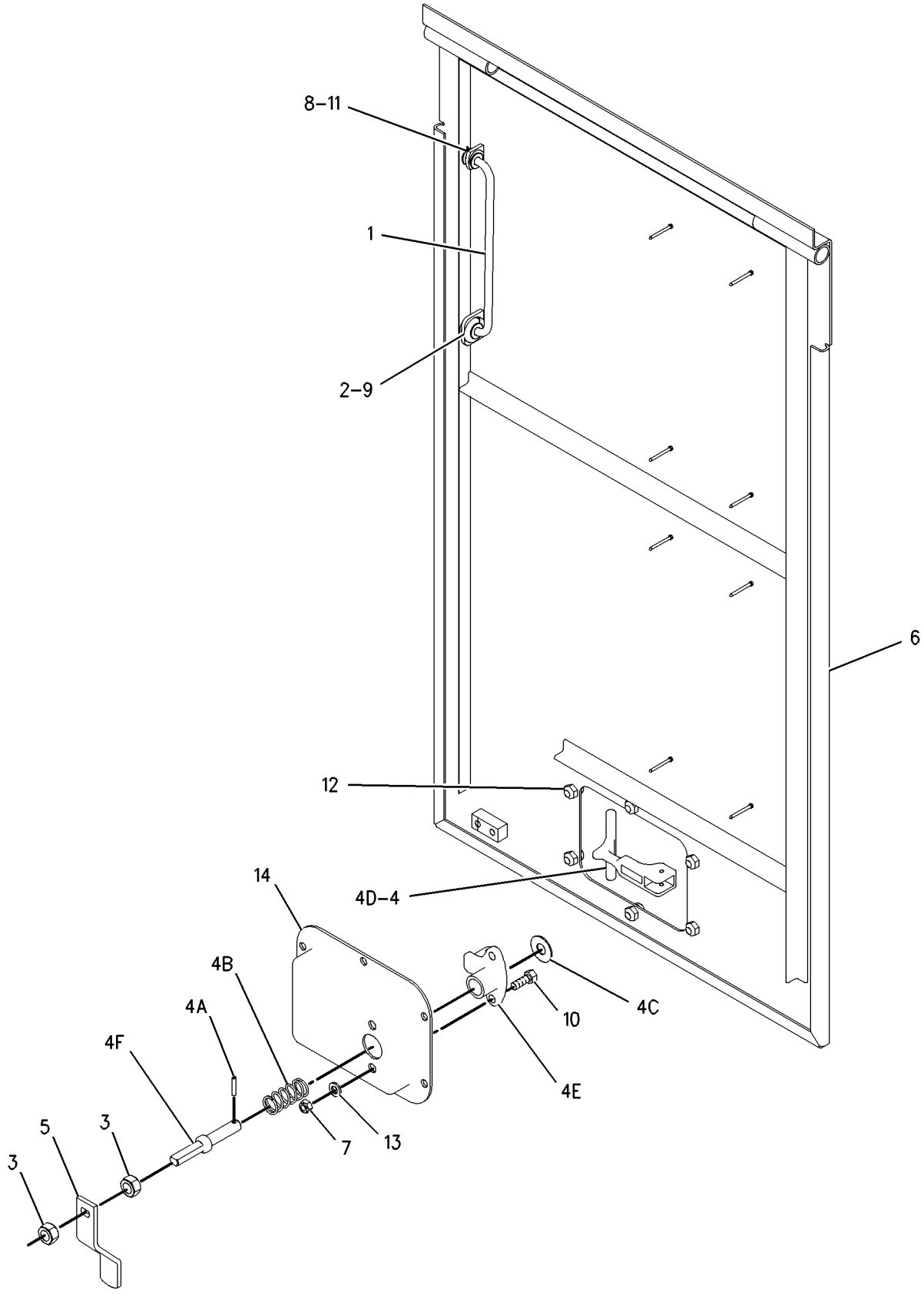

GRAPHIC #1 g00764635

FRAME AND BODY

159-8105 DRAWBAR GP

S/N: AKA1-UP

SMCS-7105, 7119 **i01446973**

NOTE	REF NO	GRAPHIC REF	PART NUMBER	QTY	PART NAME 1 2 3 4 5 6 (PRODUCT LEVEL)	SEE PAGE
	1	1	**1H-4106**	1	PIN AS-DRAWBAR	
	2	1	**2H-2534**	1	CLEVIS-DRAWBAR	
	3	1	**5H-2168**	1	LATCH-PIN	
	4	1	**7T-5793**	1	BRACKET AS-LH	
	5	1	**7T-5798**	1	BRACKET AS-RH	
	6	1	**3K-2889**	1	LOCKNUT	
	7	1	**7X-0347**	1	BOLT (5/8-11X2.25 IN)	
	8	1	**7X-0428**	8	BOLT (1 1/4-7X4 IN)	
	9	1	**7X-0437**	4	BOLT	
	10	1	**7X-0451**	4	NUT-FULL (1-1/4-7 THD)	
	11	1	**7X-0533**	16	WASHER-HARD (34X55X6MM THK)	

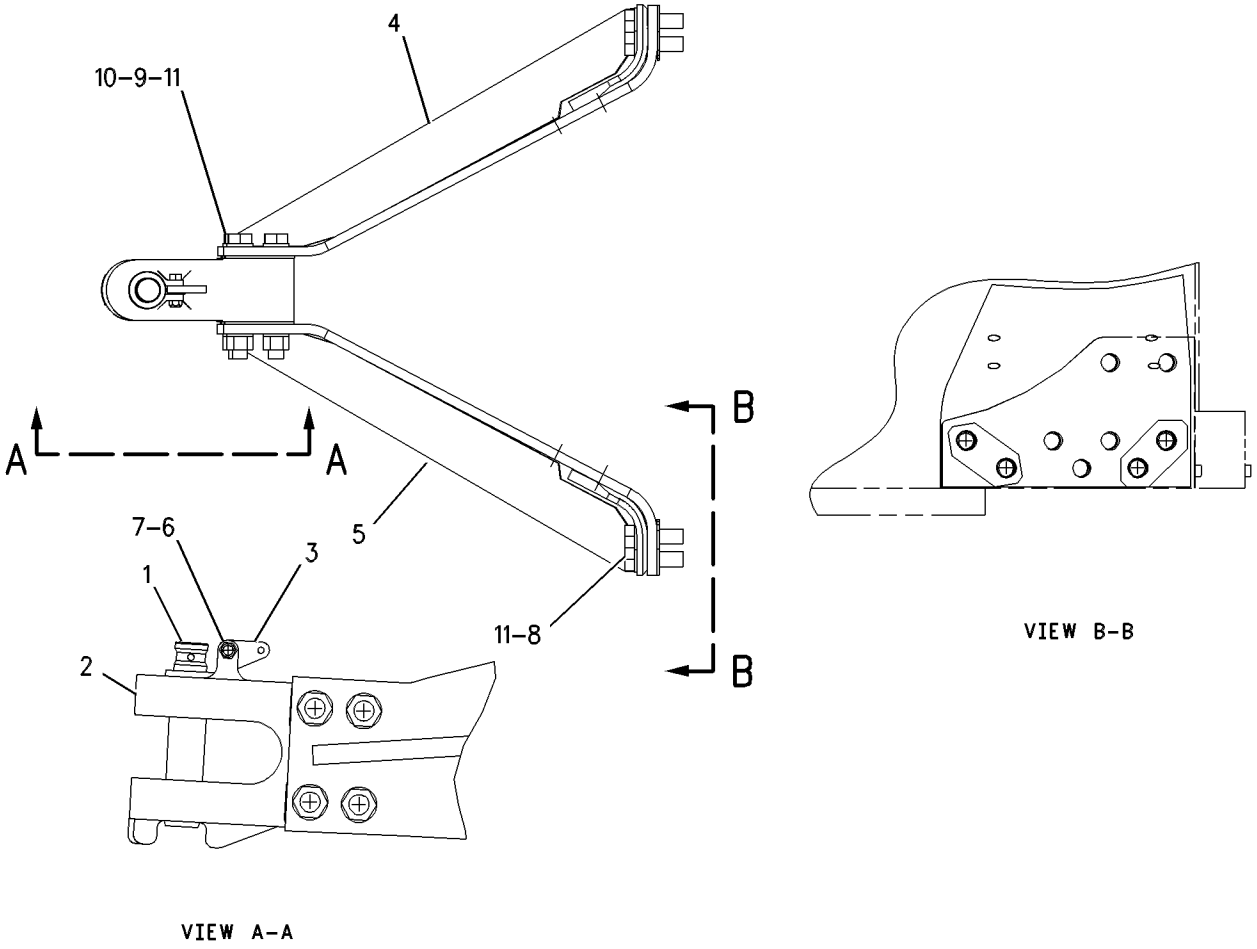

GRAPHIC #1 g00533340

MEMORANDA

FRAME AND BODY

160-2392 ENCLOSURE GP-ENGINE

S/N: AKA1-UP

SMCS-7263 **i01461066**

NOTE	REF NO	GRAPHIC REF	PART NUMBER	QTY	PART NAME 1 2 3 4 5 6 (PRODUCT LEVEL)	SEE PAGE
	1	1	**2Y-4071**	2	PADLOCK	
					(EACH INCLUDES 2 KEYS)	
	2	2	**6T-9509**	2	HINGE AS-RH	
	3	2	**6T-9510**	2	HINGE AS-LH	
	4	1	**7T-7213**	2	PLATE	
	5	1	**7T-7214**	2	PLATE	
	6	1	**9W-5290**	2	PLATE AS	
	7	1	**9W-9044**	2	PLATE	
	8	2	**114-0399**	1	PLATE AS-RH	
	9	2	**114-0401**	1	PLATE AS-LH	
	10	2	**127-1054**	1	PLATE AS-RH	
		2	**6B-4594**	7	RIVET	
	11	2	**127-1056**	1	PLATE AS-LH	
		2	**6B-4594**	7	RIVET	
	12	2	**127-1059**	1	ANGLE AS-RH	
		2	**1F-0750**	2	NUT-WELD (3/8-16 THD)	
	13	2	**127-2269**	1	ANGLE AS-LH	
		2	**1F-0750**	2	NUT-WELD (3/8-16 THD)	
	14	1	**160-2382**	1	HOOD AS	
		1	**1F-0748**	7	NUT-WELD (1/2-13 THD)	
		1	**1F-0750**	18	NUT-WELD (3/8-16 THD)	
		1	**3J-5169**	1	NUT (5/8-11 THD)	
	15	2	**160-2383**	1	PLATE AS-RH	
		2	**1F-0750**	3	NUT-WELD (3/8-16 THD)	
	16	2	**160-2385**	1	PLATE AS-LH	
		2	**1F-0750**	3	NUT-WELD (3/8-16 THD)	
	17	2	**164-5966**	1	PLATE AS	
		2	**1F-0750**	6	NUT-WELD (3/8-16 THD)	
	18	2	**164-5968**	1	PLATE AS	
		2	**1F-0750**	6	NUT-WELD (3/8-16 THD)	
Y	19	1	**165-2443**	1	DOOR GP-RH	400
Y	20	1	**165-2446**	1	DOOR GP-LH	396
	21	2	**186-1456**	1	SHIELD AS	
	22	1	**1H-3337**	2	BOLT (1/4-20X0.875 IN)	
	23	1	**2D-6235**	2	LOCKNUT	
	24	1,2	**5M-3062**	32	BOLT (3/8-16X0.75 IN)	
	25	1,2	**5P-1075**	28	WASHER-HARD (10.2X22.5X3MM THK)	
	26	2	**5S-7382**	4	BOLT (3/8-16X1.375 IN)	
	27	2	**7T-8201**	2	BLOCK	
	28	2	**8T-2561**	4	WASHER-HARD (10.5X28.5X5MM THK)	
	29	1	**8T-4896**	8	WASHER-HARD (10.2X18.5X2.5MM THK)	
B	30	2	**8T-4123**	4	WASHER-PLATED (22X35X3.5MM THK)	
	31	1	**8T-9377**	4	BOLT (3/8-16X2.25 IN)	
BD	32	2	**5P-7211**		SEAL	
BD	33	1,2	**5P-7483**		SEAL	

B-USE AS REQUIRED
D-ORDER BY THE METER
Y-SEPARATE ILLUSTRATION

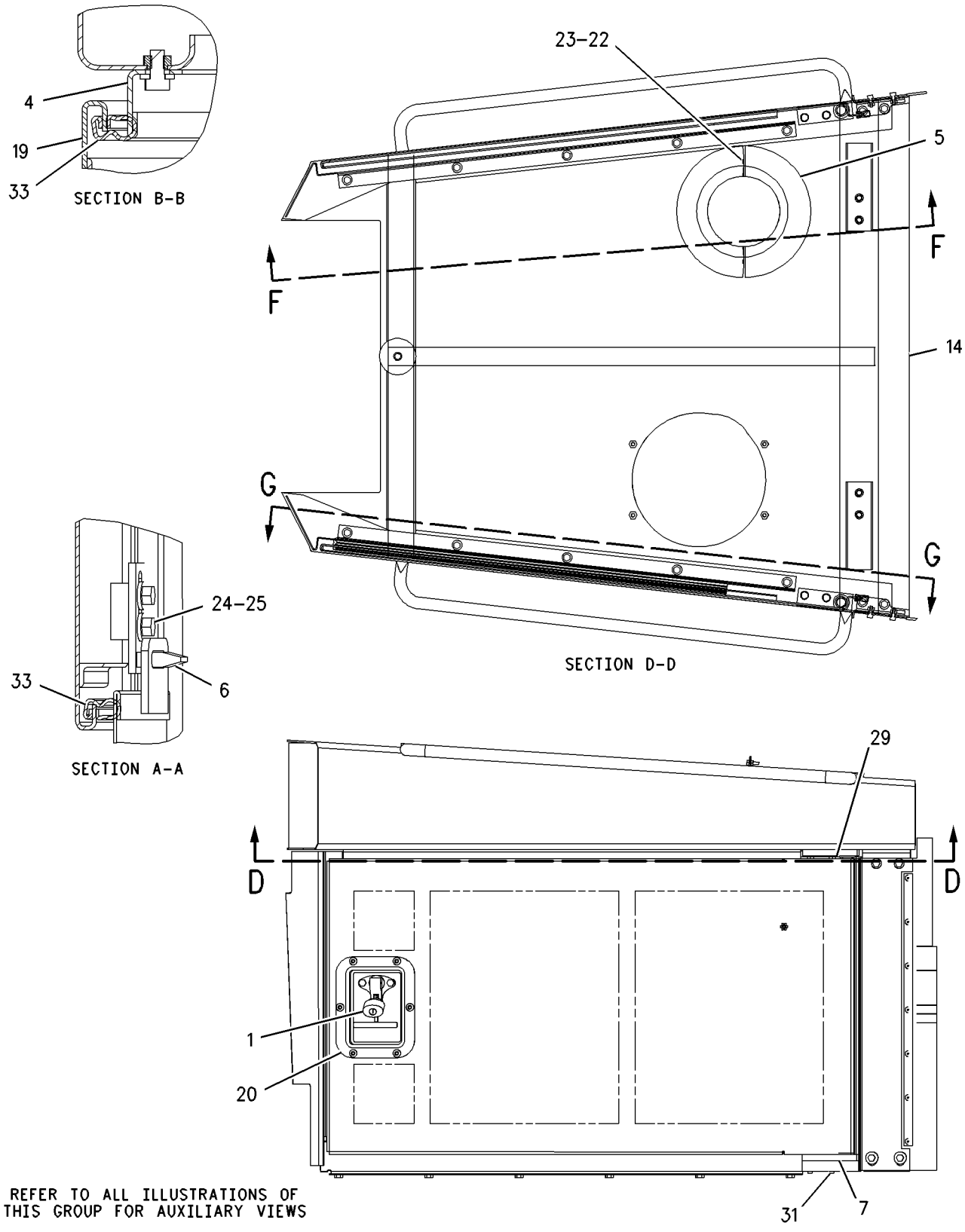

GRAPHIC #1 g00742744

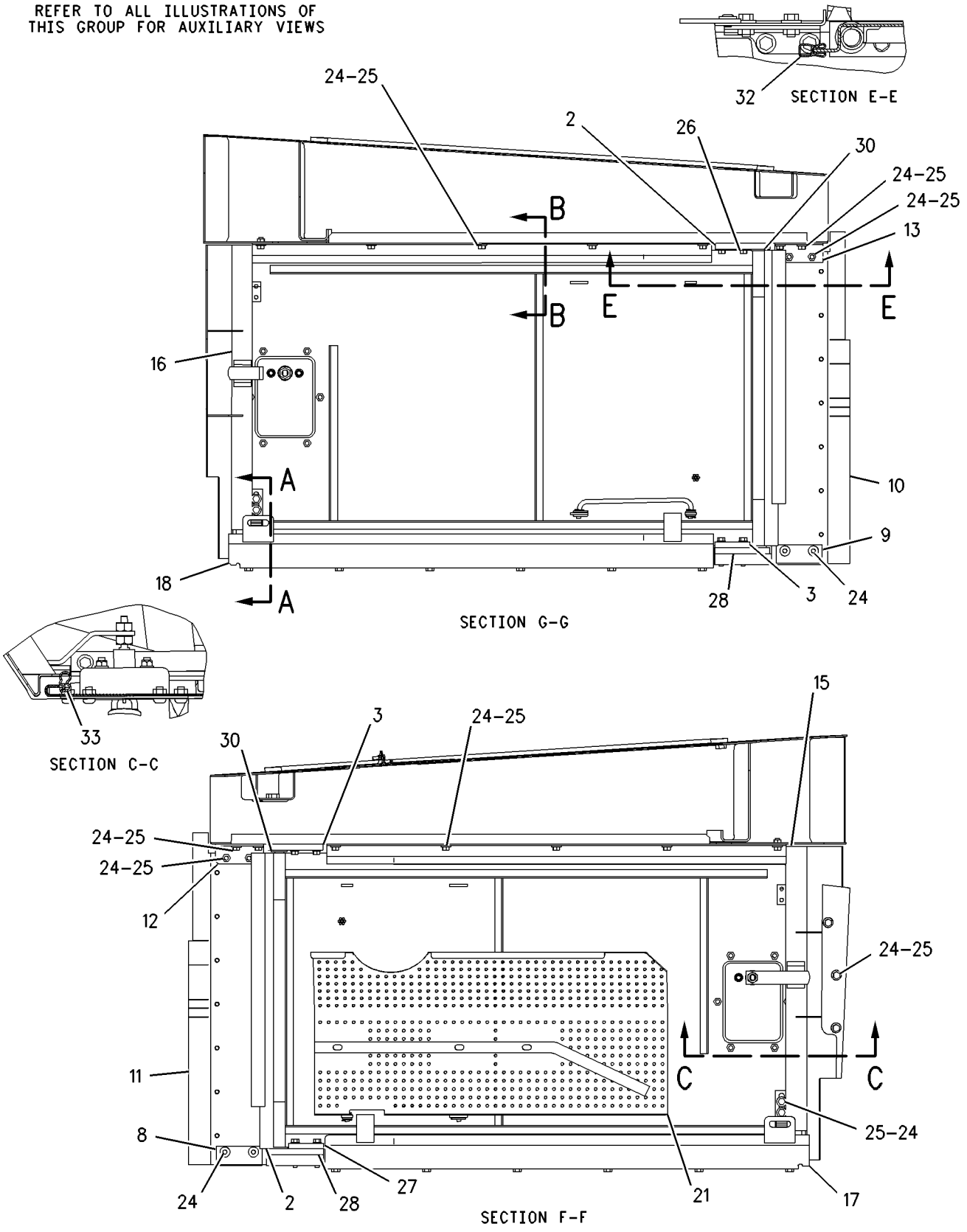

GRAPHIC #2

g00742746

MEMORANDA

FRAME AND BODY

160-2394 ENCLOSURE GP-ENGINE

S/N: AKA1-UP
SOUND SUPPRESSION
PART OF 157-8035 SUPPRESSION AR-SOUND

SMCS-7263 **i01461127**

NOTE	REF NO	GRAPHIC REF	PART NUMBER	QTY	PART NAME 1 2 3 4 5 6 (PRODUCT LEVEL)	SEE PAGE
	1	2	**5P-8502**	2	PADLOCK GP	
					(EACH INCLUDES)	
A		2	**5P-8500**	1	KEY	
A		2	**8Y-6364**	1	SLEEVE	
	2	2	**6P-2216**	46	CAP-PUSH ON	
	3	2	**6T-9509**	2	HINGE AS-RH	
	4	2	**6T-9510**	2	HINGE AS-LH	
	5	2	**7T-7213**	2	PLATE	
	6	1	**7T-7214**	2	PLATE	
	7	2	**9W-5290**	2	PLATE AS	
	8	1	**9W-9044**	2	PLATE	
	9	2	**108-1732**	1	LINER-LH	
	10	2	**108-1735**	3	LINER	
	11	2	**108-1736**	1	LINER	
	12	2	**108-1739**	1	LINER	
	13	2	**108-1741**	1	LINER	
	14	2	**108-1742**	1	LINER	
	15	2	**114-0399**	1	PLATE AS-RH	
	16	2	**114-0401**	1	PLATE AS-LH	
	17	2	**115-1961**	1	LINER-RH	
	18	2	**127-1054**	1	PLATE AS-RH	
		2	**6B-4594**	7	RIVET	
	19	2	**127-1056**	1	PLATE AS-LH	
		2	**6B-4594**	7	RIVET	
	20	2	**127-1059**	1	ANGLE AS-RH	
		2	**1F-0750**	2	NUT-WELD (3/8-16 THD)	
	21	2	**127-2269**	1	ANGLE AS-LH	
		2	**1F-0750**	2	NUT-WELD (3/8-16 THD)	
	22	2	**199-3213**	1	LINER	
	23	1	**131-0135**	1	LINER	
	24	2	**160-2383**	1	PLATE AS-RH	
		2	**1F-0750**	3	NUT-WELD (3/8-16 THD)	
	25	2	**160-2385**	1	PLATE AS-LH	
		2	**1F-0750**	3	NUT-WELD (3/8-16 THD)	
	26	1	**160-2395**	1	HOOD AS	
		1	**1F-0748**	7	NUT-WELD (1/2-13 THD)	
		1	**1F-0750**	18	NUT-WELD (3/8-16 THD)	
		1	**3J-5169**	1	NUT (5/8-11 THD)	
	27	2	**160-2411**	1	PLATE AS-RH	
		2	**1F-0750**	8	NUT-WELD (3/8-16 THD)	
	28	2	**160-2413**	1	PLATE AS-LH	
		2	**1F-0750**	8	NUT-WELD (3/8-16 THD)	
	29	2	**164-5966**	1	PLATE AS	
		2	**1F-0750**	6	NUT-WELD (3/8-16 THD)	
	30	2	**164-5968**	1	PLATE AS	
Y	31	2	*165-2449*	1	DOOR GP-RH	402
Y	32	2	*165-2451*	1	DOOR GP-LH	398
	33	2	**186-1456**	1	SHIELD AS	
	34	1	**1H-3337**	2	BOLT (1/4-20X0.875 IN)	
	35	1	**2D-6235**	2	LOCKNUT	
	36	1,2	**5M-3062**	32	BOLT (3/8-16X0.75 IN)	
	37	1,2	**5P-1075**	28	WASHER-HARD (10.2X22.5X3MM THK)	
	38	1	**5S-7382**	4	BOLT (3/8-16X1.375 IN)	
	39	2	**7T-8201**	2	BLOCK	
	40	1	**8T-2561**	4	WASHER-HARD (10.5X28.5X5MM THK)	

160-2394 **ENCLOSURE GP-ENGINE** *(contd.)* **i01461127**

NOTE	REF NO	GRAPHIC REF	PART NUMBER	QTY	PART NAME 1 2 3 4 5 6 (PRODUCT LEVEL)	SEE PAGE
	41	1,2	**8T-4896**	8	WASHER-HARD (10.2X18.5X2.5MM THK)	
	42	1	**8T-4123**	4	WASHER-PLATED (22X35X3.5MM THK)	
	43	2	**8T-9377**	4	BOLT (3/8-16X2.25 IN)	
D	44	2	**5P-7211**		SEAL (1.8M)	
D	45	2	**5P-7483**		SEAL (5.5M)	

A-NOT PART OF THIS GROUP
D-ORDER BY THE METER
Y-SEPARATE ILLUSTRATION

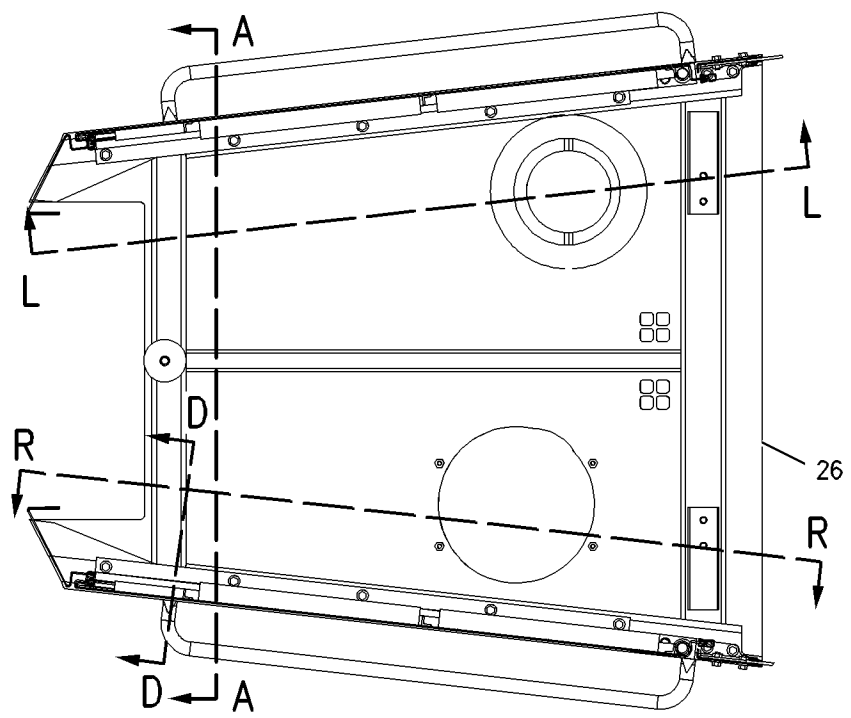

SECTION S-S

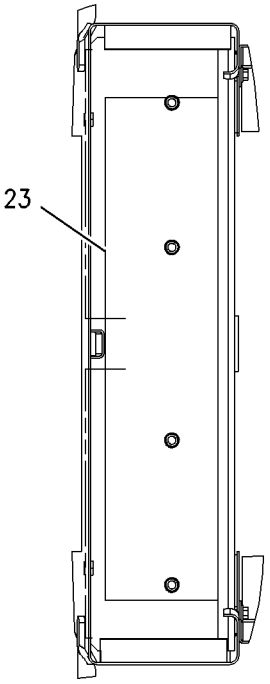

SECTION A-A

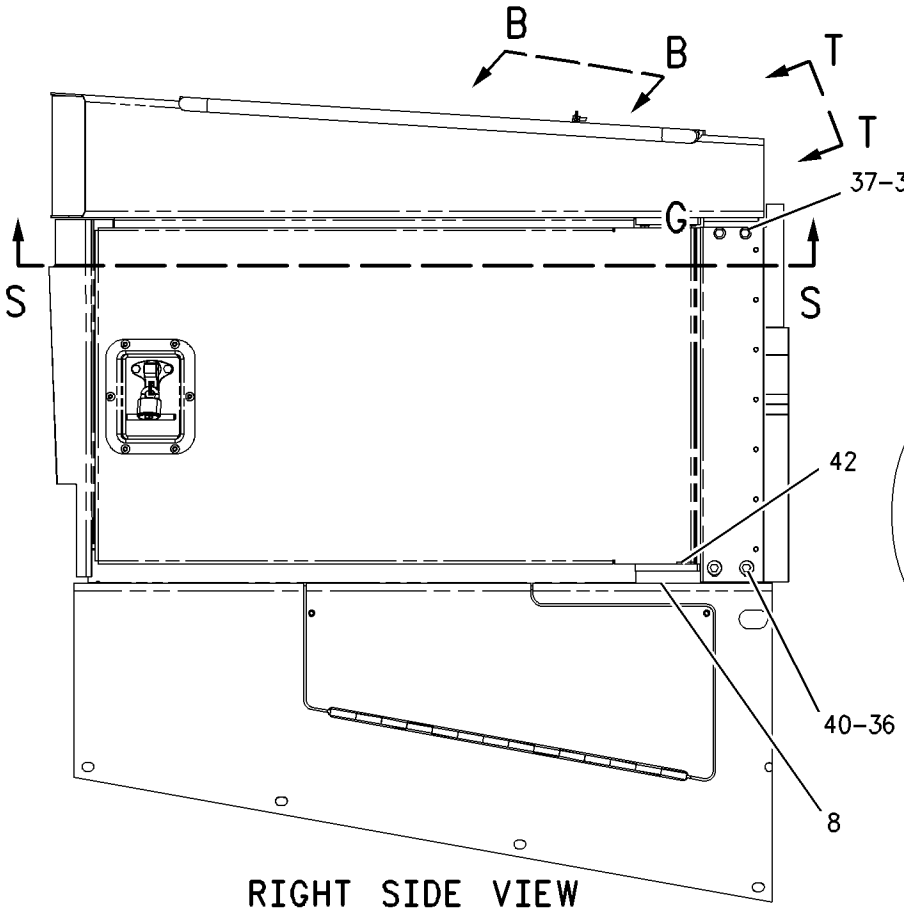

RIGHT SIDE VIEW

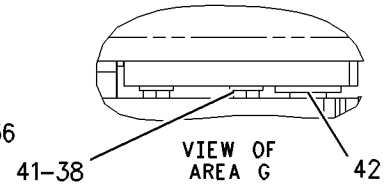

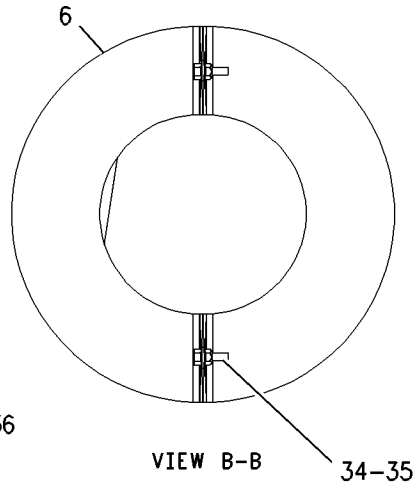

VIEW B-B

REFER TO ALL ILLUSTRATIONS OF THIS GROUP FOR AUXILIARY VIEWS

GRAPHIC #1

g00739173

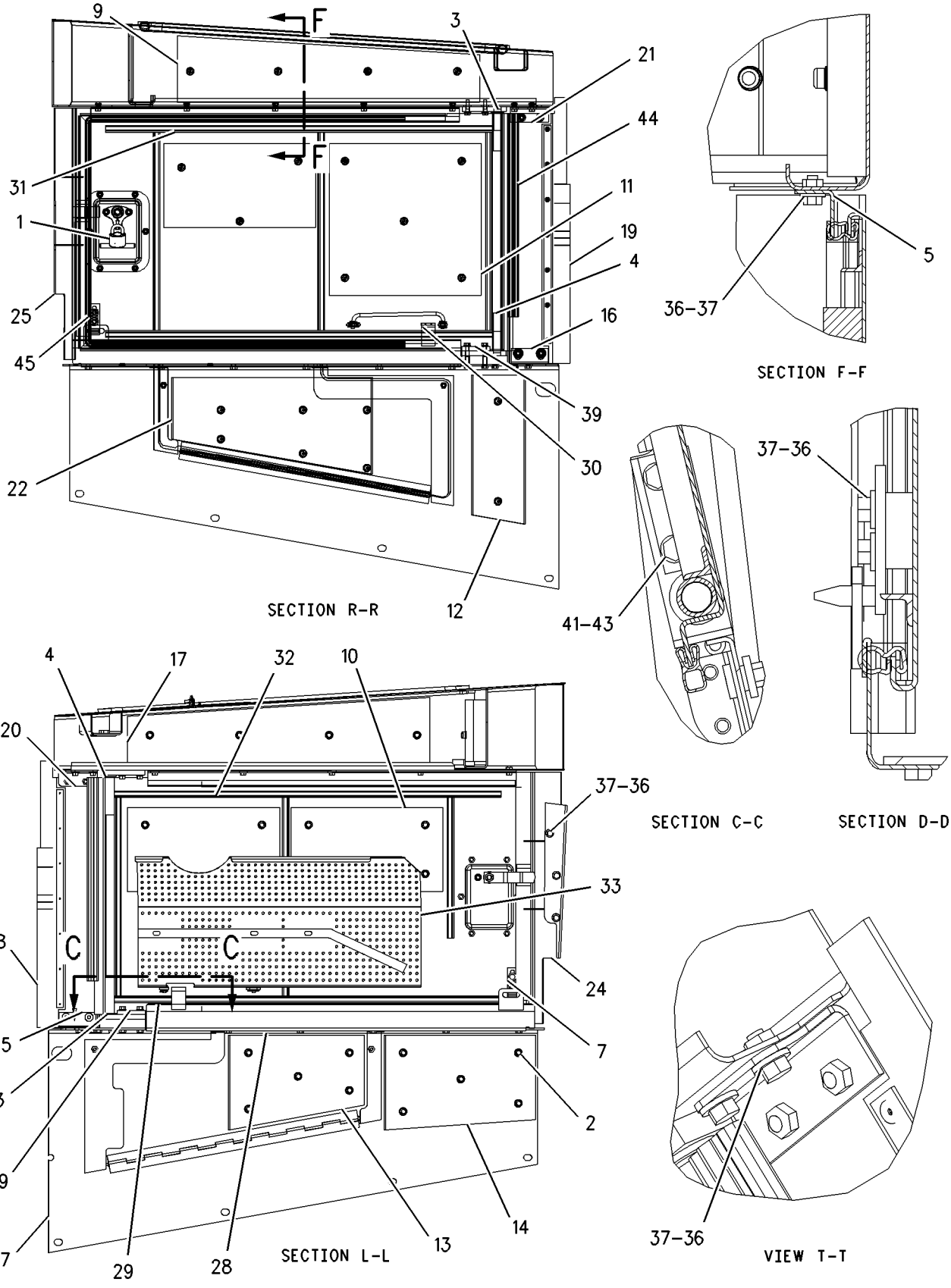

GRAPHIC #2

g00739175

160-4919 ENCLOSURE GP-HYDRAULIC TANK

S/N: AKA1-UP

PART OF 157-0819 CHASSIS AR

SMCS-5056 **i01437110**

NOTE	REF NO	GRAPHIC REF	PART NUMBER	QTY	PART NAME 1 2 3 4 5 6 (PRODUCT LEVEL)	SEE PAGE
	1	1	**160-2442**	1	PLATE AS	
		1	**9B-2923**	2	HINGE	
	2	1	**160-2440**	1	COVER AS	
	3	1	**160-2441**	1	PLATE AS	
		1	**4K-8501**	2	CLIP	
	4	1	**7G-9913**	1	DOOR	
	5	1	**9B-2052**	1	HINGE	
	6	1	**1K-8850**	1	SPRING	
	7	1	**5P-8502**	1	PADLOCK GP	
A		1	**5P-8500**	1	KEY (STARTER)	
A		1	**8Y-6364**	1	SLEEVE	
	8	1	**8E-8566**	2	BRACKET AS	
					(EACH INCLUDES)	
		1	**1F-0750**	1	NUT-WELD (3/8-16 THD)	
	9	1	**5S-7379**	18	BOLT (3/8-16X0.875 IN)	
	10	1	**5P-1075**	18	WASHER-HARD (10.2X22.5X3MM THK)	

A-NOT PART OF THIS GROUP

160-4919 **ENCLOSURE GP-HYDRAULIC TANK** *(contd.)* **i01437110**

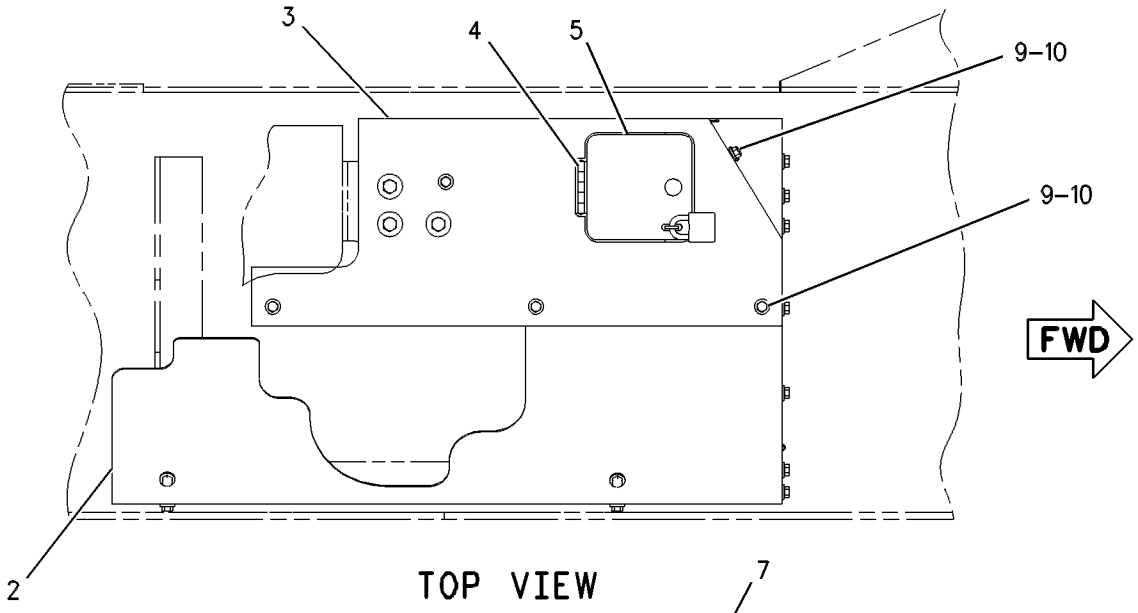

TOP VIEW

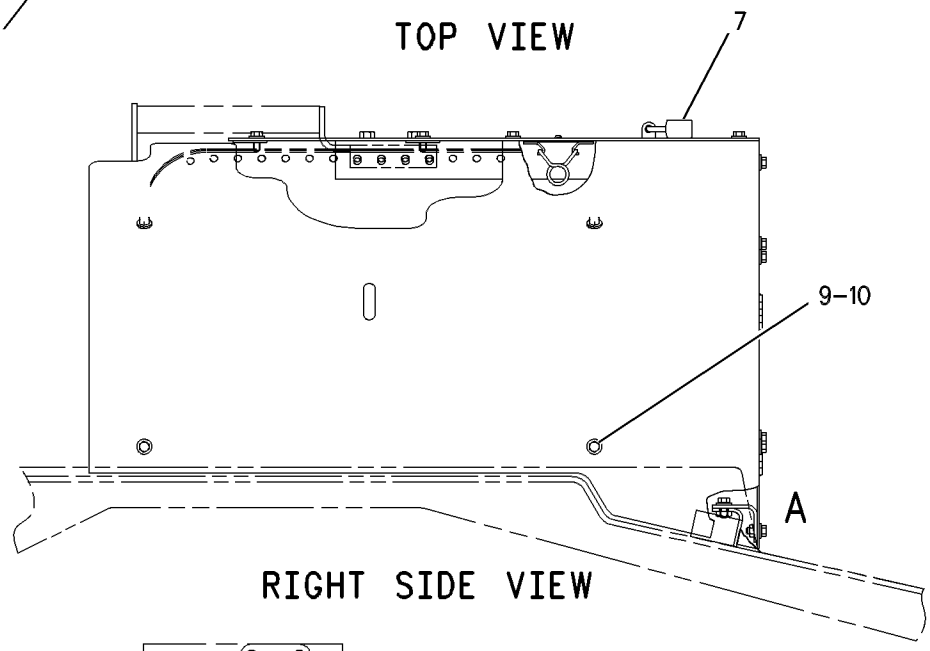

RIGHT SIDE VIEW

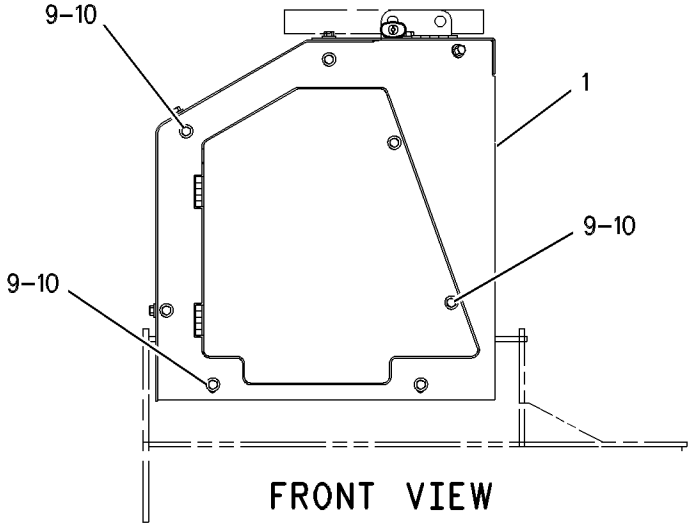

FRONT VIEW

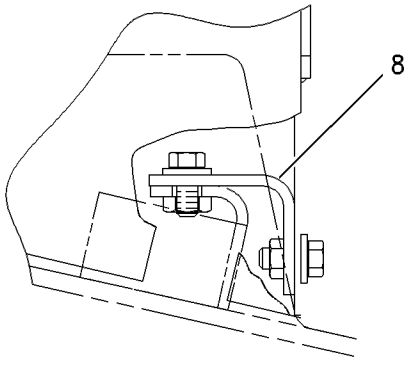

VIEW OF AREA A

GRAPHIC #1 g00529957

156-9662 FENDER GP

S/N: AKA1-UP

PART OF 157-0819 CHASSIS AR

SMCS-7252 **i01502164**

NOTE	REF NO	GRAPHIC REF	PART NUMBER	QTY	PART NAME 1 2 3 4 5 6 (PRODUCT LEVEL)	SEE PAGE
	1	1	**3W-3896**	2	HANDHOLD	
	2	1	**6J-0488**	18	SCREW-BUTTON HEAD (3/8-16X0.875 IN)	
	3	1	**172-5072**	1	PLATE AS-LH	
	4	1	**172-5074**	1	PLATE AS-RH	
	5	1	**9W-9122**	1	PLATE-RH	
	6	1	**134-3733**	2	PLATE	
	7	1	**156-3567**	1	PLATE AS	
		1	**9F-6445**	5	NUT-WELD (1/4-20 THD)	
	8	1	**156-3569**	1	PLATE AS	
	9	1	**156-9663**	1	FENDER AS-RH	
	10	1	**156-9664**	1	FENDER AS-LH	
	11	1	**157-3521**	1	SUPPORT AS	
	12	1	**4L-6454**	10	BOLT (3/8-16X1 IN)	
	13	1	**5C-6565**	4	BOLT (1/2-13X1.25 IN)	
	14	1	**5P-1075**	10	WASHER-HARD (10.2X22.5X3MM THK)	
	15	1	**5P-1076**	8	WASHER-HARD (13.5X30X4MM THK)	
	16	1	**5P-2566**	4	BOLT (1/2-13X1.5 IN)	
	17	1	**6Y-8557**	2	DOOR	
	18	1	**7X-0346**	8	BOLT (5/8-11X2 IN)	
	19	1	**7X-0349**	14	BOLT (5/8-11X3 IN)	
	20	1	**7X-0513**	6	WASHER-HARD (17X30X5MM THK)	
	21	1	**7X-0515**	22	WASHER-HARD (17X35X5MM THK)	
	22	1	**7X-0582**	8	WASHER-HARD (20X44.5X6MM THK)	
	23	1	**8C-4436**	6	BOLT (1/2-13X1.375 IN)	
	24	1	**8C-6857**	8	BOLT (3/4-10X2.75 IN)	
	25	1	**8E-8422**	1	COVER AS	
	26	1	**8T-4122**	4	WASHER-HARD (17X32X3.5MM THK)	
	27	1	**8T-4223**	6	WASHER-HARD (13.5X25.5X3MM THK)	
	28	1	**8T-9393**	4	BOLT (5/8-11X1.5 IN)	
	29	1	**9W-9123**	1	PLATE-LH	
	30	1	**8T-6871**	6	BOLT (5/8-11X2.50 IN)	

156-9662 **FENDER GP** ***(contd.)*** **i01502164**

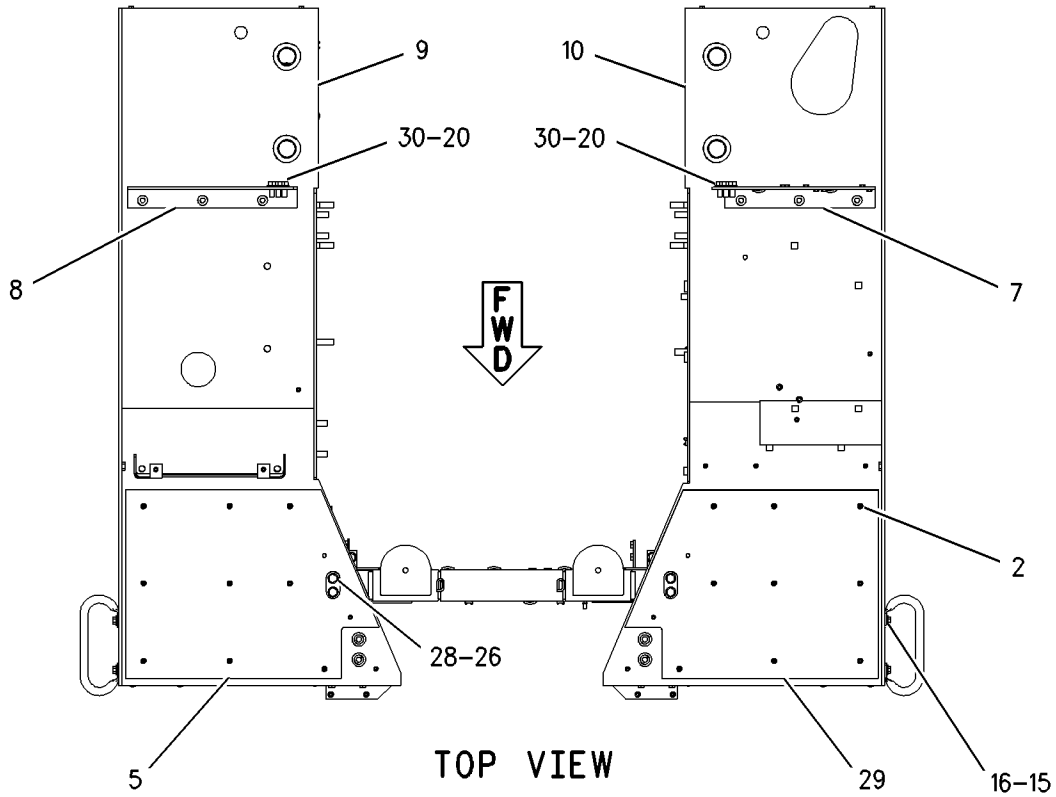

TOP VIEW

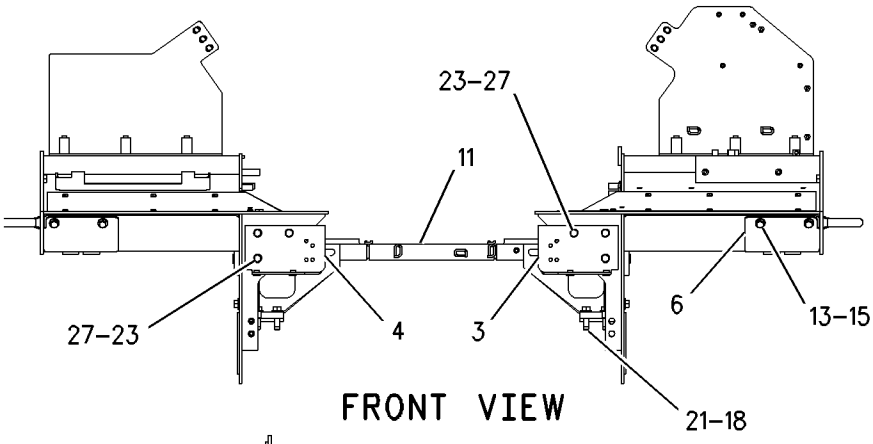

FRONT VIEW

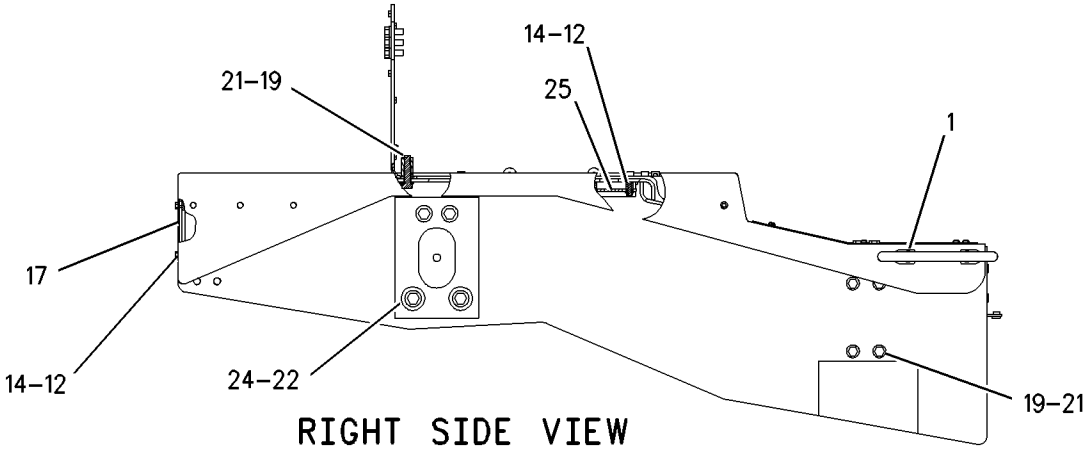

RIGHT SIDE VIEW

GRAPHIC #1 g00757472

FRAME AND BODY

115-9589 GRID GP-SAND BLAST ERODING

S/N: AKA1-UP

SMCS-7179 **i01253279**

NOTE	REF NO	GRAPHIC REF	PART NUMBER	QTY	PART NAME 1 2 3 4 5 6 (PRODUCT LEVEL)	SEE PAGE
	1	1	**137-4940**	2	PLATE	
	2	1	**115-9354**	1	BRACKET AS	
		1	**1F-0748**	4	NUT-WELD (1/2-13 THD)	
	3	1	**143-1265**	2	GRID AS-SAND BLAST	
	4	1	**113-6362**	1	BRACKET	
	5	1	**4L-6454**	12	BOLT (3/8-16X1 IN)	
	6	1	**5P-1075**	16	WASHER-HARD (10.2X22.5X3MM THK)	
	7	1	**6V-8801**	8	NUT (3/8-16 THD)	
	8	1	**5P-1076**	4	WASHER-HARD (13.5X30X4MM THK)	
	9	1	**8T-4896**	4	WASHER-HARD (10.2X18.5X2.5MM THK)	
	10	1	**5P-2566**	4	BOLT (1/2-13X1.5 IN)	

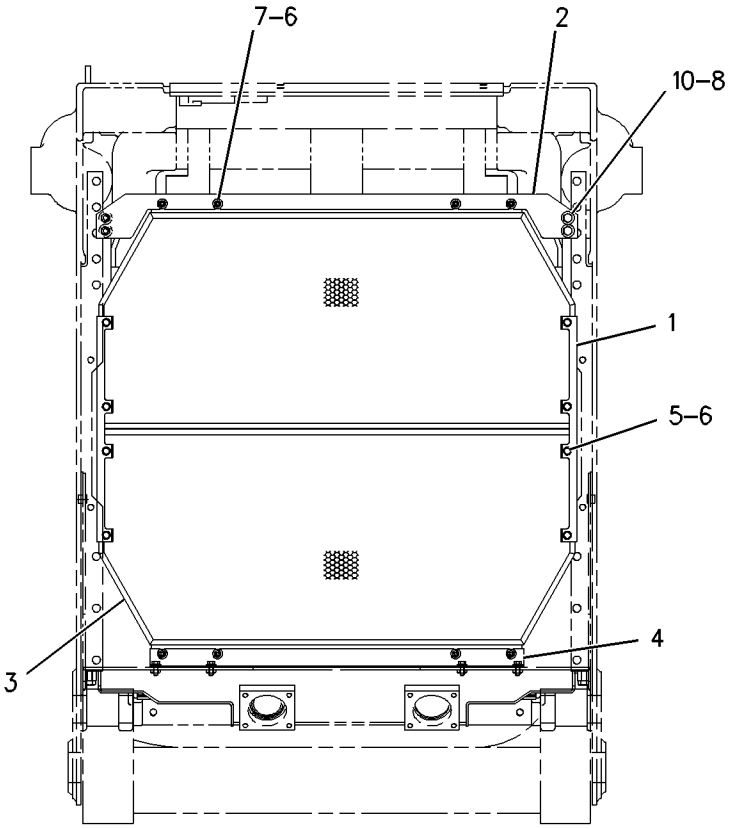

REAR VIEW

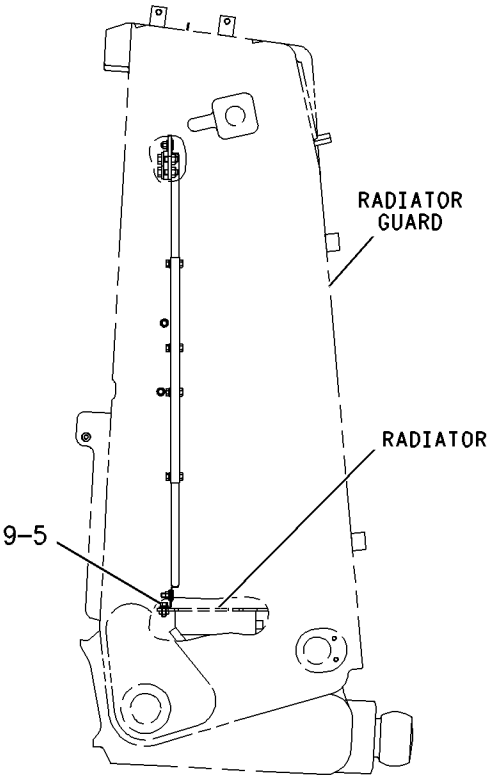

RIGHT SIDE VIEW

GRAPHIC #1 g00773459

108-4213 GRILL GP-RADIATOR

S/N: AKA1-UP
HEAVY DUTY

SMCS-7170 **i01441269**

NOTE	REF NO	GRAPHIC REF	PART NUMBER	QTY	PART NAME 1 2 3 4 5 6 (PRODUCT LEVEL)	SEE PAGE
	1	1	**108-4215**	1	GRILL AS-RH	
	2	1	**108-4214**	1	GRILL AS-LH	
	3	1	**5P-2424**	8	BOLT (1/2-13X2.25 IN)	
	4	1	**5P-1076**	8	WASHER-HARD (13.5X30X4MM THK)	

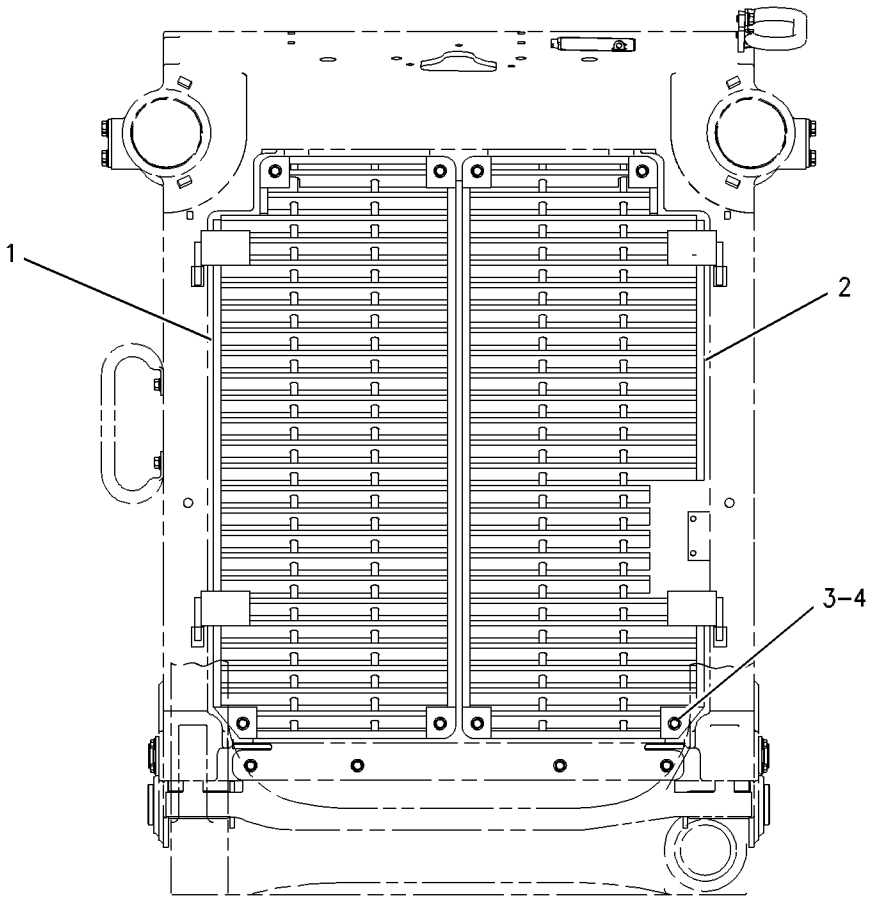

FRONT VIEW

GRAPHIC #1 g00526820

118-7442 GRILL GP-RADIATOR

S/N: AKA1-UP

PART OF 143-7722 DISPOSAL AR-WASTE, 143-7740 WOODCHIP AR

SMCS-7170 **i01223754**

NOTE	REF NO	GRAPHIC REF	PART NUMBER	QTY	PART NAME 1 2 3 4 5 6 (PRODUCT LEVEL)	SEE PAGE
	1	1	**120-6538**	1	GRILL AS-LH	
	2	1	**068-5893**	2	SPACER	
	3	1	**120-6539**	1	GRILL AS-RH	
	4	1	**2G-6741**	2	PLATE	
	5	1	**068-5893**	2	SPACER	
B	6	1	**1Q-3677**	12	SHIM (3MM THK)	
	7	1	**133-5615**	1	PAWL-BOTTOM	
	8	1	**8T-8920**	2	BOLT (1/2-13X3.25IN)	
	9	1	**1Z-9455**	2	PLATE	
	10	1	**8Y-4000**	2	LATCH AS (T-BAR/COMPARTMENT)	
					(EACH INCLUDES)	
		1	**6H-3956**	1	PIN	
		1	**7X-0766**	1	SPRING-LATCH	
		1	**8Y-3966**	1	WASHER (1.57MM THK)	
		1	**8Y-3998**	1	HANDLE-LATCH	
		1	**8Y-3999**	1	BRACKET-MOUNTING	
		1	**8Y-8306**	1	SHAFT-LATCH	
	11	1	**8T-2502**	4	BOLT (3/8-16X1.125IN)	
	12	1	**8T-4896**	4	WASHER-HARD (2.5MM THK)	
	13	1	**2K-4973**	4	LOCKNUT (3/8-16 THD)	
	14	1	**133-5616**	1	PAWL-TOP	
	15	1	**8T-4223**	10	WASHER-HARD (3MM THK)	
	16	1	**8T-9496**	4	LOCKNUT (9/16-18 THD)	
	17	1	**5P-2566**	8	BOLT (1/2-13X1.50 IN)	
	18	1	**109-3874**	4	HINGE AS	

B-USE AS REQUIRED

118-7442 **GRILL GP-RADIATOR** *(contd.)* **i01223754**

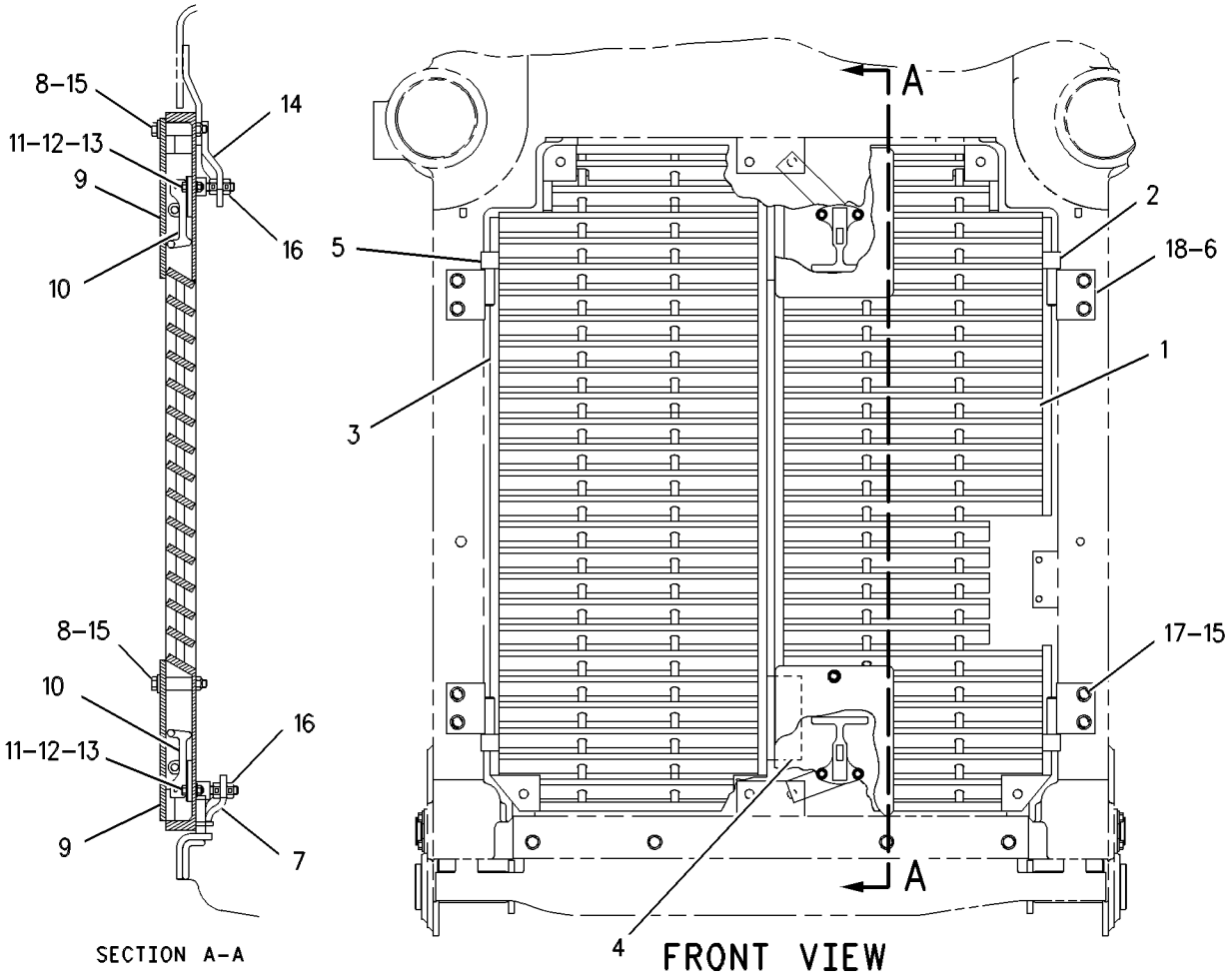

GRAPHIC #1 g00512729

143-7767 GUARD AR-BOTTOM

S/N: AKA1-UP

SMCS-7051, 7153 **i01488578**

NOTE	REF NO	GRAPHIC REF	PART NUMBER	QTY	PART NAME 1 2 3 4 5 6 (PRODUCT LEVEL)	SEE PAGE
	1	1	**3T-2747**	14	RETAINER	
	2	1	**7G-6495**	1	COVER	
B	3	1	**7K-1181**	14	STRAP-CABLE	
	4	2	**9W-1085**	1	GUARD AS	
		2	**1F-0750**	1	NUT-WELD (3/8-16 THD)	
Y	5	1	**102-6331**	2	ACTUATOR GP-POWER (BOTTOM GUARDS)	372
	6	3	**107-6174**	1	COVER AS	
Y	7	1	*112-8117*	1	CONTROL AS-REMOTE (POWERED BOTTOM GUARDS)	390
	8	2	**143-7768**	1	HARNESS AS (POWERED BOTTOM GUARD)	
		2	**102-8802**	1	KIT-RECEPTACLE (2 PIN)	
					(INCLUDES RECEPTACLE AS & WEDGE)	
		2	**102-8805**	1	KIT-RECEPTACLE (6 PIN)	
					(INCLUDES RECEPTACLE AS & WEDGE)	
	9	2	**163-5744**	1	GUARD AS	
		2	**8T-5912**	2	NUT-WELD (3/8-16 THD)	
	10	2	**163-5745**	1	GUARD AS	
		2	**112-1500**	1	PLATE AS	
Y	11	2	*187-0428*	1	CASE & FRAME GP	380
	12	2	**191-8283**	3	PIN	
	13	1	**1K-6872**	4	LOCKNUT (1/2-13 THD)	
	14	2	**3B-4640**	3	COTTER	
	15	3	**5P-1075**	2	WASHER-HARD (10.2X22.5X3MM THK)	
	16	1	**6V-8182**	14	NUT (3/4-10 THD)	
	17	1	**7X-0326**	4	BOLT (1/2-13X3 IN)	
	18	2	**7X-0365**	6	BOLT (3/4-10X1.5 IN)	
	19	1	**7X-0375**	12	BOLT (3/4-10X5 IN)	
	20	1,2	**7X-0582**	21	WASHER-HARD (20X44.5X6MM THK)	
	21	2	**8C-6913**	6	WASHER-HARD (24X41.5X4MM THK)	
	22	1	**8C-8842**	2	BOLT (3/4-10X4 IN)	
	23	1,3	**9B-7237**	3	BOLT (3/8-16X1.25 IN)	
BD	24	3	**5P-5649**		SEAL	
BD	25	3	**5P-7513**		SEAL	
BE	26	1	**7X-7898**		TRIM	

B-USE AS REQUIRED
D-ORDER BY THE METER
E-ORDER BY THE CENTIMETER
Y-SEPARATE ILLUSTRATION

143-7767 **GUARD AR-BOTTOM** *(contd.)* **i01488578**

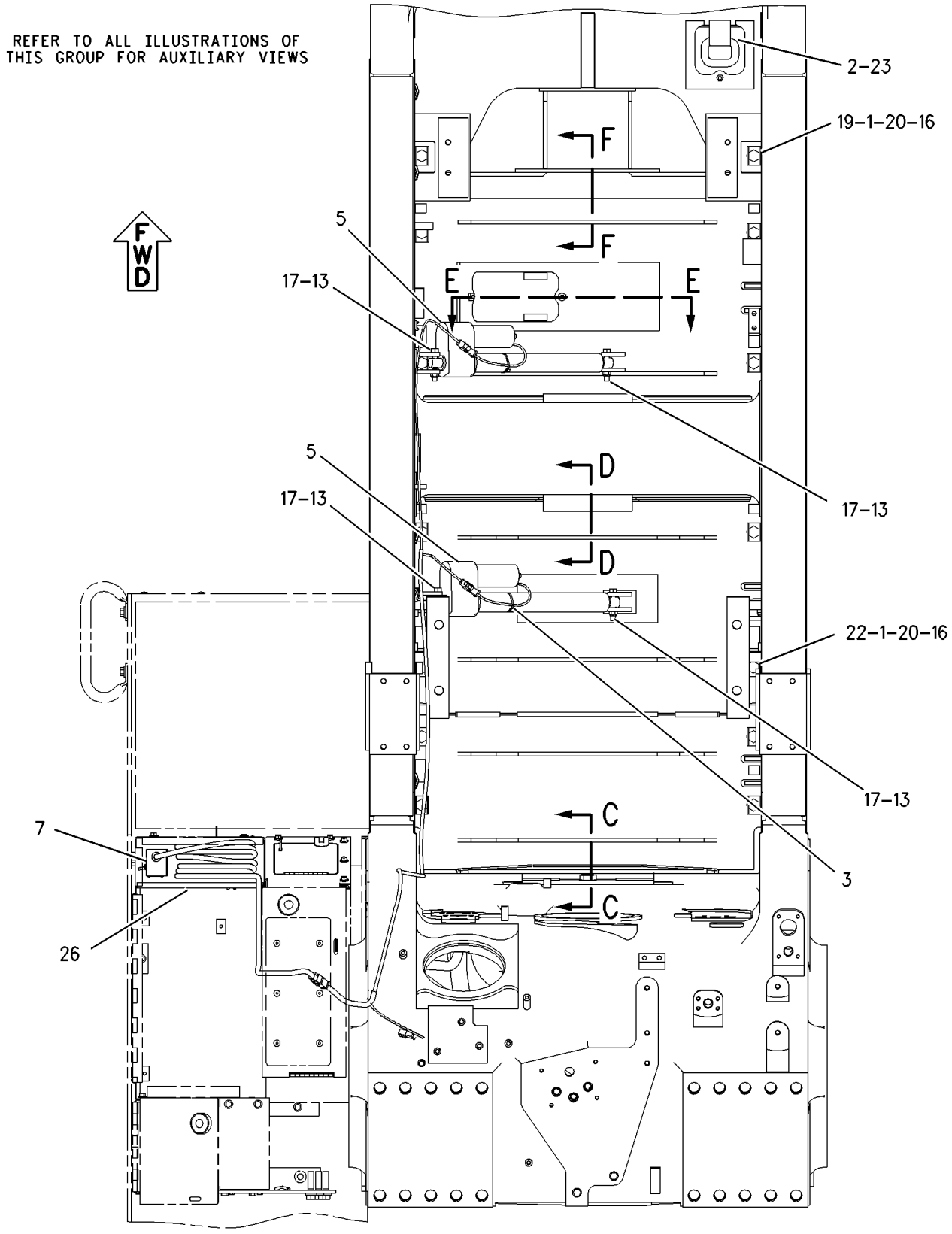

TOP VIEW

GRAPHIC #1 g00741000

REFER TO ALL ILLUSTRATIONS OF
THIS GROUP FOR AUXILIARY VIEWS

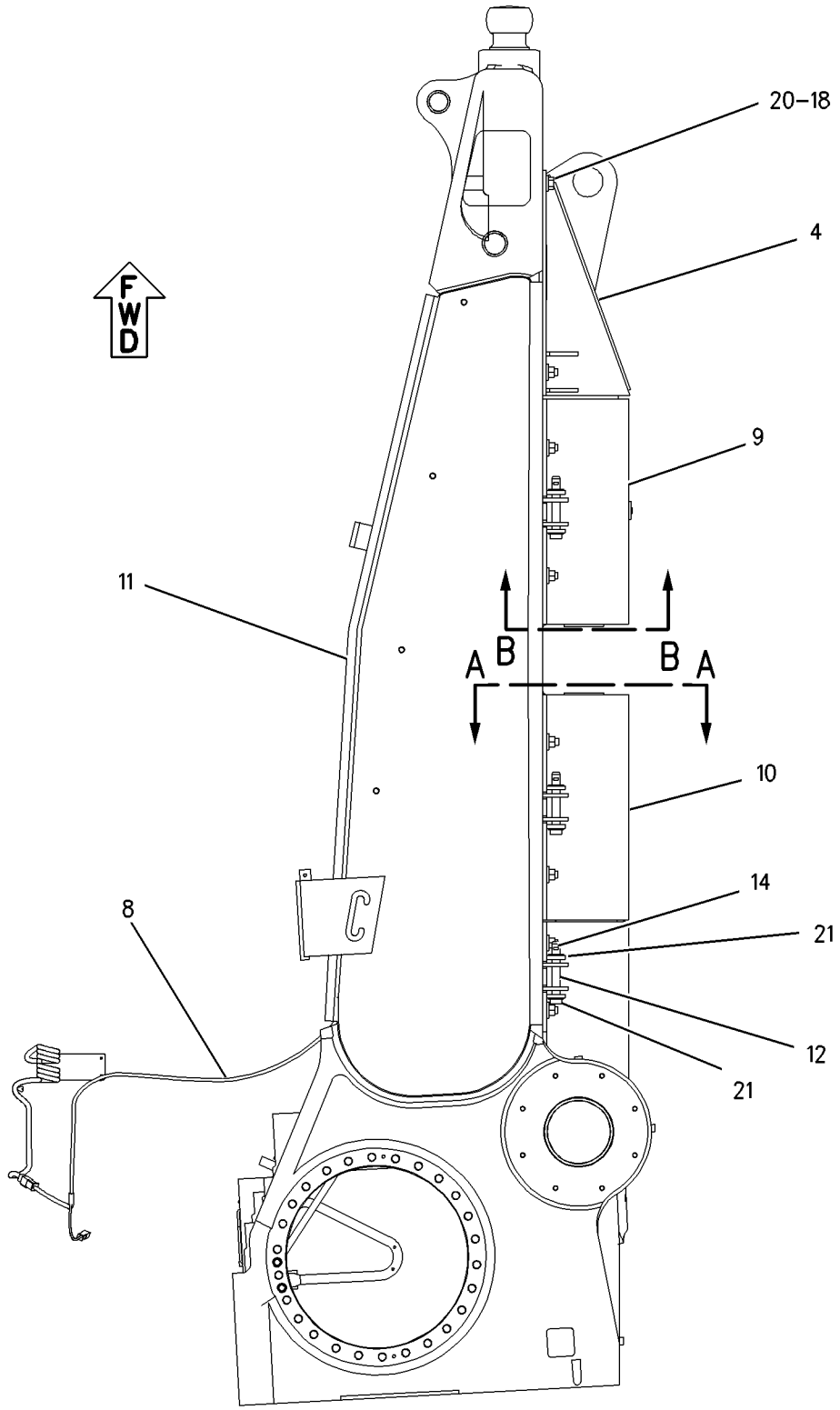

RIGHT SIDE VIEW

GRAPHIC #2 g00743726

143-7767 **GUARD AR-BOTTOM** *(contd.)* **i01488578**

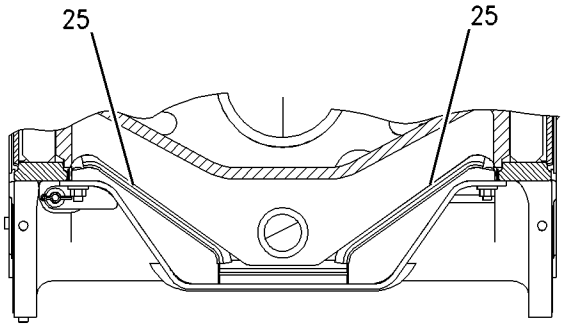

SECTION A-A

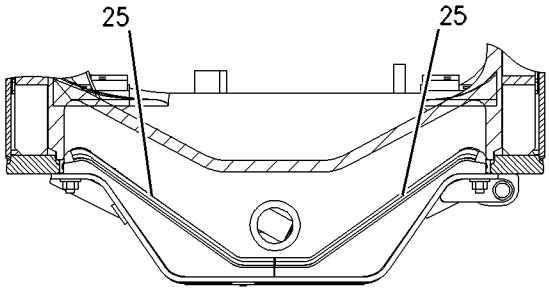

SECTION B-B

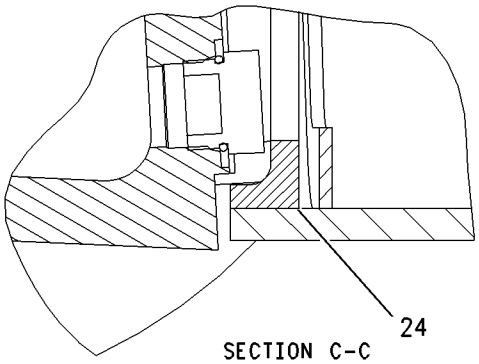

SECTION C-C

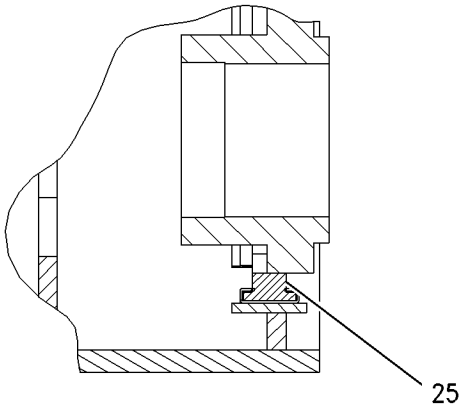

SECTION D-D

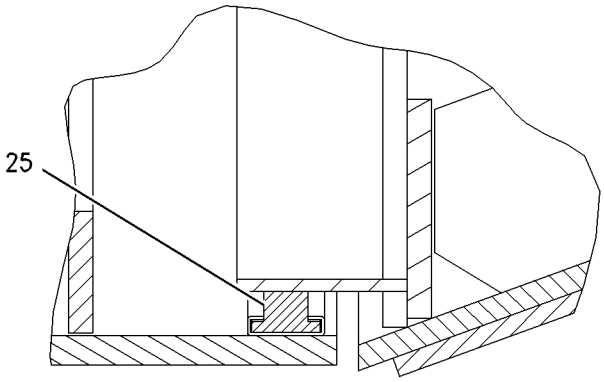

SECTION F-F

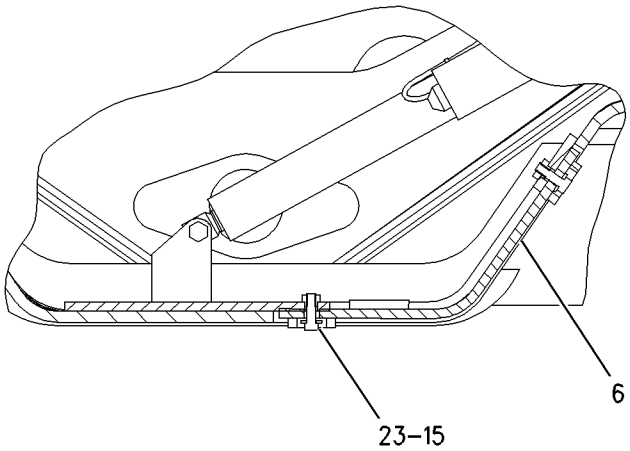

SECTION E-E

GRAPHIC #3

g00741002

FRAME AND BODY

159-8838 GUARD AR-FINAL DRIVE

S/N: AKA1-UP

PART OF 143-7721 DISPOSAL AR-WASTE

SMCS-7172 **i01478690**

NOTE	PART NUMBER	QTY	PART NAME 1 2 3 4 5 6 (PRODUCT LEVEL)	SEE PAGE
Y	**159-7941**	2	FINAL DRIVE GP	318

Y-SEPARATE ILLUSTRATION

FRAME AND BODY

166-4427 GUARD AR-IDLER

S/N: AKA1-UP
NON-SUSPENDED
PART OF 199-0818 DISPOSAL AR-WASTE

SMCS-4159 **i01434407**

NOTE	PART NUMBER	QTY	PART NAME 1 2 3 4 5 6 (PRODUCT LEVEL)	SEE PAGE
Y	**166-4420**	4	IDLER GP-TRACK	488

Y-SEPARATE ILLUSTRATION

166-4428 GUARD AR-IDLER

S/N: AKA1-UP
SUSPENDED
PART OF 143-7721 DISPOSAL AR-WASTE

SMCS-4159 **i01241775**

NOTE	PART NUMBER	QTY	PART NAME 1 2 3 4 5 6 (PRODUCT LEVEL)	SEE PAGE
Y	**166-3323**	2	IDLER GP-TRACK	487
Y	**166-4420**	2	IDLER GP-TRACK	488

Y-SEPARATE ILLUSTRATION

MEMORANDA

118-7441 GUARD AS-RADIATOR

S/N: AKA1-UP

PART OF 143-7722 DISPOSAL AR-WASTE, 143-7740 WOODCHIP AR

SMCS-7155 **i01233248**

NOTE	REF NO	GRAPHIC REF	PART NUMBER	QTY	PART NAME 1 2 3 4 5 6 (PRODUCT LEVEL)	SEE PAGE
	1	1	**3J-7189**	2	BEARING	
	2	1	**5J-8118**	2	BEARING	
	3	1	**6Y-5812**	2	BEARING	
	4	1	**9P-1779**	4	BEARING-SLEEVE	
	5	1	**120-6537**	1	GUARD AS-RADIATOR	
	6	1	**1Q-2980**	1	BAR	
	7	1	**109-3873**	4	BLOCK	
	8	1	**1F-0748**	2	NUT-WELD (1/2-13 THD)	
	9	1	**1F-0750**	6	NUT-WELD (3/8-16 THD)	
	10	1	**3J-5169**	2	NUT (5/8-11 THD)	
	11	1	**3T-6034**	1	PLATE	
	12	1	**7T-1099**	5	LINK	
	13	1	**8G-0794**	2	BAR	
	14	1	**8T-5911**	4	NUT-WELD (1/2-13 THD)	
	15	1	**8T-5912**	3	NUT-WELD (3/8-16 THD)	
	16	1	**9B-2052**	1	HINGE	

118-7441 **GUARD AS-RADIATOR** *(contd.)* **i01233248**

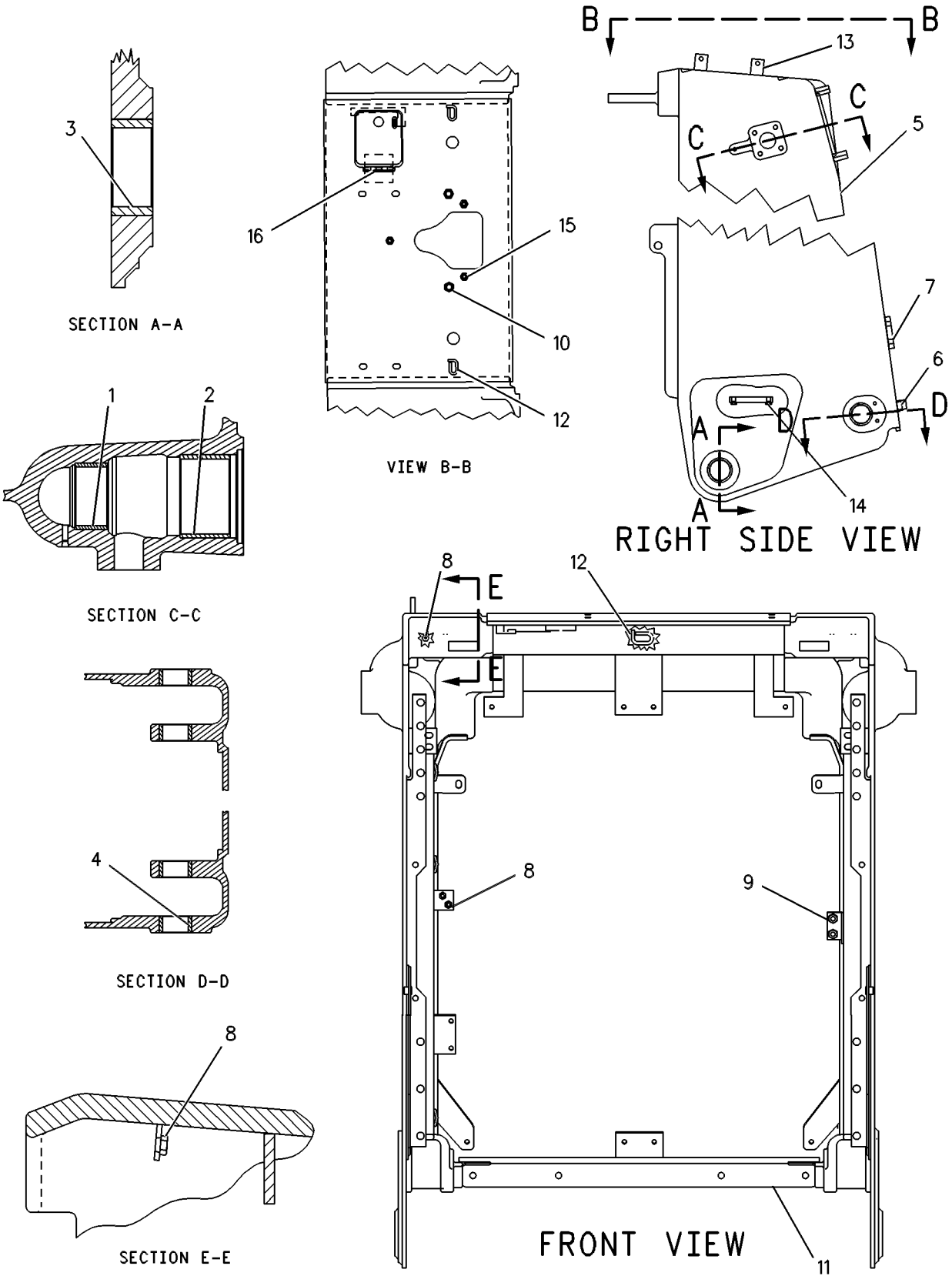

GRAPHIC #1 g00296582

159-3878 GUARD GP-BOTTOM

S/N: AKA1-UP

PART OF 157-0819 CHASSIS AR

SMCS-7153 **i01219410**

NOTE	REF NO	GRAPHIC REF	PART NUMBER	QTY	PART NAME 1 2 3 4 5 6 (PRODUCT LEVEL)	SEE PAGE
	1	1	**3T-2747**	14	RETAINER	
	2	1	**7G-6495**	1	COVER	
	3	1	**7J-0252**	3	PIN	
	4	1	**7T-4000**	1	GUARD AS	
		1	**1F-0750**	1	NUT-WELD (3/8-16 THD)	
		1	**3T-9310**	1	PLATE	
	5	1	**107-6174**	1	COVER AS	
	6	1	**159-3879**	1	GUARD AS	
		1	**1F-0750**	2	NUT-WELD (3/8-16 THD)	
	7	1	**159-3880**	1	GUARD AS	
	8	1	**159-3881**	1	GUARD AS	
	9	1	**3B-4629**	3	PIN-COTTER	
	10	1	**5P-1075**	2	WASHER-HARD (3MM THK)	
	11	1	**6V-8182**	4	NUT (3/4-10 THD)	
	12	1	**7X-0365**	6	BOLT (3/4-10X1.50IN)	
	13	1	**8T-8925**	12	BOLT (3/4-10X4.75IN)	
	14	1	**7X-0582**	20	WASHER-HARD (6MM THK)	
	15	1	**7X-0594**	6	WASHER-HARD (3MM THK)	
	16	1	**8C-8842**	2	BOLT (3/4-10X4.0IN)	
	17	1	**9B-7237**	3	BOLT (3/8-16X1.25IN)	

159-3878 **GUARD GP-BOTTOM** *(contd.)* **i01219410**

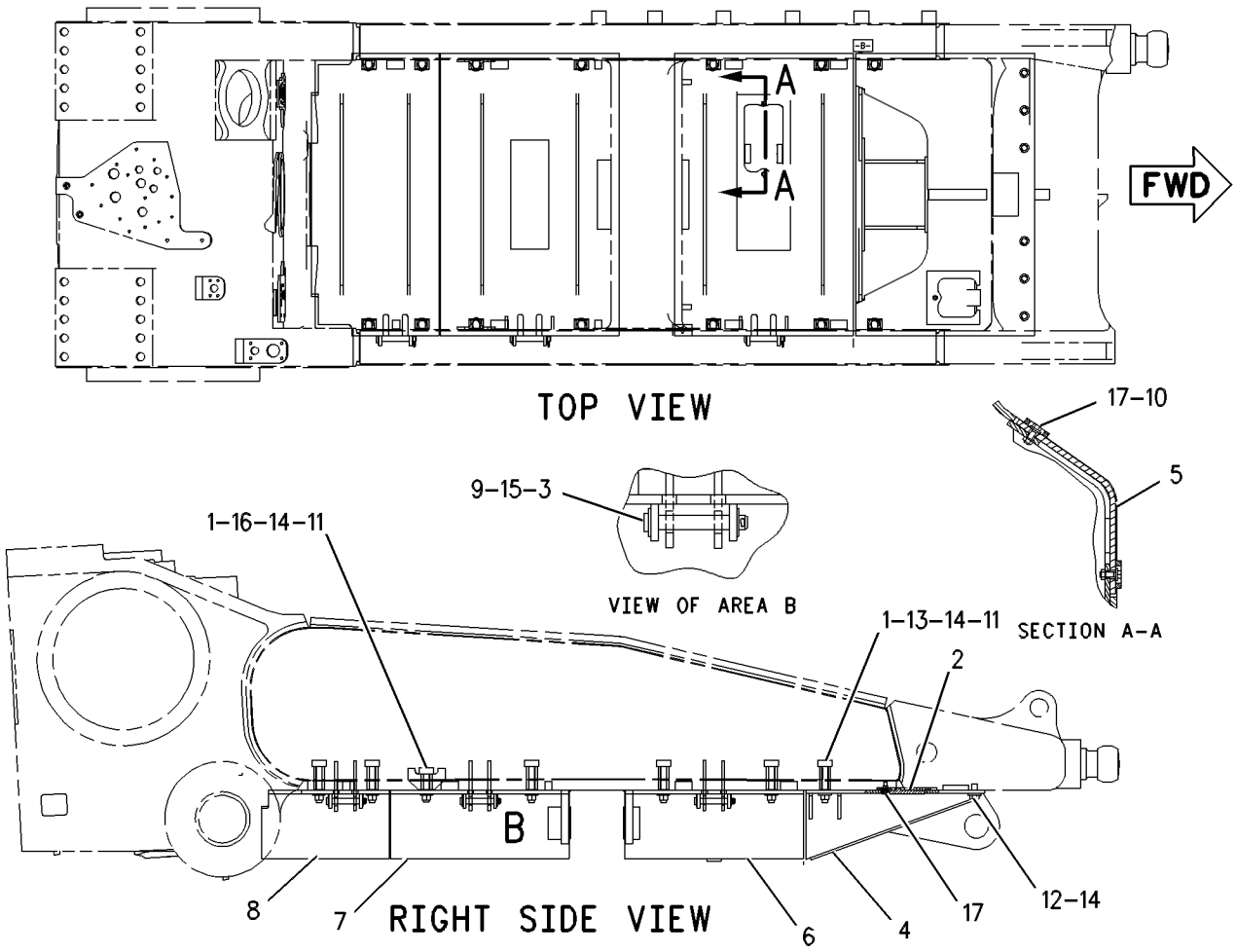

GRAPHIC #1 g00495195

FRAME AND BODY

159-5984 GUARD GP-BOTTOM

S/N: AKA1-UP
HEAVY DUTY
PART OF 143-7722 DISPOSAL AR-WASTE

SMCS-7153 **i01223776**

NOTE	REF NO	GRAPHIC REF	PART NUMBER	QTY	PART NAME 1 2 3 4 5 6 (PRODUCT LEVEL)	SEE PAGE
	1	1	**3T-2747**	14	RETAINER	
	2	1	**7G-6495**	1	COVER	
	3	1	**7J-0252**	3	PIN	
	4	1	**9W-1085**	1	GUARD AS	
		1	**1F-0750**	1	NUT-WELD (3/8-16 THD)	
	5	2	**107-6174**	1	COVER AS	
	6	1	**159-5977**	1	GUARD AS	
	7	1	**159-5978**	1	GUARD AS	
	8	1	**159-5979**	1	GUARD AS	
		1	**8T-5912**	2	NUT-WELD (3/8-16 THD)	
	9	1	**1K-6870**	14	LOCKNUT (3/4-10 THD)	
	10	1	**3B-4629**	3	PIN-COTTER	
	11	2	**5P-1075**	2	WASHER-HARD (3MM THK)	
	12	1	**7X-0365**	6	BOLT (3/4-10X1.50IN)	
	13	1	**7X-0582**	20	WASHER-HARD (6MM THK)	
	14	1	**7X-0594**	6	WASHER-HARD (3MM THK)	
	15	1	**8C-8842**	2	BOLT (3/4-10X4.0IN)	
	16	1	**8T-8925**	12	BOLT (3/4-10X4.75IN)	
	17	1,2	**9B-7237**	3	BOLT (3/8-16X1.25IN)	
BD	18	2	**5P-5649**		SEAL	
D	19	2	**5P-7513**	2	SEAL (.44M EACH)	
D	20	2	**5P-7513**		SEAL (1.17M)	
D	21	2	**5P-7513**	2	SEAL (.86M EACH)	
D	22	2	**5P-7513**		SEAL (.28M)	
D	23	2	**5P-7513**		SEAL (1.17M)	

B-USE AS REQUIRED
D-ORDER BY THE METER

159-5984 **GUARD GP-BOTTOM** *(contd.)* **i01223776**

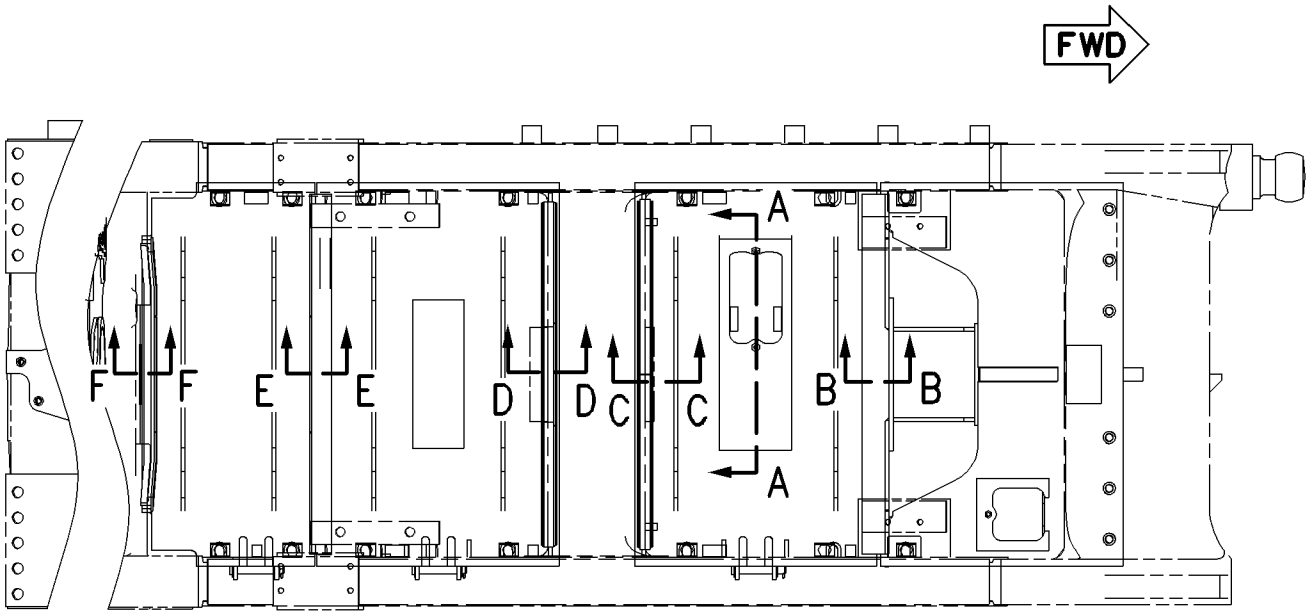

TOP VIEW

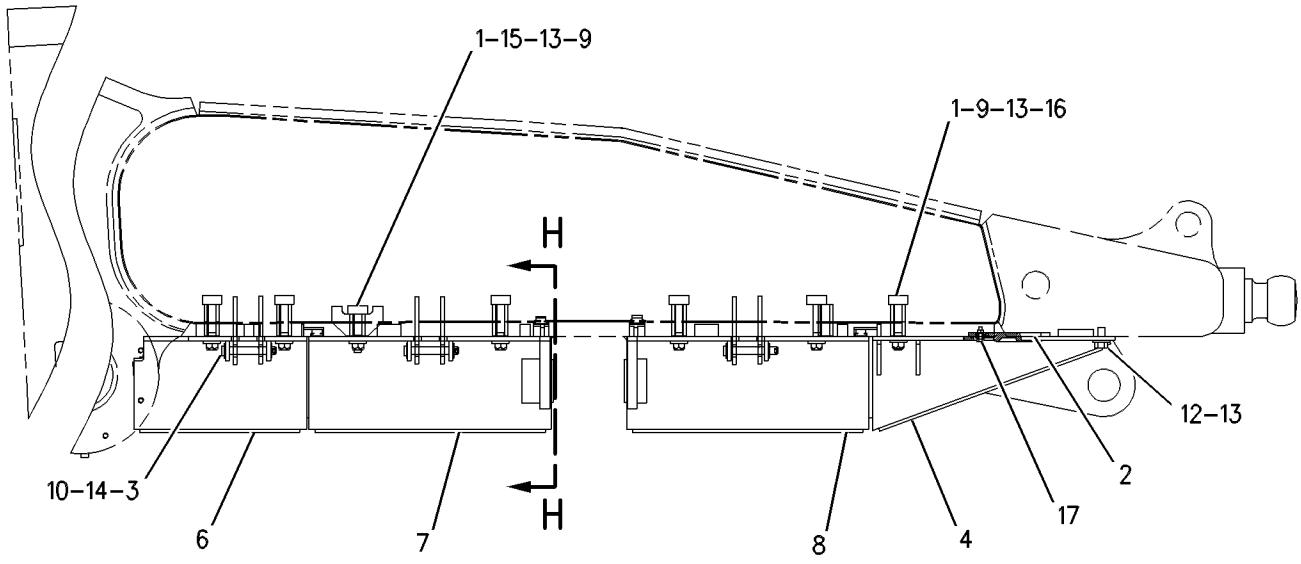

RIGHT SIDE VIEW

REFER TO ALL ILLUSTRATIONS OF
THIS GROUP FOR AUXILIARY VIEWS

GRAPHIC #1 g00602780

159-5984 **GUARD GP-BOTTOM** *(contd.)* **i01223776**

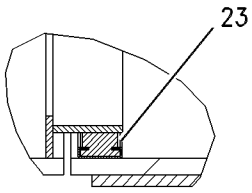

SECTION E-E

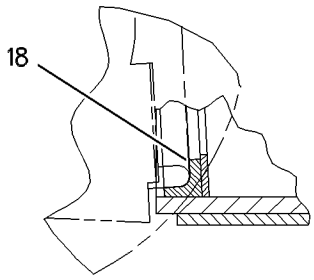

SECTION F-F

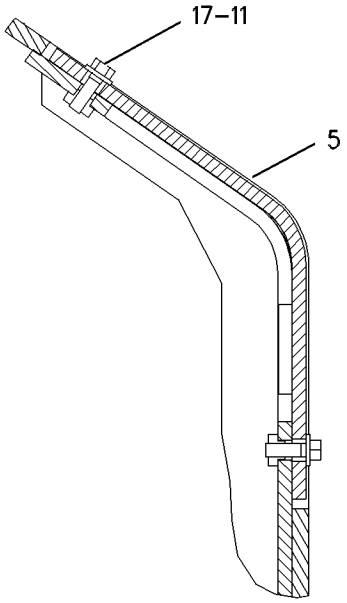

SECTION A-A

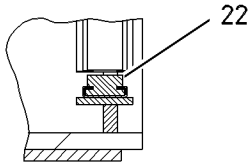

SECTION D-D

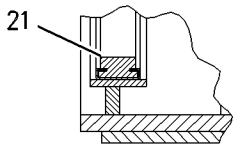

SECTION C-C

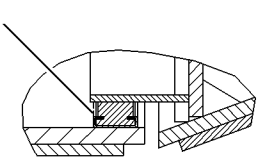

SECTION B-B

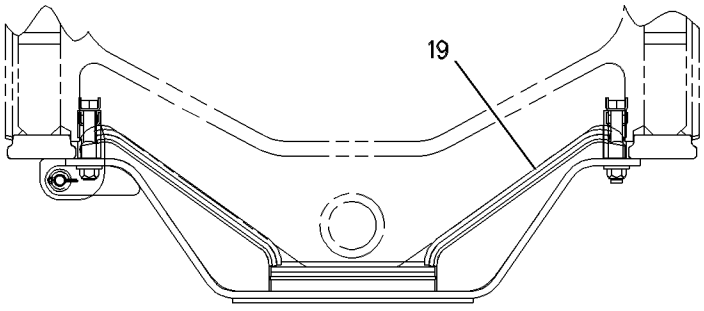

VIEW H-H

GRAPHIC #2 g00602783

FRAME AND BODY

138-3143 GUARD GP-FINAL DRIVE

S/N: AKA1-UP

SMCS-7172 **i01488440**

NOTE	REF NO	GRAPHIC REF	PART NUMBER	QTY	PART NAME 1 2 3 4 5 6 (PRODUCT LEVEL)	SEE PAGE
	1	1	**137-4485**	2	TUBE AS	
	2	1	**137-4486**	2	TUBE AS	
	3	1	**9S-1351**	52	BOLT (7/8-9X5 IN)	
	4	1	**5P-8249**	52	WASHER-HARD (24X41.5X4MM THK)	
	5	1	**6J-2515**	8	BOLT-12 POINT HEAD	

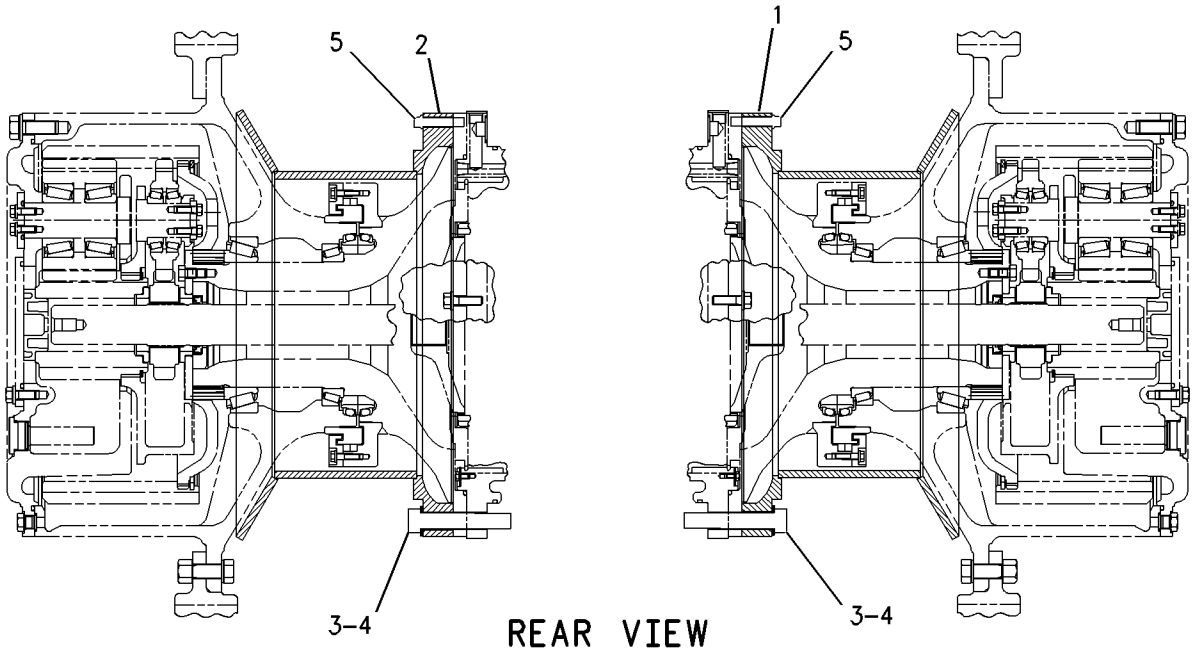

GRAPHIC #1 g00697485

164-7867 GUARD GP-FUEL TANK

S/N: AKA1-UP

SMCS-1273 **i01489013**

NOTE	REF NO	GRAPHIC REF	PART NUMBER	QTY	PART NAME 1 2 3 4 5 6 (PRODUCT LEVEL)	SEE PAGE
	1	1	**6Y-4520**	1	BRACKET	
	2	1	**8E-3013**	2	PLATE AS	
					(EACH INCLUDES)	
		1	**8T-5911**	3	NUT-WELD (1/2-13 THD)	
		1	**8V-2640**	3	SPACER	
	3	1	**198-8998**	1	FILM (RH SIDE)(D8R)	
	4	1	**123-5869**	1	FILM-STRIPE (REAR)(RH SIDE)	
	5	1	**123-5870**	1	FILM-STRIPE (REAR)(LH SIDE)	
	6	1	**164-9325**	1	GUARD AS-RH	
	7	1	**165-0117**	1	GUARD	
	8	1	**165-0121**	2	BLOCK	
	9	1	**165-1675**	1	PLATE AS	
		1	**8T-5911**	2	NUT-WELD (1/2-13 THD)	
	10	1	**190-0085**	1	BRACKET	
	11	1	**190-0089**	1	PLATE AS	
		1	**8T-5911**	2	NUT-WELD (1/2-13 THD)	
	12	1	**190-1686**	1	GUARD AS-LH	
	13	1	**198-8999**	1	FILM (LH SIDE)(D8R)	
	14	1	**199-4068**	1	GUARD AS-REAR	
		1	**8T-5911**	4	NUT-WELD (1/2-13 THD)	
	15	1	**4L-9337**	4	BOLT (3/8-16X1.5 IN)	
	16	1	**5P-1076**	56	WASHER-HARD (13.5X30X4MM THK)	
	17	1	**5P-2566**	2	BOLT (1/2-13X1.5 IN)	
	18	1	**6V-8188**	8	NUT (1/2-13 THD)	
	19	1	**8C-4436**	32	BOLT (1/2-13X1.375 IN)	
	20	1	**8T-2561**	8	WASHER-HARD (10.5X28.5X5MM THK)	
	21	1	**8T-4835**	6	BOLT (1/2-13X2 IN)	
	22	1	**8T-8917**	8	BOLT (1/2-13X1.25 IN)	

164-7867 **GUARD GP-FUEL TANK** *(contd.)* **i01489013**

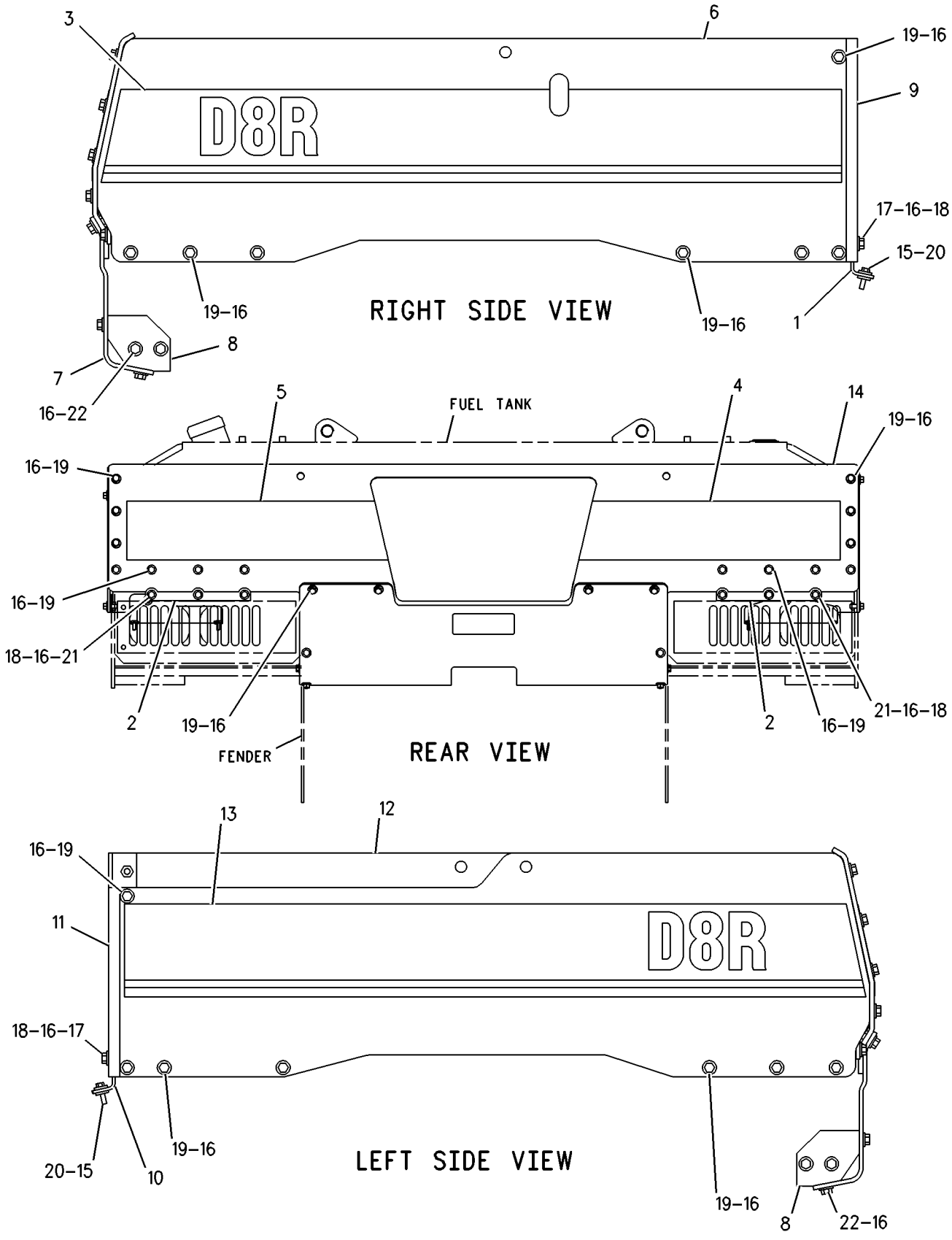

GRAPHIC #1 g00758277

164-8389 GUARD GP-FUEL TANK

S/N: AKA1-UP
WITH RIPPER

SMCS-1273 **i01489017**

NOTE	REF NO	GRAPHIC REF	PART NUMBER	QTY	PART NAME 1 2 3 4 5 6 (PRODUCT LEVEL)	SEE PAGE
	1	1	**6Y-4520**	1	BRACKET	
	2	1	**8E-3013**	2	PLATE AS	
					(EACH INCLUDES)	
		1	**8T-5911**	3	NUT-WELD (1/2-13 THD)	
		1	**8V-2640**	3	SPACER	
	3	1	**198-8998**	1	FILM (RH SIDE)(D8R)	
	4	1	**123-5869**	1	FILM-STRIPE (REAR)(RH SIDE)	
	5	1	**123-5870**	1	FILM-STRIPE (REAR)(LH SIDE)	
	6	1	**164-7868**	1	GUARD	
	7	1	**164-9325**	1	GUARD AS-RH	
	8	1	**165-0121**	2	BLOCK	
	9	1	**165-1675**	1	PLATE AS	
		1	**8T-5911**	2	NUT-WELD (1/2-13 THD)	
	10	1	**190-0085**	1	BRACKET	
	11	1	**190-0089**	1	PLATE AS	
	12	1	**190-1686**	1	GUARD AS-LH	
	13	1	**198-8999**	1	FILM (LH SIDE)(D8R)	
	14	1	**199-4068**	1	GUARD AS-REAR	
		1	**8T-5911**	4	NUT-WELD (1/2-13 THD)	
	15	1	**4L-9337**	4	BOLT (3/8-16X1.5 IN)	
	16	1	**5P-1076**	56	WASHER-HARD (13.5X30X4MM THK)	
	17	1	**5P-2566**	2	BOLT (1/2-13X1.5 IN)	
	18	1	**6V-8188**	8	NUT (1/2-13 THD)	
	19	1	**8C-4436**	32	BOLT (1/2-13X1.375 IN)	
	20	1	**8T-2561**	8	WASHER-HARD (10.5X28.5X5MM THK)	
	21	1	**8T-4835**	6	BOLT (1/2-13X2 IN)	
	22	1	**8T-8917**	8	BOLT (1/2-13X1.25 IN)	

164-8389 **GUARD GP-FUEL TANK** *(contd.)* **i01489017**

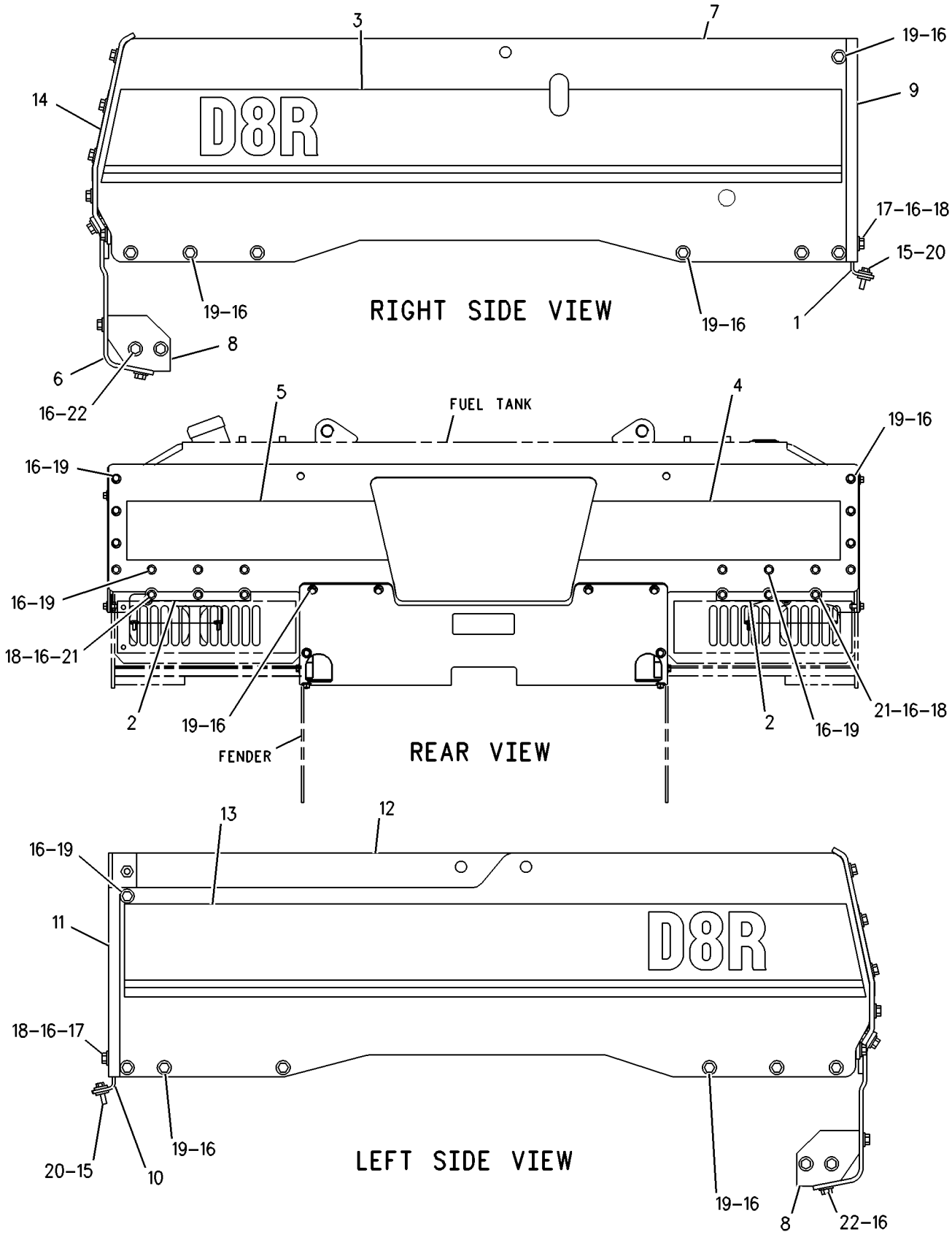

GRAPHIC #1 g00758319

FRAME AND BODY

156-5700 GUARD GP-IDLER

S/N: AKA1-UP

CANNOT BE USED WITH STANDARD TRACK ROLLER FRAME AS.

SMCS-4159 **i01488609**

NOTE	REF NO	GRAPHIC REF	PART NUMBER	QTY	PART NAME 1 2 3 4 5 6 (PRODUCT LEVEL)	SEE PAGE
	1	1	**155-2742**	4	GUARD AS	
	2	1	**155-2754**	4	PLATE	
	3	1	**163-2415**	4	GUARD AS	
	4	1	**8T-6871**	12	BOLT (5/8-11X2.50 IN)	
	5	1	**8T-4122**	24	WASHER-HARD (17X32X3.5MM THK)	
	6	1	**7X-0345**	12	BOLT (5/8-11X1.75 IN)	

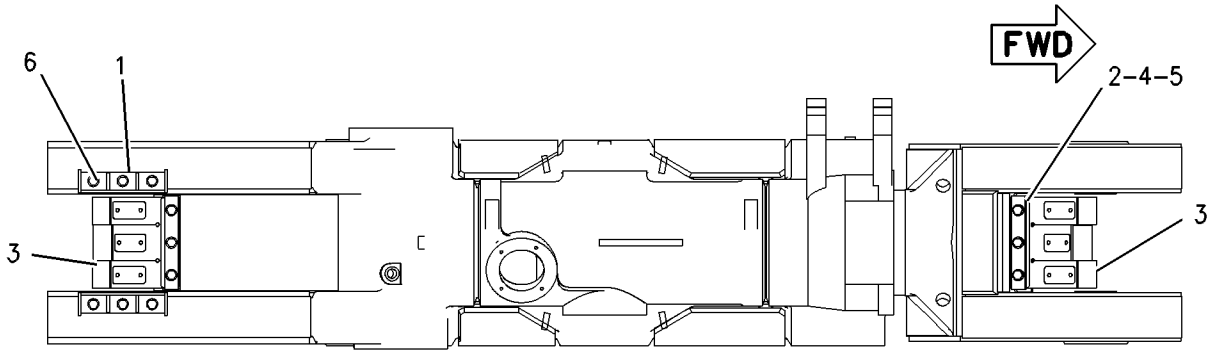

TOP VIEW

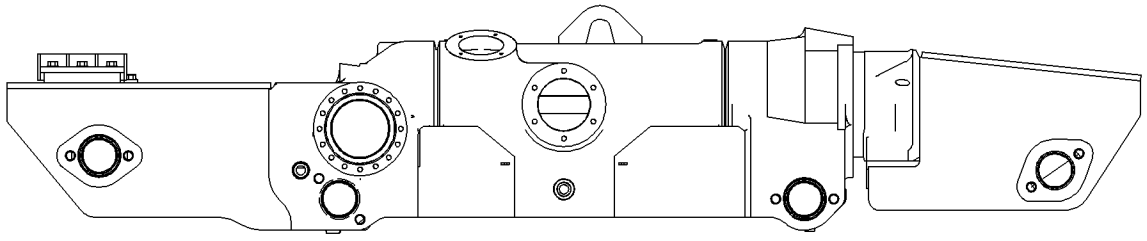

RIGHT SIDE VIEW

GRAPHIC #1 g00763669

MEMORANDA

FRAME AND BODY

105-9803 GUARD GP-RADIATOR

S/N: AKA1-UP

PART OF 157-0819 CHASSIS AR

SMCS-7155 **i01502165**

NOTE	REF NO	GRAPHIC REF	PART NUMBER	QTY	PART NAME 1 2 3 4 5 6 (PRODUCT LEVEL)	SEE PAGE
	1	1	**2B-0176**	2	CAP	
	2	1	**108-4211**	1	DOOR AS-RH	
	3	1	**108-4210**	1	DOOR AS-LH	
					(EACH DOOR AS INCLUDES)	
		1	**4J-6727**	1	PLATE	
	4	1	**8T-9389**	8	BOLT (1/2-13X2.75 IN)	
	5	1	**8T-4223**	23	WASHER-HARD (13.5X25.5X3MM THK)	
	6	1	**5M-6214**	2	PLUG-PIPE	
	7	1	**8T-8917**	2	BOLT (1/2-13X1.25 IN)	
Y	8	1	*124-7562*	1	STEP GP	457
	9	1	**5P-2566**	3	BOLT (1/2-13X1.5 IN)	
	10	1	**9N-4622**	2	PIN	
	11	1	**165-8084**	2	WASHER (20.5X75X10MM THK)	
	12	1	**1K-6870**	2	LOCKNUT	
		1	**165-7637**	2	BOLT-SOCKET HEAD (3/4-10X7.5 IN)	
	13	1	**3B-4615**	4	PIN-COTTER	
	14	1	**197-3604**	1	PLATE AS	
	15	1	**7X-0346**	2	BOLT (5/8-11X2 IN)	
	16	1	**3W-3896**	2	HANDHOLD	
	17	1	**5G-9974**	2	GASKET	
	17A	1	**5G-9973**	2	COVER	
	18	1	**9W-2822**	2	ROD	
	19	1	**5C-6565**	8	BOLT (1/2-13X1.25 IN)	
	20	1	**5P-2228**	2	BOLT (1/2-13X1 IN)	
	21	1	**9U-9229**	2	PIN	
	22	1	**4L-6454**	4	BOLT (3/8-16X1 IN)	
	23	1	**5P-1075**	4	WASHER-HARD (10.2X22.5X3MM THK)	
	24	1	**178-7517**	2	PLATE	
	25	1	**108-4217**	1	GUARD AS	
		1	**8F-9836**	1	BOSS-THREADED (3/8-16X19MM THD)	
		1	**1F-0748**	2	NUT-WELD (1/2-13 THD)	
		1	**1F-0750**	6	NUT-WELD (3/8-16 THD)	
		1	**3J-5169**	2	NUT (5/8-11 THD)	
		1	**7T-1099**	3	LINK	
		1	**8G-0794**	2	BAR	
		1	**8T-5911**	15	NUT-WELD (1/2-13 THD)	
		1	**8T-5912**	10	NUT-WELD (3/8-16 THD)	
		1	**9B-2052**	1	HINGE	
	26	1	**3J-7189**	2	BEARING-SLEEVE	
	27	1	**5J-8118**	2	BEARING-SLEEVE	
	28	1	**9P-1779**	4	BEARING-SLEEVE	
	29	1	**6Y-5812**	2	BEARING-SLEEVE	
	30	1	**5P-8502**	1	PADLOCK GP	
A		1	**5P-8500**	1	KEY	
A		1	**8Y-6364**	1	SLEEVE	
	31	1	**158-0518**	2	PLATE	
	32	1	**1A-0458**	4	BOLT (3/4-10X1.75IN)	
	33	1	**5P-8248**	4	WASHER-HARD (20X36.5X3.5MM THK)	
	34	1	**8T-4994**	4	WASHER-HARD (20X36.5X3.5MM THK)	
	35	1	**8T-4121**	4	WASHER-HARD (11X21X2.5MM THK)	
	36	1	**194-6030**	2	SPACER (17X30X12MM THK)	
	37	1	**3V-9244**	2	WASHER (16.5X50X5MM THK)	

A-NOT PART OF THIS GROUP
Y-SEPARATE ILLUSTRATION

105-9803 **GUARD GP-RADIATOR** *(contd.)* **i01502165**

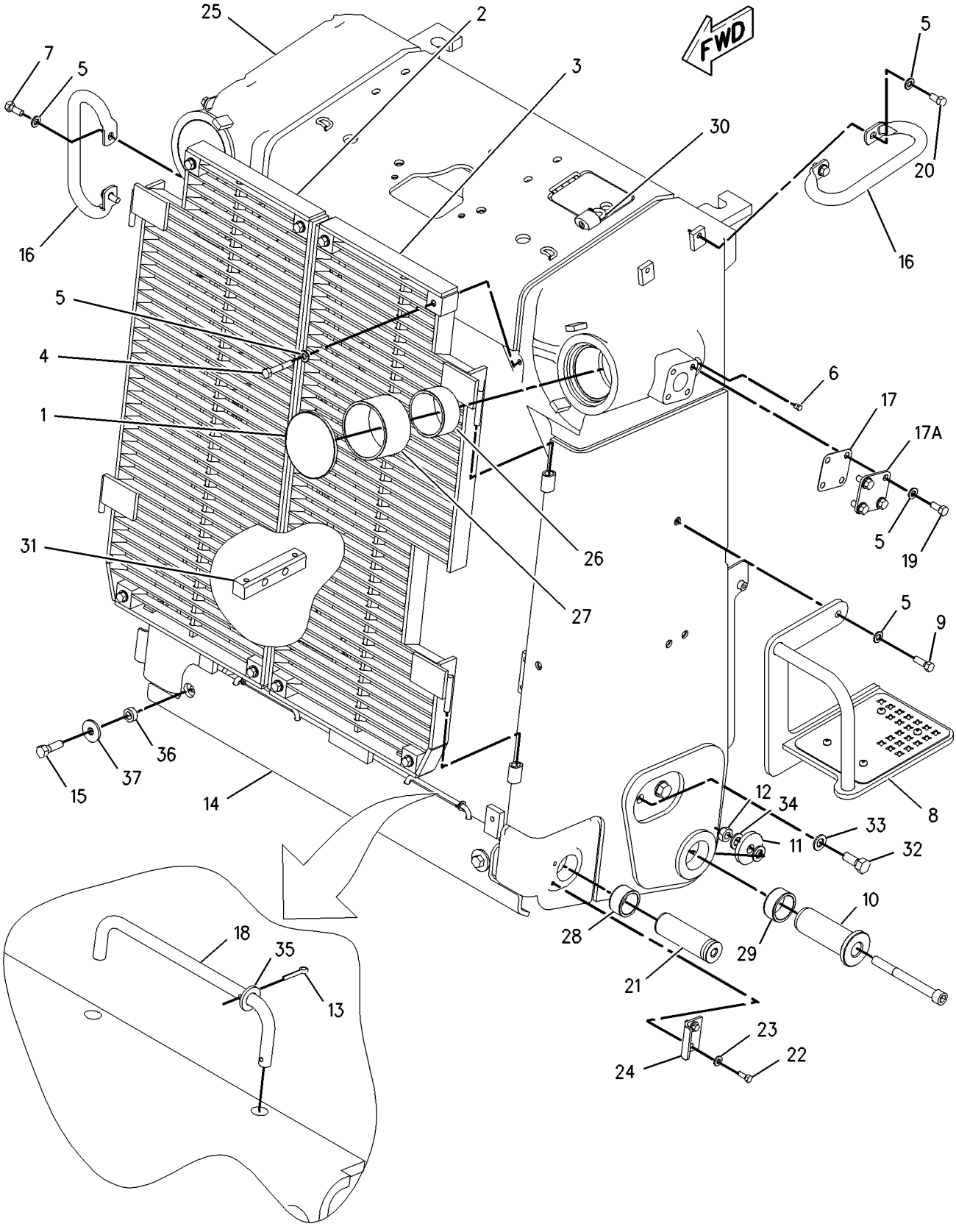

GRAPHIC #1 g00771584

FRAME AND BODY

7T-5611 GUARD GP-REAR

S/N: AKA1-UP

SMCS-7187 **i01459911**

NOTE	REF NO	GRAPHIC REF	PART NUMBER	QTY	PART NAME 1 2 3 4 5 6 (PRODUCT LEVEL)	SEE PAGE
	1	1	**7T-5156**	1	DOOR AS	
	2	1	**7P-7427**	1	HINGE	
	3	1	**7T-5067**	1	KNOB AS	
	4	1	**3H-6660**	1	PIN-SPRING	
	5	1	**8T-4223**	2	WASHER-HARD (13.5X25.5X3MM THK)	
	6	1	**9S-8230**	1	PLATE AS	
	7	1	**4H-1641**	1	PIN-SPRING	
	8	1	**7T-5159**	1	GUARD AS	
	9	1	**7X-0427**	4	BOLT (1-1/4-7X3.50 IN)	
	10	1	**7X-0533**	4	WASHER-HARD (34X55X6MM THK)	
	11	1	**7T-5147**	4	SPACER	
	12	1	**5P-2228**	2	BOLT (1/2-13X1 IN)	

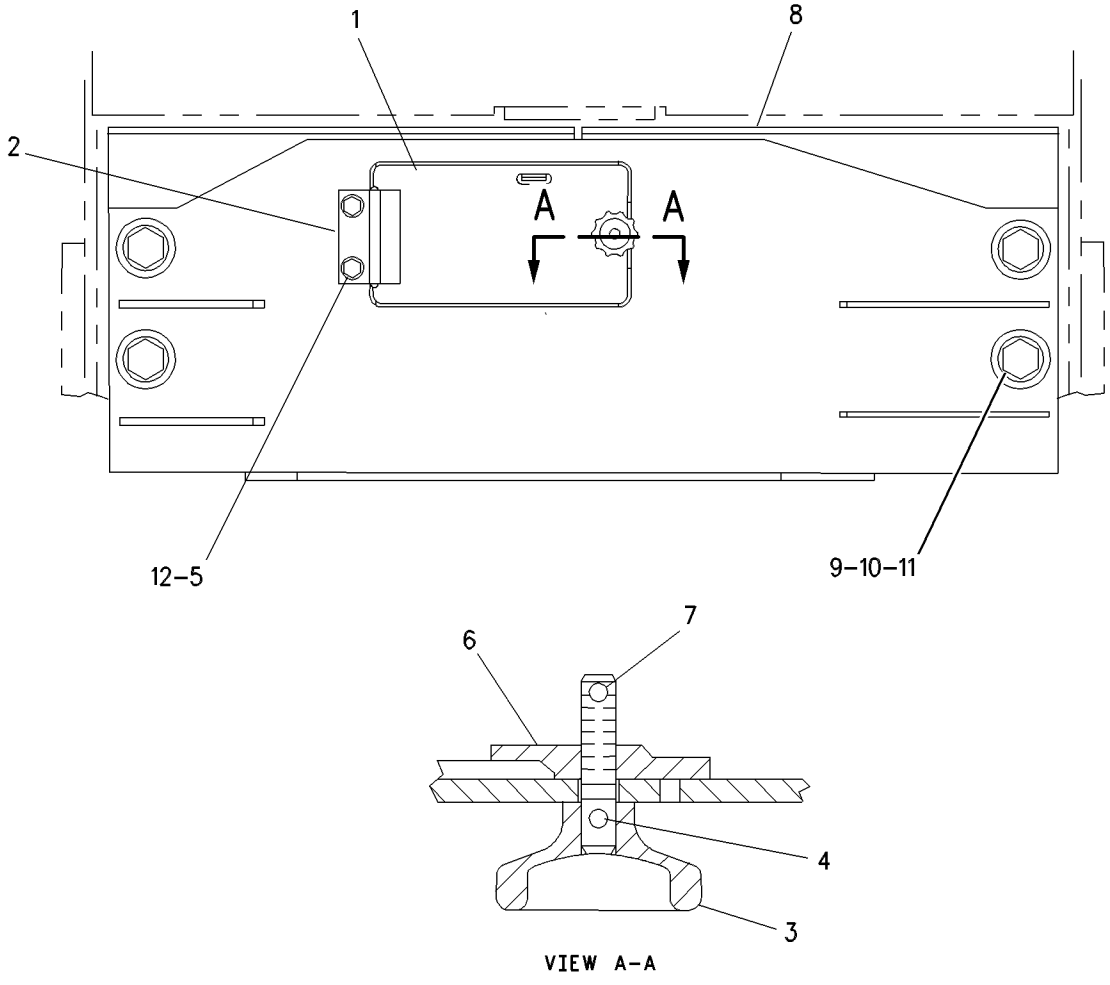

GRAPHIC #1 g00656062

1Z-0746 GUARD GP-SEAL

S/N: AKA1-UP
PIVOT SHAFT
PART OF 143-7722 DISPOSAL AR-WASTE

SMCS-7150 **i01223692**

NOTE	REF NO	GRAPHIC REF	PART NUMBER	QTY	PART NAME 1 2 3 4 5 6 (PRODUCT LEVEL)	SEE PAGE
	1	1	**1Q-3302**	4	GUARD AS	
	2	1	**7X-0328**	16	BOLT (1/2-13X3.50IN)	
		1	**8T-4223**	16	WASHER-HARD (3MM THK)	
	3	1	**7V-0762**	16	SPACER	

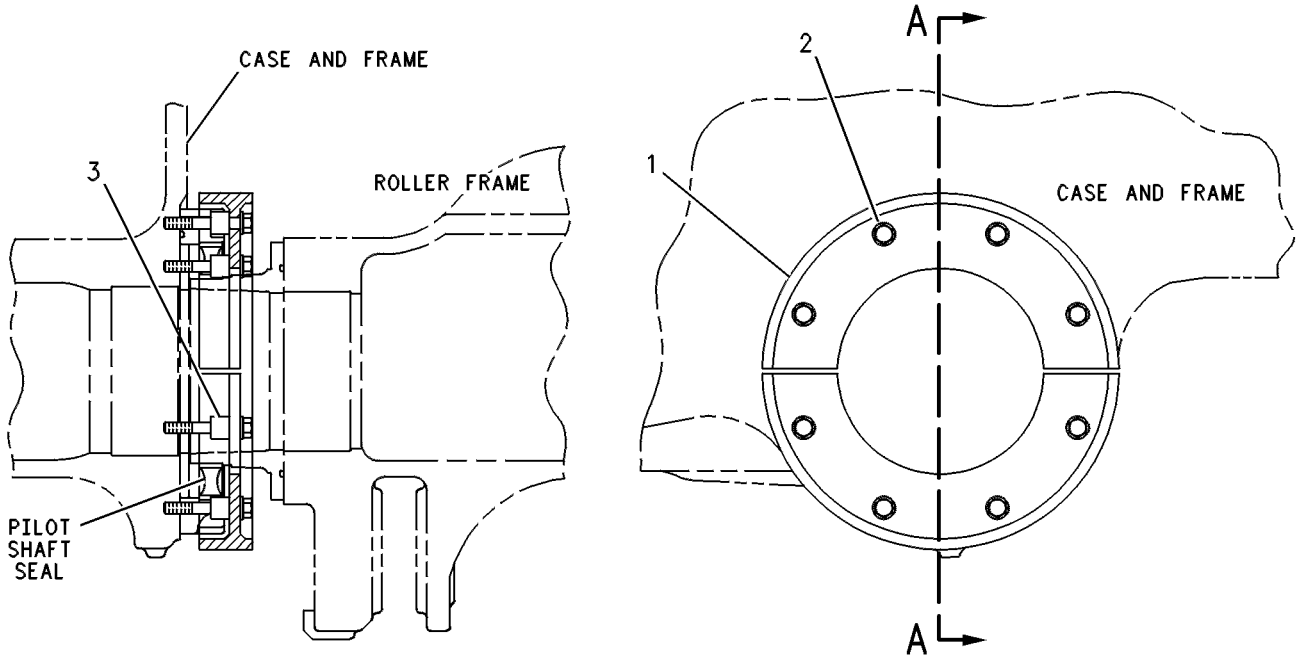

SECTION A-A

RH PROFILE VIEW

GRAPHIC #1 g00246469

6Y-4005 GUARD GP-TRACK ROLLER

S/N: AKA1-UP

SMCS-7152 **i01478832**

NOTE	REF NO	GRAPHIC REF	PART NUMBER	QTY	PART NAME 1 2 3 4 5 6 (PRODUCT LEVEL)	SEE PAGE
	1	1	**7X-0383**	16	BOLT (7/8-9X2.75IN)	
		1	**3P-8283**	16	SPACER	
	2	1	**6Y-4006**	16	GUARD AS	
	3	1	**8C-4436**	32	BOLT (1/2-13X1.375 IN)	
		1	**8T-4223**	32	WASHER-HARD (13.5X25.5X3MM THK)	

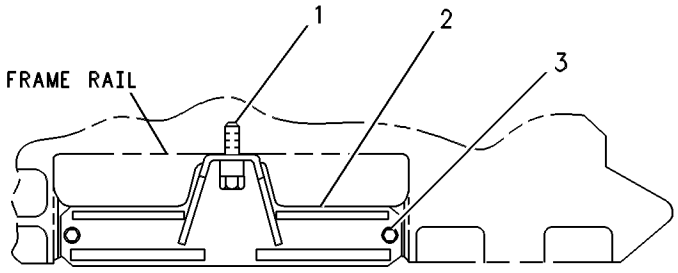

GRAPHIC #1 g00254951

MEMORANDA

FRAME AND BODY

157-0264 HOOD & GUARD GP

S/N: AKA1-UP

PART OF 157-0819 CHASSIS AR

SMCS-7251 **i01434569**

NOTE	REF NO	GRAPHIC REF	PART NUMBER	QTY	PART NAME 1 2 3 4 5 6 (PRODUCT LEVEL)	SEE PAGE
	1	1	**160-2416**	1	HOOD AS	
		1	**1F-0748**	7	NUT-WELD (1/2-13 THD)	
		1	**1F-0750**	4	NUT-WELD (3/8-16 THD)	
		1	**3J-5169**	1	NUT (5/8-11 THD)	
	2	1	**5P-1075**	20	WASHER-HARD (10.2X22.5X3MM THK)	
	3	1	**114-2538**	1	PLATE-LH	
	4	1	**6T-9927**	2	SLIDE	
	5	1	**6T-9929**	2	PLATE	
	6	1	**7X-0328**	4	BOLT (1/2-13X3.50 IN)	
	7	1	**5P-1076**	4	WASHER-HARD (13.5X30X4MM THK)	
	8	1	**6T-9928**	2	PLATE	
	9	1	**164-5963**	1	PLATE AS	
		1	**1F-0750**	6	NUT-WELD (3/8-16 THD)	
	10	1	**8T-4897**	4	WASHER (10.2X35X6MM THK)	
	11	1	**9P-3066**	2	MOUNTING	
	12	1	**6P-8269**	1	WASHER (20.5X88X6MM THK)	
	13	1	**8T-9396**	1	BOLT (5/8-11X3.25 IN)	
	14	1	**7X-0515**	9	WASHER-HARD (17X35X5MM THK)	
	15	1	**7X-0344**	8	BOLT (5/8-11X1.375 IN)	
	16	1	**160-2418**	1	PLATE AS-RH	
		1	**1F-0750**	8	NUT-WELD (3/8-16 THD)	
	17	1	**160-2419**	1	PLATE AS-LH	
		1	**1F-0750**	8	NUT-WELD (3/8-16 THD)	
	18	1	**164-5959**	1	PLATE AS	
		1	**1F-0750**	6	NUT-WELD (3/8-16 THD)	
	19	1	**9X-8266**	2	WASHER (10.2X56.5X6MM THK)	
	20	1	**8T-2502**	2	BOLT (3/8-16X1.125 IN)	
	21	1	**114-0408**	1	PLATE-RH	
	22	1	**4L-6454**	24	BOLT (3/8-16X1 IN)	
D	23	1	**5P-7211**		SEAL (1M)	

D-ORDER BY THE METER

157-0264 **HOOD & GUARD GP** *(contd.)* **i01434569**

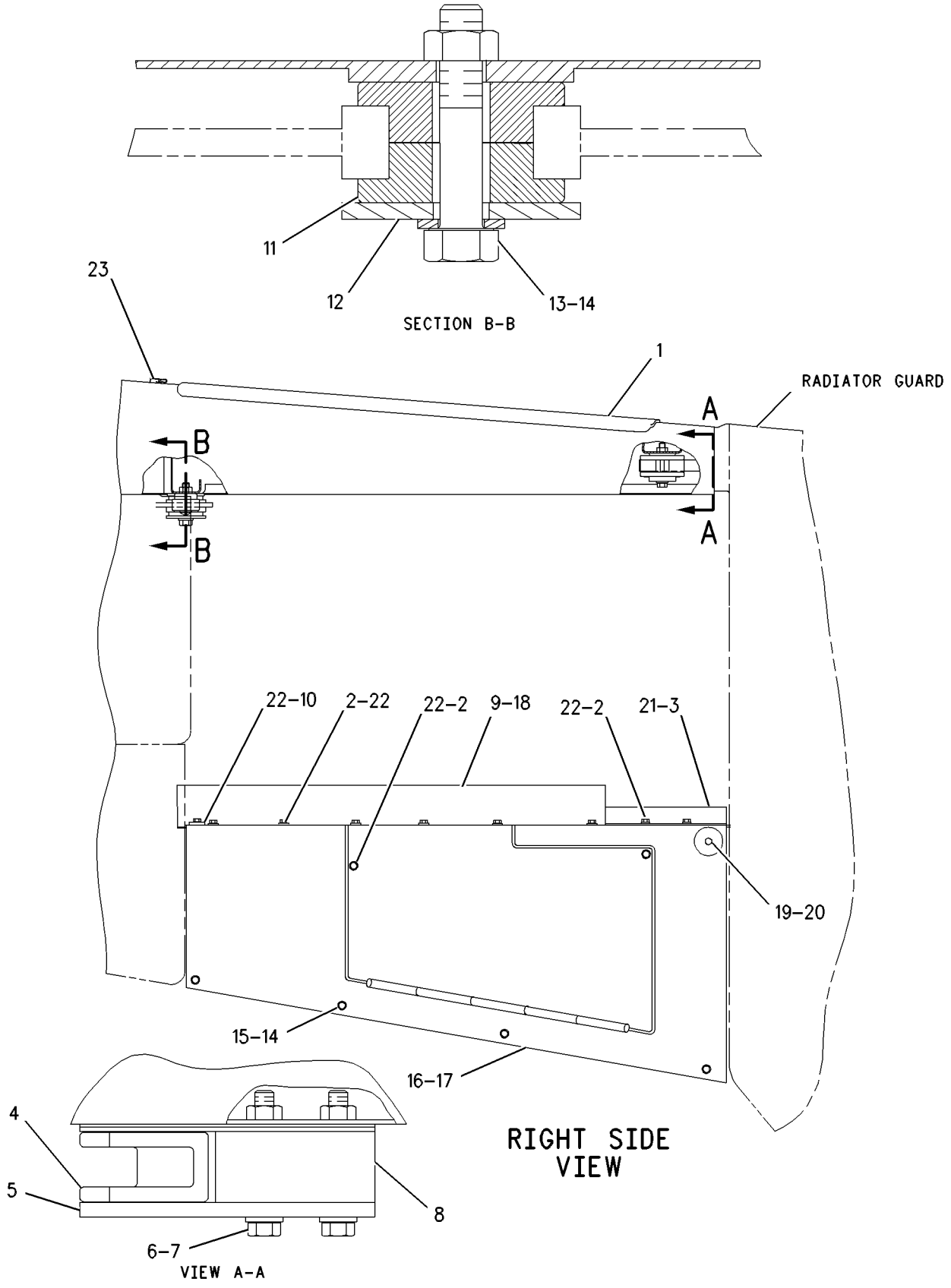

GRAPHIC #1 g00652742

162-2516 PANEL GP-SOUND SUPPRESSION

S/N: BET1-UP

PART OF 157-7196 ENGINE AR-COMPLETE

SMCS-7076 **i01448343**

NOTE	REF NO	GRAPHIC REF	PART NUMBER	QTY	PART NAME 1 2 3 4 5 6 (PRODUCT LEVEL)	SEE PAGE
	1	1	**162-2515**	1	PANEL GP-SOUND SUPPRESSION	
	2	1	**5B-0841**	2	BOLT (5/8-18X1.75 IN)	
	3	1	**5M-2894**	3	WASHER-HARD (10.2X18.5X2.5MM THK)	
	4	1	**3B-1915**	3	BOLT (3/8-16X1.37 IN)	

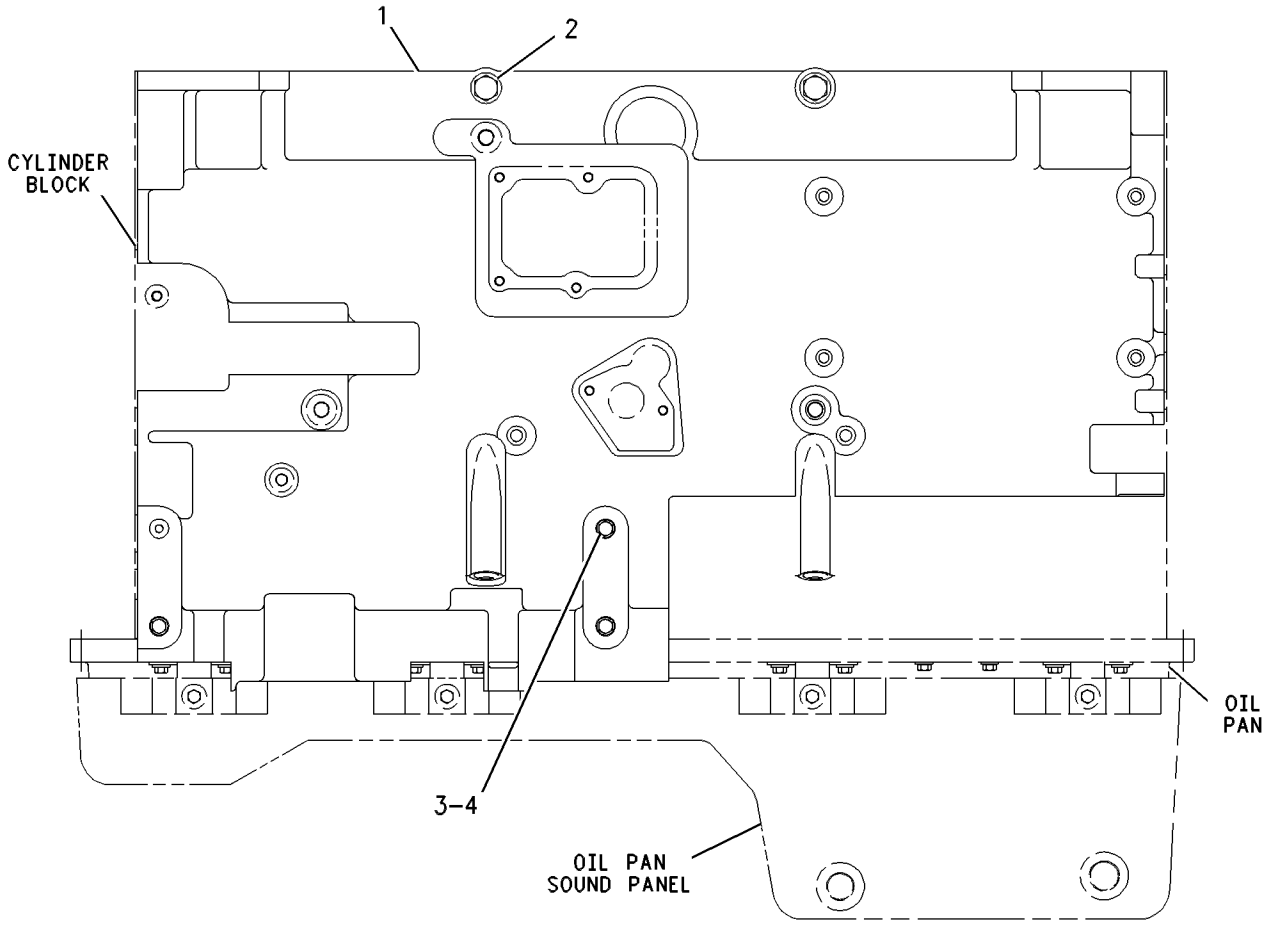

LEFT SIDE VIEW

GRAPHIC #1 g00664684

6Y-0615 PLATE GP-HITCH

S/N: AKA1-UP

SMCS-7100 **i01341117**

NOTE	REF NO	GRAPHIC REF	PART NUMBER	QTY	PART NAME 1 2 3 4 5 6 (PRODUCT LEVEL)	SEE PAGE
	1	1	**6Y-0611**	1	PLATE	
	2	1	**7X-0434**	4	BOLT (1-1/4-7X8-1/2 IN)	
	3	1	**7X-0533**	4	WASHER-HARD (6MM THK)	

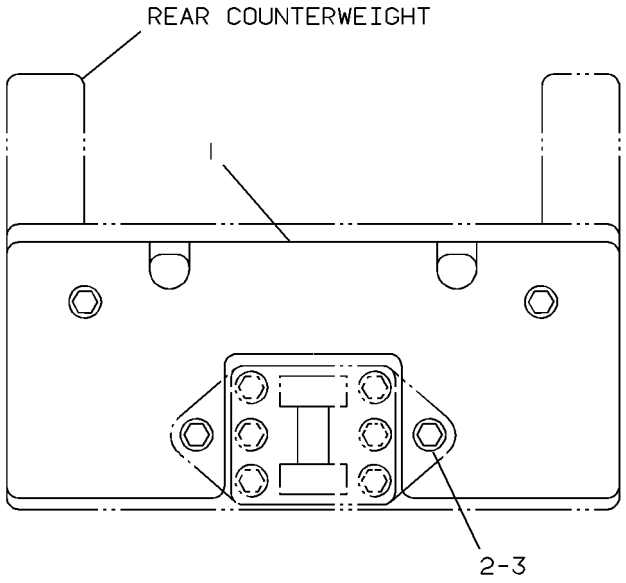

GRAPHIC #1 g00188032

156-4756 PLATFORM GP

S/N: AKA1-UP

PART OF 156-4755 PLATFORM GP-CAB

SMCS-7253 **i01437042**

NOTE	REF NO	GRAPHIC REF	PART NUMBER	QTY	PART NAME 1 2 3 4 5 6 (PRODUCT LEVEL)	SEE PAGE
	1	1	**156-4757**	1	PLATFORM AS	
	2	2	**4P-8134**	1	CLIP	
M	3	1,2	**6V-9632**	21	NUT-WELD (M6X1 THD)	
	4	2	**7T-1099**	38	LINK	
	5	2	**8F-9836**	4	LUG (3/8-16 THD)	
M	6	2	**8T-3490**	90	NUT-WELD (M10X1.5 THD)	
	7	2	**169-6907**	6	SPACER	
	8	2	**172-4871**	1	CLAMP	
	9	2	**6C-6761**	1	PLATE	
	10	2	**9T-6001**	2	BOSS	
M	11	2	**8T-3612**	2	NUT-WELD (M8X1.25 THD)	
M	12	2	**162-3934**	2	NUT-WELD (M6X1.6 THD)	
	13	2	**5D-9629**	2	ROD	
	14	2	**6P-2215**	7	PIN-WELD	
	15	1	**6V-6716**	2	RIVET-TRUSS HEAD	
	16	2	**9F-6445**	2	NUT-WELD (1/4-20 THD)	
	17	1	**109-1645**	1	CLIP	
	18	1	**169-6902**	1	BRACKET AS	
M		1	**8T-3490**	9	NUT-WELD (M10X1.5 THD)	
	19	1	**172-8600**	6	CAP-PROTECTIVE	
	20	1	**7X-7729**	2	WASHER (11X25X3MM THK)	
M	21	1	**124-8100**	2	SCREW-TRUSS HEAD (M10X1.5X20MM)	

M-METRIC PART

156-4756 **PLATFORM GP** ***(contd.)*** **i01437042**

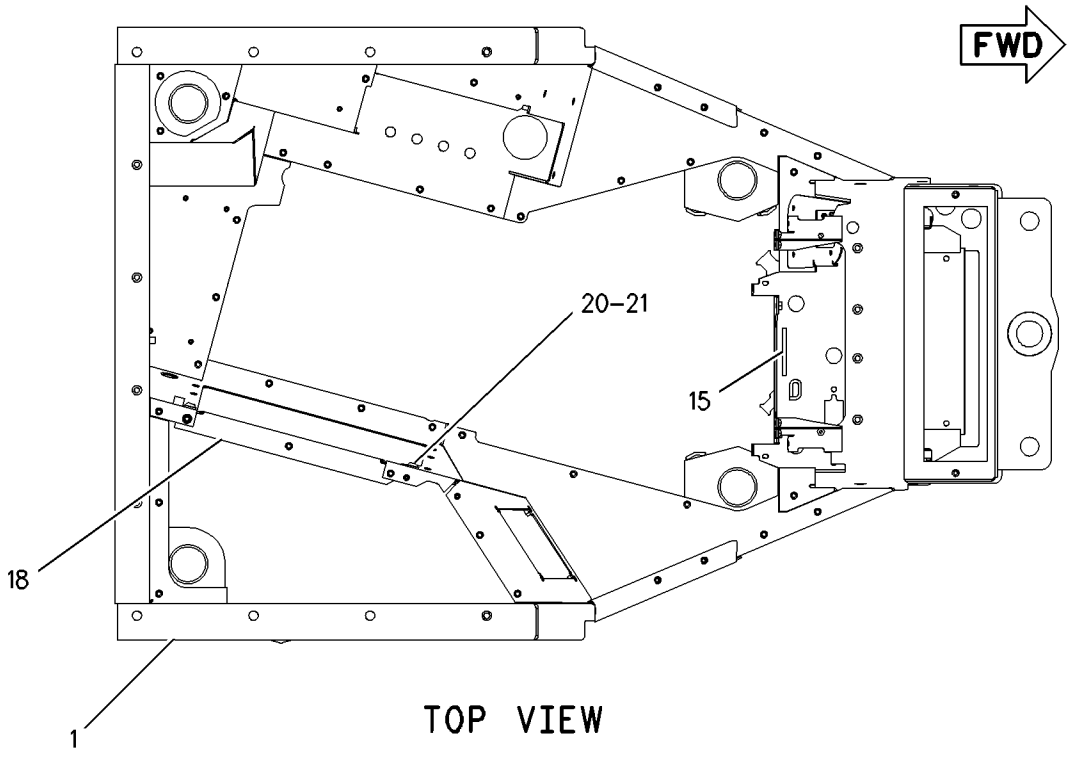

TOP VIEW

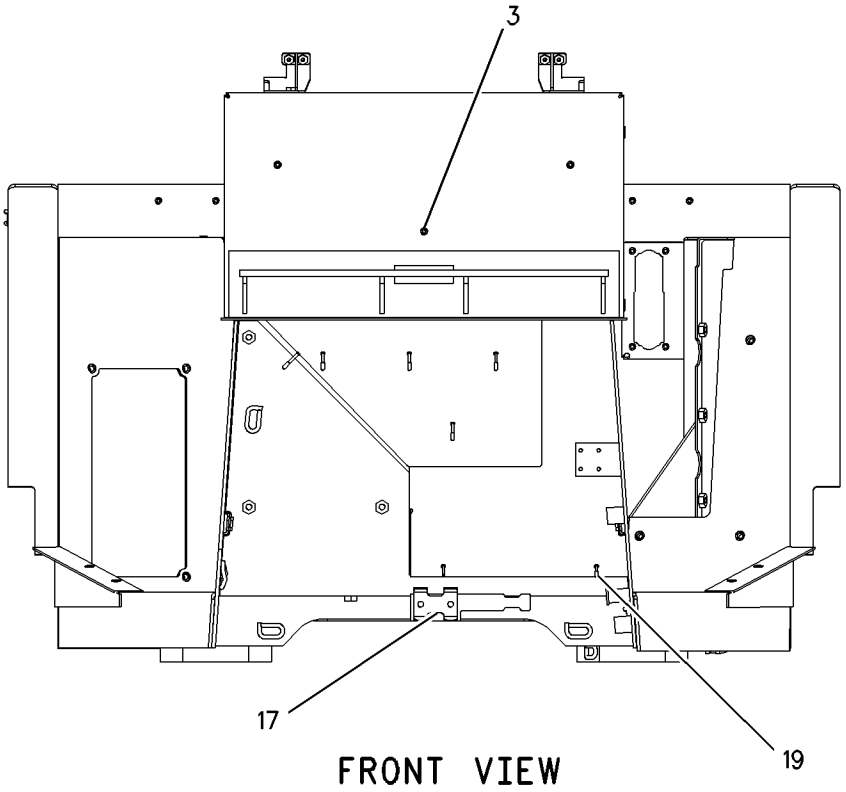

FRONT VIEW

GRAPHIC #1 g00745458

156-4756 **PLATFORM GP** ***(contd.)*** **i01437042**

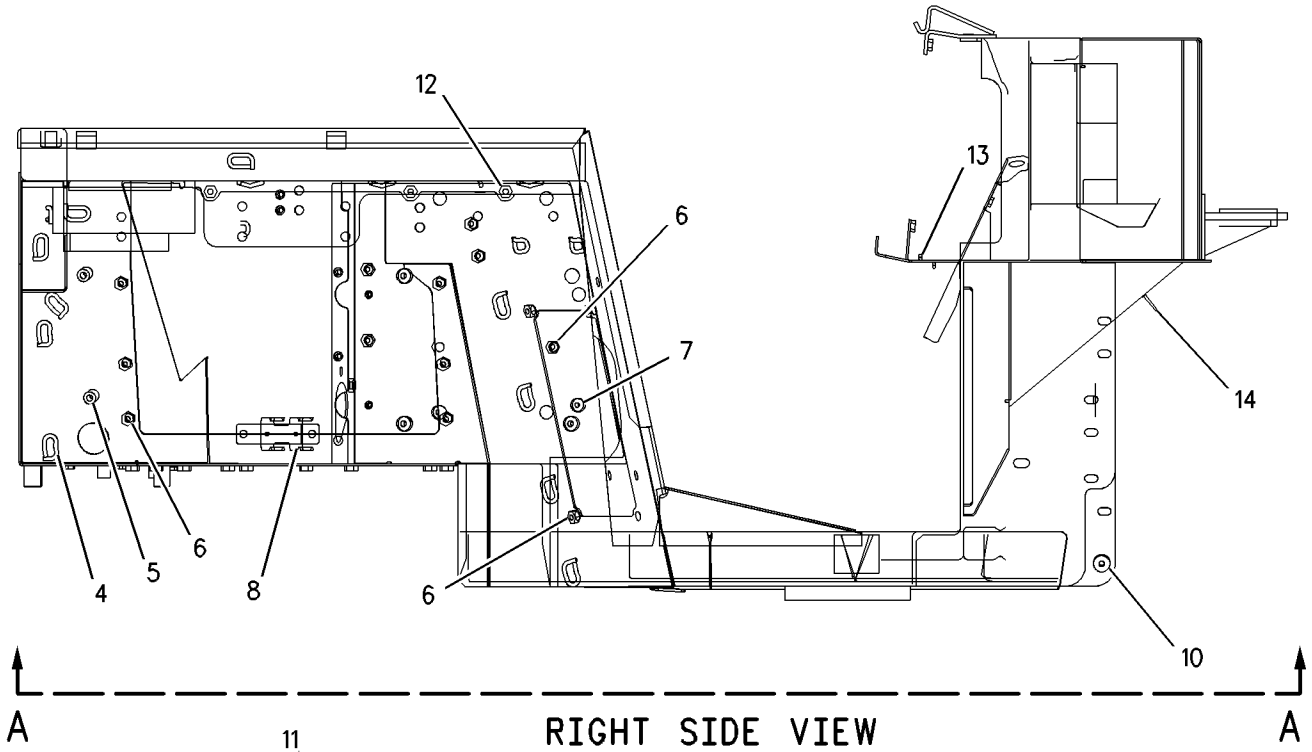

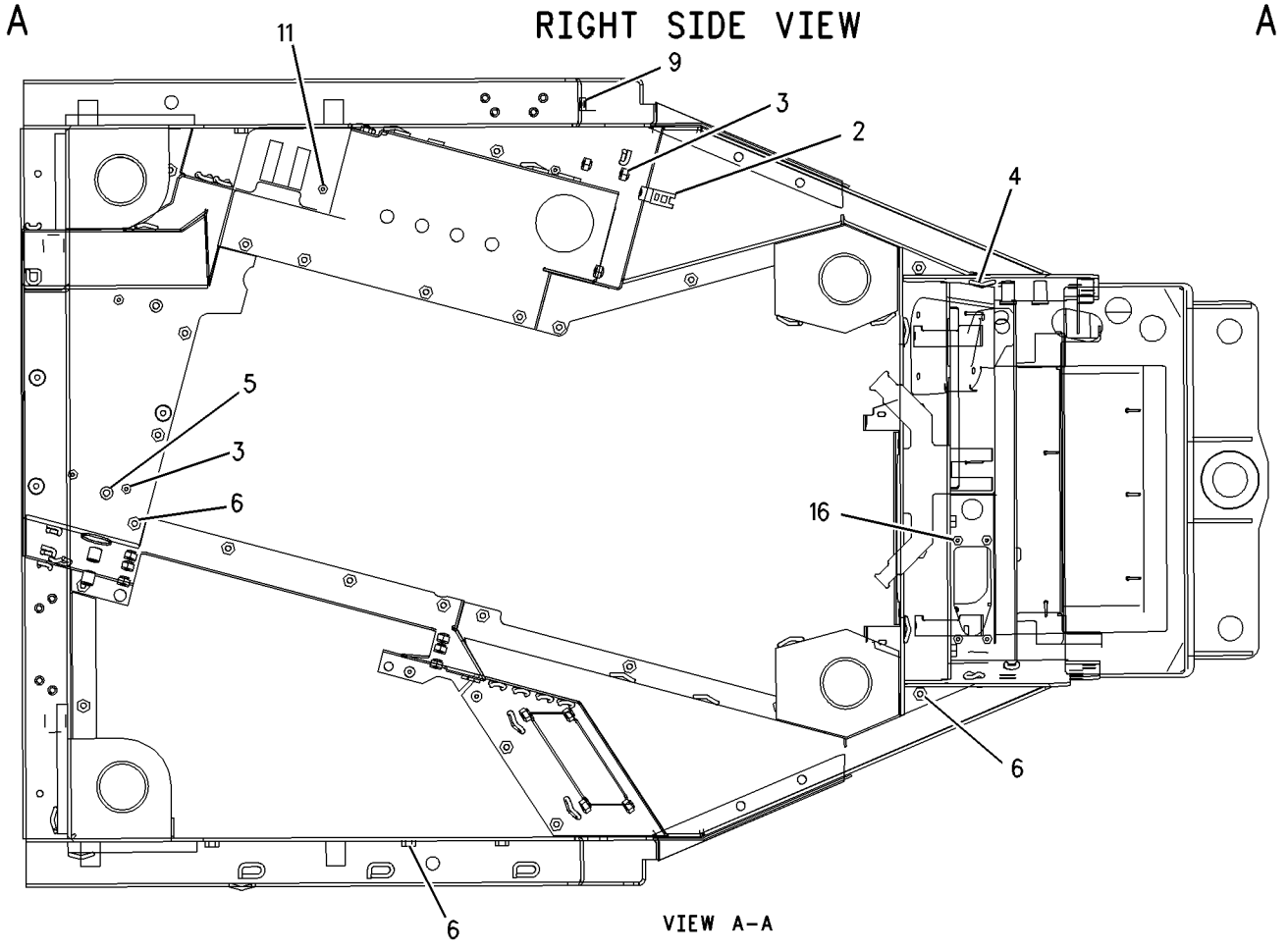

GRAPHIC #2 g00726285

FRAME AND BODY

124-7562 STEP GP

S/N: AKA1-UP

PART OF 105-9803 GUARD GP-RADIATOR

SMCS-7254 **i00569768**

NOTE	REF NO	GRAPHIC REF	PART NUMBER	QTY	PART NAME 1 2 3 4 5 6 (PRODUCT LEVEL)	SEE PAGE
	1	1	**124-5181**	1	STEP AS	
	2	1	**124-5183**	1	PLATE	
	3	1	**6V-1193**	4	SCREW-HEX SOCKET	

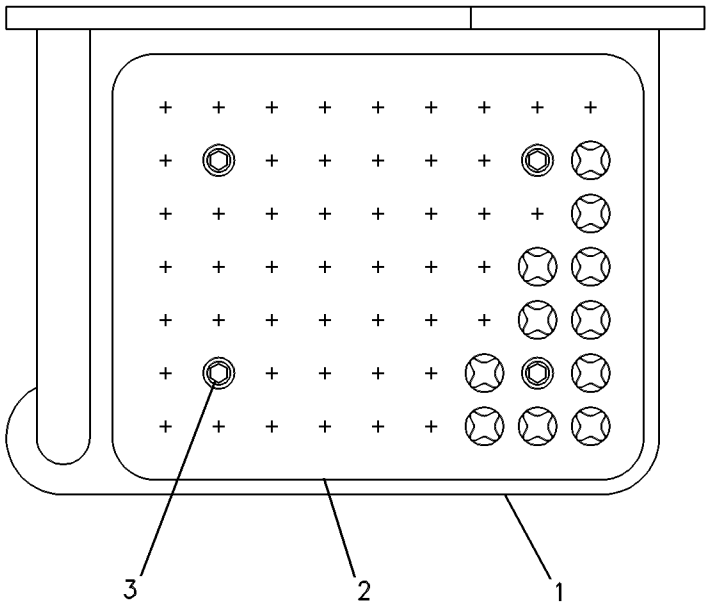

GRAPHIC #1 g00249109

FRAME AND BODY

111-3264 SWEEP GP

S/N: AKA1-UP

SMCS-7162 **i01441608**

NOTE	REF NO	GRAPHIC REF	PART NUMBER	QTY	PART NAME 1 2 3 4 5 6 (PRODUCT LEVEL)	SEE PAGE
	1	1	**150-1955**	8	PLATE	
	2	1	**6T-1698**	8	MOUNTING	
	3	1	**7X-0564**	4	WASHER-HARD (20X51X3MM THK)	
	4	1	**8E-6891**	2	BLOCK AS	
	5	1	**8E-9532**	2	SPACER	
	6	1	**132-9652**	1	SWEEP AS	
		1	**1P-2772**	4	SPACER (26X31X19MM THK)	
		1	**6K-3632**	2	LOCKNUT	
		1	**8C-8844**	2	BOLT (1-8X5 IN)	
		1	**8P-5244**	4	WASHER (33.3X69.8X6.35MM THK)	
		1	**9S-5187**	2	MOUNTING	
		1	**111-3265**	1	GUARD AS	
		1	**111-3266**	1	GUARD AS	
	7	1	**5P-1076**	8	WASHER-HARD (13.5X30X4MM THK)	
	8	1	**7X-0366**	4	BOLT (3/4-10X2 IN)	
	9	1	**7X-0582**	4	WASHER-HARD (20X44.5X6MM THK)	
	10	1	**8C-8842**	4	BOLT (3/4-10X4 IN)	
	11	1	**8T-9389**	8	BOLT (1/2-13X2.75 IN)	

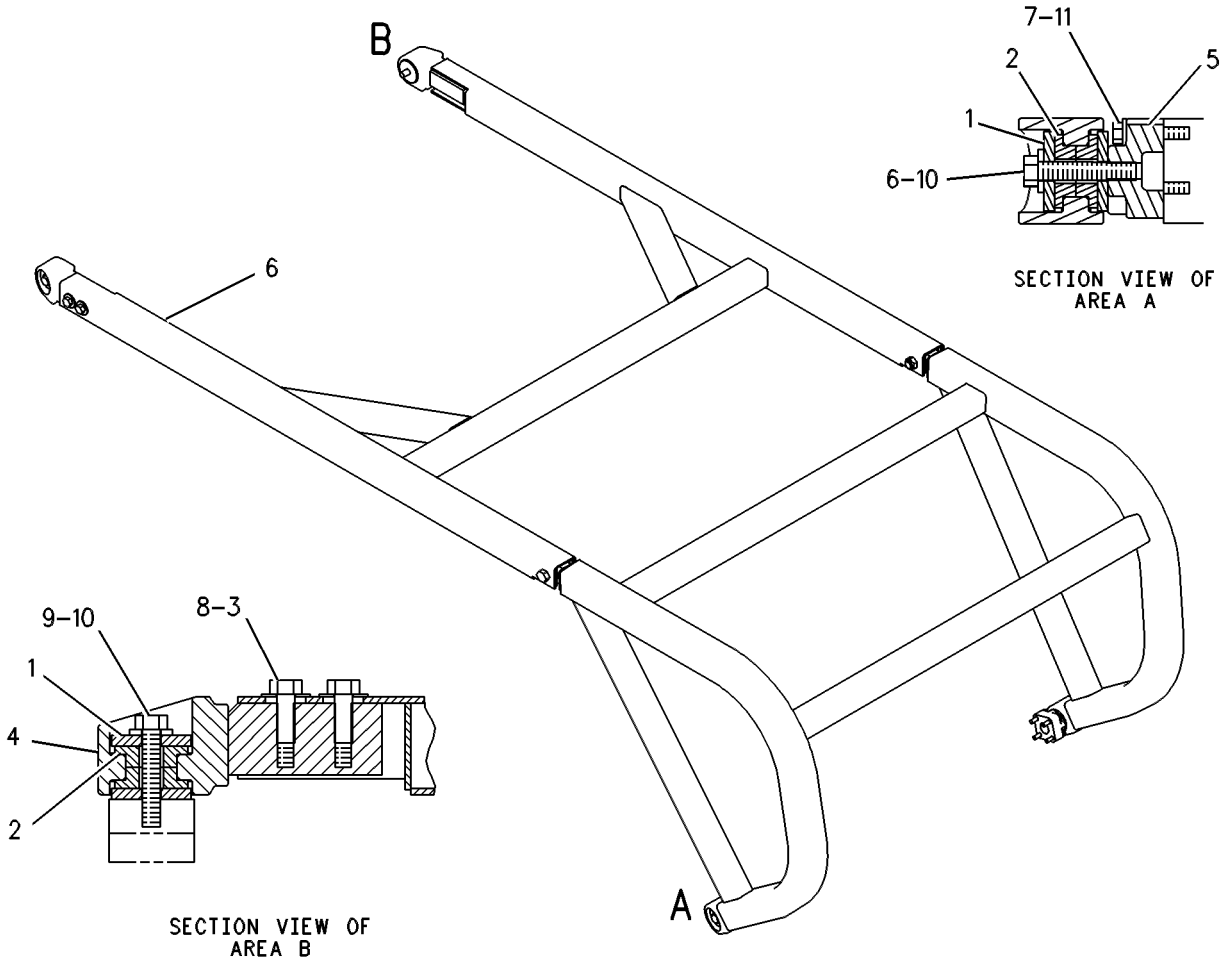

GRAPHIC #1 g00273351

MEMORANDA

FRAME AND BODY

150-1958 SWEEP GP

S/N: AKA1-UP

PART OF 160-1058 LIGHTING AR

SMCS-7162 **i01447081**

NOTE	REF NO	GRAPHIC REF	PART NUMBER	QTY	PART NAME 1 2 3 4 5 6 (PRODUCT LEVEL)	SEE PAGE
	1	1	**6T-1698**	8	MOUNTING	
	2	1	**7X-0564**	4	WASHER-HARD (20X51X3MM THK)	
	3	1	**8E-6891**	2	BLOCK AS	
	4	1	**8E-9532**	2	SPACER	
	5	1	**150-1955**	8	PLATE	
	6	1	**8T-9389**	8	BOLT (1/2-13X2.75 IN)	
	7	1	**5P-1076**	8	WASHER-HARD (13.5X30X4MM THK)	
	8	1	**7X-0366**	4	BOLT (3/4-10X2 IN)	
	9	1	**7X-0582**	4	WASHER-HARD (20X44.5X6MM THK)	
	10	1	**8C-8842**	4	BOLT (3/4-10X4 IN)	
	11	1	**7T-1099**	12	LINK	
	12	1	**1P-2772**	4	SPACER (26X31X19MM THK)	
	13	1	**8P-5244**	4	WASHER (33.3X69.8X6.35MM THK)	
	14	1	**9S-5187**	2	MOUNTING	
	15	1	**6K-3632**	2	LOCKNUT	
	16	1	**8C-8844**	2	BOLT (1-8X5 IN)	
	17	1	**111-3265**	1	GUARD AS	
	18	1	**1Q-3610**	1	GUARD AS-RH	
	19	1	**1Q-3611**	1	GUARD AS-LH	

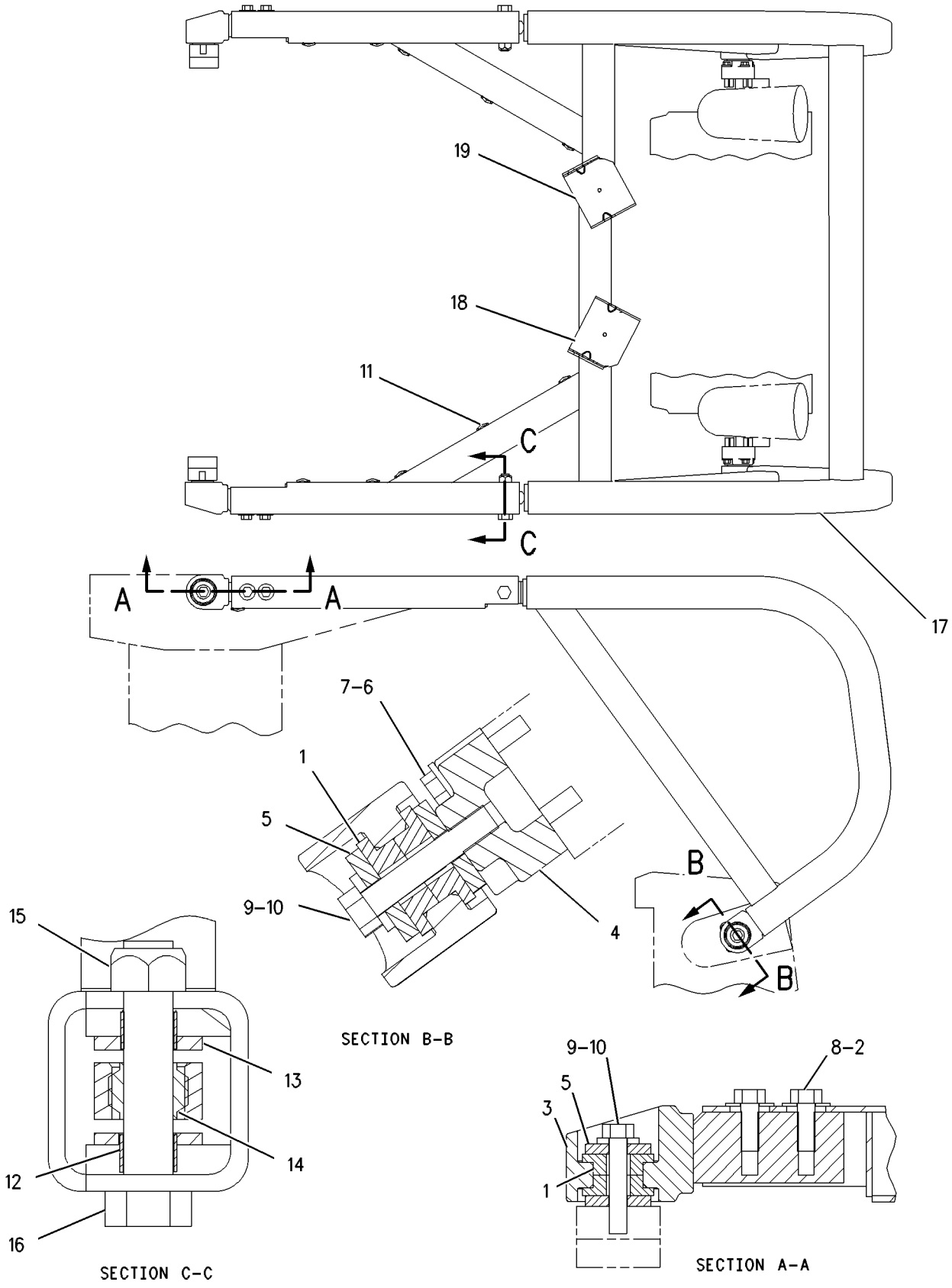

GRAPHIC #1 g00466912

UNDERCARRIAGE

126-7537 BAR AR-STRIKER

S/N: AKA1-UP
REAR ONLY

SMCS-7180 **i01310130**

NOTE	REF NO	GRAPHIC REF	PART NUMBER	QTY	PART NAME 1 2 3 4 5 6 (PRODUCT LEVEL)	SEE PAGE
	1	1	**7T-5790**	14	STUD-TAPERLOCK	
	2	1	**1H-4106**	1	PIN AS-DRAWBAR	
	3	1	**7G-6623**	1	HITCH	
	4	1	**7H-7539**	14	NUT-FULL (1 1/4-12 THD)	
	5	1	**8E-9289**	1	LATCH	
	6	1	**7X-0533**	62	WASHER-HARD (6MM THK)	
	7	1	**3K-2889**	1	LOCKNUT (5/8-11 THD)	
	8	1	**7X-0349**	1	BOLT (5/8-11X3 IN)	
	9	1	**7X-0431**	6	BOLT (1-1/4-7X6 IN)	
	10	1	**126-7534**	1	BAR AS-STRIKER	
	11	1	**1L-4418**	2	SPRING-SHUTOFF	
	12	1	**1P-2841**	2	SPACER (17.5MM THK)	
	13	1	**2K-8467**	2	PIN-SPRING (3.18MM DIA)	
	14	1	**3B-4617**	2	COTTER	
	15	1	**3T-9310**	1	PLATE	
	16	1	**7G-6495**	1	COVER	
	17	1	**8F-3556**	4	SPACER	
	18	1	**8T-1579**	1	PAWL	
	19	1	**8T-9496**	2	LOCKNUT (9/16-18 THD)	
	20	1	**8Y-6400**	1	LATCH GP	
		1	**6H-3956**	1	PIN	
		1	**7X-0766**	1	SPRING-LATCH	
		1	**8Y-3966**	1	WASHER (1.57MM THK)	
		1	**8Y-3998**	1	HANDLE-LATCH	
		1	**8Y-5747**	1	BRACKET-MOUNTING	
		1	**8Y-8306**	1	SHAFT-LATCH	
	21	1	**9Z-9211**	2	PLATE	
	22	1	**9Z-9214**	2	ROD AS	
	23	1	**126-7535**	2	HINGE AS	
	24	1	**126-7536**	2	HINGE AS	
	25	1	**126-7584**	1	DOOR AS	
	26	1	**126-7585**	1	DOOR AS	
	27	1	**1K-6872**	10	LOCKNUT (1/2-13 THD)	
	28	1	**2K-4973**	3	LOCKNUT (3/8-16 THD)	
	29	1	**4L-9337**	1	BOLT (3/8-16X1.5 IN)	
	30	1	**5P-1076**	4	WASHER-HARD (4MM THK)	
	31	1	**5S-7382**	2	BOLT (3/8-16X1.375 IN)	
	32	1	**8T-4223**	10	WASHER-HARD (3MM THK)	
	33	1	**8T-4896**	3	WASHER-HARD (10.2X18.5X2.5MM THK)	
	34	1	**8T-8919**	8	BOLT (1/2-13X1.75 IN)	
	35	1	**8T-9391**	2	BOLT (1/2-13X3.75IN)	

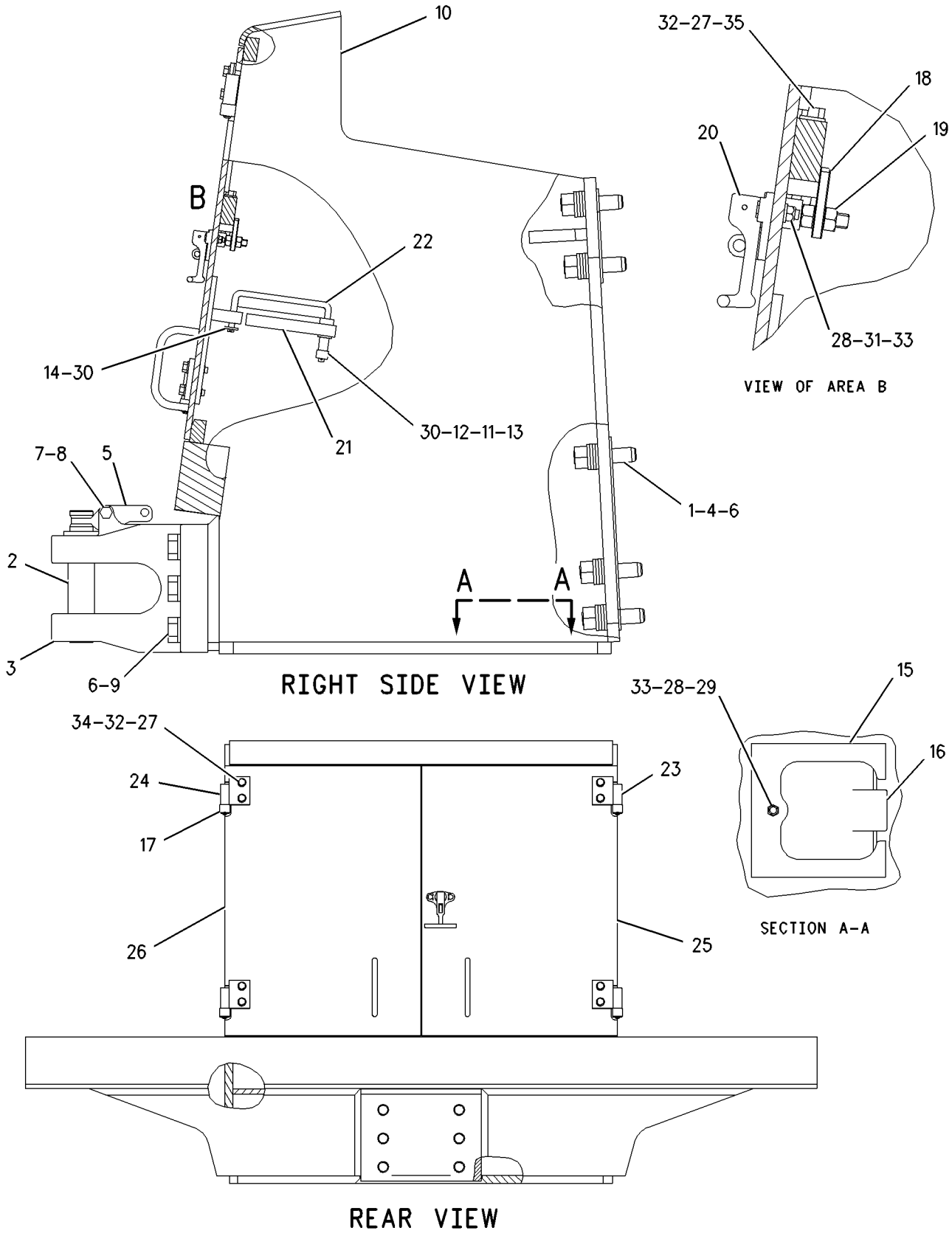

GRAPHIC #1

g00698075

UNDERCARRIAGE

129-0996 BAR AR-STRIKER

S/N: AKA1-UP

CANNOT BE USED WITH TRACK WIDER THAN 660MM (26IN)

SMCS-7180 **i01441788**

NOTE	REF NO	GRAPHIC REF	PART NUMBER	QTY	PART NAME 1 2 3 4 5 6 (PRODUCT LEVEL)	SEE PAGE
	1	1	**129-0997**	2	PLATE AS	
	2	1	**129-0999**	1	PLATE AS	
	3	1	**129-1000**	2	PLATE AS	
	4	1	**129-1002**	1	PLATE AS	
	5	1	**7X-0402**	24	BOLT (1-8X2 IN)	
	6	1	**7X-0406**	12	BOLT (1-8X3 IN)	
	7	1	**8T-5361**	36	WASHER-HARD (28X49X5MM THK)	

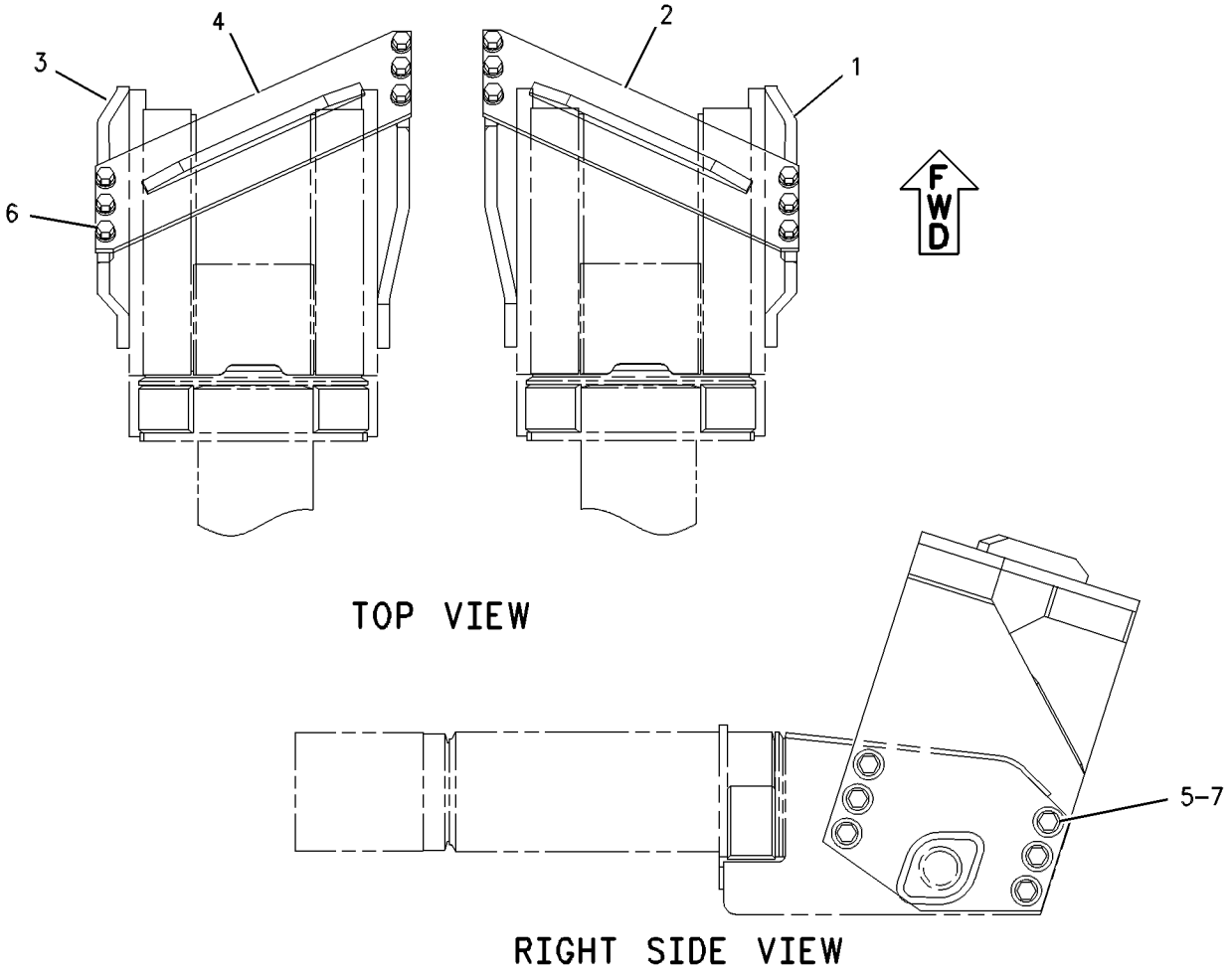

GRAPHIC #1 g00642194

9W-4477 CAP GP-TRACK IDLER

S/N: AKA1-UP

PART OF 156-5684 UNDERCARRIAGE AR

SMCS-4159 **i01065799**

NOTE	REF NO	GRAPHIC REF	PART NUMBER	QTY	PART NAME 1 2 3 4 5 6 (PRODUCT LEVEL)	SEE PAGE
	1	1	**9W-4480**	2	BOLT	
	2	1	**3S-1349**	2	WASHER (6.0MM THK)	
	3	1	**131-1644**	1	CAP AS-TRACK ILDER	
	4	1	**1T-0068**	1	PIN-SPRING	

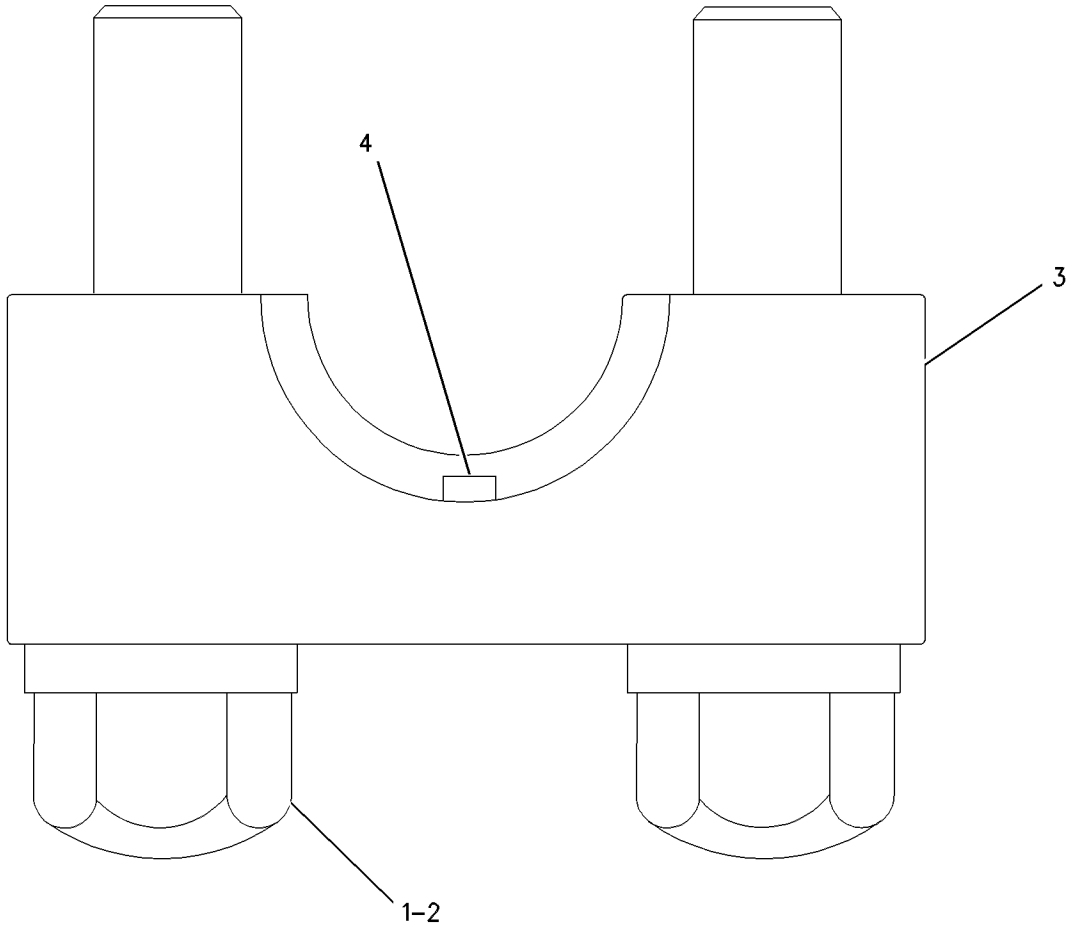

GRAPHIC #1 g00547754

UNDERCARRIAGE

9W-9205 CAP GP-TRACK IDLER

S/N: AKA1-UP

PART OF 157-8036, 157-8037 UNDERCARRIAGE AR

SMCS-4159 **i01502166**

NOTE	REF NO	GRAPHIC REF	PART NUMBER	QTY	PART NAME 1 2 3 4 5 6 (PRODUCT LEVEL)	SEE PAGE
	1	1	**9W-7882**	1	BLOCK-TRACK IDLER	
	2	1	**131-1645**	1	CAP AS-TRACK IDLER	
		1	**1T-0068**	1	PIN-SPRING	
	3	1	**8T-4934**	2	BOLT (1-1/8-7 THD)	
		1	**3S-1349**	2	WASHER-HARD (31X52.5X6MM THK)	

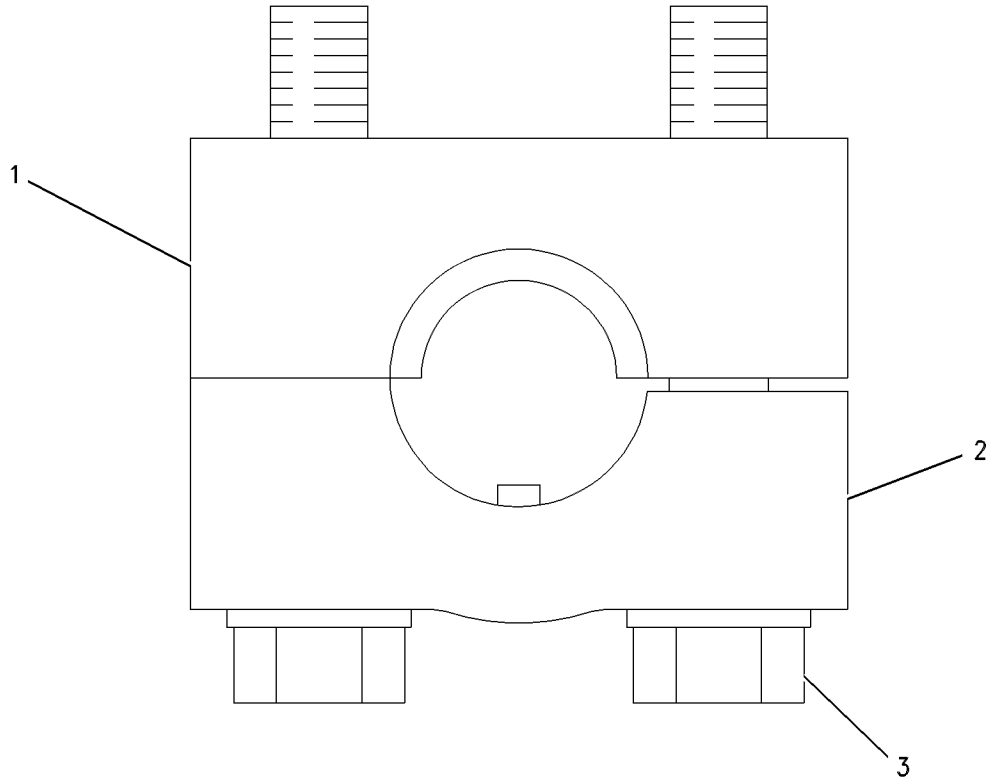

GRAPHIC #1 g00559307

UNDERCARRIAGE

9W-9206 CAP GP-TRACK IDLER

S/N: AKA1-UP

PART OF 157-8036, 157-8037 UNDERCARRIAGE AR

SMCS-4159 **i01323350**

NOTE	REF NO	GRAPHIC REF	PART NUMBER	QTY	PART NAME 1 2 3 4 5 6 (PRODUCT LEVEL)	SEE PAGE
	1	1	**9W-7882**	1	BLOCK-TRACK IDLER	
	2	1	**131-1646**	1	CAP AS-TRACK IDLER	
		1	**1T-0068**	1	PIN-SPRING	
	3	1	**8T-4934**	2	BOLT	
		1	**3S-1349**	2	WASHER (6.0MM THK)	

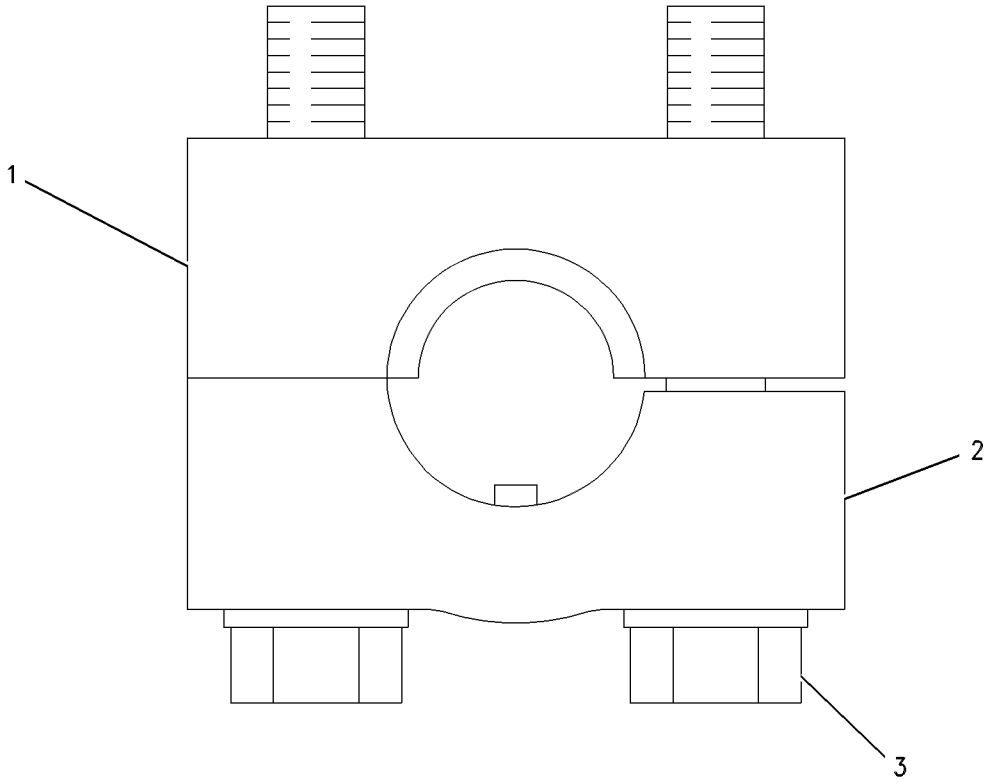

GRAPHIC #1 g00559307

6T-1142 CAP GP-TRACK ROLLER

S/N: AKA1-UP

PART OF 180-3489 ROLLER AR, 156-5684, 157-8037 UNDERCARRIAGE AR

SMCS-4180 **i01323344**

NOTE	REF NO	GRAPHIC REF	PART NUMBER	QTY	PART NAME 1 2 3 4 5 6 (PRODUCT LEVEL)	SEE PAGE
	1	1	**6T-1140**	2	BOLT-ROLLER MOUNTING	
	2	1	**5P-8249**	2	WASHER-HARD (4.0MM THK)	
	3	1	**131-1651**	1	CAP AS-TRACK ROLLER	
	4	1	**1T-0068**	1	PIN-SPRING	

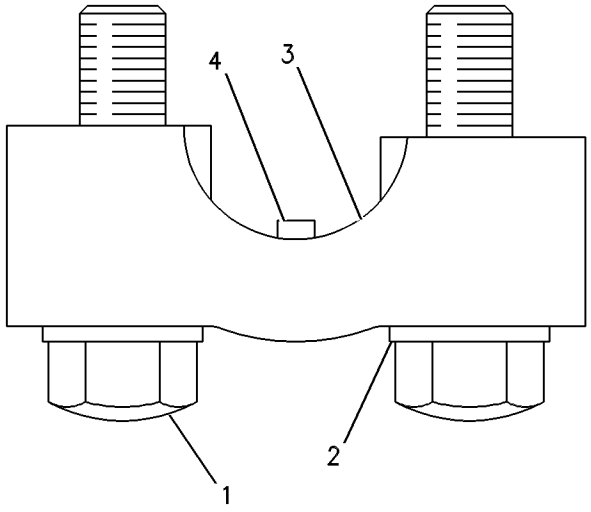

GRAPHIC #1 g00465296

126-4233 CAP GP-TRACK ROLLER

S/N: AKA1-UP

PART OF 157-8036, 157-8037 UNDERCARRIAGE AR

SMCS-4180 **i01323441**

NOTE	REF NO	GRAPHIC REF	PART NUMBER	QTY	PART NAME 1 2 3 4 5 6 (PRODUCT LEVEL)	SEE PAGE
	1	1	**131-1651**	1	CAP AS-TRACK ROLLER	
	2	1	**1T-0068**	1	PIN-SPRING	
	3	1	**5P-8249**	2	WASHER-HARD (4.0MM THK)	
	4	1	**9S-1351**	2	BOLT (7/8-9X5 IN)	

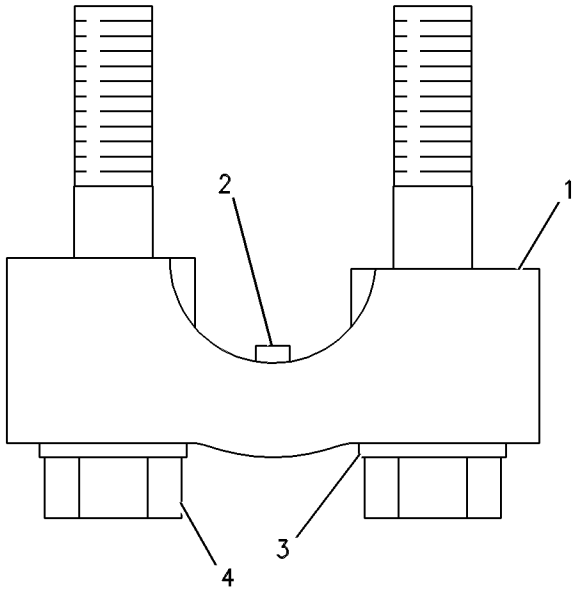

GRAPHIC #1 g00471931

127-8778 EQUALIZER BAR AS

S/N: AKA1-UP
PART OF 127-8779 EQUALIZER BAR GP
FIELD REPLACEMENT ORDER 140-9698—PAGE 474

SMCS-7206, 7207, 7210 **i01502168**

NOTE	REF NO	GRAPHIC REF	PART NUMBER	QTY	PART NAME 1 2 3 4 5 6 (PRODUCT LEVEL)	SEE PAGE
	1	1	**7G-8666**	1	SEAL AS (79.87MM ID)	
	2	1	**5L-4751**	4	RING-RETAINING	
	3	1	**9X-7505**	4	SEAL AS	
	4	1	**117-4013**	2	BEARING-SELF ALIGNING	
	5	1	**7G-8664**	1	SEAL (80.46MM ID)	
	6	1	**130-3139**	2	BEARING-SLEEVE	

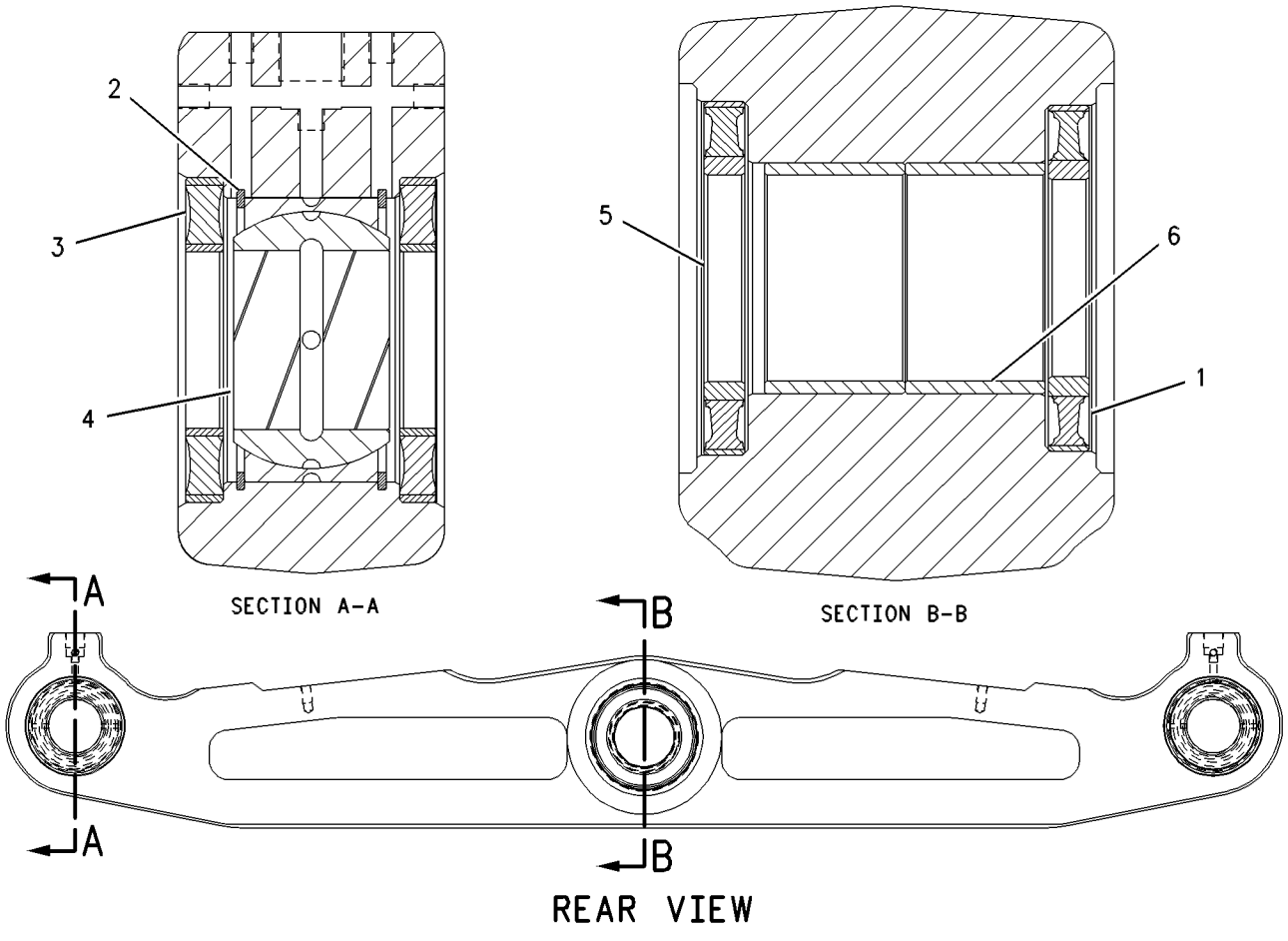

GRAPHIC #1 g00492546

MEMORANDA

UNDERCARRIAGE

127-8779 EQUALIZER BAR GP

S/N: AKA1-UP

PART OF 156-5684, 157-8036, 157-8037 UNDERCARRIAGE AR

SMCS-7206, 7207, 7210 **i01502167**

NOTE	REF NO	GRAPHIC REF	PART NUMBER	QTY	PART NAME 1 2 3 4 5 6 (PRODUCT LEVEL)	SEE PAGE
Y	1	1	*127-8778*	1	EQUALIZER BAR AS	470
	2	1	**2F-5326**	8	SETSCREW	
	3	1	**5F-1678**	2	SEAL-O-RING	
	4	1	**6V-8188**	8	NUT (1/2-13 THD)	
	5	1	**8T-4223**	16	WASHER-HARD (13.5X25.5X3MM THK)	
	6	1	**5P-1076**	4	WASHER-HARD (13.5X30X4MM THK)	
	7	1	**8F-4028**	4	SPACER	
	8	1	**8T-8917**	4	BOLT (1/2-13X1.25 IN)	
	9	1	**5C-6565**	8	BOLT (1/2-13X1.25 IN)	
	10	1	**7X-0531**	8	WASHER-HARD (31X52.5X6MM THK)	
	11	1	**2M-3530**	4	BOLT	
	12	1	**3S-1356**	4	NUT-FULL (1-1/8-12 THD)	
	13	1	**7T-4865**	2	PIN	
	14	1	**6Y-3545**	1	PIN	
	15	1	**3T-5294**	2	SPACER	
	16	1	**9P-6911**	1	PLATE	
	17	1	**2H-3745**	2	BOLT (1-14X2.75 IN)	
	18	1	**8T-5361**	2	WASHER-HARD (28X49X5MM THK)	
	19	1	**7F-6112**	1	BOLT (1 1/4-12X3 IN)	
	20	1	**7X-0533**	1	WASHER-HARD (34X55X6MM THK)	
	21	1	**3B-8489**	2	FITTING-GREASE	
	22	1	**133-5631**	2	PLUG	
	23	1	**6Y-9509**	2	PAD AS	
	24	1	**6Y-9508**	2	PAD AS	

Y-SEPARATE ILLUSTRATION

127-8779 **EQUALIZER BAR GP** *(contd.)* **i01502167**

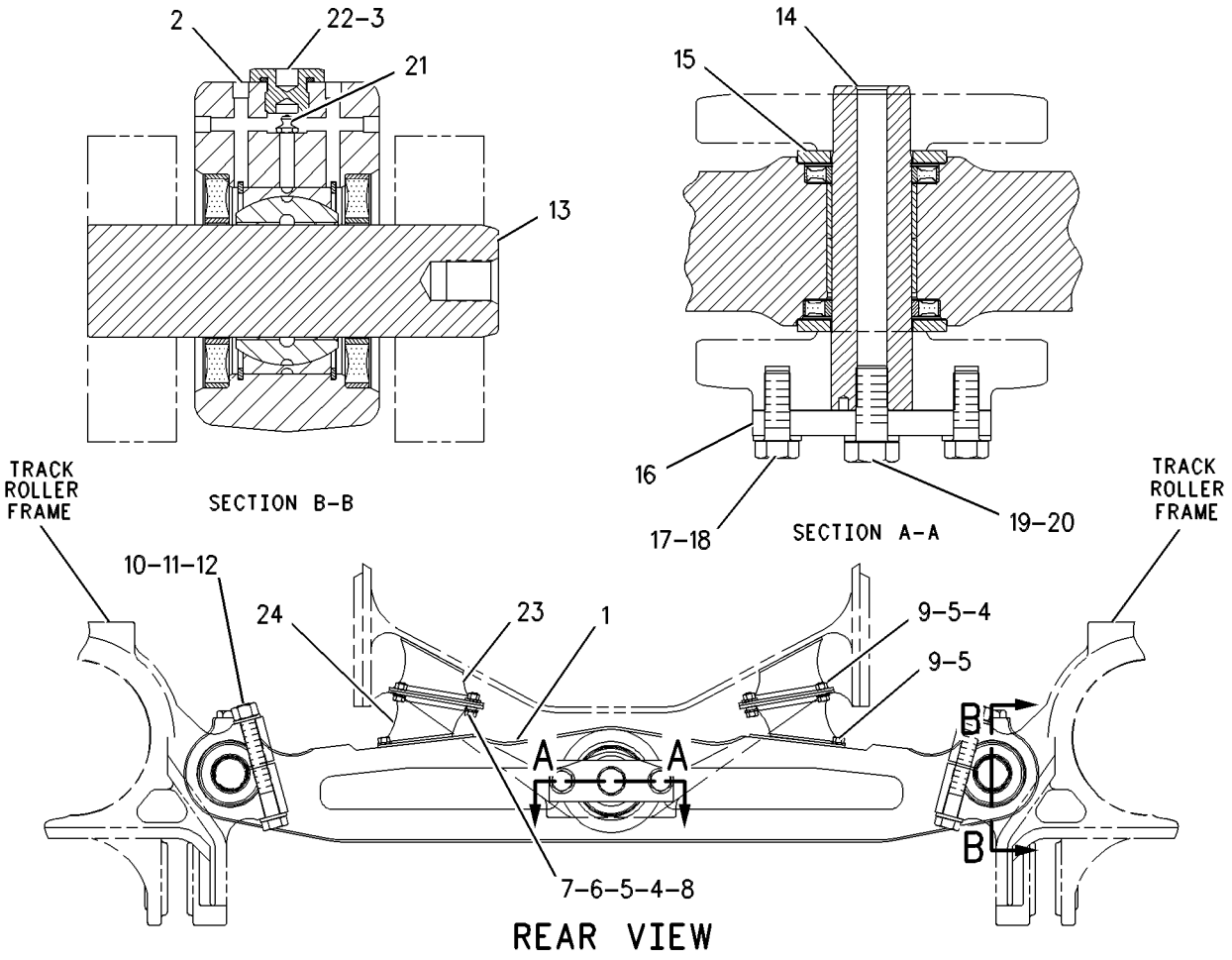

GRAPHIC #1 g00492493

UNDERCARRIAGE

140-9698 EQUALIZER BAR GP

S/N: AKA1-UP

FIELD REPLACEMENT FOR 127-8778—PAGE 470

SMCS-7206, 7207, 7210 **i01502169**

NOTE	REF NO	GRAPHIC REF	PART NUMBER	QTY	PART NAME 1 2 3 4 5 6 (PRODUCT LEVEL)	SEE PAGE
	1	1	**7G-8666**	1	SEAL AS (79.87MM ID)	
	2	1	**117-4013**	2	BEARING-SELF ALIGNING	
	3	1	**9X-7505**	4	SEAL AS	
	4	1	**2F-5326**	8	SETSCREW	
	5	1	**3B-8489**	2	FITTING-GREASE	
	6	1	**133-5631**	2	PLUG	
	7	1	**5F-1678**	2	SEAL-O-RING	
	8	1	**5L-4751**	4	RING-RETAINING	
	9	1	**7G-8664**	1	SEAL (80.46MM ID)	
	10	1	**130-3139**	2	BEARING-SLEEVE	

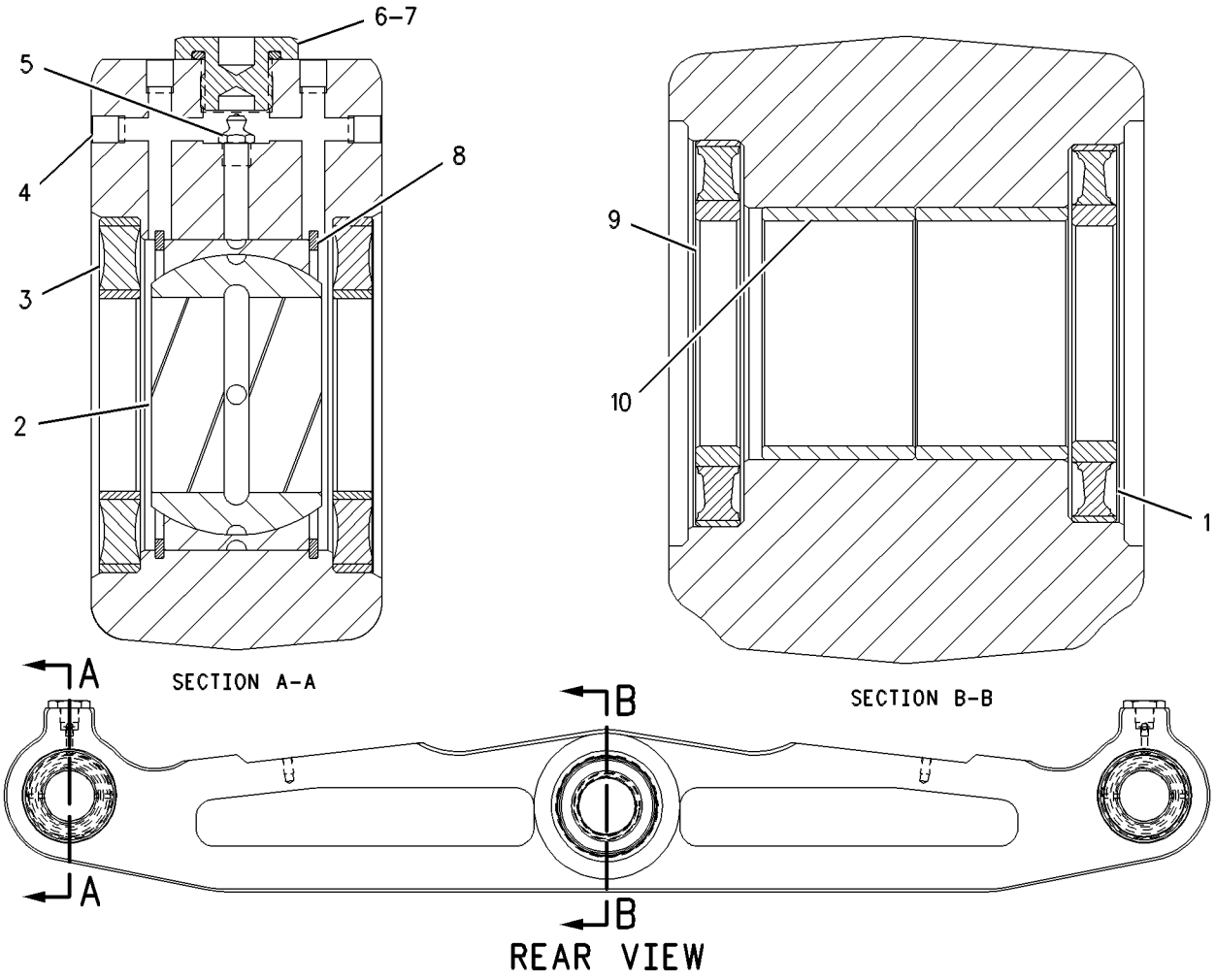

GRAPHIC #1 g00492629

170-5758 FRAME AS-TRACK ROLLER

S/N: AKA1-UP

PART OF 143-7721 DISPOSAL AR-WASTE

SMCS-4151 **i01488512**

NOTE	REF NO	GRAPHIC REF	PART NUMBER	QTY	PART NAME 1 2 3 4 5 6 (PRODUCT LEVEL)	SEE PAGE
	1	1	**4B-4158**	4	SCREW-DRIVE (3/16X0.25 IN)	
	2	1	**6V-2226**	1	PLATE-WARNING (RECOIL SPRING)	
	3	1	**154-9838**	1	SLEEVE	
Z	4	1		1	FRAME AS-FRONT	
	5	1	**6T-3793**	2	SUPPORT	
	6	1	**9P-5708**	2	SUPPORT	

Z-NOT SERVICED SEPARATELY

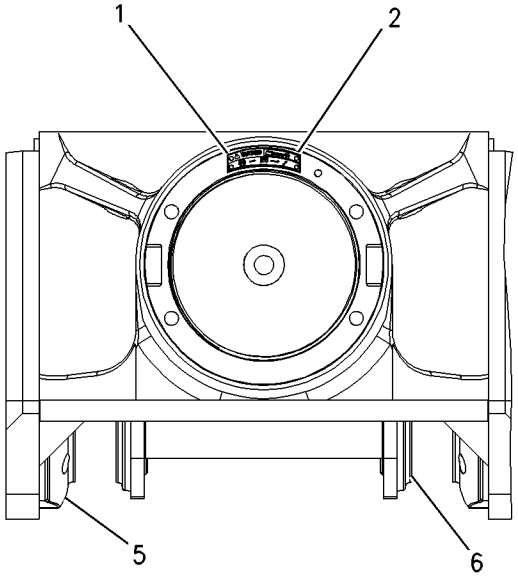

REAR VIEW

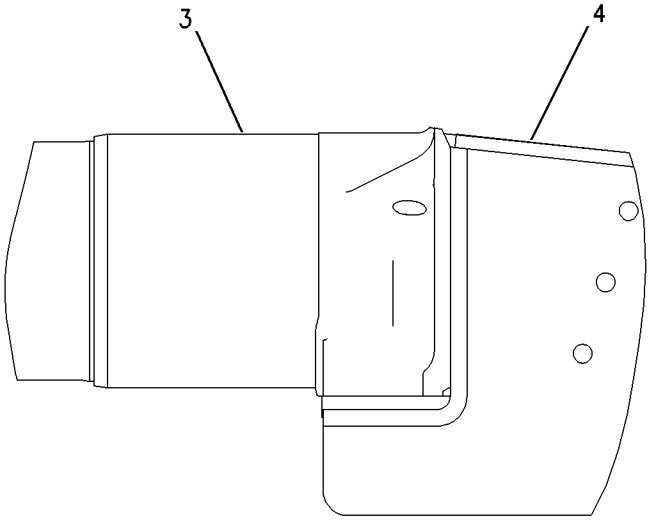

RIGHT SIDE VIEW

GRAPHIC #1 g00741147

UNDERCARRIAGE

156-5685 FRAME GP-TELESCOPING RECOIL

S/N: AKA1-UP

PART OF 156-5684 UNDERCARRIAGE AR

SMCS-4151 **i01497204**

NOTE	REF NO	GRAPHIC REF	PART NUMBER	QTY	PART NAME 1 2 3 4 5 6 (PRODUCT LEVEL)	SEE PAGE
	1	1	**175-3632**	1	FRAME AS-ROLLER (RH)	
	2	1	**175-3633**	1	FRAME AS-ROLLER (LH)	
	3	1	**4T-2069**	6	PLUG-DRAIN	
		1	**2H-3932**	6	SEAL-O-RING	
	4	1	**9W-2466**	1	COVER AS-RH	
		1	**9W-4813**	1	COVER AS-LH	
		1	**9M-3786**	2	SEAL-O-RING	
	5	1	**4L-6454**	8	BOLT (3/8-16X1 IN)	
		1	**8T-4896**	8	WASHER-HARD (10.2X18.5X2.5MM THK)	
	6	1	**171-8714**	2	FRAME AS-FRONT	
					(EACH INCLUDES)	
		1	**154-9838**	1	SLEEVE	
		1	**6V-2226**	1	PLATE-WARNING (RECOIL SPRING)	
		1	**4B-4158**	4	SCREW-DRIVE (3/16X0.25 IN)	
	7	1	**7G-7379**	2	BEARING	
	8	1	**3T-5898**	2	RING-RETAINING	
	9	1	**9X-4584**	2	SEAL AS	
	10	1	**9W-3301**	2	RING-RETAINING	
	11	1	**7X-0345**	24	BOLT (5/8-11X1.75 IN)	
		1	**8T-4122**	24	WASHER-HARD (17X32X3.5MM THK)	
	12	1	**2K-4472**	4	SEAL-O-RING	
	13	1	**6T-8258**	4	FILM-WARNING (RECOIL SPRING)	
	14	1	**6P-8931**	4	COVER	
	15	1	**6T-8801**	4	GUIDE AS	
		1	**6T-8258**	1	FILM-WARNING (RECOIL SPRING)	
	16	1	**6V-3263**	2	SEAL-O-RING	
	17	1	**7T-1149**	2	RETAINER AS	
					(EACH INCLUDES)	
	18	1	**7T-1150**	1	RETAINER	
	19	1	**7T-1151**	1	SEAL AS	
	20	1	**7T-1152**	1	RETAINER	
	21	1	**7T-1153**	1	PLATE	
	22	1	**5P-2424**	16	BOLT (1/2-13X2.25 IN)	
	23	1	**8T-4223**	32	WASHER-HARD (13.5X25.5X3MM THK)	
	24	1	**8C-4436**	16	BOLT (1/2-13X1.375 IN)	
	25	1	**5P-5374**	2	SEAL-O-RING	
	26	1	**3T-4243**	2	BEARING-SLEEVE	
	27	1	**8E-2837**	1	SHAFT-PIVOT	
	28	1	**3T-4244**	2	BEARING-SLEEVE	
	29	1	**8E-0719**	2	RING-THRUST	
	30	1	**8E-2898**	2	PLATE	
	31	1	**8S-2331**	24	BOLT-12 POINT HEAD (5/8-11 X 2 IN)	
	32	1	**8E-2899**	2	PLATE	
	33	1	**2D-1690**	2	SEAL-RING	
	34	1	**9S-8009**	2	PLUG-O-RING	
		1	**4K-1388**	2	SEAL-O-RING	
	35	1	**8T-2502**	2	BOLT (3/8-16X1.125 IN)	
		1	**7T-6079**	2	SPACER	

156-5685 **FRAME GP-TELESCOPING RECOIL** ***(contd.)*** **i01497204**

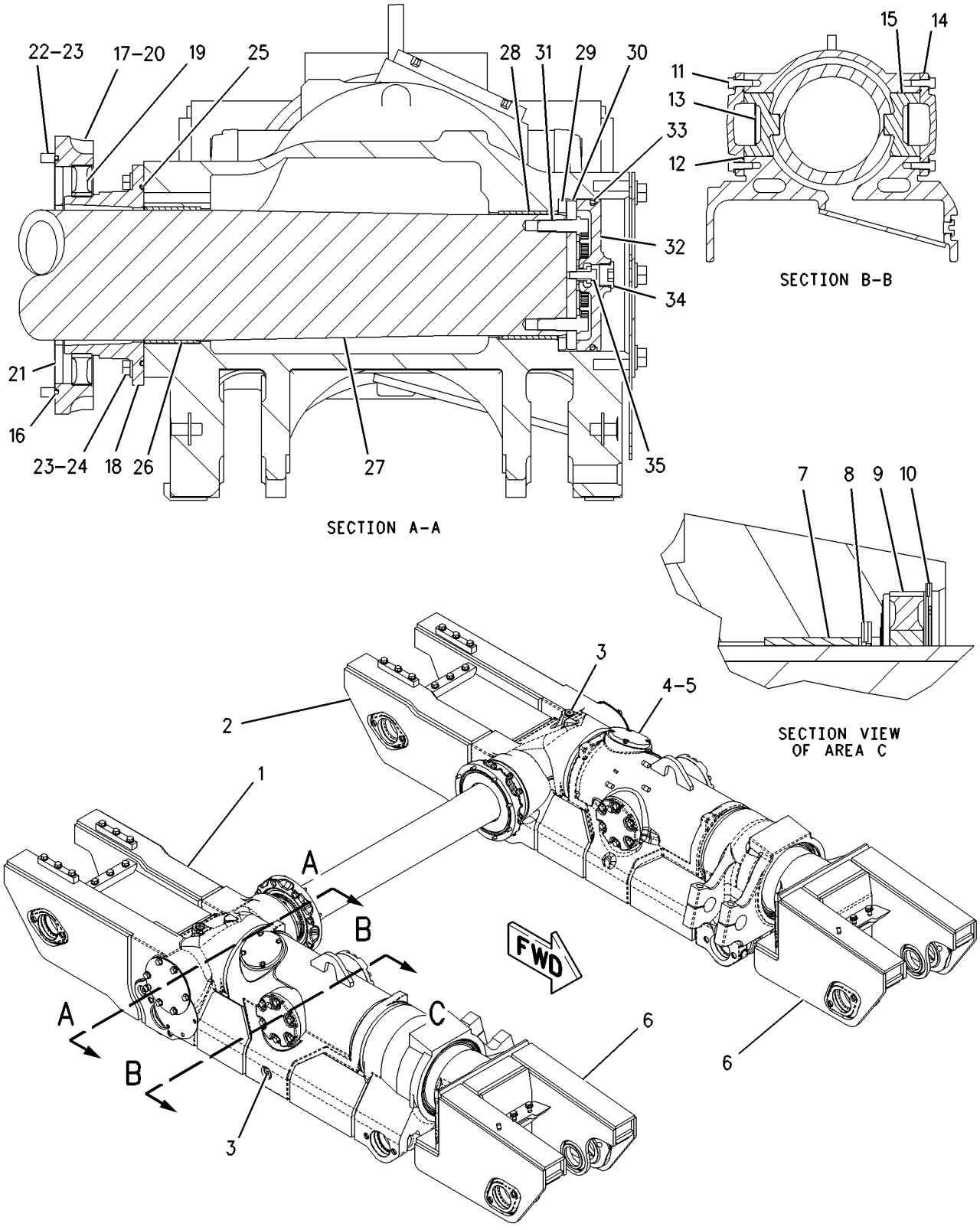

GRAPHIC #1 g00777771

UNDERCARRIAGE

157-3100 FRAME GP-TELESCOPING RECOIL

S/N: AKA1-UP

PART OF 157-8036 UNDERCARRIAGE AR

SMCS-4151 **i01497975**

NOTE	REF NO	GRAPHIC REF	PART NUMBER	QTY	PART NAME 1 2 3 4 5 6 (PRODUCT LEVEL)	SEE PAGE
	1	1	**2K-4472**	4	SEAL-O-RING	
	2	1	**6T-8258**	4	FILM-WARNING (RECOIL SPRING)	
	3	1	**7X-0345**	24	BOLT (5/8-11X1.75 IN)	
		1	**8T-4122**	24	WASHER-HARD (17X32X3.5MM THK)	
	4	1	**6T-8801**	4	GUIDE AS	
		1	**6T-8258**	1	FILM-WARNING (RECOIL SPRING)	
	5	1	**6P-8931**	4	COVER	
	6	1	**9W-7586**	8	PLATE	
	7	1	**9W-7587**	4	PLATE	
	8	1	**3T-5898**	2	RING-RETAINING	
	9	1	**9X-4584**	2	SEAL AS	
					(EACH INCLUDES)	
		1	**8T-5071**	1	GUARD-SEAL	
	10	1	**9W-3301**	2	RING-RETAINING	
	11	1	**7G-7379**	2	BEARING	
	12	1	**5P-2566**	24	BOLT (1/2-13X1.5 IN)	
	13	1	**5P-1076**	24	WASHER-HARD (13.5X30X4MM THK)	
	14	1	**9W-7594**	4	DOWEL	
	15	1	**4T-2069**	6	PLUG-DRAIN	
		1	**2H-3932**	6	SEAL-O-RING	
	16	1	**9W-4813**	1	COVER AS-LH	
		1	**9W-2466**	1	COVER AS-RH	
					(EACH COVER AS INCLUDES)	
		1	**5P-7179**	2	PLATE-WARNING (RECOIL SPRING OIL)	
		1	**9N-1995**	4	RIVET-POP	
		1	**9M-3786**	2	SEAL-O-RING	
	17	1	**4L-6454**	8	BOLT (3/8-16X1 IN)	
		1	**8T-4896**	8	WASHER-HARD (10.2X18.5X2.5MM THK)	
	18	1	**9W-7553**	1	FRAME AS-RH	
		1	**9W-7554**	1	FRAME AS-LH	
	19	1	**157-3101**	2	FRAME AS	
					(EACH INCLUDES)	
		1	**6V-2226**	1	PLATE-WARNING (RECOIL SPRING)	
		1	**4B-4158**	4	SCREW-DRIVE (3/16X0.25 IN)	
		1	**154-9838**	1	SLEEVE	
		1	**9W-7594**	2	DOWEL	
	20	1	**8C-6857**	56	BOLT (3/4-10X2.75 IN)	
		1	**8T-4994**	56	WASHER-HARD (20X36.5X3.5MM THK)	
	21	1	**184-4395**	28	GUIDE	
	22	2	**7T-1149**	2	RETAINER AS	
					(EACH INCLUDES)	
	23	2	**7T-1153**	1	PLATE	
	24	2	**7T-1152**	1	RETAINER (OUTER)	
	25	2	**7T-1151**	1	SEAL AS (SWAGED)	
	26	2	**7T-1150**	1	RETAINER (INNER)	
	27	2	**3T-4243**	2	BEARING-SLEEVE	
	28	2	**3T-4244**	2	BEARING-SLEEVE	
	29	2	**8E-0719**	2	RING-THRUST	
	30	2	**8E-2898**	2	PLATE	
	31	2	**8S-2331**	24	BOLT-12 POINT HEAD (5/8-11 X 2 IN)	
	32	2	**8E-2899**	2	PLATE	
		2	**2D-1690**	2	SEAL-RING	
	33	2	**8T-2502**	2	BOLT (3/8-16X1.125 IN)	
		2	**7T-6079**	2	SPACER	
	34	2	**9S-8009**	2	PLUG-O-RING	
		2	**4K-1388**	2	SEAL-O-RING	

157-3100 **FRAME GP-TELESCOPING RECOIL** *(contd.)* **i01497975**

NOTE	REF NO	GRAPHIC REF	PART NUMBER	QTY	PART NAME 1 2 3 4 5 6 (PRODUCT LEVEL)	SEE PAGE
	35	2	**8E-2837**	1	SHAFT-PIVOT	
	36	2	**5P-5374**	2	SEAL-O-RING	
	37	2	**8C-4436**	16	BOLT (1/2-13X1.375 IN)	
	38	2	**5P-2424**	16	BOLT (1/2-13X2.25 IN)	
	39	2	**8T-4223**	32	WASHER-HARD (13.5X25.5X3MM THK)	
	40	2	**6V-3263**	2	SEAL-O-RING	

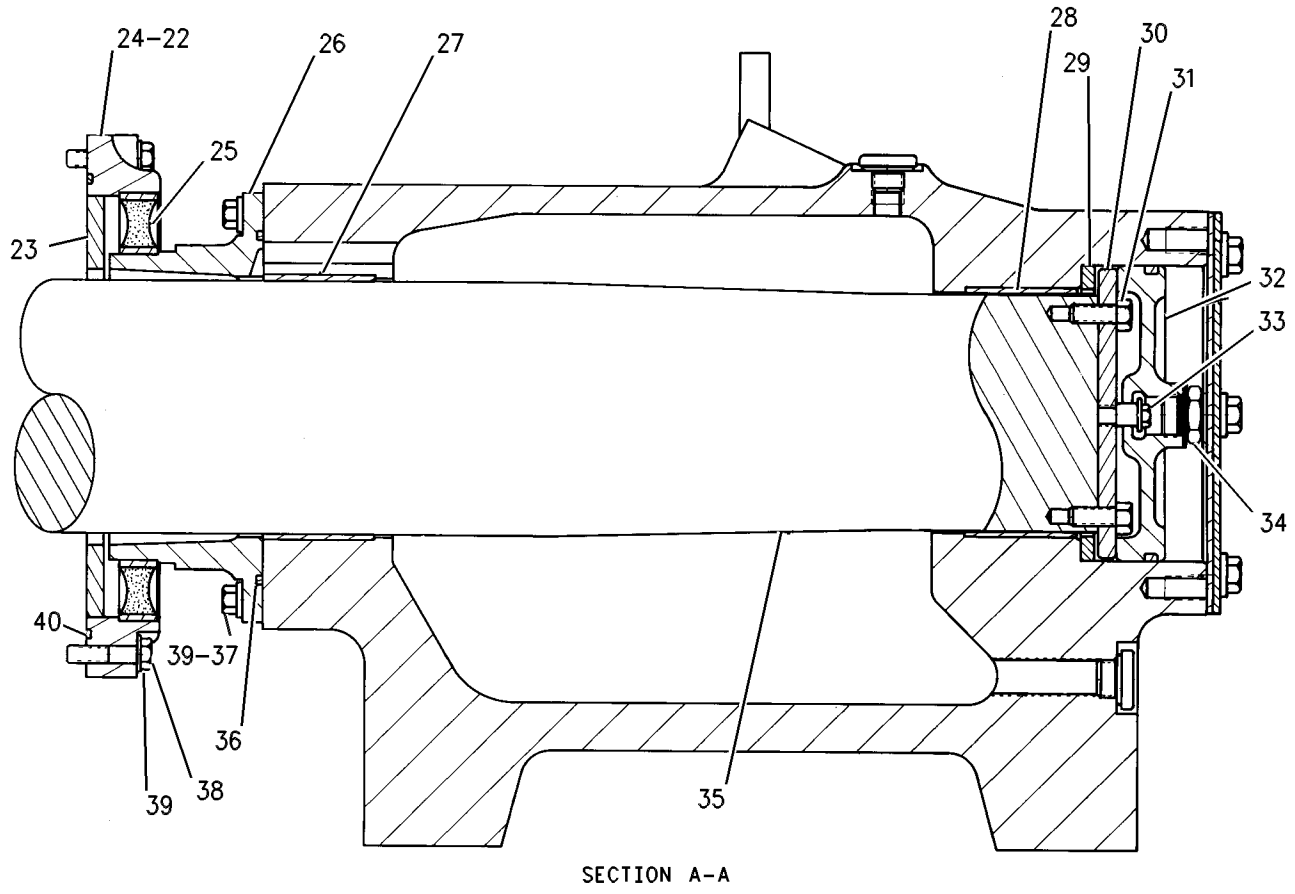

SECTION A-A

GRAPHIC #1 g00433922

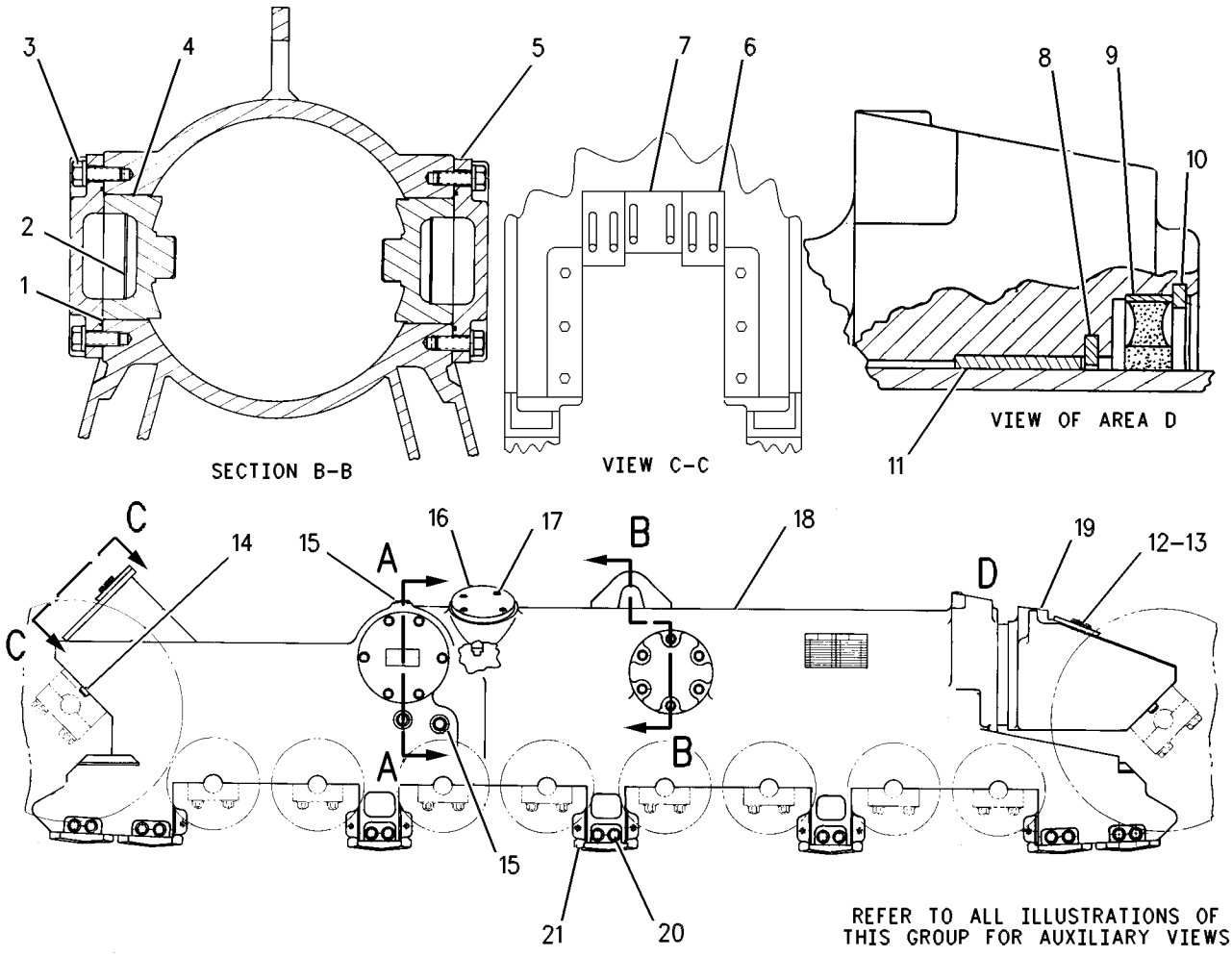

GRAPHIC #2

g00448907

MEMORANDA

UNDERCARRIAGE

157-3110 FRAME GP-TELESCOPING RECOIL

S/N: AKA1-UP

PART OF 157-8037 UNDERCARRIAGE AR

SMCS-4151 **i01497990**

NOTE	REF NO	GRAPHIC REF	PART NUMBER	QTY	PART NAME 1 2 3 4 5 6 (PRODUCT LEVEL)	SEE PAGE
	1	1	**7T-1149**	2	RETAINER AS	
					(EACH INCLUDES)	
	2	1	**7T-1150**	1	RETAINER	
	3	1	**7T-1151**	1	SEAL AS	
	4	1	**7T-1152**	1	RETAINER	
	5	1	**7T-1153**	1	PLATE	
	6	1	**8E-0719**	2	RING-THRUST	
	7	1	**8E-2898**	2	PLATE	
	8	1	**8S-2331**	24	BOLT-12 POINT HEAD (5/8-11 X 2 IN)	
	9	1	**8E-2899**	2	PLATE	
	10	1	**2D-1690**	2	SEAL-RING	
	11	1	**8T-2502**	2	BOLT (3/8-16X1.125 IN)	
	12	1	**7T-6079**	2	SPACER	
	13	1	**9S-8009**	2	PLUG-O-RING	
	14	1	**4K-1388**	2	SEAL-O-RING	
	15	1	**8E-2837**	1	SHAFT-PIVOT	
	16	1	**3T-4243**	2	BEARING-SLEEVE	
	17	1	**5P-5374**	2	SEAL-O-RING	
	18	1	**8C-4436**	16	BOLT (1/2-13X1.375 IN)	
	19	1	**6T-8801**	4	GUIDE AS	
					(EACH INCLUDES)	
		1	**6T-8258**	1	FILM-WARNING (RECOIL SPRING)	
	20	1	**6P-8931**	4	COVER	
	21	1	**2K-4472**	4	SEAL-O-RING	
	22	1	**6T-8258**	4	FILM-WARNING (RECOIL SPRING)	
	23	1	**8T-4122**	24	WASHER-HARD (17X32X3.5MM THK)	
	24	1	**7X-0345**	24	BOLT (5/8-11X1.75 IN)	
	25	1	**116-4794**	4	BRACKET AS	
	26	1	**9W-3301**	2	RING-RETAINING	
	27	1	**9X-4584**	2	SEAL AS	
	28	1	**3T-5898**	2	RING-RETAINING	
	29	1	**7G-7379**	2	BEARING	
	30	1	**7X-0408**	16	BOLT (1-8X3.50 IN)	
	31	1	**8T-5361**	16	WASHER-HARD (28X49X5MM THK)	
	32	1	**5P-2566**	24	BOLT (1/2-13X1.5 IN)	
	33	1	**157-3101**	2	FRAME AS	
		1	**4B-4158**	4	SCREW-DRIVE (3/16X0.25 IN)	
		1	**6V-2226**	1	PLATE-WARNING (RECOIL SPRING)	
		1	**9W-7594**	2	DOWEL	
		1	**154-9838**	1	SLEEVE	
	34	1	**119-6058**	1	FRAME AS-RH	
	35	1	**119-6059**	1	FRAME AS-LH	
	36	1	**9W-4813**	1	COVER AS-LH	
		1	**5P-7179**	2	PLATE-WARNING (RECOIL SPRING OIL)	
		1	**9N-1995**	4	RIVET-POP	
	37	1	**9W-2466**	1	COVER AS-RH	
		1	**5P-7179**	2	PLATE-WARNING (RECOIL SPRING OIL)	
		1	**9N-1995**	4	RIVET-POP	
	38	1	**9M-3786**	2	SEAL-O-RING	
	39	1	**4L-6454**	8	BOLT (3/8-16X1 IN)	
	40	1	**8T-4896**	8	WASHER-HARD (10.2X18.5X2.5MM THK)	
	41	1	**4T-2069**	6	PLUG-DRAIN	
	42	1	**2H-3932**	6	SEAL-O-RING	
	43	1	**9W-7587**	4	PLATE	
	44	1	**9W-7586**	8	PLATE	
	45	1	**9W-7594**	4	DOWEL	

157-3110 **FRAME GP-TELESCOPING RECOIL** *(contd.)* **i01497990**

NOTE	REF NO	GRAPHIC REF	PART NUMBER	QTY	PART NAME 1 2 3 4 5 6 (PRODUCT LEVEL)	SEE PAGE
	46	1	**184-4395**	28	GUIDE	
	47	1	**8C-6857**	56	BOLT (3/4-10X2.75 IN)	
	49	1	**8T-4994**	56	WASHER-HARD (20X36.5X3.5MM THK)	
	50	1	**5P-1076**	24	WASHER-HARD (13.5X30X4MM THK)	
	51	1	**5P-2424**	16	BOLT (1/2-13X2.25 IN)	
	52	1	**8T-4223**	32	WASHER-HARD (13.5X25.5X3MM THK)	
	53	1	**6V-3263**	2	SEAL-O-RING	
	54	1	**3T-4244**	2	BEARING-SLEEVE	

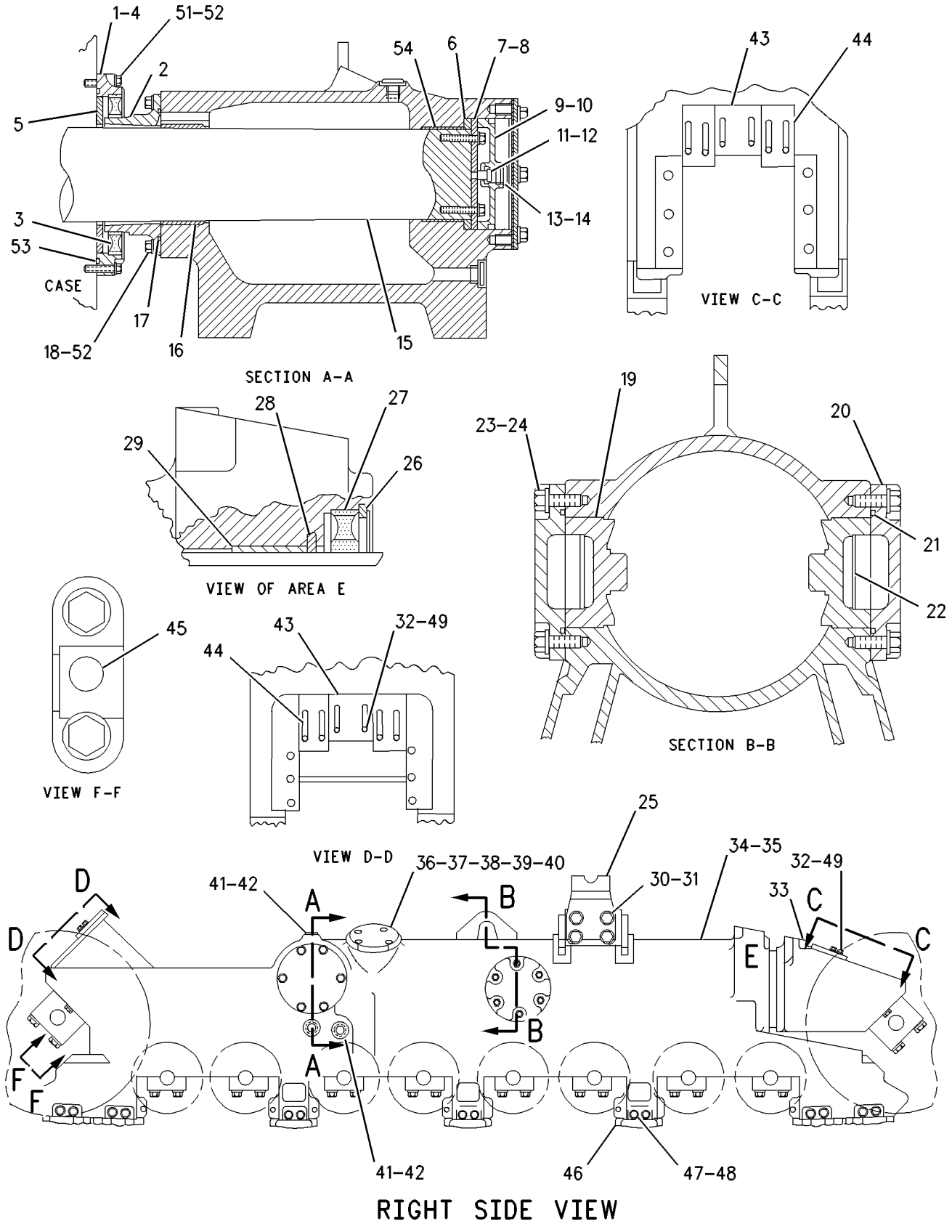

RIGHT SIDE VIEW

GRAPHIC #1 g00545910

111-1729 IDLER GP-TRACK

S/N: AKA1-UP

PART OF 156-5684, 157-8036, 157-8037 UNDERCARRIAGE AR

SMCS-4159 **i01205348**

NOTE	REF NO	GRAPHIC REF	PART NUMBER	QTY	PART NAME 1 2 3 4 5 6 (PRODUCT LEVEL)	SEE PAGE
	1	1	**6Y-0553**	1	IDLER & BEARING AS	
	2	1	**154-3298**	2	BEARING-SLEEVE	
	3	1	**107-3947**	2	COLLAR-SEAL	
	4	1	**154-3307**	1	SHAFT-TRACK IDLER	
	5	1	**8E-6619**	2	WASHER-THRUST	
	6	1	**107-4057**	2	SEAL-O-RING (67.94MM ID)	
	7	1	**162-7863**	2	SEAL GP-DUO-CONE	
					(EACH INCLUDES)	
		1	**162-2167**	2	RING-TORIC	
	8	1	**3K-6113**	24	WASHER-HARD (3MM THK)	
	9	1	**5P-2546**	24	BOLT-12 POINT HEAD (7/16-14X1.25IN)	
	10	1	**8F-9516**	2	SEAL-O-RING (139.29MM ID)	
	11	1	**6Y-0473**	1	PLUG	
	12	1	**9G-4872**	1	STOPPER-RUBBER	
	13	1	**107-3946**	2	RETAINER	

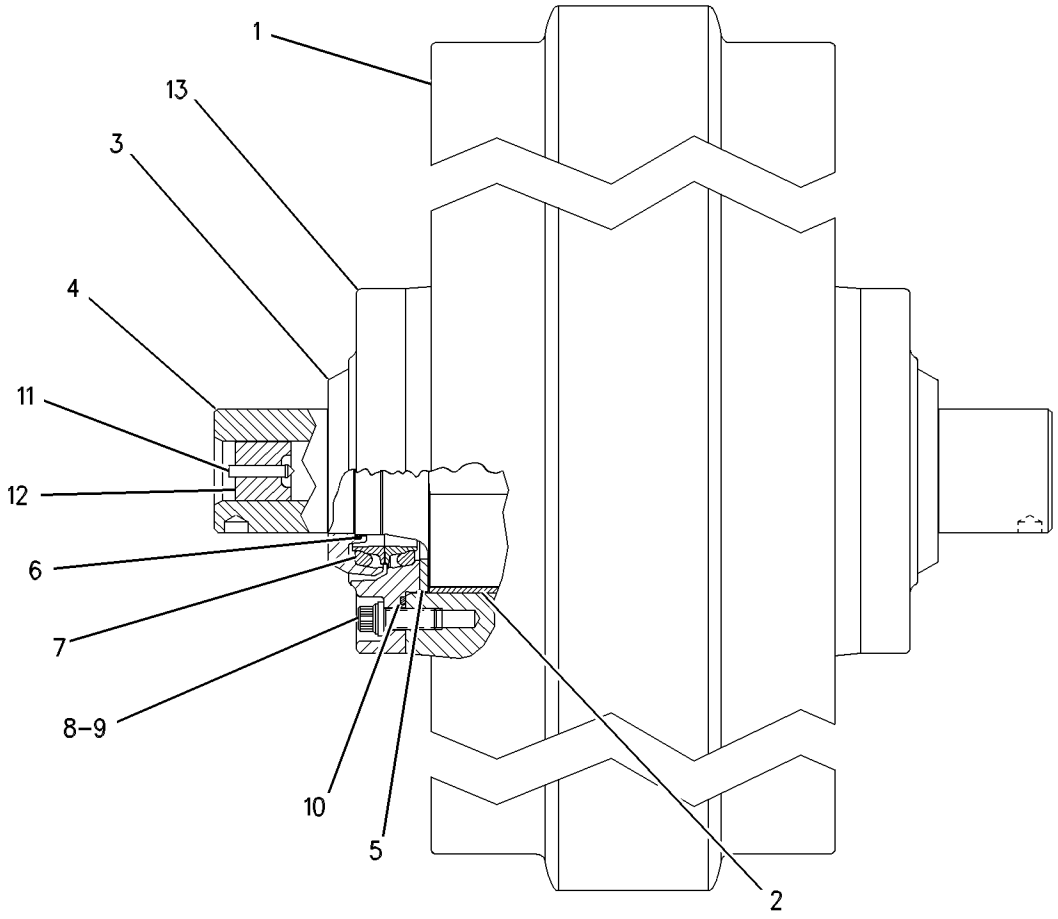

GRAPHIC #1 g00595334

111-1730 IDLER GP-TRACK

S/N: AKA1-UP

PART OF 156-5684 UNDERCARRIAGE AR

SMCS-4159 **i01205359**

NOTE	REF NO	GRAPHIC REF	PART NUMBER	QTY	PART NAME 1 2 3 4 5 6 (PRODUCT LEVEL)	SEE PAGE
	1	1	**6Y-0556**	1	IDLER & BEARING AS	
	2	1	**154-3298**	2	BEARING-SLEEVE	
	3	1	**107-3947**	2	COLLAR-SEAL	
	4	1	**154-3307**	1	SHAFT-TRACK IDLER	
	5	1	**8E-6619**	2	WASHER-THRUST	
	6	1	**107-4057**	2	SEAL-O-RING (67.94MM ID)	
	7	1	**162-7863**	2	SEAL GP-DUO-CONE	
					(EACH INCLUDES)	
		1	**162-2167**	2	RING-TORIC	
	8	1	**3K-6113**	24	WASHER-HARD (3MM THK)	
	9	1	**5P-2546**	24	BOLT-12 POINT HEAD (7/16-14X1.25IN)	
	10	1	**8F-9516**	2	SEAL-O-RING (139.29MM ID)	
	11	1	**6Y-0473**	1	PLUG	
	12	1	**9G-4872**	1	STOPPER-RUBBER	
	13	1	**107-3946**	2	RETAINER	

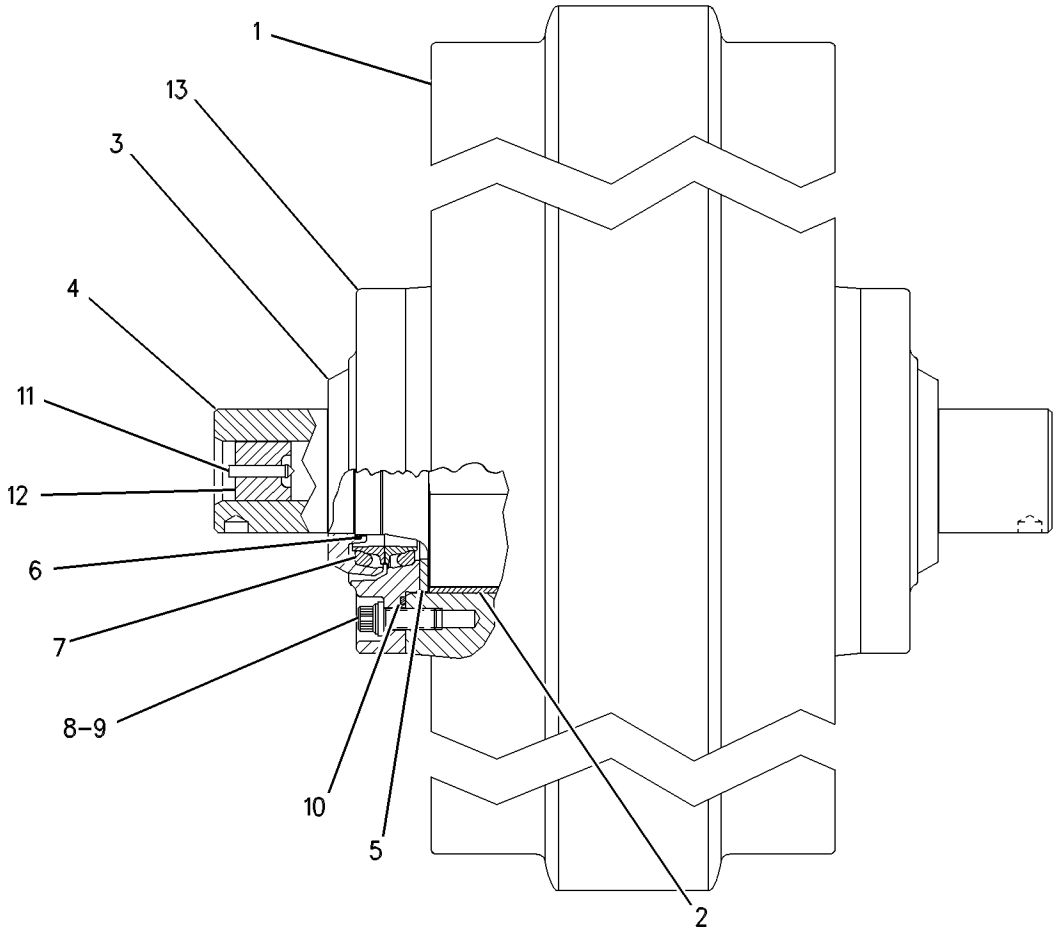

GRAPHIC #1 g00595202

UNDERCARRIAGE

166-3323 IDLER GP-TRACK

S/N: AKA1-UP

PART OF 166-4428 GUARD AR-IDLER

SMCS-4159 **i01442724**

NOTE	REF NO	GRAPHIC REF	PART NUMBER	QTY	PART NAME 1 2 3 4 5 6 (PRODUCT LEVEL)	SEE PAGE
	1	1	**6Y-0556**	1	IDLER & BEARING AS	
	2	1	**154-3298**	2	BEARING-SLEEVE	
	3	1	**154-3307**	1	SHAFT-TRACK IDLER	
	4	1	**6Y-0473**	1	PLUG-CLEAR	
		1	**9G-4872**	1	STOPPER-RUBBER	
	5	1	**107-4057**	2	SEAL-O-RING	
	6	1	**162-7863**	2	SEAL GP-DUO-CONE	
		1	**162-2167**	2	RING-TORIC	
	7	1	**8C-6877**	24	BOLT (7/16-14X1.75 IN)	
	8	1	**8T-5360**	24	WASHER (12X22.5X2.5MM THK)	
	9	1	**166-3322**	2	SEAL	
	10	1	**8F-9516**	2	SEAL-O-RING	
	11	1	**8E-6619**	2	WASHER-THRUST	
	12	1	**166-3320**	2	RETAINER	
	13	1	**166-3321**	2	COLLAR-SEAL	
	14	1	**166-3324**	2	PLATE	

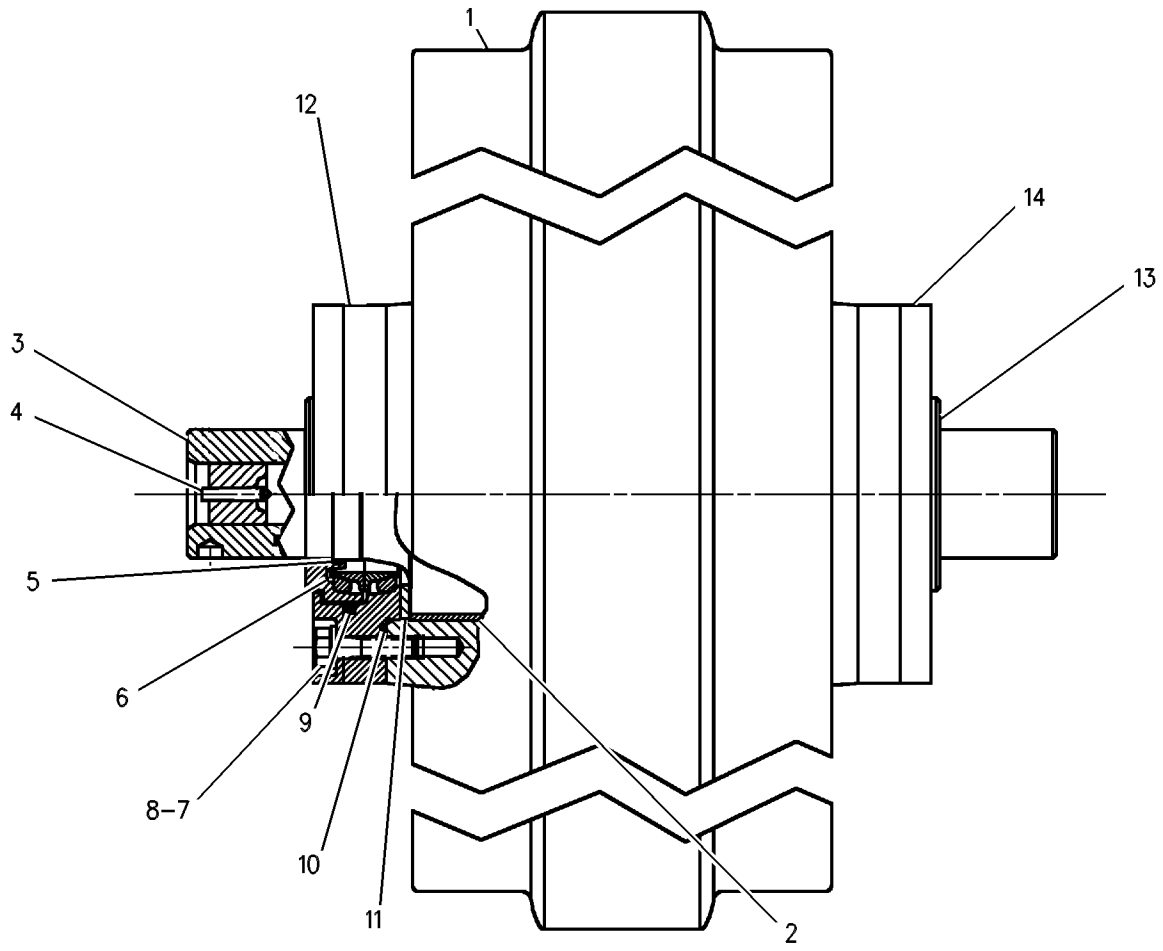

GRAPHIC #1 g00563149

166-4420 IDLER GP-TRACK

S/N: AKA1-UP

PART OF 166-4427, 166-4428 GUARD AR-IDLER

SMCS-4159 **i01442734**

NOTE	REF NO	GRAPHIC REF	PART NUMBER	QTY	PART NAME 1 2 3 4 5 6 (PRODUCT LEVEL)	SEE PAGE
	1	1	**6Y-0553**	1	IDLER & BEARING AS	
	2	1	**154-3298**	2	BEARING-SLEEVE	
	3	1	**154-3307**	1	SHAFT-TRACK IDLER	
	4	1	**6Y-0473**	1	PLUG-CLEAR	
		1	**9G-4872**	1	STOPPER-RUBBER	
	5	1	**107-4057**	2	SEAL-O-RING	
	6	1	**162-7863**	2	SEAL GP-DUO-CONE	
	7	1	**8C-6877**	24	BOLT (7/16-14X1.75 IN)	
	8	1	**8T-5360**	24	WASHER (12X22.5X2.5MM THK)	
	9	1	**166-3322**	2	SEAL	
	10	1	**8F-9516**	2	SEAL-O-RING	
	11	1	**8E-6619**	2	WASHER-THRUST	
	12	1	**166-3320**	2	RETAINER	
	13	1	**166-3321**	2	COLLAR-SEAL	
	14	1	**166-3324**	2	PLATE	

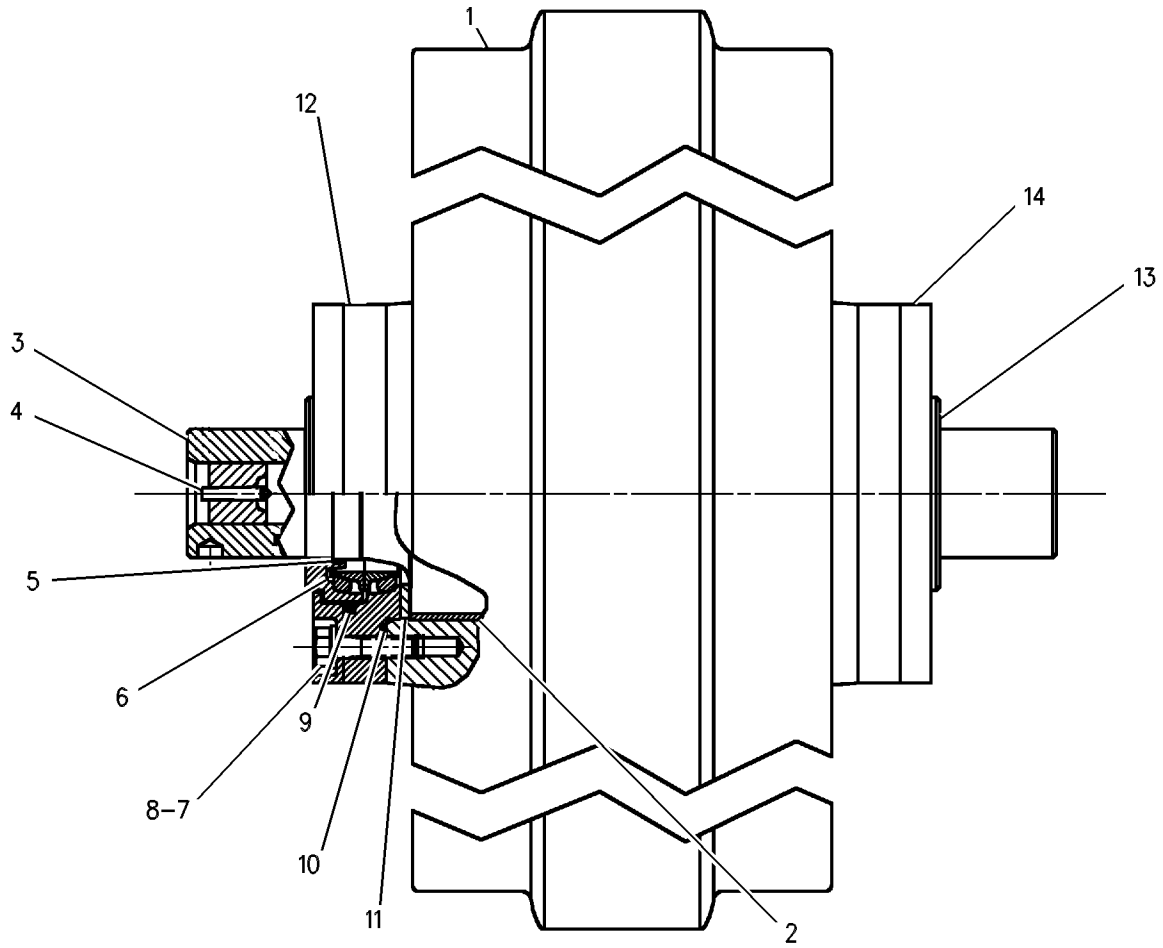

GRAPHIC #1 g00563196

8E-4518 LINK AS-TRACK

S/N: AKA1-UP

PART OF 1Q-4675, 6Y-4124, 8E-7696, 8E-7697, 8E-7698, 8E-7699, 8E-7700 TRACK GP

SMCS-4169, 4171 **i00832231**

NOTE	REF NO	GRAPHIC REF	PART NUMBER	QTY	PART NAME 1 2 3 4 5 6 (PRODUCT LEVEL)	SEE PAGE
	1	1	**8E-4060**	1	LINK-PIN END-LH	
	2	1	**6Y-0473**	44	PLUG	
	3	1	**8E-4059**	1	LINK-PIN END-RH	
	4	1	**8E-4506**	43	LINK-TRACK-LH	
	5	1	**9P-2251**	43	PIN-TRACK	
	6	1	**152-8073**	88	RING-THRUST	
	7	1	**8E-4458**	1	LINK-BUSHING END	
	8	1	**6Y-3914**	44	BUSHING-TERMINAL	
	9	1	**8E-4457**	1	LINK-BUSHING END	
	10	1	**8E-4505**	43	LINK-TRACK-RH	
	11	1	**9W-5588**	1	PIN-TRACK	
		1	**3T-9118**	2	RING-RETAINING	
	12	1	**8E-9648**	88	SEAL AS	
	13	1	**7G-4332**	44	STOPPER	

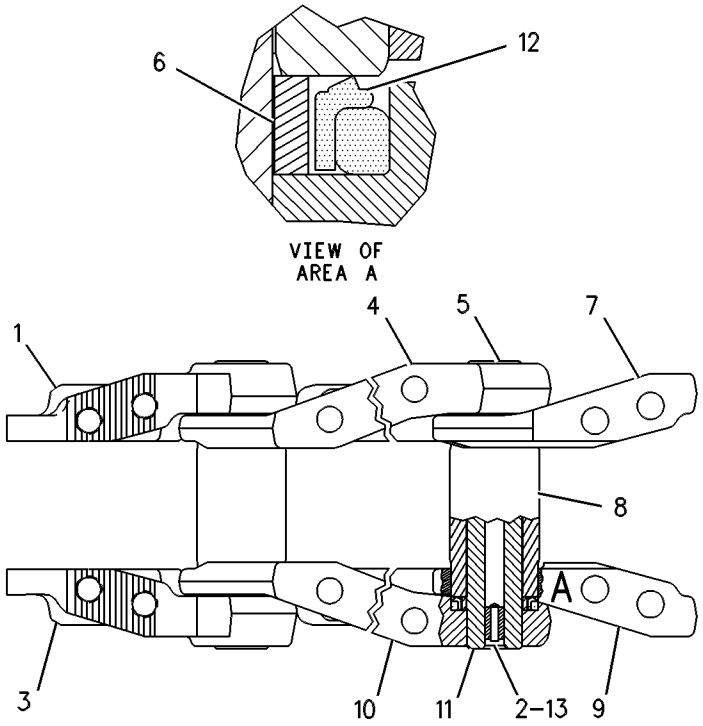

GRAPHIC #1 g00272905

UNDERCARRIAGE

159-6019 LUBRICATION GP-PIVOT SHAFT

S/N: AKA1-UP

PART OF 157-0819 CHASSIS AR

SMCS-3286 **i01486702**

NOTE	REF NO	GRAPHIC REF	PART NUMBER	QTY	PART NAME 1 2 3 4 5 6 (PRODUCT LEVEL)	SEE PAGE
	1	1	**8E-2931**	1	BOTTLE	
	2	1	**8E-3410**	1	CAP AS-OIL LEVEL	
	3	1	**8E-3696**	1	SUPPORT AS	
		1	**2R-1694**	2	SPACER	
	4	1	**8E-3698**	2	PAD	
	5	1	**9G-5127**	1	BREATHER	
I	6	1	**168-7035**	1	HOSE AS	
	7	1	*148-8347*	1	ELBOW GP	
		1	**3D-2824**	1	SEAL-O-RING	
		1	**6V-9746**	1	SEAL-O-RING	
		1	**6V-9007**	1	ELBOW	
	8	1	*148-8360*	1	ELBOW GP	
		1	**6V-9746**	1	SEAL-O-RING	
		1	**6V-9182**	1	ELBOW	
		1	**6V-9182**	1	ELBOW	
	9	1	**1S-0994**	3	CLIP	
	10	1	**4L-6454**	1	BOLT (3/8-16X1 IN)	
	11	1	**5M-3062**	2	BOLT (3/8-16X0.75 IN)	
	12	1	**5S-7379**	2	BOLT (3/8-16X0.875 IN)	
	13	1	**8T-4896**	5	WASHER-HARD (10.2X18.5X2.5MM THK)	

I-SEE HOSE FABRICATION GUIDE

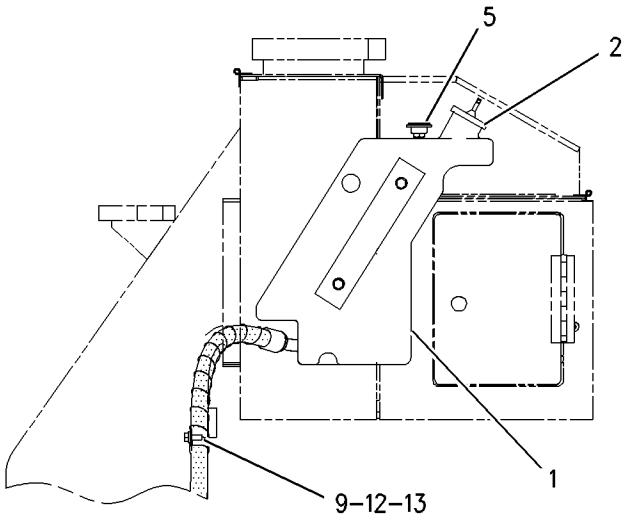

FRONT VIEW

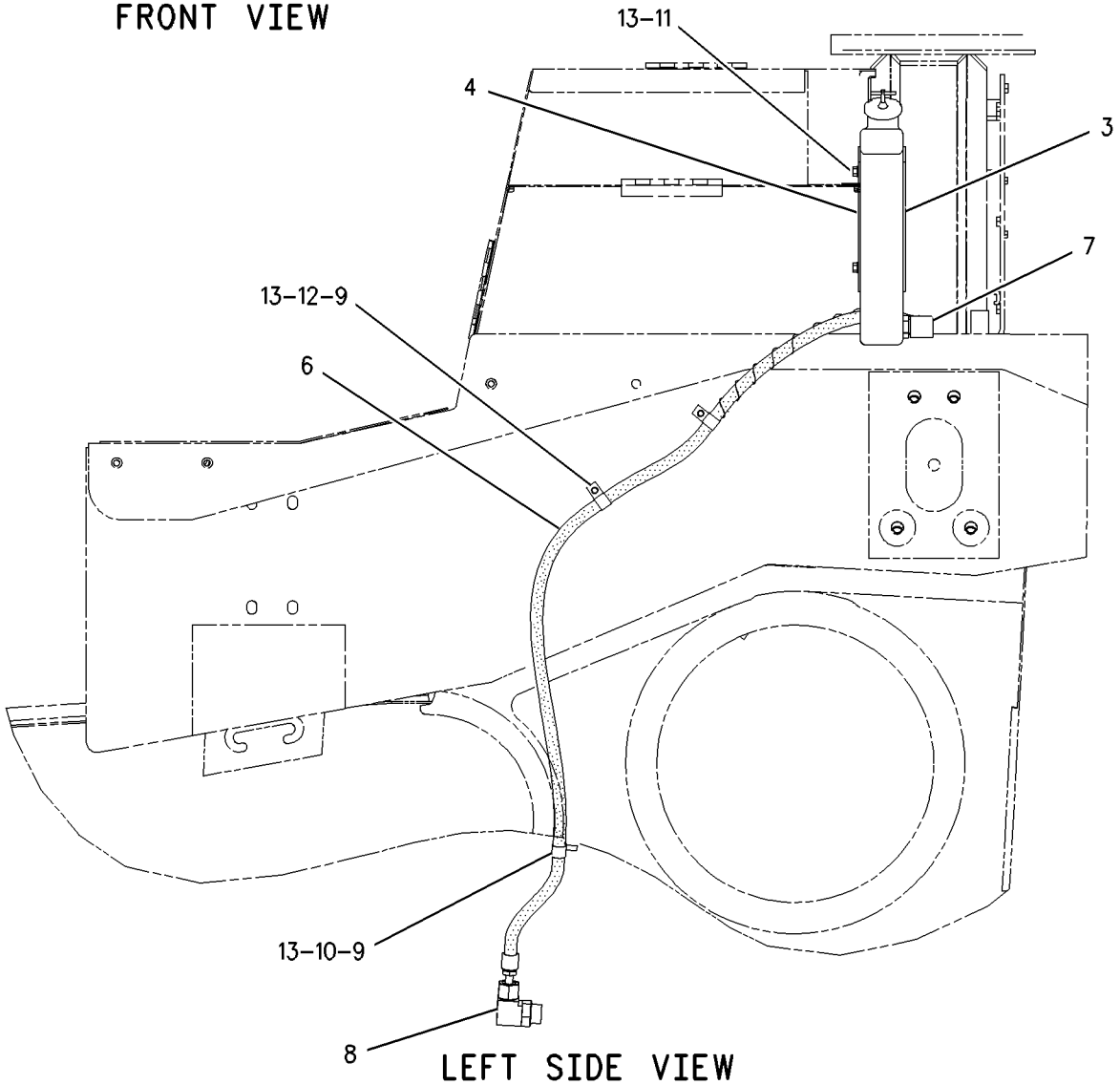

LEFT SIDE VIEW

GRAPHIC #1

g00769485

180-3489 ROLLER AR–CARRIER

S/N: AKA1-UP
GUARD READY

SMCS-4180 **i01489052**

NOTE	PART NUMBER	QTY	PART NAME 1 2 3 4 5 6 (PRODUCT LEVEL)	SEE PAGE
Y	*6T-1142*	4	CAP GP-TRACK ROLLER	468
Y	**196-9947**	2	ROLLER GP-TRACK-SINGLE FLANGE	494
	7X-0408	16	BOLT (1-8X3.50 IN)	
	116-4794	4	BRACKET AS	
	175-3637	1	FRAME AS-ROLLER	
	175-3638	1	FRAME AS-ROLLER	
	8T-5361	16	WASHER-HARD (28X49X5MM THK)	

Y-SEPARATE ILLUSTRATION

196-9946 ROLLER GP-TRACK-DOUBLE FLANGE

S/N: AKA1-UP

PART OF 156-5684, 157-8036, 157-8037 UNDERCARRIAGE AR

SMCS-4180 **i01486674**

NOTE	REF NO	GRAPHIC REF	PART NUMBER	QTY	PART NAME 1 2 3 4 5 6 (PRODUCT LEVEL)	SEE PAGE
	1	1	**5F-3106**	2	SEAL-O-RING	
	2	1	**7J-2036**	2	SEAL-O-RING	
	3	1	**9G-5664**	1	STOPPER-RUBBER	
		1	**6Y-0473**	1	PLUG-CLEAR	
	4	1	**8E-7510**	2	WASHER-THRUST	
	5	1	**107-3945**	2	COLLAR-SEAL	
	6	1	**107-8084**	1	SHAFT-TRACK ROLLER	
	7	1	**107-8085**	2	RETAINER	
	8	1	**162-7862**	2	SEAL GP-DUO-CONE	
					(EACH INCLUDES)	
	8A	1	**162-2166**	2	RING-TORIC	
Z	8B	1		2	SEAL-RING	
	9	1	**196-9948**	1	ROLLER & BEARING AS	
		1	**9W-9844**	2	BEARING-SLEEVE	
	10	1	**1A-1460**	12	BOLT (1/2-13X2 IN)	
	11	1	**5P-8245**	12	WASHER-HARD (13.5X25.5X3MM THK)	

Z-NOT SERVICED SEPARATELY

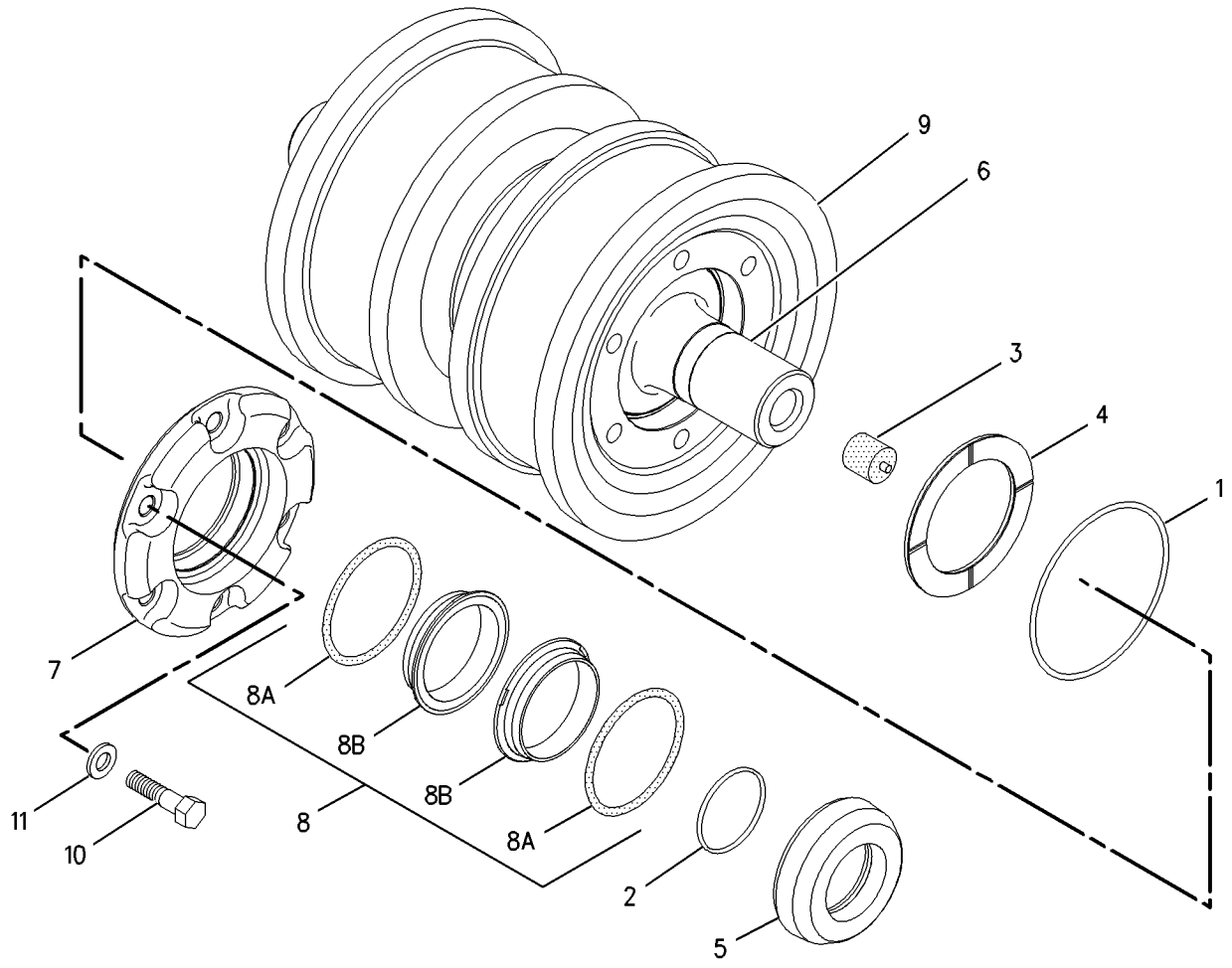

GRAPHIC #1 g00767716

UNDERCARRIAGE

196-9947 ROLLER GP-TRACK-SINGLE FLANGE

S/N: AKA1-UP

PART OF 180-3489 ROLLER AR, 156-5684, 157-8037 UNDERCARRIAGE AR

SMCS-4180 **i01486675**

NOTE	REF NO	GRAPHIC REF	PART NUMBER	QTY	PART NAME 1 2 3 4 5 6 (PRODUCT LEVEL)	SEE PAGE
	1	1	**5F-3106**	2	SEAL-O-RING	
	2	1	**7J-2036**	2	SEAL-O-RING	
	3	1	**9G-5664**	1	STOPPER-RUBBER	
		1	**6Y-0473**	1	PLUG-CLEAR	
	4	1	**8E-7510**	2	WASHER-THRUST	
	5	1	**107-3945**	2	COLLAR-SEAL	
	6	1	**107-8084**	1	SHAFT-TRACK ROLLER	
	7	1	**107-8085**	2	RETAINER	
	8	1	**162-7862**	2	SEAL GP-DUO-CONE	
					(EACH INCLUDES)	
	8A	1	**162-2166**	2	RING-TORIC	
Z	8B	1		2	SEAL-RING	
	9	1	**196-9949**	1	ROLLER & BEARING AS	
		1	**9W-9844**	2	BEARING-SLEEVE	
	10	1	**1A-1460**	12	BOLT (1/2-13X2 IN)	
	11	1	**5P-8245**	12	WASHER-HARD (13.5X25.5X3MM THK)	

Z-NOT SERVICED SEPARATELY

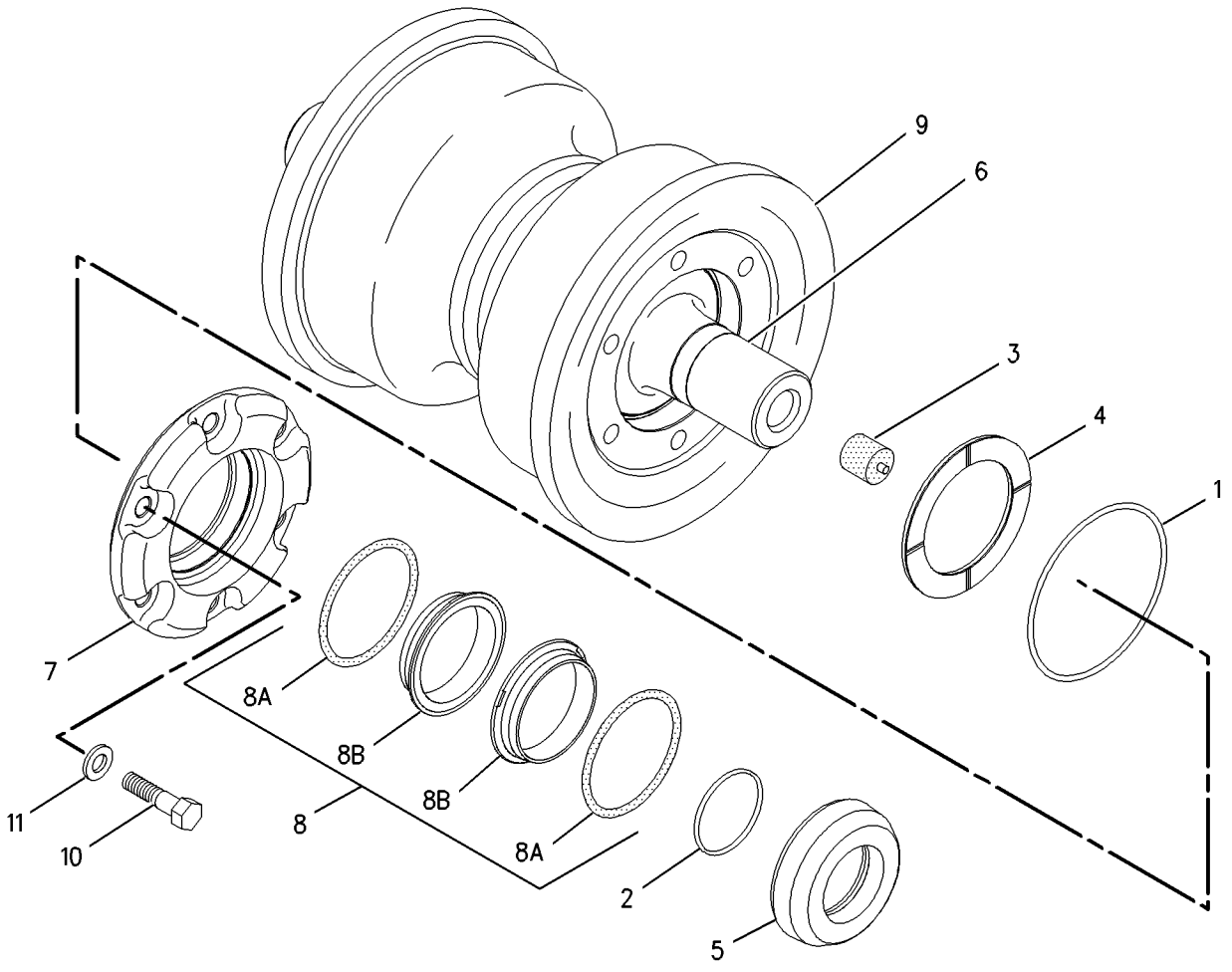

GRAPHIC #1 g00767772

MEMORANDA

UNDERCARRIAGE

7T-2540 SUSPENSION GP-BOGIE

S/N: AKA1-UP

PART OF 156-5684 UNDERCARRIAGE AR

SMCS-7217 **i01497185**

NOTE	REF NO	GRAPHIC REF	PART NUMBER	QTY	PART NAME 1 2 3 4 5 6 (PRODUCT LEVEL)	SEE PAGE
	1	1	**9W-7417**	2	BOGIE AS-FRONT	
	2	1	**7T-4697**	4	BOGIE AS-MIDDLE	
	3	1	**9W-7416**	2	BOGIE AS-REAR	
	4	1	**7T-8555**	16	BOGIE-MINOR	
	5	1	**7T-9307**	32	PIN AS-CARTRIDGE	
					(EACH INCLUDES)	
		1	**9G-4872**	2	STOPPER-RUBBER	
		1	**6Y-0473**	2	PLUG-CLEAR	
	6	1	**184-4395**	16	GUIDE	
	7	1	**8C-6857**	32	BOLT (3/4-10X2.75 IN)	
	8	1	**8T-4994**	32	WASHER-HARD (20X36.5X3.5MM THK)	
	9	1	**7T-4700**	16	PAD AS-RESILIENT	
	10	1	**7X-0307**	64	BOLT (7/16-14X.750IN)	
	11	1	**8T-5360**	64	WASHER (12X22.5X2.5MM THK)	
	12	1	**7G-5221**	16	PLATE-RETAINER	
	13	1	**067-3161**	16	RING-RETAINING	
C	14	1	**9W-4481**	8	INSERT	
	15	1	**8S-4755**	32	BOLT (1-14X1.5IN)	
	16	1	**9G-7516**	32	PLUG	
	17	1	**9P-7823**	16	COVER	

C-CHANGE FROM PREVIOUS TYPE

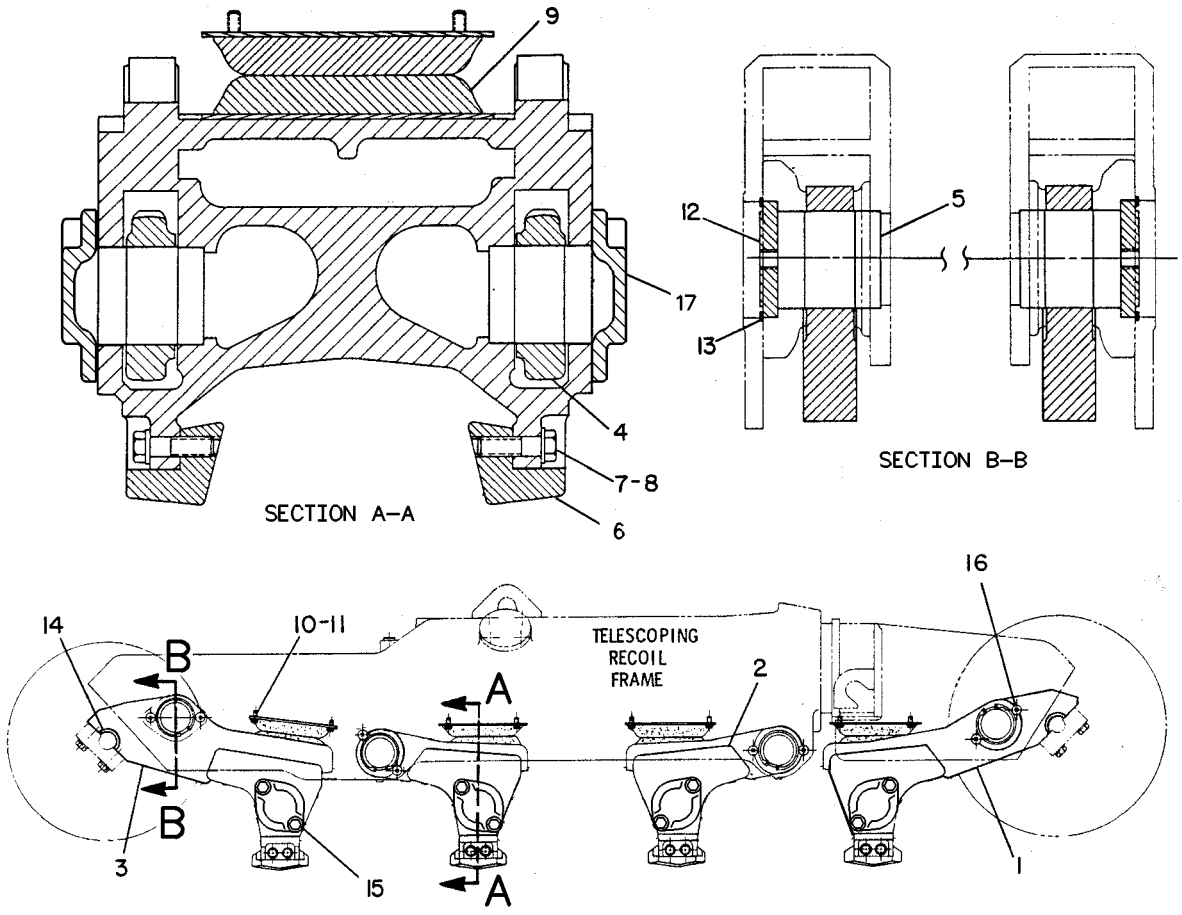

RIGHT SIDE VIEW

GRAPHIC #1 g00220606

UNDERCARRIAGE

154-3325 TRACK ADJUSTER & RECOIL GP

S/N: AKA1-UP

PART OF 156-5684, 157-8036, 157-8037 UNDERCARRIAGE AR

SMCS-4157, 4158 **i01429829**

NOTE	REF NO	GRAPHIC REF	PART NUMBER	QTY	PART NAME 1 2 3 4 5 6 (PRODUCT LEVEL)	SEE PAGE
	1	1	**1L-5081**	2	SPACER (13/32X3/4X9/16 IN THK)	
	2	1	**1M-1571**	4	RING-WEAR	
	3	1	**2S-5925**	2	VALVE (FILL)	
	4	1	**2S-5926**	2	VALVE (RELIEF)	
	5	1	**7T-4200**	2	COVER	
	6	1	**7T-4209**	2	CABLE AS	
		1	**1P-7405**	1	EYEBOLT	
	7	1	**7T-4213**	4	STOP	
	8	1	**7T-4214**	2	RETAINER	
	9	1	**7T-4616**	2	SPRING	
	10	1	**8T-2185**	2	SEAL-U-CUP	
	11	1	**9W-6074**	2	RETAINER	
	12	1	**104-6371**	2	TUBE	
	13	1	**104-6372**	2	PLATE	
	14	1	**104-6374**	2	PISTON	
	15	1	**154-3326**	2	SPACER	
	16	1	**154-3327**	2	CYLINDER AS	
		1	**154-3329**		SLEEVE	
	17	1	**5S-7382**	2	BOLT (3/8-16X1.375 IN)	
	18	1	**6J-1038**	4	SEAL-O-RING (15.47MM ID)	
	19	1	**6J-3991**	8	BOLT-12 POINT HEAD	
	20	1	**6V-8801**	2	NUT (3/8-16 THD)	
	21	1	**8H-8830**	2	RING-RETAINING	
	22	1	**8T-4223**	4	WASHER-HARD (13.5X25.5X3MM THK)	
	23	1	**8T-4835**	4	BOLT (1/2-13X2 IN)	
	24	1	**8T-4897**	2	WASHER (10.2X35X6MM THK)	

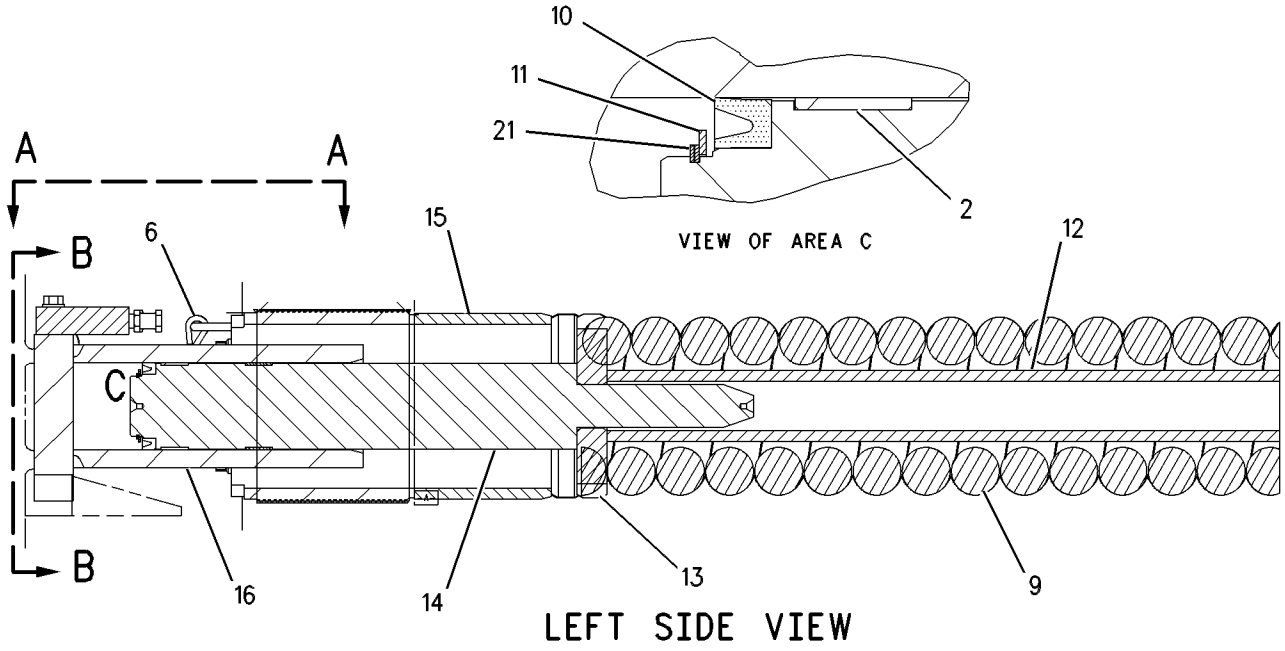

LEFT SIDE VIEW

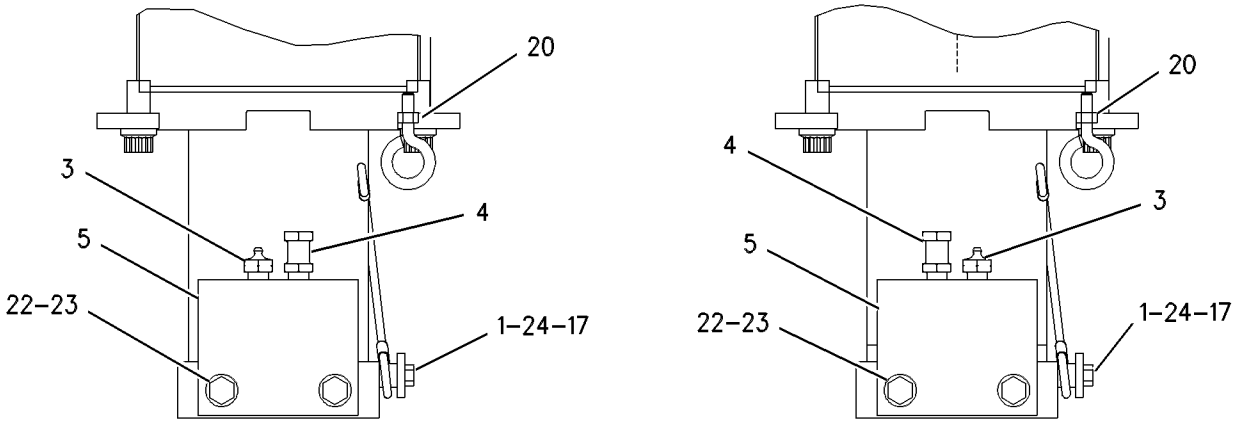

VIEW A-A
ROTATED 90 DEGREES

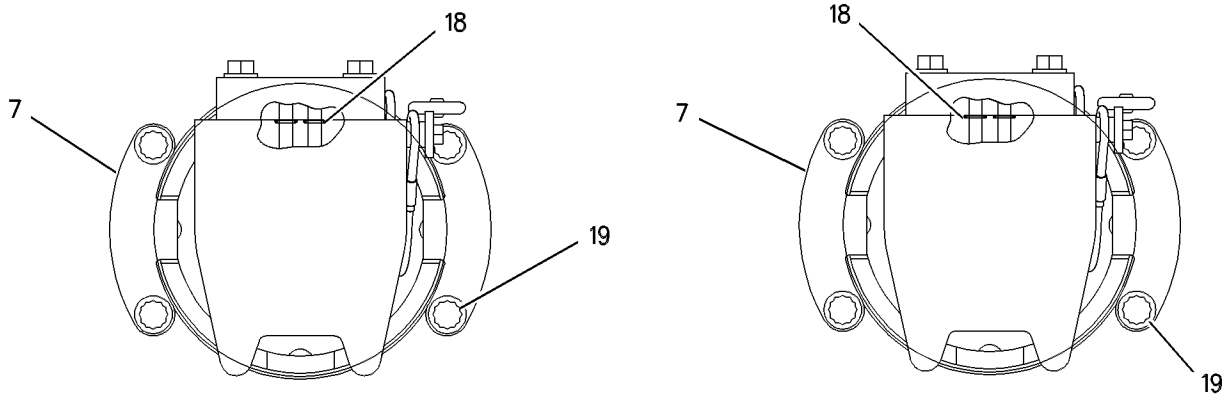

VIEW B-B

GRAPHIC #1 g00517392

UNDERCARRIAGE

1Q-4675 TRACK GP–2 REQUIRED

S/N: AKA1-UP

660MM (26 IN.) GROUSER SHOE. SEALED & LUBRICATED-EXTREME SERVICE-TRAPEZOIDAL

SMCS-4170 **i01440220**

NOTE	PART NUMBER	QTY	PART NAME 1 2 3 4 5 6 (PRODUCT LEVEL)	SEE PAGE
Y	**8E-4518**	1	LINK AS-TRACK	489
	6V-1723	172	BOLT-TRACK (7/8-14X3.42 IN)	
	6V-1724	2	BOLT-MASTER TRACK (7/8-14X3.78 IN)	
	6V-1725	2	BOLT-MASTER TRACK (7/8-14X5.08 IN)	
	7G-6442	172	NUT-TRACK (7/8-14 THD)	
	9W-5541	44	SHOE-TRACK	

Y-SEPARATE ILLUSTRATION

UNDERCARRIAGE

6Y-4124 TRACK GP–2 REQUIRED

S/N: AKA1-UP

610 MM (24 IN) GROUSER SHOE. SEALED & LUBRICATED-EXTREME SERVICE

SMCS-4170 **i00570525**

NOTE	PART NUMBER	QTY	PART NAME 1 2 3 4 5 6 (PRODUCT LEVEL)	SEE PAGE
	6V-1724	2	BOLT-MASTER TRACK	
	6V-1725	1	BOLT-MASTER TRACK	
	6V-1723	172	BOLT-TRACK	
Y	**8E-4518**	1	LINK AS-TRACK	489
	7G-6442	172	NUT-TRACK	
	7T-2392	44	SHOE-TRACK	

Y-SEPARATE ILLUSTRATION

UNDERCARRIAGE

8E-7696 TRACK GP–2 REQUIRED

S/N: AKA1-UP

560MM (22 IN) GROUSER SHOE. SEALED & LUBRICATED-MODERATE SERVICE

PART OF 156-5684 UNDERCARRIAGE AR

SMCS-4170 **i00570979**

NOTE	PART NUMBER	QTY	PART NAME 1 2 3 4 5 6 (PRODUCT LEVEL)	SEE PAGE
Y	**8E-4518**	1	LINK AS-TRACK	489
	6V-1723	172	BOLT-TRACK	
	6V-1724	2	BOLT-MASTER TRACK	
	6V-1725	2	BOLT-MASTER TRACK	
	7G-6442	172	NUT-TRACK	
	7G-6448	44	SHOE-TRACK	

Y-SEPARATE ILLUSTRATION

UNDERCARRIAGE

8E-7697 TRACK GP–2 REQUIRED.

S/N: AKA1-UP

610 MM (24 IN) GROUSER SHOE. SEALED & LUBRICATED.

SMCS-4170 **i00686603**

NOTE	PART NUMBER	QTY	PART NAME 1 2 3 4 5 6 (PRODUCT LEVEL)	SEE PAGE
Y	**8E-4518**	1	LINK AS-TRACK	489
	6V-1724	2	BOLT-MASTER TRACK	
	6V-1725	2	BOLT-MASTER TRACK	
	6V-1723	172	BOLT-TRACK	
	7G-6442	172	NUT-TRACK	
	9P-2661	44	SHOE-TRACK	

Y-SEPARATE ILLUSTRATION

UNDERCARRIAGE

8E-7698 TRACK GP

S/N: AKA1-UP

660MM (26 IN.) GROUSER SHOE. SEALED & LUBRICATED, MODERATE SERVICE

SMCS-4170 **i01357807**

NOTE	PART NUMBER	QTY	PART NAME 1 2 3 4 5 6 (PRODUCT LEVEL)	SEE PAGE
Y	**8E-4518**	1	LINK AS-TRACK	489
	6V-1724	2	BOLT-MASTER TRACK	
	6V-1725	2	BOLT-MASTER TRACK	
	6V-1723	172	BOLT-TRACK (7/8-14X3.42 IN)	
	7G-6442	172	NUT-TRACK	
	9P-2665	44	SHOE-TRACK	

Y-SEPARATE ILLUSTRATION

UNDERCARRIAGE

8E-7699 TRACK GP

S/N: AKA1-UP

710MM (28 IN.)GROUSER SHOE. SEALED & LUBRICATED, MODERATE SERVICE

SMCS-4170 **i01357849**

NOTE	PART NUMBER	QTY	PART NAME 1 2 3 4 5 6 (PRODUCT LEVEL)	SEE PAGE
Y	**8E-4518**	1	LINK AS-TRACK	489
	6V-1724	2	BOLT-MASTER TRACK (7/8-14X3.78 IN)	
	6V-1725	2	BOLT-MASTER TRACK (7/8-14X5.08 IN)	
	6V-1723	172	BOLT-TRACK (7/8-14X3.42 IN)	
	7G-6442	172	NUT-TRACK (7/8-14 THD)	
	7G-6454	44	SHOE-TRACK	

Y-SEPARATE ILLUSTRATION

UNDERCARRIAGE

8E-7700 TRACK GP–2 REQUIRED

S/N: AKA1-UP

560MM (22 IN) GROUSER SHOE. SEALED & LUBRICATED -EXTREME SERVICE

SMCS-4170 **i00570984**

NOTE	PART NUMBER	QTY	PART NAME 1 2 3 4 5 6 (PRODUCT LEVEL)	SEE PAGE
Y	**8E-4518**	1	LINK AS-TRACK	489
	6V-1723	172	BOLT-TRACK	
	6V-1724	2	BOLT-MASTER TRACK	
	6V-1725	2	BOLT-MASTER TRACK	
	7G-6442	172	NUT-TRACK	
	7T-2390	44	SHOE-TRACK	

Y-SEPARATE ILLUSTRATION

UNDERCARRIAGE

156-5684 UNDERCARRIAGE AR

S/N: AKA1-UP

PART OF 157-0818 GENERAL AR

SMCS-4150 **i01486670**

NOTE	PART NUMBER	QTY	PART NAME 1 2 3 4 5 6 (PRODUCT LEVEL)	SEE PAGE
Y	*9W-4477*	8	CAP GP-TRACK IDLER	465
Y	*6T-1142*	32	CAP GP-TRACK ROLLER	468
Y	*127-8779*	1	EQUALIZER BAR GP	472
Y	*156-5685*	1	FRAME GP-TELESCOPING RECOIL	476
Y	**111-1729**	2	IDLER GP-TRACK	485
Y	**111-1730**	2	IDLER GP-TRACK	486
Y	**196-9946**	8	ROLLER GP-TRACK-DOUBLE FLANGE	493
Y	**196-9947**	8	ROLLER GP-TRACK-SINGLE FLANGE	494
Y	*7T-2540*	1	SUSPENSION GP-BOGIE	496
Y	*154-3325*	1	TRACK ADJUSTER & RECOIL GP	498
Y	*8E-7696*	2	TRACK GP	502

Y-SEPARATE ILLUSTRATION

157-8036 UNDERCARRIAGE AR

S/N: AKA1-UP
NON-SUSPENDED
CANNOT BE USED WITH CARRIER ROLLERS

SMCS-4150 **i01488618**

NOTE	PART NUMBER	QTY	PART NAME 1 2 3 4 5 6 (PRODUCT LEVEL)	SEE PAGE
Y	*9W-9205*	4	CAP GP-TRACK IDLER	466
Y	*9W-9206*	4	CAP GP-TRACK IDLER	467
Y	*126-4233*	32	CAP GP-TRACK ROLLER	469
Y	*127-8779*	1	EQUALIZER BAR GP	472
Y	*157-3100*	1	FRAME GP-TELESCOPING RECOIL	478
Y	**111-1729**	4	IDLER GP-TRACK	485
Y	**196-9946**	16	ROLLER GP-TRACK-DOUBLE FLANGE	493
Y	*154-3325*	1	TRACK ADJUSTER & RECOIL GP	498

Y-SEPARATE ILLUSTRATION

157-8037 UNDERCARRIAGE AR

S/N: AKA1-UP

SMCS-4150 **i01488632**

NOTE	PART NUMBER	QTY	PART NAME 1 2 3 4 5 6 (PRODUCT LEVEL)	SEE PAGE
Y	*9W-9205*	4	CAP GP-TRACK IDLER	466
Y	*9W-9206*	4	CAP GP-TRACK IDLER	467
Y	*6T-1142*	4	CAP GP-TRACK ROLLER	468
Y	*126-4233*	32	CAP GP-TRACK ROLLER	469
Y	*127-8779*	1	EQUALIZER BAR GP	472
Y	*157-3110*	1	FRAME GP-TELESCOPING RECOIL	482
Y	**111-1729**	4	IDLER GP-TRACK	485
Y	**196-9946**	16	ROLLER GP-TRACK-DOUBLE FLANGE	493
Y	**196-9947**	2	ROLLER GP-TRACK-SINGLE FLANGE	494
Y	*154-3325*	1	TRACK ADJUSTER & RECOIL GP	498

Y-SEPARATE ILLUSTRATION

STEERING AND BRAKING SYSTEM

6Y-3526 ADAPTER GP-MOTOR

S/N: AKA1-UP

PART OF 157-0822 STEERING AR-HYDRAULIC

SMCS-5058 **i01066078**

NOTE	REF NO	GRAPHIC REF	PART NUMBER	QTY	PART NAME 1 2 3 4 5 6 (PRODUCT LEVEL)	SEE PAGE
	1	1	**8C-6857**	2	BOLT (3/4-10X2.75IN)	
		1	**8T-4994**	2	WASHER (5MM THK)	
	2	1	**7K-6058**	6	BOLT-12 POINT HEAD (1/2-13X2.5IN)	
	3	1	**5J-2383**	1	SEAL-O-RING (190.09MM ID)	
	4	1	**3N-0759**	1	RING-SEALING	
	5	1	**6Y-3988**	1	ADAPTER	

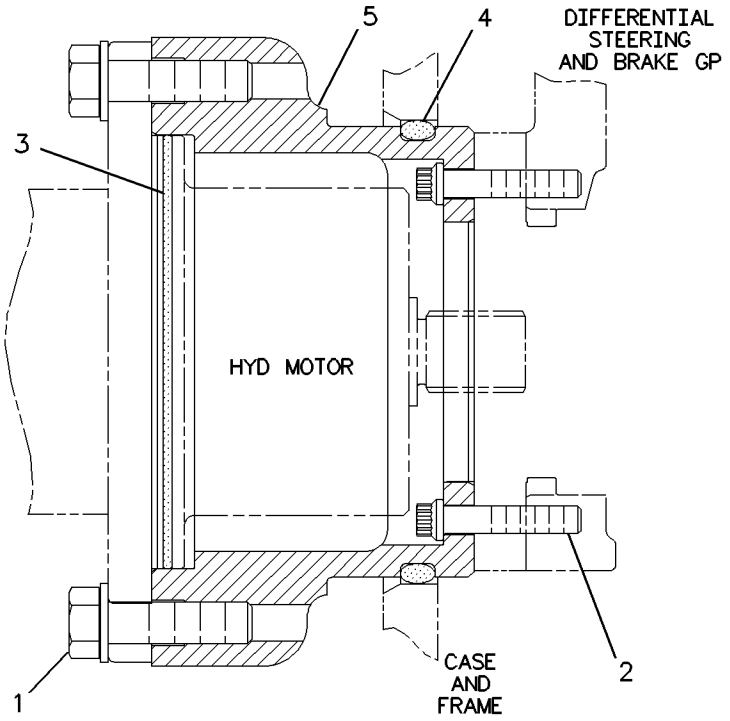

GRAPHIC #1 g00215772

MEMORANDA

STEERING AND BRAKING SYSTEM

107-3881 CONTROL GP-PARKING BRAKE

S/N: AKA1-UP

PART OF 158-8078 CONTROL GP-STEERING & TMSN

SMCS-4269, 4284 **i01164802**

NOTE	REF NO	GRAPHIC REF	PART NUMBER	QTY	PART NAME 1 2 3 4 5 6 (PRODUCT LEVEL)	SEE PAGE
	1	1	**2N-3680**	3	SCREW-HEAD	
	2	1	**2R-5001**	1	DOWEL	
	3	1	**3B-4605**	2	COTTER	
	4	1	**4V-6981**	2	SCREW-BUTTON HEAD (1/4-20X.75IN)	
	5	1	**6V-8118**	2	SCREW-SOCKET HEAD	
	6	1	**7H-9737**	1	PIN-COTTER	
	7	1	**8T-5410**	2	SEAL-LIP	
	8	1	**9S-1305**	2	PIN-CLEVIS	
	9	1	**107-3888**	1	BRACKET AS	
	10	1	**9F-6445**	2	NUT-WELD (1/4-20 THD)	
	11	1	**112-2660**	1	COVER	
	12	1	**118-0639**	1	SWITCH AS-ROCKER (PARKING BRAKE)	
	13	1	**102-8801**	1	KIT-RECEPTACLE (12 PIN)	
					(INCLUDES WEDGE & RECEPTACLE AS)	
		1	**3E-5180**	1	WEDGE-RECEPTACLE LOCK	
		1	**8T-8729**	12	PIN-CONNECTOR	
	14	1	**122-1671**	1	KNOB	
	15	1	**167-7751**	1	PLATE AS	
	16	1	**127-1596**	1	SHAFT (69MM LG)	
	17	1	**127-1597**	1	SHAFT	
	18	1	**8T-0328**	2	WASHER-HARD (1MM THK)	
	19	1	**8T-4205**	1	WASHER-HARD (2MM THK)	
M	20	1	**5C-2890**	1	NUT (M6X1.00 THD)	
	21	1	**6V-8185**	3	NUT (1/4-20 THD)	
E	22	1	**8C-5063**		CONDUIT-FLEXIBLE (30CM)	

E-ORDER BY THE CENTIMETER
M-METRIC PART

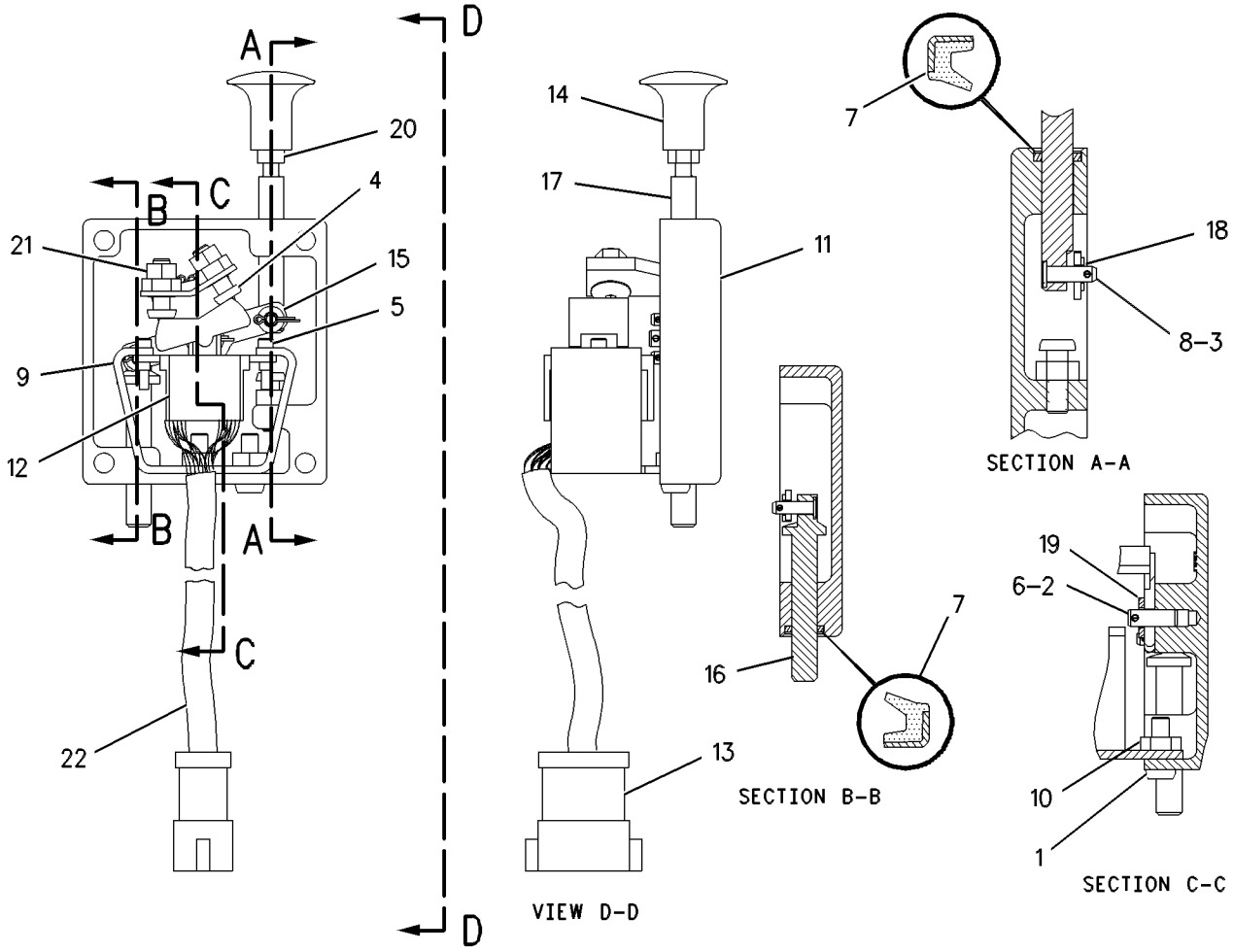

GRAPHIC #1 g00597844

STEERING AND BRAKING SYSTEM

172-5263 CONTROL GP-STEERING

S/N: AKA1-UP

PART OF 157-0822 STEERING AR-HYDRAULIC

SMCS-4135 **i01437847**

NOTE	REF NO	GRAPHIC REF	PART NUMBER	QTY	PART NAME 1 2 3 4 5 6 (PRODUCT LEVEL)	SEE PAGE
	1	1	**3E-4048**	1	CAP-PLUG	
M	2	1	**124-8100**	8	SCREW-TRUSS HEAD (M10X1.5X20MM)	
Y	3	1	*158-8078*	1	CONTROL GP-STEERING & TMSN	518
	4	1	**7X-7729**	8	WASHER (11X25X3MM THK)	

M-METRIC PART
Y-SEPARATE ILLUSTRATION

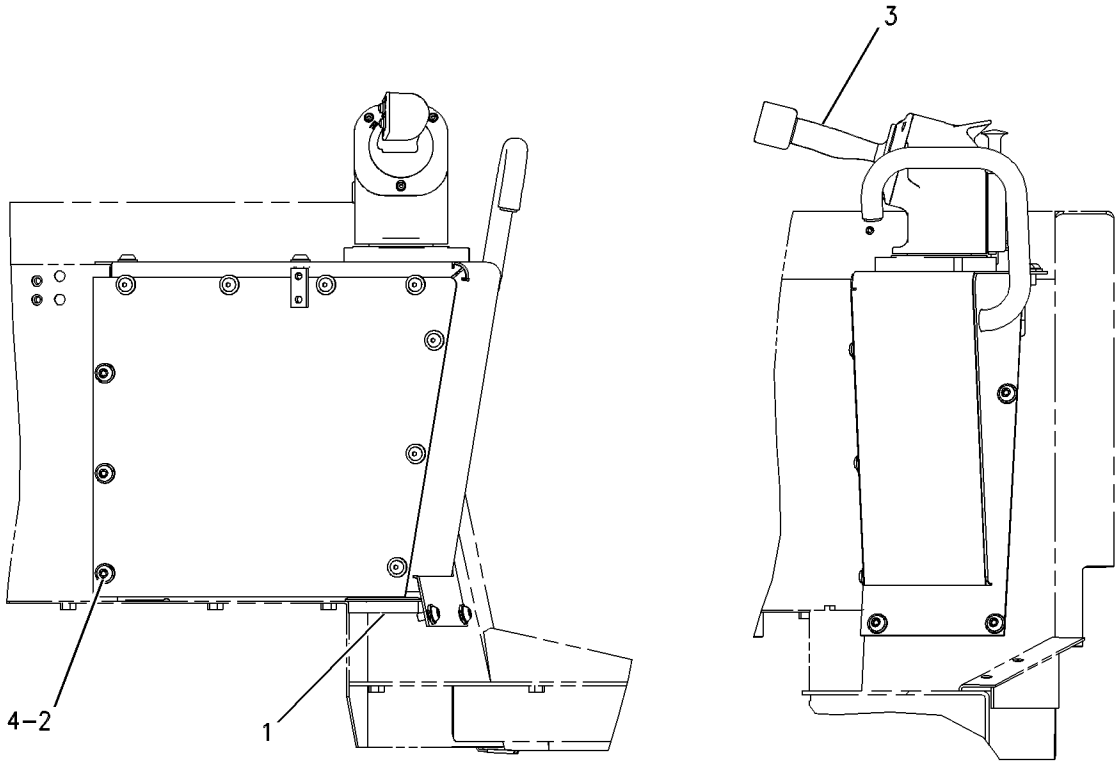

RIGHT SIDE VIEW

FRONT VIEW

GRAPHIC #1 g00662925

MEMORANDA

STEERING AND BRAKING SYSTEM

112-4820 CONTROL GP-STEERING & TMSN

S/N: AKA1-UP

PART OF 158-8078 CONTROL GP-STEERING & TMSN

SMCS-4122 **i01169882**

NOTE	REF NO	GRAPHIC REF	PART NUMBER	QTY	PART NAME 1 2 3 4 5 6 (PRODUCT LEVEL)	SEE PAGE
	1	1	**1H-3340**	1	BOLT	
J	2	1	**151-9275**	1	KIT-RECEPTACLE (6 PIN)	
					(INCLUDES PLUG AS & PART MARKED J)	
J	3	1	**3E-3383**	1	WEDGE-RECEPTACLE LOCK	
	4	1	**5H-9899**	1	RING-RETAINING	
CM	5	1	**6V-2314**	2	BOLT	
	6	1	**6V-3545**	1	BEARING-ROLLER	
	7	1	**7X-4771**	1	SEAL-VALVE RING	
M	8	1	**7Y-5226**	2	NUT (M5X0.8MM THD)	
	9	1	**8T-8729**	6	PIN-CONNECTOR	
	10	1	**103-6262**	2	SCREW-MACHINE	
CY	11	1	**161-8979**	1	SENSOR GP-POSITION (SPRINGLESS)	261
	12	1	**110-2028**	2	SCREW-PAN HEAD	
	13	1	**110-7882**	1	SWITCH AS-LIMIT (PARKING BRAKE)	
	14	1	**111-8642**	1	COVER-FRONT	
	15	1	**111-8950**	1	ANGLE	
	16	1	**112-4740**	1	HANDLE	
	17	1	**112-4757**	1	COVER	
	18	1	**128-2660**	1	WIRE AS	
	19	1	**131-0447**	2	NUT	
	20	1	**132-7419**	1	SWITCH AS-PUSH BUTTON (ELECTRONIC-UPSHIFT)	
		1	**144-0331**	1	CAP-PUSHBUTTON	
	21	1	**132-7450**	1	SWITCH AS-PUSH BUTTON (ELECTRONIC-DOWNSHIFT)	
		1	**144-0331**	1	CAP-PUSHBUTTON	
	22	1	**151-5803**	1	SHAFT AS-DETENT	
	23	1	**158-2734**	2	SPRING	
	24	1	**158-2735**	1	BASE	
	25	1	**6V-1232**	2	SCREW-BUTTON HEAD	
	26	1	**9W-1464**	2	SCREW (1/4-20 X 1 IN)	
	27	1	**7X-0584**	1	WASHER-HARD (2MM THK)	
	28	1	**8T-4205**	2	WASHER-HARD (2MM THK)	
	29	1	**9X-8256**	3	WASHER (2MM THK)	
BD	30	1	**6V-2689**		TUBE-SHRINKABLE	
C	31	1	**8M-2771**	1	CLIP (6.35MM ID)	

B-USE AS REQUIRED
C-CHANGE FROM PREVIOUS TYPE
D-ORDER BY THE METER
J-KIT MARKED J INCLUDES PART MARKED J
M-METRIC PART
Y-SEPARATE ILLUSTRATION

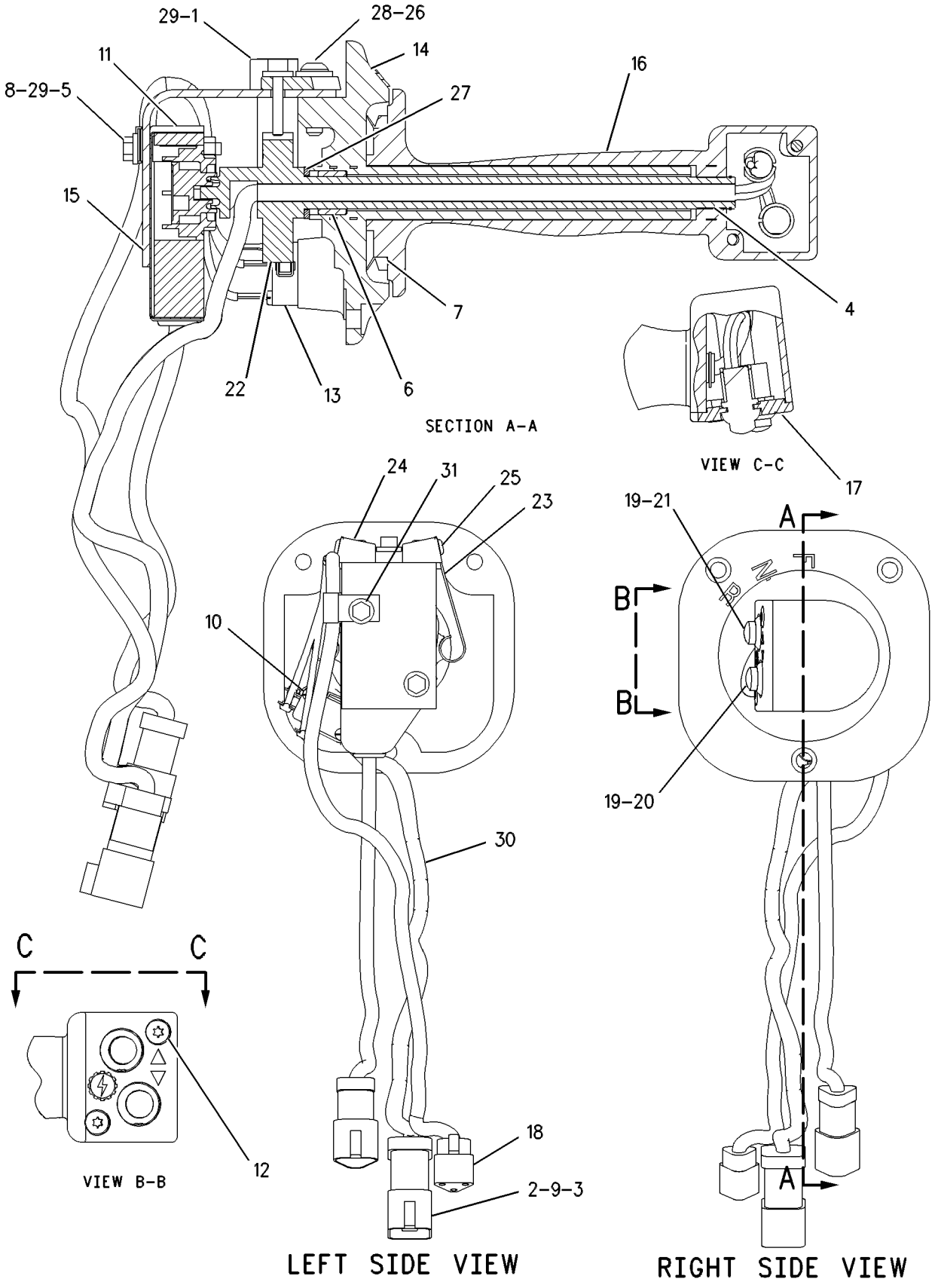

GRAPHIC #1

g00624872

STEERING AND BRAKING SYSTEM

158-8078 CONTROL GP-STEERING & TMSN

S/N: AKA1-UP

PART OF 172-5263 CONTROL GP-STEERING

SMCS-4122 **i01497359**

NOTE	REF NO	GRAPHIC REF	PART NUMBER	QTY	PART NAME 1 2 3 4 5 6 (PRODUCT LEVEL)	SEE PAGE
	1	1	**2L-6267**	1	LOCKNUT	
	2	1	**2N-3680**	3	SCREW-HEAD	
	3	1	**5L-2029**	2	BALL BEARING	
	4	1	**7V-0008**	1	BLOCK	
	5	1	**8E-3131**	1	ROLLER-CAM	
	6	1	**8E-8242**	1	SPACER	
Y	7	1	**9T-8693**	1	VALVE GP-PILOT (STEERING)	540
Y	8	1	*107-3881*	1	CONTROL GP-PARKING BRAKE	512
	9	1	**201-9624**	1	HOUSING-MAIN	
Y	10	1	**112-4820**	1	CONTROL GP-STEERING & TMSN	516
M	11	1	**124-8100**	7	SCREW-TRUSS HEAD (M10X1.5X20MM)	
	12	1	**127-1598**	1	GASKET	
	13	1	**127-1599**	1	GASKET	
	14	1	**149-3137**	1	LOCK AS	
	15	1	**160-1436**	1	HOUSING-BEARING	
	16	1	**160-1437**	1	HOUSING-BEARING	
	17	1	**161-3963**	1	SUPPORT AS	
		1	**1V-8638**	2	NUT (3/8-16 THD)	
M		1	**6V-9632**	3	NUT-WELD (M6X1 THD)	
M		1	**8T-3490**	7	NUT-WELD (M10X1.5 THD)	
	18	1	**161-3964**	1	COVER AS	
	19	1	**161-6041**	1	HOUSING	
	20	1	**200-4573**	1	HARNESS AS (DIFFERENTIAL STEERING)	
		1	**102-8803**	1	KIT-RECEPTACLE (3 PIN)	
					(INCLUDES RECEPTACLE AS & WEDGE)	
		1	**155-2260**	1	KIT-CONNECTING PLUG (3 PIN)	
		1	**155-2274**	2	KIT-CONNECTING PLUG (6 PIN)	
					(EACH PLUG KIT INCLUDES PLUG AS, WEDGE & INTERFACE SEAL)	
	21	1	**200-4574**	1	PLATE AS	
		1	**7T-1099**	4	LINK	
	22	1	**4M-5282**	4	BOLT (1/4-20X1.50 IN)	
	23	1	**6V-8801**	2	NUT (3/8-16 THD)	
	24	1	**7X-7729**	7	WASHER (11X25X3MM THK)	
	25	1	**8T-2502**	3	BOLT (3/8-16X1.125 IN)	
	26	1	**8T-4896**	7	WASHER-HARD (10.2X18.5X2.5MM THK)	
	27	1	**8T-7008**	2	BOLT (3/8-16X3 IN)	
	28	1	**7X-0290**	2	BOLT (3/8-16X3.50 IN)	
	29	1	**167-7629**	1	HARNESS AS (CONTROL)	
		1	**102-8803**	1	KIT-RECEPTACLE (3 PIN)	
		1	**102-8801**	1	KIT-RECEPTACLE (12 PIN)	
					(EACH RECEPTACLE KIT INCLUDES RECEPTACLE AS & WEDGE)	
		1	**155-2255**	1	KIT-CONNECTING PLUG (12 PIN)	
		1	**155-2260**	1	KIT-CONNECTING PLUG (3 PIN)	
		1	**155-2274**	2	KIT-CONNECTING PLUG (6 PIN)	
					(EACH PLUG KIT INCLUDES PLUG AS, WEDGE & INTERFACE SEAL)	
	30	1	**5P-1075**	2	WASHER-HARD (10.2X22.5X3MM THK)	

M-METRIC PART
Y-SEPARATE ILLUSTRATION

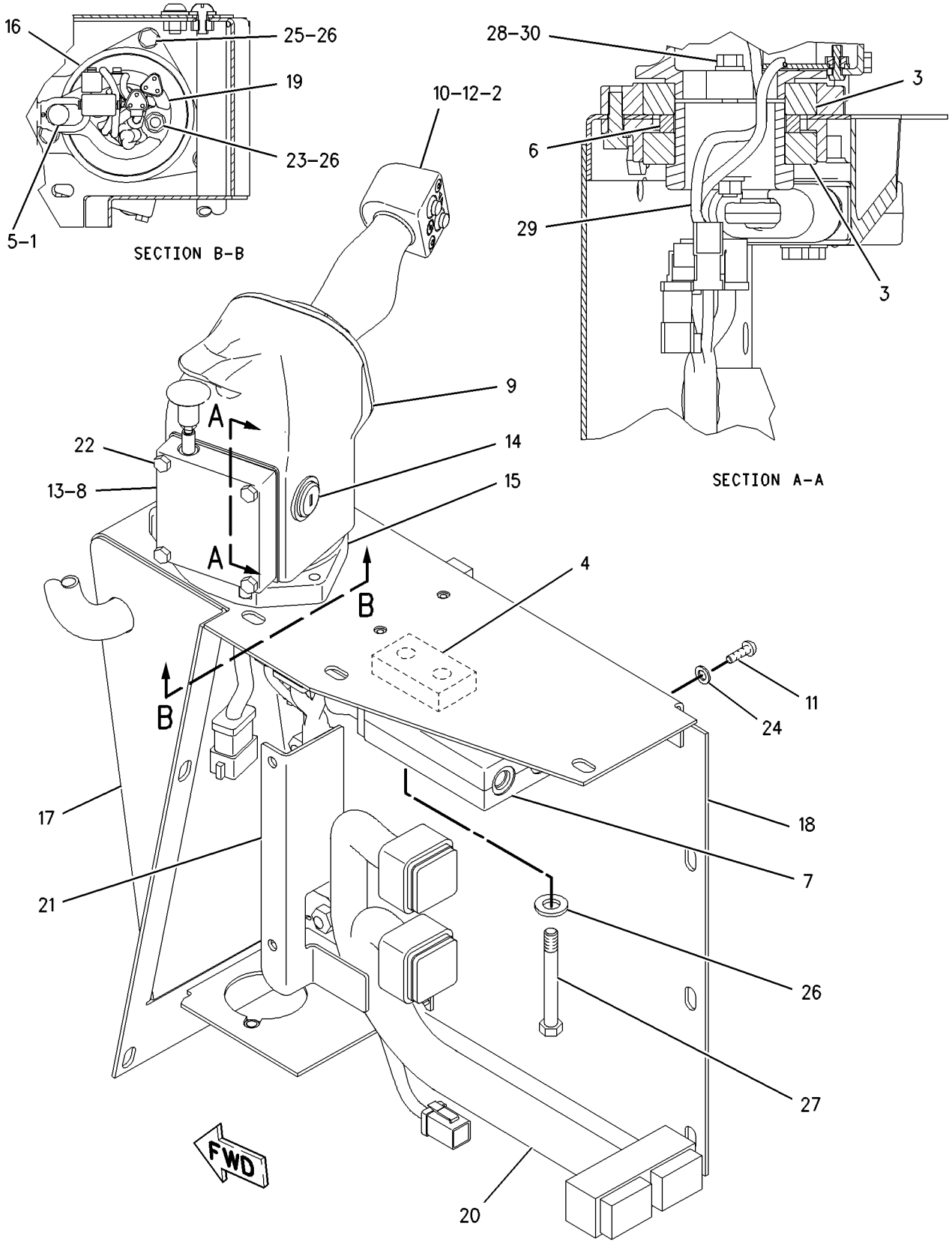

GRAPHIC #1 g00777495

177-6979 FILTER GP-OIL

S/N: AKA1-UP

PART OF 159-9309 LINES GP-STEERING

SMCS-5068 **i01393878**

NOTE	REF NO	GRAPHIC REF	PART NUMBER	QTY	PART NAME 1 2 3 4 5 6 (PRODUCT LEVEL)	SEE PAGE
	1	1	**3J-7354**	1	SEAL-O-RING (8.92MM ID)	
	2	1	**6V-0852**	1	CAP-DUST	
	3	1	**6V-3965**	1	FITTING AS (QUICK DISCONNECT)	
	4	1	**8C-3446**	1	VALVE AS-FLUID SAMPLING	
	5	1	**8C-3451**	1	CAP-DUST	
	6	1	**102-2828**	1	FILTER AS-OIL	
	7	1	**117-7773**	1	SWITCH AS-PRESSURE (OIL)	
		1	**102-8802**	1	KIT-RECEPTACLE (2 PIN)	
					(INCLUDES RECEPTACLE AS & WEDGE)	
		1	**3E-3365**	1	WEDGE-RECEPTACLE LOCK (2 PIN)	
		1	**8T-8729**	2	PIN-CONNECTOR	
BE		1	**9X-1813**		SLEEVE	
	8	1	**3J-1907**	2	SEAL-O-RING (11.89MM ID)	

B-USE AS REQUIRED
E-ORDER BY THE CENTIMETER

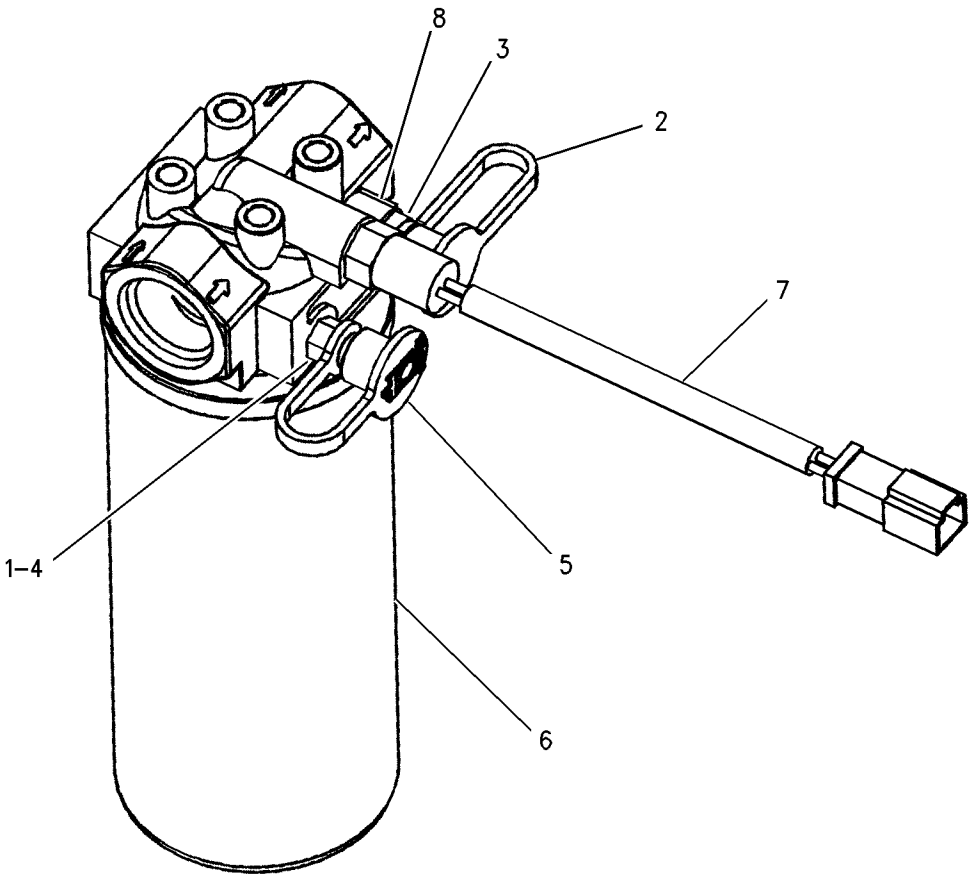

GRAPHIC #1 g00664971

MEMORANDA

183-8414 HEAD GP-PUMP

S/N: AKA1-UP

PART OF 139-4151 PUMP GP-PISTON

SMCS-5070 **i01502170**

NOTE	REF NO	GRAPHIC REF	PART NUMBER	QTY	PART NAME 1 2 3 4 5 6 (PRODUCT LEVEL)	SEE PAGE
	1	1	**9S-8002**	2	PLUG-O-RING	
Y	2	1	**183-8409**	1	VALVE GP-RELIEF	547
	3	1	**183-8415**	1	HEAD	
	4	1	**183-8416**	1	BUSHING	
	5	1	**119-7845**	1	SEAL-O-RING	
	6	1	**123-2017**	1	PLUG (M8)	
	7	1	**134-7489**	4	PLUG	
M	8	1	**135-8854**	1	PLUG GP	
	9	1	**144-9101**	1	PLUG-BREAK OFF	
	10	1	**161-6149**	2	SEAL-O-RING	
M	11	1	**3E-8008**	4	BOLT-SOCKET HEAD (M16X2X90MM)	
	12	1	**3J-7354**	2	SEAL-O-RING	
	13	1	**6E-4382**	1	BUSHING	
	14	1	**6E-4383**	1	BUSHING	
Y	15	1	**6E-4392**	1	VALVE GP-PRESSURE COMPENSATOR	542
	16	1	**6V-5586**	4	SEAL-O-RING	
	17	1	**6V-9028**	1	SEAL-O-RING	
	18	1	**178-4164**	2	VALVE GP-RELIEF	
	19	1	**178-4171**	1	KIT-SEAL	
	20	1	**123-7556**	1	CAP	

M-METRIC PART
Y-SEPARATE ILLUSTRATION

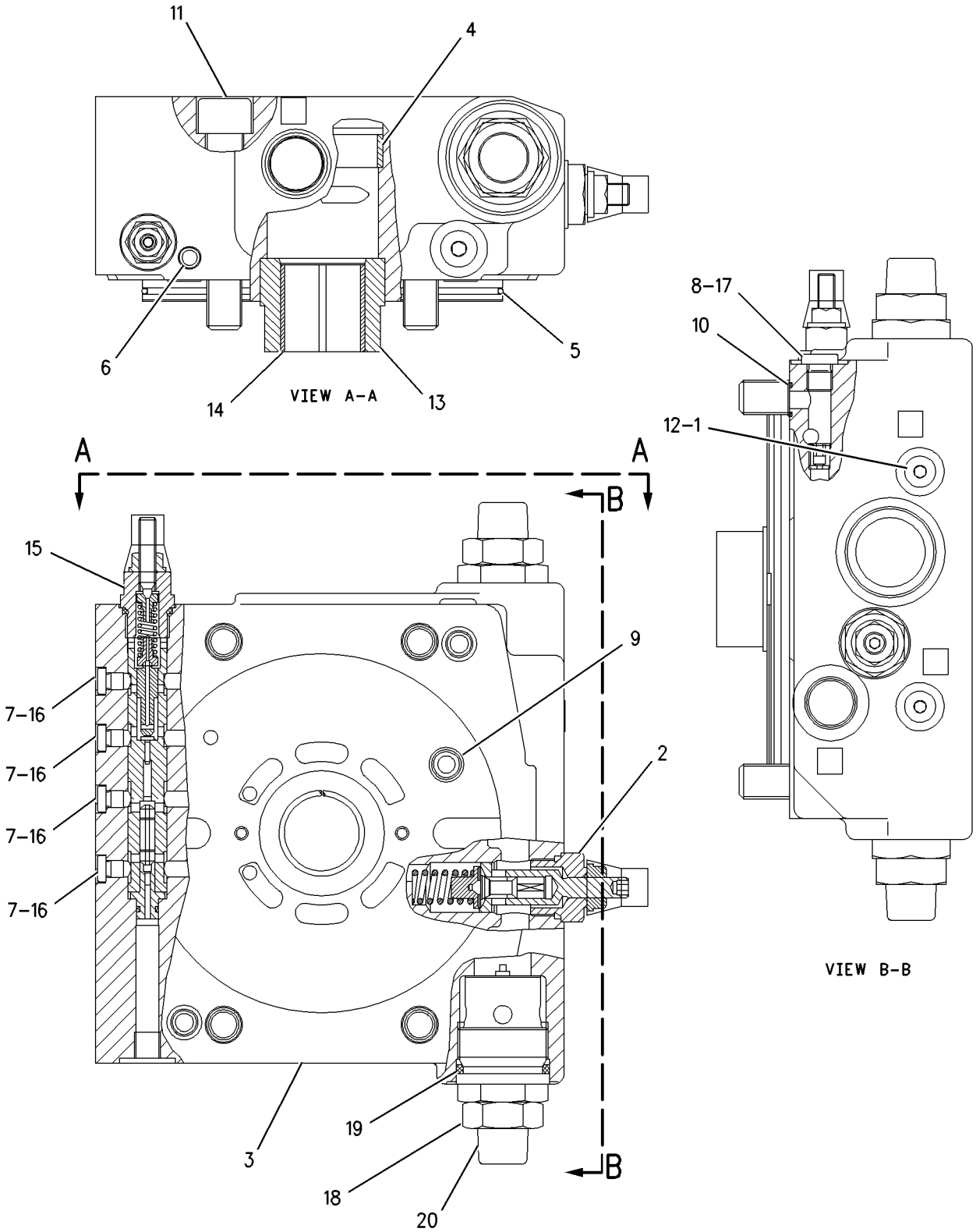

GRAPHIC #1 g00712710

STEERING AND BRAKING SYSTEM

159-9309 LINES GP-STEERING

S/N: AKA1-UP

PART OF 157-0822 STEERING AR-HYDRAULIC

SMCS-4104, 4133, 4304 **i01474430**

NOTE	REF NO	GRAPHIC REF	PART NUMBER	QTY	PART NAME 1 2 3 4 5 6 (PRODUCT LEVEL)	SEE PAGE
	1	3	**2S-0115**	2	WASHER-HARD (20X36.5X5MM THK)	
	2	1,2	**6V-0484**	2	ADAPTER-O-RING	
	3	1,2,3	**6V-0852**	8	CAP-DUST	
I	4	3	**6Y-4061**	1	HOSE AS	
	5	2	**8C-4985**	1	ADAPTER	
I	6	1	**8W-2563**	1	HOSE AS	
	7	3	**032-1853**	2	BOLT-12 POINT HEAD	
I	8	1	**111-6924**	1	HOSE AS	
Y	9	2	**126-0747**	1	VALVE GP-BYPASS	634
	10	2	**126-0814**	1	NIPPLE AS	
	11	2,3	*148-8318*	2	CONNECTOR GP	
					(EACH INCLUDES)	
		2,3	**3K-0360**	1	SEAL-O-RING	
		2,3	**6V-8397**	1	SEAL-O-RING	
		2,3	**6V-8634**	1	CONNECTOR	
	12	2	*148-8322*	2	CONNECTOR GP	
					(EACH INCLUDES)	
		2	**2M-9780**	1	SEAL-O-RING	
		2	**6V-8640**	1	CONNECTOR-SEAL	
		2	**6V-9746**	1	SEAL-O-RING	
	13	2,3	*148-8339*	5	CONNECTOR GP	
					(EACH INCLUDES)	
		2,3	**6V-8716**	1	CONNECTOR	
		2,3	**6V-9746**	1	SEAL-O-RING	
		2,3	**7M-8485**	1	SEAL-O-RING	
	14	3	*148-8355*	1	ELBOW GP	
		3	**5K-9090**	1	SEAL-O-RING	
		3	**6V-9005**	1	ELBOW	
		3	**7M-8485**	1	SEAL-O-RING	
	15	1	*148-8424*	2	TEE AS-ORFS	
					(EACH INCLUDES)	
		1	**6V-8397**	1	SEAL-O-RING	
		1	**8T-8902**	1	TEE	
	16	3	*150-3065*	1	ADAPTER GP	
		3	**3J-1907**	1	SEAL-O-RING (11.89MM ID)	
		3	**6V-0484**	1	ADAPTER-O-RING	
	17	3	*153-6243*	1	TEE AS	
		3	**2S-4078**	1	SEAL-O-RING	
		3	**5K-9090**	1	SEAL-O-RING	
		3	**6V-9746**	1	SEAL-O-RING	
		3	**8T-1120**	1	TEE-O-RING PORT	
	18	1	*153-6265*	1	CONNECTOR AS	
		1	**5K-9090**	1	SEAL-O-RING	
		1	**6K-6307**	1	SEAL-O-RING	
		1	**8C-3323**	1	CONNECTOR	
I	19	2	**160-1550**	1	HOSE AS	
I	20	2	**160-1551**	1	HOSE AS	
I	21	2	**160-1552**	1	HOSE AS	
I	22	2	**160-1553**	1	HOSE AS	
I	23	2	**160-1554**	1	HOSE AS	
I	24	2	**160-1555**	1	HOSE AS	
I	25	3	**160-1556**	1	HOSE AS	
I	26	2	**160-1557**	1	HOSE AS	
I	27	3	**162-7865**	1	HOSE AS	
Y	28	3	**163-0057**	1	VALVE GP-PRESSURE CONTROL	544
I	29	1	**163-1827**	1	HOSE AS	

159-9309 LINES GP-STEERING *(contd.)* i01474430

NOTE	REF NO	GRAPHIC REF	PART NUMBER	QTY	PART NAME 1 2 3 4 5 6 (PRODUCT LEVEL)	SEE PAGE
I	30	1	**163-4520**	2	HOSE AS	
I	31	3	**163-4772**	1	HOSE AS	
I	32	3	**164-0231**	1	HOSE AS	
	33	1	**164-4413**	4	MOUNT	
	34	3	**168-5193**	1	PLATE AS	
		3	**1F-0750**	2	NUT-WELD (3/8-16 THD)	
	35	3	**168-5194**	1	PLATE AS	
		3	**1F-0748**	1	NUT-WELD (1/2-13 THD)	
I	36	3	**168-6892**	1	HOSE AS	
Y	37	1	**177-6979**	1	FILTER GP-OIL	520
	38	1	**180-9333**	1	PLATE AS	
	39	2	**199-4027**	1	HOSE AS	
	40	3	**200-4178**	1	HOSE AS	
	41	1,2	*148-8336*	2	CONNECTOR GP	
					(EACH INCLUDES)	
		1,2	**3J-1907**	1	SEAL-O-RING (11.89MM ID)	
		1,2	**6V-8397**	1	SEAL-O-RING	
		1,2	**6V-8636**	1	CONNECTOR	
	42	2	*148-8347*	2	ELBOW GP	
					(EACH INCLUDES)	
		2	**3D-2824**	1	SEAL-O-RING	
		2	**6V-9746**	1	SEAL-O-RING	
		2	**6V-9007**	1	ELBOW	
	43	3	*148-8357*	2	ELBOW GP	
					(EACH INCLUDES)	
		3	**5K-9090**	1	SEAL-O-RING	
		3	**6V-9008**	1	ELBOW	
		3	**7M-8485**	1	SEAL-O-RING	
	44	2	*148-8360*	1	ELBOW GP	
		2	**6V-9182**	1	ELBOW	
		2	**6V-9746**	1	SEAL-O-RING	
		2	**7M-8485**	1	SEAL-O-RING	
	45	1,2	*148-8378*	5	ELBOW GP	
					(EACH INCLUDES)	
		1,2	**3J-1907**	1	SEAL-O-RING (11.89MM ID)	
		1,2	**6V-8397**	1	SEAL-O-RING	
		1,2	**6V-8724**	1	ELBOW	
	46	2	*148-8388*	1	ELBOW GP	
		2	**2M-9780**	1	SEAL-O-RING	
		2	**6V-8629**	1	ELBOW-FACE SEAL	
		2	**6V-9746**	1	SEAL-O-RING	
	47	3	*148-8417*	1	REDUCER AS-ORFS	
		3	**6V-8397**	1	SEAL-O-RING	
		3	**6V-8941**	1	REDUCER	
	48	3	*148-8449*	1	TEE GP-SWIVEL	
		3	**6V-9839**	1	TEE-SWIVEL	
		3	**6V-9839**	1	TEE-SWIVEL	
	49	1,2	*149-5452*	4	UNION AS	
					(EACH INCLUDES)	
		1,2	**6V-8397**	2	SEAL-O-RING	
		1,2	**6V-8994**	1	UNION-BULKHEAD	
	50	2	*153-6237*	1	ELBOW GP	
		2	**3D-2824**	1	SEAL-O-RING	
		2	**6V-9746**	1	SEAL-O-RING	
		2	**6V-9004**	1	ELBOW	
	51	3	*153-6244*	1	ELBOW GP	
		3	**2M-9780**	1	SEAL-O-RING	
		3	**6V-9746**	1	SEAL-O-RING	
		3	**8T-5389**	1	ELBOW	

159-9309 **LINES GP-STEERING** ***(contd.)*** **i01474430**

NOTE	REF NO	GRAPHIC REF	PART NUMBER	QTY	PART NAME 1 2 3 4 5 6 (PRODUCT LEVEL)	SEE PAGE
	52	3	**1P-3703**	2	SEAL-RECTANGULAR	
	53	3	**1P-3704**	2	SEAL-RECTANGULAR	
	54	3	**1P-5766**	4	FLANGE-HALF	
	55	3	**1P-5767**	4	FLANGE-HALF	
	56	3	**2K-8257**	1	SEAL-O-RING	
	57	2	**3D-2824**	1	SEAL-O-RING	
	58	1,2,3	**3J-1907**	10	SEAL-O-RING (11.89MM ID)	
	59	2,3	**4L-6454**	2	BOLT (3/8-16X1 IN)	
	60	2	**5P-2566**	6	BOLT (1/2-13X1.5 IN)	
	61	3	**5S-7379**	3	BOLT (3/8-16X0.875 IN)	
	62	2	**6V-1722**	1	ADAPTER-O-RING	
	63	2	**6V-1889**	1	CLIP	
	64	1,2,3	**6V-3965**	8	FITTING AS (QUICK DISCONNECT)	
	65	3	**6V-8556**	1	NUT (1 3/16-12 THD)	
	66	1,2	**6V-9168**	4	NUT (11/16-16 THD)	
	67	2	**7G-3832**	3	GROMMET	
	68	2	**7G-3833**	3	CLIP (TAB)	
	69	2	**7G-3834**	3	CLIP (SLOT)	
	70	3	**7X-0310**	2	BOLT (7/16-14X2 IN)	
	71	3	**7X-0333**	3	BOLT (1/2-13X4.75 IN)	
	72	3	**8C-6877**	6	BOLT (7/16-14X1.75 IN)	
	73	3	**8T-1893**	3	CLIP (SLOT)	
	74	3	**8T-1894**	3	CLIP (TAB)	
	75	3	**8T-1895**	2	CLIP (SLOT)	
	76	3	**8T-1896**	2	CLIP (TAB)	
	77	3	**8T-1899**	1	CLIP (SLOT)	
	78	3	**8T-1900**	1	CLIP (TAB)	
	79	1	**8T-4121**	4	WASHER-HARD (11X21X2.5MM THK)	
M	80	1	**8T-4195**	4	BOLT (M10X1.5X30MM)	
M	81	1	**8T-4196**	4	BOLT (M10X1.5X35MM)	
	82	1	**8T-4222**	8	WASHER-PLATED (11X32X2.5MM THK)	
	83	3	**8T-4223**	17	WASHER-HARD (13.5X25.5X3MM THK)	
	84	1	**8T-4835**	8	BOLT (1/2-13X2 IN)	
	85	2,3	**8T-4896**	10	WASHER-HARD (10.2X18.5X2.5MM THK)	
	86	3	**8T-5360**	8	WASHER (12X22.5X2.5MM THK)	
	87	2	**8T-8915**	3	BOLT (3/8-16X3.25 IN)	
	88	3	**9B-7237**	2	BOLT (3/8-16X1.25 IN)	
	89	3	*150-4043*	1	CONNECTOR GP	
		3	**3J-1907**	1	SEAL-O-RING (11.89MM ID)	
		3	**6V-8398**	1	SEAL-O-RING	
		3	**6V-9873**	1	CONNECTOR-SEAL	

I-SEE HOSE FABRICATION GUIDE
M-METRIC PART
Y-SEPARATE ILLUSTRATION

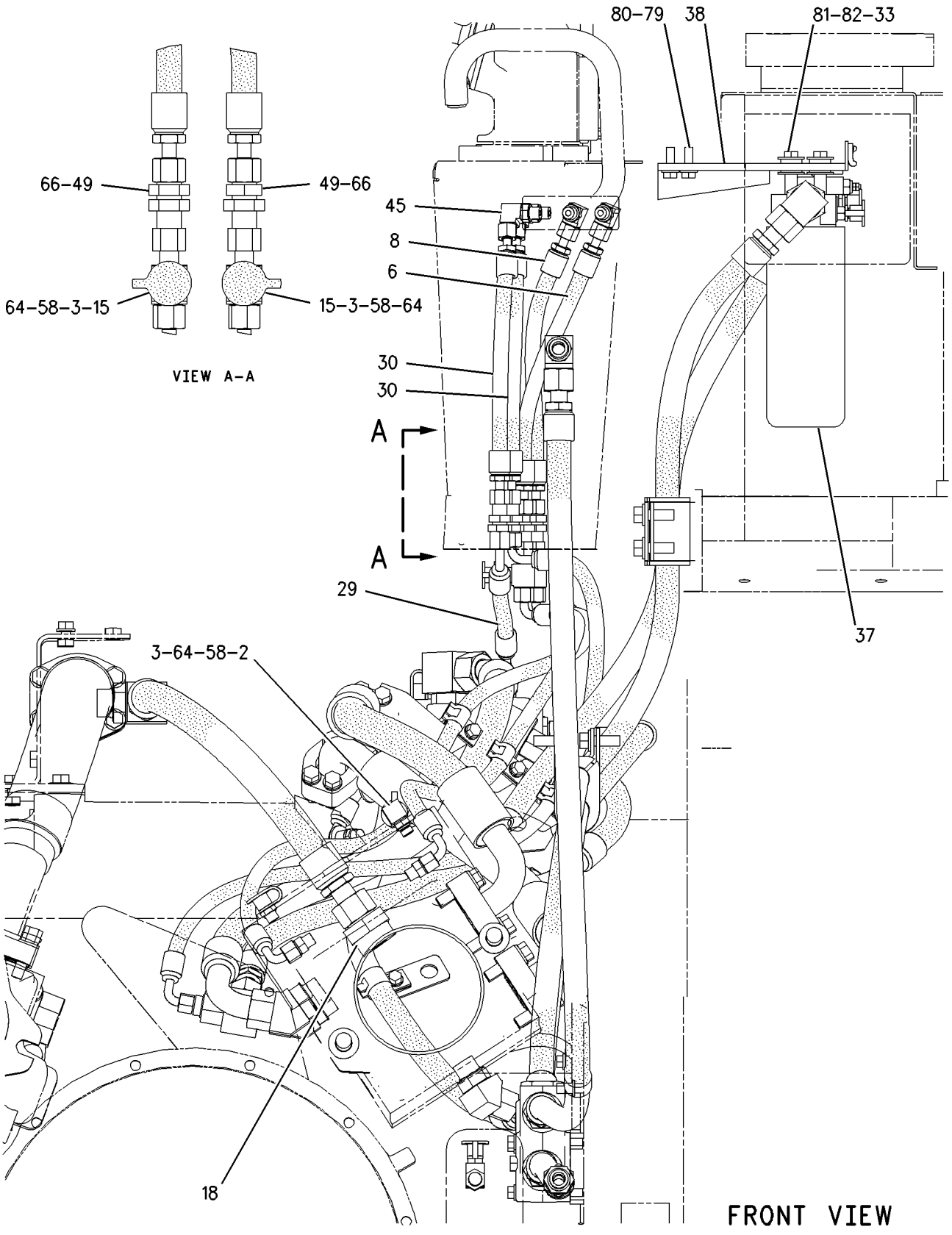

GRAPHIC #1

g00750295

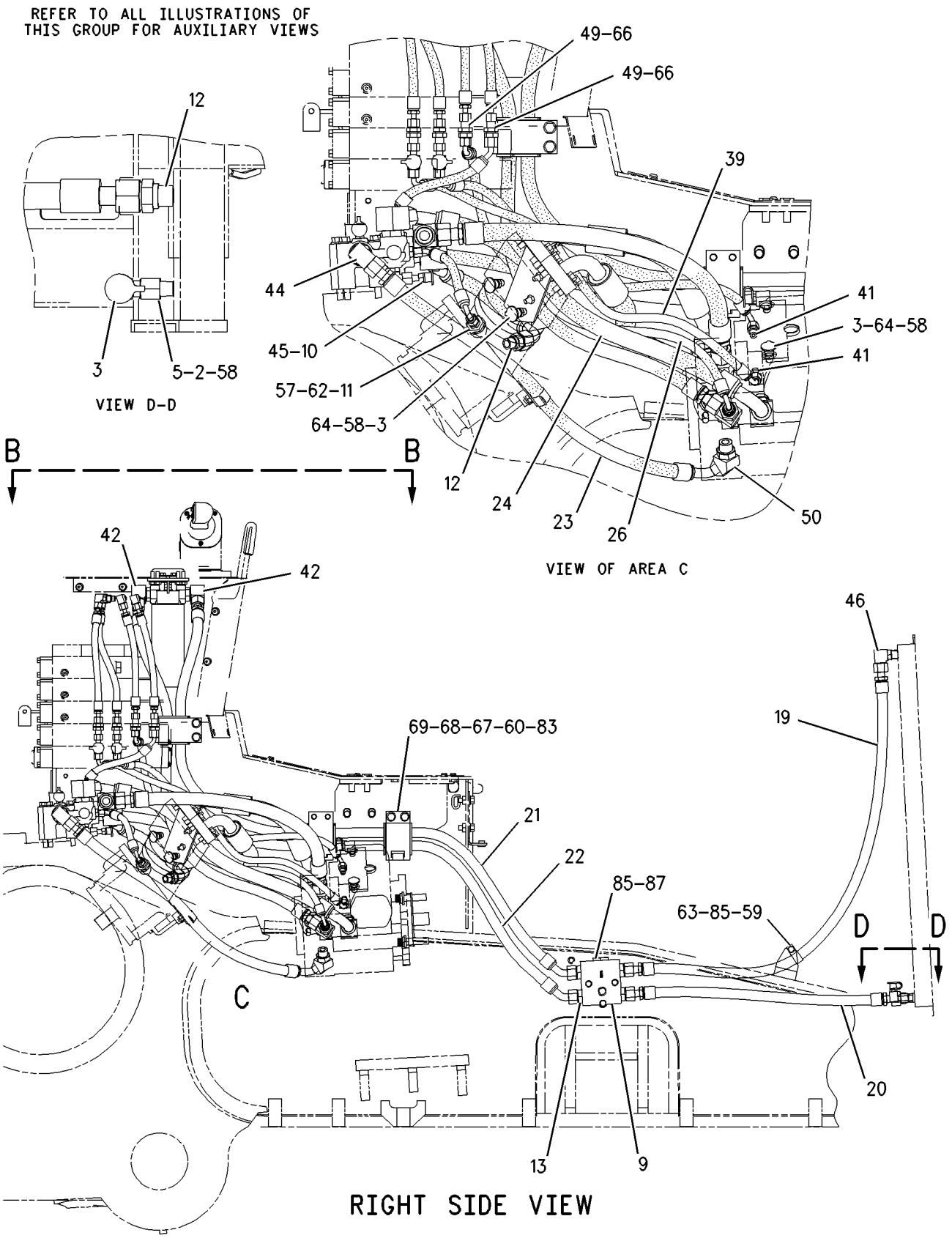

GRAPHIC #2 g00750297

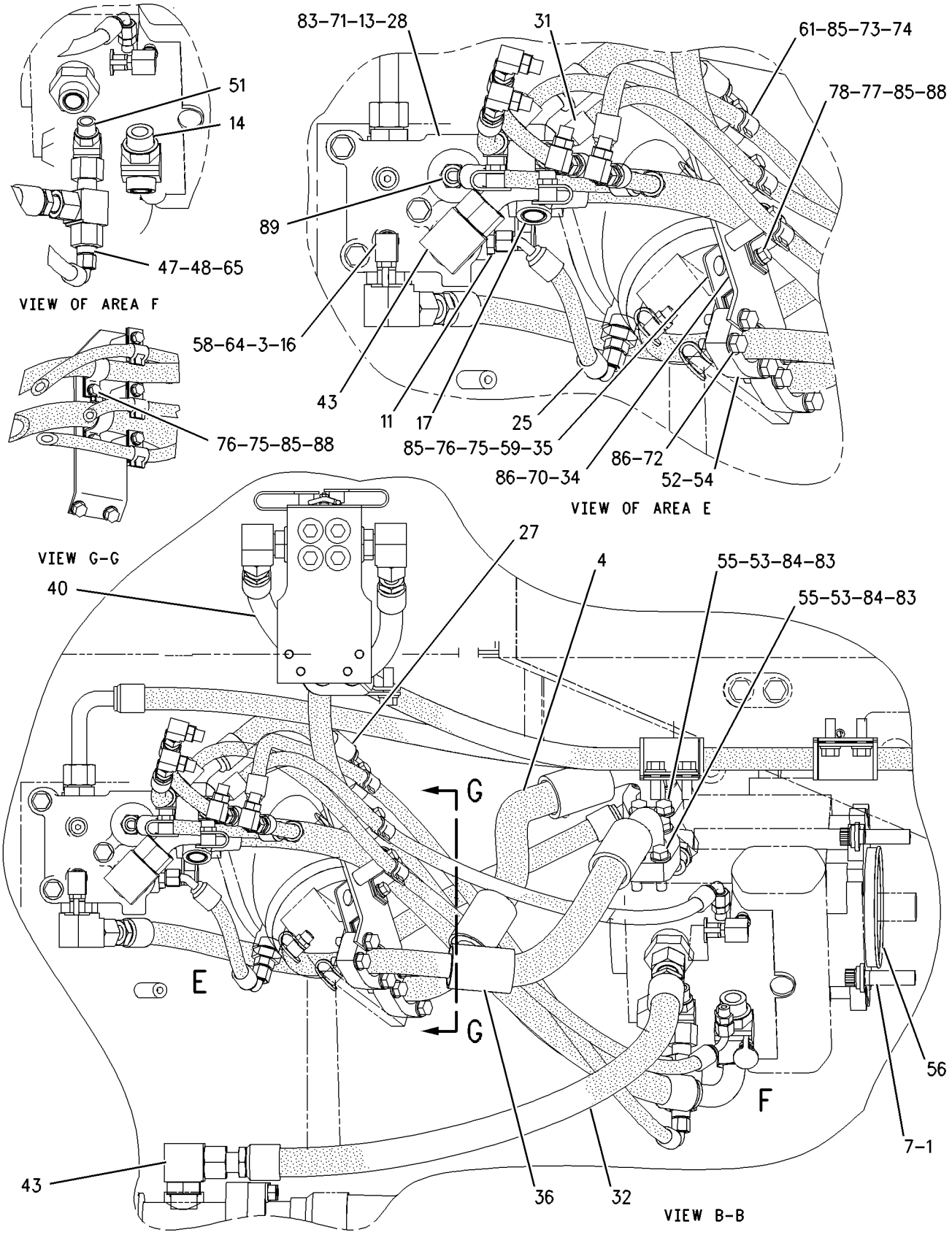

GRAPHIC #3

g00765945

159-7162 MOTOR GP-PISTON

S/N: AKA1-UP

PART OF 157-0822 STEERING AR-HYDRAULIC

SMCS-5058 **i01219329**

NOTE	REF NO	GRAPHIC REF	PART NUMBER	QTY	PART NAME 1 2 3 4 5 6 (PRODUCT LEVEL)	SEE PAGE
Y	1	1	**171-3052**	1	ROTATING GP-MOTOR	534
	2	1	**6E-4092**	1	HOUSING	
	3	1	**6V-1197**	1	SEAL-O-RING (98.02MM ID)	
	4	1	**6E-2505**	1	HEAD	
M	5	1	**8T-3957**	6	BOLT-HEX SOCKET (M12X1.75X30MM)	
	6	1	**8T-4231**	1	DOWEL	
	7	1	**9S-8004**	2	PLUG-O-RING (9/16-18 THD)	
	8	1	**3J-1907**	2	SEAL-O-RING (11.89MM ID)	
	9	1	**9S-8006**	1	PLUG-O-RING (7/8-14 THD)	
	10	1	**2M-9780**	1	SEAL-O-RING (19.18MM ID)	

M-METRIC PART
Y-SEPARATE ILLUSTRATION

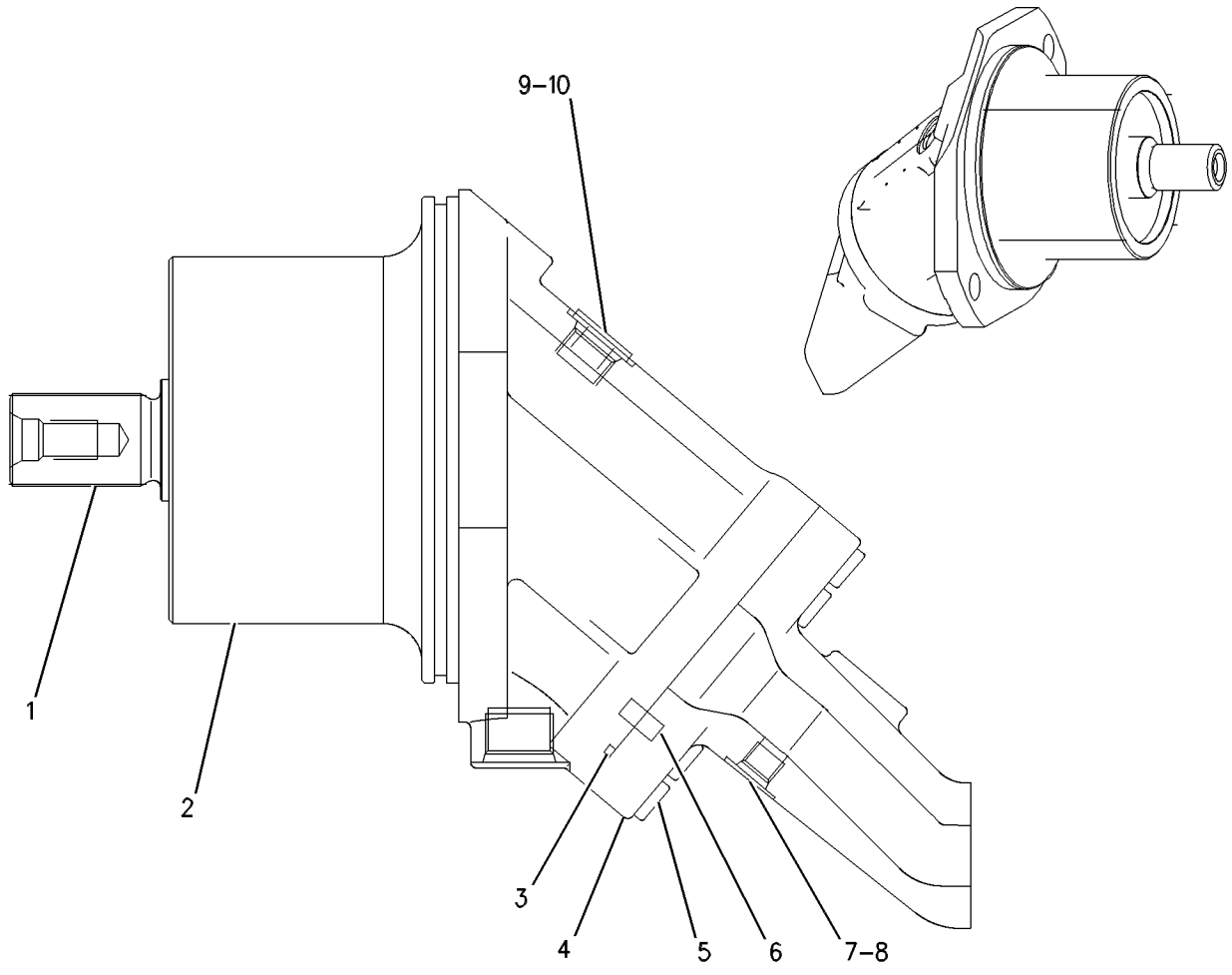

GRAPHIC #1 g00605348

183-8403 PUMP GP-GEAR

S/N: AKA1-UP
1 SECTION
PART OF 139-4151 PUMP GP-PISTON

SMCS-5073 **i01320696**

NOTE	REF NO	GRAPHIC REF	PART NUMBER	QTY	PART NAME 1 2 3 4 5 6 (PRODUCT LEVEL)	SEE PAGE
	1	1	**183-8416**	1	BUSHING	
	2	1	**183-8405**	1	SHAFT	
	3	1	**183-8406**	1	KEY	
	4	1	**183-8408**	1	RING-RETAINING	
	5	1	**144-9088**	1	PLATE-WEAR	
M	6	1	**6V-8200**	4	BOLT-HEX SOCKET (M12X1.75X35MM)	
	7	1	**8C-5237**	1	SEAL-O-RING (127.37MM ID)	

M-METRIC PART

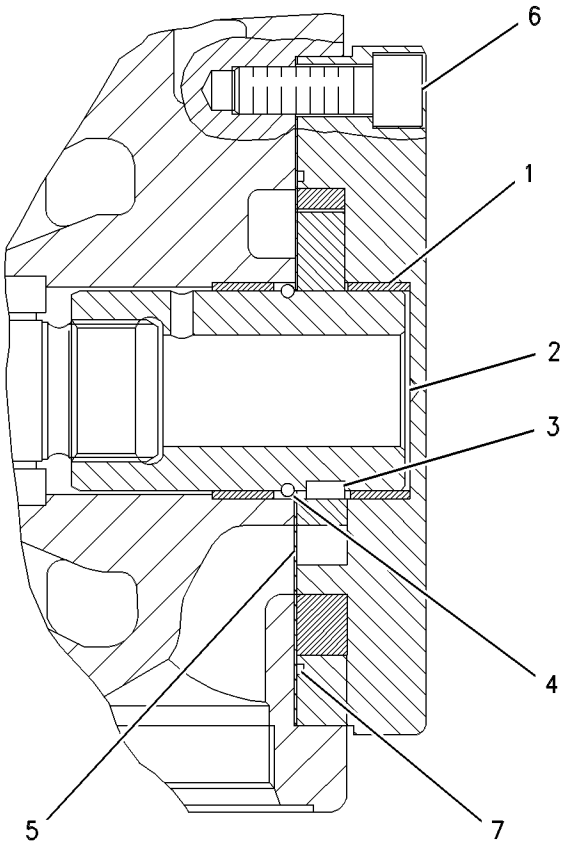

GRAPHIC #1 g00664399

139-4151 PUMP GP-PISTON

S/N: AKA1-UP
SLIPPER
PART OF 157-0822 STEERING AR-HYDRAULIC

SMCS-5070 **i01318908**

NOTE	REF NO	GRAPHIC REF	PART NUMBER	QTY	PART NAME 1 2 3 4 5 6 (PRODUCT LEVEL)	SEE PAGE
Y	1	1	**183-8388**	1	VALVE GP-SERVO	366
Y	2	1	**183-8403**	1	PUMP GP-GEAR	531
Y	3	1	**183-8414**	1	HEAD GP-PUMP	522
Y	4	1	**183-8430**	1	ACTUATOR GP-PISTON PUMP	548
Y	5	1	**183-8445**	1	ROTATING GP-PUMP	536
	6	1	**183-8454**	1	HOUSING	
	7	1	**096-6095**	1	PLUG	
	8	1	**123-7582**	1	PIN-THREADED	
	9	1	**135-8854**	3	PLUG	
	10	1	**137-3780**	2	PLUG	
	11	1	**2M-9780**	1	SEAL-O-RING (19.18MM ID)	
	12	1	**3J-1907**	4	SEAL-O-RING (11.89MM ID)	
	13	1	**6E-4350**	1	PIN	
	14	1	**6E-4351**	2	PIN	
	15	1	**6E-4352**	1	PLUG-ORIFICE	
	16	1	**6E-4353**	1	CONNECTOR	
M	17	1	**6E-4385**	1	LOCKNUT-SEAL (M12 THD)	
	18	1	**6E-4614**	2	PIN	
	19	1	**6V-5326**	1	SEAL-O-RING (23.47MM ID)	
	20	1	**6V-9028**	3	SEAL-O-RING (9.40MM ID)	
	21	1	**7M-8485**	1	SEAL-O-RING (29.74MM ID)	
	22	1	**8C-5193**	1	SEAL-O-RING	
	23	1	**8T-7876**	2	SEAL-O-RING (8.2MM ID)	
	24	1	**9S-8004**	4	PLUG-O-RING (9/16-18 THD)	
	25	1	**9S-8006**	1	PLUG-O-RING (7/8-14 THD)	
	26	1	**9S-9334**	1	PLUG (1 5/16-12 THD)	

M-METRIC PART
Y-SEPARATE ILLUSTRATION

139-4151 PUMP GP-PISTON *(contd.)* **i01318908**

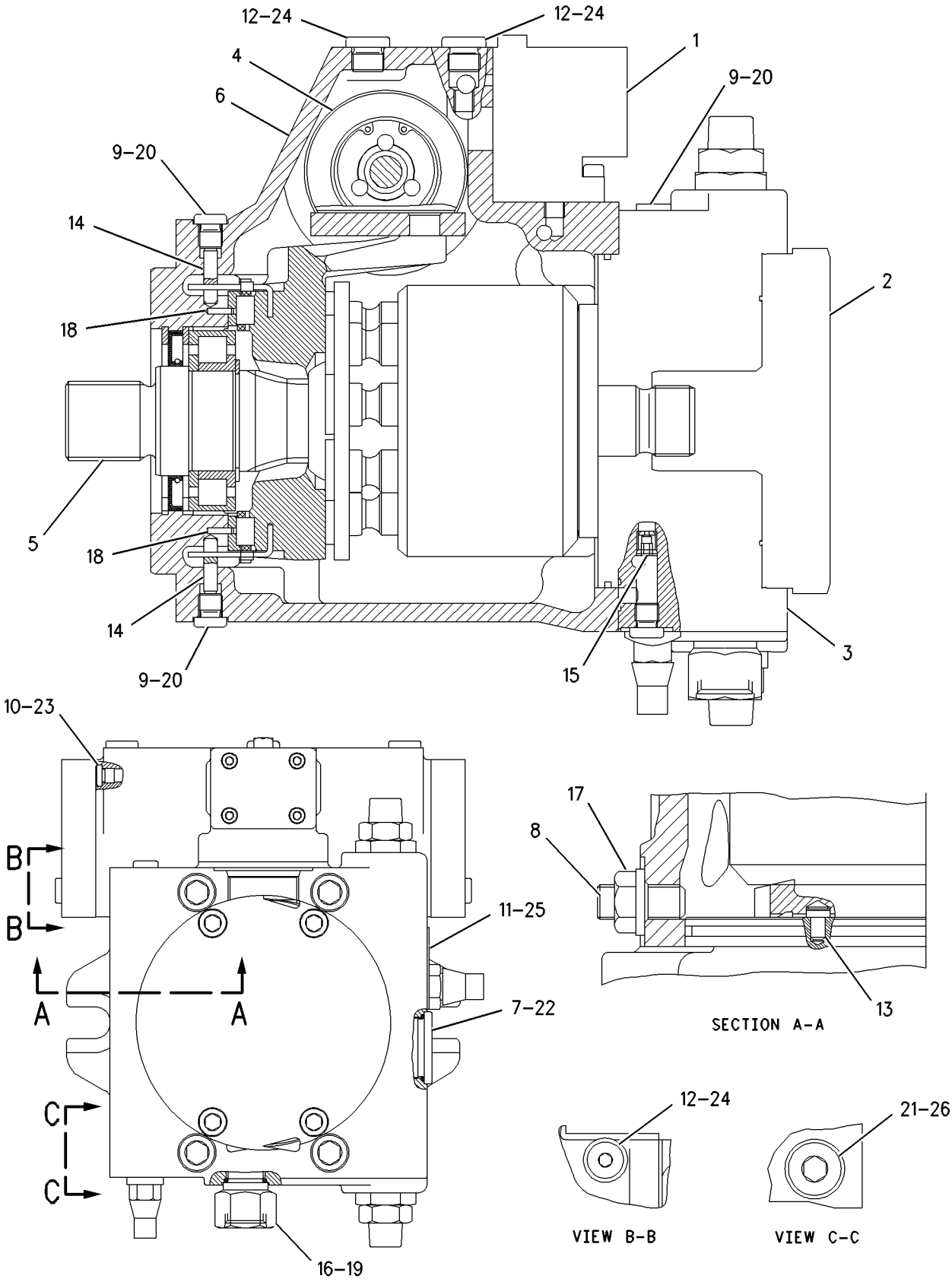

GRAPHIC #1 g00662911

171-3052 ROTATING GP-MOTOR

S/N: AKA1-UP

PART OF 159-7162 MOTOR GP-PISTON

SMCS-5058 **i01219345**

NOTE	REF NO	GRAPHIC REF	PART NUMBER	QTY	PART NAME 1 2 3 4 5 6 (PRODUCT LEVEL)	SEE PAGE
	1	1	**171-3068**	1	SHAFT-MOTOR	
	2	1	**123-5748**	1	SEAL-SHAFT	
	3	1	**9T-1637**	1	COVER-FRONT	
	4	1	**3E-4334**	1	RING-RETAINING	
	5	1	**5D-5958**	1	SEAL-O-RING	
B	6	1	**9T-1579**	1	SHIM (0.3MM THK)	
B	7	1	**9T-1576**	2	SHIM (0.1MM THK)	
M	8	1	**113-4420**	7	SCREW (M6X20MM)	
	9	1	**6E-4096**	1	BARREL	
	10	1	**171-3054**	1	PIN-CENTER	
	11	1	**171-3061**	1	SPRING	
B	12	1	**171-3055**	1	SHIM (4.0MM THK)	
B	13	1	**171-3057**	1	SHIM (3.9MM THK)	
B	14	1	**171-3058**	1	SHIM (3.8MM THK)	
B	15	1	**171-3059**	1	SHIM (3.7MM THK)	
B	16	1	**171-3060**	1	SHIM (3.6MM THK)	
	17	1	**6E-4098**	1	DISC	
Y	18	1	**119-6114**	1	VALVE GP-FLUSHING	539
	19	1	**165-6970**	7	PISTON AS	
					(EACH INCLUDES)	
		1	**6E-4626**	2	RING	
	20	1	**9T-1642**	1	PLATE-RETAINING	
	21	1	**171-5989**	1	KIT-BEARING	

B-USE AS REQUIRED
M-METRIC PART
Y-SEPARATE ILLUSTRATION

171-3052 ROTATING GP-MOTOR *(contd.)* **i01219345**

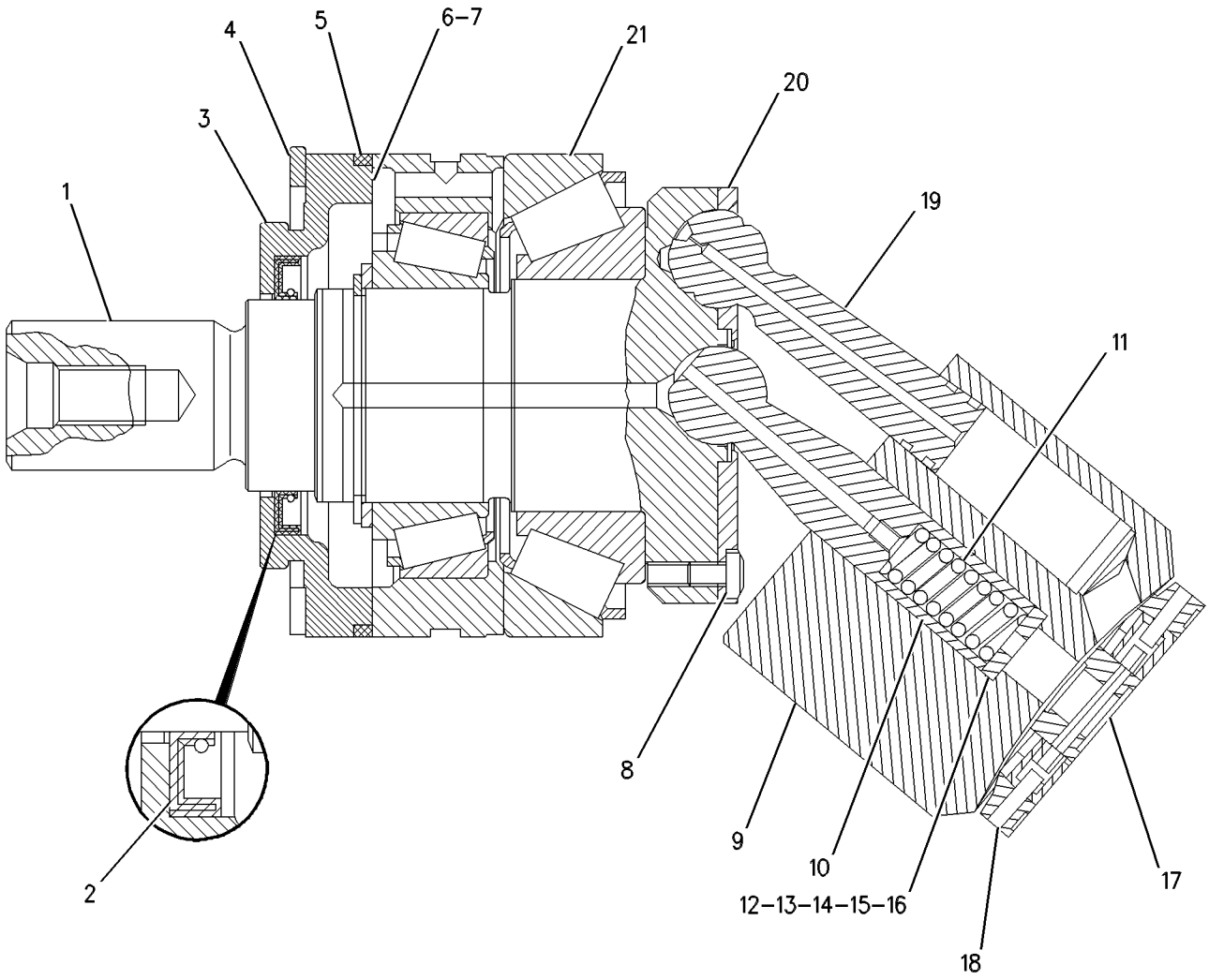

GRAPHIC #1 g00604999

STEERING AND BRAKING SYSTEM

183-8445 ROTATING GP-PUMP

S/N: AKA1-UP

PART OF 139-4151 PUMP GP-PISTON

SMCS-5070 **i01320703**

NOTE	REF NO	GRAPHIC REF	PART NUMBER	QTY	PART NAME 1 2 3 4 5 6 (PRODUCT LEVEL)	SEE PAGE
	1	1	**183-8446**	1	BARREL AS	
	2	1	**183-8447**	1	SPRING	
	3	1	**183-8448**	1	SHAFT	
	4	1	**183-8449**	1	PLATE	
	5	1	**183-8450**	1	BALL	
	6	1	**183-8451**	2	WASHER	
	7	1	**183-8452**	2	RING-RETAINING	
	8	1	**183-8453**	1	RING-SEAL	
	9	1	**122-6606**	1	SWASHPLATE	
	10	1	**122-6607**	1	LEVER	
	11	1	**141-0243**	1	RING-SNAP	
	12	1	**6E-1571**	1	BEARING AS (CYLINDRICAL ROLLER)	
	13	1	**6E-4358**	9	PISTON AS	
	14	1	**6E-4363**	2	ROD	
B	15	1	**6E-4364**		SHIM (1.2MM)	
B	16	1	**6E-4365**		SHIM (1.0MM)	
B	17	1	**6E-4366**		SHIM (.8MM)	
B	18	1	**6E-4367**		SHIM (.6MM)	
	19	1	**6E-4370**	1	GUIDE	
	20	1	**6E-4373**	1	SPRING	
	21	1	**6E-4374**	1	BEARING	
	22	1	**9X-2858**	1	RING-RETAINING	

B-USE AS REQUIRED

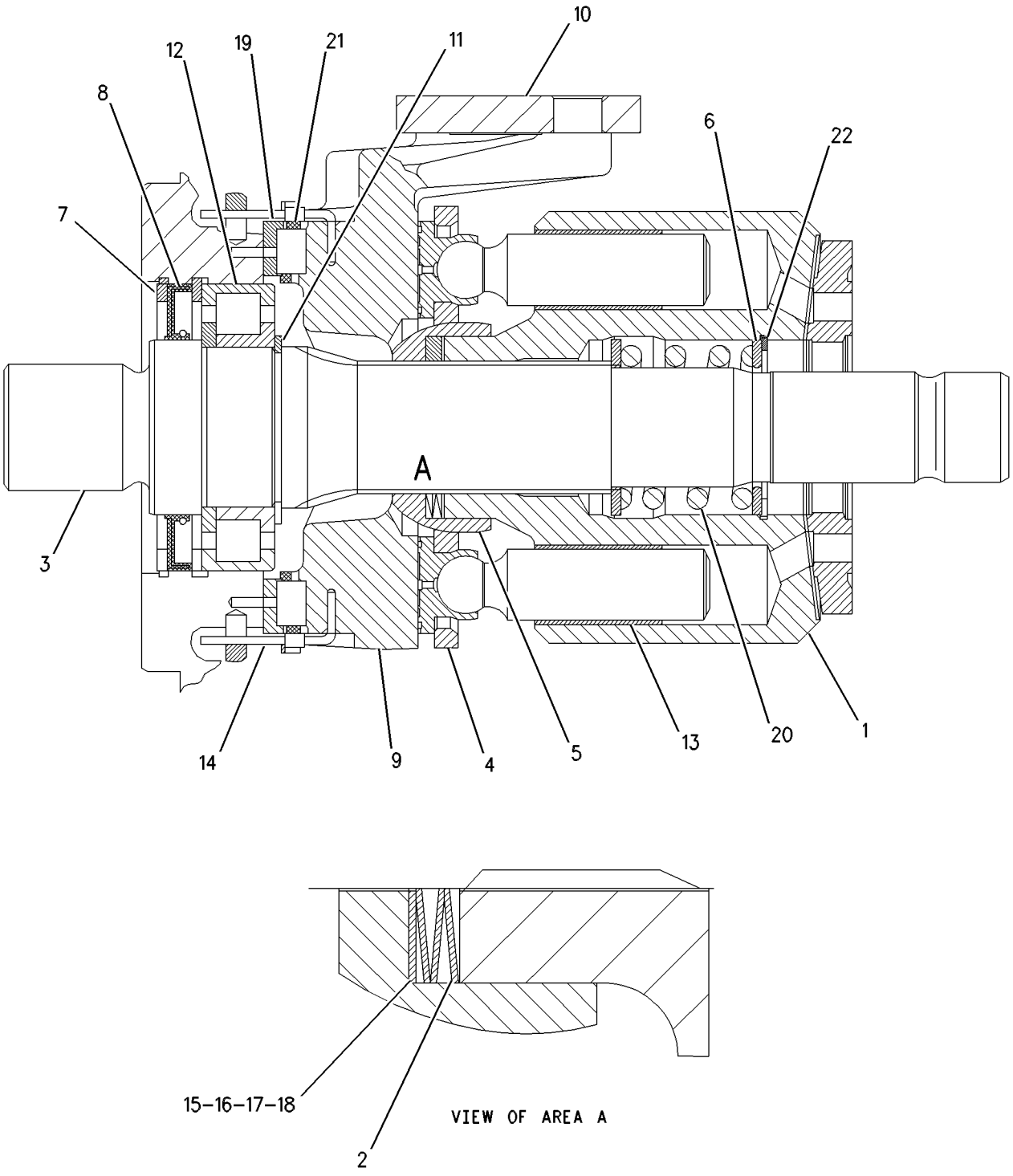

GRAPHIC #1 g00664404

157-0822 STEERING AR-HYDRAULIC

S/N: AKA1-UP

PART OF 157-0821 HYDRAULIC AR

SMCS-4300 **i01437784**

NOTE	PART NUMBER	QTY	PART NAME 1 2 3 4 5 6 (PRODUCT LEVEL)	SEE PAGE
Y	*6Y-3526*	1	ADAPTER GP-MOTOR	510
Y	*172-5263*	1	CONTROL GP-STEERING	514
Y	*159-9309*	1	LINES GP-STEERING	524
YR	**159-7162**	1	MOTOR GP-PISTON	530
YR	**139-4151**	1	PUMP GP-PISTON	532

R-REMFG PART MAY BE AVAILABLE
Y-SEPARATE ILLUSTRATION

119-6114 VALVE GP-FLUSHING

S/N: AKA1-UP

PART OF 171-3052 ROTATING GP-MOTOR

SMCS-5066 **i01219372**

NOTE	REF NO	GRAPHIC REF	PART NUMBER	QTY	PART NAME 1 2 3 4 5 6 (PRODUCT LEVEL)	SEE PAGE
	1	1	**119-6109**	1	PLATE	
	2	1	**6E-4100**	1	PIN-FLUSHING	
	3	1	**119-6110**	2	RETAINER	
	4	1	**6E-4102**	2	SPRING	
	5	1	**119-6112**	2	PIN	
	6	1	**119-6113**	2	BUSHING	

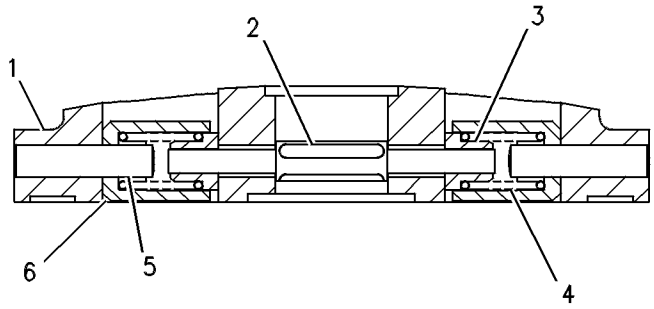

GRAPHIC #1 g00246170

9T-8693 VALVE GP-PILOT

S/N: AKA1-UP

PART OF 158-8078 CONTROL GP-STEERING & TMSN

SMCS-4307 **i00935759**

NOTE	REF NO	GRAPHIC REF	PART NUMBER	QTY	PART NAME 1 2 3 4 5 6 (PRODUCT LEVEL)	SEE PAGE
	1	1	**6E-1134**	1	LEVER	
	2	1	**1B-4427**	2	NUT-JAM (1/4-20 THD)	
	3	1	**114-5157**	2	ADJUSTER	
	4	1	**6E-1135**	1	PIN	
	5	1	**1U-3147**	4	SEAL-U-CUP	
	6	1	**033-6044**	2	SEAL-O-RING (20.35MM ID)	
B	7	1	**5S-7018**	4	SPACER (.25MM THK)	
	8	1	**6E-1982**	2	SPRING (MIDDLE)	
C	9	1	**1U-2073**	2	STEM	
	10	1	**3N-2818**	2	BEARING	
	11	1	**6E-1981**	2	SPRING (INNER)	
	12	1	**6E-1136**	2	RETAINER	
	13	1	**1U-2071**	2	RETAINER	
	14	1	**6E-1133**	1	BRACKET	
	15	1	**8J-1622**	2	NUT	
	16	1	**9T-2378**	2	SLEEVE	
	17	1	**1U-2752**	2	PLUNGER	
	18	1	**1U-2765**	1	BOOT	
	19	1	**1W-3963**	2	SPRING-OUTER	
	20	1	**6E-2193**	2	RETAINER	

B-USE AS REQUIRED
C-CHANGE FROM PREVIOUS TYPE

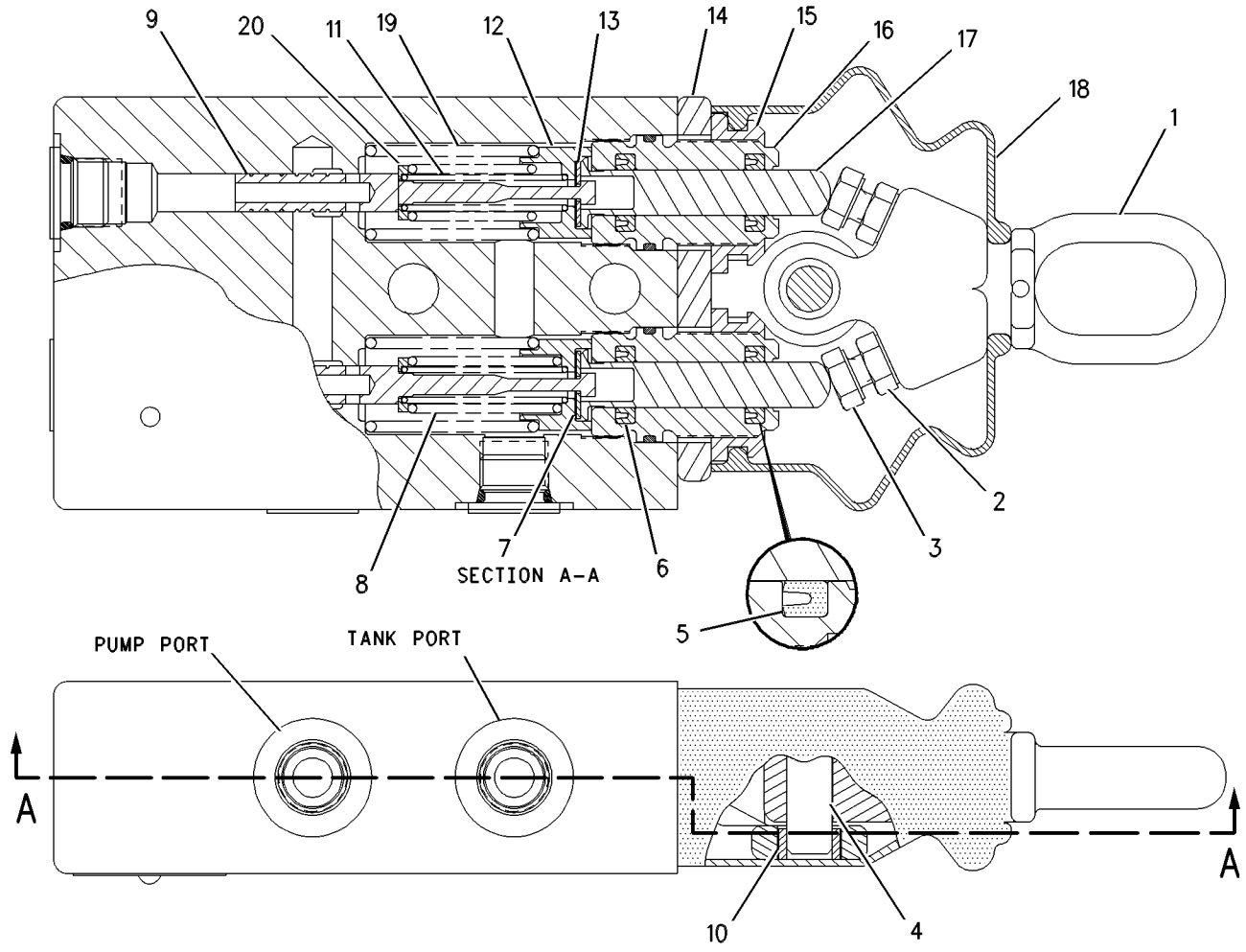

GRAPHIC #1 g00471030

6E-4392 VALVE GP-PRESSURE COMPENSATOR

S/N: AKA1-UP

PART OF 183-8414 HEAD GP-PUMP

SMCS-5086 **i01138781**

NOTE	REF NO	GRAPHIC REF	PART NUMBER	QTY	PART NAME 1 2 3 4 5 6 (PRODUCT LEVEL)	SEE PAGE
	1	1	**6E-4401**	1	SETSCREW-ADJUSTMENT	
	2	1	**6E-4393**	1	PLUG	
	3	1	**6E-4399**	1	SPRING	
	4	1	**6E-4395**	1	PISTON	
	5	1	**6E-4396**	1	PISTON	
	6	1	**6E-4397**	1	PISTON	
	7	1	**6E-4398**	1	SEAT	
	8	1	**6V-5586**	1	SEAL-O-RING (6.07MM ID)	
	9	1	**6E-4394**	1	PISTON	
	10	1	**6E-4400**	2	RETAINER-SPRING	
	11	1	**6V-8351**	1	SEAL-O-RING	
	12	1	**6E-1607**	1	LOCKNUT-SEALING	

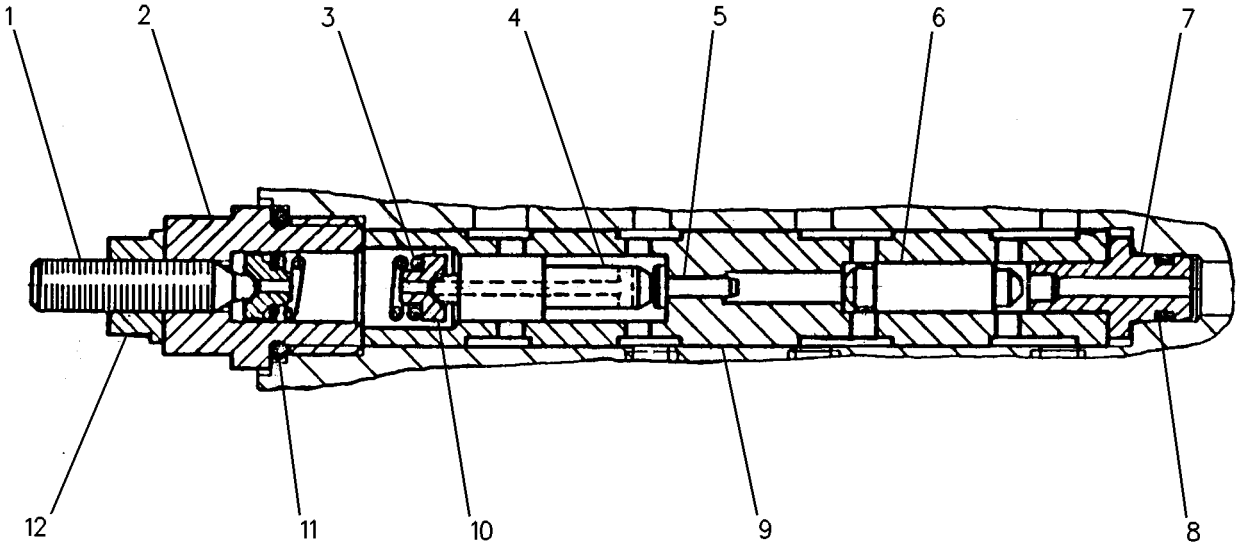

GRAPHIC #1 g00228708

MEMORANDA

STEERING AND BRAKING SYSTEM

163-0057 VALVE GP-PRESSURE CONTROL

S/N: AKA1-UP

PART OF 159-9309 LINES GP-STEERING

SMCS-4307 **i01473111**

NOTE	REF NO	GRAPHIC REF	PART NUMBER	QTY	PART NAME 1 2 3 4 5 6 (PRODUCT LEVEL)	SEE PAGE
	1	1	**1V-0358**	1	WASHER	
	2	1	**3K-6223**	1	WASHER (1.27MM THK)	
	3	1	**4B-4158**	1	SCREW-DRIVE (3/16X0.25 IN)	
B	4	1	**6B-0387**		GASKET	
	5	1	**6E-1960**	1	STOP	
	6	1	**6E-4642**	1	VALVE GP	
	7	1	**6E-5196**	1	VALVE GP-CHECK	
B	8	1	**6J-0450**		SHIM (.79MM THK)	
	9	1	**7T-0095**	1	SPRING	
B	10	1	**7T-0522**		SHIM (.5MM THK)	
	11	1	**9T-8621**	1	SPRING	
Y	12	1	**9T-9850**	1	VALVE GP-RELIEF	546
	13	1	**163-1592**	1	PLATE-IDENTIFICATION	
	14	1	**2M-9780**	1	SEAL-O-RING	
	15	1	**3J-1907**	2	SEAL-O-RING	
	16	1	**5M-2894**	1	WASHER-HARD (10.2X18.5X2.5MM THK)	
	17	1	**6V-0825**	1	BOLT-LOCKING (5/16-18X2.5 IN THD)	
	18	1	**9S-8004**	2	PLUG-HEX	
	19	1	**9S-8006**	1	PLUG	

B-USE AS REQUIRED
Y-SEPARATE ILLUSTRATION

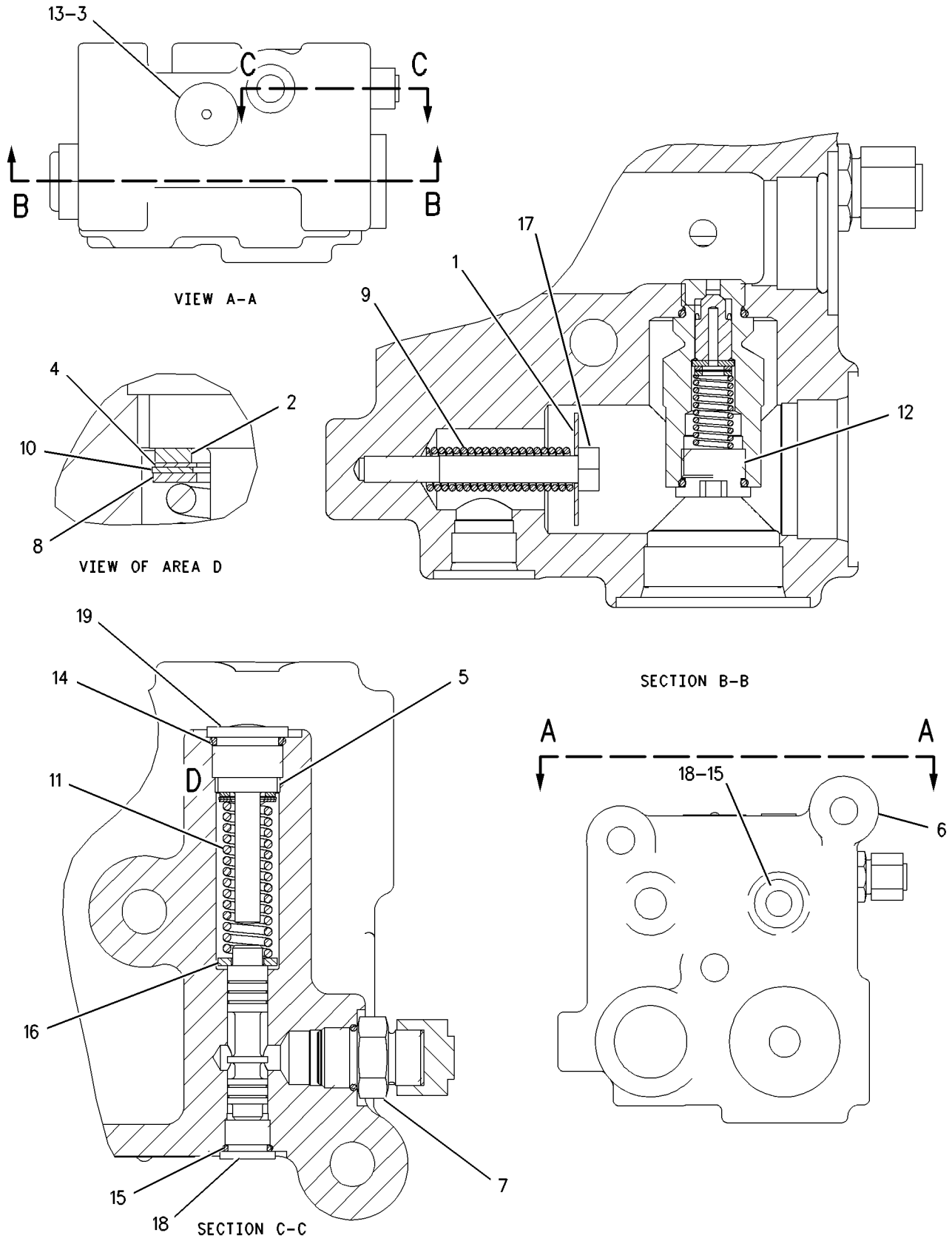

GRAPHIC #1 g00523932

9T-9850 VALVE GP-RELIEF

S/N: AKA1-UP
DIRECT OPERATED
PART OF 163-0057 VALVE GP-PRESSURE CONTROL

SMCS-4307 **i00571833**

NOTE	REF NO	GRAPHIC REF	PART NUMBER	QTY	PART NAME 1 2 3 4 5 6 (PRODUCT LEVEL)	SEE PAGE
	1	1	**9S-8005**	1	PLUG-O-RING (3/4-16 THD)	
	2	1	**9T-6783**	1	WASHER (1.6MM THK)	
	3	1	**4T-1044**	1	SPRING	
	4	1	**9T-6043**	1	VALVE	
B	5	1	**6J-8696**	2	SHIM (1.22MM THK)	
	6	1	**3K-0360**	2	SEAL-O-RING (16.36MM ID)	
B	7	1	**5J-6153**	2	SHIM (.193MM THK)	

B-USE AS REQUIRED

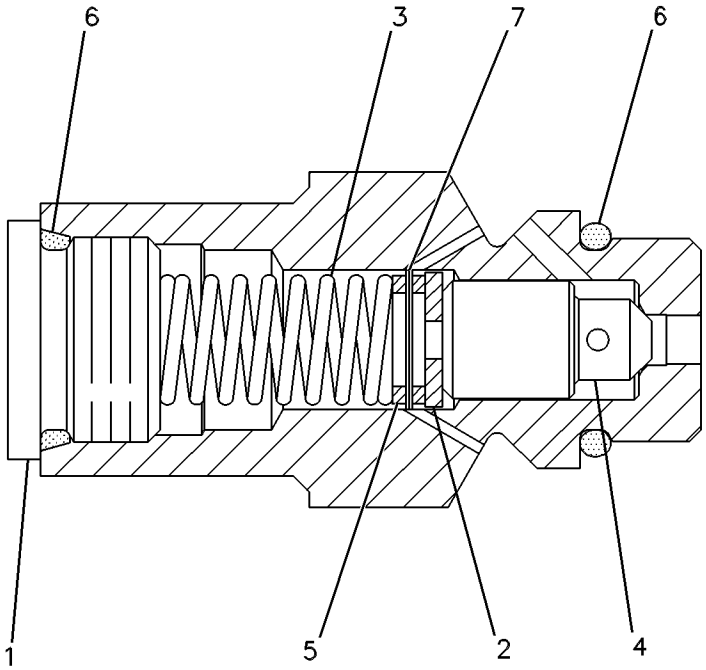

GRAPHIC #1 g00257054

183-8409 VALVE GP-RELIEF

S/N: AKA1-UP

PART OF 183-8414 HEAD GP-PUMP

SMCS-4307 **i01320719**

NOTE	REF NO	GRAPHIC REF	PART NUMBER	QTY	PART NAME 1 2 3 4 5 6 (PRODUCT LEVEL)	SEE PAGE
	1	1	**183-8410**	1	SCREW	
	2	1	**183-8412**	1	RETAINER	
	3	1	**183-8413**	1	SPRING	
	4	1	**6E-4240**	1	NUT-SEALING	
	5	1	**6E-4403**	1	PLUG	
	6	1	**6E-4404**	1	VALVE-POPPET	
	7	1	**6V-5326**	1	SEAL-O-RING (23.47MM ID)	

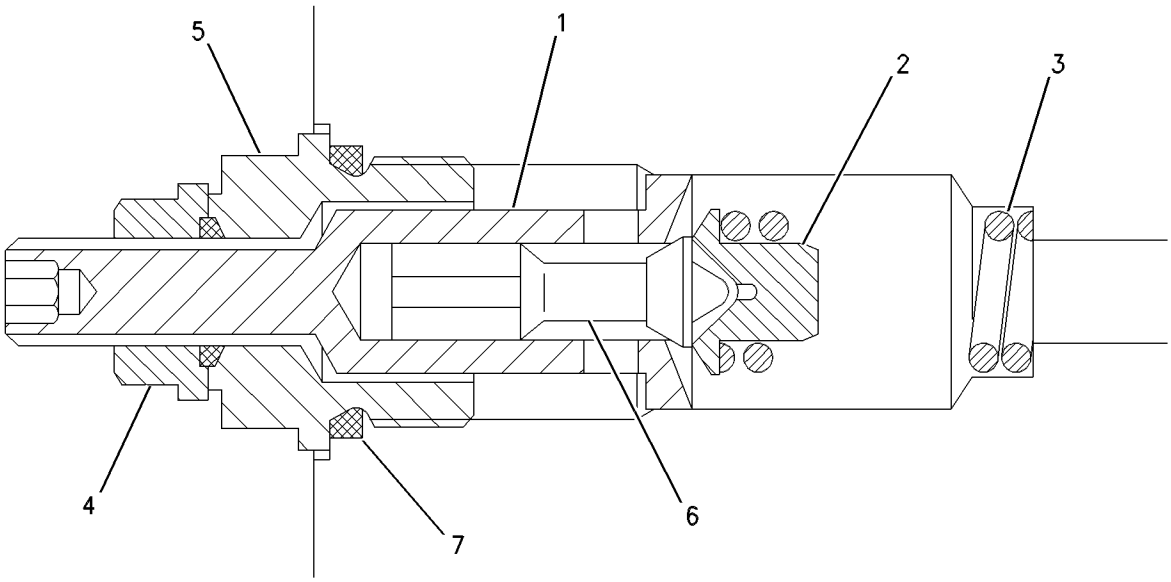

GRAPHIC #1 g00664657

183-8430 ACTUATOR GP-PISTON PUMP

S/N: AKA1-UP

PART OF 139-4151 PUMP GP-PISTON

SMCS-5070, 5078, 5086 **i01320712**

NOTE	REF NO	GRAPHIC REF	PART NUMBER	QTY	PART NAME 1 2 3 4 5 6 (PRODUCT LEVEL)	SEE PAGE
Y	1	1	**183-8417**	1	VALVE GP-SERVO	368
	2	1	**183-8431**	1	COVER	
	3	1	**183-8442**	1	COVER	
	4	1	**183-8443**	2	RING-WEAR	
	5	1	**183-8444**	2	RING-SEAL	
	6	1	**119-0942**	1	NUT	
M	7	1	**5A-3604**	8	BOLT-SOCKET HEAD (M8X1.25X25MM)	
	8	1	**8C-3089**	2	SEAL-O-RING (82.22MM ID)	

M-METRIC PART
Y-SEPARATE ILLUSTRATION

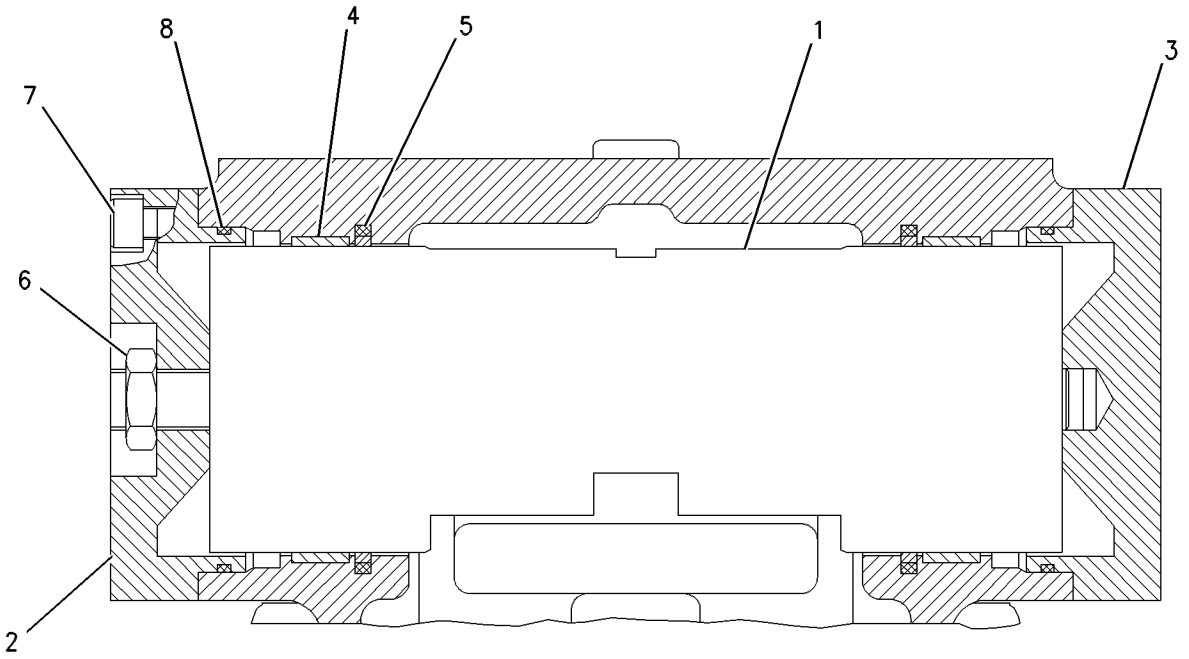

GRAPHIC #1 g00664406

HYDRAULIC SYSTEM

160-1806 CONTROL AR-HYDRAULIC

S/N: AKA1-UP

SMCS-5050 **i01452643**

NOTE	PART NUMBER	QTY	PART NAME 1 2 3 4 5 6 (PRODUCT LEVEL)	SEE PAGE
Y	*157-7331*	1	CONTROL AR-PILOT HYDRAULIC	553
Y	*157-8027*	1	LINES GP-RIPPER	610
	197-5108	1	FILM-INSTRUCTION (RIPPER CONTROL)	
			(INSTALL ON RAISED SURFACE TO THE RIGHT OF CONTROL)	

Y-SEPARATE ILLUSTRATION

HYDRAULIC SYSTEM

160-4781 CONTROL AR-HYDRAULIC

S/N: AKA1-UP
PIN PULLER

SMCS-5050 **i01488903**

NOTE	REF NO	GRAPHIC REF	PART NUMBER	QTY	PART NAME 1 2 3 4 5 6 (PRODUCT LEVEL)	SEE PAGE
	1	1	**9X-6772**	6	STRAP-CABLE	
Y	2	1	*188-6140*	1	VALVE & MTG GP-CONTROL	633
	3	1	**106-8704**	2	SUPPRESSOR AS-ARC	
					(EACH INCLUDES)	
		1	**102-8802**	1	KIT-RECEPTACLE (2 PIN)	
					(INCLUDES RECEPTACLE AS & WEDGE)	
		1	**8T-8729**	2	PIN-CONNECTOR	
	4	1	**146-0240**	1	SWITCH AS-TOGGLE (LOCKING)	
		1	**102-8803**	1	KIT-RECEPTACLE (3 PIN)	
					(INCLUDES RECEPTACLE AS & WEDGE)	
		1	**3E-3371**	1	WEDGE-RECEPTACLE LOCK (3 PIN)	
		1	**6T-3631**	2	NUT-HEX (15/32-32 THD)	
		1	**6T-3632**	1	LOCKWASHER	
		1	**6T-3633**	1	RING-LOCKING	
		1	**8T-8729**	3	PIN-CONNECTOR	
	5	1	**160-4782**	1	PLATE AS	
		1	**1F-0750**	4	NUT-WELD (3/8-16 THD)	
I	6	1	**160-4784**	1	HOSE AS	
	7	1	**164-4940**	1	HARNESS AS	
		1	**155-2260**	1	KIT-CONNECTING PLUG (3 PIN)	
		1	**155-2270**	2	KIT-CONNECTING PLUG (2 PIN)	
		1	**155-2271**	1	KIT-CONNECTING PLUG (4 PIN)	
					(EACH PLUG KIT INCLUDES PLUG AS, WEDGE & INTERFACE SEAL)	
	8	1	**137-3936**	1	FILM-INSTRUCTION	
	9	1	**198-4585**	1	HOSE AS	
	10	1	*148-8378*	4	ELBOW GP	
					(EACH INCLUDES)	
		1	**3J-1907**	1	SEAL-O-RING	
		1	**6V-8397**	1	SEAL-O-RING	
		1	**6V-8724**	1	ELBOW	
	11	1	**8T-4223**	2	WASHER-HARD (13.5X25.5X3MM THK)	
	12	1	**8T-4896**	4	WASHER-HARD (10.2X18.5X2.5MM THK)	
	13	1	**8T-8917**	2	BOLT (1/2-13X1.25 IN)	
	14	1	**8T-8915**	4	BOLT (3/8-16X3.25 IN)	

I-SEE HOSE FABRICATION GUIDE
Y-SEPARATE ILLUSTRATION

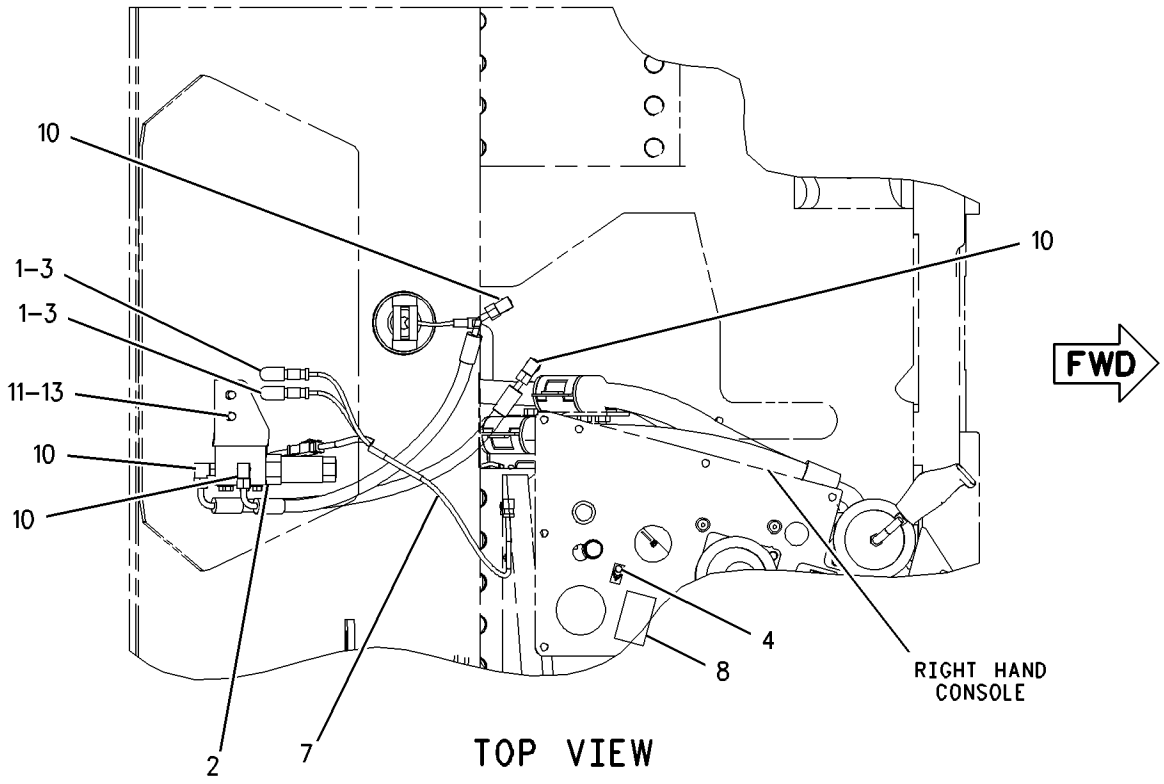

TOP VIEW

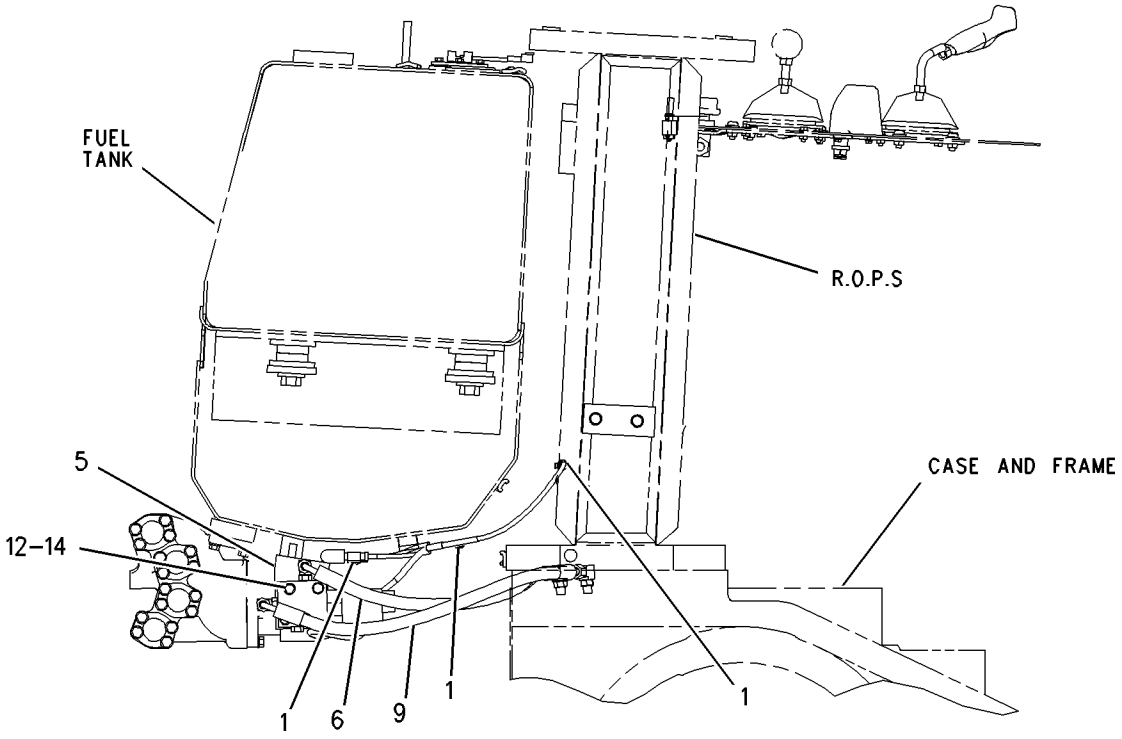

RIGHT SIDE VIEW

GRAPHIC #1 g00758400

HYDRAULIC SYSTEM

157-0824 CONTROL AR-PILOT HYDRAULIC

S/N: AKA1-UP

DOZER

PART OF 157-0823 HYDRAULIC AR

SMCS-5059, 5063 **i01487054**

NOTE	PART NUMBER	QTY	PART NAME 1 2 3 4 5 6 (PRODUCT LEVEL)	SEE PAGE
Y	**161-3615**	1	CONTROL GP-IMPLEMENT	758
Y	*157-7329*	1	LINES GP-PILOT	588
Y	*157-7328*	1	MOUNTING GP-CONTROL	805
Y	**160-5952**	1	VALVE GP-CONTROL	640
Y	**200-0189**	1	VALVE GP-PILOT (DOZER)	658

Y-SEPARATE ILLUSTRATION

HYDRAULIC SYSTEM

157-7331 CONTROL AR-PILOT HYDRAULIC

S/N: AKA1-UP

PART OF 160-1806 CONTROL AR-HYDRAULIC

SMCS-5059, 5063 **i01452645**

NOTE	PART NUMBER	QTY	PART NAME 1 2 3 4 5 6 (PRODUCT LEVEL)	SEE PAGE
Y	**161-3615**	1	CONTROL GP-IMPLEMENT	758
Y	*161-3616*	1	HANDLE GP-JOYSTICK	763
Y	*157-8029*	1	LINES GP-PILOT	594
Y	*163-3436*	1	MOUNTING GP-CONTROL	806
Y	**160-5951**	1	VALVE GP-CONTROL	638
Y	**159-9549**	1	VALVE GP-PILOT	652
Y	**184-5321**	1	VALVE GP-PILOT	656

Y-SEPARATE ILLUSTRATION

160-5560 CONTROL AR-PILOT HYDRAULIC

S/N: AKA1-UP
DOZER & WINCH
PART OF 160-5556 CONTROL AR-BULLDOZER & WINCH

SMCS-5059, 5063 **i01488928**

NOTE	PART NUMBER	QTY	PART NAME 1 2 3 4 5 6 (PRODUCT LEVEL)	SEE PAGE
Y	**161-3615**	1	CONTROL GP-IMPLEMENT	758
Y	*161-1014*	1	LINES GP-PILOT	600
Y	*163-3436*	1	MOUNTING GP-CONTROL	806
Y	**160-8612**	1	VALVE GP-CONTROL	646
Y	**200-0189**	1	VALVE GP-PILOT (DOZER)	658
Y	**160-0766**	1	VALVE GP-PILOT (WINCH)	654

Y-SEPARATE ILLUSTRATION

109-9677 COOLER GP-HYDRAULIC OIL

S/N: AKA1-UP

PART OF 159-5908 INSTALLATION AR-ENGINE

SMCS-1374, 5071 **i01503088**

NOTE	REF NO	GRAPHIC REF	PART NUMBER	QTY	PART NAME 1 2 3 4 5 6 (PRODUCT LEVEL)	SEE PAGE
	1	1	**110-6917**	1	BRACKET AS	
		1	**1F-0750**	1	NUT-WELD (3/8-16 THD)	
	2	1	**110-6938**	1	BRACKET AS	
		1	**7M-7794**	2	STUD-WELD	
	3	1	**118-0227**	1	BRACKET AS	
		1	**7M-7794**	2	STUD-WELD	
		1	**1F-0750**	1	NUT-WELD (3/8-16 THD)	
	4	1	**172-1672**	1	BRACKET AS	
		1	**1F-0750**	1	NUT-WELD (3/8-16 THD)	
	5	1	**194-6083**	1	CORE AS-HYDRAULIC OIL COOLER	
		1	**8T-6767**	2	PLUG-PIPE	
	6	1	**4L-6454**	4	BOLT (3/8-16X1 IN)	
	7	1	**5P-1076**	4	WASHER-HARD (13.5X30X4MM THK)	
	8	1	**6V-8801**	4	NUT (3/8-16 THD)	
	9	1	**8T-2561**	4	WASHER-HARD (10.5X28.5X5MM THK)	
	10	1	**8T-4835**	4	BOLT (1/2-13X2 IN)	
	11	1	**8T-4896**	4	WASHER-HARD (10.2X18.5X2.5MM THK)	

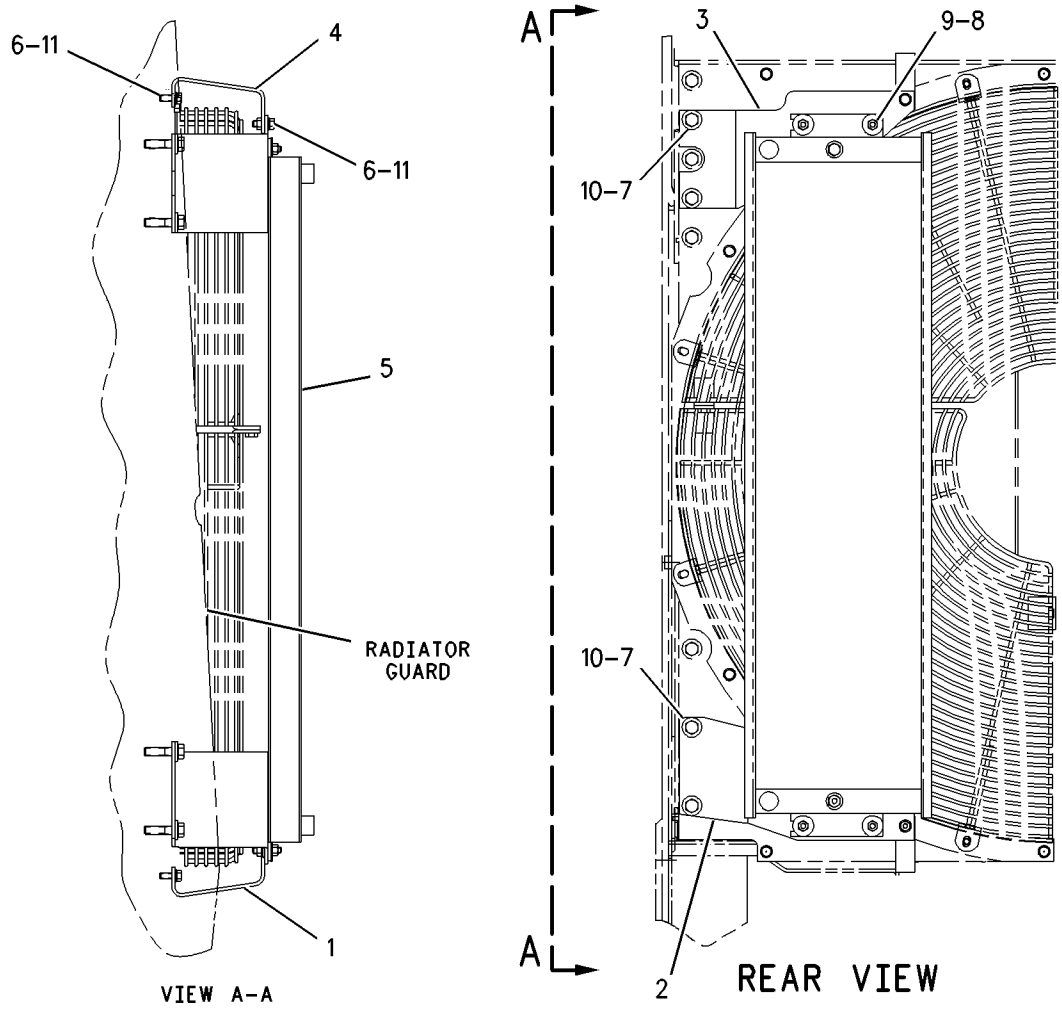

GRAPHIC #1 g00735983

108-6979 CYLINDER & LINES GP-LIFT–LH

S/N: AKA1-UP; CXB1-UP; BHR1-UP; BHW1-UP

PART OF 159-8377 BULLDOZER AR, 159-1628 BULLDOZER AR-SEMI-UNIVERSAL, 159-1629 BULLDOZER AR-UNIVERSAL

SMCS-5102 **i00569877**

NOTE	REF NO	GRAPHIC REF	PART NUMBER	QTY	PART NAME 1 2 3 4 5 6 (PRODUCT LEVEL)	SEE PAGE
	1	1	**8E-8334**	1	PLATE AS	
	2	1	**5S-7379**	4	BOLT (3/8-16X.875IN)	
	3	1	**5P-1075**	6	WASHER-HARD (3MM THK)	
I	4	1	**108-6981**	1	HOSE AS	
	5	1	**5K-9090**	1	SEAL-O-RING (23.52MM ID)	
	6	1	**4J-0520**	3	SEAL-O-RING (32.92MM ID)	
I	7	1	**108-6982**	1	HOSE AS	
	8	1	**9U-8676**	1	TUBE AS	
	9	1	**9X-8260**	1	CONNECTOR-O-RING	
	10	1	**4K-1388**	1	SEAL-O-RING (26.59MM ID)	
	11	1	**6V-8400**	1	SEAL-O-RING (29.9MM ID)	
	12	1	**2S-4078**	1	SEAL-O-RING (37.46MM ID)	
	13	1	**6V-9875**	1	CONNECTOR	
	14	1	**8E-6269**	1	BRACKET AS	
		1	**1F-0750**	2	NUT-WELD (3/8-16 THD)	
	15	1	**8T-4896**	4	WASHER-HARD (2.5MM THK)	
	16	1	**4L-9337**	2	BOLT (3/8-16X1.50IN)	
	17	1	**4L-6454**	2	BOLT (3/8-16X1.0IN)	
	18	1	**5S-7382**	2	BOLT (3/8-16X1.375IN)	
	19	1	**1P-4577**	2	FLANGE-HALF	
Y	20	1	**6E-1102**	1	CYLINDER GP-BULLDOZER LIFT	563
	21	1	**8E-6303**	1	CLIP (TAB)	
	22	1	**8E-6304**	1	CLIP (SLOT)	
	23	1	**8T-8919**	1	BOLT (1/2-13X1.75IN)	
	24	1	**6V-8188**	1	NUT (1/2-13 THD)	
	25	1	**8T-4223**	2	WASHER-HARD (3MM THK)	

I-SEE HOSE FABRICATION GUIDE
Y-SEPARATE ILLUSTRATION

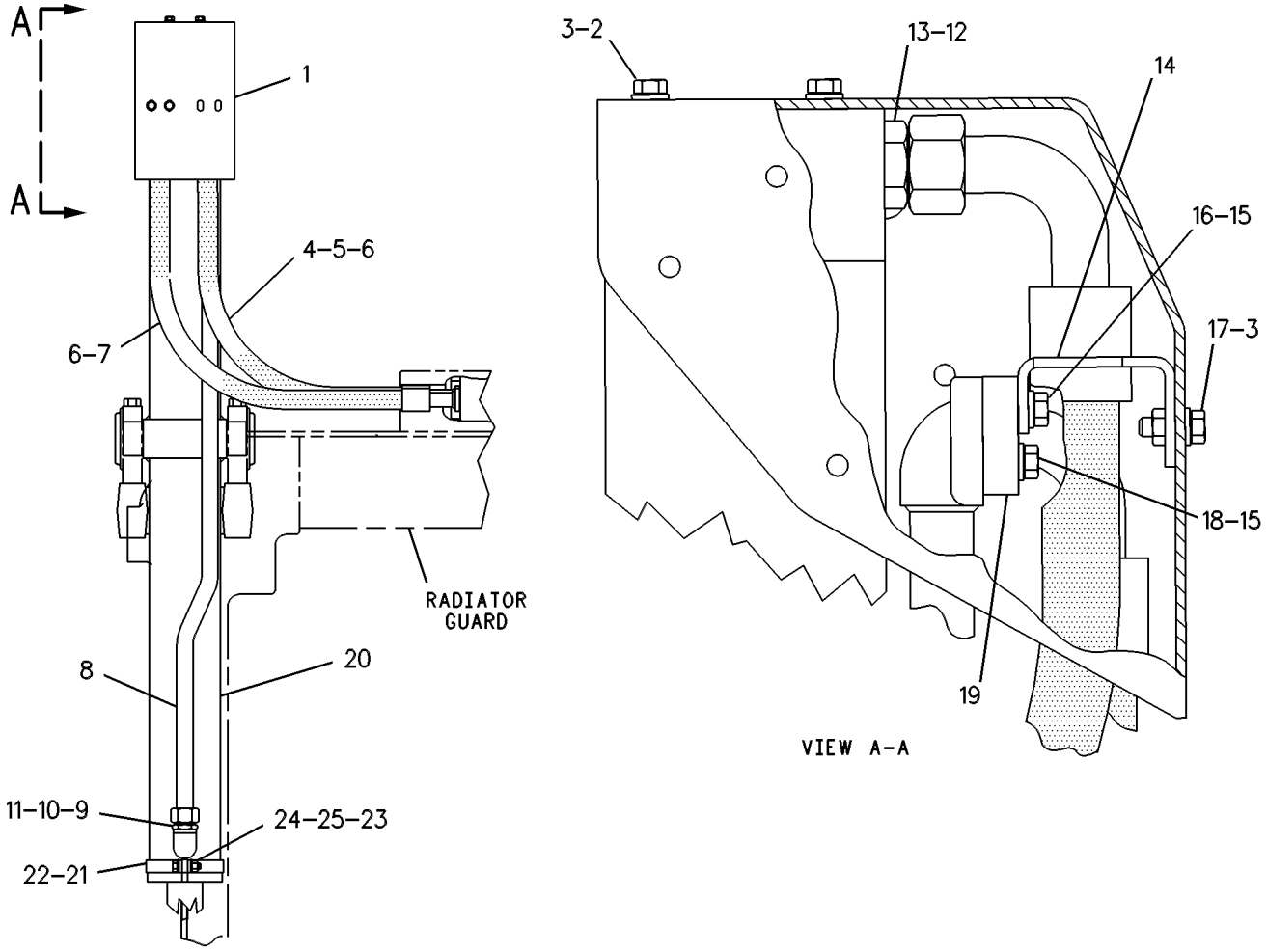

GRAPHIC #1

g00256021

HYDRAULIC SYSTEM

108-6980 CYLINDER & LINES GP-LIFT–RH

S/N: AKA1-UP; CXB1-UP; BHR1-UP; BHW1-UP

PART OF 159-8377 BULLDOZER AR, 159-1628 BULLDOZER AR-SEMI-UNIVERSAL, 159-1629 BULLDOZER AR-UNIVERSAL

SMCS-5102 **i00569887**

NOTE	REF NO	GRAPHIC REF	PART NUMBER	QTY	PART NAME 1 2 3 4 5 6 (PRODUCT LEVEL)	SEE PAGE
	1	1	**8E-8334**	1	PLATE AS	
	2	1	**5S-7379**	4	BOLT (3/8-16X.875IN)	
	3	1	**5P-1075**	6	WASHER-HARD (3MM THK)	
I	4	1	**108-6981**	1	HOSE AS	
	5	1	**5K-9090**	1	SEAL-O-RING (23.52MM ID)	
	6	1	**4J-0520**	3	SEAL-O-RING (32.92MM ID)	
I	7	1	**108-6982**	1	HOSE AS	
	8	1	**8E-8330**	1	TUBE AS	
	9	1	**9X-8260**	1	CONNECTOR-O-RING	
	10	1	**4K-1388**	1	SEAL-O-RING (26.59MM ID)	
	11	1	**6V-8400**	1	SEAL-O-RING (29.9MM ID)	
	12	1	**2S-4078**	1	SEAL-O-RING (37.46MM ID)	
	13	1	**6V-9875**	1	CONNECTOR	
	14	1	**8E-6269**	1	BRACKET AS	
	15	1	**8T-4896**	4	WASHER-HARD (2.5MM THK)	
	16	1	**4L-9337**	2	BOLT (3/8-16X1.50IN)	
	17	1	**4L-6454**	2	BOLT (3/8-16X1.0IN)	
	18	1	**5S-7382**	2	BOLT (3/8-16X1.375IN)	
	19	1	**1P-4577**	2	FLANGE-HALF	
Y	20	1	**6E-1102**	1	CYLINDER GP-BULLDOZER LIFT	563
	21	1	**8E-6303**	1	CLIP (TAB)	
	22	1	**8E-6304**	1	CLIP (SLOT)	
	23	1	**8T-8919**	1	BOLT (1/2-13X1.75IN)	
	24	1	**6V-8188**	1	NUT (1/2-13 THD)	
	25	1	**8T-4223**	2	WASHER-HARD (3MM THK)	

I-SEE HOSE FABRICATION GUIDE
Y-SEPARATE ILLUSTRATION

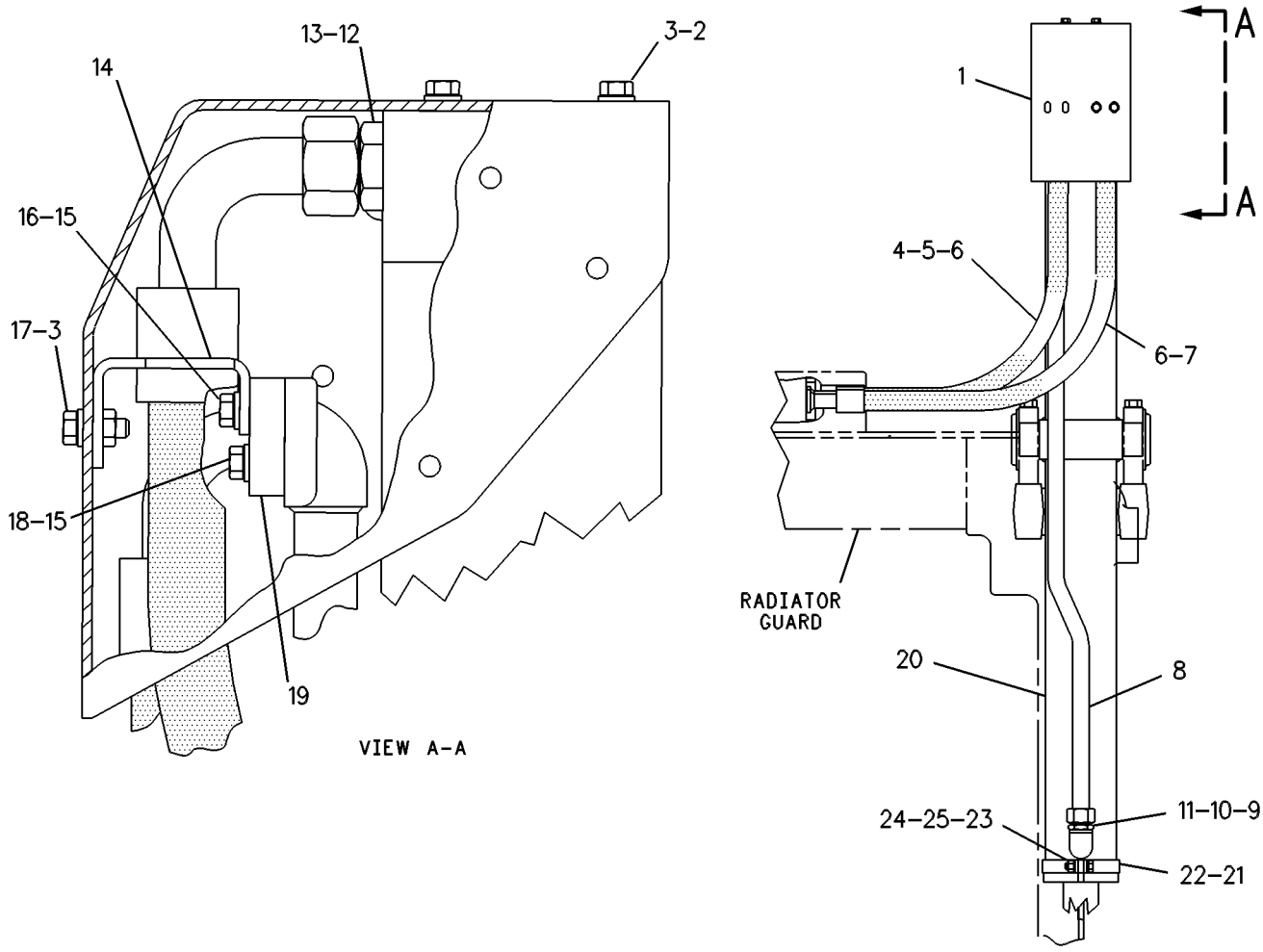

GRAPHIC #1

g00256017

HYDRAULIC SYSTEM

136-1687 CYLINDER & LINES GP-TILT

S/N: AKA1-UP
COLD WEATHER

SMCS-5104 **i01488418**

NOTE	PART NUMBER	QTY	PART NAME 1 2 3 4 5 6 (PRODUCT LEVEL)	SEE PAGE
Y	**4Z-6311**	1	CYLINDER GP-TILT	578
	137-5914	2	HOSE AS	
			84CM LENGTH EACH	
			1-90 & 1-60 DEGREE COUPLING	
	203-7819	1	HOSE AS	
			90 DEGREE COUPLING	
			93CM LENGTH	
	203-7820	1	HOSE AS	
			90 DEGREE COUPLING	
			83.5CM LENGTH	

Y-SEPARATE ILLUSTRATION

HYDRAULIC SYSTEM

8E-3039 CYLINDER AR-TILT

S/N: AKA1-UP

SMCS-5104 **i01224248**

NOTE	PART NUMBER	QTY	PART NAME 1 2 3 4 5 6 (PRODUCT LEVEL)	SEE PAGE
Y	**6E-0397**	2	CYLINDER GP-TILT	580
Y	*8E-6579*	1	LINES GP-TILT CYLINDER	612

Y-SEPARATE ILLUSTRATION

HYDRAULIC SYSTEM

158-4631 CYLINDER AR-TILT

S/N: AKA1-UP

SMCS-5104 **i01488651**

NOTE	PART NUMBER	QTY	PART NAME 1 2 3 4 5 6 (PRODUCT LEVEL)	SEE PAGE
Y	**162-0662**	1	CYLINDER GP-BULLDOZER TILT (RH)	566
Y	**162-0663**	1	CYLINDER GP-BULLDOZER TILT (LH)	568
Y	*158-6373*	1	LINES GP-TILT CYLINDER	616
Y	*158-6394*	1	PUSH ARM GP-STABILIZER	702

Y-SEPARATE ILLUSTRATION

6E-1102 CYLINDER GP-BULLDOZER LIFT

S/N: AKA1-UP; CXB1-UP; BHR1-UP; BHW1-UP
114.3 MM (4.5 IN) BORE X 1425 MM (56.1 IN) STROKE
PART OF 108-6979, 108-6980 CYLINDER & LINES GP-LIFT

SMCS-5102 **i00570571**

NOTE	REF NO	GRAPHIC REF	PART NUMBER	QTY	PART NAME 1 2 3 4 5 6 (PRODUCT LEVEL)	SEE PAGE
	1	1	**9F-6936**	4	BOLT (1-8X6IN)	
	2	1	**2J-3507**	4	NUT-FULL (1-8 THD)	
	3	1	**3G-0910**	1	CAP-BEARING	
B	4	1	**3G-0911**	28	SHIM (.8MM THK)	
Y	5	1	*124-4771*	1	CYLINDER GP	564

B-USE AS REQUIRED
Y-SEPARATE ILLUSTRATION

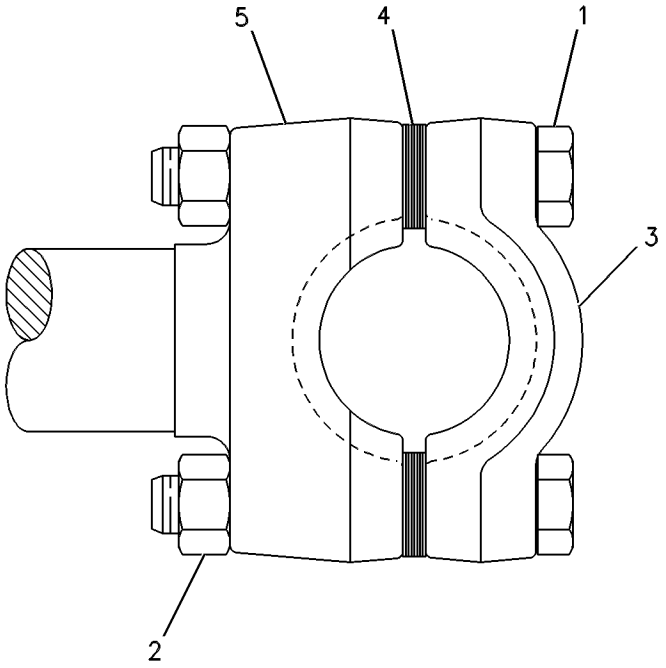

GRAPHIC #1 g00257100

HYDRAULIC SYSTEM

124-4771 CYLINDER GP-BULLDOZER LIFT

S/N: AKA1-UP; CXB1-UP; BHR1-UP; BHW1-UP
114.3 MM (4.5 IN) BORE X 1425 MM (56.1 IN) STROKE
PART OF 6E-1102 CYLINDER GP-BULLDOZER LIFT

SMCS-5102 **i01416973**

NOTE	REF NO	GRAPHIC REF	PART NUMBER	QTY	PART NAME 1 2 3 4 5 6 (PRODUCT LEVEL)	SEE PAGE
R	1	1	**6E-1103**	1	CYLINDER AS	
	2	1	**6E-1108**	2	BEARING-SLEEVE	
	3	1	**106-1017**	1	WASHER (36.7X77X6MM THK)	
	4	1	**6E-1109**	1	PISTON AS	
	5	1	**4J-3745**	1	RING-WEAR	
	6	1	**9X-7269**	1	SEAL AS	
C	7	1	**163-6474**	1	HEAD	
R	8	1	**6E-1111**	1	ROD AS	
C	9	1	**167-2469**	1	SEAL-WIPER	
C	10	1	**9X-7412**	1	SEAL-U-CUP	
C	11	1	**167-2208**	1	SEAL AS-BUFFER	
	12	1	**8C-9161**	1	RING-WEAR	
C	13	1	**5H-6734**	1	SEAL-O-RING	
	14	1	**1K-7095**	1	RING-BACKUP	
CM	15	1	**173-9682**	1	BOLT-HEX HEAD (M36X4X100MM)	

C-CHANGE FROM PREVIOUS TYPE
M-METRIC PART
R-REMFG PART MAY BE AVAILABLE

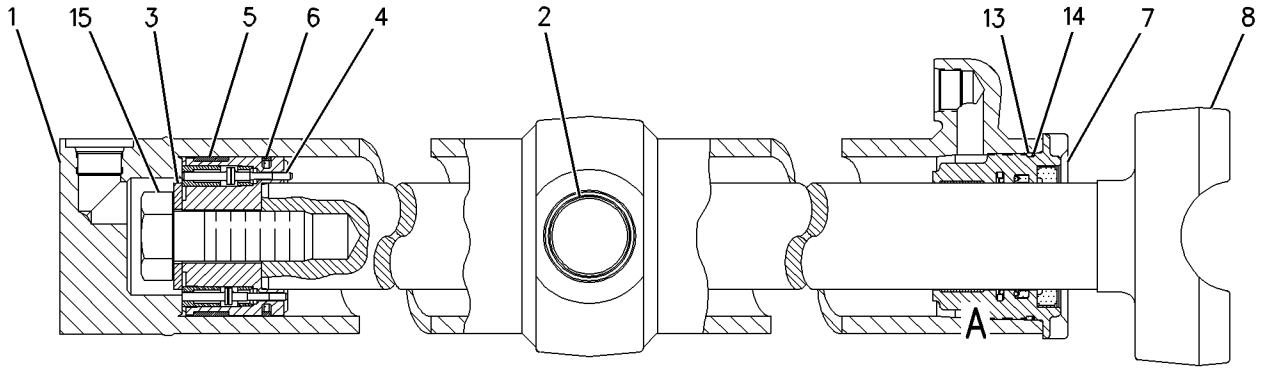

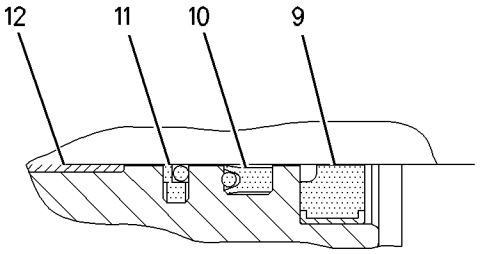

VIEW OF AREA A

GRAPHIC #1 g00774773

MEMORANDA

162-0662 CYLINDER GP-BULLDOZER TILT

S/N: AKA1-UP
184.15MM (7.25 IN)BORE X 140MM (5.5 IN)STROKE. RH
PART OF 158-4631 CYLINDER AR-TILT

SMCS-5104 **i01488660**

NOTE	REF NO	GRAPHIC REF	PART NUMBER	QTY	PART NAME 1 2 3 4 5 6 (PRODUCT LEVEL)	SEE PAGE
	1	1	**162-0667**	1	CYLINDER AS	
	2	1	**1U-2182**	2	BEARING-SLEEVE	
	3	1	**191-3584**	1	PISTON AS	
	4	1	**132-5182**	1	INSERT	
	5	1	**132-5183**	1	PLUNGER	
	6	1	**8H-3532**	1	SPRING-VALVE	
	7	1	**5J-4993**	1	SEAL AS	
		1	**5J-4407**	1	RING-EXPANDER	
	8	1	**191-3585**	1	PLUNGER	
	9	1	**8T-3282**	8	WASHER-HARD (22X35X3.5MM THK)	
	10	1	**1J-2674**	1	RING-WEAR	
	11	1	**167-2474**	1	SEAL-WIPER	
	12	1	**167-2324**	1	SEAL-U-CUP	
	13	1	**167-2211**	1	SEAL AS-BUFFER	
	14	1	**8C-5245**	1	RING-WEAR	
	15	1	**8T-8381**	1	SEAL-HEAD (180.46MM ID)	
	16	1	**191-3583**	1	HEAD	
M	17	1	**6V-3669**	8	BOLT (M20X2.5X80MM)	
	18	1	**3B-8489**	1	FITTING-GREASE	
	19	1	**9T-5900**	1	WASHER	
	20	1	**2J-0564**	1	LOCKNUT	
	21	1	**5P-7593**	1	SEAL-O-RING	
	22	1	**1U-1738**	1	RING-BACKUP	
	23	1	**162-0677**	1	ROD AS	
	24	1	**7J-3297**	1	BEARING	
	25	1	**5J-9454**	1	RING-RETAINING	

M-METRIC PART

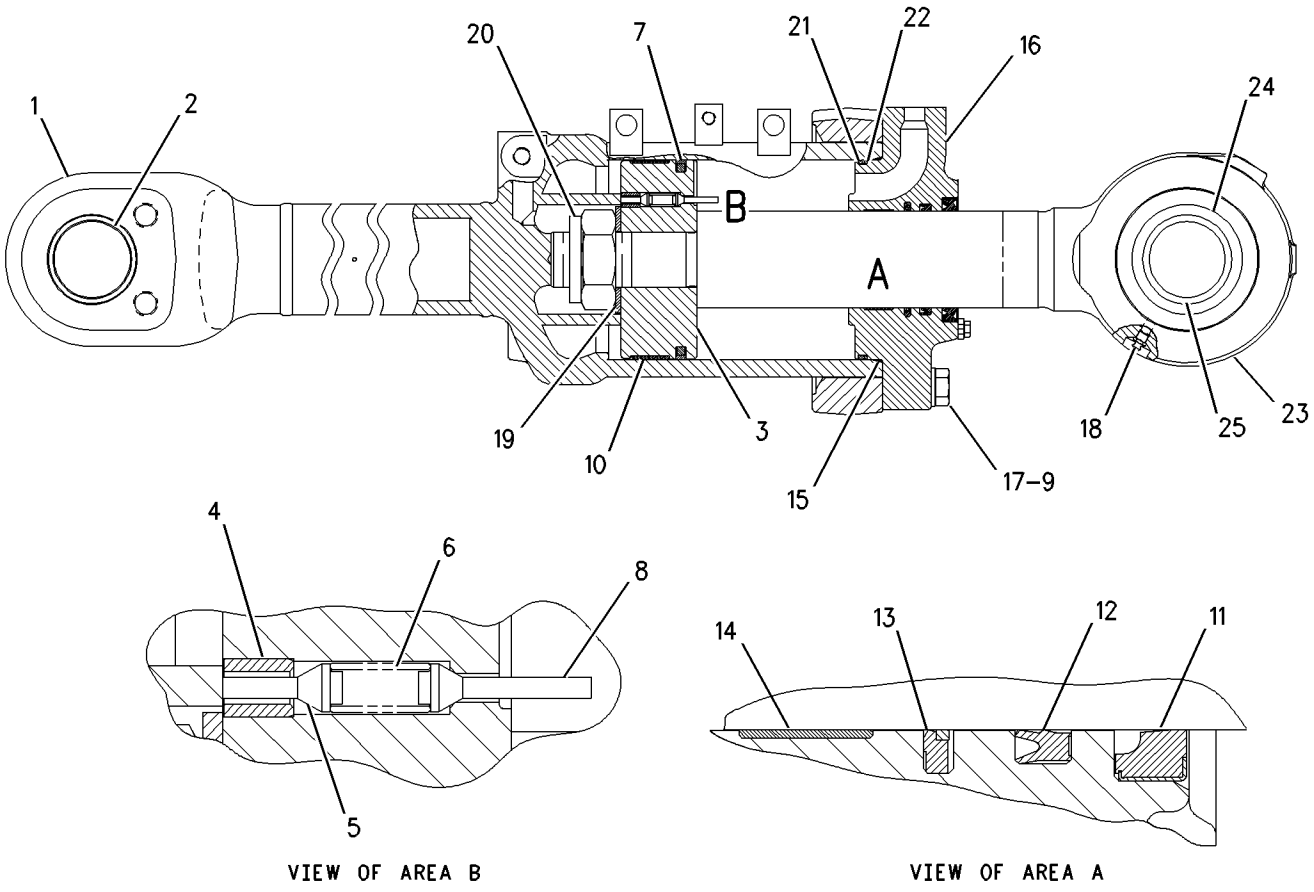

GRAPHIC #1 g00729005

162-0663 CYLINDER GP-BULLDOZER TILT

S/N: AKA1-UP
184.15MM (7.25 IN)BORE X 140MM (5.5 IN)STROKE. LH
PART OF 158-4631 CYLINDER AR-TILT

SMCS-5104 **i01488681**

NOTE	REF NO	GRAPHIC REF	PART NUMBER	QTY	PART NAME 1 2 3 4 5 6 (PRODUCT LEVEL)	SEE PAGE
	1	1	**162-0665**	1	CYLINDER AS	
	2	1	**1U-2182**	2	BEARING-SLEEVE	
	3	1	**191-3584**	1	PISTON AS	
	4	1	**132-5182**	1	INSERT	
	5	1	**132-5183**	1	PLUNGER	
	6	1	**8H-3532**	1	SPRING-VALVE	
	7	1	**5J-4993**	1	SEAL AS	
		1	**5J-4407**	1	RING-EXPANDER	
	8	1	**191-3585**	1	PLUNGER	
	9	1	**8T-3282**	8	WASHER-HARD (22X35X3.5MM THK)	
	10	1	**1J-2674**	1	RING-WEAR	
	11	1	**167-2474**	1	SEAL-WIPER	
	12	1	**167-2324**	1	SEAL-U-CUP	
	13	1	**167-2211**	1	SEAL AS-BUFFER	
	14	1	**8C-5245**	1	RING-WEAR	
	15	1	**8T-8381**	1	SEAL-HEAD (180.46MM ID)	
	16	1	**191-3583**	1	HEAD	
M	17	1	**6V-3669**	8	BOLT (M20X2.5X80MM)	
	18	1	**3B-8489**	1	FITTING-GREASE	
	19	1	**9T-5900**	1	WASHER	
	20	1	**2J-0564**	1	LOCKNUT	
	21	1	**5P-7593**	1	SEAL-O-RING	
	22	1	**1U-1738**	1	RING-BACKUP	
	23	1	**162-0677**	1	ROD AS	
	24	1	**7J-3297**	1	BEARING	
	25	1	**5J-9454**	1	RING-RETAINING	

M-METRIC PART

162-0663 **CYLINDER GP-BULLDOZER TILT** *(contd.)* **i01488681**

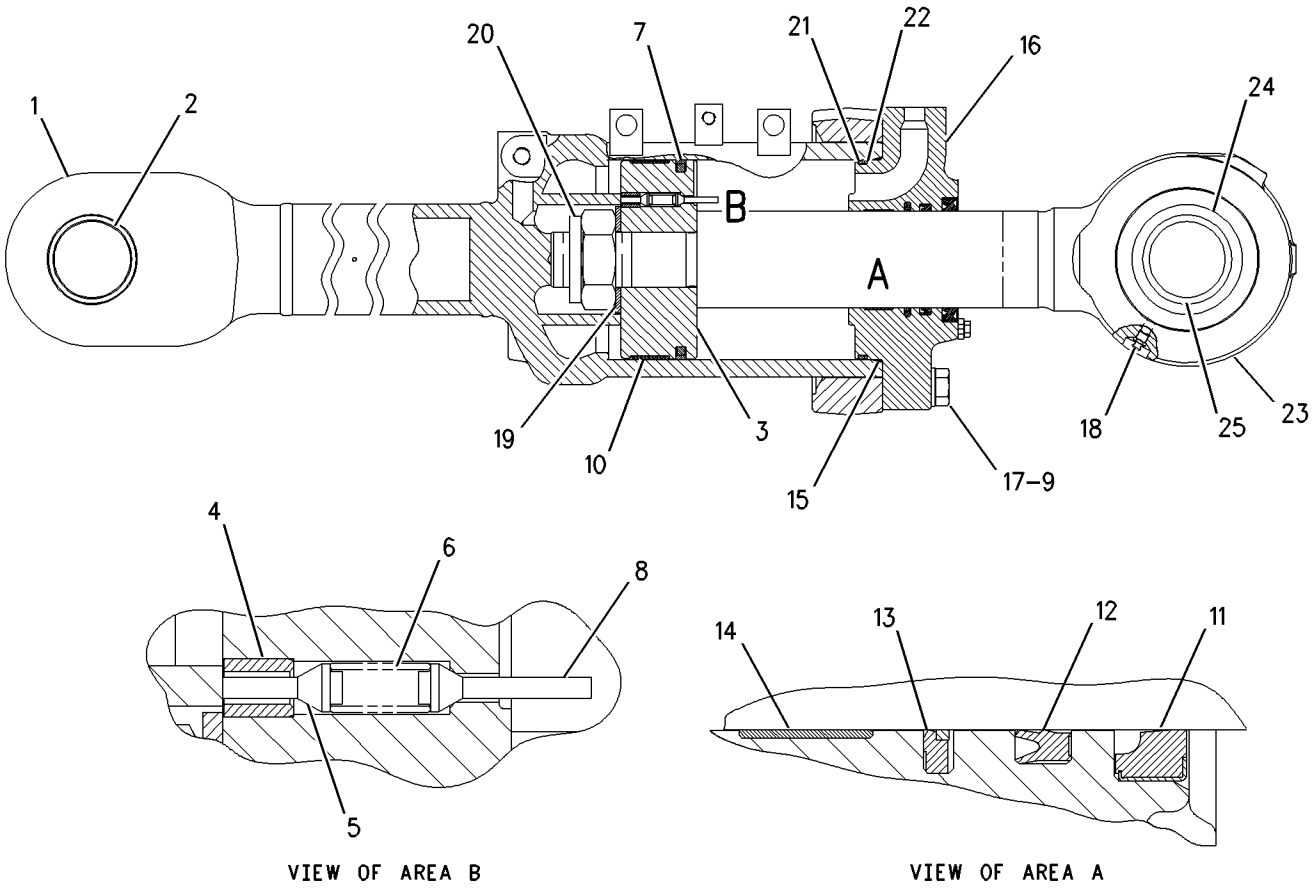

VIEW OF AREA B

VIEW OF AREA A

GRAPHIC #1

g00729007

HYDRAULIC SYSTEM

155-3653 CYLINDER GP-RIPPER LIFT

S/N: BHD1-UP
184.15 MM (7.25 IN.) BORE X 281 MM (11.06 IN.) STROKE
PART OF 153-3130 RIPPER AR

SMCS-5352 **i01442847**

NOTE	REF NO	GRAPHIC REF	PART NUMBER	QTY	PART NAME 1 2 3 4 5 6 (PRODUCT LEVEL)	SEE PAGE
	1	1	**2J-7686**	1	LOCKNUT	
	2	1	**1J-2674**	1	RING-WEAR	
	3	1	**5J-4993**	1	SEAL AS	
		1	**5J-4407**	1	RING-EXPANDER	
		1	**5J-4408**	1	SEAL	
	4	1	**1U-2716**	1	PISTON	
	5	1	**6J-9121**	1	WASHER	
	6	1	**155-3850**	1	CYLINDER AS	
		1	**3G-5999**	1	BEARING-SLEEVE	
	7	1	**5P-7593**	1	SEAL-O-RING (170.82MM ID)	
	8	1	**158-3027**	1	RING-BACKUP	
	9	1	**8T-8381**	1	SEAL-HEAD (180.46MM ID)	
	10	1	**155-3849**	1	HEAD	
M	11	1	**6V-5845**	8	BOLT (M20X2.5X70MM)	
	12	1	**3B-8489**	2	FITTING-GREASE	
R	13	1	**9T-0584**	1	ROD AS	
		1	**0R-3082**	1	ROD AS	
		1	**3G-5999**	1	BEARING-SLEEVE	
	14	1	**8T-4121**	8	WASHER-HARD (11X21X2.5MM THK)	
	15	1	**8C-3206**	4	FLANGE-HALF	
	16	1	**8T-1714**	1	RING-WEAR	
M	17	1	**8T-4196**	8	BOLT (M10X1.5X35MM)	
	18	1	**167-2469**	1	SEAL-WIPER	
	19	1	**167-2319**	1	SEAL-U-CUP	
	20	1	**167-2208**	1	SEAL AS-BUFFER	

M-METRIC PART
R-REMFG PART MAY BE AVAILABLE

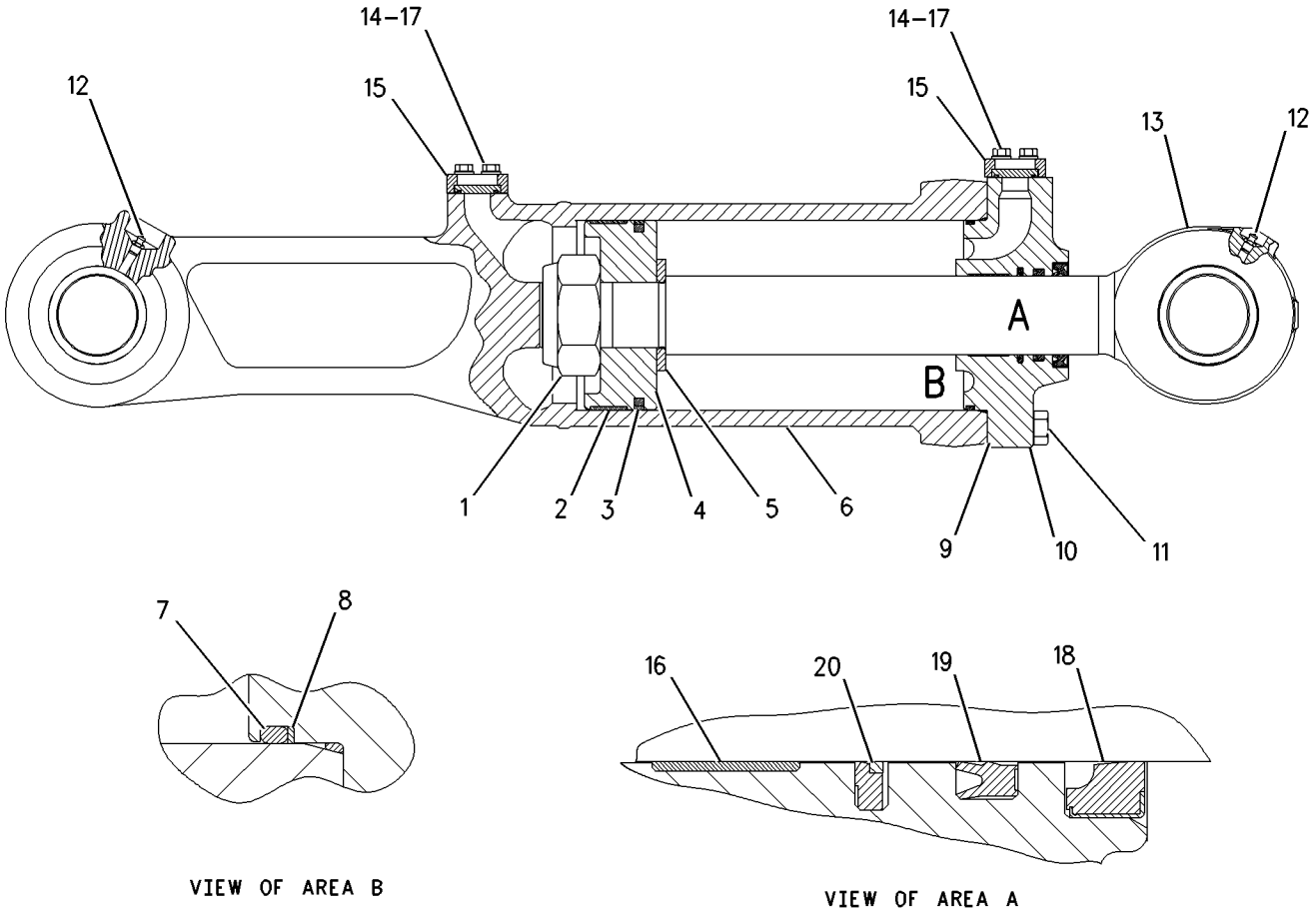

GRAPHIC #1 g00730044

HYDRAULIC SYSTEM

6E-3113 CYLINDER GP-RIPPER PIN PULLER

S/N: AKA1-UP
101.6MM (4 IN.) BORE X 138.5MM (5.5 IN.) STROKE
PART OF 160-3616 PULLER AR-PIN

SMCS-5354 **i01464223**

NOTE	REF NO	GRAPHIC REF	PART NUMBER	QTY	PART NAME 1 2 3 4 5 6 (PRODUCT LEVEL)	SEE PAGE
M	1	1	**173-9779**	1	BOLT-HEX HEAD (M24X3.0X80MM)	
	2	1	**6J-2797**	1	RING-WEAR	
	3	1	**5J-5402**	1	SEAL AS	
	4	1	**9T-3493**	1	PISTON	
	5	1	**6V-8237**	1	WASHER (26X44X4MM THK)	
	6	1	**4T-6907**	1	RING-WEAR	
	7	1	**6E-3980**	1	ROD AS	
	8	1	**167-2452**	1	SEAL-WIPER	
	9	1	**167-2300**	1	SEAL-U-CUP	
	10	1	**167-2190**	1	SEAL AS-BUFFER	
	11	1	**2K-6830**	1	RING-BACKUP	
	12	1	**175-7900**	1	SEAL-O-RING	
	13	1	**6E-4976**	1	HEAD	
	14	1	**6E-3976**	1	CYLINDER AS	

M-METRIC PART

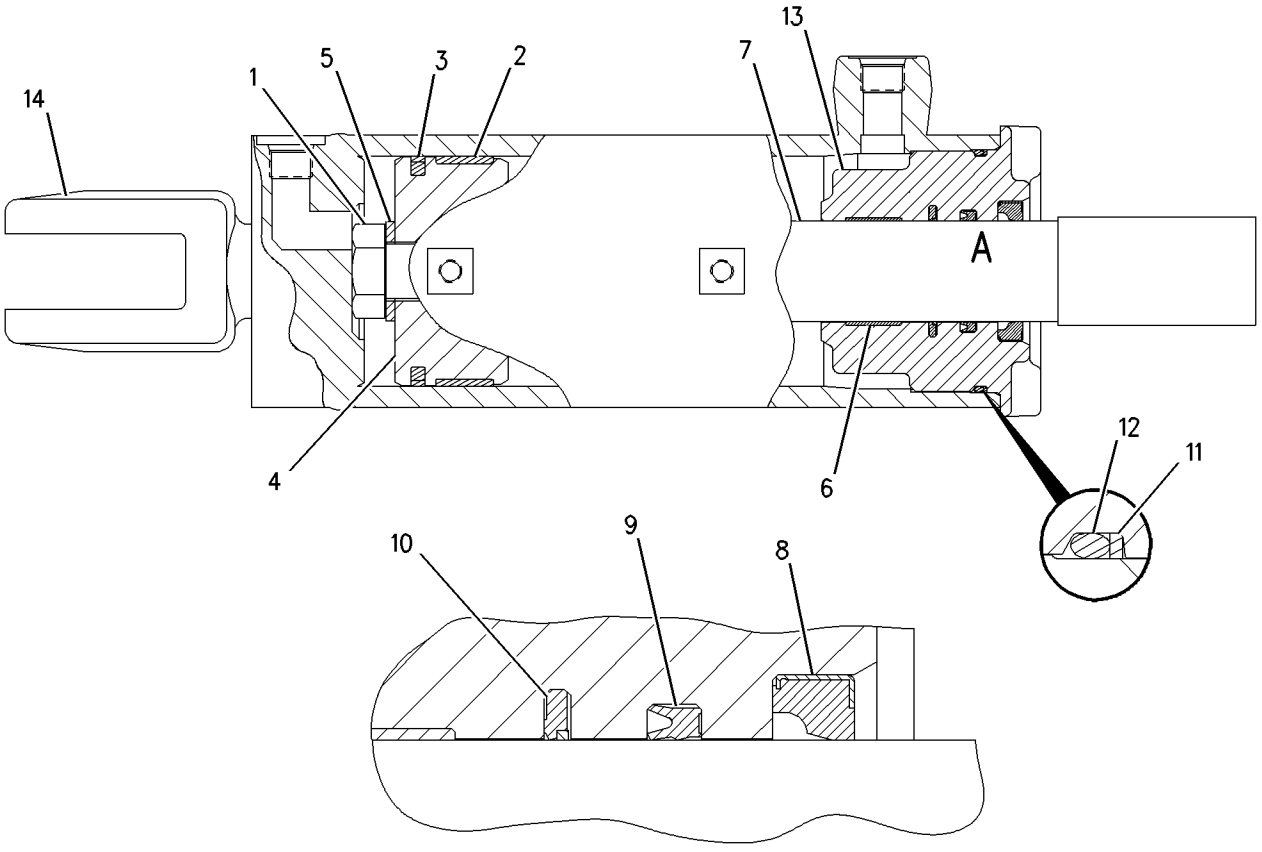

VIEW OF AREA A

GRAPHIC #1 g00719216

MEMORANDA

HYDRAULIC SYSTEM

155-3652 CYLINDER GP-RIPPER TILT–LH

S/N: BHD1-UP
165.1 MM (6.5 IN.) BORE X 437 MM (17.2 IN.) STROKE
PART OF 153-3130 RIPPER AR

SMCS-5356 **i01442898**

NOTE	REF NO	GRAPHIC REF	PART NUMBER	QTY	PART NAME 1 2 3 4 5 6 (PRODUCT LEVEL)	SEE PAGE
	1	1	**3B-8489**	2	FITTING-GREASE	
	2	1	**155-3857**	1	CYLINDER AS	
		1	**3G-5999**	1	BEARING-SLEEVE	
		1	**155-3860**	1	CAP	
	3	1	**1P-4576**	2	FLANGE	
	4	1	**8T-4121**	8	WASHER-HARD (11X21X2.5MM THK)	
M	5	1	**8T-4196**	8	BOLT (M10X1.5X35MM)	
	6	1	**4J-5267**	1	SEAL-O-RING (24.99MM ID)	
	7	1	**5H-4018**	1	COVER	
	8	1	**1P-4577**	2	FLANGE-HALF	
M	9	1	**8T-0666**	2	BOLT (M24X3.0X90MM)	
M	10	1	**6V-8133**	4	BOLT (M24X3.0X80MM)	
	11	1	**155-3856**	1	HEAD	
	12	1	**8T-8379**	1	SEAL-HEAD	
	13	1	**158-3026**	1	RING-BACKUP	
	14	1	**7J-8956**	1	SEAL-O-RING (151.77MM ID)	
R	15	1	**9T-0098**	1	ROD AS	
		1	**3G-5999**	1	BEARING-SLEEVE	
	16	1	**6J-9747**	1	WASHER	
	17	1	**5J-4991**	1	SEAL AS	
	18	1	**9T-0096**	1	RING-WEAR	
	19	1	**6J-9748**	1	PISTON	
	20	1	**2J-0564**	1	LOCKNUT	
	21	1	**8T-1714**	1	RING-WEAR	
	22	1	**167-2208**	1	SEAL AS-BUFFER	
	23	1	**167-2319**	1	SEAL-U-CUP	
	24	1	**167-2469**	1	SEAL-WIPER	

M-METRIC PART
R-REMFG PART MAY BE AVAILABLE

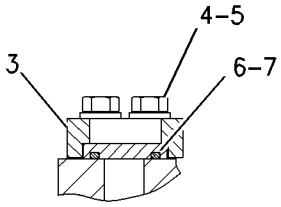

VIEW B-B

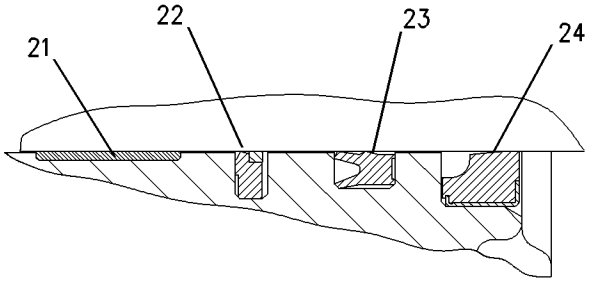

VIEW OF AREA A

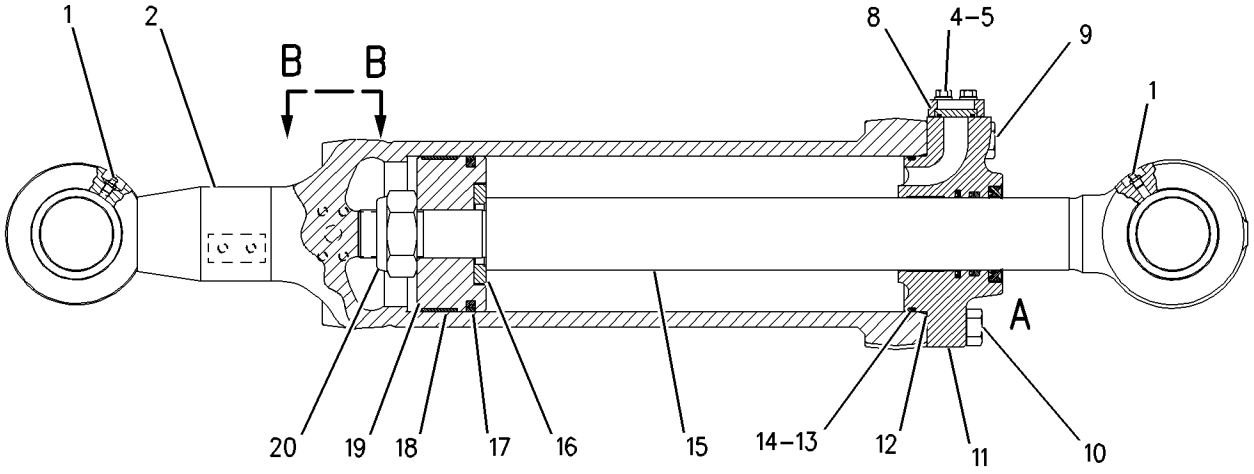

GRAPHIC #1

g00730036

HYDRAULIC SYSTEM

165-0102 CYLINDER GP-RIPPER TILT–RH

S/N: BHD1-UP
165.1 MM (6.5 IN.) BORE X 437 MM (17.2 IN.) STROKE
PART OF 153-3130 RIPPER AR

SMCS-5356 **i01442934**

NOTE	REF NO	GRAPHIC REF	PART NUMBER	QTY	PART NAME 1 2 3 4 5 6 (PRODUCT LEVEL)	SEE PAGE
	1	1	**3B-8489**	2	FITTING-GREASE	
		1	**4J-0520**	2	SEAL-O-RING (32.92MM ID)	
	2	1	**165-0101**	1	CYLINDER AS	
		1	**3G-5999**	1	BEARING-SLEEVE	
	3	1	**1P-4576**	2	FLANGE	
	4	1	**8T-4121**	8	WASHER-HARD (11X21X2.5MM THK)	
M	5	1	**8T-4196**	8	BOLT (M10X1.5X35MM)	
	6	1	**4J-5267**	1	SEAL-O-RING (24.99MM ID)	
	7	1	**5H-4018**	1	COVER	
	8	1	**1P-4577**	2	FLANGE-HALF	
M	9	1	**8T-0666**	2	BOLT (M24X3.0X90MM)	
M	10	1	**6V-8133**	4	BOLT (M24X3.0X80MM)	
	11	1	**155-3856**	1	HEAD	
	12	1	**8T-8379**	1	SEAL-HEAD	
	13	1	**158-3026**	1	RING-BACKUP	
	14	1	**7J-8956**	1	SEAL-O-RING (151.77MM ID)	
R	15	1	**9T-0098**	1	ROD AS	
		1	**3G-5999**	1	BEARING-SLEEVE	
	16	1	**6J-9747**	1	WASHER	
	17	1	**5J-4991**	1	SEAL AS	
	18	1	**9T-0096**	1	RING-WEAR	
	19	1	**6J-9748**	1	PISTON	
	20	1	**2J-0564**	1	LOCKNUT	
	21	1	**8T-1714**	1	RING-WEAR	
	22	1	**167-2208**	1	SEAL AS-BUFFER	
	23	1	**167-2319**	1	SEAL-U-CUP	
	24	1	**167-2469**	1	SEAL-WIPER	

M-METRIC PART
R-REMFG PART MAY BE AVAILABLE

165-0102 **CYLINDER GP-RIPPER TILT** ***(contd.)*** **i01442934**

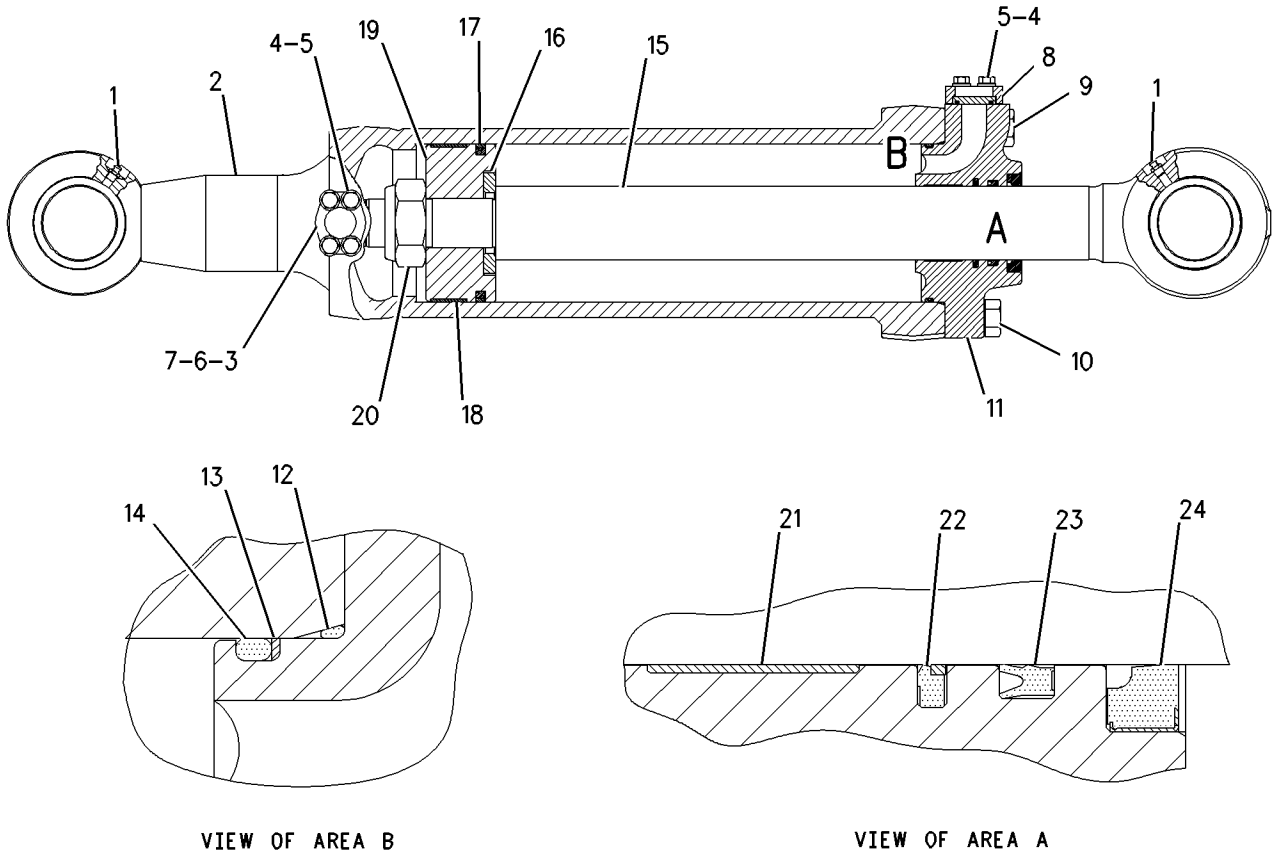

VIEW OF AREA B

VIEW OF AREA A

GRAPHIC #1 g00751763

HYDRAULIC SYSTEM

4Z-6311 CYLINDER GP-TILT

S/N: AKA1-UP
184.15MM (7.25 IN)BORE X 195MM (7.7 IN)STROKE
PART OF 136-1687 CYLINDER & LINES GP-TILT

SMCS-5104 **i01488433**

NOTE	REF NO	GRAPHIC REF	PART NUMBER	QTY	PART NAME 1 2 3 4 5 6 (PRODUCT LEVEL)	SEE PAGE
R	1	1	**6E-1176**	1	CYLINDER AS	
	1A	1	**1U-2182**	2	BEARING-SLEEVE	
	2	1	**4J-6888**	1	LOCKNUT	
	3	1	**6E-1183**	1	PISTON	
	4	1	**5P-7593**	1	SEAL-O-RING	
	5	1	**1U-1738**	1	RING-BACKUP	
	6	1	**191-3583**	1	HEAD	
R	7	1	**6E-1901**	1	ROD AS	
	7A	1	**5J-9454**	1	RING-RETAINING	
	7B	1	**7J-3297**	1	BEARING	
M	8	1	**6V-3669**	8	BOLT (M20X2.5X80MM)	
	9	1	**8T-3282**	8	WASHER-HARD (22X35X3.5MM THK)	
	10	1	**8T-1790**	1	SEAL AS	
	11	1	**1J-2674**	1	RING-WEAR	
	12	1	**167-2474**	1	SEAL-WIPER	
	13	1	**9X-7405**	1	SEAL-U-CUP	
	14	1	**167-2211**	1	SEAL AS-BUFFER	
	15	1	**8C-5245**	1	RING-WEAR	
	16	1	**8T-8381**	1	SEAL-HEAD (180.46MM ID)	
	17	1	**3B-8489**	1	FITTING-GREASE	

M-METRIC PART
R-REMFG PART MAY BE AVAILABLE

4Z-6311 **CYLINDER GP-TILT** ***(contd.)*** **i01488433**

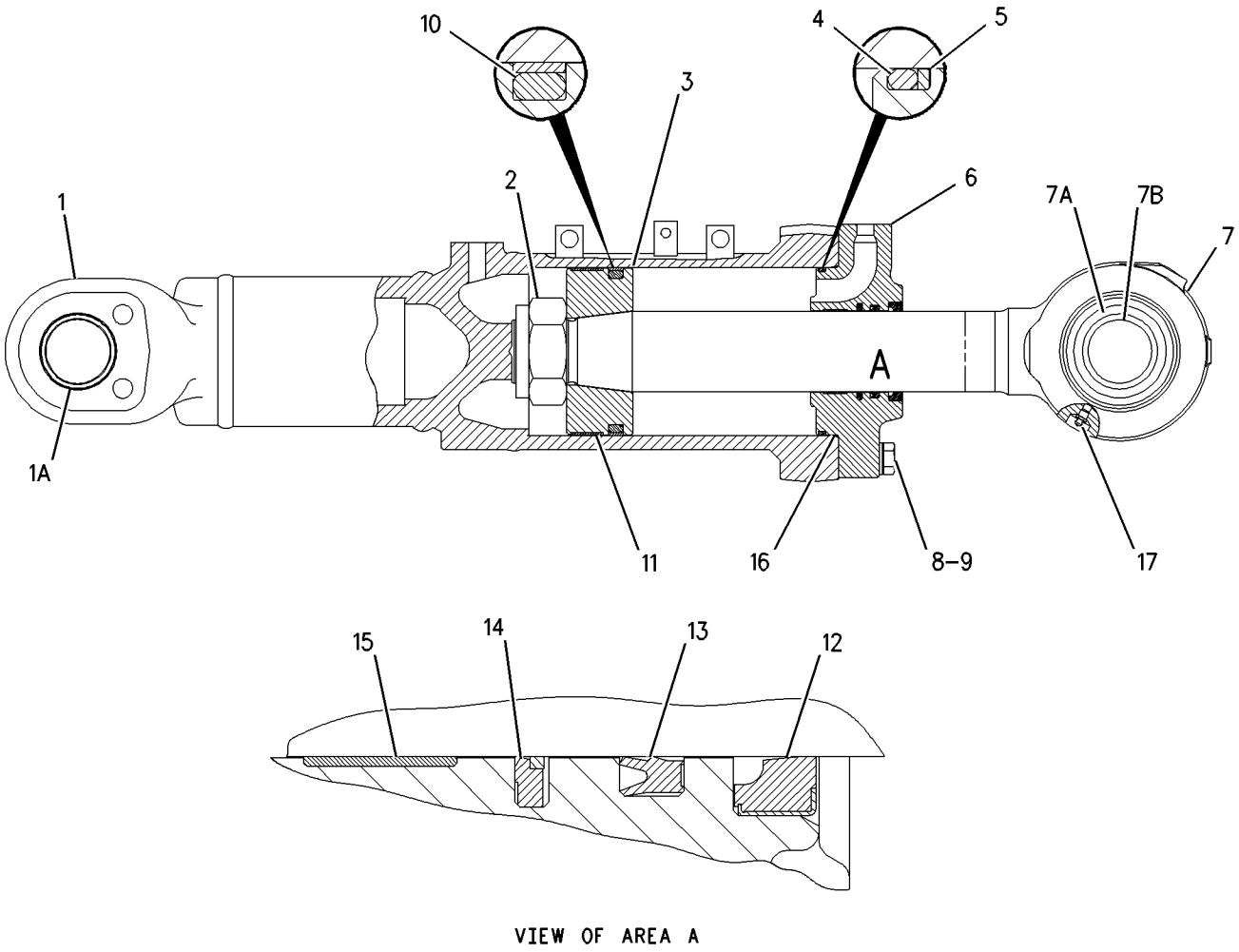

VIEW OF AREA A

GRAPHIC #1 g00754443

HYDRAULIC SYSTEM

6E-0397 CYLINDER GP-TILT

S/N: AKA1-UP

PART OF 8E-3039 CYLINDER AR-TILT

SMCS-5104 **i01488347**

NOTE	REF NO	GRAPHIC REF	PART NUMBER	QTY	PART NAME 1 2 3 4 5 6 (PRODUCT LEVEL)	SEE PAGE
R	1	1	**6E-0398**	1	CYLINDER AS	
	2	1	**1U-2182**	2	BEARING-SLEEVE	
	3	1	**9T-5900**	1	WASHER	
	4	1	**132-5180**	1	PISTON AS	
J	5	1	**5J-4993**	1	SEAL AS	
	6	1	**8H-3532**	1	SPRING-VALVE	
	7	1	**9T-4977**	1	PLUNGER	
	8	1	**132-5183**	1	PLUNGER	
	9	1	**132-5182**	1	INSERT	
R	10	1	**106-3881**	1	ROD AS	
M	11	1	**8T-0672**	4	BOLT (M24X3.0X160MM)	
	12	1	**160-6309**	1	CAP-BEARING	
B	13	1	**8J-9180**	28	SHIM (.51MM THK)	
M	14	1	**7X-0851**	4	NUT (M24X3.00 THD)	
J	15	1	**1J-2674**	1	RING-WEAR	
J	16	1	**167-2469**	1	SEAL-WIPER	
J	17	1	**167-2319**	1	SEAL-U-CUP	
J	18	1	**167-2208**	1	SEAL AS-BUFFER	
J	19	1	**9T-0094**	1	RING-WEAR	
	20	1	**2J-0564**	1	LOCKNUT	
J	21	1	**2K-2939**	1	SEAL-O-RING	
J	22	1	**2K-2940**	1	RING-BACKUP	
	23	1	**6E-0402**	1	HEAD	
M	24	1	**8C-3222**	4	BOLT (M30X3.5X80MM)	
	25	1	**3S-7023**	4	WASHER (34X57X6MM THK)	
					AVAILABLE REPAIR KIT(S):	
J			**132-6127**	1	KIT-HYDRAULIC CYLINDER SEAL	

B-USE AS REQUIRED
J-KIT MARKED J INCLUDES PARTS MARKED J
M-METRIC PART
R-REMFG PART MAY BE AVAILABLE

6E-0397 CYLINDER GP-TILT *(contd.)* i01488347

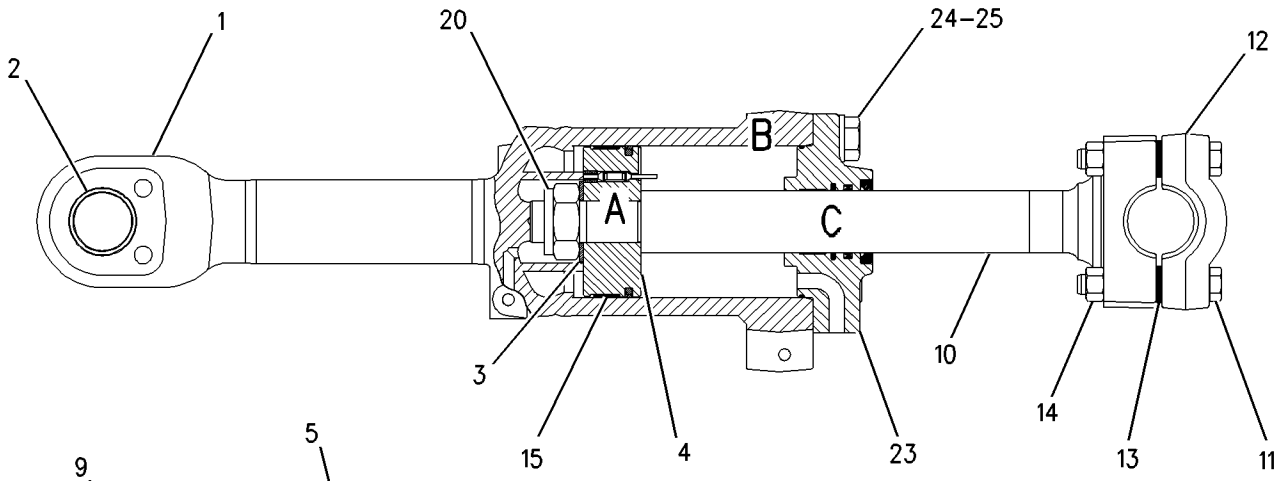

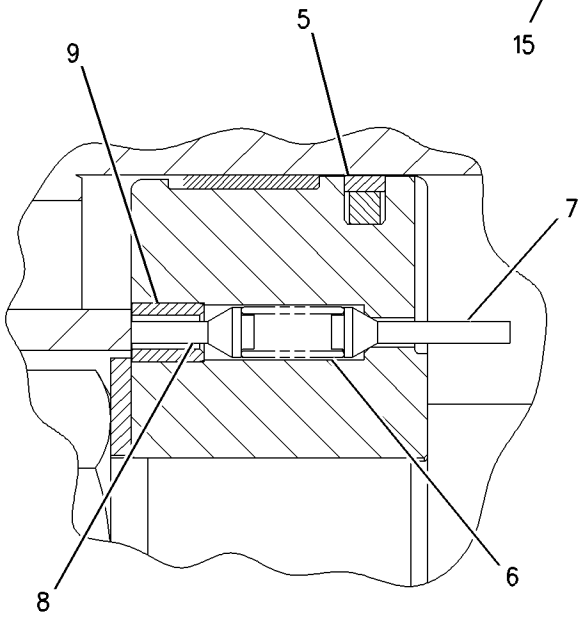

VIEW OF AREA A

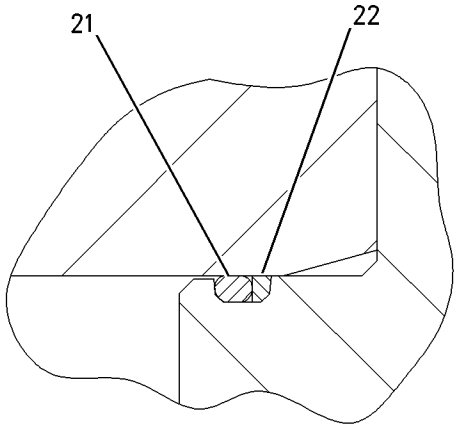

VIEW OF AREA B

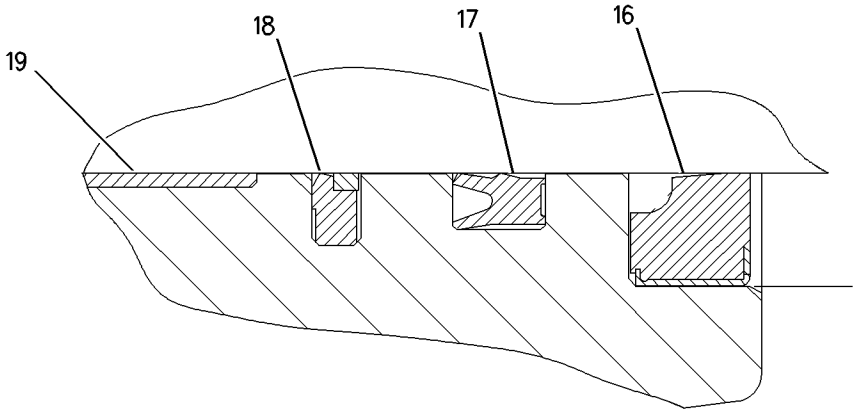

VIEW OF AREA C

GRAPHIC #1 g00731214

HYDRAULIC SYSTEM

6E-1175 CYLINDER GP-TILT

S/N: CXB1-UP; CXL1-UP; BHW1-UP
184.15 MM (7.25 IN) BORE X 195 MM (7.7 IN) STROKE
PART OF 118-3173 PUSH ARM GP-STABILIZER

SMCS-5104 **i01441632**

NOTE	REF NO	GRAPHIC REF	PART NUMBER	QTY	PART NAME 1 2 3 4 5 6 (PRODUCT LEVEL)	SEE PAGE
R	1	1	**6E-1176**	1	CYLINDER AS	
	2	1	**1U-2182**	2	BEARING-SLEEVE	
	3	1	**6E-1183**	1	PISTON	
C	4	1	**5P-7593**	1	SEAL-O-RING (170.82MM ID)	
C	5	1	**158-3027**	1	RING-BACKUP	
C	6	1	**191-3583**	1	HEAD	
R	7	1	**6E-1901**	1	ROD AS	
		1	**5J-9454**	1	RING-RETAINING	
	8	1	**6V-3340**	1	BEARING-SPHERICAL	
M	9	1	**6V-3669**	8	BOLT (M20X2.5X80MM)	
		1	**8T-3282**	8	WASHER-HARD (22X35X3.5MM THK)	
	10	1	**8T-1790**	1	SEAL AS	
	11	1	**1J-2674**	1	RING-WEAR	
C	12	1	**167-2474**	1	SEAL-WIPER	
C	13	1	**167-2324**	1	SEAL-U-CUP	
C	14	1	**167-2211**	1	SEAL AS-BUFFER	
	15	1	**8C-5245**	1	RING-WEAR	
	16	1	**4J-6888**	1	LOCKNUT	
	17	1	**8T-8381**	1	SEAL-HEAD (180.46MM ID)	
C	18	1	**3B-8489**	1	FITTING-GREASE	

C-CHANGE FROM PREVIOUS TYPE
M-METRIC PART
R-REMFG PART MAY BE AVAILABLE

6E-1175 CYLINDER GP-TILT *(contd.)* i01441632

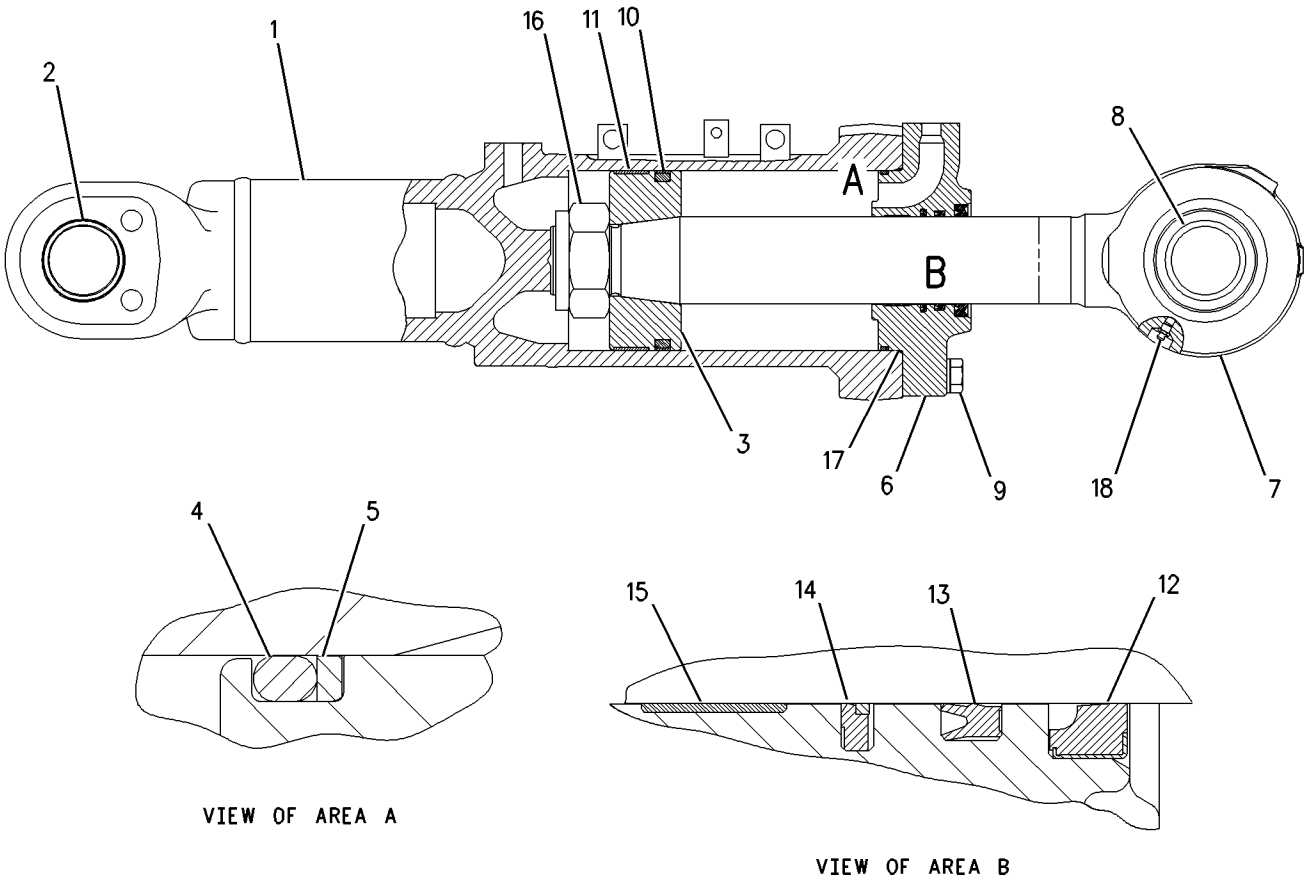

GRAPHIC #1 g00728717

HYDRAULIC SYSTEM

157-0821 HYDRAULIC AR

S/N: AKA1-UP

PART OF 157-0818 GENERAL AR

SMCS-5051, 5056, 5057, 5073 **i01429670**

NOTE	PART NUMBER	QTY	PART NAME 1 2 3 4 5 6 (PRODUCT LEVEL)	SEE PAGE
Y	**157-0823**	1	HYDRAULIC AR	585
Y	**157-0822**	1	STEERING AR-HYDRAULIC	538

Y-SEPARATE ILLUSTRATION

HYDRAULIC SYSTEM

157-0823 HYDRAULIC AR

S/N: AKA1-UP

DOZER

PART OF 157-0821 HYDRAULIC AR

SMCS-5051, 5056, 5057, 5073 **i01438304**

NOTE	PART NUMBER	QTY	PART NAME 1 2 3 4 5 6 (PRODUCT LEVEL)	SEE PAGE
Y	*157-0824*	1	CONTROL AR-PILOT HYDRAULIC	552
Y	*157-7324*	1	LINES GP-BULLDOZER MANIFOLD	586
Y	*157-7325*	1	LINES GP-PUMP	606
Y	*157-7326*	1	LINES GP-TILT CYLINDER	614
Y	*157-7327*	1	MOUNTING GP-VALVE	622
YR	**9T-8346**	1	PUMP GP-PISTON	624
Y	*164-3700*	1	TANK & FILTER GP-HYDRAULIC	630
	152-1482	1	FILM-IDENTIFICATION (DOZER)	
			INSTALL ON RAISED SURFACE TO THE RIGHT OF CONTROL	
	102-2913	1	FILM-INSTRUCTION (DOZER CONTROL) (HYD CONTROL)	
			INSTALL NEXT TO KNOB	

R-REMFG PART MAY BE AVAILABLE
Y-SEPARATE ILLUSTRATION

HYDRAULIC SYSTEM

157-7324 LINES GP-BULLDOZER MANIFOLD

S/N: AKA1-UP

PART OF 157-0823 HYDRAULIC AR

SMCS-5057 **i01497392**

NOTE	REF NO	GRAPHIC REF	PART NUMBER	QTY	PART NAME 1 2 3 4 5 6 (PRODUCT LEVEL)	SEE PAGE
	1	1	**7G-5984**	5	CLIP (TAB)	
	2	1	**7G-5985**	5	CLIP (SLOT)	
	3	1	**8E-8434**	1	GUARD	
Y	4	1	**109-6942**	1	VALVE GP-QUICK-DROP	664
I	5	1	**160-1124**	1	HOSE AS	
I	6	1	**160-1125**	1	HOSE AS	
	7	1	**200-1754**	1	BRACKET AS	
	8	1	**4J-0520**	4	SEAL-O-RING	
	9	1	**4L-9337**	3	BOLT (3/8-16X1.5 IN)	
	10	1	**5M-1932**	2	STUD-TAPERLOCK	
	11	1	**5P-8167**	3	BOLT (3/8-16X0.625 IN)	
	12	1	**6V-1324**	1	GROMMET	
	13	1	**6V-8188**	2	NUT (1/2-13 THD)	
	14	1	**7G-3413**	1	CLIP (SLOT)	
	15	1	**7G-3414**	1	CLIP (TAB)	
	16	1	**7G-5986**	5	GROMMET	
	17	1	**8C-4436**	6	BOLT (1/2-13X1.375 IN)	
	18	1	**8T-4223**	14	WASHER-HARD (13.5X25.5X3MM THK)	
	19	1	**8T-4896**	6	WASHER-HARD (10.2X18.5X2.5MM THK)	
	20	1	**8T-8917**	4	BOLT (1/2-13X1.25 IN)	
	21	1	**8T-8920**	2	BOLT (1/2-13X3.25 IN)	

I-SEE HOSE FABRICATION GUIDE
Y-SEPARATE ILLUSTRATION

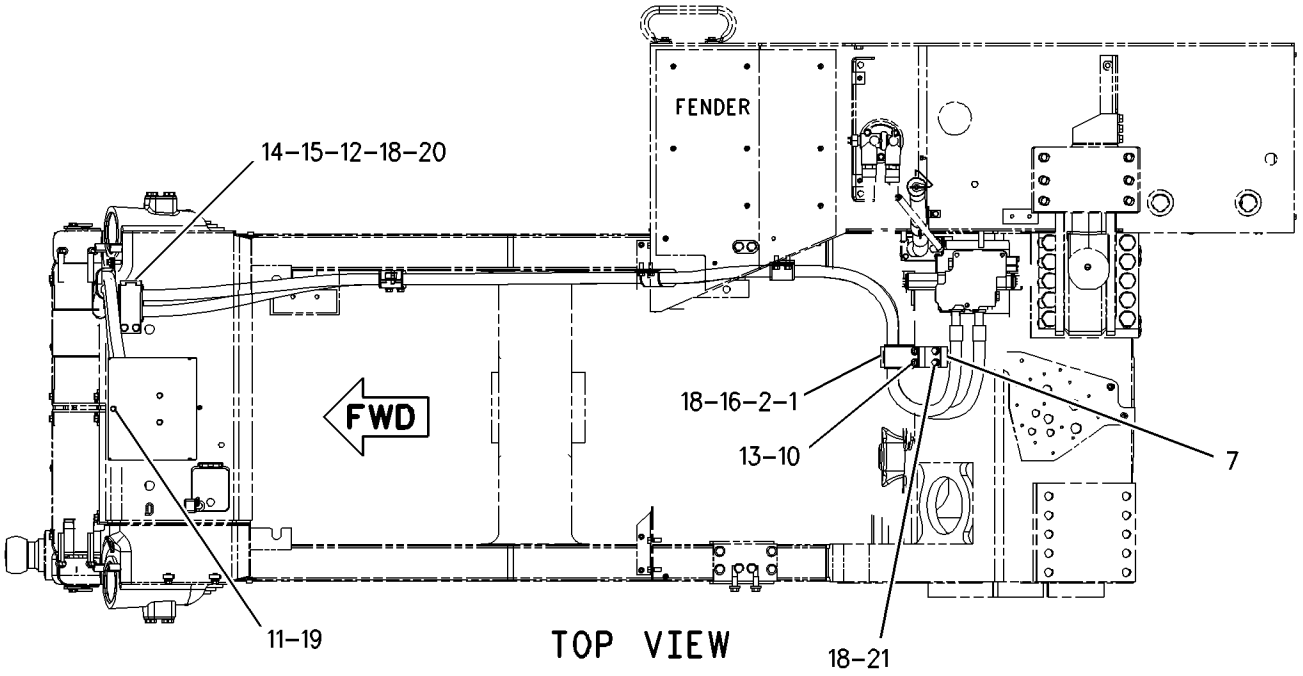

TOP VIEW

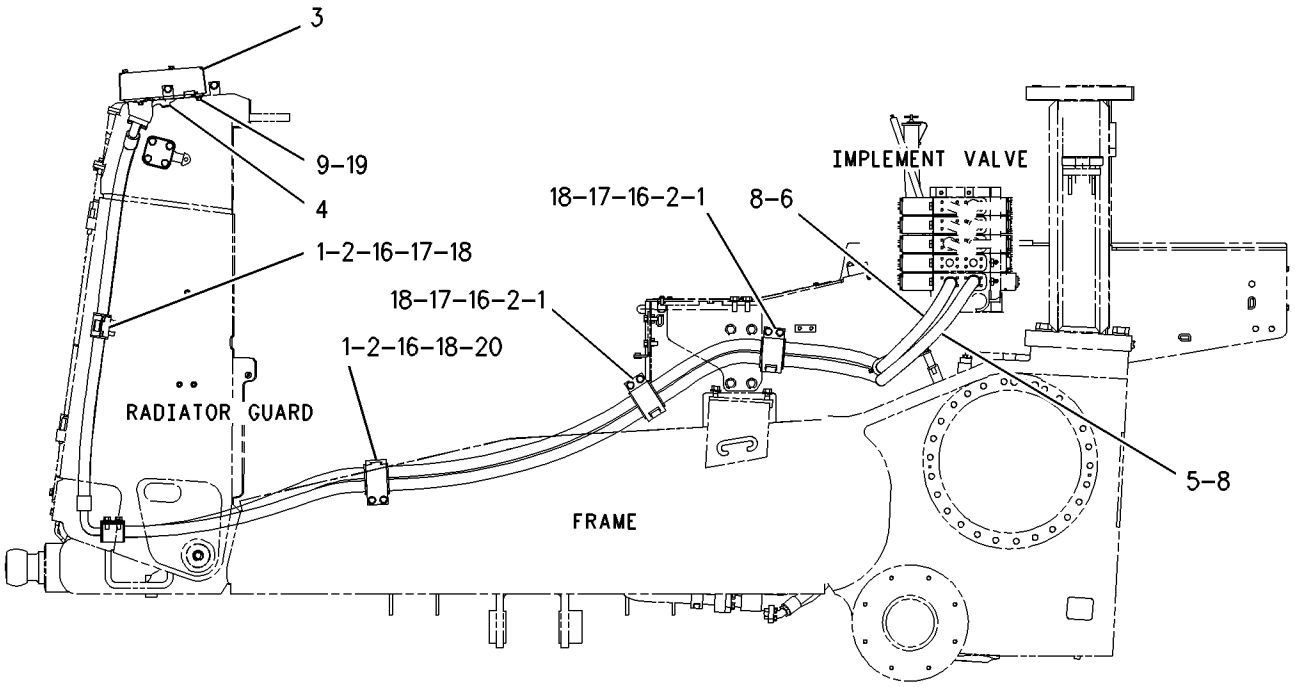

LEFT SIDE VIEW

GRAPHIC #1 g00777459

HYDRAULIC SYSTEM

157-7329 LINES GP-PILOT

S/N: AKA1-UP

PART OF 157-0824 CONTROL AR-PILOT HYDRAULIC

SMCS-5057 **i01439557**

NOTE	REF NO	GRAPHIC REF	PART NUMBER	QTY	PART NAME 1 2 3 4 5 6 (PRODUCT LEVEL)	SEE PAGE
	1	1	**1Z-9787**	1	BOSS	
	2	2	**6V-9829**	2	CAP AS	
	3	2	**7K-1181**	4	STRAP-CABLE	
	4	1	**107-1341**	1	ADAPTER	
M	5	2	**112-9319**	1	BOLT-HEX SOCKET (M5X0.8X80MM)	
	6	2	**126-0814**	1	NIPPLE AS	
		2	**6V-0852**	1	CAP-DUST	
	7	2	**159-9202**	1	SEAL	
I	8	1	**160-4301**	1	HOSE AS	
I	9	1	**160-4302**	1	HOSE AS	
I	10	1	**160-4303**	1	HOSE AS	
I	11	1	**160-4304**	1	HOSE AS	
I	12	1	**160-4306**	1	HOSE AS	
	13	2	**160-4326**	1	KNOB AS (IMPLEMENT LOCKOUT)	
Y	14	1	**162-0162**	1	VALVE GP-MANIFOLD & REDUCING	650
I	15	2	**163-3433**	1	HOSE AS	
	16	1	**170-7568**	1	BRACKET AS	
		1	**9F-6445**	2	NUT-WELD (1/4-20 THD)	
	17	1	**200-0750**	1	ACCUMULATOR GP-PILOT OIL	
I	18	1	**171-3013**	1	HOSE AS	
I	19	1	**171-3014**	1	HOSE AS	
	20	2	**171-8787**	1	CAM	
I	21	1	**174-3038**	1	HOSE AS	
	22	2	**189-0135**	1	SWITCH AS-LIMIT (IMPLEMENT LOCKOUT)	
		2	**186-3735**	3	PIN-CONNECTOR	
		2	**3E-3371**	1	WEDGE-RECEPTACLE LOCK (3 PIN)	
		2	**102-8803**	1	KIT-RECEPTACLE (3 PIN)	
					(INCLUDES RECEPTACLE AS & WEDGE)	
	23	2	**191-3587**	1	SWITCH AS (IMPLEMENT LOCKOUT)	
		2	**9G-3695**	1	PLUG (GROMMET SEALING)	
		2	**186-3735**	3	PIN-CONNECTOR	
		2	**3E-3377**	1	WEDGE-RECEPTACLE LOCK	
		2	**102-8804**	1	KIT-RECEPTACLE (4 PIN)	
					(INCLUDES RECEPTACLE AS & WEDGE)	
I	24	1	**191-5101**	1	HOSE AS	
	25	2	**194-7008**	1	VALVE GP-BALL (IMPLEMENT SHUTOFF)	
	26	2	**195-3312**	1	HARNESS AS (LOCKOUT INDICATOR) (LOCKOUT INDICATOR)	
		2	**102-8802**	1	KIT-RECEPTACLE (2 PIN)	
					(INCLUDES RECEPTACLE AS & WEDGE)	
		2	**155-2255**	1	KIT-CONNECTING PLUG (12 PIN)	
		2	**155-2260**	1	KIT-CONNECTING PLUG (3 PIN)	
		2	**155-2270**	2	KIT-CONNECTING PLUG (2 PIN)	
		2	**155-2271**	1	KIT-CONNECTING PLUG (4 PIN)	
					(EACH PLUG KIT INCLUDES PLUG AS, WEDGE & INTERFACE SEAL)	
	27	2	**196-1921**	1	PLATE	
I	28	1	**196-7757**	1	HOSE AS	
I	29	1	**197-5932**	1	HOSE AS	
	30	2	**096-5962**	4	WASHER-HARD (3.4X7X0.8MM THK)	
	31	1	**122-0450**	1	GROMMET	
	32	1	*148-8316*	1	CONNECTOR GP	
		1	**3J-7354**	1	SEAL-O-RING	
		1	**4J-5477**	1	SEAL-O-RING	
		1	**6V-8647**	1	CONNECTOR	

157-7329 **LINES GP-PILOT** ***(contd.)*** **i01439557**

NOTE	REF NO	GRAPHIC REF	PART NUMBER	QTY	PART NAME 1 2 3 4 5 6 (PRODUCT LEVEL)	SEE PAGE
	33	2	*148-8325*	2	CONNECTOR GP	
					(EACH INCLUDES)	
		2	**3J-1907**	1	SEAL-O-RING	
		2	**4J-5477**	1	SEAL-O-RING	
		2	**6V-8641**	1	CONNECTOR	
	34	2	*148-8326*	1	CONNECTOR GP	
		2	**3J-7354**	1	SEAL-O-RING	
		2	**6V-9872**	1	CONNECTOR	
	35	1	*148-8340*	1	CONNECTOR GP	
		1	**3K-0360**	1	SEAL-O-RING	
		1	**6V-8398**	1	SEAL-O-RING	
		1	**6V-8639**	1	CONNECTOR	
	36	1	*148-8346*	1	ELBOW GP	
		1	**3K-0360**	1	SEAL-O-RING	
		1	**6V-8398**	1	SEAL-O-RING	
		1	**8T-1686**	1	ELBOW	
	37	2	*148-8367*	1	ELBOW GP	
		2	**6V-8397**	1	SEAL-O-RING	
		2	**6V-9850**	1	ELBOW-SWIVEL	
	38	2	*148-8369*	2	ELBOW GP	
					(EACH INCLUDES)	
		2	**3J-7354**	1	SEAL-O-RING	
		2	**4J-5477**	1	SEAL-O-RING	
		2	**6V-8628**	1	ELBOW	
	39	1	*148-8370*	1	ELBOW GP	
		1	**6V-8398**	1	SEAL-O-RING	
		1	**6V-9851**	1	ELBOW-90 DEGREE SWIVEL	
	40	1	*148-8374*	2	ELBOW GP	
					(EACH INCLUDES)	
		1	**3K-0360**	1	SEAL-O-RING	
		1	**6V-8397**	1	SEAL-O-RING	
		1	**6V-8723**	1	ELBOW	
	41	1,2	*148-8378*	6	ELBOW GP	
					(EACH INCLUDES)	
		1,2	**3J-1907**	1	SEAL-O-RING	
		1,2	**6V-8397**	1	SEAL-O-RING	
		1,2	**6V-8724**	1	ELBOW	
	42	1	*148-8415*	1	REDUCER GP	
		1	**6V-8397**	1	SEAL-O-RING	
		1	**6V-8936**	1	REDUCER	
	43	1	*148-8426*	1	TEE GP	
		1	**3K-0360**	1	SEAL-O-RING	
		1	**6V-8397**	1	SEAL-O-RING	
		1	**6V-8398**	1	SEAL-O-RING	
		1	**8T-6696**	1	TEE-O-RING	
	44	1	*148-8428*	1	TEE GP	
		1	**3K-0360**	1	SEAL-O-RING	
		1	**6V-8398**	2	SEAL-O-RING	
		1	**6V-8782**	1	TEE-FACE SEAL	
	45	2	*148-8433*	1	TEE GP	
		2	**6V-8397**	2	SEAL-O-RING	
		2	**6V-9836**	1	TEE-SWIVEL	
	46	2	*148-8435*	1	TEE GP	
		2	**3J-1907**	1	SEAL-O-RING	
		2	**6V-8397**	2	SEAL-O-RING	
		2	**6V-8781**	1	TEE-FACE SEAL	
	47	2	*148-8439*	1	TEE GP	
		2	**3J-1907**	1	SEAL-O-RING	
		2	**6V-8397**	2	SEAL-O-RING	

157-7329 **LINES GP-PILOT** *(contd.)* **i01439557**

NOTE	REF NO	GRAPHIC REF	PART NUMBER	QTY	PART NAME 1 2 3 4 5 6 (PRODUCT LEVEL)	SEE PAGE
		2	**6V-8774**	1	TEE	
	48	1	*148-8444*	1	TEE AS-ORFS	
		1	**6V-8398**	2	SEAL-O-RING	
		1	**6V-9837**	1	TEE-SWIVEL	
	49	2	*150-5968*	1	TEE GP	
		2	**4J-5477**	2	SEAL-O-RING	
		2	**6V-9835**	1	TEE	
	50	2	*164-5570*	1	UNION GP	
		2	**6V-8397**	2	SEAL-O-RING	
		2	**6V-8730**	1	UNION-FACE SEAL	
	51	1	**3K-0360**	1	SEAL-O-RING	
	52	1	**4K-1388**	1	SEAL-O-RING	
	53	1,2	**5P-1075**	4	WASHER-HARD (10.2X22.5X3MM THK)	
	54	1	**5P-2566**	1	BOLT (1/2-13X1.5 IN)	
	55	2	**6V-8801**	1	NUT (3/8-16 THD)	
	56	1	**6V-9830**	1	CAP AS	
	57	2	**7S-3912**	1	CLIP (TAB)	
	58	2	**7S-3913**	1	CLIP (SLOT)	
	59	1	**8S-0023**	1	CLIP (SLOT)	
	60	1	**8S-0024**	1	CLIP (TAB)	
M	61	2	**8T-0287**	4	BOLT (M5X0.8X10MM)	
	62	2	**8T-1893**	1	CLIP (SLOT)	
	63	2	**8T-1894**	1	CLIP (TAB)	
	64	1	**8T-2502**	2	BOLT (3/8-16X1.125 IN)	
	65	1	**8T-4205**	2	WASHER-HARD (7.2X14.5X2MM THK)	
	66	1	**8T-4223**	1	WASHER-HARD (13.5X25.5X3MM THK)	
	67	1	**8T-9368**	2	BOLT (1/4-20X2.25 IN)	
	68	2	**9B-7237**	1	BOLT (3/8-16X1.25 IN)	
	69	2	**9X-6281**	4	SCREW-MACHINE (4-40X1 IN)	

I-SEE HOSE FABRICATION GUIDE
M-METRIC PART
Y-SEPARATE ILLUSTRATION

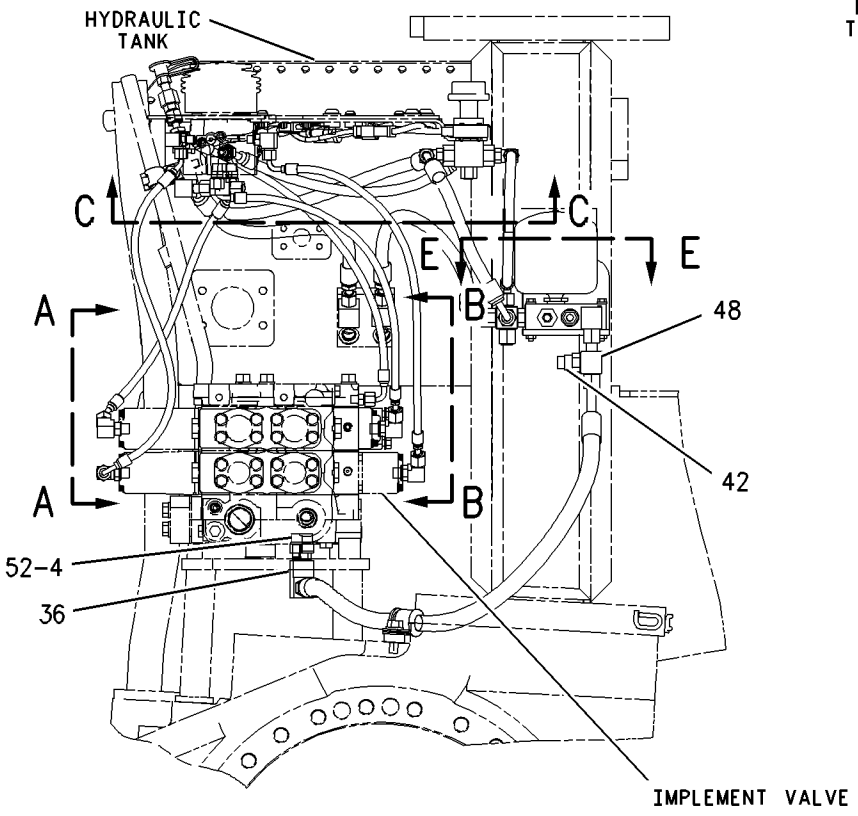

LEFT SIDE VIEW

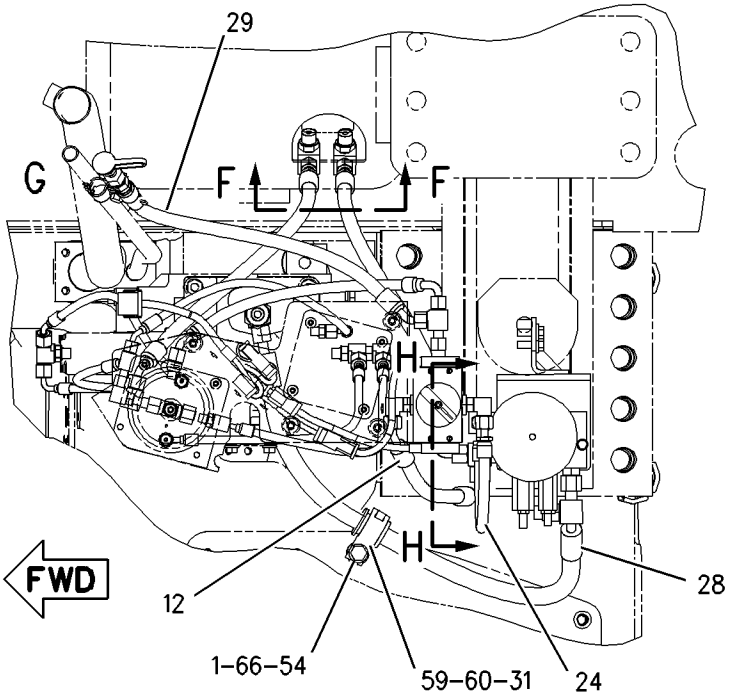

TOP VIEW

REFER TO ALL ILLUSTRATIONS OF THIS GROUP FOR AUXILIARY VIEWS

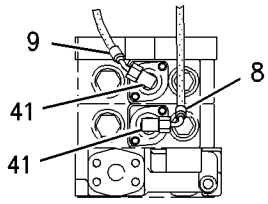

SECTION A-A

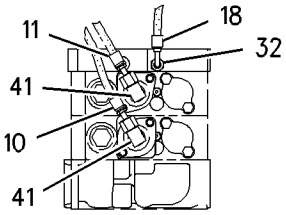

SECTION B-B

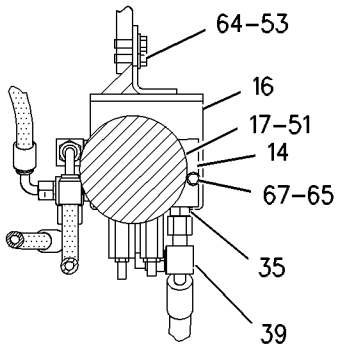

SECTION E-E

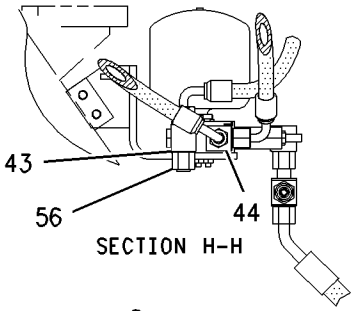

SECTION H-H

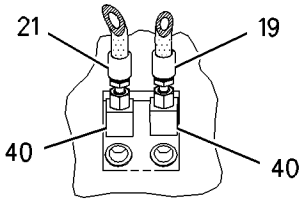

SECTION F-F

GRAPHIC #1

g00759379

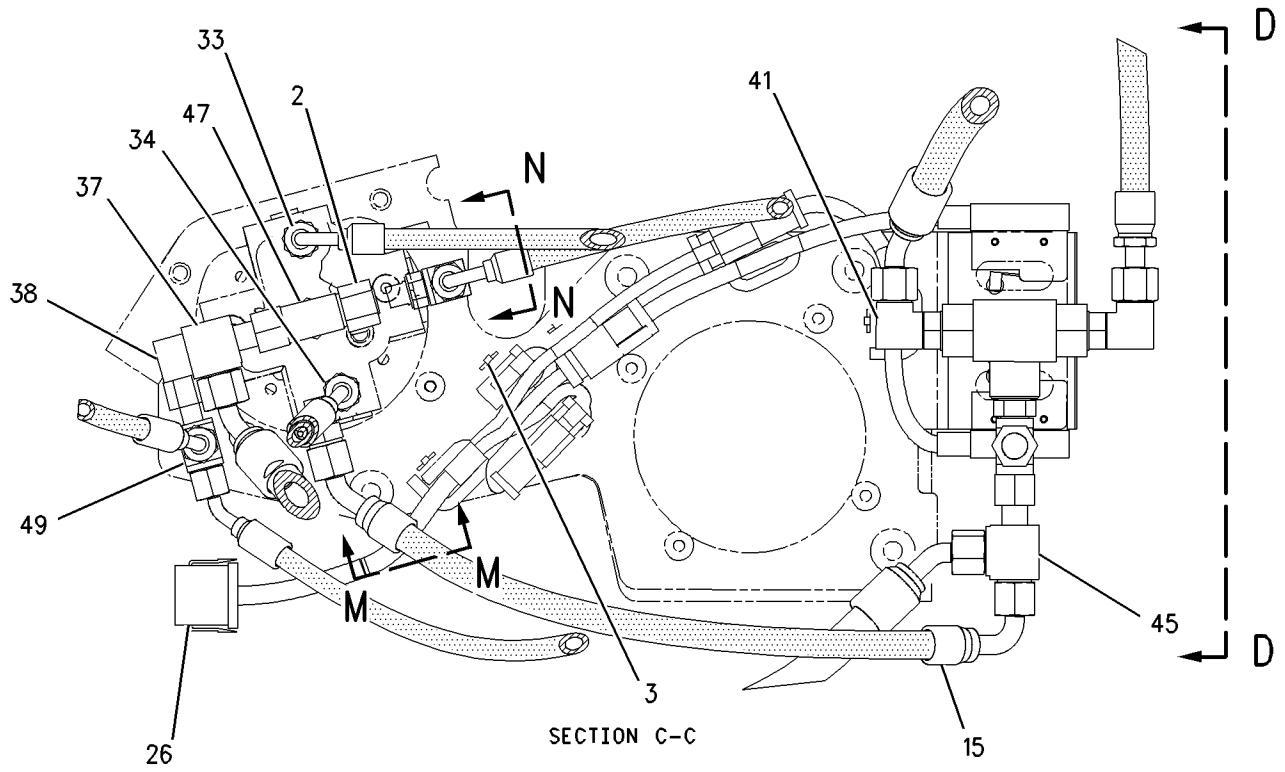

SECTION C-C

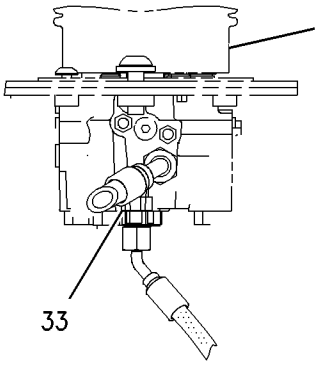

SECTION M-M

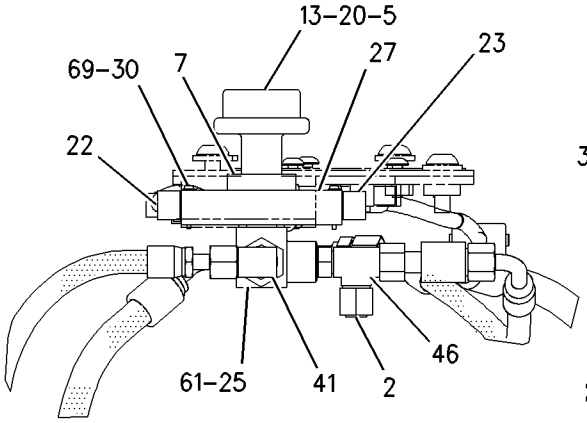

VIEW D-D

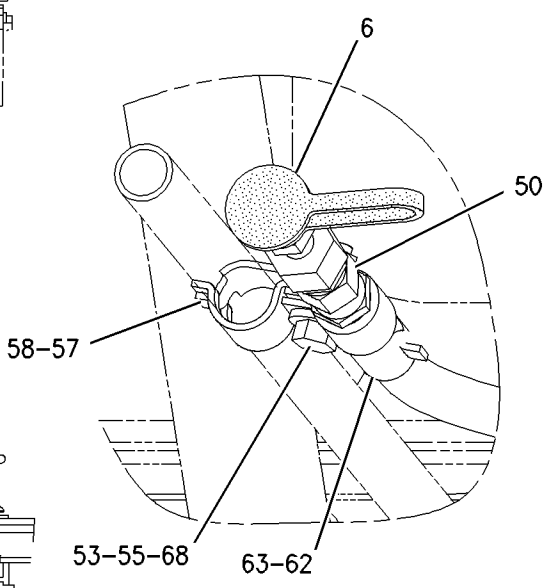

VIEW OF AREA G

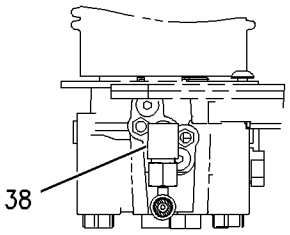

SECTION N-N

GRAPHIC #2 g00762826

MEMORANDA

HYDRAULIC SYSTEM

157-8029 LINES GP-PILOT

S/N: AKA1-UP

DOZER & RIPPER

PART OF 157-7331 CONTROL AR-PILOT HYDRAULIC

SMCS-5057 **i01452658**

NOTE	REF NO	GRAPHIC REF	PART NUMBER	QTY	PART NAME 1 2 3 4 5 6 (PRODUCT LEVEL)	SEE PAGE
	1	1	**1Z-9787**	1	BOSS	
	2	1	**7K-1181**	4	STRAP-CABLE	
	3	1	**107-1341**	1	ADAPTER	
M	4	2	**112-9319**	1	BOLT-HEX SOCKET (M5X0.8X80MM)	
	5	1	**126-0814**	1	NIPPLE AS	
	5A	1	**6V-0852**	1	CAP-DUST	
	6	2	**159-9202**	1	SEAL	
I	7	1	**160-4301**	1	HOSE AS	
I	8	1	**160-4302**	1	HOSE AS	
I	9	1	**160-4303**	1	HOSE AS	
I	10	1	**160-4304**	1	HOSE AS	
I	11	1	**160-4306**	1	HOSE AS	
	12	2	**160-4326**	1	KNOB AS (IMPLEMENT LOCKOUT)	
I	13	1	**160-4792**	1	HOSE AS	
I	14	1	**160-4793**	1	HOSE AS	
I	15	1	**160-4794**	1	HOSE AS	
I	16	1	**160-4795**	1	HOSE AS	
Y	17	1	**162-0162**	1	VALVE GP-MANIFOLD & REDUCING	650
I	18	2	**163-3433**	1	HOSE AS	
	19	2	**163-3434**	1	TUBE AS	
	20	1	**163-3435**	1	TUBE AS	
	21	2	**170-7568**	1	BRACKET AS	
		2	**9F-6445**	2	NUT-WELD (1/4-20 THD)	
I	22	2	**171-3014**	1	HOSE AS	
	23	2	**171-8787**	1	CAM	
I	24	1	**172-5404**	1	HOSE AS	
I	25	2	**174-3038**	1	HOSE AS	
	26	2	**189-0135**	1	SWITCH AS-LIMIT (IMPLEMENT LOCKOUT)	
		2	**3E-3371**	1	WEDGE-RECEPTACLE LOCK (3 PIN)	
		2	**102-8803**	1	KIT-RECEPTACLE (3 PIN)	
					(INCLUDES RECEPTACLE AS & WEDGE)	
		2	**186-3735**	3	PIN-CONNECTOR	
	27	2	**191-3587**	1	SWITCH AS (IMPLEMENT LOCKOUT)	
		2	**9G-3695**	1	PLUG (GROMMET SEALING)	
		2	**3E-3377**	1	WEDGE-RECEPTACLE LOCK	
		2	**102-8804**	1	KIT-RECEPTACLE (4 PIN)	
					(INCLUDES RECEPTACLE AS & WEDGE)	
		2	**186-3735**	3	PIN-CONNECTOR	
I	28	1	**191-5101**	1	HOSE AS	
	29	2	**194-7008**	1	VALVE GP-BALL (IMPLEMENT SHUTOFF)	
	30	1	**195-3312**	1	HARNESS AS (LOCKOUT INDICATOR)	
		1	**102-8802**	1	KIT-RECEPTACLE (2 PIN)	
					(INCLUDES RECEPTACLE AS & WEDGE)	
		1	**155-2255**	1	KIT-CONNECTING PLUG (12 PIN)	
		1	**155-2260**	1	KIT-CONNECTING PLUG (3 PIN)	
		1	**155-2270**	2	KIT-CONNECTING PLUG (2 PIN)	
		1	**155-2271**	1	KIT-CONNECTING PLUG (4 PIN)	
					(EACH PLUG KIT INCLUDES PLUG AS, WEDGE & INTERFACE SEAL)	
	31	2	**196-1921**	1	PLATE	
I	32	1	**196-7757**	1	HOSE AS	
I	33	1	**197-5932**	1	HOSE AS	
	34	2	**200-0750**	1	ACCUMULATOR GP-PILOT OIL	
	35	1	**033-8248**	2	CLIP	
	36	2	**096-5962**	4	WASHER-HARD (3.4X7X0.8MM THK)	

157-8029 **LINES GP-PILOT** ***(contd.)*** **i01452658**

NOTE	REF NO	GRAPHIC REF	PART NUMBER	QTY	PART NAME 1 2 3 4 5 6 (PRODUCT LEVEL)	SEE PAGE
	37	1	**122-0450**	1	GROMMET	
	38	1	*148-8316*	1	CONNECTOR GP	
		1	**3J-7354**	1	SEAL-O-RING	
		1	**4J-5477**	1	SEAL-O-RING	
		1	**6V-8647**	1	CONNECTOR	
	39	1,2	*148-8325*	3	CONNECTOR GP	
					(EACH INCLUDES)	
		1,2	**3J-1907**	1	SEAL-O-RING	
		1,2	**4J-5477**	1	SEAL-O-RING	
		1,2	**6V-8641**	1	CONNECTOR	
	40	1	*148-8326*	1	CONNECTOR GP	
		1	**3J-7354**	1	SEAL-O-RING	
		1	**6V-8397**	1	SEAL-O-RING	
		1	**6V-9872**	1	CONNECTOR	
	41	1	*148-8340*	1	CONNECTOR GP	
		1	**3K-0360**	1	SEAL-O-RING	
		1	**6V-8398**	1	SEAL-O-RING	
		1	**6V-8639**	1	CONNECTOR	
	42	1	*148-8346*	1	ELBOW GP	
		1	**3K-0360**	1	SEAL-O-RING	
		1	**6V-8398**	1	SEAL-O-RING	
		1	**8T-1686**	1	ELBOW	
	43	2	*148-8361*	1	ELBOW GP	
		2	**3J-7354**	1	SEAL-O-RING	
		2	**6V-8397**	1	SEAL-O-RING	
		2	**6V-9200**	1	ELBOW (90 DEGREE)	
	44	1	*148-8367*	1	ELBOW GP	
		1	**6V-8397**	1	SEAL-O-RING	
		1	**6V-9850**	1	ELBOW-SWIVEL	
	45	1	*148-8369*	5	ELBOW GP	
					(EACH INCLUDES)	
		1	**3J-7354**	1	SEAL-O-RING	
		1	**4J-5477**	1	SEAL-O-RING	
		1	**6V-8628**	1	ELBOW	
	46	1	*148-8370*	1	ELBOW GP	
		1	**6V-8398**	1	SEAL-O-RING	
		1	**6V-9851**	1	ELBOW	
	47	2	*148-8374*	2	ELBOW GP	
					(EACH INCLUDES)	
		2	**3K-0360**	1	SEAL-O-RING	
		2	**6V-8397**	1	SEAL-O-RING	
		2	**6V-8723**	1	ELBOW	
	48	1,2	*148-8378*	11	ELBOW GP	
					(EACH INCLUDES)	
		1,2	**3J-1907**	1	SEAL-O-RING	
		1,2	**6V-8397**	1	SEAL-O-RING	
		1,2	**6V-8724**	1	ELBOW	
	49	1	*148-8415*	1	REDUCER GP	
		1	**6V-8397**	1	SEAL-O-RING	
		1	**6V-8936**	1	REDUCER	
	50	2	*148-8426*	1	TEE GP	
		2	**3K-0360**	1	SEAL-O-RING	
		2	**6V-8397**	1	SEAL-O-RING	
		2	**6V-8398**	1	SEAL-O-RING	
		2	**8T-6696**	1	TEE-O-RING	
	51	2	*148-8428*	1	TEE GP	
		2	**3K-0360**	1	SEAL-O-RING	
		2	**6V-8398**	2	SEAL-O-RING	
		2	**6V-8782**	1	TEE-FACE SEAL	

157-8029 **LINES GP-PILOT** *(contd.)* **i01452658**

NOTE	REF NO	GRAPHIC REF	PART NUMBER	QTY	PART NAME 1 2 3 4 5 6 (PRODUCT LEVEL)	SEE PAGE
	52	2	*148-8433*	1	TEE GP	
		2	**6V-8397**	2	SEAL-O-RING	
		2	**6V-9836**	1	TEE-SWIVEL	
	53	2	*148-8435*	1	TEE GP	
		2	**3J-1907**	1	SEAL-O-RING	
		2	**6V-8397**	2	SEAL-O-RING	
		2	**6V-8781**	1	TEE-FACE SEAL	
	54	1	*148-8439*	1	TEE GP	
		1	**3J-1907**	1	SEAL-O-RING	
		1	**6V-8397**	2	SEAL-O-RING	
		1	**6V-8774**	1	TEE	
	55	1	*148-8444*	1	TEE AS-ORFS	
		1	**6V-8398**	2	SEAL-O-RING	
		1	**6V-9837**	1	TEE-SWIVEL	
	56	1	*150-5968*	1	TEE GP	
		1	**4J-5477**	2	SEAL-O-RING	
		1	**6V-9835**	1	TEE	
	57	1	*164-5570*	1	UNION GP	
		1	**6V-8397**	2	SEAL-O-RING	
		1	**6V-8730**	1	UNION-FACE SEAL	
	58	2	**3K-0360**	1	SEAL-O-RING	
	59	1	**4K-1388**	1	SEAL-O-RING	
	60	1	**4L-6454**	1	BOLT (3/8-16X1 IN)	
	61	1,2	**5P-1075**	4	WASHER-HARD (10.2X22.5X3MM THK)	
	62	1	**5P-2566**	1	BOLT (1/2-13X1.5 IN)	
	63	1	**6V-8801**	2	NUT (3/8-16 THD)	
	64	2	**6V-9830**	1	CAP AS	
	65	1	**7S-3912**	1	CLIP (TAB)	
	66	1	**7S-3913**	1	CLIP (SLOT)	
	67	1	**8S-0023**	1	CLIP (SLOT)	
	68	1	**8S-0024**	1	CLIP (TAB)	
M	69	2	**8T-0287**	4	BOLT (M5X0.8X10MM)	
	70	1	**8T-1893**	1	CLIP (SLOT)	
	71	1	**8T-1894**	1	CLIP (TAB)	
	72	2	**8T-2502**	2	BOLT (3/8-16X1.125 IN)	
	73	2	**8T-4205**	2	WASHER-HARD (7.2X14.5X2MM THK)	
	74	1	**8T-4223**	1	WASHER-HARD (13.5X25.5X3MM THK)	
	75	1	**8T-4896**	2	WASHER-HARD (10.2X18.5X2.5MM THK)	
	76	2	**8T-9368**	2	BOLT (1/4-20X2.25 IN)	
	77	1	**9B-7237**	1	BOLT (3/8-16X1.25 IN)	
	78	2	**9X-6281**	4	SCREW-MACHINE (4-40X1 IN)	

I-SEE HOSE FABRICATION GUIDE
M-METRIC PART
Y-SEPARATE ILLUSTRATION

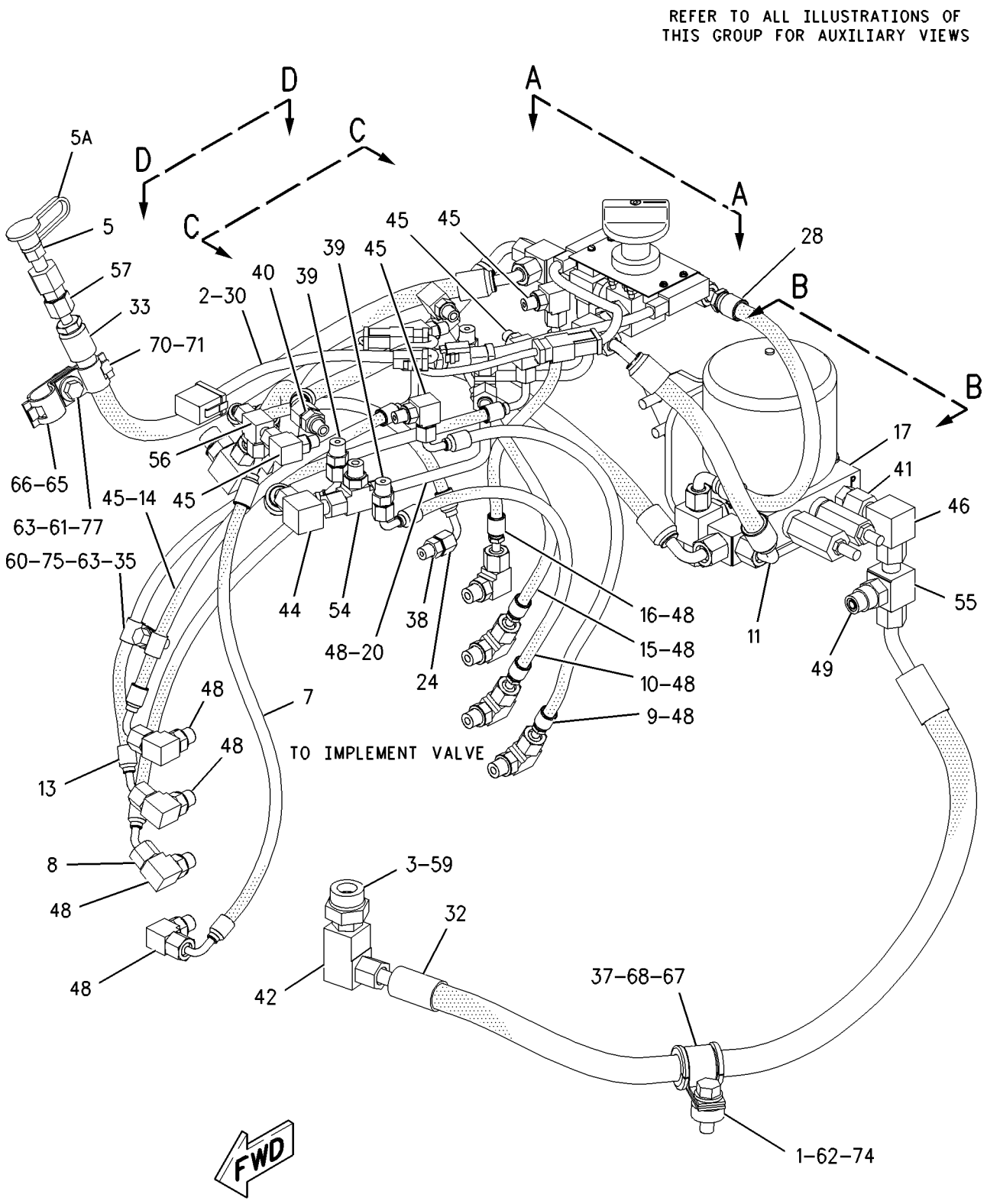

GRAPHIC #1 g00761974

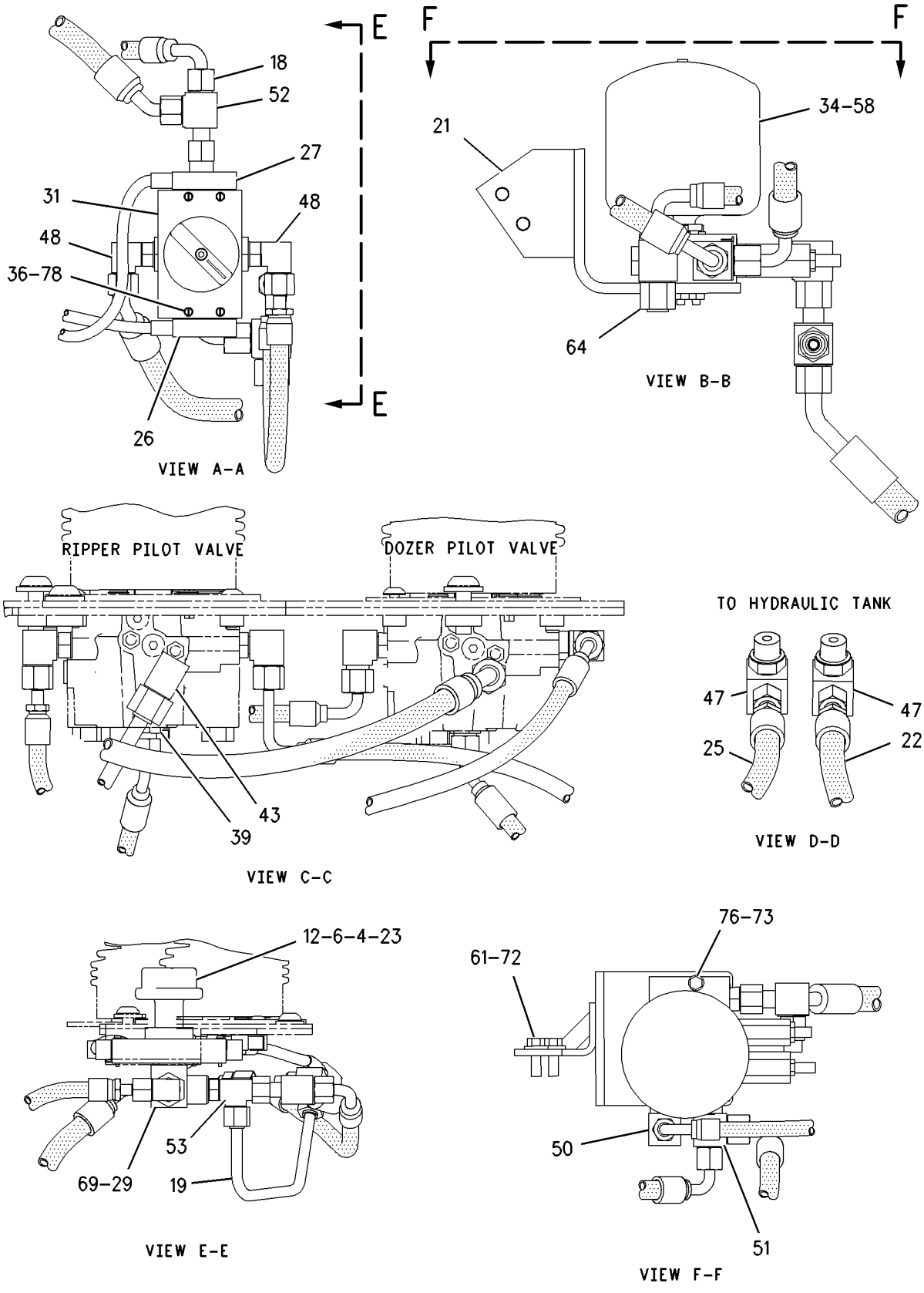

GRAPHIC #2 g00762268

MEMORANDA

HYDRAULIC SYSTEM

161-1014 LINES GP-PILOT

S/N: AKA1-UP
DOZER & WINCH
PART OF 160-5560 CONTROL AR-PILOT HYDRAULIC

SMCS-5057 **i01488952**

NOTE	REF NO	GRAPHIC REF	PART NUMBER	QTY	PART NAME 1 2 3 4 5 6 (PRODUCT LEVEL)	SEE PAGE
	1	1	**1Z-9787**	1	BOSS	
	2	1	**7K-1181**	4	STRAP-CABLE	
	3	1	**107-1341**	1	ADAPTER	
M	4	1	**112-9319**	1	BOLT-HEX SOCKET (M5X0.8X80MM)	
	5	1	**126-0810**	1	LIGHT	
	6	1	**126-0814**	1	NIPPLE AS	
I	7	1	**159-3453**	1	HOSE AS	
	8	1	**159-9202**	1	SEAL	
I	9	1	**160-4301**	1	HOSE AS	
I	10	1	**160-4302**	1	HOSE AS	
I	11	1	**160-4303**	1	HOSE AS	
I	12	1	**160-4304**	1	HOSE AS	
I	13	1	**160-4306**	1	HOSE AS	
	14	1	**160-4326**	1	KNOB AS	
I	15	1	**161-2109**	1	HOSE AS	
I	16	1	**161-2338**	1	HOSE AS	
I	17	1	**161-2339**	1	HOSE AS	
Y	18	1	**162-0162**	1	VALVE GP-MANIFOLD & REDUCING	650
I	19	1	**163-3433**	1	HOSE AS	
	20	1	**163-3434**	1	TUBE AS	
	21	1	**163-3435**	1	TUBE AS	
	22	1	**165-0107**	1	HARNESS AS (WINCH-CONSOLE)	
		1	**102-8802**	1	KIT-RECEPTACLE (2 PIN)	
					(INCLUDES RECEPTACLE AS & WEDGE)	
		1	**102-8803**	1	KIT-RECEPTACLE (3 PIN)	
					(INCLUDES RECEPTACLE AS & WEDGE)	
	23	1	**170-7568**	1	BRACKET AS	
		1	**9F-6445**	2	NUT-WELD (1/4-20 THD)	
I	24	1	**171-3013**	1	HOSE AS	
I	25	1	**171-3014**	1	HOSE AS	
	26	1	**171-8787**	1	CAM	
I	27	1	**174-3038**	1	HOSE AS	
	28	1	**189-0135**	1	SWITCH AS-LIMIT	
		1	**3E-3371**	1	WEDGE-RECEPTACLE LOCK (3 PIN)	
		1	**186-3735**	3	PIN-CONNECTOR	
		1	**102-8803**	1	KIT-RECEPTACLE (3 PIN)	
					(INCLUDES RECEPTACLE AS & WEDGE)	
	29	1	**191-3587**	1	SWITCH AS	
		1	**3E-3377**	1	WEDGE-RECEPTACLE LOCK	
		1	**9G-3695**	1	PLUG (GROMMET SEALING)	
		1	**186-3735**	1	PIN-CONNECTOR	
		1	**102-8804**	1	KIT-RECEPTACLE (4 PIN)	
					(INCLUDES RECEPTACLE AS & WEDGE)	
I	30	1	**191-5101**	1	HOSE AS	
	31	1	**194-7008**	1	VALVE GP-BALL	
	32	1	**195-3312**	1	HARNESS AS (LOCKOUT INDICATOR) (LOCKOUT INDICATOR)	
		1	**102-8802**	1	KIT-RECEPTACLE (2 PIN)	
					(INCLUDES RECEPTACLE AS & WEDGE)	
		1	**155-2255**	1	KIT-CONNECTING PLUG (12 PIN)	
					(INCLUDES PLUG AS & WEDGE)	
		1	**155-2270**	2	KIT-CONNECTING PLUG (2 PIN)	
					(EACH INCLUDES PLUG AS & WEDGE)	
		1	**155-2260**	1	KIT-CONNECTING PLUG (3 PIN)	
					(INCLUDES PLUG AS & WEDGE)	

161-1014 **LINES GP-PILOT** ***(contd.)*** **i01488952**

NOTE	REF NO	GRAPHIC REF	PART NUMBER	QTY	PART NAME 1 2 3 4 5 6 (PRODUCT LEVEL)	SEE PAGE
		1	**155-2271**	1	KIT-CONNECTING PLUG (4 PIN)	
					(INCLUDES PLUG AS & WEDGE)	
	33	1	**196-1921**	1	PLATE	
I	34	1	**196-7757**	1	HOSE AS	
I	35	1	**197-5932**	1	HOSE AS	
	36	1	**200-0750**	1	ACCUMULATOR GP-PILOT OIL	
	37	1	**096-5962**	4	WASHER-HARD (3.4X7X0.8MM THK)	
	38	1	**122-0450**	1	GROMMET	
	39	1	*148-8316*	1	CONNECTOR GP	
		1	**3J-7354**	1	SEAL-O-RING	
		1	**4J-5477**	1	SEAL-O-RING	
		1	**6V-8647**	1	CONNECTOR	
	40	1	*148-8325*	2	CONNECTOR GP	
					(EACH INCLUDES)	
		1	**3J-1907**	1	SEAL-O-RING	
		1	**4J-5477**	1	SEAL-O-RING	
		1	**6V-8641**	1	CONNECTOR	
	41	1	*148-8326*	1	CONNECTOR GP	
		1	**3J-7354**	1	SEAL-O-RING	
		1	**6V-8397**	1	SEAL-O-RING	
		1	**6V-9872**	1	CONNECTOR	
	42	1	*148-8336*	1	CONNECTOR GP	
		1	**3J-1907**	1	SEAL-O-RING	
		1	**6V-8397**	1	SEAL-O-RING	
		1	**6V-8636**	1	CONNECTOR	
	43	1	*148-8340*	1	CONNECTOR GP	
		1	**3K-0360**	1	SEAL-O-RING	
		1	**6V-8398**	1	SEAL-O-RING	
		1	**6V-8639**	1	CONNECTOR	
	44	1	*148-8346*	1	ELBOW GP	
		1	**3K-0360**	1	SEAL-O-RING	
		1	**6V-8398**	1	SEAL-O-RING	
		1	**8T-1686**	1	ELBOW	
	45	1	*148-8361*	1	ELBOW GP	
		1	**3J-7354**	1	SEAL-O-RING	
		1	**6V-8397**	1	SEAL-O-RING	
		1	**6V-9200**	1	ELBOW (90 DEGREE)	
	46	1	*148-8367*	1	ELBOW GP	
		1	**6V-8397**	1	SEAL-O-RING	
		1	**6V-9850**	1	ELBOW-SWIVEL	
	47	1	*148-8369*	4	ELBOW GP	
					(EACH INCLUDES)	
		1	**3J-7354**	1	SEAL-O-RING	
		1	**4J-5477**	1	SEAL-O-RING	
		1	**6V-8628**	1	ELBOW	
	48	1	*148-8370*	1	ELBOW GP	
		1	**6V-8398**	1	SEAL-O-RING	
		1	**6V-9851**	1	ELBOW	
	49	1	*148-8374*	2	ELBOW GP	
					(EACH INCLUDES)	
		1	**3K-0360**	1	SEAL-O-RING	
		1	**6V-8397**	1	SEAL-O-RING	
		1	**6V-8723**	1	ELBOW	
	50	1	*148-8378*	9	ELBOW GP	
					(EACH INCLUDES)	
		1	**3J-1907**	1	SEAL-O-RING	
		1	**6V-8397**	1	SEAL-O-RING	
		1	**6V-8724**	1	ELBOW	
	51	1	*148-8415*	1	REDUCER GP	

161-1014 **LINES GP-PILOT** *(contd.)* **i01488952**

NOTE	REF NO	GRAPHIC REF	PART NUMBER	QTY	PART NAME 1 2 3 4 5 6 (PRODUCT LEVEL)	SEE PAGE
		1	**6V-8397**	1	SEAL-O-RING	
		1	**6V-8936**	1	REDUCER	
	52	1	*148-8426*	1	TEE GP	
		1	**3K-0360**	1	SEAL-O-RING	
		1	**6V-8398**	1	SEAL-O-RING	
		1	**6V-8397**	1	SEAL-O-RING	
		1	**8T-6696**	1	TEE-O-RING	
	53	1	*148-8428*	1	TEE GP	
		1	**3K-0360**	1	SEAL-O-RING	
		1	**6V-8398**	2	SEAL-O-RING	
		1	**6V-8782**	1	TEE-FACE SEAL	
	54	1	*148-8433*	1	TEE GP	
		1	**6V-8397**	2	SEAL-O-RING	
		1	**6V-9836**	1	TEE-SWIVEL	
	55	1	*148-8435*	1	TEE GP	
		1	**3J-1907**	1	SEAL-O-RING	
		1	**6V-8397**	2	SEAL-O-RING	
		1	**6V-8781**	1	TEE-FACE SEAL	
	56	1	*148-8439*	1	TEE GP	
		1	**3J-1907**	1	SEAL-O-RING	
		1	**6V-8397**	2	SEAL-O-RING	
		1	**6V-8774**	1	TEE	
	57	1	*148-8444*	1	TEE AS-ORFS	
		1	**6V-8398**	2	SEAL-O-RING	
		1	**6V-9837**	1	TEE-SWIVEL	
	58	1	*150-5968*	1	TEE GP	
		1	**4J-5477**	2	SEAL-O-RING	
		1	**6V-9835**	1	TEE	
	59	1	*164-5570*	1	UNION GP	
		1	**6V-8397**	2	SEAL-O-RING	
		1	**6V-8730**	1	UNION-FACE SEAL	
	60	1	**3K-0360**	1	SEAL-O-RING	
	61	1	**4K-1388**	1	SEAL-O-RING	
	62	1	**4L-6454**	1	BOLT (3/8-16X1 IN)	
	63	1	**5K-5338**	1	CLIP	
	64	1	**5P-1075**	4	WASHER-HARD (10.2X22.5X3MM THK)	
	65	1	**5P-2566**	1	BOLT (1/2-13X1.5 IN)	
	66	1	**5S-7383**	1	BOLT (3/8-16X1.75 IN)	
	67	1	**6V-8801**	3	NUT (3/8-16 THD)	
	68	1	**7S-3912**	1	CLIP (TAB)	
	69	1	**7S-3913**	1	CLIP (SLOT)	
	70	1	**8M-2773**	2	CLIP (17.46MM ID)	
	71	1	**8S-0023**	1	CLIP (SLOT)	
	72	1	**8S-0024**	1	CLIP (TAB)	
M	73	1	**8T-0287**	4	BOLT (M5X0.8X10MM)	
	74	1	**8T-1893**	1	CLIP (SLOT)	
	75	1	**8T-1894**	1	CLIP (TAB)	
	76	1	**8T-2502**	2	BOLT (3/8-16X1.125 IN)	
	77	1	**8T-4205**	2	WASHER-HARD (7.2X14.5X2MM THK)	
	78	1	**8T-4223**	1	WASHER-HARD (13.5X25.5X3MM THK)	
	79	1	**8T-4896**	4	WASHER-HARD (10.2X18.5X2.5MM THK)	
	80	1	**8T-9368**	2	BOLT (1/4-20X2.25 IN)	
	81	1	**9B-7237**	1	BOLT (3/8-16X1.25 IN)	
	82	1	**9X-6281**	4	SCREW-MACHINE (4-40X1 IN)	

I-SEE HOSE FABRICATION GUIDE
M-METRIC PART
Y-SEPARATE ILLUSTRATION

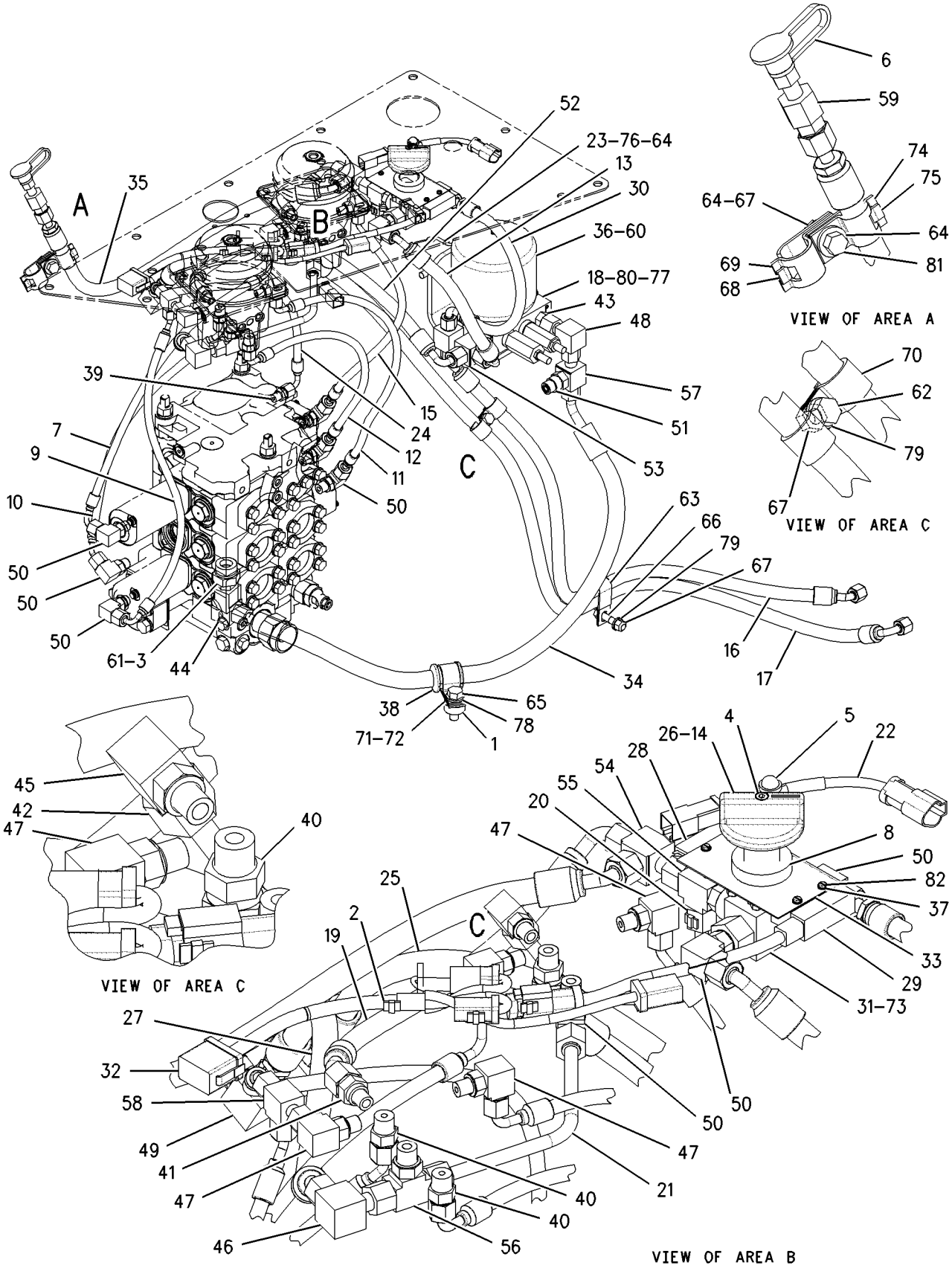

GRAPHIC #1 g00767944

HYDRAULIC SYSTEM

160-3619 LINES GP-PIN PULLER

S/N: AKA1-UP

PART OF 160-3616 PULLER AR-PIN

SMCS-5354 **i01488853**

NOTE	REF NO	GRAPHIC REF	PART NUMBER	QTY	PART NAME 1 2 3 4 5 6 (PRODUCT LEVEL)	SEE PAGE
I	1	1	**164-3683**	1	HOSE AS	
I	2	1	**164-3684**	1	HOSE AS	
	3	1	**3G-8054**	3	CLIP (TAB)	
	4	1	**3G-8057**	3	CLIP (SLOT)	
	5	1	**3J-1907**	2	SEAL-O-RING	
	6	1	**3K-0360**	2	SEAL-O-RING	
	7	1	**3G-8047**	3	GROMMET	
	8	1	**6V-8398**	4	SEAL-O-RING	
	9	1	**6V-8625**	1	ELBOW	
	10	1	**6V-9002**	1	ELBOW	
	11	1	**6V-9873**	2	CONNECTOR-SEAL	
	12	1	**8T-4121**	6	WASHER-HARD (11X21X2.5MM THK)	
M	13	1	**8T-4195**	6	BOLT (M10X1.5X30MM)	

I-SEE HOSE FABRICATION GUIDE
M-METRIC PART

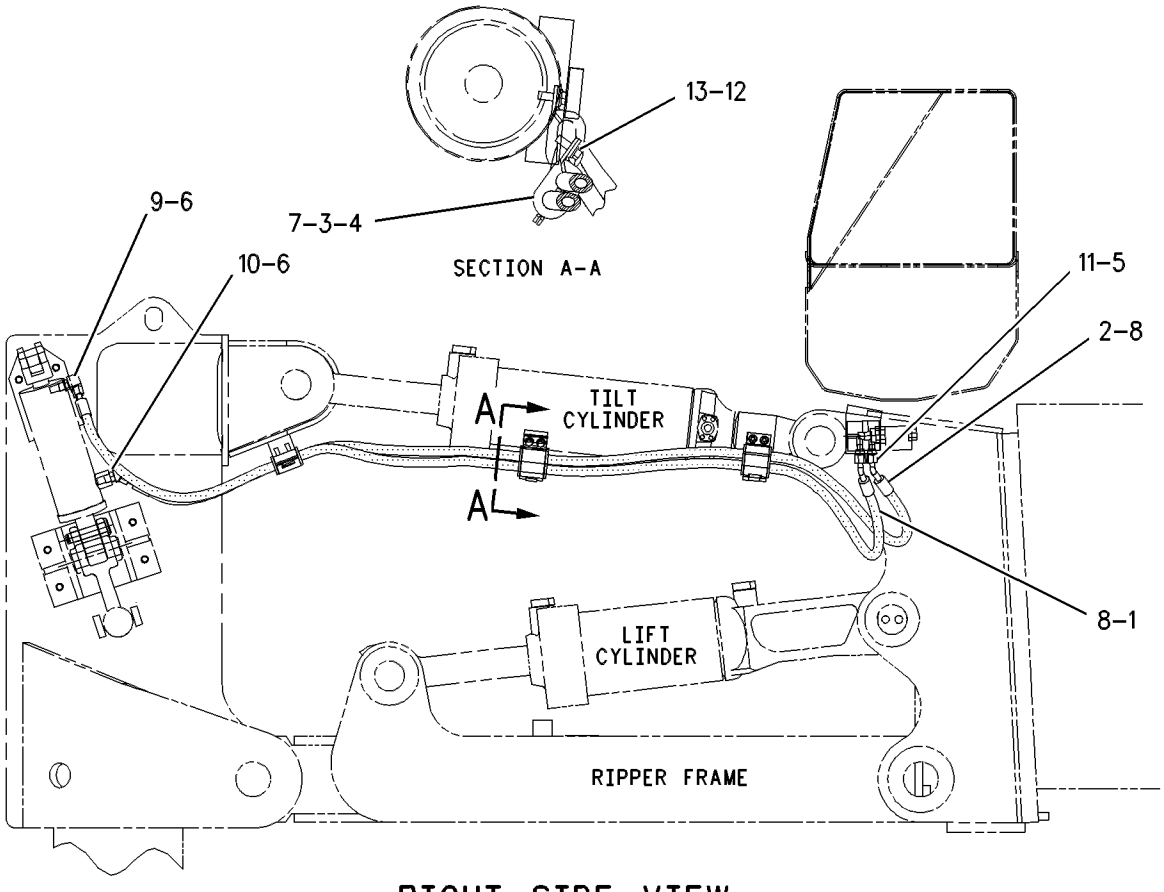

RIGHT SIDE VIEW

GRAPHIC #1 g00649172

MEMORANDA

HYDRAULIC SYSTEM

157-7325 LINES GP-PUMP

S/N: AKA1-UP

PART OF 157-0823 HYDRAULIC AR

SMCS-5057 **i01497401**

NOTE	REF NO	GRAPHIC REF	PART NUMBER	QTY	PART NAME 1 2 3 4 5 6 (PRODUCT LEVEL)	SEE PAGE
	1	1	**2B-7558**	1	CORK	
	2	1	**3G-4783**	1	VALVE-BREAKER RELIEF	
	3	1	**5P-8502**	1	PADLOCK GP	
A		1	**5P-8500**	1	KEY	
A		1	**8Y-6364**	1	SLEEVE	
	4	1	**6V-0852**	1	CAP-DUST	
	5	1	**6V-3965**	1	FITTING AS (QUICK DISCONNECT)	
	6	1	**8J-9990**	1	PLUG-ORIFICE	
	7	1	**8T-4983**	2	CLAMP-HOSE	
	8	1	**126-0814**	1	NIPPLE AS	
	9	1	*148-8322*	1	CONNECTOR GP	
		1	**2M-9780**	1	SEAL-O-RING	
		1	**6V-9746**	1	SEAL-O-RING	
		1	**6V-8640**	1	CONNECTOR-SEAL	
	10	1	*148-8367*	1	ELBOW GP	
		1	**6V-8397**	1	SEAL-O-RING	
		1	**6V-9850**	1	ELBOW-SWIVEL	
	11	1	*150-4027*	1	FITTING GP	
		1	**3J-1907**	1	SEAL-O-RING	
		1	**6V-8397**	1	SEAL-O-RING	
		1	**3E-2310**	1	TEE	
I	12	1	**160-2200**	1	HOSE AS	
I	13	1	**160-2201**	1	HOSE AS	
I	14	1	**160-2202**	1	HOSE AS	
I	15	1	**160-2203**	1	HOSE AS	
I	16	1	**160-2205**	1	HOSE AS	
	17	1	**160-2206**	1	BRACKET AS	
		1	**1F-0750**	2	NUT-WELD (3/8-16 THD)	
		1	**8F-9836**	1	BOSS-THREADED (3/8-16X19MM THD)	
		1	**8K-7186**	1	NUT-WELD (7/16-14 THD)	
	18	1	**162-3891**	1	TUBE AS	
	19	1	**163-6475**	1	BRACKET	
	20	1	**163-8824**	1	HOSE AS	
	21	1	**168-4528**	1	TUBE AS	
	22	1	**196-0065**	1	PLATE AS	
		1	**8K-7186**	2	NUT-WELD (7/16-14 THD)	
	23	1	**196-0071**	1	TUBE AS	
	24	1	*148-8378*	1	ELBOW GP	
		1	**3J-1907**	1	SEAL-O-RING	
		1	**6V-8397**	1	SEAL-O-RING	
		1	**6V-8724**	1	ELBOW	
	25	1	*148-8391*	1	ELBOW GP	
		1	**2S-4078**	1	SEAL-O-RING	
		1	**5K-9090**	1	SEAL-O-RING	
		1	**8T-8987**	1	ELBOW-O-RING	
	26	1	*148-8433*	1	TEE GP	
		1	**6V-8397**	2	SEAL-O-RING	
		1	**6V-9836**	1	TEE-SWIVEL	
	27	1	**1P-3704**	2	SEAL-RECTANGULAR	
	28	1	**1P-4578**	2	FLANGE-HALF	
	29	1	**1P-4584**	4	FLANGE-HALF	
	30	1	**1S-0994**	1	CLIP	
	31	1	**3D-2824**	1	SEAL-O-RING	
	32	1	**3G-6883**	1	CLIP (SLOT)	
	33	1	**3G-6884**	1	CLIP (TAB)	
	34	1	**3J-1907**	2	SEAL-O-RING	

157-7325 **LINES GP-PUMP** ***(contd.)*** **i01497401**

NOTE	REF NO	GRAPHIC REF	PART NUMBER	QTY	PART NAME 1 2 3 4 5 6 (PRODUCT LEVEL)	SEE PAGE
	35	1	**4J-0520**	2	SEAL-O-RING	
	36	1	**4J-0522**	1	SEAL-O-RING	
	37	1	**4L-6454**	2	BOLT (3/8-16X1 IN)	
	38	1	**5F-3106**	1	SEAL-O-RING	
	39	1	**5P-1075**	2	WASHER-HARD (10.2X22.5X3MM THK)	
	40	1	**5P-1076**	6	WASHER-HARD (13.5X30X4MM THK)	
	41	1	**5P-2566**	2	BOLT (1/2-13X1.5 IN)	
	42	1	**5P-7458**	1	CLIP (SLOT)	
	43	1	**5P-7459**	1	CLIP (TAB)	
	44	1	**5P-7468**	1	CLIP (SLOT)	
	45	1	**5P-7469**	1	CLIP (TAB)	
	46	1	**5P-8444**	1	GROMMET	
	47	1	**6J-2680**	3	SEAL-O-RING	
	48	1	**6V-0871**	1	GROMMET	
	49	1	**6V-1867**	1	CLIP (SLOT)	
	50	1	**6V-1868**	1	CLIP (TAB)	
	51	1	**6V-1869**	1	GROMMET	
	52	1	**6V-8188**	3	NUT (1/2-13 THD)	
	53	1	**7X-0310**	8	BOLT (7/16-14X2 IN)	
	54	1	**7X-0328**	2	BOLT (1/2-13X3.50 IN)	
	55	1	**7X-0345**	2	BOLT (5/8-11X1.75 IN)	
	56	1	**7X-0513**	3	WASHER-HARD (17X30X5MM THK)	
	57	1	**7X-0515**	2	WASHER-HARD (17X35X5MM THK)	
	58	1	**7X-3391**	2	WASHER-HARD (13.5X32X6MM THK)	
	59	1	**8C-4436**	2	BOLT (1/2-13X1.375 IN)	
	60	1	**8T-1889**	1	CLIP (SLOT)	
	61	1	**8T-1890**	1	CLIP (TAB)	
	62	1	**8T-1895**	1	CLIP (SLOT)	
	63	1	**8T-1896**	1	CLIP (TAB)	
	64	1	**8T-4223**	15	WASHER-HARD (13.5X25.5X3MM THK)	
	65	1	**8T-4835**	6	BOLT (1/2-13X2 IN)	
	66	1	**8T-5360**	15	WASHER (12X22.5X2.5MM THK)	
	67	1	**8T-8916**	4	BOLT (7/16-14X1.5 IN)	
	68	1	**8T-8919**	7	BOLT (1/2-13X1.75 IN)	
	69	1	**8T-9380**	3	BOLT (7/16-14X1 IN)	
	70	1	**8T-9393**	3	BOLT (5/8-11X1.5 IN)	
E	71	1	**5P-2094**		HOSE (60CM)	
	72	1	**5C-6565**	1	BOLT (1/2-13X1.25 IN)	

A-NOT PART OF THIS GROUP
E-ORDER BY THE CENTIMETER
I-SEE HOSE FABRICATION GUIDE

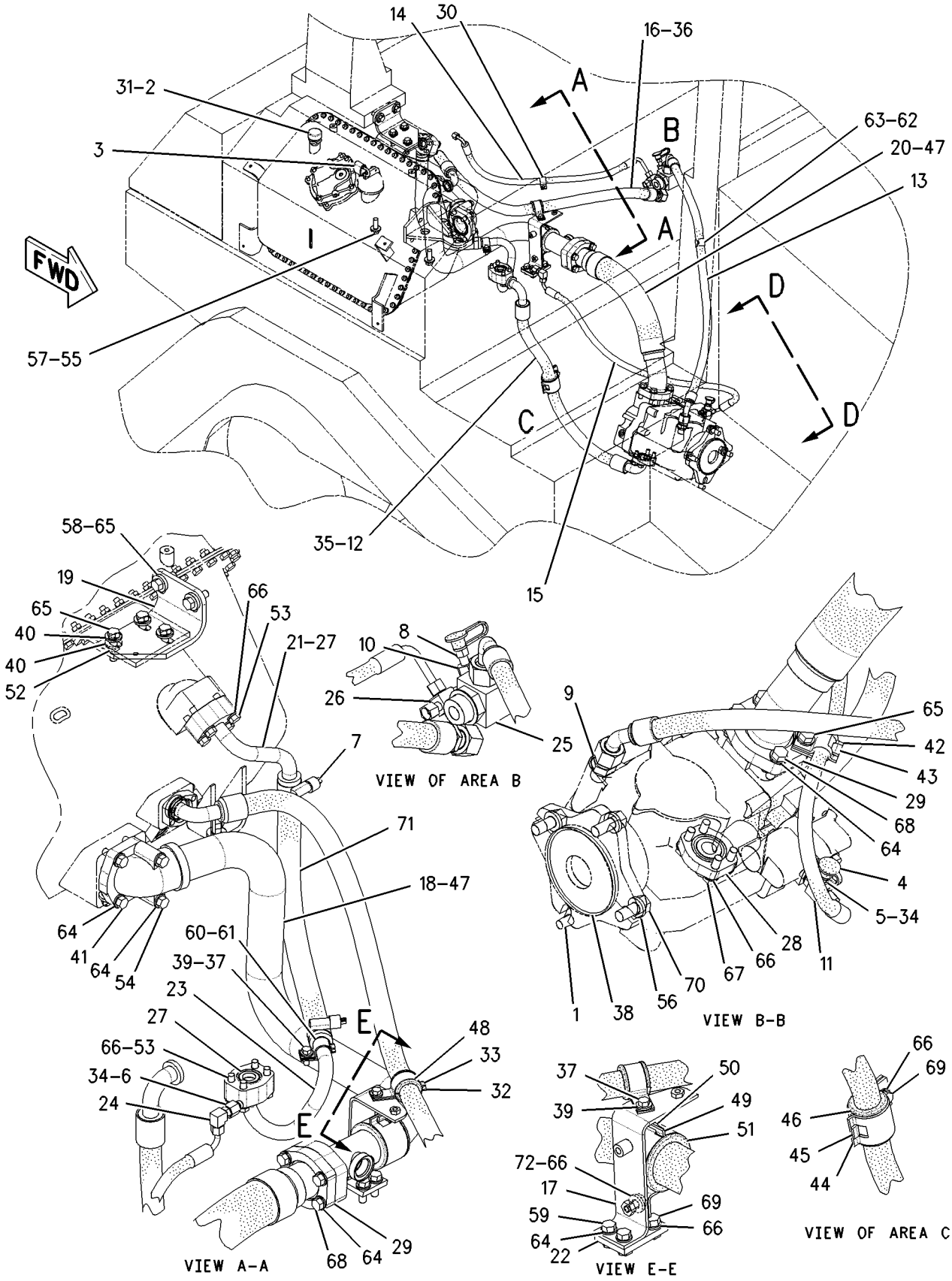

GRAPHIC #1 g00777493

153-4846 LINES GP-RIPPER

S/N: BHD1-UP

PART OF 153-3130 RIPPER AR

SMCS-5057, 5352, 5356 **i01442441**

NOTE	REF NO	GRAPHIC REF	PART NUMBER	QTY	PART NAME 1 2 3 4 5 6 (PRODUCT LEVEL)	SEE PAGE
	1	1	**9M-2904**	12	CLAMP-HOSE	
	2	1	**130-1977**	12	SHIELD	
	3	1	**130-9191**	6	GROMMET	
	4	1	**139-2455**	2	SHIELD-RH	
	5	1	**139-2456**	2	SHIELD-LH	
I	6	1	**162-0384**	1	HOSE AS (RH)	
I	7	1	**162-0385**	1	HOSE AS (LH)	
I	8	1	**162-0386**	1	HOSE AS (RH)	
I	9	1	**162-0387**	1	HOSE AS (RH)	
I	10	1	**162-0388**	2	HOSE AS	
	11	1	**4J-0520**	14	SEAL-O-RING (32.92MM ID)	
	12	1	**4J-5267**	2	SEAL-O-RING (24.99MM ID)	
I	13	1	**170-1574**	1	HOSE AS (LH)	
I	14	1	**170-1575**	1	HOSE AS (LH)	
M	15	1	**8T-4186**	12	BOLT (M10X1.5X40MM)	
	16	1	**190-1475**	2	SHIELD	

I-SEE HOSE FABRICATION GUIDE
M-METRIC PART

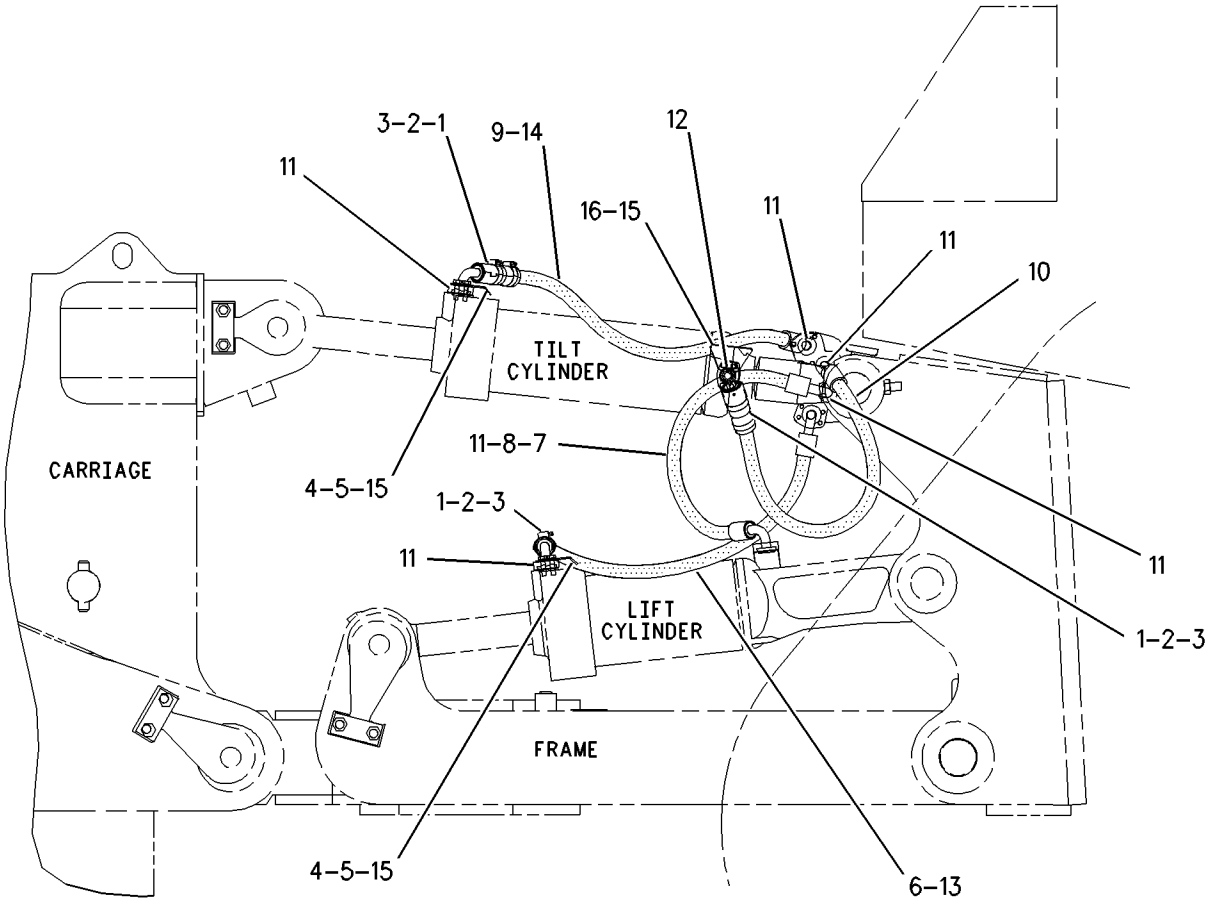

RIGHT SIDE VIEW

GRAPHIC #1 g00693260

HYDRAULIC SYSTEM

157-8027 LINES GP-RIPPER

S/N: AKA1-UP

PART OF 160-1806 CONTROL AR-HYDRAULIC

SMCS-5057, 5352, 5356 **i01452654**

NOTE	REF NO	GRAPHIC REF	PART NUMBER	QTY	PART NAME 1 2 3 4 5 6 (PRODUCT LEVEL)	SEE PAGE
	1	1	**133-8269**	1	MANIFOLD	
	2	1	**197-5469**	1	PLATE AS	
I	3	1	**197-7338**	2	HOSE AS	
I	4	1	**197-7340**	2	HOSE AS	
I	5	1	**197-7341**	1	HOSE AS	
	6	1	**1P-4577**	8	FLANGE-HALF	
	7	1	**4J-0520**	16	SEAL-O-RING	
	8	1	**5H-4019**	8	COVER	
	9	1	**5S-7382**	16	BOLT (3/8-16X1.375 IN)	
	10	1	**7G-5984**	2	CLIP (TAB)	
	11	1	**7G-5985**	2	CLIP (SLOT)	
	12	1	**7G-5986**	2	GROMMET	
	13	1	**8C-3206**	16	FLANGE-HALF	
	14	1	**8C-4436**	4	BOLT (1/2-13X1.375 IN)	
	15	1	**8T-4121**	32	WASHER-HARD (11X21X2.5MM THK)	
M	16	1	**8T-4196**	32	BOLT (M10X1.5X35MM)	
	17	1	**8T-4223**	6	WASHER-HARD (13.5X25.5X3MM THK)	
	18	1	**8T-4896**	20	WASHER-HARD (10.2X18.5X2.5MM THK)	
	19	1	**8T-8917**	2	BOLT (1/2-13X1.25 IN)	
	20	1	**9B-7237**	4	BOLT (3/8-16X1.25 IN)	

I-SEE HOSE FABRICATION GUIDE
M-METRIC PART

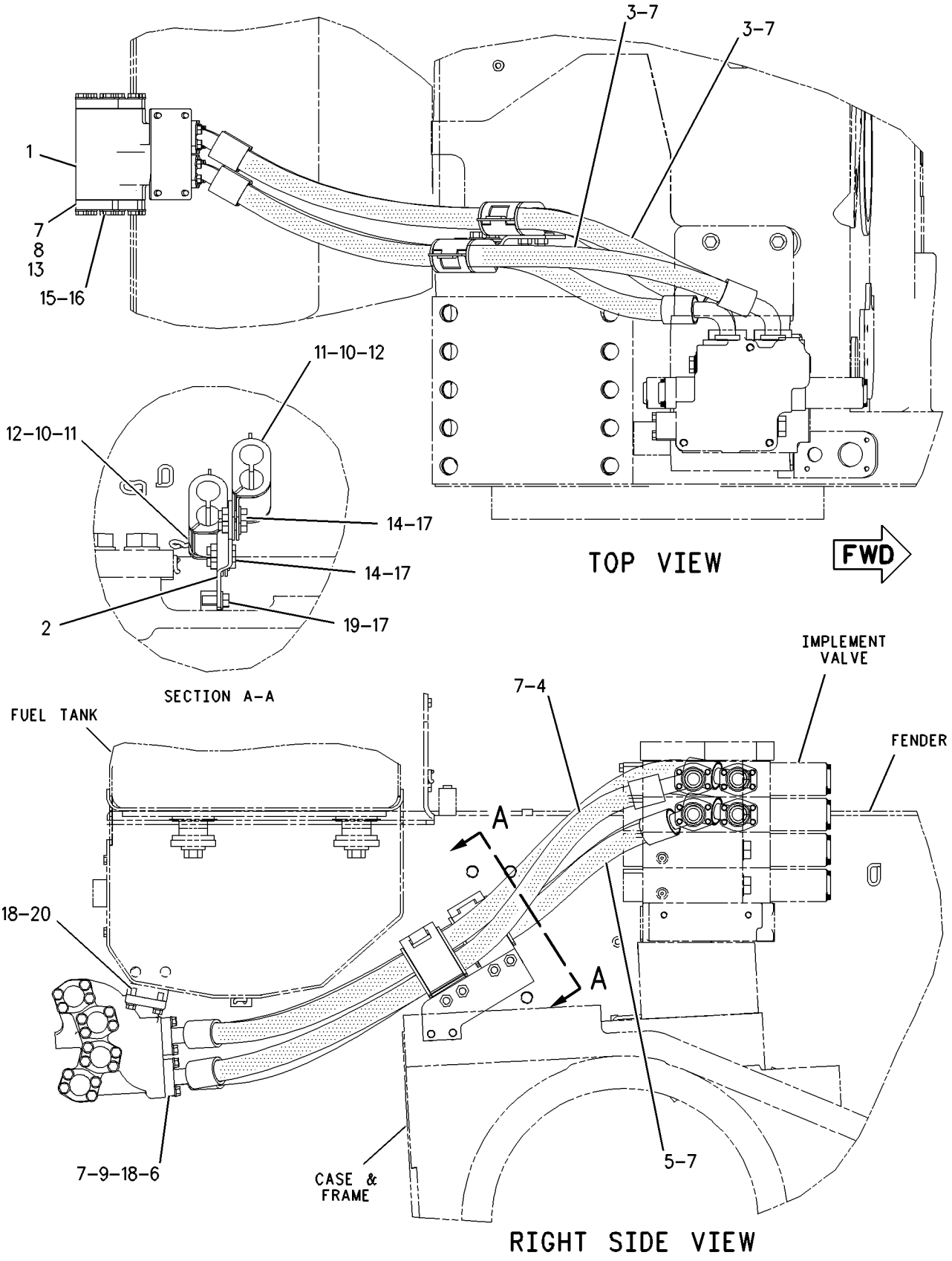

GRAPHIC #1

g00759726

HYDRAULIC SYSTEM

8E-6579 LINES GP-TILT CYLINDER

S/N: AKA1-UP

PART OF 8E-3039 CYLINDER AR-TILT

SMCS-5057, 5104 **i01488348**

NOTE	REF NO	GRAPHIC REF	PART NUMBER	QTY	PART NAME 1 2 3 4 5 6 (PRODUCT LEVEL)	SEE PAGE
	1	1	**5S-8712**	4	BLOCK	
	2	1	**8E-6580**	1	TUBE AS	
	3	1	**8E-6581**	2	TUBE AS	
	4	1	**9W-0194**	1	GUARD AS	
I	5	1	**9W-0197**	2	HOSE AS	
M	6	1	**8T-7547**	12	BOLT (M8X1.25X30MM)	
I	7	1	**9W-0198**	2	HOSE AS	
M	8	1	**8T-7338**	6	BOLT (M16X2.0X45MM)	
	9	1	**9W-8681**	2	BRACKET	
	10	1	**106-1419**	1	GUARD AS-LH	
	11	1	**106-1420**	1	GUARD AS-RH	
I	12	1	**199-7077**	2	HOSE AS	
M	13	1	**8T-4910**	4	BOLT (M12X1.75X60MM)	
	14	1	**1P-4574**	4	FLANGE-HALF	
	15	1	**4J-5140**	2	SEAL-O-RING	
	16	1	**4J-5267**	10	SEAL-O-RING	
	17	1	**5P-7464**	2	CLIP (SLOT)	
	18	1	**5P-7465**	2	CLIP (TAB)	
	19	1	**6V-1249**	2	GROMMET	
	20	1	**8C-3205**	16	FLANGE-HALF	
	21	1	**8T-4121**	32	WASHER-HARD (11X21X2.5MM THK)	
	22	1	**8T-4122**	6	WASHER-HARD (17X32X3.5MM THK)	
M	23	1	**8T-4139**	2	BOLT (M12X1.75X30MM)	
M	24	1	**8T-4192**	4	BOLT (M12X1.75X25MM)	
M	25	1	**8T-4196**	32	BOLT (M10X1.5X35MM)	
	26	1	**8T-4223**	12	WASHER-HARD (13.5X25.5X3MM THK)	
	27	1	**8T-4224**	12	WASHER-HARD (8.8X16X2MM THK)	
M	28	1	**8T-4244**	2	NUT (M12X1.75 THD)	

I-SEE HOSE FABRICATION GUIDE
M-METRIC PART

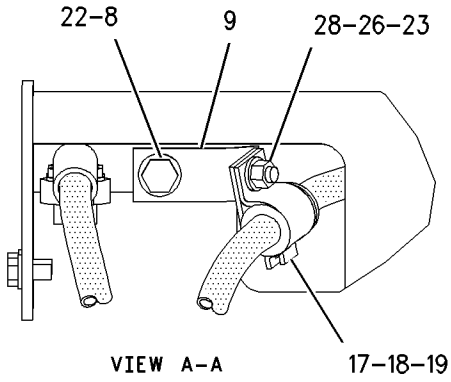

VIEW A–A

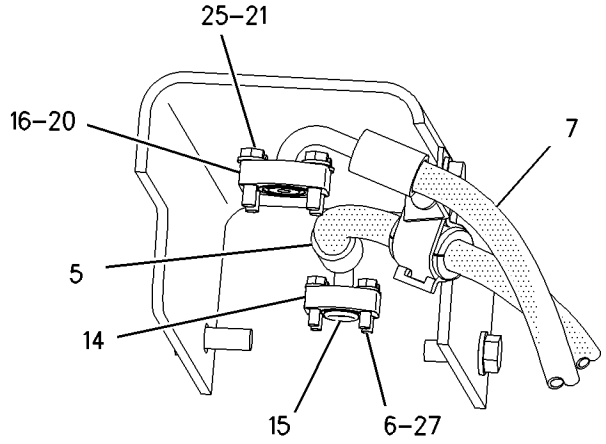

SECTION B–B

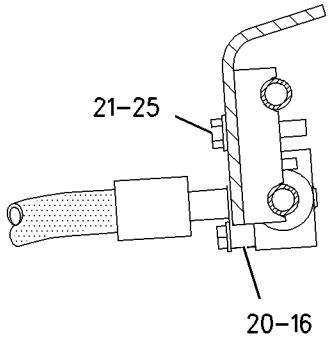

SECTION C–C

VIEW OF AREA D

GRAPHIC #1 g00765292

HYDRAULIC SYSTEM

157-7326 LINES GP-TILT CYLINDER

S/N: AKA1-UP

PART OF 157-0823 HYDRAULIC AR

SMCS-5057, 5104 **i01497426**

NOTE	REF NO	GRAPHIC REF	PART NUMBER	QTY	PART NAME 1 2 3 4 5 6 (PRODUCT LEVEL)	SEE PAGE
	1	1	**8E-8916**	1	MANIFOLD	
	2	1	**9W-3162**	1	BRACKET AS	
	3	1	**132-5535**	1	BRACKET AS	
					(EACH BRACKET AS INCLUDES)	
		1	**1F-0748**	2	NUT-WELD (1/2-13 THD)	
I	4	1	**160-1129**	2	HOSE AS	
	5	1	**1P-4576**	8	FLANGE	
	6	1	**4J-0520**	2	SEAL-O-RING	
	7	1	**4J-5267**	4	SEAL-O-RING	
	8	1	**4L-6454**	2	BOLT (3/8-16X1 IN)	
	9	1	**5C-6565**	4	BOLT (1/2-13X1.25 IN)	
	10	1	**5H-4018**	2	COVER	
	11	1	**5M-1932**	2	STUD-TAPERLOCK	
	12	1	**5P-1075**	2	WASHER-HARD (10.2X22.5X3MM THK)	
	13	1	**5S-7382**	16	BOLT (3/8-16X1.375 IN)	
	14	1	**6V-8188**	2	NUT (1/2-13 THD)	
	15	1	**7G-3832**	6	GROMMET	
	16	1	**7G-3833**	6	CLIP (TAB)	
	17	1	**7G-3834**	6	CLIP (SLOT)	
	18	1	**8C-4436**	4	BOLT (1/2-13X1.375 IN)	
	19	1	**8T-4223**	16	WASHER-HARD (13.5X25.5X3MM THK)	
	20	1	**8T-4896**	16	WASHER-HARD (10.2X18.5X2.5MM THK)	
	21	1	**8T-8917**	6	BOLT (1/2-13X1.25 IN)	

I-SEE HOSE FABRICATION GUIDE

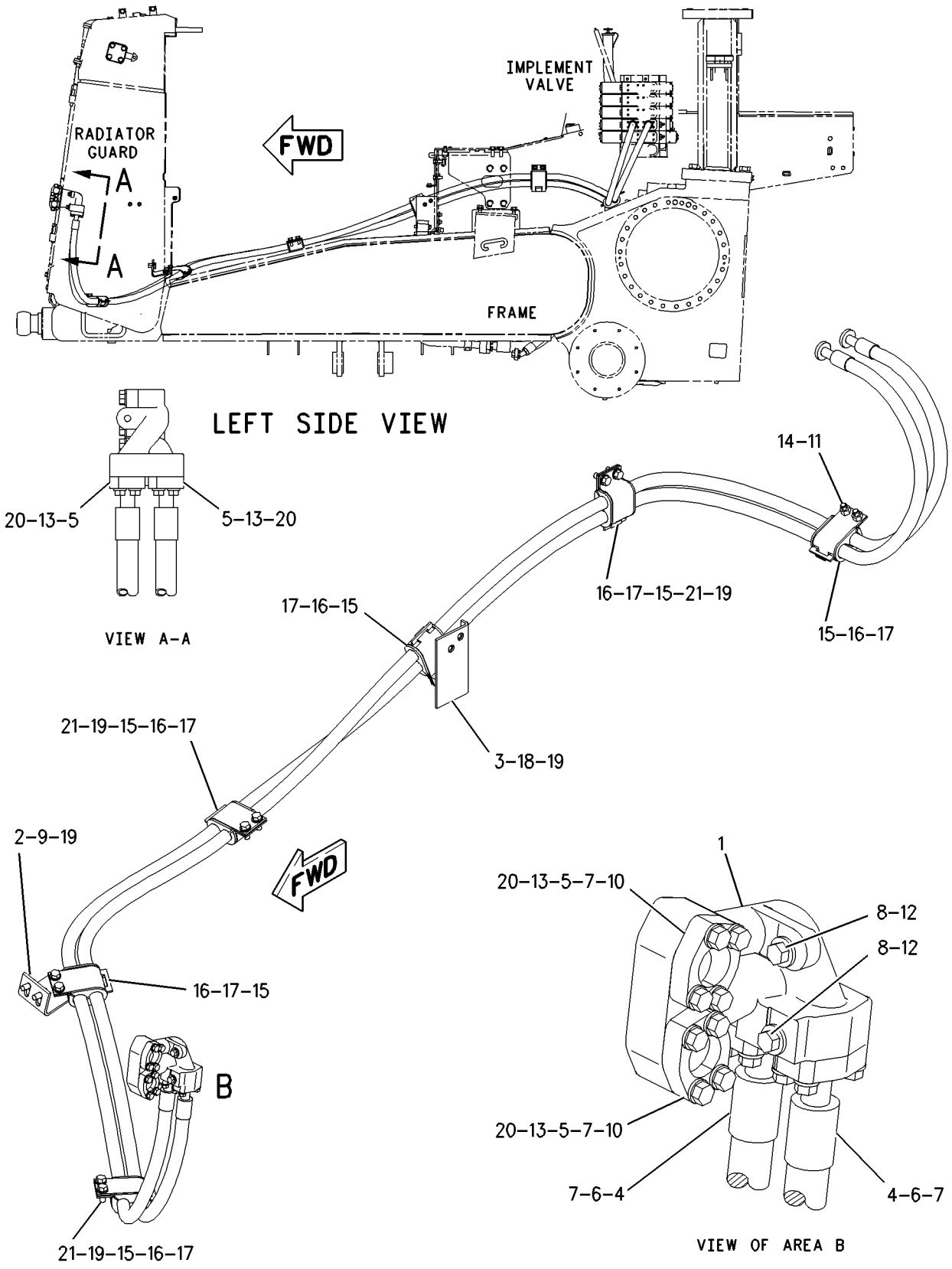

GRAPHIC #1 g00761855

HYDRAULIC SYSTEM

158-6373 LINES GP-TILT CYLINDER

S/N: AKA1-UP

DUAL

PART OF 158-4631 CYLINDER AR-TILT

SMCS-5057, 5104 **i01488656**

NOTE	REF NO	GRAPHIC REF	PART NUMBER	QTY	PART NAME 1 2 3 4 5 6 (PRODUCT LEVEL)	SEE PAGE
	1	1	**1J-7468**	4	CLAMP	
	2	1	**4T-3981**	6	CLIP	
	3	1	**183-7205**	1	ANGLE	
	4	1	**183-7206**	1	ANGLE	
	5	1	**179-7210**	1	GUARD-RH	
I	6	1	**7T-9341**	2	HOSE AS	
	7	1	**7W-3447**	8	SPACER (10.2X19.05X10.2MM THK)	
	8	1	**8E-3600**	6	PLATE	
	9	1	**179-7209**	2	TUBE AS	
	10	1	**9W-2877**	2	CLAMP	
	11	1	**108-1225**	2	TUBE AS	
	12	1	**108-1226**	2	TUBE AS	
	13	1	**146-3672**	2	GUARD	
	14	1	**158-6400**	2	TUBE AS	
	15	1	**158-6401**	2	TUBE AS	
	16	1	**158-7686**	1	GUARD	
	17	1	**159-0867**	1	GUARD	
I	18	1	**159-7177**	2	HOSE AS	
I	19	1	**159-7200**	2	HOSE AS	
I	20	1	**165-8354**	2	HOSE AS	
I	21	1	**165-8355**	2	HOSE AS	
	22	1	**9X-8257**	2	WASHER (17.5X30X3.5MM THK)	
	23	1	**4J-0520**	2	SEAL-O-RING	
	24	1	**4J-5267**	22	SEAL-O-RING	
	25	1	**5P-1076**	14	WASHER-HARD (13.5X30X4MM THK)	
M	26	1	**7X-2559**	4	BOLT (M16X2X160MM)	
	27	1	**8C-3205**	32	FLANGE-HALF	
	28	1	**8C-3206**	4	FLANGE-HALF	
	29	1	**8T-4121**	82	WASHER-HARD (11X21X2.5MM THK)	
	30	1	**8T-4122**	8	WASHER-HARD (17X32X3.5MM THK)	
M	31	1	**8T-4778**	4	LOCKNUT (M16X2 THD)	
M	32	1	**8T-4136**	12	BOLT (M10X1.5X25MM)	
M	33	1	**8T-4139**	14	BOLT (M12X1.75X30MM)	
M	34	1	**8T-4182**	12	BOLT (M10X1.5X45MM)	
M	35	1	**8T-4185**	8	BOLT (M10X1.5X50MM)	
M	36	1	**8T-4195**	2	BOLT (M10X1.5X30MM)	
M	37	1	**8T-4196**	64	BOLT (M10X1.5X35MM)	
M	38	1	**8T-4779**	2	BOLT (M16X2X35MM)	
	39	1	**9X-2027**	8	WASHER (11X18X2MM THK)	
	40	1	**6I-8516**	1	ANGLE	

I-SEE HOSE FABRICATION GUIDE
M-METRIC PART

158-6373 **LINES GP-TILT CYLINDER** *(contd.)* **i01488656**

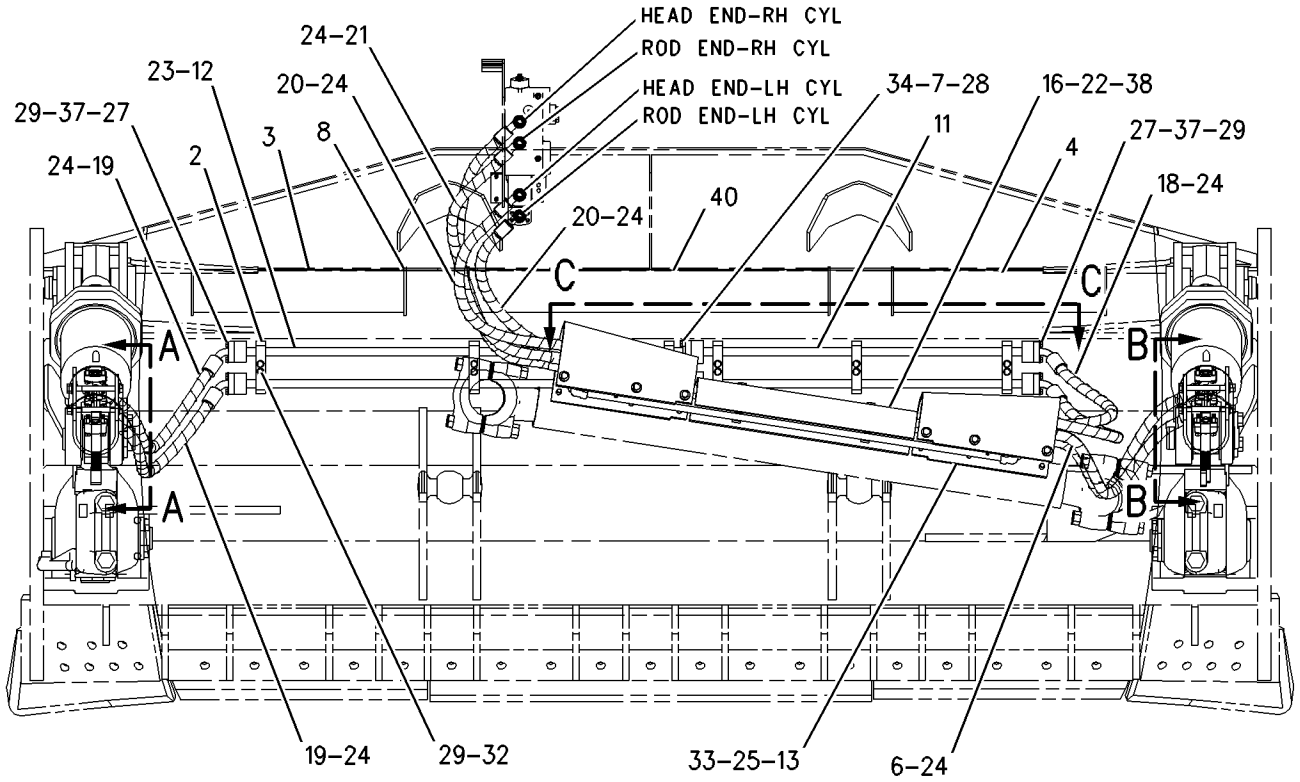

REAR VIEW

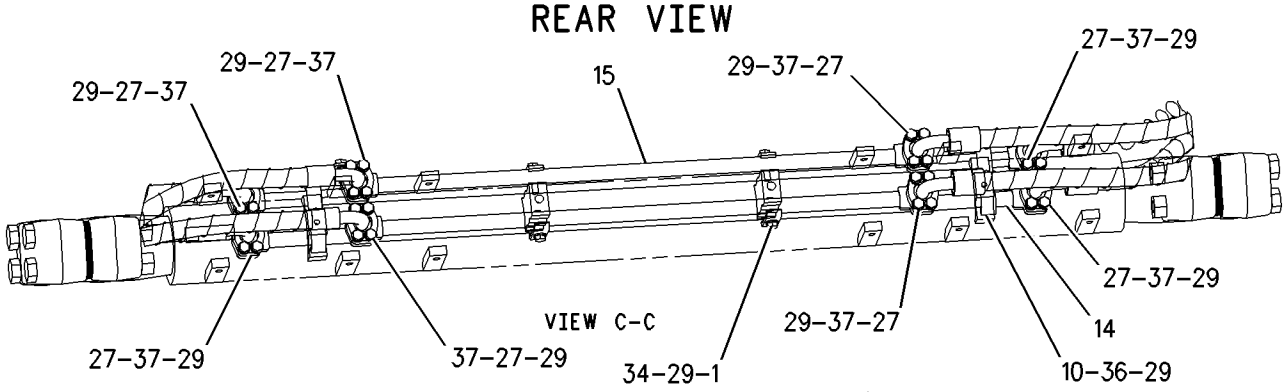

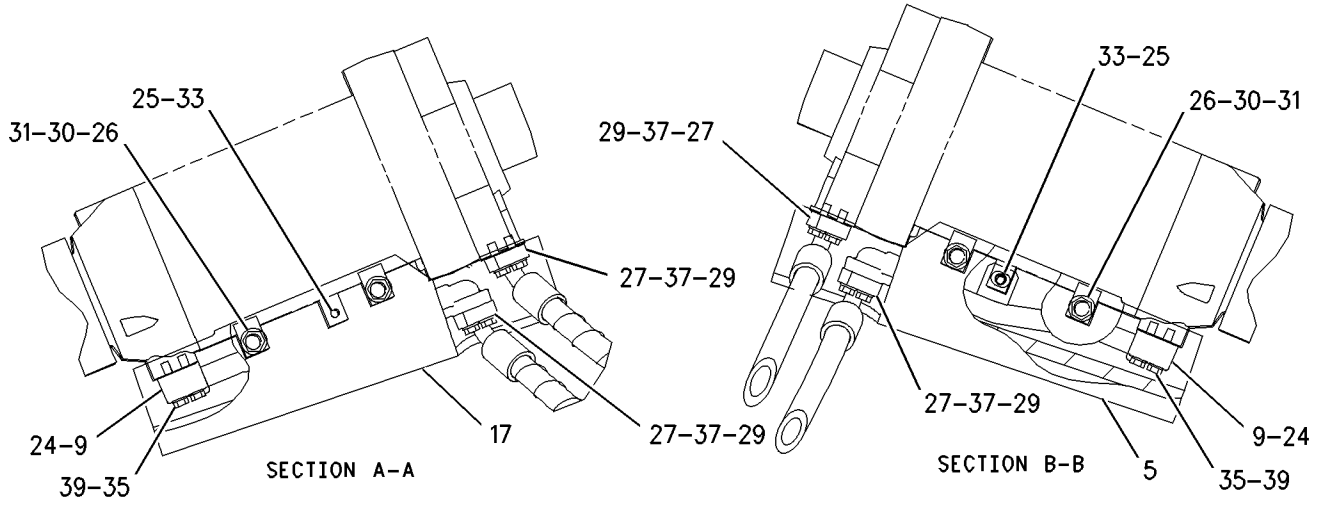

GRAPHIC #1

g00662275

HYDRAULIC SYSTEM

201-5703 LINES GP-TILT CYLINDER

S/N: CXB1-UP; CXL1-UP; BHW1-UP

PART OF 159-1633 BULLDOZER AR, 159-1628 BULLDOZER AR-SEMI-UNIVERSAL, 159-1629 BULLDOZER AR-UNIVERSAL

SMCS-5057, 5104 **i01496538**

NOTE	REF NO	GRAPHIC REF	PART NUMBER	QTY	PART NAME 1 2 3 4 5 6 (PRODUCT LEVEL)	SEE PAGE
	1	1	**7T-9333**	1	GUARD	
I	2	1	**7T-9341**	2	HOSE AS	
	3	1	**9X-8257**	2	WASHER (17.5X30X3.5MM THK)	
	4	1	**8E-6183**	1	TUBE AS	
	5	1	**9W-2877**	3	CLAMP	
	6	1	**158-6400**	2	TUBE AS	
	7	1	**158-7686**	1	GUARD	
I	8	1	**199-7078**	1	HOSE AS	
I	9	1	**199-7079**	1	HOSE AS	
	10	1	**201-5696**	2	GUARD	
	11	1	**4J-5267**	9	SEAL-O-RING	
	12	1	**5P-1076**	13	WASHER-HARD (13.5X30X4MM THK)	
M	13	1	**7X-2559**	2	BOLT (M16X2X160MM)	
	14	1	**8C-3205**	12	FLANGE-HALF	
	15	1	**8T-4121**	27	WASHER-HARD (11X21X2.5MM THK)	
	16	1	**8T-4122**	4	WASHER-HARD (17X32X3.5MM THK)	
M	17	1	**8T-4139**	13	BOLT (M12X1.75X30MM)	
M	18	1	**8T-4185**	4	BOLT (M10X1.5X50MM)	
M	19	1	**8T-4195**	3	BOLT (M10X1.5X30MM)	
M	20	1	**8T-4196**	24	BOLT (M10X1.5X35MM)	
M	21	1	**8T-4778**	2	LOCKNUT (M16X2 THD)	
M	22	1	**8T-4779**	2	BOLT (M16X2X35MM)	
	23	1	**9X-2027**	4	WASHER (11X18X2MM THK)	

I-SEE HOSE FABRICATION GUIDE
M-METRIC PART

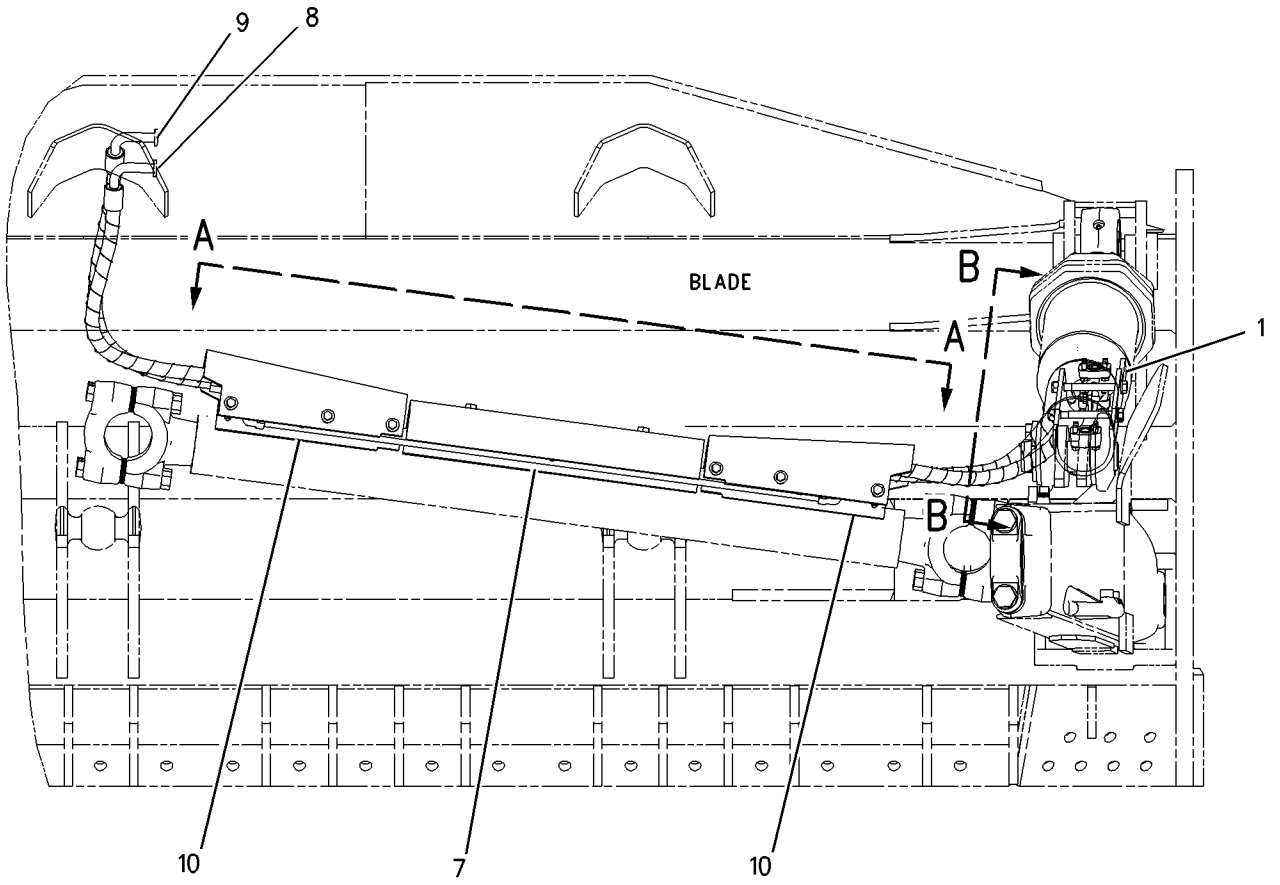

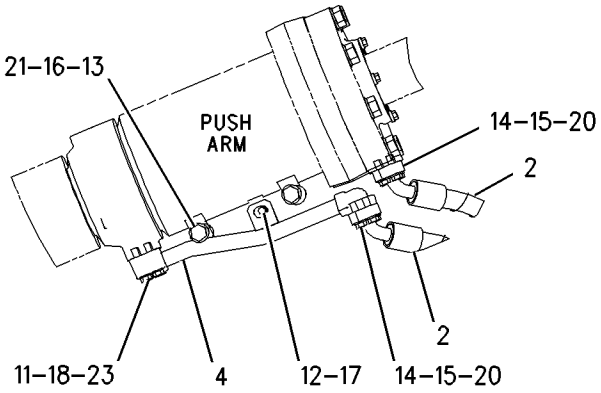

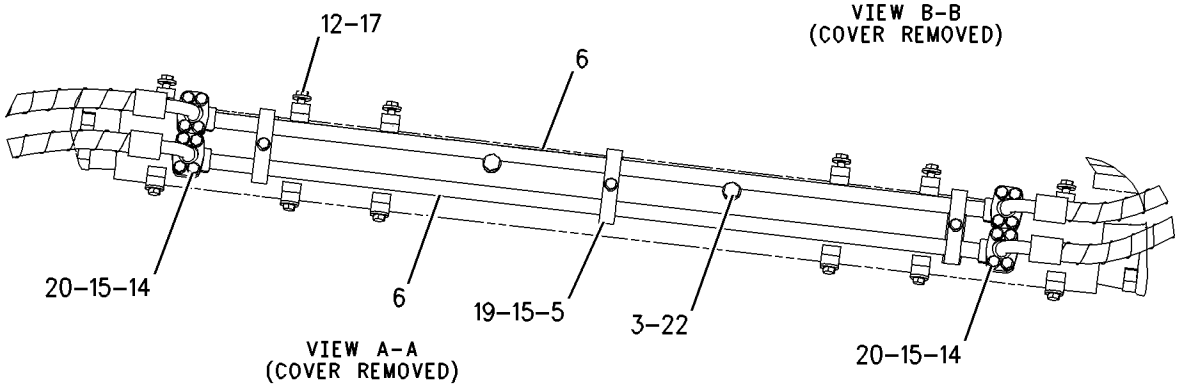

GRAPHIC #1 g00777773

HYDRAULIC SYSTEM

161-8893 MANIFOLD GP-HYDRAULIC

S/N: AKA1-UP

PART OF 160-8403 LINES GP-WINCH

SMCS-5264 **i01488938**

NOTE	REF NO	GRAPHIC REF	PART NUMBER	QTY	PART NAME 1 2 3 4 5 6 (PRODUCT LEVEL)	SEE PAGE
	1	1	**5P-8167**	1	BOLT (3/8-16X0.625 IN)	
	2	1	**8T-4896**	1	WASHER-HARD (10.2X18.5X2.5MM THK)	
	3	1	**4P-7581**	1	CLIP	
	4	1	**8T-4223**	2	WASHER-HARD (13.5X25.5X3MM THK)	
	5	1	**8T-8917**	2	BOLT (1/2-13X1.25 IN)	

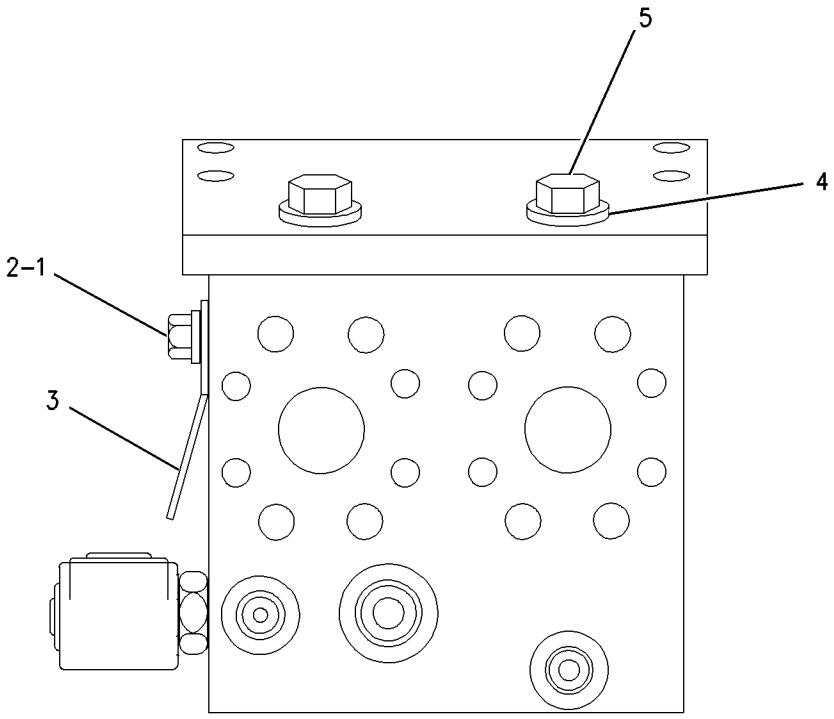

GRAPHIC #1 g00649420

163-0829 MANIFOLD GP-INLET

S/N: AKA1-UP

PART OF 160-5951, 160-5952, 160-8612 VALVE GP-CONTROL

SMCS-5264 **i01439880**

NOTE	REF NO	GRAPHIC REF	PART NUMBER	QTY	PART NAME 1 2 3 4 5 6 (PRODUCT LEVEL)	SEE PAGE
	1	1	**8J-6815**	1	PLUG-ORIFICE	
Y	2	1	**4T-4935**	1	VALVE GP-RELIEF (MAIN)	666
Y	3	1	**104-7574**	1	VALVE GP-RELIEF (CHARGE)	667
	4	1	**9S-8004**	1	PLUG	
	5	1	**1P-4577**	2	FLANGE-HALF	
	6	1	**3J-1907**	2	SEAL-O-RING (11.89MM ID)	
	7	1	**3J-7354**	2	SEAL-O-RING (8.92MM ID)	
	8	1	**4K-1388**	1	SEAL-O-RING (26.59MM ID)	
Y	9	1	**4T-5896**	1	VALVE GP-CHECK (REVERSE FLOW)	635
	10	1	**5S-7382**	4	BOLT (3/8-16X1.375 IN)	
	11	1	**8T-4896**	4	WASHER-HARD (10.2X18.5X2.5MM THK)	
	12	1	**9S-4182**	2	PLUG-O-RING	
	13	1	**9S-4188**	1	PLUG-O-RING	
	14	1	**9S-4191**	1	PLUG	

Y-SEPARATE ILLUSTRATION

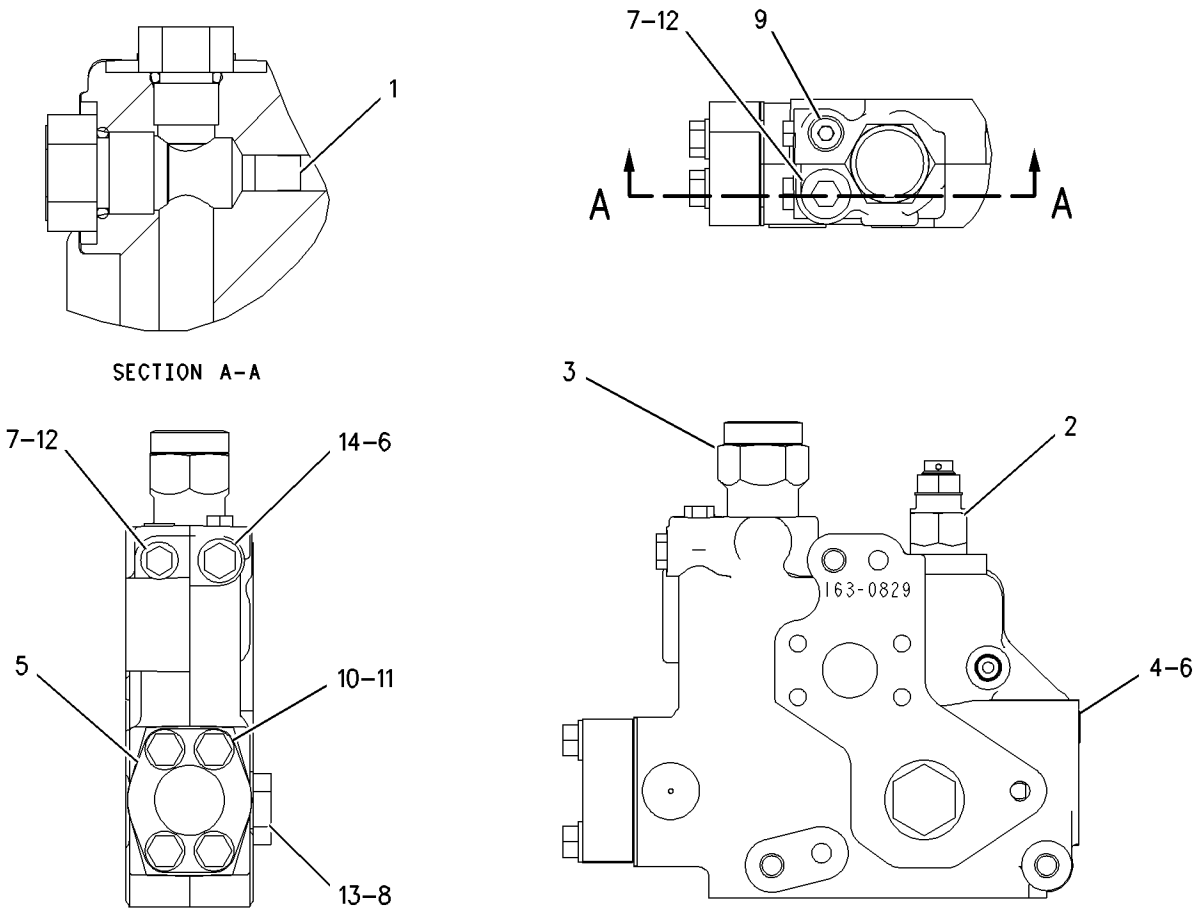

GRAPHIC #1 g00663064

HYDRAULIC SYSTEM

157-7327 MOUNTING GP-VALVE

S/N: AKA1-UP

PART OF 157-0823 HYDRAULIC AR

SMCS-5051 **i01439002**

NOTE	REF NO	GRAPHIC REF	PART NUMBER	QTY	PART NAME 1 2 3 4 5 6 (PRODUCT LEVEL)	SEE PAGE
	1	1	**196-0066**	1	PLATE AS	
		1	**8K-7186**	2	NUT-WELD (7/16-14 THD)	
	2	1	**5P-2424**	3	BOLT (1/2-13X2.25 IN)	
	3	1	**8T-4223**	7	WASHER-HARD (13.5X25.5X3MM THK)	
	4	1	**8T-8917**	4	BOLT (1/2-13X1.25 IN)	

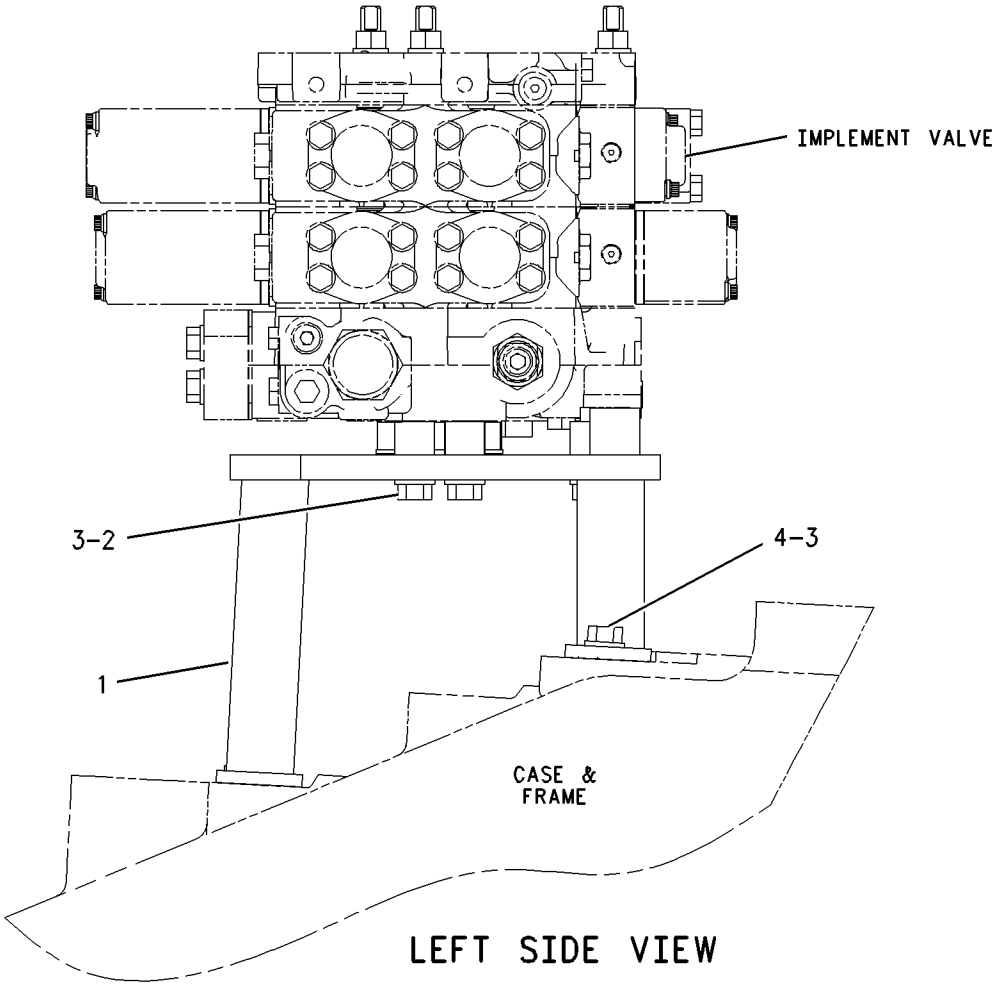

GRAPHIC #1 g00759077

MEMORANDA

HYDRAULIC SYSTEM

9T-8346 PUMP GP-PISTON*R

S/N: AKA1-UP

PART OF 157-0823 HYDRAULIC AR

SMCS-5070 **i01502173**

NOTE	REF NO	GRAPHIC REF	PART NUMBER	QTY	PART NAME 1 2 3 4 5 6 (PRODUCT LEVEL)	SEE PAGE
	1	1	**6E-4248**	1	SHAFT-GOVERNOR CONTROL	
	2	1	**6E-4237**	1	BEARING	
	3	1	**6E-4224**	1	PLUG-SWASHPLATE	
		1	**033-6036**	1	SEAL-O-RING	
Y	4	1	**6E-4221**	1	SWASHPLATE GP	627
	5	1	**6E-4247**	1	HEAD-LH	
	6	1	**9T-1699**	1	SPRING	
	7	1	**9T-1710**	1	POPPET	
	8	1	**9T-1636**	1	SEAT	
	9	1	**6E-4227**	1	COVER	
M	10	1	**6V-8837**	3	BOLT (M6X1X16 MM)	
	11	1	**4F-4097**	1	SEAL-O-RING	
	12	1	**6E-4236**	1	BEARING	
M	13	1	**3E-4302**	2	SCREW-FLAT HEAD (M4X0.7X10MM)	
	14	1	**6E-2943**	1	PLUG	
	15	1	**095-0888**	2	PIN-SPRING	
B	16	1	**103-6282**	1	SHIM PACK (INCLUDES 17 SHIMS)	
M	17	1	**8T-0343**	3	BOLT-SOCKET HEAD (M12X1.75X55MM)	
	18	1	**9S-4190**	1	PLUG-O-RING	
		1	**033-6027**	1	SEAL-O-RING	
	19	1	**6L-8797**	2	RING-RETAINING	
Y	20	1	**6E-6044**	1	VALVE GP-PRESS & FLOW CMPNSTR (PUMP OUTLET CONTROL)	662
M	21	1	**3E-8007**	1	BOLT-SOCKET HEAD (M12X1.75X90MM)	
	22	1	**8T-5039**	3	SEAL-O-RING	
M	23	1	**6V-8337**	4	BOLT-SOCKET HEAD (M8X1.25X35MM)	
	24	1	**6E-4245**	1	HOUSING	
	25	1	**7K-8876**	1	CUP-ROLLER BEARING	
		1	**7K-8877**	1	CONE-ROLLER BEARING	
	26	1	**6E-4213**	1	KIT-BIAS PISTON	
					(INCLUDES SPRING, ROD, PISTON & PACKING)	
	27	1	**6E-4214**	1	SPRING-BIAS	
Y	28	1	**6E-4216**	1	ROTATING GP-PUMP	626
	29	1	**6E-4225**	1	GASKET	
	30	1	**7L-9061**	2	SEAL-O-RING	
	31	1	**3E-7417**	4	PLUG (M10X1 THD)	
		1	**8T-7876**	4	SEAL-O-RING	
	32	1	**9X-7547**	2	SEAL-LIP	
	33	1	**6E-4234**	1	PLATE-VALVE-LH	
	34	1	**005-0471**	1	CONE-BEARING	
		1	**005-0469**	1	CUP-ROLLER BEARING	
	35	1	**6E-4215**	1	KIT-PISTON	
					(INCLUDES PACKING, ROD & PISTON)	
M	36	1	**3E-8008**	1	BOLT-SOCKET HEAD (M16X2X90MM)	
	37	1	**6E-4321**	1	SPACER	
	38	1	**9T-1652**	1	PIN	
	39	1	**104-4183**	1	SCREW-SOCKET	

B-USE AS REQUIRED
M-METRIC PART
Y-SEPARATE ILLUSTRATION

9T-8346 PUMP GP-PISTON *(contd.)* **i01502173**

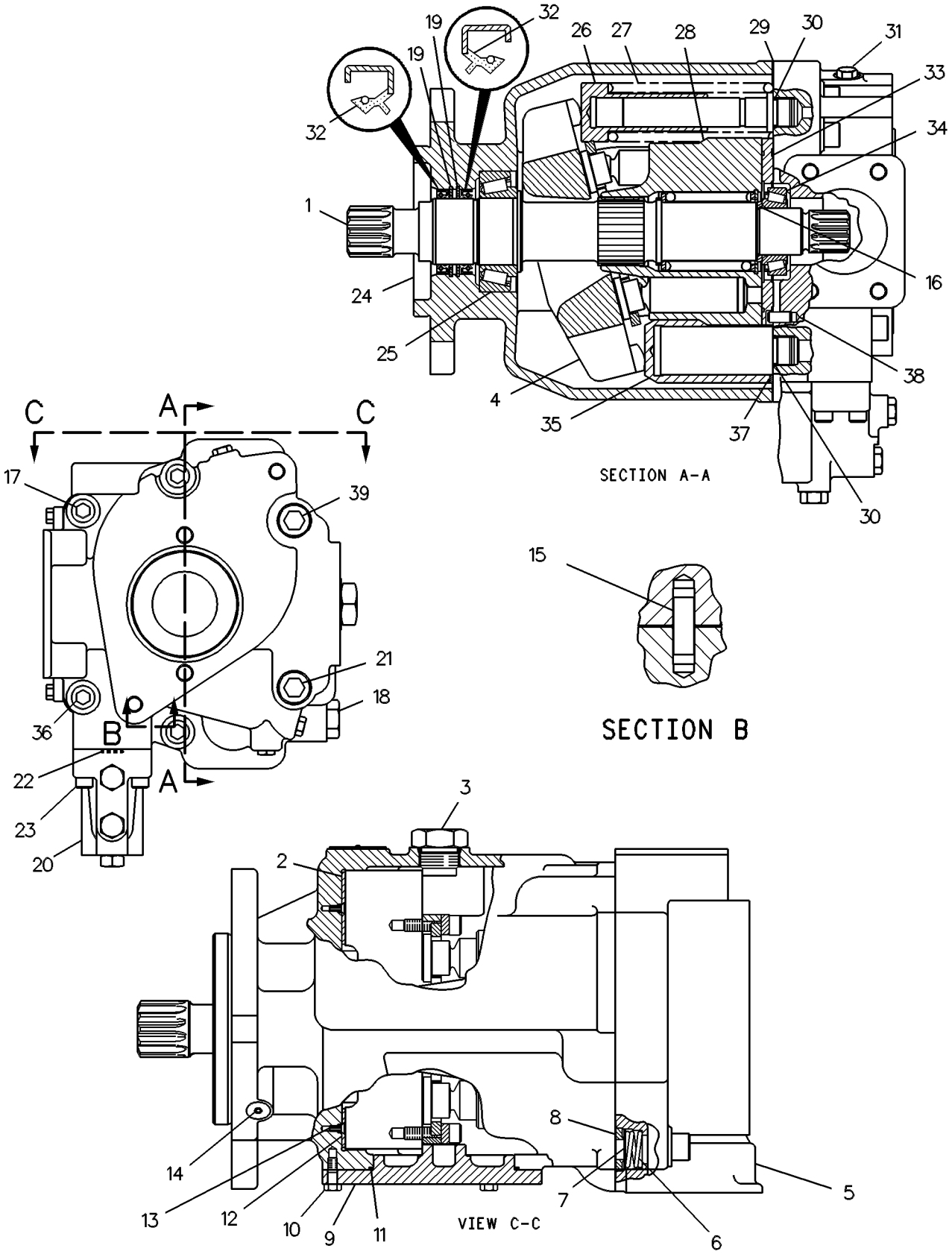

GRAPHIC #1 g00264278

6E-4216 ROTATING GP-PUMP

S/N: AKA1-UP

PART OF 9T-8346 PUMP GP-PISTON

SMCS-5070 **i00570734**

NOTE	REF NO	GRAPHIC REF	PART NUMBER	QTY	PART NAME 1 2 3 4 5 6 (PRODUCT LEVEL)	SEE PAGE
	1	1	**9T-4906**	1	RING-RETAINING	
	2	1	**6E-4219**	1	GUIDE	
M	3	1	**6V-5192**	4	BOLT-SOCKET HEAD (M8X1.25X30MM)	
	4	1	**6E-4218**	2	PLATE-SPACER	
	5	1	**6E-4217**	2	PLATE-LIMITER	
	6	1	**9T-8452**	9	PISTON	
	7	1	**9T-8445**	1	GUIDE	
	8	1	**9T-8446**	1	SPRING	
	9	1	**9T-8448**	1	BARREL	
	10	1	**9T-8450**	1	PLATE-RETAINING	

M-METRIC PART

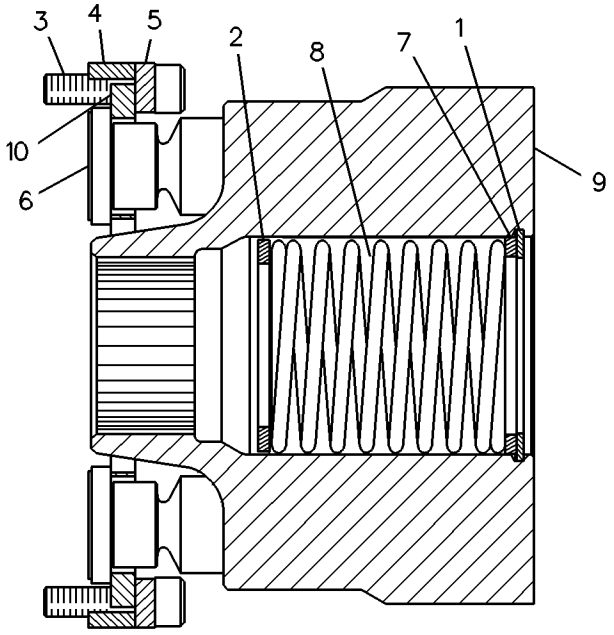

GRAPHIC #1 g00083062

HYDRAULIC SYSTEM

6E-4221 SWASHPLATE GP

S/N: AKA1-UP
PART OF 9T-8346 PUMP GP-PISTON
FIELD REPLACEMENT ORDER 184-1527—PAGE 628

SMCS-5070 **i01502175**

NOTE	PART NUMBER	QTY	PART NAME 1 2 3 4 5 6 (PRODUCT LEVEL)	SEE PAGE
	139-0532	2	BLOCK-STOP	
	8F-7219	2	SEAL-O-RING	

HYDRAULIC SYSTEM

184-1527 SWASHPLATE GP

S/N: AKA1-UP

FIELD REPLACEMENT FOR 6E-4221—PAGE 627

SMCS-5070 **i01502179**

NOTE	PART NUMBER	QTY	PART NAME 1 2 3 4 5 6 (PRODUCT LEVEL)	SEE PAGE
	1H-3937	2	PIN	
	167-1801	2	STOP-SWASHPLATE	

MEMORANDA

HYDRAULIC SYSTEM

164-3700 TANK & FILTER GP-HYDRAULIC

S/N: AKA1-UP

PART OF 157-0823 HYDRAULIC AR

SMCS-5056, 5068 **i01487038**

NOTE	REF NO	GRAPHIC REF	PART NUMBER	QTY	PART NAME 1 2 3 4 5 6 (PRODUCT LEVEL)	SEE PAGE
	1	1	**1L-4349**	1	SPRING	
	2	1	**1R-0735**	1	FILTER ELEMENT AS-OIL (HYDRAULIC/REVERSE FLOW) (DISPOSABLE)	
					—OR—	
A		1	**104-6931**	1	FILTER ELEMENT AS-OIL (REVERSE FLOW) (FIRE RESISTANT FLUID)	
					—OR—	
A		1	**139-1537**	1	FILTER ELEMENT AS-OIL (HYDRAULIC) (HIGHER PERFORMANCE)	
	3	1	**1U-2827**	1	GUIDE-VALVE	
	4	1	**4H-1225**	1	WASHER (11X22X6MM THK)	
	5	1	**4M-6921**	1	WASHER-SPRING	
	6	1	**6E-1725**	1	TUBE AS	
	7	1	**6E-1744**	1	TUBE AS	
	8	1	**6E-1752**	1	SCREEN	
	9	1	**6E-2059**	1	HOUSING	
	10	1	**6E-2060**	1	COVER AS	
	11	1	**6E-4795**	1	BRACKET	
	12	1	**7B-3039**	1	SPRING	
	13	1	**8J-8782**	1	BODY-DRAIN VALVE	
	14	1	**8J-8783**	1	VALVE	
	15	1	**9J-1979**	1	RETAINER AS	
	16	1	**9J-1985**	1	TUBE AS	
	17	1	**9J-1986**	1	FLANGE	
	18	1	**9J-1988**	1	VALVE	
	19	1	**9J-7031**	1	PLUG-DRAIN	
	20	1	**106-5705**	1	BRACKET	
	21	1	**162-2913**	1	PLATE AS	
	22	1	**164-3698**	1	TANK AS-HYDRAULIC	
		1	**9J-7203**	1	FILLER	
	23	1	**164-3699**	1	TANK AS-HYDRAULIC	
	24	1	**106-5706**	1	BRACKET	
	25	1	**1L-5072**	1	DOWEL	
	26	1	**1P-4577**	2	FLANGE-HALF	
	27	1	**1P-4578**	2	FLANGE-HALF	
	28	1	**1P-4584**	2	FLANGE-HALF	
	29	1	**2D-4202**	1	PLATE	
	30	1	**2H-6124**	1	SEAL-O-RING	
	31	1	**2J-7761**	1	RING-RETAINING	
	32	1	**3J-7354**	1	SEAL-O-RING	
	33	1	**4J-8251**	1	GROMMET	
	34	1	**4J-8252**	1	GAUGE-SIGHT	
	35	1	**5D-1911**	1	COVER-HYDRAULIC CAP	
	36	1	**5D-7927**	1	STRAINER AS	
		1	**5F-3488**	1	END-STRAINER	
	37	1	**5H-6733**	1	SEAL-O-RING	
	38	1	**5M-2057**	1	SEAL-O-RING	
	39	1	**5S-7382**	4	BOLT (3/8-16X1.375 IN)	
	40	1	**6H-9361**	1	RING-RETAINING	
M	41	1	**6V-3822**	4	BOLT (M10X1.5X35MM)	
M	42	1	**6V-4248**	60	BOLT (M10X1.50X25MM)	
	43	1	**6V-5839**	14	WASHER (11X21X2.5MM THK)	
M	44	1	**6V-7732**	7	BOLT (M10X1.5X25MM)	
M	45	1	**6V-7744**	79	LOCKNUT (M10X1.5 THD)	
M	46	1	**6V-8097**	4	BOLT (M12X1.75X30MM)	
	47	1	**7D-1195**	1	SEAL-O-RING	

164-3700 **TANK & FILTER GP-HYDRAULIC** *(contd.)* **i01487038**

NOTE	REF NO	GRAPHIC REF	PART NUMBER	QTY	PART NAME 1 2 3 4 5 6 (PRODUCT LEVEL)	SEE PAGE
	48	1	**7H-1447**	1	CAP-FILLER	
M	49	1	**8C-0573**	1	STUD-TAPERLOCK	
	50	1	**8F-4994**	1	SEAL-O-RING	
	51	1	**8J-6913**	1	RETAINER-SIGHT GLASS	
	52	1	**8T-2275**	1	BALL	
	53	1	**8T-3298**	1	SEAL-RECTANGULAR	
	54	1	**8T-4223**	8	WASHER-HARD (13.5X25.5X3MM THK)	
	55	1	**8T-4896**	4	WASHER-HARD (10.2X18.5X2.5MM THK)	
	56	1	**8T-5360**	4	WASHER (12X22.5X2.5MM THK)	
	57	1	**8T-8916**	4	BOLT (7/16-14X1.5 IN)	
	58	1	**8T-8919**	8	BOLT (1/2-13X1.75 IN)	
	59	1	**9H-6454**	1	GASKET	
	60	1	**9L-9132**	2	WASHER (10.2X25.5X2.5MM THK)	
	61	1	**9M-7394**	1	LEVER	
	62	1	**9S-4182**	1	PLUG-O-RING	
	63	1	**9T-0714**	1	PLATE	

A-NOT PART OF THIS GROUP
M-METRIC PART

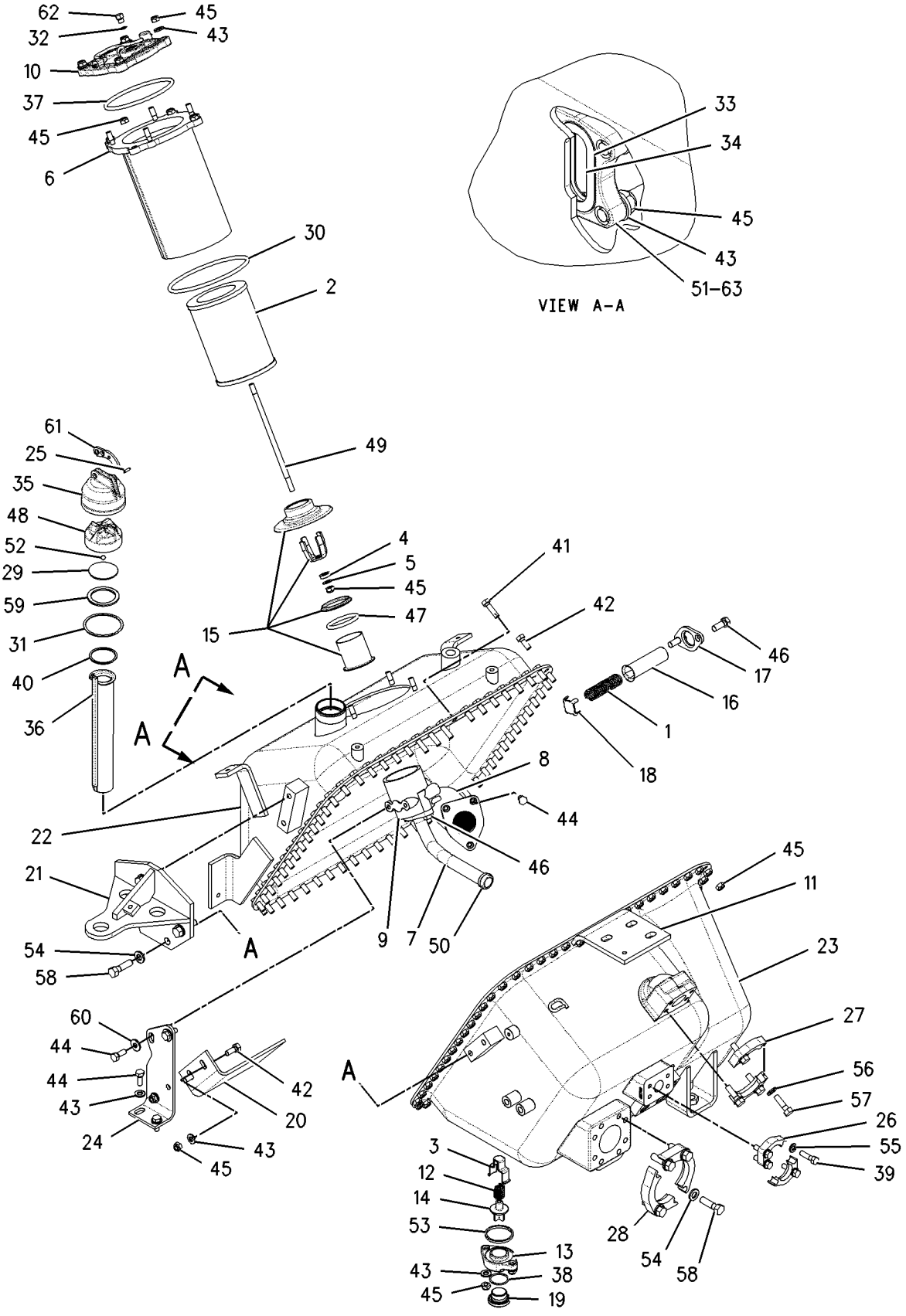

GRAPHIC #1 g00768185

HYDRAULIC SYSTEM

188-6140 VALVE & MTG GP-CONTROL

S/N: AKA1-UP

PART OF 160-4781 CONTROL AR-HYDRAULIC

SMCS-5051 **i01488908**

NOTE	REF NO	GRAPHIC REF	PART NUMBER	QTY	PART NAME 1 2 3 4 5 6 (PRODUCT LEVEL)	SEE PAGE
Y	1	1	**3E-8575**	1	VALVE GP-SOLENOID	670
	2	1	**188-6141**	1	MANIFOLD AS	
	2A	1	**3J-1907**	1	SEAL-O-RING	
	2B	1	**9S-8004**	1	PLUG	
	2C	1	**200-2964**	1	ORIFICE AS	
	2D	1	**4J-7533**	1	SEAL-O-RING	

Y-SEPARATE ILLUSTRATION

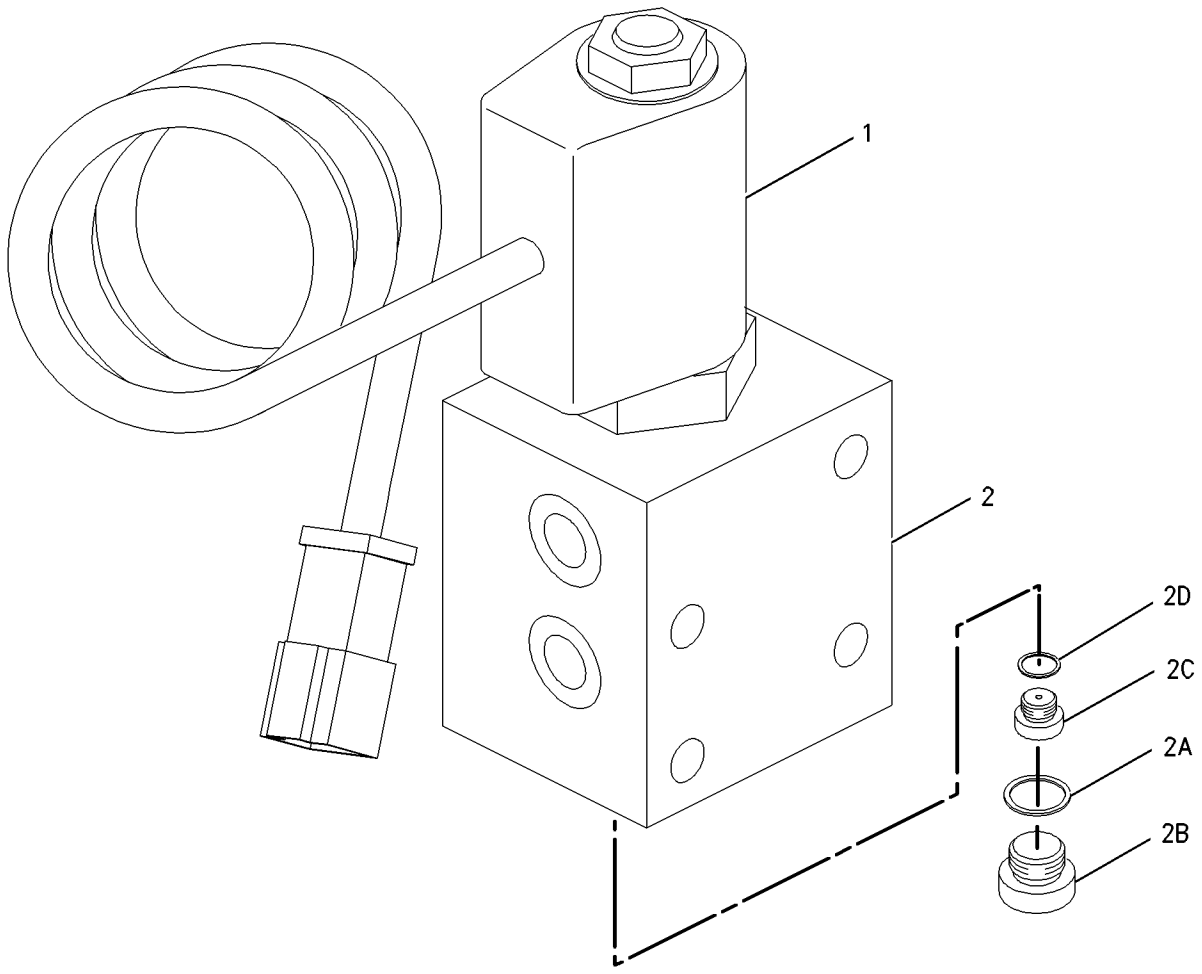

GRAPHIC #1 g00764266

HYDRAULIC SYSTEM

126-0747 VALVE GP-BYPASS

S/N: AKA1-UP

PART OF 159-9309 LINES GP-STEERING

SMCS-5076 **i01458199**

NOTE	REF NO	GRAPHIC REF	PART NUMBER	QTY	PART NAME 1 2 3 4 5 6 (PRODUCT LEVEL)	SEE PAGE
	1	1	**9S-4191**	1	PLUG-STRAIGHT THREAD	
	2	1	**126-0748**	1	BODY	
	3	1	**3J-1907**	1	SEAL-O-RING	
	4	1	**6V-8218**	1	SEAL-O-RING	

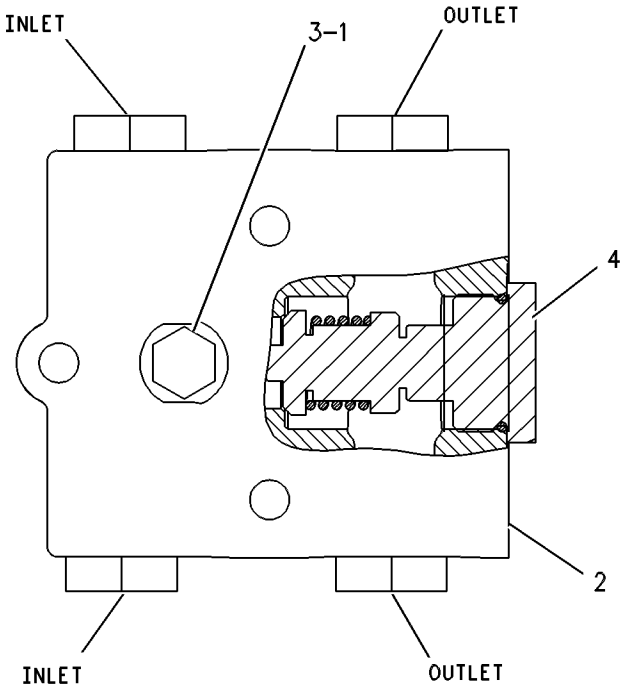

GRAPHIC #1 g00449170

4T-5896 VALVE GP-CHECK

S/N: AKA1-UP

PART OF 163-0829 MANIFOLD GP-INLET

SMCS-5067 **i00689098**

NOTE	REF NO	GRAPHIC REF	PART NUMBER	QTY	PART NAME 1 2 3 4 5 6 (PRODUCT LEVEL)	SEE PAGE
	1	1	**5H-1472**	1	BALL	
	2	1	**9G-0278**	1	SPRING	
	3	1	**3J-1907**	1	SEAL-O-RING (11.89MM ID)	
	4	1	**4T-5071**	1	RING-BACKUP	
	5	1	**8C-3085**	1	SEAL-O-RING (7.65MM ID)	
	6	1	**8L-6565**	1	PIN-SPRING	

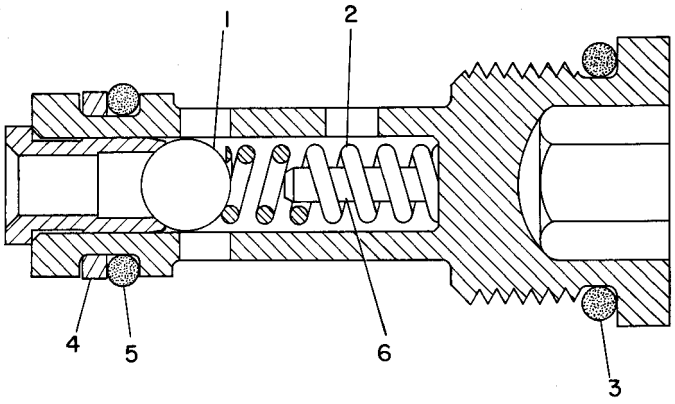

GRAPHIC #1 g00124639

HYDRAULIC SYSTEM

124-2906 VALVE GP-CONTROL

S/N: AKA1-UP

WINCH

PART OF 160-8612 VALVE GP-CONTROL

SMCS-5051 **i01491476**

NOTE	REF NO	GRAPHIC REF	PART NUMBER	QTY	PART NAME 1 2 3 4 5 6 (PRODUCT LEVEL)	SEE PAGE
	1	1	**153-7069**	1	HOUSING	
Y	2	1	**4T-1860**	1	VALVE GP-SHUTTLE (BALL RESOLVER)	669
	3	1	**9S-8002**	1	PLUG-O-RING	
	4	1	**3J-7354**	1	SEAL-O-RING	
	5	1	**8T-2501**	2	BOLT (3/8-16X2 IN)	
	6	1	**7Y-4224**	1	ORIFICE	
	7	1	**4T-4636**	1	COVER	
	8	1	**4T-1649**	1	HOUSING	
	9	1	**8J-8343**	2	SEAL-O-RING	
	10	1	**9M-4288**	2	BOLT-12 POINT HEAD (5/16-18X4.50 IN)	
	11	1	**4T-5073**	2	RING-BACKUP	
	12	1	**4T-1701**	1	SPRING	
	13	1	**6J-2419**	2	SEAL-O-RING	
	14	1	**7J-0204**	1	SEAL-O-RING	
	15	1	**153-6976**	1	SPRING	
	16	1	**4L-7711**	1	SEAL-O-RING	
	17	1	**9S-8007**	1	PLUG-O-RING	
	18	1	**4T-5072**	2	RING-BACKUP	
	19	1	**4T-4634**	1	SPACER	
	20	1	**4T-4628**	3	SHIM (0.50MM THK)	
	21	1	**153-7070**	1	SCREW	
	22	1	**4T-4631**	1	SPRING	
	23	1	**153-7067**	1	RETAINER	
	24	1	**4K-1388**	2	SEAL-O-RING	
	25	1	**9S-8001**	2	PLUG	
	26	1	**9J-8126**	1	PLUG-ORIFICE	
	27	1	**4J-7533**	2	SEAL-O-RING	
	28	1	**7M-8485**	1	SEAL-O-RING	
	29	1	**4T-0990**	1	VALVE (LOAD CHECK)	
	30	1	**4J-5351**	2	SEAL-O-RING	
	31	1	**4T-4633**	1	RETAINER	
	32	1	**4T-1108**	2	PLUG	
	33	1	**4T-2045**	1	PLUG AS	
	34	1	**2S-2596**	1	SPRING	
	35	1	**7J-9933**	2	SEAL-O-RING	
	36	1	**6V-5556**	1	SEAL-O-RING	
	37	1	**4T-5074**	1	RING-BACKUP	
	38	1	**4T-4511**	1	SLEEVE	
	39	1	**2J-2866**	4	SHIM (0.12MM THK)	
	40	1	**5M-2057**	1	SEAL-O-RING	
B	41	1	**4B-4278**	3	WASHER (10.2X20.5X1.6MM THK)	
B	42	1	**6E-1637**	2	SHIM (1.0MM THK)	

B-USE AS REQUIRED
Y-SEPARATE ILLUSTRATION

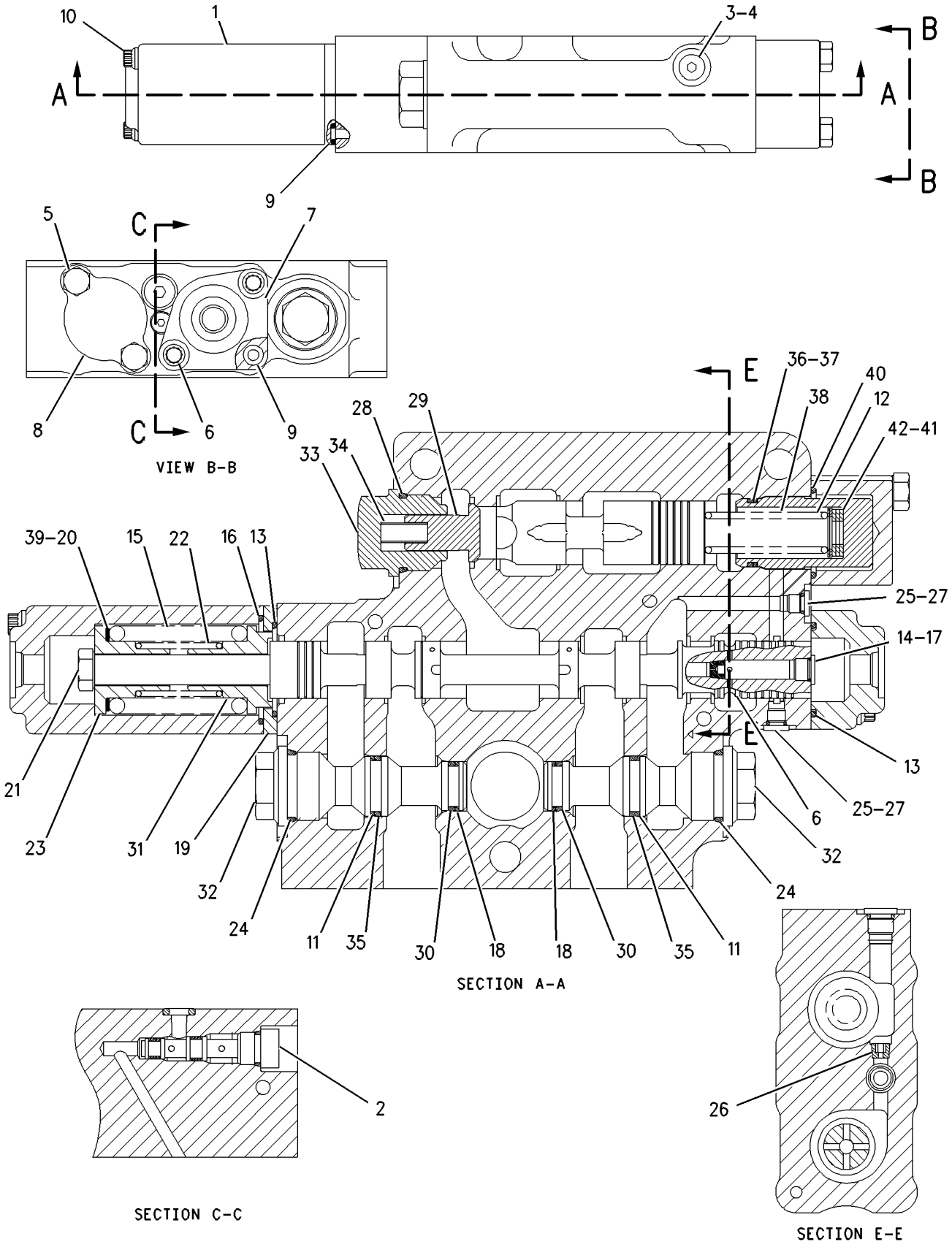

GRAPHIC #1

g00675404

HYDRAULIC SYSTEM

160-5951 VALVE GP-CONTROL

S/N: AKA1-UP

PART OF 157-7331 CONTROL AR-PILOT HYDRAULIC

SMCS-5051 **i01452707**

NOTE	REF NO	GRAPHIC REF	PART NUMBER	QTY	PART NAME 1 2 3 4 5 6 (PRODUCT LEVEL)	SEE PAGE
	1	1	**9S-8002**	2	PLUG-O-RING	
Y	2	1	**160-5953**	1	VALVE GP-CONTROL (DOZER LIFT)	642
Y	3	1	**160-5954**	1	VALVE GP-CONTROL (DOZER TILT)	644
	4	1	**9S-4191**	1	PLUG-STRAIGHT THREAD	
Y	5	1	**163-0829**	1	MANIFOLD GP-INLET (DOZER/WINCH BANK VALVE)	621
	6	1	**9S-4182**	1	PLUG-O-RING	
	7	1	**164-6174**	3	ROD	
Y	8	1	**169-3323**	1	VALVE GP-CONTROL (RIPPER LIFT)	648
Y	9	1	**169-3323**	1	VALVE GP-CONTROL (RIPPER TIP)	648
	10	1	**1P-3702**	1	SEAL-RECTANGULAR	
	11	1	**1P-4577**	16	FLANGE-HALF	
	12	1	**1P-4578**	2	FLANGE-HALF	
	13	1	**3J-7354**	3	SEAL-O-RING	
	14	1	**3J-1907**	1	SEAL-O-RING	
	15	1	**4J-0522**	15	SEAL-O-RING	
	16	1	**4J-8997**	4	SEAL-O-RING	
	17	1	**5S-7382**	32	BOLT (3/8-16X1.375 IN)	
	18	1	**6V-5555**	15	SEAL-O-RING	
	19	1	**6V-8188**	3	NUT (1/2-13 THD)	
	20	1	**7X-3392**	3	WASHER-HARD (13.5X22.5X3MM THK)	
	21	1	**8T-4896**	32	WASHER-HARD (10.2X18.5X2.5MM THK)	
	22	1	**8T-5360**	4	WASHER (12X22.5X2.5MM THK)	
	23	1	**169-9119**	1	COVER	
	24	1	**8T-8916**	4	BOLT (7/16-14X1.5 IN)	

Y-SEPARATE ILLUSTRATION

160-5951 VALVE GP-CONTROL *(contd.)* **i01452707**

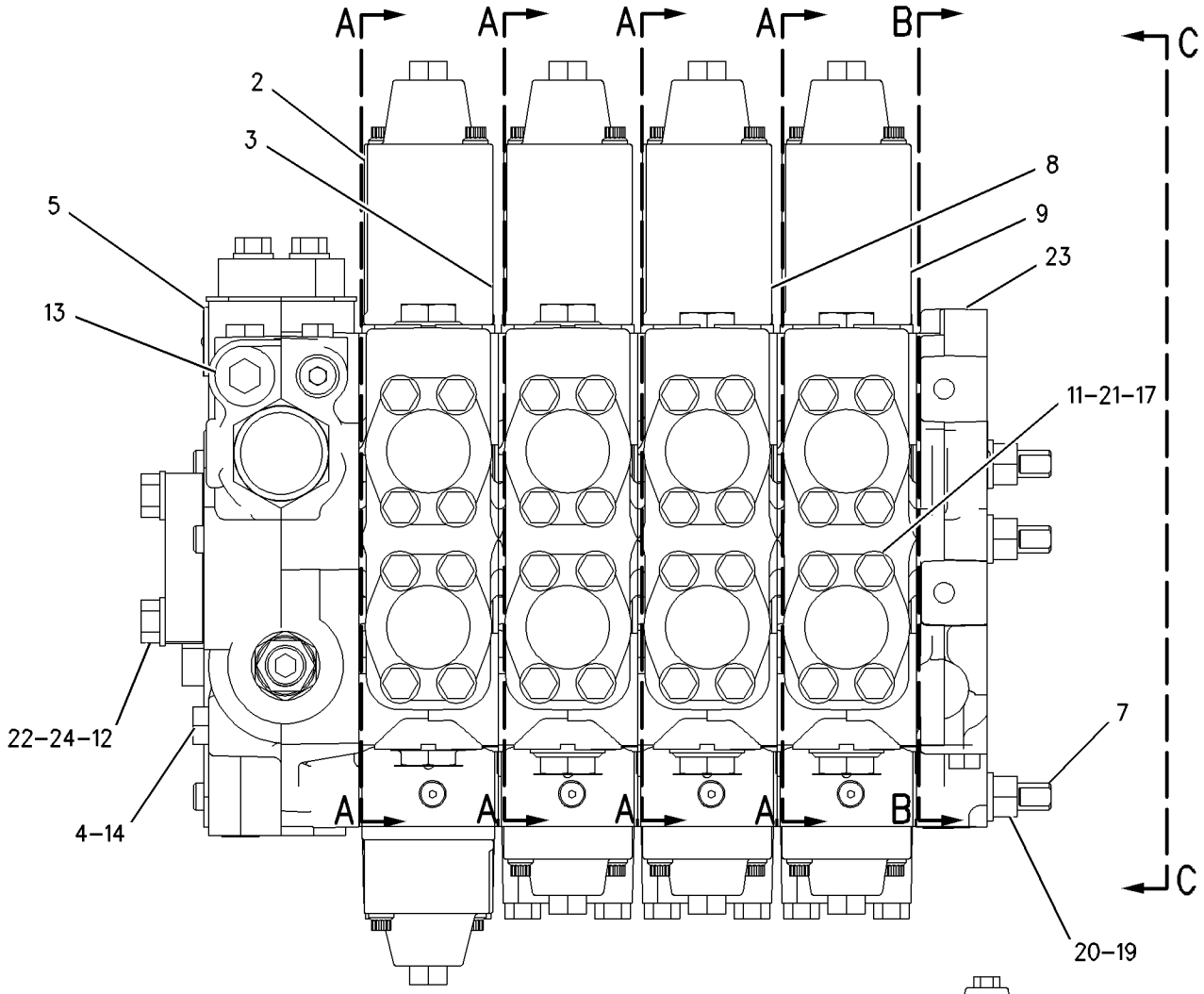

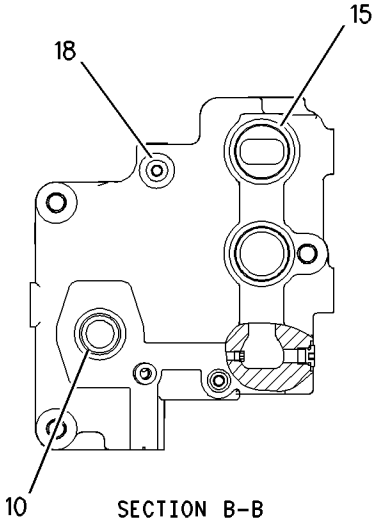

SECTION B-B

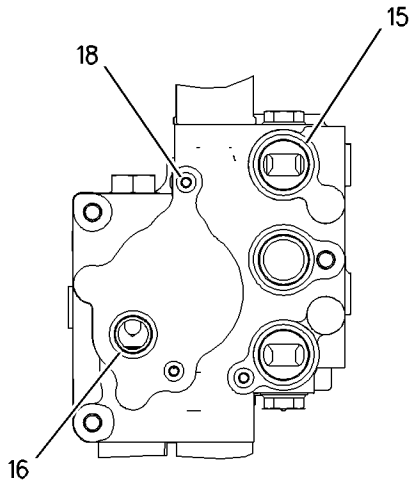

SECTION A-A
(TYPICAL 4 PLACES)

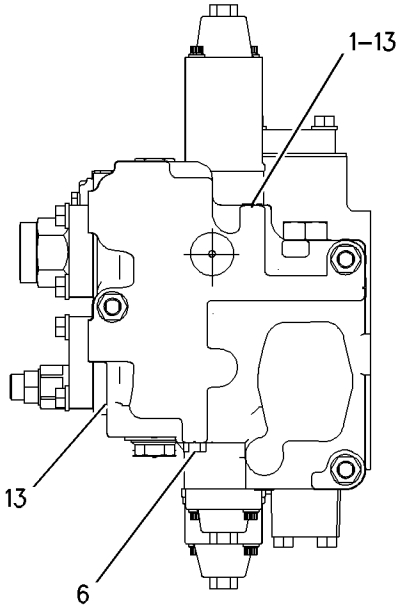

VIEW C-C

GRAPHIC #1

g00681730

HYDRAULIC SYSTEM

160-5952 VALVE GP-CONTROL

S/N: AKA1-UP

PART OF 157-0824 CONTROL AR-PILOT HYDRAULIC

SMCS-5051 **i01439705**

NOTE	REF NO	GRAPHIC REF	PART NUMBER	QTY	PART NAME 1 2 3 4 5 6 (PRODUCT LEVEL)	SEE PAGE
	1	1	**9S-4191**	1	PLUG	
Y	2	1	**160-5953**	1	VALVE GP-CONTROL (DOZER LIFT)	642
Y	3	1	**160-5954**	1	VALVE GP-CONTROL (DOZER TILT)	644
Y	4	1	**163-0829**	1	MANIFOLD GP-INLET (DOZER/WINCH BANK VALVE)	621
	5	1	**164-7678**	3	ROD	
	6	1	**3J-1907**	1	SEAL-O-RING (11.89MM ID)	
	7	1	**1P-3702**	1	SEAL-RECTANGULAR	
	8	1	**1P-4577**	8	FLANGE-HALF	
	9	1	**1P-4578**	2	FLANGE-HALF	
	10	1	**3J-7354**	3	SEAL-O-RING (8.92MM ID)	
	11	1	**4J-0522**	9	SEAL-O-RING (37.69MM ID)	
	12	1	**4J-8997**	2	SEAL-O-RING (28.17MM ID)	
	13	1	**169-9119**	1	COVER	
	14	1	**5S-7382**	16	BOLT (3/8-16X1.375 IN)	
	15	1	**6V-5555**	9	SEAL-O-RING (7.52MM ID)	
	16	1	**6V-8188**	3	NUT (1/2-13 THD)	
	17	1	**7X-3392**	3	WASHER-HARD (13.5X22.5X3MM THK)	
	18	1	**8T-4896**	16	WASHER-HARD (10.2X18.5X2.5MM THK)	
	19	1	**8T-5360**	4	WASHER (12X22.5X2.5MM THK)	
	20	1	**8T-8916**	4	BOLT (7/16-14X1.5 IN)	
	21	1	**9S-4182**	1	PLUG-O-RING	
	22	1	**9S-8002**	2	PLUG-O-RING	

Y-SEPARATE ILLUSTRATION

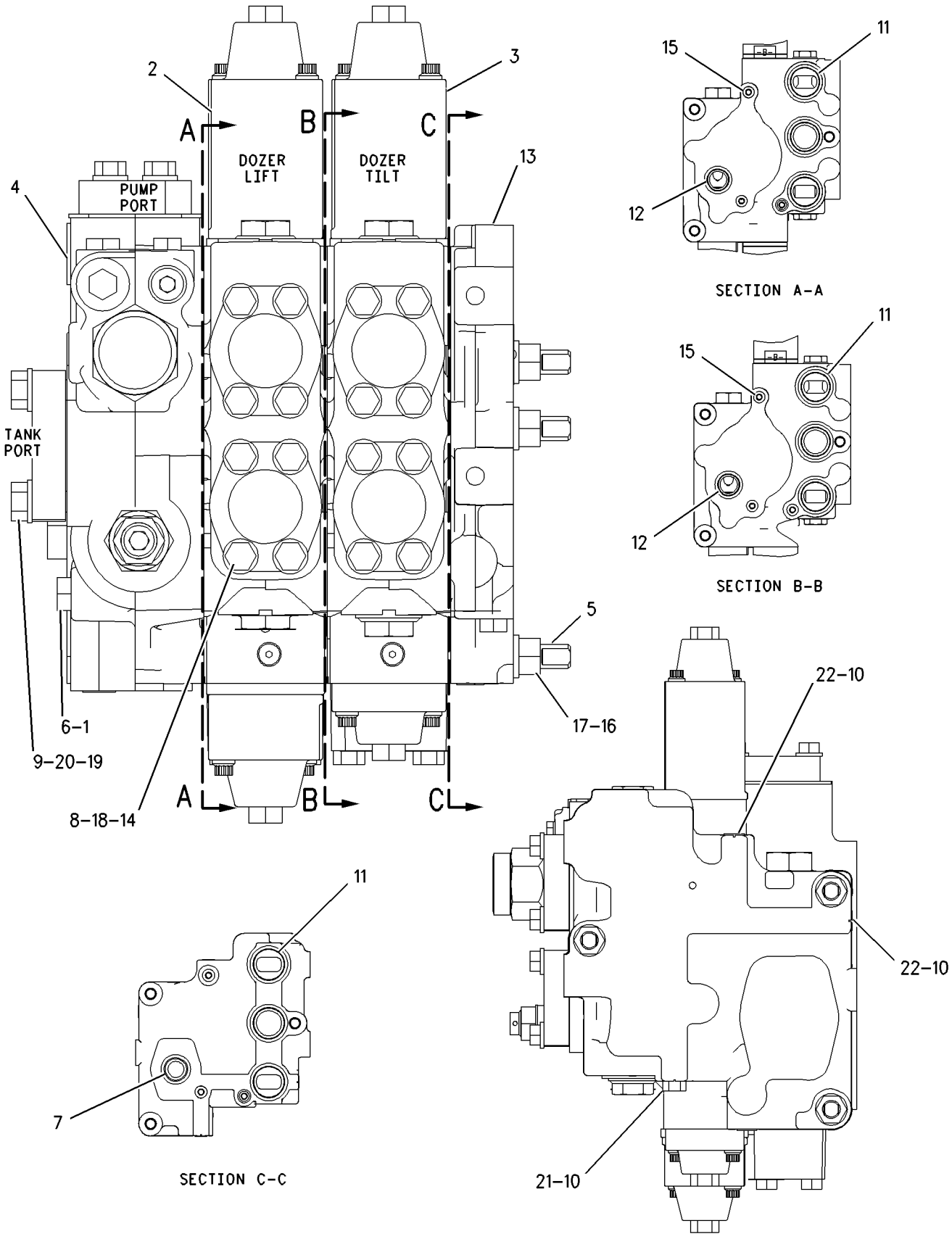

GRAPHIC #1 g00663410

HYDRAULIC SYSTEM

160-5953 VALVE GP-CONTROL

S/N: AKA1-UP

PART OF 160-5951, 160-5952, 160-8612 VALVE GP-CONTROL

SMCS-5051 **i01439816**

NOTE	REF NO	GRAPHIC REF	PART NUMBER	QTY	PART NAME 1 2 3 4 5 6 (PRODUCT LEVEL)	SEE PAGE
	1	1	**2S-2596**	2	SPRING	
	2	1	**4B-4278**	5	WASHER (10.2X20.5X1.6MM THK)	
	3	1	**4T-1108**	1	PLUG	
	4	1	**4T-1649**	1	HOUSING	
	5	1	**4T-1701**	1	SPRING	
	6	1	**4T-4511**	1	SLEEVE	
B	7	1	**4T-4628**	5	SHIM (0.50MM THK)	
	8	1	**173-0511**	1	HOUSING	
	9	1	**8T-2501**	2	BOLT (3/8-16X2 IN)	
	10	1	**4T-5072**	1	RING-BACKUP	
	11	1	**4T-5074**	1	RING-BACKUP	
	12	1	**173-0515**	1	SPACER	
	13	1	**9S-8002**	1	PLUG-O-RING	
	14	1	**174-2043**	2	BOLT (5/16-18X4 IN)	
	15	1	**100-8012**	1	BODY	
	16	1	**153-7067**	1	RETAINER	
	17	1	**173-0512**	1	HOUSING	
	18	1	**153-7553**	1	SPRING	
	19	1	**153-7549**	1	RETAINER	
	20	1	**153-7550**	1	RETAINER	
	21	1	**170-4001**	1	SPRING	
	22	1	**9S-8001**	2	PLUG	
	23	1	**161-2685**	1	SCREW	
	24	1	**5P-6446**	2	BOLT-12 POINT HEAD (5/16-18X2 IN)	
	25	1	**164-0938**	1	SPRING	
	26	1	**100-8010**	2	VALVE	
	27	1	**100-8011**	1	PLUG (1 5/16-12 THD)	
	28	1	**163-5671**	1	WASHER (17X39X2MM THK)	
B	29	1	**2J-2866**	3	SHIM (0.12MM THK)	
	30	1	**3J-7354**	1	SEAL-O-RING (8.92MM ID)	
	31	1	**4J-5351**	1	SEAL-O-RING (17.12MM ID)	
	32	1	**4J-7533**	2	SEAL-O-RING (6.07MM ID)	
	33	1	**4K-1388**	2	SEAL-O-RING (26.59MM ID)	
	34	1	**5K-0227**	2	SEAL-O-RING (44.17MM ID)	
Y	35	1	**4T-1860**	1	VALVE GP-SHUTTLE (BALL RESOLVER)	669
	36	1	**4T-5073**	2	RING-BACKUP	
	37	1	**5M-2057**	2	SEAL-O-RING (34.59MM ID)	
	38	1	**9J-8126**	1	PLUG-ORIFICE	
	39	1	**6V-5556**	1	SEAL-O-RING (25.07MM ID)	
	40	1	**7J-0204**	1	SEAL-O-RING (7.65MM ID)	
	41	1	**7J-9933**	2	SEAL-O-RING (21.89MM ID)	
	42	1	**7M-8485**	1	SEAL-O-RING (29.74MM ID)	

B-USE AS REQUIRED
Y-SEPARATE ILLUSTRATION

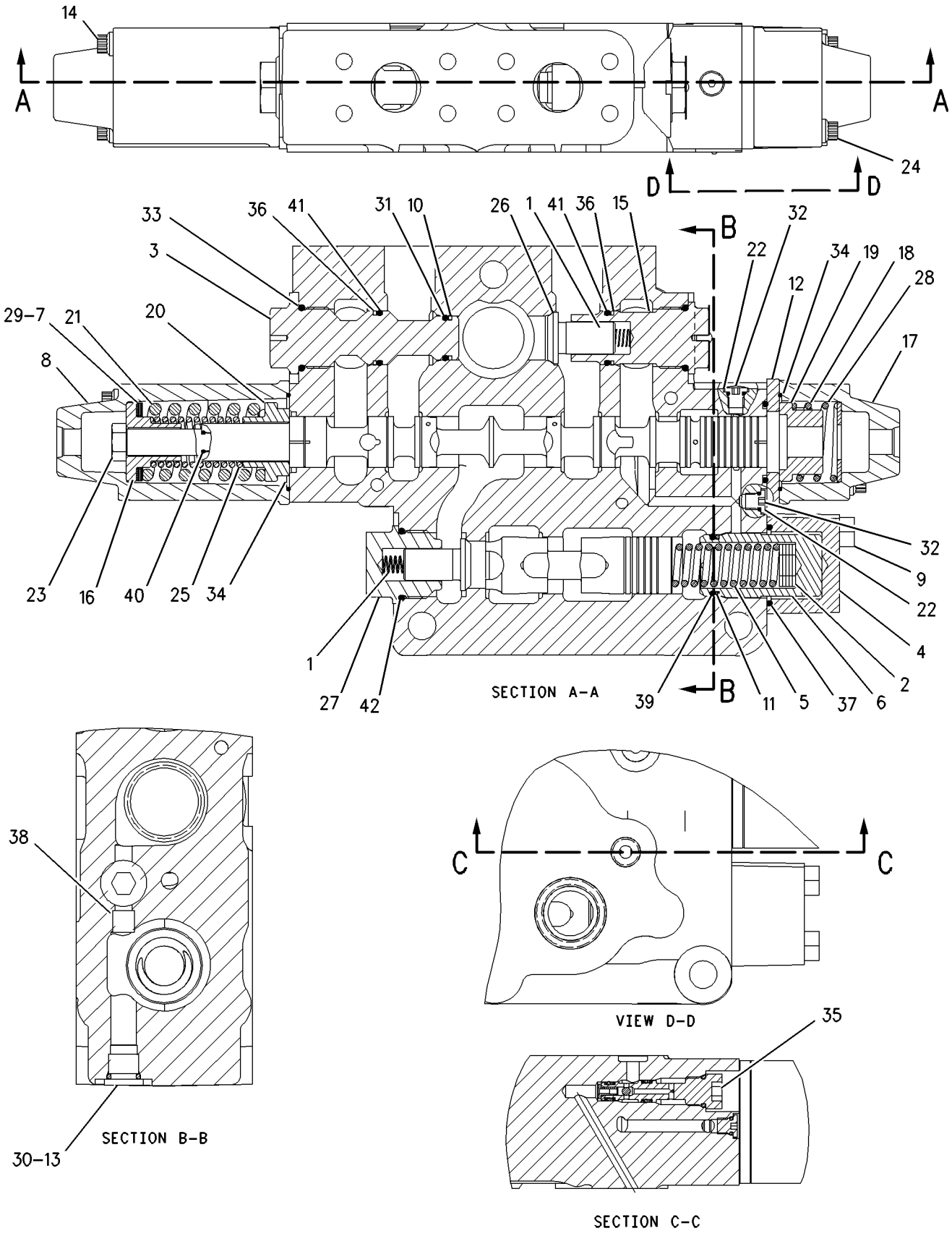

GRAPHIC #1 g00663078

HYDRAULIC SYSTEM

160-5954 VALVE GP-CONTROL

S/N: AKA1-UP

PART OF 160-5951, 160-5952, 160-8612 VALVE GP-CONTROL

SMCS-5051 **i01439930**

NOTE	REF NO	GRAPHIC REF	PART NUMBER	QTY	PART NAME 1 2 3 4 5 6 (PRODUCT LEVEL)	SEE PAGE
	1	1	**2S-2596**	1	SPRING	
	2	1	**4B-4278**	3	WASHER (10.2X20.5X1.6MM THK)	
	3	1	**4T-1108**	2	PLUG	
	4	1	**4T-1649**	1	HOUSING	
	5	1	**4T-1701**	1	SPRING	
	6	1	**4T-4511**	1	SLEEVE	
B	7	1	**4T-4628**	6	SHIM (0.50MM THK)	
	8	1	**4T-4631**	1	SPRING	
	9	1	**173-0511**	1	HOUSING	
	10	1	**7M-8485**	1	SEAL-O-RING (29.74MM ID)	
	11	1	**173-0514**	1	COVER	
	12	1	**4T-5072**	2	RING-BACKUP	
	13	1	**4T-5074**	1	RING-BACKUP	
	14	1	**9S-8002**	1	PLUG-O-RING	
	15	1	**8T-2501**	2	BOLT (3/8-16X2 IN)	
	16	1	**174-2043**	2	BOLT (5/16-18X4 IN)	
	17	1	**9J-8126**	1	PLUG-ORIFICE	
	18	1	**153-6976**	1	SPRING	
	19	1	**153-7067**	1	RETAINER	
	20	1	**153-7551**	1	RETAINER	
	21	1	**7J-9933**	2	SEAL-O-RING (21.89MM ID)	
	22	1	**161-2684**	1	SCREW (3/8-24X2.87 IN)	
	23	1	**100-8010**	1	VALVE	
	24	1	**100-8011**	1	PLUG (1 5/16-12 THD)	
B	25	1	**2J-2866**	2	SHIM (0.12MM THK)	
	26	1	**3J-7354**	1	SEAL-O-RING (8.92MM ID)	
	27	1	**4J-5351**	2	SEAL-O-RING (17.12MM ID)	
	28	1	**4J-7533**	2	SEAL-O-RING (6.07MM ID)	
	29	1	**4K-1388**	2	SEAL-O-RING (26.59MM ID)	
	30	1	**5K-0227**	1	SEAL-O-RING (44.17MM ID)	
Y	31	1	**4T-1860**	1	VALVE GP-SHUTTLE (BALL RESOLVER)	669
	32	1	**4T-5073**	2	RING-BACKUP	
	33	1	**5M-2057**	2	SEAL-O-RING (34.59MM ID)	
	34	1	**9S-8001**	2	PLUG	
	35	1	**1T-0414**	2	BOLT-12 POINT HEAD (5/16-18X1 IN)	
	36	1	**6V-5556**	1	SEAL-O-RING (25.07MM ID)	
	37	1	**7J-0204**	1	SEAL-O-RING (7.65MM ID)	

B-USE AS REQUIRED
Y-SEPARATE ILLUSTRATION

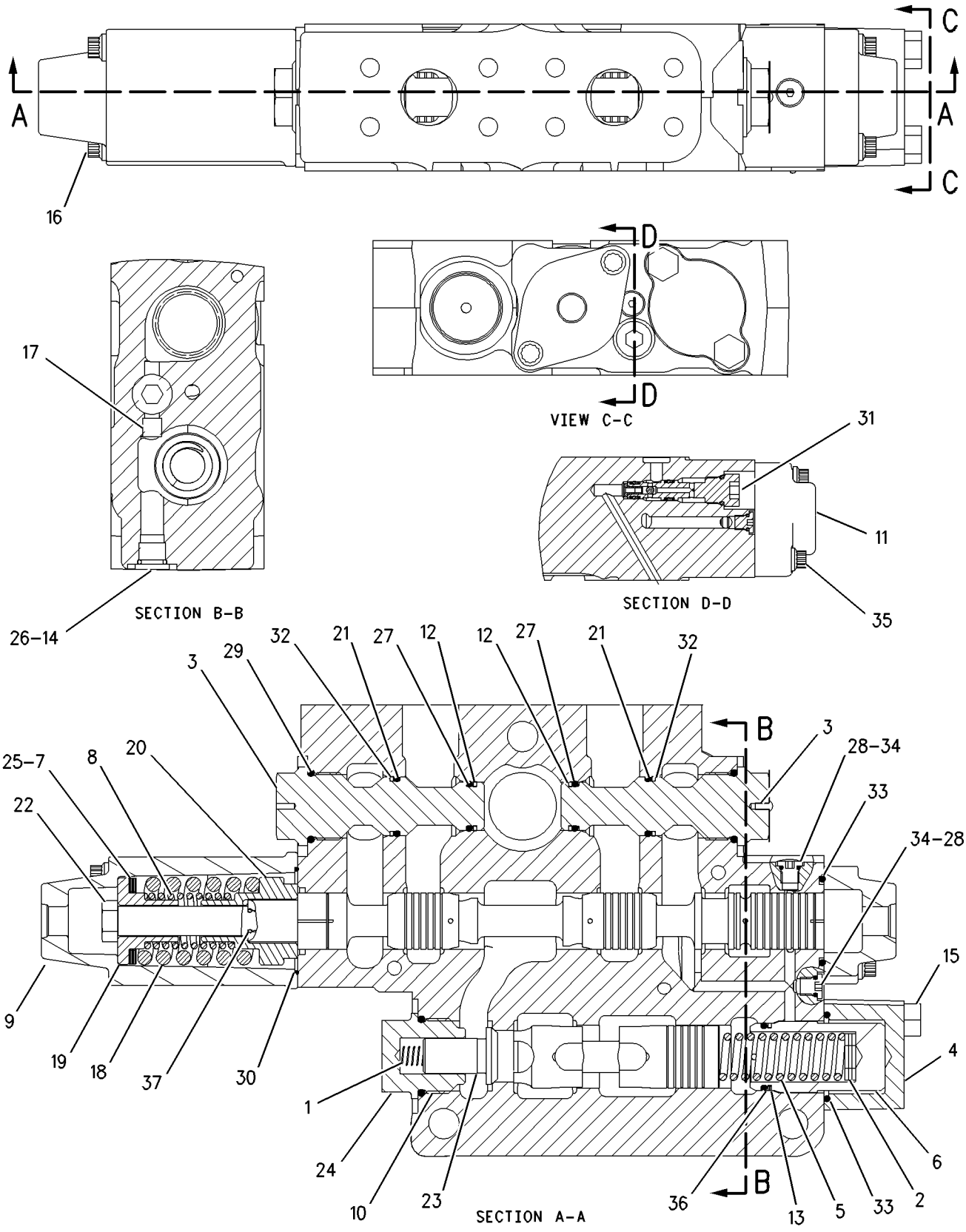

GRAPHIC #1 g00663155

160-8612 VALVE GP-CONTROL

S/N: AKA1-UP

PART OF 160-5560 CONTROL AR-PILOT HYDRAULIC

SMCS-5051 **i01488955**

NOTE	REF NO	GRAPHIC REF	PART NUMBER	QTY	PART NAME 1 2 3 4 5 6 (PRODUCT LEVEL)	SEE PAGE
	1	1	**9S-4182**	1	PLUG-O-RING	
Y	2	1	**124-2906**	1	VALVE GP-CONTROL (WINCH)	636
Y	3	1	**160-5953**	1	VALVE GP-CONTROL (DOZER LIFT)	642
Y	4	1	**160-5954**	1	VALVE GP-CONTROL (DOZER TILT)	644
Y	5	1	**163-0829**	1	MANIFOLD GP-INLET (DOZER/WINCH BANK VALVE)	621
	6	1	**164-7677**	3	ROD	
	7	1	**9S-8002**	2	PLUG-O-RING	
	8	1	**1P-3702**	1	SEAL-RECTANGULAR	
	9	1	**1P-4577**	12	FLANGE-HALF	
	10	1	**1P-4578**	2	FLANGE-HALF	
	11	1	**3J-7354**	3	SEAL-O-RING	
	12	1	**4J-0522**	12	SEAL-O-RING	
	13	1	**4J-8997**	3	SEAL-O-RING	
	14	1	**169-9119**	1	COVER	
	15	1	**5S-7382**	24	BOLT (3/8-16X1.375 IN)	
	16	1	**6V-5555**	11	SEAL-O-RING	
	17	1	**6V-8188**	3	NUT (1/2-13 THD)	
	18	1	**7X-3392**	3	WASHER-HARD (13.5X22.5X3MM THK)	
	19	1	**8T-4896**	24	WASHER-HARD (10.2X18.5X2.5MM THK)	
	20	1	**8T-5360**	4	WASHER (12X22.5X2.5MM THK)	
	21	1	**8T-8916**	4	BOLT (7/16-14X1.5 IN)	
	22	1	**3J-1907**	1	SEAL-O-RING	
	23	1	**6V-0913**	1	SEAL-O-RING	
	24	1	**9S-4191**	1	PLUG-STRAIGHT THREAD	

Y-SEPARATE ILLUSTRATION

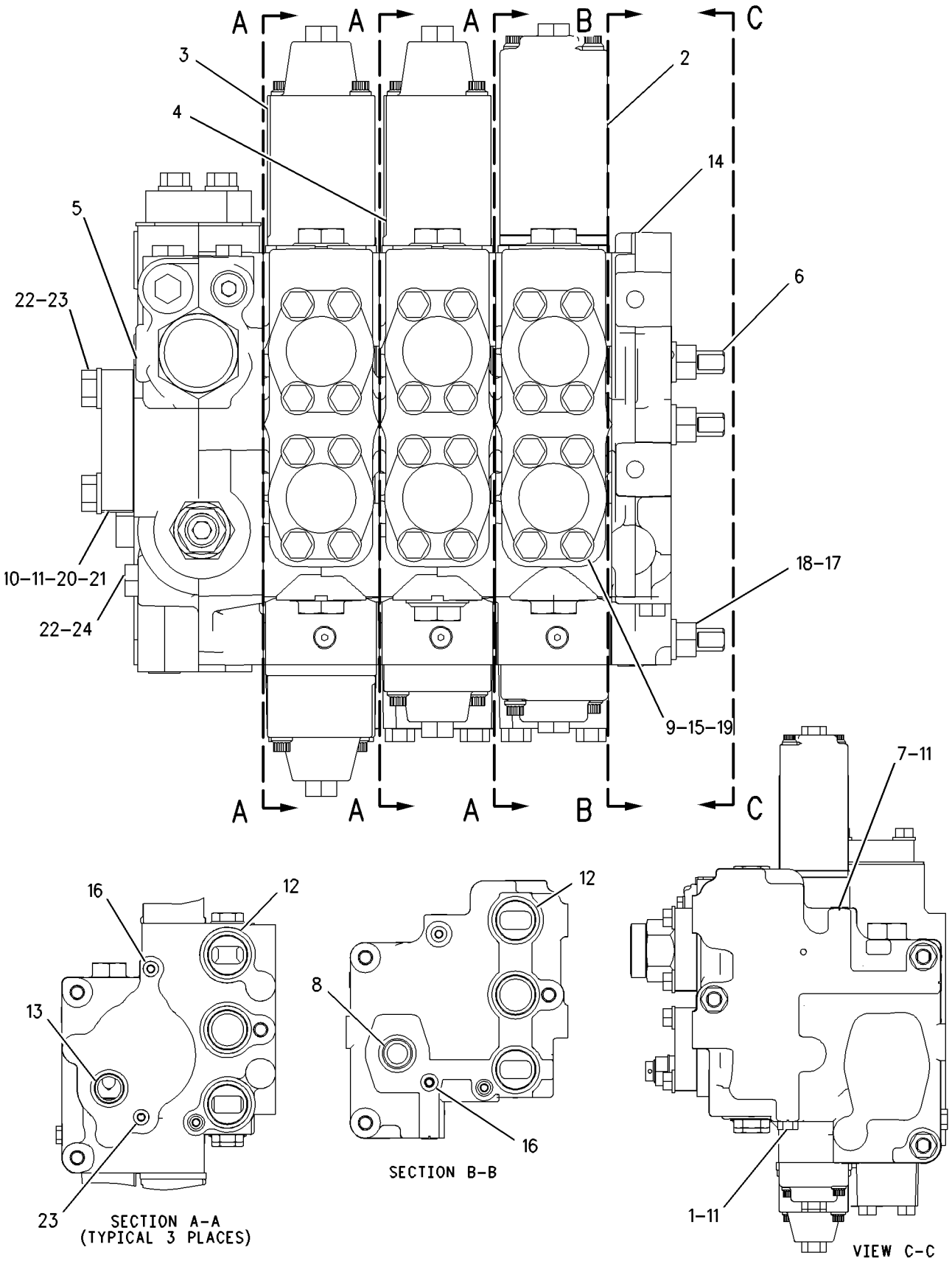

GRAPHIC #1

g00674035

HYDRAULIC SYSTEM

169-3323 VALVE GP-CONTROL

S/N: AKA1-UP

PART OF 160-5951 VALVE GP-CONTROL

SMCS-5051 **i01452734**

NOTE	REF NO	GRAPHIC REF	PART NUMBER	QTY	PART NAME 1 2 3 4 5 6 (PRODUCT LEVEL)	SEE PAGE
	1	1	**8T-2501**	2	BOLT (3/8-16X2 IN)	
	2	1	**4T-1108**	1	PLUG	
	3	1	**4T-1649**	1	HOUSING	
	4	1	**4T-1701**	1	SPRING	
	5	1	**4T-4511**	1	SLEEVE	
	6	1	**4T-4628**	6	SHIM (0.50MM THK)	
	7	1	**4T-4631**	1	SPRING	
	8	1	**173-0511**	1	HOUSING	
	9	1	**7M-8485**	1	SEAL-O-RING	
	10	1	**173-0514**	1	COVER	
	11	1	**4T-5074**	1	RING-BACKUP	
	12	1	**9J-8126**	1	PLUG-ORIFICE	
	13	1	**9S-8001**	2	PLUG	
	14	1	**174-2043**	2	BOLT (5/16-18X4 IN)	
	15	1	**100-8012**	1	BODY	
	16	1	**153-6976**	1	SPRING	
	17	1	**153-7067**	1	RETAINER	
	18	1	**153-7551**	1	RETAINER	
	19	1	**161-2684**	1	SCREW (3/8-24X2.87 IN)	
	20	1	**2S-2596**	2	SPRING	
	21	1	**9S-8002**	1	PLUG-O-RING	
	22	1	**100-8010**	2	VALVE	
	23	1	**100-8011**	1	PLUG	
B	24	1	**2J-2866**	2	SHIM (0.12MM THK)	
	25	1	**3J-7354**	1	SEAL-O-RING	
	26	1	**4J-5351**	1	SEAL-O-RING	
	27	1	**4J-7533**	2	SEAL-O-RING	
	28	1	**4K-1388**	2	SEAL-O-RING	
	29	1	**1T-0414**	2	BOLT-12 POINT HEAD (5/16-18X1 IN)	
Y	30	1	**4T-1860**	1	VALVE GP-SHUTTLE (BALL RESOLVER)	669
	31	1	**4T-5072**	1	RING-BACKUP	
	32	1	**4T-5073**	2	RING-BACKUP	
	33	1	**5M-2057**	2	SEAL-O-RING	
	34	1	**7J-9933**	2	SEAL-O-RING	
	35	1	**5K-0227**	1	SEAL-O-RING	
	36	1	**6V-5556**	1	SEAL-O-RING	
	37	1	**7J-0204**	1	SEAL-O-RING	

B-USE AS REQUIRED
Y-SEPARATE ILLUSTRATION

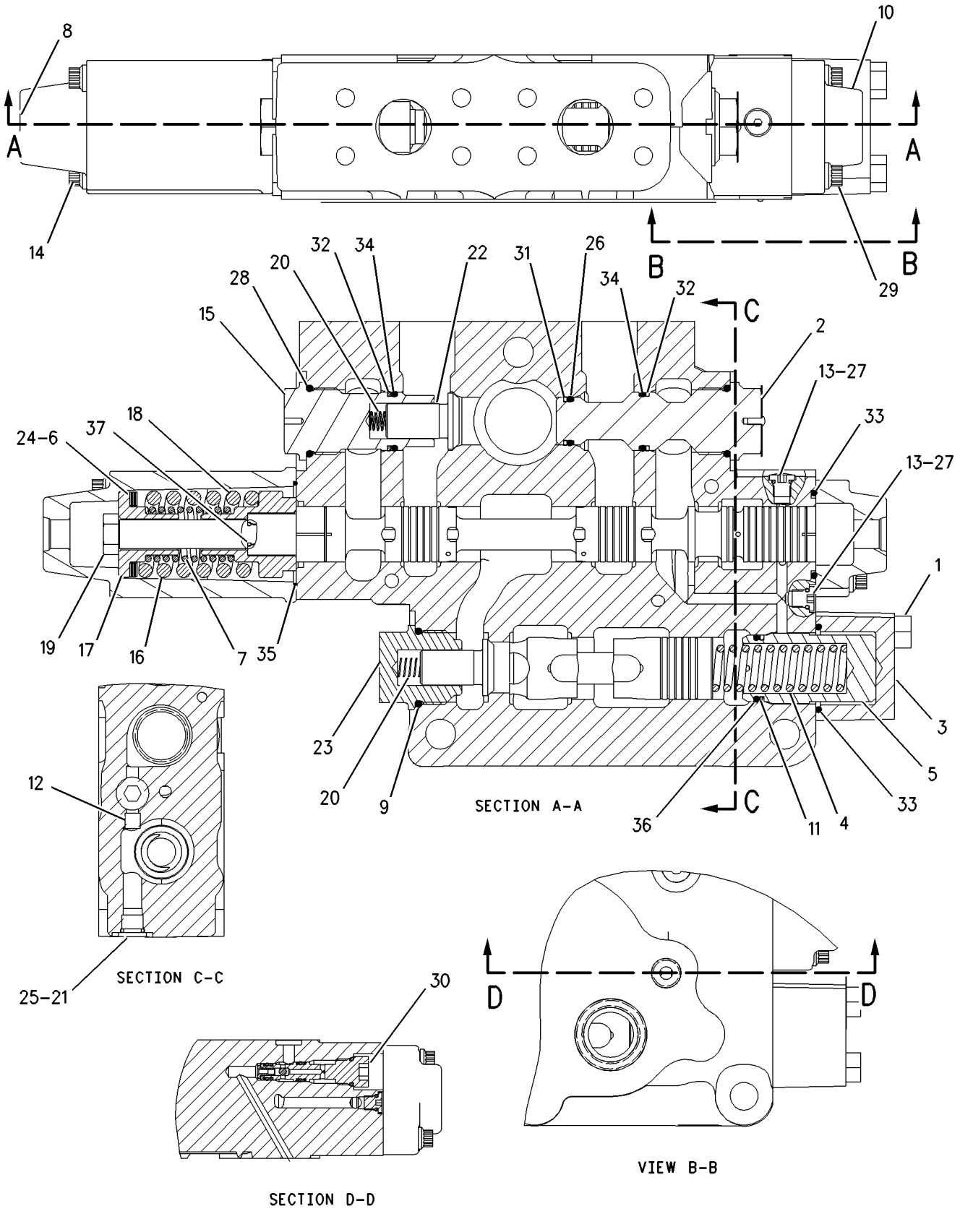

GRAPHIC #1 g00660492

162-0162 VALVE GP-MANIFOLD & REDUCING

S/N: AKA1-UP

PART OF 157-7329, 157-8029, 161-1014 LINES GP-PILOT

SMCS-3206 **i01452672**

NOTE	REF NO	GRAPHIC REF	PART NUMBER	QTY	PART NAME 1 2 3 4 5 6 (PRODUCT LEVEL)	SEE PAGE
	1	1	**158-9956**	1	VALVE-CHECK	
	2	1	**6E-5066**	1	SCREEN	
	3	1	**3K-0360**	1	SEAL-O-RING	
	4	1	**9S-8005**	1	PLUG	
Y	5	1	**170-3357**	1	VALVE GP-PRESSURE REDUCING	663
Y	6	1	**170-3360**	1	VALVE GP-RELIEF	668

Y-SEPARATE ILLUSTRATION

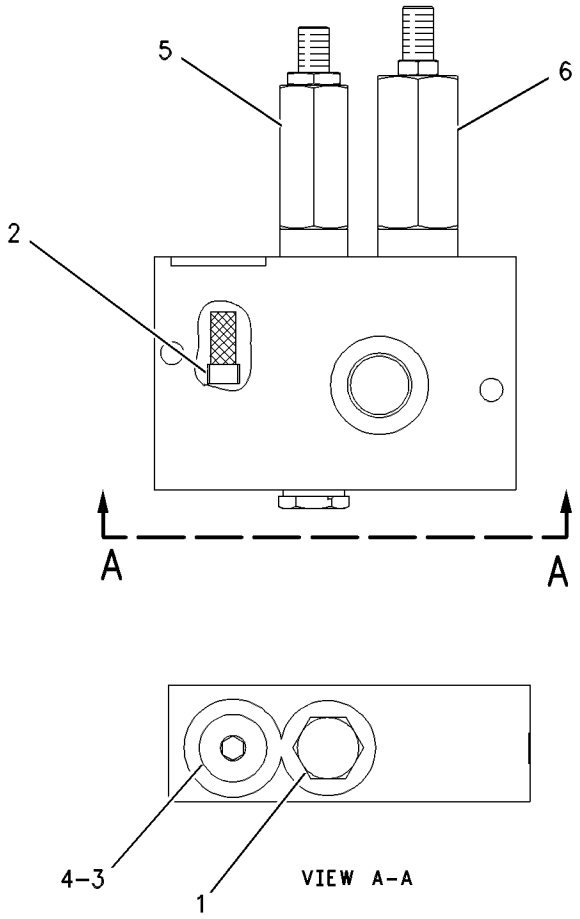

GRAPHIC #1 g00637822

MEMORANDA

HYDRAULIC SYSTEM

159-9549 VALVE GP-PILOT

S/N: AKA1-UP

PART OF 157-7331 CONTROL AR-PILOT HYDRAULIC

SMCS-5059 **i01488880**

NOTE	REF NO	GRAPHIC REF	PART NUMBER	QTY	PART NAME 1 2 3 4 5 6 (PRODUCT LEVEL)	SEE PAGE
Z	1	1		1	BODY	
	2	1	**141-4852**	1	BOOT	
	3	1	**145-2334**	1	ADAPTER	
	4	1	**163-5512**	2	GROMMET	
	5	1	**163-9308**	1	PLATE	
	6	1	**180-6152**	1	RETAINER	
Y	7	1	**194-5032**	1	VALVE GP-PILOT CARTRIDGE (DOZER RAISE)	660
Y	8	1	**194-5033**	1	VALVE GP-PILOT CARTRIDGE (DOZER TILT LEFT)	661
	9	1	**197-7947**	1	LEVER AS	
		1	**146-6315**	1	PIN	
		1	**4I-7837**	6	BALL	
		1	**146-6317**	1	WASHER	
		1	**159-3781**	1	SPRING	
M		1	**5C-2890**	4	NUT (M6X1 THD)	
		1	**199-6609**	1	SPACER	
	10	1	**9S-8004**	3	PLUG	
	11	1	**199-4147**	1	COIL AS	
BD		1	**6V-2689**		TUBE-SHRINKABLE	
		1	**8T-8729**	2	PIN-CONNECTOR	
	12	1	**136-9297**	1	PLATE	
	13	1	**136-9298**	1	RETAINER	
	14	1	**149-5470**	1	PLATE	
M	15	1	**191-8921**	4	BOLT-SOCKET HEAD (M6X1X25MM)	
	16	1	**102-8802**	1	KIT-RECEPTACLE (2 PIN)	
					(INCLUDES RECEPTACLE AS & WEDGE)	
	17	1	**3E-3365**	1	WEDGE-RECEPTACLE LOCK (2 PIN)	
	18	1	**3J-1907**	3	SEAL-O-RING	
	19	1	**3J-7354**	5	SEAL-O-RING	
	20	1	**8L-2786**	1	SEAL-O-RING	
	21	1	**9S-8002**	5	PLUG-O-RING	
Y	22	1	**194-5032**	1	VALVE GP-PILOT CARTRIDGE (DOZER LOWER)	660
Y	23	1	**194-5033**	1	VALVE GP-PILOT CARTRIDGE (DOZER TILT RIGHT)	661

B-USE AS REQUIRED
D-ORDER BY THE METER
M-METRIC PART
Y-SEPARATE ILLUSTRATION
Z-NOT SERVICED SEPARATELY

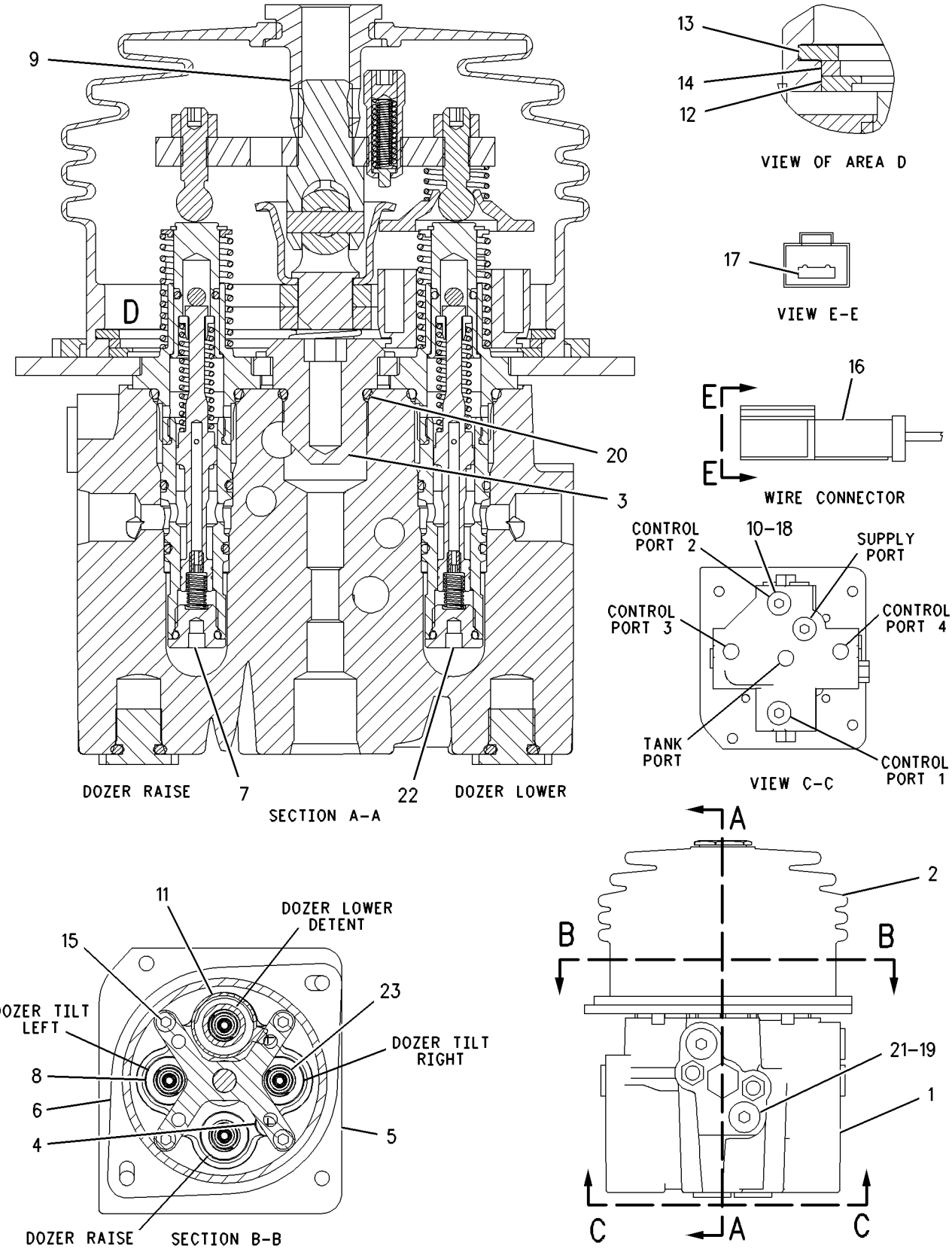

GRAPHIC #1

g00769418

HYDRAULIC SYSTEM

160-0766 VALVE GP-PILOT

S/N: AKA1-UP

PART OF 160-5560 CONTROL AR-PILOT HYDRAULIC

SMCS-5059 **i01502057**

NOTE	REF NO	GRAPHIC REF	PART NUMBER	QTY	PART NAME 1 2 3 4 5 6 (PRODUCT LEVEL)	SEE PAGE
E	1	1	**201-3304**		CONDUIT (5CM)	
	2	1	**141-4852**	1	BOOT	
	3	1	**145-2334**	1	ADAPTER	
	4	1	**160-0752**	1	PLATE	
	5	1	**163-5512**	2	GROMMET	
	6	1	**164-9657**	1	HANDLE GP-CONTROL (WINCH)	
		1	**8T-8730**	2	SOCKET-CONNECTOR	
		1	**155-2261**	2	WEDGE-PLUG LOCK (2 PIN)	
		1	**155-2270**	2	KIT-CONNECTING PLUG (2 PIN)	
					(EACH INCLUDES PLUG AS, WEDGE & INTERFACE SEAL)	
	7	1	**180-6152**	1	RETAINER	
	8	1	**188-2892**	1	LEVER AS-GATE	
M	8A	1	**5C-2890**	4	NUT (M6X1 THD)	
	8B	1	**146-6315**	4	PIN	
	8C	1	**146-6317**	1	WASHER	
	8D	1	**159-3781**	1	SPRING	
	9	1	**194-5031**	1	PLUNGER AS	
	9A	1	**3K-0360**	1	SEAL-O-RING	
	9B	1	**4K-2039**	1	SEAL-O-RING	
	9C	1	**6M-5062**	1	SEAL-O-RING	
	10	1	**9S-8002**	5	PLUG-O-RING	
	11	1	**9S-8004**	4	PLUG	
	12	1	**136-9297**	1	PLATE	
	13	1	**136-9298**	1	RETAINER	
	14	1	**137-9755**	1	COIL AS	
BD		1	**6V-2689**		TUBE-SHRINKABLE	
		1	**186-3735**	2	PIN-CONNECTOR	
	15	1	**149-5470**	1	PLATE	
M	16	1	**150-1293**	2	SCREW-BUTTON HEAD (M4X0.7X12MM)	
M	17	1	**191-8921**	4	BOLT-SOCKET HEAD (M6X1X25MM)	
	18	1	**102-8802**	2	KIT-RECEPTACLE (2 PIN)	
					(EACH INCLUDES RECEPTACLE AS & WEDGE)	
	19	1	**3E-3365**	1	WEDGE-RECEPTACLE LOCK (2 PIN)	
	20	1	**3J-1907**	4	SEAL-O-RING	
	21	1	**3J-7354**	5	SEAL-O-RING	
	22	1	**8L-2786**	1	SEAL-O-RING	
Y	23	1	**194-5033**	1	VALVE GP-PILOT CARTRIDGE (WINCH-FREE SPOOL)	661
Y	24	1	**194-5033**	1	VALVE GP-PILOT CARTRIDGE (WINCH SPOOL-OUT)	661
Y	25	1	**194-5033**	1	VALVE GP-PILOT CARTRIDGE (WINCH SPOOL-IN)	661
Z	26	1		1	BODY	

B-USE AS REQUIRED
D-ORDER BY THE METER
E-ORDER BY THE CENTIMETER
M-METRIC PART
Y-SEPARATE ILLUSTRATION
Z-NOT SERVICED SEPARATELY

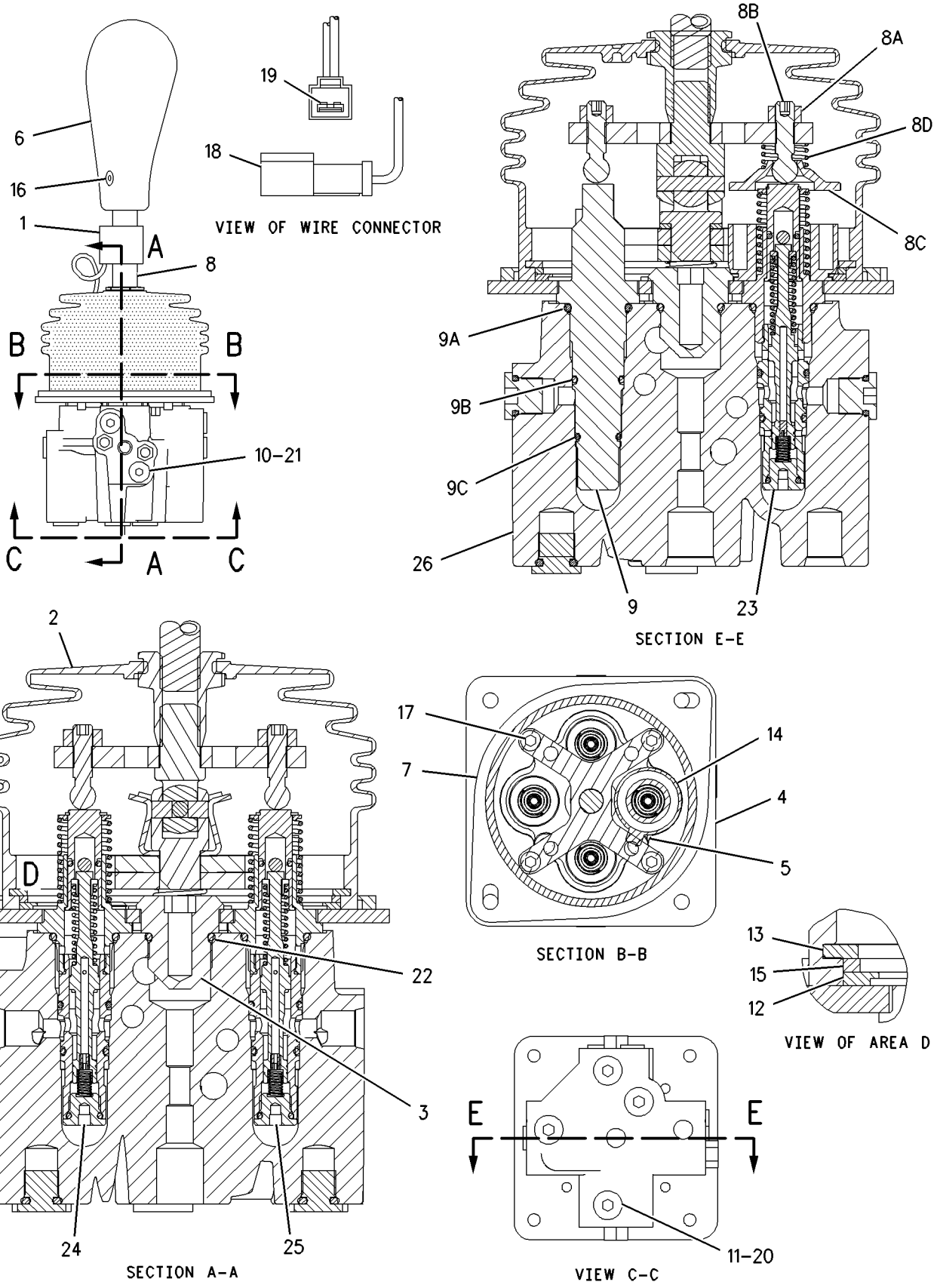

GRAPHIC #1

g00764294

184-5321 VALVE GP-PILOT

S/N: AKA1-UP

PART OF 157-7331 CONTROL AR-PILOT HYDRAULIC

SMCS-5059 **i01452745**

NOTE	REF NO	GRAPHIC REF	PART NUMBER	QTY	PART NAME 1 2 3 4 5 6 (PRODUCT LEVEL)	SEE PAGE
	1	1	**9S-8002**	4	PLUG-O-RING	
	2	1	**9S-8004**	4	PLUG	
	3	1	**188-2893**	1	LEVER AS-GATE	
	4	1	**180-7475**	1	PLATE AS	
	5	1	**180-7477**	1	SWIVEL AS	
	6	1	**188-2890**	1	PLATE AS	
M	7	1	**5C-2890**	4	NUT (M6X1 THD)	
M	8	1	**178-7877**	4	SETSCREW	
	9	1	**136-9298**	1	RETAINER	
	10	1	**141-4852**	1	BOOT	
	11	1	**145-2334**	1	ADAPTER	
	12	1	**149-5470**	1	PLATE	
Y	13	1	**194-5033**	1	VALVE GP-PILOT CARTRIDGE (RIPPER TIP-IN)	661
M	14	1	**191-8921**	4	BOLT-SOCKET HEAD (M6X1X25MM)	
	15	1	**3J-1907**	4	SEAL-O-RING	
	16	1	**3J-7354**	4	SEAL-O-RING	
	17	1	**160-0752**	1	PLATE	
	18	1	**163-5512**	2	GROMMET	
	19	1	**180-6152**	1	RETAINER	
	20	1	**8L-2786**	1	SEAL-O-RING	
	21	1	**136-9297**	1	PLATE	
Y	22	1	**194-5033**	1	VALVE GP-PILOT CARTRIDGE (RIPPER TIP-OUT)	661
Y	23	1	**194-5033**	1	VALVE GP-PILOT CARTRIDGE (RIPPER LOWER)	661
Y	24	1	**194-5033**	1	VALVE GP-PILOT CARTRIDGE (RIPPER LIFT)	661

M-METRIC PART
Y-SEPARATE ILLUSTRATION

184-5321 VALVE GP-PILOT *(contd.)* i01452745

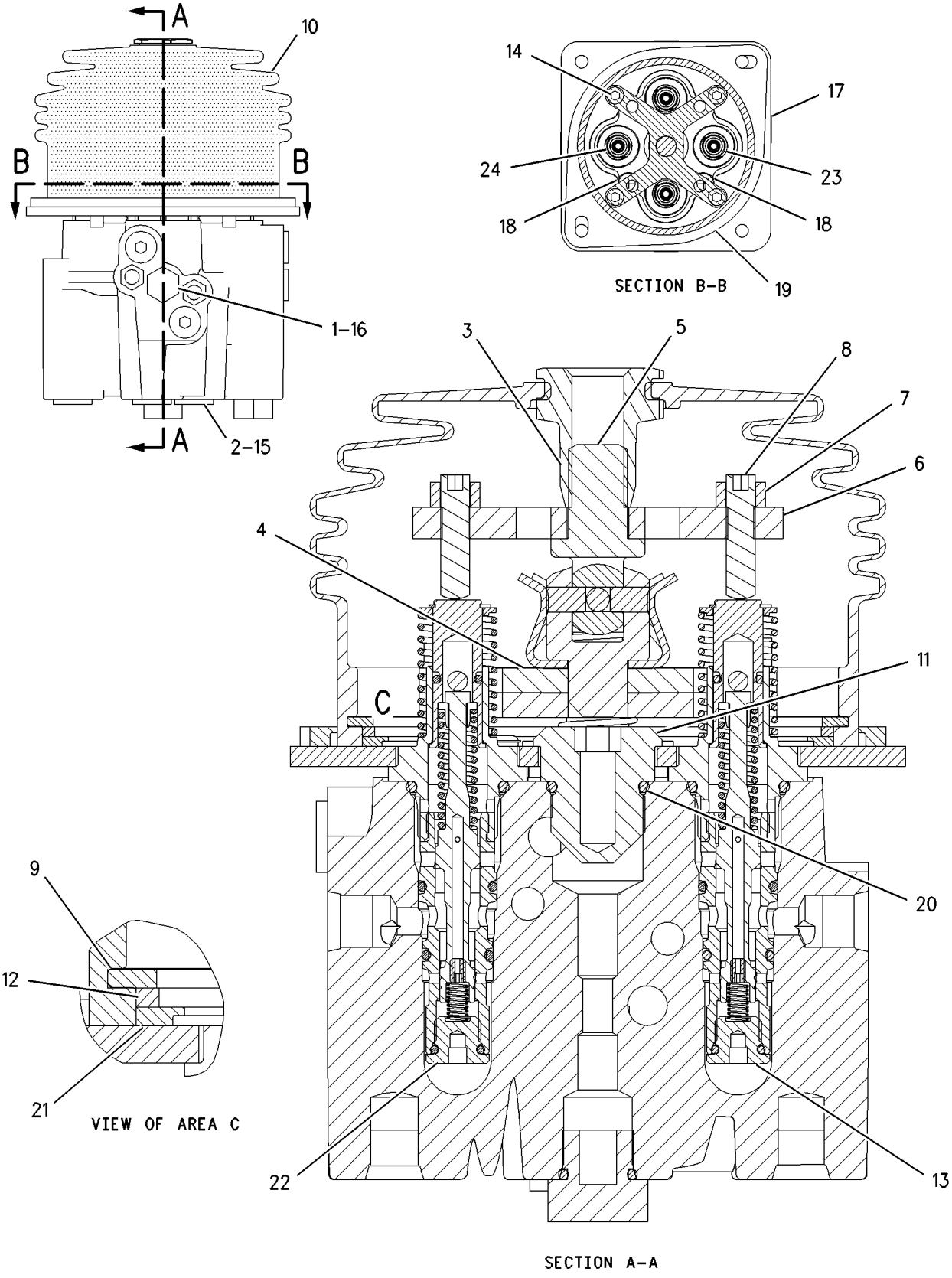

GRAPHIC #1 g00726875

HYDRAULIC SYSTEM

200-0189 VALVE GP-PILOT

S/N: AKA1-UP

PART OF 157-0824, 160-5560 CONTROL AR-PILOT HYDRAULIC

SMCS-5059 **i01487122**

NOTE	REF NO	GRAPHIC REF	PART NUMBER	QTY	PART NAME 1 2 3 4 5 6 (PRODUCT LEVEL)	SEE PAGE
Z	1	1		1	BODY	
	2	1	**141-4852**	1	BOOT	
	3	1	**145-2334**	1	ADAPTER	
	4	1	**163-5512**	2	GROMMET	
	5	1	**163-9308**	1	PLATE	
	6	1	**180-6152**	1	RETAINER	
Y	7	1	**194-5032**	1	VALVE GP-PILOT CARTRIDGE (DOZER RAISE)	660
Y	8	1	**194-5033**	1	VALVE GP-PILOT CARTRIDGE (DOZER TILT LEFT)	661
	9	1	**196-5515**	1	LEVER AS	
	9A	1	**146-6315**	3	PIN	
	9B	1	**199-7834**	1	DETENT AS	
		1	**199-7830**	1	DETENT	
		1	**8S-7499**	2	PIN-SPRING	
		1	**202-0599**	1	SPRING	
	9C	1	**146-6317**	1	WASHER	
	9D	1	**159-3781**	1	SPRING	
M	9E	1	**5C-2890**	3	NUT (M6X1 THD)	
M	9F	1	**191-8920**	2	BOLT-SOCKET HEAD (M6X1X12MM)	
	10	1	**199-7833**	1	PLATE	
	11	1	**9S-8004**	3	PLUG	
	12	1	**200-5003**	8	SHIM (0.25MM THK)	
	13	1	**136-9297**	1	PLATE	
	14	1	**136-9298**	1	RETAINER	
	15	1	**137-9755**	1	COIL AS	
BD		1	**6V-2689**		TUBE-SHRINKABLE	
		1	**8T-8729**	2	PIN-CONNECTOR	
	16	1	**149-5470**	1	PLATE	
M	17	1	**191-8921**	4	BOLT-SOCKET HEAD (M6X1X25MM)	
	18	1	**102-8802**	1	KIT-RECEPTACLE (2 PIN)	
					(INCLUDES RECEPTACLE AS & WEDGE)	
	19	1	**3E-3365**	1	WEDGE-RECEPTACLE LOCK (2 PIN)	
	20	1	**3J-1907**	3	SEAL-O-RING	
	21	1	**3J-7354**	5	SEAL-O-RING	
	22	1	**8L-2786**	1	SEAL-O-RING	
	23	1	**9S-8002**	5	PLUG-O-RING	
Y	24	1	**194-5032**	1	VALVE GP-PILOT CARTRIDGE (DOZER LOWER)	660
Y	25	1	**194-5033**	1	VALVE GP-PILOT CARTRIDGE (DOZER TILT RIGHT)	661

B-USE AS REQUIRED
D-ORDER BY THE METER
M-METRIC PART
Y-SEPARATE ILLUSTRATION
Z-NOT SERVICED SEPARATELY

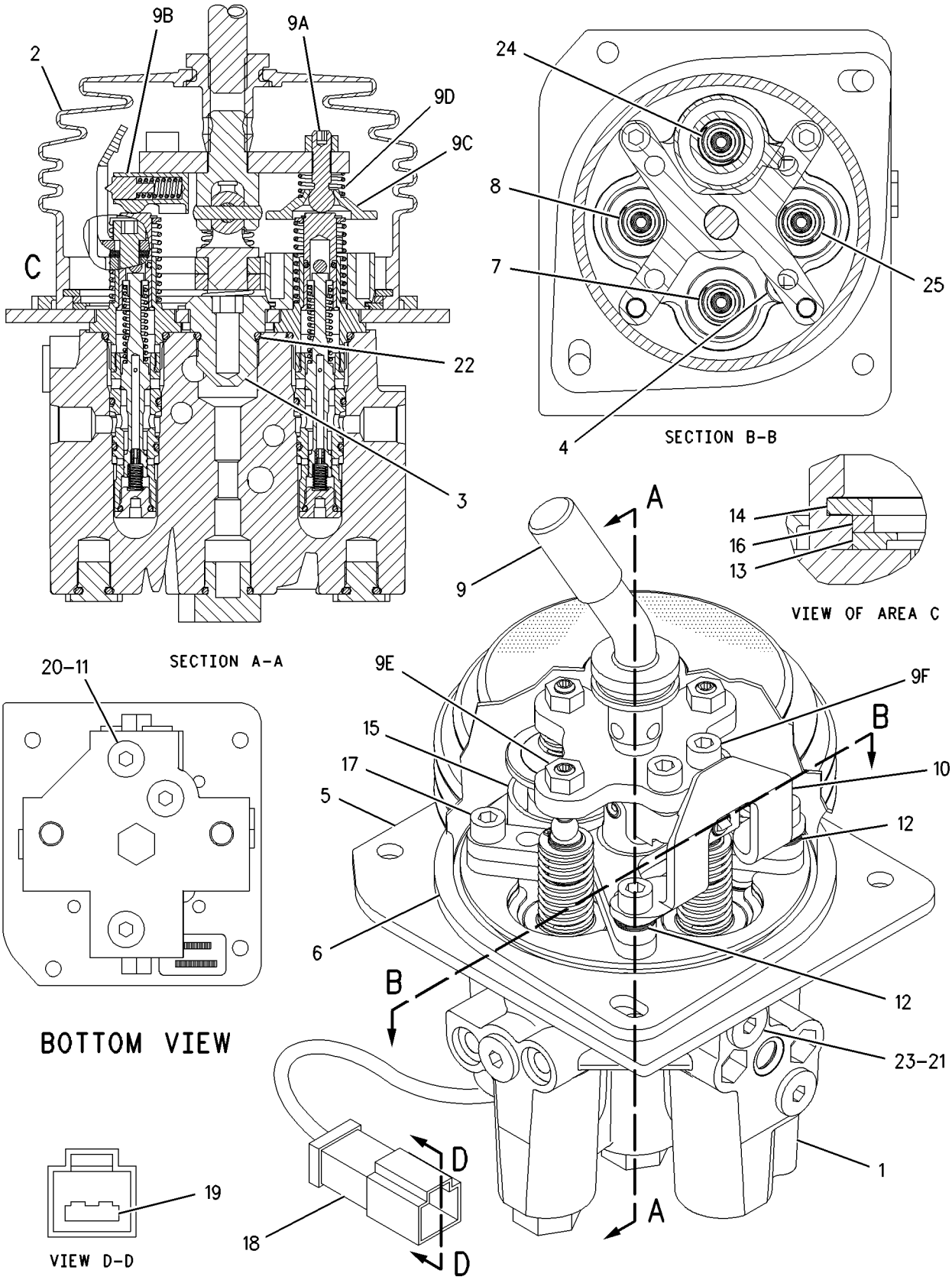

GRAPHIC #1

g00767886

HYDRAULIC SYSTEM

194-5032 VALVE GP-PILOT CARTRIDGE

S/N: AKA1-UP

PART OF 159-9549, 200-0189 VALVE GP-PILOT

SMCS-5059 **i01439589**

NOTE	REF NO	GRAPHIC REF	PART NUMBER	QTY	PART NAME 1 2 3 4 5 6 (PRODUCT LEVEL)	SEE PAGE
	1	1	**157-2153**	1	SPRING	
	2	1	**136-9304**	1	ADAPTER	
	3	1	**145-8707**	1	SPRING	
	4	1	**146-6316**	2	RETAINER	
	5	1	**146-6319**	1	RETAINER	
	6	1	**153-8925**	1	STOP	
	7	1	**116-4527**	1	ORIFICE	
	8	1	**146-6318**	1	PLUNGER	
	9	1	**191-3029**	1	SPOOL	
	10	1	**153-8926**	1	SPRING	
	11	1	**191-3028**	1	CAGE	
	12	1	**1M-6718**	1	BALL	
	13	1	**2H-3429**	1	RING-RETAINING	
	14	1	**3K-0360**	1	SEAL-O-RING (16.36MM ID)	
	15	1	**4K-2039**	1	SEAL-O-RING (12.42MM ID)	
	16	1	**6M-5062**	1	SEAL-O-RING (10.82MM ID)	
	17	1	**7I-6601**	1	SEAL-O-RING (6.73MM ID)	
	18	1	**7J-0204**	1	SEAL-O-RING (7.65MM ID)	

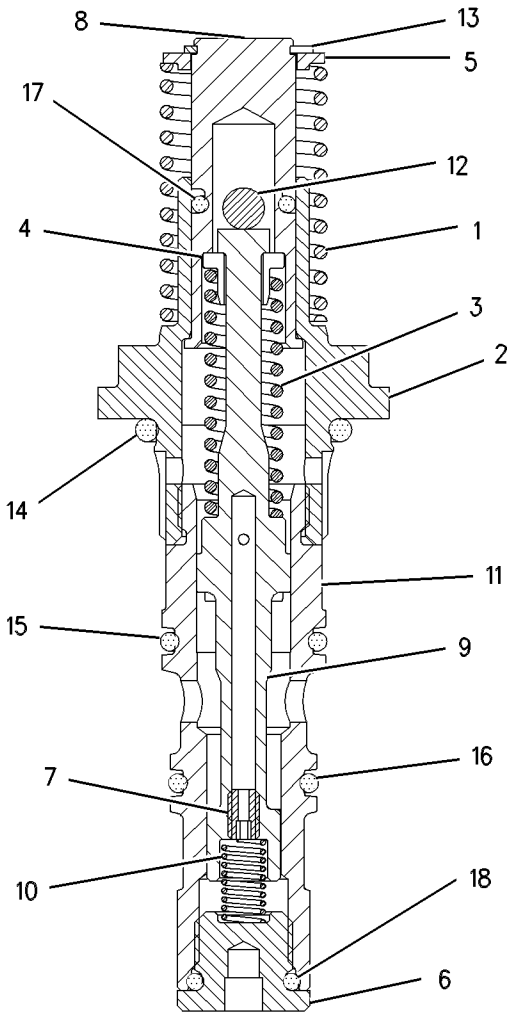

GRAPHIC #1 g00577903

194-5033 VALVE GP-PILOT CARTRIDGE

S/N: AKA1-UP

PART OF 159-9549, 160-0766, 184-5321, 200-0189 VALVE GP-PILOT

SMCS-5059 **i01439601**

NOTE	REF NO	GRAPHIC REF	PART NUMBER	QTY	PART NAME 1 2 3 4 5 6 (PRODUCT LEVEL)	SEE PAGE
	1	1	**157-2153**	1	SPRING	
	2	1	**136-9304**	1	ADAPTER	
	3	1	**141-5151**	1	SPRING	
	4	1	**146-6316**	2	RETAINER	
	5	1	**146-6319**	1	RETAINER	
	6	1	**153-8925**	1	STOP	
	7	1	**116-4527**	1	ORIFICE	
	8	1	**146-6318**	1	PLUNGER	
	9	1	**191-3029**	1	SPOOL	
	10	1	**153-8926**	1	SPRING	
	11	1	**191-3028**	1	CAGE	
	12	1	**1M-6718**	1	BALL	
	13	1	**2H-3429**	1	RING-RETAINING	
	14	1	**3K-0360**	1	SEAL-O-RING (16.36MM ID)	
	15	1	**4K-2039**	1	SEAL-O-RING (12.42MM ID)	
	16	1	**6M-5062**	1	SEAL-O-RING (10.82MM ID)	
	17	1	**7I-6601**	1	SEAL-O-RING (6.73MM ID)	
	18	1	**7J-0204**	1	SEAL-O-RING (7.65MM ID)	

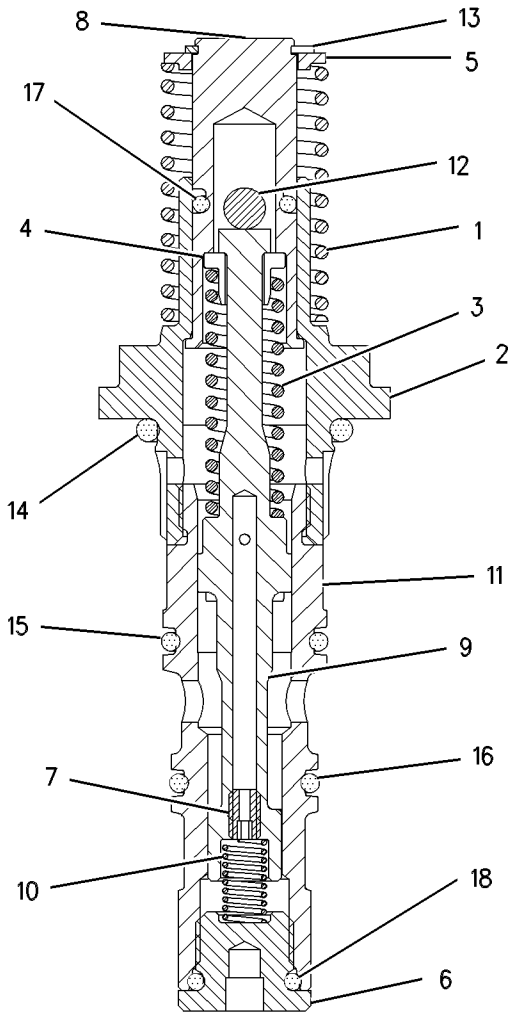

GRAPHIC #1 g00577903

HYDRAULIC SYSTEM

6E-6044 VALVE GP-PRESS & FLOW CMPNSTR

S/N: AKA1-UP

PART OF 9T-8346 PUMP GP-PISTON

SMCS-5086 **i01040075**

NOTE	REF NO	GRAPHIC REF	PART NUMBER	QTY	PART NAME 1 2 3 4 5 6 (PRODUCT LEVEL)	SEE PAGE
	1	1	**108-4814**	1	BODY-COMPENSATOR	
	2	1	**9S-4191**	1	PLUG-O-RING (9/16-18 THD)	
	3	1	**3J-1907**	3	SEAL-O-RING (11.89MM ID)	
	4	1	**6E-4241**	1	SPOOL-MARGIN	
	5	1	**9T-2186**	2	PLUG	
	6	1	**6E-4239**	1	SPOOL-CUTOFF	
	7	1	**6E-4230**	2	GUIDE-SPRING	
	8	1	**6E-4228**	1	SPRING-CUTOFF	
	9	1	**6E-6140**	1	PLUG-COMPENSATOR	
		1	**033-6036**	1	SEAL-O-RING (23.47MM ID)	
	10	1	**6E-6420**	1	VALVE-NEEDLE	
	11	1	**6E-6141**	2	LOCKNUT-SEALING	
M	12	1	**129-7632**	2	SCREW-ADJUSTMENT	
	13	1	**6E-6142**	1	PLUG-MARGIN	
		1	**033-6027**	1	SEAL-O-RING (19.18MM ID)	
	14	1	**6E-6419**	1	RING	
		1	**9X-7680**	1	SEAL-O-RING	
	15	1	**6E-4246**	1	SPRING-MARGIN	
	16	1	**6E-4318**	1	PIN-SPRING STOP	
	17	1	**6E-4242**	2	GUIDE-SPRING	

M-METRIC PART

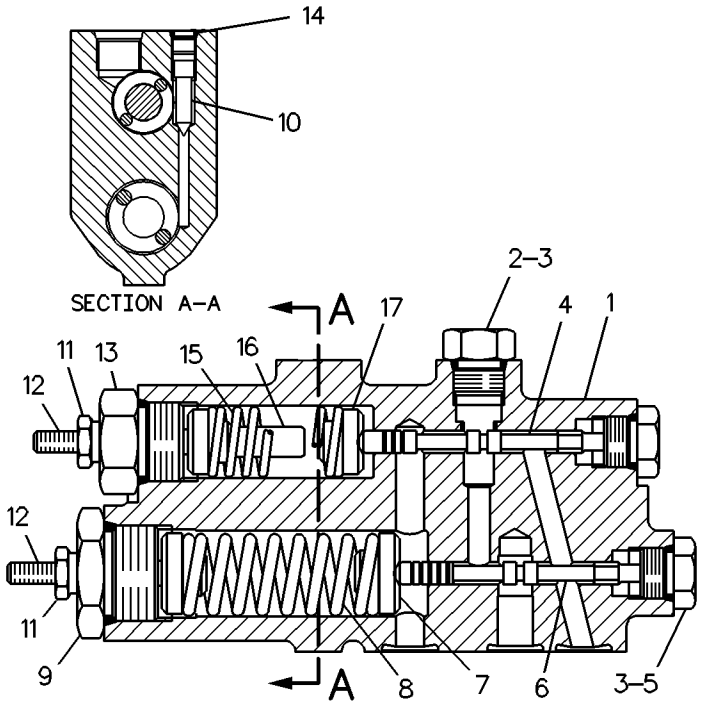

GRAPHIC #1 g00227058

170-3357 VALVE GP-PRESSURE REDUCING

S/N: AKA1-UP

PART OF 162-0162 VALVE GP-MANIFOLD & REDUCING

SMCS-5117 **i01452696**

NOTE	REF NO	GRAPHIC REF	PART NUMBER	QTY	PART NAME 1 2 3 4 5 6 (PRODUCT LEVEL)	SEE PAGE
	1	1	**3K-0360**	1	SEAL-O-RING	
	2	1	**161-6149**	1	SEAL-O-RING	
	3	1	**095-1750**	1	SEAL-O-RING	
	4	1	**161-6161**	2	RING-BACKUP	
	5	1	**187-0541**	2	RING-BACKUP	

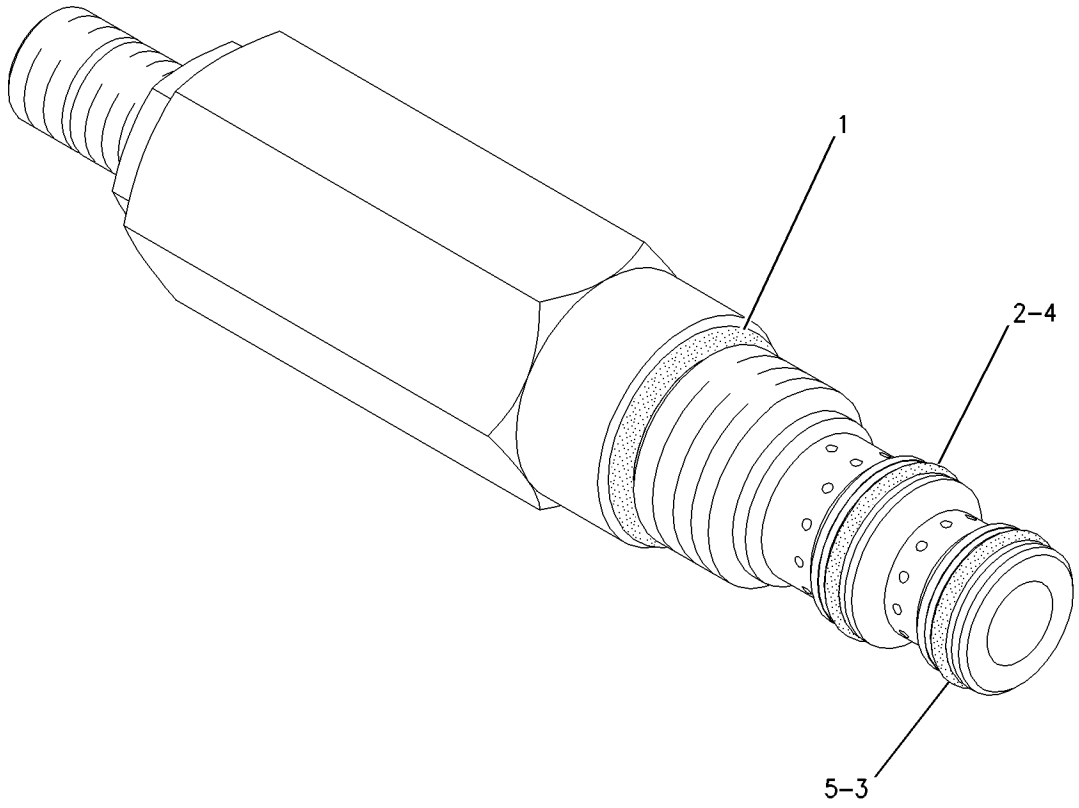

GRAPHIC #1 g00777733

HYDRAULIC SYSTEM

109-6942 VALVE GP-QUICK-DROP

S/N: AKA1-UP

PART OF 157-7324 LINES GP-BULLDOZER MANIFOLD

SMCS-5110 **i01140715**

NOTE	REF NO	GRAPHIC REF	PART NUMBER	QTY	PART NAME 1 2 3 4 5 6 (PRODUCT LEVEL)	SEE PAGE
	1	1	**9S-8003**	2	PLUG-O-RING (1/2-20 THD)	
		1	**1J-9671**	2	SEAL-O-RING (10.52MM ID)	
	2	1	**1P-3706**	2	SEAL (57.9MM ID)	
	3	1	**1P-4577**	12	FLANGE-HALF	
	4	1	**9S-8006**	1	PLUG-O-RING (7/8-14 THD)	
		1	**2M-9780**	1	SEAL-O-RING (19.18MM ID)	
	5	1	**3L-3813**	1	PIN	
B	6	1	**083-7784**	2	SHIM (2.0MM THK)	
B	7	1	**4M-6980**	3	SHIM (.25MM THK)	
B	8	1	**4T-4659**	3	SHIM (.80MM THK)	
	9	1	**5S-7382**	24	BOLT (3/8-16X34.92)	
		1	**8T-4896**	24	WASHER-HARD (2.5MM THK)	
	10	1	**6E-4532**	1	COVER	
	11	1	**6E-4533**	1	COVER	
	12	1	**6E-4907**	1	STOP	
	13	1	**6K-8162**	1	RING-RETAINING	
	14	1	**7B-7525**	8	BOLT-SOCKET HEAD (7/16-14X1.25IN)	
	15	1	**9T-9836**	1	SLEEVE-ORIFICE	
	16	1	**108-1847**	1	SPRING	
	17	1	**100-6211**	1	PISTON	

B-USE AS REQUIRED

109-6942 VALVE GP-QUICK-DROP *(contd.)* i01140715

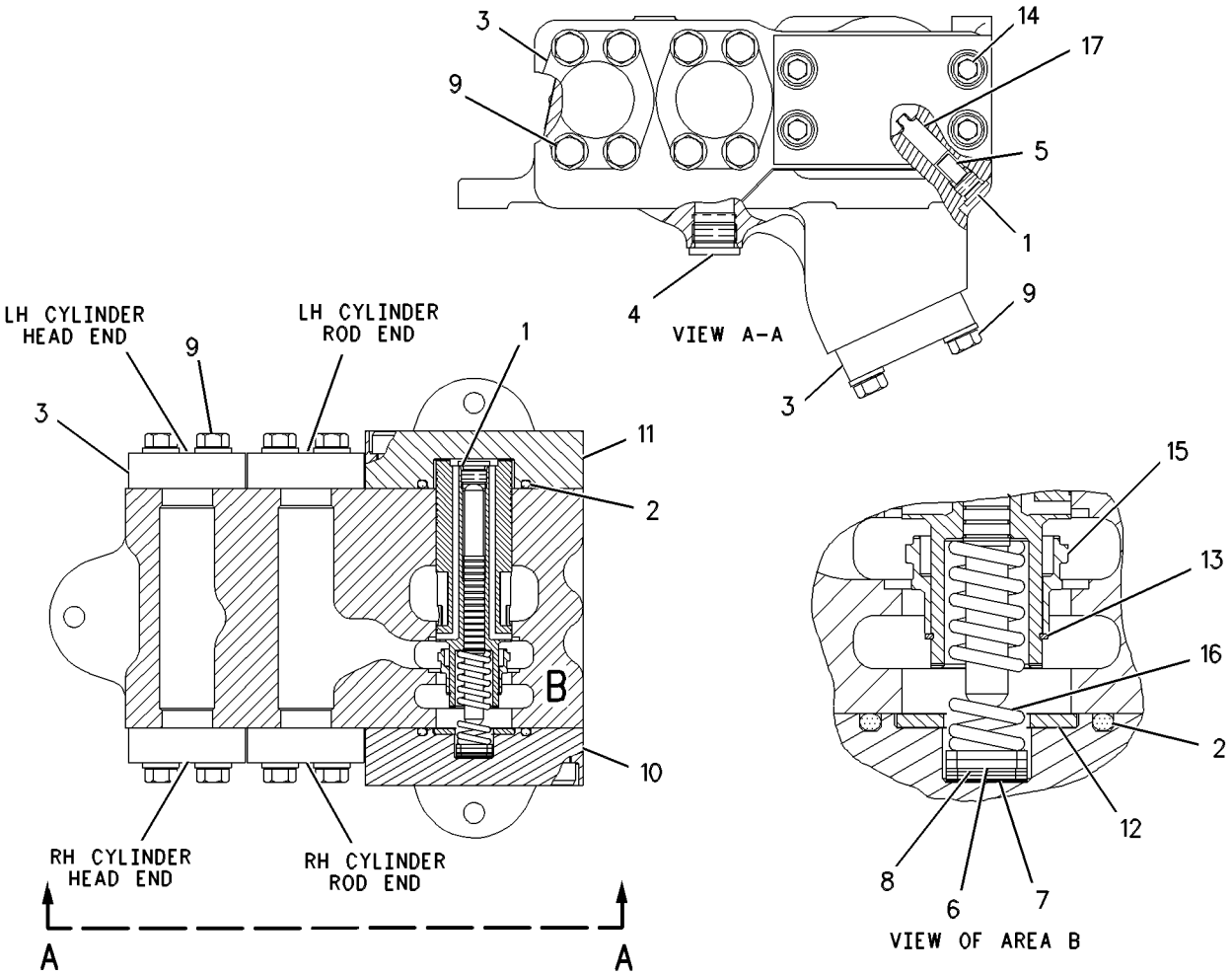

GRAPHIC #1 g00604229

HYDRAULIC SYSTEM

4T-4935 VALVE GP-RELIEF

S/N: AKA1-UP
DIRECT OPERATED
PART OF 163-0829 MANIFOLD GP-INLET

SMCS-5069, 5117 **i00131002**

NOTE	REF NO	GRAPHIC REF	PART NUMBER	QTY	PART NAME 1 2 3 4 5 6 (PRODUCT LEVEL)	SEE PAGE
	1	1	**6E-1835**	1	RETAINER AS	
	2	1	**9X-6395**	1	NUT-ORFS (3/4-16 THD)	
	3	1	**7J-9933**	1	SEAL-O-RING (21.89MM ID)	
	4	1	**4T-7571**	1	PLATE	
	5	1	**6J-6439**	1	VALVE	
	6	1	**3K-0360**	2	SEAL-O-RING (16.36MM ID)	
	7	1	**4T-4942**	1	SPRING	

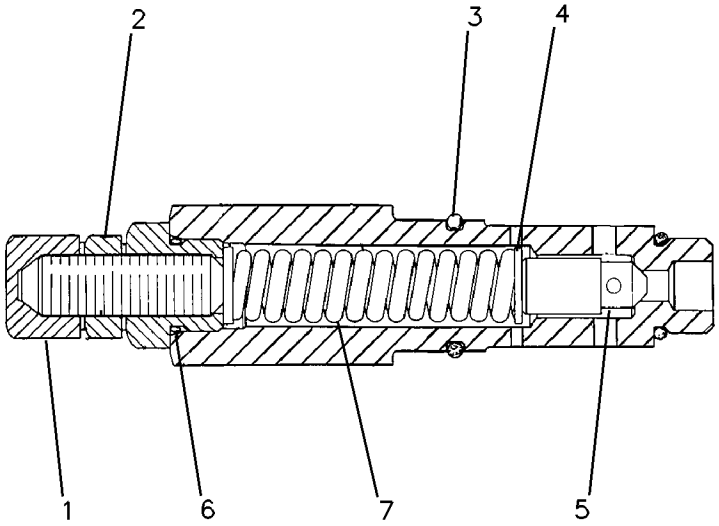

GRAPHIC #1 g00082648

104-7574 VALVE GP-RELIEF

S/N: AKA1-UP

PART OF 163-0829 MANIFOLD GP-INLET

SMCS-5069, 5117 **i00569772**

NOTE	REF NO	GRAPHIC REF	PART NUMBER	QTY	PART NAME 1 2 3 4 5 6 (PRODUCT LEVEL)	SEE PAGE
	1	1	**106-3922**	1	PLUG	
	2	1	**7M-8485**	2	SEAL-O-RING (29.74MM ID)	
	3	1	**4T-1009**	1	VALVE GP	
	4	1	**4T-5075**	1	RING-BACKUP	
	5	1	**6V-5393**	1	SEAL-O-RING	
	6	1	**4T-1011**	1	RING-SEAL	
	7	1	**5F-7054**	1	SEAL-O-RING (18.6MM ID)	
	8	1	**4T-1005**	1	SPRING	
B	9	1	**5S-7001**	4	SPACER (.91MM THK)	

B-USE AS REQUIRED

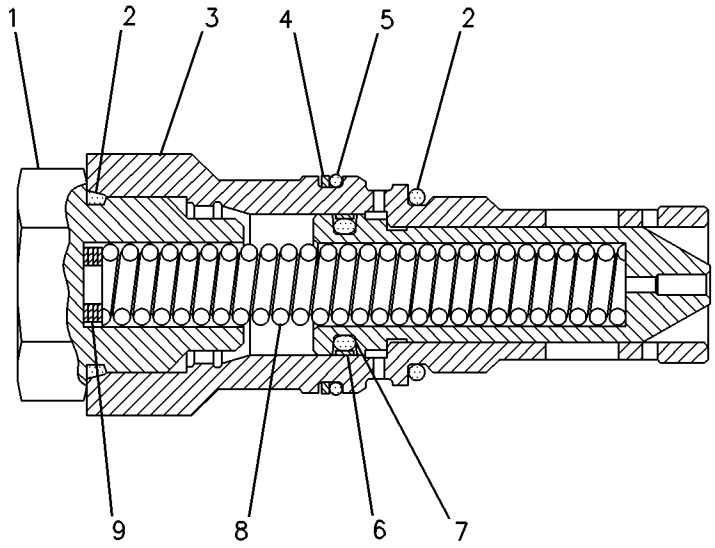

GRAPHIC #1 g00233165

170-3360 VALVE GP-RELIEF

S/N: AKA1-UP

PART OF 162-0162 VALVE GP-MANIFOLD & REDUCING

SMCS-5069, 5117 **i01452700**

NOTE	REF NO	GRAPHIC REF	PART NUMBER	QTY	PART NAME 1 2 3 4 5 6 (PRODUCT LEVEL)	SEE PAGE
	1	1	**161-6149**	1	SEAL-O-RING	
	2	1	**161-6161**	2	RING-BACKUP	
	3	1	**2M-9780**	1	SEAL-O-RING	
					AVAILABLE REPAIR KIT(S):	
			133-5545	1	KIT-SEAL	

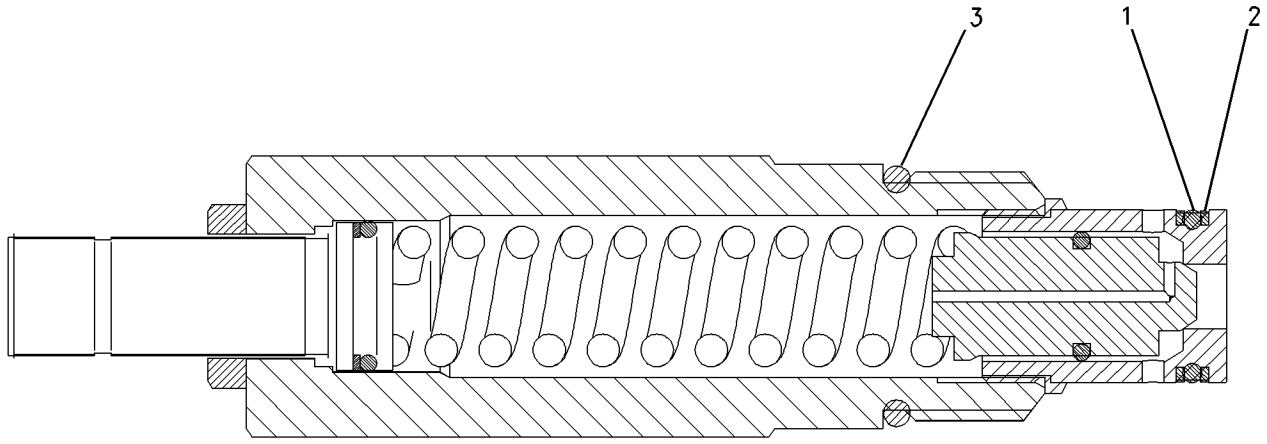

GRAPHIC #1 g00732207

HYDRAULIC SYSTEM

4T-1860 VALVE GP-SHUTTLE

S/N: AKA1-UP

BALL RESOLVER

PART OF 124-2906, 160-5953, 160-5954, 169-3323 VALVE GP-CONTROL

SMCS-5079 **i01502182**

NOTE	REF NO	GRAPHIC REF	PART NUMBER	QTY	PART NAME 1 2 3 4 5 6 (PRODUCT LEVEL)	SEE PAGE
Z	1	1		1	SEAT	
	2	1	**1M-6718**	1	BALL	
Z	3	1		1	VALVE	
	4	1	**8C-3085**	1	SEAL-O-RING	
	5	1	**6V-5586**	1	SEAL-O-RING	
	6	1	**3J-1907**	1	SEAL-O-RING	
	7	1	**4T-5070**	2	RING-BACKUP	
	8	1	**4T-5071**	2	RING-BACKUP	

Z-NOT SERVICED SEPARATELY

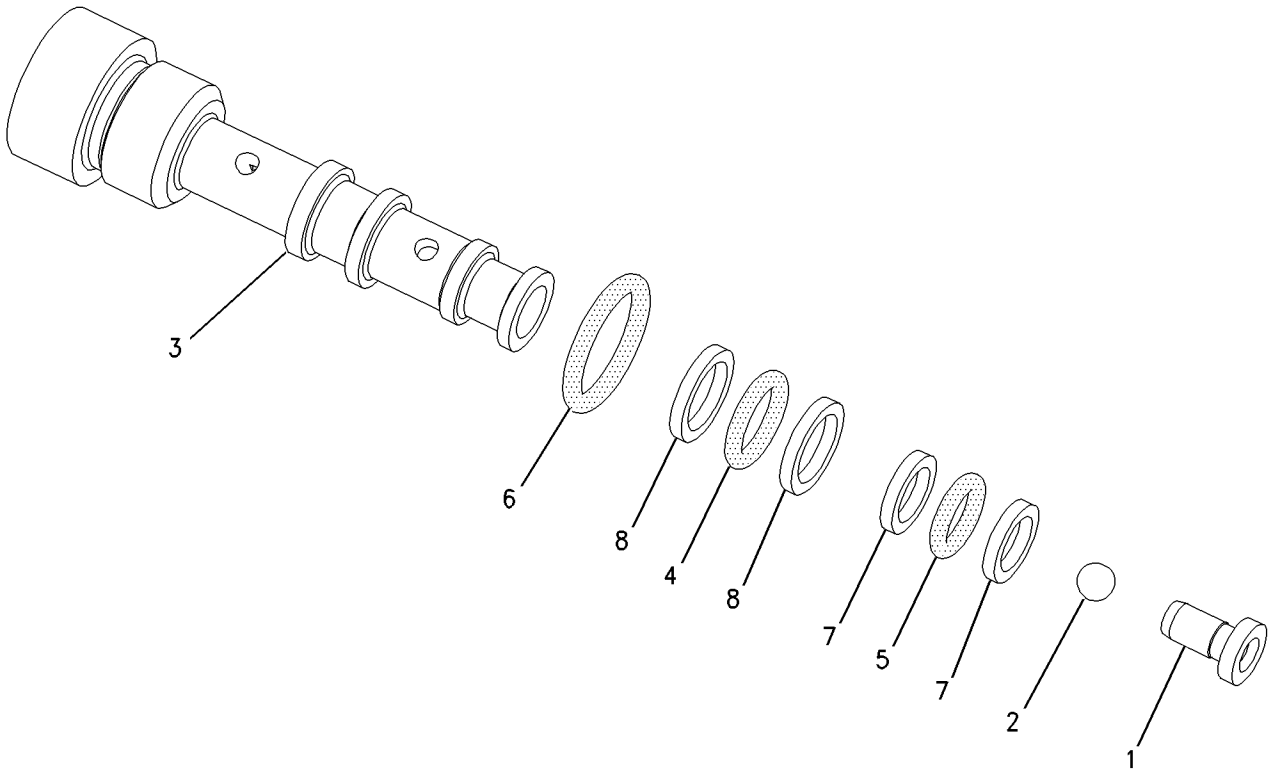

GRAPHIC #1 g00775006

3E-8575 VALVE GP-SOLENOID

S/N: AKA1-UP

PART OF 188-6140 VALVE & MTG GP-CONTROL

SMCS-5479 **i01488918**

NOTE	REF NO	GRAPHIC REF	PART NUMBER	QTY	PART NAME 1 2 3 4 5 6 (PRODUCT LEVEL)	SEE PAGE
	1	1	**6T-3382**	1	CARTRIDGE AS	
	2	1	**160-5843**	1	WASHER-IDENTIFICATION	
	3	1	**157-2284**	1	LOCKNUT-SPECIAL (5/8-18 THD)	
	4	1	**160-5844**	1	SPRING-BELLEVILLE	
	5	1	**3E-8581**	1	COIL AS	
	6	1	**102-8804**	1	KIT-RECEPTACLE (4 PIN)	
					(INCLUDES RECEPTACLE AS & WEDGE)	
	7	1	**186-3735**	4	PIN-CONNECTOR	
	8	1	**1S-9593**	2	STRAP-CABLE	
	9	1	**3E-3377**	1	WEDGE-RECEPTACLE LOCK	
					AVAILABLE REPAIR KIT(S):	
			126-5948	1	KIT-SEAL	
					(INCLUDES SEALS & RINGS)	

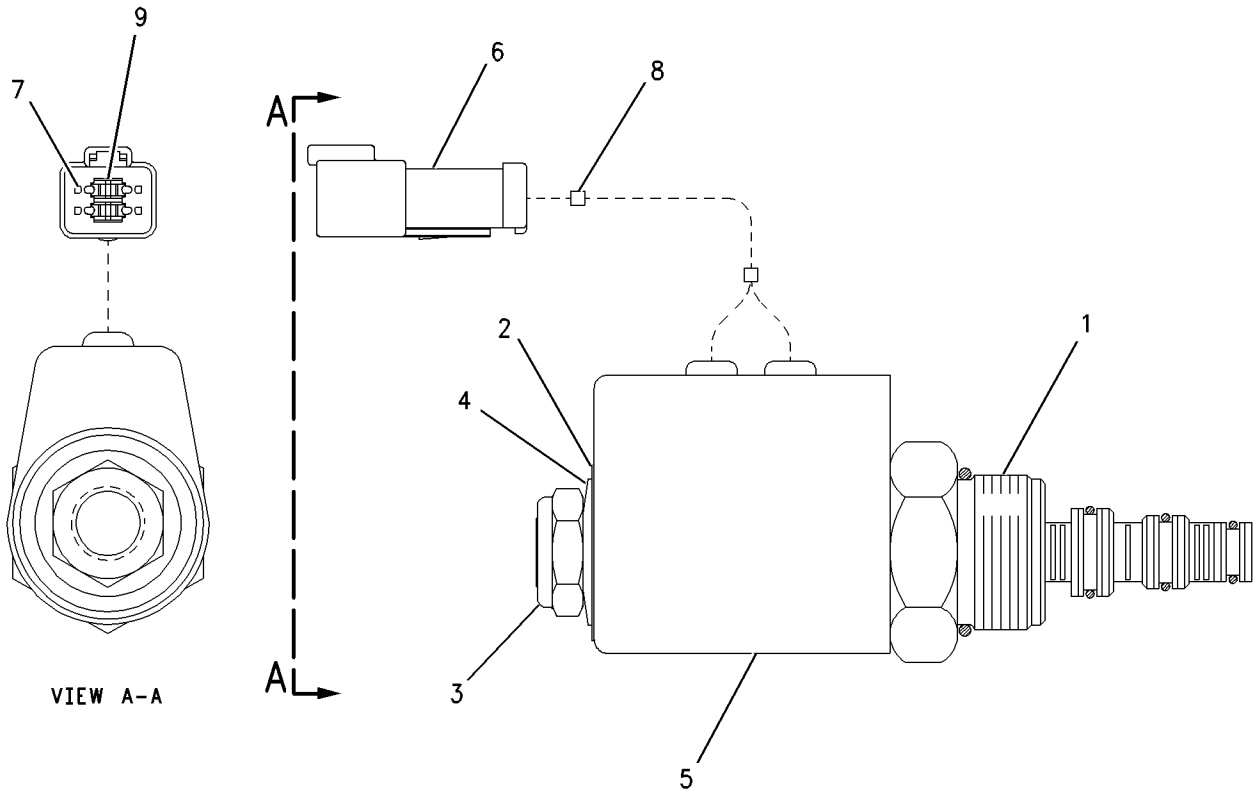

GRAPHIC #1 g00623320

3E-9205 VALVE GP-SOLENOID

S/N: AKA1-UP
24 VOLT
PART OF 143-7770 FAN AR-VARIABLE

SMCS-5479 **i01229572**

NOTE	REF NO	GRAPHIC REF	PART NUMBER	QTY	PART NAME 1 2 3 4 5 6 (PRODUCT LEVEL)	SEE PAGE
	1	1	**6T-9244**	1	CARTRIDGE AS	
	2	1	**3E-8581**	1	COIL AS	
	3	1	**102-8804**	1	KIT-RECEPTACLE (4 PIN)	
					(INCLUDES RECEPTACLE AS & WEDGE)	
		1	**3E-3377**	1	WEDGE-RECEPTACLE LOCK	
		1	**8T-8729**	4	PIN-CONNECTOR	
	4	1	**1S-9593**	2	STRAP-CABLE (0.62IN DIA)	
	5	1	**157-2284**	1	LOCKNUT-SPECIAL (5/8-18 THD)	
	6	1	**160-5843**	1	WASHER-IDENTIFICATION	
	7	1	**160-5844**	1	SPRING-BELLEVILLE	
					AVAILABLE REPAIR KIT(S):	
			6T-3381	1	KIT-SEAL	

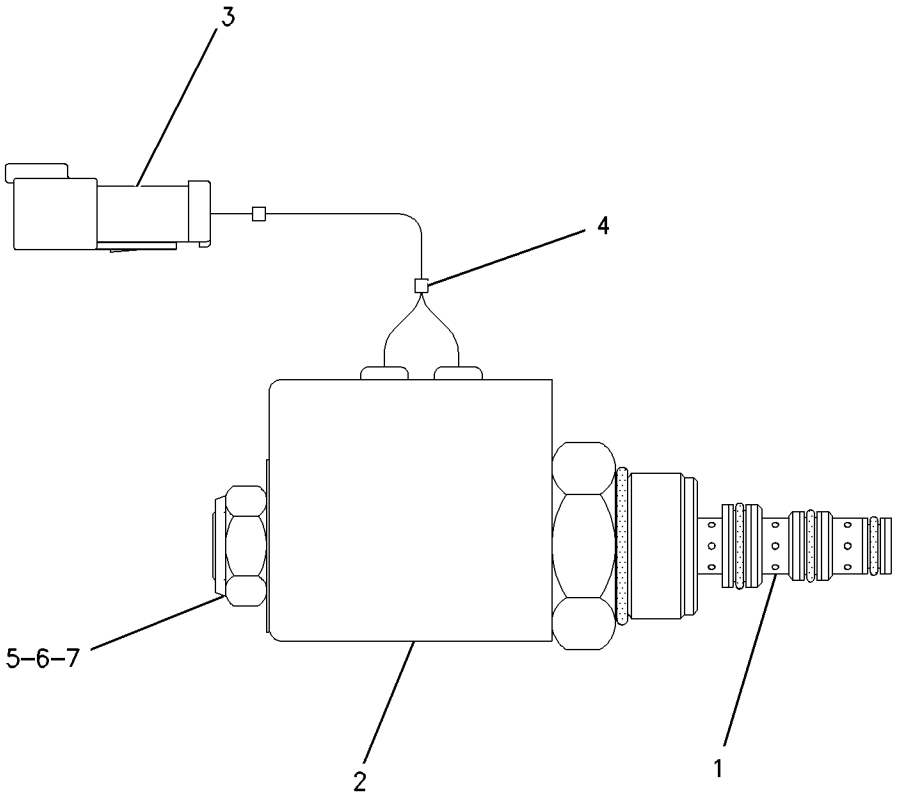

GRAPHIC #1 g00657410

151-2979 BLOCK GP-PUSH

S/N: 3MP1-UP

PART OF 163-9464 BLADE & EDGE GP

SMCS-6062 **i01239674**

NOTE	REF NO	GRAPHIC REF	PART NUMBER	QTY	PART NAME 1 2 3 4 5 6 (PRODUCT LEVEL)	SEE PAGE
	1	1	**3B-4628**	2	COTTER	
	2	1	**4F-0255**	2	PIN	
	3	1	**151-2980**	1	BLOCK AS-PUSH	
		1	**1J-3508**	1	EYE-LIFTING	
		1	**151-2984**	2	BRACKET	
	4	1	**3F-6185**	2	PIN	

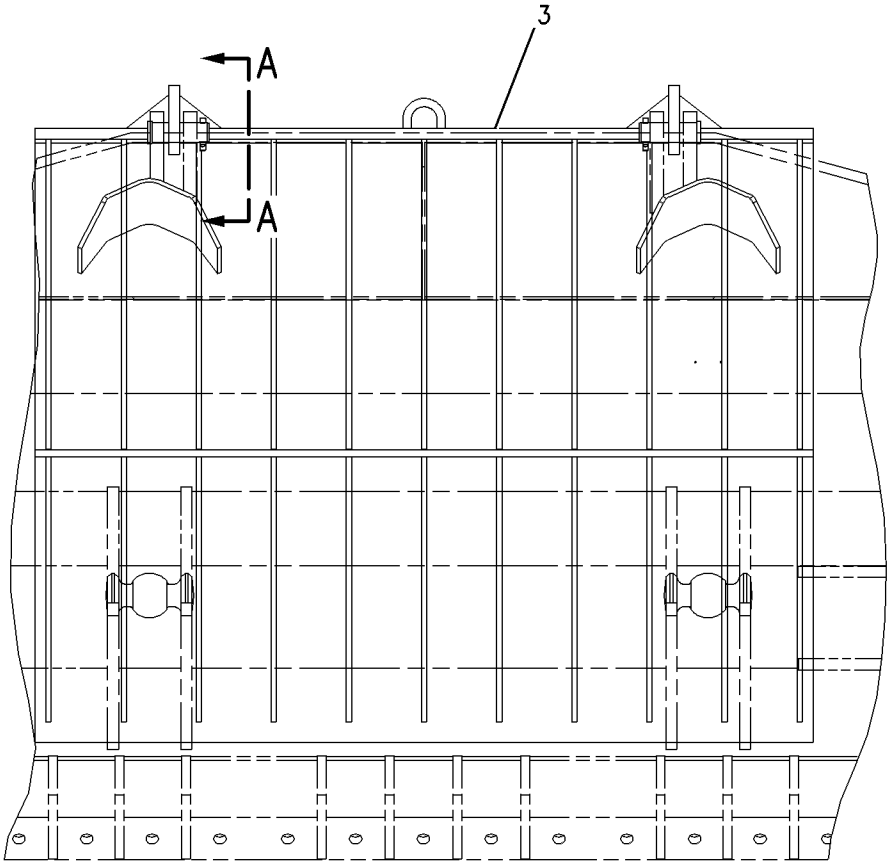

REAR VIEW

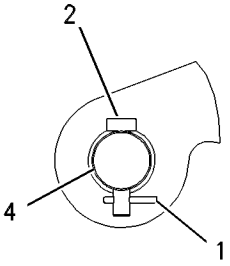

VIEW A-A

GRAPHIC #1 g00662953

8E-6439 BRACE GP-BULLDOZER

S/N: BHR1-UP
MANUAL TILT
PART OF 159-8153 BRACE GP-BULLDOZER

SMCS-6074 **i00935758**

NOTE	REF NO	GRAPHIC REF	PART NUMBER	QTY	PART NAME 1 2 3 4 5 6 (PRODUCT LEVEL)	SEE PAGE
	1	1	**8E-6176**	1	SCREW	
	2	1	**160-6309**	1	CAP-BEARING	
	3	1	**8J-9152**	1	SCREW-ADJUSTMENT	
B	4	1	**8J-9180**	28	SHIM (.02IN THK EACH)	
M	5	1	**8T-4001**	4	NUT (M24X3.00 THD)	
M	6	1	**7X-2567**	4	BOLT (M24X3X160 MM)	
	7	1	**3B-8489**	2	FITTING-GREASE	
	8	1	**9W-4931**	1	BRACE AS	
	9	1	**8J-4867**	1	LUG	
	10	1	**7T-9153**	1	HANDLE	

B-USE AS REQUIRED
M-METRIC PART

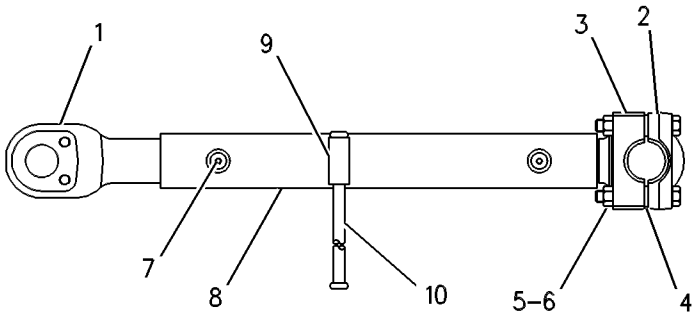

GRAPHIC #1 g00471930

159-8153 BRACE GP-BULLDOZER

S/N: BHR1-UP

PART OF 159-8377, 159-8378 BULLDOZER AR

SMCS-6074 **i01442126**

NOTE	REF NO	GRAPHIC REF	PART NUMBER	QTY	PART NAME 1 2 3 4 5 6 (PRODUCT LEVEL)	SEE PAGE
	1	1	**3G-7016**	2	PIN	
	2	1	**3J-5190**	2	CAP-BEARING	
		1	**8E-5818**	14	SHIM	
	3	1	**5P-0370**	2	LOCKPIN	
	4	1	**6J-5179**	2	RETAINER	
B	5	1	**8E-5818**	56	SHIM	
Y	6	1	*8E-6439*	2	BRACE GP-BULLDOZER	673
	7	1	**156-4125**	1	ARM AS-LH	
	8	1	**156-4126**	1	ARM AS-RH	
					(EACH ARM AS INCLUDES)	
		1	**9W-4414**	2	PLATE	
		1	**156-4124**	1	NUT	
		1	**156-4127**	1	BEARING	
		1	**156-4128**	1	END AS	
		1	**4J-4968**	2	LOCK RING	
		1	**7T-9147**	1	BEARING	
		1	**163-5116**	1	BRACKET AS	
	9	1	**158-3653**	2	PIN	
	10	1	**158-3657**	2	BALLSTUD	
M	11	1	**7X-2574**	4	BOLT (M24X3.0X45MM)	
M	12	1	**8T-4175**	8	BOLT (M16X2.0X90MM)	

B-USE AS REQUIRED
M-METRIC PART
Y-SEPARATE ILLUSTRATION

159-8153 **BRACE GP-BULLDOZER** *(contd.)* **i01442126**

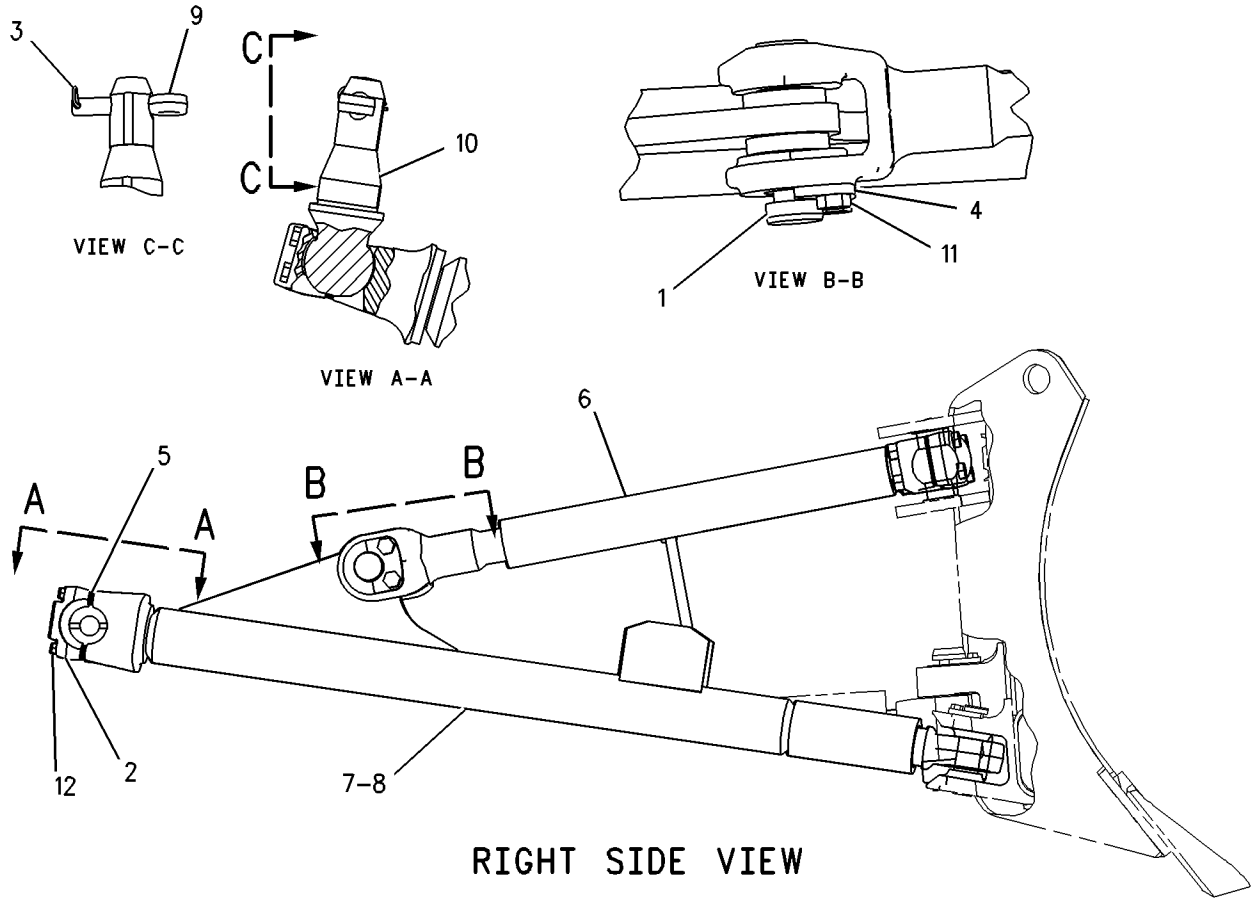

GRAPHIC #1 g00672327

IMPLEMENTS

159-1633 BULLDOZER AR

S/N: CXL1-UP

SMCS-6050 **i01496542**

NOTE	PART NUMBER	QTY	PART NAME 1 2 3 4 5 6 (PRODUCT LEVEL)	SEE PAGE
Y	**8E-6150**	1	BLADE GP-UNIVERSAL	726
Y	*201-5703*	1	LINES GP-TILT CYLINDER	618
Y	**5P-4963**	1	PLATE & FILM GP	878
Y	**118-3173**	1	PUSH ARM GP-STABILIZER	701
Y	**9W-8276**	1	TRUNNION GP-BULLDOZER	704

Y-SEPARATE ILLUSTRATION

159-8377 BULLDOZER AR

S/N: BHR1-UP

SMCS-6050 **i01477877**

NOTE	PART NUMBER	QTY	PART NAME 1 2 3 4 5 6 (PRODUCT LEVEL)	SEE PAGE
Y	*151-1151*	1	BLADE GP-ANGLING	724
Y	*159-8153*	1	BRACE GP-BULLDOZER	674
Y	*159-8142*	1	C-FRAME GP	682
Y	*108-6979*	1	CYLINDER & LINES GP-LIFT	556
Y	*108-6980*	1	CYLINDER & LINES GP-LIFT	558
Y	*159-0068*	1	LIGHTING GP-FRONT	252
Y	*6I-8788*	1	MOUNTING GP-CYLINDER	693
Y	*5P-4963*	1	PLATE & FILM GP	878
Y	*9W-8276*	1	TRUNNION GP-BULLDOZER	704

Y-SEPARATE ILLUSTRATION

IMPLEMENTS

159-8378 BULLDOZER AR

S/N: BHR1-UP

ANGLING

SMCS-6050 **i01442288**

NOTE	PART NUMBER	QTY	PART NAME 1 2 3 4 5 6 (PRODUCT LEVEL)	SEE PAGE
Y	*151-1151*	1	BLADE GP-ANGLING	724
Y	*159-8153*	1	BRACE GP-BULLDOZER	674
Y	*159-8142*	1	C-FRAME GP	682
Y	*5P-4963*	1	PLATE & FILM GP	878
Y	*9W-8276*	1	TRUNNION GP-BULLDOZER	704

Y-SEPARATE ILLUSTRATION

163-9463 BULLDOZER AR

S/N: 3MP1-UP

PUSH BLOCK

FOR USE WITH SEMI-UNIVERSAL BULLDOZER

SMCS-6050 **i01239761**

NOTE	PART NUMBER	QTY	PART NAME 1 2 3 4 5 6 (PRODUCT LEVEL)	SEE PAGE
Y	*163-9464*	1	BLADE & EDGE GP	715

Y-SEPARATE ILLUSTRATION

IMPLEMENTS

159-1628 BULLDOZER AR-SEMI-UNIVERSAL

S/N: BHW1-UP

SMCS-6050, 6078 **i01497638**

NOTE	PART NUMBER	QTY	PART NAME 1 2 3 4 5 6 (PRODUCT LEVEL)	SEE PAGE
Y	*8E-6151*	1	BLADE GP-SEMI-UNIVERSAL	725
Y	*108-6979*	1	CYLINDER & LINES GP-LIFT	556
Y	*108-6980*	1	CYLINDER & LINES GP-LIFT	558
Y	*159-0068*	1	LIGHTING GP-FRONT	252
Y	*201-5703*	1	LINES GP-TILT CYLINDER	618
Y	*6I-8788*	1	MOUNTING GP-CYLINDER	693
Y	*5P-4963*	1	PLATE & FILM GP	878
Y	*118-3173*	1	PUSH ARM GP-STABILIZER	701
Y	*9W-8276*	1	TRUNNION GP-BULLDOZER	704

Y-SEPARATE ILLUSTRATION

IMPLEMENTS

159-1629 BULLDOZER AR-UNIVERSAL

S/N: CXB1-UP

SMCS-6050, 6053 **i01496432**

NOTE	PART NUMBER	QTY	PART NAME 1 2 3 4 5 6 (PRODUCT LEVEL)	SEE PAGE
Y	**8E-6150**	1	BLADE GP-UNIVERSAL	726
Y	**108-6979**	1	CYLINDER & LINES GP-LIFT	556
Y	**108-6980**	1	CYLINDER & LINES GP-LIFT	558
Y	*159-0068*	1	LIGHTING GP-FRONT	252
Y	*201-5703*	1	LINES GP-TILT CYLINDER	618
Y	**6I-8788**	1	MOUNTING GP-CYLINDER	693
Y	**5P-4963**	1	PLATE & FILM GP	878
Y	**118-3173**	1	PUSH ARM GP-STABILIZER	701
Y	**9W-8276**	1	TRUNNION GP-BULLDOZER	704

Y-SEPARATE ILLUSTRATION

IMPLEMENTS

159-8142 C-FRAME GP

S/N: BHR1-UP

PART OF 159-8377, 159-8378 BULLDOZER AR

SMCS-6063 **i01478783**

NOTE	REF NO	GRAPHIC REF	PART NUMBER	QTY	PART NAME 1 2 3 4 5 6 (PRODUCT LEVEL)	SEE PAGE
	1	1	**3G-9571**	2	KEY	
	2	1	**193-3063**	2	CAP-BEARING	
B	3	1	**9W-7602**	56	SHIM (.8MM THK)	
	4	1	**159-8125**	1	PIN-PIVOT	
M	5	1	**8T-4131**	32	NUT (M20X2.5 THD)	
M	6	1	**3E-9850**	4	BOLT (M30X3.5X220MM)	
	7	1	**163-2013**	1	RETAINER	
M	8	1	**7X-2562**	2	BOLT (M20X2.5X45MM)	
M	9	1	**7X-2565**	32	BOLT (M20X2.5X100MM)	
	10	1	**195-6283**	4	NUT-SQUARE (M30X3.5 THD)	
	11	1	**8T-4123**	64	WASHER-PLATED (22X35X3.5MM THK)	
	12	1	**159-8143**	1	C-FRAME AS (LH)	
	13	1	**1J-6744**	1	BEARING	
	14	1	**1U-2533**	1	BAR	
	15	1	**3G-9626**	1	END-JOINT	
	16	1	**7T-5140**	1	STEP	
	17	1	**8E-6443**	1	TRUNNION AS	
	18	1	**8P-9770**	1	PLATE	
	19	1	**159-8144**	1	C-FRAME AS (RH)	
	20	1	**1J-6744**	1	BEARING	
	21	1	**1U-2533**	1	BAR	
	22	1	**7T-5140**	1	STEP	
	23	1	**8E-6444**	1	TRUNNION AS	
	24	1	**8P-9770**	1	PLATE	
	25	1	**159-8939**	1	ADAPTER AS	
		1	**160-1660**	2	BEARING-SLEEVE	
	26	1	**5M-6214**	1	PLUG-PIPE	
	27	1	**9X-8258**	4	WASHER (33X56X6MM THK)	

B-USE AS REQUIRED
M-METRIC PART

159-8142 **C-FRAME GP** *(contd.)* **i01478783**

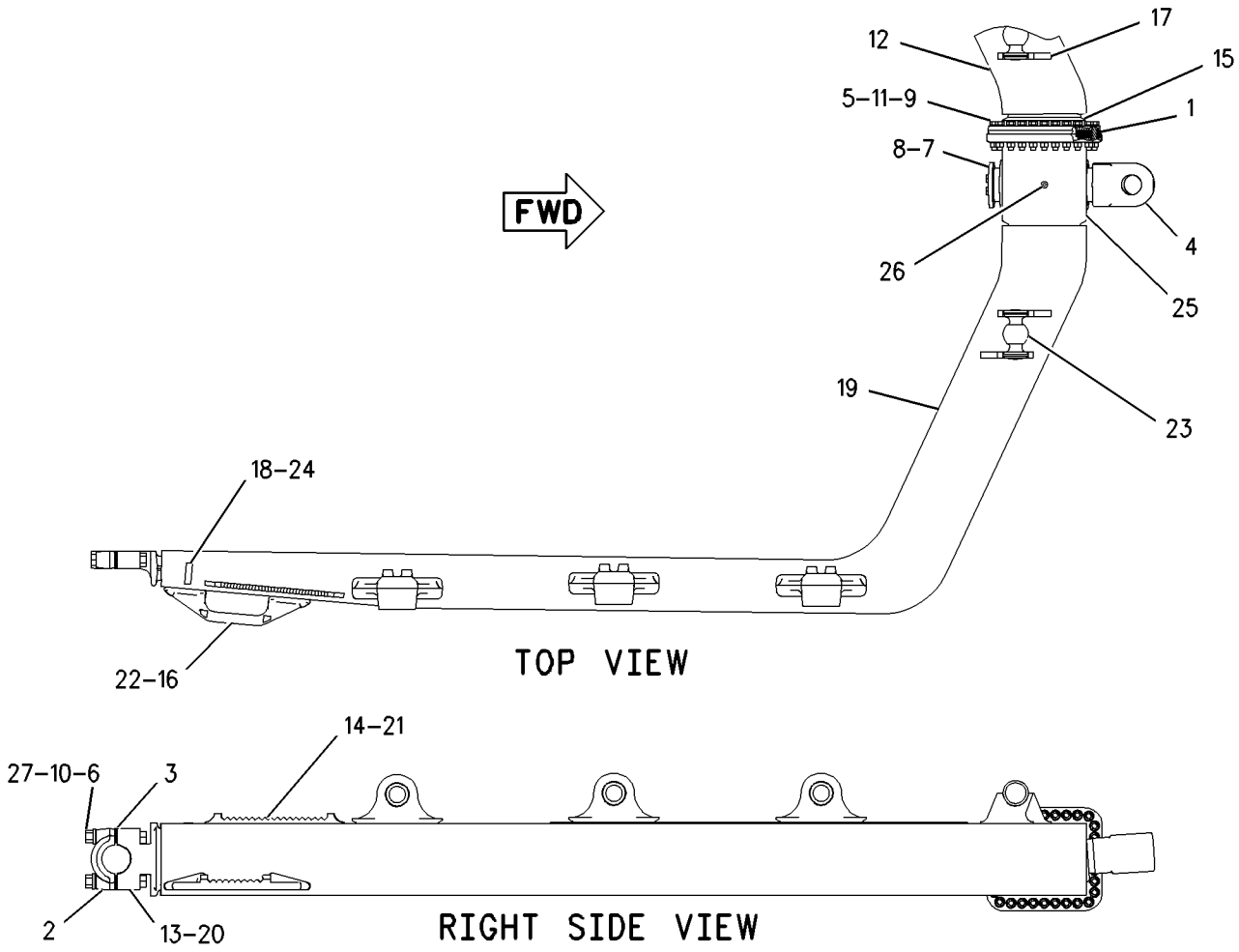

GRAPHIC #1 g00758337

IMPLEMENTS

160-5556 CONTROL AR-BULLDOZER & WINCH

S/N: AKA1-UP

SMCS-5050, 5170 **i01488921**

NOTE	PART NUMBER	QTY	PART NAME 1 2 3 4 5 6 (PRODUCT LEVEL)	SEE PAGE
Y	*160-5560*	1	CONTROL AR-PILOT HYDRAULIC	554
Y	*160-8403*	1	LINES GP-WINCH	690
	164-9928	1	FILM-IDENTIFICATION (LOW SPEED WINCH LIGHT)	
			NEXT TO LIGHT ON CONSOLE COVER	
	164-9930	1	FILM-IDENTIFICATION (WINCH CONTROL)	
			ON RAISED SURFACE TO THE RIGHT OF CONTROL	

Y-SEPARATE ILLUSTRATION

MEMORANDA

153-3134 FRAME GP-RIPPER

S/N: BHD1-UP
SINGLE SHANK
PART OF 153-3130 RIPPER AR

SMCS-6314, 7067 **i01442884**

NOTE	REF NO	GRAPHIC REF	PART NUMBER	QTY	PART NAME 1 2 3 4 5 6 (PRODUCT LEVEL)	SEE PAGE
	1	1	**1U-0990**	2	PIN	
	2	1	**3E-6756**	16	SEAL-LIP	
	3	1	**3E-6757**	8	SEAL-LIP	
	4	1	**4T-0203**	2	PIN AS	
	5	1	**4T-1389**	2	PIN AS	
	6	1	**4T-3522**	16	WASHER	
	7	1	**6J-9482**	2	PIN AS	
M	8	1	**8T-5460**	16	BOLT (M20X2.5X40MM)	
	9	1	**7T-7305**	8	PLATE	
	10	1	**132-7994**	2	PIN AS	
		1	**5J-1205**	1	PIN	
	11	1	**154-0240**	1	FRAME & BEARING AS	
		1	**3B-8489**	4	FITTING-GREASE	
		1	**4T-9751**	4	BEARING-SLEEVE (50MM LG)	
		1	**7T-3746**	4	BEARING-SLEEVE (40MM LG)	
M	12	1	**6V-7688**	2	LOCKNUT	
M	13	1	**7X-2568**	2	BOLT (M20X2.5X180MM)	

M-METRIC PART

153-3134 **FRAME GP-RIPPER** *(contd.)* **i01442884**

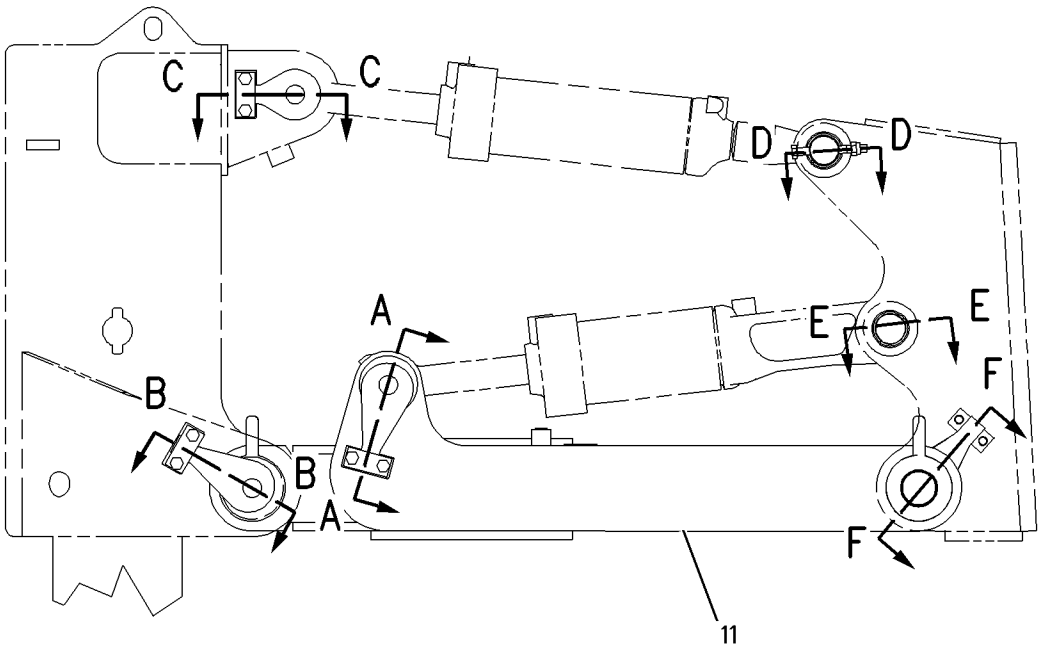

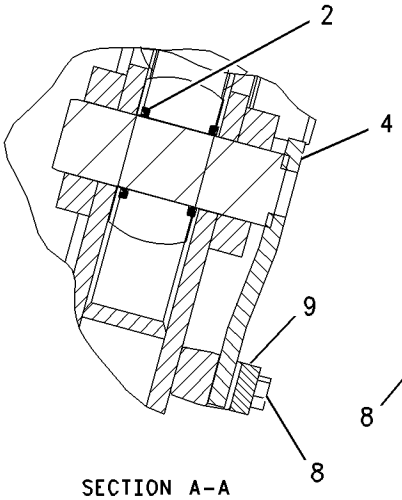

SECTION A-A

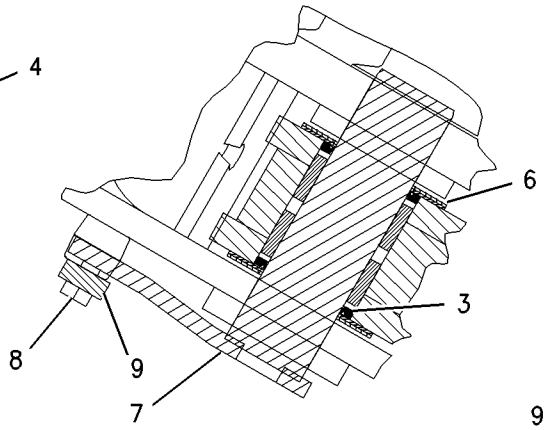

SECTION B-B

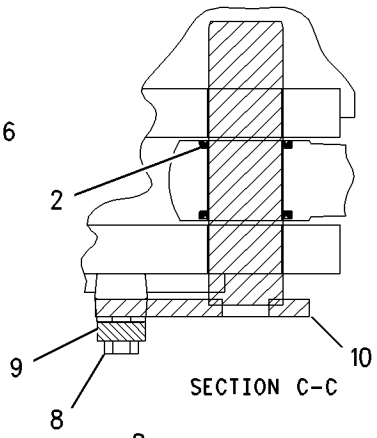

SECTION C-C

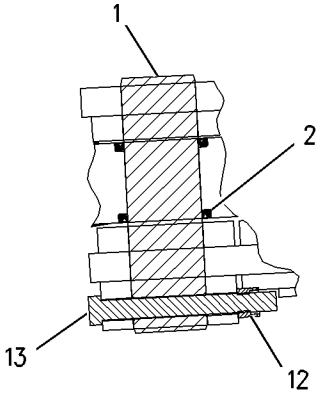

SECTION D-D

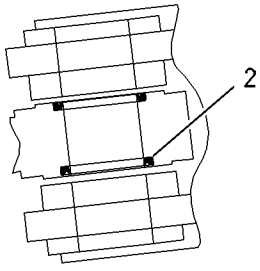

SECTION E-E

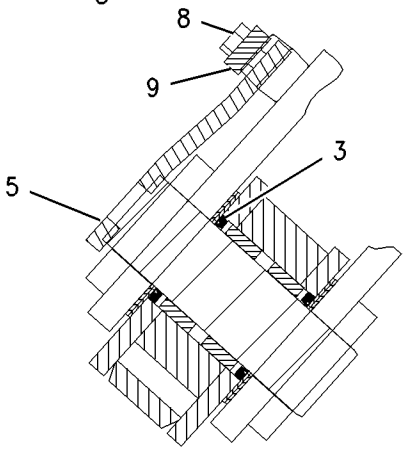

SECTION F-F

GRAPHIC #1

g00647544

8E-1497 GUARD GP-ROCK

S/N: AKA1-UP

PART OF 8E-7224 BLADE AS-SEMI-UNIVERSAL

SMCS-7182 **i01440962**

NOTE	REF NO	GRAPHIC REF	PART NUMBER	QTY	PART NAME 1 2 3 4 5 6 (PRODUCT LEVEL)	SEE PAGE
	1	1	**8E-1450**	1	GUARD AS-CENTER	
	2	1	**8E-1454**	1	GUARD AS-RH	
	3	1	**8E-1455**	1	GUARD AS-LH	

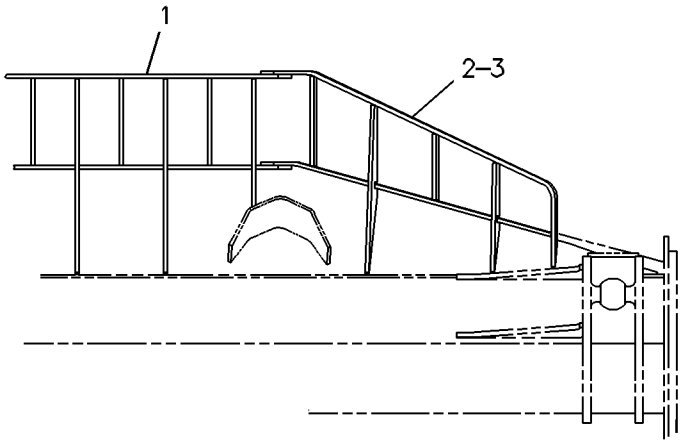

REAR VIEW

GRAPHIC #1 g00222687

8E-4205 GUARD GP-ROCK

S/N: AKA1-UP
PART OF 8E-7226 BLADE AS-UNIVERSAL
CANNOT BE USED WITH SCREEN AS

SMCS-7182 **i01254706**

NOTE	REF NO	GRAPHIC REF	PART NUMBER	QTY	PART NAME 1 2 3 4 5 6 (PRODUCT LEVEL)	SEE PAGE
	1	1	**8E-4206**	1	GUARD AS-CENTER	
	2	1	**8E-4209**	1	GUARD AS-RH	
	3	1	**8E-4216**	1	GUARD AS-LH	
	4	1	**8E-4218**	2	PLATE	

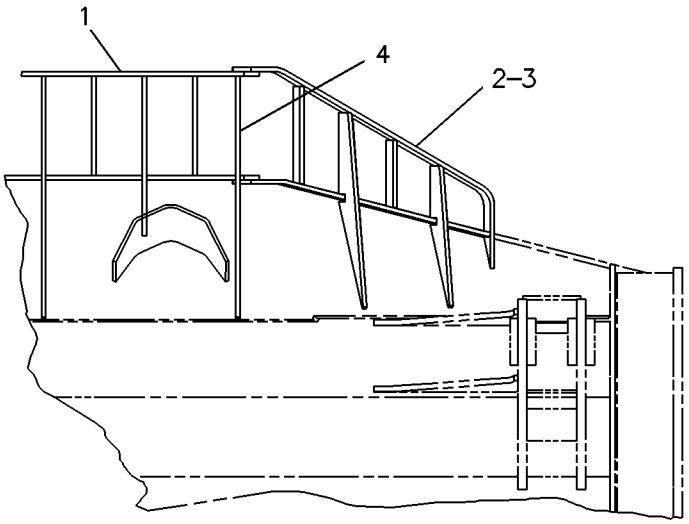

REAR VIEW

GRAPHIC #1 g00222679

160-8403 LINES GP-WINCH

S/N: AKA1-UP

PART OF 160-5556 CONTROL AR-BULLDOZER & WINCH

SMCS-5057 **i01488936**

NOTE	REF NO	GRAPHIC REF	PART NUMBER	QTY	PART NAME 1 2 3 4 5 6 (PRODUCT LEVEL)	SEE PAGE
	1	1	**9X-6772**	4	STRAP-CABLE	
I	2	1	**161-3948**	1	HOSE AS	
Y	3	1	**161-8893**	1	MANIFOLD GP-HYDRAULIC	620
	4	1	**170-4891**	1	HARNESS AS	
		1	**155-2260**	1	KIT-CONNECTING PLUG (3 PIN)	
					(INCLUDES PLUG AS & WEDGE)	
		1	**155-2270**	1	KIT-CONNECTING PLUG (2 PIN)	
					(INCLUDES PLUG AS, WEDGE & INTERFACE SEAL)	
	5	1	**197-8494**	1	HOSE AS	
	6	1	**197-8495**	1	HOSE AS	
	7	1	*148-8336*	2	CONNECTOR GP	
					(EACH INCLUDES)	
		1	**3J-1907**	1	SEAL-O-RING	
		1	**6V-8397**	1	SEAL-O-RING	
		1	**6V-8636**	1	CONNECTOR	
	8	1	*148-8340*	1	CONNECTOR GP	
		1	**3K-0360**	1	SEAL-O-RING	
		1	**6V-8398**	1	SEAL-O-RING	
		1	**6V-8639**	1	CONNECTOR	
	9	1	*148-8433*	1	TEE GP	
		1	**6V-9836**	1	TEE-SWIVEL	
		1	**6V-8397**	2	SEAL-O-RING	
	10	1	*148-8407*	1	PLUG GP	
		1	**3J-1907**	1	SEAL-O-RING	
		1	**9S-4191**	1	PLUG-STRAIGHT THREAD	
	11	1	*148-8411*	1	PLUG AS	
		1	**3K-0360**	1	SEAL-O-RING	
		1	**9S-4185**	1	PLUG-O-RING	
	12	1	*155-3624*	1	PLUG GP	
		1	**3J-7354**	1	SEAL-O-RING	
		1	**9S-4182**	1	PLUG-O-RING	
	13	1	**1P-3703**	2	SEAL-RECTANGULAR	
	14	1	**1P-4577**	6	FLANGE-HALF	
	15	1	**1P-5766**	4	FLANGE-HALF	
	16	1	**4J-0520**	4	SEAL-O-RING	
	17	1	**5P-0047**	2	COVER	
	18	1	**5S-7382**	8	BOLT (3/8-16X1.375 IN)	
	19	1	**7X-0294**	1	BOLT (3/8-16X5 IN)	
	20	1	**8C-6877**	8	BOLT (7/16-14X1.75 IN)	
	21	1	**8T-1891**	1	CLIP (SLOT)	
	22	1	**8T-1892**	1	CLIP (TAB)	
	23	1	**8T-4896**	13	WASHER-HARD (10.2X18.5X2.5MM THK)	
	24	1	**8T-5360**	8	WASHER (12X22.5X2.5MM THK)	
	25	1	**9B-7237**	4	BOLT (3/8-16X1.25 IN)	

I-SEE HOSE FABRICATION GUIDE
Y-SEPARATE ILLUSTRATION

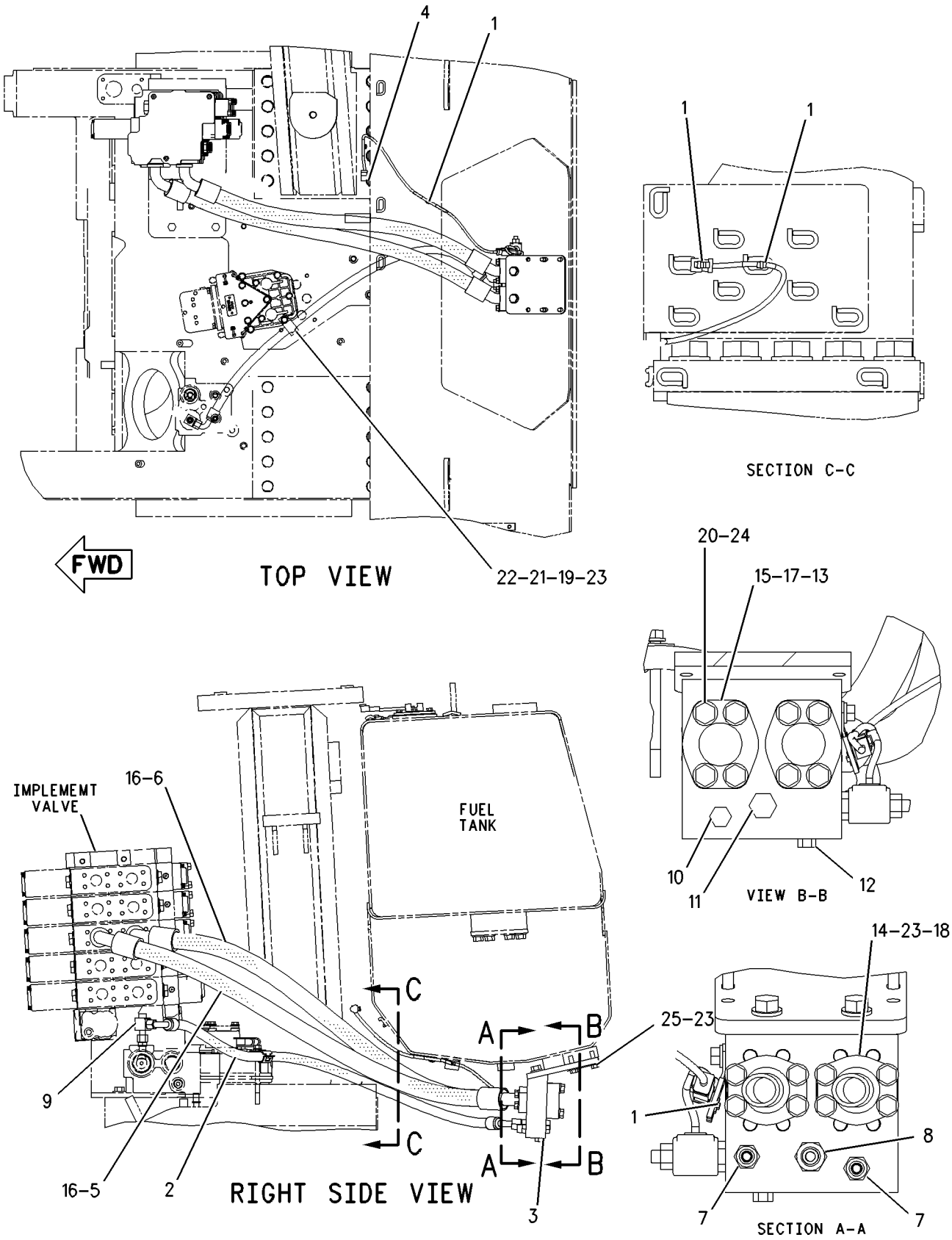

GRAPHIC #1

g00758861

158-6398 LINK GP-STABILIZER

S/N: AKA1-UP; CXB1-UP; CXL1-UP; BHW1-UP
PART OF 118-3173, 158-6394 PUSH ARM GP-STABILIZER

SMCS-6071, 7203 **i01488674**

NOTE	REF NO	GRAPHIC REF	PART NUMBER	QTY	PART NAME 1 2 3 4 5 6 (PRODUCT LEVEL)	SEE PAGE
B	1	1	**6I-8675**	52	SHIM (.60MM THK)	
	2	1	**202-4981**	1	LINK AS	
	3	1	**6I-8676**	2	BEARING	
M	4	1	**7X-2578**	8	BOLT (M24X3X200MM)	
M	5	1	**8T-4001**	8	NUT (M24X3 THD)	
	6	1	**160-6307**	2	CAP-BEARING	

B-USE AS REQUIRED
M-METRIC PART

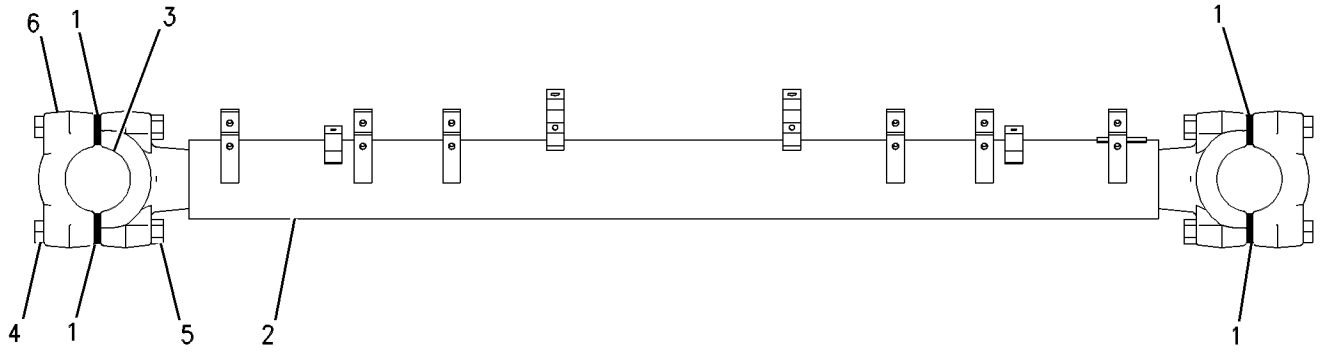

GRAPHIC #1 g00556546

6I-8788 MOUNTING GP-CYLINDER

S/N: AKA1-UP; CXB1-UP; BHR1-UP; BHW1-UP

PART OF 159-8377 BULLDOZER AR, 159-1628 BULLDOZER AR-SEMI-UNIVERSAL, 159-1629 BULLDOZER AR-UNIVERSAL

SMCS-6068 **i00569644**

NOTE	REF NO	GRAPHIC REF	PART NUMBER	QTY	PART NAME 1 2 3 4 5 6 (PRODUCT LEVEL)	SEE PAGE
	1	1	**6Y-5693**	2	YOKE	
	2	1	**8E-6185**	4	CAP AS	
	3	1	**104-1844**	1	BEARING-SLEEVE	
	4	1	**4T-4875**	2	PIN	
	5	1	**3B-8489**	2	FITTING-GREASE (1/8-27 THD)	
	6	1	**6V-0273**	2	SEAL-LIP	
	7	1	**8T-9313**	8	BOLT	
	8	1	**5P-1076**	5	WASHER-HARD (4MM THK)	
	9	1	**8E-6305**	1	PLATE-RH	
		1	**8E-6306**	1	PLATE-LH	
	10	1	**5P-2566**	1	BOLT (1/2-13X1.50IN)	

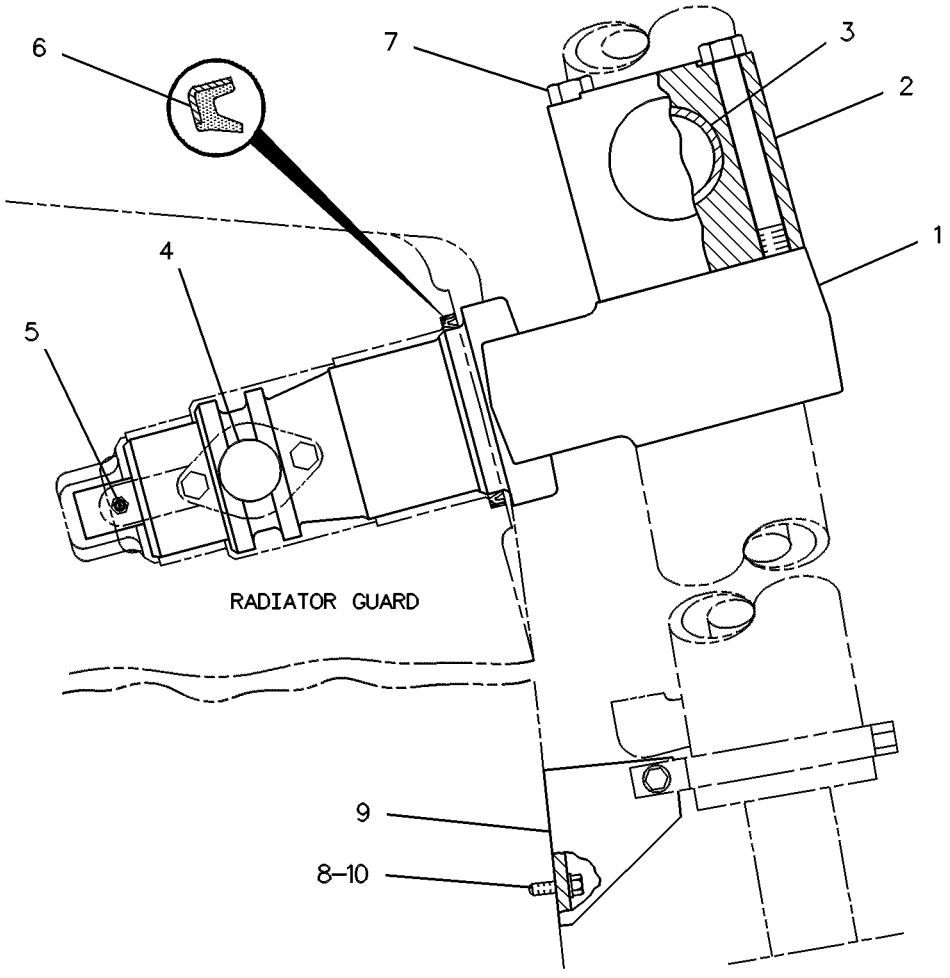

GRAPHIC #1 g00234958

153-3125 MOUNTING GP-RIPPER

S/N: BHD1-UP

PART OF 153-3130 RIPPER AR

SMCS-6165, 6324 **i01474439**

NOTE	REF NO	GRAPHIC REF	PART NUMBER	QTY	PART NAME 1 2 3 4 5 6 (PRODUCT LEVEL)	SEE PAGE
	1	1	**7T-6660**	1	PLATE	
	2	1	**9W-7990**	2	BRACKET	
	3	1	**153-3126**	1	BRACKET AS-RH	
	4	1	**153-3127**	1	BRACKET AS-LH	
	5	1	**162-0390**	2	PIN	
	6	1	**162-5218**	1	PLATE AS	
	7	1	**162-5220**	1	PLATE AS	
		1	**3B-0551**	1	PLUG-PIPE	
	8	1	**7X-0533**	20	WASHER-HARD (34X55X6MM THK)	
	9	1	**6F-4161**	2	DOWEL	
	10	1	**7X-0428**	20	BOLT (1 1/4-7X4 IN) (S/N 7XM5094-UP)	
					—OR—	
		1	**7T-5790**	20	STUD-TAPERLOCK (S/N 7XM1-5093)	
		1	**7H-7539**	20	NUT-FULL (1-1/4-12 THD) (S/N 7XM1-5093)	
M	11	1	**7X-2562**	2	BOLT (M20X2.5X45MM)	
M	12	1	**8T-4141**	4	BOLT (M20X2.5X70MM)	
	13	1	**8T-4121**	4	WASHER-HARD (11X21X2.5MM THK)	
	14	1	**8T-4123**	2	WASHER-PLATED (22X35X3.5MM THK)	
M	15	1	**8T-4131**	4	NUT (M20X2.5 THD)	
M	16	1	**8T-4136**	4	BOLT (M10X1.5X25MM)	
	17	1	**8T-5439**	16	WASHER (21.5X45X6MM THK)	
M	18	1	**8T-6430**	8	BOLT (M20X2.5X50MM)	

M-METRIC PART

153-3125 **MOUNTING GP-RIPPER** *(contd.)* **i01474439**

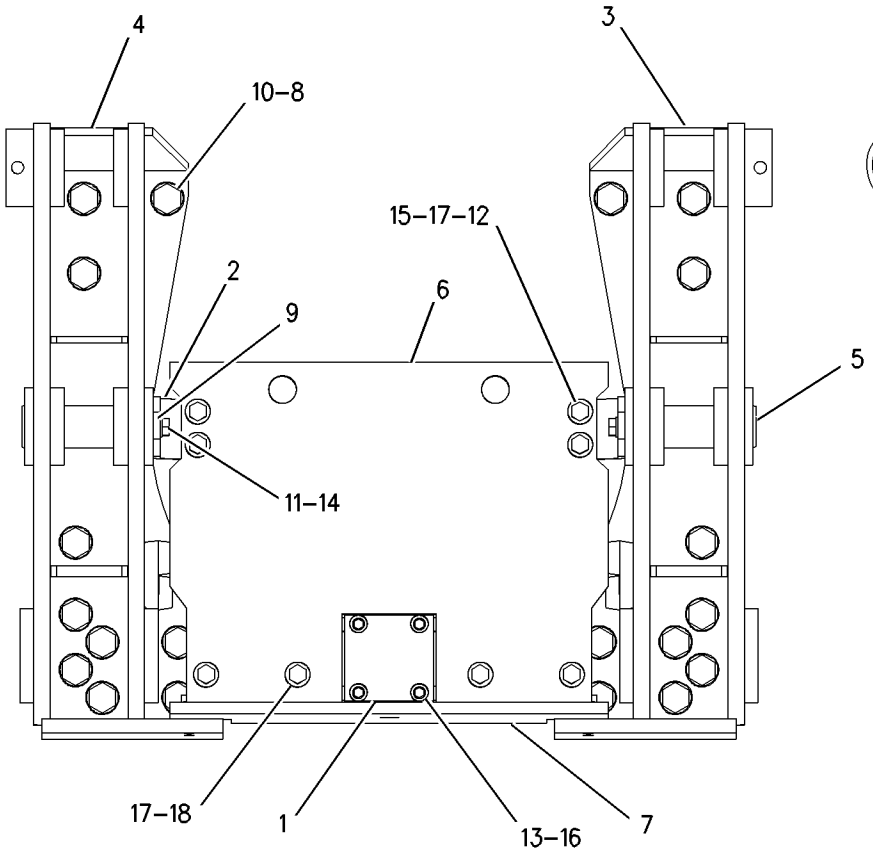

REAR VIEW

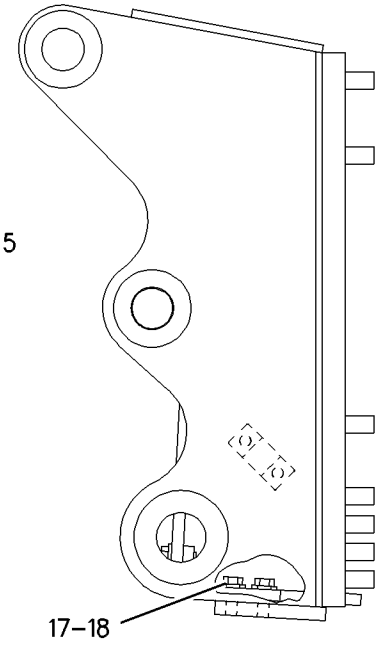

RIGHT SIDE VIEW

GRAPHIC #1 g00768673

IMPLEMENTS

160-3616 PULLER AR-PIN

S/N: AKA1-UP

SMCS-5353, 5354 **i01488847**

NOTE	PART NUMBER	QTY	PART NAME 1 2 3 4 5 6 (PRODUCT LEVEL)	SEE PAGE
Y	**6E-3113**	1	CYLINDER GP-RIPPER PIN PULLER	572
Y	*160-3619*	1	LINES GP-PIN PULLER	604
Y	*135-5111*	1	PULLER GP-PIN	697

Y-SEPARATE ILLUSTRATION

135-5111 PULLER GP-PIN

S/N: AKA1-UP

PART OF 160-3616 PULLER AR-PIN

SMCS-5353, 5354 **i01480939**

NOTE	REF NO	GRAPHIC REF	PART NUMBER	QTY	PART NAME 1 2 3 4 5 6 (PRODUCT LEVEL)	SEE PAGE
	1	1	**7T-4501**	1	PIN	
	2	1	**7T-4502**	1	PIN	
	3	1	**9X-8257**	8	WASHER (17.5X30X3.5MM THK)	
	4	1	**130-6366**	2	LINK	
	5	1	**135-5102**	1	PLATE AS	
	6	1	**135-5105**	1	PLATE AS	
	7	1	**135-5109**	1	PIN	
	8	1	**135-5113**	2	PIN	
	9	1	**135-5114**	1	PIN	
	10	1	**7X-3391**	4	WASHER-HARD (13.5X32X6MM THK)	
	11	1	**6K-3630**	1	RING	
	12	1	**7J-4169**	2	RING-SNAP	
	13	1	**7X-0537**	1	WASHER-HARD (40.5X67X6MM THK)	
M	14	1	**8C-8992**	4	BOLT-LOCKING (M12X1.75X30MM)	
	15	1	**8T-4167**	2	WASHER-HARD (26X44X4MM THK)	
M	16	1	**8T-7338**	8	BOLT (M16X2.0X45MM)	

M-METRIC PART

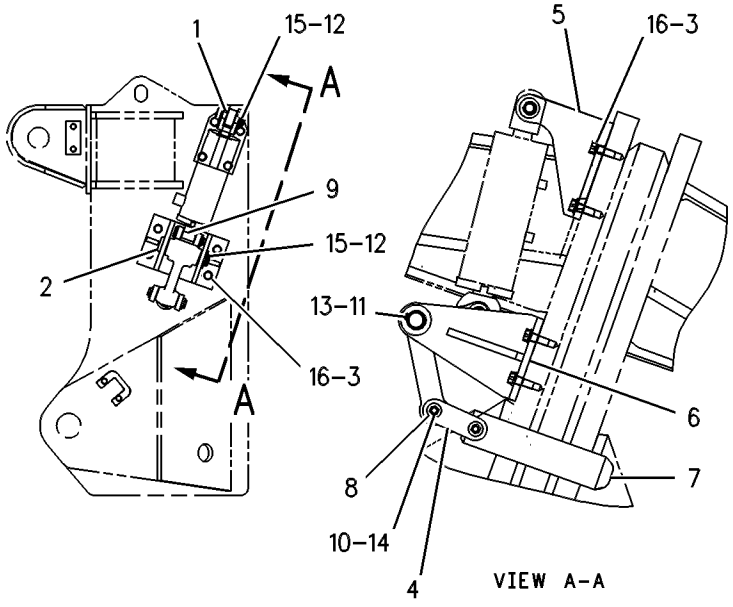

GRAPHIC #1 g00271463

109-5147 PUSH ARM GP-LH

S/N: CXB1-UP; CXL1-UP; BHW1-UP
PART OF 118-3173 PUSH ARM GP-STABILIZER

SMCS-6061 **i01441699**

NOTE	REF NO	GRAPHIC REF	PART NUMBER	QTY	PART NAME 1 2 3 4 5 6 (PRODUCT LEVEL)	SEE PAGE
B	1	1	**9W-7602**	26	SHIM (.8MM THK)	
	2	1	**195-6283**	2	NUT-SQUARE	
	3	1	**193-3063**	1	CAP-BEARING	
M	4	1	**3E-9850**	2	BOLT (M30X3.5X220MM THD)	
	5	1	**106-0786**	1	PUSH ARM AS-LH	
	6	1	**8E-6172**	1	BRACKET AS-LH	
		1	**3G-9598**	2	BEARING-SLEEVE	
	7	1	**1J-6740**	1	BEARING	
	8	1	**6I-8093**	1	BRACKET AS	
	9	1	**7T-5140**	1	STEP	
	10	1	**8P-9770**	1	PLATE	
	11	1	**9X-8258**	2	WASHER (33X56X6MM THK)	

B-USE AS REQUIRED
M-METRIC PART

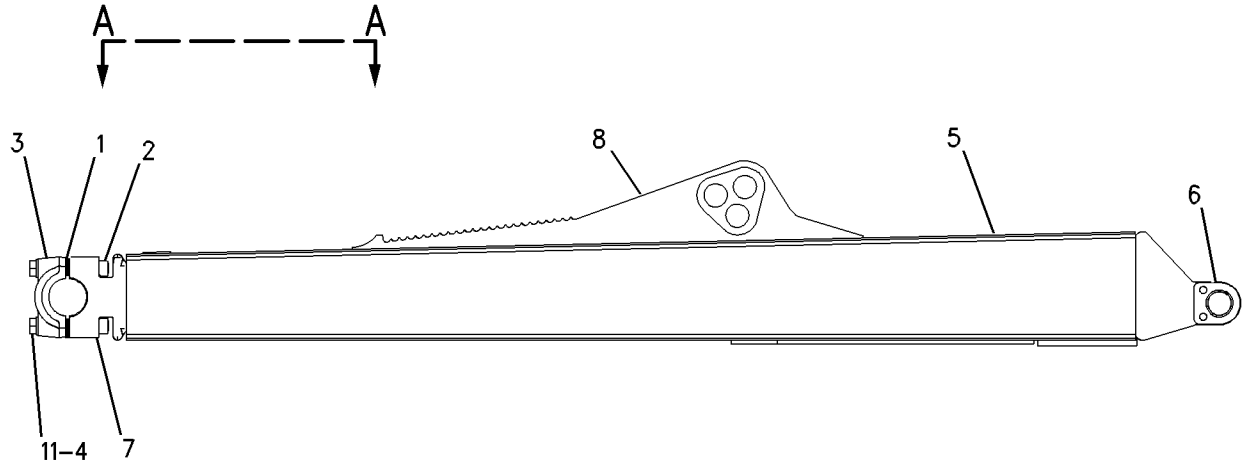

RIGHT SIDE VIEW

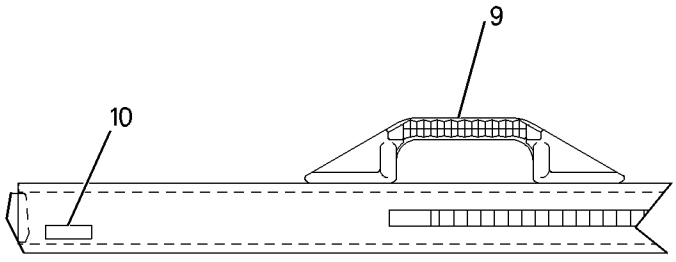

VIEW A-A

GRAPHIC #1 g00739446

158-6397 PUSH ARM GP-LH

S/N: AKA1-UP

PART OF 158-6394 PUSH ARM GP-STABILIZER

SMCS-6061 **i01488677**

NOTE	REF NO	GRAPHIC REF	PART NUMBER	QTY	PART NAME 1 2 3 4 5 6 (PRODUCT LEVEL)	SEE PAGE
	1	1	**193-3063**	1	CAP-BEARING	
B	2	1	**9W-7602**	26	SHIM (.8MM THK)	
	3	1	**158-6395**	1	PUSH ARM AS-LH	
	3A	1	**1J-6740**	1	BEARING	
	3B	1	**3G-7000**	1	BRACKET AS	
	3C	1	**7T-5140**	1	STEP	
	3D	1	**8E-6172**	1	BRACKET AS-LH	
	3E	1	**3G-9598**	2	BEARING-SLEEVE	
	3F	1	**159-0868**	1	GUARD	
	3G	1	**8P-9770**	1	PLATE	
M	4	1	**3E-9850**	2	BOLT (M30X3.5X220MM)	
	5	1	**195-6283**	2	NUT-SQUARE (M30X3.5 THD)	
	6	1	**9X-8258**	2	WASHER (33X56X6MM THK)	

B-USE AS REQUIRED
M-METRIC PART

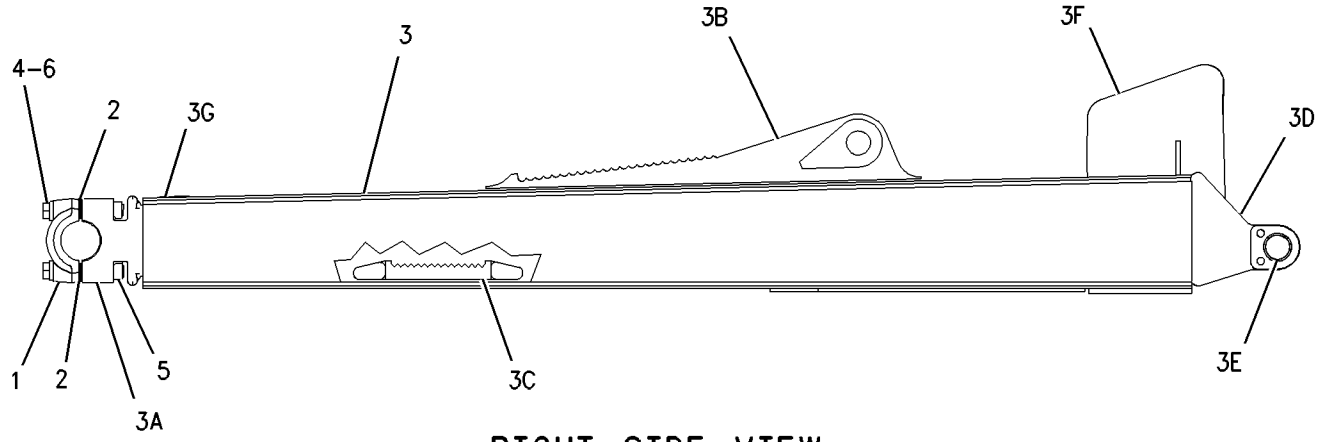

RIGHT SIDE VIEW

GRAPHIC #1 g00765289

8E-6168 PUSH ARM GP-RH

S/N: AKA1-UP; CXB1-UP; CXL1-UP; BHW1-UP
PART OF 118-3173, 158-6394 PUSH ARM GP-STABILIZER

SMCS-6061 **i01441651**

NOTE	REF NO	GRAPHIC REF	PART NUMBER	QTY	PART NAME 1 2 3 4 5 6 (PRODUCT LEVEL)	SEE PAGE
M	1	1	**3E-9850**	2	BOLT (M30X3.5X220MM THD)	
	2	1	**195-6283**	2	NUT-SQUARE	
	3	1	**193-3063**	1	CAP-BEARING	
	4	1	**8E-6169**	1	PUSH ARM AS-RH	
	5	1	**8E-6171**	1	BRACKET AS-RH	
		1	**3G-9598**	2	BEARING-SLEEVE	
	6	1	**1J-6740**	1	BEARING	
	7	1	**3G-7000**	1	BRACKET AS	
	8	1	**9W-1447**	1	GUARD	
	9	1	**7T-5140**	1	STEP	
	10	1	**8P-9770**	1	PLATE	
	11	1	**1U-2533**	1	BAR	
B	12	1	**9W-7602**	26	SHIM (.8MM THK)	
	13	1	**9X-8258**	2	WASHER (33X56X6MM THK)	

B-USE AS REQUIRED
M-METRIC PART

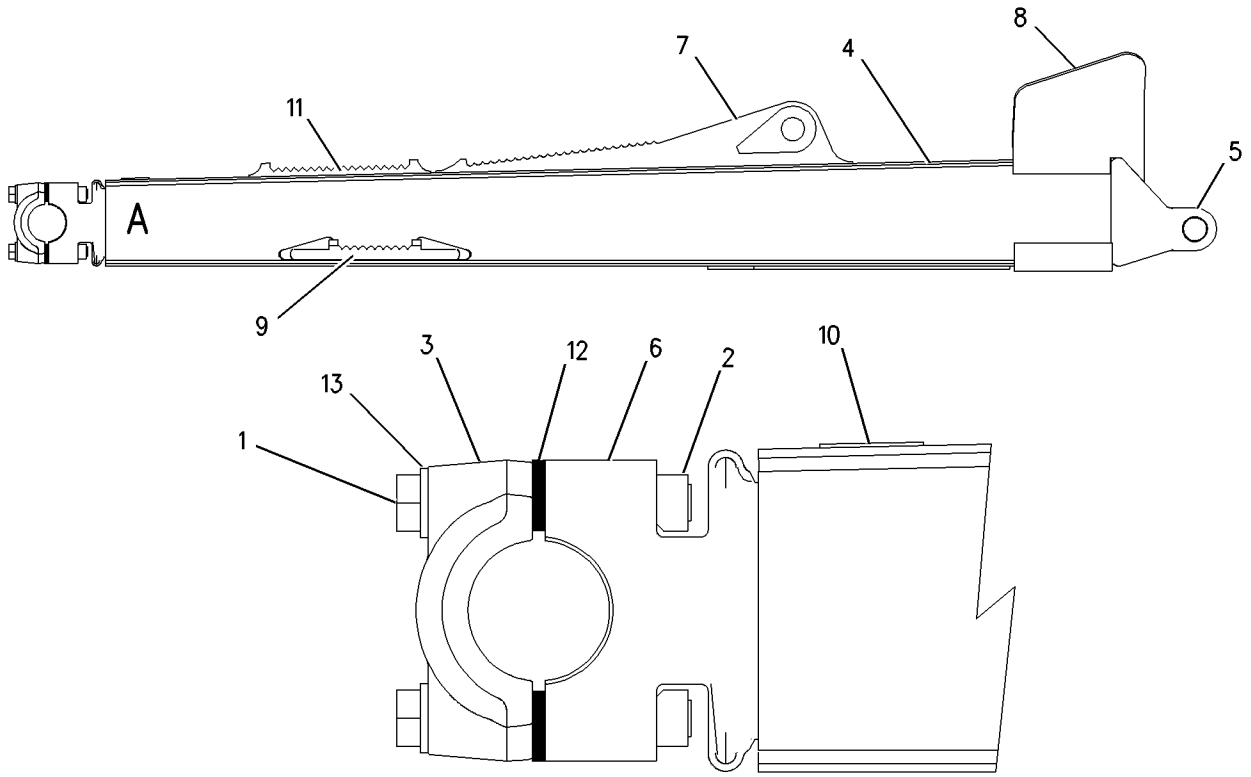

VIEW OF AREA A

GRAPHIC #1 g00740866

118-3173 PUSH ARM GP-STABILIZER

S/N: CXB1-UP; CXL1-UP; BHW1-UP

PART OF 159-1633 BULLDOZER AR, 159-1628 BULLDOZER AR-SEMI-UNIVERSAL, 159-1629 BULLDOZER AR-UNIVERSAL

SMCS-6061 **i01496515**

NOTE	REF NO	GRAPHIC REF	PART NUMBER	QTY	PART NAME 1 2 3 4 5 6 (PRODUCT LEVEL)	SEE PAGE
Y	1	1	*8E-6168*	1	PUSH ARM GP-RH	700
Y	2	1	*109-5147*	1	PUSH ARM GP-LH	698
CY	3	1	*158-6398*	1	LINK GP-STABILIZER	692
Y	4	1	**6E-1175**	1	CYLINDER GP-TILT	582
M	5	1	**7X-2574**	8	BOLT (M24X3.0X45MM)	
	6	1	**6J-5179**	4	RETAINER	
	7	1	**4T-7534**	2	PIN	
	8	1	**6I-8087**	1	BRACE AS	
	9	1	**3G-7016**	2	PIN	

C-CHANGE FROM PREVIOUS TYPE
M-METRIC PART
Y-SEPARATE ILLUSTRATION

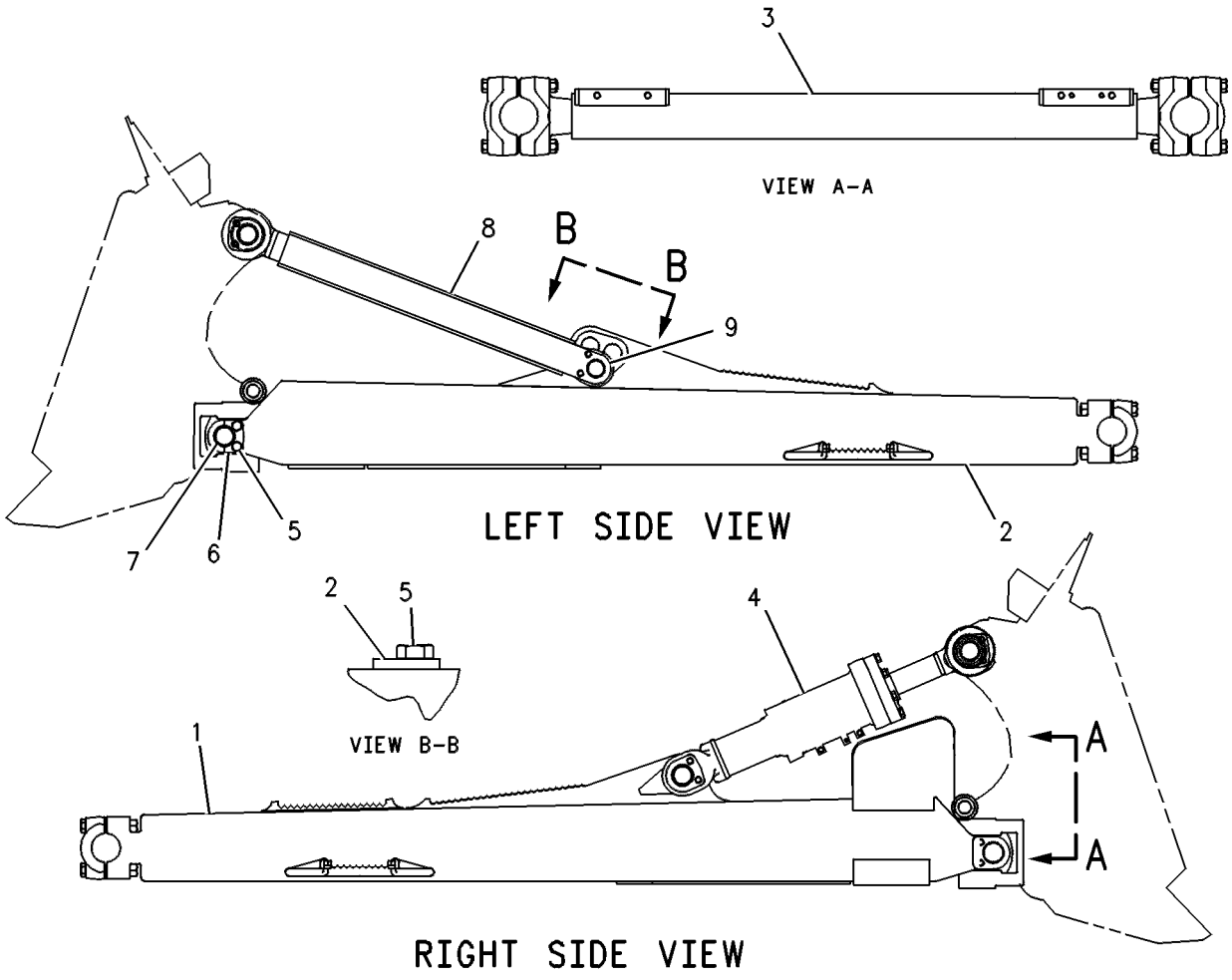

GRAPHIC #1 g00246816

158-6394 PUSH ARM GP-STABILIZER

S/N: AKA1-UP

PART OF 158-4631 CYLINDER AR-TILT

SMCS-6061 **i01488663**

NOTE	REF NO	GRAPHIC REF	PART NUMBER	QTY	PART NAME 1 2 3 4 5 6 (PRODUCT LEVEL)	SEE PAGE
	1	1	**3G-7016**	2	PIN	
	2	1	**4T-7534**	2	PIN	
	3	1	**6J-5179**	4	RETAINER	
Y	4	1	*8E-6168*	1	PUSH ARM GP-RH	700
Y	5	1	*158-6397*	1	PUSH ARM GP-LH	699
Y	6	1	*158-6398*	1	LINK GP-STABILIZER	692
M	7	1	**7X-2574**	8	BOLT (M24X3.0X45MM)	

M-METRIC PART
Y-SEPARATE ILLUSTRATION

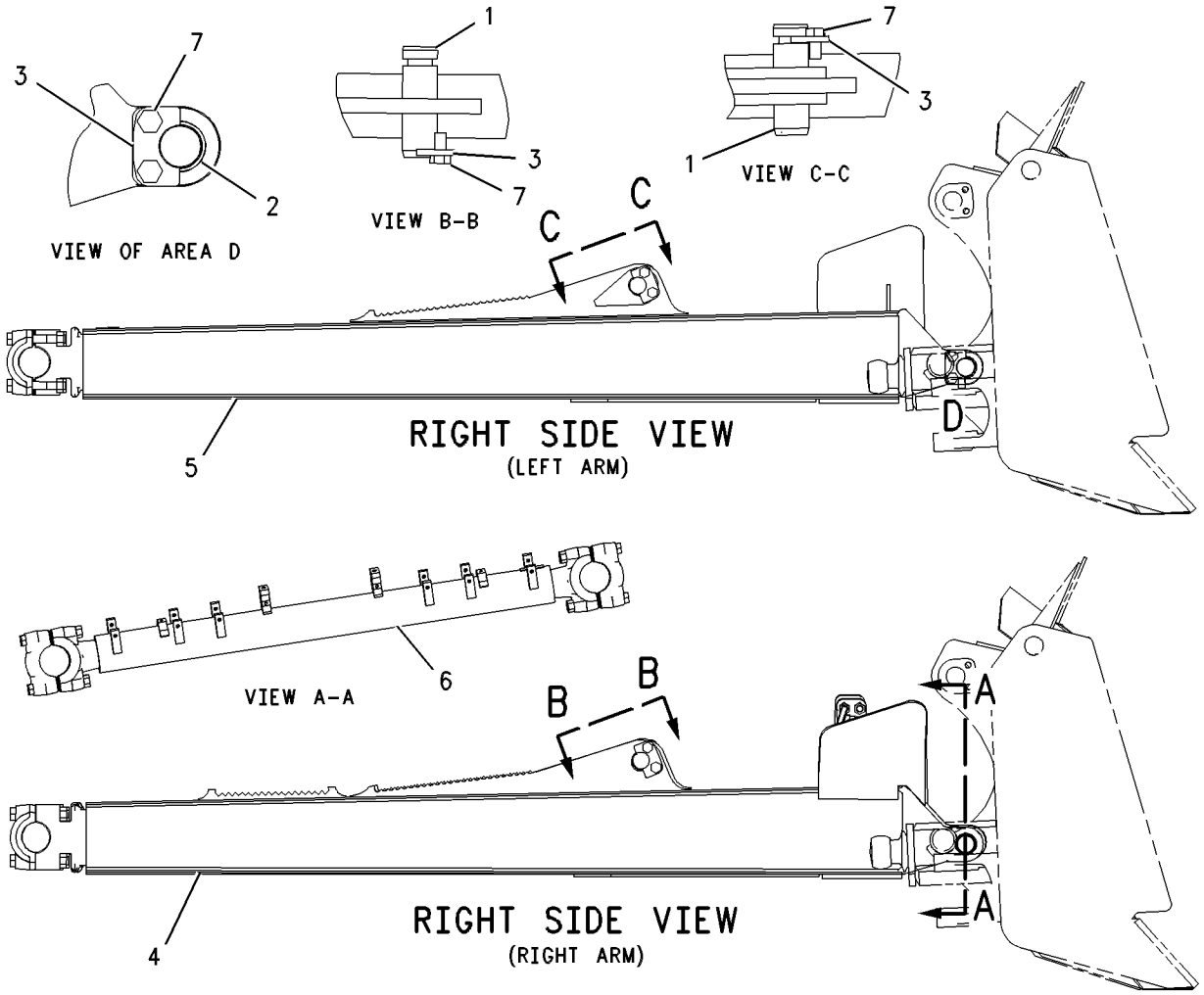

GRAPHIC #1 g00556891

153-3130 RIPPER AR

S/N: BHD1-UP

FOR USE WITH RIPPER CONTROL HYDRAULIC

SMCS-6312, 6316 **i01442123**

NOTE	REF NO	GRAPHIC REF	PART NUMBER	QTY	PART NAME 1 2 3 4 5 6 (PRODUCT LEVEL)	SEE PAGE
Y	1	1	*153-3125*	1	MOUNTING GP-RIPPER	694
Y	2	1	*153-3132*	1	RIPPER GP	729
Y	3	1	*153-3134*	1	FRAME GP-RIPPER	686
Y	4	1	*153-4846*	1	LINES GP-RIPPER	609
Y	5	1	**155-3652**	1	CYLINDER GP-RIPPER TILT	574
Y	6	1	**155-3653**	2	CYLINDER GP-RIPPER LIFT	570
Y	7	1	**165-0102**	1	CYLINDER GP-RIPPER TILT	576
FY		1	*5P-2352*	1	PLATE & FILM GP	877

F-NOT SHOWN
Y-SEPARATE ILLUSTRATION

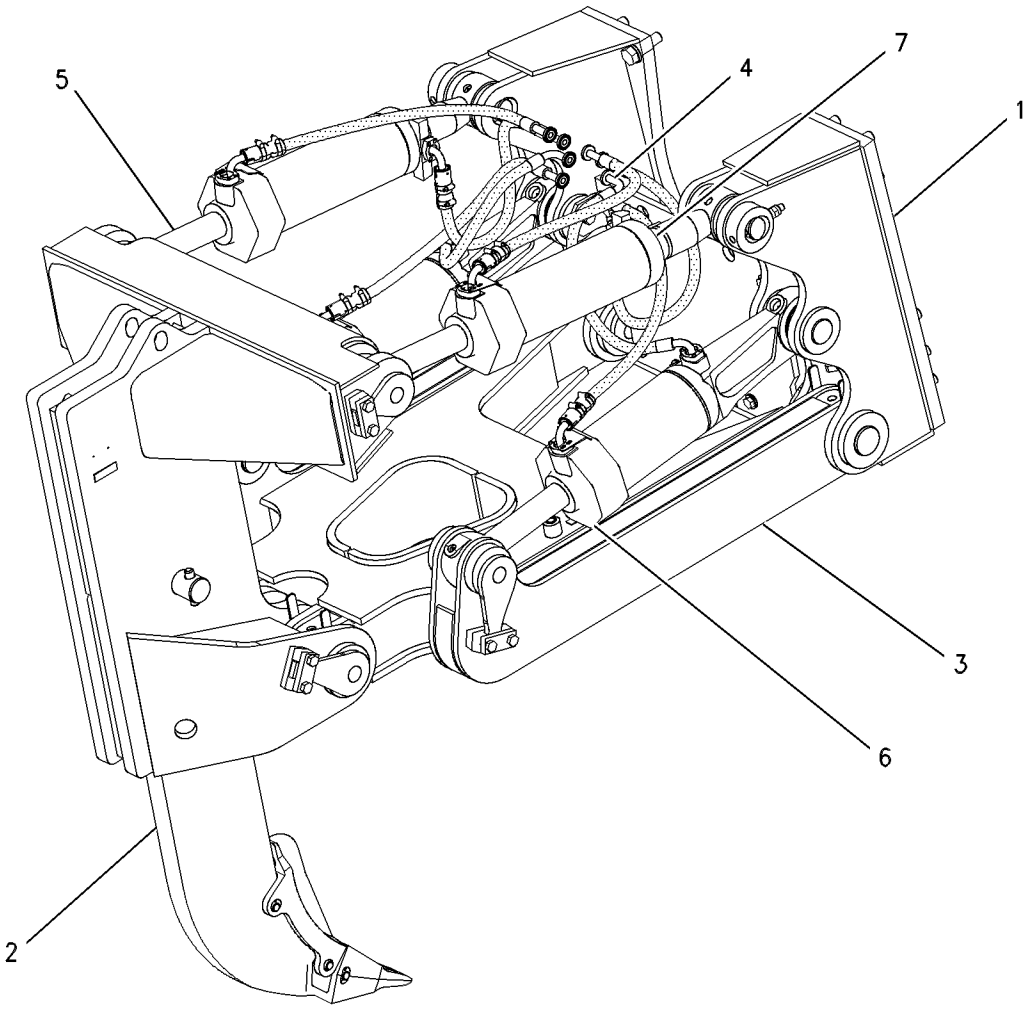

GRAPHIC #1 g00528109

9W-8276 TRUNNION GP-BULLDOZER

S/N: CXB1-UP; CXL1-UP; BHR1-UP; BHW1-UP
PART OF 159-1633, 159-8377, 159-8378 BULLDOZER AR, 159-1628 BULLDOZER AR-SEMI-UNIVERSAL, 159-1629 BULLDOZER AR-UNIVERSAL

SMCS-6069 **i01065466**

NOTE	REF NO	GRAPHIC REF	PART NUMBER	QTY	PART NAME 1 2 3 4 5 6 (PRODUCT LEVEL)	SEE PAGE
	1	1	**9W-8275**	2	TRUNNION AS	
					(EACH INCLUDES)	
		1	**5J-4321**	1	TRUNNION	
	2	1	**7X-0350**	32	BOLT	
		1	**8T-4122**	32	WASHER	

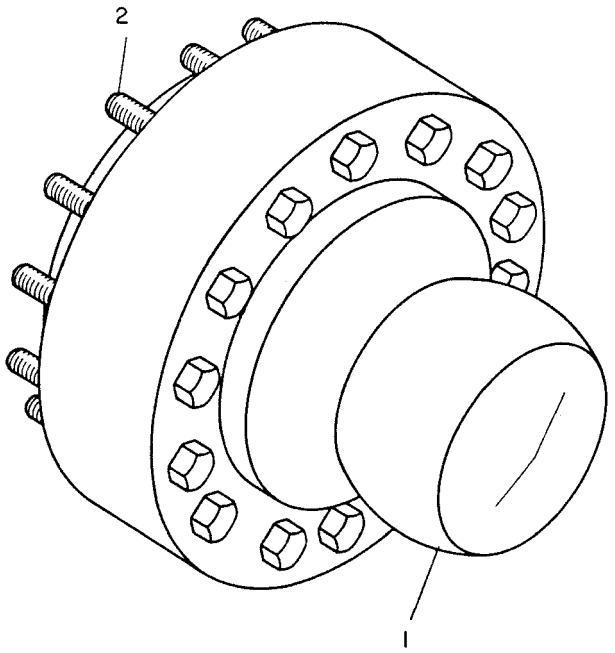

GRAPHIC #1 g00193867

WORK TOOLS

7T-5558 BIT & CUTTING EDGE GP

S/N: AKA1-UP; BHW1-UP

PART OF 9U-8083, 9U-8087, 9U-8088 BLADE & EDGE GP

SMCS-6801, 6804 **i01065453**

NOTE	REF NO	GRAPHIC REF	PART NUMBER	QTY	PART NAME 1 2 3 4 5 6 (PRODUCT LEVEL)	SEE PAGE
	1	1	**8E-4193**	1	BIT-END-RH	
	2	1	**8E-4194**	1	BIT-END-LH	
	3	1	**4J-9058**	33	BOLT-PLOW (1-8X3.25 IN)	
	4	1	**5P-8250**	33	WASHER (5.0MM THK)	
	5	1	**2J-3507**	33	NUT-FULL (1-8 THD)	
	6	1	**6Y-5540**	2	EDGE-CUTTING	
	7	1	**4T-6381**	1	EDGE-CUTTING	

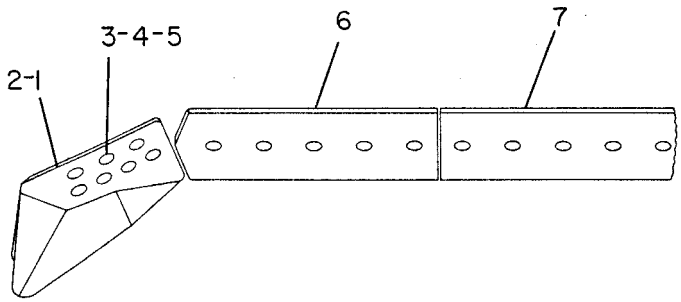

GRAPHIC #1 g00178330

WORK TOOLS

7T-5559 BIT & CUTTING EDGE GP

S/N: AKA1-UP; CXB1-UP; CXL1-UP

PART OF 9U-8085, 9U-8086 BLADE & EDGE GP

SMCS-6801, 6804 **i01239366**

NOTE	REF NO	GRAPHIC REF	PART NUMBER	QTY	PART NAME 1 2 3 4 5 6 (PRODUCT LEVEL)	SEE PAGE
	1	1	**8E-4193**	1	BIT-END	
	2	1	**8E-4194**	1	BIT-END	
	3	1	**4J-9058**	36	BOLT-PLOW (1-8X3.25 IN)	
	4	1	**5P-8250**	36	WASHER (5.0MM THK)	
	5	1	**2J-3507**	36	NUT-FULL (1-8 THD)	
	6	1	**4T-6378**	2	EDGE-CUTTING	
	7	1	**9W-5232**	2	EDGE-CUTTING	

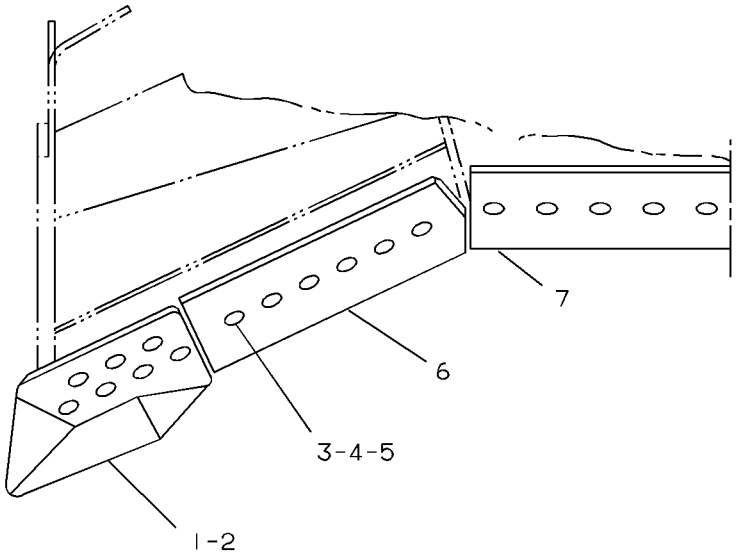

GRAPHIC #1 g00183628

WORK TOOLS

163-9465 BIT & CUTTING EDGE GP

S/N: 3MP1-UP

PART OF 163-9464 BLADE & EDGE GP

SMCS-6801, 6804 **i01239762**

NOTE	REF NO	GRAPHIC REF	PART NUMBER	QTY	PART NAME 1 2 3 4 5 6 (PRODUCT LEVEL)	SEE PAGE
	1	1	**1J-3527**	5	BOLT-PLOW (1-8X4.5 IN)	
	2	1	**2J-3507**	33	NUT-FULL (1-8 THD)	
	3	1	**4T-6381**	1	EDGE-CUTTING	
	4	1	**6Y-5540**	2	EDGE-CUTTING	
	5	1	**8E-4193**	1	BIT-END-RH	
	6	1	**8E-4194**	1	BIT-END-LH	
	7	1	**151-2985**	1	EDGE-CUTTING	
	8	1	**4J-9058**	28	BOLT-PLOW (1-8X3.25 IN)	
	9	1	**5P-8250**	33	WASHER (5.0MM THK)	

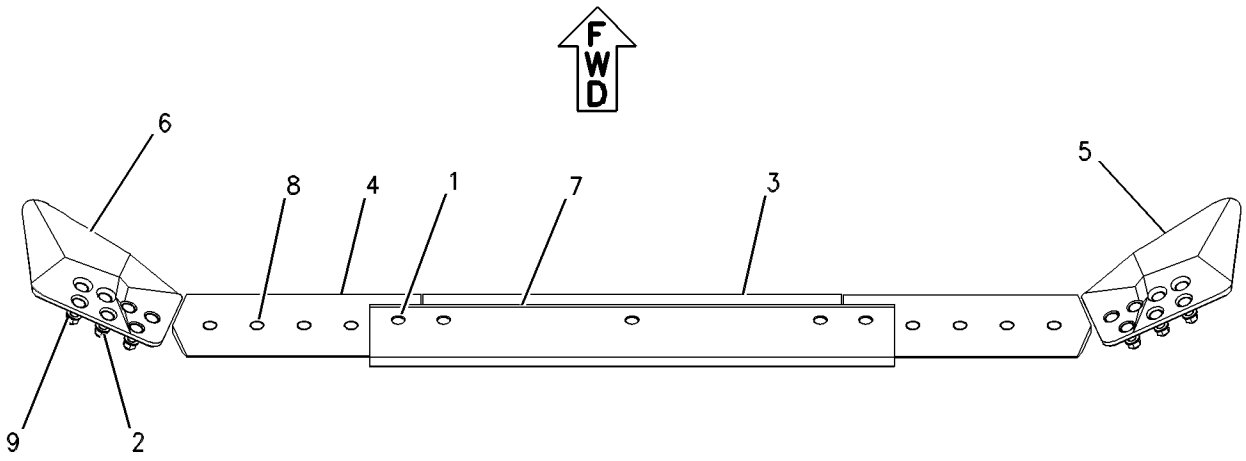

TOP VIEW

GRAPHIC #1 g00662947

WORK TOOLS

9U-8083 BLADE & EDGE GP

S/N: BHW1-UP

SEMI-UNIVERSAL

PART OF 8E-6151 BLADE GP-SEMI-UNIVERSAL

SMCS-6060 **i00596803**

NOTE	PART NUMBER	QTY	PART NAME 1 2 3 4 5 6 (PRODUCT LEVEL)	SEE PAGE
Y	*7T-5558*	1	BIT & CUTTING EDGE GP	705
Y	**8E-6154**	1	BLADE AS-SEMI-UNIVERSAL	718

Y-SEPARATE ILLUSTRATION

9U-8085 BLADE & EDGE GP

S/N: CXB1-UP; CXL1-UP

PART OF 8E-6150 BLADE GP-UNIVERSAL

SMCS-6060 **i01239362**

NOTE	PART NUMBER	QTY	PART NAME 1 2 3 4 5 6 (PRODUCT LEVEL)	SEE PAGE
Y	*7T-5559*	1	BIT & CUTTING EDGE GP	706
Y	**8E-6187**	1	BLADE AS-UNIVERSAL	722

Y-SEPARATE ILLUSTRATION

WORK TOOLS

9U-8086 BLADE & EDGE GP

S/N: AKA1-UP

SMCS-6060 **i01254779**

NOTE	PART NUMBER	QTY	PART NAME 1 2 3 4 5 6 (PRODUCT LEVEL)	SEE PAGE
Y	*7T-5559*	1	BIT & CUTTING EDGE GP	706
Y	**8E-7226**	1	BLADE AS-UNIVERSAL	723

Y-SEPARATE ILLUSTRATION

9U-8087 BLADE & EDGE GP

S/N: AKA1-UP

SEMI-UNIVERSAL WITH ROCK GUARD AND WEAR PLATES

SMCS-6060 **i01256643**

NOTE	PART NUMBER	QTY	PART NAME 1 2 3 4 5 6 (PRODUCT LEVEL)	SEE PAGE
Y	*7T-5558*	1	BIT & CUTTING EDGE GP	705
Y	**8E-7224**	1	BLADE AS-SEMI-UNIVERSAL	720

Y-SEPARATE ILLUSTRATION

WORK TOOLS

9U-8088 BLADE & EDGE GP

S/N: AKA1-UP

SEMI-UNIVERSAL WITH PUSH PLATE

SMCS-6060 **i00571877**

NOTE	PART NUMBER	QTY	PART NAME 1 2 3 4 5 6 (PRODUCT LEVEL)	SEE PAGE
Y	*7T-5558*	1	BIT & CUTTING EDGE GP	705
Y	**8E-7225**	1	BLADE AS-SEMI-UNIVERSAL	721

Y-SEPARATE ILLUSTRATION

WORK TOOLS

135-1914 BLADE & EDGE GP

S/N: AKA1-UP

SMCS-6060 **i01441871**

NOTE	PART NUMBER	QTY	PART NAME 1 2 3 4 5 6 (PRODUCT LEVEL)	SEE PAGE
Y	**193-8572**	1	BLADE AS	717
M	**7X-2552**	5	BOLT (M16X2X30MM)	
	6J-3774	2	PIN	
	159-8807	1	PIN	
	4J-5401	1	RETAINER	
	7T-6850	2	RETAINER	

M-METRIC PART
Y-SEPARATE ILLUSTRATION

151-1150 BLADE & EDGE GP

S/N: AKA1-UP; BHR1-UP

PART OF 193-8572 BLADE AS, 151-1151 BLADE GP-ANGLING

SMCS-6060 **i01397578**

NOTE	REF NO	GRAPHIC REF	PART NUMBER	QTY	PART NAME 1 2 3 4 5 6 (PRODUCT LEVEL)	SEE PAGE
Y	1	1	*135-9374*	1	EDGE GP-CUTTING	727
	2	1	**143-3553**	1	BLADE AS	
	3	1	**147-3527**	1	SUPPORT	
	4	1	**8P-9770**	1	PLATE	
	5	1	**146-9505**	2	BRACKET	
	6	1	**146-9506**	2	BRACKET AS	
					(EACH INCLUDES)	
	7	1	**4J-2043**	1	TRUNNION	

Y-SEPARATE ILLUSTRATION

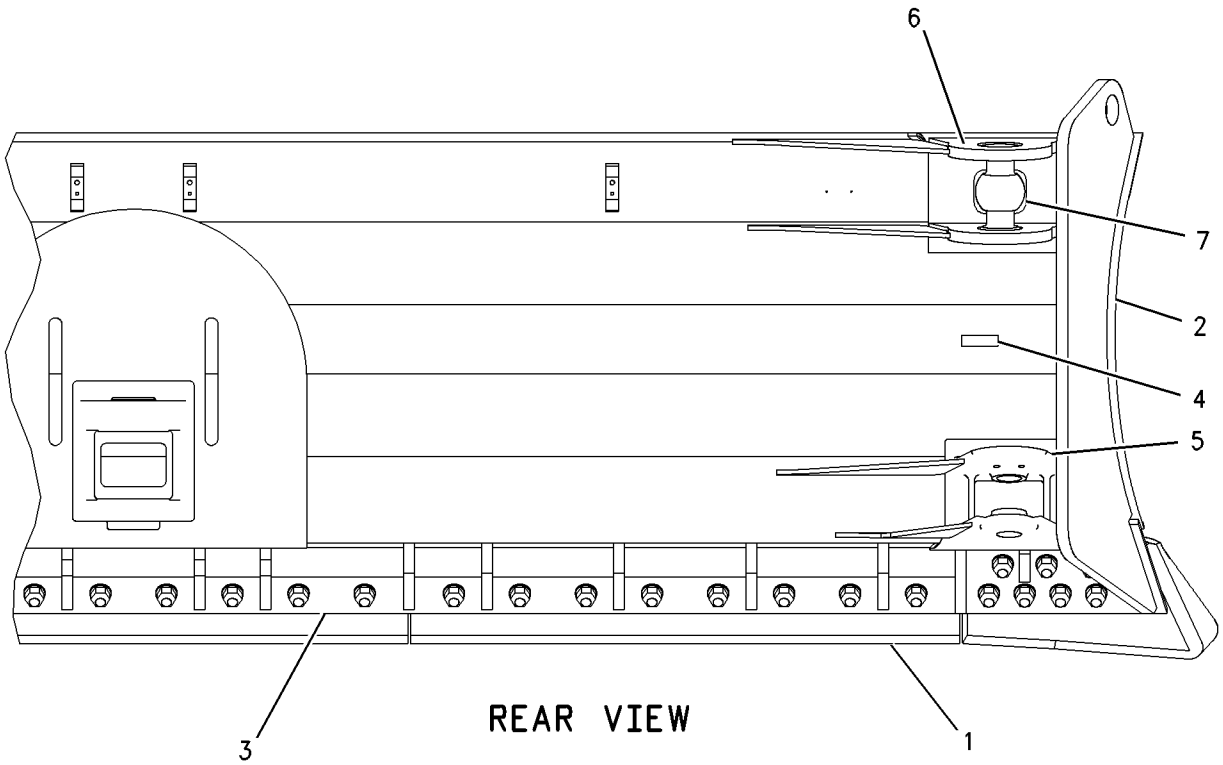

GRAPHIC #1 g00647861

WORK TOOLS

163-9464 BLADE & EDGE GP

S/N: 3MP1-UP

PART OF 163-9463 BULLDOZER AR

SMCS-6060 **i01239755**

NOTE	REF NO	GRAPHIC REF	PART NUMBER	QTY	PART NAME 1 2 3 4 5 6 (PRODUCT LEVEL)	SEE PAGE
Y	1	1	*151-2979*	1	BLOCK GP-PUSH	672
Y	2	1	*163-9465*	1	BIT & CUTTING EDGE GP	707
Y	3	1	**163-9466**	1	BLADE AS	716

Y-SEPARATE ILLUSTRATION

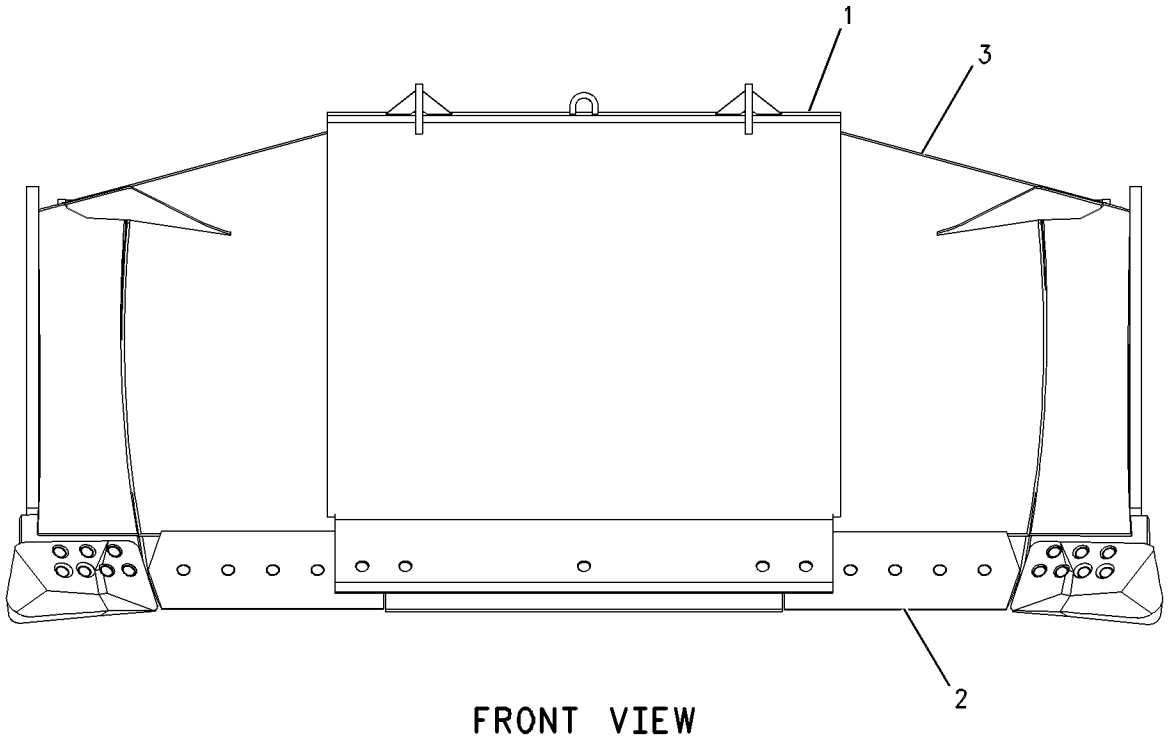

FRONT VIEW

GRAPHIC #1 g00662930

WORK TOOLS

163-9466 BLADE AS

S/N: 3MP1-UP

PART OF 163-9464 BLADE & EDGE GP

SMCS-6060 **i01239745**

NOTE	REF NO	GRAPHIC REF	PART NUMBER	QTY	PART NAME 1 2 3 4 5 6 (PRODUCT LEVEL)	SEE PAGE
Y	1	1	**8E-6154**	1	BLADE AS-SEMI-UNIVERSAL	718
	2	1	**151-3004**	4	BRACKET	

Y-SEPARATE ILLUSTRATION

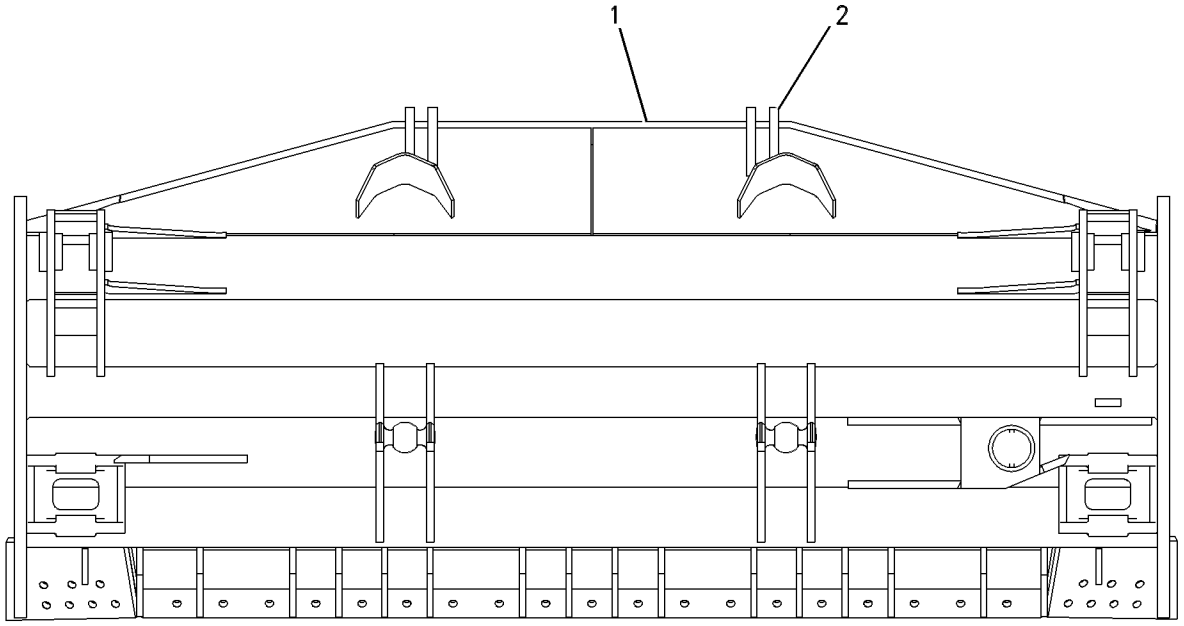

REAR VIEW

GRAPHIC #1 g00662938

WORK TOOLS

193-8572 BLADE AS

S/N: AKA1-UP

PART OF 135-1914 BLADE & EDGE GP

SMCS-6060 **i01441933**

NOTE	PART NUMBER	QTY	PART NAME 1 2 3 4 5 6 (PRODUCT LEVEL)	SEE PAGE
Y	*151-1150*	1	BLADE & EDGE GP	714
	135-1915	1	SCREEN AS	

Y-SEPARATE ILLUSTRATION

8E-6154 BLADE AS-SEMI-UNIVERSAL

S/N: AKA1-UP; 3MP1-UP; BHW1-UP

PART OF 9U-8083 BLADE & EDGE GP, 163-9466 BLADE AS, 8E-7224, 8E-7225 BLADE AS-SEMI-UNIVERSAL

SMCS-6060 **i01488377**

NOTE	REF NO	GRAPHIC REF	PART NUMBER	QTY	PART NAME 1 2 3 4 5 6 (PRODUCT LEVEL)	SEE PAGE
	1	1	**8E-6155**	1	BRACKET AS-RH	
	2	1	**8E-6156**	1	BRACKET AS-LH	
					(EACH INCLUDES)	
		1	**3G-9995**	1	PLATE	
	3	1	**1U-4961**	1	PLATE-RH	
	4	1	**110-4206**	1	TRUNNION AS	
	5	1	**1U-4962**	1	PLATE-LH	
	6	1	**6I-8403**	2	SUPPORT-OUTER	
	7	1	**7T-5936**	1	SUPPORT-CENTER	
	8	1	**8E-6160**	2	PLATE	
	9	1	**8P-9770**	1	PLATE	
	10	1	**9J-6058**	2	DEFLECTOR	
	11	1	**9J-0123**	2	TRUNNION	
	12	1	**8E-6161**	4	GUSSET-LH	
	13	1	**8E-6166**	1	BRACKET-LH	
	14	1	**8E-6165**	1	BRACKET-RH	

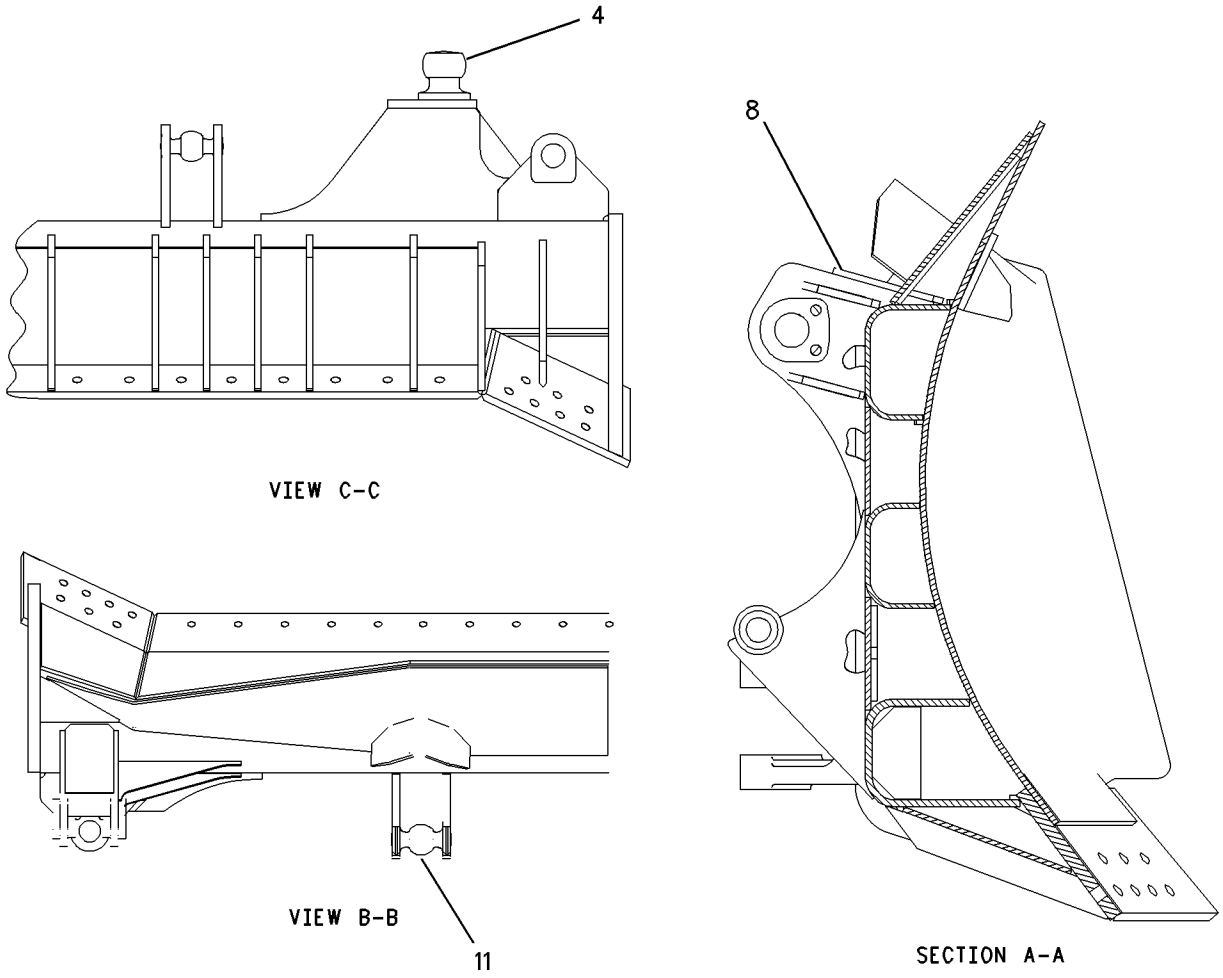

GRAPHIC #1 g00696873

8E-7224 BLADE AS-SEMI-UNIVERSAL

S/N: AKA1-UP

SEMI-UNIVERSAL WITH ROCK GUARD AND WEAR PLATES

PART OF 9U-8087 BLADE & EDGE GP

SMCS-6060 **i01440929**

NOTE	PART NUMBER	QTY	PART NAME 1 2 3 4 5 6 (PRODUCT LEVEL)	SEE PAGE
Y	**8E-6154**	1	BLADE AS-SEMI-UNIVERSAL	718
Y	*8E-1497*	1	GUARD GP-ROCK	688
Y	*9W-2707*	1	PLATE GP-WEAR	728

Y-SEPARATE ILLUSTRATION

WORK TOOLS

8E-7225 BLADE AS-SEMI-UNIVERSAL

S/N: AKA1-UP
WITH PUSH PLATE
PART OF 9U-8088 BLADE & EDGE GP

SMCS-6060 **i00570969**

NOTE	PART NUMBER	QTY	PART NAME 1 2 3 4 5 6 (PRODUCT LEVEL)	SEE PAGE
Y	**8E-6154**	1	BLADE AS-SEMI-UNIVERSAL	718

Y-SEPARATE ILLUSTRATION

WORK TOOLS

8E-6187 BLADE AS-UNIVERSAL

S/N: AKA1-UP; CXB1-UP; CXL1-UP

PART OF 9U-8085 BLADE & EDGE GP, 8E-7226 BLADE AS-UNIVERSAL

SMCS-6053, 6060 **i01488363**

NOTE	REF NO	GRAPHIC REF	PART NUMBER	QTY	PART NAME 1 2 3 4 5 6 (PRODUCT LEVEL)	SEE PAGE
	1	1	**7T-7831**	1	SUPPORT	
	2	1	**8P-9770**	1	PLATE	
	3	1	**110-4206**	1	TRUNNION AS	
	4	1	**8E-6165**	1	BRACKET-RH	
		1	**8E-6166**	1	BRACKET-LH	
	5	1	**6I-8402**	2	SUPPORT	
	6	1	**9J-6058**	2	DEFLECTOR	
	7	1	**9J-0123**	2	TRUNNION	
	8	1	**8E-6155**	1	BRACKET AS-RH	
		1	**8E-6156**	1	BRACKET AS-LH	
					(EACH BRACKET AS INCLUDES)	
	9	1	**3G-9995**	1	PLATE	

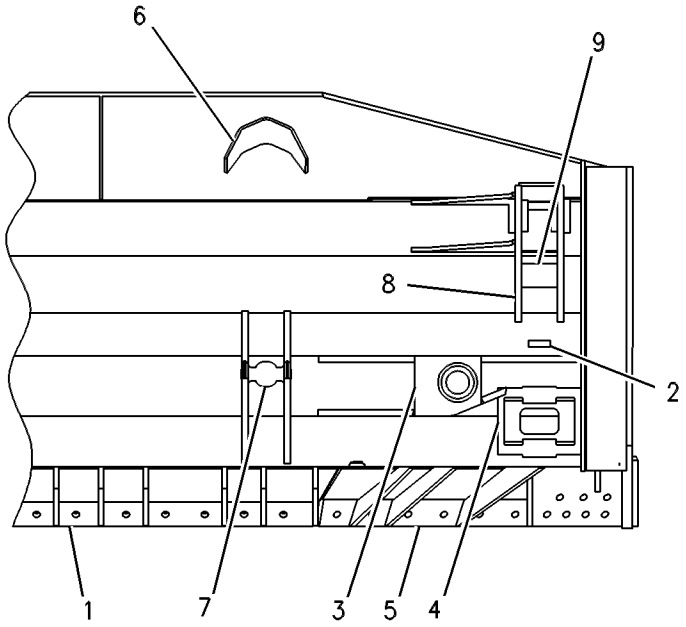

GRAPHIC #1 g00273233

WORK TOOLS

8E-7226 BLADE AS-UNIVERSAL

S/N: AKA1-UP

PART OF 9U-8086 BLADE & EDGE GP

SMCS-6053, 6060 **i01254756**

NOTE	PART NUMBER	QTY	PART NAME 1 2 3 4 5 6 (PRODUCT LEVEL)	SEE PAGE
Y	**8E-6187**	1	BLADE AS-UNIVERSAL	722
Y	*8E-4205*	1	GUARD GP-ROCK	689

Y-SEPARATE ILLUSTRATION

WORK TOOLS

151-1151 BLADE GP-ANGLING

S/N: BHR1-UP

PART OF 159-8377, 159-8378 BULLDOZER AR

SMCS-6052, 6060 **i01397572**

NOTE	REF NO	GRAPHIC REF	PART NUMBER	QTY	PART NAME 1 2 3 4 5 6 (PRODUCT LEVEL)	SEE PAGE
	1	1	**4J-5401**	1	RETAINER	
	2	1	**6J-3774**	2	PIN	
	3	1	**7T-6850**	2	RETAINER	
Y	4	1	*151-1150*	1	BLADE & EDGE GP	714
	5	1	**159-8807**	1	PIN	
M	6	1	**7X-2552**	5	BOLT (M16X2X30MM)	

M-METRIC PART
Y-SEPARATE ILLUSTRATION

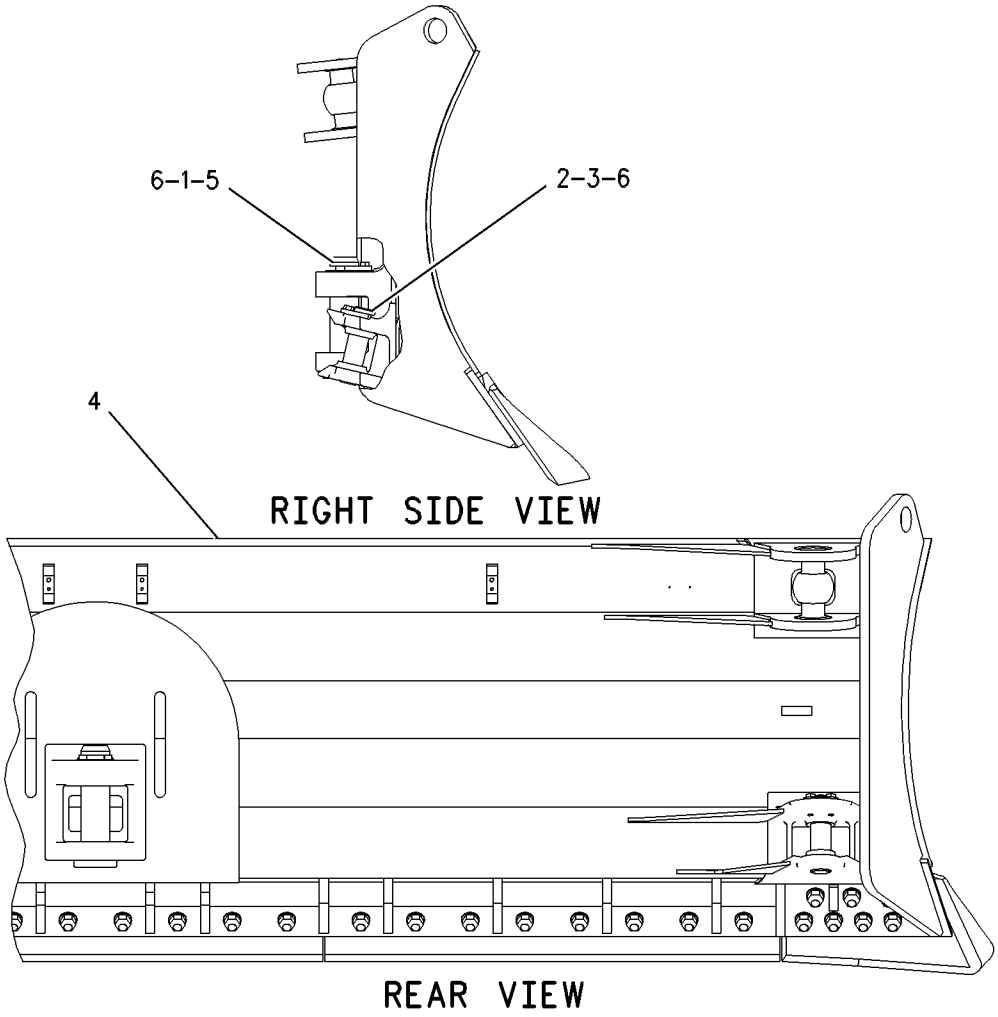

GRAPHIC #1 g00538747

8E-6151 BLADE GP-SEMI-UNIVERSAL

S/N: BHW1-UP

PART OF 159-1628 BULLDOZER AR-SEMI-UNIVERSAL

SMCS-6060, 6078 **i00570910**

NOTE	REF NO	GRAPHIC REF	PART NUMBER	QTY	PART NAME 1 2 3 4 5 6 (PRODUCT LEVEL)	SEE PAGE
Y	1	1	*9U-8083*	1	BLADE & EDGE GP	708
	2	1	**8E-6758**	2	CONNECTOR AS	
	3	1	**4T-7534**	2	PIN	
	4	1	**6J-5179**	4	RETAINER	
M	5	1	**7X-2574**	8	BOLT	
	6	1	**1U-2472**	2	PIN	

M-METRIC PART
Y-SEPARATE ILLUSTRATION

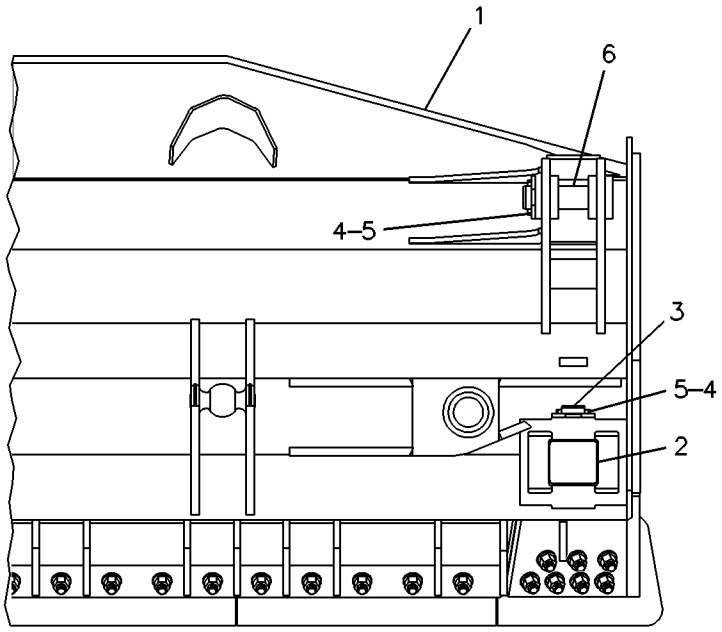

GRAPHIC #1 g00222840

WORK TOOLS

8E-6150 BLADE GP-UNIVERSAL

S/N: CXB1-UP; CXL1-UP

PART OF 159-1633 BULLDOZER AR, 159-1629 BULLDOZER AR-UNIVERSAL

SMCS-6053, 6060 **i01239353**

NOTE	REF NO	GRAPHIC REF	PART NUMBER	QTY	PART NAME 1 2 3 4 5 6 (PRODUCT LEVEL)	SEE PAGE
Y	1	1	*9U-8085*	1	BLADE & EDGE GP	709
	2	1	**1U-2472**	2	PIN	
	3	1	**6J-5179**	4	RETAINER	
M	4	1	**7X-2574**	8	BOLT	
	5	1	**8E-6758**	2	CONNECTOR AS	
	6	1	**4T-7534**	2	PIN	

M-METRIC PART
Y-SEPARATE ILLUSTRATION

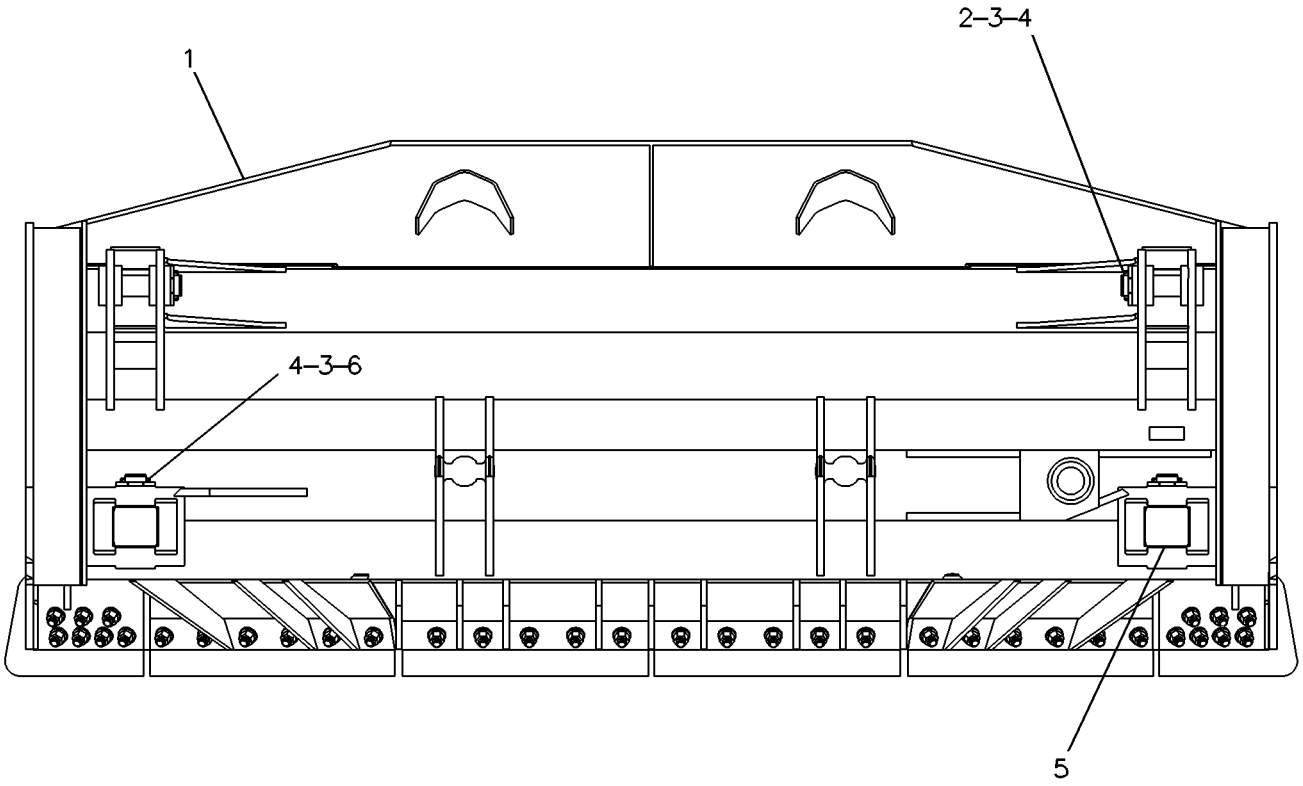

GRAPHIC #1 g00222832

WORK TOOLS

135-9374 EDGE GP-CUTTING

S/N: AKA1-UP; BHR1-UP

PART OF 151-1150 BLADE & EDGE GP

SMCS-6801 **i01397586**

NOTE	PART NUMBER	QTY	PART NAME 1 2 3 4 5 6 (PRODUCT LEVEL)	SEE PAGE
	8E-4193	1	BIT-END (RH)	
	8E-4194	1	BIT-END (LH)	
	4J-9058	38	BOLT-PLOW (1-8X3.25 IN)	
	135-9373	3	EDGE-CUTTING	
	2J-3507	38	NUT-FULL (1-8 THD)	
	5P-8250	38	WASHER (28X49X5MM THK)	

WORK TOOLS

9W-2707 PLATE GP-WEAR

S/N: AKA1-UP

PART OF 8E-7224 BLADE AS-SEMI-UNIVERSAL

SMCS-6820 **i01440966**

NOTE	REF NO	GRAPHIC REF	PART NUMBER	QTY	PART NAME 1 2 3 4 5 6 (PRODUCT LEVEL)	SEE PAGE
	1	1	**9W-2760**	1	PLATE-LH	
	2	1	**9W-1771**	1	PLATE-WEAR	
	3	1	**9W-2757**	1	PLATE-RH	

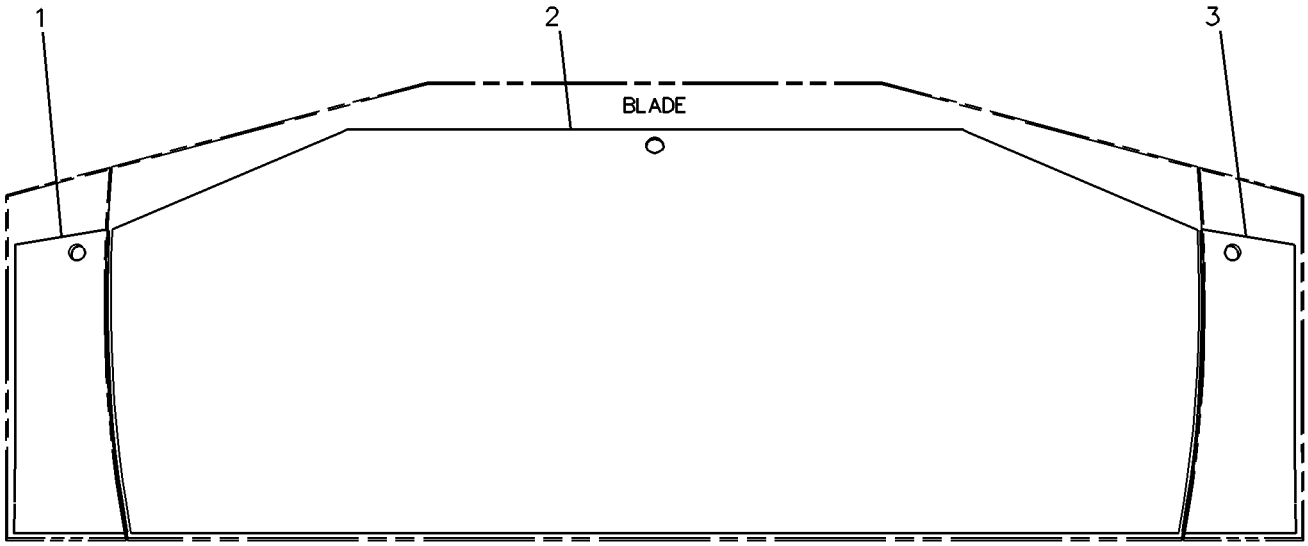

REAR VIEW

GRAPHIC #1 g00224190

WORK TOOLS

153-3132 RIPPER GP

S/N: BHD1-UP

PART OF 153-3130 RIPPER AR

SMCS-6311, 6312, 6315, 6316, 6325 **i01442169**

NOTE	REF NO	GRAPHIC REF	PART NUMBER	QTY	PART NAME 1 2 3 4 5 6 (PRODUCT LEVEL)	SEE PAGE
	1	1	**4T-2479**	2	PIN AS	
		1	**5J-3576**	1	SPRING	
Y	2	1	*4T-8986*	1	TOOTH GP-RIPPER	731
	3	1	**154-3230**	1	CARRIAGE AS	
		1	**8P-9770**	1	PLATE	
		1	**133-6614**	1	BOSS	
	4	1	**6J-6703**	1	PIN	

Y-SEPARATE ILLUSTRATION

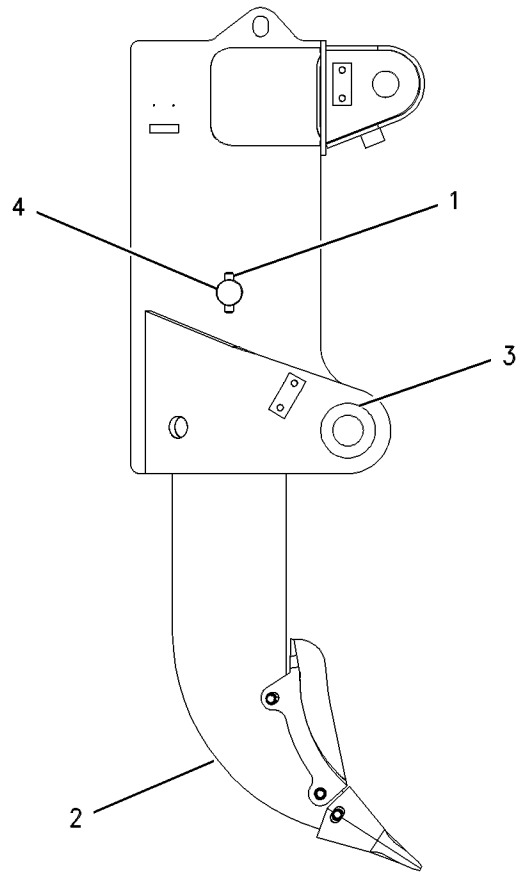

GRAPHIC #1 g00528119

WORK TOOLS

4T-0137 TOOTH GP-RIPPER

S/N: AKA1-UP

DEEP RIPPING SHANK

SMCS-6808, 6810 **i01256394**

NOTE	REF NO	GRAPHIC REF	PART NUMBER	QTY	PART NAME 1 2 3 4 5 6 (PRODUCT LEVEL)	SEE PAGE
C	1	1	**6Y-3394**	3	PIN-G.E.T.	
C	2	1	**8E-4743**	3	RETAINER-G.E.T.	
	3	1	**9W-2451**	1	TIP-RIPPER	
	4	1	**8E-1848**	1	PROTECTOR	
C	5	1	**8E-5340**	1	SHANK AS-RIPPER	
	6	1	**3G-5596**	1	LUG	

C-CHANGE FROM PREVIOUS TYPE

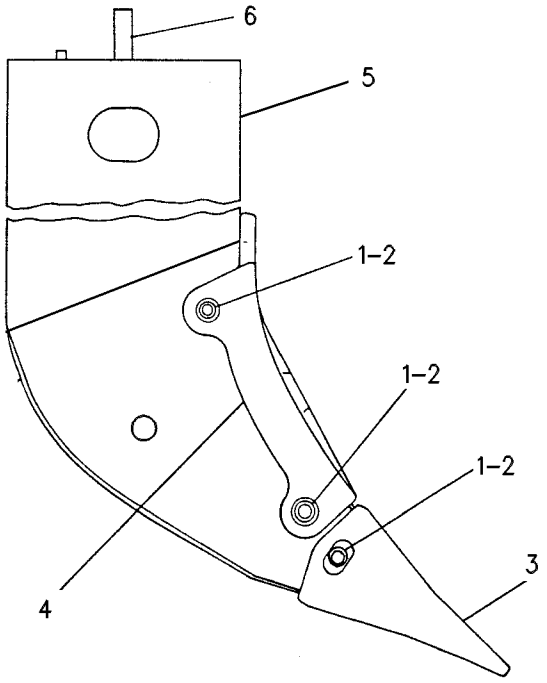

GRAPHIC #1 g00247217

WORK TOOLS

4T-8986 TOOTH GP-RIPPER

S/N: BHD1-UP

PART OF 153-3132 RIPPER GP

SMCS-6808, 6810 **i00570526**

NOTE	REF NO	GRAPHIC REF	PART NUMBER	QTY	PART NAME 1 2 3 4 5 6 (PRODUCT LEVEL)	SEE PAGE
	1	1	**6Y-3394**	3	PIN-G.E.T.	
	2	1	**8E-4743**	3	RETAINER-G.E.T.	
	3	1	**9W-2451**	1	TIP-RIPPER	
	4	1	**8E-1848**	1	PROTECTOR	
	5	1	**8E-5347**	1	SHANK AS-RIPPER	
	6	1	**3G-5596**	1	LUG	

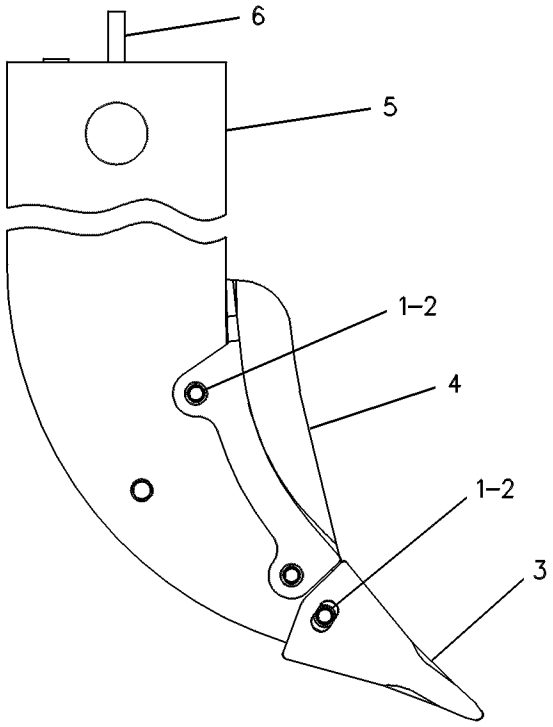

GRAPHIC #1 g00234413

WORK TOOLS

4T-8987 TOOTH GP-RIPPER

S/N: AKA1-UP

SMCS-6808, 6810 **i00570530**

NOTE	REF NO	GRAPHIC REF	PART NUMBER	QTY	PART NAME 1 2 3 4 5 6 (PRODUCT LEVEL)	SEE PAGE
	1	1	**4T-2479**	2	PIN AS	
					(EACH INCLUDES)	
		1	**5J-3576**	1	SPRING	
	2	1	**6Y-3394**	3	PIN-G.E.T.	
	3	1	**9W-2452**	1	TIP-RIPPER	
	4	1	**8E-1848**	1	PROTECTOR	
	5	1	**8E-5346**	1	SHANK AS-RIPPER	
	6	1	**3G-5596**	1	LUG	
	7	1	**8E-4743**	3	RETAINER-G.E.T.	
	8	1	**6J-6680**	1	PIN	

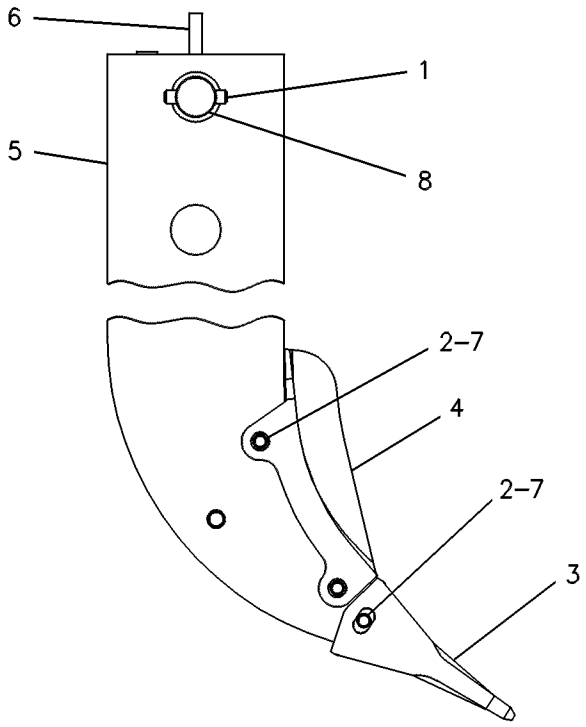

GRAPHIC #1 g00234302

OPERATOR STATION

158-2959 AIR CONDITIONER AR

S/N: AKA1-UP
R-134A REFRIGERANT
CANNOT BE USED WITH 157-8035—PAGE 9

SMCS-7320 **i01445736**

NOTE	PART NUMBER	QTY	PART NAME 1 2 3 4 5 6 (PRODUCT LEVEL)	SEE PAGE
Y	*108-0720*	1	AIR CONDITIONER GP	736
Y	*159-7301*	1	COMPRESSOR GP-REFRIGERANT	750
Y	*109-9941*	1	CONDENSER & MTG GP-REFRIGERANT	752
Y	*159-3969*	1	LINES GP-AIR CONDITIONER	790
	110-6393	1	PLATE-INSTRUCTION (AIR CONDITIONER)	
			ON LH SIDE OF DASH APPROXIMATELY 250MM ABOVE FLOOR AND 10MM IN FRONT OF DASH REAR EDGE	
	125-9257	1	SWITCH AS-ROCKER	
	3E-8825	2	LAMP (24 VOLT)	
	3E-8857	1	SWITCH AS	
	126-1699	1	ACTUATOR-ROCKER	

Y-SEPARATE ILLUSTRATION

OPERATOR STATION

158-2960 AIR CONDITIONER AR

S/N: AKA1-UP

R-134A REFRIGERANT WITH ROMOTE MOUNTED CONDENSER

SMCS-7320 **i01445980**

NOTE	PART NUMBER	QTY	PART NAME 1 2 3 4 5 6 (PRODUCT LEVEL)	SEE PAGE
Y	*108-0720*	1	AIR CONDITIONER GP	736
Y	*159-7301*	1	COMPRESSOR GP-REFRIGERANT	750
Y	**103-9527**	1	CONDENSER GP-REFRIGERANT	754
Y	*159-3968*	1	LINES GP-AIR CONDITIONER	786
Y	*133-2259*	1	MIRROR GP	796
	110-6393	1	PLATE-INSTRUCTION (AIR CONDITIONER)	
			ON LH SIDE OF DASH APPROXIMATELY 250MM ABOVE FLOOR AND 10MM IN FRONT OF DASH REAR EDGE	
	125-9257	1	SWITCH AS-ROCKER	
	3E-8825	2	LAMP (24 VOLT)	
	3E-8857	1	SWITCH AS	
	126-1699	1	ACTUATOR-ROCKER	

Y-SEPARATE ILLUSTRATION

OPERATOR STATION

158-6439 AIR CONDITIONER AR

S/N: AKA1-UP
4-134A REFRIGERANT-ROPS MOUNTED
PART OF 143-7740 WOODCHIP AR

SMCS-7320 **i01446187**

NOTE	PART NUMBER	QTY	PART NAME 1 2 3 4 5 6 (PRODUCT LEVEL)	SEE PAGE
Y	*108-0720*	1	AIR CONDITIONER GP	736
Y	*159-7301*	1	COMPRESSOR GP-REFRIGERANT	750
Y	**103-9527**	1	CONDENSER GP-REFRIGERANT	754
Y	*159-3967*	1	LINES GP-AIR CONDITIONER	782
	110-6393	1	PLATE-INSTRUCTION (AIR CONDITIONER)	
			ON LH SIDE OF DASH APPROXIMATELY 250MM ABOVE FLOOR AND 10MM IN FRONT OF DASH REAR EDGE	
	159-8853	1	ROPS AS	
	125-9257	1	SWITCH AS-ROCKER	
	3E-8857	1	SWITCH AS	
	126-1699	1	ACTUATOR-ROCKER	
	3E-8825	2	LAMP (24 VOLT)	

Y-SEPARATE ILLUSTRATION

OPERATOR STATION

108-0720 AIR CONDITIONER GP

S/N: AKA1-UP

PART OF 158-2959, 158-2960, 158-6439 AIR CONDITIONER AR

SMCS-7320 **i01093699**

NOTE	REF NO	GRAPHIC REF	PART NUMBER	QTY	PART NAME 1 2 3 4 5 6 (PRODUCT LEVEL)	SEE PAGE
B	1	1	**6K-9555**	1	GROMMET	
BD	2	1	**5P-5643**		SEAL	
	3	1	**109-6406**	1	COIL AS	
	4	1	**3E-5464**	1	SWITCH AS-THERMOSTAT	
	5	1	**6L-7159**	2	SCREW-MACHINE (8-32X.313 IN)	
M	6	1	**8T-4191**	2	BOLT (M10X1.50X16MM)	
	7	1	**2V-1937**	1	GROMMET	
	8	1	**5P-1075**	2	WASHER-HARD (3MM THK)	
	9	1	**1V-3113**	1	CLIP	
	10	1	**2A-3211**	1	WASHER (0.8MM THK)	
	11	1	**7S-4346**	1	SCREW-MACHINE	
D	12	1	**5P-5992**		HOSE (.1M)	
B	13	1	**2V-1937**	1	GROMMET	

B-USE AS REQUIRED
D-ORDER BY THE METER
M-METRIC PART

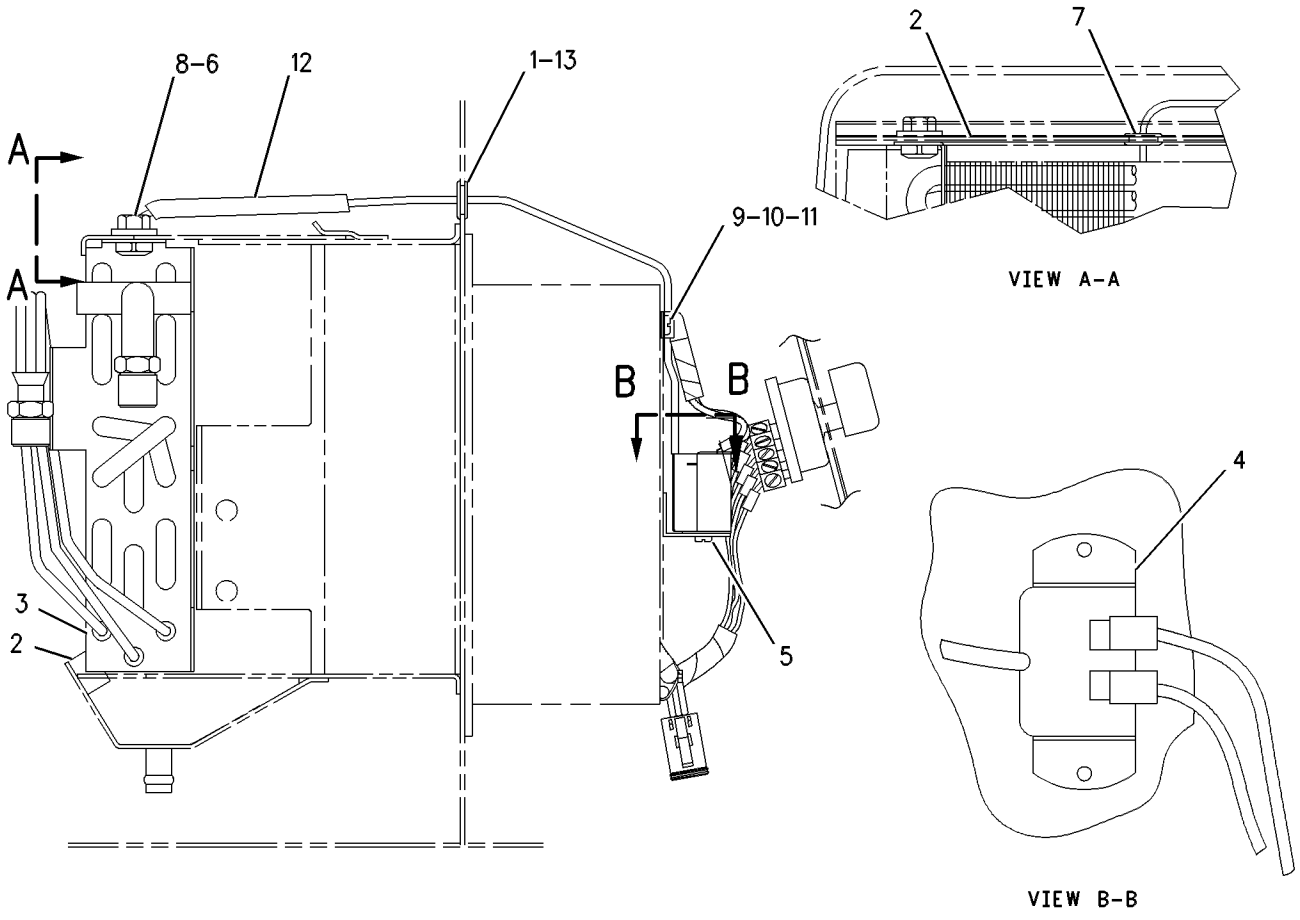

GRAPHIC #1 g00547149

MEMORANDA

OPERATOR STATION

159-0653 BLOWER GP-CAB

S/N: AKA1-UP

PART OF 159-0725 PRESSURIZER GP-CAB

SMCS-7316 **i01447146**

NOTE	REF NO	GRAPHIC REF	PART NUMBER	QTY	PART NAME 1 2 3 4 5 6 (PRODUCT LEVEL)	SEE PAGE
	1	1	**1M-1230**	4	NUT & LOCK AS	
	2	1	**3E-9865**	7	LOCKNUT (1/4-20 THD)	
	3	1	**3S-2093**	2	STRAP-CABLE	
	4	1	**6T-6708**	2	WASHER (7X28.6X4.1MM THK)	
	5	1	**8C-3756**	1	FILM-IDENTIFICATION (GROUP & SEQUENCE NO.)	
	6	1	**037-4838**	2	CLAMP	
	7	1	**118-5195**	2	WHEEL-BLOWER	
	8	1	**125-9740**	1	RESISTOR	
	9	1	**132-6534**	2	PLATE-ORIFICE	
	10	1	**172-9290**	1	HARNESS AS	
		1	**102-8805**	1	KIT-RECEPTACLE (6 PIN)	
					(INCLUDES RECEPTACLE AS & WEDGE)	
		1	**155-2270**	2	KIT-CONNECTING PLUG (2 PIN)	
					(INCLUDES PLUG AS & WEDGE)	
	11	1	**174-1504**	2	MOTOR AS	
		1	**3E-3365**	1	WEDGE-RECEPTACLE LOCK (2 PIN)	
		1	**9W-0852**	2	PIN-CONNECTOR	
		1	**102-8802**	1	KIT-RECEPTACLE (2 PIN)	
					(INCLUDES RECEPTACLE AS & WEDGE)	
	12	1	**175-0070**	4	BRACKET	
	13	1	**176-2504**	1	PLATE AS	
	14	1	**176-2505**	1	GASKET	
	15	1	**4B-4274**	4	WASHER (5.5X13X1.2MM THK)	
	16	1	**5P-4115**	6	WASHER-HARD (7.2X19X2MM THK)	
	17	1	**5P-8441**	1	GROMMET	
	18	1	**6D-4246**	2	CLIP	
	19	1	**6V-1668**	2	WASHER (6.5X29.1X3MM THK)	
	20	1	**6V-3320**	1	SCREW-MACHINE (1/4-20X7.50 IN)	

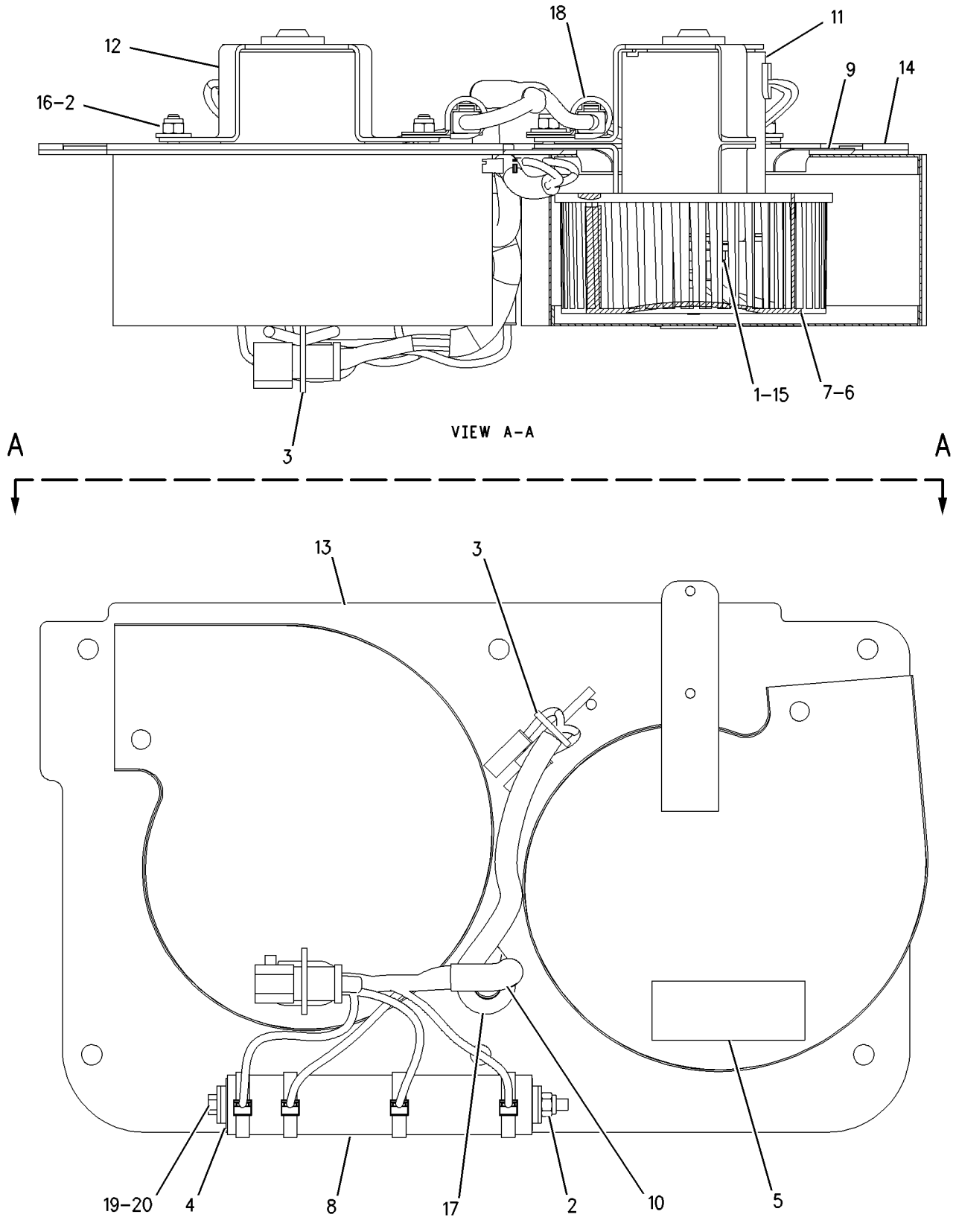

GRAPHIC #1 g00759306

OPERATOR STATION

169-9648 BOTTLE GP-WINDOW WASHER—WINDSHIELD WASHER

S/N: AKA1-UP

PART OF 159-8367 CAB AR

SMCS-7306 **i01477644**

NOTE	REF NO	GRAPHIC REF	PART NUMBER	QTY	PART NAME 1 2 3 4 5 6 (PRODUCT LEVEL)	SEE PAGE
	1	1	**3S-2093**	1	STRAP-CABLE	
	2	1	**8T-5383**	4	VALVE AS-CHECK (WIPER/WASHER SYSTEM)	
Y	3	1	*169-9649*	1	BOTTLE GP-WINDOW WASHER	742
	4	1	**4M-5281**	5	BOLT (1/4-20X0.750 IN)	
	5	1	**4P-8134**	1	CLIP	
	6	1	**8T-4205**	5	WASHER-HARD (7.2X14.5X2MM THK)	

Y-SEPARATE ILLUSTRATION

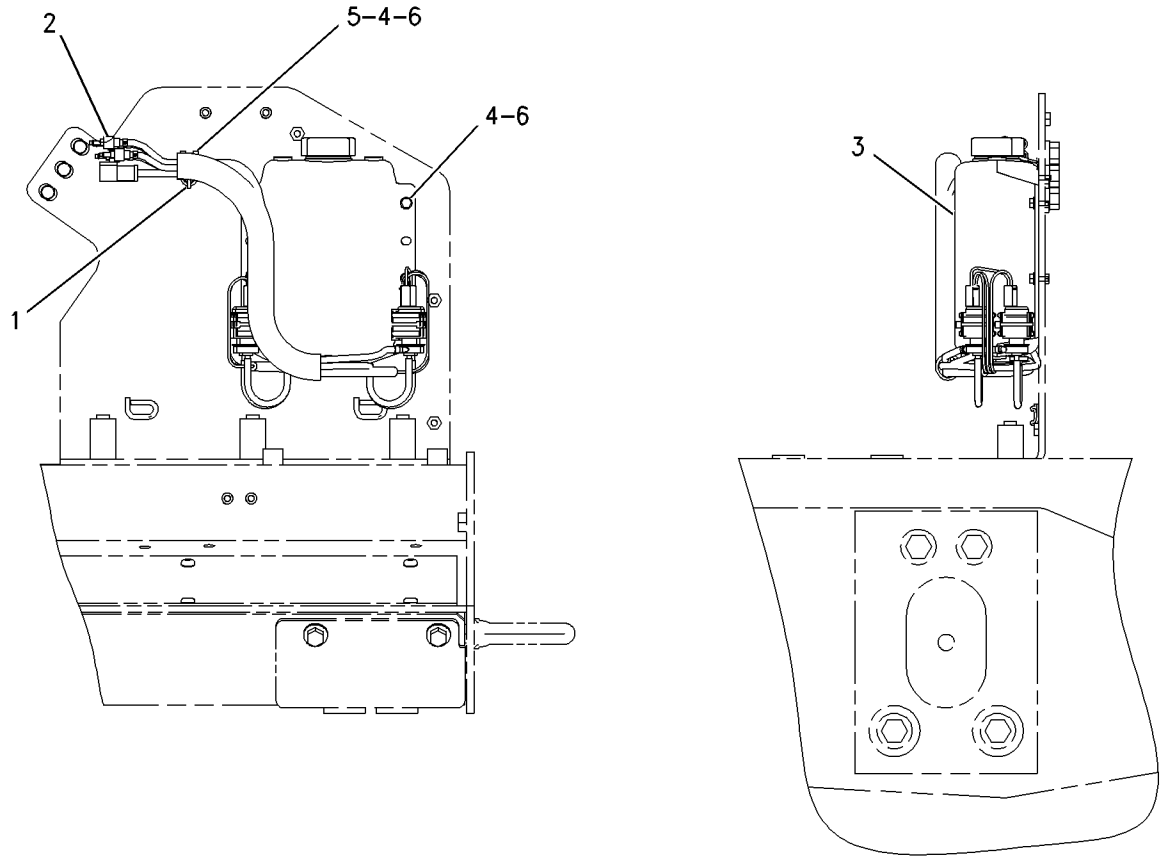

GRAPHIC #1 g00672058

MEMORANDA

OPERATOR STATION

169-9649 BOTTLE GP-WINDOW WASHER

S/N: AKA1-UP

PART OF 169-9648 BOTTLE GP-WINDOW WASHER

SMCS-7306 **i01477704**

NOTE	REF NO	GRAPHIC REF	PART NUMBER	QTY	PART NAME 1 2 3 4 5 6 (PRODUCT LEVEL)	SEE PAGE
	1	1	**169-9650**	1	BOTTLE-WASHER	
	2	1	**8E-8292**	1	CAP-VENTED	
BE	3	1	**7X-7930**		TAPE	
	4	1	**186-4857**	1	HARNESS AS (WATER BOTTLE)	
		1	**102-8805**	1	KIT-RECEPTACLE (6 PIN)	
					(INCLUDES RECEPTACLE AS & WEDGE)	
BD	5	1	**6V-5817**		CONDUIT-FLEXIBLE	
	6	1	**7T-8891**	4	PUMP AS-WASHER	
	7	1	**7K-1181**	6	STRAP-CABLE	
BE	8	1	**7X-7927**		TAPE	
BE	9	1	**7X-7928**		TAPE	
BE	10	1	**7X-7929**		TAPE	
E	11	1	**144-0195**	1	HOSE (64CM)	
E	12	1	**144-0195**	4	HOSE (15CM EACH)	
E	13	1	**144-0195**	2	HOSE (58CM EACH)	
E	14	1	**144-0195**	1	HOSE (59CM)	

B-USE AS REQUIRED
D-ORDER BY THE METER
E-ORDER BY THE CENTIMETER

169-9649 BOTTLE GP-WINDOW WASHER *(contd.)* **i01477704**

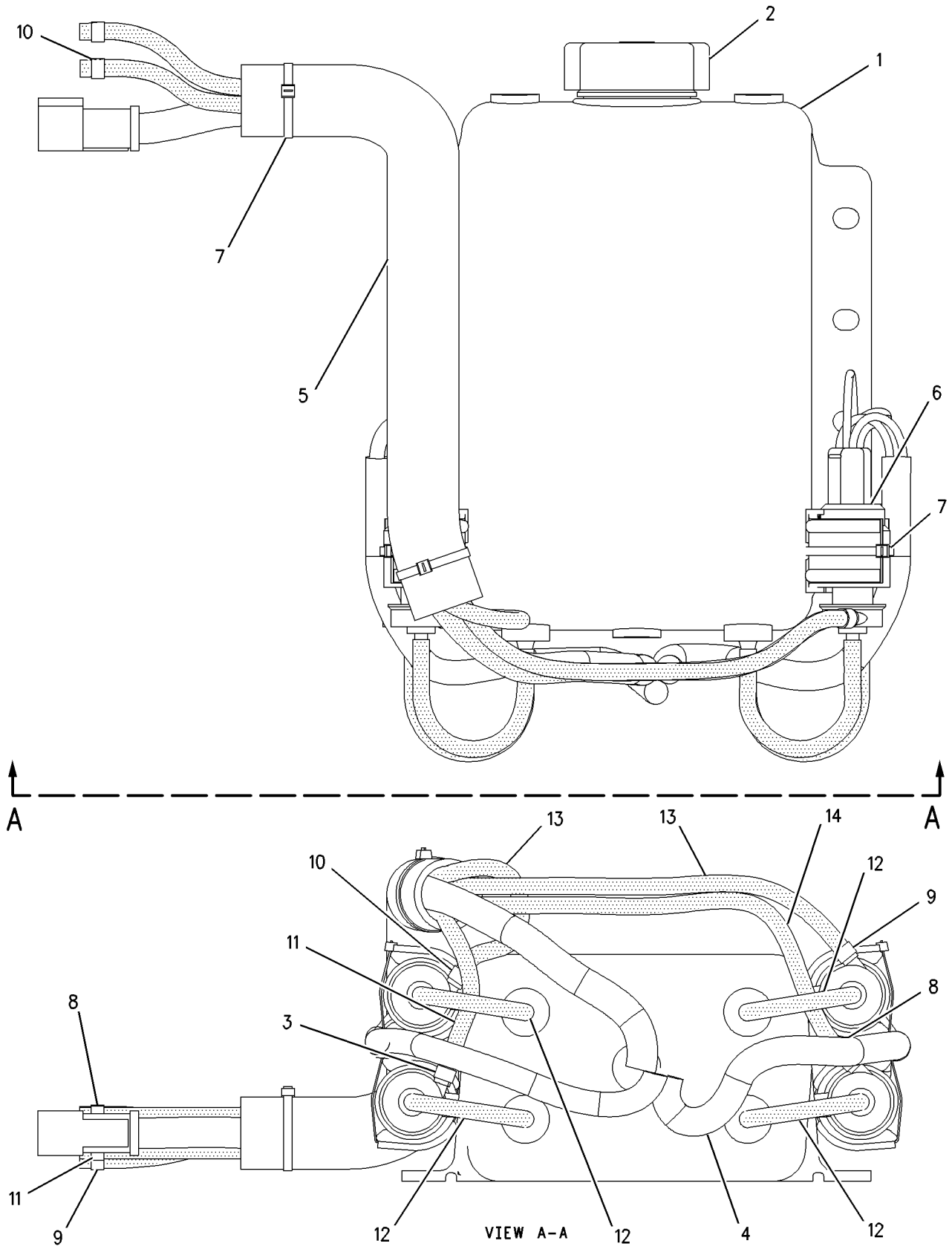

GRAPHIC #1

g00745464

OPERATOR STATION

158-7694 CAB AR

S/N: AKA1-UP

PART OF 159-8367 CAB AR

SMCS-7301, 7325, 7335 **i01448462**

NOTE	PART NUMBER	QTY	PART NAME 1 2 3 4 5 6 (PRODUCT LEVEL)	SEE PAGE
Y	*158-7696*	1	CAB GP	746
Y	*105-9657*	1	INSTALLATION GP-RADIO	769
Y	*158-7695*	1	LINER GP-CAB	778
Y	*105-9659*	1	MIRROR GP-REAR VIEW	798
Y	*158-7690*	1	WASHER GP-WINDOW	848
Y	*158-7691*	1	WIPER GP-WINDOW	870

Y-SEPARATE ILLUSTRATION

OPERATOR STATION

159-8367 CAB AR

S/N: AKA1-UP

SMCS-7301, 7325, 7335 **i01447075**

NOTE	PART NUMBER	QTY	PART NAME 1 2 3 4 5 6 (PRODUCT LEVEL)	SEE PAGE
Y	*169-9648*	1	BOTTLE GP-WINDOW WASHER	740
Y	*158-7694*	1	CAB AR	744
Y	*156-7409*	1	COVER GP-CONSOLE	760
Y	*108-2675*	1	HEATER GP-CAB	764
Y	*156-0244*	1	INSTRUMENT GP-CAB	774
Y	*161-6207*	1	LINES GP-HEATER	794
Y	*169-9637*	1	MOUNTING GP-CAB	804
Y	*159-0725*	1	PRESSURIZER GP-CAB	818
Y	*159-8809*	1	ROPS GP-ENCLOSED	826
Y	**160-7186**	1	SEAT GP-SUSPENSION	840
Y	*194-4269*	1	WIRING GP-THROTTLE	291
	170-0258	1	PANEL	
	3E-6513	1	FILM-CATERPILLAR	
			CENTER ABOVE REAR WINDOW ON BACK OF CAB	
	184-3287	1	FLOORPLATE AS	
	184-3285	1	PANEL	
M	**8T-3490**	2	NUT-WELD (M10X1.5 THD)	
	184-3290	1	FLOORPLATE AS	
M	**8T-3597**	4	NUT-WELD (M12X1.75 THD)	
	184-3289	1	PANEL	
	1J-1256	2	PLUG-PROTECTION	
	190-2937	1	PLATE-ROPS	
	159-4717	1	PLATE-FOPS	
	9W-8760	1	PLATE-LH	
	9W-8761	1	PLATE-RH	
	9N-1995	6	RIVET-POP	
	6J-0488	2	SCREW-BUTTON HEAD (3/8-16X0.875 IN)	
BE	**3E-3892**		SEAL	
BD	**5P-8309**		SEAL	
	8T-9530	4	TACK-FASTENER	

B-USE AS REQUIRED
D-ORDER BY THE METER
E-ORDER BY THE CENTIMETER
M-METRIC PART
Y-SEPARATE ILLUSTRATION

OPERATOR STATION

158-7696 CAB GP

S/N: AKA1-UP

PART OF 158-7694 CAB AR

SMCS-7301, 7325, 7335 **i01469103**

NOTE	REF NO	GRAPHIC REF	PART NUMBER	QTY	PART NAME 1 2 3 4 5 6 (PRODUCT LEVEL)	SEE PAGE
	1	2	**5G-8655**	2	LEVER	
	2	2	**6I-9386**	2	BRACKET AS	
					(EACH INCLUDES)	
		2	**7P-7610**	2	PLATE	
	3	2	**6V-2331**	2	HANDLE AS	
	4	2	**6V-2375**	2	HANDLE AS-INSIDE	
	5	2	**6V-3260**	8	BOLT-SOCKET HEAD (1/4-20X0.75 IN)	
	6	2	**6V-7190**	2	LEVER AS	
					(EACH INCLUDES)	
		2	**6V-8129**	2	SETSCREW-SOCKET	
	7	2	**6V-7636**	4	PIN AS-SPRING	
	8	2	**6V-8073**	2	LINK-CONNECTING	
	9	1	**7G-2454**	1	GLASS (TINTED)	
	10	2	**8C-3442**	2	SPRING-COIL	
Y	11	1	**8E-5112**	1	WINDOW AS-SLIDING (REAR)	850
Y	12	1	**8E-5113**	1	WINDOW AS-SLIDING (RH)	851
Y	13	1	**8E-5114**	1	WINDOW AS-SLIDING (LH)	852
B	14	2	**8T-0318**	8	SHIM (0.8MM THK)	
	15	2	**8T-1979**	1	LINKAGE AS	
		2	**8T-8914**	1	SEAL-LINKAGE	
	16	2	**8T-1980**	1	LINKAGE AS	
		2	**8T-8914**	1	SEAL-LINKAGE	
	17	2	**8T-3561**	1	PLATE-IDENTIFICATION	
	18	2	**8Y-8304**	2	STRIKER AS-LATCH	
					(EACH INCLUDES)	
		2	**8T-4158**	1	WASHER	
	19	1	**9G-1127**	2	GLASS	
	20	2	**109-9828**	1	LATCH AS-ROTARY	
	21	2	**109-9829**	1	LATCH AS-ROTARY	
	22	2	**118-0693**	2	ROD	
	23	1	**125-8254**	2	GLASS	
	24	1	**156-5086**	1	DOOR AS-LH	
	25	1	**156-5087**	1	DOOR AS-RH	
					(EACH DOOR AS INCLUDES)	
M		1	**6V-9632**	2	NUT-WELD (M6X1 THD)	
	26	1	**158-7697**	1	CAB AS	
M		1	**6V-9632**	13	NUT-WELD (M6X1 THD)	
		1	**1K-5888**	2	SPACER (.42X.67X.63 IN THK)	
		1	**8E-3276**	4	SPACER (7.5X15X5MM THK)	
		1	**5G-8871**	2	BOSS	
		1	**7T-1099**	14	LINK	
		1	**9T-6001**	2	BOSS	
	27	2	**170-5854**	1	BRACKET-RH	
	28	2	**170-5855**	1	BRACKET-LH	
	29	2	**1B-8735**	2	KEY-WOODRUFF	
	30	2	**4K-3533**	2	WASHER (9.7X17.5X1.6MM THK)	
	31	2	**4M-6425**	2	BOLT (5/16-18X1 IN)	
	32	2	**5M-8500**	2	KNOB	
	33	1	**5P-1076**	1	WASHER-HARD (13.5X30X4MM THK)	
	34	2	**6V-8189**	2	NUT (5/16-18 THD)	
	35	2	**7X-0623**	12	WASHER (10.5X21X2MM THK)	
	36	2	**7X-7729**	12	WASHER (11X25X3MM THK)	
M	37	2	**8T-4136**	24	BOLT (M10X1.5X25MM)	
M	38	2	**8T-4181**	8	BOLT (M6X1X20MM)	
M	39	1	**8T-4192**	1	BOLT (M12X1.75X25MM)	
	40	2	**8T-9043**	2	BOLT (5/16-18X.875 IN)	

158-7696 **CAB GP** ***(contd.)*** **i01469103**

NOTE	REF NO	GRAPHIC REF	PART NUMBER	QTY	PART NAME 1 2 3 4 5 6 (PRODUCT LEVEL)	SEE PAGE
	41	2	**9D-9736**	2	BUMPER	
	42	2	**9N-1995**	2	RIVET-POP	
BD	43	1	**5P-6605**		SEAL	
BD	44	2	**5P-5930**		SEAL	
BE	45	2	**103-2543**		SEAL	
BD	46	2	**5P-5643**		SEAL	
BD	47	2	**5P-7483**		SEAL	
BD	48	2	**8T-6936**		SEAL	

B-USE AS REQUIRED
D-ORDER BY THE METER
E-ORDER BY THE CENTIMETER
M-METRIC PART
Y-SEPARATE ILLUSTRATION

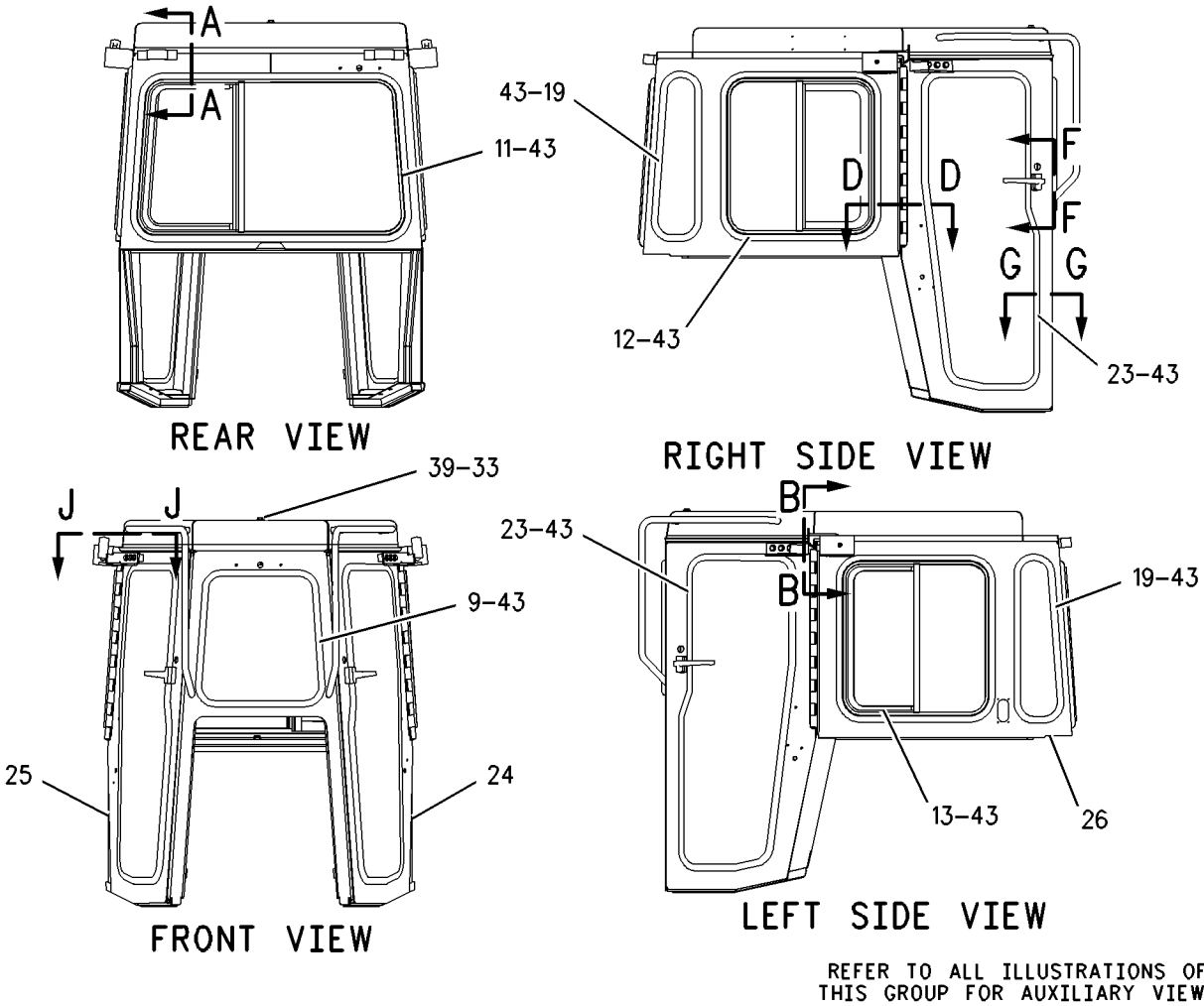

REFER TO ALL ILLUSTRATIONS OF THIS GROUP FOR AUXILIARY VIEWS

GRAPHIC #1 g00672173

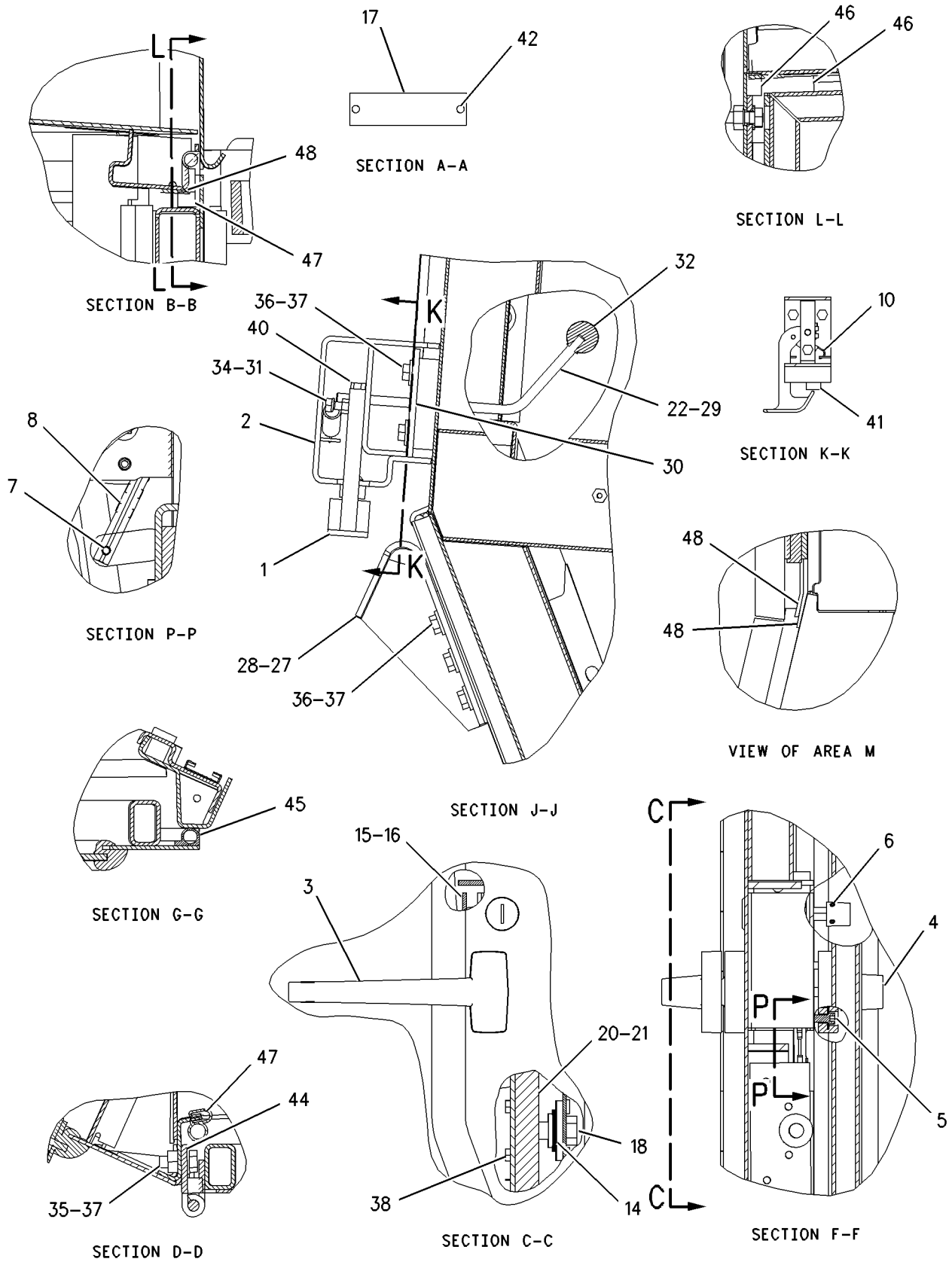

GRAPHIC #2 g00745481

OPERATOR STATION

3E-1906 COMPRESSOR GP-REFRIGERANT

S/N: AKA1-UP

PART OF 159-7301 COMPRESSOR GP-REFRIGERANT

SMCS-1802 **i01093702**

NOTE	REF NO	GRAPHIC REF	PART NUMBER	QTY	PART NAME 1 2 3 4 5 6 (PRODUCT LEVEL)	SEE PAGE
C	1	1	**7T-4532**	1	PLUG AS	
C	2	1	**9X-7385**	2	SEAL-O-RING (20.22MM ID)	

C-CHANGE FROM PREVIOUS TYPE

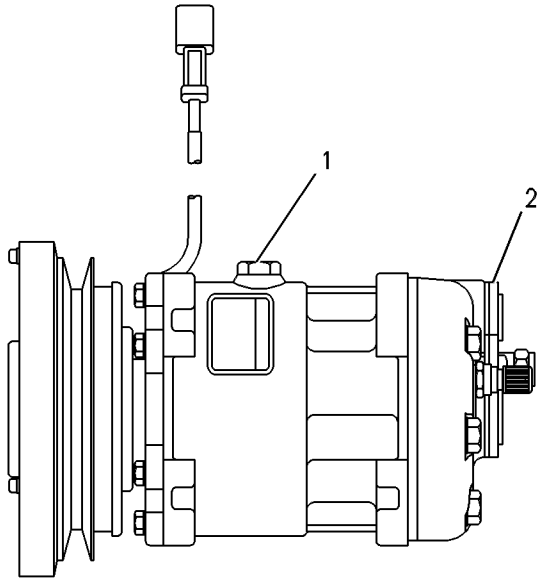

GRAPHIC #1 g00273360

OPERATOR STATION

159-7301 COMPRESSOR GP-REFRIGERANT

S/N: AKA1-UP

PART OF 158-2959, 158-2960, 158-6439 AIR CONDITIONER AR

SMCS-1802 **i01498006**

NOTE	REF NO	GRAPHIC REF	PART NUMBER	QTY	PART NAME 1 2 3 4 5 6 (PRODUCT LEVEL)	SEE PAGE
	1	1	**2S-9506**	1	V-BELT (AIR CONDITIONER COMPRESSOR)	
Y	2	1	**3E-1906**	1	COMPRESSOR GP-REFRIGERANT	749
	3	1	**8S-5383**	1	BLOCK	
	4	1	**198-7464**	1	BRACKET	
	5	1	**200-3908**	1	SUPPORT-COMPRESSOR	
	6	1	**200-3909**	1	BRACKET AS	
		1	**7T-1099**	2	LINK	
	7	1	**1S-4698**	1	ROD	
	8	1	**4L-9337**	7	BOLT (3/8-16X1.5 IN)	
	9	1	**5P-2424**	1	BOLT (1/2-13X2.25 IN)	
	10	1	**5P-2566**	1	BOLT (1/2-13X1.5 IN)	
	11	1	**6V-8188**	3	NUT (1/2-13 THD)	
	12	1	**6V-8801**	5	NUT (3/8-16 THD)	
	13	1	**7C-7595**	1	BRACKET	
	14	1	**7X-0328**	2	BOLT (1/2-13X3.50 IN)	
	15	1	**7X-0345**	1	BOLT (5/8-11X1.75 IN)	
	16	1	**7X-0448**	2	NUT (5/8-11 THD)	
	17	1	**7X-0515**	1	WASHER-HARD (17X35X5MM THK)	
	18	1	**8N-3525**	1	SPACER (14.3X17.5X17.5MM THK)	
	19	1	**8T-4223**	10	WASHER-HARD (13.5X25.5X3MM THK)	
	20	1	**8T-4896**	12	WASHER-HARD (10.2X18.5X2.5MM THK)	
	21	1	**8T-8917**	1	BOLT (1/2-13X1.25 IN)	
	22	1	**8T-8919**	2	BOLT (1/2-13X1.75 IN)	

Y-SEPARATE ILLUSTRATION

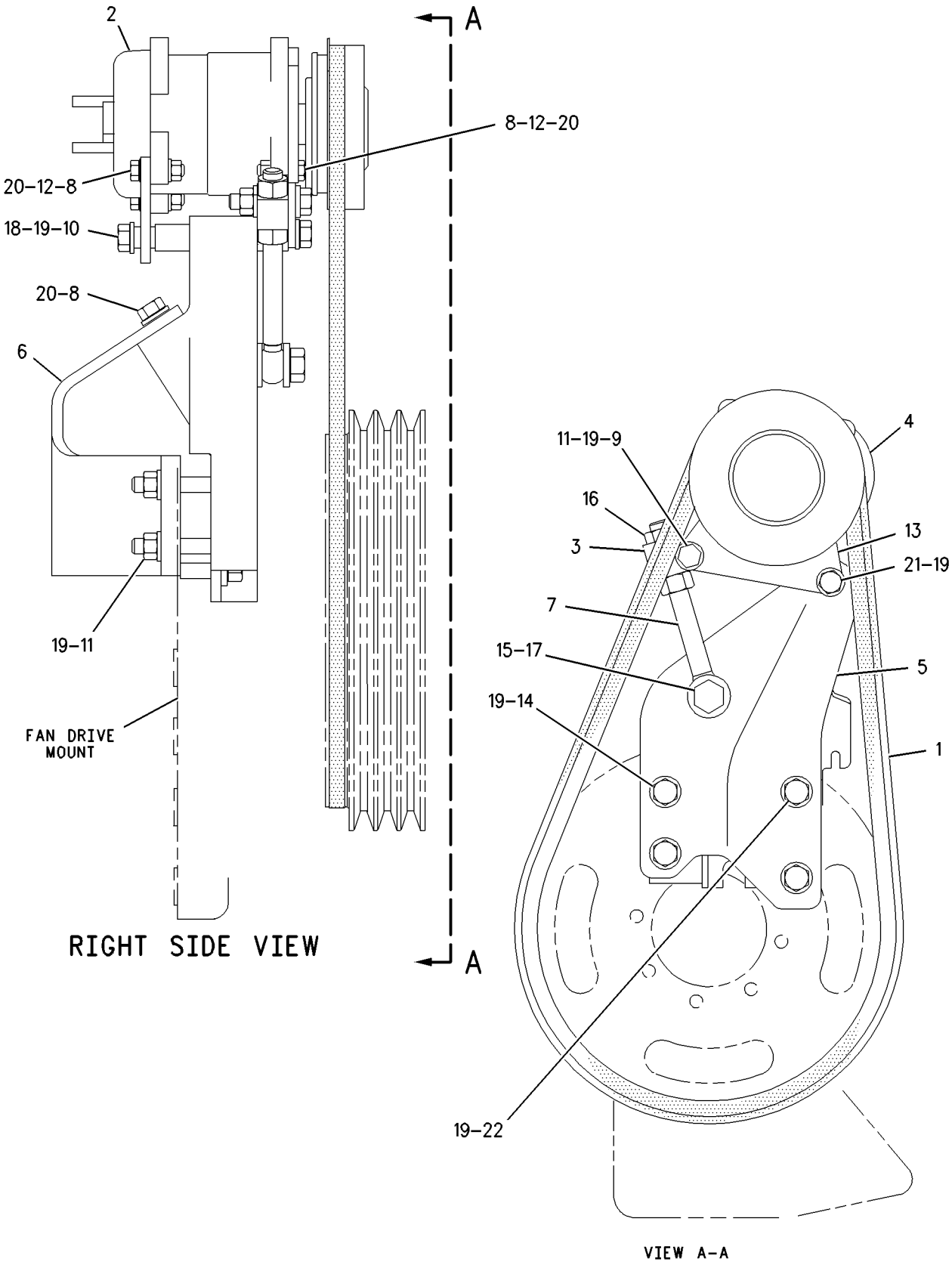

GRAPHIC #1

g00764619

OPERATOR STATION

109-9941 CONDENSER & MTG GP-REFRIGERANT

S/N: AKA1-UP

PART OF 158-2959 AIR CONDITIONER AR

SMCS-1805 **i01026726**

NOTE	REF NO	GRAPHIC REF	PART NUMBER	QTY	PART NAME 1 2 3 4 5 6 (PRODUCT LEVEL)	SEE PAGE
	1	1	**105-9227**	1	CONDENSER	
	2	1	**112-2625**	1	BAFFLE AS	
		1	**1F-0750**	3	NUT-WELD (3/8-16 THD)	
	3	1	**110-6891**	1	BRACKET AS-RH	
		1	**1F-0750**	2	NUT-WELD (3/8-16 THD)	
	4	1	**110-6897**	1	BRACKET-RH	
	5	1	**110-6896**	1	BRACKET AS-LH	
		1	**1F-0748**	2	NUT-WELD (1/2-13 THD)	
		1	**1F-0750**	4	NUT-WELD (3/8-16 THD)	
	6	1	**110-6898**	1	BRACKET-LH	
	7	1	**110-6928**	1	SUPPORT AS	
		1	**7M-7794**	2	STUD-WELD	
	8	1	**108-8717**	1	BRACKET AS	
		1	**3Y-7829**	1	BOSS (3/8-16 THD)	
		1	**7M-7794**	2	STUD-WELD	
	9	1	**110-6918**	1	SUPPORT AS	
		1	**5M-9621**	2	STUD-WELD (3/8-16 THD)	
	10	1	**5P-1075**	6	WASHER-HARD (3MM THK)	
	11	1	**4L-6454**	2	BOLT (3/8-16X1.0IN)	
	12	1	**8T-4896**	9	WASHER-HARD (2.5MM THK)	
	13	1	**6V-8801**	2	NUT (3/8-16 THD)	
	14	1	**8T-4835**	6	BOLT (1/2X2.0 IN)	
	15	1	**4L-9337**	4	BOLT (3/8-16X1.5IN)	
	16	1	**9L-8781**	4	WASHER	
	17	1	**6N-8744**	4	MOUNT	
	18	1	**8T-8917**	2	BOLT (1/2-13X1.25IN)	
	19	1	**8T-4223**	2	WASHER-HARD (3MM THK)	
	20	1	**5M-3062**	8	BOLT (3/8-16X.75IN)	
	21	1	**9B-7237**	2	BOLT (3/8-16X1.25IN)	
	22	1	**7D-7233**	2	CLIP (38.1MM ID)	
	23	1	**7N-1277**	1	BRACKET AS	
		1	**1F-0750**	1	NUT-WELD (3/8-16 THD)	
	24	1	**5S-7379**	1	BOLT (3/8-16X.875IN)	

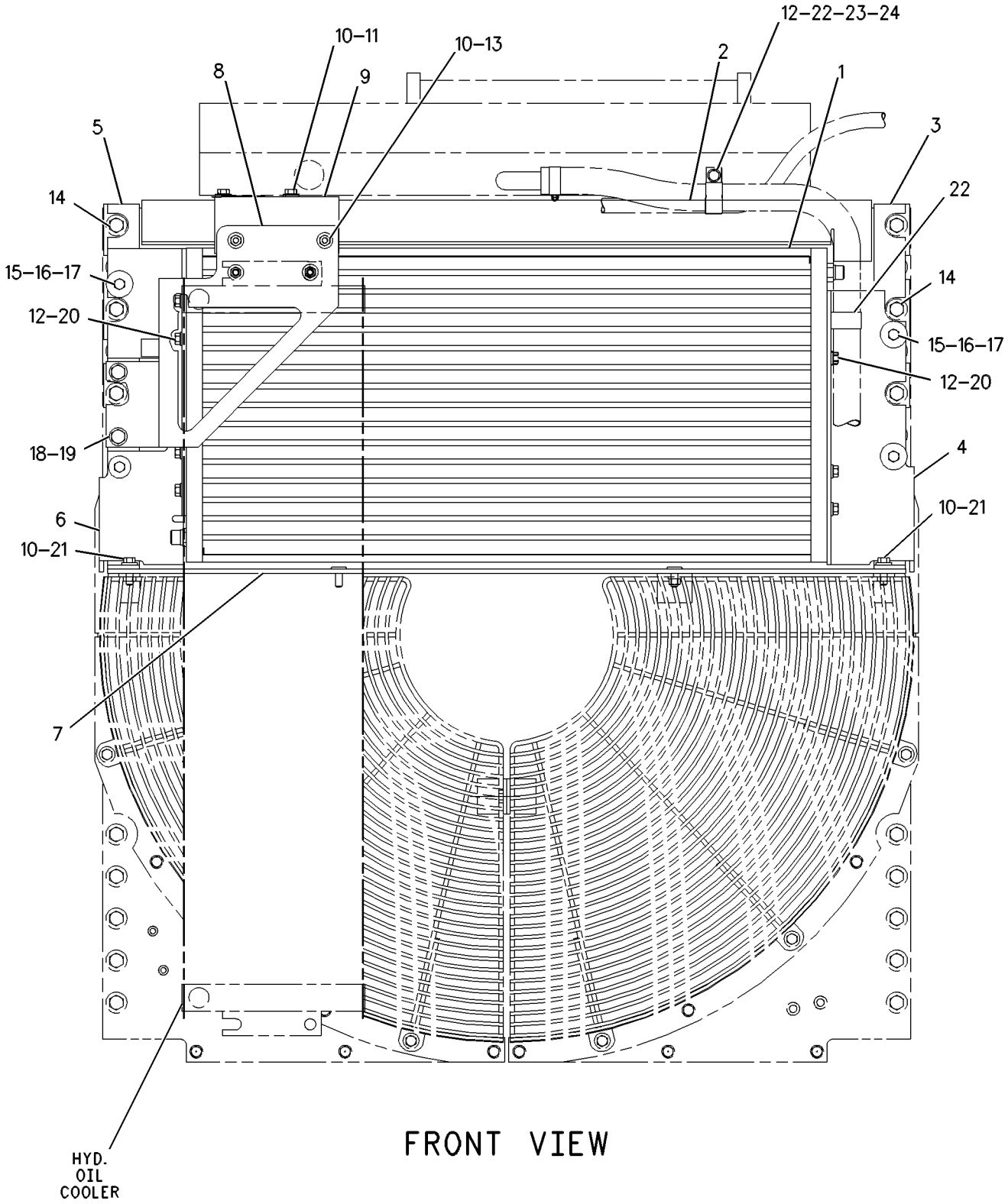

FRONT VIEW

GRAPHIC #1

g00528832

OPERATOR STATION

103-9527 CONDENSER GP-REFRIGERANT

S/N: AKA1-UP

PART OF 158-2960, 158-6439 AIR CONDITIONER AR

SMCS-1805 **i01446049**

NOTE	REF NO	GRAPHIC REF	PART NUMBER	QTY	PART NAME 1 2 3 4 5 6 (PRODUCT LEVEL)	SEE PAGE
	1	1	**2L-1224**	1	CAP-AIR CONDITIONER VALVE (7/16 X 20 THD)	
	2	1	**3E-5239**	1	RELAY AS (24 VOLT) (CONDENSER BLOWER MOTOR)	
	3	1	**3S-2093**	7	STRAP-CABLE	
C	4	1	**7T-5856**	4	CLAMP	
	5	1	**8C-3756**	1	FILM-IDENTIFICATION (GROUP & SEQUENCE NO.)	
C	6	1	**8P-6363**	1	PLUG	
	7	1	**9X-3439**	1	COIL-CONDENSER	
	8	1	**9X-3451**	1	CASE AS	
M		1	**5C-9553**	2	BOLT (M6X1X16MM)	
M		1	**8T-3490**	12	NUT-WELD (M10X1.5 THD)	
		1	**9G-9151**	3	CLIP	
M		1	**8T-5413**	2	STUD-WELD (M10X1.5X25MM OAL)	
		1	**7T-1099**	6	LINK	
M		1	**8T-3597**	12	NUT-WELD (M12X1.75 THD)	
M		1	**8T-3994**	2	STUD-WELD (M6X1-6G THD)	
	9	1	**9X-3452**	2	GUARD AS-FAN	
	10	1	**9X-4292**	4	TUBE	
J	11	1	**174-1495**	2	MOTOR GP-ELECTRIC	
					(EACH INCLUDES)	
		1	**3E-3365**	1	WEDGE-RECEPTACLE LOCK (2 PIN)	
		1	**9W-0852**	2	PIN-CONNECTOR	
		1	**102-8802**	1	KIT-RECEPTACLE (2 PIN)	
					(INCLUDES WEDGE & RECEPTACLE AS)	
	12	1	**123-8329**	1	HARNESS AS-AIR CONDITIONER	
		1	**155-2270**	1	KIT-CONNECTING PLUG (2 PIN)	
					(INCLUDES PLUG AS & WEDGE)	
		1	**102-8803**	1	KIT-RECEPTACLE (3 PIN)	
					(INCLUDES RECEPTACLE AS & WEDGE)	
		1	**9X-1054**	1	PLUG AS-CONNECTOR (4 PIN)	
	13	1	**127-9083**	2	PLATE	
	14	1	**142-8620**	2	FAN AS	
M	15	1	**5C-2890**	1	NUT (M6X1 THD)	
	16	1	**5P-1075**	8	WASHER-HARD (10.2X22.5X3MM THK)	
C	17	1	**5P-8441**	1	GROMMET	
	18	1	**6D-4246**	2	CLIP	
	19	1	**8T-4121**	8	WASHER-HARD (11X21X2.5MM THK)	
M	20	1	**8T-4133**	4	NUT (M10X1.5 THD)	
M	21	1	**8T-4137**	8	BOLT (M10X1.5X20MM)	
M	22	1	**8T-4192**	12	BOLT (M12X1.75X25MM)	
M	23	1	**8T-4198**	4	BOLT (M10X1.5X100MM)	
	24	1	**8T-4205**	1	WASHER-HARD (7.2X14.5X2MM THK)	
	25	1	**8T-4223**	12	WASHER-HARD (13.5X25.5X3MM THK)	
C	26	1	**9X-7373**	1	GROMMET	
BD	27	1	**5P-5673**		SEAL (9.52MM WIDE)	
BD	28	1	**5P-5924**		SEAL (38.1MM WIDE)	
BCD	29	1	**5P-5908**		SEAL	

B-USE AS REQUIRED
C-CHANGE FROM PREVIOUS TYPE
D-ORDER BY THE METER
J-REPAIR KIT(S) MARKED J AVAILABLE FOR PART MARKED J
M-METRIC PART

103-9527 **CONDENSER GP-REFRIGERANT** *(contd.)* **i01446049**

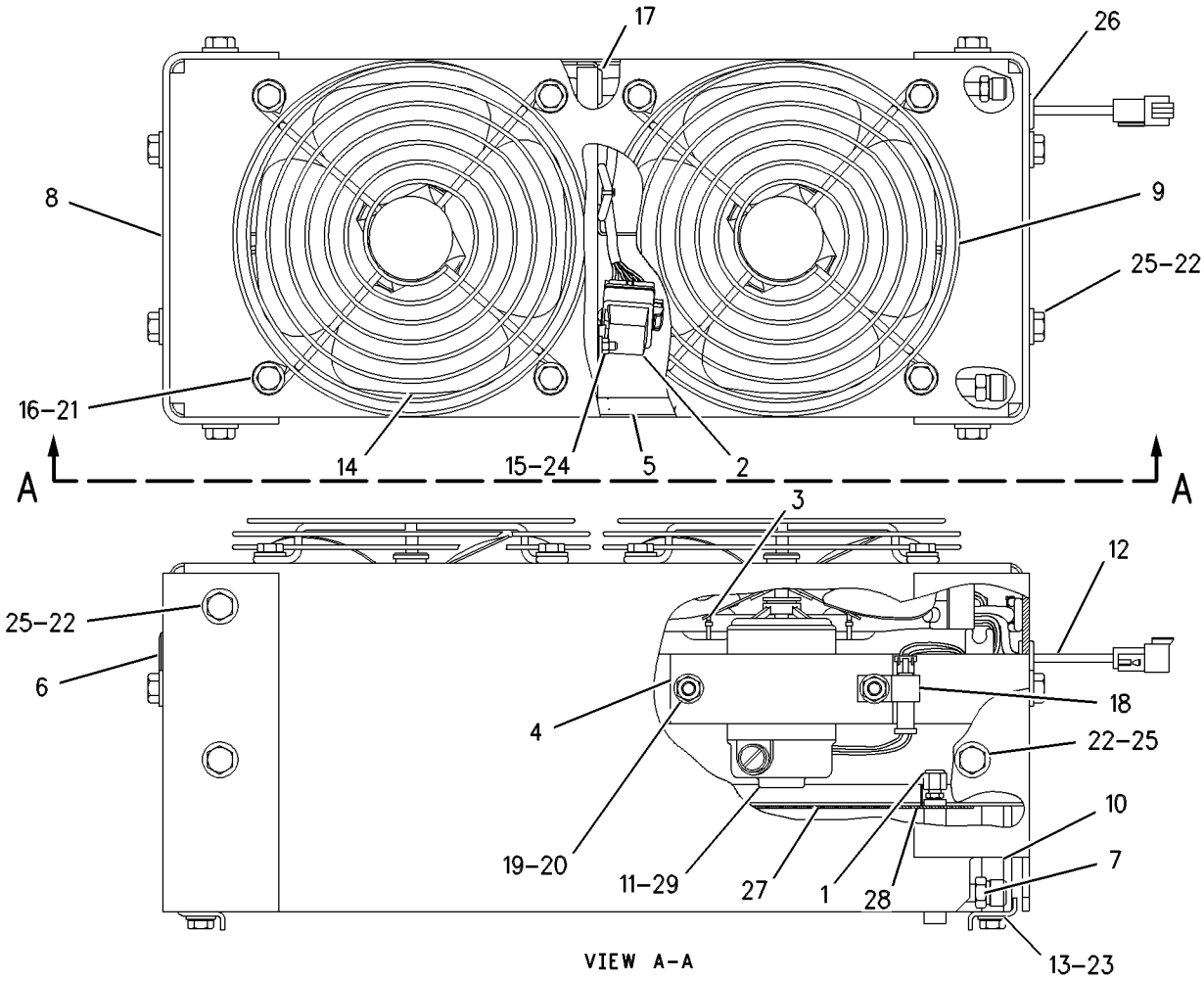

GRAPHIC #1 g00566536

OPERATOR STATION

186-0929 CONTROL GP-ELECTRONIC

S/N: AKA1-UP
(OPTIONAL SERVICE REPLACEMENT) (INCLUDES SOFTWARE)
PART OF 195-5200 ELECTRONICS GP-MONITOR

SMCS-1901 **i01432925**

NOTE	REF NO	GRAPHIC REF	PART NUMBER	QTY	PART NAME 1 2 3 4 5 6 (PRODUCT LEVEL)	SEE PAGE
	1	1	**154-7443**	1	CONTROL GP-UNPROGRAMMED	
F			**186-0928**	1	SOFTWARE GP-MONITOR	

F-NOT SHOWN

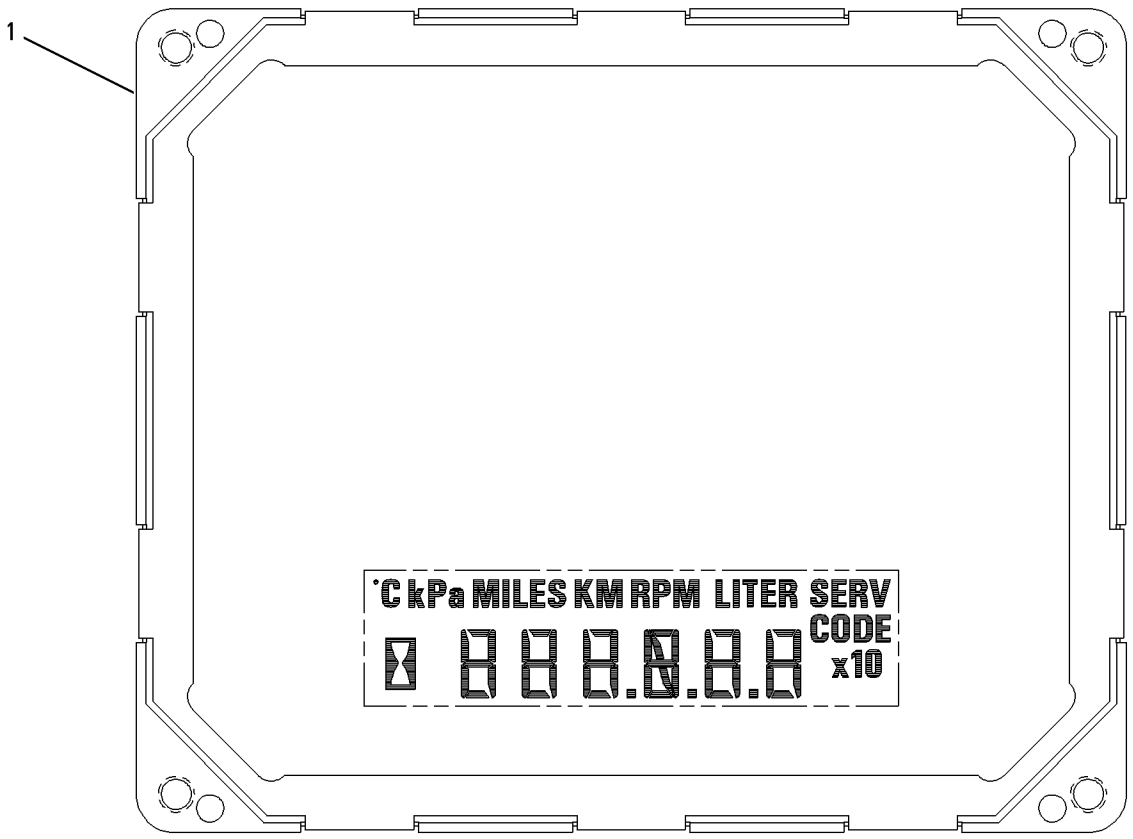

GRAPHIC #1 g00726850

OPERATOR STATION

192-9800 CONTROL GP-ELECTRONIC

S/N: AKA1-UP
(OPTIONAL SERVICE REPLACEMENT) (INCLUDES SOFTWARE)
PART OF 159-9035 ELECTRONICS GP-MACHINE

SMCS-1901 **i01432797**

NOTE	REF NO	GRAPHIC REF	PART NUMBER	QTY	PART NAME 1 2 3 4 5 6 (PRODUCT LEVEL)	SEE PAGE
Y	1	1	**172-9389**	1	CONTROL GP-UNPROGRAMMED	215
F		1	**192-9799**	1	SOFTWARE GP (ELECTRONIC)	

F-NOT SHOWN
Y-SEPARATE ILLUSTRATION

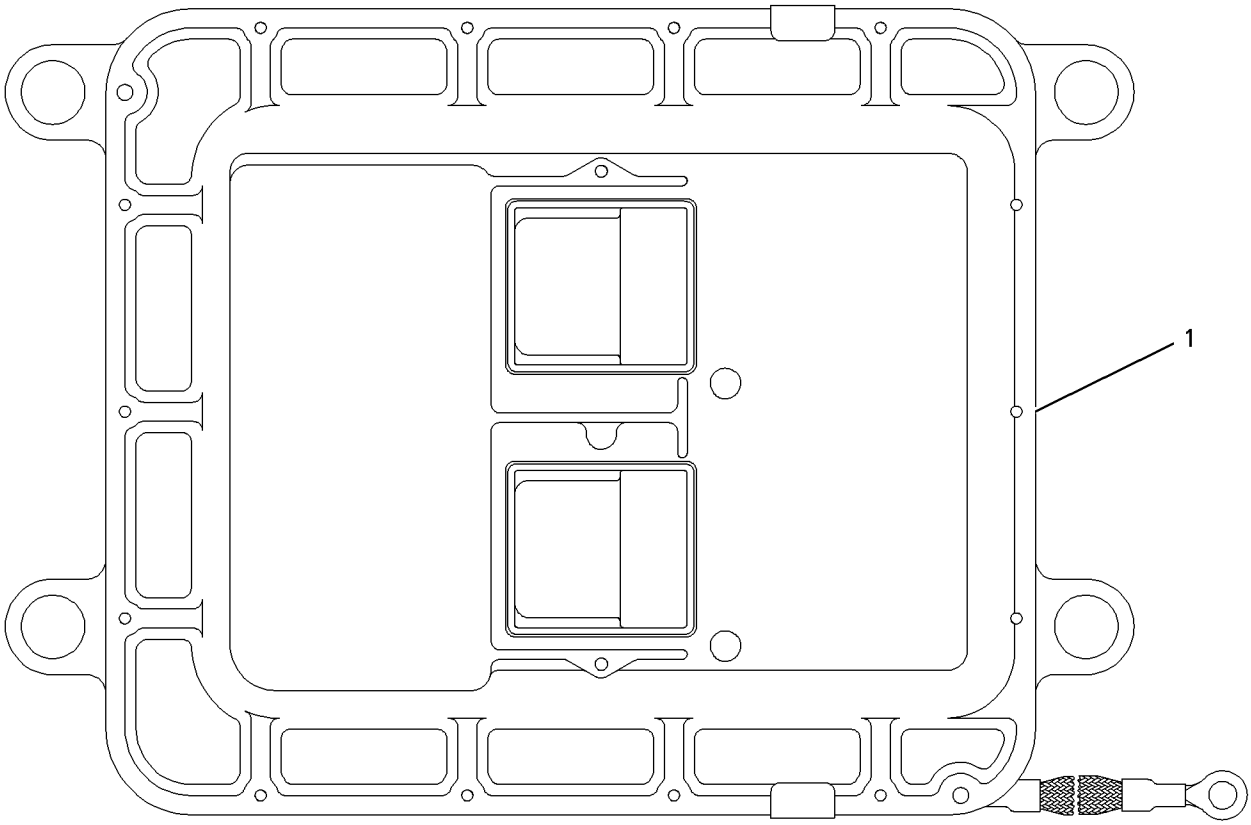

GRAPHIC #1 g00726887

OPERATOR STATION

161-3615 CONTROL GP-IMPLEMENT

S/N: AKA1-UP

DOZER

PART OF 157-0824, 157-7331, 160-5560 CONTROL AR-PILOT HYDRAULIC

SMCS-5063 **i01487137**

NOTE	REF NO	GRAPHIC REF	PART NUMBER	QTY	PART NAME 1 2 3 4 5 6 (PRODUCT LEVEL)	SEE PAGE
Y	1	1	**188-1079**	1	HANDLE GP-CONTROL (DOZER)	762
	2	1	**4B-9806**	2	SETSCREW-SOCKET (1/4 THD)	

Y-SEPARATE ILLUSTRATION

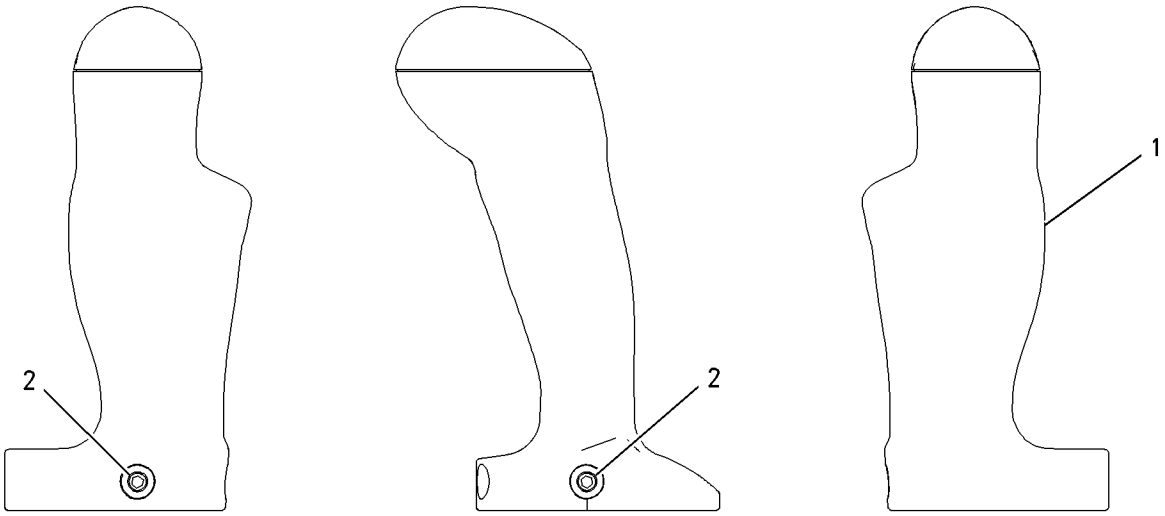

GRAPHIC #1 g00763645

MEMORANDA

OPERATOR STATION

156-7409 COVER GP-CONSOLE

S/N: AKA1-UP

PART OF 159-8367 CAB AR

SMCS-5258 **i01447117**

NOTE	REF NO	GRAPHIC REF	PART NUMBER	QTY	PART NAME 1 2 3 4 5 6 (PRODUCT LEVEL)	SEE PAGE
	1	1	**9N-0869**	2	WASHER-HARD (8.8X25.5X2MM THK)	
	2	1	**6Y-0206**	4	RETAINER	
	3	1	**7D-6922**	6	LOCKNUT	
	4	1	**7G-4824**	2	STRAP	
	5	1	**8E-7791**	2	STRAP	
	6	1	**8Y-5746**	1	ASHTRAY	
	7	1	**8Y-6388**	3	LOUVER AS	
M	8	1	**7Y-7389**	2	SCREW (M5X0.8X16MM)	
	9	1	**161-3611**	1	PLATE	
	10	1	**9X-2038**	6	WASHER (7X19X2MM THK)	
	11	1	**159-9202**	1	SEAL	
	12	1	**159-7948**	1	FLOOR MAT	
	13	1	**159-7949**	1	FLOOR MAT	
	14	1	**159-7945**	1	PANEL-ACOUSTICAL	
	15	1	**159-3961**	1	PANEL-ACOUSTICAL	
	16	1	**159-7943**	1	PANEL-ACOUSTICAL	
	17	1	**159-7946**	1	PANEL-ACOUSTICAL	
	18	1	**170-5849**	1	SHROUD AS	
		1	**170-5851**	1	LINER-FOAM	
		1	**170-5852**	1	LINER-FOAM	
		1	**170-5853**	1	LINER-FOAM	
	19	1	**159-3568**	1	COVER AS	
		1	**114-9125**	1	HOLDER-CUP	
	20	1	**156-7410**	1	COVER AS	
	21	1	**159-8107**	1	COVER	
	22	1	**159-8108**	1	COVER	
	23	1	**159-8109**	1	COVER	
	24	1	**111-5147**	6	SCREW-MACHINE (6-32 X .625IN)	
BE	25	1	**124-3243**		SEAL (56CM)	
	26	1	**5P-4116**	4	WASHER-HARD (8.8X20.5X2MM THK)	
	27	1	**161-4024**	2	BOOT	
M	28	1	**8T-4189**	4	BOLT (M8X1.25X20MM)	
M	29	1	**9X-2043**	8	SCREW-TRUSS HEAD (M6X1X14MM)	
M	30	1	**9X-2045**	9	SCREW-TRUSS HEAD (M6X1X20MM)	

B-USE AS REQUIRED
E-ORDER BY THE CENTIMETER
M-METRIC PART

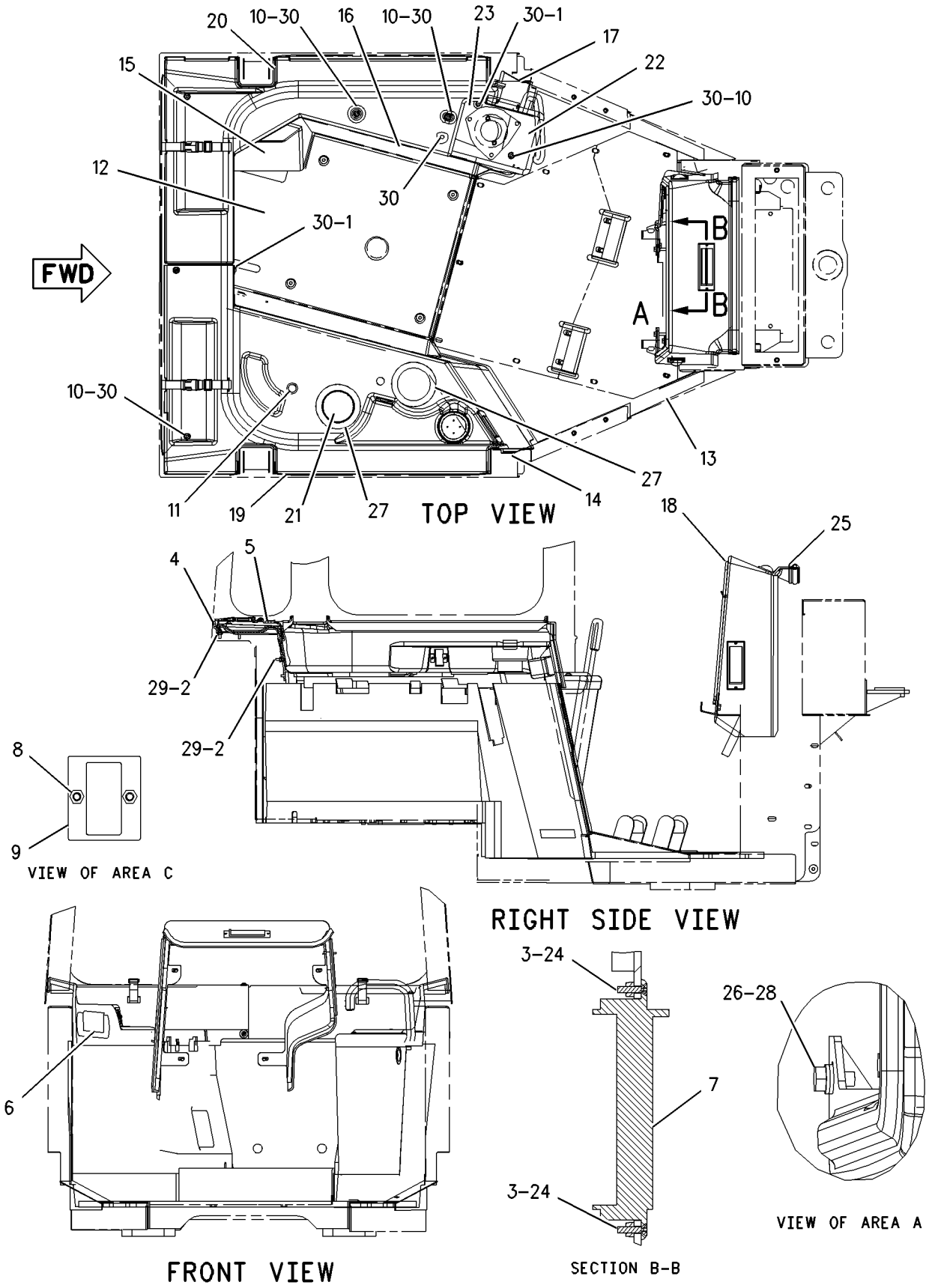

GRAPHIC #1 g00726072

OPERATOR STATION

188-1079 HANDLE GP-CONTROL

S/N: AKA1-UP

PART OF 161-3615 CONTROL GP-IMPLEMENT

SMCS-3168 **i01439692**

NOTE	REF NO	GRAPHIC REF	PART NUMBER	QTY	PART NAME 1 2 3 4 5 6 (PRODUCT LEVEL)	SEE PAGE
	1	1	**164-6963**	1	HANDGRIP AS	

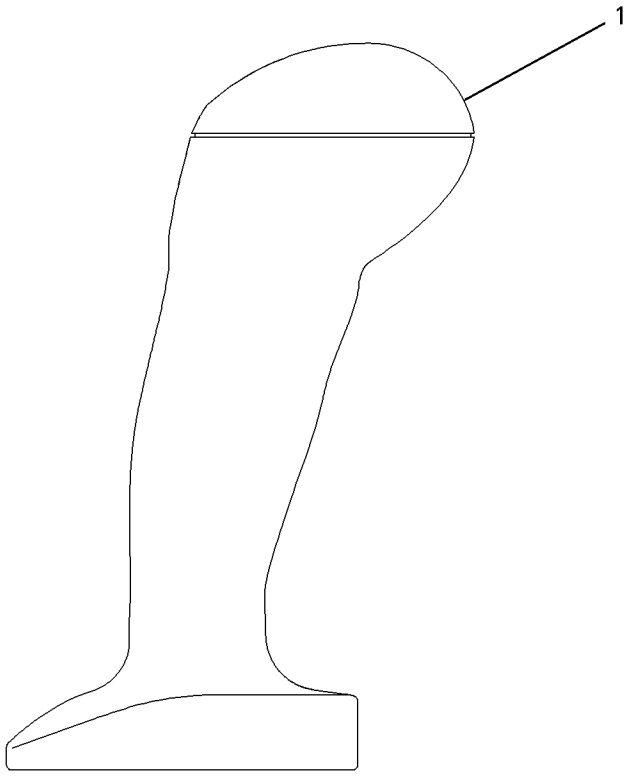

GRAPHIC #1 g00721034

OPERATOR STATION

161-3616 HANDLE GP-JOYSTICK

S/N: AKA1-UP

PART OF 157-7331 CONTROL AR-PILOT HYDRAULIC

SMCS-5063 **i01488877**

NOTE	REF NO	GRAPHIC REF	PART NUMBER	QTY	PART NAME 1 2 3 4 5 6 (PRODUCT LEVEL)	SEE PAGE
	1	1	**2A-1736**	1	HANDLE	
	2	1	**7X-3374**	1	NUT-FULL (1/2-20 THD)	

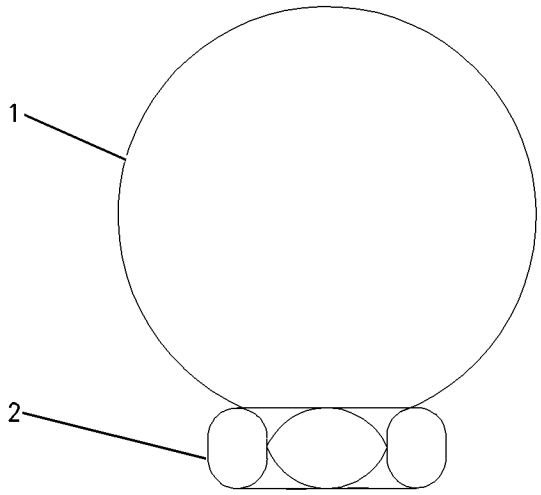

GRAPHIC #1 g00763264

OPERATOR STATION

108-2675 HEATER GP-CAB

S/N: AKA1-UP

PART OF 159-8367 CAB AR

SMCS-7304 **i01093892**

NOTE	REF NO	GRAPHIC REF	PART NUMBER	QTY	PART NAME 1 2 3 4 5 6 (PRODUCT LEVEL)	SEE PAGE
E	1	1	**5P-0767**		HOSE	
	2	1	**109-5761**	1	COIL AS-HEATER	
	3	1	**5D-1026**	2	CLAMP-HOSE	
	4	1	**8T-4121**	5	WASHER (2.5MM THK)	
M	5	1	**8T-4133**	1	NUT (M10X1.50 THD)	
M	6	1	**8T-4137**	4	BOLT (M10X1.50X20MM)	
	7	1	**6T-5617**	1	PLATE	
	8	1	**141-4123**	1	PLATE	
	9	1	**9X-2185**	4	SCREW	
BD	10	1	**5P-5643**		SEAL	
BD	11	1	**5P-5639**		SEAL	
	12	1	**7T-6299**	1	GROMMET	
	13	1	**134-9602**	1	VALVE AS-WATER	
	14	1	**2M-1444**	1	SCREW-TAPPING	
	15	1	**3E-1841**	1	LEVER	
	16	1	**8Y-5737**	1	CLIP (COMPRESSION)	
	17	1	**037-4426**	1	RETAINER	
	18	1	**102-0341**	1	CLIP (TAB)	

B-USE AS REQUIRED
D-ORDER BY THE METER
E-ORDER BY THE CENTIMETER
M-METRIC PART

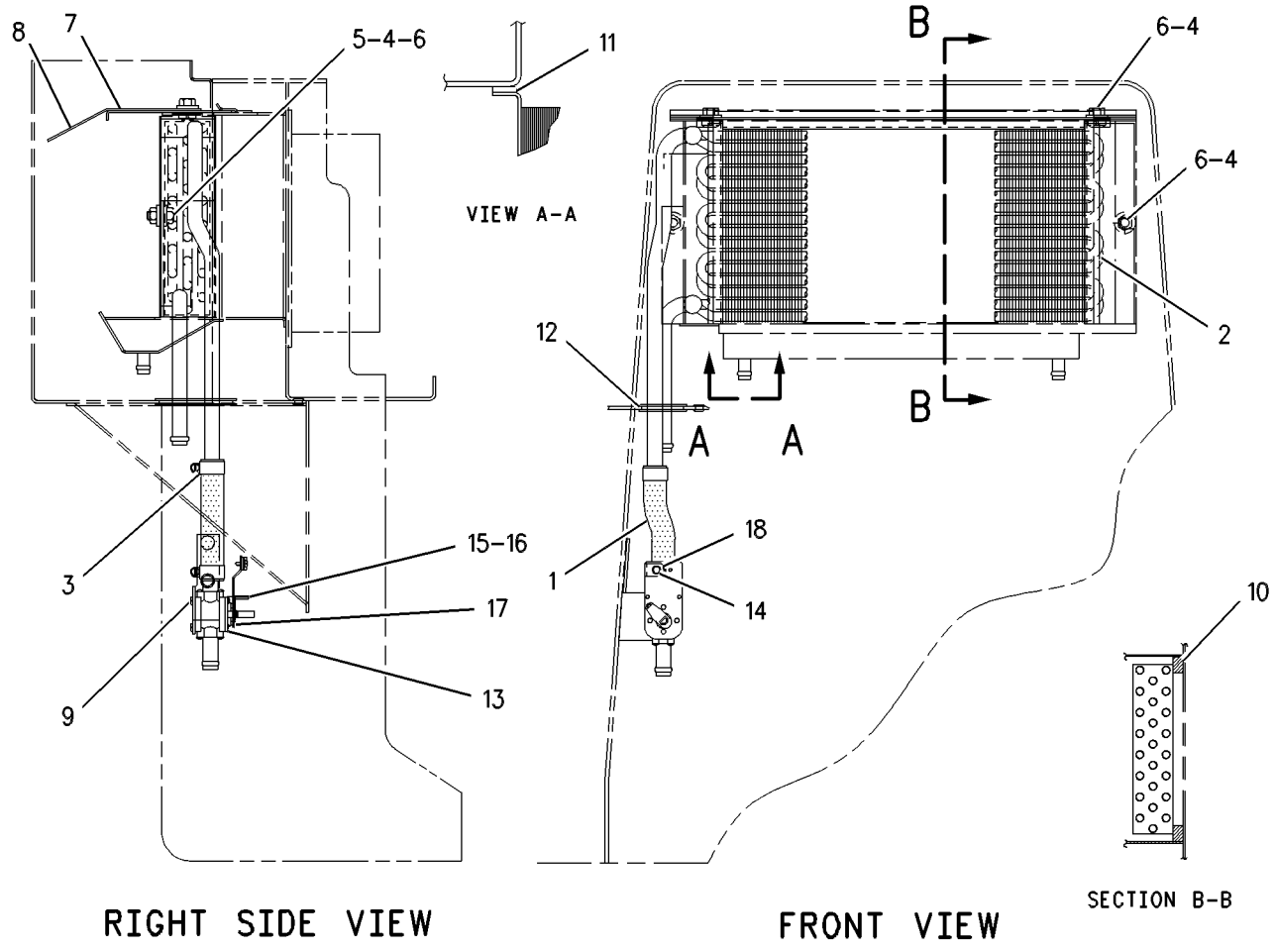

GRAPHIC #1 g00411640

OPERATOR STATION

174-2231 HOUSING GP-SEAT SUSPENSION

S/N: AKA1-UP

PART OF 160-7165 SUSPENSION GP-SEAT

SMCS-7321 **i01437505**

NOTE	REF NO	GRAPHIC REF	PART NUMBER	QTY	PART NAME 1 2 3 4 5 6 (PRODUCT LEVEL)	SEE PAGE
	1	1	**1Y-7927**	1	PIN	
	2	1	**2D-6235**	2	LOCKNUT (1/4-20 THD)	
	3	1	**2M-7819**	4	RING-RETAINING	
	4	1	**3D-2975**	2	RING-RETAINING	
	5	1	**4B-5059**	6	WASHER (2.5MM THK)	
	6	1	**4N-2927**	2	RACE-THRUST BEARING	
	7	1	**5D-4822**	2	RING-RETAINING	
	8	1	**5P-8445**	4	RING-RETAINING	
	9	1	**5V-0770**	2	BOLT-CARRIAGE	
	10	1	**7M-7219**	1	BEARING-THRUST	
	11	1	**7V-5191**	2	SPACER (7.1MM THK)	
	12	1	**8L-8413**	2	STRAP-CABLE	
	13	1	**8S-7803**	4	RING-RETAINING	
	14	1	**8Y-6041**	1	ARM AS	
	15	1	**8Y-6045**	1	CAM	
	16	1	**8Y-6046**	1	PIN	
	17	1	**8Y-6047**	2	PIN	
	18	1	**8Y-6060**	2	ROLLER	
	19	1	**8Y-6062**	1	LINK-ACTUATOR-RH	
	20	1	**8Y-6063**	1	LINK-ACTUATOR-LH	
	21	1	**8Y-6064**	2	ROLLER-SLIDER	
	22	1	**8Y-6066**	1	SPRING	
	23	1	**8Y-6067**	1	SPACER (10.54 MM THK)	
	24	1	**8Y-6068**	1	NUT (3/8 X 16 THD)	
	25	1	**8Y-6069**	1	ADJUSTER AS	
	26	1	**9X-8918**	3	SCREW-FLAT HEAD (8-32X0.50 IN)	
	27	1	**095-0878**	1	PIN-SPRING	
	28	1	**131-4242**	1	BOLT (3/8-16X5.18IN)	
	29	1	**131-5167**	1	KNOB AS-WEIGHT	
	30	1	**161-5967**	1	SHAFT	
	31	1	**174-2237**	1	HOUSING AS-UPPER	
JZ	32	1		1	KNOB-HEIGHT	
JZ	33	1		1	KNOB-HEIGHT	
LZ	34	1		2	SPRING	
LZ	35	1		2	BUSHING	
VZ	36	1		2	SPRING	
VZ	37	1		2	SPACER	
VZ	38	1		2	BUSHING-GUIDE	
VZ	39	1		2	ROD	
PZ	40	1		1	TAPE-INDICATOR	
PZ	41	1		1	GUIDE	
SZ	42	1		1	PIN	
SZ	43	1		1	FOLLOWER-CAM	
TZ	44	1		1	PIN	
TZ	45	1		1	FOLLOWER-CAM	
UZ	46	1		2	ROLLER AS	
UZ	47	1		1	ROLLER AS	
QZ	48	1		3	BUMPER	
					AVAILABLE REPAIR KIT(S):	
J			**8Y-5945**	1	KIT-SUSPENSION KNOB	
L			**8Y-6859**	1	KIT-SPRING	
V			**8Y-6860**	1	KIT-SPRING	
P			**100-3224**	1	KIT-INDICATOR	
Q			**100-5179**	1	KIT-BUMPER	
S			**108-4086**	1	KIT-FOLLOWER	
T			**108-4087**	1	KIT-FOLLOWER	

174-2231 **HOUSING GP-SEAT SUSPENSION** *(contd.)* **i01437505**

NOTE	REF NO	GRAPHIC REF	PART NUMBER	QTY	PART NAME 1 2 3 4 5 6 (PRODUCT LEVEL)	SEE PAGE
U			**108-4103**	1	KIT-BEARING	

J-KIT MARKED J INCLUDES PARTS MARKED J
L-KIT MARKED L INCLUDES PARTS MARKED L AND RETAINING RING
P-KIT MARKED P INCLUDES PARTS MARKED P AND CABLE STRAP
Q-KIT MARKED Q INCLUDES PARTS MARKED Q
S-KIT MARKED S INCLUDES PARTS MARKED S
T-KIT MARKED T INCLUDES PARTS MARKED T
U-KIT MARKED U INCLUDES PARTS MARKED U
V-KIT MARKED V INCLUDES PARTS MARKED V
Z-NOT SERVICED SEPARATELY

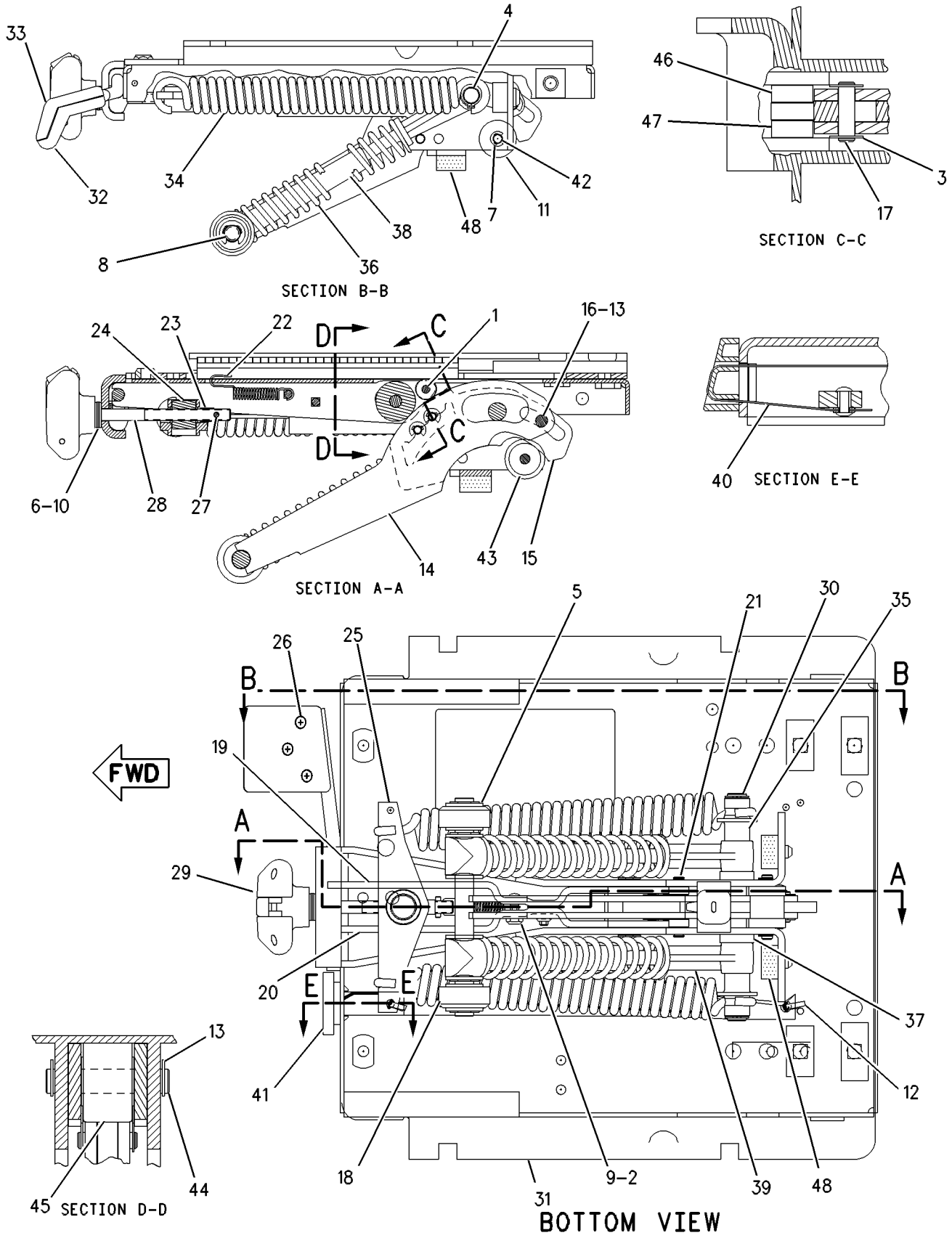

GRAPHIC #1 g00608620

OPERATOR STATION

105-9657 INSTALLATION GP-RADIO

S/N: AKA1-UP

PART OF 158-7694 CAB AR

SMCS-7338 **i01448467**

NOTE	REF NO	GRAPHIC REF	PART NUMBER	QTY	PART NAME 1 2 3 4 5 6 (PRODUCT LEVEL)	SEE PAGE
	1	1	**108-3138**	1	BRACKET AS	
	2	1	**6Y-7385**	1	BRACKET	
M	3	1	**8T-4171**	1	BOLT (M6X1X12MM)	
	4	1	**9X-8256**	1	WASHER (6.6X12X2MM THK)	
	5	1	**8E-1118**	1	ANTENNA AS	
	6	1	**9U-8263**	1	COVER	
	7	1	**9U-8746**	1	CABLE AS-COAXIAL	
	8	1	**6V-7646**	4	WASHER-HARD (7.2X25X2MM THK)	
M	9	1	**5C-2890**	4	NUT (M6X1 THD)	
	10	1	**3E-6601**	2	FILM-NOTICE (RADIO)	
	11	1	**8K-1433**	1	GROMMET (12.70MM ID)	
	12	1	**4N-9915**	4	GROMMET AS	
	13	1	**3E-4356**	4	WASHER-HARD (6MM THK)	

M-METRIC PART

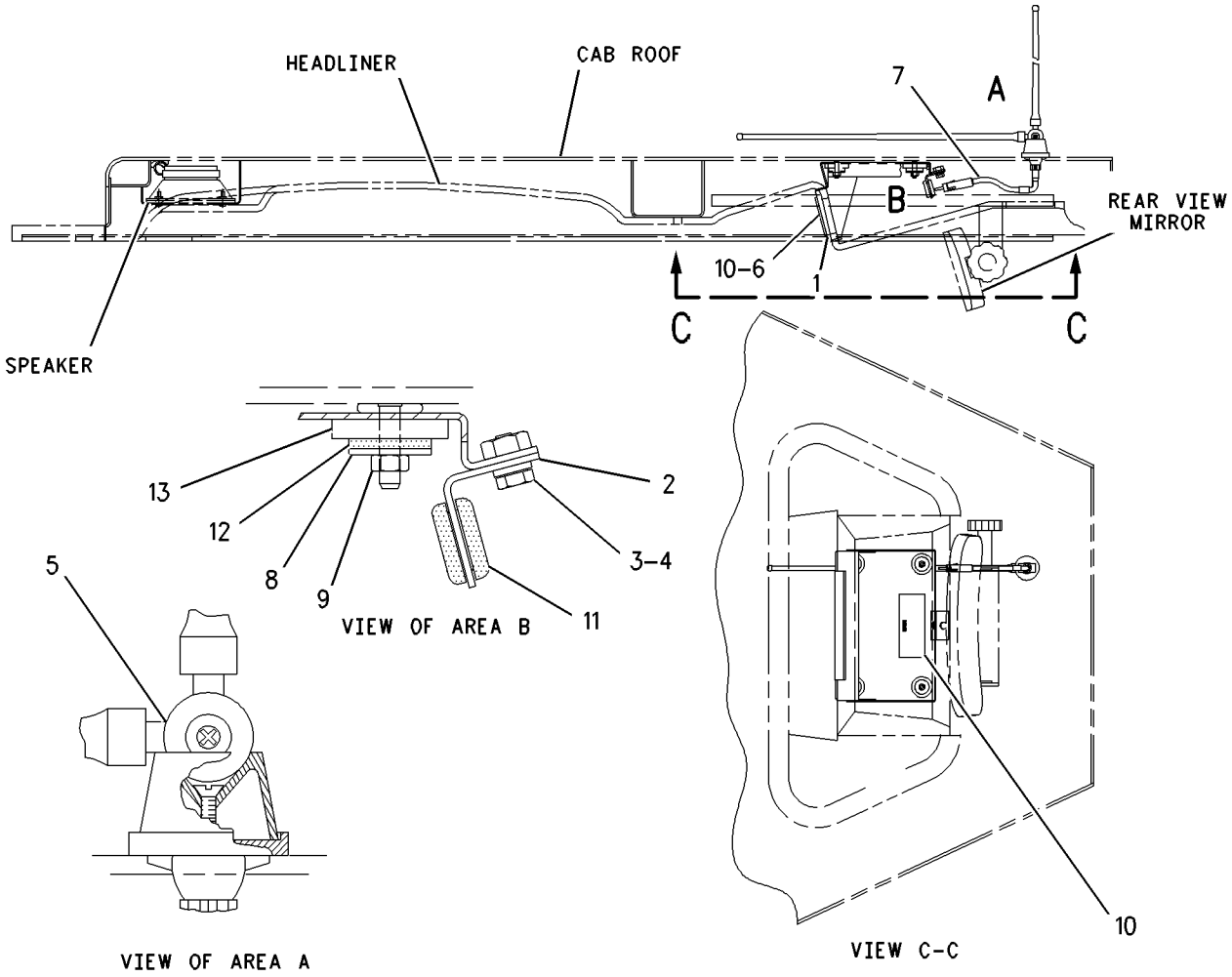

GRAPHIC #1 g00714009

OPERATOR STATION

156-1667 INSTRUMENT GP

S/N: AKA1-UP
OPEN ROPS
PART OF 157-0819 CHASSIS AR

SMCS-7450, 7451 **i01497213**

NOTE	REF NO	GRAPHIC REF	PART NUMBER	QTY	PART NAME 1 2 3 4 5 6 (PRODUCT LEVEL)	SEE PAGE
	1	1	**3E-0109**	1	PLUG-ROCKER SWITCH	
	2	1	**3S-2093**	18	STRAP-CABLE	
	3	1	**083-9527**	1	SPACER	
	4	1	**110-6109**	1	KNOB-CONTROL	
	5	1	**116-6203**	1	RESISTOR AS	
		1	**102-8802**	1	KIT-RECEPTACLE (2 PIN)	
					(INCLUDES RECEPTACLE AS & WEDGE)	
		1	**3E-3365**	1	WEDGE-RECEPTACLE LOCK (2 PIN)	
		1	**8T-8729**	2	PIN-CONNECTOR	
	6	1	**122-7127**	6	NUT	
	7	1	**123-0304**	1	INDICATOR AS	
		1	**115-1748**	1	LAMP (24 VOLT)	
		1	**123-0306**	1	SOCKET AS	
	8	1	**123-9294**	4	LAMP (28 VOLT)	
	9	1	**133-9405**	4	SWITCH AS-PUSH BUTTON	
					(EACH INCLUDES)	
		1	**3E-3371**	1	WEDGE-RECEPTACLE LOCK (3 PIN)	
		1	**3K-0835**	1	NUT (5/8-24 THD)	
		1	**6F-0253**	1	LOCKWASHER	
		1	**8T-8729**	3	PIN-CONNECTOR	
		1	**102-8803**	1	KIT-RECEPTACLE (3 PIN)	
					(INCLUDES RECEPTACLE AS & WEDGE)	
	10	1	**142-8858**	1	SWITCH AS-KEY START	
		1	**167-1530**	1	NUT	
	11	1	**156-6288**	1	PANEL AS-INSTRUCTION	
	12	1	**157-2741**	1	GUARD-VANDALISM	
	13	1	**159-4712**	1	FILM-IDENTIFICATION	
	14	1	**159-4714**	1	FILM-IDENTIFICATION	
	15	1	**159-9257**	1	LIGHT-DASH PANEL	
	16	1	**164-0847**	1	CABLE	
	17	1	**164-9929**	1	FILM-IDENTIFICATION	
Y	18	1	**166-6928**	1	MODULE GP-QUAD GAUGE	799
Y	19	1	**168-0369**	1	MODULE GP-DISPLAY	254
	20	1	**175-1349**	1	PLATE	
	21	1	**175-3950**	1	SWITCH AS (LIGHTS)	
		1	**102-8806**	1	KIT-RECEPTACLE (8 PIN)	
					(INCLUDES RECEPTACLE AS & WEDGE)	
		1	**3E-3389**	1	WEDGE-RECEPTACLE LOCK	
		1	**9W-0852**	7	PIN-CONNECTOR	
	22	1	**178-3003**	1	COVER	
	23	1	**184-7766**	1	CONTROL GP-MONITOR (CATERPILLAR MONITORING SYSTEM)	
	24	1	**185-3533**	7	CLIP	
	25	1	**186-5097**	1	ROD	
	26	1	**186-5099**	1	LOCK AS	
	27	1	**194-1466**	1	CLIP	
	28	1	**199-9797**	1	HARNESS AS (INSTRUMENT)	
		1	**102-8802**	1	KIT-RECEPTACLE (2 PIN)	
		1	**102-8803**	1	KIT-RECEPTACLE (3 PIN)	
		1	**102-8804**	2	KIT-RECEPTACLE (4 PIN)	
		1	**102-8806**	1	KIT-RECEPTACLE (8 PIN)	
					(EACH RECEPTACLE KIT INCLUDES RECEPTACLE AS & WEDGE)	
		1	**155-2265**	1	KIT-CONNECTING PLUG (8 PIN)	
		1	**155-2260**	7	KIT-CONNECTING PLUG (3 PIN)	

156-1667 **INSTRUMENT GP** ***(contd.)*** **i01497213**

NOTE	REF NO	GRAPHIC REF	PART NUMBER	QTY	PART NAME 1 2 3 4 5 6 (PRODUCT LEVEL)	SEE PAGE
		1	**155-2270**	3	KIT-CONNECTING PLUG (2 PIN)	
		1	**155-2271**	4	KIT-CONNECTING PLUG (4 PIN)	
		1	**155-2274**	4	KIT-CONNECTING PLUG (6 PIN)	
					(EACH CONNECTING PLUG KIT INCLUDES PLUG AS, WEDGE & INTERFACE SEAL)	
	29	1	**4M-5281**	2	BOLT (1/4-20X0.750 IN)	
	30	1	**130-5300**	3	CLIP	
	31	1	**132-5789**	1	CLIP	
	32	1	**198-9705**	6	SCREW-TRUSS HEAD	
	33	1	**198-9706**	12	SCREW-TRUSS HEAD	
	34	1	**198-9707**	4	SCREW-TRUSS HEAD	
	35	1	**4P-7581**	2	CLIP	
	36	1	**4P-8134**	1	CLIP	
	37	1	**5P-4115**	2	WASHER-HARD (7.2X19X2MM THK)	
M	38	1	**8T-0337**	1	SCREW-MACHINE (M4X0.7X12MM)	
M	39	1	**8T-2659**	1	LOCKNUT (M4X0.7 THD)	
M	40	1	**8T-4138**	1	BOLT (M6X1X20MM)	
M	41	1	**8T-4171**	11	BOLT (M6X1X12MM)	
	42	1	**8T-4205**	12	WASHER-HARD (7.2X14.5X2MM THK)	

M-METRIC PART
Y-SEPARATE ILLUSTRATION

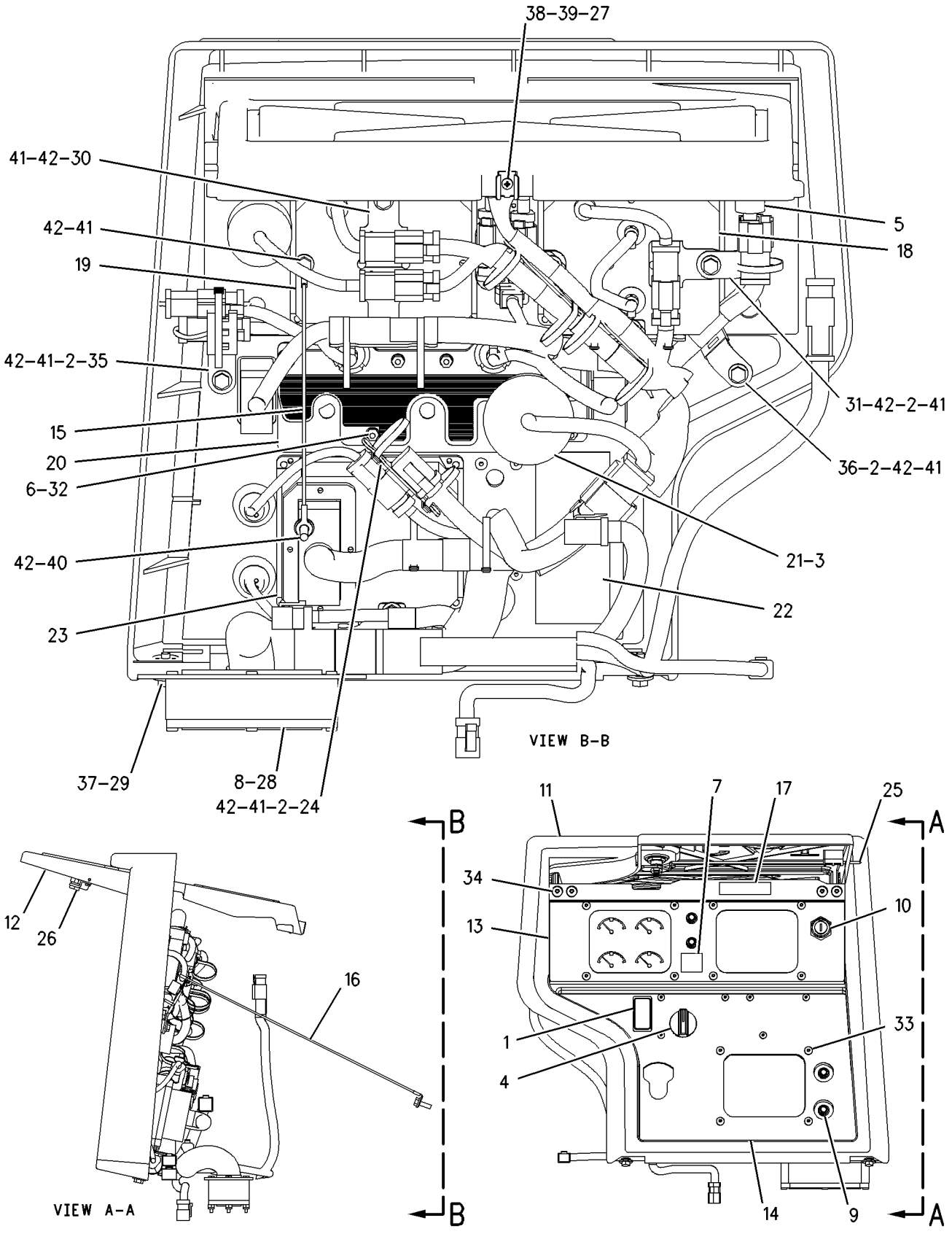

GRAPHIC #1

g00769501

MEMORANDA

OPERATOR STATION

156-0244 INSTRUMENT GP-CAB

S/N: AKA1-UP

PART OF 159-8367 CAB AR

SMCS-7451 **i01448405**

NOTE	REF NO	GRAPHIC REF	PART NUMBER	QTY	PART NAME 1 2 3 4 5 6 (PRODUCT LEVEL)	SEE PAGE
	1	1	**2P-4339**	1	NUT-JAM (7/16-20 THD)	
	2	1	**3E-0109**	2	PLUG-ROCKER SWITCH	
	3	1	**3S-2093**	18	STRAP-CABLE	
	4	1	**7F-6998**	1	LOCKWASHER	
	5	1	**8Y-6388**	5	LOUVER AS	
	6	1	**083-9527**	2	SPACER	
	7	1	**110-6109**	3	KNOB-CONTROL	
	8	1	**116-6203**	1	RESISTOR AS	
		1	**102-8802**	1	KIT-RECEPTACLE (2 PIN)	
					(INCLUDES RECEPTACLE AS & WEDGE)	
		1	**3E-3365**	1	WEDGE-RECEPTACLE LOCK (2 PIN)	
		1	**8T-8729**	2	PIN-CONNECTOR	
	9	1	**122-7127**	6	NUT	
	10	1	**123-0304**	1	INDICATOR AS	
		1	**115-1748**	1	LAMP (24 VOLT)	
		1	**123-0306**	1	SOCKET AS	
	11	1	**123-9294**	4	LAMP (28 VOLT)	
	12	1	**133-9405**	4	SWITCH AS-PUSH BUTTON	
					(EACH INCLUDES)	
		1	**3E-3371**	1	WEDGE-RECEPTACLE LOCK (3 PIN)	
		1	**3K-0835**	1	NUT (5/8-24 THD)	
		1	**6F-0253**	1	LOCKWASHER	
		1	**8T-8729**	3	PIN-CONNECTOR	
		1	**102-8803**	1	KIT-RECEPTACLE (3 PIN)	
					(INCLUDES RECEPTACLE AS & WEDGE)	
	13	1	**142-8858**	1	SWITCH AS-KEY START	
		1	**167-1530**	1	NUT	
	14	1	**156-6287**	1	PANEL AS-INSTRUMENT	
	15	1	**157-1361**	1	SWITCH AS (BLOWER)	
		1	**3E-3383**	1	WEDGE-RECEPTACLE LOCK	
		1	**9W-0852**	6	PIN-CONNECTOR	
		1	**102-8805**	1	KIT-RECEPTACLE (6 PIN)	
					(INCLUDES RECEPTACLE AS & WEDGE)	
	16	1	**159-4712**	1	FILM-IDENTIFICATION	
	17	1	**159-4713**	1	FILM-IDENTIFICATION	
	18	1	**159-9257**	1	LIGHT-DASH PANEL	
	19	1	**164-0847**	1	CABLE	
Y	20	1	**166-6928**	1	MODULE GP-QUAD GAUGE	799
Y	21	1	**168-0369**	1	MODULE GP-DISPLAY	254
	22	1	**170-0260**	1	PLATE	
	23	1	**175-1349**	1	PLATE	
	24	1	**175-3950**	1	SWITCH AS (LIGHTS)	
		1	**3E-3389**	1	WEDGE-RECEPTACLE LOCK	
		1	**9W-0852**	7	PIN-CONNECTOR	
		1	**102-8806**	1	KIT-RECEPTACLE (8 PIN)	
					(INCLUDES RECEPTACLE AS & WEDGE)	
	25	1	**175-4393**	1	SPACER (11.4X17.5X2MM THK)	
	26	1	**184-7766**	1	CONTROL GP-MONITOR (CATERPILLAR MONITORING SYSTEM)	
	27	1	**185-3533**	7	CLIP	
	28	1	**193-3356**	1	CABLE	
	29	1	**193-3359**	1	CONTROL AS (TEMPERATURE)	
	30	1	**199-9797**	1	HARNESS AS (INSTRUMENT)	
		1	**102-8802**	1	KIT-RECEPTACLE (2 PIN)	
		1	**102-8803**	1	KIT-RECEPTACLE (3 PIN)	
		1	**102-8804**	2	KIT-RECEPTACLE (4 PIN)	

156-0244 **INSTRUMENT GP-CAB** *(contd.)* **i01448405**

NOTE	REF NO	GRAPHIC REF	PART NUMBER	QTY	PART NAME 1 2 3 4 5 6 (PRODUCT LEVEL)	SEE PAGE
		1	**102-8806**	1	KIT-RECEPTACLE (8 PIN)	
					(EACH RECEPTACLE KIT INCLUDES RECEPTACLE AS & WEDGE)	
		1	**155-2265**	1	KIT-CONNECTING PLUG (8 PIN)	
		1	**155-2260**	7	KIT-CONNECTING PLUG (3 PIN)	
		1	**155-2270**	3	KIT-CONNECTING PLUG (2 PIN)	
		1	**155-2271**	4	KIT-CONNECTING PLUG (4 PIN)	
		1	**155-2274**	4	KIT-CONNECTING PLUG (6 PIN)	
					(EACH PLUG KIT INCLUDES PLUG AS,WEDGE & INTERFACE SEAL	
	31	1	**0S-1615**	2	BOLT (1/4-20X0.75 IN)	
	32	1	**130-5300**	3	CLIP	
	33	1	**132-5789**	1	CLIP	
	34	1	**198-9705**	6	SCREW-TRUSS HEAD	
	35	1	**198-9706**	12	SCREW-TRUSS HEAD	
	36	1	**198-9707**	4	SCREW-TRUSS HEAD	
	37	1	**3E-6922**	10	SCREW-RECESS FLAT HEAD (NO. 6-19X12.7MM)	
	38	1	**4P-7581**	2	CLIP	
	39	1	**4P-8134**	1	CLIP	
	40	1	**5P-4115**	2	WASHER-HARD (7.2X19X2MM THK)	
	41	1	**6P-6591**	1	GROMMET	
M	42	1	**8T-4138**	3	BOLT (M6X1X20MM)	
M	43	1	**8T-4171**	11	BOLT (M6X1X12MM)	
	44	1	**8T-4205**	14	WASHER-HARD (7.2X14.5X2MM THK)	
	45	1	**9D-3769**	1	GROMMET	
BD	46	1	**195-2194**		TUBING-BULK	

B-USE AS REQUIRED
D-ORDER BY THE METER
M-METRIC PART
Y-SEPARATE ILLUSTRATION

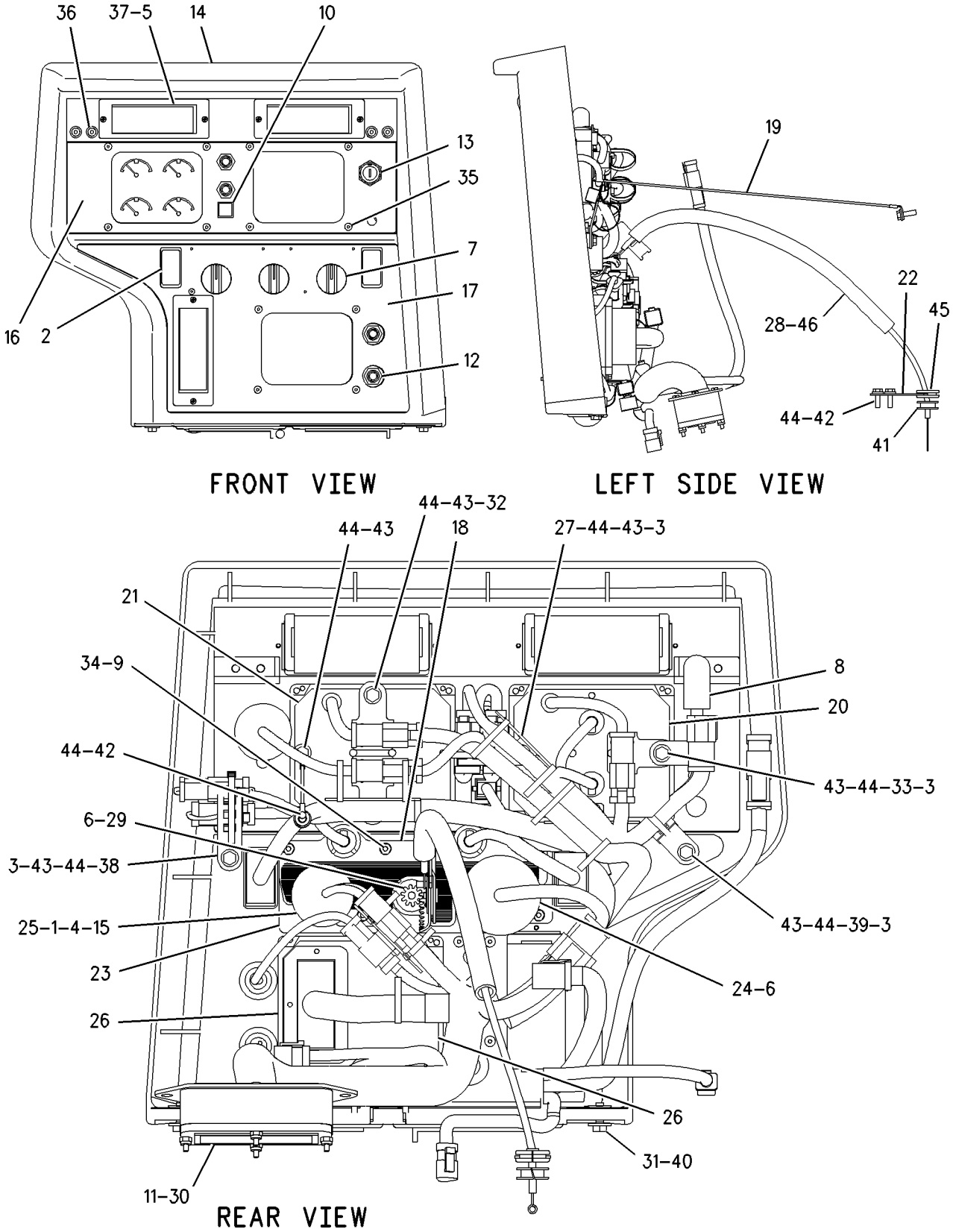

GRAPHIC #1 g00767004

MEMORANDA

OPERATOR STATION

158-7695 LINER GP-CAB

S/N: AKA1-UP

PART OF 158-7694 CAB AR

SMCS-7329 **i01474817**

NOTE	REF NO	GRAPHIC REF	PART NUMBER	QTY	PART NAME 1 2 3 4 5 6 (PRODUCT LEVEL)	SEE PAGE
	1	1	*6V-8928*	1	HOOK-COAT	
	2	1	**110-8152**	2	HANDLE AS-PULL	
M	3	1	**9X-2043**	14	SCREW-TRUSS HEAD (M6X1X14MM)	
	4	1	**126-3492**	1	HANDLE AS	
	5	1	**131-5176**	1	PLATE	
	6	1	**137-8708**	1	PLATE	
	7	1	**158-8906**	2	BLOCK-FOAM	
	8	1	**161-1083**	1	COVER-DOOR (RH)	
	9	1	**161-1084**	1	COVER-DOOR (LH)	
	10	1	**161-1085**	1	COVER-FRONT	
	11	1	**161-1086**	1	COVER AS	
	12	1	**161-1091**	1	COVER-POST (RH)	
	13	1	**161-1092**	1	COVER-POST (LH)	
	14	1	**161-1093**	2	TRIM-POST	
	15	1	**161-1094**	1	HEADLINER-FRONT	
Y	16	1	*161-1096*	1	LINER GP-CAB	780
	17	1	**161-1098**	1	RETAINER	
M	18	1	**3E-8020**	4	SCREW-TRUSS HEAD (M6X1X25MM)	
M	19	1	**6V-5683**	4	BOLT (M6X1X16MM)	
M	20	1	**6V-8225**	2	NUT (M6X1 THD)	
M	21	1	**8T-4181**	2	BOLT (M6X1X20MM)	
	22	1	**9X-8267**	2	WASHER (6.6X12X2MM THK)	
M	23	1	**9X-2045**	1	SCREW-TRUSS HEAD (M6X1X20MM)	

M-METRIC PART
Y-SEPARATE ILLUSTRATION

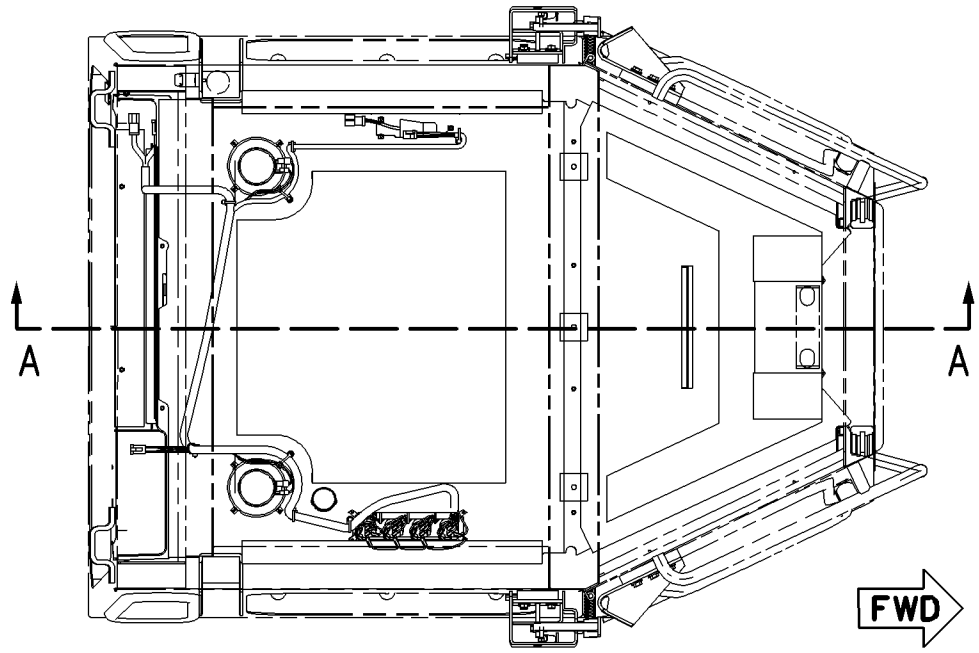

TOP VIEW

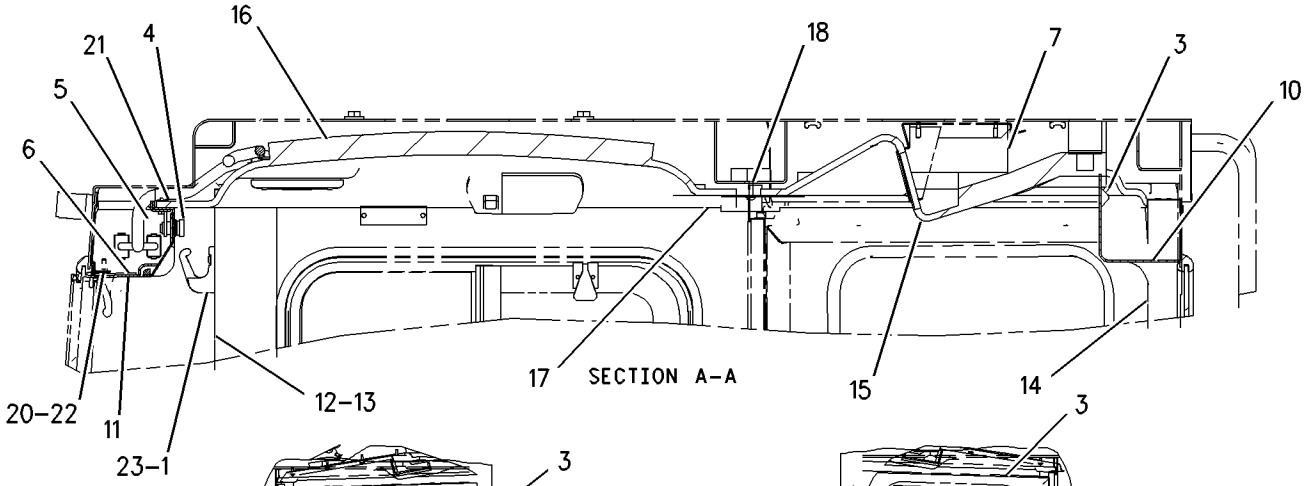

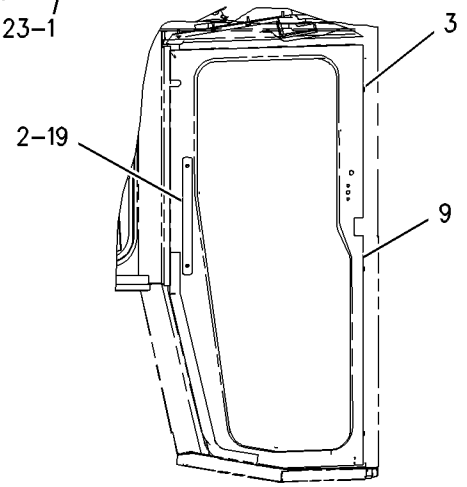

INSIDE VIEW LH DOOR

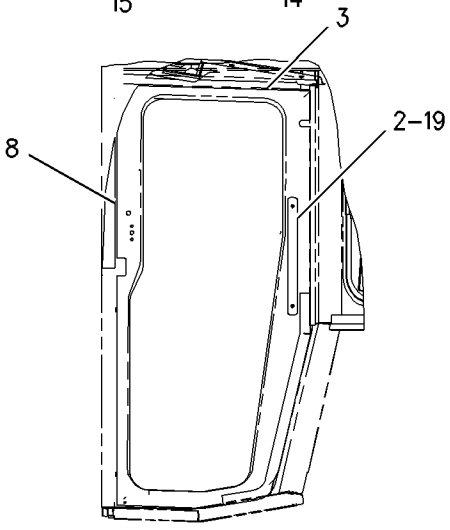

INSIDE VIEW RH DOOR

GRAPHIC #1 g00722401

OPERATOR STATION

161-1096 LINER GP-CAB

S/N: AKA1-UP

PART OF 158-7695 LINER GP-CAB

SMCS-7329 **i01475159**

NOTE	REF NO	GRAPHIC REF	PART NUMBER	QTY	PART NAME 1 2 3 4 5 6 (PRODUCT LEVEL)	SEE PAGE
Y	1	1	**3E-6389**	1	LAMP GP-DOME (24 VOLT)(WITH SWITCH)	229
	2	1	**3S-2093**	11	STRAP-CABLE	
M	3	1	**7Y-7388**	4	SCREW-BUTTON HEAD (M5X0.8X12MM)	
	4	1	**6T-7695**	2	SPEAKER AS-RADIO	
	5	1	**8T-4752**	4	NUT (M5X0.8-6H THD)	
	6	1	**9U-9942**	1	FILM-IDENTIFICATION	
	7	1	**101-3055**	2	COVER-SPEAKER	
	8	1	**131-5137**	1	PLUG	
	9	1	**161-1097**	1	HEADLINER-REAR	
	10	1	**161-1099**	1	PLATE	
	11	1	**166-3733**	11	NUT-SPEED	
	12	1	**169-9636**	1	HARNESS AS	
	13	1	**103-9425**	11	SCREW-MACHINE (8-32X1 IN)	
	14	1	**3T-6655**	1	SWITCH AS-ROTARY (WIPER/WASHER) (RH DOOR)	
	15	1	**3T-6655**	1	SWITCH AS-ROTARY (WIPER/WASHER) (LH DOOR)	
	16	1	**3T-6655**	1	SWITCH AS-ROTARY (WIPER/WASHER) (FRONT)	
	17	1	**3T-6655**	1	SWITCH AS-ROTARY (WIPER/WASHER) (REAR)	
					(EACH SWITCH AS INCLUDES)	
		1	**7T-9302**	1	KNOB	
		1	**2H-3920**	1	LOCKWASHER	
		1	**6V-8369**	1	NUT (7/16-28 THD)	

M-METRIC PART
Y-SEPARATE ILLUSTRATION

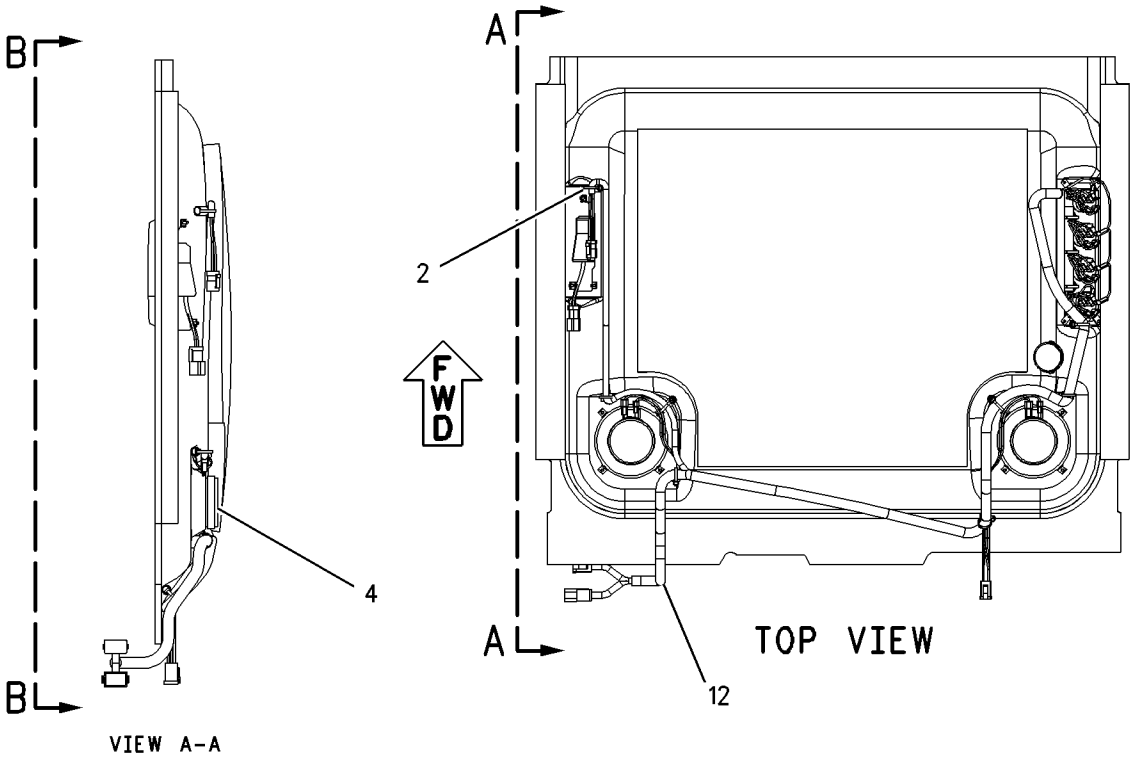

GRAPHIC #1 g00672355

OPERATOR STATION

159-3967 LINES GP-AIR CONDITIONER

S/N: AKA1-UP

PART OF 158-6439 AIR CONDITIONER AR

SMCS-1808 **i01446210**

NOTE	REF NO	GRAPHIC REF	PART NUMBER	QTY	PART NAME 1 2 3 4 5 6 (PRODUCT LEVEL)	SEE PAGE
	1	1	**1P-6356**	1	PLATE	
I	2	1	**1Q-1998**	1	HOSE AS	
	3	1	**3E-3535**	1	RECEIVER DRYER AS (AIR CONDITIONER)	
	4	1	**3S-2093**	4	STRAP-CABLE	
	5	1	**5P-3948**	1	COUPLING AS-REFRIGERANT	
		1	**7F-8607**	1	SEAL-O-RING	
		1	**107-4399**	1	VALVE AS (AIR CONDITIONER)	
	6	1	**6D-2667**	3	CLIP	
	7	1	**6L-1698**	1	SPACER	
	8	1	**7K-3176**	1	COUPLING AS	
		1	**107-4393**	1	VALVE AS (AIR CONDITIONER)	
		1	**107-4394**	1	GASKET	
	9	1	**7T-9426**	2	GROMMET	
	10	1	**8C-5682**	1	TEE	
	11	1	**8D-3932**	4	MOUNTING	
	12	1	**9X-0358**	1	NIPPLE AS	
	13	1	**9X-6772**	5	STRAP-CABLE	
	14	1	**103-6100**	3	COUPLER AS-QUICK	
					(EACH INCLUDES)	
		1	**9X-7382**	2	SEAL-O-RING	
	15	1	**110-2915**	1	HARNESS AS	
		1	**155-2260**	2	KIT-CONNECTING PLUG (3 PIN)	
					(EACH INCLUDES PLUG AS, WEDGE & INTERFACE SEAL)	
I	16	1	**110-2969**	1	HOSE AS	
	17	1	**110-4506**	1	PLATE	
I	18	1	**114-0929**	1	HOSE AS	
	19	1	**114-5333**	1	SWITCH AS-PRESSURE (AIR CONDITIONER HIGH/LOW)	
		1	**102-8802**	1	KIT-RECEPTACLE (2 PIN)	
					(INCLUDES RECEPTACLE AS & WEDGE)	
		1	**8T-8729**	2	PIN-CONNECTOR	
		1	**3E-3365**	1	WEDGE-RECEPTACLE LOCK (2 PIN)	
	20	1	**116-6202**	2	BOOT	
	21	1	**134-0165**	4	WASHER (13.8X45X3MM THK)	
	22	1	**162-8053**	1	BRACKET	
I	23	1	**162-8054**	1	HOSE AS	
I	24	1	**162-8056**	1	HOSE AS	
I	25	1	**162-8057**	1	HOSE AS	
	26	1	**169-5452**	2	U-BOLT	
	27	1	**179-2891**	1	FITTING AS-AIR CONDITIONER	
	28	1	**186-6189**	1	ACCUMULATOR-REFRIGERANT	
I	29	1	**199-4066**	1	HOSE AS	
	30	1	**106-8704**	1	SUPPRESSOR AS-ARC	
		1	**3E-3365**	1	WEDGE-RECEPTACLE LOCK (2 PIN)	
		1	**8T-8729**	2	PIN-CONNECTOR	
	31	1	**109-1633**	1	CLIP (SLOT)	
	32	1	**109-1634**	1	CLIP (TAB)	
	33	1	**188-5145**	1	TUBE	
	34	1	**3E-4066**	1	FITTING AS-AIR CONDITIONER	
		1	**3E-4052**	1	CAP-SEAL (AIR CONDITIONER)(HIGH SIDE)	
		1	**3E-4058**	1	VALVE AS-AIR CONDITIONER (HIGH SIDE)	
	35	1	**4K-8302**	2	CLIP	
	36	1	**4L-6454**	1	BOLT (3/8-16X1 IN)	
	37	1	**4P-7428**	3	CLIP	
	38	1	**4P-8134**	2	CLIP	
	39	1	**5C-6565**	1	BOLT (1/2-13X1.25 IN)	
	40	1	**5F-4899**	1	BOLT (3/8-16X5.5 IN)	

159-3967 LINES GP-AIR CONDITIONER *(contd.)* i01446210

NOTE	REF NO	GRAPHIC REF	PART NUMBER	QTY	PART NAME 1 2 3 4 5 6 (PRODUCT LEVEL)	SEE PAGE
	41	1	**5M-3062**	6	BOLT (3/8-16X0.75 IN)	
	42	1	**5P-1075**	10	WASHER-HARD (10.2X22.5X3MM THK)	
	43	1	**5P-2566**	1	BOLT (1/2-13X1.5 IN)	
	44	1	**5P-4295**	2	CLIP	
	45	1	**5S-7383**	3	BOLT (3/8-16X1.75 IN)	
	46	1	**6D-1641**	1	CLIP	
	47	1	**6D-4636**	4	CLIP	
	48	1	**6V-2372**	1	ELBOW-BARBED	
	49	1	**6V-8801**	5	NUT (3/8-16 THD)	
	50	1	**7T-8894**	1	GROMMET	
	51	1	**7T-9793**	1	VALVE (CHECK) (A/C EVAPORATOR DRAIN)	
M	52	1	**8T-4139**	4	BOLT (M12X1.75X30MM)	
	53	1	**8T-4223**	7	WASHER-HARD (13.5X25.5X3MM THK)	
	54	1	**8T-4835**	4	BOLT (1/2-13X2 IN)	
	55	1	**8T-4896**	2	WASHER-HARD (10.2X18.5X2.5MM THK)	
M	56	1	**8T-6466**	1	BOLT (M10X1.50X60MM)	
	57	1	**8T-9383**	1	BOLT (1/2-13X0.75 IN)	
	58	1	**9M-8406**	2	CLIP	
	59	1	**9X-7378**	1	SEAL-O-RING	
	60	1	**9X-7380**	5	SEAL-O-RING	
	61	1	**9X-7381**	3	SEAL-O-RING	
	62	1	**9X-7382**	2	SEAL-O-RING	
	63	1	**9X-7383**	4	SEAL-O-RING	
	64	1	**9X-7385**	2	SEAL-O-RING	
BD	65	1	**5P-6129**		TUBE	

B-USE AS REQUIRED
D-ORDER BY THE METER
I-SEE HOSE FABRICATION GUIDE
M-METRIC PART

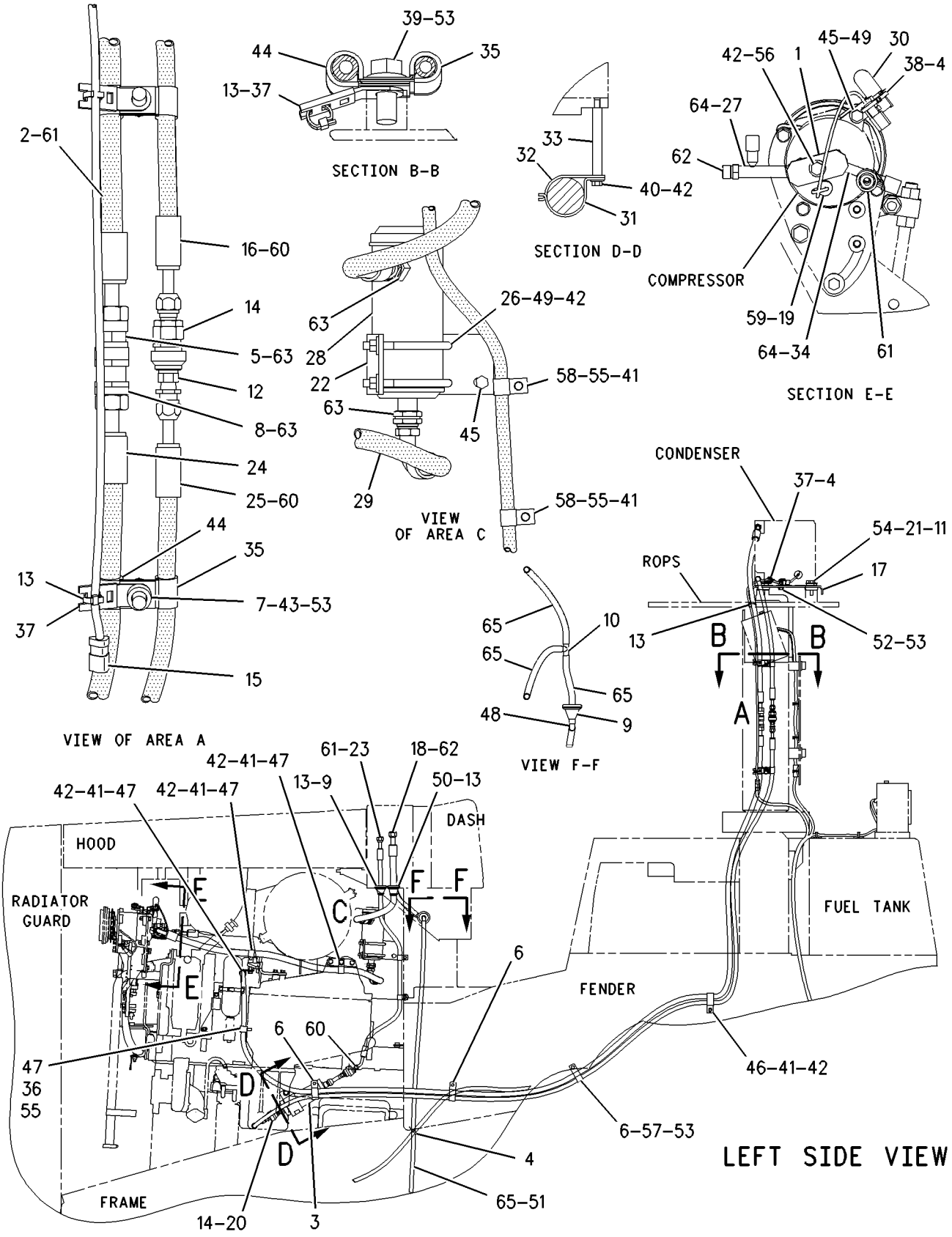

GRAPHIC #1 g00762779

MEMORANDA

OPERATOR STATION

159-3968 LINES GP-AIR CONDITIONER

S/N: AKA1-UP

PART OF 158-2960 AIR CONDITIONER AR

SMCS-1808 **i01446171**

NOTE	REF NO	GRAPHIC REF	PART NUMBER	QTY	PART NAME 1 2 3 4 5 6 (PRODUCT LEVEL)	SEE PAGE
	1	2	**1P-6356**	1	PLATE	
	2	2	**3E-3535**	1	RECEIVER DRYER AS (AIR CONDITIONER)	
		2	**7X-2049**	1	TUBE AS-REFRIGERANT ORIFICE	
	3	1,2	**3S-2093**	3	STRAP-CABLE	
	4	1,2	**6D-2667**	7	CLIP	
I	5	1	**199-4066**	1	HOSE AS	
	6	1	**7T-9426**	2	GROMMET	
	7	2	**8C-5682**	1	TEE	
	8	1,2	**9X-6772**	7	STRAP-CABLE	
	9	1	**103-6100**	2	COUPLER AS-QUICK	
		1	**9X-7382**	2	SEAL-O-RING	
	10	2	**106-8704**	1	SUPPRESSOR AS-ARC	
		2	**102-8802**	1	KIT-RECEPTACLE (2 PIN)	
					(INCLUDES RECEPTACLE AS & WEDGE)	
		2	**8T-8729**	2	PIN-CONNECTOR	
	11	2	**107-8438**	1	BRACKET AS	
	12	1	**107-8439**	1	HANDHOLD-RH	
	13	1	**188-5145**	1	TUBE	
	14	2	**198-0156**	1	BRACKET AS	
		2	**7T-1099**	1	LINK	
		2	**1F-0748**	1	NUT-WELD (1/2-13 THD)	
		2	**8T-5911**	1	NUT-WELD (1/2-13 THD)	
	15	2	**111-7272**	1	BRACKET	
I	16	1	**114-0929**	1	HOSE AS	
	17	2	**114-5333**	1	SWITCH AS-PRESSURE (HIGH/LOW)	
		2	**102-8802**	1	KIT-RECEPTACLE (2 PIN)	
					(INCLUDES RECEPTACLE AS & WEDGE)	
		2	**8T-8729**	2	PIN-CONNECTOR	
	18	1	**116-6202**	2	BOOT	
	19	2	**121-3307**	4	MOUNT AS-RUBBER	
		2	**8T-4226**	1	WASHER-PLATED (10.5X45X3MM THK)	
	20	1	**186-6189**	1	ACCUMULATOR-REFRIGERANT	
	21	1	**162-8053**	1	BRACKET	
I	22	1	**162-8054**	1	HOSE AS	
	23	1	**165-7004**	1	PLATE AS	
		1	**1F-0750**	1	NUT-WELD (3/8-16 THD)	
		1	**4K-8501**	2	CLIP	
		1	**7G-9913**	1	DOOR	
		1	**9B-2052**	1	HINGE	
	24	1	**165-7854**	1	HOSE AS	
	25	1	**169-5452**	2	U-BOLT	
	26	1	**170-5944**	1	HOSE AS	
	27	2	**173-7148**	1	HARNESS AS	
	28	2	**179-2891**	1	FITTING AS-AIR CONDITIONER	
	29	1	**109-1633**	1	CLIP (SLOT)	
	30	1	**109-1634**	1	CLIP (TAB)	
	31	2	**3E-4066**	1	FITTING AS-AIR CONDITIONER	
		2	**3E-4052**	1	CAP-SEAL (AIR CONDITIONER)(HIGH SIDE)	
		2	**3E-4058**	1	VALVE AS-AIR CONDITIONER (HIGH SIDE)	
	32	1	**8T-9383**	1	BOLT (1/2-13X0.75 IN)	
	33	2	**4L-6459**	4	BOLT (3/8-16X2.5 IN)	
	34	2	**4P-7428**	1	CLIP	
	35	2	**4P-8134**	3	CLIP	
	36	1,2	**5M-3062**	10	BOLT (3/8-16X0.75 IN)	
	37	1,2	**5P-1075**	18	WASHER-HARD (10.2X22.5X3MM THK)	
	38	2	**5P-1076**	11	WASHER-HARD (13.5X30X4MM THK)	

159-3968 **LINES GP-AIR CONDITIONER** *(contd.)* **i01446171**

NOTE	REF NO	GRAPHIC REF	PART NUMBER	QTY	PART NAME 1 2 3 4 5 6 (PRODUCT LEVEL)	SEE PAGE
	39	2	**5P-2228**	1	BOLT (1/2-13X1 IN)	
	40	2	**5P-2566**	1	BOLT (1/2-13X1.5 IN)	
	41	1	**4L-6454**	1	BOLT (3/8-16X1 IN)	
	42	1,2	**5S-7383**	3	BOLT (3/8-16X1.75 IN)	
	43	1	**6D-1641**	1	CLIP	
	44	1,2	**6D-4636**	4	CLIP	
	45	2	**6D-7573**	1	CLIP	
	46	1	**6V-2372**	1	ELBOW-BARBED	
	47	2	**6V-8188**	1	NUT (1/2-13 THD)	
	48	1,2	**6V-8801**	9	NUT (3/8-16 THD)	
	49	1	**7T-8894**	1	GROMMET	
	50	1	**7T-9793**	1	VALVE (CHECK)	
	51	2	**7X-0325**	2	BOLT (1/2-13X2.5 IN)	
	52	2	**7X-0328**	2	BOLT (1/2-13X3.50 IN)	
	53	1	**5F-4899**	1	BOLT (3/8-16X5.5 IN)	
	54	2	**8T-4226**	8	WASHER-PLATED (10.5X45X3MM THK)	
	55	1	**8T-4896**	3	WASHER-HARD (10.2X18.5X2.5MM THK)	
M	56	2	**8T-4956**	4	BOLT (M12X1.75X35MM)	
M	57	2	**8T-6466**	1	BOLT (M10X1.50X60MM)	
	58	1	**9M-8406**	2	CLIP	
	59	2	**9X-7378**	1	SEAL-O-RING	
	60	1	**9X-7380**	3	SEAL-O-RING	
	61	1	**9X-7381**	3	SEAL-O-RING	
	62	1,2	**9X-7382**	2	SEAL-O-RING	
	63	1	**9X-7383**	2	SEAL-O-RING	
	64	2	**9X-7385**	2	SEAL-O-RING	
BD	65	1,2	**5P-6129**		TUBE	
	66	1	**8T-4223**	1	WASHER-HARD (13.5X25.5X3MM THK)	

B-USE AS REQUIRED
D-ORDER BY THE METER
I-SEE HOSE FABRICATION GUIDE
M-METRIC PART

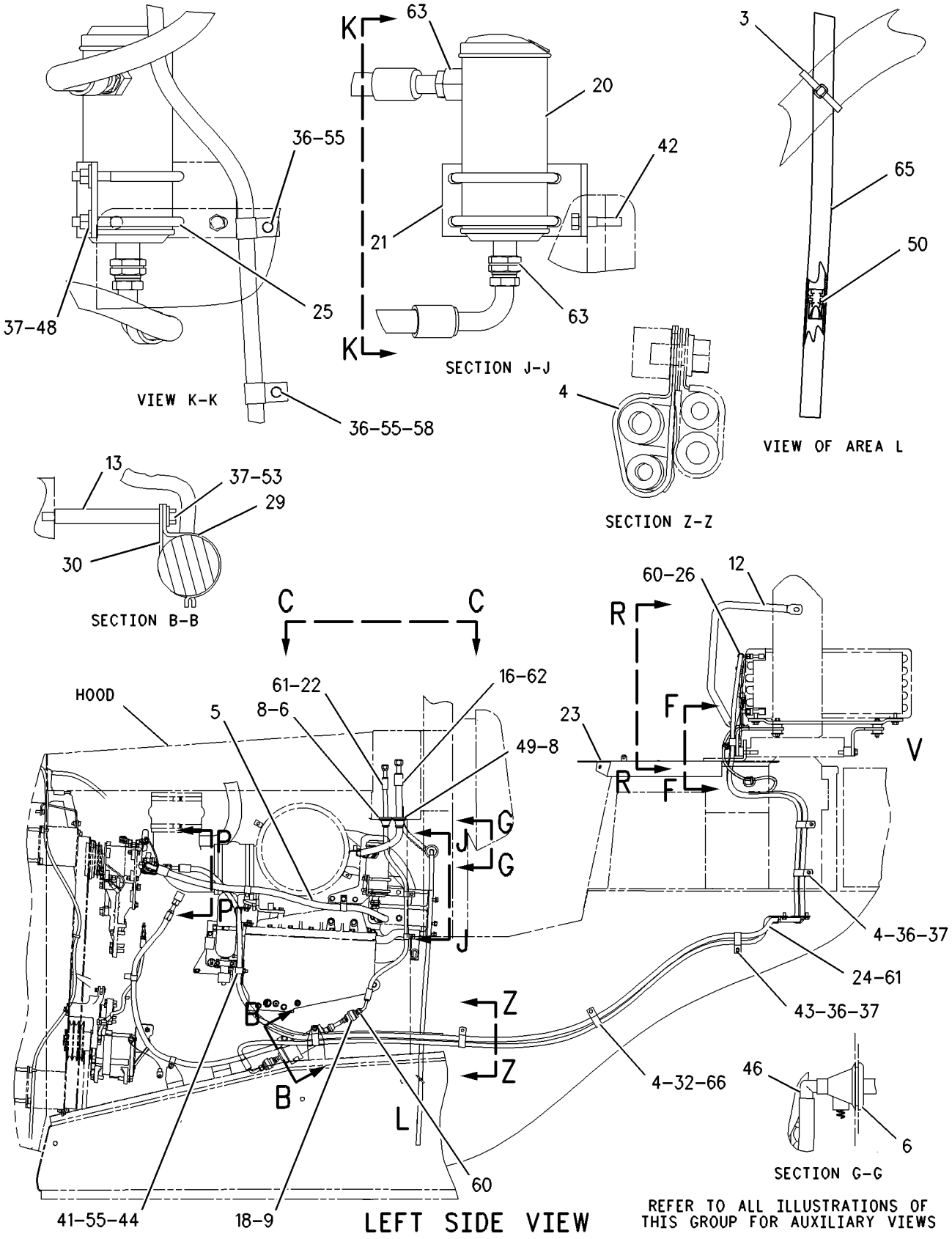

GRAPHIC #1 g00701878

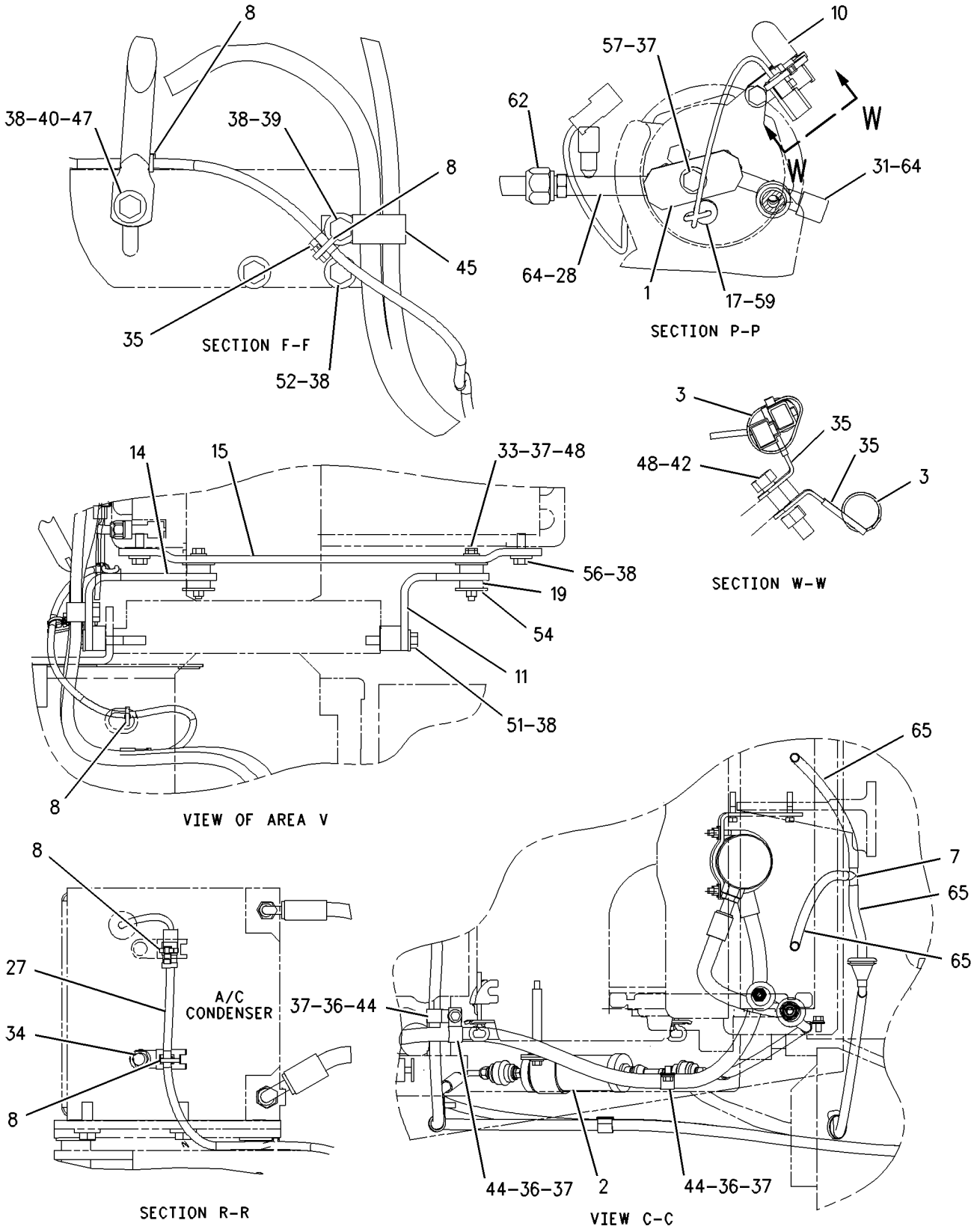

GRAPHIC #2

g00701797

OPERATOR STATION

159-3969 LINES GP-AIR CONDITIONER

S/N: AKA1-UP

PART OF 158-2959 AIR CONDITIONER AR

SMCS-1808 **i01445771**

NOTE	REF NO	GRAPHIC REF	PART NUMBER	QTY	PART NAME 1 2 3 4 5 6 (PRODUCT LEVEL)	SEE PAGE
	1	1	**1P-6356**	1	PLATE	
	2	1	**3E-3535**	1	RECEIVER DRYER AS (AIR CONDITIONER)	
		1	**7X-2049**	1	TUBE AS-REFRIGERANT ORIFICE	
	3	1	**3S-2093**	4	STRAP-CABLE	
	4	1	**7T-9426**	2	GROMMET	
	5	1	**8C-5682**	1	TEE	
	6	1	**9X-6772**	2	STRAP-CABLE	
	7	1	**103-6100**	2	COUPLER AS-QUICK	
					(EACH INCLUDES)	
		1	**9X-7382**	2	SEAL-O-RING	
I	8	1	**111-7266**	1	HOSE AS	
I	9	1	**114-0929**	1	HOSE AS	
	10	1	**114-5333**	1	SWITCH AS-PRESSURE	
		1	**102-8802**	1	KIT-RECEPTACLE (2 PIN)	
					(INCLUDES RECEPTACLE AS & WEDGE)	
		1	**8T-8729**	2	PIN-CONNECTOR	
	11	1	**116-6202**	2	BOOT	
	12	1	**162-8053**	1	BRACKET	
I	13	1	**162-8054**	1	HOSE AS	
	14	1	**166-0266**	1	HOSE AS	
	15	1	**169-5452**	2	U-BOLT	
	16	1	**179-2891**	1	FITTING AS-AIR CONDITIONER	
	17	1	**186-6189**	1	ACCUMULATOR-REFRIGERANT	
I	18	1	**199-4066**	1	HOSE AS	
	19	1	**106-8704**	1	SUPPRESSOR AS-ARC	
		1	**102-8802**	1	KIT-RECEPTACLE (2 PIN)	
					(INCLUDES RECEPTACLE AS & WEDGE)	
		1	**8T-8729**	2	PIN-CONNECTOR	
	20	1	**109-1633**	1	CLIP (SLOT)	
	21	1	**109-1634**	1	CLIP (TAB)	
	22	1	**188-5145**	1	TUBE	
	23	1	**1P-7009**	1	CLIP	
	24	1	**3E-4053**	1	FITTING AS-AIR CONDITIONER	
		1	**3E-4052**	1	CAP-SEAL (AIR CONDITIONER)(HIGH SIDE)	
		1	**3E-4058**	1	VALVE AS-AIR CONDITIONER (HIGH SIDE)	
	25	1	**4D-7735**	1	CLIP	
	26	1	**4P-8134**	2	CLIP	
	27	1	**5F-4899**	1	BOLT (3/8-16X5.5 IN)	
	28	1	**5M-3062**	4	BOLT (3/8-16X0.75 IN)	
	29	1	**5P-1075**	8	WASHER-HARD (10.2X22.5X3MM THK)	
	30	1	**5S-7383**	3	BOLT (3/8-16X1.75 IN)	
	31	1	**6D-4636**	2	CLIP	
	32	1	**6V-2372**	1	ELBOW-BARBED	
	33	1	**6V-8801**	5	NUT (3/8-16 THD)	
	34	1	**7T-8894**	1	GROMMET	
	35	1	**7T-9793**	1	VALVE (CHECK)	
	36	1	**8T-4896**	2	WASHER-HARD (10.2X18.5X2.5MM THK)	
M	37	1	**8T-6466**	1	BOLT (M10X1.50X60MM)	
	38	1	**9M-8406**	3	CLIP	
	39	1	**9X-7378**	1	SEAL-O-RING	
	40	1	**9X-7380**	3	SEAL-O-RING	
	41	1	**9X-7381**	3	SEAL-O-RING	
	42	1	**9X-7382**	2	SEAL-O-RING	
	43	1	**9X-7383**	2	SEAL-O-RING	
	44	1	**9X-7385**	2	SEAL-O-RING	
BD	45	1	**5P-6129**		TUBE	

B-USE AS REQUIRED
D-ORDER BY THE METER
I-SEE HOSE FABRICATION GUIDE
M-METRIC PART

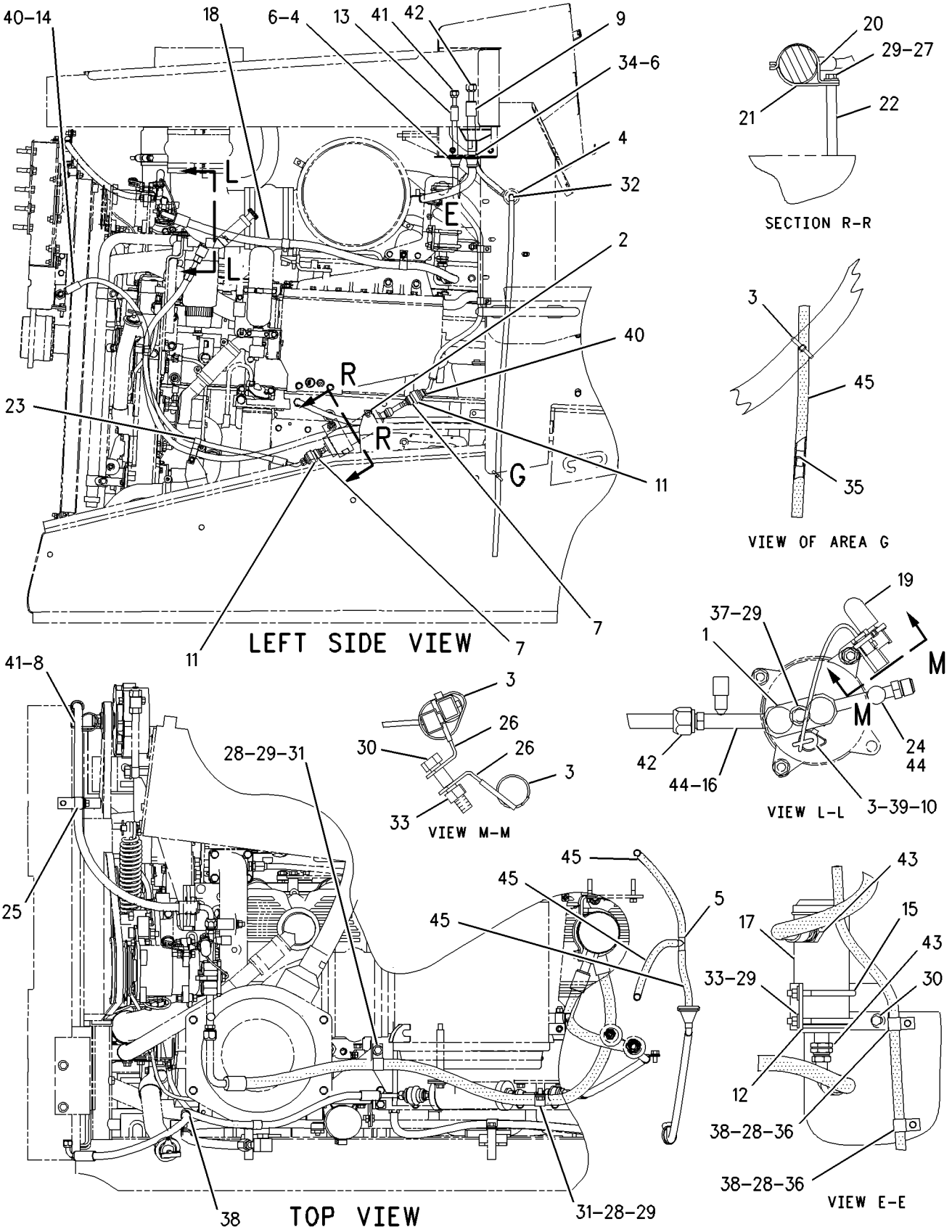

GRAPHIC #1

g00758363

MEMORANDA

OPERATOR STATION

161-6207 LINES GP-HEATER

S/N: AKA1-UP

PART OF 159-8367 CAB AR

SMCS-7304 **i01476696**

NOTE	REF NO	GRAPHIC REF	PART NUMBER	QTY	PART NAME 1 2 3 4 5 6 (PRODUCT LEVEL)	SEE PAGE
	1	1	**3V-1483**	1	ANGLE	
	2	1	**5D-1026**	4	CLAMP-HOSE	
	3	1	**8F-8151**	2	VALVE-SHUTOFF	
	4	1	**8L-6005**	1	TEE-PIPE	
	5	1	**003-2143**	1	ELBOW	
	6	1	**164-2817**	1	PLATE AS	
		1	**1F-0750**	2	NUT-WELD (3/8-16 THD)	
	7	1	**011-5224**	1	BUSHING-TERMINAL	
	8	1	**4B-4845**	1	PLUG	
	9	1	**4L-6454**	3	BOLT (3/8-16X1 IN)	
	10	1	**4L-9337**	2	BOLT (3/8-16X1.5 IN)	
	11	1	**1B-2886**	1	BOLT (1/2-13X3.75 IN)	
	12	1	**6B-4661**	1	BUSHING-REDUCER	
	13	1	**6D-1641**	4	CLIP	
	14	1	**6V-8801**	3	NUT (3/8-16 THD)	
	15	1	**8T-4223**	1	WASHER-HARD (13.5X25.5X3MM THK)	
	16	1	**8T-4896**	8	WASHER-HARD (10.2X18.5X2.5MM THK)	
E	17	1	**5P-0767**		HOSE (169CM)	
E	18	1	**5P-0767**		HOSE (194CM)	
	19	1	**9X-6772**	1	STRAP-CABLE	
E	20	1	**7X-7702**		CONDUIT-FLEXIBLE (20CM)	

E-ORDER BY THE CENTIMETER

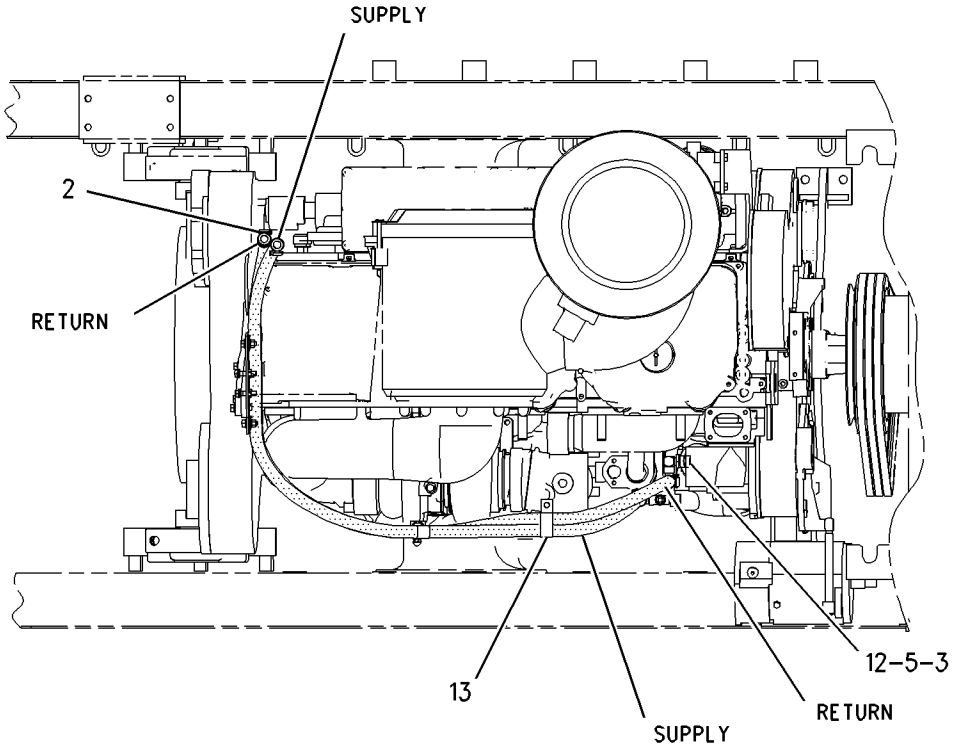

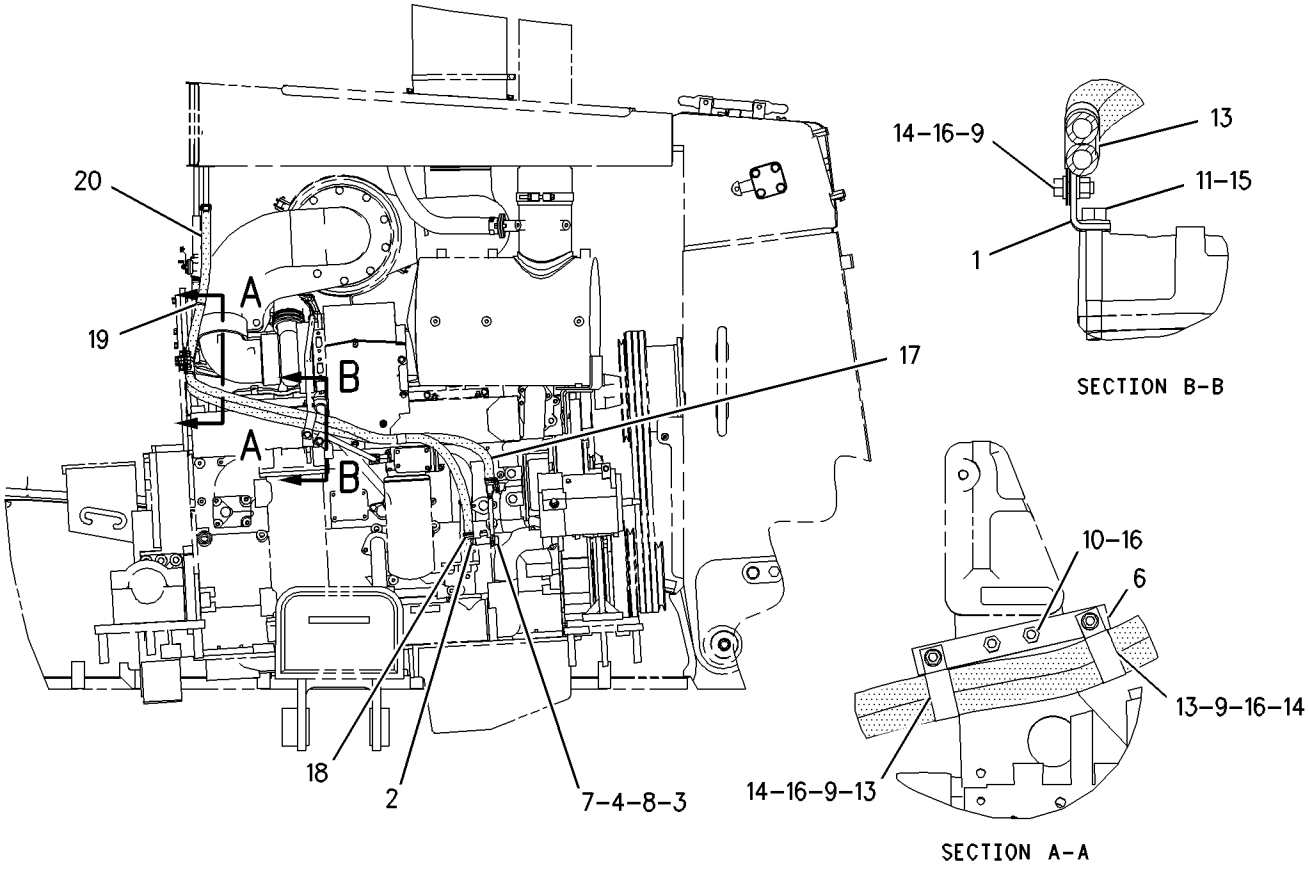

GRAPHIC #1 g00672230

OPERATOR STATION

133-2259 MIRROR GP

S/N: AKA1-UP

PART OF 158-2960 AIR CONDITIONER AR

SMCS-7319 **i01469090**

NOTE	REF NO	GRAPHIC REF	PART NUMBER	QTY	PART NAME 1 2 3 4 5 6 (PRODUCT LEVEL)	SEE PAGE
	1	1	**133-2253**	1	PLATE AS	
		1	**1F-0750**	2	NUT-WELD (3/8-16 THD)	
	2	1	**6V-9156**	1	MIRROR	
	3	1	**7X-0575**	2	WASHER-HARD (10.2X22.5X5MM THK)	
	4	1	**4L-6454**	2	BOLT (3/8-16X1 IN)	

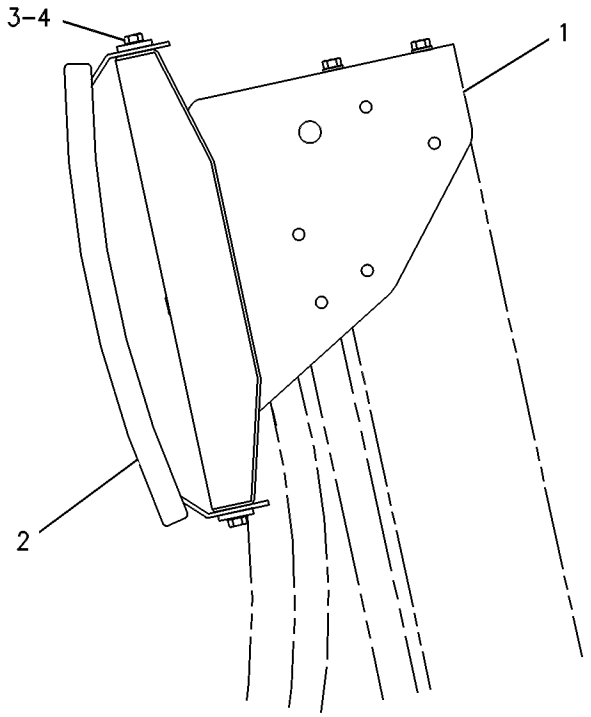

GRAPHIC #1 g00273453

OPERATOR STATION

9P-9392 MIRROR GP-REAR VIEW

S/N: AKA1-UP

PART OF 167-2088 ROPS GP

SMCS-7319 **i00568406**

NOTE	REF NO	GRAPHIC REF	PART NUMBER	QTY	PART NAME 1 2 3 4 5 6 (PRODUCT LEVEL)	SEE PAGE
	1	1	**5S-7379**	2	BOLT (3/8-16X.875IN)	
		1	**5P-1075**	2	WASHER-HARD (3MM THK)	
	2	1	**9P-9390**	1	BRACKET	
	3	1	**9P-9388**	1	KNOB	
	4	1	**5P-6874**	1	MIRROR	
	5	1	**5K-9179**	1	BOLT-ROUND HEAD	

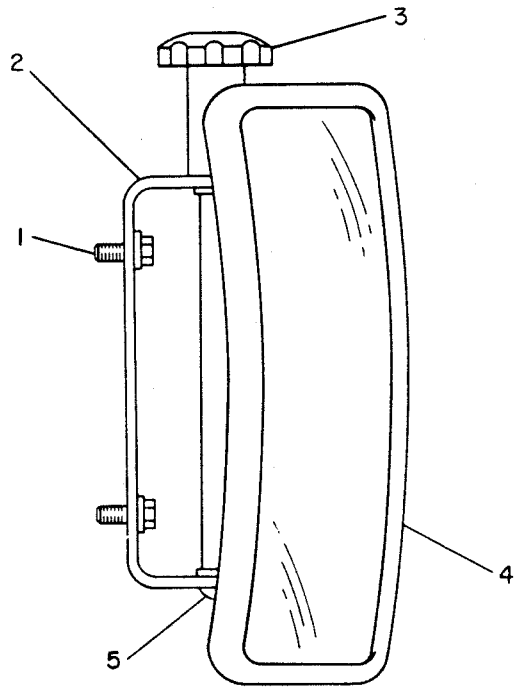

GRAPHIC #1 g00143265

OPERATOR STATION

105-9659 MIRROR GP-REAR VIEW

S/N: AKA1-UP

PART OF 158-7694 CAB AR

SMCS-7319 **i00599732**

NOTE	REF NO	GRAPHIC REF	PART NUMBER	QTY	PART NAME 1 2 3 4 5 6 (PRODUCT LEVEL)	SEE PAGE
	1	1	**9P-9388**	1	KNOB	
	2	1	**5P-6874**	1	MIRROR	
	3	1	**5K-9179**	1	BOLT-ROUND HEAD	
	4	1	**6Y-5113**	1	BRACKET	
	5	1	**8T-4121**	2	WASHER (2.5MM THK)	
M	6	1	**8T-4195**	2	BOLT (M10X1.50X30MM)	

M-METRIC PART

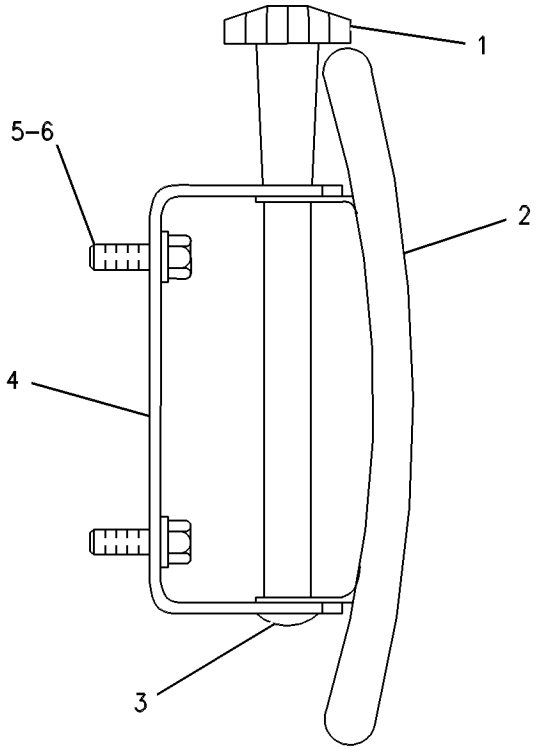

GRAPHIC #1 g00254288

OPERATOR STATION

166-6928 MODULE GP-QUAD GAUGE

S/N: AKA1-UP

PART OF 156-1667 INSTRUMENT GP, 156-0244 INSTRUMENT GP-CAB

SMCS-7450, 7451 **i01502185**

NOTE	REF NO	GRAPHIC REF	PART NUMBER	QTY	PART NAME 1 2 3 4 5 6 (PRODUCT LEVEL)	SEE PAGE
	1	1	**102-8805**	1	KIT-RECEPTACLE (6 PIN)	
					(INCLUDES WEDGE)	
	2	1	**8T-8729**	6	PIN-CONNECTOR	

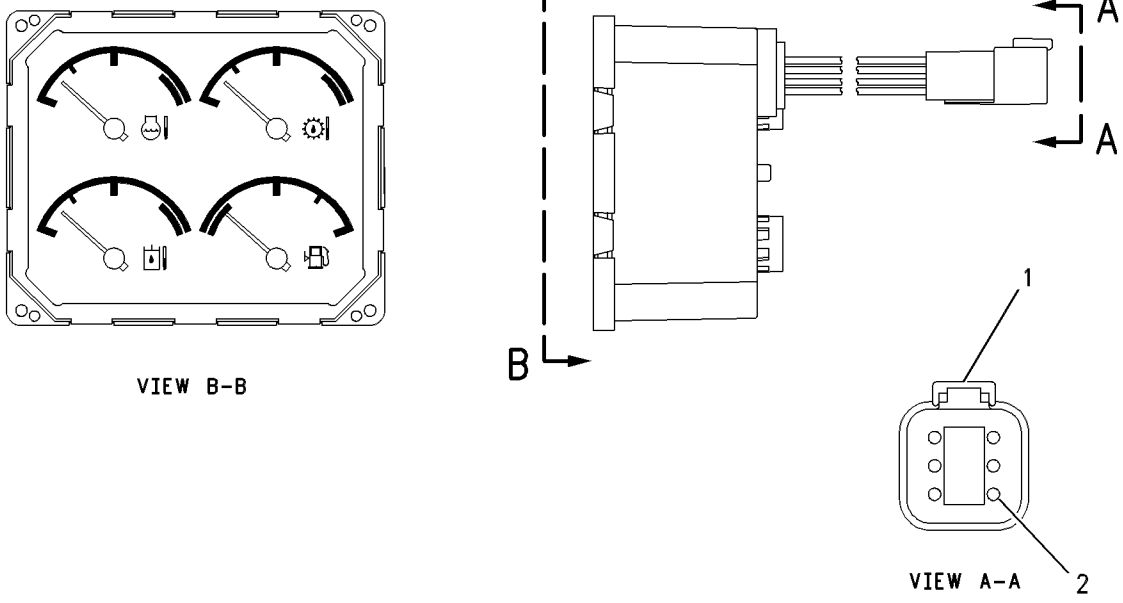

GRAPHIC #1 g00587276

OPERATOR STATION

117-1881 MOTOR AS-WINDOW WIPER

S/N: AKA1-UP
24 VOLT
PART OF 158-7691 WIPER GP-WINDOW

SMCS-7305 **i01094906**

NOTE	REF NO	GRAPHIC REF	PART NUMBER	QTY	PART NAME 1 2 3 4 5 6 (PRODUCT LEVEL)	SEE PAGE
	1	1	**7T-9096**	1	CAP	
	2	1	**5C-8814**	1	SEAL	
	3	1	**6A-9708**	1	NUT	
	4	1	**6A-9709**	1	WASHER	
	5	1	**6A-9710**	1	WASHER (LEATHER)	
M	6	1	**6V-6889**	1	NUT (M8X1.25 THD)	
	7	1	**6A-9718**	1	WASHER	
M	8	1	**5C-9553**	2	BOLT (M6X1.0X16MM)	
	9	1	**5P-0537**	2	WASHER (2MM THK)	
	10	1	**102-8805**	1	KIT-RECEPTACLE (6 PIN)	
					(INCLUDES RECEPTACLE AS & WEDGE)	
	11	1	**8T-8737**	1	PLUG-SEAL	
	12	1	**3E-3383**	1	WEDGE-RECEPTACLE LOCK	
	13	1	**8T-8729**	5	PIN-CONNECTOR	

M-METRIC PART

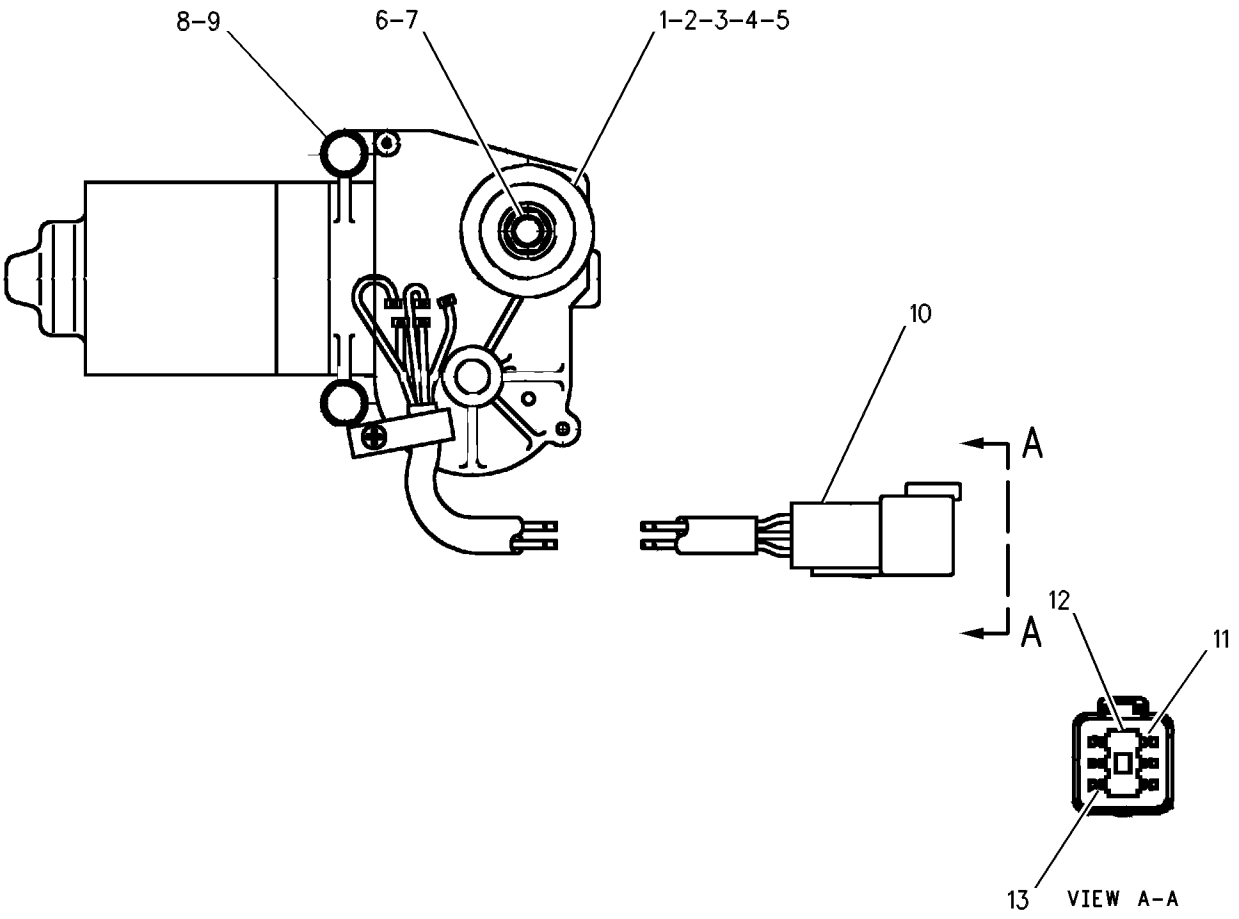

GRAPHIC #1 g00535254

OPERATOR STATION

117-1882 MOTOR AS-WINDOW WIPER

S/N: AKA1-UP
24 VOLT
PART OF 158-7691 WIPER GP-WINDOW

SMCS-7305 **i01094908**

NOTE	REF NO	GRAPHIC REF	PART NUMBER	QTY	PART NAME 1 2 3 4 5 6 (PRODUCT LEVEL)	SEE PAGE
	1	1	**7T-9096**	1	CAP	
	2	1	**5C-8814**	1	SEAL	
	3	1	**6A-9708**	1	NUT	
	4	1	**6A-9709**	1	WASHER	
	5	1	**6A-9710**	1	WASHER (LEATHER)	
M	6	1	**6V-6889**	1	NUT (M8X1.25 THD)	
	7	1	**6A-9718**	1	WASHER	
M	8	1	**5C-9553**	2	BOLT (M6X1.0X16MM)	
	9	1	**5P-0537**	2	WASHER (2MM THK)	
	10	1	**102-8805**	1	KIT-RECEPTACLE (6 PIN)	
					(INCLUDES RECEPTACLE AS & WEDGE)	
	11	1	**8T-8737**	1	PLUG-SEAL	
	12	1	**3E-3383**	1	WEDGE-RECEPTACLE LOCK	
	13	1	**8T-8729**	5	PIN-CONNECTOR	

M-METRIC PART

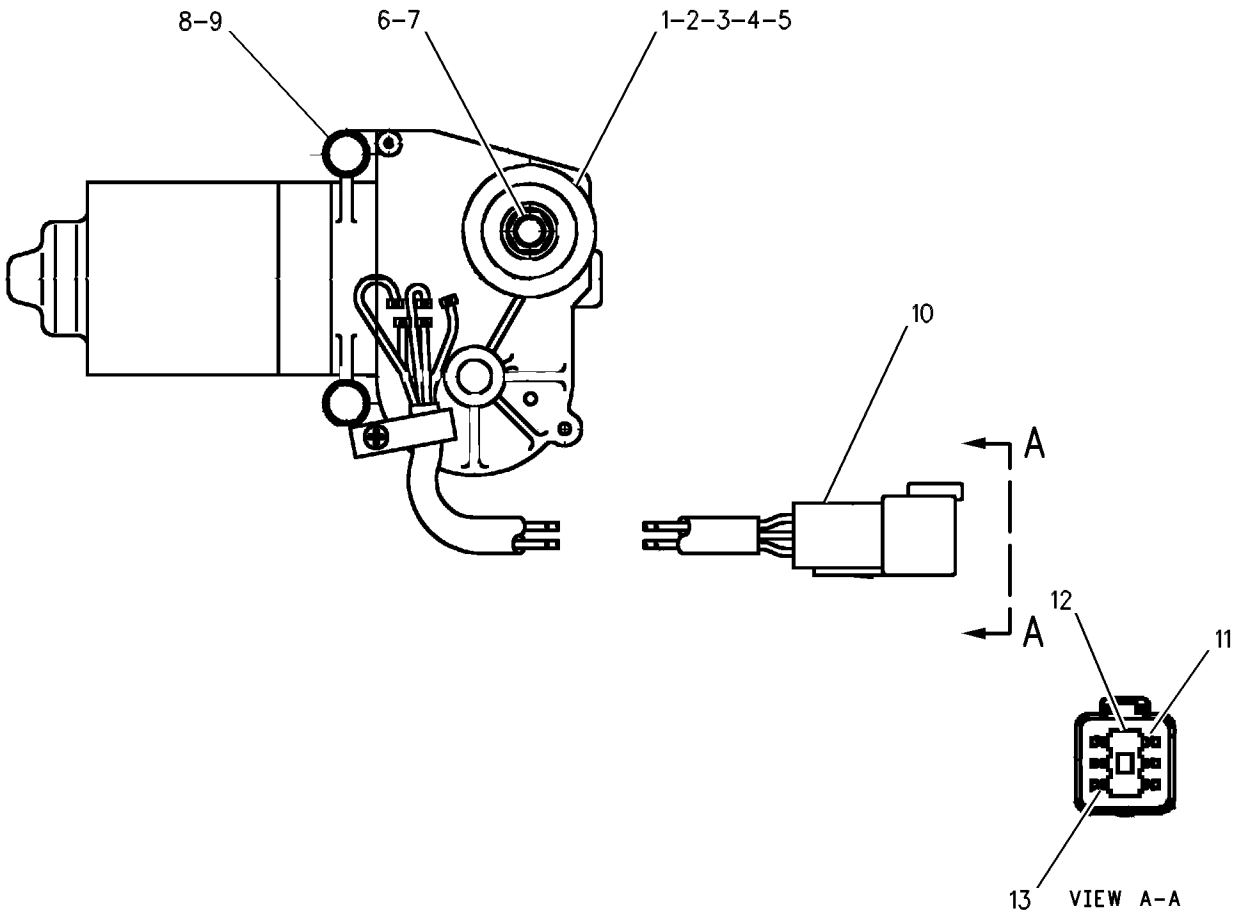

GRAPHIC #1 g00535299

OPERATOR STATION

147-7976 MOTOR GP-WINDOW WIPER

S/N: AKA1-UP

PART OF 158-7691 WIPER GP-WINDOW

SMCS-7305 **i00862395**

NOTE	REF NO	GRAPHIC REF	PART NUMBER	QTY	PART NAME 1 2 3 4 5 6 (PRODUCT LEVEL)	SEE PAGE
M	1	1	**5C-7261**	1	NUT (M8X1.25 THD)	
	2	1	**3F-9556**	1	LOCKWASHER (8.4MM ID)	
	3	1	**102-8805**	1	KIT-RECEPTACLE	
					(INCLUDES RECEPTACLE AND WEDGE)	
	4	1	**9G-3695**	1	PLUG-SEAL	
	5	1	**8T-8729**	5	PIN-CONNECTOR	

M-METRIC PART

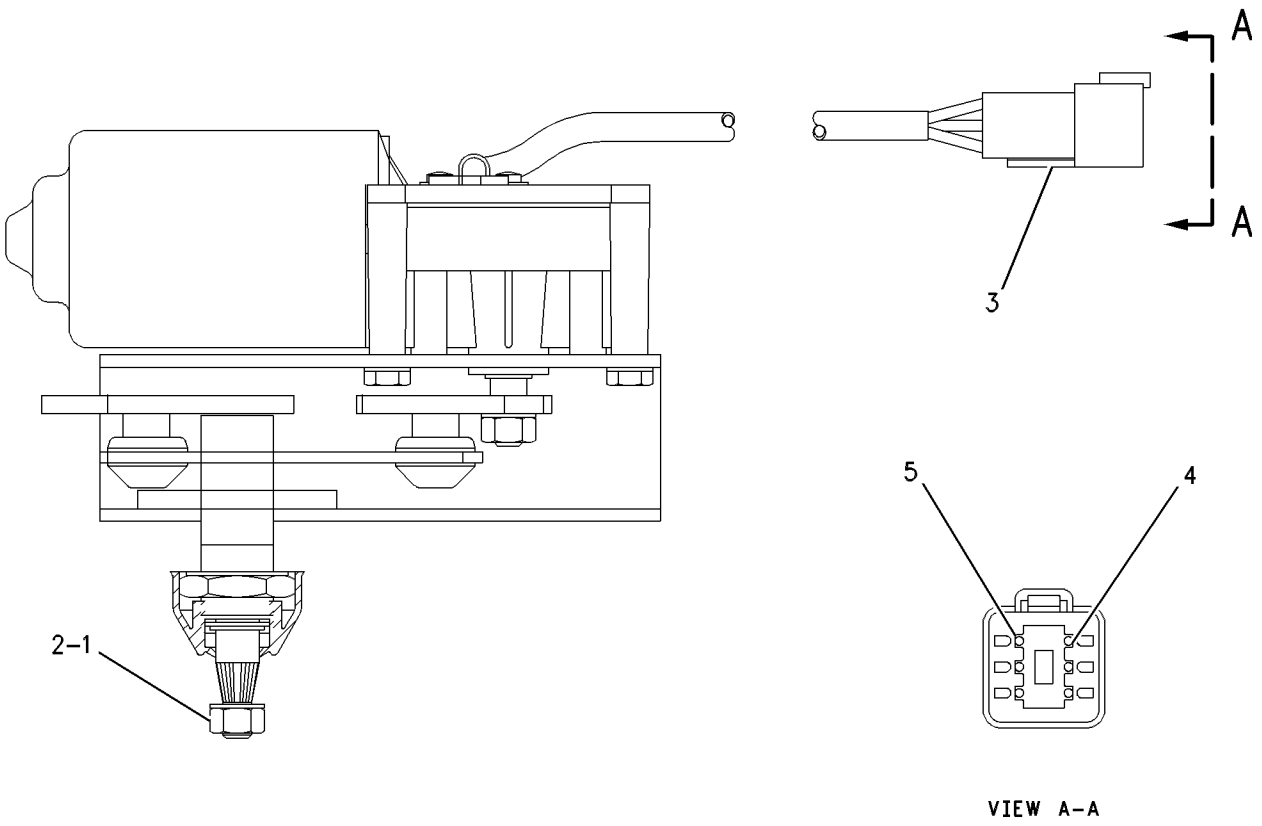

GRAPHIC #1 g00464037

OPERATOR STATION

147-7979 MOTOR GP-WINDOW WIPER

S/N: AKA1-UP
24 VOLT
PART OF 158-7691 WIPER GP-WINDOW

SMCS-7305 **i01082860**

NOTE	REF NO	GRAPHIC REF	PART NUMBER	QTY	PART NAME 1 2 3 4 5 6 (PRODUCT LEVEL)	SEE PAGE
M	1	1	**5C-7261**	1	NUT (M8X1.25 THD)	
	2	1	**3F-9556**	1	LOCKWASHER (8.4MM ID)	
	3	1	**102-8805**	1	KIT-RECEPTACLE (6 PIN)	
					(INCLUDES RECEPTACLE AS & WEDGE)	
	4	1	**9G-3695**	1	PLUG-SEAL	
	5	1	**8T-8729**	5	PIN-CONNECTOR	

M-METRIC PART

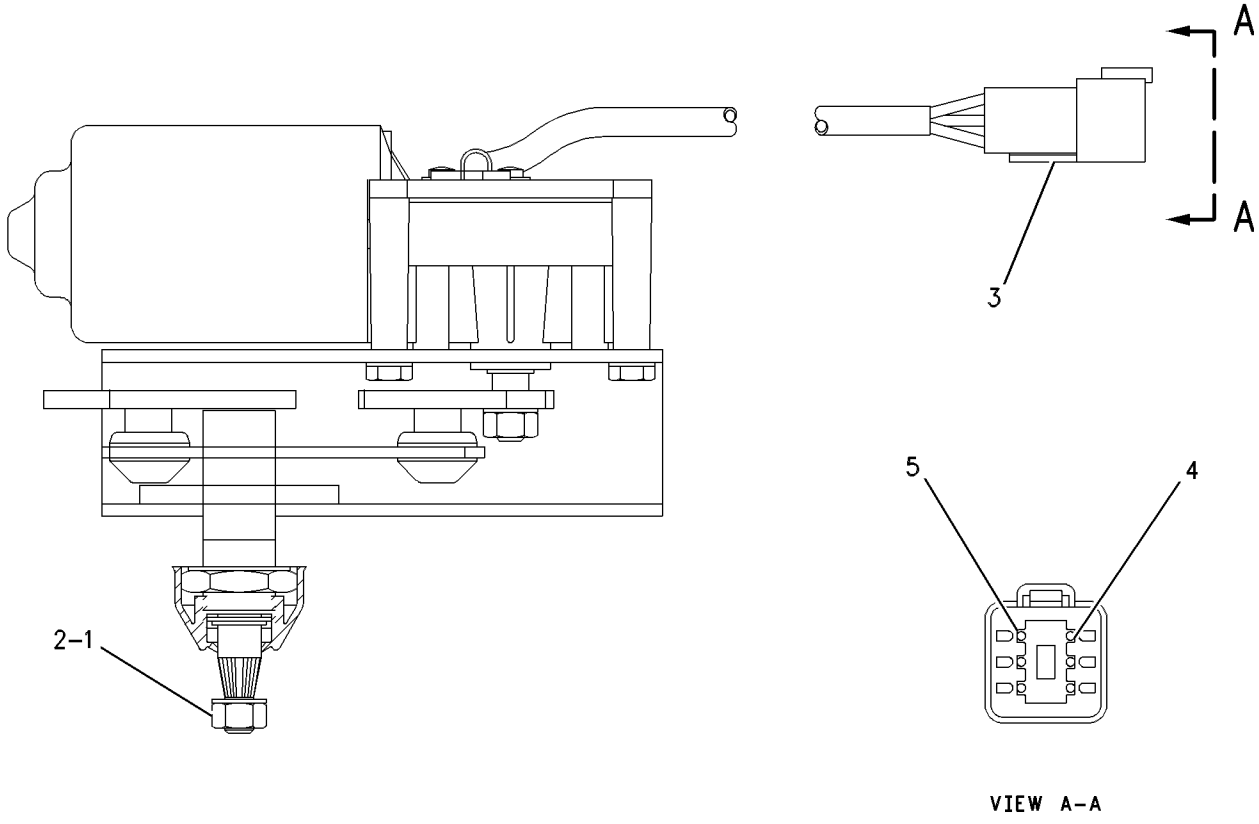

GRAPHIC #1 g00464037

OPERATOR STATION

169-9637 MOUNTING GP-CAB

S/N: AKA1-UP

PART OF 159-8367 CAB AR

SMCS-7266, 7301 **i01488740**

NOTE	REF NO	GRAPHIC REF	PART NUMBER	QTY	PART NAME 1 2 3 4 5 6 (PRODUCT LEVEL)	SEE PAGE
	1	1	**9G-0986**	1	SEAL	
	2	1	**9G-0983**	2	SEAL	
BD	3	1	**5P-7514**		SEAL	
	4	1	**9G-0990**	1	SEAL	
	5	1	**113-6033**	1	ANGLE	
	6	1	**189-5359**	2	WASHER-HARD (10.5X28.5X5MM THK)	
	7	1	**7X-3392**	31	WASHER-HARD (13.5X22.5X3MM THK)	
	8	1	**171-2438**	7	BOLT-12 POINT HEAD (M12X1.75X30MM)	
M	9	1	**8T-4136**	8	BOLT (M10X1.5X25MM)	
	10	1	**7X-7729**	8	WASHER (11X25X3MM THK)	
BD	11	1	**5P-7513**		SEAL	
M	12	1	**189-5358**	2	BOLT-HEX HEAD (M10X1.5X60MM)	
M	13	1	**9X-8272**	12	BOLT (M12X1.75X60MM)	

B-USE AS REQUIRED
D-ORDER BY THE METER
M-METRIC PART

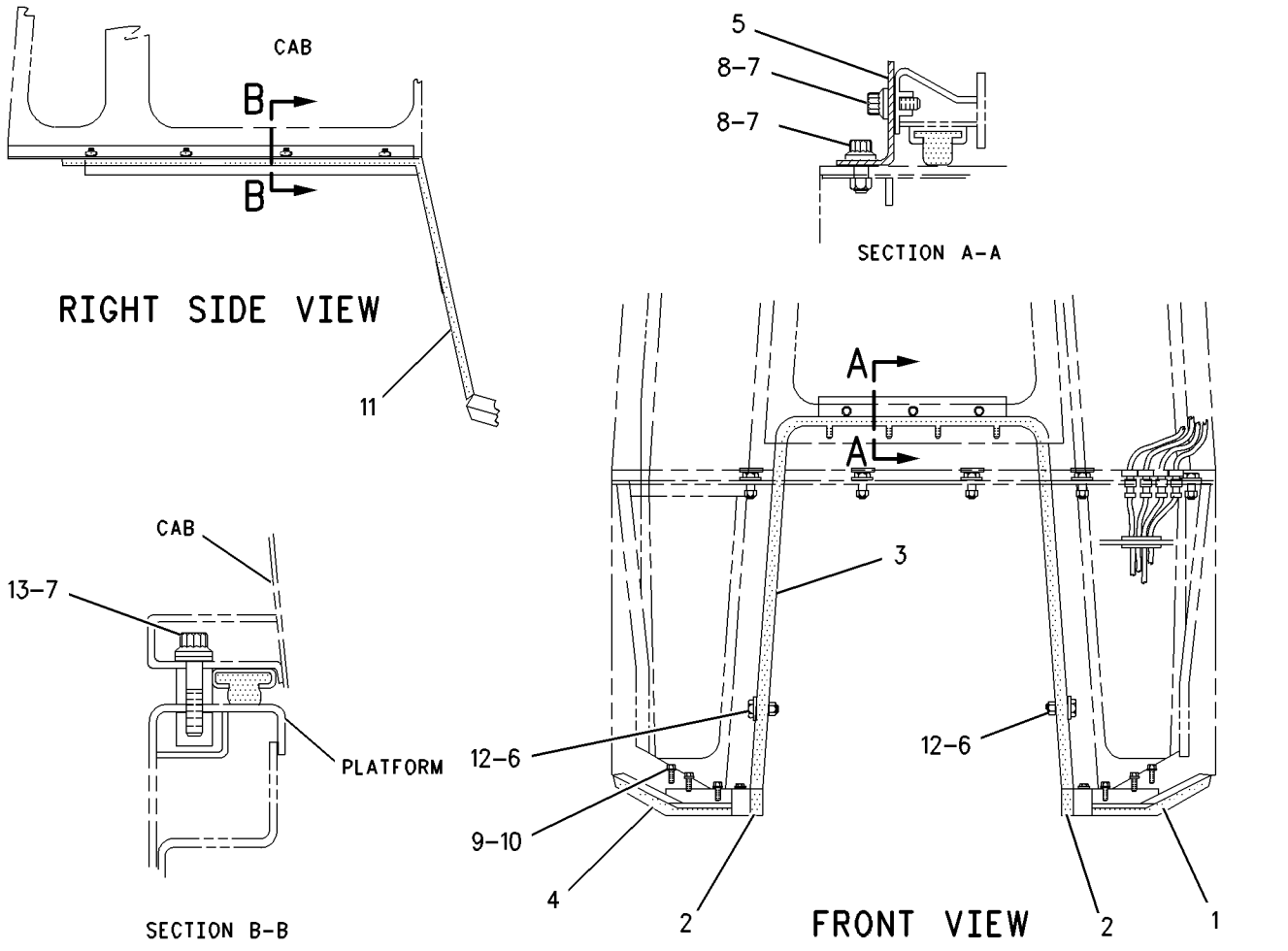

GRAPHIC #1 g00722402

OPERATOR STATION

157-7328 MOUNTING GP-CONTROL

S/N: AKA1-UP

PART OF 157-0824 CONTROL AR-PILOT HYDRAULIC

SMCS-5063 **i01389898**

NOTE	REF NO	GRAPHIC REF	PART NUMBER	QTY	PART NAME 1 2 3 4 5 6 (PRODUCT LEVEL)	SEE PAGE
	1	1	**160-4702**	1	PLATE	
	2	1	**160-4703**	1	PLATE AS	
	3	1	**165-8433**	1	GASKET	
M	4	1	**172-5291**	4	SCREW	
	5	1	**7X-7729**	4	WASHER (11X25X3MM THK)	
	6	1	**8T-4205**	6	WASHER-HARD (7.2X14.5X2MM THK)	
M	7	1	**9X-2045**	6	SCREW-TRUSS HEAD (M6X1X20MM)	

M-METRIC PART

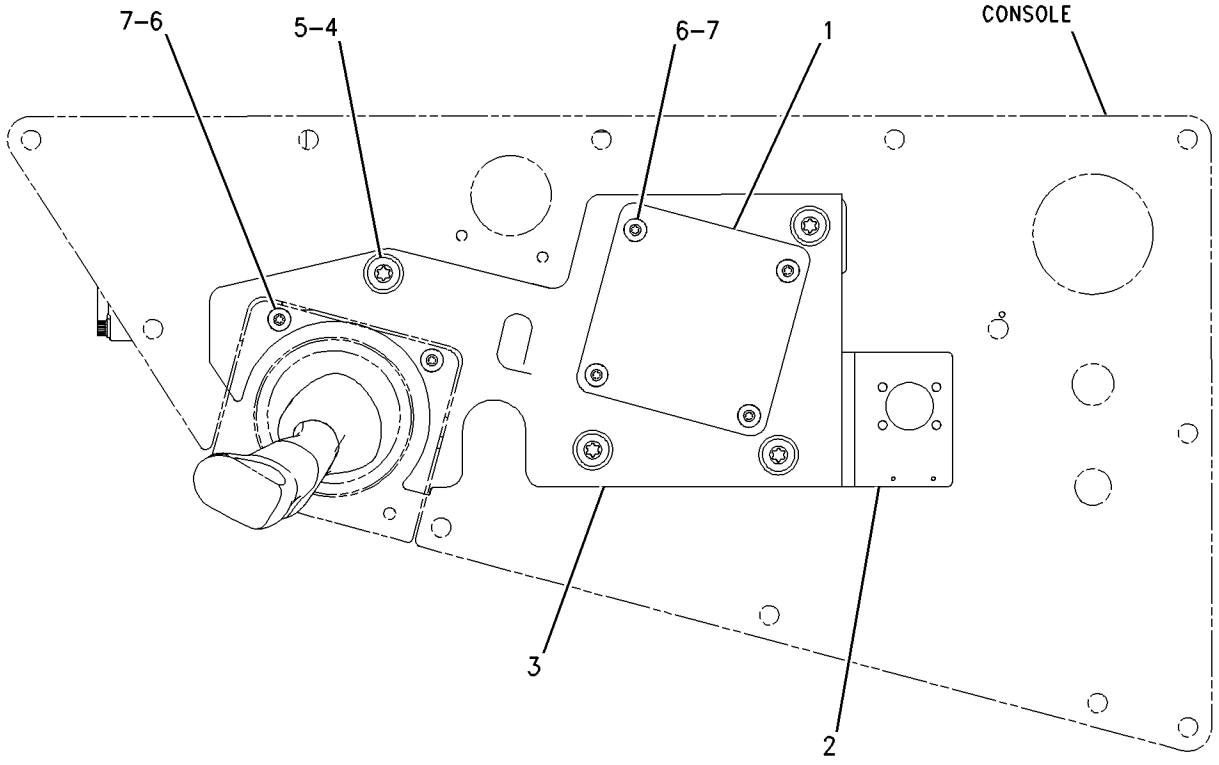

TOP VIEW

GRAPHIC #1 g00732695

OPERATOR STATION

163-3436 MOUNTING GP-CONTROL

S/N: AKA1-UP

PART OF 157-7331, 160-5560 CONTROL AR-PILOT HYDRAULIC

SMCS-5063 **i01392327**

NOTE	REF NO	GRAPHIC REF	PART NUMBER	QTY	PART NAME 1 2 3 4 5 6 (PRODUCT LEVEL)	SEE PAGE
	1	1	**160-4703**	1	PLATE AS	
	2	1	**165-8433**	1	GASKET	
M	3	1	**172-5291**	4	SCREW	
	4	1	**7X-7729**	4	WASHER (11X25X3MM THK)	
	5	1	**8T-4205**	6	WASHER-HARD (7.2X14.5X2MM THK)	
M	6	1	**9X-2045**	6	SCREW-TRUSS HEAD (M6X1X20MM)	

M-METRIC PART

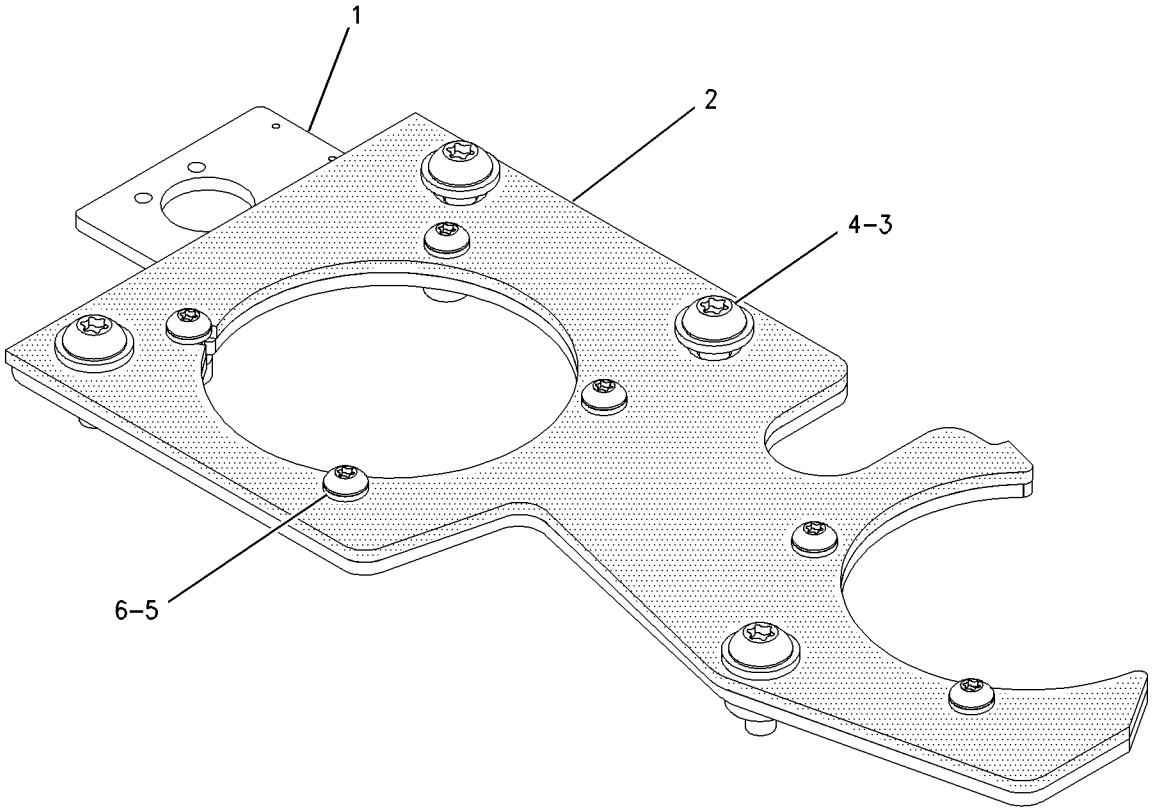

GRAPHIC #1 g00695281

MEMORANDA

OPERATOR STATION

192-4093 OPERATOR AR

S/N: AKA1-UP

SMCS-7225, 7301, 7335 **i01489100**

NOTE	REF NO	GRAPHIC REF	PART NUMBER	QTY	PART NAME 1 2 3 4 5 6 (PRODUCT LEVEL)	SEE PAGE
	1	1	**1Q-3783**	2	PLATE AS	
	2	1	**110-8379**	1	PEDAL	
	3	1	**110-8380**	1	PEDAL	
M	4	1	**8T-4136**	12	BOLT (M10X1.5X25MM)	
	5	1	**195-4454**	2	PLATE AS	
M		1	**8T-3490**	6	NUT-WELD (M10X1.5 THD)	
	6	1	**195-4455**	1	TREAD	
	7	1	**196-3598**	1	FLOOR MAT	
	8	1	**196-3600**	1	FLOORPLATE AS	
M		1	**8T-3490**	6	NUT-WELD (M10X1.5 THD)	
	9	1	**8T-4121**	12	WASHER-HARD (11X21X2.5MM THK)	
	10	1	**195-4450**	1	BOX AS	
		1	**2V-5019**	1	SPRING	
		1	**3W-1547**	1	STRIKER AS	
M	11	1	**8T-3490**	2	NUT-WELD (M10X1.5 THD)	
	12	1	**8T-4121**	2	WASHER-HARD (11X21X2.5MM THK)	
M	13	1	**8T-4137**	2	BOLT (M10X1.5X20MM)	
	14	1	**121-4057**	1	HINGE	

M-METRIC PART

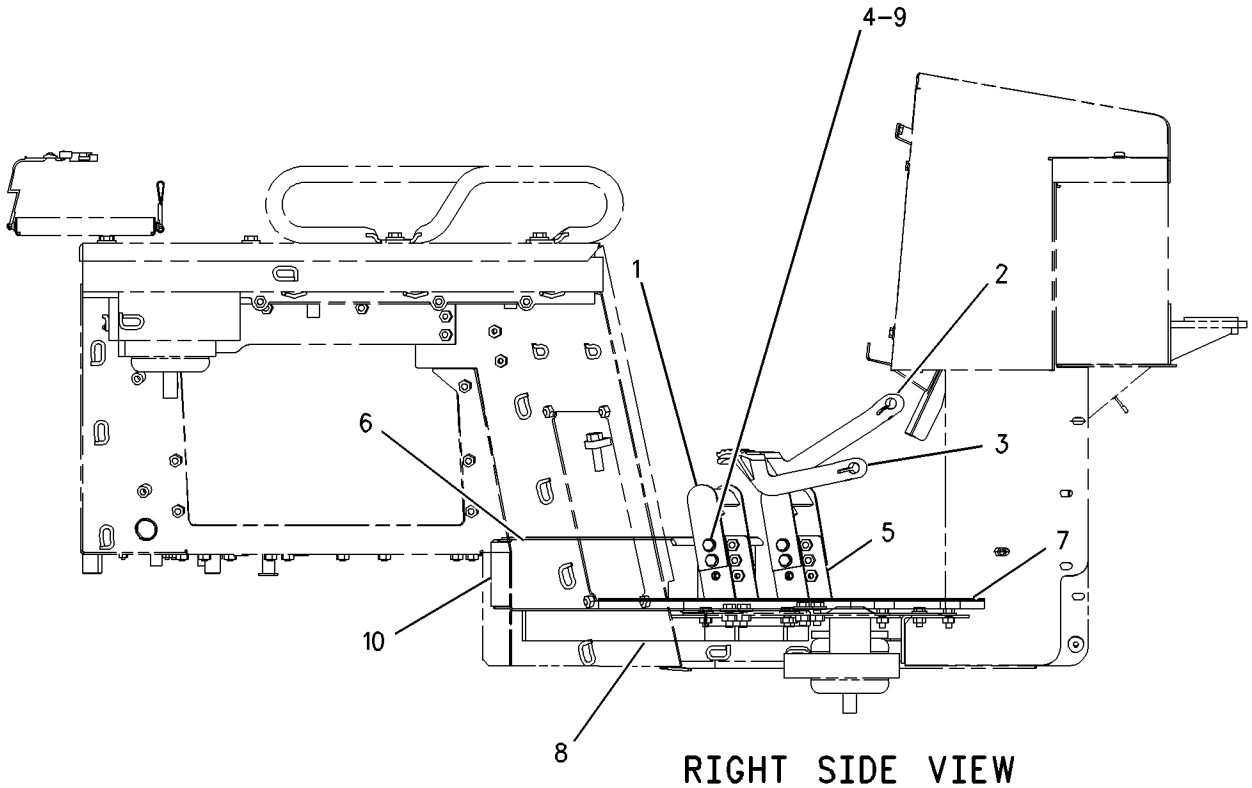

RIGHT SIDE VIEW

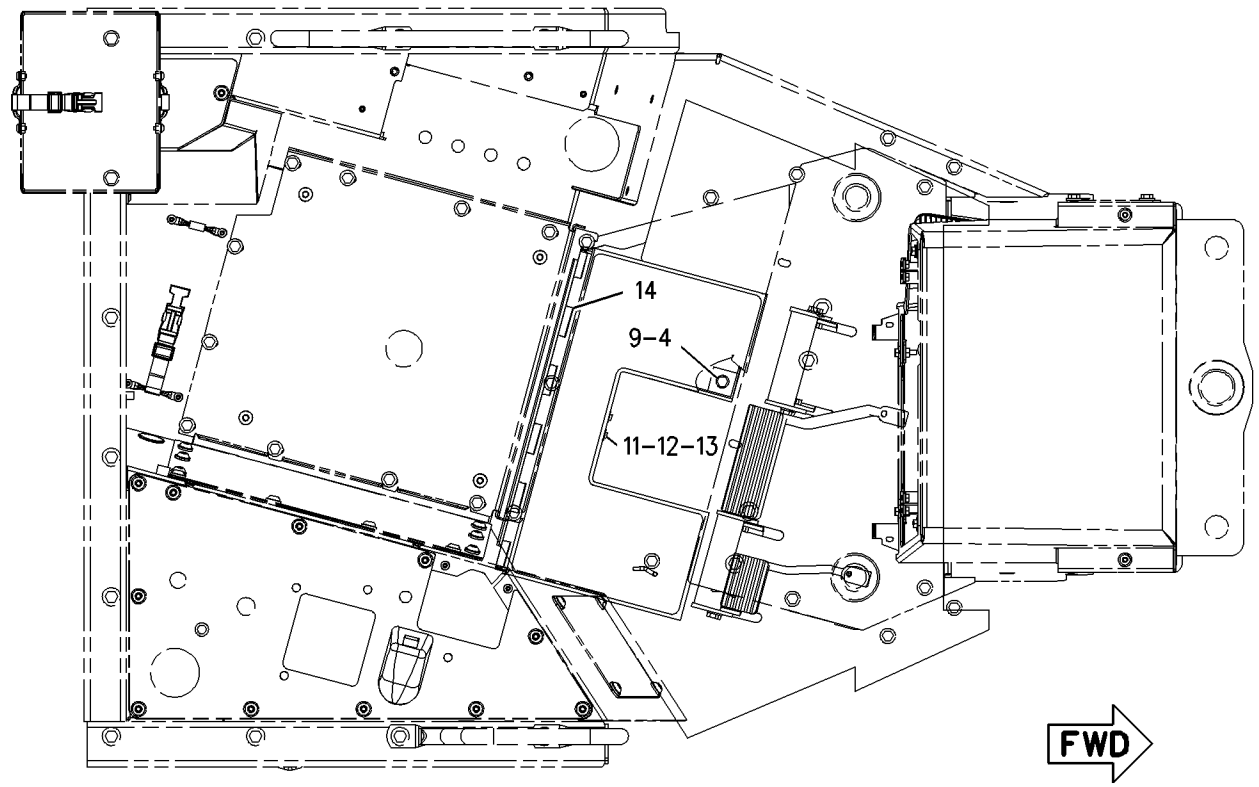

TOP VIEW

GRAPHIC #1 g00739703

OPERATOR STATION

178-0605 PAN GP-BACKREST

S/N: AKA1-UP

PART OF 178-0604, 180-7305 PAN GP-SEAT

SMCS-7312 **i01437598**

NOTE	REF NO	GRAPHIC REF	PART NUMBER	QTY	PART NAME 1 2 3 4 5 6 (PRODUCT LEVEL)	SEE PAGE
	1	1	**4K-9429**	8	RIVET-POP	
	2	1	**5P-7957**	1	LANYARD	
	3	1	**136-1543**	1	PLATE AS-LUMBAR	
	4	1	**173-2052**	1	RETAINER	
	5	1	**178-7907**	1	HOLDER	
	6	1	**177-4930**	1	PAN AS-BACK	

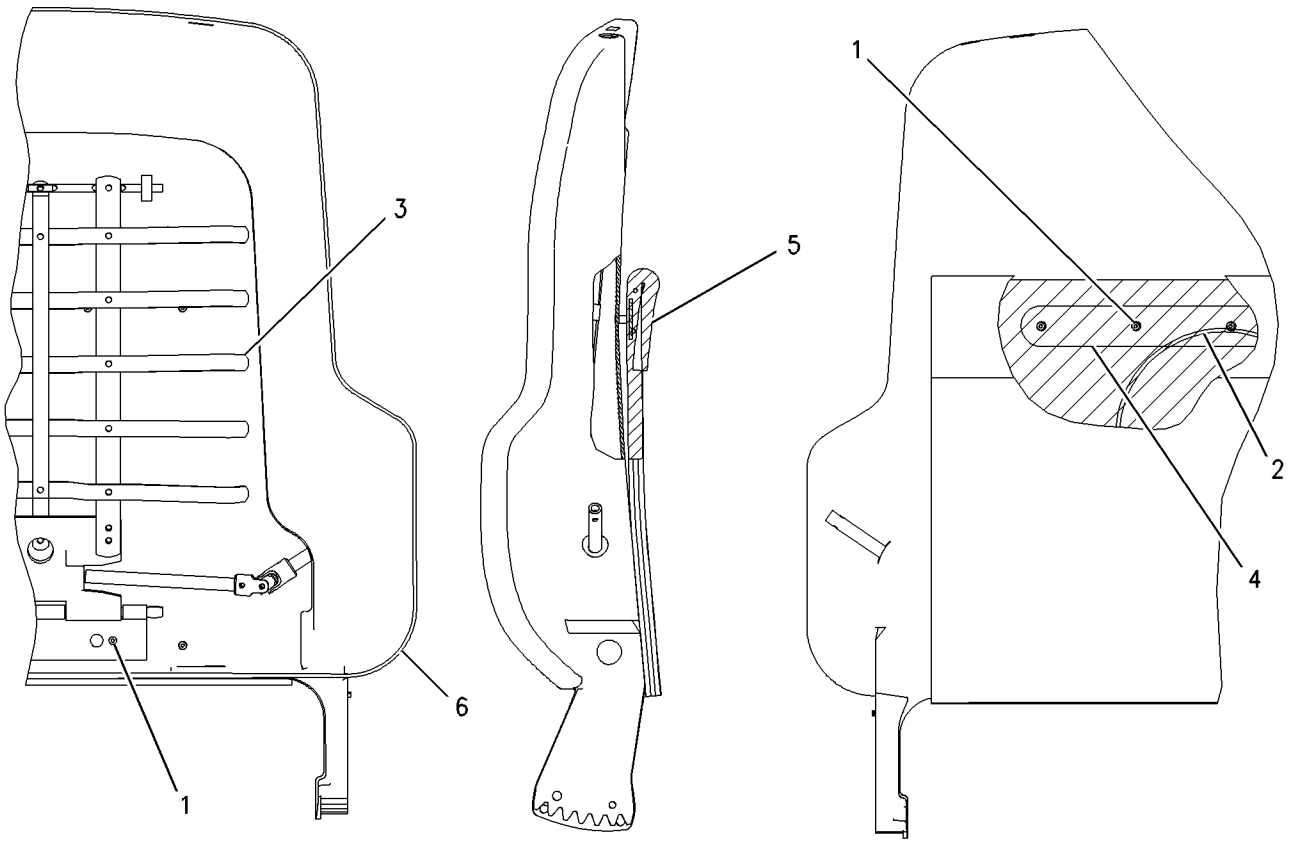

GRAPHIC #1 g00716497

178-0604 PAN GP-SEAT–CLOTH

S/N: AKA1-UP

PART OF 178-0603 SEAT GP

SMCS-7312 **i01448095**

NOTE	REF NO	GRAPHIC REF	PART NUMBER	QTY	PART NAME 1 2 3 4 5 6 (PRODUCT LEVEL)	SEE PAGE
	1	1	**164-4883**	1	KNOB-LUMBAR	
	2	1	**169-0651**	1	CUSHION AS	
Y	3	1	*178-0605*	1	PAN GP-BACKREST	810
	4	1	**8T-7566**	1	PIN-SPRING	

Y-SEPARATE ILLUSTRATION

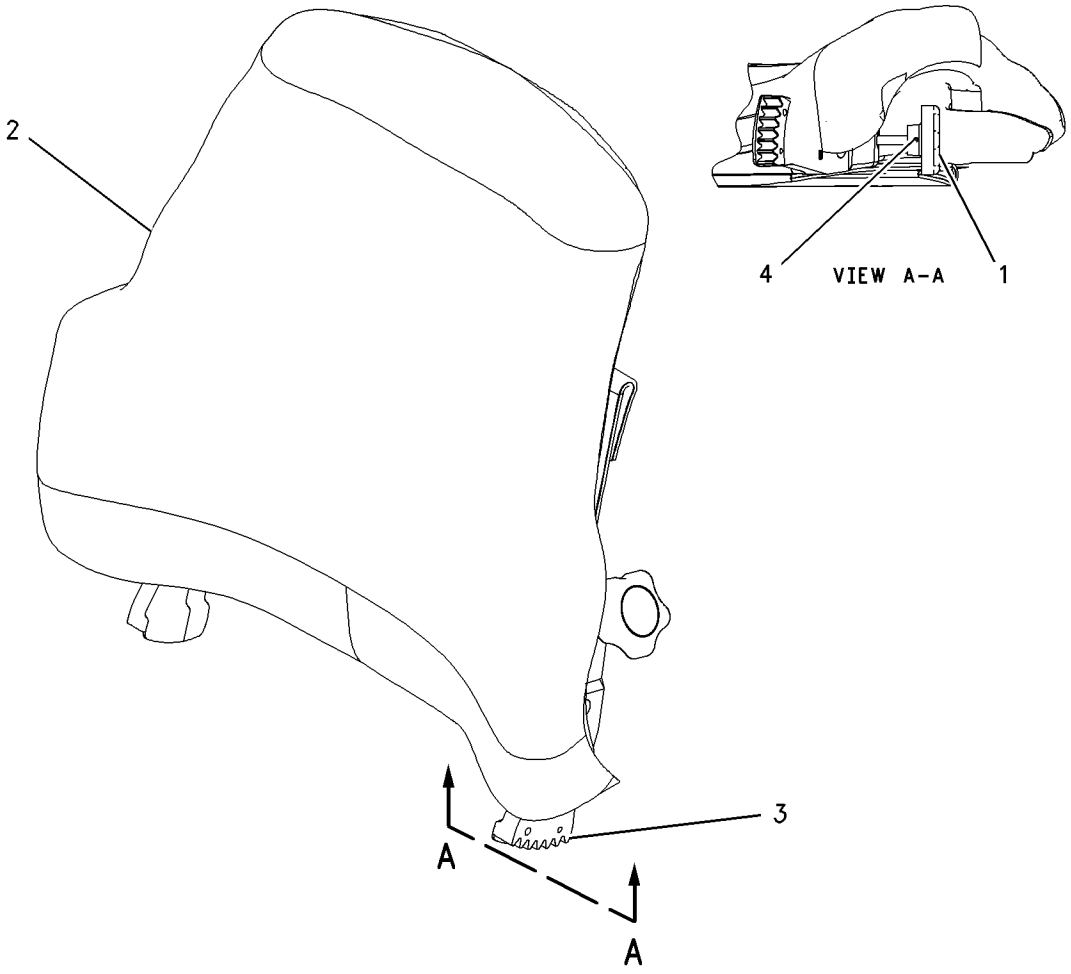

GRAPHIC #1 g00727710

OPERATOR STATION

180-7305 PAN GP-SEAT

S/N: AKA1-UP

PART OF 180-7304 SEAT GP

SMCS-7312 **i01437595**

NOTE	REF NO	GRAPHIC REF	PART NUMBER	QTY	PART NAME 1 2 3 4 5 6 (PRODUCT LEVEL)	SEE PAGE
	1	1	**164-4883**	1	KNOB-LUMBAR	
	2	1	**169-0697**	1	CUSHION AS	
		1	**184-2300**	1	FILM	
Y	3	1	*178-0605*	1	PAN GP-BACKREST	810
	4	1	**8T-7566**	1	PIN-SPRING	

Y-SEPARATE ILLUSTRATION

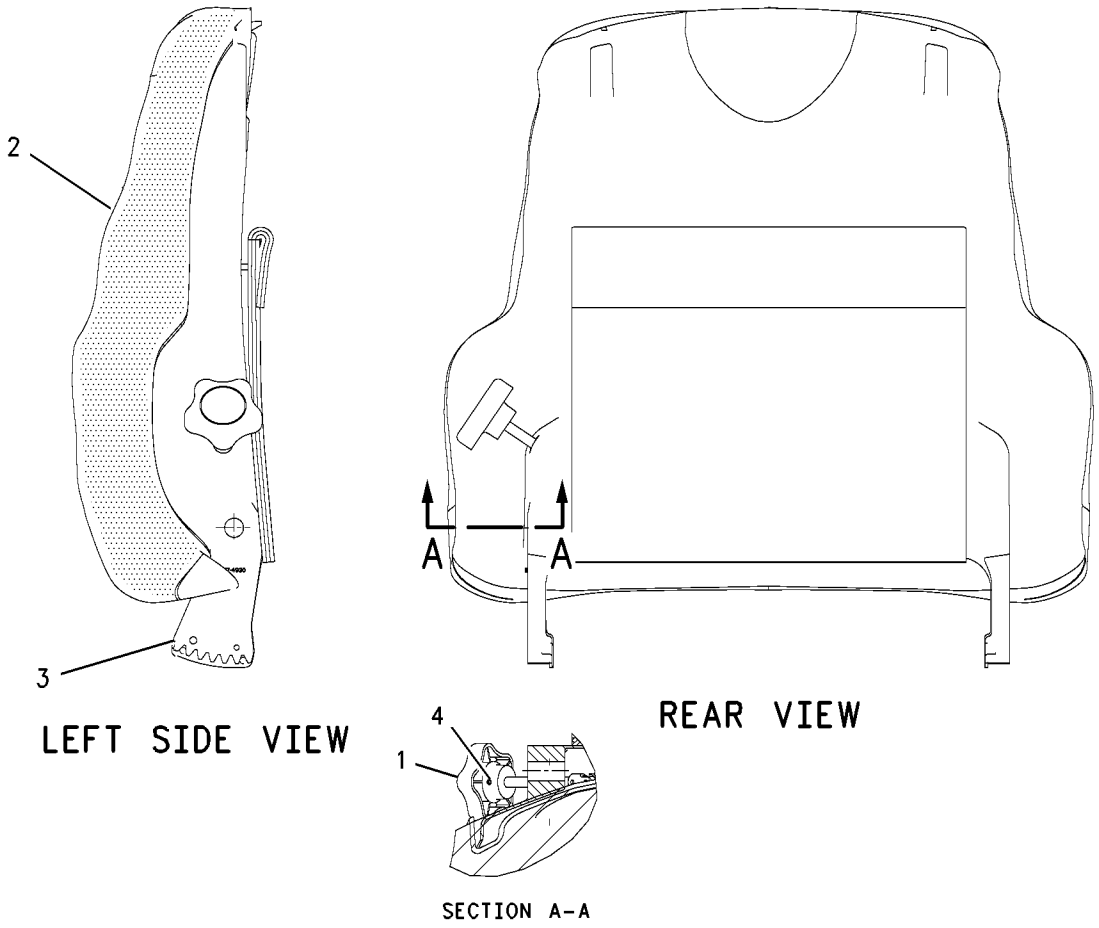

LEFT SIDE VIEW

REAR VIEW

SECTION A-A

GRAPHIC #1 g00678939

OPERATOR STATION

173-1028 PLATE GP-SLIDE

S/N: AKA1-UP

PART OF 178-0603, 180-7304 SEAT GP

SMCS-7321 **i01437574**

NOTE	REF NO	GRAPHIC REF	PART NUMBER	QTY	PART NAME 1 2 3 4 5 6 (PRODUCT LEVEL)	SEE PAGE
	1	1	**4V-8256**	4	SPRING	
	2	1	**117-4486**	1	ANCHOR	
	3	1	**117-4492**	1	ROD	
	4	1	**132-0338**	2	WASHER-PLASTIC	
	5	1	**136-1544**	1	LATCH AS-LH	
	6	1	**143-1288**	1	LOCKNUT-FLANGE	
	7	1	**156-5545**	1	LATCH AS-RH	
	8	1	**164-4531**	1	ROD	
	9	1	**9M-1974**	1	WASHER-HARD (8.8X16X2MM THK)	
	10	1	**170-1114**	1	HANDLE (SLIDE ADJUSTMENT)	
	11	1	**170-1115**	1	HANDLE (TILT ADJUSTMENT)	
	12	1	**172-4001**	1	BRACKET	
	13	1	**1D-4675**	1	BOLT-CARRIAGE (3/8-16X.75 IN)	
	14	1	**2K-4973**	2	LOCKNUT (3/8-16 THD)	
	15	1	**7L-8170**	1	NUT-FULL (5/16-18 THD)	
	16	1	**7X-0608**	2	WASHER-HARD (10.2X16X2.0MM THK)	
	17	1	**170-1112**	1	PLATE AS	

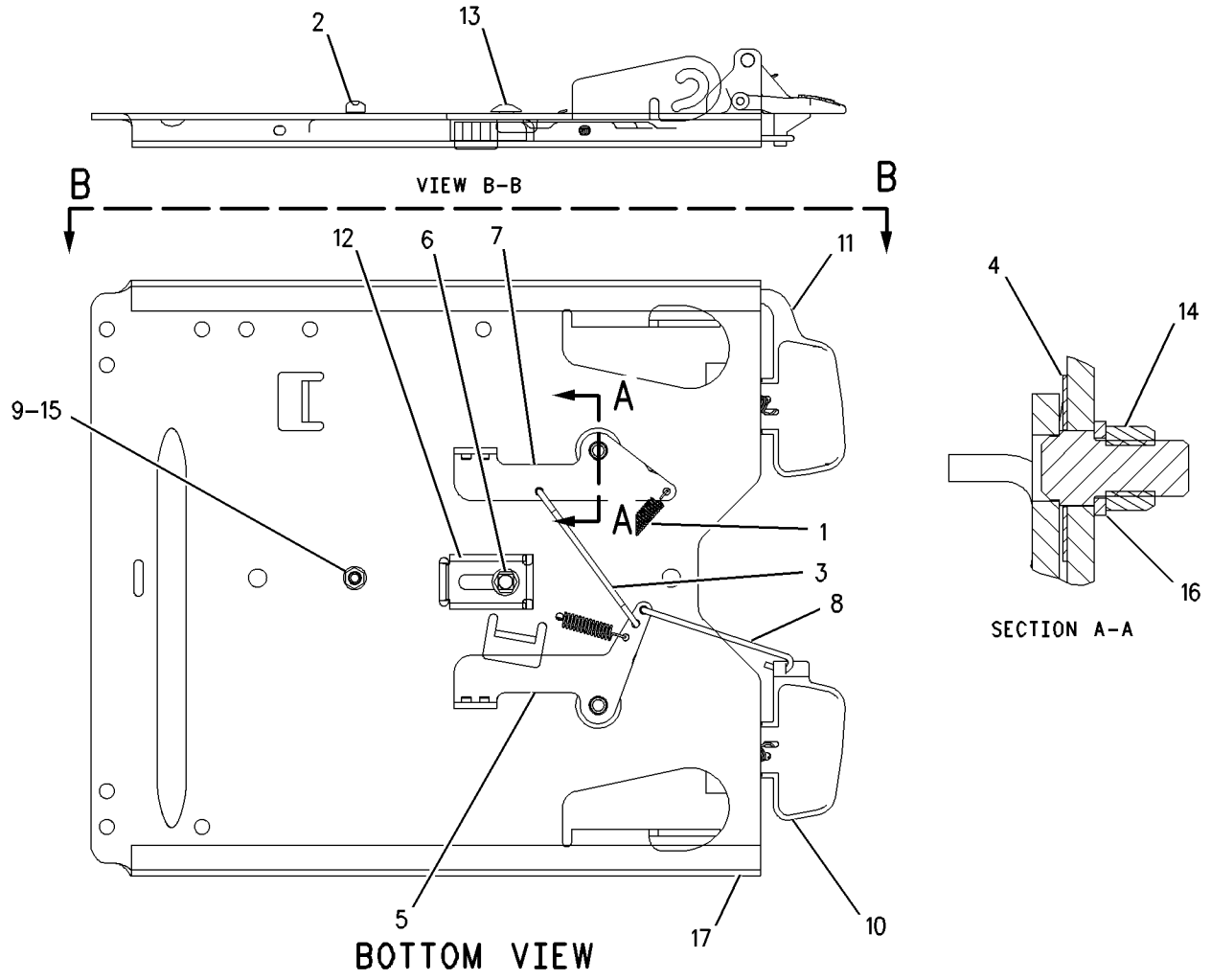

GRAPHIC #1 g00686297

OPERATOR STATION

156-4755 PLATFORM GP-CAB

S/N: AKA1-UP

PART OF 157-0819 CHASSIS AR

SMCS-7253 **i01497223**

NOTE	REF NO	GRAPHIC REF	PART NUMBER	QTY	PART NAME 1 2 3 4 5 6 (PRODUCT LEVEL)	SEE PAGE
B	1	1	**1J-0245**	4	PLUG-PROTECTION	
	2	2	**3T-3634**	1	HANDHOLD	
B	3	1,2	**4H-0408**	15	PLUG-PROTECTION	
	4	2	**9X-8256**	4	WASHER (6.6X12X2MM THK)	
	5	2	**5P-7509**	1	PLUG-BUTTON	
	6	2	**6I-9706**	1	RETAINER AS	
M		2	**6V-9632**	4	NUT-WELD (M6X1 THD)	
	7	1	**6T-4556**	1	COVER	
	8	1	**6T-4557**	1	GASKET	
	9	2	**6V-8547**	1	PLUG-BUTTON	
	10	2	**6Y-0206**	4	RETAINER	
	11	2	**6Y-8114**	2	SPACER (12.7MM THK)	
	12	2	**7G-4824**	2	STRAP	
	13	2	**8C-5226**	1	PLUG-SEAL	
	14	2	**8E-7791**	2	STRAP	
	15	2	**8T-4943**	1	PLUG	
	16	1	**117-8131**	8	MOUNT	
	17	2	**117-9966**	1	PLUG	
M	18	2	**124-8100**	24	SCREW-TRUSS HEAD (M10X1.5X20MM)	
	19	2	**127-3018**	1	HANDHOLD	
	20	1	**141-2240**	1	PLATE	
Y	21	2	**156-4756**	1	PLATFORM GP	454
	22	2	**157-1457**	1	PLATE	
	23	2	**160-0082**	1	PLATE AS	
		2	**1F-0750**	1	NUT-WELD (3/8-16 THD)	
	24	2	**161-3610**	1	HOUSING	
	25	2	**161-3958**	1	GASKET	
	26	2	**161-3959**	1	PLATE AS	
	27	2	**161-3967**	1	PLATE AS	
	28	2	**163-3281**	1	BRACKET AS	
		2	**7G-4550**	1	GROMMET	
	29	1	**164-0758**	1	BOLT-HEX HEAD (9/16-18X2 IN)	
	30	2	**164-4365**	1	GASKET	
	31	2	**165-6857**	1	PAD AS-RUBBER	
	32	2	**170-0251**	2	STRIP	
	33	2	**170-0255**	1	COVER AS	
M	34	2	**172-5291**	4	SCREW (M10X1.5X30MM)	
	35	2	**184-3286**	1	FLOORPLATE AS	
M		2	**8T-3490**	2	NUT-WELD (M10X1.5 THD)	
	36	2	**184-3288**	1	FLOORPLATE AS	
M		2	**8T-3597**	4	NUT-WELD (M12X1.75 THD)	
	37	2	**184-3291**	1	FLOOR MAT	
	38	2	**185-2076**	2	SUPPORT AS	
	39	1	**185-3666**	4	SLEEVE	
Y	40	2	**192-3016**	1	COVER GP	393
	41	2	**192-3025**	1	PLATE	
	42	2	**5P-1075**	2	WASHER-HARD (10.2X22.5X3MM THK)	
	43	2	**5P-1076**	14	WASHER-HARD (13.5X30X4MM THK)	
	44	1	**5P-4115**	2	WASHER-HARD (7.2X19X2MM THK)	
	45	2	**5P-4116**	4	WASHER-HARD (8.8X20.5X2MM THK)	
	46	2	**6J-0488**	2	SCREW-BUTTON HEAD (3/8-16X0.875 IN)	
	47	1	**6T-8714**	4	WASHER-HARD (28X125X12MM THK)	
	48	1,2	**7X-7729**	66	WASHER (11X25X3MM THK)	
M	49	1	**8C-3290**	2	BOLT (M24X3X150MM)	
M	50	2	**8T-4136**	34	BOLT (M10X1.5X25MM)	
M	51	2	**9X-2046**	2	SCREW-TRUSS HEAD (M6X1X35MM)	

156-4755 **PLATFORM GP-CAB** ***(contd.)*** **i01497223**

NOTE	REF NO	GRAPHIC REF	PART NUMBER	QTY	PART NAME 1 2 3 4 5 6 (PRODUCT LEVEL)	SEE PAGE
M	52	2	**8T-4138**	2	BOLT (M6X1X20MM)	
M	53	2	**8T-4139**	14	BOLT (M12X1.75X30MM)	
	54	1	**8T-4167**	4	WASHER-HARD (26X44X4MM THK)	
M	55	2	**8T-4194**	2	BOLT (M12X1.75X50MM)	
M	56	1	**8T-4196**	4	BOLT (M10X1.5X35MM)	
	57	2	**8T-4223**	2	WASHER-HARD (13.5X25.5X3MM THK)	
M	58	1	**8T-4649**	2	BOLT (M24X3X140MM)	
M	59	2	**8T-4189**	4	BOLT (M8X1.25X20MM)	
	60	1	**8T-8908**	2	BOLT (1/4-20X1 IN)	
M	61	2	**9X-2042**	4	SCREW-TRUSS HEAD (M6X1X12MM)	
M	62	2	**9X-2043**	12	SCREW-TRUSS HEAD (M6X1X14MM)	

B-USE AS REQUIRED
M-METRIC PART
Y-SEPARATE ILLUSTRATION

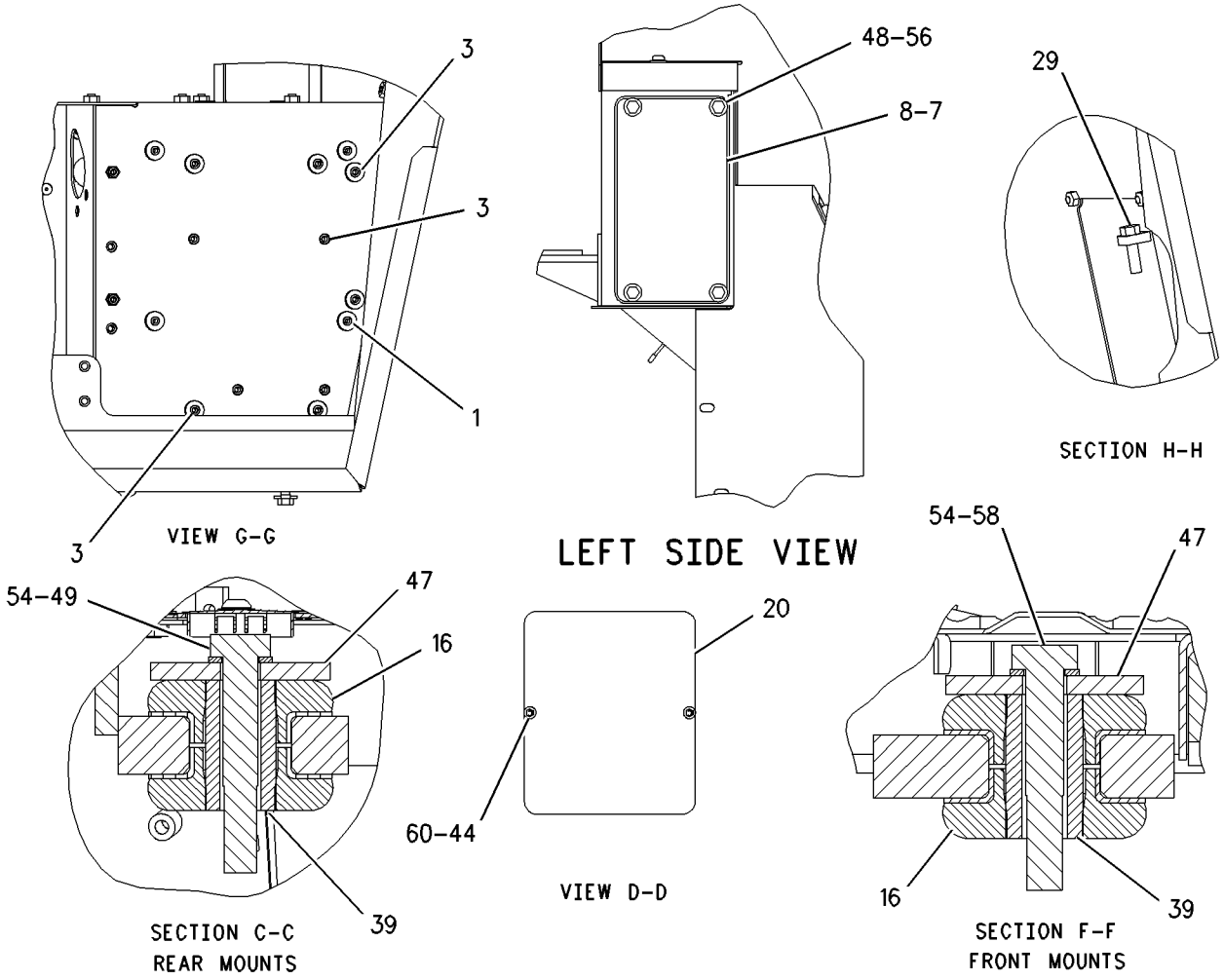

GRAPHIC #1

g00745780

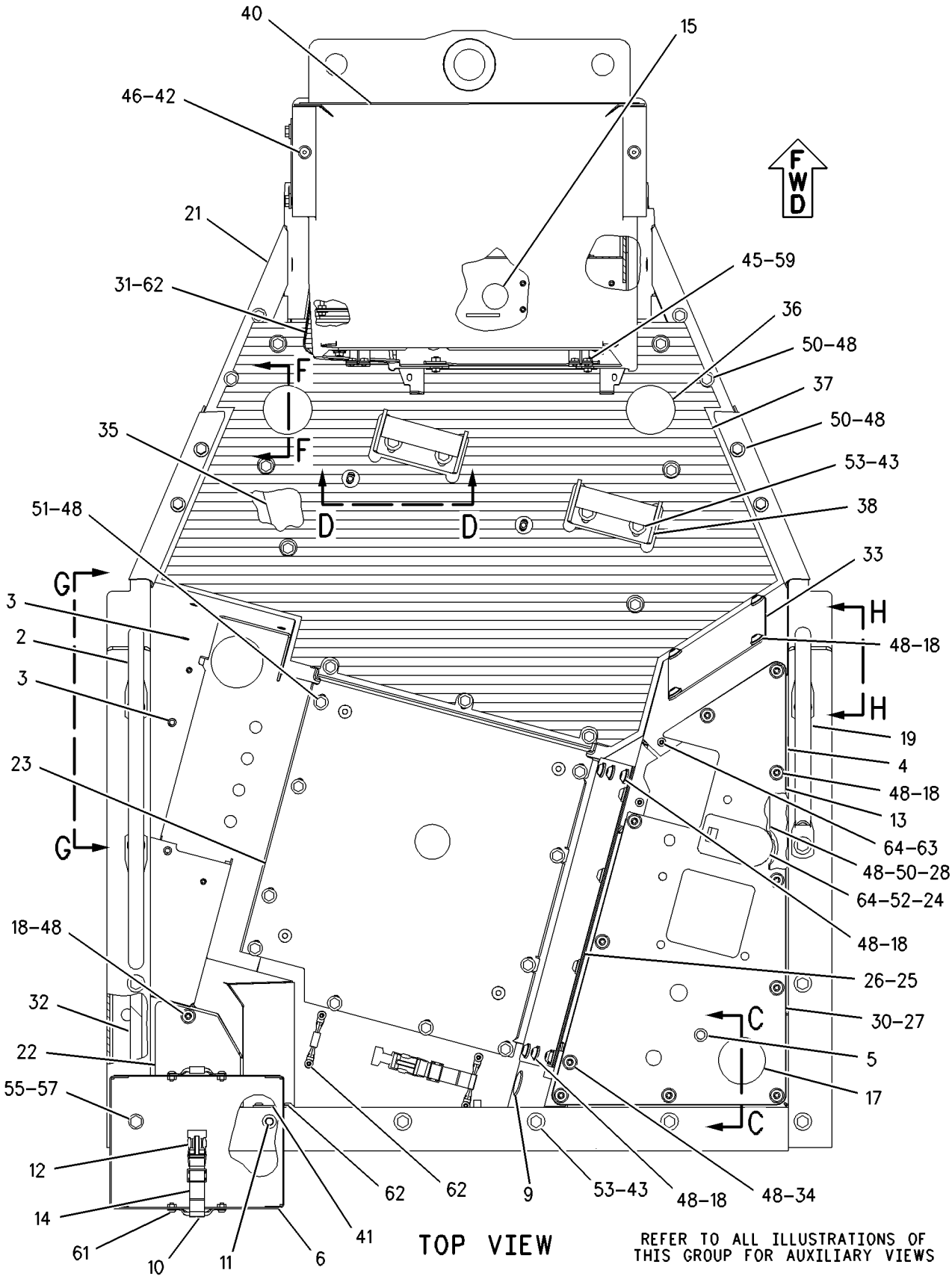

GRAPHIC #2

g00777503

OPERATOR STATION

195-8711 PLUG AS

S/N: AKA1-UP

PART OF 157-8035 SUPPRESSION AR-SOUND

SMCS-1408 **i01445662**

NOTE	REF NO	GRAPHIC REF	PART NUMBER	QTY	PART NAME 1 2 3 4 5 6 (PRODUCT LEVEL)	SEE PAGE
BD	1	1	**5P-5677**		WIRE (18 GA)	
BE		1	**119-3662**		TUBE-SHRINKABLE	
	2	1	**155-2265**	1	KIT-CONNECTING PLUG (8 PIN)	
					(INCLUDES PLUG AS, WEDGE & INTERFACE SEAL)	
		1	**155-2259**	1	WEDGE-PLUG LOCK	
		1	**8T-8737**	3	PLUG-SEAL	
		1	**9X-3402**	3	SOCKET-CONNECTOR	
					(FOR 16-18 GA WIRE)	
					—OR—	
		1	**126-1768**	3	SOCKET-CONNECTOR	
					(FOR 14 GA WIRE)	

B-USE AS REQUIRED
D-ORDER BY THE METER
E-ORDER BY THE CENTIMETER

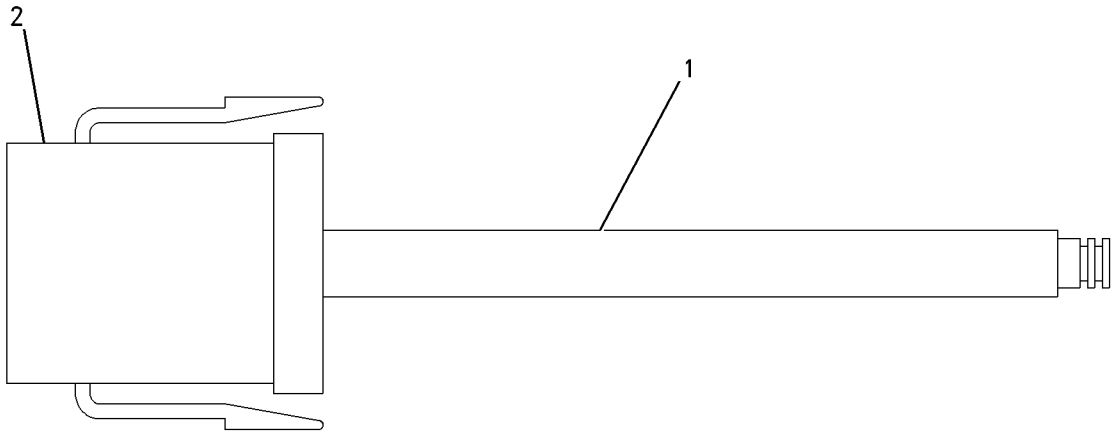

GRAPHIC #1 g00730235

OPERATOR STATION

159-0725 PRESSURIZER GP-CAB

S/N: AKA1-UP

PART OF 159-8367 CAB AR

SMCS-7311 **i01447129**

NOTE	REF NO	GRAPHIC REF	PART NUMBER	QTY	PART NAME 1 2 3 4 5 6 (PRODUCT LEVEL)	SEE PAGE
	1	1	**3H-6660**	2	PIN-SPRING	
	2	1	**3L-0594**	3	SPACER (8.7X15.9X15.9MM THK)	
	3	1	**3W-6756**	2	KNOB	
	4	1	**6P-2216**	6	CAP-PUSH ON	
	5	1	**6T-0988**	1	FILTER-AIR (CAB FRESH AIR)	
	6	1	**6T-5067**	1	LINER	
	7	1	**6T-5068**	1	FILTER AS (CAB REC AIR)	
	8	1,2	**6V-1790**	3	PLUG-BUTTON	
	9	1	**9W-7033**	2	KNOB AS	
					(EACH INCLUDES)	
		1	**8T-7566**	1	PIN-SPRING	
	10	1	**111-4482**	1	COVER AS	
	11	1	**117-8863**	1	LINER	
	12	2	**127-1043**	1	LINER	
	13	2	**127-1044**	1	LINER	
	14	2	**127-1045**	1	LINER	
	15	1	**127-1046**	1	LINER	
	16	1	**127-1048**	1	LINER	
	17	1	**141-4044**	1	PANEL	
Y	18	1	**159-0653**	1	BLOWER GP-CAB	738
	19	1	**7X-0603**	3	WASHER-HARD (9.9X35X2.5MM THK)	
	20	1	**8T-4121**	6	WASHER-HARD (11X21X2.5MM THK)	
M	21	1	**8T-4195**	6	BOLT (M10X1.5X30MM)	
M	22	1	**8T-4971**	3	BOLT (M6X1X30MM)	
	23	1	**9X-8256**	3	WASHER (6.6X12X2MM THK)	
E	24	2	**7X-7877**		STRIP-EDGING (47CM)	

E-ORDER BY THE CENTIMETER
M-METRIC PART
Y-SEPARATE ILLUSTRATION

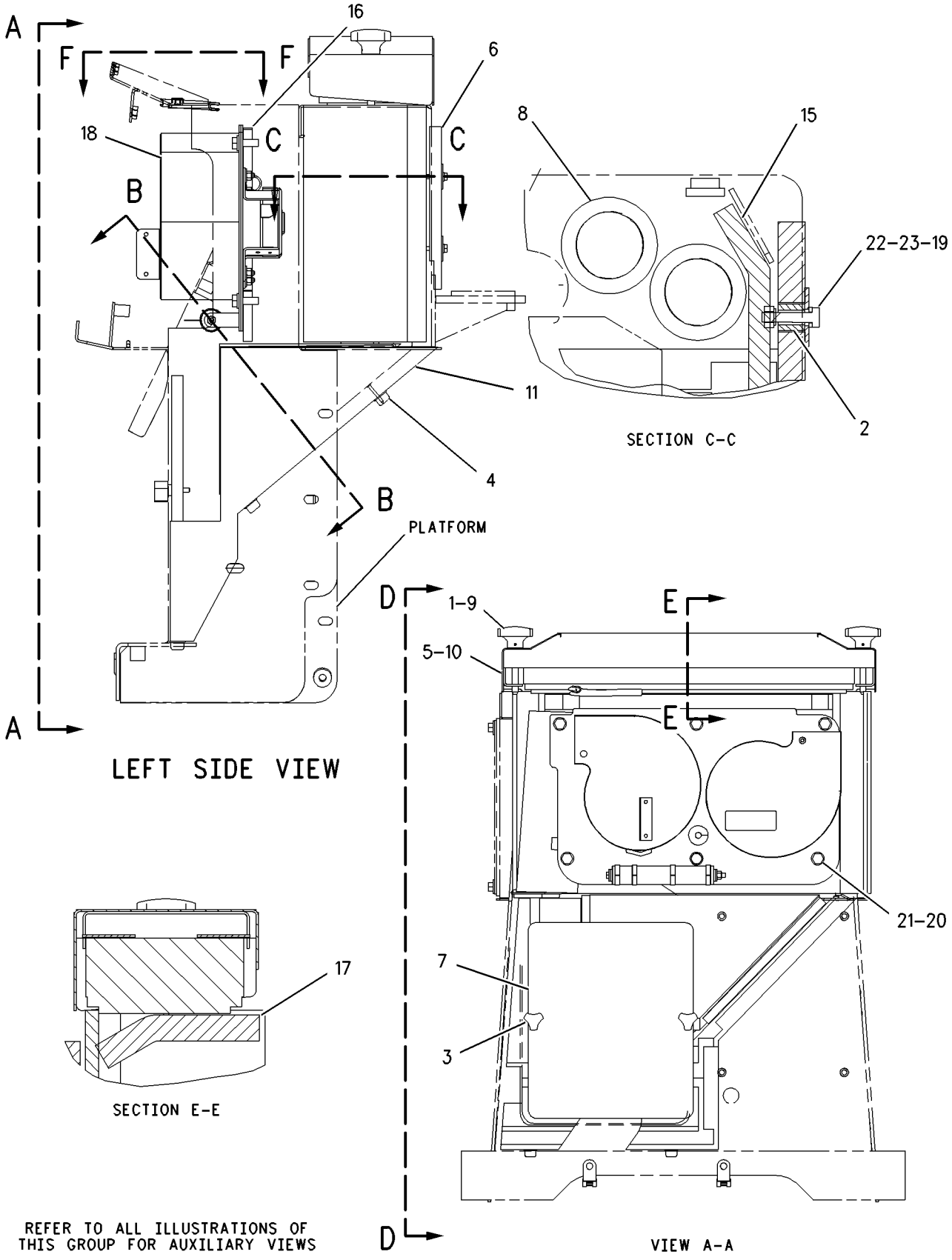

GRAPHIC #1 g00744854

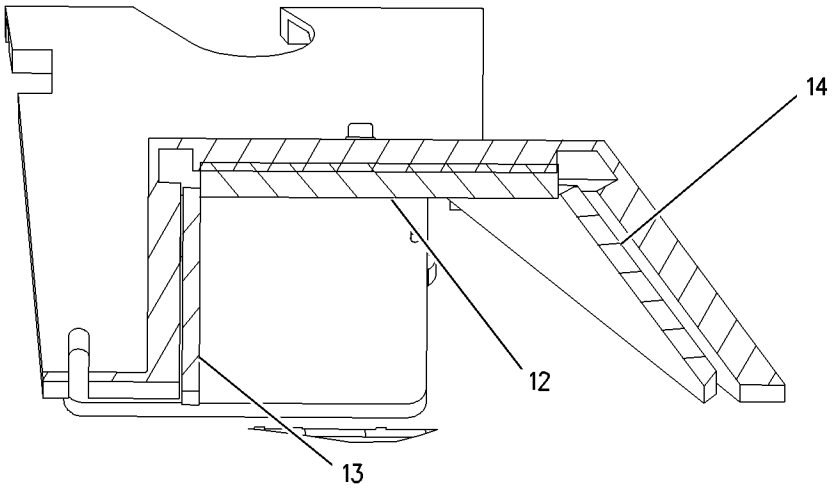

SECTION B-B

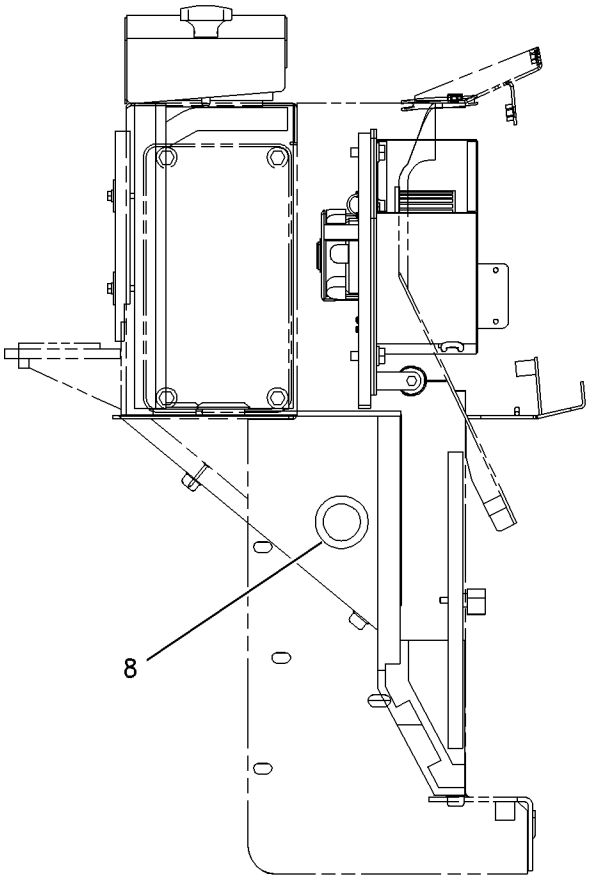

VIEW D-D

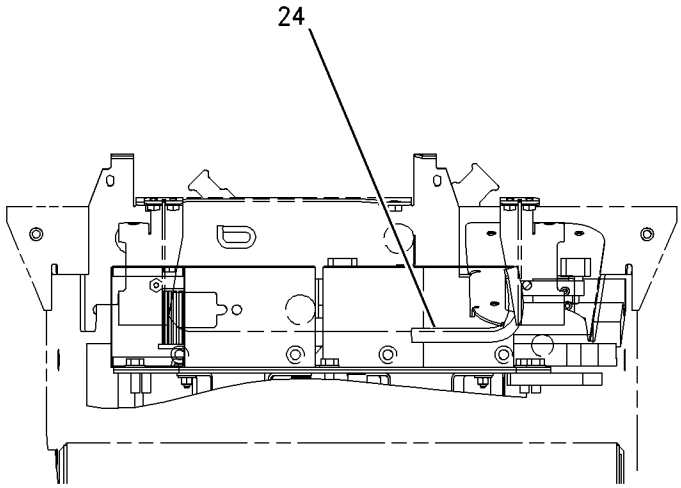

VIEW F-F

GRAPHIC #2

g00744855

OPERATOR STATION

173-6530 RADIO GP-AM/FM/WB

S/N: AKA1-UP

SMCS-7338 **i01489035**

NOTE	REF NO	GRAPHIC REF	PART NUMBER	QTY	PART NAME 1 2 3 4 5 6 (PRODUCT LEVEL)	SEE PAGE
	1	1	**102-8806**	1	KIT-RECEPTACLE (8 PIN)	
					(INCLUDES RECEPTACLE AS & WEDGE)	
	2	1	**3E-3389**	1	WEDGE-RECEPTACLE LOCK	
	3	1	**8T-8737**	1	PLUG-SEAL	
	4	1	**186-3735**	7	PIN-CONNECTOR	
	5	1	**192-7054**	1	SLEEVE	
	6	1	**137-8165**	1	BUMPER	
	7	1	**186-2741**	1	HARNESS AS-RADIO	
		1	**102-8806**	1	KIT-RECEPTACLE (8 PIN)	
					(INCLUDES RECEPTACLE AS & WEDGE)	
	8	1	**175-3678**	1	KIT-KNOB	

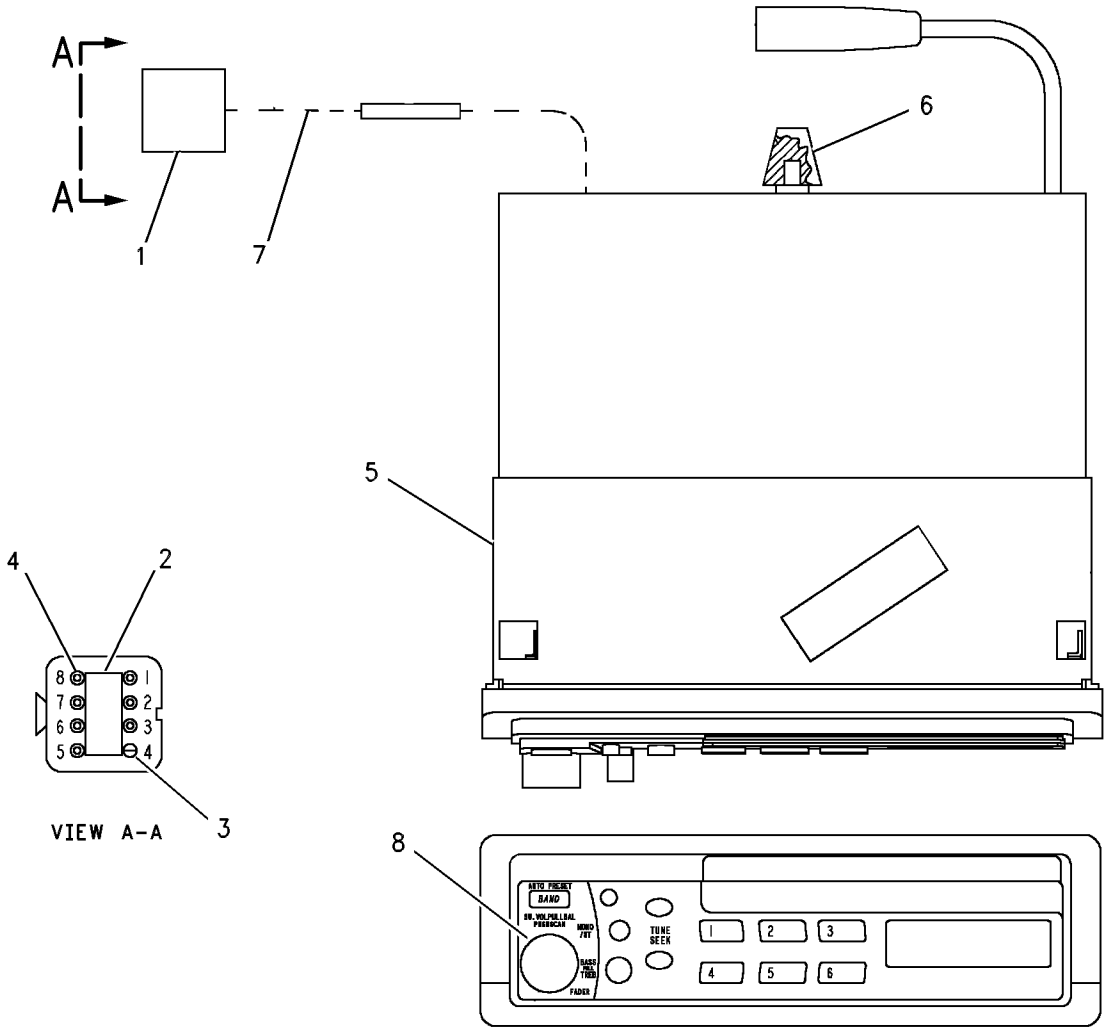

GRAPHIC #1 g00623314

OPERATOR STATION

177-4935 RECLINER GP-SEAT

S/N: AKA1-UP

PART OF 178-0603, 180-7304 SEAT GP

SMCS-7312 **i01437592**

NOTE	REF NO	GRAPHIC REF	PART NUMBER	QTY	PART NAME 1 2 3 4 5 6 (PRODUCT LEVEL)	SEE PAGE
	1	1	**188-2586**	1	LATCH	
	2	1	**164-4146**	1	SPRING	
	3	1	**177-1860**	1	GEAR	
	4	1	**177-1862**	1	BRACKET	
	5	1	**178-0607**	1	SHAFT AS	
	5A	1	**2K-9111**	2	PIN-SPRING	
	5B	1	**9M-6803**	2	DOWEL	
	5C	1	**170-8590**	1	SPRING	
	6	1	**178-0608**	1	BRACKET AS	
	7	1	**178-0609**	1	BRACKET AS	
	8	1	**0S-1614**	1	BOLT (1/4-20X.5 IN)	
	9	1	**101-2867**	1	WASHER-HARD	
	10	1	**4M-6425**	1	BOLT (5/16-18X1 IN)	
	11	1	**5S-7383**	1	BOLT (3/8-16X1.75 IN)	
	12	1	**8T-4224**	1	WASHER-HARD (8.8X16X2MM THK)	

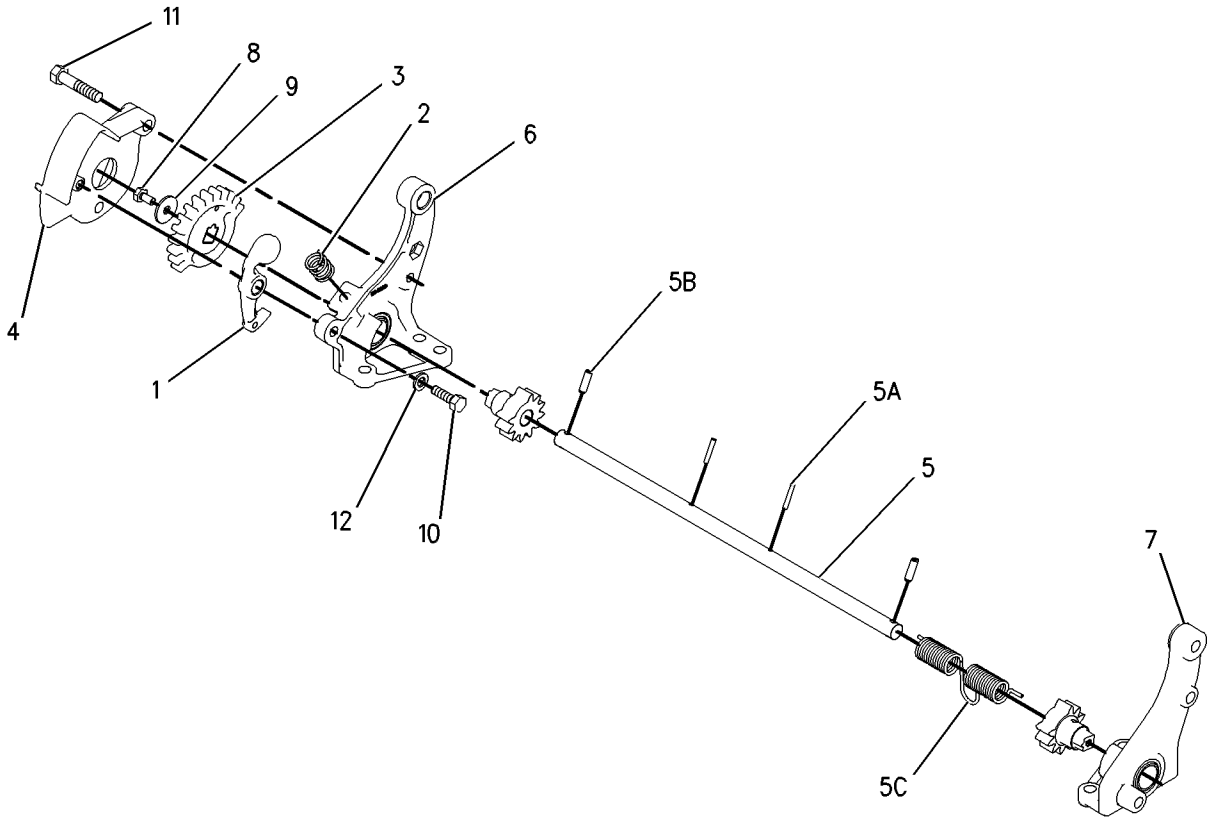

GRAPHIC #1 g00673022

MEMORANDA

OPERATOR STATION

167-2088 ROPS GP

S/N: AKA1-UP

PART OF 157-0819 CHASSIS AR

SMCS-7323, 7325 **i01435245**

NOTE	REF NO	GRAPHIC REF	PART NUMBER	QTY	PART NAME 1 2 3 4 5 6 (PRODUCT LEVEL)	SEE PAGE
	1	1	**184-3152**	1	ROPS AS	
	2	1	**8P-9747**	2	HANDHOLD	
	3	1	**5P-1076**	12	WASHER-HARD (13.5X30X4MM THK)	
	4	1	**5C-6565**	12	BOLT (1/2-13X1.25 IN)	
Y	5	1	*9P-9392*	1	MIRROR GP-REAR VIEW	797
	6	1	**170-7259**	1	TUBE AS	
	7	1	**170-7260**	1	TUBE AS	
	8	1	**8T-4994**	4	WASHER-HARD (20X36.5X5MM THK)	
	9	1	**8T-8924**	4	BOLT (3/4-10X2.50 IN)	
	10	1	**9G-0992**	2	HANDHOLD	
	11	1	**180-6600**	2	HANDHOLD	
	12	1	**8C-8843**	2	BOLT (1-8X4.5 IN)	
	13	1	**8P-5244**	4	WASHER (33.3X69.8X6.35MM THK)	
	14	1	**1P-2772**	4	SPACER (26X31X19MM THK)	
	15	1	**6K-3632**	2	LOCKNUT (1-8 THD)	
	16	1	**9S-5187**	2	MOUNTING	
	17	1	**196-9846**	1	HEADLINER	
	18	1	**198-6574**	12	WASHER (16X75X3.5MM THK)	
	19	1	**198-6575**	12	BUTTON	
	20	1	**7X-0531**	12	WASHER-HARD (31X52.5X6MM THK)	
	21	1	**7X-0421**	12	BOLT (1 1/8-7X3 IN)	

Y-SEPARATE ILLUSTRATION

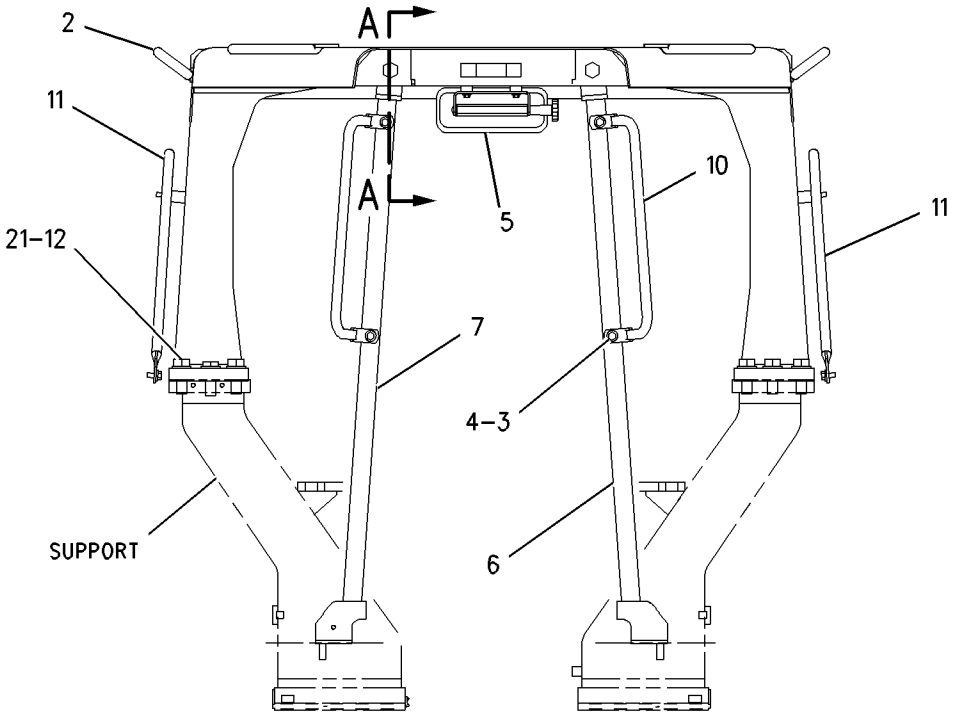

FRONT VIEW

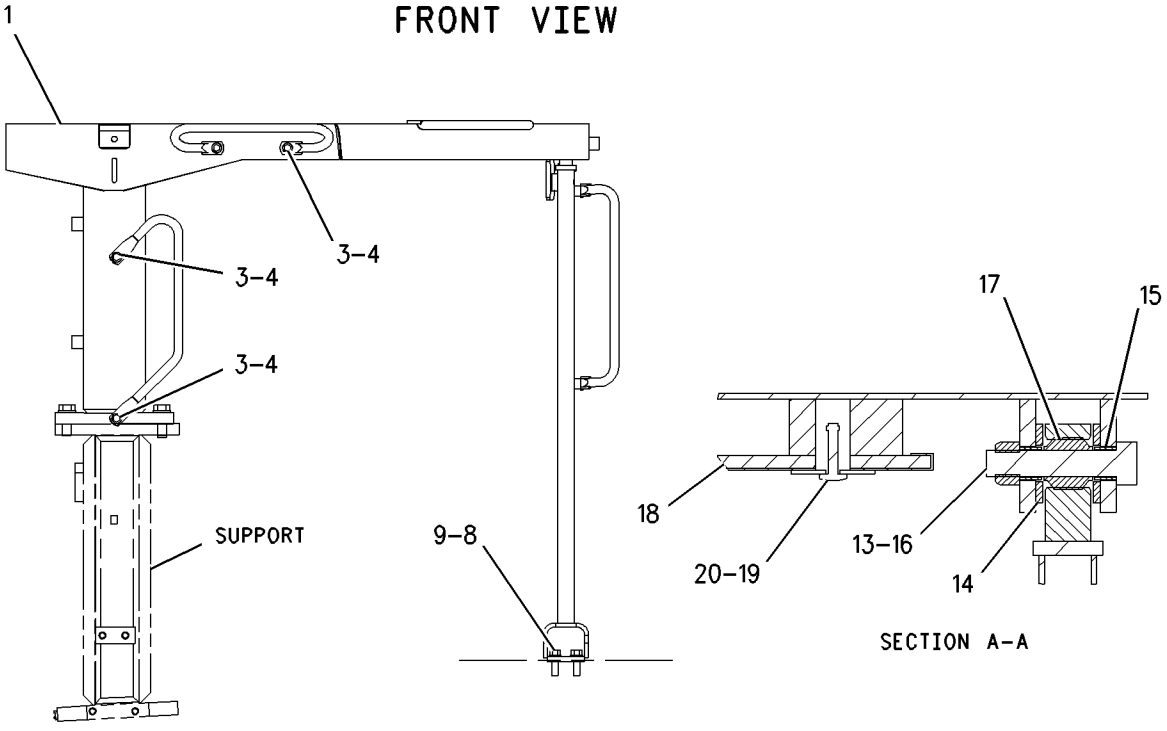

RIGHT SIDE VIEW

GRAPHIC #1 g00749338

OPERATOR STATION

159-8809 ROPS GP-ENCLOSED

S/N: AKA1-UP

PART OF 159-8367 CAB AR

SMCS-7323 **i01476602**

NOTE	REF NO	GRAPHIC REF	PART NUMBER	QTY	PART NAME 1 2 3 4 5 6 (PRODUCT LEVEL)	SEE PAGE
	1	1	**159-8816**	1	ROPS AS	
	2	1	**180-6600**	2	HANDHOLD	
	3	1	**5C-6565**	4	BOLT (1/2-13X1.25 IN)	
	4	1	**5P-1076**	6	WASHER-HARD (13.5X30X4MM THK)	
	5	1	**7X-0421**	12	BOLT (1 1/8-7X3 IN)	
	6	1	**7X-0531**	12	WASHER-HARD (31X52.5X6MM THK)	

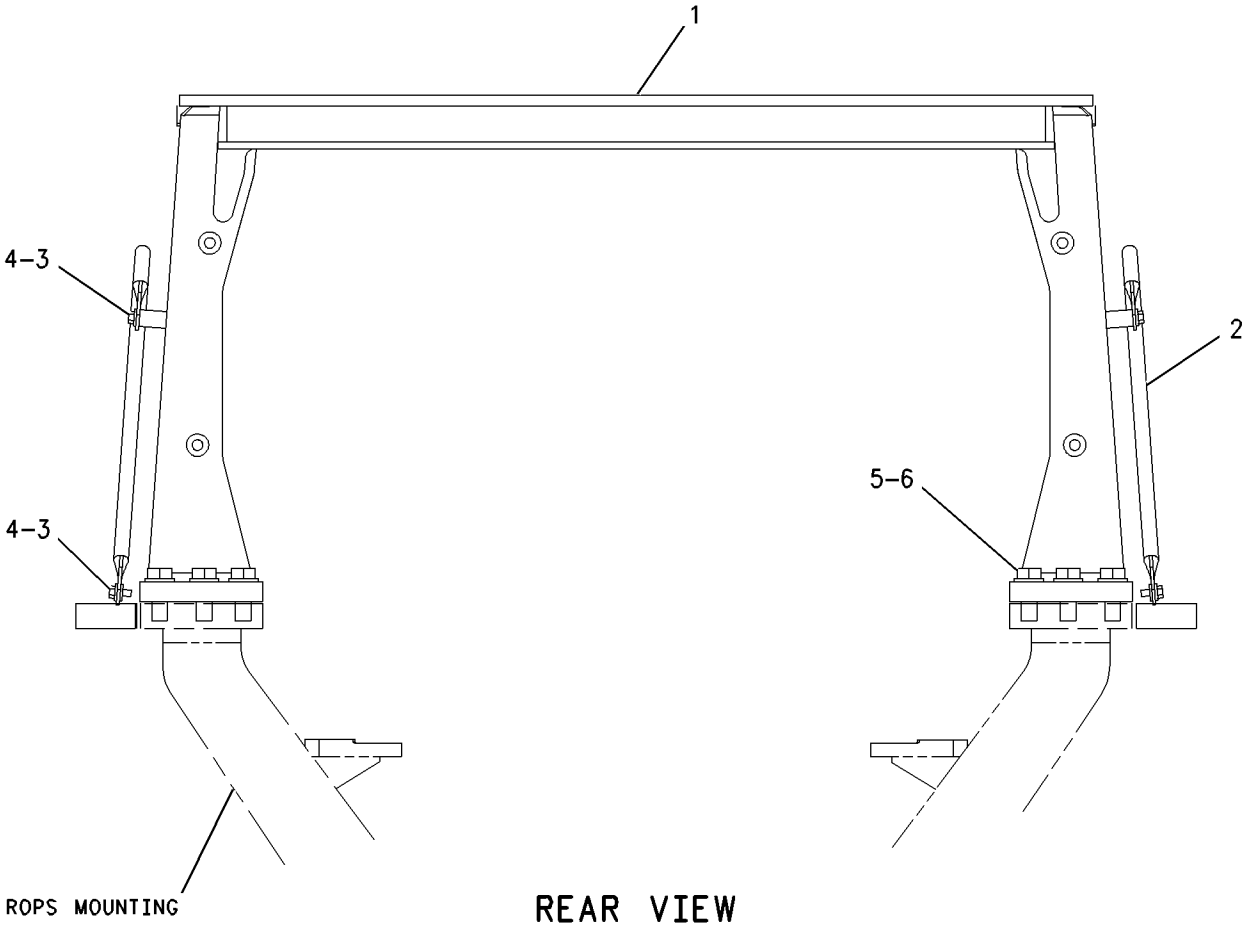

REAR VIEW

GRAPHIC #1 g00672041

OPERATOR STATION

126-8799 SCREEN GP-PROTECTION–REAR

S/N: AKA1-UP

SMCS-7165 **i01441716**

NOTE	REF NO	GRAPHIC REF	PART NUMBER	QTY	PART NAME 1 2 3 4 5 6 (PRODUCT LEVEL)	SEE PAGE
	1	1	**127-8968**	1	SCREEN AS	
	2	1	**127-8977**	1	BRACKET AS	
		1	**8J-7236**	4	NUT-WELD (3/4-10 THD)	
		1	**7T-1099**	2	LINK	
	3	1	**127-8979**	1	BRACKET AS	
		1	**8J-7236**	4	NUT-WELD (3/4-10 THD)	
		1	**7T-1099**	1	LINK	
	4	1	**7X-0365**	4	BOLT (3/4-10X1.5 IN)	
	5	1	**7X-0582**	12	WASHER-HARD (20X44.5X6MM THK)	
	6	1	**8T-9398**	8	BOLT (3/4-10X1.75 IN)	

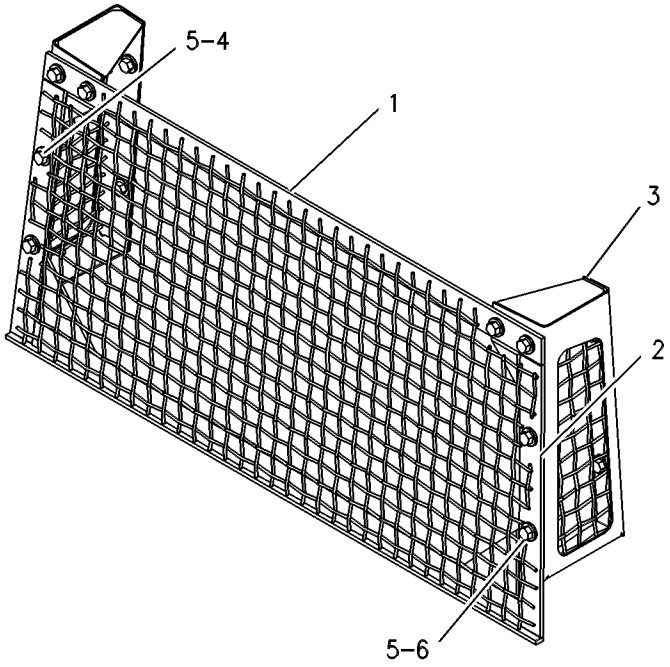

GRAPHIC #1 g00273421

OPERATOR STATION

165-2578 SCREEN GP-PROTECTION

S/N: AKA1-UP

REAR

SMCS-7165 **i01489019**

NOTE	REF NO	GRAPHIC REF	PART NUMBER	QTY	PART NAME 1 2 3 4 5 6 (PRODUCT LEVEL)	SEE PAGE
N	1	1	**165-2577**	1	SCREEN AS	
	2	1	**7X-0366**	4	BOLT (3/4-10X2 IN)	
	3	1	**7X-0582**	4	WASHER-HARD (20X44.5X6MM THK)	

N-NEW PART

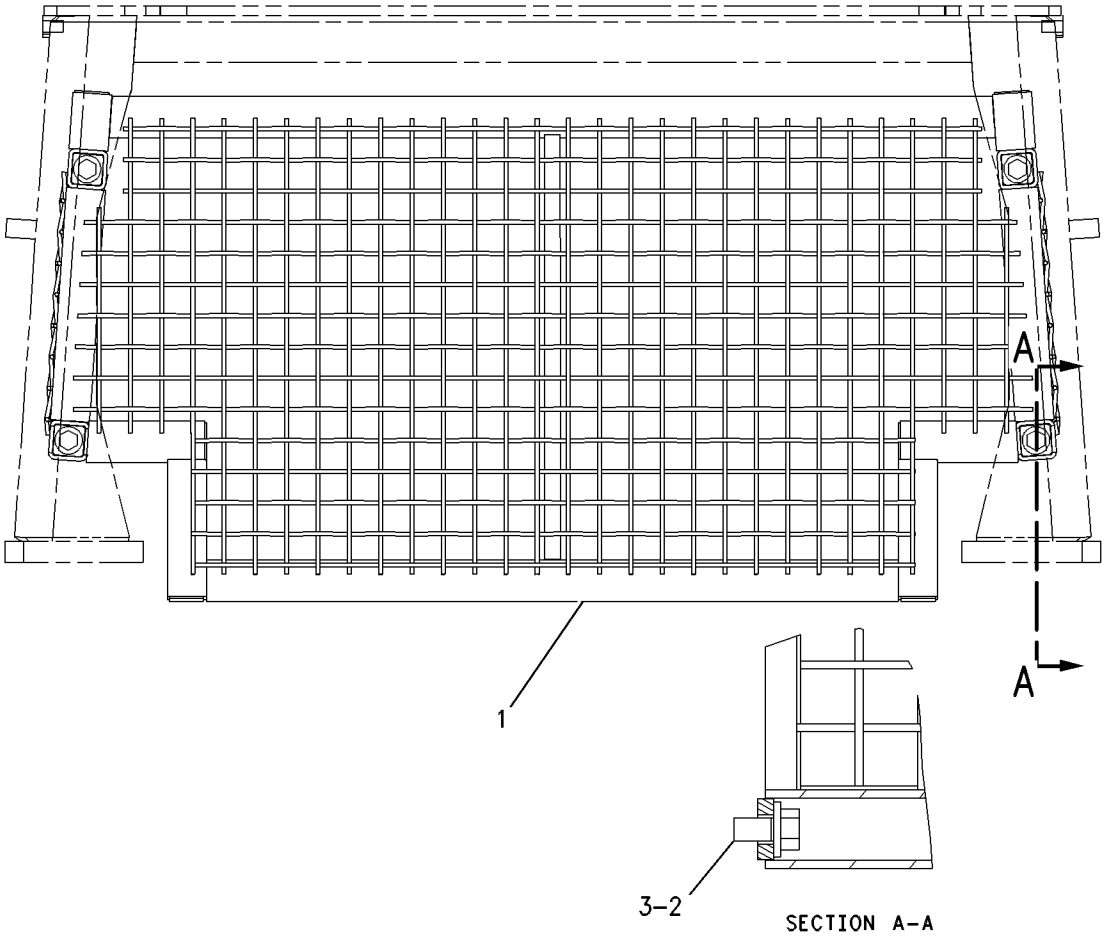

GRAPHIC #1 g00569648

OPERATOR STATION

177-7352 SEAT AR

S/N: AKA1-UP

SMCS-7312 **i01489043**

NOTE	REF NO	GRAPHIC REF	PART NUMBER	QTY	PART NAME 1 2 3 4 5 6 (PRODUCT LEVEL)	SEE PAGE
Y	1	1	**159-2950**	1	SEAT GP-SUSPENSION	839

Y-SEPARATE ILLUSTRATION

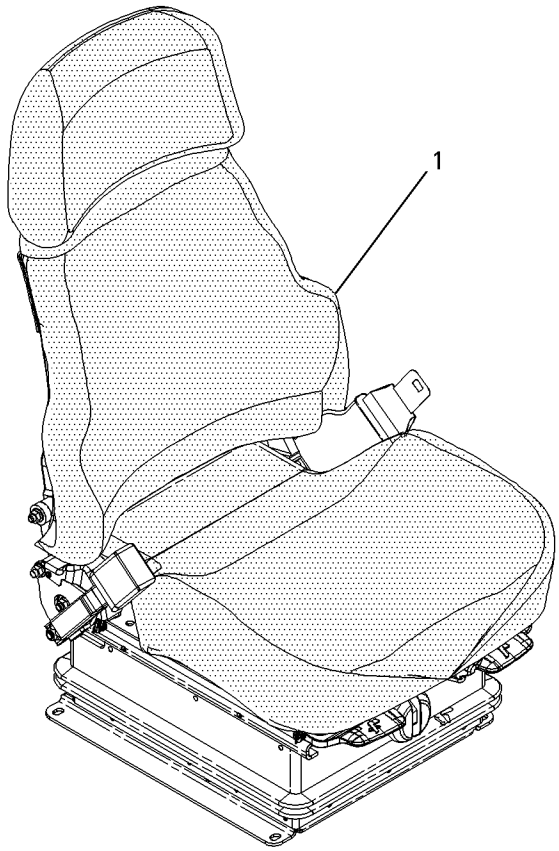

GRAPHIC #1 g00695004

OPERATOR STATION

160-6521 SEAT GP

S/N: AKA1-UP

PART OF 157-0819 CHASSIS AR

SMCS-7312 **i01437122**

NOTE	REF NO	GRAPHIC REF	PART NUMBER	QTY	PART NAME 1 2 3 4 5 6 (PRODUCT LEVEL)	SEE PAGE
	1	1	**6V-8829**	4	WASHER-HARD (12.5X24X3MM THK)	
	2	1	**126-3700**	1	ARMREST AS	
	3	1	**126-3701**	1	ARMREST AS	
Y	4	1	**159-2950**	1	SEAT GP-SUSPENSION	839
	5	1	**163-3286**	1	BRACKET AS	
	6	1	**184-1503**	2	KNOB (ARMREST ADJUSTMENT)	
	7	1	**184-3269**	1	PLATE AS	
	8	1	**184-3270**	1	PLATE AS	
	9	1	**5P-1075**	2	WASHER-HARD (10.2X22.5X3MM THK)	
	10	1	**7X-7729**	4	WASHER (11X25X3MM THK)	
	11	1	**8T-4121**	4	WASHER-HARD (11X21X2.5MM THK)	
M	12	1	**8T-4137**	6	BOLT (M10X1.5X20MM)	
M	13	1	**8T-4196**	2	BOLT (M10X1.5X35MM)	
M	14	1	**9X-2125**	4	BOLT-LOCKING (M10X1.5X25MM)	

M-METRIC PART
Y-SEPARATE ILLUSTRATION

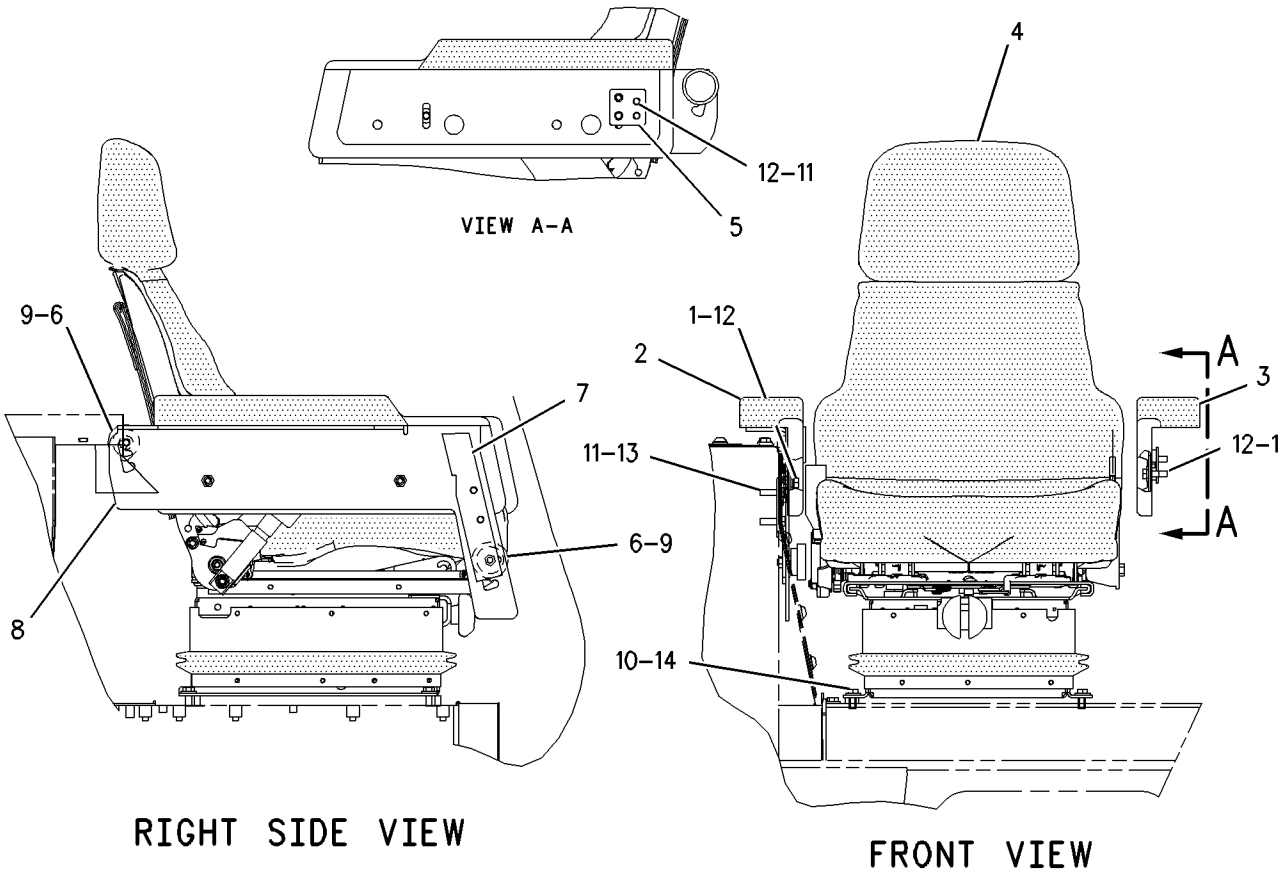

GRAPHIC #1 g00743940

OPERATOR STATION

160-7178 SEAT GP

S/N: AKA1-UP

SMCS-7312 **i01488964**

NOTE	REF NO	GRAPHIC REF	PART NUMBER	QTY	PART NAME 1 2 3 4 5 6 (PRODUCT LEVEL)	SEE PAGE
Y	1	1	**160-7188**	1	SEAT GP-SUSPENSION	841
	2	1	**9V-2818**	1	GROMMET	

Y-SEPARATE ILLUSTRATION

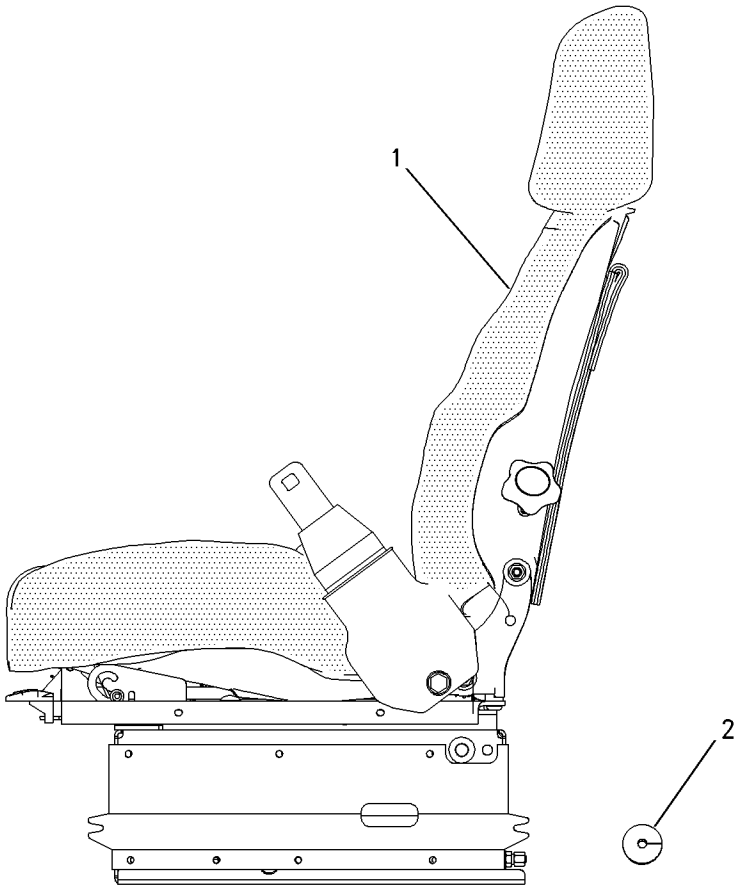

LEFT SIDE VIEW

GRAPHIC #1 g00722599

OPERATOR STATION

178-0603 SEAT GP–FABRIC

S/N: AKA1-UP

PART OF 178-0606 SEAT GP

SMCS-7312 **i01447913**

NOTE	REF NO	GRAPHIC REF	PART NUMBER	QTY	PART NAME 1 2 3 4 5 6 (PRODUCT LEVEL)	SEE PAGE
	1	1	**135-5499**	1	PAN AS	
		1	**8T-9082**	5	RIVET-POP	
		1	**117-4506**	1	CUSHION AS	
	2	1	**143-1288**	8	LOCKNUT-FLANGE	
	3	1	**171-1230**	6	SCREW-BUTTON HEAD (3/8-16X1 IN)	
	4	1	**171-6682**	1	BAR-RECLINER	
	5	1	**172-2416**	2	PIN	
Y	6	1	*173-1028*	1	PLATE GP-SLIDE	813
	7	1	**177-1863**	2	BOLT-PIVOT (3/8-16X2.89 IN)	
Y	8	1	*177-4935*	1	RECLINER GP-SEAT	822
Y	9	1	*178-0604*	1	PAN GP-SEAT (BACK)	811
	10	1	**184-2298**	1	ROD	
	11	1	**184-2299**	4	WASHER (7X25.4X2.54MM THK)	
	12	1	**095-0843**	2	COTTER	
	13	1	**5V-1496**	2	RETAINER	
	14	1	**6V-7646**	2	WASHER-HARD (7.2X25X2MM THK)	
	15	1	**8T-0328**	1	WASHER-HARD (5.5X10X1MM THK)	
	16	1	**8T-4205**	1	WASHER-HARD (7.2X14.5X2MM THK)	
	17	1	**8Y-6277**	2	SPACER (10.5X28.6X10MM THK)	

Y-SEPARATE ILLUSTRATION

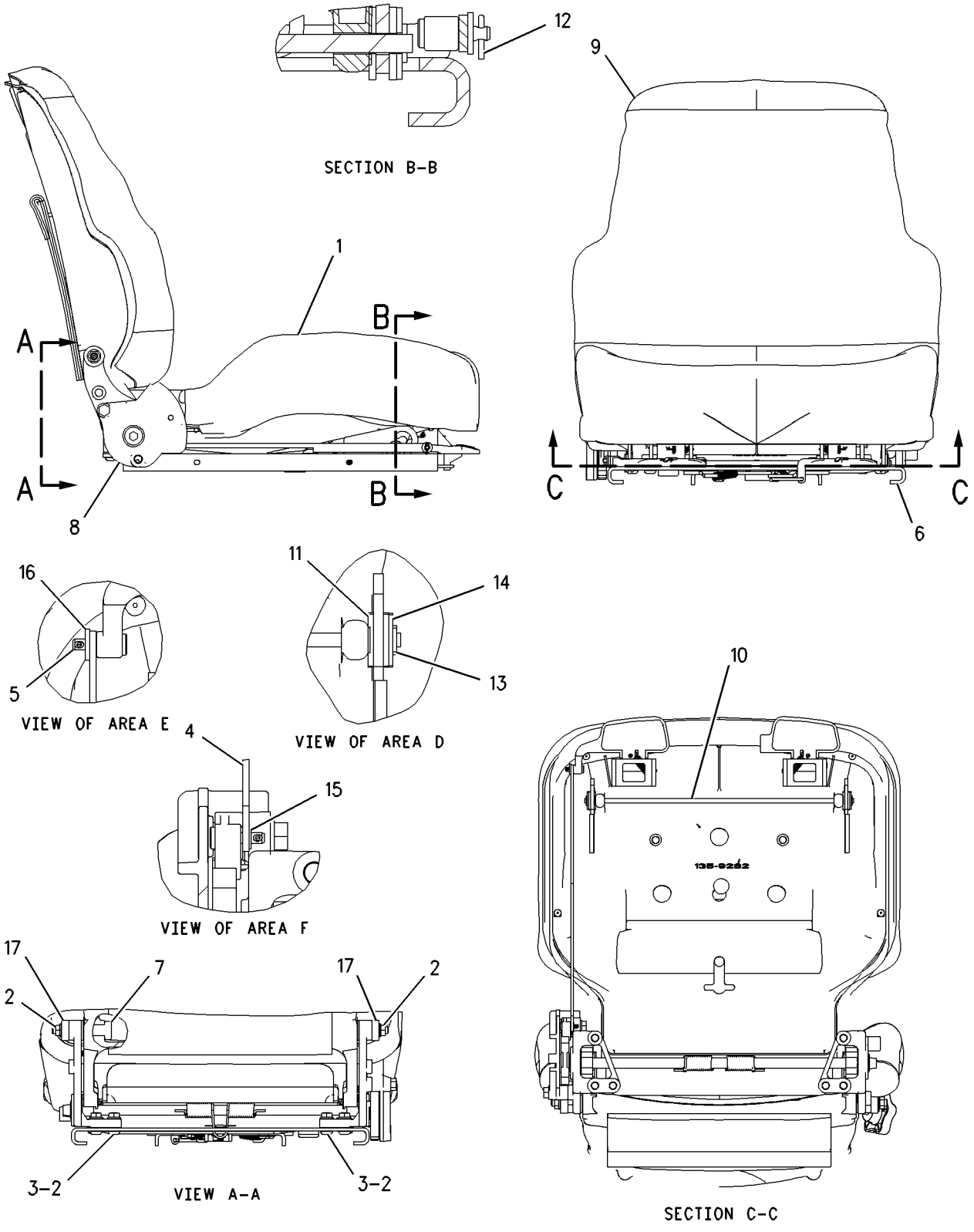

GRAPHIC #1 g00729407

OPERATOR STATION

178-0606 SEAT GP–CLOTH

S/N: AKA1-UP

PART OF 160-7186, 160-7188 SEAT GP-SUSPENSION

SMCS-7312 **i01447903**

NOTE	PART NUMBER	QTY	PART NAME 1 2 3 4 5 6 (PRODUCT LEVEL)	SEE PAGE
	173-3082	1	EXTENSION GP-BACKREST (CLOTH)	
	117-4491	1	ROD	
	180-5559	1	SCREW-PAN HEAD (7/16-20X1.75 IN)	
	180-5560	1	SCREW-PAN HEAD (7/16-20X1.25 IN)	
	183-3648	1	SEAT BELT GP	
Y	**178-0603**	1	SEAT GP (CLOTH)	832
	177-4937	1	SPACER (12.7MM ID)	

Y-SEPARATE ILLUSTRATION

MEMORANDA

OPERATOR STATION

180-7304 SEAT GP

S/N: AKA1-UP
VINYL
PART OF 184-6011 SEAT GP

SMCS-7312 **i01437550**

NOTE	REF NO	GRAPHIC REF	PART NUMBER	QTY	PART NAME 1 2 3 4 5 6 (PRODUCT LEVEL)	SEE PAGE
	1	1	**6K-3273**	5	RIVET-POP (6.4MM DIA)	
		1	**169-1026**	1	CUSHION AS	
	2	1	**143-1288**	8	LOCKNUT-FLANGE	
	3	1	**171-1230**	6	SCREW-BUTTON HEAD	
	4	1	**171-6682**	1	BAR-RECLINER	
	5	1	**172-2416**	2	PIN	
Y	6	1	*173-1028*	1	PLATE GP-SLIDE	813
	7	1	**177-1863**	2	BOLT-PIVOT	
Y	8	1	*177-4935*	1	RECLINER GP-SEAT	822
Y	9	1	*180-7305*	1	PAN GP-SEAT (BACK)	812
	10	1	**184-2298**	1	ROD	
	11	1	**184-2299**	4	WASHER	
	12	1	**095-0843**	2	COTTER	
	13	1	**8Y-6277**	2	SPACER (10.0MM THK)	
	14	1	**5V-1496**	2	RETAINER	
	15	1	**6V-7646**	2	WASHER-HARD (7.2X25X2MM THK)	
	16	1	**8T-0328**	1	WASHER-HARD (5.5X10X1MM THK)	
	17	1	**8T-4205**	1	WASHER-HARD (7.2X14.5X2MM THK)	

Y-SEPARATE ILLUSTRATION

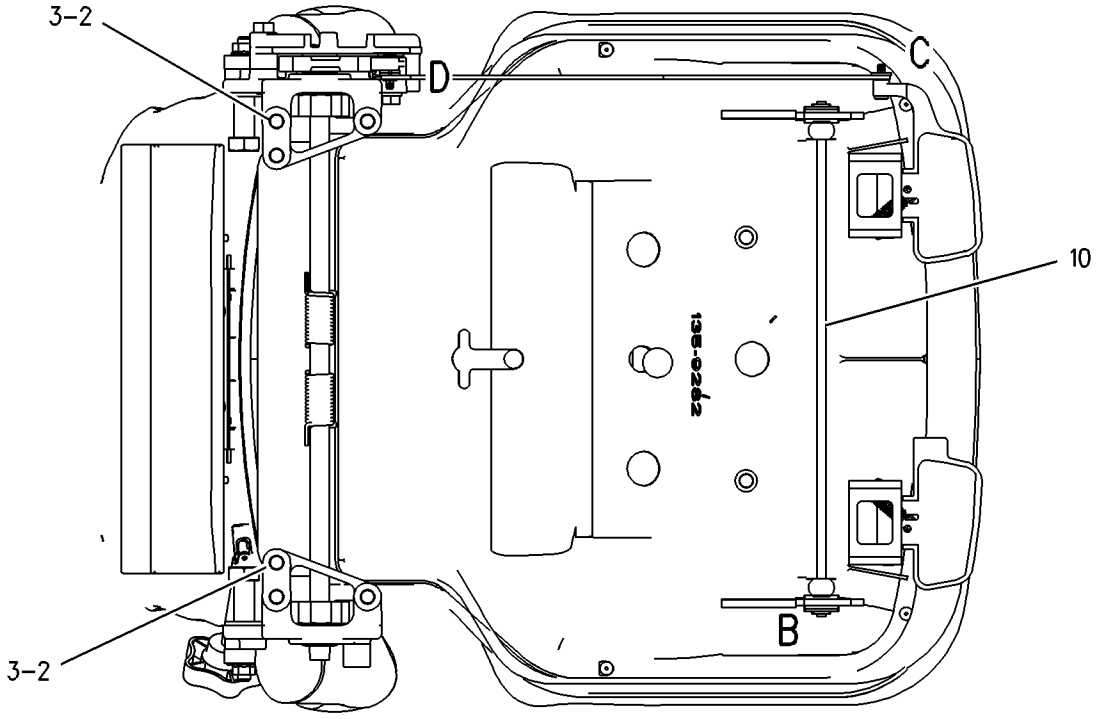

SECTION A-A

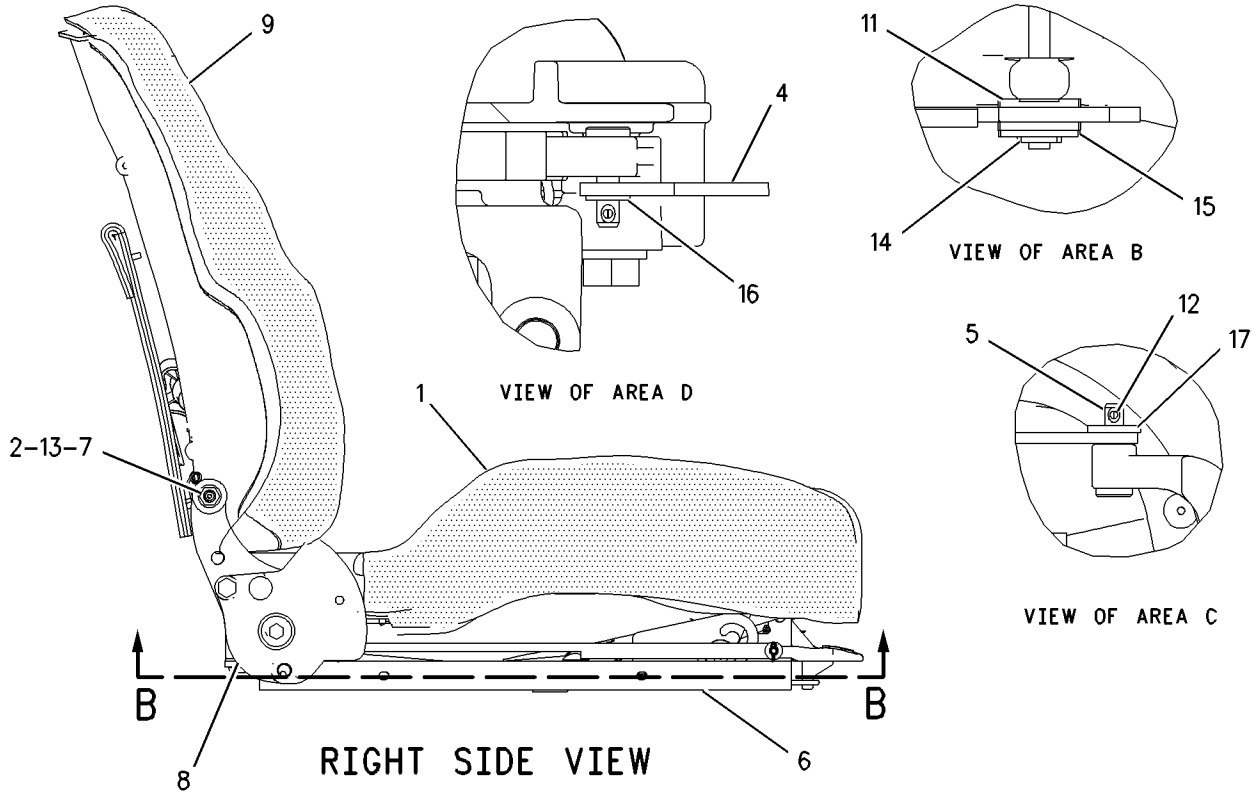

GRAPHIC #1 g00726860

OPERATOR STATION

184-6011 SEAT GP

S/N: AKA1-UP
VINYL
PART OF 159-2950 SEAT GP-SUSPENSION

SMCS-7312 **i01437523**

NOTE	REF NO	GRAPHIC REF	PART NUMBER	QTY	PART NAME 1 2 3 4 5 6 (PRODUCT LEVEL)	SEE PAGE
	1	1	**173-3083**	1	EXTENSION GP-BACKREST	
	2	1	**177-4937**	1	SPACER (12.7MM ID)	
	3	1	**180-5559**	1	SCREW-PAN HEAD (7/16-20X1.75 IN)	
	4	1	**180-5560**	1	SCREW-PAN HEAD (7/16-20X1.25 IN)	
Y	5	1	**180-7304**	1	SEAT GP	836
	6	1	**183-3648**	1	SEAT BELT GP	

Y-SEPARATE ILLUSTRATION

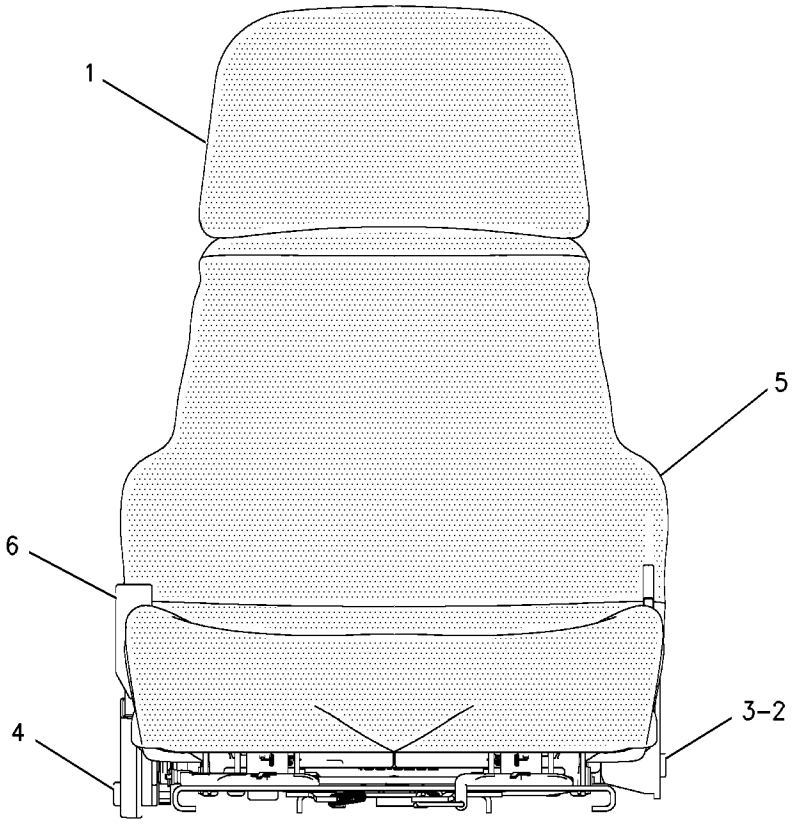

FRONT VIEW

GRAPHIC #1 g00683843

159-2950 SEAT GP-SUSPENSION–VINYL

S/N: AKA1-UP

PART OF 177-7352 SEAT AR, 160-6521 SEAT GP

SMCS-7321, 7324, 7336 **i01437148**

NOTE	REF NO	GRAPHIC REF	PART NUMBER	QTY	PART NAME 1 2 3 4 5 6 (PRODUCT LEVEL)	SEE PAGE
Y	1	1	**160-7165**	1	SUSPENSION GP-SEAT	844
Y	2	1	*184-6011*	1	SEAT GP	838
JZ	3	1		4	BLOCK-SLIDER	
J	4	1	**169-7380**	1	BOLT-SOCKET HEAD (3/8 - 16 THD)	
J	5	1	**173-5787**	4	SETSCREW	
					AVAILABLE REPAIR KIT(S):	
J			**173-7035**	1	KIT-SLIDER BLOCK	

J-KIT MARKED J INCLUDES PART(S) MARKED J
Y-SEPARATE ILLUSTRATION
Z-NOT SERVICED SEPARATELY

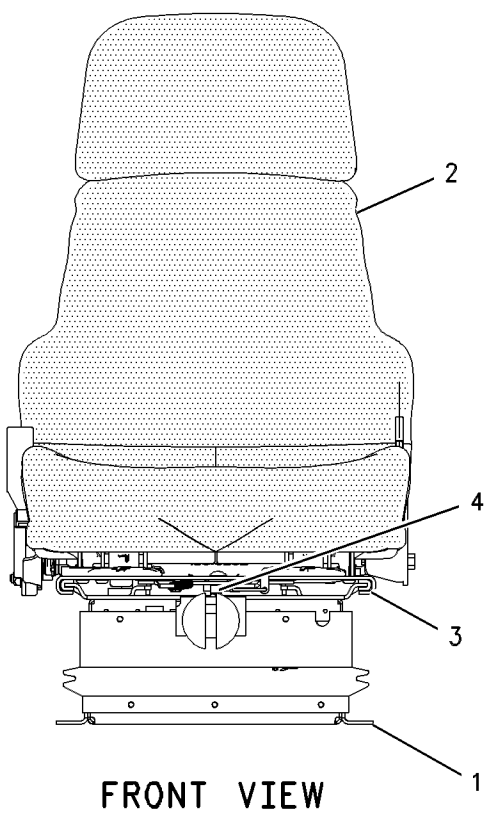

FRONT VIEW

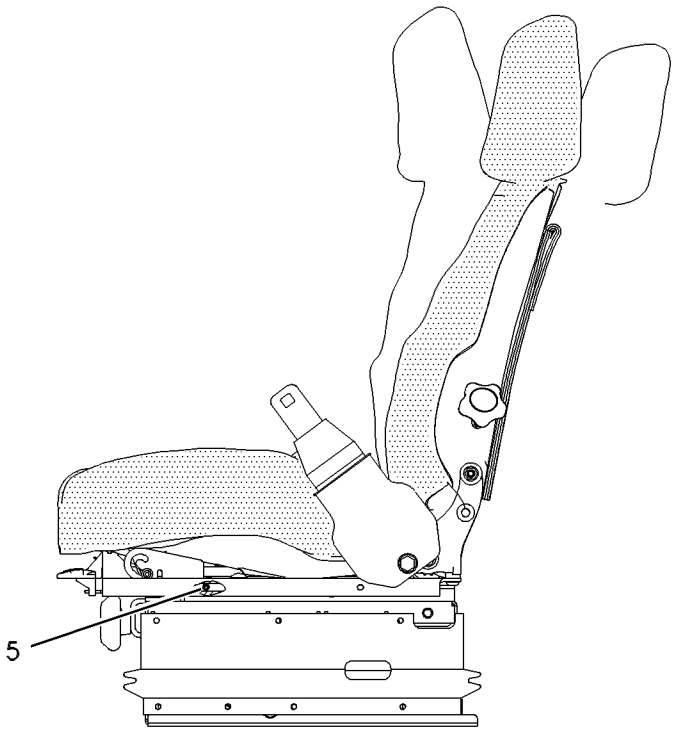

LEFT SIDE VIEW

GRAPHIC #1 g00610923

OPERATOR STATION

160-7186 SEAT GP-SUSPENSION

S/N: AKA1-UP
GREY
PART OF 159-8367 CAB AR

SMCS-7321, 7324, 7336 **i01447203**

NOTE	REF NO	GRAPHIC REF	PART NUMBER	QTY	PART NAME 1 2 3 4 5 6 (PRODUCT LEVEL)	SEE PAGE
Y	1	1	**160-7165**	1	SUSPENSION GP-SEAT	844
Y	2	1	**178-0606**	1	SEAT GP	834
J	3	1	**161-9289**	4	BLOCK-SLIDER	
	4	1	**169-7380**	2	BOLT-SOCKET HEAD (3/8-16X0.375 IN)	
	5	1	**173-5787**	4	SETSCREW	
					AVAILABLE REPAIR KIT(S):	
J			**173-7035**	1	KIT-SLIDER BLOCK	

J-PART MARKED J SERVICED BY KIT MARKED J
Y-SEPARATE ILLUSTRATION

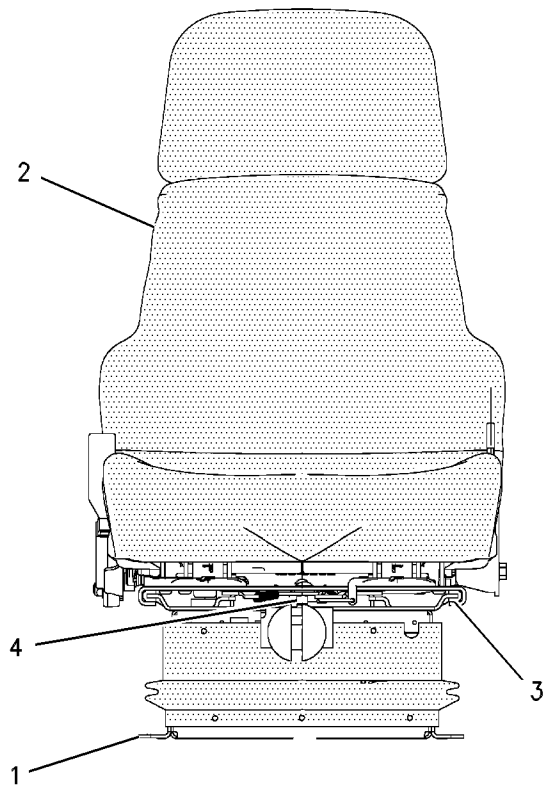

FRONT VIEW

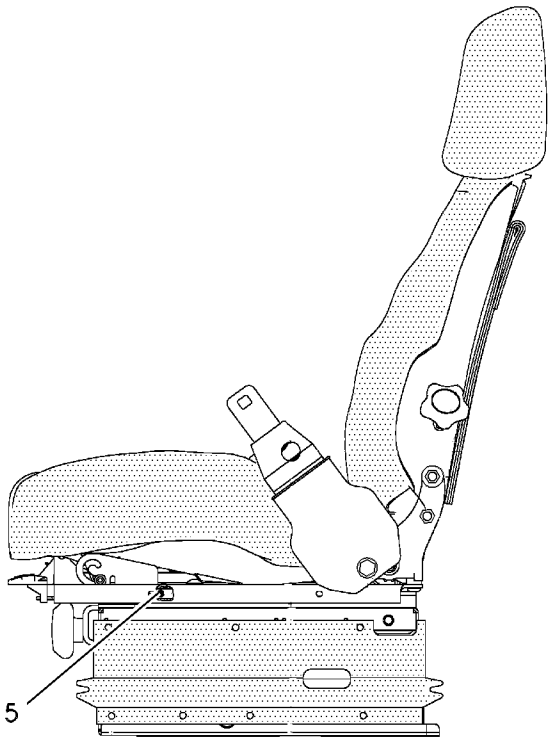

LEFT SIDE VIEW

GRAPHIC #1 g00638255

OPERATOR STATION

160-7188 SEAT GP-SUSPENSION

S/N: AKA1-UP

PART OF 160-7178 SEAT GP

SMCS-7321, 7324, 7336 **i01488968**

NOTE	REF NO	GRAPHIC REF	PART NUMBER	QTY	PART NAME 1 2 3 4 5 6 (PRODUCT LEVEL)	SEE PAGE
Y	1	1	**161-7539**	1	SUSPENSION GP-SEAT	846
Y	2	1	*178-0606*	1	SEAT GP	834
	3	1	**173-7035**	1	KIT-SLIDER BLOCK	
	4	1	**169-7380**	1	BOLT-SOCKET HEAD (3/8-16X0.375 IN)	
	5	1	**173-5787**	4	SETSCREW	

Y-SEPARATE ILLUSTRATION

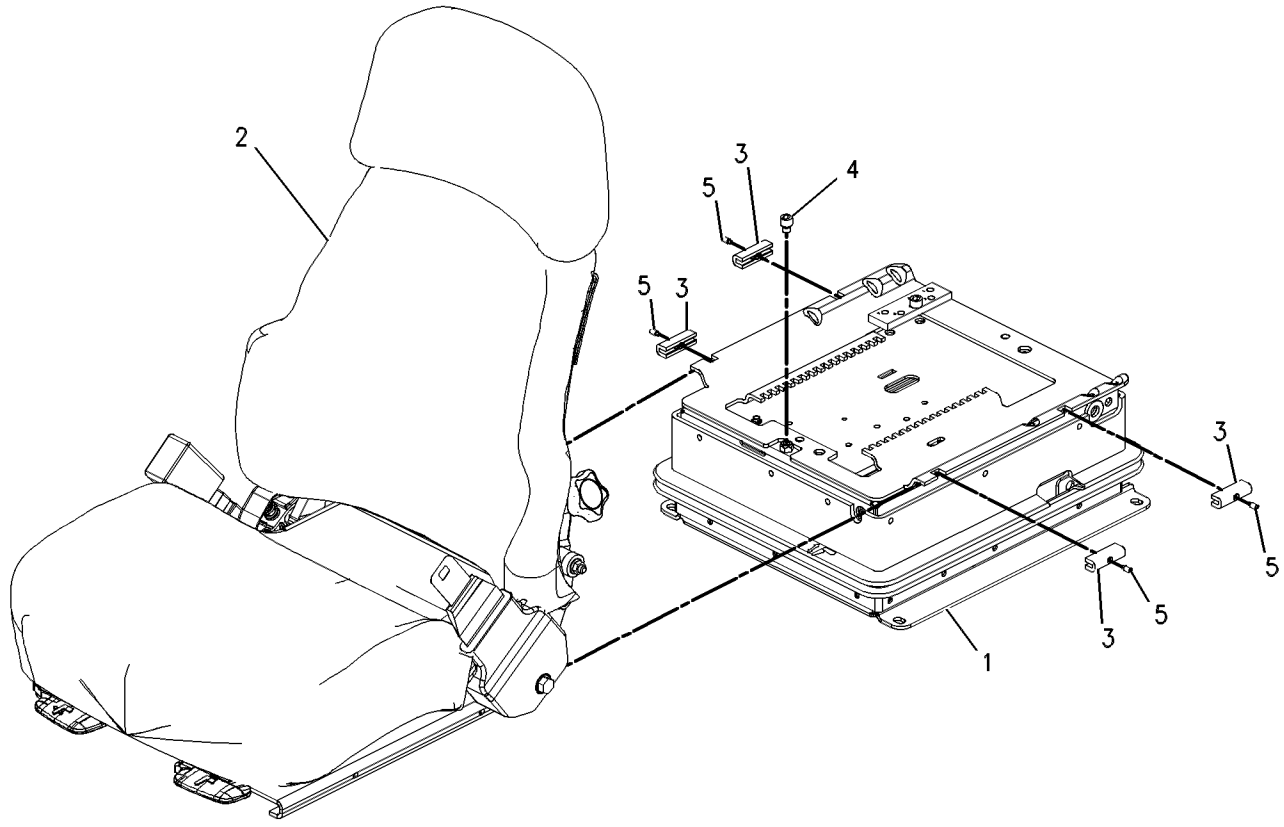

GRAPHIC #1 g00662344

OPERATOR STATION

102-4317 STEP & HANDHOLD AR

S/N: AKA1-UP
HEAVY DUTY

SMCS-7254 **i01404407**

NOTE	PART NUMBER	QTY	PART NAME 1 2 3 4 5 6 (PRODUCT LEVEL)	SEE PAGE
	8T-4835	4	BOLT (1/2-13X2 IN)	
	8T-8919	2	BOLT (1/2-13X1.75 IN)	
	1Q-2130	1	HANDLE AS	
	1Q-2423	2	HANDLE AS	
	8T-4223	4	WASHER-HARD (13.5X25.5X3MM THK)	

OPERATOR STATION

156-8347 SUPPORT GP-ROPS

S/N: AKA1-UP

PART OF 157-0819 CHASSIS AR

SMCS-7325 **i01434552**

NOTE	REF NO	GRAPHIC REF	PART NUMBER	QTY	PART NAME 1 2 3 4 5 6 (PRODUCT LEVEL)	SEE PAGE
	1	1	**156-8345**	1	SUPPORT AS-LH	
		1	**7T-1099**	2	LINK	
		1	**3Y-7829**	1	BOSS (3/8-16 THD)	
	2	1	**156-8346**	1	SUPPORT AS-RH	
		1	**7T-1099**	3	LINK	
		1	**8R-1386**	1	BLOCK	
	3	1	**7X-0533**	20	WASHER-HARD (34X55X6MM THK)	
	4	1	**7X-0428**	20	BOLT (1 1/4-7X4 IN)	

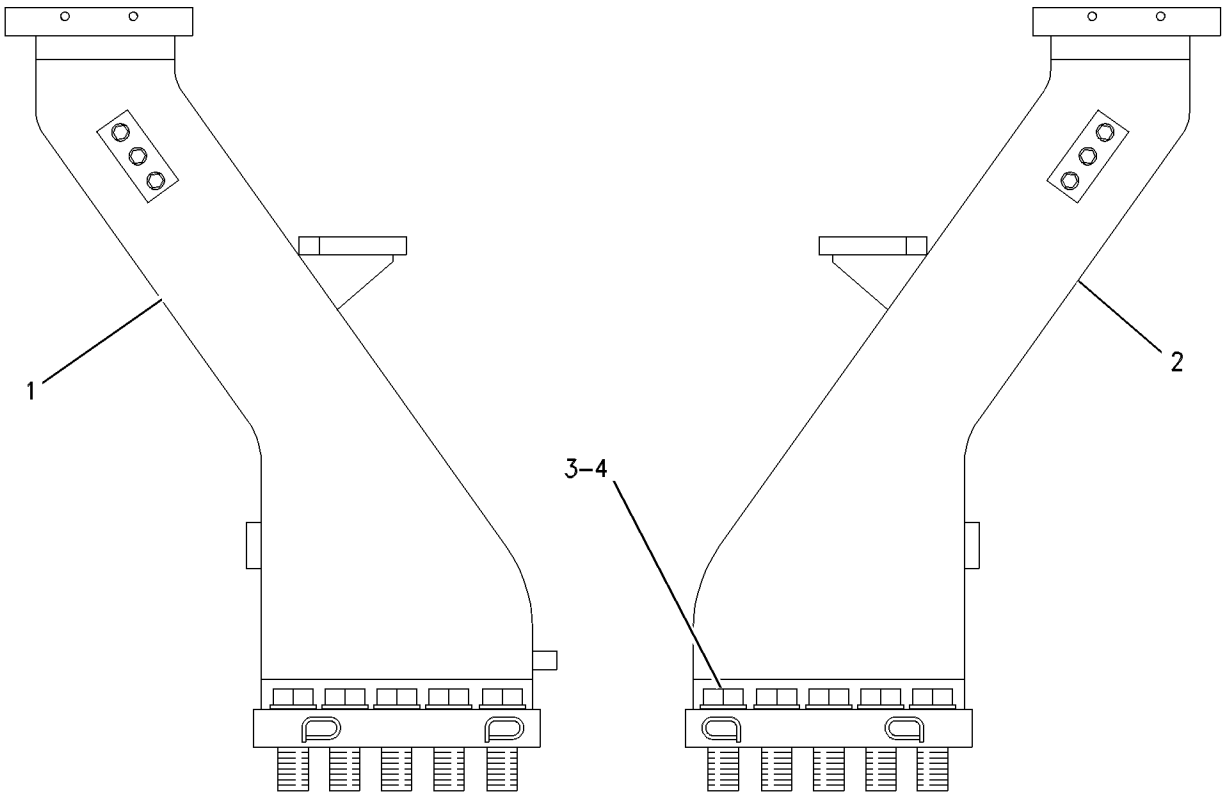

GRAPHIC #1 g00529969

OPERATOR STATION

160-7165 SUSPENSION GP-SEAT

S/N: AKA1-UP

PART OF 159-2950, 160-7186 SEAT GP-SUSPENSION

SMCS-7324 **i01447865**

NOTE	REF NO	GRAPHIC REF	PART NUMBER	QTY	PART NAME 1 2 3 4 5 6 (PRODUCT LEVEL)	SEE PAGE
	1	1	**2K-4973**	2	LOCKNUT	
	2	1	**4V-7884**	2	BEARING	
	3	1	**4V-8577**	4	BEARING	
	4	1	**5V-1497**	1	RETAINER	
	5	1	**8Y-5965**	1	ABSORBER-SHOCK	
	6	1	**8Y-6012**	1	ARM AS-SUSPENSION	
	7	1	**8Y-6014**	1	HOUSING AS-LOWER	
	8	1	**8Y-6024**	2	SHAFT AS	
J	9	1	**101-0003**	20	FASTENER	
J	10	1	**166-6781**	3	FASTENER	
J	11	1	**163-1146**	3	FASTENER	
	12	1	**145-0326**	1	FILM-INSTRUCTION (SEAT ADJUSTMENT)	
	13	1	**169-7380**	1	BOLT-SOCKET HEAD (3/8-16X0.375 IN)	
Y	14	1	**174-2231**	1	HOUSING GP-SEAT SUSPENSION	766
J	15	1	**197-7689**	3	FASTENER	
					AVAILABLE REPAIR KIT(S):	
J			**8Y-5944**	1	KIT-SUSPENSION BOOT	
					(INCLUDES BOOT, RETAINER & PARTS MARKED J)	
			101-4194	1	KIT-BELT TETHER	
			101-4195	1	KIT-SUSPENSION ROLLER	

J-KIT MARKED J SERVICES PART(S) MARKED J
Y-SEPARATE ILLUSTRATION

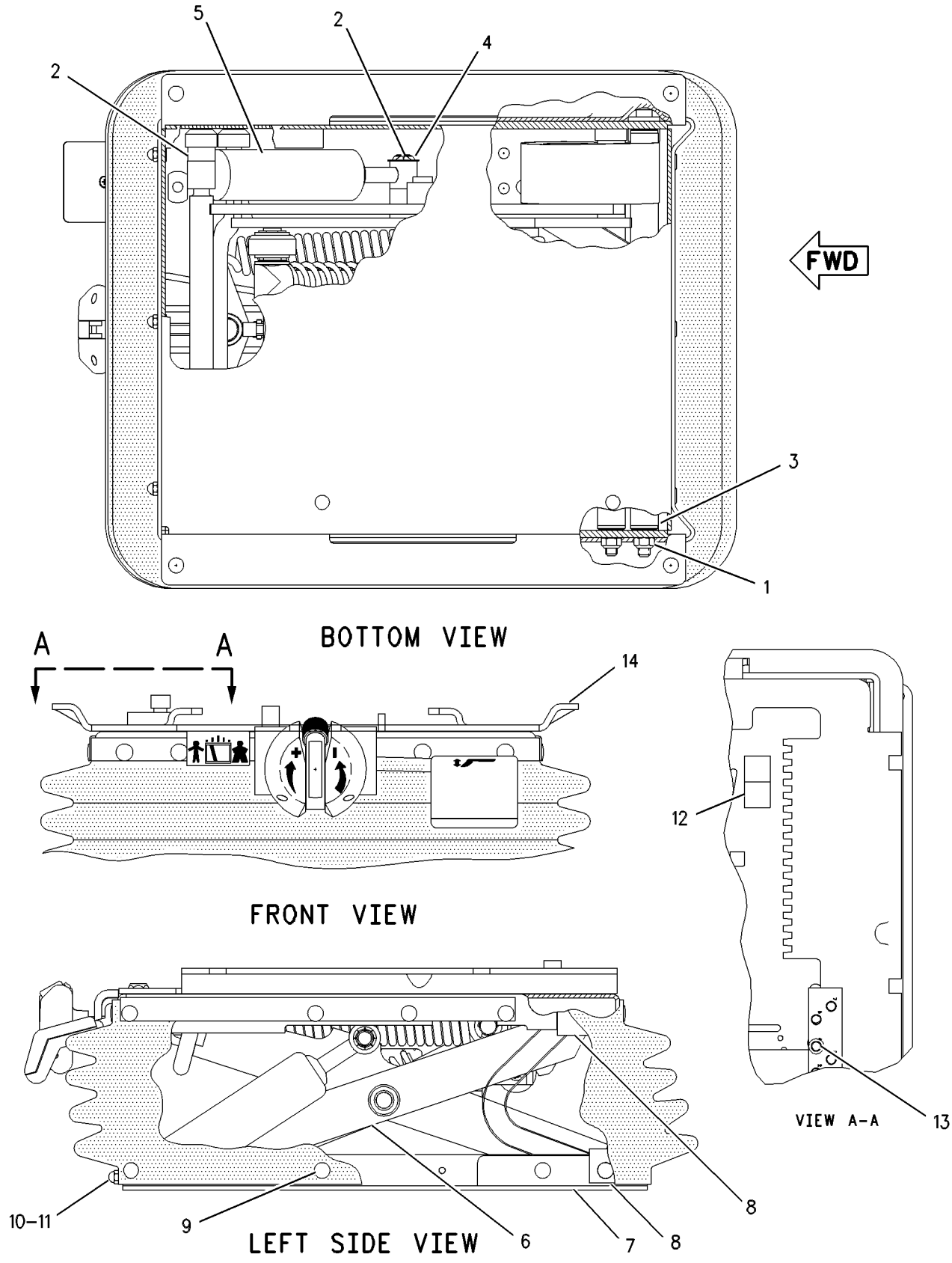

GRAPHIC #1 g00609097

OPERATOR STATION

161-7539 SUSPENSION GP-SEAT

S/N: AKA1-UP

PART OF 160-7188 SEAT GP-SUSPENSION

SMCS-7324 **i01488973**

NOTE	REF NO	GRAPHIC REF	PART NUMBER	QTY	PART NAME 1 2 3 4 5 6 (PRODUCT LEVEL)	SEE PAGE
	1	1	**1B-4430**	4	NUT-JAM (1/2-20 THD)	
	2	1	**3J-4818**	4	LOCKWASHER	
	3	1	**4V-7884**	2	BEARING	
	4	1	**4V-8556**	1	BOLT (3/8-16X2.34 IN)	
	5	1	**6K-0806**	1	STRAP-CABLE	
	6	1	**8L-8413**	5	STRAP-CABLE	
	7	1	**8Y-6917**	1	BOOT	
	8	1	**8Y-6922**	1	HOUSING AS	
	9	1	**9M-0164**	1	CLAMP-HOSE	
	10	1	**102-6317**	4	BUMPER	
	11	1	**123-8157**	2	SHAFT	
	12	1	**123-9131**	1	ABSORBER-SHOCK	
	13	1	**124-7128**	1	BUSHING-RELIEF	
	14	1	**128-0686**	2	SPACER (9.78X15.88X27.8MM THK)	
	15	1	**147-4549**	2	FITTING-ELBOW	
	16	1	**147-6522**	1	SPRING-AIR	
	17	1	**147-6523**	1	COMPRESSOR	
	18	1	**148-3749**	1	SCISSORS AS	
	19	1	**160-7765**	1	WASHER (16.26X22.23X1.97MM THK)	
B	20	1	**160-7766**	3	WASHER (16.26X22.23X0.51MM THK)	
B	21	1	**160-7767**	8	WASHER (3.68X12.57X0.51MM THK)	
	22	1	**164-5951**	1	HOUSING AS	
		1	**2K-4973**	1	LOCKNUT (3/8-16 THD)	
	23	1	**2K-4973**	3	LOCKNUT (3/8-16 THD)	
	24	1	**5P-8167**	1	BOLT (3/8-16X0.625 IN)	
	25	1	**8M-3267**	1	SCREW-HEX SOCKET (3/8-16X0.75 IN)	
	26	1	**8T-2501**	2	BOLT (3/8-16X2 IN)	
BE	27	1	**147-6541**		TUBE	
	28	1	**128-0613**	1	KIT-TETHER	
					(INCLUDES 2 TETHERS)	
JZ	29	1		27	CLIP	
LZ	30	1		4	ROLLER	
LZ	31	1		4	BEARING	
PZ	32	1		1	HARNESS	
PZ	33	1		1	NUT	
PZ		1		1	WASHER (0.38X0.88X0.02 IN THK)	
PZ		1		1	WASHER	
					AVAILABLE REPAIR KIT(S):	
			8Y-6928	1	KIT-FASTENER (SEAT SUSPENSION)	
					(INCLUDES PARTS MARKED J)	
			123-9128	1	KIT-ROLLER	
					(INCLUDES PARTS MARKED L & TIE WRAP)	
			123-8266	1	KIT-WIRING HARNESS	
					(INCLUDES PARTS MARKED P & TIE WRAPS)	

B-USE AS REQUIRED
E-ORDER BY THE CENTIMETER
J-INCLUDED IN 8Y6928 FASTENER KIT
L-INLCUDED IN 123-9128 ROLLER KIT
P-INLCUDED IN 123-8266 HARNESS KIT
Z-NOT SERVICED SEPARATELY

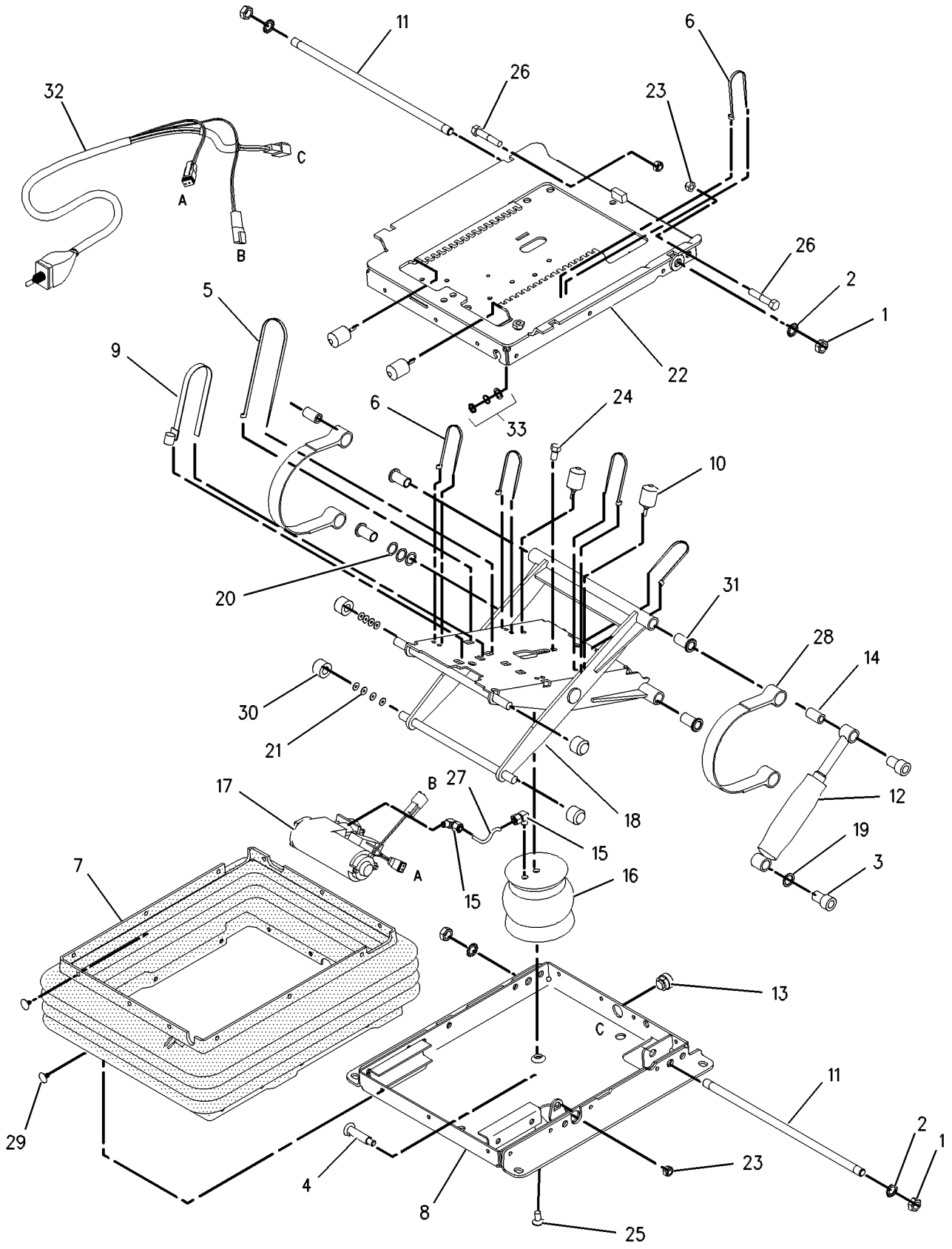

GRAPHIC #1 g00536599

OPERATOR STATION

158-7690 WASHER GP-WINDOW

S/N: AKA1-UP

PART OF 158-7694 CAB AR

SMCS-7306 **i01474793**

NOTE	REF NO	GRAPHIC REF	PART NUMBER	QTY	PART NAME 1 2 3 4 5 6 (PRODUCT LEVEL)	SEE PAGE
	1	1	**8T-5400**	4	CONNECTOR	
E	2	1	**7X-7702**		CONDUIT-FLEXIBLE (83CM)	
	3	1	**9N-1995**	4	RIVET-POP	
	4	1	**3S-2093**	19	STRAP-CABLE	
	5	1	**8E-6856**	1	COVER	
M	6	1	**8T-4133**	1	NUT (M10X1.5 THD)	
E	7	1	**144-0195**		HOSE (250CM)	
	8	1	**169-9635**	1	HARNESS AS	
	9	1	**8T-4896**	1	WASHER-HARD (10.2X18.5X2.5MM THK)	
D	10	1	**6V-5818**		CONDUIT-FLEXIBLE (.8M)	
	11	1	**155-2274**	1	KIT-CONNECTING PLUG (6 PIN)	
					(INCLUDES PLUG AS & WEDGE)	
		1	**102-8815**	1	SEAL-INTERFACE	
	12	1	**3E-3380**	1	WEDGE-PLUG LOCK	
	13	1	**8T-8737**	1	PLUG-SEAL	
E	14	1	**144-0195**		HOSE (450CM)	
E	15	1	**144-0195**		HOSE (350CM)	
E	16	1	**144-0195**		HOSE (350CM)	
E	17	1	**144-0195**	2	HOSE (2CM EACH)	
	18	1	**7Y-3281**	3	GROMMET	
	19	1	**145-7328**	2	ELBOW-HOSE	
	20	1	**2G-8097**	1	MOUNTING	

D-ORDER BY THE METER
E-ORDER BY THE CENTIMETER
M-METRIC PART

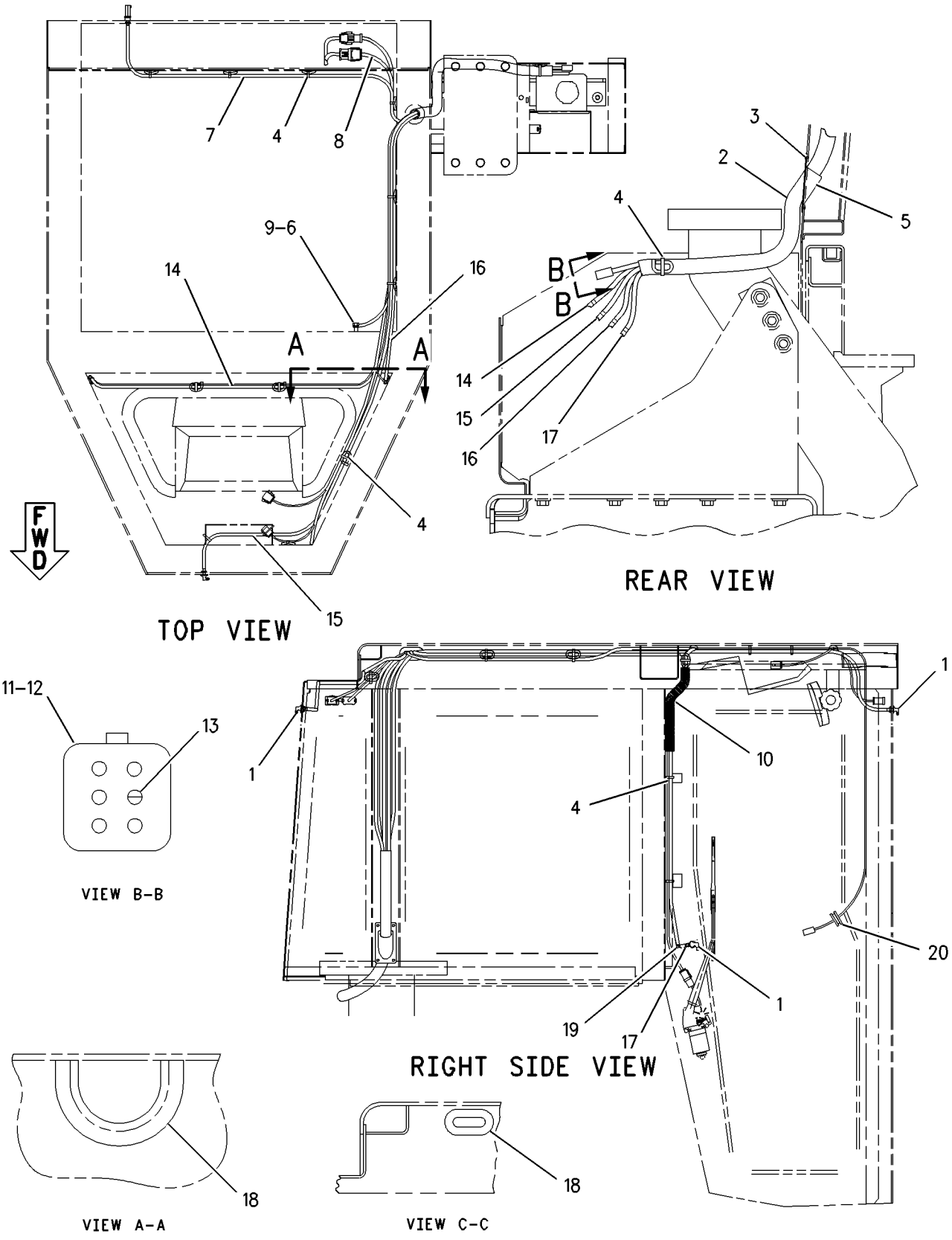

GRAPHIC #1 g00699988

OPERATOR STATION

8E-5112 WINDOW AS-SLIDING—REAR

S/N: AKA1-UP

PART OF 158-7696 CAB GP

SMCS-7310 **i00720026**

NOTE	PART NUMBER	QTY	PART NAME 1 2 3 4 5 6 (PRODUCT LEVEL)	SEE PAGE
Y	**6T-5008**	1	WINDOW GP	854
Y	*9N-4369*	1	WINDOW GP	868

Y-SEPARATE ILLUSTRATION

OPERATOR STATION

8E-5113 WINDOW AS-SLIDING—RH

S/N: AKA1-UP

PART OF 158-7696 CAB GP

SMCS-7310 **i00569833**

NOTE	PART NUMBER	QTY	PART NAME 1 2 3 4 5 6 (PRODUCT LEVEL)	SEE PAGE
Y	*6T-8402*	1	WINDOW GP-CAB	855
			-OR-	
Y	*8E-3446*	1	WINDOW GP-CAB	859

Y-SEPARATE ILLUSTRATION

OPERATOR STATION

8E-5114 WINDOW AS-SLIDING—LH

S/N: AKA1-UP

PART OF 158-7696 CAB GP

SMCS-7310 **i00570466**

NOTE	PART NUMBER	QTY	PART NAME 1 2 3 4 5 6 (PRODUCT LEVEL)	SEE PAGE
Y	*6T-8403*	1	WINDOW GP-CAB	856
			-OR-	
Y	*8E-3447*	1	WINDOW GP-CAB	860

Y-SEPARATE ILLUSTRATION

OPERATOR STATION

6T-5005 WINDOW GP-CAB—REAR

S/N: AKA1-UP

PART OF 6T-5008 WINDOW GP-CAB

SMCS-7310 **i01166630**

NOTE	REF NO	GRAPHIC REF	PART NUMBER	QTY	PART NAME 1 2 3 4 5 6 (PRODUCT LEVEL)	SEE PAGE
	1	1	**3T-1121**	1	LOCK AS	
	2	1	**2H-6622**	2	SCREW-MACHINE	
	3	1	**9P-7860**	1	LOCK AS	
	4	1	**9P-7859**	2	SCREW	
D	5	1	**5P-5680**		SEAL (.61M)	
EB	6	1	**9X-6268**		TAPE	
D	7	1	**6V-5833**		SEAL (.64M)	
D	8	1	**5P-8918**		SEAL (1.4M)	
	9	1	**8Y-6447**	1	GLASS (TINTED)	
E	10	1	**8Y-6839**		SEAL (63.5CM)	
D	11	1	**5P-5680**		SEAL (1.3 M)	
	12	1	**117-5676**	1	SLIDE	
	13	1	**124-9775**	1	SLIDE	

B-USE AS REQUIRED
D-ORDER BY THE METER
E-ORDER BY THE CENTIMETER

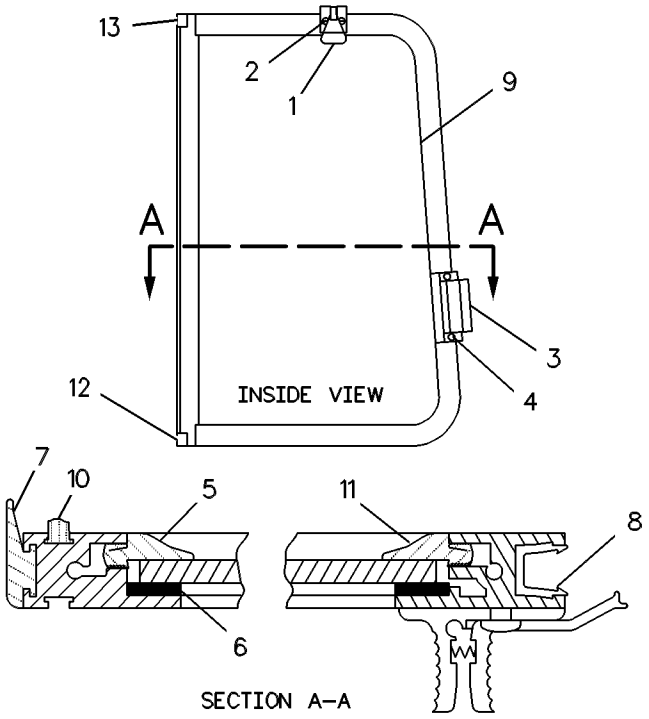

GRAPHIC #1 g00257563

6T-5008 WINDOW GP-CAB–REAR

S/N: AKA1-UP
SLIDING
PART OF 8E-5112 WINDOW AS-SLIDING

SMCS-7310 **i00569766**

NOTE	REF NO	GRAPHIC REF	PART NUMBER	QTY	PART NAME 1 2 3 4 5 6 (PRODUCT LEVEL)	SEE PAGE
Y	1	1	**6T-5005**	1	WINDOW GP	853
	2	1	**9P-7855**	1	GLASS (TINTED)	
DB	3	1	**5P-5680**		SEAL (3 M)	
EB	4	1	**9X-6268**		TAPE	
BD	5	1	**6V-5833**		SEAL (1 M)	
DB	6	1	**8T-0687**		FILLER	
BE	7	1	**8Y-6839**		SEAL (64 CM)	

B-USE AS REQUIRED
D-ORDER BY THE METER
E-ORDER BY THE CENTIMETER
Y-SEPARATE ILLUSTRATION

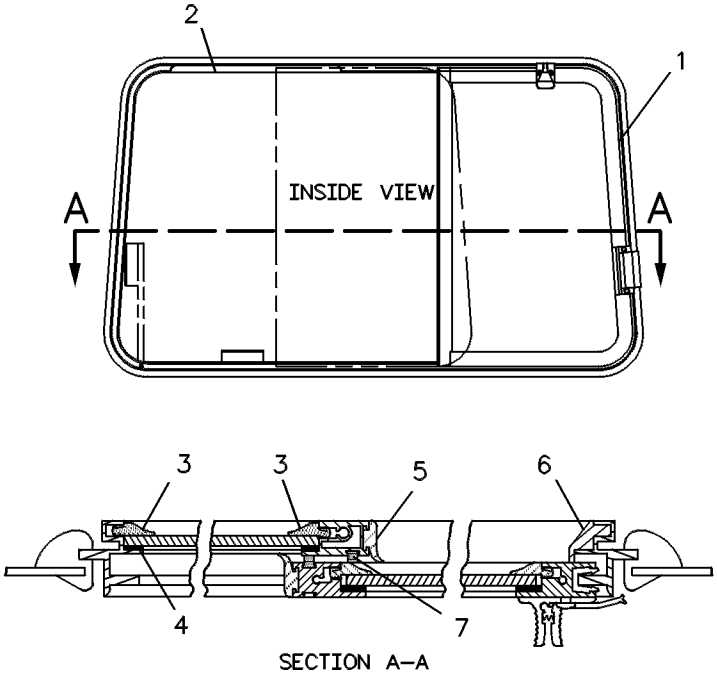

GRAPHIC #1 g00246891

OPERATOR STATION

6T-8402 WINDOW GP-CAB—RH

S/N: AKA1-UP
SLIDING
PART OF 8E-5113 WINDOW AS-SLIDING

SMCS-7310 **i01502187**

NOTE	REF NO	GRAPHIC REF	PART NUMBER	QTY	PART NAME 1 2 3 4 5 6 (PRODUCT LEVEL)	SEE PAGE
Y	1	1	**7T-1068**	1	WINDOW GP-CAB (RH)	857
	2	1	**7T-1330**	1	GLASS (TINTED)	
D	3	1	**5P-5680**		SEAL (1.14M)	
DB	4	1	**8T-0687**		FILLER	
EB	5	1	**9X-6268**		TAPE	
D	6	1	**6V-5833**		SEAL (.64M)	
E	7	1	**8Y-6839**		SEAL (64 CM)	
D	8	1	**5P-5680**		SEAL (.66M)	

B-USE AS REQUIRED
D-ORDER BY THE METER
E-ORDER BY THE CENTIMETER
Y-SEPARATE ILLUSTRATION

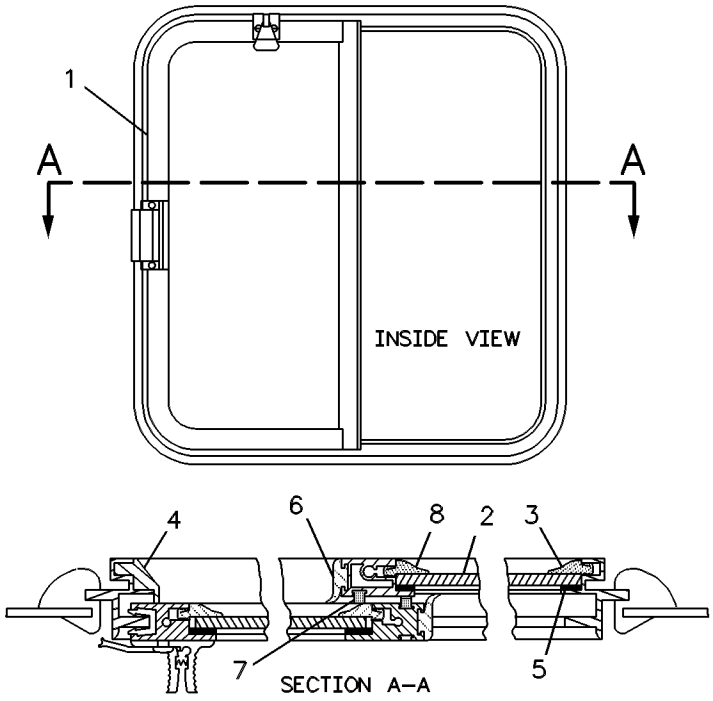

GRAPHIC #1 g00330572

OPERATOR STATION

6T-8403 WINDOW GP-CAB—LH

S/N: AKA1-UP
SLIDING
PART OF 8E-5114 WINDOW AS-SLIDING

SMCS-7310 **i01502193**

NOTE	REF NO	GRAPHIC REF	PART NUMBER	QTY	PART NAME 1 2 3 4 5 6 (PRODUCT LEVEL)	SEE PAGE
BD	1	1	**5P-5680**		SEAL	
BE	2	1	**9X-6268**		TAPE	
BD	3	1	**6V-5833**		SEAL	
Y	4	1	**7T-1069**	1	WINDOW GP-CAB (LH)	858
BE	5	1	**8Y-6839**		SEAL	
	6	1	**7T-1330**	1	GLASS (TINTED)	
BD	7	1	**8T-0687**		FILLER	

B-USE AS REQUIRED
D-ORDER BY THE METER
E-ORDER BY THE CENTIMETER
Y-SEPARATE ILLUSTRATION

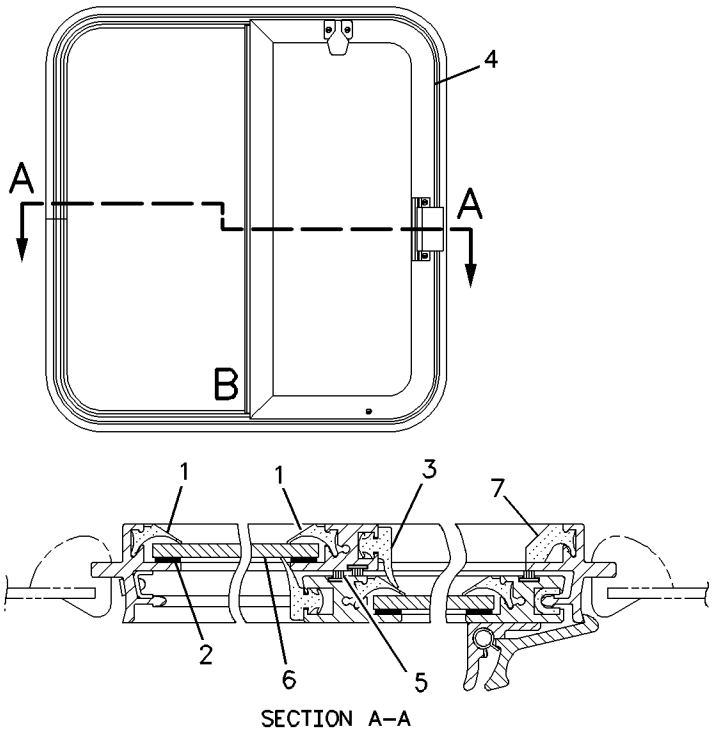

SECTION A—A

GRAPHIC #1 g00757599

OPERATOR STATION

7T-1068 WINDOW GP-CAB—RH

S/N: AKA1-UP

PART OF 6T-8402 WINDOW GP-CAB

SMCS-7310 **i01138757**

NOTE	REF NO	GRAPHIC REF	PART NUMBER	QTY	PART NAME 1 2 3 4 5 6 (PRODUCT LEVEL)	SEE PAGE
	1	1	**3T-1121**	1	LOCK AS	
	2	1	**2H-6622**	2	SCREW-MACHINE	
	3	1	**9P-7860**	1	LOCK AS	
	4	1	**9P-7859**	2	SCREW	
BD	5	1	**5P-5680**		SEAL (.61M)	
EB	6	1	**9X-6268**		TAPE	
BD	7	1	**6V-5833**		SEAL (.64M)	
BD	8	1	**5P-8918**		SEAL (1.2M)	
	9	1	**8Y-6448**	1	GLASS	
BE	10	1	**8Y-6839**		SEAL (64CM)	
BD	11	1	**5P-5680**		SEAL (1.1M)	
	12	1	**124-9774**	1	SLIDE	
	13	1	**117-5677**	1	SLIDE	

B-USE AS REQUIRED
D-ORDER BY THE METER
E-ORDER BY THE CENTIMETER

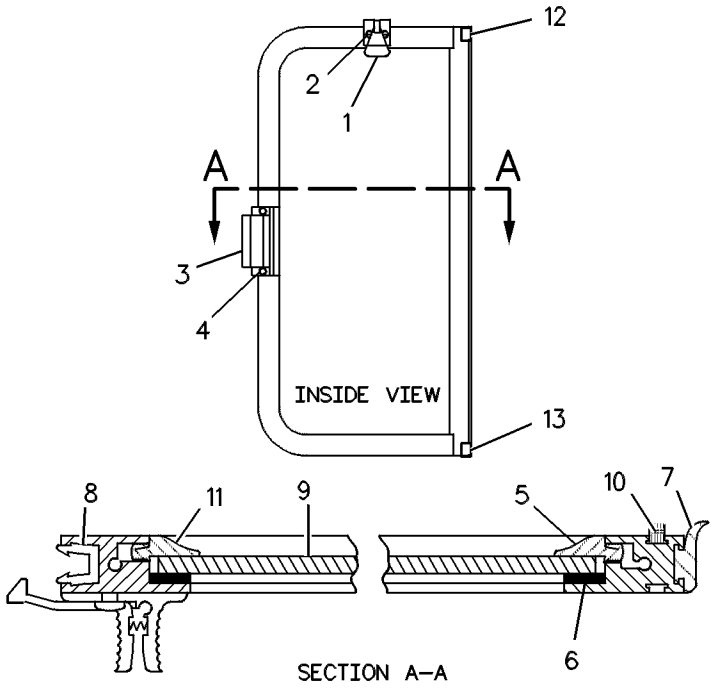

GRAPHIC #1 g00257169

OPERATOR STATION

7T-1069 WINDOW GP-CAB—LH

S/N: AKA1-UP

PART OF 6T-8403 WINDOW GP-CAB

SMCS-7310 **i00753665**

NOTE	REF NO	GRAPHIC REF	PART NUMBER	QTY	PART NAME 1 2 3 4 5 6 (PRODUCT LEVEL)	SEE PAGE
	1	1	**3T-1121**	1	LOCK AS	
	2	1	**2H-6622**	2	SCREW-MACHINE	
	3	1	**9P-7860**	1	LOCK AS	
	4	1	**9P-7859**	2	SCREW	
D	5	1	**5P-5680**		SEAL (.61M)	
EB	6	1	**9X-6268**		TAPE	
D	7	1	**6V-5833**		SEAL (.64M)	
D	8	1	**5P-8918**		SEAL (1.2M)	
	9	1	**8Y-6448**	1	GLASS	
E	10	1	**8Y-6839**		SEAL (64CM)	
D	11	1	**5P-5680**		SEAL (1.1M)	
	12	1	**124-9774**	1	SLIDE	
	13	1	**117-5677**	1	SLIDE	

B-USE AS REQUIRED
D-ORDER BY THE METER
E-ORDER BY THE CENTIMETER

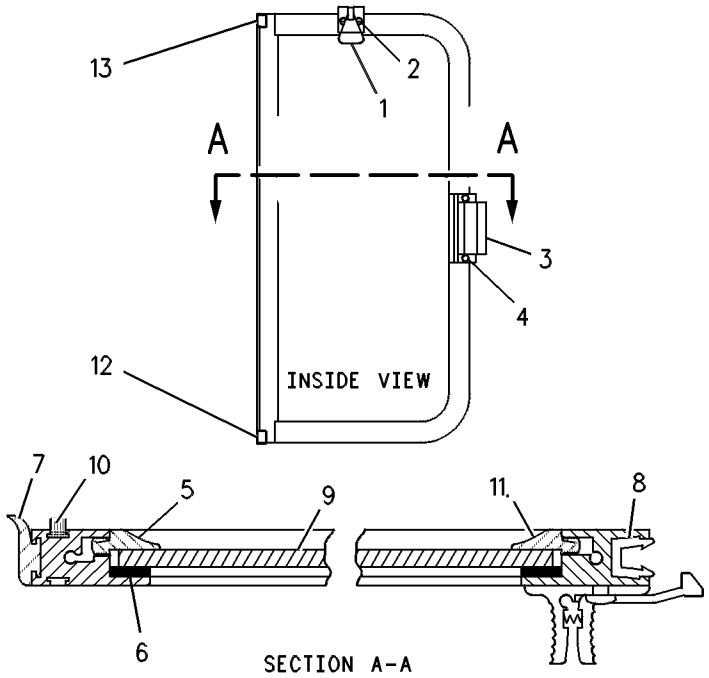

GRAPHIC #1 g00326280

8E-3446 WINDOW GP-CAB–RH

S/N: AKA1-UP
SLIDING
PART OF 8E-5113 WINDOW AS-SLIDING

SMCS-7310 **i01502195**

NOTE	REF NO	GRAPHIC REF	PART NUMBER	QTY	PART NAME 1 2 3 4 5 6 (PRODUCT LEVEL)	SEE PAGE
BE	1	1	**8Y-6423**		SEAL	
BE	2	1	**8Y-6459**		TAPE-BUTYL	
	3	1	**8Y-6430**	1	SEAL-WINDOW	
Y	4	1	**8Y-6433**	1	WINDOW GP-CAB (RH)	864
	5	1	**8Y-6462**	1	KIT-LEAF SPRING	
					(INCLUDES SPRING AS & RIVET)	
	6	1	**8Y-6432**	1	GLASS-FIXED-RH (TINTED)	
BE	7	1	**8Y-6424**		SEAL	
BE	8	1	**8Y-6910**		WEATHERSTRIP	

B-USE AS REQUIRED
E-ORDER BY THE CENTIMETER
Y-SEPARATE ILLUSTRATION

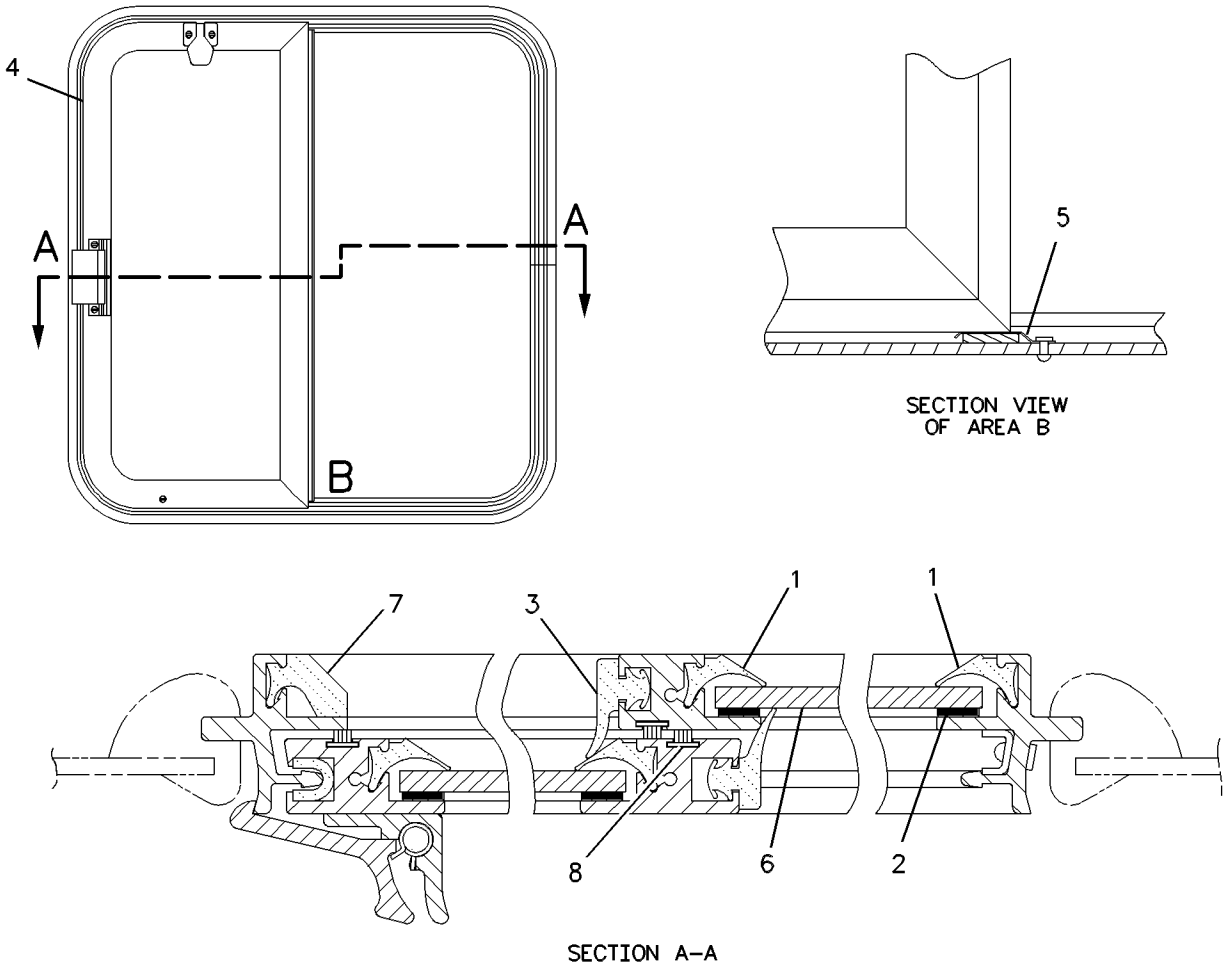

GRAPHIC #1 g00544799

OPERATOR STATION

8E-3447 WINDOW GP-CAB—LH

S/N: AKA1-UP
SLIDING
PART OF 8E-5114 WINDOW AS-SLIDING

SMCS-7310 **i01502198**

NOTE	REF NO	GRAPHIC REF	PART NUMBER	QTY	PART NAME 1 2 3 4 5 6 (PRODUCT LEVEL)	SEE PAGE
BE	1	1	**8Y-6423**		SEAL	
BE	2	1	**8Y-6459**		TAPE-BUTYL	
	3	1	**8Y-6430**	1	SEAL-WINDOW	
Y	4	1	**8Y-6420**	1	WINDOW GP-CAB (LH)	862
	5	1	**8Y-6462**	1	KIT-LEAF SPRING	
					(INCLUDES SPRING AS & RIVET)	
	6	1	**8Y-6419**	1	GLASS-FIXED-LH (TINTED)	
BE	7	1	**8Y-6424**		SEAL	
BE	8	1	**8Y-6910**		WEATHERSTRIP	

B-USE AS REQUIRED
E-ORDER BY THE CENTIMETER
Y-SEPARATE ILLUSTRATION

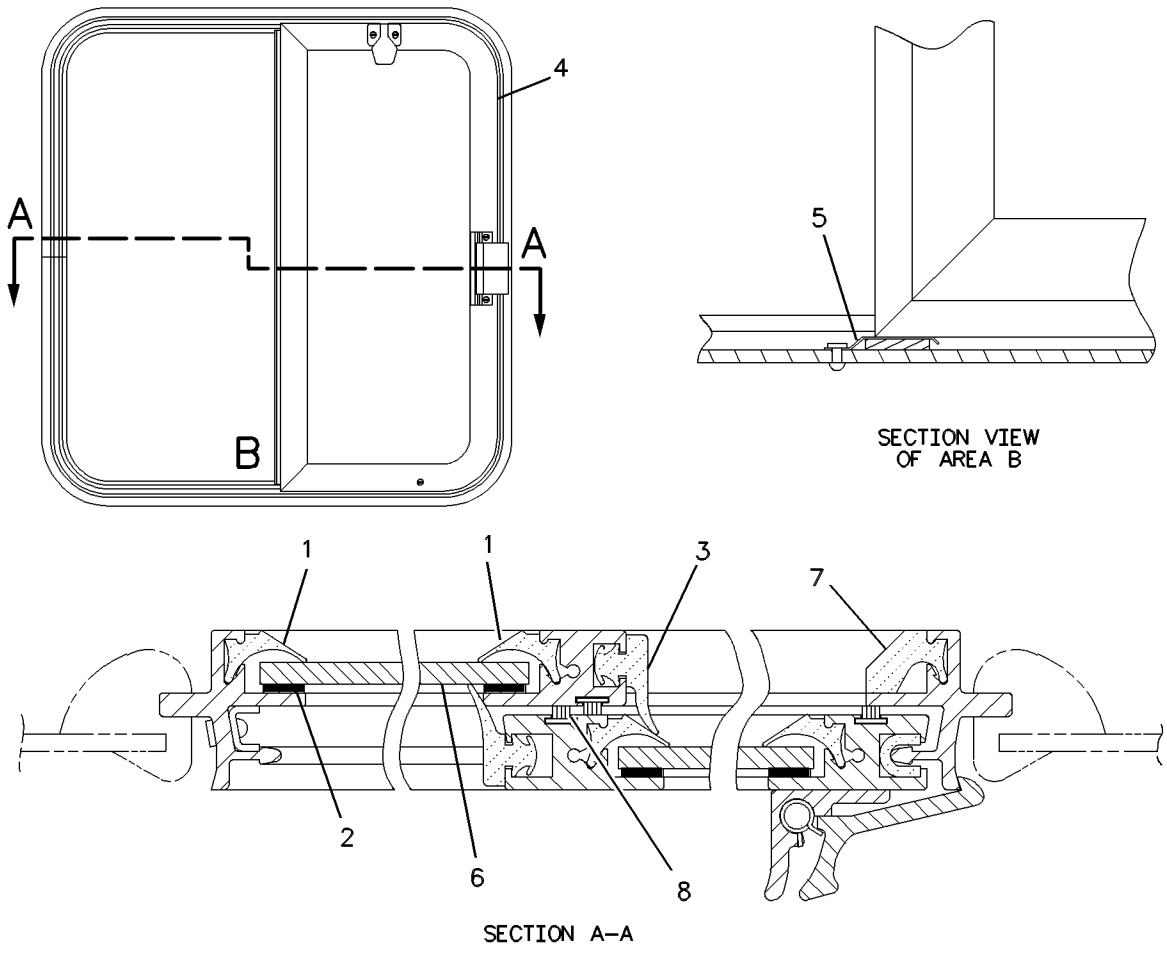

GRAPHIC #1 g00544804

MEMORANDA

OPERATOR STATION

8Y-6420 WINDOW GP-CAB—LH

S/N: AKA1-UP

PART OF 8E-3447 WINDOW GP-CAB

SMCS-7310 **i01094900**

NOTE	REF NO	GRAPHIC REF	PART NUMBER	QTY	PART NAME 1 2 3 4 5 6 (PRODUCT LEVEL)	SEE PAGE
	1	1	**8Y-6454**	1	KIT-CATCH	
					(INCLUDES CATCH AS & PARTS MARKED J)	
JM	2	1	**084-4111**	2	SCREW-PAN HEAD	
	3	1	**8Y-6455**	1	KIT-CATCH (INCLUDES CATCH AS & 2 SCREWS)	
M	4	1	**8T-4777**	2	SCREW-MACHINE (M5X0.8X12MM)	
	5	1	**8Y-6460**	1	KIT-RUNNER GUIDE (INCLUDES GUIDE & SCREW)	
	6	1	**3S-9557**	2	SCREW-PAN HEAD	
	7	1	**8Y-6461**	1	KIT-RUNNER GUIDE	
					(INCLUDES A GUIDE & PARTS MARKED L)	
LM	8	1	**6V-2312**	2	SCREW-MACHINE (M6X1X25MM)	
BE	9	1	**8Y-6423**		SEAL	
	10	1	**8Y-6430**	1	SEAL-WINDOW	
BE	11	1	**8Y-6459**		TAPE-BUTYL	
	12	1	**8Y-6422**	1	GLASS-SLIDER (TINTED)	
BE	13	1	**8Y-6910**		WEATHERSTRIP	

B-USE AS REQUIRED
E-ORDER BY THE CENTIMETER
J-INCLUDED IN 8Y6454 CATCH KIT
L-INCLUDED IN 8Y6461 GUIDE RUNNER KIT
M-METRIC PART

8Y-6420 WINDOW GP-CAB *(contd.)* **i01094900**

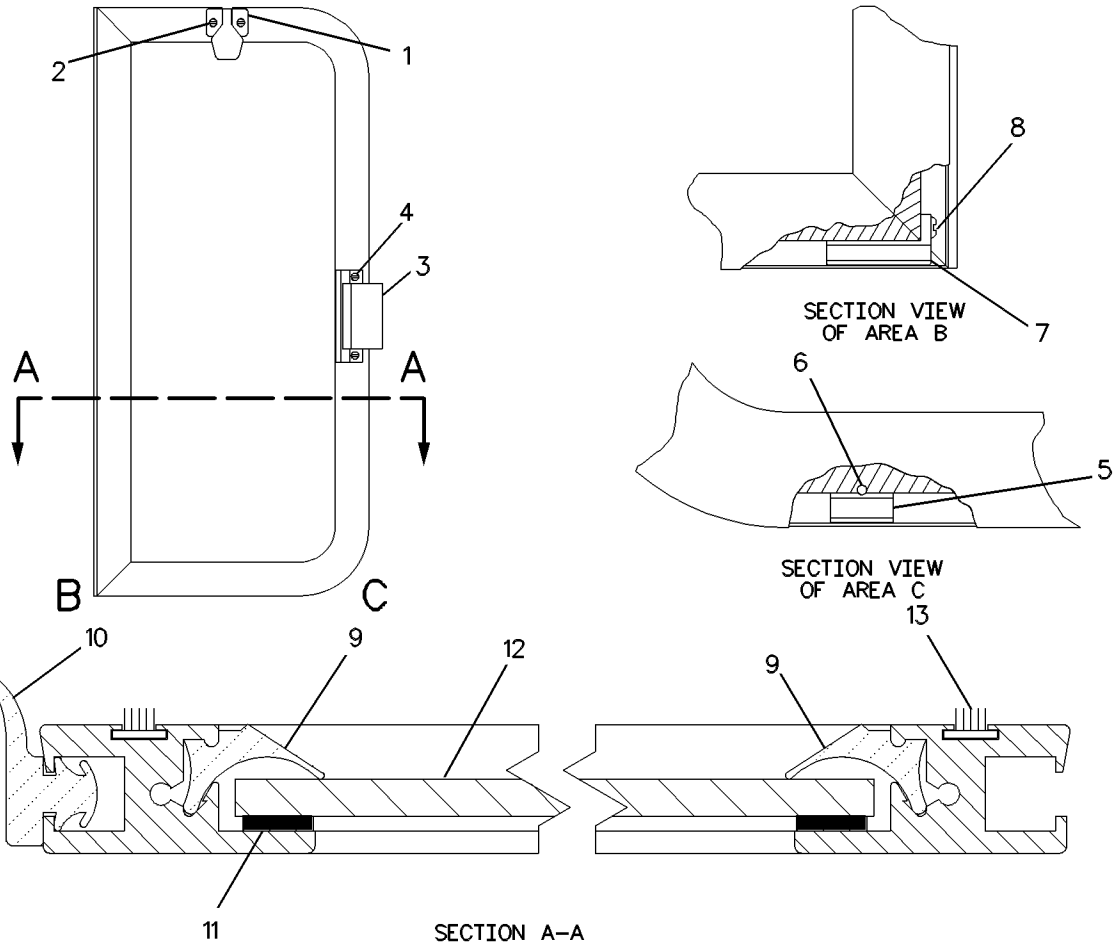

GRAPHIC #1 g00544827

OPERATOR STATION

8Y-6433 WINDOW GP-CAB—RH

S/N: AKA1-UP

PART OF 8E-3446 WINDOW GP-CAB

SMCS-7310 **i00757589**

NOTE	REF NO	GRAPHIC REF	PART NUMBER	QTY	PART NAME 1 2 3 4 5 6 (PRODUCT LEVEL)	SEE PAGE
	1	1	**8Y-6454**	1	KIT-CATCH (INCL CATCH AS & 2 SCREWS)	
M	2	1	**084-4111**	2	SCREW-PAN HEAD	
	3	1	**8Y-6455**	1	KIT-CATCH (INCL CATCH AS & 2 SCREWS)	
M	4	1	**8T-4777**	2	SCREW-MACHINE (M5X0.8X12MM)	
	5	1	**8Y-6460**	1	KIT-RUNNER GUIDE (INCL GUIDE & SCREW)	
M	6	1	**6V-2312**	2	SCREW-MACHINE (M6X1X25MM)	
	7	1	**8Y-6461**	1	KIT-RUNNER GUIDE (INCL GUIDE & SCREW)	
E	8	1	**8Y-6423**		SEAL (125CM)	
	9	1	**8Y-6430**	1	SEAL-WINDOW	
BE	10	1	**8Y-6459**		TAPE-BUTYL	
E	11	1	**8Y-6423**		SEAL (59CM)	
	12	1	**8Y-6431**	1	GLASS-SLIDER-RH (TINTED)	
BE	13	1	**8Y-6910**		WEATHERSTRIP	

B-USE AS REQUIRED
E-ORDER BY THE CENTIMETER
M-METRIC PART

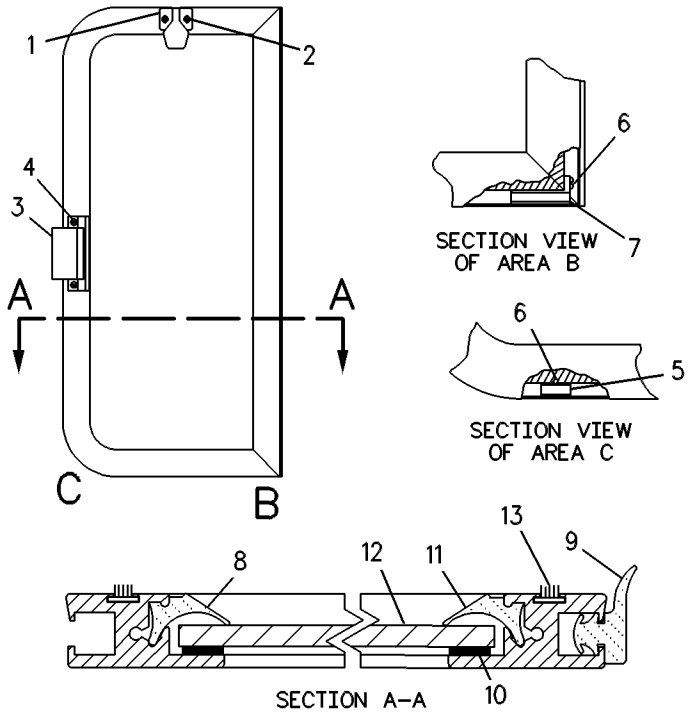

GRAPHIC #1 g00326281

MEMORANDA

OPERATOR STATION

8Y-6446 WINDOW GP-CAB—REAR

S/N: AKA1-UP

PART OF 9N-4369 WINDOW GP-CAB

SMCS-7310 **i01502199**

NOTE	REF NO	GRAPHIC REF	PART NUMBER	QTY	PART NAME 1 2 3 4 5 6 (PRODUCT LEVEL)	SEE PAGE
	1	1	**8Y-6454**	1	KIT-CATCH	
					(INCLUDES CATCH AS & 2 SCREWS)	
M	2	1	**084-4111**	2	SCREW-PAN HEAD	
	3	1	**8Y-6455**	1	KIT-CATCH	
					(INCLUDES CATCH AS & 2 SCREWS)	
M	4	1	**8T-4777**	2	SCREW-MACHINE (M5X0.8X12MM)	
	5	1	**8Y-6460**	1	KIT-RUNNER GUIDE	
					(INCLUDES GUIDE & SCREW)	
M	6	1	**6V-2312**	1	SCREW-MACHINE (M6X1X25MM)	
	7	1	**8Y-6461**	1	KIT-RUNNER GUIDE	
					(INCLUDES GUIDE & SCREW)	
M	8	1	**6V-2312**	1	SCREW-MACHINE (M6X1X25MM)	
	9	1	**8Y-6430**	1	SEAL-WINDOW	
EB	10	1	**8Y-6459**		TAPE-BUTYL	
EB	11	1	**8Y-6423**		SEAL	
	12	1	**8Y-6443**	1	GLASS-REAR SLIDER (TINTED)	
EB	13	1	**8Y-6910**		WEATHERSTRIP	

B-USE AS REQUIRED
E-ORDER BY THE CENTIMETER
M-METRIC PART

8Y-6446 WINDOW GP-CAB *(contd.)* **i01502199**

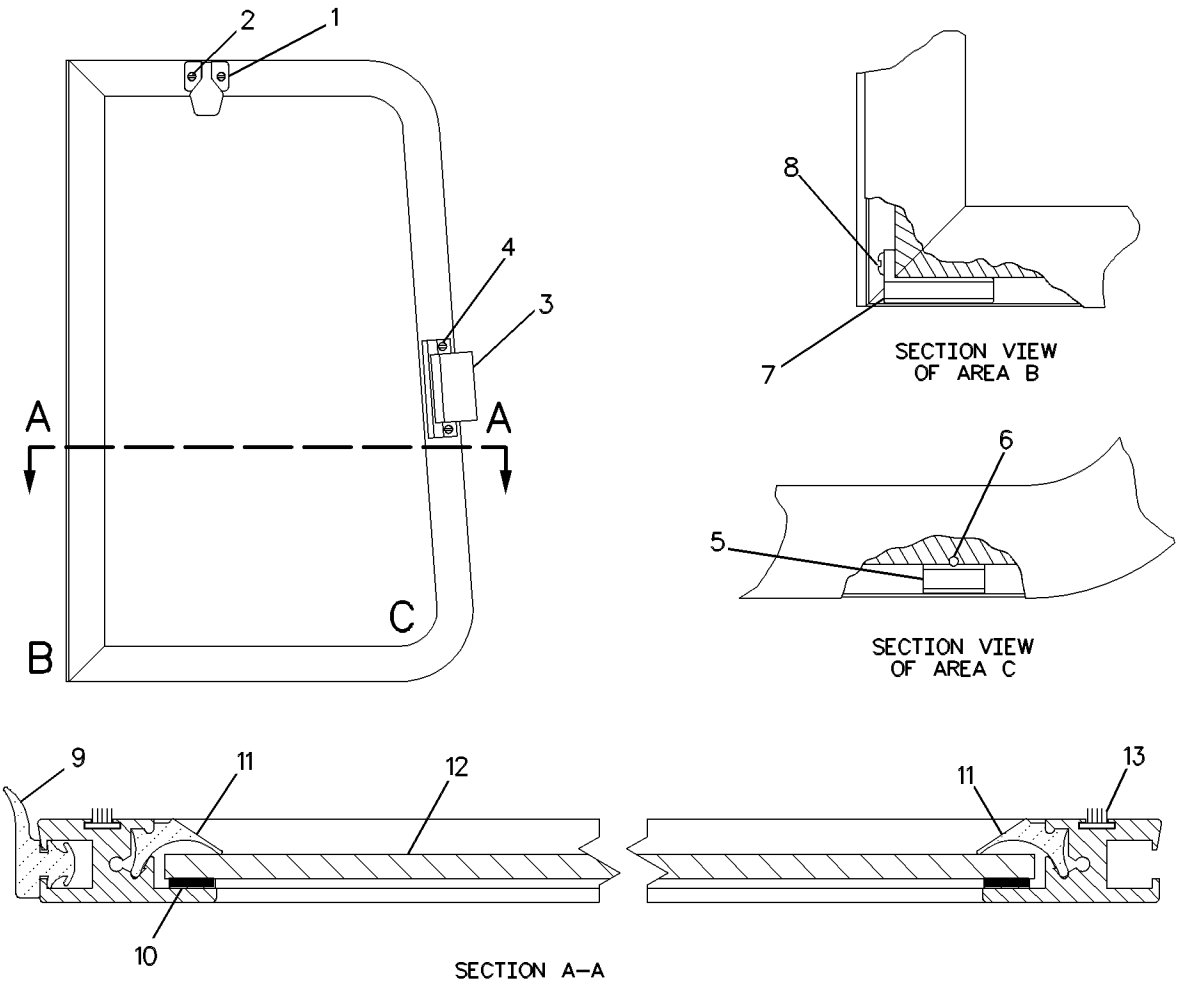

GRAPHIC #1 g00544049

OPERATOR STATION

9N-4369 WINDOW GP-CAB—REAR

S/N: AKA1-UP
SLIDING
PART OF 8E-5112 WINDOW AS-SLIDING

SMCS-7310 **i01502202**

NOTE	REF NO	GRAPHIC REF	PART NUMBER	QTY	PART NAME 1 2 3 4 5 6 (PRODUCT LEVEL)	SEE PAGE
BE	1	1	**8Y-6423**		SEAL	
BE	2	1	**8Y-6459**		TAPE-BUTYL	
	3	1	**8Y-6430**	1	SEAL-WINDOW	
Y	4	1	**8Y-6446**	1	WINDOW GP-CAB (REAR)	866
	5	1	**8Y-6463**	1	KIT-STOP RAIL	
JM	6	1	**8C-4982**	1	BOLT-SOCKET HEAD (M4X0.7X20 MM)	
J	7	1	**8Y-6428**	1	STOP-RUBBER	
J	8	1	**8Y-6429**	1	CLIP	
	9	1	**8Y-6462**	1	KIT-LEAF SPRING	
					(INCLUDES SPRING AS & RIVET)	
	10	1	**8Y-6445**	1	GLASS-FIXED REAR (TINTED)	
BE	11	1	**8Y-6424**		SEAL (115CM)	
BE	12	1	**8Y-6910**		WEATHERSTRIP (68CM)	

B-USE AS REQUIRED
E-ORDER BY THE CENTIMETER
J-INCLUDED IN 8Y6463 STOP RAIL KIT
M-METRIC PART
Y-SEPARATE ILLUSTRATION

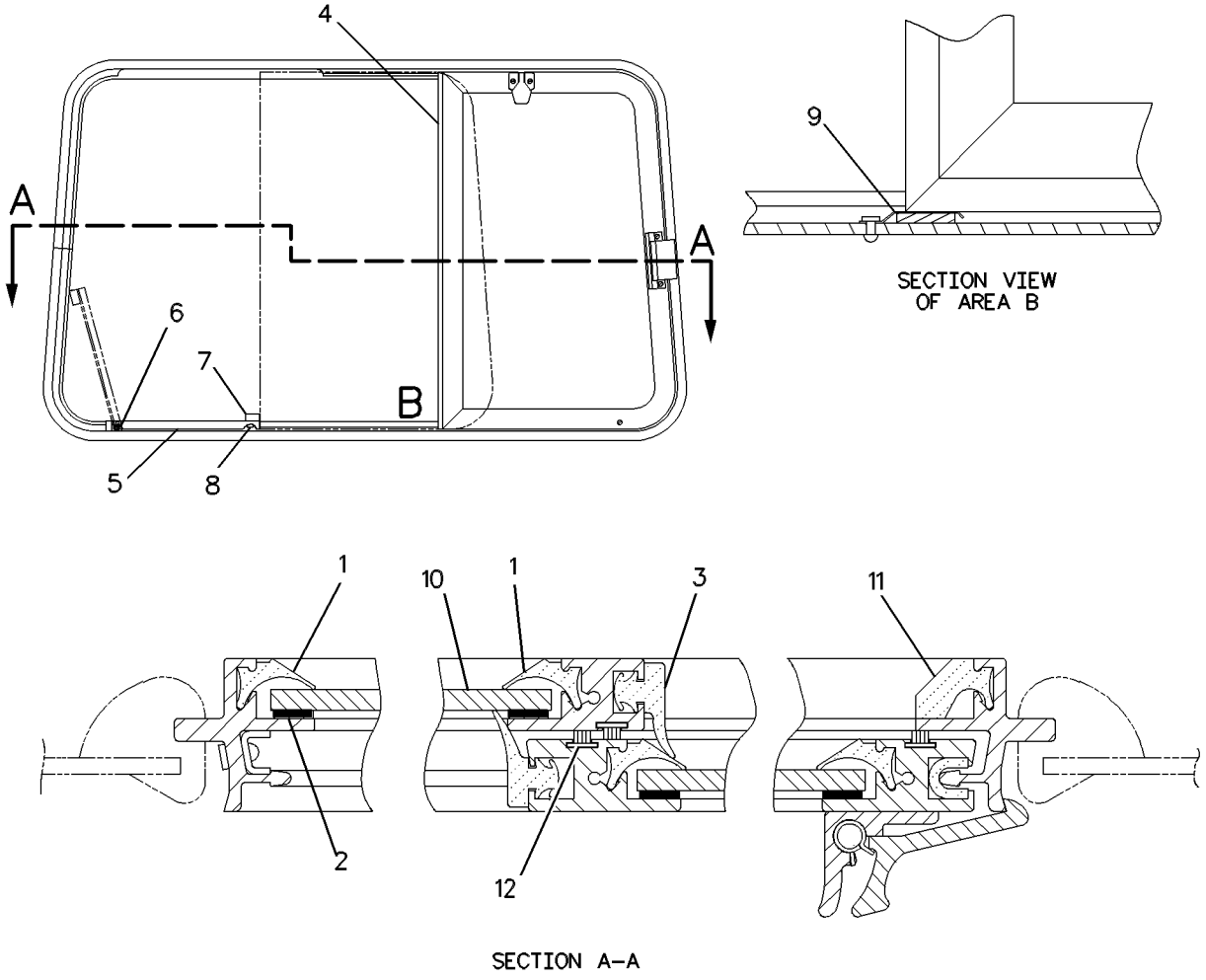

GRAPHIC #1 g00544830

MEMORANDA

OPERATOR STATION

158-7691 WIPER GP-WINDOW

S/N: AKA1-UP

PART OF 158-7694 CAB AR

SMCS-7305 **i01475572**

NOTE	REF NO	GRAPHIC REF	PART NUMBER	QTY	PART NAME 1 2 3 4 5 6 (PRODUCT LEVEL)	SEE PAGE
Y	1	1	**147-7976**	1	MOTOR GP-WINDOW WIPER (FRONT)	802
	2	1	**145-8741**	1	ARM AS-WIPER	
J	3	1	**6V-5851**	2	BLADE AS-WIPER (FRONT & REAR)	
J	4	1	**6V-5849**	2	BLADE AS-WIPER (RH & LH DOORS)	
	5	1	**151-0254**	1	ARM AS-WIPER	
Y	6	1	**117-1882**	1	MOTOR AS-WINDOW WIPER (LH DOOR)	801
Y	7	1	**117-1881**	1	MOTOR AS-WINDOW WIPER (RH DOOR)	800
	8	1	**151-0255**	1	ARM AS-WIPER	
	9	1	**7T-8361**	2	SPACER	
	10	1	**8V-5455**	1	BOSS	
	11	1	**6N-7523**	2	WASHER (6.48X11.9X1.57MM THK)	
Y	12	1	*6V-6561*	1	WIPER PIVOT GP	872
	13	1	**151-0256**	1	ARM AS	
M	14	1	**6V-7357**	2	BOLT (M6X1.0X25MM)	
Y	15	1	**147-7979**	1	MOTOR GP-WINDOW WIPER (REAR)	803
	16	1	**9N-2061**	2	CLIP (7.94MM ID)	
					AVAILABLE REPAIR KIT(S):	
J			**8C-5060**		KIT-WIPER BLADE	

J-REPAIR KIT MARKED J AVAILABLE FOR PART MARKED J
M-METRIC PART
Y-SEPARATE ILLUSTRATION

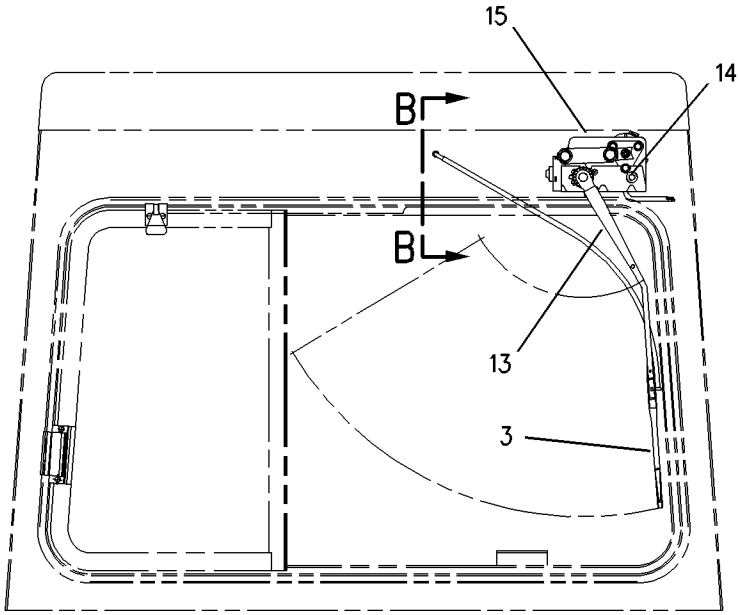

REAR VIEW

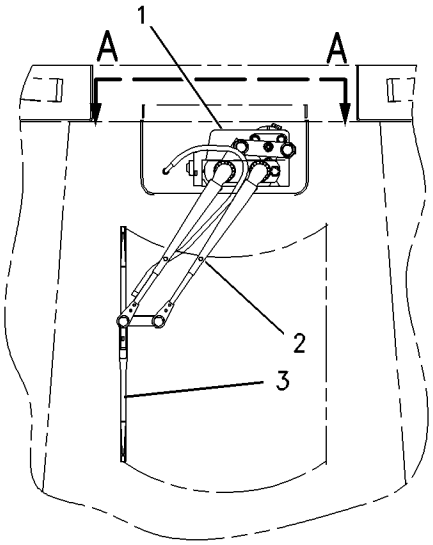

FRONT VIEW

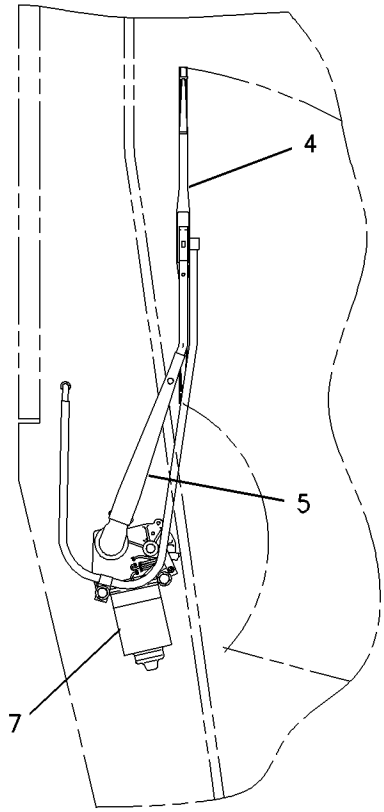

VIEW OF RH DOOR

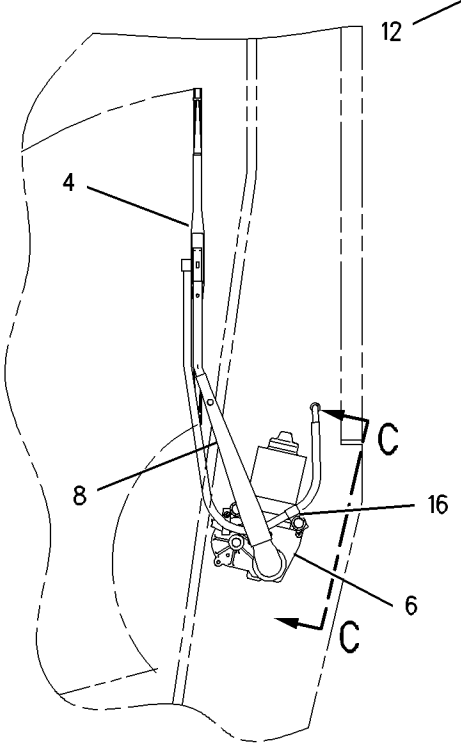

VIEW OF LH DOOR

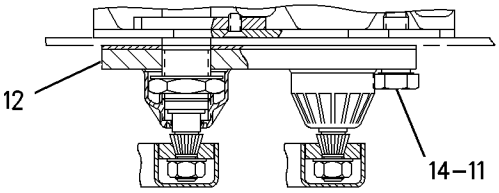

VIEW A-A

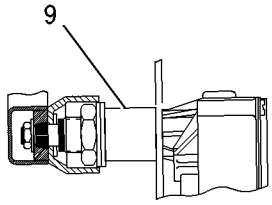

VIEW C-C

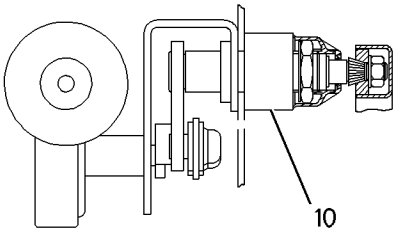

VIEW B-B

GRAPHIC #1 g00675513

OPERATOR STATION

6V-6561 WIPER PIVOT GP

S/N: AKA1-UP

PART OF 158-7691 WIPER GP-WINDOW

SMCS-7305 **i01177978**

NOTE	REF NO	GRAPHIC REF	PART NUMBER	QTY	PART NAME 1 2 3 4 5 6 (PRODUCT LEVEL)	SEE PAGE
	1	1	**6V-6207**	1	SHAFT AS-PIVOT	
	2	1	**6V-6209**	1	CAP	
M	3	1	**6V-6889**	1	NUT (M8X1.25 THD)	
	4	1	**6A-9718**	1	WASHER (M8.1X12.5X1MM THK)	
	5	1	**6V-6210**	1	GASKET-SHAFT	

M-METRIC PART

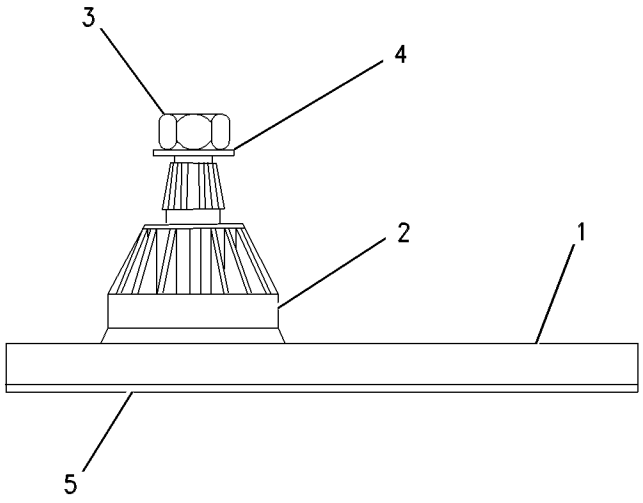

GRAPHIC #1 g00316575

MEMORANDA

SERVICE EQUIPMENT AND SUPPLIES

173-1643 FILM GP

S/N: AKA1-UP

PART OF 159-8022 PLATE & FILM GP

SMCS-7000 **i01437092**

NOTE	REF NO	GRAPHIC REF	PART NUMBER	QTY	PART NAME 1 2 3 4 5 6 (PRODUCT LEVEL)	SEE PAGE
	1	1	**3E-6603**	1	FILM-STRIPE (CATERPILLAR)	
	2	1	**127-8831**	1	FILM-STRIPE	
	3	1	**122-0573**	1	FILM-D8R	
	4	1	**110-0978**	1	FILM-STRIPE-RH	
	5	1	**122-0574**	1	FILM-D8R	
	6	1	**183-6765**	1	FILM-STRIPE-LH	
	7	1	**173-1644**	1	FILM-STRIPE (CAT)	
	8	1	**173-1645**	1	FILM-STRIPE (CAT)	
	9	1	**119-6625**	1	FILM-STRIPE	
	10	1	**119-6626**	1	FILM-STRIPE	
	11	1	**119-6628**	1	FILM-STRIPE	
	12	1	**119-6629**	1	FILM-STRIPE	
	13	1	**119-6630**	1	FILM-STRIPE	

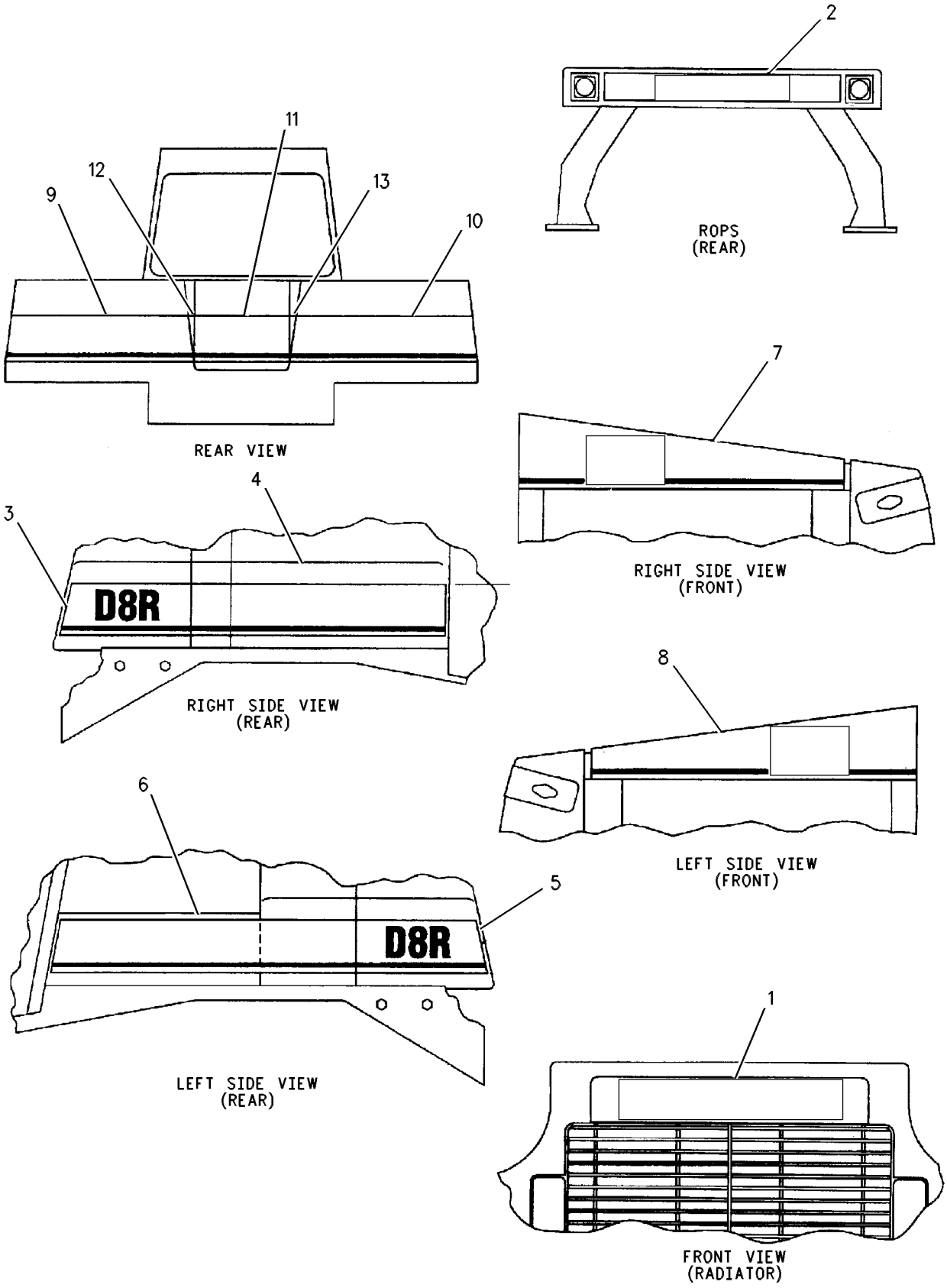

GRAPHIC #1 g00583932

SERVICE EQUIPMENT AND SUPPLIES

8F-9866 GREASE GUN GP

S/N: AKA1-UP

PART OF 9S-7977 TOOL GP-HAND

SMCS-0646 **i01440821**

NOTE	REF NO	GRAPHIC REF	PART NUMBER	QTY	PART NAME 1 2 3 4 5 6 (PRODUCT LEVEL)	SEE PAGE
C	1	1	**190-1669**	1	HOSE AS	
	2	1	**9F-2637**	1	FITTING	
C	3	1	**190-1668**	1	COUPLER-GREASE	

C-CHANGE FROM PREVIOUS TYPE

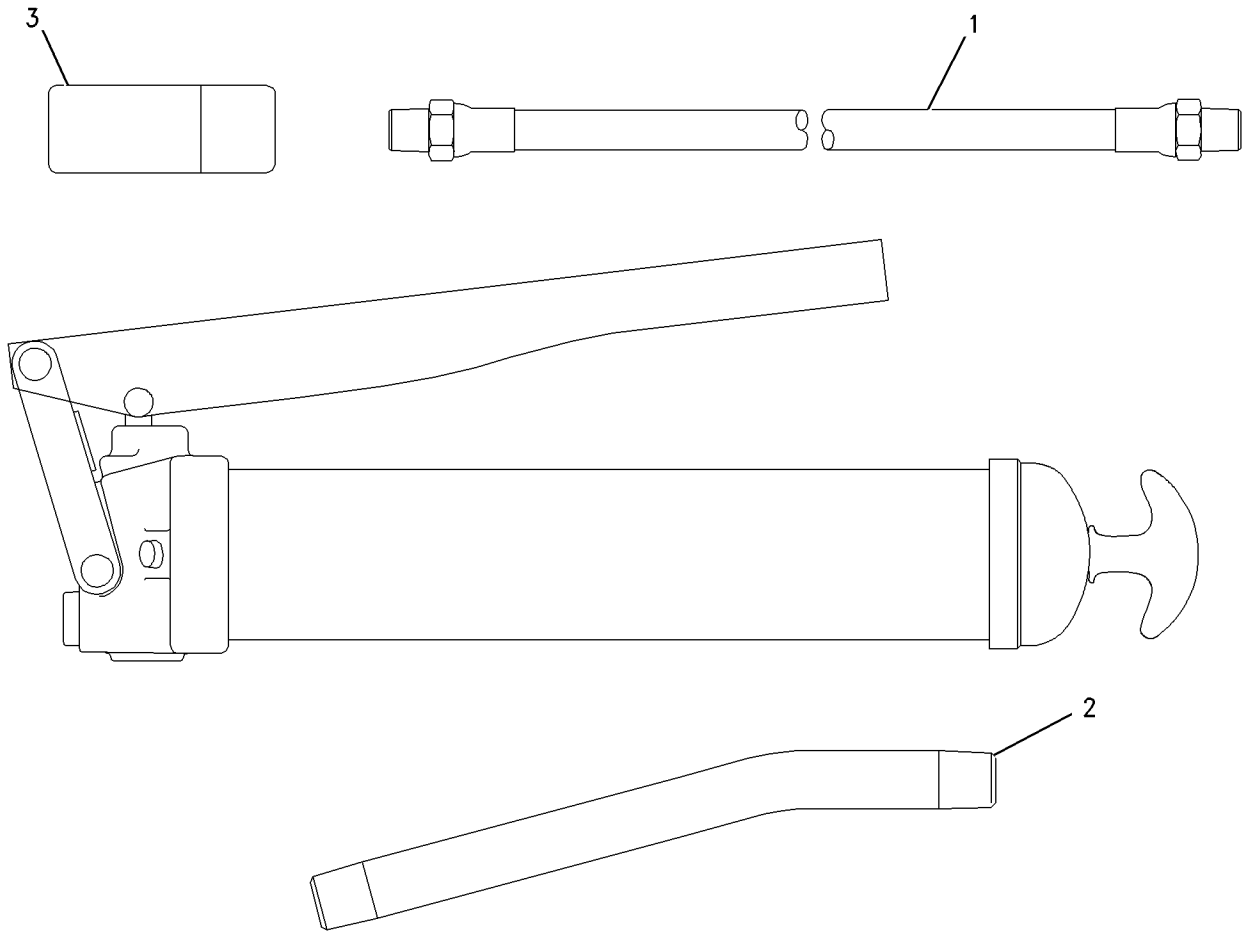

GRAPHIC #1 g00752624

SERVICE EQUIPMENT AND SUPPLIES

5P-2352 PLATE & FILM GP

S/N: BHD1-UP

PART OF 153-3130 RIPPER AR

SMCS-7557, 7563 **i01442141**

NOTE	PART NUMBER	QTY	PART NAME 1 2 3 4 5 6 (PRODUCT LEVEL)	SEE PAGE
	2Y-9790	1	PLATE-SERIAL NUMBER	
			ON CYLINDER TOWER	
	4B-4158	2	SCREW-DRIVE (3/16X0.25 IN)	

SERVICE EQUIPMENT AND SUPPLIES

5P-4963 PLATE & FILM GP

S/N: CXB1-UP; CXL1-UP; BHR1-UP; BHW1-UP
PART OF 159-1633, 159-8377, 159-8378 BULLDOZER AR, 159-1628 BULLDOZER AR-SEMI-UNIVERSAL, 159-1629 BULLDOZER AR-UNIVERSAL

SMCS-7557, 7563 **i01034631**

NOTE	PART NUMBER	QTY	PART NAME 1 2 3 4 5 6 (PRODUCT LEVEL)	SEE PAGE
	2Y-9790	1	PLATE-SERIAL NUMBER	
	4B-4158	2	SCREW-DRIVE	

MEMORANDA

SERVICE EQUIPMENT AND SUPPLIES

159-8022 PLATE & FILM GP

S/N: AKA1-UP

PART OF 157-0819 CHASSIS AR

SMCS-7557, 7563 **i01486708**

NOTE	PART NUMBER	QTY	PART NAME 1 2 3 4 5 6 (PRODUCT LEVEL)	SEE PAGE
Y	*173-1643*	1	FILM GP	874
A	**3N-3790**	1	PLATE-SERIAL NUMBER (ENGINE)	
			ON UPPER RH CORNER OF CYLINDER BLOCK	
	8T-9905	1	PLATE-IDENTIFICATION (TRANSMISSION OIL FILL TUBE)	
			ON TRANSMISSION OIL FILL CAP	
	9X-6189	1	PLATE (IDENTIFICATION NUMBER)	
			ON TOP LH CORNER OF REAR FACE OF CASE & FRAME	
	159-4719	1	PLATE-ROPS/FOPS	
			REAR CENTER ON ROPS ROLLOVER AS	
	174-4590	1	PLATE-INFORMATION	
			ON STEEL AREA OF LH DASH UPRIGHT WITH TACK FASTENERS	
	189-0488	1	PLATE-WARNING (UNIVERSAL)	
			ON UPPER LEDGE OF LH CONSOLE OF OPERATORS STATION-READABLE FROM RH SIDE OF TRACTOR	
	202-9824	1	PLATE-INFORMATION	
			NEAR SERVICE INFORMATION PLATE	
	8T-9530	10	TACK-FASTENER	
	9F-6656	1	RING-RETAINING	
	9N-1995	4	RIVET-POP	
	039-6360	4	RIVET	
	1P-2807	4	FILM (LIFT EYE LOCATION)	
			FOR MACHINES WITHOUT RIPPER, ON TRACK ROLLER FRAME BETWEEN FRONT IDLER & FRONT ROLLER AND BETWEEN REAR IDLER & REAR	
			ROLLER (2 EACH SIDE)	
			FOR MACHINES WITH RIPPER, ON TRACK ROLLER FRAME BETWEEN FRONT IDLER & FRONT ROLLER AND ON REAR OF RIPPER FRAME	
	3E-2378	1	FILM-INSTRUCTION (PIVOT SHAFT LUBRICATION)	
			ON TOP OF PIVOT SHAFT BOTTLE	
	5P-9884	1	FILM-HYDRAULIC OIL	
			ON HYDRAULIC TANK	
	6V-4611	1	FILM-WARNING (JUMPER CABLE)	
			ON UNDERSIDE OF BATTERY CONPARTMENT COVER	
	7X-7644	8	FILM-TIE DOWN	
			1-FRONT TOWING EYE	
			6-ON TRACK ROLLER FRAMES AT FRONT & REAR MAJOR CARTRIDGE PINS & CENTERED BETWEEN FRONT & REAR IDLERS (3 EACH SIDE)	
			1-AT REAR ON RETRIEVAL HITCH OR RIPPER FRAME. NOT REQUIRED ON MACHINES WITHOUT HITCH OR RIPPER	
	8C-3221	1	FILM-OIL LEVEL (TRANSMISSION)	
			ON INSIDE OF HYD. ENCLOSURE GP	
	8C-8821	1	FILM-IDENTIFICATION	
			ON FUEL FILTER	
	8C-8902	1	FILM-IDENTIFICATION (ENGINE OIL FILTER)	
			ON OIL FILTER	
	8T-2896	2	FILM-NOTICE	
			AT CENTER OF PIVOT SHAFT COVER	
	8T-4999	1	FILM-INSTRUCTION (BATTERY DISCONNECT)	
			ON FACE OF DISCONNECT SWITCH	
	9X-6200	1	FILM-NOTICE	
			ON RH MAIN FRAME BELOW FENDER	

159-8022 **PLATE & FILM GP** ***(contd.)*** **i01486708**

NOTE	PART NUMBER	QTY	PART NAME 1 2 3 4 5 6 (PRODUCT LEVEL)	SEE PAGE
	9X-6340	1	FILM-INSTRUCTION (ENGINE OIL)	
			ON OIL FILL TUBE	
	102-2913	1	FILM-INSTRUCTION (DOZER CONTROL)	
			ON RAISED SURFACE TO THE RIGHT OF CONTROL	
	134-7258	1	FILM-IDENTIFICATION (EXTENDED LIFE COOLANT)	
			ON INSIDE OF DOOR TO RADIATOR FILL	
	142-2769	1	FILM-NOTICE (STEERING)	
			ON TOP OF DIFFERENTIAL STEERING CONTROL	
	152-1482	1	FILM-IDENTIFICATION	
			HYDRAULIC CONTROL LOCK NEXT TO KNOB	
	169-2876	2	FILM-IDENTIFICATION (12 VOLT)	
			1-ON REAR RH CONSOLE	
			1-ON REAR CONSOLE BEHIND OPERATORS SEAT	
	164-9999	1	FILM-INSTRUCTION	
			VERTICALLY ON REAR OF BATTERY BOX PANEL	
	159-8028	1	FILM-MONITOR	
			ON EMS MODULE INSTRUMENT PANEL	

A-NOT PART OF THIS GROUP
Y-SEPARATE ILLUSTRATION

SERVICE EQUIPMENT AND SUPPLIES

9S-7977 TOOL GP-HAND

S/N: AKA1-UP

SMCS-0600, 0601, 0602, 0603, 0604, 0605, 0606, 0607, 7259 **i01440354**

NOTE	REF NO	GRAPHIC REF	PART NUMBER	QTY	PART NAME 1 2 3 4 5 6 (PRODUCT LEVEL)	SEE PAGE
	1	1	**1U-7267**	1	SCREWDRIVER (NO. 2 PHILLIPS)	
	2	1	**1U-7264**	1	SCREWDRIVER	
	3	1	**1U-7115**	1	RATCHET-REVERSE	
	4	1	**1U-7118**	1	EXTENSION (SOCKET-10 IN LG)	
		1	**1U-7119**	1	EXTENSION (SOCKET-5 IN LG)	
Y	5	1	**8F-9866**	1	GREASE GUN GP (LEVER)	876
	6	1	**185-3630**	1	WRENCH AS-STRAP	
	7	1	**5S-9568**	1	SOCKET-DRAIN PLUG	
C	8	1	**5P-1763**	1	SOCKET-VALVE	
	9	1	**1U-7234**	1	GAUGE GP-FEELER	
	10	1	**5F-4764**	1	BAR-PRY	
	11	1	**1U-7053**	1	WRENCH (5/16 OPENING)	
		1	**1U-7054**	1	WRENCH (3/8 OPENING)	
		1	**1U-7056**	1	WRENCH-COMBINATION (1/2 IN)	
		1	**1U-7057**	1	WRENCH (9/16 IN.)	
		1	**1U-7058**	1	WRENCH	
		1	**1U-7060**	1	WRENCH (3/4 IN.)	
		1	**1U-7062**	1	WRENCH	
		1	**1U-7064**	1	WRENCH (1IN OPENING)	
C	12	1	**1U-7099**	1	SOCKET (1/2 OPENING)	
		1	**1U-7102**	1	SOCKET (9/16 IN.)	
		1	**1U-7107**	1	SOCKET (7/8 IN.)	
		1	**1U-7108**	1	SOCKET	
		1	**1U-7109**	1	SOCKET (1 IN.)	
		1	**1U-7111**	1	SOCKET (1-1/8 OPENING)	
	13	1	**5S-9569**	1	SOCKET	
	14	1	**9U-7509**	1	PLIERS	
	15	1	**9U-6219**	1	TOOL BOX	

C-CHANGE FROM PREVIOUS TYPE
Y-SEPARATE ILLUSTRATION

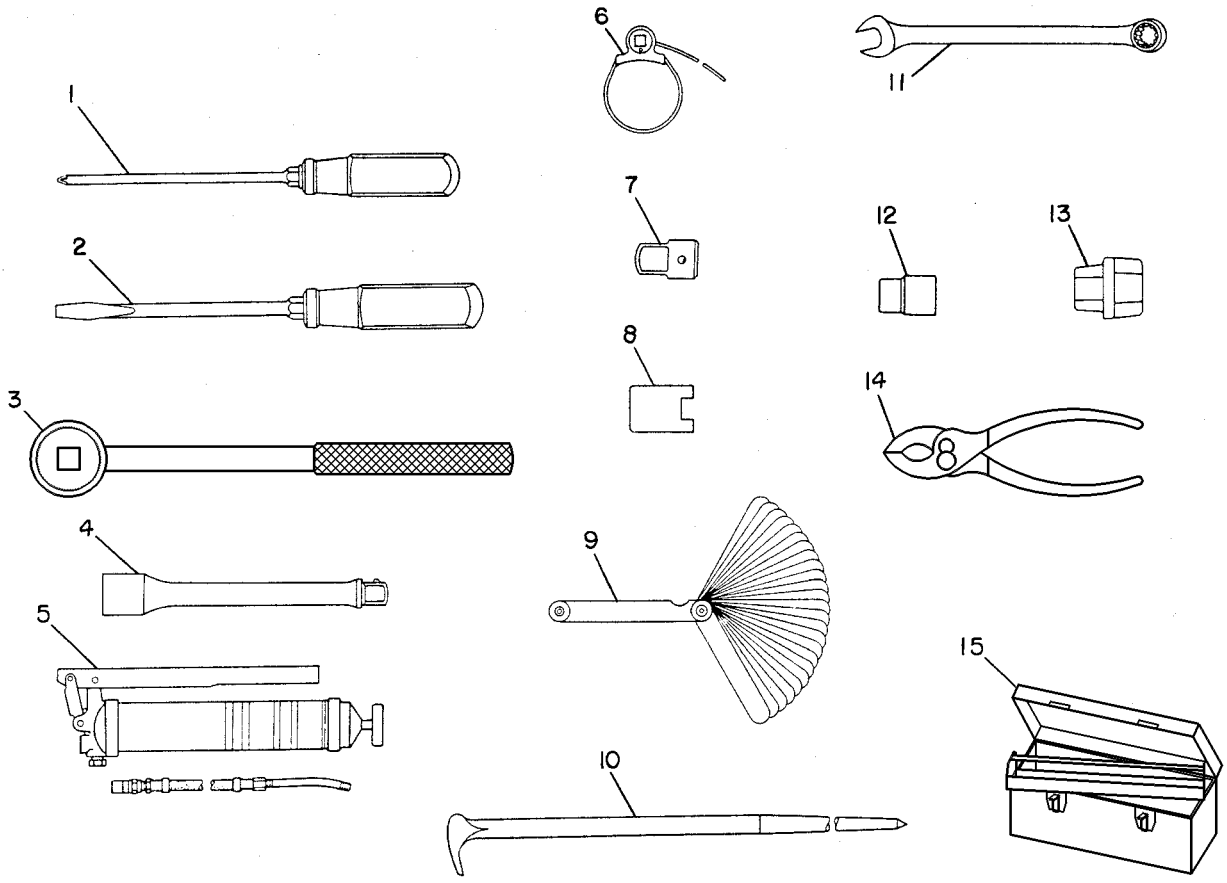

GRAPHIC #1 g00237896

MEMORANDA

PART NUMBER INDEX

Part	Page
0	
0L-1143	23
	73
	84
	274
	294
0L-1169	320
0L-1351	16
	82
	110
	286
0L-2070	54
	56
	110
	274
	286
0R-3082	570
0S-0175	16
0S-0484	345
	353
0S-0509	80
	180
	286
	306
0S-1566	40
	42
	98
0S-1569	320
0S-1571	48
	54
	56
	76
	84
	88
0S-1576	286
0S-1585	52
	300
	302
0S-1587	62
	64
	341
0S-1588	40
	42
	50
	54
	56
	62
	64
	74
	76
	82
	110
	149
	152
	174
	258
	286
	350
	378
	380
	386
0S-1589	69
	70
0S-1590	73
	82
	86
	88
	104
	110
	142
	173
	286
0S-1591	54
	56
	60
	61
	62
	64
	82
	110
	118
	144
	174
	180
	320
0S-1594	19
	21
	44
	52
	56
	76
	82
	110
	112
	147
	152
	180
	220
	302
	306
	365
0S-1595	59
	110
0S-1602	46
0S-1608	153
	154
0S-1614	294
	822
0S-1615	775
0S-1619	52
	76
	84
	110
	180
	306
	337
0S-1620	337
0T-0055	54
	56
0T-0065	152
	306
0T-0102	161
	302
1	
1A-0075	320
1A-0458	444
1A-1135	118
1A-1460	50
	294
	493
	494
1A-2029	82
	114
	153
	154
	294
	300
1A-2223	294
	337
1A-2610	302
1A-3203	39
1A-5183	336
	354
1A-5822	320
1A-5964	56
	142
1A-9579	24
1B-2578	88
	334
1B-2790	174
1B-2886	794
1B-3867	170
1B-4427	540
1B-4430	846
1B-5355	153
	154
1B-7182	118
	176
1B-8705	48
	342
1B-8706	334
1B-8714	334
1B-8735	746
1C-0569	300
1D-4538	80
1D-4539	74
	210
1D-4540	306
1D-4541	220
1D-4569	110
1D-4601	320
1D-4602	40
	42
1D-4628	331
1D-4675	813
1D-5976	70
1F-0748	10
	124
	128
	130
	132
	134
	157
	376
	380
	386
	406
	410
	418
	430
	444
1F-0750	2
	10
	59
	64
	80
	84
	88
	98
	103
	104
	105
	106
	124
	126
	128
	130
	132
	134
	142
	152
	157
	197
	222
	224
	238
	244
	246
	248
	274
	324
	374
	376
	396
	400
	402
	406
	410
	414
	422
	430
	432
	434
	444
	450
	525
	550
	555
	556
	606
	752
	786
	794
	796
	814
1F-7958	61
	120
1H-1023	276
	280
1H-1200	332
1H-2629	276

► **PRIMARY REFERENCE**

PART NUMBER INDEX

Part	Page
	280
1H-3244	190
	256
1H-3337	406
	410
1H-3340	516
1H-3937	628
1H-4106	392
	404
	462
1H-7339	116
	142
	325
1H-8128	168
	184
1H-8647	170
1J-0245	814
1J-1256	745
1J-2674	566
	568
	570
	578
	580
	582
1J-3508	672
1J-3527	707
1J-6740	698
	699
	700
1J-6744	682
1J-7468	616
1J-9671	168
	664
1K-4649	99
1K-5888	746
1K-6870	434
	444
1K-6872	378
	380
	386
	422
	462
1K-7095	564
1K-8850	376
	414
1L-3162	362
1L-4349	630
1L-4418	462
1L-5072	630
1L-5081	498
1L-6957	320
1L-7388	336
1M-0130	21
1M-0644	92
1M-1230	738
1M-1571	498
1M-3780	342
1M-3909	342
1M-4986	203
1M-6119	202
	204
1M-6120	202
	204
1M-6718	660
	661
	669
1M-7911	312
	316
	318
1M-7912	312
	316
	318
1M-8657	337
1M-9011	332
1M-9968	277
	281
1M-9971	276
1P-0436	174
	176
	220
1P-1367	82
1P-1744	329
1P-2772	458
	460
	824
1P-2807	880
1P-2841	462
1P-3702	638
	640
	646
1P-3703	526
	690
1P-3704	526
	606
1P-3705	325
1P-3706	664
1P-3934	320
1P-3935	320
1P-4278	124
	128
	132
	138
1P-4574	612
1P-4576	325
	341
	574
	576
	614
1P-4577	325
	341
	556
	558
	574
	576
	610
	621
	630
	638
	640
	646
	664
	690
1P-4578	325
	341
	606
	630
	638
	640
	646
1P-4579	325
1P-4582	341
1P-4584	325
	341
	606
	630
1P-5766	526
	690
1P-5767	526
1P-6356	782
	786
	790
1P-7009	180
	790
1P-7346	48
1P-7405	498
1P-9328	138
1P-9390	144
1Q-1998	782
1Q-2130	2
	842
1Q-2423	2
	842
1Q-2446	2
1Q-2980	430
1Q-2983	2
1Q-3000	2
1Q-3039	6
1Q-3042	6
1Q-3056	6
	►292
1Q-3057	292
1Q-3059	292
1Q-3136	6
1Q-3302	447
1Q-3610	460
1Q-3611	460
1Q-3613	98
1Q-3677	420
1Q-3685	2
1Q-3770	148
1Q-3783	808
1Q-4675	►500
1R-0716	76
1R-0735	630
1R-0749	174
1R-0769	175
1R-0778	310
1S-0994	178
	490
	606
1S-0996	205
1S-1015	205
1S-4295	165
1S-4589	193
	194
	197
	200
1S-4698	750
1S-4915	203
	204
	205
1S-7251	202
	203
	204
	205
1S-7252	203
1S-7446	276
	280
1S-8687	16
1S-9540	32
1S-9593	369
	370
	670
	671
1S-9799	350
1T-0068	465
	466
	467
	468
	469
1T-0414	644
	648
1T-0679	346
1T-0680	346
1T-0681	346
1T-0738	356
1T-0765	183
1T-1278	346
1T-1281	346
1T-1282	346
1T-1402	350
1T-1589	346
1T-1590	346
1U-0990	686
1U-1738	566
	568
	578
1U-2071	540
1U-2073	540
1U-2182	566
	568
	578
	580
	582
1U-2472	725
	726
1U-2533	682
	700
1U-2716	570
1U-2752	540
1U-2765	540
1U-2827	630
1U-3147	540
1U-4961	718
1U-4962	718
1U-7053	882
1U-7054	882
1U-7056	882
1U-7057	882
1U-7058	882
1U-7060	882
1U-7062	882
1U-7064	882
1U-7099	882
1U-7102	882
1U-7107	882
1U-7108	882
1U-7109	882
1U-7111	882
1U-7115	882

► **PRIMARY REFERENCE**

PART NUMBER INDEX

Part	Page	Part	Page	Part	Page	Part	Page
1U-7118	882	2D-1690	476	2J-7761	630		518
1U-7119	882		478	2J-8163	276	2N-8109	72
1U-7234	882		482		280	2P-1286	86
1U-7264	882	2D-4202	630	2K-2939	580	2P-2772	52
1U-7267	882	2D-4534	168	2K-2940	580	2P-2975	187
1U-8846	295	2D-6235	406	2K-3219	390		202
	300		410	2K-4472	476	2P-3203	62
1V-0358	544		766		478		64
1V-3113	736	2D-6392	276		482	2P-3760	76
1V-3713	324		280	2K-4821	190		82
1V-7753	325	2D-6506	332	2K-4973	144	2P-3761	76
1V-8638	518	2D-6642	320		332		82
1W-3014	71	2D-8155	99		396	2P-4301	76
1W-3088	153	2F-4967	78		398	2P-4304	76
	154	2F-5326	472		400	2P-4305	76
1W-3136	52		474		402		88
1W-3963	540	2F-6678	277		420	2P-4339	774
1W-4564	40		281		462	2P-5616	190
	42	2G-0493	184		813	2P-8421	36
1W-4738	50	2G-1133	289		844	2R-0098	312
1W-6135	82	2G-6741	420		846		316
1W-6137	82	2G-8097	848	2K-5069	294		318
1W-6448	54	2G-9000	▶166	2K-5986	348	2R-1694	490
	56		168	2K-6830	572	2R-5001	512
1W-6632	62	2H-1193	110	2K-8257	526	2S-0115	524
	64	2H-2534	404	2K-8467	462	2S-0795	110
1W-8341	11	2H-3429	276	2K-9111	822	2S-2251	350
	12		280	2K-9295	294	2S-2596	636
	▶21		660	2L-1224	754		642
1W-9302	28		661	2L-3650	346		644
1W-9860	365	2H-3745	472	2L-6267	518		648
1Y-7927	766	2H-3755	54	2L-6679	276	2S-2760	92
1Z-0746	2		56	2L-8075	190	2S-3770	286
	▶447		286	2L-8079	204	2S-4078	302
1Z-0886	10	2H-3920	780	2M-1444	764		312
1Z-9277	2	2H-3922	284	2M-1538	150		316
1Z-9278	2		288	2M-2742	16		318
1Z-9455	420	2H-3931	308	2M-3530	472		325
1Z-9787	588	2H-3932	306	2M-5173	150		362
	594		476	2M-7041	364		524
	600		478	2M-7819	766		556
			482	2M-9780	88		558
		2H-6124	630		180		606
2		2H-6184	325		220	2S-5925	498
		2H-6622	853		302	2S-5926	498
2A-0762	164		857		329	2S-6150	16
2A-1162	52		858		358	2S-6151	16
2A-1736	763	2J-0564	566		524	2S-6160	16
2A-3211	736		568		525	2S-6196	16
2A-3746	342		574		530	2S-9506	750
	348		576		532	2S-9727	390
2A-4429	38		580		544	2T-2295	114
2A-4639	294	2J-2866	636		606	2V-1937	148
2B-0176	444		642		664		736
2B-0858	36		644		668	2V-2043	86
	350		648	2N-1347	114	2V-4868	138
2B-0941	76	2J-3118	48	2N-2765	149	2V-5019	808
2B-0947	294	2J-3507	563		165	2V-6166	202
	300		705	2N-2766	149	2W-1733	28
2B-2694	142		706		151	2W-1734	28
2B-2695	22		707		165	2W-2169	16
	110		727	2N-3350	82	2W-3376	16
	364	2J-6356	310	2N-3476	289	2W-5825	104
2B-7558	606		334	2N-3479	390	2W-6000	29
2D-1523	350	2J-7686	570	2N-3680	512	2Y-2347	366

▶ **PRIMARY REFERENCE**

PART NUMBER INDEX

Part	Page
2Y-4071	406
2Y-9790	877
	878
3	
3B-0551	62
	694
3B-0623	34
3B-0645	34
3B-1915	40
	42
	50
	58
	142
	452
3B-4124	294
3B-4501	288
3B-4605	396
	398
	400
	402
	512
3B-4610	376
3B-4615	444
3B-4617	16
	462
3B-4628	672
3B-4629	432
	434
3B-4640	422
3B-6487	148
3B-6552	16
	148
3B-7721	88
3B-8485	40
3B-8489	16
	42
	472
	474
	566
	568
	570
	574
	576
	578
	582
	673
	686
	693
3D-2824	86
	283
	358
	490
	525
	526
	606
3D-2895	312
	316
	318
3D-2975	766
3D-7943	329
3E-0109	770
	774
3E-1841	764
3E-1906	▶749
	750
3E-2310	606
3E-2378	880
3E-3365	88
	136
	202
	203
	204
	230
	271
	274
	283
	288
	369
	520
	652
	654
	658
	738
	754
	770
	774
	782
3E-3368	262
	263
	264
	265
	266
	267
	268
3E-3371	98
	110
	142
	171
	172
	229
	260
	261
	272
	550
	588
	594
	600
	770
	774
3E-3377	588
	594
	600
	670
	671
3E-3380	848
3E-3383	254
	340
	516
	774
	800
	801
3E-3389	770
	774
	821
3E-3535	782
	786
	790
3E-3892	745
3E-4048	514
3E-4052	782
	786
	790
3E-4053	790
3E-4058	782
	786
	790
3E-4066	782
	786
3E-4302	624
3E-4334	534
3E-4352	22
	210
	286
3E-4356	769
3E-4367	227
3E-5180	512
3E-5239	274
	754
3E-5464	736
3E-6328	▶188
	288
3E-6332	274
3E-6389	▶229
	780
3E-6513	745
3E-6601	769
3E-6603	874
3E-6747	31
	32
3E-6756	686
3E-6757	686
3E-6772	36
3E-6922	775
3E-7417	624
3E-7448	32
3E-7577	▶190
	193
3E-7771	277
3E-8007	624
3E-8008	522
	624
3E-8020	778
3E-8558	227
3E-8575	633
	▶670
3E-8581	670
	671
3E-8790	240
3E-8825	733
	734
	735
3E-8857	240
	733
	734
	735
3E-9205	98
	▶671
3E-9850	682
	698
	699
	700
3E-9865	738
3F-0379	276
	280
3F-1547	50
3F-3442	302
3F-3727	346
3F-5022	336
3F-6185	672
3F-9556	802
	803
3G-0910	563
3G-0911	563
3G-4214	325
3G-4218	325
3G-4783	606
3G-5596	730
	731
	732
3G-5999	570
	574
	576
3G-6883	606
3G-6884	606
3G-7000	699
	700
3G-7016	674
	701
	702
3G-7242	342
3G-8047	604
3G-8054	604
3G-8057	604
3G-9571	682
3G-9598	698
	699
	700
3G-9626	682
3G-9995	718
	722
3H-1996	348
3H-6660	446
	818
3H-7654	346
3J-1907	76
	98
	99
	142
	178
	180
	302
	309
	310
	325
	346
	358
	360
	362
	365
	378
	380
	386
	520
	524
	525
	526
	530

▶ **PRIMARY REFERENCE**

PART NUMBER INDEX

Part	Page	Part	Page	Part	Page	Part	Page
	532	3J-8500	342		354	3T-4244	476
	544	3K-0360	52	3S-1349	465		478
	550		74		466		483
	589		88		467	3T-4377	336
	595		150	3S-1356	472	3T-4568	295
	596		178	3S-2093	88	3T-4709	276
	601		180		286	3T-4710	276
	602		205		356	3T-4715	295
	604		294		738	3T-4824	295
	606		300		740	3T-5021	295
	621		312		754	3T-5200	295
	633		316		770	3T-5294	472
	634		318		774	3T-5760	205
	635		325		780	3T-5807	300
	638		365		782	3T-5851	292
	640		524		786		293
	646		546		790	3T-5898	476
	652		589		848		478
	654		590	3S-2708	294		482
	656		595		300	3T-5923	312
	658		596		336		316
	662		601		337		318
	669		602		348	3T-6034	430
	690		604	3S-3964	98	3T-6354	190
3J-4818	846		650	3S-6049	202	3T-6471	324
3J-5169	10		654	3S-6050	202	3T-6655	780
	157		660		204	3T-6742	320
	406		661	3S-7023	580	3T-6963	295
	410		663	3S-8652	309	3T-8729	336
	430		666		310	3T-9118	489
	444		690	3S-9557	862	3T-9272	294
	450	3K-0835	98	3S-9643	110	3T-9310	432
3J-5190	674		770	3T-0304	288		462
3J-5389	114		774	3T-0688	310	3T-9494	276
3J-7189	430	3K-2511	337	3T-1121	853		277
	444	3K-2889	392		857		280
3J-7354	52		404		858		281
	76		462	3T-2662	216	3T-9524	277
	99	3K-3256	183	3T-2747	422		280
	114	3K-6113	485		432	3T-9525	276
	138		486		434		280
	142	3K-6175	22	3T-3175	337	3T-9922	302
	178	3K-6223	544	3T-3418	276	3V-1483	794
	205	3K-7928	220	3T-3422	276	3V-9244	444
	325	3L-0594	818		280	3V-9399	396
	520	3L-3380	276	3T-3423	276		398
	522		280		277		400
	588	3L-3813	664		281		402
	589	3L-8187	390	3T-3424	276	3W-1547	808
	595	3N-0759	510		277	3W-1852	300
	601	3N-2818	540		281	3W-3896	416
	621	3N-3763	277	3T-3434	276		444
	630		280		280	3W-6756	818
	636	3N-3790	880	3T-3601	294	3Y-7829	752
	638	3P-0572	325		300		843
	640	3P-0574	325	3T-3634	814		
	642	3P-1155	54	3T-4008	348		
	644		56	3T-4009	348		
	646	3P-1323	29	3T-4011	348		
	648		30	3T-4238	378	4B-2043	190
	652	3P-8283	448		380	4B-2049	202
	654	3R-8801	277		386		277
	656		280	3T-4243	476		281
	658		281		478	4B-3388	22
	690	3S-0004	342		482		210

4

► **PRIMARY REFERENCE**

PART NUMBER INDEX

Part	Page
4B-3609	334
4B-4043	52
4B-4158	475
	476
	478
	482
	544
	877
	878
4B-4274	738
4B-4278	396
	398
	400
	402
	636
	642
	644
4B-4845	794
4B-4863	256
	291
4B-5059	766
4B-5324	286
4B-7739	350
4B-9365	220
4B-9782	68
	302
4B-9785	302
4B-9806	758
4B-9880	320
4C-5598	165
4D-1212	236
4D-1326	88
4D-3704	46
	69
4D-6293	376
4D-7388	78
	286
4D-7529	378
	380
	386
4D-7735	790
4D-7794	234
	252
4E-8266	227
4F-0255	672
4F-4097	624
4F-6024	50
4F-7390	72
4F-7957	15
	170
4H-0019	320
4H-0408	814
4H-1225	630
4H-1641	376
	446
4H-2558	396
	398
	400
	402
4H-3283	342
4H-9541	84
4I-6287	325
4I-7837	652
4J-0520	325
	556
	558
	576
	586
	607
	609
	610
	614
	616
	690
4J-0522	325
	607
	638
	640
	646
4J-0524	325
4J-0527	168
	325
4J-2043	714
4J-3745	564
4J-4968	674
4J-5140	612
4J-5267	325
	574
	576
	609
	612
	614
	616
	618
4J-5351	636
	642
	644
	648
4J-5401	713
	724
4J-5477	120
	325
	588
	589
	590
	595
	596
	601
	602
4J-5573	325
4J-6727	444
4J-6888	578
	582
4J-7533	356
	633
	636
	642
	644
	648
4J-8251	630
4J-8252	630
4J-8997	638
	640
	646
4J-9058	705
	706
	707
	727
4K-1388	476
	478
	482
	556
	558
	590
	596
	602
	621
	636
	642
	644
	648
4K-2039	362
	654
	660
	661
4K-3533	746
4K-8302	782
4K-8501	376
	414
	786
4K-8603	350
4K-8864	205
4K-9097	80
	274
4K-9429	288
	810
4L-2729	277
4L-6454	78
	84
	86
	99
	102
	103
	104
	114
	124
	128
	132
	138
	156
	157
	158
	168
	184
	234
	248
	252
	323
	326
	350
	374
	376
	396
	398
	400
	402
	416
	418
	444
	450
	476
	478
	482
	490
	526
4L-6459	86
	114
	193
	194
	197
	200
	786
4L-6499	88
4L-7124	280
4L-7711	636
4L-8337	149
4L-9337	16
	105
	106
	107
	108
	150
	438
	440
	462
	556
	558
	586
	750
	752
	794
4M-0189	52
4M-1815	277
	281
4M-1827	276
	280
4M-1828	276
	280
4M-1829	276
	280
4M-1831	276
	280
4M-1853	276
	280
4M-1854	276
	280
4M-1896	277
	281
4M-2442	337
4M-5281	88
	194
	200
	274
	740
	771
4M-5282	518
4M-5905	364
4M-5912	362

► **PRIMARY REFERENCE**

PART NUMBER INDEX

Part	Page
4M-6425	16
	274
	746
	822
4M-6480	21
4M-6921	630
4M-6980	664
4M-7470	396
	398
	400
	402
4M-8239	365
4M-8548	54
	56
4M-9592	337
4N-0513	92
4N-0587	92
4N-0641	110
4N-0683	32
	71
4N-0684	28
	50
4N-0699	19
	20
	84
4N-0741	13
	▶28
4N-0826	82
4N-0827	76
4N-0913	82
4N-0914	82
4N-0933	52
	82
4N-0955	16
4N-0995	82
4N-1059	88
	279
4N-1151	64
4N-1156	110
4N-1199	110
4N-1215	82
4N-1216	82
4N-1419	114
4N-1650	32
4N-2040	84
4N-2109	39
4N-2473	11
	12
	▶69
4N-2481	13
	▶73
4N-2514	46
4N-2690	16
4N-2697	16
4N-2927	766
4N-3661	62
4N-3808	308
4N-3841	110
4N-4193	142
4N-4631	69
4N-4668	72
4N-5339	92
4N-5857	29
	30
4N-6228	82
4N-6229	82
4N-6257	110
4N-7082	76
4N-7250	78
4N-7266	62
	64
4N-7489	82
4N-7497	82
4N-8150	76
	82
4N-8218	193
	194
	197
	200
4N-8596	40
	42
4N-9915	769
4P-0513	62
4P-0519	62
	64
4P-0706	152
4P-2383	117
4P-3874	40
	42
4P-3875	40
	42
4P-3877	40
	42
4P-3878	40
	42
4P-4278	68
4P-4279	68
4P-5893	11
	12
	▶39
4P-6846	13
	▶44
4P-7371	68
4P-7377	66
4P-7428	205
	782
	786
4P-7429	138
	205
4P-7581	89
	205
	222
	224
	238
	274
	286
	289
	620
	771
	775
4P-8134	89
	138
	205
	222
	224
	240
	248
	274
	286
	289
	454
	740
	771
	775
	782
	786
	790
4P-8221	98
4P-9579	74
4S-1962	205
4S-5367	16
4S-5983	362
4T-0137	▶730
4T-0203	686
4T-0990	636
4T-1005	667
4T-1009	667
4T-1011	667
4T-1044	546
4T-1108	636
	642
	644
	648
4T-1389	686
4T-1649	636
	642
	644
	648
4T-1701	636
	642
	644
	648
4T-1860	636
	642
	644
	648
4T-2045	636
4T-2069	476
	478
	482
4T-2479	729
	732
4T-3522	686
4T-3981	616
4T-4511	636
	642
	644
	648
4T-4628	636
	642
	644
	648
4T-4631	636
	644
	648
4T-4633	636
4T-4634	636
4T-4636	636
4T-4659	664
4T-4875	693
4T-4935	621
	▶666
4T-4942	666
4T-5070	669
4T-5071	635
	669
4T-5072	636
	642
	644
	648
4T-5073	636
	642
	644
	648
4T-5074	636
	642
	644
	648
4T-5075	667
4T-5896	621
	▶635
4T-6378	706
4T-6381	705
	707
4T-6907	572
4T-7534	701
	702
	725
	726
4T-7571	666
4T-8986	729
	▶731
4T-8987	▶732
4T-9751	686
4V-6981	148
	512
4V-7884	844
	846
4V-8256	813
4V-8556	846
4V-8577	844
4W-3821	11
	12
	▶82
4W-4775	142
4W-4794	110
4W-5492	28
4W-5698	28
4W-5699	28
4W-5700	28
4W-5701	28
4W-8595	40
	42
	98
4W-9822	11
	12
	▶96
4W-9972	202
4Z-6311	560
	▶578
	5
5A-3604	548
5B-0841	452
5B-3180	364
5B-9603	60
	110

▶ **PRIMARY REFERENCE**

PART NUMBER INDEX

Part	Page	Part	Page	Part	Page	Part	Page
5C-2890	512	5G-8836	337		525		320
	652	5G-8871	746		556		337
	654	5G-9973	444		558		350
	656	5G-9974	444		606		452
	658	5H-1472	635	5K-9107	295		544
	754	5H-1504	36	5K-9179	797	5M-3034	276
	769	5H-2168	404		798		280
5C-6565	248	5H-4018	574	5K-9246	302	5M-3038	337
	326		576	5K-9660	86	5M-3062	16
	416		614	5K-9988	302		40
	444	5H-4019	610	5L-2029	518		45
	472	5H-6733	630	5L-2683	286		89
	607	5H-6734	168	5L-4751	6		144
	614		184		470		162
	782		564		474		178
	824	5H-9394	378	5L-4758	329		205
	826		380	5L-7200	288		222
5C-7261	802		386	5L-8854	149		224
	803	5H-9899	516	5M-0578	294		236
5C-8814	800	5J-1205	686		300		238
	801	5J-2383	510	5M-1932	586		240
5C-9553	291	5J-3576	729		614		241
	754		732	5M-2057	630		242
	800	5J-4321	704		636		244
	801	5J-4407	566		642		246
5D-0353	378		568		644		247
	380		570		648		326
	386	5J-4408	570	5M-2894	16		374
5D-1026	220	5J-4991	574		19		376
	764		576		21		406
	794	5J-4993	566		23		410
5D-1911	630		568		44		490
5D-4822	766		570		52		752
5D-5958	534		580		54		783
5D-7927	630	5J-5314	276		56		786
5D-9629	256		280		58		790
	454	5J-5402	572		62	5M-4987	342
5E-7045	366	5J-5793	52		64	5M-6126	337
5E-8771	48	5J-6153	546		73	5M-6213	82
5F-0149	40	5J-7386	348		76	5M-6214	96
	42	5J-8118	430		80		114
5F-0304	52		444		82		444
5F-1678	472	5J-8225	184		86		682
	474	5J-9454	566		92	5M-7878	348
5F-2465	312		568		110	5M-7925	294
	316		578		112	5M-8009	40
	318		582		142		42
5F-3106	493	5K-0227	642		147	5M-8500	746
	494		644		149	5M-9548	362
	607		648		151	5M-9554	362
5F-3488	630	5K-0906	162		152	5M-9621	752
5F-4764	882		274		153	5M-9735	16
5F-4899	92	5K-5120	302		154	5P-0047	690
	782		306		173	5P-0370	674
	787	5K-5338	99		174	5P-0537	15
	790		178		180		164
5F-6044	342		602		183		174
5F-7054	312	5K-8454	312		220		176
	316		316		258		220
	318		318		274		800
	667	5K-9090	86		286		801
5F-9144	175		88		294	5P-0695	203
5F-9757	289		89		300		204
5G-4109	178		325		302		205
5G-8655	746		524		306	5P-0747	202

► **PRIMARY REFERENCE**

PART NUMBER INDEX

Part	Page	Part	Page	Part	Page	Part	Page
	203		590		479	5P-4295	205
	204		596		483		783
	205		602		622	5P-4495	114
5P-0760	203		607		750	5P-4924	178
5P-0761	204		614	5P-2546	485	5P-4963	676
	205		736		486		677
5P-0763	116		752	5P-2566	126		678
5P-0767	220		754		130		680
	764		783		134		681
	794		786		193		▶878
5P-0840	32		790		194	5P-5045	336
	36		797		197	5P-5296	336
5P-1075	78		814		200	5P-5297	337
	84		830		205	5P-5374	476
	99	5P-1076	99		326		479
	102		124		341		482
	103		126		416	5P-5623	288
	104		128		418	5P-5630	148
	114		130		420	5P-5639	764
	124		132		438	5P-5643	736
	126		134		440		747
	128		248		444		764
	130		326		478	5P-5649	422
	132		416		482		434
	134		418		526	5P-5673	754
	138		419		590	5P-5677	202
	150		438		596		203
	152		440		602		204
	157		450		607		340
	158		458		693		388
	162		460		750		817
	168		462		783	5P-5678	15
	205		472		787	5P-5680	853
	222		478	5P-2618	168		854
	224		483	5P-2817	147		855
	234		555	5P-2937	138		856
	236		607	5P-2955	236		857
	238		616		238		858
	240		618		240	5P-5908	754
	241		693		241	5P-5924	754
	242		746		242	5P-5930	747
	244		786		244	5P-5992	736
	246		814		246	5P-6129	783
	247		824		247		787
	248		826	5P-3075	288		790
	252	5P-1251	138	5P-3418	190	5P-6298	276
	326	5P-1255	78	5P-3419	190		280
	374	5P-1257	114	5P-3620	309	5P-6313	148
	376	5P-1259	114		310		274
	378	5P-1262	114	5P-3930	337	5P-6314	148
	380	5P-1265	114		348		274
	386	5P-1404	358	5P-3948	782	5P-6315	148
	406	5P-1442	178	5P-4057	302		274
	410	5P-1465	138	5P-4115	89	5P-6446	642
	414	5P-1476	203		738	5P-6605	747
	416	5P-1763	882		771	5P-6874	797
	418	5P-2094	607		775		798
	422	5P-2228	444		814	5P-6944	178
	432		446	5P-4116	24	5P-7177	393
	434		787		162	5P-7179	478
	444	5P-2352	703		760		482
	450		▶877		814	5P-7204	142
	518	5P-2424	326	5P-4142	48	5P-7211	2
	556		419	5P-4255	54		406
	558		476		56		411

▶ **PRIMARY REFERENCE**

PART NUMBER INDEX

Part	Page
	450
5P-7213	345
	353
5P-7458	607
5P-7459	607
5P-7464	612
5P-7465	612
5P-7468	326
	607
5P-7469	326
	607
5P-7483	406
	411
	747
5P-7509	814
5P-7513	422
	434
	804
5P-7514	804
5P-7592	320
5P-7593	566
	568
	570
	578
	582
5P-7665	344
5P-7679	348
5P-7807	190
5P-7907	148
5P-7957	810
5P-8167	89
	586
	620
	846
5P-8194	336
5P-8245	52
	59
	61
	110
	120
	294
	300
	302
	320
	336
	493
	494
5P-8247	52
	70
	286
	320
5P-8248	444
5P-8249	70
	331
	437
	468
	469
5P-8250	705
	706
	707
	727
5P-8286	52
5P-8309	745
5P-8441	738
	754
5P-8444	607
5P-8445	766
5P-8472	312
	316
	318
5P-8500	14
	178
	184
	374
	410
	414
	444
	606
5P-8502	14
	178
	184
	374
	410
	414
	444
	606
5P-8522	234
	238
	250
	252
5P-8918	853
	857
	858
5P-8939	326
5P-8998	302
5P-9297	16
	40
5P-9658	308
5P-9884	880
5P-9938	205
5R-0939	378
	380
	386
5R-0940	378
	380
	386
5S-0003	22
	24
	210
5S-0581	118
5S-1188	149
5S-7001	667
5S-7008	332
5S-7018	540
5S-7379	16
	104
	124
	128
	132
	138
	162
	205
	236
	238
	244
	326
	374
	414
	490
	526
	556
	558
	752
	797
5S-7382	326
	332
	341
	406
	410
	462
	498
	556
	558
	610
	614
	621
	630
	638
	640
	646
	664
	690
5S-7383	99
	102
	103
	150
	331
	602
	783
	787
	790
	822
5S-8712	612
5S-9568	882
5S-9569	882
5V-0770	766
5V-1496	832
	836
5V-1497	844
6	
6A-9708	800
	801
6A-9709	800
	801
6A-9710	800
	801
6A-9718	800
	801
	872
6B-0387	544
6B-1124	16
6B-4594	124
	128
	132
	406
	410
6B-4661	220
	794
6B-6863	336
6C-3060	184
6C-6761	454
6D-1641	220
	783
	787
	794
6D-1746	376
6D-2667	782
	786
6D-4244	89
6D-4246	738
	754
6D-4247	205
6D-4636	220
	783
	787
	790
6D-5801	256
	291
6D-7573	787
6D-9953	294
	300
6E-0397	561
	▶580
6E-0398	580
6E-0402	580
6E-1102	556
	558
	▶563
6E-1103	564
6E-1108	564
6E-1109	564
6E-1111	564
6E-1133	540
6E-1134	540
6E-1135	540
6E-1136	540
6E-1175	▶582
	701
6E-1176	578
	582
6E-1183	578
	582
6E-1571	536
6E-1607	366
	542
6E-1637	636
6E-1725	630
6E-1744	630
6E-1752	630
6E-1835	666
6E-1901	578
	582
6E-1960	544
6E-1981	540
6E-1982	540
6E-2059	630
6E-2060	630
6E-2193	540
6E-2505	530
6E-2943	624
6E-3113	▶572
	696
6E-3976	572
6E-3980	572
6E-4092	530
6E-4096	534
6E-4098	534

▶ **PRIMARY REFERENCE**

PART NUMBER INDEX

Part	Page	Part	Page	Part	Page	Part	Page
6E-4100	539	6E-4795	630	6I-8403	718	6K-8162	664
6E-4102	539	6E-4907	664	6I-8500	336	6K-8178	78
6E-4213	624	6E-4976	572	6I-8507	320		180
6E-4214	624	6E-5066	650	6I-8510	336	6K-8498	302
6E-4215	624	6E-5196	544	6I-8511	320	6K-9194	180
6E-4216	624	6E-6044	624	6I-8516	616	6K-9555	736
	▶626		▶662	6I-8675	692	6L-1698	782
6E-4217	626	6E-6140	662	6I-8676	692	6L-2479	138
6E-4218	626	6E-6141	662	6I-8724	295	6L-2609	74
6E-4219	626	6E-6142	662	6I-8788	677	6L-7159	736
6E-4221	624	6E-6419	662		680	6L-8797	624
	▶627	6E-6420	662		681	6L-9965	302
6E-4224	624	6F-0253	98		▶693	6M-5062	654
6E-4225	624		770	6I-9386	746		660
6E-4227	624		774	6I-9706	814		661
6E-4228	662	6F-0711	378	6I-9784	337	6N-1872	190
6E-4230	662		380	6I-9785	336	6N-1931	92
6E-4234	624		386	6I-9786	336	6N-2985	324
6E-4236	624	6F-4161	694	6I-9788	337	6N-3279	276
6E-4237	624	6F-6673	331	6J-0450	544		280
6E-4239	662	6F-7045	284	6J-0488	416	6N-3826	276
6E-4240	547	6G-7724	184		745		280
6E-4241	662	6H-0853	220		814	6N-4414	174
6E-4242	662	6H-3956	396	6J-1038	498	6N-7523	184
6E-4245	624		398	6J-2419	358		870
6E-4246	662		400		636	6N-7672	274
6E-4247	624		402	6J-2515	437	6N-8744	752
6E-4248	624		420	6J-2680	326	6N-8863	161
6E-4318	662		462		607	6P-1735	294
6E-4321	624	6H-4005	238	6J-2797	572	6P-1736	294
6E-4350	532		244	6J-3473	320	6P-2215	454
6E-4351	532	6H-5852	157	6J-3774	713	6P-2216	410
6E-4352	532		158		724		818
6E-4353	532	6H-9361	630	6J-3991	498	6P-5317	294
6E-4358	536	6I-0213	177	6J-5179	674		300
6E-4363	536	6I-0901	68		701	6P-5332	310
6E-4364	536	6I-0928	38		702	6P-6591	775
6E-4365	536	6I-1055	32		725	6P-7704	336
6E-4366	536	6I-1418	208		726	6P-8269	450
6E-4367	536		210	6J-6439	666	6P-8931	476
6E-4370	536	6I-1453	28	6J-6680	732		478
6E-4373	536	6I-1458	182	6J-6703	729		482
6E-4374	536	6I-1940	13	6J-7836	294	6S-2828	320
6E-4382	522		▶182		300	6S-2829	320
6E-4383	522	6I-2431	126	6J-8696	546	6S-4039	234
6E-4385	366		130	6J-9121	570		252
	532		134	6J-9482	686	6T-0009	▶332
6E-4392	522	6I-2435	126	6J-9747	574		340
	▶542		130		576	6T-0062	295
6E-4393	542		134	6J-9748	574	6T-0064	295
6E-4394	542	6I-2505	146		576	6T-0363	276
6E-4395	542	6I-2506	146	6K-0806	846		280
6E-4396	542	6I-3623	48	6K-3273	836	6T-0364	320
6E-4397	542	6I-3624	48	6K-3630	697	6T-0371	276
6E-4398	542	6I-3625	48	6K-3632	458		280
6E-4399	542	6I-3632	48		460	6T-0372	276
6E-4400	542	6I-3638	13		824	6T-0465	203
6E-4401	542		▶173	6K-4934	234	6T-0838	337
6E-4403	547	6I-3643	118		252	6T-0850	294
6E-4404	547	6I-4421	32	6K-4935	234	6T-0988	818
6E-4532	664	6I-4465	146		252	6T-1120	277
6E-4533	664	6I-4575	170	6K-6307	524		281
6E-4614	532	6I-8087	701	6K-7917	378	6T-1140	468
6E-4626	534	6I-8093	698		380	6T-1142	▶468
6E-4642	544	6I-8402	722		386		492

▶ **PRIMARY REFERENCE**

PART NUMBER INDEX

Part	Page	Part	Page	Part	Page	Part	Page
	507	6V-0484	302		503		365
	509		358		504		520
6T-1698	184		524		505		526
	458	6V-0662	312		506		606
	460		316	6V-1790	818	6V-4248	346
6T-2173	312		318	6V-1820	346		630
	316	6V-0663	312	6V-1867	607	6V-4365	142
	318		316	6V-1868	607	6V-4433	326
6T-2202	▶394		318	6V-1869	607	6V-4589	171
6T-2724	222	6V-0664	312	6V-1889	526		172
	224		316	6V-2226	475		371
6T-3381	671		318		476	6V-4611	880
6T-3382	670	6V-0825	544		478	6V-5044	162
6T-3631	390	6V-0852	76		482	6V-5048	32
	550		114	6V-2312	862		36
6T-3632	390		302		864		176
	550		310		866		258
6T-3633	390		324	6V-2314	516	6V-5049	36
	550		358	6V-2331	746		54
6T-3643	256		365	6V-2360	248		56
6T-3714	324		520	6V-2372	783		171
6T-3764	224		524		787		172
6T-3793	475		588		790		175
6T-3852	320		594	6V-2375	746		258
6T-3853	320		606	6V-2381	86	6V-5050	36
6T-4556	814	6V-0855	294	6V-2382	86	6V-5100	27
6T-4557	814	6V-0871	607	6V-2404	320	6V-5141	50
6T-5005	▶853	6V-0890	▶276	6V-2455	202	6V-5185	326
	854		279	6V-2478	337	6V-5186	326
6T-5008	850	6V-0894	334	6V-2686	274	6V-5192	626
	▶854	6V-0913	646	6V-2689	288	6V-5326	532
6T-5067	818	6V-1193	376		516		547
6T-5068	818		396		652	6V-5387	324
6T-5617	764		398		654	6V-5393	667
6T-6221	184		400		658	6V-5555	638
6T-6708	738		402	6V-2712	162		640
6T-6970	390		457	6V-2803	393		646
6T-7058	288	6V-1197	18	6V-3251	36	6V-5556	636
6T-7695	780		530	6V-3260	746		642
6T-7863	294	6V-1232	516	6V-3263	476		644
	300	6V-1249	612		479		648
6T-8258	476	6V-1322	276		483	6V-5586	522
	478		280	6V-3298	312		542
	482	6V-1324	586		316		669
6T-8402	851	6V-1355	138		318	6V-5645	256
	▶855	6V-1359	393	6V-3320	738	6V-5683	256
6T-8403	852	6V-1668	738	6V-3340	582		778
	▶856	6V-1722	526	6V-3545	516	6V-5758	178
6T-8714	814	6V-1723	500	6V-3668	346	6V-5817	742
6T-8801	476		501	6V-3669	566	6V-5818	848
	478		502		568	6V-5833	853
	482		503		578		854
6T-9222	309		504		582		855
6T-9244	671		505	6V-3677	48		856
6T-9509	406		506	6V-3683	258		857
	410	6V-1724	500	6V-3822	630		858
6T-9510	406		501	6V-3823	346	6V-5839	346
	410		502	6V-3830	62		630
6T-9559	98		503		64	6V-5841	344
6T-9927	450		504	6V-3965	76	6V-5845	570
6T-9928	450		505		302	6V-5849	870
6T-9929	450		506		310	6V-5851	870
6V-0128	15	6V-1725	500		326	6V-6207	872
6V-0273	693		501		358	6V-6209	872
6V-0473	336		502		360	6V-6210	872

▶ **PRIMARY REFERENCE**

PART NUMBER INDEX

Part	Page
6V-6561	870
	▶872
6V-6703	213
	215
6V-6716	288
	454
6V-6889	800
	801
	872
6V-6923	186
6V-7190	746
6V-7191	205
6V-7357	227
	334
	870
6V-7636	746
6V-7646	294
	769
	832
	836
6V-7688	686
6V-7728	227
6V-7732	630
6V-7743	248
6V-7744	248
	334
	630
6V-8073	746
6V-8097	630
6V-8118	512
6V-8129	746
6V-8133	574
	576
6V-8182	323
	422
	432
6V-8185	148
	256
	512
6V-8187	256
6V-8188	40
	99
	205
	277
	280
	438
	440
	472
	556
	558
	586
	607
	614
	638
	640
	646
	750
	787
6V-8189	162
	236
	238
	240
	241
	242
	244
	246
	247
	746
6V-8200	531
6V-8218	634
6V-8225	778
6V-8237	572
6V-8337	624
6V-8351	542
6V-8369	780
6V-8370	288
6V-8373	277
	281
6V-8374	288
	390
6V-8376	216
	256
	334
6V-8378	88
6V-8397	98
	99
	138
	180
	325
	326
	524
	525
	550
	589
	590
	595
	596
	601
	602
	606
	690
6V-8398	99
	138
	178
	526
	589
	590
	595
	596
	601
	602
	604
	690
6V-8400	326
	556
	558
6V-8547	814
6V-8556	526
6V-8625	178
	604
6V-8628	589
	595
	601
6V-8629	525
6V-8634	325
	524
6V-8635	325
6V-8636	98
	525
	601
	690
6V-8639	589
	595
	601
	690
6V-8640	524
	606
6V-8641	589
	595
	601
6V-8647	588
	595
	601
6V-8714	86
6V-8716	86
	88
	524
6V-8722	88
6V-8723	180
	589
	595
	601
6V-8724	99
	180
	325
	525
	550
	589
	595
	601
	606
6V-8730	590
	596
	602
6V-8737	138
6V-8774	590
	596
	602
6V-8781	589
	596
	602
6V-8782	589
	595
	602
6V-8801	78
	102
	103
	114
	144
	150
	193
	194
	197
	200
	234
	241
	242
	246
	247
	252
	286
	326
	418
	498
	518
	555
	590
	596
	602
	750
	752
	783
	787
	790
	794
6V-8829	830
6V-8837	624
6V-8927	222
	224
6V-8928	778
6V-8936	589
	595
	602
6V-8941	525
6V-8994	99
	525
6V-9001	180
6V-9002	604
6V-9004	525
6V-9005	86
	524
6V-9007	490
	525
6V-9008	325
	525
6V-9028	522
	532
6V-9156	796
6V-9168	99
	326
	526
6V-9182	324
	490
	525
6V-9200	99
	178
	595
	601
6V-9632	256
	291
	454
	518
	746
	814
6V-9746	86
	88
	89
	324
	490
	524
	525
	606
6V-9807	325
6V-9829	588
6V-9830	590
	596
6V-9832	89
6V-9833	86
6V-9835	590
	596

▶ **PRIMARY REFERENCE**

PART NUMBER INDEX

Part	Page
	602
6V-9836	589
	596
	602
	606
	690
6V-9837	99
	590
	596
	602
6V-9839	525
6V-9844	99
6V-9849	120
6V-9850	589
	595
	601
	606
6V-9851	589
	595
	601
6V-9853	86
	88
6V-9872	138
	589
	595
	601
6V-9873	526
	604
6V-9875	325
	556
	558
6Y-0061	336
6Y-0206	760
	814
6Y-0473	485
	486
	487
	488
	489
	493
	494
	496
6Y-0553	485
	488
6Y-0556	486
	487
6Y-0610	392
6Y-0611	453
6Y-0615	▶453
6Y-0860	316
	318
6Y-0926	294
6Y-0984	295
6Y-1336	312
	316
	318
6Y-2065	70
6Y-2119	184
6Y-2549	324
6Y-2574	294
6Y-2576	294
6Y-2704	294
	300
6Y-2811	337
6Y-3394	730
	731
	732
6Y-3526	▶510
	538
6Y-3545	472
6Y-3587	▶294
	299
6Y-3588	298
	▶300
6Y-3914	489
6Y-3974	374
6Y-3979	294
6Y-3980	300
6Y-3981	300
6Y-3982	294
6Y-3984	294
6Y-3986	294
	300
6Y-3988	510
6Y-3991	294
6Y-4003	294
	300
6Y-4005	▶448
6Y-4006	448
6Y-4039	300
6Y-4061	524
6Y-4124	▶501
6Y-4205	342
6Y-4520	438
	440
6Y-4638	364
6Y-4687	324
6Y-4771	336
6Y-4834	336
6Y-4846	337
6Y-5113	798
6Y-5439	324
6Y-5540	705
	707
6Y-5693	693
6Y-5812	430
	444
6Y-5911	336
6Y-5912	337
6Y-7385	769
6Y-8114	814
6Y-8556	168
6Y-8557	416
6Y-9373	294
	300
6Y-9508	472
6Y-9509	472
7B-2742	174
	176
7B-3028	341
	342
	365
7B-3039	630
7B-3235	320
	378
	380
7B-7525	664
7C-0307	110
7C-1175	154
7C-1187	161
7C-2991	153
7C-3039	93
7C-4038	76
7C-4941	11
	12
	▶76
7C-6514	27
7C-7368	220
7C-7397	220
7C-7398	220
7C-7595	750
7C-8246	98
7D-1195	630
7D-1553	78
7D-1649	320
7D-1677	345
7D-6922	289
	760
7D-7111	142
7D-7233	138
	752
7E-0558	66
7E-0559	66
7E-0658	70
7E-0659	70
7E-0660	70
7E-1177	66
7E-4195	66
7E-5661	48
7E-6508	15
7E-9262	28
7F-3425	60
7F-3488	276
	280
7F-3491	276
	280
7F-3525	276
	280
7F-6112	472
7F-6998	774
7F-7621	190
7F-8607	782
7F-9090	76
7G-1596	295
7G-2343	337
7G-2454	746
7G-2830	336
7G-3413	326
	586
7G-3414	326
	586
7G-3415	326
7G-3832	526
	614
7G-3833	526
	614
7G-3834	526
	614
7G-3945	380
	386
7G-4262	376
7G-4332	489
7G-4550	814
7G-4824	760
	814
7G-5186	124
	128
	132
	138
7G-5221	496
7G-5320	350
7G-5831	312
	316
	318
7G-5832	312
	316
	318
7G-5984	586
	610
7G-5985	586
	610
7G-5986	586
	610
7G-6442	500
	501
	502
	503
	504
	505
	506
7G-6448	502
7G-6454	505
7G-6495	422
	432
	434
	462
7G-6623	392
	462
7G-7379	476
	478
	482
7G-7541	346
7G-7724	336
7G-8427	346
7G-8664	6
	470
	474
7G-8666	6
	470
	474
7G-8947	380
	386
7G-9913	414
	786
7H-0847	183
7H-1447	631
7H-3608	344
7H-4566	294
7H-7539	462
	694
7H-7628	320
7H-7658	337
7H-9737	512
7I-1189	98
7I-6601	660

7

▶ **PRIMARY REFERENCE**

PART NUMBER INDEX

Part	Page
	661
7J-0204	362
	636
	642
	644
	648
	660
	661
7J-0252	432
	434
7J-0482	114
7J-2036	493
	494
7J-3297	566
	568
	578
7J-4169	697
7J-8611	302
	326
7J-8956	574
	576
7J-9108	88
	89
7J-9933	636
	642
	644
	648
	666
7K-1181	99
	138
	148
	202
	216
	256
	288
	390
	422
	588
	594
	600
	742
7K-3176	782
7K-6058	510
7K-8876	624
7K-8877	624
7L-2894	276
	280
7L-6326	114
7L-8170	813
7L-9061	624
7M-0324	276
	280
7M-0325	277
	280
7M-0326	276
	280
7M-0327	276
7M-1201	302
7M-1674	150
7M-7219	766
7M-7794	555
	752
7M-8485	62
	64
	86
	88
	138
	324
	325
	326
	362
	364
	378
	380
	386
	524
	525
	532
	636
	642
	644
	648
	667
7M-8651	277
7N-0296	274
7N-0452	44
7N-0718	202
	▶284
7N-1210	71
7N-1277	138
	752
7N-1572	110
7N-1996	288
7N-2043	66
7N-2059	274
7N-2156	92
7N-2708	204
7N-5274	202
	204
7N-5686	153
	154
7N-5959	16
7N-6908	150
7N-7559	84
7N-7628	112
7N-7672	164
7N-7673	164
7N-7878	112
7N-8008	390
7N-9023	190
7N-9801	274
7N-9943	229
7P-4190	334
7P-7427	446
7P-7610	746
7S-2042	376
7S-3912	378
	380
	386
	590
	596
	602
7S-3913	378
	380
	386
	590
	596
	602
7S-3916	378
	380
	386
7S-3919	378
	380
	386
7S-4244	99
7S-4346	736
7S-4411	153
	154
7S-5005	28
7S-8817	144
7T-0020	229
7T-0095	544
7T-0522	544
7T-1068	855
	▶857
7T-1069	856
	▶858
7T-1099	59
	98
	184
	203
	204
	236
	238
	241
	244
	246
	256
	376
	378
	380
	386
	390
	430
	444
	454
	460
	518
	746
	750
	754
	786
	827
	843
7T-1149	476
	478
	482
7T-1150	476
	478
	482
7T-1151	6
	476
	478
	482
7T-1152	476
	478
	482
7T-1153	6
	476
	478
	482
7T-1330	855
	856
7T-1474	320
7T-1475	320
7T-1885	294
	300
7T-2390	506
7T-2392	501
7T-2524	312
	316
	318
7T-2530	312
	316
	318
7T-2540	▶496
	507
7T-2853	184
7T-3746	686
7T-3974	276
	280
7T-4000	432
7T-4200	498
7T-4209	498
7T-4213	498
7T-4214	498
7T-4501	697
7T-4502	697
7T-4515	369
7T-4532	749
7T-4616	498
7T-4697	496
7T-4700	496
7T-4865	472
7T-5010	378
	380
	386
7T-5067	446
7T-5140	682
	698
	699
	700
7T-5147	446
7T-5156	446
7T-5159	446
7T-5558	▶705
	708
	711
	712
7T-5559	▶706
	709
	710
7T-5611	▶446
7T-5790	462
	694
7T-5793	404
7T-5798	404
7T-5856	754
7T-5936	718
7T-6079	476
	478
	482
7T-6299	764
7T-6578	337
7T-6580	336
7T-6581	337
7T-6660	694
7T-6850	713
	724
7T-6915	▶323

▶ **PRIMARY REFERENCE**

PART NUMBER INDEX

Part	Page	Part	Page	Part	Page	Part	Page
7T-6916	323		▶62		416	7X-0582	184
7T-6918	323	7W-0570	110		462		236
7T-6922	323	7W-0688	142	7X-0350	704		238
7T-6923	323	7W-0843	62	7X-0365	236		244
7T-6924	323		64		238		416
7T-6994	294	7W-0844	62		244		422
	300		64		422		432
7T-7208	396	7W-0845	62		432		434
	400		64		434		458
7T-7213	406	7W-1890	138		827		460
	410	7W-2206	11	7X-0366	312		827
7T-7214	406		12		316		828
	410		▶93		318	7X-0584	516
7T-7305	686	7W-2735	147		323	7X-0594	432
7T-7831	722		157		458		434
7T-8001	316		158		460	7X-0603	818
7T-8130	295	7W-3447	616		828	7X-0608	813
7T-8136	300	7W-3587	110	7X-0368	323	7X-0618	326
7T-8148	▶293	7W-5444	20	7X-0370	323	7X-0620	88
	340	7W-6492	31	7X-0375	422	7X-0623	746
7T-8201	406		32	7X-0383	448	7X-0766	396
	410		110	7X-0402	464		398
7T-8361	870	7W-6529	92	7X-0406	464		400
7T-8555	496	7W-6534	294	7X-0408	482		402
7T-8816	336	7W-7142	92		492		420
7T-8875	302	7X-0288	326	7X-0421	824		462
7T-8876	302	7X-0290	326		826	7X-0772	326
7T-8891	742		518	7X-0427	446		332
7T-8894	783	7X-0291	205	7X-0428	404	7X-0818	208
	787	7X-0294	690		694		228
	790	7X-0301	362		843	7X-0851	580
7T-9096	800	7X-0304	205	7X-0429	392	7X-2049	786
	801	7X-0307	496	7X-0431	462		790
7T-9123	277	7X-0308	341	7X-0432	392	7X-2537	358
	281	7X-0310	526	7X-0434	453	7X-2538	289
7T-9147	674		607	7X-0437	404	7X-2541	356
7T-9153	673	7X-0313	326	7X-0448	193	7X-2548	256
7T-9272	336	7X-0325	332		194	7X-2552	713
7T-9302	780		341		197		724
7T-9307	496		787		200	7X-2559	616
7T-9333	618	7X-0326	326		750		618
7T-9341	616		422	7X-0451	404	7X-2562	682
	618	7X-0328	326	7X-0513	416		694
7T-9369	336		447		607	7X-2565	682
7T-9426	782		450	7X-0515	416	7X-2567	673
	786		607		450	7X-2568	686
	790		750		607	7X-2574	674
7T-9515	288		787		750		701
7T-9526	312	7X-0332	332	7X-0531	472		702
	316	7X-0333	526		824		725
	318	7X-0344	450		826		726
7T-9527	312	7X-0345	193	7X-0533	392	7X-2578	692
	316		194		404	7X-3188	350
	318		197		446	7X-3373	276
7T-9793	783		200		453		280
	787		442		462	7X-3374	763
	790		476		472	7X-3391	607
7T-9832	294		478		694		697
7T-9837	294		482		843	7X-3392	638
	300		607	7X-0537	697		640
7T-9946	320		750	7X-0562	277		646
7V-0008	518	7X-0346	416		281		804
7V-0762	447		444	7X-0564	458	7X-4771	516
7V-5191	766	7X-0347	404		460	7X-4777	312
7W-0158	11	7X-0349	392	7X-0575	796		316

▶ **PRIMARY REFERENCE**

PART NUMBER INDEX

Part	Page	Part	Page	Part	Page	Part	Page
	318	8C-3334	337	8C-8843	824		706
7X-4805	54	8C-3442	746	8C-8844	458		707
	56	8C-3445	76		460		727
7X-6222	227	8C-3446	76	8C-8902	880	8E-4205	▶689
7X-6315	213		326	8C-8992	697		723
	214		520	8C-9161	564	8E-4206	689
	215	8C-3447	324	8C-9660	190	8E-4209	689
7X-7644	880	8C-3451	520		276	8E-4216	689
7X-7700	184	8C-3681	138		280	8E-4218	689
7X-7702	794	8C-3756	738	8D-1817	320	8E-4457	489
	848		754	8D-1819	320	8E-4458	489
7X-7729	334	8C-4436	416	8D-3508	378	8E-4505	489
	454		438		386	8E-4506	489
	514		440	8D-3932	782	8E-4518	▶489
	518		448	8D-4771	331		500
	746		476	8D-9739	336		501
	804		479	8E-0618	292		502
	805		482		293		503
	806		586	8E-0719	476		504
	814		607		478		505
	830		610		482		506
7X-7731	110		614	8E-1118	769	8E-4743	730
7X-7732	31	8C-4982	868	8E-1450	688		731
	32	8C-4985	524	8E-1454	688		732
7X-7877	818	8C-5060	870	8E-1455	688	8E-5112	746
7X-7898	422	8C-5063	512	8E-1497	▶688		▶850
7X-7927	742	8C-5193	532		720	8E-5113	746
7X-7928	742	8C-5226	814	8E-1848	730		▶851
7X-7929	742	8C-5237	531		731	8E-5114	746
7X-7930	742	8C-5245	566		732		▶852
7Y-3281	848		568	8E-2481	316	8E-5340	730
7Y-4224	636		578	8E-2837	476	8E-5346	732
7Y-5226	516		582		479	8E-5347	731
7Y-5497	202	8C-5607	227		482	8E-5818	674
7Y-5546	202		248	8E-2898	476	8E-6150	676
7Y-7388	780	8C-5608	227		478		681
7Y-7389	760		248		482		▶726
		8C-5682	782	8E-2899	476	8E-6151	680
			786		478		▶725
8			790		482	8E-6154	708
		8C-5917	204	8E-2931	490		716
8A-2615	324	8C-6561	312	8E-3013	438		▶718
8B-0544	86		318		440		720
8B-2327	16	8C-6857	416	8E-3039	▶561		721
8B-4624	376		478	8E-3131	518	8E-6155	718
8B-7789	346		483	8E-3276	746		722
8B-8255	40		496	8E-3410	490	8E-6156	718
	42		510	8E-3446	851		722
8C-0573	631	8C-6865	120		▶859	8E-6160	718
8C-3075	320	8C-6866	120	8E-3447	852	8E-6161	718
8C-3085	635	8C-6877	326		▶860	8E-6165	718
	669		487	8E-3518	293		722
8C-3089	276		488	8E-3519	293	8E-6166	718
	280		526	8E-3600	616		722
	548		690	8E-3696	490	8E-6168	▶700
8C-3205	612	8C-6913	422	8E-3698	490		701
	616	8C-8580	366	8E-4051	300		702
	618	8C-8821	880	8E-4052	300	8E-6169	700
8C-3206	570	8C-8842	184	8E-4059	489	8E-6171	700
	610		323	8E-4060	489	8E-6172	698
	616		422	8E-4193	705		699
8C-3221	880		432		706	8E-6176	673
8C-3222	580		434		707	8E-6183	618
8C-3290	814		458		727	8E-6185	693
8C-3323	524		460	8E-4194	705	8E-6187	709

▶ **PRIMARY REFERENCE**

PART NUMBER INDEX

Part	Page
	▶722
	723
8E-6269	556
	558
8E-6303	556
	558
8E-6304	556
	558
8E-6305	693
8E-6306	693
8E-6439	▶673
	674
8E-6443	682
8E-6444	682
8E-6579	561
	▶612
8E-6580	612
8E-6581	612
8E-6619	485
	486
	487
	488
8E-6758	725
	726
8E-6856	848
8E-6891	458
	460
8E-7224	711
	▶720
8E-7225	712
	▶721
8E-7226	710
	▶723
8E-7510	493
	494
8E-7532	312
	316
	318
8E-7533	312
	316
	318
8E-7534	312
	316
	318
8E-7561	376
8E-7696	▶502
	507
8E-7697	▶503
8E-7698	▶504
8E-7699	▶505
8E-7700	▶506
8E-7791	760
	814
8E-8242	518
8E-8292	742
8E-8299	337
8E-8300	348
8E-8303	337
8E-8304	337
8E-8307	294
	300
8E-8310	294
8E-8330	558
8E-8334	556
	558
8E-8422	416
8E-8434	586
8E-8566	414
8E-8916	614
8E-9289	392
	462
8E-9532	458
	460
8E-9648	489
8F-1434	88
	190
	202
	277
	280
8F-3556	462
8F-4028	472
8F-4994	631
8F-7219	627
8F-7702	334
8F-8151	794
8F-9516	485
	486
	487
	488
8F-9836	378
	380
	386
	444
	454
	606
8F-9866	▶876
	882
8G-0794	430
	444
8G-4386	386
8G-5247	386
8H-1603	302
8H-2768	345
8H-3127	15
8H-3532	566
	568
	580
8H-5303	284
8H-5306	284
8H-5352	336
8H-8830	498
8H-9818	350
8H-9819	350
8J-1196	378
	380
	386
8J-1622	540
8J-1665	312
	316
	318
8J-4351	258
	326
8J-4867	673
8J-4916	378
	380
	386
8J-6273	362
8J-6709	365
8J-6815	621
8J-6913	631
8J-7236	827
8J-8343	636
8J-8782	630
8J-8783	630
8J-9152	673
8J-9180	580
	673
8J-9990	606
8K-1433	769
8K-7186	606
	622
8L-2746	371
8L-2777	68
8L-2779	171
	172
8L-2786	36
	54
	56
	142
	171
	172
	652
	654
	656
	658
8L-5423	152
8L-6005	794
8L-6557	16
	40
	42
8L-6565	635
8L-8413	204
	766
	846
8M-0547	114
8M-0755	112
	114
8M-1869	114
8M-2530	302
8M-2537	362
8M-2769	205
8M-2770	80
8M-2771	516
8M-2772	89
8M-2773	178
	326
	602
8M-3267	846
8M-4390	332
8M-4432	302
	306
8M-4433	350
8M-4438	294
	300
8M-4447	326
8M-4992	365
8M-5010	336
8M-5254	326
	354
8M-5255	336
8M-5266	336
8M-5661	302
8M-6393	309
8M-7057	114
8M-7066	114
8M-7145	126
	378
	380
	386
8M-8157	326
8M-8489	92
	337
8M-8627	362
8M-9315	50
	52
8N-0869	203
	204
8N-1725	202
8N-2101	172
8N-2104	82
8N-2694	148
8N-3525	750
8N-8100	142
8N-8571	149
8N-9707	220
8P-0058	302
8P-0412	362
8P-1892	337
8P-1916	337
8P-1964	336
8P-2019	337
8P-2022	337
8P-2023	336
8P-2051	336
8P-2053	337
8P-5244	458
	460
	824
8P-6363	754
8P-8540	244
8P-9507	336
8P-9569	337
8P-9679	114
	180
8P-9747	824
8P-9770	682
	698
	699
	700
	714
	718
	722
	729
8Q-1963	193
	194
	197
	200
8R-1386	843
8S-0023	326
	590
	596
	602
8S-0024	326
	590
	596
	602
8S-0527	300
8S-0948	205
	220
8S-2331	476

▶ **PRIMARY REFERENCE**

PART NUMBER INDEX

Part	Page	Part	Page	Part	Page	Part	Page
	478		590		808		746
	482		596		814		804
8S-2332	89		602	8T-3561	746		808
	279	8T-1894	526	8T-3597	745		814
8S-2385	2		590		754	8T-4137	289
8S-2387	42		596		814		754
8S-2388	40		602	8T-3612	454		764
8S-2634	202	8T-1895	526	8T-3647	356		808
8S-3020	203		607	8T-3957	530		830
	204	8T-1896	526	8T-3994	754	8T-4138	771
8S-4212	74		607	8T-4001	673		775
8S-4755	496	8T-1899	326		692		815
8S-5383	750		526	8T-4121	138	8T-4139	612
8S-7499	658	8T-1900	326		248		616
8S-7803	766		526		256		618
8S-9008	350	8T-1905	180		289		783
8S-9094	31	8T-1979	746		305		815
	32	8T-1980	746		334	8T-4141	694
8S-9130	302	8T-2185	498		444	8T-4158	746
8S-9191	54	8T-2225	203		526	8T-4167	697
	177		204		570		815
8T-0081	178		205		574	8T-4171	769
8T-0119	178	8T-2275	631		576		771
8T-0122	154	8T-2501	98		604		775
8T-0269	366		102		610	8T-4175	674
8T-0287	590		103		612	8T-4177	356
	596		302		616	8T-4179	256
	602		636		618	8T-4181	746
8T-0318	746		642		694		778
8T-0323	205		644		754	8T-4182	616
8T-0328	202		648		764	8T-4185	616
	216		846		798		618
	277	8T-2502	99		808	8T-4186	334
	281		126		818		609
	289		130		830	8T-4189	289
	512		134	8T-4122	193		760
	832		138		194		815
	836		326		197	8T-4191	256
8T-0337	771		420		200		289
8T-0343	624		450		394		736
8T-0639	227		476		416	8T-4192	612
8T-0666	574		478		442		746
	576		482		476		754
8T-0672	580		518		478	8T-4194	815
8T-0687	854		590		482	8T-4195	305
	855		596		612		334
	856		602		616		526
8T-1120	524	8T-2561	130		618		604
8T-1445	336		134		704		616
8T-1579	462		406	8T-4123	406		618
8T-1686	589		410		411		798
	595		438		682		818
	601		440		694	8T-4196	526
8T-1714	570		555	8T-4131	682		570
	574	8T-2659	771		694		574
	576	8T-2896	880	8T-4133	138		576
8T-1790	578	8T-3282	566		305		610
	582		568		754		612
8T-1889	326		578		764		616
	607		582		848		618
8T-1890	326	8T-3298	631	8T-4136	138		815
	607	8T-3490	454		289		830
8T-1891	690		518		334	8T-4198	754
8T-1892	690		745		616	8T-4205	89
8T-1893	526		754		694		148

► **PRIMARY REFERENCE**

PART NUMBER INDEX

Part	Page	Part	Page	Part	Page	Part	Page
	194		607		102		602
	200		610		103		610
	256		612		104		614
	274		614		105		620
	276		620		106		621
	280		622		107		631
	334		631		108		638
	512		750		114		640
	516		752		124		646
	590		754		128		664
	596		783		132		690
	602		787		138		750
	740		794		144		752
	754		815		150		783
	771		842		152		787
	775	8T-4224	208		156		790
	805		228		157		794
	806		236		158		848
	832		238		168	8T-4897	450
	836		240		178		498
8T-4222	526		241		184	8T-4910	612
8T-4223	2		244		193	8T-4934	466
	42		246		194		467
	84		247		197	8T-4943	814
	98		256		200	8T-4956	787
	168		274		205	8T-4970	334
	193		289		234	8T-4971	818
	194		312		236	8T-4983	78
	197		318		238		116
	200		358		241		606
	205		612		244	8T-4984	114
	220		822		247	8T-4985	114
	256	8T-4226	786		248	8T-4994	238
	298		787		252		244
	299	8T-4231	530		286		312
	312	8T-4244	612		312		316
	316	8T-4649	815		316		318
	318	8T-4752	780		318		323
	326	8T-4777	862		323		444
	332		864		326		478
	341		866		331		483
	362	8T-4778	616		341		496
	378		618		350		510
	380	8T-4779	616		362		824
	386		618		396	8T-4999	880
	416	8T-4835	2		398	8T-5039	624
	420		40		400	8T-5071	478
	444		126		402	8T-5360	326
	446		130		406		332
	447		134		411		341
	448		438		418		350
	462		440		420		487
	472		498		462		488
	476		526		476		496
	479		555		478		526
	483		607		482		607
	498		752		490		631
	526		783		518		638
	550		842		526		640
	556	8T-4896	16		550		646
	558		40		555		690
	586		45		556	8T-5361	464
	590		86		558		472
	596		89		586		482
	602		99		596		492

► **PRIMARY REFERENCE**

PART NUMBER INDEX

Part	Page	Part	Page	Part	Page	Part	Page
8T-5383	740		582		438		462
8T-5389	525	8T-8729	88		440	8T-9393	394
8T-5391	162		98		444		416
8T-5400	848		110		472		607
8T-5410	512		136		550	8T-9396	450
8T-5413	754		142		586	8T-9398	827
8T-5439	694		171		610	8T-9399	238
8T-5460	686		172		614		244
8T-5911	126		202		620	8T-9496	396
	430		229		622		398
	438		230		750		400
	440		254		752		402
	444		259	8T-8919	40		420
	786		260		124		462
8T-5912	422		261		128	8T-9527	173
	430		271		132	8T-9530	98
	434		272		193		745
	444		274		194		880
8T-6430	694		288		197	8T-9655	208
8T-6466	783		369		200		210
	787		370		298	8T-9905	880
	790		512		299	8V-2640	438
8T-6639	178		516		341		440
8T-6696	589		520		462	8V-5455	870
	595		550		556	8V-9885	380
	602		652		558		386
8T-6703	114		658		607	8W-2563	524
8T-6757	31		671		631	8X-6439	286
	34		770		750	8Y-3966	396
8T-6761	110		774		842		398
8T-6762	114		782	8T-8920	420		400
	302		786		586		402
8T-6763	36		790	8T-8924	323		420
8T-6764	150		799		824		462
8T-6765	36		800	8T-8925	432	8Y-3998	396
	52		801		434		398
	110		802	8T-8987	606		400
	116		803	8T-9043	746		402
8T-6767	19	8T-8730	262	8T-9082	832		420
	110		264	8T-9101	99		462
	114		265		114	8Y-3999	396
	555		654	8T-9313	693		398
8T-6871	416	8T-8737	340	8T-9358	324		400
	442		370	8T-9364	184		402
8T-6912	228		388	8T-9367	89		420
8T-6936	747		800	8T-9368	590	8Y-4000	396
8T-7008	326		801		596		398
	518		817		602		400
8T-7338	612		821	8T-9375	205		402
	697		848	8T-9377	102		420
8T-7546	99	8T-8902	524		406	8Y-5737	764
8T-7547	358	8T-8908	815		411	8Y-5746	760
	612	8T-8914	746	8T-9380	607	8Y-5747	462
8T-7566	376	8T-8915	526	8T-9382	350	8Y-5944	844
	811		550	8T-9383	783	8Y-5945	766
	812	8T-8916	326		786	8Y-5965	844
	818		607	8T-9386	88	8Y-6012	844
8T-7876	532		631	8T-9389	42	8Y-6014	844
	624		638		99	8Y-6024	844
8T-8379	574		640		168	8Y-6041	766
	576		646		220	8Y-6045	766
8T-8381	566	8T-8917	114		444	8Y-6046	766
	568		312		458	8Y-6047	766
	570		316		460	8Y-6060	766
	578		318	8T-9391	84	8Y-6062	766

► **PRIMARY REFERENCE**

PART NUMBER INDEX

Part	Page
8Y-6063	766
8Y-6064	766
8Y-6066	766
8Y-6067	766
8Y-6068	766
8Y-6069	766
8Y-6277	832
	836
8Y-6364	14
	178
	184
	374
	410
	414
	444
	606
8Y-6388	760
	774
8Y-6400	462
8Y-6419	860
8Y-6420	860
	▶862
8Y-6422	862
8Y-6423	859
	860
	862
	864
	866
	868
8Y-6424	859
	860
	868
8Y-6428	868
8Y-6429	868
8Y-6430	859
	860
	862
	864
	866
	868
8Y-6431	864
8Y-6432	859
8Y-6433	859
	▶864
8Y-6443	866
8Y-6445	868
8Y-6446	▶866
	868
8Y-6447	853
8Y-6448	857
	858
8Y-6454	862
	864
	866
8Y-6455	862
	864
	866
8Y-6459	859
	860
	862
	864
	866
	868
8Y-6460	862
	864
	866
8Y-6461	862
	864
	866
8Y-6462	859
	860
	868
8Y-6463	868
8Y-6839	853
	854
	855
	856
	857
	858
8Y-6859	766
8Y-6860	766
8Y-6910	859
	860
	862
	864
	866
	868
8Y-6917	846
8Y-6922	846
8Y-6928	846
8Y-8304	746
8Y-8306	396
	398
	400
	402
	420
	462
9B-0576	294
9B-2052	414
	430
	444
	786
9B-2923	414
9B-7233	190
	216
	256
	334
9B-7237	78
	102
	103
	126
	128
	130
	134
	152
	157
	158
	326
	422
	432
	434
	526
	590
	596
	602
	610
9C-9743	202
9D-0630	168
9D-3768	250
9D-3769	775
9D-6621	390
9D-9736	747
9F-2247	190
9F-2637	876
9F-2773	142
9F-2978	62
	82
9F-5599	276
	280
9F-5644	284
9F-6445	88
	274
	416
	454
	512
	588
	594
	600
9F-6656	880
9F-6936	563
9F-8125	390
9F-8999	142
9G-0002	204
9G-0004	204
9G-0278	635
9G-0289	337
9G-0290	336
9G-0682	16
9G-0832	320
9G-0983	804
9G-0986	804
9G-0990	804
9G-0992	824
9G-1127	746
9G-1930	345
9G-2673	99
	289
9G-2787	394
9G-3695	203
	204
	244
	588
	594
	600
	802
	803
9G-4101	276
	277
9G-4872	485
	486
	487
	488
	496
9G-5127	490
9G-5664	493
	494
9G-5926	386
9G-6655	222
9G-6744	336
9G-6770	277
	281
9G-7516	496
9G-8020	336
9G-8615	302
9G-8629	310
9G-9151	754
9H-0362	346
9H-0846	312
	316
	318
	350
9H-1031	29
	30
9H-3757	276
	280
9H-6454	631
9H-8712	350
9J-0123	718
	722
9J-1979	630
9J-1985	630
9J-1986	630
9J-1988	630
9J-6058	718
	722
9J-7031	630
9J-7203	630
9J-8126	636
	642
	644
	648
9K-3050	378
	380
	386
9K-7290	52
9L-1937	19
9L-5839	149
9L-5854	29
9L-6331	220
9L-6770	190
9L-7712	68
9L-8781	102
	105
	106
	107
	108
	752
9L-8925	15
9L-9068	356
9L-9132	153
	154
	294
	631
9M-0164	846
9M-0853	76
9M-1974	22
	54
	56
	74
	80
	110
	174
	176
	210

9

▶ **PRIMARY REFERENCE**

PART NUMBER INDEX

Part	Page	Part	Page	Part	Page	Part	Page
	220	9P-2665	504		176		522
	306	9P-3066	450	9S-4181	62		636
	364	9P-3709	350		64		638
	813	9P-5708	475		325		640
9M-1976	350	9P-6911	472		378		642
9M-1986	310	9P-7072	320		380		644
9M-2008	348	9P-7121	184		386		646
9M-2904	144	9P-7390	336	9S-4182	31		648
	147	9P-7823	496		32		652
	609	9P-7855	854		52		654
9M-3296	286	9P-7859	853		258		656
9M-3786	117		857		621		658
	476		858		631	9S-8003	664
	478	9P-7860	853		638	9S-8004	36
	482		857		640		142
9M-4007	346		858		646		171
9M-4136	202	9P-8626	336		690		172
9M-4288	636	9P-9150	356	9S-4185	52		530
9M-4355	336	9P-9388	797		54		532
9M-4388	342		798		56		544
9M-5731	334	9P-9390	797		74		621
9M-6522	84	9P-9392	▶797		150		633
9M-6527	118		824		312		652
9M-6803	822	9Q-3668	98		316		654
9M-7002	332	9Q-3670	40		318		656
9M-7394	631	9R-1004	84		365		658
9M-7606	276	9R-1005	84		690	9S-8005	36
	280	9R-3141	324	9S-4188	621		52
9M-7609	276	9R-9733	286	9S-4190	31		294
	280	9S-1018	342		32		300
9M-8406	783	9S-1305	512		36		546
	787	9S-1351	437		302		650
	790		469		329	9S-8006	530
9M-9647	302	9S-1366	61		358		532
9N-0869	208	9S-2005	190		624		544
	210	9S-2006	190	9S-4191	54		664
	760	9S-2009	190		56	9S-8007	362
9N-0943	190	9S-2011	190		309		636
9N-1394	220	9S-2012	190		310	9S-8008	358
9N-1995	478	9S-2013	190		325	9S-8009	476
	482	9S-2014	190		346		478
	745	9S-2248	190		362		482
	747	9S-2255	190		365	9S-8010	362
	848	9S-2260	190		378	9S-8230	376
	880	9S-2262	190		380		446
9N-2038	164	9S-2290	190		386	9S-8752	48
9N-2061	870	9S-2291	191		621		54
9N-3388	190	9S-2292	190		634		56
9N-4369	850	9S-2300	190		638		76
	▶868	9S-2301	190		640		142
9N-4622	444	9S-2302	190		646		152
9N-6108	23	9S-2389	190		662		173
9P-0214	324	9S-2390	190		690		180
9P-0356	353	9S-2393	190	9S-5187	458		183
9P-1475	302	9S-2396	190		460		220
9P-1478	320	9S-2437	190		824	9S-9334	532
9P-1779	430	9S-2544	190	9S-6130	302	9S-9830	190
	444		276	9S-7710	302	9T-0094	580
9P-1780	378		280	9S-7977	▶882	9T-0096	574
	380	9S-3451	190	9S-8001	636		576
	386	9S-3784	193		642	9T-0098	574
9P-1921	320		194		644		576
9P-1922	320		197		648	9T-0584	570
9P-2251	489		200	9S-8002	142	9T-0714	631
9P-2661	503	9S-4167	171		176	9T-1576	534

▶ **PRIMARY REFERENCE**

PART NUMBER INDEX

Part	Page	Part	Page	Part	Page	Part	Page
9T-1579	534	9W-1569	320	9W-5290	406		509
9T-1636	624	9W-1570	320		410	9W-9392	312
9T-1637	534	9W-1571	295	9W-5334	302		316
9T-1642	534	9W-1686	324	9W-5541	500		318
9T-1652	624	9W-1771	728	9W-5588	489	9W-9393	312
9T-1699	624	9W-2451	730	9W-6074	498		316
9T-1710	624		731	9W-6102	295		318
9T-2186	662	9W-2452	732	9W-6103	295	9W-9394	312
9T-2378	540	9W-2466	476	9W-6186	337		316
9T-3493	572		478	9W-6359	332		318
9T-3853	366		482	9W-6577	294	9W-9844	493
9T-4906	626	9W-2707	720		300		494
9T-4977	580		▶728	9W-6770	294	9W-9982	320
9T-5900	566	9W-2757	728	9W-6990	346	9X-0195	203
	568	9W-2760	728	9W-7033	818	9X-0199	288
	580	9W-2822	444	9W-7416	496	9X-0358	782
9T-6001	454	9W-2853	294	9W-7417	496	9X-1054	754
	746	9W-2877	616	9W-7481	300	9X-1386	202
9T-6043	546		618	9W-7553	478	9X-1813	110
9T-6783	546	9W-2992	320	9W-7554	478		171
9T-8346	585	9W-2997	336	9W-7586	478		172
	▶624	9W-3158	380		482		202
9T-8445	626		386	9W-7587	478		262
9T-8446	626	9W-3162	614		482		263
9T-8448	626	9W-3232	312	9W-7594	478		265
9T-8450	626		316		482		266
9T-8452	626		318	9W-7602	682		268
9T-8621	544	9W-3273	342		698		271
9T-8693	518	9W-3301	476		699		272
	▶540		478		700		283
9T-9836	664		482	9W-7882	466		288
9T-9850	544	9W-3372	312		467		520
	▶546		316	9W-7925	300	9X-2027	616
9U-6219	882		318	9W-7926	300		618
9U-7509	882	9W-3373	312	9W-7990	694	9X-2029	380
9U-8069	362		316	9W-8084	396	9X-2038	170
9U-8083	▶708		318		398		760
	725	9W-3377	312		400	9X-2042	815
9U-8085	▶709		316		402	9X-2043	760
	726		318	9W-8269	336		778
9U-8086	▶710	9W-3378	312	9W-8270	336		815
9U-8087	▶711		316	9W-8275	704	9X-2045	760
9U-8088	▶712		318	9W-8276	676		778
9U-8263	769	9W-3620	40		677		805
9U-8676	556		42		678		806
9U-8746	769	9W-3621	40		680	9X-2046	814
9U-9229	444		42		681	9X-2125	830
9U-9942	780	9W-3937	295		▶704	9X-2134	180
9V-2818	831	9W-3939	295	9W-8612	320	9X-2185	764
9W-0194	612	9W-3940	300	9W-8681	612	9X-2205	184
9W-0197	612	9W-4159	302	9W-8760	745	9X-2235	86
9W-0198	612	9W-4361	241	9W-8761	745		88
9W-0645	336		242	9W-8940	396	9X-2297	180
9W-0648	376		246		398	9X-2480	248
9W-0852	738		247		400	9X-2500	190
	754	9W-4414	674		402	9X-2858	536
	770	9W-4477	▶465	9W-9044	406	9X-3265	227
	774		507		410	9X-3401	203
9W-1085	422	9W-4480	465	9W-9122	416		204
	434	9W-4481	496	9W-9123	416		288
9W-1441	256	9W-4813	476	9W-9205	▶466		340
9W-1442	256		478		508	9X-3402	263
9W-1446	256		482		509		388
9W-1447	700	9W-4931	673	9W-9206	▶467		817
9W-1464	516	9W-5232	706		508	9X-3439	754

▶ **PRIMARY REFERENCE**

PART NUMBER INDEX

Part	Page
9X-3451	754
9X-3452	754
9X-3463	230
	231
	232
9X-4292	754
9X-4584	476
	478
	482
9X-5699	204
9X-6165	227
	248
9X-6189	880
9X-6200	880
9X-6258	286
	289
9X-6268	853
	854
	855
	856
	857
	858
9X-6274	326
9X-6281	334
	590
	596
	602
9X-6340	881
9X-6395	666
9X-6458	48
	54
	56
	61
	74
	82
	89
	302
9X-6615	334
9X-6772	88
	89
	138
	222
	224
	234
	236
	238
	240
	244
	248
	250
	252
	550
	690
	782
	786
	790
	794
9X-7269	564
9X-7317	177
9X-7373	754
9X-7378	31
	32
	783
	787
	790
9X-7380	783
	787
	790
9X-7381	783
	787
	790
9X-7382	782
	783
	786
	787
	790
9X-7383	783
	787
	790
9X-7385	749
	783
	787
	790
9X-7405	578
9X-7412	564
9X-7418	177
9X-7419	177
9X-7430	34
9X-7454	366
9X-7505	6
	470
	474
9X-7547	624
9X-7676	366
9X-7680	662
9X-8256	248
	291
	334
	516
	769
	814
	818
9X-8257	616
	618
	697
9X-8258	682
	698
	699
	700
9X-8260	556
	558
9X-8266	450
9X-8267	778
9X-8272	804
9X-8600	184
9X-8872	47
9X-8873	110
9X-8874	61
	110
9X-8875	110
9X-8876	71
9X-8918	766
9X-9120	203
9Y-1800	92
9Y-1981	50
9Y-1985	50
9Y-2092	50
9Y-2094	50
9Y-2187	11
	12
	▶50
9Y-2989	11
	12
	▶72
9Y-5618	50
9Y-6054	66
9Y-7735	66
9Y-7889	40
	42
9Y-8837	14
	▶70
9Y-9236	138
9Z-9127	2
9Z-9128	2
9Z-9129	2
9Z-9211	462
9Z-9214	462
0	
002-3136	348
003-2143	794
005-0469	624
005-0471	624
005-4834	294
008-1430	24
008-6817	36
011-5224	794
030-2135	295
030-3978	36
030-7571	20
030-7972	84
030-8535	302
030-8538	336
031-0218	302
	306
031-1119	137
031-3185	48
032-1853	524
032-9313	68
033-4953	114
033-5879	366
033-6027	624
	662
033-6028	178
033-6033	186
033-6036	624
	662
033-6044	540
033-8248	594
034-3557	312
	316
	318
036-9821	276
	280
036-9823	276
	280
037-4426	764
037-4838	738
039-6360	880
045-4065	277
	281
053-6845	376
053-6846	376
061-6711	336
061-9455	74
067-2551	114
	138
	180
067-3161	496
068-4209	216
	256
	291
068-5893	420
068-8093	336
083-7784	664
083-9527	770
	774
084-4111	862
	864
	866
090-9019	64
095-0843	832
	836
095-0878	766
095-0888	624
095-0942	368
095-1207	362
095-1750	663
096-5962	334
	588
	594
	601
096-6095	532
096-6166	222
	224
1	
100-2878	52
100-2879	11
	12
	▶52
100-3224	766
100-3320	269
100-4853	23
100-4915	369
100-5072	177
100-5179	766
100-5218	15
100-5219	15
100-6211	664
100-6531	190
100-6532	190
100-6656	190
100-6657	190
100-6658	190
100-7399	31
	32
100-8010	642
	644
	648
100-8011	642
	644
	648
100-8012	642
	648
100-9347	11

▶ **PRIMARY REFERENCE**

PART NUMBER INDEX

Part	Page
	12
	▶117
101-0003	844
101-0852	215
101-2850	146
101-2867	822
101-3055	780
101-3120	54
	56
101-3670	50
101-3934	52
101-4194	844
101-4195	844
101-8468	48
101-9754	362
102-0341	764
102-2240	110
	171
	172
102-2828	520
102-2913	585
	881
102-4317	▶842
102-4360	▶148
	156
102-4395	▶250
102-5861	48
102-6229	38
102-6317	846
102-6331	▶372
	422
102-7664	11
	12
	▶258
102-8608	151
102-8801	205
	228
	289
	512
	518
102-8802	88
	98
	136
	188
	202
	203
	204
	230
	234
	238
	244
	252
	269
	270
	271
	274
	283
	286
	288
	289
	369
	422
	520
	550
	588
	594
	600
	652
	654
	658
	738
	754
	770
	774
	782
	786
	790
102-8803	88
	98
	110
	142
	171
	172
	202
	203
	204
	229
	259
	260
	261
	272
	286
	288
	289
	518
	550
	588
	594
	600
	754
	770
	774
102-8804	98
	203
	289
	370
	588
	594
	600
	670
	671
	770
	774
102-8805	254
	340
	422
	738
	742
	774
	799
	800
	801
	802
	803
102-8806	203
	227
	289
	770
	774
	775
	821
102-8811	288
102-8812	286
102-8813	262
	265
	266
	268
102-8815	848
102-8817	286
102-9089	18
103-2543	747
103-3711	148
103-4916	148
103-6037	258
103-6045	22
	24
103-6100	782
	786
	790
103-6262	516
103-6282	624
103-9425	780
103-9527	734
	735
	▶754
104-1844	693
104-3947	369
104-4183	624
104-4820	23
104-4825	12
	▶23
104-6202	286
104-6371	498
104-6372	498
104-6374	498
104-6729	306
104-6730	306
104-6931	630
104-7574	621
	▶667
104-9270	68
105-3482	334
105-9149	289
105-9152	88
105-9227	752
105-9657	744
	▶769
105-9659	744
	▶798
105-9803	388
	▶444
106-0786	698
106-1017	564
106-1419	612
106-1420	612
106-1792	151
106-3881	580
106-3922	667
106-4150	302
	▶308
106-4572	124
	128
	132
	138
106-5472	334
106-5705	630
106-5706	630
106-8186	378
	380
	386
106-8187	378
	380
	386
106-8704	550
	782
	786
	790
106-9212	364
106-9214	364
107-0583	48
107-0799	256
107-1341	588
	594
	600
107-2498	324
107-3786	216
	289
107-3881	▶512
	518
107-3888	512
107-3945	493
	494
107-3946	485
	486
107-3947	485
	486
107-4057	485
	486
	487
	488
107-4393	782
107-4394	782
107-4399	782
107-5769	183
107-6174	422
	432
	434
107-6737	11
	12
	▶19
107-7378	12
	▶64
107-7495	156
	157
	158
107-8084	493
	494
107-8085	493
	494
107-8438	786
107-8439	786
107-8618	142
108-0697	126
	130
	134
108-0720	733
	734
	735
	▶736
108-0957	124

▶ **PRIMARY REFERENCE**

PART NUMBER INDEX

Part	Page
	128
	132
108-0958	124
	128
	132
108-1225	616
108-1226	616
108-1730	402
108-1732	410
108-1735	410
108-1736	410
108-1739	410
108-1741	410
108-1742	410
108-1798	124
	128
	132
108-1799	124
	128
	132
108-1847	664
108-2096	364
108-2675	745
	▶764
108-3138	769
108-3612	151
108-4086	766
108-4087	766
108-4103	767
108-4210	444
108-4211	444
108-4213	▶419
108-4214	419
108-4215	419
108-4217	444
108-4429	358
108-4430	358
108-4431	358
108-4432	358
108-4814	662
108-6523	362
108-6979	▶556
	677
	680
	681
108-6980	▶558
	677
	680
	681
108-6981	556
	558
108-6982	556
	558
108-7743	336
108-7747	302
108-7749	337
108-7930	118
108-8705	114
108-8707	114
108-8708	114
108-8709	114
108-8717	752
108-8884	362
109-0072	82
109-0073	82
109-0076	82
	110
109-0077	93
	110
	117
109-0078	82
	142
109-0119	346
109-0136	▶331
	340
109-1633	782
	786
	790
109-1634	782
	786
	790
109-1645	288
	289
	454
109-3609	126
	130
	134
109-3610	126
	130
	134
109-3611	126
	130
	134
109-3614	124
	128
	132
109-3615	124
	128
	132
109-3873	430
109-3874	420
109-3968	364
109-3969	364
109-4365	306
	▶364
109-5147	▶698
	701
109-5196	2
109-5197	10
109-5761	764
109-5839	64
109-5840	64
109-6406	736
109-6942	586
	▶664
109-7425	174
109-9677	14
	▶555
109-9828	746
109-9829	746
109-9941	733
	▶752
109-9985	58
110-0285	124
	128
	132
110-0978	874
110-2028	516
110-2220	29
110-2445	138
110-2836	306
110-2842	358
110-2915	782
110-2969	782
110-3292	378
	380
	386
110-4206	718
	722
110-4506	782
110-6109	770
	774
110-6393	733
	734
	735
110-6891	752
110-6896	752
110-6897	752
110-6898	752
110-6917	555
110-6918	752
110-6928	752
110-6936	40
110-6938	555
110-7882	516
110-8152	778
110-8318	86
110-8319	86
110-8379	334
	808
110-8380	808
110-8826	86
110-8827	86
110-9734	324
111-1729	▶485
	507
	508
	509
111-1730	▶486
	507
111-2416	270
111-3264	▶458
111-3265	458
	460
111-3266	458
111-3780	334
111-3781	334
111-4482	818
111-5147	760
111-6924	524
111-7266	790
111-7272	786
111-7421	138
111-7470	336
111-7472	337
111-8314	236
	238
	241
	242
	244
	246
	247
111-8642	516
111-8892	366
111-8950	516
111-9251	334
111-9862	280
111-9864	280
111-9866	281
112-1345	380
	386
112-1494	380
	386
112-1500	422
112-2625	752
112-2660	512
112-3462	128
112-4511	337
112-4550	142
112-4740	516
112-4757	516
112-4820	▶516
	518
112-5282	110
112-5585	337
112-8111	390
112-8115	390
112-8116	390
112-8117	▶390
	422
112-8118	390
112-8124	390
112-9217	48
112-9319	588
	594
	600
112-9416	390
113-4420	534
113-5819	390
113-6033	804
113-6362	418
113-6363	138
113-6364	138
113-7335	124
	128
	132
113-7336	124
	128
	132
114-0399	406
	410
114-0401	406
	410
114-0408	450
114-0929	782
	786
	790
114-2031	103
114-2032	103
114-2033	103
114-2368	238
	246
114-2538	450
114-2687	84
114-3929	372
114-4427	31
	32
114-4698	98
114-5157	540
114-5333	782

▶ **PRIMARY REFERENCE**

PART NUMBER INDEX

Part	Page	Part	Page	Part	Page	Part	Page
	786	117-9966	814	122-1671	512		▶280
	790	118-0227	555	122-3347	14	125-0434	110
114-9125	760	118-0639	512		▶147	125-0473	88
114-9363	241	118-0693	746	122-3771	356	125-1302	256
114-9981	372	118-3173	676	122-3772	117	125-2001	▶246
114-9990	372		680	122-4490	147		250
114-9998	372		681	122-6606	536	125-3949	103
115-0001	372		▶701	122-6607	536	125-6533	277
115-0482	365	118-5068	80	122-7127	770		281
115-1024	238	118-5195	738		774	125-6535	277
	244	118-6365	202	122-7375	34		281
115-1025	238	118-7226	202	122-8612	34	125-6536	277
	244		▶272	123-0304	770		281
115-1027	234	118-7441	2		774	125-6537	277
115-1748	770		10	123-0306	770		280
	774		▶430		774	125-6743	126
115-1961	410	118-7442	2	123-2017	522	125-7874	388
115-3055	210		10	123-3202	15	125-7875	288
	▶212		▶420	123-5150	88	125-7876	227
115-3514	365	119-0036	18	123-5748	534	125-8254	746
115-4371	354	119-0942	548	123-5869	438	125-8523	▶40
115-8109	227	119-3025	121		440		97
115-9354	418	119-3662	340	123-5870	438	125-8530	124
115-9360	124		817		440		▶126
	128	119-4763	40	123-6449	202	125-9257	733
	132		42	123-6615	▶156		734
115-9589	▶418	119-5125	2	123-7556	522		735
116-3046	52		▶8	123-7582	532	125-9740	738
116-3749	126	119-5153	8	123-8157	846	126-0747	524
116-4527	660	119-5154	8	123-8266	846		▶634
	661	119-6058	482	123-8329	754	126-0748	634
116-4794	482	119-6059	482	123-9128	846	126-0810	600
	492	119-6109	539	123-9131	846	126-0814	324
116-6202	782	119-6110	539	123-9294	770		524
	786	119-6112	539		774		588
	790	119-6113	539	123-9769	366		594
116-6203	770	119-6114	534	123-9773	281		600
	774		▶539	123-9776	281		606
116-7885	62	119-6625	874	124-1854	36	126-1074	10
	64	119-6626	874	124-1855	36		157
117-0067	202	119-6628	874	124-2906	▶636	126-1699	733
117-0610	280	119-6629	874		646		734
117-1385	54	119-6630	874	124-3243	760		735
	56	119-7845	522	124-4771	563	126-1756	48
117-1881	▶800	120-6537	430		▶564	126-1757	54
	870	120-6538	420	124-4818	▶97		56
117-1882	▶801	120-6539	420	124-5181	457	126-1767	203
	870	120-9243	54	124-5183	457		204
117-2311	288		56	124-5332	306		340
117-4013	6	121-2829	398	124-7128	846	126-1768	263
	470	121-2844	202	124-7520	97		388
	474	121-3307	786		▶124		817
117-4486	813	121-4057	808	124-7521	97	126-3492	778
117-4491	834	121-4862	150		▶103	126-3700	830
117-4492	813	121-4865	144	124-7562	444	126-3701	830
117-4506	832	122-0447	34		▶457	126-4233	▶469
117-5676	853	122-0450	588	124-8100	454		508
117-5677	857		595		514		509
	858		601		518	126-4935	110
117-7773	520	122-0573	874		814	126-5011	269
117-7826	337	122-0574	874	124-9401	337		270
117-8131	814	122-1248	13	124-9774	857	126-5948	670
117-8557	48		▶15		858	126-7534	462
117-8801	48	122-1472	15	124-9775	853	126-7535	462
117-8863	818	122-1486	15	124-9780	88	126-7536	462

▶ **PRIMARY REFERENCE**

PART NUMBER INDEX

Part	Page
126-7537	▶462
126-7574	213
126-7584	462
126-7585	462
126-8799	▶827
127-0291	176
127-1043	818
127-1044	818
127-1045	818
127-1046	818
127-1048	818
127-1054	406
	410
127-1056	406
	410
127-1059	406
	410
127-1570	210
127-1596	512
127-1597	512
127-1598	518
127-1599	518
127-1991	210
127-2269	406
	410
127-3018	814
127-5084	88
127-8778	▶470
	472
127-8779	▶472
	507
	508
	509
127-8831	874
127-8968	827
127-8977	827
127-8979	827
127-9083	754
128-0302	4
	▶312
128-0317	118
128-0613	846
128-0686	846
128-2659	48
128-2660	516
128-2722	▶336
	352
128-2723	▶302
	352
128-2922	118
128-6157	288
128-8510	13
	▶177
128-8853	48
129-0996	▶464
129-0997	464
129-0999	464
129-1000	464
129-1002	464
129-1330	4
	▶6
129-1609	342
129-2327	88
129-2416	40
	42
129-5222	362
129-5223	362
129-5427	54
	56
129-5428	54
	56
129-5476	362
129-7632	662
129-8331	236
	238
	244
129-9452	151
129-9907	118
130-1977	609
130-3139	6
	470
	474
130-3232	238
	244
130-3233	238
	244
130-3281	158
	▶159
130-4701	48
130-5101	9
130-5158	9
130-5300	228
	289
	771
	775
130-6366	697
130-8412	336
130-9191	609
131-0135	410
131-0447	516
131-1644	465
131-1645	466
131-1646	467
131-1651	468
	469
131-4091	337
131-4242	766
131-5137	780
131-5167	766
131-5176	778
131-8674	50
132-0338	813
132-3201	50
132-5180	580
132-5182	566
	568
	580
132-5183	566
	568
	580
132-5535	614
132-5789	205
	771
	775
132-6127	580
132-6534	738
132-6545	248
132-6663	66
132-7077	334
132-7419	516
132-7450	516
132-7994	686
132-8876	309
132-9455	330
132-9652	458
132-9770	54
	56
132-9899	356
132-9900	356
133-0260	269
133-0261	270
133-0526	312
133-1279	309
133-2199	309
133-2249	370
133-2253	796
133-2259	734
	▶796
133-5545	668
133-5615	420
133-5616	420
133-5631	472
	474
133-6614	729
133-8269	610
133-9116	183
133-9405	98
	770
	774
133-9906	170
133-9907	▶170
	173
134-0165	782
134-1251	356
134-2804	248
134-2805	248
134-2967	248
134-3733	416
134-3937	104
134-4126	214
134-4447	248
134-4492	248
134-5251	34
134-6054	110
	▶136
134-7258	881
134-7489	522
134-9602	764
135-1914	▶713
135-1915	717
135-4918	118
135-4925	117
	▶118
135-4928	118
135-5102	697
135-5105	697
135-5109	697
135-5111	696
	▶697
135-5113	697
135-5114	697
135-5499	832
135-5549	▶230
	248
135-8854	522
	532
135-9373	727
135-9374	714
	▶727
136-1107	118
136-1543	810
136-1544	813
136-1596	294
136-1679	362
	▶369
136-1687	▶560
136-3742	118
136-5017	171
136-6820	312
136-6821	312
136-9297	652
	654
	656
	658
136-9298	652
	654
	656
	658
136-9304	660
	661
136-9419	▶47
	48
137-3780	532
137-3936	550
137-4485	437
137-4486	437
137-4488	312
	318
137-4489	312
	318
137-4490	312
	318
137-4491	318
137-4492	312
	318
137-4550	164
137-4940	418
137-5541	176
137-5914	560
137-5921	13
	▶48
137-6603	358
137-7657	342
137-8165	821
137-8467	▶29
	32
137-8468	▶30
	31
137-8469	▶31
137-8708	778
137-8793	329
137-8794	329
137-9755	654
	658
137-9810	312
	318
138-0444	184
138-3094	264
	267
138-3143	▶437

▶ **PRIMARY REFERENCE**

PART NUMBER INDEX

Part	Page
138-3759	336
138-6744	118
139-0532	627
139-1537	630
139-2455	609
139-2456	609
139-4151	▶532
	538
139-6873	171
	172
	▶187
139-6941	▶171
	174
140-2964	324
140-3108	88
140-9698	▶474
141-0243	536
141-2240	814
141-4044	818
141-4123	764
141-4852	652
	654
	656
	658
141-4976	289
141-5151	661
142-0038	86
142-2329	32
142-2769	881
142-6217	29
142-7072	29
142-8393	54
	56
	▶269
142-8394	54
	56
	▶270
142-8395	269
142-8396	270
142-8620	754
142-8858	770
	774
143-1224	156
143-1265	418
143-1288	813
	832
	836
143-2933	171
	172
143-3553	714
143-7721	▶1
143-7722	1
	▶2
	4
143-7740	▶10
143-7767	▶422
143-7768	422
143-7770	▶98
	122
143-7772	98
144-0195	742
	848
144-0331	516
144-4284	336
144-5282	230
144-5283	230
144-5284	230
144-5744	230
144-6142	120
144-6284	210
144-6418	366
144-7871	306
144-7878	336
144-7881	337
144-9088	531
144-9093	368
144-9094	368
144-9097	368
144-9098	368
144-9101	366
	522
145-0326	844
145-1144	360
	371
145-2334	652
	654
	656
	658
145-3405	334
145-3850	286
145-5375	362
145-5985	156
145-6669	158
145-7328	848
145-7806	212
	▶213
145-8707	660
145-8741	870
145-9277	110
146-0240	550
146-2601	22
	24
146-2741	13
	▶32
146-3672	616
146-6315	652
	654
	658
146-6316	660
	661
146-6317	652
	654
	658
146-6318	660
	661
146-6319	660
	661
146-6669	302
146-6670	302
146-8438	22
	24
146-9505	714
146-9506	714
147-0319	▶231
	236
	238
	240
	241
	242
	244
	246
	247
147-0385	234
147-0633	281
147-1160	▶378
	388
147-1680	▶259
	334
147-3527	714
147-3801	54
	56
147-4549	846
147-5088	121
147-6522	846
147-6523	846
147-6541	846
147-7976	▶802
	870
147-7979	▶803
	870
147-9672	104
148-3749	846
148-8313	178
148-8316	588
	595
	601
148-8317	86
148-8318	325
	524
148-8320	120
148-8322	524
	606
148-8323	325
148-8325	589
	595
	601
148-8326	589
	595
	601
148-8335	325
148-8336	98
	525
	601
	690
148-8337	120
148-8339	86
	88
	524
148-8340	589
	595
	601
	690
148-8346	589
	595
	601
148-8347	490
	525
148-8351	120
148-8353	180
148-8355	86
	524
148-8357	325
	525
148-8360	324
	490
	525
148-8361	98
	178
	595
	601
148-8364	178
148-8367	589
	595
	601
148-8369	589
	595
	601
148-8370	589
	595
	601
148-8374	180
	589
	595
	601
148-8378	99
	180
	325
	525
	550
	589
	595
	601
148-8388	525
148-8391	606
148-8392	86
	88
148-8407	325
	690
148-8411	690
148-8415	589
	595
	601
148-8417	525
148-8424	524
148-8426	589
	595
	602
148-8428	589
	595
	602
148-8433	589
	596
	602
	606
	690
148-8435	589
	596
	602
148-8439	589
	596
	602
148-8444	99
	590
	596
	602
148-8449	525
148-8458	325
148-9104	164

▶ **PRIMARY REFERENCE**

PART NUMBER INDEX

Part	Page	Part	Page	Part	Page	Part	Page
149-3137	518	152-9840	325	154-9023	114		738
149-5452	99	153-1025	54	154-9838	475		754
	525		56		476		771
149-5470	652	153-1256	118		478		775
	654	153-1278	158		482	155-2271	98
	656	153-2073	▶232	155-1371	345		203
	658		236		▶353		288
150-1293	654	153-2325	227	155-2255	205		289
150-1955	458	153-3125	▶694		228		550
	460		703		286		588
150-1958	236	153-3126	694		518		594
	▶460	153-3127	694		588		601
150-2557	25	153-3130	▶703		594		771
150-3024	178	153-3132	703		600		775
150-3036	180		▶729	155-2259	388	155-2274	88
150-3065	524	153-3134	▶686		817		289
150-3135	▶25		703	155-2260	98		518
	26	153-4846	▶609		202		771
150-3136	27		703		203		775
150-3345	11	153-6230	88		262		848
	12	153-6237	525		263	155-2725	350
	▶45	153-6243	524		264	155-2742	442
150-4027	606	153-6244	525		265	155-2754	442
150-4037	99	153-6265	524		266	155-2821	346
150-4043	526	153-6976	636		267	155-3624	690
150-4048	88		644		268	155-3629	54
150-4278	11		648		288		56
	▶22	153-7023	38		289	155-3652	▶574
150-4793	34	153-7024	38		518		703
150-5968	590	153-7067	636		550	155-3653	▶570
	596		642		588		703
	602		644		594	155-3849	570
151-0254	870		648		600	155-3850	570
151-0255	870	153-7069	636		690	155-3856	574
151-0256	870	153-7070	636		770		576
151-1150	▶714	153-7549	642		775	155-3857	574
	717	153-7550	642		782	155-3860	574
	724	153-7551	644	155-2261	654	155-4325	320
151-1151	677		648	155-2262	288	155-4327	320
	678	153-7553	642	155-2265	227	155-5161	350
	▶724	153-8925	660		288	155-5619	52
151-2979	▶672		661		289	155-5745	309
	715	153-8926	660		291		310
151-2980	672		661		388	155-6647	346
151-2984	672	153-9650	346		770	155-6648	346
151-2985	707	153-9653	36		775	155-9820	54
151-3004	716	154-0240	686		817		56
151-4854	252	154-2558	346	155-2270	88	156-0244	745
151-5803	516	154-3230	729		98		▶774
151-5925	66	154-3298	485		203	156-1667	388
151-5966	48		486		204		▶770
151-7413	324		487		234	156-2542	▶324
151-9275	516		488		236		340
152-1330	337	154-3307	485		238	156-2546	324
152-1482	585		486		244	156-2548	324
	881		487		252	156-2551	324
152-5221	346		488		286	156-3567	416
152-7141	346	154-3325	▶498		288	156-3569	416
152-7157	348		507		289	156-4124	674
152-7160	346		508		550	156-4125	674
152-7162	350		509		588	156-4126	674
152-7582	34	154-3326	498		594	156-4127	674
152-8073	489	154-3327	498		600	156-4128	674
152-8427	238	154-3329	498		654	156-4406	337
	▶241	154-7443	756		690	156-4575	350

▶ **PRIMARY REFERENCE**

PART NUMBER INDEX

Part	Page
156-4755	388
	▶814
156-4756	▶454
	814
156-4757	454
156-5086	746
156-5087	746
156-5137	348
156-5341	312
	316
	318
	▶344
156-5545	813
156-5684	7
	▶507
156-5685	▶476
	507
156-5700	▶442
156-5783	171
	172
	▶186
156-5970	370
156-6287	774
156-6288	770
156-7238	346
156-7239	346
156-7409	745
	▶760
156-7410	760
156-7485	346
156-8073	149
156-8345	843
156-8346	843
156-8347	388
	▶843
156-8539	14
	▶153
156-8543	11
	12
	▶149
156-8544	11
	12
	▶84
156-8560	84
156-8562	84
156-9270	84
156-9662	388
	▶416
156-9663	416
156-9664	416
156-9780	▶320
	352
157-0264	388
	▶450
157-0687	348
157-0688	348
157-0818	▶7
157-0819	7
	▶388
157-0820	7
	▶340
157-0821	7
	▶584
157-0822	▶538
	584
157-0823	584
	▶585
157-0824	▶552
	585
157-1350	348
157-1361	774
157-1457	814
157-1740	▶5
	7
157-2153	660
	661
157-2284	670
	671
157-2389	98
157-2473	160
	▶162
157-2474	162
157-2475	162
157-2476	162
157-2477	162
157-2479	162
157-2480	162
157-2481	162
157-2741	770
157-3100	▶478
	508
157-3101	478
	482
157-3110	▶482
	509
157-3521	416
157-5072	298
	299
	▶316
157-5073	▶298
	340
157-5075	312
	316
	318
157-7017	98
157-7022	98
157-7086	151
157-7087	11
	12
	▶151
157-7122	98
157-7195	7
	▶11
157-7196	9
	▶12
157-7324	585
	▶586
157-7325	585
	▶606
157-7326	585
	▶614
157-7327	585
	▶622
157-7328	552
	▶805
157-7329	552
	▶588
157-7331	549
	▶553
157-8027	549
	▶610
157-8029	553
	▶594
157-8035	▶9
157-8036	▶508
157-8037	▶509
158-0248	231
	232
158-0250	231
	232
158-0252	231
	232
158-0518	444
158-2734	516
158-2735	516
158-2959	▶733
158-2960	▶734
158-3026	574
	576
158-3027	570
	582
158-3416	48
158-3653	674
158-3657	674
158-4631	▶562
158-6373	562
	▶616
158-6394	562
	▶702
158-6395	699
158-6397	▶699
	702
158-6398	▶692
	701
	702
158-6400	616
	618
158-6401	616
158-6439	10
	▶735
158-6632	288
158-7686	616
	618
158-7690	744
	▶848
158-7691	744
	▶870
158-7694	▶744
	745
158-7695	744
	▶778
158-7696	744
	▶746
158-7697	746
158-8076	340
	▶354
158-8077	▶208
	340
158-8078	514
	▶518
158-8079	305
	▶334
158-8906	778
158-9956	650
159-0068	▶252
159-0226	142
159-0653	▶738
	818
159-0725	745
	▶818
159-0867	616
159-0868	699
159-1549	288
159-1628	▶680
159-1629	▶681
159-1633	▶676
159-1868	142
159-1869	142
159-1870	149
159-2045	376
159-2542	▶299
	340
159-2950	829
	830
	▶839
159-3453	600
159-3568	760
159-3781	652
	654
	658
159-3878	388
	▶432
159-3879	432
159-3880	432
159-3881	432
159-3961	760
159-3967	735
	▶782
159-3968	734
	▶786
159-3969	733
	▶790
159-4698	256
159-4712	770
	774
159-4713	774
159-4714	770
159-4717	745
159-4719	880
159-5860	378
159-5908	7
	▶14
159-5977	434
159-5978	434
159-5979	434
159-5984	2
	▶434
159-6018	▶178
	388
159-6019	388
	▶490
159-6120	178
159-6128	324
159-6132	324
159-6133	324
159-6160	14
	▶274

▶ **PRIMARY REFERENCE**

PART NUMBER INDEX

Part	Page	Part	Page	Part	Page	Part	Page
159-6161	▶86		388	160-2201	606	160-4784	550
159-7162	▶530	159-9264	▶288	160-2202	606	160-4792	594
	538		388	160-2203	606	160-4793	594
159-7177	616	159-9309	▶524	160-2205	606	160-4794	594
159-7200	616		538	160-2206	606	160-4795	594
159-7301	733	159-9350	110	160-2382	406	160-4919	388
	734	159-9351	110	160-2383	406		▶414
	735	159-9376	42		410	160-4920	▶374
	▶750		98	160-2385	406		388
159-7590	▶244	159-9379	60		410	160-4921	▶194
	388	159-9429	14	160-2392	▶406	160-4934	11
159-7614	202		▶42	160-2394	9		12
159-7615	238	159-9549	553		▶410		▶110
	244		▶652	160-2395	410	160-5556	▶684
159-7941	▶318	160-0082	814	160-2411	410	160-5560	▶554
	426	160-0262	▶234	160-2413	410		684
159-7943	760	160-0265	234	160-2416	450	160-5569	11
159-7945	760	160-0566	11	160-2418	450		12
159-7946	760		12	160-2419	450		▶58
159-7948	760		▶13	160-2422	376	160-5570	203
159-7949	760	160-0567	▶193	160-2429	376	160-5574	288
159-8022	388	160-0569	11	160-2440	414	160-5579	203
	▶880		12	160-2441	414	160-5723	114
159-8028	881		▶60	160-2442	414	160-5843	670
159-8104	▶392	160-0752	654	160-2443	▶260		671
159-8105	▶404		656		334	160-5844	670
159-8106	▶184	160-0766	554	160-2456	354		671
	388		▶654		▶356	160-5951	553
159-8107	760	160-1008	114	160-2710	▶240		▶638
159-8108	760	160-1058	▶236	160-3585	320	160-5952	552
159-8109	760	160-1061	236	160-3588	320		▶640
159-8125	682	160-1122	11	160-3616	▶696	160-5953	638
159-8142	677		12	160-3619	▶604		640
	678		▶142		696		▶642
	▶682	160-1124	586	160-3916	11		646
159-8143	682	160-1125	586		12	160-5954	638
159-8144	682	160-1129	614		▶120		640
159-8153	▶674	160-1431	334	160-3917	120		▶644
	677	160-1432	334		▶121		646
	678	160-1433	334	160-4213	110	160-6307	692
159-8367	▶745	160-1434	334	160-4301	588	160-6309	580
159-8377	▶677	160-1435	334		594		673
159-8378	▶678	160-1436	518		600	160-6521	388
159-8807	713	160-1437	518	160-4302	588		▶830
	724	160-1550	524		594	160-6999	107
159-8809	745	160-1551	524		600	160-7000	107
	▶826	160-1552	524	160-4303	588	160-7001	106
159-8816	826	160-1553	524		594	160-7002	106
159-8838	1	160-1554	524		600	160-7003	105
	▶426	160-1555	524	160-4304	588	160-7004	105
159-8853	735	160-1556	524		594	160-7005	14
159-8866	46	160-1557	524		600		▶102
159-8939	682	160-1660	682	160-4306	588	160-7006	108
159-9019	11	160-1773	110		594	160-7007	108
	12	160-1806	▶549		600	160-7008	▶104
	▶46	160-1809	1	160-4326	588	160-7165	839
159-9035	5		4		594		840
	▶217		10		600		▶844
159-9202	588		▶238	160-4366	▶160	160-7178	▶831
	594	160-1823	184	160-4702	805	160-7186	745
	600	160-1834	324	160-4703	805		▶840
	760		▶341		806	160-7188	831
159-9257	770	160-1835	341	160-4713	150		▶841
	774		▶342	160-4781	▶550	160-7402	13
159-9263	▶202	160-2200	606	160-4782	550		▶36

▶ **PRIMARY REFERENCE**

PART NUMBER INDEX

Part	Page
160-7428	342
160-7441	▶157
160-7442	10
	▶158
160-7443	10
	157
160-7451	11
	12
	▶26
160-7452	26
	▶27
160-7720	112
160-7765	846
160-7766	846
160-7767	846
160-7827	▶220
160-8151	34
160-8403	684
	▶690
160-8408	306
	▶360
160-8612	554
	▶646
160-8769	240
160-9933	340
	▶345
161-1014	554
	▶600
161-1083	778
161-1084	778
161-1085	778
161-1086	778
161-1091	778
161-1092	778
161-1093	778
161-1094	778
161-1096	778
	▶780
161-1097	780
161-1098	778
161-1099	780
161-1189	▶222
161-1503	11
	12
	▶286
161-1507	11
	12
	▶180
161-1508	54
	56
161-1509	11
	▶54
161-2109	600
161-2338	600
161-2339	600
161-2423	11
	12
	▶80
161-2424	14
	▶128
161-2427	11
	12
	▶112
161-2428	14
	▶78
161-2430	14
	▶144
161-2431	14
	▶150
161-2435	14
	▶16
161-2684	644
	648
161-2685	642
161-2853	174
161-3006	121
161-3007	121
161-3008	121
161-3009	121
161-3202	11
	12
	▶174
161-3232	128
	▶130
161-3233	▶132
161-3234	132
	▶134
161-3304	▶346
	348
161-3305	▶348
	350
161-3306	340
	▶350
161-3610	814
161-3611	760
161-3615	552
	553
	554
	▶758
161-3616	553
	▶763
161-3617	▶224
161-3928	78
161-3948	690
161-3958	814
161-3959	814
161-3963	518
161-3964	518
161-3967	814
161-4018	342
161-4019	342
161-4024	760
161-4112	13
	▶92
161-4178	13
161-5793	324
	▶365
161-5794	365
161-5795	365
161-5967	766
161-6041	518
161-6149	368
	522
	663
	668
161-6161	663
	668
161-6207	745
	▶794
161-6291	142
161-6612	78
161-7539	841
	▶846
161-8142	▶88
161-8399	24
161-8400	12
	▶24
161-8414	12
	▶56
161-8415	56
161-8426	114
161-8893	▶620
	690
161-8979	▶261
	516
161-9289	840
161-9667	324
	▶362
161-9925	258
	▶262
161-9926	203
	▶263
161-9929	36
	▶264
161-9931	32
	▶265
161-9937	342
161-9938	342
161-9939	342
162-0162	588
	594
	600
	▶650
162-0384	609
162-0385	609
162-0386	609
162-0387	609
162-0388	609
162-0390	694
162-0662	562
	▶566
162-0663	562
	▶568
162-0665	568
162-0667	566
162-0677	566
	568
162-1587	11
	12
	▶74
162-1590	74
162-1622	11
	12
	▶183
162-2166	493
	494
162-2167	485
	486
	487
162-2515	452
162-2516	12
	▶452
162-2679	92
162-2682	92
162-2787	342
162-2791	342
162-2792	342
162-2913	630
162-3285	74
162-3891	606
162-3934	454
162-5218	694
162-5220	694
162-5357	▶329
	356
162-5358	329
162-5367	356
	▶358
162-5497	172
162-6157	324
162-7122	86
162-7578	274
162-7586	86
162-7862	493
	494
162-7863	485
	486
	487
	488
162-7865	524
162-8053	782
	786
	790
162-8054	782
	786
	790
162-8056	782
162-8057	782
162-8629	380
	386
162-9174	68
162-9175	68
163-0057	524
	▶544
163-0829	▶621
	638
	640
	646
163-0895	152
163-1146	844
163-1592	544
163-1827	524
163-2013	682
163-2415	442
163-3281	814
163-3286	830
163-3433	588
	594
	600
163-3434	594
	600
163-3435	594
	600
163-3436	553
	554
	▶806
163-4061	10
	▶94
	122
163-4062	10

▶ **PRIMARY REFERENCE**

PART NUMBER INDEX

Part	Page
	▶95
	122
163-4520	525
163-4772	525
163-5116	674
163-5455	168
163-5512	652
	654
	656
	658
163-5641	▶306
	352
163-5671	642
163-5744	422
163-5745	422
163-5748	158
163-6474	564
163-6475	606
163-7217	180
163-7219	180
163-7220	180
163-7381	▶68
	182
163-8824	606
163-9308	652
	658
163-9463	▶679
163-9464	679
	▶715
163-9465	▶707
	715
163-9466	715
	▶716
164-0050	362
164-0051	362
164-0052	362
164-0231	525
164-0234	340
	▶352
164-0758	814
164-0847	770
	774
164-0938	642
164-2108	360
	371
164-2553	14
	▶152
164-2817	794
164-2910	324
164-2924	324
164-2963	98
164-3414	184
164-3417	184
164-3683	604
164-3684	604
164-3698	630
164-3699	630
164-3700	585
	▶630
164-3744	203
164-3759	138
164-4146	822
164-4180	325
	378
	386
164-4365	814
164-4413	525
164-4459	324
164-4531	813
164-4883	811
	812
164-4940	550
164-5549	325
164-5570	590
	596
	602
164-5951	846
164-5959	450
164-5963	450
164-5966	406
	410
164-5968	406
	410
164-6174	638
164-6225	374
	▶376
164-6963	762
164-7556	230
164-7577	203
	▶283
164-7677	646
164-7678	640
164-7867	▶438
164-7868	440
164-7908	99
164-8101	240
164-8102	203
164-8128	203
164-8389	▶440
164-9287	376
164-9325	438
	440
164-9541	334
164-9633	153
164-9657	654
164-9760	144
164-9761	144
	▶146
164-9790	374
164-9805	376
164-9869	180
164-9928	684
164-9929	770
164-9930	684
164-9999	881
165-0020	8
165-0101	576
165-0102	▶576
	703
165-0107	600
165-0117	438
165-0121	438
	440
165-0486	324
165-1675	438
	440
165-2443	▶400
	406
165-2446	▶396
	406
165-2449	▶402
	410
165-2451	▶398
	410
165-2524	144
165-2577	828
165-2578	▶828
165-3725	374
165-3930	52
165-3932	52
165-3936	52
165-4489	142
165-5140	194
	▶196
165-5655	228
165-6170	80
165-6779	334
165-6857	814
165-6940	▶137
	138
165-6970	534
165-7004	786
165-7021	102
	▶105
165-7022	102
	▶106
165-7023	102
	▶107
165-7637	444
165-7833	341
165-7834	342
165-7854	786
165-8079	309
165-8084	444
165-8354	616
165-8355	616
165-8433	805
	806
165-9100	334
165-9101	334
165-9102	334
165-9103	334
165-9104	334
166-0266	790
166-2903	34
166-2904	34
166-3320	487
	488
166-3321	487
	488
166-3322	487
	488
166-3323	428
	▶487
166-3324	487
	488
166-3733	780
166-3739	34
166-3773	128
166-4420	427
	428
	▶488
166-4427	4
	▶427
166-4428	1
	▶428
166-5336	130
	134
166-6781	844
166-6928	770
	774
	▶799
166-9144	54
	56
167-0113	14
	▶114
167-0114	11
	12
	▶116
167-0138	256
	▶285
167-0642	34
167-0643	34
167-1530	770
	774
167-1801	628
167-1884	236
	242
	244
167-1885	▶242
	244
	252
167-2088	388
	▶824
167-2190	572
167-2208	564
	570
	574
	576
	580
167-2211	566
	568
	578
	582
167-2300	572
167-2319	570
	574
	576
	580
167-2324	566
	568
	582
167-2452	572
167-2469	564
	570
	574
	576
	580
167-2474	566
	568
	578
	582
167-4224	203
167-6834	306
167-6861	114
167-7629	518
167-7630	▶216
167-7751	512
167-8126	39
167-9270	164

▶ **PRIMARY REFERENCE**

PART NUMBER INDEX

Part	Page
167-9524	360
	371
168-0369	▶254
	770
	774
168-2100	39
168-4528	606
168-4539	66
168-4629	203
168-5193	525
168-5194	525
168-6892	525
168-7035	490
168-7246	66
168-7354	120
169-0651	811
169-0697	812
169-0908	102
	105
	106
	107
	108
169-1026	836
169-2876	881
169-3323	638
	▶648
169-4736	346
169-4737	346
169-4738	346
169-4739	346
169-4740	346
169-4741	346
169-4893	104
	▶108
169-5452	782
	786
	790
169-6902	454
169-6907	454
169-7380	839
	840
	841
	844
169-8761	324
169-9119	638
	640
	646
169-9635	848
169-9636	780
169-9637	745
	▶804
169-9639	393
169-9648	▶740
	745
169-9649	740
	▶742
169-9650	742
170-0251	814
170-0255	814
170-0258	745
170-0260	774
170-1112	813
170-1114	813
170-1115	813
170-1574	609
170-1575	609
170-3357	650
	▶663
170-3360	650
	▶668
170-3461	288
170-4001	642
170-4666	220
170-4672	11
	12
	▶20
170-4673	110
170-4674	11
	12
	▶61
170-4737	34
170-4738	34
170-4891	690
170-5758	1
	▶475
170-5849	760
170-5851	760
170-5852	760
170-5853	760
170-5854	746
170-5855	746
170-5944	786
170-7142	227
170-7259	824
170-7260	824
170-7568	588
	594
	600
170-8590	822
170-8661	68
170-9198	227
171-1230	832
	836
171-1283	14
	▶138
171-2213	256
171-2438	804
171-3013	588
	600
171-3014	588
	594
	600
171-3052	530
	▶534
171-3054	534
171-3055	534
171-3057	534
171-3058	534
171-3059	534
171-3060	534
171-3061	534
171-3068	534
171-5349	271
171-5989	534
171-6682	832
	836
171-7077	305
171-8714	476
171-8787	588
	594
	600
172-0335	14
	▶197
172-1672	555
172-2391	370
172-2392	330
	▶370
172-2416	832
	836
172-4001	813
172-4863	256
172-4864	204
172-4871	454
172-5072	416
172-5074	416
172-5262	▶305
	340
172-5263	▶514
	538
172-5291	805
	806
	814
172-5404	594
172-5457	116
172-8027	25
	27
172-8600	454
172-9290	738
172-9383	58
172-9389	208
	▶215
	757
173-0419	102
173-0511	642
	644
	648
173-0512	642
173-0514	644
	648
173-0515	642
173-0948	344
173-1028	▶813
	832
	836
173-1566	288
173-1643	▶874
	880
173-1644	874
173-1645	874
173-2052	810
173-2390	25
	27
173-3082	834
173-3083	838
173-3207	98
173-3208	98
173-3209	98
173-4511	130
173-4512	130
173-5787	839
	840
	841
173-6530	▶821
173-7035	839
	840
173-7126	175
173-7148	786
173-8453	362
173-9682	564
173-9779	572
174-1495	754
174-1504	738
174-2043	642
	644
	648
174-2231	▶766
	844
174-2237	766
174-3038	588
	594
	600
174-4590	880
174-4895	159
174-4909	329
	▶371
174-7875	204
174-7876	205
175-0070	738
175-1349	770
	774
175-2221	286
175-3617	34
175-3632	476
175-3633	476
175-3637	492
175-3638	492
175-3678	821
175-3950	770
	774
175-4393	774
175-4972	▶330
	356
175-7016	288
175-7017	▶256
	288
175-7018	256
175-7020	256
175-7021	256
175-7022	256
175-7023	256
175-7024	256
175-7025	256
175-7026	256
175-7523	38
175-7526	38
175-7900	572
176-0259	356
176-0840	2
176-0841	2
176-2504	738
176-2505	738
176-5618	▶175
	176
176-5744	66
176-5745	13
	▶66
176-5749	66
176-6496	369
176-9918	▶34

▶ **PRIMARY REFERENCE**

PART NUMBER INDEX

Part	Page	Part	Page	Part	Page	Part	Page
	38	179-7210	616	183-8401	366	184-3291	814
177-1491	324	179-9557	204	183-8402	366	184-3579	216
177-1860	822	180-3489	▶492	183-8403	▶531	184-4395	478
177-1862	822	180-3835	▶227		532		483
177-1863	832	180-3837	227	183-8405	531		496
	836	180-5051	226	183-8406	531	184-5321	553
177-4152	15		▶228	183-8408	531		▶656
177-4308	88	180-5052	228	183-8409	522	184-5498	197
177-4930	810	180-5559	834		▶547	184-6011	▶838
177-4935	▶822		838	183-8410	547		839
	832	180-5560	834	183-8412	547	184-7425	204
	836		838	183-8413	547	184-7766	770
177-4937	834	180-5734	32	183-8414	▶522		774
	838	180-6152	652		532	184-8026	388
177-6831	374		654	183-8415	522	184-8060	334
177-6979	▶520		656	183-8416	522	185-2076	814
	525		658		531	185-3503	356
177-7352	▶829	180-6600	824	183-8417	▶368	185-3533	770
177-7496	66		826		548		774
177-9653	289	180-7304	▶836	183-8418	368	185-3630	882
177-9656	216		838	183-8419	368	185-3666	814
	289	180-7305	▶812	183-8420	368	185-5294	197
178-0568	▶309		836	183-8421	368	185-5529	376
	325	180-7475	656	183-8423	368	185-5628	216
178-0603	▶832	180-7477	656	183-8424	368	185-6349	18
	834	180-8066	288	183-8425	368	185-6392	193
178-0604	▶811	180-9333	525	183-8426	368		194
	832	180-9340	266	183-8427	368		197
178-0605	▶810		267	183-8428	368		200
	811		268	183-8429	368	185-6393	279
	812	183-3441	204	183-8430	532	185-6684	324
178-0606	▶834	183-3648	834		▶548	185-7141	227
	840		838	183-8431	548	185-7444	142
	841	183-4346	▶172	183-8442	548	185-7445	210
178-0607	822		220	183-8443	548	185-7976	126
178-0608	822	183-4503	247	183-8444	548		134
178-0609	822	183-4652	234	183-8445	532	185-8055	376
178-0612	376		▶247		▶536	185-8056	376
178-1780	286	183-5296	36	183-8446	536	185-9699	13
178-3003	770		▶38	183-8447	536		▶18
178-4144	366	183-6765	874	183-8448	536	185-9978	11
178-4147	366	183-6925	13	183-8449	536		12
178-4164	522		▶165	183-8450	536		▶176
178-4171	522	183-7205	616	183-8451	536	186-0067	14
178-7298	376	183-7206	616	183-8452	536		▶279
178-7517	444	183-7547	68	183-8453	536	186-0928	219
178-7877	656	183-7648	2	183-8454	532		756
178-7907	810		▶198	184-0870	340	186-0929	219
178-9316	126		200	184-1503	830		▶756
	134	183-8374	88	184-1527	▶628	186-1456	406
178-9572	▶164	183-8385	366	184-2298	832		410
	165	183-8386	366		836	186-1457	161
178-9573	164	183-8387	366	184-2299	832	186-1733	114
178-9580	204	183-8388	▶366		836	186-2001	38
179-0006	88		532	184-2300	812	186-2169	11
179-0600	227	183-8389	366	184-2472	214		12
179-0787	204	183-8390	366	184-3152	824		▶210
179-1979	116	183-8391	366	184-3269	830	186-2379	▶310
179-2891	782	183-8392	366	184-3270	830		324
	786	183-8395	366	184-3285	745	186-2741	821
	790	183-8396	366	184-3286	814	186-3075	350
179-6444	204	183-8397	366	184-3287	745	186-3718	▶248
179-6445	204	183-8398	366	184-3288	814	186-3720	14
179-6874	254	183-8399	366	184-3289	745		▶161
179-7209	616	183-8400	366	184-3290	745	186-3735	188

▶ **PRIMARY REFERENCE**

PART NUMBER INDEX

Part	Page
	228
	283
	588
	594
	600
	654
	670
	821
186-4087	88
186-4857	742
186-4998	334
186-5097	770
186-5099	770
186-6189	782
	786
	790
186-6439	380
187-0428	▶380
	422
187-0541	663
187-1679	184
187-5276	▶168
188-0755	137
188-1079	758
	▶762
188-2586	822
188-2890	656
188-2892	654
188-2893	656
188-5095	168
188-5145	782
	786
	790
188-6140	550
	▶633
188-6141	633
188-8849	231
	232
189-0135	588
	594
	600
189-0488	880
189-0971	▶122
189-1839	370
189-5358	804
189-5359	804
189-5762	180
189-9240	204
	228
189-9771	66
190-0085	438
	440
190-0089	438
	440
190-1030	256
190-1475	609
190-1668	876
190-1669	876
190-1686	438
	440
190-2277	320
190-2278	302
190-2840	204
190-2937	745
190-3443	183
190-3848	204
190-4243	376
190-5149	376
191-1738	376
191-3005	177
191-3026	54
	56
191-3028	660
	661
191-3029	660
	661
191-3583	566
	568
	578
	582
191-3584	566
	568
191-3585	566
	568
191-3587	588
	594
	600
191-5101	588
	594
	600
191-8280	98
191-8281	98
191-8282	98
191-8283	422
191-8693	204
191-8920	658
191-8921	652
	654
	656
	658
192-0158	324
192-0542	11
	12
	▶71
192-3016	▶393
	814
192-3017	393
192-3018	393
192-3025	814
192-4093	▶808
192-4209	216
192-5425	138
192-7054	821
192-7468	194
	200
192-7469	194
	200
192-9734	228
192-9742	98
192-9799	217
	757
192-9800	217
	▶757
193-1598	168
193-2550	204
	▶271
	337
193-3063	682
	698
	699
	700
193-3356	774
193-3359	774
193-3944	376
193-3973	228
	288
193-5768	168
193-7377	393
193-8549	214
193-8550	▶214
	228
	273
193-8572	713
	▶717
194-1094	291
194-1466	770
194-4268	291
194-4269	▶291
	745
194-5031	654
194-5032	652
	658
	▶660
194-5033	652
	654
	656
	658
	▶661
194-6030	444
194-6083	555
194-6722	▶266
194-6724	▶267
194-6725	▶268
194-6835	98
194-7005	99
194-7008	588
	594
	600
194-7034	334
194-7664	205
194-8124	36
194-9350	218
	273
194-9351	218
	▶273
194-9380	288
195-0417	205
195-0759	228
195-2194	775
195-3312	588
	594
	600
195-4450	808
195-4454	808
195-4455	808
195-5200	5
	▶219
195-5202	▶218
	226
195-5236	▶226
195-5857	228
195-6283	682
	698
	699
	700
195-8510	86
195-8666	88
195-8667	88
195-8711	9
	▶817
195-9324	88
195-9354	288
196-0065	606
196-0066	622
196-0071	606
196-1921	588
	594
	601
196-3598	808
196-3600	808
196-5515	658
196-7155	114
196-7757	588
	594
	601
196-8884	337
196-8946	288
196-8950	288
196-9011	54
	56
196-9846	824
196-9946	▶493
	507
	508
	509
196-9947	492
	▶494
	507
	509
196-9948	493
196-9949	494
197-2679	138
197-3604	444
197-4628	288
197-4980	194
	200
197-5108	549
197-5469	610
197-5932	588
	594
	601
197-6223	112
197-6281	222
197-7338	610
197-7340	610
197-7341	610
197-7689	844
197-7947	652
197-8494	690
197-8495	690
197-8620	386
197-9701	386
198-0156	786
198-1335	180
198-2694	205
198-4585	550
198-6574	824
198-6575	824
198-6868	324
198-7464	750

▶ **PRIMARY REFERENCE**

PART NUMBER INDEX

Part	Page
198-7740	61
198-8998	438
	440
198-8999	438
	440
198-9705	771
	775
198-9706	771
	775
198-9707	771
	775
198-9753	386
198-9754	4
	▶386
199-0818	▶4
199-1192	205
199-3202	274
199-3213	410
199-4010	289
199-4013	324
199-4014	324
199-4024	324
199-4025	178
199-4027	525
199-4028	80
199-4066	782
	786
	790
199-4068	438
	440
199-4147	652
199-5128	222
	224
199-5142	224
199-6321	180
199-6609	652
199-7077	612
199-7078	618
199-7079	618
199-7830	658
199-7833	658
199-7834	658
199-9785	227
199-9797	770
	774
199-9798	289
200-3200	154
200-3905	61
200-3908	750
200-3909	750
200-4178	525
200-4573	518
200-4574	518
200-5003	658
200-5370	302
200-6567	324
200-6568	324
200-6569	324
200-6570	324
200-6571	324
201-3304	654
201-5696	618
201-5703	▶618
	676
	680
	681
201-9624	518
202-0599	658
202-1205	138
202-1331	2
202-1345	9
	▶154
	160
202-4981	692
202-9750	80
202-9751	80
202-9780	10
	▶200
202-9824	880
203-6550	157
203-7819	560
203-7820	560

2

Part	Page
200-0189	552
	554
	▶658
200-0750	588
	594
	601
200-1172	59
200-1302	11
	12
	▶59
200-1754	586
200-1912	160
200-2183	205
200-2423	324
200-2964	633

▶ **PRIMARY REFERENCE**

MEMORANDA



© 2001 Caterpillar
All Rights Reserved

Printed in U.S.A.