CATERPILLAR®

SEBP4195-44
December 2008

VOLUME II
Pages 595-1234

RUTHZIL TRATOR COMERCIAL DE PEÇAS LTDA 11 97083-6812 ROLANDO CITRANGULO

Parts Manual

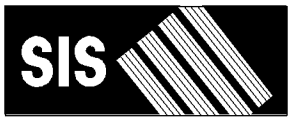

See "General Information" for New Parts Manual Features.

D8T TRACK-TYPE TRACTOR

J8B1-Up (Machine)
LHX1-Up (Engine)
DZH1-Up (Transmission)
A5G1-Up (Bulldozer)
B8S1-Up (Bulldozer)
D1E1-Up (Bulldozer)
D1F1-Up (Bulldozer)
DZR1-Up (Bulldozer)
DZS1-Up (Bulldozer)
DZX1-Up (Bulldozer)
L1J1-Up (Ripper)
R8S1-Up (Ripper)
BZC1-Up (Torque Converter)

Powered By C15 Engine
This Parts Manual is also available in .PDF format on Compact Disc (CD-ROM)-Caterpillar Form No. SERP4195-44

Product and Dealer Information

Note: For product identification plate locations, see the section “Product Identification Information” in the Operation and Maintenance Manual.

Delivery Date: _____

Product Information

Model: _____

Product Identification Number: _____

Engine Serial Number: _____

Transmission Serial Number: _____

Generator Serial Number: _____

Attachment Serial Numbers: _____

Attachment Information: _____

Customer Equipment Number: _____

Dealer Equipment Number: _____

Dealer Information

Name: _____ Branch: _____

Address: _____

_____

_____

	Dealer Contact	Phone Number	Hours
Sales:	_____	_____	_____
Parts:	_____	_____	_____
Service:	_____	_____	_____

MEMORANDA

TABLE OF CONTENTS

Name	Page
GENERAL INFORMATION	A5
REPAIR ALTERNATIVES	A8
SUPPLEMENTAL COOLANT ADDITIVES	A9
MAINTENANCE PARTS	A10
INDEX	A16
MACHINE ARRANGEMENT	1
CHASSIS AR	1
COLD WEATHER AR	2
GENERAL AR	2
MACHINE AR-HIGH AMBIENT TEMP	3
MODIFICATION AR-WOODCHIP	3
WASTE HANDLING AR	5
ENGINE ARRANGEMENT	11
ENGINE AR-COMPLETE	11
ENGINE AR-CORE	15
INSTALLATION AR-ENGINE	17
BASIC ENGINE	18
ADAPTER GP-PUMP DRIVE	18
BASE GP-VALVE COVER & INJ HARN	19
CAMSHAFT GP	22
COVER GP-CYLINDER BLOCK	23
COVER GP-FLYWHEEL HOUSING	25
COVER GP-FRONT HOUSING	27
COVER GP-SOUND SUPPRESSION	28
COVER GP-VALVE MECHANISM	29
CRANKSHAFT GP	35
CYLINDER BLOCK AS	36
CYLINDER BLOCK GP	38
CYLINDER HEAD AS	46
CYLINDER HEAD GP	52
DAMPER & PULLEY GP	58
FASTENER GP-ENGINE WIRING	59
FASTENER GP-FRONT HOUSING	60
FASTENER GP-VALVE MECHANISM	62
FLYWHEEL GP	63
GEAR GP-CAMSHAFT	64
GEAR GP-FRONT	65
GEAR GP-REAR	67
HOUSING GP-FLYWHEEL	69
HOUSING GP-FRONT	71
LIFTING GP-ENGINE	75
MECHANISM GP-FUEL PUMP & VALVE	77
MOUNTING GP-ALTERNATOR & COMPR	81
PAN GP-OIL	82
PISTON & ROD GP	94
PLUG GP-CYLINDER BLOCK	100
PLUG GP-CYLINDER HEAD	103
ROCKER ARM GP	104
SEAL GP-CRANKSHAFT	110
SUPPORT GP-ENGINE	111
SUPPRESSION AR-SOUND	113
TRUNNION GP-ENGINE	114
LUBRICATION SYSTEM	115
BREATHER GP	115
FASTENER GP-OIL PUMP MOUNTING	117
FILLER GP-ENGINE OIL	118
FILTER GP-ENGINE OIL	119
FUMES DISPOSAL GP	121
GAUGE GP-OIL LEVEL (DIPSTICK)	123
LINES GP-TURBOCHARGER OIL	124
OIL CHANGE GP-HIGH SPEED	126
PRELUBRICATION AR-ENGINE	128
PUMP GP-ENGINE OIL	130
COOLING SYSTEM	131
CORE GP-OIL COOLER	131
FAN AR-REVERSIBLE	132
FAN GP-SUCTION	136
LINES GP-WATER	138
PUMP GP-WATER	146
RADIATOR AR	148
RADIATOR GP	150
TANK GP-COOLANT	155
AIR INLET AND EXHAUST SYSTEM	157
AFTERCOOLER GP-AIR	157
AIR CLEANER GP	159
DUST EJECTOR GP	161
LINES GP-AIR	162
MANIFOLD GP-EXHAUST	164
MOUNTING GP-AIR CLEANER	165
MUFFLER GP	166
PRECLEANER AR	167
PRECLEANER GP	169
SHIELD GP-MANIFOLD	177
TURBOCHARGER GP	178
FUEL SYSTEM	180
ADAPTER GP-FAST FILL FUEL	180
FILTER GP-PRIMARY FUEL	182
FILTER GP-SECONDARY FUEL	186
FILTER GP-WATER SEP & FUEL	192
LINES GP-FUEL	193
LINES GP-FUEL FILTER	195
PUMP & MTG GP-FUEL TRANSFER	203
PUMP GP-FUEL INJECTION	204
PUMP GP-FUEL PRM & WATER SEP	205
TANK GP-FUEL	206
VALVE GP-CHECK	212

TABLE OF CONTENTS

Name	Page
ELECTRICAL AND STARTING SYSTEM	214
ALARM GP	214
ALTERNATOR GP-CHARGING	215
BATTERY & WIRING GP	226
BATTERY GP	234
BLOCK GP-JUNCTION	235
CAMERA AR	236
CONNECTION GP-ELECTRICAL	238
CONTROL & MTG GP-ENGINE ELEK	239
CONTROL & MTG GP-IMPLEMENT	242
CONTROL GP-COMMUNICATION	243
CONTROL GP-IMPLEMENT	244
CONTROL GP-SWITCH	246
CONTROL GP-UNPROGRAMMED	248
CONVERTER GP-ELECTRICAL	250
ELECTRONICS AR-MACHINE	251
ELECTRONICS GP-COMMUNICATION	251
ELECTRONICS GP-IMPLEMENT	252
ELECTRONICS GP-MACHINE	252
ELECTRONICS GP-MONITOR	252
ELECTRONICS GP-POWER TRAIN	252
GRADE CONTROL AR	253
GRADE CONTROL AR-LASER	253
GRADE CONTROL AR-SATELLITE	254
HEATER GP-JACKET WATER	256
INSTALLATION GP-COMMUNICATION	259
INSTALLATION GP-SECURITY	265
LAMP GP-FLOOD	267
LIGHTING GP-FLOOD	273
LIGHTING GP-RIPPER	313
LIGHTING GP-WARNING BEACON	314
LINES GP-ALTERNATOR AIR	317
MAST GP	319
MOUNTING GP-CONNECTOR	320
MOUNTING GP-GRADE CONTROL	322
MOUNTING GP-RECEIVER	323
MOUNTING GP-SENSOR	326
PANEL GP-FUSE	327
RADIO GP-COMMUNICATION	331
RECEIVER GP-LASER	331
RECEIVER GP-SATELLITE	331
RESISTOR GP-CAB HEATER	334
SENSOR & MOUNTING GP	335
SENSOR GP-ENGINE	338
SENSOR GP-POSITION	342
SENSOR GP-PRESSURE	347
SENSOR GP-SPEED	356
SENSOR GP-TEMPERATURE	361
STARTING AID GP-ETHER	367
STARTING MOTOR GP-ELECTRIC	368
SWITCH GP-BYPASS	372
SWITCH GP-DISCONNECT	373
SWITCH GP-FLOW	376
SWITCH GP-LIMIT	377
SWITCH GP-MAGNETIC	378
SWITCH GP-PRESSURE	380
SWITCH GP-PUSH BUTTON	381
SWITCH GP-WIPER	382
VALVE GP-ETHER STARTING	383
WIRING GP-CAB	384
WIRING GP-ELECTRONIC CONTROL	386
WIRING GP-ENGINE	388
WIRING GP-GRADE CONTROL	395
WIRING GP-PLATFORM	402
POWER TRAIN	411
AXLE GP	411
BRAKE & DIFFERENTIAL DRIVE GP	413
BRAKE & PLANETARY GP	417
CASE & PARTS GP-PLANETARY	419
CASE GP-TRANSMISSION	422
CONTROL GP-TRANSMISSION HYD	424
COUPLING GP-PUMP	428
DIFFERENTIAL & BEVEL GEAR GP	429
DRAIN GP-ECOLOGY	431
DRIVE GP-FINAL	432
FINAL DRIVE GP	444
DRIVE GP-PUMP	446
LINES GP-POWER TRAIN OIL	447
MOUNTING GP-FINAL DRIVE	471
MOUNTING GP-TRANSMISSION	472
PLANETARY GP-TRANSMISSION	473
POWER TRAIN AR	478
PUMP GP-GEAR	479
SCREEN GP	483
SEGMENT GP-SPROCKET	484
SHAFT GP-DRIVE	488
SLIP JOINT GP	489
TORQUE CONVERTER GP	490
TRANSMISSION AR	495
UNIVERSAL JOINT GP	497
VALVE GP-MODULATING	498
VALVE GP-PRIORITY	500
VALVE GP-RELIEF	505
VALVE GP-SOLENOID	508
FRAME AND BODY	510
ACTUATOR GP-POWER	510
BAR AR-STRIKER	512
BAR GP-STRIKER	514
BOX GP-BATTERY	516
CASE & FRAME GP	518
COUNTERWEIGHT GP	522
COUNTERWEIGHT GP-FRONT	525
COVER GP-HOOD	526
DOOR GP-ACCESS	527
DRAWBAR GP	539
ENCLOSURE GP-ENGINE	540
ENCLOSURE GP-HYDRAULIC TANK	547

TABLE OF CONTENTS

Name	Page
FENDER GP	548
FLOORPLATE GP	552
FRAME & BEARING AS	553
GRILL GP-RADIATOR	555
GUARD AR-BOTTOM	560
GUARD AR-FINAL DRIVE	564
GUARD GP-BOTTOM	565
GUARD GP-BRUSH	568
GUARD GP-DRIVE SHAFT	570
GUARD GP-FINAL DRIVE	571
GUARD GP-FUEL TANK	573
GUARD GP-POWER TRAIN	575
GUARD GP-RADIATOR	576
GUARD GP-REAR	582
GUARD GP-ROCK	583
GUARD GP-SEAL	585
LATCH GP	586
PANEL GP-SOUND SUPPRESSION	587
SEAL GP-WASTE HANDLING	588
STEP GP	592
SWEEP GP	593
UNDERCARRIAGE	595
BAR AS-EQUALIZER	595
BAR GP-EQUALIZER	596
CAP GP-TRACK IDLER	598
CAP GP-TRACK ROLLER	601
FRAME AS-TRACK ROLLER	603
FRAME GP-TELESCOPING RECOIL	604
GAUGE AR-TRACK	618
GAUGE AR-UNDERCARRIAGE	618
GUARD AR-IDLER	618
GUARD GP-IDLER	620
IDLER GP-TRACK	623
LINK AS-TRACK	633
LINK AS-TRACK BOX	639
LUBRICATION GP-PIVOT SHAFT	641
ROLLER AR-TRACK CARRIER	643
ROLLER GP-TRACK-DOUBLE FLANGE	646
ROLLER GP-TRACK-SINGLE FLANGE	650
SUSPENSION GP-BOGIE	655
TRACK ADJUSTER & RECOIL GP	661
TRACK GP	667
UNDERCARRIAGE AR	691
STEERING AND BRAKING SYSTEM	695
ACTUATOR GP-PUMP	695
CONTROL GP-PARKING BRAKE	696
FILTER GP-OIL	698
HEAD GP-PUMP	701
LINES GP-STEERING	703
MANIFOLD & VALVE GP	707
MOTOR GP-PISTON	710
PUMP GP-CHARGE	711
PUMP GP-PISTON	712
ROTATING GP-MOTOR	714
ROTATING GP-PUMP	716
VALVE GP-BRAKE CONTROL	718
VALVE GP-FLUSHING	720
VALVE GP-PUMP CONTROL	721
VALVE GP-RELIEF	723
VALVE GP-SOLENOID	724
VALVE GP-STEERING & BRAKE CONT	726
HYDRAULIC SYSTEM	728
ACCUMULATOR GP-PILOT OIL	728
ACTUATOR GP-PUMP	730
ADAPTER GP-MOTOR	731
CONTROL AR-HYD PIN PULLER	732
CONTROL AR-HYDRAULIC	734
COOLER GP-HYDRAULIC OIL	736
CYLINDER & LINES GP-LIFT	737
CYLINDER AR-DUAL TILT	741
CYLINDER GP-BULLDOZER LIFT	744
CYLINDER GP-RIPPER LIFT	746
CYLINDER GP-RIPPER PIN PULLER	748
CYLINDER GP-TILT	749
HYDRAULIC AR	759
LINES GP-BULLDOZER MANIFOLD	760
LINES GP-HYDRAULIC	762
LINES GP-HYDRAULIC FAN	763
LINES GP-PIN PULLER CYLINDER	772
LINES GP-PUMP	773
LINES GP-RIPPER	776
LINES GP-TILT CYLINDER	779
MANIFOLD GP-CONTROL	798
MANIFOLD GP-HYDRAULIC	803
MANIFOLD GP-VALVE	804
MOTOR & MTG GP-HYDRAULIC FAN	806
MOTOR GP-PISTON	807
MOUNTING GP-CYLINDER	809
PLUG GP-CONTROL VALVE	810
PUMP & MOUNTING GP	811
PUMP GP-PISTON	813
ROTATING GP-MOTOR	821
ROTATING GP-PUMP	823
TANK & MTG GP-HYDRAULIC	825
VALVE & MTG GP-CONTROL	834
VALVE & MTG GP-HYDRAULIC FAN	838
VALVE & MTG GP-IMPLEMENT CONT	839
VALVE GP-BANK 3	840
VALVE GP-BANK 4	854
VALVE GP-BYPASS	862
VALVE GP-CHECK	863
VALVE GP-CONTROL	867
VALVE GP-FAN REVERSING	894
VALVE GP-PRESSURE REDUCING	896
VALVE GP-PUMP CONTROL	897
VALVE GP-QUICK-DROP	901

TABLE OF CONTENTS

Name	Page
VALVE GP-RELIEF	903
VALVE GP-SHUTTLE	908
VALVE GP-SOLENOID	909
IMPLEMENTS	916
BRACE GP-BULLDOZER	916
BULLDOZER AR-ANGLING	919
BULLDOZER AR-SEMI-UNIVERSAL	921
BULLDOZER AR-UNIVERSAL	924
C-FRAME GP	926
LINK GP-STABILIZER	928
MODIFICATION AR-BULLDOZER	931
PUSH ARM GP	932
PUSH ARM GP-STABILIZER	935
TRUNNION GP-BULLDOZER	939
WORK TOOLS	941
BLADE & EDGE GP-ANGLING	941
BLADE & EDGE GP-SEMI-UNIVERSAL	942
BLADE & EDGE GP-UNIVERSAL	949
BLADE AS-SEMI-UNIVERSAL	954
BLADE AS-UNIVERSAL	962
BLADE GP	966
BLADE GP-ANGLING	968
BLADE GP-SEMI-UNIVERSAL	969
BLADE GP-UNIVERSAL	976
EDGE GP-BIT & CUTTING	981
FRAME AR-STRIKER	985
FRAME GP-RIPPER	987
LINES GP-WINCH	990
MOUNTING GP-MAST	992
MOUNTING GP-RIPPER	994
PLATE AS-WEAR	995
PULLER AR-PIN	997
PULLER GP-PIN	998
RIPPER AR	999
RIPPER GP	1001
TOOTH GP-RIPPER	1003
OPERATOR STATION	1006
ADJUSTER GP-SEAT	1006
AIR COMPRESSOR GP-SEAT	1007
AIR CONDITIONER AR	1009
BOX GP-STORAGE	1010
BRACKET GP-MOUNTING	1011
CAB AR	1014
CAB GP	1017
CANOPY AR-OPEN ROPS	1026
COMPRESSOR GP-REFRIGERANT	1027
CONDENSER & MTG GP-REFRIGERANT	1029
CONDENSER GP-REFRIGERANT	1031
CONSOLE GP-FRONT	1033
CONSOLE GP-OPERATOR	1034
CONTROL & MTG GP-PEDAL	1036
CONTROL GP-HANDLE	1041
CONTROL GP-JOYSTICK	1054
CONTROL GP-RIPPER	1072
CONTROL GP-STEER CLUTCH & BRK	1074
CONTROL GP-STEERING	1075
CONTROL GP-STEERING & XMSN	1076
CONVERSION AR-OPEN ROPS	1080
CONVERSION AR-ROPS	1080
COVER GP-ACCESS	1081
DISPLAY GP-MONITOR	1083
DOOR GP-CAB	1084
FILTER GP-CAB AIR	1091
HEATER GP-CAB	1093
HOUSING GP-SEAT SUSPENSION	1099
INSTALLATION GP-RADIO	1102
KIT-WINDOW	1104
LINER GP-CAB	1105
LINES GP-AIR CONDITIONER	1107
LINES GP-HEATER	1137
MIRROR GP-REAR VIEW	1139
MONITOR AS	1142
MOUNTING GP-ANTENNA	1143
MOUNTING GP-CAB	1146
MOUNTING GP-CONDENSER	1147
MOUNTING GP-MONITOR	1150
MOUNTING GP-RADIO	1152
MOUNTING GP-ROPS	1153
OPERATOR AR	1155
PAN GP-BACKREST	1157
PANEL GP-CONTROL	1163
PEDAL GP-GOVERNOR & BRAKE	1165
PLATFORM AR	1171
PLATFORM GP-OPERATOR	1174
RECLINER GP-SEAT	1176
ROPS GP	1177
ROPS GP-OPEN	1178
SCREEN GP-PROTECTION	1180
SEAT & MOUNTING GP	1182
SEAT GP	1183
SEAT GP-SUSPENSION	1194
SUSPENSION GP-SEAT	1200
TANK GP-WINDOW WASHER	1204
WASHER GP-WINDOW	1206
WINDOW GP-CAB	1208
WINDOW GP-SLIDING	1212
WIPER GP-WINDOW	1215
WIPER PIVOT GP	1224
SERVICE EQUIPMENT AND SUPPLIES	1226
FILM GP	1226
PLATE & FILM GP	1230
PLATE GP-ENGINE IDENTIFICATION	1233
PART NUMBER INDEX	B1

222-6926 BAR AS-EQUALIZER

S/N: J8B1-UP
PART OF 220-0211 BAR GP-EQUALIZER
ALSO AN ATTACHMENT

SMCS-7206 **i02228017**

NOTE	REF NO	GRAPHIC REF	PART NUMBER	QTY	PART NAME 1 2 3 4 5 6 (PRODUCT LEVEL)	SEE PAGE
	1	1	**3B-8489**	2	FITTING-GREASE	
	2	1	**5L-4751**	4	RING-RETAINING	
	3	1	**7G-8664**	1	SEAL	
	4	1	**7G-8666**	1	SEAL AS	
	5	1	**9X-7505**	4	SEAL AS	
	6	1	**117-4013**	2	BEARING-SELF-ALIGNING	
	7	1	**130-3139**	2	BEARING-SLEEVE	
	8	1	**133-5631**	2	PLUG	
	9	1	**5F-1678**	2	SEAL-O-RING	
	10	1	**2F-5326**	8	SETSCREW (3/8-16X0.37-IN)	

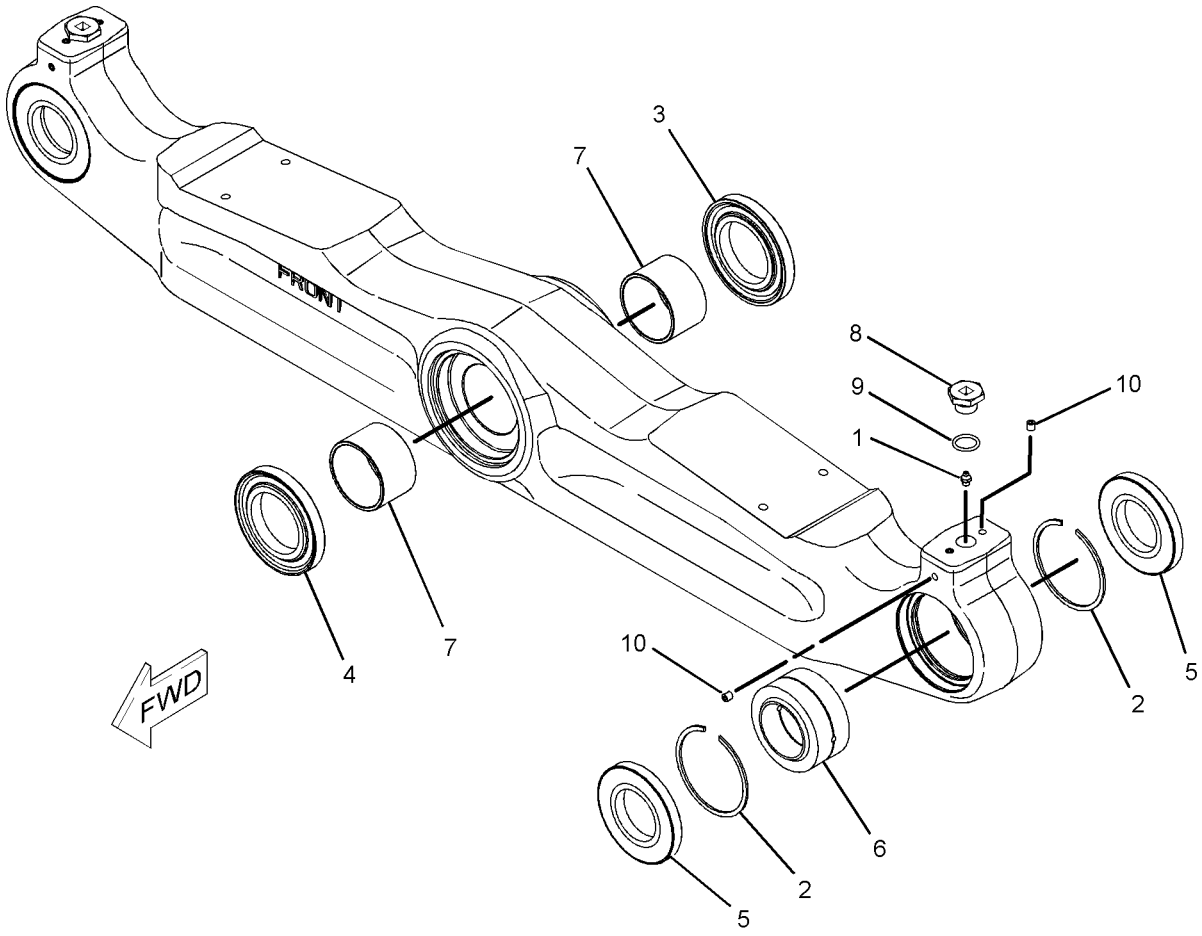

GRAPHIC #1 **<END>** g01014354

UNDERCARRIAGE

220-0211 BAR GP-EQUALIZER

S/N: J8B1-UP

PART OF 206-6779, 310-2848, 310-2849, 310-2850 UNDERCARRIAGE AR

ALSO AN ATTACHMENT

SMCS-7206 **i02228007**

NOTE	REF NO	GRAPHIC REF	PART NUMBER	QTY	PART NAME 1 2 3 4 5 6 (PRODUCT LEVEL)	SEE PAGE
	1	1	**3T-5294**	2	SPACER (82.5X150X12-MM THK)	
	2	1	**6Y-9508**	2	PAD AS	
	3	1	**6Y-9509**	2	PAD AS	
	4	1	**8F-4028**	4	SPACER (13.5X19X6.35-MM THK)	
	5	1	**9P-6911**	1	PLATE	
	6	1	**219-5735**	2	PIN	
	7	1	**219-5743**	1	PIN	
Y	8	1	**222-6926**	1	BAR AS-EQUALIZER	595
	9	1	**5P-1076**	4	WASHER-HARD (13.5X30X4-MM THK)	
M	10	1	**7X-2576**	2	BOLT (M24X3X70-MM)	
M	11	1	**8C-8723**	1	BOLT (M30X3.5X80-MM)	
M	12	1	**8T-1583**	4	NUT (M30X3.5-THD)	
M	13	1	**8T-4139**	8	BOLT (M12X1.75X30-MM)	
	14	1	**8T-4167**	2	WASHER-HARD (26X44X4-MM THK)	
	15	1	**8T-4223**	16	WASHER-HARD (13.5X25.5X3-MM THK)	
M	16	1	**8T-4244**	8	NUT (M12X1.75-THD)	
M	17	1	**8T-4956**	4	BOLT (M12X1.75X35-MM)	
M	18	1	**9X-6151**	4	BOLT (M30X3.5X240-MM)	
	19	1	**9X-8258**	1	WASHER (33X56X6-MM THK)	
	20	1	**9X-8399**	8	WASHER (33X56X6-MM THK)	

M-METRIC PART
Y-SEPARATE ILLUSTRATION

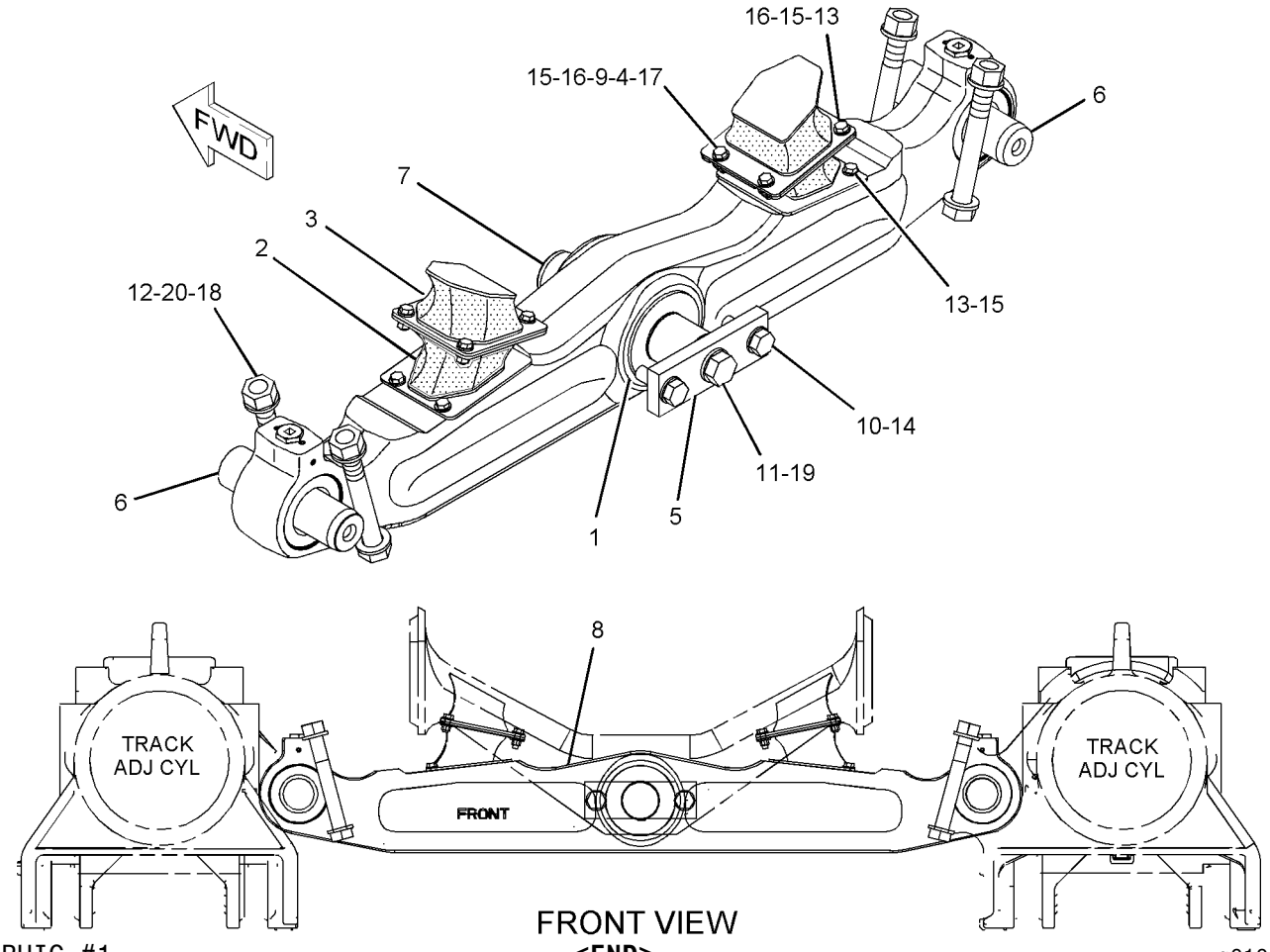

FRONT VIEW

GRAPHIC #1 **<END>** g01014241

260-4695 BAR GP-EQUALIZER–LOW GROUND PRESSURE

S/N: J8B1-UP

PART OF 209-5115 GAUGE AR-UNDERCARRIAGE, 209-5118 WASTE HANDLING AR AN ATTACHMENT

SMCS-7206 **i02395572**

NOTE	REF NO	GRAPHIC REF	PART NUMBER	QTY	PART NAME 1 2 3 4 5 6 (PRODUCT LEVEL)	SEE PAGE
	1	1	**5F-1678**	2	SEAL-O-RING	
	2	1	**2F-5326**	8	SETSCREW (3/8-16XO.37-IN)	
	3	1	**3B-8489**	2	FITTING-GREASE	
	4	1	**5L-4751**	4	RING-RETAINING	
	5	1	**7G-8664**	1	SEAL	
	6	1	**7G-8666**	1	SEAL AS	
	7	1	**9X-7505**	4	SEAL AS	
	8	1	**117-4013**	2	BEARING-SELF-ALIGNING	
	9	1	**130-3139**	2	BEARING-SLEEVE	
	10	1	**133-5631**	2	PLUG	

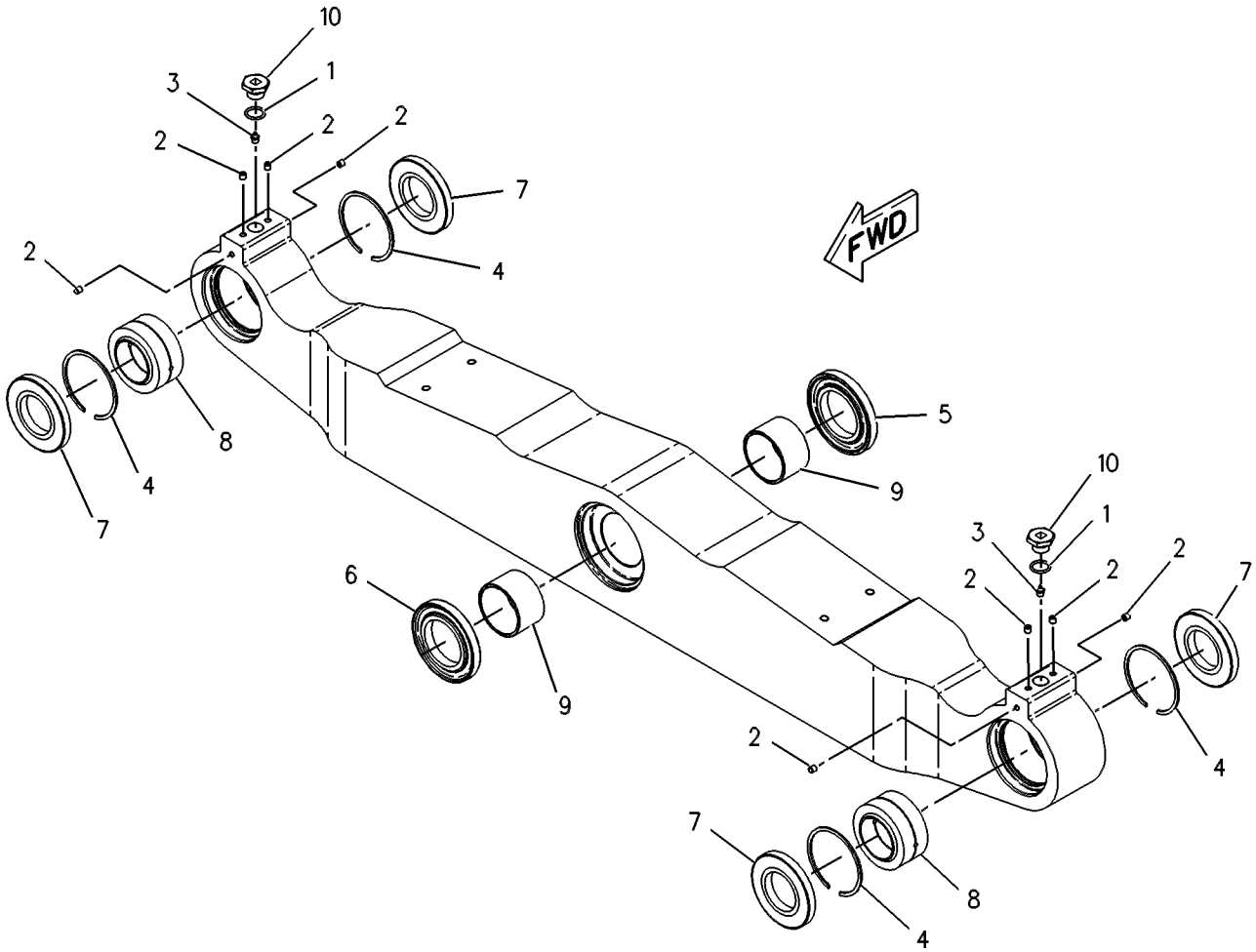

GRAPHIC #1 **<END>** g00273500

UNDERCARRIAGE

9W-4477 CAP GP-TRACK IDLER

S/N: J8B1-UP

PART OF 206-6779, 310-2848, 310-2849, 310-2850 UNDERCARRIAGE AR

ALSO AN ATTACHMENT

SMCS-4159 **i02808832**

NOTE	REF NO	GRAPHIC REF	PART NUMBER	QTY	PART NAME 1 2 3 4 5 6 (PRODUCT LEVEL)	SEE PAGE
	1	1	**9W-4480**	2	BOLT (1-1/8-7X5.5-IN)	
	2	1	**3S-1349**	2	WASHER-HARD (31X52.5X6-MM THK)	
	3	1	**306-9441**	1	CAP AS-TRACK IDLER	
	3A	1	**1T-0068**	1	PIN-SPRING	

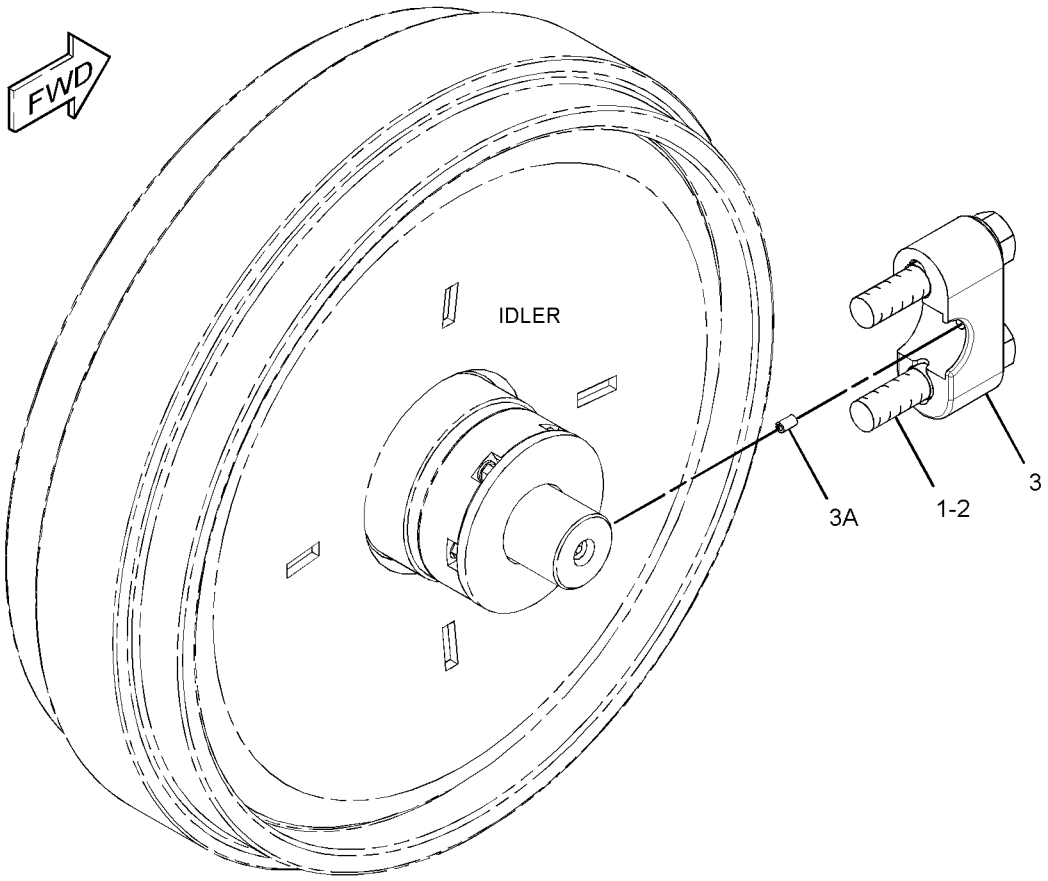

GRAPHIC #1 **<END>** g01406110

9W-9205 CAP GP-TRACK IDLER

S/N: J8B1-UP
PART OF 209-3418, 209-3419 UNDERCARRIAGE AR
AN ATTACHMENT

SMCS-4159 **i02813846**

NOTE	REF NO	GRAPHIC REF	PART NUMBER	QTY	PART NAME 1 2 3 4 5 6 (PRODUCT LEVEL)	SEE PAGE
	1	1	**9W-7882**	1	BLOCK-TRACK IDLER	
	2	1	**306-9437**	1	CAP AS-TRACK IDLER	
	2A	1	**1T-0068**	1	PIN-SPRING	
	3	1	**8T-4934**	2	BOLT (1-1/8-7-THD)	
	4	1	**3S-1349**	2	WASHER-HARD (31X52.5X6-MM THK)	

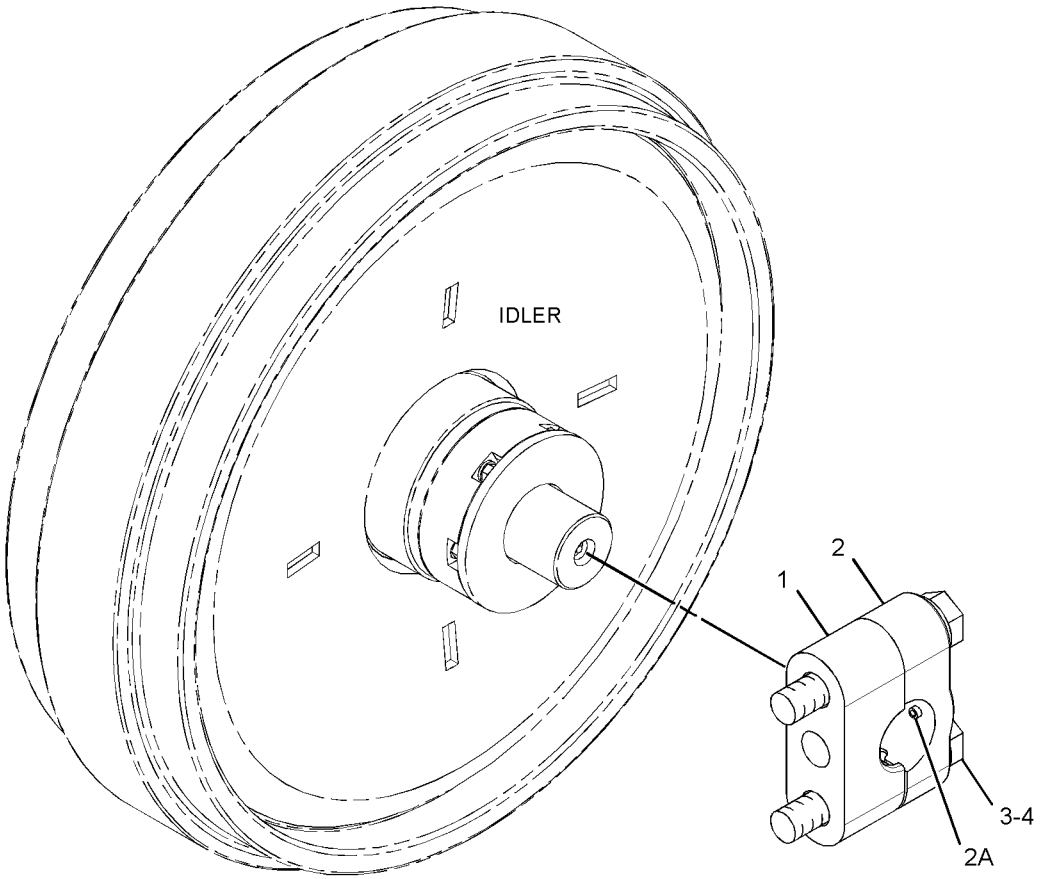

GRAPHIC #1 **<END>** g01416720

UNDERCARRIAGE

9W-9206 CAP GP-TRACK IDLER

S/N: J8B1-UP

PART OF 209-3418, 209-3419 UNDERCARRIAGE AR

AN ATTACHMENT

SMCS-4159 **i02813839**

NOTE	REF NO	GRAPHIC REF	PART NUMBER	QTY	PART NAME 1 2 3 4 5 6 (PRODUCT LEVEL)	SEE PAGE
	1	1	**9W-7884**	1	BLOCK-TRACK IDLER	
	2	1	**306-9439**	1	CAP AS-TRACK IDLER	
	2A	1	**1T-0068**	1	PIN-SPRING	
	3	1	**8T-4934**	2	BOLT (1-1/8-7-THD)	
	4	1	**3S-1349**	2	WASHER-HARD (31X52.5X6-MM THK)	

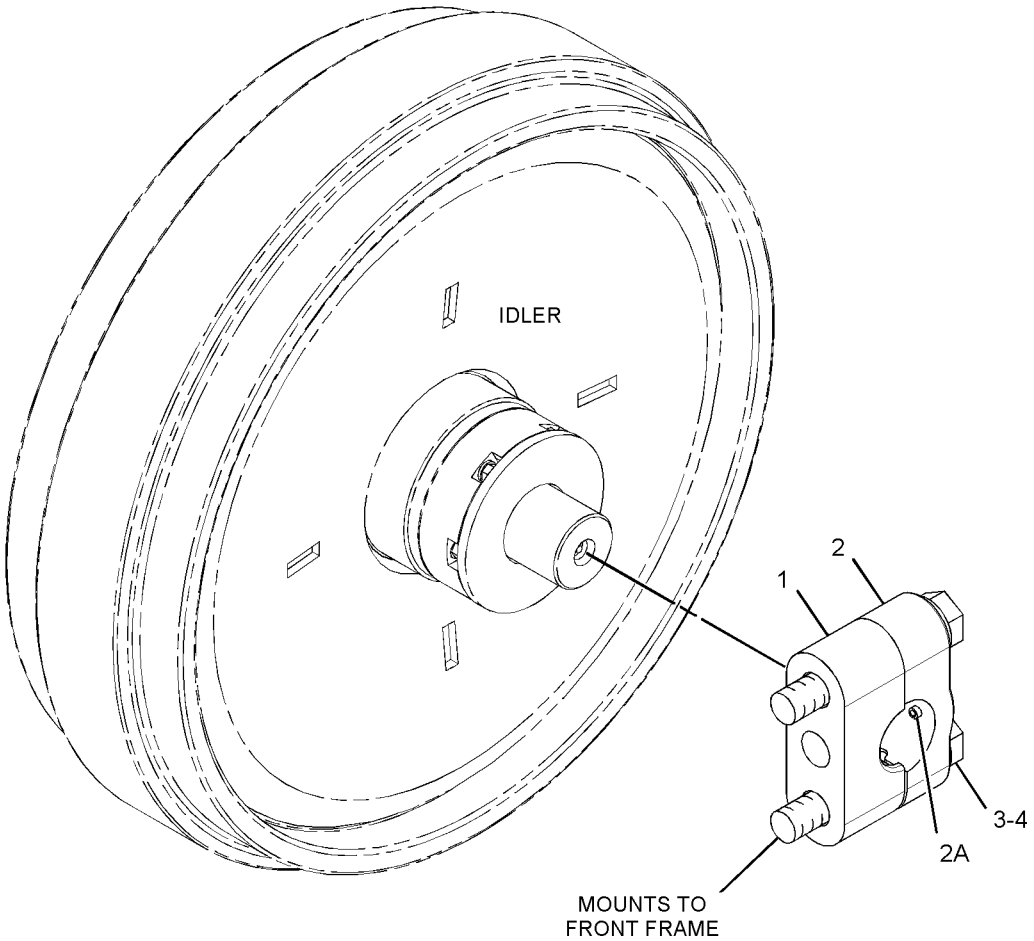

GRAPHIC #1 **<END>** g01416753

6T-1142 CAP GP-TRACK ROLLER

S/N: J8B1-UP

PART OF 192-2599 ROLLER AR-TRACK CARRIER, 206-6779, 209-3419, 310-2848, 310-2849, 310-2850 UNDERCARRIAGE AR

ALSO AN ATTACHMENT

SMCS-4180 **i01323344**

NOTE	REF NO	GRAPHIC REF	PART NUMBER	QTY	PART NAME 1 2 3 4 5 6 (PRODUCT LEVEL)	SEE PAGE
	1	1	**6T-1140**	2	BOLT-ROLLER MOUNTING	
	2	1	**5P-8249**	2	WASHER-HARD (24X41.5X4-MM THK)	
	3	1	**131-1651**	1	CAP AS-TRACK ROLLER	
	4	1	**1T-0068**	1	PIN-SPRING	

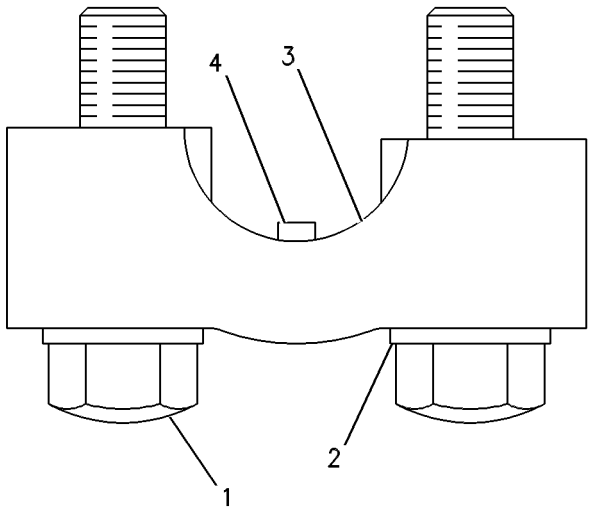

GRAPHIC #1 **<END>** g00465296

126-4233 CAP GP-TRACK ROLLER

S/N: J8B1-UP
PART OF 209-3418, 209-3419 UNDERCARRIAGE AR
AN ATTACHMENT

SMCS-4180 **i01323441**

NOTE	REF NO	GRAPHIC REF	PART NUMBER	QTY	PART NAME 1 2 3 4 5 6 (PRODUCT LEVEL)	SEE PAGE
	1	1	**131-1651**	1	CAP AS-TRACK ROLLER	
	2	1	**1T-0068**	1	PIN-SPRING	
	3	1	**5P-8249**	2	WASHER-HARD (4.0MM THK)	
	4	1	**9S-1351**	2	BOLT (7/8-9X5 IN)	

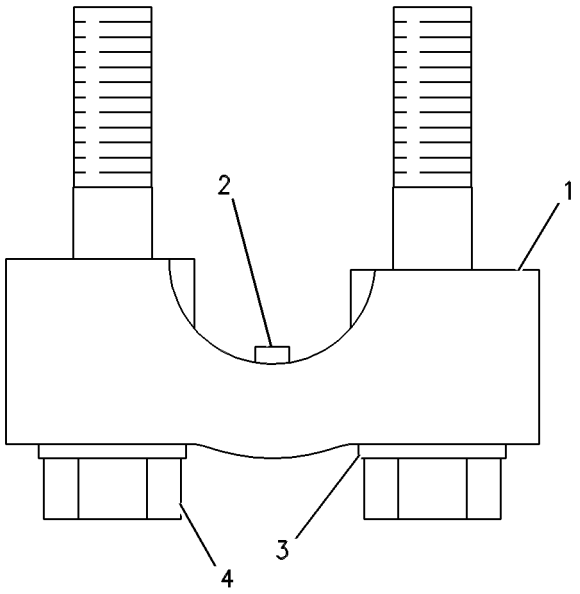

GRAPHIC #1 **<END>** g00471931

154-3330 FRAME AS-TRACK ROLLER–FRONT

S/N: J8B1-UP
PART OF 209-5099 WASTE HANDLING AR
AN ATTACHMENT

SMCS-4151 **i02495045**

NOTE	REF NO	GRAPHIC REF	PART NUMBER	QTY	PART NAME 1 2 3 4 5 6 (PRODUCT LEVEL)	SEE PAGE
	1	1	**4B-4158**	4	SCREW-DRIVE (NO 4X1/4-IN)	
	2	1	**154-3322**	1	FRAME AS	
	3	1	**199-8210**	1	SLEEVE	
	4	1	**254-1686**	1	PLATE-WARNING (RECOIL SPRING)	

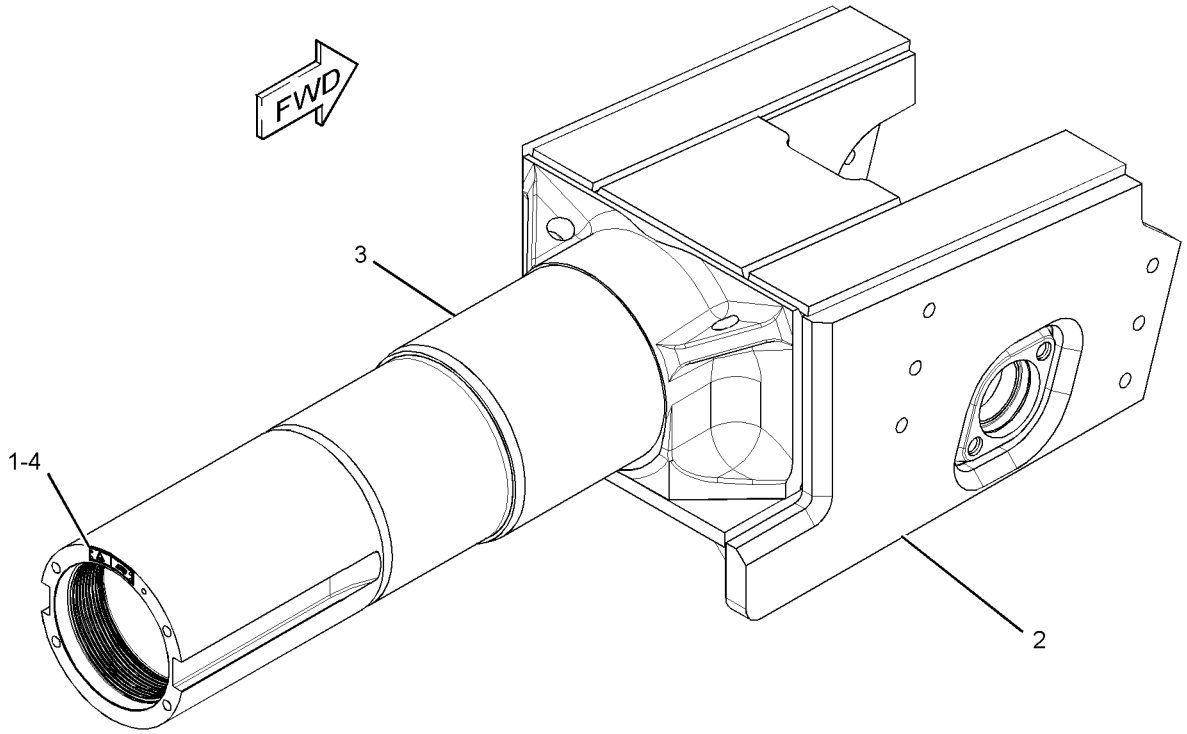

GRAPHIC #1 **<END>** g01307788

UNDERCARRIAGE

192-2576 FRAME GP-TELESCOPING RECOIL

S/N: J8B1-UP

PART OF 206-6779 UNDERCARRIAGE AR

SMCS-4151 **i02626847**

NOTE	REF NO	GRAPHIC REF	PART NUMBER	QTY	PART NAME 1 2 3 4 5 6 (PRODUCT LEVEL)	SEE PAGE
	1	1	**3T-4243**	2	BEARING-SLEEVE	
	2	1	**3T-4244**	2	BEARING-SLEEVE	
	3	1	**4B-4158**	8	SCREW-DRIVE (NO 4X1/4-IN)	
	4	1	**4T-2069**	6	PLUG-DRAIN (RECOIL FRAME)	
	5	1	**253-1346**	2	PLATE-WARNING (HIGH PRESSURE CYLINDER)	
	6	1	**6P-8931**	4	COVER	
	7	1	**6T-8801**	4	GUIDE AS	
					(EACH INCLUDES)	
	7A	1	**242-7104**	1	FILM-WARNING (RECOIL SPRING)	
	8	1	**9W-3301**	2	RING-RETAINING	
	9	1	**7T-1149**	2	RETAINER AS	
					(EACH INCLUDES)	
	9A	1	**7T-1150**	1	RETAINER	
	9B	1	**7T-1151**	1	SEAL AS	
	9C	1	**7T-1152**	1	RETAINER	
	9D	1	**7T-1153**	1	PLATE	
	10	1	**7T-6079**	2	SPACER (10X22X15.5-MM THK)	
	11	1	**7T-8330**	2	COVER	
	12	1	**8E-0719**	2	RING-THRUST	
	13	1	**8E-2837**	1	SHAFT-PIVOT	
	14	1	**8E-2898**	2	PLATE	
	15	1	**8E-2899**	2	PLATE	
	16	1	**9X-4584**	2	SEAL AS	
	17	1	**237-8210**	1	FRAME AS-TRACK ROLLER (RH)	
	18	1	**237-8211**	1	FRAME AS-TRACK ROLLER (LH)	
					(EACH FRAME ASSEMBLY INCLUDES)	
		1	**9P-5708**	2	SUPPORT (SLEEVE)	
		1	**155-2756**	1	BAR	
	19	1	**199-8204**	2	FRAME AS (FRONT)	
					(EACH FRAME AS INCLUDES)	
	19A	1	**254-1686**	1	PLATE-WARNING (RECOIL SPRING)	
	19B	1	**4B-4158**	4	SCREW-DRIVE (NO 4X1/4-IN)	
	19C	1	**199-8210**	1	SLEEVE	
	20	1	**2D-1690**	2	SEAL-RING	
	21	1	**2H-3932**	6	SEAL-O-RING	
	22	1	**2K-4472**	4	SEAL-O-RING	
	23	1	**3S-1223**	2	SEAL-O-RING	
	24	1	**3T-5898**	2	RING-RETAINING	
	25	1	**4K-1388**	2	SEAL-O-RING	
	26	1	**5P-5374**	2	SEAL-O-RING	
	27	1	**6V-3263**	2	SEAL-O-RING	
	28	1	**7G-7379**	2	BEARING	
	29	1	**7X-0345**	24	BOLT (5/8-11X1.75-IN)	
	30	1	**8C-4436**	22	BOLT (1/2-13X1.375-IN)	
	31	1	**8S-2331**	24	BOLT-12 POINT HEAD (5/8-11X2-IN)	
	32	1	**8T-2502**	2	BOLT (3/8-16X1.125-IN)	
	33	1	**8T-4122**	36	WASHER-HARD (17X32X3.5-MM THK)	
	34	1	**8T-4223**	38	WASHER-HARD (13.5X25.5X3-MM THK)	
M	35	1	**8T-4910**	16	BOLT (M12X1.75X60-MM)	
	36	1	**9S-8009**	2	PLUG-O-RING (RECOIL FRAME)	
	37	1	**8T-5361**	8	WASHER-HARD (28X49X5-MM THK)	
	38	1	**7X-0616**	8	WASHER-HARD (28X57X6-MM THK)	
	39	1	**7X-0399**	8	BOLT (1-8X1.25-IN)	
	40	1	**7X-0342**	12	BOLT (5/8-11X0.75-IN)	

M-METRIC PART

192-2576 **FRAME GP-TELESCOPING RECOIL** *(contd.)* **i02626847**

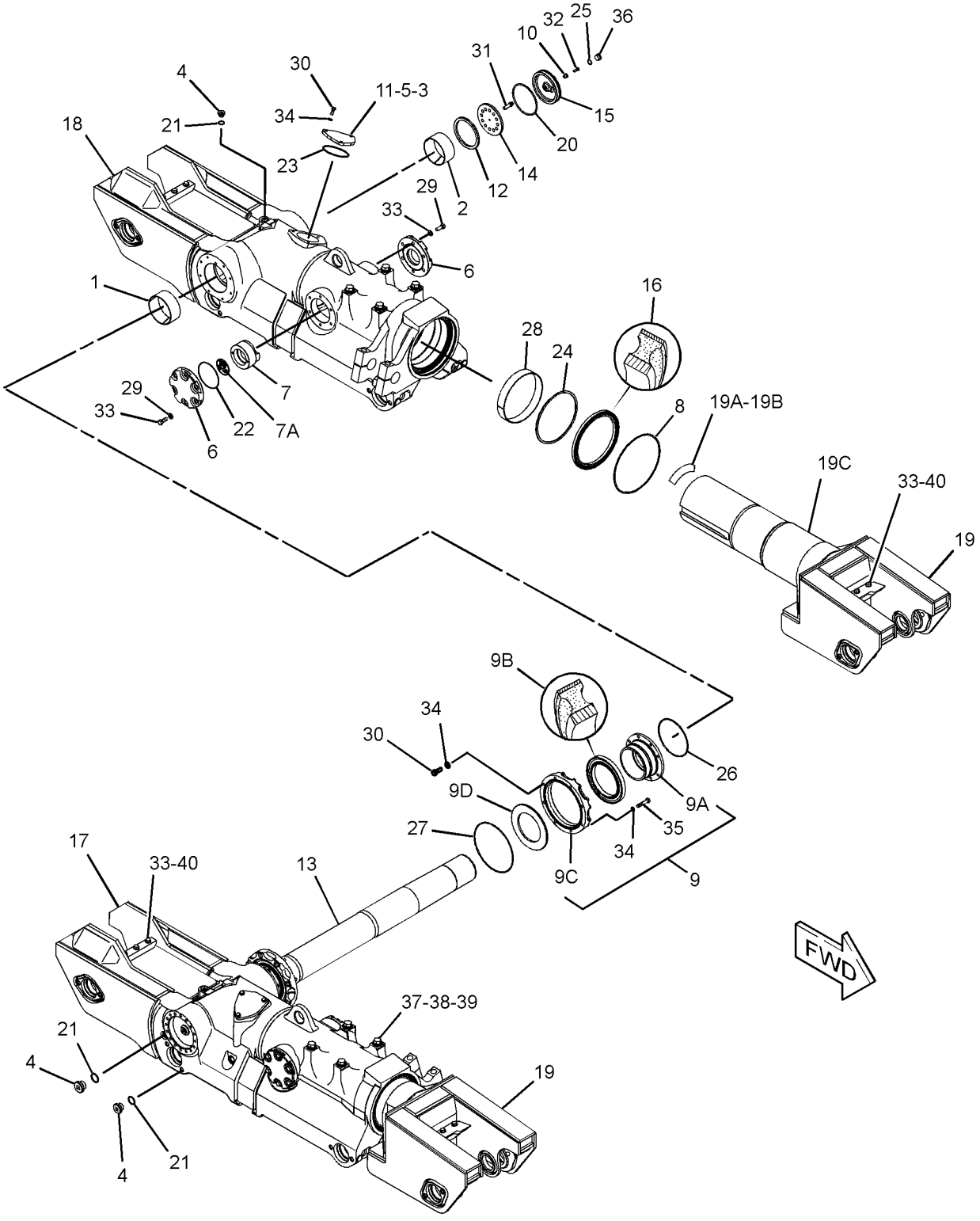

GRAPHIC #1 **<END>** g01319015

UNDERCARRIAGE

260-7614 FRAME GP-TELESCOPING RECOIL–

NON-SUSPENDED UNDERCARRIAGE

S/N: J8B1-UP

PART OF 209-3418 UNDERCARRIAGE AR

AN ATTACHMENT

SMCS-4151 **i02437152**

NOTE	REF NO	GRAPHIC REF	PART NUMBER	QTY	PART NAME 1 2 3 4 5 6 (PRODUCT LEVEL)	SEE PAGE
	1	1	**7T-1149**	2	RETAINER AS	
					(EACH INCLUDES)	
		1	**7T-1150**	1	RETAINER	
		1	**7T-1151**	1	SEAL AS	
		1	**7T-1152**	1	RETAINER	
		1	**7T-1153**	1	PLATE	
M	2	1	**8T-4910**	16	BOLT (M12X1.75X60-MM)	
	3	1	**8T-4223**	32	WASHER-HARD (13.5X25.5X3-MM THK)	
	4	1	**6V-3263**	2	SEAL-O-RING	
	5	1	**3T-4244**	2	BEARING-SLEEVE	
	6	1	**8E-0719**	2	RING-THRUST	
	7	1	**8E-2898**	2	PLATE	
	8	1	**8S-2331**	24	BOLT-12 POINT HEAD (5/8-11X2-IN)	
	9	1	**8E-2899**	2	PLATE	
	10	1	**2D-1690**	2	SEAL-RING	
	11	1	**8T-2502**	2	BOLT (3/8-16X1.125-IN)	
	12	1	**7T-6079**	2	SPACER (10X22X15.5-MM THK)	
	13	1	**9S-8009**	2	PLUG-O-RING	
	14	1	**4K-1388**	2	SEAL-O-RING	
	15	1	**8E-2837**	1	SHAFT-PIVOT	
	16	1	**3T-4243**	2	BEARING-SLEEVE	
	17	1	**5P-5374**	2	SEAL-O-RING	
	18	1	**8C-4436**	16	BOLT (1/2-13X1.375-IN)	
	19	1	**6T-8801**	4	GUIDE AS	
					(EACH INCLUDES)	
	19A	1	**242-7104**	1	FILM-WARNING (RECOIL SPRING)	
	20	1	**6P-8931**	4	COVER	
	21	1	**2K-4472**	4	SEAL-O-RING	
	23	1	**8T-4122**	24	WASHER-HARD (17X32X3.5-MM THK)	
	24	1	**7X-0345**	24	BOLT (5/8-11X1.75-IN)	
	26	1	**9W-3301**	2	RING-RETAINING	
	27	1	**9X-4584**	2	SEAL AS	
					(EACH INCLUDES)	
		1	**8T-5071**	1	GUARD-SEAL	
	28	1	**3T-5898**	2	RING-RETAINING	
	29	1	**7G-7379**	2	BEARING	
	32	1	**5P-2566**	24	BOLT (1/2-13X1.5-IN)	
	33	1	**157-3101**	2	FRAME AS-TRACK ROLLER (FRONT)	
					(EACH INCLUDES)	
		1	**4B-4158**	4	SCREW-DRIVE (NO 4X1/4-IN)	
		1	**9W-7594**	2	DOWEL	
		1	**154-9838**	1	SLEEVE-WEAR	
		1	**254-1686**	1	PLATE-WARNING (RECOIL SPRING)	
	34	1	**9W-7553**	1	FRAME AS (RH)	
	35	1	**9W-7554**	1	FRAME AS (LH)	
	36	1	**9W-4813**	1	COVER AS (LH)	
		1	**9N-1995**	4	RIVET-POP	
		1	**253-1344**	2	PLATE-WARNING (HIGH PRESSURE CYLINDER)	
	37	1	**9W-2466**	1	COVER AS (RH)	
		1	**9N-1995**	4	RIVET-POP	
		1	**253-1344**	2	PLATE-WARNING (HIGH PRESSURE CYLINDER)	
	38	1	**9M-3786**	2	SEAL-O-RING	
	39	1	**4L-6454**	8	BOLT (3/8-16X1-IN)	
	40	1	**8T-4896**	8	WASHER-HARD (10.2X18.5X2.5-MM THK)	

260-7614 **FRAME GP-TELESCOPING RECOIL** *(contd.)* **i02437152**

NOTE	REF NO	GRAPHIC REF	PART NUMBER	QTY	PART NAME 1 2 3 4 5 6 (PRODUCT LEVEL)	SEE PAGE
	41	1	**4T-2069**	2	PLUG-DRAIN (PIVOT SHAFT OIL FILL)	
	41A	1	**4T-2069**	4	PLUG-DRAIN (PIVOT SHAFT OIL)	
	42	1	**2H-3932**	6	SEAL-O-RING	
	43	1	**9W-7587**	4	PLATE	
	44	1	**9W-7586**	8	PLATE	
	45	1	**9W-7594**	4	DOWEL	
	46	1	**248-2987**	28	GUIDE	
	47	1	**8T-8924**	56	BOLT (3/4-10X2.5-IN)	
	48	1	**8T-4994**	56	WASHER-HARD (20X36.5X3.5-MM THK)	
	49	1	**5P-1076**	24	WASHER-HARD (13.5X30X4-MM THK)	

QUANTITIES SHOWN ARE THOSE REQUIRED FOR BOTH LH AND RH SIDES
M-METRIC PART

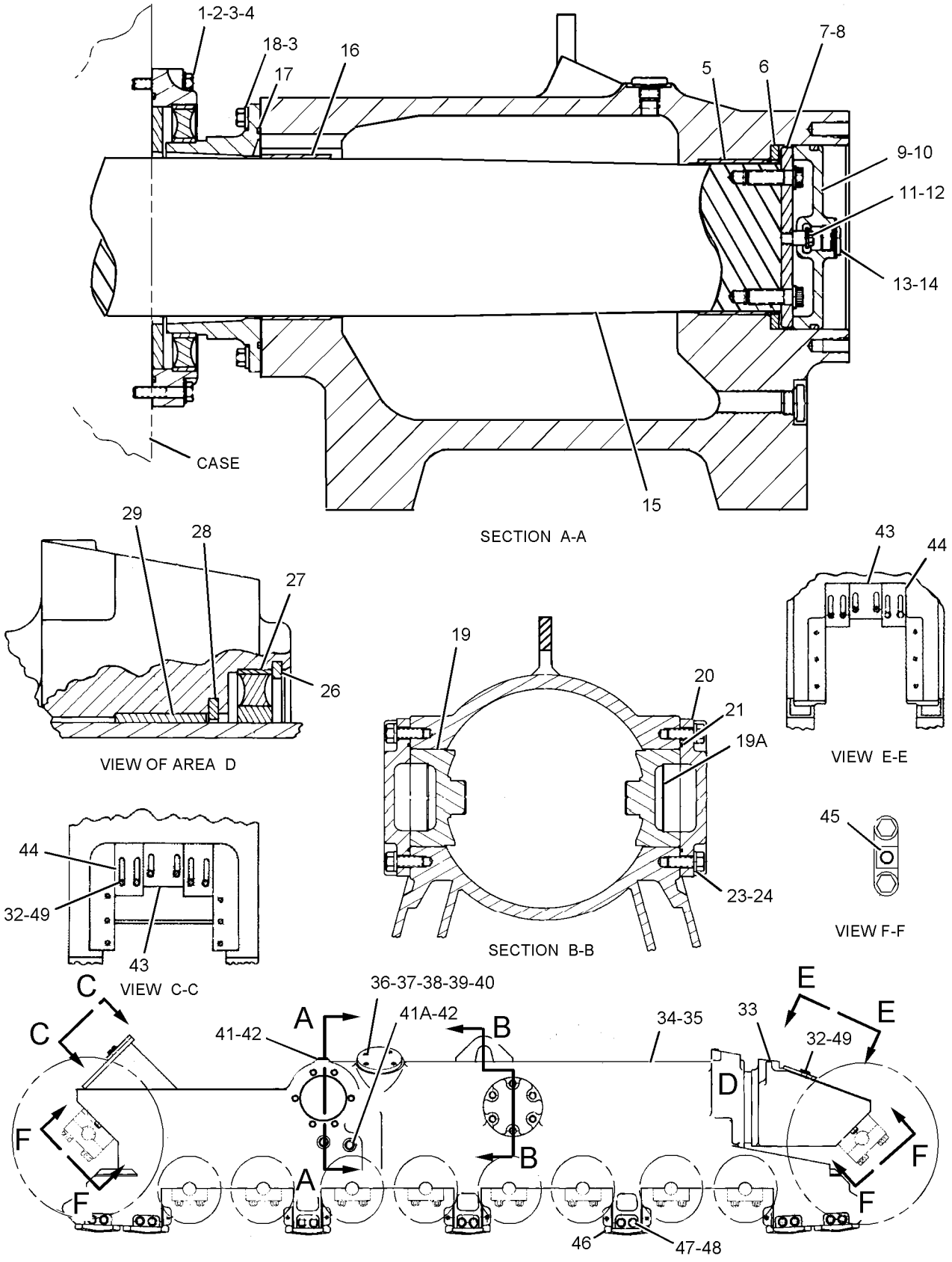

GRAPHIC #1 **<END>** g01130133

260-7615 FRAME GP-TELESCOPING RECOIL–

NON-SUSP UNDCRG WITH CARR RLR

S/N: J8B1-UP

PART OF 209-3419 UNDERCARRIAGE AR

AN ATTACHMENT

SMCS-4151 **i02506993**

NOTE	REF NO	GRAPHIC REF	PART NUMBER	QTY	PART NAME 1 2 3 4 5 6 (PRODUCT LEVEL)	SEE PAGE
	1	1	**7T-1149**	2	RETAINER AS	
					(EACH INCLUDES)	
		1	**7T-1150**	1	RETAINER	
		1	**7T-1152**	1	RETAINER	
		1	**7T-1151**	1	SEAL AS	
		1	**7T-1153**	1	PLATE	
M	2	1	**8T-4910**	16	BOLT (M12X1.75X60-MM)	
	3	1	**8T-4223**	32	WASHER-HARD (13.5X25.5X3-MM THK)	
	4	1	**6V-3263**	2	SEAL-O-RING	
	5	1	**3T-4244**	2	BEARING-SLEEVE	
	6	1	**8E-0719**	2	RING-THRUST	
	7	1	**8E-2898**	2	PLATE	
	8	1	**8S-2331**	24	BOLT-12 POINT HEAD (5/8-11X2-IN)	
	9	1	**8E-2899**	2	PLATE	
	10	1	**2D-1690**	2	SEAL-RING	
	11	1	**8T-2502**	2	BOLT (3/8-16X1.125-IN)	
	12	1	**7T-6079**	2	SPACER (10X22X15.5-MM THK)	
	13	1	**9S-8009**	2	PLUG-O-RING	
	14	1	**4K-1388**	2	SEAL-O-RING	
	15	1	**8E-2837**	1	SHAFT-PIVOT	
	16	1	**3T-4243**	2	BEARING-SLEEVE	
	17	1	**5P-5374**	2	SEAL-O-RING	
	18	1	**8C-4436**	16	BOLT (1/2-13X1.375-IN)	
	19	1	**6T-8801**	4	GUIDE AS	
					(EACH INCLUDES)	
	19A	1	**242-7104**	1	FILM-WARNING (RECOIL SPRING)	
	20	1	**6P-8931**	4	COVER	
	21	1	**2K-4472**	4	SEAL-O-RING	
	23	1	**8T-4122**	24	WASHER-HARD (17X32X3.5-MM THK)	
	24	1	**7X-0345**	24	BOLT (5/8-11X1.75-IN)	
	25	1	**116-4794**	4	BRACKET AS	
	26	1	**9W-3301**	2	RING-RETAINING	
	27	1	**9X-4584**	2	SEAL AS	
		1	**8T-5071**	1	GUARD-SEAL	
	28	1	**3T-5898**	2	RING-RETAINING	
	29	1	**7G-7379**	2	BEARING	
	30	1	**7X-0408**	16	BOLT (1-8X3.5-IN)	
	31	1	**8T-5361**	16	WASHER-HARD (28X49X5-MM THK)	
	32	1	**5P-2566**	24	BOLT (1/2-13X1.5-IN)	
	33	1	**157-3101**	2	FRAME AS-TRACK ROLLER (FRONT)	
					(EACH INCLUDES)	
		1	**254-1686**	1	PLATE-WARNING (RECOIL SPRING)	
		1	**4B-4158**	4	SCREW-DRIVE (NO 4X1/4-IN)	
		1	**9W-7594**	2	DOWEL	
		1	**154-9838**	1	SLEEVE-WEAR	
	34	1	**119-6058**	1	FRAME AS (RH)	
	35	1	**119-6059**	1	FRAME AS (LH)	
	36	1	**9W-4813**	1	COVER AS (LH)	
	37	1	**9W-2466**	1	COVER AS (RH)	
					(EACH COVER AS INCLUDES)	
		1	**253-1344**	2	PLATE-WARNING (HIGH PRESSURE CYLINDER)	
		1	**9N-1995**	4	RIVET-POP	
	38	1	**9M-3786**	2	SEAL-O-RING	
	39	1	**4L-6454**	8	BOLT (3/8-16X1-IN)	

260-7615 **FRAME GP-TELESCOPING RECOIL** *(contd.)* **i02506993**

NOTE	REF NO	GRAPHIC REF	PART NUMBER	QTY	PART NAME 1 2 3 4 5 6 (PRODUCT LEVEL)	SEE PAGE
	40	1	**8T-4896**	8	WASHER-HARD (10.2X18.5X2.5-MM THK)	
	41	1	**4T-2069**	2	PLUG-DRAIN (PIVOT SHAFT, OIL FILL)	
	41A	1	**4T-2069**	4	PLUG-DRAIN (PIVOT SHAFT, OIL DRAIN)	
	42	1	**2H-3932**	6	SEAL-O-RING	
	43	1	**9W-7587**	4	PLATE	
	44	1	**9W-7586**	8	PLATE	
	45	1	**9W-7594**	4	DOWEL	
	46	1	**248-2987**	28	GUIDE	
	47	1	**8T-8924**	56	BOLT (3/4-10X2.5-IN)	
	48	1	**8T-4994**	56	WASHER-HARD (20X36.5X3.5-MM THK)	
	49	1	**5P-1076**	24	WASHER-HARD (13.5X30X4-MM THK)	

QUANTITIES SHOWN ARE THOSE REQUIRED FOR BOTH LH AND RH SIDES
M-METRIC PART

260-7615 **FRAME GP-TELESCOPING RECOIL** *(contd.)* **i02506993**

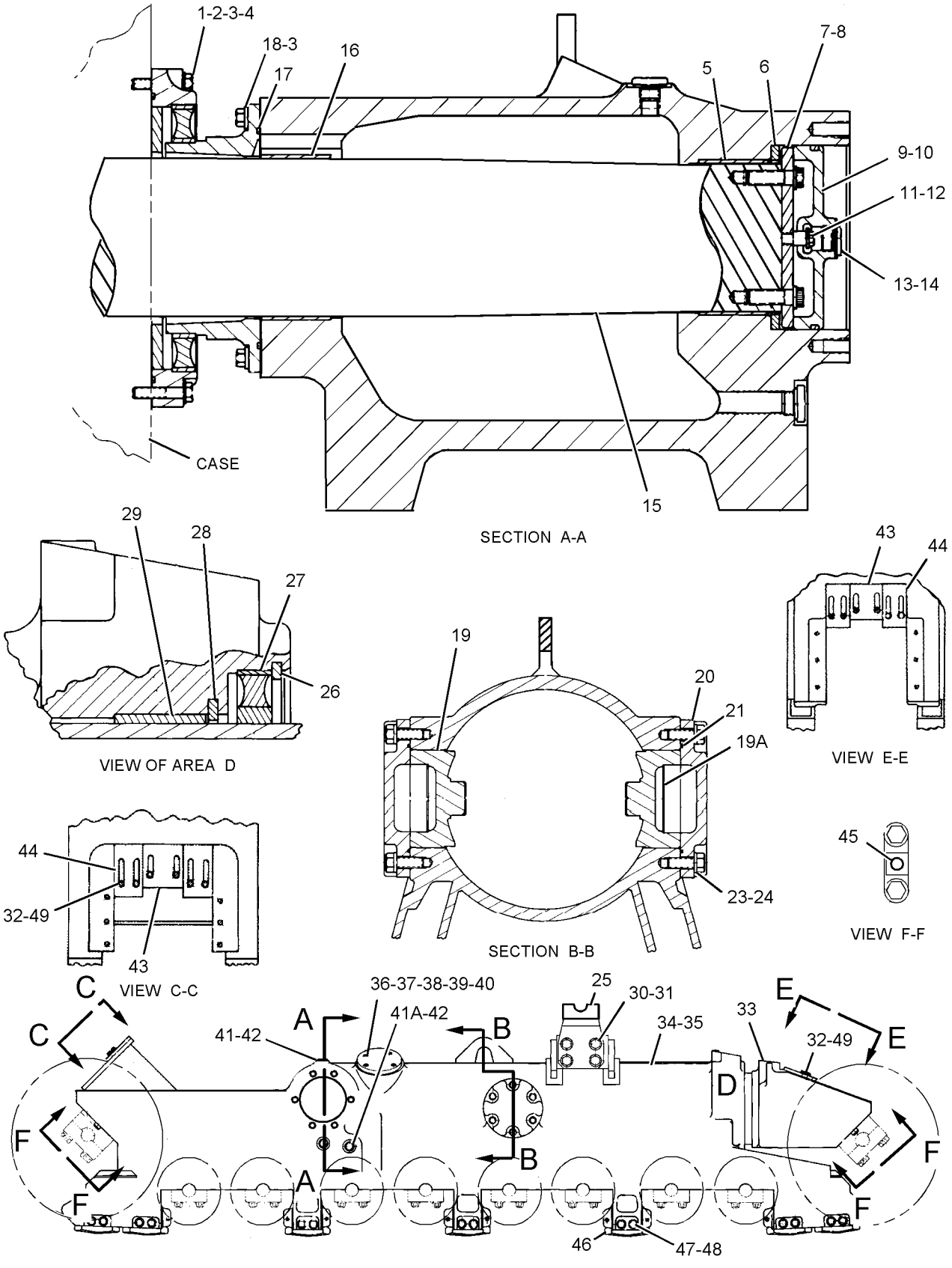

GRAPHIC #1 **<END>** g01130134

UNDERCARRIAGE

310-2847 FRAME GP-TELESCOPING RECOIL

S/N: J8B1-UP
PART OF 310-2848 UNDERCARRIAGE AR
AN ATTACHMENT

SMCS-4151 **i03021822**

NOTE	REF NO	GRAPHIC REF	PART NUMBER	QTY	PART NAME 1 2 3 4 5 6 (PRODUCT LEVEL)	SEE PAGE
	1	2	**3T-4243**	2	BEARING-SLEEVE	
	2	2	**3T-4244**	2	BEARING-SLEEVE	
	3	2	**4B-4158**	8	SCREW-DRIVE (NO 4X1/4-IN)	
	4	1	**4T-2069**	6	PLUG-DRAIN (RECOIL SPRING)	
	5	1	**6P-8931**	4	COVER	
	6	1	**6T-8801**	4	GUIDE AS	
	6A	1	**242-7104**	1	FILM-WARNING (RECOIL SPRING)	
	7	2	**7G-7379**	2	BEARING	
	8	2	**7T-1149**	2	RETAINER AS	
					(EACH INCLUDES)	
		2	**7T-1150**	1	RETAINER	
		2	**7T-1151**	1	SEAL AS	
		2	**7T-1152**	1	RETAINER	
		2	**7T-1153**	1	PLATE	
	9	2	**7T-6079**	2	SPACER (10X22X15.5-MM THK)	
	10	2	**7T-8330**	2	COVER	
	11	2	**8E-0719**	2	RING-THRUST	
	12	1	**8E-2837**	1	SHAFT-PIVOT	
	13	2	**8E-2898**	2	PLATE	
	14	2	**8E-2899**	2	PLATE	
	15	2	**9X-4584**	2	SEAL AS	
	17	2	**253-1346**	2	PLATE-WARNING (HIGH PRESSURE CYLINDER)	
	18	1	**310-2853**	2	FRAME AS-FRONT	
					(EACH INCLUDES)	
		1	**4B-4158**	4	SCREW-DRIVE (NO 4X1/4-IN)	
		1	**199-8210**	1	SLEEVE	
		1	**254-1686**	1	PLATE-WARNING (RECOIL SPRING)	
		1	**310-2855**	1	FRAME AS-FRONT	
	19	1	**310-2870**	1	FRAME AS (RH)	
	20	1	**310-2871**	1	FRAME AS (LH)	
					(EACH FRAME AS INCLUDES)	
		1	**9P-5708**	2	SUPPORT (SLEEVE)	
	21	2	**2D-1690**	2	SEAL-RING	
	22	1	**2H-3932**	6	SEAL-O-RING	
	23	1	**2K-4472**	4	SEAL-O-RING	
	24	2	**3S-1223**	2	SEAL-O-RING	
	25	2	**3T-5898**	2	RING-RETAINING	
	26	2	**4K-1388**	2	SEAL-O-RING	
	27	2	**5P-5374**	2	SEAL-O-RING	
	28	2	**6V-3263**	2	SEAL-O-RING	
	29	1	**7X-0345**	24	BOLT (5/8-11X1.75-IN)	
	30	1	**7X-0399**	8	BOLT (1-8X1.25-IN)	
	31	1	**7X-0616**	8	WASHER-HARD (28X57X6-MM THK)	
	32	2	**8C-4436**	22	BOLT (1/2-13X1.375-IN)	
	33	2	**8S-2331**	24	BOLT-12 POINT HEAD (5/8-11X2-IN)	
	34	2	**8T-2502**	2	BOLT (3/8-16X1.125-IN)	
	35	1	**8T-4122**	24	WASHER-HARD (17X32X3.5-MM THK)	
	36	2	**8T-4223**	38	WASHER-HARD (13.5X25.5X3-MM THK)	
M	37	2	**8T-4910**	16	BOLT (M12X1.75X60-MM)	
	38	1	**8T-5361**	8	WASHER-HARD (28X49X5-MM THK)	
	39	2	**9S-8009**	2	PLUG-O-RING	
	40	2	**9W-3301**	2	RING-RETAINING	

M-METRIC PART

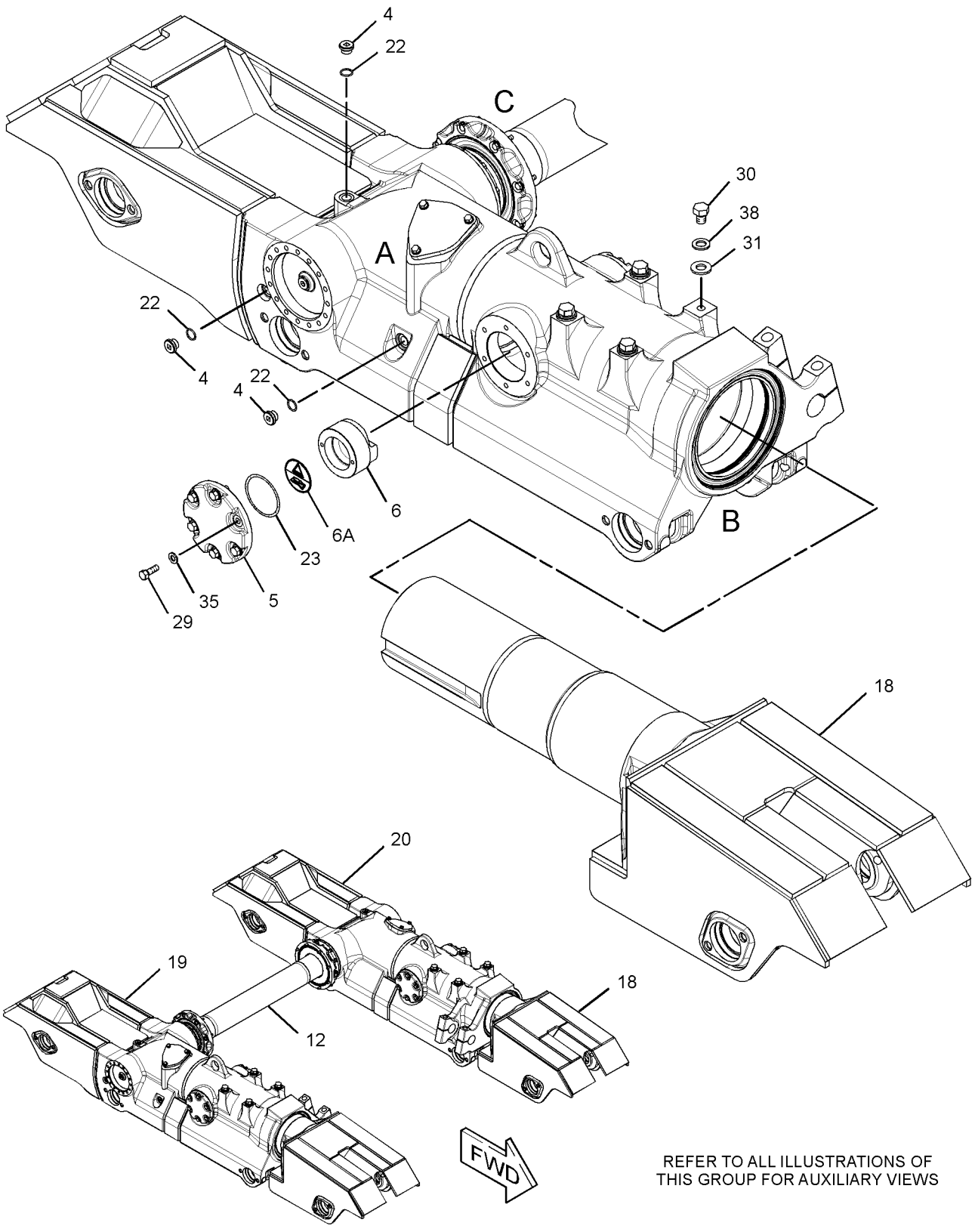

GRAPHIC #1

g01556173

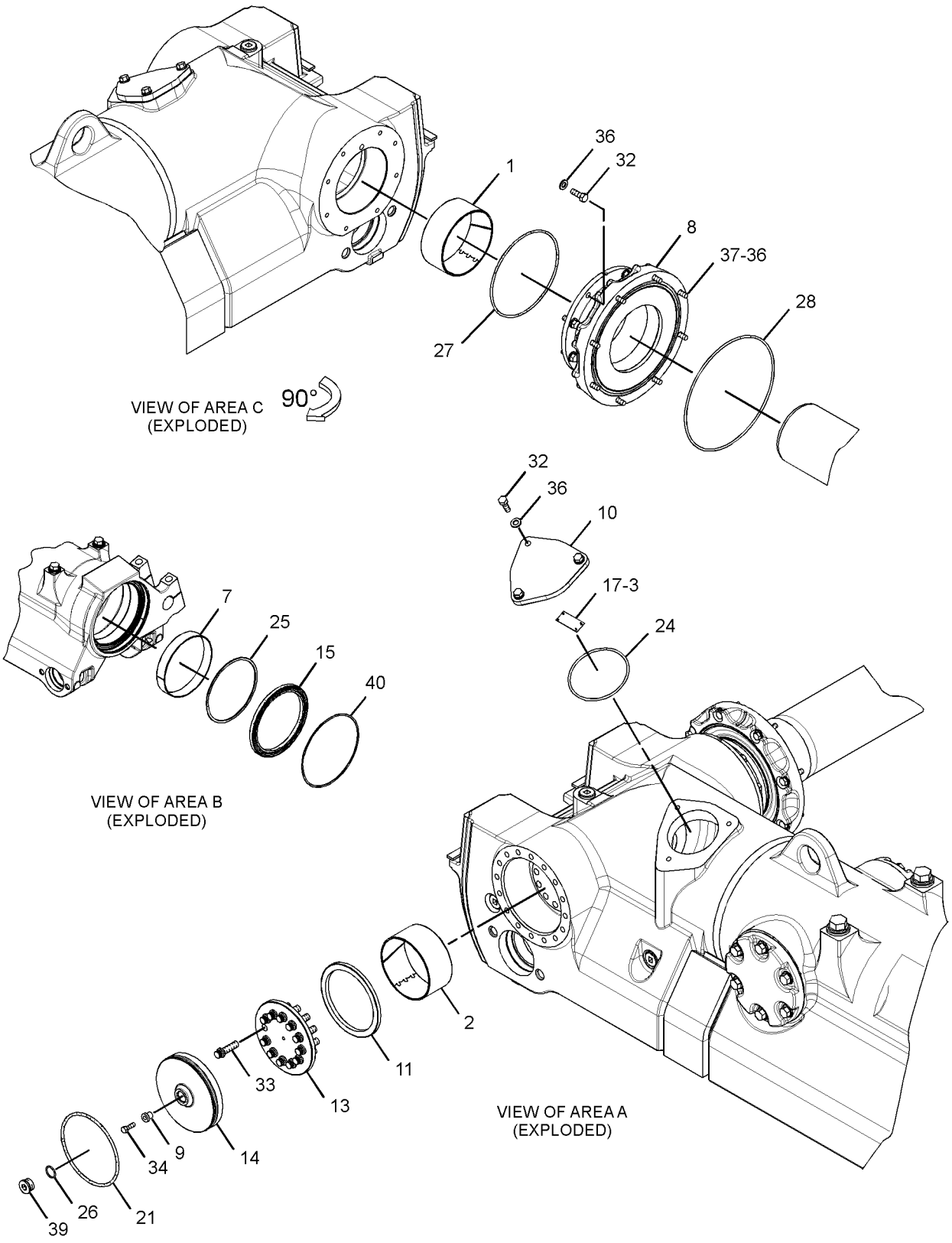

GRAPHIC #2 **<END>** g01551694

UNDERCARRIAGE

310-2851 FRAME GP-TELESCOPING RECOIL

S/N: J8B1-UP

PART OF 310-2849, 310-2850 UNDERCARRIAGE AR

ALSO AN ATTACHMENT

SMCS-4151 **i03238614**

NOTE	REF NO	GRAPHIC REF	PART NUMBER	QTY	PART NAME 1 2 3 4 5 6 (PRODUCT LEVEL)	SEE PAGE
	1	2	**3T-4243**	2	BEARING-SLEEVE	
	2	2	**3T-4244**	2	BEARING-SLEEVE	
	3	2	**4B-4158**	8	SCREW-DRIVE (NO 4X1/4-IN)	
	4	1	**4T-2069**	2	PLUG-DRAIN (PIVOT SHAFT, OIL FILL)	
	4A	1	**4T-2069**	4	PLUG-DRAIN (PIVOT SHAFT, OIL DRAIN)	
	5	1	**6P-8931**	4	COVER	
	6	1	**6T-8801**	4	GUIDE AS	
					(EACH INCLUDES)	
	6A	1	**242-7104**	1	FILM-WARNING (RECOIL SPRING)	
	7	2	**7G-7379**	2	BEARING	
	8	2	**7T-1149**	2	RETAINER AS	
		2	**7T-1150**	1	RETAINER	
		2	**7T-1151**	1	SEAL AS	
		2	**7T-1152**	1	RETAINER	
		2	**7T-1153**	1	PLATE	
	9	2	**7T-6079**	2	SPACER (10X22X15.5-MM THK)	
	10	2	**7T-8330**	2	COVER	
	11	2	**8E-0719**	2	RING-THRUST	
	12	1	**8E-2837**	1	SHAFT-PIVOT	
	13	2	**8E-2898**	2	PLATE	
	14	2	**8E-2899**	2	PLATE	
	15	2	**9X-4584**	2	SEAL AS	
		2	**8T-5071**	1	GUARD-SEAL	
	17	2	**253-1346**	2	PLATE-WARNING (HIGH PRESSURE CYLINDER)	
	18	1	**310-2852**	2	FRAME AS-FRONT	
					(EACH INCLUDES)	
		1	**4B-4158**	4	SCREW-DRIVE (NO 4X1/4-IN)	
		1	**199-8210**	1	SLEEVE	
		1	**254-1686**	1	PLATE-WARNING (RECOIL SPRING)	
		1	**310-2854**	1	FRAME AS-FRONT	
	19	1	**310-2888**	1	FRAME AS (RH) (RH)	
		1	**9P-5708**	2	SUPPORT (SLEEVE)	
	20	1	**310-2889**	1	FRAME AS (LH) (LH)	
		1	**9P-5708**	2	SUPPORT (SLEEVE)	
	21	2	**2D-1690**	2	SEAL-RING	
	22	1	**2H-3932**	6	SEAL-O-RING	
	23	1	**2K-4472**	4	SEAL-O-RING	
	24	2	**3S-1223**	2	SEAL-O-RING	
	25	2	**3T-5898**	2	RING-RETAINING	
	26	2	**4K-1388**	2	SEAL-O-RING	
	27	2	**5P-5374**	2	SEAL-O-RING	
	28	2	**6V-3263**	2	SEAL-O-RING	
	29	1	**7X-0345**	24	BOLT (5/8-11X1.75-IN)	
	30	1	**7X-0399**	8	BOLT (1-8X1.25-IN)	
	31	1	**7X-0616**	8	WASHER-HARD (28X57X6-MM THK)	
	32	2	**8C-4436**	22	BOLT (1/2-13X1.375-IN)	
	33	2	**8S-2331**	24	BOLT-12 POINT HEAD (5/8-11X2-IN)	
	34	2	**8T-2502**	2	BOLT (3/8-16X1.125-IN)	
	35	1	**8T-4122**	24	WASHER-HARD (17X32X3.5-MM THK)	
	36	2	**8T-4223**	38	WASHER-HARD (13.5X25.5X3-MM THK)	
M	37	2	**8T-4910**	16	BOLT (M12X1.75X60-MM)	
	38	1	**8T-5361**	8	WASHER-HARD (28X49X5-MM THK)	
	39	2	**9S-8009**	2	PLUG-O-RING	
	40	2	**9W-3301**	2	RING-RETAINING	

M-METRIC PART

310-2851 **FRAME GP-TELESCOPING RECOIL** *(contd.)* **i03238614**

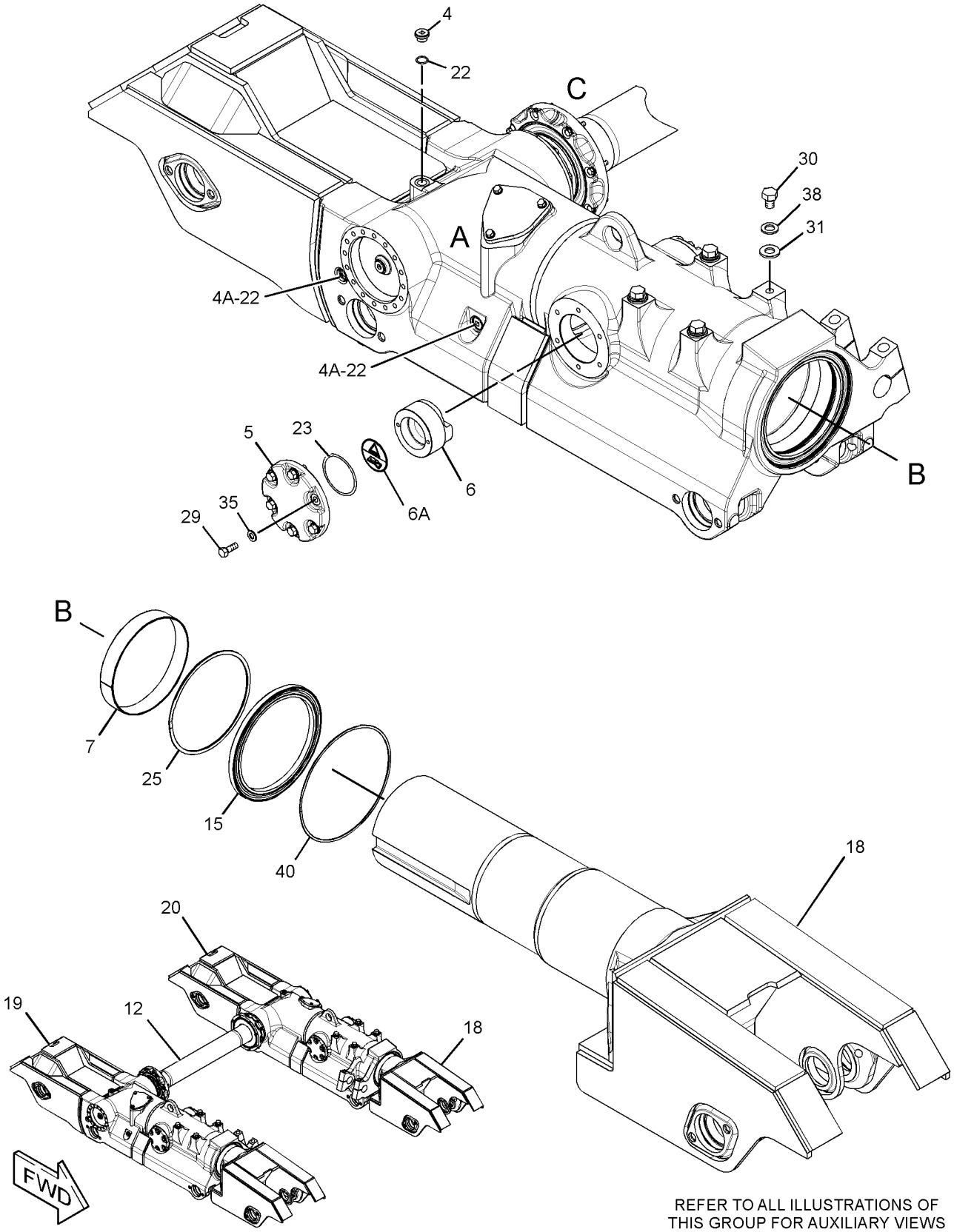

REFER TO ALL ILLUSTRATIONS OF
THIS GROUP FOR AUXILIARY VIEWS

GRAPHIC #1

g01602116

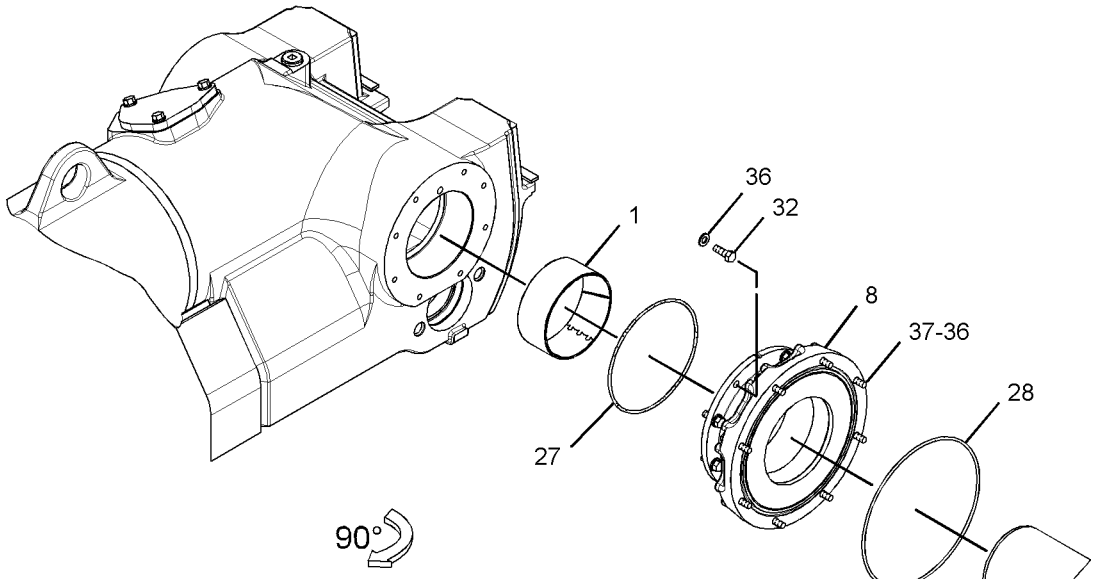

VIEW OF AREA C
(EXPLODED)

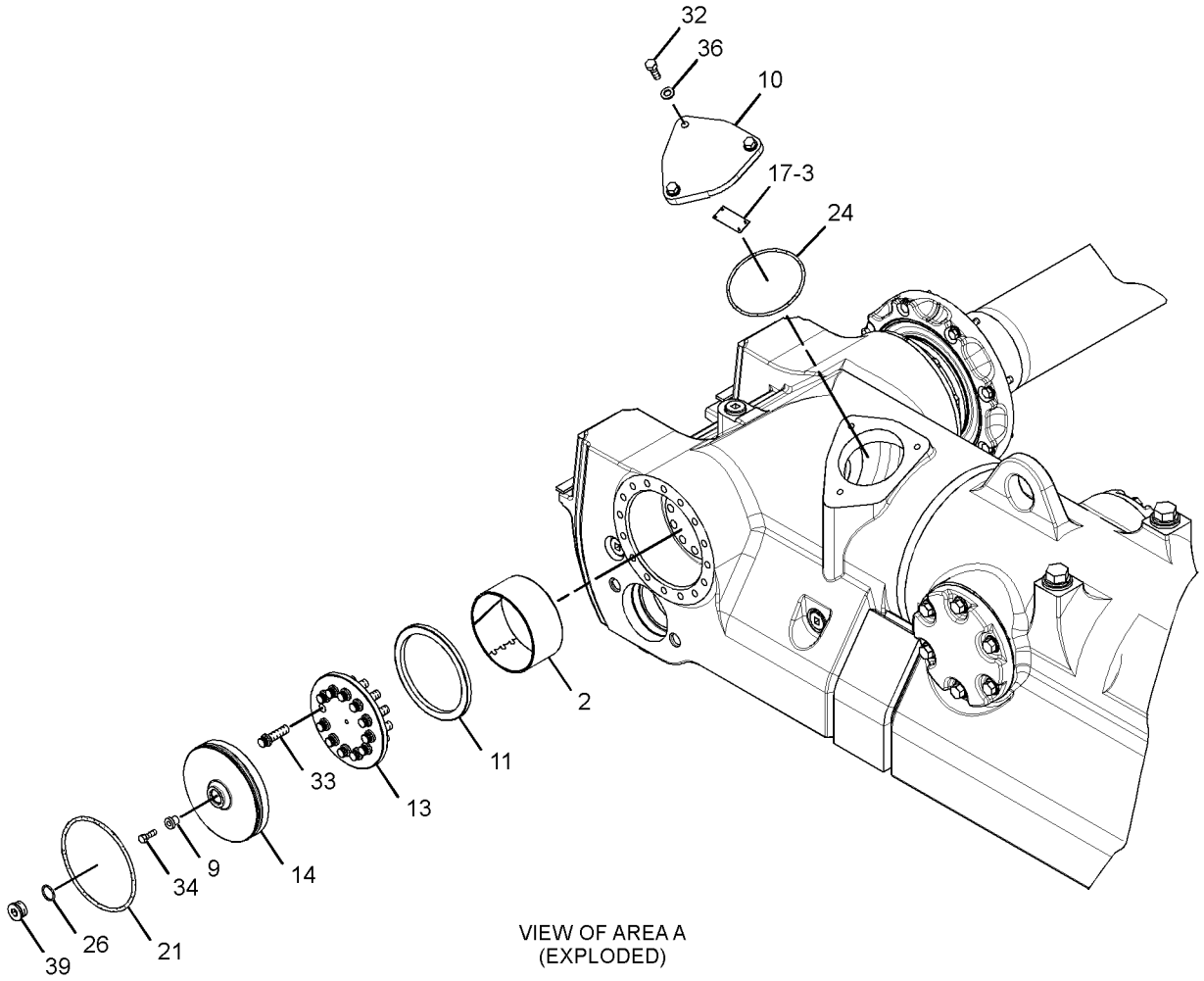

VIEW OF AREA A
(EXPLODED)

GRAPHIC #2 **<END>** g01557819

209-5117 GAUGE AR-TRACK—LOW GROUND PRESSURE

S/N: J8B1-UP
CONVERTS FROM 2083-GA TO 2337-GA
FOR USE WITH 245-3557—PAGE 923. CANNOT BE USED WITH 243-5300—PAGE 10
AN ATTACHMENT

SMCS-4151 **i03242621**

NOTE	PART NUMBER	QTY	PART NAME 1 2 3 4 5 6 (PRODUCT LEVEL)	SEE PAGE
Y	*260-3903*	1	CASE & FRAME GP	521
Y	*1Q-3054*	2	DRIVE GP-FINAL	432
Y	*209-5115*	1	GAUGE AR-UNDERCARRIAGE (LOW GROUND PRESSURE)	618
Y-SEPARATE ILLUSTRATION				

<END>

209-5115 GAUGE AR-UNDERCARRIAGE—LOW GROUND PRESSURE

S/N: J8B1-UP
PART OF 209-5117 GAUGE AR-TRACK
AN ATTACHMENT

SMCS-4151 **i02395397**

NOTE	PART NUMBER	QTY	PART NAME 1 2 3 4 5 6 (PRODUCT LEVEL)	SEE PAGE
Y	*1Q-3056*	1	AXLE GP	411
Y	**260-4695**	1	BAR GP-EQUALIZER	597
	1Q-3039	2	RETAINER AS	
			(EACH INCLUDES)	
	7T-1151	1	SEAL AS	
	7T-1152	1	RETAINER	
	7T-1153	1	PLATE	
	1Q-3042	1	SHAFT-PIVOT	
Y-SEPARATE ILLUSTRATION				

<END>

166-4427 GUARD AR-IDLER—WASTE HANDLING

S/N: J8B1-UP
PART OF 209-5118, 243-5300 WASTE HANDLING AR
FOR USE WITH 209-3418—PAGE 691, 209-3419—PAGE 692
AN ATTACHMENT

SMCS-7169 **i02239441**

NOTE	PART NUMBER	QTY	PART NAME 1 2 3 4 5 6 (PRODUCT LEVEL)	SEE PAGE
Y	**244-1324**	4	IDLER GP-TRACK	628
Y-SEPARATE ILLUSTRATION				

<END>

166-4428 GUARD AR-IDLER—WASTE HANDLING

S/N: J8B1-UP
PART OF 209-5099 WASTE HANDLING AR
FOR USE WITH SUSPENDED UNDERCARRIAGE. CANNOT BE USED WITH DISPOSAL AR, 102-4373—PAGE 2
AN ATTACHMENT

SMCS-7169 **i02240560**

NOTE	PART NUMBER	QTY	PART NAME 1 2 3 4 5 6 (PRODUCT LEVEL)	SEE PAGE
Y	**244-1323**	2	IDLER GP-TRACK (FRONT)	627
Y	**244-1324**	2	IDLER GP-TRACK (REAR)	628
Y-SEPARATE ILLUSTRATION				

<END>

319-6071 GUARD AR-IDLER—WASTE HANDLING, SYSTEMONE

S/N: J8B1-UP
FOR USE WITH SUSPENDED UNDERCARRIAGE
AN ATTACHMENT

SMCS-7169 **i03202201**

NOTE	PART NUMBER	QTY	PART NAME 1 2 3 4 5 6 (PRODUCT LEVEL)	SEE PAGE
Y	**308-4366**	2	IDLER GP-TRACK (FRONT)	631
Y	**308-4367**	2	IDLER GP-TRACK (REAR)	632
Y-SEPARATE ILLUSTRATION				

<END>

UNDERCARRIAGE

230-3046 GUARD GP-IDLER

S/N: J8B1-UP
AN ATTACHMENT

SMCS-7169 **i02243086**

NOTE	REF NO	GRAPHIC REF	PART NUMBER	QTY	PART NAME 1 2 3 4 5 6 (PRODUCT LEVEL)	SEE PAGE
	1	1	**155-2754**	4	PLATE	
	2	1	**163-2415**	4	GUARD AS	
	3	1	**8T-4122**	12	WASHER-HARD (17X32X3.5-MM THK)	
	4	1	**8T-6871**	12	BOLT (5/8-11X2.5-IN)	

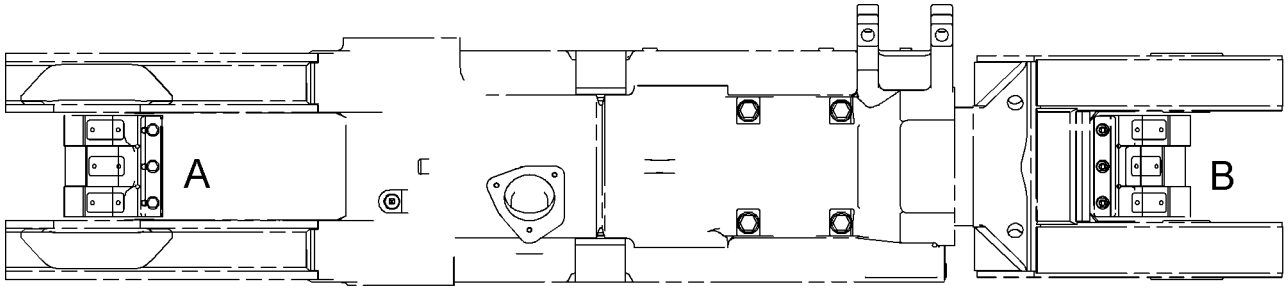

TOP VIEW FWD

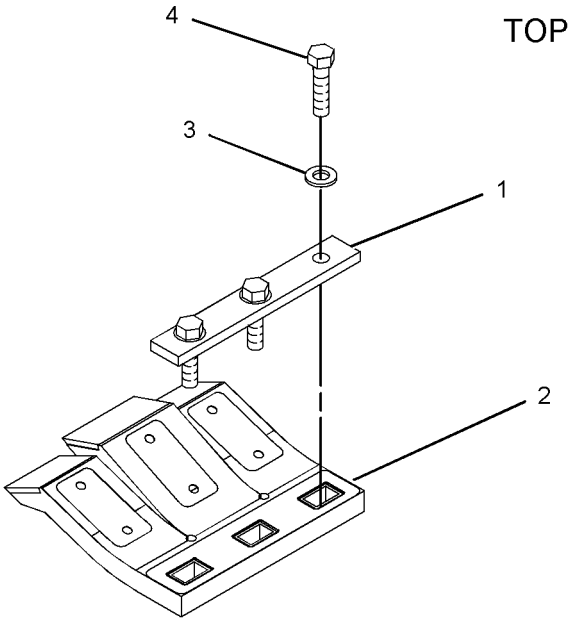

EXPLODED VIEW OF AREA A

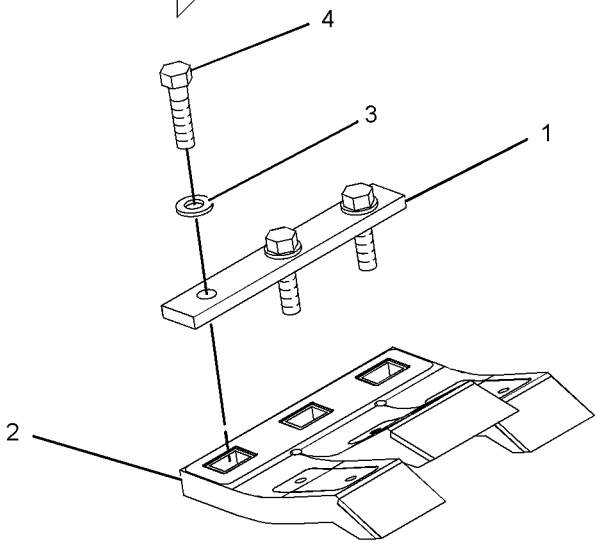

EXPLODED VIEW OF AREA B

GRAPHIC #1

<END>

g01020144

310-2910 GUARD GP-IDLER–SYSTEMONE

S/N: J8B1-UP
LOWER, OUTER
PART OF 310-2848 UNDERCARRIAGE AR
AN ATTACHMENT

SMCS-7169 **i03021827**

NOTE	REF NO	GRAPHIC REF	PART NUMBER	QTY	PART NAME 1 2 3 4 5 6 (PRODUCT LEVEL)	SEE PAGE
	1	1	**310-2909**	4	PLATE	
	2	1	**310-2912**	2	GUARD AS	
	3	1	**310-2913**	2	GUARD AS	
	4	1	**315-5491**	20	SPACER (20.5X38X20-MM THK)	
	5	1	**7X-0369**	20	BOLT (3/4-10X3.25-IN)	
	6	1	**8T-4994**	12	WASHER-HARD (20X36.5X3.5-MM THK)	
	7	1	**8T-9398**	12	BOLT (3/4-10X1.75-IN)	

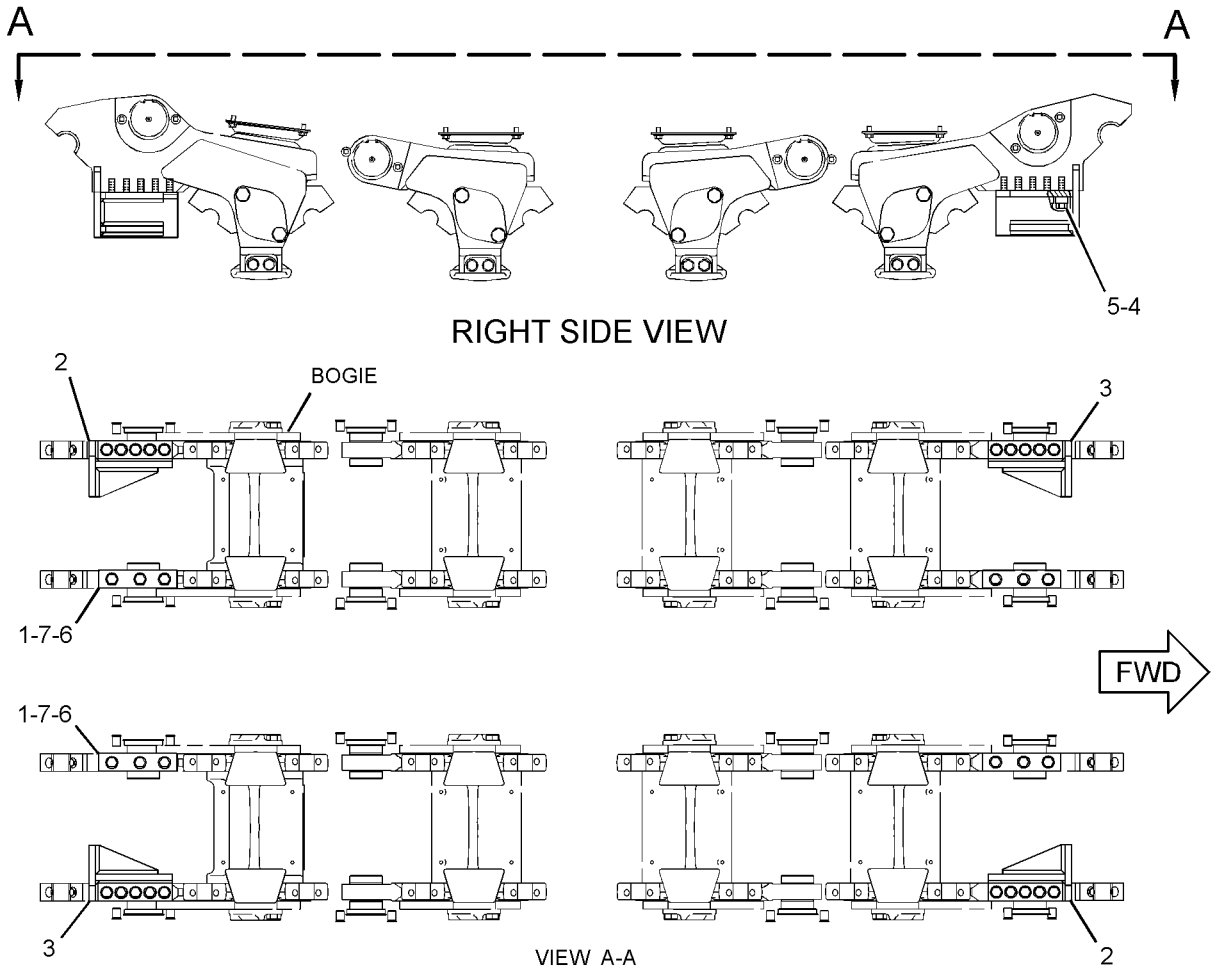

GRAPHIC #1 **<END>** g01533433

310-2911 GUARD GP-IDLER–SYSTEMONE

S/N: J8B1-UP
LOWER, INNER
AN ATTACHMENT

SMCS-7169 **i03021848**

NOTE	REF NO	GRAPHIC REF	PART NUMBER	QTY	PART NAME 1 2 3 4 5 6 (PRODUCT LEVEL)	SEE PAGE
	1	1	**310-2912**	2	GUARD AS	
	2	1	**310-2913**	2	GUARD AS	
	3	1	**315-5491**	20	SPACER (20.5X38X20-MM THK)	
	4	1	**7X-0369**	20	BOLT (3/4-10X3.25-IN)	

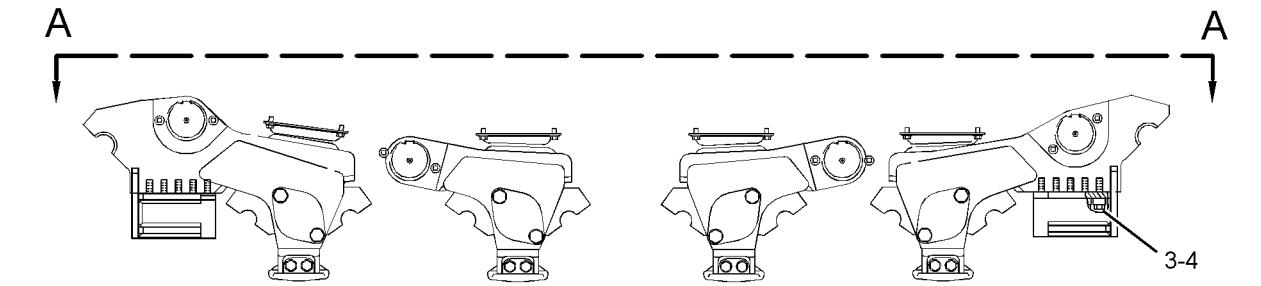

RIGHT SIDE VIEW

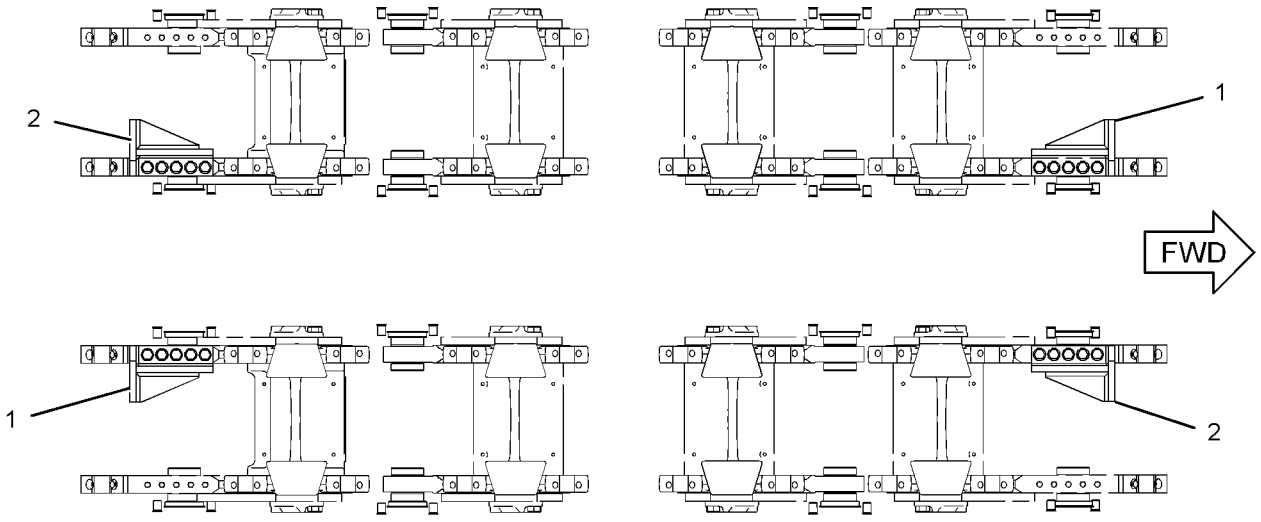

VIEW A-A

GRAPHIC #1 **<END>** g01512438

111-1729 IDLER GP-TRACK

S/N: J8B1-UP

PART OF 206-6779, 209-3418, 209-3419, 310-2849, 310-2850 UNDERCARRIAGE AR ALSO AN ATTACHMENT

SMCS-4159 **i01205348**

NOTE	REF NO	GRAPHIC REF	PART NUMBER	QTY	PART NAME 1 2 3 4 5 6 (PRODUCT LEVEL)	SEE PAGE
	1	1	**6Y-0553**	1	IDLER & BEARING AS	
	2	1	**154-3298**	2	BEARING-SLEEVE	
	3	1	**107-3947**	2	COLLAR-SEAL	
	4	1	**154-3307**	1	SHAFT-TRACK IDLER	
	5	1	**8E-6619**	2	WASHER-THRUST (12X18.5X3-MM THK)	
	6	1	**107-4057**	2	SEAL-O-RING	
	7	1	**162-7863**	2	SEAL GP-DUO-CONE	
					(EACH INCLUDES)	
		1	**162-2167**	2	RING-TORIC	
	8	1	**3K-6113**	24	WASHER-HARD (12X18.5X3-MM THK)	
	9	1	**5P-2546**	24	BOLT-12 POINT HEAD (7/16-14X1.25-IN)	
	10	1	**8F-9516**	2	SEAL-O-RING	
	11	1	**6Y-0473**	1	PLUG-CLEAR	
	12	1	**9G-4872**	1	STOPPER-RUBBER	
	13	1	**107-3946**	2	RETAINER	

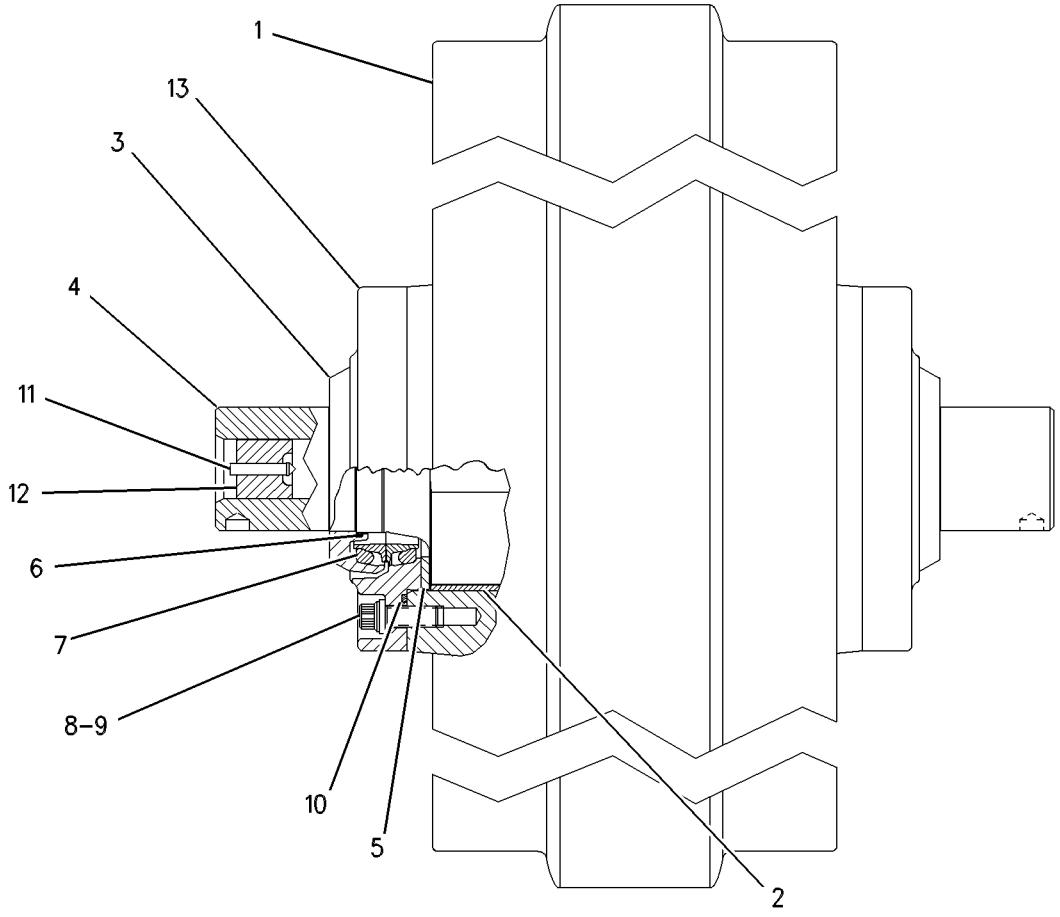

GRAPHIC #1 **<END>** g00595334

111-1730 IDLER GP-TRACK–FRONT

S/N: J8B1-UP

PART OF 206-6779, 310-2849, 310-2850 UNDERCARRIAGE AR

ALSO AN ATTACHMENT

SMCS-4159 **i01205359**

NOTE	REF NO	GRAPHIC REF	PART NUMBER	QTY	PART NAME 1 2 3 4 5 6 (PRODUCT LEVEL)	SEE PAGE
	1	1	**6Y-0556**	1	IDLER & BEARING AS	
	2	1	**154-3298**	2	BEARING-SLEEVE	
	3	1	**107-3947**	2	COLLAR-SEAL	
	4	1	**154-3307**	1	SHAFT-TRACK IDLER	
	5	1	**8E-6619**	2	WASHER-THRUST	
	6	1	**107-4057**	2	SEAL-O-RING (67.94MM ID)	
	7	1	**162-7863**	2	SEAL GP-DUO-CONE	
					(EACH INCLUDES)	
		1	**162-2167**	2	RING-TORIC	
	8	1	**3K-6113**	24	WASHER-HARD (3MM THK)	
	9	1	**5P-2546**	24	BOLT-12 POINT HEAD (7/16-14X1.25IN)	
	10	1	**8F-9516**	2	SEAL-O-RING (139.29MM ID)	
	11	1	**6Y-0473**	1	PLUG	
	12	1	**9G-4872**	1	STOPPER-RUBBER	
	13	1	**107-3946**	2	RETAINER	

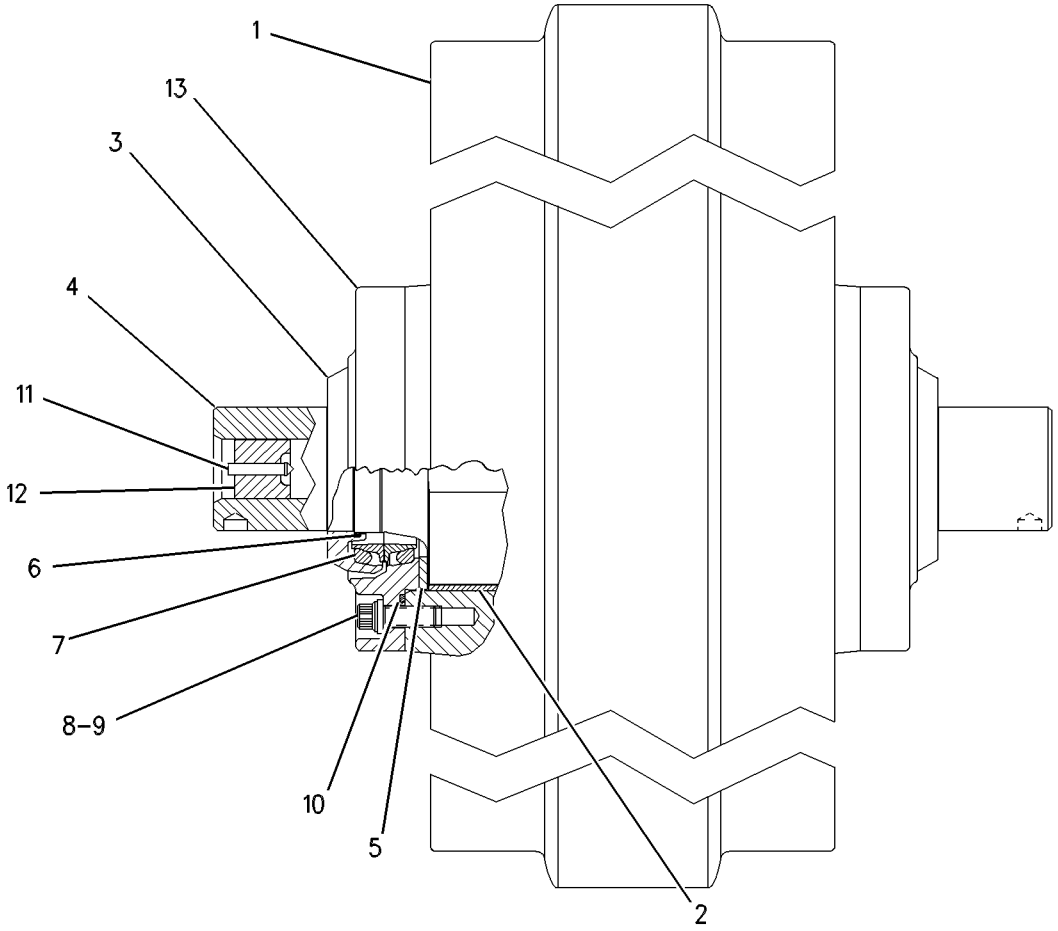

GRAPHIC #1 **<END>** g00595202

244-0878 IDLER GP-TRACK–REAR, COLD WEATHER

S/N: J8B1-UP
PART OF 102-4373 COLD WEATHER AR
AN ATTACHMENT

SMCS-4159 **i02311433**

NOTE	REF NO	GRAPHIC REF	PART NUMBER	QTY	PART NAME 1 2 3 4 5 6 (PRODUCT LEVEL)	SEE PAGE
	1	1	**6Y-0473**	1	PLUG-CLEAR	
	2	1	**6Y-0553**	1	IDLER & BEARING AS	
	2A	1	**252-5617**	2	BEARING-SLEEVE	
	3	1	**8E-6619**	2	WASHER-THRUST (12X18.5X3-MM THK)	
	4	1	**8F-9516**	2	SEAL-O-RING	
	5	1	**9G-4872**	1	STOPPER-RUBBER	
	6	1	**107-3946**	2	RETAINER	
	7	1	**107-3947**	2	COLLAR-SEAL	
	8	1	**107-4057**	2	SEAL-O-RING	
	9	1	**154-3307**	1	SHAFT-TRACK IDLER	
	10	1	**162-7863**	2	SEAL GP-DUO-CONE	
					(EACH INCLUDES)	
	10A	1	**162-2167**	2	RING-TORIC	
Z	10B	1		2	SEAL-RING	
	11	1	**3K-6113**	24	WASHER-HARD (12X18.5X3-MM THK)	
	12	1	**5P-2546**	24	BOLT-12 POINT HEAD (7/16-14X1.25-IN)	

Z-NOT SERVICED SEPARATELY

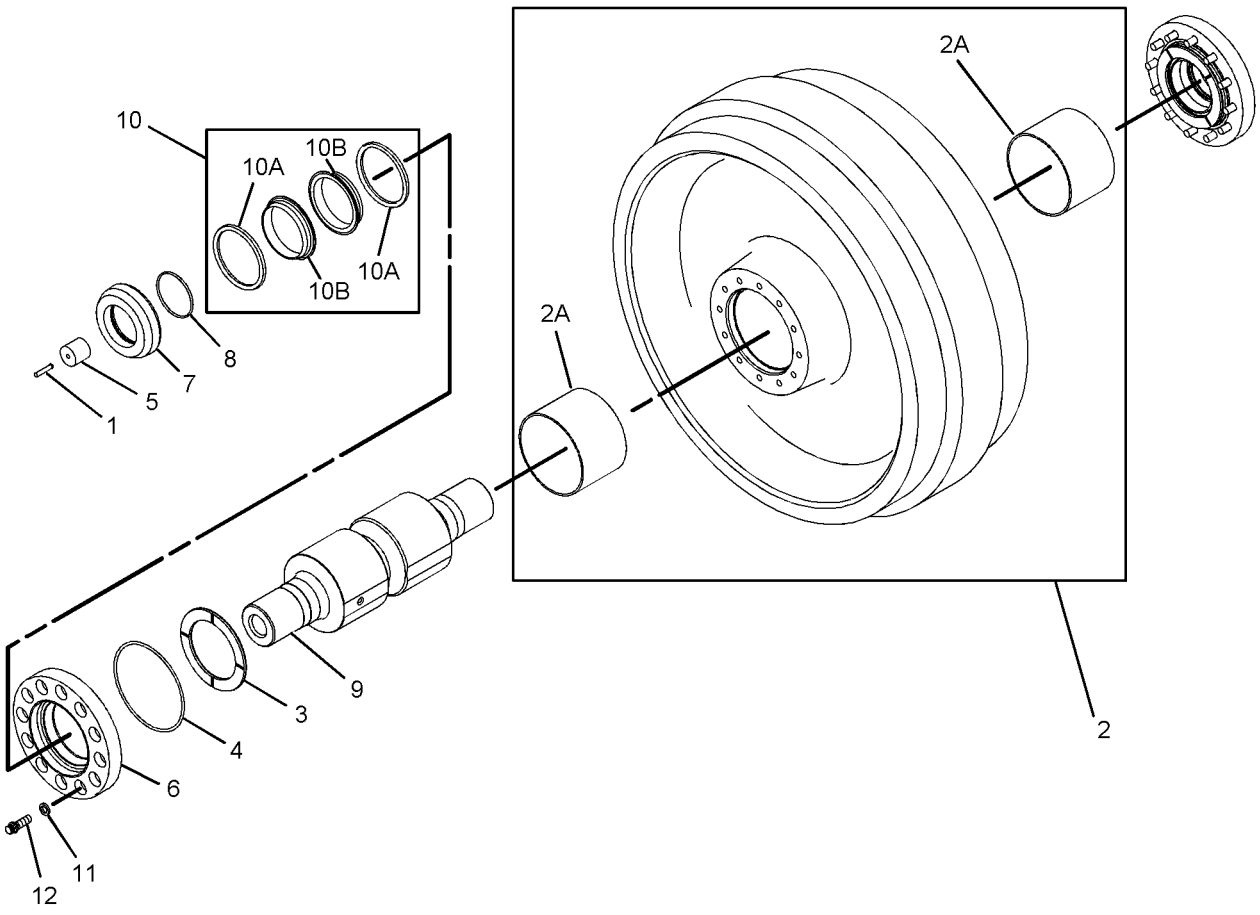

GRAPHIC #1 **<END>** g01117035

244-0879 IDLER GP-TRACK–FRONT, COLD WEATHER

S/N: J8B1-UP
PART OF 102-4373 COLD WEATHER AR
AN ATTACHMENT

SMCS-4159 **i02311312**

NOTE	REF NO	GRAPHIC REF	PART NUMBER	QTY	PART NAME 1 2 3 4 5 6 (PRODUCT LEVEL)	SEE PAGE
	1	1	**6Y-0473**	1	PLUG-CLEAR	
	2	1	**6Y-0556**	1	IDLER & BEARING AS	
	2A	1	**154-3298**	2	BEARING-SLEEVE	
	3	1	**8E-6619**	2	WASHER-THRUST (12X18.5X3-MM THK)	
	4	1	**8F-9516**	2	SEAL-O-RING	
	5	1	**9G-4872**	1	STOPPER-RUBBER	
	6	1	**107-3946**	2	RETAINER	
	7	1	**107-3947**	2	COLLAR-SEAL	
	8	1	**107-4057**	2	SEAL-O-RING	
	9	1	**154-3307**	1	SHAFT-TRACK IDLER	
	10	1	**162-7863**	2	SEAL GP-DUO-CONE	
					(EACH INCLUDES)	
	10A	1	**162-2167**	2	RING-TORIC	
Z	10B	1		2	SEAL-RING	
	11	1	**3K-6113**	24	WASHER-HARD (12X18.5X3-MM THK)	
	12	1	**5P-2546**	24	BOLT-12 POINT HEAD (7/16-14X1.25-IN)	

Z-NOT SERVICED SEPARATELY

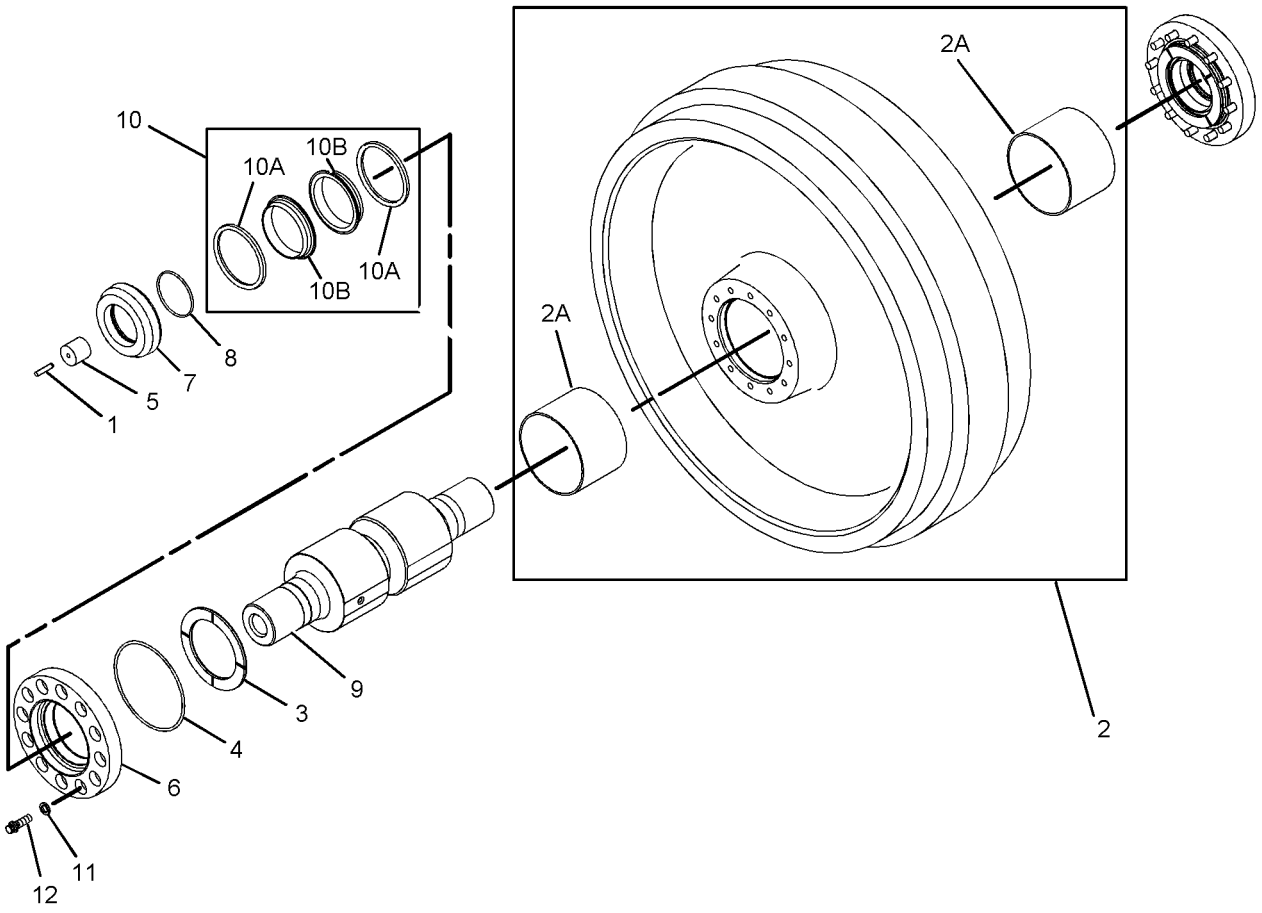

GRAPHIC #1 **<END>** g01117032

244-1323 IDLER GP-TRACK–FRONT

S/N: J8B1-UP
WASTE HANDLING, COLD WEATHER, NITRILE RUBBER, SYNTHETIC OIL
PART OF 166-4428 GUARD AR-IDLER
AN ATTACHMENT

SMCS-4159 **i02344719**

NOTE	REF NO	GRAPHIC REF	PART NUMBER	QTY	PART NAME 1 2 3 4 5 6 (PRODUCT LEVEL)	SEE PAGE
	1	1	**6Y-0473**	1	PLUG-CLEAR	
	2	1	**6Y-0556**	1	IDLER & BEARING AS	
	2A	1	**154-3298**	2	BEARING-SLEEVE	
	3	1	**8E-6619**	2	WASHER-THRUST (12X18.5X3-MM THK)	
	4	1	**8F-9516**	2	SEAL-O-RING	
	5	1	**9G-4872**	1	STOPPER-RUBBER	
	6	1	**107-4057**	2	SEAL-O-RING	
	7	1	**154-3307**	1	SHAFT-TRACK IDLER	
	8	1	**162-7863**	2	SEAL GP-DUO-CONE	
					(EACH INCLUDES)	
	8A	1	**162-2167**	2	RING-TORIC	
Z	8B	1		2	SEAL-RING	
	9	1	**261-9672**	2	RETAINER	
	10	1	**261-9673**	2	COLLAR-SEAL	
	11	1	**166-3324**	2	PLATE	
	12	1	**8C-6877**	24	BOLT (7/16-14X1.75-IN)	
	13	1	**8T-5360**	24	WASHER (12X22.5X2.5-MM THK)	

Z-NOT SERVICED SEPARATELY

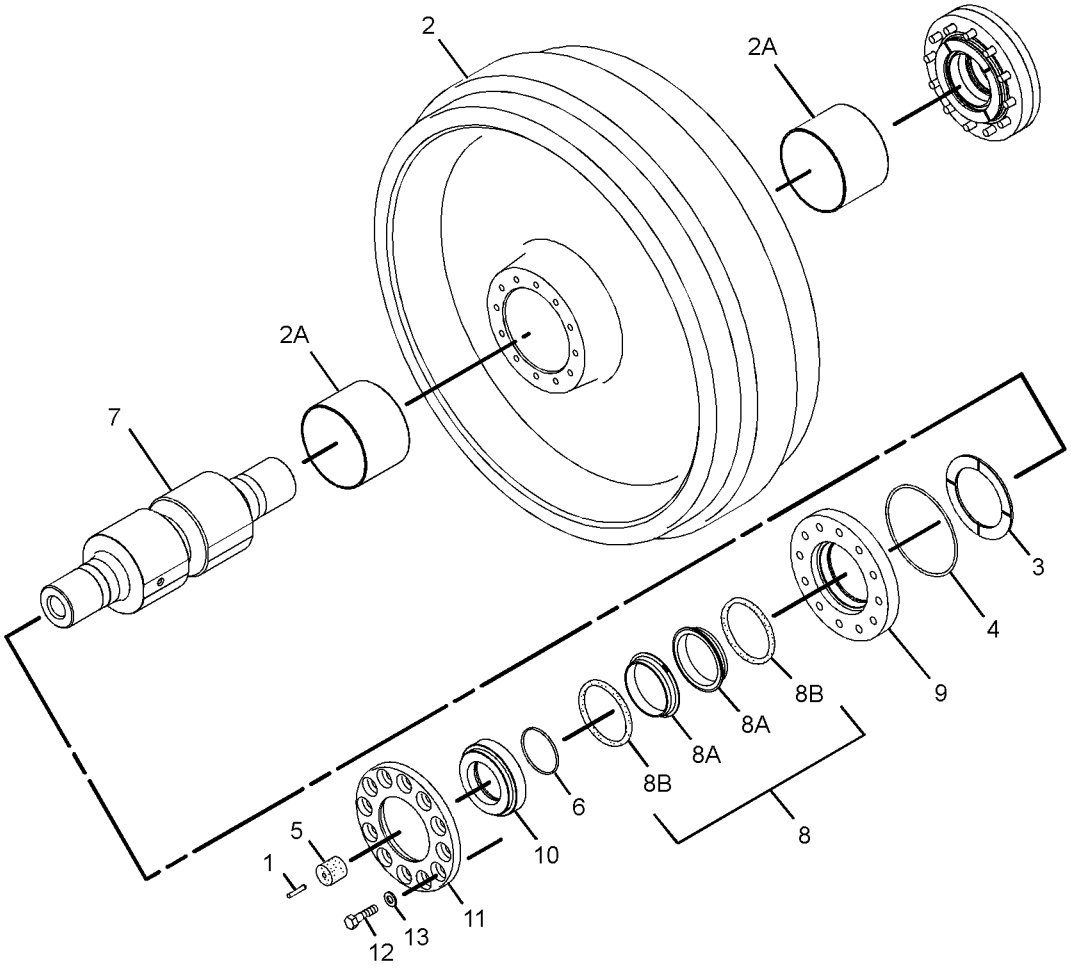

GRAPHIC #1 **<END>** g01167017

UNDERCARRIAGE

244-1324 IDLER GP-TRACK

S/N: J8B1-UP
WASTE HANDLING, COLD WEATHER, NITRILE RUBBER, SYNTHETIC OIL
PART OF 166-4427, 166-4428 GUARD AR-IDLER
AN ATTACHMENT

SMCS-4159 **i02239699**

NOTE	REF NO	GRAPHIC REF	PART NUMBER	QTY	PART NAME 1 2 3 4 5 6 (PRODUCT LEVEL)	SEE PAGE
	1	1	**6Y-0473**	1	PLUG-CLEAR	
	2	1	**6Y-0553**	1	IDLER & BEARING AS	
	2A	1	**154-3298**	2	BEARING-SLEEVE	
	3	1	**8E-6619**	2	WASHER-THRUST (12X18.5X3-MM THK)	
	4	1	**8F-9516**	2	SEAL-O-RING	
	5	1	**9G-4872**	1	STOPPER-RUBBER	
	6	1	**107-4057**	2	SEAL-O-RING	
	7	1	**154-3307**	1	SHAFT-TRACK IDLER	
	8	1	**162-7863**	2	SEAL GP-DUO-CONE	
					(EACH INCLUDES)	
	8A	1	**162-2167**	2	RING-TORIC	
Z	8B	1		2	SEAL-RING	
	9	1	**166-3324**	2	PLATE	
	10	1	**261-9672**	2	RETAINER	
	11	1	**261-9673**	2	COLLAR-SEAL	
	12	1	**8C-6877**	24	BOLT (7/16-14X1.75-IN)	
	13	1	**8T-5360**	24	WASHER (12X22.5X2.5-MM THK)	

Z-NOT SERVICED SEPARATELY

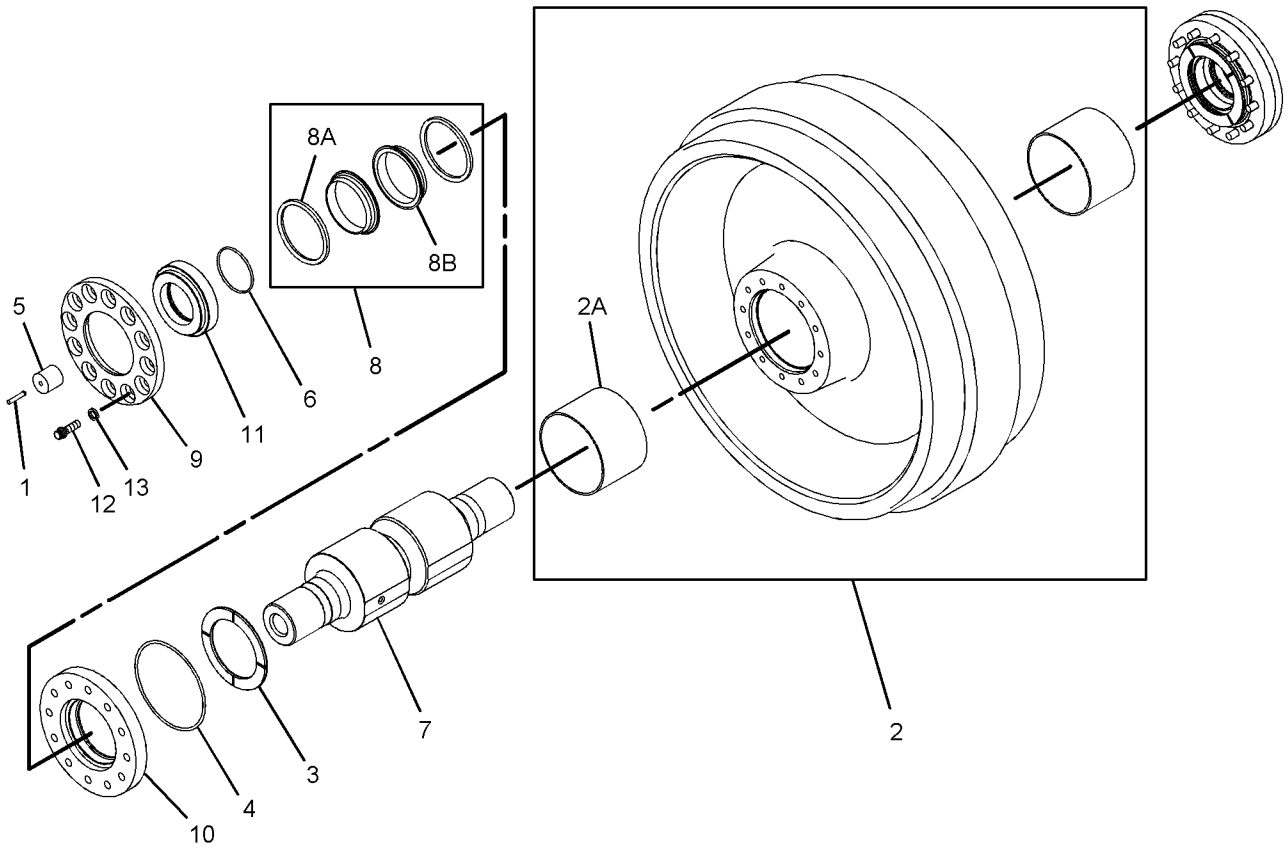

GRAPHIC #1 **<END>** g01118254

308-4364 IDLER GP-TRACK–SYSTEMONE, FRONT

S/N: J8B1-UP
PART OF 310-2848 UNDERCARRIAGE AR
AN ATTACHMENT

SMCS-4159 **i03021839**

NOTE	REF NO	GRAPHIC REF	PART NUMBER	QTY	PART NAME 1 2 3 4 5 6 (PRODUCT LEVEL)	SEE PAGE
	1	1	**6Y-0473**	1	PLUG-CLEAR	
	2	1	**8E-6619**	2	WASHER-THRUST (12X18.5X3-MM THK)	
	3	1	**8F-9516**	2	SEAL-O-RING	
	4	1	**9G-4872**	1	STOPPER-RUBBER	
	5	1	**107-3946**	2	RETAINER	
	6	1	**107-3947**	2	COLLAR-SEAL	
	7	1	**107-4057**	2	SEAL-O-RING	
	8	1	**154-3307**	1	SHAFT-TRACK IDLER	
	9	1	**162-7863**	2	SEAL GP-DUO-CONE	
					(EACH INCLUDES)	
	9A	1	**162-2167**	2	RING-TORIC	
	10	1	**308-4362**	1	IDLER & BEARING AS	
	10A	1	**154-3298**	2	BEARING-SLEEVE	
	11	1	**3K-6113**	24	WASHER-HARD (12X18.5X3-MM THK)	
	12	1	**5P-2546**	24	BOLT-12 POINT HEAD (7/16-14X1.25-IN)	

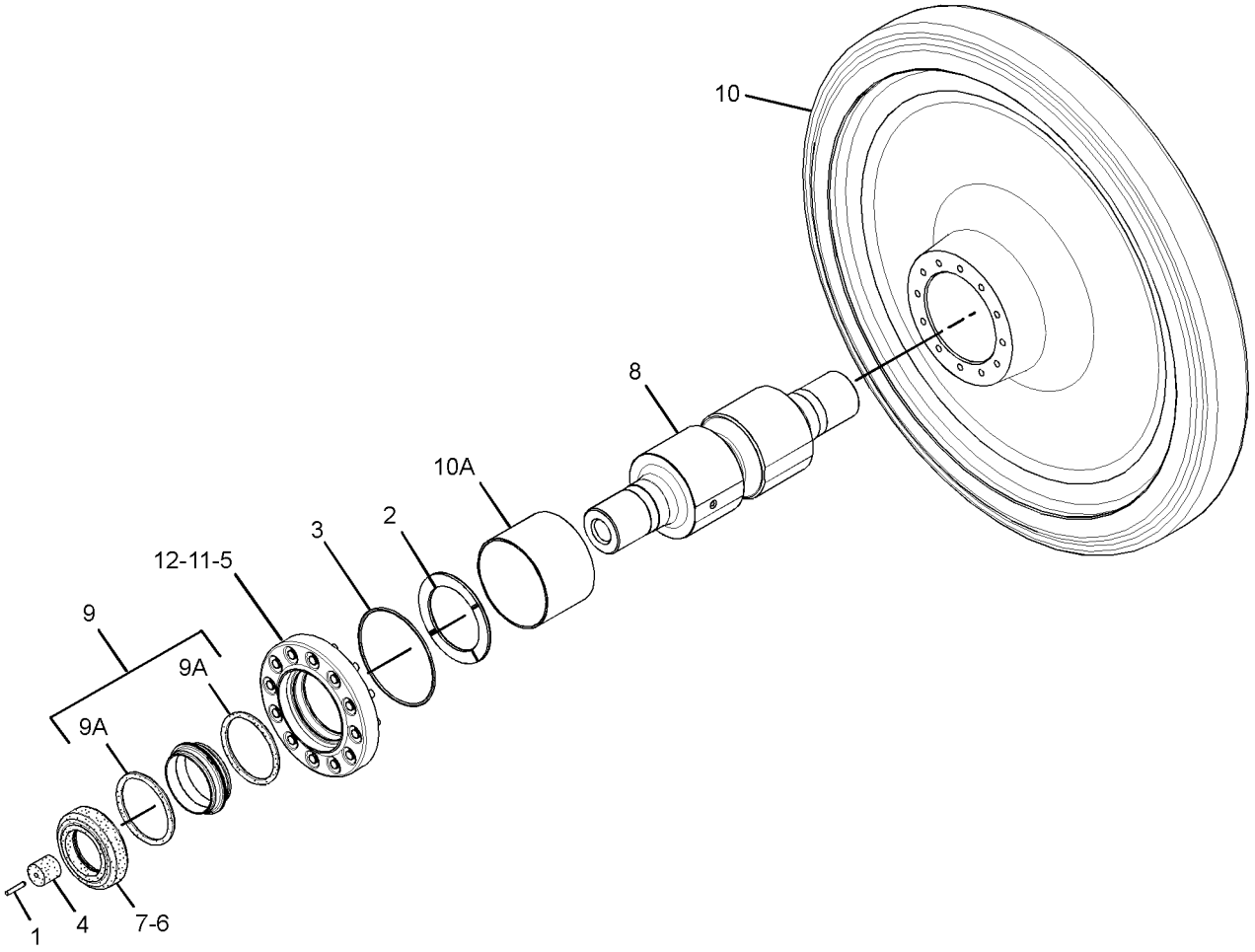

GRAPHIC #1 **<END>** g01563282

UNDERCARRIAGE

308-4365 IDLER GP-TRACK–SYSTEMONE, REAR

S/N: J8B1-UP
PART OF 310-2848 UNDERCARRIAGE AR
AN ATTACHMENT

SMCS-4159 **i03021844**

NOTE	REF NO	GRAPHIC REF	PART NUMBER	QTY	PART NAME 1 2 3 4 5 6 (PRODUCT LEVEL)	SEE PAGE
	1	1	**6Y-0473**	1	PLUG-CLEAR	
	2	1	**8E-6619**	2	WASHER-THRUST (12X18.5X3-MM THK)	
	3	1	**8F-9516**	2	SEAL-O-RING	
	4	1	**9G-4872**	1	STOPPER-RUBBER	
	5	1	**107-3946**	2	RETAINER	
	6	1	**107-3947**	2	COLLAR-SEAL	
	7	1	**107-4057**	2	SEAL-O-RING	
	8	1	**154-3307**	1	SHAFT-TRACK IDLER	
	9	1	**162-7863**	2	SEAL GP-DUO-CONE	
					(EACH INCLUDES)	
	9A	1	**162-2167**	2	RING-TORIC	
	10	1	**308-4363**	1	IDLER & BEARING AS	
	10A	1	**154-3298**	2	BEARING-SLEEVE	
	11	1	**3K-6113**	24	WASHER-HARD (12X18.5X3-MM THK)	
	12	1	**5P-2546**	24	BOLT-12 POINT HEAD (7/16-14X1.25-IN)	

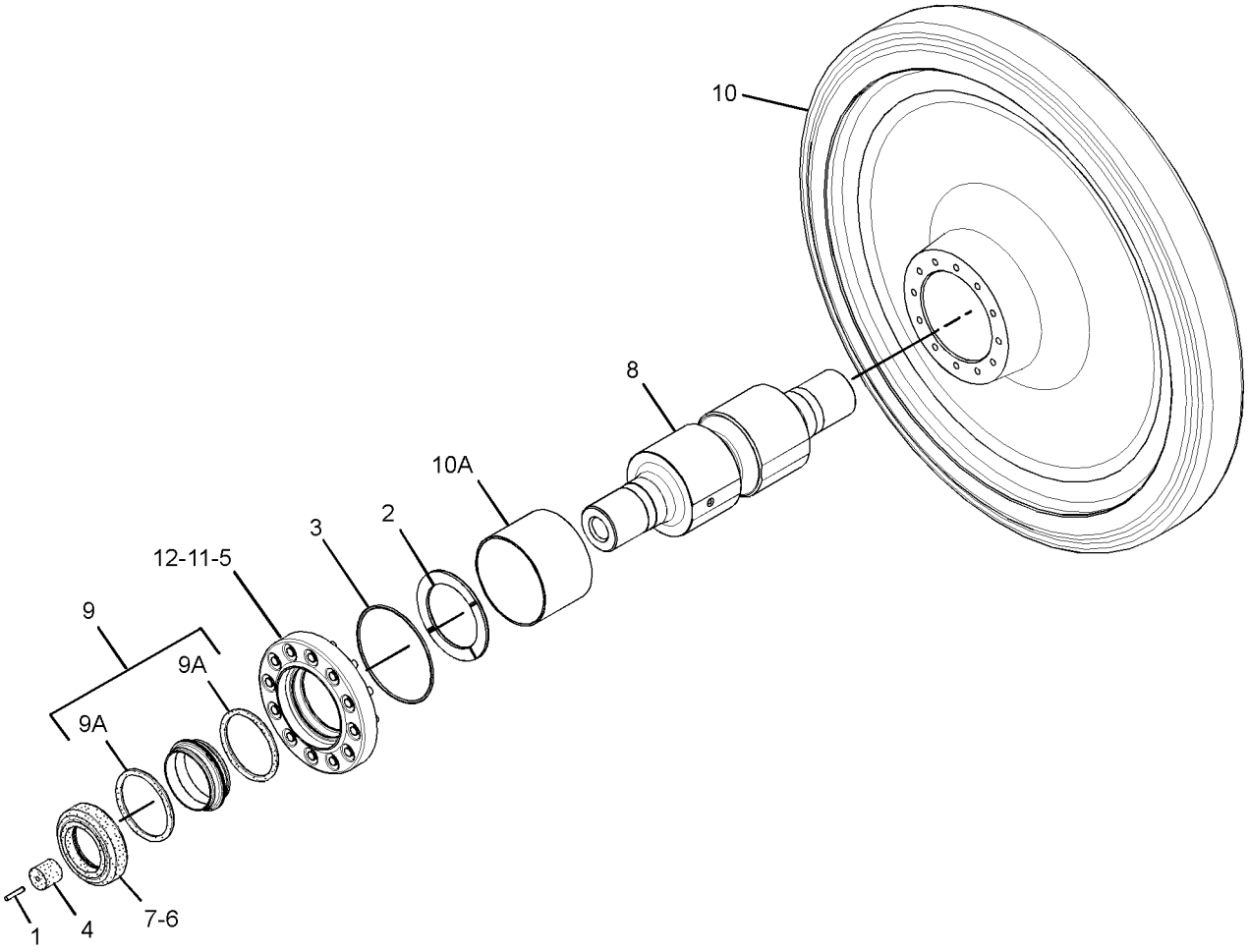

GRAPHIC #1 **<END>** g01563157

308-4366 IDLER GP-TRACK–SYSTEMONE, FRONT

S/N: J8B1-UP
WASTE HANDLING
PART OF 319-6071 GUARD AR-IDLER
AN ATTACHMENT

SMCS-4159 **i03202254**

NOTE	REF NO	GRAPHIC REF	PART NUMBER	QTY	PART NAME 1 2 3 4 5 6 (PRODUCT LEVEL)	SEE PAGE
	1	1	**6Y-0473**	1	PLUG-CLEAR	
	2	1	**8E-6619**	2	WASHER-THRUST (12X18.5X3-MM THK)	
	3	1	**8F-9516**	2	SEAL-O-RING	
	4	1	**9G-4872**	1	STOPPER-RUBBER	
	5	1	**107-4057**	2	SEAL-O-RING	
	6	1	**154-3307**	1	SHAFT-TRACK IDLER	
	7	1	**162-7863**	2	SEAL GP-DUO-CONE	
					(EACH INCLUDES)	
	7A	1	**162-2167**	2	RING-TORIC	
	8	1	**166-3324**	2	PLATE	
	9	1	**261-9672**	2	RETAINER	
	10	1	**261-9673**	2	COLLAR-SEAL	
	11	1	**308-4362**	1	IDLER & BEARING AS	
	11A	1	**154-3298**	2	BEARING-SLEEVE	
	12	1	**8C-6877**	24	BOLT (7/16-14X1.75-IN)	
	13	1	**8T-5360**	24	WASHER (12X22.5X2.5-MM THK)	

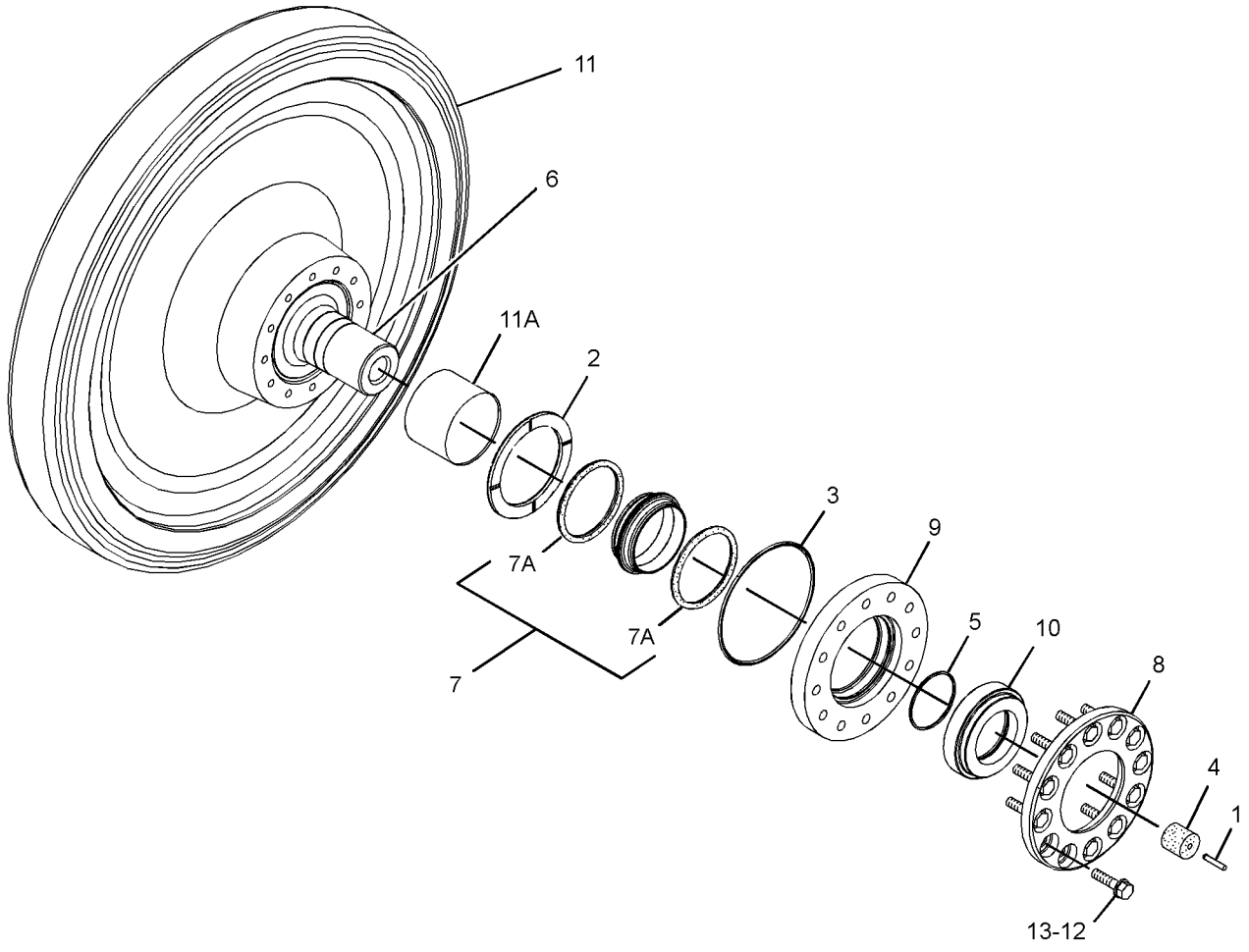

GRAPHIC #1 **<END>** g01542674

308-4367 IDLER GP-TRACK–SYSTEMONE, REAR

S/N: J8B1-UP
WASTE HANDLING
PART OF 319-6071 GUARD AR-IDLER
AN ATTACHMENT

SMCS-4159 **i03202262**

NOTE	REF NO	GRAPHIC REF	PART NUMBER	QTY	PART NAME 1 2 3 4 5 6 (PRODUCT LEVEL)	SEE PAGE
	1	1	**6Y-0473**	1	PLUG-CLEAR	
	2	1	**8E-6619**	2	WASHER-THRUST (12X18.5X3-MM THK)	
	3	1	**8F-9516**	2	SEAL-O-RING	
	4	1	**9G-4872**	1	STOPPER-RUBBER	
	5	1	**107-4057**	2	SEAL-O-RING	
	6	1	**154-3307**	1	SHAFT-TRACK IDLER	
	7	1	**162-7863**	2	SEAL GP-DUO-CONE	
					(EACH INCLUDES)	
	7A	1	**162-2167**	2	RING-TORIC	
	8	1	**166-3324**	2	PLATE	
	9	1	**261-9672**	2	RETAINER	
	10	1	**261-9673**	2	COLLAR-SEAL	
	11	1	**308-4363**	1	IDLER & BEARING AS	
	11A	1	**154-3298**	2	BEARING-SLEEVE	
	12	1	**8C-6877**	24	BOLT (7/16-14X1.75-IN)	
	13	1	**8T-5360**	24	WASHER (12X22.5X2.5-MM THK)	

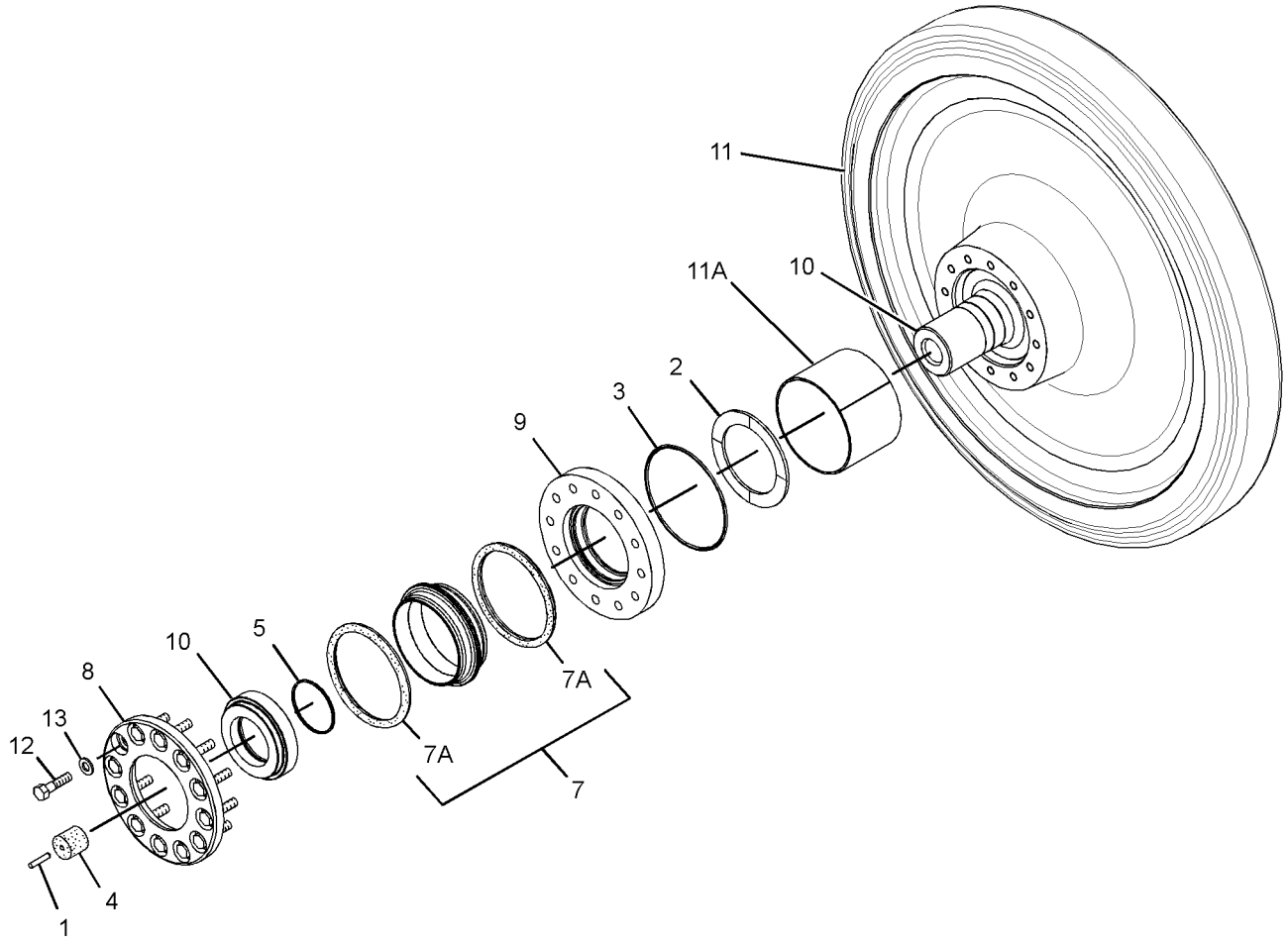

GRAPHIC #1 **<END>** g01541296

8E-4517 LINK AS-TRACK—POSITIVE PIN RETENTION

S/N: J8B1-UP
SEALED, LUBRICATED
PART OF 159-8862, 1Q-4622, 1Q-4739, 203-2198, 205-5796, 209-0849, 212-0927, 213-5088, 217-4205, 217-5257, 237-9320 TRACK GP
AN ATTACHMENT

SMCS-4169, 4171 **i02240678**

NOTE	REF NO	GRAPHIC REF	PART NUMBER	QTY	PART NAME 1 2 3 4 5 6 (PRODUCT LEVEL)	SEE PAGE
	1	1	**6Y-0473**	44	PLUG-CLEAR	
			7G-4332	44	STOPPER	
	2	1	**6Y-0469**	88	RING-RETAINING	
	3	1	**6Y-3914**	44	BUSHING-TRACK	
	4	1	**7T-7054**	44	PIN-TRACK	
	5	1	**8E-4061**	1	LINK-TRACK MASTER (PIN END, RH)	
	6	1	**8E-4062**	1	LINK-TRACK MASTER (PIN END, LH)	
	7	1	**8E-4457**	1	LINK-TRACK MASTER (BUSHING END, RH)	
	8	1	**8E-4458**	1	LINK-TRACK MASTER (BUSHING END, LH)	
	9	1	**8E-4513**	43	LINK-TRACK (RH)	
	10	1	**8E-4514**	43	LINK-TRACK (LH)	
	11	1	**152-8073**	88	RING-THRUST	
	12	1	**222-6998**	88	SEAL AS	

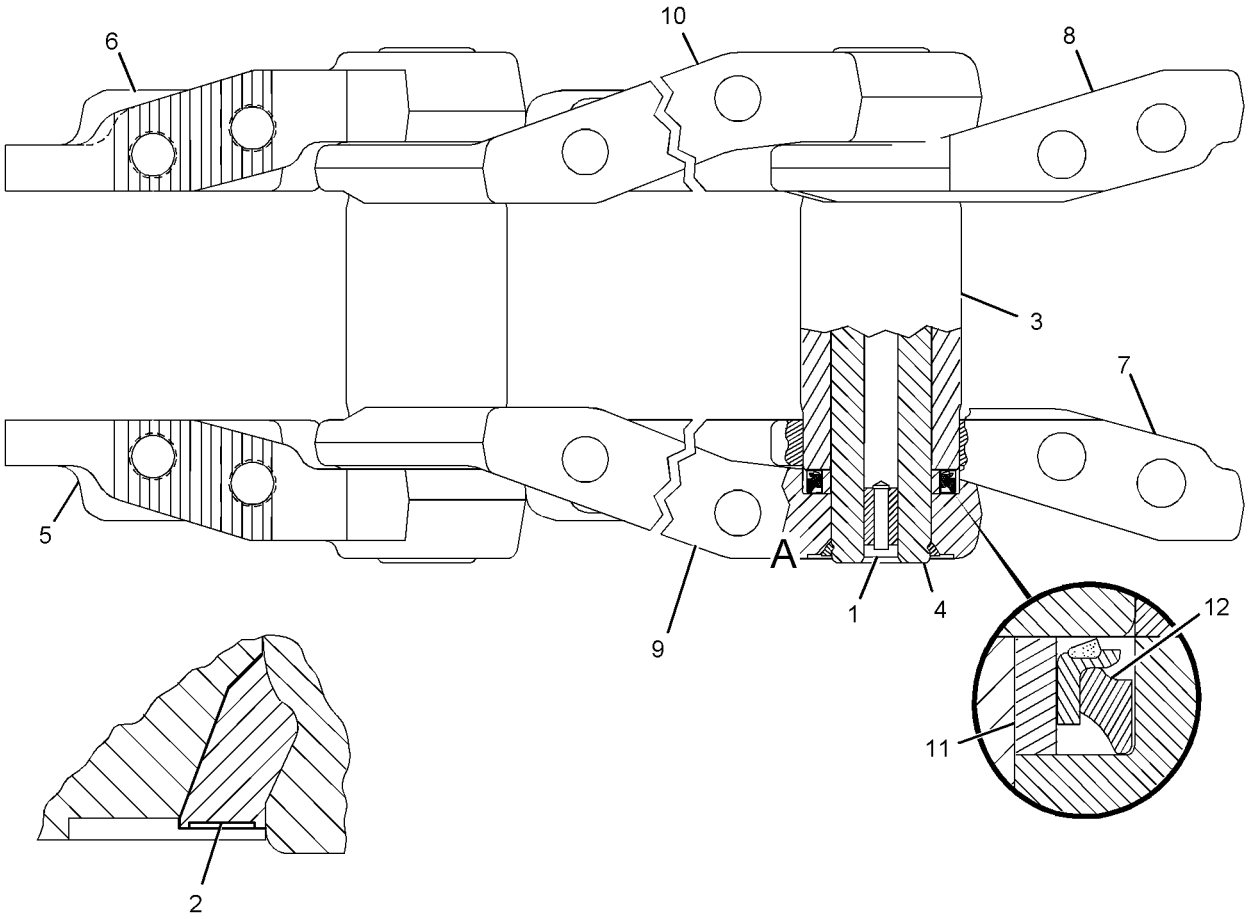

VIEW OF AREA A

GRAPHIC #1 **<END>** g01109105

8E-4518 LINK AS-TRACK

S/N: J8B1-447
SEALED, LUBRICATED
PART OF 138-8717, 139-2612, 158-6403, 172-6526, 190-9822, 191-9945, 1Q-4676, 1Q-4677, 1Q-4683, 1Q-4684, 1Q-4685, 1Q-4686, 1Q-4703, 200-4075, 218-7347, 6Y-4124, 8E-7696, 8E-7697, 8E-7698, 8E-7699, 8E-7700 TRACK GP
ALSO AN ATTACHMENT

SMCS-4169, 4171 **i02181915**

NOTE	REF NO	GRAPHIC REF	PART NUMBER	QTY	PART NAME 1 2 3 4 5 6 (PRODUCT LEVEL)	SEE PAGE
	1	1	**8E-4060**	1	LINK-TRACK MASTER (PIN END, LH)	
	2	1	**6Y-0473**	44	PLUG-CLEAR	
	3	1	**8E-4059**	1	LINK-TRACK MASTER (PIN END, RH)	
	4	1	**8E-4506**	43	LINK-TRACK (LH)	
	5	1	**199-2794**	43	PIN-TRACK	
	6	1	**152-8073**	88	RING-THRUST	
	7	1	**8E-4458**	1	LINK-TRACK MASTER (BUSHING END, LH)	
	8	1	**6Y-3914**	44	BUSHING-TRACK	
	9	1	**8E-4457**	1	LINK-TRACK MASTER (BUSHING END, RH)	
	10	1	**8E-4505**	43	LINK-TRACK (RH)	
	11	1	**9W-5588**	1	PIN-TRACK (MASTER)	
	12	1	**222-6998**	88	SEAL AS	
	13	1	**7G-4332**	44	STOPPER	
F			**3T-9118**	2	RING-RETAINING	

F-NOT SHOWN

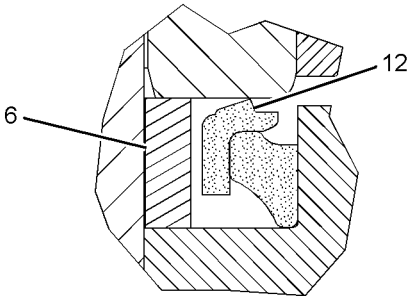

VIEW OF AREA A

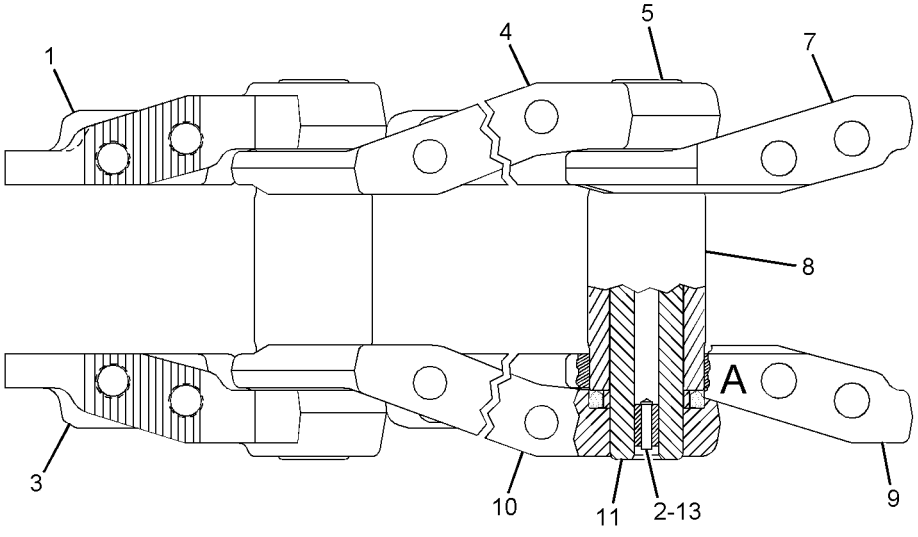

GRAPHIC #1 **<END>** g01104378

157-0527 LINK AS-TRACK–STEEL MILL

S/N: J8B1-UP
PART OF 201-0714 TRACK GP
AN ATTACHMENT

SMCS-4169, 4171 **i03277608**

NOTE	REF NO	GRAPHIC REF	PART NUMBER	QTY	PART NAME 1 2 3 4 5 6 (PRODUCT LEVEL)	SEE PAGE
	1	1	**8E-4272**	44	PIN-TRACK	
	2	1	**1Q-4991**	88	SPACER	
	3	1	**8E-4059**	1	LINK-TRACK MASTER (PIN END, RH)	
	4	1	**8E-4060**	1	LINK-TRACK MASTER (PIN END, LH)	
	5	1	**8E-4505**	43	LINK-TRACK (RH)	
	6	1	**8E-4506**	43	LINK-TRACK (LH)	
	7	1	**8E-4458**	1	LINK-TRACK MASTER (BUSHING END, LH)	
	8	1	**6Y-3914**	44	BUSHING-TRACK	
	9	1	**8E-4457**	1	LINK-TRACK MASTER (BUSHING END, RH)	

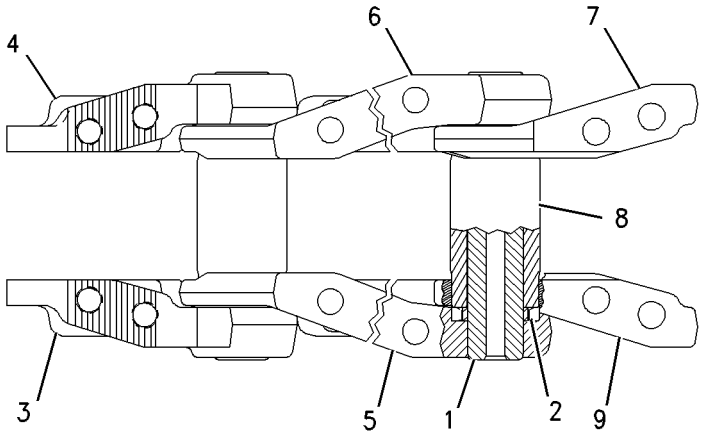

GRAPHIC #1 **<END>** g00730286

272-6009 LINK AS-TRACK

S/N: J8B1-UP
SEALED, LUBRICATED, POSITIVE PIN RETENTION
PART OF 159-8862, 1Q-4622, 1Q-4739, 203-2198, 205-5796, 209-0849, 212-0927, 213-5088, 217-4205, 217-5257, 237-9320, 243-6329 TRACK GP
AN ATTACHMENT

SMCS-4169, 4171 **i02399113**

NOTE	REF NO	GRAPHIC REF	PART NUMBER	QTY	PART NAME 1 2 3 4 5 6 (PRODUCT LEVEL)	SEE PAGE
	1	1	**6Y-0473**	44	PLUG-CLEAR	
			7G-4332	44	STOPPER	
	2	1	**152-8073**	88	RING-THRUST	
	3	1	**239-7943**	88	SEAL AS	
	4	1	**8E-4514**	43	LINK-TRACK (LH)	
	5	1	**8E-4513**	43	LINK-TRACK (RH)	
	6	1	**8E-4062**	1	LINK-TRACK MASTER (PIN END, LH)	
	7	1	**8E-4061**	1	LINK-TRACK MASTER (PIN END, RH)	
	8	1	**8E-4458**	1	LINK-TRACK MASTER (BUSHING END, LH)	
	9	1	**8E-4457**	1	LINK-TRACK MASTER (BUSHING END, RH)	
	10	1	**6Y-3914**	44	BUSHING-TRACK	
	11	1	**7T-7054**	44	PIN-TRACK	
	12	1	**6Y-0469**	88	RING-RETAINING	

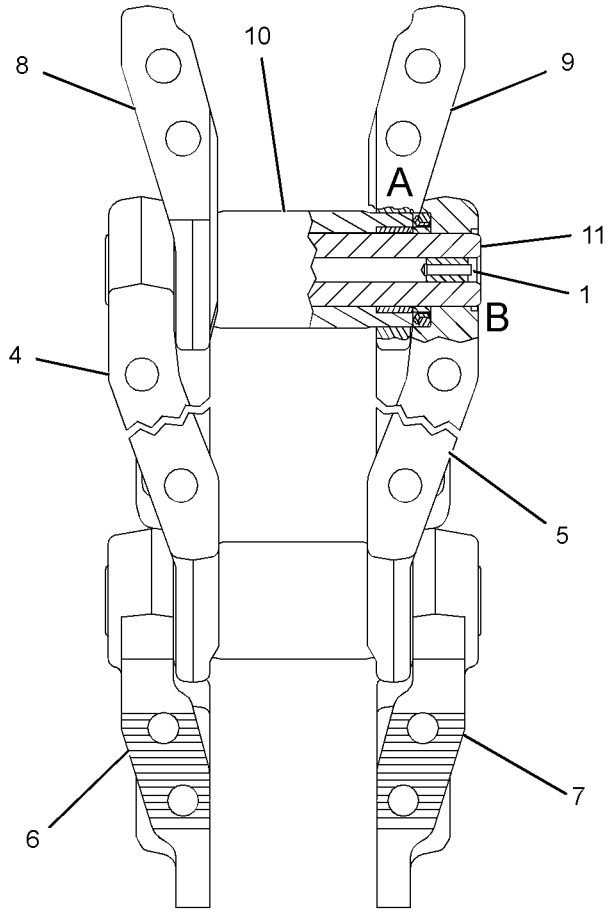

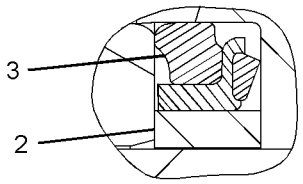

VIEW OF AREA A

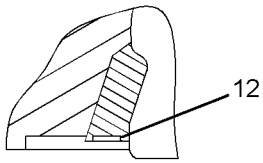

VIEW OF AREA B

GRAPHIC #1 **<END>** g01174803

272-6010 LINK AS-TRACK

S/N: J8B1-UP
SEALED & LUBRICATED
PART OF 138-8717, 139-2612, 158-6403, 172-6526, 190-9822, 191-9945, 1Q-4654, 1Q-4675, 1Q-4676, 1Q-4677, 1Q-4683, 1Q-4684, 1Q-4685, 1Q-4686, 1Q-4703, 200-4075, 218-7347, 6Y-4124, 8E-7696, 8E-7697, 8E-7698, 8E-7699, 8E-7700
TRACK GP
ALSO AN ATTACHMENT

SMCS-4169, 4171 **i02397680**

NOTE	REF NO	GRAPHIC REF	PART NUMBER	QTY	PART NAME 1 2 3 4 5 6 (PRODUCT LEVEL)	SEE PAGE
	1	1	**6Y-3914**	44	BUSHING-TRACK	
	2	1	**8E-4457**	1	LINK-TRACK MASTER (BUSHING END, RH)	
	3	1	**8E-4505**	43	LINK-TRACK (RH)	
	4	1	**239-7943**	88	SEAL AS	
	5	1	**152-8073**	88	RING-THRUST	
	6	1	**8E-4458**	1	LINK-TRACK MASTER (BUSHING END, LH)	
	7	1	**6Y-0473**	44	PLUG-CLEAR	
			7G-4332	44	STOPPER	
	8	1	**3T-9118**	2	RING-RETAINING	
	9	1	**199-2794**	43	PIN-TRACK	
	10	1	**8E-4060**	1	LINK-TRACK MASTER (PIN END, LH)	
	11	1	**8E-4506**	43	LINK-TRACK (LH)	
	12	1	**8E-4059**	1	LINK-TRACK MASTER (PIN END, RH)	
	13	1	**9W-5588**	1	PIN-TRACK (MASTER)	

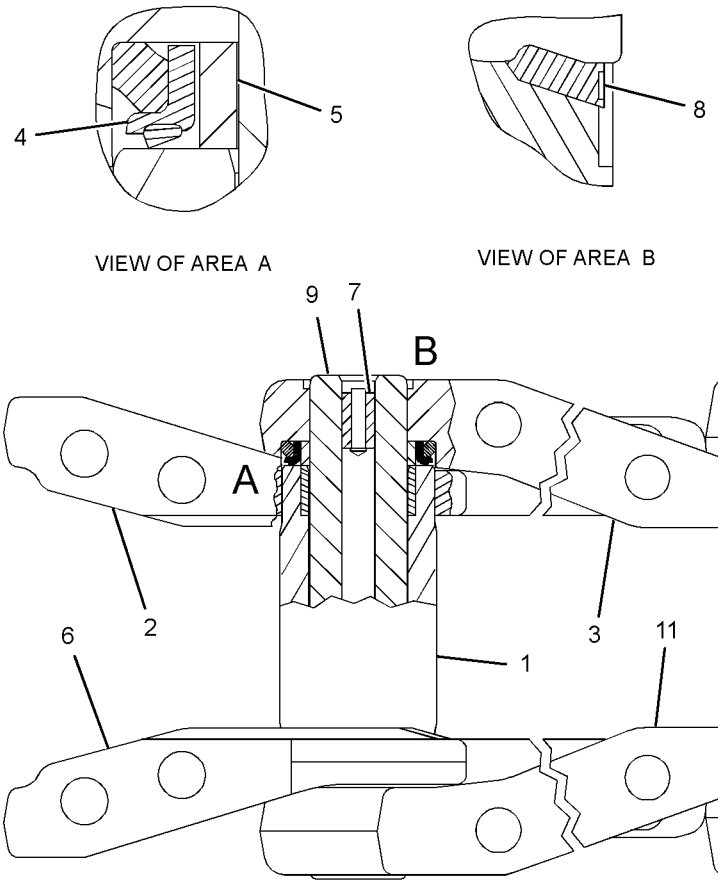

GRAPHIC #1 **<END>** g01206562

304-5688 LINK AS-TRACK—SYSTEMONE

S/N: J8B1-UP
44-JOINTS. SEALED, LUBRICATED
PART OF 272-3163, 272-3164, 272-3165, 272-3166, 272-3167, 272-3168, 272-3169, 272-3170, 272-3171, 276-0535, 276-0539, 276-0543, 276-0547, 276-0550, 276-0554, 286-0732, 300-8744 TRACK GP
FOR USE WITH SYSTEMONE SEGMENTS & GUARDS
AN ATTACHMENT

SMCS-4169, 4171 **i03117431**

NOTE	REF NO	GRAPHIC REF	PART NUMBER	QTY	PART NAME 1 2 3 4 5 6 (PRODUCT LEVEL)	SEE PAGE
	1	1	**304-5680**	42	LINK-TRACK (SYSTEMONE)	
	2	1	**318-5033**	22	LINK AS-TRACK BOX	
					(EACH INCLUDES)	
	2A	1	**6Y-0473**	1	PLUG-CLEAR	
	2B	1	**7G-4332**	1	STOPPER	

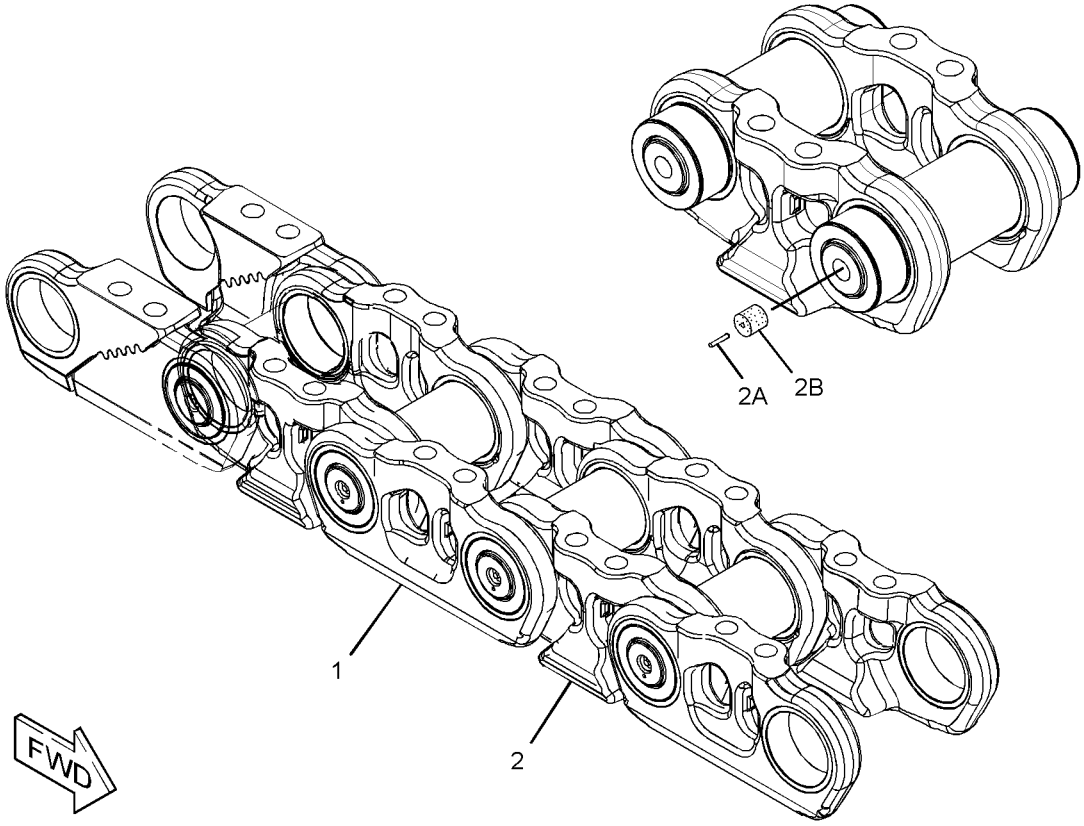

GRAPHIC #1 **<END>** g01571773

321-2018 LINK AS-TRACK BOX–SYSTEMONE

S/N: J8B1-UP
SEALED, LUBRICATED, SHOE END MASTER
FIELD INSTALLATION

SMCS-4169 **i03212362**

NOTE	REF NO	GRAPHIC REF	PART NUMBER	QTY	PART NAME 1 2 3 4 5 6 (PRODUCT LEVEL)	SEE PAGE
	1	1	**318-5033**	1	LINK AS-TRACK BOX	
	1A	1	**6Y-0473**	1	PLUG-CLEAR	
	1B	1	**7G-4332**	1	STOPPER	
					PARTS SHOWN IN GRAPHIC(S) WITHOUT A REFERENCE NUMBER ARE NOT SERVICED SEPARATELY	

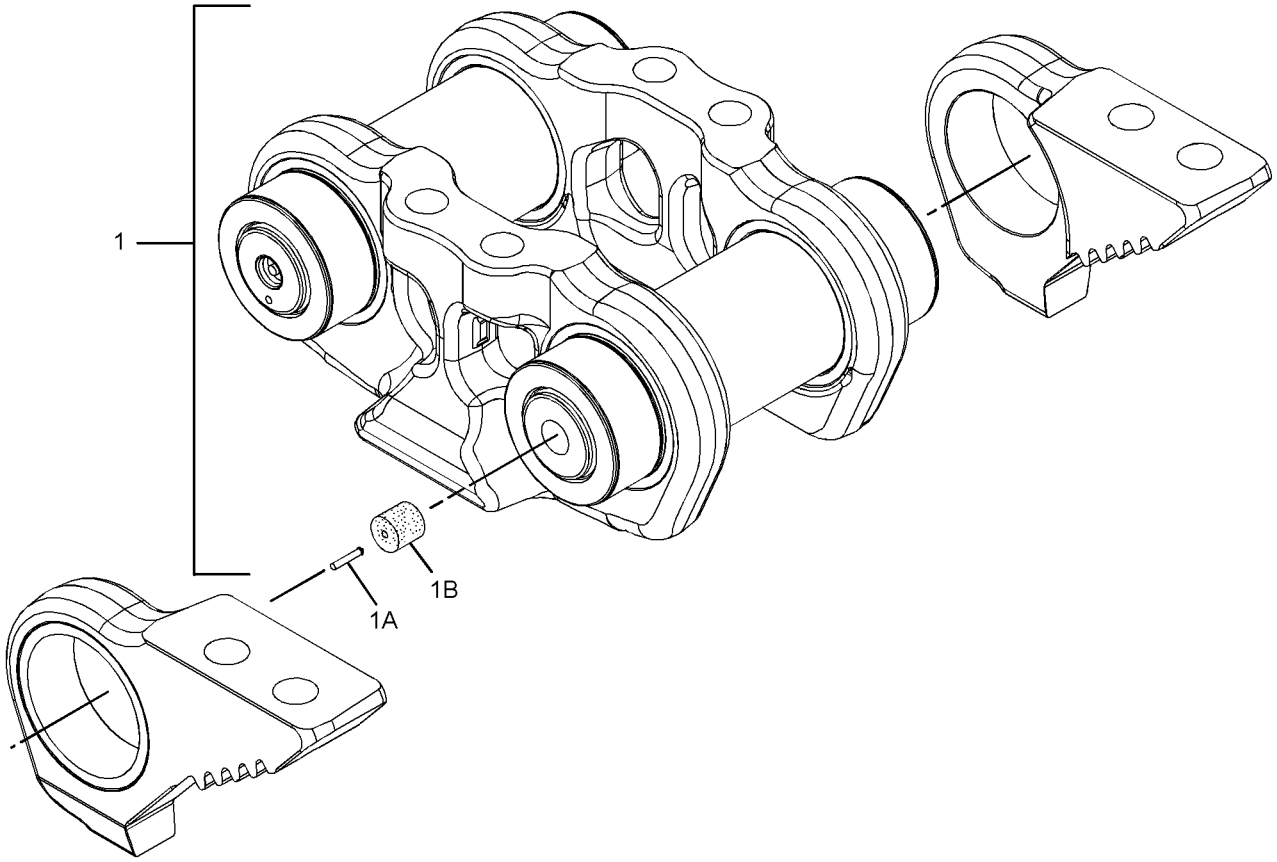

GRAPHIC #1 **<END>** g01666733

321-2019 LINK AS-TRACK BOX–SYSTEMONE

S/N: J8B1-UP
SEALED, LUBRICATED, RAIL END MASTER
FIELD INSTALLATION

SMCS-4169 **i03212367**

NOTE	REF NO	GRAPHIC REF	PART NUMBER	QTY	PART NAME 1 2 3 4 5 6 (PRODUCT LEVEL)	SEE PAGE
	1	1	**318-5033**	1	LINK AS-TRACK BOX	
	1A	1	**6Y-0473**	1	PLUG-CLEAR	
	1B	1	**7G-4332**	1	STOPPER	
					PARTS SHOWN IN GRAPHIC(S) WITHOUT A REFERENCE NUMBER ARE NOT SERVICED SEPARATELY	

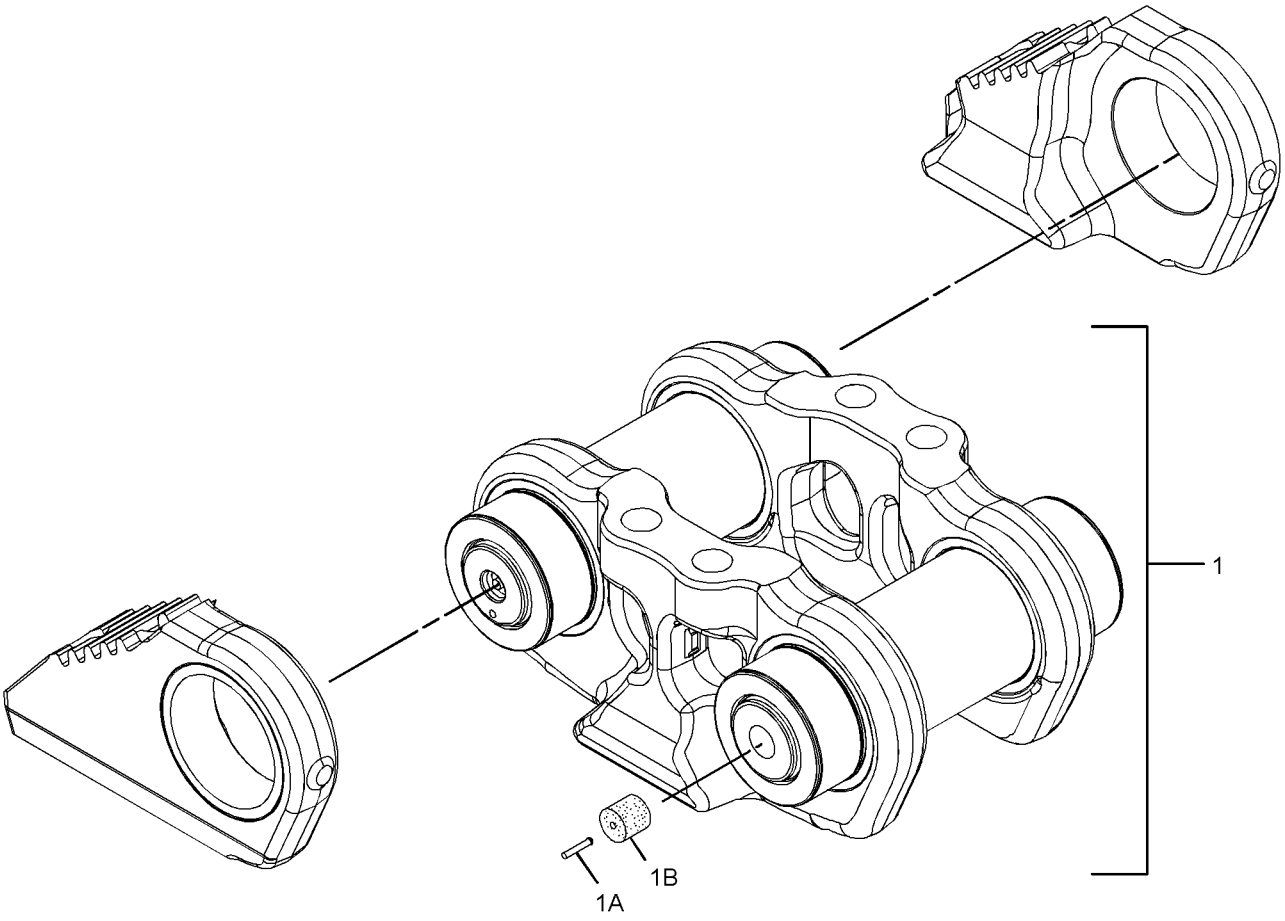

GRAPHIC #1 **<END>** g01666894

210-6114 LUBRICATION GP-PIVOT SHAFT

S/N: J8B1-UP

PART OF 206-6780 CHASSIS AR

SMCS-3286 **i02237795**

NOTE	REF NO	GRAPHIC REF	PART NUMBER	QTY	PART NAME 1 2 3 4 5 6 (PRODUCT LEVEL)	SEE PAGE
	1	1	**9G-5127**	1	BREATHER (PIVOT SHAFT OIL TANK)	
	2	1	**9U-9409**	1	TANK (PIVOT SHAFT OIL)	
	3	1	**9W-1694**	2	PAD	
	4	1	**114-9224**	1	SPACER (11.13X19.05X47-MM THK)	
I	5	1	**215-1469**	1	HOSE AS	
	6	1	**216-1337**	1	PLATE	
	7	1	**221-0812**	1	CAP-OIL FILLER (PIVOT SHAFT LUBRICATION)	
	8	1	*148-8359*	1	ELBOW AS	
		1	**6V-9877**	1	ELBOW	
		1	**3K-0360**	1	SEAL-O-RING	
		1	**6V-9746**	1	SEAL-O-RING	
	9	1	*148-8360*	1	ELBOW AS	
		1	**6V-9182**	1	ELBOW	
		1	**6V-9746**	1	SEAL-O-RING	
		1	**7M-8485**	1	SEAL-O-RING	
	10	1	*171-6723*	1	ELBOW AS	
		1	**8T-8899**	1	ELBOW	
		1	**6V-9746**	1	SEAL-O-RING	
	11	1	**7X-7729**	1	WASHER (11X25X3-MM THK)	
	12	1	**8T-1895**	2	CLIP (SLOT)	
	13	1	**8T-1896**	2	CLIP (TAB)	
	14	1	**8T-4121**	3	WASHER-HARD (11X21X2.5-MM THK)	
M	15	1	**8T-4137**	2	BOLT (M10X1.5X20-MM)	
M	16	1	**8T-4196**	1	BOLT (M10X1.5X35-MM)	
M	17	1	**8T-5005**	1	BOLT (M10X1.5X70-MM)	

I-REFER TO HYDRAULIC INFORMATION SYSTEM
M-METRIC PART

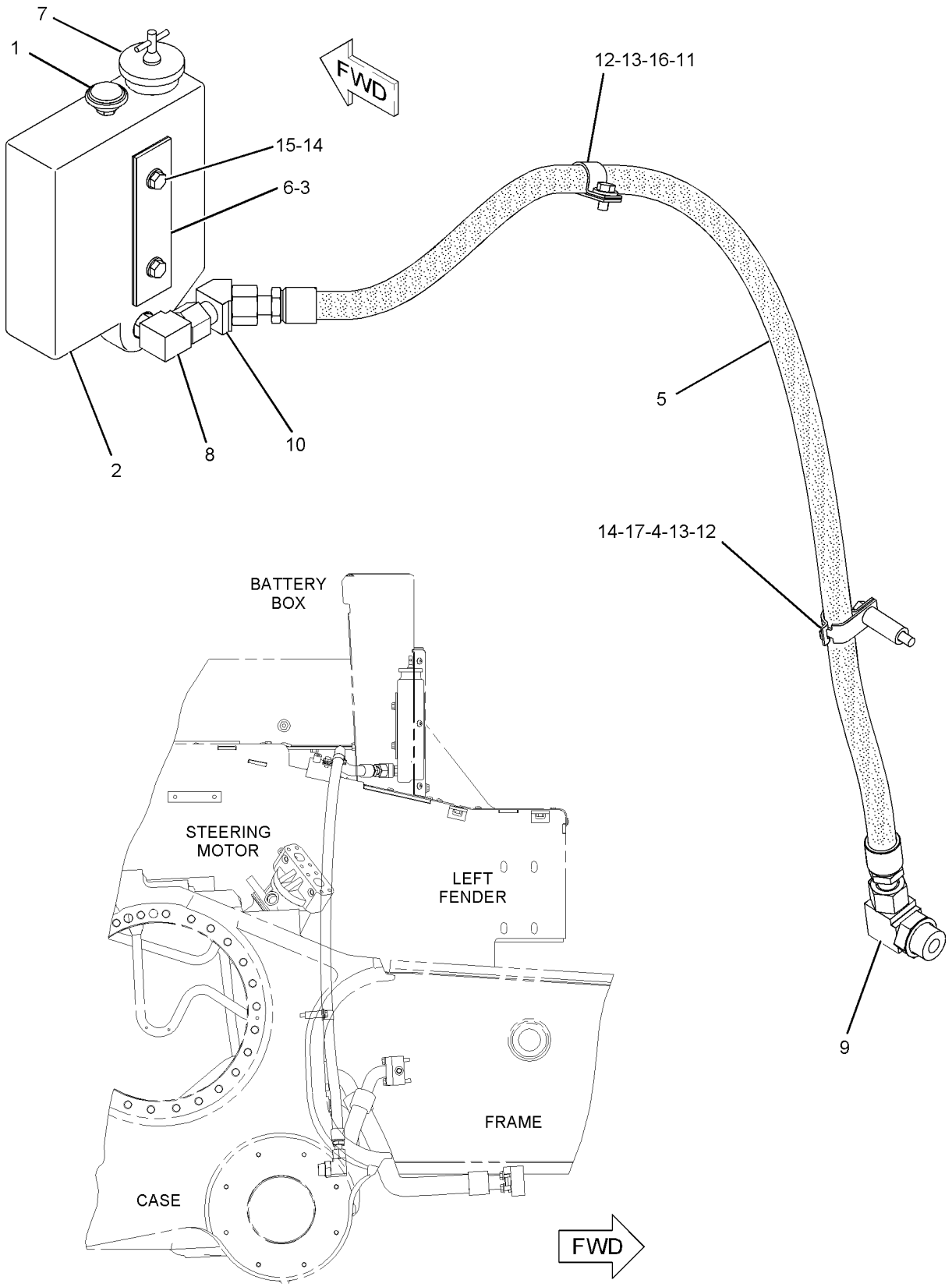

RIGHT SIDE VIEW

GRAPHIC #1

<END>

g01020976

192-2599 ROLLER AR-TRACK CARRIER

S/N: J8B1-UP
PART OF 209-5101 MODIFICATION AR-WOODCHIP
FOR USE WITH 230-3046—PAGE 620, SUSPENDED UNDERCARRIAGE
AN ATTACHMENT

SMCS-4154 **i02239718**

NOTE	REF NO	GRAPHIC REF	PART NUMBER	QTY	PART NAME 1 2 3 4 5 6 (PRODUCT LEVEL)	SEE PAGE
Y	1	1	*6T-1142*	4	CAP GP-TRACK ROLLER	601
	2	1	**192-2577**	2	SUPPORT-ROLLER	
YR	3	1	**196-9947**	2	ROLLER GP-TRACK-SINGLE FLANGE	650
	4	1	**7X-0406**	8	BOLT (1-8X3-IN)	
	5	1	**8T-5361**	8	WASHER-HARD (28X49X5-MM THK)	

R-REMFG PART MAY BE AVAILABLE
Y-SEPARATE ILLUSTRATION

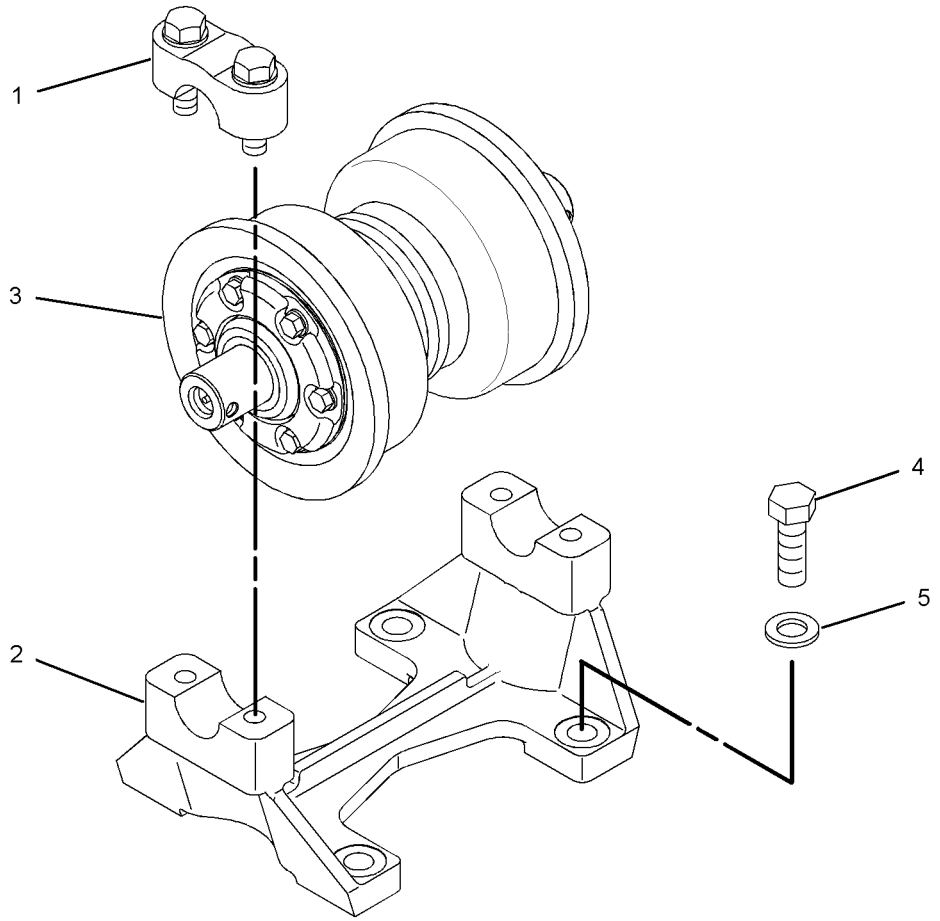

GRAPHIC #1 **<END>** g01130058

192-2599 ROLLER AR-TRACK CARRIER

S/N: J8B581-1106

FOR USE WITH 230-3046—PAGE 620, SUSPENDED UNDERCARRIAGE

AN ATTACHMENT

SMCS-4154 **i02554513**

NOTE	REF NO	GRAPHIC REF	PART NUMBER	QTY	PART NAME 1 2 3 4 5 6 (PRODUCT LEVEL)	SEE PAGE
Y	1	1	*6T-1142*	4	CAP GP-TRACK ROLLER	601
	2	1	**192-2577**	2	SUPPORT-ROLLER	
CYR	3	1	**246-0775**	2	ROLLER GP-TRACK-SINGLE FLANGE (SYSTEMONE)	652
	4	1	**7X-0406**	8	BOLT (1-8X3-IN)	
	5	1	**8T-5361**	8	WASHER-HARD (28X49X5-MM THK)	

C-CHANGE FROM PREVIOUS TYPE
R-REMFG PART MAY BE AVAILABLE
Y-SEPARATE ILLUSTRATION

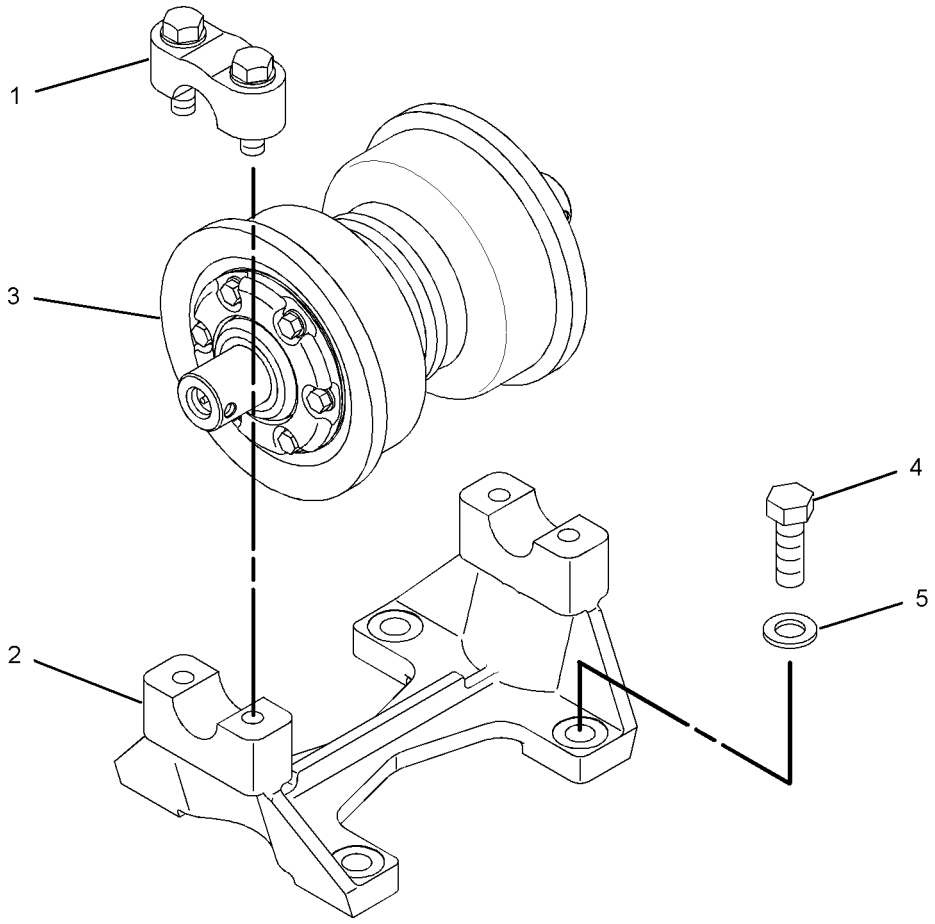

GRAPHIC #1 **<END>** g01130058

192-2599 ROLLER AR-TRACK CARRIER

S/N: J8B1107-UP

FOR USE WITH 230-3046—PAGE 620, SUSPENDED UNDERCARRIAGE

AN ATTACHMENT

SMCS-4154 **i02737903**

NOTE	REF NO	GRAPHIC REF	PART NUMBER	QTY	PART NAME 1 2 3 4 5 6 (PRODUCT LEVEL)	SEE PAGE
Y	1	1	*6T-1142*	4	CAP GP-TRACK ROLLER	601
C	2	1	**287-3293**	4	SUPPORT	
YR	3	1	**246-0775**	2	ROLLER GP-TRACK-SINGLE FLANGE (SYSTEMONE)	652
C	4	1	**7X-0408**	8	BOLT (1-8X3.5-IN)	
	5	1	**8T-5361**	8	WASHER-HARD (28X49X5-MM THK)	

C-CHANGE FROM PREVIOUS TYPE
R-REMFG PART MAY BE AVAILABLE
Y-SEPARATE ILLUSTRATION

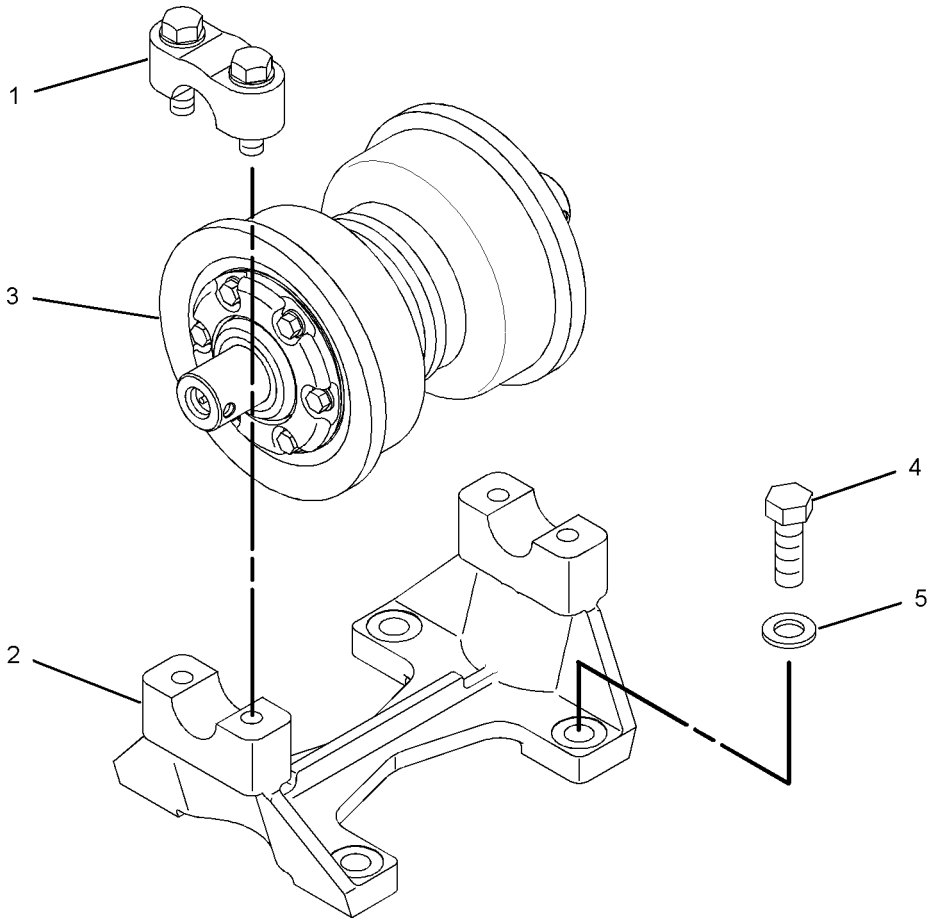

GRAPHIC #1 **<END>** g01130058

UNDERCARRIAGE

196-9946 ROLLER GP-TRACK-DOUBLE FLANGE*R

S/N: J8B1-733, 990
PART OF 206-6779, 209-3418, 209-3419 UNDERCARRIAGE AR
ALSO AN ATTACHMENT

SMCS-4180 **i02227973**

NOTE	REF NO	GRAPHIC REF	PART NUMBER	QTY	PART NAME 1 2 3 4 5 6 (PRODUCT LEVEL)	SEE PAGE
	1	1	**5F-3106**	2	SEAL-O-RING	
	2	1	**7J-2036**	2	SEAL-O-RING	
	3	1	**9G-5664**	1	STOPPER-RUBBER	
		1	**6Y-0473**	1	PLUG-CLEAR	
	4	1	**8E-7510**	2	WASHER-THRUST (86X120.27X4.52-MM THK)	
	5	1	**107-3945**	2	COLLAR-SEAL	
	6	1	**107-8084**	1	SHAFT-TRACK ROLLER	
	7	1	**107-8085**	2	RETAINER	
	8	1	**162-7862**	2	SEAL GP-DUO-CONE	
					(EACH INCLUDES)	
	8A	1	**162-2166**	2	RING-TORIC	
Z	8B	1		2	SEAL-RING	
	9	1	**196-9948**	1	ROLLER & BEARING AS	
		1	**9W-9844**	2	BEARING-SLEEVE (BURNISHED)	
	10	1	**241-1855**	12	BOLT (1/2-13X2-IN)	
	11	1	**5P-8245**	12	WASHER-HARD (13.5X25.5X3-MM THK)	

Z-NOT SERVICED SEPARATELY

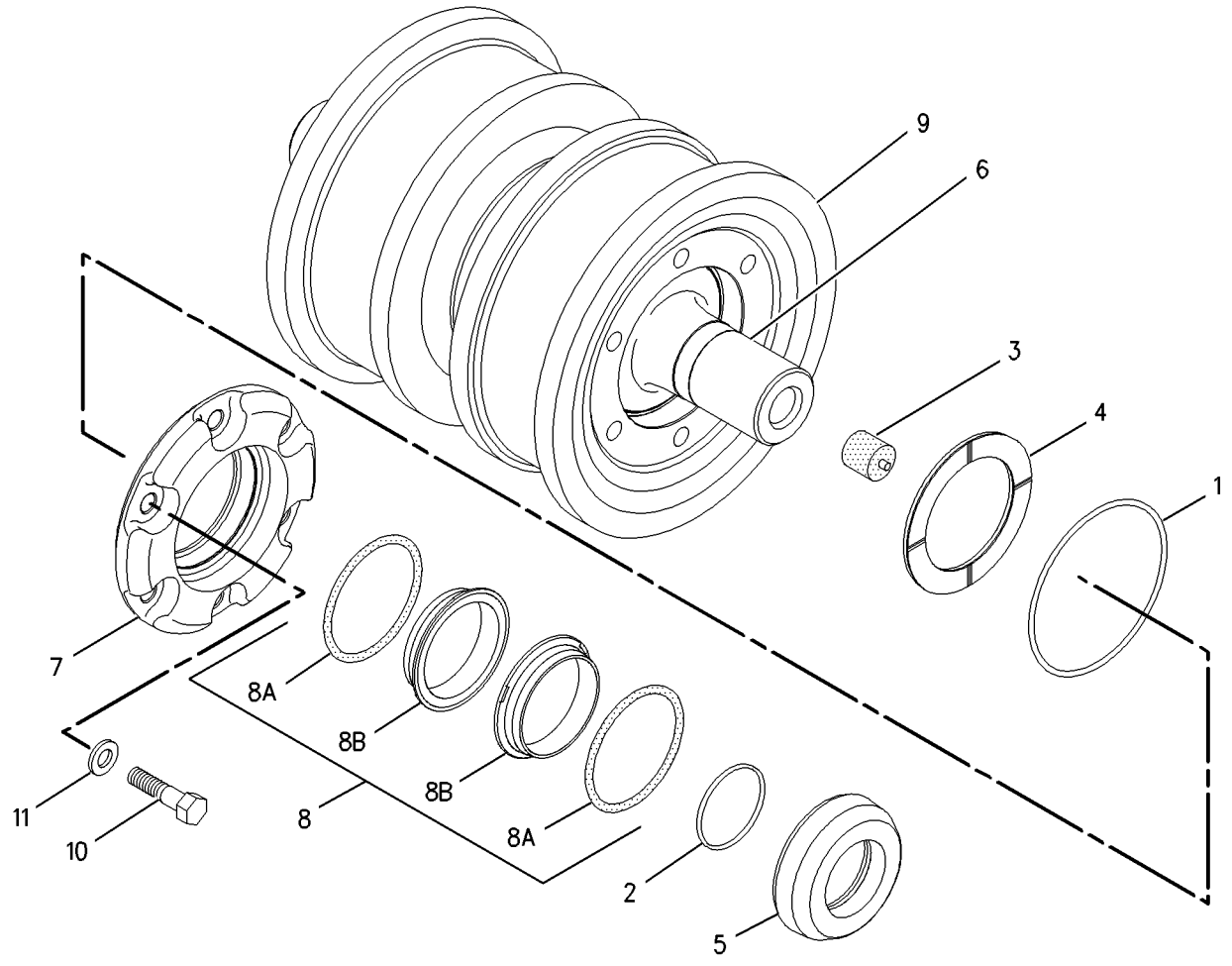

GRAPHIC #1 **<END>** g00767716

244-0881 ROLLER GP-TRACK-DOUBLE FLANGE–COLD WEATHER

S/N: J8B1-UP
PART OF 102-4373 COLD WEATHER AR
AN ATTACHMENT

SMCS-4180 **i02311487**

NOTE	REF NO	GRAPHIC REF	PART NUMBER	QTY	PART NAME 1 2 3 4 5 6 (PRODUCT LEVEL)	SEE PAGE
	1	1	**5F-3106**	2	SEAL-O-RING	
	2	1	**7J-2036**	2	SEAL-O-RING	
	3	1	**6Y-0473**	1	PLUG-CLEAR	
	3A	1	**9G-5664**	1	STOPPER-RUBBER	
	4	1	**8E-7510**	2	WASHER-THRUST (86X120.27X4.52-MM THK)	
	5	1	**107-3945**	2	COLLAR-SEAL	
	6	1	**107-8084**	1	SHAFT-TRACK ROLLER	
	7	1	**107-8085**	2	RETAINER	
	8	1	**162-7862**	2	SEAL GP-DUO-CONE	
					(EACH INCLUDES)	
	8A	1	**162-2166**	2	RING-TORIC	
Z	8B	1		2	SEAL-RING	
	9	1	**196-9948**	1	ROLLER & BEARING AS	
	9A	1	**9W-9844**	2	BEARING-SLEEVE (BURNISHED)	
	10	1	**241-1855**	12	BOLT (1/2-13X2-IN)	
	11	1	**5P-8245**	12	WASHER-HARD (13.5X25.5X3-MM THK)	

Z-NOT SERVICED SEPARATELY

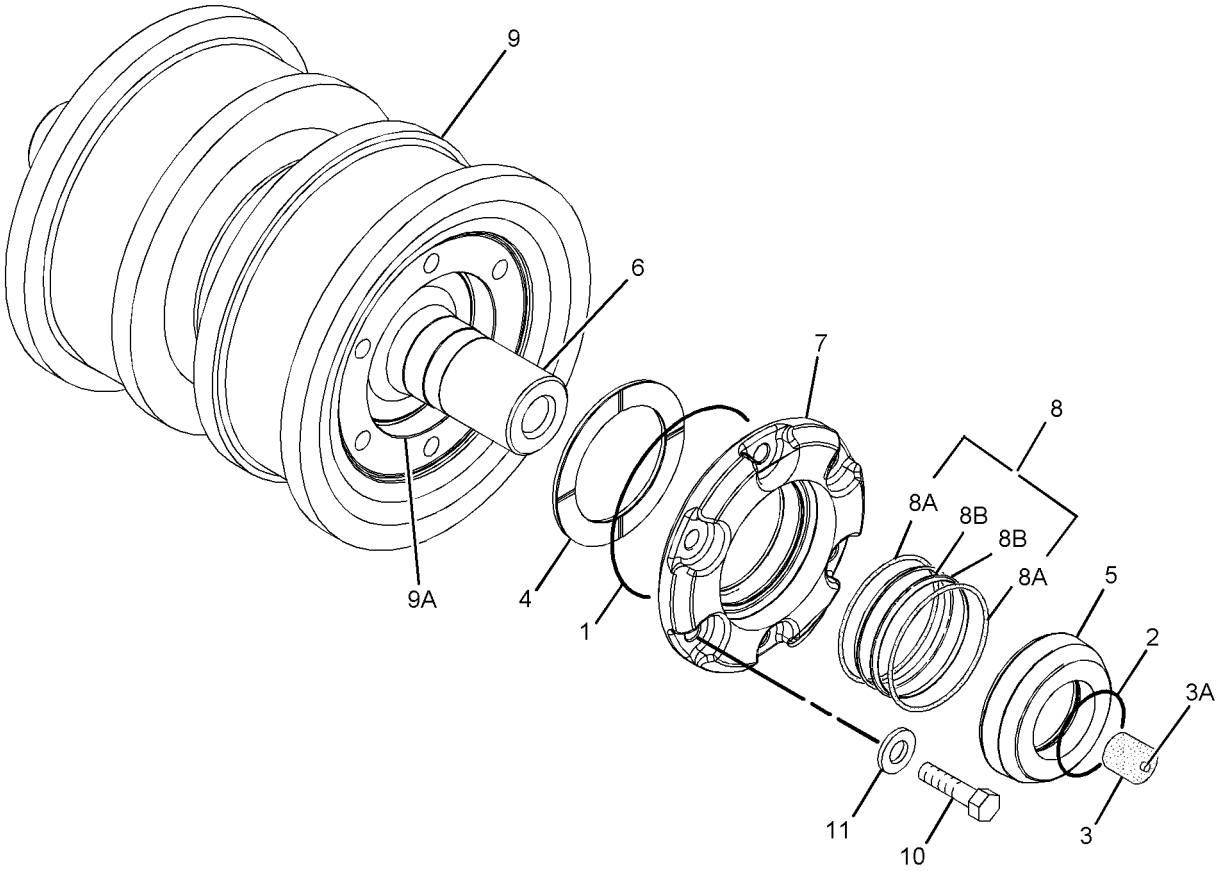

GRAPHIC #1 **<END>** g01115623

246-0779 ROLLER GP-TRACK-DOUBLE FLANGE–SYSTEMONE*R

S/N: J8B1-UP

PART OF 206-6779, 209-3418, 209-3419, 310-2850 UNDERCARRIAGE AR

ALSO AN ATTACHMENT

SMCS-4180 **i02588689**

NOTE	REF NO	GRAPHIC REF	PART NUMBER	QTY	PART NAME 1 2 3 4 5 6 (PRODUCT LEVEL)	SEE PAGE
	1	1	**5F-3106**	2	SEAL-O-RING	
	2	1	**7J-2036**	2	SEAL-O-RING	
	3	1	*8E-2139*	1	STOP AS	
	3A	1	**6Y-0473**	1	PLUG-CLEAR	
	3B	1	**9G-5664**	1	STOPPER-RUBBER	
	4	1	**8E-7510**	2	WASHER-THRUST (86X120.27X4.52-MM THK)	
	5	1	**107-3945**	2	COLLAR-SEAL	
	6	1	**107-8084**	1	SHAFT-TRACK ROLLER	
	7	1	**107-8085**	2	RETAINER	
	8	1	**162-7862**	2	SEAL GP-DUO-CONE	
					(EACH INCLUDES)	
	8A	1	**162-2166**	2	RING-TORIC	
Z	8B	1			SEAL-RING	
	9	1	**246-0780**	1	ROLLER & BEARING AS	
		1	**9W-9844**	2	BEARING-SLEEVE (BURNISHED)	
	10	1	**241-1855**	12	BOLT (1/2-13X2-IN)	
	11	1	**5P-8245**	12	WASHER-HARD (13.5X25.5X3-MM THK)	

Z-NOT SERVICED SEPARATELY

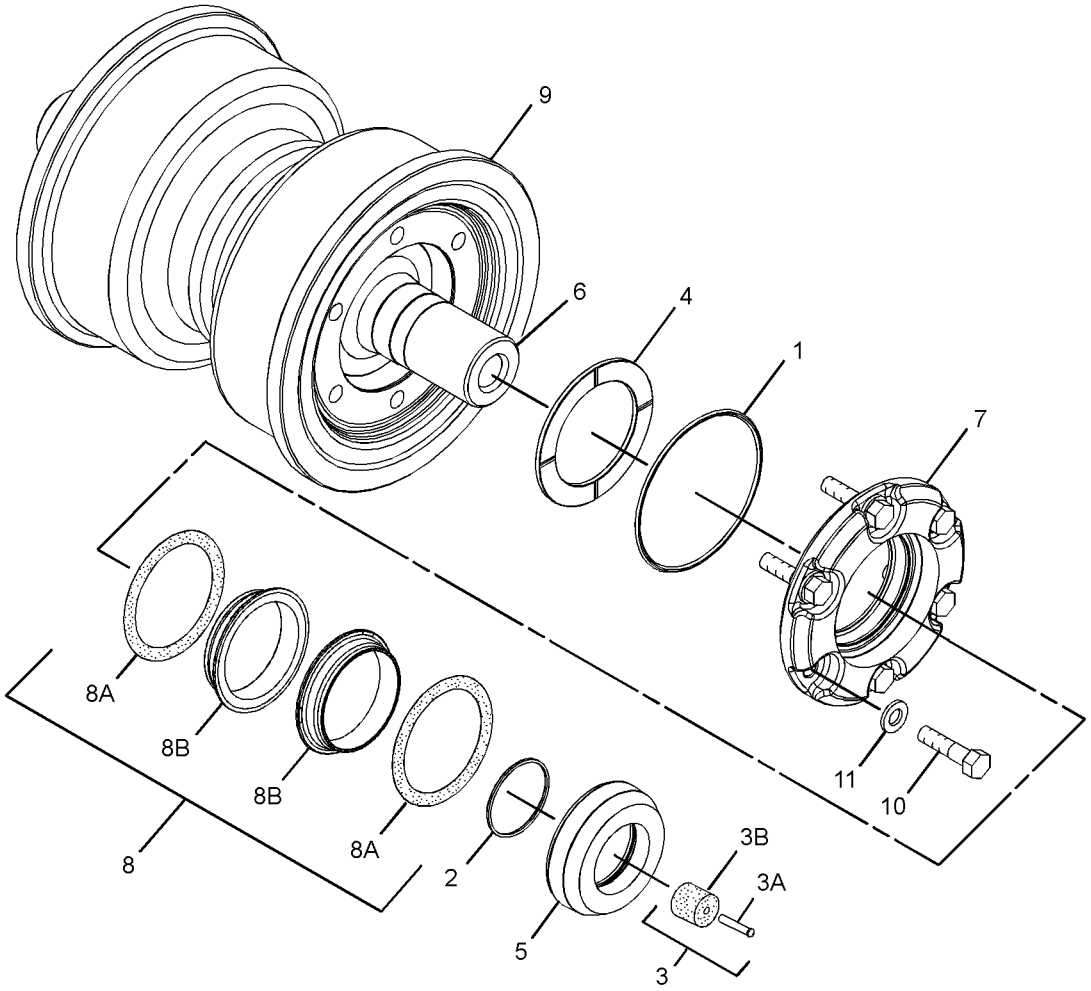

GRAPHIC #1 **<END>** g01307789

278-9540 ROLLER GP-TRACK-DOUBLE FLANGE–

COLD WEATHER–SYSTEMONE

S/N: J8B1-UP

PART OF 102-4373 COLD WEATHER AR

AN ATTACHMENT

SMCS-4180 **i02810104**

NOTE	REF NO	GRAPHIC REF	PART NUMBER	QTY	PART NAME 1 2 3 4 5 6 (PRODUCT LEVEL)	SEE PAGE
	1	1	**5F-3106**	2	SEAL-O-RING	
	2	1	**7J-2036**	2	SEAL-O-RING	
	3	1	*8E-2139*	1	STOP AS	
	3A	1	**6Y-0473**	1	PLUG-CLEAR	
	3B	1	**9G-5664**	1	STOPPER-RUBBER	
	4	1	**8E-7510**	2	WASHER-THRUST (86X120.27X4.52-MM THK)	
	5	1	**107-3945**	2	COLLAR-SEAL	
	6	1	**107-8084**	1	SHAFT-TRACK ROLLER	
	7	1	**107-8085**	2	RETAINER	
	8	1	**162-7862**	2	SEAL GP-DUO-CONE	
	8A	1	**162-2166**	2	RING-TORIC	
Z	8B	1		2	SEAL-RING	
	9	1	**246-0780**	1	ROLLER & BEARING AS	
	9A	1	**9W-9844**	2	BEARING-SLEEVE (BURNISHED)	
	10	1	**241-1855**	12	BOLT (1/2-13X2-IN)	
	11	1	**5P-8245**	12	WASHER-HARD (13.5X25.5X3-MM THK)	

Z-NOT SERVICED SEPARATELY

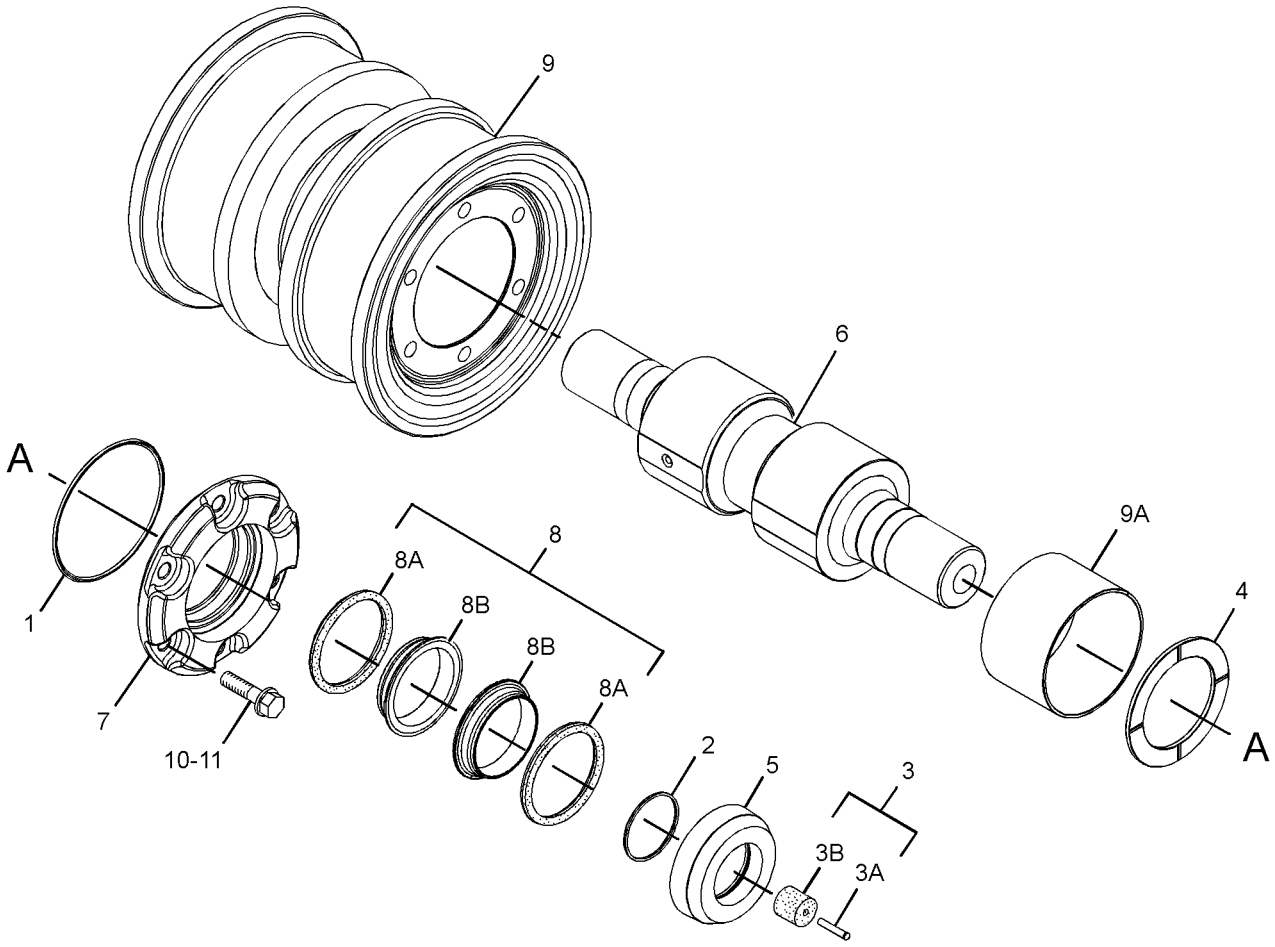

GRAPHIC #1 **<END>** g01315134

UNDERCARRIAGE

196-9947 ROLLER GP-TRACK-SINGLE FLANGE*R

S/N: J8B1-733, 990

PART OF 192-2599 ROLLER AR-TRACK CARRIER, 206-6779, 209-3419 UNDERCARRIAGE AR

ALSO AN ATTACHMENT

SMCS-4180 **i02227981**

NOTE	REF NO	GRAPHIC REF	PART NUMBER	QTY	PART NAME 1 2 3 4 5 6 (PRODUCT LEVEL)	SEE PAGE
	1	1	**5F-3106**	2	SEAL-O-RING	
	2	1	**7J-2036**	2	SEAL-O-RING	
	3	1	**9G-5664**	1	STOPPER-RUBBER	
		1	**6Y-0473**	1	PLUG-CLEAR	
	4	1	**8E-7510**	2	WASHER-THRUST (86X120.27X4.52-MM THK)	
	5	1	**107-3945**	2	COLLAR-SEAL	
	6	1	**107-8084**	1	SHAFT-TRACK ROLLER	
	7	1	**107-8085**	2	RETAINER	
	8	1	**162-7862**	2	SEAL GP-DUO-CONE	
					(EACH INCLUDES)	
	8A	1	**162-2166**	2	RING-TORIC	
Z	8B	1		2	SEAL-RING	
	9	1	**196-9949**	1	ROLLER & BEARING AS	
		1	**9W-9844**	2	BEARING-SLEEVE (BURNISHED)	
	10	1	**241-1855**	12	BOLT (1/2-13X2-IN)	
	11	1	**5P-8245**	12	WASHER-HARD (13.5X25.5X3-MM THK)	

Z-NOT SERVICED SEPARATELY

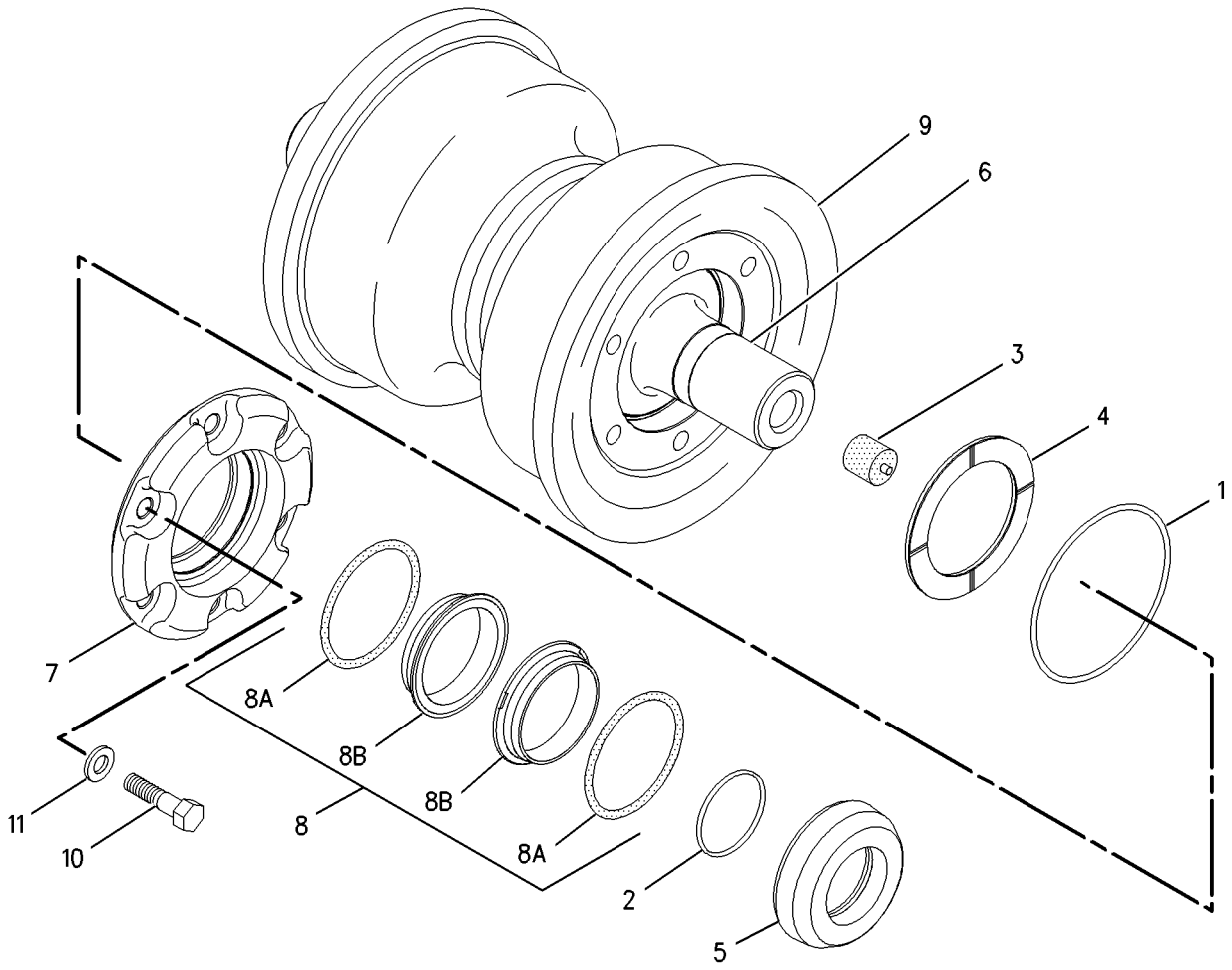

GRAPHIC #1 **<END>** g00767772

244-0880 ROLLER GP-TRACK-SINGLE FLANGE–COLD WEATHER

S/N: J8B1-UP
PART OF 102-4373 COLD WEATHER AR
AN ATTACHMENT

SMCS-4180 **i02311461**

NOTE	REF NO	GRAPHIC REF	PART NUMBER	QTY	PART NAME 1 2 3 4 5 6 (PRODUCT LEVEL)	SEE PAGE
	1	1	**5F-3106**	2	SEAL-O-RING	
	2	1	**7J-2036**	2	SEAL-O-RING	
	3	1	**6Y-0473**	1	PLUG-CLEAR	
	3A	1	**9G-5664**	1	STOPPER-RUBBER	
	4	1	**8E-7510**	2	WASHER-THRUST (86X120.27X4.52-MM THK)	
	5	1	**107-3945**	2	COLLAR-SEAL	
	6	1	**107-8084**	1	SHAFT-TRACK ROLLER	
	7	1	**107-8085**	2	RETAINER	
	8	1	**162-7862**	2	SEAL GP-DUO-CONE	
					(EACH INCLUDES)	
	8A	1	**162-2166**	2	RING-TORIC	
Z	8B	1		2	SEAL-RING	
	9	1	**196-9949**	1	ROLLER & BEARING AS	
	9A	1	**9W-9844**	2	BEARING-SLEEVE (BURNISHED)	
	10	1	**241-1855**	12	BOLT (1/2-13X2-IN)	
	11	1	**5P-8245**	12	WASHER-HARD (13.5X25.5X3-MM THK)	

Z-NOT SERVICED SEPARATELY

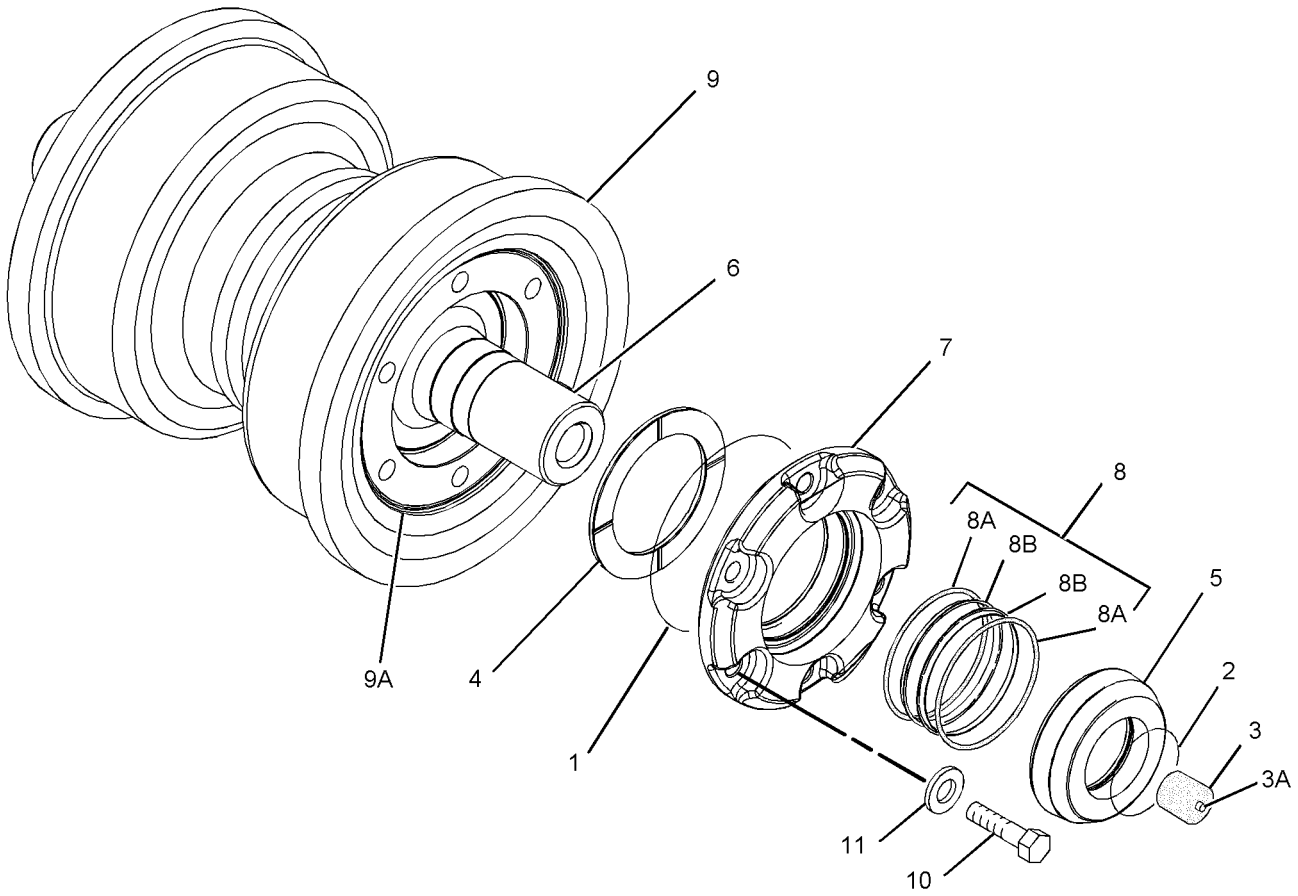

GRAPHIC #1 **<END>** g01115491

246-0775 ROLLER GP-TRACK-SINGLE FLANGE—SYSTEMONE*R

S/N: J8B1-UP

PART OF 192-2599 ROLLER AR-TRACK CARRIER, 206-6779, 209-3419, 310-2848, 310-2849, 310-2850 UNDERCARRIAGE AR

ALSO AN ATTACHMENT

SMCS-4180 **i02554516**

NOTE	REF NO	GRAPHIC REF	PART NUMBER	QTY	PART NAME 1 2 3 4 5 6 (PRODUCT LEVEL)	SEE PAGE
	1	1	**5F-3106**	2	SEAL-O-RING	
	2	1	**7J-2036**	2	SEAL-O-RING	
	3	1	**6Y-0473**	1	PLUG-CLEAR	
	3A	1	**9G-5664**	1	STOPPER-RUBBER	
	4	1	**8E-7510**	2	WASHER-THRUST (86X120.27X4.52-MM THK)	
	5	1	**107-3945**	2	COLLAR-SEAL	
	6	1	**107-8084**	1	SHAFT-TRACK ROLLER	
	7	1	**107-8085**	2	RETAINER	
	8	1	**162-7862**	2	SEAL GP-DUO-CONE	
					(EACH INCLUDES)	
	8A	1	**162-2166**	2	RING-TORIC	
Z	8B	1		2	SEAL-RING	
	9	1	**284-5456**	1	ROLLER AS	
	9A	1	**9W-9844**	2	BEARING-SLEEVE (BURNISHED)	
	10	1	**241-1855**	12	BOLT (1/2-13X2-IN)	
	11	1	**5P-8245**	12	WASHER-HARD (13.5X25.5X3-MM THK)	

Z-NOT SERVICED SEPARATELY

246-0775 ROLLER GP-TRACK-SINGLE FLANGE *(contd.)* **i02554516**

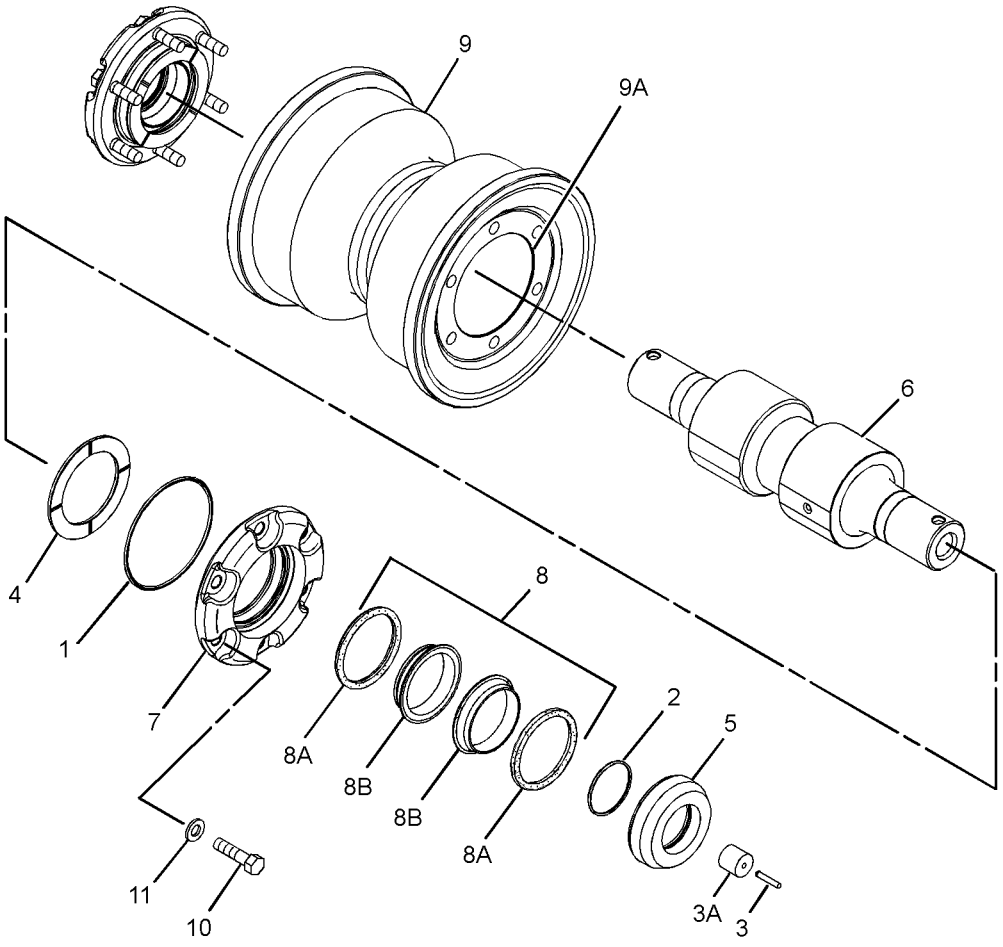

GRAPHIC #1 **<END>** g01231479

278-9539 ROLLER GP-TRACK-SINGLE FLANGE–

COLD WEATHER–SYSTEMONE

S/N: J8B1-UP

PART OF 102-4373 COLD WEATHER AR

AN ATTACHMENT

SMCS-4180 **i02810100**

NOTE	REF NO	GRAPHIC REF	PART NUMBER	QTY	PART NAME 1 2 3 4 5 6 (PRODUCT LEVEL)	SEE PAGE
	1	1	**5F-3106**	2	SEAL-O-RING	
	2	1	**7J-2036**	2	SEAL-O-RING	
	3	1	**6Y-0473**	1	PLUG-CLEAR	
	3A	1	**9G-5664**	1	STOPPER-RUBBER	
	4	1	**8E-7510**	2	WASHER-THRUST (86X120.27X4.52-MM THK)	
	5	1	**107-3945**	2	COLLAR-SEAL	
	6	1	**107-8084**	1	SHAFT-TRACK ROLLER	
	7	1	**107-8085**	2	RETAINER	
	8	1	**162-7862**	2	SEAL GP-DUO-CONE	
					(EACH INCLUDES)	
	8A	1	**162-2166**	2	RING-TORIC	
Z	8B	1		2	SEAL-RING	
	9	1	**284-5456**	1	ROLLER AS	
		1	**9W-9844**	2	BEARING-SLEEVE (BURNISHED)	
	10	1	**241-1855**	12	BOLT (1/2-13X2-IN)	
	11	1	**5P-8245**	12	WASHER-HARD (13.5X25.5X3-MM THK)	

Z-NOT SERVICED SEPARATELY

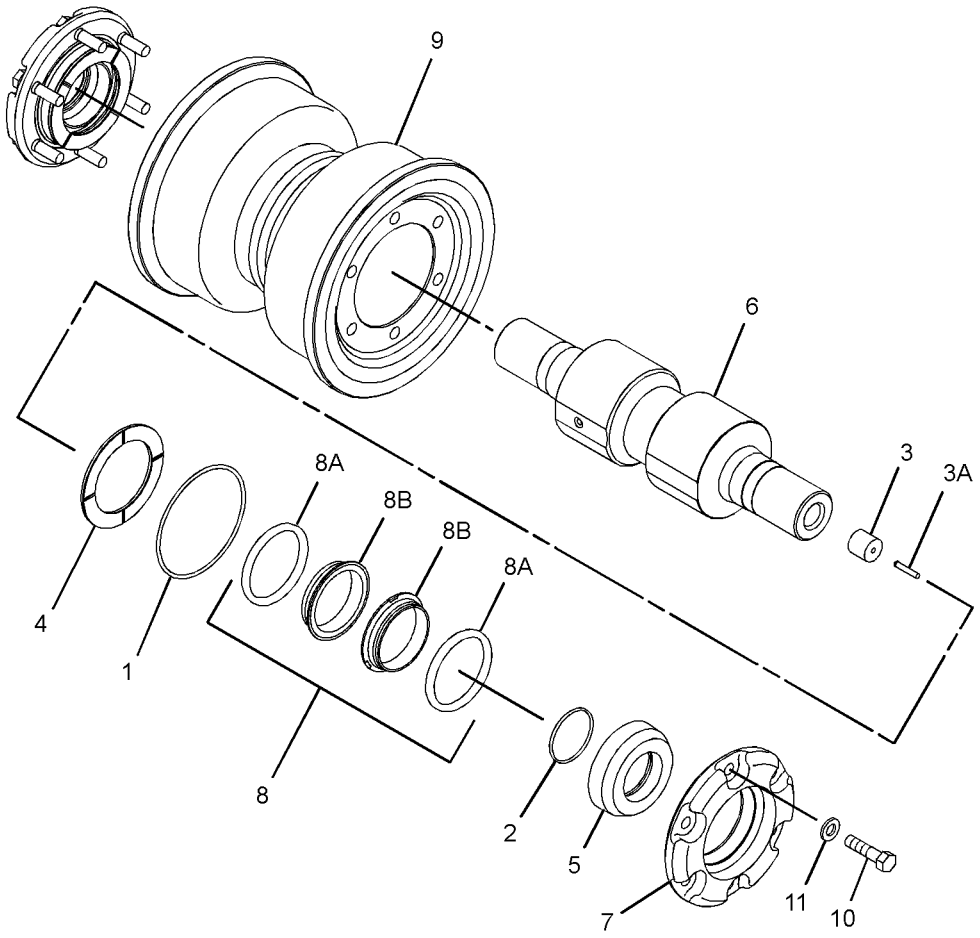

GRAPHIC #1 **<END>** g01238123

UNDERCARRIAGE

7T-2540 SUSPENSION GP-BOGIE

S/N: J8B1-1439

PART OF 206-6779 UNDERCARRIAGE AR

SMCS-7217 **i02461341**

NOTE	REF NO	GRAPHIC REF	PART NUMBER	QTY	PART NAME 1 2 3 4 5 6 (PRODUCT LEVEL)	SEE PAGE
	1	1	**9W-7417**	2	BOGIE AS (FRONT)	
	2	1	**7T-4697**	4	BOGIE AS (MIDDLE)	
	3	1	**9W-7416**	2	BOGIE AS (REAR)	
	4	1	**7T-8555**	16	BOGIE-MINOR	
	5	1	**7T-9307**	32	PIN AS-CARTRIDGE	
					(EACH INCLUDES)	
		1	**9G-4872**	2	STOPPER-RUBBER	
		1	**6Y-0473**	2	PLUG-CLEAR	
	6	1	**248-2987**	16	GUIDE	
	7	1	**8T-8924**	32	BOLT (3/4-10X2.5-IN)	
	8	1	**8T-4994**	32	WASHER-HARD (20X36.5X3.5-MM THK)	
	9	1	**7T-4700**	16	PAD AS-RESILIENT	
					(EACH INCLUDES)	
		1	**7T-4699**	1	PLATE	
	10	1	**7X-0307**	64	BOLT (7/16-14X0.75-IN)	
	11	1	**8T-5360**	64	WASHER (12X22.5X2.5-MM THK)	
	12	1	**7G-5221**	16	PLATE-RETAINER	
	13	1	**067-3161**	16	RING-RETAINING	
	14	1	**9W-4481**	8	INSERT	
	15	1	**8S-4755**	32	BOLT (1-14X1.5-IN)	
	16	1	**9G-7516**	32	PLUG	
	17	1	**9P-7823**	16	COVER	

QUANTITIES SHOWN ARE THOSE REQUIRED FOR BOTH LH AND RH SIDES

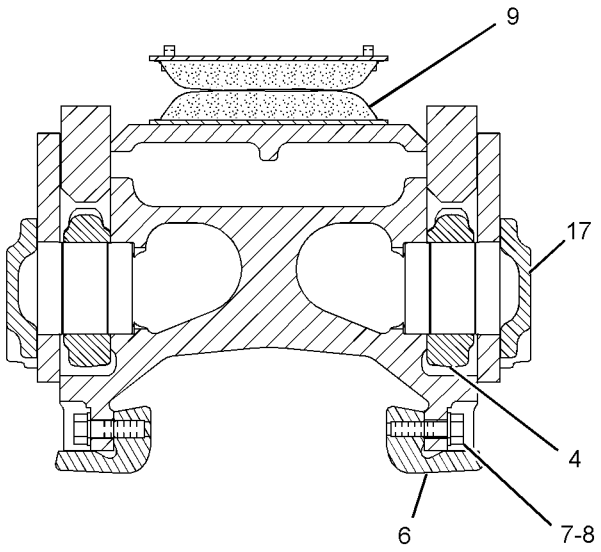

SECTION A-A

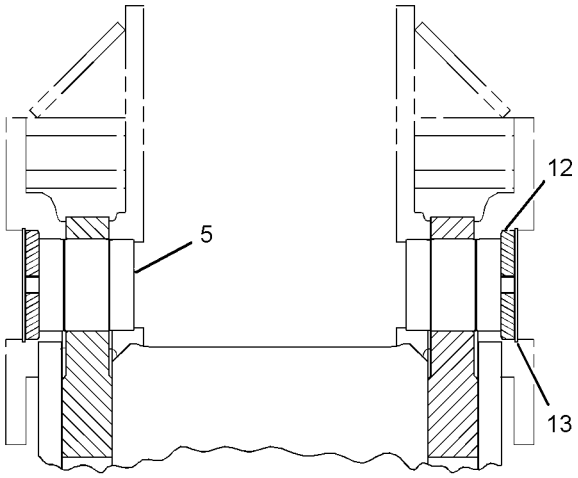

SECTION B-B

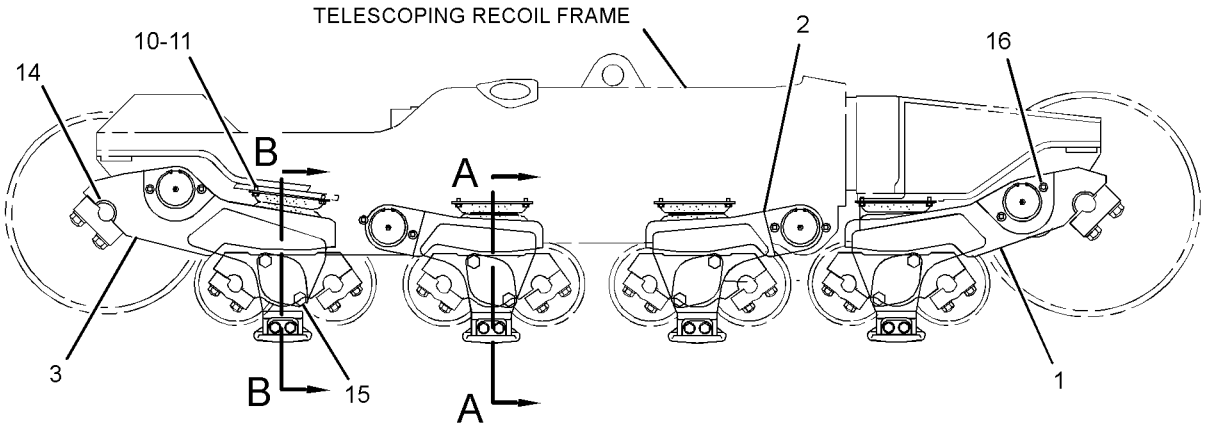

RIGHT SIDE VIEW

GRAPHIC #1 **<END>** g01245075

UNDERCARRIAGE

7T-2540 SUSPENSION GP-BOGIE

S/N: J8B1-UP

PART OF 206-6779, 310-2850 UNDERCARRIAGE AR

SMCS-7217 **i03022226**

NOTE	REF NO	GRAPHIC REF	PART NUMBER	QTY	PART NAME 1 2 3 4 5 6 (PRODUCT LEVEL)	SEE PAGE
C	1	1	**310-2901**	2	BOGIE AS (FRONT)	
C	2	1	**310-2866**	4	BOGIE AS (MIDDLE)	
C	3	1	**310-2902**	2	BOGIE AS (REAR)	
	4	1	**7T-8555**	16	BOGIE-MINOR	
	5	1	**7T-9307**	32	PIN AS-CARTRIDGE	
					(EACH INCLUDES)	
		1	**9G-4872**	2	STOPPER-RUBBER	
		1	**6Y-0473**	2	PLUG-CLEAR	
	6	1	**248-2987**	16	GUIDE	
	7	1	**8T-8924**	32	BOLT (3/4-10X2.5-IN)	
	8	1	**8T-4994**	32	WASHER-HARD (20X36.5X3.5-MM THK)	
	9	1	**7T-4700**	16	PAD AS-RESILIENT	
					(EACH INCLUDES)	
		1	**7T-4699**	1	PLATE	
C	10	1	**5P-2228**	64	BOLT (1/2-13X1-IN)	
C	11	1	**5P-1076**	64	WASHER-HARD (13.5X30X4-MM THK)	
	12	1	**7G-5221**	16	PLATE-RETAINER	
	13	1	**067-3161**	16	RING-RETAINING	
	14	1	**9W-4481**	8	INSERT	
	15	1	**8S-4755**	32	BOLT (1-14X1.5-IN)	
	16	1	**9G-7516**	32	PLUG	
	17	1	**9P-7823**	16	COVER	

C-CHANGE FROM PREVIOUS TYPE

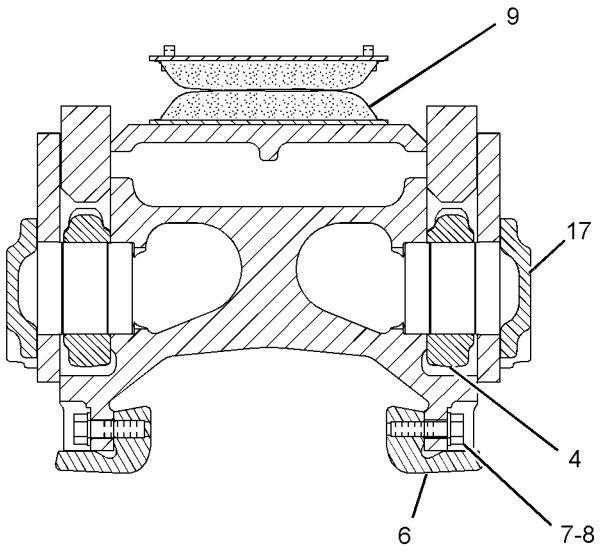

SECTION A-A

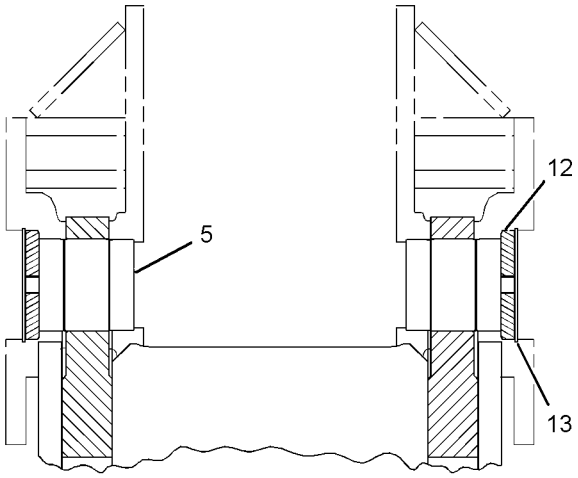

SECTION B-B

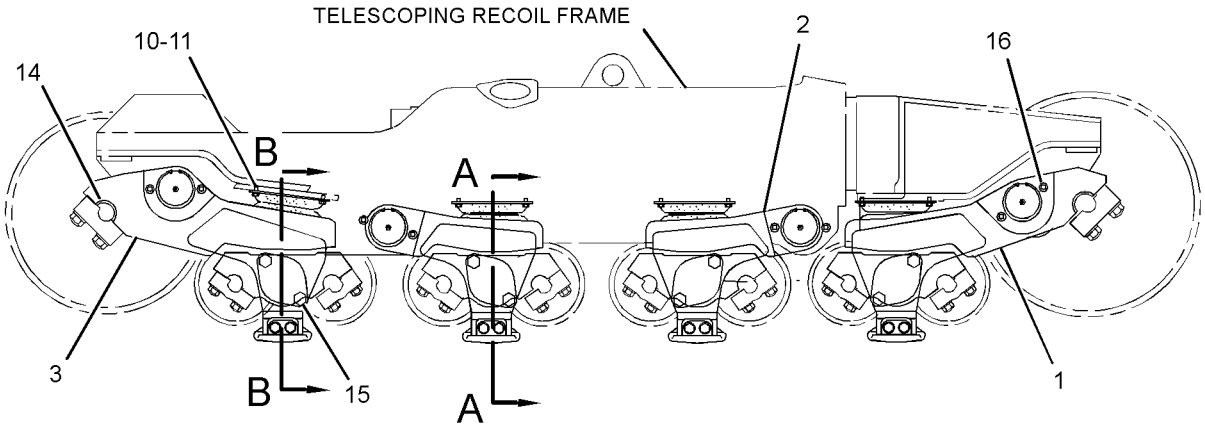

RIGHT SIDE VIEW

GRAPHIC #1 **<END>** g01245075

310-2924 SUSPENSION GP-BOGIE—SYSTEMONE

S/N: J8B1-UP

PART OF 310-2848, 310-2849 UNDERCARRIAGE AR

AN ATTACHMENT

SMCS-7217 **i03021831**

NOTE	REF NO	GRAPHIC REF	PART NUMBER	QTY	PART NAME 1 2 3 4 5 6 (PRODUCT LEVEL)	SEE PAGE
	1	1	**7G-5221**	16	PLATE-RETAINER	
	2	1	**7T-4700**	16	PAD AS-RESILIENT	
					(EACH INCLUDES)	
		1	**7T-4699**	1	PLATE	
	3	1	**7T-8555**	16	BOGIE-MINOR	
	4	1	**7T-9307**	32	PIN AS-CARTRIDGE	
					(EACH INCLUDES)	
		1	**6Y-0473**	2	PLUG-CLEAR	
		1	**9G-4872**	2	STOPPER-RUBBER	
	5	1	**9G-7516**	32	PLUG	
	6	1	**9P-7823**	16	COVER	
	7	1	**9W-4481**	8	INSERT	
	8	1	**248-2987**	16	GUIDE	
	9	1	**310-2866**	4	BOGIE AS (MIDDLE)	
	10	1	**310-2905**	2	BOGIE AS (FRONT)	
	11	1	**310-2906**	2	BOGIE AS (REAR)	
	12	1	**067-3161**	16	RING-RETAINING	
	13	1	**5P-1076**	64	WASHER-HARD (13.5X30X4-MM THK)	
	14	1	**5P-2228**	64	BOLT (1/2-13X1-IN)	
	15	1	**8S-4755**	32	BOLT (1-14X1.5-IN)	
	16	1	**8T-4994**	32	WASHER-HARD (20X36.5X3.5-MM THK)	
	17	1	**8T-8924**	32	BOLT (3/4-10X2.5-IN)	

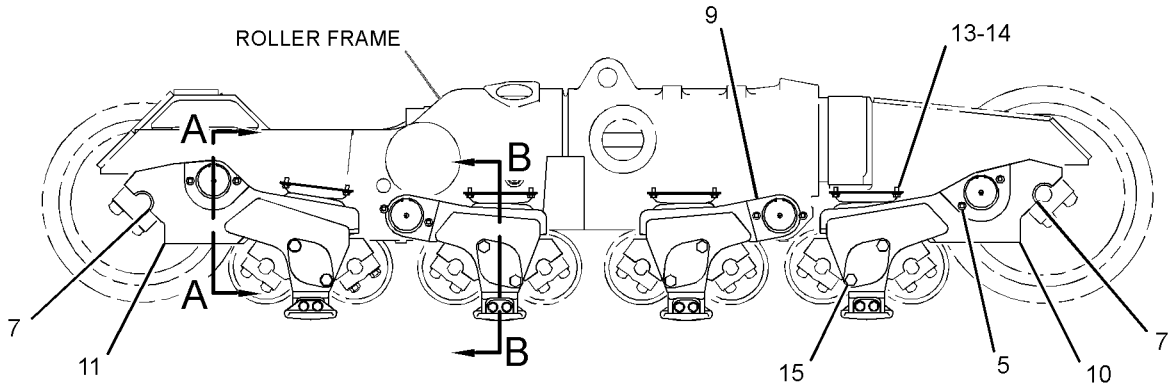

RIGHT SIDE VIEW

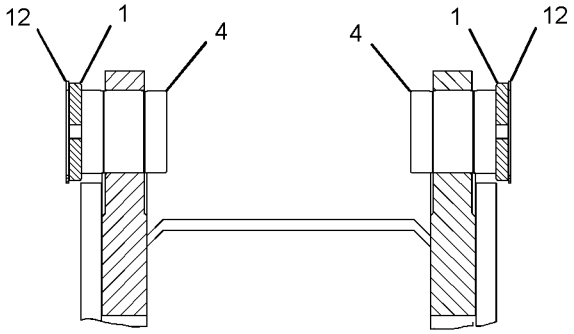

SECTION A-A

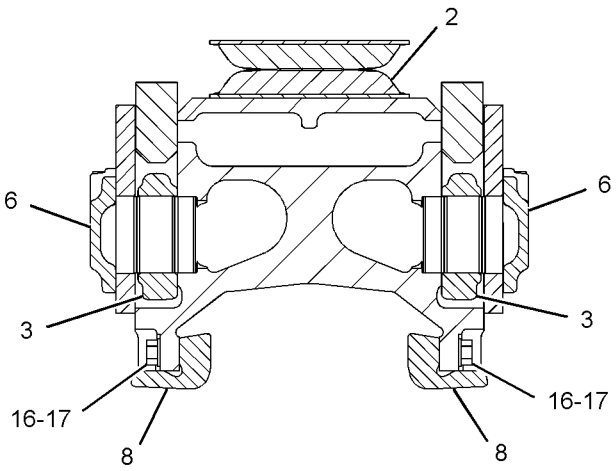

SECTION B-B

GRAPHIC #1 **<END>** g01524550

UNDERCARRIAGE

154-3325 TRACK ADJUSTER & RECOIL GP

S/N: J8B1-UP

PART OF 209-3418, 209-3419 UNDERCARRIAGE AR

AN ATTACHMENT

SMCS-4157, 4158 **i01429829**

NOTE	REF NO	GRAPHIC REF	PART NUMBER	QTY	PART NAME 1 2 3 4 5 6 (PRODUCT LEVEL)	SEE PAGE
	1	1	**1L-5081**	2	SPACER (0.41X0.75X0.56-IN THK)	
	2	1	**1M-1571**	4	RING-WEAR	
	3	1	**2S-5925**	2	FITTING-GREASE	
	4	1	**2S-5926**	2	VALVE-RELIEF	
	5	1	**7T-4200**	2	COVER	
	6	1	**7T-4209**	2	CABLE AS	
		1	**1P-7405**	1	EYEBOLT (3/8-16-THD)	
	7	1	**7T-4213**	4	STOP	
	8	1	**7T-4214**	2	RETAINER	
	9	1	**7T-4616**	2	SPRING	
	10	1	**8T-2185**	2	SEAL-U-CUP	
	11	1	**9W-6074**	2	RETAINER	
	12	1	**104-6371**	2	TUBE	
	13	1	**104-6372**	2	PLATE	
	14	1	**104-6374**	2	PISTON	
	15	1	**154-3326**	2	SPACER (190.5X215.9X159-MM THK)	
	16	1	**154-3327**	2	CYLINDER AS	
		1	**154-3329**		BEARING-SLEEVE	
	17	1	**5S-7382**	2	BOLT (3/8-16X1.375-IN)	
	18	1	**6J-1038**	4	SEAL-O-RING	
	19	1	**6J-3991**	8	BOLT-12 POINT HEAD (3/4-10X1.5-IN)	
	20	1	**6V-8801**	2	NUT (3/8-16-THD)	
	21	1	**8H-8830**	2	RING-RETAINING	
	22	1	**8T-4223**	4	WASHER-HARD (13.5X25.5X3-MM THK)	
	23	1	**8T-4835**	4	BOLT (1/2-13X2-IN)	
	24	1	**8T-4897**	2	WASHER (10.2X35X6-MM THK)	

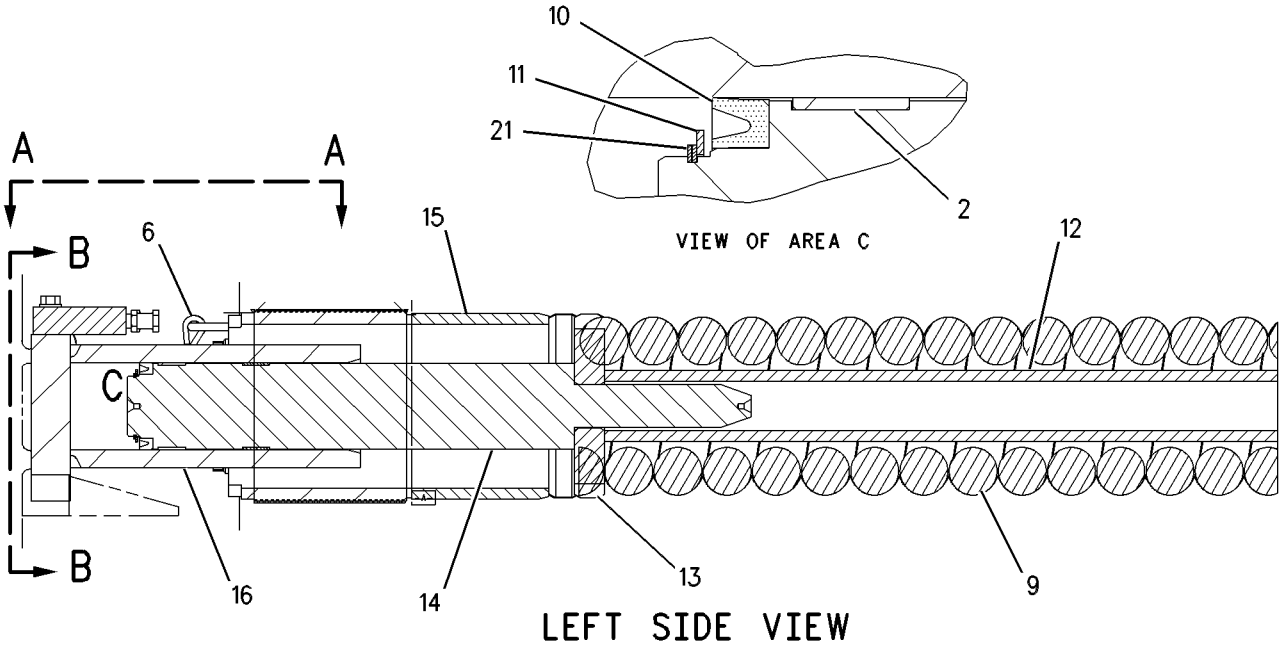

LEFT SIDE VIEW

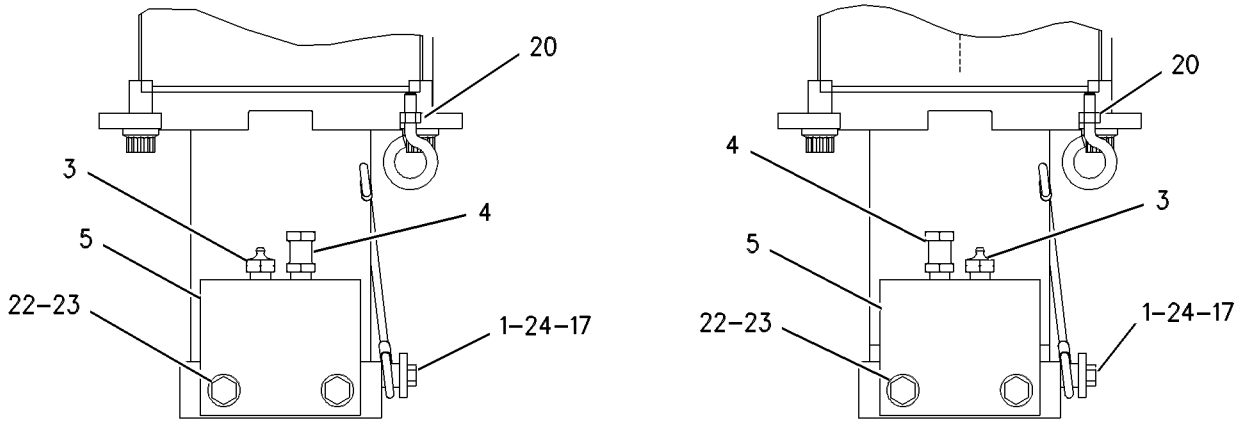

VIEW A-A
ROTATED 90 DEGREES

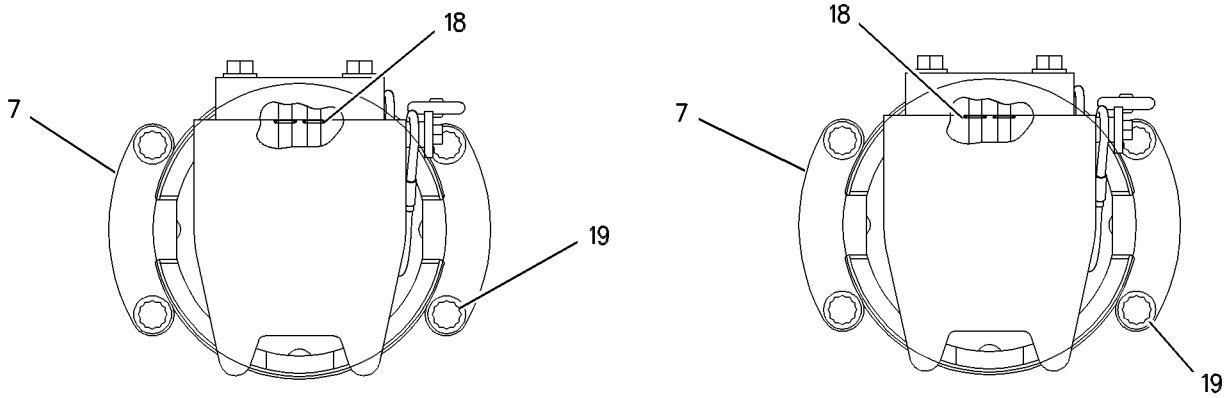

VIEW B-B

GRAPHIC #1 **<END>** g00517392

199-8185 TRACK ADJUSTER & RECOIL GP

S/N: J8B1-UP

PART OF 206-6779 UNDERCARRIAGE AR

SMCS-4157, 4158 **i02227997**

NOTE	REF NO	GRAPHIC REF	PART NUMBER	QTY	PART NAME 1 2 3 4 5 6 (PRODUCT LEVEL)	SEE PAGE
	1	1	**1L-5081**	2	SPACER (0.41X0.75X0.56-IN THK)	
	2	1	**1M-1571**	4	RING-WEAR	
	3	1	**2S-5925**	2	FITTING-GREASE	
	4	1	**2S-5926**	2	VALVE-RELIEF	
	5	1	**7T-4200**	2	COVER	
	6	1	**7T-4213**	4	STOP	
	7	1	**8T-2185**	2	SEAL-U-CUP	
	8	1	**9W-6074**	2	RETAINER	
	9	1	**104-6372**	2	PLATE	
	10	1	**199-8186**	2	SPRING	
	11	1	**199-8187**	2	TUBE	
	12	1	**199-8188**	2	PISTON	
	13	1	**199-8194**	2	RETAINER	
	14	1	**199-8202**	2	CYLINDER AS	
	15	1	**199-8211**	2	CABLE AS	
					(EACH INCLUDES)	
		1	**1P-7405**	1	EYEBOLT (3/8-16-THD)	
	16	1	**5S-7382**	2	BOLT (3/8-16X1.375-IN)	
	17	1	**6J-1038**	4	SEAL-O-RING	
	18	1	**6J-3991**	8	BOLT-12 POINT HEAD (3/4-10X1.5-IN)	
	19	1	**6V-8801**	2	NUT (3/8-16-THD)	
	20	1	**8H-8830**	2	RING-RETAINING	
	21	1	**8T-4223**	4	WASHER-HARD (13.5X25.5X3-MM THK)	
	22	1	**8T-4835**	4	BOLT (1/2-13X2-IN)	
	23	1	**8T-4897**	2	WASHER (10.2X35X6-MM THK)	

199-8185 **TRACK ADJUSTER & RECOIL GP** *(contd.)* **i02227997**

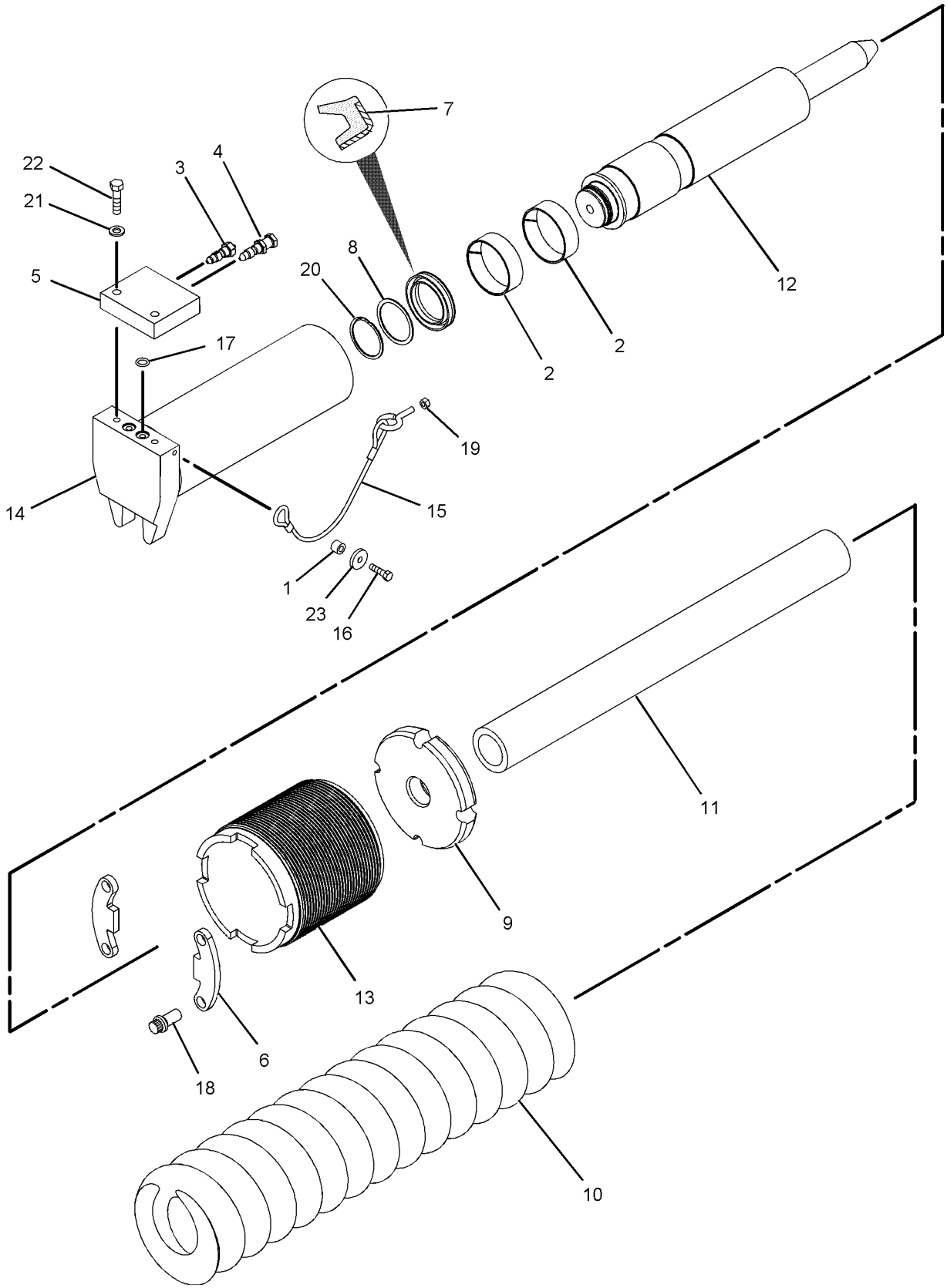

GRAPHIC #1 **<END>** g01014383

310-2920 TRACK ADJUSTER & RECOIL GP–SYSTEMONE

S/N: J8B1-UP

PART OF 310-2848, 310-2849, 310-2850 UNDERCARRIAGE AR

ALSO AN ATTACHMENT

SMCS-4157, 4158 **i03021830**

NOTE	REF NO	GRAPHIC REF	PART NUMBER	QTY	PART NAME 1 2 3 4 5 6 (PRODUCT LEVEL)	SEE PAGE
	1	1	**1L-5081**	2	SPACER (0.41X0.75X0.56-IN THK)	
	2	1	**1M-1571**	4	RING-WEAR	
	3	1	**2S-5926**	2	VALVE-RELIEF	
	4	1	**7T-4200**	2	COVER	
	5	1	**7T-4213**	4	STOP	
	6	1	**8T-2185**	2	SEAL-U-CUP	
	7	1	**9W-6074**	2	RETAINER	
	8	1	**104-6372**	2	PLATE	
	9	1	**190-8609**	2	VALVE-FILL	
	10	1	**199-8188**	2	PISTON	
	11	1	**199-8194**	2	RETAINER	
	12	1	**199-8202**	2	CYLINDER AS	
	13	1	**199-8211**	2	CABLE AS	
					(EACH INCLUDES)	
		1	**1P-7405**	1	EYEBOLT (3/8-16-THD)	
	14	1	**314-7924**	2	TUBE	
	15	1	**314-7925**	2	SPRING	
	16	1	**5S-7382**	2	BOLT (3/8-16X1.375-IN)	
	17	1	**6J-1038**	4	SEAL-O-RING	
	18	1	**6J-3991**	8	BOLT-12 POINT HEAD (3/4-10X1.5-IN)	
	19	1	**6V-8801**	2	NUT (3/8-16-THD)	
	20	1	**8H-8830**	2	RING-RETAINING	
	21	1	**8T-4223**	4	WASHER-HARD (13.5X25.5X3-MM THK)	
	22	1	**8T-4835**	4	BOLT (1/2-13X2-IN)	
	23	1	**8T-4897**	2	WASHER (10.2X35X6-MM THK)	

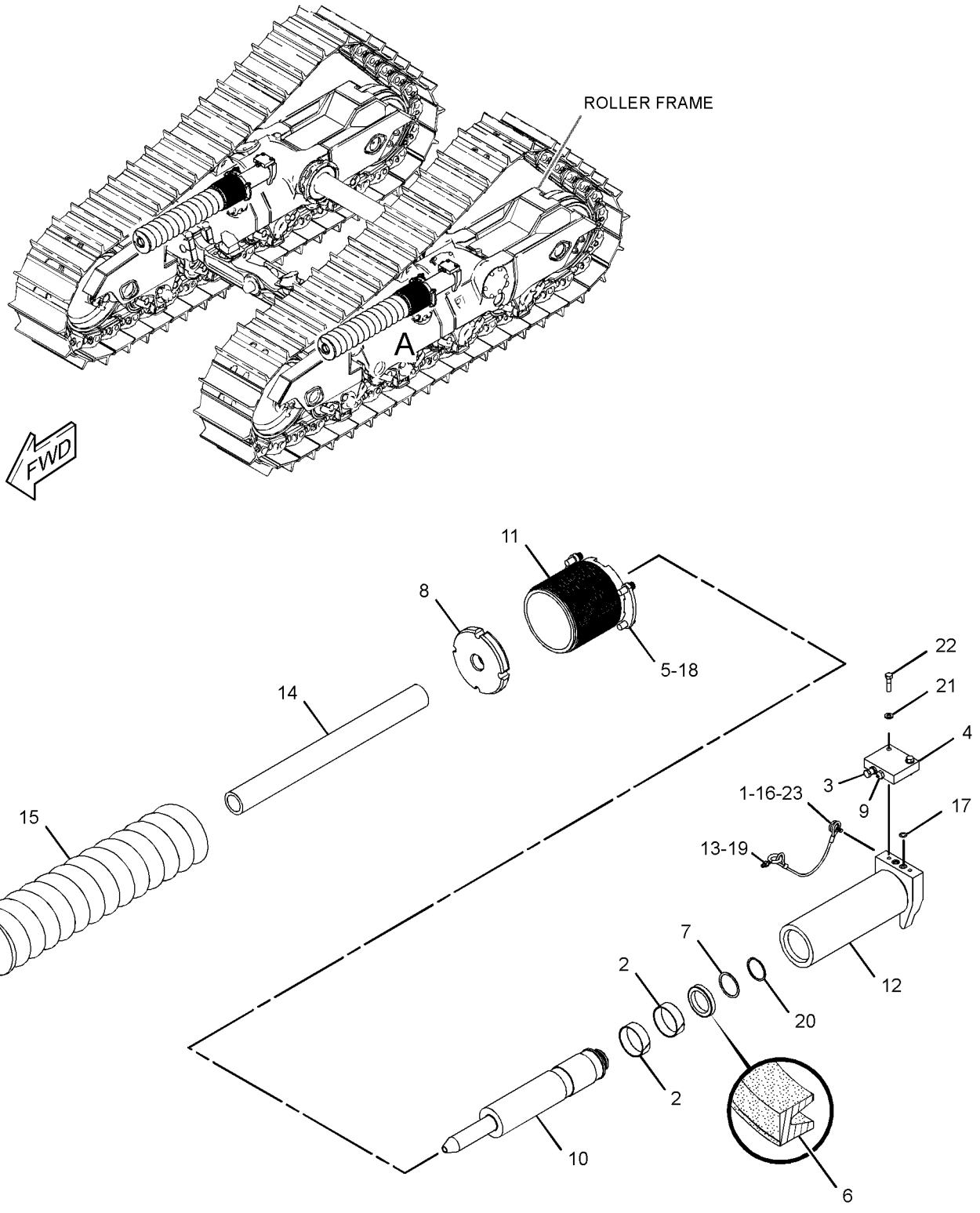

VIEW OF AREA A
(EXPLODED)

GRAPHIC #1 **<END>** g01523593

1Q-4622 TRACK GP—2-REQUIRED

S/N: J8B1-UP
965-MM (38-IN) GROUSER SHOE. SEALED, LUBRICATED, MODERATE SERVICE, POSITIVE PIN RETENTION
FOR USE WITH LOW GROUND PRESSURE GAUGE AR
AN ATTACHMENT

SMCS-4170 **i03199542**

NOTE	PART NUMBER	QTY	PART NAME 1 2 3 4 5 6 (PRODUCT LEVEL)	SEE PAGE
Y	**8E-4517**	1	LINK AS-TRACK	633
			—OR—	
Y	**272-6009**	1	LINK AS-TRACK	636
	6V-1724	2	BOLT-TRACK MASTER (7/8-14X3.78-IN)	
	6V-1725	2	BOLT-TRACK MASTER (7/8-14X5.08-IN)	
	6V-1723	172	BOLT-TRACK (7/8-14X3.42-IN)	
	7G-6442	172	NUT-TRACK (7/8-14-THD)	
	1Q-4621	44	SHOE-TRACK	
Y-SEPARATE ILLUSTRATION				

<END>

1Q-4654 TRACK GP—2-REQUIRED

S/N: J8B1-UP
660-MM (26-IN) GROUSER SHOE.
SEALED, LUBRICATED, MODERATE SERVICE, TRAPEZOIDAL
AN ATTACHMENT

SMCS-4170 **i03194919**

NOTE	PART NUMBER	QTY	PART NAME 1 2 3 4 5 6 (PRODUCT LEVEL)	SEE PAGE
Y	**8E-4518**	1	LINK AS-TRACK	634
			—OR—	
Y	**272-6010**	1	LINK AS-TRACK	637
	6V-1724	2	BOLT-TRACK MASTER (7/8-14X3.78-IN)	
	6V-1725	2	BOLT-TRACK MASTER (7/8-14X5.08-IN)	
	6V-1723	172	BOLT-TRACK (7/8-14X3.42-IN)	
	7G-6442	172	NUT-TRACK (7/8-14-THD)	
	6T-7405	44	SHOE-TRACK	
Y-SEPARATE ILLUSTRATION				

<END>

UNDERCARRIAGE

1Q-4675 TRACK GP—2-REQUIRED

S/N: J8B1-UP

660-MM (26-IN) GROUSER SHOE. SEALED, LUBRICATED, EXTREME SERVICE, TRAPEZOIDAL

AN ATTACHMENT

SMCS-4170 **i02398677**

NOTE	PART NUMBER	QTY	PART NAME 1 2 3 4 5 6 (PRODUCT LEVEL)	SEE PAGE
Y	**8E-4518**	1	LINK AS-TRACK	634
Y	**272-6010**	1	LINK AS-TRACK	637
	6V-1723	172	BOLT-TRACK (7/8-14X3.42-IN)	
	6V-1724	2	BOLT-TRACK MASTER (7/8-14X3.78-IN)	
	6V-1725	2	BOLT-TRACK MASTER (7/8-14X5.08-IN)	
	7G-6442	172	NUT-TRACK (7/8-14-THD)	
	9W-5541	44	SHOE-TRACK	
Y-SEPARATE ILLUSTRATION				

<END>

1Q-4676 TRACK GP—2-REQUIRED

S/N: J8B1-UP

610-MM (24-IN) GROUSER SHOE. SEALED, LUBRICATED, MODERATE SERVICE, TRAPEZOIDAL

AN ATTACHMENT

SMCS-4170 **i03267600**

NOTE	PART NUMBER	QTY	PART NAME 1 2 3 4 5 6 (PRODUCT LEVEL)	SEE PAGE
Y	**8E-4518**	1	LINK AS-TRACK	634
			—OR—	
Y	**272-6010**	1	LINK AS-TRACK	637
	6V-1724	2	BOLT-TRACK MASTER (7/8-14X3.78-IN)	
	6V-1725	2	BOLT-TRACK MASTER (7/8-14X5.08-IN)	
	6V-1723	172	BOLT-TRACK (7/8-14X3.42-IN)	
	7G-6442	172	NUT-TRACK (7/8-14-THD)	
	1Z-9960	44	SHOE-TRACK	
Y-SEPARATE ILLUSTRATION				

<END>

1Q-4677 TRACK GP—2-REQUIRED

S/N: J8B1-UP

660-MM (26-IN) GROUSER SHOE. SEALED, LUBRICATED, EXTREME SERVICE

AN ATTACHMENT

SMCS-4170 **i03267661**

NOTE	PART NUMBER	QTY	PART NAME 1 2 3 4 5 6 (PRODUCT LEVEL)	SEE PAGE
Y	**8E-4518**	1	LINK AS-TRACK	634
			—OR—	
Y	**272-6010**	1	LINK AS-TRACK	637
	6V-1723	172	BOLT-TRACK (7/8-14X3.42-IN)	
	6V-1724	2	BOLT-TRACK MASTER (7/8-14X3.78-IN)	
	6V-1725	2	BOLT-TRACK MASTER (7/8-14X5.08-IN)	
	7G-6442	172	NUT-TRACK (7/8-14-THD)	
	7T-2394	44	SHOE-TRACK	

Y-SEPARATE ILLUSTRATION

<END>

1Q-4683 TRACK GP—2-REQUIRED

S/N: J8B1-UP

560-MM (22-IN) GROUSER SHOE. SEALED, LUBRICATED, MODERATE SERVICE, TRAPEZOIDAL

AN ATTACHMENT

SMCS-4170 **i03267702**

NOTE	PART NUMBER	QTY	PART NAME 1 2 3 4 5 6 (PRODUCT LEVEL)	SEE PAGE
Y	**8E-4518**	1	LINK AS-TRACK	634
			—OR—	
Y	**272-6010**	1	LINK AS-TRACK	637
	6V-1723	172	BOLT-TRACK (7/8-14X3.42-IN)	
	6V-1725	2	BOLT-TRACK MASTER (7/8-14X5.08-IN)	
	6V-1724	2	BOLT-TRACK MASTER (7/8-14X3.78-IN)	
	7G-6442	172	NUT-TRACK (7/8-14-THD)	
	1Z-9983	44	SHOE-TRACK	

Y-SEPARATE ILLUSTRATION

<END>

UNDERCARRIAGE

1Q-4684 TRACK GP—2-REQUIRED

S/N: J8B1-UP

560-MM (22-IN) GROUSER SHOE. SEALED, LUBRICATED, EXTREME SERVICE, TRAPEZOIDAL

AN ATTACHMENT

SMCS-4170 **i03267725**

NOTE	PART NUMBER	QTY	PART NAME 1 2 3 4 5 6 (PRODUCT LEVEL)	SEE PAGE
Y	**8E-4518**	1	LINK AS-TRACK	634
			—OR—	
Y	**272-6010**	1	LINK AS-TRACK	637
	6V-1723	172	BOLT-TRACK (7/8-14X3.42-IN)	
	6V-1724	2	BOLT-TRACK MASTER (7/8-14X3.78-IN)	
	6V-1725	2	BOLT-TRACK MASTER (7/8-14X5.08-IN)	
	7G-6442	172	NUT-TRACK (7/8-14-THD)	
	1Z-9417	44	SHOE-TRACK	

Y-SEPARATE ILLUSTRATION

<END>

1Q-4685 TRACK GP—2-REQUIRED

S/N: J8B1-UP

610-MM (24-IN) GROUSER SHOE. SEALED, LUBRICATED, EXTREME SERVICE, TRAPEZOIDAL

AN ATTACHMENT

SMCS-4170 **i03267825**

NOTE	PART NUMBER	QTY	PART NAME 1 2 3 4 5 6 (PRODUCT LEVEL)	SEE PAGE
Y	**8E-4518**	1	LINK AS-TRACK	634
			—OR—	
Y	**272-6010**	1	LINK AS-TRACK	637
	6V-1723	172	BOLT-TRACK (7/8-14X3.42-IN)	
	6V-1724	2	BOLT-TRACK MASTER (7/8-14X3.78-IN)	
	6V-1725	2	BOLT-TRACK MASTER (7/8-14X5.08-IN)	
	7G-6442	172	NUT-TRACK (7/8-14-THD)	
	1Z-9422	44	SHOE-TRACK	

Y-SEPARATE ILLUSTRATION

<END>

1Q-4686 TRACK GP—2-REQUIRED

S/N: J8B1-UP

710-MM (28-IN) GROUSER SHOE. SEALED, LUBRICATED, MODERATE SERVICE, TRAPEZOIDAL

AN ATTACHMENT

SMCS-4170 **i03267843**

NOTE	PART NUMBER	QTY	PART NAME 1 2 3 4 5 6 (PRODUCT LEVEL)	SEE PAGE
Y	**8E-4518**	1	LINK AS-TRACK	634
			—OR—	
Y	**272-6010**	1	LINK AS-TRACK	637
	6V-1723	172	BOLT-TRACK (7/8-14X3.42-IN)	
	6V-1724	2	BOLT-TRACK MASTER (7/8-14X3.78-IN)	
	6V-1725	2	BOLT-TRACK MASTER (7/8-14X5.08-IN)	
	7G-6442	172	NUT-TRACK (7/8-14-THD)	
	1Z-9425	44	SHOE-TRACK	

Y-SEPARATE ILLUSTRATION

<END>

1Q-4703 TRACK GP—2-REQUIRED

S/N: J8B1-UP

610-MM (24-IN) GROUSER SHOE. SEALED, LUBRICATED, CHOPPING

AN ATTACHMENT

SMCS-4170 **i03267866**

NOTE	PART NUMBER	QTY	PART NAME 1 2 3 4 5 6 (PRODUCT LEVEL)	SEE PAGE
Y	**8E-4518**	1	LINK AS-TRACK	634
			—OR—	
Y	**272-6010**	1	LINK AS-TRACK	637
	6V-1723	172	BOLT-TRACK (7/8-14X3.42-IN)	
	6V-1724	2	BOLT-TRACK MASTER (7/8-14X3.78-IN)	
	6V-1725	2	BOLT-TRACK MASTER (7/8-14X5.08-IN)	
	7G-6442	172	NUT-TRACK (7/8-14-THD)	
	8E-9799	44	SHOE-TRACK	

Y-SEPARATE ILLUSTRATION

<END>

UNDERCARRIAGE

1Q-4739 TRACK GP—2-REQUIRED

S/N: J8B1-UP

560-MM (22-IN) GROUSER SHOE. SEALED, LUBRICATED, EXTREME SERVICE, POSITIVE PIN RETENTION

AN ATTACHMENT

SMCS-4170 **i03267908**

NOTE	PART NUMBER	QTY	PART NAME 1 2 3 4 5 6 (PRODUCT LEVEL)	SEE PAGE
Y	**8E-4517**	1	LINK AS-TRACK	633
			—OR—	
Y	**272-6009**	1	LINK AS-TRACK	636
	6V-1723	172	BOLT-TRACK (7/8-14X3.42-IN)	
	6V-1724	2	BOLT-TRACK MASTER (7/8-14X3.78-IN)	
	6V-1725	2	BOLT-TRACK MASTER (7/8-14X5.08-IN)	
	7G-6442	172	NUT-TRACK (7/8-14-THD)	
	7T-2390	44	SHOE-TRACK	
Y-SEPARATE ILLUSTRATION				

<END>

6Y-4124 TRACK GP—2-REQUIRED

S/N: J8B1-UP

610-MM (24-IN) GROUSER SHOE. SEALED, LUBRICATED, EXTREME SERVICE

AN ATTACHMENT

SMCS-4170 **i02398569**

NOTE	PART NUMBER	QTY	PART NAME 1 2 3 4 5 6 (PRODUCT LEVEL)	SEE PAGE
Y	**8E-4518**	1	LINK AS-TRACK	634
			S/N: J8B1-448	
Y	**272-6010**	1	LINK AS-TRACK	637
			S/N: J8B449-UP	
	6V-1724	2	BOLT-TRACK MASTER (7/8-14X3.78-IN)	
	6V-1725	2	BOLT-TRACK MASTER (7/8-14X5.08-IN)	
	6V-1723	172	BOLT-TRACK (7/8-14X3.42-IN)	
	7G-6442	172	NUT-TRACK (7/8-14-THD)	
	7T-2392	44	SHOE-TRACK	
Y-SEPARATE ILLUSTRATION				

<END>

8E-7696 TRACK GP—2-REQUIRED

S/N: J8B1-UP

560-MM (22-IN) GROUSER SHOE. SEALED, LUBRICATED, MODERATE SERVICE

PART OF 206-6779, 310-2850 UNDERCARRIAGE AR

SMCS-4170 **i03383320**

NOTE	PART NUMBER	QTY	PART NAME 1 2 3 4 5 6 (PRODUCT LEVEL)	SEE PAGE
Y	**8E-4518**	1	LINK AS-TRACK	634
			S/N: J8B1-447	
Y	**272-6010**	1	LINK AS-TRACK	637
			S/N: J8B448-UP	
	6V-1724	2	BOLT-TRACK MASTER (7/8-14X3.78-IN)	
	6V-1725	2	BOLT-TRACK MASTER (7/8-14X5.08-IN)	
	6V-1723	172	BOLT-TRACK (7/8-14X3.42-IN)	
	7G-6442	172	NUT-TRACK (7/8-14-THD)	
	7G-6448	44	SHOE-TRACK	

Y-SEPARATE ILLUSTRATION

<END>

8E-7697 TRACK GP—2-REQUIRED

S/N: J8B1-UP

610-MM (24-IN) GROUSER SHOE. SEALED, LUBRICATED, MODERATE SERVICE

AN ATTACHMENT

SMCS-4170 **i02414249**

NOTE	PART NUMBER	QTY	PART NAME 1 2 3 4 5 6 (PRODUCT LEVEL)	SEE PAGE
Y	**8E-4518**	1	LINK AS-TRACK	634
			S/N: J8B1-447	
Y	**272-6010**	1	LINK AS-TRACK	637
			S/N: J8B448-UP	
	6V-1724	2	BOLT-TRACK MASTER (7/8-14X3.78-IN)	
	6V-1725	2	BOLT-TRACK MASTER (7/8-14X5.08-IN)	
	6V-1723	172	BOLT-TRACK (7/8-14X3.42-IN)	
	7G-6442	172	NUT-TRACK (7/8-14-THD)	
	9P-2661	44	SHOE-TRACK	

Y-SEPARATE ILLUSTRATION

<END>

8E-7698 TRACK GP—2-REQUIRED

S/N: J8B1-UP

660-MM (26-IN) GROUSER SHOE. SEALED, LUBRICATED, MODERATE SERVICE AN ATTACHMENT

SMCS-4170 **i02399367**

NOTE	PART NUMBER	QTY	PART NAME 1 2 3 4 5 6 (PRODUCT LEVEL)	SEE PAGE
Y	**8E-4518**	1	LINK AS-TRACK	634
			S/N: J8B1-464	
Y	**272-6010**	1	LINK AS-TRACK	637
			S/N: J8B465-UP	
	6V-1724	2	BOLT-TRACK MASTER (7/8-14X3.78-IN)	
	6V-1725	2	BOLT-TRACK MASTER (7/8-14X5.08-IN)	
	6V-1723	172	BOLT-TRACK (7/8-14X3.42-IN)	
	7G-6442	172	NUT-TRACK (7/8-14-THD)	
	9P-2665	44	SHOE-TRACK	
Y-SEPARATE ILLUSTRATION				

<END>

8E-7699 TRACK GP—2-REQUIRED

S/N: J8B1-UP

710-MM (28-IN) GROUSER SHOE. SEALED, LUBRICATED, MODERATE SERVICE AN ATTACHMENT

SMCS-4170 **i03383342**

NOTE	PART NUMBER	QTY	PART NAME 1 2 3 4 5 6 (PRODUCT LEVEL)	SEE PAGE
Y	**8E-4518**	1	LINK AS-TRACK	634
			S/N: J8B1-447	
Y	**272-6010**	1	LINK AS-TRACK	637
			S/N: J8B448-UP	
	6V-1724	2	BOLT-TRACK MASTER (7/8-14X3.78-IN)	
	6V-1725	2	BOLT-TRACK MASTER (7/8-14X5.08-IN)	
	6V-1723	172	BOLT-TRACK (7/8-14X3.42-IN)	
	7G-6442	172	NUT-TRACK (7/8-14-THD)	
	7G-6454	44	SHOE-TRACK	
Y-SEPARATE ILLUSTRATION				

<END>

UNDERCARRIAGE

8E-7700 TRACK GP—2-REQUIRED

S/N: J8B1-UP

560-MM (22-IN) GROUSER SHOE. SEALED, LUBRICATED, EXTREME SERVICE

AN ATTACHMENT

SMCS-4170 **i03383344**

NOTE	PART NUMBER	QTY	PART NAME 1 2 3 4 5 6 (PRODUCT LEVEL)	SEE PAGE
Y	**8E-4518**	1	LINK AS-TRACK	634
			S/N: J8B1-450	
Y	**272-6010**	1	LINK AS-TRACK	637
			S/N: J8B451-UP	
	6V-1724	2	BOLT-TRACK MASTER (7/8-14X3.78-IN)	
	6V-1725	2	BOLT-TRACK MASTER (7/8-14X5.08-IN)	
	6V-1723	172	BOLT-TRACK (7/8-14X3.42-IN)	
	7G-6442	172	NUT-TRACK (7/8-14-THD)	
	7T-2390	44	SHOE-TRACK	
Y-SEPARATE ILLUSTRATION				

<END>

138-8717 TRACK GP—2-REQUIRED

S/N: J8B1-UP

965-MM (38-IN) GROUSER SHOE. SEALED, LUBRICATED, MODERATE SERVICE, TRAPEZOIDAL

FOR USE WITH LOW GROUND PRESSURE GAUGE AR

AN ATTACHMENT

SMCS-4170 **i03268902**

NOTE	PART NUMBER	QTY	PART NAME 1 2 3 4 5 6 (PRODUCT LEVEL)	SEE PAGE
Y	**8E-4518**	1	LINK AS-TRACK	634
			—OR—	
Y	**272-6010**	1	LINK AS-TRACK	637
	6V-1723	172	BOLT-TRACK (7/8-14X3.42-IN)	
	6V-1724	2	BOLT-TRACK MASTER (7/8-14X3.78-IN)	
	6V-1725	2	BOLT-TRACK MASTER (7/8-14X5.08-IN)	
	7G-6442	172	NUT-TRACK (7/8-14-THD)	
	138-9470	44	SHOE-TRACK	
Y-SEPARATE ILLUSTRATION				

<END>

139-2612 TRACK GP–2-REQUIRED

S/N: J8B1-UP

810-MM (32-IN) GROUSER SHOE. SEALED, LUBRICATED, MODERATE SERVICE, TRAPEZOIDAL

AN ATTACHMENT

SMCS-4170 **i03269036**

NOTE	PART NUMBER	QTY	PART NAME 1 2 3 4 5 6 (PRODUCT LEVEL)	SEE PAGE
Y	**8E-4518**	1	LINK AS-TRACK	634
			–OR–	
Y	**272-6010**	1	LINK AS-TRACK	637
	6V-1723	172	BOLT-TRACK (7/8-14X3.42-IN)	
	6V-1724	2	BOLT-TRACK MASTER (7/8-14X3.78-IN)	
	6V-1725	2	BOLT-TRACK MASTER (7/8-14X5.08-IN)	
	7G-6442	172	NUT-TRACK (7/8-14-THD)	
	139-2609	44	SHOE-TRACK	
Y-SEPARATE ILLUSTRATION				

<END>

158-6403 TRACK GP–2-REQUIRED

S/N: J8B1-UP

965-MM (38-IN) GROUSER SHOE. SEALED, LUBRICATED, MODERATE SERVICE

FOR USE WITH LOW GROUND PRESSURE GAUGE AR

AN ATTACHMENT

SMCS-4170 **i03269325**

NOTE	PART NUMBER	QTY	PART NAME 1 2 3 4 5 6 (PRODUCT LEVEL)	SEE PAGE
Y	**8E-4518**	1	LINK AS-TRACK	634
			–OR–	
Y	**272-6010**	1	LINK AS-TRACK	637
	6V-1723	172	BOLT-TRACK (7/8-14X3.42-IN)	
	6V-1724	2	BOLT-TRACK MASTER (7/8-14X3.78-IN)	
	6V-1725	2	BOLT-TRACK MASTER (7/8-14X5.08-IN)	
	7G-6442	172	NUT-TRACK (7/8-14-THD)	
	1Q-4621	44	SHOE-TRACK	
Y-SEPARATE ILLUSTRATION				

<END>

159-8862 TRACK GP—2-REQUIRED

S/N: J8B1-UP

610-MM (24-IN) GROUSER SHOE. SEALED, LUBRICATED, EXTREME SERVICE, TRAPEZOIDAL, POSITIVE PIN RETENTION

AN ATTACHMENT

SMCS-4170 **i03269479**

NOTE	PART NUMBER	QTY	PART NAME 1 2 3 4 5 6 (PRODUCT LEVEL)	SEE PAGE
Y	**8E-4517**	1	LINK AS-TRACK	633
			—OR—	
Y	**272-6009**	1	LINK AS-TRACK	636
	6V-1723	172	BOLT-TRACK (7/8-14X3.42-IN)	
	6V-1724	2	BOLT-TRACK MASTER (7/8-14X3.78-IN)	
	6V-1725	2	BOLT-TRACK MASTER (7/8-14X5.08-IN)	
	7G-6442	172	NUT-TRACK (7/8-14-THD)	
	1Z-9422	44	SHOE-TRACK	
Y-SEPARATE ILLUSTRATION				

<END>

172-6526 TRACK GP—2-REQUIRED

S/N: J8B1-UP

965-MM (38-IN) GROUSER SHOE. SEALED, LUBRICATED, EXTREME SERVICE, TRAPEZOIDAL

FOR USE WITH LOW GROUND PRESSURE GAUGE AR

AN ATTACHMENT

SMCS-4170 **i03276822**

NOTE	PART NUMBER	QTY	PART NAME 1 2 3 4 5 6 (PRODUCT LEVEL)	SEE PAGE
Y	**8E-4518**	1	LINK AS-TRACK	634
			—OR—	
Y	**272-6010**	1	LINK AS-TRACK	637
	6V-1723	172	BOLT-TRACK (7/8-14X3.42-IN)	
	6V-1724	2	BOLT-TRACK MASTER (7/8-14X3.78-IN)	
	6V-1725	2	BOLT-TRACK MASTER (7/8-14X5.08-IN)	
	7G-6442	172	NUT-TRACK (7/8-14-THD)	
	172-6564	44	SHOE-TRACK	
Y-SEPARATE ILLUSTRATION				

<END>

190-9822 TRACK GP–2-REQUIRED

S/N: J8B1-UP

965-MM (38-IN) GROUSER SHOE. SEALED, LUBRICATED, EXTREME SERVICE
FOR USE WITH LOW GROUND PRESSURE GAUGE AR
AN ATTACHMENT

SMCS-4170 **i03276840**

NOTE	PART NUMBER	QTY	PART NAME 1 2 3 4 5 6 (PRODUCT LEVEL)	SEE PAGE
Y	**8E-4518**	1	LINK AS-TRACK	634
			–OR–	
Y	**272-6010**	1	LINK AS-TRACK	637
	6V-1723	172	BOLT-TRACK (7/8-14X3.42-IN)	
	6V-1724	2	BOLT-TRACK MASTER (7/8-14X3.78-IN)	
	6V-1725	2	BOLT-TRACK MASTER (7/8-14X5.08-IN)	
	7G-6442	172	NUT-TRACK (7/8-14-THD)	
	191-0921	44	SHOE-TRACK	

Y-SEPARATE ILLUSTRATION

<END>

191-9945 TRACK GP–2-REQUIRED

S/N: J8B1-UP

810-MM (32-IN) GROUSER SHOE. SEALED, LUBRICATED, MODERATE SERVICE, CLIPPED
FOR USE WITH LOW GROUND PRESSURE GAUGE AR
AN ATTACHMENT

SMCS-4170 **i03276903**

NOTE	PART NUMBER	QTY	PART NAME 1 2 3 4 5 6 (PRODUCT LEVEL)	SEE PAGE
Y	**8E-4518**	1	LINK AS-TRACK	634
			–OR–	
Y	**272-6010**	1	LINK AS-TRACK	637
	6V-1723	172	BOLT-TRACK (7/8-14X3.42-IN)	
	6V-1724	2	BOLT-TRACK MASTER (7/8-14X3.78-IN)	
	6V-1725	2	BOLT-TRACK MASTER (7/8-14X5.08-IN)	
	7G-6442	172	NUT-TRACK (7/8-14-THD)	
	191-9917	44	SHOE-TRACK	

Y-SEPARATE ILLUSTRATION

<END>

UNDERCARRIAGE

200-4075 TRACK GP—2-REQUIRED

S/N: J8B1-UP

700-MM (28-IN) GROUSER SHOE. SEALED, LUBRICATED, EXTREME SERVICE

AN ATTACHMENT

SMCS-4170 **i03277503**

NOTE	PART NUMBER	QTY	PART NAME 1 2 3 4 5 6 (PRODUCT LEVEL)	SEE PAGE
Y	**8E-4518**	1	LINK AS-TRACK	634
			—OR—	
Y	**272-6010**	1	LINK AS-TRACK	637
	6V-1723	172	BOLT-TRACK (7/8-14X3.42-IN)	
	6V-1724	2	BOLT-TRACK MASTER (7/8-14X3.78-IN)	
	6V-1725	2	BOLT-TRACK MASTER (7/8-14X5.08-IN)	
	7G-6442	172	NUT-TRACK (7/8-14-THD)	
	200-4074	44	SHOE-TRACK	

Y-SEPARATE ILLUSTRATION

<END>

201-0714 TRACK GP—2-REQUIRED

S/N: J8B1-UP

560-MM (22-IN) GROUSER SHOE. SEALED, LUBRICATED, MODERATE SERVICE, STEEL MILL

AN ATTACHMENT

SMCS-4170 **i03277599**

NOTE	PART NUMBER	QTY	PART NAME 1 2 3 4 5 6 (PRODUCT LEVEL)	SEE PAGE
Y	**157-0527**	1	LINK AS-TRACK	635
	6V-1723	172	BOLT-TRACK (7/8-14X3.42-IN)	
	6V-1724	2	BOLT-TRACK MASTER (7/8-14X3.78-IN)	
	6V-1725	2	BOLT-TRACK MASTER (7/8-14X5.08-IN)	
	7G-6442	172	NUT-TRACK (7/8-14-THD)	
	7T-2390	44	SHOE-TRACK	

Y-SEPARATE ILLUSTRATION

<END>

UNDERCARRIAGE

203-2198 TRACK GP—2-REQUIRED

S/N: J8B1-UP

610-MM (24-IN) GROUSER SHOE. SEALED, LUBRICATED, EXTREME SERVICE, POSITIVE PIN RETENTION

AN ATTACHMENT

SMCS-4170 **i02398747**

NOTE	PART NUMBER	QTY	PART NAME 1 2 3 4 5 6 (PRODUCT LEVEL)	SEE PAGE
Y	**8E-4517**	1	LINK AS-TRACK	633
			S/N: J8B1-447	
Y	**272-6009**	1	LINK AS-TRACK	636
			S/N: J8B448-UP	
	6V-1724	2	BOLT-TRACK MASTER (7/8-14X3.78-IN)	
	6V-1725	2	BOLT-TRACK MASTER (7/8-14X5.08-IN)	
	6V-1723	172	BOLT-TRACK (7/8-14X3.42-IN)	
	7G-6442	172	NUT-TRACK (7/8-14-THD)	
	7T-2392	44	SHOE-TRACK	
Y-SEPARATE ILLUSTRATION				

<END>

205-5796 TRACK GP—2-REQUIRED

S/N: J8B1-UP

610-MM (24-IN) GROUSER SHOE. SEALED, LUBRICATED, POSITIVE PIN RETENTION, SUPER EXTREME SERVICE

AN ATTACHMENT

SMCS-4170 **i02411046**

NOTE	PART NUMBER	QTY	PART NAME 1 2 3 4 5 6 (PRODUCT LEVEL)	SEE PAGE
Y	**8E-4517**	1	LINK AS-TRACK	633
			S/N: J8B1-447	
Y	**272-6009**	1	LINK AS-TRACK	636
			S/N: J8B448-UP	
	6V-1724	2	BOLT-TRACK MASTER (7/8-14X3.78-IN)	
	6V-1725	2	BOLT-TRACK MASTER (7/8-14X5.08-IN)	
	6V-1723	172	BOLT-TRACK (7/8-14X3.42-IN)	
	7G-6442	172	NUT-TRACK (7/8-14-THD)	
	115-1385	44	SHOE-TRACK	
Y-SEPARATE ILLUSTRATION				

<END>

209-0849 TRACK GP–2-REQUIRED

S/N: J8B1-UP

710-MM (28-IN) GROUSER SHOE. SEALED, LUBRICATED, MODERATE SERVICE, TRAPEZOIDAL, POSITIVE PIN RETENTION

AN ATTACHMENT

SMCS-4170 **i03277707**

NOTE	PART NUMBER	QTY	PART NAME 1 2 3 4 5 6 (PRODUCT LEVEL)	SEE PAGE
Y	**8E-4517**	1	LINK AS-TRACK	633
			–OR–	
Y	**272-6009**	1	LINK AS-TRACK	636
	6V-1723	172	BOLT-TRACK (7/8-14X3.42-IN)	
	6V-1724	2	BOLT-TRACK MASTER (7/8-14X3.78-IN)	
	6V-1725	2	BOLT-TRACK MASTER (7/8-14X5.08-IN)	
	7G-6442	172	NUT-TRACK (7/8-14-THD)	
	1Z-9425	44	SHOE-TRACK	

Y-SEPARATE ILLUSTRATION

<END>

212-0927 TRACK GP–2-REQUIRED

S/N: J8B1-UP

560-MM (22-IN) GROUSER SHOE. SEALED, LUBRICATED, EXTREME SERVICE, POSITIVE PIN RETENTION, TRAPEZOIDAL

AN ATTACHMENT

SMCS-4170 **i03277880**

NOTE	PART NUMBER	QTY	PART NAME 1 2 3 4 5 6 (PRODUCT LEVEL)	SEE PAGE
Y	*8E-4517*	1	LINK AS-TRACK	633
			–OR–	
Y	**272-6009**	1	LINK AS-TRACK	636
	6V-1724	2	BOLT-TRACK MASTER (7/8-14X3.78-IN)	
	6V-1725	2	BOLT-TRACK MASTER (7/8-14X5.08-IN)	
	6V-1723	172	BOLT-TRACK (7/8-14X3.42-IN)	
	7G-6442	172	NUT-TRACK (7/8-14-THD)	
	1Z-9417	44	SHOE-TRACK	

Y-SEPARATE ILLUSTRATION

<END>

UNDERCARRIAGE

213-5088 TRACK GP–2-REQUIRED

S/N: J8B1-UP

660-MM (26-IN) GROUSER SHOE. SEALED, LUBRICATED, EXTREME SERVICE, POSITIVE PIN RETENTION, TRAPEZOIDAL

AN ATTACHMENT

SMCS-4170 **i03278225**

NOTE	PART NUMBER	QTY	PART NAME 1 2 3 4 5 6 (PRODUCT LEVEL)	SEE PAGE
Y	*8E-4517*	1	LINK AS-TRACK	633
			–OR–	
Y	**272-6009**	1	LINK AS-TRACK	636
	6V-1723	172	BOLT-TRACK (7/8-14X3.42-IN)	
	6V-1724	2	BOLT-TRACK MASTER (7/8-14X3.78-IN)	
	6V-1725	2	BOLT-TRACK MASTER (7/8-14X5.08-IN)	
	7G-6442	172	NUT-TRACK (7/8-14-THD)	
	9W-5541	44	SHOE-TRACK	

Y-SEPARATE ILLUSTRATION

<END>

217-4205 TRACK GP–2-REQUIRED

S/N: J8B1-UP

660-MM (26-IN) GROUSER SHOE. SEALED, LUBRICATED, MODERATE SERVICE, POSITIVE PIN RETENTION

AN ATTACHMENT

SMCS-4170 **i02411361**

NOTE	PART NUMBER	QTY	PART NAME 1 2 3 4 5 6 (PRODUCT LEVEL)	SEE PAGE
Y	**8E-4517**	1	LINK AS-TRACK	633
			S/N: J8B1-447	
Y	**272-6009**	1	LINK AS-TRACK	636
			S/N: J8B448-UP	
	6V-1724	2	BOLT-TRACK MASTER (7/8-14X3.78-IN)	
	6V-1725	2	BOLT-TRACK MASTER (7/8-14X5.08-IN)	
	6V-1723	172	BOLT-TRACK (7/8-14X3.42-IN)	
	7G-6442	172	NUT-TRACK (7/8-14-THD)	
	9P-2665	44	SHOE-TRACK	

Y-SEPARATE ILLUSTRATION

<END>

UNDERCARRIAGE

217-5257 TRACK GP–2-REQUIRED

S/N: J8B1-UP
660-MM (26-IN) GROUSER SHOE.
SEALED, LUBRICATED, EXTREME SERVICE, POSITIVE PIN RETENTION
FIELD INSTALLATION

SMCS-4170 **i02414241**

NOTE	PART NUMBER	QTY	PART NAME 1 2 3 4 5 6 (PRODUCT LEVEL)	SEE PAGE
Y	**272-6009**	1	LINK AS-TRACK	636
	6V-1724	2	BOLT-TRACK MASTER (7/8-14X3.78-IN)	
	6V-1725	2	BOLT-TRACK MASTER (7/8-14X5.08-IN)	
	6V-1723	172	BOLT-TRACK (7/8-14X3.42-IN)	
	7G-6442	172	NUT-TRACK (7/8-14-THD)	
	7T-2394	44	SHOE-TRACK	
Y-SEPARATE ILLUSTRATION				

<END>

218-7347 TRACK GP–2-REQUIRED

S/N: J8B1-UP
610-MM (24-IN) GROUSER SHOE. SEALED, LUBRICATED, SUPER EXTREME SERVICE
AN ATTACHMENT

SMCS-4170 **i02399338**

NOTE	PART NUMBER	QTY	PART NAME 1 2 3 4 5 6 (PRODUCT LEVEL)	SEE PAGE
Y	*8E-4518*	1	LINK AS-TRACK	634
			S/N: J8B1-447	
Y	**272-6010**	1	LINK AS-TRACK	637
			S/N: J8B448-UP	
	6V-1724	2	BOLT-TRACK MASTER (7/8-14X3.78-IN)	
	6V-1725	2	BOLT-TRACK MASTER (7/8-14X5.08-IN)	
	6V-1723	172	BOLT-TRACK (7/8-14X3.42-IN)	
	7G-6442	172	NUT-TRACK (7/8-14-THD)	
	115-1385	44	SHOE-TRACK	
Y-SEPARATE ILLUSTRATION				

<END>

237-9320 TRACK GP—2-REQUIRED

S/N: J8B1-UP
965-MM (38-IN) GROUSER SHOE. SEALED, LUBRICATED, EXTREME SERVICE, POSITIVE PIN RETENTION, TRAPEZOIDAL
FOR USE WITH LOW GROUND PRESSURE GAUGE AR
AN ATTACHMENT

SMCS-4170 **i02414080**

NOTE	PART NUMBER	QTY	PART NAME 1 2 3 4 5 6 (PRODUCT LEVEL)	SEE PAGE
Y	**8E-4517**	1	LINK AS-TRACK	633
			—OR—	
Y	**272-6009**	1	LINK AS-TRACK	636
	6V-1724	2	BOLT-TRACK MASTER (7/8-14X3.78-IN)	
	6V-1725	2	BOLT-TRACK MASTER (7/8-14X5.08-IN)	
	6V-1723	172	BOLT-TRACK (7/8-14X3.42-IN)	
	7G-6442	172	NUT-TRACK (7/8-14-THD)	
	172-6564	44	SHOE-TRACK	

Y-SEPARATE ILLUSTRATION

<END>

243-6329 TRACK GP—2-REQUIRED

S/N: J8B1-UP
965-MM (38-IN) GROUSER SHOE.
SEALED, LUBRICATED, EXTREME SERVICE, POSITIVE PIN RETENTION
FOR USE WITH SPECIAL LOW GROUND PRESSURE GAUGE AR
AN ATTACHMENT

SMCS-4170 **i02663510**

NOTE	PART NUMBER	QTY	PART NAME 1 2 3 4 5 6 (PRODUCT LEVEL)	SEE PAGE
Y	**272-6009**	1	LINK AS-TRACK	636
	6V-1723	172	BOLT-TRACK (7/8-14X3.42-IN)	
	6V-1724	2	BOLT-TRACK MASTER (7/8-14X3.78-IN)	
	6V-1725	2	BOLT-TRACK MASTER (7/8-14X5.08-IN)	
	7G-6442	172	NUT-TRACK (7/8-14-THD)	
	191-0921	44	SHOE-TRACK	

Y-SEPARATE ILLUSTRATION

<END>

272-3163 TRACK GP–2-REQUIRED, SYSTEMONE

S/N: J8B1-UP

610-MM (24-IN) GROUSER SHOE. SEALED, LUBRICATED, EXTREME SERVICE

FOR USE WITH SYSTEMONE UNDERCARRIAGE

AN ATTACHMENT

SMCS-4170 **i03201500**

NOTE	PART NUMBER	QTY	PART NAME 1 2 3 4 5 6 (PRODUCT LEVEL)	SEE PAGE
Y	**304-5688**	1	LINK AS-TRACK (SYSTEMONE)	638
	6V-1723	172	BOLT-TRACK (7/8-14X3.42-IN)	
	6V-1725	4	BOLT-TRACK MASTER (7/8-14X5.08-IN)	
	273-8806	172	NUT-TRACK (7/8-14-THD)	
	246-7483	43	SHOE-TRACK	
	295-9963	1	SHOE-TRACK MASTER	
Y-SEPARATE ILLUSTRATION				

<END>

272-3164 TRACK GP–2-REQUIRED, SYSTEMONE

S/N: J8B1-UP

660-MM (26-IN) GROUSER SHOE. SEALED, LUBRICATED, CENTER HOLE, EXTREME SERVICE

FOR USE WITH SYSTEMONE SEGMENTS & GUARDS

AN ATTACHMENT

SMCS-4170 **i03117404**

NOTE	PART NUMBER	QTY	PART NAME 1 2 3 4 5 6 (PRODUCT LEVEL)	SEE PAGE
Y	**304-5688**	1	LINK AS-TRACK (SYSTEMONE)	638
	6V-1723	172	BOLT-TRACK (7/8-14X3.42-IN)	
	6V-1725	4	BOLT-TRACK MASTER (7/8-14X5.08-IN)	
	273-8806	172	NUT-TRACK (7/8-14-THD)	
	246-7486	43	SHOE-TRACK	
	257-6929	1	SHOE-TRACK MASTER	
Y-SEPARATE ILLUSTRATION				

<END>

272-3165 TRACK GP–2-REQUIRED, SYSTEMONE

S/N: J8B1-UP

710-MM (28-IN) GROUSER SHOE. SEALED, LUBRICATED, MODERATE SERVICE

FOR USE WITH SYSTEMONE UNDERCARRIAGE

AN ATTACHMENT

SMCS-4170 **i03201524**

NOTE	PART NUMBER	QTY	PART NAME 1 2 3 4 5 6 (PRODUCT LEVEL)	SEE PAGE
Y	**304-5688**	1	LINK AS-TRACK (SYSTEMONE)	638
	6V-1723	172	BOLT-TRACK (7/8-14X3.42-IN)	
	6V-1725	4	BOLT-TRACK MASTER (7/8-14X5.08-IN)	
	273-8806	172	NUT-TRACK (7/8-14-THD)	
	246-7493	43	SHOE TRACK	
	295-9968	1	SHOE-TRACK MASTER	
Y-SEPARATE ILLUSTRATION				

<END>

272-3166 TRACK GP–2-REQUIRED, SYSTEMONE

S/N: J8B1-UP
560-MM (22-IN) GROUSER SHOE. SEALED, LUBRICATED, EXTREME SERVICE
FOR USE WITH SYSTEMONE UNDERCARRIAGE
AN ATTACHMENT

SMCS-4170 **i03201540**

NOTE	PART NUMBER	QTY	PART NAME 1 2 3 4 5 6 (PRODUCT LEVEL)	SEE PAGE
Y	**304-5688**	1	LINK AS-TRACK (SYSTEMONE)	638
	6V-1723	172	BOLT-TRACK (7/8-14X3.42-IN)	
	6V-1725	4	BOLT-TRACK MASTER (7/8-14X5.08-IN)	
	273-8806	172	NUT-TRACK (7/8-14-THD)	
	272-3178	43	SHOE-TRACK	
	295-9961	1	SHOE-TRACK MASTER	
Y-SEPARATE ILLUSTRATION				

<END>

272-3167 TRACK GP–2-REQUIRED, SYSTEMONE

S/N: J8B1-UP
660-MM (26-IN) GROUSER SHOE. SEALED, LUBRICATED, MODERATE SERVICE
FOR USE WITH SYSTEMONE UNDERCARRIAGE
AN ATTACHMENT

SMCS-4170 **i03201548**

NOTE	PART NUMBER	QTY	PART NAME 1 2 3 4 5 6 (PRODUCT LEVEL)	SEE PAGE
Y	**304-5688**	1	LINK AS-TRACK (SYSTEMONE)	638
	6V-1723	172	BOLT-TRACK (7/8-14X3.42-IN)	
	6V-1725	4	BOLT-TRACK MASTER (7/8-14X5.08-IN)	
	273-8806	172	NUT-TRACK (7/8-14-THD)	
	272-3179	43	SHOE-TRACK	
	295-9967	1	SHOE-TRACK MASTER	
Y-SEPARATE ILLUSTRATION				

<END>

272-3168 TRACK GP–2-REQUIRED, SYSTEMONE

S/N: J8B1-UP
660-MM (26-IN) GROUSER SHOE. SEALED, LUBRICATED, EXTREME SERVICE
FOR USE WITH SYSTEMONE UNDERCARRIAGE
AN ATTACHMENT

SMCS-4170 **i03117509**

NOTE	PART NUMBER	QTY	PART NAME 1 2 3 4 5 6 (PRODUCT LEVEL)	SEE PAGE
Y	**304-5688**	1	LINK AS-TRACK (SYSTEMONE)	638
	6V-1723	172	BOLT-TRACK (7/8-14X3.42-IN)	
	6V-1725	4	BOLT-TRACK MASTER (7/8-14X5.08-IN)	
	273-8806	172	NUT-TRACK (7/8-14-THD)	
	272-3180	43	SHOE-TRACK	
	296-1396	1	SHOE-TRACK MASTER	
Y-SEPARATE ILLUSTRATION				

<END>

272-3169 TRACK GP–2-REQUIRED, SYSTEMONE

S/N: J8B1-UP

610-MM (24-IN) GROUSER SHOE. SEALED, LUBRICATED, CENTER HOLE, EXTREME SERVICE

FOR USE WITH SYSTEMONE SEGMENTS & GUARDS

AN ATTACHMENT

SMCS-4170 **i03132010**

NOTE	PART NUMBER	QTY	PART NAME 1 2 3 4 5 6 (PRODUCT LEVEL)	SEE PAGE
Y	**304-5688**	1	LINK AS-TRACK (SYSTEMONE)	638
	6V-1723	172	BOLT-TRACK (7/8-14X3.42-IN)	
	6V-1725	4	BOLT-TRACK MASTER (7/8-14X5.08-IN)	
	273-8806	172	NUT-TRACK (7/8-14-THD)	
	272-3181	43	SHOE-TRACK	
	295-9964	1	SHOE-TRACK MASTER	
Y-SEPARATE ILLUSTRATION				

<END>

272-3170 TRACK GP–2-REQUIRED, SYSTEMONE

S/N: J8B1-UP

610-MM (24-IN) GROUSER SHOE. SEALED, LUBRICATED, MODERATE SERVICE

FOR USE WITH SYSTEMONE UNDERCARRIAGE

AN ATTACHMENT

SMCS-4170 **i03201602**

NOTE	PART NUMBER	QTY	PART NAME 1 2 3 4 5 6 (PRODUCT LEVEL)	SEE PAGE
Y	**304-5688**	1	LINK AS-TRACK (SYSTEMONE)	638
	6V-1723	172	BOLT-TRACK (7/8-14X3.42-IN)	
	6V-1725	4	BOLT-TRACK MASTER (7/8-14X5.08-IN)	
	273-8806	172	NUT-TRACK (7/8-14-THD)	
	272-3182	43	SHOE-TRACK	
	295-9965	1	SHOE-TRACK MASTER	
Y-SEPARATE ILLUSTRATION				

<END>

272-3171 TRACK GP–2-REQUIRED, SYSTEMONE

S/N: J8B1-UP

710-MM (28-IN) GROUSER SHOE. SEALED, LUBRICATED, EXTREME SERVICE

FOR USE WITH SYSTEMONE UNDERCARRIAGE

AN ATTACHMENT

SMCS-4170 **i03201889**

NOTE	PART NUMBER	QTY	PART NAME 1 2 3 4 5 6 (PRODUCT LEVEL)	SEE PAGE
Y	**304-5688**	1	LINK AS-TRACK (SYSTEMONE)	638
	6V-1723	172	BOLT-TRACK (7/8-14X3.42-IN)	
	6V-1725	4	BOLT-TRACK MASTER (7/8-14X5.08-IN)	
	273-8806	172	NUT-TRACK (7/8-14-THD)	
	272-3183	43	SHOE-TRACK	
	240-6674	1	SHOE-TRACK MASTER	
Y-SEPARATE ILLUSTRATION				

<END>

276-0535 TRACK GP–2-REQUIRED, SYSTEMONE

S/N: J8B1-UP

660-MM (26-IN) GROUSER SHOE. SEALED, LUBRICATED, CENTER HOLE, SUPER EXTREME SERVICE

FOR USE WITH SYSTEMONE UNDERCARRIAGE

AN ATTACHMENT

SMCS-4170 **i03211797**

NOTE	PART NUMBER	QTY	PART NAME 1 2 3 4 5 6 (PRODUCT LEVEL)	SEE PAGE
Y	**304-5688**	1	LINK AS-TRACK (SYSTEMONE)	638
	6V-1723	172	BOLT-TRACK (7/8-14X3.42-IN)	
	6V-1725	4	BOLT-TRACK MASTER (7/8-14X5.08-IN)	
	273-8806	172	NUT-TRACK (7/8-14-THD)	
	276-0533	43	SHOE-TRACK	
	240-6673	1	SHOE-TRACK MASTER	
Y-SEPARATE ILLUSTRATION				

<END>

276-0539 TRACK GP–2-REQUIRED, SYSTEMONE

S/N: J8B1-UP

560-MM (22-IN) GROUSER SHOE. SEALED, LUBRICATED, SUPER EXTREME SERVICE

FOR USE WITH SYSTEMONE UNDERCARRIAGE

AN ATTACHMENT

SMCS-4170 **i03201900**

NOTE	PART NUMBER	QTY	PART NAME 1 2 3 4 5 6 (PRODUCT LEVEL)	SEE PAGE
Y	**304-5688**	1	LINK AS-TRACK (SYSTEMONE)	638
	6V-1723	172	BOLT-TRACK (7/8-14X3.42-IN)	
	6V-1725	4	BOLT-TRACK MASTER (7/8-14X5.08-IN)	
	273-8806	172	NUT-TRACK (7/8-14-THD)	
	276-0537	43	SHOE-TRACK	
	295-9962	1	SHOE-TRACK MASTER	
Y-SEPARATE ILLUSTRATION				

<END>

276-0543 TRACK GP–2-REQUIRED, SYSTEMONE

S/N: J8B1-UP

660-MM (26-IN) GROUSER SHOE. SEALED, LUBRICATED, SUPER EXTREME SERVICE

FOR USE WITH SYSTEMONE UNDERCARRIAGE

AN ATTACHMENT

SMCS-4170 **i03201903**

NOTE	PART NUMBER	QTY	PART NAME 1 2 3 4 5 6 (PRODUCT LEVEL)	SEE PAGE
Y	**304-5688**	1	LINK AS-TRACK (SYSTEMONE)	638
	6V-1723	172	BOLT-TRACK (7/8-14X3.42-IN)	
	6V-1725	4	BOLT-TRACK MASTER (7/8-14X5.08-IN)	
	273-8806	172	NUT-TRACK (7/8-14-THD)	
	276-0541	43	SHOE-TRACK	
	296-1373	1	SHOE-TRACK MASTER	
Y-SEPARATE ILLUSTRATION				

<END>

276-0547 TRACK GP–2-REQUIRED, SYSTEMONE

S/N: J8B1-UP

610-MM (24-IN) GROUSER SHOE. SEALED, LUBRICATED, CENTER HOLE, SUPER EXTREME SERVICE

FOR USE WITH SYSTEMONE UNDERCARRIAGE

AN ATTACHMENT

SMCS-4170 **i03211820**

NOTE	PART NUMBER	QTY	PART NAME 1 2 3 4 5 6 (PRODUCT LEVEL)	SEE PAGE
Y	**304-5688**	1	LINK AS-TRACK (SYSTEMONE)	638
	6V-1723	172	BOLT-TRACK (7/8-14X3.42-IN)	
	6V-1725	4	BOLT-TRACK MASTER (7/8-14X5.08-IN)	
	273-8806	172	NUT-TRACK (7/8-14-THD)	
	276-0545	43	SHOE-TRACK	
	296-1372	1	SHOE-TRACK MASTER	
Y-SEPARATE ILLUSTRATION				

<END>

276-0550 TRACK GP–2-REQUIRED, SYSTEMONE

S/N: J8B1-UP

610-MM (24-IN) GROUSER SHOE. SEALED, LUBRICATED, SUPER EXTREME SERVICE

FOR USE WITH SYSTEMONE SEGMENTS & GUARDS

AN ATTACHMENT

SMCS-4170 **i03117444**

NOTE	PART NUMBER	QTY	PART NAME 1 2 3 4 5 6 (PRODUCT LEVEL)	SEE PAGE
Y	**304-5688**	1	LINK AS-TRACK (SYSTEMONE)	638
	6V-1723	172	BOLT-TRACK (7/8-14X3.42-IN)	
	6V-1725	4	BOLT-TRACK MASTER (7/8-14X5.08-IN)	
	273-8806	172	NUT-TRACK (7/8-14-THD)	
	257-6928	43	SHOE-TRACK	
	295-9966	1	SHOE-TRACK MASTER	
Y-SEPARATE ILLUSTRATION				

<END>

276-0554 TRACK GP–2-REQUIRED, SYSTEMONE

S/N: J8B1-UP

710-MM (28-IN) GROUSER SHOE. SEALED, LUBRICATED, SUPER EXTREME SERVICE

FOR USE WITH SYSTEMONE UNDERCARRIAGE

AN ATTACHMENT

SMCS-4170 **i03201942**

NOTE	PART NUMBER	QTY	PART NAME 1 2 3 4 5 6 (PRODUCT LEVEL)	SEE PAGE
Y	**304-5688**	1	LINK AS-TRACK (SYSTEMONE)	638
	6V-1723	172	BOLT-TRACK (7/8-14X3.42-IN)	
	6V-1725	4	BOLT-TRACK MASTER (7/8-14X5.08-IN)	
	273-8806	172	NUT-TRACK (7/8-14-THD)	
	276-0552	43	SHOE-TRACK	
	242-1931	1	SHOE-TRACK MASTER	
Y-SEPARATE ILLUSTRATION				

<END>

286-0732 TRACK GP—2-REQUIRED, SYSTEMONE

S/N: J8B1-UP

965-MM (38-IN) GROUSER SHOE. SEALED, LUBRICATED, EXTREME SERVICE

FOR USE WITH SYSTEMONE UNDERCARRIAGE

AN ATTACHMENT

SMCS-4170 **i03404780**

NOTE	PART NUMBER	QTY	PART NAME 1 2 3 4 5 6 (PRODUCT LEVEL)	SEE PAGE
Y	**304-5688**	1	LINK AS-TRACK (SYSTEMONE)	638
	6V-1723	172	BOLT-TRACK (7/8-14X3.42-IN)	
	6V-1725	4	BOLT-TRACK MASTER (7/8-14X5.08-IN)	
	273-8806	172	NUT-TRACK (7/8-14-THD)	
	267-7504	43	SHOE-TRACK	
	257-6926	1	SHOE-TRACK MASTER	
Y-SEPARATE ILLUSTRATION				

<END>

300-8744 TRACK GP—2-REQUIRED, SYSTEMONE

S/N: J8B1-UP

965-MM (38-IN) GROUSER SHOE. SEALED, LUBRICATED, CENTER HOLE, EXTREME SERVICE

FOR USE WITH SYSTEMONE UNDERCARRIAGE

AN ATTACHMENT

SMCS-4170 **i03432980**

NOTE	PART NUMBER	QTY	PART NAME 1 2 3 4 5 6 (PRODUCT LEVEL)	SEE PAGE
Y	**304-5688**	1	LINK AS-TRACK (SYSTEMONE)	638
	6V-1723	172	BOLT-TRACK (7/8-14X3.42-IN)	
	6V-1725	4	BOLT-TRACK MASTER (7/8-14X5.08-IN)	
	273-8806	172	NUT-TRACK (7/8-14-THD)	
	300-9112	43	SHOE-TRACK	
	300-8743	1	SHOE-TRACK MASTER	
Y-SEPARATE ILLUSTRATION				

<END>

UNDERCARRIAGE

206-6779 UNDERCARRIAGE AR

S/N: J8B1-UP

PART OF 206-6783 GENERAL AR

SMCS-4150 **i03399685**

NOTE	PART NUMBER	QTY	PART NAME 1 2 3 4 5 6 (PRODUCT LEVEL)	SEE PAGE
Y	*220-0211*	1	BAR GP-EQUALIZER	596
Y	*9W-4477*	8	CAP GP-TRACK IDLER	598
Y	*6T-1142*	32	CAP GP-TRACK ROLLER	601
Y	**192-2576**	1	FRAME GP-TELESCOPING RECOIL	604
Y	**111-1729**	2	IDLER GP-TRACK (REAR)	623
Y	**111-1730**	2	IDLER GP-TRACK (FRONT)	624
YR	**196-9946**	8	ROLLER GP-TRACK-DOUBLE FLANGE	646
			S/N: J8B1-733, 990	
YR	**246-0779**	8	ROLLER GP-TRACK-DOUBLE FLANGE (SYSTEMONE)	648
			S/N: J8B734-989, 991-UP	
YR	**196-9947**	8	ROLLER GP-TRACK-SINGLE FLANGE	650
			S/N: J8B1-733, 990	
YR	**246-0775**	8	ROLLER GP-TRACK-SINGLE FLANGE (SYSTEMONE)	652
			S/N: J8B734-989, 991-UP	
Y	*7T-2540*	1	SUSPENSION GP-BOGIE	655
Y	*199-8185*	1	TRACK ADJUSTER & RECOIL GP	663
Y	*8E-7696*	2	TRACK GP	673

R-REMFG PART MAY BE AVAILABLE
Y-SEPARATE ILLUSTRATION

<END>

209-3418 UNDERCARRIAGE AR—NON-SUSPENDED

S/N: J8B1-UP

AN ATTACHMENT

SMCS-4150 **i03406359**

NOTE	PART NUMBER	QTY	PART NAME 1 2 3 4 5 6 (PRODUCT LEVEL)	SEE PAGE
Y	*9W-9206*	4	CAP GP-TRACK IDLER	600
			(FRONT - LH OUTER/RH INNER)	
			(REAR - LH INNER/RH OUTER)	
Y	*9W-9205*	4	CAP GP-TRACK IDLER	599
			(FRONT - LH INNER/RH OUTER)	
			(REAR - LH OUTER/RH INNER)	
Y	*126-4233*	32	CAP GP-TRACK ROLLER	602
Y	*260-7614*	1	FRAME GP-TELESCOPING RECOIL	606
Y	**111-1729**	4	IDLER GP-TRACK	623
YR	**196-9946**	16	ROLLER GP-TRACK-DOUBLE FLANGE	646
			S/N: J8B1-733	
YR	**246-0779**	16	ROLLER GP-TRACK-DOUBLE FLANGE (SYSTEMONE)	648
			S/N: J8B734-UP	
Y	*154-3325*	1	TRACK ADJUSTER & RECOIL GP	661
	2M-3530	4	BOLT (1-1/8-12-THD)	
	3S-1356	4	NUT-FULL (1-1/8-12-THD)	
	7X-0531	8	WASHER-HARD (31X52.5X6-MM THK)	

R-REMFG PART MAY BE AVAILABLE
Y-SEPARATE ILLUSTRATION

<END>

UNDERCARRIAGE

209-3419 UNDERCARRIAGE AR—NON-SUSPENDED

S/N: J8B1-UP
WITH CARRIER ROLLERS
AN ATTACHMENT

SMCS-4150 **i03430201**

NOTE	PART NUMBER	QTY	PART NAME 1 2 3 4 5 6 (PRODUCT LEVEL)	SEE PAGE
Y	*9W-9205*	4	CAP GP-TRACK IDLER	599
			(FRONT - LH INNER/RH OUTER)	
			(REAR - LH OUTER/RH INNER)	
Y	*9W-9206*	4	CAP GP-TRACK IDLER	600
			(FRONT - LH OUTER/RH INNER)	
			(REAR - LH INNER/RH OUTER)	
Y	*6T-1142*	4	CAP GP-TRACK ROLLER (CARRIER ROLLER)	601
Y	*126-4233*	32	CAP GP-TRACK ROLLER	602
Y	*260-7615*	1	FRAME GP-TELESCOPING RECOIL	609
Y	**111-1729**	4	IDLER GP-TRACK	623
YR	**196-9946**	16	ROLLER GP-TRACK-DOUBLE FLANGE	646
			S/N: J8B1-733	
YR	**246-0779**	16	ROLLER GP-TRACK-DOUBLE FLANGE (SYSTEMONE)	648
			S/N: J8B734-UP	
YR	**196-9947**	2	ROLLER GP-TRACK-SINGLE FLANGE	650
			S/N: J8B1-733	
YR	**246-0775**	2	ROLLER GP-TRACK-SINGLE FLANGE (SYSTEMONE)	652
			S/N: J8B734-UP	
Y	*154-3325*	1	TRACK ADJUSTER & RECOIL GP	661
	2M-3530	4	BOLT (1-1/8-12-THD)	
	3S-1356	4	NUT-FULL (1-1/8-12-THD)	
	7X-0531	8	WASHER-HARD (31X52.5X6-MM THK)	

R-REMFG PART MAY BE AVAILABLE
Y-SEPARATE ILLUSTRATION

<END>

310-2848 UNDERCARRIAGE AR—SYSTEMONE

S/N: J8B1-UP
CANNOT BE USED WITH STANDARD IDLERS, EU SOUND AR, NON-SUSPENDED UNDERCARRIAGE, WASTE HANDLING AR, LOW GROUND PRESSURE AR
AN ATTACHMENT

SMCS-4150 **i03399720**

NOTE	PART NUMBER	QTY	PART NAME 1 2 3 4 5 6 (PRODUCT LEVEL)	SEE PAGE
Y	*220-0211*	1	BAR GP-EQUALIZER	596
Y	*9W-4477*	8	CAP GP-TRACK IDLER	598
Y	*6T-1142*	32	CAP GP-TRACK ROLLER	601
Y	*310-2847*	1	FRAME GP-TELESCOPING RECOIL	612
Y	*310-2910*	1	GUARD GP-IDLER (SYSTEMONE)	621
Y	**308-4364**	2	IDLER GP-TRACK (SYSTEMONE, FRONT)	629
Y	**308-4365**	2	IDLER GP-TRACK (SYSTEMONE, REAR)	630
YR	**246-0775**	16	ROLLER GP-TRACK-SINGLE FLANGE (SYSTEMONE)	652
Y	*314-5463*	2	SEGMENT GP-SPROCKET	487
Y	*310-2924*	1	SUSPENSION GP-BOGIE	659
Y	*310-2920*	1	TRACK ADJUSTER & RECOIL GP	665
	318-6248	2	HUB-SPROCKET	

R-REMFG PART MAY BE AVAILABLE
Y-SEPARATE ILLUSTRATION

<END>

UNDERCARRIAGE

310-2849 UNDERCARRIAGE AR—SYSTEMONE

S/N: J8B1-UP

WITH STANDARD IDLERS

FOR USE WITH EU SOUND AR. CANNOT BE USED WITH SYSTEMONE IDLERS, NON-SUSPENDED UNDERCARRIAGE, WASTE HANDLING AR, LOW GROUND PRESSURE AR AN ATTACHMENT

SMCS-4150 **i03399740**

NOTE	PART NUMBER	QTY	PART NAME 1 2 3 4 5 6 (PRODUCT LEVEL)	SEE PAGE
Y	*220-0211*	1	BAR GP-EQUALIZER	596
Y	*9W-4477*	8	CAP GP-TRACK IDLER	598
Y	*6T-1142*	32	CAP GP-TRACK ROLLER	601
Y	*310-2851*	1	FRAME GP-TELESCOPING RECOIL	615
Y	**111-1729**	2	IDLER GP-TRACK (REAR)	623
Y	**111-1730**	2	IDLER GP-TRACK (FRONT)	624
YR	**246-0775**	16	ROLLER GP-TRACK-SINGLE FLANGE (SYSTEMONE)	652
Y	*314-5463*	2	SEGMENT GP-SPROCKET	487
Y	*310-2924*	1	SUSPENSION GP-BOGIE	659
Y	*310-2920*	1	TRACK ADJUSTER & RECOIL GP	665
	8T-9398	24	BOLT (3/4-10X1.75-IN)	
	318-6248	2	HUB-SPROCKET	
	310-2909	8	PLATE	
	8T-4994	24	WASHER-HARD (20X36.5X3.5-MM THK)	

R-REMFG PART MAY BE AVAILABLE
Y-SEPARATE ILLUSTRATION

<END>

UNDERCARRIAGE

310-2850 UNDERCARRIAGE AR

S/N: J8B1-UP

PART OF 206-6783 GENERAL AR

SMCS-4150 **i03400666**

NOTE	REF NO	GRAPHIC REF	PART NUMBER	QTY	PART NAME 1 2 3 4 5 6 (PRODUCT LEVEL)	SEE PAGE
Y	1	1	*6T-1142*	32	CAP GP-TRACK ROLLER	601
Y	2	1	*7T-2540*	1	SUSPENSION GP-BOGIE	655
Y	3	1	*8E-7696*	2	TRACK GP	673
Y	4	1	*9W-4477*	8	CAP GP-TRACK IDLER	598
Y	5	1	**111-1729**	2	IDLER GP-TRACK (REAR)	623
Y	6	1	**111-1730**	2	IDLER GP-TRACK (FRONT)	624
Y	7	1	*220-0211*	1	BAR GP-EQUALIZER	596
YR	8	1	**246-0775**	8	ROLLER GP-TRACK-SINGLE FLANGE (SYSTEMONE)	652
YR	9	1	**246-0779**	8	ROLLER GP-TRACK-DOUBLE FLANGE (SYSTEMONE)	648
Y	10	1	*310-2851*	1	FRAME GP-TELESCOPING RECOIL	615
Y	11	1	*310-2920*	1	TRACK ADJUSTER & RECOIL GP	665

R-REMFG PART MAY BE AVAILABLE
Y-SEPARATE ILLUSTRATION

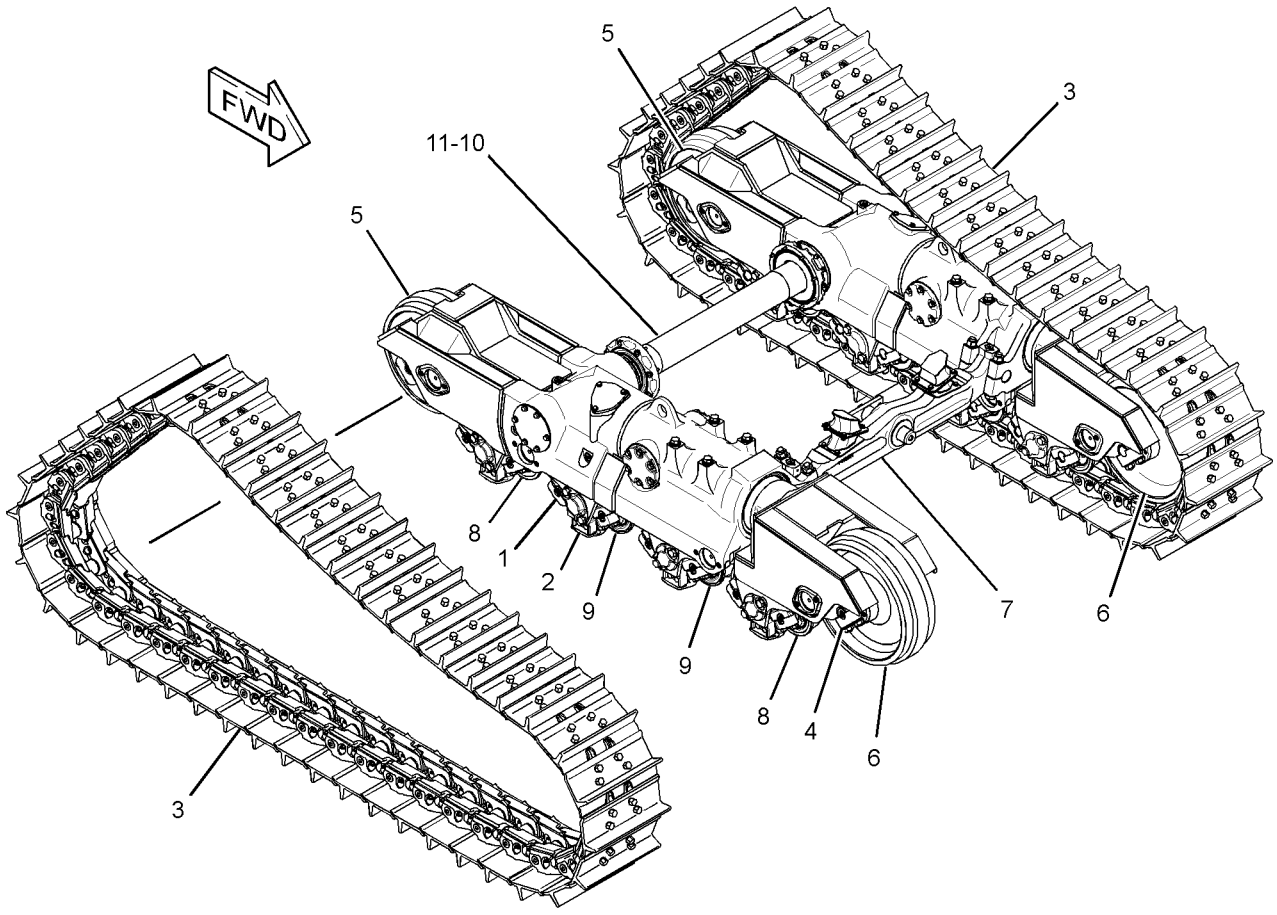

GRAPHIC #1 **<END>** g01560360

183-8417 ACTUATOR GP-PUMP—STEERING

S/N: J8B1-UP

PART OF 183-8430 ACTUATOR GP-PUMP

ALSO AN ATTACHMENT

SMCS-5078 **i03193524**

NOTE	REF NO	GRAPHIC REF	PART NUMBER	QTY	PART NAME 1 2 3 4 5 6 (PRODUCT LEVEL)	SEE PAGE
	1	1	**183-8427**	2	SPRING	
	2	1	**183-8428**	2	SPRING	
	3	1	**183-8429**	2	RING	
	4	1	**095-0942**	2	RING-RETAINING	
	5	1	**161-6149**	1	SEAL-O-RING	

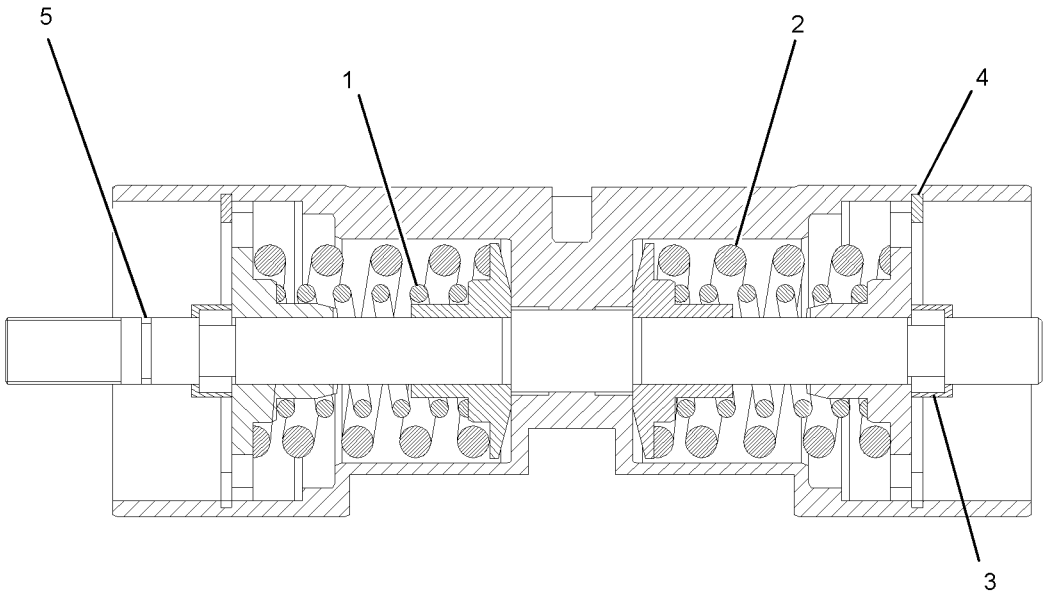

GRAPHIC #1 **<END>** g01106838

STEERING AND BRAKING SYSTEM

223-2115 CONTROL GP-PARKING BRAKE

S/N: J8B1-UP

PART OF 222-1546 CONTROL GP-HANDLE

SMCS-4267, 4284 **i02239810**

NOTE	REF NO	GRAPHIC REF	PART NUMBER	QTY	PART NAME 1 2 3 4 5 6 (PRODUCT LEVEL)	SEE PAGE
	1	1	**2R-5001**	1	DOWEL	
	2	1	**3B-4605**	2	PIN-COTTER	
	3	1	**7H-9737**	1	PIN-COTTER	
	4	1	**9S-1305**	2	PIN-CLEVIS	
	5	1	**216-0381**	1	PLATE AS	
	6	1	**223-2113**	1	BLOCK	
	7	1	**225-3194**	1	SHAFT	
	8	1	**225-3201**	1	SHAFT	
	9	1	**242-5206**	1	SPACER (6.4X12.5X0.76-MM THK)	
	10	1	**1W-6448**	1	DOWEL	
	11	1	**4V-6981**	2	SCREW-BUTTON HEAD (1/4-20X0.75-IN)	
	12	1	**6V-8185**	2	NUT (1/4-20-THD)	
	13	1	**8T-0328**	2	WASHER-HARD (5.5X10X1-MM THK)	
	14	1	**8T-4205**	1	WASHER-HARD (7.2X14.5X2-MM THK)	

223-2115 CONTROL GP-PARKING BRAKE *(contd.)* **i02239810**

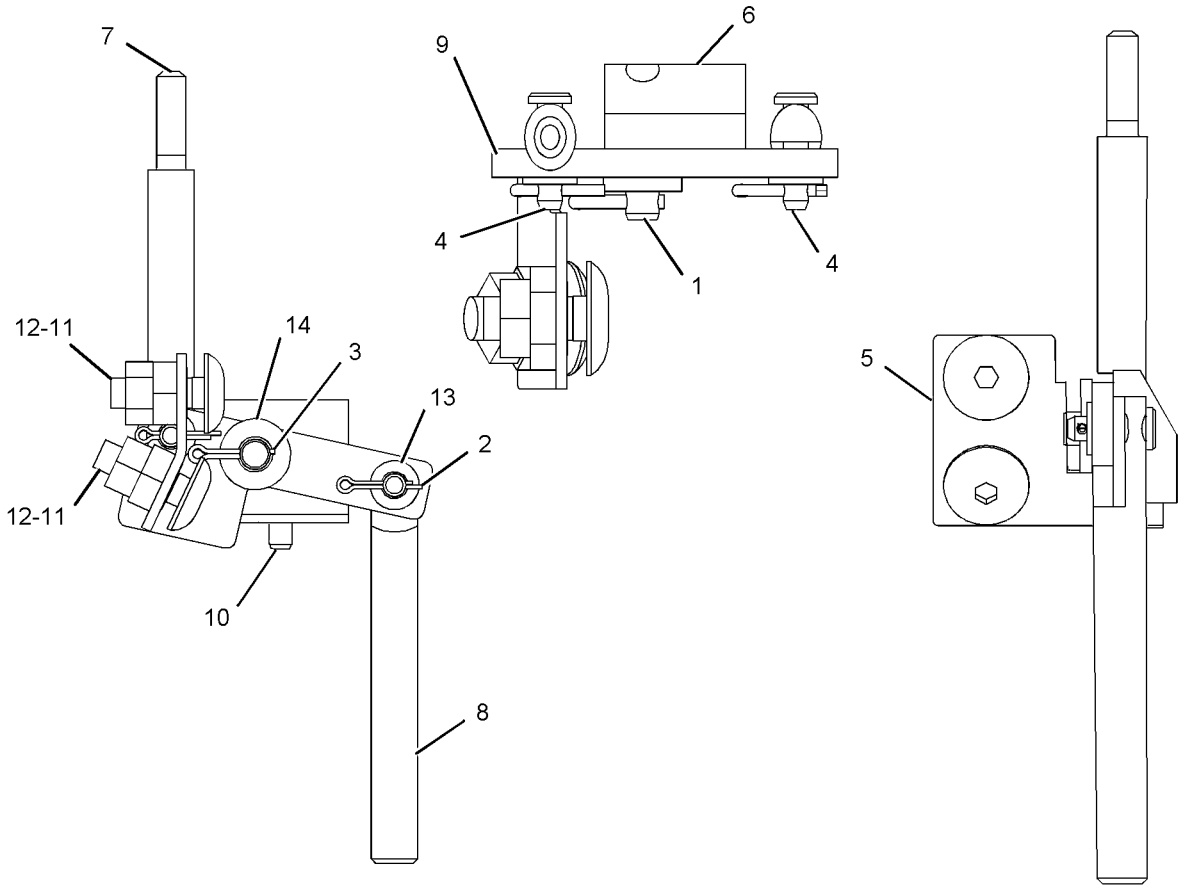

GRAPHIC #1 **<END>** g01129397

211-6053 FILTER GP-OIL–STEERING

S/N: J8B1-UP
PART OF 208-9525 LINES GP-STEERING
TYPE 1

SMCS-5068 **i03430222**

NOTE	REF NO	GRAPHIC REF	PART NUMBER	QTY	PART NAME 1 2 3 4 5 6 (PRODUCT LEVEL)	SEE PAGE
	1	1	**6V-0484**	1	ADAPTER-O-RING	
	2	1	**8C-3451**	1	CAP-DUST	
		1	**1G-8878**	1	FILTER-OIL (ADVANCED EFFICIENCY)	
					–OR–	
	3	1	**102-2828**	1	FILTER-OIL (ULTRA HIGH EFFICIENCY)	
					–OR–	
		1	**156-0214**	1	FILTER-OIL (FIRE RESISTANT FLUID)	
	4	1	**253-2673**	1	SWITCH AS-PRESSURE (STEERING CHARGE FILTER BYPASS)	
		1	**102-8802**	1	KIT-RECEPTACLE (2-PIN)	
					(INCLUDES RECEPTACLE AS & WEDGE)	
		1	**186-3735**	2	PIN-CONNECTOR (16-GA TO 18-GA)	
E		1	**9X-1813**		SLEEVE (14-CM)	
	5	1	**183-7264**	1	VALVE AS-FLUID SAMPLING (STEERING MAIN PUMP OIL)	
	6	1	**205-3079**	1	ADAPTER	
Y	7	1	**224-4535**	1	SENSOR GP-PRESSURE (STEERING CHARGE)	350
	8	1	**1J-9671**	1	SEAL-O-RING	
	9	1	**3J-1907**	4	SEAL-O-RING	
	10	1	**5F-9144**	1	SEAL-O-RING	

E-ORDER BY THE CENTIMETER
Y-SEPARATE ILLUSTRATION

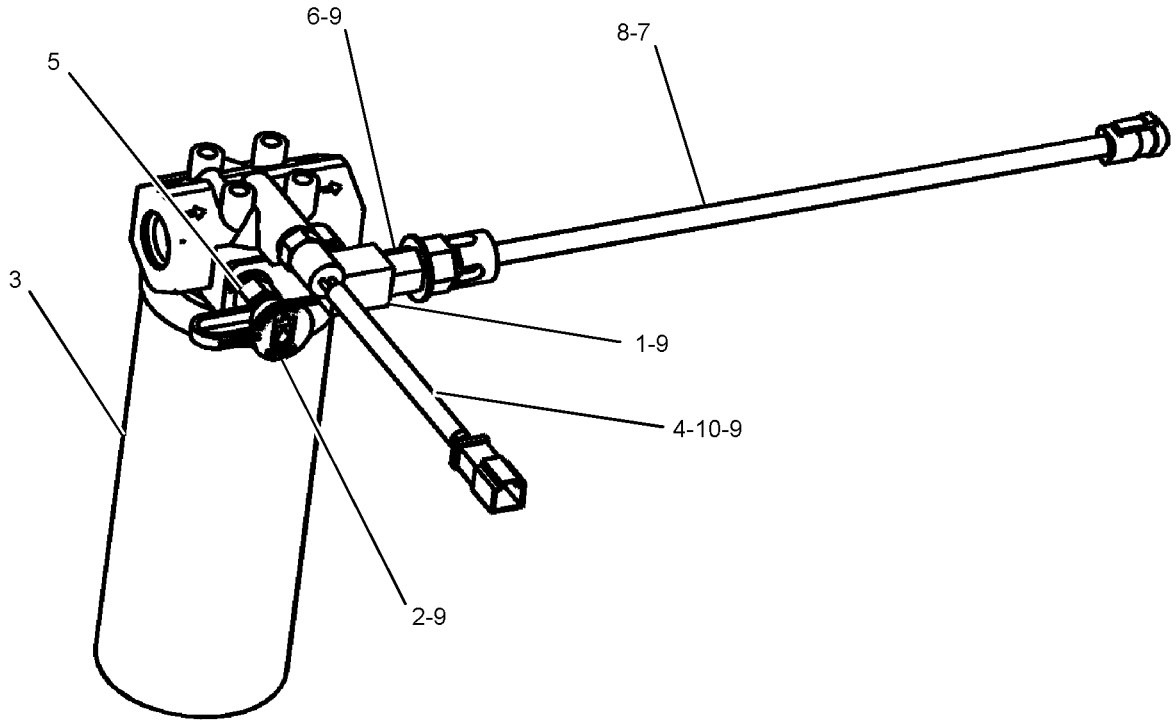

GRAPHIC #1 **<END>** g01021923

211-6053 FILTER GP-OIL–STEERING

S/N: J8B1-UP
PART OF 208-9525 LINES GP-STEERING
TYPE 2

SMCS-5068 **i03430223**

NOTE	REF NO	GRAPHIC REF	PART NUMBER	QTY	PART NAME 1 2 3 4 5 6 (PRODUCT LEVEL)	SEE PAGE
	1	1	**6V-0484**	1	ADAPTER-O-RING	
	2	1	**8C-3451**	1	CAP-DUST	
			1G-8878	1	FILTER-OIL (ADVANCED EFFICIENCY)	
					–OR–	
	3	1	**102-2828**	1	FILTER-OIL (ULTRA HIGH EFFICIENCY)	
					–OR–	
			156-0214	1	FILTER-OIL (FIRE RESISTANT FLUID)	
	4	1	**253-2673**	1	SWITCH AS-PRESSURE (STEERING CHARGE FILTER BYPASS)	
		1	**3J-1907**	1	SEAL-O-RING	
		1	**5F-9144**	1	SEAL-O-RING	
		1	**102-8802**	1	KIT-RECEPTACLE (2-PIN)	
					(INCLUDES RECEPTACLE AS & WEDGE)	
		1	**186-3735**	2	PIN-CONNECTOR (16-GA TO 18-GA)	
E		1	**9X-1813**		SLEEVE (14-CM)	
	5	1	**183-7264**	1	VALVE AS-FLUID SAMPLING (STEERING MAIN PUMP OIL)	
	6	1	**205-3079**	1	ADAPTER	
	8	1	**1J-9671**	1	SEAL-O-RING	
	9	1	**3J-1907**	4	SEAL-O-RING	
	10	1	**5F-9144**	1	SEAL-O-RING	
C	11	1	**284-2728**	1	SENSOR GP-PRESSURE (STEERING CHARGE)	
C	12	1	**249-5293**	1	HARNESS AS-SENSOR	

C-CHANGE FROM PREVIOUS TYPE
E-ORDER BY THE CENTIMETER

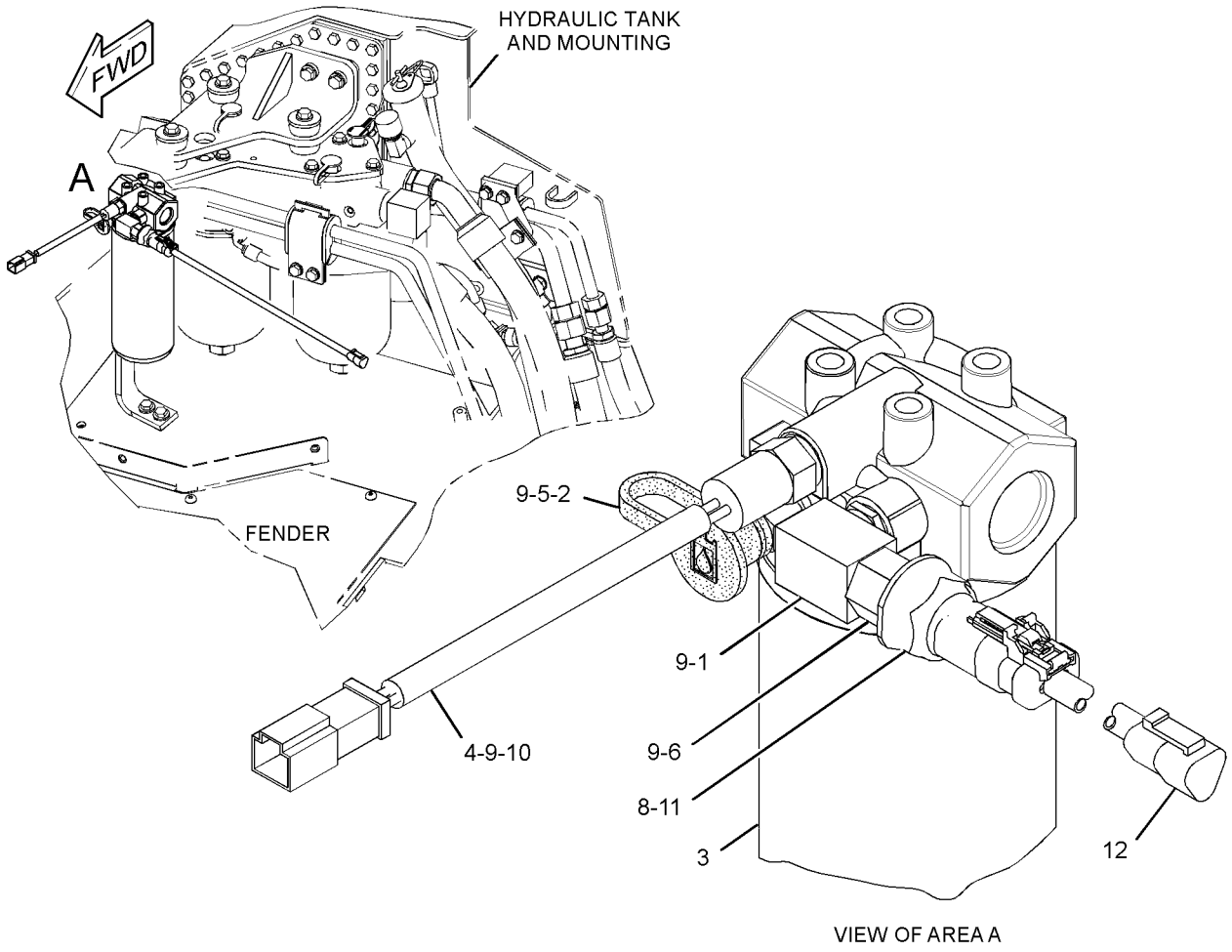

GRAPHIC #1 **<END>** g01440500

253-7529 HEAD GP-PUMP—STEERING

S/N: J8B1-UP

PART OF 205-1823 PUMP GP-PISTON

ALSO AN ATTACHMENT

SMCS-5070 **i03430336**

NOTE	REF NO	GRAPHIC REF	PART NUMBER	QTY	PART NAME 1 2 3 4 5 6 (PRODUCT LEVEL)	SEE PAGE
	1	1	**178-4164**	2	VALVE GP-RELIEF (CROSSOVER)	
					(EACH INCLUDES)	
		1	**123-7556**	1	CAP	
		1	**178-4171**	1	KIT-SEAL (RELIEF VALVE) (PUMP HEAD)	
					(INCLUDES O-RING SEALS)	
Y	2	1	**183-8409**	1	VALVE GP-RELIEF (CHARGE PRESSURE)	723
	3	1	**256-1278**	1	HEAD	
	4	1	**183-8416**	1	BUSHING	
	5	1	**119-7845**	1	SEAL-O-RING	
M	6	1	**123-2017**	1	PLUG	
	7	1	**134-7489**	4	PLUG	
	8	1	**9T-3929**	1	PLUG AS	
		1	**6E-5479**	1	SEAL	
	9	1	**144-9101**	1	PLUG-BREAK OFF	
	10	1	**161-6149**	2	SEAL-O-RING	
M	11	1	**3E-8008**	4	BOLT-SOCKET HEAD (M16X2X90-MM)	
	12	1	**3J-7354**	2	SEAL-O-RING	
	13	1	**6E-4382**	1	BUSHING	
	14	1	**6E-4383**	1	BUSHING	
Y	15	1	**6E-4392**	1	VALVE GP-PUMP CONTROL (PRESSURE COMPENSATOR)	721
	16	1	**6V-5586**	4	SEAL-O-RING	
	17	1	**9S-8002**	2	PLUG-O-RING	

M-METRIC PART
Y-SEPARATE ILLUSTRATION

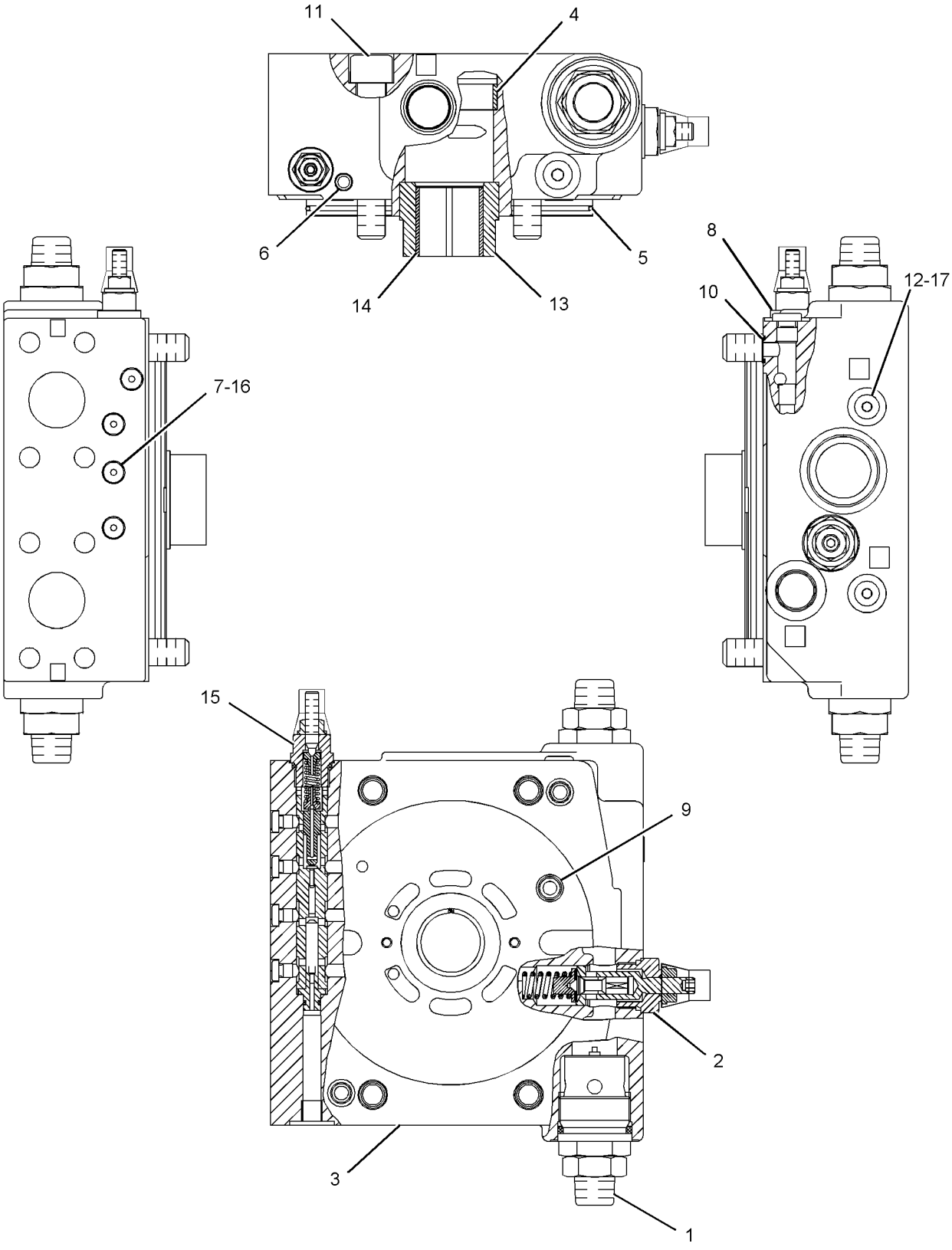

GRAPHIC #1 **<END>** g01106994

STEERING AND BRAKING SYSTEM

208-9525 LINES GP-STEERING

S/N: J8B1-UP

PART OF 206-6782 HYDRAULIC AR

SMCS-4104, 4133, 4304 **i03430280**

NOTE	REF NO	GRAPHIC REF	PART NUMBER	QTY	PART NAME 1 2 3 4 5 6 (PRODUCT LEVEL)	SEE PAGE
	1	2	**6V-0852**	4	CAP-DUST	
I	2	2	**166-9159**	1	HOSE AS	
I	3	1	**208-9751**	1	HOSE AS	
I	4	1	**208-9752**	1	HOSE AS	
I	5	1	**208-9753**	1	HOSE AS	
I	6	2	**208-9754**	1	HOSE AS	
I	7	2	**208-9756**	1	HOSE AS	
I	8	2	**208-9757**	1	HOSE AS	
I	9	2	**208-9758**	1	HOSE AS	
	10	1	**208-9759**	1	TUBE AS	
	11	1	**208-9760**	1	TUBE AS	
I	12	2	**208-9934**	1	HOSE AS	
Y	13	1	**211-6053**	1	FILTER GP-OIL (HYDRAULIC) (STEERING)	698
I	14	1	**295-5502**	1	HOSE AS	
	15	2	*148-8315*	1	CONNECTOR AS	
		2	**6V-8642**	1	CONNECTOR	
		2	**2M-9780**	1	SEAL-O-RING	
		2	**7J-9108**	1	SEAL-O-RING	
	16	2	*148-8324*	1	CONNECTOR AS	
		2	**6V-9874**	1	CONNECTOR	
		2	**3K-0360**	1	SEAL-O-RING	
		2	**6V-9746**	1	SEAL-O-RING	
	17	2	*148-8335*	1	CONNECTOR AS	
		2	**6V-8635**	1	CONNECTOR	
		2	**5K-9090**	1	SEAL-O-RING	
		2	**7M-8485**	1	SEAL-O-RING	
	18	2	*148-8345*	1	CONNECTOR AS	
		2	**6V-8638**	1	CONNECTOR	
		2	**2M-9780**	1	SEAL-O-RING	
		2	**6V-8398**	1	SEAL-O-RING	
	19	1,2	*148-8347*	5	ELBOW AS	
					(EACH INCLUDES)	
		1,2	**6V-9007**	1	ELBOW	
		1,2	**3D-2824**	1	SEAL-O-RING	
		1,2	**6V-9746**	1	SEAL-O-RING	
	20	2	*148-8357*	1	ELBOW AS	
		2	**6V-9008**	1	ELBOW	
		2	**5K-9090**	1	SEAL-O-RING	
		2	**7M-8485**	1	SEAL-O-RING	
	21	2	*148-8449*	1	TEE AS-SWIVEL	
		2	**6V-9839**	1	TEE-SWIVEL	
		2	**6V-9746**	2	SEAL-O-RING	
	22	2	*150-3035*	1	ELBOW AS	
		2	**8T-1718**	1	ELBOW	
		2	**6V-9746**	1	SEAL-O-RING	
	23	2	*153-6252*	1	CONNECTOR AS	
		2	**9X-8408**	1	CONNECTOR	
		2	**6V-8398**	1	SEAL-O-RING	
		2	**7M-8485**	1	SEAL-O-RING	
	24	2	*156-4283*	2	CONNECTOR AS	
					(EACH INCLUDES)	
		2	**8T-7926**	1	CONNECTOR	
		2	**6K-6307**	1	SEAL-O-RING	
		2	**8T-0315**	1	SEAL-O-RING	
	25	2	*164-9904*	1	TEE AS	
		2	**122-9088**	1	TEE	

208-9525 **LINES GP-STEERING** *(contd.)* **i03430280**

NOTE	REF NO	GRAPHIC REF	PART NUMBER	QTY	PART NAME 1 2 3 4 5 6 (PRODUCT LEVEL)	SEE PAGE
		2	**2M-9780**	1	SEAL-O-RING	
		2	**6V-9746**	2	SEAL-O-RING	
M	26	1	**180-3998**	2	STUD (M10X1.5X55-MM)	
	27	1	**1P-3704**	4	SEAL-RECTANGULAR	
	28	2	**1P-5767**	8	FLANGE-HALF	
	29	1	**3G-8054**	2	CLIP (TAB)	
	30	1	**3G-8057**	2	CLIP (SLOT)	
	31	2	**3J-1907**	4	SEAL-O-RING	
	32	1	**6V-0974**	2	GROMMET	
	33	2	**6V-3965**	4	FITTING (QUICK DISCONNECT)	
	34	1	**6V-9746**	2	SEAL-O-RING	
	35	1	**8T-1895**	1	CLIP (SLOT)	
	36	1	**8T-1896**	1	CLIP (TAB)	
	37	1	**8T-4121**	9	WASHER-HARD (11X21X2.5-MM THK)	
M	38	1	**8T-4133**	2	NUT (M10X1.5-THD)	
M	39	1	**8T-4136**	3	BOLT (M10X1.5X25-MM)	
M	40	2	**8T-4194**	16	BOLT (M12X1.75X50-MM)	
M	41	1	**8T-4195**	4	BOLT (M10X1.5X30-MM)	
	42	2	**8T-4223**	16	WASHER-HARD (13.5X25.5X3-MM THK)	

I-REFER TO HYDRAULIC INFORMATION SYSTEM
M-METRIC PART
Y-SEPARATE ILLUSTRATION

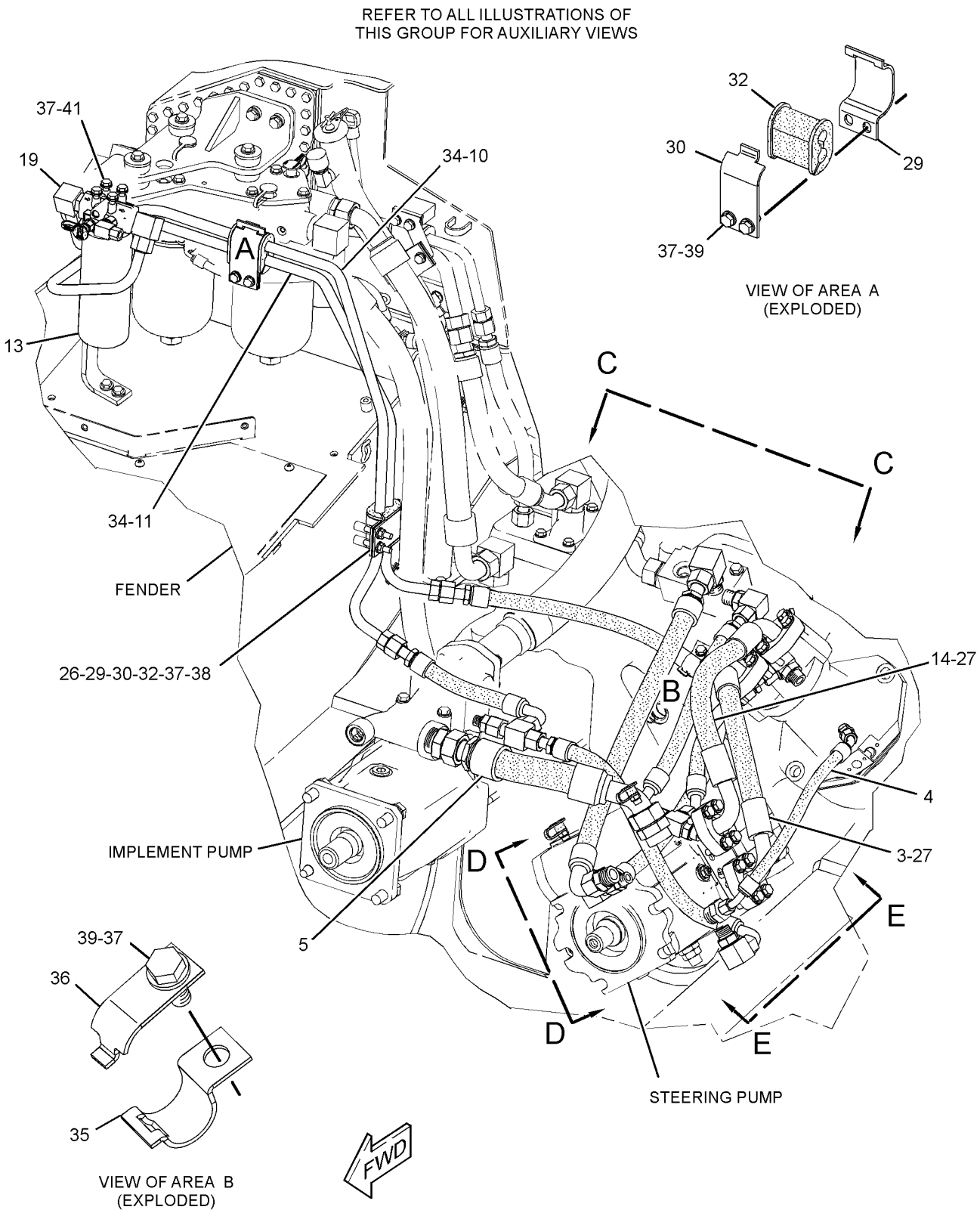

GRAPHIC #1

g01438571

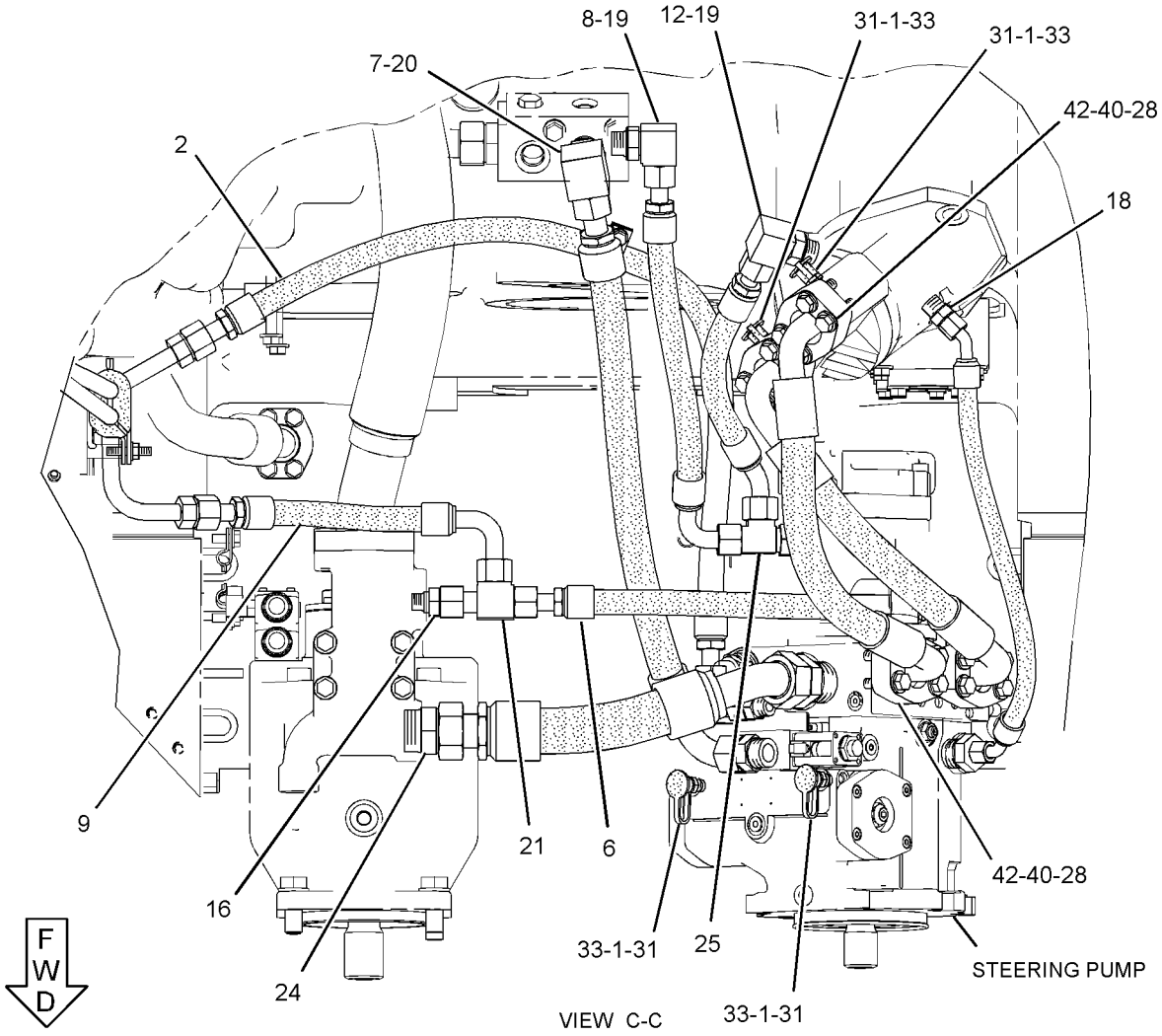

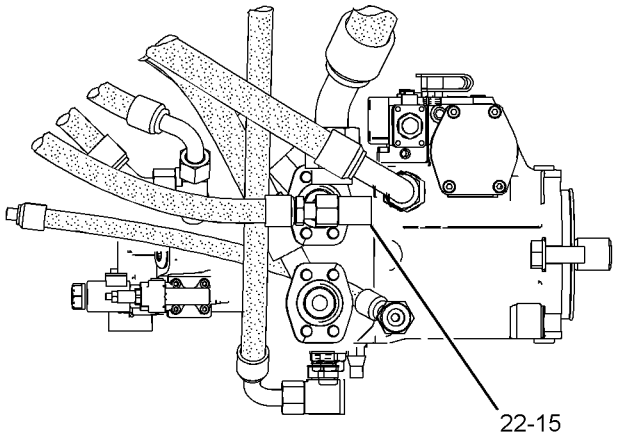

VIEW D-D

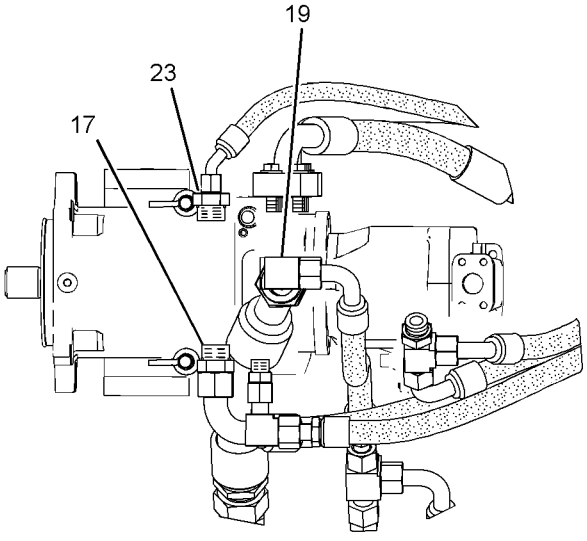

VIEW E-E

GRAPHIC #2 **<END>** g01438620

162-5357 MANIFOLD & VALVE GP—SECONDARY BRAKE

S/N: J8B1-UP

PART OF 201-7274 VALVE GP-STEERING & BRAKE CONT

SMCS-3206, 5479 **i02990078**

NOTE	REF NO	GRAPHIC REF	PART NUMBER	QTY	PART NAME 1 2 3 4 5 6 (PRODUCT LEVEL)	SEE PAGE
	1	1	**137-8794**	1	SPOOL AS	
	1A	1	**5L-4758**	1	SEAL-O-RING	
	1B	1	**137-8793**	1	SPRING	
	1C	1	**3D-7943**	1	RING-RETAINING	
	2	1	**148-8410**	1	PLUG AS	
	3	1	**162-5358**	1	MANIFOLD	
Y	4	1	**174-4909**	1	VALVE GP-SOLENOID (PILOT)	725
	5	1	**1P-1744**	1	DOWEL	

Y-SEPARATE ILLUSTRATION

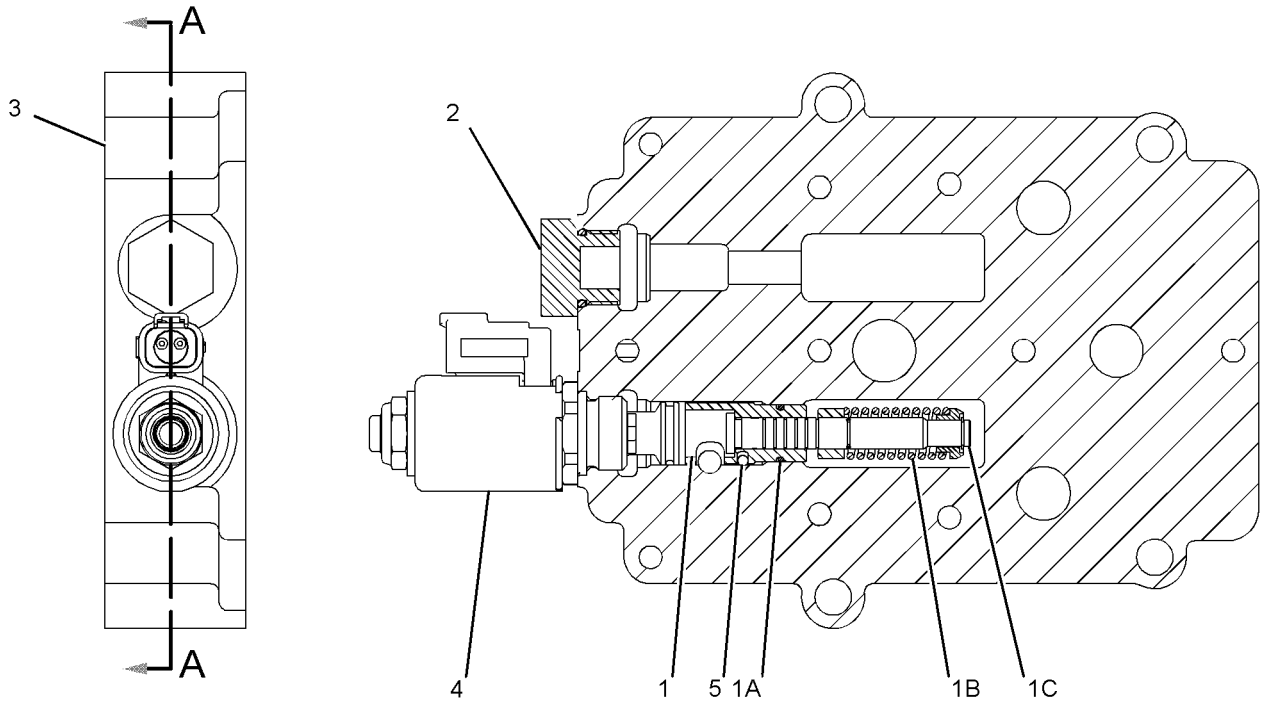

SECTION A-A

GRAPHIC #1 **<END>** g01129384

175-4972 MANIFOLD & VALVE GP–PARKING, SECONDARY BRAKE

S/N: J8B1-UP

PART OF 201-7274 VALVE GP-STEERING & BRAKE CONT

SMCS-3206, 5479 **i02800968**

NOTE	REF NO	GRAPHIC REF	PART NUMBER	QTY	PART NAME 1 2 3 4 5 6 (PRODUCT LEVEL)	SEE PAGE
	1	1	**132-9455**	1	MANIFOLD	
Y	2	1	**172-2392**	2	VALVE GP-SOLENOID (PARKING, SECONDARY BRAKE)	724

Y-SEPARATE ILLUSTRATION

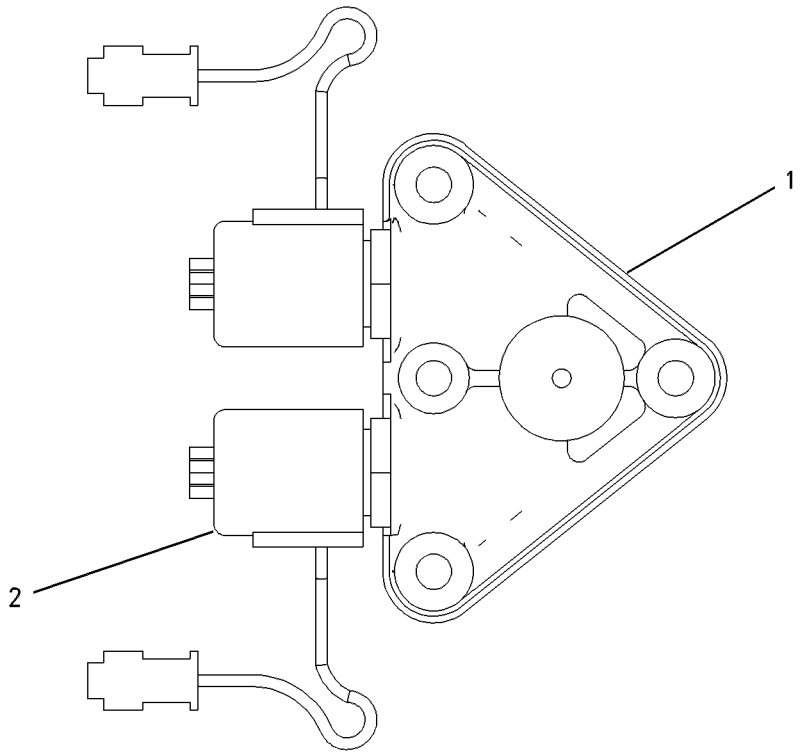

GRAPHIC #1 **<END>** g00653425

252-5127 MOTOR GP-PISTON–STEERING*R

S/N: J8B1-UP

PART OF 206-6782 HYDRAULIC AR

SMCS-5058 **i02235281**

NOTE	REF NO	GRAPHIC REF	PART NUMBER	QTY	PART NAME 1 2 3 4 5 6 (PRODUCT LEVEL)	SEE PAGE
Y	1	1	**252-9202**	1	ROTATING GP-MOTOR	714
	2	1	**9S-8006**	1	PLUG-O RING	
	3	1	**2M-9780**	1	SEAL-O-RING	
	4	1	**6V-1197**	1	SEAL-O-RING	
	5	1	**8T-4231**	1	DOWEL	
M	6	1	**8T-3957**	6	BOLT-SOCKET HEAD (M12X1.75X30-MM)	
	7	1	**252-9203**	1	HEAD	

M-METRIC PART
Y-SEPARATE ILLUSTRATION

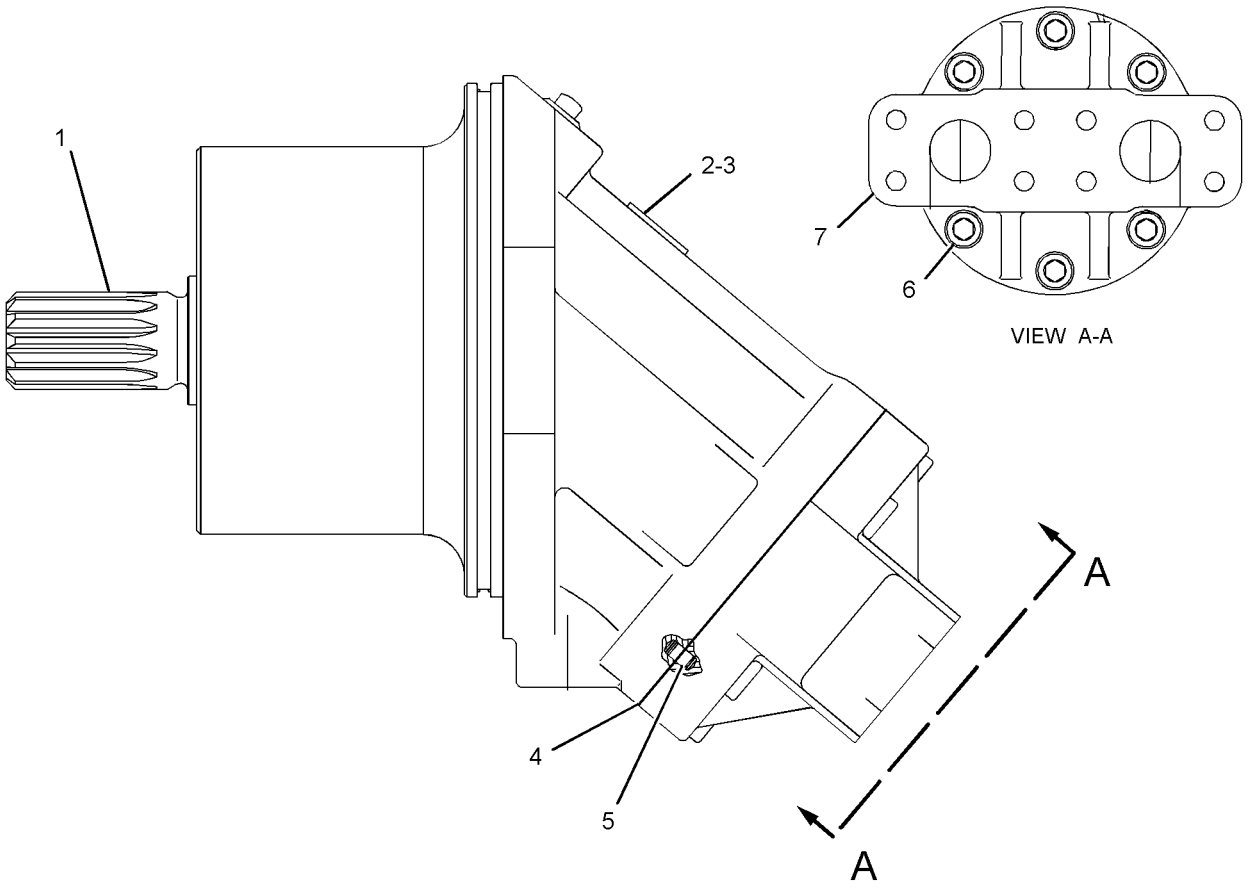

GRAPHIC #1 **<END>** g01107550

253-7530 PUMP GP-CHARGE—STEERING

S/N: J8B1-UP

PART OF 205-1823 PUMP GP-PISTON

ALSO AN ATTACHMENT

SMCS-3204 **i03206902**

NOTE	REF NO	GRAPHIC REF	PART NUMBER	QTY	PART NAME 1 2 3 4 5 6 (PRODUCT LEVEL)	SEE PAGE
	1	1	**8C-5237**	2	SEAL-O-RING	
	2	1	**144-9088**	1	PLATE-WEAR	
	3	1	**183-8408**	1	RING-RETAINING	
	4	1	**296-1499**	1	SHAFT-DRIVE	
	5	1	**296-1498**	1	KEY (SHAFT)	
M	6	1	**8T-0273**	4	BOLT-SOCKET HEAD (M12X1.75X40-MM)	
	7	1	**183-8416**	1	BUSHING	
	8	1	**246-5804**	2	PLUG	
	9	1	**3K-0715**	1	SEAL-O-RING	

M-METRIC PART

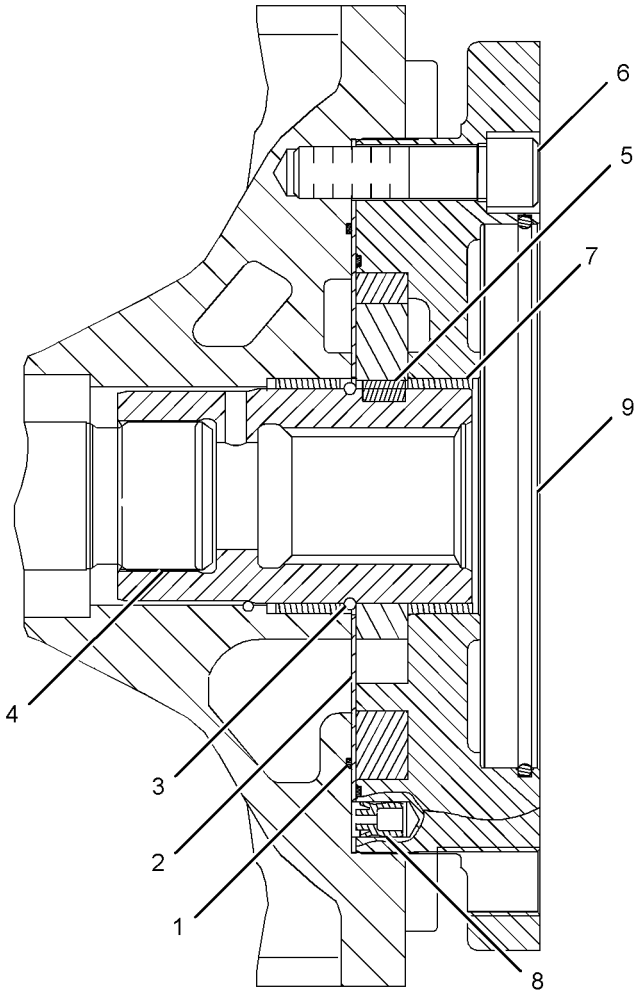

GRAPHIC #1 **<END>** g01107311

205-1823 PUMP GP-PISTON—STEERING*R

S/N: J8B1-UP

PART OF 212-0271, 319-3594 PUMP GP-PISTON

ALSO AN ATTACHMENT

SMCS-5070 **i03206828**

NOTE	REF NO	GRAPHIC REF	PART NUMBER	QTY	PART NAME 1 2 3 4 5 6 (PRODUCT LEVEL)	SEE PAGE
Y	1	1	**253-7531**	1	VALVE GP-PUMP CONTROL (PRESSURE, FLOW COMPENSATOR) (STEERING)	722
Y	2	1	**253-7530**	1	PUMP GP-CHARGE (STEERING)	711
Y	3	1	**253-7529**	1	HEAD GP-PUMP (STEERING)	701
Y	4	1	**183-8430**	1	ACTUATOR GP-PUMP (STEERING)	730
Y	5	1	**256-0313**	1	ROTATING GP-PUMP (STEERING)	716
	6	1	**183-8454**	1	HOUSING	
	7	1	**096-6095**	1	PLUG	
	8	1	**123-7582**	1	PIN-THREADED	
	9	1	**9T-3929**	2	PLUG AS	
					(EACH INCLUDES)	
		1	**6E-5479**	1	SEAL	
	10	1	**9T-3928**	2	PLUG AS	
					(EACH INCLUDES)	
		1	**187-8001**	1	SEAL	
	11	1	**9S-8002**	2	PLUG-O-RING	
	12	1	**3J-1907**	4	SEAL-O-RING	
	13	1	**6E-4350**	1	PIN	
	14	1	**6E-4351**	2	PIN	
	15	1	**6E-4352**	1	PLUG-ORIFICE	
	16	1	**6E-4353**	1	CONNECTOR	
M	17	1	**6E-4385**	1	LOCKNUT (M12X1.5-THD)	
	18	1	**6E-4614**	2	PIN	
	19	1	**6V-5326**	1	SEAL-O-RING	
	20	1	**9S-8006**	1	PLUG-O-RING	
	21	1	**7M-8485**	1	SEAL-O-RING	
	22	1	**8C-5193**	1	SEAL-O-RING	
	23	1	**2M-9780**	1	SEAL-O-RING	
	24	1	**9S-8004**	4	PLUG-O-RING	
	25	1	**3J-7354**	2	SEAL-O-RING	
	26	1	**9S-9334**	1	PLUG-O-RING	

M-METRIC PART
Y-SEPARATE ILLUSTRATION

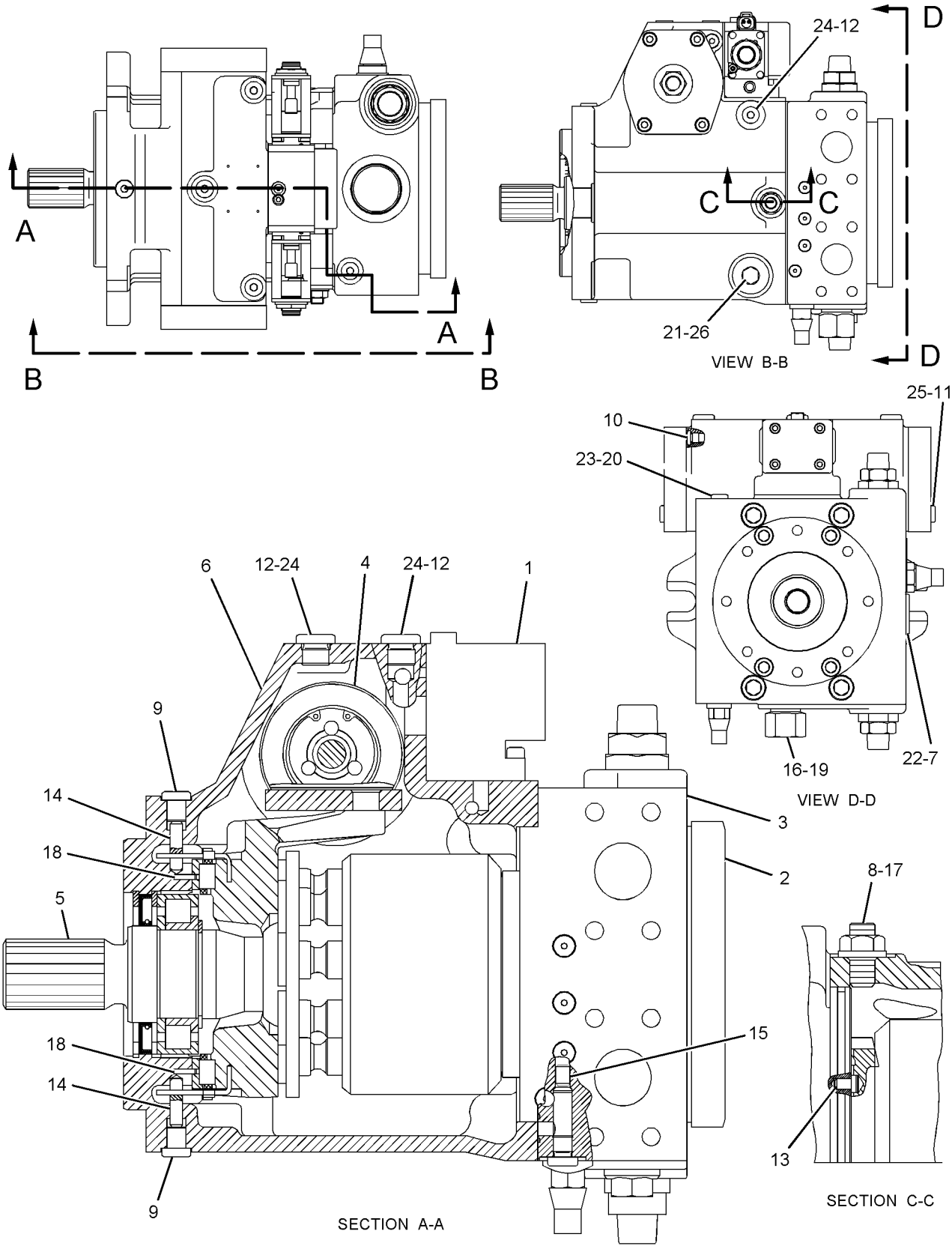

GRAPHIC #1 **<END>** g01107743

STEERING AND BRAKING SYSTEM

252-9202 ROTATING GP-MOTOR—STEERING

S/N: J8B1-UP

PART OF 252-5127 MOTOR GP-PISTON

SMCS-5058 **i02235301**

NOTE	REF NO	GRAPHIC REF	PART NUMBER	QTY	PART NAME 1 2 3 4 5 6 (PRODUCT LEVEL)	SEE PAGE
	1	1	**252-9204**	1	SHAFT-MOTOR	
	2	1	**123-5748**	1	SEAL-SHAFT	
	3	1	**9T-1637**	1	COVER-FRONT	
	4	1	**3E-4334**	1	RING-RETAINING	
	5	1	**5D-5958**	1	SEAL-O-RING	
B	6	1	**9T-1579**	1	SHIM (0.3-MM THK)	
B	7	1	**9T-1576**	2	SHIM (0.1-MM THK)	
M	8	1	**113-4420**	7	SCREW (M6X20-MM)	
	9	1	**6E-4096**	1	BARREL	
	10	1	**171-3054**	1	PIN-CENTER	
	11	1	**171-3061**	1	SPRING	
B	12	1	**171-3055**	1	SHIM (4-MM THK)	
B	13	1	**171-3057**	1	SHIM (3.9-MM THK)	
B	14	1	**171-3058**	1	SHIM (3.8-MM THK)	
B	15	1	**171-3059**	1	SHIM (3.7-MM THK)	
B	16	1	**171-3060**	1	SHIM (3.6-MM THK)	
	17	1	**6E-4098**	1	DISC	
Y	18	1	**119-6114**	1	VALVE GP-FLUSHING	720
	19	1	**165-6970**	7	PISTON AS	
					(EACH INCLUDES)	
		1	**6E-4626**	2	RING	
	20	1	**9T-1642**	1	PLATE-RETAINING	
J	21	1	**171-5989**	1	KIT-BEARING (MOTOR ROTATING GROUP) (BASIC)	
					(INCLUDES BEARINGS)	
	22	1	**9T-1643**	1	DISC-RETAINING	
	23	1	**246-1156**	1	GEAR-RING (59-TEETH)	
J	24	1	**096-5516**	1	RING-RETAINING	

B-USE AS REQUIRED
J-KIT MARKED J SERVICES PART MARKED J
M-METRIC PART
Y-SEPARATE ILLUSTRATION

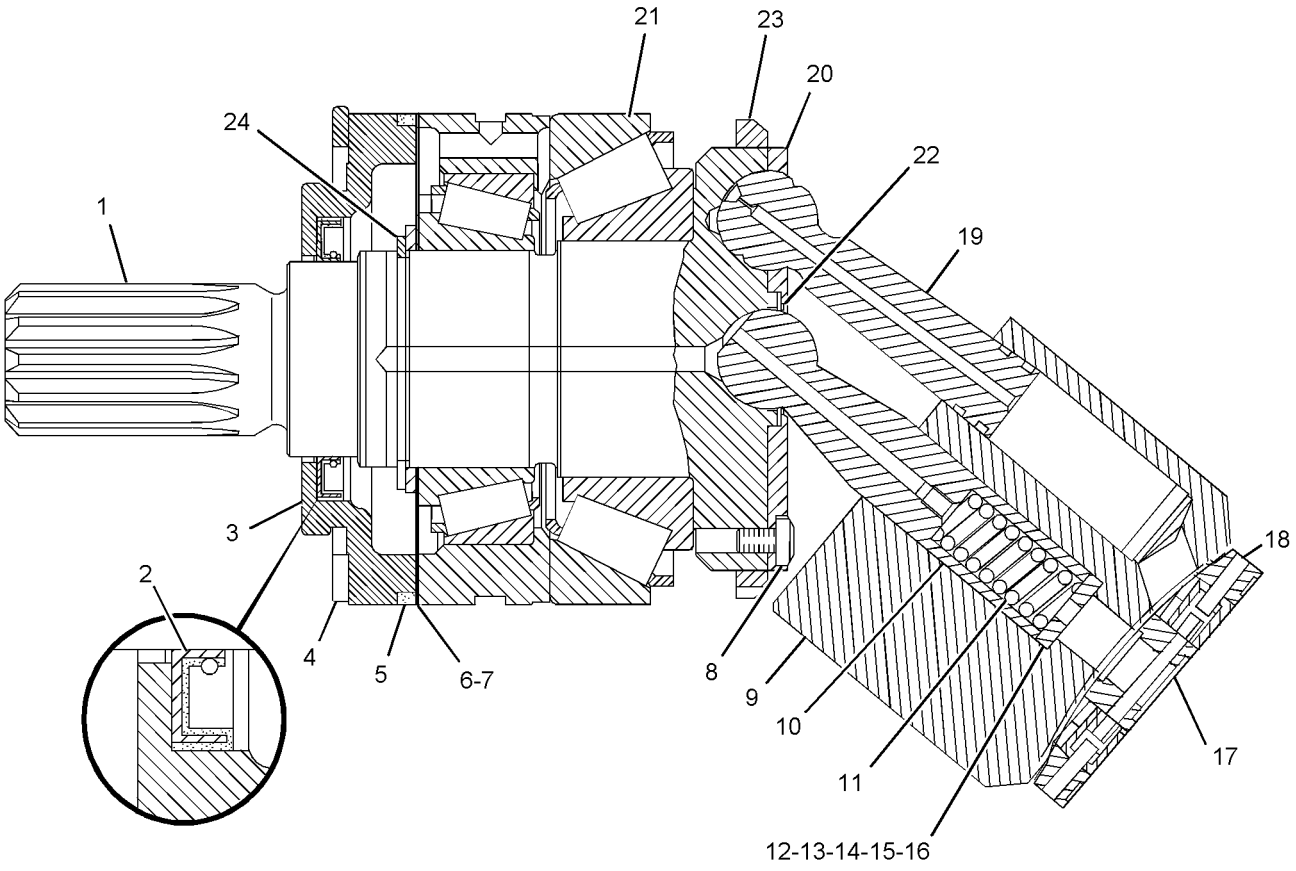

GRAPHIC #1 **<END>** g01107518

STEERING AND BRAKING SYSTEM

256-0313 ROTATING GP-PUMP—STEERING

S/N: J8B1-UP

PART OF 205-1823 PUMP GP-PISTON

ALSO AN ATTACHMENT

SMCS-5070 **i02234828**

NOTE	REF NO	GRAPHIC REF	PART NUMBER	QTY	PART NAME 1 2 3 4 5 6 (PRODUCT LEVEL)	SEE PAGE
	1	1	**183-8446**	1	BARREL AS	
	2	1	**183-8447**	1	SPRING	
	3	1	**192-0938**	1	SHAFT	
	4	1	**183-8449**	1	PLATE	
	5	1	**183-8450**	1	BALL	
	6	1	**183-8451**	2	WASHER	
	7	1	**183-8452**	2	RING-RETAINING	
	8	1	**183-8453**	1	RING-SEAL	
	9	1	**122-6606**	1	SWASHPLATE	
	10	1	**122-6607**	1	LEVER	
	11	1	**8T-4241**	1	RING-RETAINING	
	12	1	**6E-1571**	1	BEARING AS	
	13	1	**6E-4358**	9	PISTON AS	
	14	1	**6E-4363**	2	ROD	
B	15	1	**6E-4364**	1	SHIM (1.2-MM THK)	
B	16	1	**6E-4365**	1	SHIM (1-MM THK)	
B	17	1	**6E-4366**	1	SHIM (0.8-MM THK)	
B	18	1	**6E-4367**	1	SHIM (0.6-MM THK)	
	19	1	**6E-4370**	1	GUIDE	
		1	**229-0625**	2	GUIDE-BEARING	
	20	1	**6E-4373**	1	SPRING	
	21	1	**6E-4374**	1	BEARING	
	22	1	**9X-2858**	1	RING-RETAINING	

B-USE AS REQUIRED

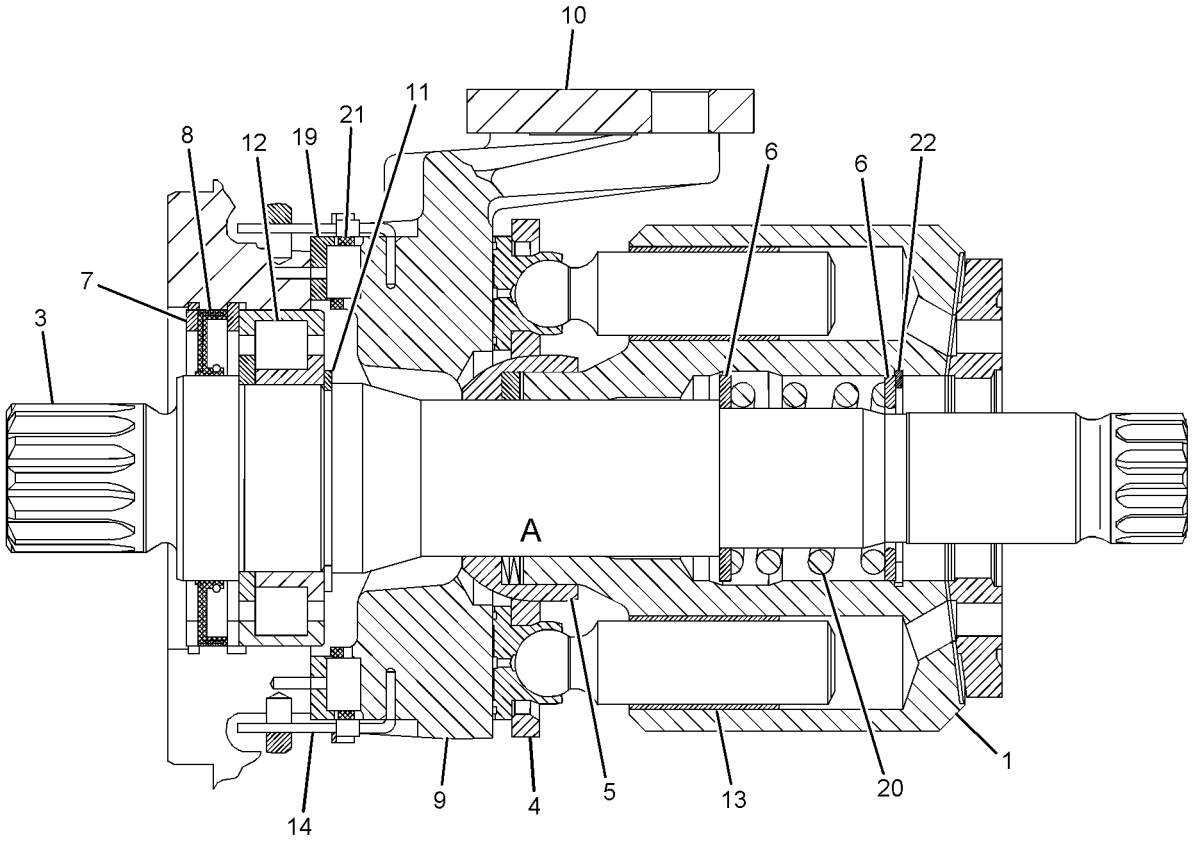

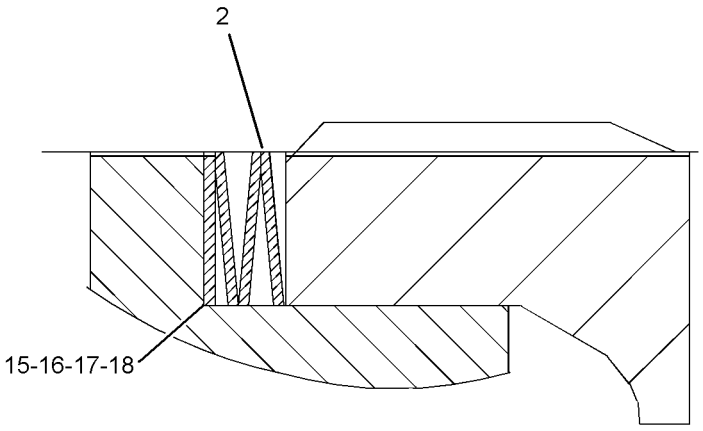

VIEW OF AREA A

GRAPHIC #1 **<END>** g01127090

STEERING AND BRAKING SYSTEM

201-7269 VALVE GP-BRAKE CONTROL

S/N: J8B1-UP

PART OF 201-7274 VALVE GP-STEERING & BRAKE CONT

SMCS-4265, 4282 **i02777465**

NOTE	REF NO	GRAPHIC REF	PART NUMBER	QTY	PART NAME 1 2 3 4 5 6 (PRODUCT LEVEL)	SEE PAGE
	1	1	**293-2851**	1	STOP	
	2	1	**188-7067**	2	SPRING	
	3	1	**188-7068**	2	RETAINER	
	4	1	**188-7069**	2	PISTON-LOAD	
	5	1	**108-4430**	2	SPRING	
	6	1	**110-2842**	1	PLATE-END	
	7	1	**137-6603**	2	SPOOL	
	8	1	*148-8410*	2	PLUG AS	
					(EACH INCLUDES)	
		1	**2M-9780**	1	SEAL-O-RING	
		1	**9S-4190**	1	PLUG-O-RING	
	9	1	*148-8409*	2	PLUG AS	
					(EACH INCLUDES)	
		1	**3D-2824**	1	SEAL-O-RING	
		1	**9S-8008**	1	PLUG-O-RING	
	10	1	**6J-2419**	2	SEAL-O-RING	
M	11	1	**7X-2537**	2	BOLT (M8X1.25X35-MM)	
	12	1	**8T-4224**	2	WASHER-HARD (8.8X16X2-MM THK)	
M	13	1	**8T-7547**	2	BOLT (M8X1.25X30-MM)	
					PARTS SHOWN IN GRAPHIC(S) WITHOUT A REFERENCE NUMBER ARE NOT SERVICED SEPARATELY	

M-METRIC PART

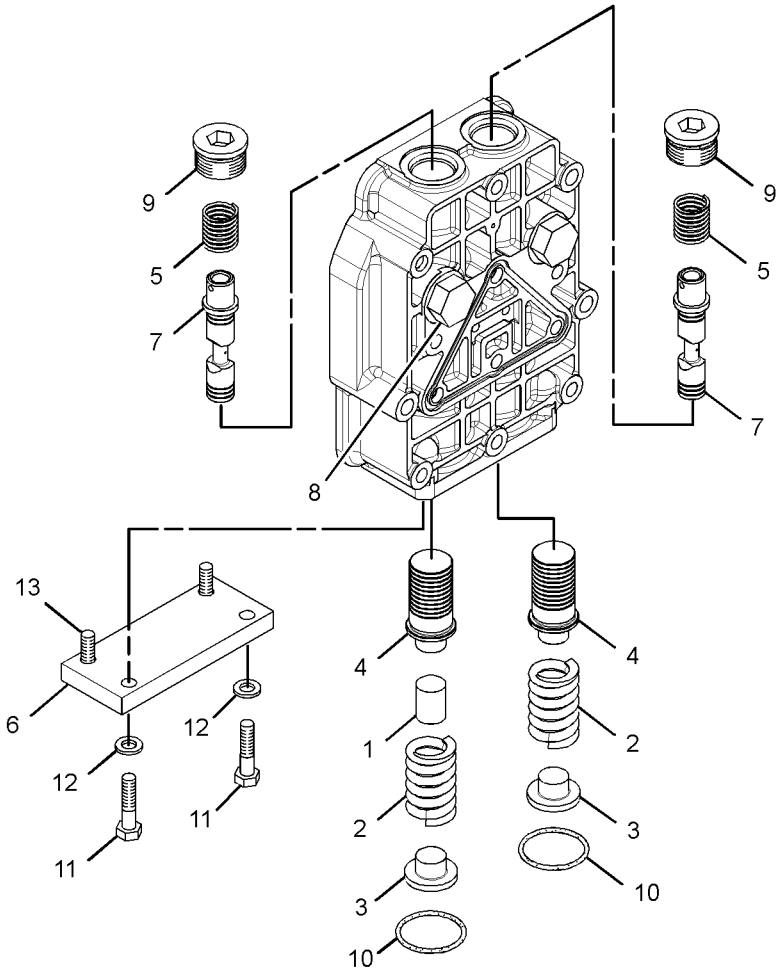

GRAPHIC #1 **<END>** g01393299

119-6114 VALVE GP-FLUSHING–STEERING

S/N: J8B1-UP

PART OF 252-9202 ROTATING GP-MOTOR

SMCS-5066 **i01219372**

NOTE	REF NO	GRAPHIC REF	PART NUMBER	QTY	PART NAME 1 2 3 4 5 6 (PRODUCT LEVEL)	SEE PAGE
	1	1	**119-6109**	1	PLATE	
	2	1	**6E-4100**	1	PIN-FLUSHING	
	3	1	**119-6110**	2	RETAINER	
	4	1	**6E-4102**	2	SPRING	
	5	1	**119-6112**	2	PIN	
	6	1	**119-6113**	2	BUSHING	

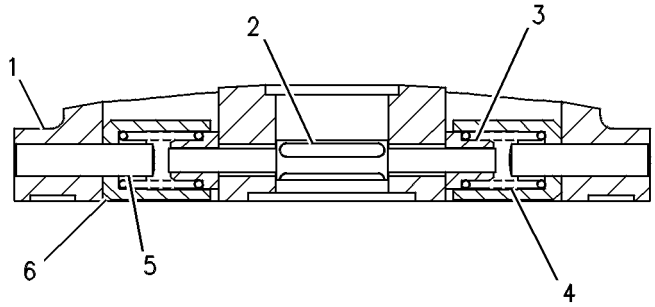

GRAPHIC #1 **<END>** g00246170

6E-4392 VALVE GP-PUMP CONTROL–PRESSURE COMPENSATOR–STEERING

S/N: J8B1-UP

PART OF 253-7529 HEAD GP-PUMP

ALSO AN ATTACHMENT

SMCS-5455 **i02234824**

NOTE	REF NO	GRAPHIC REF	PART NUMBER	QTY	PART NAME 1 2 3 4 5 6 (PRODUCT LEVEL)	SEE PAGE
M	1	1	**6E-4401**	1	SETSCREW-ADJUSTMENT	
	2	1	**6V-8351**	1	SEAL-O-RING	
M	3	1	**6E-1607**	1	LOCKNUT-SEALING	
	4	1	**6V-5586**	1	SEAL-O-RING	

M-METRIC PART

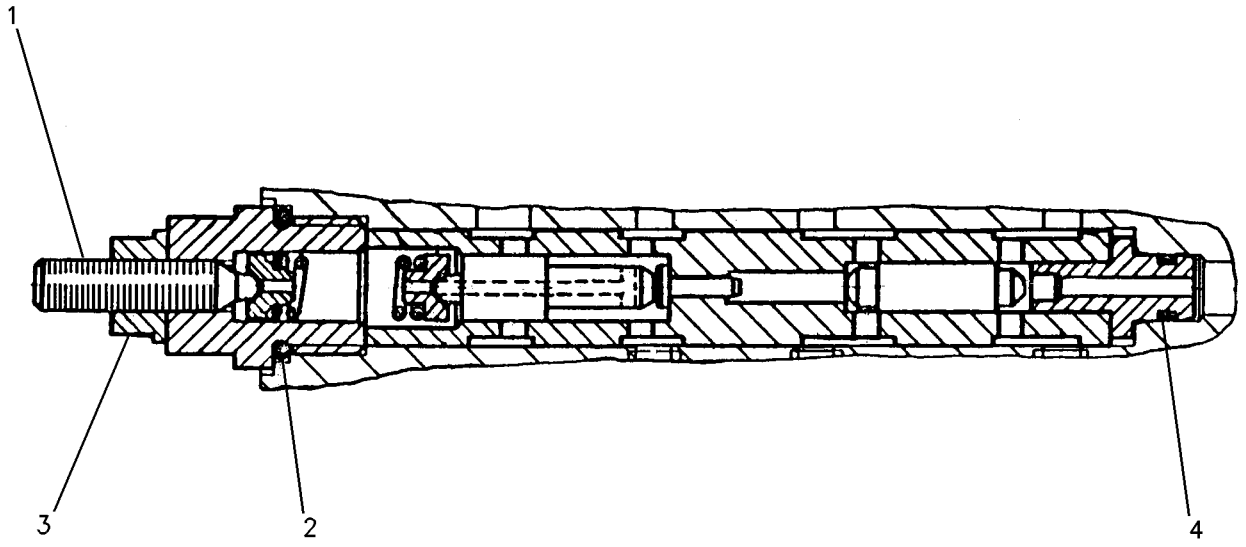

GRAPHIC #1 **<END>** g00986174

STEERING AND BRAKING SYSTEM

253-7531 VALVE GP-PUMP CONTROL–STEERING

S/N: J8B1-UP
PART OF 205-1823 PUMP GP-PISTON
ALSO AN ATTACHMENT

SMCS-5455 **i03206904**

NOTE	REF NO	GRAPHIC REF	PART NUMBER	QTY	PART NAME 1 2 3 4 5 6 (PRODUCT LEVEL)	SEE PAGE
M	1	1	**8T-0269**	2	BOLT-SOCKET HEAD (M6X1X20-MM)	
	2	1	**192-4370**	2	SOLENOID GP-PROPORTIONAL (12-VOLT) (STEERING)	
	3	1	**196-4250**	2	SPACER	
	4	1	**6V-8400**	1	SEAL-O-RING	
	5	1	**111-8897**	1	COVER	
	6	1	**247-7625**	1	SPRING	
	7	1	**262-7701**	1	GASKET	
M	8	1	**8T-2922**	4	BOLT-SOCKET HEAD (M6X1X65-MM)	
	9	1	**6M-5062**	3	SEAL-O-RING	
M	10	1	**196-9444**	8	BOLT-SOCKET HEAD (M5X0.8X10-MM)	
	11	1	**161-6149**	2	SEAL-O-RING	
	12	1	**6V-5586**	1	SEAL-O-RING	
	13	1	**196-4254**	2	SPRING	
	14	1	**202-6535**	1	PIN	
	15	1	**6V-6228**	2	SEAL-O-RING	

M-METRIC PART

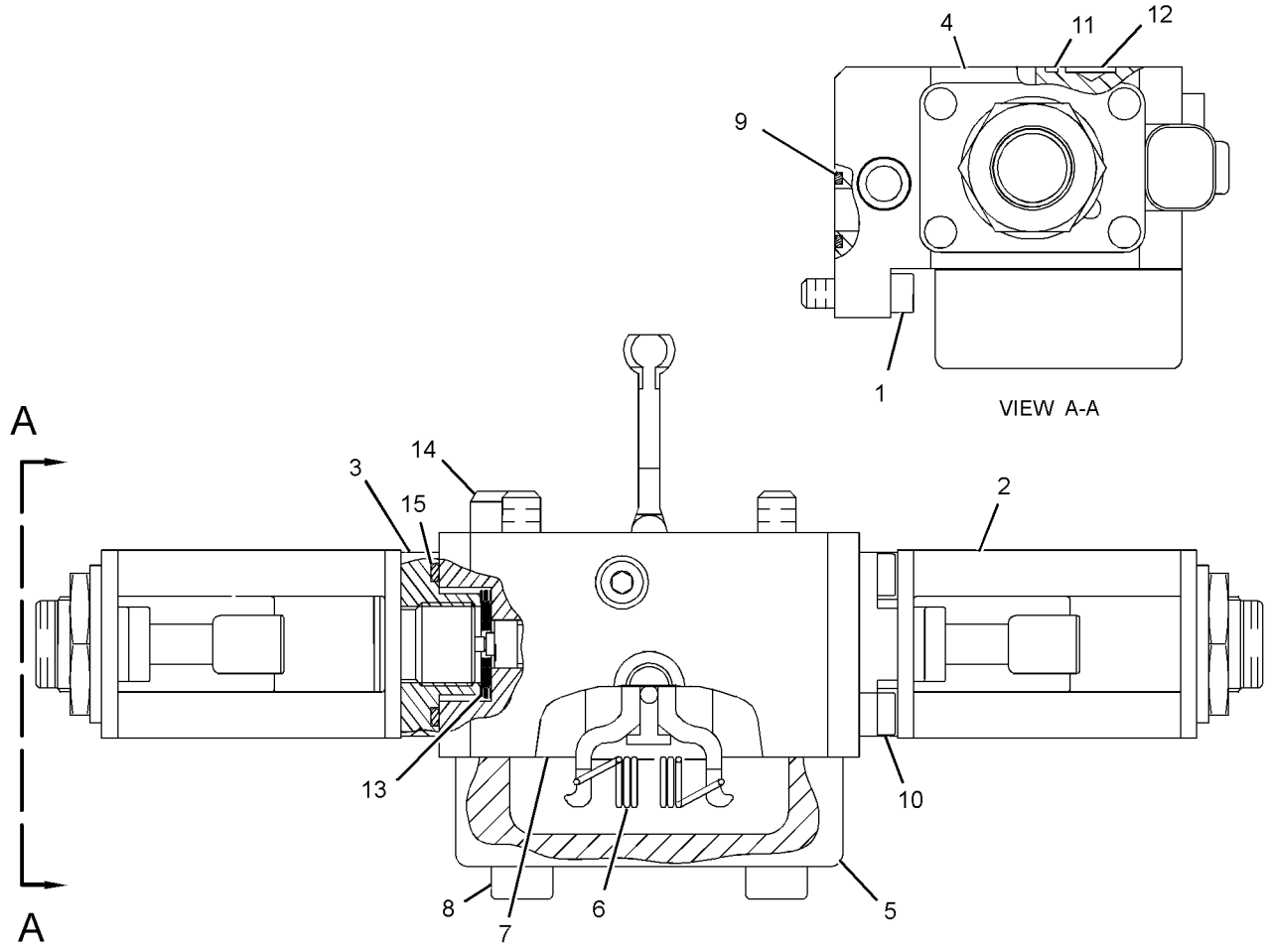

GRAPHIC #1 **<END>** g01164183

183-8409 VALVE GP-RELIEF—CHARGE PRESSURE—STEERING

S/N: J8B1-UP

PART OF 253-7529 HEAD GP-PUMP

ALSO AN ATTACHMENT

SMCS-4307 **i01320719**

NOTE	REF NO	GRAPHIC REF	PART NUMBER	QTY	PART NAME 1 2 3 4 5 6 (PRODUCT LEVEL)	SEE PAGE
	1	1	**183-8410**	1	SCREW	
	2	1	**183-8412**	1	RETAINER	
	3	1	**183-8413**	1	SPRING	
M	4	1	**6E-4240**	1	NUT-SEALING (M10X1-THD)	
	5	1	**6E-4403**	1	PLUG	
	6	1	**6E-4404**	1	VALVE-POPPET	
	7	1	**6V-5326**	1	SEAL-O-RING	

M-METRIC PART

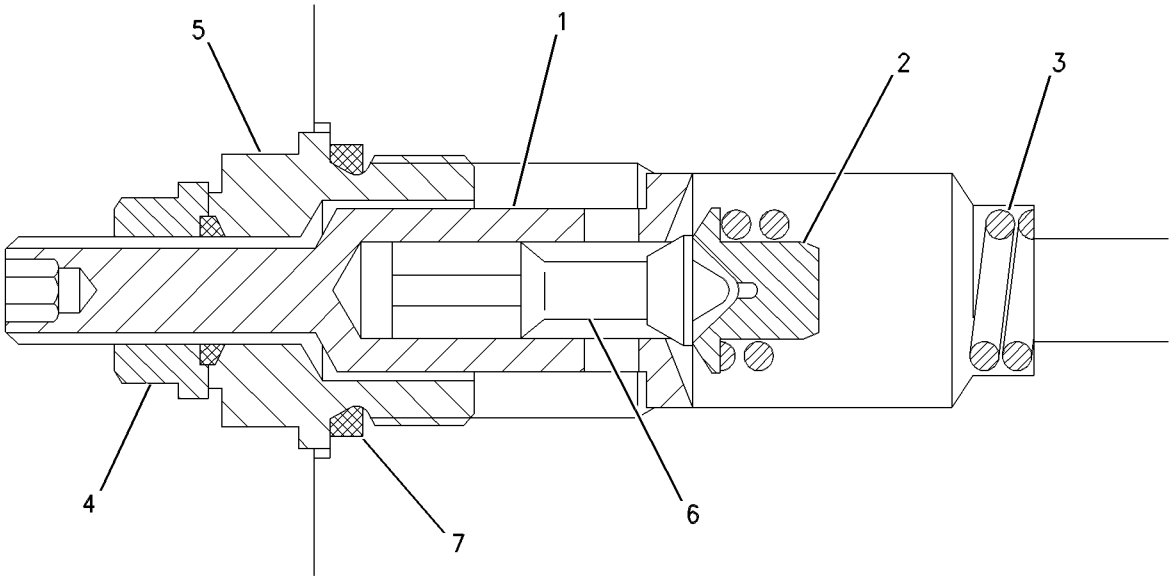

GRAPHIC #1 **<END>** g00664657

172-2392 VALVE GP-SOLENOID

S/N: J8B1-UP
24-VOLT
PART OF 175-4972 MANIFOLD & VALVE GP

SMCS-4804 **i01883348**

NOTE	REF NO	GRAPHIC REF	PART NUMBER	QTY	PART NAME 1 2 3 4 5 6 (PRODUCT LEVEL)	SEE PAGE
	1	1	**156-5970**	1	NUT (1/2-20-THD)	
	2	1	**133-2249**	1	COIL AS	
		1	**1S-9593**	2	STRAP-CABLE	
		1	**8T-8729**	2	PIN-CONNECTOR	
		1	**8T-8737**	2	PLUG-SEAL	
		1	**102-8804**	1	KIT-RECEPTACLE (4-PIN)	
					(INCLUDES RECEPTACLE AS & WEDGE)	
	3	1	**172-2391**	1	SPOOL AS	
		1	**156-5970**	1	NUT (1/2-20-THD)	
					AVAILABLE REPAIR KIT(S):	
			189-1839	1	KIT-SEAL (SOLENOID VALVE)	
					(INCLUDES SEALS & RING-BACK UP)	

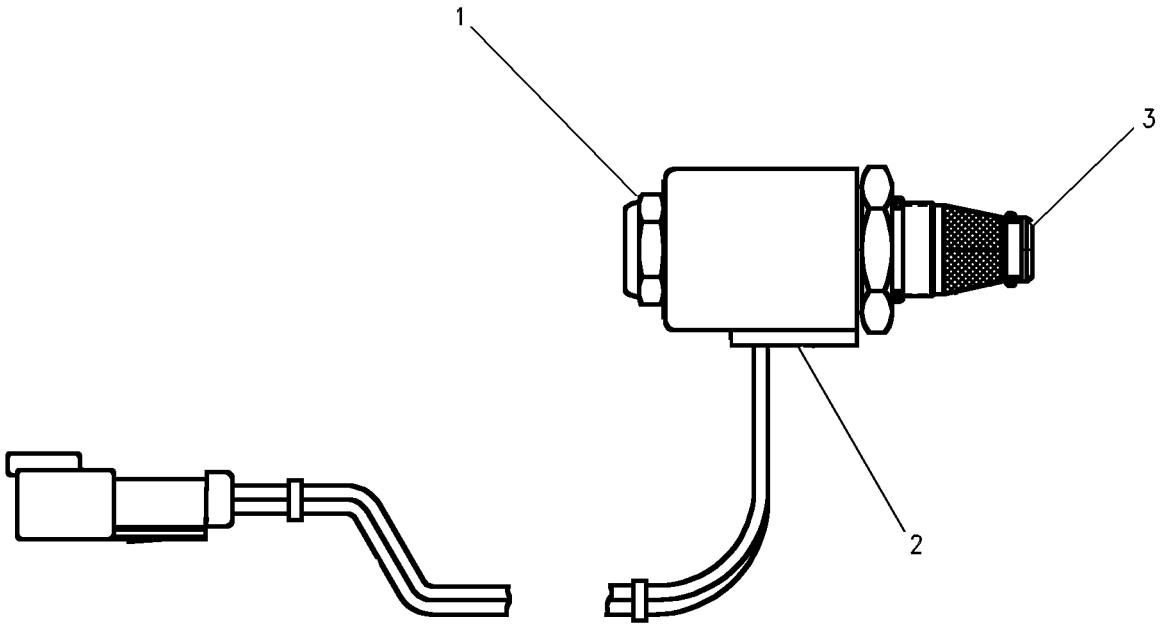

GRAPHIC #1 **<END>** g00653409

174-4909 VALVE GP-SOLENOID

S/N: J8B1-UP
24-VOLT
PART OF 162-5357 MANIFOLD & VALVE GP

SMCS-4804 **i02426161**

NOTE	REF NO	GRAPHIC REF	PART NUMBER	QTY	PART NAME 1 2 3 4 5 6 (PRODUCT LEVEL)	SEE PAGE
	1	1	**226-9622**	1	COIL AS (24-VOLT)	
	2	1	**164-2108**	1	WASHER (13.03X25.4X2.38-MM THK)	
	3	1	**218-2373**	1	NUT (1/2-28-THD)	

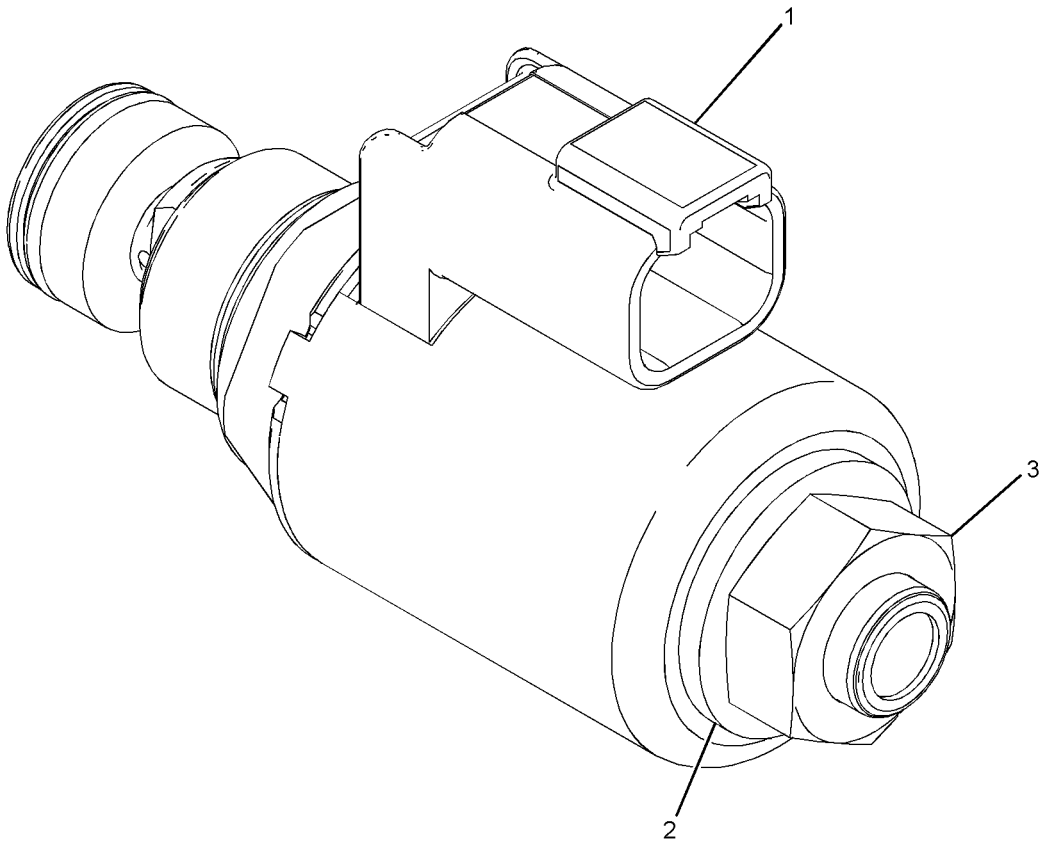

GRAPHIC #1 **<END>** g01139934

STEERING AND BRAKING SYSTEM

201-7274 VALVE GP-STEERING & BRAKE CONT

S/N: J8B1-UP

PART OF 261-4929 VALVE & MTG GP-CONTROL

SMCS-4120 **i02990086**

NOTE	REF NO	GRAPHIC REF	PART NUMBER	QTY	PART NAME 1 2 3 4 5 6 (PRODUCT LEVEL)	SEE PAGE
	1	1	**9L-9068**	4	DOWEL	
Y	2	1	*162-5357*	1	MANIFOLD & VALVE GP (PILOT)	707
Y	3	1	*175-4972*	1	MANIFOLD & VALVE GP (PARKING, SECONDARY BRAKE)	709
	4	1	**176-0259**	1	PLUG AS (ORIFICE SCREEN)	
M	5	1	**8T-4177**	2	BOLT (M8X1.25X90-MM)	
Y	6	1	**201-7269**	1	VALVE GP-BRAKE CONTROL	718
	7	1	**122-3771**	2	SEAL-O-RING	
	8	1	**132-9899**	1	PLATE	
	9	1	**132-9900**	1	PLATE	
	10	1	**134-1251**	1	PLATE-SEPARATOR	
	11	1	**185-3503**	2	SEAL-O-RING	
	12	1	**1T-0738**	10	WASHER (8.4X19X1.83-MM THK)	
	13	1	**3S-2093**	4	STRAP-CABLE	
	14	1	**4J-7533**	1	SEAL-O-RING	
M	15	1	**7X-2541**	4	BOLT (M8X1.25X140-MM)	
M	16	1	**8T-3647**	4	BOLT (M8X1.25X80-MM)	
	17	1	**9P-9150**	24	WASHER (8.25X18X0.84-MM THK)	

M-METRIC PART
Y-SEPARATE ILLUSTRATION

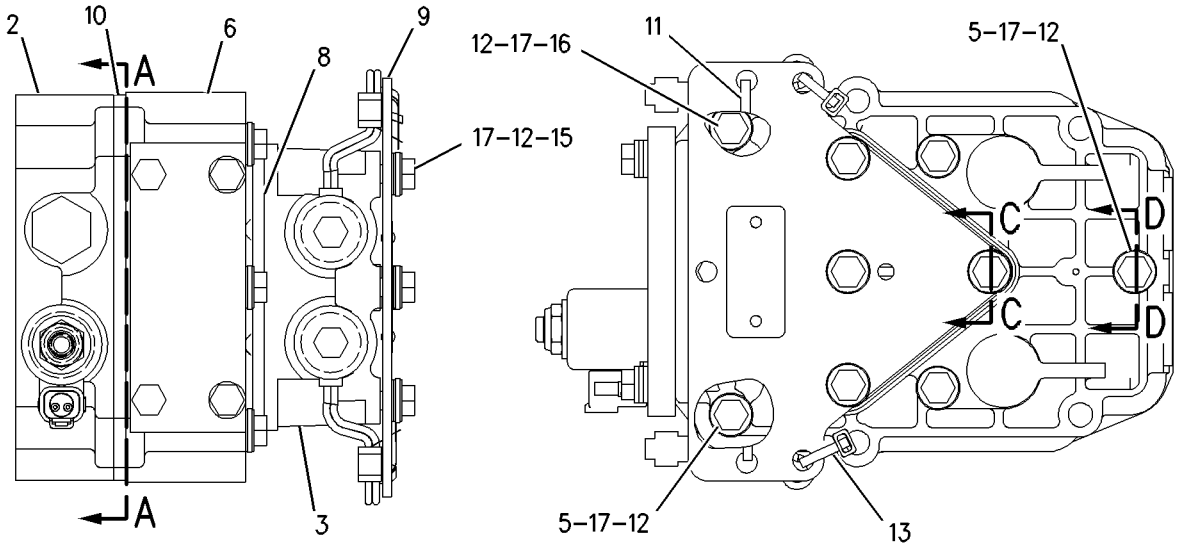

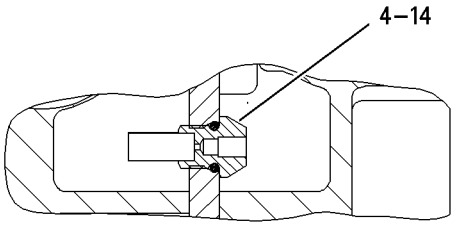

SECTION E-E

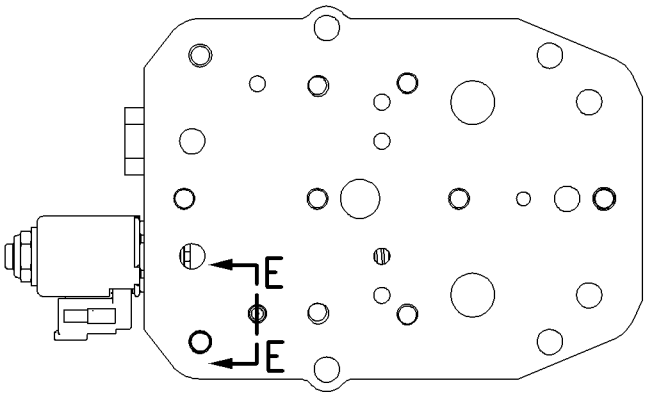

SECTION A-A

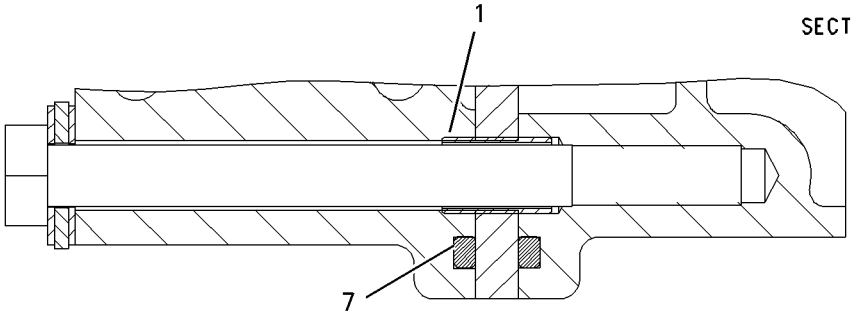

SECTION D-D

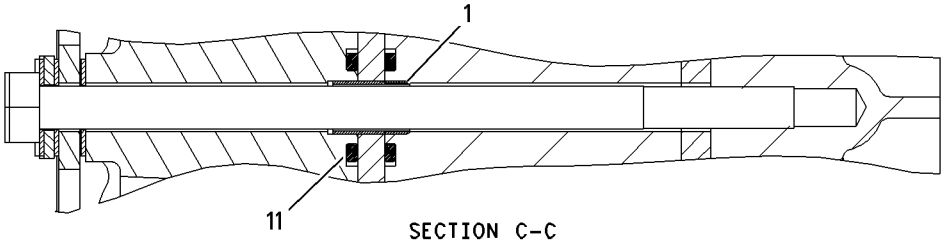

SECTION C-C

GRAPHIC #1 **<END>** g00936951

HYDRAULIC SYSTEM

179-9387 ACCUMULATOR GP-PILOT OIL—UNCHARGED

S/N: J8B1-UP

FIELD REPLACEMENT FOR 200-0750—PAGE 729

SMCS-5077 **i02232516**

NOTE	REF NO	GRAPHIC REF	PART NUMBER	QTY	PART NAME 1 2 3 4 5 6 (PRODUCT LEVEL)	SEE PAGE
	1	1	**204-8758**	2	FILM-WARNING (ACCUMULATOR)	

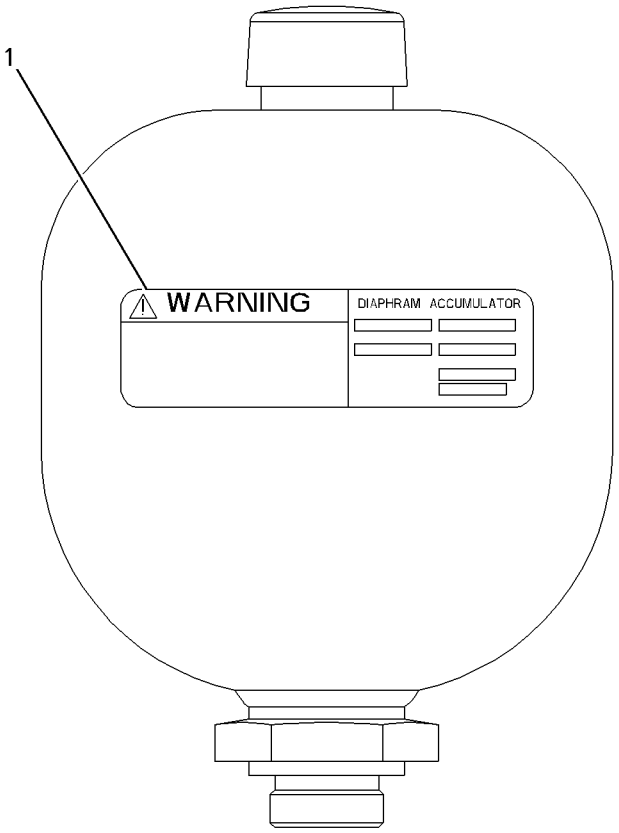

GRAPHIC #1 **<END>** g01004085

200-0750 ACCUMULATOR GP-PILOT OIL—CHARGED

S/N: J8B1-UP

PART OF 208-9527 VALVE & MTG GP-IMPLEMENT CONT

FIELD REPLACEMENT ORDER 179-9387—PAGE 728

SMCS-5077 **i02232482**

NOTE	REF NO	GRAPHIC REF	PART NUMBER	QTY	PART NAME 1 2 3 4 5 6 (PRODUCT LEVEL)	SEE PAGE
	1	1	**204-8758**	2	FILM-WARNING (ACCUMULATOR)	

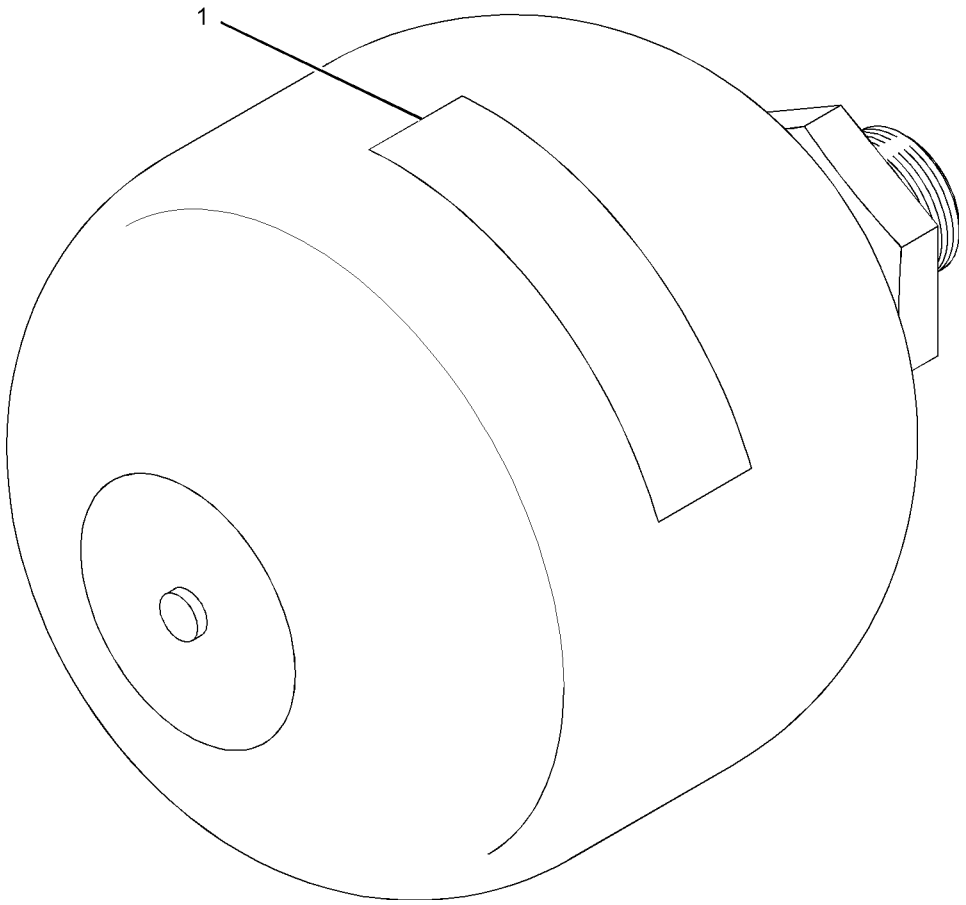

GRAPHIC #1 **<END>** g01034166

HYDRAULIC SYSTEM

183-8430 ACTUATOR GP-PUMP–STEERING

S/N: J8B1-UP
PART OF 205-1823 PUMP GP-PISTON
ALSO AN ATTACHMENT

SMCS-5070, 5078 **i02234810**

NOTE	REF NO	GRAPHIC REF	PART NUMBER	QTY	PART NAME 1 2 3 4 5 6 (PRODUCT LEVEL)	SEE PAGE
Y	1	1	**183-8417**	1	ACTUATOR GP-PUMP	695
	2	1	**183-8431**	1	COVER	
	3	1	**183-8442**	1	COVER	
	4	1	**183-8443**	2	RING-WEAR	
	5	1	**183-8444**	2	RING-SEAL	
M	6	1	**161-7614**	1	NUT (M16X1.5-MM-THD)	
M	7	1	**5A-3604**	8	BOLT-SOCKET HEAD (M8X1.25X25-MM)	
	8	1	**8C-3089**	2	SEAL-O-RING	

M-METRIC PART
Y-SEPARATE ILLUSTRATION

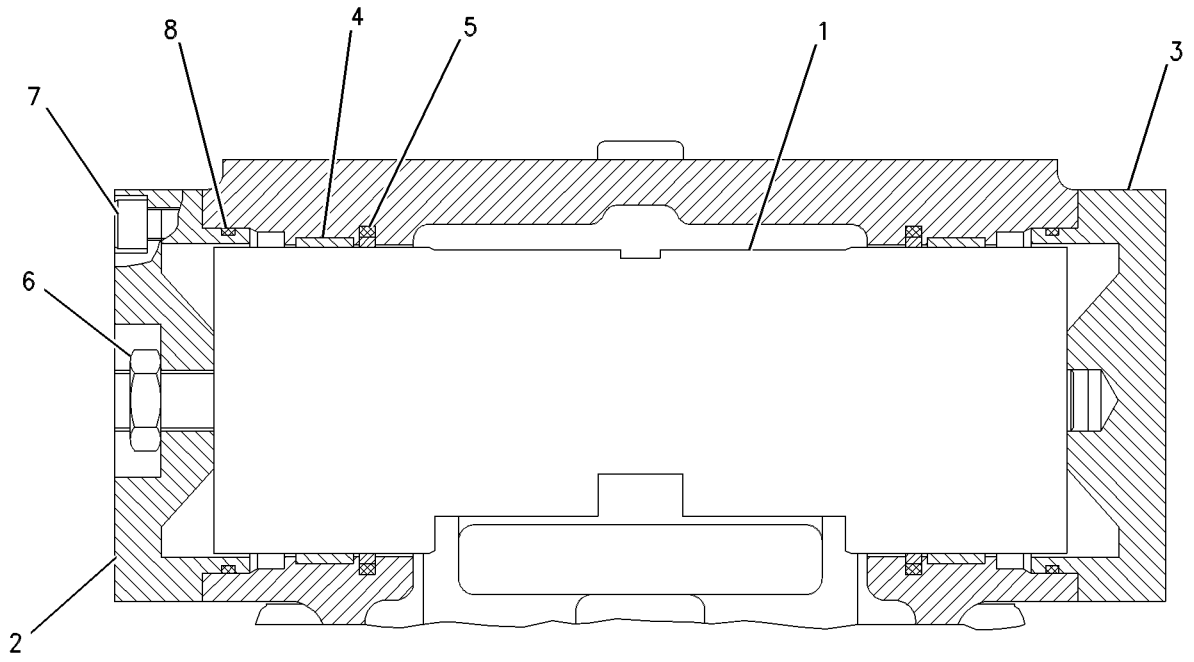

GRAPHIC #1 **<END>** g00664406

6Y-3526 ADAPTER GP-MOTOR

S/N: J8B1-UP

PART OF 206-6782 HYDRAULIC AR

SMCS-5058 **i01066078**

NOTE	REF NO	GRAPHIC REF	PART NUMBER	QTY	PART NAME 1 2 3 4 5 6 (PRODUCT LEVEL)	SEE PAGE
	1	1	**8C-6857**	2	BOLT (3/4-10X2.75-IN)	
		1	**8T-4994**	2	WASHER-HARD (20X36.5X3.5-MM THK)	
	2	1	**7K-6058**	6	BOLT-12 POINT HEAD (1/2-13X2.5-IN)	
	3	1	**5J-2383**	1	SEAL-O-RING	
	4	1	**3N-0759**	1	RING-SEALING	
	5	1	**6Y-3988**	1	ADAPTER	

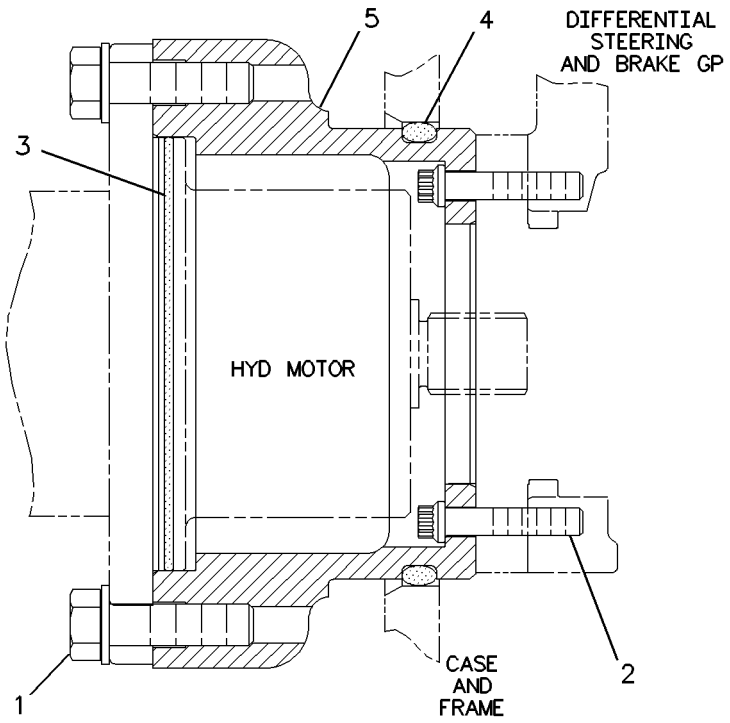

GRAPHIC #1 **<END>** g00215772

HYDRAULIC SYSTEM

211-9501 CONTROL AR-HYD PIN PULLER

S/N: J8B1-UP
FOR USE WITH RIPPER
AN ATTACHMENT

SMCS-5353 **i02776131**

NOTE	REF NO	GRAPHIC REF	PART NUMBER	QTY	PART NAME 1 2 3 4 5 6 (PRODUCT LEVEL)	SEE PAGE
	1	1	**7K-1181**	4	STRAP-CABLE	
	2	1	**106-8704**	2	SUPPRESSOR AS-ARC	
	3	1	**164-4940**	1	HARNESS AS-SOLENOID (PIN PULLER)	
		1	**155-2260**	1	KIT-CONNECTING PLUG (3-PIN)	
		1	**155-2270**	2	KIT-CONNECTING PLUG (2-PIN)	
		1	**155-2271**	1	KIT-CONNECTING PLUG (4-PIN)	
					(EACH INCLUDES PLUG AS, WEDGE, & INTERFACE SEAL)	
Y	4	1	*188-6140*	1	VALVE & MTG GP-CONTROL (HYDRAULIC PIN PULLER)	834
I	5	1	**219-1918**	1	HOSE AS	
I	6	1	**219-1919**	1	HOSE AS	
	7	1	**222-7889**	1	SWITCH AS-ROCKER (HYDRAULIC PIN PULLER)	
	8	1	**228-9936**	1	PLATE AS	
	9	1	*148-8378*	4	ELBOW AS	
					(EACH INCLUDES)	
		1	**6V-8724**	1	ELBOW	
		1	**3J-1907**	1	SEAL-O-RING	
		1	**6V-8397**	1	SEAL-O-RING	
	10	1	**5P-1075**	4	WASHER-HARD (10.2X22.5X3-MM THK)	
	11	1	**8D-9671**	1	CLIP	
	12	1	**8T-4121**	1	WASHER-HARD (11X21X2.5-MM THK)	
M	13	1	**8T-4136**	1	BOLT (M10X1.5X25-MM)	
M	14	1	**8T-4192**	2	BOLT (M12X1.75X25-MM)	
M	15	1	**8T-4178**	4	BOLT (M10X1.5X90-MM)	
	16	1	**8T-4223**	2	WASHER-HARD (13.5X25.5X3-MM THK)	
	17	1	**246-4311**	1	GUARD (SWITCH)	

I-REFER TO HYDRAULIC INFORMATION SYSTEM
M-METRIC PART
Y-SEPARATE ILLUSTRATION

211-9501 **CONTROL AR-HYD PIN PULLER** *(contd.)* **i02776131**

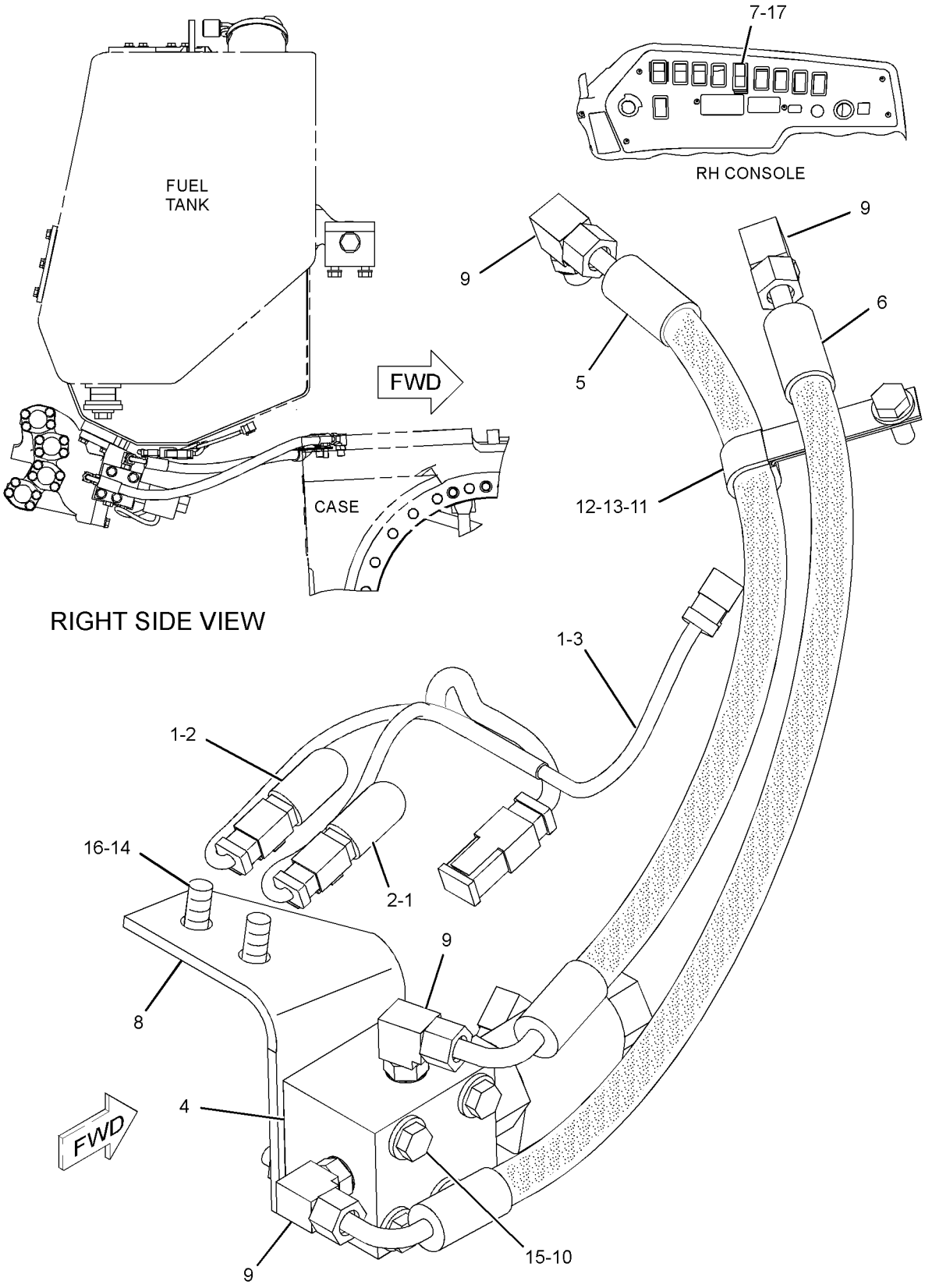

GRAPHIC #1 **<END>** g01414750

209-3430 CONTROL AR-HYDRAULIC—BULLDOZER, RIPPER

S/N: J8B1-UP

AN ATTACHMENT

SMCS-5057, 5170, 5357 **i03430321**

NOTE	PART NUMBER	QTY	PART NAME 1 2 3 4 5 6 (PRODUCT LEVEL)	SEE PAGE
Y	*196-9987*	1	CONTROL & MTG GP-IMPLEMENT (RIPPER)	242
Y	*208-9528*	1	LINES GP-RIPPER	777
Y	*215-5615*	1	VALVE GP-BANK 4 (BULLDOZER, RIPPER)	856

Y-SEPARATE ILLUSTRATION

<END>

209-3431 CONTROL AR-HYDRAULIC—BULLDOZER, WINCH

S/N: J8B1-UP

AN ATTACHMENT

SMCS-5057, 5170, 5357 **i03430322**

NOTE	PART NUMBER	QTY	PART NAME 1 2 3 4 5 6 (PRODUCT LEVEL)	SEE PAGE
Y	*209-2608*	1	CONTROL GP-IMPLEMENT (WINCH)	244
Y	*208-9529*	1	LINES GP-WINCH	990
Y	*215-6822*	1	VALVE GP-BANK 3 (BULLDOZER, WINCH)	842
	222-7888	1	SWITCH AS-ROCKER (24-VOLT, SEALED, ILLUMINATED) (WINCH ON, OFF)	
	246-4311	1	GUARD (SWITCH)	
	235-7152	1	FILM-INSTRUCTION (WINCH)	
			(NEXT TO CONTROL DEVICE ON RH CONSOLE)	

Y-SEPARATE ILLUSTRATION

<END>

HYDRAULIC SYSTEM

209-5102 CONTROL AR-HYDRAULIC—BULLDOZER, DUAL TILT

S/N: J8B1-UP
AN ATTACHMENT

SMCS-5057, 5170, 5357 **i03297993**

NOTE	PART NUMBER	QTY	PART NAME 1 2 3 4 5 6 (PRODUCT LEVEL)	SEE PAGE
Y	**208-6072**	1	CONTROL GP-JOYSTICK (BULLDOZER, DUAL TILT)	1054
			S/N: J8B1-735	
Y	**242-6208**	1	CONTROL GP-JOYSTICK (BULLDOZER) (DUAL TILT)	1061
			S/N: J8B736-UP	
			-OR-	
Y	**327-3548**	1	CONTROL GP-JOYSTICK (BULLDOZER) (DUAL TILT)	1070
			S/N: J8B736-UP	
Y	*229-2013*	1	GUARD GP-RADIATOR	578
Y	*211-9513*	1	LINES GP-TILT CYLINDER	784
Y	**217-4326**	1	VALVE GP-CONTROL (DUAL TILT)	892
	233-7894	1	FILM-IDENTIFICATION (DUAL TILT)	
			S/N: J8B1-735	
			(ON UPPER RH CONSOLE)	
	318-9690	1	FILM-INSTRUCTION (BULLDOZER TILT)	
			S/N: J8B736-UP	
			(ON UPPER RH CONSOLE)	
	234-3404	1	FILM-IDENTIFICATION (AUTOMATIC BLADE)	
			S/N: J8B1-735	
			(ON LOWER RH CONSOLE)	
	312-3420	1	FILM-INSTRUCTION (BULLDOZER CONTROL, AUTO)	
			S/N: J8B736-UP	
			(ON LOWER RH CONSOLE)	

Y-SEPARATE ILLUSTRATION

<END>

251-5811 CONTROL AR-HYDRAULIC—AUTO CARRY

S/N: J8B1-UP
AN ATTACHMENT

SMCS-5057, 5170, 5357 **i02553468**

NOTE	PART NUMBER	QTY	PART NAME 1 2 3 4 5 6 (PRODUCT LEVEL)	SEE PAGE
Y	**247-0747**	1	CONTROL GP-JOYSTICK (BULLDOZER CONTROL)	1064
			S/N: J8B1-703	
Y	**242-6209**	1	CONTROL GP-JOYSTICK (BULLDOZER CONTROL)	1063
			S/N: J8B704-UP	
Y	*252-5788*	1	SENSOR & MOUNTING GP (AUTO CARRY)	335
Y	*260-6231*	1	WIRING GP-PLATFORM (AUTO CARRY)	409
	252-5830	1	GUARD AS	
	260-1453	1	CONFIGURATION-PREMIUM (AUTO CARRY)	
			(DLR INSTALL CONFIG: SEE IRM: EES03-01)	

Y-SEPARATE ILLUSTRATION

<END>

209-8378 COOLER GP-HYDRAULIC OIL

S/N: J8B1-UP

PART OF 209-5457 INSTALLATION AR-ENGINE

SMCS-1374 **i02995479**

NOTE	REF NO	GRAPHIC REF	PART NUMBER	QTY	PART NAME 1 2 3 4 5 6 (PRODUCT LEVEL)	SEE PAGE
	1	1	**297-5587**	1	BRACKET AS	
	2	1	**303-8791**	1	CORE AS-OIL COOLER	
	3	1	**7X-7729**	7	WASHER (11X25X3-MM THK)	
M	4	1	**8T-4133**	2	NUT (M10X1.5-THD)	
M	5	1	**8T-4195**	5	BOLT (M10X1.5X30-MM)	

M-METRIC PART

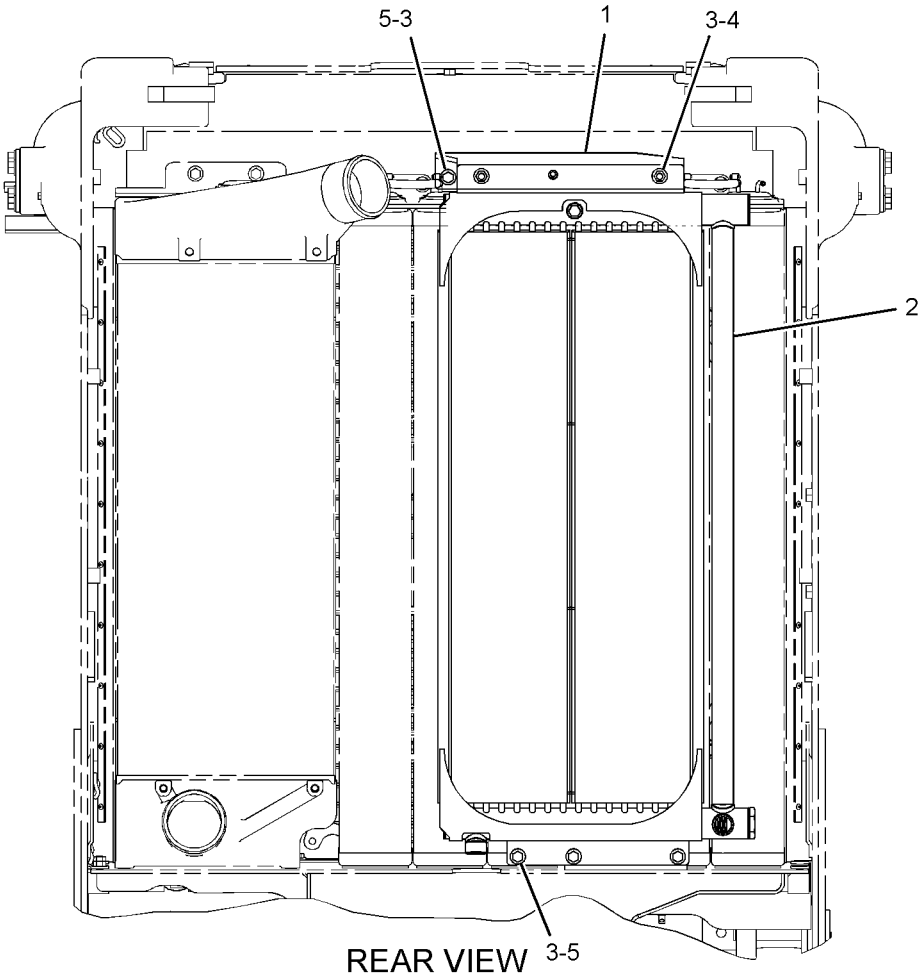

GRAPHIC #1 **<END>** g01453592

HYDRAULIC SYSTEM

237-7362 CYLINDER & LINES GP-LIFT–LH

S/N: J8B1-UP; D1E1-UP; A5G1-UP; B8S1-UP
PART OF 261-2351 BULLDOZER AR-ANGLING, 227-5437 BULLDOZER AR-SEMI-UNIVERSAL, 245-3566 BULLDOZER AR-UNIVERSAL
FOR USE WITH 237-7363–PAGE 739
AN ATTACHMENT

SMCS-5102 **i03385621**

NOTE	REF NO	GRAPHIC REF	PART NUMBER	QTY	PART NAME 1 2 3 4 5 6 (PRODUCT LEVEL)	SEE PAGE
	1	1	**8E-8334**	1	PLATE AS	
I	2	1	**108-6981**	1	HOSE AS	
I	3	1	**108-6982**	1	HOSE AS	
	4	1	*148-8323*	1	CONNECTOR AS	
		1	**6V-9875**	1	CONNECTOR	
		1	**2S-4078**	1	SEAL-O-RING	
		1	**5K-9090**	1	SEAL-O-RING	
	5	1	*153-6251*	1	CONNECTOR AS	
		1	**9X-8260**	1	CONNECTOR	
		1	**4K-1388**	1	SEAL-O-RING	
		1	**6V-8400**	1	SEAL-O-RING	
	6	1	**238-9612**	1	BRACKET AS	
	7	1	**238-9807**	1	TUBE AS	
Y	8	1	*250-5861*	1	CYLINDER GP-BULLDOZER LIFT	744
	9	1	**8E-6304**	1	CLIP (SLOT)	
	10	1	**4J-0520**	3	SEAL-O-RING	
M	11	1	**6V-8149**	1	NUT (M12X1.75-THD)	
	12	1	**7X-7729**	6	WASHER (11X25X3-MM THK)	
	13	1	**8C-3206**	2	FLANGE-HALF	
	14	1	**8E-6303**	1	CLIP (TAB)	
	15	1	**8T-4121**	4	WASHER-HARD (11X21X2.5-MM THK)	
M	16	1	**8T-4136**	2	BOLT (M10X1.5X25-MM)	
M	17	1	**8T-4137**	4	BOLT (M10X1.5X20-MM)	
M	18	1	**8T-4186**	2	BOLT (M10X1.5X40-MM)	
M	19	1	**8T-4194**	1	BOLT (M12X1.75X50-MM)	
M	20	1	**8T-4196**	2	BOLT (M10X1.5X35-MM)	
	21	1	**8T-4223**	2	WASHER-HARD (13.5X25.5X3-MM THK)	

I-REFER TO HYDRAULIC INFORMATION SYSTEM
M-METRIC PART
Y-SEPARATE ILLUSTRATION

237-7362 **CYLINDER & LINES GP-LIFT** *(contd.)* **i03385621**

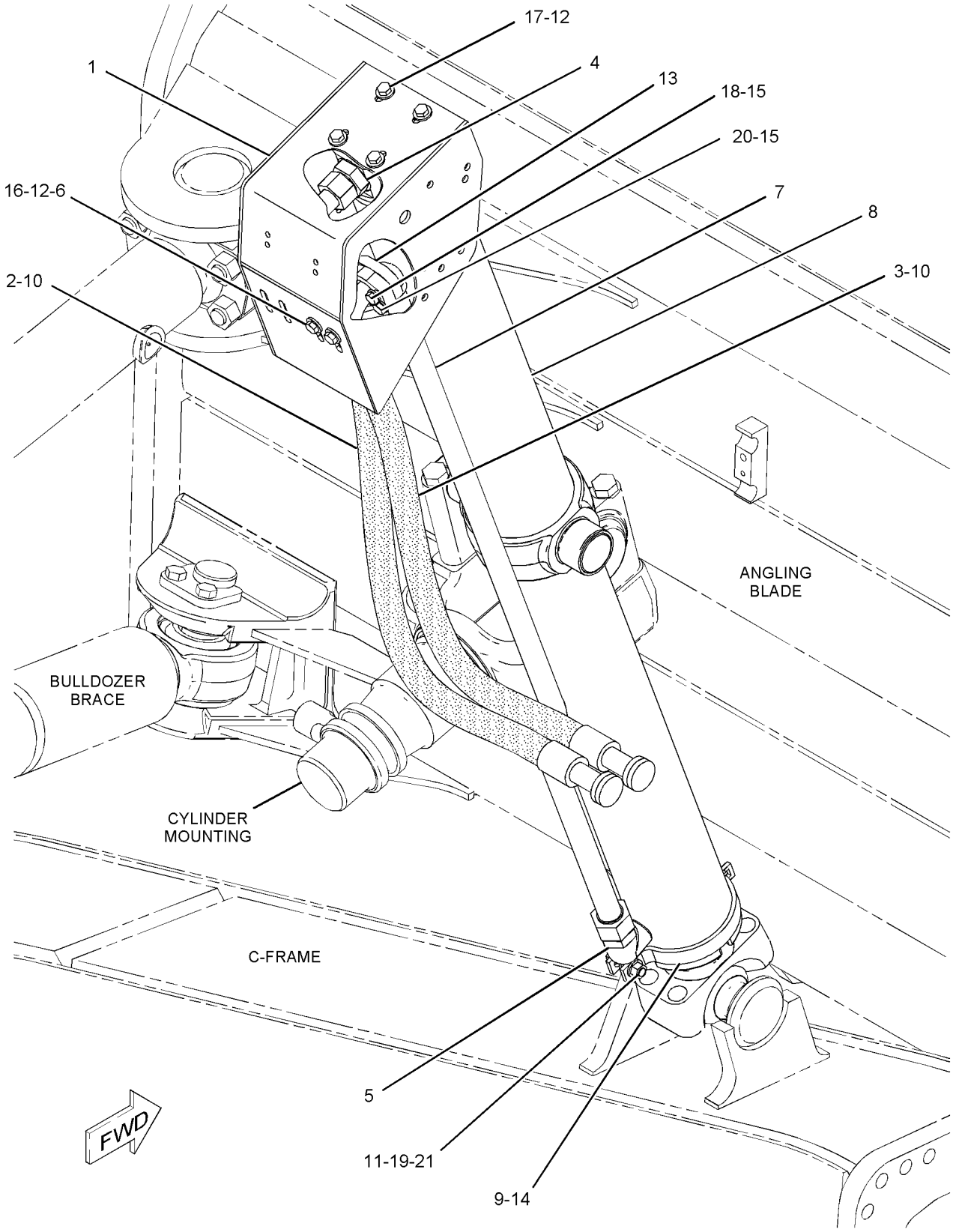

GRAPHIC #1 **<END>** g01110201

HYDRAULIC SYSTEM

237-7363 CYLINDER & LINES GP-LIFT–RH

S/N: J8B1-UP; D1E1-UP; A5G1-UP; B8S1-UP
PART OF 261-2351 BULLDOZER AR-ANGLING, 227-5437 BULLDOZER AR-SEMI-UNIVERSAL, 245-3566 BULLDOZER AR-UNIVERSAL
FOR USE WITH 237-7362–PAGE 737
AN ATTACHMENT

SMCS-5102 **i03385623**

NOTE	REF NO	GRAPHIC REF	PART NUMBER	QTY	PART NAME 1 2 3 4 5 6 (PRODUCT LEVEL)	SEE PAGE
	1	1	**8E-8334**	1	PLATE AS	
I	2	1	**108-6981**	1	HOSE AS	
I	3	1	**108-6982**	1	HOSE AS	
	4	1	*148-8323*	1	CONNECTOR AS	
		1	**6V-9875**	1	CONNECTOR	
		1	**2S-4078**	1	SEAL-O-RING	
		1	**5K-9090**	1	SEAL-O-RING	
	5	1	*153-6251*	1	CONNECTOR AS	
		1	**9X-8260**	1	CONNECTOR	
		1	**4K-1388**	1	SEAL-O-RING	
		1	**6V-8400**	1	SEAL-O-RING	
	6	1	**238-9612**	1	BRACKET AS	
	7	1	**239-0221**	1	TUBE AS	
Y	8	1	**250-5861**	1	CYLINDER GP-BULLDOZER LIFT	744
	9	1	**8E-6304**	1	CLIP (SLOT)	
	10	1	**4J-0520**	3	SEAL-O-RING	
M	11	1	**6V-8149**	1	NUT (M12X1.75-THD)	
	12	1	**7X-7729**	6	WASHER (11X25X3-MM THK)	
	13	1	**8C-3206**	2	FLANGE-HALF	
	14	1	**8E-6303**	1	CLIP (TAB)	
	15	1	**8T-4121**	4	WASHER-HARD (11X21X2.5-MM THK)	
M	16	1	**8T-4136**	2	BOLT (M10X1.5X25-MM)	
M	17	1	**8T-4137**	4	BOLT (M10X1.5X20-MM)	
M	18	1	**8T-4186**	2	BOLT (M10X1.5X40-MM)	
M	19	1	**8T-4194**	1	BOLT (M12X1.75X50-MM)	
M	20	1	**8T-4196**	2	BOLT (M10X1.5X35-MM)	
	21	1	**8T-4223**	2	WASHER-HARD (13.5X25.5X3-MM THK)	

I-REFER TO HYDRAULIC INFORMATION SYSTEM
M-METRIC PART
Y-SEPARATE ILLUSTRATION

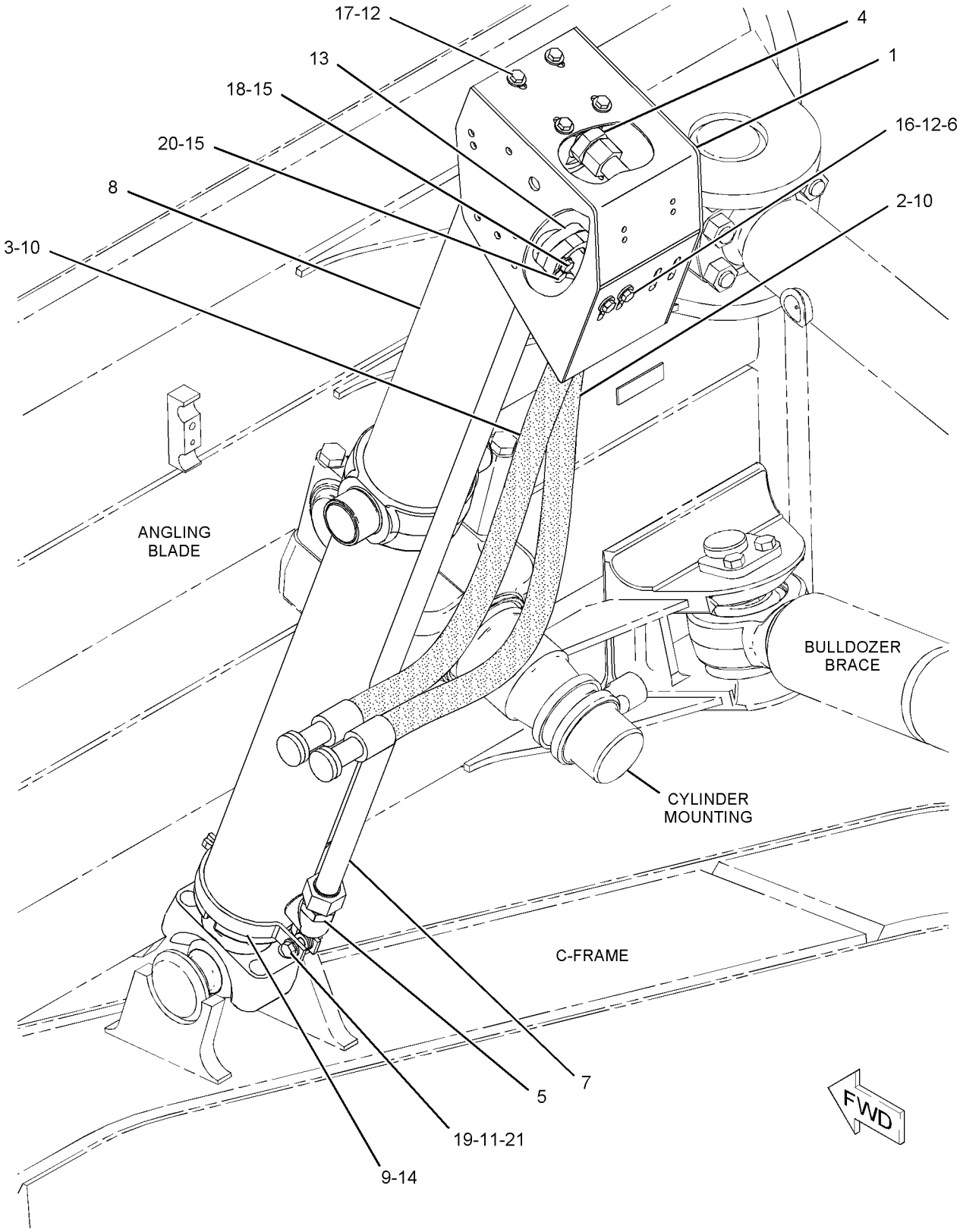

GRAPHIC #1 **<END>** g01111222

8E-3039 CYLINDER AR-DUAL TILT—ANGLING BULLDOZER

S/N: J8B1-UP

AN ATTACHMENT

SMCS-5104 **i01224248**

NOTE	PART NUMBER	QTY	PART NAME 1 2 3 4 5 6 (PRODUCT LEVEL)	SEE PAGE
Y	**6E-0397**	2	CYLINDER GP-TILT	749
Y	*8E-6579*	1	LINES GP-TILT CYLINDER	780

Y-SEPARATE ILLUSTRATION

<END>

HYDRAULIC SYSTEM

237-9234 CYLINDER AR-DUAL TILT

S/N: J8B1-UP

FOR USE WITH 227-5437—PAGE 921, 227-5439—PAGE 922, 245-3567—PAGE 925, 245-3566—PAGE 924

AN ATTACHMENT

SMCS-5104 **i02243189**

NOTE	REF NO	GRAPHIC REF	PART NUMBER	QTY	PART NAME 1 2 3 4 5 6 (PRODUCT LEVEL)	SEE PAGE
Y	1	1	*237-9235*	1	LINES GP-TILT CYLINDER	790
Y	2	1	*237-9236*	1	PUSH ARM GP-STABILIZER	936
Y	3	1	**241-0550**	2	CYLINDER GP-TILT (RH, LH)	757

Y-SEPARATE ILLUSTRATION

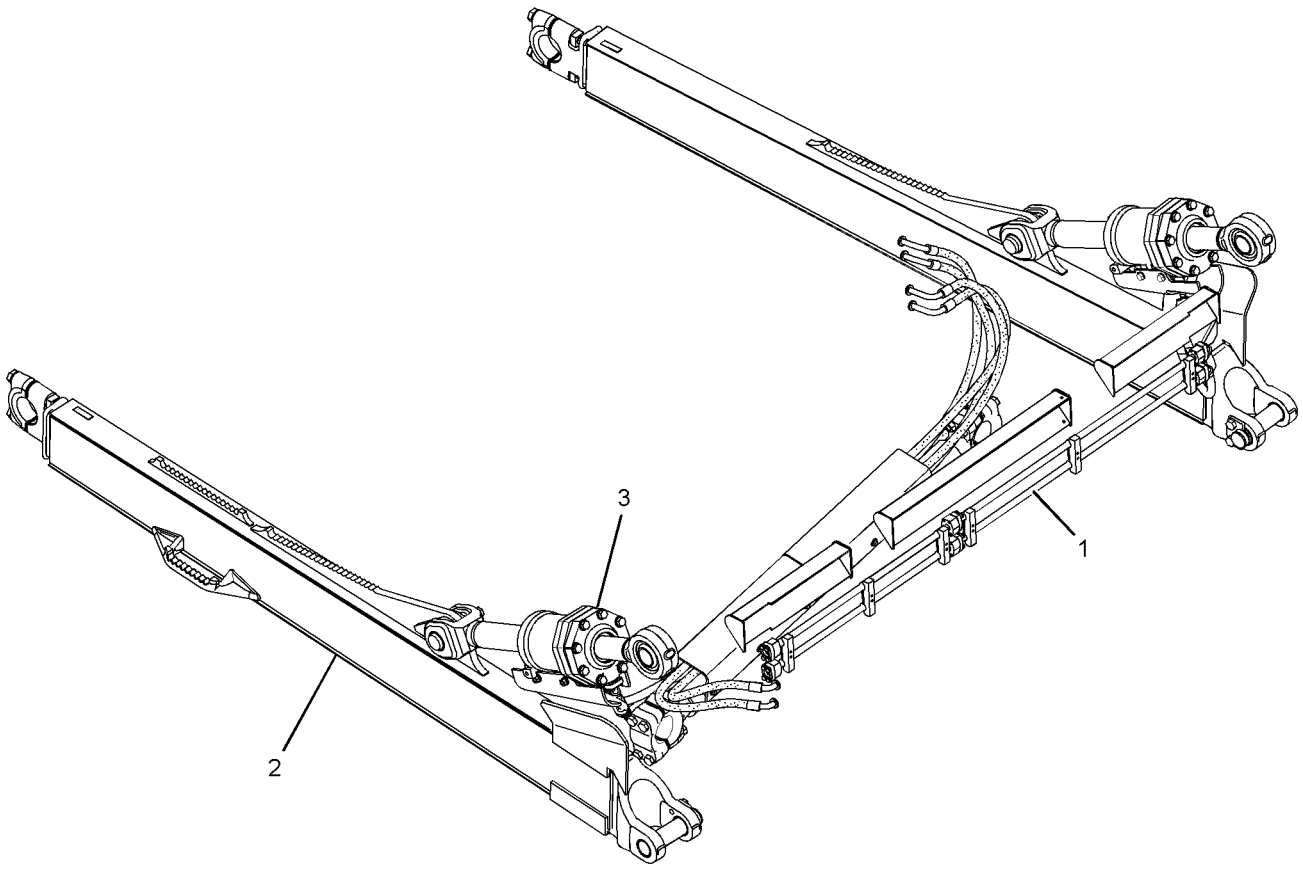

GRAPHIC #1 **<END>** g01112599

245-3558 CYLINDER AR-DUAL TILT–LOW GROUND PRESSURE

S/N: J8B1-UP

FOR USE WITH 209-5117–PAGE 618, 245-3557–PAGE 923

AN ATTACHMENT

SMCS-5104 **i03245487**

NOTE	REF NO	GRAPHIC REF	PART NUMBER	QTY	PART NAME 1 2 3 4 5 6 (PRODUCT LEVEL)	SEE PAGE
Y	1	1	**241-0550**	2	CYLINDER GP-TILT (RH, LH)	757
Y	2	1	*261-4801*	1	PUSH ARM GP-STABILIZER	938
Y	3	1	*261-4802*	1	LINES GP-TILT CYLINDER	796

Y-SEPARATE ILLUSTRATION

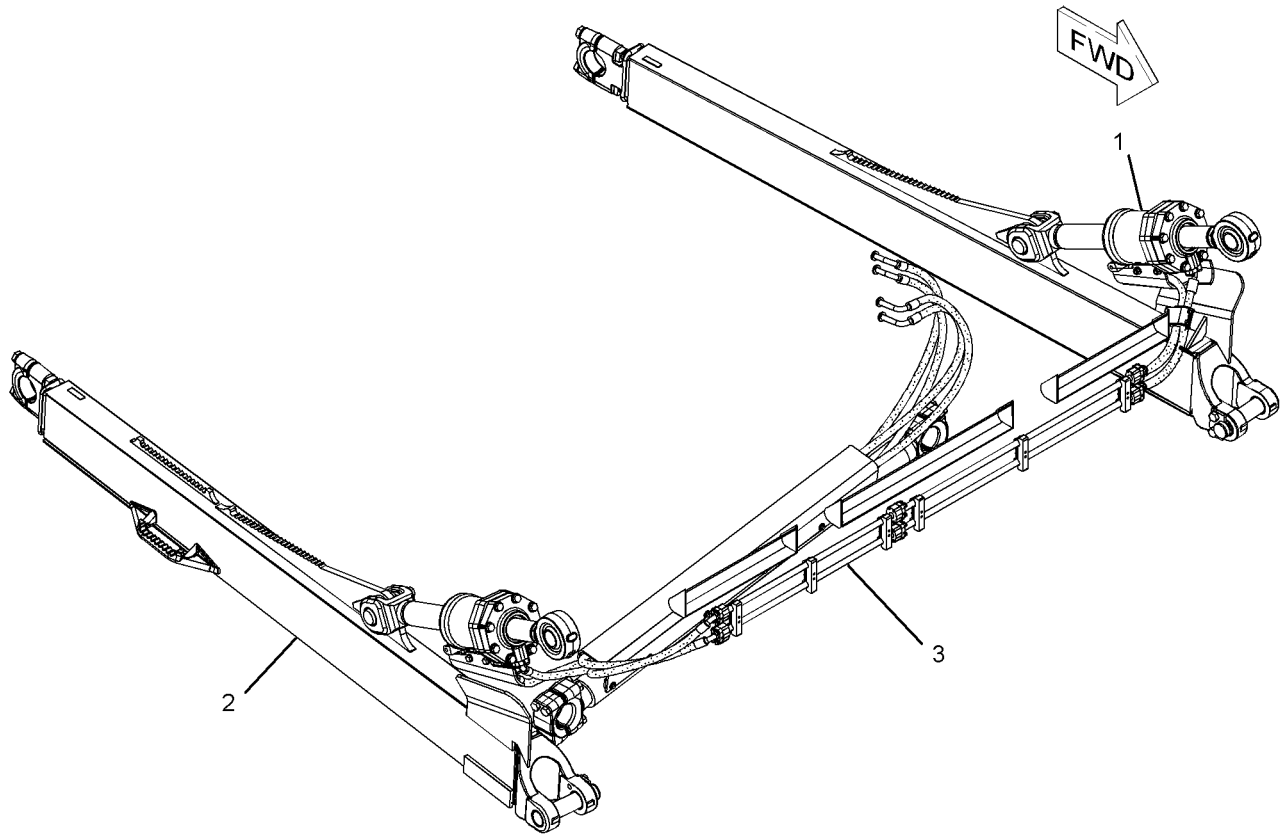

GRAPHIC #1 **<END>** g01122976

250-5861 CYLINDER GP-BULLDOZER LIFT–RH, LH

S/N: J8B1-UP; D1E1-UP; A5G1-UP; B8S1-UP
114.3-MM (4.50-IN) BORE X 1425-MM (56.10-IN) STROKE
PART OF 237-7362, 237-7363 CYLINDER & LINES GP-LIFT
AN ATTACHMENT

SMCS-5102 **i02155629**

NOTE	REF NO	GRAPHIC REF	PART NUMBER	QTY	PART NAME 1 2 3 4 5 6 (PRODUCT LEVEL)	SEE PAGE
	1	1	**6E-1109**	1	PISTON AS	
		1	**9X-7269**	1	SEAL AS	
R	2	1	**6E-1111**	1	ROD AS	
	3	1	**225-3284**	1	SEAL-WIPER	
R	4	1	**238-8637**	1	CYLINDER AS	
		1	**6E-1108**	2	BEARING-SLEEVE	
	5	1	**106-1017**	1	WASHER (36.7X77X6-MM THK)	
	6	1	**163-6474**	1	HEAD	
	7	1	**167-2208**	1	SEAL AS-BUFFER	
M	8	1	**173-9682**	1	BOLT (M36X4X100-MM)	
	9	1	**175-7902**	1	SEAL-O-RING	
	10	1	**1K-7095**	1	RING-BACKUP	
	11	1	**3G-0910**	1	CAP-BEARING	
B	12	1	**3G-0911**	28	SHIM (0.8-MM THK)	
	13	1	**4J-3745**	1	RING-WEAR	
M	14	1	**7X-0851**	4	NUT (M24X3-THD)	
	15	1	**8C-9161**	1	RING-WEAR	
M	16	1	**8T-0671**	4	BOLT (M24X3X150-MM)	
	17	1	**9X-7412**	1	SEAL-U-CUP	

B-USE AS REQUIRED
M-METRIC PART
R-REMFG PART MAY BE AVAILABLE

250-5861 CYLINDER GP-BULLDOZER LIFT *(contd.)* **i02155629**

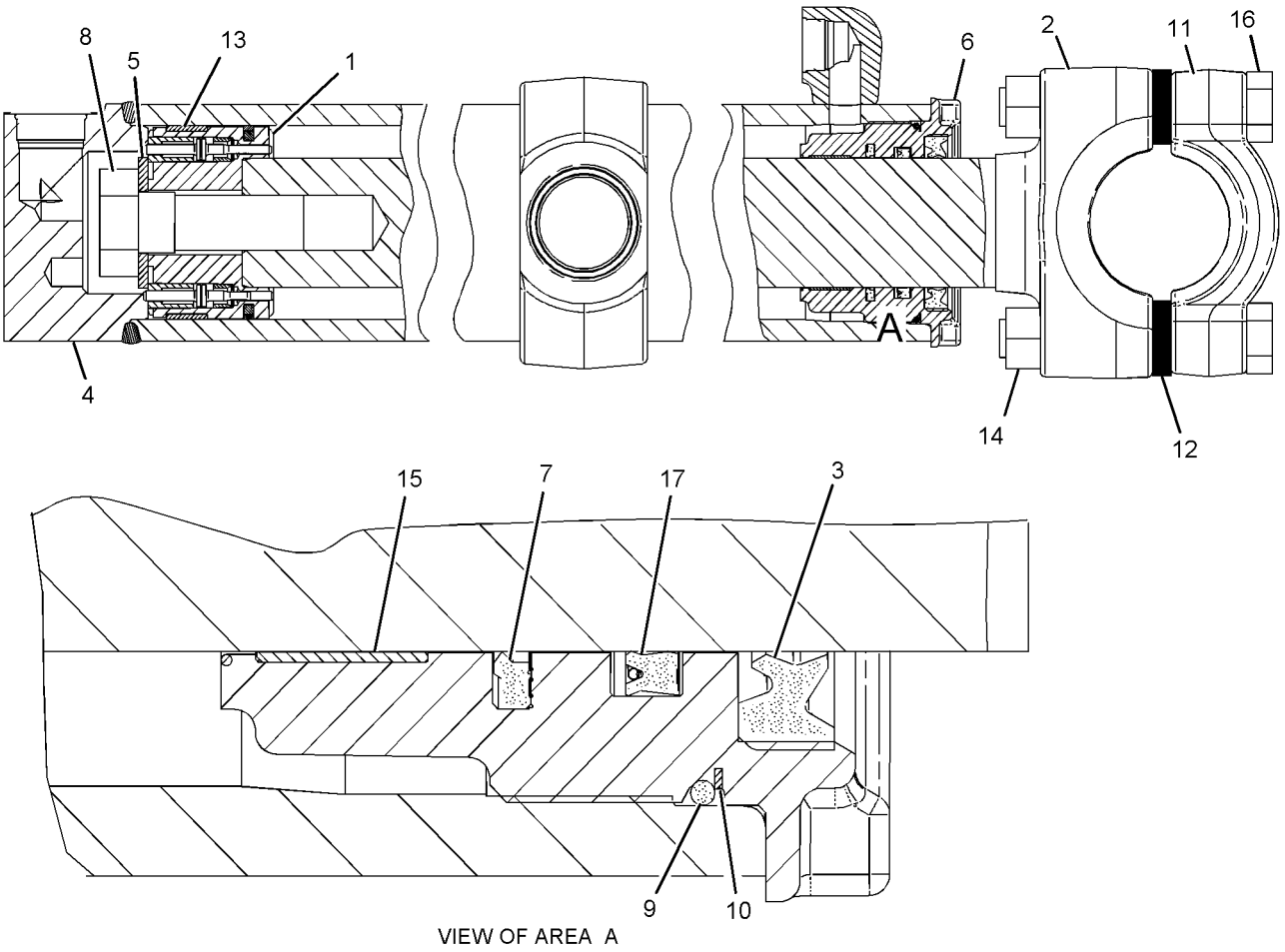

VIEW OF AREA A

GRAPHIC #1 **<END>** g01111715

HYDRAULIC SYSTEM

155-3653 CYLINDER GP-RIPPER LIFT

S/N: L1J1-UP; R8S1-UP
184.15 MM (7.25 IN.) BORE X 281 MM (11.06 IN.) STROKE
PART OF 215-6422, 215-6423 RIPPER AR
AN ATTACHMENT

SMCS-5352 **i02246594**

NOTE	REF NO	GRAPHIC REF	PART NUMBER	QTY	PART NAME 1 2 3 4 5 6 (PRODUCT LEVEL)	SEE PAGE
	1	1	**2J-7686**	1	LOCKNUT	
	2	1	**1J-2674**	1	RING-WEAR	
	3	1	**5J-4993**	1	SEAL AS	
		1	**5J-4407**	1	RING-EXPANDER	
		1	**5J-4408**	1	SEAL	
	4	1	**1U-2716**	1	PISTON	
	5	1	**6J-9121**	1	WASHER (63.73X107.95X8.74-MM THK)	
R	6	1	**155-3850**	1	CYLINDER AS	
	6A	1	**3G-5999**	1	BEARING-SLEEVE	
	7	1	**5P-7593**	1	SEAL-O-RING	
	8	1	**158-3027**	1	RING-BACKUP	
	9	1	**8T-8381**	1	SEAL	
	10	1	**155-3849**	1	HEAD	
M	11	1	**6V-5845**	8	BOLT (M20X2.5X70-MM)	
	12	1	**3B-8489**	2	FITTING-GREASE	
R	13	1	**9T-0584**	1	ROD AS	
	13A	1	**3G-5999**	1	BEARING-SLEEVE	
	14	1	**8T-4121**	8	WASHER-HARD (11X21X2.5-MM THK)	
	15	1	**8C-3206**	4	FLANGE-HALF	
	16	1	**225-3284**	1	SEAL-WIPER	
	17	1	**167-2208**	1	SEAL AS-BUFFER	
	18	1	**167-2319**	1	SEAL-U-CUP	
	19	1	**8T-1714**	1	RING-WEAR	
M	20	1	**8T-4196**	8	BOLT (M10X1.5X35-MM)	

M-METRIC PART
R-REMFG PART MAY BE AVAILABLE

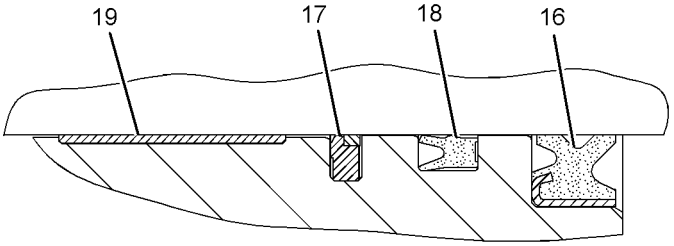

VIEW OF AREA A

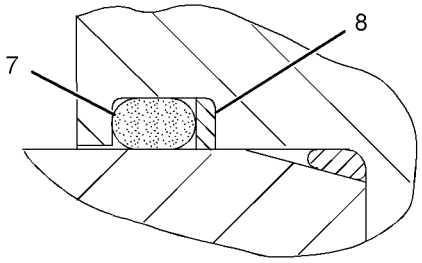

VIEW OF AREA B

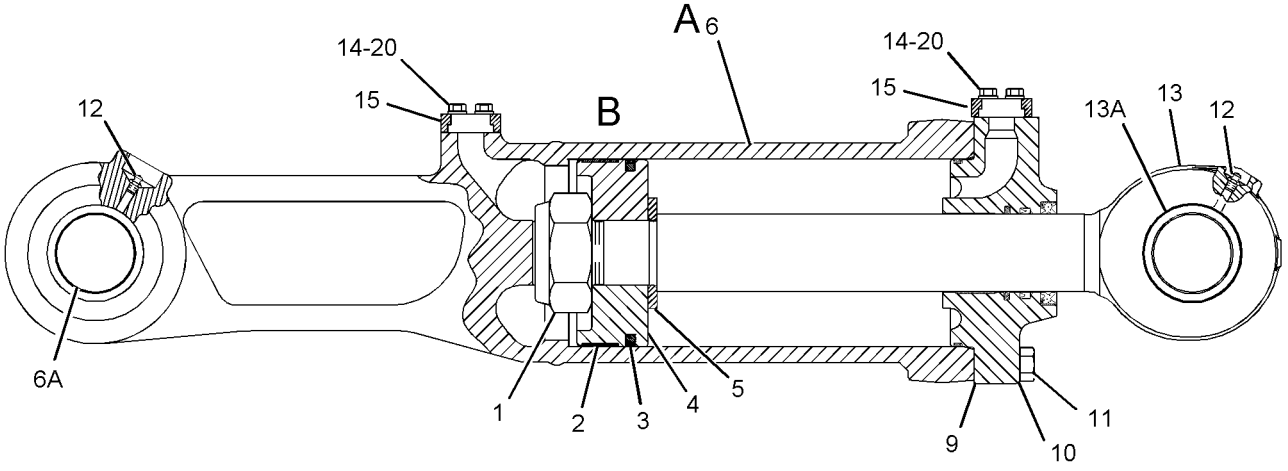

GRAPHIC #1 **<END>** g01131792

HYDRAULIC SYSTEM

6E-3113 CYLINDER GP-RIPPER PIN PULLER

S/N: J8B1-UP
101.6-MM (4-IN) BORE X 138.5-MM (5.5-IN) STROKE
PART OF 160-3616 PULLER AR-PIN
AN ATTACHMENT

SMCS-5354 **i02239112**

NOTE	REF NO	GRAPHIC REF	PART NUMBER	QTY	PART NAME 1 2 3 4 5 6 (PRODUCT LEVEL)	SEE PAGE
M	1	1	**173-9779**	1	BOLT (M24X3X80-MM)	
	2	1	**6J-2797**	1	RING-WEAR	
	3	1	**5J-5402**	1	SEAL AS	
	4	1	**9T-3493**	1	PISTON	
	5	1	**6V-8237**	1	WASHER (26X44X4-MM THK)	
	6	1	**4T-6907**	1	RING-WEAR	
	7	1	**6E-3980**	1	ROD AS	
	8	1	**231-3539**	1	SEAL-WIPER	
	9	1	**167-2300**	1	SEAL-U-CUP	
	10	1	**167-2190**	1	SEAL AS-BUFFER	
	11	1	**2K-6830**	1	RING-BACKUP	
	12	1	**175-7900**	1	SEAL-O-RING	
	13	1	**6E-4976**	1	HEAD	
	14	1	**6E-3976**	1	CYLINDER AS	

M-METRIC PART

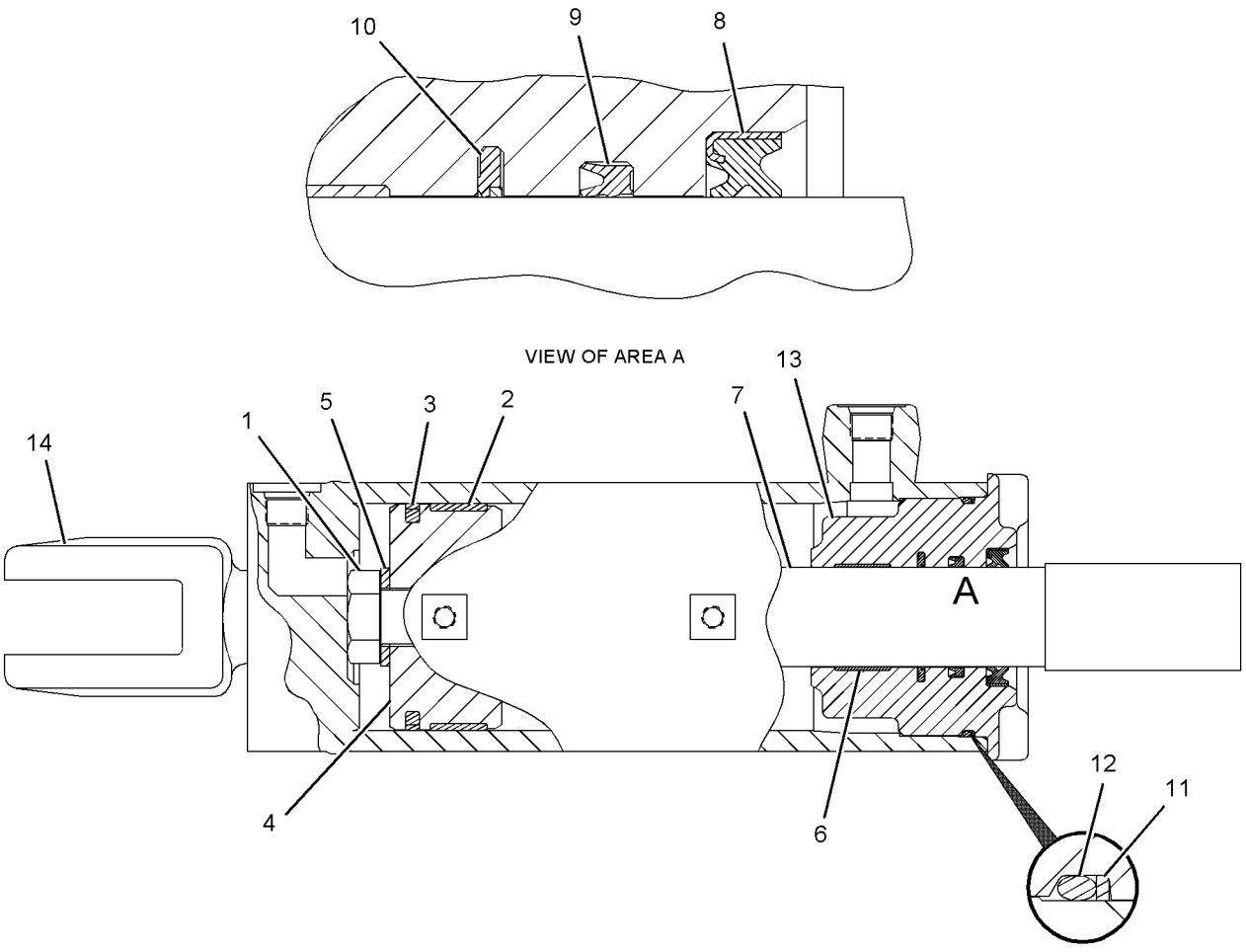

GRAPHIC #1 **<END>** g01130136

6E-0397 CYLINDER GP-TILT—ANGLING BULLDOZER

S/N: J8B1-UP
184.15-MM (7.25-IN) BORE X 175-MM (6.9-IN) STROKE
PART OF 8E-3039 CYLINDER AR-DUAL TILT
AN ATTACHMENT

SMCS-5104 **i02515071**

NOTE	REF NO	GRAPHIC REF	PART NUMBER	QTY	PART NAME 1 2 3 4 5 6 (PRODUCT LEVEL)	SEE PAGE
R	1	1	**6E-0398**	1	CYLINDER AS	
	1A	1	**1U-2182**	2	BEARING-SLEEVE	
	2	1	**2J-0564**	1	LOCKNUT (2-12-THD)	
	3	1	**9T-5900**	1	WASHER (51.2X98X4.76-MM THK)	
	4	1	**274-5527**	1	PISTON AS-CYLINDER	
	4A	1	**5J-4993**	1	SEAL AS	
	4B	1	**8H-3532**	1	SPRING-VALVE	
	4C	1	**9T-4977**	1	PLUNGER	
	4D	1	**132-5182**	1	INSERT	
	4E	1	**132-5183**	1	PLUNGER	
	5	1	**2K-2939**	1	SEAL-O-RING	
	6	1	**2K-2940**	1	RING-BACKUP	
	7	1	**6E-0402**	1	HEAD	
M	8	1	**8C-3222**	4	BOLT (M30X3.5X80-MM)	
	9	1	**3S-7023**	4	WASHER (34X57X6-MM THK)	
R	10	1	**106-3881**	1	ROD AS	
M	11	1	**8T-0672**	4	BOLT (M24X3X160-MM)	
	12	1	**160-6309**	1	CAP-BEARING	
B	13	1	**8J-9180**	28	SHIM (0.51-MM THK)	
M	14	1	**7X-0851**	4	NUT (M24X3-THD)	
	15	1	**1J-2674**	1	RING-WEAR	
	16	1	**225-3284**	1	SEAL-WIPER	
	17	1	**167-2319**	1	SEAL-U-CUP	
	18	1	**167-2208**	1	SEAL AS-BUFFER	
	19	1	**9T-0094**	1	RING-WEAR	

B-USE AS REQUIRED
M-METRIC PART
R-REMFG PART MAY BE AVAILABLE

6E-0397 CYLINDER GP-TILT *(contd.)* i02515071

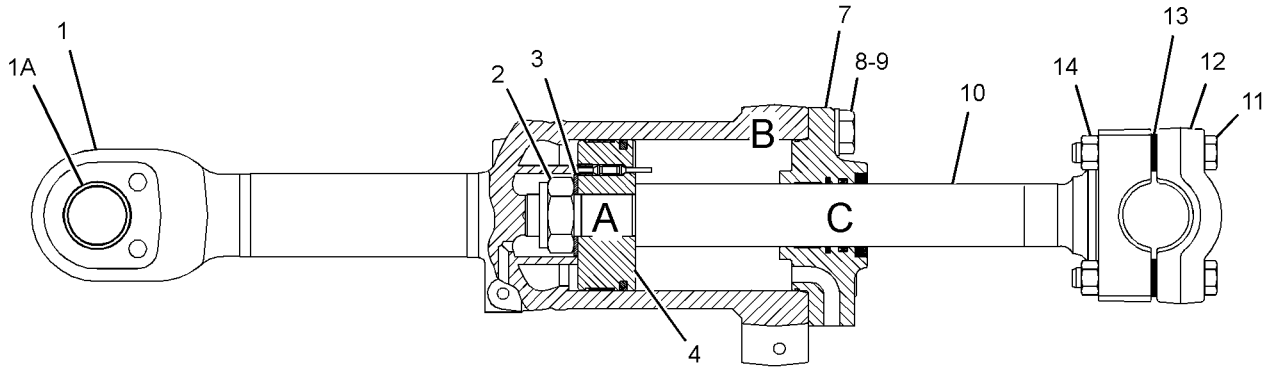

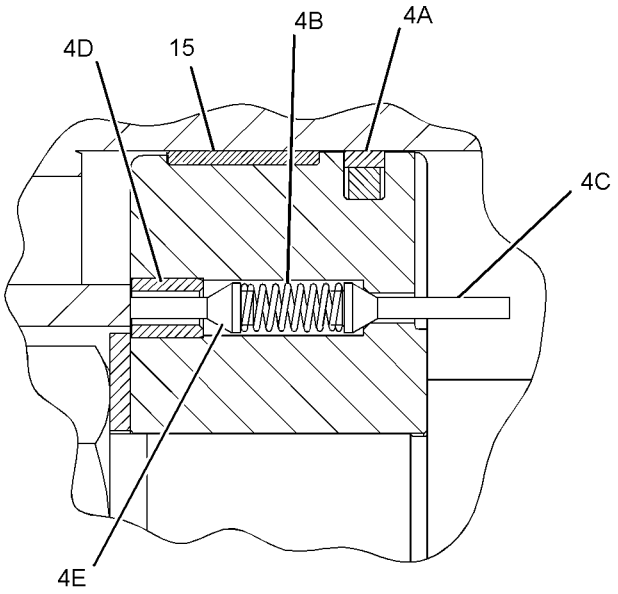

VIEW OF AREA A

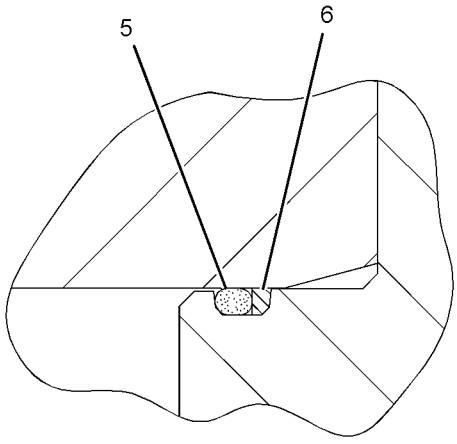

VIEW OF AREA B

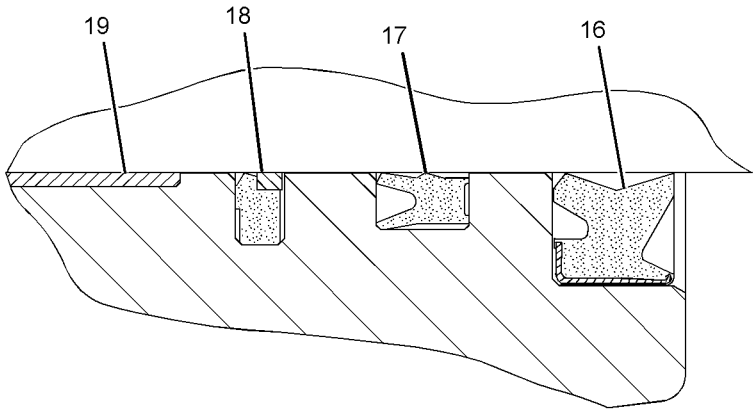

VIEW OF AREA C

GRAPHIC #1 **<END>** g01179949

HYDRAULIC SYSTEM

155-3652 CYLINDER GP-TILT–RIPPER, LH

S/N: L1J1-UP; R8S1-UP
165.1-MM (6.5-IN) BORE X 437-MM (17.2-IN) STROKE
PART OF 215-6422, 215-6423 RIPPER AR
AN ATTACHMENT

SMCS-5104 **i03430331**

NOTE	REF NO	GRAPHIC REF	PART NUMBER	QTY	PART NAME 1 2 3 4 5 6 (PRODUCT LEVEL)	SEE PAGE
	1	1	**3B-8489**	2	FITTING-GREASE	
	2	1	**155-3857**	1	CYLINDER AS	
	2A	1	**3G-5999**	1	BEARING-SLEEVE	
	3	1	**1P-4576**	2	FLANGE-HALF	
	4	1	**8T-4121**	8	WASHER-HARD (11X21X2.5-MM THK)	
M	5	1	**8T-4196**	8	BOLT (M10X1.5X35-MM)	
	6	1	**1P-4577**	2	FLANGE-HALF	
M	7	1	**8T-0666**	2	BOLT (M24X3X90-MM)	
M	8	1	**6V-8133**	4	BOLT (M24X3X80-MM)	
	9	1	**155-3856**	1	HEAD	
	10	1	**8T-8379**	1	SEAL-HEAD	
	11	1	**158-3026**	1	RING-BACKUP	
	12	1	**7J-8956**	1	SEAL-O-RING	
R	13	1	**9T-0098**	1	ROD AS	
	13A	1	**3G-5999**	1	BEARING-SLEEVE	
	14	1	**6J-9747**	1	WASHER (53X105X12.7-MM THK)	
	15	1	**5J-4991**	1	SEAL AS	
		1	**5J-4592**	1	SEAL	
		1	**5J-4593**	1	RING-EXPANDER	
	16	1	**9T-0096**	1	RING-WEAR	
	17	1	**6J-9748**	1	PISTON	
	18	1	**2J-0564**	1	LOCKNUT (2-12-THD)	
	19	1	**8T-1714**	1	RING-WEAR	
	20	1	**167-2208**	1	SEAL AS-BUFFER	
	21	1	**167-2319**	1	SEAL-U-CUP	
	22	1	**225-3284**	1	SEAL-WIPER	

M-METRIC PART
R-REMFG PART MAY BE AVAILABLE

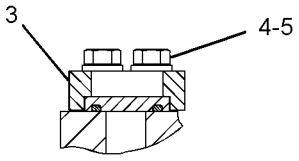

VIEW B-B

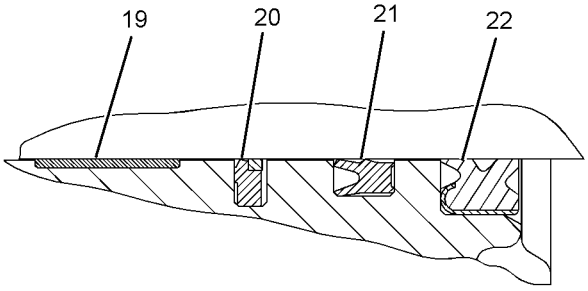

VIEW OF AREA A

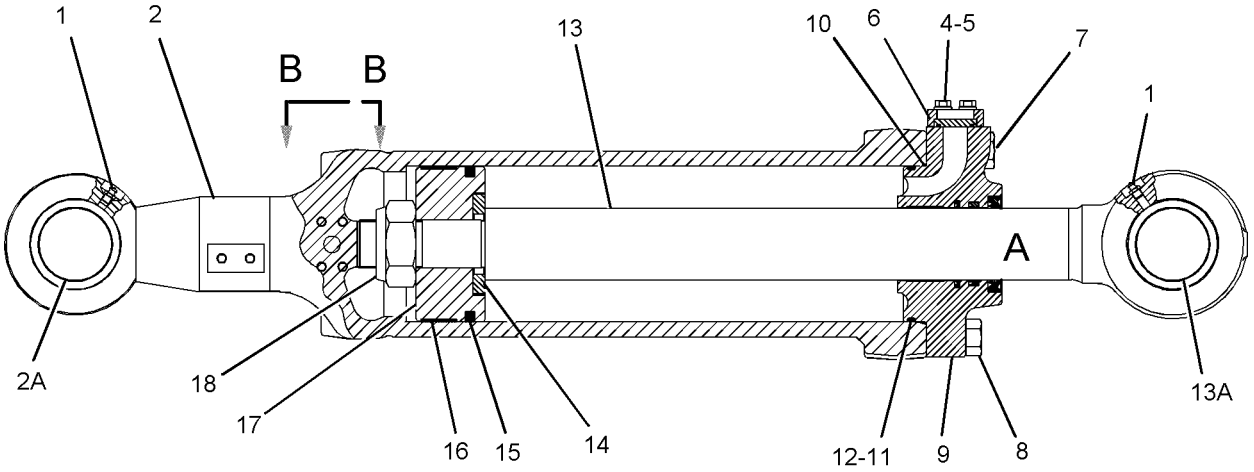

GRAPHIC #1 **<END>** g01131482

165-0102 CYLINDER GP-TILT–RIPPER, RH

S/N: L1J1-UP; R8S1-UP
165.1 MM (6.5 IN.) BORE X 437 MM (17.2 IN.) STROKE
PART OF 215-6422, 215-6423 RIPPER AR
AN ATTACHMENT

SMCS-5104 **i03430333**

NOTE	REF NO	GRAPHIC REF	PART NUMBER	QTY	PART NAME 1 2 3 4 5 6 (PRODUCT LEVEL)	SEE PAGE
	1	1	**3B-8489**	2	FITTING-GREASE	
	2	1	**165-0101**	1	CYLINDER AS	
		1	**155-3860**	1	CAP	
		1	**3G-5999**	1	BEARING-SLEEVE	
	3	1	**1P-4576**	2	FLANGE-HALF	
	4	1	**8T-4121**	8	WASHER-HARD (11X21X2.5-MM THK)	
M	5	1	**8T-4196**	8	BOLT (M10X1.5X35-MM)	
	6	1	**1P-4577**	2	FLANGE-HALF	
M	7	1	**8T-0666**	2	BOLT (M24X3X90-MM)	
M	8	1	**173-9779**	4	BOLT (M24X3X80-MM)	
	9	1	**155-3856**	1	HEAD	
	10	1	**8T-8379**	1	SEAL-HEAD	
	11	1	**158-3026**	1	RING-BACKUP	
	12	1	**7J-8956**	1	SEAL-O-RING	
R	13	1	**9T-0098**	1	ROD AS	
		1	**3G-5999**	1	BEARING-SLEEVE	
	14	1	**6J-9747**	1	WASHER (53X105X12.7-MM THK)	
	15	1	**5J-4991**	1	SEAL AS	
	16	1	**9T-0096**	1	RING-WEAR	
	17	1	**6J-9748**	1	PISTON	
	18	1	**2J-0564**	1	LOCKNUT (2-12-THD)	
	19	1	**8T-1714**	1	RING-WEAR	
	20	1	**167-2208**	1	SEAL AS-BUFFER	
	21	1	**167-2319**	1	SEAL-U-CUP	
	22	1	**225-3284**	1	SEAL-WIPER	

M-METRIC PART
R-REMFG PART MAY BE AVAILABLE

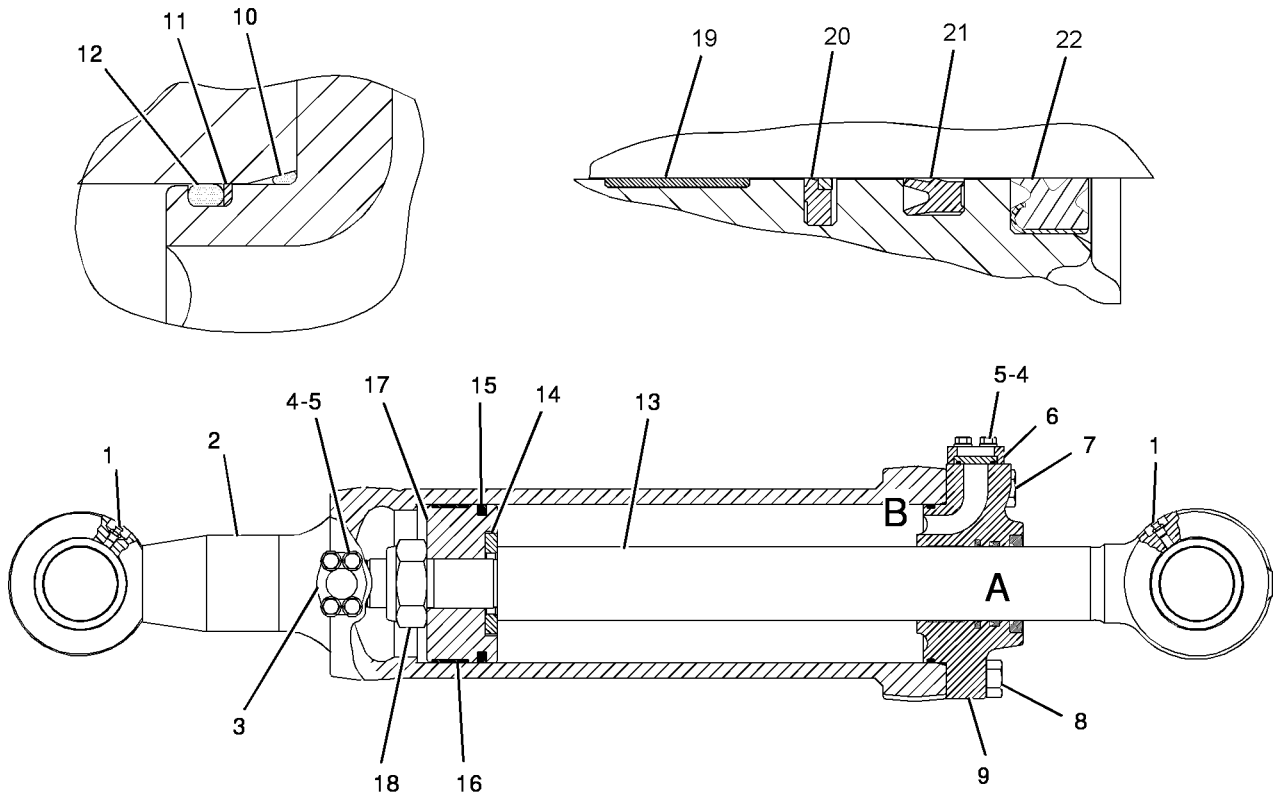

GRAPHIC #1 **<END>** g01017586

240-7347 CYLINDER GP-TILT–BULLDOZER

S/N: A5G1-UP; DZR1-UP; B8S1-UP; DZS1-UP; DZX1-UP
184.5-MM (7.2-IN) BORE X 208.4-MM (8.2-IN) STROKE
PART OF 237-4368, 247-0851 PUSH ARM GP-STABILIZER
AN ATTACHMENT

SMCS-5104 **i02227992**

NOTE	REF NO	GRAPHIC REF	PART NUMBER	QTY	PART NAME 1 2 3 4 5 6 (PRODUCT LEVEL)	SEE PAGE
	1	1	**240-7348**	1	CYLINDER AS	
	1A	1	**1U-2182**	2	BEARING-SLEEVE	
	2	1	**4J-6888**	1	LOCKNUT (2-3/4-12-THD)	
	3	1	**6E-1183**	1	PISTON	
	4	1	**5P-7593**	1	SEAL-O-RING	
	5	1	**158-3027**	1	RING-BACKUP	
	6	1	**191-3583**	1	HEAD	
	7	1	**240-7349**	1	ROD AS	
	7A	1	**7J-3297**	1	BEARING	
	7B	1	**8T-9044**	1	RING-RETAINING	
M	8	1	**6V-3669**	8	BOLT (M20X2.5X80-MM)	
	9	1	**8T-3282**	8	WASHER-HARD (22X35X3.5-MM THK)	
	10	1	**8T-1790**	1	SEAL AS	
	11	1	**1J-2674**	1	RING-WEAR	
	12	1	**225-3286**	1	SEAL-WIPER	
	13	1	**167-2324**	1	SEAL-U-CUP	
	14	1	**167-2211**	1	SEAL AS-BUFFER	
	15	1	**8C-5245**	1	RING-WEAR	
	16	1	**8T-8381**	1	SEAL	
	17	1	**3B-8489**	1	FITTING-GREASE	

M-METRIC PART

240-7347 CYLINDER GP-TILT *(contd.)* **i02227992**

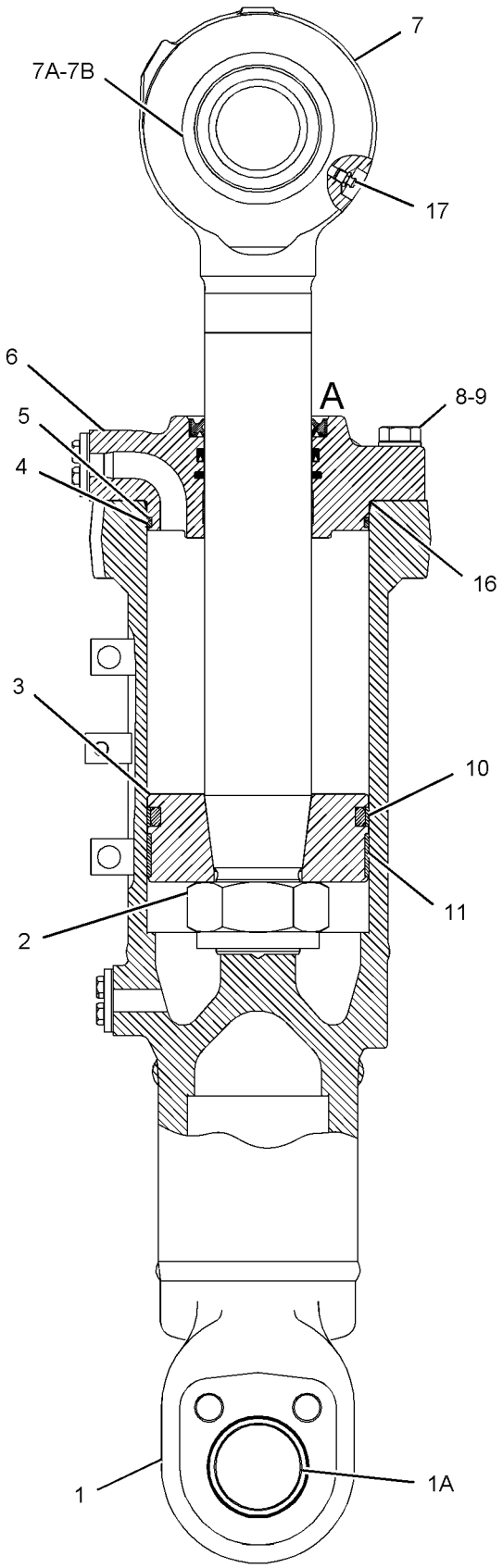

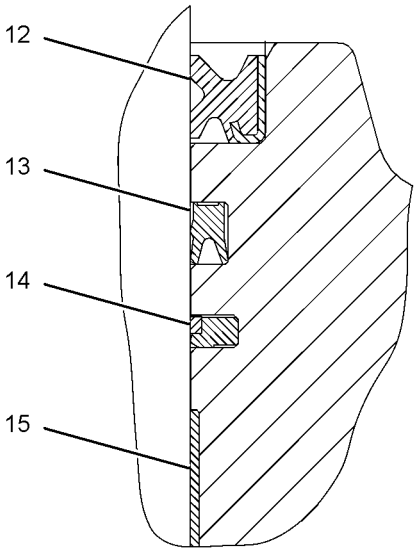

VIEW OF AREA A

GRAPHIC #1 **<END>** g01112221

241-0550 CYLINDER GP-TILT–RH, LH–BULLDOZER

S/N: J8B1-UP
184.15-MM (7.2-IN) BORE X 153.8-MM (6-IN) STROKE
PART OF 237-9234, 245-3558 CYLINDER AR-DUAL TILT
AN ATTACHMENT

SMCS-5104 **i02680924**

NOTE	REF NO	GRAPHIC REF	PART NUMBER	QTY	PART NAME 1 2 3 4 5 6 (PRODUCT LEVEL)	SEE PAGE
	1	1	**241-0551**	1	CYLINDER AS	
	1A	1	**1U-2182**	2	BEARING-SLEEVE	
	2	1	**2J-0564**	1	LOCKNUT (2-12-THD)	
	3	1	**248-1272**	1	PISTON AS	
	3A	1	**5J-4993**	1	SEAL AS	
	3B	1	**8H-3532**	1	SPRING-VALVE	
	3C	1	**132-5182**	1	INSERT	
	3D	1	**132-5183**	1	PLUNGER	
	4	1	**5P-7593**	1	SEAL-O-RING	
	5	1	**1U-1738**	1	RING-BACKUP	
	6	1	**191-3583**	1	HEAD	
	7	1	**241-0552**	1	ROD AS	
	7A	1	**7J-3297**	1	BEARING	
	7B	1	**8T-9044**	1	RING-RETAINING	
M	8	1	**6V-3669**	8	BOLT (M20X2.5X80-MM)	
	9	1	**8T-3282**	8	WASHER-HARD (22X35X3.5-MM THK)	
	10	1	**1J-2674**	1	RING-WEAR	
	11	1	**225-3286**	1	SEAL-WIPER	
	12	1	**167-2324**	1	SEAL-U-CUP	
	13	1	**167-2211**	1	SEAL AS-BUFFER	
	14	1	**8C-5245**	1	RING-WEAR	
	15	1	**8T-8381**	1	SEAL	
	16	1	**3B-8489**	1	FITTING-GREASE	
	17	1	**9T-5900**	1	WASHER (51.2X98X4.76-MM THK)	

M-METRIC PART

241-0550 CYLINDER GP-TILT *(contd.)* **i02680924**

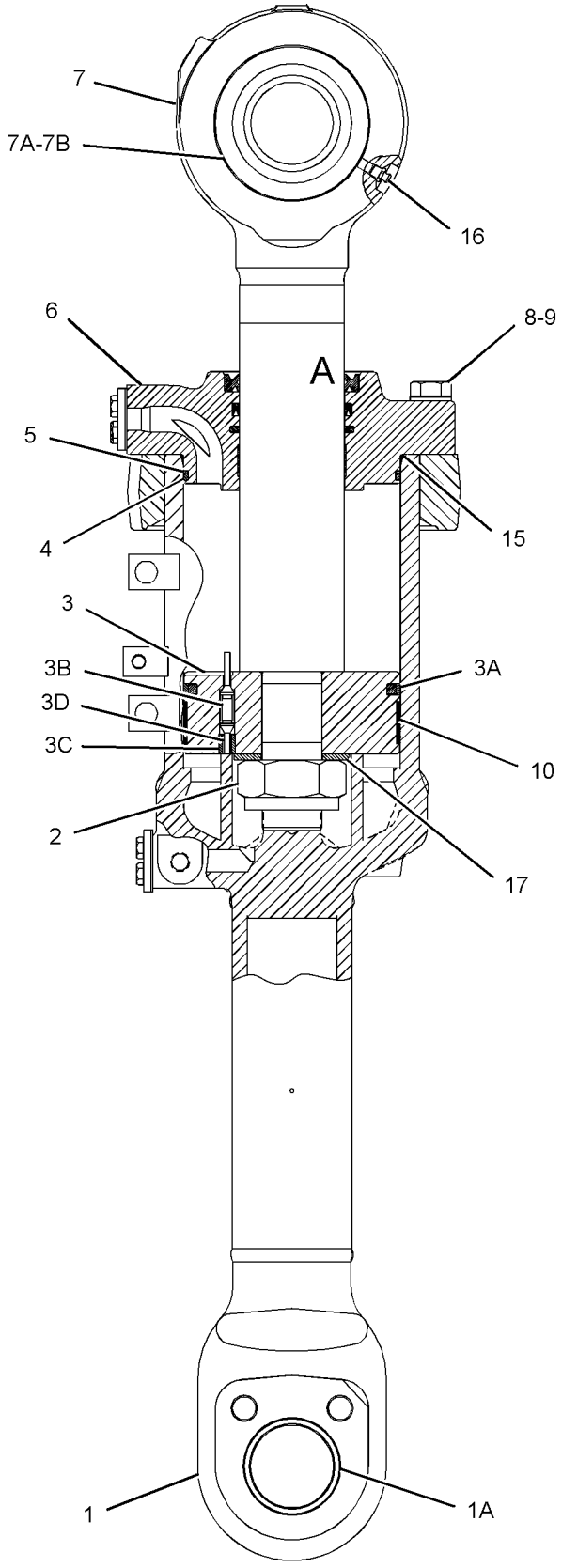

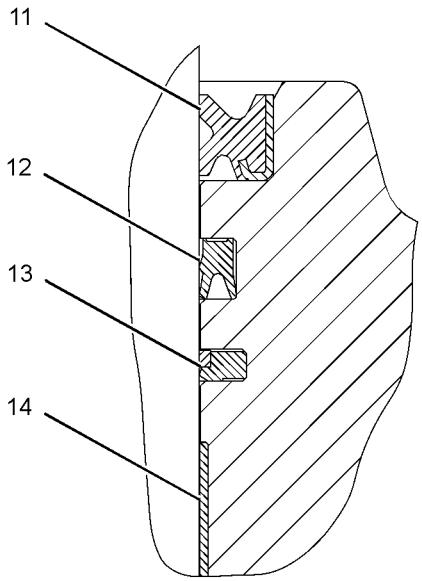

VIEW OF AREA A

GRAPHIC #1 **<END>** g01346773

HYDRAULIC SYSTEM

206-6782 HYDRAULIC AR

S/N: J8B1-UP

PART OF 206-6783 GENERAL AR

SMCS-5050 **i03430440**

NOTE	PART NUMBER	QTY	PART NAME 1 2 3 4 5 6 (PRODUCT LEVEL)	SEE PAGE
Y	*6Y-3526*	1	ADAPTER GP-MOTOR	731
Y	**208-6074**	1	CONTROL GP-JOYSTICK (BULLDOZER)	1056
			S/N: J8B1-703	
Y	**242-6207**	1	CONTROL GP-JOYSTICK (BULLDOZER)	1060
			S/N: J8B704-UP	
			-OR-	
Y	**327-3542**	1	CONTROL GP-JOYSTICK (BULLDOZER)	1068
			S/N: J8B704-UP	
Y	*208-9522*	1	LINES GP-BULLDOZER MANIFOLD	760
Y	*208-9526*	1	LINES GP-HYDRAULIC FAN	763
Y	*208-9524*	1	LINES GP-PUMP	773
Y	*208-9525*	1	LINES GP-STEERING	703
Y	*208-9523*	1	LINES GP-TILT CYLINDER	782
Y	*210-6607*	1	MOTOR & MTG GP-HYDRAULIC FAN	806
YR	**252-5127**	1	MOTOR GP-PISTON (STEERING)	710
Y	*210-6600*	1	PUMP & MOUNTING GP (IMPLEMENT)	811
Y	*210-6601*	1	PUMP & MOUNTING GP (STEERING, HYDRAULIC FAN)	812
Y	*210-6603*	1	TANK & MTG GP-HYDRAULIC	833
Y	*210-6605*	1	VALVE & MTG GP-CONTROL (QUICK-DROP) (BLADE)	835
Y	*208-9527*	1	VALVE & MTG GP-IMPLEMENT CONT (BULLDOZER)	839

R-REMFG PART MAY BE AVAILABLE
Y-SEPARATE ILLUSTRATION

<END>

HYDRAULIC SYSTEM

208-9522 LINES GP-BULLDOZER MANIFOLD

S/N: J8B1-UP

PART OF 206-6782 HYDRAULIC AR

SMCS-5057 **i02230932**

NOTE	REF NO	GRAPHIC REF	PART NUMBER	QTY	PART NAME 1 2 3 4 5 6 (PRODUCT LEVEL)	SEE PAGE
I	1	1	**209-1380**	1	HOSE AS	
I	2	1	**209-1381**	1	HOSE AS	
	3	1	**217-6886**	1	MANIFOLD	
	4	1	**228-0913**	1	BRACKET AS	
	5	1	**248-6991**	1	BRACKET AS	
I	6	1	**250-7721**	2	HOSE AS	
	7	1	**4J-0520**	8	SEAL-O-RING	
	8	1	**7G-5984**	6	CLIP (TAB)	
	9	1	**7G-5985**	5	CLIP (SLOT)	
	10	1	**7G-5986**	6	GROMMET	
	11	1	**7X-7729**	8	WASHER (11X25X3-MM THK)	
	12	1	**8C-3206**	8	FLANGE-HALF	
	13	1	**8T-4121**	20	WASHER-HARD (11X21X2.5-MM THK)	
M	14	1	**8T-4136**	2	BOLT (M10X1.5X25-MM)	
M	15	1	**8T-4186**	2	BOLT (M10X1.5X40-MM)	
M	16	1	**8T-4195**	8	BOLT (M10X1.5X30-MM)	
M	17	1	**8T-4196**	16	BOLT (M10X1.5X35-MM)	
	18	1	**8T-4223**	6	WASHER-HARD (13.5X25.5X3-MM THK)	
M	19	1	**8T-4956**	6	BOLT (M12X1.75X35-MM)	

I-REFER TO HYDRAULIC INFORMATION SYSTEM
M-METRIC PART

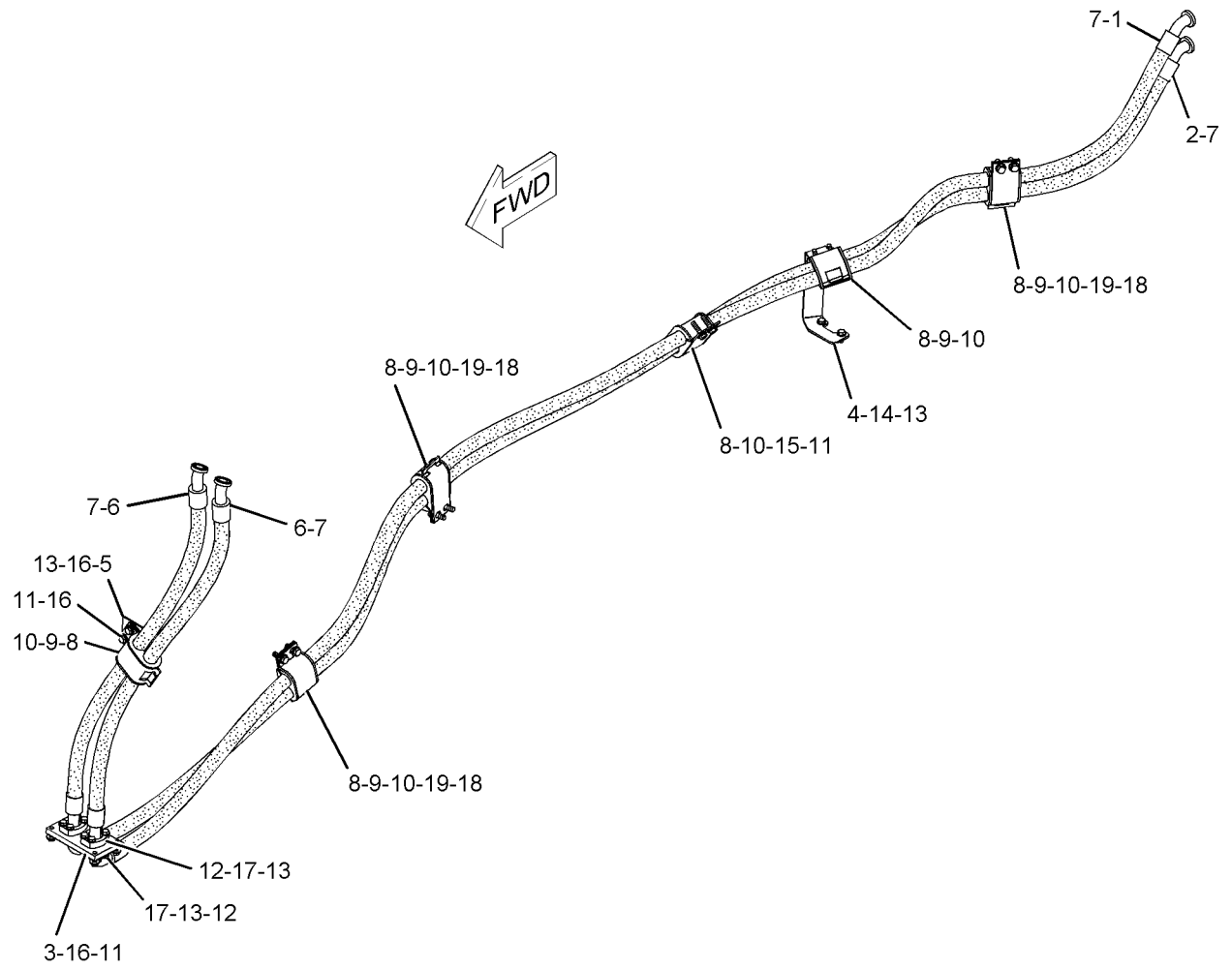

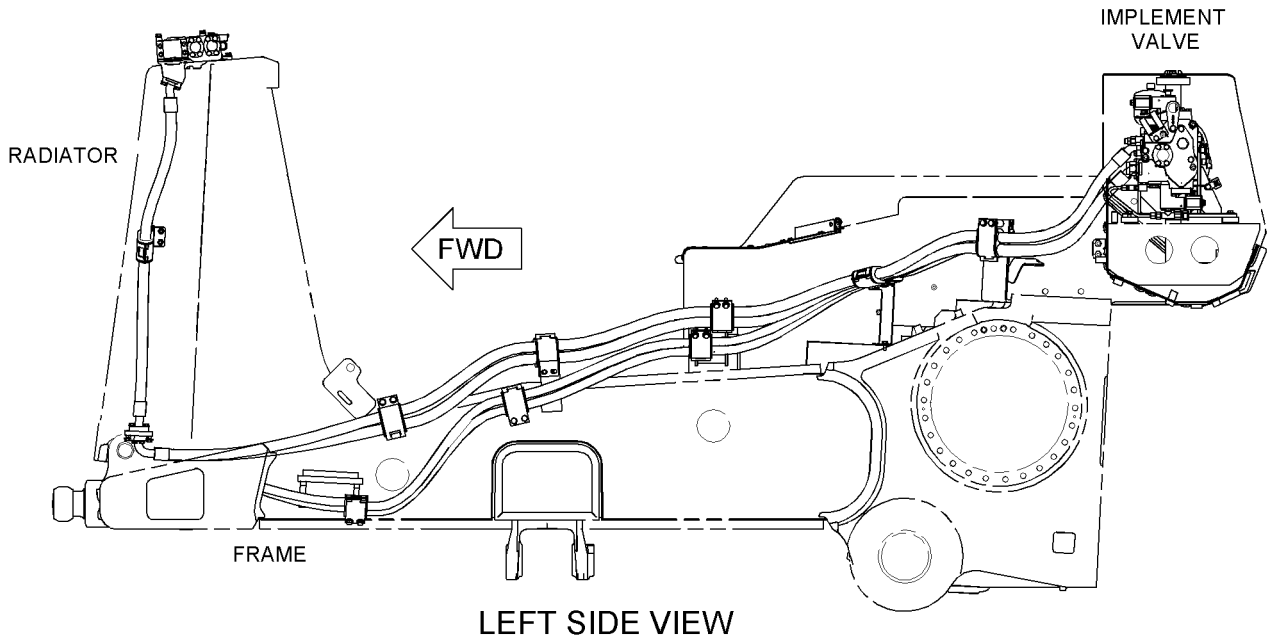

LEFT SIDE VIEW

GRAPHIC #1

<END>

g01106761

HYDRAULIC SYSTEM

187-4658 LINES GP-HYDRAULIC

S/N: J8B1-UP
ANGLING-TILT CYLINDER HOSE GUARDS
FOR USE WITH 8E-3039—PAGE 741
AN ATTACHMENT

SMCS-5057 **i01541253**

NOTE	PART NUMBER	QTY	PART NAME 1 2 3 4 5 6 (PRODUCT LEVEL)	SEE PAGE
I	**187-4421**	2	HOSE AS	
I	**187-4422**	2	HOSE AS	
I	**187-4423**	2	HOSE AS	

I-SEE HOSE FABRICATION GUIDE

<END>

HYDRAULIC SYSTEM

208-9526 LINES GP-HYDRAULIC FAN

S/N: J8B1-UP

PART OF 206-6782 HYDRAULIC AR

SMCS-1386, 1387, 5057 **i03430460**

NOTE	REF NO	GRAPHIC REF	PART NUMBER	QTY	PART NAME 1 2 3 4 5 6 (PRODUCT LEVEL)	SEE PAGE
	1	1	**4E-1437**	1	VALVE AS-COOLER BYPASS (LOW PRESSURE)	
	2	1	**6V-0852**	1	CAP-DUST	
	3	1	*150-3058*	1	TEE AS	
		1	**8C-8431**	1	TEE	
		1	**3J-1907**	1	SEAL-O-RING	
I	4	1	**208-9932**	1	HOSE AS	
I	5	1	**208-9933**	1	HOSE AS	
I	6	1	**208-9935**	1	HOSE AS	
I	7	1	**208-9937**	1	HOSE AS	
I	8	1	**208-9938**	1	HOSE AS	
I	9	1	**208-9939**	1	HOSE AS	
I	10	1	**215-1469**	1	HOSE AS	
	11	1	**217-5854**	1	BRACKET	
I	12	1	**218-4879**	1	HOSE AS	
I	13	1	**261-7170**	1	HOSE AS	
	14	1	*148-8327*	4	CONNECTOR AS	
					(EACH INCLUDES)	
		1	**6V-8637**	1	CONNECTOR	
		1	**3D-2824**	1	SEAL-O-RING	
		1	**6V-9746**	1	SEAL-O-RING	
	15	1	*148-8347*	1	ELBOW AS	
		1	**6V-9007**	1	ELBOW	
		1	**3D-2824**	1	SEAL-O-RING	
		1	**6V-9746**	1	SEAL-O-RING	
	16	1	*148-8364*	2	ELBOW AS	
					(EACH INCLUDES)	
		1	**6V-8625**	1	ELBOW	
		1	**3K-0360**	1	SEAL-O-RING	
		1	**6V-8398**	1	SEAL-O-RING	
	17	1	*148-8380*	1	ELBOW AS	
		1	**6V-8988**	1	ELBOW	
		1	**6V-8398**	2	SEAL-O-RING	
	18	1	*155-6345*	1	UNION AS	
		1	**8T-7926**	1	CONNECTOR	
		1	**6K-6307**	1	SEAL-O-RING	
		1	**8T-0315**	1	SEAL-O-RING	
	19	1	**156-4283**	1	CONNECTOR AS	
		1	**8T-7926**	1	CONNECTOR	
		1	**6K-6307**	1	SEAL-O-RING	
		1	**8T-0315**	1	SEAL-O-RING	
	20	1	*165-4933*	2	ELBOW AS	
					(EACH INCLUDES)	
		1	**6V-8990**	1	ELBOW	
		1	**6V-9746**	2	SEAL-O-RING	
	21	1	**1P-4579**	2	FLANGE-HALF	
	22	1	**2P-1293**	2	LOCKNUT (1-3/16-12-THD)	
	23	1	**3J-1907**	1	SEAL-O-RING	
	24	1	**4J-0520**	1	SEAL-O-RING	
	25	1	**4J-0524**	1	SEAL-O-RING	
	26	1	**5K-9090**	1	SEAL-O-RING	
	27	1	**5P-7466**	4	CLIP (SLOT)	
	28	1	**5P-7467**	4	CLIP (TAB)	
	29	1	**5P-8112**	4	GROMMET	
	30	1	**6V-3965**	1	FITTING (QUICK DISCONNECT)	
	31	1	**6V-5185**	5	CLIP (SLOT)	
	32	1	**6V-5186**	5	CLIP (TAB)	

208-9526 **LINES GP-HYDRAULIC FAN** *(contd.)* **i03430460**

NOTE	REF NO	GRAPHIC REF	PART NUMBER	QTY	PART NAME 1 2 3 4 5 6 (PRODUCT LEVEL)	SEE PAGE
	33	1	**6V-9169**	1	NUT-BULKHEAD (13/16-16-THD)	
	34	1	**7X-0531**	2	WASHER-HARD (31X52.5X6-MM THK)	
	35	1	**7X-7729**	12	WASHER (11X25X3-MM THK)	
	36	1	**8C-3206**	2	FLANGE-HALF	
	37	1	**8T-1887**	7	CLIP (SLOT)	
	38	1	**8T-1888**	7	CLIP (TAB)	
	39	1	**8T-4121**	9	WASHER-HARD (11X21X2.5-MM THK)	
	40	1	**8T-4123**	1	WASHER (22X35X3.5-MM THK)	
M	41	1	**8T-4136**	5	BOLT (M10X1.5X25-MM)	
M	42	1	**8T-4183**	4	BOLT (M12X1.75X40-MM)	
M	43	1	**8T-4195**	12	BOLT (M10X1.5X30-MM)	
M	44	1	**8T-4196**	4	BOLT (M10X1.5X35-MM)	
	45	1	**8T-4223**	4	WASHER-HARD (13.5X25.5X3-MM THK)	

I-REFER TO HYDRAULIC INFORMATION SYSTEM
M-METRIC PART

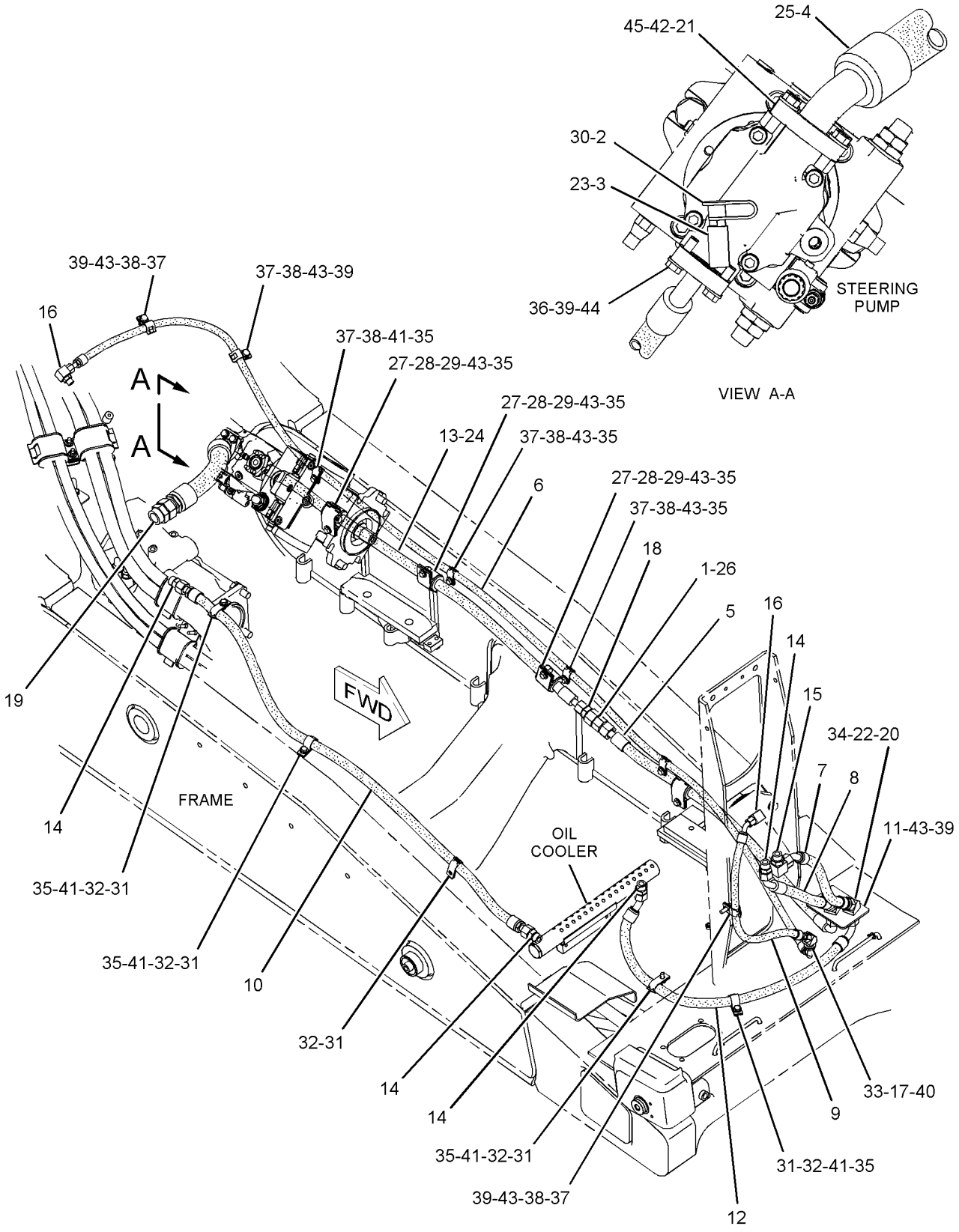

GRAPHIC #1 **<END>** g01127147

HYDRAULIC SYSTEM

303-5933 LINES GP-HYDRAULIC FAN

S/N: J8B1256-1571
PART OF 257-5525 RADIATOR AR
AN ATTACHMENT

SMCS-1386, 1387, 5057 **i03430488**

NOTE	REF NO	GRAPHIC REF	PART NUMBER	QTY	PART NAME 1 2 3 4 5 6 (PRODUCT LEVEL)	SEE PAGE
	1	2	**4E-1437**	1	VALVE AS-COOLER BYPASS (LOW PRESSURE)	
	2	1	**6V-0852**	1	CAP-DUST	
I	3	1,2	**116-3211**	1	HOSE AS	
Y	4	2	**126-0747**	1	VALVE GP-BYPASS (HYDRAULIC OIL COOLER)	862
	5	1	*150-3058*	1	TEE AS	
		1	**8C-8431**	1	TEE	
		1	**3J-1907**	1	SEAL-O-RING	
I	6	2	**203-2921**	1	HOSE AS	
I	7	1	**208-9932**	1	HOSE AS	
I	8	1,2	**208-9933**	1	HOSE AS	
I	9	1,2	**208-9935**	1	HOSE AS	
I	10	2	**208-9937**	1	HOSE AS	
I	11	2	**208-9938**	1	HOSE AS	
I	12	2	**208-9939**	1	HOSE AS	
	13	2	**217-5854**	1	BRACKET	
I	14	1	**261-7170**	1	HOSE AS	
I	15	1,2	**303-4426**	1	HOSE AS	
I	16	1	**305-2781**	1	HOSE AS	
	17	2	**307-6507**	1	PLATE AS	
	18	1	**091-0081**	1	SPACER (10.5X20X10-MM THK)	
	19	2	*148-8327*	2	CONNECTOR AS	
					(EACH INCLUDES)	
		2	**6V-8637**	1	CONNECTOR	
		2	**3D-2824**	1	SEAL-O-RING	
		2	**6V-9746**	1	SEAL-O-RING	
	20	1,2	*148-8339*	3	CONNECTOR AS	
					(EACH INCLUDES)	
		1,2	**6V-8716**	1	CONNECTOR	
		1,2	**6V-9746**	1	SEAL-O-RING	
		1,2	**7M-8485**	1	SEAL-O-RING	
	21	2	*148-8347*	1	ELBOW AS	
		2	**6V-9007**	1	ELBOW	
		2	**3D-2824**	1	SEAL-O-RING	
		2	**6V-9746**	1	SEAL-O-RING	
	22	2	*148-8360*	2	ELBOW AS	
					(EACH INCLUDES)	
		2	**6V-9182**	1	ELBOW	
		2	**6V-9746**	1	SEAL-O-RING	
		2	**7M-8485**	1	SEAL-O-RING	
	23	1,2	*148-8364*	2	ELBOW AS	
					(EACH INCLUDES)	
		1,2	**6V-8625**	1	ELBOW	
		1,2	**3K-0360**	1	SEAL-O-RING	
		1,2	**6V-8398**	1	SEAL-O-RING	
	24	2	*148-8380*	1	ELBOW AS	
		2	**6V-8988**	1	ELBOW	
		2	**6V-8398**	2	SEAL-O-RING	
	25	1	*148-8449*	1	TEE AS-SWIVEL	
		1	**6V-9839**	1	TEE-SWIVEL	
		1	**6V-9746**	2	SEAL-O-RING	
	26	2	*155-6345*	1	UNION AS	
		2	**6V-8740**	1	UNION	
		2	**5K-9090**	1	SEAL-O-RING	
		2	**6V-9746**	1	SEAL-O-RING	
	27	1	*156-4283*	1	CONNECTOR AS	

303-5933 LINES GP-HYDRAULIC FAN *(contd.)* i03430488

NOTE	REF NO	GRAPHIC REF	PART NUMBER	QTY	PART NAME 1 2 3 4 5 6 (PRODUCT LEVEL)	SEE PAGE
		1	**8T-7926**	1	CONNECTOR	
		1	**6K-6307**	1	SEAL-O-RING	
		1	**8T-0315**	1	SEAL-O-RING	
	28	2	*165-4933*	2	ELBOW AS	
					(EACH INCLUDES)	
		2	**6V-8990**	1	ELBOW	
		2	**6V-9746**	2	SEAL-O-RING	
	29	1	**1P-4579**	2	FLANGE-HALF	
	30	2	**2P-1293**	2	LOCKNUT (1-3/16-12-THD)	
	31	1	**3J-1907**	1	SEAL-O-RING	
	32	1	**4J-0520**	1	SEAL-O-RING	
	33	1	**4J-0524**	1	SEAL-O-RING	
	34	2	**5K-9090**	1	SEAL-O-RING	
	35	1,2	**5P-7466**	4	CLIP (SLOT)	
	36	1,2	**5P-7467**	4	CLIP (TAB)	
	37	1,2	**5P-8112**	4	GROMMET	
	38	1	**6V-3965**	1	FITTING (QUICK DISCONNECT)	
	39	1,2	**6V-5185**	7	CLIP (SLOT)	
	40	1,2	**6V-5186**	7	CLIP (TAB)	
	41	2	**6V-9169**	1	NUT-BULKHEAD (13/16-16-THD)	
	42	2	**7X-0531**	2	WASHER-HARD (31X52.5X6-MM THK)	
	43	1,2	**7X-7729**	10	WASHER (11X25X3-MM THK)	
	44	1	**8C-3206**	2	FLANGE-HALF	
	45	1,2	**8T-1887**	7	CLIP (SLOT)	
	46	1,2	**8T-1888**	7	CLIP (TAB)	
	47	1,2	**8T-4121**	18	WASHER-HARD (11X21X2.5-MM THK)	
	48	2	**8T-4123**	1	WASHER (22X35X3.5-MM THK)	
M	49	1	**8T-4136**	3	BOLT (M10X1.5X25-MM)	
M	50	2	**8T-4178**	3	BOLT (M10X1.5X90-MM)	
M	51	1	**8T-4183**	4	BOLT (M12X1.75X40-MM)	
M	52	1,2	**8T-4195**	18	BOLT (M10X1.5X30-MM)	
M	53	1	**8T-4196**	4	BOLT (M10X1.5X35-MM)	
	54	1	**8T-4223**	4	WASHER-HARD (13.5X25.5X3-MM THK)	

I-REFER TO HYDRAULIC INFORMATION SYSTEM
M-METRIC PART
Y-SEPARATE ILLUSTRATION

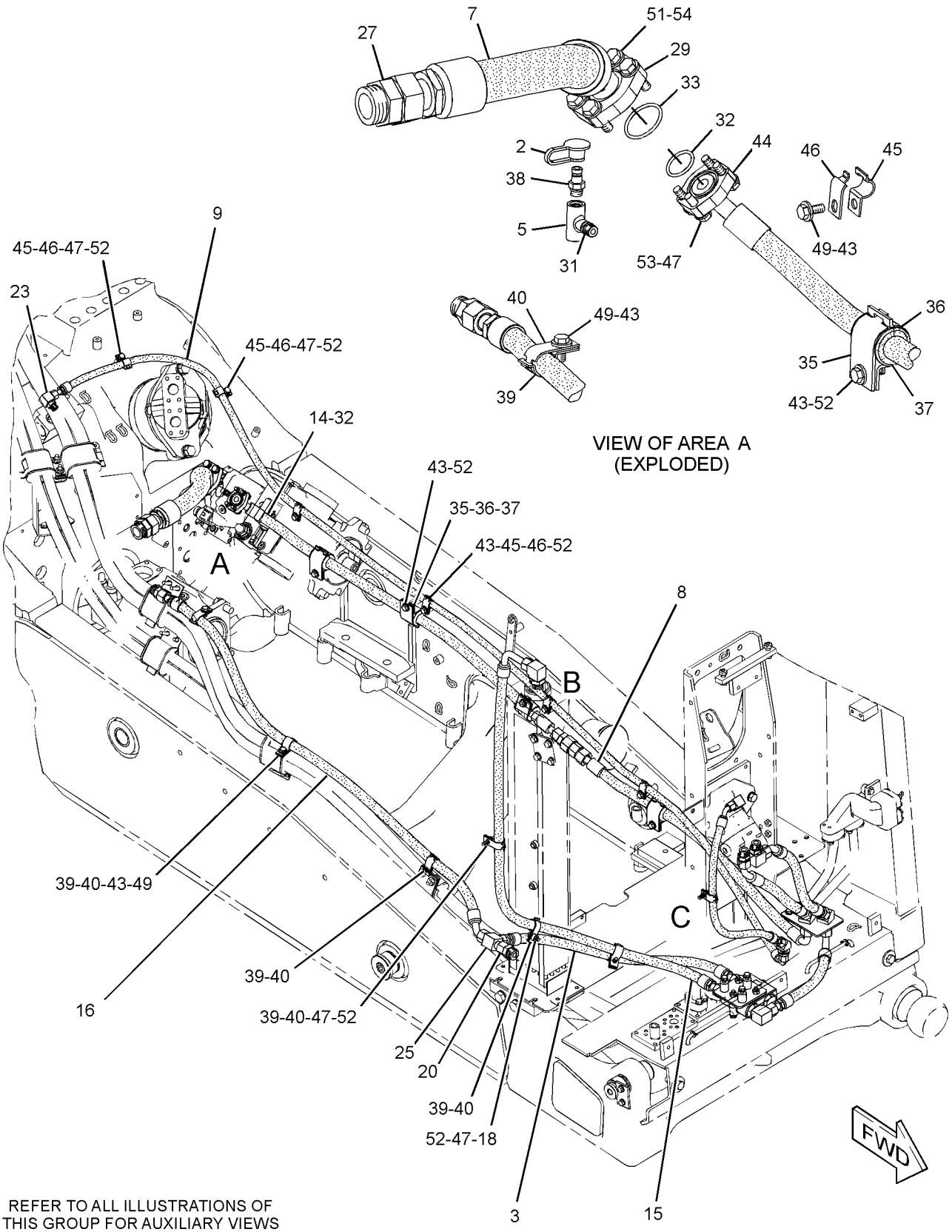

REFER TO ALL ILLUSTRATIONS OF
THIS GROUP FOR AUXILIARY VIEWS

GRAPHIC #1

g01433566

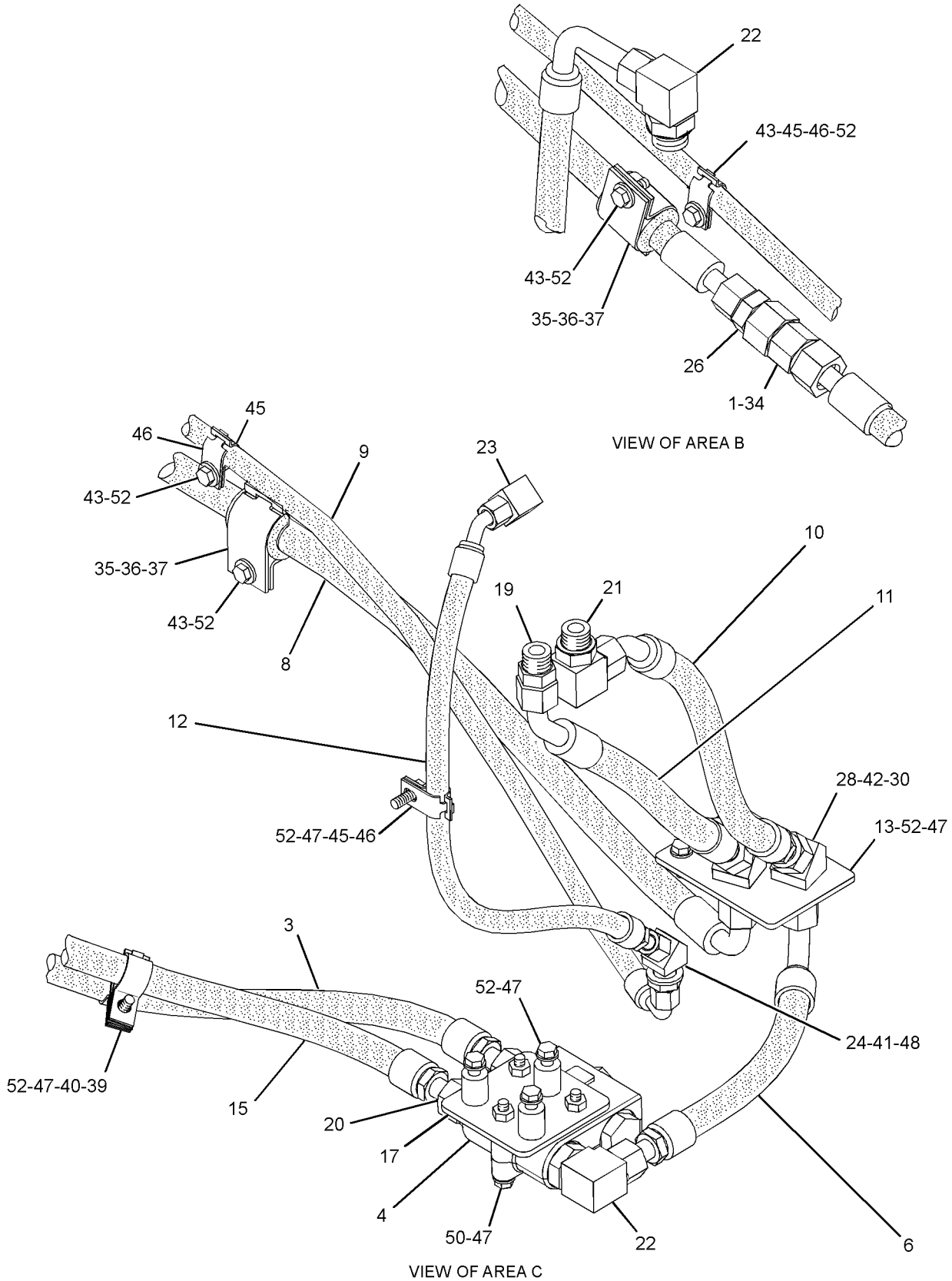

GRAPHIC #2

<END>

g01433567

HYDRAULIC SYSTEM

303-5933 LINES GP-HYDRAULIC FAN

S/N: J8B1572-UP
PART OF 257-5525 RADIATOR AR
AN ATTACHMENT

SMCS-1386, 1387, 5057 **i03430487**

NOTE	REF NO	GRAPHIC REF	PART NUMBER	QTY	PART NAME 1 2 3 4 5 6 (PRODUCT LEVEL)	SEE PAGE
I	1	1	**116-3211**	1	HOSE AS	
Y	2	1	**126-0747**	1	VALVE GP-BYPASS (HYDRAULIC OIL COOLER)	862
I	3	1	**203-2921**	1	HOSE AS	
I	4	1	**303-4426**	1	HOSE AS	
I	5	1	**305-2781**	1	HOSE AS	
	6	1	**307-6507**	1	PLATE AS	
M		1	**7Y-8763**	3	BOSS (M10X1.5X25-MM)	
M		1	**8T-3490**	3	NUT-WELD (M10X1.5-THD)	
	7	1	**091-0081**	1	SPACER (10.5X20X10-MM THK)	
	8	1	*148-8339*	3	CONNECTOR AS	
					(EACH INCLUDES)	
		1	**6V-8716**	1	CONNECTOR	
		1	**6V-9746**	1	SEAL-O-RING	
		1	**7M-8485**	1	SEAL-O-RING	
	9	1	*148-8360*	2	ELBOW AS	
					(EACH INCLUDES)	
		1	**6V-9182**	1	ELBOW	
		1	**6V-9746**	1	SEAL-O-RING	
		1	**7M-8485**	1	SEAL-O-RING	
	10	1	*148-8449*	1	TEE AS-SWIVEL	
		1	**6V-9839**	1	TEE-SWIVEL	
		1	**6V-9746**	2	SEAL-O-RING	
C	11	1	**6V-5185**	4	CLIP (SLOT)	
C	12	1	**6V-5186**	4	CLIP (TAB)	
C	13	1	**8T-4121**	9	WASHER-HARD (11X21X2.5-MM THK)	
M	14	1	**8T-4178**	3	BOLT (M10X1.5X90-MM)	
CM	15	1	**8T-4195**	6	BOLT (M10X1.5X30-MM)	

C-CHANGE FROM PREVIOUS TYPE
I-REFER TO HYDRAULIC INFORMATION SYSTEM
M-METRIC PART
Y-SEPARATE ILLUSTRATION

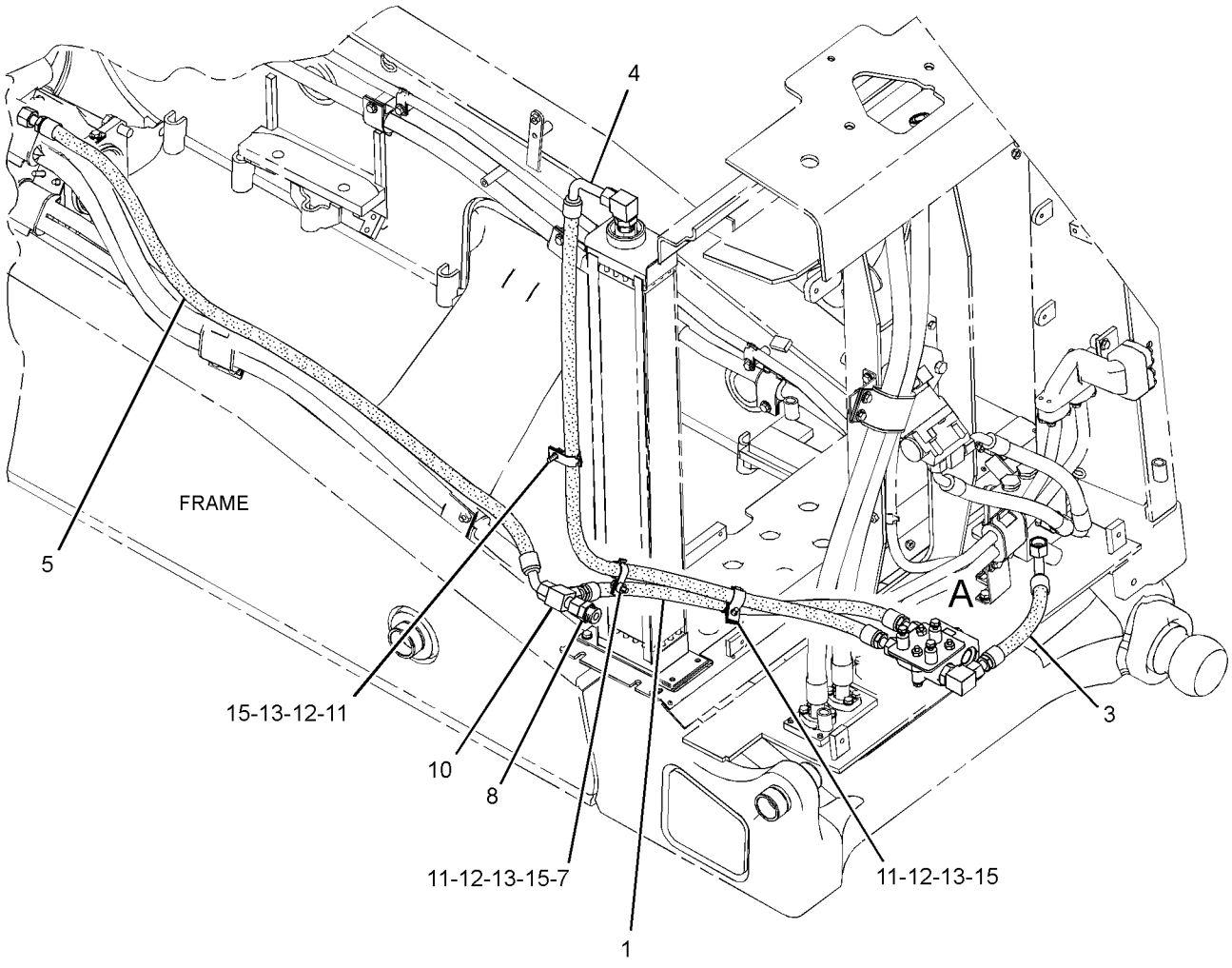

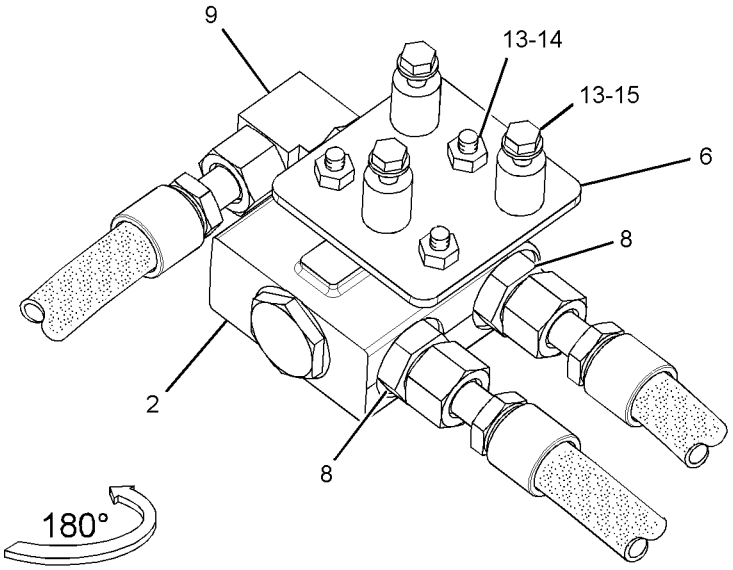

VIEW OF AREA A

GRAPHIC #1 **<END>** g01569776

HYDRAULIC SYSTEM

160-3619 LINES GP-PIN PULLER CYLINDER

S/N: J8B1-UP
PART OF 160-3616 PULLER AR-PIN
AN ATTACHMENT

SMCS-5057, 5354 **i01622356**

NOTE	REF NO	GRAPHIC REF	PART NUMBER	QTY	PART NAME 1 2 3 4 5 6 (PRODUCT LEVEL)	SEE PAGE
I	1	1	**180-0929**	1	HOSE AS	
I	2	1	**209-3299**	1	HOSE AS	
	3	1	**3G-8054**	3	CLIP (TAB)	
	4	1	**3G-8057**	3	CLIP (SLOT)	
	5	1	**3J-1907**	2	SEAL-O-RING	
	6	1	**3K-0360**	2	SEAL-O-RING	
	7	1	**3G-8047**	3	GROMMET	
	8	1	**6V-8398**	4	SEAL-O-RING	
	9	1	**6V-8625**	1	ELBOW	
	10	1	**6V-9002**	1	ELBOW	
	11	1	**6V-9873**	2	CONNECTOR	
	12	1	**8T-4121**	6	WASHER-HARD (11X21X2.5-MM THK)	
M	13	1	**8T-4195**	6	BOLT (M10X1.5X30-MM)	

I-REFER TO HYDRAULIC INFORMATION SYSTEM
M-METRIC PART

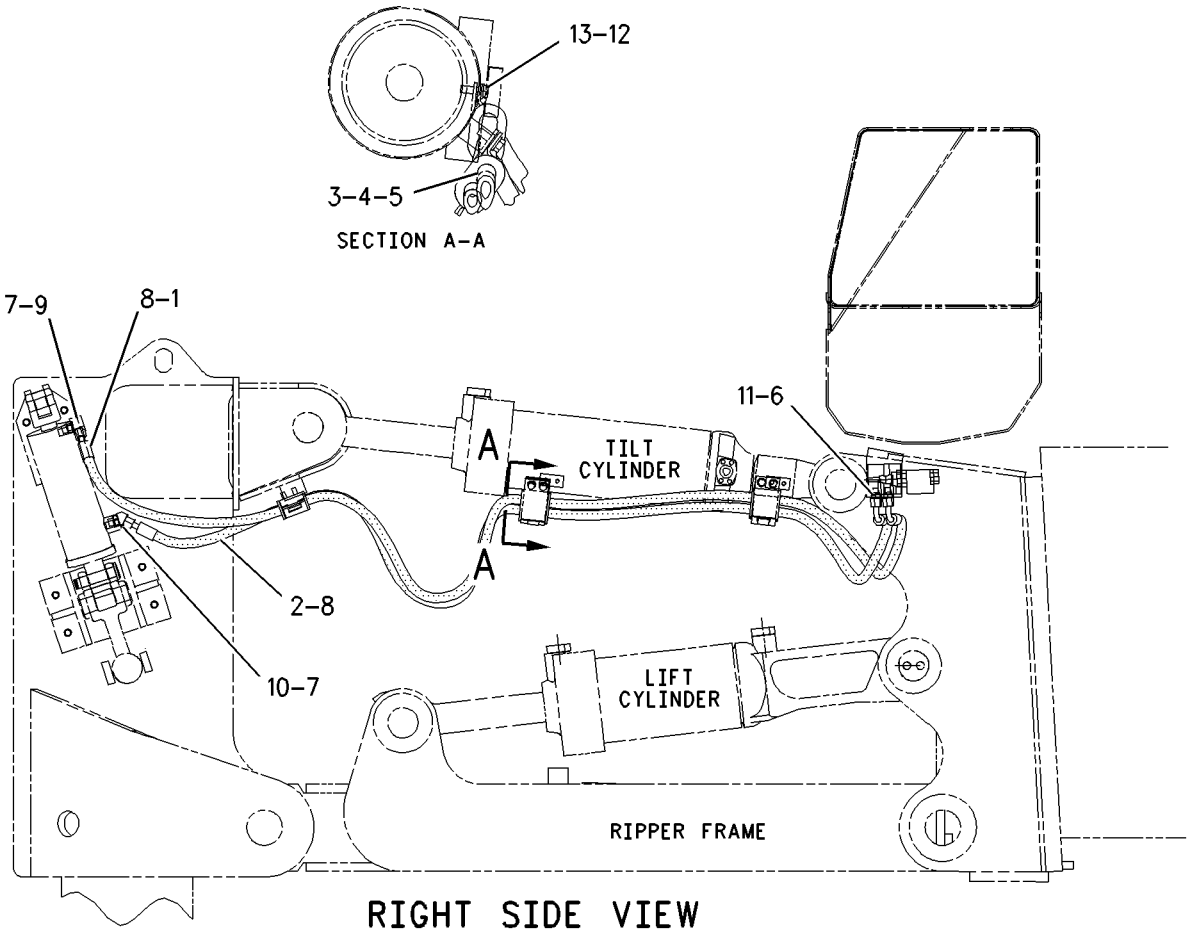

RIGHT SIDE VIEW

GRAPHIC #1 **<END>** g00849456

HYDRAULIC SYSTEM

208-9524 LINES GP-PUMP

S/N: J8B1-UP

PART OF 206-6782 HYDRAULIC AR

SMCS-5057 **i03431961**

NOTE	REF NO	GRAPHIC REF	PART NUMBER	QTY	PART NAME 1 2 3 4 5 6 (PRODUCT LEVEL)	SEE PAGE
	1	1	**2H-9233**	1	SPACER (0.563X1X1-IN THK)	
Y	2	1	**198-9220**	1	VALVE GP-RELIEF (IMPLEMENT PUMP OIL)	906
	3	1	**209-1392**	1	MANIFOLD	
I	4	1	**209-1402**	1	HOSE AS	
I	5	1	**209-1404**	1	HOSE AS	
I	6	1	**209-1405**	1	HOSE AS	
I	7	1	**209-1406**	1	HOSE AS	
I	8	1	**209-1407**	1	HOSE AS	
I	9	1	**215-7292**	1	HOSE AS	
	10	1	**236-4540**	1	MANIFOLD	
	11	1	**237-6035**	1	TUBE AS	
	12	1	**237-9482**	1	BRACKET AS	
	13	1	**247-7788**	1	MANIFOLD	
	14	1	**261-0664**	1	TUBE AS	
I	15	1	**261-0665**	1	HOSE AS	
	16	1	**261-0967**	1	BRACKET AS	
	17	1	*148-8327*	2	CONNECTOR AS	
					(EACH INCLUDES)	
		1	**6V-8637**	1	CONNECTOR	
		1	**3D-2824**	1	SEAL-O-RING	
		1	**6V-9746**	1	SEAL-O-RING	
	18	1	*148-8334*	1	CONNECTOR AS	
		1	**8T-3611**	1	CONNECTOR	
		1	**2S-4078**	1	SEAL-O-RING	
		1	**6V-8400**	1	SEAL-O-RING	
	19	1	*148-8353*	1	ELBOW AS	
		1	**6V-9001**	1	ELBOW	
		1	**3J-1907**	1	SEAL-O-RING	
		1	**6V-8397**	1	SEAL-O-RING	
	20	1	*148-8378*	2	ELBOW AS	
					(EACH INCLUDES)	
		1	**6V-8724**	1	ELBOW	
		1	**3J-1907**	1	SEAL-O-RING	
		1	**6V-8937**	1	REDUCER-O-RING	
	21	1	*148-8411*	1	PLUG AS	
		1	**9S-4185**	1	PLUG-O-RING	
		1	**3K-0360**	1	SEAL-O-RING	
	22	1	**1P-4577**	4	FLANGE-HALF	
	23	1	**1P-4578**	2	FLANGE-HALF	
	24	1	**1P-4584**	2	FLANGE-HALF	
	25	1	**1S-6420**	1	CLIP	
	26	1	**3P-2404**	1	CLIP	
	27	1	**4J-0520**	4	SEAL-O-RING	
	28	1	**4J-0522**	2	SEAL-O-RING	
	29	1	**4J-0524**	1	SEAL-O-RING	
	30	1	**5P-7468**	2	CLIP (SLOT)	
	31	1	**5P-7469**	2	CLIP (TAB)	
	32	1	**5P-8444**	1	GROMMET	
	33	1	**6J-2680**	4	SEAL-O-RING	
	34	1	**6V-4349**	1	GROMMET	
	35	1	**6V-5185**	2	CLIP (SLOT)	
	36	1	**6V-5186**	2	CLIP (TAB)	
M	37	1	**7X-2549**	1	BOLT (M12X1.75X100-MM)	
M	38	1	**7X-2550**	2	BOLT (M12X1.75X110-MM)	
	39	1	**7X-7729**	4	WASHER (11X25X3-MM THK)	
	40	1	**8T-1887**	5	CLIP (SLOT)	

208-9524 **LINES GP-PUMP** *(contd.)* **i03431961**

NOTE	REF NO	GRAPHIC REF	PART NUMBER	QTY	PART NAME 1 2 3 4 5 6 (PRODUCT LEVEL)	SEE PAGE
	41	1	**8T-1888**	5	CLIP (TAB)	
	42	1	**8T-1893**	2	CLIP (SLOT)	
	43	1	**8T-1894**	2	CLIP (TAB)	
	44	1	**8T-4121**	18	WASHER-HARD (11X21X2.5-MM THK)	
M	45	1	**8T-4136**	4	BOLT (M10X1.5X25-MM)	
M	46	1	**8T-4137**	3	BOLT (M10X1.5X20-MM)	
M	47	1	**8T-4139**	2	BOLT (M12X1.75X30-MM)	
M	48	1	**8T-4176**	3	BOLT (M12X1.75X90-MM)	
M	49	1	**8T-4184**	4	BOLT (M12X1.75X45-MM)	
M	50	1	**8T-4186**	8	BOLT (M10X1.5X40-MM)	
M	51	1	**8T-4195**	2	BOLT (M10X1.5X30-MM)	
M	52	1	**8T-4196**	5	BOLT (M10X1.5X35-MM)	
	53	1	**8T-4223**	16	WASHER-HARD (13.5X25.5X3-MM THK)	
M	54	1	**8T-5041**	1	BOLT (M12X1.75X120-MM)	
M	55	1	**8T-5092**	1	BOLT (M12X1.75X150-MM)	
M	56	1	**8T-7929**	2	BOLT (M12X1.75X180-MM)	
B	57	1	**1P-4584**	2	FLANGE-HALF	
BM	58	1	**8T-4184**	4	BOLT (M12X1.75X45-MM)	
B	59	1	**8T-4223**	4	WASHER-HARD (13.5X25.5X3-MM THK)	

B-USE AS REQUIRED
I-REFER TO HYDRAULIC INFORMATION SYSTEM
M-METRIC PART
Y-SEPARATE ILLUSTRATION

208-9524 **LINES GP-PUMP** *(contd.)* **i03431961**

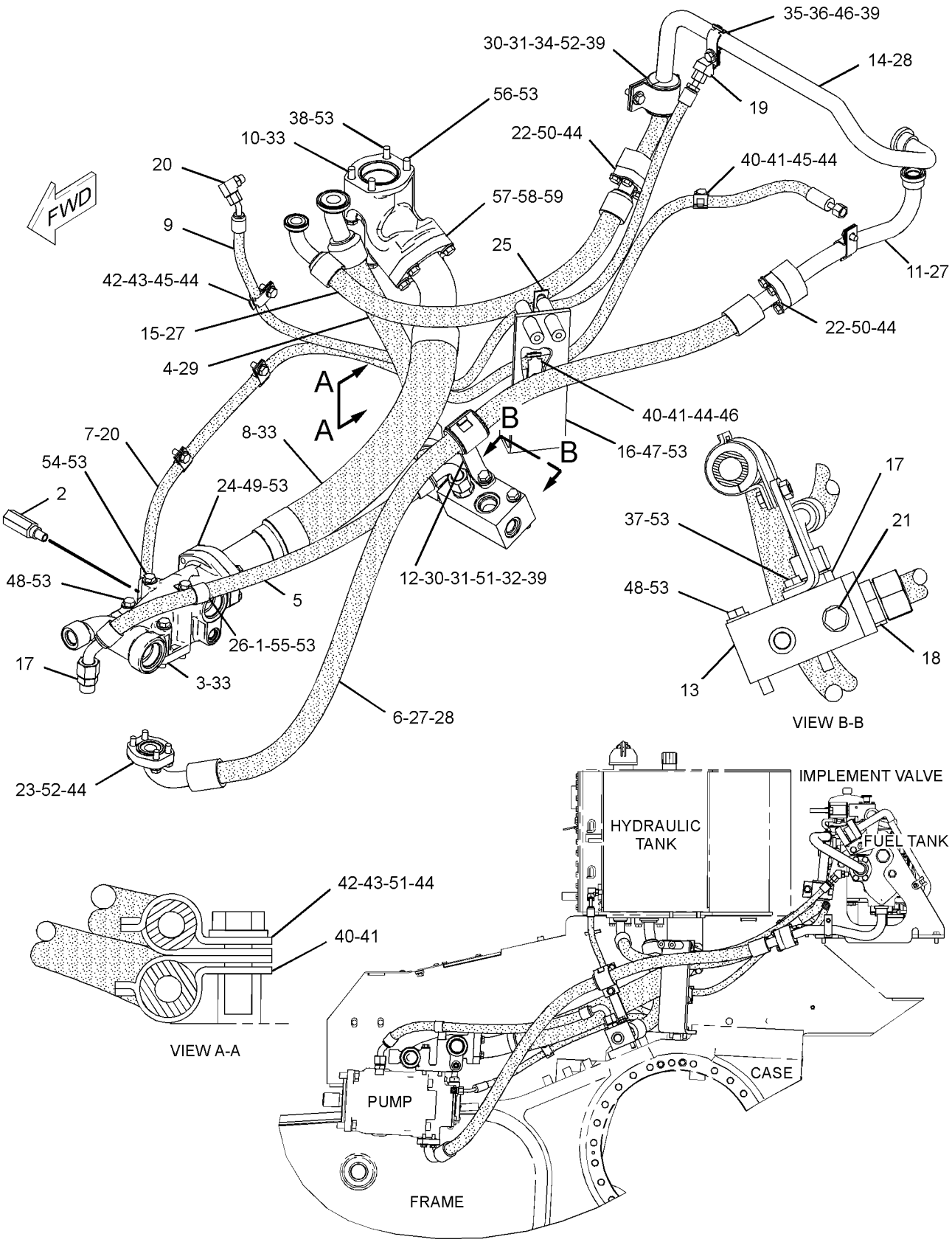

GRAPHIC #1 **<END>** g01164279

HYDRAULIC SYSTEM

153-4846 LINES GP-RIPPER

S/N: L1J1-UP; R8S1-UP
PART OF 215-6422, 215-6423 RIPPER AR
AN ATTACHMENT

SMCS-5057, 5352, 5356 **i01442441**

NOTE	REF NO	GRAPHIC REF	PART NUMBER	QTY	PART NAME 1 2 3 4 5 6 (PRODUCT LEVEL)	SEE PAGE
	1	1	**9M-2904**	12	CLAMP-HOSE	
	2	1	**130-1977**	12	SHIELD	
	3	1	**130-9191**	6	GROMMET	
	4	1	**139-2455**	2	SHIELD-RH	
	5	1	**139-2456**	2	SHIELD-LH	
I	6	1	**162-0384**	1	HOSE AS (RH)	
I	7	1	**162-0385**	1	HOSE AS (LH)	
I	8	1	**162-0386**	1	HOSE AS (RH)	
I	9	1	**162-0387**	1	HOSE AS (RH)	
I	10	1	**162-0388**	2	HOSE AS	
	11	1	**4J-0520**	14	SEAL-O-RING	
	12	1	**4J-5267**	2	SEAL-O-RING	
I	13	1	**170-1574**	1	HOSE AS (LH)	
I	14	1	**170-1575**	1	HOSE AS (LH)	
M	15	1	**8T-4186**	12	BOLT (M10X1.5X40-MM)	
	16	1	**190-1475**	2	SHIELD	

I-REFER TO HYDRAULIC INFORMATION SYSTEM
M-METRIC PART

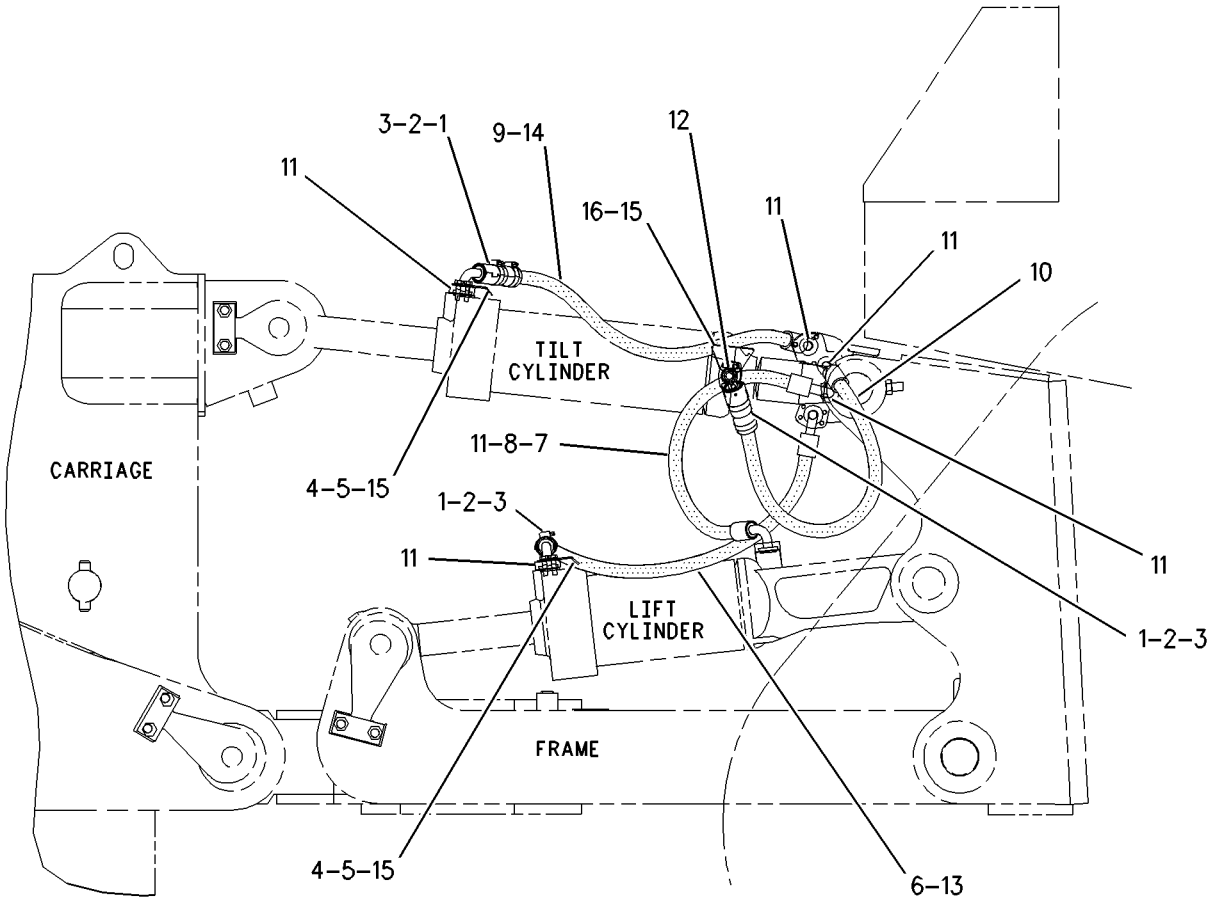

RIGHT SIDE VIEW

GRAPHIC #1 **<END>** g00693260

HYDRAULIC SYSTEM

208-9528 LINES GP-RIPPER

S/N: J8B1-UP
PART OF 209-3430 CONTROL AR-HYDRAULIC
AN ATTACHMENT

SMCS-5057, 5352, 5356 **i02565443**

NOTE	REF NO	GRAPHIC REF	PART NUMBER	QTY	PART NAME 1 2 3 4 5 6 (PRODUCT LEVEL)	SEE PAGE
	1	1	**208-9993**	1	TUBE AS	
	2	1	**208-9994**	1	TUBE AS	
	3	1	**211-9491**	1	MANIFOLD	
	4	1	**219-6224**	1	TUBE AS	
	5	1	**219-6225**	1	TUBE AS	
	6	1	**239-3212**	1	BRACKET AS	
	7	1	**239-3213**	2	TUBE AS	
	8	1	**239-3214**	2	TUBE AS	
	9	1	**1P-3703**	8	SEAL-RECTANGULAR	
	10	1	**1P-5760**	8	FLANGE-HALF	
	11	1	**5K-9090**	4	SEAL-O-RING	
	12	1	**7G-3833**	2	CLIP (TAB)	
	13	1	**7G-3834**	2	CLIP (SLOT)	
	14	1	**8C-3174**	2	GROMMET	
	15	1	**8C-3206**	16	FLANGE-HALF	
	16	1	**8T-4121**	52	WASHER-HARD (11X21X2.5-MM THK)	
M	17	1	**8T-4182**	16	BOLT (M10X1.5X45-MM)	
M	18	1	**8T-4183**	2	BOLT (M12X1.75X40-MM)	
M	19	1	**8T-4192**	2	BOLT (M12X1.75X25-MM)	
M	20	1	**8T-4195**	4	BOLT (M10X1.5X30-MM)	
M	21	1	**8T-4196**	32	BOLT (M10X1.5X35-MM)	
	22	1	**8T-4223**	4	WASHER-HARD (13.5X25.5X3-MM THK)	

M-METRIC PART

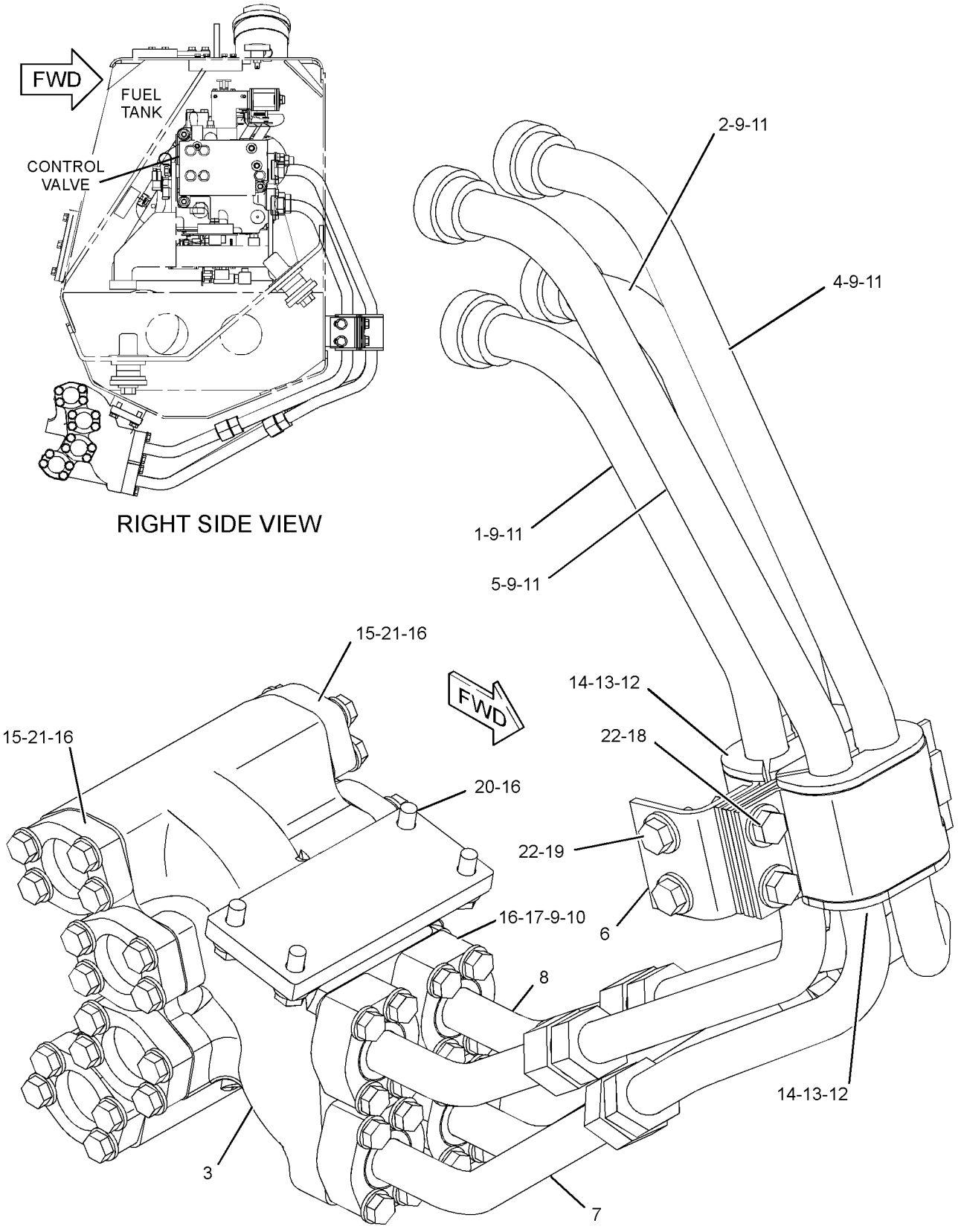

GRAPHIC #1 **<END>** g01263826

HYDRAULIC SYSTEM

4Z-0672 LINES GP-TILT CYLINDER—WASTE HANDLING

S/N: J8B1-UP

PART OF 233-9782 WASTE HANDLING AR

AN ATTACHMENT

SMCS-5057, 5104 **i03286940**

NOTE	PART NUMBER	QTY	PART NAME 1 2 3 4 5 6 (PRODUCT LEVEL)	SEE PAGE
I	**239-9970**	2	HOSE AS	
I	**297-4986**	2	HOSE AS	

I-REFER TO HYDRAULIC INFORMATION SYSTEM

<END>

HYDRAULIC SYSTEM

8E-6579 LINES GP-TILT CYLINDER–DUAL

S/N: J8B1-UP

PART OF 8E-3039 CYLINDER AR-DUAL TILT

AN ATTACHMENT

SMCS-5057, 5104 **i01488348**

NOTE	REF NO	GRAPHIC REF	PART NUMBER	QTY	PART NAME 1 2 3 4 5 6 (PRODUCT LEVEL)	SEE PAGE
	1	1	**5S-8712**	4	BLOCK	
	2	1	**8E-6580**	1	TUBE AS	
	3	1	**8E-6581**	2	TUBE AS	
	4	1	**9W-0194**	1	GUARD AS	
I	5	1	**9W-0197**	2	HOSE AS	
M	6	1	**8T-7547**	12	BOLT (M8X1.25X30-MM)	
I	7	1	**9W-0198**	2	HOSE AS	
M	8	1	**8T-7338**	6	BOLT (M16X2X45-MM)	
	9	1	**9W-8681**	2	BRACKET	
	10	1	**106-1419**	1	GUARD AS	
	11	1	**106-1420**	1	GUARD AS	
I	12	1	**199-7077**	2	HOSE AS	
M	13	1	**8T-4910**	4	BOLT (M12X1.75X60-MM)	
	14	1	**1P-4574**	4	FLANGE-HALF	
	15	1	**4J-5140**	2	SEAL-O-RING	
	16	1	**4J-5267**	10	SEAL-O-RING	
	17	1	**5P-7464**	2	CLIP (SLOT)	
	18	1	**5P-7465**	2	CLIP (TAB)	
	19	1	**6V-1249**	2	GROMMET	
	20	1	**8C-3205**	16	FLANGE-HALF	
	21	1	**8T-4121**	32	WASHER-HARD (11X21X2.5-MM THK)	
	22	1	**8T-4122**	6	WASHER-HARD (17X32X3.5-MM THK)	
M	23	1	**8T-4139**	2	BOLT (M12X1.75X30-MM)	
M	24	1	**8T-4192**	4	BOLT (M12X1.75X25-MM)	
M	25	1	**8T-4196**	32	BOLT (M10X1.5X35-MM)	
	26	1	**8T-4223**	12	WASHER-HARD (13.5X25.5X3-MM THK)	
	27	1	**8T-4224**	12	WASHER-HARD (8.8X16X2-MM THK)	
M	28	1	**8T-4244**	2	NUT (M12X1.75-THD)	

I-REFER TO HYDRAULIC INFORMATION SYSTEM
M-METRIC PART

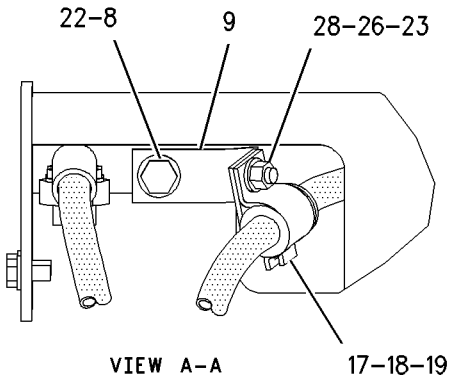

VIEW A–A

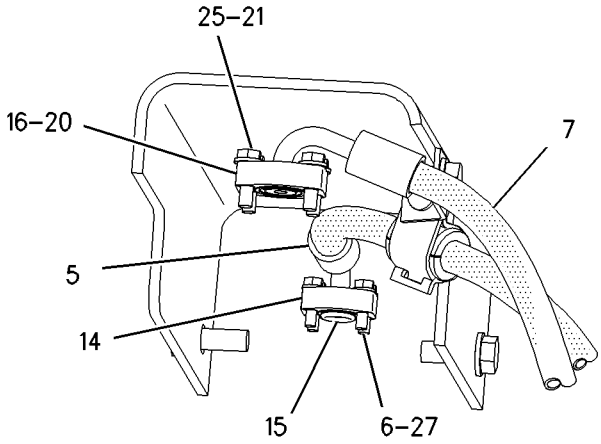

SECTION B–B

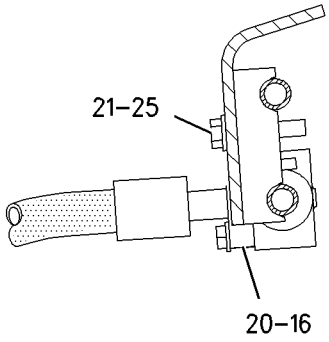

SECTION C–C

VIEW OF AREA D

GRAPHIC #1 **<END>** g00765292

HYDRAULIC SYSTEM

208-9523 LINES GP-TILT CYLINDER

S/N: J8B1-UP

PART OF 206-6782 HYDRAULIC AR

SMCS-5057, 5104 **i02859230**

NOTE	REF NO	GRAPHIC REF	PART NUMBER	QTY	PART NAME 1 2 3 4 5 6 (PRODUCT LEVEL)	SEE PAGE
I	1	1	**209-1382**	1	HOSE AS	
	2	1	**212-5804**	1	TUBE AS	
	3	1	**212-5805**	1	TUBE AS	
	4	1	**217-6887**	1	MANIFOLD	
	5	1	**218-7227**	1	BRACKET AS	
	6	1	**226-7906**	1	MANIFOLD	
I	7	1	**262-4097**	1	HOSE AS	
M	8	1	**3E-4319**	2	STUD-TAPERLOCK (M12X1.75X55-MM)	
	9	1	**4J-0519**	4	SEAL-O-RING	
	10	1	**4J-0520**	2	SEAL-O-RING	
	11	1	**4J-5267**	4	SEAL-O-RING	
	12	1	**5H-4018**	2	COVER	
	13	1	**7G-3832**	5	GROMMET	
	14	1	**7G-3833**	6	CLIP (TAB)	
	15	1	**7G-3834**	4	CLIP (SLOT)	
	16	1	**7X-7729**	12	WASHER (11X25X3-MM THK)	
	17	1	**8C-3174**	1	GROMMET	
	18	1	**8C-3205**	8	FLANGE-HALF	
	19	1	**8T-4121**	32	WASHER-HARD (11X21X2.5-MM THK)	
M	20	1	**8T-4133**	2	NUT (M10X1.5-THD)	
M	21	1	**8T-4137**	1	BOLT (M10X1.5X20-MM)	
M	22	1	**8T-4139**	4	BOLT (M12X1.75X30-MM)	
M	23	1	**8T-4182**	16	BOLT (M10X1.5X45-MM)	
M	24	1	**8T-4186**	3	BOLT (M10X1.5X40-MM)	
M	25	1	**8T-4195**	6	BOLT (M10X1.5X30-MM)	
M	26	1	**8T-4196**	16	BOLT (M10X1.5X35-MM)	
	27	1	**8T-4223**	8	WASHER-HARD (13.5X25.5X3-MM THK)	
M	28	1	**8T-4244**	2	NUT (M12X1.75-THD)	
M	29	1	**8T-4956**	2	BOLT (M12X1.75X35-MM)	

I-REFER TO HYDRAULIC INFORMATION SYSTEM
M-METRIC PART

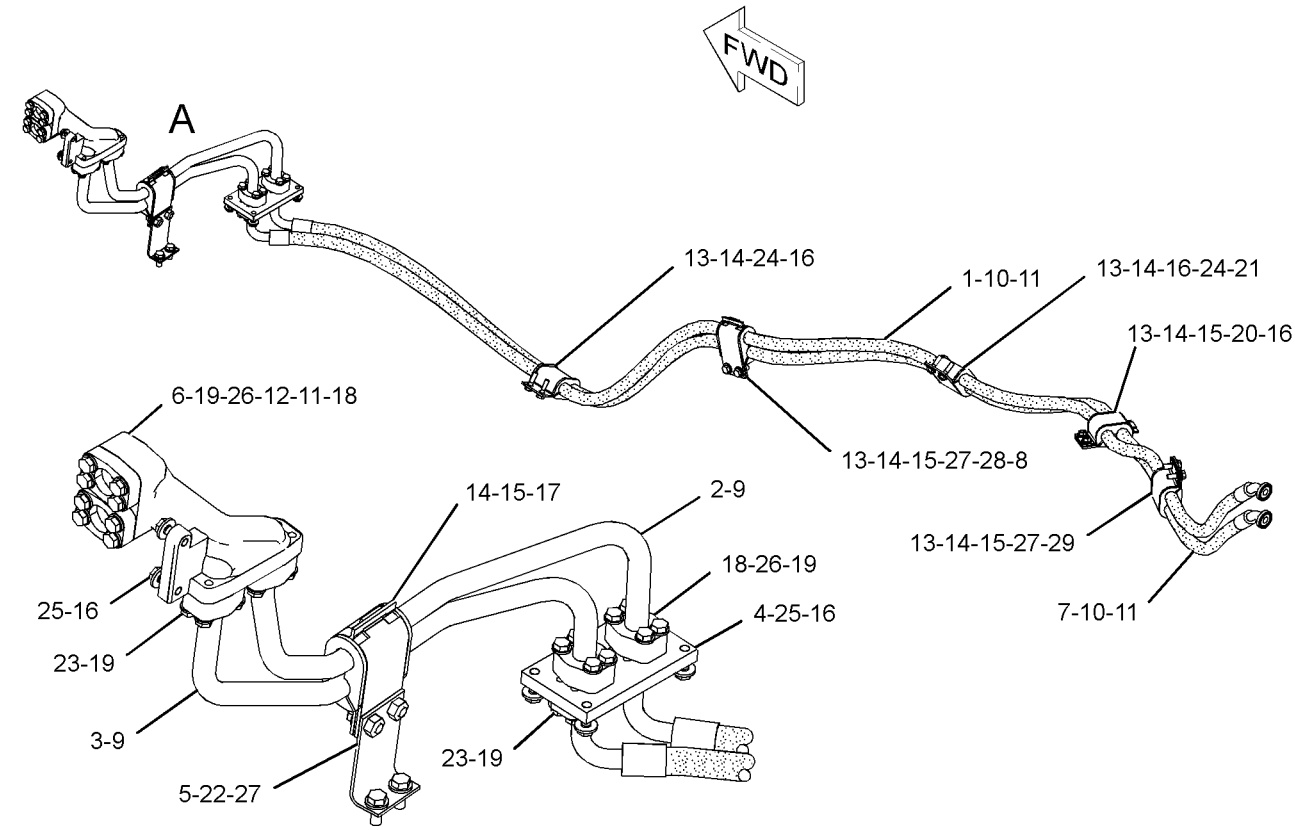

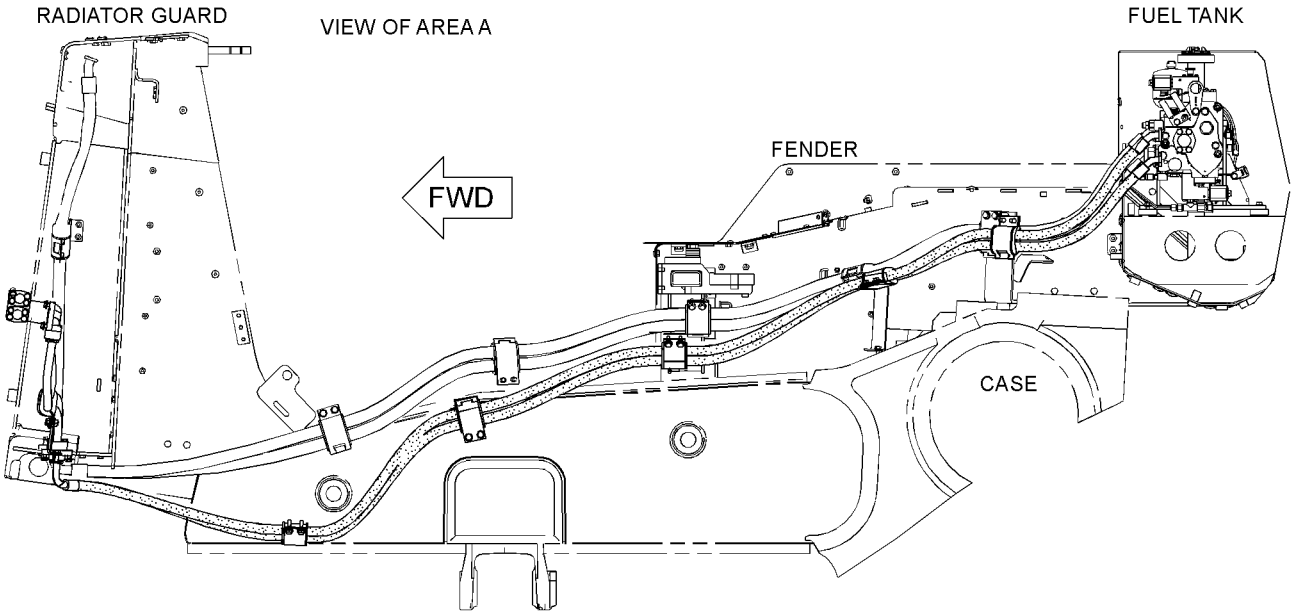

LEFT SIDE VIEW

GRAPHIC #1 **<END>** g01424473

HYDRAULIC SYSTEM

211-9513 LINES GP-TILT CYLINDER—DUAL TILT

S/N: J8B1-UP

PART OF 209-5102 CONTROL AR-HYDRAULIC

AN ATTACHMENT

SMCS-5057, 5104 **i02863583**

NOTE	REF NO	GRAPHIC REF	PART NUMBER	QTY	PART NAME 1 2 3 4 5 6 (PRODUCT LEVEL)	SEE PAGE
I	1	2	**7T-0628**	1	HOSE AS	
	2	2	**193-9131**	1	BRACKET AS	
M		2	**8T-3490**	1	NUT-WELD (M10X1.5-THD)	
	3	2	**211-9573**	1	TUBE AS	
	4	2	**211-9574**	1	TUBE AS	
I	5	2	**211-9576**	1	HOSE AS	
	6	2	**221-5400**	1	ELBOW	
	7	1	**222-7882**	1	SWITCH AS-ROCKER (AUTOMATIC BLADE)	
I	8	2	**228-4219**	1	HOSE AS	
	9	2	**237-4021**	1	PLATE AS	
M	10	2	**133-7810**	1	STUD-TAPERLOCK (M10X1.5X45-MM)	
	11	2	*148-8336*	1	CONNECTOR AS	
		2	**6V-8636**	1	CONNECTOR	
		2	**3J-1907**	1	SEAL-O-RING	
		2	**6V-8397**	1	SEAL-O-RING	
	12	2	*148-8378*	2	ELBOW AS	
					(EACH INCLUDES)	
		2	**6V-8724**	1	ELBOW	
		2	**3J-1907**	1	SEAL-O-RING	
		2	**6V-8397**	1	SEAL-O-RING	
	13	2	*148-8417*	1	REDUCER AS	
		2	**6V-8941**	1	REDUCER	
		2	**6V-8397**	1	SEAL-O-RING	
	14	2	*149-5452*	1	UNION AS	
		2	**6V-8994**	1	UNION	
		2	**6V-8397**	2	SEAL-O-RING	
	15	2	*153-6259*	1	TEE AS	
		2	**6V-8777**	1	TEE-FACE SEAL	
		2	**3D-2824**	1	SEAL-O-RING	
		2	**6V-9746**	2	SEAL-O-RING	
M	16	2	**231-0336**	3	STUD-TAPERLOCK (M10X1.5X70-MM)	
	17	2	**1P-3703**	1	SEAL-RECTANGULAR	
	18	2	**4J-0519**	3	SEAL-O-RING	
	19	2	**4J-5267**	1	SEAL-O-RING	
	20	2	**6V-8556**	1	NUT (1-3/16-12-THD)	
	21	2	**6V-9168**	1	NUT (11/16-16-THD)	
	22	2	**7X-0582**	1	WASHER-HARD (20X44.5X6-MM THK)	
	23	2	**7X-7729**	4	WASHER (11X25X3-MM THK)	
	24	2	**8C-3205**	4	FLANGE-HALF	
	25	2	**8T-1887**	4	CLIP (SLOT)	
	26	2	**8T-1888**	4	CLIP (TAB)	
	27	2	**8T-1893**	1	CLIP (SLOT)	
	28	2	**8T-1894**	1	CLIP (TAB)	
	29	2	**8T-4121**	34	WASHER-HARD (11X21X2.5-MM THK)	
M	30	2	**8T-4133**	4	NUT (M10X1.5-THD)	
M	31	2	**8T-4136**	1	BOLT (M10X1.5X25-MM)	
M	32	2	**8T-4137**	1	BOLT (M10X1.5X20-MM)	
M	33	2	**8T-4139**	3	BOLT (M12X1.75X30-MM)	
M	34	2	**8T-4182**	12	BOLT (M10X1.5X45-MM)	
M	35	2	**8T-4185**	4	BOLT (M10X1.5X50-MM)	
M	36	2	**8T-4195**	4	BOLT (M10X1.5X30-MM)	
M	37	2	**8T-4196**	8	BOLT (M10X1.5X35-MM)	
	38	2	**8T-4223**	3	WASHER-HARD (13.5X25.5X3-MM THK)	
M	39	2	**8T-6685**	4	BOLT (M10X1.5X110-MM)	

I-REFER TO HYDRAULIC INFORMATION SYSTEM
M-METRIC PART

REFER TO ALL ILLUSTRATIONS OF
THIS GROUP FOR AUXILIARY VIEWS

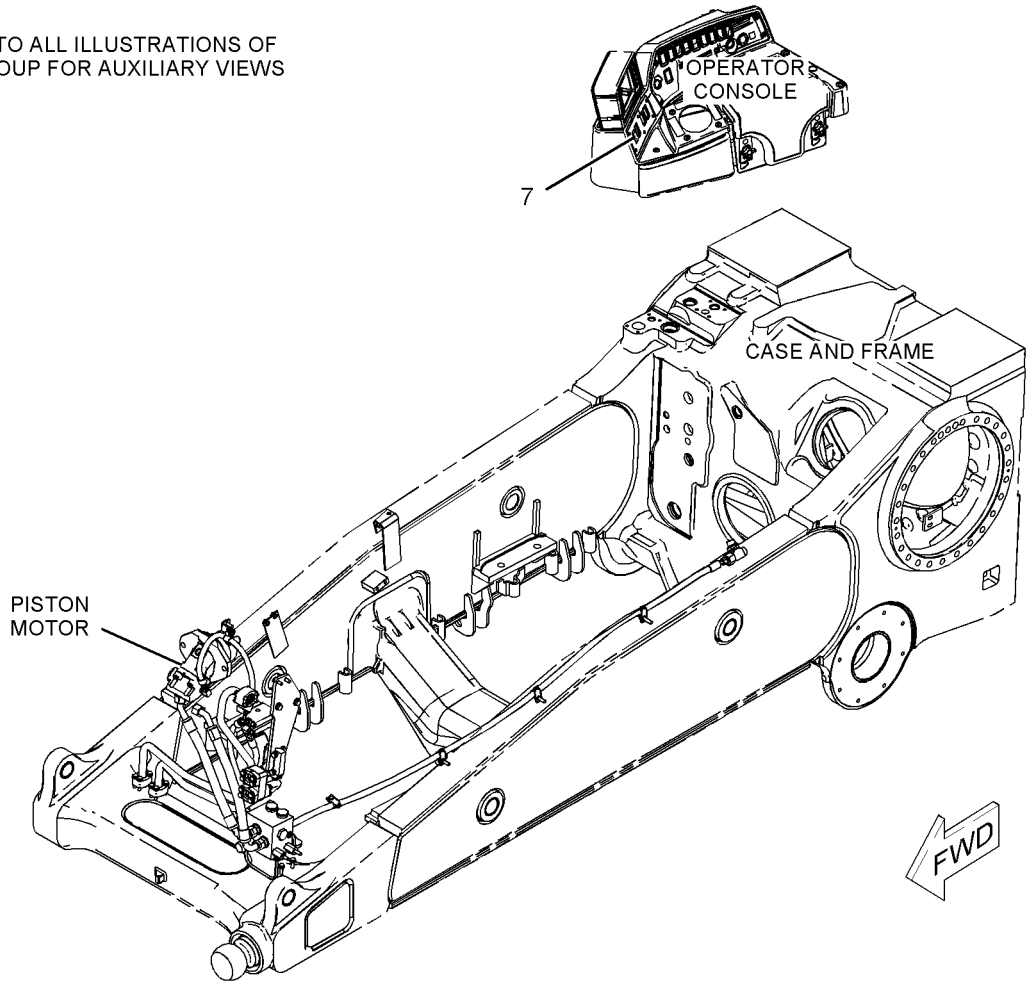

GRAPHIC #1 g01112709

211-9513 **LINES GP-TILT CYLINDER** *(contd.)* **i02863583**

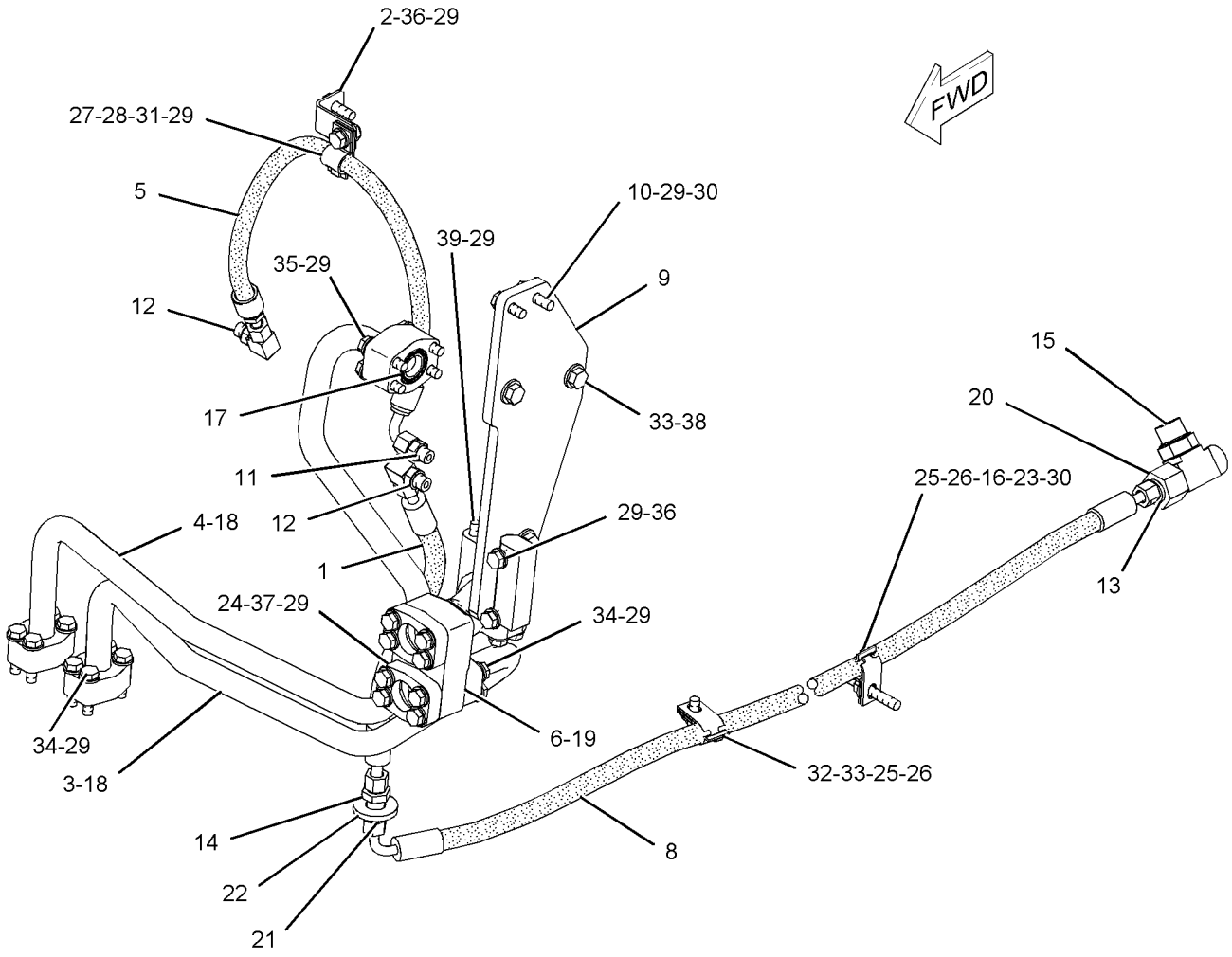

GRAPHIC #2 **<END>** g01112711

HYDRAULIC SYSTEM

237-4369 LINES GP-TILT CYLINDER–

UNIVERSAL, SEMI-UNIVERSAL BULLDOZER

S/N: A5G1-UP; B8S1-UP; DZS1-UP; DZX1-UP

PART OF 227-5437, 227-5439 BULLDOZER AR-SEMI-UNIVERSAL, 245-3566, 245-3567 BULLDOZER AR-UNIVERSAL

AN ATTACHMENT

SMCS-5057, 5104 **i02775798**

NOTE	REF NO	GRAPHIC REF	PART NUMBER	QTY	PART NAME 1 2 3 4 5 6 (PRODUCT LEVEL)	SEE PAGE
	1	1	**7T-9333**	1	GUARD	
	2	1	**8E-6183**	1	TUBE AS	
	3	1	**239-3344**	2	TUBE AS	
I	4	1	**239-3345**	2	HOSE AS	
	6	1	**239-3350**	1	GUARD	
I	7	1	**295-6897**	2	HOSE AS	
	9	1	**4J-5267**	9	SEAL-O-RING	
	10	1	**5P-1076**	10	WASHER-HARD (13.5X30X4-MM THK)	
	11	1	**7D-4108**	3	CLAMP	
M	12	1	**7X-2559**	2	BOLT (M16X2X160-MM)	
	13	1	**8C-3205**	12	FLANGE-HALF	
	14	1	**8T-4121**	24	WASHER-HARD (11X21X2.5-MM THK)	
	15	1	**8T-4122**	4	WASHER-HARD (17X32X3.5-MM THK)	
M	16	1	**8T-4139**	13	BOLT (M12X1.75X30-MM)	
M	17	1	**8T-4185**	4	BOLT (M10X1.5X50-MM)	
M	18	1	**8T-4196**	24	BOLT (M10X1.5X35-MM)	
	19	1	**8T-4223**	3	WASHER-HARD (13.5X25.5X3-MM THK)	
M	20	1	**8T-4778**	2	LOCKNUT (M16X2-THD)	
	21	1	**9X-2027**	4	WASHER (11X18X2-MM THK)	

I-REFER TO HYDRAULIC INFORMATION SYSTEM
M-METRIC PART

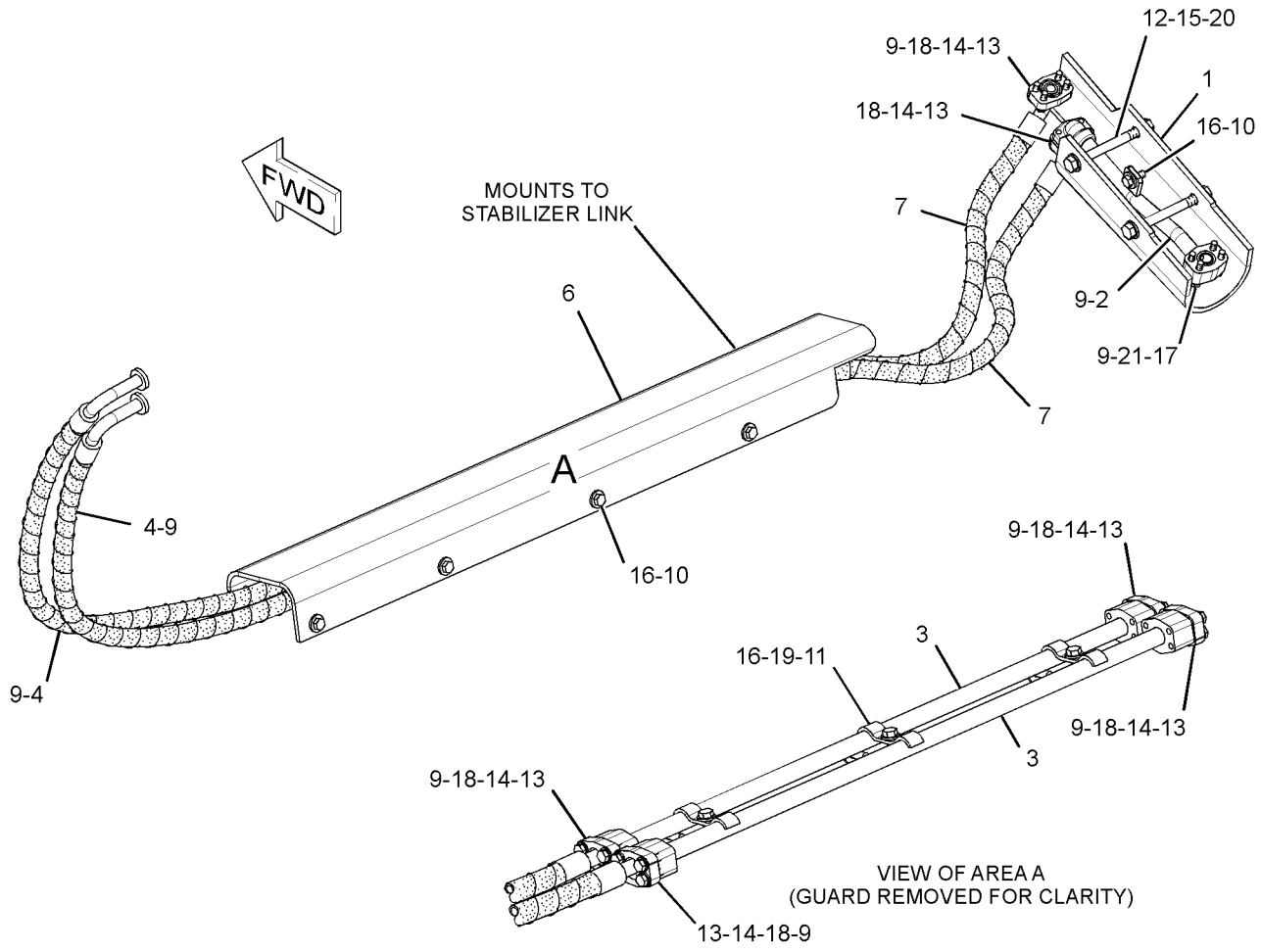

GRAPHIC #1 **<END>** g01434840

HYDRAULIC SYSTEM

237-9235 LINES GP-TILT CYLINDER—DUAL TILT

S/N: J8B1-537

PART OF 237-9234 CYLINDER AR-DUAL TILT

AN ATTACHMENT

SMCS-5057, 5104 **i02243209**

NOTE	REF NO	GRAPHIC REF	PART NUMBER	QTY	PART NAME 1 2 3 4 5 6 (PRODUCT LEVEL)	SEE PAGE
	1	1	**179-7210**	1	GUARD (RH)	
	2	1	**8T-4122**	8	WASHER-HARD (17X32X3.5-MM THK)	
M	3	1	**7X-2559**	4	BOLT (M16X2X160-MM)	
	4	1	**239-3344**	2	TUBE AS	
M	5	1	**8T-4778**	4	LOCKNUT (M16X2-THD)	
	6	1	**129-5082**	6	BLOCK	
	7	1	**183-7205**	1	ANGLE	
	8	1	**183-7206**	1	ANGLE	
	9	1	**6I-8516**	1	ANGLE	
	10	1	**108-1226**	2	TUBE AS	
	11	1	**108-1225**	2	TUBE AS	
	12	1	**8E-3600**	6	PLATE	
I	13	1	**239-7076**	1	HOSE AS	
I	14	1	**239-7075**	1	HOSE AS	
I	15	1	**239-7071**	2	HOSE AS	
I	17	1	**239-7072**	2	HOSE AS	
I	19	1	**239-7074**	2	HOSE AS	
	21	1	**159-0867**	1	GUARD (LH)	
	22	1	**7G-3832**	1	GROMMET	
	23	1	**7G-3833**	1	CLIP (TAB)	
	24	1	**7G-3834**	1	CLIP (SLOT)	
M	25	1	**8T-4137**	2	BOLT (M10X1.5X20-MM)	
M	26	1	**8T-4133**	2	NUT (M10X1.5-THD)	
	27	1	**4T-3981**	6	CLIP	
	28	1	**8T-4121**	76	WASHER-HARD (11X21X2.5-MM THK)	
M	29	1	**8T-4136**	12	BOLT (M10X1.5X25-MM)	
	30	1	**4J-0520**	2	SEAL-O-RING	
	31	1	**8C-3205**	36	FLANGE-HALF	
M	32	1	**8T-4196**	64	BOLT (M10X1.5X35-MM)	
	33	1	**7W-3447**	8	SPACER (10.2X19.05X10.2-MM THK)	
M	34	1	**8T-4182**	8	BOLT (M10X1.5X45-MM)	
I	35	1	**261-4671**	2	HOSE AS	
	37	1	**252-6517**	3	BLOCK	
	38	1	**7D-4108**	3	CLAMP	
	39	1	**239-7078**	1	GUARD	
	40	1	**179-7209**	1	TUBE AS	
	41	1	**241-7877**	2	TUBE AS	
	42	1	**4J-5267**	20	SEAL-O-RING	
	43	1	**5P-1076**	10	WASHER-HARD (13.5X30X4-MM THK)	
M	44	1	**8T-4139**	10	BOLT (M12X1.75X30-MM)	
	45	1	**9X-2027**	4	WASHER (11X18X2-MM THK)	
M	46	1	**8T-4185**	4	BOLT (M10X1.5X50-MM)	
	47	1	**8T-4223**	3	WASHER-HARD (13.5X25.5X3-MM THK)	
M	48	1	**8T-6868**	3	BOLT (M12X1.75X80-MM)	

I-REFER TO HYDRAULIC INFORMATION SYSTEM
M-METRIC PART

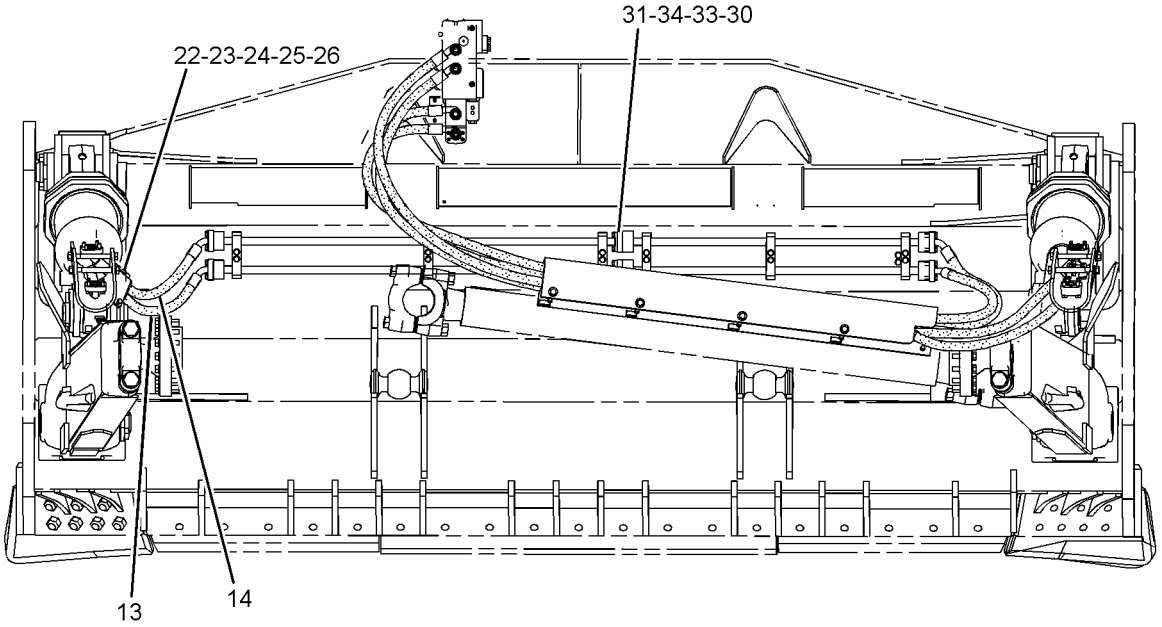

REAR VIEW

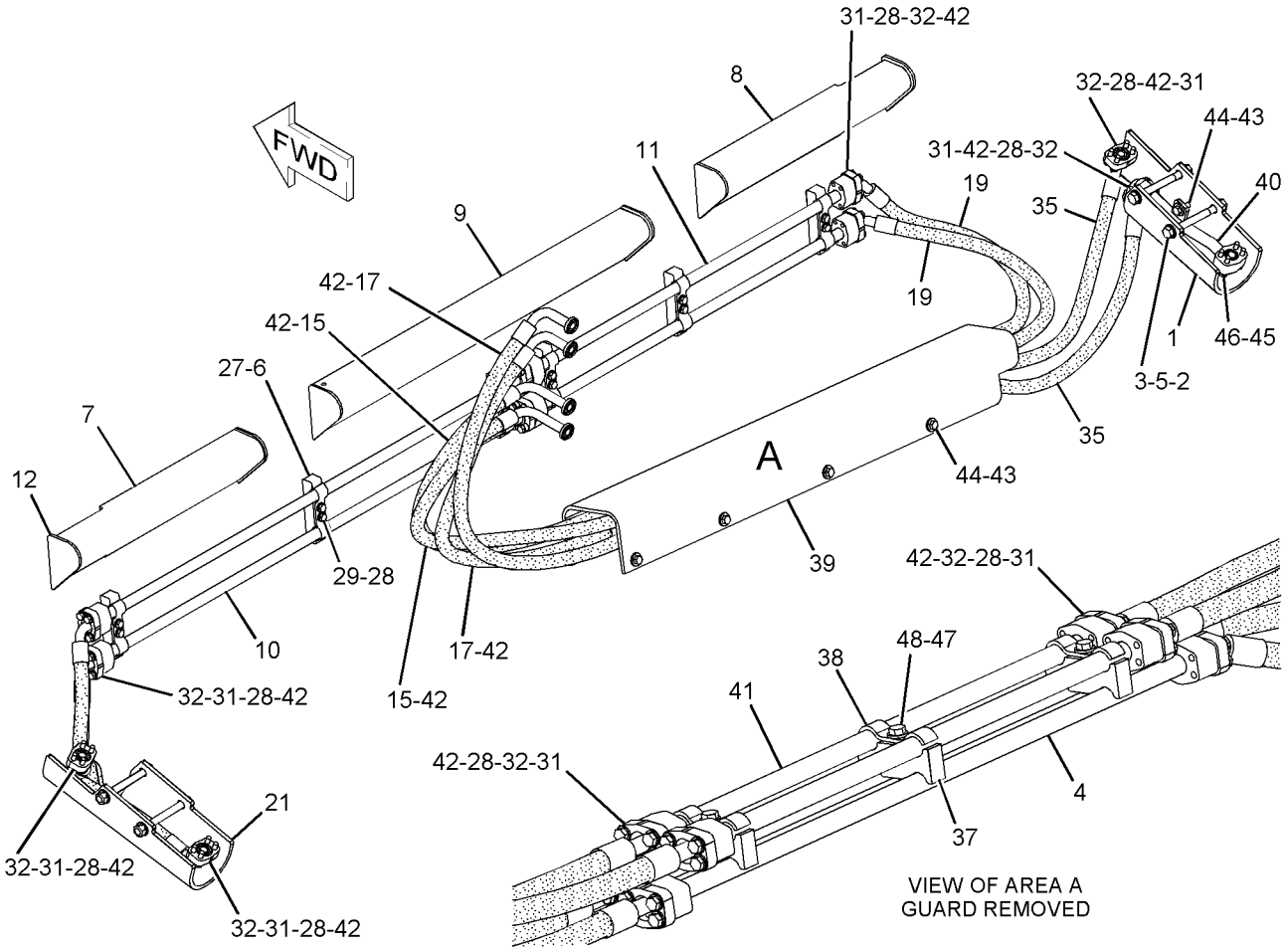

GRAPHIC #1 **<END>** g01112521

HYDRAULIC SYSTEM

237-9235 LINES GP-TILT CYLINDER—DUAL TILT

S/N: J8B538-UP

PART OF 237-9234 CYLINDER AR-DUAL TILT

AN ATTACHMENT

SMCS-5057, 5104 **i02775801**

NOTE	REF NO	GRAPHIC REF	PART NUMBER	QTY	PART NAME 1 2 3 4 5 6 (PRODUCT LEVEL)	SEE PAGE
	1	1	**179-7210**	1	GUARD (RH)	
	2	1	**8T-4122**	8	WASHER-HARD (17X32X3.5-MM THK)	
M	3	1	**7X-2559**	4	BOLT (M16X2X160-MM)	
	4	1	**239-3344**	2	TUBE AS	
M	5	1	**8T-4778**	4	LOCKNUT (M16X2-THD)	
	6	1	**129-5082**	6	BLOCK	
	7	1	**183-7205**	1	ANGLE	
	8	1	**183-7206**	1	ANGLE	
	9	1	**6I-8516**	1	ANGLE	
	10	1	**108-1226**	2	TUBE AS	
	11	1	**108-1225**	2	TUBE AS	
	12	1	**8E-3600**	6	PLATE	
CI	13	1	**183-5408**	2	HOSE AS	
I	15	1	**239-7071**	2	HOSE AS	
I	17	1	**239-7072**	2	HOSE AS	
I	19	1	**239-7074**	2	HOSE AS	
	21	1	**159-0867**	1	GUARD (LH)	
	27	1	**4T-3981**	6	CLIP	
	28	1	**8T-4121**	76	WASHER-HARD (11X21X2.5-MM THK)	
M	29	1	**8T-4136**	12	BOLT (M10X1.5X25-MM)	
	30	1	**4J-0520**	2	SEAL-O-RING	
C	31	1	**8C-3205**	32	FLANGE-HALF	
M	32	1	**8T-4196**	64	BOLT (M10X1.5X35-MM)	
	33	1	**7W-3447**	8	SPACER (10.2X19.05X10.2-MM THK)	
M	34	1	**8T-4182**	8	BOLT (M10X1.5X45-MM)	
I	35	1	**297-4986**	2	HOSE AS	
	37	1	**252-6517**	3	BLOCK	
	38	1	**7D-4108**	3	CLAMP	
	39	1	**239-7078**	1	GUARD	
C	40	1	**179-7209**	2	TUBE AS	
	41	1	**241-7877**	2	TUBE AS	
C	42	1	**4J-5267**	22	SEAL-O-RING	
C	43	1	**5P-1076**	11	WASHER-HARD (13.5X30X4-MM THK)	
CM	44	1	**8T-4139**	11	BOLT (M12X1.75X30-MM)	
C	45	1	**9X-2027**	8	WASHER (11X18X2-MM THK)	
CM	46	1	**8T-4185**	8	BOLT (M10X1.5X50-MM)	
	47	1	**8T-4223**	3	WASHER-HARD (13.5X25.5X3-MM THK)	
M	48	1	**8T-6868**	3	BOLT (M12X1.75X80-MM)	
C	49	1	**8C-3206**	4	FLANGE-HALF	

C-CHANGE FROM PREVIOUS TYPE
I-REFER TO HYDRAULIC INFORMATION SYSTEM
M-METRIC PART

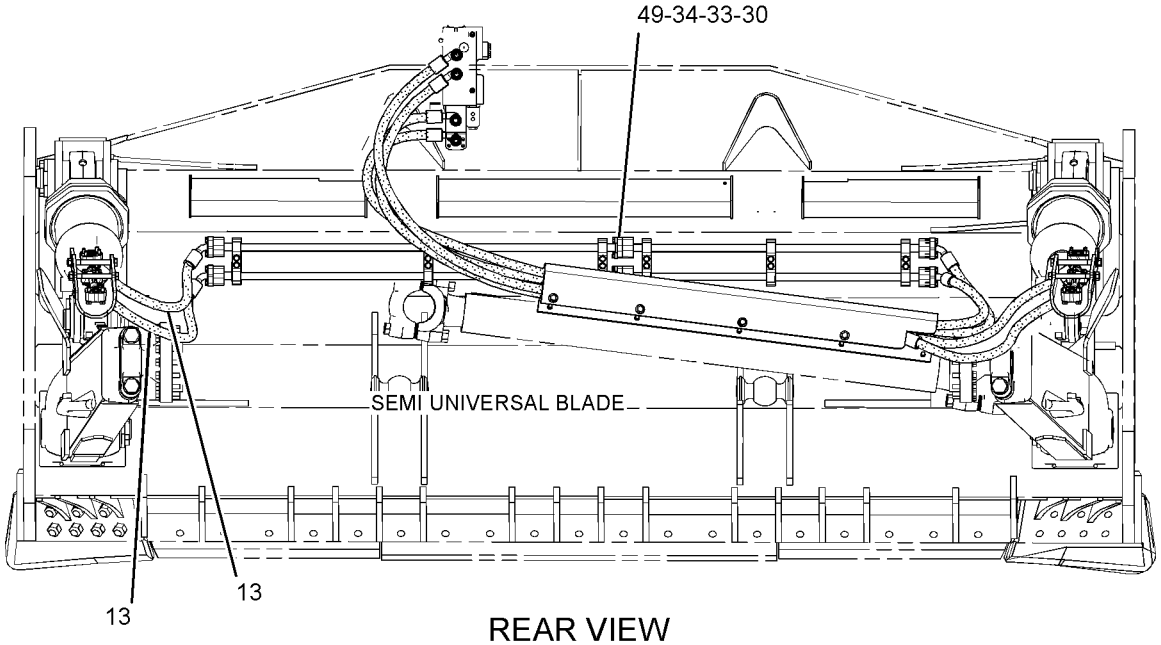

REAR VIEW

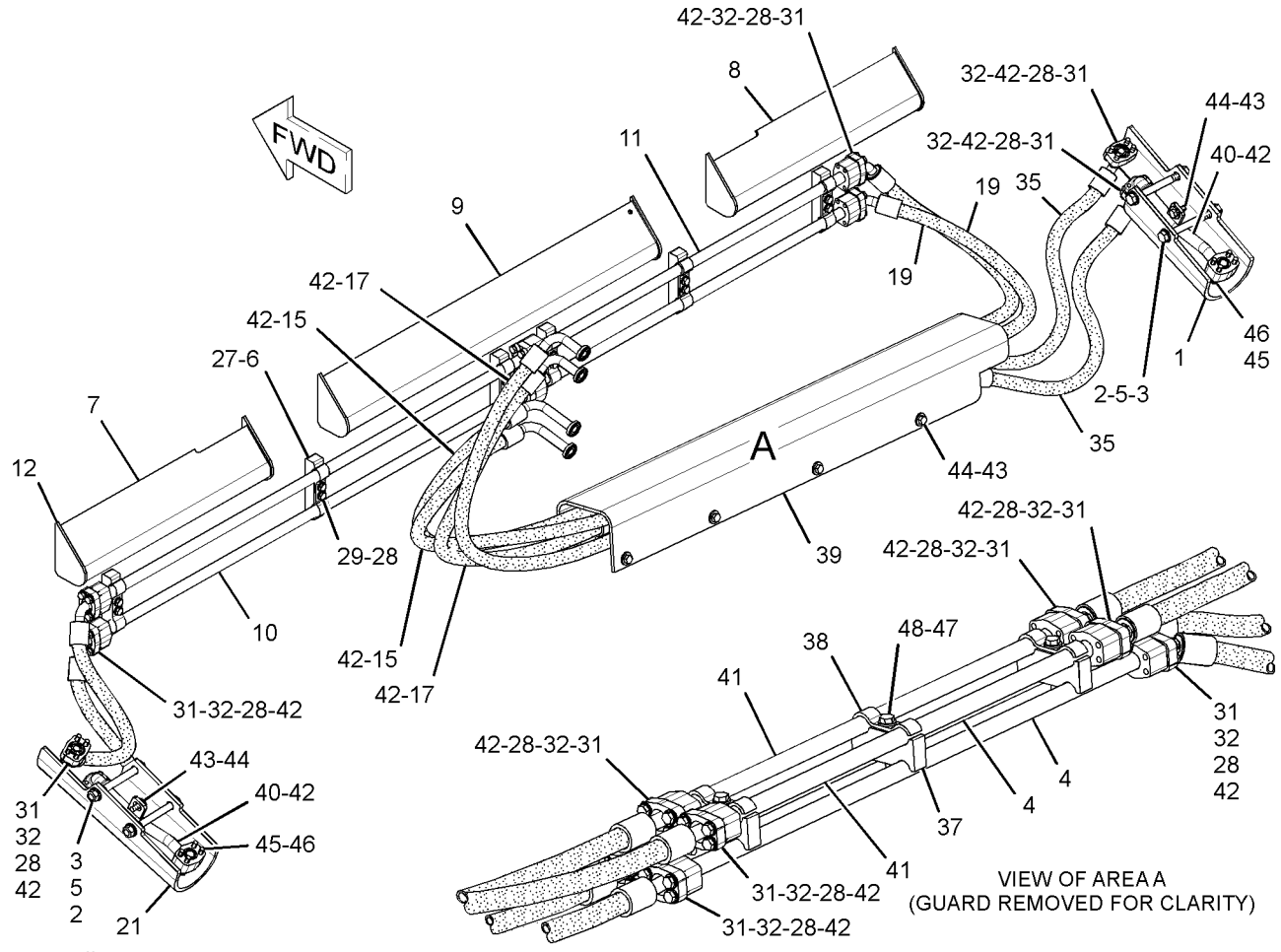

GRAPHIC #1

<END>

g01439295

HYDRAULIC SYSTEM

256-4905 LINES GP-TILT CYLINDER–

SEMI-UNIVERSAL BULLDOZER

S/N: DZR1-UP

PART OF 245-3557 BULLDOZER AR-SEMI-UNIVERSAL

AN ATTACHMENT

SMCS-5057, 5104 **i03242963**

NOTE	REF NO	GRAPHIC REF	PART NUMBER	QTY	PART NAME 1 2 3 4 5 6 (PRODUCT LEVEL)	SEE PAGE
	1	1	**7T-9333**	1	GUARD	
	2	1	**8E-6183**	1	TUBE AS	
I	3	1	**239-3345**	2	HOSE AS	
I	4	1	**295-6897**	2	HOSE AS	
	5	1	**256-4907**	2	TUBE AS	
	6	1	**256-4909**	1	GUARD	
	7	1	**4J-5267**	9	SEAL-O-RING	
	8	1	**5P-1076**	12	WASHER-HARD (13.5X30X4-MM THK)	
	9	1	**7D-4108**	4	CLAMP	
M	10	1	**7X-2559**	2	BOLT (M16X2X160-MM)	
	11	1	**8C-3205**	12	FLANGE-HALF	
	12	1	**8T-4121**	24	WASHER-HARD (11X21X2.5-MM THK)	
	13	1	**8T-4122**	4	WASHER-HARD (17X32X3.5-MM THK)	
M	14	1	**8T-4139**	16	BOLT (M12X1.75X30-MM)	
M	15	1	**8T-4185**	4	BOLT (M10X1.5X50-MM)	
M	16	1	**8T-4196**	24	BOLT (M10X1.5X35-MM)	
	17	1	**8T-4223**	4	WASHER-HARD (13.5X25.5X3-MM THK)	
M	18	1	**8T-4778**	2	LOCKNUT (M16X2-THD)	
	19	1	**9X-2027**	4	WASHER (11X18X2-MM THK)	

I-REFER TO HYDRAULIC INFORMATION SYSTEM
M-METRIC PART

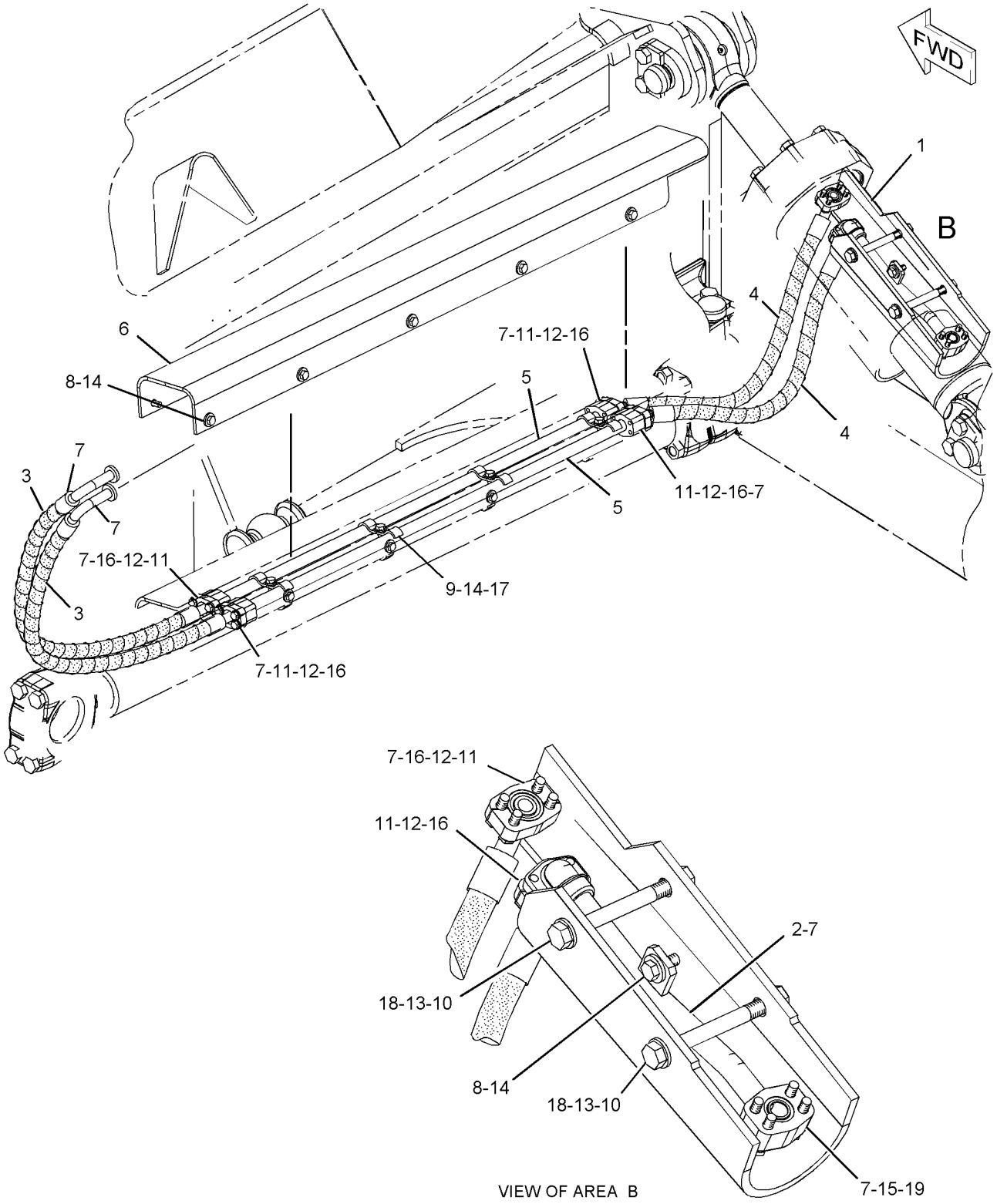

GRAPHIC #1 **<END>** g01119975

HYDRAULIC SYSTEM

261-4802 LINES GP-TILT CYLINDER—DUAL TILT

S/N: J8B1-UP
LOW GROUND PRESSURE
PART OF 245-3558 CYLINDER AR-DUAL TILT
AN ATTACHMENT

SMCS-5057, 5104 **i03245631**

NOTE	REF NO	GRAPHIC REF	PART NUMBER	QTY	PART NAME 1 2 3 4 5 6 (PRODUCT LEVEL)	SEE PAGE
	1	1	**4T-3981**	6	CLIP	
	2	1	**6I-8514**	2	ANGLE	
	3	1	**6I-8516**	1	ANGLE	
	4	1	**7W-3447**	8	SPACER (10.2X19.05X10.2-MM THK)	
	5	1	**8E-3600**	6	PLATE	
	6	1	**108-1225**	2	TUBE AS	
	7	1	**108-1226**	2	TUBE AS	
	8	1	**159-0867**	1	GUARD (LH)	
	9	1	**179-7209**	2	TUBE AS	
	10	1	**179-7210**	1	GUARD (RH)	
	11	1	**239-3344**	2	TUBE AS	
I	12	1	**239-7071**	2	HOSE AS	
I	14	1	**239-7072**	2	HOSE AS	
	16	1	**252-6517**	2	BLOCK	
	17	1	**256-4907**	2	TUBE AS	
I	18	1	**261-4843**	2	HOSE AS	
	20	1	**261-4844**	1	GUARD	
I	21	1	**276-3734**	2	HOSE AS	
	23	1	**129-5082**	6	BLOCK	
I	24	1	**297-4986**	2	HOSE AS	
	26	1	**4J-0520**	2	SEAL-O-RING	
	27	1	**4J-5267**	22	SEAL-O-RING	
	28	1	**5P-1076**	13	WASHER-HARD (13.5X30X4-MM THK)	
	29	1	**7D-4108**	4	CLAMP	
M	30	1	**7X-2559**	4	BOLT (M16X2X160-MM)	
	31	1	**8C-3205**	32	FLANGE-HALF	
	32	1	**8C-3206**	4	FLANGE-HALF	
	33	1	**8T-4121**	76	WASHER-HARD (11X21X2.5-MM THK)	
	34	1	**8T-4122**	8	WASHER-HARD (17X32X3.5-MM THK)	
M	35	1	**8T-4136**	12	BOLT (M10X1.5X25-MM)	
M	36	1	**8T-4139**	15	BOLT (M12X1.75X30-MM)	
M	37	1	**8T-4182**	8	BOLT (M10X1.5X45-MM)	
M	38	1	**8T-4185**	8	BOLT (M10X1.5X50-MM)	
M	39	1	**8T-4196**	64	BOLT (M10X1.5X35-MM)	
	40	1	**8T-4223**	4	WASHER-HARD (13.5X25.5X3-MM THK)	
M	41	1	**8T-4778**	4	LOCKNUT (M16X2-THD)	
M	42	1	**8T-6868**	2	BOLT (M12X1.75X80-MM)	
	43	1	**9X-2027**	8	WASHER (11X18X2-MM THK)	

I-REFER TO HYDRAULIC INFORMATION SYSTEM
M-METRIC PART

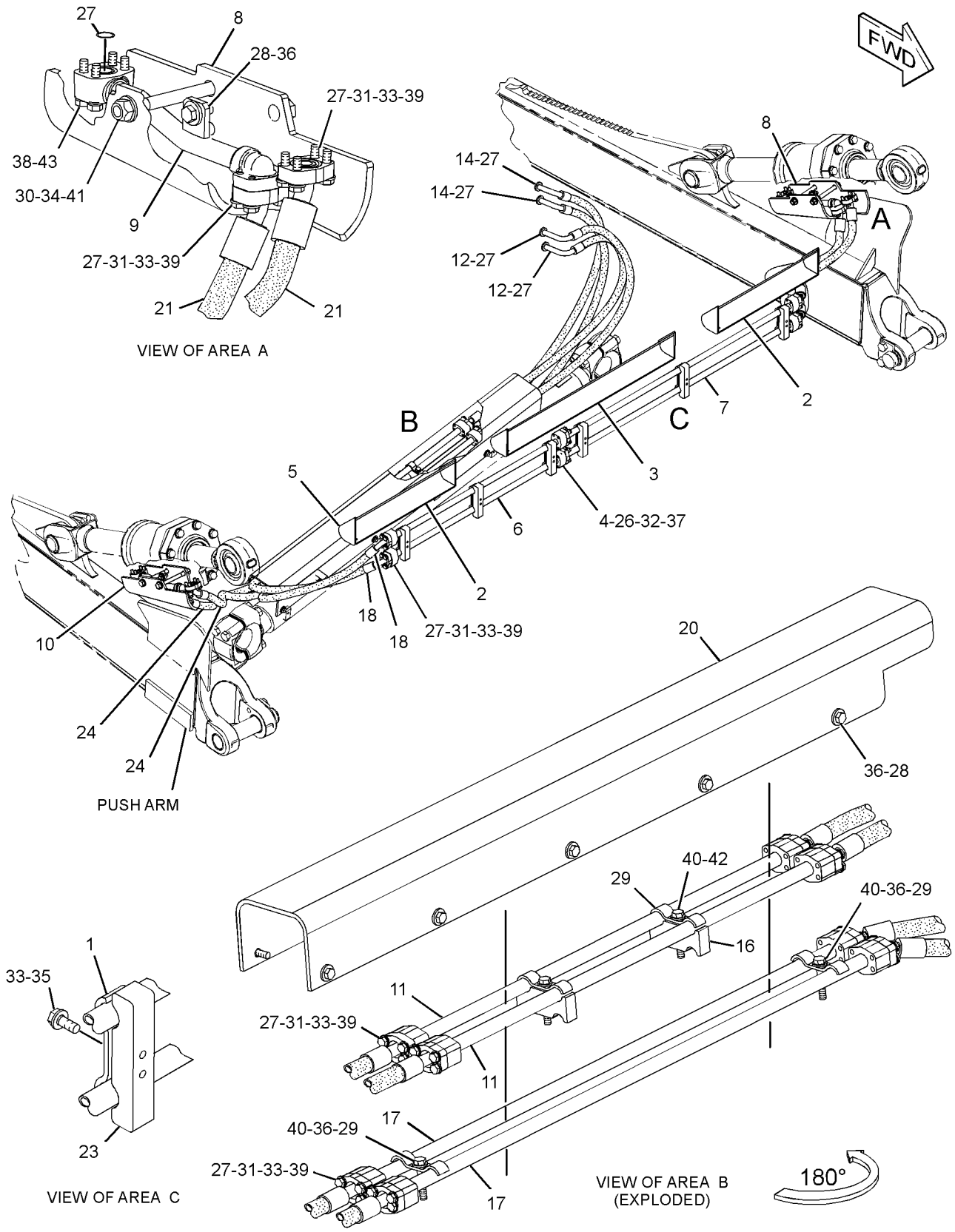

GRAPHIC #1 **<END>** g01652214

212-5835 MANIFOLD GP-CONTROL–IMPLEMENT PILOT

S/N: J8B1-1255

PART OF 215-6822, 238-2753 VALVE GP-BANK 3, 215-5615 VALVE GP-BANK 4

ALSO AN ATTACHMENT

SMCS-5264 **i03430500**

NOTE	REF NO	GRAPHIC REF	PART NUMBER	QTY	PART NAME 1 2 3 4 5 6 (PRODUCT LEVEL)	SEE PAGE
	1	1	**3J-1907**	2	SEAL-O-RING	
	2	1	**6E-5066**	1	SCREEN (CONTROL VALVE MANIFOLD)	
	3	1	**3K-0360**	1	SEAL-O-RING	
	4	1	**6V-0852**	2	CAP-DUST	
	5	1	**6V-3965**	2	FITTING (QUICK DISCONNECT)	
Y	6	1	**170-3357**	1	VALVE GP-PRESSURE REDUCING (PILOT OIL)	896
Y	7	1	**225-8026**	1	VALVE GP-RELIEF (PILOT MANIFOLD PRESSURE)	907
Y	8	1	**201-0950**	1	VALVE GP-SOLENOID (IMPLEMENT PUMP PRESSURE)	912
Y	9	1	**158-9956**	1	VALVE GP-CHECK (PILOT PRESSURE SUPPLY)	865
Y	10	1	**226-3800**	1	VALVE GP-CHECK (PILOT ACCUMULATOR PRESSURE)	866
	11	1	**217-0041**	1	FITTING	
	12	1	**226-3799**	1	PLUG-ORIFICE	
	13	1	**6K-6307**	1	SEAL-O-RING	
	14	1	**9S-8001**	5	PLUG-O-RING	
	15	1	**9S-8002**	5	PLUG-O-RING	
	16	1	**9S-8005**	1	PLUG-O-RING	
	17	1	**4J-7533**	5	SEAL-O-RING	
	18	1	**3J-7354**	5	SEAL-O-RING	

Y-SEPARATE ILLUSTRATION

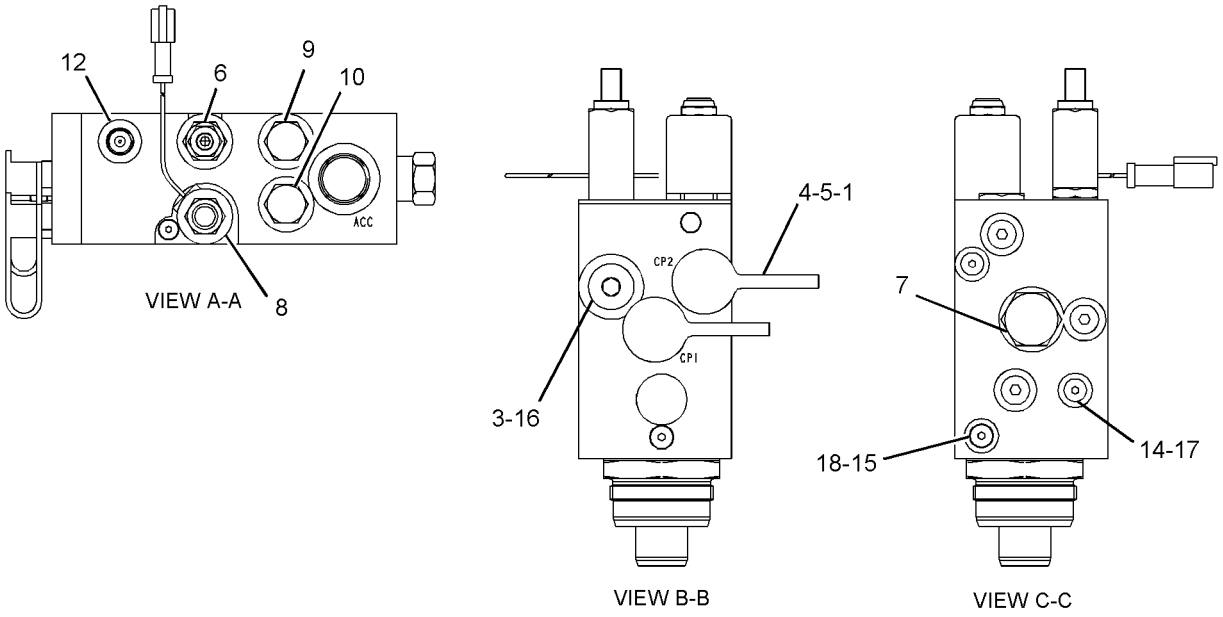

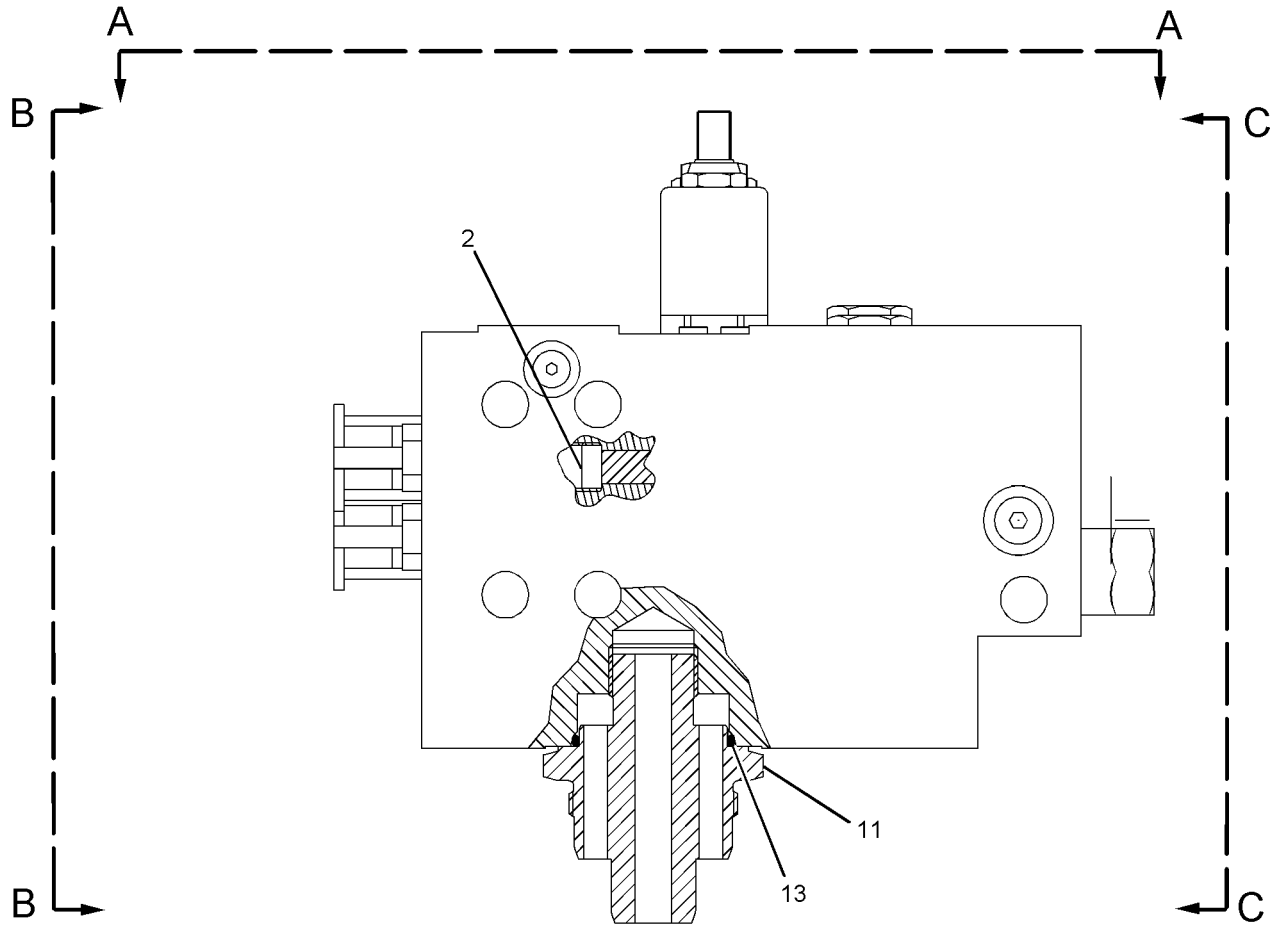

GRAPHIC #1 **<END>** g01127019

HYDRAULIC SYSTEM

296-1391 MANIFOLD GP-CONTROL

S/N: J8B1256-1275
PART OF 215-6822, 238-2753 VALVE GP-BANK 3
ALSO AN ATTACHMENT

SMCS-5264 **i02808829**

NOTE	REF NO	GRAPHIC REF	PART NUMBER	QTY	PART NAME 1 2 3 4 5 6 (PRODUCT LEVEL)	SEE PAGE
	1	1	**3J-1907**	2	SEAL-O-RING	
	2	1	**6E-5066**	1	SCREEN (PILOT MANIFOLD)	
	3	1	**3K-0360**	1	SEAL-O-RING	
	4	1	**6V-0852**	2	CAP-DUST	
	5	1	**6V-3965**	2	FITTING (QUICK DISCONNECT)	
Y	6	1	**170-3357**	1	VALVE GP-PRESSURE REDUCING (PILOT OIL)	896
Y	7	1	**225-8026**	1	VALVE GP-RELIEF (PILOT OIL)	907
Y	8	1	**201-0950**	1	VALVE GP-SOLENOID (HYDRAULIC LOCKOUT)	912
Y	9	1	**158-9956**	1	VALVE GP-CHECK (PILOT PRESSURE SUPPLY)	865
Y	10	1	**226-3800**	1	VALVE GP-CHECK (PILOT ACCUMULATOR PRESSURE)	866
	11	1	**217-0041**	1	FITTING	
	12	1	**226-3799**	1	PLUG-ORIFICE	
	13	1	**6K-6307**	1	SEAL-O-RING	
	14	1	**9S-8001**	5	PLUG-O-RING	
	15	1	**9S-8002**	5	PLUG-O-RING	
	16	1	**9S-8005**	1	PLUG-O-RING	
	17	1	**4J-7533**	5	SEAL-O-RING	
	18	1	**3J-7354**	5	SEAL-O-RING	

Y-SEPARATE ILLUSTRATION

296-1391 MANIFOLD GP-CONTROL *(contd.)* i02808829

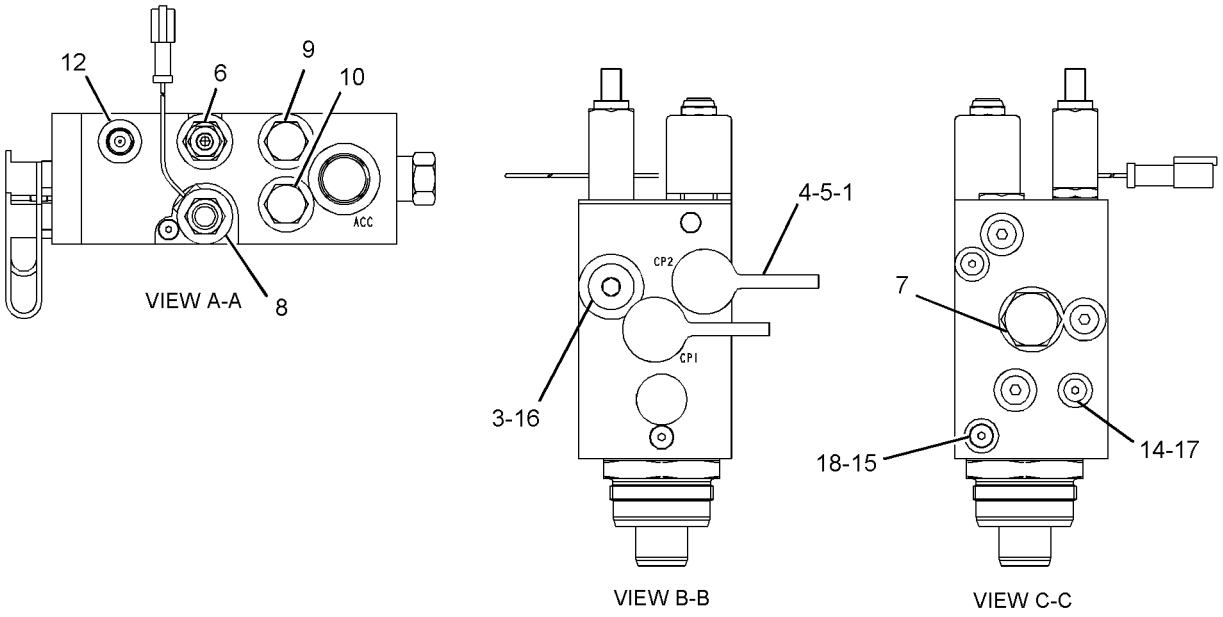

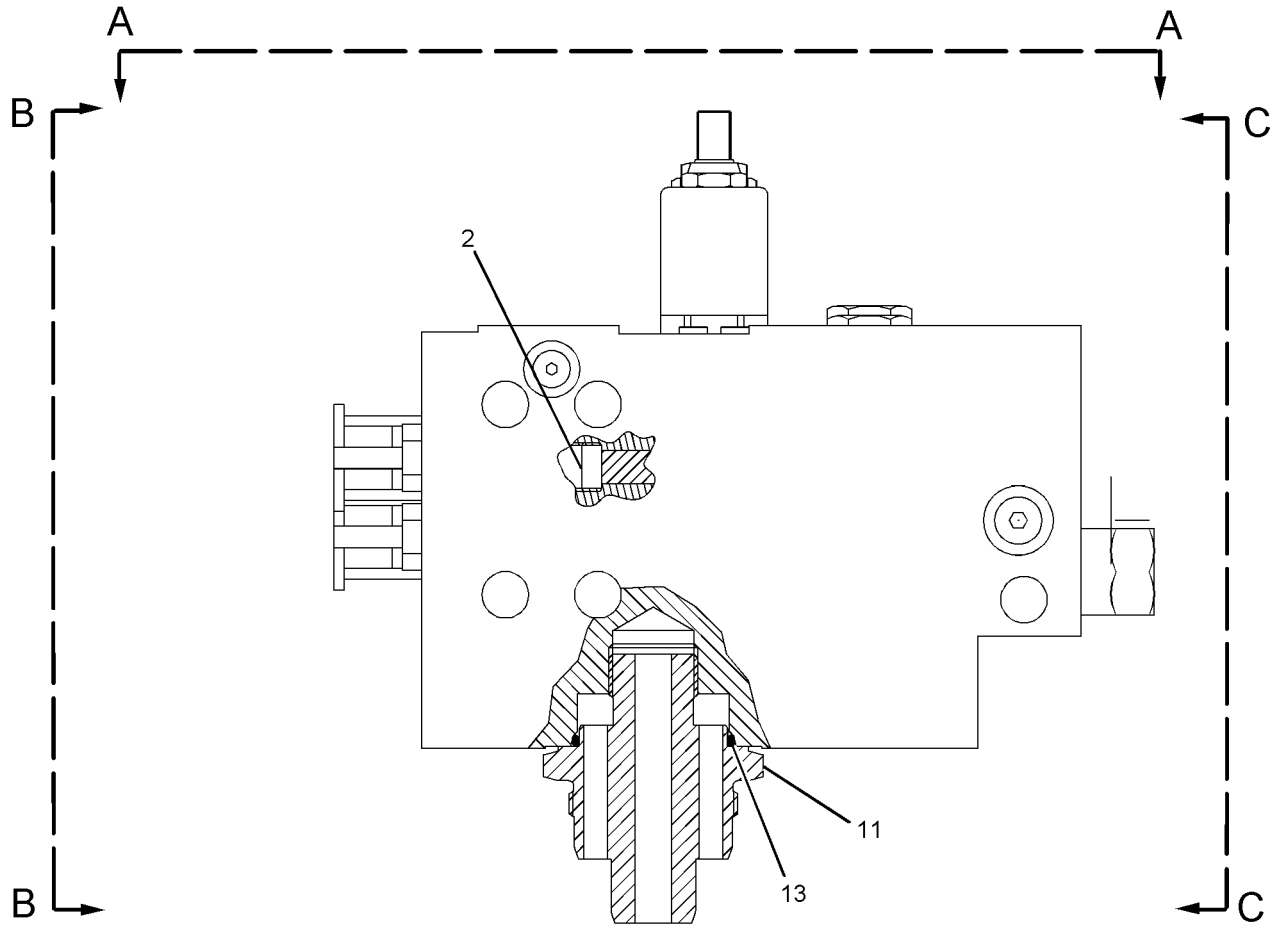

GRAPHIC #1 **<END>** g01106336

HYDRAULIC SYSTEM

301-2269 MANIFOLD GP-CONTROL

S/N: J8B1276-UP

PART OF 215-6822, 238-2753 VALVE GP-BANK 3, 215-5615 VALVE GP-BANK 4

ALSO AN ATTACHMENT

SMCS-5264 **i03206581**

NOTE	REF NO	GRAPHIC REF	PART NUMBER	QTY	PART NAME 1 2 3 4 5 6 (PRODUCT LEVEL)	SEE PAGE
	1	1	**6V-0852**	2	CAP-DUST	
	2	1	**6V-3965**	2	FITTING (QUICK DISCONNECT)	
Y	3	1	**170-3357**	1	VALVE GP-PRESSURE REDUCING (PILOT OIL)	896
Y	4	1	**225-8026**	1	VALVE GP-RELIEF (PILOT OIL)	907
Y	5	1	**201-0950**	1	VALVE GP-SOLENOID (HYDRAULIC LOCKOUT)	912
Y	6	1	**158-9956**	1	VALVE GP-CHECK (PILOT PRESSURE SUPPLY)	865
Y	7	1	**226-3800**	1	VALVE GP-CHECK (PILOT ACCUMULATOR PRESSURE)	866
	8	1	**217-0041**	1	FITTING	
	9	1	**6K-6307**	1	SEAL-O-RING	
					AVAILABLE REPAIR KIT(S):	
			309-2803	1	MANIFOLD GP-CONTROL (KIT)	
					(INCLUDES PLUGS, SEALS & SCREEN)	

Y-SEPARATE ILLUSTRATION

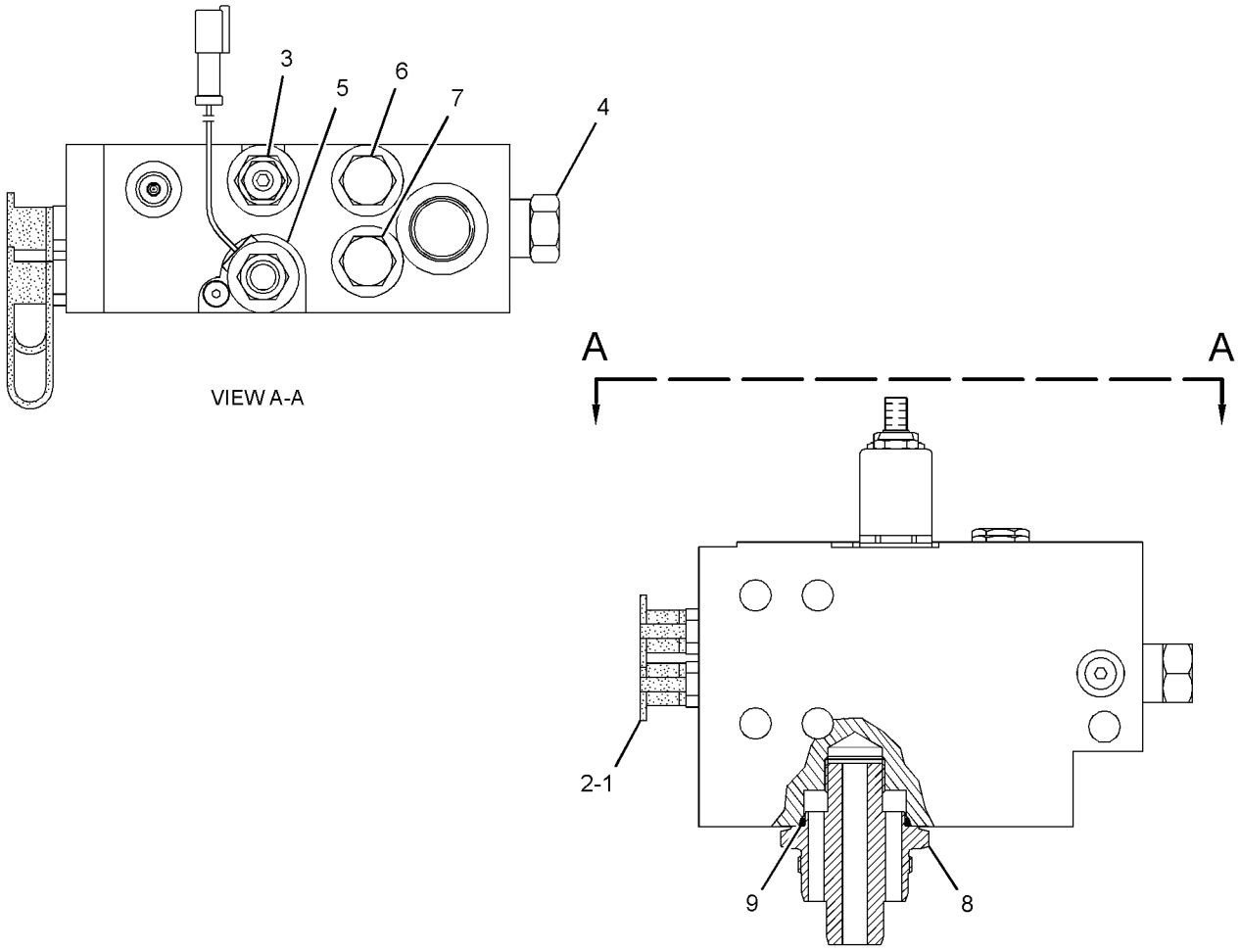

GRAPHIC #1 **<END>** g01455261

HYDRAULIC SYSTEM

191-1443 MANIFOLD GP-HYDRAULIC–WINCH

S/N: J8B1-UP
PART OF 208-9529 LINES GP-WINCH
AN ATTACHMENT

SMCS-5264 **i02241838**

NOTE	REF NO	GRAPHIC REF	PART NUMBER	QTY	PART NAME 1 2 3 4 5 6 (PRODUCT LEVEL)	SEE PAGE
	2	1	**8T-8737**	1	PLUG-SEAL	
	3	1	**8T-4223**	2	WASHER-HARD (13.5X25.5X3-MM THK)	
M	4	1	**8T-4139**	2	BOLT (M12X1.75X30-MM)	
	5	1	**4P-7581**	2	CLIP	
M	6	1	**8T-4191**	2	BOLT (M10X1.5X16-MM)	
	7	1	**8T-4121**	2	WASHER-HARD (11X21X2.5-MM THK)	
	8	1	**102-8802**	1	KIT-RECEPTACLE (2-PIN)	
	9	1	**102-8803**	1	KIT-RECEPTACLE (3-PIN)	
					(EACH INCLUDES RECEPTACLE AS & WEDGE)	
	10	1	**3E-3365**	1	WEDGE-RECEPTACLE LOCK (2-PIN)	
	11	1	**3E-3371**	1	WEDGE-RECEPTACLE LOCK (3-PIN)	
	12	1	**186-3735**	4	PIN-CONNECTOR (16-GA TO 18-GA)	

M-METRIC PART

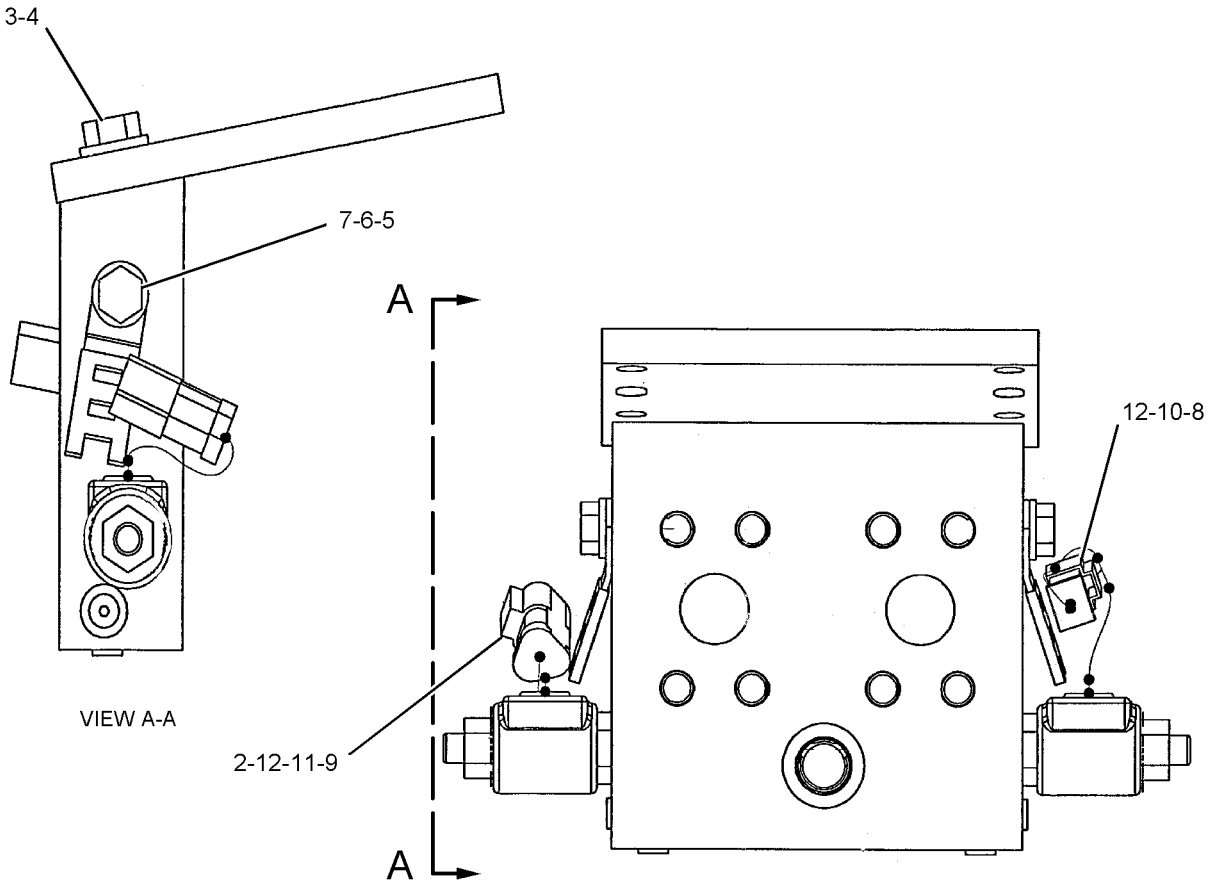

GRAPHIC #1 **<END>** g01104826

213-4325 MANIFOLD GP-VALVE—IMPLEMENT CONTROL

S/N: J8B1-UP

PART OF 210-7776 VALVE GP-BANK 3, 210-7775 VALVE GP-BANK 4, 209-6379 VALVE GP-CONTROL

ALSO AN ATTACHMENT

SMCS-5264 **i02233011**

NOTE	REF NO	GRAPHIC REF	PART NUMBER	QTY	PART NAME 1 2 3 4 5 6 (PRODUCT LEVEL)	SEE PAGE
Y	1	1	**4T-4935**	1	VALVE GP-RELIEF (IMPLEMENT INLET MANIFOLD)	903
	2	1	**6V-0852**	2	CAP-DUST	
	3	1	**8J-6815**	1	PLUG-ORIFICE	
Y	4	1	**104-7574**	1	VALVE GP-RELIEF (IMPLEMENT INLET MANIFOLD)	904
Z	5	1		1	MANIFOLD	
	6	1	*155-3624*	1	PLUG AS	
		1	**3J-7354**	1	SEAL-O-RING	
		1	**9S-4182**	1	PLUG-O-RING	
	7	1	*164-5567*	2	COUPLER AS-QUICK DISCONNECT	
					(EACH INCLUDES)	
		1	**3J-1907**	1	SEAL-O-RING	
		1	**6V-3965**	1	FITTING (QUICK DISCONNECT)	
Y	8	1	**4T-5896**	1	VALVE GP-CHECK (IMPLEMENT INLET MANIFOLD)	863
	9	1	**8C-3206**	2	FLANGE-HALF	
	10	1	**8T-4121**	8	WASHER-HARD (11X21X2.5-MM THK)	
M	11	1	**8T-4196**	4	BOLT (M10X1.5X35-MM)	

M-METRIC PART
Y-SEPARATE ILLUSTRATION
Z-NOT SERVICED SEPARATELY

213-4325 **MANIFOLD GP-VALVE** *(contd.)* **i02233011**

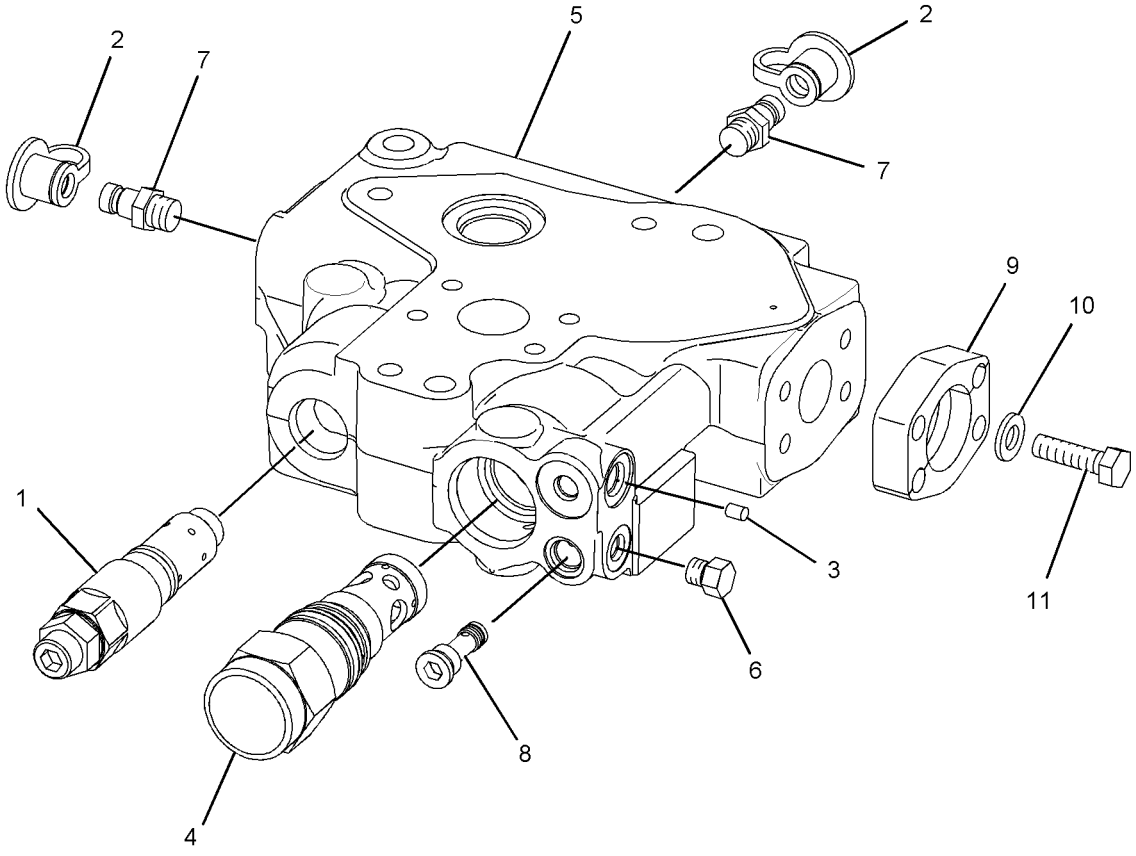

GRAPHIC #1 **<END>** g01127433

HYDRAULIC SYSTEM

210-6607 MOTOR & MTG GP-HYDRAULIC FAN

S/N: J8B1-UP

PART OF 206-6782 HYDRAULIC AR

SMCS-1386 **i03430504**

NOTE	REF NO	GRAPHIC REF	PART NUMBER	QTY	PART NAME 1 2 3 4 5 6 (PRODUCT LEVEL)	SEE PAGE
	1	1	*148-8407*	1	PLUG AS	
		1	**9S-4191**	1	PLUG-O-RING	
		1	**3J-1907**	1	SEAL-O-RING	
YR	2	1	**205-1821**	1	MOTOR GP-PISTON (HYDRAULIC FAN)	808
M	3	1	**8T-4193**	2	BOLT (M16X2X50-MM)	
	4	1	**9X-8257**	2	WASHER (17.5X30X3.5-MM THK)	

M-METRIC PART
R-REMFG PART MAY BE AVAILABLE
Y-SEPARATE ILLUSTRATION

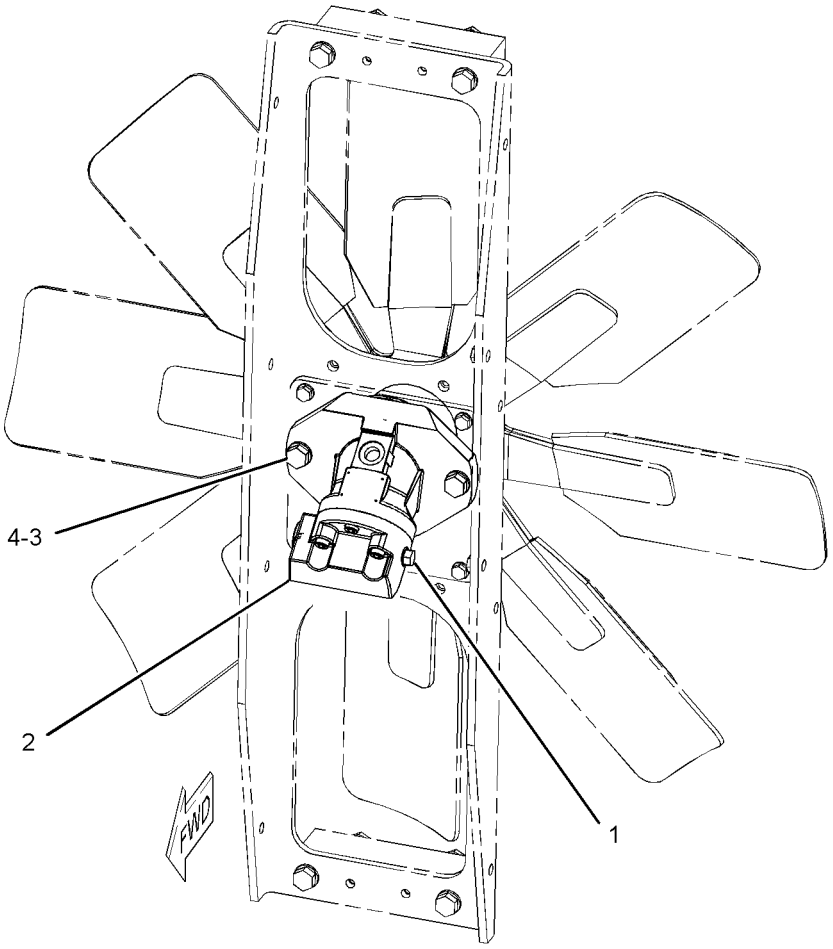

GRAPHIC #1 **<END>** g01127740

205-1820 MOTOR GP-PISTON–REVERSIBLE FAN*R

S/N: J8B1-UP
PART OF 218-3397 FAN AR-REVERSIBLE
AN ATTACHMENT

SMCS-5058 **i02236662**

NOTE	REF NO	GRAPHIC REF	PART NUMBER	QTY	PART NAME 1 2 3 4 5 6 (PRODUCT LEVEL)	SEE PAGE
Y	1	1	**250-2250**	1	ROTATING GP-MOTOR	821
M	2	1	**8T-2223**	4	BOLT-SOCKET HEAD (M10X1.5X45-MM)	
	3	1	**250-2251**	1	HEAD	
	4	1	**192-8862**	1	PIN	
	5	1	**3K-0360**	1	SEAL-O-RING	
	6	1	**6V-1179**	1	SEAL-O-RING	
M	7	1	**8T-1159**	2	BOLT-SOCKET HEAD (M10X1.5X25-MM)	
	8	1	**9S-8005**	1	PLUG-O-RING	

M-METRIC PART
Y-SEPARATE ILLUSTRATION

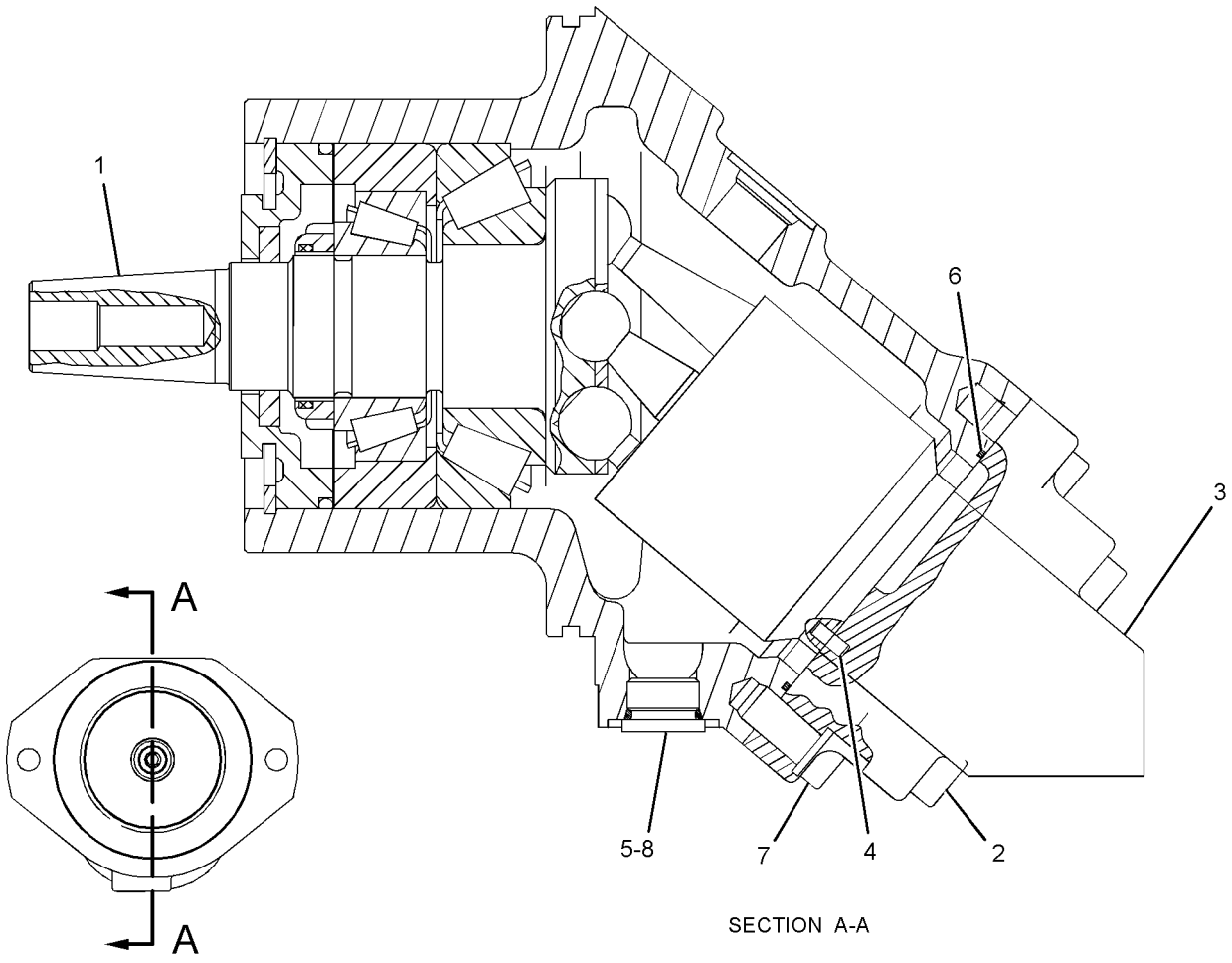

SECTION A-A

GRAPHIC #1 **<END>** g01098132

205-1821 MOTOR GP-PISTON–HYDRAULIC FAN*R

S/N: J8B1-UP

PART OF 210-6607 MOTOR & MTG GP-HYDRAULIC FAN

SMCS-5058 **i02235175**

NOTE	REF NO	GRAPHIC REF	PART NUMBER	QTY	PART NAME 1 2 3 4 5 6 (PRODUCT LEVEL)	SEE PAGE
Y	1	1	**250-2250**	1	ROTATING GP-MOTOR	821
M	2	1	**8T-2223**	4	BOLT-SOCKET HEAD (M10X1.5X45-MM)	
	3	1	**250-2253**	1	HEAD AS	
		1	**250-2274**	1	HEAD	
		1	**241-2943**	1	SPRING	
		1	**251-6358**	1	VALVE AS	
		1	**252-8073**	1	SEAL-O-RING	
	4	1	**192-8862**	1	PIN	
	5	1	**3K-0360**	1	SEAL-O-RING	
	6	1	**6V-1179**	1	SEAL-O-RING	
M	7	1	**8T-1159**	2	BOLT-SOCKET HEAD (M10X1.5X25-MM)	
	8	1	**9S-8005**	1	PLUG-O-RING	
	9	1	**9S-8004**	1	PLUG-O-RING	
	10	1	**3J-1907**	1	SEAL-O-RING	

M-METRIC PART
Y-SEPARATE ILLUSTRATION

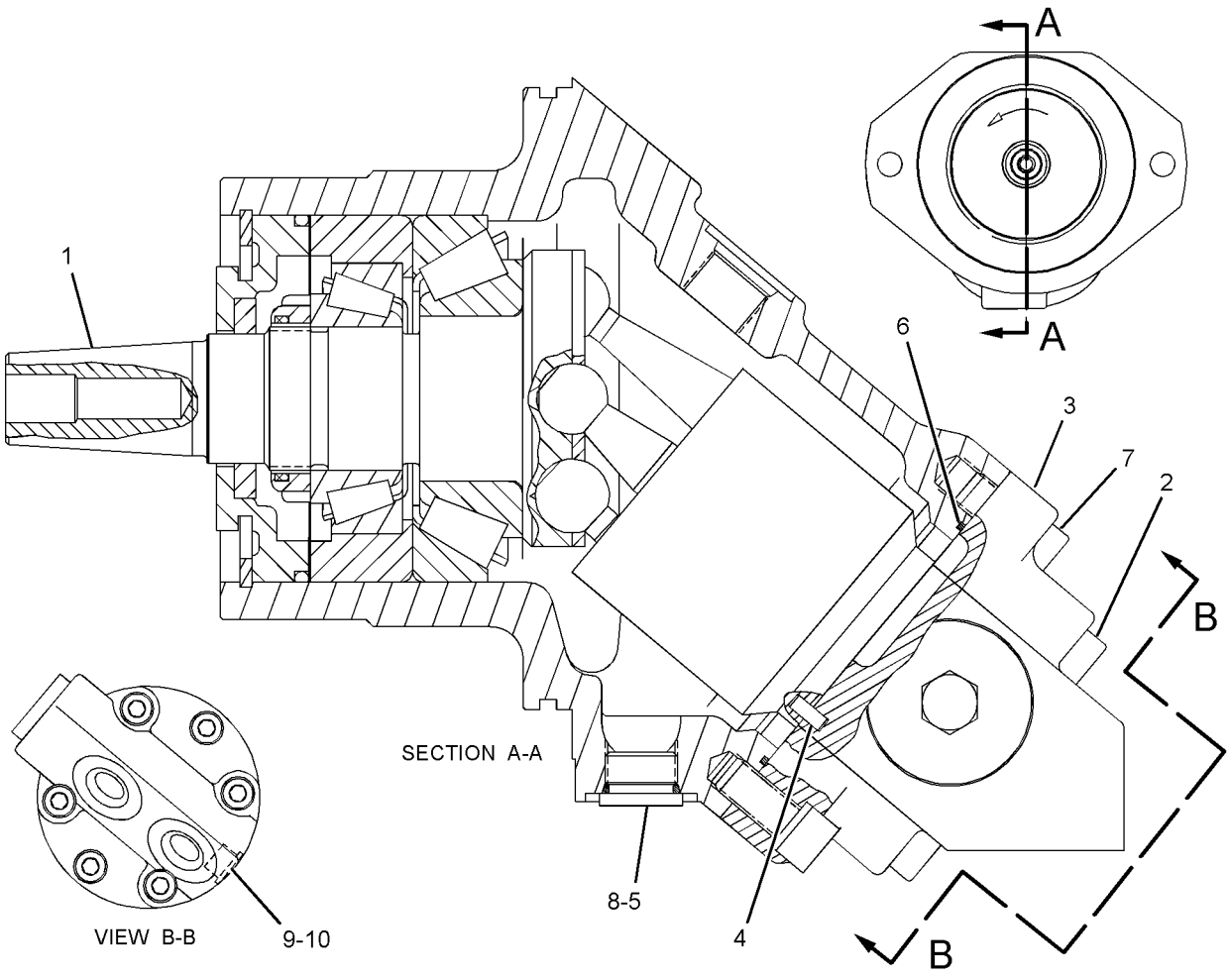

GRAPHIC #1 **<END>** g01127339

227-6315 MOUNTING GP-CYLINDER

S/N: J8B1-UP; D1E1-UP; A5G1-UP; B8S1-UP
PART OF 261-2351 BULLDOZER AR-ANGLING, 227-5437 BULLDOZER AR-SEMI-UNIVERSAL, 245-3566 BULLDOZER AR-UNIVERSAL
AN ATTACHMENT

SMCS-7562 **i03385940**

NOTE	REF NO	GRAPHIC REF	PART NUMBER	QTY	PART NAME 1 2 3 4 5 6 (PRODUCT LEVEL)	SEE PAGE
	1	1	**3B-8489**	2	FITTING-GREASE	
	2	1	**4T-4875**	2	PIN	
	3	1	**8E-6305**	1	PLATE (RH)	
	4	1	**8E-6306**	1	PLATE (LH)	
	5	1	**227-8406**	4	CAP AS	
					(EACH INCLUDES)	
		1	**104-1844**	1	BEARING-SLEEVE	
	6	1	**229-9744**	2	YOKE	
	7	1	**5P-1076**	2	WASHER-HARD (13.5X30X4-MM THK)	
	8	1	**6V-0273**	2	SEAL-LIP TYPE	
M	9	1	**7X-2568**	8	BOLT (M20X2.5X180-MM)	
M	10	1	**8T-4183**	2	BOLT (M12X1.75X40-MM)	

M-METRIC PART

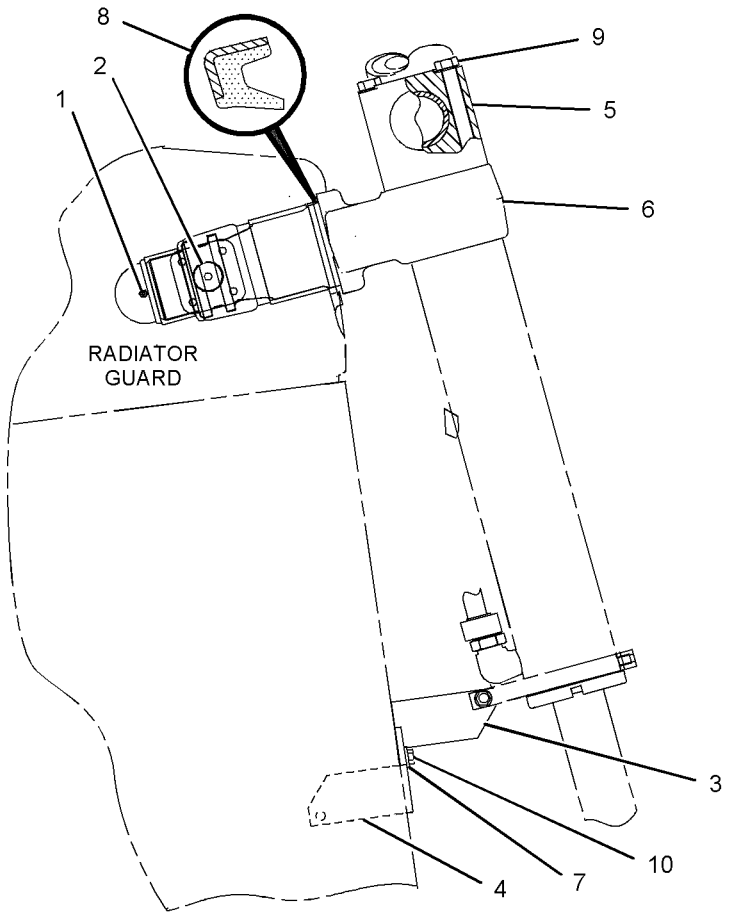

GRAPHIC #1 **<END>** g01018043

194-3286 PLUG GP-CONTROL VALVE–
PRESSURE, FLOW COMPENSATOR
S/N: J8B1-UP
PART OF 176-7520, 194-3899 VALVE GP-PUMP CONTROL

SMCS-5051, 5086 **i03206720**

NOTE	REF NO	GRAPHIC REF	PART NUMBER	QTY	PART NAME 1 2 3 4 5 6 (PRODUCT LEVEL)	SEE PAGE
M	1	1	**5C-2873**	1	NUT (M12X1-THD)	
	2	1	**195-3324**	1	CAP	
	3	1	**195-3325**	1	RING	
	4	1	**3E-6761**	1	SEAL-O-RING	
	5	1	**187-8567**	1	SEAL-O-RING	
	6	1	**194-6849**	1	RETAINER	

M-METRIC PART

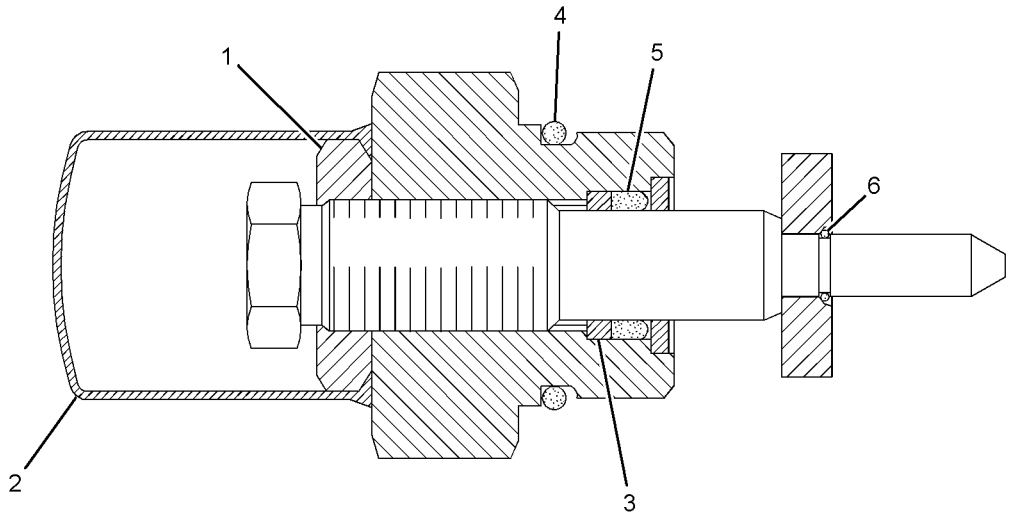

GRAPHIC #1 **<END>** g01388986

HYDRAULIC SYSTEM

210-6600 PUMP & MOUNTING GP—IMPLEMENT

S/N: J8B1-UP

PART OF 206-6782 HYDRAULIC AR

SMCS-5084 **i02234202**

NOTE	REF NO	GRAPHIC REF	PART NUMBER	QTY	PART NAME 1 2 3 4 5 6 (PRODUCT LEVEL)	SEE PAGE
	1	1	**2Y-5503**	1	CORK	
YR	2	1	**214-1091**	1	PUMP GP-PISTON	816
	3	1	**2K-8257**	1	SEAL-O-RING	
	4	1	**8T-4123**	3	WASHER (22X35X3.5-MM THK)	
M	5	1	**8T-6430**	3	BOLT (M20X2.5X50-MM)	

M-METRIC PART
R-REMFG PART MAY BE AVAILABLE
Y-SEPARATE ILLUSTRATION

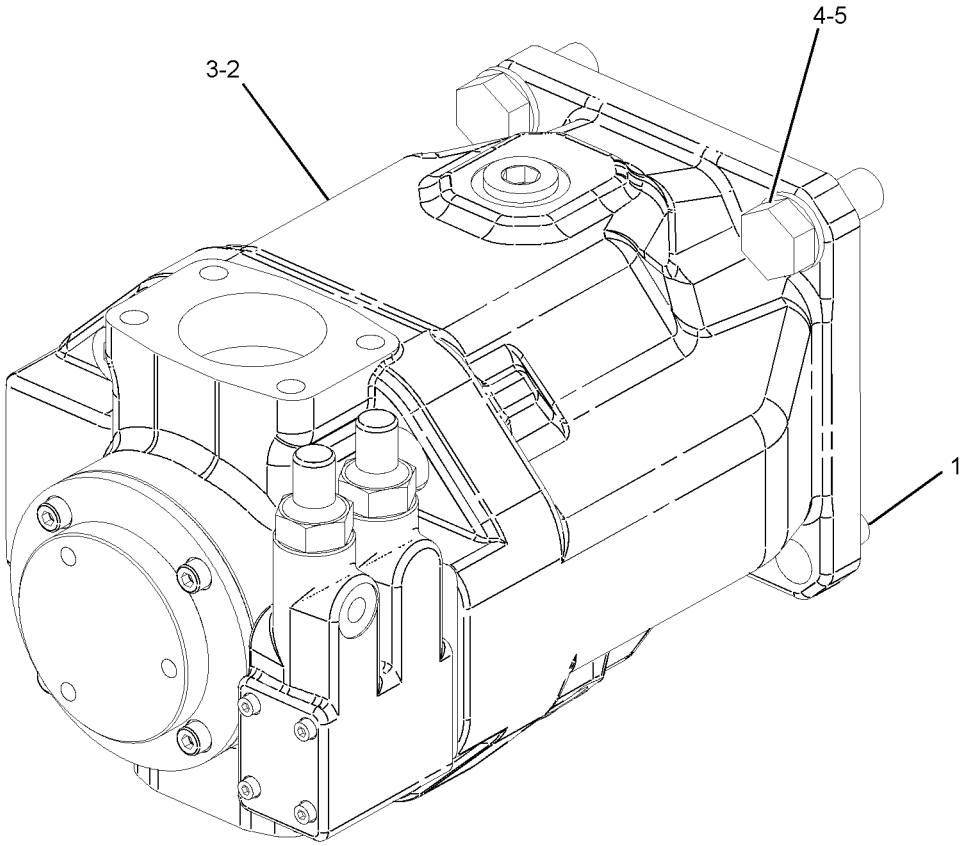

GRAPHIC #1 **<END>** g01021033

HYDRAULIC SYSTEM

210-6601 PUMP & MOUNTING GP—STEERING, HYDRAULIC FAN

S/N: J8B1-UP

PART OF 206-6782 HYDRAULIC AR

SMCS-5084 **i02234598**

NOTE	REF NO	GRAPHIC REF	PART NUMBER	QTY	PART NAME 1 2 3 4 5 6 (PRODUCT LEVEL)	SEE PAGE
YR	1	1	**212-0271**	1	PUMP GP-PISTON	815
	2	1	**2K-8257**	1	SEAL-O-RING	
	3	1	**8T-4123**	2	WASHER (22X35X3.5-MM THK)	
M	4	1	**8T-6430**	2	BOLT (M20X2.5X50-MM)	

M-METRIC PART
R-REMFG PART MAY BE AVAILABLE
Y-SEPARATE ILLUSTRATION

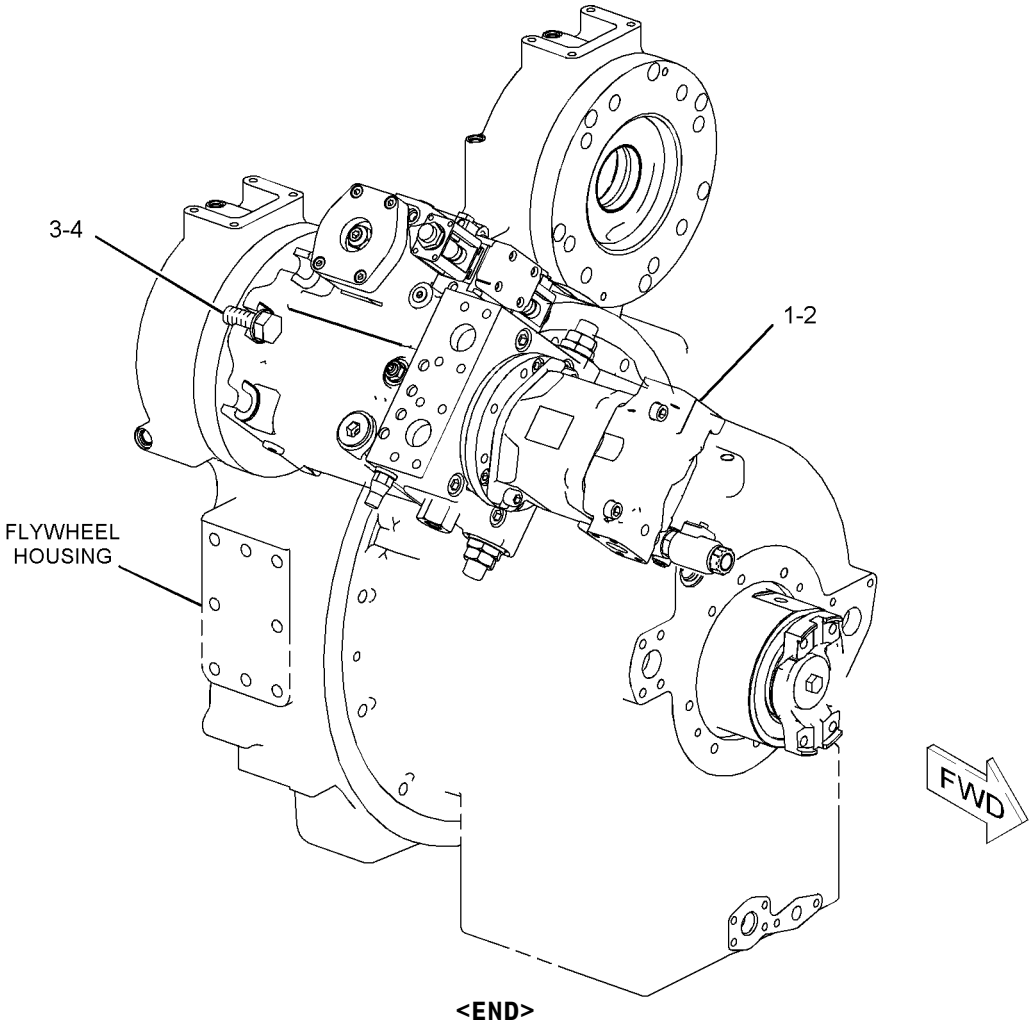

GRAPHIC #1 **<END>** g01021053

204-2578 PUMP GP-PISTON—HYDRAULIC FAN*R

S/N: J8B1-UP

PART OF 212-0271 PUMP GP-PISTON

SMCS-5070 **i03206800**

NOTE	REF NO	GRAPHIC REF	PART NUMBER	QTY	PART NAME 1 2 3 4 5 6 (PRODUCT LEVEL)	SEE PAGE
Y	1	1	**254-0059**	1	ROTATING GP-PUMP	824
	2	1	**168-7861**	1	PISTON-ACTUATOR	
	3	1	**168-2198**	1	LINK-CONTROL	
	4	1	**197-1762**	1	SWASHPLATE	
	5	1	**233-0065**	1	SHAFT-DRIVE	
	6	1	**198-5351**	1	PLUG	
	7	1	**127-9490**	1	SPRING (BIAS)	
	8	1	**127-9483**	1	SHIM (PRELOAD)	
	9	1	**203-9163**	1	CONE-BEARING	
	10	1	**6V-4636**	1	CUP-BEARING	
	11	1	**105-3035**	1	CONE-BEARING	
	12	1	**203-8609**	1	CUP-BEARING	
	13	1	**166-0344**	1	SEAL-SHAFT	
	14	1	**127-9485**	1	SEAL-O-RING	
	15	1	**8T-7525**	1	SEAL-O-RING	
	16	1	**168-3504**	1	SEAL	
	17	1	**8C-3110**	1	RING-RETAINING	
M	18	1	**095-0670**	4	BOLT (M12X1.75X45-MM)	
	19	1	**9S-8006**	1	PLUG-O-RING	
	20	1	**120-4394**	1	PLUG-BREAK OFF	
	21	1	**9X-8979**	1	DOWEL	
	22	1	**2M-9780**	1	SEAL-O-RING	
Y	23	1	**310-1523**	1	VALVE GP-PUMP CONTROL (PRESSURE, FLOW COMPENSATOR)	899
	24	1	**168-7871**	1	HOUSING-PUMP	
	25	1	**280-7870**	1	GASKET	
M	26	1	**8T-8442**	4	BOLT-SOCKET HEAD (M6X1X30-MM)	
	27	1	**237-4227**	2	BEARING-CRADLE	

M-METRIC PART
Y-SEPARATE ILLUSTRATION

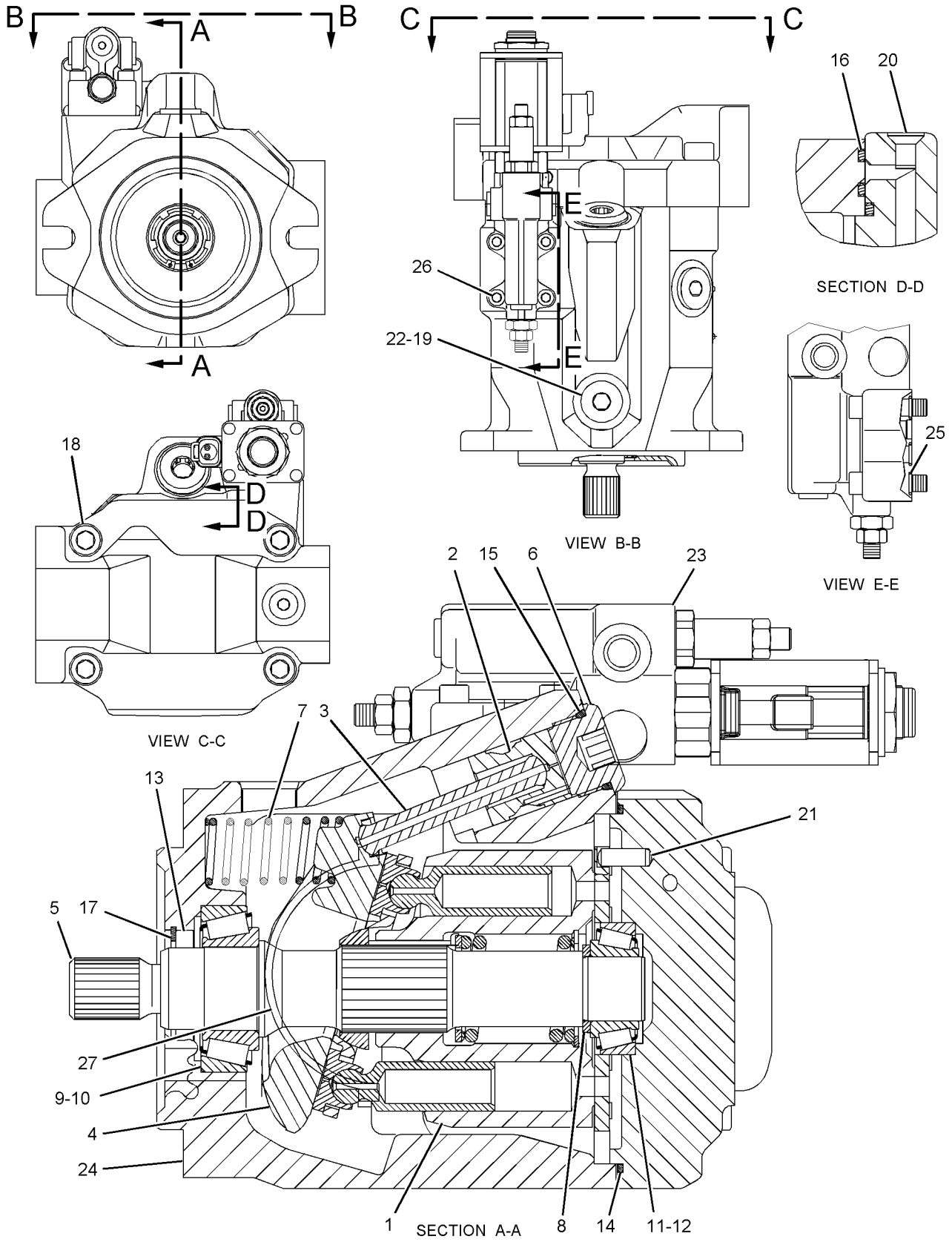

GRAPHIC #1 **<END>** g01108047

212-0271 PUMP GP-PISTON–HYDRAULIC FAN, STEERING*R

S/N: J8B1-UP

PART OF 210-6601 PUMP & MOUNTING GP

SMCS-5070 **i02234609**

NOTE	REF NO	GRAPHIC REF	PART NUMBER	QTY	PART NAME 1 2 3 4 5 6 (PRODUCT LEVEL)	SEE PAGE
YR	1	1	**205-1823**	1	PUMP GP-PISTON (FRONT) (STEERING)	712
YR	2	1	**204-2578**	1	PUMP GP-PISTON (REAR) (HYDRAULIC FAN)	813
M	3	1	**6V-3668**	2	BOLT (M12X1.75X30-MM)	
	4	1	**5P-8245**	2	WASHER-HARD (13.5X25.5X3-MM THK)	
	5	1	**3K-0715**	1	SEAL-O-RING	

M-METRIC PART
R-REMFG PART MAY BE AVAILABLE
Y-SEPARATE ILLUSTRATION

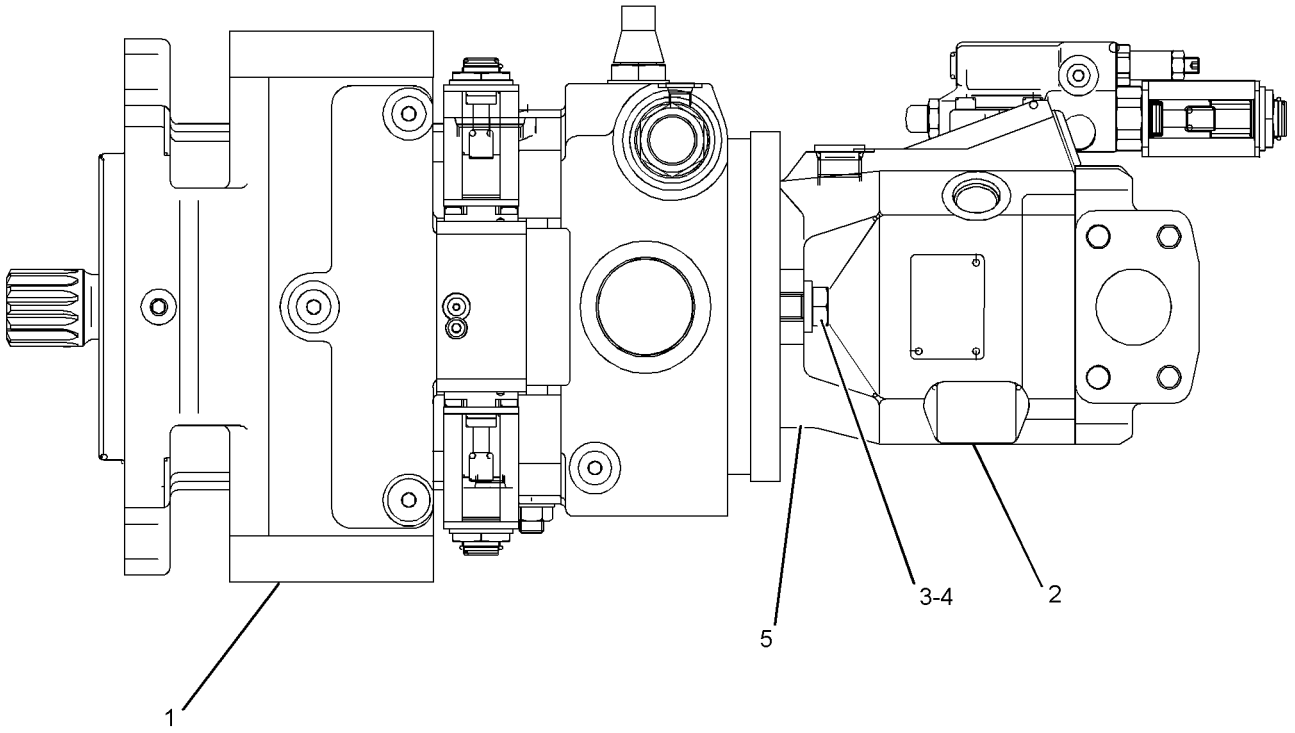

GRAPHIC #1 **<END>** g01127104

HYDRAULIC SYSTEM

214-1091 PUMP GP-PISTON–IMPLEMENT*R

S/N: J8B1-UP

PART OF 210-6600 PUMP & MOUNTING GP

SMCS-5070 **i02236038**

NOTE	REF NO	GRAPHIC REF	PART NUMBER	QTY	PART NAME 1 2 3 4 5 6 (PRODUCT LEVEL)	SEE PAGE
	1	1	**095-0942**	2	RING-RETAINING	
	2	1	**176-7507**	2	BEARING-CRADLE	
	3	1	**252-0032**	1	COUPLING	
Y	4	1	**176-7509**	1	ROTATING GP-PUMP	823
	5	1	**5P-9186**	4	SEAL-O-RING	
M	6	1	**7Y-0467**	4	BOLT-SOCKET HEAD (M18X2.5X55-MM)	
	7	1	**6Y-2736**	3	CONE-BEARING	
	8	1	**6Y-2737**	3	CUP-BEARING	
	9	1	**247-3761**	1	SPACER (45X3-MM THK)	
	10	1	**107-3114**	1	SEAL-O-RING	
	11	1	**176-7511**	1	GUIDE-PLUNGER	
	12	1	**176-7512**	1	SPRING	
	13	1	**176-7513**	1	PLUNGER	
	14	1	**9S-8008**	1	PLUG-O-RING	
	15	1	**3D-2824**	1	SEAL-O-RING	
	16	1	**252-0031**	1	SHAFT-DRIVE	
	17	1	**1B-3908**	1	CONE-BEARING	
	18	1	**1B-3909**	1	CUP-BEARING	
	19	1	**203-1095**	2	SEAL	
	20	1	**256-7619**	1	SWASHPLATE AS	
	21	1	**176-7517**	1	PISTON-CONTROL	
	22	1	**176-7518**	1	GUIDE-PISTON	
	23	1	**120-4394**	1	PLUG-BREAK OFF	
	24	1	**7X-2438**	1	DOWEL	
	25	1	**204-3334**	1	SEAL-O-RING	
Y	26	1	**176-7520**	1	VALVE GP-PUMP CONTROL (PRESSURE COMPENSATOR)	897
Y	27	1	**194-3899**	1	VALVE GP-PUMP CONTROL (FLOW COMPENSATOR)	898
M	28	1	**127-4832**	4	BOLT-SOCKET HEAD (M5X0.8X90-MM)	
	29	1	**257-4385**	1	RING	
	30	1	**176-7692**	1	SLEEVE-STOP	
	31	1	**9S-8004**	1	PLUG-O-RING	
	32	1	**3J-1907**	1	SEAL-O-RING	
	33	1	**033-6039**	10	SEAL-O-RING	
M	34	1	**8T-1158**	4	BOLT-SOCKET HEAD (M8X1.25X20-MM)	
	35	1	**251-2459**	1	SHAFT	
	36	1	**251-2460**	1	COVER	
	37	1	**6V-5200**	1	RING-RETAINING	

M-METRIC PART
Y-SEPARATE ILLUSTRATION

214-1091 PUMP GP-PISTON *(contd.)* i02236038

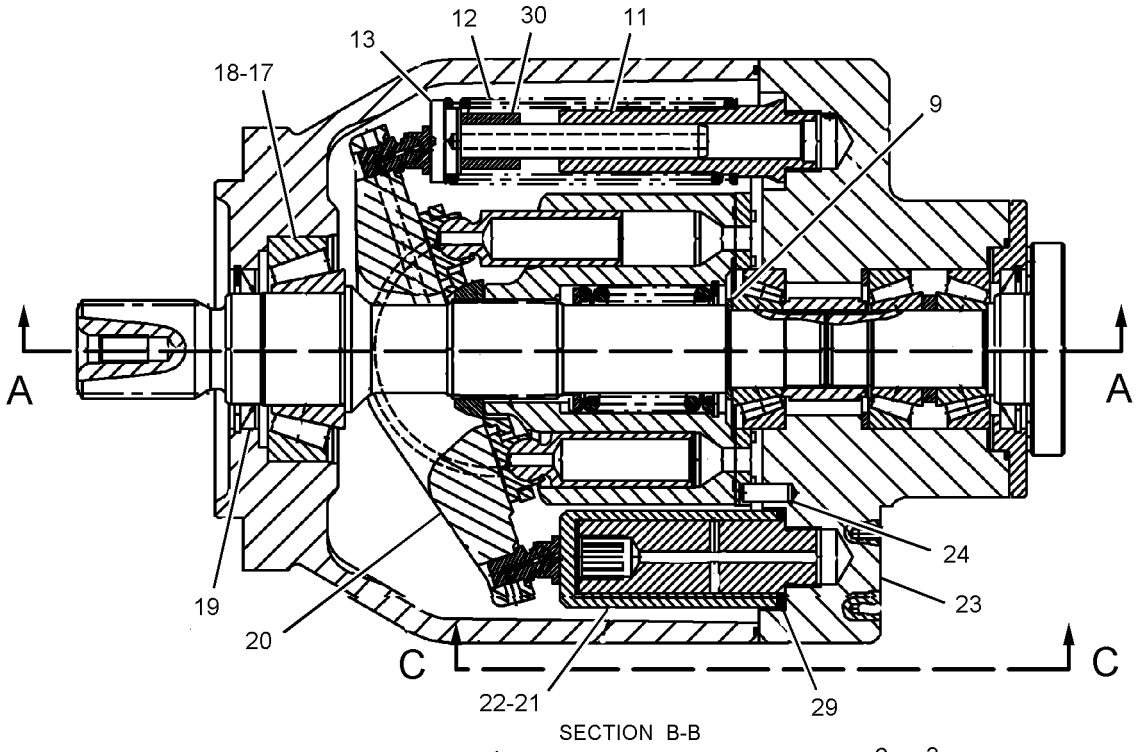

SECTION B-B

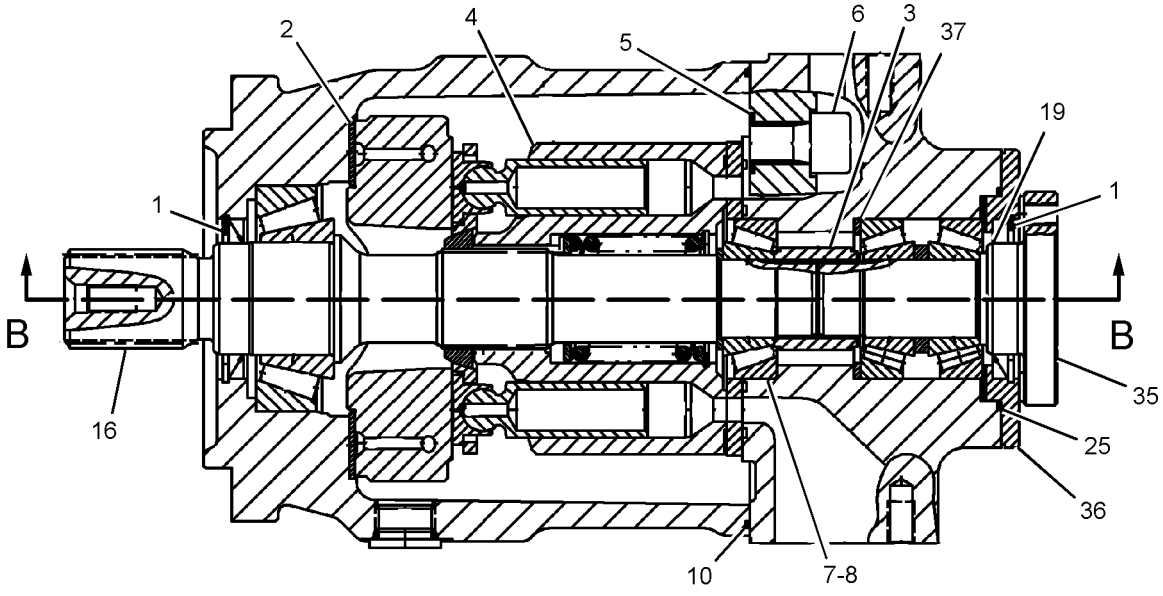

SECTION A-A

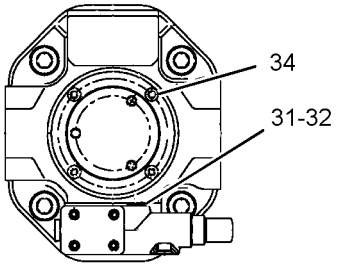

VIEW D-D

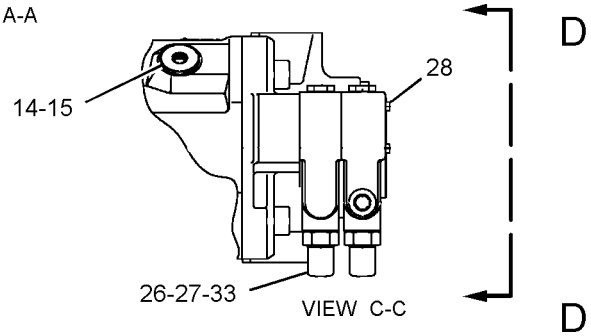

VIEW C-C

GRAPHIC #1 **<END>** g01128140

HYDRAULIC SYSTEM

319-3593 PUMP GP-PISTON—REAR HYDRAULIC FAN

S/N: J8B1-UP
PART OF 319-3594 PUMP GP-PISTON
AN ATTACHMENT

SMCS-5070 **i03202668**

NOTE	REF NO	GRAPHIC REF	PART NUMBER	QTY	PART NAME 1 2 3 4 5 6 (PRODUCT LEVEL)	SEE PAGE
Y	1	1	**254-0059**	1	ROTATING GP-PUMP	824
	2	1	**168-7861**	1	PISTON-ACTUATOR	
	3	1	**168-2198**	1	LINK-CONTROL	
	4	1	**197-1762**	1	SWASHPLATE	
	5	1	**233-0065**	1	SHAFT-DRIVE	
	6	1	**198-5351**	1	PLUG	
	7	1	**127-9490**	1	SPRING (BIAS)	
	8	1	**127-9483**	1	SHIM (PRELOAD)	
	9	1	**203-9163**	1	CONE-BEARING	
	10	1	**6V-4636**	1	CUP-BEARING	
	11	1	**105-3035**	1	CONE-BEARING	
	12	1	**203-8609**	1	CUP-BEARING	
	13	1	**166-0344**	1	SEAL-SHAFT	
	14	1	**127-9485**	1	SEAL-O-RING	
	15	1	**8T-7525**	1	SEAL-O-RING	
	16	1	**168-3504**	1	SEAL	
	17	1	**8C-3110**	1	RING-RETAINING	
M	18	1	**095-0670**	4	BOLT (M12X1.75X45-MM)	
	19	1	**9S-8006**	1	PLUG-O-RING	
	20	1	**120-4394**	1	PLUG-BREAK OFF	
	21	1	**9X-8979**	1	DOWEL	
	22	1	**2M-9780**	1	SEAL-O-RING	
Y	23	1	**318-3130**	1	VALVE GP-PUMP CONTROL (PRESSURE, FLOW COMPENSATOR) (HYDRAULIC FAN)	900
	24	1	**168-7871**	1	HOUSING-PUMP	
	25	1	**280-7870**	1	GASKET	
M	26	1	**8T-8442**	4	BOLT-SOCKET HEAD (M6X1X30-MM)	
	27	1	**237-4227**	2	BEARING-CRADLE	

M-METRIC PART
Y-SEPARATE ILLUSTRATION

319-3593 PUMP GP-PISTON *(contd.)* **i03202668**

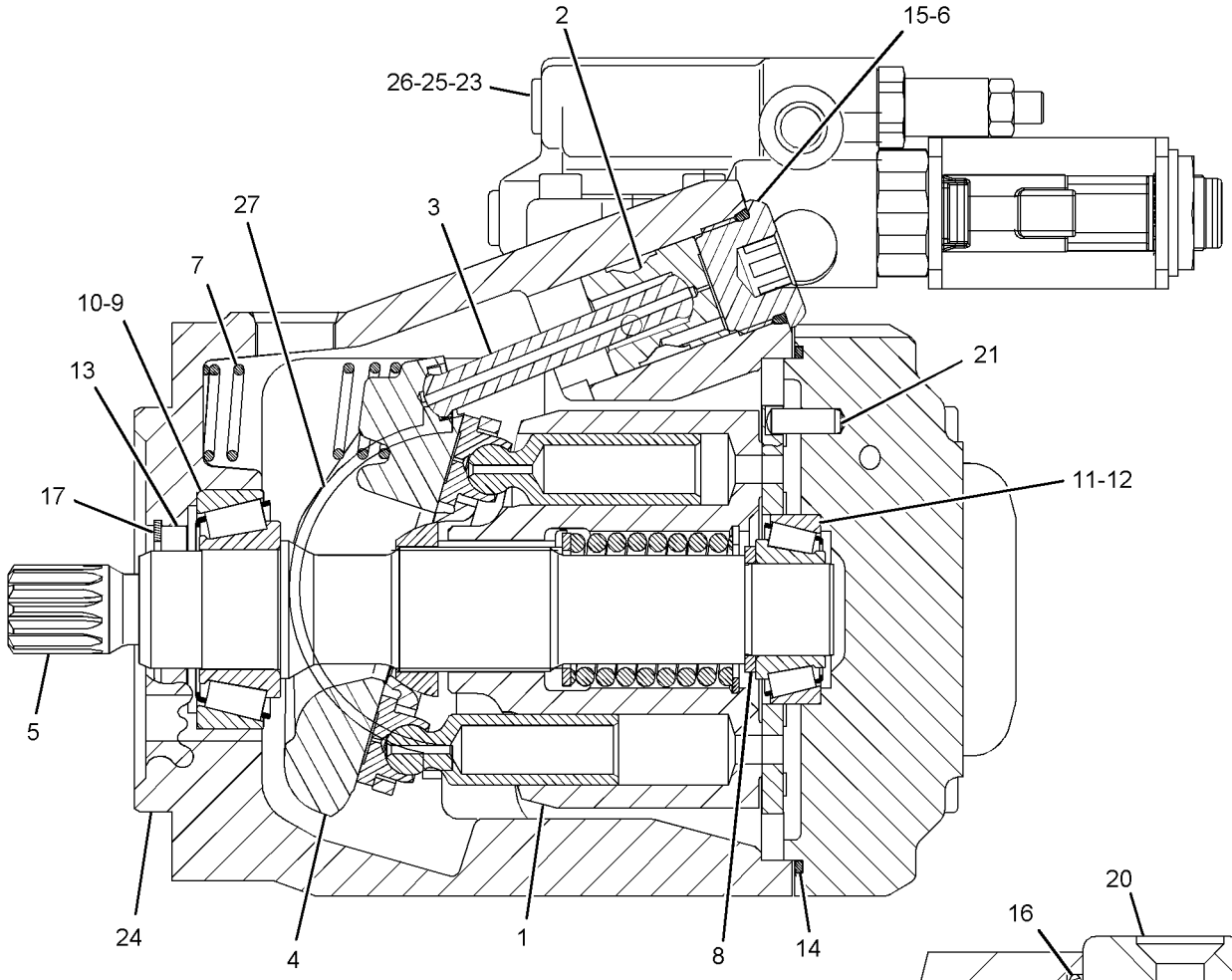

SECTION A-A

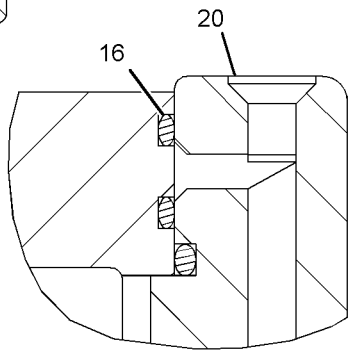

SECTION B-B

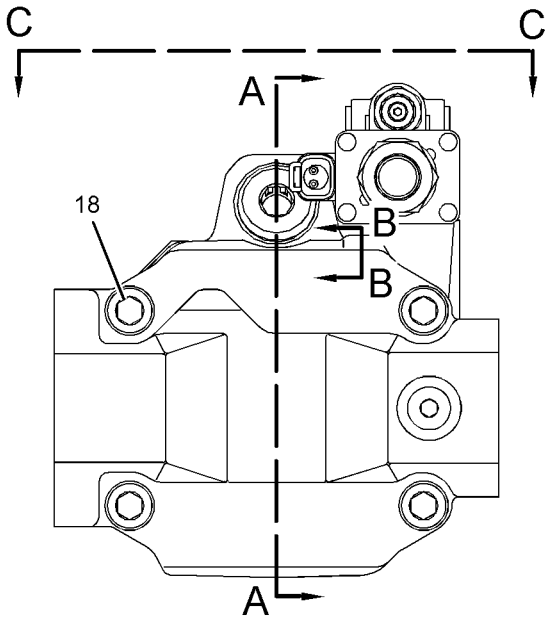

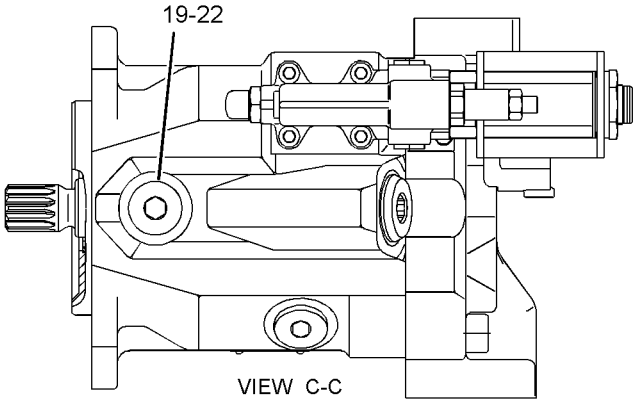

VIEW C-C

GRAPHIC #1 **<END>** g01635938

319-3594 PUMP GP-PISTON–HYDRAULIC FAN

S/N: J8B1-UP
PART OF 218-3397 FAN AR-REVERSIBLE
AN ATTACHMENT

SMCS-5070 **i03202646**

NOTE	REF NO	GRAPHIC REF	PART NUMBER	QTY	PART NAME 1 2 3 4 5 6 (PRODUCT LEVEL)	SEE PAGE
YR	1	1	**205-1823**	1	PUMP GP-PISTON (FRONT) (HYDRAULIC FAN)	712
Y	2	1	**319-3593**	1	PUMP GP-PISTON (REAR) (HYDRAULIC FAN)	818
M	3	1	**6V-3668**	2	BOLT (M12X1.75X30-MM)	
	4	1	**5P-8245**	2	WASHER-HARD (13.5X25.5X3-MM THK)	
	5	1	**3K-0715**	1	SEAL-O-RING	

M-METRIC PART
R-REMFG PART MAY BE AVAILABLE
Y-SEPARATE ILLUSTRATION

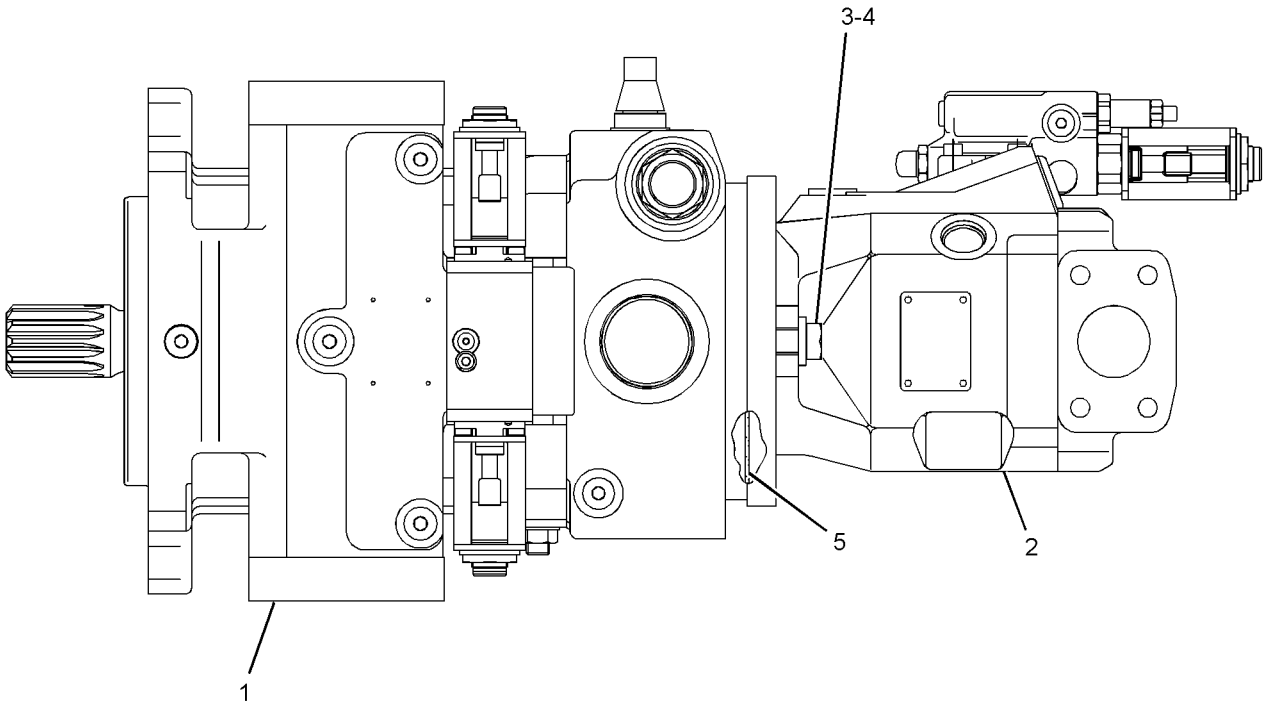

GRAPHIC #1 **<END>** g01637058

250-2250 ROTATING GP-MOTOR–HYDRAULIC FAN

S/N: J8B1-UP

PART OF 205-1820, 205-1821 MOTOR GP-PISTON

ALSO AN ATTACHMENT

SMCS-5058 **i02235178**

NOTE	REF NO	GRAPHIC REF	PART NUMBER	QTY	PART NAME 1 2 3 4 5 6 (PRODUCT LEVEL)	SEE PAGE
	1	1	**095-0944**	1	RING-RETAINING	
	2	1	**157-0387**	1	COVER	
	3	1	**139-2840**	1	SEAL-SHAFT	
	4	1	**6V-8002**	1	SEAL-O-RING	
B	5	1	**180-1376**	1	SHIM (0.3-MM THK)	
B	6	1	**180-1375**	1	SHIM (0.1-MM THK)	
	7	1	**250-2273**	1	SHAFT-DRIVE	
	8	1	**228-4006**	1	BARREL	
	9	1	**194-2895**	1	PLATE	
	10	1	**157-0395**	1	PIN-CENTER	
	11	1	**179-9938**	7	PISTON AS	
					(EACH INCLUDES)	
		1	**157-0403**	2	RING-PISTON	
	12	1	**157-0388**	1	WASHER (17.54X24X0.3-MM THK)	
	13	1	**157-0389**	1	PLATE-RETAINING	
	14	1	**152-2638**	7	BOLT	
	15	1	**157-0401**	1	SPRING-CUP	
	16	1	**180-1288**	1	KIT-BEARING (HYDRAULIC FAN MOTOR)	
	17	1	**6V-5201**	1	RING-RETAINING	
B	18	1	**180-1274**	1	SPACER (5X15.4X3.8-MM THK)	
B	19	1	**180-1275**	1	SPACER (5X15.4X3.9-MM THK)	
B	20	1	**180-1276**	1	SPACER (5X15.4X4-MM THK)	
B	21	1	**180-1277**	1	SPACER (5X15.4X3.7-MM THK)	
B	22	1	**180-1278**	1	SPACER (5X15.4X3.6-MM THK)	
B	23	1	**180-1279**	1	SPACER (5X15.4X3.5-MM THK)	

B-USE AS REQUIRED

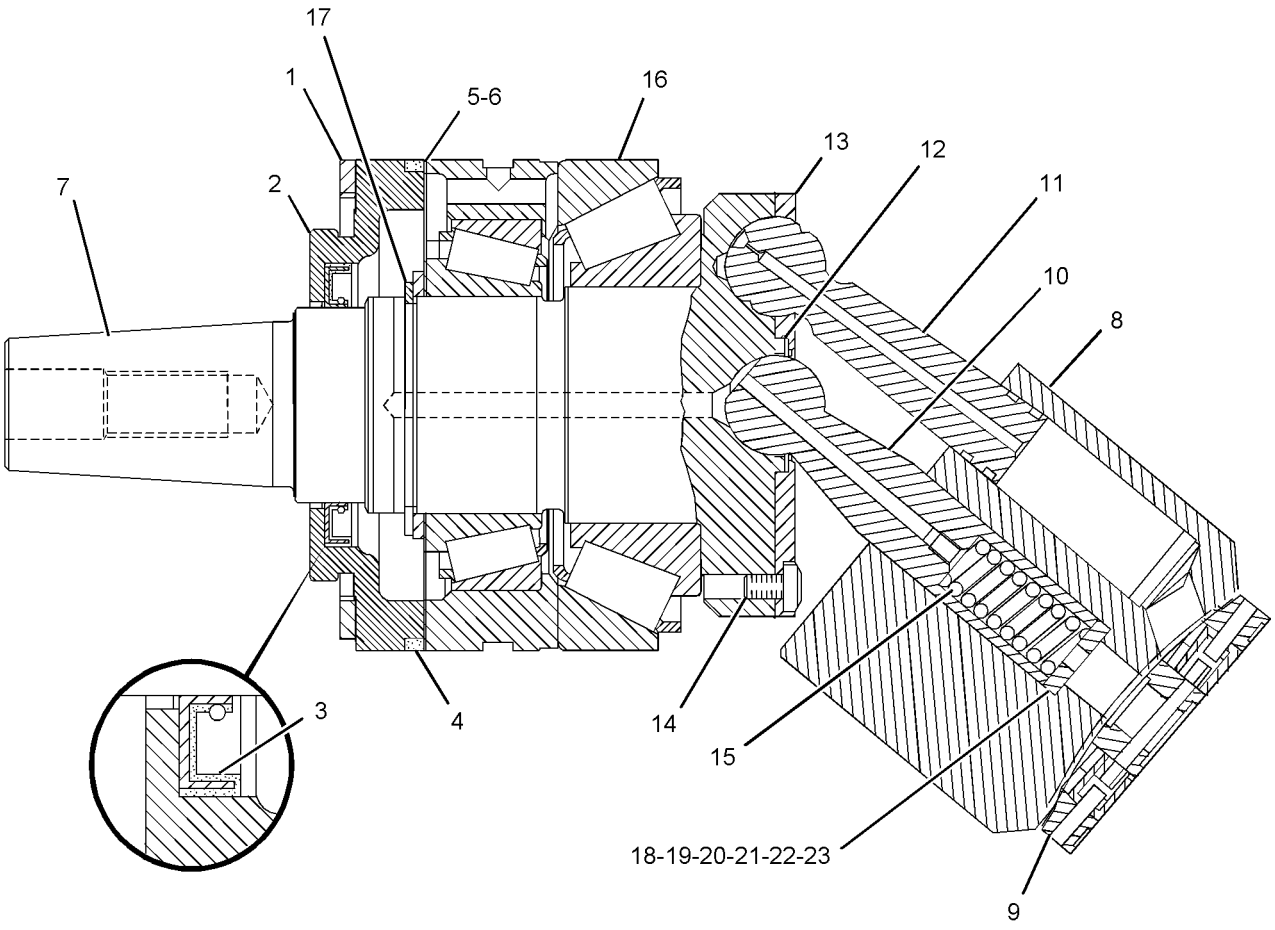

GRAPHIC #1 **<END>** g01127978

176-7509 ROTATING GP-PUMP–IMPLEMENT

S/N: J8B1-UP

PART OF 214-1091 PUMP GP-PISTON

SMCS-5070 **i03206705**

NOTE	REF NO	GRAPHIC REF	PART NUMBER	QTY	PART NAME 1 2 3 4 5 6 (PRODUCT LEVEL)	SEE PAGE
	1	1	**191-7587**	9	PISTON AS	
	2	1	**191-7589**	1	BARREL	
	3	1	**191-7585**	1	PLATE-DISTRIBUTOR	
	4	1	**191-7591**	1	PLATE-RETAINING	
	5	1	**290-0461**	1	BEARING	
	6	1	**191-7594**	1	SPRING	
	7	1	**191-7596**	3	PIN	
	8	1	**095-0939**	1	RING-RETAINING	
	9	1	**191-7597**	1	SPACER (55X3-MM THK)	

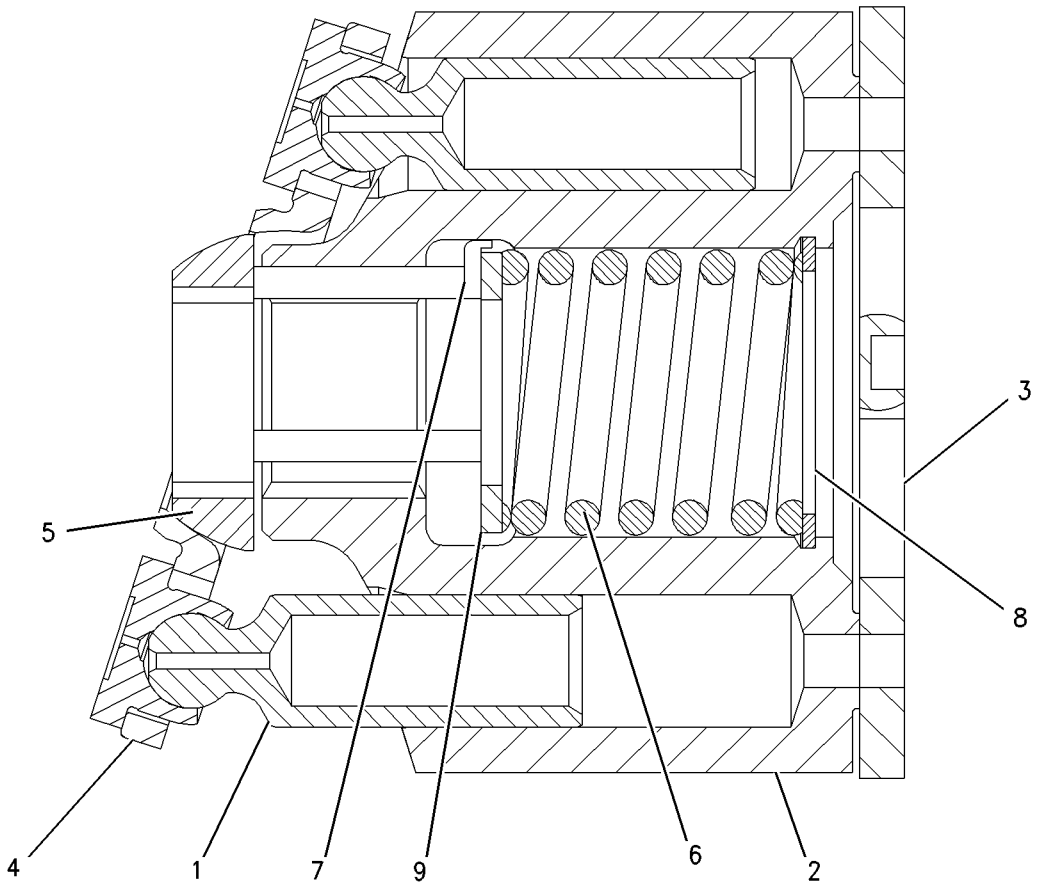

GRAPHIC #1 **<END>** g00745979

254-0059 ROTATING GP-PUMP—HYDRAULIC FAN

S/N: J8B1-UP

PART OF 204-2578, 319-3593 PUMP GP-PISTON

ALSO AN ATTACHMENT

SMCS-5070 **i02234759**

NOTE	REF NO	GRAPHIC REF	PART NUMBER	QTY	PART NAME 1 2 3 4 5 6 (PRODUCT LEVEL)	SEE PAGE
	1	1	**138-8175**	1	BEARING-TAPERED ROLLER	
	2	1	**168-7940**	3	PIN	
	3	1	**096-0015**	1	RING-RETAINING	
	4	1	**254-0061**	1	BARREL	
	5	1	**168-7941**	1	SPRING	
	6	1	**168-7942**	1	WASHER (2-MM THK)	
	7	1	**168-7943**	9	PISTON AS	
	8	1	**168-7944**	1	PLATE-RETRACTION	
	9	1	**254-0060**	1	PLATE	

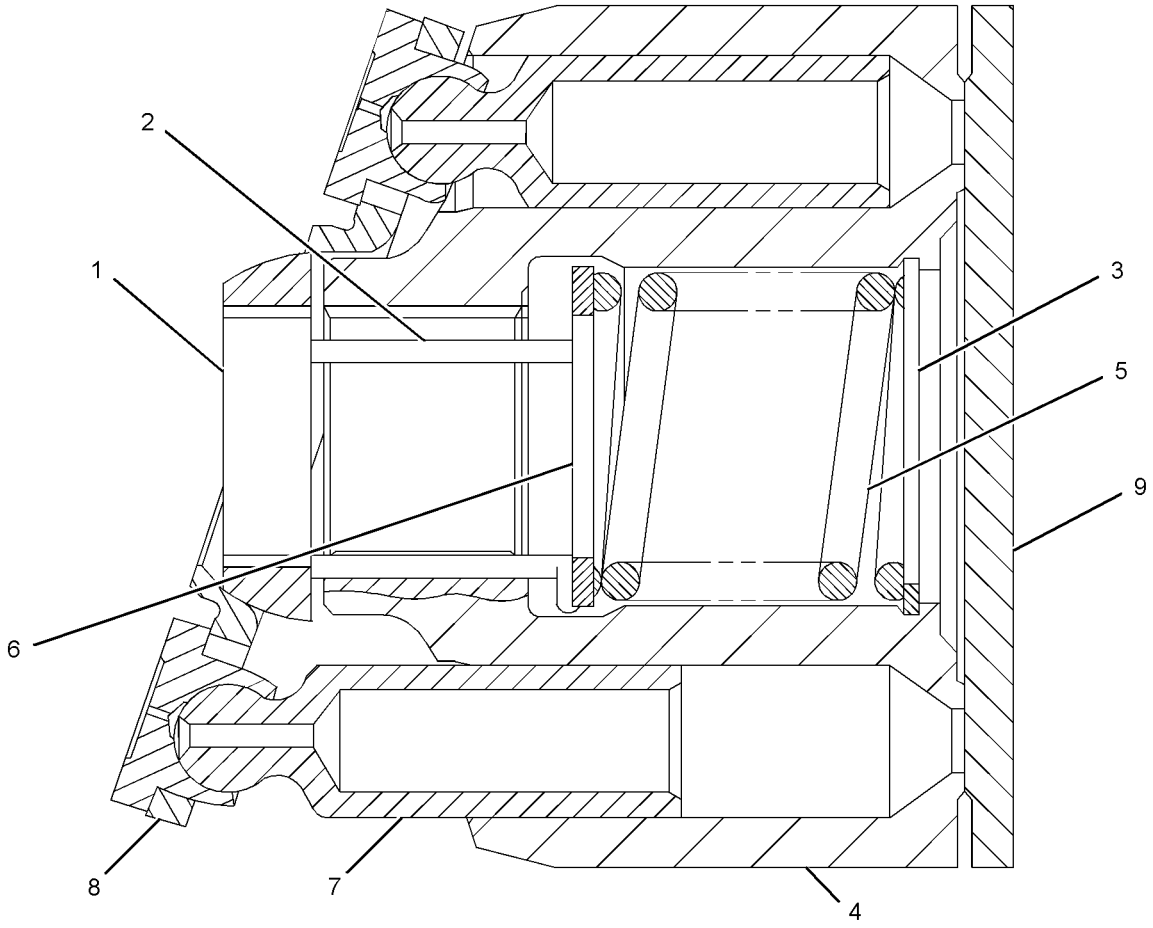

GRAPHIC #1 **<END>** g01107087

HYDRAULIC SYSTEM

209-6686 TANK & MTG GP-HYDRAULIC

S/N: J8B1-552

PART OF 210-6603 TANK & MTG GP-HYDRAULIC

SMCS-5056 **i03434240**

NOTE	REF NO	GRAPHIC REF	PART NUMBER	QTY	PART NAME 1 2 3 4 5 6 (PRODUCT LEVEL)	SEE PAGE
	1	2	**1U-2827**	1	GUIDE-VALVE (HYDRAULIC TANK DRAIN)	
	2	1	**2D-4202**	1	PLATE	
	3	1	**4H-1225**	1	WASHER (11X22X6-MM THK)	
	4	1	**4J-8251**	1	GROMMET	
	5	1	**4J-8252**	1	GAUGE-SIGHT (HYDRAULIC TANK OIL)	
	6	1	**4M-6921**	1	WASHER-SPRING	
	7	1	**5D-1911**	1	COVER-HYDRAULIC CAP	
	8	1	**5D-7927**	1	STRAINER AS-OIL (HYDRAULIC TANK FILL)	
		1	**5F-3488**	1	END-STRAINER	
	9	1	**5P-0597**	2	CLAMP-HOSE	
	10	1	**6E-1752**	1	SCREEN (HYDRAULIC TANK)	
	11	1	**6E-2059**	1	HOUSING	
	12	1	**6E-2060**	1	COVER AS	
	13	2	**7B-3039**	1	SPRING	
	14	1	**7H-1447**	1	CAP-FILLER (HYDRAULIC TANK OIL)	
	15	1	**8J-6913**	1	RETAINER-SIGHT GLASS	
	16	2	**8J-8782**	1	BODY-DRAIN VALVE (HYDRAULIC OIL)	
	17	2	**8J-8783**	1	VALVE (HYDRAULIC TANK DRAIN)	
	18	2	**8T-3298**	1	SEAL-RECTANGULAR	
	19	1	**9J-1979**	1	RETAINER AS	
	20	1	**9J-1985**	1	TUBE AS	
	21	1	**9J-1986**	1	FLANGE	
	22	1	**9J-1988**	1	VALVE (FILTER BY PASS)	
	23	2	**9J-7031**	1	PLUG-DRAIN (HYDRAULIC TANK)	
	24	1	**9M-7394**	1	LEVER (CAP LOCK)	
	25	1	**187-9194**	1	PLATE (SIGHT GLASS)	
	26	1	**209-6685**	1	TANK AS-HYDRAULIC	
	27	1	**216-1479**	1	COVER AS	
	28	1	**216-1680**	1	BRACKET	
	29	1	**216-1683**	1	TUBE AS	
	30	1	**217-8192**	2	BRACKET AS	
	31	1	**218-1966**	1	TUBE AS	
	32	1	**236-4460**	1	BRACKET	
	33	1	**242-5123**	1	SPRING	
	34	1	**243-1949**	1	GASKET	
	35	1	**243-2746**	1	HOSE	
	36	1	**257-0390**	1	GASKET	
	37	1	*155-3624*	1	PLUG AS	
		1	**9S-4182**	1	PLUG-O-RING	
		1	**3J-7354**	1	SEAL-O-RING	
	38	1	**1L-5072**	1	DOWEL	
	39	2	**1P-4579**	2	FLANGE-HALF	
	40	2	**1P-4584**	2	FLANGE-HALF	
	41	1	**1R-0777**	1	FILTER ELEMENT AS-OIL (ADVANCED EFFICIENCY)	
					—OR—	
A		1	**104-6931**	1	FILTER ELEMENT AS-OIL (FIRE RESISTANT FLUID)	
					—OR—	
A		1	**139-1537**	1	FILTER ELEMENT AS-OIL (ULTRA HIGH EFFICIENCY)	
	42	1	**2H-6124**	1	SEAL-O-RING	
	43	1	**2J-7761**	1	RING-RETAINING	
	44	1	**3E-4353**	2	WASHER-HARD (11X25X3-MM THK)	
	45	1	**4P-8134**	1	CLIP	
	46	1	**5H-6733**	1	SEAL-O-RING	
	47	2	**5M-2057**	1	SEAL-O-RING	
	48	1	**6H-9361**	1	RING-RETAINING	
	49	1,2	**6V-5839**	12	WASHER (11X21X2.5-MM THK)	

209-6686 **TANK & MTG GP-HYDRAULIC** *(contd.)* **i03434240**

NOTE	REF NO	GRAPHIC REF	PART NUMBER	QTY	PART NAME 1 2 3 4 5 6 (PRODUCT LEVEL)	SEE PAGE
M	50	1	**6V-7732**	5	BOLT (M10X1.5X25-MM)	
M	51	1,2	**6V-7744**	15	LOCKNUT (M10X1.5-THD)	
M	52	1	**6V-8097**	4	BOLT (M12X1.75X30-MM)	
	53	1	**7D-1195**	1	SEAL-O-RING	
M	54	1	**8C-0573**	1	STUD-TAPERLOCK (M10X1.5-THD)	
	55	2	**8C-3206**	2	FLANGE-HALF	
	56	1	**8T-2275**	1	BALL	
	57	1,2	**8T-4121**	12	WASHER-HARD (11X21X2.5-MM THK)	
M	58	1	**8T-4133**	4	NUT (M10X1.5-THD)	
M	59	1	**8T-4136**	4	BOLT (M10X1.5X25-MM)	
M	60	1	**8T-4137**	35	BOLT (M10X1.5X20-MM)	
M	61	2	**8T-4184**	4	BOLT (M12X1.75X45-MM)	
M	62	1	**8T-4195**	2	BOLT (M10X1.5X30-MM)	
M	63	2	**8T-4196**	4	BOLT (M10X1.5X35-MM)	
	64	2	**8T-4223**	8	WASHER-HARD (13.5X25.5X3-MM THK)	
M	65	2	**8T-4956**	4	BOLT (M12X1.75X35-MM)	
	66	1	**9H-6454**	1	GASKET	

A-NOT PART OF THIS GROUP
M-METRIC PART

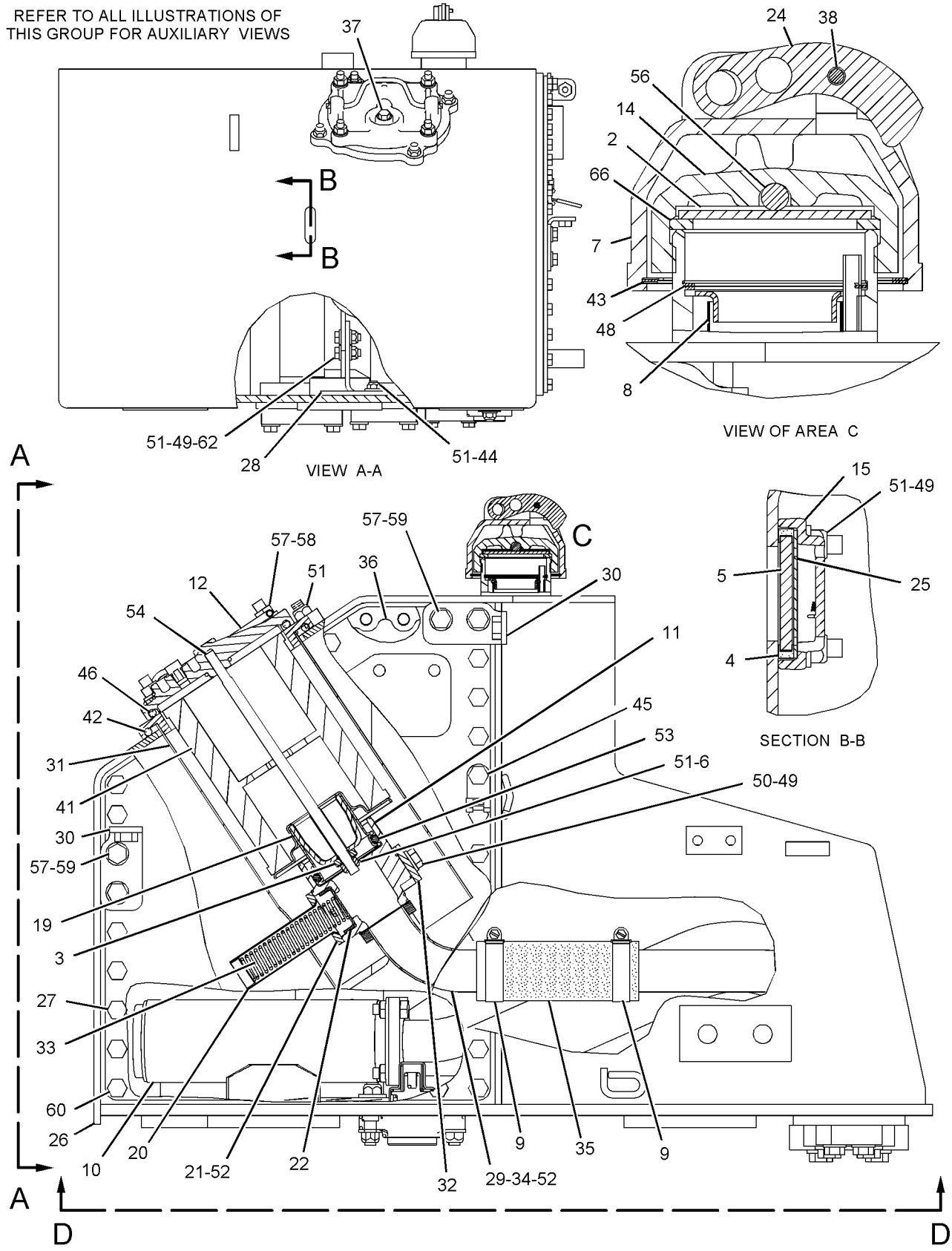

GRAPHIC #1

g01107738

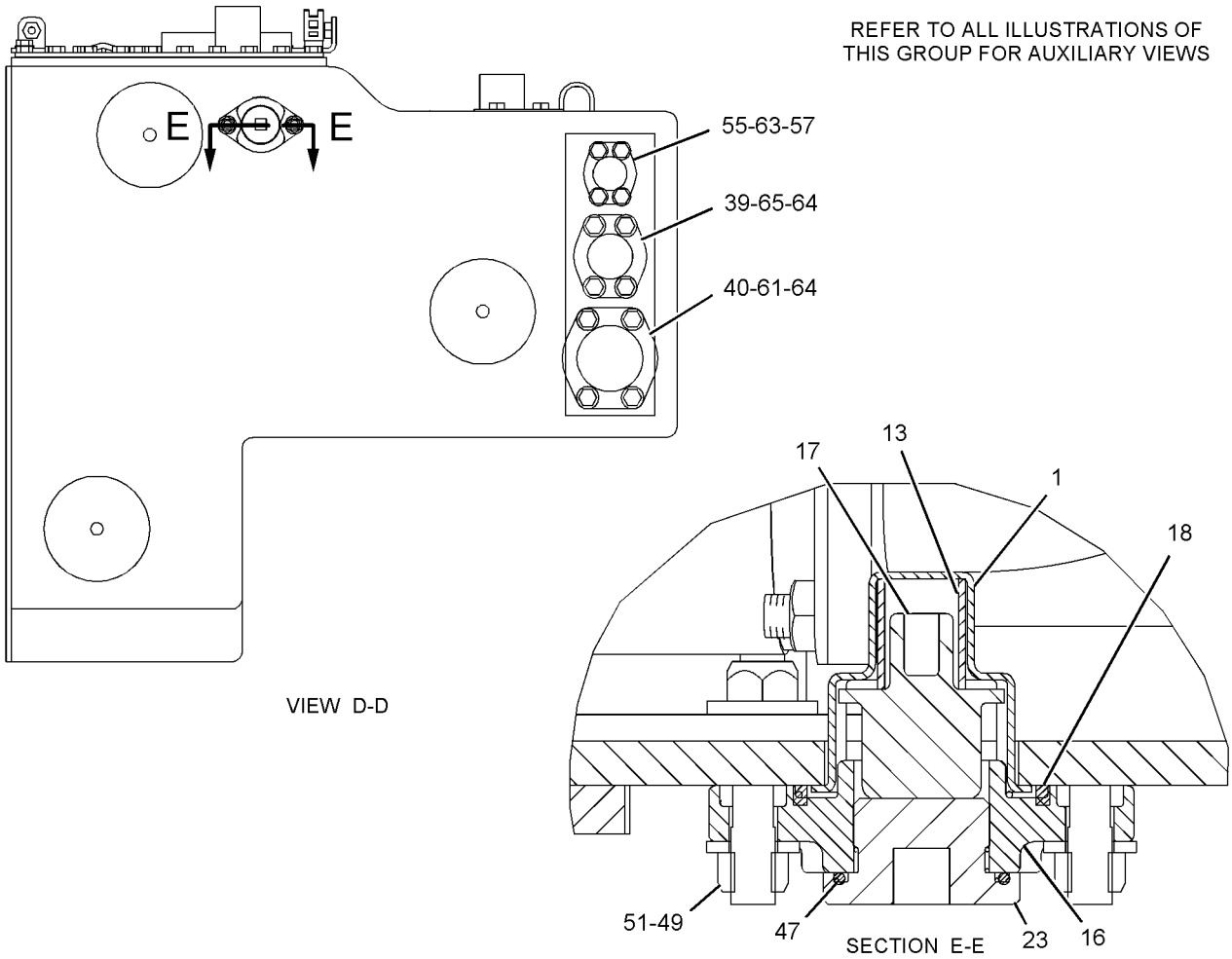

GRAPHIC #2 **<END>** g01107739

HYDRAULIC SYSTEM

209-6686 TANK & MTG GP-HYDRAULIC

S/N: J8B553-UP

PART OF 210-6603 TANK & MTG GP-HYDRAULIC

SMCS-5056 **i03206909**

NOTE	REF NO	GRAPHIC REF	PART NUMBER	QTY	PART NAME 1 2 3 4 5 6 (PRODUCT LEVEL)	SEE PAGE
	1	1	**1U-2827**	1	GUIDE-VALVE (HYDRAULIC TANK DRAIN)	
	2	2	**2D-4202**	1	PLATE	
	3	2	**4H-1225**	1	WASHER (11X22X6-MM THK)	
	4	2	**4J-8251**	1	GROMMET	
	5	2	**4J-8252**	1	GAUGE-SIGHT (HYDRAULIC TANK OIL)	
	6	2	**4M-6921**	1	WASHER-SPRING	
	7	2	**5D-1911**	1	COVER-HYDRAULIC CAP	
	8	2	**5D-7927**	1	STRAINER AS-OIL (HYDRAULIC TANK FILL)	
		2	**5F-3488**	1	END-STRAINER	
	9	2	**5P-0597**	2	CLAMP-HOSE	
	10	1	**6E-1752**	1	SCREEN (HYDRAULIC TANK)	
	11	2	**6E-2059**	1	HOUSING	
	12	2	**6E-2060**	1	COVER AS	
	13	1	**7B-3039**	1	SPRING	
	14	2	**7H-1447**	1	CAP-FILLER (HYDRAULIC TANK OIL)	
	15	2	**8J-6913**	1	RETAINER-SIGHT GLASS	
	16	1	**8J-8782**	1	BODY-DRAIN VALVE (HYDRAULIC OIL)	
	17	1	**8J-8783**	1	VALVE (HYDRAULIC TANK DRAIN)	
	18	1	**8T-3298**	1	SEAL-RECTANGULAR	
	19	2	**9J-1979**	1	RETAINER AS	
	20	2	**9J-1985**	1	TUBE AS	
	21	2	**9J-1986**	1	FLANGE	
	22	2	**9J-1988**	1	VALVE (FILTER BY PASS)	
	23	1	**9J-7031**	1	PLUG-DRAIN (HYDRAULIC TANK)	
	24	2	**9M-7394**	1	LEVER (CAP LOCK)	
	25	2	**187-9194**	1	PLATE (SIGHT GLASS)	
	26	2	**209-6685**	1	TANK AS-HYDRAULIC	
	27	2	**216-1479**	1	COVER AS	
	28	2	**216-1680**	1	BRACKET	
	29	2	**216-1683**	1	TUBE AS	
	30	2	**217-8192**	2	BRACKET AS	
	31	2	**218-1966**	1	TUBE AS	
	32	2	**236-4460**	1	BRACKET	
	33	2	**242-5123**	1	SPRING	
	34	2	**243-1949**	1	GASKET	
CE	35	2	**5P-1291**		HOSE (21-CM)	
	36	2	**257-0390**	1	GASKET	
	37	2	*155-3624*	1	PLUG AS	
		2	**9S-4182**	1	PLUG-O-RING	
		2	**3J-7354**	1	SEAL-O-RING	
	38	2	**1L-5072**	1	DOWEL	
	39	1	**1P-4579**	2	FLANGE-HALF	
	40	1	**1P-4584**	2	FLANGE-HALF	
	41	2	**1R-0777**	1	FILTER ELEMENT AS-OIL (ADVANCED EFFICIENCY)	
					—OR—	
A		2	**104-6931**	1	FILTER ELEMENT AS-OIL (FIRE RESISTANT FLUID)	
					—OR—	
A		2	**139-1537**	1	FILTER ELEMENT AS-OIL (ULTRA HIGH EFFICIENCY)	
	42	2	**2H-6124**	1	SEAL-O-RING	
	43	2	**2J-7761**	1	RING-RETAINING	
	44	2	**3E-4353**	2	WASHER-HARD (11X25X3-MM THK)	
	45	2	**4P-8134**	1	CLIP (LADDER)	
	46	2	**5H-6733**	1	SEAL-O-RING	
	47	1	**5M-2057**	1	SEAL-O-RING	
	48	2	**6H-9361**	1	RING-RETAINING	
	49	1,2	**6V-5839**	12	WASHER (11X21X2.5-MM THK)	

209-6686 **TANK & MTG GP-HYDRAULIC** *(contd.)* **i03206909**

NOTE	REF NO	GRAPHIC REF	PART NUMBER	QTY	PART NAME 1 2 3 4 5 6 (PRODUCT LEVEL)	SEE PAGE
M	50	1,2	**6V-7732**	5	BOLT (M10X1.5X25-MM)	
M	51	1,2	**6V-7744**	14	LOCKNUT (M10X1.5-THD)	
M	52	2	**6V-8097**	4	BOLT (M12X1.75X30-MM)	
	53	2	**7D-1195**	1	SEAL-O-RING	
M	54	2	**8C-0573**	1	STUD-TAPERLOCK (M10X1.5-THD)	
	55	1	**8C-3206**	2	FLANGE-HALF	
	56	2	**8T-2275**	1	BALL	
	57	1,2	**8T-4121**	12	WASHER-HARD (11X21X2.5-MM THK)	
M	58	2	**8T-4133**	4	NUT (M10X1.5-THD)	
M	59	2	**8T-4136**	4	BOLT (M10X1.5X25-MM)	
M	60	2	**8T-4137**	35	BOLT (M10X1.5X20-MM)	
M	61	1	**8T-4184**	4	BOLT (M12X1.75X45-MM)	
M	62	2	**8T-4195**	2	BOLT (M10X1.5X30-MM)	
M	63	1	**8T-4196**	4	BOLT (M10X1.5X35-MM)	
	64	1	**8T-4223**	8	WASHER-HARD (13.5X25.5X3-MM THK)	
M	65	1	**8T-4956**	4	BOLT (M12X1.75X35-MM)	
	66	2	**9H-6454**	1	GASKET	
M	67	2	**8T-0389**	1	LOCKNUT (M10X1.5-THD)	

A-NOT PART OF THIS GROUP
C-CHANGE FROM PREVIOUS TYPE
E-ORDER BY THE CENTIMETER
M-METRIC PART

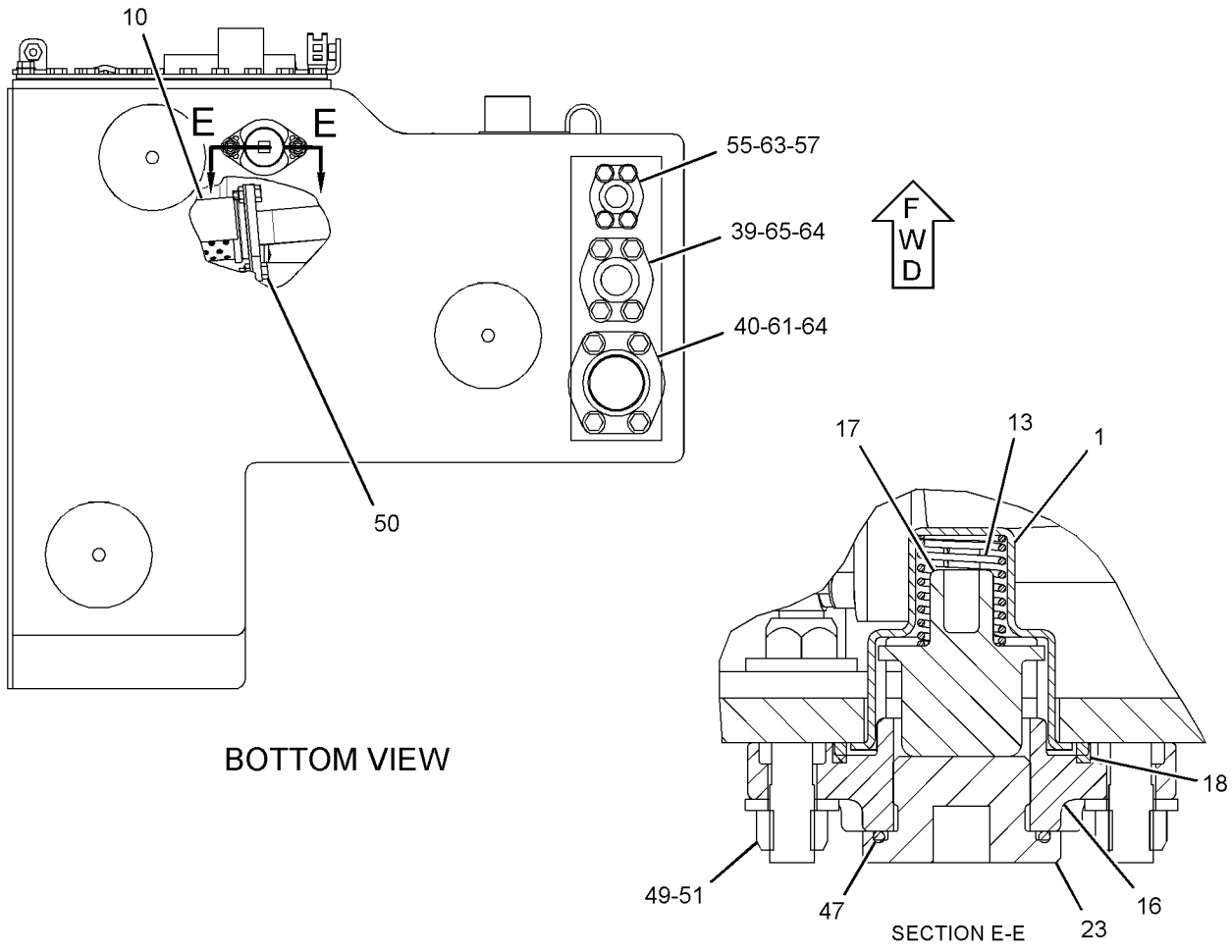

GRAPHIC #1

g01544855

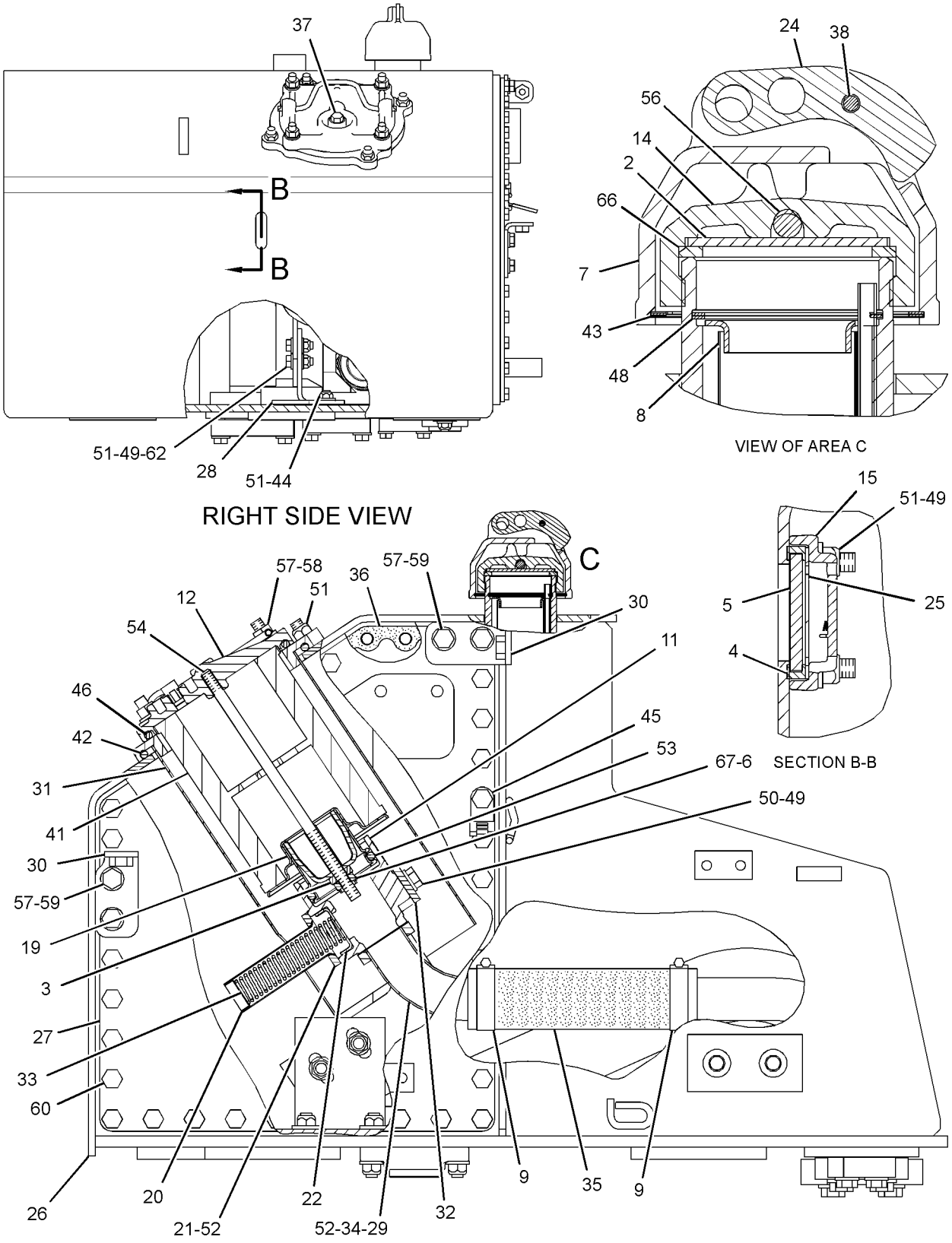

GRAPHIC #2 **<END>** g01544856

HYDRAULIC SYSTEM

210-6603 TANK & MTG GP-HYDRAULIC

S/N: J8B1-UP

PART OF 206-6782 HYDRAULIC AR

SMCS-5056 **i03434241**

NOTE	REF NO	GRAPHIC REF	PART NUMBER	QTY	PART NAME 1 2 3 4 5 6 (PRODUCT LEVEL)	SEE PAGE
	1	1	**246-2641**	1	PADLOCK GP	
		1	**5P-8500**	1	KEY	
	2	1	**116-2810**	1	VALVE (BREAKER RELIEF)	
Y	3	1	*209-6686*	1	TANK & MTG GP-HYDRAULIC	825
	4	1	**3D-2824**	1	SEAL-O-RING	
M	5	1	**8T-4779**	3	BOLT (M16X2X35-MM)	
	6	1	**9X-8257**	3	WASHER (17.5X30X3.5-MM THK)	

M-METRIC PART
Y-SEPARATE ILLUSTRATION

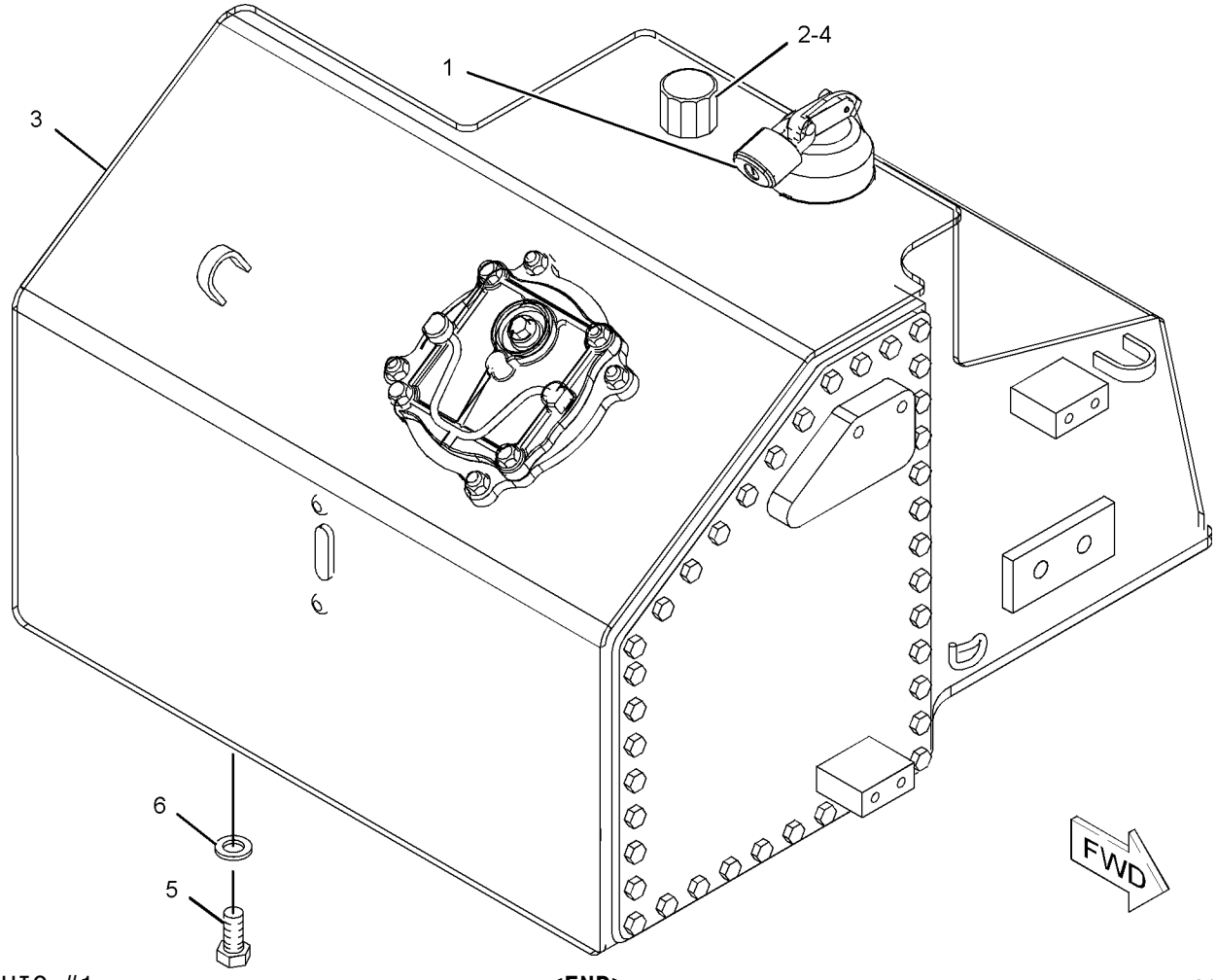

GRAPHIC #1 **<END>** g01021065

188-6140 VALVE & MTG GP-CONTROL—HYDRAULIC PIN PULLER

S/N: J8B1-UP
PART OF 211-9501 CONTROL AR-HYD PIN PULLER
AN ATTACHMENT

SMCS-5051 **i03386890**

NOTE	REF NO	GRAPHIC REF	PART NUMBER	QTY	PART NAME 1 2 3 4 5 6 (PRODUCT LEVEL)	SEE PAGE
Y	1	1	**3E-8575**	1	VALVE GP-SOLENOID (RIPPER PIN PULLER)	909
	2	1	**188-6141**	1	MANIFOLD AS	
	2A	1	**3J-1907**	1	SEAL-O-RING	
	2B	1	**9S-8004**	1	PLUG-O-RING	
	2C	1	**200-2964**	1	ORIFICE AS	
	2D	1	**4J-7533**	1	SEAL-O-RING	

Y-SEPARATE ILLUSTRATION

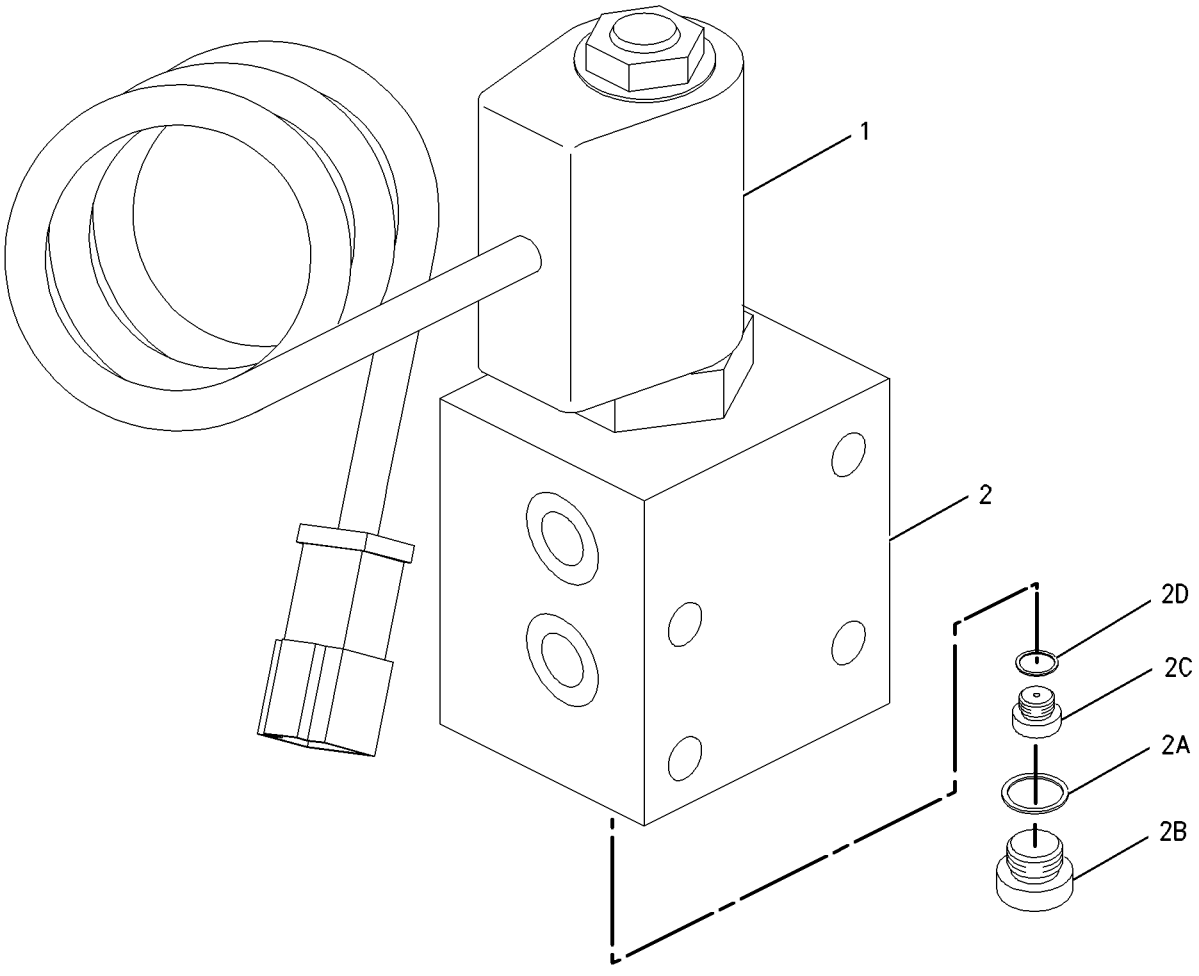

GRAPHIC #1 **<END>** g00764266

HYDRAULIC SYSTEM

210-6605 VALVE & MTG GP-CONTROL—BLADE, QUICK-DROP

S/N: J8B1-UP

PART OF 206-6782 HYDRAULIC AR

SMCS-5051 **i03431964**

NOTE	REF NO	GRAPHIC REF	PART NUMBER	QTY	PART NAME 1 2 3 4 5 6 (PRODUCT LEVEL)	SEE PAGE
	1	1	**246-2641**	1	PADLOCK GP	
		1	**5P-8500**	1	KEY	
	2	1	**221-7643**	1	COVER AS	
Y	3	1	**234-3042**	1	VALVE GP-QUICK-DROP (BLADE)	901
	4	1	**8T-4121**	6	WASHER-HARD (11X21X2.5-MM THK)	
M	5	1	**8T-4137**	3	BOLT (M10X1.5X20-MM)	
M	6	1	**8T-4186**	3	BOLT (M10X1.5X40-MM)	

M-METRIC PART
Y-SEPARATE ILLUSTRATION

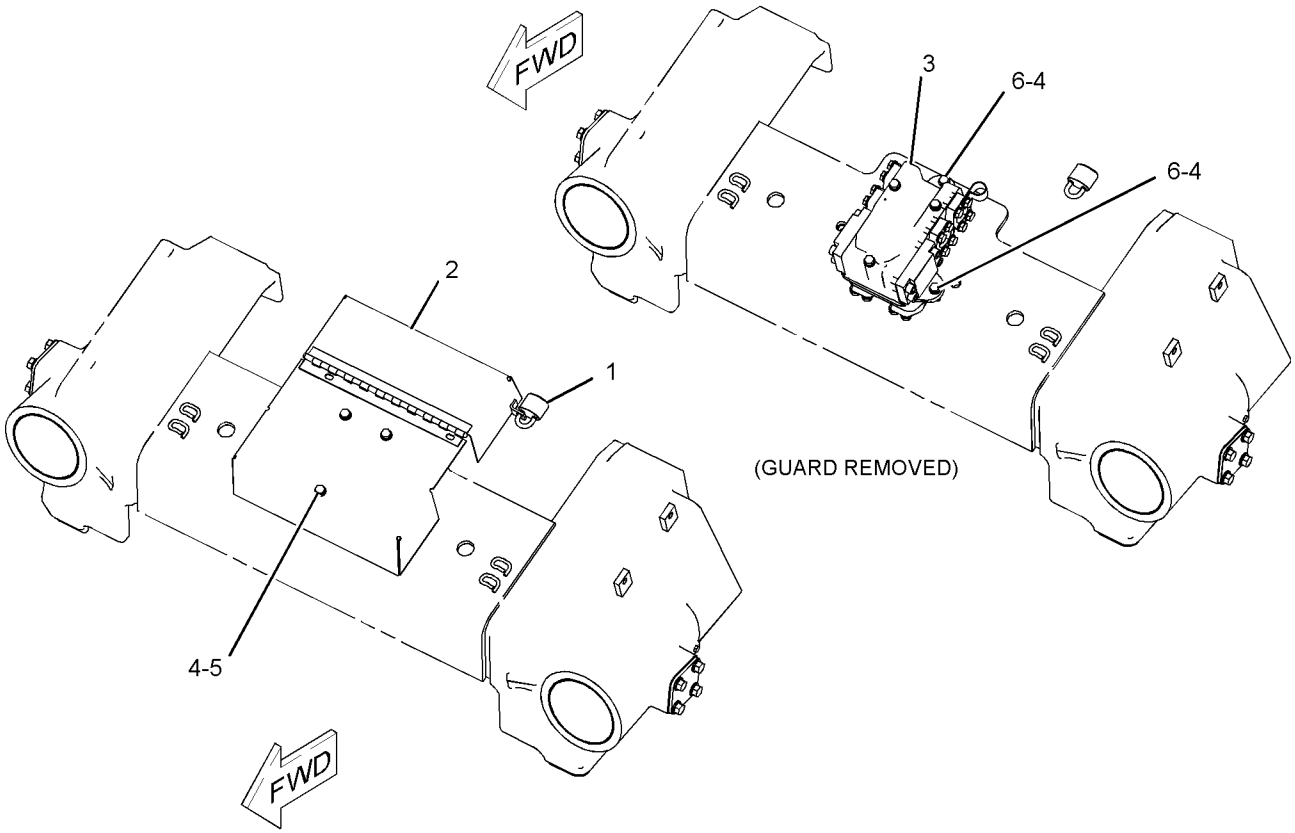

GRAPHIC #1 **<END>** g01021306

HYDRAULIC SYSTEM

261-4929 VALVE & MTG GP-CONTROL—STEERING, BRAKE

S/N: J8B1-UP

PART OF 206-6781 POWER TRAIN AR

SMCS-5051 **i02239817**

NOTE	REF NO	GRAPHIC REF	PART NUMBER	QTY	PART NAME 1 2 3 4 5 6 (PRODUCT LEVEL)	SEE PAGE
	1	1	**3S-0004**	4	WASHER (0.406X0.728X0.09-IN THK)	
	2	1	**6V-0852**	1	CAP-DUST	
	3	1	**8T-9358**	1	CONNECTOR	
I	4	1	**169-7451**	1	HOSE AS	
Y	5	1	**201-7274**	1	VALVE GP-STEERING & BRAKE CONT	726
	6	1	**228-1850**	1	PLATE	
	7	1	**260-2017**	1	BRACKET AS	
	8	1	*148-8336*	1	CONNECTOR AS	
		1	**6V-8636**	1	CONNECTOR	
		1	**3J-1907**	1	SEAL-O-RING	
		1	**6V-8397**	1	SEAL-O-RING	
	9	1	*150-3065*	1	ADAPTER AS	
		1	**6V-0484**	1	ADAPTER-O-RING	
		1	**3J-1907**	1	SEAL-O-RING	
	10	1	*150-4046*	1	ADAPTER AS	
		1	**5P-1404**	1	ADAPTER-O-RING	
		1	**2M-9780**	1	SEAL-O-RING	
	11	1	**3J-1907**	1	SEAL-O-RING	
	12	1	**6V-3965**	1	FITTING (QUICK DISCONNECT)	
	13	1	**6V-8397**	1	SEAL-O-RING	
	14	1	**6V-9168**	1	NUT (11/16-16-THD)	
	15	1	**8M-5254**	4	SEAL-O-RING	
M	16	1	**8T-5030**	4	BOLT (M10X1.5X120-MM)	

I-REFER TO HYDRAULIC INFORMATION SYSTEM
M-METRIC PART
Y-SEPARATE ILLUSTRATION

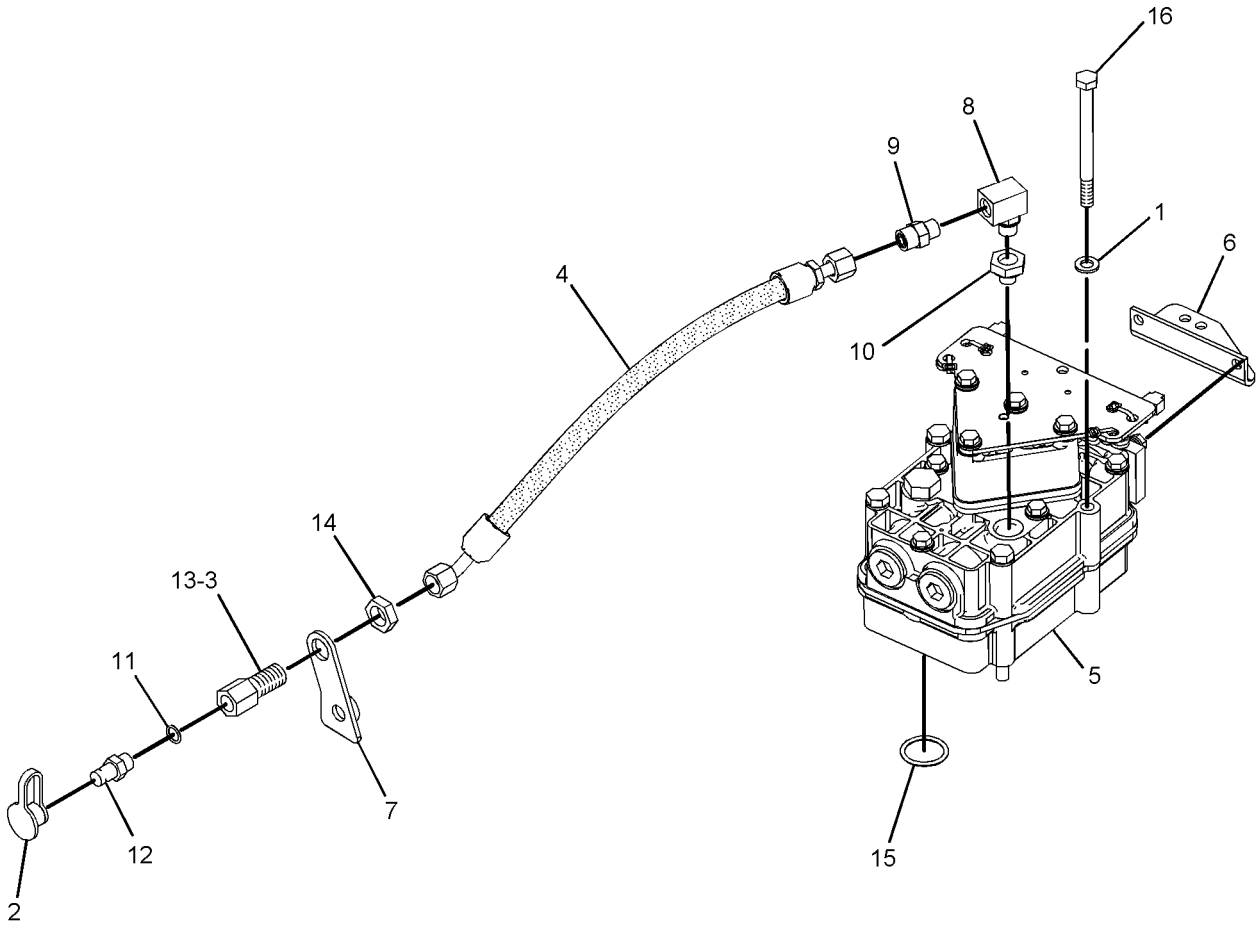

GRAPHIC #1 **<END>** g01106145

HYDRAULIC SYSTEM

217-5742 VALVE & MTG GP-HYDRAULIC FAN–REVERSING

S/N: J8B1-UP
PART OF 218-3397 FAN AR-REVERSIBLE
AN ATTACHMENT

SMCS-1387 **i02236690**

NOTE	REF NO	GRAPHIC REF	PART NUMBER	QTY	PART NAME 1 2 3 4 5 6 (PRODUCT LEVEL)	SEE PAGE
Y	1	1	**162-2191**	1	VALVE GP-FAN REVERSING	894
I	2	1	**217-5870**	1	HOSE AS	
I	3	1	**217-5871**	1	HOSE AS	
	4	1	**217-5872**	1	BRACKET	
	5	1	*148-8327*	4	CONNECTOR AS	
					(EACH INCLUDES)	
		1	**6V-8637**	1	CONNECTOR	
		1	**3D-2824**	1	SEAL-O-RING	
		1	**6V-9746**	1	SEAL-O-RING	
	6	1	*148-8407*	1	PLUG AS	
		1	**9S-4191**	1	PLUG-O-RING	
		1	**3J-1907**	1	SEAL-O-RING	
	7	1	**8T-4121**	4	WASHER-HARD (11X21X2.5-MM THK)	
M	8	1	**8T-4186**	2	BOLT (M10X1.5X40-MM)	
M	9	1	**8T-4195**	2	BOLT (M10X1.5X30-MM)	

I-REFER TO HYDRAULIC INFORMATION SYSTEM
M-METRIC PART
Y-SEPARATE ILLUSTRATION

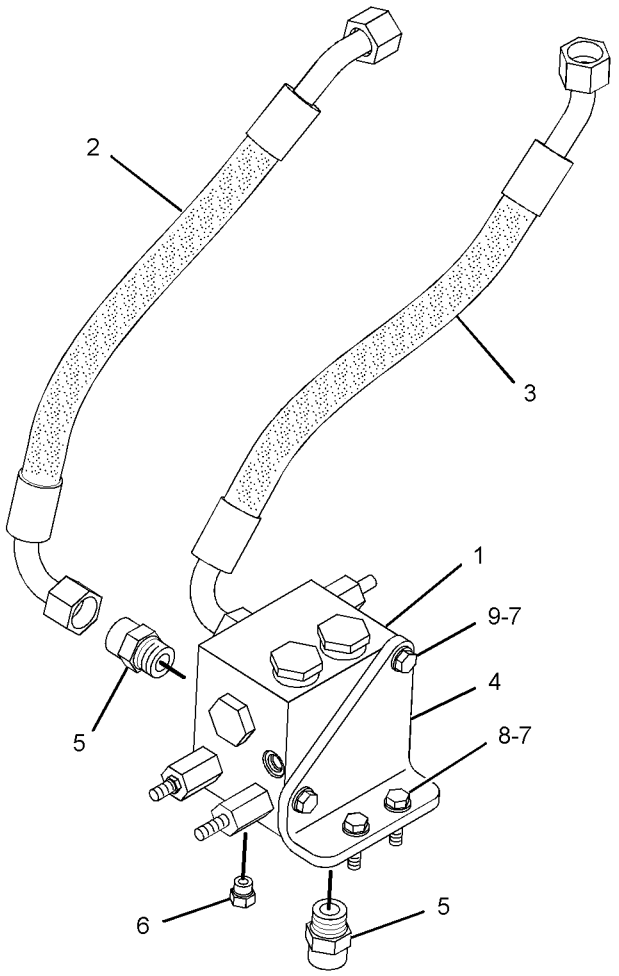

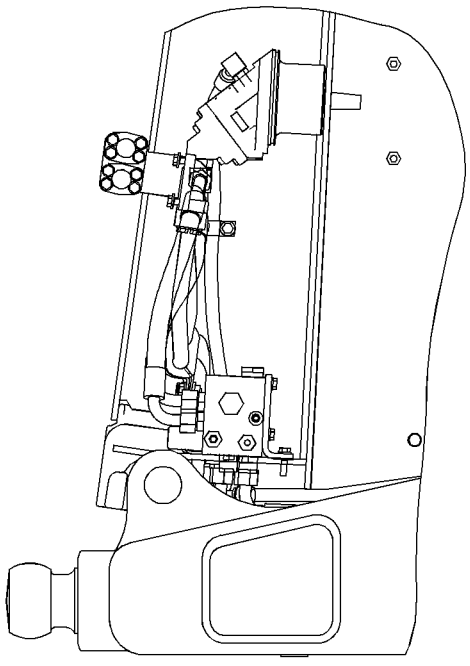

RIGHT SIDE VIEW

GRAPHIC #1 **<END>** g01110018

208-9527 VALVE & MTG GP-IMPLEMENT CONT–BULLDOZER

S/N: J8B1-UP

PART OF 206-6782 HYDRAULIC AR

SMCS-5051 **i03431700**

NOTE	REF NO	GRAPHIC REF	PART NUMBER	QTY	PART NAME 1 2 3 4 5 6 (PRODUCT LEVEL)	SEE PAGE
Y	1	1	*200-0750*	1	ACCUMULATOR GP-PILOT OIL (CHARGED) (IMPLEMENT CONTROL VALVE)	729
Y	2	1	**238-2753**	1	VALVE GP-BANK 3 (BULLDOZER)	848
	3	1	**245-1737**	1	BOLT (9/16-18-THD)	
	4	1	**3D-2824**	1	SEAL-O-RING	
M	5	1	**8T-4139**	4	BOLT (M12X1.75X30-MM)	
	6	1	**8T-4223**	4	WASHER-HARD (13.5X25.5X3-MM THK)	

M-METRIC PART
Y-SEPARATE ILLUSTRATION

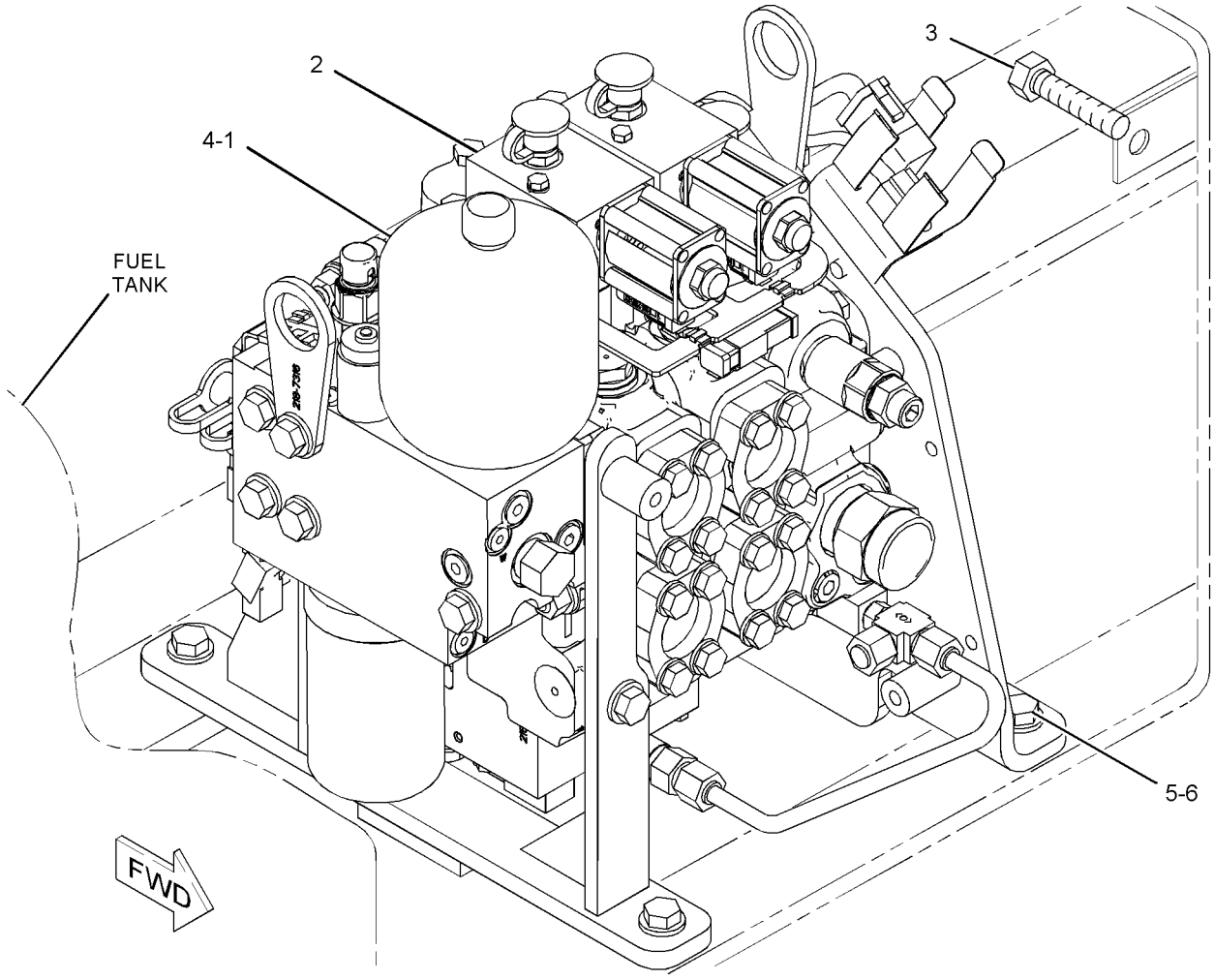

GRAPHIC #1 **<END>** g01105943

HYDRAULIC SYSTEM

210-7776 VALVE GP-BANK 3—BULLDOZER, WINCH

S/N: J8B1-UP

PART OF 215-6822 VALVE GP-BANK 3

AN ATTACHMENT

SMCS-5051 **i02241855**

NOTE	REF NO	GRAPHIC REF	PART NUMBER	QTY	PART NAME 1 2 3 4 5 6 (PRODUCT LEVEL)	SEE PAGE
	2	1	**4T-1073**	3	ROD	
	3	1	**6V-8188**	6	NUT (1/2-13-THD)	
	4	1	**211-1751**	1	COVER	
Y	5	1	**212-6322**	1	VALVE GP-CONTROL (BULLDOZER LIFT)	869
Y	6	1	**212-6323**	1	VALVE GP-CONTROL (BULLDOZER TILT)	875
Y	8	1	**213-4325**	1	MANIFOLD GP-VALVE (IMPLEMENT)	804
Y	9	1	**213-4326**	1	VALVE GP-CONTROL (WINCH)	886
	10	1	*155-3624*	5	PLUG AS	
					(EACH INCLUDES)	
		1	**9S-4182**	1	PLUG-O-RING	
		1	**3J-7354**	1	SEAL-O-RING	
	11	1	*169-5862*	1	ELBOW AS	
		1	**8C-6712**	1	ELBOW	
		1	**3J-1907**	1	SEAL-O-RING	
	12	1	*183-7263*	1	PLUG AS	
		1	**9S-8002**	1	PLUG-O-RING	
		1	**3J-7354**	1	SEAL-O-RING	
	13	1	**1P-3702**	1	SEAL-RECTANGULAR	
	14	1	**1P-4578**	2	FLANGE-HALF	
	15	1	*207-7899*	1	PLUG AS	
		1	**9S-4188**	1	PLUG	
		1	**4K-1388**	1	SEAL-O-RING	
	16	1	**4J-0522**	12	SEAL-O-RING	
	17	1	**4J-8997**	3	SEAL-O-RING	
	18	1	**6V-5555**	12	SEAL-O-RING	
	19	1	**8C-3206**	12	FLANGE-HALF	
	20	1	**8T-4121**	28	WASHER-HARD (11X21X2.5-MM THK)	
M	21	1	**8T-4196**	28	BOLT (M10X1.5X35-MM)	
	22	1	**8T-4223**	6	WASHER-HARD (13.5X25.5X3-MM THK)	

M-METRIC PART
Y-SEPARATE ILLUSTRATION

210-7776 VALVE GP-BANK 3 *(contd.)* **i02241855**

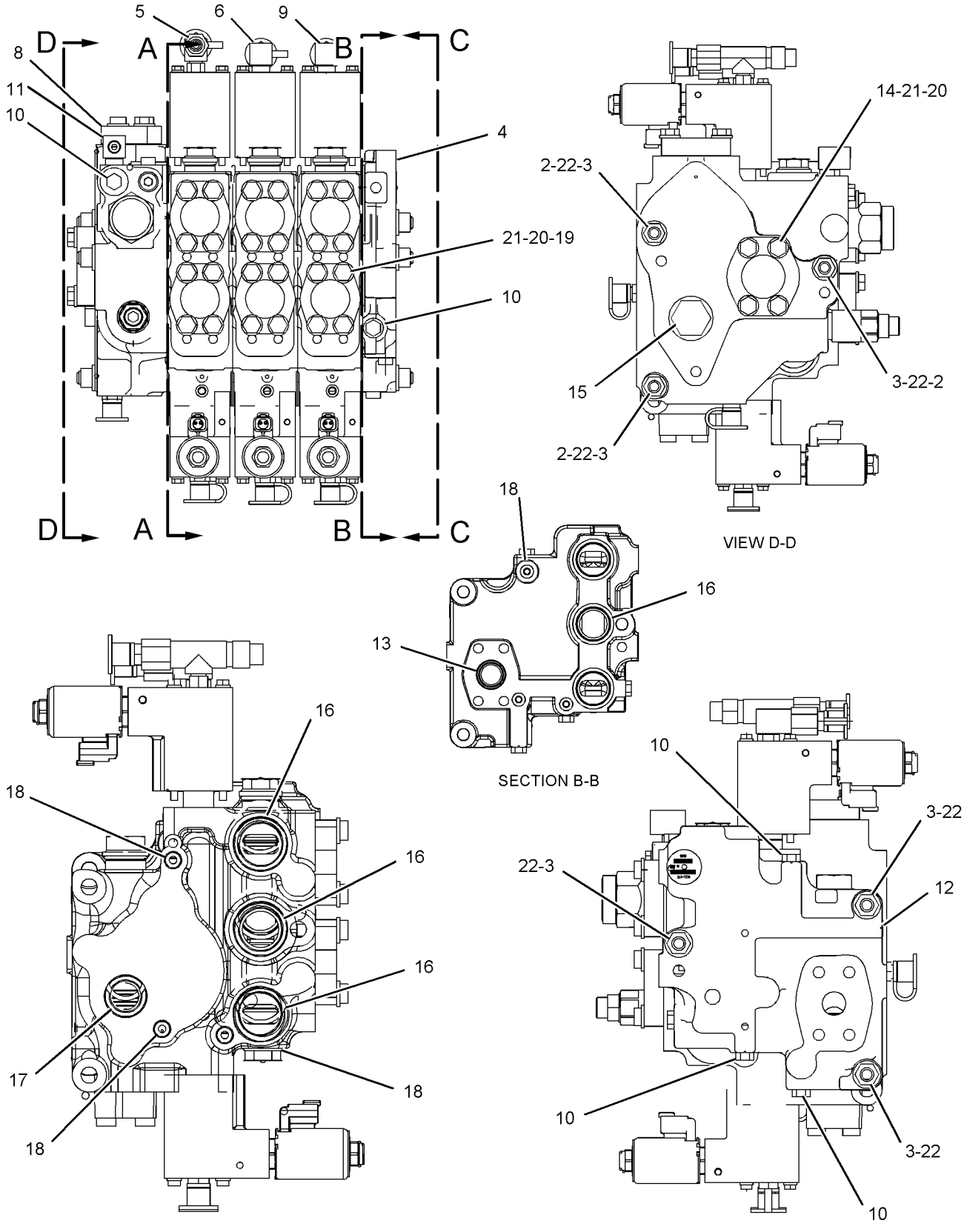

GRAPHIC #1 **<END>** g01130178

HYDRAULIC SYSTEM

215-6822 VALVE GP-BANK 3—BULLDOZER, WINCH

S/N: J8B1-1141
PART OF 209-3431 CONTROL AR-HYDRAULIC
AN ATTACHMENT

SMCS-5051 **i02855534**

NOTE	REF NO	GRAPHIC REF	PART NUMBER	QTY	PART NAME 1 2 3 4 5 6 (PRODUCT LEVEL)	SEE PAGE
	2	1	**7K-1181**	13	STRAP-CABLE	
	3	1	**126-1813**	1	FILTER-OIL (ULTRA HIGH EFFICIENCY)	
	4	1	**204-8000**	5	MOUNT (TIE WRAP)	
	5	1	**205-3079**	1	ADAPTER	
	6	1	**209-1372**	1	PLATE AS	
M		1	**7Y-8763**	1	BOSS (M10X1.5X25-MM)	
	7	1	**209-1376**	1	BRACKET AS	
	8	1	**209-7738**	1	HARNESS AS-VALVE	
		1	**102-8801**	1	KIT-RECEPTACLE (12-PIN)	
		1	**102-8802**	2	KIT-RECEPTACLE (2-PIN)	
		1	**102-8803**	1	KIT-RECEPTACLE (3-PIN)	
					(EACH RECEPTACLE KIT INCLUDES RECEPTACLE AS & WEDGE)	
		1	**155-2255**	1	KIT-CONNECTING PLUG (12-PIN)	
		1	**155-2270**	7	KIT-CONNECTING PLUG (2-PIN)	
					(EACH PLUG KIT INCLUDES PLUG AS, WEDGE, & INTERFACE SEAL)	
Y	9	1	**210-7776**	1	VALVE GP-BANK 3 (BULLDOZER, WINCH)	840
Y	10	1	**212-5835**	1	MANIFOLD GP-CONTROL (IMPLEMENT PILOT)	798
	11	1	**218-7316**	2	PLATE	
	12	1	**226-9649**	1	TUBE AS	
	13	1	**228-3105**	1	BRACKET	
	14	1	**228-3106**	1	BRACKET	
	15	1	**233-6942**	1	VALVE	
Y	16	1	**237-0957**	1	SENSOR GP-PRESSURE (IMPLEMENT PUMP OIL)	351
	18	1	**130-5300**	4	CLIP	
	19	1	**1J-9671**	1	SEAL-O-RING	
	20	1	**1P-3702**	2	SEAL-RECTANGULAR	
	21	1	**3J-1907**	1	SEAL-O-RING	
	22	1	**3J-7354**	1	SEAL-O-RING	
	23	1	**4P-8134**	1	CLIP	
	24	1	**6V-5555**	2	SEAL-O-RING	
	25	1	**6V-8397**	2	SEAL-O-RING	
M	26	1	**7X-2549**	5	BOLT (M12X1.75X100-MM)	
	27	1	**8T-4121**	8	WASHER-HARD (11X21X2.5-MM THK)	
M	28	1	**8T-4136**	5	BOLT (M10X1.5X25-MM)	
M	29	1	**8T-4137**	1	BOLT (M10X1.5X20-MM)	
M	30	1	**8T-4139**	2	BOLT (M12X1.75X30-MM)	
M	31	1	**8T-4171**	6	BOLT (M6X1X12-MM)	
M	32	1	**8T-4191**	2	BOLT (M10X1.5X16-MM)	
M	33	1	**8T-4192**	1	BOLT (M12X1.75X25-MM)	
M	34	1	**8T-4194**	3	BOLT (M12X1.75X50-MM)	
	35	1	**8T-4223**	11	WASHER-HARD (13.5X25.5X3-MM THK)	
	36	1	**9X-8256**	6	WASHER (6.6X12X2-MM THK)	

M-METRIC PART
Y-SEPARATE ILLUSTRATION

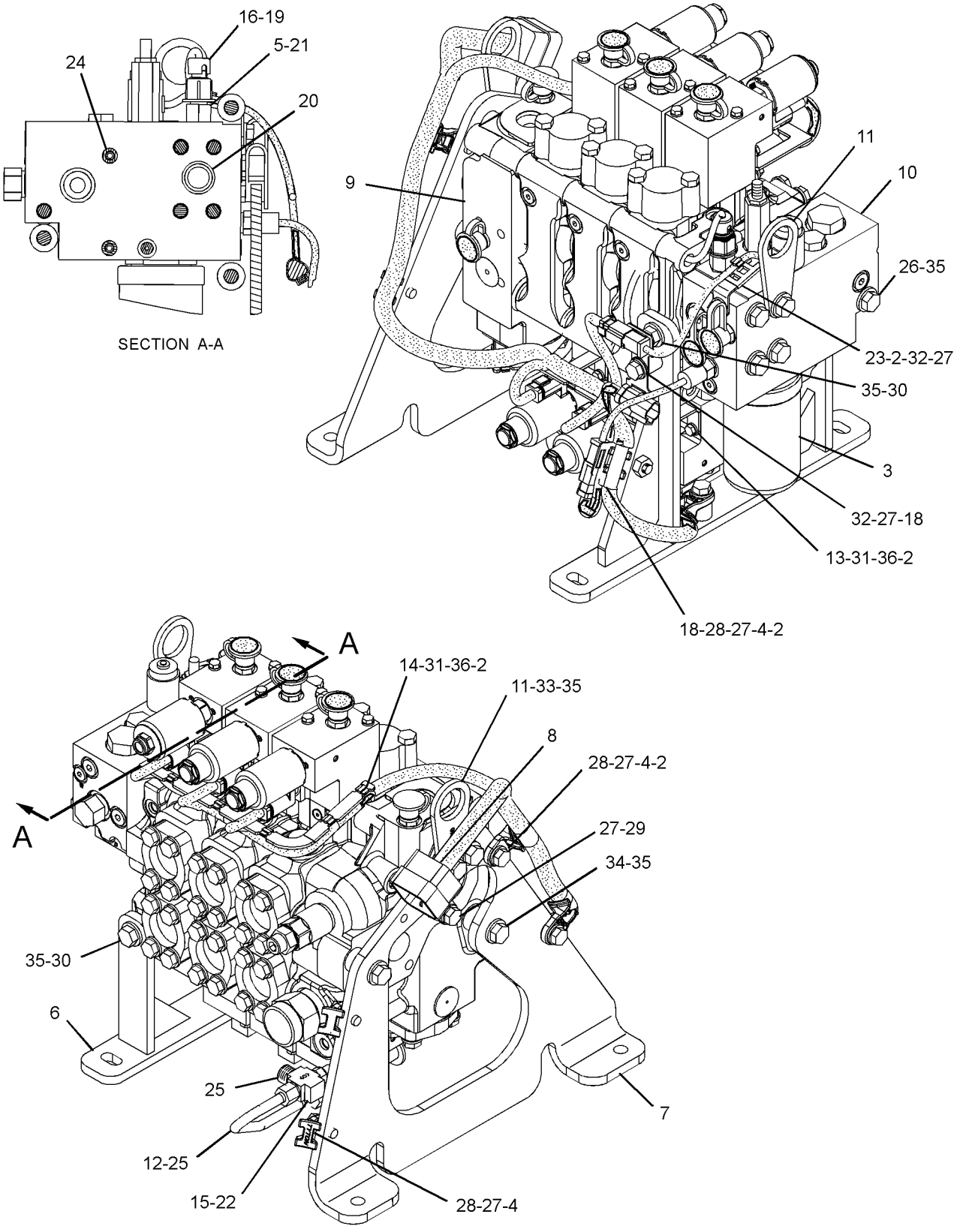

GRAPHIC #1 **<END>** g01236348

HYDRAULIC SYSTEM

215-6822 VALVE GP-BANK 3—BULLDOZER, WINCH

S/N: J8B1142

PART OF 209-3431 CONTROL AR-HYDRAULIC

AN ATTACHMENT

SMCS-5051 **i02855536**

NOTE	REF NO	GRAPHIC REF	PART NUMBER	QTY	PART NAME 1 2 3 4 5 6 (PRODUCT LEVEL)	SEE PAGE
	1	1	**7K-1181**	13	STRAP-CABLE	
	3	1	**126-1813**	1	FILTER-OIL (ULTRA HIGH EFFICIENCY)	
	4	1	**204-8000**	5	MOUNT (TIE WRAP)	
	5	1	**205-3079**	1	ADAPTER	
	6	1	**209-1372**	1	PLATE AS	
M		1	**7Y-8763**	1	BOSS (M10X1.5X25-MM)	
	7	1	**209-1376**	1	BRACKET AS	
	8	1	**209-7738**	1	HARNESS AS-VALVE	
		1	**102-8801**	1	KIT-RECEPTACLE (12-PIN)	
		1	**102-8802**	2	KIT-RECEPTACLE (2-PIN)	
		1	**102-8803**	1	KIT-RECEPTACLE (3-PIN)	
					(EACH RECEPTACLE KIT INCLUDES RECEPTACLE AS & WEDGE)	
		1	**155-2255**	1	KIT-CONNECTING PLUG (12-PIN)	
		1	**155-2270**	7	KIT-CONNECTING PLUG (2-PIN)	
					(EACH PLUG KIT INCLUDES PLUG AS, WEDGE, & INTERFACE SEAL)	
Y	9	1	**210-7776**	1	VALVE GP-BANK 3 (BULLDOZER, WINCH)	840
CY	10	1	**296-1391**	1	MANIFOLD GP-CONTROL (IMPLEMENT PILOT)	800
	11	1	**218-7316**	2	PLATE	
	12	1	**226-9649**	1	TUBE AS	
	13	1	**228-3105**	1	BRACKET	
	14	1	**228-3106**	1	BRACKET	
	15	1	**233-6942**	1	VALVE	
Y	16	1	**237-0957**	1	SENSOR GP-PRESSURE (IMPLEMENT PUMP OIL)	351
	18	1	**130-5300**	4	CLIP	
	19	1	**1J-9671**	1	SEAL-O-RING	
	20	1	**1P-3702**	2	SEAL-RECTANGULAR	
	21	1	**3J-1907**	1	SEAL-O-RING	
	22	1	**3J-7354**	1	SEAL-O-RING	
	23	1	**4P-8134**	1	CLIP	
	24	1	**6V-5555**	2	SEAL-O-RING	
	25	1	**6V-8397**	2	SEAL-O-RING	
M	26	1	**7X-2549**	5	BOLT (M12X1.75X100-MM)	
	27	1	**8T-4121**	8	WASHER-HARD (11X21X2.5-MM THK)	
M	28	1	**8T-4136**	5	BOLT (M10X1.5X25-MM)	
M	29	1	**8T-4137**	1	BOLT (M10X1.5X20-MM)	
M	30	1	**8T-4139**	2	BOLT (M12X1.75X30-MM)	
M	31	1	**8T-4171**	6	BOLT (M6X1X12-MM)	
M	32	1	**8T-4191**	2	BOLT (M10X1.5X16-MM)	
M	33	1	**8T-4192**	1	BOLT (M12X1.75X25-MM)	
M	34	1	**8T-4194**	3	BOLT (M12X1.75X50-MM)	
	35	1	**8T-4223**	11	WASHER-HARD (13.5X25.5X3-MM THK)	
	36	1	**9X-8256**	6	WASHER (6.6X12X2-MM THK)	

C-CHANGE FROM PREVIOUS TYPE
M-METRIC PART
Y-SEPARATE ILLUSTRATION

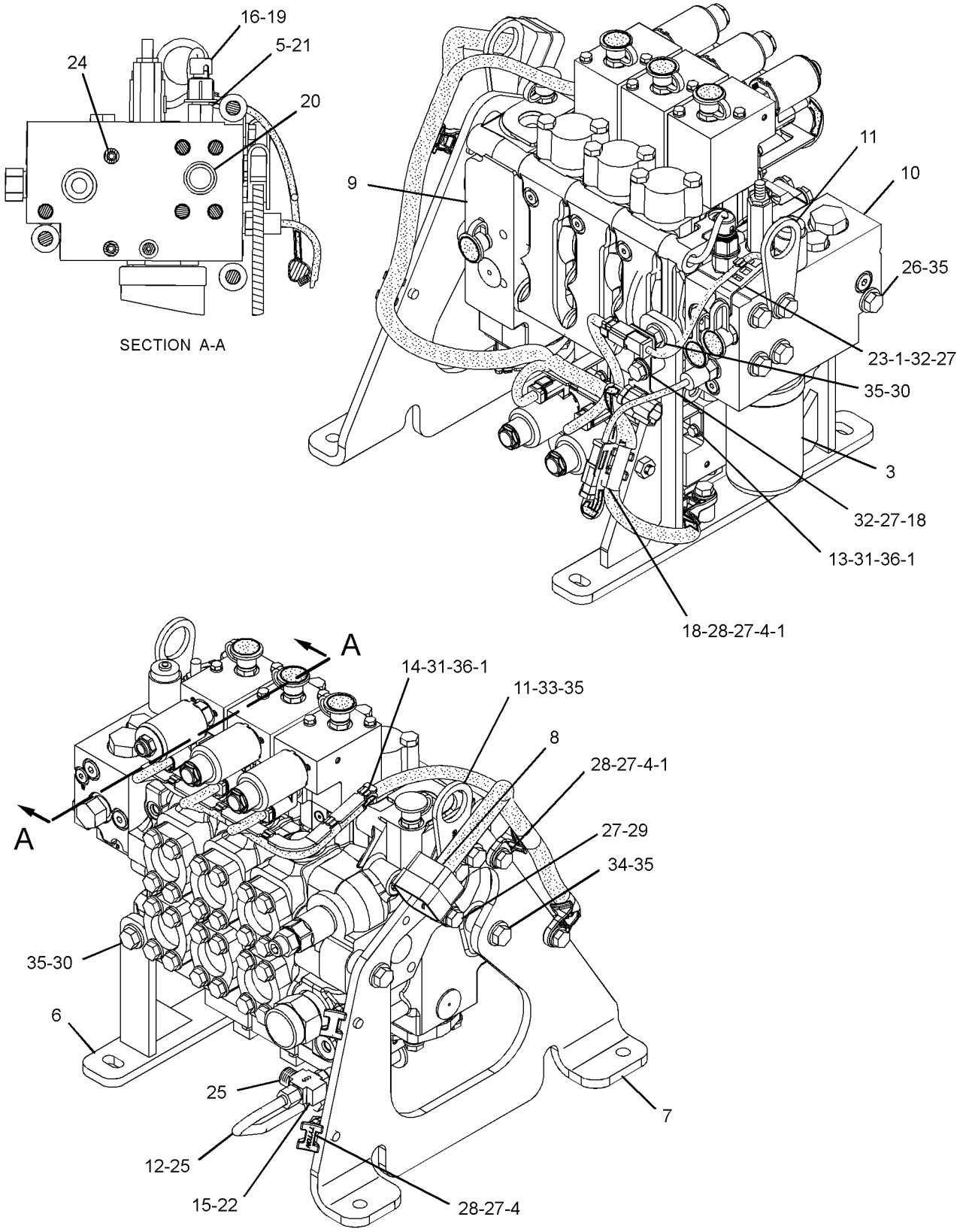

GRAPHIC #1 **<END>** g01401920

HYDRAULIC SYSTEM

215-6822 VALVE GP-BANK 3—BULLDOZER, WINCH

S/N: J8B1143-UP

PART OF 209-3431 CONTROL AR-HYDRAULIC

AN ATTACHMENT

SMCS-5051 **i02855538**

NOTE	REF NO	GRAPHIC REF	PART NUMBER	QTY	PART NAME 1 2 3 4 5 6 (PRODUCT LEVEL)	SEE PAGE
	1	1	**7K-1181**	13	STRAP-CABLE	
	3	1	**126-1813**	1	FILTER-OIL (ULTRA HIGH EFFICIENCY)	
	4	1	**204-8000**	5	MOUNT (TIE WRAP)	
	5	1	**205-3079**	1	ADAPTER	
	6	1	**209-1372**	1	PLATE AS	
M		1	**7Y-8763**	1	BOSS (M10X1.5X25-MM)	
	7	1	**209-1376**	1	BRACKET AS	
	8	1	**209-7738**	1	HARNESS AS-VALVE	
		1	**102-8801**	1	KIT-RECEPTACLE (12-PIN)	
		1	**102-8802**	2	KIT-RECEPTACLE (2-PIN)	
		1	**102-8803**	1	KIT-RECEPTACLE (3-PIN)	
					(EACH RECEPTACLE KIT INCLUDES RECEPTACLE AS & WEDGE)	
		1	**155-2255**	1	KIT-CONNECTING PLUG (12-PIN)	
		1	**155-2270**	7	KIT-CONNECTING PLUG (2-PIN)	
					(EACH PLUG KIT INCLUDES PLUG AS, WEDGE, & INTERFACE SEAL)	
Y	9	1	**210-7776**	1	VALVE GP-BANK 3 (BULLDOZER, WINCH)	840
CY	10	1	*301-2269*	1	MANIFOLD GP-CONTROL (IMPLEMENT PILOT)	802
	11	1	**218-7316**	2	PLATE	
	12	1	**226-9649**	1	TUBE AS	
	13	1	**228-3105**	1	BRACKET	
	14	1	**228-3106**	1	BRACKET	
	15	1	**233-6942**	1	VALVE	
Y	16	1	**237-0957**	1	SENSOR GP-PRESSURE (IMPLEMENT PUMP OIL)	351
	18	1	**130-5300**	4	CLIP	
	19	1	**1J-9671**	1	SEAL-O-RING	
	20	1	**1P-3702**	2	SEAL-RECTANGULAR	
	21	1	**3J-1907**	1	SEAL-O-RING	
	22	1	**3J-7354**	1	SEAL-O-RING	
	23	1	**4P-8134**	1	CLIP	
	24	1	**6V-5555**	2	SEAL-O-RING	
	25	1	**6V-8397**	2	SEAL-O-RING	
M	26	1	**7X-2549**	5	BOLT (M12X1.75X100-MM)	
	27	1	**8T-4121**	8	WASHER-HARD (11X21X2.5-MM THK)	
M	28	1	**8T-4136**	5	BOLT (M10X1.5X25-MM)	
M	29	1	**8T-4137**	1	BOLT (M10X1.5X20-MM)	
M	30	1	**8T-4139**	2	BOLT (M12X1.75X30-MM)	
M	31	1	**8T-4171**	6	BOLT (M6X1X12-MM)	
M	32	1	**8T-4191**	2	BOLT (M10X1.5X16-MM)	
M	33	1	**8T-4192**	1	BOLT (M12X1.75X25-MM)	
M	34	1	**8T-4194**	3	BOLT (M12X1.75X50-MM)	
	35	1	**8T-4223**	11	WASHER-HARD (13.5X25.5X3-MM THK)	
	36	1	**9X-8256**	6	WASHER (6.6X12X2-MM THK)	

C-CHANGE FROM PREVIOUS TYPE
M-METRIC PART
Y-SEPARATE ILLUSTRATION

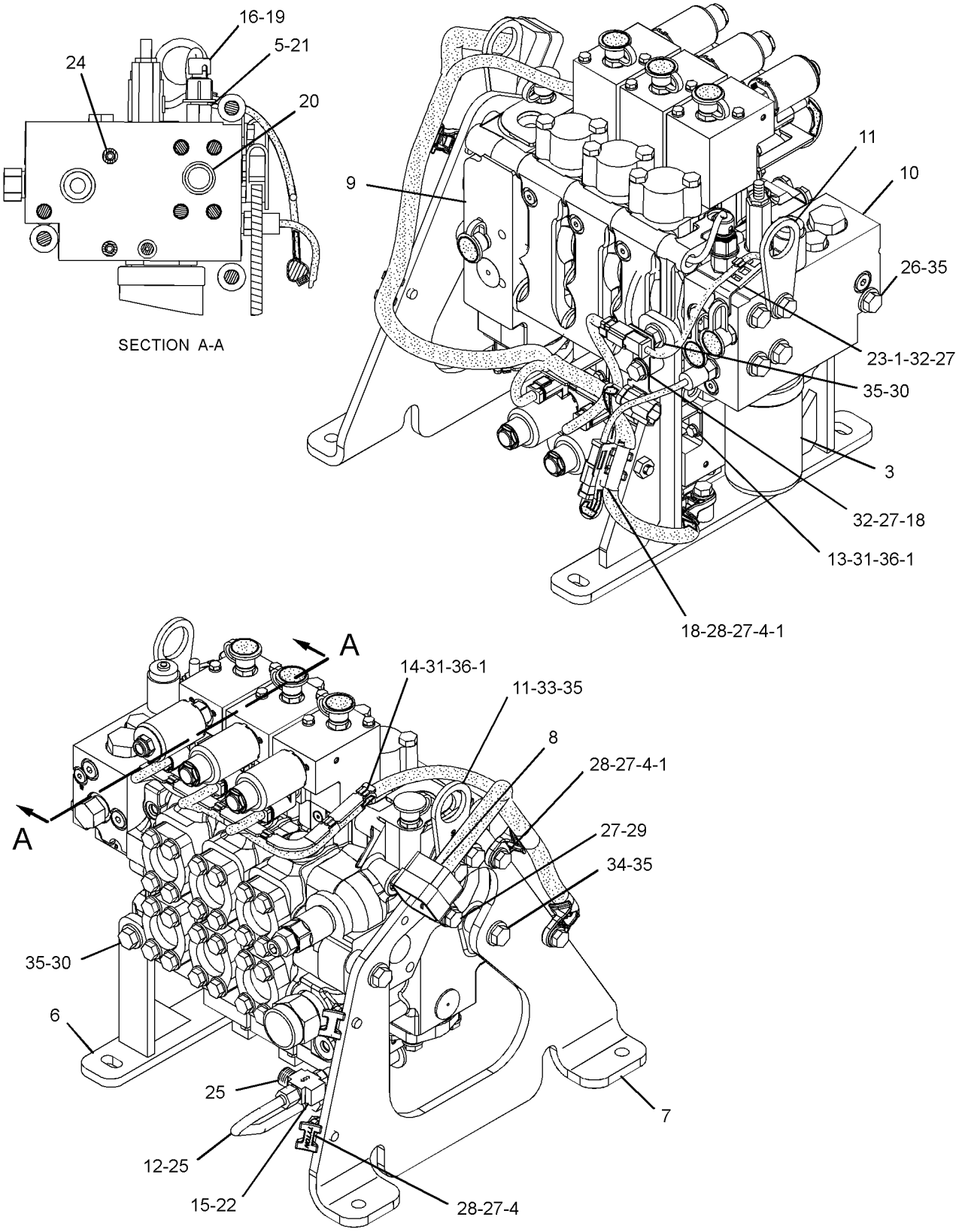

GRAPHIC #1 **<END>** g01401920

HYDRAULIC SYSTEM

238-2753 VALVE GP-BANK 3—BULLDOZER

S/N: J8B1-1255

PART OF 208-9527 VALVE & MTG GP-IMPLEMENT CONT

SMCS-5051 **i02855512**

NOTE	REF NO	GRAPHIC REF	PART NUMBER	QTY	PART NAME 1 2 3 4 5 6 (PRODUCT LEVEL)	SEE PAGE
	2	1	**7K-1181**	14	STRAP-CABLE	
	3	1	**126-1813**	1	FILTER-OIL (ULTRA HIGH EFFICIENCY)	
	4	1	**204-8000**	5	MOUNT (TIE WRAP)	
	5	1	**205-3079**	1	ADAPTER	
	6	1	**209-1372**	1	PLATE AS	
M		1	**7Y-8763**	1	BOSS (M10X1.5X25-MM)	
	7	1	**209-1376**	1	BRACKET AS	
Y	8	1	**209-6379**	1	VALVE GP-CONTROL (BULLDOZER LIFT, TILT)	867
	9	1	**209-7738**	1	HARNESS AS-VALVE (IMPLEMENT CONTROL)	
		1	**102-8801**	1	KIT-RECEPTACLE (12-PIN)	
		1	**102-8802**	2	KIT-RECEPTACLE (2-PIN)	
		1	**102-8803**	1	KIT-RECEPTACLE (3-PIN)	
					(EACH RECEPTACLE KIT INCLUDES RECEPTACLE AS & WEDGE)	
		1	**155-2255**	1	KIT-CONNECTING PLUG (12-PIN)	
		1	**155-2270**	7	KIT-CONNECTING PLUG (2-PIN)	
					(EACH PLUG KIT INCLUDES PLUG AS, WEDGE, & INTERFACE SEAL)	
Y	10	1	**212-5835**	1	MANIFOLD GP-CONTROL (IMPLEMENT PILOT)	798
	11	1	**218-7316**	2	PLATE	
	12	1	**226-9649**	1	TUBE AS	
	13	1	**228-3101**	1	BRACKET	
	14	1	**228-3103**	1	BRACKET	
	15	1	**233-6942**	1	VALVE	
Y	16	1	**237-0957**	1	SENSOR GP-PRESSURE (IMPLEMENT PUMP OIL)	351
	18	1	**130-5300**	4	CLIP	
	19	1	**1J-9671**	1	SEAL-O-RING	
	20	1	**1P-3702**	2	SEAL-RECTANGULAR	
	21	1	**3J-1907**	1	SEAL-O-RING	
	22	1	**3J-7354**	2	SEAL-O-RING	
	23	1	**4P-8134**	1	CLIP	
	24	1	**6V-5555**	2	SEAL-O-RING	
	25	1	**6V-8397**	2	SEAL-O-RING	
	26	1	**6V-9829**	1	CAP AS	
M	27	1	**7X-2549**	5	BOLT (M12X1.75X100-MM)	
	28	1	**8T-4121**	8	WASHER-HARD (11X21X2.5-MM THK)	
M	29	1	**8T-4136**	5	BOLT (M10X1.5X25-MM)	
M	30	1	**8T-4137**	1	BOLT (M10X1.5X20-MM)	
M	31	1	**8T-4139**	2	BOLT (M12X1.75X30-MM)	
M	32	1	**8T-4171**	4	BOLT (M6X1X12-MM)	
M	33	1	**8T-4191**	2	BOLT (M10X1.5X16-MM)	
M	34	1	**8T-4192**	1	BOLT (M12X1.75X25-MM)	
M	35	1	**8T-4194**	3	BOLT (M12X1.75X50-MM)	
	36	1	**8T-4223**	11	WASHER-HARD (13.5X25.5X3-MM THK)	
	37	1	**9X-8256**	4	WASHER (6.6X12X2-MM THK)	

M-METRIC PART
Y-SEPARATE ILLUSTRATION

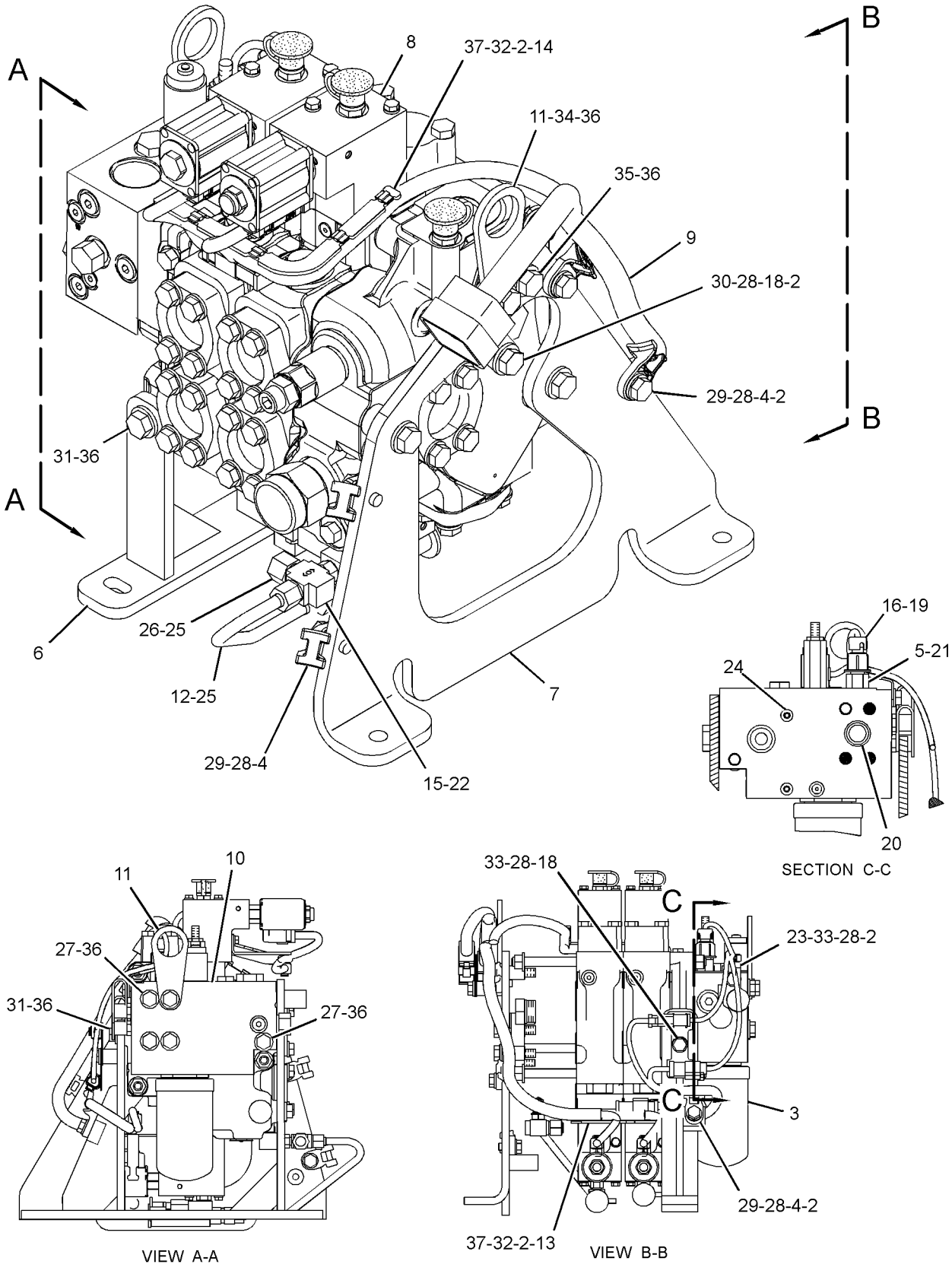

GRAPHIC #1 **<END>** g01306695

HYDRAULIC SYSTEM

238-2753 VALVE GP-BANK 3—BULLDOZER

S/N: J8B1256-1275

PART OF 208-9527 VALVE & MTG GP-IMPLEMENT CONT

SMCS-5051 **i02862049**

NOTE	REF NO	GRAPHIC REF	PART NUMBER	QTY	PART NAME 1 2 3 4 5 6 (PRODUCT LEVEL)	SEE PAGE
	2	1	**7K-1181**	14	STRAP-CABLE	
	3	1	**126-1813**	1	FILTER-OIL (ULTRA HIGH EFFICIENCY)	
	4	1	**204-8000**	5	MOUNT (TIE WRAP)	
	5	1	**205-3079**	1	ADAPTER	
	6	1	**209-1372**	1	PLATE AS	
M		1	**7Y-8763**	1	BOSS (M10X1.5X25-MM)	
	7	1	**209-1376**	1	BRACKET AS	
Y	8	1	**209-6379**	1	VALVE GP-CONTROL (BULLDOZER LIFT, TILT)	867
	9	1	**209-7738**	1	HARNESS AS-VALVE (IMPLEMENT CONTROL)	
		1	**102-8801**	1	KIT-RECEPTACLE (12-PIN)	
		1	**102-8802**	2	KIT-RECEPTACLE (2-PIN)	
		1	**102-8803**	1	KIT-RECEPTACLE (3-PIN)	
					(EACH RECEPTACLE KIT INCLUDES RECEPTACLE AS & WEDGE)	
		1	**155-2255**	1	KIT-CONNECTING PLUG (12-PIN)	
		1	**155-2270**	7	KIT-CONNECTING PLUG (2-PIN)	
					(EACH PLUG KIT INCLUDES PLUG AS, WEDGE, & INTERFACE SEAL)	
CY	10	1	**296-1391**	1	MANIFOLD GP-CONTROL (IMPLEMENT PILOT)	800
	11	1	**218-7316**	2	PLATE	
	12	1	**226-9649**	1	TUBE AS	
	13	1	**228-3101**	1	BRACKET	
	14	1	**228-3103**	1	BRACKET	
	15	1	**233-6942**	1	VALVE	
Y	16	1	**237-0957**	1	SENSOR GP-PRESSURE (IMPLEMENT PUMP OIL)	351
	18	1	**130-5300**	4	CLIP	
	19	1	**1J-9671**	1	SEAL-O-RING	
	20	1	**1P-3702**	2	SEAL-RECTANGULAR	
	21	1	**3J-1907**	1	SEAL-O-RING	
	22	1	**3J-7354**	2	SEAL-O-RING	
	23	1	**4P-8134**	1	CLIP	
	24	1	**6V-5555**	2	SEAL-O-RING	
	25	1	**6V-8397**	2	SEAL-O-RING	
	26	1	**6V-9829**	1	CAP AS	
M	27	1	**7X-2549**	5	BOLT (M12X1.75X100-MM)	
	28	1	**8T-4121**	8	WASHER-HARD (11X21X2.5-MM THK)	
M	29	1	**8T-4136**	5	BOLT (M10X1.5X25-MM)	
M	30	1	**8T-4137**	1	BOLT (M10X1.5X20-MM)	
M	31	1	**8T-4139**	2	BOLT (M12X1.75X30-MM)	
M	32	1	**8T-4171**	4	BOLT (M6X1X12-MM)	
M	33	1	**8T-4191**	2	BOLT (M10X1.5X16-MM)	
M	34	1	**8T-4192**	1	BOLT (M12X1.75X25-MM)	
M	35	1	**8T-4194**	3	BOLT (M12X1.75X50-MM)	
	36	1	**8T-4223**	11	WASHER-HARD (13.5X25.5X3-MM THK)	
	37	1	**9X-8256**	4	WASHER (6.6X12X2-MM THK)	

C-CHANGE FROM PREVIOUS TYPE
M-METRIC PART
Y-SEPARATE ILLUSTRATION

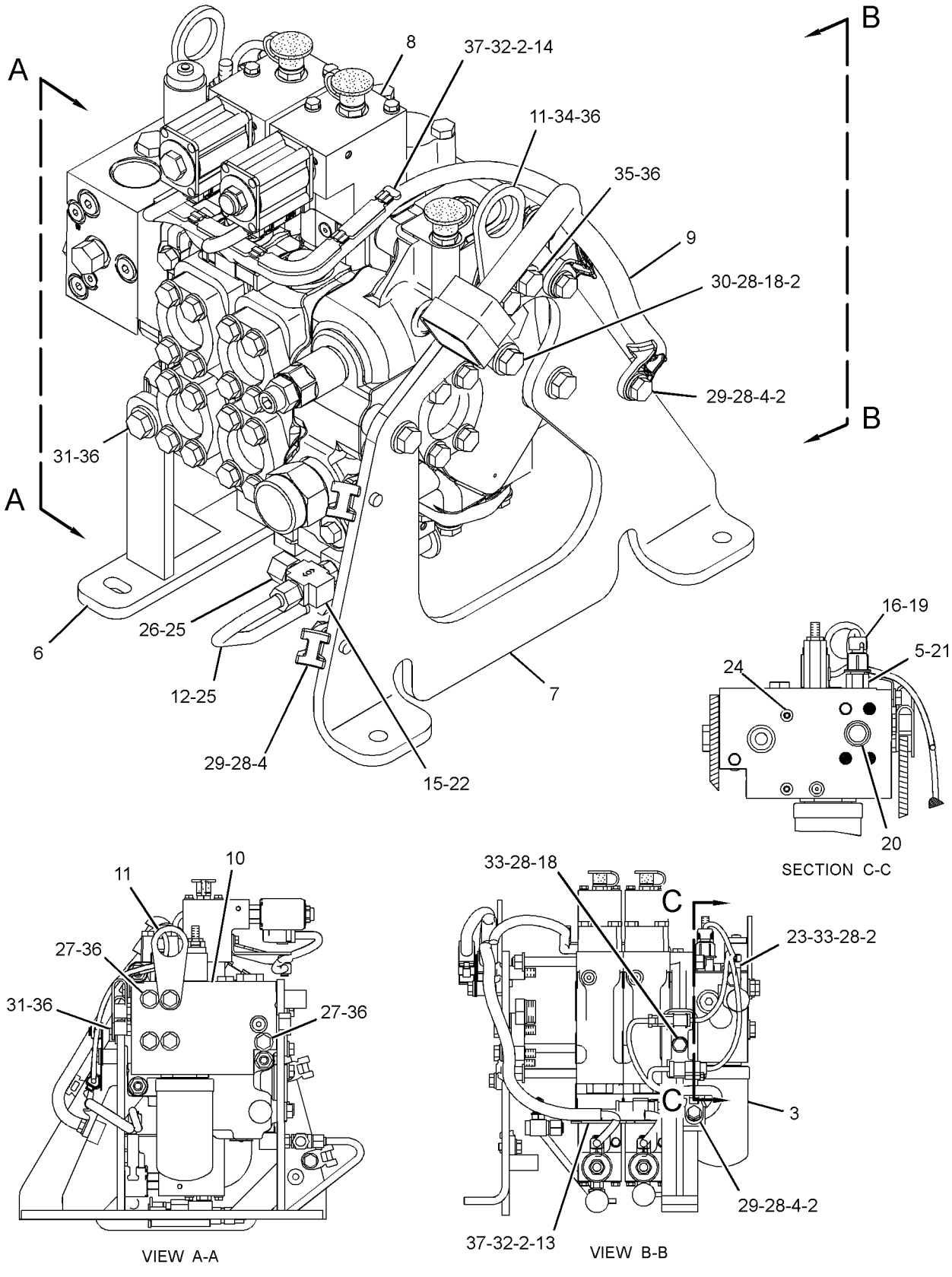

GRAPHIC #1 **<END>** g01306695

HYDRAULIC SYSTEM

238-2753 VALVE GP-BANK 3—BULLDOZER

S/N: J8B1276-UP

PART OF 208-9527 VALVE & MTG GP-IMPLEMENT CONT

SMCS-5051 **i02885098**

NOTE	REF NO	GRAPHIC REF	PART NUMBER	QTY	PART NAME 1 2 3 4 5 6 (PRODUCT LEVEL)	SEE PAGE
	1	1	**9X-8256**	4	WASHER (6.6X12X2-MM THK)	
	2	1	**7K-1181**	14	STRAP-CABLE	
	3	1	**126-1813**	1	FILTER-OIL (ULTRA HIGH EFFICIENCY)	
	4	1	**204-8000**	5	MOUNT (TIE WRAP)	
	5	1	**205-3079**	1	ADAPTER	
	6	1	**209-1372**	1	PLATE AS	
	7	1	**209-1376**	1	BRACKET AS	
Y	8	1	**209-6379**	1	VALVE GP-CONTROL (BULLDOZER LIFT, TILT)	867
	9	1	**209-7738**	1	HARNESS AS-VALVE (IMPLEMENT CONTROL)	
		1	**102-8801**	1	KIT-RECEPTACLE (12-PIN)	
		1	**102-8802**	2	KIT-RECEPTACLE (2-PIN)	
		1	**102-8803**	1	KIT-RECEPTACLE (3-PIN)	
					(EACH RECEPTACLE KIT INCLUDES RECEPTACLE AS & WEDGE)	
		1	**155-2255**	1	KIT-CONNECTING PLUG (12-PIN)	
		1	**155-2270**	7	KIT-CONNECTING PLUG (2-PIN)	
					(EACH PLUG KIT INCLUDES PLUG AS, WEDGE, & INTERFACE SEAL)	
CY	10	1	**301-2269**	1	MANIFOLD GP-CONTROL (IMPLEMENT PILOT)	802
	11	1	**218-7316**	2	PLATE	
	12	1	**226-9649**	1	TUBE AS	
	13	1	**228-3101**	1	BRACKET	
	14	1	**228-3103**	1	BRACKET	
	15	1	**233-6942**	1	VALVE	
Y	16	1	**237-0957**	1	SENSOR GP-PRESSURE (IMPLEMENT PUMP OIL)	351
	18	1	**130-5300**	4	CLIP	
	19	1	**1J-9671**	1	SEAL-O-RING	
	20	1	**1P-3702**	2	SEAL-RECTANGULAR	
	21	1	**3J-1907**	1	SEAL-O-RING	
	22	1	**3J-7354**	2	SEAL-O-RING	
	23	1	**4P-8134**	1	CLIP	
	24	1	**6V-5555**	2	SEAL-O-RING	
	25	1	**6V-8397**	2	SEAL-O-RING	
	26	1	**6V-9829**	1	CAP AS	
M	27	1	**7X-2549**	5	BOLT (M12X1.75X100-MM)	
	28	1	**8T-4121**	8	WASHER-HARD (11X21X2.5-MM THK)	
M	29	1	**8T-4136**	5	BOLT (M10X1.5X25-MM)	
M	30	1	**8T-4137**	1	BOLT (M10X1.5X20-MM)	
M	31	1	**8T-4139**	2	BOLT (M12X1.75X30-MM)	
M	32	1	**8T-4171**	4	BOLT (M6X1X12-MM)	
M	33	1	**8T-4191**	2	BOLT (M10X1.5X16-MM)	
M	34	1	**8T-4192**	1	BOLT (M12X1.75X25-MM)	
M	35	1	**8T-4194**	3	BOLT (M12X1.75X50-MM)	
	36	1	**8T-4223**	11	WASHER-HARD (13.5X25.5X3-MM THK)	

C-CHANGE FROM PREVIOUS TYPE
M-METRIC PART
Y-SEPARATE ILLUSTRATION

238-2753 **VALVE GP-BANK 3** *(contd.)* **i02885098**

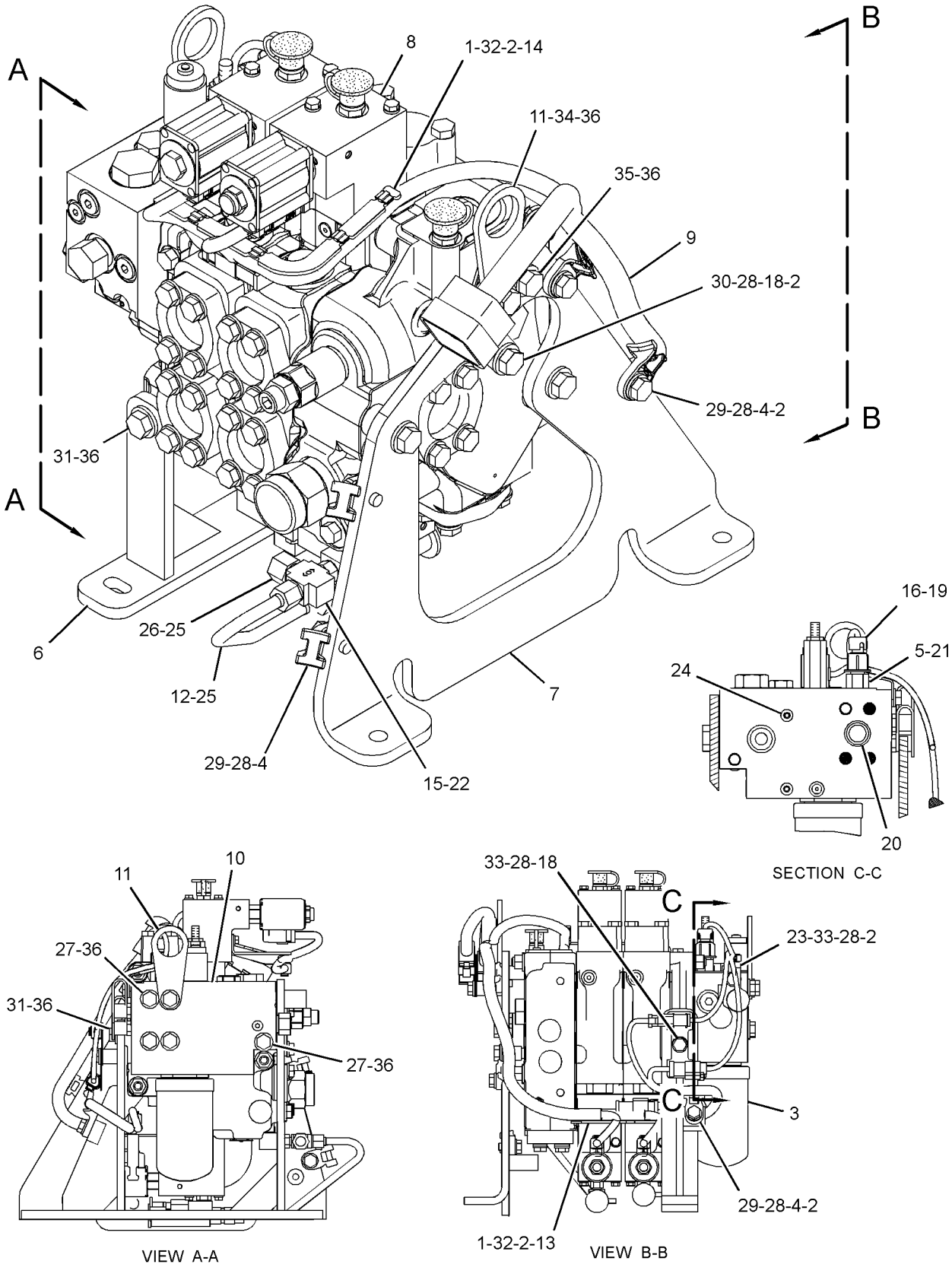

GRAPHIC #1 **<END>** g01442812

HYDRAULIC SYSTEM

210-7775 VALVE GP-BANK 4—BULLDOZER, RIPPER

S/N: J8B1-UP

PART OF 215-5615 VALVE GP-BANK 4

AN ATTACHMENT

SMCS-5051 **i03434242**

NOTE	REF NO	GRAPHIC REF	PART NUMBER	QTY	PART NAME 1 2 3 4 5 6 (PRODUCT LEVEL)	SEE PAGE
	2	1	**6V-8188**	6	NUT (1/2-13-THD)	
	3	1	**9T-2856**	3	ROD	
	4	1	**211-1751**	1	COVER	
Y	5	1	**212-6322**	1	VALVE GP-CONTROL (BULLDOZER LIFT)	869
Y	6	1	**212-6323**	1	VALVE GP-CONTROL (BULLDOZER TILT)	875
Y	7	1	**212-6324**	1	VALVE GP-CONTROL (RIPPER LIFT)	880
Y	8	1	**212-6324**	1	VALVE GP-CONTROL (RIPPER TILT)	880
Y	9	1	**213-4325**	1	MANIFOLD GP-VALVE (IMPLEMENT CONTROL)	804
	10	1	*155-3624*	5	PLUG AS	
					(EACH INCLUDES)	
		1	**9S-4182**	1	PLUG-O-RING	
		1	**3J-7354**	1	SEAL-O-RING	
	11	1	*169-5862*	1	ELBOW AS	
		1	**8C-6712**	1	ELBOW	
		1	**3J-1907**	1	SEAL-O-RING	
	12	1	*183-7263*	1	PLUG AS	
		1	**9S-8002**	1	PLUG-O-RING	
		1	**3J-7354**	1	SEAL-O-RING	
	13	1	**1P-3702**	1	SEAL-RECTANGULAR	
	14	1	**1P-4578**	2	FLANGE-HALF	
	15	1	**1P-5760**	8	FLANGE-HALF	
	16	1	*207-7899*	1	PLUG AS	
		1	**9S-4188**	1	PLUG	
		1	**4K-1388**	1	SEAL-O-RING	
	17	1	**4J-0522**	15	SEAL-O-RING	
	18	1	**4J-8997**	4	SEAL-O-RING	
	19	1	**6V-5555**	15	SEAL-O-RING	
	20	1	**8C-3206**	8	FLANGE-HALF	
	21	1	**8T-4121**	36	WASHER-HARD (11X21X2.5-MM THK)	
M	22	1	**8T-4182**	16	BOLT (M10X1.5X45-MM)	
M	23	1	**8T-4196**	20	BOLT (M10X1.5X35-MM)	
	24	1	**8T-4223**	6	WASHER-HARD (13.5X25.5X3-MM THK)	

M-METRIC PART
Y-SEPARATE ILLUSTRATION

210-7775 **VALVE GP-BANK 4** *(contd.)* **i03434242**

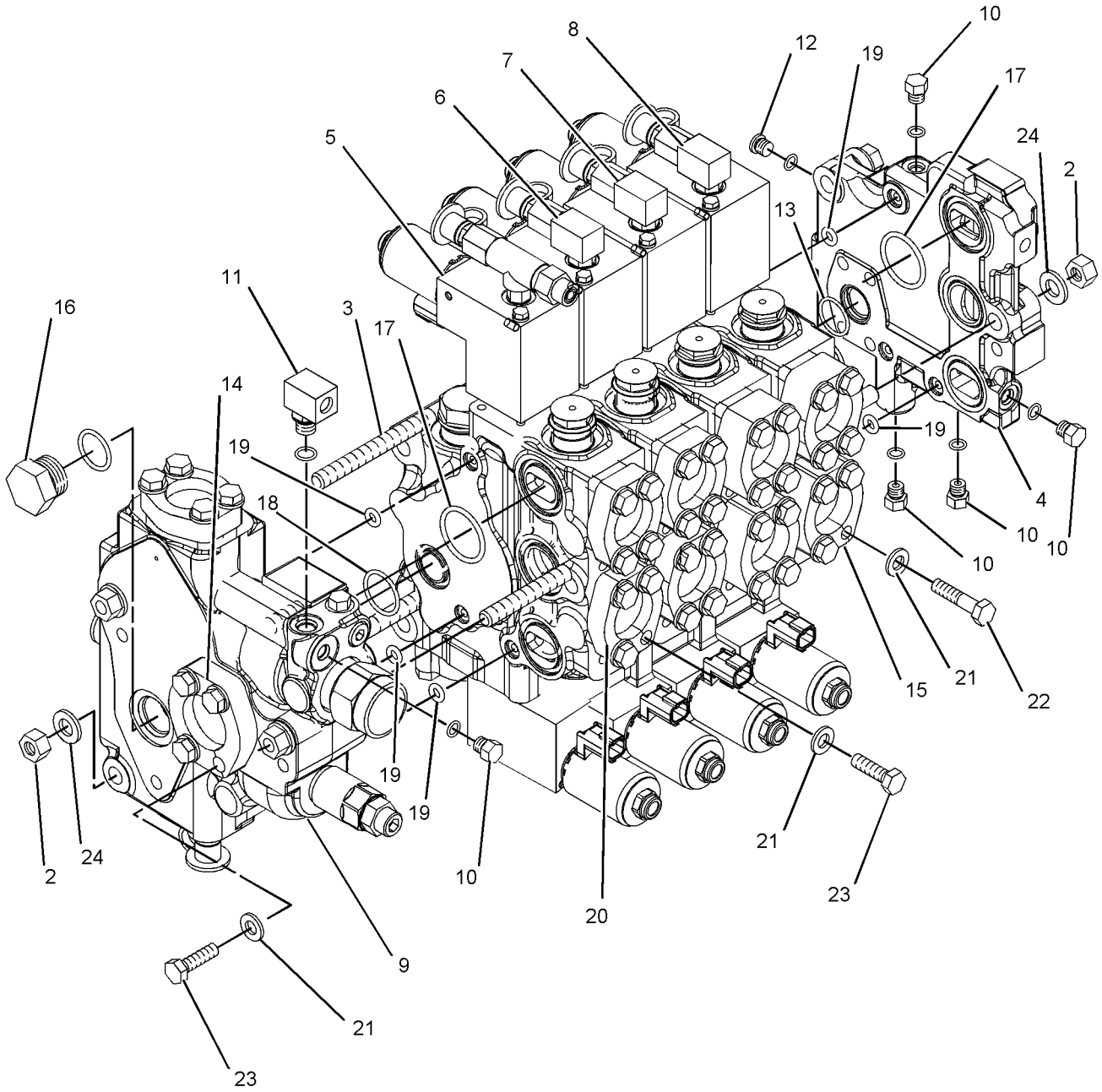

GRAPHIC #1 **<END>** g01110183

HYDRAULIC SYSTEM

215-5615 VALVE GP-BANK 4—BULLDOZER, RIPPER

S/N: J8B1-1137

PART OF 209-3430 CONTROL AR-HYDRAULIC

AN ATTACHMENT

SMCS-5051 **i02468881**

NOTE	REF NO	GRAPHIC REF	PART NUMBER	QTY	PART NAME 1 2 3 4 5 6 (PRODUCT LEVEL)	SEE PAGE
	1	1	**9X-8256**	8	WASHER (6.6X12X2-MM THK)	
	2	1,2	**7K-1181**	16	STRAP-CABLE	
	3	1	**126-1813**	1	FILTER-OIL (ULTRA HIGH EFFICIENCY)	
	4	2	**204-8000**	5	MOUNT (TIE WRAP)	
	5	1	**205-3079**	1	ADAPTER	
	6	1	**209-1372**	1	PLATE AS	
M		1	**7Y-8763**	1	BOSS (M10X1.5X25-MM)	
	7	1	**209-1376**	1	BRACKET AS	
Y	8	1	**210-7775**	1	VALVE GP-BANK 4 (BULLDOZER, RIPPER)	854
Y	9	1	**212-5835**	1	MANIFOLD GP-CONTROL	798
	10	1	**214-6460**	1	HARNESS AS-VALVE (BULLDOZER, RIPPER)	
	11	2	**218-7316**	2	PLATE	
	12	1	**226-9649**	1	TUBE AS	
	13	1	**228-3101**	1	BRACKET	
	14	1	**228-3102**	1	BRACKET	
	15	1	**228-3103**	1	BRACKET	
	16	1	**228-3104**	1	BRACKET	
	17	1	**233-6942**	1	VALVE	
Y	18	1	**237-0957**	1	SENSOR GP-PRESSURE (IMPLEMENT PUMP OIL)	351
	20	2	**130-5300**	4	CLIP	
	21	1	**1J-9671**	1	SEAL-O-RING	
	22	1	**1P-3702**	2	SEAL-RECTANGULAR	
	23	1	**3J-1907**	1	SEAL-O-RING	
	24	1	**3J-7354**	1	SEAL-O-RING	
	25	2	**4P-8134**	1	CLIP	
	26	1	**6V-5555**	2	SEAL-O-RING	
	27	1	**6V-8397**	2	SEAL-O-RING	
M	28	2	**7X-2549**	5	BOLT (M12X1.75X100-MM)	
	29	2	**8T-4121**	8	WASHER-HARD (11X21X2.5-MM THK)	
M	30	2	**8T-4136**	5	BOLT (M10X1.5X25-MM)	
M	31	2	**8T-4137**	1	BOLT (M10X1.5X20-MM)	
M	32	1,2	**8T-4139**	2	BOLT (M12X1.75X30-MM)	
M	33	1	**8T-4171**	8	BOLT (M6X1X12-MM)	
M	34	2	**8T-4191**	2	BOLT (M10X1.5X16-MM)	
M	35	2	**8T-4192**	1	BOLT (M12X1.75X25-MM)	
M	36	2	**8T-4194**	3	BOLT (M12X1.75X50-MM)	
	37	1,2	**8T-4223**	11	WASHER-HARD (13.5X25.5X3-MM THK)	

M-METRIC PART
Y-SEPARATE ILLUSTRATION

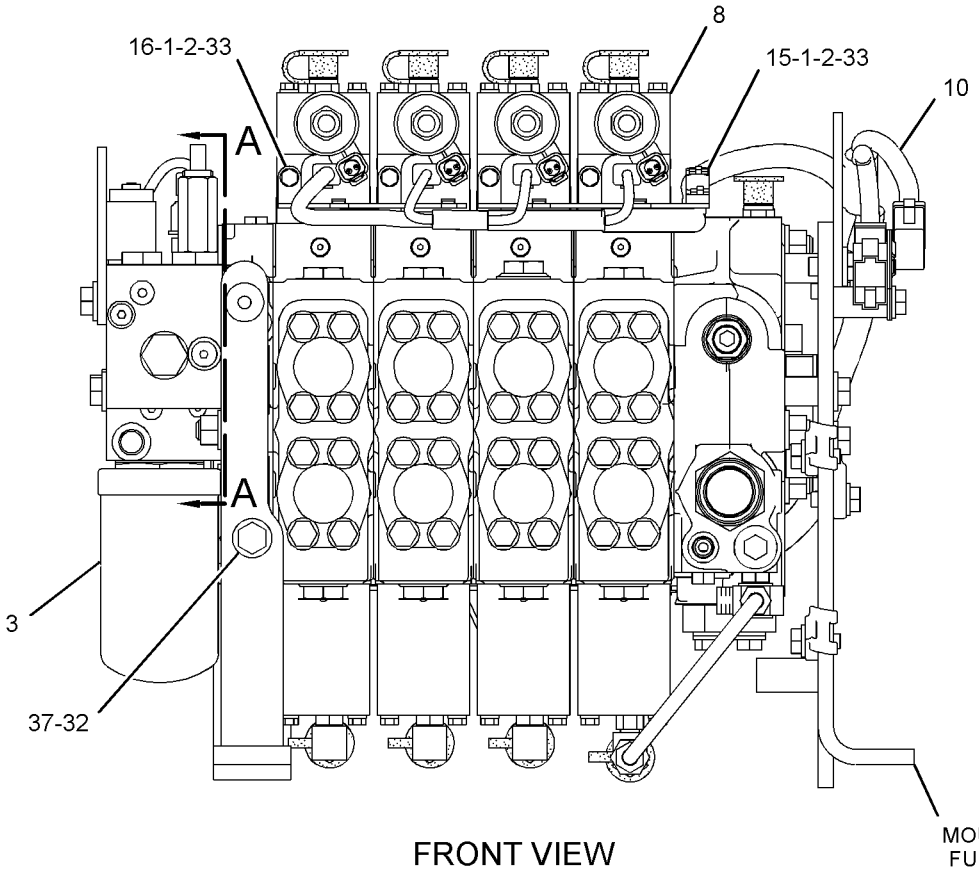

FRONT VIEW

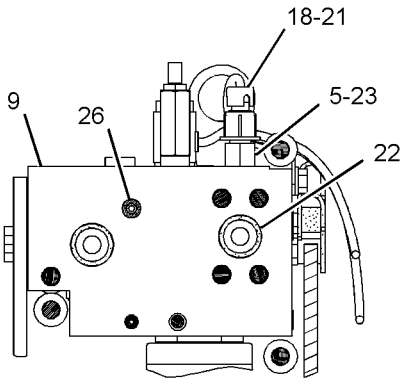

SECTION A-A

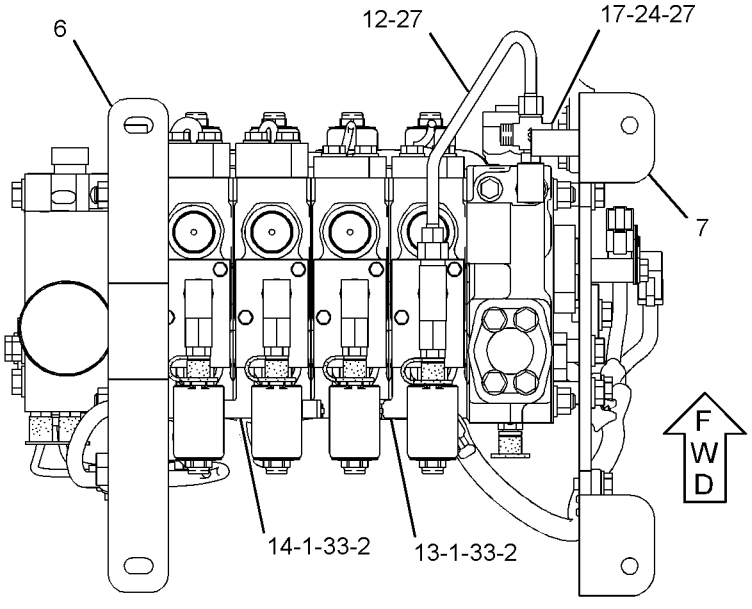

BOTTOM VIEW

GRAPHIC #1

g01442974

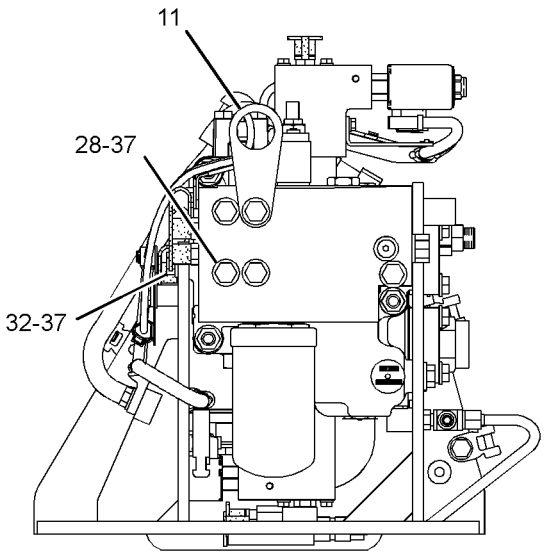

RIGHT SIDE VIEW

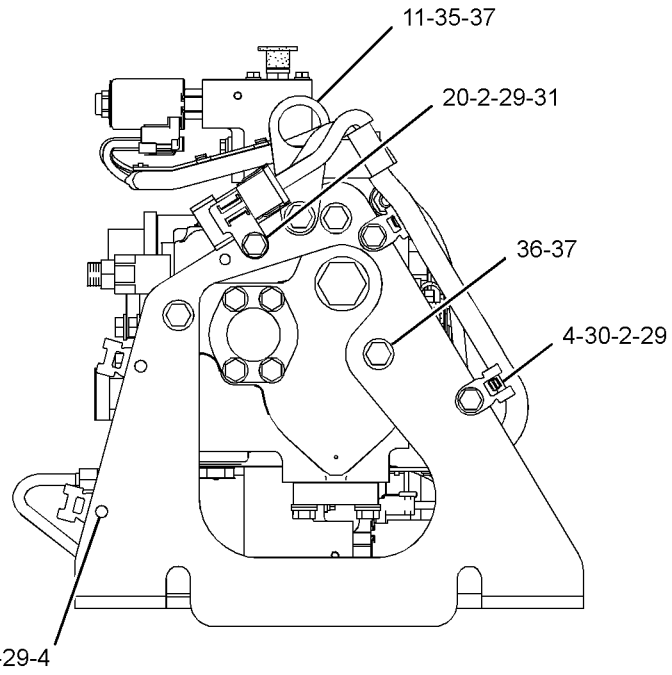

LEFT SIDE VIEW

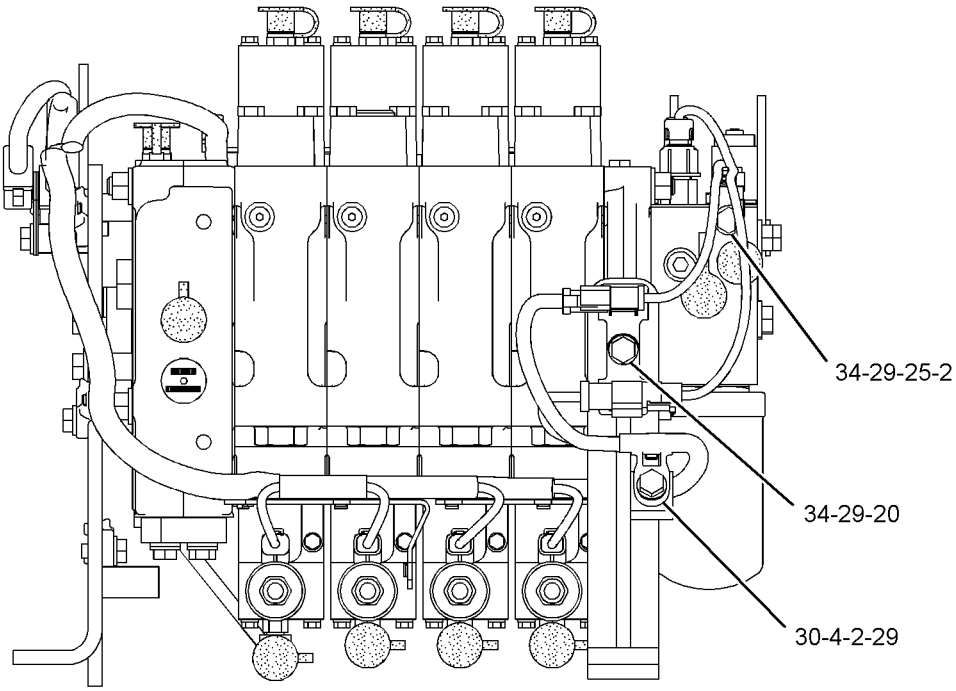

REAR VIEW

GRAPHIC #2 **<END>** g01442975

215-5615 VALVE GP-BANK 4—BULLDOZER, RIPPER

S/N: J8B1138-UP
PART OF 209-3430 CONTROL AR-HYDRAULIC
AN ATTACHMENT

SMCS-5051 **i02818438**

NOTE	REF NO	GRAPHIC REF	PART NUMBER	QTY	PART NAME 1 2 3 4 5 6 (PRODUCT LEVEL)	SEE PAGE
	1	1	**9X-8256**	8	WASHER (6.6X12X2-MM THK)	
	2	1,2	**7K-1181**	16	STRAP-CABLE	
	3	1	**126-1813**	1	FILTER-OIL (ULTRA HIGH EFFICIENCY)	
	4	2	**204-8000**	5	MOUNT (TIE WRAP)	
	5	1	**205-3079**	1	ADAPTER	
	6	1	**209-1372**	1	PLATE AS	
M		1	**7Y-8763**	1	BOSS (M10X1.5X25-MM)	
	7	1	**209-1376**	1	BRACKET AS	
Y	8	1	**210-7775**	1	VALVE GP-BANK 4 (BULLDOZER, RIPPER)	854
CY	9	1	*301-2269*	1	MANIFOLD GP-CONTROL	802
	10	1	**214-6460**	1	HARNESS AS-VALVE (BULLDOZER, RIPPER)	
	11	2	**218-7316**	2	PLATE	
	12	1	**226-9649**	1	TUBE AS	
	13	1	**228-3101**	1	BRACKET	
	14	1	**228-3102**	1	BRACKET	
	15	1	**228-3103**	1	BRACKET	
	16	1	**228-3104**	1	BRACKET	
	17	1	**233-6942**	1	VALVE	
Y	18	1	**237-0957**	1	SENSOR GP-PRESSURE (IMPLEMENT PUMP OIL)	351
	20	2	**130-5300**	4	CLIP	
	21	1	**1J-9671**	1	SEAL-O-RING	
	22	1	**1P-3702**	2	SEAL-RECTANGULAR	
	23	1	**3J-1907**	1	SEAL-O-RING	
	24	1	**3J-7354**	1	SEAL-O-RING	
	25	2	**4P-8134**	1	CLIP	
	26	1	**6V-5555**	2	SEAL-O-RING	
	27	1	**6V-8397**	2	SEAL-O-RING	
M	28	2	**7X-2549**	5	BOLT (M12X1.75X100-MM)	
	29	2	**8T-4121**	8	WASHER-HARD (11X21X2.5-MM THK)	
M	30	2	**8T-4136**	5	BOLT (M10X1.5X25-MM)	
M	31	2	**8T-4137**	1	BOLT (M10X1.5X20-MM)	
M	32	1,2	**8T-4139**	2	BOLT (M12X1.75X30-MM)	
M	33	1	**8T-4171**	8	BOLT (M6X1X12-MM)	
M	34	2	**8T-4191**	2	BOLT (M10X1.5X16-MM)	
M	35	2	**8T-4192**	1	BOLT (M12X1.75X25-MM)	
M	36	2	**8T-4194**	3	BOLT (M12X1.75X50-MM)	
	37	1,2	**8T-4223**	11	WASHER-HARD (13.5X25.5X3-MM THK)	

C-CHANGE FROM PREVIOUS TYPE
M-METRIC PART
Y-SEPARATE ILLUSTRATION

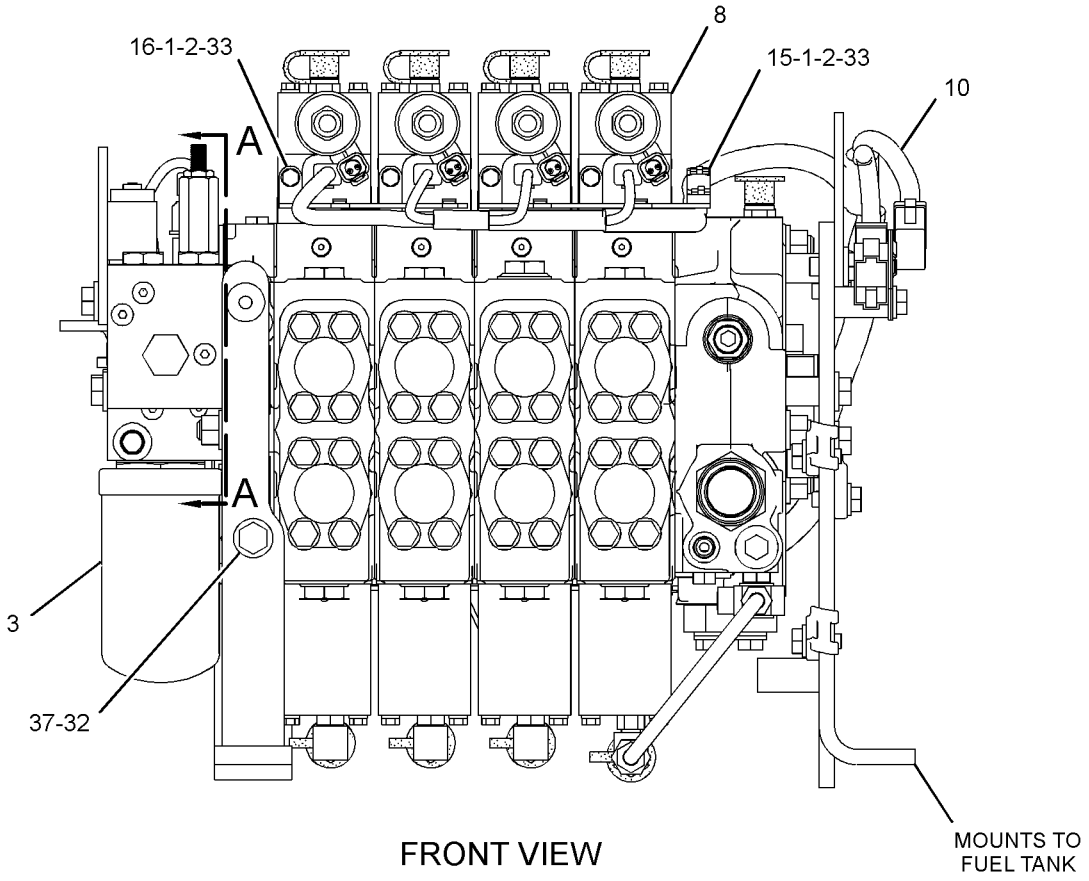

FRONT VIEW

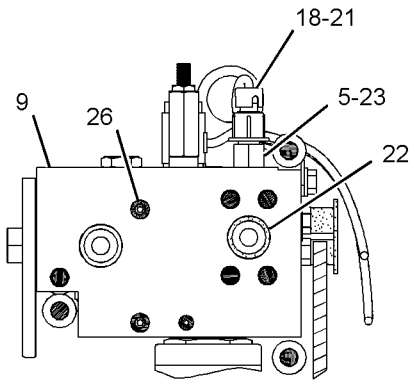

SECTION A-A

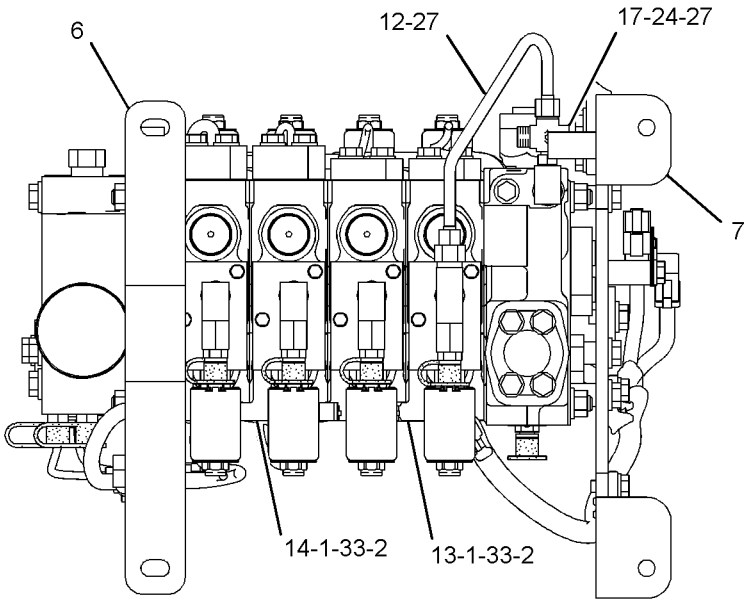

BOTTOM VIEW

GRAPHIC #1

g01441190

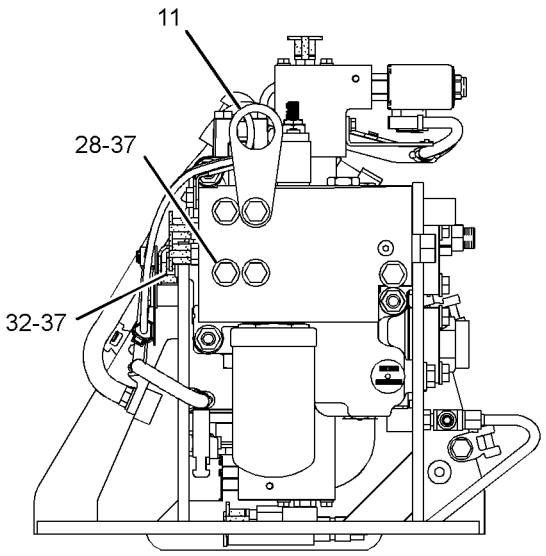

RIGHT SIDE VIEW

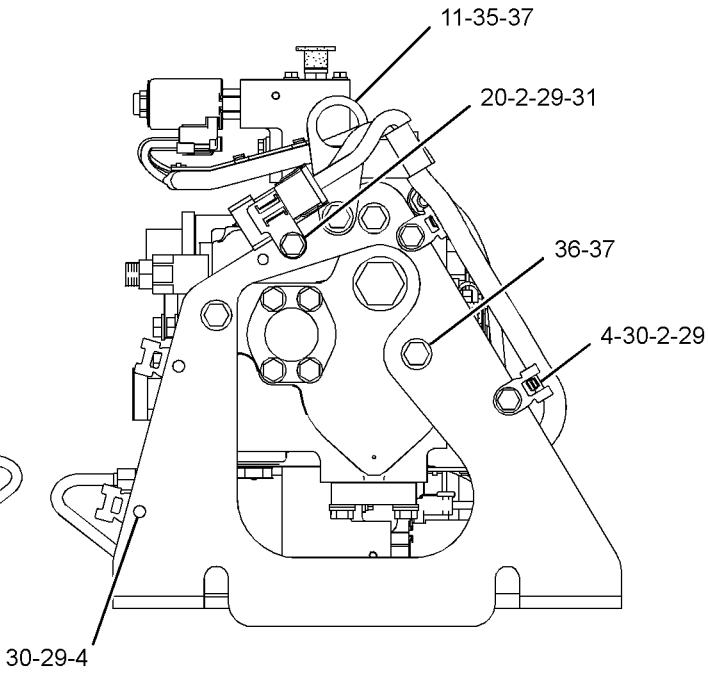

LEFT SIDE VIEW

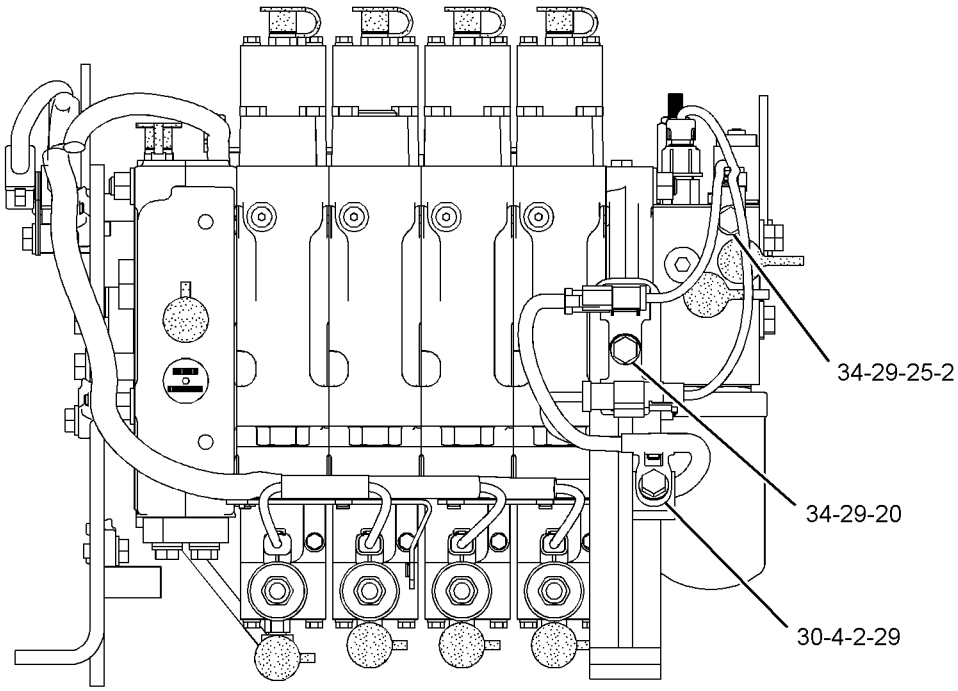

REAR VIEW

GRAPHIC #2 **<END>** g01441184

126-0747 VALVE GP-BYPASS–HYDRAULIC OIL COOLER

S/N: J8B1256-UP

PART OF 303-5933 LINES GP-HYDRAULIC FAN

AN ATTACHMENT

SMCS-5076 **i02252561**

NOTE	REF NO	GRAPHIC REF	PART NUMBER	QTY	PART NAME 1 2 3 4 5 6 (PRODUCT LEVEL)	SEE PAGE
	1	1	**124-8335**	1	VALVE AS-CONTROL	
	2	1	**126-0748**	1	BODY	
	3	1	*148-8407*	1	PLUG AS	
		1	**9S-4191**	1	PLUG-O-RING	
		1	**3J-1907**	1	SEAL-O-RING	
	4	1	**6V-8218**	1	SEAL-O-RING	

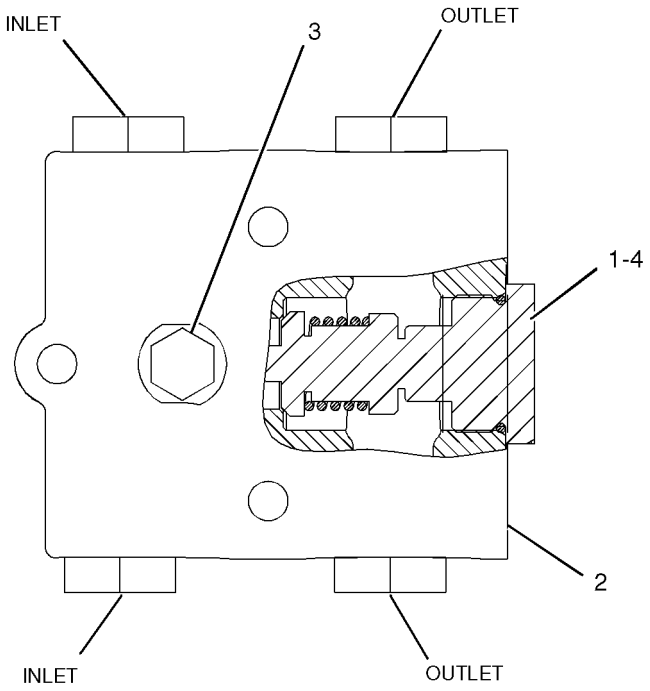

GRAPHIC #1 **<END>** g01044349

4T-5896 VALVE GP-CHECK

S/N: J8B1-UP
PART OF 213-4325 MANIFOLD GP-VALVE
ALSO AN ATTACHMENT

SMCS-5067 **i00689098**

NOTE	REF NO	GRAPHIC REF	PART NUMBER	QTY	PART NAME 1 2 3 4 5 6 (PRODUCT LEVEL)	SEE PAGE
	1	1	**5H-1472**	1	BALL	
	2	1	**9G-0278**	1	SPRING	
	3	1	**3J-1907**	1	SEAL-O-RING	
	4	1	**4T-5071**	1	RING-BACKUP	
	5	1	**8C-3085**	1	SEAL-O-RING	
	6	1	**8L-6565**	1	PIN-SPRING	

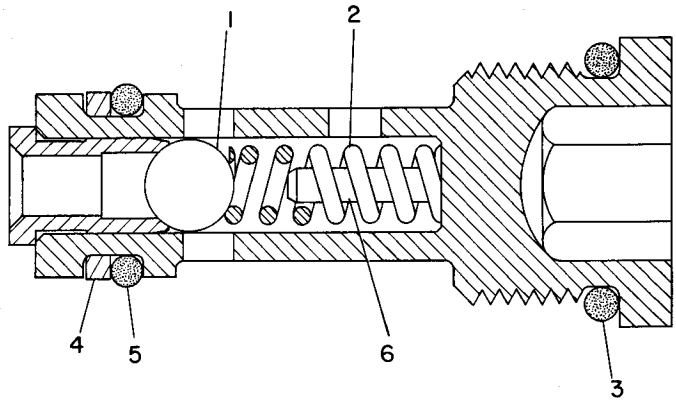

GRAPHIC #1 **<END>** g00124639

HYDRAULIC SYSTEM

128-2780 VALVE GP-CHECK–REVERSING FAN

S/N: J8B1-UP

PART OF 162-2191 VALVE GP-FAN REVERSING

AN ATTACHMENT

SMCS-5067 **i02236707**

NOTE	PART NUMBER	QTY	PART NAME 1 2 3 4 5 6 (PRODUCT LEVEL)	SEE PAGE
	128-2779	1	KIT-SEAL (CHECK VALVE) (HYDRAULIC FAN, REVERSING)	

<END>

158-9956 VALVE GP-CHECK–PILOT MANIFOLD

S/N: J8B1-UP

PART OF 212-5835, 296-1391, 301-2269 MANIFOLD GP-CONTROL

ALSO AN ATTACHMENT

SMCS-5067 **i02106248**

NOTE	REF NO	GRAPHIC REF	PART NUMBER	QTY	PART NAME 1 2 3 4 5 6 (PRODUCT LEVEL)	SEE PAGE
	1	1	**3K-0360**	1	SEAL-O-RING	
	2	1	**161-6154**	1	SEAL-O-RING	
	3	1	**6E-0381**	1	RING-BACKUP	

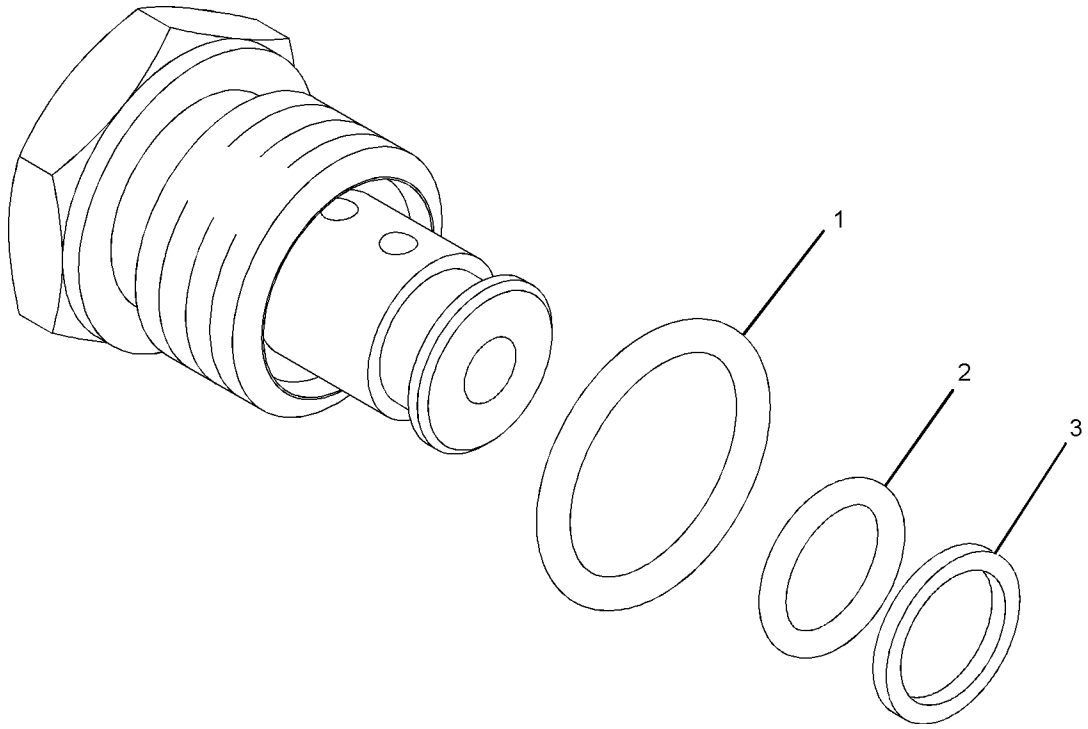

GRAPHIC #1 **<END>** g01016882

226-3800 VALVE GP-CHECK—PILOT ACCUMULATOR PRESSURE

S/N: J8B1-UP

PART OF 212-5835, 296-1391, 301-2269 MANIFOLD GP-CONTROL

ALSO AN ATTACHMENT

SMCS-5067 **i02233922**

NOTE	REF NO	GRAPHIC REF	PART NUMBER	QTY	PART NAME 1 2 3 4 5 6 (PRODUCT LEVEL)	SEE PAGE
	1	1	**3K-0360**	2	SEAL-O-RING	
	2	1	**161-6154**	1	SEAL-O-RING	
	3	1	**6E-0381**	1	RING-BACKUP	

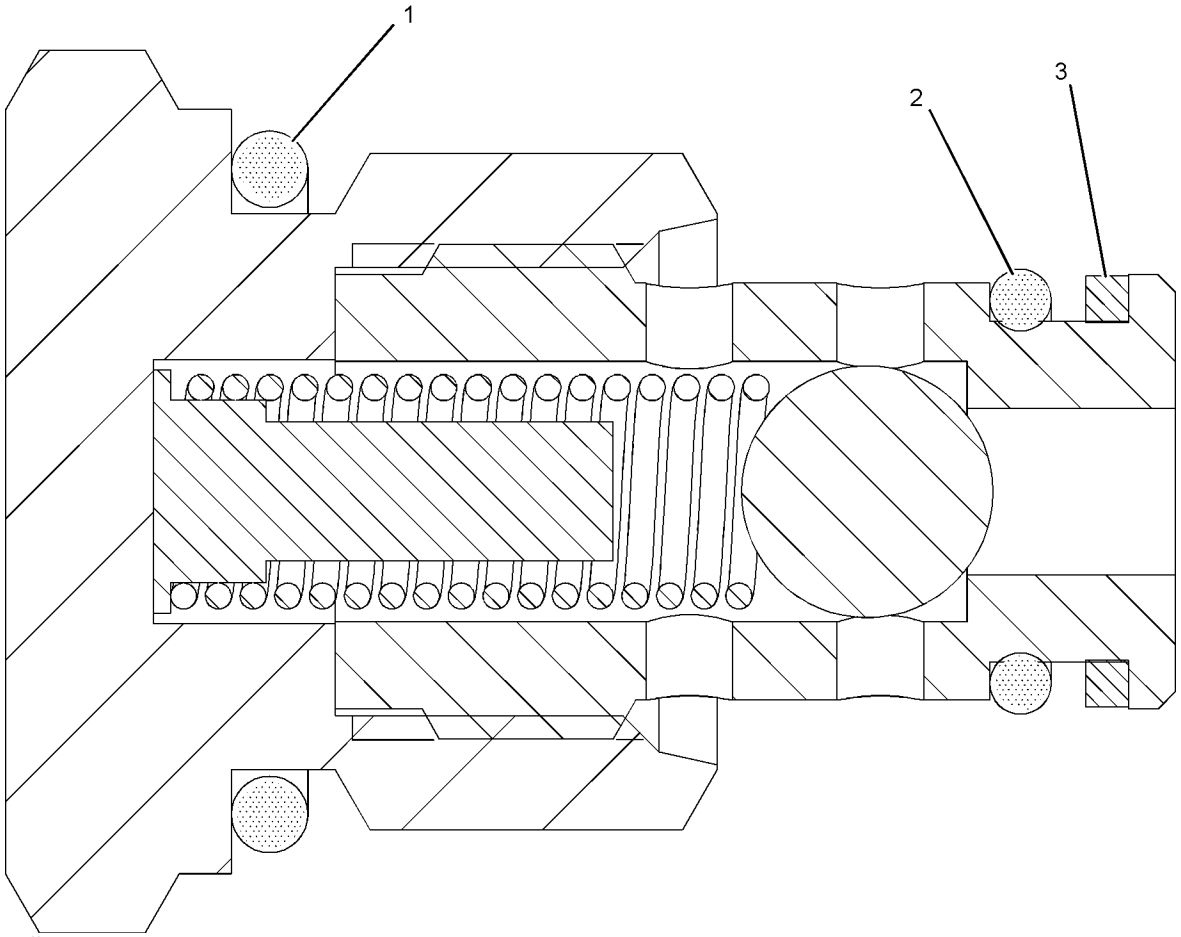

GRAPHIC #1 **<END>** g01019757

209-6379 VALVE GP-CONTROL–BULLDOZER LIFT, TILT

S/N: J8B1-UP

PART OF 238-2753 VALVE GP-BANK 3

SMCS-5051 **i02233005**

NOTE	REF NO	GRAPHIC REF	PART NUMBER	QTY	PART NAME 1 2 3 4 5 6 (PRODUCT LEVEL)	SEE PAGE
	2	1	**4T-1859**	3	ROD	
	3	1	**6V-8188**	6	NUT (1/2-13-THD)	
	4	1	**211-1751**	1	COVER	
Y	5	1	**212-6322**	1	VALVE GP-CONTROL (BULLDOZER LIFT)	869
Y	6	1	**212-6323**	1	VALVE GP-CONTROL (BULLDOZER TILT)	875
Y	8	1	**213-4325**	1	MANIFOLD GP-VALVE (BULLDOZER LIFT, TILT)	804
	9	1	*155-3624*	5	PLUG AS	
					(EACH INCLUDES)	
		1	**9S-4182**	1	PLUG-O-RING	
		1	**3J-7354**	1	SEAL-O-RING	
	10	1	*169-5862*	1	ELBOW AS	
		1	**8C-6712**	1	ELBOW	
		1	**3J-1907**	1	SEAL-O-RING	
	11	1	*183-7263*	1	PLUG AS	
		1	**9S-8002**	1	PLUG-O-RING	
		1	**3J-7354**	1	SEAL-O-RING	
	12	1	**1P-3702**	1	SEAL-RECTANGULAR	
	13	1	**1P-4578**	2	FLANGE-HALF	
	14	1	*207-7899*	1	PLUG AS	
		1	**9S-4188**	1	PLUG	
		1	**4K-1388**	1	SEAL-O-RING	
	15	1	**4J-0522**	9	SEAL-O-RING	
	16	1	**4J-8997**	2	SEAL-O-RING	
	17	1	**6V-5555**	9	SEAL-O-RING	
	18	1	**8C-3206**	8	FLANGE-HALF	
	19	1	**8T-4121**	20	WASHER-HARD (11X21X2.5-MM THK)	
M	20	1	**8T-4196**	20	BOLT (M10X1.5X35-MM)	
	21	1	**8T-4223**	6	WASHER-HARD (13.5X25.5X3-MM THK)	

M-METRIC PART
Y-SEPARATE ILLUSTRATION

209-6379 VALVE GP-CONTROL *(contd.)* i02233005

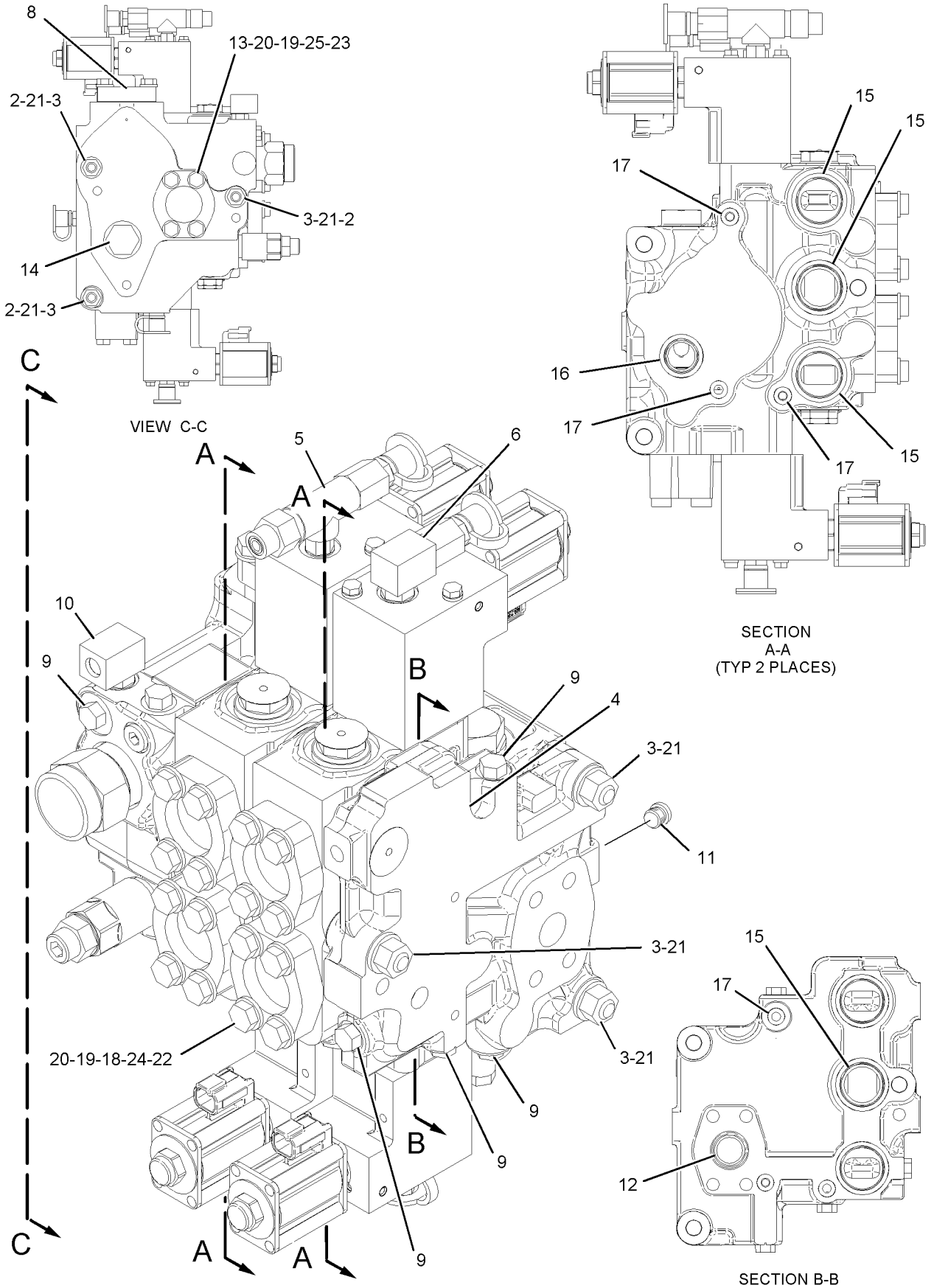

GRAPHIC #1 **<END>** g01021593

HYDRAULIC SYSTEM

212-6322 VALVE GP-CONTROL—BULLDOZER LIFT

S/N: J8B1-UP

PART OF 210-7776 VALVE GP-BANK 3, 210-7775 VALVE GP-BANK 4, 209-6379 VALVE GP-CONTROL

ALSO AN ATTACHMENT

TYPE 1

SMCS-5051 **i02233006**

NOTE	REF NO	GRAPHIC REF	PART NUMBER	QTY	PART NAME 1 2 3 4 5 6 (PRODUCT LEVEL)	SEE PAGE
	1	1	**2S-2596**	2	SPRING	
B	3	1	**4B-4278**	5	WASHER (10.2X20.5X1.6-MM THK)	
	4	1	**4T-1108**	1	PLUG	
	5	1	**4T-1649**	1	HOUSING	
	6	1	**4T-1701**	1	SPRING	
	7	1	**4T-4511**	1	SLEEVE	
	8	1	**4T-5074**	1	RING-BACKUP	
	9	1	**6V-0852**	2	CAP-DUST	
M	10	1	**8T-4145**	4	BOLT (M6X1X95-MM)	
	12	1	**100-8012**	1	BODY	
	13	1	*150-3058*	1	TEE AS	
		1	**8C-8431**	1	TEE	
		1	**3J-1907**	1	SEAL-O-RING	
	14	1	*164-5567*	2	COUPLER AS-QUICK DISCONNECT	
					(EACH INCLUDES)	
		1	**6V-3965**	1	FITTING (QUICK DISCONNECT)	
		1	**3J-1907**	1	SEAL-O-RING	
	15	1	*165-6365*	1	FITTING AS	
		1	**7W-7381**	1	FITTING-OUTLET	
		1	**3J-1907**	1	SEAL-O-RING	
	16	1	**207-7434**	2	RETAINER	
	17	1	**207-7435**	1	RETAINER	
	18	1	**207-7436**	1	RETAINER	
	19	1	**207-7437**	1	SPRING	
	20	1	**207-7438**	1	SPRING	
	24	1	*222-4737*	1	PLUG AS	
		1	**9S-4180**	1	PLUG	
		1	**4J-7533**	1	SEAL-O-RING	
	25	1	**242-7954**	1	HOUSING AS	
	26	1	**242-7955**	1	HOUSING AS	
Y	27	1	**257-0267**	2	VALVE GP-SOLENOID (BULLDOZER LIFT)	913
	28	1	**100-8010**	2	VALVE-CHECK (BULLDOZER LIFT)	
	29	1	**100-8011**	1	PLUG	
	30	1	*172-9287*	1	CONNECTOR AS	
		1	**7E-9898**	1	CONNECTOR	
		1	**3J-1907**	1	SEAL-O-RING	
		1	**6V-8397**	1	SEAL-O-RING	
	31	1	**173-3993**	2	PLUG AS	
					(EACH INCLUDES)	
		1	**9S-8001**	1	PLUG-O-RING	
		1	**4J-7533**	1	SEAL-O-RING	
	32	1	*183-7263*	1	PLUG AS	
		1	**9S-8002**	1	PLUG-O-RING	
		1	**3J-7354**	1	SEAL-O-RING	
	33	1	**187-9630**	2	SEAL-O-RING	
	34	1	**1H-1023**	4	SEAL-O-RING	
Y	35	1	**260-8590**	1	VALVE GP-SHUTTLE (BULLDOZER LIFT)	908
	36	1	**4J-5351**	1	SEAL-O-RING	
	37	1	**4K-1388**	2	SEAL-O-RING	
	38	1	**4T-5072**	1	RING-BACKUP	
	39	1	**4T-5073**	2	RING-BACKUP	
	40	1	**5M-2057**	1	SEAL-O-RING	
	41	1	**6V-5556**	1	SEAL-O-RING	

212-6322 VALVE GP-CONTROL *(contd.)* i02233006

NOTE	REF NO	GRAPHIC REF	PART NUMBER	QTY	PART NAME 1 2 3 4 5 6 (PRODUCT LEVEL)	SEE PAGE
	42	1	**7J-9933**	2	SEAL-O-RING	
	43	1	**7M-8485**	1	SEAL-O-RING	
M	44	1	**8T-4185**	2	BOLT (M10X1.5X50-MM)	
	45	1	**9J-8126**	1	PLUG-ORIFICE	
	46	1	**9X-8256**	4	WASHER (6.6X12X2-MM THK)	

B-USE AS REQUIRED
M-METRIC PART
Y-SEPARATE ILLUSTRATION

212-6322 VALVE GP-CONTROL *(contd.)* **i02233006**

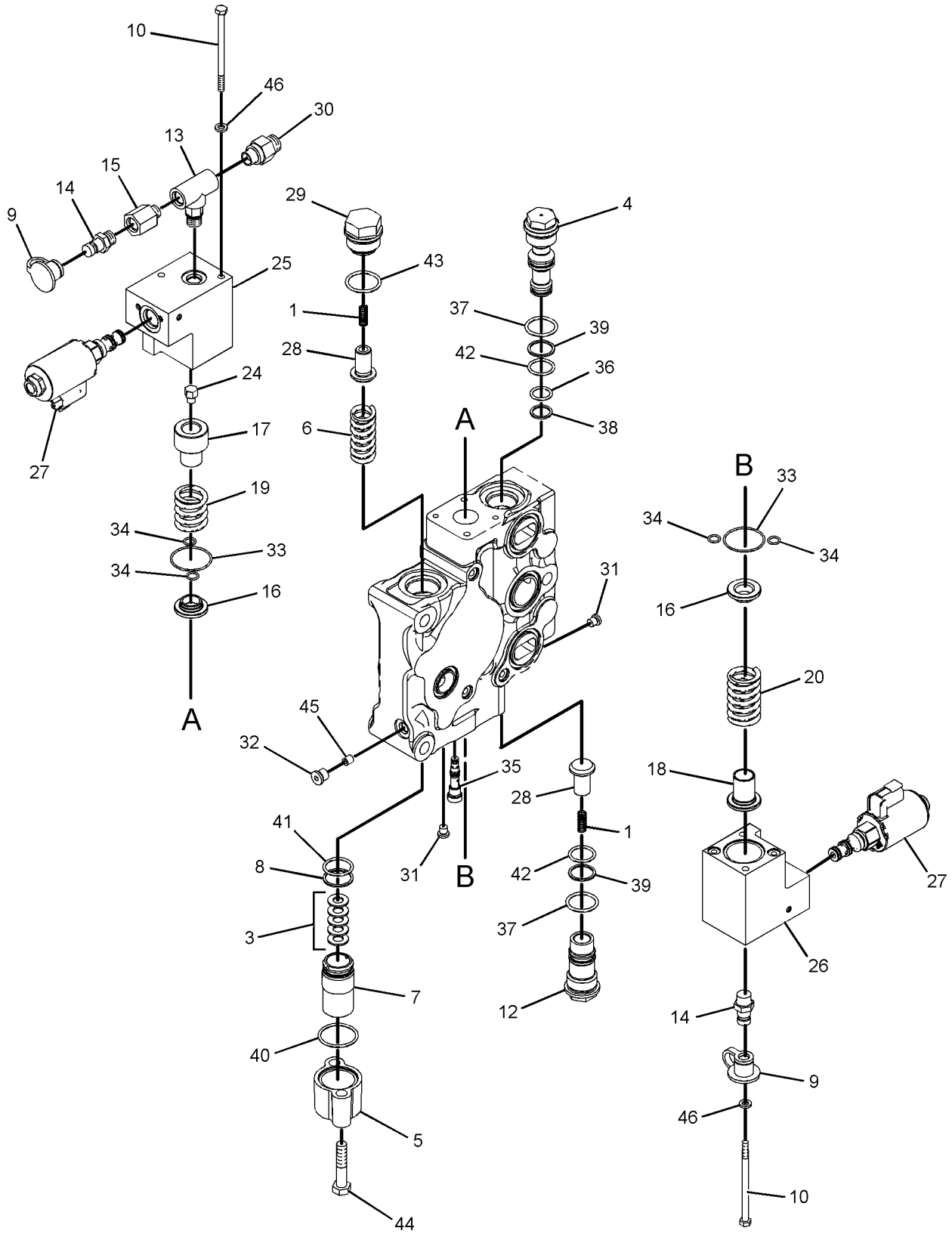

GRAPHIC #1 **<END>** g01112124

HYDRAULIC SYSTEM

212-6322 VALVE GP-CONTROL—BULLDOZER LIFT

S/N: J8B1-UP

PART OF 210-7776 VALVE GP-BANK 3, 210-7775 VALVE GP-BANK 4, 209-6379 VALVE GP-CONTROL

ALSO AN ATTACHMENT

TYPE 2

SMCS-5051 **i02631995**

NOTE	REF NO	GRAPHIC REF	PART NUMBER	QTY	PART NAME 1 2 3 4 5 6 (PRODUCT LEVEL)	SEE PAGE
	1	1	**2S-2596**	2	SPRING	
B	3	1	**4B-4278**	5	WASHER (10.2X20.5X1.6-MM THK)	
	4	1	**4T-1108**	1	PLUG	
	5	1	**4T-1649**	1	HOUSING	
	6	1	**4T-1701**	1	SPRING	
	7	1	**4T-4511**	1	SLEEVE	
	8	1	**4T-5074**	1	RING-BACKUP	
	9	1	**6V-0852**	2	CAP-DUST	
M	10	1	**8T-4145**	4	BOLT (M6X1X95-MM)	
	12	1	**100-8012**	1	BODY	
	13	1	*150-3058*	1	TEE AS	
		1	**8C-8431**	1	TEE	
		1	**3J-1907**	1	SEAL-O-RING	
	14	1	*164-5567*	2	COUPLER AS-QUICK DISCONNECT (EACH INCLUDES)	
		1	**6V-3965**	1	FITTING (QUICK DISCONNECT)	
		1	**3J-1907**	1	SEAL-O-RING	
	15	1	*165-6365*	1	FITTING AS	
		1	**7W-7381**	1	FITTING-OUTLET	
		1	**3J-1907**	1	SEAL-O-RING	
	16	1	**207-7434**	2	RETAINER	
	17	1	**207-7435**	1	RETAINER	
	18	1	**207-7436**	1	RETAINER	
	19	1	**207-7437**	1	SPRING	
	20	1	**207-7438**	1	SPRING	
	24	1	*222-4737*	1	PLUG AS	
		1	**9S-4180**	1	PLUG	
		1	**4J-7533**	1	SEAL-O-RING	
	25	1	**242-7954**	1	HOUSING AS	
	26	1	**242-7955**	1	HOUSING AS	
CY	27	1	**285-5730**	2	VALVE GP-SOLENOID (PILOT PROPORTIONING)	914
	28	1	**100-8010**	2	VALVE-CHECK	
	29	1	**100-8011**	1	PLUG	
	30	1	*172-9287*	1	CONNECTOR AS	
		1	**7E-9898**	1	CONNECTOR	
		1	**3J-1907**	1	SEAL-O-RING	
		1	**6V-8397**	1	SEAL-O-RING	
	31	1	*173-3993*	2	PLUG AS (EACH INCLUDES)	
		1	**9S-8001**	1	PLUG-O-RING	
		1	**4J-7533**	1	SEAL-O-RING	
	32	1	*183-7263*	1	PLUG AS	
		1	**9S-8002**	1	PLUG-O-RING	
		1	**3J-7354**	1	SEAL-O-RING	
	33	1	**187-9630**	2	SEAL-O-RING	
	34	1	**1H-1023**	4	SEAL-O-RING	
Y	35	1	**260-8590**	1	VALVE GP-SHUTTLE (BULLDOZER LIFT)	908
	36	1	**4J-5351**	1	SEAL-O-RING	
	37	1	**4K-1388**	2	SEAL-O-RING	
	38	1	**4T-5072**	1	RING-BACKUP	
	39	1	**4T-5073**	2	RING-BACKUP	
	40	1	**5M-2057**	1	SEAL-O-RING	
	41	1	**6V-5556**	1	SEAL-O-RING	

212-6322 VALVE GP-CONTROL *(contd.)* i02631995

NOTE	REF NO	GRAPHIC REF	PART NUMBER	QTY	PART NAME 1 2 3 4 5 6 (PRODUCT LEVEL)	SEE PAGE
	42	1	**7J-9933**	2	SEAL-O-RING	
	43	1	**7M-8485**	1	SEAL-O-RING	
M	44	1	**8T-4185**	2	BOLT (M10X1.5X50-MM)	
	45	1	**9J-8126**	1	PLUG-ORIFICE	
	46	1	**9X-8256**	4	WASHER (6.6X12X2-MM THK)	

B-USE AS REQUIRED
C-CHANGE FROM PREVIOUS TYPE
M-METRIC PART
Y-SEPARATE ILLUSTRATION

212-6322 VALVE GP-CONTROL *(contd.)* i02631995

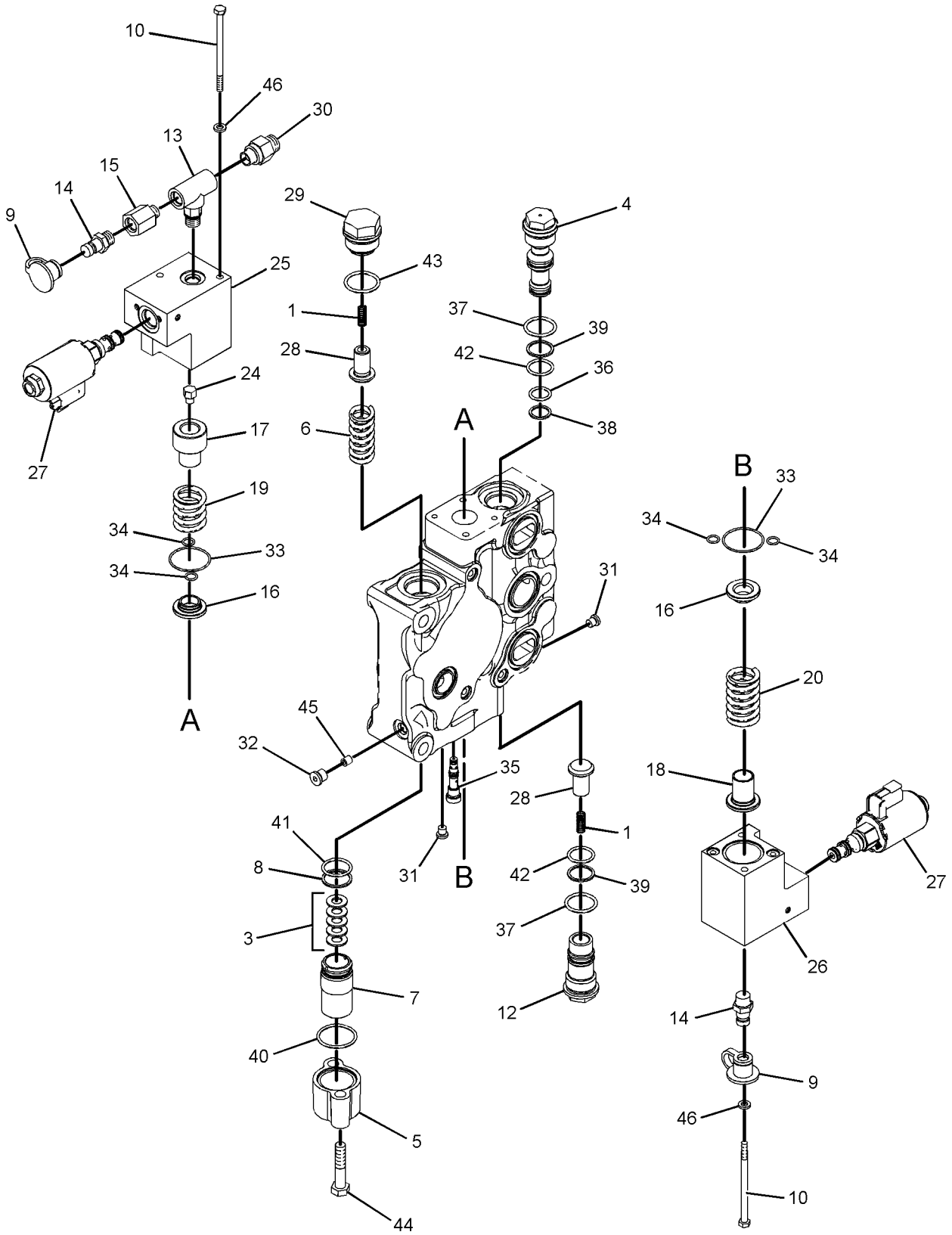

GRAPHIC #1 **<END>** g01112124

HYDRAULIC SYSTEM

212-6323 VALVE GP-CONTROL—BULLDOZER TILT

S/N: J8B1-UP

PART OF 210-7776 VALVE GP-BANK 3, 210-7775 VALVE GP-BANK 4, 209-6379 VALVE GP-CONTROL

ALSO AN ATTACHMENT

TYPE 1

SMCS-5051 **i02233010**

NOTE	REF NO	GRAPHIC REF	PART NUMBER	QTY	PART NAME 1 2 3 4 5 6 (PRODUCT LEVEL)	SEE PAGE
	1	1	**2S-2596**	1	SPRING	
B	3	1	**4B-4278**	5	WASHER (10.2X20.5X1.6-MM THK)	
	4	1	**4T-1108**	2	PLUG	
	5	1	**4T-1649**	1	HOUSING	
	6	1	**4T-1701**	1	SPRING	
	7	1	**4T-4511**	1	SLEEVE	
	8	1	**4T-5074**	1	RING-BACKUP	
	9	1	**6V-0852**	2	CAP-DUST	
M	10	1	**8T-4145**	4	BOLT (M6X1X95-MM)	
	12	1	*164-5567*	2	COUPLER AS-QUICK DISCONNECT	
					(EACH INCLUDES)	
		1	**3J-1907**	1	SEAL-O-RING	
		1	**6V-3965**	1	FITTING (QUICK DISCONNECT)	
	13	1	*165-6365*	1	FITTING AS	
		1	**3J-1907**	1	SEAL-O-RING	
		1	**7W-7381**	1	FITTING-OUTLET	
	14	1	**207-7434**	2	RETAINER	
	15	1	**207-7435**	2	RETAINER	
	16	1	**207-7437**	2	SPRING	
	21	1	**242-7954**	1	HOUSING AS	
	22	1	**242-7955**	1	HOUSING AS	
Y	23	1	**257-0267**	2	VALVE GP-SOLENOID (BULLDOZER TILT)	913
	24	1	**100-8010**	1	VALVE-CHECK (BULLDOZER TILT)	
	25	1	**100-8011**	1	PLUG	
	26	1	*150-3065*	1	ADAPTER AS	
		1	**3J-1907**	1	SEAL-O-RING	
		1	**6V-0484**	1	ADAPTER-O-RING	
	27	1	**173-3993**	2	PLUG AS	
					(EACH INCLUDES)	
		1	**4J-7533**	1	SEAL-O-RING	
		1	**9S-8001**	1	PLUG-O-RING	
	29	1	**187-9630**	2	SEAL-O-RING	
	30	1	**1H-1023**	4	SEAL-O-RING	
Y	31	1	**260-8590**	1	VALVE GP-SHUTTLE (BULLDOZER TILT)	908
	32	1	**4J-5351**	2	SEAL-O-RING	
	33	1	**4K-1388**	2	SEAL-O-RING	
	34	1	**4T-5072**	2	RING-BACKUP	
	35	1	**4T-5073**	2	RING-BACKUP	
	36	1	**5M-2057**	1	SEAL-O-RING	
	37	1	**6V-5556**	1	SEAL-O-RING	
	38	1	**7J-9933**	2	SEAL-O-RING	
	39	1	**7M-8485**	1	SEAL-O-RING	
M	40	1	**8T-4185**	2	BOLT (M10X1.5X50-MM)	
	41	1	**9J-8126**	1	PLUG-ORIFICE	
	42	1	**9X-8256**	4	WASHER (6.6X12X2-MM THK)	

B-USE AS REQUIRED
M-METRIC PART
Y-SEPARATE ILLUSTRATION

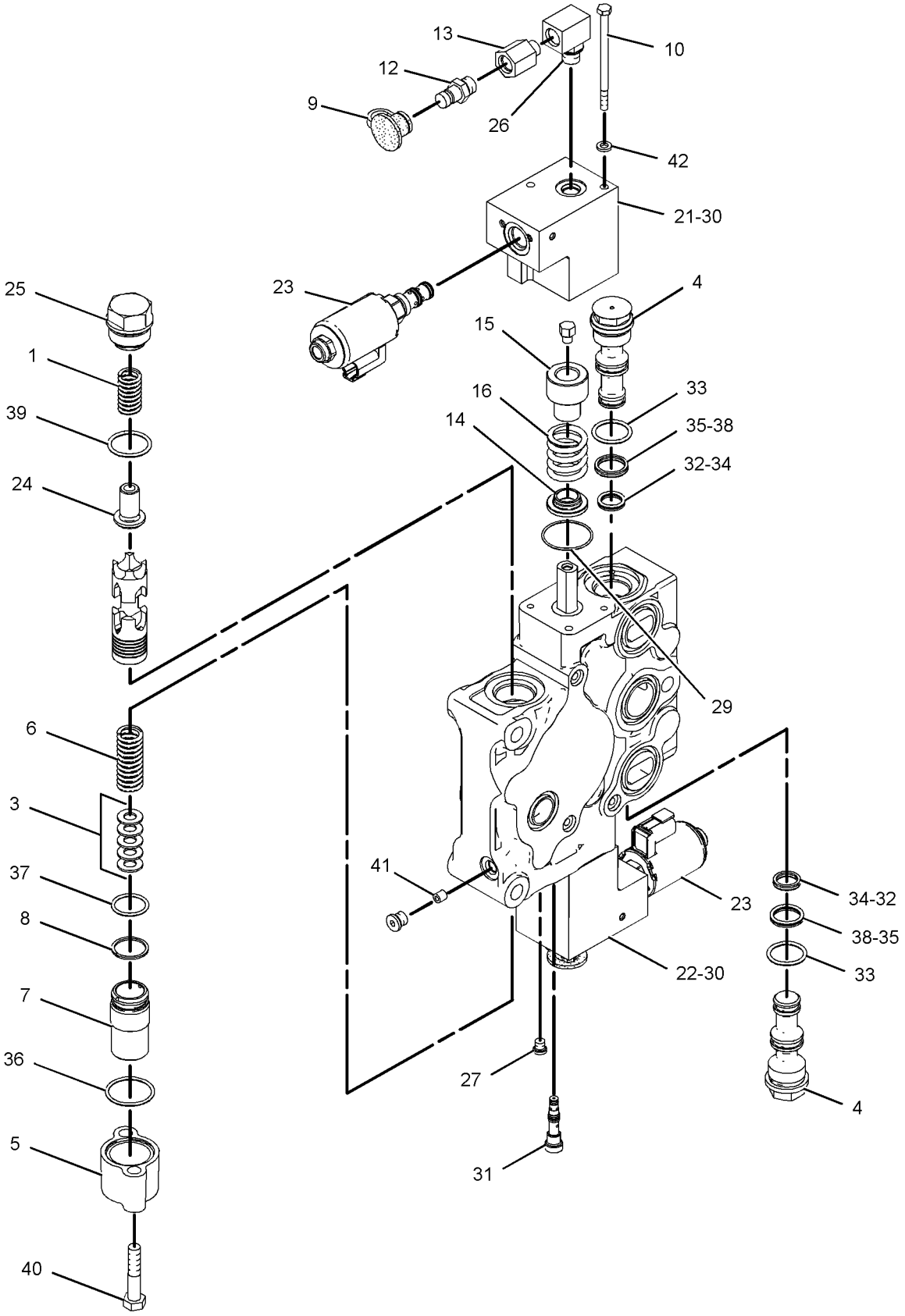

GRAPHIC #1 **<END>** g01110551

HYDRAULIC SYSTEM

212-6323 VALVE GP-CONTROL—BULLDOZER TILT

S/N: J8B1-UP
PART OF 210-7776 VALVE GP-BANK 3, 210-7775 VALVE GP-BANK 4, 209-6379 VALVE GP-CONTROL
ALSO AN ATTACHMENT
TYPE 2

SMCS-5051 **i02632022**

NOTE	REF NO	GRAPHIC REF	PART NUMBER	QTY	PART NAME 1 2 3 4 5 6 (PRODUCT LEVEL)	SEE PAGE
	1	1	**2S-2596**	1	SPRING	
B	3	1	**4B-4278**	5	WASHER (10.2X20.5X1.6-MM THK)	
	4	1	**4T-1108**	2	PLUG	
	5	1	**4T-1649**	1	HOUSING	
	6	1	**4T-1701**	1	SPRING	
	7	1	**4T-4511**	1	SLEEVE	
	8	1	**4T-5074**	1	RING-BACKUP	
	9	1	**6V-0852**	2	CAP-DUST	
M	10	1	**8T-4145**	4	BOLT (M6X1X95-MM)	
	12	1	*164-5567*	2	COUPLER AS-QUICK DISCONNECT	
					(EACH INCLUDES)	
		1	**6V-3965**	1	FITTING (QUICK DISCONNECT)	
		1	**3J-1907**	1	SEAL-O-RING	
	13	1	*165-6365*	1	FITTING AS	
		1	**7W-7381**	1	FITTING-OUTLET	
		1	**3J-1907**	1	SEAL-O-RING	
	14	1	**207-7434**	2	RETAINER	
	15	1	**207-7435**	2	RETAINER	
	16	1	**207-7437**	2	SPRING	
	20	1	*222-4737*	1	PLUG AS	
		1	**9S-4180**	1	PLUG	
		1	**4J-7533**	1	SEAL-O-RING	
	21	1	**242-7954**	1	HOUSING AS	
	22	1	**242-7955**	1	HOUSING AS	
CY	23	1	**285-5730**	2	VALVE GP-SOLENOID (PILOT PROPORTIONING)	914
	24	1	**100-8010**	1	VALVE-CHECK	
	25	1	**100-8011**	1	PLUG	
	26	1	*150-3065*	1	ADAPTER AS	
		1	**6V-0484**	1	ADAPTER-O-RING	
		1	**3J-1907**	1	SEAL-O-RING	
	27	1	*173-3993*	2	PLUG AS	
					(EACH INCLUDES)	
		1	**9S-8001**	1	PLUG-O-RING	
		1	**4J-7533**	1	SEAL-O-RING	
	28	1	*183-7263*	1	PLUG AS	
		1	**9S-8002**	1	PLUG-O-RING	
		1	**3J-7354**	1	SEAL-O-RING	
	29	1	**187-9630**	2	SEAL-O-RING	
	30	1	**1H-1023**	4	SEAL-O-RING	
Y	31	1	**260-8590**	1	VALVE GP-SHUTTLE	908
	32	1	**4J-5351**	2	SEAL-O-RING	
	33	1	**4K-1388**	2	SEAL-O-RING	
	34	1	**4T-5072**	2	RING-BACKUP	
	35	1	**4T-5073**	2	RING-BACKUP	
	36	1	**5M-2057**	1	SEAL-O-RING	
	37	1	**6V-5556**	1	SEAL-O-RING	
	38	1	**7J-9933**	2	SEAL-O-RING	
	39	1	**7M-8485**	1	SEAL-O-RING	
M	40	1	**8T-4185**	2	BOLT (M10X1.5X50-MM)	
	41	1	**9J-8126**	1	PLUG-ORIFICE	
	42	1	**9X-8256**	4	WASHER (6.6X12X2-MM THK)	

B-USE AS REQUIRED
C-CHANGE FROM PREVIOUS TYPE
M-METRIC PART
Y-SEPARATE ILLUSTRATION

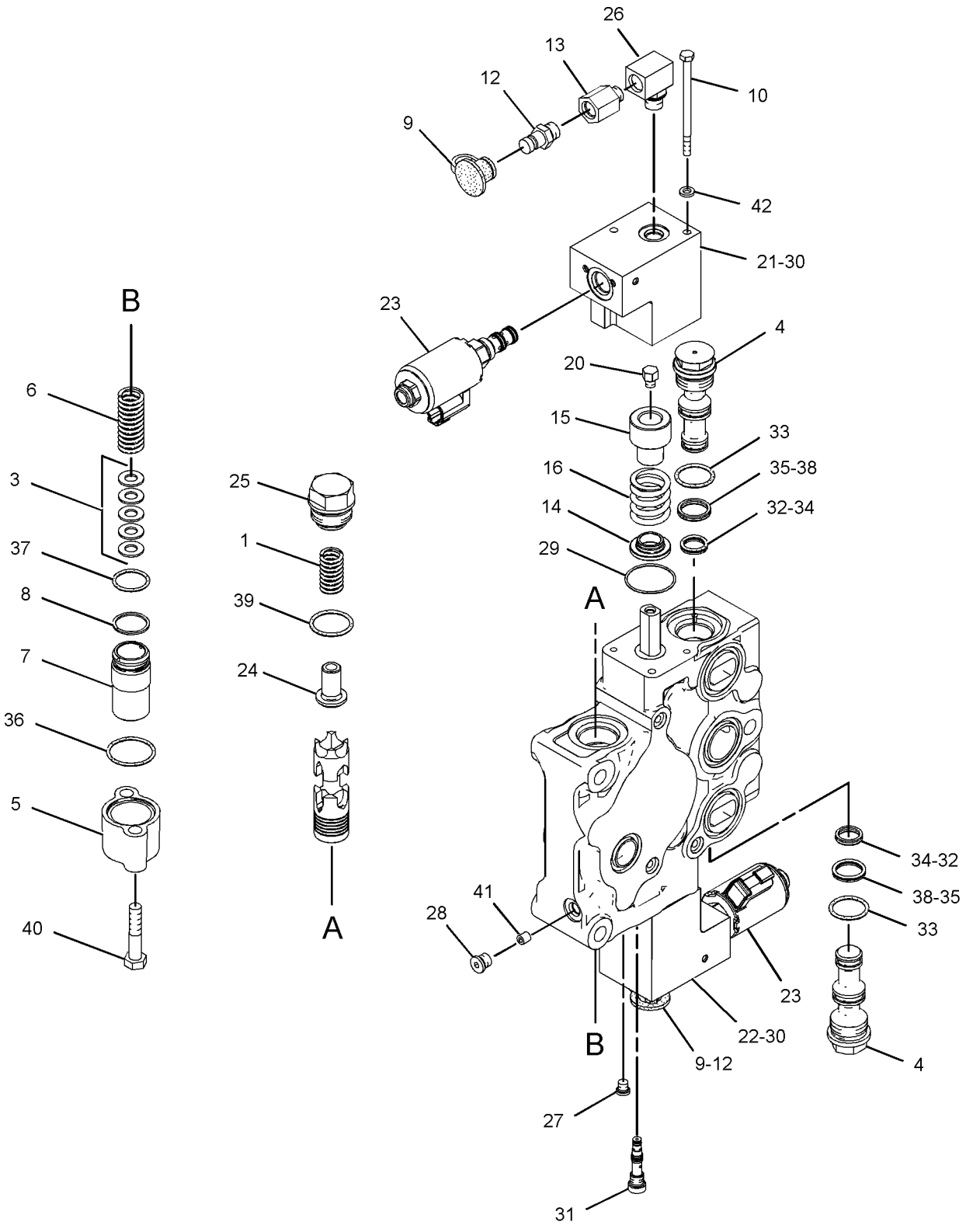

GRAPHIC #1 **<END>** g01352781

HYDRAULIC SYSTEM

212-6324 VALVE GP-CONTROL—RIPPER LIFT, TILT

S/N: J8B1-UP
PART OF 210-7775 VALVE GP-BANK 4
AN ATTACHMENT
TYPE 1

SMCS-5051 **i03434245**

NOTE	REF NO	GRAPHIC REF	PART NUMBER	QTY	PART NAME 1 2 3 4 5 6 (PRODUCT LEVEL)	SEE PAGE
	1	1	**2S-2596**	2	SPRING	
B	3	1	**4B-4278**	5	WASHER (10.2X20.5X1.6-MM THK)	
	4	1	**4T-1108**	1	PLUG	
	5	1	**4T-1649**	1	HOUSING	
	6	1	**4T-1701**	1	SPRING	
	7	1	**4T-4511**	1	SLEEVE	
	8	1	**4T-5074**	1	RING-BACKUP	
	9	1	**6V-0852**	2	CAP-DUST	
M	10	1	**8T-4145**	4	BOLT (M6X1X95-MM)	
	12	1	**100-8012**	1	BODY	
	13	1	*164-5567*	2	COUPLER AS-QUICK DISCONNECT	
					(EACH INCLUDES)	
		1	**6V-3965**	1	FITTING (QUICK DISCONNECT)	
		1	**3J-1907**	1	SEAL-O-RING	
	14	1	*165-6365*	1	FITTING AS	
		1	**7W-7381**	1	FITTING-OUTLET	
		1	**3J-1907**	1	SEAL-O-RING	
	15	1	**207-7434**	2	RETAINER	
	16	1	**207-7435**	2	RETAINER	
	17	1	**207-7437**	2	SPRING	
	21	1	*222-4737*	1	PLUG AS	
		1	**9S-4180**	1	PLUG	
		1	**4J-7533**	1	SEAL-O-RING	
	22	1	**242-7954**	1	HOUSING AS	
	23	1	**242-7955**	1	HOUSING AS	
Y	24	1	**257-0267**	2	VALVE GP-SOLENOID (PILOT PROPORTIONING)	913
	25	1	**100-8010**	2	VALVE-CHECK	
	26	1	**100-8011**	1	PLUG	
	27	1	*150-3065*	1	ADAPTER AS	
		1	**3J-1907**	1	SEAL-O-RING	
		1	**6V-0484**	1	ADAPTER-O-RING	
	28	1	*173-3993*	2	PLUG AS	
					(EACH INCLUDES)	
		1	**9S-8001**	1	PLUG-O-RING	
		1	**4J-7533**	1	SEAL-O-RING	
	29	1	*183-7263*	1	PLUG AS	
		1	**9S-8002**	1	PLUG-O-RING	
		1	**3J-7354**	1	SEAL-O-RING	
	30	1	**187-9630**	2	SEAL-O-RING	
	31	1	**1H-1023**	4	SEAL-O-RING	
Y	32	1	**260-8590**	1	VALVE GP-SHUTTLE	908
	33	1	**4J-5351**	1	SEAL-O-RING	
	34	1	**4K-1388**	2	SEAL-O-RING	
	35	1	**4T-5072**	1	RING-BACKUP	
	36	1	**4T-5073**	2	RING-BACKUP	
	37	1	**5M-2057**	1	SEAL-O-RING	
	38	1	**6V-5556**	1	SEAL-O-RING	
	39	1	**7J-9933**	2	SEAL-O-RING	
	40	1	**7M-8485**	1	SEAL-O-RING	
M	41	1	**8T-4185**	2	BOLT (M10X1.5X50-MM)	
	42	1	**9J-8126**	1	PLUG-ORIFICE	
	43	1	**9X-8256**	4	WASHER (6.6X12X2-MM THK)	

212-6324 VALVE GP-CONTROL *(contd.)* i03434245

B-USE AS REQUIRED
M-METRIC PART
Y-SEPARATE ILLUSTRATION

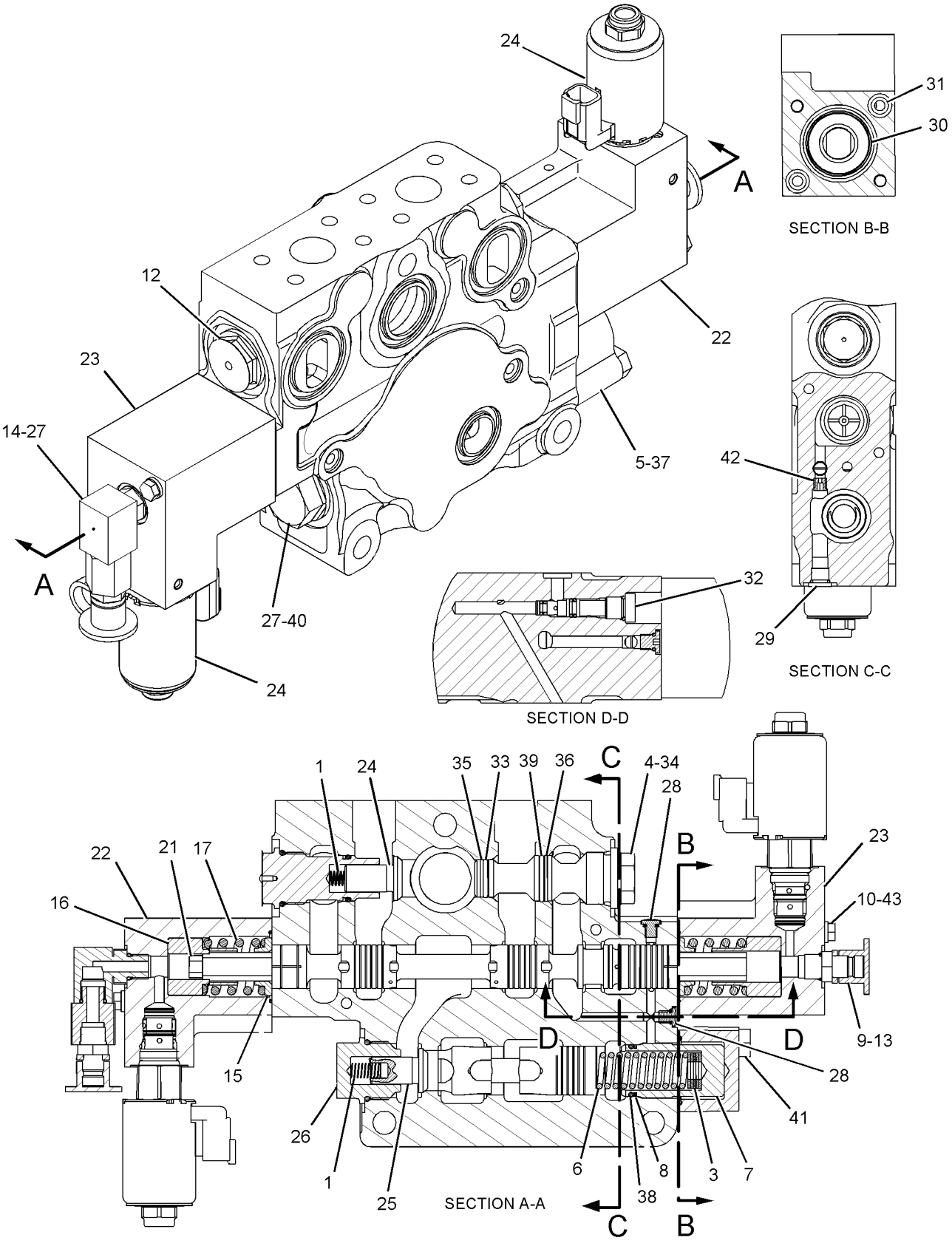

GRAPHIC #1 **<END>** g01110113

HYDRAULIC SYSTEM

212-6324 VALVE GP-CONTROL—RIPPER LIFT, TILT

S/N: J8B1-UP
PART OF 210-7775 VALVE GP-BANK 4
AN ATTACHMENT
TYPE 2

SMCS-5051 **i03434246**

NOTE	REF NO	GRAPHIC REF	PART NUMBER	QTY	PART NAME 1 2 3 4 5 6 (PRODUCT LEVEL)	SEE PAGE
	1	1	**2S-2596**	2	SPRING	
B	3	1	**4B-4278**	5	WASHER (10.2X20.5X1.6-MM THK)	
	4	1	**4T-1108**	1	PLUG	
	5	1	**4T-1649**	1	HOUSING	
	6	1	**4T-1701**	1	SPRING	
	7	1	**4T-4511**	1	SLEEVE	
	8	1	**4T-5074**	1	RING-BACKUP	
	9	1	**6V-0852**	2	CAP-DUST	
M	10	1	**8T-4145**	4	BOLT (M6X1X95-MM)	
	12	1	**100-8012**	1	BODY	
	13	1	*164-5567*	2	COUPLER AS-QUICK DISCONNECT	
					(EACH INCLUDES)	
		1	**6V-3965**	1	FITTING (QUICK DISCONNECT)	
		1	**3J-1907**	1	SEAL-O-RING	
	14	1	*165-6365*	1	FITTING AS	
		1	**7W-7381**	1	FITTING-OUTLET	
		1	**3J-1907**	1	SEAL-O-RING	
	15	1	**207-7434**	2	RETAINER	
	16	1	**207-7435**	2	RETAINER	
	17	1	**207-7437**	2	SPRING	
	21	1	*222-4737*	1	PLUG AS	
		1	**9S-4180**	1	PLUG	
		1	**4J-7533**	1	SEAL-O-RING	
	22	1	**242-7954**	1	HOUSING AS	
	23	1	**242-7955**	1	HOUSING AS	
CY	24	1	**285-5730**	2	VALVE GP-SOLENOID (PILOT PROPORTIONING)	914
	25	1	**100-8010**	2	VALVE-CHECK	
	26	1	**100-8011**	1	PLUG	
	27	1	*150-3065*	1	ADAPTER AS	
		1	**6V-0484**	1	ADAPTER-O-RING	
		1	**3J-1907**	1	SEAL-O-RING	
	28	1	*173-3993*	2	PLUG AS	
					(EACH INCLUDES)	
		1	**9S-8001**	1	PLUG-O-RING	
		1	**4J-7533**	1	SEAL-O-RING	
	29	1	*183-7263*	1	PLUG AS	
		1	**9S-8002**	1	PLUG-O-RING	
		1	**3J-7354**	1	SEAL-O-RING	
	30	1	**187-9630**	2	SEAL-O-RING	
	31	1	**1H-1023**	4	SEAL-O-RING	
Y	32	1	**260-8590**	1	VALVE GP-SHUTTLE	908
	33	1	**4J-5351**	1	SEAL-O-RING	
	34	1	**4K-1388**	2	SEAL-O-RING	
	35	1	**4T-5072**	1	RING-BACKUP	
	36	1	**4T-5073**	2	RING-BACKUP	
	37	1	**5M-2057**	1	SEAL-O-RING	
	38	1	**6V-5556**	1	SEAL-O-RING	
	39	1	**7J-9933**	2	SEAL-O-RING	
	40	1	**7M-8485**	1	SEAL-O-RING	
M	41	1	**8T-4185**	2	BOLT (M10X1.5X50-MM)	
	42	1	**9J-8126**	1	PLUG-ORIFICE	
	43	1	**9X-8256**	4	WASHER (6.6X12X2-MM THK)	

B-USE AS REQUIRED
C-CHANGE FROM PREVIOUS TYPE
M-METRIC PART
Y-SEPARATE ILLUSTRATION

212-6324 VALVE GP-CONTROL *(contd.)* **i03434246**

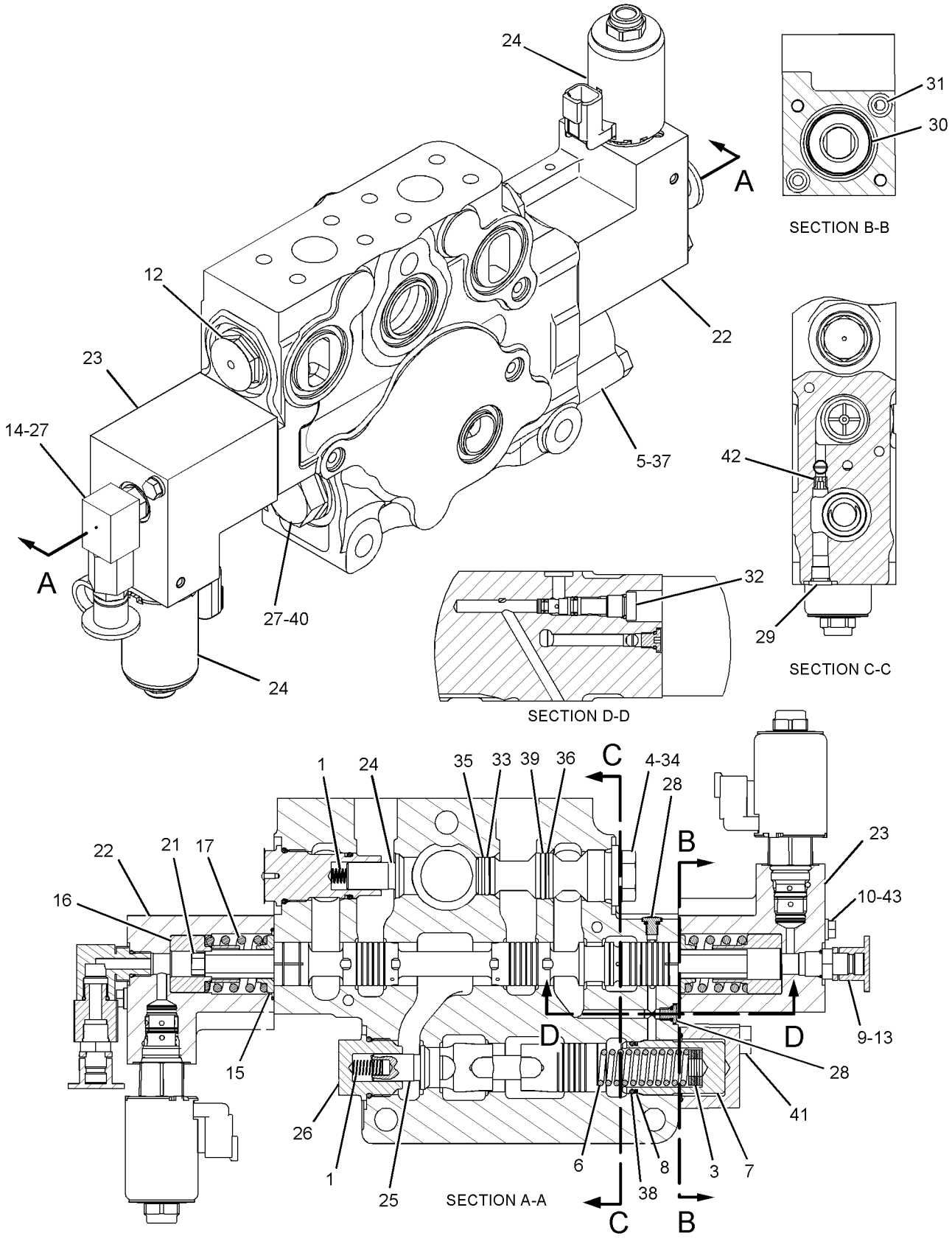

GRAPHIC #1 **<END>** g01110113

HYDRAULIC SYSTEM

213-4326 VALVE GP-CONTROL—WINCH

S/N: J8B1-UP
PART OF 210-7776 VALVE GP-BANK 3
AN ATTACHMENT
TYPE 1

SMCS-5051 **i02273160**

NOTE	REF NO	GRAPHIC REF	PART NUMBER	QTY	PART NAME 1 2 3 4 5 6 (PRODUCT LEVEL)	SEE PAGE
	1	1	**2S-2596**	1	SPRING	
	2	1	*3J-3679*	1	PLUG AS	
		1	**9S-8003**	1	PLUG	
		1	**1J-9671**	1	SEAL-O-RING	
B	4	1	**4B-4278**	5	WASHER (10.2X20.5X1.6-MM THK)	
	5	1	**4T-1108**	2	PLUG	
	6	1	**4T-1649**	1	HOUSING	
	7	1	**4T-1701**	1	SPRING	
	8	1	**4T-4511**	1	SLEEVE	
	9	1	**4T-5072**	2	RING-BACKUP	
	10	1	**4T-5074**	1	RING-BACKUP	
	11	1	**6V-0852**	2	CAP-DUST	
	12	1	**7N-4333**	1	PLUG-ORIFICE	
	13	1	**7Y-4224**	1	ORIFICE	
M	14	1	**8T-4145**	4	BOLT (M6X1X95-MM)	
	16	1	*164-5567*	2	COUPLER AS-QUICK DISCONNECT	
					(EACH INCLUDES)	
		1	**3J-1907**	1	SEAL-O-RING	
		1	**6V-3965**	1	FITTING (QUICK DISCONNECT)	
	17	1	*165-6365*	1	FITTING AS	
		1	**3J-1907**	1	SEAL-O-RING	
		1	**7W-7381**	1	FITTING-OUTLET	
	18	1	**207-7434**	2	RETAINER	
	19	1	**207-7435**	2	RETAINER	
	20	1	**207-7437**	2	SPRING	
	23	1	*222-4737*	1	PLUG AS	
		1	**9S-4180**	1	PLUG	
		1	**4J-7533**	1	SEAL-O-RING	
	25	1	**242-7954**	1	HOUSING AS	
	26	1	**242-7955**	1	HOUSING AS	
Y	27	1	**257-0267**	2	VALVE GP-SOLENOID (WINCH CONTROL)	913
	28	1	**100-8010**	1	VALVE-CHECK	
	29	1	**100-8011**	1	PLUG	
	30	1	*150-3065*	1	ADAPTER AS	
		1	**6V-0484**	1	ADAPTER-O-RING	
		1	**3J-1907**	1	SEAL-O-RING	
	31	1	**173-3993**	2	PLUG AS	
					(EACH INCLUDES)	
		1	**9S-8001**	1	PLUG-O-RING	
		1	**4J-7533**	1	SEAL-O-RING	
	32	1	**187-9630**	2	SEAL-O-RING	
	33	1	**1H-1023**	4	SEAL-O-RING	
Y	34	1	**260-8590**	1	VALVE GP-SHUTTLE (WINCH CONTROL)	908
	35	1	**4J-5351**	2	SEAL-O-RING	
	36	1	**4K-1388**	2	SEAL-O-RING	
	37	1	**4T-5073**	2	RING-BACKUP	
	38	1	**5M-2057**	1	SEAL-O-RING	
	39	1	**6V-5556**	1	SEAL-O-RING	
	40	1	**7J-9933**	2	SEAL-O-RING	
	41	1	**7M-8485**	1	SEAL-O-RING	
M	42	1	**8T-4185**	2	BOLT (M10X1.5X50-MM)	
	43	1	**9X-8256**	4	WASHER (6.6X12X2-MM THK)	

B-USE AS REQUIRED
M-METRIC PART
Y-SEPARATE ILLUSTRATION

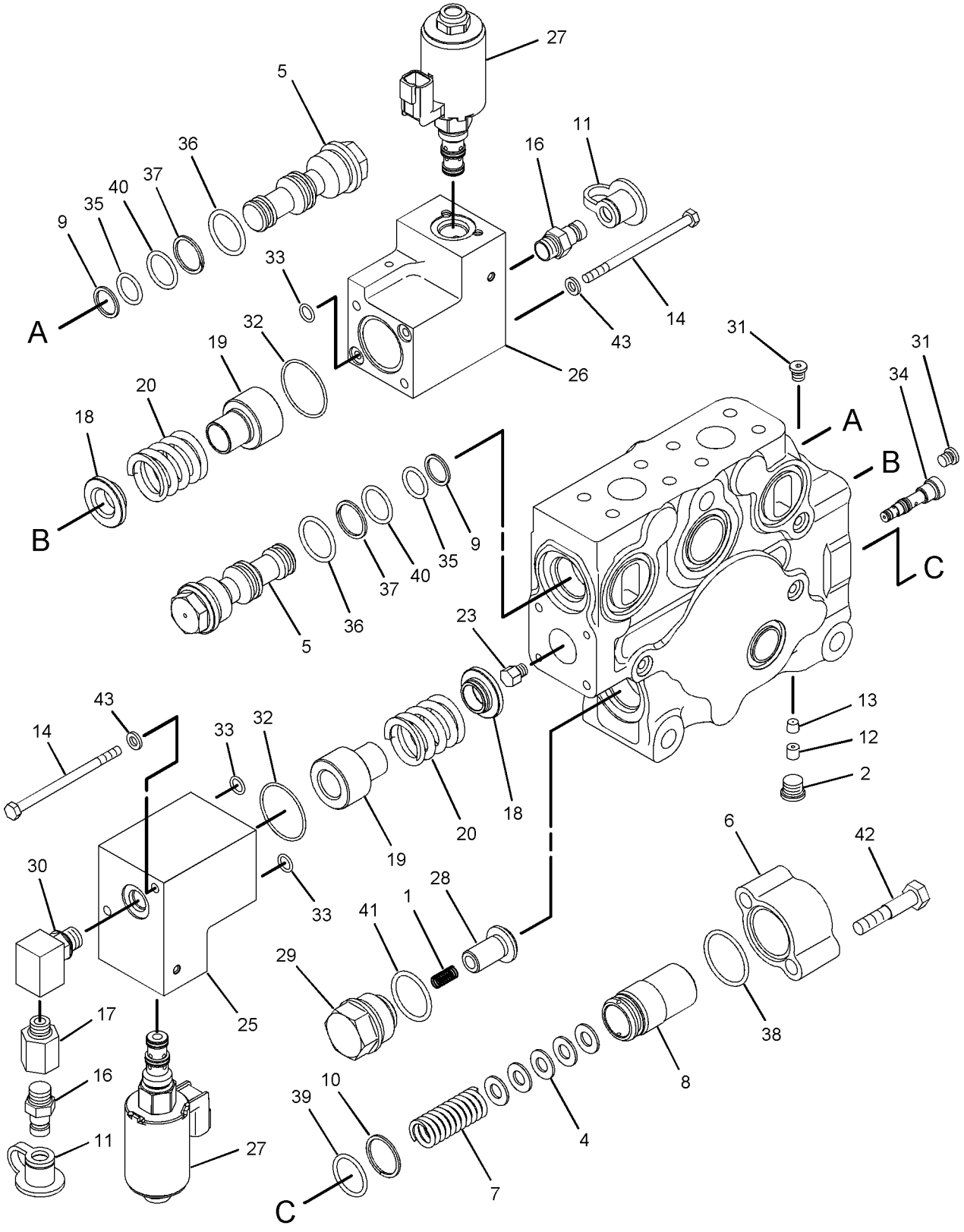

GRAPHIC #1 **<END>** g01131233

HYDRAULIC SYSTEM

213-4326 VALVE GP-CONTROL—WINCH

S/N: J8B1-UP
PART OF 210-7776 VALVE GP-BANK 3
AN ATTACHMENT
TYPE 2

SMCS-5051 **i03208042**

NOTE	REF NO	GRAPHIC REF	PART NUMBER	QTY	PART NAME 1 2 3 4 5 6 (PRODUCT LEVEL)	SEE PAGE
	1	1	**2S-2596**	1	SPRING	
	2	1	*3J-3679*	1	PLUG AS	
		1	**9S-8003**	1	PLUG	
		1	**1J-9671**	1	SEAL-O-RING	
B	4	1	**4B-4278**	5	WASHER (10.2X20.5X1.6-MM THK)	
	5	1	**4T-1108**	2	PLUG	
	6	1	**4T-1649**	1	HOUSING	
	7	1	**4T-1701**	1	SPRING	
	8	1	**4T-4511**	1	SLEEVE	
	9	1	**4T-5072**	2	RING-BACKUP	
	10	1	**4T-5074**	1	RING-BACKUP	
	11	1	**6V-0852**	2	CAP-DUST	
	12	1	**7N-4333**	1	PLUG-ORIFICE	
	13	1	**7Y-4224**	1	ORIFICE	
M	14	1	**8T-4145**	4	BOLT (M6X1X95-MM)	
	16	1	*164-5567*	2	COUPLER AS-QUICK DISCONNECT	
					(EACH INCLUDES)	
		1	**6V-3965**	1	FITTING (QUICK DISCONNECT)	
		1	**3J-1907**	1	SEAL-O-RING	
	17	1	*165-6365*	1	FITTING AS (TEST PORT)	
		1	**7W-7381**	1	FITTING-OUTLET	
		1	**3J-1907**	1	SEAL-O-RING	
	18	1	**207-7434**	2	RETAINER	
	19	1	**207-7435**	2	RETAINER	
	20	1	**207-7437**	2	SPRING	
	23	1	*222-4737*	1	PLUG AS	
		1	**9S-4180**	1	PLUG	
		1	**4J-7533**	1	SEAL-O-RING	
	25	1	**242-7954**	1	HOUSING AS	
	26	1	**242-7955**	1	HOUSING AS	
CY	27	1	**285-5730**	2	VALVE GP-SOLENOID (PILOT PROPORTIONING)	914
	28	1	**100-8010**	1	VALVE-CHECK	
	29	1	**100-8011**	1	PLUG	
	30	1	*150-3065*	1	ADAPTER AS	
		1	**6V-0484**	1	ADAPTER-O-RING	
		1	**3J-1907**	1	SEAL-O-RING	
	31	1	*173-3993*	2	PLUG AS	
					(EACH INCLUDES)	
		1	**9S-8001**	1	PLUG-O-RING	
		1	**4J-7533**	1	SEAL-O-RING	
	32	1	**187-9630**	2	SEAL-O-RING	
	33	1	**1H-1023**	4	SEAL-O-RING	
Y	34	1	**260-8590**	1	VALVE GP-SHUTTLE	908
	35	1	**4J-5351**	2	SEAL-O-RING	
	36	1	**4K-1388**	2	SEAL-O-RING	
	37	1	**4T-5073**	2	RING-BACKUP	
	38	1	**5M-2057**	1	SEAL-O-RING	
	39	1	**6V-5556**	1	SEAL-O-RING	
	40	1	**7J-9933**	2	SEAL-O-RING	
	41	1	**7M-8485**	1	SEAL-O-RING	
M	42	1	**8T-4185**	2	BOLT (M10X1.5X50-MM)	

213-4326 **VALVE GP-CONTROL** *(contd.)* **i03208042**

NOTE	REF NO	GRAPHIC REF	PART NUMBER	QTY	PART NAME 1 2 3 4 5 6 (PRODUCT LEVEL)	SEE PAGE
	43	1	**9X-8256**	4	WASHER (6.6X12X2-MM THK)	

PARTS SHOWN IN GRAPHIC(S) WITHOUT A REFERENCE NUMBER ARE NOT SERVICED SEPARATELY

B-USE AS REQUIRED
C-CHANGE FROM PREVIOUS TYPE
M-METRIC PART
Y-SEPARATE ILLUSTRATION

213-4326 **VALVE GP-CONTROL** *(contd.)* **i03208042**

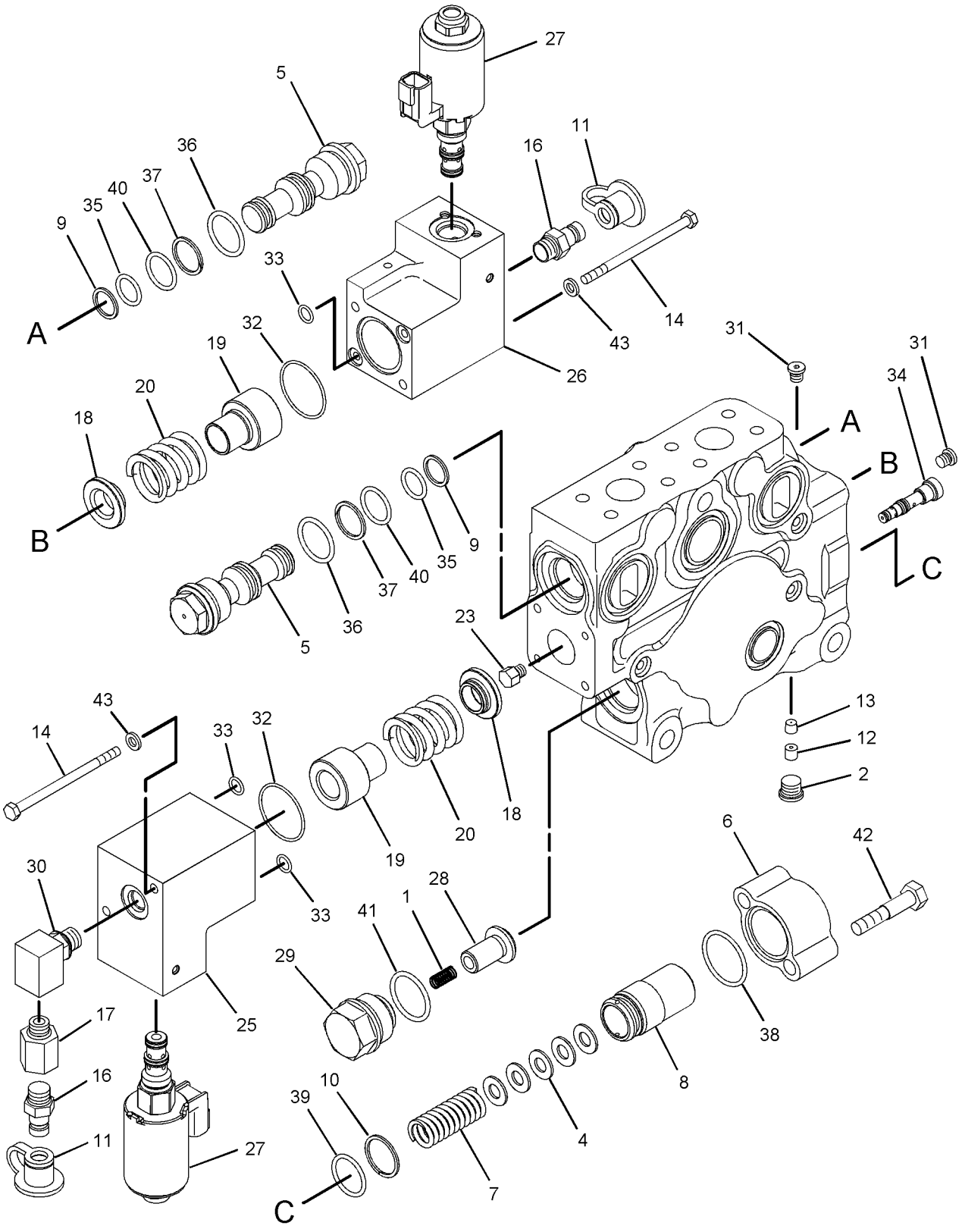

GRAPHIC #1 **<END>** g01131233

HYDRAULIC SYSTEM

217-4326 VALVE GP-CONTROL—DUAL TILT

S/N: J8B1-UP
PART OF 209-5102 CONTROL AR-HYDRAULIC
AN ATTACHMENT

SMCS-5051 **i02241861**

NOTE	REF NO	GRAPHIC REF	PART NUMBER	QTY	PART NAME 1 2 3 4 5 6 (PRODUCT LEVEL)	SEE PAGE
Y	1	1	**3E-9205**	1	VALVE GP-SOLENOID (24-VOLT)	910
M	2	1	**8T-4196**	16	BOLT (M10X1.5X35-MM)	
	3	1	**8J-8621**	2	SPRING	
	4	1	**9J-1722**	1	RETAINER	
	5	1	**9S-8004**	1	PLUG-O-RING	
	6	1	**215-2899**	4	BOLT (M10X1.5X45-MM)	
	7	1	**217-3665**	2	COVER	
	8	1	**9S-8001**	4	PLUG-O-RING	
	9	1	**9X-2027**	4	WASHER (11X18X2-MM THK)	
	10	1	**223-4445**	1	RETAINER	
	11	1	**3J-1907**	1	SEAL-O-RING	
	12	1	**4J-0522**	2	SEAL-O-RING	
	13	1	**4J-7533**	4	SEAL-O-RING	
	14	1	**8C-3205**	6	FLANGE-HALF	
	15	1	**8C-3206**	2	FLANGE-HALF	
	16	1	**8T-4121**	16	WASHER-HARD (11X21X2.5-MM THK)	

M-METRIC PART
Y-SEPARATE ILLUSTRATION

217-4326 VALVE GP-CONTROL *(contd.)* **i02241861**

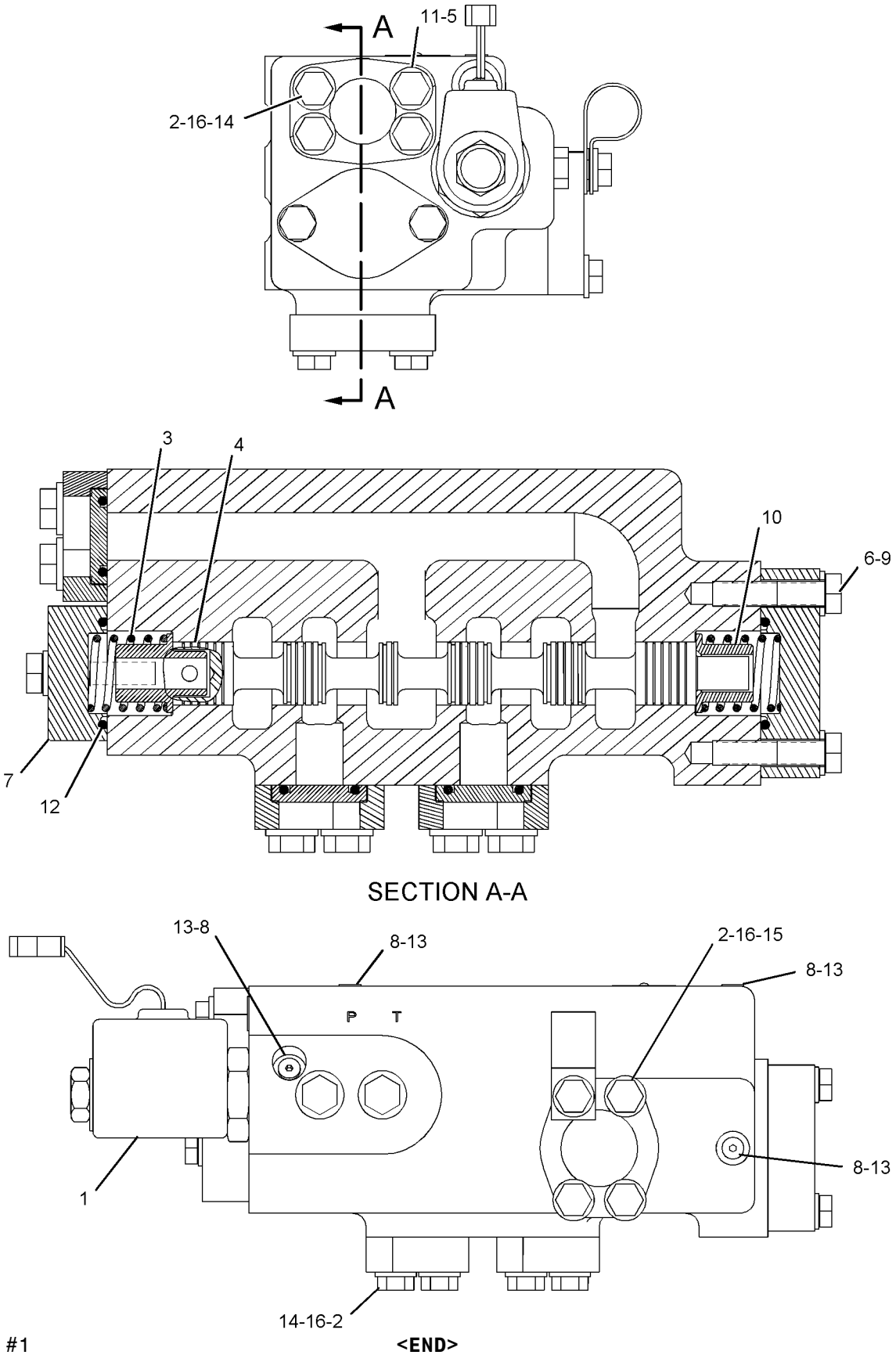

GRAPHIC #1 **<END>** g01021899

HYDRAULIC SYSTEM

162-2191 VALVE GP-FAN REVERSING

S/N: J8B1-UP
PART OF 217-5742 VALVE & MTG GP-HYDRAULIC FAN
AN ATTACHMENT

SMCS-138R, 5051 **i02374827**

NOTE	REF NO	GRAPHIC REF	PART NUMBER	QTY	PART NAME 1 2 3 4 5 6 (PRODUCT LEVEL)	SEE PAGE
Y	1	1	**128-2780**	2	VALVE GP-CHECK (REVERSING FAN)	864
Y	2	1	**152-8340**	1	VALVE GP-SOLENOID (24-VOLT) (REVERSING FAN)	911
Y	3	1	**166-8498**	1	VALVE GP-RELIEF (HYDRAULIC FAN MOTOR)	905
Y	3A	1	**166-8498**	2	VALVE GP-RELIEF (CROSSOVER, REVERSING FAN)	905
H	4	1	**178-9037**	2	VALVE GP-DIVERTER (REVERSING FAN)	
					(EACH INCLUDES)	
H	4A	1	**4K-1388**	1	SEAL-O-RING	
J	5	1	**239-0617**	1	VALVE GP-CHECK (MAKEUP)	
J	5A	1	**3H-0442**	1	SEAL-O-RING	
J	5B	1	**095-1513**	1	SEAL-O-RING	
	6	1	**3J-1907**	6	SEAL-O-RING	
	7	1	**3K-0360**	2	SEAL-O-RING	
	8	1	**4J-7533**	11	SEAL-O-RING	
	9	1	**9S-8001**	11	PLUG-O-RING	
	10	1	**9S-8004**	6	PLUG-O-RING	
	11	1	**9S-8005**	2	PLUG-O-RING	
					AVAILABLE REPAIR KIT(S):	
H			**188-6298**	1	KIT-SEAL (DIVERTER VALVE) (REVERSING FAN)	
					(INCLUDES O-RINGS & BACK-UP RINGS)	
J			**239-5157**	1	KIT-SEAL (CHECK VALVE) (REVERSING FAN)	
					(INCLUDES O-RINGS & BACK-UP RINGS)	

H-(KIT MARKED H SERVICES PARTS MARKED H)
J-(KIT MARKED J SERVICES PARTS MARKED J)
Y-SEPARATE ILLUSTRATION

162-2191 VALVE GP-FAN REVERSING *(contd.)* **i02374827**

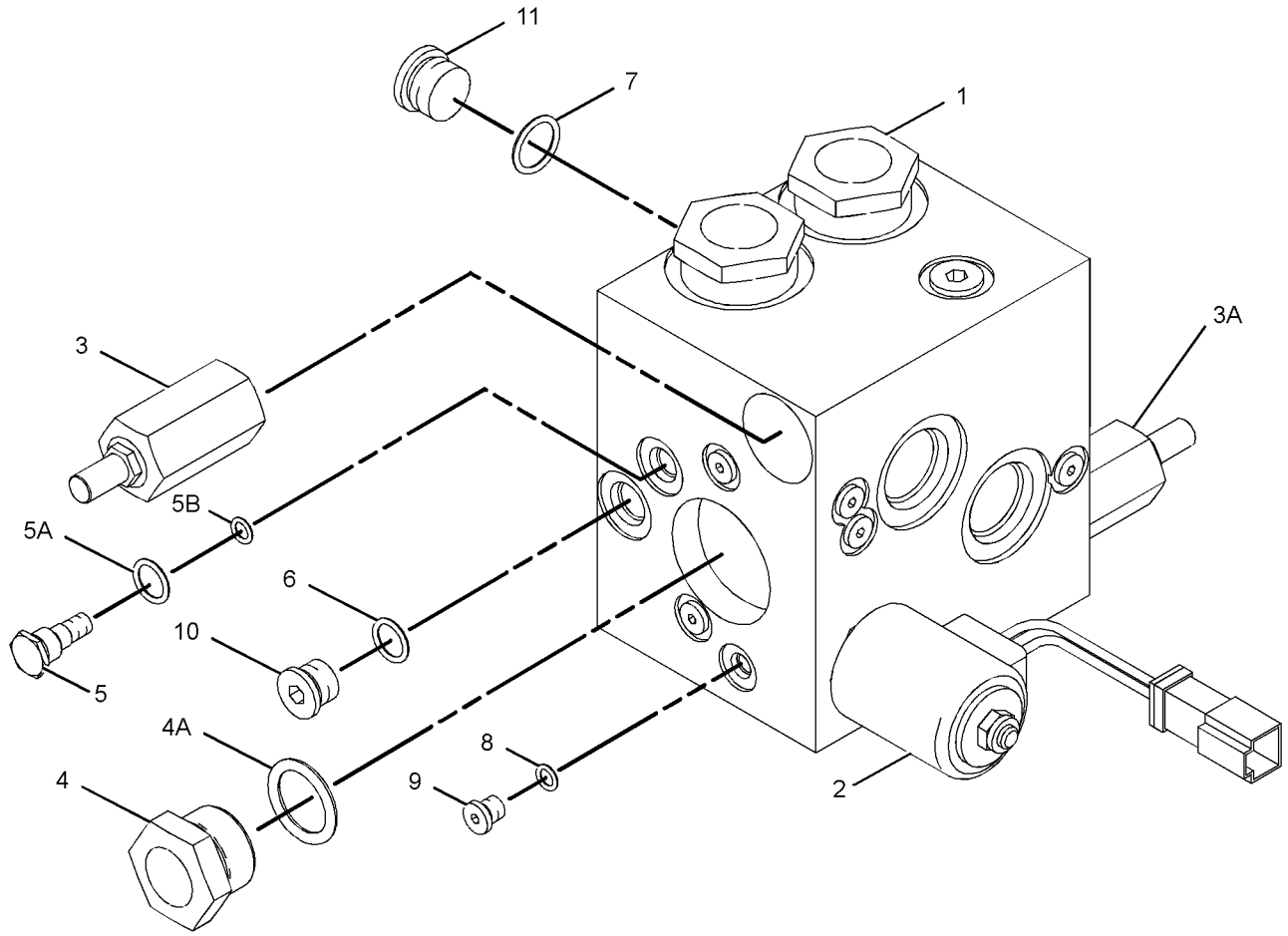

GRAPHIC #1 **<END>** g01179162

170-3357 VALVE GP-PRESSURE REDUCING–PILOT OIL

S/N: J8B1-UP

PART OF 212-5835, 296-1391, 301-2269 MANIFOLD GP-CONTROL

ALSO AN ATTACHMENT

SMCS-5117 **i01452696**

NOTE	REF NO	GRAPHIC REF	PART NUMBER	QTY	PART NAME 1 2 3 4 5 6 (PRODUCT LEVEL)	SEE PAGE
	1	1	**3K-0360**	1	SEAL-O-RING	
	2	1	**161-6149**	1	SEAL-O-RING	
	3	1	**095-1750**	1	SEAL-O-RING	
	4	1	**161-6161**	2	RING-BACKUP	
	5	1	**187-0541**	2	RING-BACKUP	

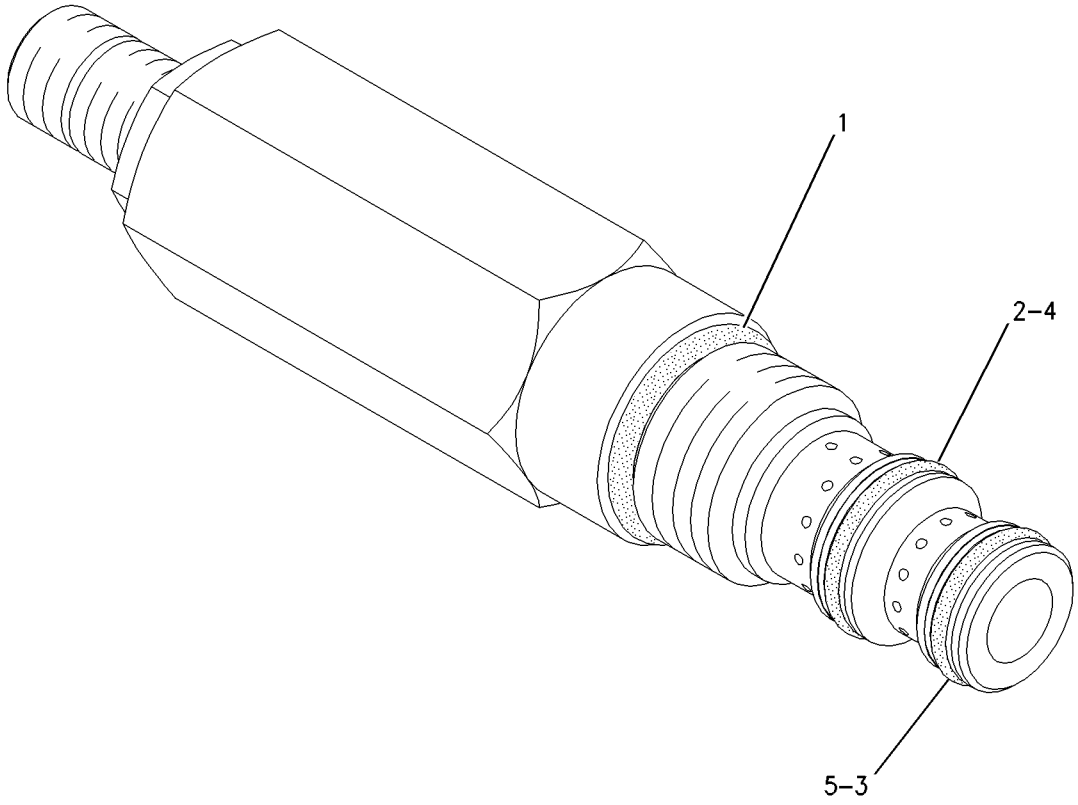

GRAPHIC #1 **<END>** g00777733

176-7520 VALVE GP-PUMP CONTROL–PRESSURE COMPENSATOR–IMPLEMENT

S/N: J8B1-UP

PART OF 214-1091 PUMP GP-PISTON

SMCS-5455 **i02236151**

NOTE	REF NO	GRAPHIC REF	PART NUMBER	QTY	PART NAME 1 2 3 4 5 6 (PRODUCT LEVEL)	SEE PAGE
JY	1	1	**194-3286**	1	PLUG GP-CONTROL VALVE	810
	2	1	**194-3285**	1	RETAINER	
J	3	1	**194-3287**	1	PLUG	
	4	1	**194-3288**	1	SPRING	
	5	1	**194-3289**	1	SPRING	
J	6	1	**6V-5142**	1	SEAL-O-RING	
					AVAILABLE REPAIR KIT(S):	
J			**191-7607**	1	KIT-VALVE REPAIR	
					(INCLUDES PLUG ASSEMBLIES, SEAL-O-RINGS, RING-BACKUP, & PARTS MARKED J)	

J-KIT MARKED J SERVICES PARTS MARKED J
Y-SEPARATE ILLUSTRATION

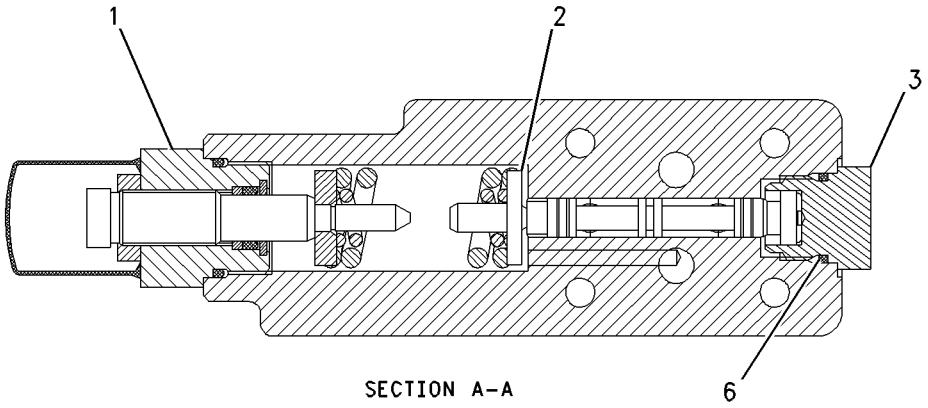

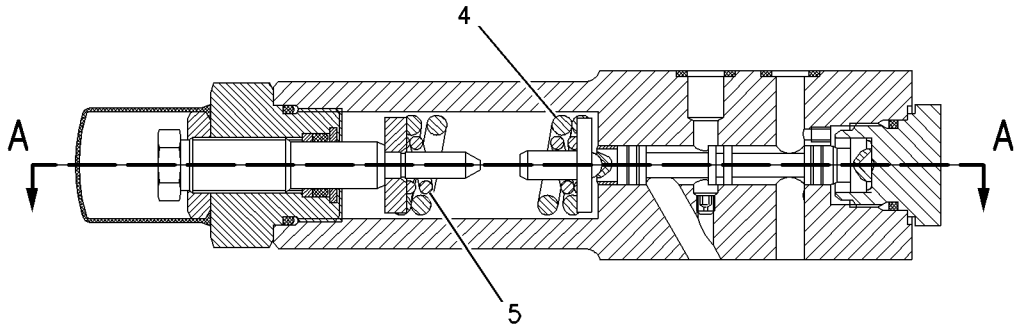

GRAPHIC #1 **<END>** g00751359

194-3899 VALVE GP-PUMP CONTROL–FLOW COMPENSATOR–IMPLEMENT

S/N: J8B1-UP

PART OF 214-1091 PUMP GP-PISTON

SMCS-5455 **i02236198**

NOTE	REF NO	GRAPHIC REF	PART NUMBER	QTY	PART NAME 1 2 3 4 5 6 (PRODUCT LEVEL)	SEE PAGE
JY	1	1	**194-3286**	1	PLUG GP-CONTROL VALVE	810
	2	1	**194-3285**	1	RETAINER	
J	3	1	**191-7600**	1	PLUG	
	4	1	**191-7605**	1	SPRING (10.9-MM OD)	
	5	1	**194-3279**	1	SPRING	
J	6	1	**6V-5142**	1	SEAL-O-RING	
	7	1	**194-3280**	2	PLUG	
	8	1	**194-3284**	1	WASHER	
					AVAILABLE REPAIR KIT(S):	
J			**191-7608**	1	KIT-VALVE REPAIR	
					(INCLUDES PLUG ASSEMBLIES, SEAL-O RINGS, RING-BACKUP, & PARTS MARKED J)	

J-KIT MARKED J SERVICES PARTS MARKED J
Y-SEPARATE ILLUSTRATION

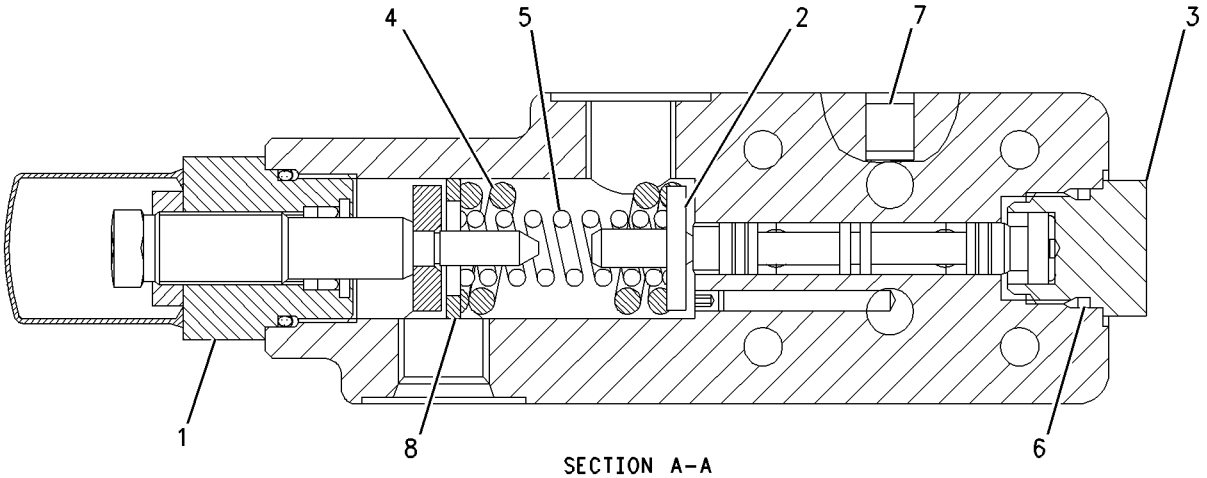

SECTION A-A

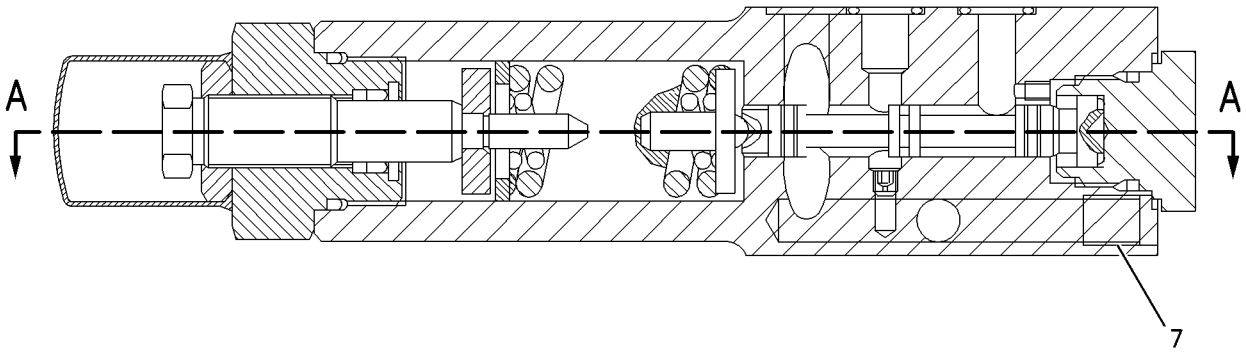

GRAPHIC #1 **<END>** g00751414

310-1523 VALVE GP-PUMP CONTROL–
PRESSURE, FLOW COMPENSATOR
S/N: J8B1-UP
PART OF 204-2578 PUMP GP-PISTON

SMCS-5455 **i03206821**

NOTE	REF NO	GRAPHIC REF	PART NUMBER	QTY	PART NAME 1 2 3 4 5 6 (PRODUCT LEVEL)	SEE PAGE
	1	1	**192-4370**	1	SOLENOID GP-PROPORTIONAL (12-VOLT) (HYDRAULIC FAN)	
		1	**191-2128**	1	COIL AS	
		1	**191-9247**	1	WASHER (19.15X31.65X2.36-MM THK)	
		1	**198-2914**	1	NUT (3/4-32-THD)	
	2	1	**213-9242**	1	SEAL-O-RING	
	3	1	**213-9247**	1	SEAL-O-RING	
	4	1	**033-6043**	1	SEAL-O-RING	
	5	1	**214-7568**	1	SEAL-O-RING	
	6	1	**033-6033**	1	SEAL-O-RING	
	7	1	**280-7870**	1	GASKET	
M	8	1	**8T-8442**	4	BOLT-SOCKET HEAD (M6X1X30-MM)	

M-METRIC PART

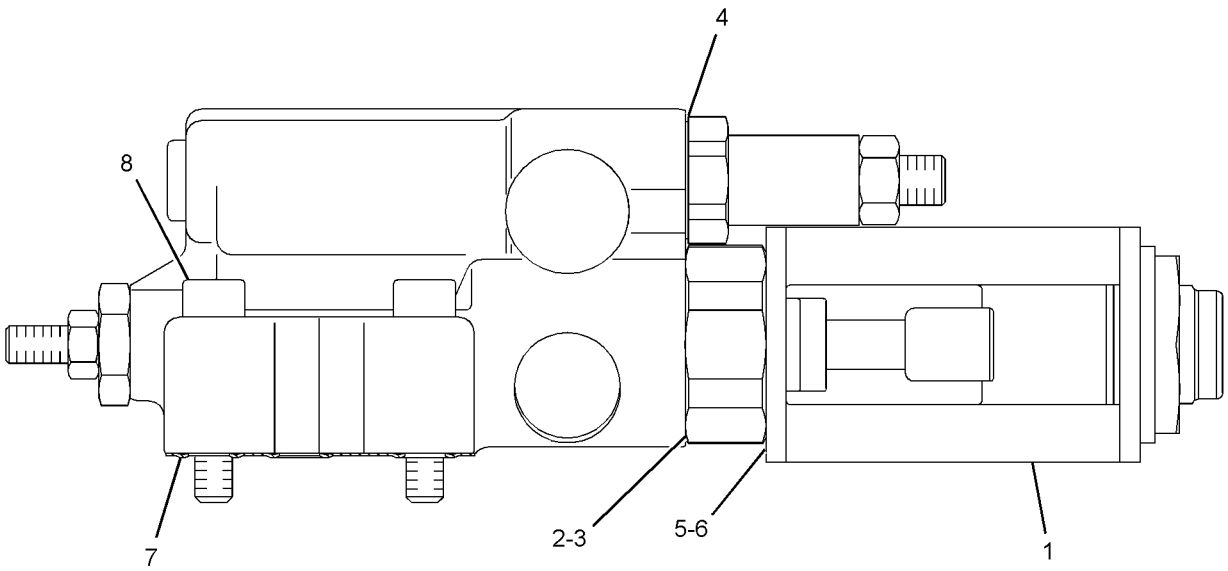

GRAPHIC #1 **<END>** g01387935

HYDRAULIC SYSTEM

318-3130 VALVE GP-PUMP CONTROL

S/N: J8B1-UP
PART OF 319-3593 PUMP GP-PISTON
AN ATTACHMENT

SMCS-5455 **i03202720**

NOTE	REF NO	GRAPHIC REF	PART NUMBER	QTY	PART NAME 1 2 3 4 5 6 (PRODUCT LEVEL)	SEE PAGE
	1	1	**192-4370**	1	SOLENOID GP-PROPORTIONAL (12-VOLT)	
		1	**191-2128**	1	COIL AS	
		1	**191-9247**	1	WASHER (19.15X31.65X2.36-MM THK)	
		1	**198-2914**	1	NUT (3/4-32-THD)	
	2	1	**213-9242**	1	SEAL-O-RING	
	3	1	**213-9247**	1	SEAL-O-RING	
	4	1	**033-6043**	1	SEAL-O-RING	
	5	1	**214-7568**	1	SEAL-O-RING	
	6	1	**033-6033**	1	SEAL-O-RING	
	7	1	**280-7870**	1	GASKET	
M	8	1	**8T-8442**	4	BOLT-SOCKET HEAD (M6X1X30-MM)	

M-METRIC PART

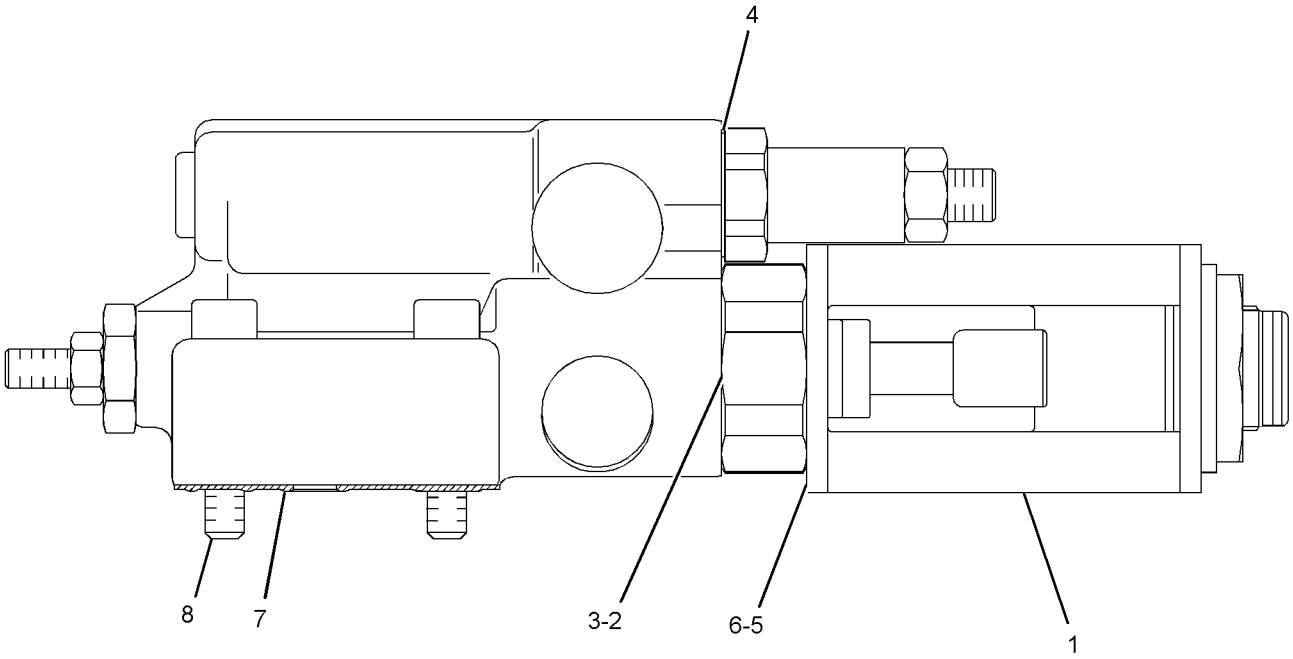

GRAPHIC #1 **<END>** g01635934

234-3042 VALVE GP-QUICK-DROP–BLADE

S/N: J8B1-UP

PART OF 210-6605 VALVE & MTG GP-CONTROL

SMCS-5110 **i02234834**

NOTE	REF NO	GRAPHIC REF	PART NUMBER	QTY	PART NAME 1 2 3 4 5 6 (PRODUCT LEVEL)	SEE PAGE
	1	1	**9S-8003**	2	PLUG	
			1J-9671	2	SEAL-O-RING	
B	3	1	**4T-4659**	3	SHIM (0.8-MM THK)	
	4	1	**6E-4907**	1	STOP	
	5	1	**9T-9836**	1	SLEEVE-ORIFICE	
B	6	1	**083-7784**	2	SHIM (2-MM THK)	
	7	1	**100-6211**	1	PISTON	
	8	1	**108-1847**	1	SPRING	
	10	1	**234-3043**	1	COVER	
	12	1	**234-3451**	1	COVER	
	14	1	*164-5619*	1	PLUG AS	
		1	**2M-9780**	1	SEAL-O-RING	
		1	**9S-8006**	1	PLUG-O-RING	
	15	1	**1P-3706**	2	SEAL-RECTANGULAR	
	16	1	**3L-3813**	1	PIN	
B	17	1	**4M-6980**	3	SHIM (0.25-MM THK)	
	18	1	**6K-8162**	1	RING-RETAINING	
M	19	1	**6V-8200**	8	BOLT-SOCKET HEAD (M12X1.75X35-MM)	
	20	1	**8C-3206**	12	FLANGE-HALF	
	21	1	**8T-4121**	24	WASHER-HARD (11X21X2.5-MM THK)	
M	22	1	**8T-4196**	24	BOLT (M10X1.5X35-MM)	

B-USE AS REQUIRED
M-METRIC PART

234-3042 VALVE GP-QUICK-DROP *(contd.)* **i02234834**

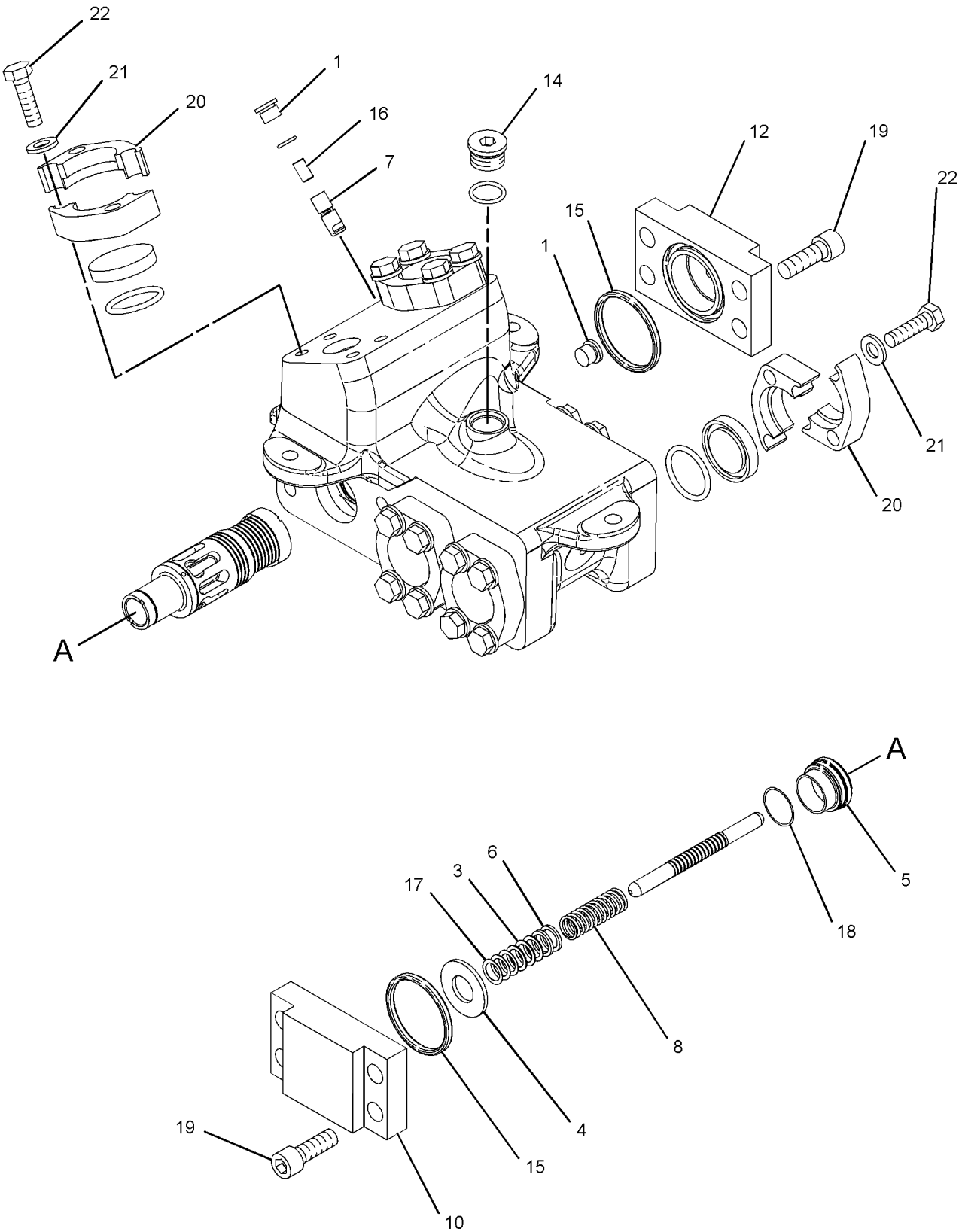

GRAPHIC #1 **<END>** g01127073

4T-4935 VALVE GP-RELIEF–IMPLEMENT INLET MANIFOLD

S/N: J8B1-UP

PART OF 213-4325 MANIFOLD GP-VALVE

ALSO AN ATTACHMENT

SMCS-5069, 5117 **i00131002**

NOTE	REF NO	GRAPHIC REF	PART NUMBER	QTY	PART NAME 1 2 3 4 5 6 (PRODUCT LEVEL)	SEE PAGE
	1	1	**6E-1835**	1	RETAINER AS	
	2	1	**9X-6395**	1	NUT (3/4-16-THD)	
	3	1	**7J-9933**	1	SEAL-O-RING	
	4	1	**4T-7571**	1	PLATE	
	5	1	**6J-6439**	1	VALVE-POPPET	
	6	1	**3K-0360**	2	SEAL-O-RING	
	7	1	**4T-4942**	1	SPRING	

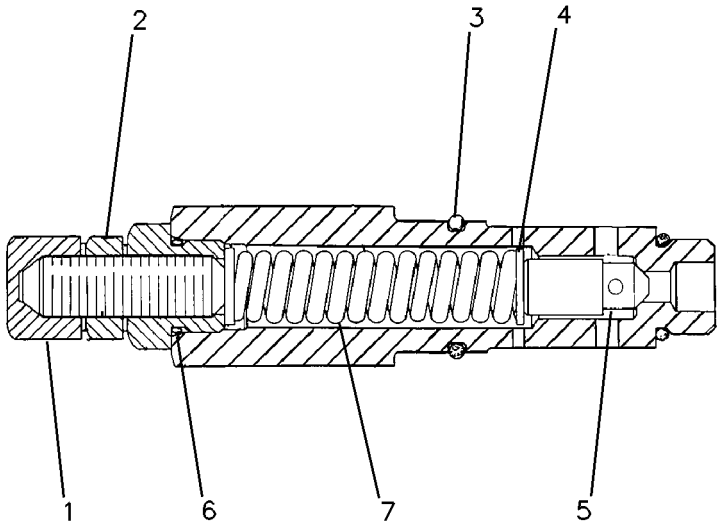

GRAPHIC #1 **<END>** g00082648

HYDRAULIC SYSTEM

104-7574 VALVE GP-RELIEF–CHARGING

S/N: J8B1-UP
PART OF 213-4325 MANIFOLD GP-VALVE
ALSO AN ATTACHMENT

SMCS-5069, 5117 **i01851613**

NOTE	REF NO	GRAPHIC REF	PART NUMBER	QTY	PART NAME 1 2 3 4 5 6 (PRODUCT LEVEL)	SEE PAGE
	1	1	**106-3922**	1	PLUG	
	2	1	**7M-8485**	2	SEAL-O-RING	
	3	1	**4T-1009**	1	VALVE GP	
	4	1	**4T-5075**	1	RING-BACKUP	
	5	1	**6V-5393**	1	SEAL-O-RING	
	6	1	**4T-1011**	1	RING-SEAL	
	7	1	**5F-7054**	1	SEAL-O-RING	
	8	1	**4T-1005**	1	SPRING	
B	9	1	**5S-7001**	4	SPACER (7.54X14.15X0.9-MM THK)	

B-USE AS REQUIRED

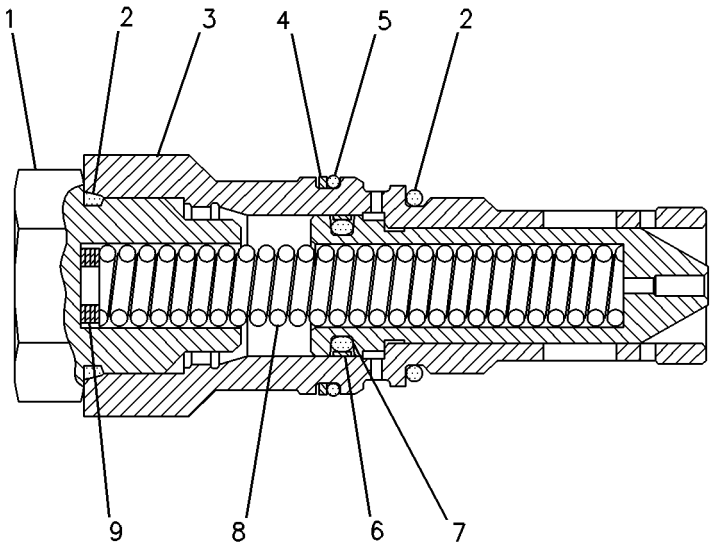

GRAPHIC #1 **<END>** g00233165

166-8498 VALVE GP-RELIEF–CROSSOVER, RVSG FAN; FAN MOTOR

S/N: J8B1-UP

PART OF 162-2191 VALVE GP-FAN REVERSING

AN ATTACHMENT

SMCS-5069, 5117 **i02249998**

NOTE	REF NO	GRAPHIC REF	PART NUMBER	QTY	PART NAME 1 2 3 4 5 6 (PRODUCT LEVEL)	SEE PAGE
J	1	1	**161-6149**	1	SEAL-O-RING	
J	2	1	**161-6161**	2	RING-BACKUP	
J	3	1	**2M-9780**	1	SEAL-O-RING	
					AVAILABLE REPAIR KIT(S):	
J			**133-5545**	1	KIT-SEAL (RELIEF VALVE)	
					(INCLUDES SEAL-O-RINGS, RING-BACKUP)	

J-KIT MARKED J SERVICES PARTS MARKED J

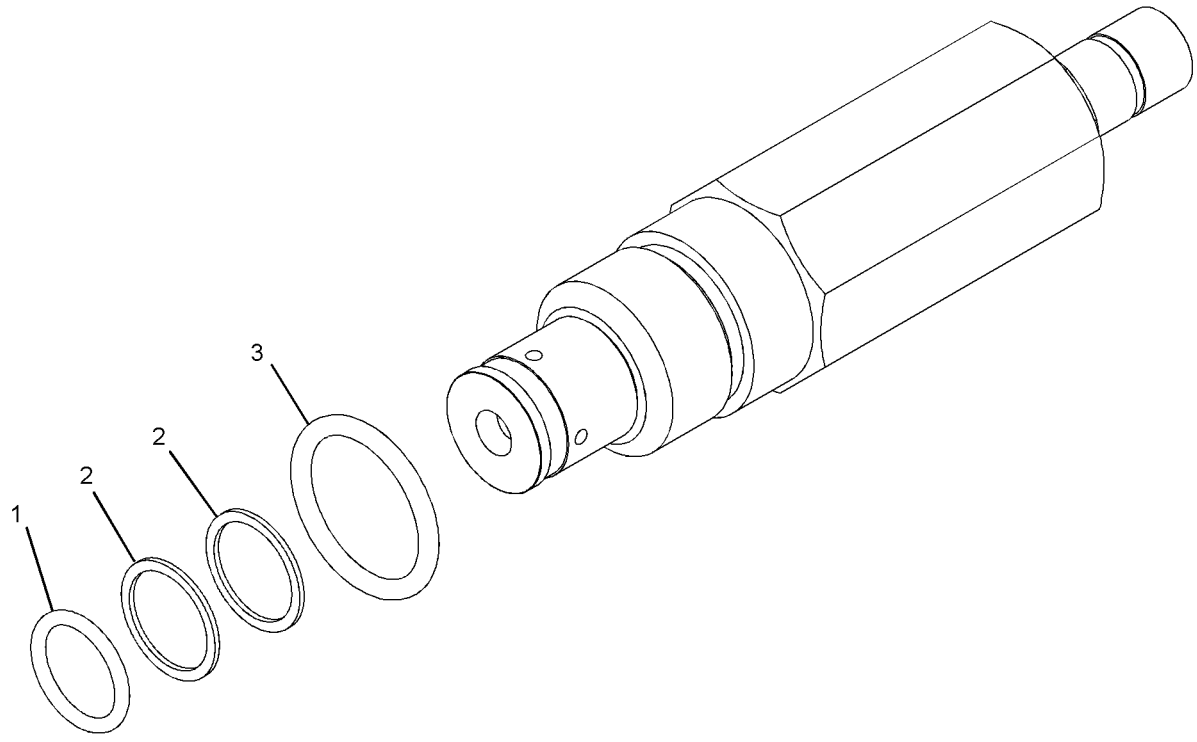

GRAPHIC #1 **<END>** g01110948

198-9220 VALVE GP-RELIEF–IMPLEMENT PUMP OIL

S/N: J8B1-UP

PART OF 208-9524 LINES GP-PUMP

SMCS-5069, 5117 **i02945628**

NOTE	REF NO	GRAPHIC REF	PART NUMBER	QTY	PART NAME 1 2 3 4 5 6 (PRODUCT LEVEL)	SEE PAGE
J	1	1	**2M-9780**	1	SEAL-O-RING	
J	2	1	**161-6149**	1	SEAL-O-RING	
J	3	1	**161-6161**	2	RING-BACKUP	
					AVAILABLE REPAIR KIT(S):	
			133-5545	1	KIT-SEAL (RELIEF VALVE)	
J-KIT MARKED J SERVICES PARTS MARKED J						

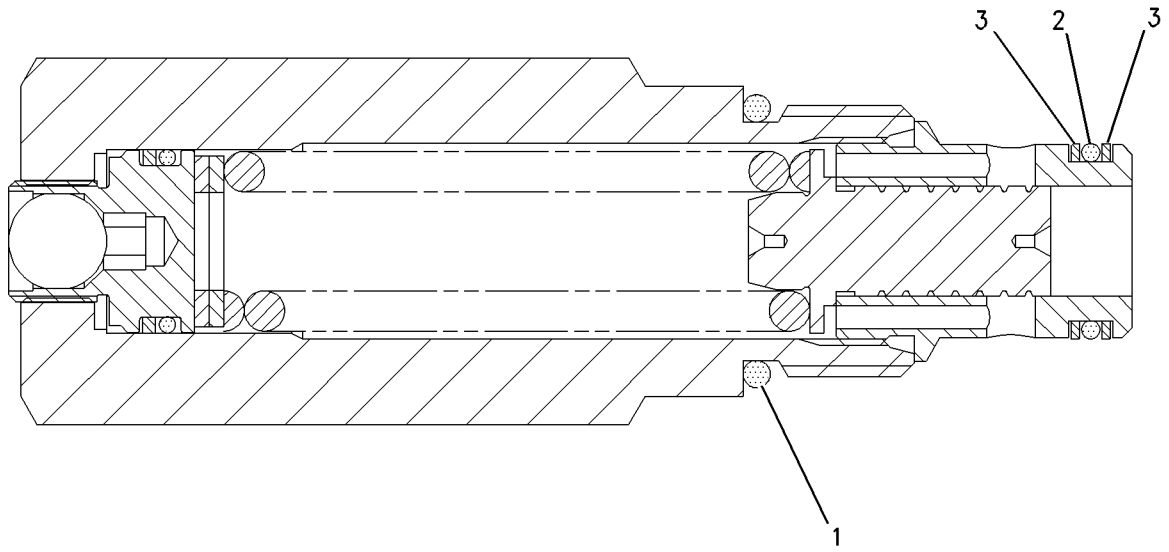

GRAPHIC #1 **<END>** g00938075

225-8026 VALVE GP-RELIEF–PILOT MANIFOLD PRESSURE

S/N: J8B1-UP

PART OF 212-5835, 296-1391, 301-2269 MANIFOLD GP-CONTROL

ALSO AN ATTACHMENT

SMCS-5069, 5117 **i02071342**

NOTE	REF NO	GRAPHIC REF	PART NUMBER	QTY	PART NAME 1 2 3 4 5 6 (PRODUCT LEVEL)	SEE PAGE
J	1	1	**161-6149**	1	SEAL-O-RING	
J	2	1	**161-6161**	2	RING-BACKUP	
J	3	1	**2M-9780**	1	SEAL-O-RING	
					AVAILABLE REPAIR KIT(S):	
J			**133-5545**	1	KIT-SEAL (RELIEF VALVE)	

J-KIT MARKED J SERVICES PARTS MARKED J

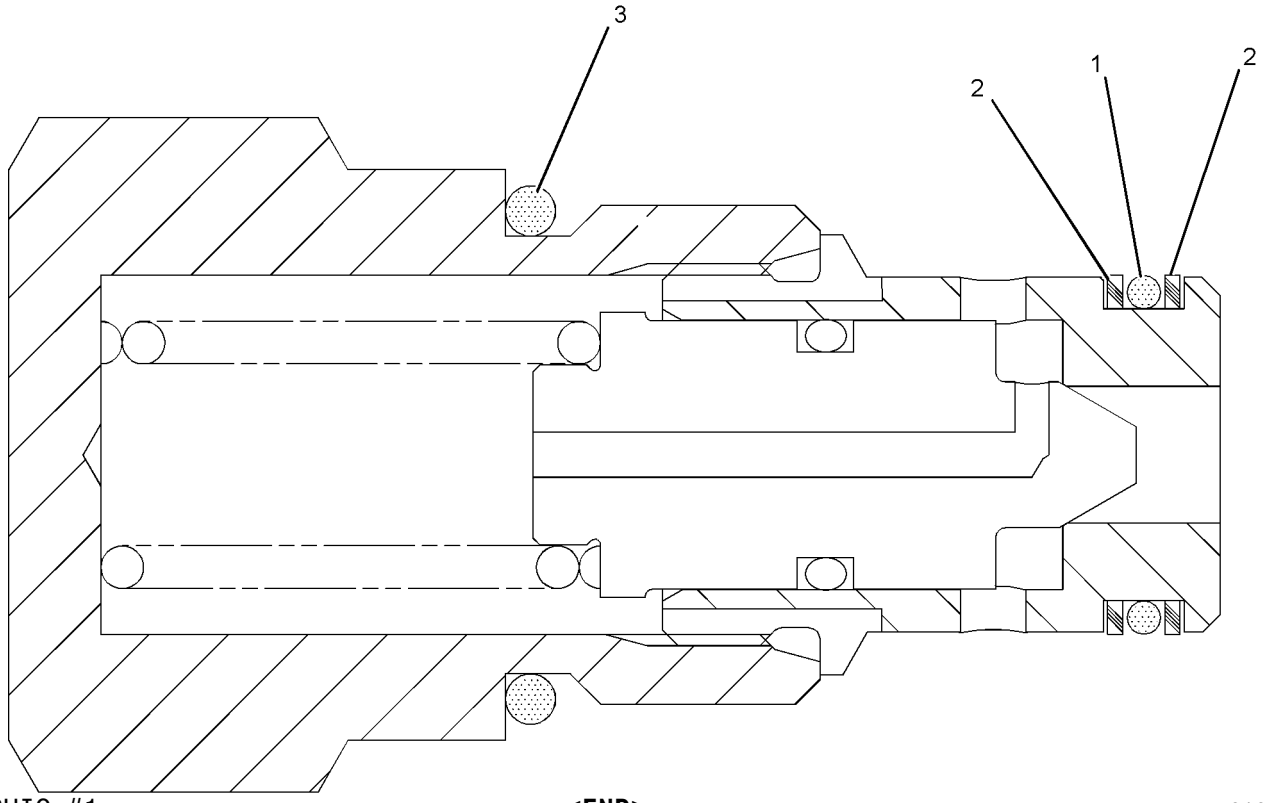

GRAPHIC #1 **<END>** g01019745

260-8590 VALVE GP-SHUTTLE–IMPLEMENT CONTROL

S/N: J8B1-UP

PART OF 212-6322, 212-6323, 212-6324, 213-4326 VALVE GP-CONTROL

ALSO AN ATTACHMENT

SMCS-5079 **i02233009**

NOTE	REF NO	GRAPHIC REF	PART NUMBER	QTY	PART NAME 1 2 3 4 5 6 (PRODUCT LEVEL)	SEE PAGE
J	1	1	**3J-7354**	1	SEAL-O-RING	
J	2	1	**9N-1756**	1	SEAL-O-RING	
J	3	1	**3H-0442**	1	SEAL-O-RING	
					AVAILABLE REPAIR KIT(S):	
J			**240-7356**	1	KIT-SEAL (SHUTTLE VALVE) (IMPLEMENT CONTROL)	

J-(KIT MARKED J INCLUDES PARTS MARKED J)

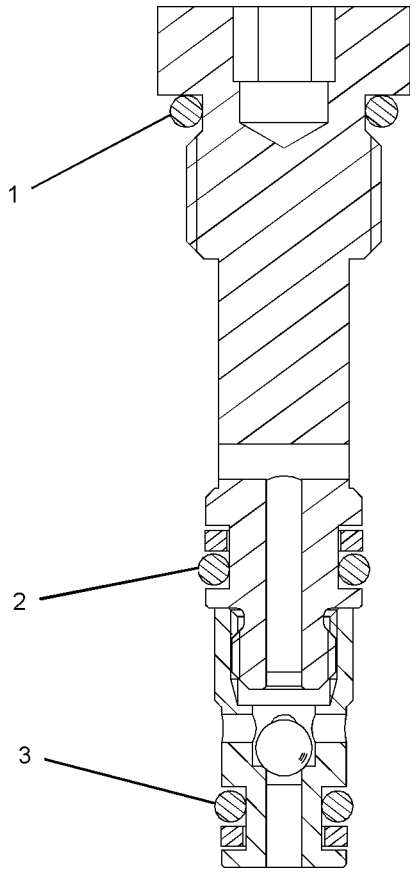

GRAPHIC #1 **<END>** g01018080

3E-8575 VALVE GP-SOLENOID

S/N: J8B1-UP
PART OF 188-6140 VALVE & MTG GP-CONTROL
AN ATTACHMENT

SMCS-5479 **i01488918**

NOTE	REF NO	GRAPHIC REF	PART NUMBER	QTY	PART NAME 1 2 3 4 5 6 (PRODUCT LEVEL)	SEE PAGE
	1	1	**6T-3382**	1	CARTRIDGE AS	
	2	1	**160-5843**	1	WASHER (16.8X38.1X0.5-MM THK)	
	3	1	**157-2284**	1	LOCKNUT-SPECIAL (5/8-18-THD)	
	4	1	**160-5844**	1	WASHER-SPRING (16.3X31.5X1.85-MM THK)	
	5	1	**3E-8581**	1	COIL AS	
	6	1	**102-8804**	1	KIT-RECEPTACLE (4-PIN)	
					(INCLUDES RECEPTACLE AS & WEDGE)	
	7	1	**186-3735**	4	PIN-CONNECTOR (16-GA TO 18-GA)	
	8	1	**1S-9593**	2	STRAP-CABLE	
	9	1	**3E-3377**	1	WEDGE-RECEPTACLE LOCK (4-PIN)	
					AVAILABLE REPAIR KIT(S):	
			126-5948	1	KIT-SEAL	
					(INCLUDES SEALS & RINGS)	

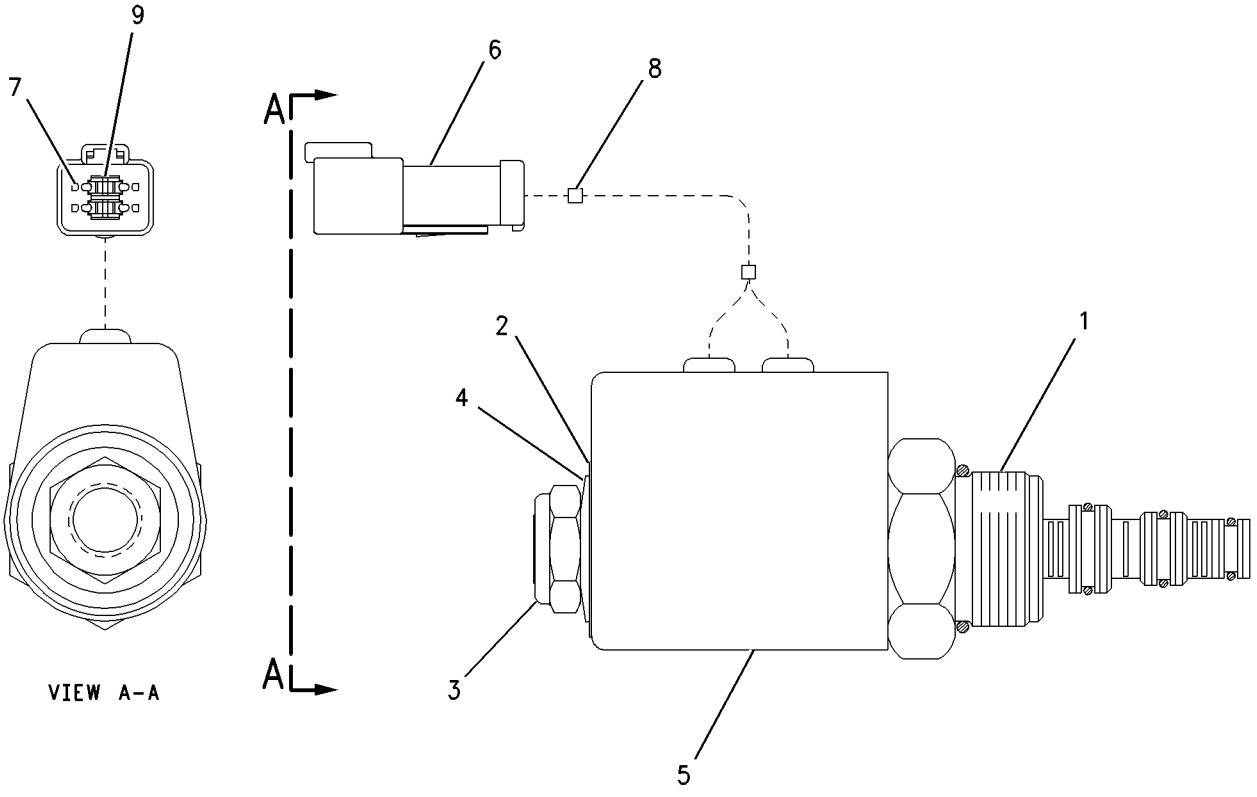

GRAPHIC #1 **<END>** g00623320

HYDRAULIC SYSTEM

3E-9205 VALVE GP-SOLENOID

S/N: J8B1-UP
24-VOLT
PART OF 217-4326 VALVE GP-CONTROL
AN ATTACHMENT

SMCS-5479 **i03208642**

NOTE	REF NO	GRAPHIC REF	PART NUMBER	QTY	PART NAME 1 2 3 4 5 6 (PRODUCT LEVEL)	SEE PAGE
	1	1	**6T-9244**	1	CARTRIDGE AS	
	2	1	**3E-8581**	1	COIL AS	
	3	1	**102-8804**	1	KIT-RECEPTACLE (4-PIN)	
					(INCLUDES RECEPTACLE AS & WEDGE)	
		1	**186-3735**	4	PIN-CONNECTOR (16-GA TO 18-GA)	
	4	1	**1S-9593**	2	STRAP-CABLE	
	5	1	**157-2284**	1	LOCKNUT-SPECIAL (5/8-18-THD)	
	6	1	**160-5843**	1	WASHER (16.8X38.1X0.5-MM THK)	
	7	1	**160-5844**	1	WASHER-SPRING (16.3X31.5X1.85-MM THK)	
					AVAILABLE REPAIR KIT(S):	
			126-5948	1	KIT-SEAL (SOLENOID VALVE)	
					(INCLUDES SEAL-O-RINGS & RINGS)	

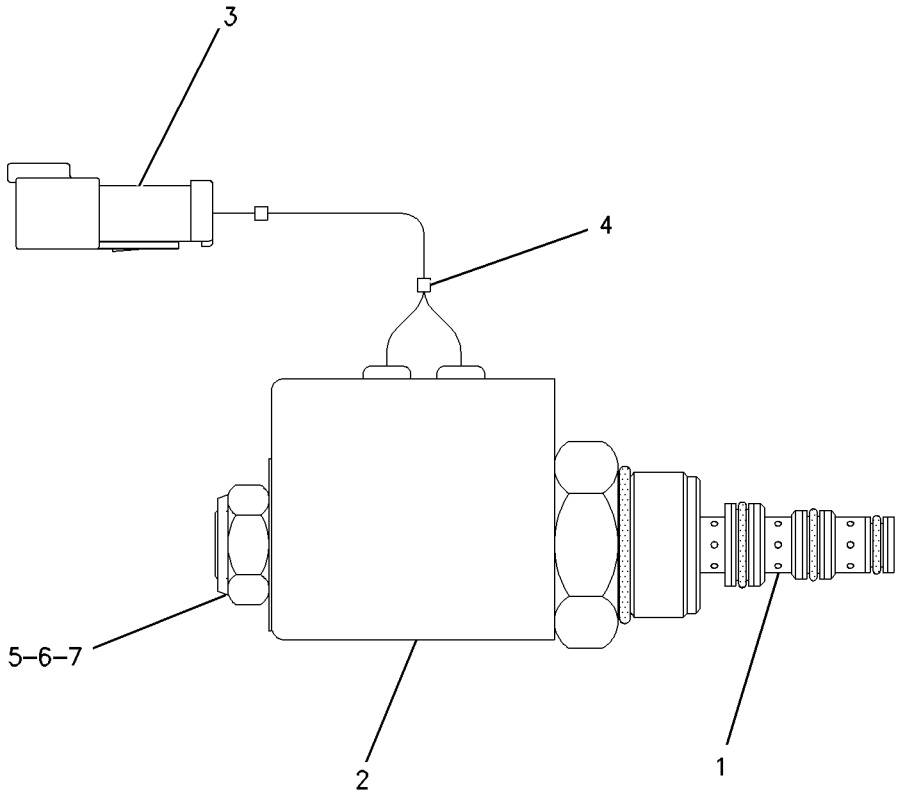

GRAPHIC #1 **<END>** g00657410

152-8340 VALVE GP-SOLENOID

S/N: J8B1-UP
PART OF 162-2191 VALVE GP-FAN REVERSING
AN ATTACHMENT

SMCS-5479 **i02236758**

NOTE	REF NO	GRAPHIC REF	PART NUMBER	QTY	PART NAME 1 2 3 4 5 6 (PRODUCT LEVEL)	SEE PAGE
	1	1	**8C-9987**	1	WASHER (8.3X28X2.5-MM THK)	
	2	1	**111-0343**	1	LOCKNUT (5/16-18-THD)	
	3	1	**152-8338**	1	CARTRIDGE AS	
		1	**8C-9987**	1	WASHER (8.3X28X2.5-MM THK)	
		1	**111-0343**	1	LOCKNUT (5/16-18-THD)	
	4	1	**189-0189**	1	COIL AS	
					—OR—	
	5	1	**227-4398**	1	COIL AS	
					(EACH COIL ASSEMBLY INCLUDES)	
	5A	1	**186-3735**	2	PIN-CONNECTOR (16-GA TO 18-GA)	
	5B	1	**3E-3365**	1	WEDGE-RECEPTACLE LOCK (2-PIN)	
	5C	1	**102-8802**	1	KIT-RECEPTACLE (2-PIN)	
					(INCLUDES RECEPTACLE AS & WEDGE)	
	5D	1	**1S-9593**	2	STRAP-CABLE	
					AVAILABLE REPAIR KIT(S):	
			197-7701	1	KIT-SEAL (SOLENOID VALVE)	
					(INCLUDES SEALS AND RINGS)	

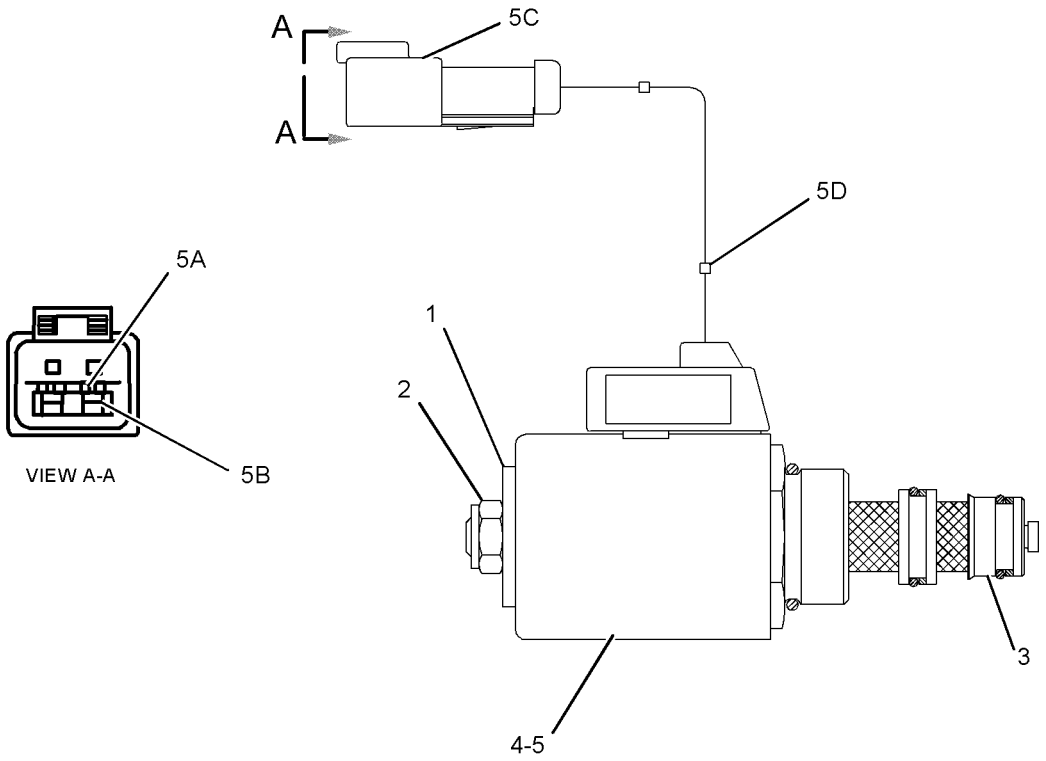

GRAPHIC #1 **<END>** g01127692

HYDRAULIC SYSTEM

201-0950 VALVE GP-SOLENOID

S/N: J8B1-UP

PART OF 212-5835, 296-1391, 301-2269 MANIFOLD GP-CONTROL

ALSO AN ATTACHMENT

SMCS-5479 **i02470752**

NOTE	REF NO	GRAPHIC REF	PART NUMBER	QTY	PART NAME 1 2 3 4 5 6 (PRODUCT LEVEL)	SEE PAGE
	1	1	**122-1133**	1	COIL AS (24-VOLT)	
		1	**1S-9593**	2	STRAP-CABLE	
		1	**186-3735**	2	PIN-CONNECTOR (16-GA TO 18-GA)	
		1	**102-8802**	1	KIT-RECEPTACLE (2-PIN)	
	2	1	**156-5970**	1	NUT (1/2-20-THD)	
	3	1	**171-8772**	1	VALVE AS-SOLENOID	
		1	**156-5970**	1	NUT (1/2-20-THD)	
					AVAILABLE REPAIR KIT(S):	
			195-7430	1	KIT-SEAL (SOLENOID VALVE) (SOLENOID VALVE)	

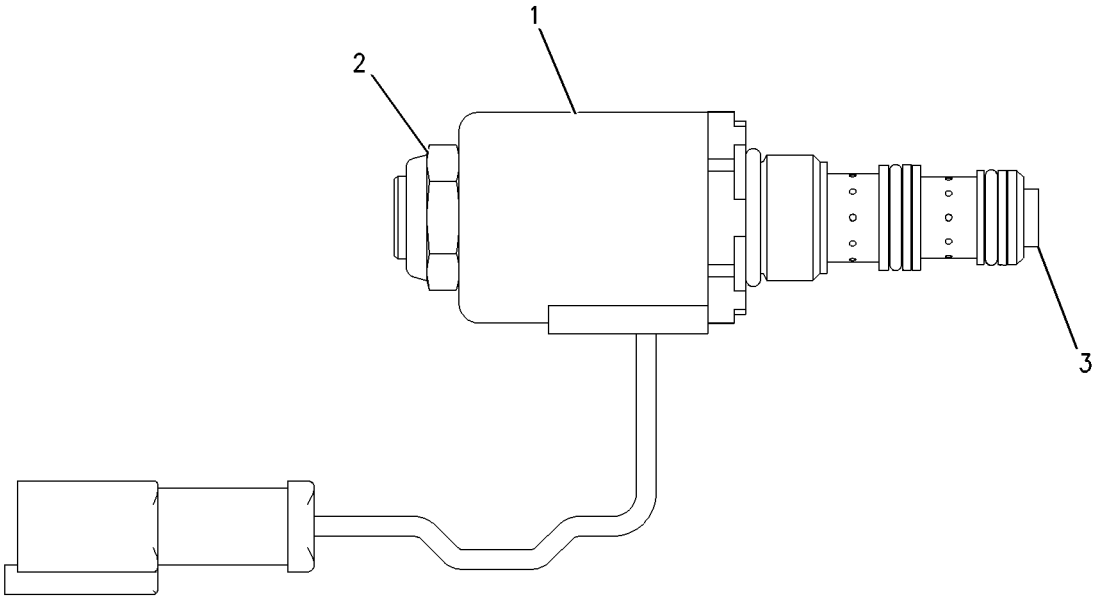

GRAPHIC #1 **<END>** g00888488

257-0267 VALVE GP-SOLENOID

S/N: J8B1-UP

PART OF 212-6322, 212-6323, 212-6324, 213-4326 VALVE GP-CONTROL

ALSO AN ATTACHMENT

SMCS-5479 **i02233007**

NOTE	REF NO	GRAPHIC REF	PART NUMBER	QTY	PART NAME 1 2 3 4 5 6 (PRODUCT LEVEL)	SEE PAGE
Z	1	1		1	CARTRIDGE AS	
Z	2	1		1	COIL AS	
Z	3	1		1	CARTRIDGE AS-VALVE	
Z	4	1		1	WASHER-SPRING	
	5	1	**6M-5062**	1	SEAL-O-RING	
	6	1	**3K-0360**	1	SEAL-O-RING	
	7	1	**4K-2039**	1	SEAL-O-RING	

Z-NOT SERVICED SEPARATELY

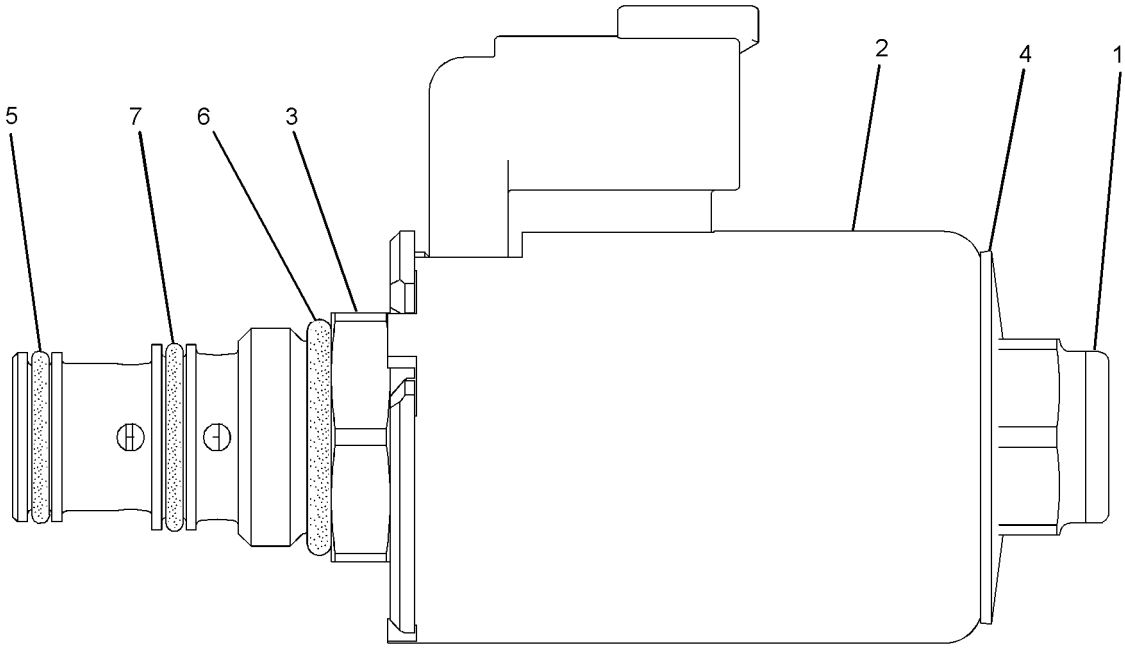

GRAPHIC #1 **<END>** g01022105

285-5730 VALVE GP-SOLENOID

S/N: J8B1-UP
24-VDC
PART OF 212-6322, 212-6323, 212-6324, 213-4326 VALVE GP-CONTROL
FIELD REPLACEMENT ORDER 313-7668—PAGE 915
ALSO AN ATTACHMENT

SMCS-5479 **i03206500**

NOTE	REF NO	GRAPHIC REF	PART NUMBER	QTY	PART NAME 1 2 3 4 5 6 (PRODUCT LEVEL)	SEE PAGE
	1	1	**312-8629**	1	COIL AS	
	2	1	**6M-5062**	1	SEAL-O-RING	
	3	1	**3K-0360**	1	SEAL-O-RING	
	4	1	**4K-2039**	1	SEAL-O-RING	
					PARTS SHOWN IN GRAPHIC(S) WITHOUT A REFERENCE NUMBER ARE NOT SERVICED SEPARATELY	

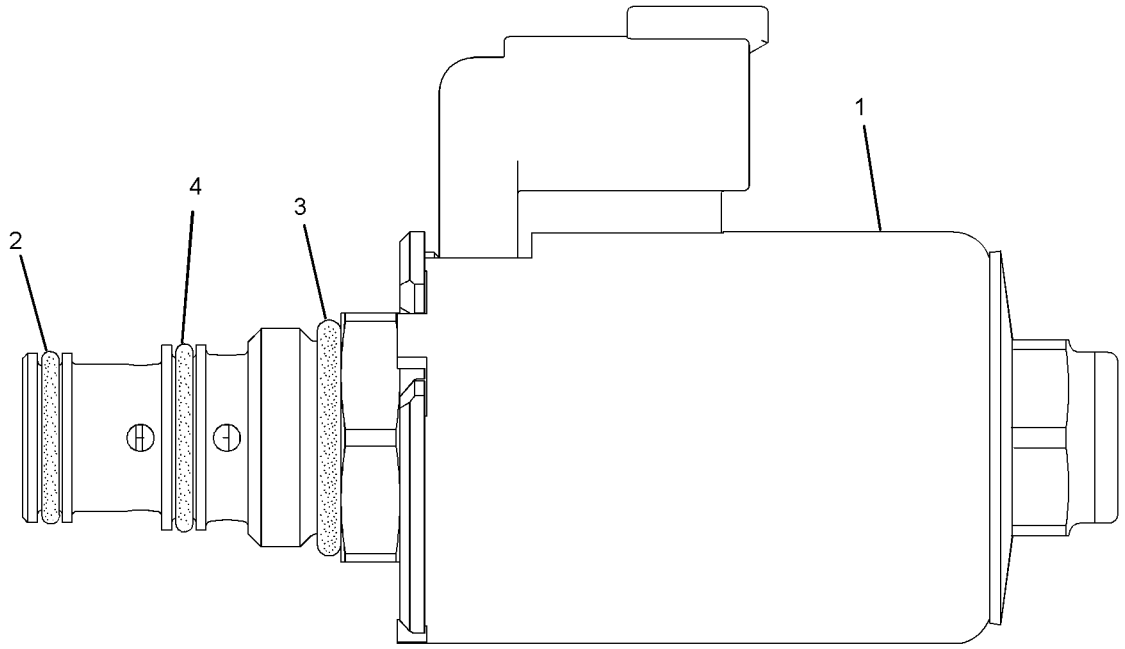

GRAPHIC #1 **<END>** g01336691

HYDRAULIC SYSTEM

313-7668 VALVE GP-SOLENOID

S/N: J8B1-UP
24-VDC
PART OF 213-4326 VALVE GP-CONTROL

SMCS-5479 **i03302458**

NOTE	REF NO	GRAPHIC REF	PART NUMBER	QTY	PART NAME 1 2 3 4 5 6 (PRODUCT LEVEL)	SEE PAGE
	1	1	**191-9247**	1	WASHER (19.15X31.65X2.36-MM THK)	
	2	1	**198-2914**	1	NUT (3/4-32-THD)	
	3	1	**312-8629**	1	COIL AS	
F			**3K-0360**	1	SEAL-O-RING	
F			**4K-2039**	1	SEAL-O-RING	
F			**6M-5062**	1	SEAL-O-RING	
F-NOT SHOWN						

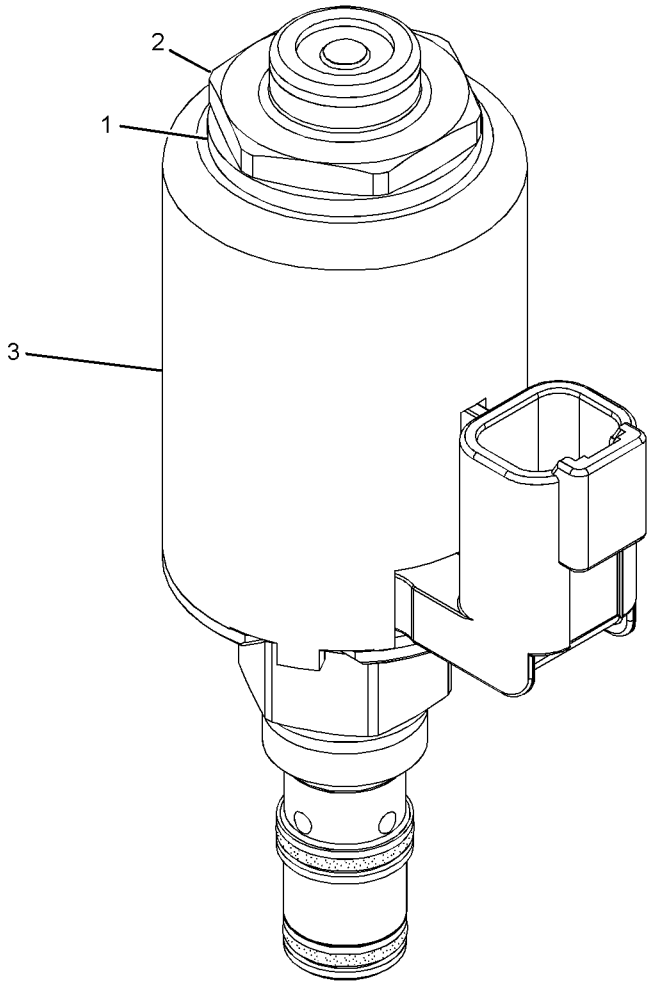

GRAPHIC #1 **<END>** g01637233

8E-6439 BRACE GP-BULLDOZER—MANUAL TILT

S/N: D1E1-UP; D1F1-UP
PART OF 159-8153 BRACE GP-BULLDOZER
AN ATTACHMENT

SMCS-6074 **i03387042**

NOTE	REF NO	GRAPHIC REF	PART NUMBER	QTY	PART NAME 1 2 3 4 5 6 (PRODUCT LEVEL)	SEE PAGE
	1	1	**8E-6176**	1	SCREW	
	2	1	**160-6309**	1	CAP-BEARING	
	3	1	**8J-9152**	1	SCREW-ADJUSTMENT	
B	4	1	**8J-9180**	28	SHIM (0.51-MM THK)	
M	5	1	**8T-4001**	4	NUT (M24X3-THD)	
M	6	1	**7X-2567**	4	BOLT (M24X3X160-MM)	
	7	1	**3B-8489**	2	FITTING-GREASE	
	8	1	**9W-4931**	1	BRACE AS	
	9	1	**8J-4867**	1	LUG	
	10	1	**7T-9153**	1	HANDLE	

B-USE AS REQUIRED
M-METRIC PART

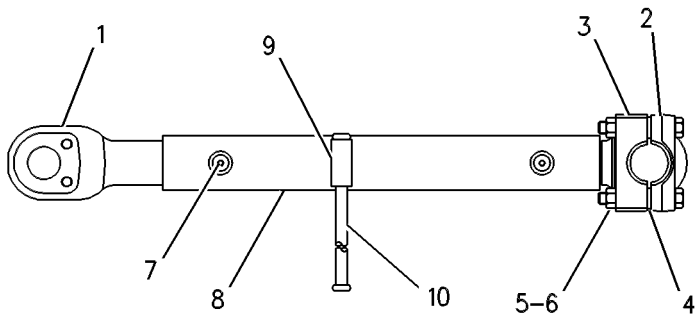

GRAPHIC #1 **<END>** g00471930

159-8153 BRACE GP-BULLDOZER

S/N: D1E1-UP; D1F1-UP
PART OF 261-2351, 261-2352 BULLDOZER AR-ANGLING
AN ATTACHMENT

SMCS-6074 **i01442126**

NOTE	REF NO	GRAPHIC REF	PART NUMBER	QTY	PART NAME 1 2 3 4 5 6 (PRODUCT LEVEL)	SEE PAGE
	1	1	**3G-7016**	2	PIN	
	2	1	**3J-5190**	2	CAP-BEARING	
		1	**8E-5818**	14	SHIM (0.8-MM THK)	
	3	1	**5P-0370**	2	LOCK PIN	
	4	1	**6J-5179**	2	RETAINER	
B	5	1	**8E-5818**	56	SHIM (0.8-MM THK)	
Y	6	1	*8E-6439*	2	BRACE GP-BULLDOZER	916
	7	1	**156-4125**	1	ARM AS	
	8	1	**156-4126**	1	ARM AS	
					(EACH ARM AS INCLUDES)	
		1	**9W-4414**	2	PLATE	
		1	**156-4124**	1	NUT	
		1	**156-4127**	1	BEARING	
		1	**156-4128**	1	END AS	
		1	**4J-4968**	2	RING-LOCK	
		1	**7T-9147**	1	BEARING	
		1	**163-5116**	1	BRACKET AS	
	9	1	**158-3653**	2	PIN	
	10	1	**158-3657**	2	STUD-BALL	
M	11	1	**7X-2574**	4	BOLT (M24X3X45-MM)	
M	12	1	**8T-4175**	8	BOLT (M16X2X90-MM)	

B-USE AS REQUIRED
M-METRIC PART
Y-SEPARATE ILLUSTRATION

159-8153 **BRACE GP-BULLDOZER** *(contd.)* **i01442126**

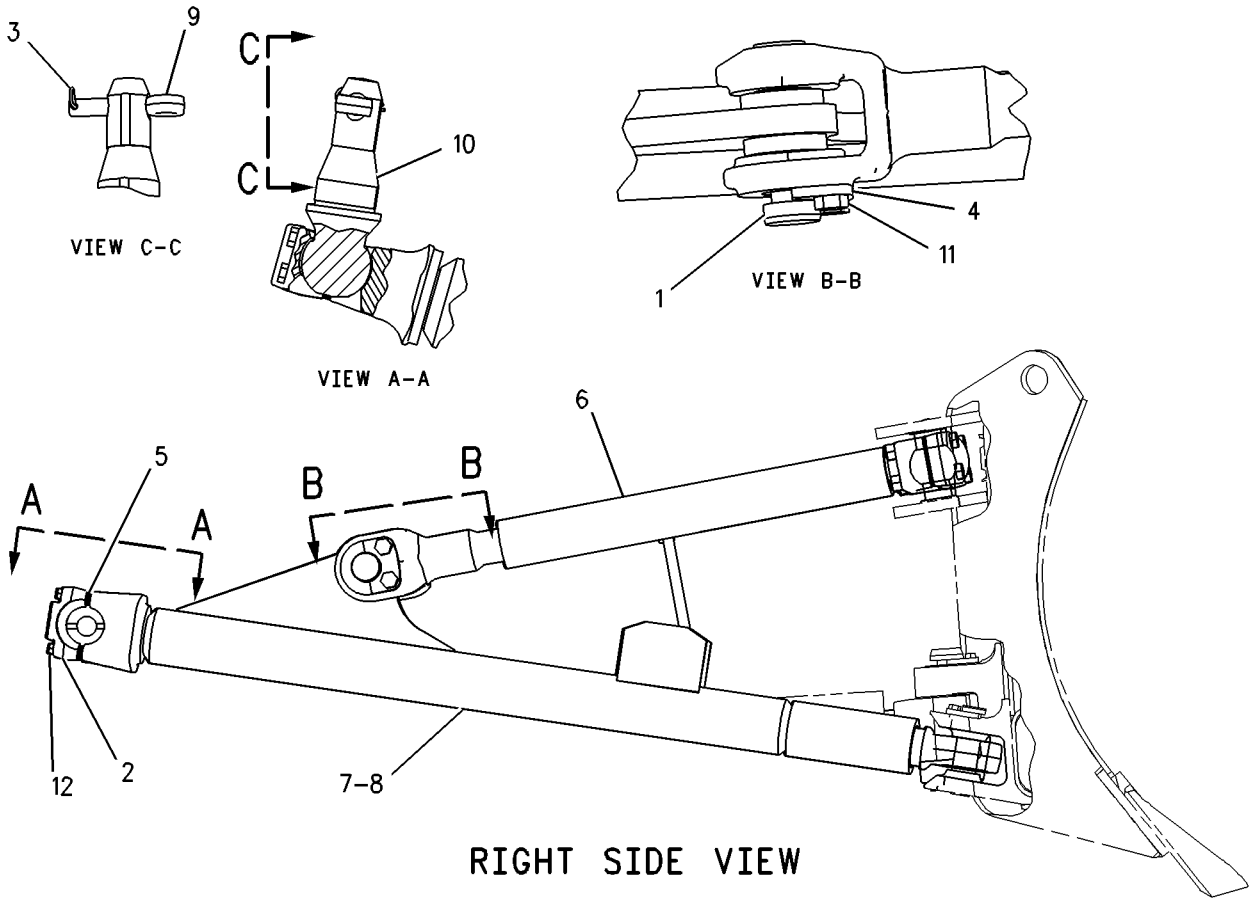

GRAPHIC #1 **<END>** g00672327

IMPLEMENTS

261-2351 BULLDOZER AR-ANGLING

S/N: D1E1-UP

AN ATTACHMENT

SMCS-6050, 6052 **i03387083**

NOTE	REF NO	GRAPHIC REF	PART NUMBER	QTY	PART NAME 1 2 3 4 5 6 (PRODUCT LEVEL)	SEE PAGE
Y	1	1	*151-1151*	1	BLADE GP-ANGLING	968
Y	2	1	*159-8142*	1	C-FRAME GP	926
Y	3	1	*159-8153*	1	BRACE GP-BULLDOZER	917
Y	4	1	*227-6315*	1	MOUNTING GP-CYLINDER	809
Y	5	1	*237-4370*	1	TRUNNION GP-BULLDOZER	939
Y	6	1	*237-7362*	1	CYLINDER & LINES GP-LIFT (LH)	737
Y	7	1	*237-7363*	1	CYLINDER & LINES GP-LIFT (RH)	739
F			**2Y-9790**	1	PLATE-SERIAL NUMBER (BULLDOZER)	
					(ON BACK OF MOLDBOARD, NEAR TOP AT RIGHT END)	
F			**4B-4158**	2	SCREW-DRIVE (NO 4X1/4-IN)	

F-NOT SHOWN
Y-SEPARATE ILLUSTRATION

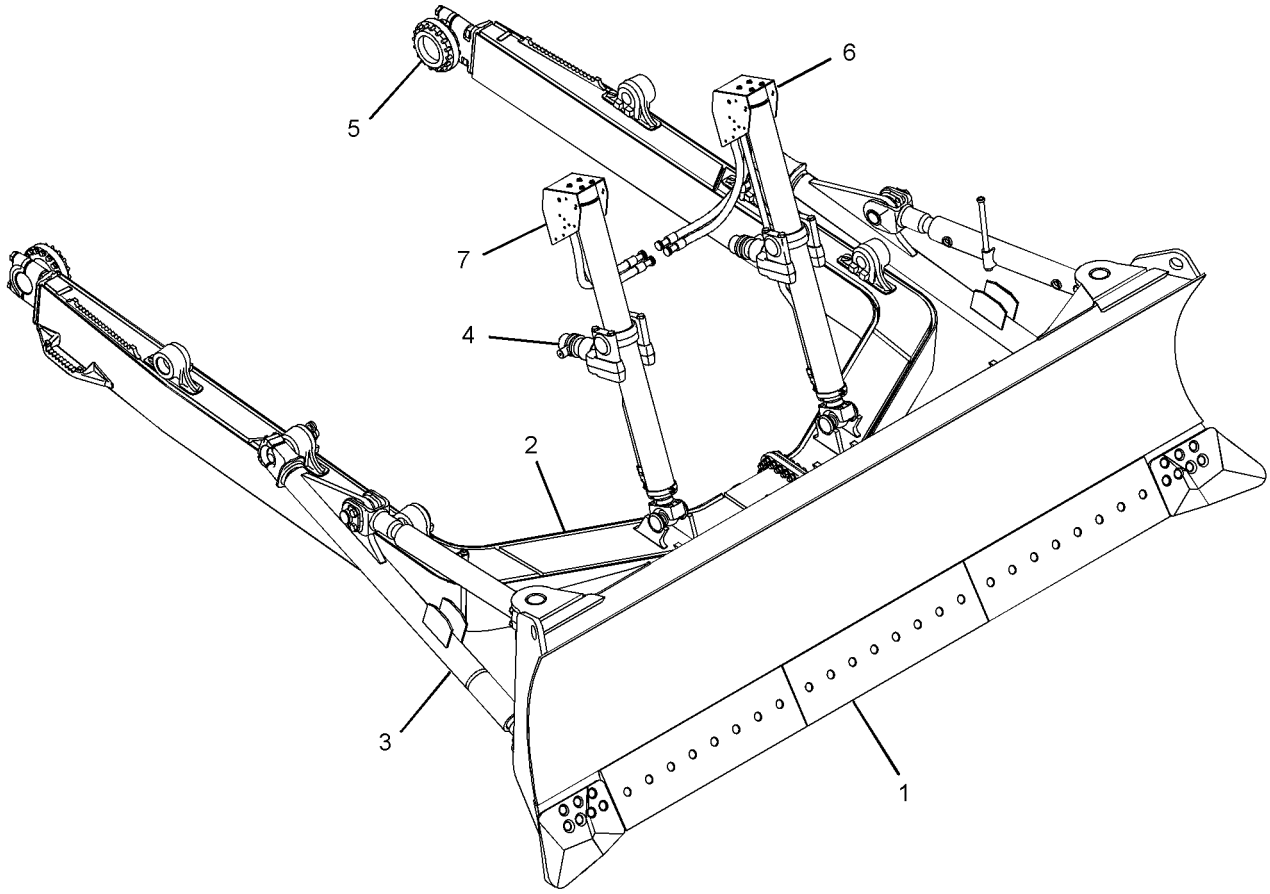

GRAPHIC #1 **<END>** g01111858

261-2352 BULLDOZER AR-ANGLING

S/N: D1F1-UP

FOR USE WITH 227-6315—PAGE 809, 237-7362—PAGE 737, 237-7363—PAGE 739

AN ATTACHMENT

SMCS-6050, 6052 **i02250042**

NOTE	REF NO	GRAPHIC REF	PART NUMBER	QTY	PART NAME 1 2 3 4 5 6 (PRODUCT LEVEL)	SEE PAGE
Y	1	1	*151-1151*	1	BLADE GP-ANGLING	968
Y	2	1	*159-8142*	1	C-FRAME GP	926
Y	3	1	*159-8153*	1	BRACE GP-BULLDOZER	917
Y	4	1	*237-4370*	1	TRUNNION GP-BULLDOZER	939

Y-SEPARATE ILLUSTRATION

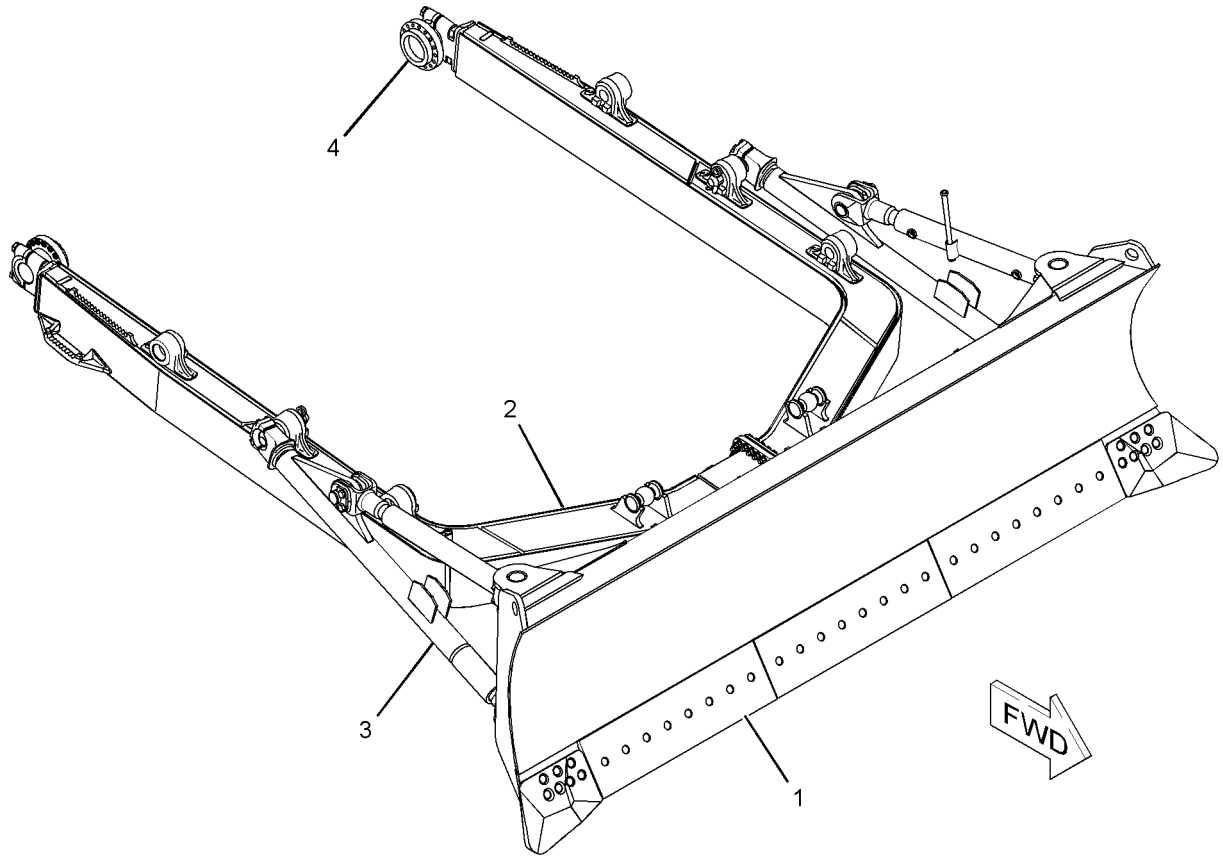

GRAPHIC #1 **<END>** g01110946

227-5437 BULLDOZER AR-SEMI-UNIVERSAL

S/N: B8S1-UP

AN ATTACHMENT

SMCS-6050, 6078 **i03387900**

NOTE	REF NO	GRAPHIC REF	PART NUMBER	QTY	PART NAME 1 2 3 4 5 6 (PRODUCT LEVEL)	SEE PAGE
Y	1	1	*227-6315*	1	MOUNTING GP-CYLINDER	809
Y	2	1	*237-4366*	1	BLADE GP-SEMI-UNIVERSAL	969
Y	3	1	*237-4368*	1	PUSH ARM GP-STABILIZER	935
Y	4	1	*237-4369*	1	LINES GP-TILT CYLINDER	788
Y	5	1	*237-4370*	1	TRUNNION GP-BULLDOZER	939
Y	6	1	*237-7362*	1	CYLINDER & LINES GP-LIFT (LH)	737
Y	7	1	*237-7363*	1	CYLINDER & LINES GP-LIFT (RH)	739
F			**2Y-9790**	1	PLATE-SERIAL NUMBER (BULLDOZER)	
					(ON BACK OF MOLDBOARD, NEAR TOP AT RIGHT END)	
F			**4B-4158**	2	SCREW-DRIVE (NO 4X1/4-IN)	

F-NOT SHOWN
Y-SEPARATE ILLUSTRATION

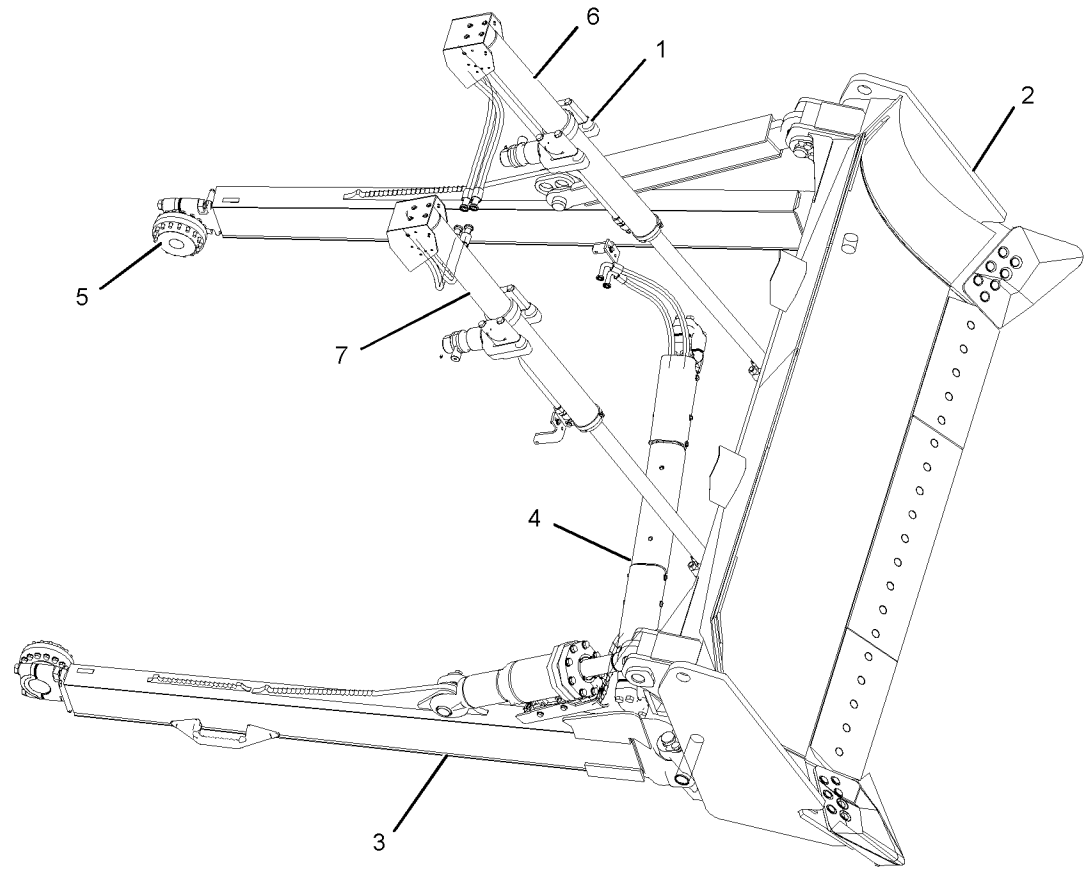

GRAPHIC #1 **<END>** g01111661

IMPLEMENTS

227-5439 BULLDOZER AR-SEMI-UNIVERSAL

S/N: DZX1-UP

FOR USE WITH 227-6315—PAGE 809, 237-7362—PAGE 737, 237-7363—PAGE 739

AN ATTACHMENT

SMCS-6050, 6078 **i03387903**

NOTE	REF NO	GRAPHIC REF	PART NUMBER	QTY	PART NAME 1 2 3 4 5 6 (PRODUCT LEVEL)	SEE PAGE
Y	1	1	*237-4366*	1	BLADE GP-SEMI-UNIVERSAL	969
Y	2	1	*237-4368*	1	PUSH ARM GP-STABILIZER	935
Y	3	1	*237-4369*	1	LINES GP-TILT CYLINDER	788
Y	4	1	*237-4370*	1	TRUNNION GP-BULLDOZER	939
F			**2Y-9790**	1	PLATE-SERIAL NUMBER (BULLDOZER)	
					(ON BACK OF MOLDBOARD, NEAR TOP AT RIGHT END)	
F			**4B-4158**	2	SCREW-DRIVE (NO 4X1/4-IN)	

F-NOT SHOWN
Y-SEPARATE ILLUSTRATION

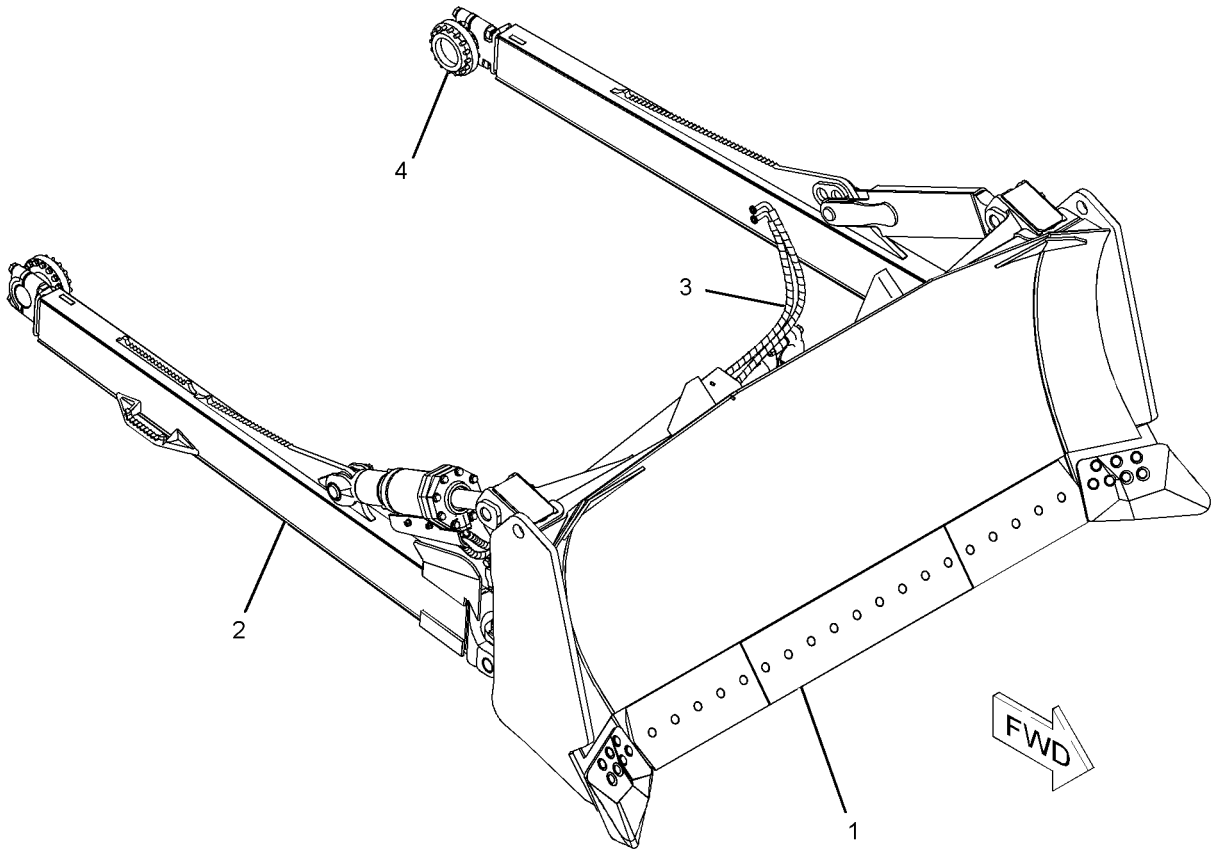

GRAPHIC #1 **<END>** g01130740

245-3557 BULLDOZER AR-SEMI-UNIVERSAL–
LOW GROUND PRESSURE
S/N: DZR1-UP
FOR USE WITH 209-5117–PAGE 618, 227-6315–PAGE 809, 237-7362–PAGE 737, 237-7363–PAGE 739
AN ATTACHMENT

SMCS-6050, 6078 **i03242669**

NOTE	REF NO	GRAPHIC REF	PART NUMBER	QTY	PART NAME 1 2 3 4 5 6 (PRODUCT LEVEL)	SEE PAGE
Y	1	1	*247-0850*	1	BLADE GP-SEMI-UNIVERSAL	971
Y	2	1	*247-0851*	1	PUSH ARM GP-STABILIZER	937
Y	3	1	*247-0852*	1	TRUNNION GP-BULLDOZER	940
Y	4	1	*256-4905*	1	LINES GP-TILT CYLINDER	794
F			**4B-4158**	2	SCREW-DRIVE (NO 4X1/4-IN)	
F			**2Y-9790**	1	PLATE-SERIAL NUMBER (BULLDOZER)	
					(ON BACK OF MOLDBOARD, NEAR TOP AT RIGHT END)	

F-NOT SHOWN
Y-SEPARATE ILLUSTRATION

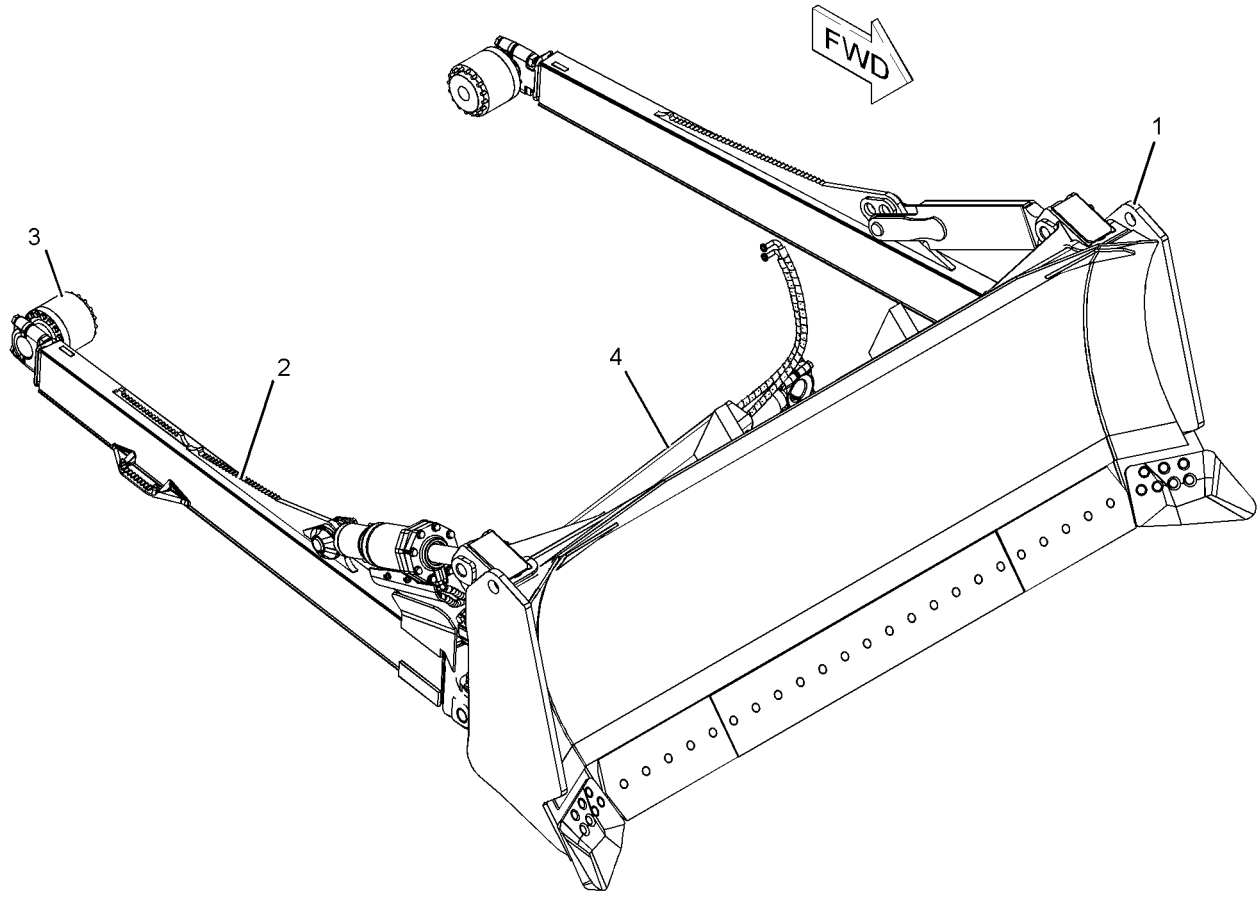

GRAPHIC #1 **<END>** g01119248

IMPLEMENTS

245-3566 BULLDOZER AR-UNIVERSAL

S/N: A5G1-UP

AN ATTACHMENT

SMCS-6050, 6053 **i03392906**

NOTE	REF NO	GRAPHIC REF	PART NUMBER	QTY	PART NAME 1 2 3 4 5 6 (PRODUCT LEVEL)	SEE PAGE
Y	1	1	*227-6315*	1	MOUNTING GP-CYLINDER	809
Y	2	1	*237-4368*	1	PUSH ARM GP-STABILIZER	935
Y	3	1	*237-4369*	1	LINES GP-TILT CYLINDER	788
Y	4	1	*237-4370*	1	TRUNNION GP-BULLDOZER	939
Y	5	1	*237-7362*	1	CYLINDER & LINES GP-LIFT (LH)	737
Y	6	1	*237-7363*	1	CYLINDER & LINES GP-LIFT (RH)	739
Y	7	1	*245-3562*	1	BLADE GP-UNIVERSAL	976
F			**2Y-9790**	1	PLATE-SERIAL NUMBER (BULLDOZER)	
					(ON BACK OF MOLDBOARD, NEAR TOP AT RIGHT END)	
F			**4B-4158**	2	SCREW-DRIVE (NO 4X1/4-IN)	

F-NOT SHOWN
Y-SEPARATE ILLUSTRATION

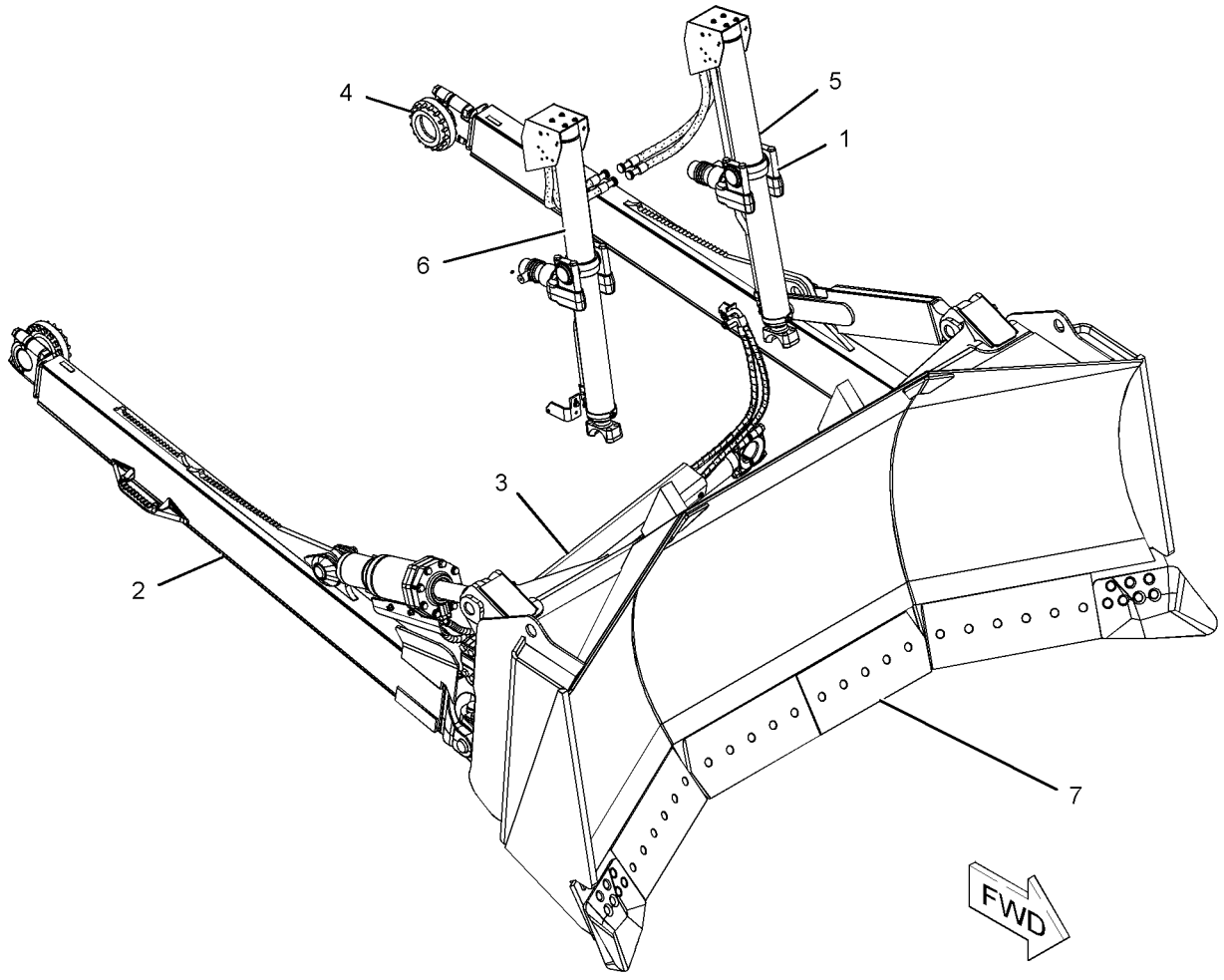

GRAPHIC #1 **<END>** g01112074

IMPLEMENTS

245-3567 BULLDOZER AR-UNIVERSAL

S/N: DZS1-UP

FOR USE WITH 227-6315—PAGE 809, 237-7362—PAGE 737, 237-7363—PAGE 739

AN ATTACHMENT

SMCS-6050, 6053 **i03387930**

NOTE	REF NO	GRAPHIC REF	PART NUMBER	QTY	PART NAME 1 2 3 4 5 6 (PRODUCT LEVEL)	SEE PAGE
Y	1	1	*237-4368*	1	PUSH ARM GP-STABILIZER	935
Y	2	1	*237-4369*	1	LINES GP-TILT CYLINDER	788
Y	3	1	*237-4370*	1	TRUNNION GP-BULLDOZER	939
Y	4	1	*245-3562*	1	BLADE GP-UNIVERSAL	976
F			**2Y-9790**	1	PLATE-SERIAL NUMBER (BULLDOZER)	
					(ON BACK OF MOLDBOARD, NEAR TOP AT RIGHT END)	
F			**4B-4158**	2	SCREW-DRIVE (NO 4X1/4-IN)	

F-NOT SHOWN
Y-SEPARATE ILLUSTRATION

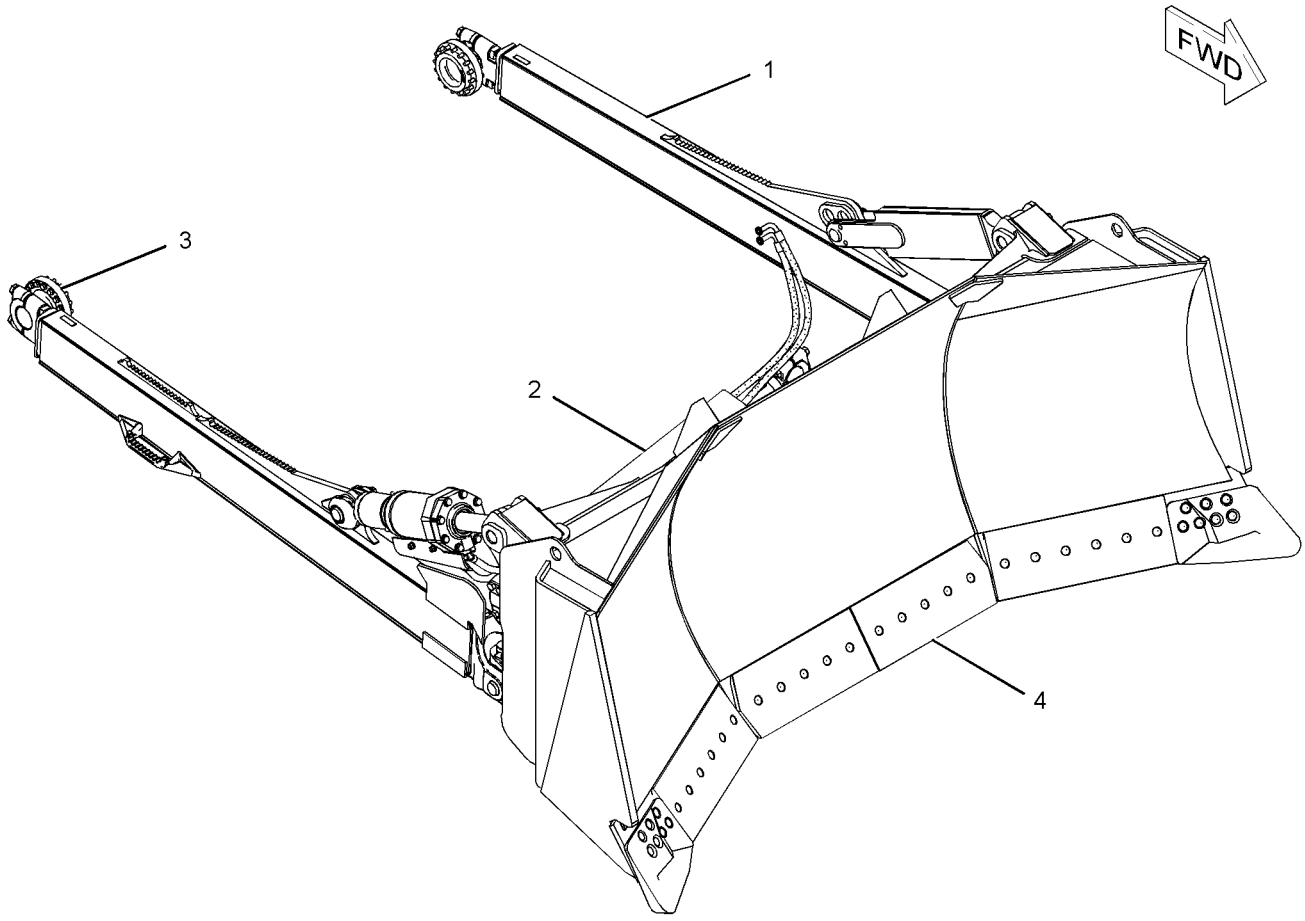

GRAPHIC #1 **<END>** g01112585

IMPLEMENTS

159-8142 C-FRAME GP

S/N: D1E1-UP; D1F1-UP
PART OF 261-2351, 261-2352 BULLDOZER AR-ANGLING
AN ATTACHMENT

SMCS-6063 **i02250041**

NOTE	REF NO	GRAPHIC REF	PART NUMBER	QTY	PART NAME 1 2 3 4 5 6 (PRODUCT LEVEL)	SEE PAGE
	1	1	**3G-9571**	2	KEY	
	2	1	**193-3063**	2	CAP-BEARING	
B	3	1	**9W-7602**	56	SHIM (0.8-MM THK)	
	4	1	**237-4872**	1	PIN-PIVOT	
M	5	1	**8T-4131**	32	NUT (M20X2.5-THD)	
M	6	1	**3E-9850**	4	BOLT (M30X3.5X220-MM)	
	7	1	**163-2013**	1	RETAINER	
M	8	1	**7X-2562**	2	BOLT (M20X2.5X45-MM)	
M	9	1	**7X-2565**	32	BOLT (M20X2.5X100-MM)	
	10	1	**195-6283**	4	NUT-SQUARE (M30X3.5-THD)	
	11	1	**8T-4123**	64	WASHER (22X35X3.5-MM THK)	
	12	1	**159-8143**	1	C-FRAME AS (LH)	
	13	1	**1J-6744**	1	BEARING	
	14	1	**1U-2533**	1	BAR	
	15	1	**3G-9626**	1	END-JOINT	
	16	1	**7T-5140**	1	STEP	
	17	1	**8E-6443**	1	TRUNNION AS	
		1	**9J-0123**	1	TRUNNION	
	18	1	**8P-9770**	1	PLATE	
	19	1	**159-8144**	1	C-FRAME AS (RH)	
	20	1	**1J-6744**	1	BEARING	
	21	1	**1U-2533**	1	BAR	
	22	1	**7T-5140**	1	STEP	
	23	1	**8E-6444**	1	TRUNNION AS	
		1	**9J-0123**	1	TRUNNION	
	24	1	**8P-9770**	1	PLATE	
	25	1	**159-8939**	1	ADAPTER AS	
		1	**160-1660**	2	BEARING-SLEEVE	
	26	1	**5M-6214**	1	PLUG-PIPE	
	27	1	**9X-8258**	4	WASHER (33X56X6-MM THK)	

B-USE AS REQUIRED
M-METRIC PART

159-8142 **C-FRAME GP** *(contd.)* **i02250041**

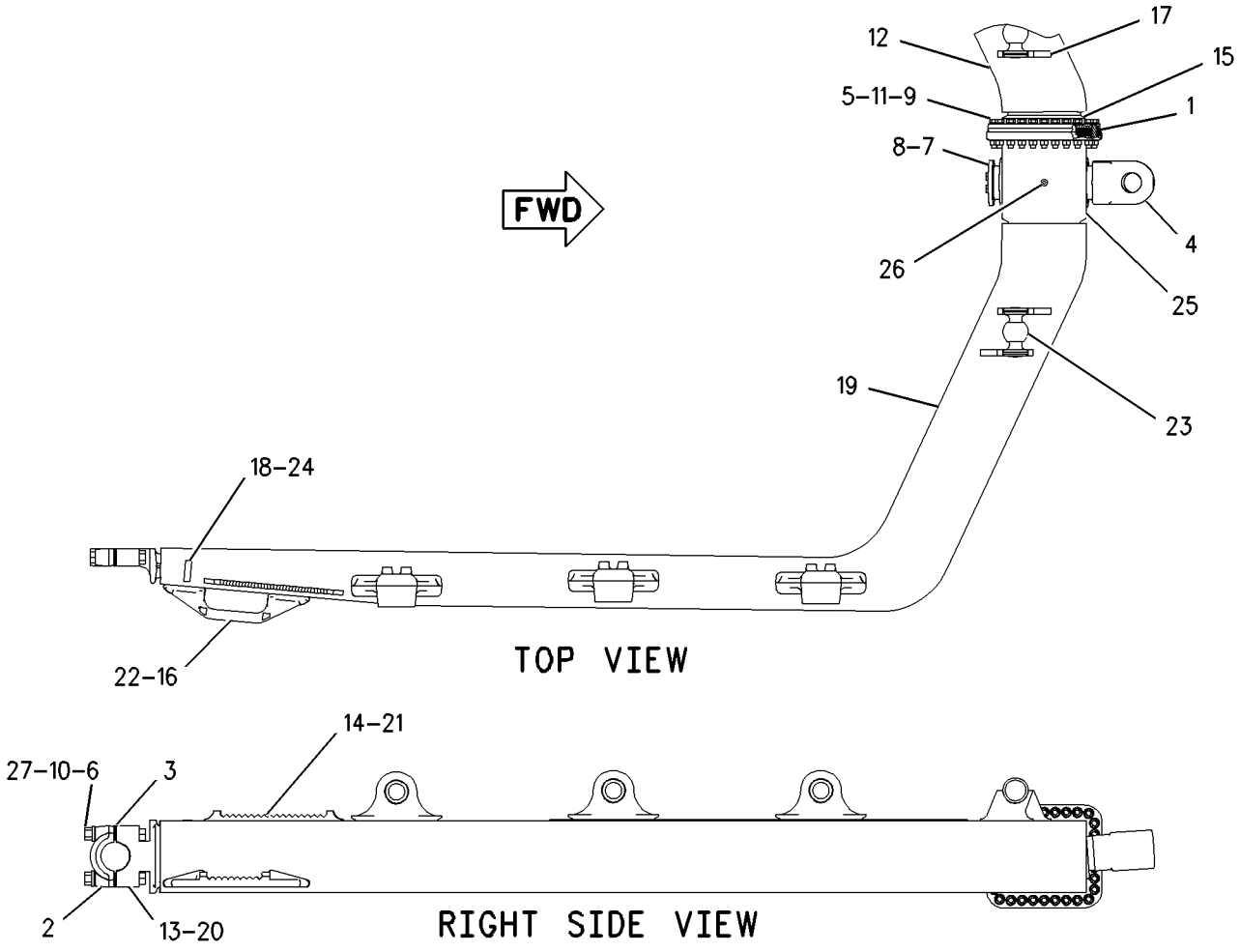

GRAPHIC #1 **<END>** g00758337

239-3340 LINK GP-STABILIZER

S/N: J8B1-UP; A5G1-UP; B8S1-UP; DZS1-UP; DZX1-UP
PART OF 237-4368, 237-9236 PUSH ARM GP-STABILIZER
AN ATTACHMENT

SMCS-6071, 7203 **i02155493**

NOTE	REF NO	GRAPHIC REF	PART NUMBER	QTY	PART NAME 1 2 3 4 5 6 (PRODUCT LEVEL)	SEE PAGE
B	1	1	**6I-8675**	52	SHIM (0.6-MM THK)	
	2	1	**160-6307**	2	CAP-BEARING	
	3	1	**239-3341**	1	LINK AS	
		1	**239-4263**	2	BEARING	
		1	**239-9275**	5	BLOCK	
		1	**239-9670**	2	BLOCK	
M	4	1	**7X-2578**	8	BOLT (M24X3X200-MM)	
M	5	1	**8T-4001**	8	NUT (M24X3-THD)	

B-USE AS REQUIRED
M-METRIC PART

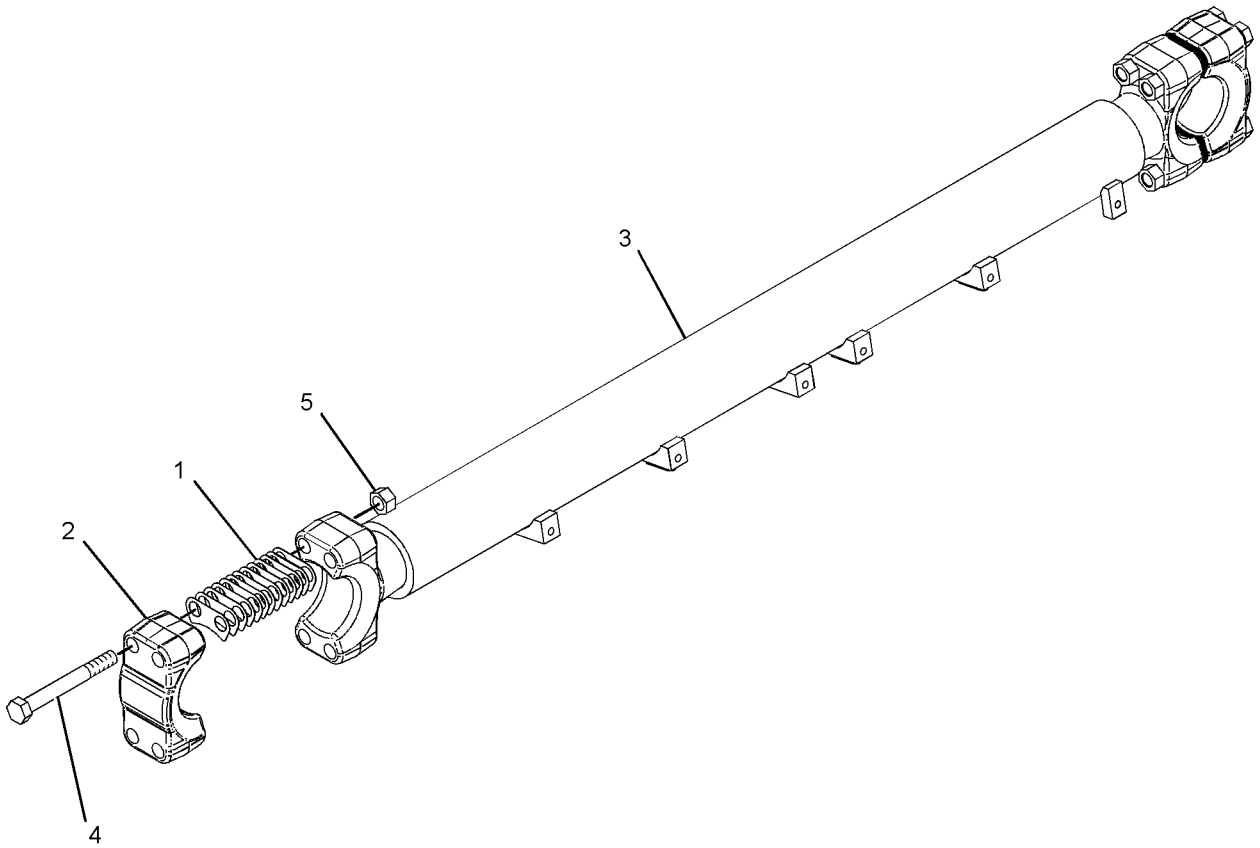

GRAPHIC #1 **<END>** g01022475

256-4901 LINK GP-STABILIZER

S/N: J8B1-UP; DZR1-UP
LOW GROUND PRESSURE
PART OF 247-0851, 261-4801 PUSH ARM GP-STABILIZER
FOR USE WITH SEMI-UNIVERSAL BULLDOZER AR
AN ATTACHMENT

SMCS-6071, 7203 **i03242789**

NOTE	REF NO	GRAPHIC REF	PART NUMBER	QTY	PART NAME 1 2 3 4 5 6 (PRODUCT LEVEL)	SEE PAGE
B	1	1	**6I-8675**	52	SHIM (0.6-MM THK)	
	2	1	**160-6307**	2	CAP-BEARING	
	3	1	**256-4902**	1	LINK AS	
	3A	1	**8P-9770**	1	PLATE	
	3B	1	**239-4263**	2	BEARING	
	3C	1	**239-9275**	4	BLOCK	
	3D	1	**239-9670**	3	BLOCK	
M	4	1	**7X-2578**	8	BOLT (M24X3X200-MM)	
M	5	1	**8T-4001**	8	NUT (M24X3-THD)	

B-USE AS REQUIRED
M-METRIC PART

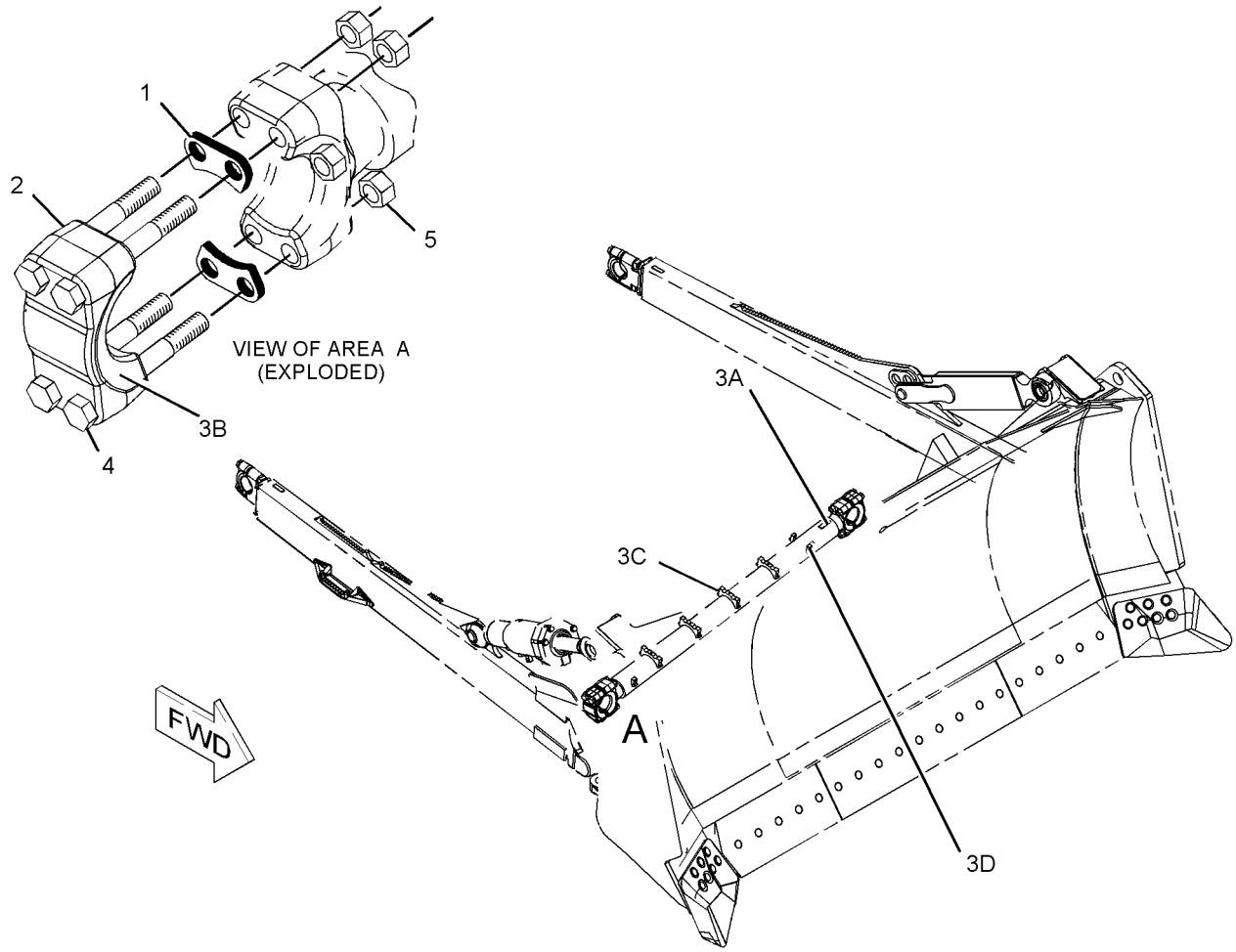

GRAPHIC #1 **<END>** g01119198

245-3559 MODIFICATION AR-BULLDOZER—SEMI-UNIVERSAL

S/N: J8B1-UP
WITH TRASH RACK
AN ATTACHMENT

SMCS-6050 **i03245774**

NOTE	PART NUMBER	QTY	PART NAME 1 2 3 4 5 6 (PRODUCT LEVEL)	SEE PAGE
Y	*301-4872*	1	BLADE & EDGE GP-SEMI-UNIVERSAL	948
Y-SEPARATE ILLUSTRATION				

<END>

239-4212 PUSH ARM GP–LH–BULLDOZER

S/N: A5G1-UP; DZR1-UP; B8S1-UP; DZS1-UP; DZX1-UP
PART OF 237-4368, 247-0851 PUSH ARM GP-STABILIZER
AN ATTACHMENT

SMCS-6061 **i02155563**

NOTE	REF NO	GRAPHIC REF	PART NUMBER	QTY	PART NAME 1 2 3 4 5 6 (PRODUCT LEVEL)	SEE PAGE
B	1	1	**9W-7602**	26	SHIM (0.8-MM THK)	
	2	1	**193-3063**	1	CAP-BEARING	
	3	1	**195-6283**	2	NUT-SQUARE (M30X3.5-THD)	
	4	1	**239-4215**	1	PUSH ARM AS (LH)	
	4A	1	**7T-5140**	1	STEP	
	4B	1	**109-5675**	1	BRACKET AS (LH)	
	4C	1	**3G-9598**	2	BEARING-SLEEVE	
	4D	1	**1J-6740**	1	BEARING	
	4E	1	**239-4218**	1	BRACKET AS	
M	5	1	**3E-9850**	2	BOLT (M30X3.5X220-MM)	
	6	1	**9X-8258**	2	WASHER (33X56X6-MM THK)	

B-USE AS REQUIRED
M-METRIC PART

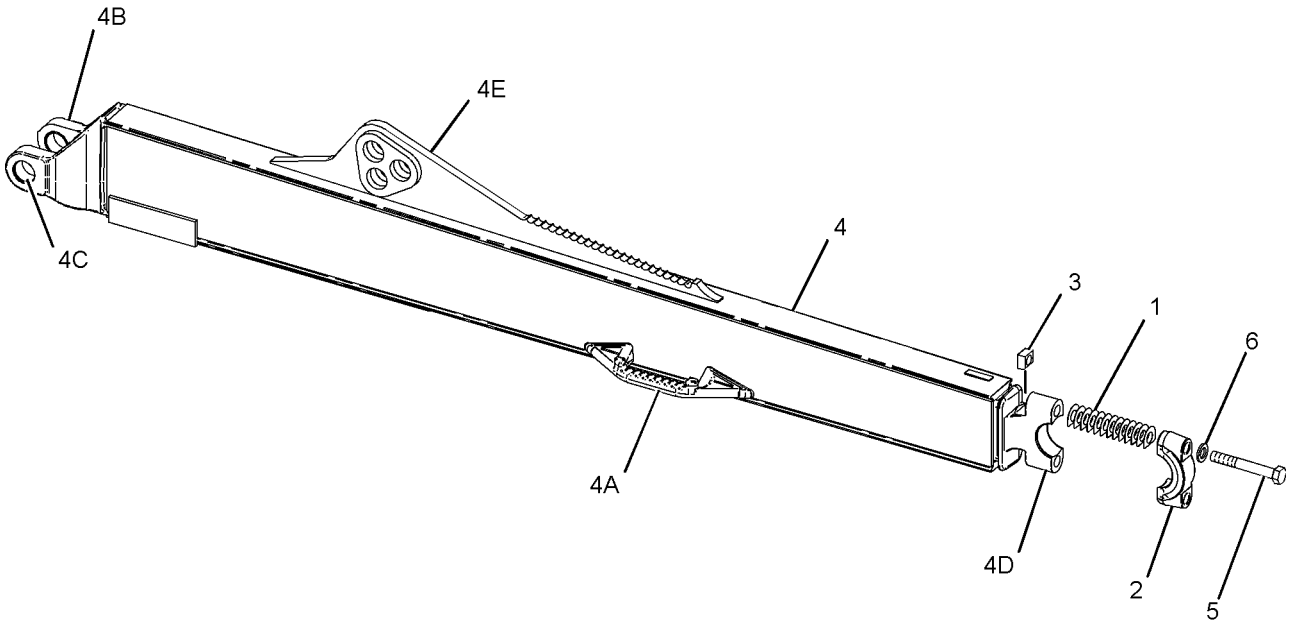

GRAPHIC #1 **<END>** g01111674

239-4224 PUSH ARM GP–RH–BULLDOZER–DUAL TILT CYLINDER

S/N: J8B1-UP; A5G1-UP; DZR1-UP; B8S1-UP; DZS1-UP; DZX1-UP
PART OF 237-4368, 237-9236, 247-0851, 261-4801 PUSH ARM GP-STABILIZER
AN ATTACHMENT

SMCS-6061 **i03391340**

NOTE	REF NO	GRAPHIC REF	PART NUMBER	QTY	PART NAME 1 2 3 4 5 6 (PRODUCT LEVEL)	SEE PAGE
B	1	1	**9W-7602**	26	SHIM (0.8-MM THK)	
	2	1	**193-3063**	1	CAP-BEARING	
	3	1	**195-6283**	2	NUT-SQUARE (M30X3.5-THD)	
	4	1	**239-4225**	1	PUSH ARM AS (RH)	
	4A	1	**1U-2533**	1	BAR	
	4B	1	**7T-5140**	1	STEP	
	4C	1	**8P-9770**	1	PLATE	
	4D	1	**9W-1447**	1	GUARD	
	4E	1	**1J-6740**	1	BEARING	
	4F	1	**239-4227**	1	BRACKET AS	
	4G	1	**109-5674**	1	BRACKET AS (RH)	
	4H	1	**3G-9598**	2	BEARING-SLEEVE	
M	5	1	**3E-9850**	2	BOLT (M30X3.5X220-MM)	
	6	1	**9X-8258**	2	WASHER (33X56X6-MM THK)	

B-USE AS REQUIRED
M-METRIC PART

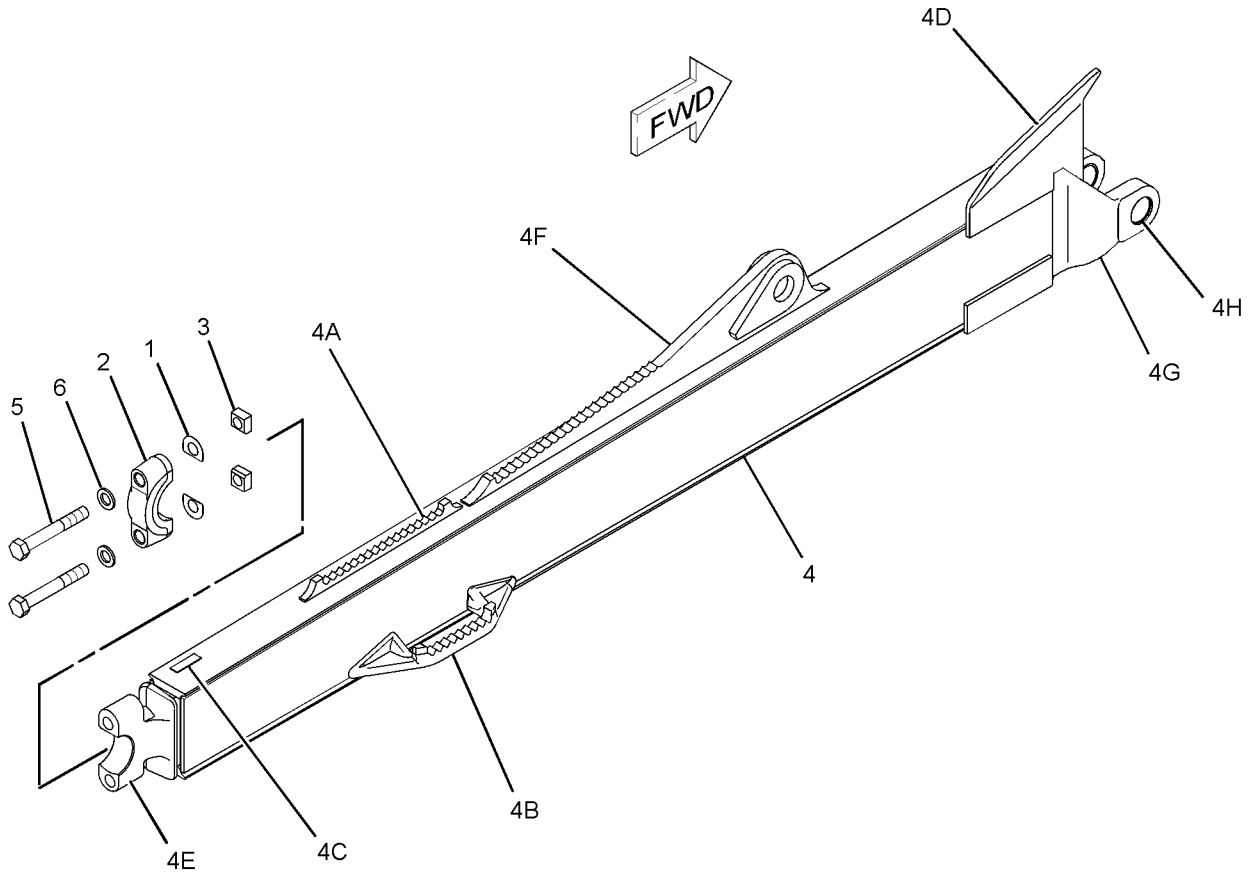

GRAPHIC #1 **<END>** g01111758

240-3395 PUSH ARM GP–BULLDOZER, LH

S/N: J8B1-UP
DUAL TILT CYLINDER
PART OF 237-9236, 261-4801 PUSH ARM GP-STABILIZER
AN ATTACHMENT

SMCS-6061 **i02243216**

NOTE	REF NO	GRAPHIC REF	PART NUMBER	QTY	PART NAME 1 2 3 4 5 6 (PRODUCT LEVEL)	SEE PAGE
B	1	1	**9W-7602**	26	SHIM (0.8-MM THK)	
	2	1	**193-3063**	1	CAP-BEARING	
	3	1	**195-6283**	2	NUT-SQUARE (M30X3.5-THD)	
	4	1	**240-3396**	1	PUSH ARM AS (LH)	
	4A	1	**7T-5140**	1	STEP	
	4B	1	**133-5901**	1	GUARD	
	4C	1	**109-5675**	1	BRACKET AS (LH)	
	4D	1	**3G-9598**	2	BEARING-SLEEVE	
	4E	1	**1J-6740**	1	BEARING	
	4F	1	**239-4227**	1	BRACKET AS	
	4G	1	**8P-9770**	1	PLATE	
M	5	1	**3E-9850**	2	BOLT (M30X3.5X220-MM)	
	6	1	**9X-8258**	2	WASHER (33X56X6-MM THK)	

B-USE AS REQUIRED
M-METRIC PART

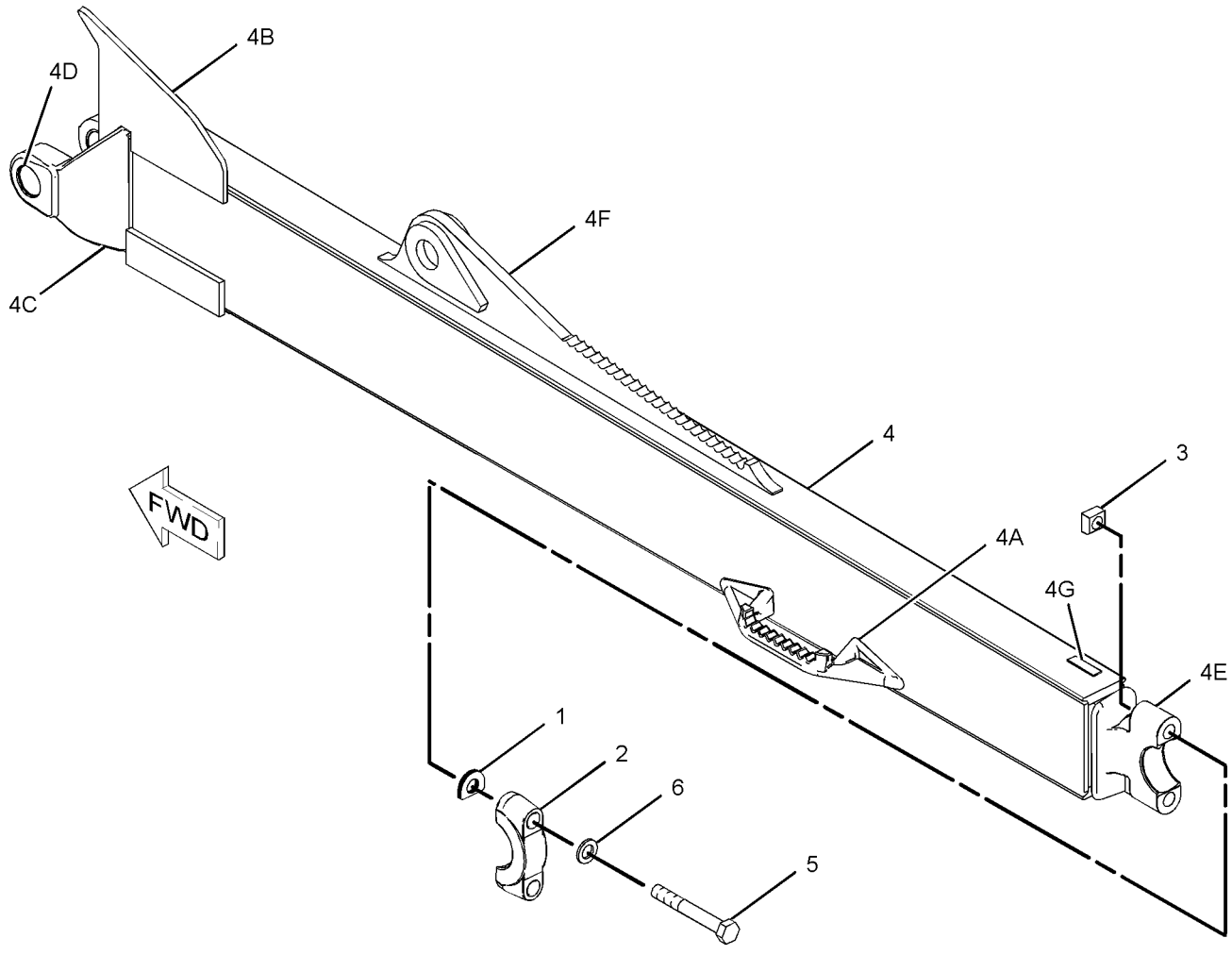

GRAPHIC #1 **<END>** g01112925

237-4368 PUSH ARM GP-STABILIZER

S/N: A5G1-UP; B8S1-UP; DZS1-UP; DZX1-UP
PART OF 227-5437, 227-5439 BULLDOZER AR-SEMI-UNIVERSAL, 245-3566, 245-3567 BULLDOZER AR-UNIVERSAL
AN ATTACHMENT

SMCS-6061 **i02776367**

NOTE	REF NO	GRAPHIC REF	PART NUMBER	QTY	PART NAME 1 2 3 4 5 6 (PRODUCT LEVEL)	SEE PAGE
	1	1	**3G-7016**	1	PIN	
	2	1	**4T-7534**	2	PIN	
	3	1	**6J-5179**	4	RETAINER	
Y	4	1	*239-3340*	1	LINK GP-STABILIZER	928
Y	5	1	*239-4212*	1	PUSH ARM GP (LH)	932
Y	6	1	*239-4224*	1	PUSH ARM GP (RH)	933
	7	1	**239-4237**	1	BRACE AS	
	8	1	**239-9940**	1	PIN	
Y	9	1	**240-7347**	1	CYLINDER GP-TILT	755
M	10	1	**7X-2574**	6	BOLT (M24X3X45-MM)	
M	11	1	**7X-2573**	2	BOLT (M24X3X40-MM)	

M-METRIC PART
Y-SEPARATE ILLUSTRATION

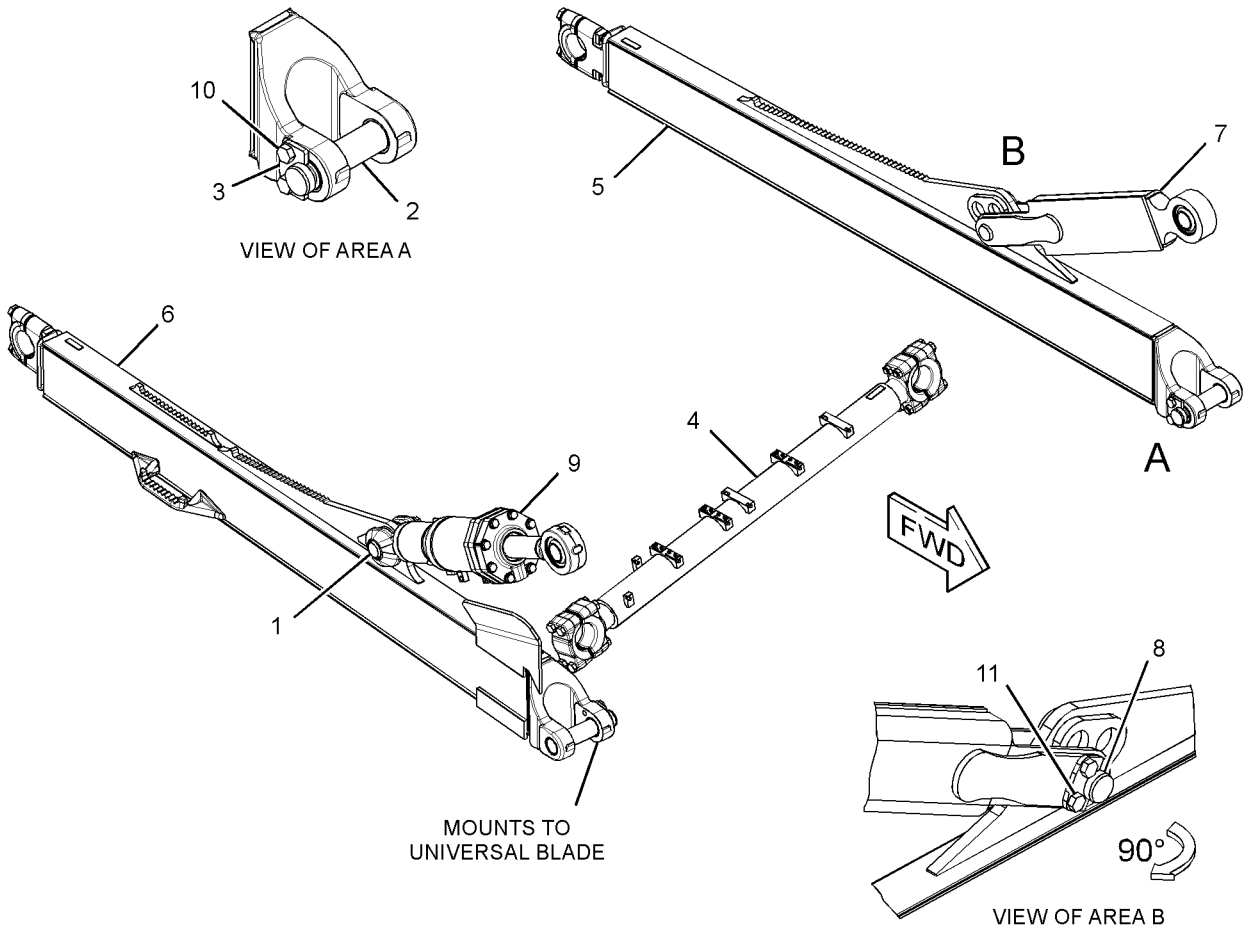

GRAPHIC #1 **<END>** g01404130

237-9236 PUSH ARM GP-STABILIZER—DUAL TILT CYLINDER

S/N: J8B1-UP
PART OF 237-9234 CYLINDER AR-DUAL TILT
AN ATTACHMENT

SMCS-6061 **i02243212**

NOTE	REF NO	GRAPHIC REF	PART NUMBER	QTY	PART NAME 1 2 3 4 5 6 (PRODUCT LEVEL)	SEE PAGE
	1	1	**3G-7016**	2	PIN	
	2	1	**4T-7534**	2	PIN	
	3	1	**6J-5179**	4	RETAINER	
Y	4	1	*239-3340*	1	LINK GP-STABILIZER	928
Y	5	1	*239-4224*	1	PUSH ARM GP (RH)	933
Y	6	1	*240-3395*	1	PUSH ARM GP (LH)	934
M	7	1	**7X-2574**	8	BOLT (M24X3X45-MM)	

M-METRIC PART
Y-SEPARATE ILLUSTRATION

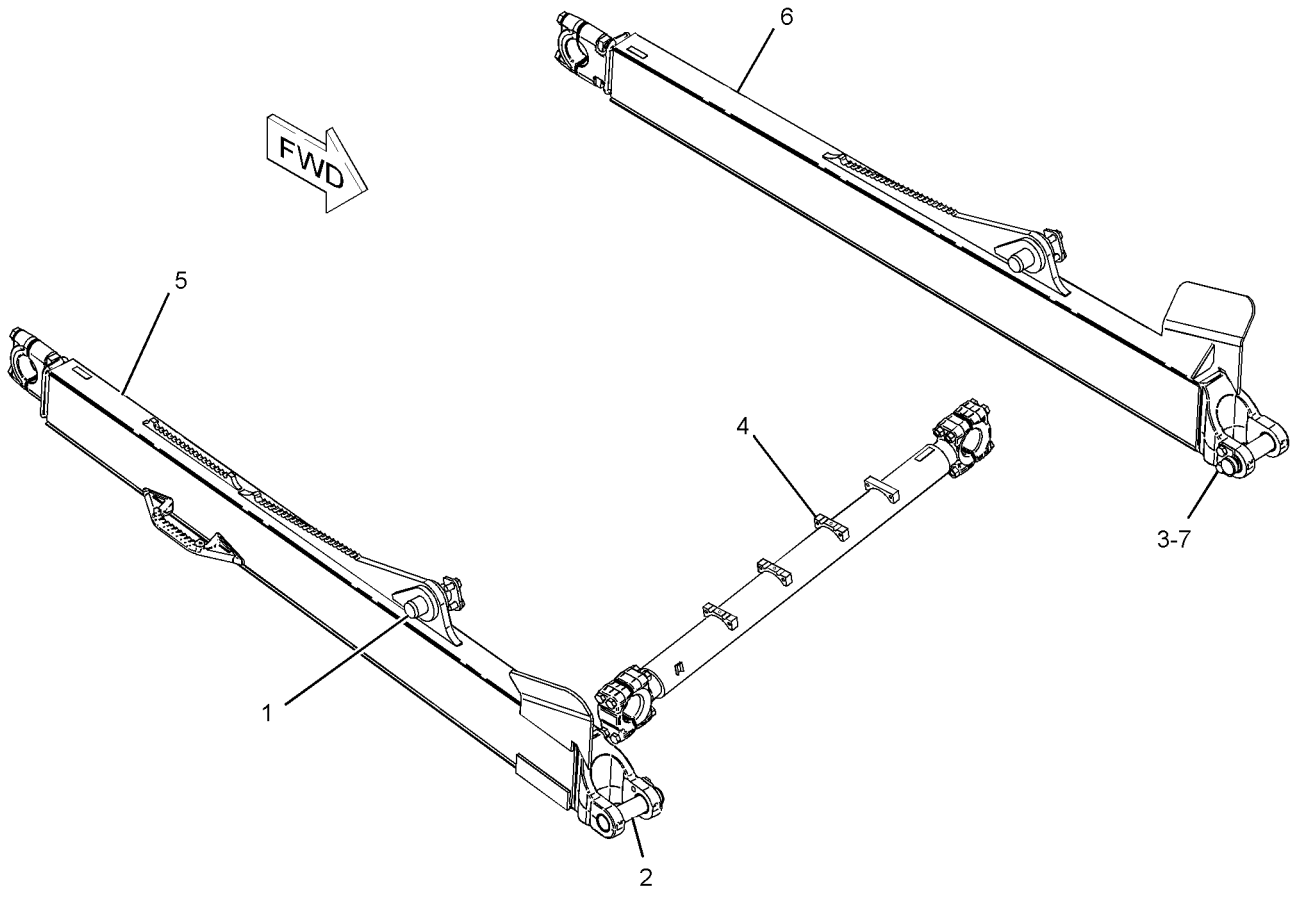

GRAPHIC #1 **<END>** g01111663

247-0851 PUSH ARM GP-STABILIZER–

SEMI-UNIVERSAL BULLDOZER
S/N: DZR1-UP
LOW GROUND PRESSURE
PART OF 245-3557 BULLDOZER AR-SEMI-UNIVERSAL
AN ATTACHMENT

SMCS-6061 **i03242699**

NOTE	REF NO	GRAPHIC REF	PART NUMBER	QTY	PART NAME 1 2 3 4 5 6 (PRODUCT LEVEL)	SEE PAGE
	1	1	**3G-7016**	1	PIN	
	2	1	**4T-7534**	2	PIN	
	3	1	**6J-5179**	4	RETAINER	
Y	4	1	*239-4212*	1	PUSH ARM GP (LH)	932
Y	5	1	*239-4224*	1	PUSH ARM GP (RH)	933
	6	1	**239-4237**	1	BRACE AS	
	6A	1	**3B-8489**	1	FITTING-GREASE	
	6B	1	**7J-3296**	1	RING-LOCK	
	6C	1	**7J-3297**	1	BEARING	
	7	1	**239-9940**	1	PIN	
Y	8	1	**240-7347**	1	CYLINDER GP-TILT (BULLDOZER)	755
Y	9	1	**256-4901**	1	LINK GP-STABILIZER	929
M	10	1	**7X-2574**	8	BOLT (M24X3X45-MM)	

M-METRIC PART
Y-SEPARATE ILLUSTRATION

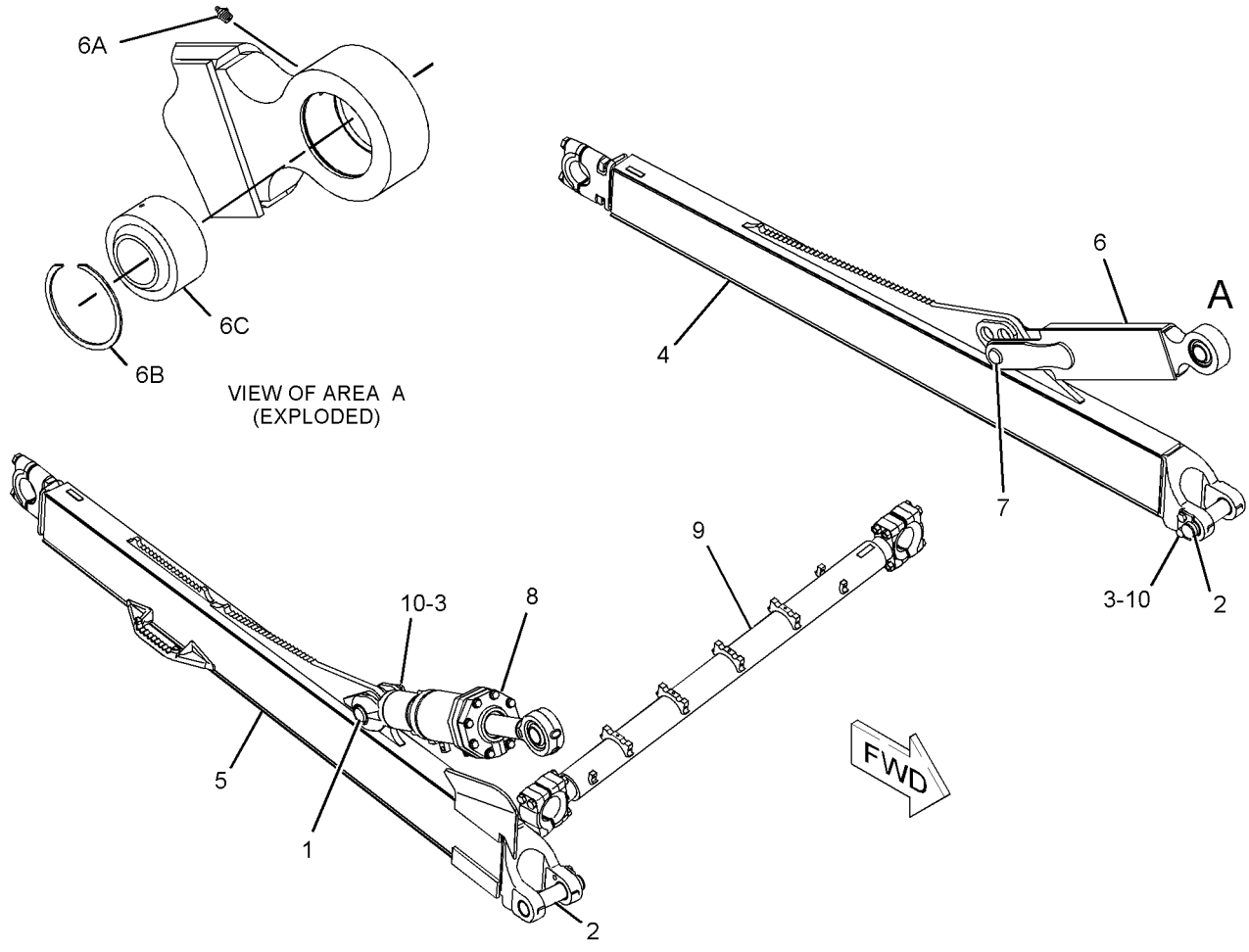

GRAPHIC #1 **<END>** g01119140

261-4801 PUSH ARM GP-STABILIZER—DUAL TILT CYLINDER

S/N: J8B1-UP
LOW GROUND PRESSURE
PART OF 245-3558 CYLINDER AR-DUAL TILT
AN ATTACHMENT

SMCS-6061 **i03245490**

NOTE	REF NO	GRAPHIC REF	PART NUMBER	QTY	PART NAME 1 2 3 4 5 6 (PRODUCT LEVEL)	SEE PAGE
	1	1	**3G-7016**	2	PIN	
	2	1	**4T-7534**	2	PIN	
	3	1	**6J-5179**	4	RETAINER	
Y	4	1	*239-4224*	1	PUSH ARM GP (RH)	933
Y	5	1	*240-3395*	1	PUSH ARM GP (LH)	934
Y	6	1	*256-4901*	1	LINK GP-STABILIZER	929
M	7	1	**7X-2574**	8	BOLT (M24X3X45-MM)	

M-METRIC PART
Y-SEPARATE ILLUSTRATION

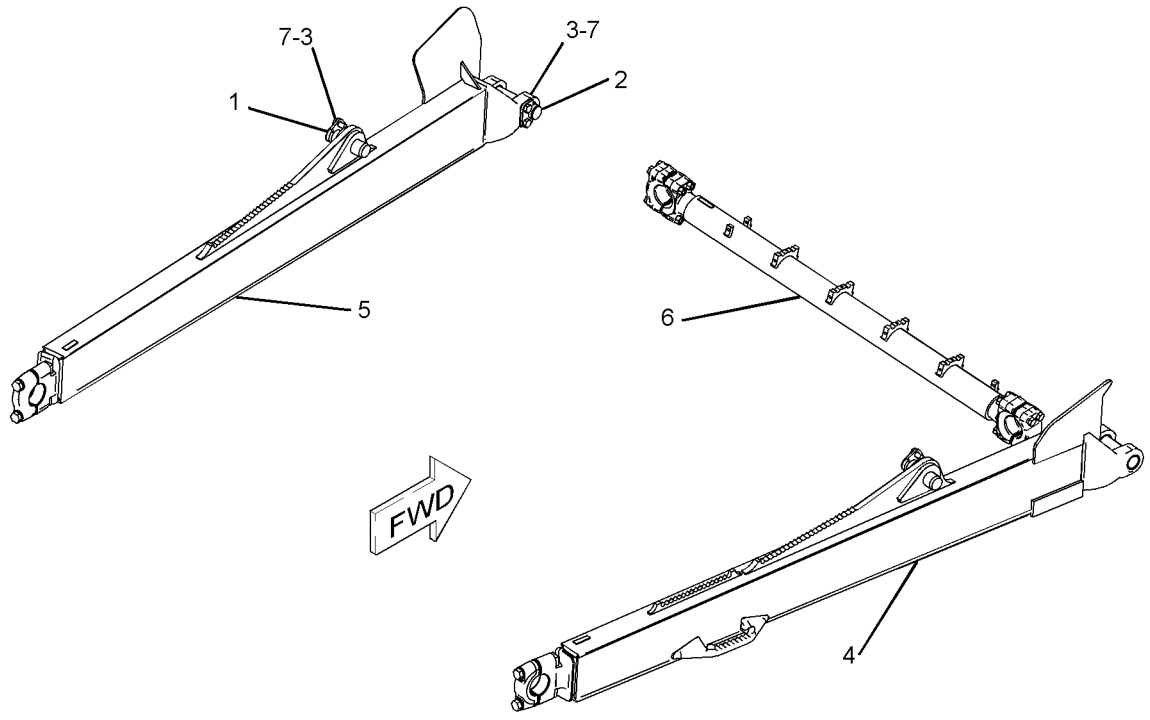

GRAPHIC #1 **<END>** g01123194

237-4370 TRUNNION GP-BULLDOZER

S/N: J8B1-UP; D1E1-UP; D1F1-UP; A5G1-UP; B8S1-UP; DZS1-UP; DZX1-UP
PART OF 261-2351, 261-2352 BULLDOZER AR-ANGLING, 227-5437, 227-5439 BULLDOZER AR-SEMI-UNIVERSAL, 245-3566, 245-3567 BULLDOZER AR-UNIVERSAL AN ATTACHMENT

SMCS-6069 **i02155579**

NOTE	REF NO	GRAPHIC REF	PART NUMBER	QTY	PART NAME 1 2 3 4 5 6 (PRODUCT LEVEL)	SEE PAGE
	1	1	**239-1497**	2	TRUNNION	
	2	1	**8C-6362**	32	BOLT (5/8-11X2.75-IN)	
	3	1	**8T-4122**	32	WASHER-HARD (17X32X3.5-MM THK)	

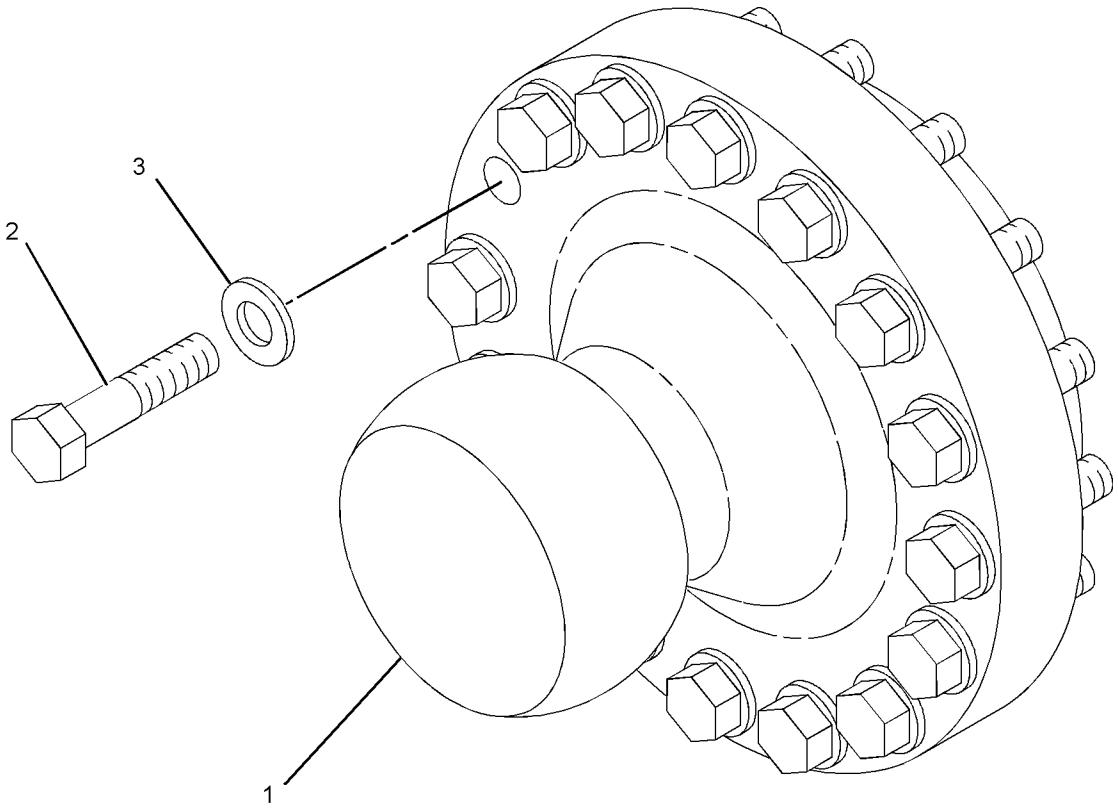

GRAPHIC #1 **<END>** g01022241

247-0852 TRUNNION GP-BULLDOZER

S/N: DZR1-UP
PART OF 245-3557 BULLDOZER AR-SEMI-UNIVERSAL
AN ATTACHMENT

SMCS-6069 **i03242889**

NOTE	REF NO	GRAPHIC REF	PART NUMBER	QTY	PART NAME 1 2 3 4 5 6 (PRODUCT LEVEL)	SEE PAGE
	1	1	**239-1497**	2	TRUNNION	
	2	1	**256-4904**	2	PLATE	
	3	1	**6V-3266**	32	BOLT (5/8-11X9.5-IN)	
	4	1	**8T-4122**	32	WASHER-HARD (17X32X3.5-MM THK)	

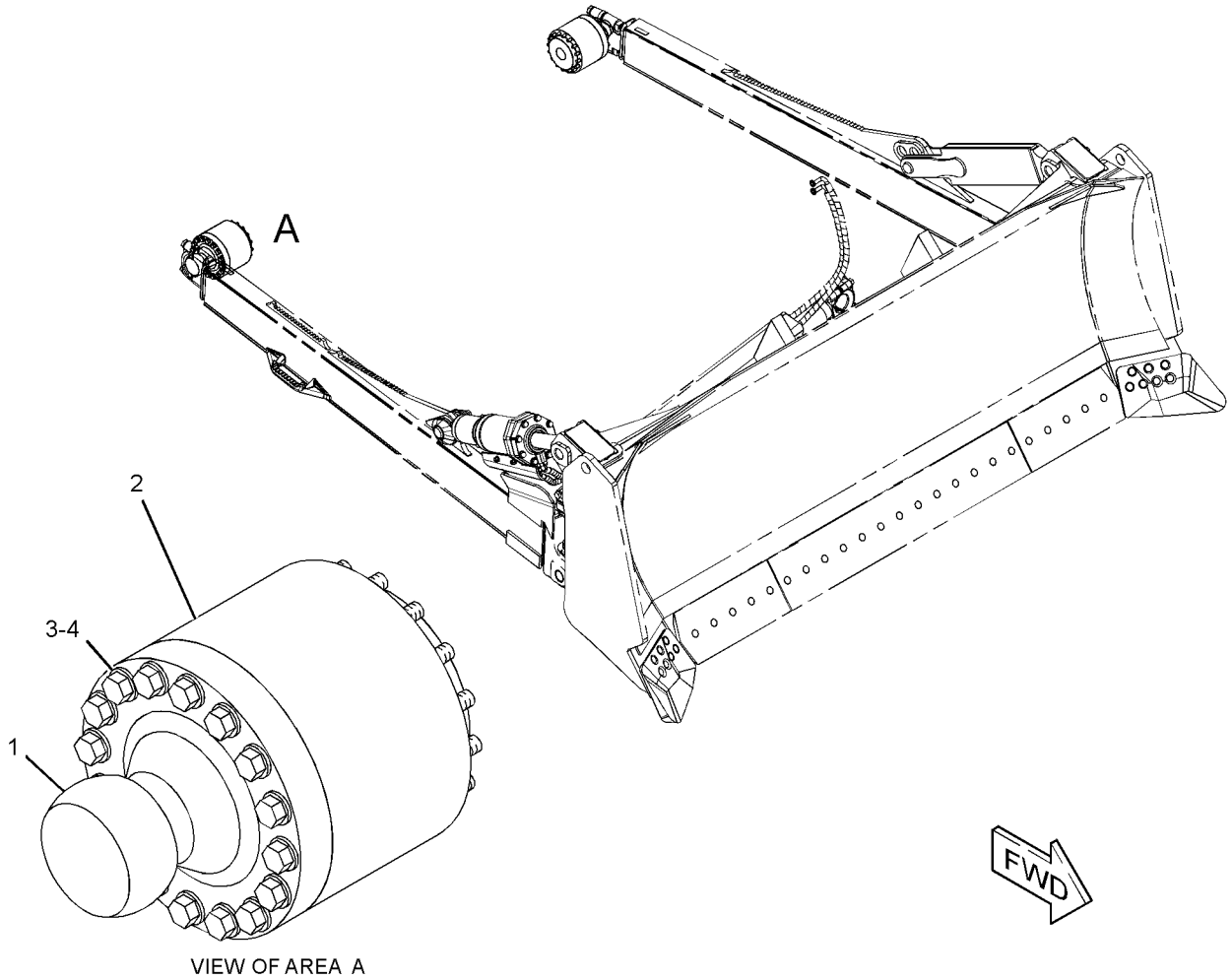

VIEW OF AREA A

GRAPHIC #1 **<END>** g01652535

WORK TOOLS

151-1150 BLADE & EDGE GP-ANGLING

S/N: D1E1-UP; D1F1-UP
PART OF 151-1151 BLADE GP-ANGLING
AN ATTACHMENT

SMCS-6060 **i01397578**

NOTE	REF NO	GRAPHIC REF	PART NUMBER	QTY	PART NAME 1 2 3 4 5 6 (PRODUCT LEVEL)	SEE PAGE
Y	1	1	*135-9374*	1	EDGE GP-BIT & CUTTING	984
	2	1	**143-3553**	1	BLADE AS-ANGLING	
	3	1	**147-3527**	1	SUPPORT	
	4	1	**8P-9770**	1	PLATE	
	5	1	**146-9505**	2	BRACKET	
	6	1	**146-9506**	2	BRACKET AS	
					(EACH INCLUDES)	
	7	1	**4J-2043**	1	TRUNNION	

Y-SEPARATE ILLUSTRATION

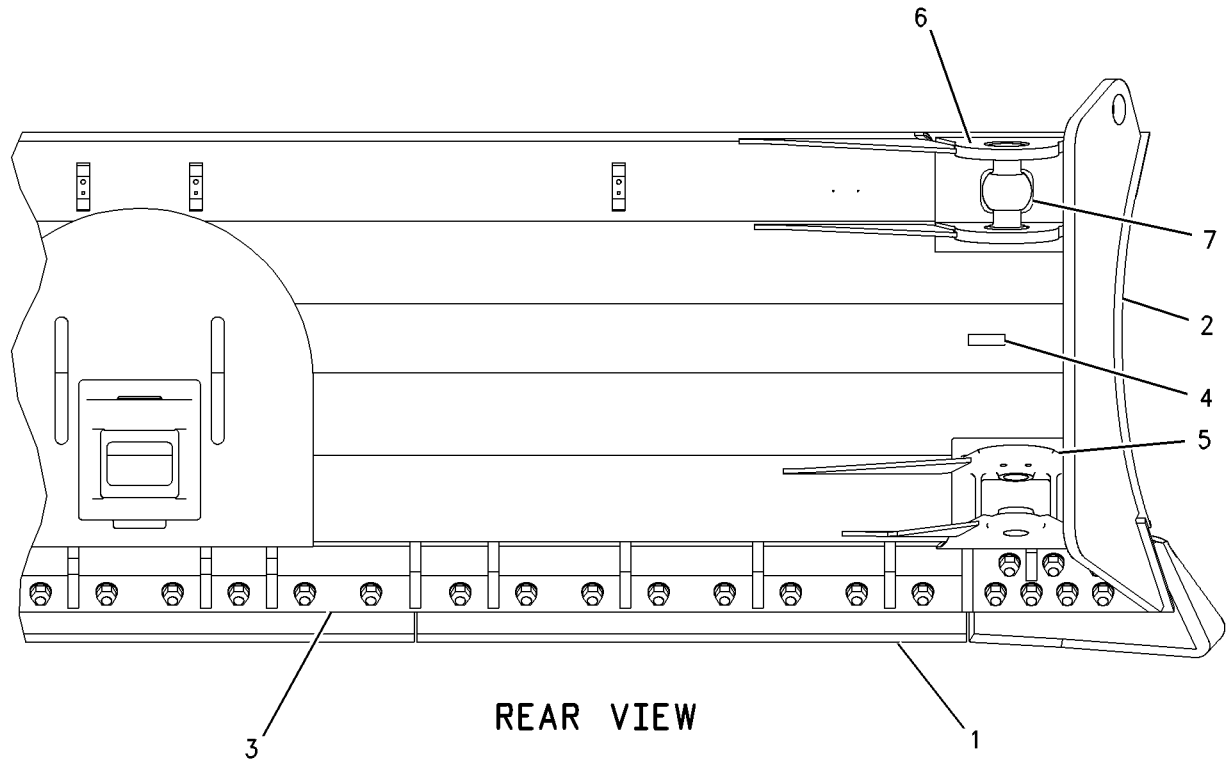

REAR VIEW

GRAPHIC #1 **<END>** g00647861

WORK TOOLS

4Z-0670 BLADE & EDGE GP-SEMI-UNIVERSAL

S/N: J8B1-UP
LANDFILL WITH PUSH PLATE
AN ATTACHMENT

SMCS-6060 **i03268104**

NOTE	PART NUMBER	QTY	PART NAME 1 2 3 4 5 6 (PRODUCT LEVEL)	SEE PAGE
Y	*301-4873*	1	BLADE & EDGE GP-SEMI-UNIVERSAL	948

Y-SEPARATE ILLUSTRATION

<END>

WORK TOOLS

237-4367 BLADE & EDGE GP-SEMI-UNIVERSAL

S/N: B8S1-UP; DZX1-UP

PART OF 237-4366 BLADE GP-SEMI-UNIVERSAL

AN ATTACHMENT

SMCS-6060 **i03193182**

NOTE	REF NO	GRAPHIC REF	PART NUMBER	QTY	PART NAME 1 2 3 4 5 6 (PRODUCT LEVEL)	SEE PAGE
Y	1	1	*7T-5558*	1	EDGE GP-BIT & CUTTING (SEMI-UNIVERSAL)	982
Y	2	1	**239-4170**	1	BLADE AS-SEMI-UNIVERSAL	957
M	3	1	**7X-2548**	8	BOLT (M12X1.75X16-MM)	
M	4	1	**8T-4171**	4	BOLT (M6X1X12-MM)	

M-METRIC PART
Y-SEPARATE ILLUSTRATION

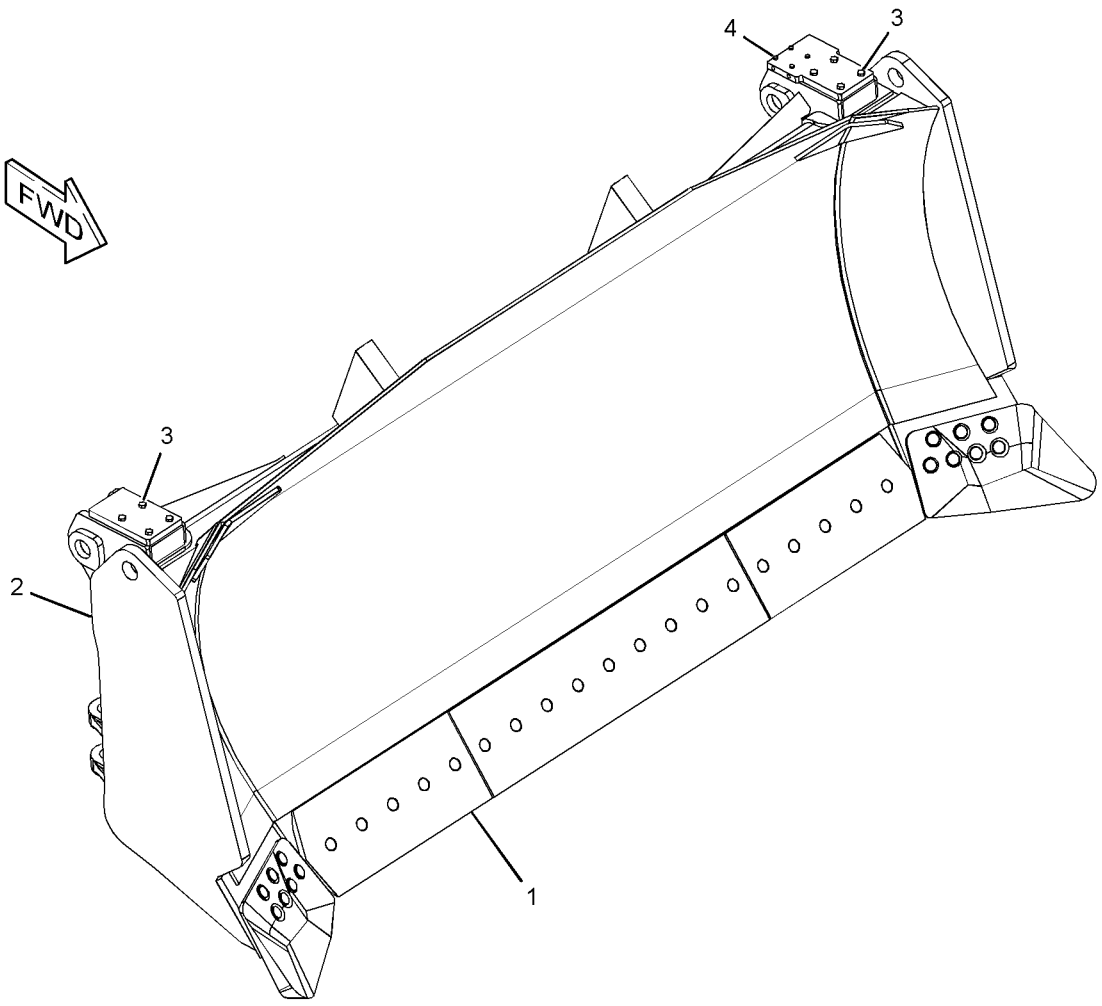

GRAPHIC #1 **<END>** g01631014

245-3564 BLADE & EDGE GP-SEMI-UNIVERSAL

S/N: J8B1-UP
WITH ROCK GUARD & WEAR PLATES
AN ATTACHMENT

SMCS-6060 **i02810800**

NOTE	PART NUMBER	QTY	PART NAME 1 2 3 4 5 6 (PRODUCT LEVEL)	SEE PAGE
Y	**301-4869**	1	BLADE GP-SEMI-UNIVERSAL	973
Y-SEPARATE ILLUSTRATION				

<END>

245-3565 BLADE & EDGE GP-SEMI-UNIVERSAL

S/N: J8B1-UP
WITH PUSH PLATES
AN ATTACHMENT

SMCS-6060 **i02887345**

NOTE	PART NUMBER	QTY	PART NAME 1 2 3 4 5 6 (PRODUCT LEVEL)	SEE PAGE
Y	**301-4871**	1	BLADE GP-SEMI-UNIVERSAL	974
Y-SEPARATE ILLUSTRATION				

<END>

256-4889 BLADE & EDGE GP-SEMI-UNIVERSAL–
LOW GROUND PRESSURE
S/N: DZR1-UP
PART OF 247-0850 BLADE GP-SEMI-UNIVERSAL
AN ATTACHMENT

SMCS-6060 **i03242689**

NOTE	REF NO	GRAPHIC REF	PART NUMBER	QTY	PART NAME 1 2 3 4 5 6 (PRODUCT LEVEL)	SEE PAGE
Y	1	1	*4Z-9057*	1	EDGE GP-BIT & CUTTING (SEMI-UNIVERSAL)	981
Y	2	1	**247-0854**	1	BLADE AS-SEMI-UNIVERSAL	959

Y-SEPARATE ILLUSTRATION

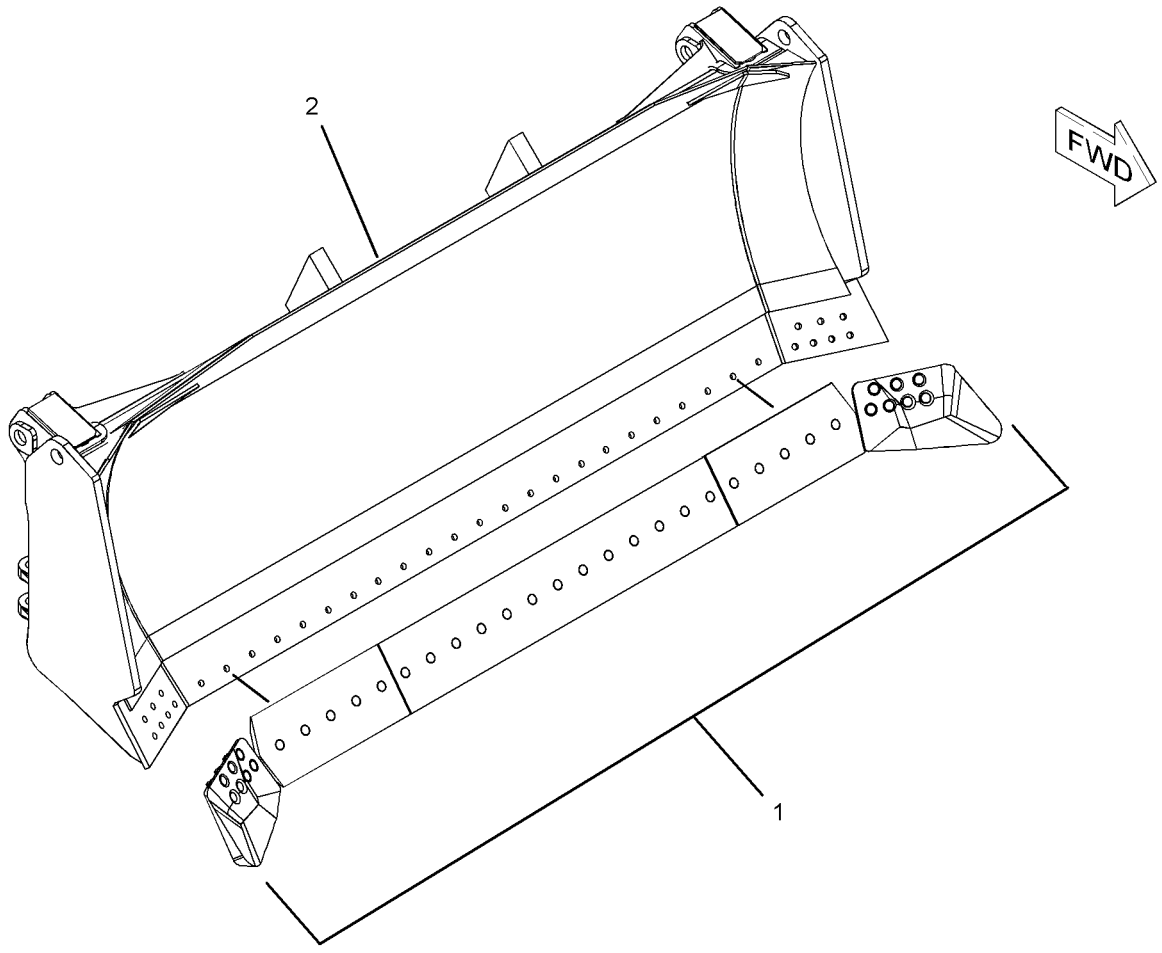

GRAPHIC #1 **<END>** g01119476

257-5547 BLADE & EDGE GP-SEMI-UNIVERSAL—LANDFILL

S/N: J8B1-UP
LOW GROUND PRESSURE
AN ATTACHMENT

SMCS-6060 **i03246983**

NOTE	REF NO	GRAPHIC REF	PART NUMBER	QTY	PART NAME 1 2 3 4 5 6 (PRODUCT LEVEL)	SEE PAGE
Y	1	1	*4Z-9057*	1	EDGE GP-BIT & CUTTING (SEMI-UNIVERSAL)	981
Y	2	1	*257-5548*	1	BLADE AS-SEMI-UNIVERSAL	961

Y-SEPARATE ILLUSTRATION

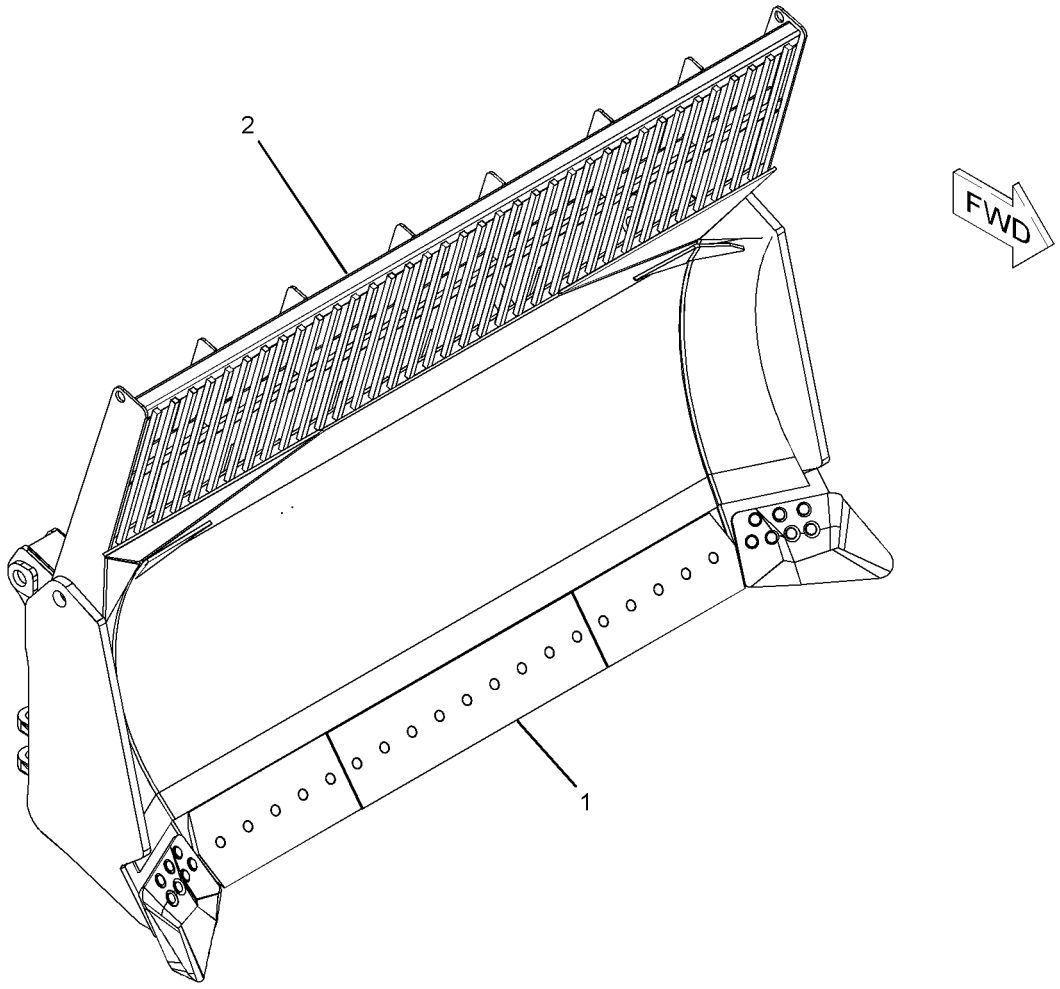

GRAPHIC #1 **<END>** g01119740

282-7741 BLADE & EDGE GP-SEMI-UNIVERSAL—ACCUGRADE

S/N: J8B1-UP
AN ATTACHMENT

SMCS-6060 **i02491401**

NOTE	PART NUMBER	QTY	PART NAME 1 2 3 4 5 6 (PRODUCT LEVEL)	SEE PAGE
Y	*282-7743*	1	BLADE GP-SEMI-UNIVERSAL (GRADE CONTROL)	972
Y	*7T-5558*	1	EDGE GP-BIT & CUTTING (SEMI-UNIVERSAL)	982
Y-SEPARATE ILLUSTRATION				

<END>

296-8541 BLADE & EDGE GP-SEMI-UNIVERSAL

S/N: J8B1-UP
FOR USE WITH ACCUGRADE
AN ATTACHMENT

SMCS-6060 **i03211905**

NOTE	PART NUMBER	QTY	PART NAME 1 2 3 4 5 6 (PRODUCT LEVEL)	SEE PAGE
Y	**301-4874**	1	BLADE GP-SEMI-UNIVERSAL	974
Y-SEPARATE ILLUSTRATION				

<END>

296-8543 BLADE & EDGE GP-SEMI-UNIVERSAL

S/N: J8B1-UP
WITH ROCK GUARD & WEAR PLATES
FOR USE WITH ACCUGRADE
AN ATTACHMENT

SMCS-6060 **i03213388**

NOTE	PART NUMBER	QTY	PART NAME 1 2 3 4 5 6 (PRODUCT LEVEL)	SEE PAGE
Y	**301-4875**	1	BLADE GP-SEMI-UNIVERSAL	975
Y-SEPARATE ILLUSTRATION				

<END>

296-8545 BLADE & EDGE GP-SEMI-UNIVERSAL

S/N: J8B1-UP
WITH PUSH PLATE
FOR USE WITH ACCUGRADE
AN ATTACHMENT

SMCS-6060 **i03213395**

NOTE	PART NUMBER	QTY	PART NAME 1 2 3 4 5 6 (PRODUCT LEVEL)	SEE PAGE
Y	**301-4876**	1	BLADE GP	966
Y-SEPARATE ILLUSTRATION				

<END>

WORK TOOLS

296-8553 BLADE & EDGE GP-SEMI-UNIVERSAL—LGP

S/N: J8B1-UP
FOR USE WITH ACCUGRADE
AN ATTACHMENT

SMCS-6060 **i03213501**

NOTE	PART NUMBER	QTY	PART NAME 1 2 3 4 5 6 (PRODUCT LEVEL)	SEE PAGE
Y	**301-4884**	1	BLADE GP-SEMI-UNIVERSAL	975

Y-SEPARATE ILLUSTRATION

<END>

301-4872 BLADE & EDGE GP-SEMI-UNIVERSAL

S/N: J8B1-UP
PART OF 245-3559 MODIFICATION AR-BULLDOZER
AN ATTACHMENT

SMCS-6060 **i03245784**

NOTE	PART NUMBER	QTY	PART NAME 1 2 3 4 5 6 (PRODUCT LEVEL)	SEE PAGE
Y	*4Z-9508*	1	BLADE AS-SEMI-UNIVERSAL	955
Y	*7T-5558*	1	EDGE GP-BIT & CUTTING (SEMI-UNIVERSAL)	982
M	**7X-2574**	8	BOLT (M24X3X45-MM)	
	8E-6758	2	CONNECTOR AS	
			(EACH INCLUDES)	
	8E-6752	4	BEARING-SLEEVE	
	1U-2472	2	PIN	
	4T-7534	2	PIN	
	6J-5179	4	RETAINER	

M-METRIC PART
Y-SEPARATE ILLUSTRATION

<END>

301-4873 BLADE & EDGE GP-SEMI-UNIVERSAL—LANDFILL

S/N: J8B1-UP
WITH WEAR PLATES
PART OF 4Z-0670 BLADE & EDGE GP-SEMI-UNIVERSAL
AN ATTACHMENT

SMCS-6060 **i03268325**

NOTE	PART NUMBER	QTY	PART NAME 1 2 3 4 5 6 (PRODUCT LEVEL)	SEE PAGE
Y	*4Z-9507*	1	BLADE AS-SEMI-UNIVERSAL	954
Y	*7T-5558*	1	EDGE GP-BIT & CUTTING (SEMI-UNIVERSAL)	982
M	**7X-2574**	8	BOLT (M24X3X45-MM)	
	8E-6758	2	CONNECTOR AS	
			(EACH INCLUDES)	
	8E-6752	4	BEARING-SLEEVE	
	1U-2472	2	PIN	
	4T-7534	2	PIN	
	6J-5179	4	RETAINER	

M-METRIC PART
Y-SEPARATE ILLUSTRATION

<END>

WORK TOOLS

245-3561 BLADE & EDGE GP-UNIVERSAL—LANDFILL

S/N: J8B1-UP
WITH WEAR PLATES
AN ATTACHMENT

SMCS-6060 **i03246167**

NOTE	PART NUMBER	QTY	PART NAME 1 2 3 4 5 6 (PRODUCT LEVEL)	SEE PAGE
Y	*301-4879*	1	BLADE & EDGE GP-UNIVERSAL	952
Y-SEPARATE ILLUSTRATION				

<END>

245-3563 BLADE & EDGE GP-UNIVERSAL

S/N: J8B1-UP
WITH ROCK GUARD
AN ATTACHMENT

SMCS-6060 **i03236220**

NOTE	PART NUMBER	QTY	PART NAME 1 2 3 4 5 6 (PRODUCT LEVEL)	SEE PAGE
Y	**301-4878**	1	BLADE GP-UNIVERSAL	980
Y-SEPARATE ILLUSTRATION				

<END>

245-3569 BLADE & EDGE GP-UNIVERSAL

S/N: J8B1-UP
WITH ROCK GUARD & WEAR PLATES
AN ATTACHMENT

SMCS-6060 **i03246369**

NOTE	PART NUMBER	QTY	PART NAME 1 2 3 4 5 6 (PRODUCT LEVEL)	SEE PAGE
Y	*301-4877*	1	BLADE & EDGE GP-UNIVERSAL	952
Y-SEPARATE ILLUSTRATION				

<END>

WORK TOOLS

255-8707 BLADE & EDGE GP-UNIVERSAL

S/N: J8B1-UP; A5G1-UP; DZS1-UP
PART OF 245-3562 BLADE GP-UNIVERSAL
AN ATTACHMENT

SMCS-6060 **i02245840**

NOTE	REF NO	GRAPHIC REF	PART NUMBER	QTY	PART NAME 1 2 3 4 5 6 (PRODUCT LEVEL)	SEE PAGE
Y	1	1	*7T-5559*	1	EDGE GP-BIT & CUTTING	983
Y	2	1	**245-8150**	1	BLADE AS-UNIVERSAL	962

Y-SEPARATE ILLUSTRATION

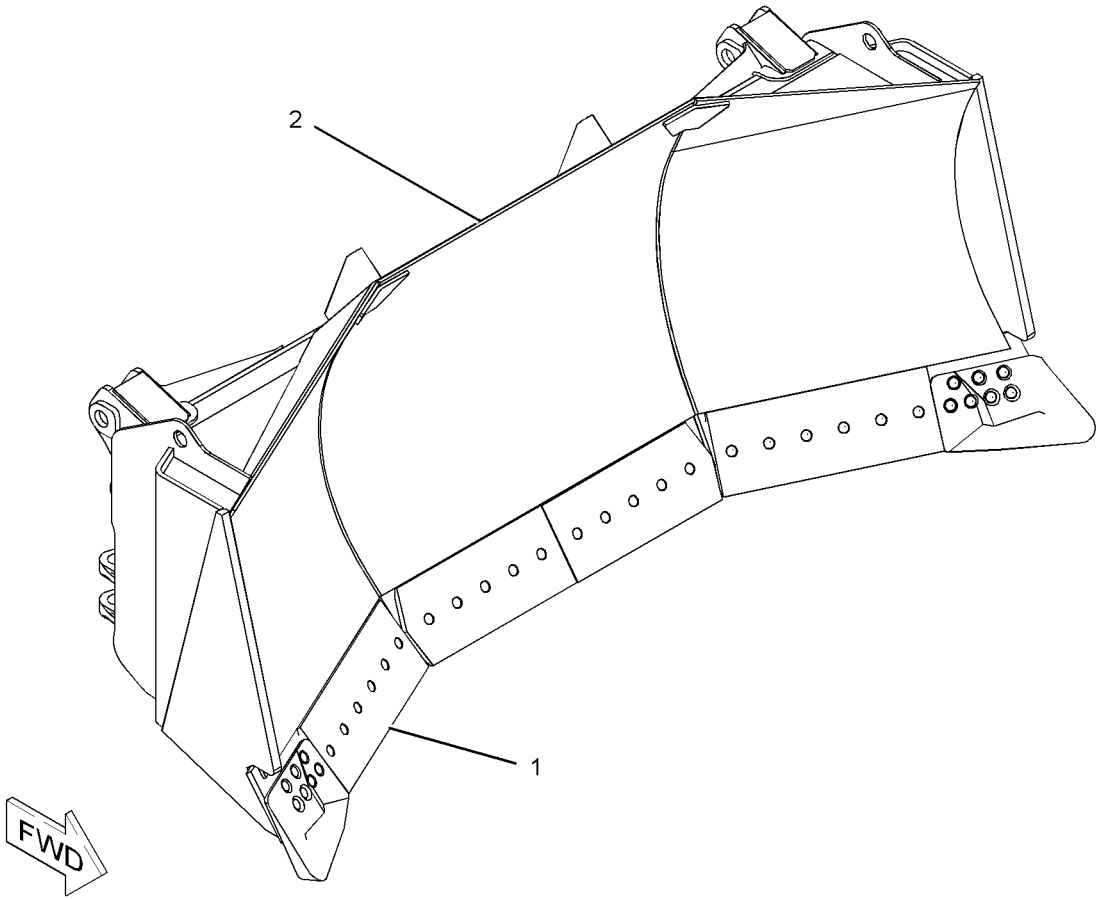

GRAPHIC #1 **<END>** g01112156

WORK TOOLS

256-8685 BLADE & EDGE GP-UNIVERSAL—LANDFILL

S/N: J8B1-UP
AN ATTACHMENT

SMCS-6060 **i03246880**

NOTE	PART NUMBER	QTY	PART NAME 1 2 3 4 5 6 (PRODUCT LEVEL)	SEE PAGE
Y	*301-4880*	1	BLADE & EDGE GP-UNIVERSAL	953
Y-SEPARATE ILLUSTRATION				

<END>

282-7740 BLADE & EDGE GP-UNIVERSAL—ACCUGRADE

S/N: J8B1-UP
AN ATTACHMENT

SMCS-6060 **i02491322**

NOTE	PART NUMBER	QTY	PART NAME 1 2 3 4 5 6 (PRODUCT LEVEL)	SEE PAGE
Y	*282-7742*	1	BLADE GP-UNIVERSAL (GRADE CONTROL)	979
Y	*7T-5559*	1	EDGE GP-BIT & CUTTING (UNIVERSAL)	983
Y-SEPARATE ILLUSTRATION				

<END>

296-8547 BLADE & EDGE GP-UNIVERSAL

S/N: J8B1-UP
FOR USE WITH ACCUGRADE
AN ATTACHMENT

SMCS-6060 **i03213400**

NOTE	PART NUMBER	QTY	PART NAME 1 2 3 4 5 6 (PRODUCT LEVEL)	SEE PAGE
Y	**301-4881**	1	BLADE GP	966
Y-SEPARATE ILLUSTRATION				

<END>

296-8549 BLADE & EDGE GP-UNIVERSAL

S/N: J8B1-UP
AN ATTACHMENT

SMCS-6060 **i03213422**

NOTE	PART NUMBER	QTY	PART NAME 1 2 3 4 5 6 (PRODUCT LEVEL)	SEE PAGE
Y	**301-4882**	1	BLADE GP	967
Y-SEPARATE ILLUSTRATION				

<END>

WORK TOOLS

296-8551 BLADE & EDGE GP-UNIVERSAL

S/N: J8B1-UP
WITH ROCK GUARD & WEAR PLATE
AN ATTACHMENT

SMCS-6060 **i03213461**

NOTE	PART NUMBER	QTY	PART NAME 1 2 3 4 5 6 (PRODUCT LEVEL)	SEE PAGE
Y	**301-4883**	1	BLADE GP	967

Y-SEPARATE ILLUSTRATION

<END>

301-4877 BLADE & EDGE GP-UNIVERSAL

S/N: J8B1-UP
WITH ROCK GUARD & WEAR PLATES
PART OF 245-3569 BLADE & EDGE GP-UNIVERSAL
AN ATTACHMENT

SMCS-6060 **i03246376**

NOTE	PART NUMBER	QTY	PART NAME 1 2 3 4 5 6 (PRODUCT LEVEL)	SEE PAGE
Y	**256-5314**	1	BLADE GP-UNIVERSAL	978
Y	*7T-5559*	1	EDGE GP-BIT & CUTTING (UNIVERSAL)	983
M	**7X-2574**	8	BOLT (M24X3X45-MM)	
	8E-6758	2	CONNECTOR AS	
			(EACH INCLUDES)	
	8E-6752	4	BEARING-SLEEVE	
	1U-2472	2	PIN	
	4T-7534	2	PIN	
	6J-5179	4	RETAINER	

M-METRIC PART
Y-SEPARATE ILLUSTRATION

<END>

301-4879 BLADE & EDGE GP-UNIVERSAL—LANDFILL

S/N: J8B1-UP
WITH WEAR PLATES
PART OF 245-3561 BLADE & EDGE GP-UNIVERSAL
AN ATTACHMENT

SMCS-6060 **i03246195**

NOTE	PART NUMBER	QTY	PART NAME 1 2 3 4 5 6 (PRODUCT LEVEL)	SEE PAGE
Y	*257-0005*	1	BLADE AS-UNIVERSAL	965
Y	*7T-5559*	1	EDGE GP-BIT & CUTTING (UNIVERSAL)	983
M	**7X-2574**	8	BOLT (M24X3X45-MM)	
	8E-6758	2	CONNECTOR AS	
			(EACH INCLUDES)	
	8E-6752	4	BEARING-SLEEVE	
	1U-2472	2	PIN	
	4T-7534	2	PIN	
	6J-5179	4	RETAINER	

M-METRIC PART
Y-SEPARATE ILLUSTRATION

<END>

WORK TOOLS

301-4880 BLADE & EDGE GP-UNIVERSAL—LANDFILL

S/N: J8B1-UP

PART OF 256-8685 BLADE & EDGE GP-UNIVERSAL

AN ATTACHMENT

SMCS-6060 **i03246942**

NOTE	PART NUMBER	QTY	PART NAME 1 2 3 4 5 6 (PRODUCT LEVEL)	SEE PAGE
Y	*256-8790*	1	BLADE AS-UNIVERSAL	964
Y	*7T-5559*	1	EDGE GP-BIT & CUTTING (UNIVERSAL)	983
M	**7X-2574**	8	BOLT (M24X3X45-MM)	
	8E-6758	2	CONNECTOR AS	
			(EACH INCLUDES)	
	8E-6752	4	BEARING-SLEEVE	
	1U-2472	2	PIN	
	4T-7534	2	PIN	
	6J-5179	4	RETAINER	

M-METRIC PART
Y-SEPARATE ILLUSTRATION

<END>

WORK TOOLS

4Z-9507 BLADE AS-SEMI-UNIVERSAL—LANDFILL

S/N: J8B1-UP
WITH WEAR PLATES
PART OF 301-4873 BLADE & EDGE GP-SEMI-UNIVERSAL
AN ATTACHMENT

SMCS-6060 **i03268328**

NOTE	REF NO	GRAPHIC REF	PART NUMBER	QTY	PART NAME 1 2 3 4 5 6 (PRODUCT LEVEL)	SEE PAGE
Y	1	1	*4Z-9508*	1	BLADE AS-SEMI-UNIVERSAL	955
Y	2	1	*9W-2707*	1	PLATE AS-WEAR	996

Y-SEPARATE ILLUSTRATION

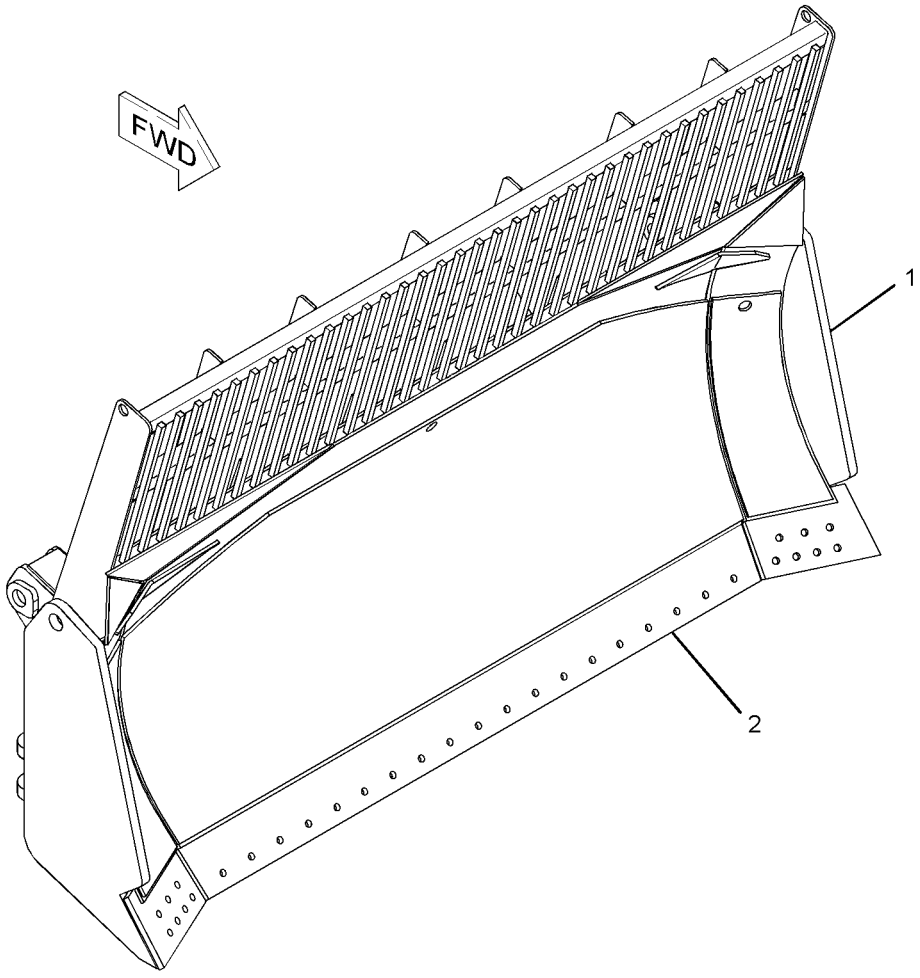

GRAPHIC #1 **<END>** g01117039

WORK TOOLS

4Z-9508 BLADE AS-SEMI-UNIVERSAL—LANDFILL

S/N: J8B1-UP

PART OF 301-4872 BLADE & EDGE GP-SEMI-UNIVERSAL, 4Z-9507 BLADE AS-SEMI-UNIVERSAL

AN ATTACHMENT

SMCS-6060 **i02246655**

NOTE	REF NO	GRAPHIC REF	PART NUMBER	QTY	PART NAME 1 2 3 4 5 6 (PRODUCT LEVEL)	SEE PAGE
	1	1	**4Z-9509**	1	SCREEN AS (BLADE)	
Y	2	1	**239-4170**	1	BLADE AS-SEMI-UNIVERSAL	957

Y-SEPARATE ILLUSTRATION

4Z-9508 **BLADE AS-SEMI-UNIVERSAL** *(contd.)* **i02246655**

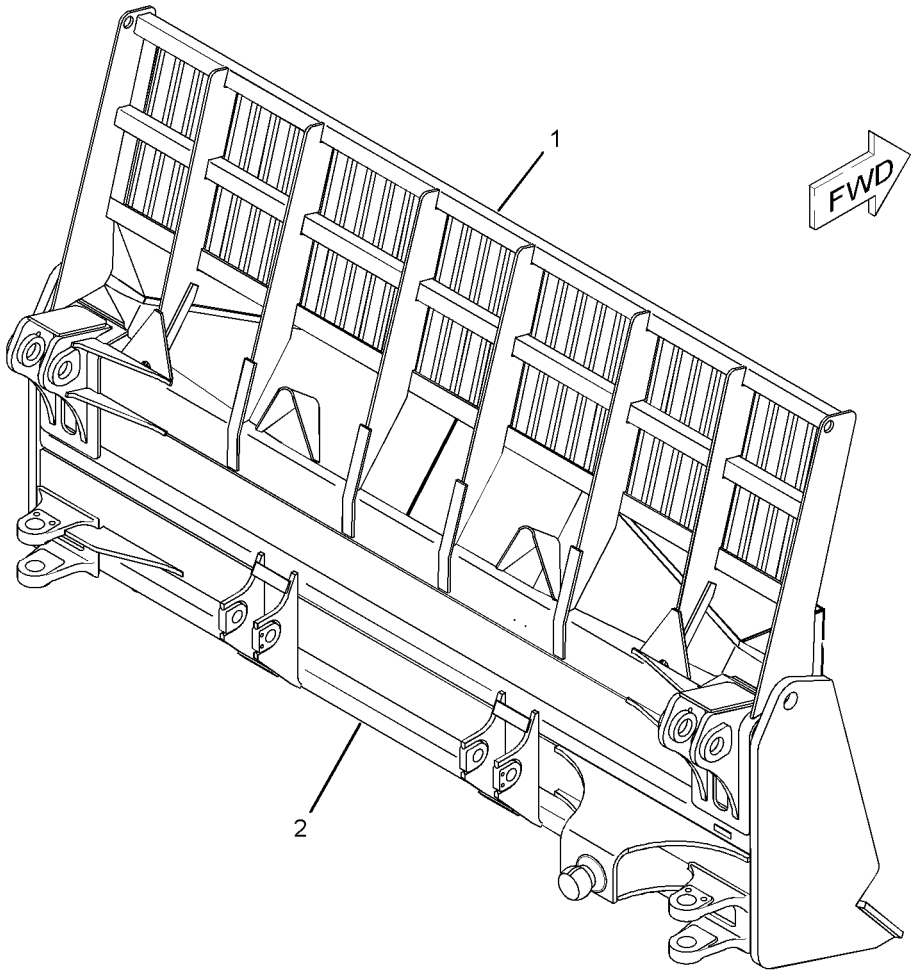

GRAPHIC #1 **<END>** g01131154

239-4170 BLADE AS-SEMI-UNIVERSAL

S/N: J8B1-UP; B8S1-UP; DZX1-UP
PART OF 237-4367 BLADE & EDGE GP-SEMI-UNIVERSAL, 245-8153, 4Z-9508 BLADE AS-SEMI-UNIVERSAL, 245-8152, 282-7743, 296-8542 BLADE GP-SEMI-UNIVERSAL AN ATTACHMENT

SMCS-6060 **i03207830**

NOTE	REF NO	GRAPHIC REF	PART NUMBER	QTY	PART NAME 1 2 3 4 5 6 (PRODUCT LEVEL)	SEE PAGE
	1	1	**1U-0183**	2	DEFLECTOR	
	2	1	**1U-4961**	1	PLATE (RH)	
	3	1	**1U-4962**	1	PLATE (LH)	
	9	1	**8P-9770**	1	PLATE	
	15	1	**230-5565**	2	BRACKET AS	
	18	1	**239-4172**	2	SUPPORT-OUTER	
	22	1	**239-4176**	1	SUPPORT-CENTER	
	31	1	**311-2117**	1	BRACKET AS	
		1	**110-2966**	1	TRUNNION	
	33	1	**331-1560**	2	BRACKET AS	
	35	1	**302-4032**	2	BRACKET	

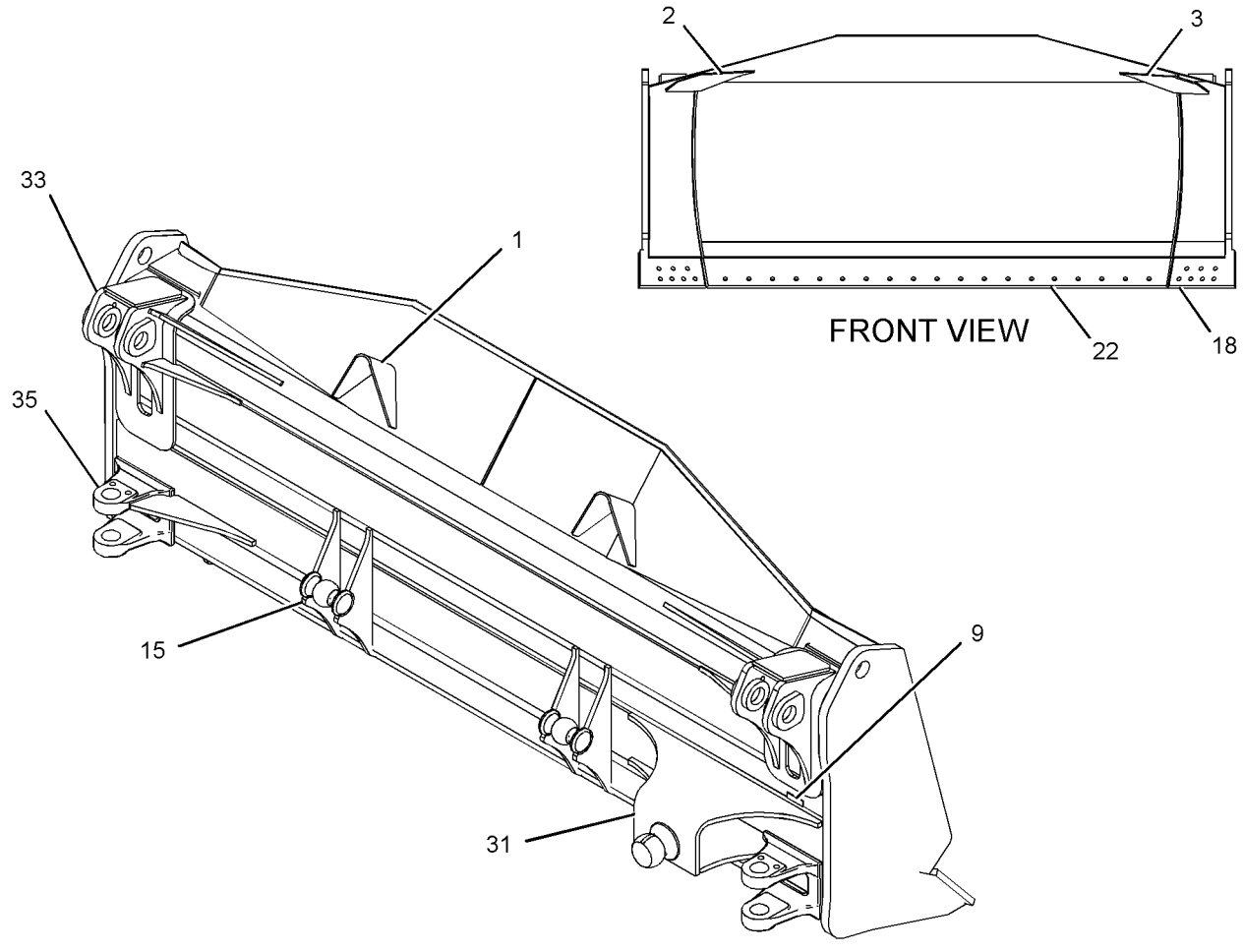

GRAPHIC #1 **<END>** g01111507

WORK TOOLS

245-8153 BLADE AS-SEMI-UNIVERSAL

S/N: J8B1-UP
WITH PUSH PLATE
PART OF 296-8546, 301-4871 BLADE GP-SEMI-UNIVERSAL
AN ATTACHMENT

SMCS-6060 **i02245832**

NOTE	REF NO	GRAPHIC REF	PART NUMBER	QTY	PART NAME 1 2 3 4 5 6 (PRODUCT LEVEL)	SEE PAGE
	1	1	**9W-2756**	1	PLATE-PUSH	
Y	2	1	**239-4170**	1	BLADE AS-SEMI-UNIVERSAL	957

Y-SEPARATE ILLUSTRATION

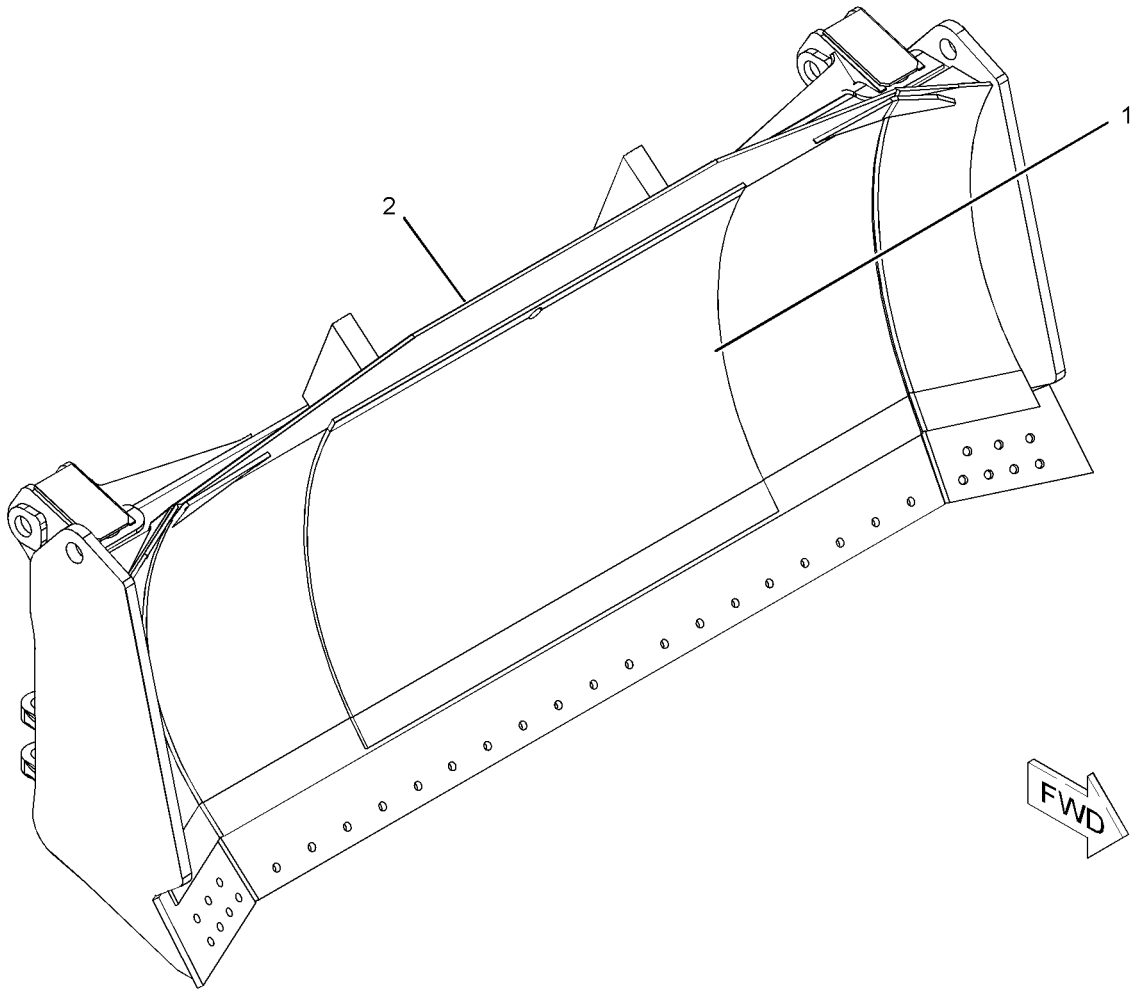

GRAPHIC #1 **<END>** g01112056

WORK TOOLS

247-0854 BLADE AS-SEMI-UNIVERSAL

S/N: J8B1-UP; DZR1-UP

PART OF 256-4889 BLADE & EDGE GP-SEMI-UNIVERSAL, 257-5548 BLADE AS-SEMI-UNIVERSAL, 296-8554 BLADE GP-SEMI-UNIVERSAL

AN ATTACHMENT

SMCS-6060 **i03213625**

NOTE	REF NO	GRAPHIC REF	PART NUMBER	QTY	PART NAME 1 2 3 4 5 6 (PRODUCT LEVEL)	SEE PAGE
	1	1	**1U-0183**	2	DEFLECTOR	
	2	1	**1U-4961**	1	PLATE (RH)	
	3	1	**1U-4962**	1	PLATE (LH)	
	4	1	**230-5565**	2	BRACKET AS	
					(EACH INCLUDES)	
	4A	1	**9J-0123**	1	TRUNNION	
	5	1	**311-2117**	1	BRACKET AS	
	5A	1	**110-2966**	1	TRUNNION	
	6	1	**239-4191**	2	BRACKET AS	
	7	1	**302-4032**	2	BRACKET	
	8	1	**239-4172**	2	SUPPORT-OUTER	
	9	1	**256-4890**	1	SUPPORT-CENTER	

247-0854 **BLADE AS-SEMI-UNIVERSAL** *(contd.)* **i03213625**

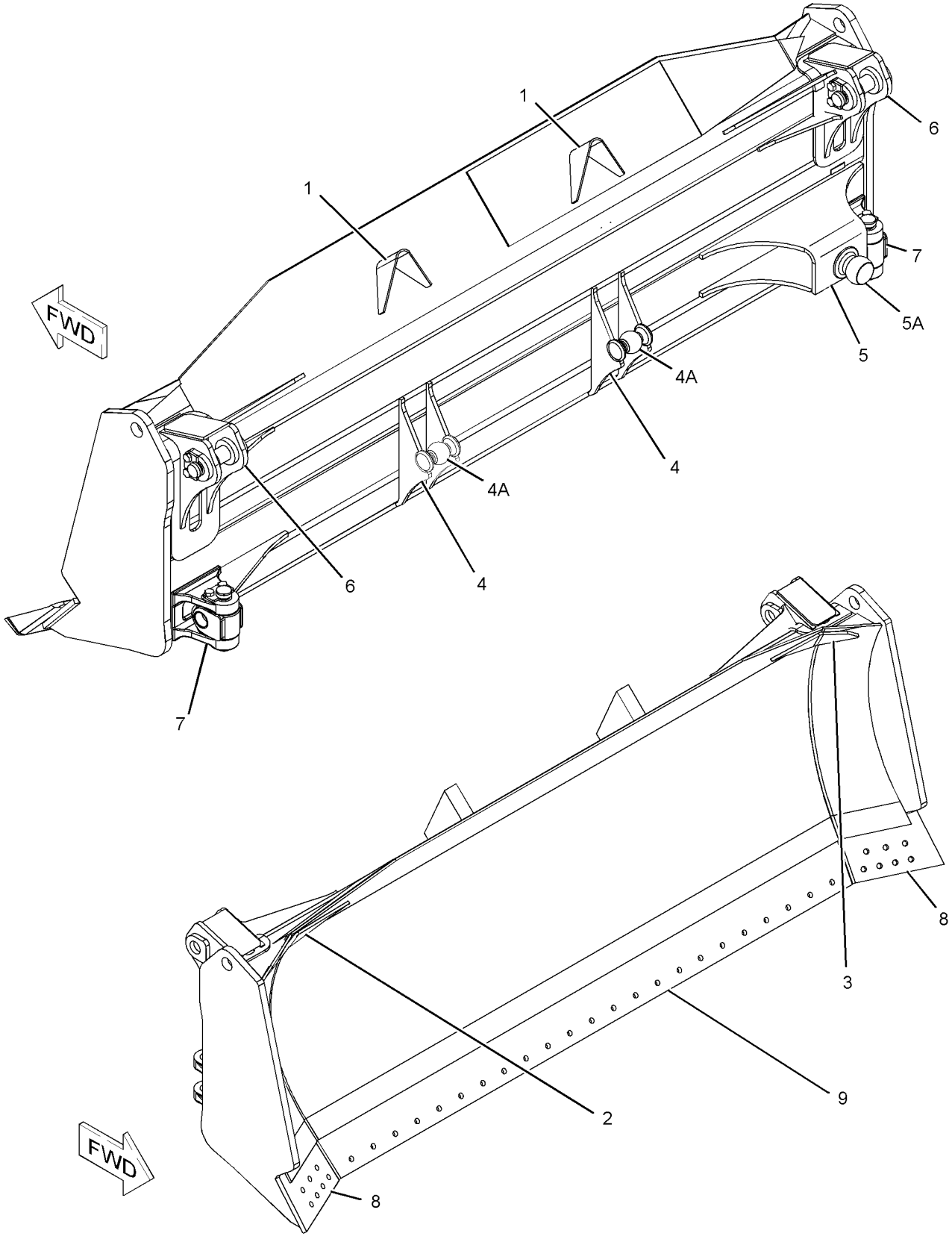

GRAPHIC #1 **<END>** g01119772

257-5548 BLADE AS-SEMI-UNIVERSAL–LANDFILL

S/N: J8B1-UP
LOW GROUND PRESSURE
PART OF 257-5547 BLADE & EDGE GP-SEMI-UNIVERSAL
AN ATTACHMENT

SMCS-6060 **i03247001**

NOTE	REF NO	GRAPHIC REF	PART NUMBER	QTY	PART NAME 1 2 3 4 5 6 (PRODUCT LEVEL)	SEE PAGE
Y	1	1	*247-0854*	1	BLADE AS-SEMI-UNIVERSAL	959
Y-SEPARATE ILLUSTRATION						

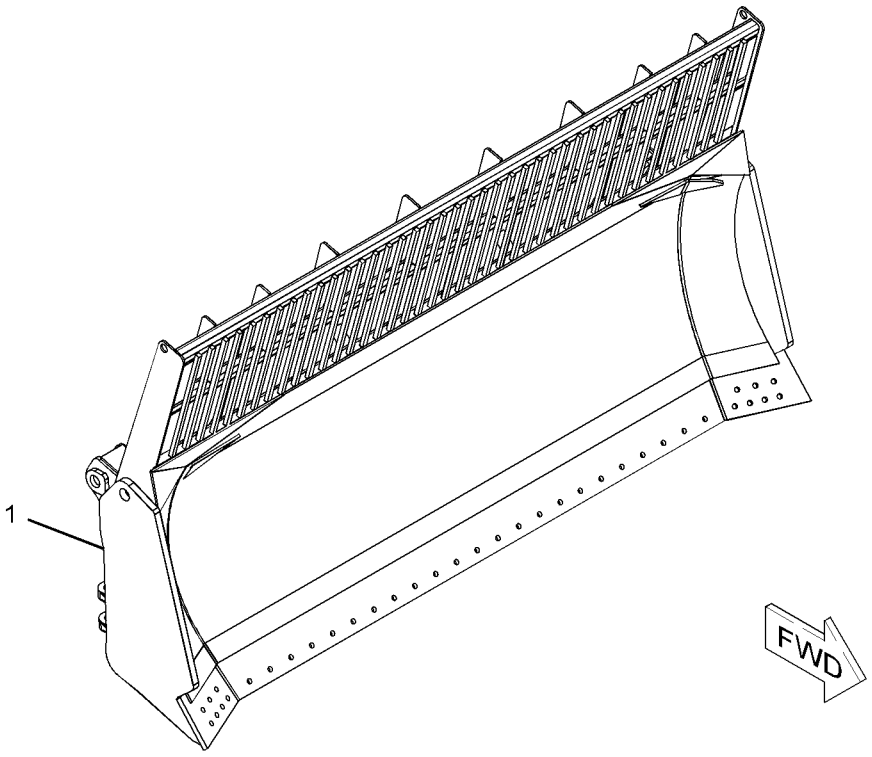

GRAPHIC #1 **<END>** g01673156

245-8150 BLADE AS-UNIVERSAL

S/N: J8B1-UP; A5G1-UP; DZS1-UP
PART OF 255-8707 BLADE & EDGE GP-UNIVERSAL, 256-8790 BLADE AS-UNIVERSAL, 245-8151, 282-7742, 296-8548 BLADE GP-UNIVERSAL
AN ATTACHMENT

SMCS-6053, 6060 **i03148202**

NOTE	REF NO	GRAPHIC REF	PART NUMBER	QTY	PART NAME 1 2 3 4 5 6 (PRODUCT LEVEL)	SEE PAGE
	1	1	**1U-0183**	2	DEFLECTOR	
	2	1	**8P-9770**	1	PLATE	
	3	1	**230-5565**	2	BRACKET AS	
					(EACH INCLUDES)	
	3A	1	**9J-0123**	1	TRUNNION	
	4	1	**311-2117**	1	BRACKET AS	
	4A	1	**110-2966**	1	TRUNNION	
	5	1	**239-4191**	2	BRACKET AS	
	6	1	**302-4032**	2	BRACKET	
	7	1	**255-8188**	2	SUPPORT	
	8	1	**255-8189**	1	SUPPORT	

245-8150 BLADE AS-UNIVERSAL *(contd.)* **i03148202**

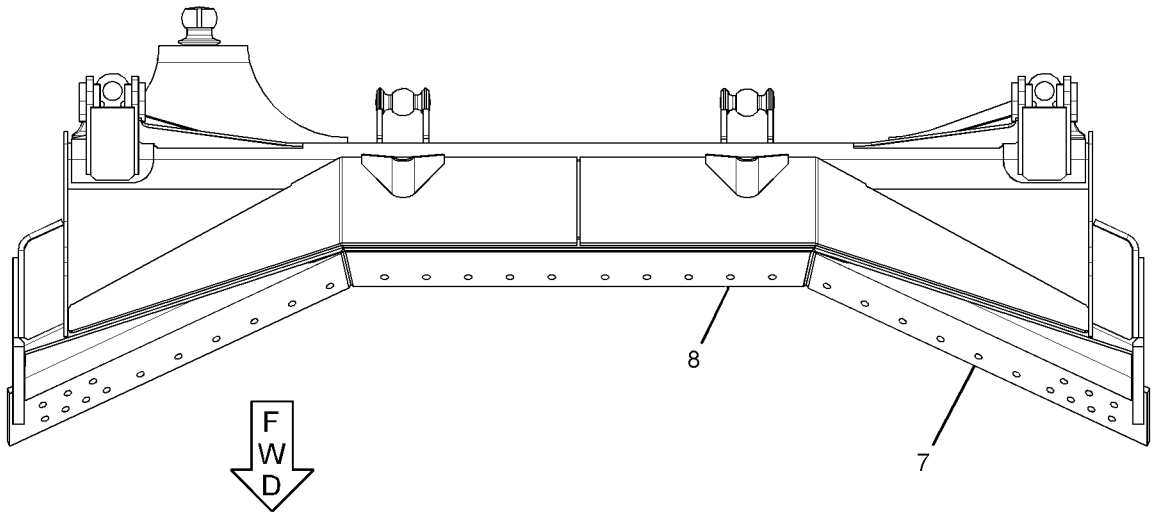

TOP VIEW

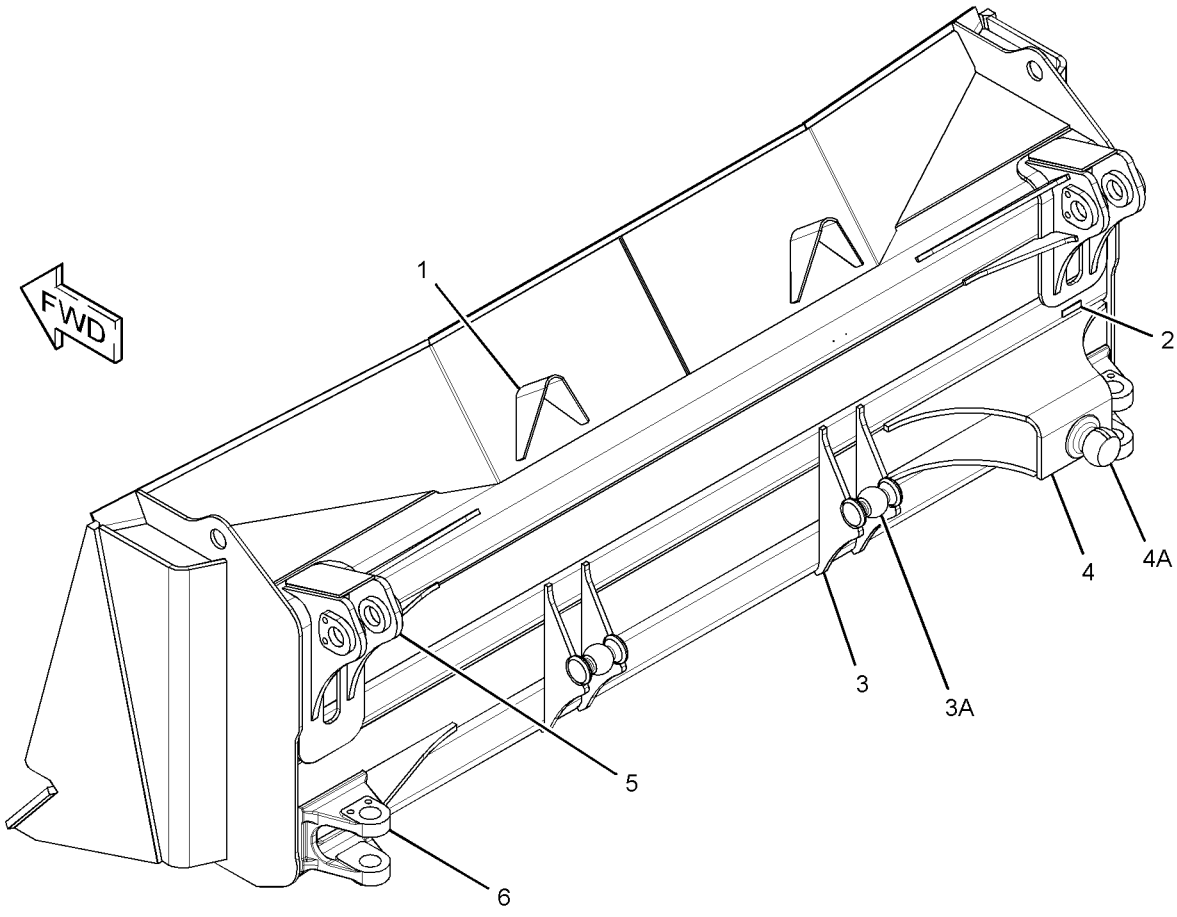

GRAPHIC #1 **<END>** g01544854

WORK TOOLS

256-8790 BLADE AS-UNIVERSAL–LANDFILL

S/N: J8B1-UP

PART OF 301-4880 BLADE & EDGE GP-UNIVERSAL, 257-0005 BLADE AS-UNIVERSAL

AN ATTACHMENT

SMCS-6053, 6060 **i03246324**

NOTE	REF NO	GRAPHIC REF	PART NUMBER	QTY	PART NAME 1 2 3 4 5 6 (PRODUCT LEVEL)	SEE PAGE
Y	1	1	**245-8150**	1	BLADE AS-UNIVERSAL	962

Y-SEPARATE ILLUSTRATION

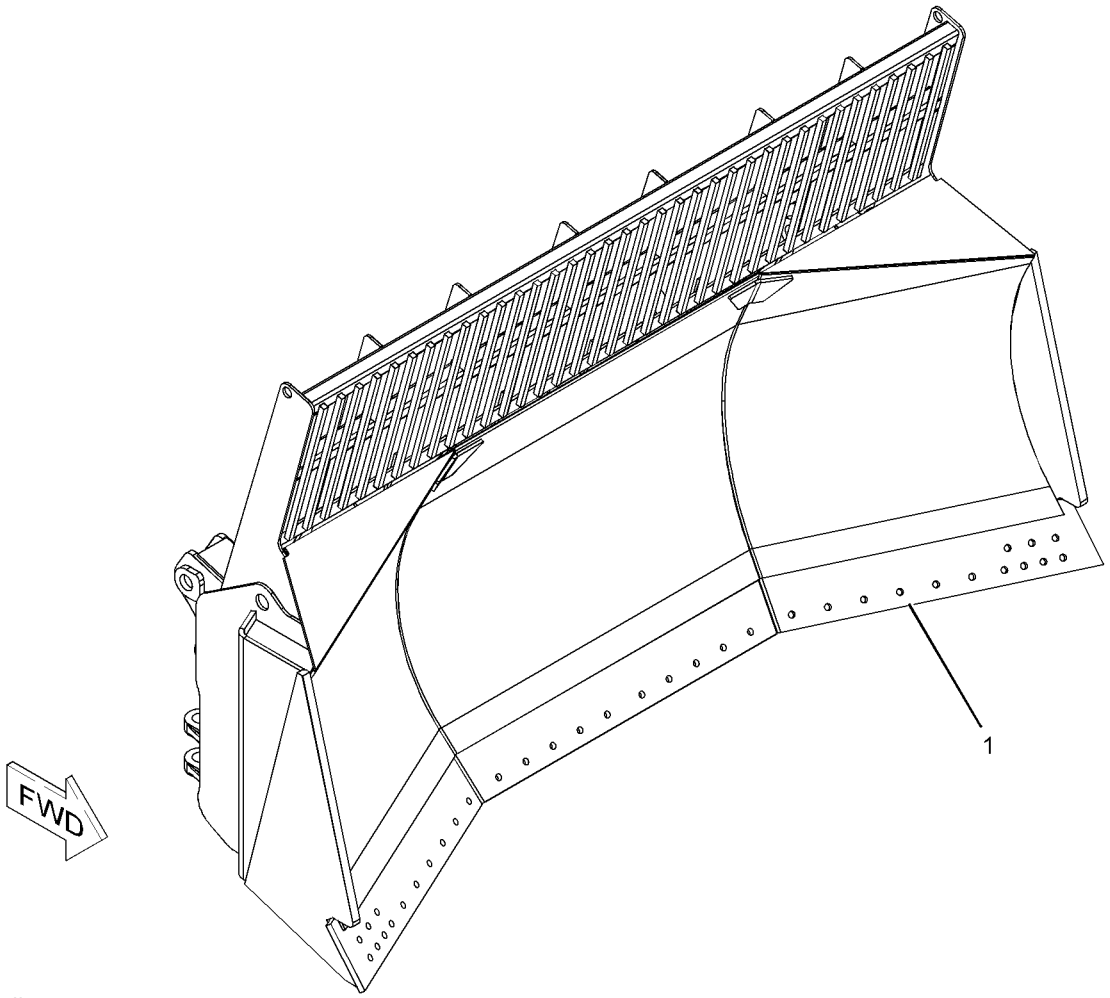

GRAPHIC #1 **<END>** g01665793

257-0005 BLADE AS-UNIVERSAL–LANDFILL

S/N: J8B1-UP
WITH WEAR PLATE
PART OF 301-4879 BLADE & EDGE GP-UNIVERSAL
AN ATTACHMENT

SMCS-6053, 6060 **i03246229**

NOTE	REF NO	GRAPHIC REF	PART NUMBER	QTY	PART NAME 1 2 3 4 5 6 (PRODUCT LEVEL)	SEE PAGE
Y	1	1	*6Y-7243*	1	PLATE AS-WEAR	995
Y	2	1	**256-8790**	1	BLADE AS-UNIVERSAL	964

Y-SEPARATE ILLUSTRATION

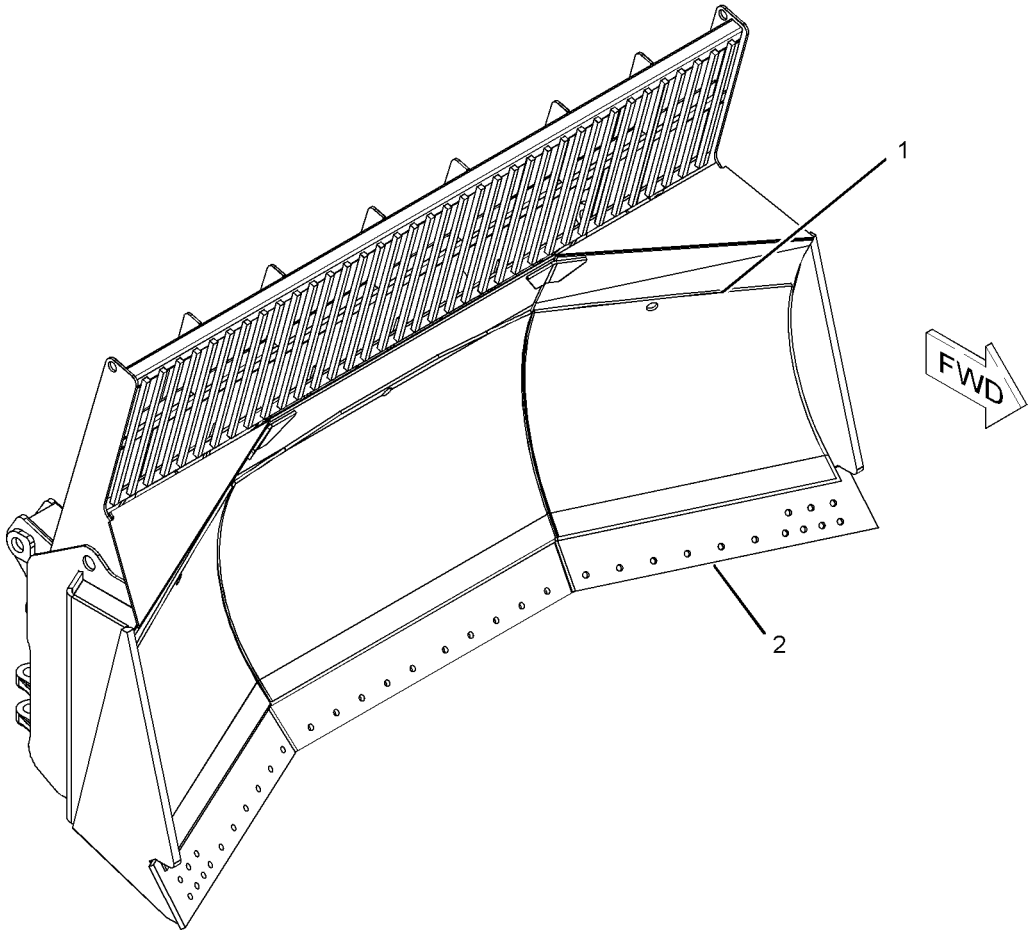

GRAPHIC #1 **<END>** g01119253

301-4876 BLADE GP

S/N: J8B1-UP
WITH PUSH PLATE
PART OF 296-8545 BLADE & EDGE GP-SEMI-UNIVERSAL
AN ATTACHMENT

SMCS-6060 **i03213396**

NOTE	PART NUMBER	QTY	PART NAME 1 2 3 4 5 6 (PRODUCT LEVEL)	SEE PAGE
Y	*296-8546*	1	BLADE GP-SEMI-UNIVERSAL	973
Y	*7T-5558*	1	EDGE GP-BIT & CUTTING (SEMI-UNIVERSAL)	982
M	**7X-2574**	8	BOLT (M24X3X45-MM)	
	8E-6758	2	CONNECTOR AS	
			(EACH INCLUDES)	
	8E-6752	4	BEARING-SLEEVE	
	1U-2472	2	PIN	
	4T-7534	2	PIN	
	6J-5179	4	RETAINER	

M-METRIC PART
Y-SEPARATE ILLUSTRATION

<END>

301-4881 BLADE GP

S/N: J8B1-UP
PART OF 296-8547 BLADE & EDGE GP-UNIVERSAL
FOR USE WITH ACCUGRADE
AN ATTACHMENT

SMCS-6060 **i03213403**

NOTE	PART NUMBER	QTY	PART NAME 1 2 3 4 5 6 (PRODUCT LEVEL)	SEE PAGE
Y	*296-8548*	1	BLADE GP-UNIVERSAL	979
Y	*7T-5559*	1	EDGE GP-BIT & CUTTING (UNIVERSAL)	983
M	**7X-2574**	8	BOLT (M24X3X45-MM)	
	8E-6758	2	CONNECTOR AS	
			(EACH INCLUDES)	
	8E-6752	4	BEARING-SLEEVE	
	1U-2472	2	PIN	
	4T-7534	2	PIN	
	6J-5179	4	RETAINER	

M-METRIC PART
Y-SEPARATE ILLUSTRATION

<END>

WORK TOOLS

301-4882 BLADE GP

S/N: J8B1-UP
PART OF 296-8549 BLADE & EDGE GP-UNIVERSAL
FOR USE WITH ACCUGRADE
AN ATTACHMENT

SMCS-6060 **i03213424**

NOTE	PART NUMBER	QTY	PART NAME 1 2 3 4 5 6 (PRODUCT LEVEL)	SEE PAGE
Y	*296-8550*	1	BLADE GP-UNIVERSAL	979
Y	*7T-5559*	1	EDGE GP-BIT & CUTTING (UNIVERSAL)	983
M	**7X-2574**	8	BOLT (M24X3X45-MM)	
	8E-6758	2	CONNECTOR AS	
			(EACH INCLUDES)	
	8E-6752	4	BEARING-SLEEVE	
	1U-2472	2	PIN	
	4T-7534	2	PIN	
	6J-5179	4	RETAINER	

M-METRIC PART
Y-SEPARATE ILLUSTRATION

<END>

301-4883 BLADE GP

S/N: J8B1-UP
WITH ROCK GUARD & WEAR PLATES
PART OF 296-8551 BLADE & EDGE GP-UNIVERSAL
FOR USE WITH ACCUGRADE
AN ATTACHMENT

SMCS-6060 **i03213465**

NOTE	PART NUMBER	QTY	PART NAME 1 2 3 4 5 6 (PRODUCT LEVEL)	SEE PAGE
Y	*296-8552*	1	BLADE GP-UNIVERSAL	980
Y	*7T-5559*	1	EDGE GP-BIT & CUTTING (UNIVERSAL)	983
M	**7X-2574**	8	BOLT (M24X3X45-MM)	
	8E-6758	2	CONNECTOR AS	
			(EACH INCLUDES)	
	8E-6752	4	BEARING-SLEEVE	
	1U-2472	2	PIN	
	4T-7534	2	PIN	
	6J-5179	4	RETAINER	

M-METRIC PART
Y-SEPARATE ILLUSTRATION

<END>

WORK TOOLS

151-1151 BLADE GP-ANGLING

S/N: D1E1-UP; D1F1-UP
PART OF 261-2351, 261-2352 BULLDOZER AR-ANGLING
AN ATTACHMENT

SMCS-6052, 6060 **i01397572**

NOTE	REF NO	GRAPHIC REF	PART NUMBER	QTY	PART NAME 1 2 3 4 5 6 (PRODUCT LEVEL)	SEE PAGE
	1	1	**4J-5401**	1	RETAINER	
	2	1	**6J-3774**	2	PIN	
	3	1	**7T-6850**	2	RETAINER	
Y	4	1	*151-1150*	1	BLADE & EDGE GP-ANGLING	941
	5	1	**159-8807**	1	PIN	
M	6	1	**7X-2552**	5	BOLT (M16X2X30-MM)	

M-METRIC PART
Y-SEPARATE ILLUSTRATION

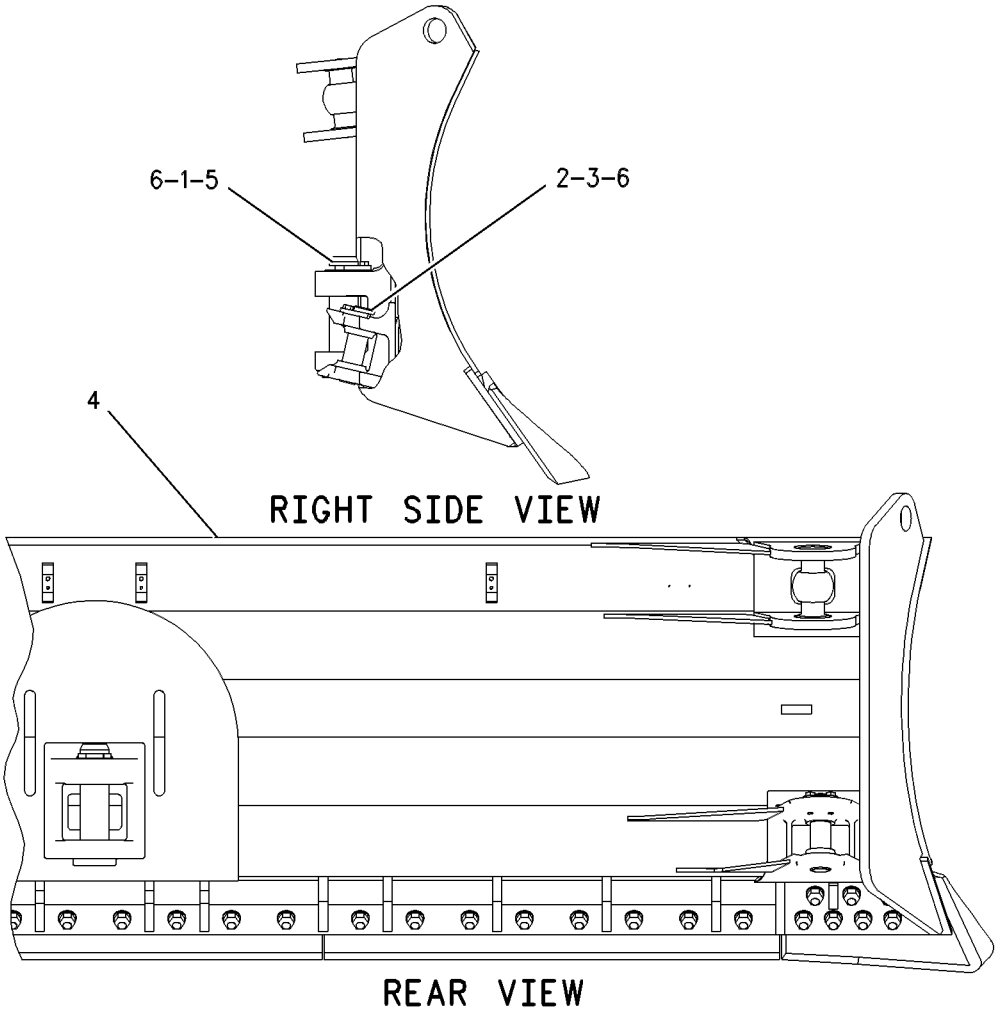

GRAPHIC #1 **<END>** g00538747

237-4366 BLADE GP-SEMI-UNIVERSAL

S/N: B8S1-UP; DZX1-UP

PART OF 227-5437, 227-5439 BULLDOZER AR-SEMI-UNIVERSAL

AN ATTACHMENT

SMCS-6060, 6078 **i02237739**

NOTE	REF NO	GRAPHIC REF	PART NUMBER	QTY	PART NAME 1 2 3 4 5 6 (PRODUCT LEVEL)	SEE PAGE
	1	1	**1U-2472**	2	PIN	
	2	1	**4T-7534**	2	PIN	
	3	1	**6J-5179**	4	RETAINER	
	4	1	**8E-6758**	2	CONNECTOR AS	
					(EACH INCLUDES)	
		1	**8E-6752**	4	BEARING-SLEEVE	
Y	5	1	*237-4367*	1	BLADE & EDGE GP-SEMI-UNIVERSAL	943
M	6	1	**7X-2574**	8	BOLT (M24X3X45-MM)	

M-METRIC PART
Y-SEPARATE ILLUSTRATION

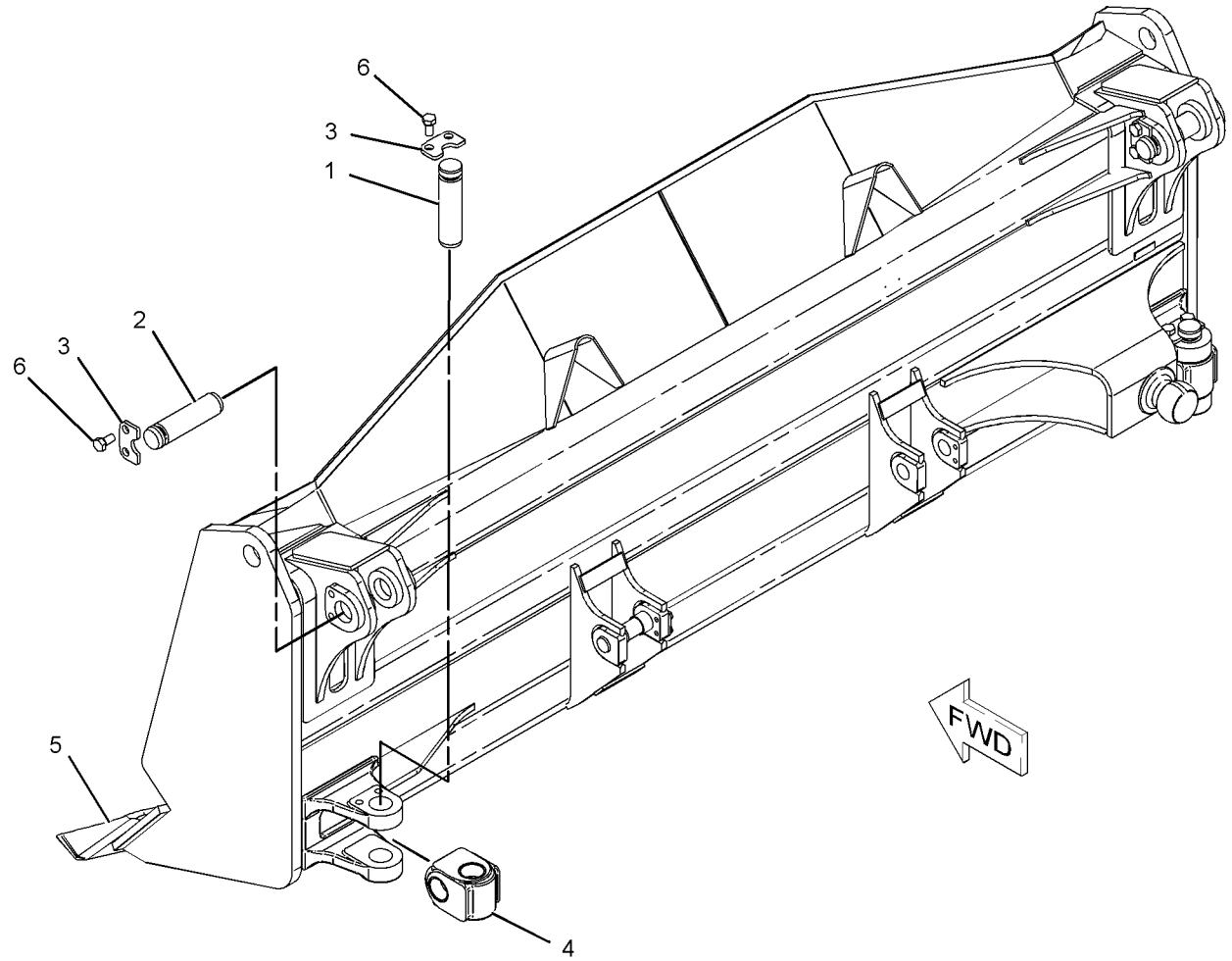

GRAPHIC #1 **<END>** g01111728

WORK TOOLS

245-8152 BLADE GP-SEMI-UNIVERSAL

S/N: J8B1-UP
WITH ROCK GUARD & WEAR PLATES
PART OF 296-8544, 301-4869 BLADE GP-SEMI-UNIVERSAL
AN ATTACHMENT

SMCS-6060, 6078 **i02245827**

NOTE	REF NO	GRAPHIC REF	PART NUMBER	QTY	PART NAME 1 2 3 4 5 6 (PRODUCT LEVEL)	SEE PAGE
Y	1	1	*8E-1497*	1	GUARD GP-ROCK	583
Y	2	1	*9W-2707*	1	PLATE AS-WEAR	996
Y	3	1	**239-4170**	1	BLADE AS-SEMI-UNIVERSAL	957

Y-SEPARATE ILLUSTRATION

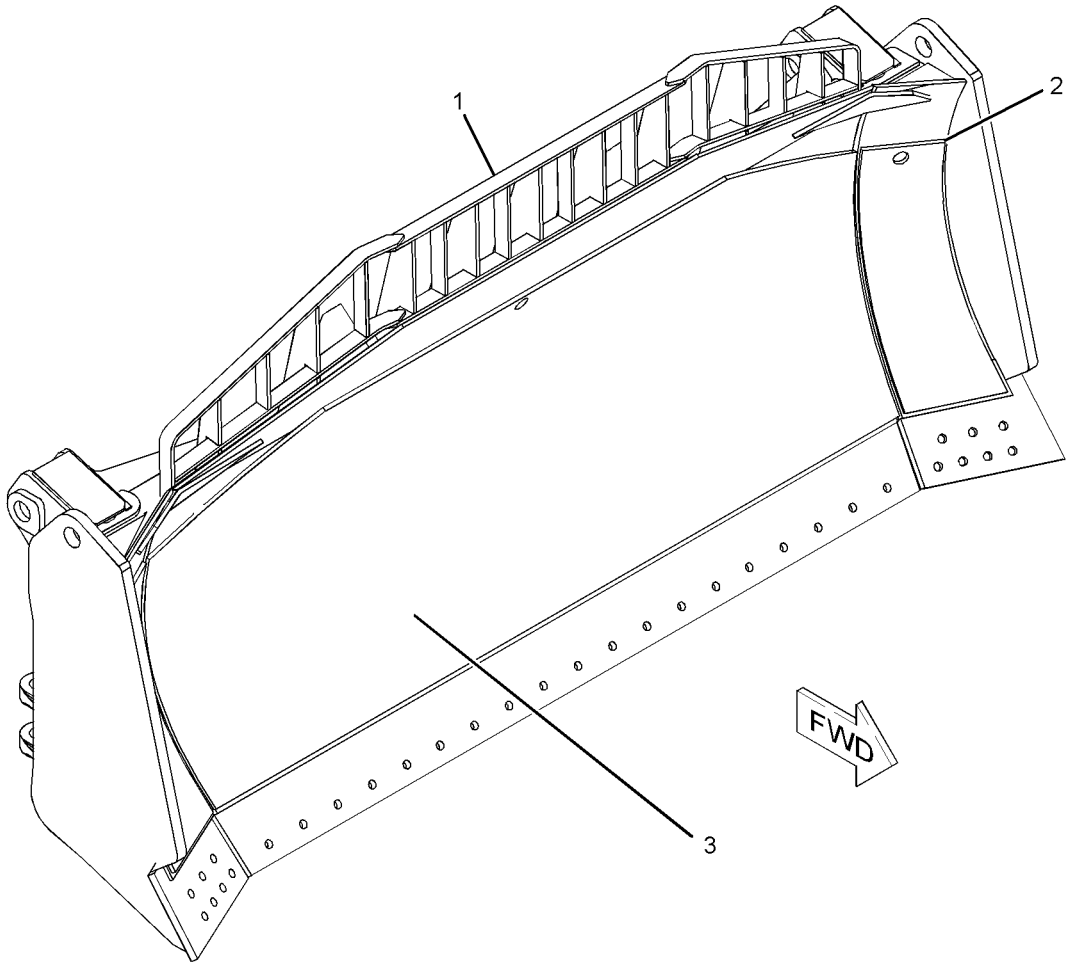

GRAPHIC #1 **<END>** g01131389

247-0850 BLADE GP-SEMI-UNIVERSAL—LOW GROUND PRESSURE

S/N: DZR1-UP

PART OF 245-3557 BULLDOZER AR-SEMI-UNIVERSAL

AN ATTACHMENT

SMCS-6060, 6078 **i03242673**

NOTE	REF NO	GRAPHIC REF	PART NUMBER	QTY	PART NAME 1 2 3 4 5 6 (PRODUCT LEVEL)	SEE PAGE
	1	1	**1U-2472**	2	PIN	
	2	1	**4T-7534**	2	PIN	
	3	1	**6J-5179**	4	RETAINER	
	4	1	**8E-6758**	2	CONNECTOR AS	
					(EACH INCLUDES)	
	4A	1	**8E-6752**	4	BEARING-SLEEVE	
Y	5	1	*256-4889*	1	BLADE & EDGE GP-SEMI-UNIVERSAL	945
M	6	1	**7X-2574**	8	BOLT (M24X3X45-MM)	

M-METRIC PART
Y-SEPARATE ILLUSTRATION

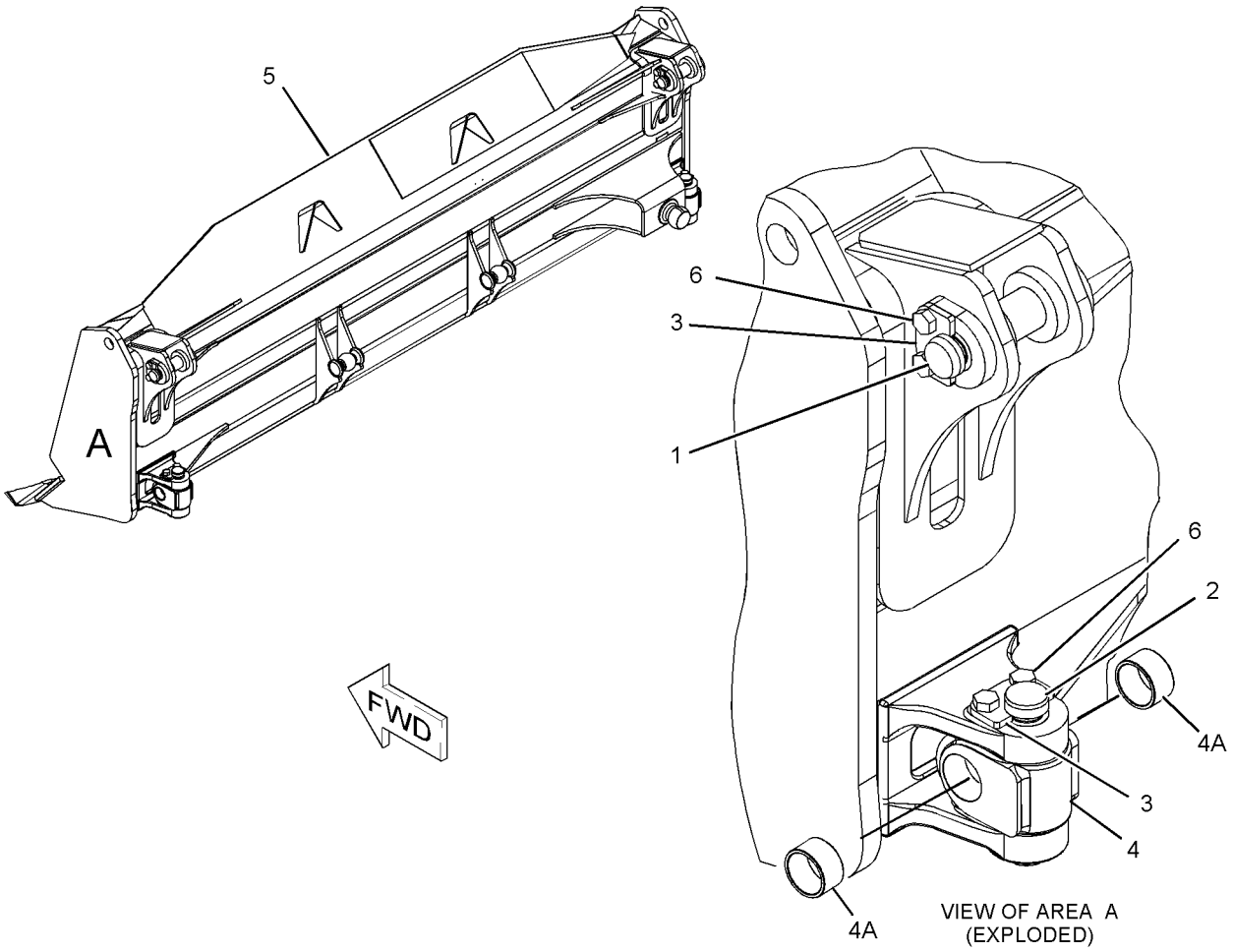

GRAPHIC #1 **<END>** g01119486

282-7743 BLADE GP-SEMI-UNIVERSAL

S/N: J8B1-UP
PART OF 282-7741 BLADE & EDGE GP-SEMI-UNIVERSAL
FOR USE WITH ACCUGRADE
AN ATTACHMENT

SMCS-6060, 6078 **i02491402**

NOTE	PART NUMBER	QTY	PART NAME 1 2 3 4 5 6 (PRODUCT LEVEL)	SEE PAGE
Y	**239-4170**	1	BLADE AS-SEMI-UNIVERSAL	957
Y	*245-4178*	1	MOUNTING GP-MAST (GRADE CONTROL)	992

Y-SEPARATE ILLUSTRATION

<END>

296-8542 BLADE GP-SEMI-UNIVERSAL

S/N: J8B1-UP
PART OF 301-4874 BLADE GP-SEMI-UNIVERSAL
FOR USE WITH ACCUGRADE
AN ATTACHMENT

SMCS-6060, 6078 **i03212113**

NOTE	PART NUMBER	QTY	PART NAME 1 2 3 4 5 6 (PRODUCT LEVEL)	SEE PAGE
Y	**239-4170**	1	BLADE AS-SEMI-UNIVERSAL	957
Y	*245-4178*	1	MOUNTING GP-MAST (GRADE CONTROL)	992

Y-SEPARATE ILLUSTRATION

<END>

296-8544 BLADE GP-SEMI-UNIVERSAL

S/N: J8B1-UP
WITH ROCK GUARD & WEAR PLATES
PART OF 301-4875 BLADE GP-SEMI-UNIVERSAL
FOR USE WITH ACCUGRADE
AN ATTACHMENT

SMCS-6060, 6078 **i03213392**

NOTE	PART NUMBER	QTY	PART NAME 1 2 3 4 5 6 (PRODUCT LEVEL)	SEE PAGE
Y	**245-8152**	1	BLADE GP-SEMI-UNIVERSAL	970
Y	*245-4178*	1	MOUNTING GP-MAST (GRADE CONTROL)	992

Y-SEPARATE ILLUSTRATION

<END>

WORK TOOLS

296-8546 BLADE GP-SEMI-UNIVERSAL

S/N: J8B1-UP
WITH PUSH PLATE
PART OF 301-4876 BLADE GP
FOR USE WITH ACCUGRADE
AN ATTACHMENT

SMCS-6060, 6078 **i03213398**

NOTE	PART NUMBER	QTY	PART NAME 1 2 3 4 5 6 (PRODUCT LEVEL)	SEE PAGE
Y	**245-8153**	1	BLADE AS-SEMI-UNIVERSAL	958
Y	*245-4178*	1	MOUNTING GP-MAST (GRADE CONTROL)	992

Y-SEPARATE ILLUSTRATION

<END>

296-8554 BLADE GP-SEMI-UNIVERSAL—LGP

S/N: J8B1-UP
PART OF 301-4884 BLADE GP-SEMI-UNIVERSAL
FOR USE WITH ACCUGRADE
AN ATTACHMENT

SMCS-6060, 6078 **i03213541**

NOTE	PART NUMBER	QTY	PART NAME 1 2 3 4 5 6 (PRODUCT LEVEL)	SEE PAGE
Y	**247-0854**	1	BLADE AS-SEMI-UNIVERSAL	959
Y	*245-4178*	1	MOUNTING GP-MAST (GRADE CONTROL)	992

Y-SEPARATE ILLUSTRATION

<END>

301-4869 BLADE GP-SEMI-UNIVERSAL

S/N: J8B1-UP
WITH ROCK GUARD & WEAR PLATES
PART OF 245-3564 BLADE & EDGE GP-SEMI-UNIVERSAL
AN ATTACHMENT

SMCS-6060, 6078 **i02810053**

NOTE	PART NUMBER	QTY	PART NAME 1 2 3 4 5 6 (PRODUCT LEVEL)	SEE PAGE
Y	**245-8152**	1	BLADE GP-SEMI-UNIVERSAL	970
Y	*7T-5558*	1	EDGE GP-BIT & CUTTING (SEMI-UNIVERSAL)	982
	8E-6758	2	CONNECTOR AS	
			(EACH INCLUDES)	
	8E-6752	4	BEARING-SLEEVE	
M	**7X-2574**	8	BOLT (M24X3X45-MM)	
	1U-2472	2	PIN	
	4T-7534	2	PIN	
	6J-5179	4	RETAINER	

M-METRIC PART
Y-SEPARATE ILLUSTRATION

<END>

WORK TOOLS

301-4871 BLADE GP-SEMI-UNIVERSAL

S/N: J8B1-UP
PART OF 245-3565 BLADE & EDGE GP-SEMI-UNIVERSAL
AN ATTACHMENT

SMCS-6060, 6078 **i02777058**

NOTE	PART NUMBER	QTY	PART NAME 1 2 3 4 5 6 (PRODUCT LEVEL)	SEE PAGE
Y	**245-8153**	1	BLADE AS-SEMI-UNIVERSAL	958
Y	*7T-5558*	1	EDGE GP-BIT & CUTTING (SEMI-UNIVERSAL)	982
M	**7X-2574**	8	BOLT (M24X3X45-MM)	
	8E-6758	2	CONNECTOR AS	
	8E-6752	4	BEARING-SLEEVE	
	1U-2472	2	PIN	
	4T-7534	2	PIN	
	6J-5179	4	RETAINER	

M-METRIC PART
Y-SEPARATE ILLUSTRATION

<END>

301-4874 BLADE GP-SEMI-UNIVERSAL

S/N: J8B1-UP
PART OF 296-8541 BLADE & EDGE GP-SEMI-UNIVERSAL
FOR USE WITH ACCUGRADE
AN ATTACHMENT

SMCS-6060, 6078 **i03212040**

NOTE	PART NUMBER	QTY	PART NAME 1 2 3 4 5 6 (PRODUCT LEVEL)	SEE PAGE
Y	*296-8542*	1	BLADE GP-SEMI-UNIVERSAL	972
Y	*7T-5558*	1	EDGE GP-BIT & CUTTING (SEMI-UNIVERSAL)	982
M	**7X-2574**	8	BOLT (M24X3X45-MM)	
	8E-6758	2	CONNECTOR AS	
			(EACH INCLUDES)	
	8E-6752	4	BEARING-SLEEVE	
	1U-2472	2	PIN	
	4T-7534	2	PIN	
	6J-5179	4	RETAINER	

M-METRIC PART
Y-SEPARATE ILLUSTRATION

<END>

301-4875 BLADE GP-SEMI-UNIVERSAL

S/N: J8B1-UP
WITH ROCK GUARD & WEAR PLATES
PART OF 296-8543 BLADE & EDGE GP-SEMI-UNIVERSAL
AN ATTACHMENT

SMCS-6060, 6078 **i03213391**

NOTE	PART NUMBER	QTY	PART NAME 1 2 3 4 5 6 (PRODUCT LEVEL)	SEE PAGE
Y	*296-8544*	1	BLADE GP-SEMI-UNIVERSAL	972
Y	*7T-5558*	1	EDGE GP-BIT & CUTTING (SEMI-UNIVERSAL)	982
M	**7X-2574**	8	BOLT (M24X3X45-MM)	
	8E-6758	2	CONNECTOR AS	
			(EACH INCLUDES)	
	8E-6752	4	BEARING-SLEEVE	
	1U-2472	2	PIN	
	4T-7534	2	PIN	
	6J-5179	4	RETAINER	

M-METRIC PART
Y-SEPARATE ILLUSTRATION

<END>

301-4884 BLADE GP-SEMI-UNIVERSAL

S/N: J8B1-UP
PART OF 296-8553 BLADE & EDGE GP-SEMI-UNIVERSAL
AN ATTACHMENT

SMCS-6060, 6078 **i03213506**

NOTE	PART NUMBER	QTY	PART NAME 1 2 3 4 5 6 (PRODUCT LEVEL)	SEE PAGE
Y	*296-8554*	1	BLADE GP-SEMI-UNIVERSAL	973
Y	*4Z-9057*	1	EDGE GP-BIT & CUTTING (SEMI-UNIVERSAL)	981
M	**7X-2574**	8	BOLT (M24X3X45-MM)	
	8E-6758	2	CONNECTOR AS	
			(EACH INCLUDES)	
	8E-6752	4	BEARING-SLEEVE	
	1U-2472	2	PIN	
	4T-7534	2	PIN	
	6J-5179	4	RETAINER	

M-METRIC PART
Y-SEPARATE ILLUSTRATION

<END>

WORK TOOLS

245-3562 BLADE GP-UNIVERSAL

S/N: A5G1-UP; DZS1-UP
PART OF 245-3566, 245-3567 BULLDOZER AR-UNIVERSAL
AN ATTACHMENT

SMCS-6053, 6060 **i02245838**

NOTE	REF NO	GRAPHIC REF	PART NUMBER	QTY	PART NAME 1 2 3 4 5 6 (PRODUCT LEVEL)	SEE PAGE
	1	1	**1U-2472**	2	PIN	
	2	1	**4T-7534**	2	PIN	
	3	1	**6J-5179**	4	RETAINER	
	4	1	**8E-6758**	2	CONNECTOR AS	
					(EACH INCLUDES)	
		1	**8E-6752**	4	BEARING-SLEEVE	
Y	5	1	*255-8707*	1	BLADE & EDGE GP-UNIVERSAL	950
M	6	1	**7X-2574**	8	BOLT (M24X3X45-MM)	

M-METRIC PART
Y-SEPARATE ILLUSTRATION

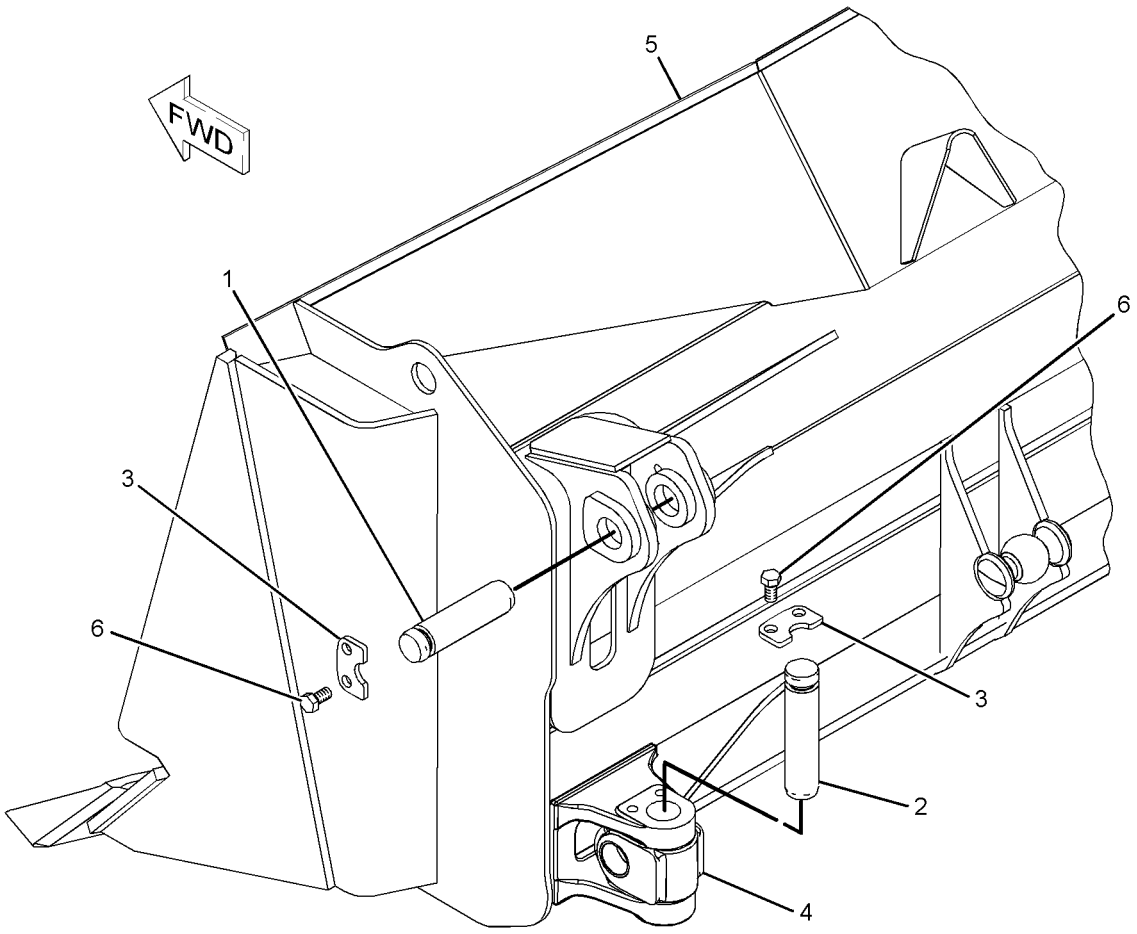

GRAPHIC #1 **<END>** g01111713

WORK TOOLS

245-8151 BLADE GP-UNIVERSAL

S/N: J8B1-UP
WITH ROCK GUARD
PART OF 256-5314, 296-8550, 301-4878 BLADE GP-UNIVERSAL
AN ATTACHMENT

SMCS-6053, 6060 **i03213440**

NOTE	REF NO	GRAPHIC REF	PART NUMBER	QTY	PART NAME 1 2 3 4 5 6 (PRODUCT LEVEL)	SEE PAGE
Y	1	1	*8E-4205*	1	GUARD GP-ROCK	584
Y	2	1	**245-8150**	1	BLADE AS-UNIVERSAL	962

Y-SEPARATE ILLUSTRATION

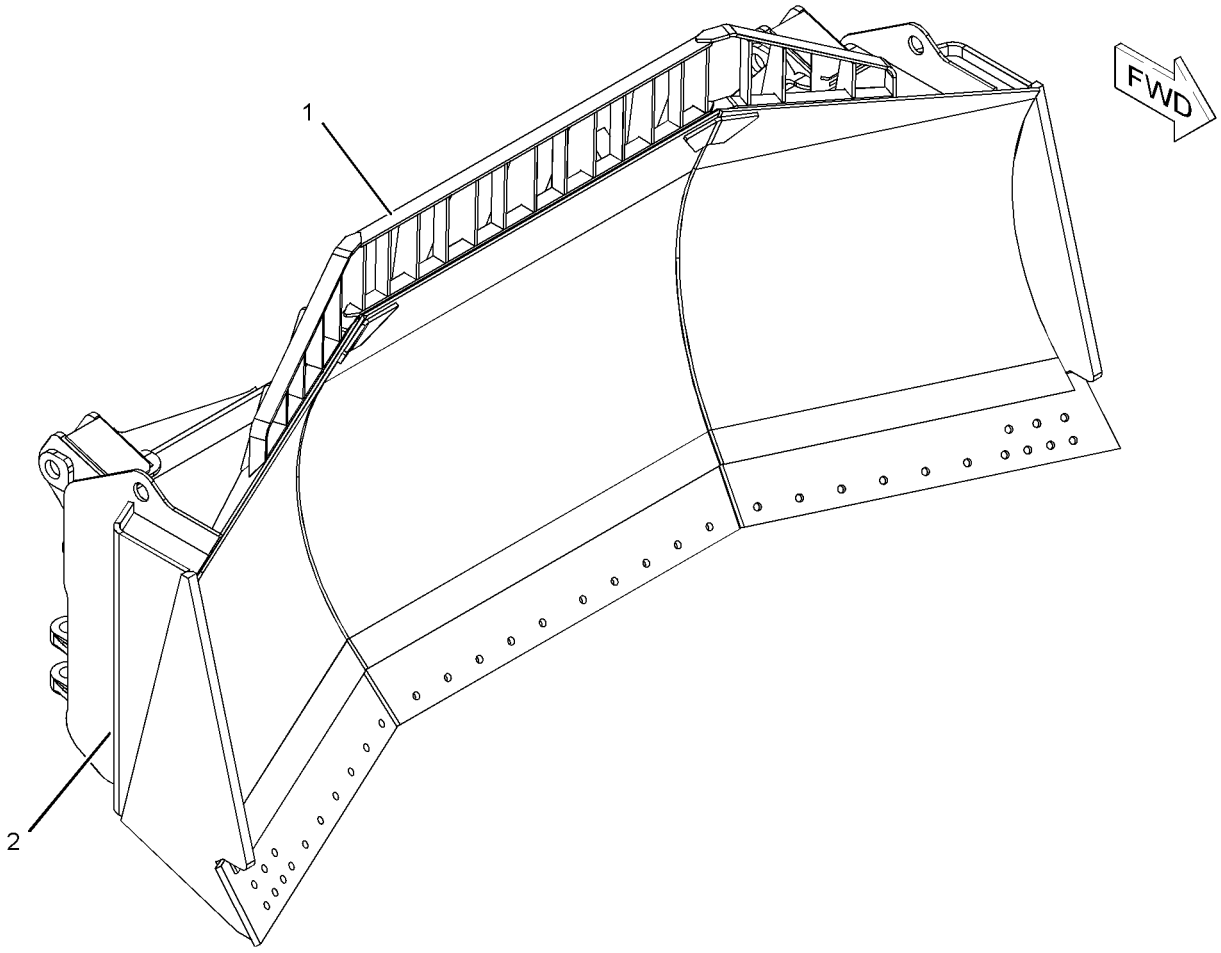

GRAPHIC #1 **<END>** g01119601

256-5314 BLADE GP-UNIVERSAL

S/N: J8B1-UP
WITH ROCK GUARD & WEAR PLATES
PART OF 301-4877 BLADE & EDGE GP-UNIVERSAL, 296-8552 BLADE GP-UNIVERSAL
AN ATTACHMENT

SMCS-6053, 6060 **i03213471**

NOTE	REF NO	GRAPHIC REF	PART NUMBER	QTY	PART NAME 1 2 3 4 5 6 (PRODUCT LEVEL)	SEE PAGE
Y	1	1	*6Y-7243*	1	PLATE AS-WEAR	995
Y	2	1	**245-8151**	1	BLADE GP-UNIVERSAL	977

Y-SEPARATE ILLUSTRATION

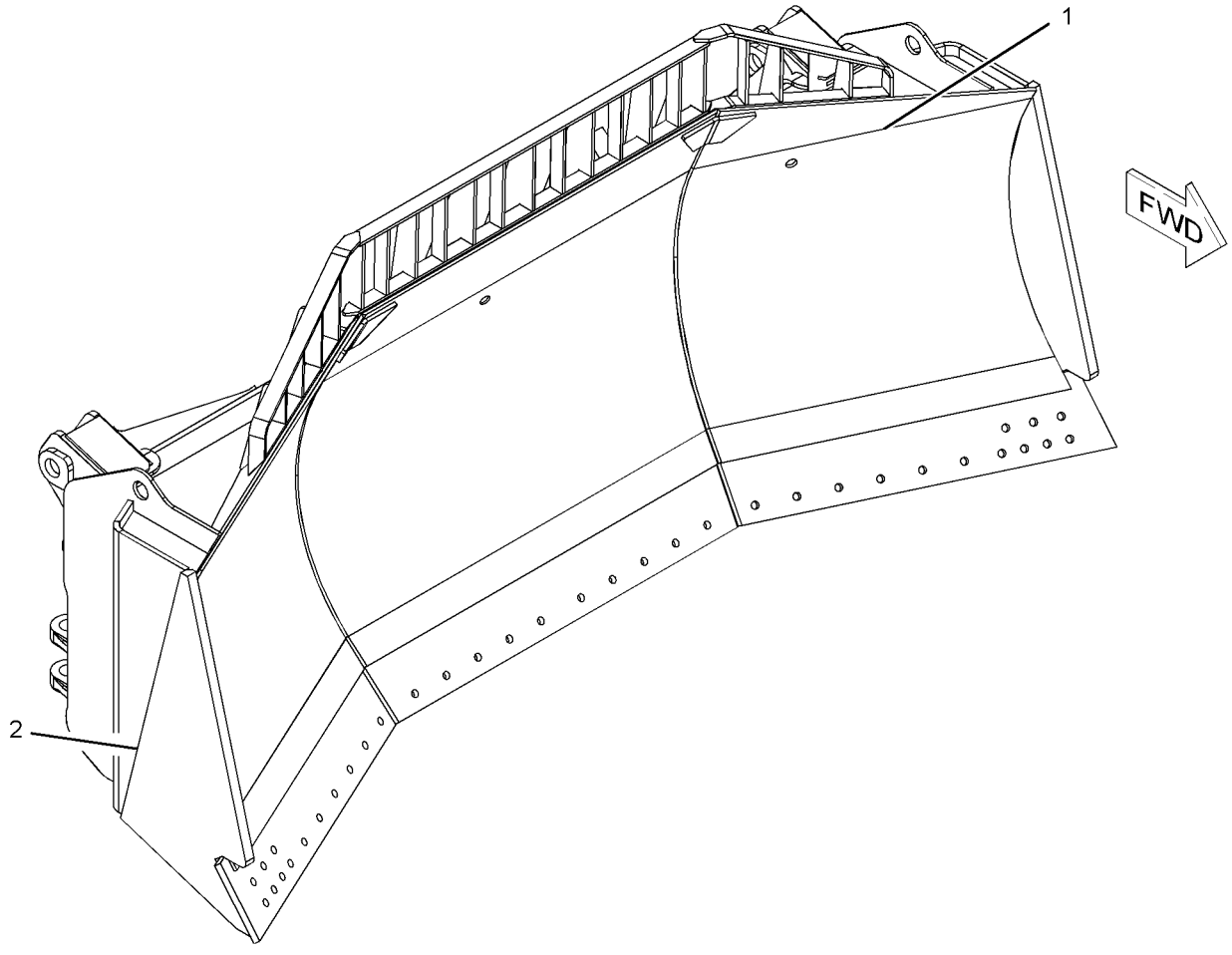

GRAPHIC #1 **<END>** g01119621

282-7742 BLADE GP-UNIVERSAL

S/N: J8B1-UP
PART OF 282-7740 BLADE & EDGE GP-UNIVERSAL
FOR USE WITH ACCUGRADE
AN ATTACHMENT

SMCS-6053, 6060 **i02491398**

NOTE	PART NUMBER	QTY	PART NAME 1 2 3 4 5 6 (PRODUCT LEVEL)	SEE PAGE
Y	**245-8150**	1	BLADE AS-UNIVERSAL	962
Y	*245-4178*	1	MOUNTING GP-MAST (GRADE CONTROL)	992
Y-SEPARATE ILLUSTRATION				

<END>

296-8548 BLADE GP-UNIVERSAL

S/N: J8B1-UP
PART OF 301-4881 BLADE GP
FOR USE WITH ACCUGRADE
AN ATTACHMENT

SMCS-6053, 6060 **i03213405**

NOTE	PART NUMBER	QTY	PART NAME 1 2 3 4 5 6 (PRODUCT LEVEL)	SEE PAGE
Y	**245-8150**	1	BLADE AS-UNIVERSAL	962
Y	*245-4178*	1	MOUNTING GP-MAST (GRADE CONTROL)	992
Y-SEPARATE ILLUSTRATION				

<END>

296-8550 BLADE GP-UNIVERSAL

S/N: J8B1-UP
WITH ROCK GUARD
PART OF 301-4882 BLADE GP
FOR USE WITH ACCUGRADE
AN ATTACHMENT

SMCS-6053, 6060 **i03213430**

NOTE	PART NUMBER	QTY	PART NAME 1 2 3 4 5 6 (PRODUCT LEVEL)	SEE PAGE
Y	**245-8151**	1	BLADE GP-UNIVERSAL	977
Y	*245-4178*	1	MOUNTING GP-MAST (GRADE CONTROL)	992
Y-SEPARATE ILLUSTRATION				

<END>

WORK TOOLS

296-8552 BLADE GP-UNIVERSAL

S/N: J8B1-UP
WITH ROCK GUARD & WEAR PLATE
PART OF 301-4883 BLADE GP
FOR USE WITH ACCUGRADE
AN ATTACHMENT

SMCS-6053, 6060 **i03213467**

NOTE	PART NUMBER	QTY	PART NAME 1 2 3 4 5 6 (PRODUCT LEVEL)	SEE PAGE
Y	**256-5314**	1	BLADE GP-UNIVERSAL	978
Y	*245-4178*	1	MOUNTING GP-MAST (GRADE CONTROL)	992

Y-SEPARATE ILLUSTRATION

<END>

301-4878 BLADE GP-UNIVERSAL

S/N: J8B1-UP
PART OF 245-3563 BLADE & EDGE GP-UNIVERSAL
AN ATTACHMENT

SMCS-6053, 6060 **i03236241**

NOTE	PART NUMBER	QTY	PART NAME 1 2 3 4 5 6 (PRODUCT LEVEL)	SEE PAGE
Y	**245-8151**	1	BLADE GP-UNIVERSAL	977
Y	*7T-5559*	1	EDGE GP-BIT & CUTTING (UNIVERSAL)	983
M	**7X-2574**	8	BOLT (M24X3X45-MM)	
	8E-6758	2	CONNECTOR AS	
	8E-6752	4	BEARING-SLEEVE	
	1U-2472	2	PIN	
	4T-7534	2	PIN	
	6J-5179	4	RETAINER	

M-METRIC PART
Y-SEPARATE ILLUSTRATION

<END>

WORK TOOLS

4Z-9057 EDGE GP-BIT & CUTTING—SEMI-UNIVERSAL

S/N: J8B1-UP; DZR1-UP
LOW GROUND PRESSURE
PART OF 256-4889, 257-5547 BLADE & EDGE GP-SEMI-UNIVERSAL, 301-4884 BLADE GP-SEMI-UNIVERSAL
AN ATTACHMENT

SMCS-6801, 6804 **i03213521**

NOTE	REF NO	GRAPHIC REF	PART NUMBER	QTY	PART NAME 1 2 3 4 5 6 (PRODUCT LEVEL)	SEE PAGE
	1	1	**8E-4193**	1	BIT-END (RH)	
	2	1	**8E-4194**	1	BIT-END (LH)	
	3	1	**4J-9058**	37	BOLT-PLOW (1-8X3.25-IN)	
	4	1	**5P-8250**	37	WASHER (28X49X5-MM THK)	
	5	1	**2J-3507**	37	NUT-FULL (1-8-THD)	
	6	1	**6Y-5540**	2	EDGE-CUTTING	
	7	1	**4Z-9058**	1	EDGE-CUTTING	

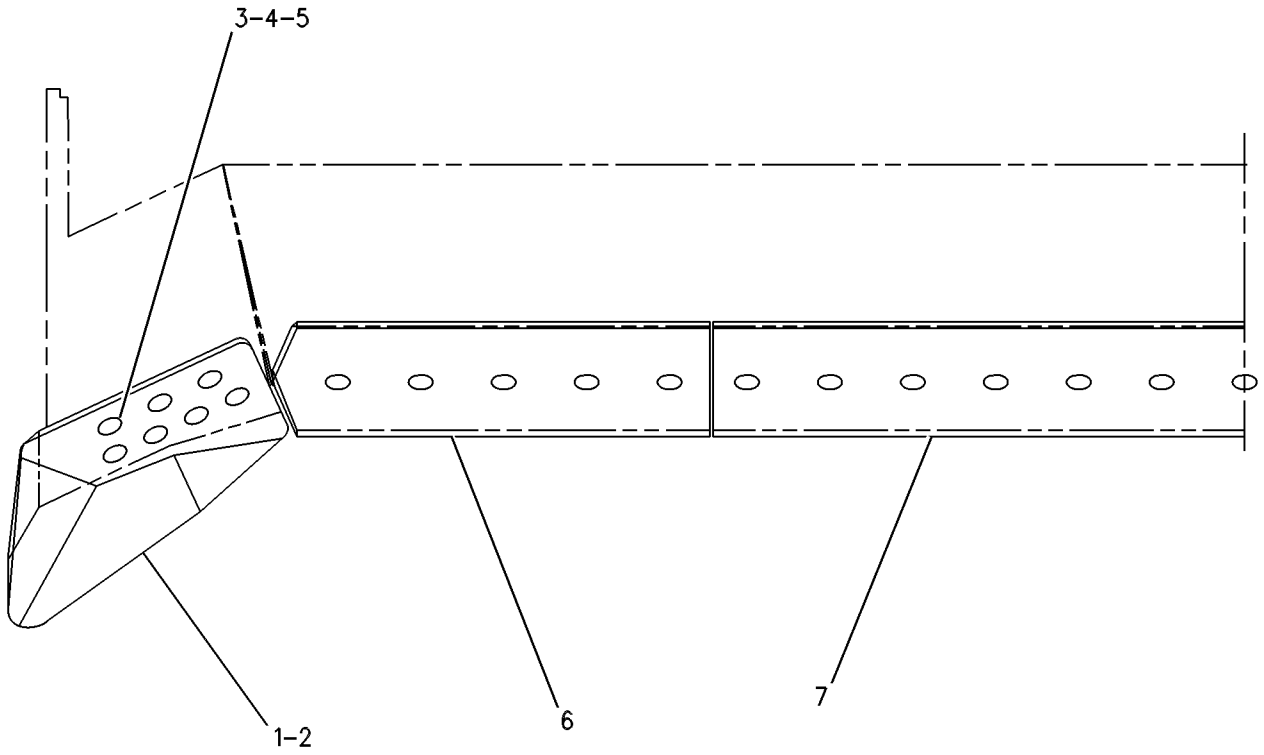

GRAPHIC #1 **<END>** g00270706

7T-5558 EDGE GP-BIT & CUTTING—SEMI-UNIVERSAL

S/N: J8B1-UP; B8S1-UP; DZX1-UP

PART OF 237-4367, 282-7741, 301-4872, 301-4873 BLADE & EDGE GP-SEMI-UNIVERSAL, 301-4876 BLADE GP, 301-4869, 301-4871, 301-4874, 301-4875 BLADE GP-SEMI-UNIVERSAL

AN ATTACHMENT

SMCS-6801, 6804 **i01065453**

NOTE	REF NO	GRAPHIC REF	PART NUMBER	QTY	PART NAME 1 2 3 4 5 6 (PRODUCT LEVEL)	SEE PAGE
	1	1	**8E-4193**	1	BIT-END-RH	
	2	1	**8E-4194**	1	BIT-END-LH	
	3	1	**4J-9058**	33	BOLT-PLOW (1-8X3.25 IN)	
	4	1	**5P-8250**	33	WASHER (5.0MM THK)	
	5	1	**2J-3507**	33	NUT-FULL (1-8 THD)	
	6	1	**6Y-5540**	2	EDGE-CUTTING	
	7	1	**4T-6381**	1	EDGE-CUTTING	

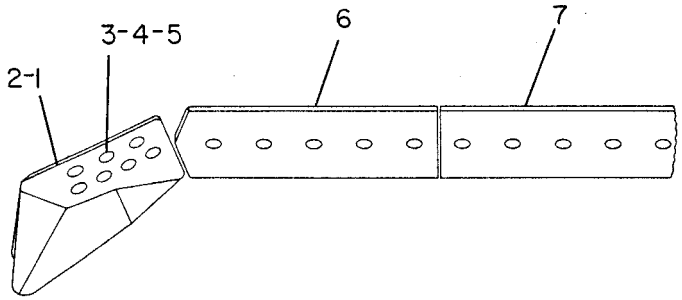

GRAPHIC #1 **<END>** g00178330

7T-5559 EDGE GP-BIT & CUTTING—UNIVERSAL

S/N: J8B1-UP; A5G1-UP; DZS1-UP
PART OF 255-8707, 282-7740, 301-4877, 301-4879, 301-4880 BLADE & EDGE GP-UNIVERSAL, 301-4881, 301-4882, 301-4883 BLADE GP, 301-4878 BLADE GP-UNIVERSAL
AN ATTACHMENT

SMCS-6801, 6804 **i01239366**

NOTE	REF NO	GRAPHIC REF	PART NUMBER	QTY	PART NAME 1 2 3 4 5 6 (PRODUCT LEVEL)	SEE PAGE
	1	1	**8E-4193**	1	BIT-END	
	2	1	**8E-4194**	1	BIT-END	
	3	1	**4J-9058**	36	BOLT-PLOW (1-8X3.25 IN)	
	4	1	**5P-8250**	36	WASHER (5.0MM THK)	
	5	1	**2J-3507**	36	NUT-FULL (1-8 THD)	
	6	1	**4T-6378**	2	EDGE-CUTTING	
	7	1	**9W-5232**	2	EDGE-CUTTING	

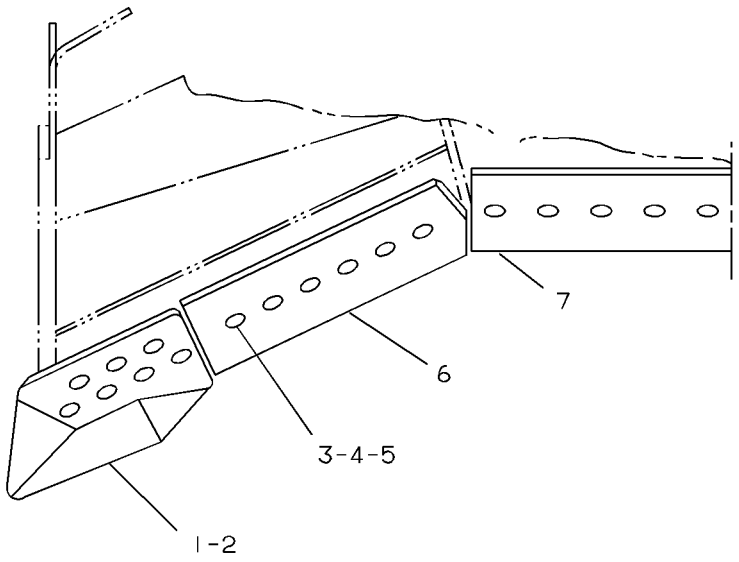

GRAPHIC #1 **<END>** g00183628

135-9374 EDGE GP-BIT & CUTTING—ANGLING BLADE

S/N: D1E1-UP; D1F1-UP
PART OF 151-1150 BLADE & EDGE GP-ANGLING
AN ATTACHMENT

SMCS-6801, 6804 **i03201378**

NOTE	REF NO	GRAPHIC REF	PART NUMBER	QTY	PART NAME 1 2 3 4 5 6 (PRODUCT LEVEL)	SEE PAGE
	1	1	**8E-4193**	1	BIT-END (RH)	
		1	**8E-4194**	1	BIT-END (LH)	
	2	1	**135-9373**	3	EDGE-CUTTING	
	3	1	**2J-3507**	38	NUT-FULL (1-8-THD)	
		1	**4F-4042**	38	BOLT-PLOW (1-8X3-IN)	
		1	**5P-8250**	38	WASHER (28X49X5-MM THK)	

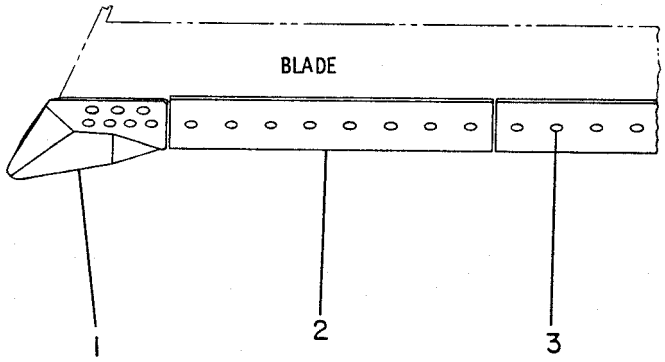

GRAPHIC #1 **<END>** g00178372

WORK TOOLS

251-1723 FRAME AR-STRIKER—SINGLE SHANK

S/N: J8B1-UP

FOR USE WITH 215-6422—PAGE 999

AN ATTACHMENT

SMCS-7180 **i02246141**

NOTE	REF NO	GRAPHIC REF	PART NUMBER	QTY	PART NAME 1 2 3 4 5 6 (PRODUCT LEVEL)	SEE PAGE
Y	1	1	**251-1722**	1	FRAME & BEARING AS	553

Y-SEPARATE ILLUSTRATION

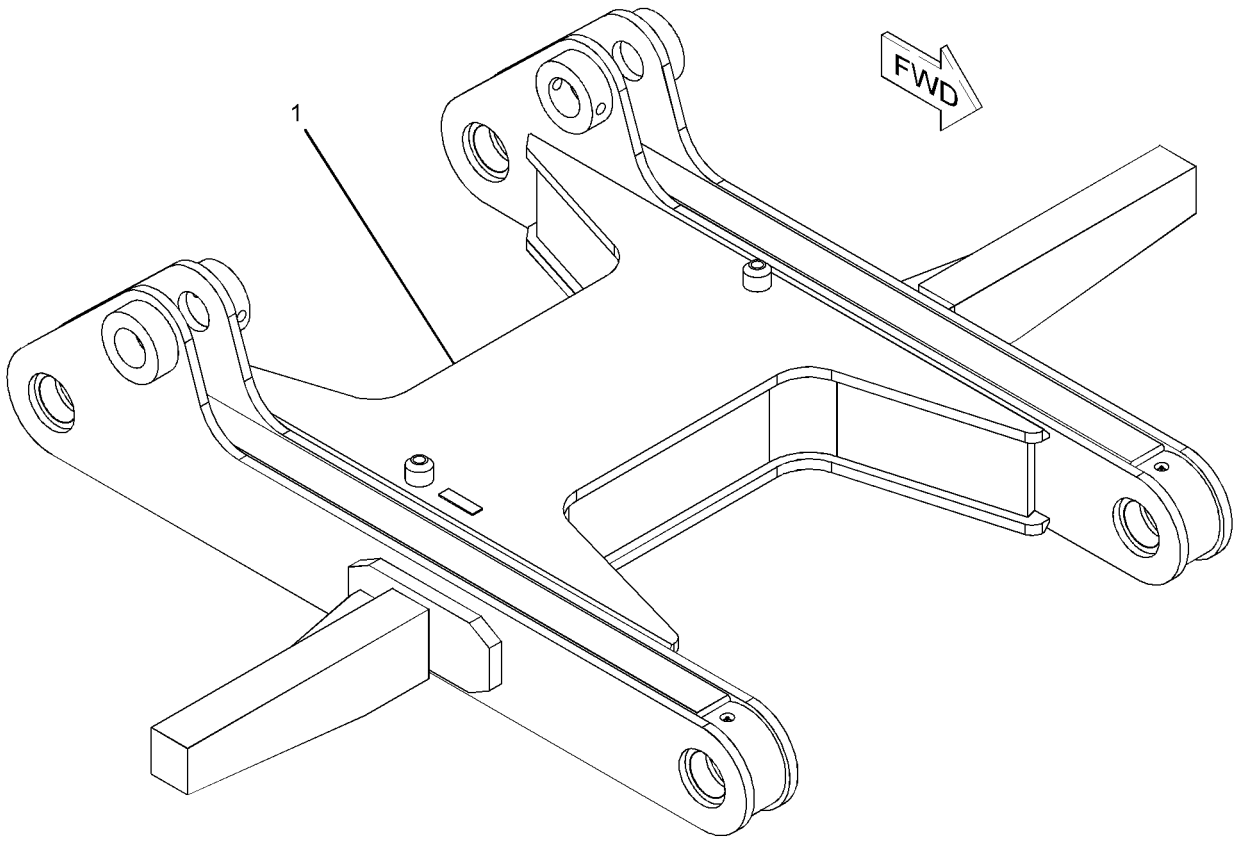

GRAPHIC #1 **<END>** g01119879

WORK TOOLS

251-1726 FRAME AR-STRIKER—MULTISHANK

S/N: J8B1-UP

FOR USE WITH 215-6423—PAGE 1000

AN ATTACHMENT

SMCS-7180 **i02246149**

NOTE	REF NO	GRAPHIC REF	PART NUMBER	QTY	PART NAME 1 2 3 4 5 6 (PRODUCT LEVEL)	SEE PAGE
Y	1	1	**251-1725**	1	FRAME & BEARING AS	554

Y-SEPARATE ILLUSTRATION

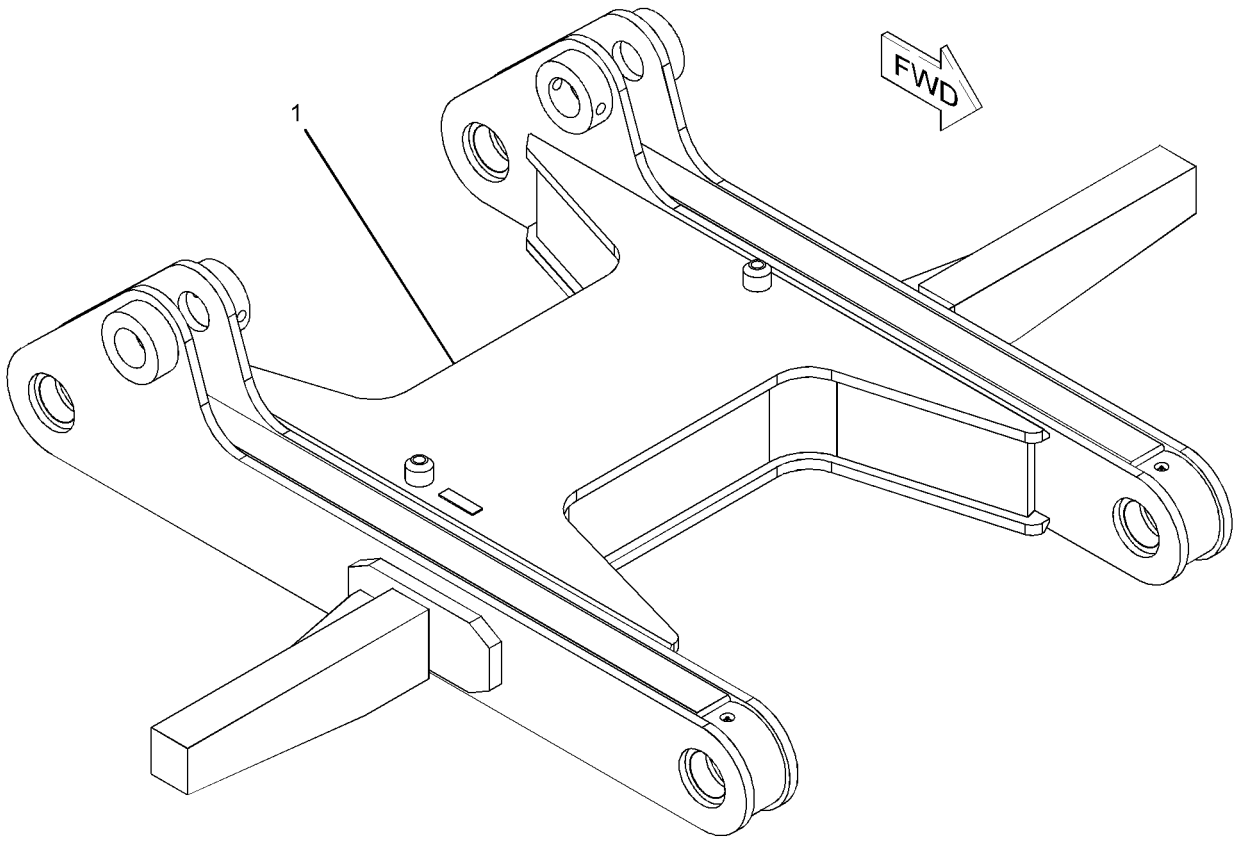

GRAPHIC #1 **<END>** g01119879

228-1871 FRAME GP-RIPPER—SINGLE SHANK

S/N: R8S1-UP
PART OF 215-6422 RIPPER AR
AN ATTACHMENT

SMCS-6314, 7067 **i02402562**

NOTE	REF NO	GRAPHIC REF	PART NUMBER	QTY	PART NAME 1 2 3 4 5 6 (PRODUCT LEVEL)	SEE PAGE
	1	1	**1U-0990**	4	PIN	
	2	1	**4T-1389**	2	PIN AS	
B	3	1	**4T-3522**	16	WASHER (95X170X3-MM THK)	
	4	1	**6J-9482**	2	PIN AS	
	5	1	**6V-9313**	2	PLUG	
	6	1	**7T-7305**	6	PLATE	
	7	1	**132-7994**	2	PIN AS	
	8	1	**228-1872**	1	FRAME & BEARING AS	
	8A	1	**3B-8489**	4	FITTING-GREASE	
	8B	1	**4T-9751**	4	BEARING-SLEEVE	
	8C	1	**7T-3746**	4	BEARING-SLEEVE	
	9	1	**3E-6756**	16	SEAL-LIP TYPE	
	10	1	**3E-6757**	8	SEAL-LIP TYPE	
M	11	1	**6V-7688**	4	LOCKNUT (M20X2.5-THD)	
M	12	1	**7X-2568**	4	BOLT (M20X2.5X180-MM)	
M	13	1	**8T-5460**	12	BOLT (M20X2.5X40-MM)	

B-USE AS REQUIRED
M-METRIC PART

228-1871 **FRAME GP-RIPPER** *(contd.)* **i02402562**

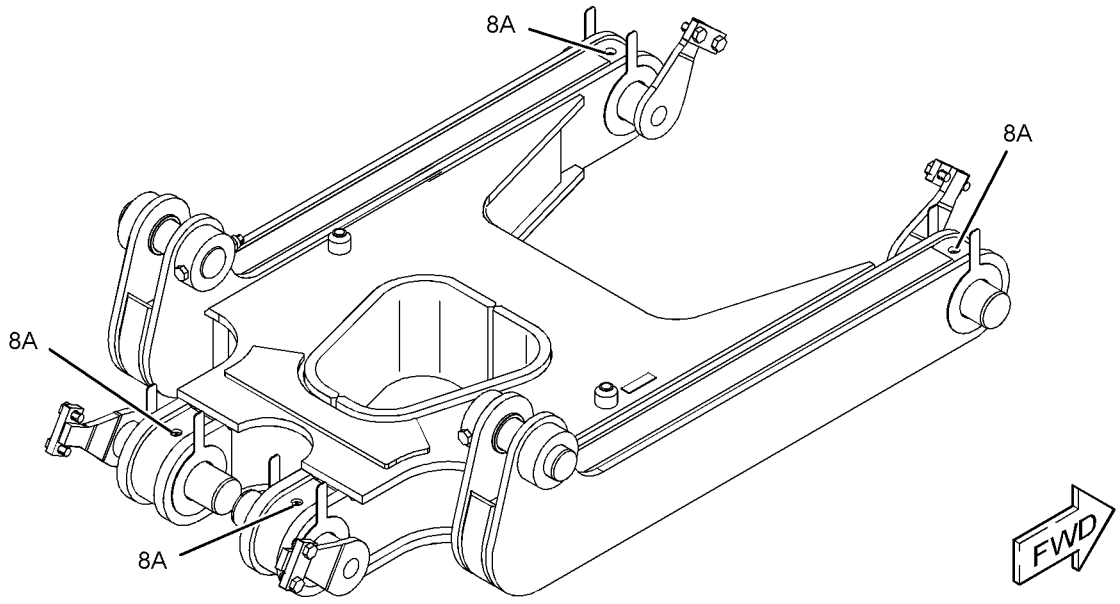

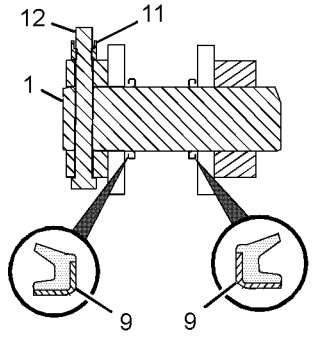

SECTION A-A
(TYPICAL SEAL INSTALLATION)

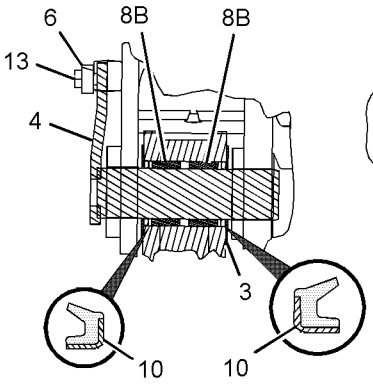

SECTION B-B
(TYPICAL SEAL INSTALLATION)

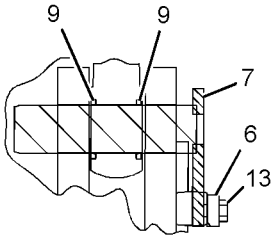

SECTION C-C

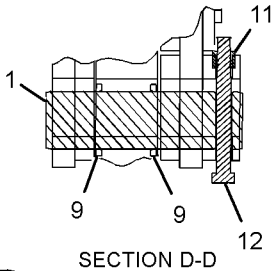

SECTION D-D

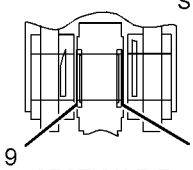

SECTION E-E

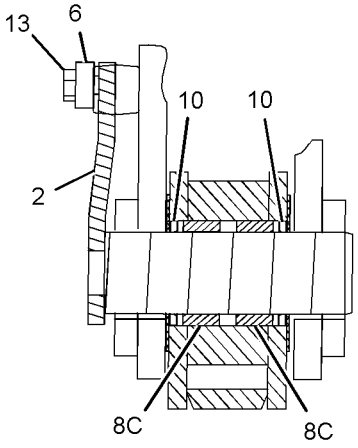

SECTION F-F

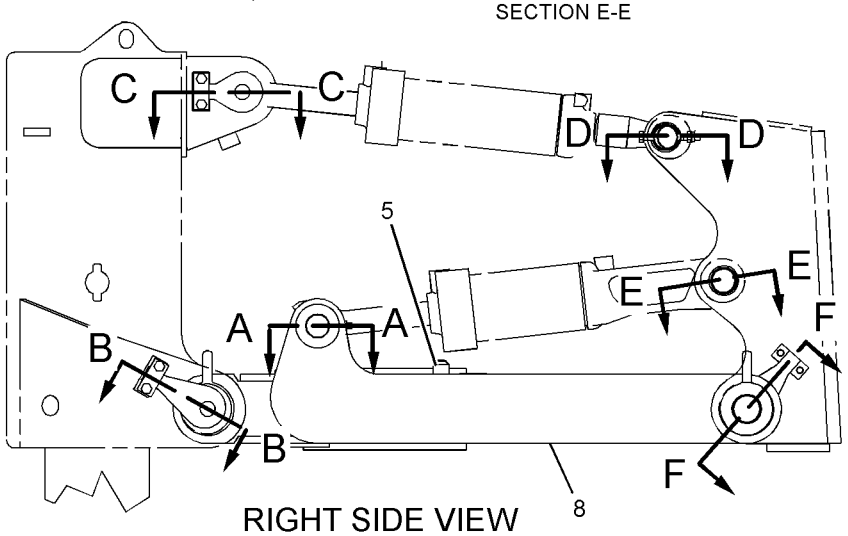

RIGHT SIDE VIEW

GRAPHIC #1 **<END>** g01166319

244-7617 FRAME GP-RIPPER—MULTI SHANK

S/N: L1J1-UP
PART OF 215-6423 RIPPER AR
AN ATTACHMENT

SMCS-6314, 7067 **i02402642**

NOTE	REF NO	GRAPHIC REF	PART NUMBER	QTY	PART NAME 1 2 3 4 5 6 (PRODUCT LEVEL)	SEE PAGE
	1	1	**1U-0990**	4	PIN	
	2	1	**4T-0203**	2	PIN AS	
	3	1	**4T-1389**	4	PIN AS	
B	4	1	**4T-3522**	16	WASHER (95X170X3-MM THK)	
	5	1	**6V-9313**	2	PLUG	
	6	1	**7T-7305**	6	PLATE	
	7	1	**244-7618**	1	FRAME AS-RIPPER	
	7A	1	**3B-8489**	4	FITTING-GREASE	
	7B	1	**7T-3746**	8	BEARING-SLEEVE	
	8	1	**3E-6756**	16	SEAL-LIP TYPE	
	9	1	**3E-6757**	8	SEAL-LIP TYPE	
M	10	1	**6V-7688**	4	LOCKNUT (M20X2.5-THD)	
M	11	1	**7X-2568**	4	BOLT (M20X2.5X180-MM)	
M	12	1	**8T-5460**	12	BOLT (M20X2.5X40-MM)	

B-USE AS REQUIRED
M-METRIC PART

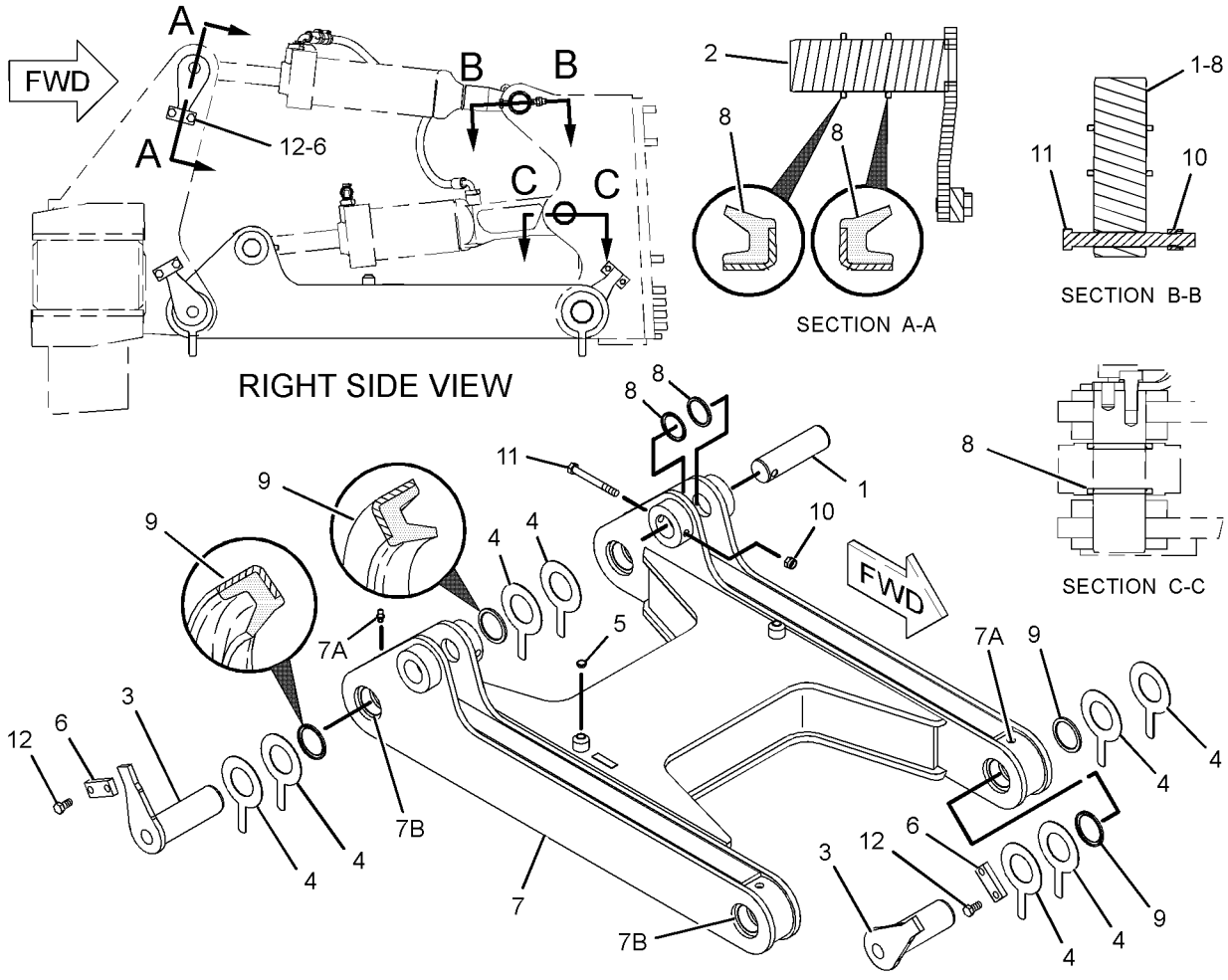

GRAPHIC #1 **<END>** g01164138

WORK TOOLS

208-9529 LINES GP-WINCH

S/N: J8B1-UP

PART OF 209-3431 CONTROL AR-HYDRAULIC

AN ATTACHMENT

SMCS-5179 **i02467548**

NOTE	REF NO	GRAPHIC REF	PART NUMBER	QTY	PART NAME 1 2 3 4 5 6 (PRODUCT LEVEL)	SEE PAGE
	1	1	**6V-0852**	1	CAP-DUST	
I	2	1	**146-7578**	1	HOSE AS	
	3	1	*150-4027*	1	TEE AS	
		1	**3E-2310**	1	TEE	
		1	**3J-1907**	1	SEAL-O-RING	
		1	**6V-8397**	1	SEAL-O-RING	
Y	4	1	**191-1443**	1	MANIFOLD GP-HYDRAULIC (WINCH)	803
I	5	1	**213-5003**	1	HOSE AS	
	6	1	**219-8051**	1	HARNESS AS-SOLENOID (WINCH)	
		1	**102-8803**	1	KIT-RECEPTACLE (3-PIN)	
					(INCLUDES RECEPTACLE AS & WEDGE)	
		1	**155-2270**	1	KIT-CONNECTING PLUG (2-PIN)	
		1	**155-2260**	1	KIT-CONNECTING PLUG (3-PIN)	
					(EACH INCLUDES PLUG AS, WEDGE, & INTERFACE SEAL)	
I	7	1	**238-5096**	1	HOSE AS	
I	8	1	**238-5097**	1	HOSE AS	
	9	1	**239-3327**	1	BRACKET AS	
	10	1	*148-8326*	1	CONNECTOR AS	
		1	**6V-9872**	1	CONNECTOR	
		1	**3J-7354**	1	SEAL-O-RING	
		1	**6V-8397**	1	SEAL-O-RING	
	11	1	*148-8340*	1	CONNECTOR AS	
		1	**6V-8639**	1	CONNECTOR	
		1	**3K-0360**	1	SEAL-O-RING	
		1	**6V-8398**	1	SEAL-O-RING	
	12	1	*148-8354*	1	ELBOW AS	
		1	**6V-9002**	1	ELBOW	
		1	**3K-0360**	1	SEAL-O-RING	
		1	**6V-8398**	1	SEAL-O-RING	
	13	1	*148-8407*	1	PLUG AS	
		1	**9S-4191**	1	PLUG-O-RING	
		1	**3J-1907**	1	SEAL-O-RING	
	14	1	*148-8411*	1	PLUG AS	
		1	**9S-4185**	1	PLUG-O-RING	
		1	**3K-0360**	1	SEAL-O-RING	
	15	1	*155-3624*	1	PLUG AS	
		1	**9S-4182**	1	PLUG-O-RING	
		1	**3J-7354**	1	SEAL-O-RING	
	16	1	**1P-3703**	2	SEAL-RECTANGULAR	
	17	1	**6V-0400**	4	FLANGE-HALF	
	18	1	**1S-0994**	2	CLIP	
	19	1	**3J-1907**	1	SEAL-O-RING	
	20	1	**4J-0520**	4	SEAL-O-RING	
	21	1	**5P-0047**	2	COVER	
	22	1	**5P-4295**	1	CLIP	
	23	1	**6V-3965**	1	FITTING (QUICK DISCONNECT)	
	24	1	**7G-5984**	1	CLIP (TAB)	
	25	1	**7G-5985**	1	CLIP (SLOT)	
	26	1	**7G-5986**	1	GROMMET	
	27	1	**8C-3206**	4	FLANGE-HALF	
	28	1	**8T-4121**	14	WASHER-HARD (11X21X2.5-MM THK)	
M	29	1	**8T-4136**	2	BOLT (M10X1.5X25-MM)	
M	30	1	**8T-4139**	2	BOLT (M12X1.75X30-MM)	
M	31	1	**8T-4184**	8	BOLT (M12X1.75X45-MM)	

208-9529 **LINES GP-WINCH** *(contd.)* **i02467548**

NOTE	REF NO	GRAPHIC REF	PART NUMBER	QTY	PART NAME 1 2 3 4 5 6 (PRODUCT LEVEL)	SEE PAGE
M	32	1	**8T-4192**	2	BOLT (M12X1.75X25-MM)	
M	33	1	**8T-4195**	4	BOLT (M10X1.5X30-MM)	
M	34	1	**8T-4196**	8	BOLT (M10X1.5X35-MM)	
	35	1	**8T-4223**	12	WASHER-HARD (13.5X25.5X3-MM THK)	

I-REFER TO HYDRAULIC INFORMATION SYSTEM
M-METRIC PART
Y-SEPARATE ILLUSTRATION

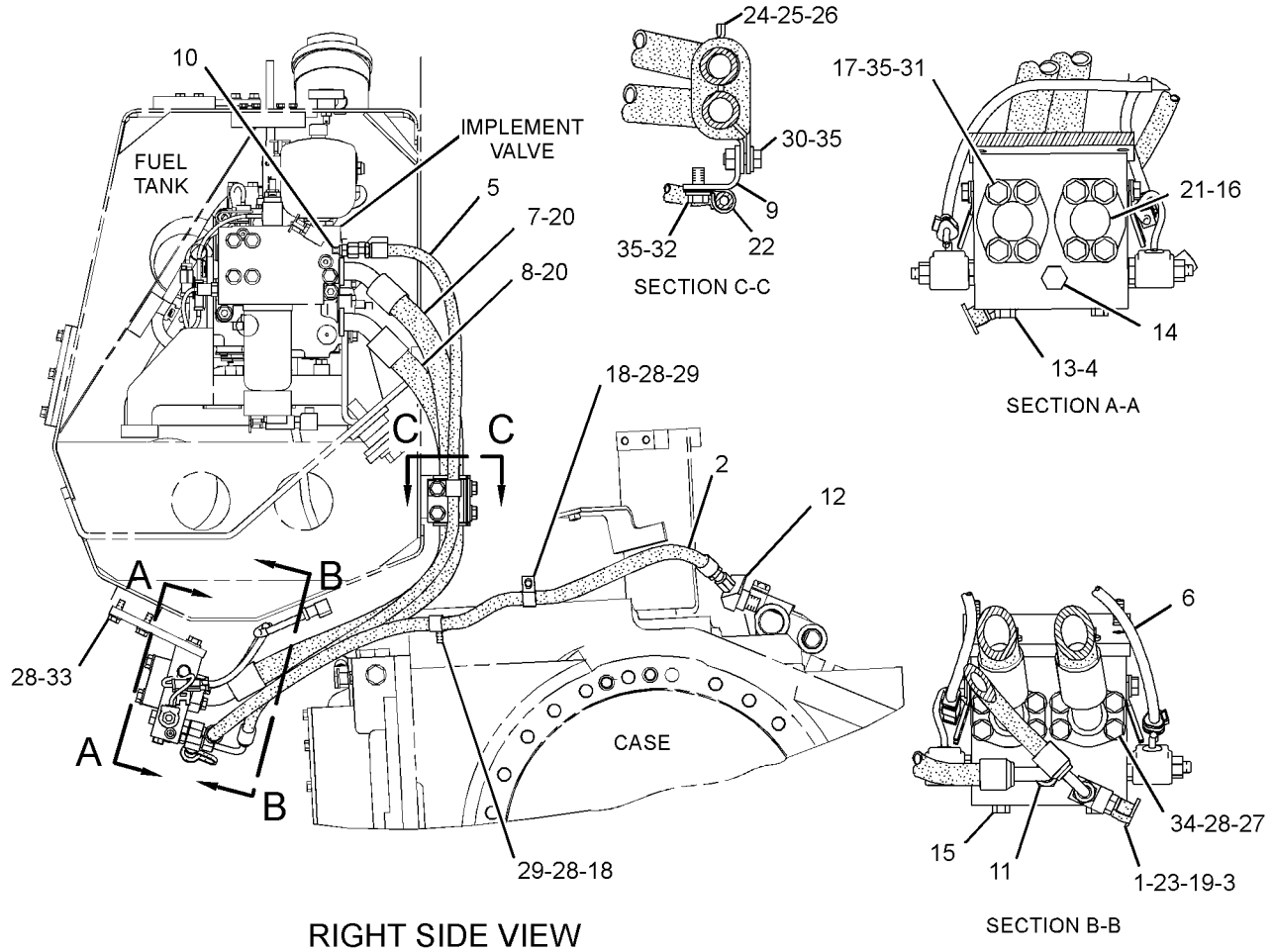

GRAPHIC #1 **<END>** g01277532

245-4178 MOUNTING GP-MAST–ACCUGRADE

S/N: J8B1-UP

PART OF 282-7743, 296-8542, 296-8544, 296-8546, 296-8554 BLADE GP-SEMI-UNIVERSAL, 282-7742, 296-8548, 296-8550, 296-8552 BLADE GP-UNIVERSAL FOR USE WITH UNIVERSAL OR SEMI-UNIVERSAL BLADE. CANNOT BE USED WITH ANGLING BLADE

AN ATTACHMENT

SMCS-79NS **i02395745**

NOTE	REF NO	GRAPHIC REF	PART NUMBER	QTY	PART NAME 1 2 3 4 5 6 (PRODUCT LEVEL)	SEE PAGE
	1	1	**245-4179**	1	BRACKET AS	
		1	**1J-0245**	4	PLUG-PROTECTION	
		1	**4H-0407**	4	PLUG-PROTECTION	
	2	1	**245-4243**	1	BRACKET AS	
	3	1	**245-4252**	1	SHIELD AS	
		1	**189-9240**	1	LINK	
	4	1	**5P-1076**	4	WASHER-HARD (13.5X30X4-MM THK)	
M	5	1	**8T-4183**	4	BOLT (M12X1.75X40-MM)	

M-METRIC PART

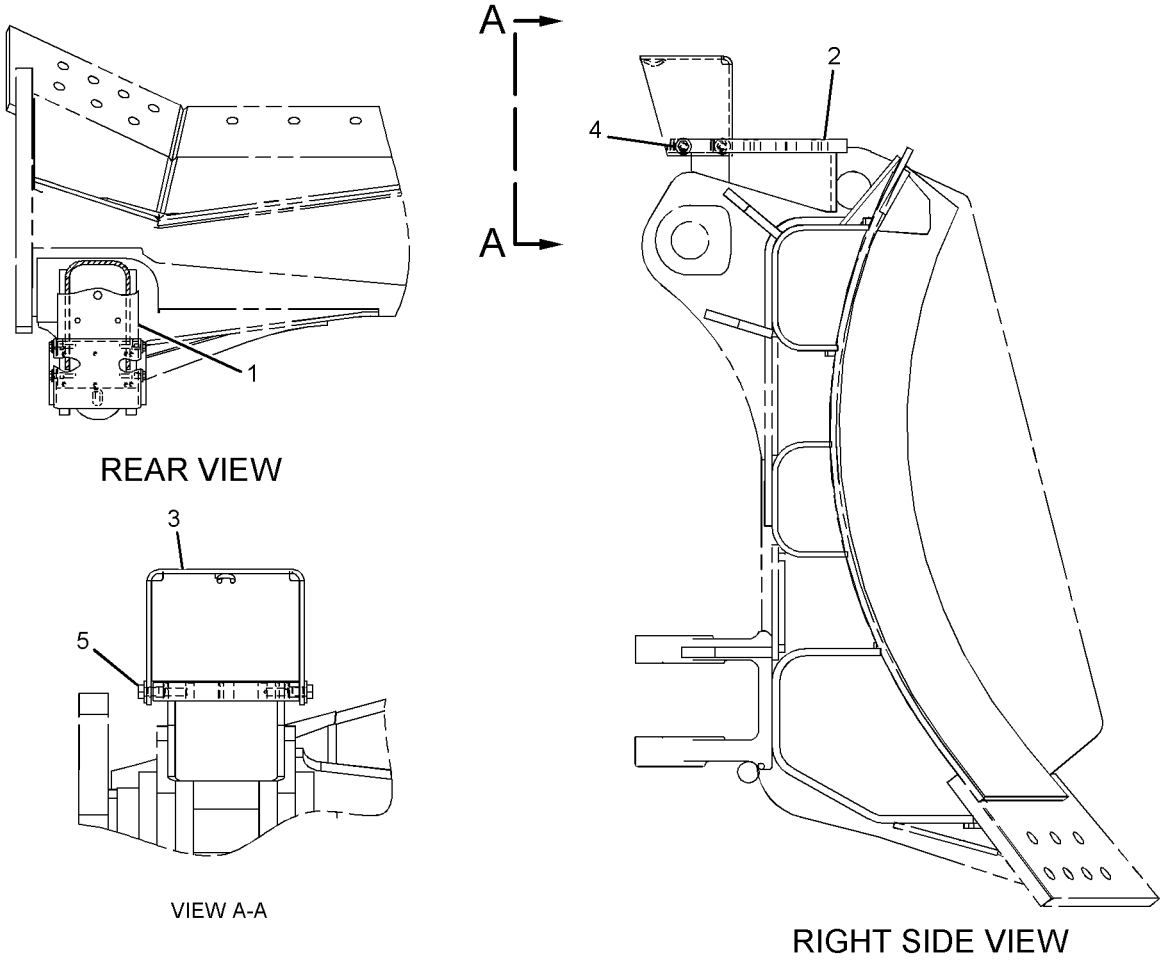

GRAPHIC #1 **<END>** g01131112

292-0302 MOUNTING GP-MAST—LASER RECEIVER

S/N: J8B1-UP

PART OF 292-0281 MAST GP

SMCS-79NS **i02649290**

NOTE	PART NUMBER	QTY	PART NAME 1 2 3 4 5 6 (PRODUCT LEVEL)	SEE PAGE
M	**8T-4648**	4	BOLT (M12X1.75X70-MM)	
	237-7552	3	FILM-WARNING (LASER TRANSMITTER)	
	252-8744	1	FILM-WARNING (BLADE, DO NOT CLIMB, READ OMM)	
M	**8T-4244**	4	NUT (M12X1.75-THD)	
	8T-4223	8	WASHER-HARD (13.5X25.5X3-MM THK)	

M-METRIC PART

<END>

292-0303 MOUNTING GP-MAST—SATELLITE RECEIVER

S/N: J8B1-UP

PART OF 292-0290 MAST GP

SMCS-79NS **i02993165**

NOTE	PART NUMBER	QTY	PART NAME 1 2 3 4 5 6 (PRODUCT LEVEL)	SEE PAGE
M	**8T-4648**	4	BOLT (M12X1.75X70-MM)	
	252-8744	1	FILM-WARNING (BLADE, DO NOT CLIMB, READ OMM)	
			(ON THE REAR OF THE MAST AT EYE LEVEL)	
M	**8T-4244**	4	NUT (M12X1.75-THD)	
	8T-4223	8	WASHER-HARD (13.5X25.5X3-MM THK)	

M-METRIC PART

<END>

WORK TOOLS

215-6421 MOUNTING GP-RIPPER

S/N: L1J1-UP; R8S1-UP
PART OF 215-6422, 215-6423 RIPPER AR
AN ATTACHMENT

SMCS-6165, 6310, 6324 **i02246597**

NOTE	REF NO	GRAPHIC REF	PART NUMBER	QTY	PART NAME 1 2 3 4 5 6 (PRODUCT LEVEL)	SEE PAGE
	1	1	**7T-6660**	1	PLATE	
	2	1	**9W-7990**	2	BRACKET	
	3	1	**162-0390**	2	PIN	
	4	1	**162-5218**	1	PLATE AS	
		1	**162-7222**	2	BAR	
	5	1	**162-5220**	1	PLATE AS	
		1	**3B-0551**	1	PLUG-PIPE	
		1	**162-7220**	4	BLOCK	
	6	1	**215-6415**	1	BRACKET AS (RH)	
	7	1	**215-6420**	1	BRACKET AS (LH)	
	8	1	**6F-4161**	2	DOWEL	
M	9	1	**7X-2562**	2	BOLT (M20X2.5X45-MM)	
M	10	1	**7X-2581**	20	BOLT (M30X3.5X100-MM)	
	11	1	**8T-4121**	4	WASHER-HARD (11X21X2.5-MM THK)	
	12	1	**8T-4123**	2	WASHER (22X35X3.5-MM THK)	
M	13	1	**8T-4131**	4	NUT (M20X2.5-THD)	
M	14	1	**8T-4136**	4	BOLT (M10X1.5X25-MM)	
M	15	1	**8T-4141**	4	BOLT (M20X2.5X70-MM)	
	16	1	**8T-5439**	16	WASHER-HARD (21.5X45X6-MM THK)	
M	17	1	**8T-6430**	8	BOLT (M20X2.5X50-MM)	
	18	1	**9X-8258**	20	WASHER (33X56X6-MM THK)	

M-METRIC PART

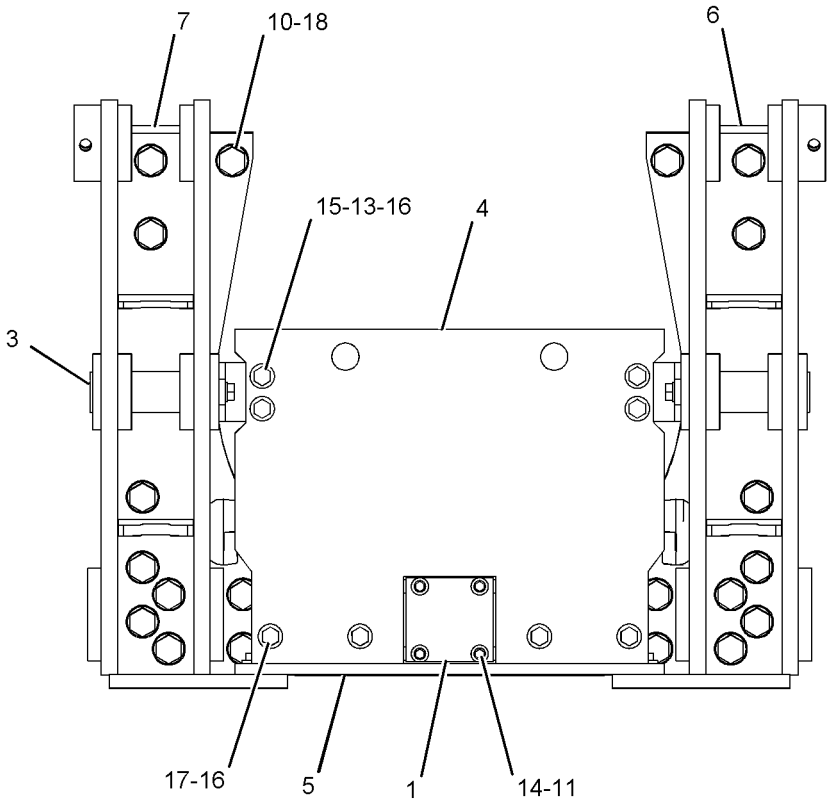

REAR VIEW

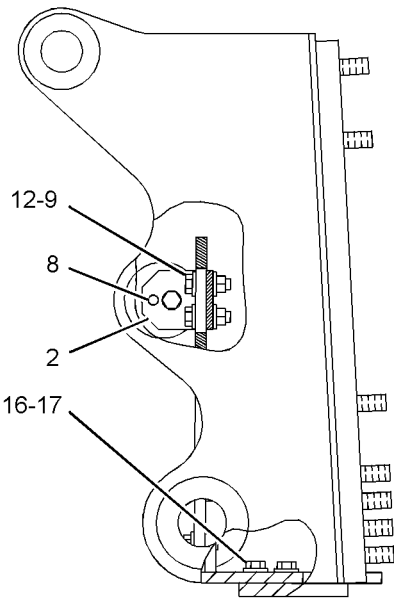

RIGHT SIDE VIEW

GRAPHIC #1 **<END>** g01022896

6Y-7243 PLATE AS-WEAR–UNIVERSAL

S/N: J8B1-UP

PART OF 257-0005 BLADE AS-UNIVERSAL, 256-5314 BLADE GP-UNIVERSAL

AN ATTACHMENT

SMCS-6820 **i03213481**

NOTE	REF NO	GRAPHIC REF	PART NUMBER	QTY	PART NAME 1 2 3 4 5 6 (PRODUCT LEVEL)	SEE PAGE
	1	1	**6Y-7244**	1	PLATE-WEAR	
	2	1	**6Y-7246**	1	PLATE-WEAR-LH	
	3	1	**6Y-7245**	1	PLATE-WEAR-RH	

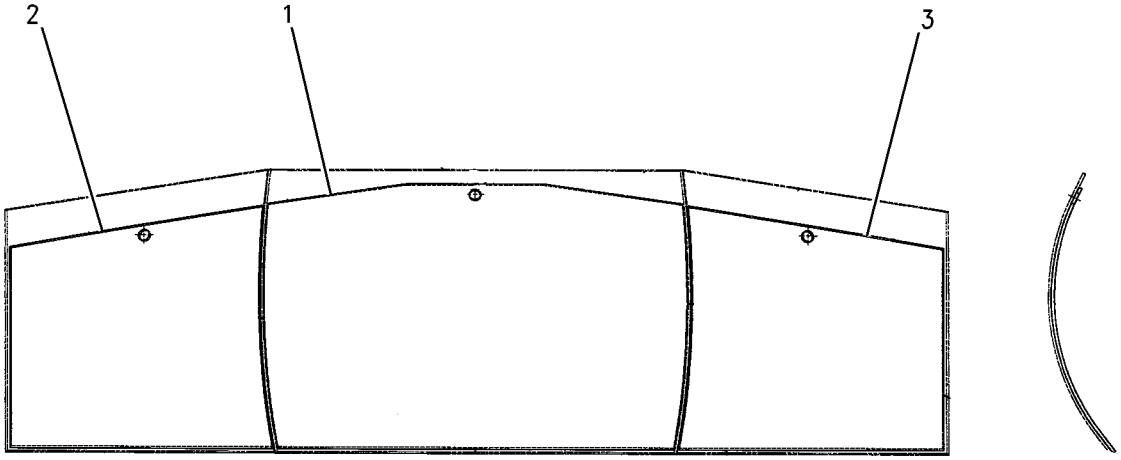

GRAPHIC #1 **<END>** g00732419

WORK TOOLS

9W-2707 PLATE AS-WEAR–SEMI-UNIVERSAL

S/N: J8B1-UP

PART OF 4Z-9507 BLADE AS-SEMI-UNIVERSAL, 245-8152 BLADE GP-SEMI-UNIVERSAL AN ATTACHMENT

SMCS-6820 **i01440966**

NOTE	REF NO	GRAPHIC REF	PART NUMBER	QTY	PART NAME 1 2 3 4 5 6 (PRODUCT LEVEL)	SEE PAGE
	1	1	**9W-2760**	1	PLATE (LH)	
	2	1	**9W-1771**	1	PLATE-WEAR	
	3	1	**9W-2757**	1	PLATE (RH)	

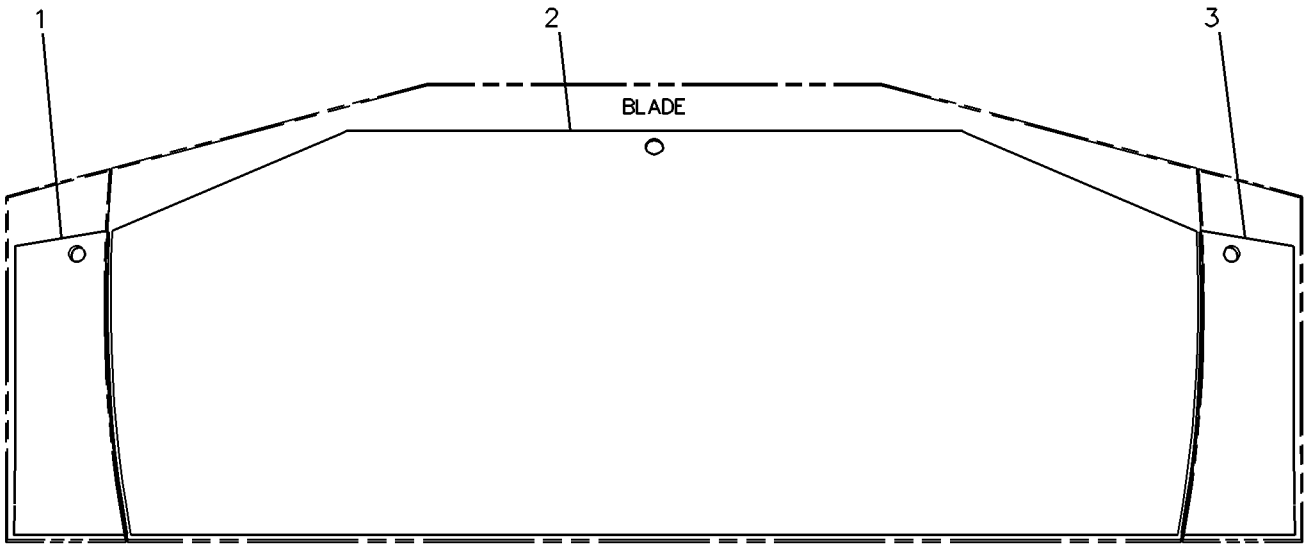

REAR VIEW

GRAPHIC #1 **<END>** g00224190

WORK TOOLS

160-3616 PULLER AR-PIN

S/N: J8B1-UP

FOR USE WITH 211-9501—PAGE 732, SINGLE SHANK RIPPERS

AN ATTACHMENT

SMCS-5353, 5354 **i01488847**

NOTE	PART NUMBER	QTY	PART NAME 1 2 3 4 5 6 (PRODUCT LEVEL)	SEE PAGE
Y	**6E-3113**	1	CYLINDER GP-RIPPER PIN PULLER	748
Y	*160-3619*	1	LINES GP-PIN PULLER CYLINDER	772
Y	*135-5111*	1	PULLER GP-PIN	998

Y-SEPARATE ILLUSTRATION

<END>

WORK TOOLS

135-5111 PULLER GP-PIN

S/N: J8B1-UP
PART OF 160-3616 PULLER AR-PIN
AN ATTACHMENT

SMCS-5353, 5354 **i01480939**

NOTE	REF NO	GRAPHIC REF	PART NUMBER	QTY	PART NAME 1 2 3 4 5 6 (PRODUCT LEVEL)	SEE PAGE
	1	1	**7T-4501**	1	PIN	
	2	1	**7T-4502**	1	PIN	
	3	1	**9X-8257**	8	WASHER (17.5X30X3.5-MM THK)	
	4	1	**130-6366**	2	LINK	
	5	1	**135-5102**	1	PLATE AS	
	6	1	**135-5105**	1	PLATE AS	
	7	1	**135-5109**	1	PIN	
	8	1	**135-5113**	2	PIN	
	9	1	**135-5114**	1	PIN	
	10	1	**7X-3391**	4	WASHER-HARD (13.5X32X6-MM THK)	
	11	1	**6K-3630**	1	RING	
	12	1	**7J-4169**	2	RING-SNAP	
	13	1	**7X-0537**	1	WASHER-HARD (40.5X67X6-MM THK)	
M	14	1	**8C-8992**	4	BOLT-LOCKING (M12X1.75X30-MM)	
	15	1	**8T-4167**	2	WASHER-HARD (26X44X4-MM THK)	
M	16	1	**8T-7338**	8	BOLT (M16X2X45-MM)	

M-METRIC PART

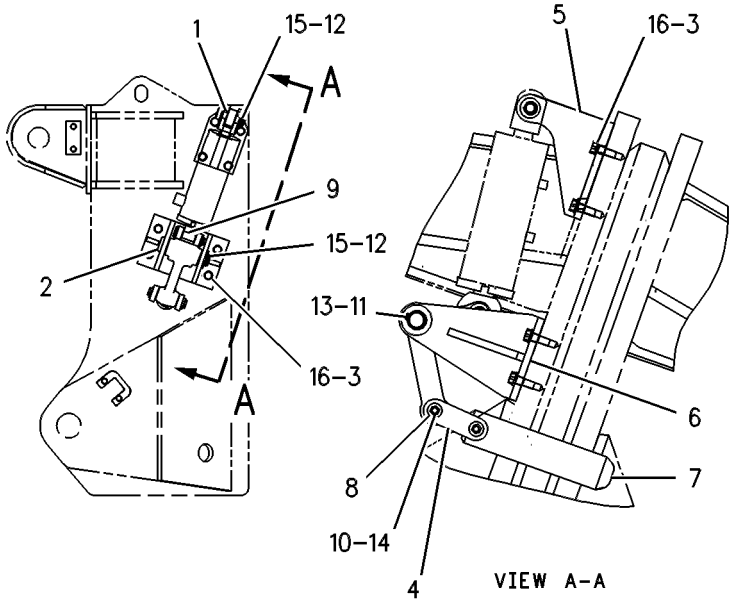

GRAPHIC #1 **<END>** g00271463

215-6422 RIPPER AR—SINGLE SHANK

S/N: R8S1-UP

FOR USE WITH 209-3430—PAGE 734

AN ATTACHMENT

SMCS-6310 **i03435141**

NOTE	REF NO	GRAPHIC REF	PART NUMBER	QTY	PART NAME 1 2 3 4 5 6 (PRODUCT LEVEL)	SEE PAGE
Y	1	1	*153-3132*	1	RIPPER GP	1002
Y	2	1	*153-4846*	1	LINES GP-RIPPER	776
Y	3	1	**155-3652**	1	CYLINDER GP-TILT (RIPPER, LH)	751
Y	4	1	**155-3653**	2	CYLINDER GP-RIPPER LIFT	746
Y	5	1	**165-0102**	1	CYLINDER GP-TILT (RIPPER, RH)	753
Y	6	1	*215-6421*	1	MOUNTING GP-RIPPER	994
Y	7	1	*228-1871*	1	FRAME GP-RIPPER	987
F			**5P-1327**	1	PLATE-SERIAL NUMBER (RIPPER) (ON CYLINDER TOWER)	
F			**4B-4158**	2	SCREW-DRIVE (NO 4X1/4-IN)	

F-NOT SHOWN
Y-SEPARATE ILLUSTRATION

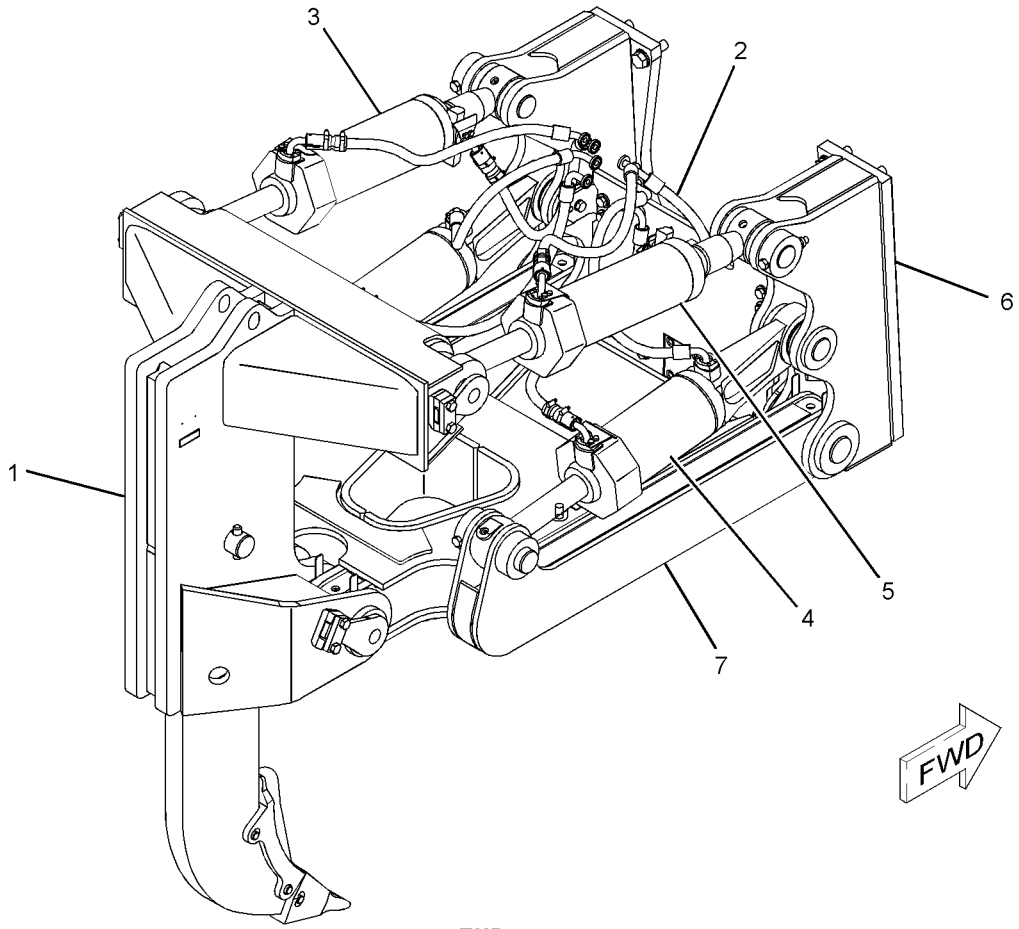

GRAPHIC #1 **<END>** g01019580

WORK TOOLS

215-6423 RIPPER AR—MULTI-SHANK

S/N: L1J1-UP

FOR USE WITH 209-3430—PAGE 734

AN ATTACHMENT

SMCS-6310 **i03435144**

NOTE	REF NO	GRAPHIC REF	PART NUMBER	QTY	PART NAME 1 2 3 4 5 6 (PRODUCT LEVEL)	SEE PAGE
Y	1	1	*153-3129*	1	RIPPER GP	1001
Y	2	1	*153-4846*	1	LINES GP-RIPPER	776
Y	3	1	**155-3652**	1	CYLINDER GP-TILT (RIPPER, LH)	751
Y	4	1	**155-3653**	2	CYLINDER GP-RIPPER LIFT	746
Y	5	1	**165-0102**	1	CYLINDER GP-TILT (RIPPER, RH)	753
Y	6	1	*215-6421*	1	MOUNTING GP-RIPPER	994
Y	7	1	*244-7617*	1	FRAME GP-RIPPER	989
F			**5P-1327**	1	PLATE-SERIAL NUMBER (RIPPER)	
					(ON CYLINDER TOWER)	
F			**4B-4158**	2	SCREW-DRIVE (NO 4X1/4-IN)	

F-NOT SHOWN
Y-SEPARATE ILLUSTRATION

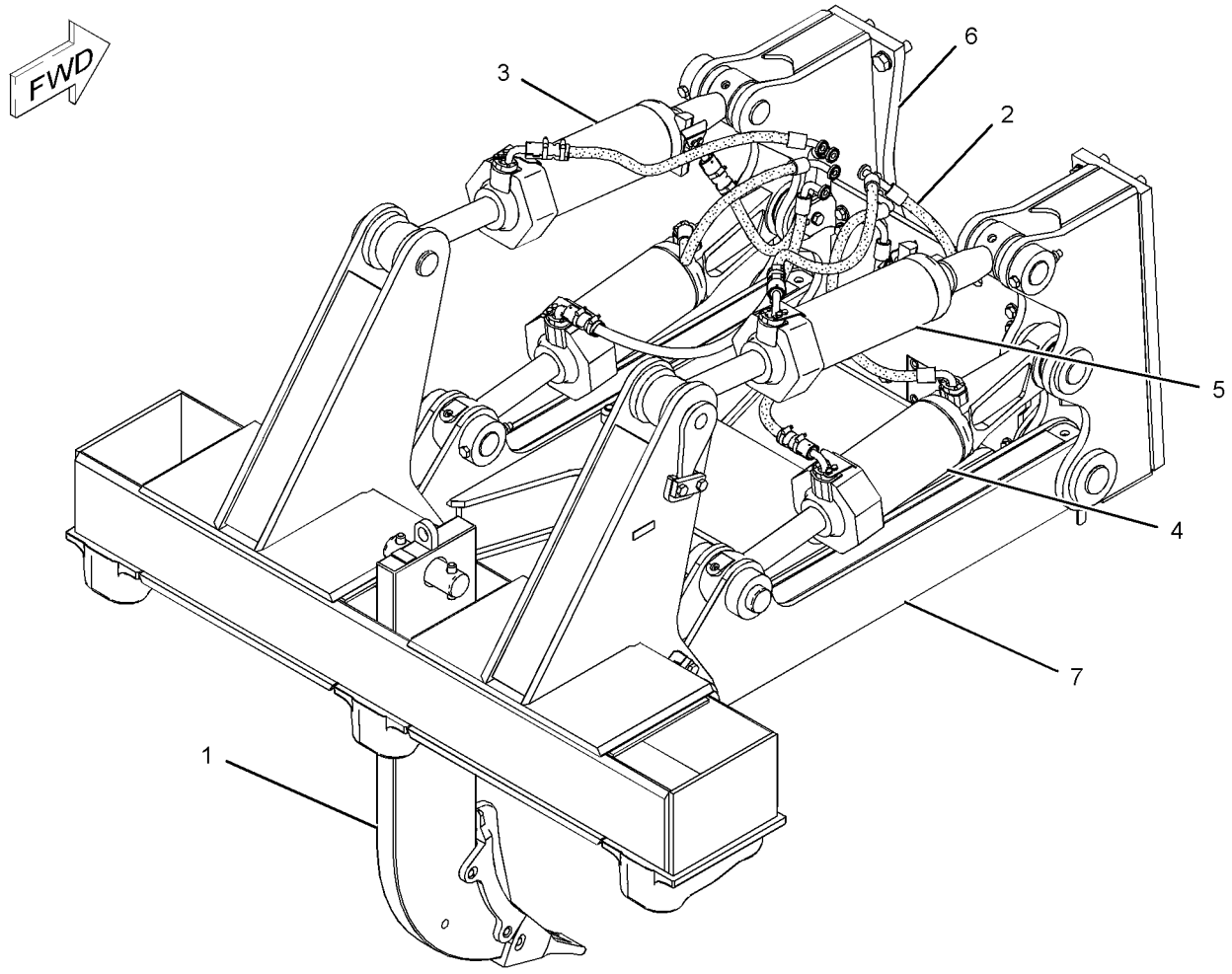

GRAPHIC #1 **<END>** g01110981

153-3129 RIPPER GP–MULTI SHANK

S/N: L1J1-UP

PART OF 215-6423 RIPPER AR

AN ATTACHMENT

SMCS-6310, 6325 **i01443003**

NOTE	REF NO	GRAPHIC REF	PART NUMBER	QTY	PART NAME 1 2 3 4 5 6 (PRODUCT LEVEL)	SEE PAGE
Y	1	1	*4T-8987*	1	TOOTH GP-RIPPER	1005
	2	1	**155-4877**	1	BEAM AS	
		1	**2J-1227**	2	RETAINER	

Y-SEPARATE ILLUSTRATION

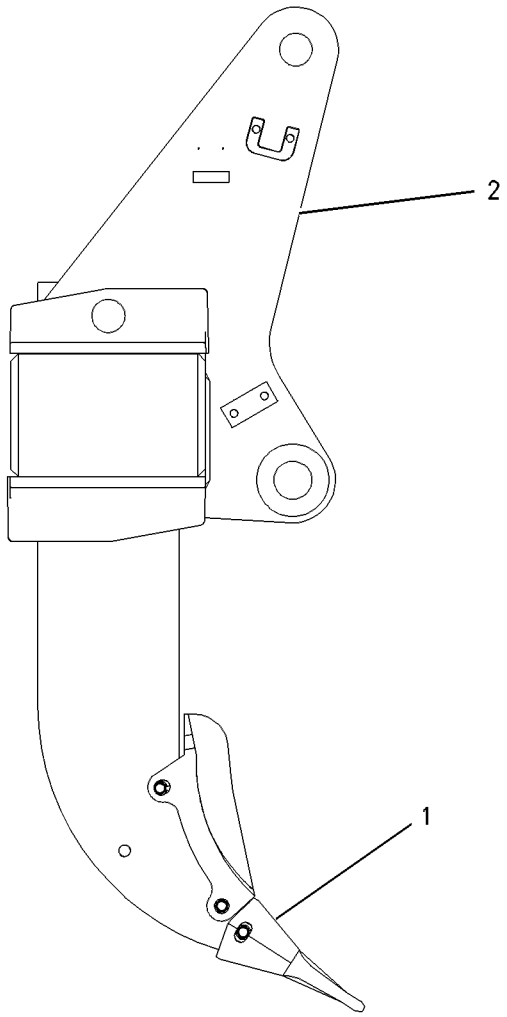

GRAPHIC #1 **<END>** g00532829

WORK TOOLS

153-3132 RIPPER GP—SINGLE SHANK

S/N: R8S1-UP
PART OF 215-6422 RIPPER AR
AN ATTACHMENT

SMCS-6310, 6325 **i01442169**

NOTE	REF NO	GRAPHIC REF	PART NUMBER	QTY	PART NAME 1 2 3 4 5 6 (PRODUCT LEVEL)	SEE PAGE
	1	1	**4T-2479**	2	PIN AS	
		1	**5J-3576**	1	SPRING	
Y	2	1	*4T-8986*	1	TOOTH GP-RIPPER	1004
	3	1	**154-3230**	1	CARRIAGE AS	
		1	**8P-9770**	1	PLATE	
		1	**133-6614**	1	BOSS	
	4	1	**6J-6703**	1	PIN	

Y-SEPARATE ILLUSTRATION

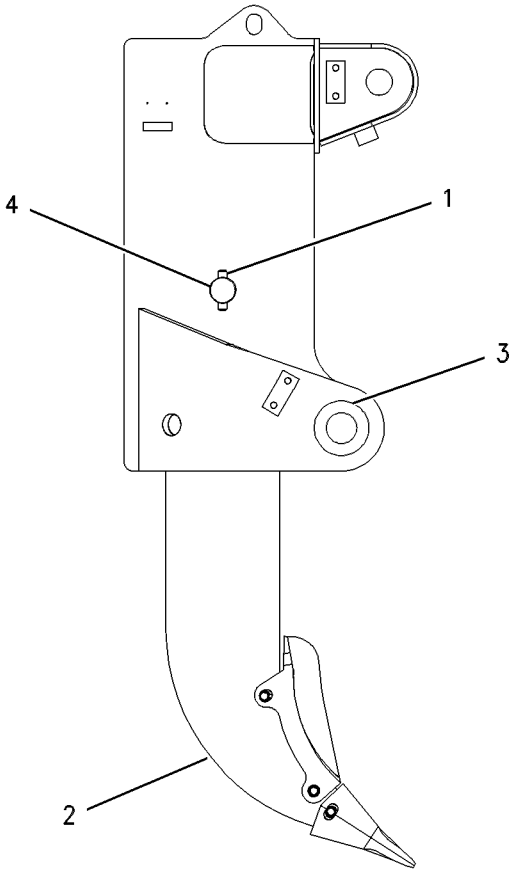

GRAPHIC #1 **<END>** g00528119

4T-0137 TOOTH GP-RIPPER

S/N: J8B1-UP
DEEP RIPPING SHANK
FOR USE WITH 215-6422—PAGE 999, 160-3616—PAGE 997
AN ATTACHMENT

SMCS-6808, 6810 **i01256394**

NOTE	REF NO	GRAPHIC REF	PART NUMBER	QTY	PART NAME 1 2 3 4 5 6 (PRODUCT LEVEL)	SEE PAGE
C	1	1	**6Y-3394**	3	PIN-G.E.T.	
C	2	1	**8E-4743**	3	RETAINER-G.E.T.	
	3	1	**9W-2451**	1	TIP-RIPPER	
	4	1	**8E-1848**	1	PROTECTOR	
C	5	1	**8E-5340**	1	SHANK AS-RIPPER	
	6	1	**3G-5596**	1	LUG	

C-CHANGE FROM PREVIOUS TYPE

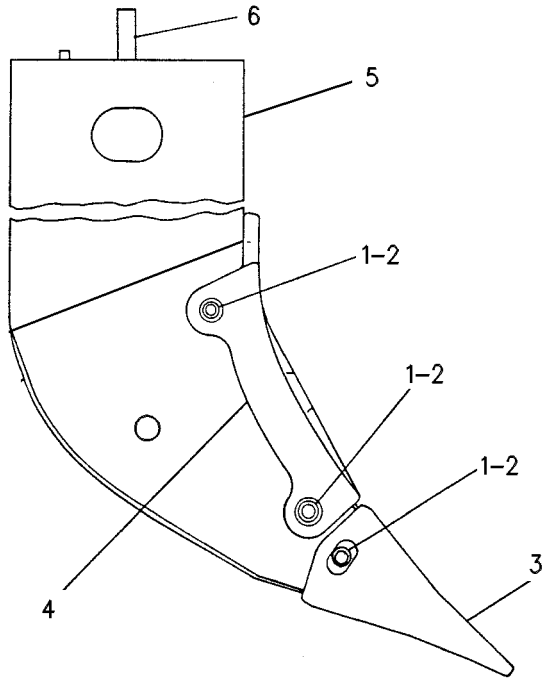

GRAPHIC #1 **<END>** g00247217

4T-8986 TOOTH GP-RIPPER—SINGLE SHANK

S/N: R8S1-UP
PART OF 153-3132 RIPPER GP
AN ATTACHMENT

SMCS-6808, 6810 **i00570526**

NOTE	REF NO	GRAPHIC REF	PART NUMBER	QTY	PART NAME 1 2 3 4 5 6 (PRODUCT LEVEL)	SEE PAGE
	1	1	**6Y-3394**	3	PIN-G.E.T.	
	2	1	**8E-4743**	3	RETAINER-G.E.T.	
	3	1	**9W-2451**	1	TIP-RIPPER	
	4	1	**8E-1848**	1	PROTECTOR	
	5	1	**8E-5347**	1	SHANK AS-RIPPER	
	6	1	**3G-5596**	1	LUG	

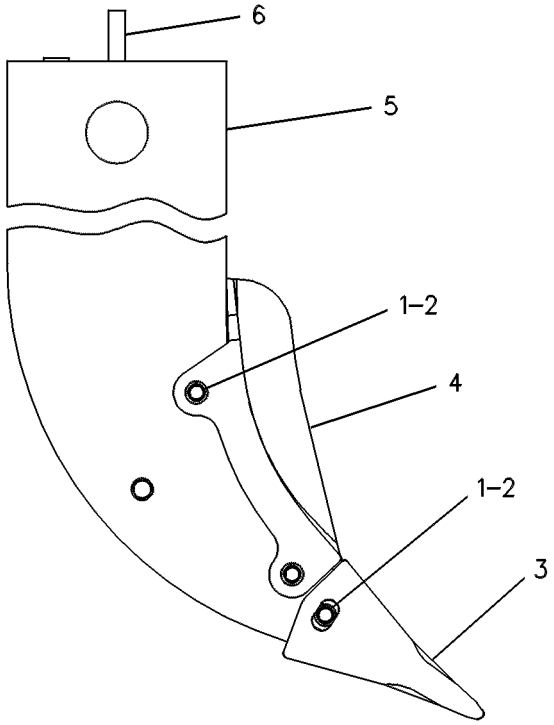

GRAPHIC #1 **<END>** g00234413

4T-8987 TOOTH GP-RIPPER—MULTI SHANK

S/N: J8B1-UP; L1J1-UP
CURVED
PART OF 153-3129 RIPPER GP
FOR USE WITH 215-6423—PAGE 1000
AN ATTACHMENT

SMCS-6808, 6810 **i00570530**

NOTE	REF NO	GRAPHIC REF	PART NUMBER	QTY	PART NAME 1 2 3 4 5 6 (PRODUCT LEVEL)	SEE PAGE
	1	1	**4T-2479**	2	PIN AS	
					(EACH INCLUDES)	
		1	**5J-3576**	1	SPRING	
	2	1	**6Y-3394**	3	PIN-G.E.T.	
	3	1	**9W-2452**	1	TIP-RIPPER	
	4	1	**8E-1848**	1	PROTECTOR	
	5	1	**8E-5346**	1	SHANK AS-RIPPER	
	6	1	**3G-5596**	1	LUG	
	7	1	**8E-4743**	3	RETAINER-G.E.T.	
	8	1	**6J-6680**	1	PIN	

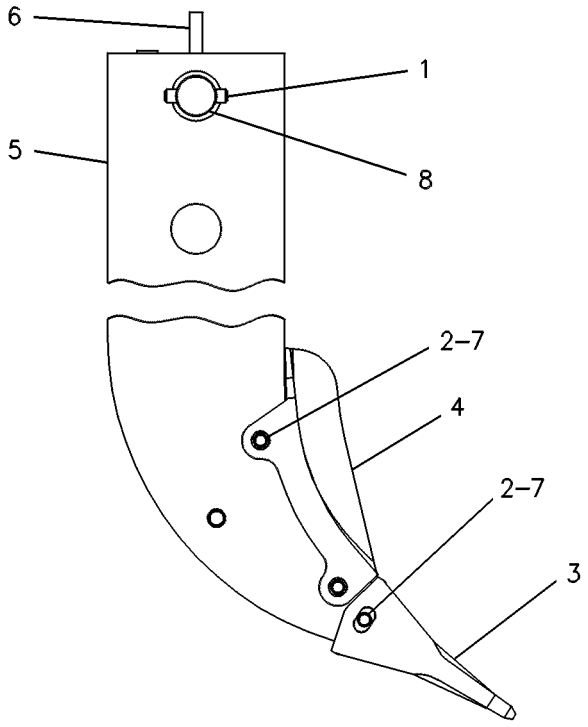

GRAPHIC #1 **<END>** g00234302

OPERATOR STATION

173-1028 ADJUSTER GP-SEAT

S/N: J8B1-UP
PART OF 178-0603, 180-7304 SEAT GP
ALSO AN ATTACHMENT

SMCS-7321 **i01582195**

NOTE	REF NO	GRAPHIC REF	PART NUMBER	QTY	PART NAME 1 2 3 4 5 6 (PRODUCT LEVEL)	SEE PAGE
	1	1	**4V-8256**	4	SPRING	
	2	1	**117-4492**	1	ROD	
	3	1	**136-1544**	1	LATCH AS-LH	
	4	1	**156-5545**	1	LATCH AS-RH	
	5	1	**164-4531**	1	ROD	
	6	1	**170-1112**	1	PLATE AS	
	7	1	**170-1114**	1	HANDLE (SLIDE ADJUSTMENT)	
	8	1	**170-1115**	1	HANDLE (TILT ADJUSTMENT)	
	9	1	**132-0338**	2	WASHER-PLASTIC (13X31.7X.8-MM THK)	
	10	1	**2K-4973**	2	LOCKNUT (3/8-16-THD)	
	11	1	**7X-0608**	2	WASHER-HARD (10.2X16X2-MM THK)	

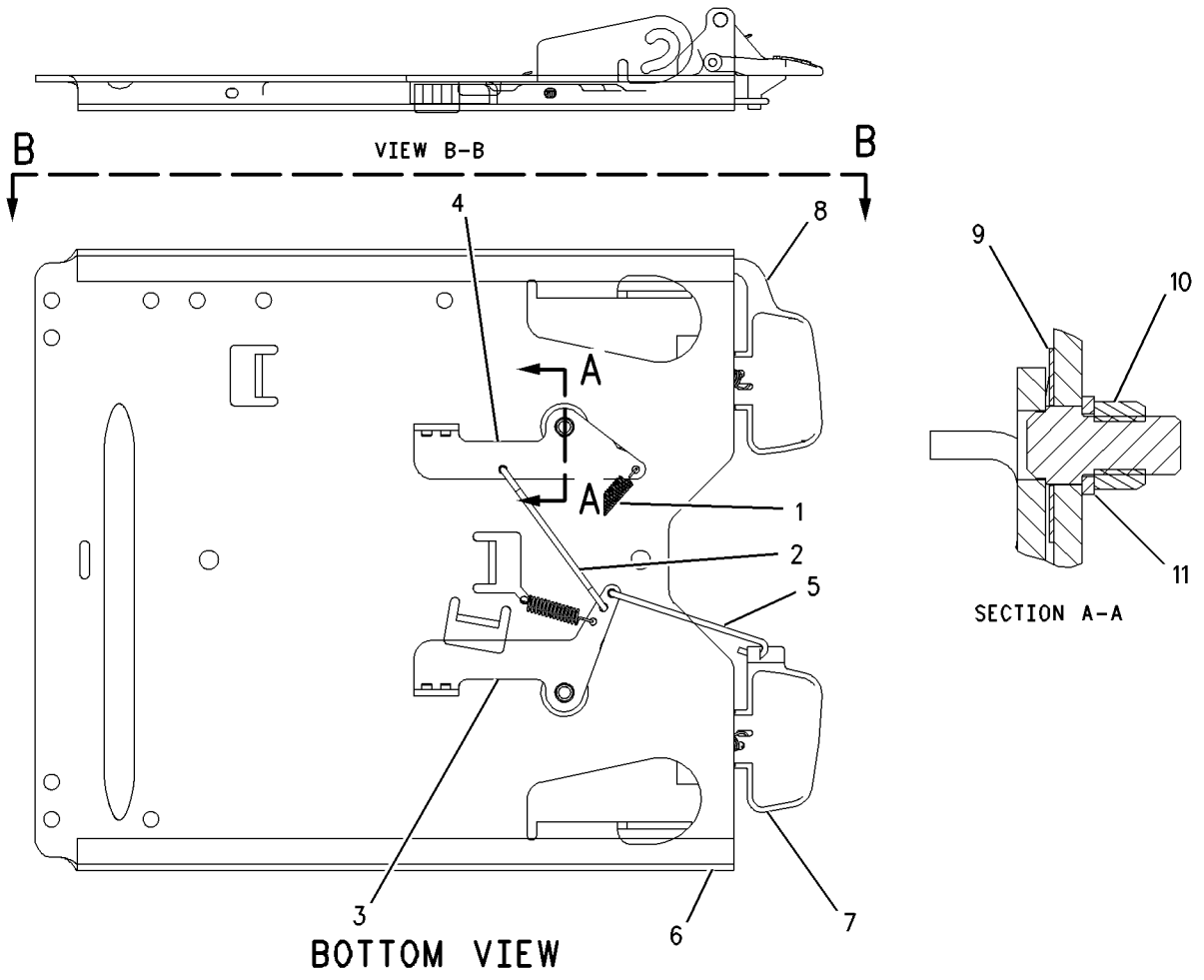

GRAPHIC #1 **<END>** g00816460

214-0783 AIR COMPRESSOR GP-SEAT–HEAVY-DUTY

S/N: J8B1-UP

OPTIONAL FIELD REPLACEMENT FOR 237-3970 STANDARD DUTY COMPRESSOR

PART OF 191-2933 SUSPENSION GP-SEAT

SMCS-731S, 7324 **i02801038**

NOTE	REF NO	GRAPHIC REF	PART NUMBER	QTY	PART NAME 1 2 3 4 5 6 (PRODUCT LEVEL)	SEE PAGE
	1	1	**5P-4423**	1	ELBOW	
	2	1	**5P-4432**	1	ELBOW-AIR BRAKE	
	3	1	**175-5058**	1	MOUNT	
	4	1	**186-5107**	3	SCREW-DRIVE (NO 8X1.25-IN)	
	5	1	**214-0784**	1	COMPRESSOR AS	

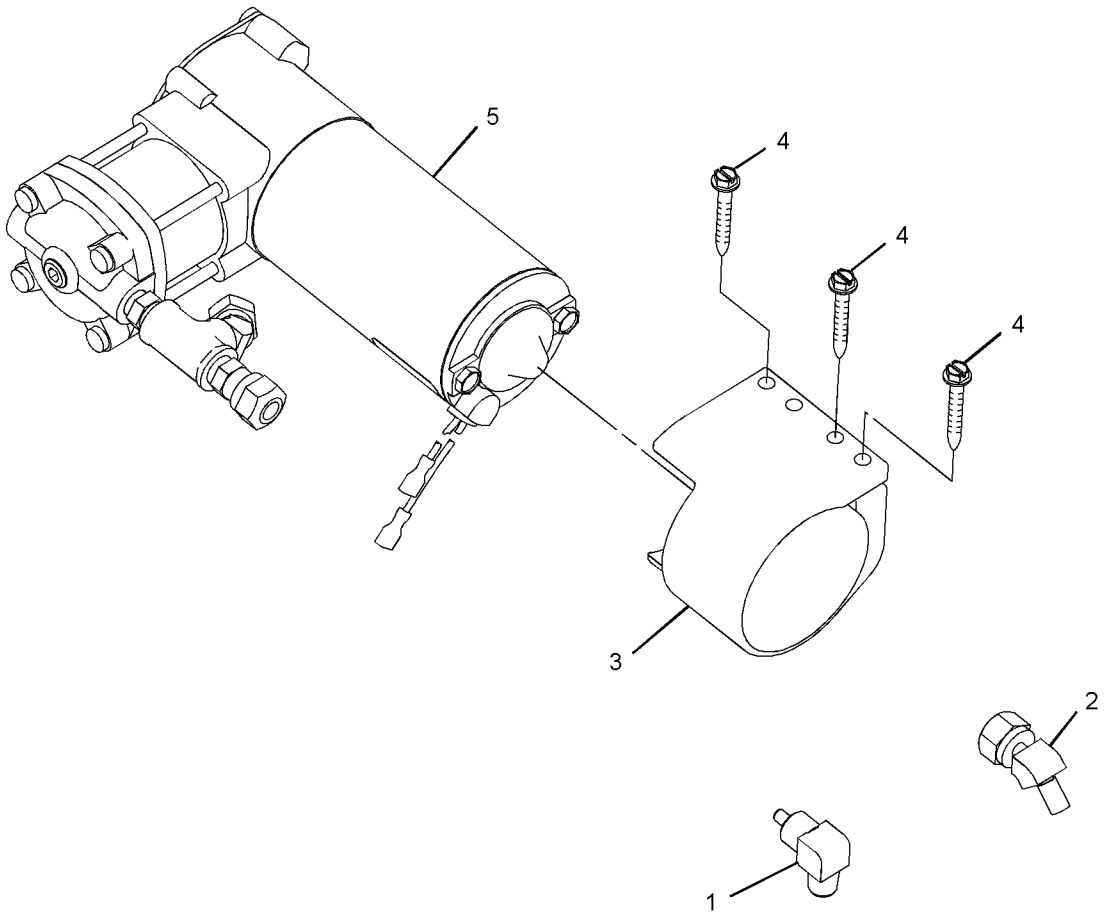

GRAPHIC #1 **<END>** g01040572

OPERATOR STATION

237-3970 AIR COMPRESSOR GP-SEAT

S/N: J8B1-UP

FOR OPTIONAL FIELD REPLACEMENT ORDER 214-0783 COMPRESSOR,211-5358 CONDUIT(100-CM) & 5P-6010 TUBE(1-M), PROVIDES HEAVY DUTY SEAT COMPRESSOR PART OF 191-2933 SUSPENSION GP-SEAT AN ATTACHMENT

SMCS-731S, 7324 **i02784170**

NOTE	REF NO	GRAPHIC REF	PART NUMBER	QTY	PART NAME 1 2 3 4 5 6 (PRODUCT LEVEL)	SEE PAGE
					(NO SERVICED PARTS)	

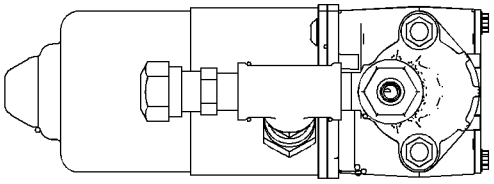

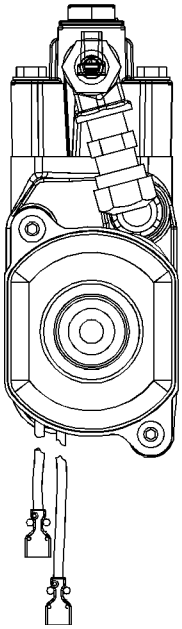

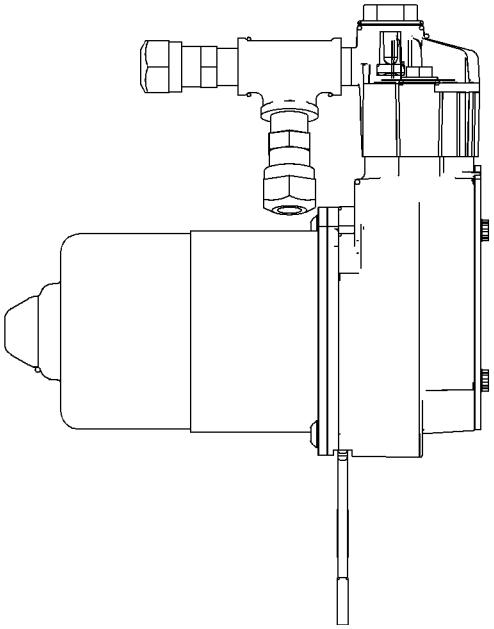

GRAPHIC #1 **<END>** g01040576

OPERATOR STATION

209-8294 AIR CONDITIONER AR

S/N: J8B1-UP
R134A
AN ATTACHMENT

SMCS-7320 **i02242116**

NOTE	PART NUMBER	QTY	PART NAME 1 2 3 4 5 6 (PRODUCT LEVEL)	SEE PAGE
Y	*213-8053*	1	COMPRESSOR GP-REFRIGERANT	1028
Y	*209-8305*	1	CONDENSER & MTG GP-REFRIGERANT	1029
Y	*209-2125*	1	LINES GP-AIR CONDITIONER	1128
	110-6393	1	PLATE-INSTRUCTION (AIR CONDITIONER)	
			ON LH SIDE OF DASH BELOW FOOTPAD AND ABOVE SERIAL NUMBER PLATE	

Y-SEPARATE ILLUSTRATION

<END>

209-9751 AIR CONDITIONER AR—ROPS MOUNTED CONDENSER

S/N: J8B1-UP
R134A
AN ATTACHMENT

SMCS-7320 **i02242160**

NOTE	PART NUMBER	QTY	PART NAME 1 2 3 4 5 6 (PRODUCT LEVEL)	SEE PAGE
Y	*213-8053*	1	COMPRESSOR GP-REFRIGERANT	1028
Y	*219-3587*	1	MOUNTING GP-CONDENSER	1148
Y	**103-9527**	1	CONDENSER GP-REFRIGERANT (WITH FANS)	1031
Y	*209-2123*	1	LINES GP-AIR CONDITIONER	1107
	227-9542	1	ROPS AS	
	110-6393	1	PLATE-INSTRUCTION (AIR CONDITIONER)	
			ON LH SIDE OF DASH BELOW FOOTPAD AND ABOVE SERIAL NUMBER PLATE	

Y-SEPARATE ILLUSTRATION

<END>

209-9752 AIR CONDITIONER AR—REMOTE MOUNTED CONDENSER

S/N: J8B1-UP
R134A
AN ATTACHMENT

SMCS-7320 **i02242176**

NOTE	PART NUMBER	QTY	PART NAME 1 2 3 4 5 6 (PRODUCT LEVEL)	SEE PAGE
Y	*213-8053*	1	COMPRESSOR GP-REFRIGERANT	1028
Y	**103-9527**	1	CONDENSER GP-REFRIGERANT (WITH FANS)	1031
Y	*209-2124*	1	LINES GP-AIR CONDITIONER	1116
Y	*248-2939*	1	MIRROR GP-REAR VIEW	1141
Y	*218-3241*	1	MOUNTING GP-CONDENSER	1147
	110-6393	1	PLATE-INSTRUCTION (AIR CONDITIONER)	
			ON LH SIDE OF DASH BELOW FOOTPAD AND ABOVE SERIAL NUMBER PLATE	

Y-SEPARATE ILLUSTRATION

<END>

OPERATOR STATION

214-4176 BOX GP-STORAGE

S/N: J8B1-UP

PART OF 214-2014 CONSOLE GP-FRONT

SMCS-7268 **i02237785**

NOTE	REF NO	GRAPHIC REF	PART NUMBER	QTY	PART NAME 1 2 3 4 5 6 (PRODUCT LEVEL)	SEE PAGE
	1	1	**9M-5733**	6	RIVET-POP	
	2	1	**178-0266**	1	HINGE AS	
	3	1	**209-5157**	1	DOOR-FRONT	
	4	1	**214-2015**	1	LATCH (STORAGE COMPARTMENT)	
	5	1	**224-4905**	2	BUMPER	
	6	1	**226-7665**	1	BOX AS-STORAGE	
	7	1	**3H-0240**	6	WASHER (5X9.7X0.8-MM THK)	
M	8	1	**8C-7581**	5	SCREW-MACHINE (M4X0.7X8-MM)	

M-METRIC PART

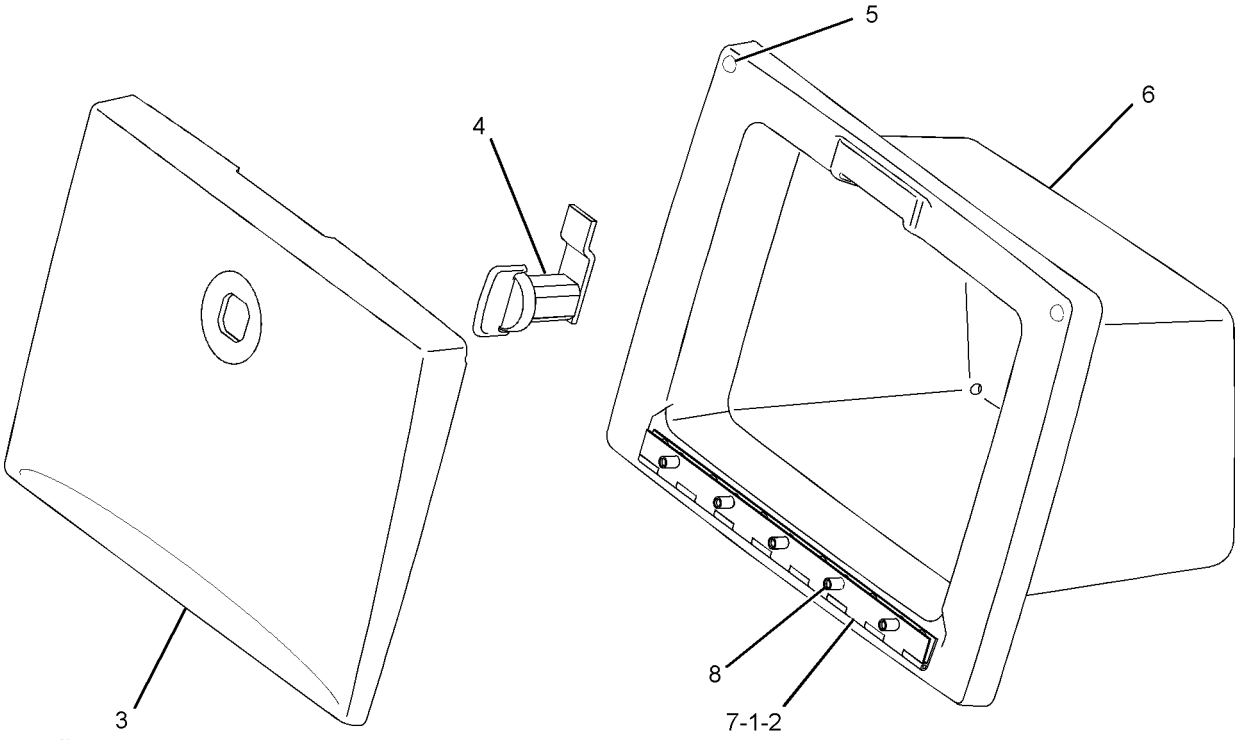

GRAPHIC #1 **<END>** g01019845

230-7622 BRACKET GP-MOUNTING–CAB DOOR

S/N: J8B1-UP
CAB DOOR HOLD OPEN
PART OF 208-9607 CAB AR

SMCS-7301 **i03115121**

NOTE	REF NO	GRAPHIC REF	PART NUMBER	QTY	PART NAME 1 2 3 4 5 6 (PRODUCT LEVEL)	SEE PAGE
	1	1	**325-1288**	1	BRACKET (RH)	
	2	1	**325-1289**	1	BRACKET (LH)	
	3	1	**7X-7729**	6	WASHER (11X25X3-MM THK)	
M	4	1	**8T-4136**	6	BOLT (M10X1.5X25-MM)	

M-METRIC PART

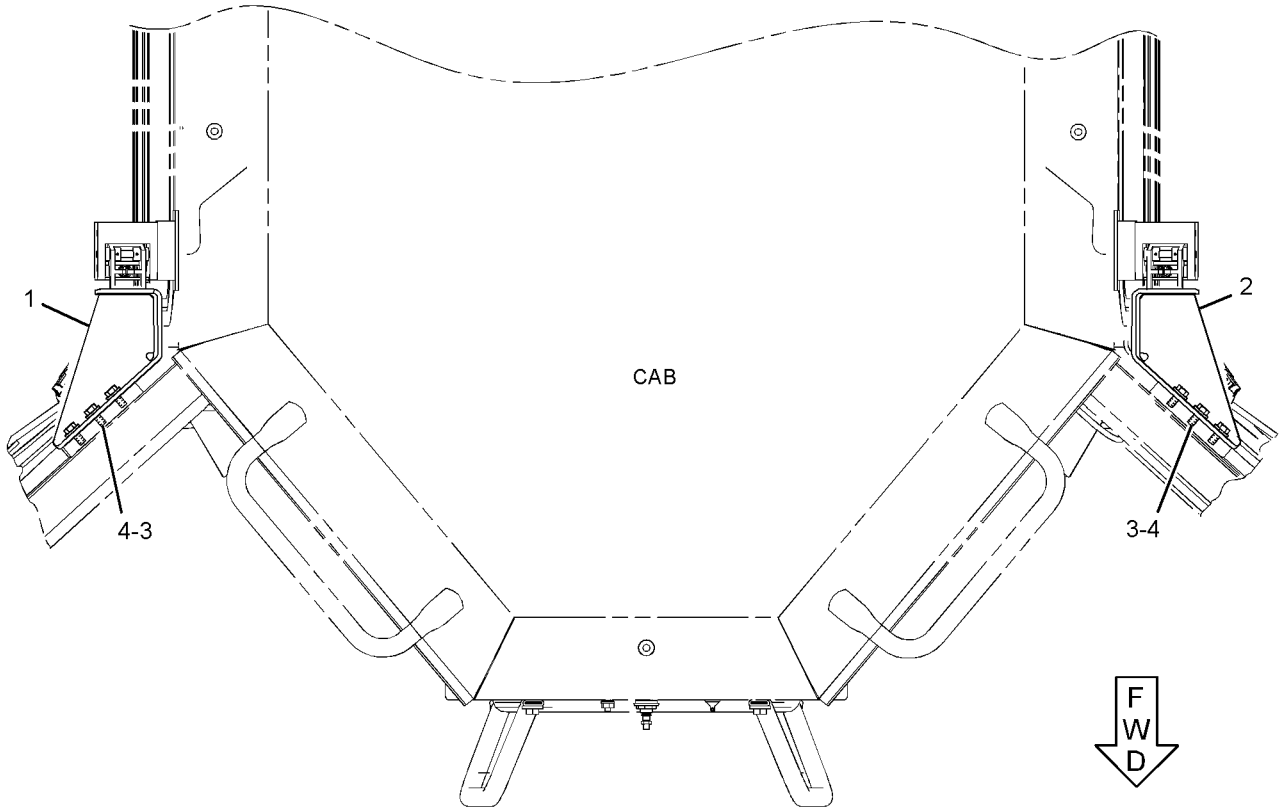

TOP VIEW

GRAPHIC #1 **<END>** g01528454

OPERATOR STATION

261-3768 BRACKET GP-MOUNTING—FIRST AID KIT

S/N: J8B1-UP

PART OF 214-1800, 248-4178 CAB GP, 247-8271 WINDOW GP-CAB

ALSO AN ATTACHMENT

SMCS-7301 **i02229487**

NOTE	REF NO	GRAPHIC REF	PART NUMBER	QTY	PART NAME 1 2 3 4 5 6 (PRODUCT LEVEL)	SEE PAGE
	1	1	**7G-4824**	1	STRAP	
	2	1	**8E-7791**	1	STRAP	
	3	1	**247-4156**	1	BRACKET	
	4	1	**8T-4121**	2	WASHER-HARD (11X21X2.5-MM THK)	
M	5	1	**8T-4195**	2	BOLT (M10X1.5X30-MM)	

M-METRIC PART

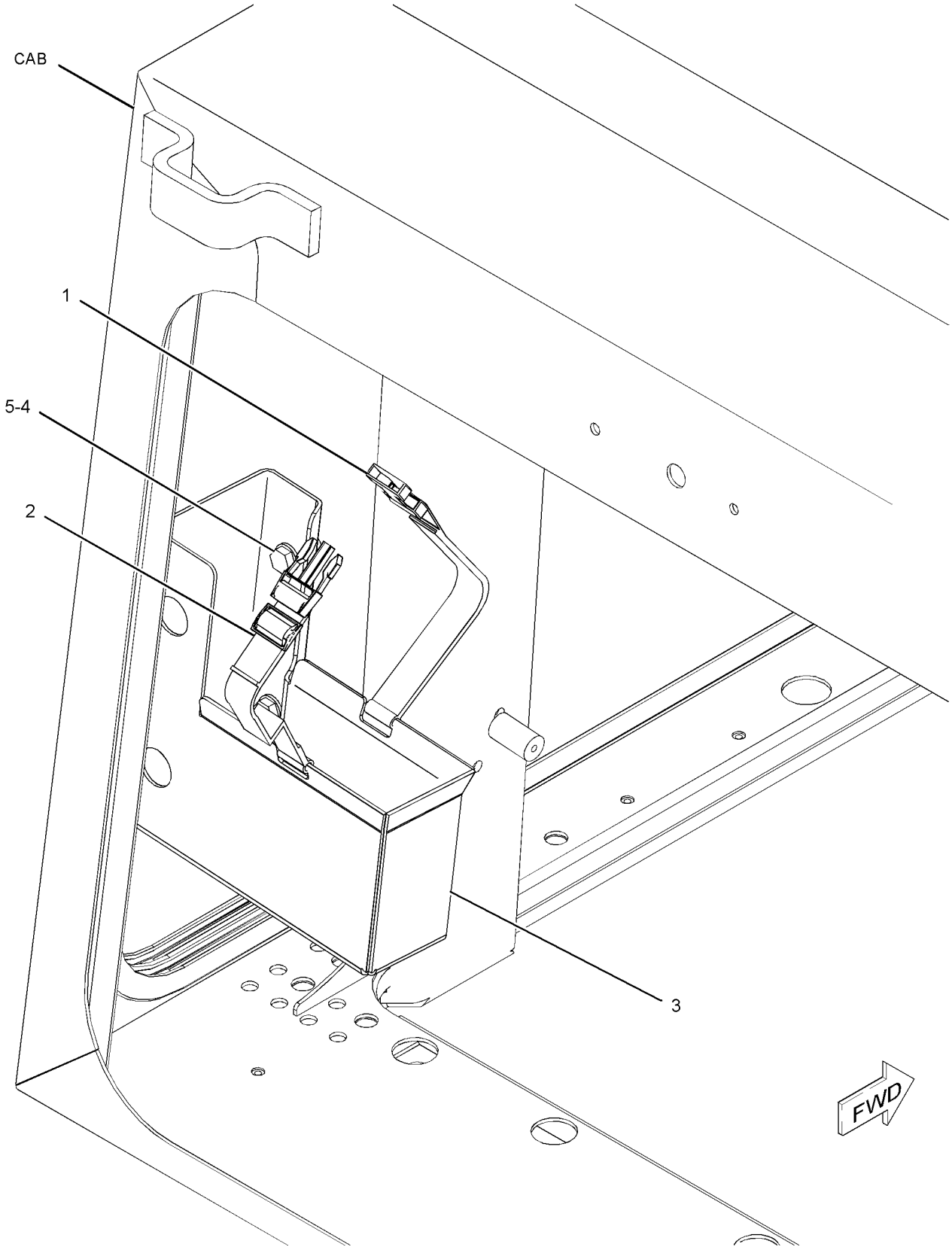

GRAPHIC #1 **<END>** g01110014

OPERATOR STATION

208-9607 CAB AR

S/N: J8B1-UP
PART OF 206-6780 CHASSIS AR

SMCS-7301 **i03385161**

NOTE	PART NUMBER	QTY	PART NAME 1 2 3 4 5 6 (PRODUCT LEVEL)	SEE PAGE
Y	*230-7622*	1	BRACKET GP-MOUNTING	1011
Y	*213-1100*	1	CAB AR	1014
Y	*209-7755*	1	COVER GP-ACCESS	1081
Y	*214-1740*	1	MOUNTING GP-CAB	1146
Y	*228-4981*	1	TANK GP-WINDOW WASHER	1204
	328-0731	1	HANDHOLD GP	
	9W-5343	1	HANDHOLD	

Y-SEPARATE ILLUSTRATION

<END>

213-1100 CAB AR

S/N: J8B1-UP
PART OF 208-9607 CAB AR

SMCS-7301 **i02227470**

NOTE	PART NUMBER	QTY	PART NAME 1 2 3 4 5 6 (PRODUCT LEVEL)	SEE PAGE
Y	*214-1800*	1	CAB GP	1017
Y	*214-1760*	1	INSTALLATION GP-RADIO	1102
Y	*212-8725*	1	LINER GP-CAB	1105
Y	*105-9659*	1	MIRROR GP-REAR VIEW (INTERIOR)	1140
Y	*214-1780*	1	WASHER GP-WINDOW	1206
Y	*214-1770*	1	WIPER GP-WINDOW	1215
Y	*214-4763*	1	WIRING GP-CAB	384

Y-SEPARATE ILLUSTRATION

<END>

248-4172 CAB AR

S/N: J8B1-UP
40-PSI GLASS
AN ATTACHMENT

SMCS-7301 **i03246400**

NOTE	PART NUMBER	QTY	PART NAME 1 2 3 4 5 6 (PRODUCT LEVEL)	SEE PAGE
Y	*295-0710*	1	CAB AR (40-PSI GLASS)	1016
Y	*245-8220*	1	PRECLEANER GP	175

Y-SEPARATE ILLUSTRATION

<END>

OPERATOR STATION

248-4175 CAB AR—DUAL PANE GLASS

S/N: J8B1-UP
AN ATTACHMENT

SMCS-7301 **i02729489**

NOTE	PART NUMBER	QTY	PART NAME 1 2 3 4 5 6 (PRODUCT LEVEL)	SEE PAGE
Y	**286-9188**	1	CAB AR	1015
Y	*256-0194*	1	FILTER GP-CAB AIR	1091

Y-SEPARATE ILLUSTRATION

<END>

248-4176 CAB AR

S/N: J8B1-UP
40-PSI GLASS
AN ATTACHMENT

SMCS-7301 **i03210769**

NOTE	PART NUMBER	QTY	PART NAME 1 2 3 4 5 6 (PRODUCT LEVEL)	SEE PAGE
Y	*295-0710*	1	CAB AR (40-PSI GLASS)	1016
Y	*256-0194*	1	FILTER GP-CAB AIR	1091

Y-SEPARATE ILLUSTRATION

<END>

286-9188 CAB AR—DUAL PANE GLASS

S/N: J8B1-UP
PART OF 248-4175 CAB AR
AN ATTACHMENT

SMCS-7301 **i02729492**

NOTE	PART NUMBER	QTY	PART NAME 1 2 3 4 5 6 (PRODUCT LEVEL)	SEE PAGE
Y	*248-4178*	1	CAB GP (DUAL PANE)	1022
Y	*214-1760*	1	INSTALLATION GP-RADIO	1102
Y	*212-8725*	1	LINER GP-CAB	1105
Y	*105-9659*	1	MIRROR GP-REAR VIEW (INTERIOR)	1140
Y	*214-1780*	1	WASHER GP-WINDOW	1206
Y	*254-9371*	1	WIPER GP-WINDOW	1218
Y	*214-4763*	1	WIRING GP-CAB	384

Y-SEPARATE ILLUSTRATION

<END>

OPERATOR STATION

295-0710 CAB AR

S/N: J8B1-UP
40-PSI GLASS
PART OF 248-4172, 248-4176 CAB AR
AN ATTACHMENT

SMCS-7301 **i03210770**

NOTE	PART NUMBER	QTY	PART NAME 1 2 3 4 5 6 (PRODUCT LEVEL)	SEE PAGE
Y	*214-1760*	1	INSTALLATION GP-RADIO	1102
Y	*212-8725*	1	LINER GP-CAB	1105
Y	*105-9659*	1	MIRROR GP-REAR VIEW (INTERIOR)	1140
Y	*214-1780*	1	WASHER GP-WINDOW	1206
Y	*247-8271*	1	WINDOW GP-CAB	1209
Y	*254-9371*	1	WIPER GP-WINDOW	1218
Y	*214-4763*	1	WIRING GP-CAB	384

Y-SEPARATE ILLUSTRATION

<END>

OPERATOR STATION

214-1800 CAB GP

S/N: J8B1-UP
PART OF 213-1100 CAB AR
TYPE 1

SMCS-7301 **i02464980**

NOTE	REF NO	GRAPHIC REF	PART NUMBER	QTY	PART NAME 1 2 3 4 5 6 (PRODUCT LEVEL)	SEE PAGE
	1	1	**3H-6660**	4	PIN-SPRING	
	2	1	**5M-8500**	2	KNOB (DOOR RELEASE)	
	3	1	**6V-8928**	1	HOOK-COAT	
	4	1	**6Y-3732**	1	BRACKET	
	5	1	**8C-3442**	2	SPRING-COIL	
	6	1	**8E-2685**	1	BRACKET	
	7	1	**8E-5922**	2	LATCH (WINDOW)	
	8	1	**9N-1995**	4	RIVET-POP	
	9	1	**9P-6572**	1	PLUG	
	10	1	**205-7048**	4	INSERT-THREADED (M6X1-THD)	
	11	1	**214-1801**	1	GLASS (TINTED)	
	12	1	**214-1808**	2	HANDHOLD	
Y	13	1	**214-7244**	1	WINDOW GP-SLIDING (RH)	1212
Y	14	1	**214-7245**	1	WINDOW GP-SLIDING (LH)	1213
Y	15	1	**214-7246**	1	WINDOW GP-SLIDING (REAR)	1214
	16	1	**225-6169**	1	ROD	
	17	1	**225-6170**	1	ROD	
	18	1	**236-1300**	1	CAB AS	
	19	1	**239-9961**	2	STRIKER AS	
Y	20	1	*255-6899*	1	DOOR GP-CAB (RH)	1084
Y	21	1	*255-6900*	1	DOOR GP-CAB (LH)	1085
	22	1	**256-0271**	1	COVER AS	
	23	1	**258-8885**	1	GASKET	
Y	24	1	*261-3768*	1	BRACKET GP-MOUNTING (FIRST AID KIT)	1012
	25	1	**110-7524**	18	BUTTON	
	26	1	**180-3748**	3	INSERT-THREADED (M8X1.25-THD)	
M	27	1	**224-6208**	2	INSERT-THREADED (M10X1.5-THD)	
M	28	1	**3E-8020**	1	SCREW-TRUSS HEAD (M6X1X25-MM)	
	29	1	**3K-6235**	2	SEAL-LIP TYPE	
M	30	1	**5C-9553**	6	BOLT (M6X1X16-MM)	
	31	1	**5P-1076**	8	WASHER-HARD (13.5X30X4-MM THK)	
	32	1	**7X-7729**	8	WASHER (11X25X3-MM THK)	
	33	1	**8E-6856**	1	COVER	
	34	1	**8T-2501**	4	BOLT (3/8-16X2-IN)	
	35	1	**8T-4121**	4	WASHER-HARD (11X21X2.5-MM THK)	
M	36	1	**8T-4139**	4	BOLT (M12X1.75X30-MM)	
M	37	1	**8T-4183**	4	BOLT (M12X1.75X40-MM)	
M	38	1	**8T-4191**	4	BOLT (M10X1.5X16-MM)	
	39	1	**9M-5884**	2	BUMPER	
M	40	1	**9X-2041**	4	SCREW-TRUSS HEAD (M10X1.5X20-MM)	
	41	1	**9X-8256**	6	WASHER (6.6X12X2-MM THK)	
D	42	1	**5P-6605**		SEAL (1.8-M)	

D-ORDER BY THE METER
M-METRIC PART
Y-SEPARATE ILLUSTRATION

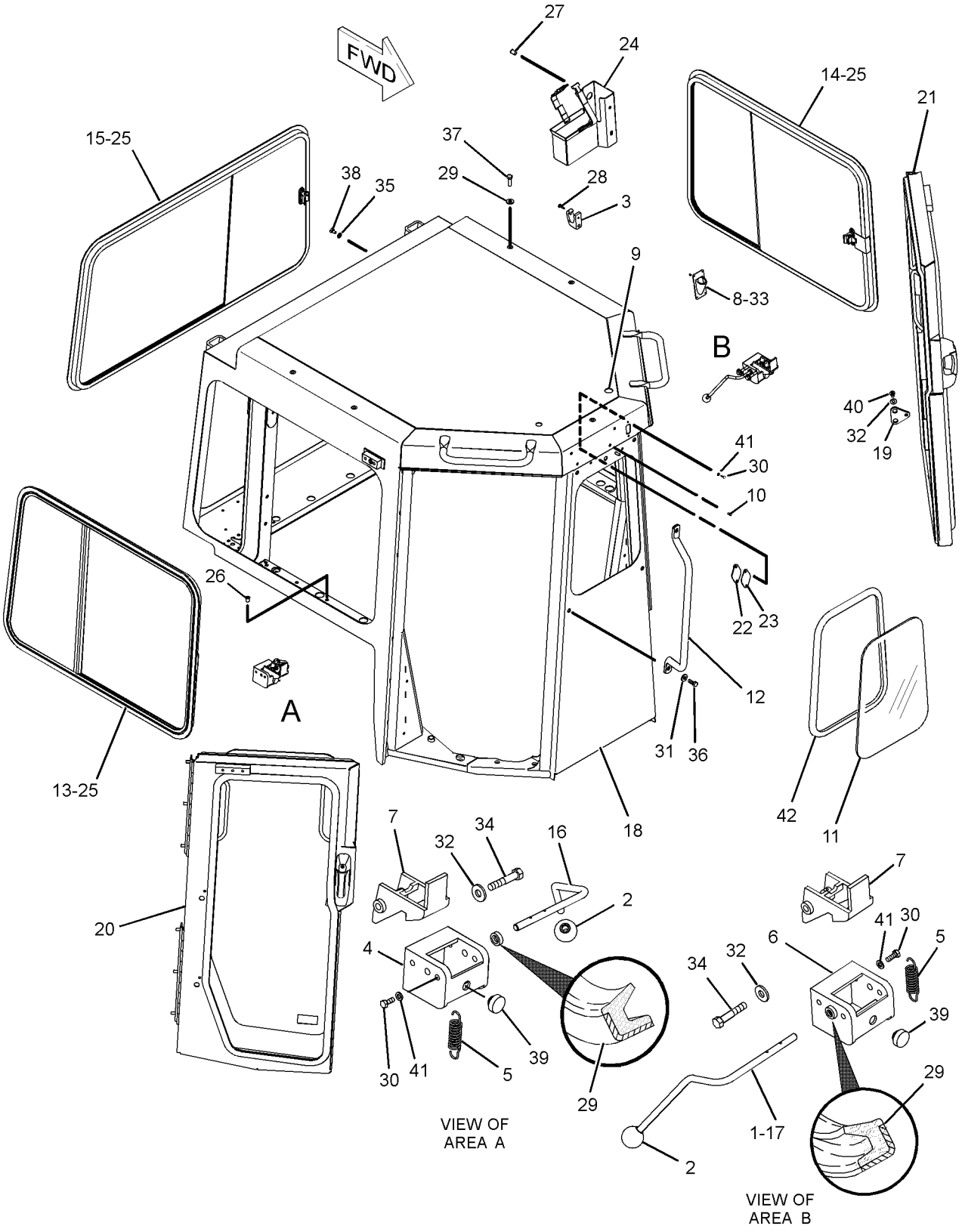

GRAPHIC #1 **<END>** g01165077

OPERATOR STATION

214-1800 CAB GP

S/N: J8B1-UP
PART OF 213-1100 CAB AR
TYPE 2

SMCS-7301 **i03203882**

NOTE	REF NO	GRAPHIC REF	PART NUMBER	QTY	PART NAME 1 2 3 4 5 6 (PRODUCT LEVEL)	SEE PAGE
	1	1	**3H-6660**	4	PIN-SPRING	
	2	1	**5M-8500**	2	KNOB (DOOR RELEASE)	
	3	2	**6V-8928**	1	HOOK-COAT	
	4	1	**6Y-3732**	1	BRACKET	
	5	1	**8C-3442**	2	SPRING-COIL	
	6	1	**8E-2685**	1	BRACKET	
	7	1	**8E-5922**	2	LATCH (WINDOW)	
	8	2	**9N-1995**	4	RIVET-POP	
	9	1	**9P-6572**	1	PLUG	
	10	1	**214-1801**	1	GLASS (TINTED)	
	11	1	**214-1808**	2	HANDHOLD	
Y	12	1	**214-7244**	1	WINDOW GP-SLIDING (RH)	1212
Y	13	1	**214-7245**	1	WINDOW GP-SLIDING (LH)	1213
Y	14	1	**214-7246**	1	WINDOW GP-SLIDING (REAR)	1214
	15	1	**225-6169**	1	ROD	
	16	1	**225-6170**	1	ROD	
	17	1	**236-1300**	1	CAB AS	
	18	2	**239-9961**	2	STRIKER AS	
Y	19	1	*255-6899*	1	DOOR GP-CAB (RH)	1084
Y	20	2	*255-6900*	1	DOOR GP-CAB (LH)	1085
Y	21	2	*261-3768*	1	BRACKET GP-MOUNTING (FIRST AID KIT)	1012
	22	2	**131-5879**	8	WASHER (11X32X3-MM THK)	
CM	23	1	**195-0937**	6	INSERT-THREADED (M8X1.25-THD)	
M	24	2	**224-6208**	2	INSERT-THREADED (M10X1.5-THD)	
CM	25	2	**3E-4304**	2	INSERT-THREADED (M6X1-THD)	
M	26	2	**3E-8020**	1	SCREW-TRUSS HEAD (M6X1X25-MM)	
	27	1	**3K-6235**	2	SEAL-LIP TYPE	
	29	1	**5P-1076**	9	WASHER-HARD (13.5X30X4-MM THK)	
	30	1	**7X-7729**	4	WASHER (11X25X3-MM THK)	
	31	2	**8E-6856**	1	COVER	
	32	1	**8T-2501**	4	BOLT (3/8-16X2-IN)	
	33	2	**8T-4121**	4	WASHER-HARD (11X21X2.5-MM THK)	
M	34	1	**8T-4139**	4	BOLT (M12X1.75X30-MM)	
M	35	1	**8T-4183**	5	BOLT (M12X1.75X40-MM)	
M	36	2	**8T-4191**	4	BOLT (M10X1.5X16-MM)	
	37	1	**9M-5884**	2	BUMPER	
M	38	2	**9X-2040**	4	SCREW-TRUSS HEAD (M10X1.5X25-MM)	
D	40	2	**5P-5969**		SEAL (1.3-M)	
D	41	1	**5P-6605**		SEAL (1.9-M)	
E	42	1	**3E-3000**		SEAL (400-CM)	
E	42A	1	**3E-3000**		SEAL (350-CM EACH)	
	43	1	**9R-5616**	1	PLUG	
M	44	2	**6V-3940**	3	BOLT (M8X1.25X25-MM)	
	45	2	**9M-1974**	3	WASHER-HARD (8.8X16X2-MM THK)	

C-CHANGE FROM PREVIOUS TYPE
D-ORDER BY THE METER
E-ORDER BY THE CENTIMETER
M-METRIC PART
Y-SEPARATE ILLUSTRATION

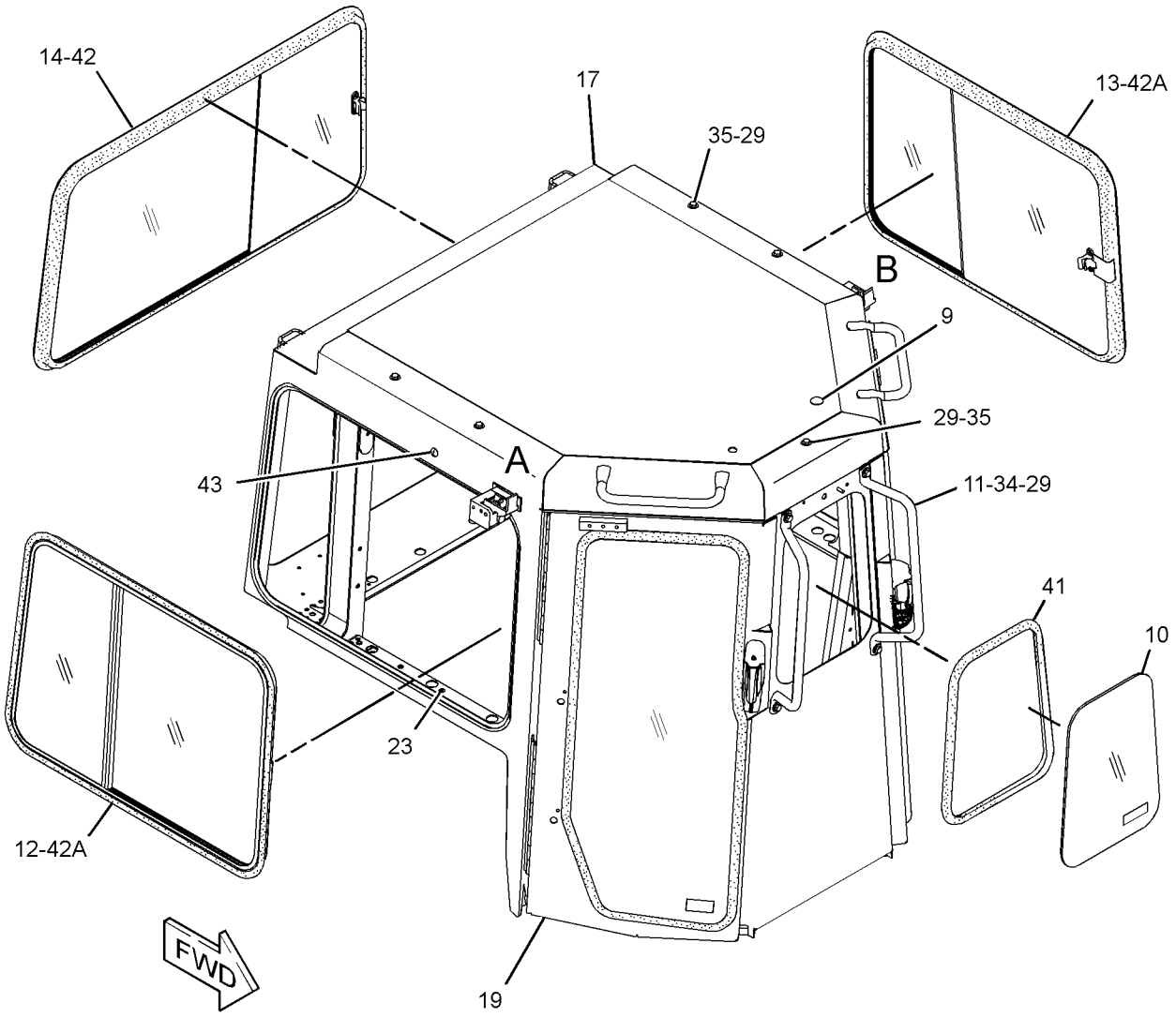

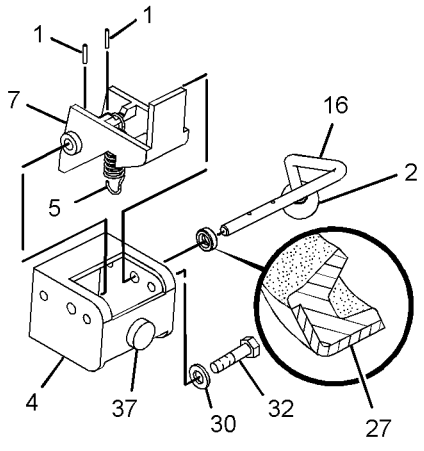

VIEW OF AREA A
(EXPLODED)

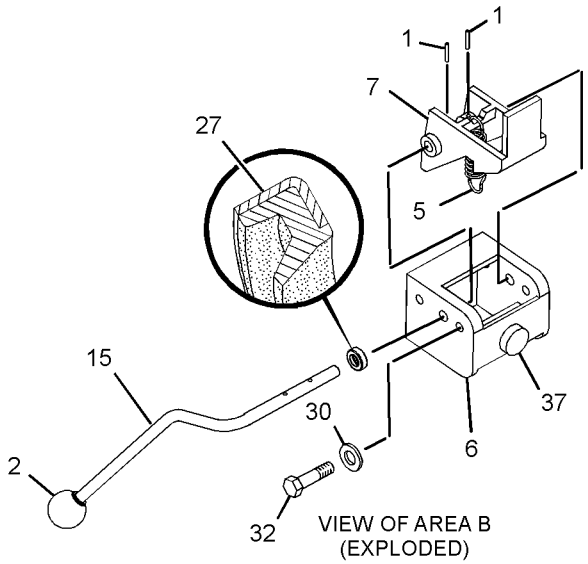

VIEW OF AREA B
(EXPLODED)

GRAPHIC #1

g01657335

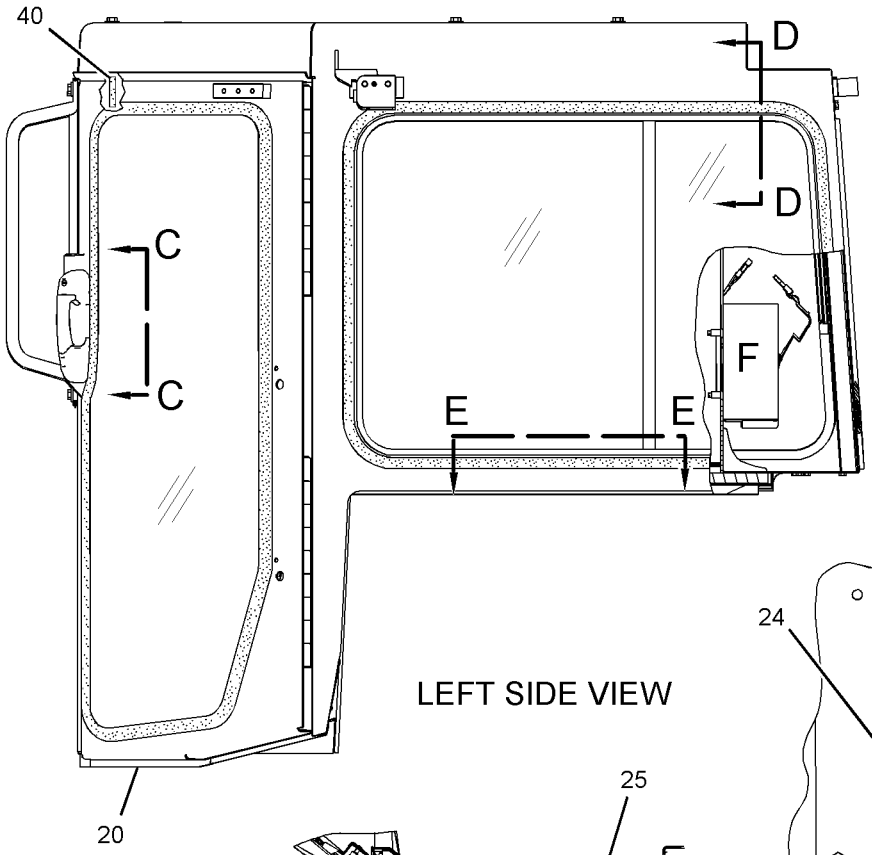

LEFT SIDE VIEW

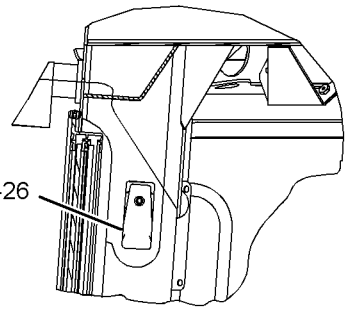

SECTION D-D

SECTION E-E

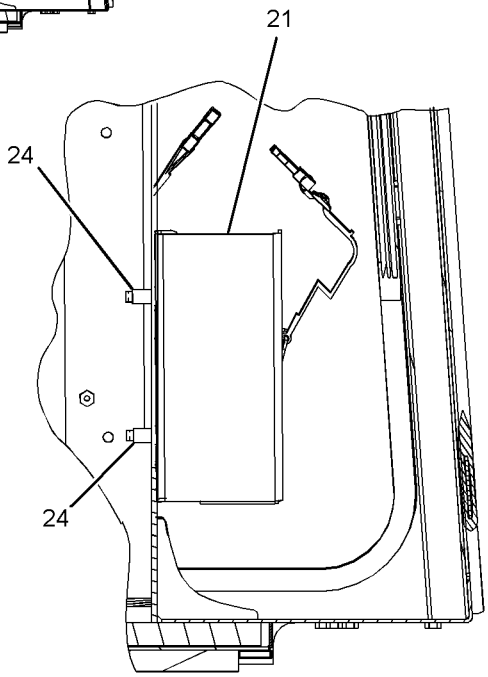

VIEW OF AREA F

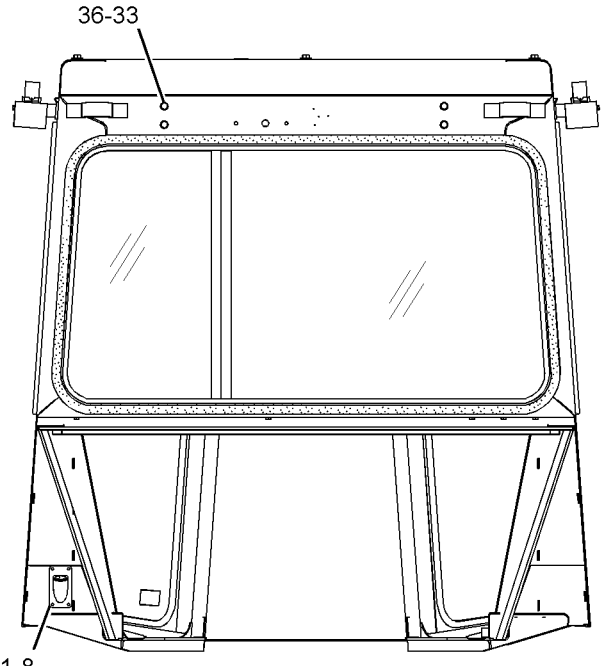

REAR VIEW

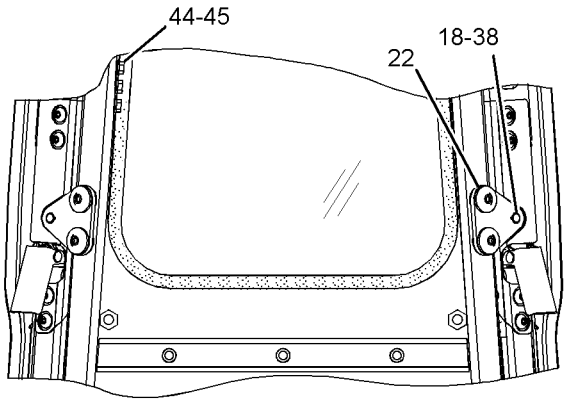

VIEW C-C

GRAPHIC #2 **<END>** g01657334

OPERATOR STATION

248-4178 CAB GP—DUAL PANE

S/N: J8B1-UP
PART OF 286-9188 CAB AR
AN ATTACHMENT

SMCS-7301 **i03210727**

NOTE	REF NO	GRAPHIC REF	PART NUMBER	QTY	PART NAME 1 2 3 4 5 6 (PRODUCT LEVEL)	SEE PAGE
	1	1	**3H-6660**	4	PIN-SPRING	
	2	1	**5M-8500**	2	KNOB	
	3	2	**6V-8928**	1	HOOK-COAT	
	4	1	**6Y-3732**	1	BRACKET (RH)	
	5	1	**8C-3442**	2	SPRING-COIL	
	6	2	**8E-2685**	1	BRACKET (LH)	
	7	1	**8E-5922**	2	LATCH	
	8	2	**9N-1995**	4	RIVET-POP	
	9	2	**9P-6572**	1	PLUG	
	10	1	**214-1808**	2	HANDHOLD	
	11	1	**225-6169**	1	ROD (RH)	
	12	2	**225-6170**	1	ROD (LH)	
	13	1	**236-1300**	1	CAB AS	
	14	2	**239-9961**	2	STRIKER AS	
Y	15	2	*261-3768*	1	BRACKET GP-MOUNTING (FIRST AID KIT)	1012
	16	1	**271-9250**	1	WINDOW AS (FRONT)	
	17	1	**271-9253**	1	WINDOW AS (LH)	
	18	1	**271-9254**	1	WINDOW AS (RH)	
	19	1	**271-9255**	1	WINDOW AS (REAR)	
	20	1	**271-9256**	1	FRAME (RH)	
	21	1	**271-9257**	1	FRAME (LH)	
	22	1	**271-9258**	1	FRAME (REAR)	
Y	23	1	*286-9193*	1	DOOR GP-CAB (LH)	1086
Y	24	1	*286-9194*	1	DOOR GP-CAB (RH)	1087
	25	2	**131-5879**	8	WASHER (11X32X3-MM THK)	
M	26	1	**195-0937**	6	INSERT-THREADED (M8X1.25-THD)	
M	27	2	**224-6208**	2	INSERT-THREADED (M10X1.5-THD)	
M	28	2	**3E-4304**	2	INSERT-THREADED (M6X1-THD)	
M	29	2	**3E-8020**	1	SCREW-TRUSS HEAD (M6X1X25-MM)	
	30	1	**3K-6235**	2	SEAL-LIP TYPE	
	31	1,2	**5P-1076**	9	WASHER-HARD (13.5X30X4-MM THK)	
	32	1	**7X-7729**	4	WASHER (11X25X3-MM THK)	
	33	2	**8E-6856**	1	COVER	
	34	1	**8T-2501**	4	BOLT (3/8-16X2-IN)	
	35	2	**8T-4121**	4	WASHER-HARD (11X21X2.5-MM THK)	
M	36	1	**8T-4139**	4	BOLT (M12X1.75X30-MM)	
M	37	1,2	**8T-4183**	5	BOLT (M12X1.75X40-MM)	
M	38	2	**8T-4191**	4	BOLT (M10X1.5X16-MM)	
	39	1	**9M-5884**	2	BUMPER	
	40	1	**9R-5616**	1	PLUG	
M	41	2	**9X-2040**	4	SCREW-TRUSS HEAD (M10X1.5X25-MM)	
	42	1	**270-5001**	3	ANGLE	
	43	1	**270-5002**	3	ANGLE	
B	44	1	**214-9186**	15	BUTTON	
D	45	1,2	**5P-5969**		SEAL (0.7-M EACH)	
D	46	1	**5P-6605**		SEAL (1.9-M)	
D	46A	1	**5P-6605**		SEAL (3.8-M)	
D	46B	1	**5P-6605**		SEAL (3.3-M EACH)	
E	47	1	**3E-3000**		SEAL (350-CM EACH)	
E	47A	1	**3E-3000**		SEAL (400-CM)	
M	48	2	**6V-3940**	3	BOLT (M8X1.25X25-MM)	
	49	2	**9M-1974**	3	WASHER-HARD (8.8X16X2-MM THK)	

B-USE AS REQUIRED
D-ORDER BY THE METER
E-ORDER BY THE CENTIMETER
M-METRIC PART
Y-SEPARATE ILLUSTRATION

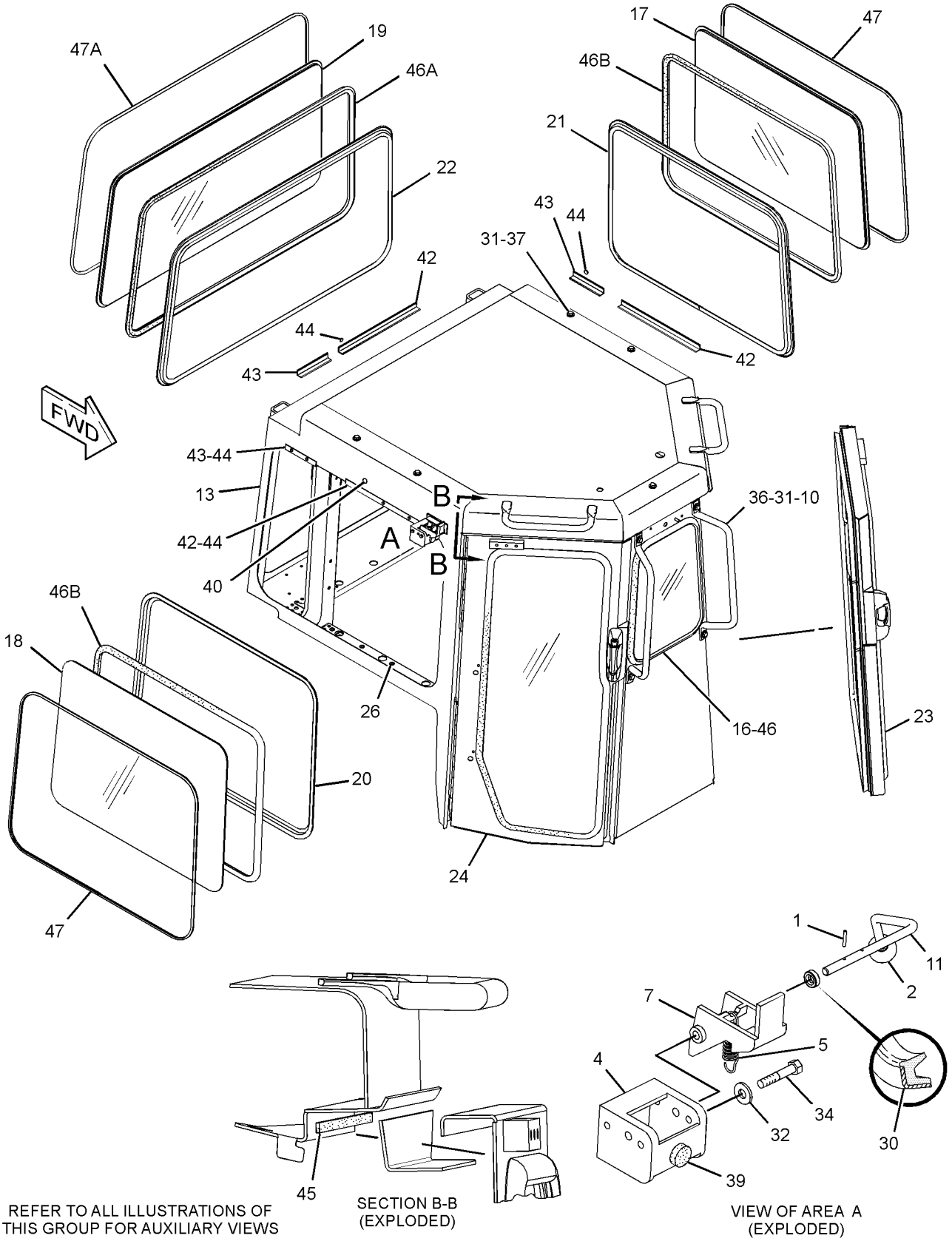

REFER TO ALL ILLUSTRATIONS OF THIS GROUP FOR AUXILIARY VIEWS

GRAPHIC #1

g01666815

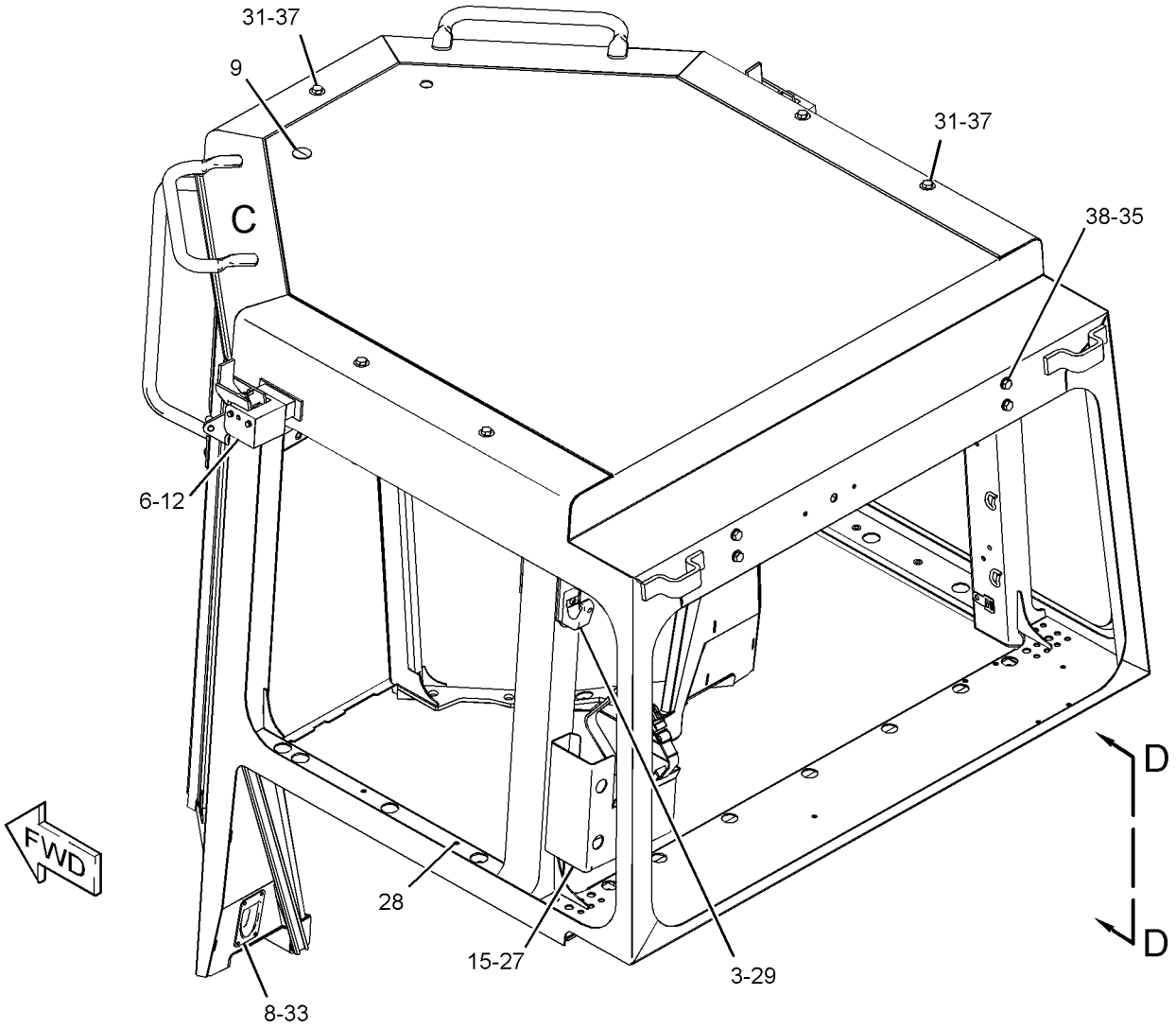

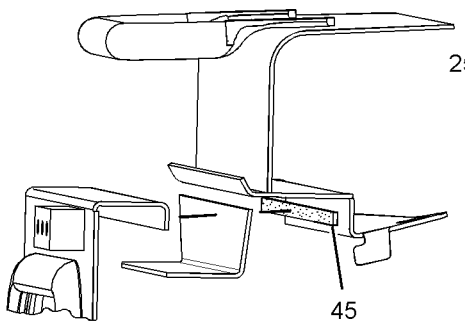

VIEW OF AREA C
(EXPLODED)

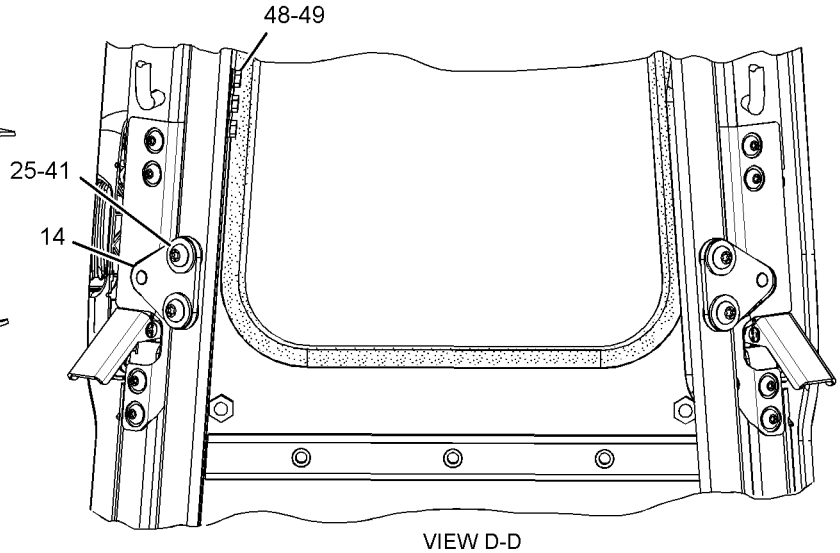

VIEW D-D

GRAPHIC #2 **<END>** g01666817

OPERATOR STATION

237-2884 CANOPY AR-OPEN ROPS

S/N: J8B1-UP

AN ATTACHMENT

SMCS-7302, 7323 **i02490537**

NOTE	PART NUMBER	QTY	PART NAME 1 2 3 4 5 6 (PRODUCT LEVEL)	SEE PAGE
Y	*237-0200*	1	PLATFORM AR	1172
Y	*234-7952*	1	ROPS GP-OPEN	1178
Y	**159-2950**	1	SEAT GP-SUSPENSION	1194
			S/N: J8B1-575	
Y	*277-2272*	1	SEAT GP-SUSPENSION	1198
			S/N: J8B576-UP	
	254-8984	1	FILM-INFORMATION (ROPS, FOPS, READ OMM)	
			ON RH ROPS POST VIEWABLE FROM GROUND	
	219-0305	1	FILM-WARNING (NO WELD, NO DRILL, READ OMM)	
			ON RH ROPS POST VIEWABLE FROM GROUND	
	248-4773	1	PLATE AS	

Y-SEPARATE ILLUSTRATION

<END>

OPERATOR STATION

183-5106 COMPRESSOR GP-REFRIGERANT

S/N: J8B1-UP

PART OF 213-8053 COMPRESSOR GP-REFRIGERANT

AN ATTACHMENT

SMCS-1802 **i03437060**

NOTE	REF NO	GRAPHIC REF	PART NUMBER	QTY	PART NAME 1 2 3 4 5 6 (PRODUCT LEVEL)	SEE PAGE
	1	1	**180-9339**	2	PIN-CONNECTOR (14-GA TO 18-GA)	
	2	1	**102-8802**	1	KIT-RECEPTACLE (2-PIN)	
					(INCLUDES RECEPTACLE AS & WEDGE)	
	3	1	**314-4018**	1	VALVE AS (REFRIGERANT COMPRESSOR)	
		1	**9X-7378**	1	SEAL-O-RING	
	4	1	**7T-4532**	1	PLUG AS	
	5	1	**9X-7385**	2	SEAL-O-RING	

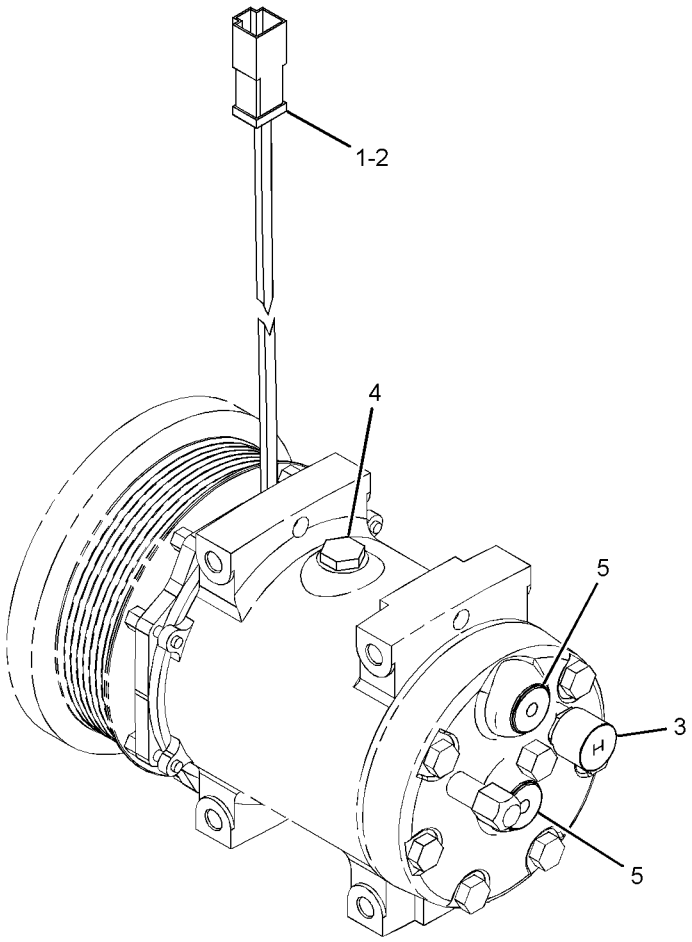

GRAPHIC #1 **<END>** g01419732

OPERATOR STATION

213-8053 COMPRESSOR GP-REFRIGERANT

S/N: J8B1-UP

PART OF 209-8294, 209-9751, 209-9752 AIR CONDITIONER AR AN ATTACHMENT

SMCS-1802 **i02242135**

NOTE	REF NO	GRAPHIC REF	PART NUMBER	QTY	PART NAME 1 2 3 4 5 6 (PRODUCT LEVEL)	SEE PAGE
Y	1	1	**183-5106**	1	COMPRESSOR GP-REFRIGERANT	1027
	2	1	**219-8689**	1	BELT-SERPENTINE (A/C COMPRESSOR PULLEY)	
	3	1	**133-7023**	1	PULLEY AS-IDLER	
		1	**151-2898**	1	SPACER (10.4X38.1X20-MM THK)	
M		1	**151-2900**	1	BOLT (M10X1.5X54.25-MM)	
		1	**166-6358**	1	COVER-DUST	
M	4	1	**7X-2538**	4	BOLT (M8X1.25X100-MM)	
	5	1	**8T-4224**	4	WASHER-HARD (8.8X16X2-MM THK)	

M-METRIC PART
Y-SEPARATE ILLUSTRATION

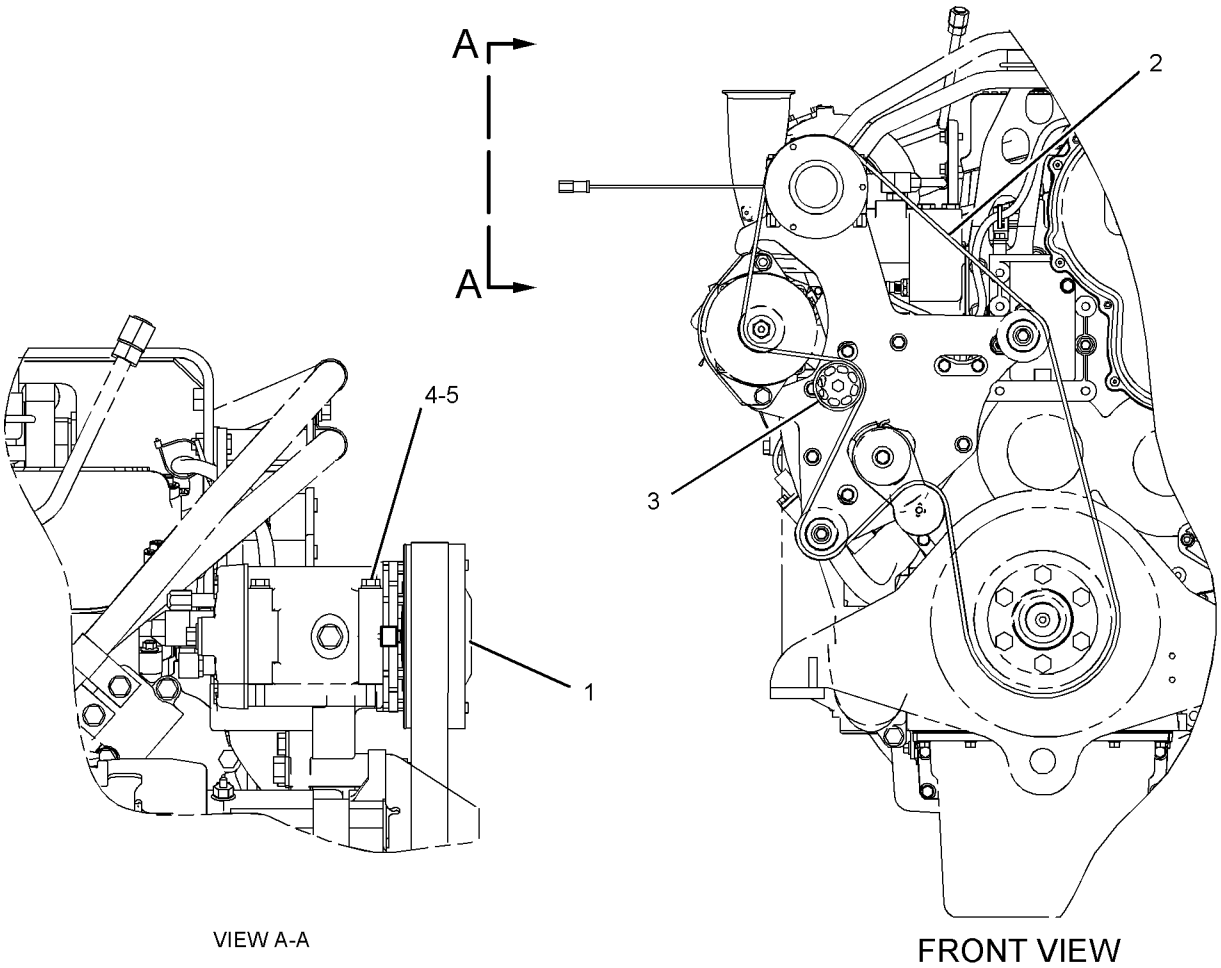

VIEW A-A

FRONT VIEW

GRAPHIC #1 **<END>** g01021498

209-8305 CONDENSER & MTG GP-REFRIGERANT

S/N: J8B1-UP

PART OF 209-8294 AIR CONDITIONER AR

AN ATTACHMENT

SMCS-1805 **i02242132**

NOTE	REF NO	GRAPHIC REF	PART NUMBER	QTY	PART NAME 1 2 3 4 5 6 (PRODUCT LEVEL)	SEE PAGE
	1	1	**6N-8744**	4	MOUNT	
	2	1	**218-5138**	2	BRACKET	
	3	1	**239-8160**	1	BRACKET AS	
	4	1	**252-7134**	1	CORE AS-CONDENSER	
	5	1	**7X-7729**	2	WASHER (11X25X3-MM THK)	
	6	1	**8T-4121**	4	WASHER-HARD (11X21X2.5-MM THK)	
M	7	1	**8T-4136**	6	BOLT (M10X1.5X25-MM)	
M	8	1	**8T-4196**	4	BOLT (M10X1.5X35-MM)	
	9	1	**8T-4226**	4	WASHER-PLATED (10.5X45X3-MM THK)	

M-METRIC PART

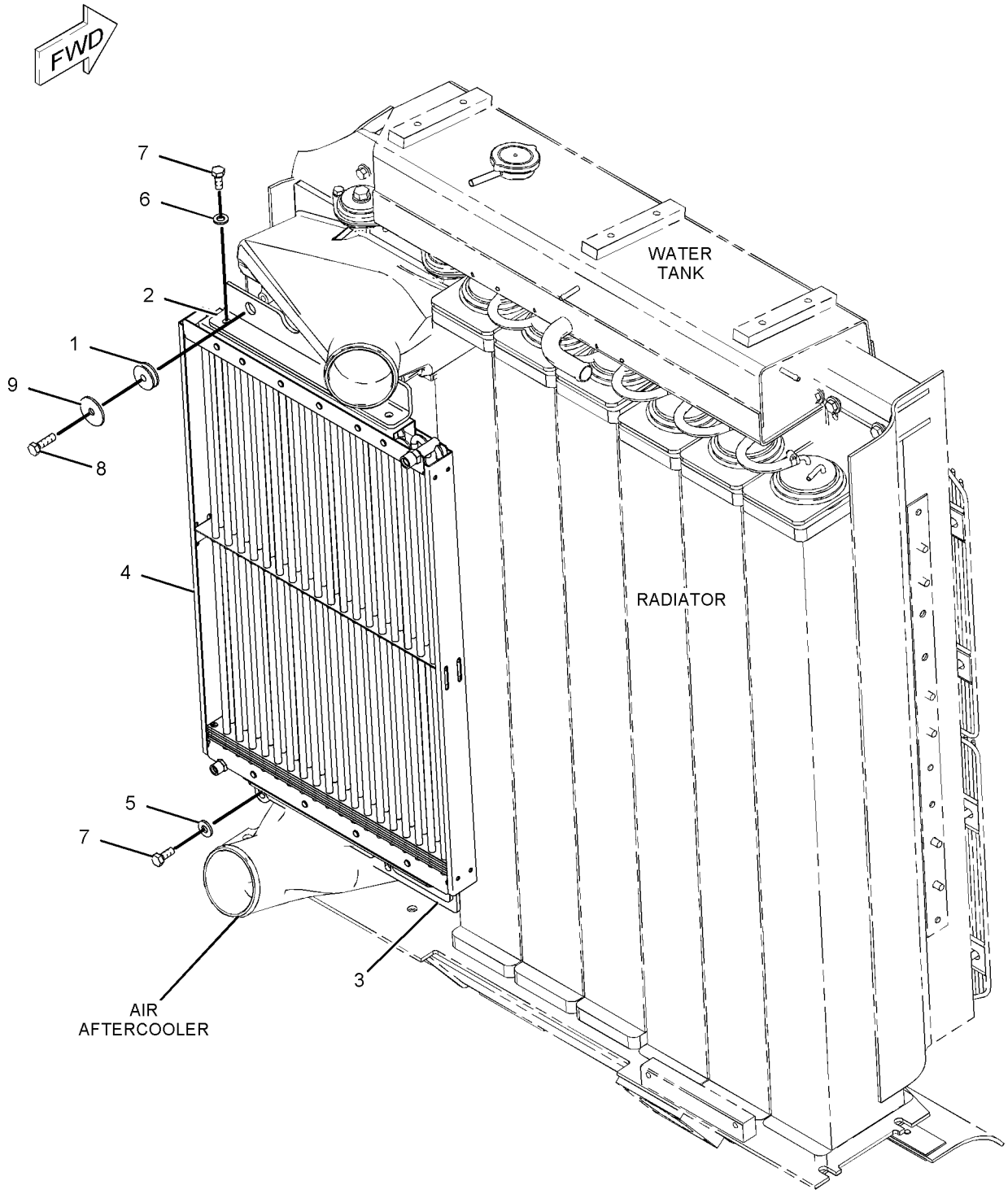

GRAPHIC #1 **<END>** g01110743

OPERATOR STATION

103-9527 CONDENSER GP-REFRIGERANT—WITH FANS

S/N: J8B1-UP

PART OF 209-9751, 209-9752 AIR CONDITIONER AR

AN ATTACHMENT

SMCS-1805 **i02886602**

NOTE	REF NO	GRAPHIC REF	PART NUMBER	QTY	PART NAME 1 2 3 4 5 6 (PRODUCT LEVEL)	SEE PAGE
	1	1	**3E-5239**	1	RELAY AS (24-VOLT) (CONDENSER FAN MOTOR)	
	2	1	**3S-2093**	7	STRAP-CABLE	
C	3	1	**7K-1181**	2	STRAP-CABLE	
	4	1	**7T-5856**	4	CLAMP	
	6	1	**8P-6363**	1	PLUG	
	7	1	**9X-3452**	2	GUARD AS-FAN	
C	8	1	**124-8490**	1	HARNESS AS-HEATER & AIR COND	
		1	**9X-1054**	1	PLUG AS-CONNECTOR (4-PIN)	
		1	**102-8803**	1	KIT-RECEPTACLE (3-PIN)	
					(INCLUDES RECEPTACLE AS & WEDGE)	
		1	**155-2270**	2	KIT-CONNECTING PLUG (2-PIN)	
					(EACH INCLUDES PLUG AS & WEDGE)	
	9	1	**142-8620**	2	FAN AS-CONDENSER (4 BLADE)	
		1	**3H-7180**	1	SETSCREW (1/4-28X0.25-IN)	
	10	1	**308-6335**	2	MOTOR GP-ELECTRIC (CONDENSER BLOWER MOTOR)	
					(EACH INCLUDES)	
		1	**9W-0852**	2	PIN-CONNECTOR (14-GA)	
		1	**102-8802**	1	KIT-RECEPTACLE (2-PIN)	
					(INCLUDES RECEPTACLE AS & WEDGE)	
CJ	11	1	**203-2070**	8	MOUNT	
CJ	12	1	**204-9530**	4	TUBE	
CJ	13	1	**204-9531**	1	COIL-CONDENSER	
C	14	1	**204-9532**	1	CASE AS	
C	15	1	**4P-8134**	2	CLIP	
M	16	1	**5C-2890**	1	NUT (M6X1-THD)	
	17	1	**5P-1075**	8	WASHER-HARD (10.2X22.5X3-MM THK)	
	18	1	**5P-8441**	1	GROMMET	
J	19	1	**7X-0578**	4	WASHER-HARD (10.2X32X2.5-MM THK)	
C	20	1	**8T-4121**	4	WASHER-HARD (11X21X2.5-MM THK)	
M	21	1	**8T-4133**	4	NUT (M10X1.5-THD)	
M	22	1	**8T-4137**	8	BOLT (M10X1.5X20-MM)	
M	23	1	**8T-4192**	12	BOLT (M12X1.75X25-MM)	
	24	1	**8T-4205**	1	WASHER-HARD (7.2X14.5X2-MM THK)	
	25	1	**8T-4223**	12	WASHER-HARD (13.5X25.5X3-MM THK)	
CJM	26	1	**8T-6685**	4	BOLT (M10X1.5X110-MM)	
	27	1	**9X-7373**	1	GROMMET	
D	28	1	**5P-5924**		SEAL (0.2-M)	
CD	29	1	**5P-5672**		SEAL (1.2-M)	
D	30	1	**5P-5908**		SEAL (1-M)	
					AVAILABLE REPAIR KIT(S):	
J			**216-0805**	1	KIT-COIL (AIR CONDITIONER)	

C-CHANGE FROM PREVIOUS TYPE
D-ORDER BY THE METER
J-KIT MARKED J SERVICES PART(S) MARKED J
M-METRIC PART

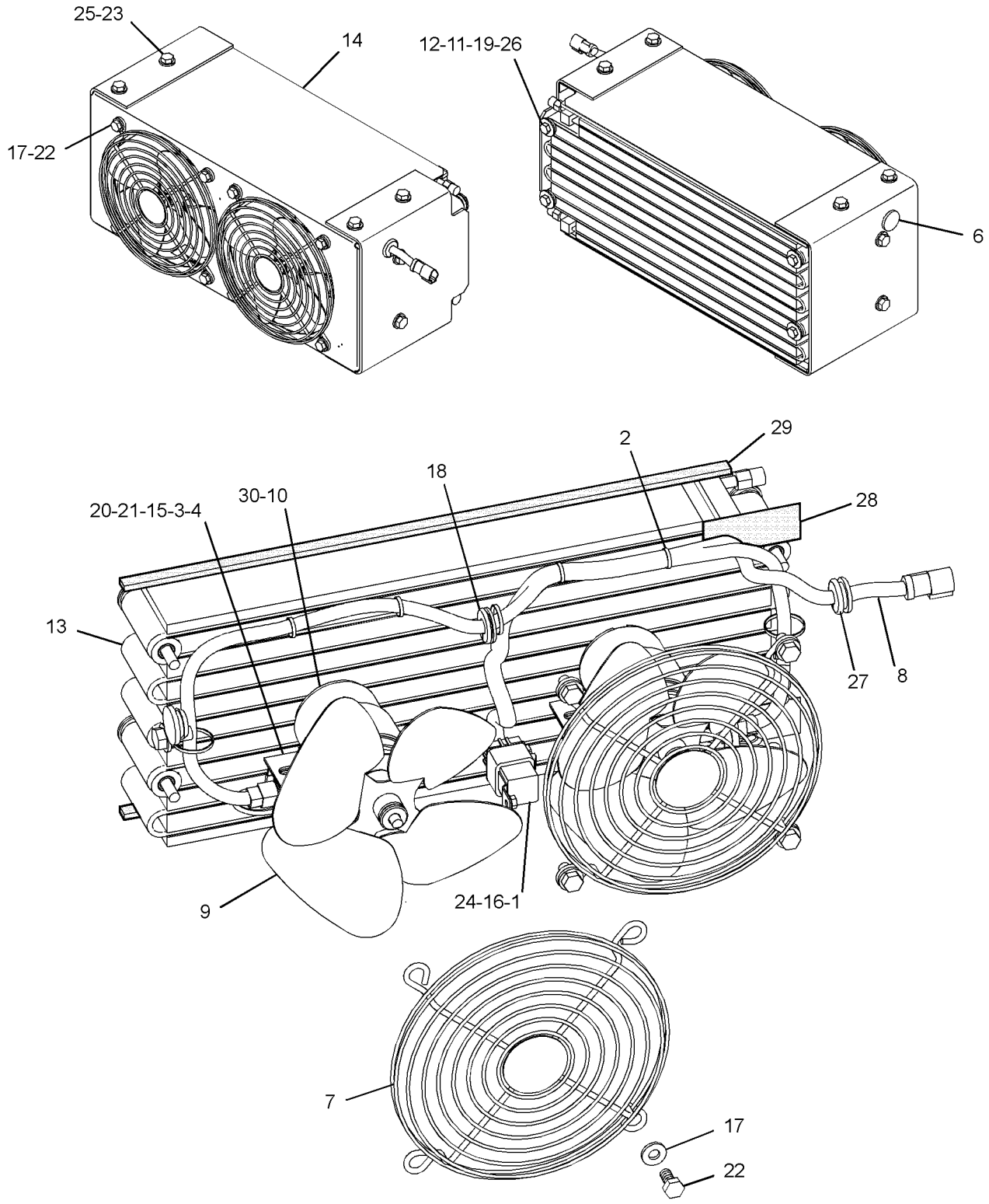

(COVER AND MTG HARDWARE REMOVED)

GRAPHIC #1 **<END>** g01437296

OPERATOR STATION

214-2014 CONSOLE GP-FRONT

S/N: J8B1-UP

PART OF 209-9700 PLATFORM AR

SMCS-5258 **i02610623**

NOTE	REF NO	GRAPHIC REF	PART NUMBER	QTY	PART NAME 1 2 3 4 5 6 (PRODUCT LEVEL)	SEE PAGE
	1	1	**6Y-5094**	1	CABLE	
	2	1	**209-5155**	1	CONSOLE-FRONT	
Y	3	1	**214-4176**	1	BOX GP-STORAGE	1010
	4	1	**232-6668**	1	PAD AS (FOOT)	
	5	1	**244-6529**	1	FOAM AS	
M	6	1	**127-2170**	10	SCREW-TRUSS HEAD (M8X1.25X20-MM)	
	7	1	**4B-4274**	4	WASHER (5.5X13X1.2-MM THK)	
M	8	1	**5C-9553**	1	BOLT (M6X1X16-MM)	
M	9	1	**8C-6364**	4	BOLT-SOCKET HEAD (M5X0.8X14-MM)	
	10	1	**9X-8256**	1	WASHER (6.6X12X2-MM THK)	

M-METRIC PART
Y-SEPARATE ILLUSTRATION

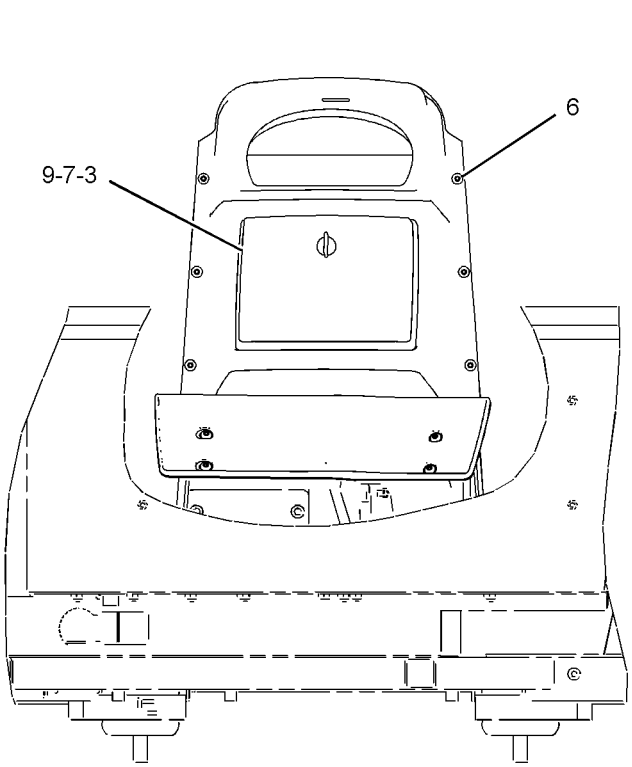

REAR VIEW

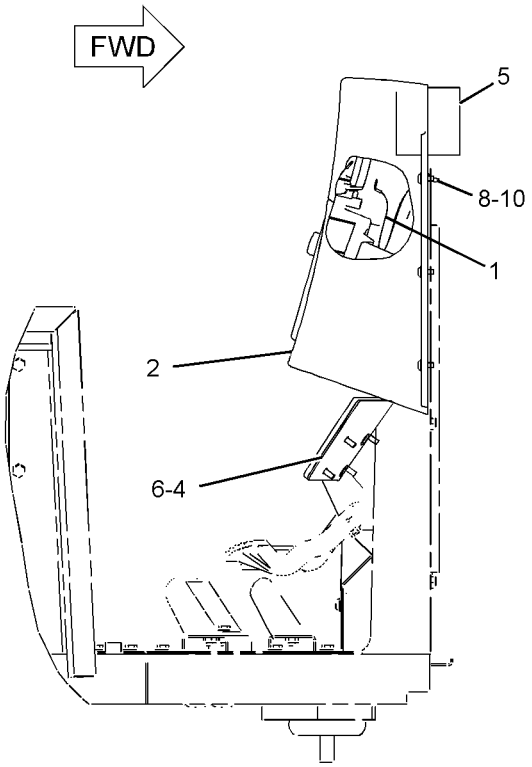

RIGHT SIDE VIEW

GRAPHIC #1 **<END>** g01128755

OPERATOR STATION

209-5154 CONSOLE GP-OPERATOR

S/N: J8B1-UP

PART OF 209-9700 PLATFORM AR

SMCS-5258, 7451 **i02590851**

NOTE	REF NO	GRAPHIC REF	PART NUMBER	QTY	PART NAME 1 2 3 4 5 6 (PRODUCT LEVEL)	SEE PAGE
	1	1	**154-8079**	12	NUT (U-TYPE RETAINER)	
	2	1	**252-5115**	1	CUSHION AS	
	3	1	**218-3266**	1	PANEL	
	4	1	**218-3269**	1	PANEL	
	5	1	**220-3439**	1	PLATE	
	6	1	**220-6126**	2	PLATE AS	
	7	1	**221-9409**	2	KNOB (ARMREST ADJUSTMENT)	
	8	1	**230-0093**	1	BRACKET AS	
	9	1	**233-9161**	12	SCREW-TRUSS HEAD (M4X0.7X18-MM)	
	10	1	**235-3560**	1	CASE-REAR	
	11	1	**235-3561**	1	PANEL AS (FRONT)	
	12	1	**252-5114**	1	CONSOLE AS (RH)	
	13	1	**263-3280**	1	CUSHION AS	
	14	1	**264-0072**	1	PLATE	
	15	1	**267-8828**	1	GROMMET	
	16	1	**271-9408**	4	SCREW-TRUSS HEAD (M5X0.8X10-MM)	
	17	1	**278-7129**	1	PLATE	
M	18	1	**127-2170**	5	SCREW-TRUSS HEAD (M8X1.25X20-MM)	
M	19	1	**131-3539**	4	SCREW-FLAT HEAD (M8-1.25X30-MM)	
	20	1	**198-9706**	4	SCREW-TRUSS HEAD (M5X0.8X16-MM)	
	21	1	**3E-4352**	7	WASHER-HARD (8.8X20.5X2.5-MM THK)	
M	22	1	**3T-0849**	4	BOLT-SOCKET HEAD (M6X1X25-MM)	
M	23	1	**5C-9553**	4	BOLT (M6X1X16-MM)	
	24	1	**5P-4116**	11	WASHER-HARD (8.8X20.5X2-MM THK)	
M	25	1	**5P-7970**	1	NUT (M8X1.25-THD)	
M	26	1	**6V-9189**	8	LOCKNUT (M8X1.25-THD)	
	27	1	**7X-0578**	2	WASHER-HARD (10.2X32X2.5-MM THK)	
M	28	1	**7X-2538**	3	BOLT (M8X1.25X100-MM)	
M	29	1	**7X-2540**	3	BOLT (M8X1.25X120-MM)	
	30	1	**7X-7729**	2	WASHER (11X25X3-MM THK)	
M	31	1	**8T-4136**	4	BOLT (M10X1.5X25-MM)	
M	32	1	**8T-4200**	2	BOLT (M8X1.25X16-MM)	
	33	1	**9D-3767**	3	PLUG-BUTTON	
	34	1	**9X-8267**	4	WASHER (6.6X12X2-MM THK)	

M-METRIC PART

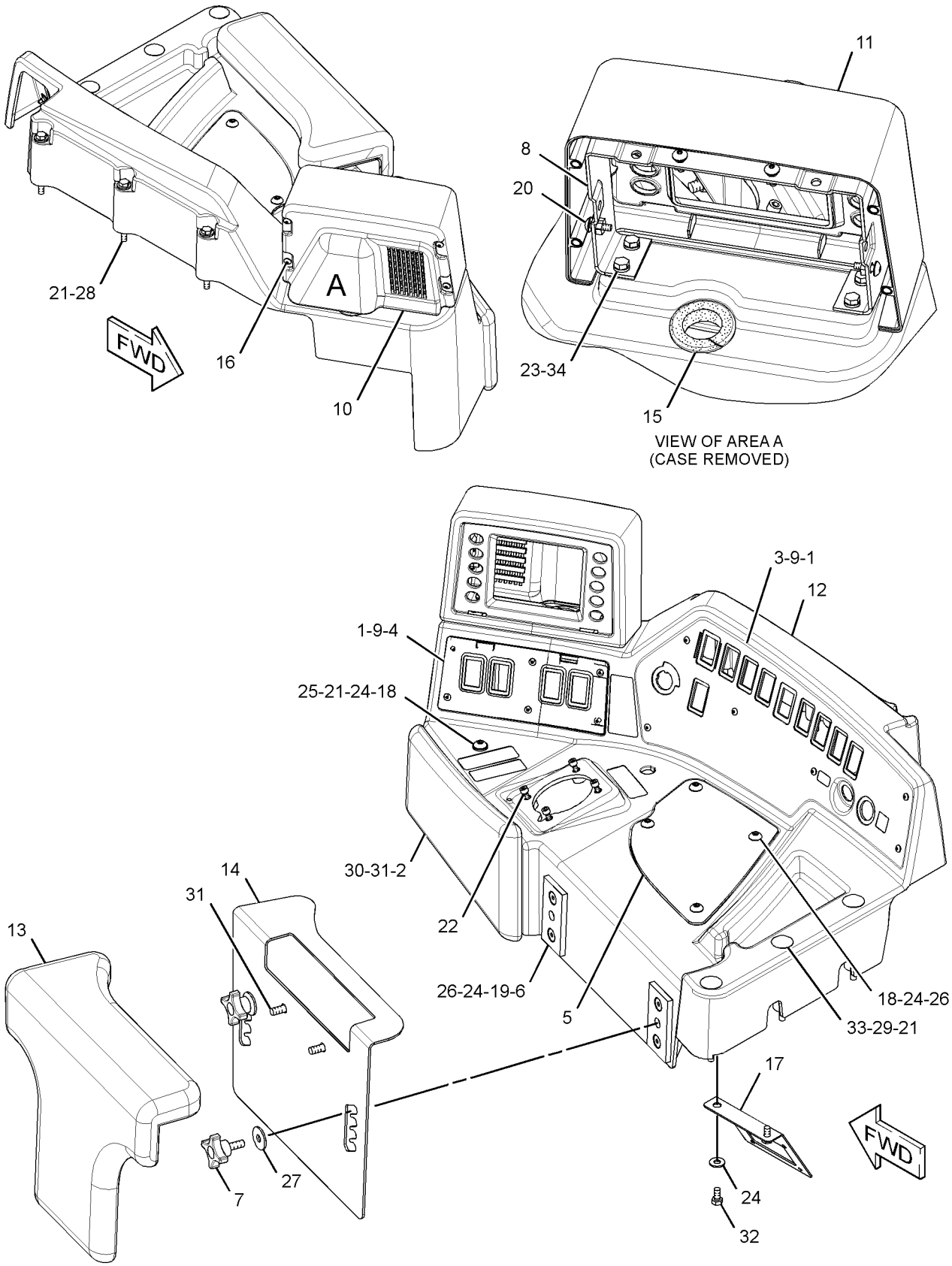

GRAPHIC #1 **<END>** g01279765

OPERATOR STATION

232-6622 CONTROL & MTG GP-PEDAL—GOVERNOR, BRAKE

S/N: J8B1-UP

PART OF 206-6781 POWER TRAIN AR

SMCS-5462 **i02239727**

NOTE	REF NO	GRAPHIC REF	PART NUMBER	QTY	PART NAME 1 2 3 4 5 6 (PRODUCT LEVEL)	SEE PAGE
	1	1	**171-7077**	2	ROD-THREADED	
Y	2	1	*231-7314*	1	PEDAL GP-GOVERNOR & BRAKE	1165
	3	1	**8T-4121**	4	WASHER-HARD (11X21X2.5-MM THK)	
M	4	1	**8T-4133**	2	NUT (M10X1.5-THD)	
M	5	1	**8T-4195**	2	BOLT (M10X1.5X30-MM)	

M-METRIC PART
Y-SEPARATE ILLUSTRATION

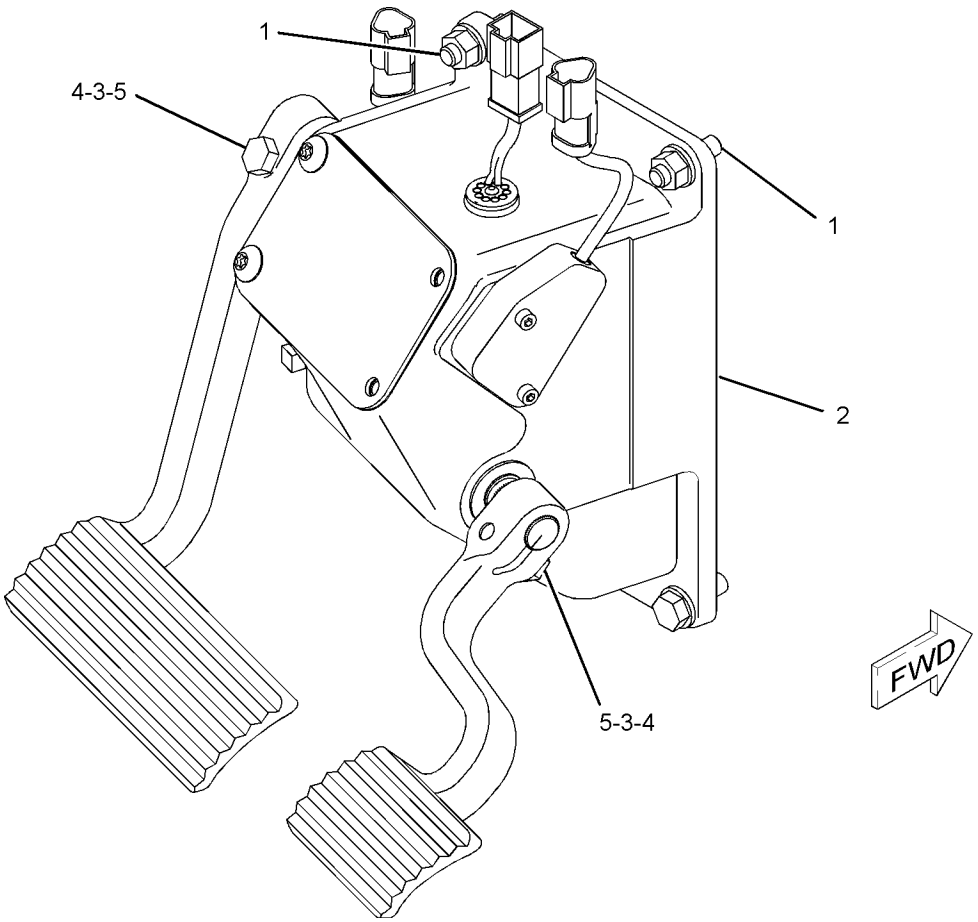

GRAPHIC #1 **<END>** g01021937

OPERATOR STATION

263-3318 CONTROL & MTG GP-PEDAL

S/N: J8B1-1528
PART OF 256-0189 OPERATOR AR
AN ATTACHMENT

SMCS-5462 **i02530263**

NOTE	REF NO	GRAPHIC REF	PART NUMBER	QTY	PART NAME 1 2 3 4 5 6 (PRODUCT LEVEL)	SEE PAGE
	1	1	**1B-8706**	1	KEY-WOODRUFF	
	2	1	**1B-8714**	1	KEY-WOODRUFF	
	3	1	**2J-6356**	4	RING-RETAINING	
	4	1	**7P-4190**	4	BEARING-ROLLER	
	5	1	**9M-5731**	2	RIVET-POP	
M	6	1	**9X-6615**	4	BOLT (M5X0.8X30-MM)	
	7	1	**258-0978**	1	PEDAL AS (SERVICE BRAKE)	
	8	1	**111-3780**	1	SPRING	
	9	1	**111-3781**	2	BOLT-ANCHOR (M10X1.5X23-MM)	
	10	1	**132-7077**	1	SWITCH AS-LIMIT (SERVICE BRAKE PEDAL)	
		1	**6V-8376**	3	SCREW-MACHINE (8-32X0.25-IN)	
		1	**9B-7233**	3	LOCKWASHER	
	11	1	**145-3405**	2	SPACER (10.3X16.7X8-MM THK)	
	12	1	**160-1433**	1	LEVER	
	13	1	**160-1434**	1	LEVER	
Y	14	1	**160-2443**	1	SENSOR GP-POSITION (ROTARY) (DECELERATOR PEDAL)	342
	15	1	**164-9541**	1	HARNESS AS-SWITCH (SERVICE BRAKE)	
		1	**102-8804**	1	KIT-RECEPTACLE (4-PIN)	
					(INCLUDES RECEPTACLE AS & WEDGE)	
	16	1	**165-9100**	1	LINK	
	17	1	**165-9103**	1	SPRING	
	18	1	**280-1654**	1	SPACER (8X9.5X10.1-MM THK)	
	19	1	**205-7331**	1	SPACER (20.32X28.01X0.41-MM THK)	
Y	20	1	**224-5530**	1	SENSOR GP-POSITION (SERVICE BRAKE PEDAL)	343
	21	1	**258-0980**	1	PEDAL AS (DECELERATOR)	
	22	1	**231-7307**	1	PLATE	
	23	1	**231-7308**	1	GASKET	
	24	1	**231-7309**	1	PLATE	
	25	1	**231-7310**	1	BRACKET AS	
	26	1	**231-7311**	1	SHAFT	
	27	1	**231-7312**	1	SHAFT	
	28	1	**231-7313**	1	HOUSING	
	29	1	**280-1653**	1	SPRING	
	30	1	**096-5962**	2	WASHER-HARD (3.4X7X0.8-MM THK)	
M	31	1	**106-5472**	1	SETSCREW-HEX SOCKET (M5X0.8X20-MM)	
	32	1	**111-9251**	4	WASHER-HARD (20X35X1.6-MM THK)	
M	33	1	**127-2170**	2	SCREW-TRUSS HEAD (M8X1.25X20-MM)	
	34	1	**4B-3609**	1	SETSCREW-SQUARE HEAD (3/8-16X1.5-IN)	
	35	1	**6V-0894**	2	SEAL-O-RING	
	36	1	**280-1655**	1	BOLT-SHOULDER (M6X1X27.5-MM)	
M	37	1	**6V-7744**	2	LOCKNUT (M10X1.5-THD)	
	38	1	**6V-8801**	1	NUT (3/8-16-THD)	
	39	1	**7X-7729**	2	WASHER (11X25X3-MM THK)	
	40	1	**8F-7702**	2	SEAL-LIP TYPE	
	41	1	**8T-4121**	4	WASHER-HARD (11X21X2.5-MM THK)	
M	42	1	**8T-4136**	2	BOLT (M10X1.5X25-MM)	
M	43	1	**8T-4186**	2	BOLT (M10X1.5X40-MM)	
M	44	1	**8T-4195**	2	BOLT (M10X1.5X30-MM)	
	45	1	**171-2988**	2	WASHER-HARD (8X14X1.6-MM THK)	
M	46	1	**8T-4970**	2	BOLT (M6X1X14-MM)	
	47	1	**9X-6281**	2	SCREW-MACHINE (4-40X1-IN)	
	48	1	**9X-8256**	2	WASHER (6.6X12X2-MM THK)	

M-METRIC PART
Y-SEPARATE ILLUSTRATION

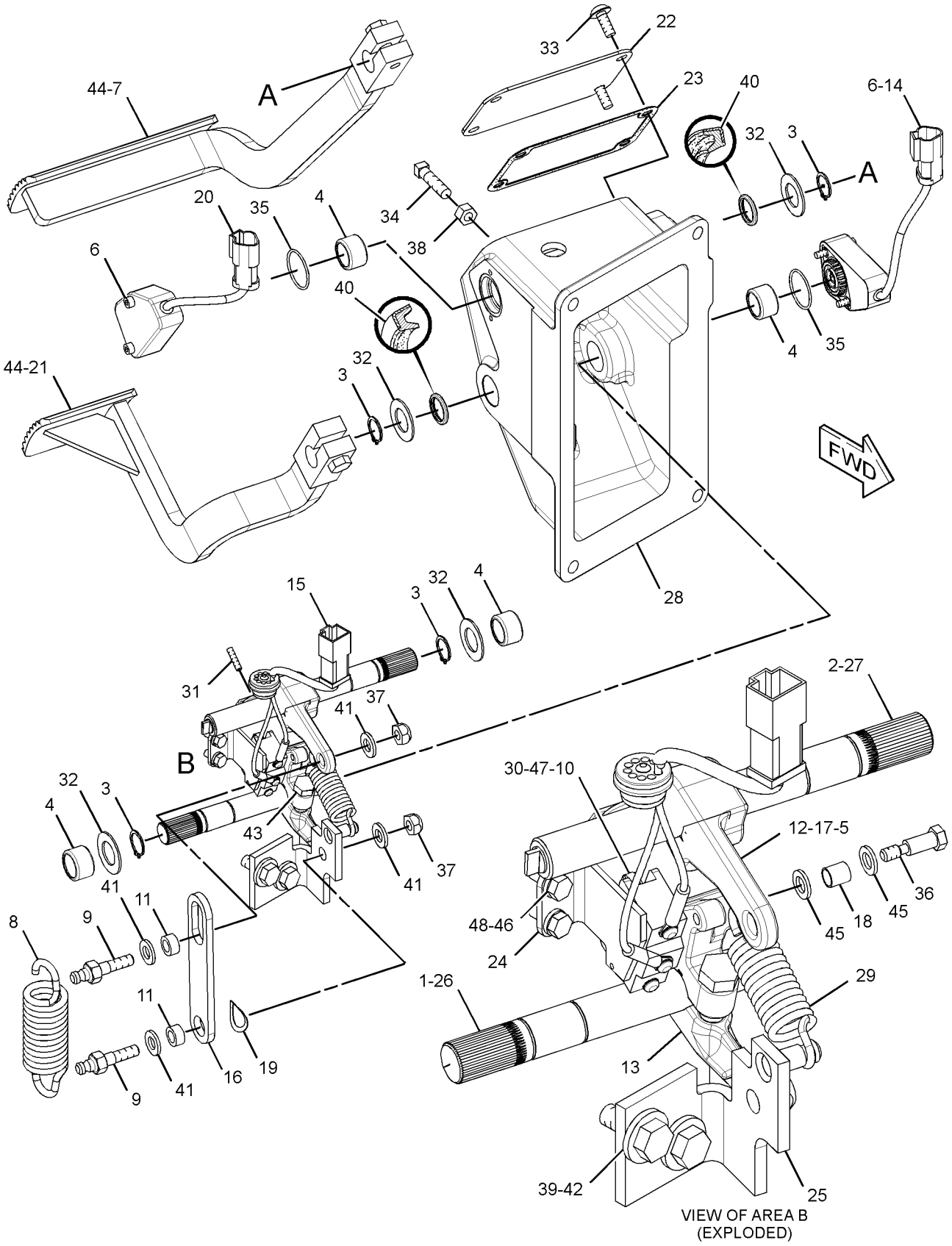

GRAPHIC #1 **<END>** g01305749

OPERATOR STATION

263-3318 CONTROL & MTG GP-PEDAL

S/N: J8B1529-UP
PART OF 256-0189 OPERATOR AR
AN ATTACHMENT

SMCS-5462 **i03099864**

NOTE	REF NO	GRAPHIC REF	PART NUMBER	QTY	PART NAME 1 2 3 4 5 6 (PRODUCT LEVEL)	SEE PAGE
	1	1	**1B-8706**	1	KEY-WOODRUFF	
	2	1	**1B-8714**	1	KEY-WOODRUFF	
	3	1	**2J-6356**	4	RING-RETAINING	
	4	1	**7P-4190**	4	BEARING-ROLLER	
	5	1	**9M-5731**	2	RIVET-POP	
M	6	1	**9X-6615**	4	BOLT (M5X0.8X30-MM)	
	7	1	**258-0978**	1	PEDAL AS (SERVICE BRAKE)	
	8	1	**111-3780**	1	SPRING	
	9	1	**111-3781**	2	BOLT-ANCHOR (M10X1.5X23-MM)	
	10	1	**132-7077**	1	SWITCH AS-LIMIT (SERVICE BRAKE PEDAL)	
		1	**6V-8376**	3	SCREW-MACHINE (8-32X0.25-IN)	
		1	**9B-7233**	3	LOCKWASHER	
	11	1	**145-3405**	2	SPACER (10.3X16.7X8-MM THK)	
	12	1	**160-1433**	1	LEVER	
	13	1	**160-1434**	1	LEVER	
CY	14	1	**266-1467**	1	SENSOR GP-POSITION (ROTARY) (DECELERATOR PEDAL)	344
	15	1	**164-9541**	1	HARNESS AS-SWITCH (SERVICE BRAKE)	
		1	**102-8804**	1	KIT-RECEPTACLE (4-PIN)	
					(INCLUDES RECEPTACLE AS & WEDGE)	
	16	1	**165-9100**	1	LINK	
	17	1	**165-9103**	1	SPRING	
	18	1	**280-1654**	1	SPACER (8X9.5X10.1-MM THK)	
	19	1	**205-7331**	1	SPACER (20.32X28.01X0.41-MM THK)	
Y	20	1	**224-5530**	1	SENSOR GP-POSITION (SERVICE BRAKE PEDAL)	343
	21	1	**258-0980**	1	PEDAL AS (DECELERATOR)	
	22	1	**231-7307**	1	PLATE	
	23	1	**231-7308**	1	GASKET	
	24	1	**231-7309**	1	PLATE	
	25	1	**231-7310**	1	BRACKET AS	
	26	1	**231-7311**	1	SHAFT	
	27	1	**231-7312**	1	SHAFT	
	28	1	**231-7313**	1	HOUSING	
C	29	1	**318-9461**	1	SPRING	
	30	1	**096-5962**	2	WASHER-HARD (3.4X7X0.8-MM THK)	
M	31	1	**106-5472**	1	SETSCREW-HEX SOCKET (M5X0.8X20-MM)	
	32	1	**111-9251**	4	WASHER-HARD (20X35X1.6-MM THK)	
M	33	1	**127-2170**	2	SCREW-TRUSS HEAD (M8X1.25X20-MM)	
	34	1	**4B-3609**	1	SETSCREW-SQUARE HEAD (3/8-16X1.5-IN)	
	35	1	**6V-0894**	2	SEAL-O-RING	
	36	1	**280-1655**	1	BOLT-SHOULDER (M6X1X27.5-MM)	
M	37	1	**6V-7744**	2	LOCKNUT (M10X1.5-THD)	
	38	1	**6V-8801**	1	NUT (3/8-16-THD)	
	39	1	**7X-7729**	2	WASHER (11X25X3-MM THK)	
	40	1	**8F-7702**	2	SEAL-LIP TYPE	
	41	1	**8T-4121**	4	WASHER-HARD (11X21X2.5-MM THK)	
M	42	1	**8T-4136**	2	BOLT (M10X1.5X25-MM)	
M	43	1	**8T-4186**	2	BOLT (M10X1.5X40-MM)	
M	44	1	**8T-4195**	2	BOLT (M10X1.5X30-MM)	
	45	1	**171-2988**	2	WASHER-HARD (8X14X1.6-MM THK)	
M	46	1	**8T-4970**	2	BOLT (M6X1X14-MM)	
	47	1	**9X-6281**	2	SCREW-MACHINE (4-40X1-IN)	
	48	1	**9X-8256**	2	WASHER (6.6X12X2-MM THK)	

C-CHANGE FROM PREVIOUS TYPE
M-METRIC PART
Y-SEPARATE ILLUSTRATION

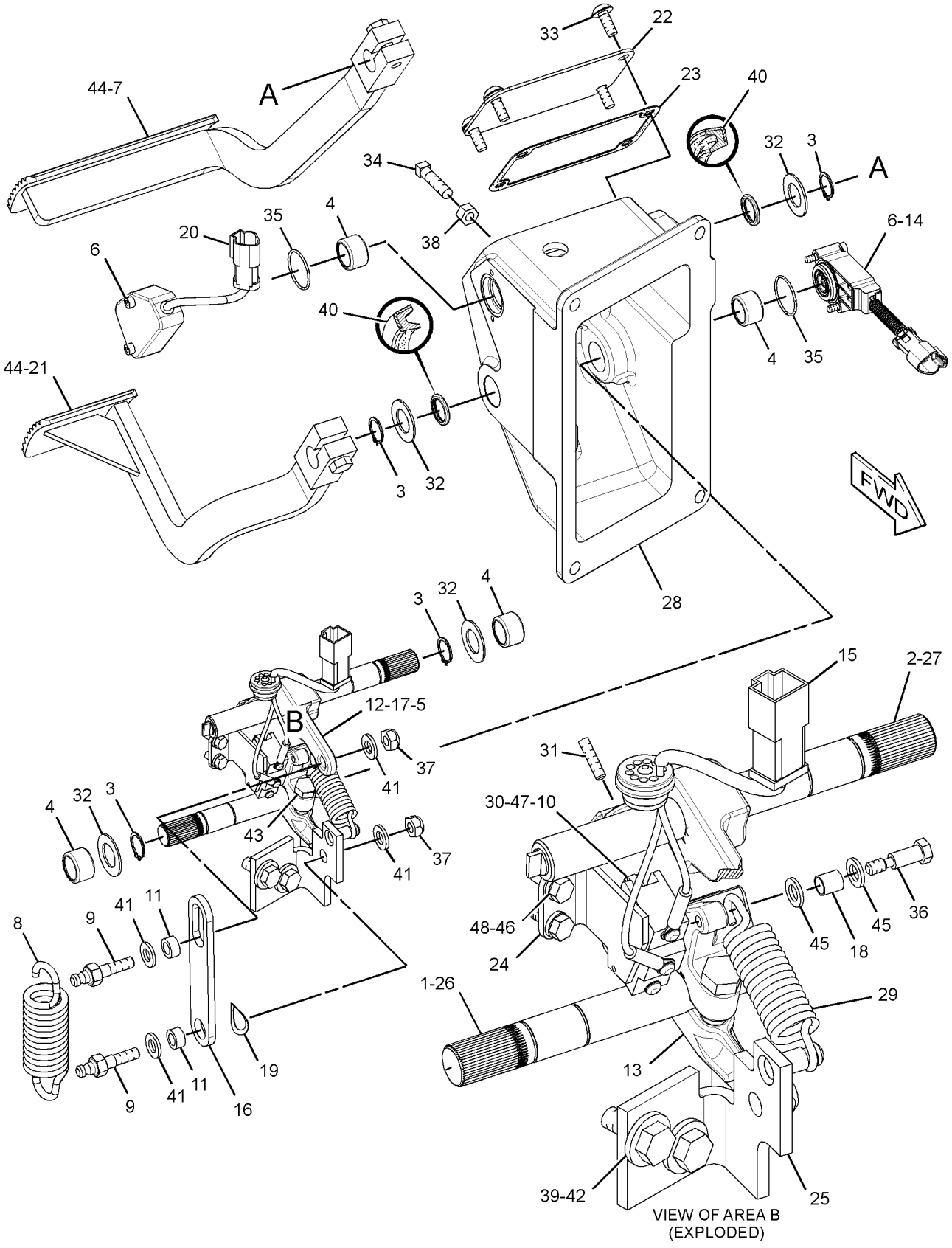

GRAPHIC #1 **<END>** g01551593

OPERATOR STATION

188-1079 CONTROL GP-HANDLE–BULLDOZER

S/N: J8B1-703

PART OF 208-6074 CONTROL GP-JOYSTICK

SMCS-5063, 5705 **i01439692**

NOTE	REF NO	GRAPHIC REF	PART NUMBER	QTY	PART NAME 1 2 3 4 5 6 (PRODUCT LEVEL)	SEE PAGE
	1	1	**164-6963**	1	HANDGRIP AS	

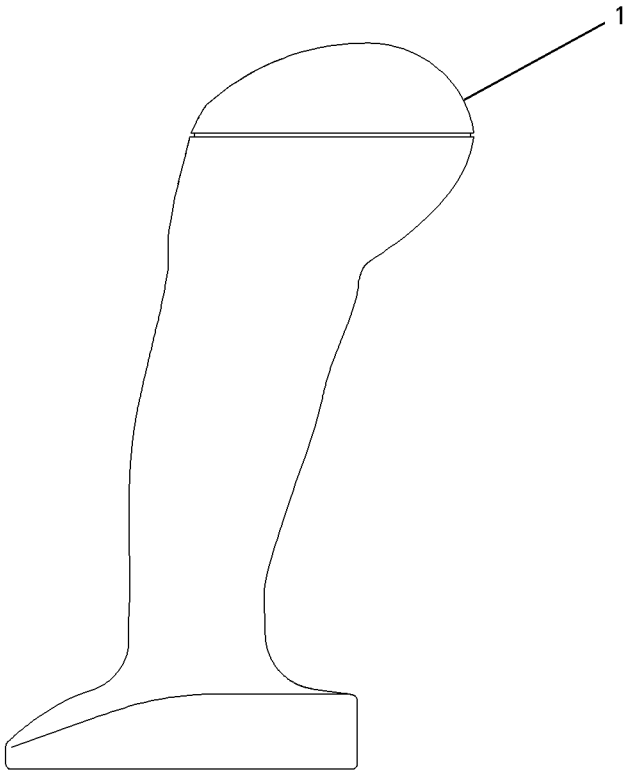

GRAPHIC #1 **<END>** g00721034

OPERATOR STATION

208-6070 CONTROL GP-HANDLE—BULLDOZER CONTROL

S/N: J8B1-735

PART OF 208-6072 CONTROL GP-JOYSTICK

AN ATTACHMENT

SMCS-5063, 5705 **i03435280**

NOTE	REF NO	GRAPHIC REF	PART NUMBER	QTY	PART NAME 1 2 3 4 5 6 (PRODUCT LEVEL)	SEE PAGE
Z	1	1		1	CONTROL GP-HANDLE (JOYSTICK)	
	2	1	**144-0331**	3	CAP-PUSH BUTTON (YELLOW)	
	3	1	**208-6067**	1	HOUSING AS	
	4	1	**162-8387**	1	LEVER-TRIGGER	
	5	1	**9B-1117**	2	LOCKWASHER	
	6	1	**162-8389**	1	PLATE (SWITCH)	
	7	1	**175-4170**	2	SCREW-PAN HEAD (NO 6X1.625-IN)	
	8	1	**208-6081**	1	SLEEVE	
E	9	1	**218-7136**		SLEEVE (36-CM)	
	10	1	**179-7376**	1	SWITCH AS-PUSH BUTTON (BLADE PITCH)	
BD	11	1	**6V-1614**		TUBE-HEAT SHRINK (9.52-MM DIA)	

B-USE AS REQUIRED
D-ORDER BY THE METER
E-ORDER BY THE CENTIMETER
Z-NOT SERVICED SEPARATELY

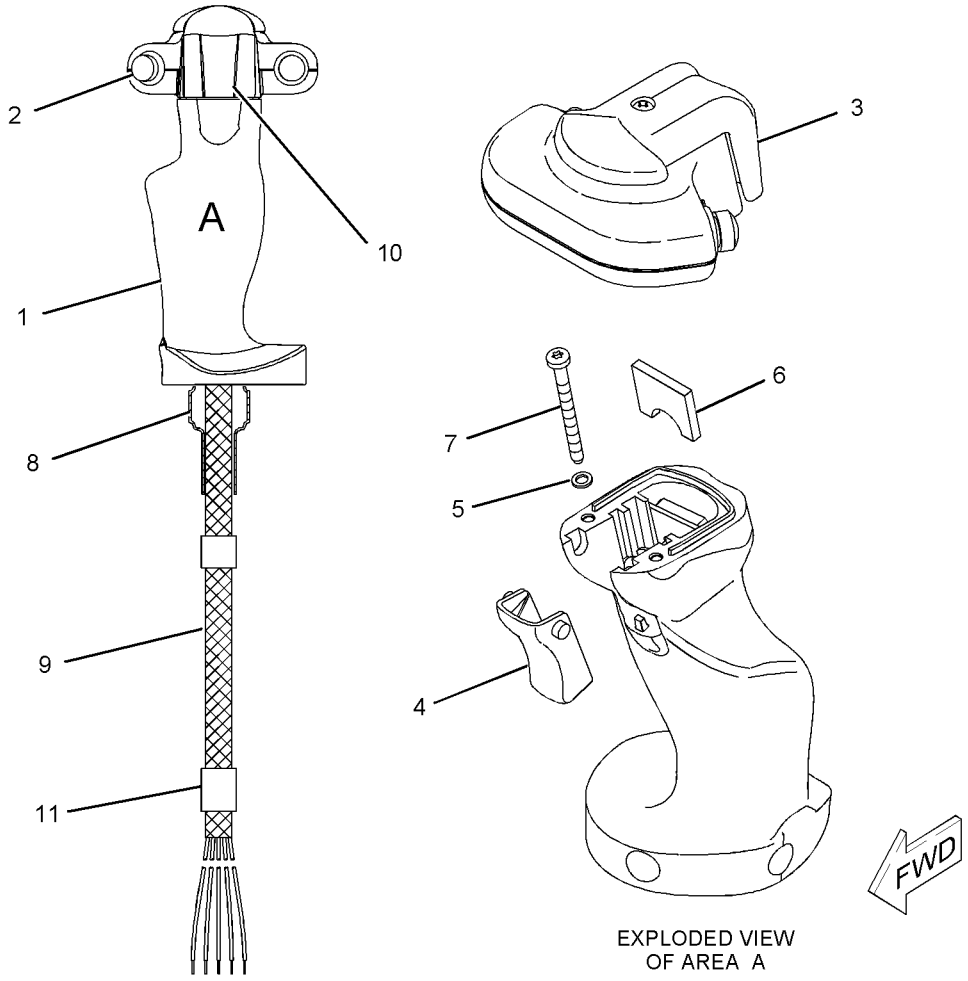

EXPLODED VIEW
OF AREA A

GRAPHIC #1 **<END>** g01130131

OPERATOR STATION

222-1546 CONTROL GP-HANDLE–STEERING, TRANSMISSION

S/N: J8B1-UP

PART OF 237-0158 CONTROL GP-STEERING & XMSN

SMCS-5063, 5705 **i02419870**

NOTE	REF NO	GRAPHIC REF	PART NUMBER	QTY	PART NAME 1 2 3 4 5 6 (PRODUCT LEVEL)	SEE PAGE
	1	1	**208-9647**	1	KNOB (PARKING BRAKE)	
	2	1	**214-1962**	1	HOUSING	
	3	1	**216-0380**	1	PLATE	
Y	4	1	**222-1462**	1	CONTROL GP-STEERING & TMSN	1076
Y	5	1	**223-2115**	1	CONTROL GP-PARKING BRAKE	696
	6	1	**225-3195**	1	GASKET	
	8	1	**257-7285**	1	SWITCH AS-ROCKER (PARKING BRAKE ON, OFF)	
		1	**102-8806**	1	KIT-RECEPTACLE (8-PIN)	
					(INCLUDES RECEPTACLE AS & WEDGE)	
		1	**3E-3389**	1	WEDGE-RECEPTACLE LOCK	
		1	**8T-8737**	2	PLUG-SEAL	
		1	**9X-3401**	6	PIN-CONNECTOR (16-GA TO 18-GA)	
M	9	1	**166-3777**	3	SCREW-BUTTON HEAD (M6X1X28-MM)	
M	10	1	**5C-2890**	1	NUT (M6X1-THD)	
M	11	1	**8T-4138**	2	BOLT (M6X1X20-MM)	
	12	1	**8T-5410**	1	SEAL-LIP TYPE	
	13	1	**112-0858**	2	BEARING	
	14	1	**1N-5724**	2	BOLT (6-32X0.5-IN)	

M-METRIC PART
Y-SEPARATE ILLUSTRATION

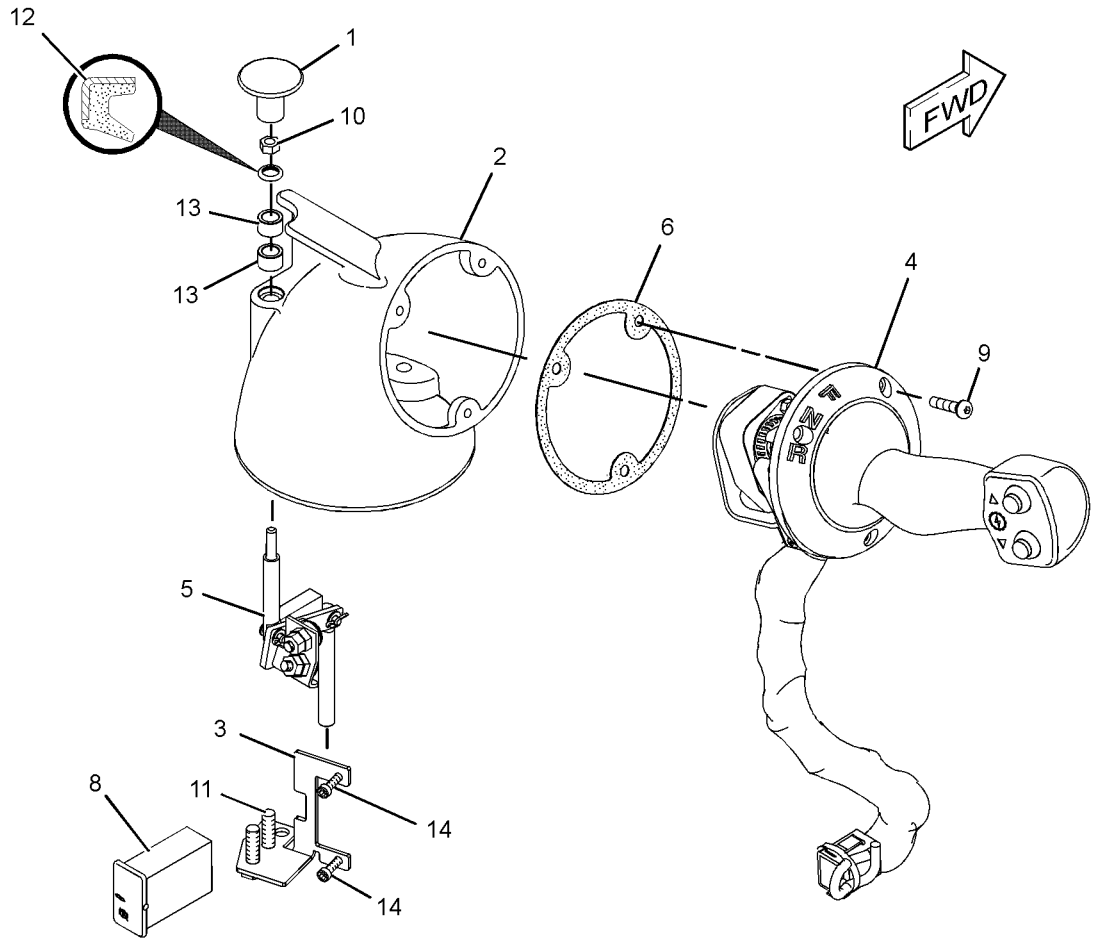

GRAPHIC #1 **<END>** g01163573

OPERATOR STATION

240-7837 CONTROL GP-HANDLE–BULLDOZER CONTROL

S/N: J8B1-703
PART OF 247-0747 CONTROL GP-JOYSTICK
AN ATTACHMENT

SMCS-5063, 5705 **i02246266**

NOTE	REF NO	GRAPHIC REF	PART NUMBER	QTY	PART NAME 1 2 3 4 5 6 (PRODUCT LEVEL)	SEE PAGE
BE	1	1	**218-7136**		SLEEVE	
BD	2	1	**6V-1614**		TUBE-HEAT SHRINK (9.52-MM DIA)	
	3	1	**144-0331**	3	CAP-PUSH BUTTON (YELLOW)	

B-USE AS REQUIRED
D-ORDER BY THE METER
E-ORDER BY THE CENTIMETER

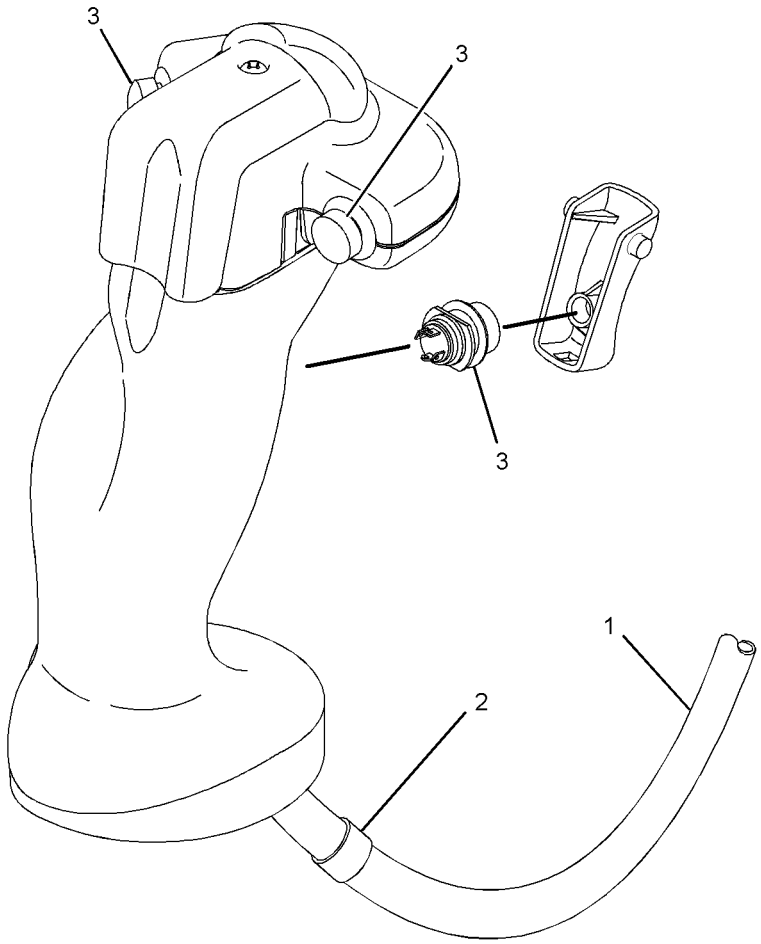

GRAPHIC #1 **<END>** g01112658

OPERATOR STATION

259-5746 CONTROL GP-HANDLE–BULLDOZER, DUAL TILT

S/N: J8B736-UP

PART OF 242-6208, 327-3543 CONTROL GP-JOYSTICK

AN ATTACHMENT

SMCS-5063, 5705 **i02732978**

NOTE	REF NO	GRAPHIC REF	PART NUMBER	QTY	PART NAME 1 2 3 4 5 6 (PRODUCT LEVEL)	SEE PAGE
	1	1	**162-8387**	1	LEVER-TRIGGER	
	2	1	**162-8389**	1	PLATE (SWITCH)	
	3	1	**175-4165**	2	SCREW-PAN HEAD (NO 4X12.7-MM)	
	4	1	**179-7376**	1	SWITCH AS-PUSH BUTTON	
		1	**162-8378**	1	SWITCH AS-PUSH BUTTON (DUAL TILT)	
	5	1	**208-6067**	1	HOUSING AS	
	6	1	**175-4170**	2	SCREW-PAN HEAD (NO 6X1.625-IN)	
	7	1	**9B-1117**	2	LOCKWASHER	
	8	1	**1S-9593**	1	STRAP-CABLE	
E	9	1	**218-7136**		SLEEVE (63-CM)	
	10	1	**186-3735**	11	PIN-CONNECTOR (16-GA TO 18-GA)	
	11	1	**174-3091**	1	KIT-RECEPTACLE (12-PIN) (INCLUDES RECEPTACLE AS & WEDGE)	
	12	1	**8T-8737**	1	PLUG-SEAL	
	13	1	**144-0331**	1	CAP-PUSH BUTTON (YELLOW) (MODE SELECT)	
	13A	1	**144-0331**	1	CAP-PUSH BUTTON (YELLOW) (MANUAL MODE)	
	13B	1	**144-0331**	1	CAP-PUSH BUTTON (YELLOW) (DUAL TILT, SINGLE TILT)	

E-ORDER BY THE CENTIMETER

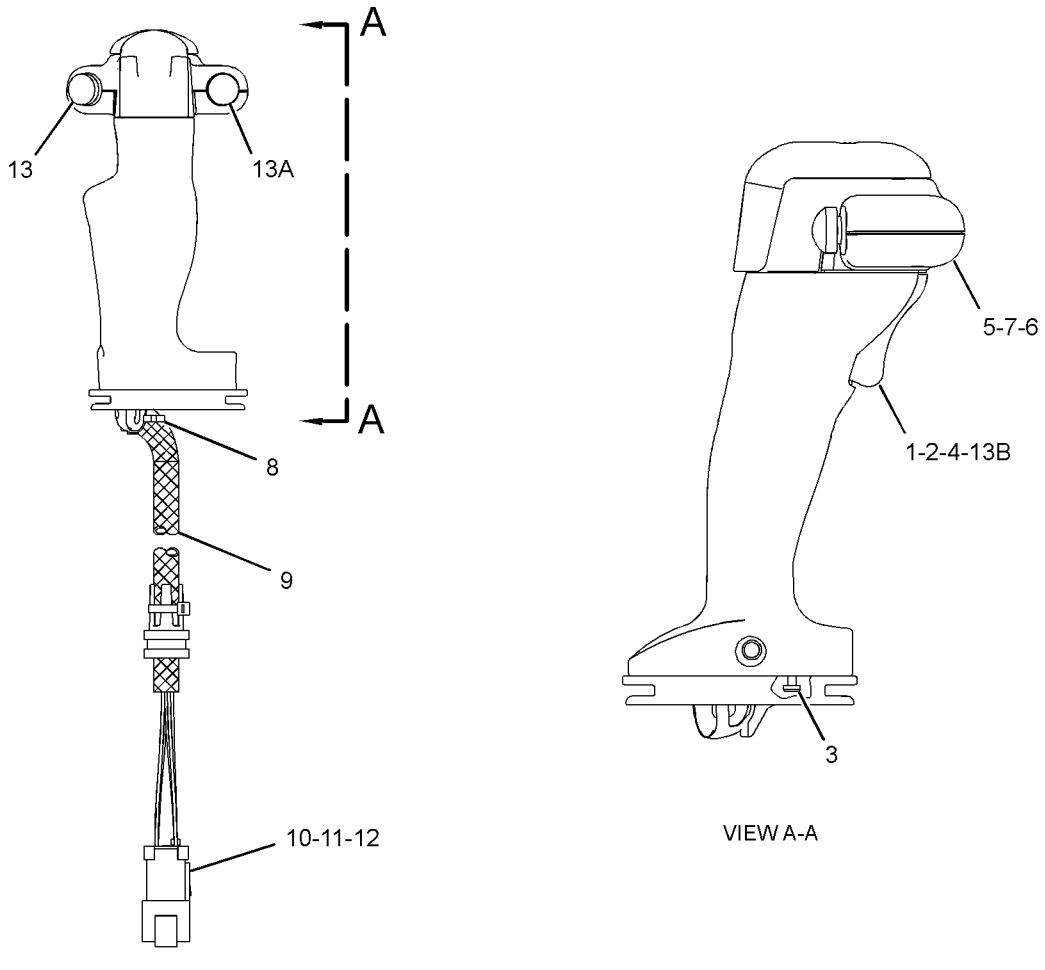

GRAPHIC #1 **<END>** g01396501

OPERATOR STATION

259-5747 CONTROL GP-HANDLE—BULLDOZER, IMPLEMENT

S/N: J8B704-UP

PART OF 242-6209 CONTROL GP-JOYSTICK

AN ATTACHMENT

SMCS-5063, 5705 **i02550193**

NOTE	REF NO	GRAPHIC REF	PART NUMBER	QTY	PART NAME 1 2 3 4 5 6 (PRODUCT LEVEL)	SEE PAGE
	1	1	**144-0331**	3	CAP-PUSH BUTTON (YELLOW)	
	2	1	**268-3695**	1	ADAPTER-RING	
	3	1	**1S-9593**	1	STRAP-CABLE	
E	4	1	**218-7136**		SLEEVE (63-CM)	
	5	1	**8T-8737**	5	PLUG-SEAL	
	6	1	**186-3735**	7	PIN-CONNECTOR (16-GA TO 18-GA)	
	7	1	**174-3091**	1	KIT-RECEPTACLE (12-PIN)	
					(INCLUDES RECEPTACLE AS & WEDGE)	

E-ORDER BY THE CENTIMETER

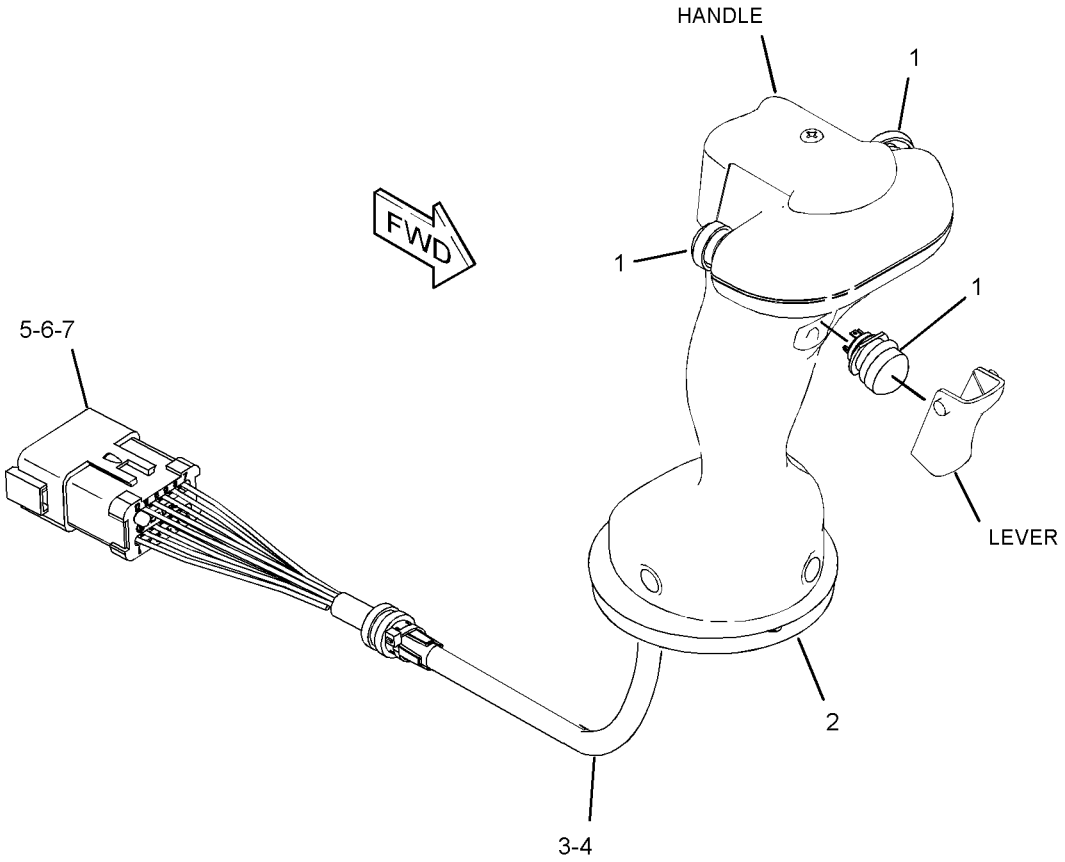

GRAPHIC #1 **<END>** g01319429

OPERATOR STATION

259-5751 CONTROL GP-HANDLE—BULLDOZER, DUAL TILT

S/N: J8B736-1092

PART OF 242-6208 CONTROL GP-JOYSTICK

AN ATTACHMENT

SMCS-5063, 5705 **i02568413**

NOTE	REF NO	GRAPHIC REF	PART NUMBER	QTY	PART NAME 1 2 3 4 5 6 (PRODUCT LEVEL)	SEE PAGE
Z	1	1		1	HANDLE AS-GRIP	
	2	1	**175-4165**	2	SCREW-PAN HEAD (NO 4X12.7-MM)	
	3	1	**144-0331**	1	CAP-PUSH BUTTON (YELLOW) (MODE SELECT)	
	3A	1	**144-0331**	1	CAP-PUSH BUTTON (YELLOW) (MANUAL MODE)	
	3B	1	**144-0331**	1	CAP-PUSH BUTTON (YELLOW) (DUAL TILT, SINGLE TILT)	
	4	1	**164-6964**	1	HOUSING AS	
	5	1	**162-8387**	1	LEVER-TRIGGER	
	6	1	**9B-1117**	2	LOCKWASHER	
	7	1	**162-8389**	1	PLATE (SWITCH)	
	8	1	**175-4170**	2	SCREW-PAN HEAD (NO 6X1.625-IN)	
E	9	1	**218-7136**		SLEEVE (63-CM)	
	10	1	**179-7376**	1	SWITCH AS-PUSH BUTTON (BULLDOZER TILT)	
		1	**162-8378**	1	SWITCH AS-PUSH BUTTON (BULLDOZER TILT)	
		1	**144-0331**	1	CAP-PUSH BUTTON (YELLOW)	
E		1	**5P-8435**		WIRE (22-GA) (14-CM)	
	11	1	**174-3091**	1	KIT-RECEPTACLE (12-PIN)	
					(INCLUDES RECEPTACLE AS & WEDGE)	
	12	1	**8T-8737**	1	PLUG-SEAL	
	13	1	**186-3735**	11	PIN-CONNECTOR (16-GA TO 18-GA)	
	14	1	**268-3695**	1	ADAPTER-RING	
	15	1	**1S-9593**	1	STRAP-CABLE	

E-ORDER BY THE CENTIMETER
Z-NOT SERVICED SEPARATELY

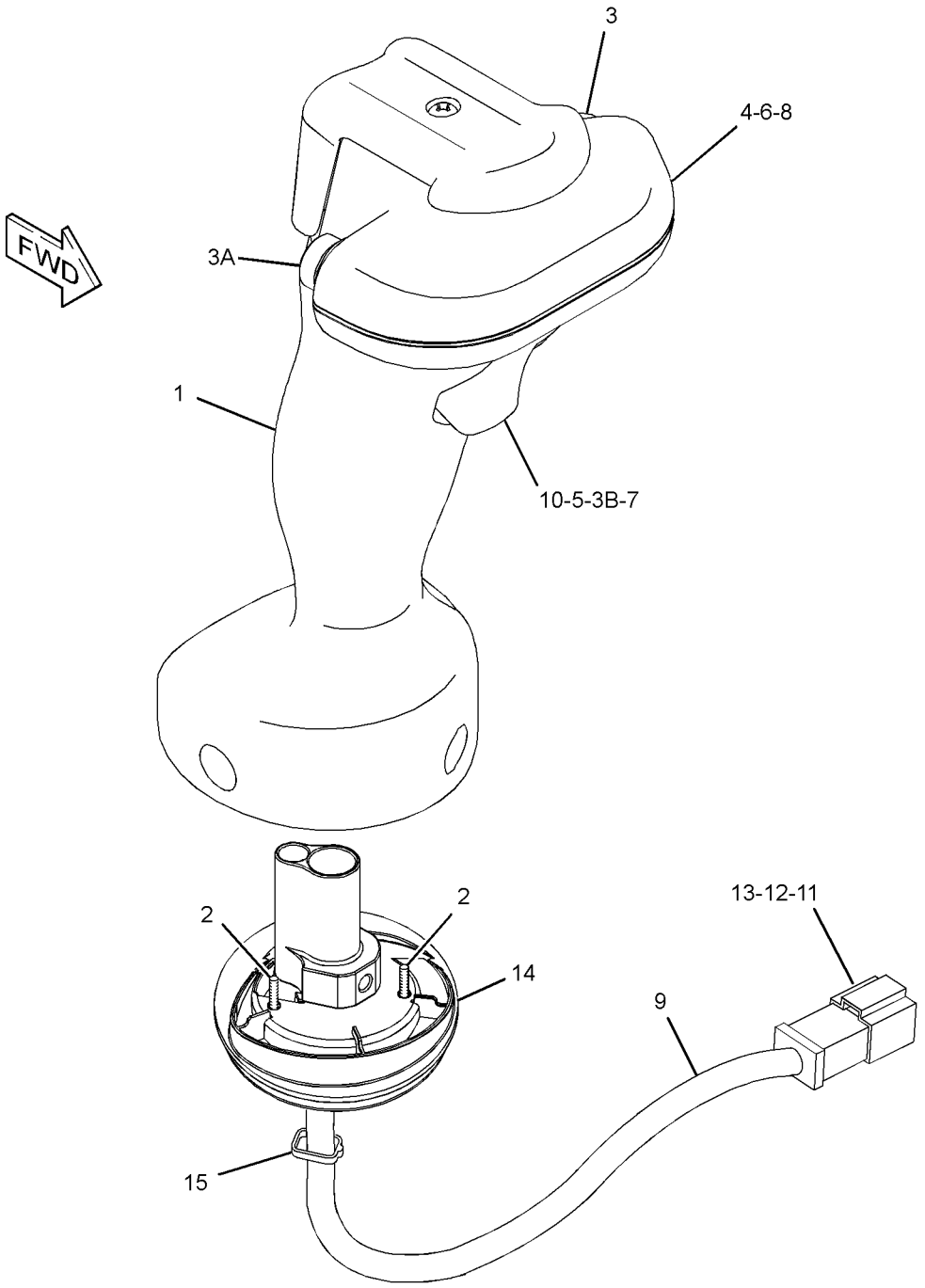

GRAPHIC #1 **<END>** g01318779

OPERATOR STATION

309-9542 CONTROL GP-HANDLE—BULLDOZER, DUAL TILT

S/N: J8B736-UP

PART OF 327-3548 CONTROL GP-JOYSTICK

AN ATTACHMENT

SMCS-5063, 5705 **i03257589**

NOTE	REF NO	GRAPHIC REF	PART NUMBER	QTY	PART NAME 1 2 3 4 5 6 (PRODUCT LEVEL)	SEE PAGE
	1	1	**162-8387**	1	LEVER-TRIGGER	
	2	1	**162-8389**	1	PLATE (SWITCH)	
	3	1	**175-4165**	2	SCREW-PAN HEAD (NO 4X12.7-MM)	
	4	1	**179-7376**	1	SWITCH AS-PUSH BUTTON (DUAL TILT, SINGLE TILT)	
		1	**162-8378**	1	SWITCH AS-PUSH BUTTON (DUAL TILT, SINGLE TILT)	
		1	**144-0331**	1	CAP-PUSH BUTTON (YELLOW)	
E		1	**5P-8435**		WIRE (22-GA) (14-CM)	
	5	1	**175-4170**	2	SCREW-PAN HEAD (NO 6X1.625-IN)	
	6	1	**9B-1117**	2	LOCKWASHER	
	7	1	**1S-9593**	2	STRAP-CABLE	
	8	1	**102-8801**	1	KIT-RECEPTACLE (12-PIN)	
					(INCLUDES RECEPTACLE AS & WEDGE)	
	9	1	**8T-8737**	1	PLUG-SEAL	
	10	1	**174-3091**	1	KIT-RECEPTACLE (12-PIN)	
					(INCLUDES RECEPTACLE AS & WEDGE)	
	11	1	**232-3870**	1	HOUSING AS	
	12	1	**186-3735**	11	PIN-CONNECTOR (16-GA TO 18-GA)	
E	13	1	**218-7136**		SLEEVE (63-CM)	
	14	1	**144-0331**	1	CAP-PUSH BUTTON (YELLOW) (MODE SELECT)	
	14A	1	**144-0331**	1	CAP-PUSH BUTTON (YELLOW) (MANUAL MODE)	

E-ORDER BY THE CENTIMETER

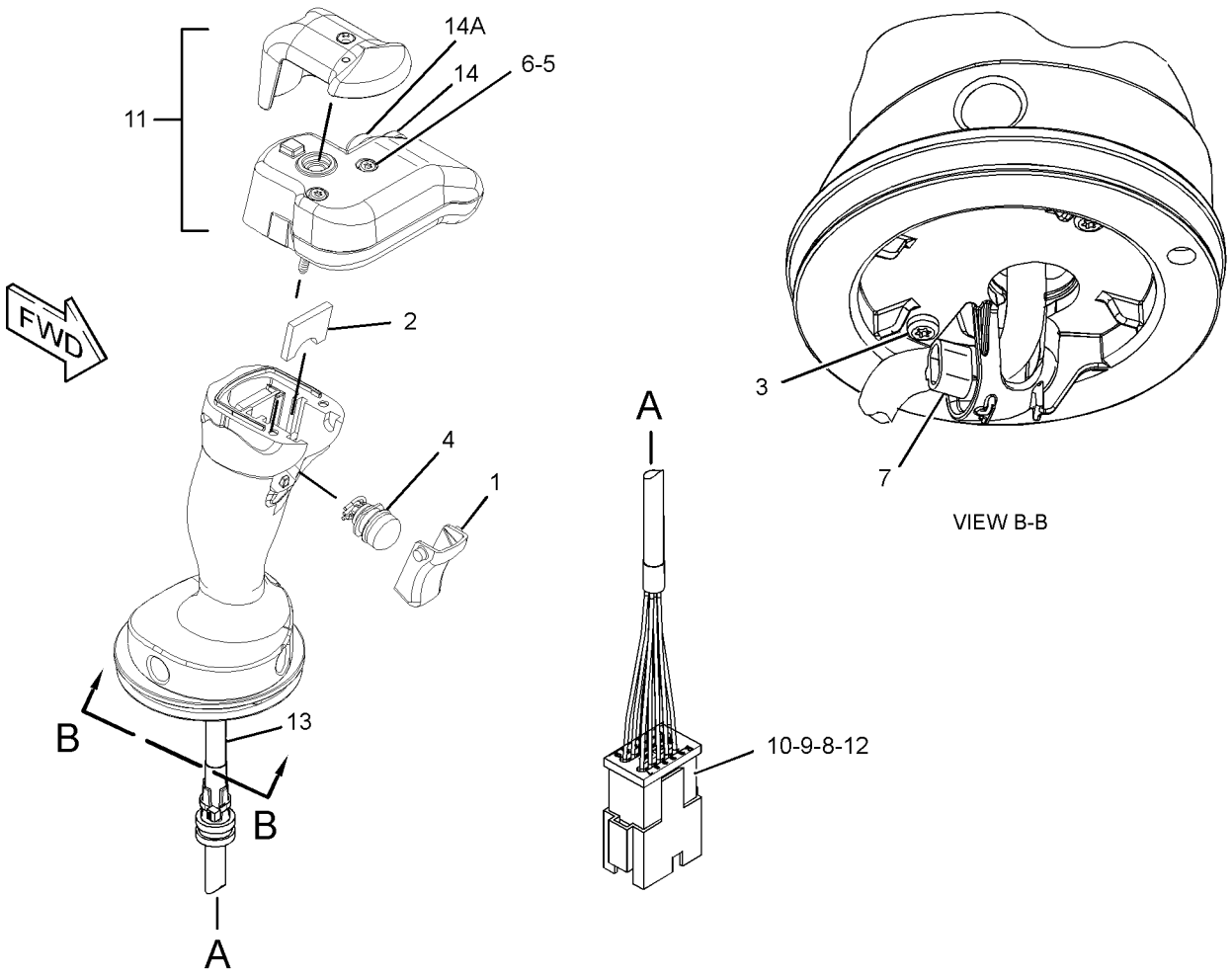

GRAPHIC #1 **<END>** g01659035

OPERATOR STATION

319-1858 CONTROL GP-HANDLE—BULLDOZER, IMPLEMENT

S/N: J8B1000-UP

PART OF 327-3550 CONTROL GP-JOYSTICK

AN ATTACHMENT

SMCS-5063, 5705 **i03211196**

NOTE	REF NO	GRAPHIC REF	PART NUMBER	QTY	PART NAME 1 2 3 4 5 6 (PRODUCT LEVEL)	SEE PAGE
	1	1	**162-8387**	1	LEVER-TRIGGER	
	2	1	**162-8389**	1	PLATE (SWITCH)	
	3	1	**175-4165**	2	SCREW-PAN HEAD (NO 4X12.7-MM)	
	4	1	**179-7376**	1	SWITCH AS-PUSH BUTTON (IMPLEMENT)	
		1	**162-8378**	1	SWITCH AS-PUSH BUTTON (IMPLEMENT)	
		1	**144-0331**	1	CAP-PUSH BUTTON (YELLOW)	
E		1	**5P-8435**		WIRE (22-GA) (14-CM)	
	5	1	**175-4170**	2	SCREW-PAN HEAD (NO 6X1.625-IN)	
	6	1	**9B-1117**	2	LOCKWASHER	
	7	1	**1S-9593**	2	STRAP-CABLE	
	8	1	**102-8801**	1	KIT-RECEPTACLE (12-PIN)	
					(INCLUDES RECEPTACLE AS & WEDGE)	
	9	1	**8T-8737**	1	PLUG-SEAL	
	10	1	**174-3091**	1	KIT-RECEPTACLE (12-PIN)	
					(INCLUDES RECEPTACLE AS & WEDGE)	
	11	1	**232-3870**	1	HOUSING AS	
	12	1	**186-3735**	11	PIN-CONNECTOR (16-GA TO 18-GA)	
E	13	1	**218-7136**		SLEEVE (63-CM)	
	14	1	**144-0331**	3	CAP-PUSH BUTTON (YELLOW)	
	15	1	**276-4878**	1	GROMMET	

E-ORDER BY THE CENTIMETER

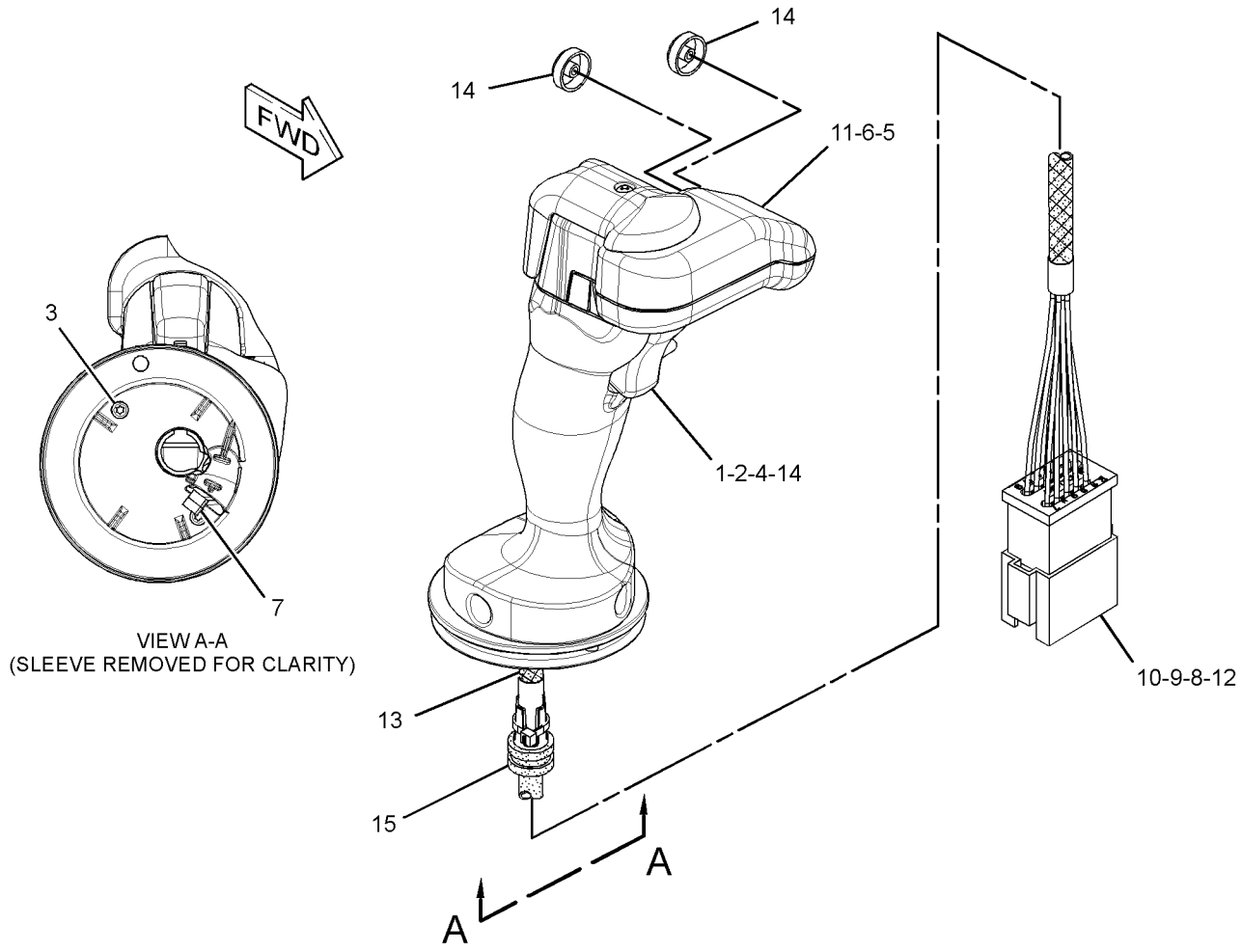

GRAPHIC #1 **<END>** g01525295

OPERATOR STATION

208-6072 CONTROL GP-JOYSTICK—BULLDOZER, DUAL TILT

S/N: J8B1-735

PART OF 209-5102 CONTROL AR-HYDRAULIC

AN ATTACHMENT

SMCS-5705 **i02241858**

NOTE	REF NO	GRAPHIC REF	PART NUMBER	QTY	PART NAME 1 2 3 4 5 6 (PRODUCT LEVEL)	SEE PAGE
M	1	1	**192-4658**	4	SCREW-PAN HEAD (M4X0.7X20-MM)	
M	2	1	**193-4476**	8	SCREW-PAN HEAD (M4X0.7X35-MM)	
	3	1	*206-7421*	1	BASE AS	
		1	**205-2941**	4	SCREW-FLAT HEAD (M5X0.08X2.8-MM)	
		1	**175-1529**	1	BOOT	
Y	4	1	**208-6070**	1	CONTROL GP-HANDLE (BULLDOZER CONTROL)	1042
	5	1	**216-3002**	1	DETENT GP-CONTROL (BLADE LIFT, LOWER)	
	6	1	**227-6718**	1	DETENT GP-CONTROL (BLADE TILT)	
	7	1	**151-4977**	12	WASHER (4.445X9.525X1.092-MM THK)	
	8	1	**175-3265**	1	SCREW (8-16X0.63-IN)	
	9	1	**257-2529**	1	SENSOR GP-POSITION (BLADE LIFT, LOWER)	
	10	1	**257-2532**	1	SENSOR GP-POSITION (BLADE TILT)	
	11	1	**2K-4898**	1	CLAMP-TUBE	
	12	1	**4B-9808**	2	SETSCREW (1/4-20X0.5-IN)	
	13	1	**186-3735**	11	PIN-CONNECTOR (16-GA TO 18-GA)	
	14	1	**8T-8737**	1	PLUG-SEAL	
	15	1	**174-3091**	1	KIT-RECEPTACLE (12-PIN)	
					(INCLUDES RECEPTACLE AS & WEDGE)	
	16	1	**208-6081**	1	SLEEVE	

M-METRIC PART
Y-SEPARATE ILLUSTRATION

208-6072 CONTROL GP-JOYSTICK *(contd.)* **i02241858**

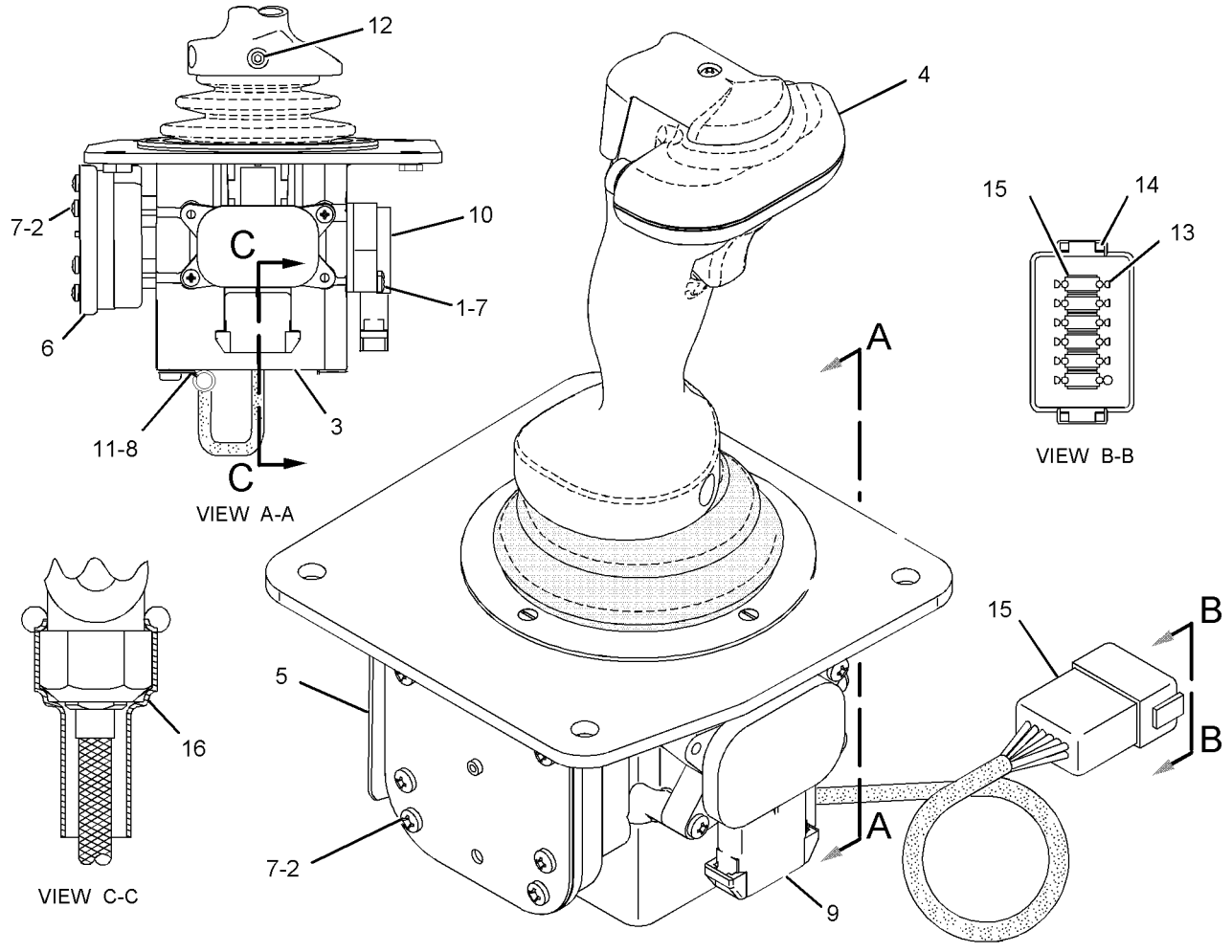

GRAPHIC #1 **<END>** g01110614

OPERATOR STATION

208-6074 CONTROL GP-JOYSTICK—BULLDOZER, SINGLE TILT

S/N: J8B1-703

PART OF 206-6782 HYDRAULIC AR

SMCS-5705 **i02230926**

NOTE	REF NO	GRAPHIC REF	PART NUMBER	QTY	PART NAME 1 2 3 4 5 6 (PRODUCT LEVEL)	SEE PAGE
Y	1	1	**188-1079**	1	CONTROL GP-HANDLE (BULLDOZER CONTROL)	1041
M	2	1	**192-4658**	4	SCREW-PAN HEAD (M4X0.7X20-MM)	
M	3	1	**193-4476**	8	SCREW-PAN HEAD (M4X0.7X35-MM)	
	4	1	**175-1529**	1	BOOT	
	4A	1	**205-2941**	4	SCREW-FLAT HEAD (M5X0.08X2.8-MM)	
	5	1	**216-3002**	1	DETENT GP-CONTROL (BLADE LIFT, LOWER)	
	6	1	**227-6718**	1	DETENT GP-CONTROL (BLADE TILT)	
	7	1	**257-2529**	1	SENSOR GP-POSITION (BLADE LIFT, LOWER)	
	8	1	**257-2532**	1	SENSOR GP-POSITION (BLADE TILT)	
	9	1	**151-4977**	12	WASHER (4.445X9.525X1.092-MM THK)	
	10	1	**4B-9808**	2	SETSCREW (1/4-20X0.5-IN)	

M-METRIC PART
Y-SEPARATE ILLUSTRATION

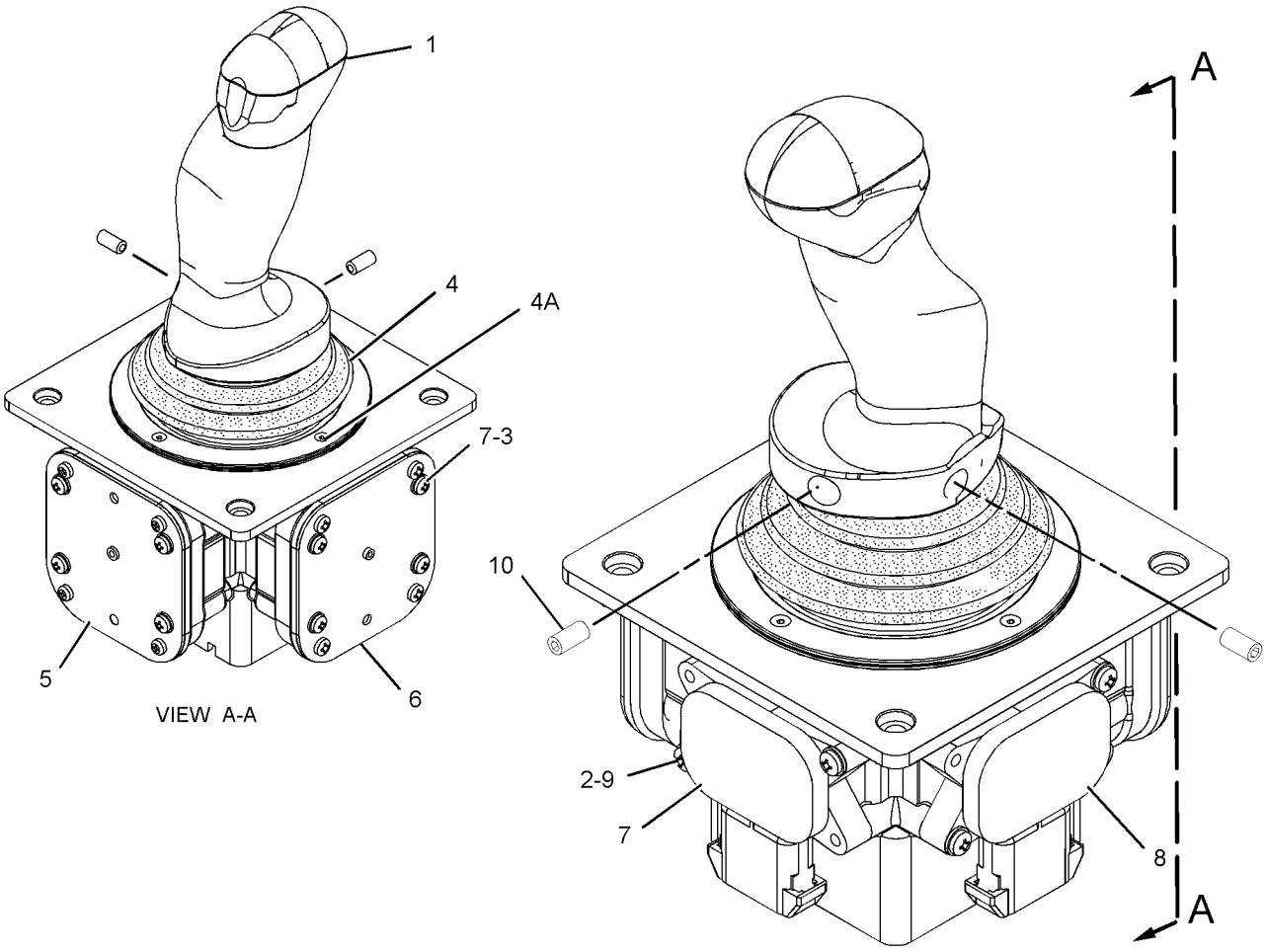

GRAPHIC #1 **<END>** g01106082

OPERATOR STATION

208-6075 CONTROL GP-JOYSTICK–WINCH

S/N: J8B1-492
PART OF 209-2608 CONTROL GP-IMPLEMENT
AN ATTACHMENT

SMCS-5705 **i02272850**

NOTE	REF NO	GRAPHIC REF	PART NUMBER	QTY	PART NAME 1 2 3 4 5 6 (PRODUCT LEVEL)	SEE PAGE
	1	1	**188-1080**	1	DETENT GP-CONTROL (DRUM CLUTCH RELEASE)	
	2	1	**189-2305**	1	DETENT GP-CONTROL (REEL IN, REEL OUT)	
M	3	1	**193-4476**	8	SCREW-PAN HEAD (M4X0.7X35-MM)	
	4	1	**219-7912**	1	HANDLE GP-MODULAR (WINCH)	
Z	5	1		1	BASE AS	
	6	1	**257-2529**	1	SENSOR GP-POSITION (REEL IN, REEL OUT)	
	7	1	**257-2530**	1	SENSOR GP-POSITION (DRUM CLUTCH RELEASE)	
M	8	1	**150-1293**	2	SCREW-BUTTON HEAD (M4X0.7X12-MM)	
	9	1	**151-4977**	12	WASHER (4.445X9.525X1.092-MM THK)	
	10	1	**175-3265**	1	SCREW (8-16X0.63-IN)	
M	11	1	**192-4658**	4	SCREW-PAN HEAD (M4X0.7X20-MM)	
	12	1	**2K-4898**	1	CLAMP-TUBE	
	13	1	**102-8804**	1	KIT-RECEPTACLE (4-PIN)	
					(INCLUDES RECEPTACLE AS & WEDGE)	
	14	1	**8T-8737**	1	PLUG-SEAL	
	15	1	**186-3735**	3	PIN-CONNECTOR (16-GA TO 18-GA)	

M-METRIC PART
Z-NOT SERVICED SEPARATELY

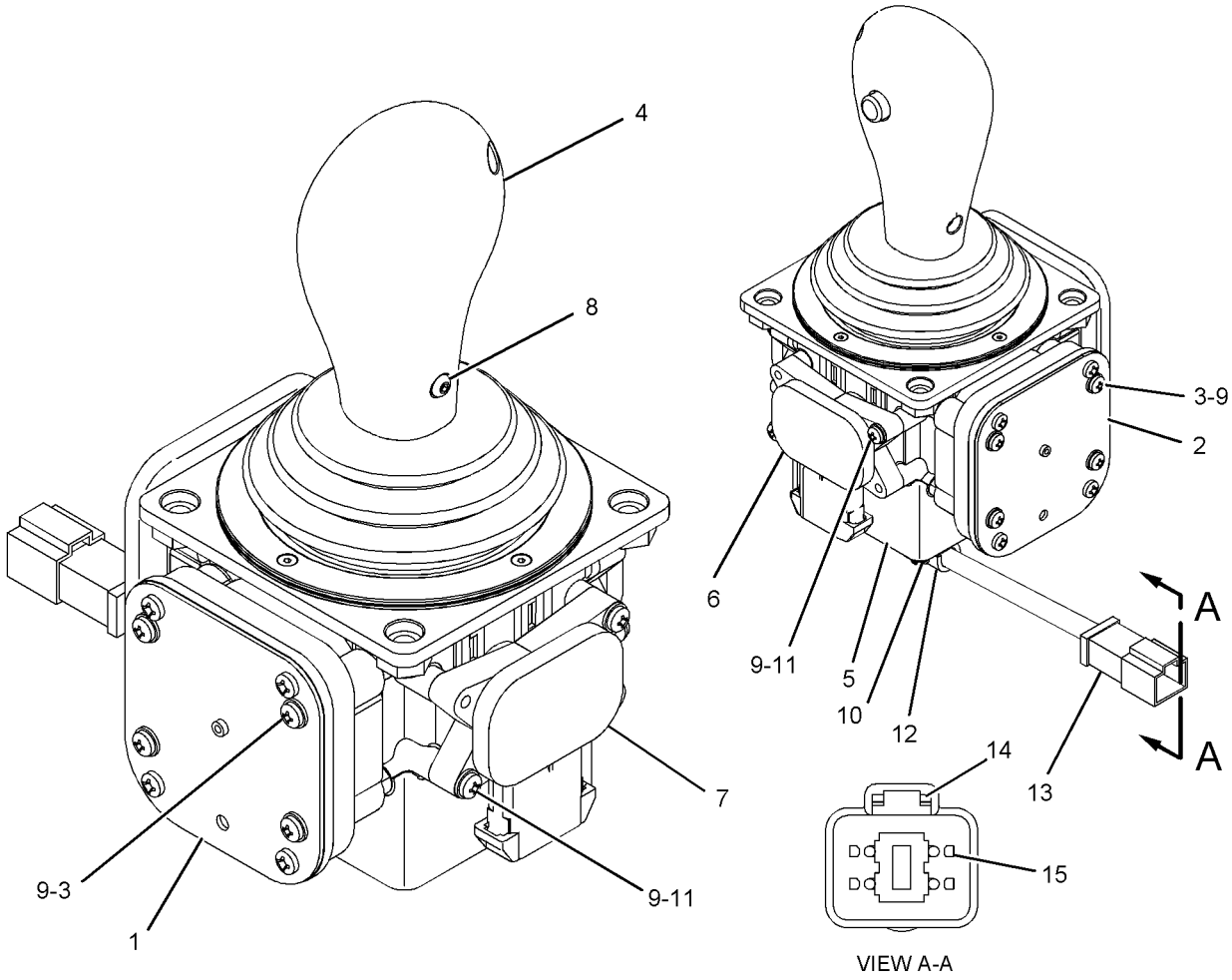

GRAPHIC #1 **<END>** g01130699

OPERATOR STATION

242-6207 CONTROL GP-JOYSTICK–BULLDOZER, SINGLE TILT

S/N: J8B704-UP

PART OF 206-6782 HYDRAULIC AR

FIELD REPLACEMENT ORDER 327-3542–PAGE 1068

SMCS-5705 **i02550199**

NOTE	REF NO	GRAPHIC REF	PART NUMBER	QTY	PART NAME 1 2 3 4 5 6 (PRODUCT LEVEL)	SEE PAGE
	1	1	**259-5750**	1	HANDGRIP AS	
		1	**175-4165**	2	SCREW-PAN HEAD (NO 4X12.7-MM)	
	2	1	**210-7115**	1	VALVE GP-PILOT (IMPLEMENT PILOT OIL)	
	2A	1	**102-8805**	1	KIT-RECEPTACLE (6-PIN)	
					(INCLUDES RECEPTACLE AS & WEDGE)	
	2B	1	**186-3735**	6	PIN-CONNECTOR (16-GA TO 18-GA)	
	3	1	**285-0150**	1	BOOT	
	4	1	**4B-9808**	2	SETSCREW (1/4-20X0.5-IN)	

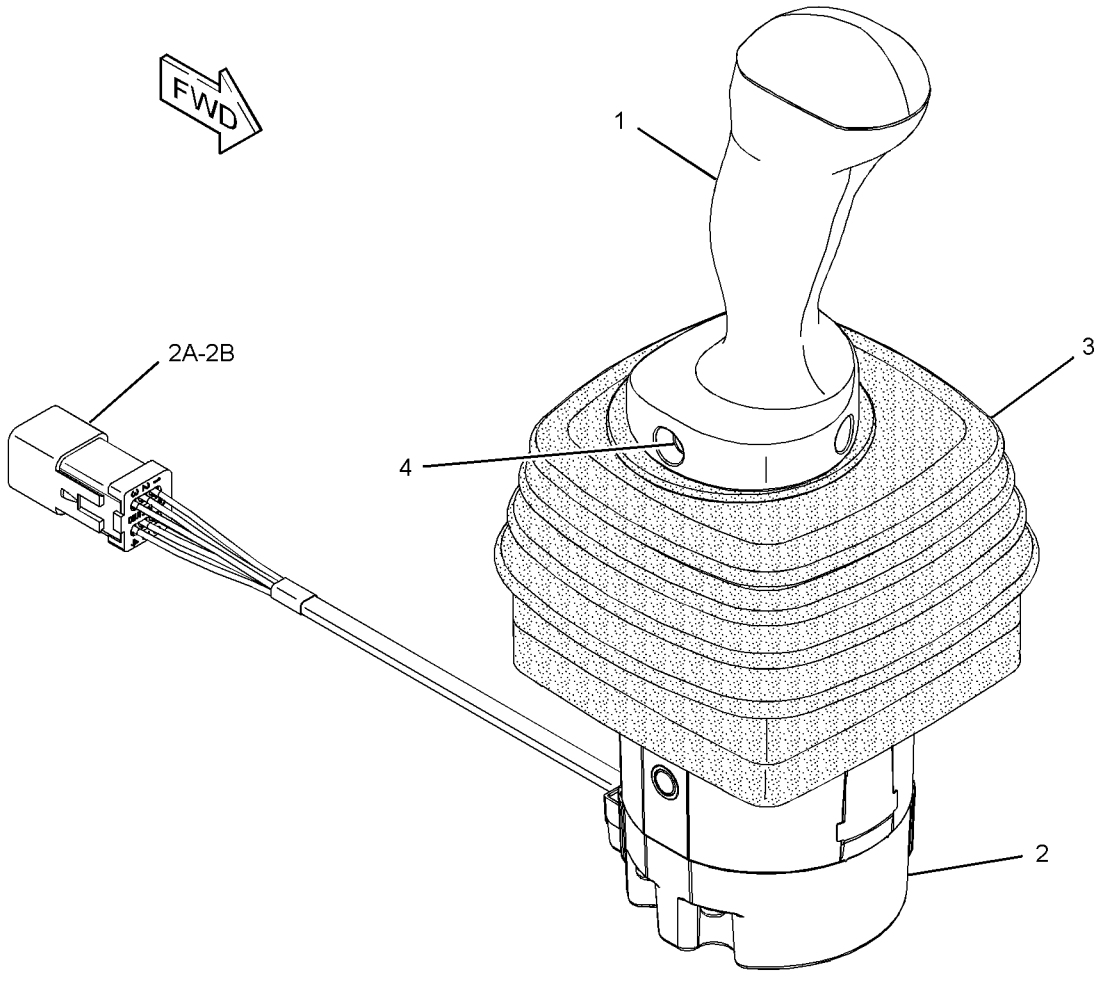

GRAPHIC #1 **<END>** g01326278

242-6208 CONTROL GP-JOYSTICK–BULLDOZER, DUAL TILT

S/N: J8B736-1092
PART OF 209-5102 CONTROL AR-HYDRAULIC
FIELD REPLACEMENT ORDER 327-3543–PAGE 1069
AN ATTACHMENT

SMCS-5705 **i02568294**

NOTE	REF NO	GRAPHIC REF	PART NUMBER	QTY	PART NAME 1 2 3 4 5 6 (PRODUCT LEVEL)	SEE PAGE
Y	1	1	**259-5751**	1	CONTROL GP-HANDLE (BULLDOZER)	1048
	2	1	**210-7115**	1	VALVE GP-PILOT (IMPLEMENT PILOT OIL)	
		1	**102-8805**	1	KIT-RECEPTACLE (6-PIN)	
					(INCLUDES RECEPTACLE AS & WEDGE)	
		1	**186-3735**	6	PIN-CONNECTOR (16-GA TO 18-GA)	
	3	1	**253-3352**	1	BOOT	
	4	1	**4B-9808**	2	SETSCREW (1/4-20X0.5-IN)	
	5	1	**174-3091**	1	KIT-RECEPTACLE (12-PIN)	
	6	1	**102-8805**	1	KIT-RECEPTACLE (6-PIN)	
					(EACH INCLUDES RECEPTACLE AS & WEDGE)	
	7	1	**186-3735**	17	PIN-CONNECTOR (16-GA TO 18-GA)	
	8	1	**8T-8737**	1	PLUG-SEAL	

Y-SEPARATE ILLUSTRATION

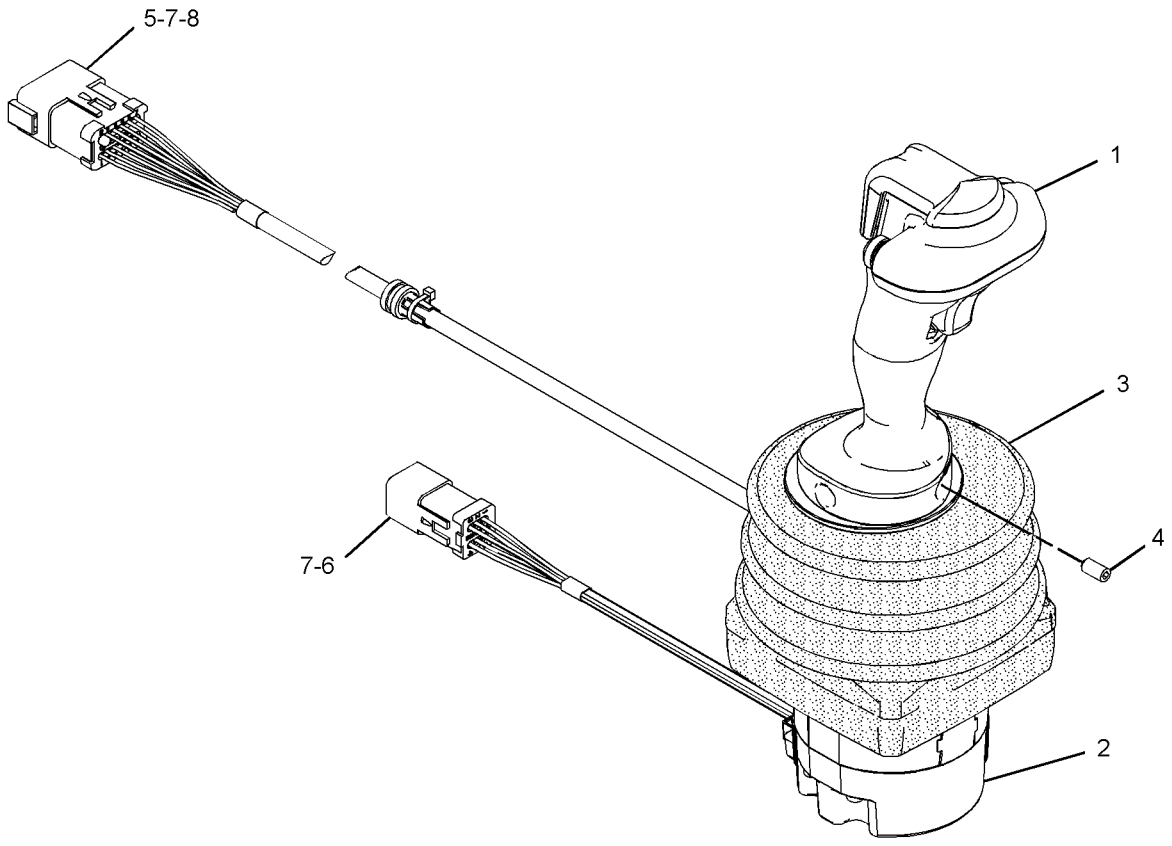

GRAPHIC #1 **<END>** g01258030

OPERATOR STATION

242-6208 CONTROL GP-JOYSTICK—BULLDOZER, DUAL TILT

S/N: J8B1093-UP
PART OF 209-5102 CONTROL AR-HYDRAULIC
FIELD REPLACEMENT ORDER 327-3543—PAGE 1069
AN ATTACHMENT

SMCS-5705 **i02732966**

NOTE	REF NO	GRAPHIC REF	PART NUMBER	QTY	PART NAME 1 2 3 4 5 6 (PRODUCT LEVEL)	SEE PAGE
CY	1	1	**259-5746**	1	CONTROL GP-HANDLE (BULLDOZER)	1046
	2	1	**210-7115**	1	VALVE GP-PILOT (IMPLEMENT PILOT OIL)	
		1	**102-8805**	1	KIT-RECEPTACLE (6-PIN)	
					(INCLUDES RECEPTACLE AS & WEDGE)	
		1	**186-3735**	6	PIN-CONNECTOR (16-GA TO 18-GA)	
C	3	1	**285-0150**	1	BOOT	
	4	1	**4B-9808**	2	SETSCREW (1/4-20X0.5-IN)	
	5	1	**174-3091**	1	KIT-RECEPTACLE (12-PIN)	
	6	1	**102-8805**	1	KIT-RECEPTACLE (6-PIN)	
					(EACH INCLUDES RECEPTACLE AS & WEDGE)	
	7	1	**186-3735**	17	PIN-CONNECTOR (16-GA TO 18-GA)	
	8	1	**8T-8737**	1	PLUG-SEAL	

C-CHANGE FROM PREVIOUS TYPE
Y-SEPARATE ILLUSTRATION

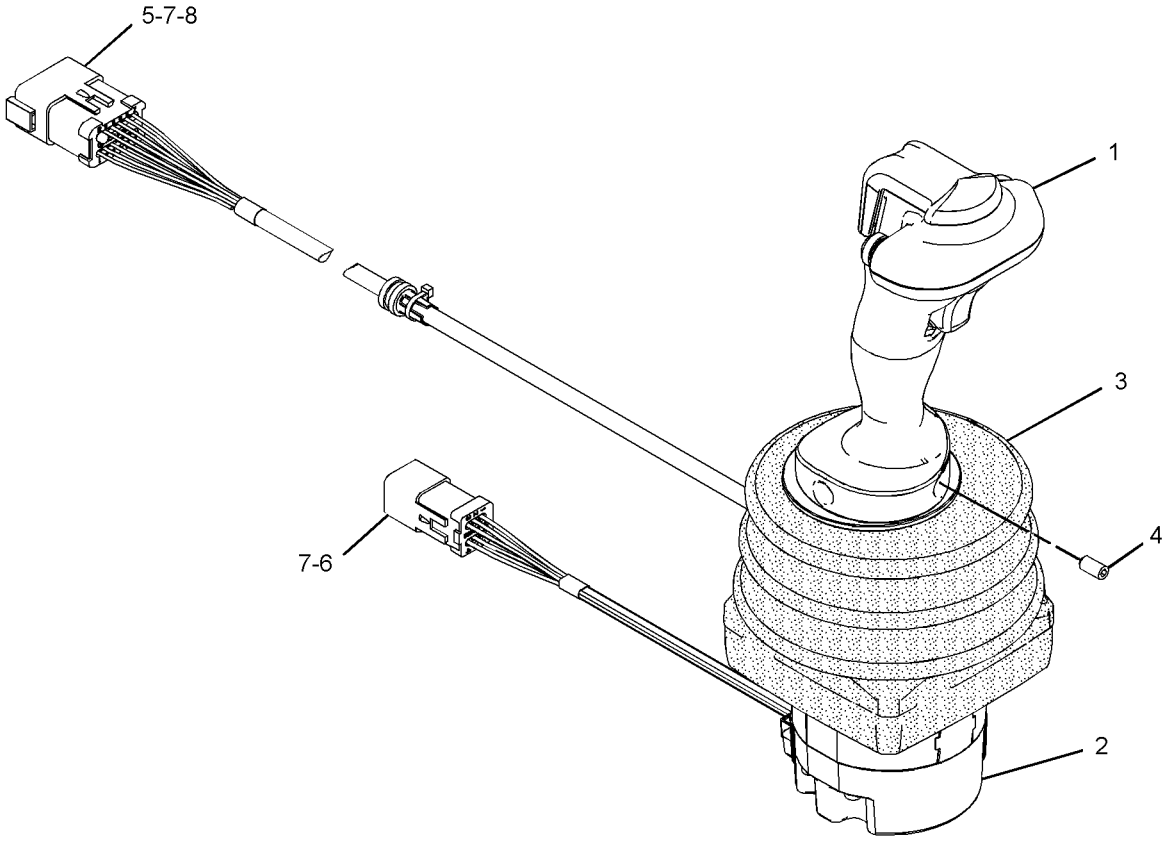

GRAPHIC #1 **<END>** g01258030

242-6209 CONTROL GP-JOYSTICK–GRADE CONTROL, AUTO CARRY

S/N: J8B704-UP

PART OF 251-5811 CONTROL AR-HYDRAULIC, 251-5810 GRADE CONTROL AR AN ATTACHMENT

SMCS-5705 **i02550175**

NOTE	REF NO	GRAPHIC REF	PART NUMBER	QTY	PART NAME 1 2 3 4 5 6 (PRODUCT LEVEL)	SEE PAGE
Y	1	1	**259-5747**	1	CONTROL GP-HANDLE (BULLDOZER, IMPLEMENT)	1047
	2	1	**210-7115**	1	VALVE GP-PILOT (IMPLEMENT PILOT OIL)	
		1	**102-8805**	1	KIT-RECEPTACLE (6-PIN)	
					(INCLUDES RECEPTACLE AS & WEDGE)	
		1	**186-3735**	6	PIN-CONNECTOR (16-GA TO 18-GA)	
	3	1	**285-0150**	1	BOOT	
	4	1	**4B-9808**	2	SETSCREW (1/4-20X0.5-IN)	
	5	1	**174-3091**	1	KIT-RECEPTACLE (12-PIN)	
	6	1	**102-8805**	1	KIT-RECEPTACLE (6-PIN)	
					(EACH INCLUDES RECEPTACLE AS & WEDGE)	
	7	1	**186-3735**	17	PIN-CONNECTOR (16-GA TO 18-GA)	
	8	1	**8T-8737**	1	PLUG-SEAL	

Y-SEPARATE ILLUSTRATION

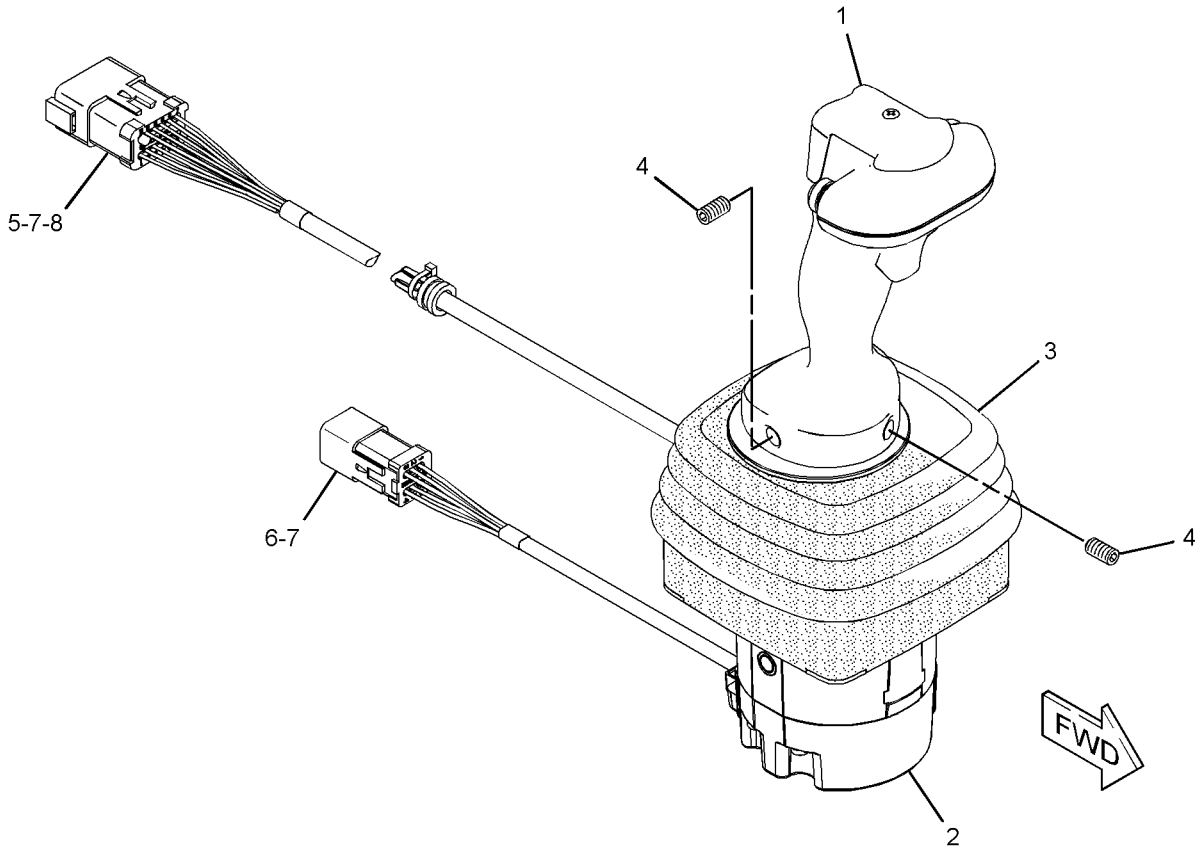

GRAPHIC #1 **<END>** g01326362

OPERATOR STATION

247-0747 CONTROL GP-JOYSTICK–GRADE CONTROL, AUTO CARRY

S/N: J8B1-703

PART OF 251-5811 CONTROL AR-HYDRAULIC, 251-5810 GRADE CONTROL AR AN ATTACHMENT

SMCS-5705 **i02246264**

NOTE	REF NO	GRAPHIC REF	PART NUMBER	QTY	PART NAME 1 2 3 4 5 6 (PRODUCT LEVEL)	SEE PAGE
M	1	1	**192-4658**	4	SCREW-PAN HEAD (M4X0.7X20-MM)	
M	2	1	**193-4476**	8	SCREW-PAN HEAD (M4X0.7X35-MM)	
	4	1	**216-3002**	1	DETENT GP-CONTROL (BLADE LIFT, LOWER)	
M		1	**193-4476**	4	SCREW-PAN HEAD (M4X0.7X35-MM)	
		1	**151-4977**	4	WASHER (4.445X9.525X1.092-MM THK)	
	5	1	**227-6718**	1	DETENT GP-CONTROL (BLADE TILT)	
M		1	**193-4476**	4	SCREW-PAN HEAD (M4X0.7X35-MM)	
		1	**151-4977**	4	WASHER (4.445X9.525X1.092-MM THK)	
Y	6	1	**240-7837**	1	CONTROL GP-HANDLE (BULLDOZER CONTROL)	1045
	7	1	**257-2529**	1	SENSOR GP-POSITION (BLADE LIFT, LOWER)	
	8	1	**257-2532**	1	SENSOR GP-POSITION (BLADE TILT)	
	9	1	**151-4977**	12	WASHER (4.445X9.525X1.092-MM THK)	
	10	1	**175-3265**	1	SCREW (8-16X0.63-IN)	
	11	1	**2K-4898**	1	CLAMP-TUBE	
	12	1	**4B-9808**	2	SETSCREW (1/4-20X0.5-IN)	
	13	1	**186-3735**	7	PIN-CONNECTOR (16-GA TO 18-GA)	
	14	1	**8T-8737**	5	PLUG-SEAL	
	15	1	**174-3091**	1	KIT-RECEPTACLE (12-PIN)	
					(INCLUDES RECEPTACLE AS & WEDGE)	
	16	1	**208-6081**	1	SLEEVE	

M-METRIC PART
Y-SEPARATE ILLUSTRATION

247-0747 CONTROL GP-JOYSTICK *(contd.)* i02246264

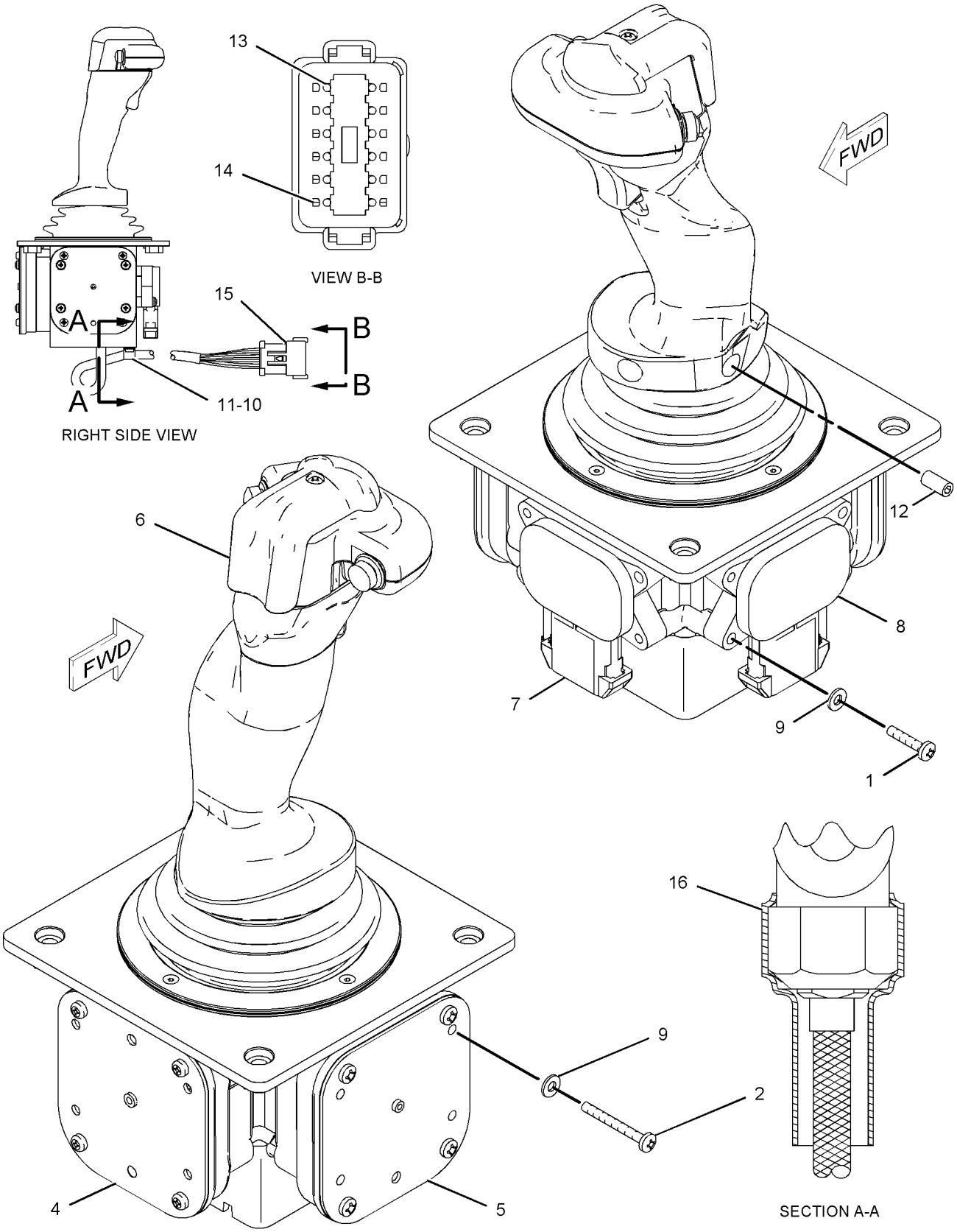

GRAPHIC #1 **<END>** g01112500

OPERATOR STATION

269-9388 CONTROL GP-JOYSTICK–WINCH

S/N: J8B493-UP

PART OF 209-2608 CONTROL GP-IMPLEMENT

AN ATTACHMENT

SMCS-5705 **i02467566**

NOTE	REF NO	GRAPHIC REF	PART NUMBER	QTY	PART NAME 1 2 3 4 5 6 (PRODUCT LEVEL)	SEE PAGE
	1	1	**189-2305**	1	DETENT GP-CONTROL (REEL IN, REEL OUT)	
M	2	1	**193-4476**	8	SCREW-PAN HEAD (M4X0.7X35-MM)	
	3	1	**219-7912**	1	HANDLE GP-MODULAR (WINCH)	
	4	1	**257-2529**	1	SENSOR GP-POSITION (DRUM CLUTCH RELEASE)	
	5	1	**257-2530**	1	SENSOR GP-POSITION (WINCH REEL IN, OUT)	
	6	1	**269-9346**	1	DETENT GP-CONTROL (DRUM CLUTCH RELEASE)	
M	8	1	**150-1293**	2	SCREW-BUTTON HEAD (M4X0.7X12-MM)	
	9	1	**151-4977**	12	WASHER (4.445X9.525X1.092-MM THK)	
	10	1	**175-3265**	1	SCREW (8-16X0.63-IN)	
M	11	1	**192-4658**	4	SCREW-PAN HEAD (M4X0.7X20-MM)	
	12	1	**2K-4898**	1	CLAMP-TUBE	
	13	1	**102-8804**	1	KIT-RECEPTACLE (4-PIN)	
					(INCLUDES RECEPTACLE AS & WEDGE)	
	14	1	**8T-8737**	1	PLUG-SEAL	
	15	1	**186-3735**	3	PIN-CONNECTOR (16-GA TO 18-GA)	

M-METRIC PART

269-9388 CONTROL GP-JOYSTICK *(contd.)* i02467566

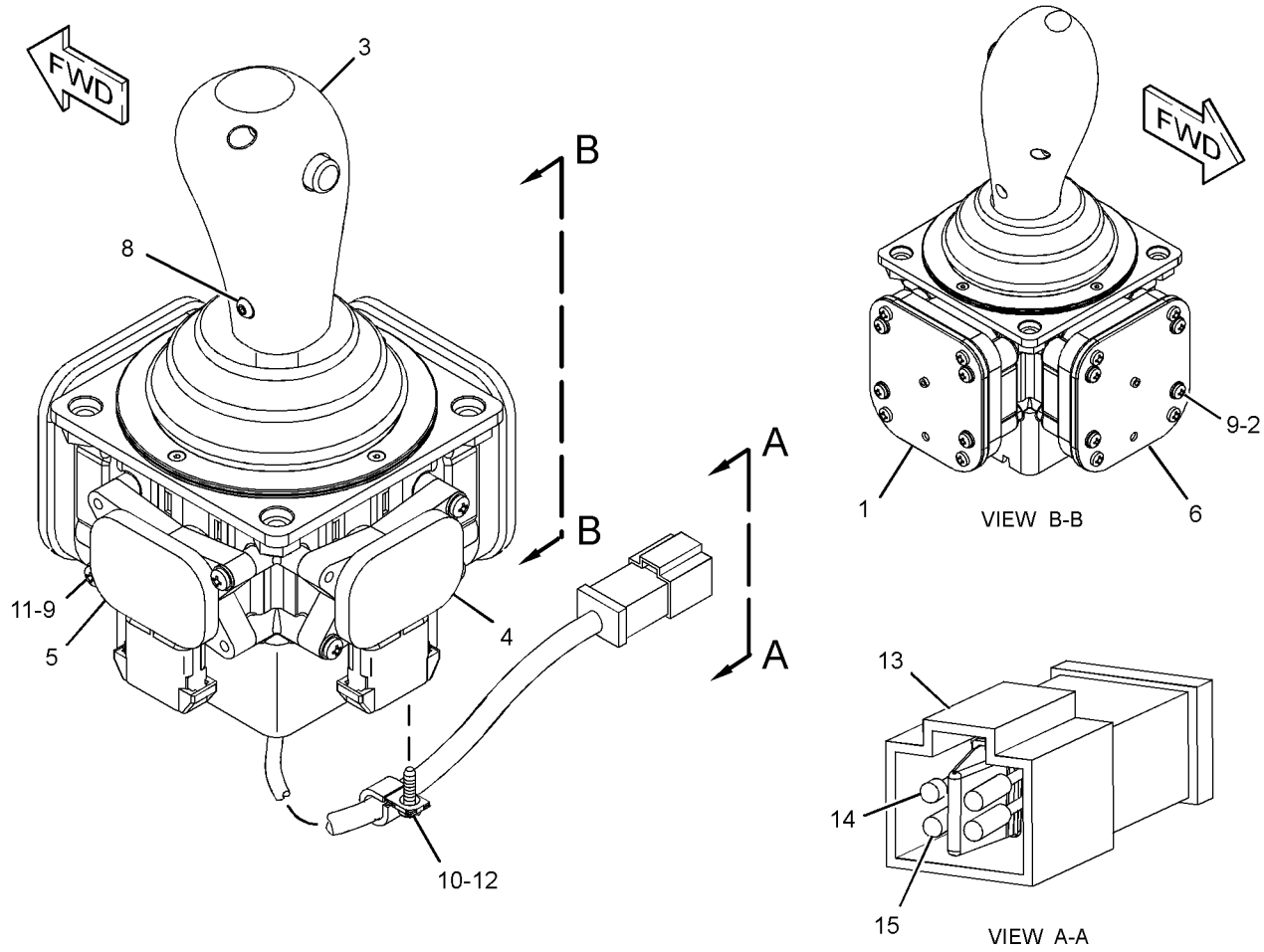

GRAPHIC #1 **<END>** g01304029

OPERATOR STATION

327-3542 CONTROL GP-JOYSTICK–BULLDOZER, SINGLE TILT

S/N: J8B704-UP

PART OF 206-6782 HYDRAULIC AR

SMCS-5705 **i03156364**

NOTE	REF NO	GRAPHIC REF	PART NUMBER	QTY	PART NAME 1 2 3 4 5 6 (PRODUCT LEVEL)	SEE PAGE
	1	1	**259-5750**	1	HANDGRIP AS (BULLDOZER CONTROL HANDLE)	
		1	**175-4165**	2	SCREW-PAN HEAD (NO 4X12.7-MM)	
	2	1	**327-3541**	1	SENSOR AS-POSITION (BULLDOZER CONTROL HANDLE)	
	2A	1	**186-3735**	6	PIN-CONNECTOR (16-GA TO 18-GA)	
	2B	1	**102-8805**	1	KIT-RECEPTACLE (6-PIN)	
					(INCLUDES RECEPTACLE AS & WEDGE)	
	3	1	**285-0150**	1	BOOT	
	4	1	**4B-9808**	2	SETSCREW (1/4-20X0.5-IN)	

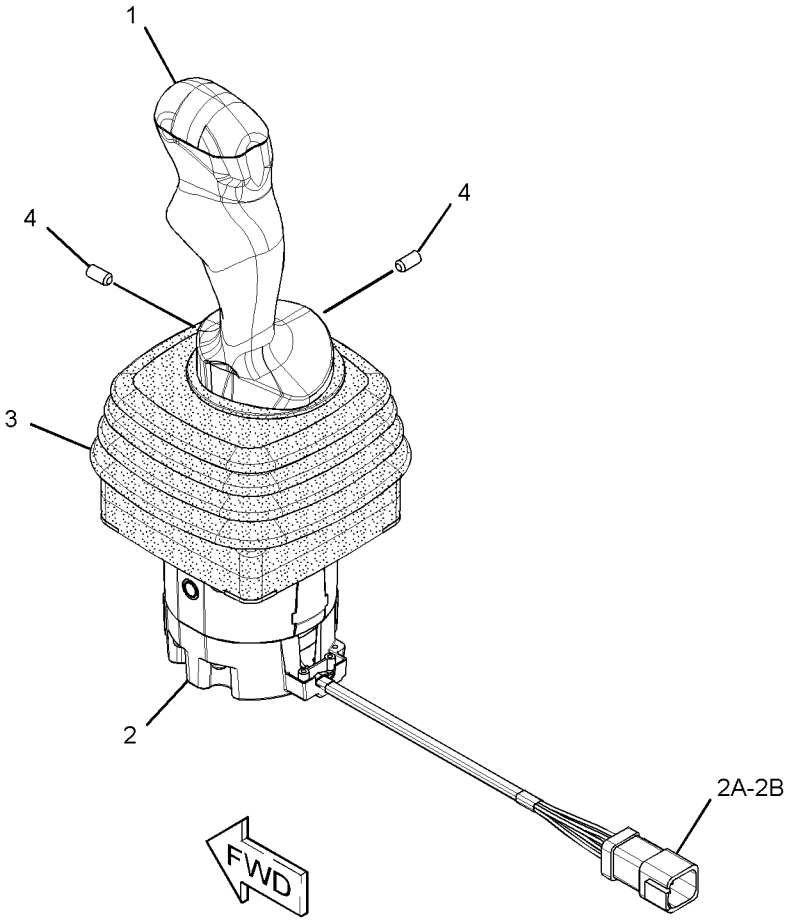

GRAPHIC #1 **<END>** g01542193

OPERATOR STATION

327-3543 CONTROL GP-JOYSTICK–BULLDOZER, DUAL TILT

S/N: J8B736-UP

FIELD INSTALLATION

SMCS-5705 **i03211880**

NOTE	REF NO	GRAPHIC REF	PART NUMBER	QTY	PART NAME 1 2 3 4 5 6 (PRODUCT LEVEL)	SEE PAGE
Y	1	1	**259-5746**	1	CONTROL GP-HANDLE (BULLDOZER, DUAL TILT)	1046
	2	1	**327-3541**	1	SENSOR AS-POSITION (BULLDOZER CONTROL HANDLE)	
	2A	1	**102-8805**	1	KIT-RECEPTACLE (6-PIN)	
					(INCLUDES RECEPTACLE AS & WEDGE)	
	2B	1	**186-3735**	6	PIN-CONNECTOR (16-GA TO 18-GA)	
	3	1	**285-0150**	1	BOOT	
	4	1	**4B-9808**	2	SETSCREW (1/4-20X0.5-IN)	
	5	1	**174-3091**	1	KIT-RECEPTACLE (12-PIN)	
	7	1	**186-3735**	11	PIN-CONNECTOR (16-GA TO 18-GA)	
	8	1	**8T-8737**	1	PLUG-SEAL	
	9	1	**144-0331**	2	CAP-PUSH BUTTON (YELLOW)	

Y-SEPARATE ILLUSTRATION

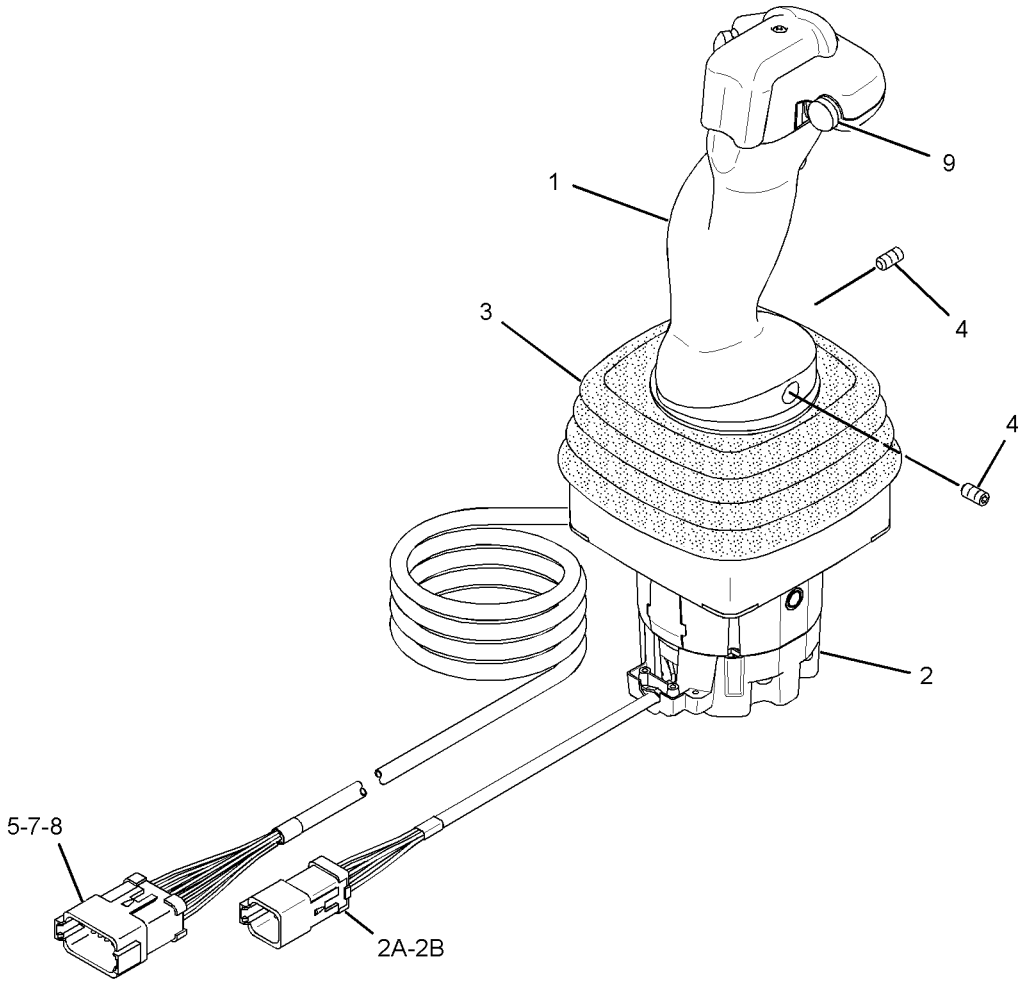

GRAPHIC #1 **<END>** g01526719

OPERATOR STATION

327-3548 CONTROL GP-JOYSTICK–BULLDOZER, DUAL TILT

S/N: J8B736-UP

PART OF 209-5102 CONTROL AR-HYDRAULIC

AN ATTACHMENT

SMCS-5705 **i03257583**

NOTE	REF NO	GRAPHIC REF	PART NUMBER	QTY	PART NAME 1 2 3 4 5 6 (PRODUCT LEVEL)	SEE PAGE
Y	1	1	**309-9542**	1	CONTROL GP-HANDLE (BULLDOZER, DUAL TILT)	1050
	2	1	**327-3541**	1	SENSOR AS-POSITION (BULLDOZER CONTROL HANDLE)	
	2A	1	**186-3735**	6	PIN-CONNECTOR (16-GA TO 18-GA)	
	2B	1	**102-8805**	1	KIT-RECEPTACLE (6-PIN)	
					(INCLUDES RECEPTACLE AS & WEDGE)	
	3	1	**285-0150**	1	BOOT	
	4	1	**4B-9808**	2	SETSCREW (1/4-20X0.5-IN)	
	5	1	**174-3091**	1	KIT-RECEPTACLE (12-PIN)	
	6	1	**186-3735**	11	PIN-CONNECTOR (16-GA TO 18-GA)	
	7	1	**8T-8737**	1	PLUG-SEAL	

Y-SEPARATE ILLUSTRATION

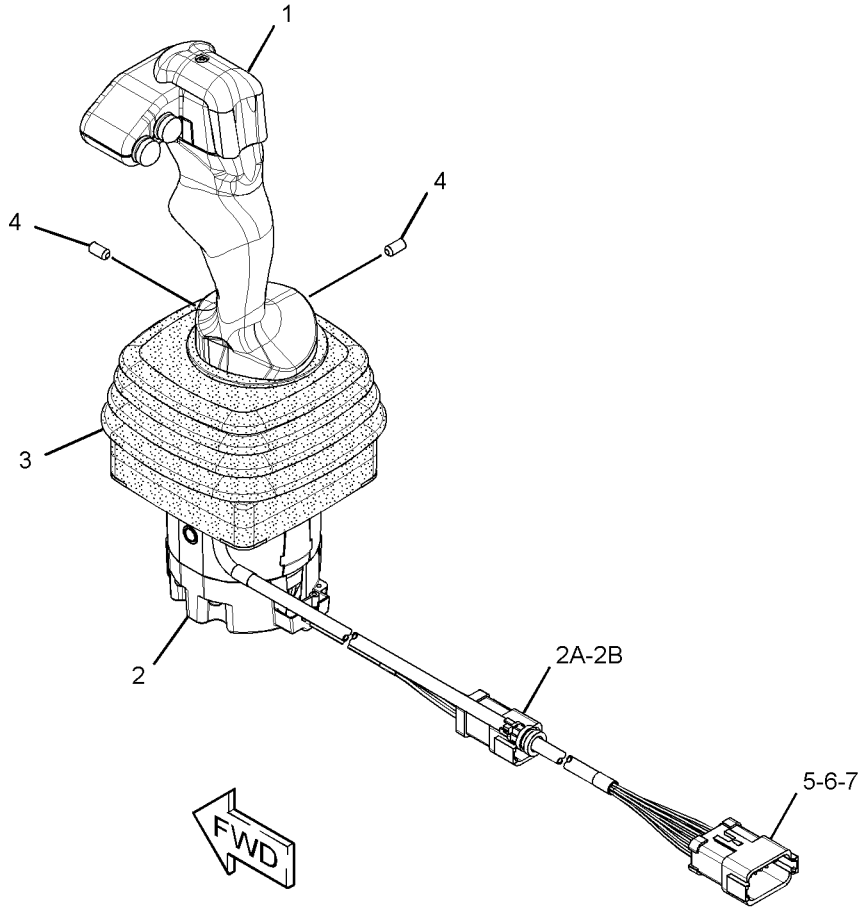

GRAPHIC #1 **<END>** g01608455

327-3550 CONTROL GP-JOYSTICK–BULLDOZER

S/N: J8B1000-UP

PART OF 251-5810 GRADE CONTROL AR

AN ATTACHMENT

SMCS-5705 **i03211173**

NOTE	REF NO	GRAPHIC REF	PART NUMBER	QTY	PART NAME 1 2 3 4 5 6 (PRODUCT LEVEL)	SEE PAGE
Y	1	1	**319-1858**	1	CONTROL GP-HANDLE (BULLDOZER, IMPLEMENT)	1052
	2	1	**327-3541**	1	SENSOR AS-POSITION (BULLDOZER CONTROL HANDLE)	
	2A	1	**186-3735**	6	PIN-CONNECTOR (16-GA TO 18-GA)	
	2B	1	**102-8805**	1	KIT-RECEPTACLE (6-PIN)	
					(INCLUDES RECEPTACLE AS & WEDGE)	
	3	1	**285-0150**	1	BOOT	
	4	1	**4B-9808**	2	SETSCREW (1/4-20X0.5-IN)	
	5	1	**174-3091**	1	KIT-RECEPTACLE (12-PIN)	
					(INCLUDES RECEPTACLE AS & WEDGE)	
	6	1	**186-3735**	11	PIN-CONNECTOR (16-GA TO 18-GA)	
	7	1	**8T-8737**	1	PLUG-SEAL	
	8	1	**144-0331**	2	CAP-PUSH BUTTON (YELLOW)	

Y-SEPARATE ILLUSTRATION

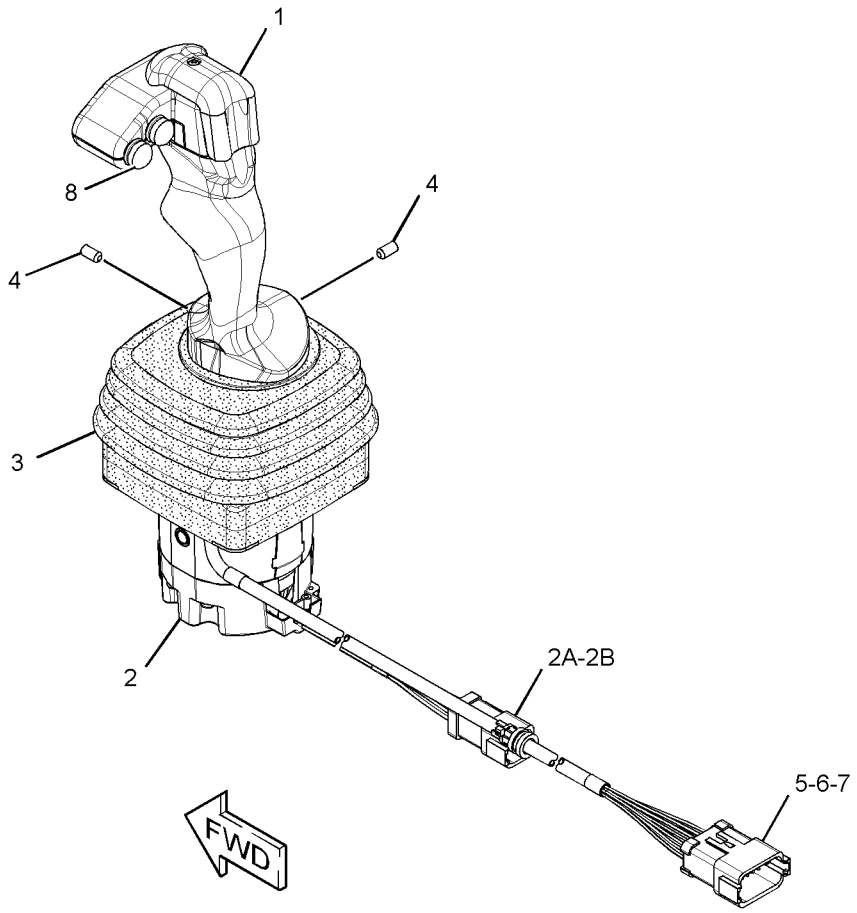

GRAPHIC #1 **<END>** g01637441

OPERATOR STATION

226-7420 CONTROL GP-RIPPER

S/N: J8B1-UP
PART OF 196-9987 CONTROL & MTG GP-IMPLEMENT
AN ATTACHMENT

SMCS-5357 **i02776720**

NOTE	REF NO	GRAPHIC REF	PART NUMBER	QTY	PART NAME 1 2 3 4 5 6 (PRODUCT LEVEL)	SEE PAGE
	1	1	**4B-1270**	2	SCREW-MACHINE (8-32X0.75-IN)	
	2	1	**8T-5410**	2	SEAL-LIP TYPE	
M	3	1	**295-4155**	4	BOLT-SOCKET HEAD (M5X0.8X35-MM)	
	4	1	**112-0858**	4	BEARING	
	5	1	**137-5817**	1	KNOB AS (RIPPER CONTROL)	
Z	6	1		1	SHAFT	
	7	1	**142-2526**	2	PLATE	
Z	8	1		2	CAM	
	9	1	**132-7450**	1	SWITCH AS-PUSH BUTTON (UPSHIFT)	
		1	**144-0331**	1	CAP-PUSH BUTTON (YELLOW)	
	10	1	**155-2260**	1	KIT-CONNECTING PLUG (3-PIN)	
					(INCLUDES PLUG AS, WEDGE, & INTERFACE SEAL)	
B	11	1	**195-7869**	1	SHIM (0.15-MM THK)	
B	12	1	**195-7870**	1	SHIM (0.51-MM THK)	
B	13	1	**195-7871**	1	SHIM (0.25-MM THK)	
B	14	1	**195-7872**	1	SHIM (0.41-MM THK)	
	15	1	**219-2390**	1	SENSOR GP-POSITION (RIPPER SHANK IN, OUT)	
		1	**102-8803**	1	KIT-RECEPTACLE (3-PIN)	
					(INCLUDES RECEPTACLE AS & WEDGE)	
		1	**3E-3371**	1	WEDGE-RECEPTACLE LOCK (3-PIN)	
		1	**186-3735**	3	PIN-CONNECTOR (16-GA TO 18-GA)	
E		1	**9X-1813**		SLEEVE (13-CM)	
	16	1	**219-2391**	1	SENSOR GP-POSITION (RIPPER RAISE, LOWER)	
		1	**102-8804**	1	KIT-RECEPTACLE (4-PIN)	
					(INCLUDES RECEPTACLE AS & WEDGE)	
		1	**3E-3377**	1	WEDGE-RECEPTACLE LOCK (4-PIN)	
		1	**186-3735**	3	PIN-CONNECTOR (16-GA TO 18-GA)	
		1	**9G-3695**	1	PLUG	
	17	1	**223-4461**	1	BASE AS	
	18	1	**226-2751**	1	LEVER-FINGER (RIPPER SHANK IN, OUT)	
	19	1	**226-7295**	1	FILM-INFORMATION (AUTOMATIC RIPPER)	
	20	1	**226-7480**	1	SHAFT	
	21	1	**242-5205**	2	GASKET	
	22	1	**245-3856**	2	SPRING	
	23	1	**1W-6448**	4	DOWEL	
	24	1	**2L-5894**	4	PIN-SPRING	
	25	1	**3K-4897**	2	PIN-SPRING	
	26	1	**6V-0894**	2	SEAL-O-RING	
D	27	1	**8T-5677**		SLEEVE (0.5-M)	
	28	1	**8T-0328**	4	WASHER-HARD (5.5X10X1-MM THK)	
	29	1	**186-3736**	3	SOCKET-CONNECTOR (16-GA TO 18-GA)	
E	30	1	**7X-3159**		TUBE-HEAT SHRINK (2.5-CM EACH)	

B-USE AS REQUIRED
D-ORDER BY THE METER
E-ORDER BY THE CENTIMETER
M-METRIC PART
Z-NOT SERVICED SEPARATELY

226-7420 CONTROL GP-RIPPER *(contd.)* i02776720

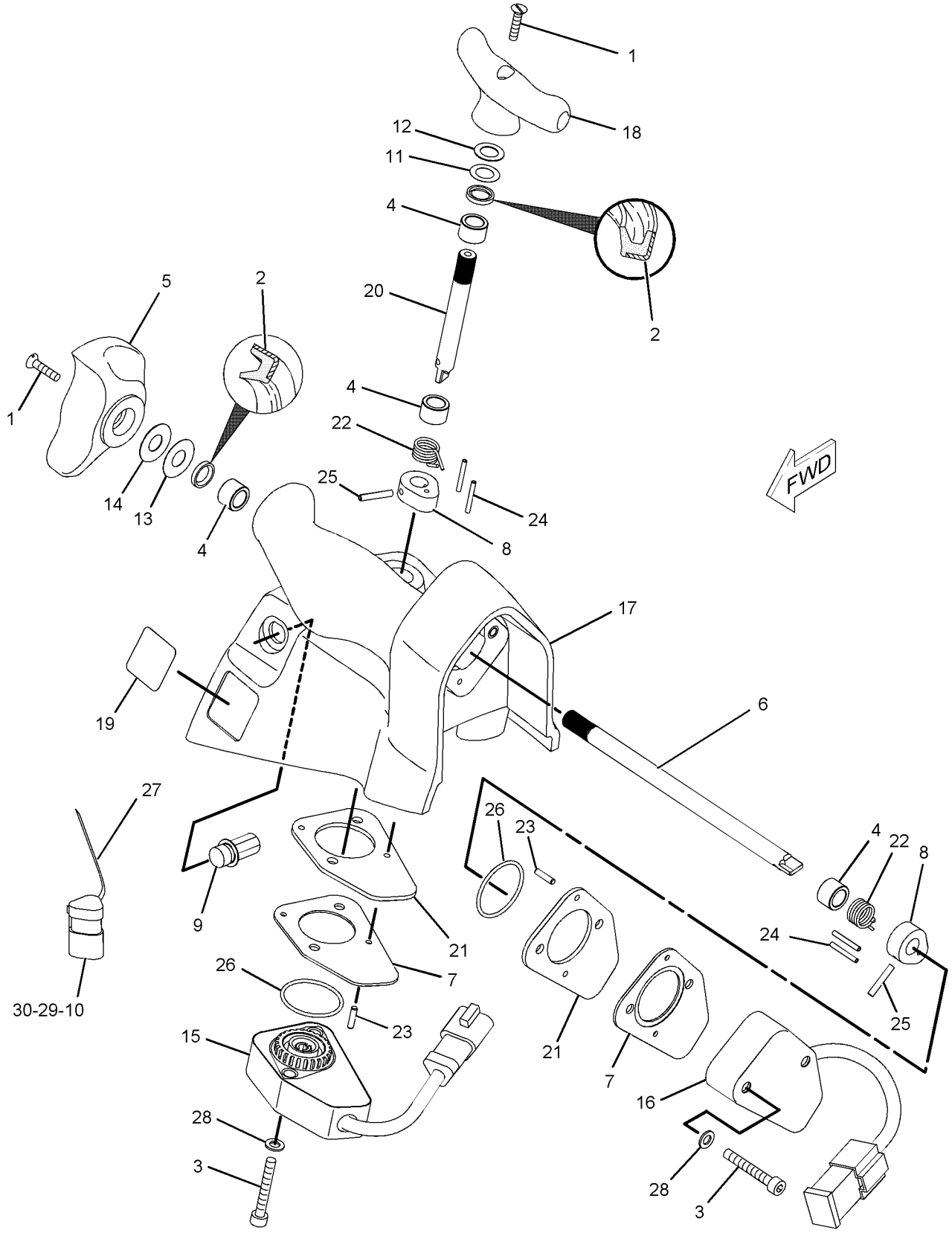

GRAPHIC #1 **<END>** g01130543

OPERATOR STATION

237-0160 CONTROL GP-STEER CLUTCH & BRK

S/N: J8B1-UP

PART OF 242-5198 CONTROL GP-STEERING

SMCS-4122 **i02395270**

NOTE	REF NO	GRAPHIC REF	PART NUMBER	QTY	PART NAME 1 2 3 4 5 6 (PRODUCT LEVEL)	SEE PAGE
	1	1	**237-0149**	1	COVER	
	2	1	**237-0152**	1	PLATE AS	
	3	1	**237-0154**	1	PLATE	
	4	1	**237-0155**	1	COVER	
	5	1	**237-0156**	1	COVER	
Y	6	1	*237-0158*	1	CONTROL GP-STEERING & TMSN	1078
M	7	1	**3E-8020**	1	SCREW-TRUSS HEAD (M6X1X25-MM)	
M	8	1	**5C-2890**	1	NUT (M6X1-THD)	
M	9	1	**8T-4138**	3	BOLT (M6X1X20-MM)	
	10	1	**8T-4224**	4	WASHER-HARD (8.8X16X2-MM THK)	
M	11	1	**8T-4908**	4	BOLT (M8X1.25X25-MM)	
M	12	1	**9X-2043**	4	SCREW-TRUSS HEAD (M6X1X14-MM)	
M	13	1	**9X-2045**	5	SCREW-TRUSS HEAD (M6X1X20-MM)	
	14	1	**9X-8256**	4	WASHER (6.6X12X2-MM THK)	

M-METRIC PART
Y-SEPARATE ILLUSTRATION

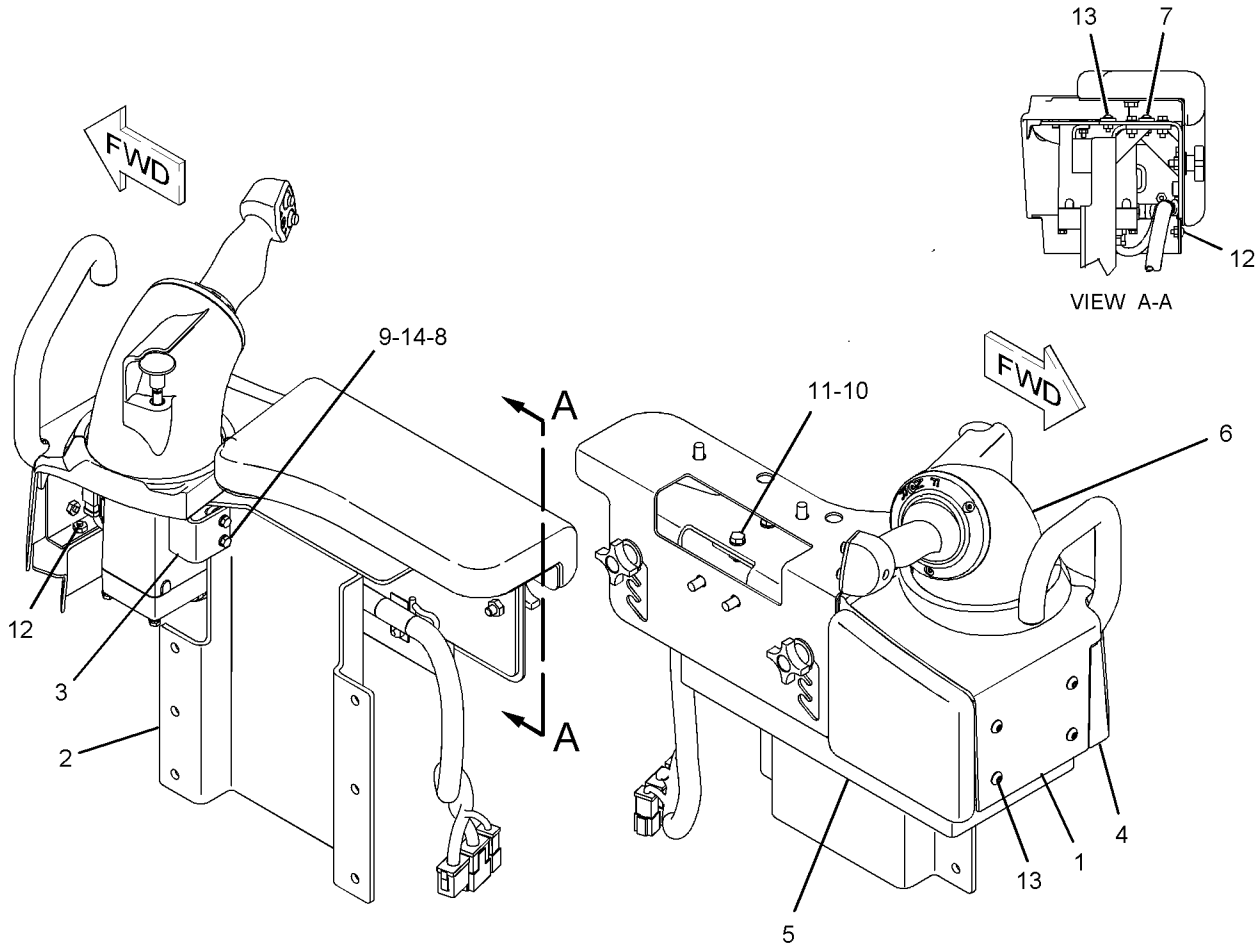

GRAPHIC #1 **<END>** g01132167

OPERATOR STATION

242-5198 CONTROL GP-STEERING

S/N: J8B1-UP

PART OF 206-6781 POWER TRAIN AR

SMCS-4135 **i02402638**

NOTE	REF NO	GRAPHIC REF	PART NUMBER	QTY	PART NAME 1 2 3 4 5 6 (PRODUCT LEVEL)	SEE PAGE
	1	1	**171-7077**	2	ROD-THREADED	
Y	2	1	*237-0160*	1	CONTROL GP-STEER CLUTCH & BRK	1074
	3	1	**8T-4121**	6	WASHER-HARD (11X21X2.5-MM THK)	
M	4	1	**8T-4133**	2	NUT (M10X1.5-THD)	
M	5	1	**8T-4136**	4	BOLT (M10X1.5X25-MM)	
	6	1	**8C-5226**	1	PLUG-SEAL	

M-METRIC PART
Y-SEPARATE ILLUSTRATION

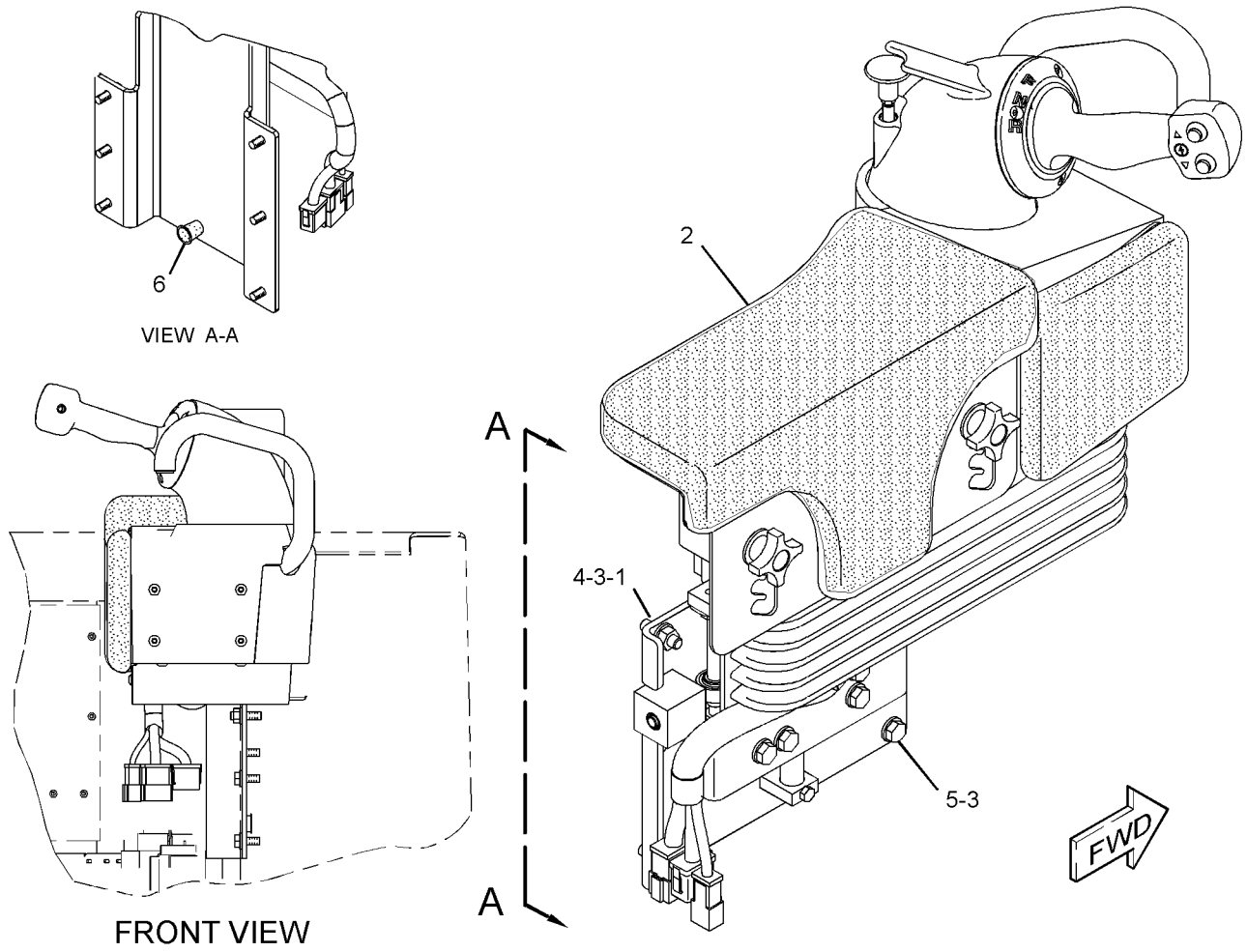

GRAPHIC #1 **<END>** g01161895

OPERATOR STATION

222-1462 CONTROL GP-STEERING & XMSN

S/N: J8B1-UP

PART OF 222-1546 CONTROL GP-HANDLE

SMCS-4122 **i03437800**

NOTE	REF NO	GRAPHIC REF	PART NUMBER	QTY	PART NAME 1 2 3 4 5 6 (PRODUCT LEVEL)	SEE PAGE
	1	1	**219-2391**	1	SENSOR GP-POSITION (FORWARD, NEUTRAL, REVERSE)	
		1	**102-8804**	1	KIT-RECEPTACLE (4-PIN)	
					(INCLUDES RECEPTACLE AS & WEDGE)	
		1	**186-3735**	3	PIN-CONNECTOR (16-GA TO 18-GA)	
		1	**9G-3695**	1	PLUG	
H	2	1	**3E-3383**	1	WEDGE-RECEPTACLE LOCK (6-PIN)	
	3	1	**3S-2093**	2	STRAP-CABLE	
	4	1	**6V-3545**	1	BEARING-ROLLER	
	5	1	**186-3735**	6	PIN-CONNECTOR (16-GA TO 18-GA)	
	7	1	**9W-1464**	2	SCREW (1/4-20X1-IN)	
	8	1	**9X-4610**	1	SEAL-V-RING	
M	9	1	**130-3265**	1	SCREW (M6X1X20-MM)	
	10	1	**131-0447**	2	NUT (15/32-32-THD)	
	11	1	**132-7419**	1	SWITCH AS-PUSH BUTTON (ELECTRONIC DOWNSHIFT)	
	12	1	**132-7450**	1	SWITCH AS-PUSH BUTTON (ELECTRONIC UPSHIFT)	
					(EACH SWITCH ASSEMBLY INCLUDES)	
		1	**144-0331**	1	CAP-PUSH BUTTON (YELLOW)	
H	13	1	**151-9275**	1	KIT-RECEPTACLE (6-PIN)	
					(INCLUDES RECEPTACLE AS & WEDGE)	
	14	1	**158-2734**	2	SPRING	
	15	1	**158-2735**	1	BASE	
	20	1	**242-5202**	1	FILM-IDENTIFICATION (JOYSTICK CONTROL)	
	21	1	**226-9423**	2	SPRING	
Y	22	1	**237-0151**	1	SWITCH GP-LIMIT (STEERING CONTROL)	377
	24	1	**103-6262**	4	SCREW-MACHINE (4-40X0.63-IN)	
	26	1	**5H-9899**	1	RING-RETAINING (EXTERNAL)	
	27	1	**6V-1051**	1	SCREW-BUTTON HEAD (10-24X19.05-MM)	
	28	1	**6V-1232**	2	SCREW-BUTTON HEAD (8-32X9.52-MM)	
M	29	1	**6V-2314**	2	BOLT (M5X0.8X35-MM)	
	30	1	**7X-0584**	1	WASHER-HARD (13.5X20.5X2-MM THK)	
M	31	1	**7Y-5226**	2	NUT (M5X0.8-THD)	
	32	1	**8T-4205**	2	WASHER-HARD (7.2X14.5X2-MM THK)	
	33	1	**9X-8256**	3	WASHER (6.6X12X2-MM THK)	
D	34	1	**6V-2689**		TUBE-HEAT SHRINK (6.35-MM DIA) (0.14-M)	
D	34A	1	**6V-2689**		TUBE-HEAT SHRINK (6.35-MM DIA) (0.35-M)	
E	35	1	**242-5207**		WRAP-SPIRAL (11-CM)	
					PARTS SHOWN IN GRAPHIC(S) WITHOUT A REFERENCE NUMBER ARE NOT SERVICED SEPARATELY	

D-ORDER BY THE METER
E-ORDER BY THE CENTIMETER
H-(KIT MARKED H INCLUDES PART MARKED H)
M-METRIC PART
Y-SEPARATE ILLUSTRATION

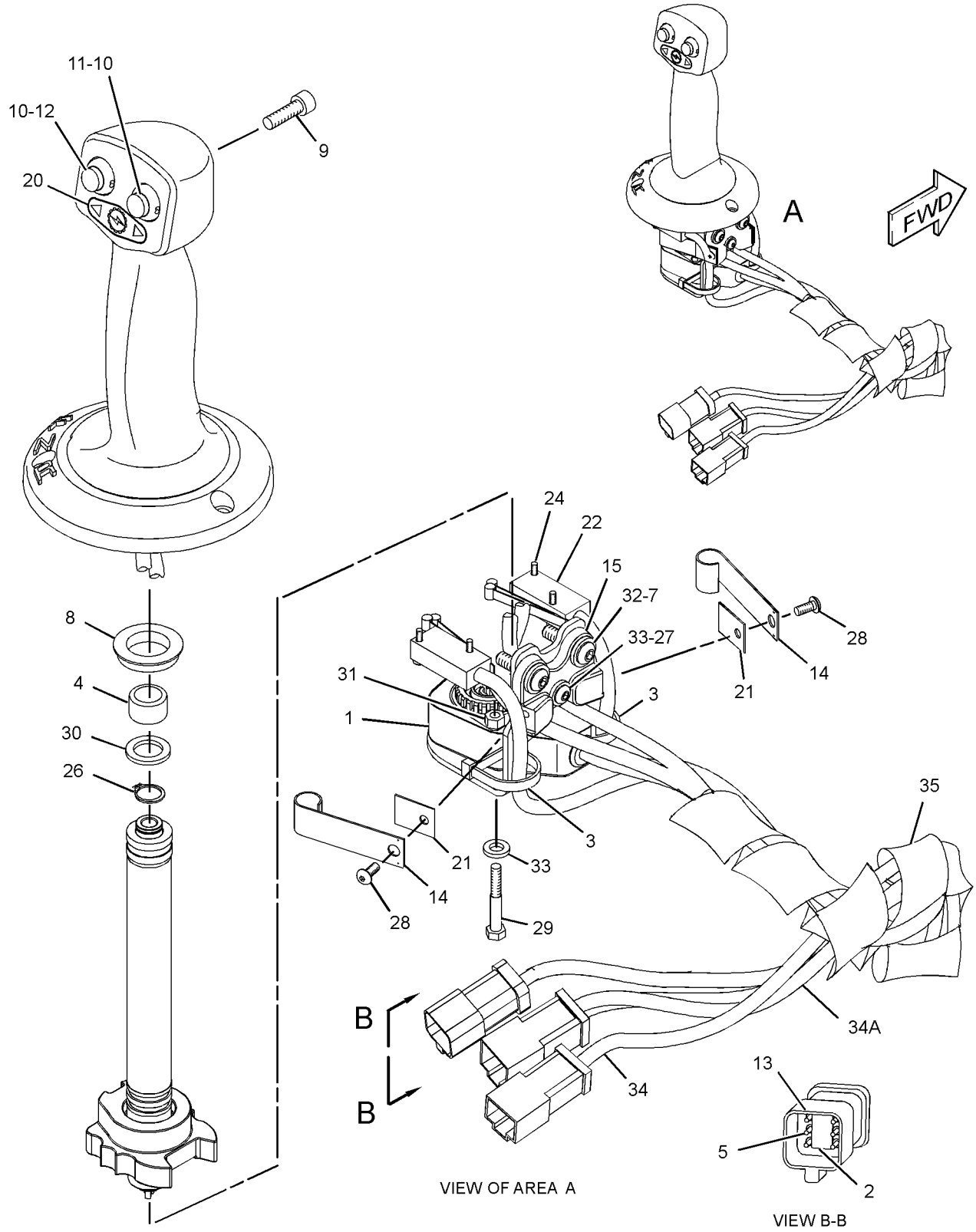

GRAPHIC #1 **<END>** g01636418

OPERATOR STATION

237-0158 CONTROL GP-STEERING & XMSN

S/N: J8B1-UP

PART OF 237-0160 CONTROL GP-STEER CLUTCH & BRK

SMCS-4122 **i03437113**

NOTE	REF NO	GRAPHIC REF	PART NUMBER	QTY	PART NAME 1 2 3 4 5 6 (PRODUCT LEVEL)	SEE PAGE
	1	1	**9X-6772**	6	STRAP-CABLE	
	2	1	**112-0858**	2	BEARING	
	3	1	**159-7351**	2	CLIP	
	4	1	**215-7446**	1	CUSHION AS	
	5	1	**220-3990**	1	PLATE	
	6	1	**221-9409**	2	KNOB	
Y	7	1	**222-1546**	1	CONTROL GP-HANDLE (BRAKE, STEERING, TRANSMISSION)	1044
	8	1	**224-4973**	1	CUSHION AS	
	9	1	**237-0153**	1	PLATE AS	
		1	**1F-0750**	2	NUT-WELD (3/8-16-THD)	
M		1	**6V-9632**	9	NUT-WELD (M6X1-THD)	
		1	**7T-1099**	4	LINK	
		1	**132-5789**	1	CLIP	
	10	1	**242-5199**	1	HARNESS AS-CONSOLE	
	11	1	**242-5204**	1	BRACKET	
	12	1	**268-4737**	1	COVER AS	
Y	13	1	**276-5312**	1	SENSOR GP-POSITION (STEERING)	345
	14	1	**132-5789**	1	CLIP	
	15	1	**1B-8706**	1	KEY-WOODRUFF	
	16	1	**7X-0578**	2	WASHER-HARD (10.2X32X2.5-MM THK)	
	17	1	**8T-4121**	6	WASHER-HARD (11X21X2.5-MM THK)	
M	18	1	**8T-4137**	5	BOLT (M10X1.5X20-MM)	
M	19	1	**8T-4186**	1	BOLT (M10X1.5X40-MM)	
M	20	1	**8T-4189**	3	BOLT (M8X1.25X20-MM)	
M	21	1	**8T-4191**	2	BOLT (M10X1.5X16-MM)	
M	22	1	**8T-4195**	2	BOLT (M10X1.5X30-MM)	
	23	1	**8T-4224**	3	WASHER-HARD (8.8X16X2-MM THK)	
	24	1	**8T-5410**	2	SEAL-LIP TYPE	

M-METRIC PART
Y-SEPARATE ILLUSTRATION

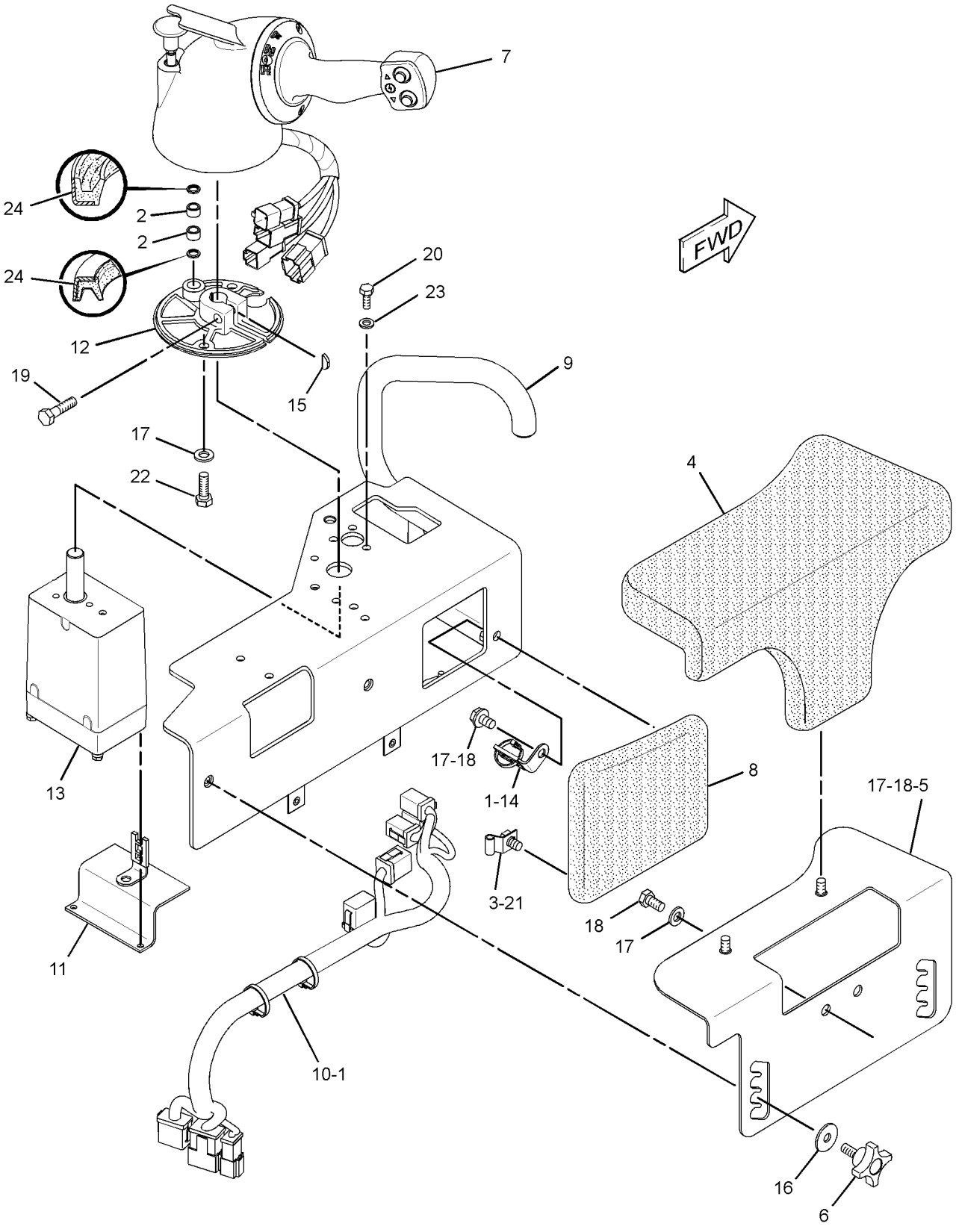

GRAPHIC #1 **<END>** g01635379

OPERATOR STATION

261-2904 CONVERSION AR-OPEN ROPS

S/N: J8B1-UP
FOR USE WITH CANOPY AR
AN ATTACHMENT

SMCS-7323 **i02246550**

NOTE	PART NUMBER	QTY	PART NAME 1 2 3 4 5 6 (PRODUCT LEVEL)	SEE PAGE
M	**7X-7900**	2	BOLT (M30X3.5X50-MM)	
	261-2966	1	HANDHOLD AS	
	239-5616	1	PLATE (RH)	
	239-5617	1	PLATE (LH)	
M	**8C-8585**	6	SCREW-BUTTON HEAD (M10X1.5X20-MM)	
	9X-8258	2	WASHER (33X56X6-MM THK)	

M-METRIC PART

<END>

261-2903 CONVERSION AR-ROPS—ENCLOSED

S/N: J8B1-UP
CANNOT BE USED WITH CANOPY AR
AN ATTACHMENT

SMCS-7301 **i02246553**

NOTE	PART NUMBER	QTY	PART NAME 1 2 3 4 5 6 (PRODUCT LEVEL)	SEE PAGE
M	**7X-7900**	2	BOLT (M30X3.5X50-MM)	
	261-2966	1	HANDHOLD AS	
	9X-8258	2	WASHER (33X56X6-MM THK)	

M-METRIC PART

<END>

OPERATOR STATION

209-7755 COVER GP-ACCESS

S/N: J8B1-UP

PART OF 208-9607 CAB AR

SMCS-726A **i02776384**

NOTE	REF NO	GRAPHIC REF	PART NUMBER	QTY	PART NAME 1 2 3 4 5 6 (PRODUCT LEVEL)	SEE PAGE
	1	1	**6Y-0206**	2	RETAINER	
	2	1	**7G-4824**	1	STRAP	
	3	1	**8E-7791**	1	STRAP	
	4	1	**190-8505**	1	ASHTRAY	
	5	1	**209-5198**	1	FLOOR MAT (PLATFORM, CAB)	
	6	1	**209-5199**	1	FLOOR MAT (PLATFORM, CAB)	
	7	1	**212-4998**	1	PANEL-ACOUSTICAL	
	8	1	**212-4999**	1	PANEL-ACOUSTICAL	
	9	1	**237-0190**	1	GASKET	
M	10	1	**9X-2043**	2	SCREW-TRUSS HEAD (M6X1X14-MM)	
M	11	1	**9X-2045**	5	SCREW-TRUSS HEAD (M6X1X20-MM)	
	12	1	**9X-2038**	3	WASHER (7X19X2-MM THK)	

M-METRIC PART

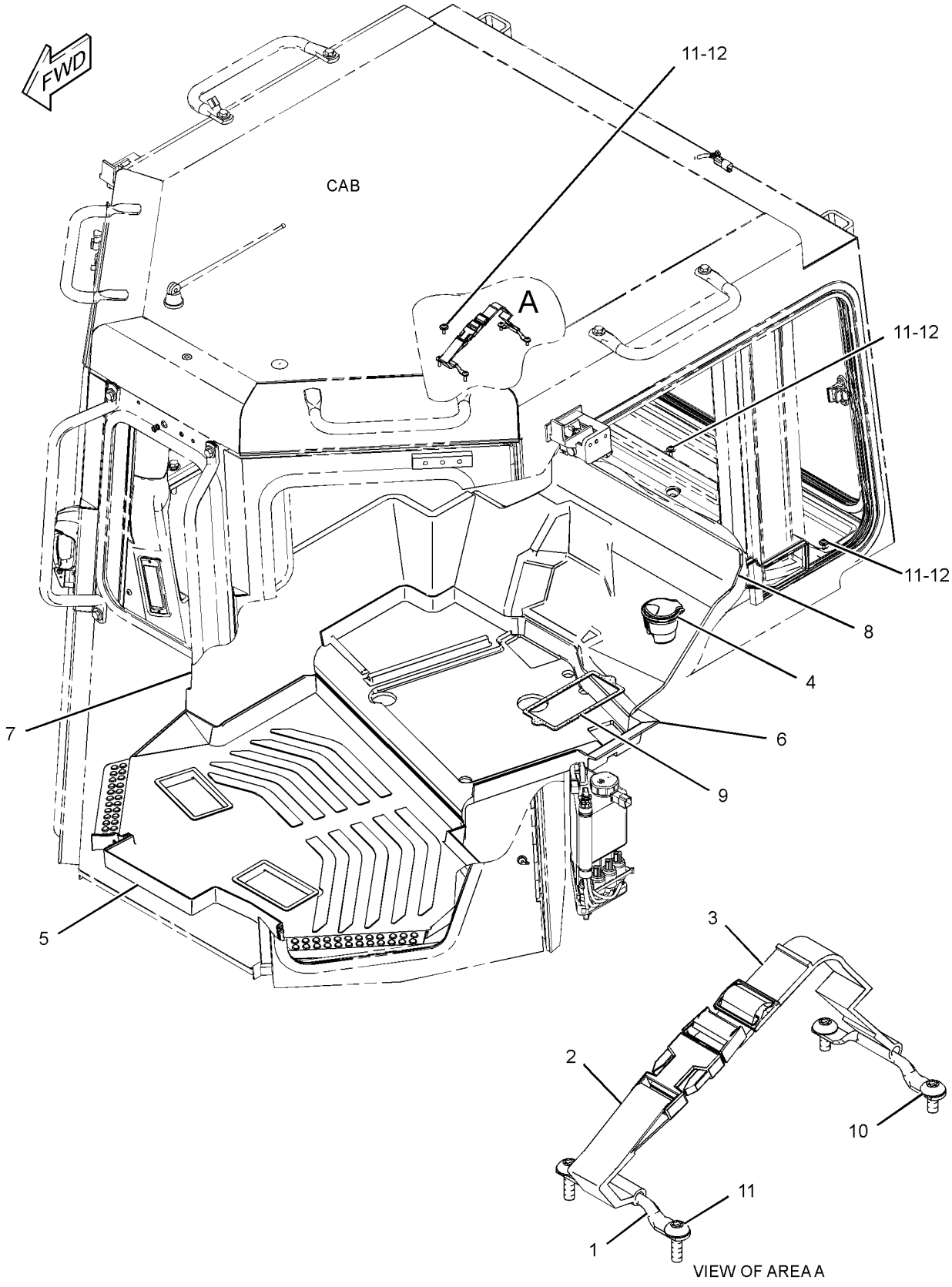

GRAPHIC #1 **<END>** g01397795

OPERATOR STATION

286-0134 DISPLAY GP-MONITOR—CD700

S/N: J8B1-UP

PART OF 290-5570, 290-5571, 292-0279, 292-0280 GRADE CONTROL AR-SATELLITE

SMCS-7490 **i02926873**

NOTE	PART NUMBER	QTY	PART NAME 1 2 3 4 5 6 (PRODUCT LEVEL)	SEE PAGE
R	**244-1716**	1	DISPLAY GP-MONITOR (CD700)	
	283-4426	1	CARD AS-MEMORY (FLASH)	
	194-8031	1	ADAPTER (COMPACT)	
M	**8T-4171**	4	BOLT (M6X1X12-MM)	
	292-0311	1	CASE-CARRYING	
	318-5081	1	COMPACT DISC (ACCUGRADE V10.71)	
M	**8T-0285**	6	SCREW-MACHINE (M4X0.7X12-MM)	
	9X-8256	4	WASHER (6.6X12X2-MM THK)	
	096-6166	6	WASHER-HARD (4.5X9X1-MM THK)	

M-METRIC PART
R-REMFG PART MAY BE AVAILABLE

<END>

292-0309 DISPLAY GP-MONITOR—CD610

S/N: J8B1-UP

PART OF 292-0293, 292-0312 GRADE CONTROL AR-LASER

SMCS-7490 **i02649296**

NOTE	PART NUMBER	QTY	PART NAME 1 2 3 4 5 6 (PRODUCT LEVEL)	SEE PAGE
M	**7X-2619**	6	BOLT (M6X1X10-MM)	
	292-0311	1	CASE-CARRYING	
	283-9530	1	DISPLAY GP-MONITOR (CD610)	
	290-6112	1	SOFTWARE GP-MONITOR	
	8T-4205	6	WASHER-HARD (7.2X14.5X2-MM THK)	

M-METRIC PART

<END>

OPERATOR STATION

255-6899 DOOR GP-CAB–RH

S/N: J8B1-UP

PART OF 214-1800 CAB GP

SMCS-7308 **i03117248**

NOTE	REF NO	GRAPHIC REF	PART NUMBER	QTY	PART NAME 1 2 3 4 5 6 (PRODUCT LEVEL)	SEE PAGE
	1	1	**200-7836**	1	HANDLE AS	
	2	1	**212-7670**	1	PLATE	
	3	1	**214-1802**	1	GLASS	
	4	1	**255-0845**	1	DOOR AS (RH)	
	5	1	**255-0849**	1	COVER (RH)	
	6	1	**325-5687**	1	LATCH AS (RH)	
	7	1	**300-3920**	1	SEAL-DOOR (RH)	
M	8	1	**127-2170**	4	SCREW-TRUSS HEAD (M8X1.25X20-MM)	
M	9	1	**3E-4304**	5	INSERT-THREADED (M6X1-THD)	
M	10	1	**5C-9553**	4	BOLT (M6X1X16-MM)	
	11	1	**7X-7729**	6	WASHER (11X25X3-MM THK)	
	12	1	**8E-6856**	1	COVER	
M	13	1	**8T-4136**	6	BOLT (M10X1.5X25-MM)	
	14	1	**9N-1995**	4	RIVET-POP	
M	15	1	**9X-2042**	2	SCREW-TRUSS HEAD (M6X1X12-MM)	
	16	1	**9X-8256**	4	WASHER (6.6X12X2-MM THK)	
D	17	1	**5P-6605**		SEAL (3.6-M)	

D-ORDER BY THE METER
M-METRIC PART

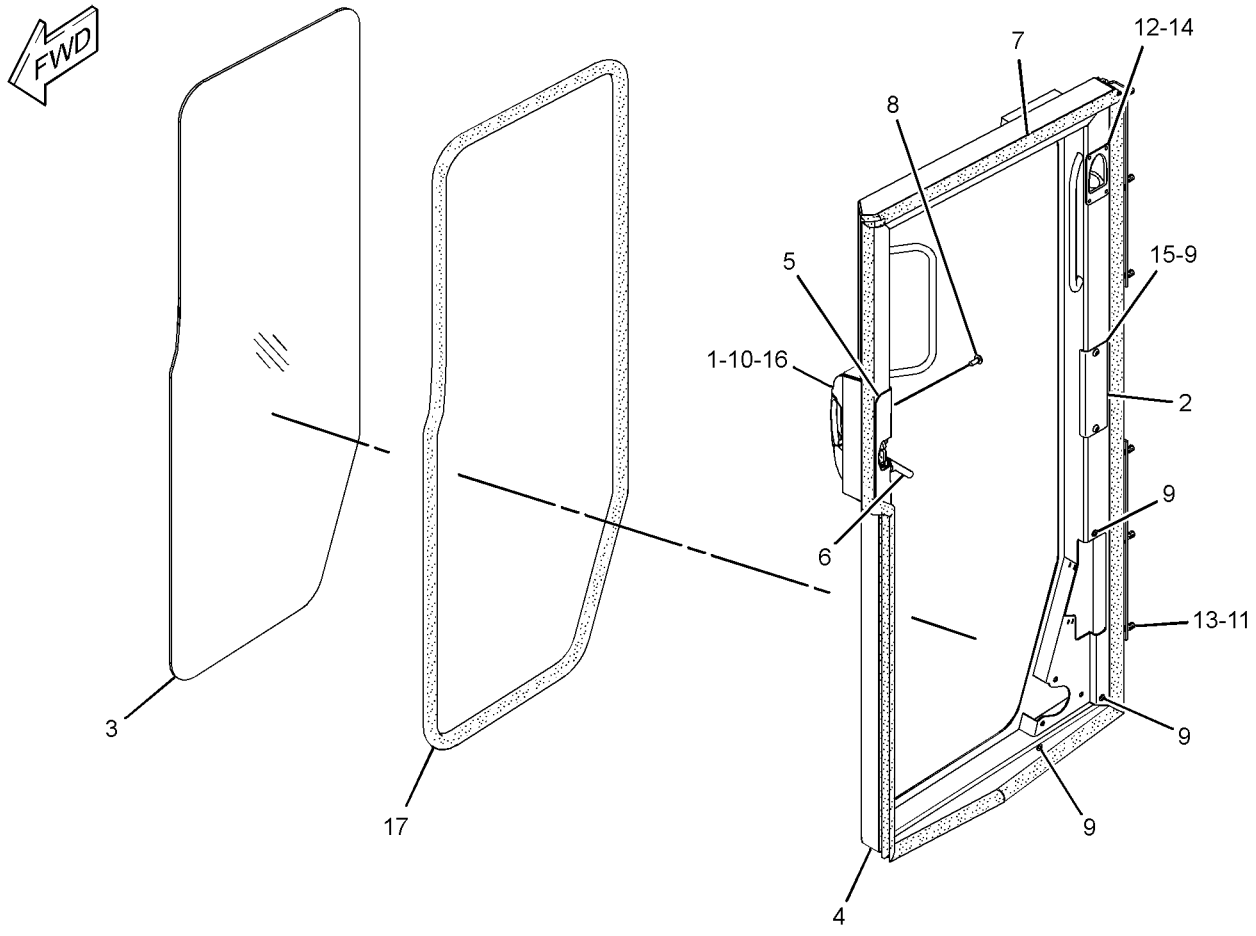

GRAPHIC #1 **<END>** g01391292

OPERATOR STATION

255-6900 DOOR GP-CAB–LH

S/N: J8B1-UP

PART OF 214-1800 CAB GP

SMCS-7308 **i03117251**

NOTE	REF NO	GRAPHIC REF	PART NUMBER	QTY	PART NAME 1 2 3 4 5 6 (PRODUCT LEVEL)	SEE PAGE
	1	1	**200-7836**	1	HANDLE AS	
	2	1	**212-7670**	1	PLATE	
	3	1	**214-1802**	1	GLASS	
	4	1	**255-0844**	1	DOOR AS (LH)	
	5	1	**255-0848**	1	COVER (LH)	
	6	1	**325-5686**	1	LATCH AS (LH)	
	7	1	**300-3919**	1	SEAL-DOOR (LH)	
M	8	1	**127-2170**	4	SCREW-TRUSS HEAD (M8X1.25X20-MM)	
M	9	1	**3E-4304**	5	INSERT-THREADED (M6X1-THD)	
M	10	1	**5C-9553**	4	BOLT (M6X1X16-MM)	
	11	1	**7X-7729**	6	WASHER (11X25X3-MM THK)	
	12	1	**8E-6856**	1	COVER	
M	13	1	**8T-4136**	6	BOLT (M10X1.5X25-MM)	
	14	1	**9N-1995**	4	RIVET-POP	
M	15	1	**9X-2042**	2	SCREW-TRUSS HEAD (M6X1X12-MM)	
	16	1	**9X-8256**	4	WASHER (6.6X12X2-MM THK)	
D	17	1	**5P-6605**		SEAL (3.6-M)	

D-ORDER BY THE METER
M-METRIC PART

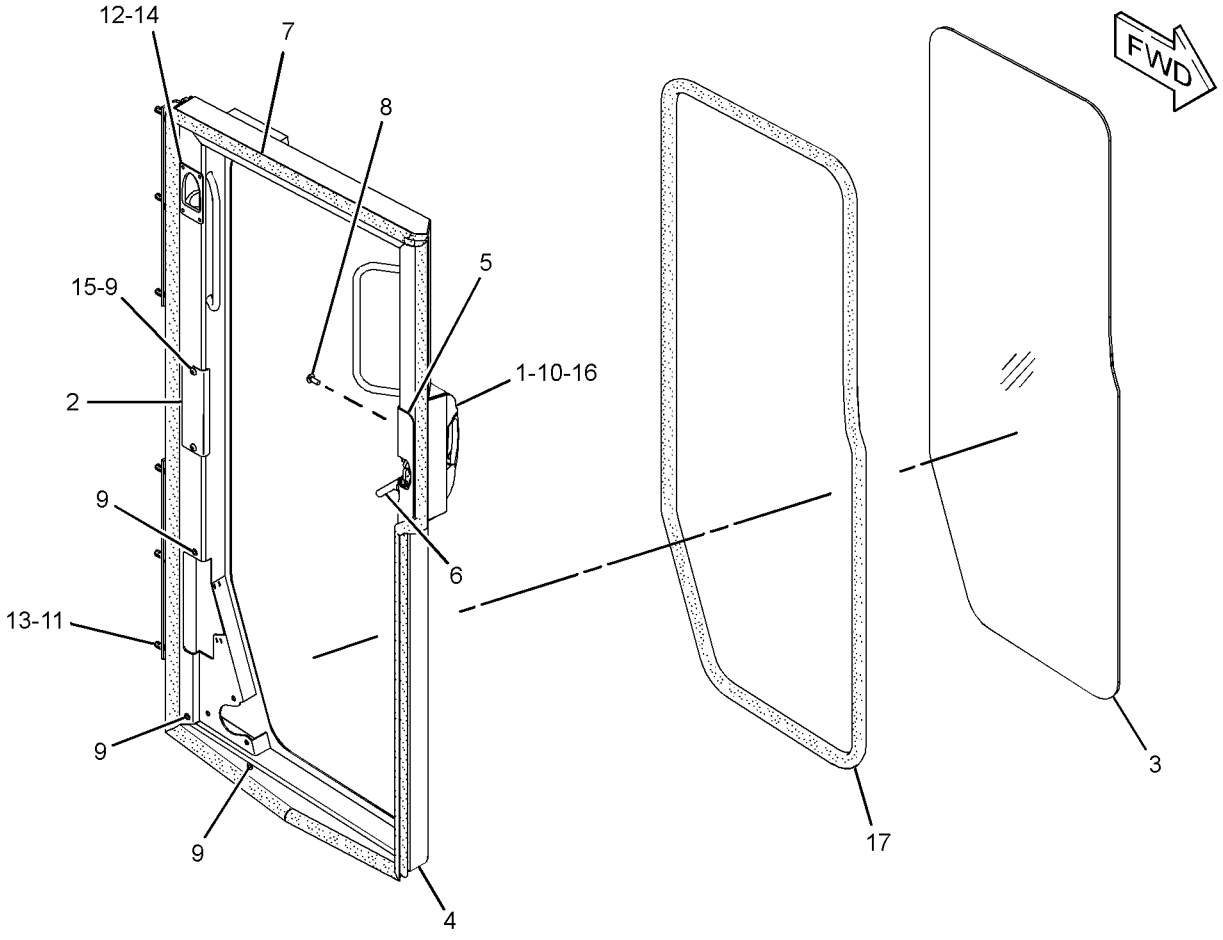

GRAPHIC #1 **<END>** g01391283

OPERATOR STATION

286-9193 DOOR GP-CAB—LH

S/N: J8B1-UP
PART OF 248-4178 CAB GP
AN ATTACHMENT

SMCS-7308 **i03210736**

NOTE	REF NO	GRAPHIC REF	PART NUMBER	QTY	PART NAME 1 2 3 4 5 6 (PRODUCT LEVEL)	SEE PAGE
	1	1	**200-7836**	1	HANDLE AS	
	2	1	**212-7670**	1	PLATE	
	3	1	**271-9251**	1	WINDOW AS (LH)	
	4	1	**255-0844**	1	DOOR AS (LH)	
	5	1	**255-0848**	1	COVER (LH)	
	6	1	**325-5686**	1	LATCH AS (LH)	
M	7	1	**127-2170**	4	SCREW-TRUSS HEAD (M8X1.25X20-MM)	
M	8	1	**3E-4304**	5	INSERT-THREADED (M6X1-THD)	
	9	1	**7X-7729**	6	WASHER (11X25X3-MM THK)	
	10	1	**8E-6856**	1	COVER	
M	11	1	**8T-4136**	6	BOLT (M10X1.5X25-MM)	
	12	1	**9N-1995**	4	RIVET-POP	
M	13	1	**9X-2042**	2	SCREW-TRUSS HEAD (M6X1X12-MM)	
M	14	1	**5C-9553**	4	BOLT (M6X1X16-MM)	
D	15	1	**5P-6605**		SEAL (3.6-M)	
	16	1	**300-3919**	1	SEAL-DOOR (LH)	
	17	1	**9X-8256**	4	WASHER (6.6X12X2-MM THK)	

D-ORDER BY THE METER
M-METRIC PART

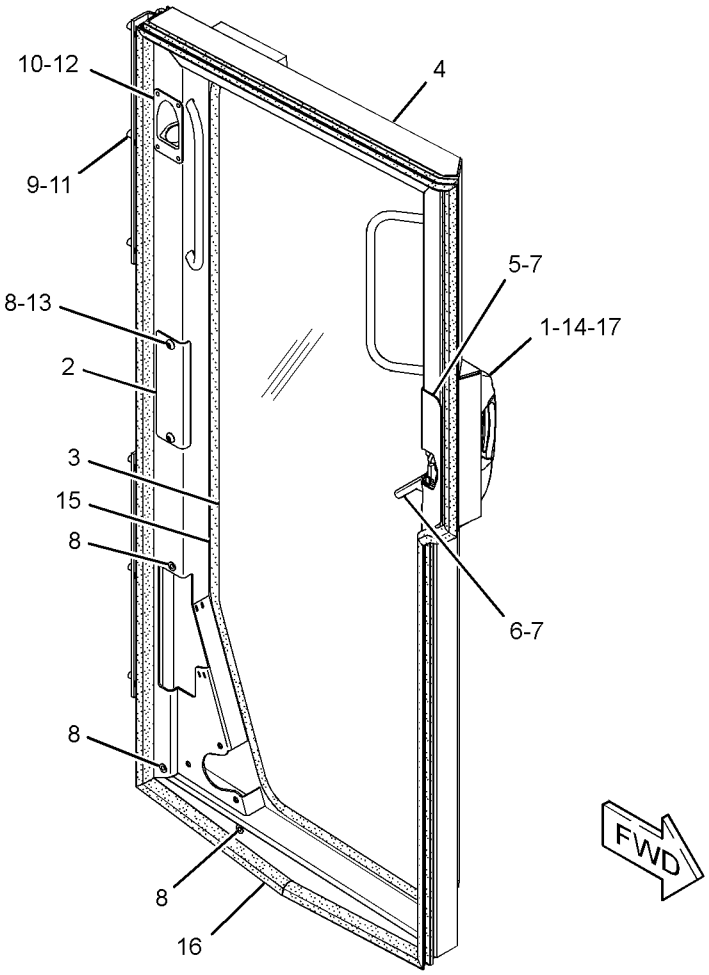

GRAPHIC #1 **<END>** g01391629

OPERATOR STATION

286-9194 DOOR GP-CAB–RH

S/N: J8B1-UP
PART OF 248-4178 CAB GP
AN ATTACHMENT

SMCS-7308 **i03210740**

NOTE	REF NO	GRAPHIC REF	PART NUMBER	QTY	PART NAME 1 2 3 4 5 6 (PRODUCT LEVEL)	SEE PAGE
	1	1	**200-7836**	1	HANDLE AS	
	2	1	**212-7670**	1	PLATE	
	3	1	**271-9252**	1	WINDOW AS (RH)	
	4	1	**255-0845**	1	DOOR AS (RH)	
	5	1	**255-0849**	1	COVER (RH)	
	6	1	**325-5687**	1	LATCH AS (RH)	
M	7	1	**127-2170**	4	SCREW-TRUSS HEAD (M8X1.25X20-MM)	
M	8	1	**3E-4304**	5	INSERT-THREADED (M6X1-THD)	
	9	1	**7X-7729**	6	WASHER (11X25X3-MM THK)	
	10	1	**8E-6856**	1	COVER	
M	11	1	**8T-4136**	6	BOLT (M10X1.5X25-MM)	
	12	1	**9N-1995**	4	RIVET-POP	
M	13	1	**9X-2042**	2	SCREW-TRUSS HEAD (M6X1X12-MM)	
M	14	1	**5C-9553**	4	BOLT (M6X1X16-MM)	
D	15	1	**5P-6605**		SEAL (3.6-M)	
	16	1	**300-3920**	1	SEAL-DOOR (RH)	
	17	1	**9X-8256**	4	WASHER (6.6X12X2-MM THK)	

D-ORDER BY THE METER
M-METRIC PART

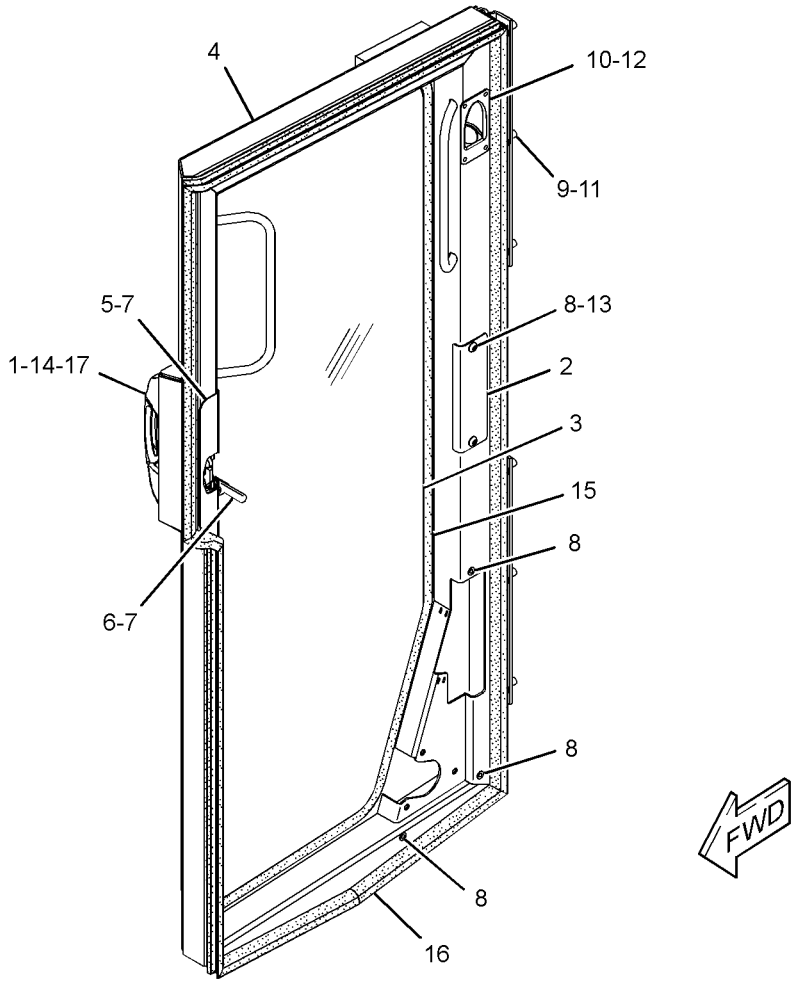

GRAPHIC #1 **<END>** g01391467

OPERATOR STATION

304-8557 DOOR GP-CAB—RH

S/N: J8B1-UP
40-PSI GLASS
PART OF 247-8271 WINDOW GP-CAB
AN ATTACHMENT

SMCS-7308 **i03210893**

NOTE	REF NO	GRAPHIC REF	PART NUMBER	QTY	PART NAME 1 2 3 4 5 6 (PRODUCT LEVEL)	SEE PAGE
	1	1	**200-7836**	1	HANDLE AS	
	2	1	**212-7670**	1	PLATE	
	3	1	**222-2825**	1	GLASS-CAB (DOOR)	
	4	1	**255-0845**	1	DOOR AS (RH)	
	5	1	**255-0849**	1	COVER (RH)	
	6	1	**325-5687**	1	LATCH AS (RH)	
B	7	1	**300-3920**	1	SEAL-DOOR (RH)	
	8	1	**304-0326**	2	CLIP	
	9	1	**110-7524**	6	BUTTON	
M	10	1	**127-2170**	4	SCREW-TRUSS HEAD (M8X1.25X20-MM)	
M	11	1	**3E-4304**	5	INSERT-THREADED (M6X1-THD)	
M	12	1	**5C-9553**	4	BOLT (M6X1X16-MM)	
	13	1	**7X-7729**	6	WASHER (11X25X3-MM THK)	
	14	1	**8E-6856**	1	COVER	
M	15	1	**8T-4136**	6	BOLT (M10X1.5X25-MM)	
	16	1	**9N-1995**	4	RIVET-POP	
M	17	1	**9X-2042**	2	SCREW-TRUSS HEAD (M6X1X12-MM)	
	18	1	**9X-8256**	4	WASHER (6.6X12X2-MM THK)	

B-USE AS REQUIRED
M-METRIC PART

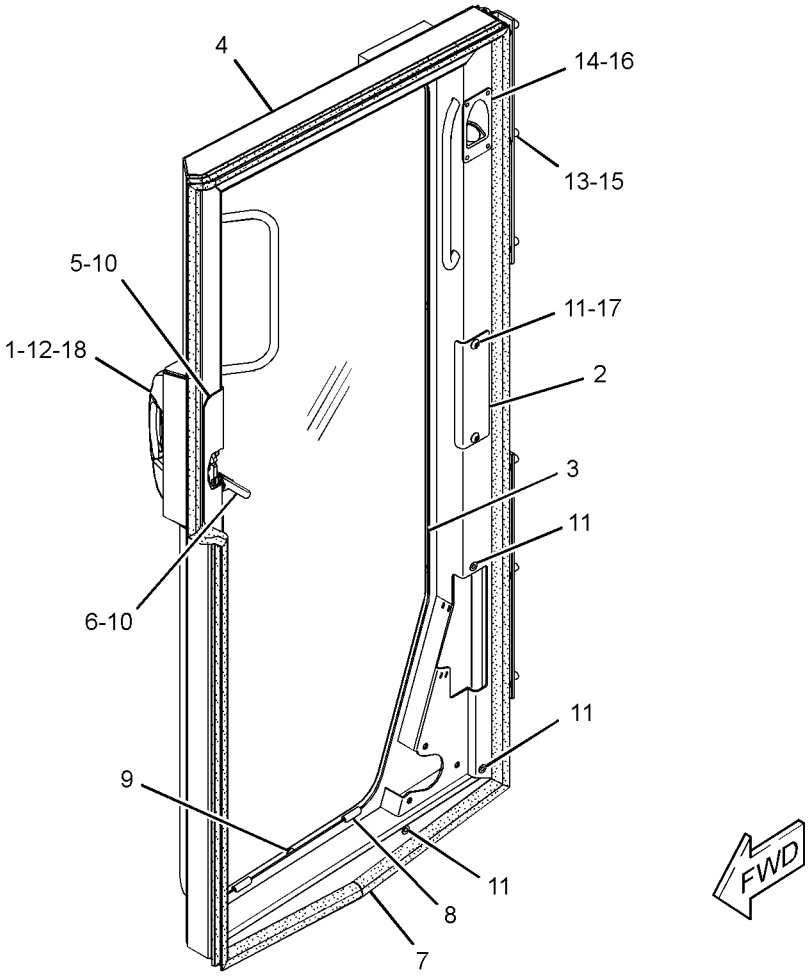

GRAPHIC #1

<END>

g01391423

OPERATOR STATION

304-8558 DOOR GP-CAB–LH

S/N: J8B1-UP
PART OF 247-8271 WINDOW GP-CAB
AN ATTACHMENT

SMCS-7308 **i03210899**

NOTE	REF NO	GRAPHIC REF	PART NUMBER	QTY	PART NAME 1 2 3 4 5 6 (PRODUCT LEVEL)	SEE PAGE
	1	1	**200-7836**	1	HANDLE AS	
	2	1	**212-7670**	1	PLATE	
	3	1	**222-2825**	1	GLASS-CAB (DOOR)	
	4	1	**255-0844**	1	DOOR AS (LH)	
	5	1	**255-0848**	1	COVER (LH)	
	6	1	**325-5686**	1	LATCH AS (LH)	
B	7	1	**300-3919**	1	SEAL-DOOR (LH)	
	8	1	**304-0326**	2	CLIP	
	9	1	**110-7524**	6	BUTTON	
M	10	1	**127-2170**	4	SCREW-TRUSS HEAD (M8X1.25X20-MM)	
M	11	1	**3E-4304**	5	INSERT-THREADED (M6X1-THD)	
M	12	1	**5C-9553**	4	BOLT (M6X1X16-MM)	
	13	1	**7X-7729**	6	WASHER (11X25X3-MM THK)	
	14	1	**8E-6856**	1	COVER	
M	15	1	**8T-4136**	6	BOLT (M10X1.5X25-MM)	
	16	1	**9N-1995**	4	RIVET-POP	
M	17	1	**9X-2042**	2	SCREW-TRUSS HEAD (M6X1X12-MM)	
	18	1	**9X-8256**	4	WASHER (6.6X12X2-MM THK)	

B-USE AS REQUIRED
M-METRIC PART

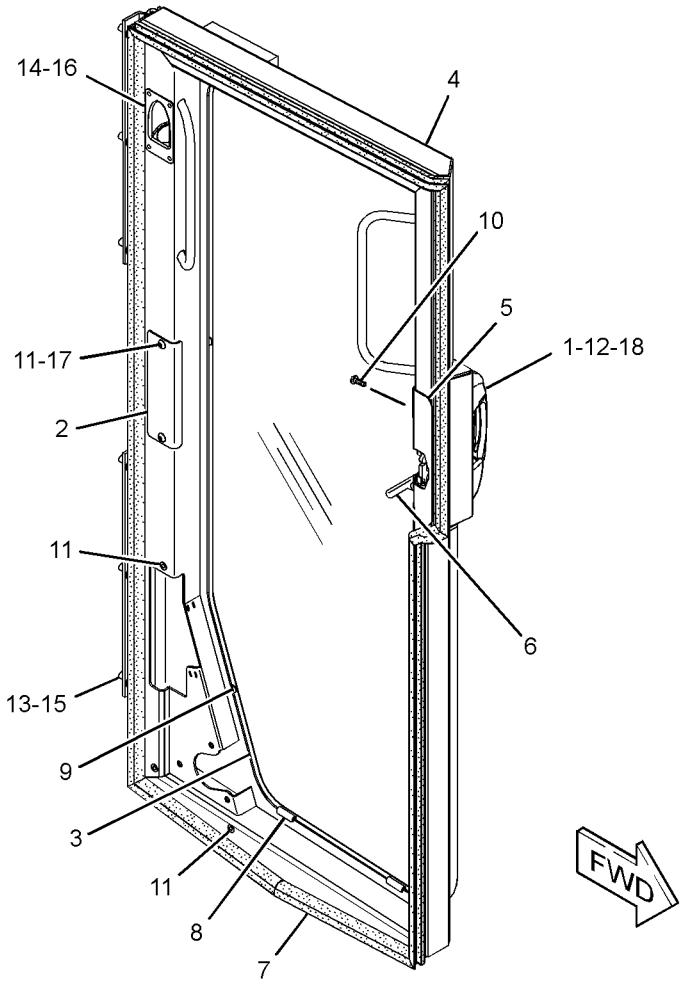

GRAPHIC #1 **<END>** g01391108

OPERATOR STATION

256-0194 FILTER GP-CAB AIR

S/N: J8B1-UP
PART OF 248-4175, 248-4176 CAB AR
AN ATTACHMENT

SMCS-7342 **i03148026**

NOTE	REF NO	GRAPHIC REF	PART NUMBER	QTY	PART NAME 1 2 3 4 5 6 (PRODUCT LEVEL)	SEE PAGE
	1	1	**144-0367**	3	CLAMP-HOSE	
	2	1	*232-3583*	1	PRECLEANER GP (CAB AIR)	
		1	**197-1932**	1	MOTOR AS-BLOWER (24-VOLT, CAB AIR)	
		1	**9W-0852**	2	PIN-CONNECTOR (14-GA)	
		1	**102-8802**	1	KIT-RECEPTACLE (2-PIN)	
					(INCLUDES RECEPTACLE AS & WEDGE)	
	3	1	**235-0320**	1	CAP AS-AIR CLEANER (PRECLEANER)	
	4	1	**261-8820**	1	PLATE AS	
	5	1	**261-8821**	1	BRACKET AS	
	6	1	**261-8822**	1	PLATE AS	
	7	1	**261-8823**	1	DOOR AS	
	8	1	**261-8824**	1	PLATE AS	
	9	1	**265-0959**	1	BRACKET AS	
	10	1	**311-4065**	1	FILTER ELEMENT-AIR (ADVANCED EFFICIENCY)	
	11	1	**117-8929**	4	WASHER (6.6X22X2-MM THK)	
	12	1	**5P-4116**	2	WASHER-HARD (8.8X20.5X2-MM THK)	
M	13	1	**8T-4138**	10	BOLT (M6X1X20-MM)	
M	14	1	**8T-4192**	2	BOLT (M12X1.75X25-MM)	
	15	1	**8T-4205**	6	WASHER-HARD (7.2X14.5X2-MM THK)	
	16	1	**8T-4223**	2	WASHER-HARD (13.5X25.5X3-MM THK)	
M	17	1	**8T-4908**	2	BOLT (M8X1.25X25-MM)	
	18	1	**9G-1307**	1	GROMMET	
E	19	1	**5P-1680**		HOSE (10-CM)	
D	20	1	**5P-5931**		SEAL (0.1-M)	
L	21	1	**6V-5654**		SEAL (2-DM)	
D	22	1	**5P-7211**		SEAL (0.3-M)	
D	23	1	**5P-7483**		SEAL (0.15-M)	
D	23A	1	**5P-7483**		SEAL (0.1-M)	
E	24	1	**8T-9005**		SEAL (23-CM)	

D-ORDER BY THE METER
E-ORDER BY THE CENTIMETER
L-ORDER BY THE DECIMETER
M-METRIC PART

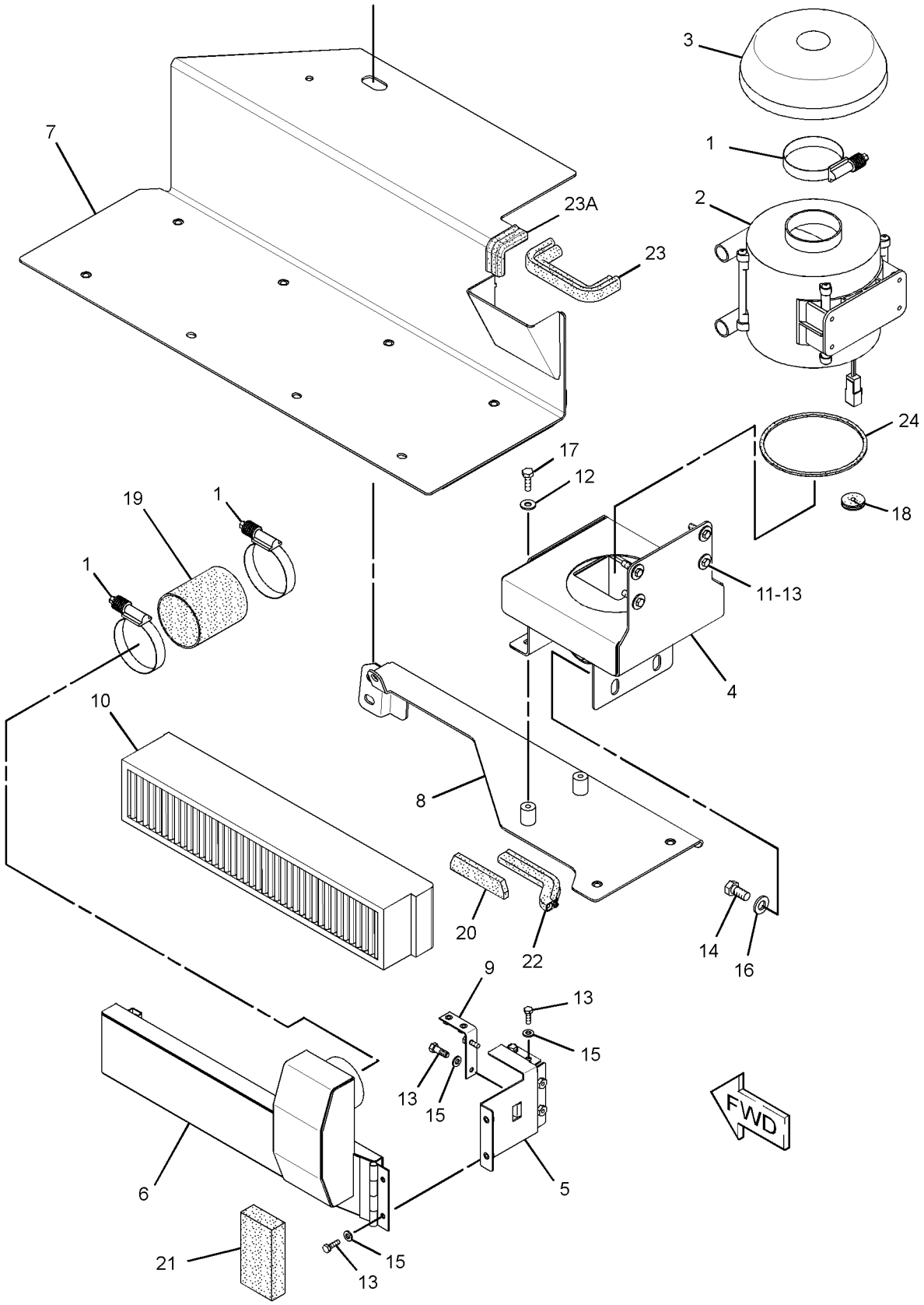

GRAPHIC #1 **<END>** g01621543

OPERATOR STATION

205-3645 HEATER GP-CAB

S/N: J8B1-UP

PART OF 263-3278 HEATER GP-CAB

SMCS-7304 **i03205785**

NOTE	REF NO	GRAPHIC REF	PART NUMBER	QTY	PART NAME 1 2 3 4 5 6 (PRODUCT LEVEL)	SEE PAGE
	1	1	**3E-5239**	1	RELAY AS (24-VOLT) (HEATER, AIR CONDITIONER)	
	2	2	**3E-5464**	1	THERMOSTAT (CAB AIR) (HEATER, AIR CONDITIONER)	
	3	1,2	**5V-1474**	12	SCREW-FORMING (10-16X0.625-IN)	
	4	2	**9X-2185**	3	SCREW (8-15X0.44-IN)	
	5	2	**131-3093**	1	BUSHING	
	6	1	**133-8715**	1	GROMMET	
	7	2	**136-6505**	2	INSULATION	
	8	2	**306-9992**	1	COIL AS-HEATER	
	9	2	**216-8732**	1	COIL AS-EVAPORATOR	
	10	1	**222-8843**	1	COVER	
	11	2	**225-2338**	1	GASKET	
	12	2	**225-2339**	1	SEAL	
	13	2	**245-1596**	1	ACTUATOR	
Y	14	1	**248-2921**	1	RESISTOR GP-CAB HEATER	334
	15	2	**248-2923**	3	FITTING-DRAIN	
	16	1	**248-2931**	1	PLATE	
	17	2	**248-6772**	4	SCREW-MACHINE (8-16X7.75-IN)	
	18	1	**249-9311**	1	HARNESS AS-HEATER & AIR COND	
		1	**239-9368**	1	RESISTOR AS	
		1	**155-2255**	1	KIT-CONNECTING PLUG (12-PIN)	
		1	**155-2270**	3	KIT-CONNECTING PLUG (2-PIN)	
					(EACH INCLUDES PLUG AS, WEDGE, & INTERFACE SEAL)	
		1	**102-8802**	1	KIT-RECEPTACLE (2-PIN)	
					(INCLUDES RECEPTACLE AS & WEDGE)	
		1	**9X-1054**	1	PLUG AS-CONNECTOR (4-PIN)	
		1	**7K-1181**	1	STRAP-CABLE	
	19	1	**264-0461**	1	PLATE	
	20	2	**264-0462**	1	PLATE	
	21	2	**264-0465**	1	PLATE AS	
	22	2	**264-0466**	1	PLATE AS	
	23	1	**264-0467**	1	PLATE	
	24	2	**264-0468**	1	PLATE	
	25	2	**268-8792**	1	MOTOR AS-BLOWER (24-VOLT, A/C, HEATER)	
		2	**9W-0852**	2	PIN-CONNECTOR (14-GA)	
		2	**102-8802**	1	KIT-RECEPTACLE (2-PIN)	
					(INCLUDES RECEPTACLE AS & WEDGE)	
	26	2	**264-1476**	1	VALVE AS-WATER	
	27	1	**266-3447**	1	CASE AS	
		1	**117-9066**	1	LATCH AS	
M	28	1,2	**129-3178**	9	LOCKNUT (M6X1-THD)	
	29	2	**3B-4501**	2	LOCKWASHER	
	30	2	**4M-6582**	1	SEAL-O-RING	
	31	1	**4P-8134**	3	CLIP	
	32	1	**6C-3680**	2	RIVET-POP	
	33	2	**6P-1301**	1	GROMMET	
M	34	1	**6V-7357**	5	BOLT (M6X1X25-MM)	
	35	1	**8T-4205**	8	WASHER-HARD (7.2X14.5X2-MM THK)	
	36	2	**8T-6631**	2	SCREW-MACHINE (8-32X0.5-IN)	
	37	1,2	**9X-8256**	6	WASHER (6.6X12X2-MM THK)	
D	38	2	**5P-5639**		SEAL (0.26-M EACH)	
H	39	2	**267-8575**		TUBE (6-DM EACH)	
	40	2	**278-3354**	1	FILM-INSTRUCTION (HVAC WATER, DRAINING, FILLING)	
	41	1	**225-4174**	1	FITTING-DRAIN	

205-3645 **HEATER GP-CAB** *(contd.)* **i03205785**

NOTE	REF NO	GRAPHIC REF	PART NUMBER	QTY	PART NAME 1 2 3 4 5 6 (PRODUCT LEVEL)	SEE PAGE
D	42	2	**5P-7070**		INSULATION-STRIP (1.3-M)	
	43	1	**3S-2093**	7	STRAP-CABLE	

D-ORDER BY THE METER
H-ORDER BY THE DECIMETER
M-METRIC PART
Y-SEPARATE ILLUSTRATION

REFER TO ALL ILLUSTRATIONS OF
THIS GROUP FOR AUXILIARY VIEWS

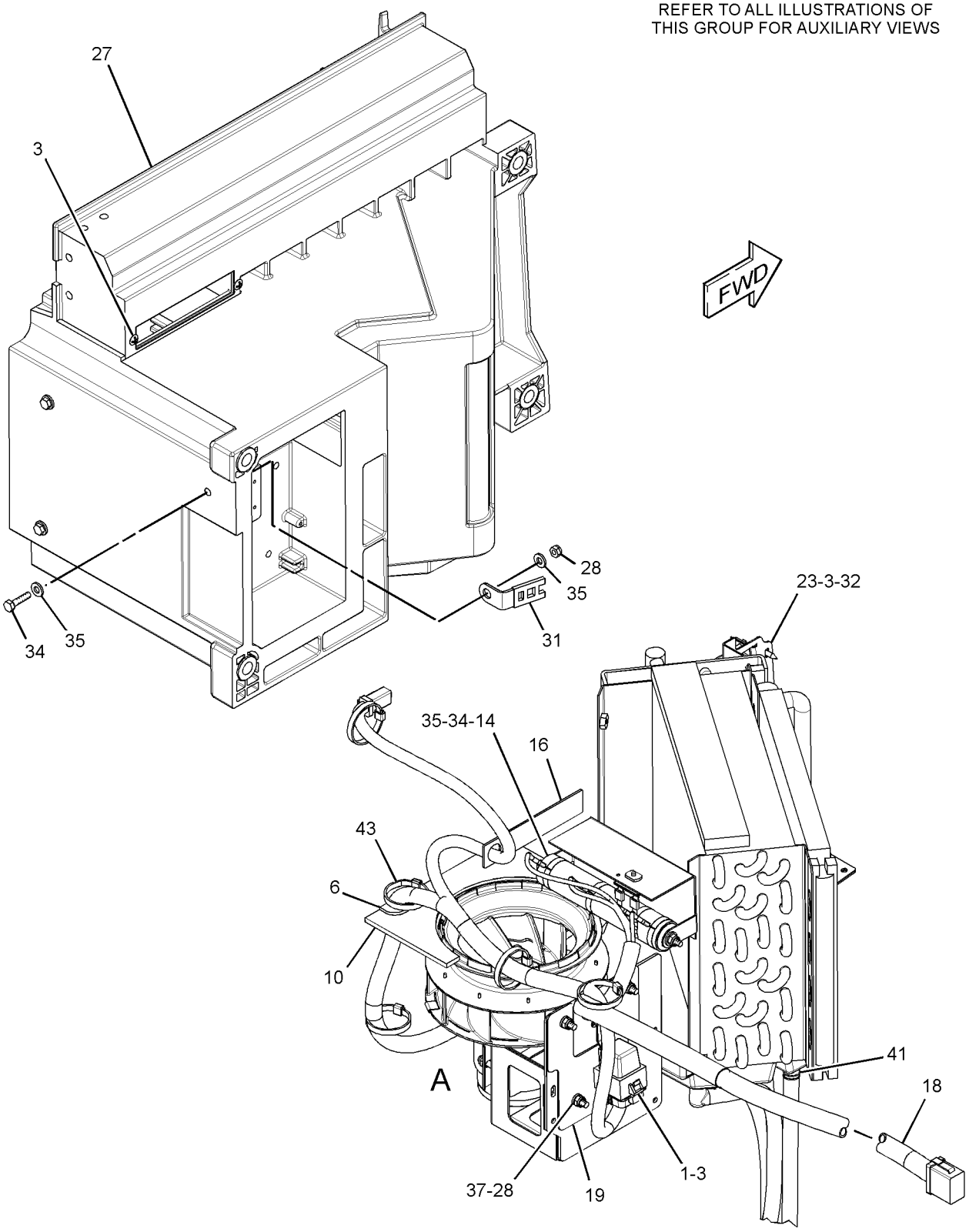

GRAPHIC #1

g01667916

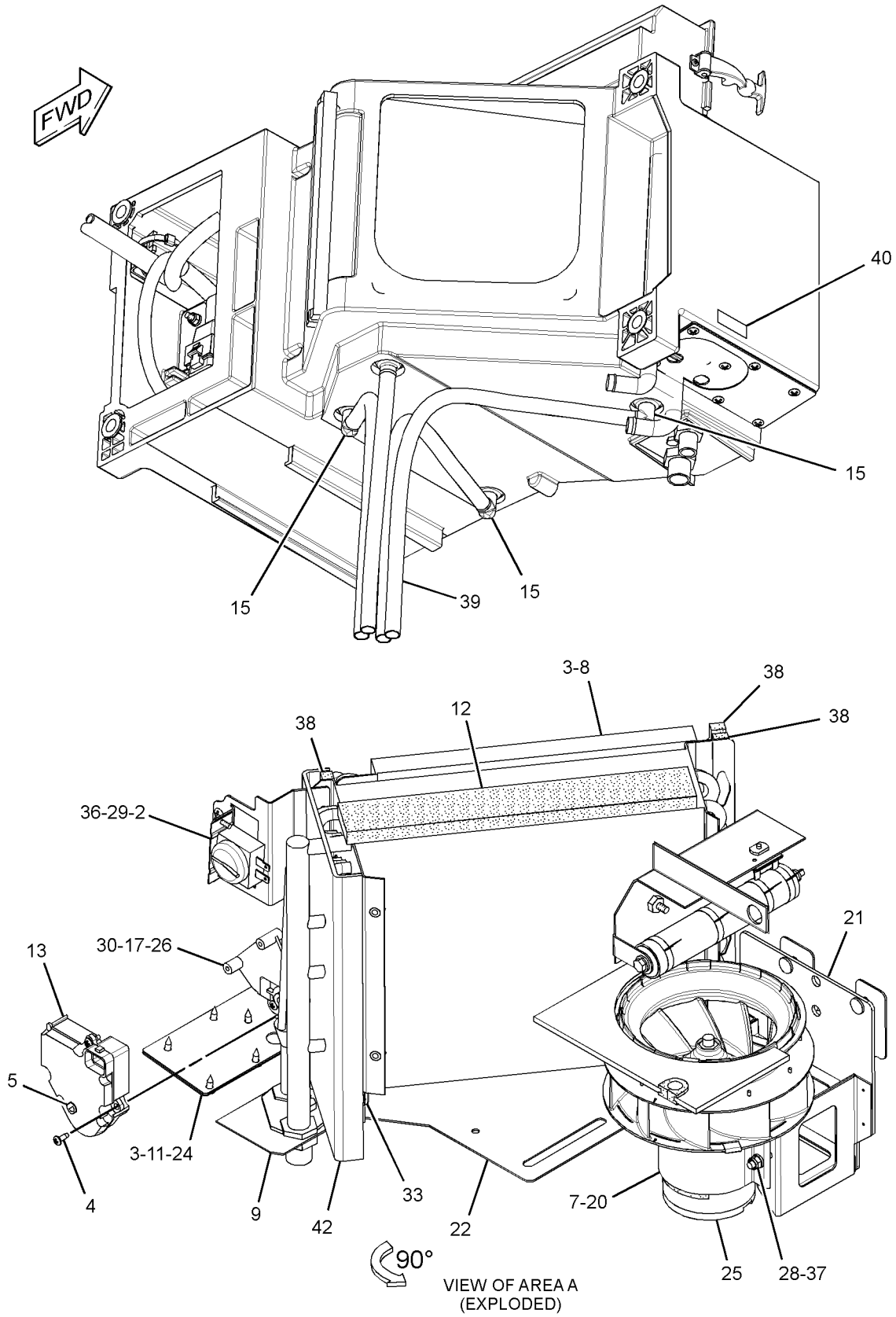

GRAPHIC #2 **<END>** g01667918

OPERATOR STATION

207-1407 HEATER GP-CAB

S/N: J8B1-UP

PART OF 209-9700 PLATFORM AR

SMCS-7304 **i02815768**

NOTE	REF NO	GRAPHIC REF	PART NUMBER	QTY	PART NAME 1 2 3 4 5 6 (PRODUCT LEVEL)	SEE PAGE
	1	1	**209-8217**	1	FILTER ELEMENT-CAB AIR (STANDARD EFFICIENCY) (CAB)	
	2	1	**216-4998**	1	PLATE AS	
	3	1	**238-0479**	1	FILTER ELEMENT-AIR (STANDARD) (CAB)	
	4	1	**248-2929**	1	GASKET	
	5	1	**248-2930**	1	GASKET	
Y	6	1	*263-3278*	1	HEATER GP-CAB	1098
	7	1	**7X-7729**	4	WASHER (11X25X3-MM THK)	
M	8	1	**8T-6466**	2	BOLT (M10X1.5X60-MM)	
D	9	1	**5P-6882**		SEAL (0.2-M)	
M	10	1	**5C-9553**	4	BOLT (M6X1X16-MM)	
	11	1	**8T-4205**	4	WASHER-HARD (7.2X14.5X2-MM THK)	
	12	1	**280-8785**	1	BRACKET AS	
	13	1	**7K-1181**	1	STRAP-CABLE	
M	14	1	**8T-4133**	2	NUT (M10X1.5-THD)	
	15	1	**242-1583**	2	STUD (M10X1.5X75-MM)	

D-ORDER BY THE METER
M-METRIC PART
Y-SEPARATE ILLUSTRATION

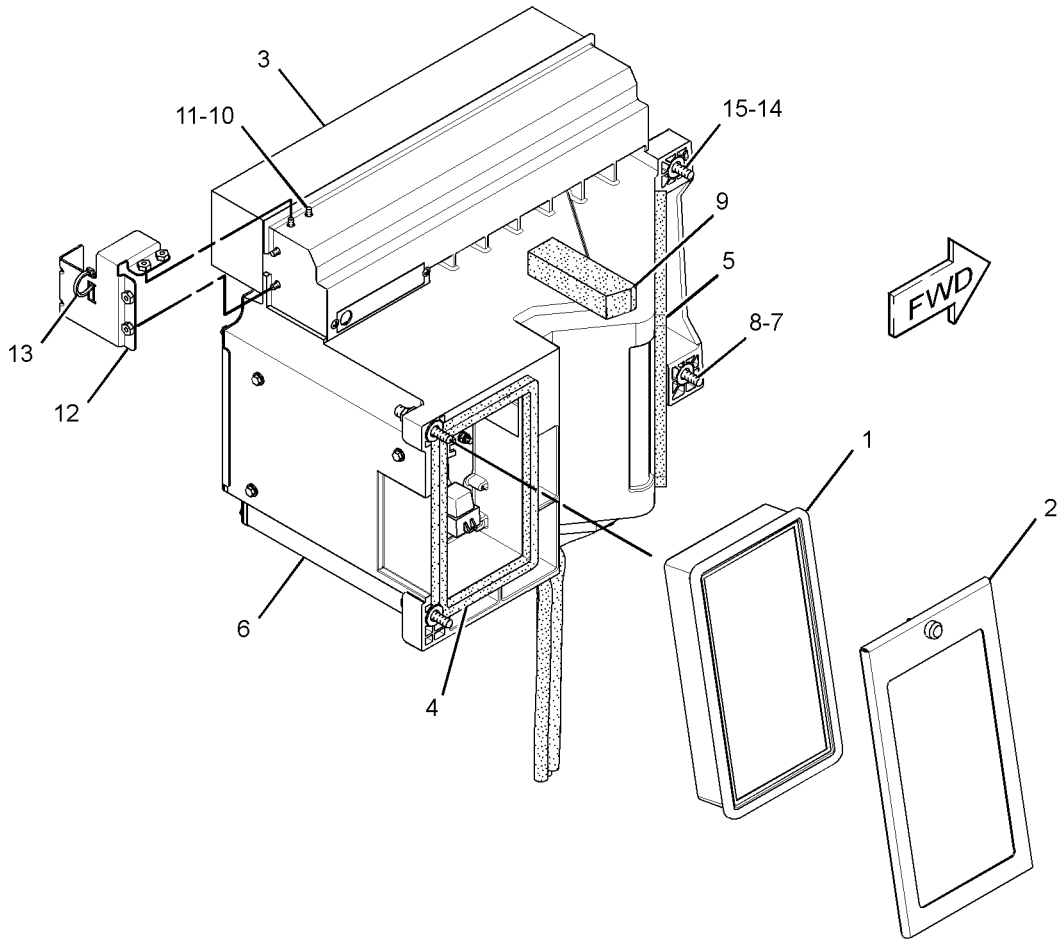

GRAPHIC #1 **<END>** g01424740

OPERATOR STATION

263-3278 HEATER GP-CAB

S/N: J8B1-UP

PART OF 207-1407 HEATER GP-CAB

SMCS-7304 **i02352987**

NOTE	REF NO	GRAPHIC REF	PART NUMBER	QTY	PART NAME 1 2 3 4 5 6 (PRODUCT LEVEL)	SEE PAGE
Y	1	1	**205-3645**	1	HEATER GP-CAB	1093
	2	1	**266-3450**	1	PLATE AS	
M	3	1	**5C-9553**	2	BOLT (M6X1X16-MM)	
M	4	1	**8T-4171**	6	BOLT (M6X1X12-MM)	
	5	1	**8T-4205**	8	WASHER-HARD (7.2X14.5X2-MM THK)	

M-METRIC PART
Y-SEPARATE ILLUSTRATION

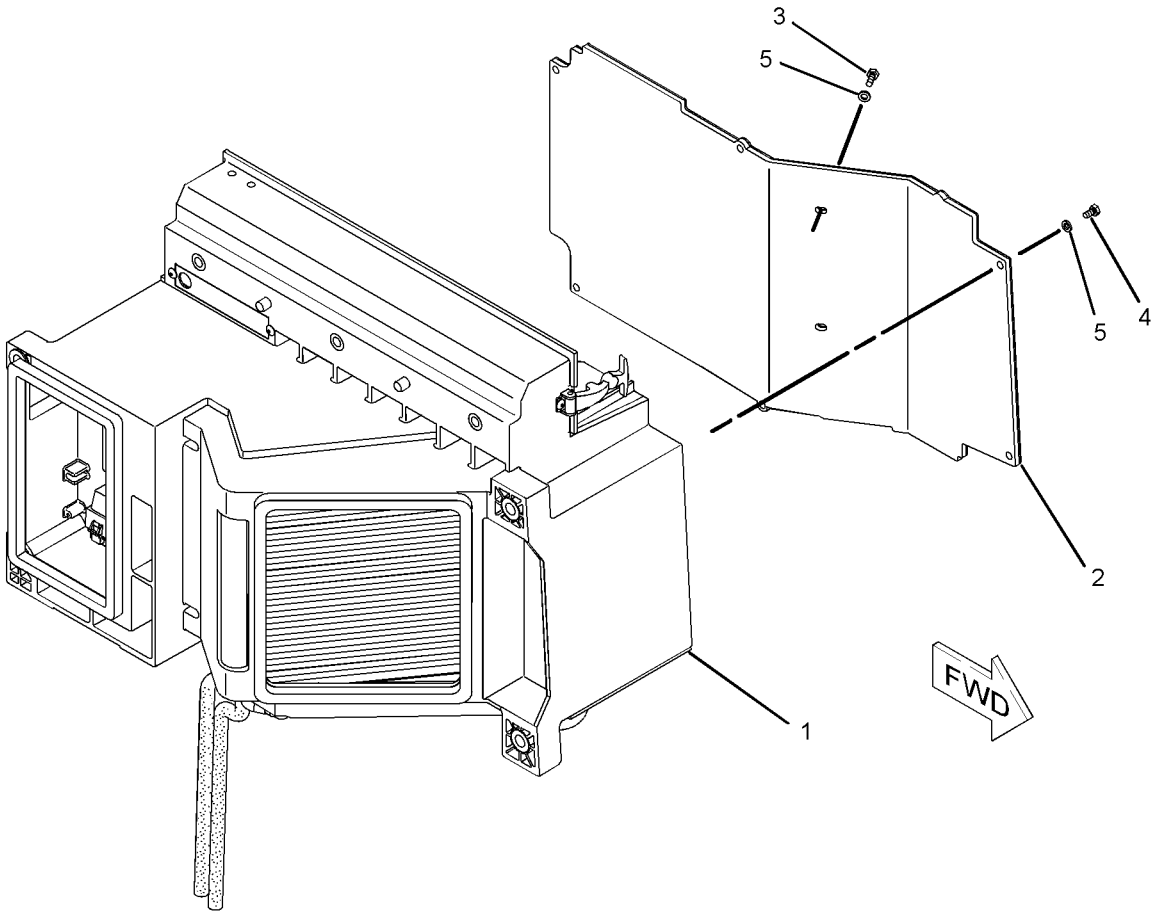

GRAPHIC #1 **<END>** g01190957

OPERATOR STATION

174-2231 HOUSING GP-SEAT SUSPENSION

S/N: J8B1-UP
PART OF 160-7165 SUSPENSION GP-SEAT
ALSO AN ATTACHMENT

SMCS-7321 **i01883773**

NOTE	REF NO	GRAPHIC REF	PART NUMBER	QTY	PART NAME 1 2 3 4 5 6 (PRODUCT LEVEL)	SEE PAGE
	1	1	**1Y-7927**	1	PIN	
	2	1	**2D-6235**	2	LOCKNUT (1/4-20-THD)	
	3	1	**2M-7819**	4	RING-RETAINING	
	4	1	**3D-2975**	2	RING-RETAINING	
	5	1	**4B-5059**	6	WASHER (15X29.5X2.5-MM THK)	
	6	1	**4N-2927**	2	RACE-THRUST BEARING	
	7	1	**5D-4822**	2	RING-RETAINING	
	8	1	**5P-8445**	4	RING-RETAINING	
	9	1	**5V-0770**	2	BOLT-CARRIAGE (1/4-20X0.74-IN)	
	10	1	**7M-7219**	1	BEARING-THRUST	
	11	1	**7V-5191**	2	SPACER (28X10X7.1-MM THK)	
	12	1	**8L-8413**	2	STRAP-CABLE	
	13	1	**8S-7803**	4	RING-RETAINING	
	14	1	**8Y-6041**	1	ARM AS	
	15	1	**8Y-6045**	1	CAM	
	16	1	**8Y-6046**	1	PIN	
	17	1	**8Y-6047**	2	PIN	
	18	1	**8Y-6060**	2	ROLLER	
	19	1	**8Y-6062**	1	LINK-ACTUATOR	
	20	1	**8Y-6063**	1	LINK-ACTUATOR	
	21	1	**8Y-6064**	2	ROLLER-SLIDER	
	22	1	**8Y-6066**	1	SPRING	
	23	1	**8Y-6067**	1	SPACER (10.54-MM THK)	
	24	1	**8Y-6068**	1	NUT (3/8X16-THD)	
	25	1	**8Y-6069**	1	ADJUSTER AS	
	26	1	**9X-8918**	3	SCREW-FLAT HEAD (8-32X0.5-IN)	
	27	1	**095-0878**	1	PIN-SPRING	
	28	1	**131-4242**	1	BOLT (3/8-16X5.18-IN)	
	29	1	**131-5167**	1	KNOB AS-ADJUSTMENT (SEAT SUSPENSION)	
	30	1	**161-5967**	1	SHAFT	
	31	1	**174-2237**	1	HOUSING AS-UPPER	
JZ	32	1		1	KNOB-HEIGHT (SEAT SUSPENSION)	
JZ	33	1		1	KNOB-HEIGHT (SEAT SUSPENSION)	
LZ	34	1		2	SPRING	
LZ	35	1		2	BUSHING	
VZ	36	1		2	SPRING	
VZ	37	1		2	SPACER	
VZ	38	1		2	BUSHING-GUIDE	
VZ	39	1		2	ROD	
PZ	40	1		1	TAPE-INDICATOR	
PZ	41	1		1	GUIDE	
SZ	42	1		1	PIN	
SZ	43	1		1	FOLLOWER-CAM	
TZ	44	1		1	PIN	
TZ	45	1		1	FOLLOWER-CAM	
UZ	46	1		2	ROLLER AS	
UZ	47	1		1	ROLLER AS	
QZ	48	1		3	BUMPER	
					AVAILABLE REPAIR KIT(S):	
J			**8Y-5945**	1	KIT-SUSPENSION KNOB (HEIGHT ADJUSTMENT) (SUSPENSION SEAT)	
L			**8Y-6859**	1	KIT-SPRING (SUSPENSION SEAT)	
V			**8Y-6860**	1	KIT-SPRING (HEIGHT ADJUSTMENT) (SUSPENSION SEAT)	

174-2231 **HOUSING GP-SEAT SUSPENSION** *(contd.)* **i01883773**

NOTE	REF NO	GRAPHIC REF	PART NUMBER	QTY	PART NAME 1 2 3 4 5 6 (PRODUCT LEVEL)	SEE PAGE
P			**100-3224**	1	KIT-INDICATOR (WEIGHT ADJUSTMENT) (SUSPENSION SEAT)	
Q			**100-5179**	1	KIT-BUMPER (WEIGHT ADJUSTMENT) (SUSPENSION SEAT)	
S			**108-4086**	1	KIT-FOLLOWER (SUSPENSION SEAT)	
T			**108-4087**	1	KIT-FOLLOWER (SUSPENSION SEAT)	
U			**108-4103**	1	KIT-BEARING (SUSPENSION SEAT)	

J-KIT MARKED J INCLUDES PARTS MARKED J
L-KIT MARKED L INCLUDES PARTS MARKED L AND RETAINING RING
P-KIT MARKED P INCLUDES PARTS MARKED P AND CABLE STRAP
Q-KIT MARKED Q INCLUDES PARTS MARKED Q
S-KIT MARKED S INCLUDES PARTS MARKED S
T-KIT MARKED T INCLUDES PARTS MARKED T
U-KIT MARKED U INCLUDES PARTS MARKED U
V-KIT MARKED V INCLUDES PARTS MARKED V
Z-NOT SERVICED SEPARATELY

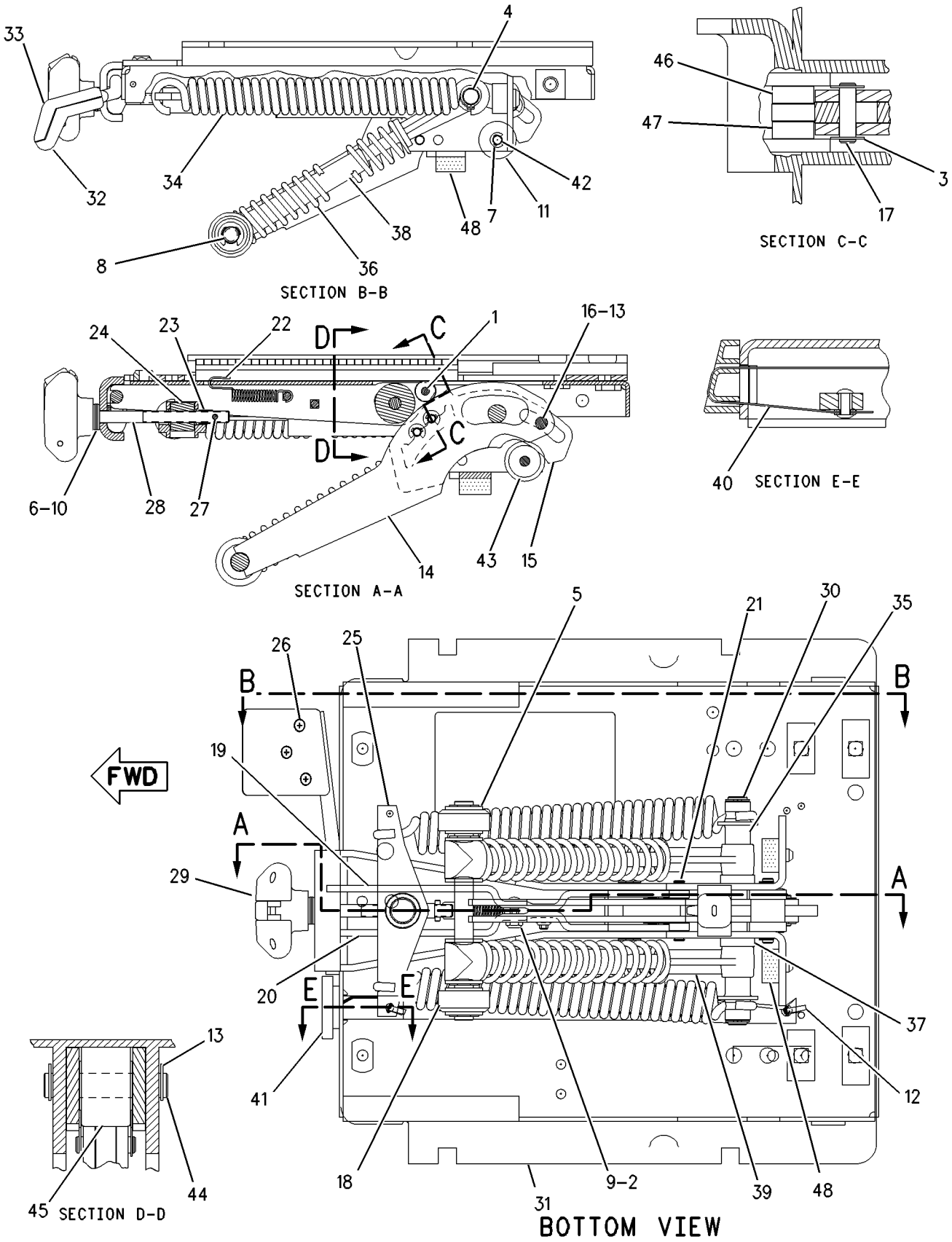

GRAPHIC #1 **<END>** g00608620

OPERATOR STATION

214-1760 INSTALLATION GP-RADIO

S/N: J8B1-UP

PART OF 213-1100, 286-9188, 295-0710 CAB AR

ALSO AN ATTACHMENT

SMCS-7338 **i02228500**

NOTE	REF NO	GRAPHIC REF	PART NUMBER	QTY	PART NAME 1 2 3 4 5 6 (PRODUCT LEVEL)	SEE PAGE
	1	1	**3E-4356**	4	WASHER-HARD (17.5X30X6-MM THK)	
	2	1	**4N-9915**	4	GROMMET AS	
	3	1	**6V-7646**	4	WASHER-HARD (7.2X25X2-MM THK)	
	4	1	**6Y-7385**	1	BRACKET	
	5	1	**8E-1118**	1	ANTENNA AS	
	6	1	**8K-1433**	1	GROMMET	
	7	1	**9U-8263**	1	COVER	
	8	1	**9U-8746**	1	CABLE AS-COAXIAL	
	9	1	**168-8772**	2	SPEAKER AS-RADIO	
	10	1	**108-3138**	1	BRACKET AS	
	11	1	**217-8433**	1	FILM-NOTICE (RADIO)	
M	12	1	**5C-2890**	4	NUT (M6X1-THD)	
M	13	1	**8T-4171**	1	BOLT (M6X1X12-MM)	
M	14	1	**9X-1046**	8	SCREW (M4X0.7X18-MM)	
	15	1	**9X-8256**	1	WASHER (6.6X12X2-MM THK)	

M-METRIC PART

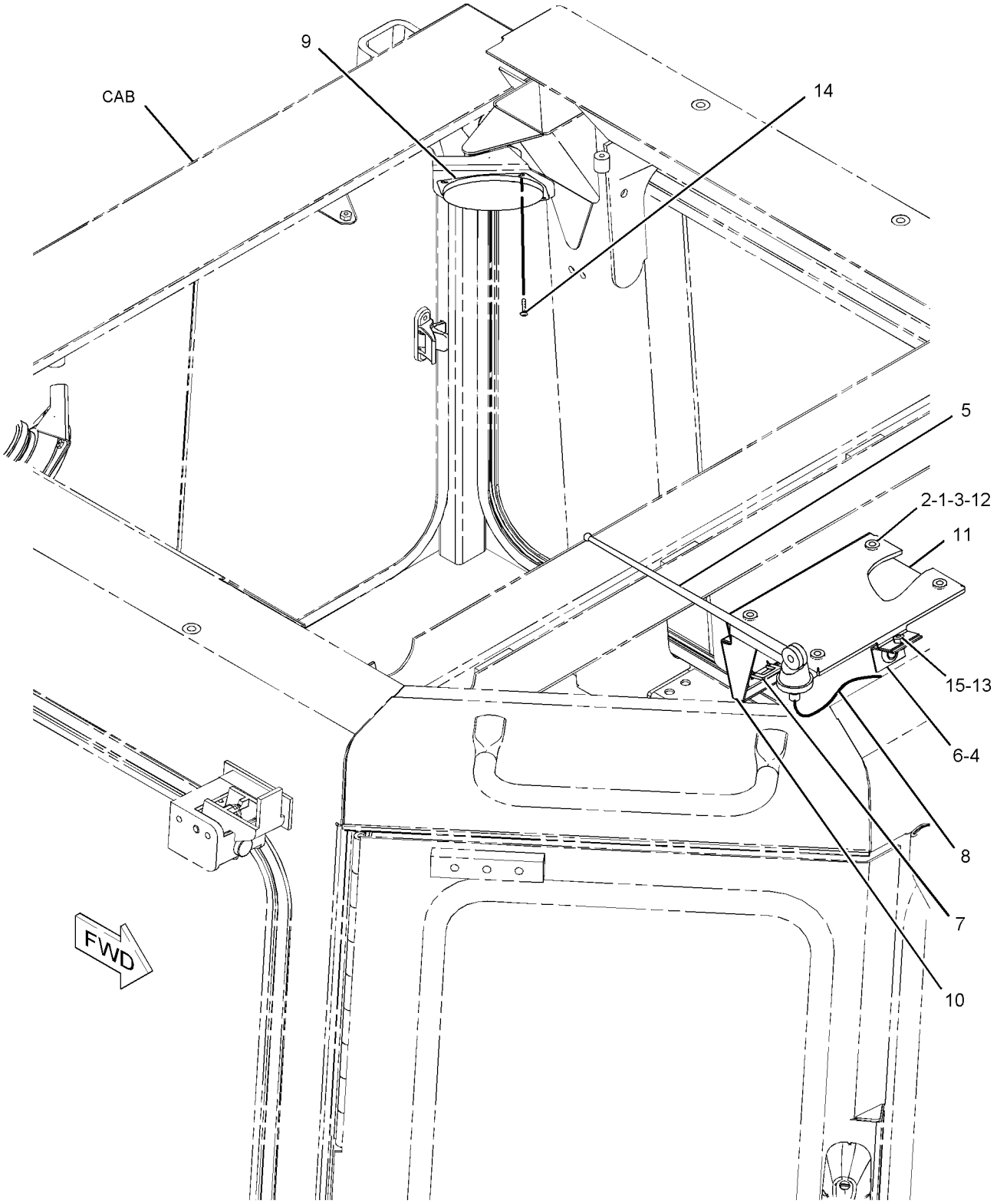

GRAPHIC #1 **<END>** g01110176

OPERATOR STATION

313-4095 KIT-WINDOW

S/N: J8B1-UP

AN ATTACHMENT

SMCS-7310 **i03031846**

NOTE	REF NO	GRAPHIC REF	PART NUMBER	QTY	PART NAME 1 2 3 4 5 6 (PRODUCT LEVEL)	SEE PAGE
	1	1	**304-0326**	6	CLIP	
Y	2	1	*310-5931*	1	WIPER GP-WINDOW	1222
	3	1	**110-7524**	34	BUTTON	
	4	1	**222-2824**	1	GLASS-FRONT	
	5	1	**222-2825**	2	GLASS-CAB (DOOR)	
	6	1	**222-2828**	1	GLASS-REAR	
	7	1	**280-2751**	2	GLASS (SIDE)	
	8	1	**280-2752**	1	FRAME-RH	
	9	1	**280-2753**	1	FRAME-LH	
	10	1	**304-5292**	2	CLIP	

Y-SEPARATE ILLUSTRATION

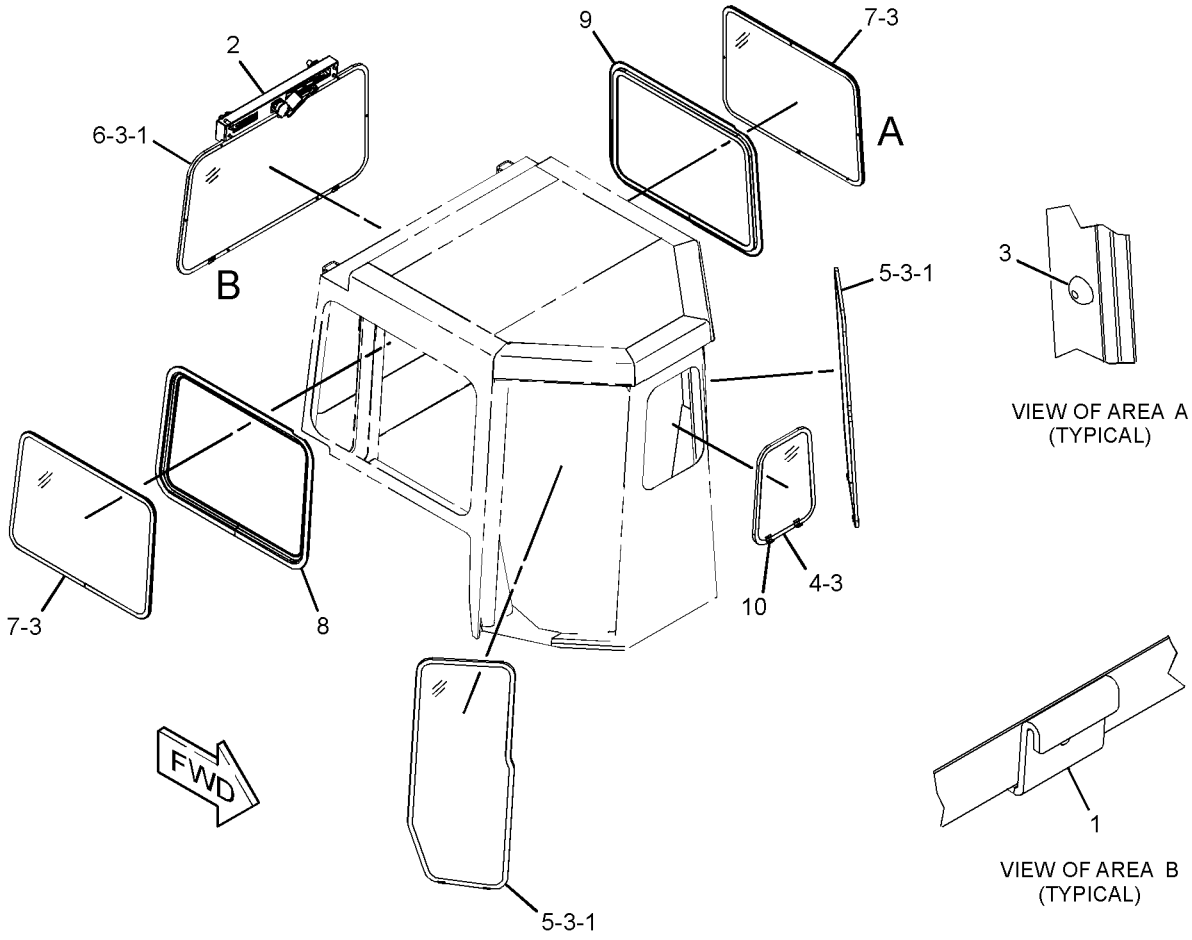

GRAPHIC #1 **<END>** g01398695

OPERATOR STATION

212-8725 LINER GP-CAB

S/N: J8B1-UP

PART OF 213-1100, 286-9188, 295-0710 CAB AR

ALSO AN ATTACHMENT

SMCS-7329 **i03125940**

NOTE	REF NO	GRAPHIC REF	PART NUMBER	QTY	PART NAME 1 2 3 4 5 6 (PRODUCT LEVEL)	SEE PAGE
M	1	1	**3E-6924**	2	SCREW-TRUSS HEAD (M6X1X50-MM)	
	2	1	**8Y-6388**	6	LOUVER AS-VENT	
	3	1	**9P-6571**	1	PLUG	
	4	1	**141-5169**	2	WASHER (7.5X40X3-MM THK)	
	5	1	**171-4047**	5	LOUVER AS-VENT	
	6	1	**209-5161**	1	CONSOLE-REAR	
	7	1	**209-5162**	1	LINER AS	
	8	1	**209-5193**	1	DUCT-RH	
	9	1	**209-5194**	1	CONSOLE (LH)	
	10	1	**212-8948**	1	LINER AS (REAR)	
	11	1	**212-9973**	1	DUCT (LH)	
	12	1	**212-9974**	1	DUCT (LH)	
	13	1	**212-9975**	1	DUCT (UPPER)	
	14	1	**212-9976**	1	DUCT (LH)	
	15	1	**214-1751**	1	BARRIER	
	16	1	**214-3316**	1	LINER AS	
	17	1	**214-7737**	1	DUCT-RH	
	18	1	**216-2813**	1	DUCT-UPPER	
	19	1	**220-3987**	1	COVER	
	20	1	**220-3988**	1	COVER (WIPER MOTOR, LH DOOR)	
	21	1	**220-3989**	1	COVER (WIPER MOTOR, RH DOOR)	
	22	1	**227-4158**	1	PLATE	
	23	1	**238-1265**	1	DUCT (UPPER)	
	24	1	**256-5701**	1	COVER AS (RH)	
		1	**209-5204**	1	COVER (RH)	
	25	1	**101-2867**	18	WASHER-HARD (7.2X25X2-MM THK)	
	26	1	**104-2091**	22	SCREW-FLAT HEAD (NO 6X0.5-IN)	
M	27	1	**3E-8020**	22	SCREW-TRUSS HEAD (M6X1X25-MM)	
M	28	1	**9X-2046**	8	SCREW-TRUSS HEAD (M6X1X35-MM)	
E	29	1	**9X-6382**		SEAL (15-CM)	
D	30	1	**5P-5969**		SEAL (0.1-M EACH)	
D	30A	1	**5P-5969**		SEAL (0.08-M)	
	31	1	**9X-2038**	4	WASHER (7X19X2-MM THK)	

D-ORDER BY THE METER
E-ORDER BY THE CENTIMETER
M-METRIC PART

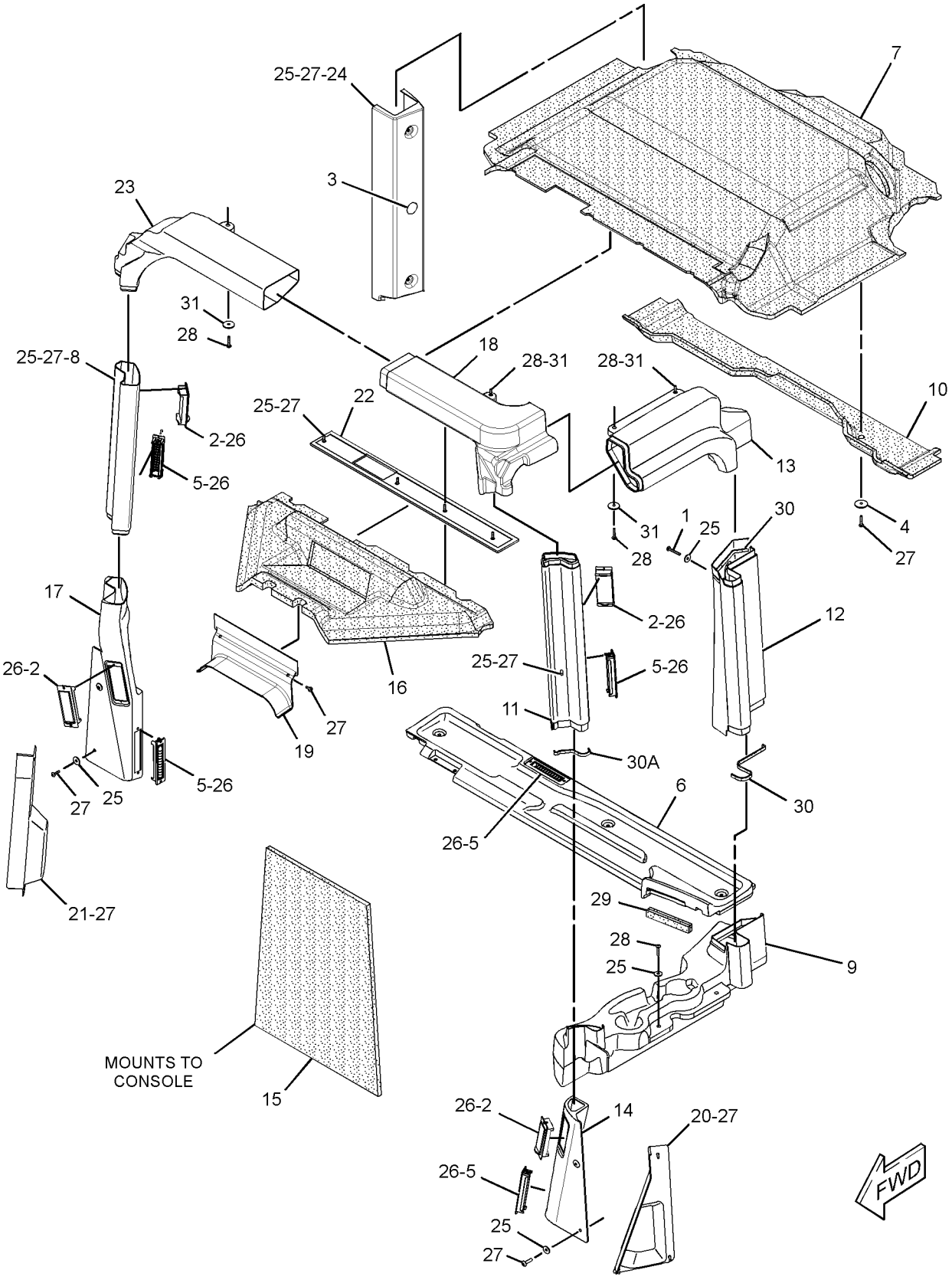

GRAPHIC #1 **<END>** g01558493

OPERATOR STATION

209-2123 LINES GP-AIR CONDITIONER—ROPS

S/N: J8B1-501
PART OF 209-9751 AIR CONDITIONER AR
AN ATTACHMENT

SMCS-1808 **i03437119**

NOTE	REF NO	GRAPHIC REF	PART NUMBER	QTY	PART NAME 1 2 3 4 5 6 (PRODUCT LEVEL)	SEE PAGE
	1	1	**1P-6356**	1	PLATE	
	2	1	**175-7162**	1	RECEIVER-REFRIGERANT DRYER	
		1	**7X-2049**	1	TUBE AS-REFRIGERANT ORIFICE	
	3	1	**5P-3948**	1	COUPLING AS-REFRIGERANT	
		1	**7F-8607**	1	SEAL-O-RING	
		1	**107-4399**	1	VALVE AS	
	4	1	**6D-2667**	1	CLIP	
	5	1	**6T-3643**	1	CIRCUIT BREAKER AS (15-AMPERE) (CONDENSOR FAN MOTOR)	
		1	**6V-8376**	2	SCREW-MACHINE (8-32XO.25-IN)	
		1	**9B-7233**	2	LOCKWASHER	
	6	1	**7K-3176**	1	COUPLING AS-REFRIGERANT (SELF SEALING)	
		1	**107-4394**	1	GASKET	
		1	**107-4393**	1	VALVE AS	
	7	1	**9R-2216**	1	BOSS	
	8	1	**9X-0358**	1	FITTING AS	
M	9	1	**101-3129**	2	STUD (M10X1.5-THD)	
	10	1	**114-5333**	1	SWITCH AS-PRESSURE (COMPRESSOR, HIGH SIDE)	
		1	**102-8802**	1	KIT-RECEPTACLE (2-PIN)	
					(INCLUDES RECEPTACLE AS & WEDGE)	
		1	**3E-3365**	1	WEDGE-RECEPTACLE LOCK (2-PIN)	
		1	**186-3735**	2	PIN-CONNECTOR (16-GA TO 18-GA)	
E		1	**9X-1386**		SLEEVE (31-CM)	
	11	1	**103-6100**	3	FITTING AS-AIR CONDITIONER (QUICK DISCONNECT)	
					(EACH INCLUDES)	
		1	**9X-7382**	2	SEAL-O-RING	
	12	1	**116-6202**	2	BOOT	
	13	1	**136-1122**	1	BUSHING	
	14	1	**149-6371**	1	SWITCH AS-PRESSURE (COMPRESSOR, LOW SIDE)	
		1	**102-8802**	1	KIT-RECEPTACLE (2-PIN)	
					(INCLUDES RECEPTACLE AS & WEDGE)	
		1	**3E-3365**	1	WEDGE-RECEPTACLE LOCK (2-PIN)	
		1	**186-3735**	2	PIN-CONNECTOR (16-GA TO 18-GA)	
	15	1	**169-7443**	1	TIMER AS-ON DELAY (24-VOLT) (COMPRESSOR CYCLE LIMITER)	
		1	**186-3735**	4	PIN-CONNECTOR (16-GA TO 18-GA)	
		1	**102-8804**	1	KIT-RECEPTACLE (4-PIN)	
					(INCLUDES RECEPTACLE AS & WEDGE)	
	16	1	**170-5293**	1	HARNESS AS-HEATER & AIR COND (COMPRESSOR)	
		1	**102-8805**	1	KIT-RECEPTACLE (6-PIN)	
					(INCLUDES RECEPTACLE AS & WEDGE)	
		1	**155-2270**	3	KIT-CONNECTING PLUG (2-PIN)	
					(EACH INCLUDES PLUG AS & WEDGE)	
		1	**155-2272**	1	PLUG AS-CONNECTOR (4-PIN)	
	17	1	**186-6189**	1	ACCUMULATOR-REFRIGERANT	
	18	1	**187-8661**	1	FITTING AS-AIR CONDITIONER	
		1	**3E-4051**	1	CAP-SEAL	
		1	**3E-4057**	1	VALVE AS	
		1	**172-4880**	1	CAP-SEAL	
		1	**180-7180**	1	CORE-VALVE	
		1	**180-7181**	1	BODY-VALVE	
	19	1	**200-6345**	1	MOUNT (DUAL SWIVEL)	
	20	1	**204-2281**	2	STRAP-TIE	
	21	1	**220-1622**	2	BRACKET AS	
	22	1	**229-2681**	1	BRACKET AS	

OPERATOR STATION

209-2123 **LINES GP-AIR CONDITIONER** *(contd.)* **i03437119**

NOTE	REF NO	GRAPHIC REF	PART NUMBER	QTY	PART NAME 1 2 3 4 5 6 (PRODUCT LEVEL)	SEE PAGE
I	23	1	**236-2226**	1	HOSE AS	
I	24	1	**236-2227**	1	HOSE AS	
I	25	1	**236-2228**	1	HOSE AS	
I	26	1	**236-2229**	1	HOSE AS	
	27	1	**238-5530**	1	HARNESS AS-HEATER & AIR COND (CONDENSER FAN)	
		1	**102-8803**	1	KIT-RECEPTACLE (3-PIN)	
					(INCLUDES RECEPTACLE AS & WEDGE)	
		1	**155-2260**	1	KIT-CONNECTING PLUG (3-PIN)	
					(INCLUDES PLUG AS & WEDGE)	
	28	1	**246-2984**	1	FITTING AS-AIR CONDITIONER	
		1	**2L-1224**	1	CAP	
		1	**3E-4052**	1	CAP-SEAL	
		1	**3E-4058**	1	VALVE AS	
		1	**180-7180**	1	CORE-VALVE	
	29	1	**068-4209**	2	SCREW (8-32X0.75-IN)	
	30	1	**101-8296**	2	CLIP	
	31	1	**109-1633**	1	CLIP (SLOT)	
	32	1	**109-1634**	1	CLIP (TAB)	
I	33	1	**218-2240**	1	HOSE AS	
I	34	1	**218-2241**	1	HOSE AS	
I	35	1	**218-2242**	1	HOSE AS	
	36	1	**1S-6420**	2	CLIP	
	37	1	**4D-7733**	6	CLIP	
	38	1	**4K-8302**	1	CLIP	
	39	1	**4P-7428**	4	CLIP	
	40	1	**4P-8134**	3	CLIP	
	41	1	**4S-1936**	2	CLIP	
	42	1	**5P-1075**	1	WASHER-HARD (10.2X22.5X3-MM THK)	
	43	1	**6D-1641**	5	CLIP	
	44	1	**7K-1181**	5	STRAP-CABLE	
	45	1	**7X-7729**	5	WASHER (11X25X3-MM THK)	
	46	1	**8J-8197**	1	CLIP	
	47	1	**8T-4121**	11	WASHER-HARD (11X21X2.5-MM THK)	
M	48	1	**8T-4133**	2	NUT (M10X1.5-THD)	
M	49	1	**8T-4136**	7	BOLT (M10X1.5X25-MM)	
M	50	1	**8T-4137**	5	BOLT (M10X1.5X20-MM)	
M	51	1	**8T-4139**	1	BOLT (M12X1.75X30-MM)	
M	52	1	**8T-4183**	1	BOLT (M12X1.75X40-MM)	
M	53	1	**8T-4185**	1	BOLT (M10X1.5X50-MM)	
	54	1	**8T-4223**	3	WASHER-HARD (13.5X25.5X3-MM THK)	
M	55	1	**8T-6466**	1	BOLT (M10X1.5X60-MM)	
	56	1	**9X-7378**	1	SEAL-O-RING	
	57	1	**9X-7380**	5	SEAL-O-RING	
	58	1	**9X-7381**	3	SEAL-O-RING	
	59	1	**9X-7382**	2	SEAL-O-RING	
	60	1	**9X-7383**	4	SEAL-O-RING	
	61	1	**9X-7385**	2	SEAL-O-RING	
BD	62	1	**6V-2495**		SEAL	

B-USE AS REQUIRED
D-ORDER BY THE METER
E-ORDER BY THE CENTIMETER
I-REFER TO HYDRAULIC INFORMATION SYSTEM
M-METRIC PART

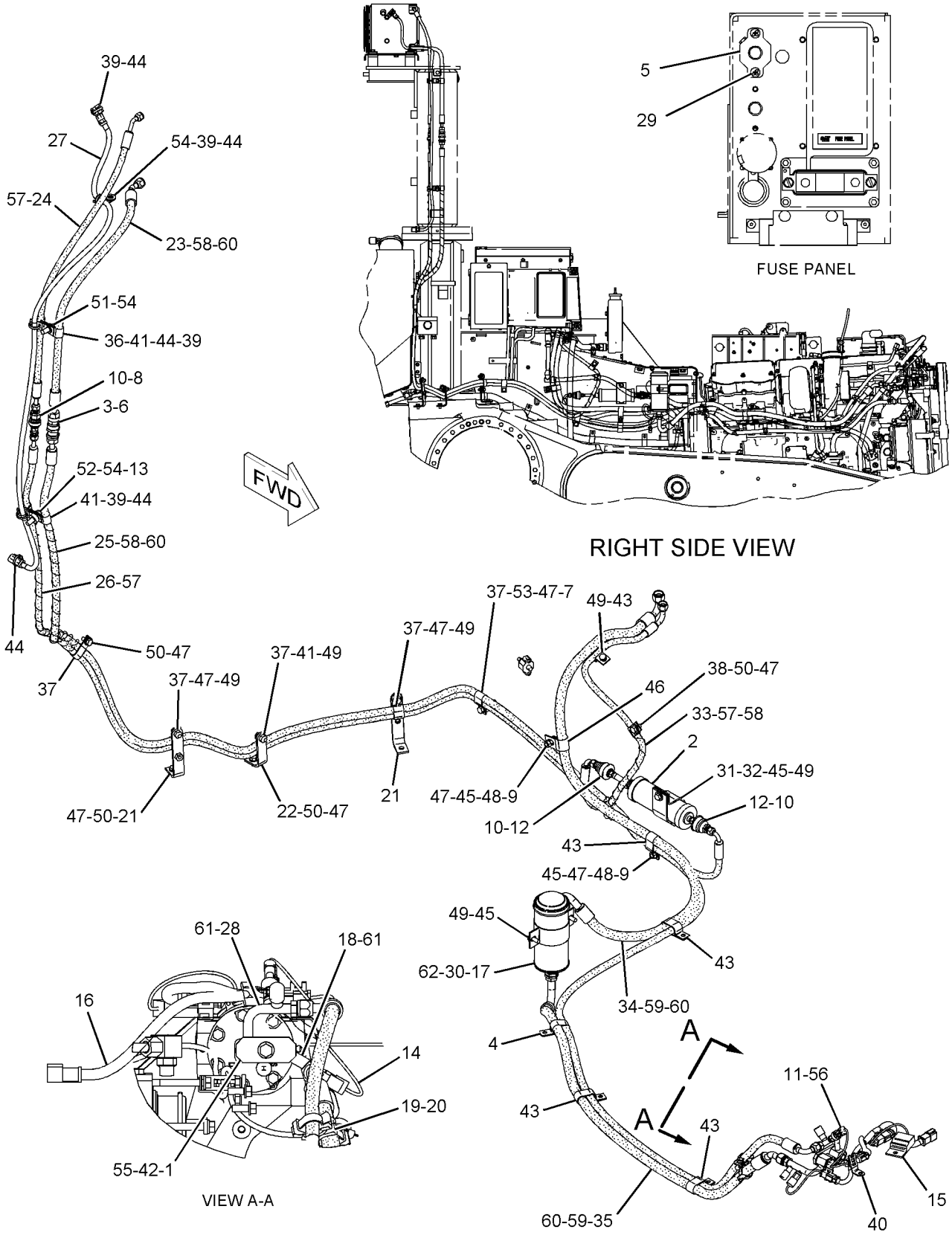

GRAPHIC #1 **<END>** g01112852

OPERATOR STATION

209-2123 LINES GP-AIR CONDITIONER—ROPS

S/N: J8B502-1277

PART OF 209-9751 AIR CONDITIONER AR

AN ATTACHMENT

SMCS-1808 **i03437118**

NOTE	REF NO	GRAPHIC REF	PART NUMBER	QTY	PART NAME 1 2 3 4 5 6 (PRODUCT LEVEL)	SEE PAGE
	1	1	**1P-6356**	1	PLATE	
	2	1	**175-7162**	1	RECEIVER-REFRIGERANT DRYER	
		1	**7X-2049**	1	TUBE AS-REFRIGERANT ORIFICE	
	3	1	**5P-3948**	1	COUPLING AS-REFRIGERANT	
		1	**7F-8607**	1	SEAL-O-RING	
		1	**107-4399**	1	VALVE AS	
	4	1	**6T-3643**	1	CIRCUIT BREAKER AS (15-AMPERE) (CONDENSOR FAN MOTOR)	
		1	**6V-8376**	2	SCREW-MACHINE (8-32X0.25-IN)	
		1	**9B-7233**	2	LOCKWASHER	
	5	1	**7K-3176**	1	COUPLING AS-REFRIGERANT (SELF SEALING)	
		1	**107-4394**	1	GASKET	
		1	**107-4393**	1	VALVE AS	
	6	1	**9R-2216**	1	BOSS	
	7	1	**9X-0358**	1	FITTING AS	
M	8	1	**101-3129**	2	STUD (M10X1.5-THD)	
	9	1	**103-6100**	3	FITTING AS-AIR CONDITIONER (QUICK DISCONNECT)	
					(EACH INCLUDES)	
		1	**9X-7382**	2	SEAL-O-RING	
	10	1	**114-5333**	1	SWITCH AS-PRESSURE (COMPRESSOR, HIGH SIDE)	
		1	**102-8802**	1	KIT-RECEPTACLE (2-PIN)	
					(INCLUDES RECEPTACLE AS & WEDGE)	
		1	**186-3735**	2	PIN-CONNECTOR (16-GA TO 18-GA)	
E		1	**9X-1386**		SLEEVE (25-CM)	
	11	1	**116-6202**	2	BOOT	
	12	1	**130-9984**	2	CLIP	
	13	1	**136-1122**	1	BUSHING	
	14	1	**149-6371**	1	SWITCH AS-PRESSURE (COMPRESSOR, LOW SIDE)	
		1	**102-8802**	1	KIT-RECEPTACLE (2-PIN)	
					(INCLUDES RECEPTACLE AS & WEDGE)	
		1	**186-3735**	2	PIN-CONNECTOR (16-GA TO 18-GA)	
	15	1	**169-7443**	1	TIMER AS-ON DELAY (24-VOLT) (COMPRESSOR CYCLE LIMITER)	
		1	**186-3735**	4	PIN-CONNECTOR (16-GA TO 18-GA)	
		1	**102-8804**	1	KIT-RECEPTACLE (4-PIN)	
					(INCLUDES RECEPTACLE AS & WEDGE)	
	16	1	**170-5293**	1	HARNESS AS-HEATER & AIR COND (COMPRESSOR)	
		1	**102-8805**	1	KIT-RECEPTACLE (6-PIN)	
					(INCLUDES RECEPTACLE AS & WEDGE)	
		1	**155-2270**	3	KIT-CONNECTING PLUG (2-PIN)	
					(EACH INCLUDES PLUG AS, WEDGE, & INTERFACE SEAL)	
		1	**155-2272**	1	PLUG AS-CONNECTOR (4-PIN)	
	17	1	**186-6189**	1	ACCUMULATOR-REFRIGERANT	
	18	1	**187-8661**	1	FITTING AS-AIR CONDITIONER	
		1	**3E-4051**	1	CAP-SEAL	
		1	**3E-4057**	1	VALVE AS	
		1	**172-4880**	1	CAP-SEAL	
		1	**180-7180**	1	CORE-VALVE	
I	19	1	**218-2240**	1	HOSE AS	
	20	1	**220-1622**	2	BRACKET AS	
	21	1	**229-2681**	1	BRACKET AS	
I	22	1	**236-2226**	1	HOSE AS	
I	23	1	**236-2227**	1	HOSE AS	
I	24	1	**236-2229**	1	HOSE AS	

209-2123 **LINES GP-AIR CONDITIONER** *(contd.)* **i03437118**

NOTE	REF NO	GRAPHIC REF	PART NUMBER	QTY	PART NAME 1 2 3 4 5 6 (PRODUCT LEVEL)	SEE PAGE
	25	1	**238-5530**	1	HARNESS AS-HEATER & AIR COND (CONDENSER FAN)	
		1	**102-8803**	1	KIT-RECEPTACLE (3-PIN)	
					(INCLUDES RECEPTACLE AS & WEDGE)	
		1	**155-2260**	1	KIT-CONNECTING PLUG (3-PIN)	
					(INCLUDES PLUG AS, WEDGE, & INTERFACE SEAL)	
	26	1	**246-2984**	1	FITTING AS-AIR CONDITIONER	
		1	**2L-1224**	1	CAP	
		1	**3E-4052**	1	CAP-SEAL	
		1	**3E-4058**	1	VALVE AS	
		1	**180-7180**	1	CORE-VALVE	
I	27	1	**265-6975**	1	HOSE AS	
	28	1	**265-6977**	1	BRACKET AS	
I	29	1	**303-8792**	1	HOSE AS	
I	30	1	**304-9262**	1	HOSE AS	
	31	1	**068-4209**	2	SCREW (8-32X0.75-IN)	
	32	1	**101-8296**	2	CLIP	
	33	1	**109-1633**	1	CLIP (SLOT)	
	34	1	**109-1634**	1	CLIP (TAB)	
	35	1	**0S-0509**	2	BOLT (3/8-16X0.75-IN)	
	36	1	**1S-6420**	2	CLIP	
	37	1	**4D-7733**	6	CLIP	
	38	1	**4K-8302**	1	CLIP	
	39	1	**4P-7428**	4	CLIP	
	40	1	**4P-8134**	3	CLIP	
	41	1	**4S-1936**	2	CLIP	
	42	1	**5M-2894**	2	WASHER-HARD (10.2X18.5X2.5-MM THK)	
	43	1	**5P-1075**	1	WASHER-HARD (10.2X22.5X3-MM THK)	
	44	1	**6D-1641**	3	CLIP	
	45	1	**7K-1181**	5	STRAP-CABLE	
	46	1	**7X-7729**	6	WASHER (11X25X3-MM THK)	
	47	1	**8J-8197**	2	CLIP	
	48	1	**8S-0948**	2	CLIP	
	49	1	**8T-4121**	11	WASHER-HARD (11X21X2.5-MM THK)	
M	50	1	**8T-4133**	2	NUT (M10X1.5-THD)	
M	51	1	**8T-4136**	5	BOLT (M10X1.5X25-MM)	
M	52	1	**8T-4137**	8	BOLT (M10X1.5X20-MM)	
M	53	1	**8T-4139**	1	BOLT (M12X1.75X30-MM)	
M	54	1	**8T-4183**	1	BOLT (M12X1.75X40-MM)	
M	55	1	**8T-4185**	1	BOLT (M10X1.5X50-MM)	
	56	1	**8T-4223**	3	WASHER-HARD (13.5X25.5X3-MM THK)	
M	57	1	**8T-6466**	1	BOLT (M10X1.5X60-MM)	
	58	1	**9X-7378**	1	SEAL-O-RING	
	59	1	**9X-7380**	5	SEAL-O-RING	
	60	1	**9X-7381**	3	SEAL-O-RING	
	61	1	**9X-7382**	2	SEAL-O-RING	
	62	1	**9X-7383**	4	SEAL-O-RING	
	63	1	**9X-7385**	2	SEAL-O-RING	
D	64	1	**6V-2495**		SEAL (0.3-M)	

D-ORDER BY THE METER
E-ORDER BY THE CENTIMETER
I-REFER TO HYDRAULIC INFORMATION SYSTEM
M-METRIC PART

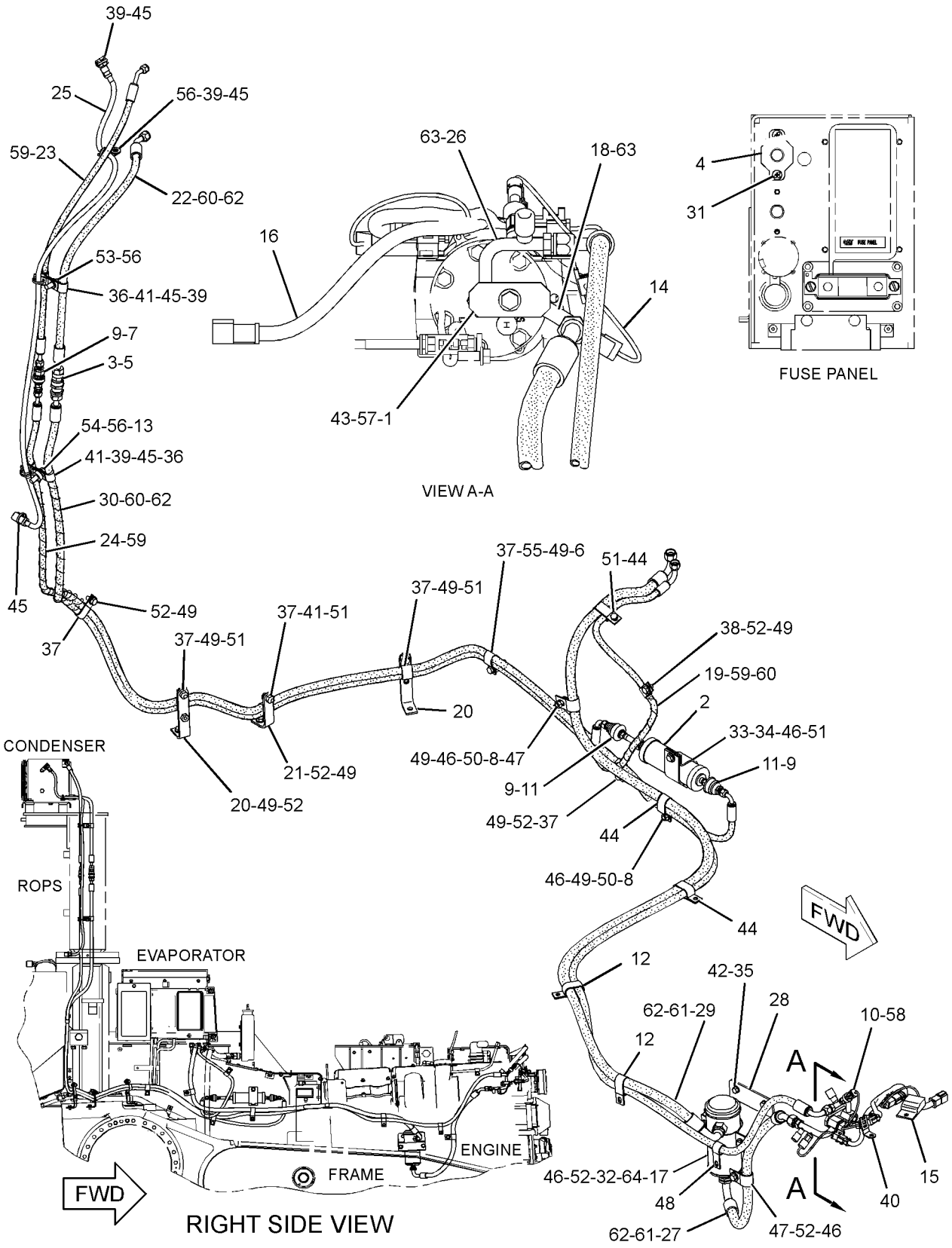

GRAPHIC #1 **<END>** g01419792

OPERATOR STATION

209-2123 LINES GP-AIR CONDITIONER—ROPS

S/N: J8B1278-UP
PART OF 209-9751 AIR CONDITIONER AR
AN ATTACHMENT

SMCS-1808 **i03399381**

NOTE	REF NO	GRAPHIC REF	PART NUMBER	QTY	PART NAME 1 2 3 4 5 6 (PRODUCT LEVEL)	SEE PAGE
	1	1	**1P-6356**	1	PLATE	
	2	1	**175-7162**	1	RECEIVER-REFRIGERANT DRYER	
		1	**7X-2049**	1	TUBE AS-REFRIGERANT ORIFICE	
	3	1	**5P-3948**	1	COUPLING AS-REFRIGERANT	
		1	**7F-8607**	1	SEAL-O-RING	
		1	**107-4399**	1	VALVE AS	
	4	1	**6T-3643**	1	CIRCUIT BREAKER AS (15-AMPERE) (CONDENSOR FAN MOTOR)	
		1	**6V-8376**	2	SCREW-MACHINE (8-32X0.25-IN)	
		1	**9B-7233**	2	LOCKWASHER	
	5	1	**7K-3176**	1	COUPLING AS-REFRIGERANT (SELF SEALING)	
		1	**107-4394**	1	GASKET	
		1	**107-4393**	1	VALVE AS	
	6	1	**9R-2216**	1	BOSS	
	7	1	**9X-0358**	1	FITTING AS	
M	8	1	**101-3129**	2	STUD (M10X1.5-THD)	
	9	1	**103-6100**	3	FITTING AS-AIR CONDITIONER (QUICK DISCONNECT)	
					(EACH INCLUDES)	
		1	**9X-7382**	2	SEAL-O-RING	
	10	1	**114-5333**	1	SWITCH AS-PRESSURE (COMPRESSOR, HIGH SIDE)	
		1	**102-8802**	1	KIT-RECEPTACLE (2-PIN)	
					(INCLUDES RECEPTACLE AS & WEDGE)	
		1	**186-3735**	2	PIN-CONNECTOR (16-GA TO 18-GA)	
E		1	**9X-1386**		SLEEVE (25-CM)	
	11	1	**116-6202**	2	BOOT	
	12	1	**130-9984**	2	CLIP	
	13	1	**136-1122**	1	BUSHING	
	14	1	**149-6371**	1	SWITCH AS-PRESSURE (COMPRESSOR, LOW SIDE)	
		1	**102-8802**	1	KIT-RECEPTACLE (2-PIN)	
					(INCLUDES RECEPTACLE AS & WEDGE)	
		1	**186-3735**	2	PIN-CONNECTOR (16-GA TO 18-GA)	
	15	1	**169-7443**	1	TIMER AS-ON DELAY (24-VOLT) (COMPRESSOR CYCLE LIMITER)	
		1	**186-3735**	4	PIN-CONNECTOR (16-GA TO 18-GA)	
		1	**102-8804**	1	KIT-RECEPTACLE (4-PIN)	
					(INCLUDES RECEPTACLE AS & WEDGE)	
	16	1	**170-5293**	1	HARNESS AS-HEATER & AIR COND (COMPRESSOR)	
	17	1	**186-6189**	1	ACCUMULATOR-REFRIGERANT	
	18	1	**187-8661**	1	FITTING AS-AIR CONDITIONER (LOW SIDE)	
		1	**3E-4051**	1	CAP-SEAL	
		1	**3E-4057**	1	VALVE AS	
		1	**172-4880**	1	CAP-SEAL	
		1	**180-7180**	1	CORE-VALVE	
I	19	1	**218-2240**	1	HOSE AS	
	20	1	**220-1622**	2	BRACKET AS	
	21	1	**229-2681**	1	BRACKET AS	
I	22	1	**236-2226**	1	HOSE AS	
I	23	1	**236-2227**	1	HOSE AS	
I	24	1	**236-2229**	1	HOSE AS	
	25	1	**238-5530**	1	HARNESS AS-HEATER & AIR COND (CONDENSER FAN)	
	26	1	**246-2984**	1	FITTING AS-AIR CONDITIONER (HIGH SIDE)	
		1	**2L-1224**	1	CAP	
		1	**3E-4052**	1	CAP-SEAL	
		1	**3E-4058**	1	VALVE AS	
		1	**180-7180**	1	CORE-VALVE	

OPERATOR STATION

209-2123 **LINES GP-AIR CONDITIONER** *(contd.)* **i03399381**

NOTE	REF NO	GRAPHIC REF	PART NUMBER	QTY	PART NAME 1 2 3 4 5 6 (PRODUCT LEVEL)	SEE PAGE
I	27	1	**265-6975**	1	HOSE AS	
	28	1	**265-6977**	1	BRACKET AS	
I	29	1	**330-6563**	1	HOSE AS	
I	30	1	**304-9262**	1	HOSE AS	
	31	1	**068-4209**	2	SCREW (8-32X0.75-IN)	
	32	1	**101-8296**	2	CLIP	
	33	1	**109-1633**	1	CLIP (SLOT)	
	34	1	**109-1634**	1	CLIP (TAB)	
	35	1	**0S-0509**	2	BOLT (3/8-16X0.75-IN)	
	36	1	**1S-6420**	2	CLIP	
	37	1	**4D-7733**	6	CLIP	
	39	1	**4P-7428**	4	CLIP	
	40	1	**4P-8134**	3	CLIP	
	41	1	**4S-1936**	2	CLIP	
	42	1	**5M-2894**	2	WASHER-HARD (10.2X18.5X2.5-MM THK)	
	43	1	**5P-1075**	1	WASHER-HARD (10.2X22.5X3-MM THK)	
	44	1	**6D-1641**	3	CLIP	
	45	1	**7K-1181**	5	STRAP-CABLE	
C	46	1	**7X-7729**	5	WASHER (11X25X3-MM THK)	
C	47	1	**8J-8197**	3	CLIP	
	49	1	**8T-4121**	11	WASHER-HARD (11X21X2.5-MM THK)	
M	50	1	**8T-4133**	2	NUT (M10X1.5-THD)	
M	51	1	**8T-4136**	5	BOLT (M10X1.5X25-MM)	
CM	52	1	**8T-4137**	7	BOLT (M10X1.5X20-MM)	
M	53	1	**8T-4139**	1	BOLT (M12X1.75X30-MM)	
M	54	1	**8T-4183**	1	BOLT (M12X1.75X40-MM)	
M	55	1	**8T-4185**	1	BOLT (M10X1.5X50-MM)	
	56	1	**8T-4223**	3	WASHER-HARD (13.5X25.5X3-MM THK)	
M	57	1	**8T-6466**	1	BOLT (M10X1.5X60-MM)	
	58	1	**9X-7378**	1	SEAL-O-RING	
	59	1	**9X-7380**	5	SEAL-O-RING	
	60	1	**9X-7381**	3	SEAL-O-RING	
	61	1	**9X-7382**	2	SEAL-O-RING	
	62	1	**9X-7383**	4	SEAL-O-RING	
	63	1	**9X-7385**	2	SEAL-O-RING	
D	64	1	**6V-2495**		SEAL (0.3-M)	

C-CHANGE FROM PREVIOUS TYPE
D-ORDER BY THE METER
E-ORDER BY THE CENTIMETER
I-REFER TO HYDRAULIC INFORMATION SYSTEM
M-METRIC PART

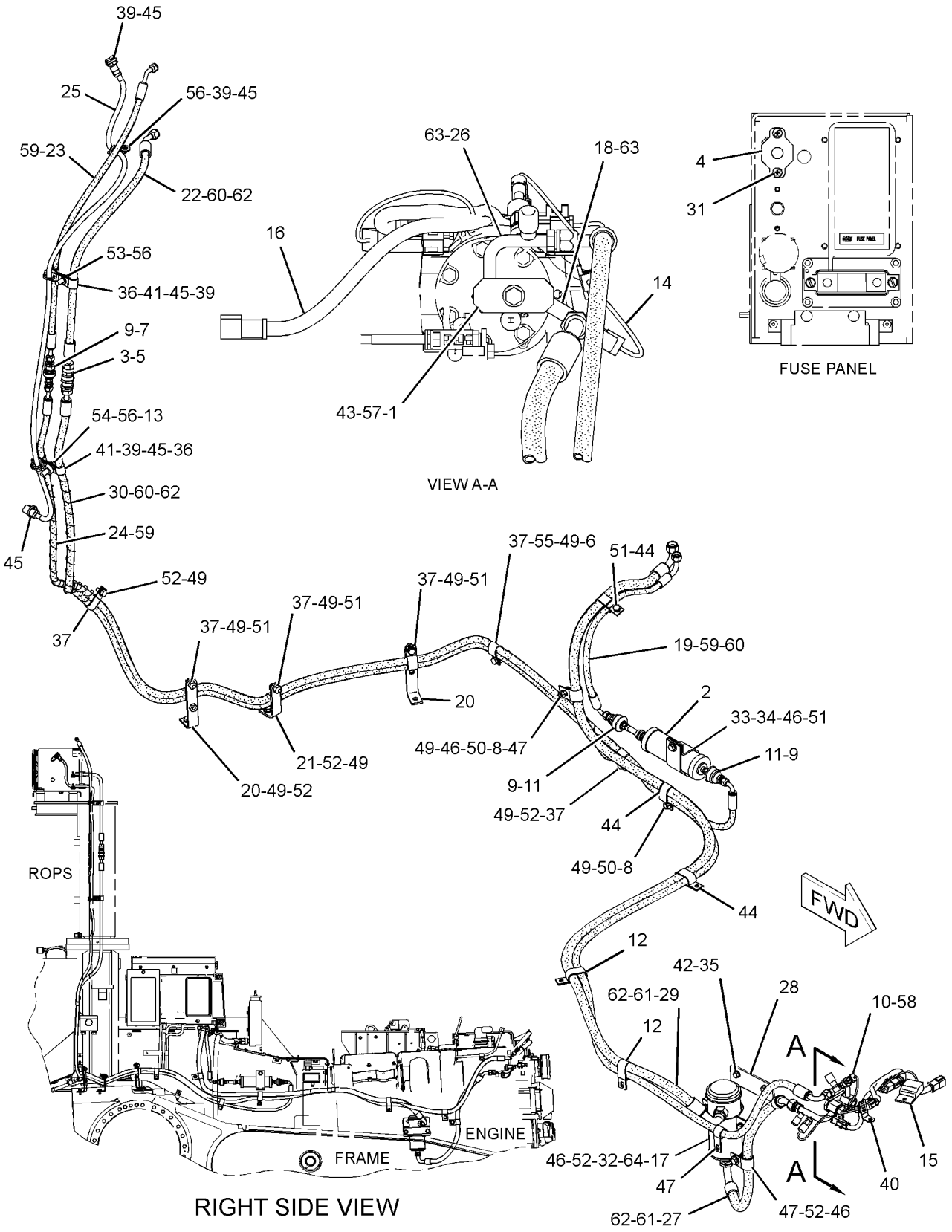

RIGHT SIDE VIEW

GRAPHIC #1 **<END>** g01475274

OPERATOR STATION

209-2124 LINES GP-AIR CONDITIONER—FENDER

S/N: J8B1-501

PART OF 209-9752 AIR CONDITIONER AR

AN ATTACHMENT

SMCS-1808 **i02242181**

NOTE	REF NO	GRAPHIC REF	PART NUMBER	QTY	PART NAME 1 2 3 4 5 6 (PRODUCT LEVEL)	SEE PAGE
	1	1	**1P-6356**	1	PLATE	
	2	1	**175-7162**	1	RECEIVER-REFRIGERANT DRYER	
	3	1	**6D-2667**	1	CLIP	
	4	1	**6T-3643**	1	CIRCUIT BREAKER AS (15-AMPERE) (A/C, HEATER CONTROL)	
		1	**6V-8376**	2	SCREW-MACHINE (8-32X0.25-IN)	
		1	**9B-7233**	2	LOCKWASHER	
	5	1	**9R-2216**	1	BOSS	
M	6	1	**101-3129**	2	STUD (M10X1.5-THD)	
	7	1	**103-6100**	2	FITTING AS-AIR CONDITIONER (QUICK DISCONNECT)	
					(EACH INCLUDES)	
		1	**9X-7382**	2	SEAL-O-RING	
	8	1	**114-5333**	1	SWITCH AS-PRESSURE (AIR CONDITIONER)	
		1	**102-8802**	1	KIT-RECEPTACLE (2-PIN)	
					(INCLUDES RECEPTACLE AS & WEDGE)	
		1	**3E-3365**	1	WEDGE-RECEPTACLE LOCK (2-PIN)	
		1	**186-3735**	2	PIN-CONNECTOR (16-GA TO 18-GA)	
E		1	**9X-1386**		SLEEVE (25-CM)	
	9	1	**116-6202**	2	BOOT	
	10	1	**149-6371**	1	SWITCH AS-PRESSURE (COMPRESSOR, LOW SIDE)	
		1	**102-8802**	1	KIT-RECEPTACLE (2-PIN)	
					(INCLUDES RECEPTACLE AS & WEDGE)	
		1	**3E-3365**	1	WEDGE-RECEPTACLE LOCK (2-PIN)	
		1	**186-3735**	2	PIN-CONNECTOR (16-GA TO 18-GA)	
	11	1	**169-7443**	1	TIMER AS-ON DELAY (24-VOLT) (AIR CONDITIONER)	
		1	**186-3735**	4	PIN-CONNECTOR (16-GA TO 18-GA)	
		1	**102-8804**	1	KIT-RECEPTACLE (4-PIN)	
					(INCLUDES RECEPTACLE AS & WEDGE)	
	12	1	**170-5293**	1	HARNESS AS-HEATER & AIR COND (COMPRESSOR)	
		1	**102-8805**	1	KIT-RECEPTACLE (6-PIN)	
					(INCLUDES RECEPTACLE AS & WEDGE)	
		1	**155-2270**	3	KIT-CONNECTING PLUG (2-PIN)	
					(EACH INCLUDES PLUG AS & WEDGE)	
		1	**155-2272**	1	PLUG AS-CONNECTOR (4-PIN)	
	13	1	**186-6189**	1	ACCUMULATOR-REFRIGERANT	
	14	1	**187-8661**	1	FITTING AS-AIR CONDITIONER	
		1	**3E-4051**	1	CAP-SEAL	
		1	**3E-4057**	1	VALVE AS	
		1	**172-4880**	1	CAP-SEAL	
		1	**180-7180**	1	CORE-VALVE	
		1	**180-7181**	1	BODY-VALVE	
	15	1	**200-6345**	1	MOUNT (DUAL SWIVEL)	
	16	1	**204-2281**	2	STRAP-TIE	
	17	1	**220-1622**	2	BRACKET AS	
	18	1	**229-2681**	1	BRACKET AS	
	19	1	**246-2984**	1	FITTING AS-AIR CONDITIONER	
		1	**2L-1224**	1	CAP	
		1	**3E-4052**	1	CAP-SEAL	
		1	**3E-4058**	1	VALVE AS	
		1	**180-7180**	1	CORE-VALVE	
	20	1	**068-4209**	2	SCREW (8-32X0.75-IN)	
	21	1	**101-8296**	2	CLIP	
	22	1	**109-1633**	1	CLIP (SLOT)	
	23	1	**109-1634**	1	CLIP (TAB)	
I	24	1	**218-2240**	1	HOSE AS	

209-2124 LINES GP-AIR CONDITIONER *(contd.)* i02242181

NOTE	REF NO	GRAPHIC REF	PART NUMBER	QTY	PART NAME 1 2 3 4 5 6 (PRODUCT LEVEL)	SEE PAGE
I	25	1	**218-2241**	1	HOSE AS	
I	26	1	**218-2242**	1	HOSE AS	
I	27	1	**218-2245**	1	HOSE AS	
I	28	1	**218-2246**	1	HOSE AS	
	29	1	**4D-7733**	7	CLIP	
	30	1	**4K-8302**	1	CLIP	
	31	1	**4P-8134**	3	CLIP	
	32	1	**5P-1075**	1	WASHER-HARD (10.2X22.5X3-MM THK)	
	33	1	**6D-1641**	5	CLIP	
	34	1	**7X-7729**	5	WASHER (11X25X3-MM THK)	
	35	1	**8J-8197**	1	CLIP	
	36	1	**8T-4121**	13	WASHER-HARD (11X21X2.5-MM THK)	
M	37	1	**8T-4133**	3	NUT (M10X1.5-THD)	
M	38	1	**8T-4136**	7	BOLT (M10X1.5X25-MM)	
M	39	1	**8T-4137**	5	BOLT (M10X1.5X20-MM)	
M	40	1	**8T-4185**	1	BOLT (M10X1.5X50-MM)	
M	41	1	**8T-4195**	1	BOLT (M10X1.5X30-MM)	
M	42	1	**8T-6466**	1	BOLT (M10X1.5X60-MM)	
	43	1	**9X-7378**	1	SEAL-O-RING	
	44	1	**9X-7380**	3	SEAL-O-RING	
	45	1	**9X-7381**	3	SEAL-O-RING	
	46	1	**9X-7382**	2	SEAL-O-RING	
	47	1	**9X-7383**	2	SEAL-O-RING	
	48	1	**9X-7385**	2	SEAL-O-RING	
BD	49	1	**6V-2495**		SEAL	

B-USE AS REQUIRED
D-ORDER BY THE METER
E-ORDER BY THE CENTIMETER
I-REFER TO HYDRAULIC INFORMATION SYSTEM
M-METRIC PART

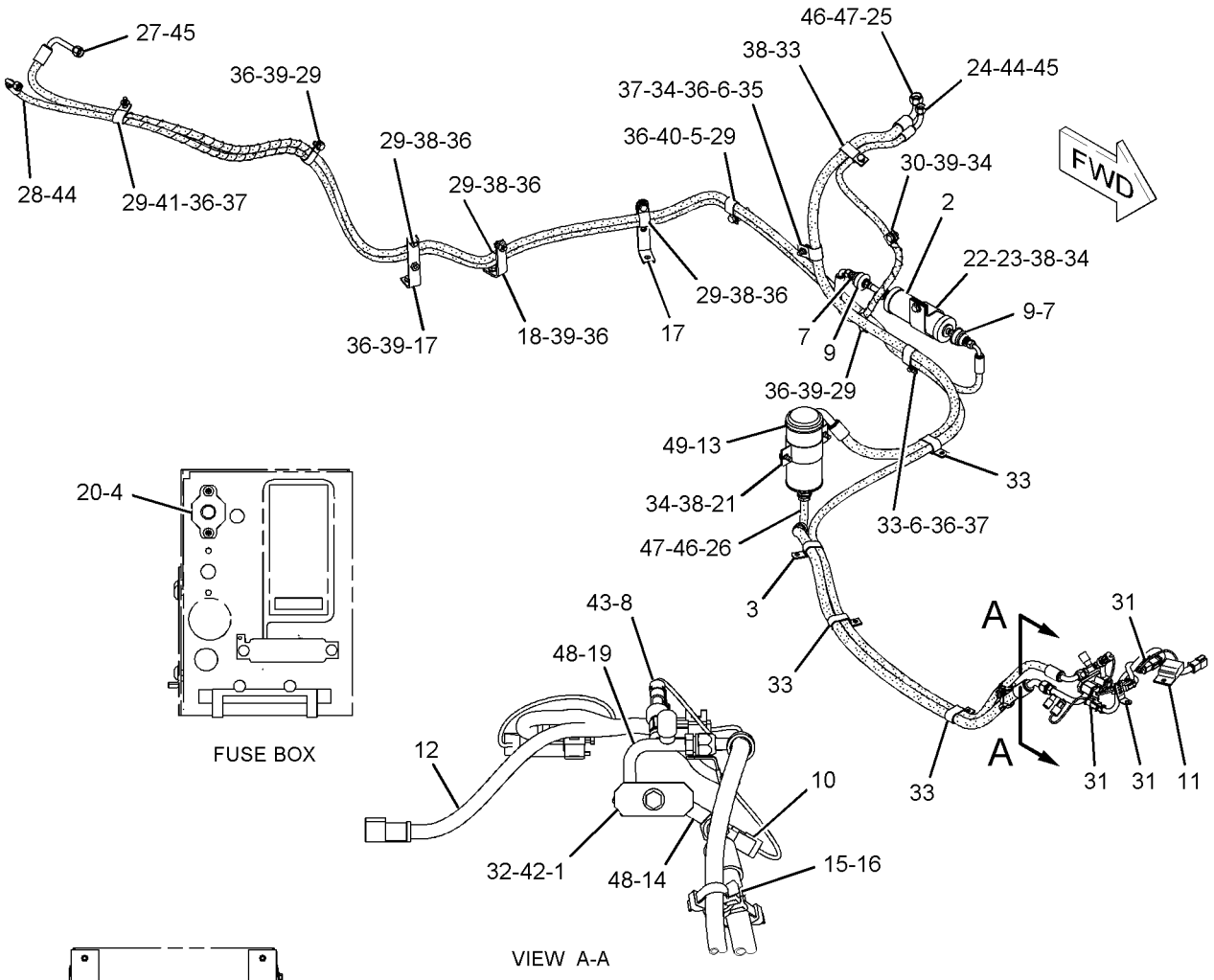

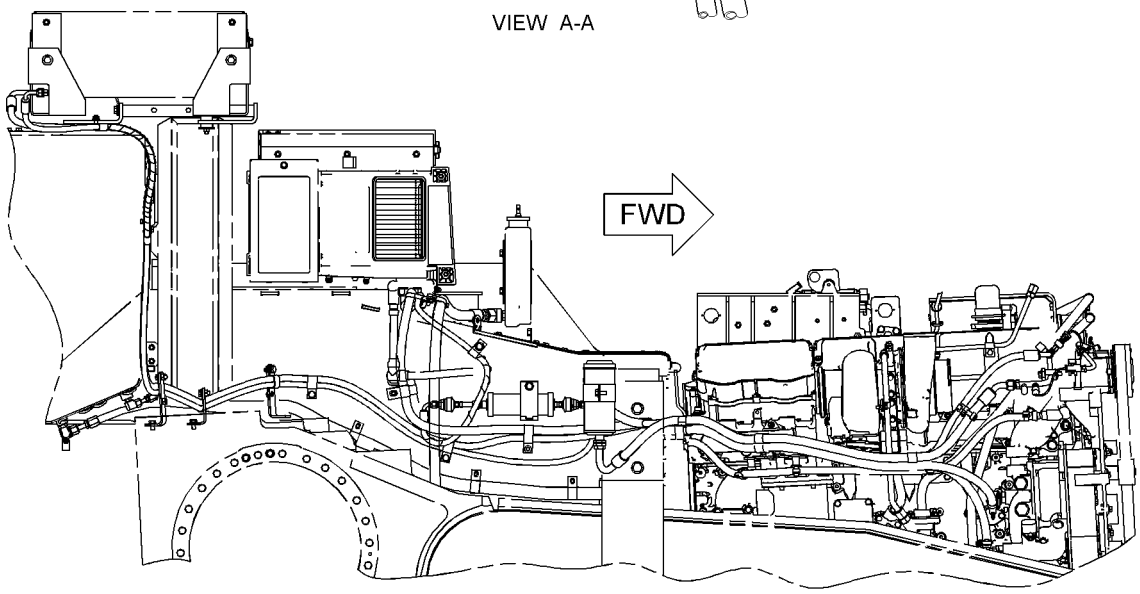

RIGHT SIDE VIEW

GRAPHIC #1 **<END>** g01111766

OPERATOR STATION

209-2124 LINES GP-AIR CONDITIONER—FENDER

S/N: J8B502-1130

PART OF 209-9752 AIR CONDITIONER AR

AN ATTACHMENT

SMCS-1808 **i02462415**

NOTE	REF NO	GRAPHIC REF	PART NUMBER	QTY	PART NAME 1 2 3 4 5 6 (PRODUCT LEVEL)	SEE PAGE
	1	1	**1P-6356**	1	PLATE	
	2	1	**175-7162**	1	RECEIVER-REFRIGERANT DRYER	
		1	**7X-2049**	1	TUBE AS-REFRIGERANT ORIFICE	
	3	1	**6T-3643**	1	CIRCUIT BREAKER AS (15-AMPERE) (CONDENSOR FAN MOTOR)	
		1	**6V-8376**	2	SCREW-MACHINE (8-32X0.25-IN)	
		1	**9B-7233**	2	LOCKWASHER	
	4	1	**9R-2216**	1	BOSS	
M	5	1	**101-3129**	2	STUD (M10X1.5-THD)	
	6	1	**103-6100**	2	FITTING AS-AIR CONDITIONER (QUICK DISCONNECT)	
					(EACH INCLUDES)	
		1	**9X-7382**	2	SEAL-O-RING	
	7	1	**114-5333**	1	SWITCH AS-PRESSURE (COMPRESSOR, HIGH SIDE)	
		1	**102-8802**	1	KIT-RECEPTACLE (2-PIN)	
					(INCLUDES RECEPTACLE AS & WEDGE)	
		1	**186-3735**	2	PIN-CONNECTOR (16-GA TO 18-GA)	
E		1	**9X-1386**		SLEEVE (25-CM)	
	8	1	**116-6202**	2	BOOT	
	9	1	**149-6371**	1	SWITCH AS-PRESSURE (COMPRESSOR, LOW SIDE)	
		1	**102-8802**	1	KIT-RECEPTACLE (2-PIN)	
					(INCLUDES RECEPTACLE AS & WEDGE)	
		1	**186-3735**	2	PIN-CONNECTOR (16-GA TO 18-GA)	
	10	1	**169-7443**	1	TIMER AS-ON DELAY (24-VOLT) (COMPRESSOR CYCLE LIMITER)	
		1	**186-3735**	4	PIN-CONNECTOR (16-GA TO 18-GA)	
		1	**102-8804**	1	KIT-RECEPTACLE (4-PIN)	
					(INCLUDES RECEPTACLE AS & WEDGE)	
	11	1	**170-5293**	1	HARNESS AS-HEATER & AIR COND (COMPRESSOR)	
		1	**102-8805**	1	KIT-RECEPTACLE (6-PIN)	
					(INCLUDES RECEPTACLE AS & WEDGE)	
		1	**155-2270**	3	KIT-CONNECTING PLUG (2-PIN)	
					(EACH INCLUDES PLUG AS, WEDGE, & INTERFACE SEAL)	
		1	**155-2272**	1	PLUG AS-CONNECTOR (4-PIN)	
	12	1	**186-6189**	1	ACCUMULATOR-REFRIGERANT	
	13	1	**187-8661**	1	FITTING AS-AIR CONDITIONER	
		1	**3E-4051**	1	CAP-SEAL	
		1	**3E-4057**	1	VALVE AS	
		1	**172-4880**	1	CAP-SEAL	
		1	**180-7180**	1	CORE-VALVE	
		1	**180-7181**	1	BODY-VALVE	
I	14	1	**218-2240**	1	HOSE AS	
	15	1	**220-1622**	2	BRACKET AS	
	16	1	**229-2681**	1	BRACKET AS	
	17	1	**246-2984**	1	FITTING AS-AIR CONDITIONER	
		1	**2L-1224**	1	CAP	
		1	**3E-4052**	1	CAP-SEAL	
		1	**3E-4058**	1	VALVE AS	
		1	**180-7180**	1	CORE-VALVE	
CI	18	1	**265-6974**	1	HOSE AS	
CI	19	1	**265-6975**	1	HOSE AS	
CI	20	1	**265-6976**	1	HOSE AS	
C	21	1	**265-6977**	1	BRACKET AS	
	22	1	**068-4209**	2	SCREW (8-32X0.75-IN)	
	23	1	**101-8296**	2	CLIP	

209-2124 LINES GP-AIR CONDITIONER *(contd.)* i02462415

NOTE	REF NO	GRAPHIC REF	PART NUMBER	QTY	PART NAME 1 2 3 4 5 6 (PRODUCT LEVEL)	SEE PAGE
	24	1	**109-1633**	1	CLIP (SLOT)	
	25	1	**109-1634**	1	CLIP (TAB)	
I	26	1	**218-2246**	1	HOSE AS	
C	27	1	**0S-0509**	2	BOLT (3/8-16X0.75-IN)	
	28	1	**4D-7733**	7	CLIP	
	29	1	**4K-8302**	1	CLIP	
	30	1	**4P-8134**	3	CLIP	
C	31	1	**5M-2894**	2	WASHER-HARD (10.2X18.5X2.5-MM THK)	
	32	1	**5P-1075**	1	WASHER-HARD (10.2X22.5X3-MM THK)	
	33	1	**6D-1641**	5	CLIP	
C	34	1	**7X-7729**	6	WASHER (11X25X3-MM THK)	
C	35	1	**8J-8197**	2	CLIP	
C	36	1	**8S-0948**	1	CLIP	
	37	1	**8T-4121**	13	WASHER-HARD (11X21X2.5-MM THK)	
M	38	1	**8T-4133**	3	NUT (M10X1.5-THD)	
CM	39	1	**8T-4136**	5	BOLT (M10X1.5X25-MM)	
CM	40	1	**8T-4137**	8	BOLT (M10X1.5X20-MM)	
M	41	1	**8T-4185**	1	BOLT (M10X1.5X50-MM)	
M	42	1	**8T-4195**	1	BOLT (M10X1.5X30-MM)	
M	43	1	**8T-6466**	1	BOLT (M10X1.5X60-MM)	
	44	1	**9X-7378**	1	SEAL-O-RING	
	45	1	**9X-7380**	3	SEAL-O-RING	
	46	1	**9X-7381**	3	SEAL-O-RING	
	47	1	**9X-7382**	2	SEAL-O-RING	
	48	1	**9X-7383**	2	SEAL-O-RING	
	49	1	**9X-7385**	2	SEAL-O-RING	
D	50	1	**6V-2495**		SEAL (0.3-M)	

C-CHANGE FROM PREVIOUS TYPE
D-ORDER BY THE METER
E-ORDER BY THE CENTIMETER
I-REFER TO HYDRAULIC INFORMATION SYSTEM
M-METRIC PART

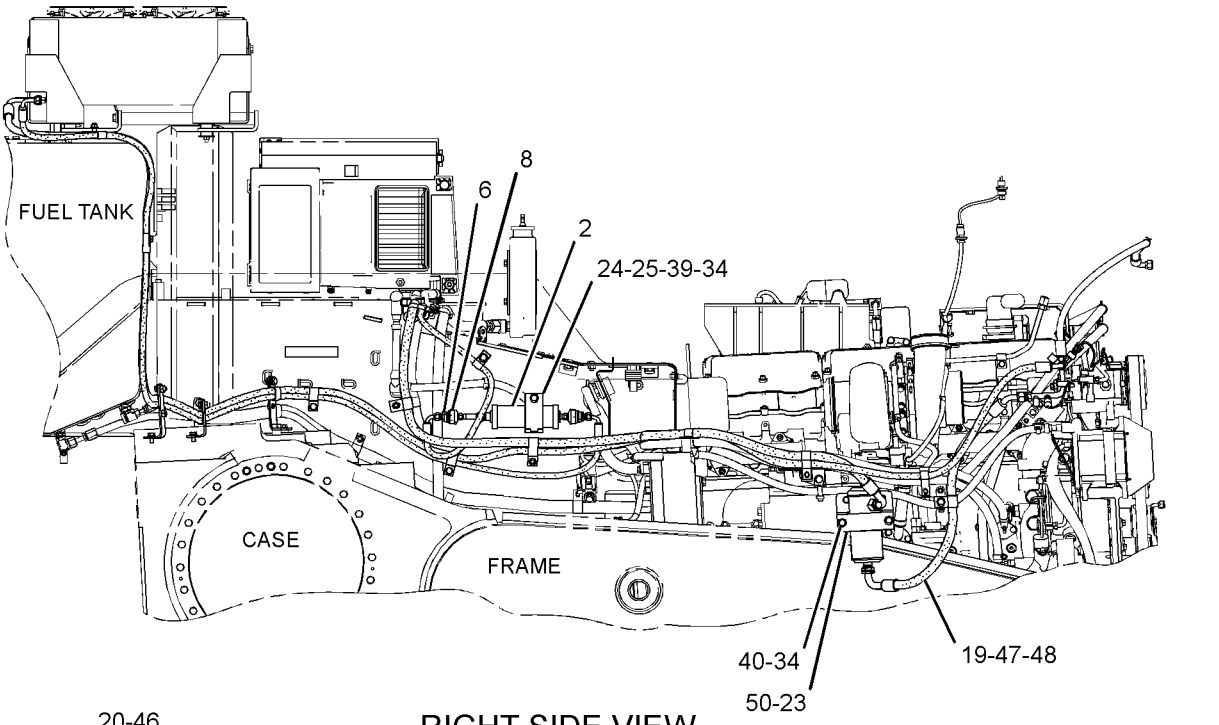

RIGHT SIDE VIEW

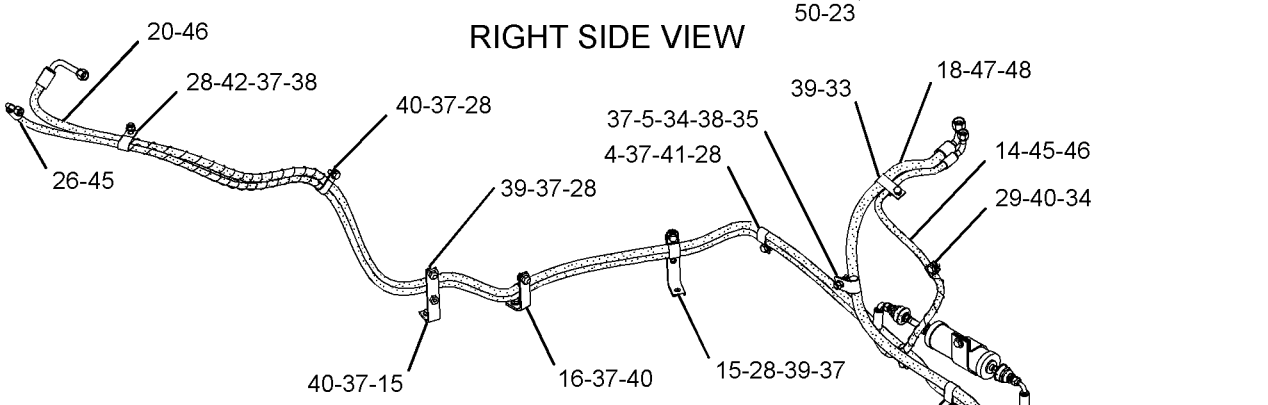

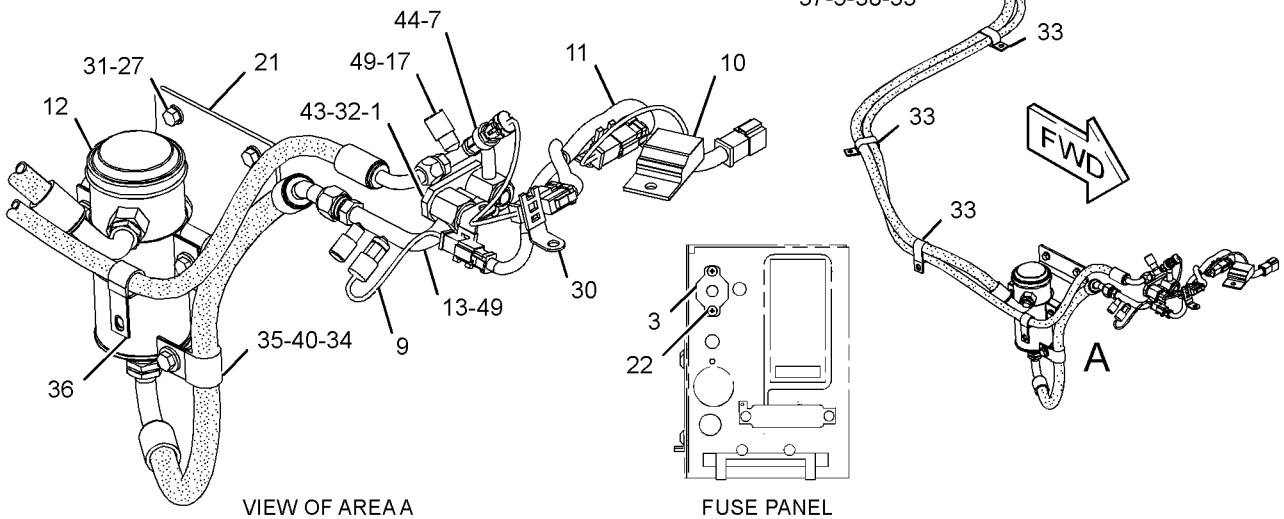

VIEW OF AREA A

FUSE PANEL

GRAPHIC #1 **<END>** g01261156

OPERATOR STATION

209-2124 LINES GP-AIR CONDITIONER—FENDER

S/N: J8B1131-1277
PART OF 209-9752 AIR CONDITIONER AR
AN ATTACHMENT

SMCS-1808 **i02869796**

NOTE	REF NO	GRAPHIC REF	PART NUMBER	QTY	PART NAME 1 2 3 4 5 6 (PRODUCT LEVEL)	SEE PAGE
	1	1	**1P-6356**	1	PLATE	
	2	1	**175-7162**	1	RECEIVER-REFRIGERANT DRYER	
		1	**7X-2049**	1	TUBE AS-REFRIGERANT ORIFICE	
	3	1	**6T-3643**	1	CIRCUIT BREAKER AS (15-AMPERE) (AIR CONDITIONER)	
		1	**6V-8376**	2	SCREW-MACHINE (8-32X0.25-IN)	
		1	**9B-7233**	2	LOCKWASHER	
	4	1	**9R-2216**	1	BOSS	
M	5	1	**101-3129**	2	STUD (M10X1.5-THD)	
	6	1	**103-6100**	2	FITTING AS-AIR CONDITIONER (QUICK DISCONNECT)	
		1	**9X-7382**	2	SEAL-O-RING	
	7	1	**114-5333**	1	SWITCH AS-PRESSURE (AIR CONDITIONER, HIGH SIDE)	
		1	**102-8802**	1	KIT-RECEPTACLE (2-PIN)	
					(INCLUDES RECEPTACLE AS & WEDGE)	
		1	**186-3735**	2	PIN-CONNECTOR (16-GA TO 18-GA)	
E		1	**9X-1386**		SLEEVE (25-CM)	
	8	1	**116-6202**	2	BOOT	
C	9	1	**130-9984**	2	CLIP	
	10	1	**149-6371**	1	SWITCH AS-PRESSURE (AIR CONDITIONER, LOW SIDE)	
		1	**102-8802**	1	KIT-RECEPTACLE (2-PIN)	
					(INCLUDES RECEPTACLE AS & WEDGE)	
		1	**186-3735**	2	PIN-CONNECTOR (16-GA TO 18-GA)	
	11	1	**169-7443**	1	TIMER AS-ON DELAY (24-VOLT)	
		1	**102-8804**	1	KIT-RECEPTACLE (4-PIN)	
					(INCLUDES RECEPTACLE AS & WEDGE)	
		1	**186-3735**	4	PIN-CONNECTOR (16-GA TO 18-GA)	
	12	1	**170-5293**	1	HARNESS AS-HEATER & AIR COND (COMPRESSOR)	
	13	1	**186-6189**	1	ACCUMULATOR-REFRIGERANT	
	14	1	**187-8661**	1	FITTING AS-AIR CONDITIONER	
		1	**3E-4051**	1	CAP-SEAL	
		1	**3E-4057**	1	VALVE AS	
		1	**172-4880**	1	CAP-SEAL	
		1	**180-7180**	1	CORE-VALVE	
I	15	1	**218-2240**	1	HOSE AS	
	16	1	**220-1622**	2	BRACKET AS	
	17	1	**229-2681**	1	BRACKET AS	
	18	1	**246-2984**	1	FITTING AS-AIR CONDITIONER	
		1	**2L-1224**	1	CAP	
		1	**3E-4052**	1	CAP-SEAL	
		1	**3E-4058**	1	VALVE AS	
		1	**180-7180**	1	CORE-VALVE	
I	19	1	**265-6975**	1	HOSE AS	
	20	1	**265-6977**	1	BRACKET AS	
CI	21	1	**303-8792**	1	HOSE AS	
CI	22	1	**304-0391**	1	HOSE AS	
	23	1	**068-4209**	2	SCREW (8-32X0.75-IN)	
	24	1	**101-8296**	2	CLIP	
	25	1	**109-1633**	1	CLIP (SLOT)	
	26	1	**109-1634**	1	CLIP (TAB)	
I	27	1	**218-2246**	1	HOSE AS	
	28	1	**0S-0509**	2	BOLT (3/8-16X0.75-IN)	
	29	1	**4D-7733**	7	CLIP	
	30	1	**4K-8302**	1	CLIP	

209-2124 **LINES GP-AIR CONDITIONER** *(contd.)* **i02869796**

NOTE	REF NO	GRAPHIC REF	PART NUMBER	QTY	PART NAME 1 2 3 4 5 6 (PRODUCT LEVEL)	SEE PAGE
	31	1	**4P-8134**	3	CLIP	
	32	1	**5M-2894**	2	WASHER-HARD (10.2X18.5X2.5-MM THK)	
	33	1	**5P-1075**	1	WASHER-HARD (10.2X22.5X3-MM THK)	
C	34	1	**6D-1641**	3	CLIP	
	35	1	**7X-7729**	6	WASHER (11X25X3-MM THK)	
	36	1	**8J-8197**	2	CLIP	
	37	1	**8S-0948**	1	CLIP	
	38	1	**8T-4121**	13	WASHER-HARD (11X21X2.5-MM THK)	
M	39	1	**8T-4133**	3	NUT (M10X1.5-THD)	
M	40	1	**8T-4136**	5	BOLT (M10X1.5X25-MM)	
M	41	1	**8T-4137**	8	BOLT (M10X1.5X20-MM)	
M	42	1	**8T-4185**	1	BOLT (M10X1.5X50-MM)	
M	43	1	**8T-4195**	1	BOLT (M10X1.5X30-MM)	
M	44	1	**8T-6466**	1	BOLT (M10X1.5X60-MM)	
	45	1	**9X-7378**	1	SEAL-O-RING	
	46	1	**9X-7380**	3	SEAL-O-RING	
	47	1	**9X-7381**	3	SEAL-O-RING	
	48	1	**9X-7382**	2	SEAL-O-RING	
	49	1	**9X-7383**	2	SEAL-O-RING	
	50	1	**9X-7385**	2	SEAL-O-RING	
D	51	1	**6V-2495**		SEAL (0.3-M)	

C-CHANGE FROM PREVIOUS TYPE
D-ORDER BY THE METER
E-ORDER BY THE CENTIMETER
I-REFER TO HYDRAULIC INFORMATION SYSTEM
M-METRIC PART

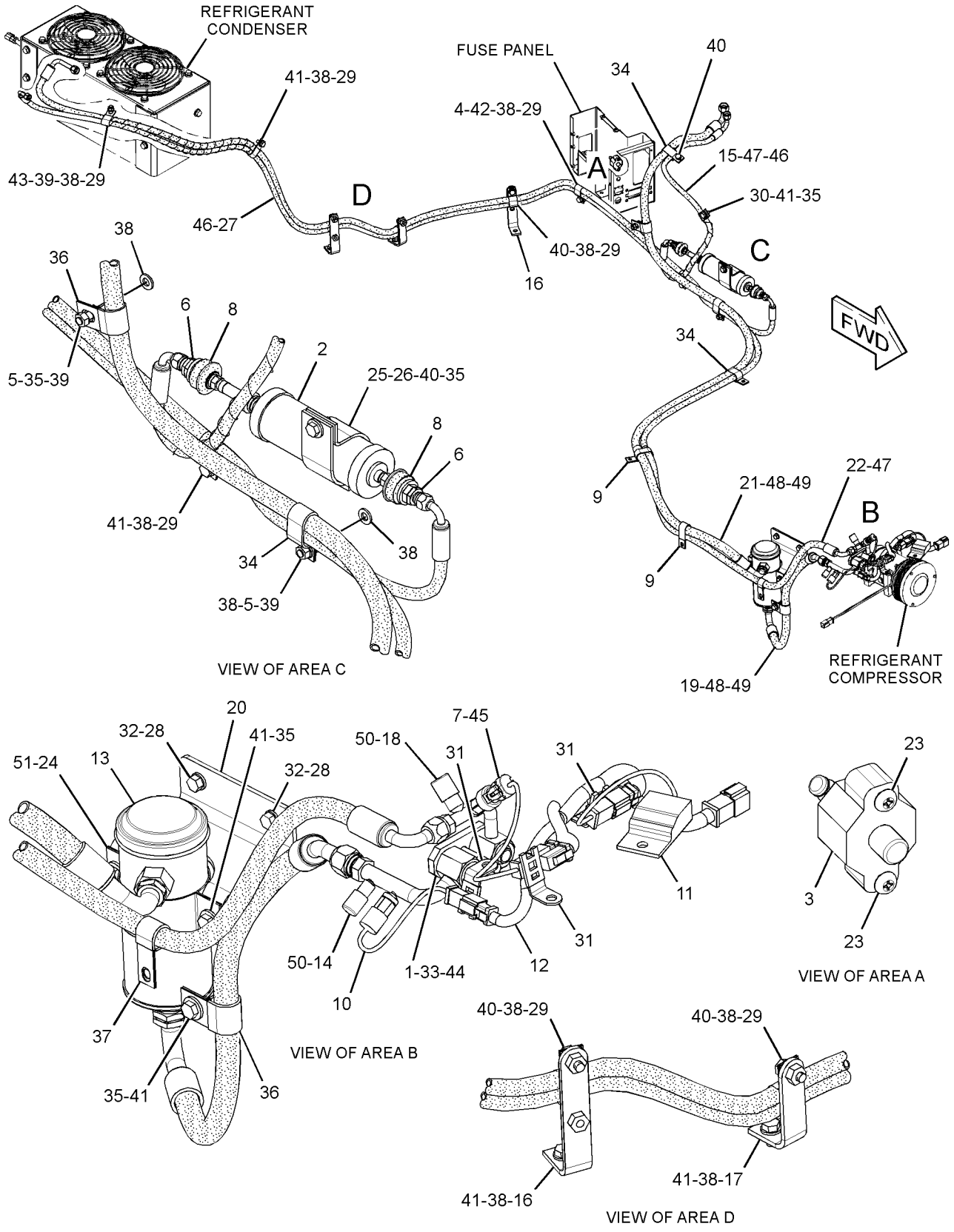

GRAPHIC #1 **<END>** g01426869

OPERATOR STATION

209-2124 LINES GP-AIR CONDITIONER—FENDER

S/N: J8B1278-UP

PART OF 209-9752 AIR CONDITIONER AR

AN ATTACHMENT

SMCS-1808 **i03399384**

NOTE	REF NO	GRAPHIC REF	PART NUMBER	QTY	PART NAME 1 2 3 4 5 6 (PRODUCT LEVEL)	SEE PAGE
	1	1	**1P-6356**	1	PLATE	
	2	1	**175-7162**	1	RECEIVER-REFRIGERANT DRYER	
		1	**7X-2049**	1	TUBE AS-REFRIGERANT ORIFICE	
	3	1	**6T-3643**	1	CIRCUIT BREAKER AS (15-AMPERE) (AIR CONDITIONER)	
		1	**6V-8376**	2	SCREW-MACHINE (8-32X0.25-IN)	
		1	**9B-7233**	2	LOCKWASHER	
	4	1	**9R-2216**	1	BOSS	
M	5	1	**101-3129**	2	STUD (M10X1.5-THD)	
	6	1	**103-6100**	2	FITTING AS-AIR CONDITIONER (QUICK DISCONNECT)	
		1	**9X-7382**	2	SEAL-O-RING	
	7	1	**114-5333**	1	SWITCH AS-PRESSURE (COMPRESSOR, HIGH SIDE)	
		1	**102-8802**	1	KIT-RECEPTACLE (2-PIN)	
					(INCLUDES RECEPTACLE AS & WEDGE)	
		1	**186-3735**	2	PIN-CONNECTOR (16-GA TO 18-GA)	
E		1	**9X-1386**		SLEEVE (25-CM)	
	8	1	**116-6202**	2	BOOT	
	9	1	**130-9984**	2	CLIP	
	10	1	**149-6371**	1	SWITCH AS-PRESSURE (COMPRESSOR, LOW SIDE)	
		1	**102-8802**	1	KIT-RECEPTACLE (2-PIN)	
					(INCLUDES RECEPTACLE AS & WEDGE)	
		1	**186-3735**	2	PIN-CONNECTOR (16-GA TO 18-GA)	
	11	1	**169-7443**	1	TIMER AS-ON DELAY (24-VOLT)	
		1	**102-8804**	1	KIT-RECEPTACLE (4-PIN)	
					(INCLUDES RECEPTACLE AS & WEDGE)	
		1	**186-3735**	4	PIN-CONNECTOR (16-GA TO 18-GA)	
	12	1	**170-5293**	1	HARNESS AS-HEATER & AIR COND (COMPRESSOR)	
	13	1	**186-6189**	1	ACCUMULATOR-REFRIGERANT	
	14	1	**187-8661**	1	FITTING AS-AIR CONDITIONER	
		1	**3E-4051**	1	CAP-SEAL	
		1	**3E-4057**	1	VALVE AS	
		1	**172-4880**	1	CAP-SEAL	
		1	**180-7180**	1	CORE-VALVE	
I	15	1	**218-2240**	1	HOSE AS	
	16	1	**220-1622**	2	BRACKET AS	
	17	1	**229-2681**	1	BRACKET AS	
	18	1	**246-2984**	1	FITTING AS-AIR CONDITIONER	
		1	**2L-1224**	1	CAP	
		1	**3E-4052**	1	CAP-SEAL	
		1	**3E-4058**	1	VALVE AS	
		1	**180-7180**	1	CORE-VALVE	
I	19	1	**265-6975**	1	HOSE AS	
	20	1	**265-6977**	1	BRACKET AS	
I	21	1	**330-6563**	1	HOSE AS	
I	22	1	**304-0391**	1	HOSE AS	
	23	1	**068-4209**	2	SCREW (8-32X0.75-IN)	
	24	1	**101-8296**	2	CLIP	
	25	1	**109-1633**	1	CLIP (SLOT)	
	26	1	**109-1634**	1	CLIP (TAB)	
I	27	1	**218-2246**	1	HOSE AS	
	28	1	**0S-0509**	2	BOLT (3/8-16X0.75-IN)	
	29	1	**4D-7733**	7	CLIP	
	31	1	**4P-8134**	3	CLIP	
	32	1	**5M-2894**	2	WASHER-HARD (10.2X18.5X2.5-MM THK)	
	33	1	**5P-1075**	1	WASHER-HARD (10.2X22.5X3-MM THK)	

209-2124 LINES GP-AIR CONDITIONER *(contd.)* i03399384

NOTE	REF NO	GRAPHIC REF	PART NUMBER	QTY	PART NAME 1 2 3 4 5 6 (PRODUCT LEVEL)	SEE PAGE
	34	1	**6D-1641**	3	CLIP	
C	35	1	**7X-7729**	5	WASHER (11X25X3-MM THK)	
C	36	1	**8J-8197**	3	CLIP	
	38	1	**8T-4121**	13	WASHER-HARD (11X21X2.5-MM THK)	
M	39	1	**8T-4133**	3	NUT (M10X1.5-THD)	
M	40	1	**8T-4136**	5	BOLT (M10X1.5X25-MM)	
CM	41	1	**8T-4137**	7	BOLT (M10X1.5X20-MM)	
M	42	1	**8T-4185**	1	BOLT (M10X1.5X50-MM)	
M	43	1	**8T-4195**	1	BOLT (M10X1.5X30-MM)	
M	44	1	**8T-6466**	1	BOLT (M10X1.5X60-MM)	
	45	1	**9X-7378**	1	SEAL-O-RING	
	46	1	**9X-7380**	3	SEAL-O-RING	
	47	1	**9X-7381**	3	SEAL-O-RING	
	48	1	**9X-7382**	2	SEAL-O-RING	
	49	1	**9X-7383**	2	SEAL-O-RING	
	50	1	**9X-7385**	2	SEAL-O-RING	
D	51	1	**6V-2495**		SEAL (0.3-M)	

C-CHANGE FROM PREVIOUS TYPE
D-ORDER BY THE METER
E-ORDER BY THE CENTIMETER
I-REFER TO HYDRAULIC INFORMATION SYSTEM
M-METRIC PART

209-2124 **LINES GP-AIR CONDITIONER** *(contd.)* **i03399384**

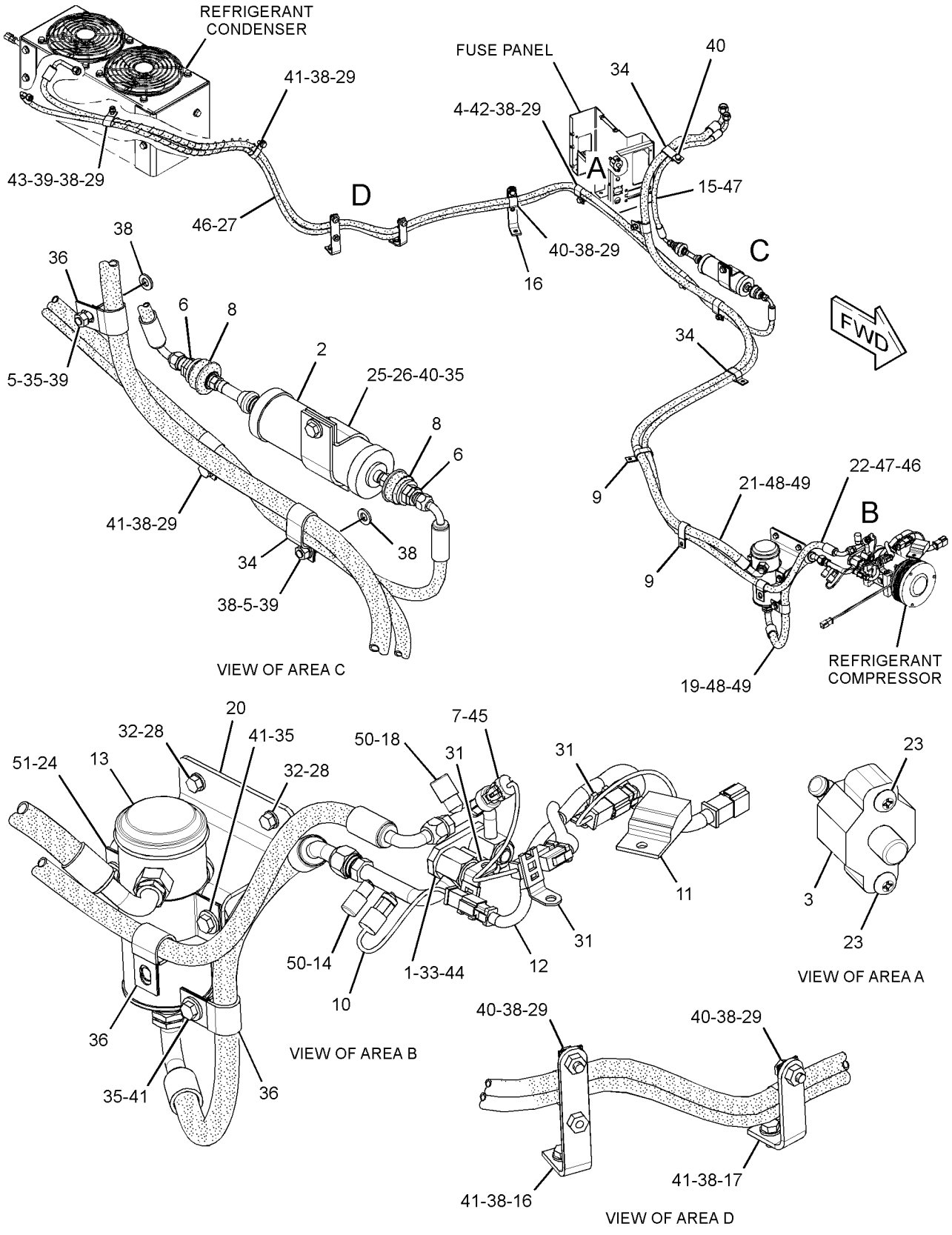

GRAPHIC #1 **<END>** g01454334

OPERATOR STATION

209-2125 LINES GP-AIR CONDITIONER—UNDER HOOD

S/N: J8B1-501

PART OF 209-8294 AIR CONDITIONER AR

AN ATTACHMENT

SMCS-1808 **i02242120**

NOTE	REF NO	GRAPHIC REF	PART NUMBER	QTY	PART NAME 1 2 3 4 5 6 (PRODUCT LEVEL)	SEE PAGE
	1	1	**1P-6356**	1	PLATE	
	2	1	**175-7162**	1	RECEIVER-REFRIGERANT DRYER	
M	3	1	**101-3129**	2	STUD (M10X1.5-THD)	
	4	1	**103-6100**	2	FITTING AS-AIR CONDITIONER (QUICK DISCONNECT)	
					(EACH INCLUDES)	
		1	**9X-7382**	2	SEAL-O-RING	
	5	1	**114-5333**	1	SWITCH AS-PRESSURE (COMPRESSOR, HIGH SIDE)	
		1	**102-8802**	1	KIT-RECEPTACLE (2-PIN)	
					(INCLUDES RECEPTACLE AS & WEDGE)	
		1	**186-3735**	2	PIN-CONNECTOR (16-GA TO 18-GA)	
		1	**3E-3365**	1	WEDGE-RECEPTACLE LOCK (2-PIN)	
E		1	**9X-1386**		SLEEVE (25-CM)	
	6	1	**116-6202**	2	BOOT	
	7	1	**149-6371**	1	SWITCH AS-PRESSURE (COMPRESSOR, LOW SIDE)	
		1	**102-8802**	1	KIT-RECEPTACLE (2-PIN)	
					(INCLUDES RECEPTACLE AS & WEDGE)	
		1	**3E-3365**	1	WEDGE-RECEPTACLE LOCK (2-PIN)	
		1	**186-3735**	2	PIN-CONNECTOR (16-GA TO 18-GA)	
	8	1	**169-7443**	1	TIMER AS-ON DELAY (24-VOLT) (COMPRESSOR CYCLE LIMITER)	
		1	**186-3735**	4	PIN-CONNECTOR (16-GA TO 18-GA)	
		1	**102-8804**	1	KIT-RECEPTACLE (4-PIN)	
					(INCLUDES RECEPTACLE AS & WEDGE)	
	9	1	**170-5293**	1	HARNESS AS-HEATER & AIR COND (COMPRESSOR)	
		1	**102-8805**	1	KIT-RECEPTACLE (6-PIN)	
					(INCLUDES RECEPTACLE AS & WEDGE)	
		1	**155-2270**	3	KIT-CONNECTING PLUG (2-PIN)	
					(EACH INCLUDES PLUG AS & WEDGE)	
		1	**155-2272**	1	PLUG AS-CONNECTOR (4-PIN)	
	10	1	**186-6189**	1	ACCUMULATOR-REFRIGERANT	
	11	1	**187-8661**	1	FITTING AS-AIR CONDITIONER (LOW SIDE)	
		1	**3E-4051**	1	CAP-SEAL	
		1	**3E-4057**	1	VALVE AS	
		1	**172-4880**	1	CAP-SEAL	
		1	**180-7180**	1	CORE-VALVE	
		1	**180-7181**	1	BODY-VALVE	
I	12	1	**218-2243**	1	HOSE AS	
I	13	1	**218-2244**	1	HOSE AS	
	14	1	**218-2252**	1	BRACKET AS	
	15	1	**237-4977**	1	BRACKET AS	
	16	1	**246-2984**	1	FITTING AS-AIR CONDITIONER (HIGH SIDE)	
		1	**2L-1224**	1	CAP	
		1	**3E-4052**	1	CAP-SEAL	
		1	**3E-4058**	1	VALVE AS	
		1	**180-7180**	1	CORE-VALVE	
	17	1	**101-8296**	2	CLIP	
	18	1	**109-1633**	1	CLIP (SLOT)	
	19	1	**109-1634**	1	CLIP (TAB)	
I	20	1	**218-2240**	1	HOSE AS	
I	21	1	**218-2241**	1	HOSE AS	
I	22	1	**218-2242**	1	HOSE AS	
	23	1	**1S-6420**	1	CLIP	
	24	1	**4K-8302**	1	CLIP	
	25	1	**4K-8864**	2	CLIP	
	26	1	**4P-8134**	3	CLIP	

209-2125 **LINES GP-AIR CONDITIONER** *(contd.)* **i02242120**

NOTE	REF NO	GRAPHIC REF	PART NUMBER	QTY	PART NAME 1 2 3 4 5 6 (PRODUCT LEVEL)	SEE PAGE
	27	1	**4S-1936**	1	CLIP	
	28	1	**5P-1075**	1	WASHER-HARD (10.2X22.5X3-MM THK)	
	29	1	**6D-1641**	1	CLIP	
	30	1	**7X-7729**	12	WASHER (11X25X3-MM THK)	
	31	1	**8J-8197**	6	CLIP	
	32	1	**8T-4121**	6	WASHER-HARD (11X21X2.5-MM THK)	
M	33	1	**8T-4133**	2	NUT (M10X1.5-THD)	
M	34	1	**8T-4136**	5	BOLT (M10X1.5X25-MM)	
M	35	1	**8T-4137**	2	BOLT (M10X1.5X20-MM)	
M	36	1	**8T-4195**	4	BOLT (M10X1.5X30-MM)	
M	37	1	**8T-6466**	3	BOLT (M10X1.5X60-MM)	
	38	1	**9X-7378**	1	SEAL-O-RING	
	39	1	**9X-7380**	3	SEAL-O-RING	
	40	1	**9X-7381**	3	SEAL-O-RING	
	41	1	**9X-7382**	2	SEAL-O-RING	
	42	1	**9X-7383**	2	SEAL-O-RING	
	43	1	**9X-7385**	2	SEAL-O-RING	
BD	44	1	**6V-2495**		SEAL	

B-USE AS REQUIRED
D-ORDER BY THE METER
E-ORDER BY THE CENTIMETER
I-REFER TO HYDRAULIC INFORMATION SYSTEM
M-METRIC PART

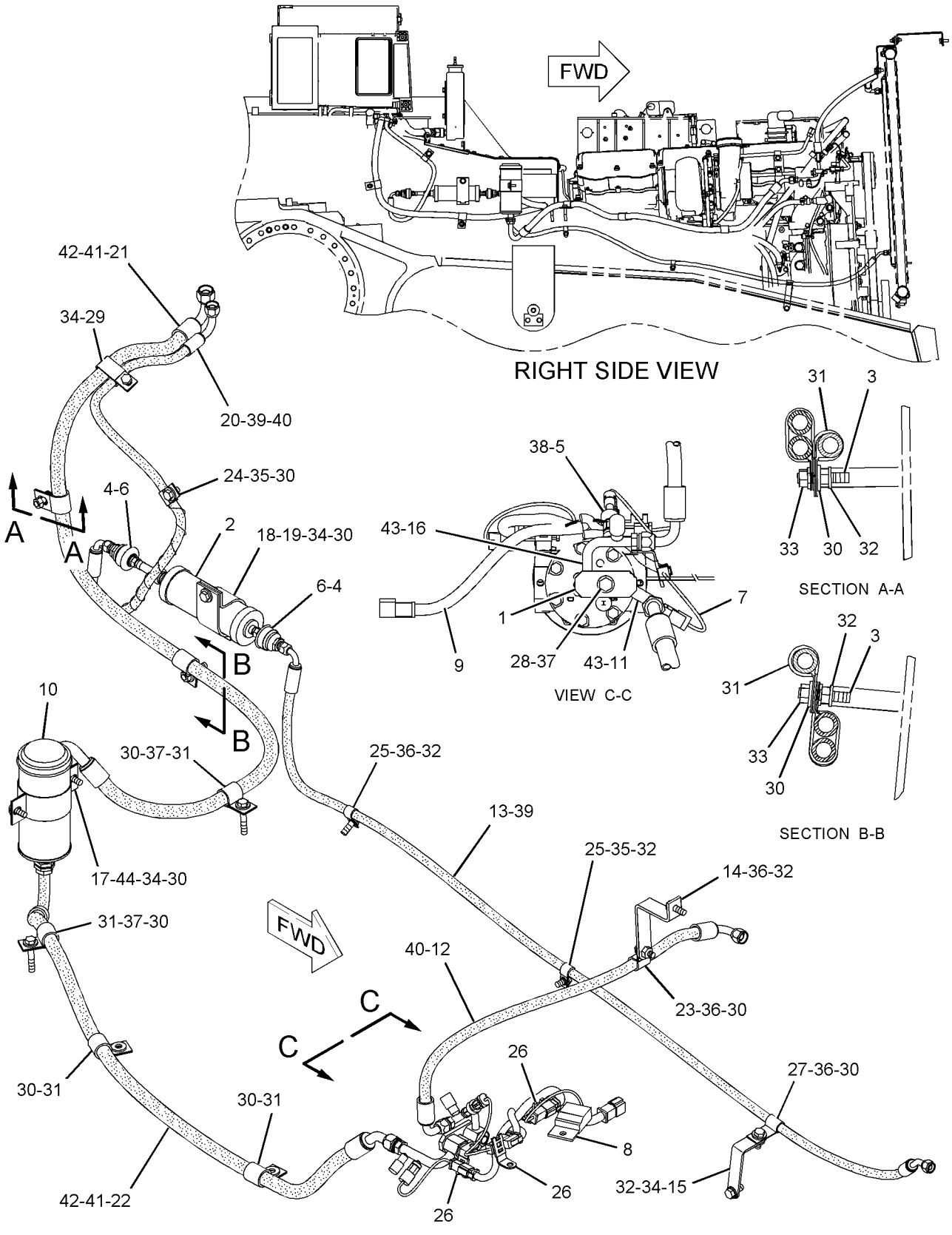

GRAPHIC #1 **<END>** g01110515

OPERATOR STATION

209-2125 LINES GP-AIR CONDITIONER—UNDER HOOD

S/N: J8B502-1277

PART OF 209-8294 AIR CONDITIONER AR

AN ATTACHMENT

SMCS-1808 **i02869917**

NOTE	REF NO	GRAPHIC REF	PART NUMBER	QTY	PART NAME 1 2 3 4 5 6 (PRODUCT LEVEL)	SEE PAGE
	1	1	**1P-6356**	1	PLATE	
	2	1	**175-7162**	1	RECEIVER-REFRIGERANT DRYER	
		1	**7X-2049**	1	TUBE AS-REFRIGERANT ORIFICE	
M	3	1	**101-3129**	2	STUD (M10X1.5-THD)	
	4	1	**103-6100**	2	FITTING AS-AIR CONDITIONER (QUICK DISCONNECT)	
					(EACH INCLUDES)	
		1	**9X-7382**	2	SEAL-O-RING	
	5	1	**114-5333**	1	SWITCH AS-PRESSURE (COMPRESSOR, HIGH SIDE)	
		1	**102-8802**	1	KIT-RECEPTACLE (2-PIN)	
					(INCLUDES RECEPTACLE AS & WEDGE)	
		1	**186-3735**	2	PIN-CONNECTOR (16-GA TO 18-GA)	
E		1	**9X-1386**		SLEEVE (25-CM)	
	6	1	**116-6202**	2	BOOT	
	7	1	**149-6371**	1	SWITCH AS-PRESSURE (COMPRESSOR, LOW SIDE)	
		1	**102-8802**	1	KIT-RECEPTACLE (2-PIN)	
					(INCLUDES RECEPTACLE AS & WEDGE)	
		1	**186-3735**	2	PIN-CONNECTOR (16-GA TO 18-GA)	
	8	1	**169-7443**	1	TIMER AS-ON DELAY (24-VOLT) (COMPRESSOR CYCLE LIMITER)	
		1	**186-3735**	4	PIN-CONNECTOR (16-GA TO 18-GA)	
		1	**102-8804**	1	KIT-RECEPTACLE (4-PIN)	
					(INCLUDES RECEPTACLE AS & WEDGE)	
	9	1	**170-5293**	1	HARNESS AS-HEATER & AIR COND (COMPRESSOR)	
		1	**102-8805**	1	KIT-RECEPTACLE (6-PIN)	
					(INCLUDES RECEPTACLE AS & WEDGE)	
		1	**155-2270**	3	KIT-CONNECTING PLUG (2-PIN)	
					(EACH INCLUDES PLUG AS, WEDGE & INTERFACE SEAL)	
		1	**155-2272**	1	PLUG AS-CONNECTOR (4-PIN)	
	10	1	**186-6189**	1	ACCUMULATOR-REFRIGERANT	
	11	1	**187-8661**	1	FITTING AS-AIR CONDITIONER (LOW SIDE)	
		1	**3E-4051**	1	CAP-SEAL	
		1	**3E-4057**	1	VALVE AS	
		1	**172-4880**	1	CAP-SEAL	
		1	**180-7180**	1	CORE-VALVE	
I	12	1	**218-2240**	1	HOSE AS	
I	13	1	**218-2243**	1	HOSE AS	
I	14	1	**218-2244**	1	HOSE AS	
	15	1	**218-2252**	1	BRACKET AS	
	16	1	**237-4977**	1	BRACKET AS	
	17	1	**246-2984**	1	FITTING AS-AIR CONDITIONER (HIGH SIDE)	
		1	**2L-1224**	1	CAP	
		1	**3E-4052**	1	CAP-SEAL	
		1	**3E-4058**	1	VALVE AS	
		1	**180-7180**	1	CORE-VALVE	
I	18	1	**265-6975**	1	HOSE AS	
	19	1	**265-6977**	1	BRACKET AS	
I	20	1	**303-8792**	1	HOSE AS	
	21	1	**101-8296**	2	CLIP	
	22	1	**109-1633**	1	CLIP (SLOT)	
	23	1	**109-1634**	1	CLIP (TAB)	
	24	1	**0S-0509**	2	BOLT (3/8-16X0.75-IN)	
	25	1	**1S-6420**	1	CLIP	
	26	1	**4K-8302**	1	CLIP	
	27	1	**4K-8864**	2	CLIP	

209-2125 **LINES GP-AIR CONDITIONER** *(contd.)* **i02869917**

NOTE	REF NO	GRAPHIC REF	PART NUMBER	QTY	PART NAME 1 2 3 4 5 6 (PRODUCT LEVEL)	SEE PAGE
	28	1	**4P-8134**	3	CLIP	
	29	1	**4S-1936**	1	CLIP	
	30	1	**5M-2894**	2	WASHER-HARD (10.2X18.5X2.5-MM THK)	
	31	1	**5N-2840**	1	CLIP	
	32	1	**5P-1075**	1	WASHER-HARD (10.2X22.5X3-MM THK)	
	33	1	**6D-1641**	1	CLIP	
	34	1	**7X-7729**	11	WASHER (11X25X3-MM THK)	
	35	1	**8D-9947**	1	CLIP	
	36	1	**8J-8197**	4	CLIP	
	37	1	**8T-4121**	6	WASHER-HARD (11X21X2.5-MM THK)	
M	38	1	**8T-4133**	2	NUT (M10X1.5-THD)	
M	39	1	**8T-4136**	4	BOLT (M10X1.5X25-MM)	
M	40	1	**8T-4137**	5	BOLT (M10X1.5X20-MM)	
M	41	1	**8T-4195**	3	BOLT (M10X1.5X30-MM)	
M	42	1	**8T-6466**	3	BOLT (M10X1.5X60-MM)	
	43	1	**9X-7378**	1	SEAL-O-RING	
	44	1	**9X-7380**	3	SEAL-O-RING	
	45	1	**9X-7381**	3	SEAL-O-RING	
	46	1	**9X-7382**	2	SEAL-O-RING	
	47	1	**9X-7383**	2	SEAL-O-RING	
	48	1	**9X-7385**	2	SEAL-O-RING	
D	49	1	**6V-2495**		SEAL (0.3-M)	

D-ORDER BY THE METER
E-ORDER BY THE CENTIMETER
I-REFER TO HYDRAULIC INFORMATION SYSTEM
M-METRIC PART

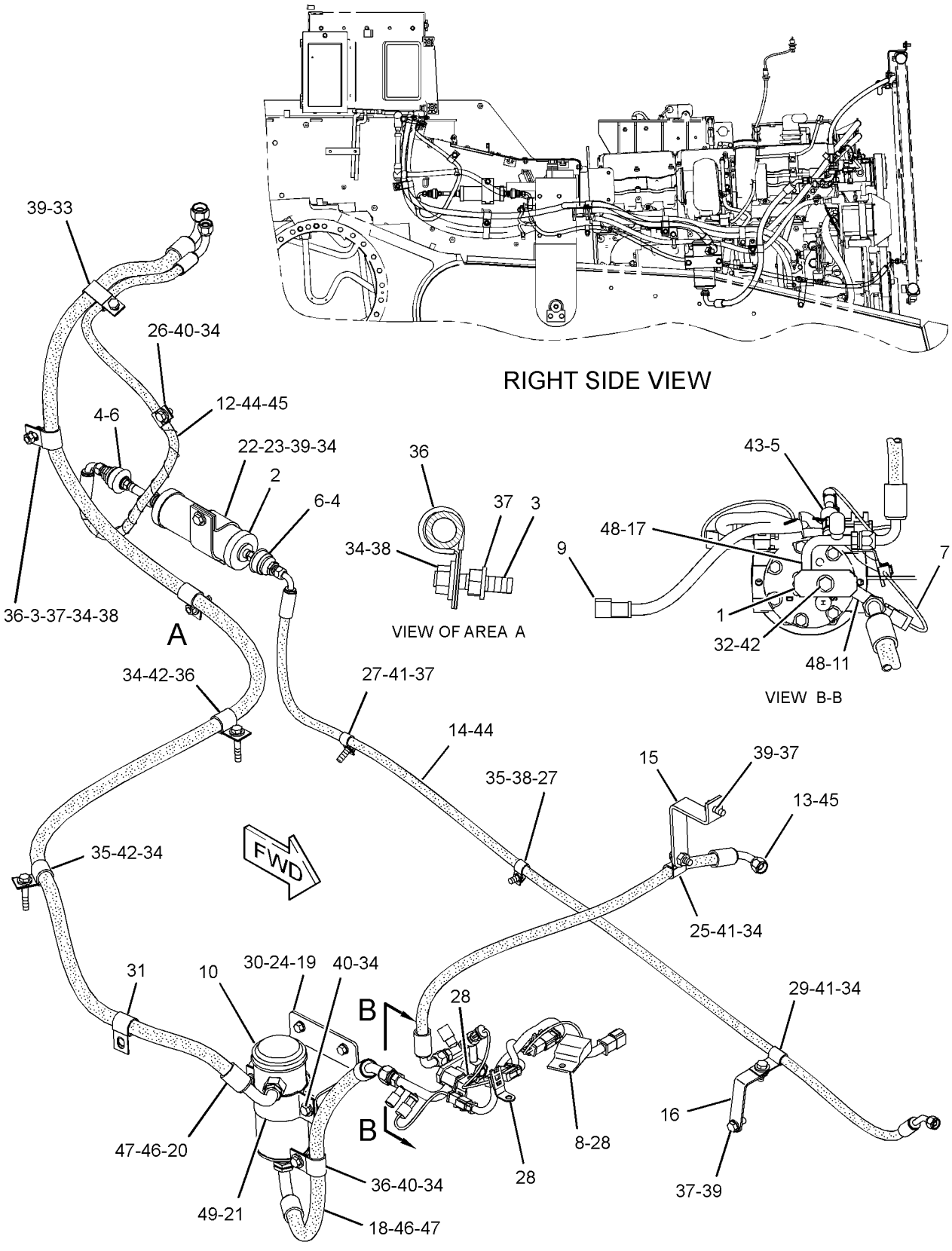

GRAPHIC #1 **<END>** g01419759

OPERATOR STATION

209-2125 LINES GP-AIR CONDITIONER—UNDER HOOD

S/N: J8B1278-UP
PART OF 209-8294 AIR CONDITIONER AR
AN ATTACHMENT

SMCS-1808 **i03399388**

NOTE	REF NO	GRAPHIC REF	PART NUMBER	QTY	PART NAME 1 2 3 4 5 6 (PRODUCT LEVEL)	SEE PAGE
	1	1	**1P-6356**	1	PLATE	
	2	1	**175-7162**	1	RECEIVER-REFRIGERANT DRYER	
M	3	1	**101-3129**	2	STUD (M10X1.5-THD)	
	4	1	**103-6100**	2	FITTING AS-AIR CONDITIONER (QUICK DISCONNECT)	
					(EACH INCLUDES)	
		1	**9X-7382**	2	SEAL-O-RING	
	5	1	**114-5333**	1	SWITCH AS-PRESSURE (COMPRESSOR, HIGH SIDE)	
		1	**102-8802**	1	KIT-RECEPTACLE (2-PIN)	
					(INCLUDES RECEPTACLE AS & WEDGE)	
		1	**186-3735**	2	PIN-CONNECTOR (16-GA TO 18-GA)	
E		1	**9X-1386**		SLEEVE (25-CM)	
	6	1	**116-6202**	2	BOOT	
	7	1	**149-6371**	1	SWITCH AS-PRESSURE (COMPRESSOR, LOW SIDE)	
		1	**102-8802**	1	KIT-RECEPTACLE (2-PIN)	
					(INCLUDES RECEPTACLE AS & WEDGE)	
		1	**186-3735**	2	PIN-CONNECTOR (16-GA TO 18-GA)	
	8	1	**169-7443**	1	TIMER AS-ON DELAY (24-VOLT) (COMPRESSOR CYCLE LIMITER)	
		1	**186-3735**	4	PIN-CONNECTOR (16-GA TO 18-GA)	
		1	**102-8804**	1	KIT-RECEPTACLE (4-PIN)	
					(INCLUDES RECEPTACLE AS & WEDGE)	
	9	1	**170-5293**	1	HARNESS AS-HEATER & AIR COND (COMPRESSOR)	
	10	1	**186-6189**	1	ACCUMULATOR-REFRIGERANT	
	11	1	**187-8661**	1	FITTING AS-AIR CONDITIONER (LOW SIDE)	
		1	**3E-4051**	1	CAP-SEAL	
		1	**3E-4057**	1	VALVE AS	
		1	**172-4880**	1	CAP-SEAL	
		1	**180-7180**	1	CORE-VALVE	
I	12	1	**218-2240**	1	HOSE AS	
I	13	1	**218-2243**	1	HOSE AS	
I	14	1	**218-2244**	1	HOSE AS	
	15	1	**218-2252**	1	BRACKET AS	
	16	1	**237-4977**	1	BRACKET AS	
	17	1	**246-2984**	1	FITTING AS-AIR CONDITIONER (HIGH SIDE)	
		1	**2L-1224**	1	CAP	
		1	**3E-4052**	1	CAP-SEAL	
		1	**3E-4058**	1	VALVE AS	
		1	**180-7180**	1	CORE-VALVE	
I	18	1	**265-6975**	1	HOSE AS	
	19	1	**265-6977**	1	BRACKET AS	
I	20	1	**330-6563**	1	HOSE AS	
	21	1	**101-8296**	2	CLIP	
	22	1	**109-1633**	1	CLIP (SLOT)	
	23	1	**109-1634**	1	CLIP (TAB)	
	24	1	**0S-0509**	2	BOLT (3/8-16X0.75-IN)	
	25	1	**1S-6420**	1	CLIP	
	26	1	**4K-8864**	2	CLIP	
	27	1	**4P-8134**	3	CLIP	
	28	1	**4S-1936**	1	CLIP	
	29	1	**5M-2894**	2	WASHER-HARD (10.2X18.5X2.5-MM THK)	
	30	1	**5N-2840**	1	CLIP	
	31	1	**5P-1075**	1	WASHER-HARD (10.2X22.5X3-MM THK)	
	32	1	**6D-1641**	1	CLIP	
C	33	1	**7X-7729**	11	WASHER (11X25X3-MM THK)	
	34	1	**8D-9947**	1	CLIP	

209-2125 LINES GP-AIR CONDITIONER *(contd.)* i03399388

NOTE	REF NO	GRAPHIC REF	PART NUMBER	QTY	PART NAME 1 2 3 4 5 6 (PRODUCT LEVEL)	SEE PAGE
	35	1	**8J-8197**	4	CLIP	
	36	1	**8T-4121**	5	WASHER-HARD (11X21X2.5-MM THK)	
M	37	1	**8T-4133**	2	NUT (M10X1.5-THD)	
M	38	1	**8T-4136**	4	BOLT (M10X1.5X25-MM)	
CM	39	1	**8T-4137**	4	BOLT (M10X1.5X20-MM)	
M	40	1	**8T-4195**	2	BOLT (M10X1.5X30-MM)	
M	41	1	**8T-6466**	3	BOLT (M10X1.5X60-MM)	
	42	1	**9X-7378**	1	SEAL-O-RING	
	43	1	**9X-7380**	3	SEAL-O-RING	
	44	1	**9X-7381**	3	SEAL-O-RING	
	45	1	**9X-7382**	2	SEAL-O-RING	
	46	1	**9X-7383**	2	SEAL-O-RING	
	47	1	**9X-7385**	2	SEAL-O-RING	
D	48	1	**6V-2495**		SEAL (0.3-M)	
M	49	1	**8T-4196**	1	BOLT (M10X1.5X35-MM)	

C-CHANGE FROM PREVIOUS TYPE
D-ORDER BY THE METER
E-ORDER BY THE CENTIMETER
I-REFER TO HYDRAULIC INFORMATION SYSTEM
M-METRIC PART

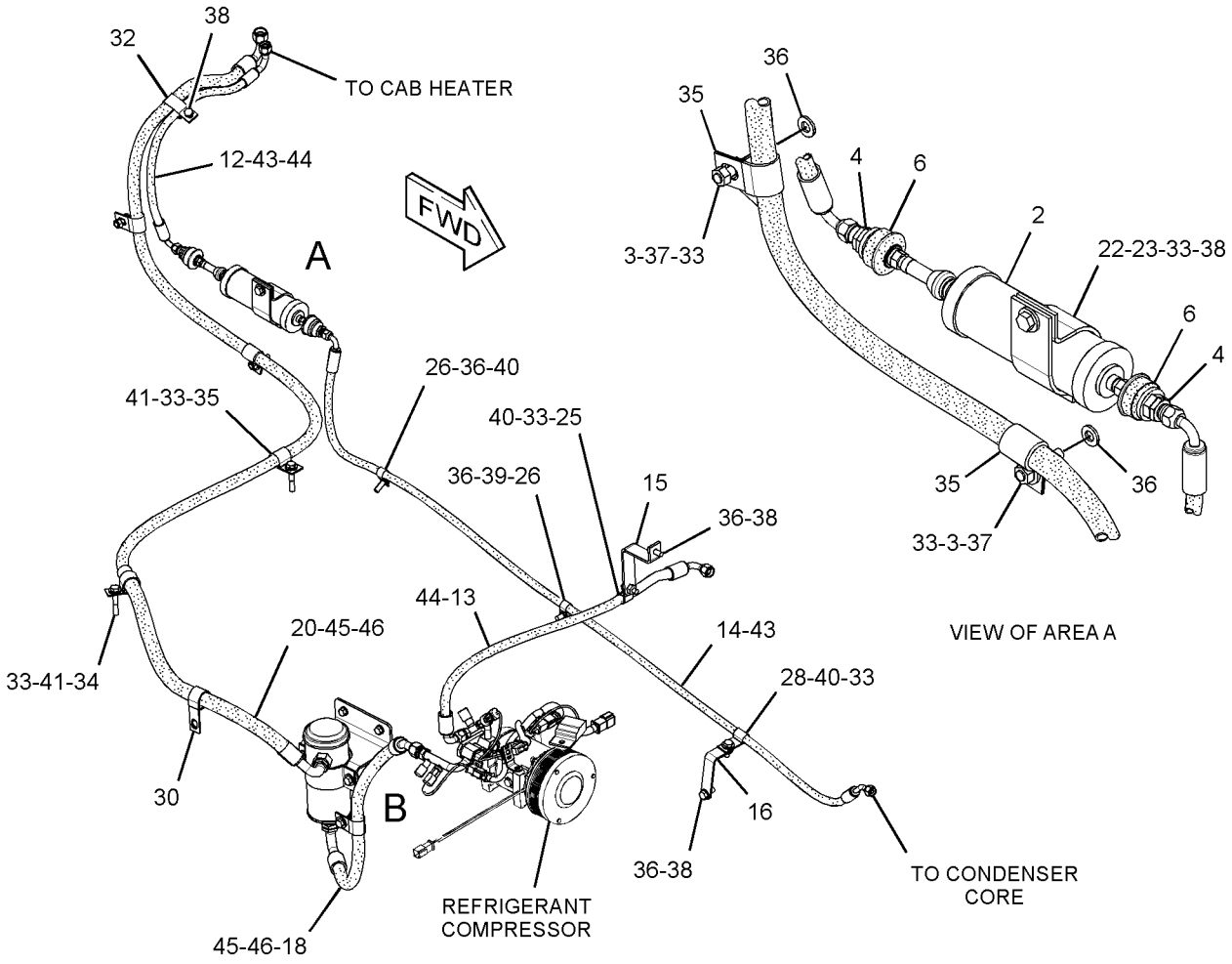

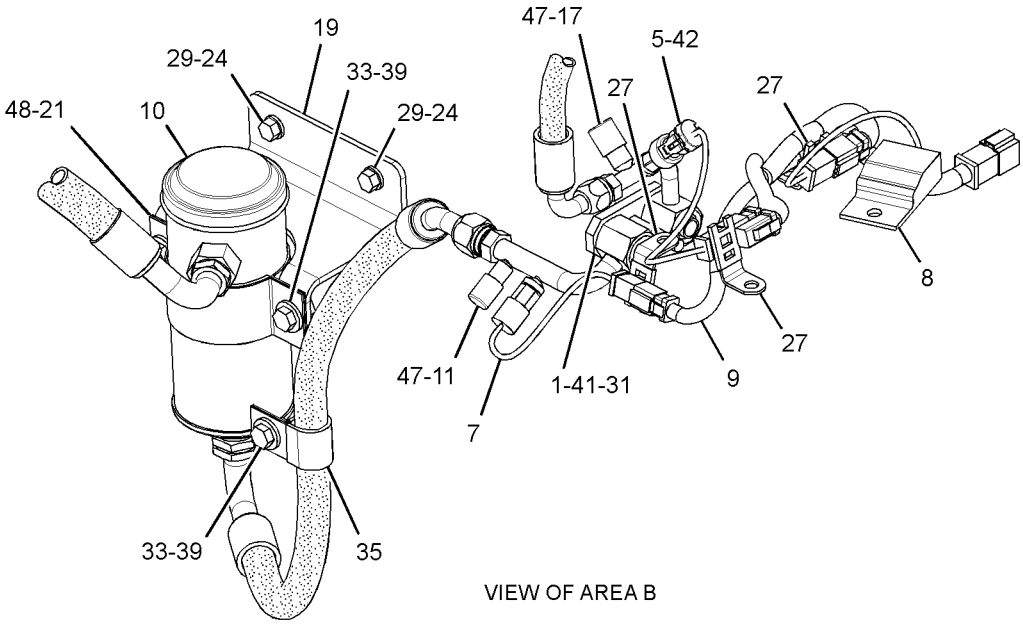

GRAPHIC #1 **<END>** g01454344

OPERATOR STATION

209-2127 LINES GP-HEATER

S/N: J8B1-UP

PART OF 206-6780 CHASSIS AR

SMCS-7304 **i02230713**

NOTE	REF NO	GRAPHIC REF	PART NUMBER	QTY	PART NAME 1 2 3 4 5 6 (PRODUCT LEVEL)	SEE PAGE
	1	1	**1H-7855**	2	SPACER (0.531X1X1.38-IN THK)	
	2	1	**8F-8151**	2	VALVE-SHUTOFF	
	3	1	*165-5007*	1	ELBOW AS	
		1	**6I-6547**	1	ELBOW	
		1	**3K-0360**	1	SEAL-O-RING	
	4	1	*155-7321*	1	ADAPTER AS	
		1	**6V-1722**	1	ADAPTER-O-RING	
		1	**3D-2824**	1	SEAL-O-RING	
	5	1	**159-1503**	4	CLAMP-HOSE	
	6	1	**3B-7255**	1	BUSHING-REDUCING	
	7	1	**6D-1641**	7	CLIP	
	8	1	**6L-9952**	1	ADAPTER	
	9	1	**6V-5050**	1	SEAL-O-RING	
	10	1	**8T-4121**	7	WASHER-HARD (11X21X2.5-MM THK)	
M	11	1	**8T-4137**	3	BOLT (M10X1.5X20-MM)	
M	12	1	**8T-4195**	2	BOLT (M10X1.5X30-MM)	
M	13	1	**8T-6466**	2	BOLT (M10X1.5X60-MM)	
E	14	1	**5P-0767**		HOSE (317-CM)	
E	14A	1	**5P-0767**		HOSE (326-CM)	

E-ORDER BY THE CENTIMETER
M-METRIC PART

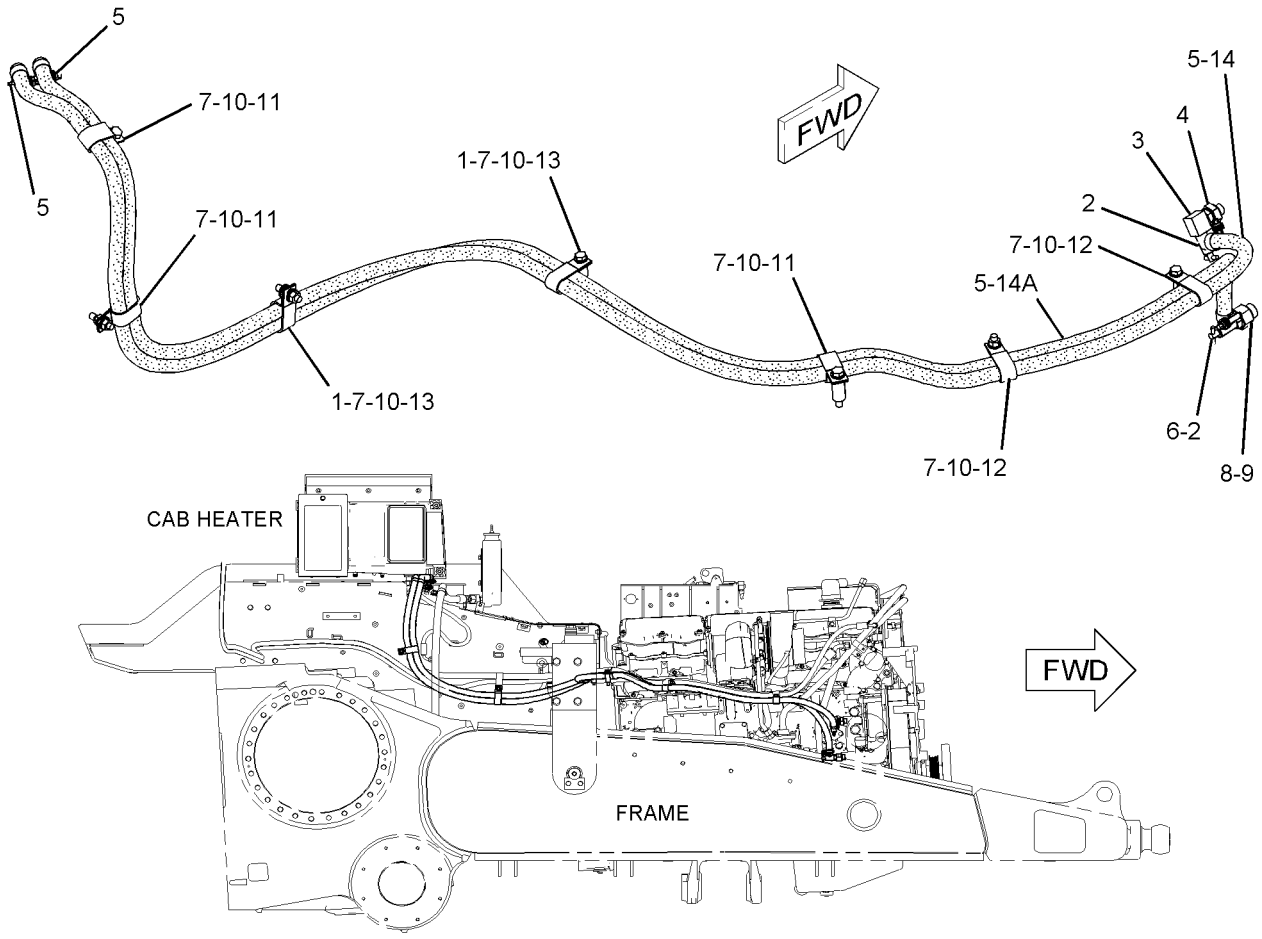

RIGHT SIDE VIEW

GRAPHIC #1 **<END>** g01125825

OPERATOR STATION

9P-9392 MIRROR GP-REAR VIEW—OPEN ROPS

S/N: J8B1-UP
PART OF 234-7952 ROPS GP-OPEN
AN ATTACHMENT

SMCS-7319 **i00568406**

NOTE	REF NO	GRAPHIC REF	PART NUMBER	QTY	PART NAME 1 2 3 4 5 6 (PRODUCT LEVEL)	SEE PAGE
	1	1	**5S-7379**	2	BOLT (3/8-16X0.875-IN)	
		1	**5P-1075**	2	WASHER-HARD (10.2X22.5X3-MM THK)	
	2	1	**9P-9390**	1	BRACKET	
	3	1	**9P-9388**	1	KNOB	
	4	1	**5P-6874**	1	MIRROR	
	5	1	**5K-9179**	1	BOLT-ROUND HEAD (3/8-16X11-IN)	

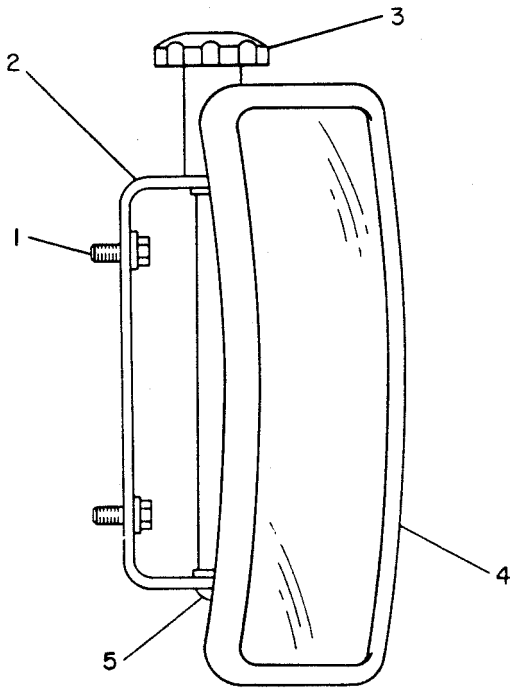

GRAPHIC #1 **<END>** g00143265

OPERATOR STATION

105-9659 MIRROR GP-REAR VIEW

S/N: J8B1-UP
PART OF 213-1100, 286-9188, 295-0710 CAB AR
ALSO AN ATTACHMENT

SMCS-7319 **i00599732**

NOTE	REF NO	GRAPHIC REF	PART NUMBER	QTY	PART NAME 1 2 3 4 5 6 (PRODUCT LEVEL)	SEE PAGE
	1	1	**9P-9388**	1	KNOB	
	2	1	**5P-6874**	1	MIRROR	
	3	1	**5K-9179**	1	BOLT-ROUND HEAD (3/8-16X11-IN)	
	4	1	**6Y-5113**	1	BRACKET	
	5	1	**8T-4121**	2	WASHER-HARD (11X21X2.5-MM THK)	
M	6	1	**8T-4195**	2	BOLT (M10X1.5X30-MM)	

M-METRIC PART

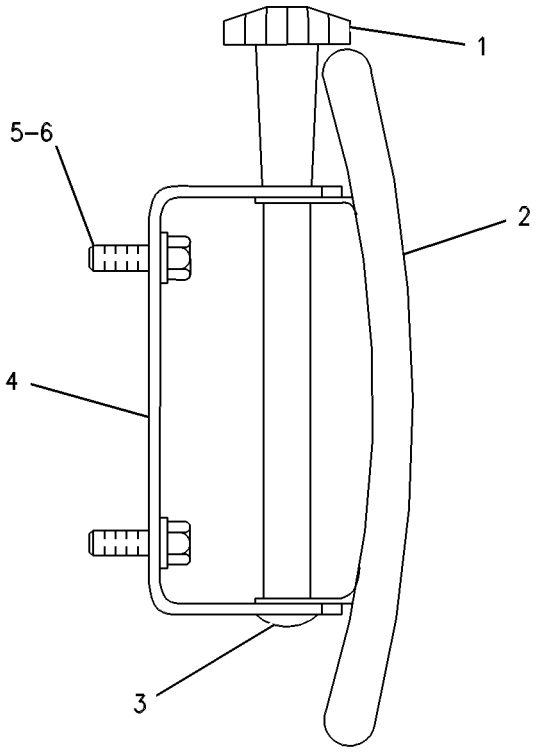

GRAPHIC #1 **<END>** g00254288

OPERATOR STATION

248-2939 MIRROR GP-REAR VIEW—CAB

S/N: J8B1-UP
PART OF 209-9752 AIR CONDITIONER AR
AN ATTACHMENT

SMCS-7319 **i02242259**

NOTE	REF NO	GRAPHIC REF	PART NUMBER	QTY	PART NAME 1 2 3 4 5 6 (PRODUCT LEVEL)	SEE PAGE
	1	1	**6V-9156**	1	MIRROR	
	2	1	**252-4730**	1	BRACKET AS	
	3	1	**7D-1649**	2	WASHER-HARD (13.5X32X5-MM THK)	
	4	1	**7X-7729**	3	WASHER (11X25X3-MM THK)	
M	5	1	**8T-4136**	5	BOLT (M10X1.5X25-MM)	

M-METRIC PART

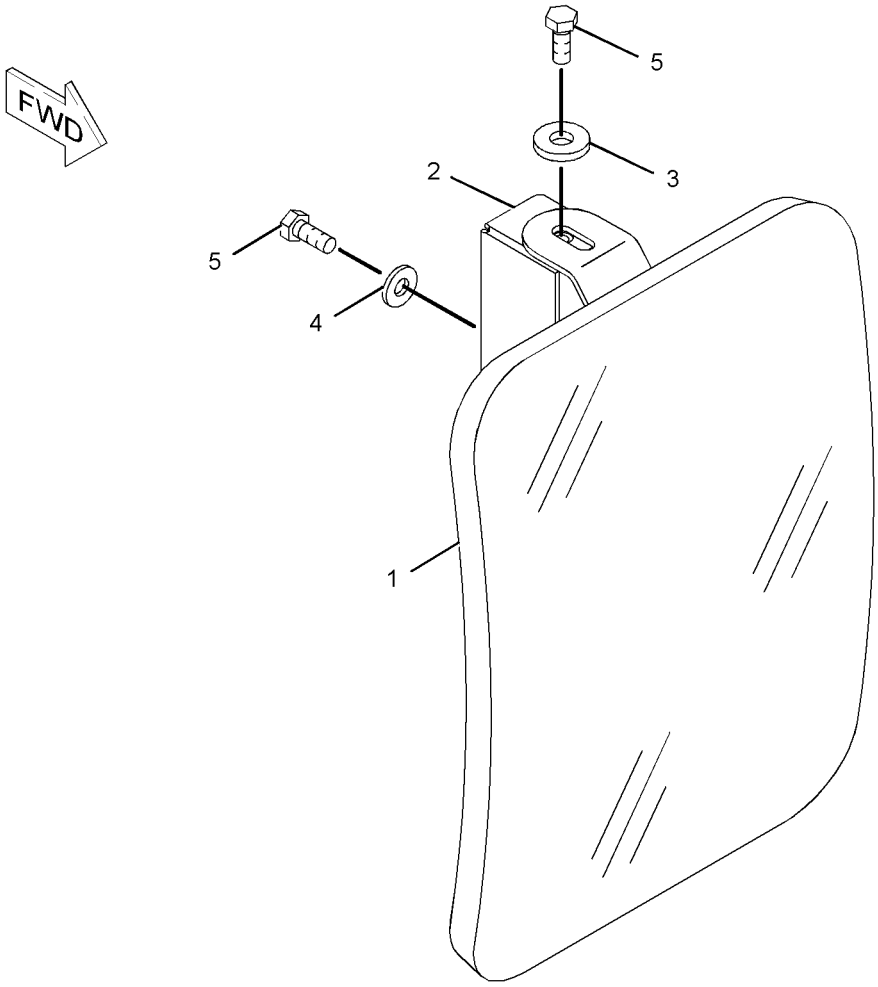

GRAPHIC #1 **<END>** g01111531

OPERATOR STATION

286-9124 MONITOR AS–LIGHT BAR

S/N: J8B1-UP

PART OF 290-5570, 290-5571, 292-0279, 292-0280 GRADE CONTROL AR-SATELLITE

SMCS-7431 **i02618799**

NOTE	REF NO	GRAPHIC REF	PART NUMBER	QTY	PART NAME 1 2 3 4 5 6 (PRODUCT LEVEL)	SEE PAGE
	1	1	**230-5009**	1	RECEPTACLE AS-CONNECTOR (4-PIN)	
	2	1	**9X-3402**	3	SOCKET-CONNECTOR (16-GA TO 18-GA)	
	3	1	**8T-8737**	1	PLUG-SEAL	

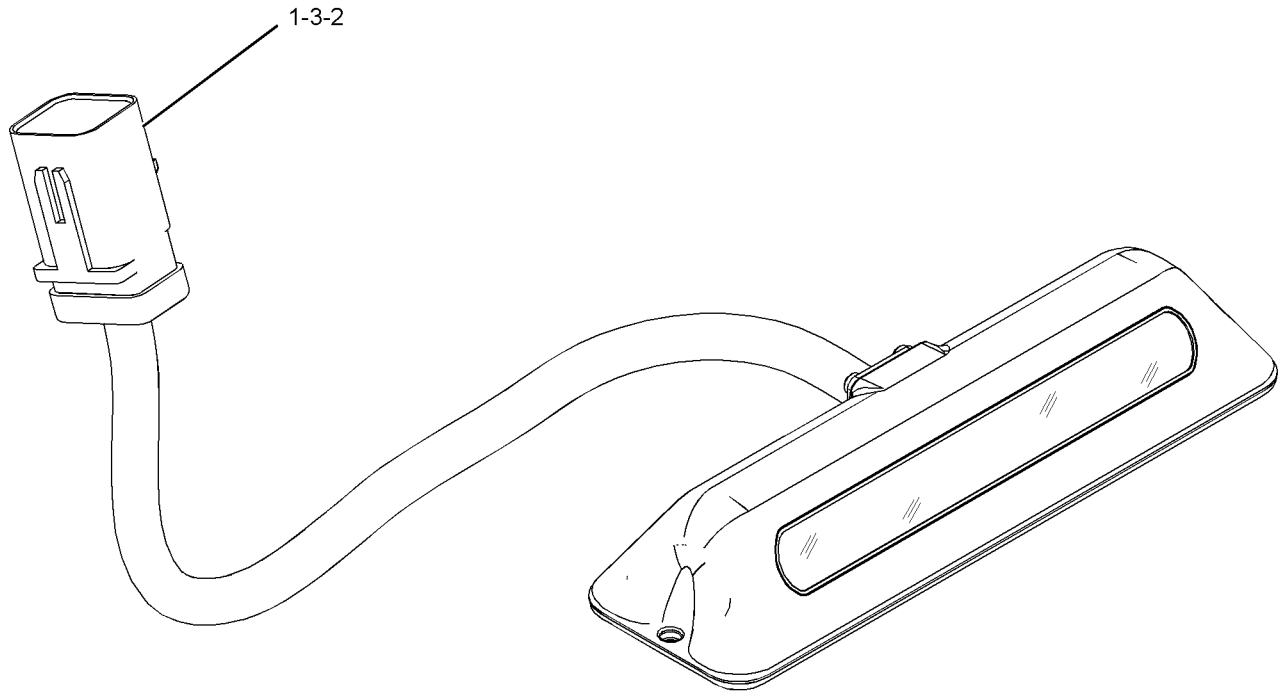

GRAPHIC #1 **<END>** g01313338

OPERATOR STATION

237-9140 MOUNTING GP-ANTENNA–GRADE CONTROL

S/N: J8B1-UP
PART OF 251-5810 GRADE CONTROL AR
AN ATTACHMENT
TYPE 1

SMCS-7606 **i02246193**

NOTE	REF NO	GRAPHIC REF	PART NUMBER	QTY	PART NAME 1 2 3 4 5 6 (PRODUCT LEVEL)	SEE PAGE
	1	1	**8C-5607**	6	MOUNT-ISOLATION	
	2	1	**8C-5608**	3	SPACER (6.5X9.5X25.4-MM THK)	
	3	1	**140-7480**	1	BRACKET-MOUNTING	
	4	1	**167-8610**	1	BRACKET AS	
	5	1	**239-5103**	1	PLATE AS	
	6	1	**5P-1076**	2	WASHER-HARD (13.5X30X4-MM THK)	
	7	1	**5S-7349**	2	BOLT (1/4-20X0.5-IN)	
M	8	1	**7X-2533**	3	BOLT (M6X1X35-MM)	
M	9	1	**8T-4139**	2	BOLT (M12X1.75X30-MM)	
	10	1	**9X-6165**	3	WASHER (6.5X22X2.5-MM THK)	
	11	1	**9X-8256**	2	WASHER (6.6X12X2-MM THK)	

M-METRIC PART

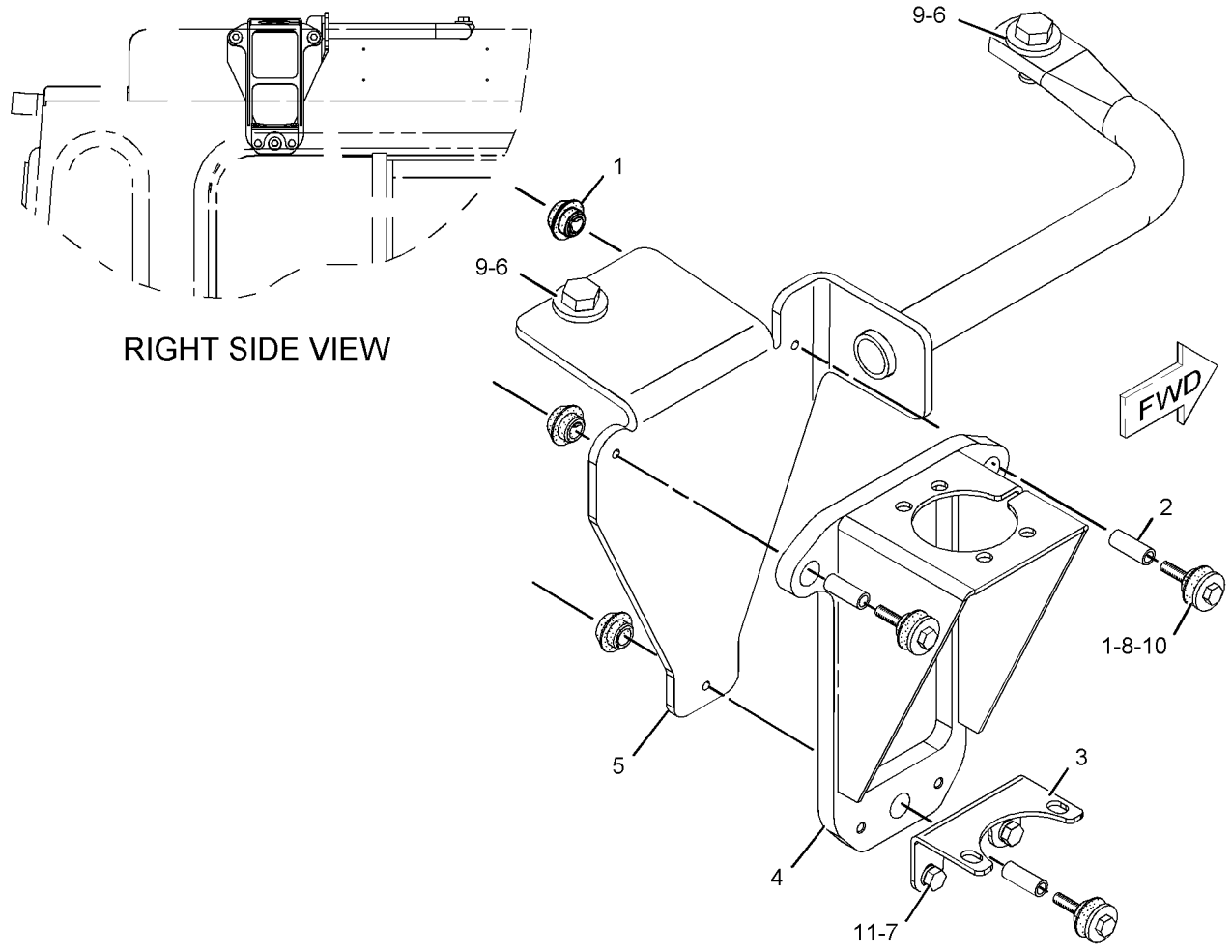

GRAPHIC #1 **<END>** g01112069

OPERATOR STATION

237-9140 MOUNTING GP-ANTENNA–GRADE CONTROL

S/N: J8B1-UP
PART OF 251-5810 GRADE CONTROL AR
AN ATTACHMENT
TYPE 2

SMCS-7606 **i02454131**

NOTE	REF NO	GRAPHIC REF	PART NUMBER	QTY	PART NAME 1 2 3 4 5 6 (PRODUCT LEVEL)	SEE PAGE
	1	1	**239-5103**	1	PLATE AS	
	2	1	**5P-1076**	2	WASHER-HARD (13.5X30X4-MM THK)	
M	3	1	**8T-4139**	2	BOLT (M12X1.75X30-MM)	

M-METRIC PART

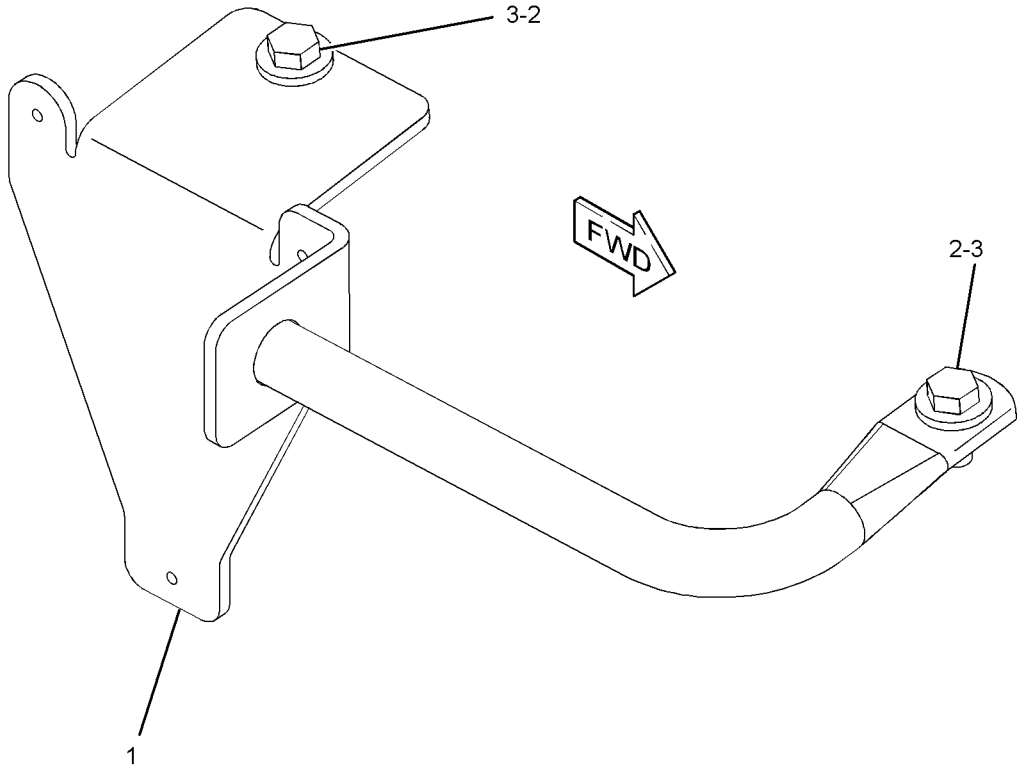

GRAPHIC #1 **<END>** g01164187

237-9140 MOUNTING GP-ANTENNA–GRADE CONTROL

S/N: J8B1-UP
PART OF 251-5810 GRADE CONTROL AR
AN ATTACHMENT
TYPE 3

SMCS-7606 **i03053206**

NOTE	REF NO	GRAPHIC REF	PART NUMBER	QTY	PART NAME 1 2 3 4 5 6 (PRODUCT LEVEL)	SEE PAGE
C	1	1	**317-2656**	1	HANDHOLD AS	
	2	1	**5P-1076**	2	WASHER-HARD (13.5X30X4-MM THK)	
M	3	1	**8T-4139**	2	BOLT (M12X1.75X30-MM)	

C-CHANGE FROM PREVIOUS TYPE
M-METRIC PART

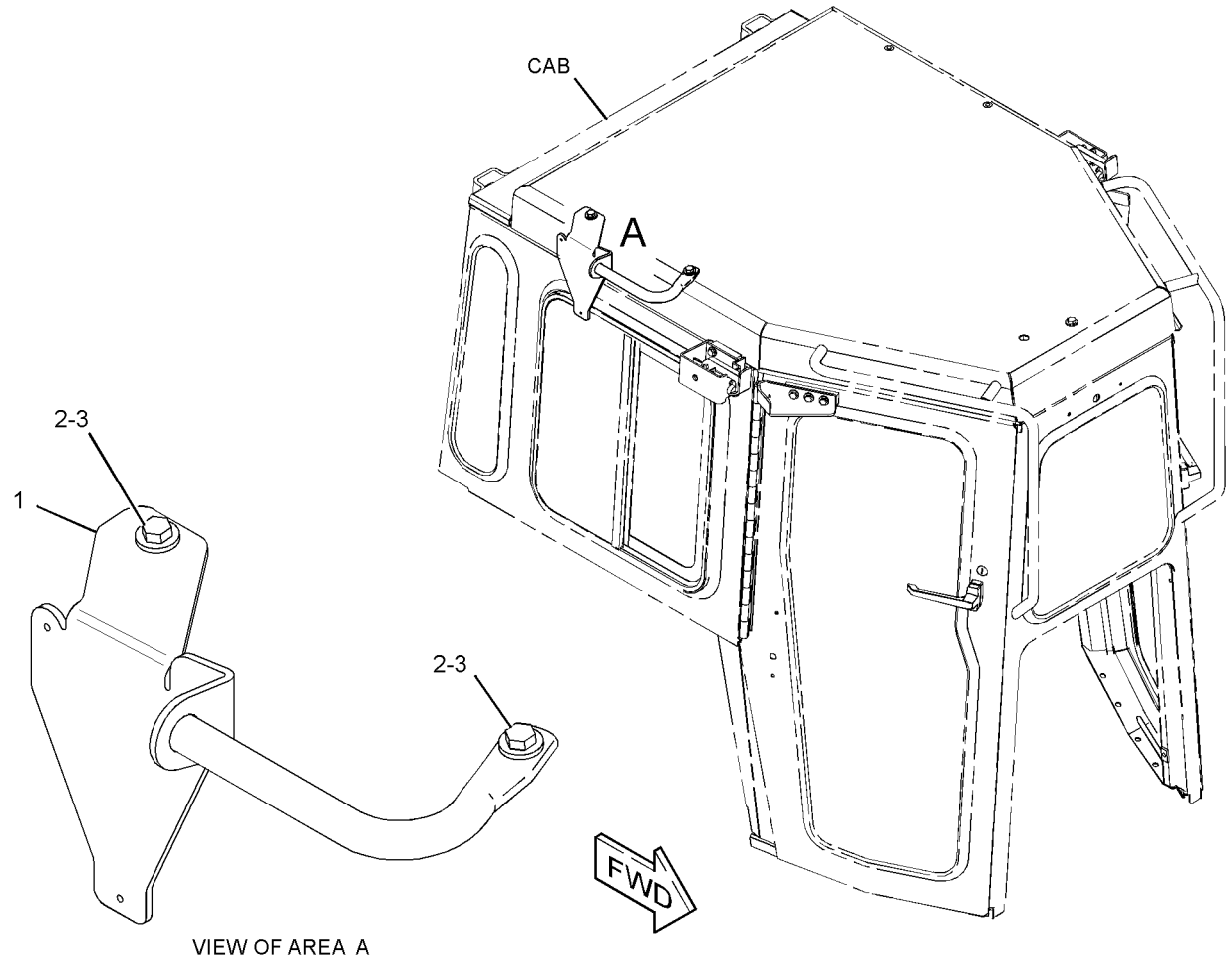

VIEW OF AREA A

GRAPHIC #1 **<END>** g01571261

OPERATOR STATION

214-1740 MOUNTING GP-CAB

S/N: J8B1-UP

PART OF 208-9607 CAB AR

SMCS-7266, 7301 **i02229505**

NOTE	REF NO	GRAPHIC REF	PART NUMBER	QTY	PART NAME 1 2 3 4 5 6 (PRODUCT LEVEL)	SEE PAGE
	1	1	**230-4691**	1	PLATE	
	2	1	**7X-0618**	6	WASHER-HARD (13.5X40X5-MM THK)	
	3	1	**7X-3392**	42	WASHER-HARD (13.5X22.5X3-MM THK)	
	4	1	**7X-7729**	8	WASHER (11X25X3-MM THK)	
	5	1	**8T-4121**	1	WASHER-HARD (11X21X2.5-MM THK)	
M	6	1	**8T-4137**	1	BOLT (M10X1.5X20-MM)	
M	7	1	**8T-4139**	6	BOLT (M12X1.75X30-MM)	
M	8	1	**8T-4178**	2	BOLT (M10X1.5X90-MM)	
M	9	1	**8T-4195**	6	BOLT (M10X1.5X30-MM)	
M	10	1	**8T-4648**	4	BOLT (M12X1.75X70-MM)	
M	11	1	**8T-4910**	11	BOLT (M12X1.75X60-MM)	
M	12	1	**8T-6868**	6	BOLT (M12X1.75X80-MM)	
	13	1	**247-4144**	1	SEAL	
BD	14	1	**5P-7513**		SEAL	

B-USE AS REQUIRED
D-ORDER BY THE METER
M-METRIC PART

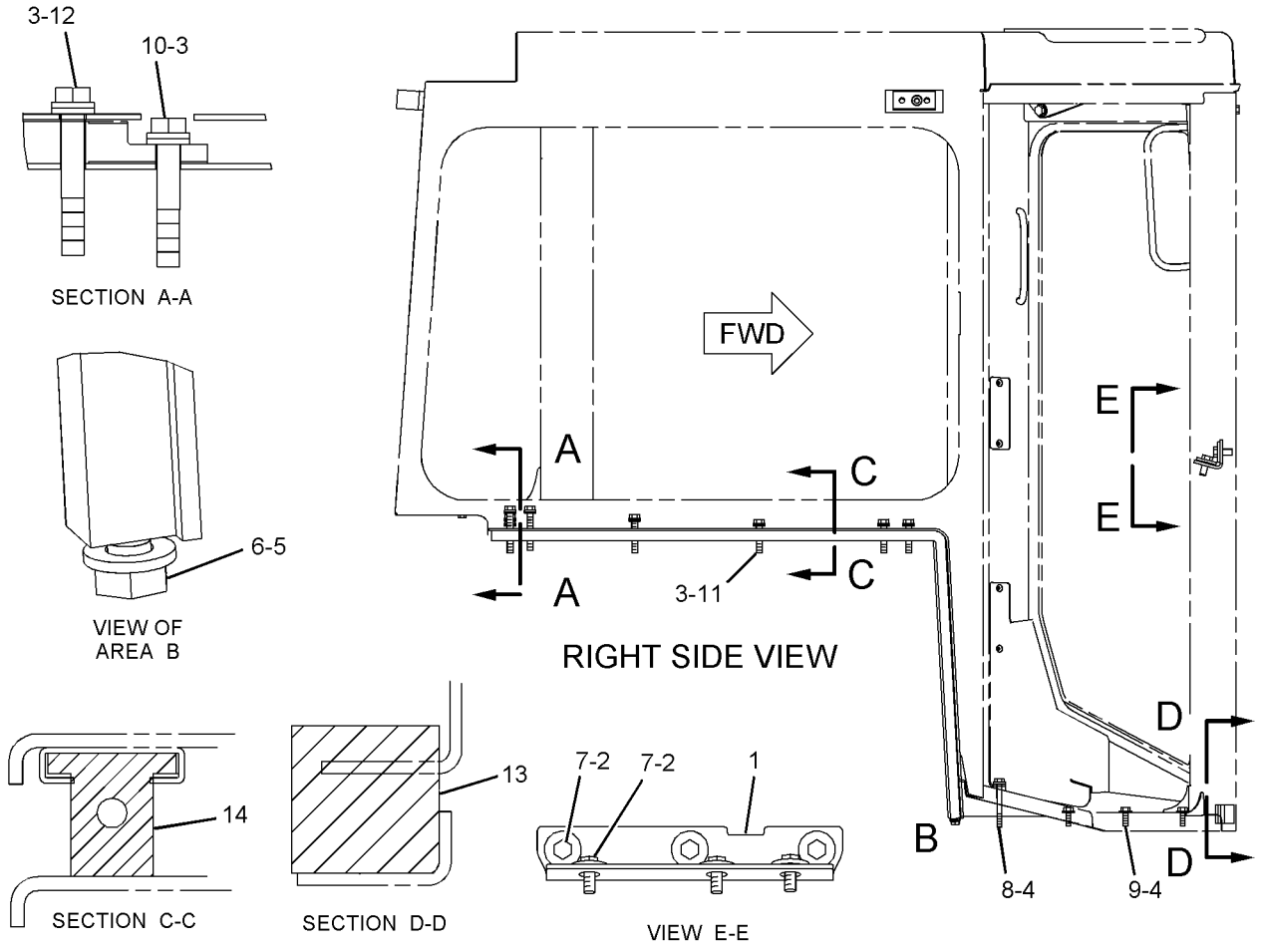

GRAPHIC #1 **<END>** g01124962

OPERATOR STATION

218-3241 MOUNTING GP-CONDENSER–REMOTE MOUNTED

S/N: J8B1-UP

PART OF 209-9752 AIR CONDITIONER AR

AN ATTACHMENT

SMCS-1805 **i02400753**

NOTE	REF NO	GRAPHIC REF	PART NUMBER	QTY	PART NAME 1 2 3 4 5 6 (PRODUCT LEVEL)	SEE PAGE
	1	1	**121-3307**	4	MOUNT AS-RESILIENT	
	2	1	**215-8171**	2	PLATE	
	3	1	**219-6500**	2	PLATE	
M	4	1	**2Y-5829**	4	NUT (M10X1.5-THD)	
	5	1	**4P-7428**	2	CLIP	
	6	1	**4P-7429**	1	CLIP	
	7	1	**5P-1076**	12	WASHER-HARD (13.5X30X4-MM THK)	
M	8	1	**6V-5230**	4	BOLT (M10X1.5X60-MM)	
	9	1	**8T-4121**	4	WASHER-HARD (11X21X2.5-MM THK)	
	10	1	**8T-4226**	8	WASHER-PLATED (10.5X45X3-MM THK)	
M	11	1	**8T-4956**	12	BOLT (M12X1.75X35-MM)	

M-METRIC PART

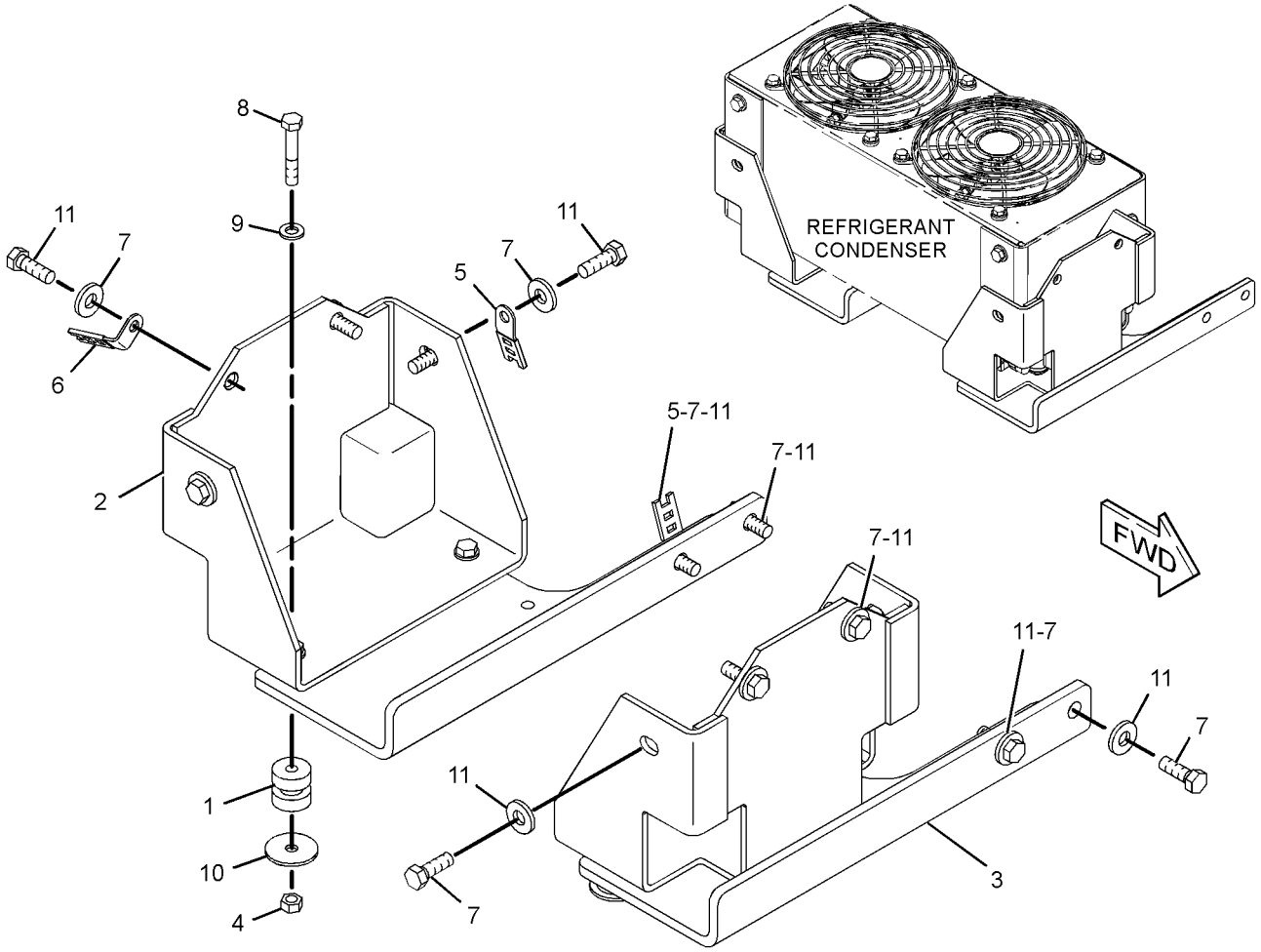

GRAPHIC #1 **<END>** g01164856

OPERATOR STATION

219-3587 MOUNTING GP-CONDENSER—ROPS MOUNTED

S/N: J8B1-UP

PART OF 209-9751 AIR CONDITIONER AR

AN ATTACHMENT

SMCS-1805 **i02242173**

NOTE	REF NO	GRAPHIC REF	PART NUMBER	QTY	PART NAME 1 2 3 4 5 6 (PRODUCT LEVEL)	SEE PAGE
	1	1	**8D-3932**	4	MOUNTING	
	2	1	**110-4506**	1	PLATE	
	3	1	**134-0165**	4	WASHER (13.8X45X3-MM THK)	
M	4	1	**8T-4139**	4	BOLT (M12X1.75X30-MM)	
M	5	1	**8T-4194**	4	BOLT (M12X1.75X50-MM)	
	6	1	**8T-4223**	4	WASHER-HARD (13.5X25.5X3-MM THK)	

M-METRIC PART

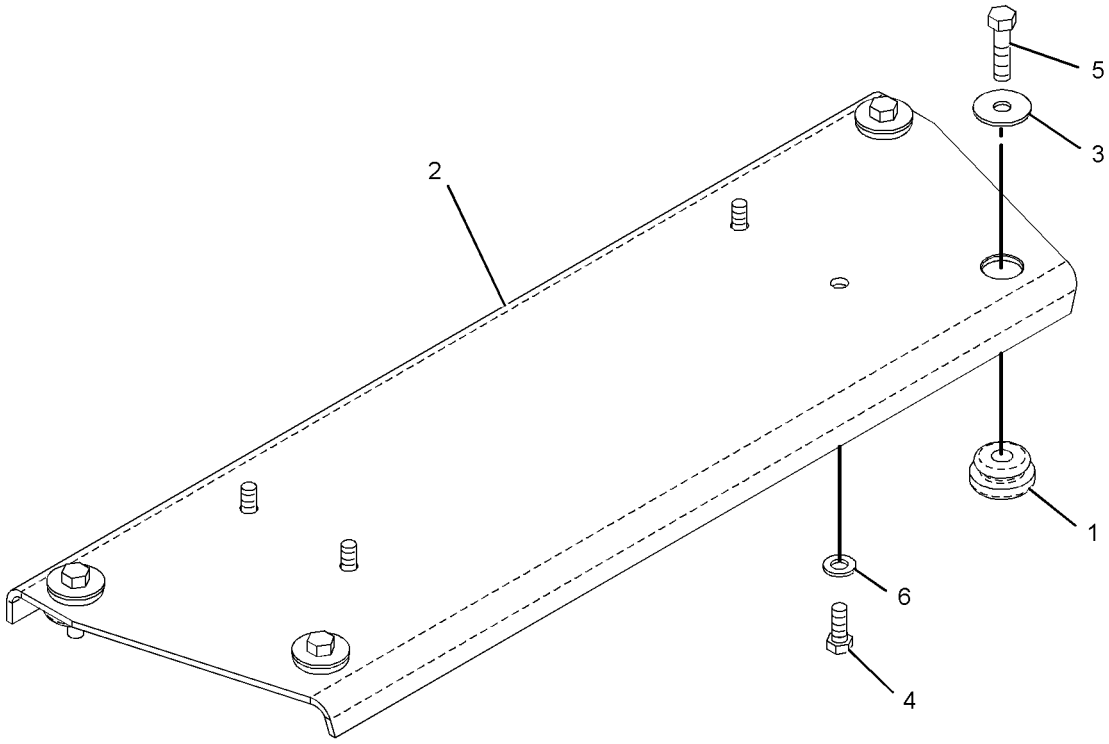

GRAPHIC #1 **<END>** g01112228

OPERATOR STATION

241-7920 MOUNTING GP-MONITOR—GRADE CONTROL

S/N: J8B1-999
PART OF 251-5810 GRADE CONTROL AR
AN ATTACHMENT

SMCS-7490 **i02390237**

NOTE	REF NO	GRAPHIC REF	PART NUMBER	QTY	PART NAME 1 2 3 4 5 6 (PRODUCT LEVEL)	SEE PAGE
M	1	1	**179-4324**	4	LOCKNUT (M5X0.8-THD)	
	2	1	**247-4151**	1	PLATE AS	
	3	1	**247-4152**	1	PLATE AS	
	4	1	**252-5110**	1	COVER	
	5	1	**252-5111**	2	GASKET	
	6	1	**252-5112**	1	BASE AS	
	7	1	**198-9706**	4	SCREW-TRUSS HEAD (M5X0.8X16-MM)	
	8	1	**204-6102**	4	WASHER-HARD (4.45X9.52X1-MM THK)	
	9	1	**4B-4274**	4	WASHER (5.5X13X1.2-MM THK)	
	10	1	**4B-4863**	2	WASHER (4.7X11X1.2-MM THK)	
M	11	1	**8T-2659**	2	LOCKNUT (M4X0.7-THD)	
	12	1	**8T-4121**	4	WASHER-HARD (11X21X2.5-MM THK)	
M	13	1	**8T-4137**	4	BOLT (M10X1.5X20-MM)	
M	14	1	**9X-1046**	2	SCREW (M4X0.7X18-MM)	

M-METRIC PART

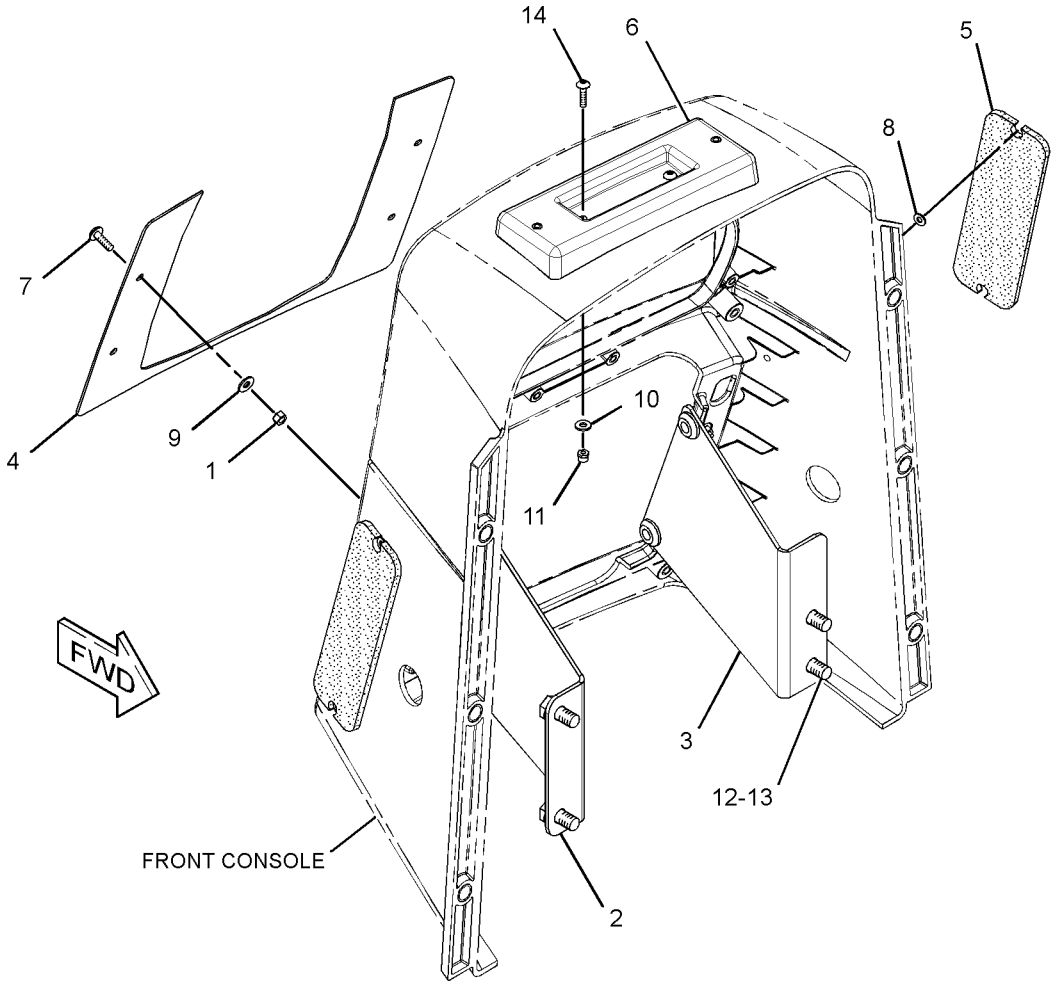

GRAPHIC #1 **<END>** g01299528

OPERATOR STATION

282-8250 MOUNTING GP-MONITOR—GRADE CONTROL

S/N: J8B1000-UP

PART OF 251-5810 GRADE CONTROL AR

AN ATTACHMENT

SMCS-7490 **i02730835**

NOTE	REF NO	GRAPHIC REF	PART NUMBER	QTY	PART NAME 1 2 3 4 5 6 (PRODUCT LEVEL)	SEE PAGE
	1	1	**214-2015**	1	LATCH	
	2	1	**252-5111**	2	GASKET	
	3	1	**252-5112**	1	BASE AS	
	4	1	**282-8243**	1	PLATE AS	
	5	1	**282-8249**	1	COVER	
	6	1	**282-8271**	1	PLATE AS	
	7	1	**204-6102**	4	WASHER-HARD (4.45X9.52X1-MM THK)	
	8	1	**271-9408**	4	SCREW-TRUSS HEAD (M5X0.8X10-MM)	
	9	1	**4B-4863**	2	WASHER (4.7X11X1.2-MM THK)	
M	10	1	**8T-2659**	2	LOCKNUT (M4X0.7-THD)	
	11	1	**8T-4121**	4	WASHER-HARD (11X21X2.5-MM THK)	
M	12	1	**8T-4137**	4	BOLT (M10X1.5X20-MM)	
M	13	1	**9X-1046**	2	SCREW (M4X0.7X18-MM)	
D	14	1	**6V-8109**		SEAL (0.6-M)	

D-ORDER BY THE METER
M-METRIC PART

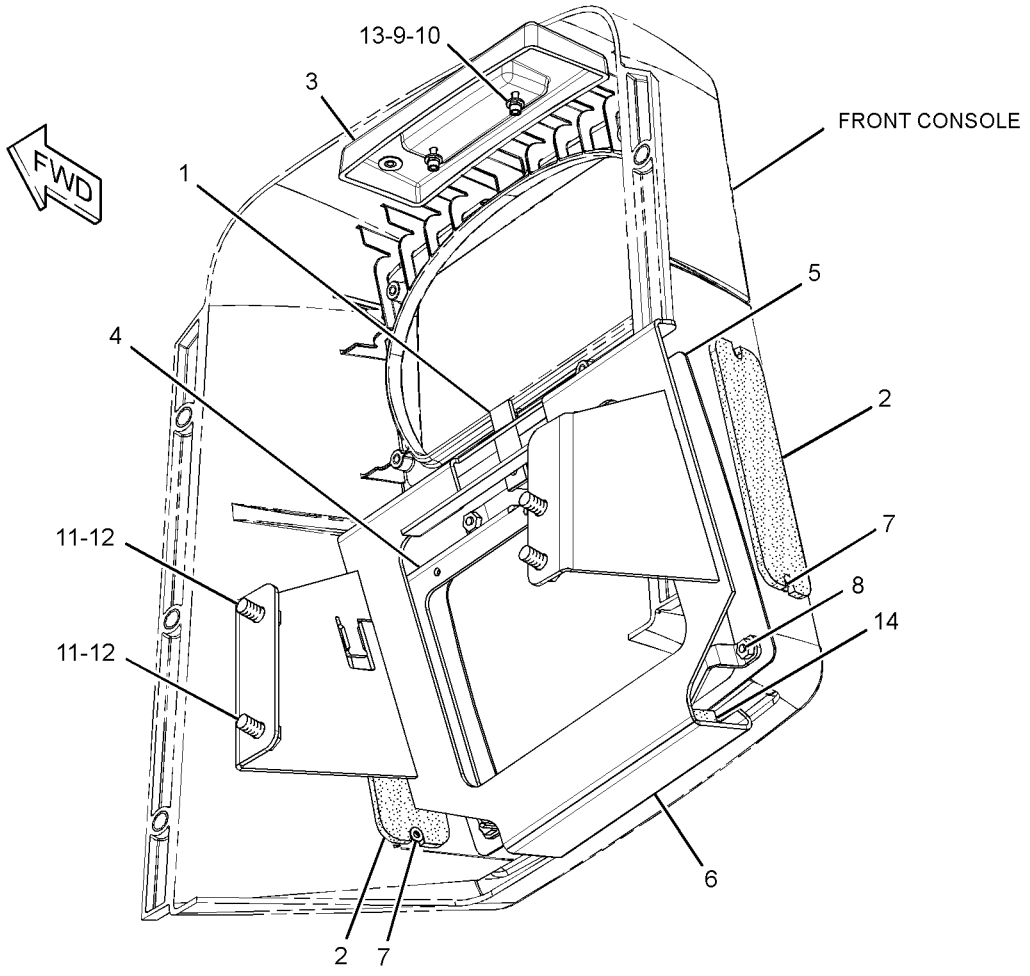

GRAPHIC #1 **<END>** g01373051

OPERATOR STATION

259-4746 MOUNTING GP-RADIO

S/N: J8B1-UP
GLOBAL POSITIONING SYSTEM
PART OF 292-0296 MOUNTING GP-GRADE CONTROL

SMCS-7338 **i02618867**

NOTE	REF NO	GRAPHIC REF	PART NUMBER	QTY	PART NAME 1 2 3 4 5 6 (PRODUCT LEVEL)	SEE PAGE
	1	1	**8C-5607**	6	MOUNT-ISOLATION	
	2	1	**8C-5608**	3	SPACER (6.5X9.5X25.4-MM THK)	
	3	1	**140-7480**	1	BRACKET-MOUNTING	
	4	1	**167-8610**	1	BRACKET AS	
	5	1	**5S-7349**	2	BOLT (1/4-20X0.5-IN)	
	6	1	**8T-4205**	2	WASHER-HARD (7.2X14.5X2-MM THK)	
M	7	1	**9X-2480**	3	BOLT (M6X1X45-MM)	
	8	1	**9X-6165**	3	WASHER (6.5X22X2.5-MM THK)	
BJM	9	1	**7X-2533**	3	BOLT (M6X1X35-MM)	

B-USE AS REQUIRED
J-TO BE USED ON HYDRAULIC EXCAVATOR
M-METRIC PART

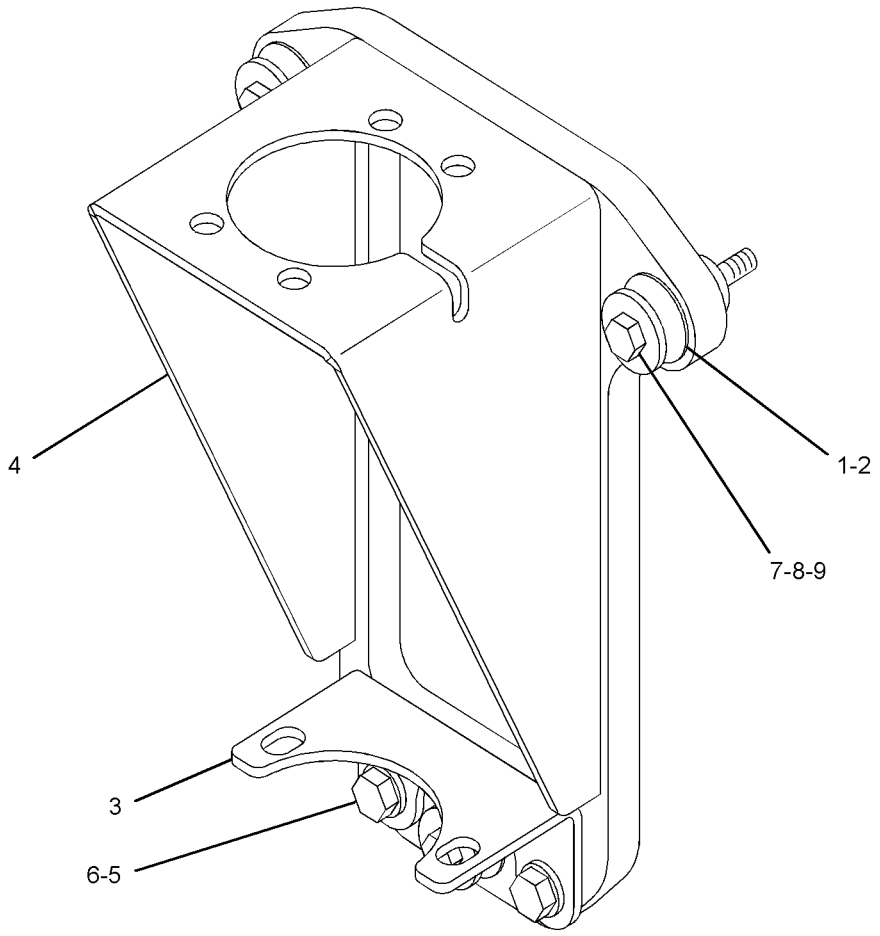

GRAPHIC #1 **<END>** g01259563

OPERATOR STATION

210-0219 MOUNTING GP-ROPS

S/N: J8B1-UP

PART OF 206-6780 CHASSIS AR

SMCS-7266 **i02237787**

NOTE	REF NO	GRAPHIC REF	PART NUMBER	QTY	PART NAME 1 2 3 4 5 6 (PRODUCT LEVEL)	SEE PAGE
	1	1	**210-0214**	1	SUPPORT AS (RH)	
	2	1	**210-0215**	1	SUPPORT AS (LH)	
M	3	1	**7X-2581**	20	BOLT (M30X3.5X100-MM)	
	4	1	**9X-8258**	20	WASHER (33X56X6-MM THK)	

M-METRIC PART

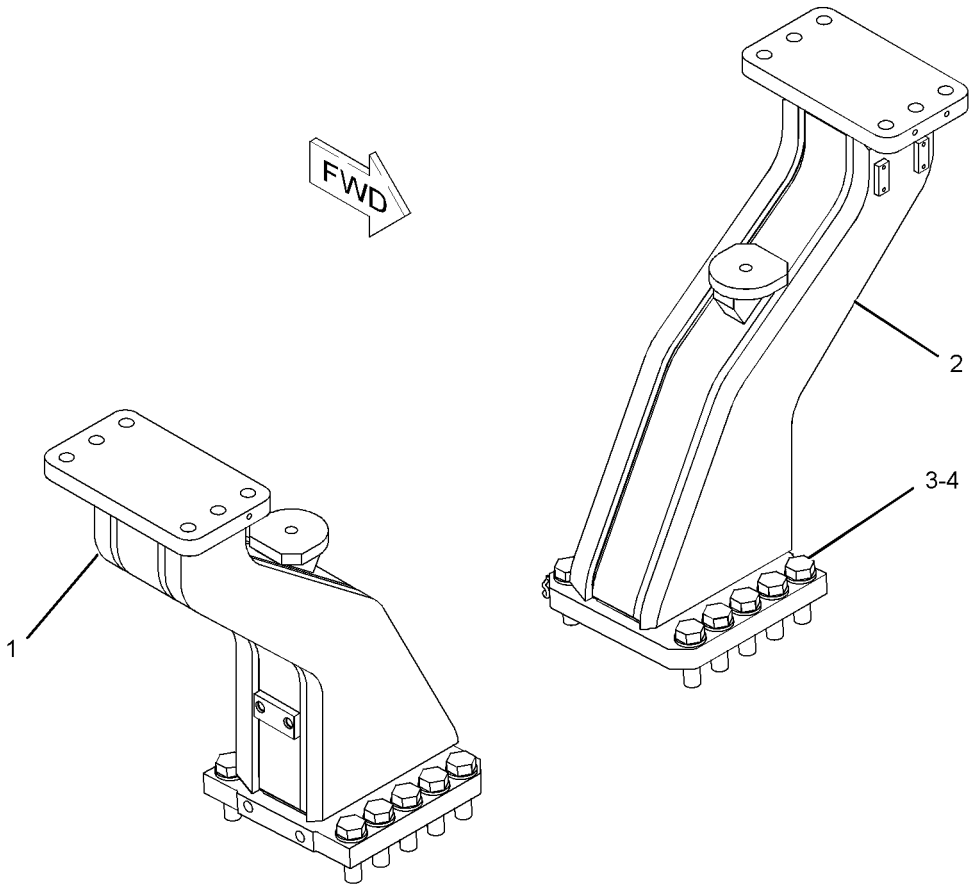

GRAPHIC #1 **<END>** g01129005

OPERATOR STATION

256-0189 OPERATOR AR

S/N: J8B1-UP
5TH PERCENTILE
AN ATTACHMENT

SMCS-7301 **i02492960**

NOTE	REF NO	GRAPHIC REF	PART NUMBER	QTY	PART NAME 1 2 3 4 5 6 (PRODUCT LEVEL)	SEE PAGE
	1	1	**1Q-3783**	2	PLATE AS	
Y	2	1	*263-3318*	1	CONTROL & MTG GP-PEDAL (GOVERNOR, BRAKE)	1037
	3	1	**274-1645**	2	PLATE AS	
	4	1	**274-9204**	1	BOX GP	
	5	1	**274-9205**	1	FLOOR MAT-LOWER	
	6	1	**274-9206**	1	FLOOR MAT-UPPER	
	7	1	**277-5273**	1	FLOORPLATE AS	
		1	**220-2799**	1	PANEL	
		1	**277-5274**	1	PLATE AS	
		1	**217-4245**	1	GASKET	
	8	1	**7X-7729**	25	WASHER (11X25X3-MM THK)	
	9	1	**8T-4121**	1	WASHER-HARD (11X21X2.5-MM THK)	
M	10	1	**8T-4133**	5	NUT (M10X1.5-THD)	
M	11	1	**8T-4136**	8	BOLT (M10X1.5X25-MM)	
M	12	1	**8T-4186**	2	BOLT (M10X1.5X40-MM)	
M	13	1	**8T-4195**	11	BOLT (M10X1.5X30-MM)	

M-METRIC PART
Y-SEPARATE ILLUSTRATION

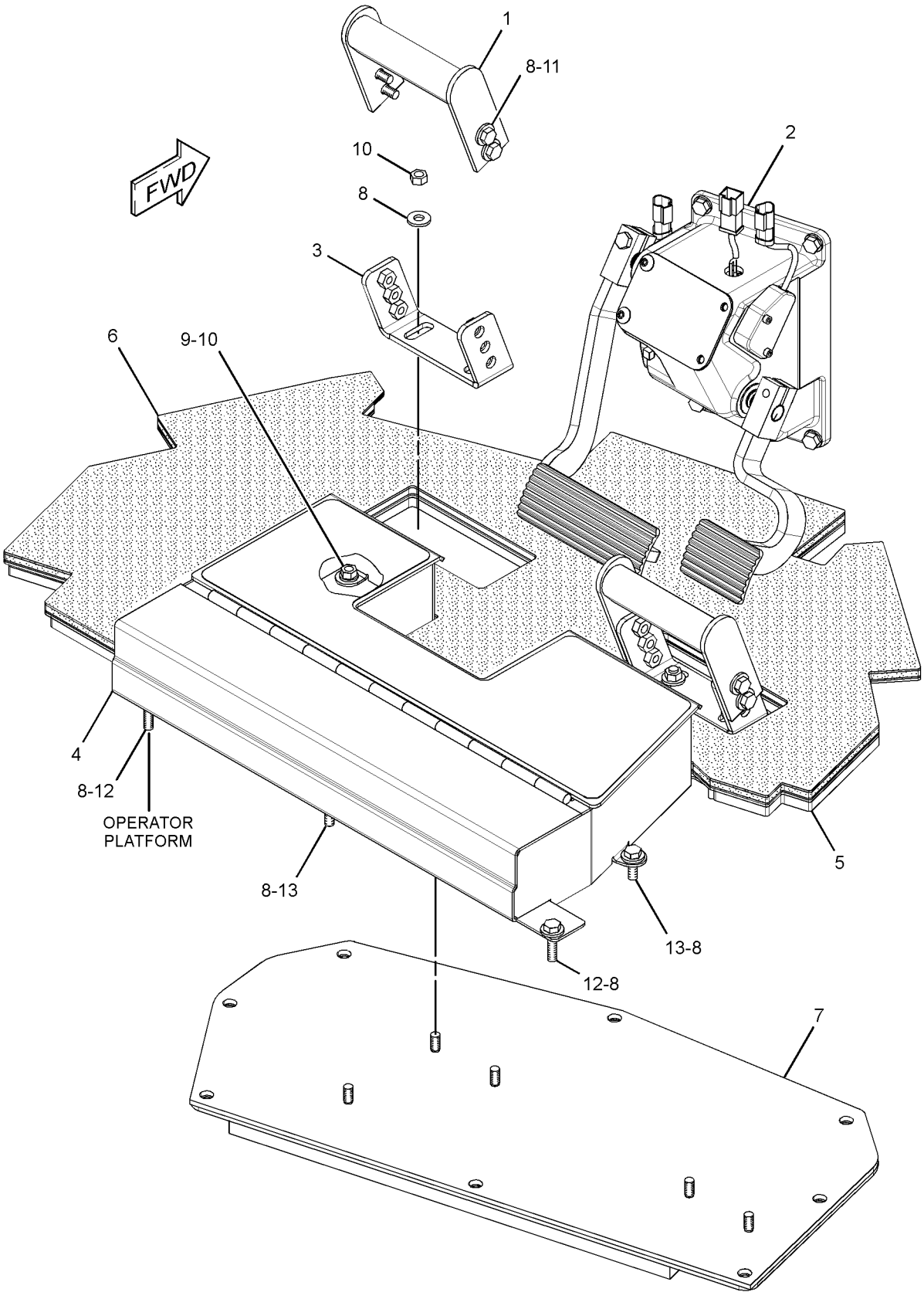

GRAPHIC #1 **<END>** g01326863

178-0604 PAN GP-BACKREST–CLOTH

S/N: J8B1-UP
PART OF 178-0603 SEAT GP
ALSO AN ATTACHMENT

SMCS-7312 **i02925400**

NOTE	REF NO	GRAPHIC REF	PART NUMBER	QTY	PART NAME 1 2 3 4 5 6 (PRODUCT LEVEL)	SEE PAGE
	1	1	**164-4883**	1	KNOB-LUMBAR	
Y	2	1	*178-0605*	1	PAN GP-BACKREST (LUMBAR)	1158
	3	1	**233-6745**	1	CUSHION AS (CLOTH)	
	4	1	**250-4628**	3	PLUG	
	5	1	**8T-7566**	1	PIN-SPRING	

Y-SEPARATE ILLUSTRATION

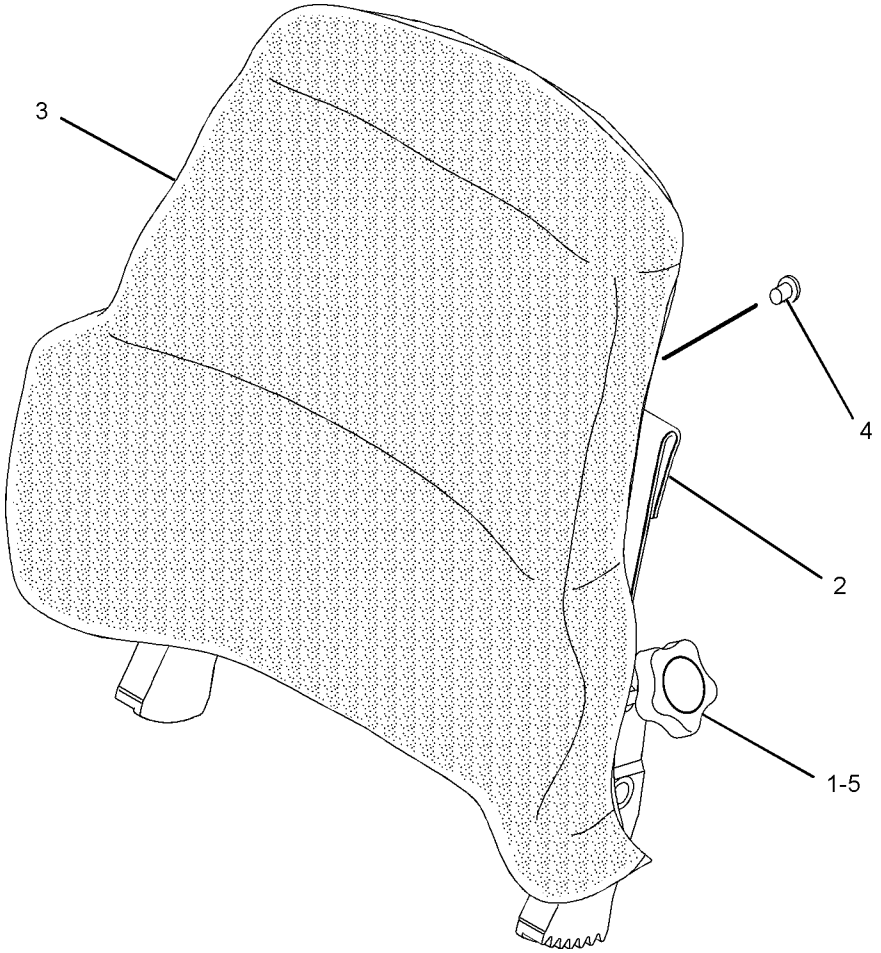

GRAPHIC #1 **<END>** g01092296

OPERATOR STATION

178-0605 PAN GP-BACKREST

S/N: J8B1-UP
PART OF 178-0604, 180-7305 PAN GP-BACKREST
ALSO AN ATTACHMENT

SMCS-7312 **i02560701**

NOTE	REF NO	GRAPHIC REF	PART NUMBER	QTY	PART NAME 1 2 3 4 5 6 (PRODUCT LEVEL)	SEE PAGE
	1	1	**4K-9429**	8	RIVET-POP	
	2	1	**5P-7957**	1	LANYARD	
	3	1	**136-1543**	1	PLATE AS-LUMBAR	
	4	1	**173-2052**	1	RETAINER	
	5	1	**178-7907**	1	HOLDER	
	6	1	**261-5694**	1	PAN AS-BACKREST	

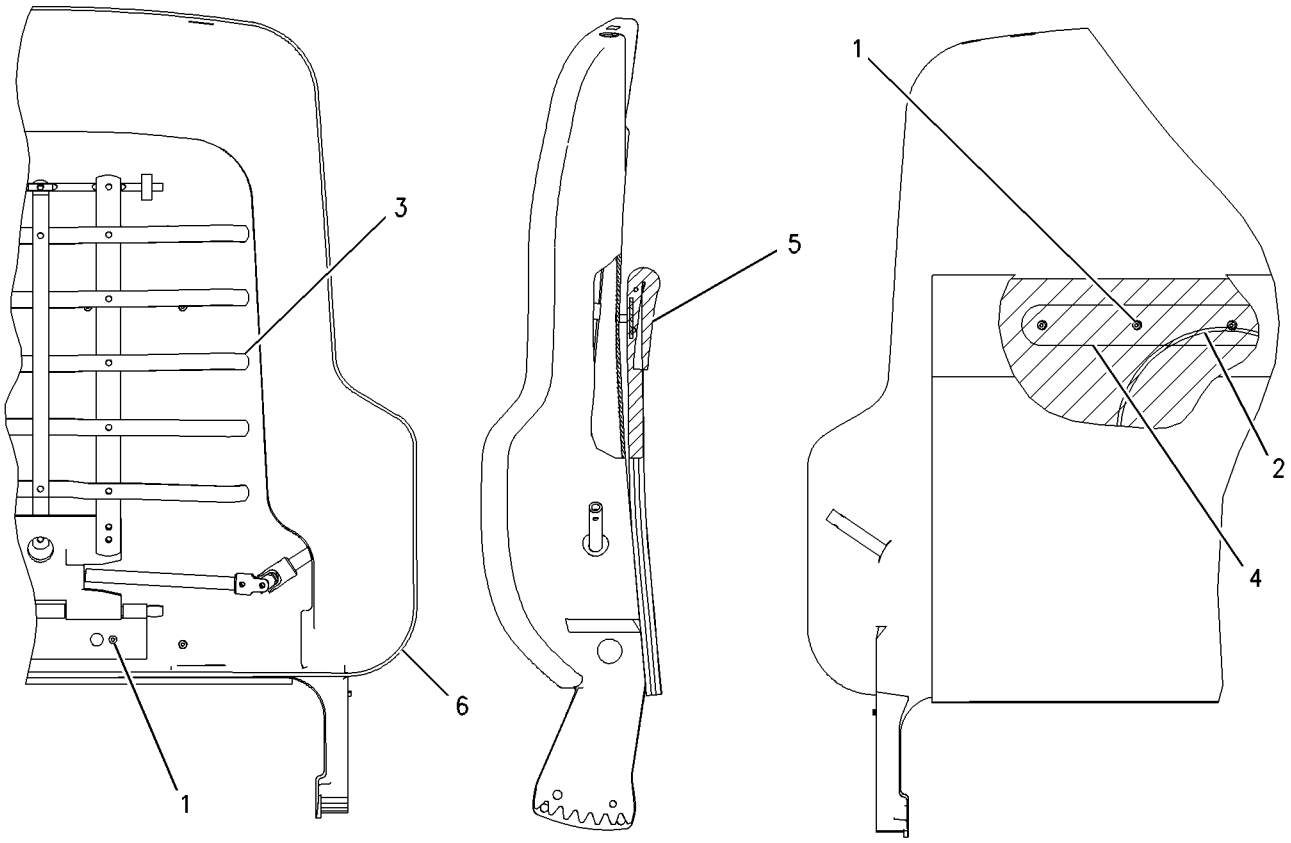

GRAPHIC #1 **<END>** g00716497

180-7305 PAN GP-BACKREST–VINYL

S/N: J8B1-UP
PART OF 180-7304 SEAT GP
AN ATTACHMENT

SMCS-7312 **i02122315**

NOTE	REF NO	GRAPHIC REF	PART NUMBER	QTY	PART NAME 1 2 3 4 5 6 (PRODUCT LEVEL)	SEE PAGE
	1	1	**164-4883**	1	KNOB-LUMBAR	
	2	1	**169-0697**	1	CUSHION AS	
Y	3	1	*178-0605*	1	PAN GP-BACKREST (LUMBAR)	1158
	4	1	**250-4628**	3	PLUG	
	5	1	**8T-7566**	1	PIN-SPRING	

Y-SEPARATE ILLUSTRATION

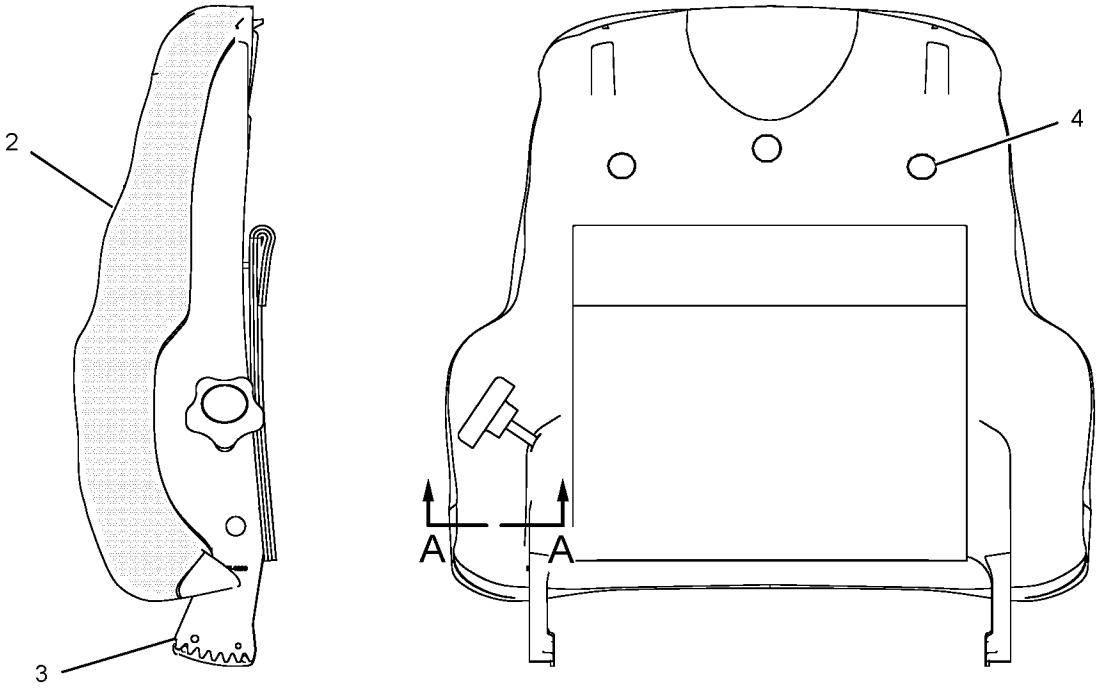

LEFT SIDE VIEW

REAR VIEW

SECTION A-A

<END>

GRAPHIC #1

g01082619

OPERATOR STATION

292-6402 PAN GP-BACKREST–LUMBAR

S/N: J8B1-UP
PART OF 292-9237, 292-9238 PAN GP-BACKREST
ALSO AN ATTACHMENT

SMCS-7312 **i03095782**

NOTE	REF NO	GRAPHIC REF	PART NUMBER	QTY	PART NAME 1 2 3 4 5 6 (PRODUCT LEVEL)	SEE PAGE
	1	1	**5P-7957**	1	LANYARD	
	2	1	**136-1543**	1	PLATE AS-LUMBAR	
	3	1	**173-2052**	1	RETAINER	
	4	1	**178-7907**	1	HOLDER	
	5	1	**261-5694**	1	PAN AS-BACKREST	
	6	1	**322-3161**	1	SPRING	
	7	1	**4K-9429**	8	RIVET-POP	

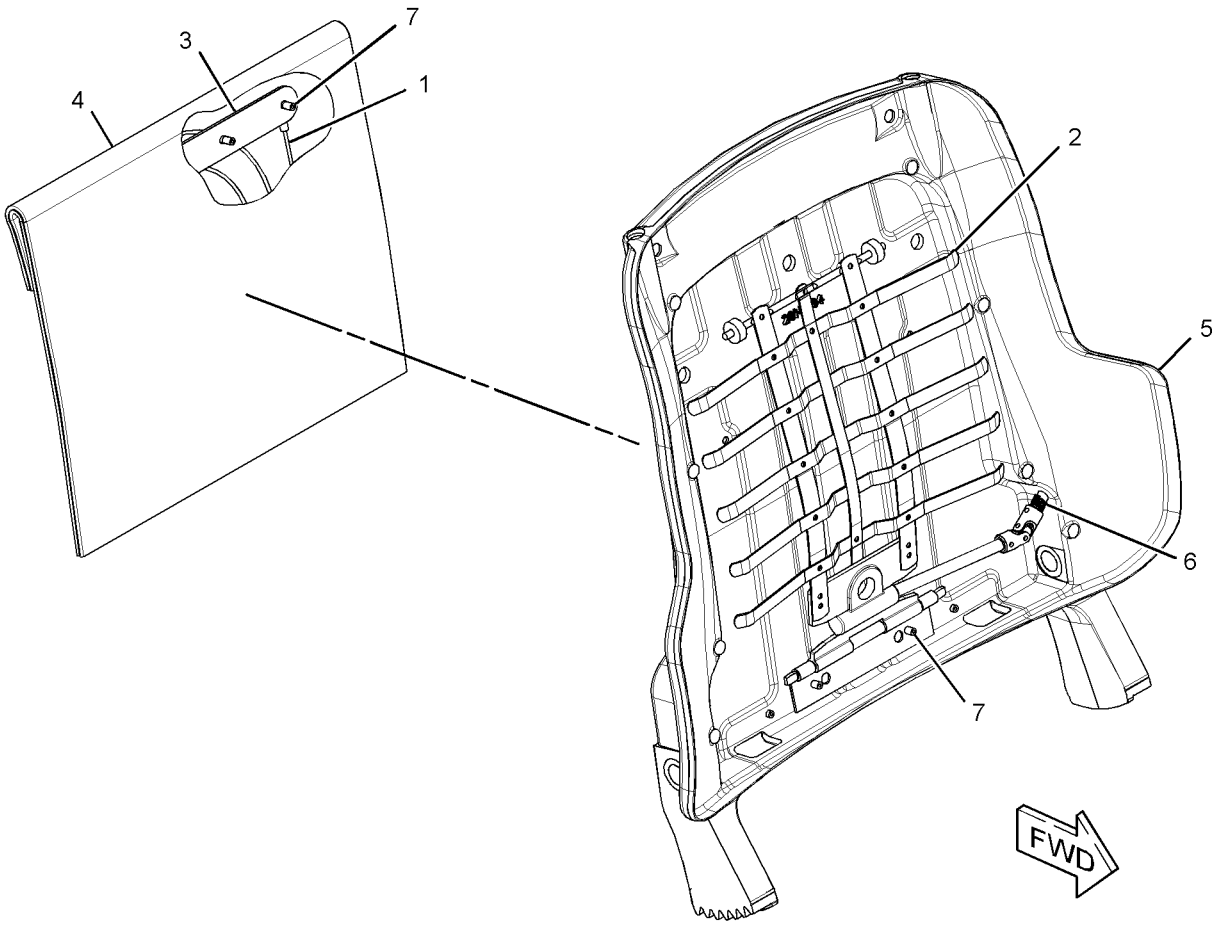

GRAPHIC #1 **<END>** g01577333

OPERATOR STATION

292-9237 PAN GP-BACKREST

S/N: J8B1-UP
PART OF 178-0603 SEAT GP
ALSO AN ATTACHMENT

SMCS-7312 **i03093580**

NOTE	REF NO	GRAPHIC REF	PART NUMBER	QTY	PART NAME 1 2 3 4 5 6 (PRODUCT LEVEL)	SEE PAGE
	1	1	**164-4883**	1	KNOB-LUMBAR	
	2	1	**250-4628**	3	PLUG	
	3	1	**292-6097**	1	CUSHION AS-BACK	
Y	4	1	**292-6402**	1	PAN GP-BACKREST (LUMBAR)	1160
	5	1	**5P-0537**	2	WASHER-HARD (7.2X14.5X2-MM THK)	
	6	1	**6V-8969**	2	SCREW-BUTTON HEAD (1/4-20X0.5-IN)	
	7	1	**8T-7566**	1	PIN-SPRING	

Y-SEPARATE ILLUSTRATION

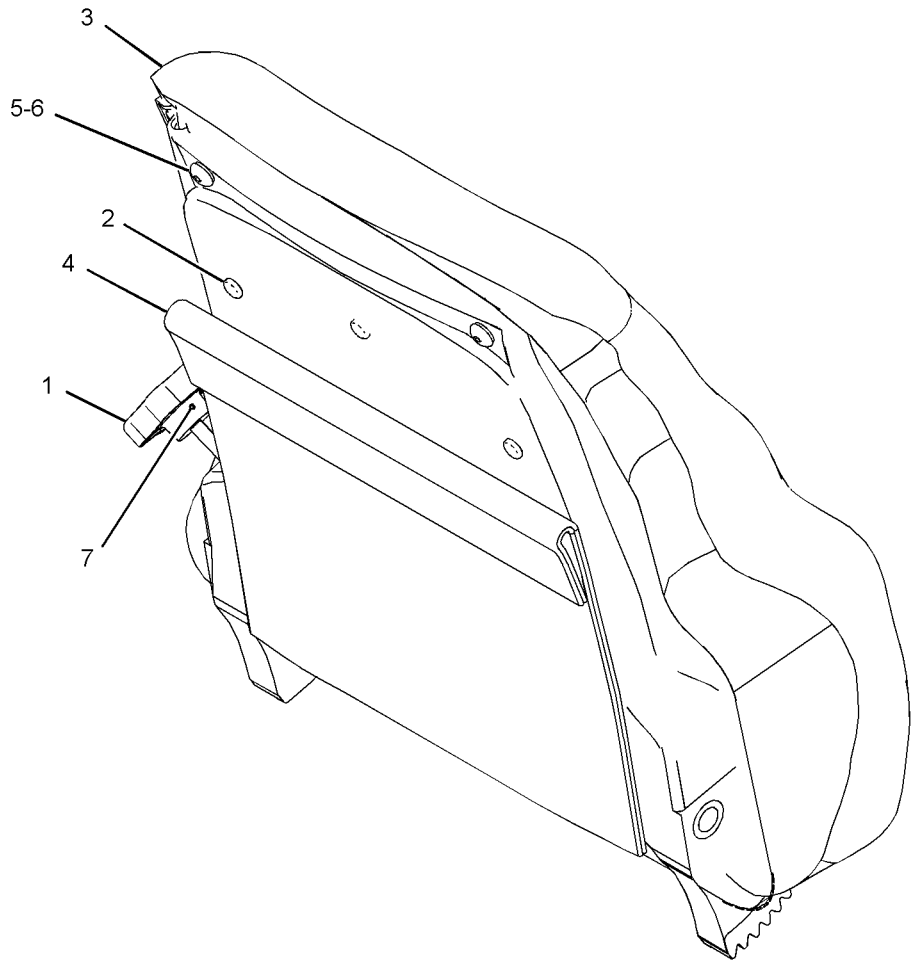

GRAPHIC #1 **<END>** g01336870

OPERATOR STATION

292-9238 PAN GP-BACKREST–VINYL

S/N: J8B1-UP
PART OF 180-7304 SEAT GP
AN ATTACHMENT

SMCS-7312 **i02925498**

NOTE	REF NO	GRAPHIC REF	PART NUMBER	QTY	PART NAME 1 2 3 4 5 6 (PRODUCT LEVEL)	SEE PAGE
	1	1	**164-4883**	1	KNOB-LUMBAR	
	2	1	**250-4628**	3	PLUG	
	3	1	**292-6098**	1	CUSHION AS (VINYL)	
Y	4	1	*292-6402*	1	PAN GP-BACKREST (LUMBAR)	1160
	5	1	**5P-0537**	2	WASHER-HARD (7.2X14.5X2-MM THK)	
	6	1	**6V-8969**	2	SCREW-BUTTON HEAD (1/4-20X0.5-IN)	
	7	1	**8T-7566**	1	PIN-SPRING	

Y-SEPARATE ILLUSTRATION

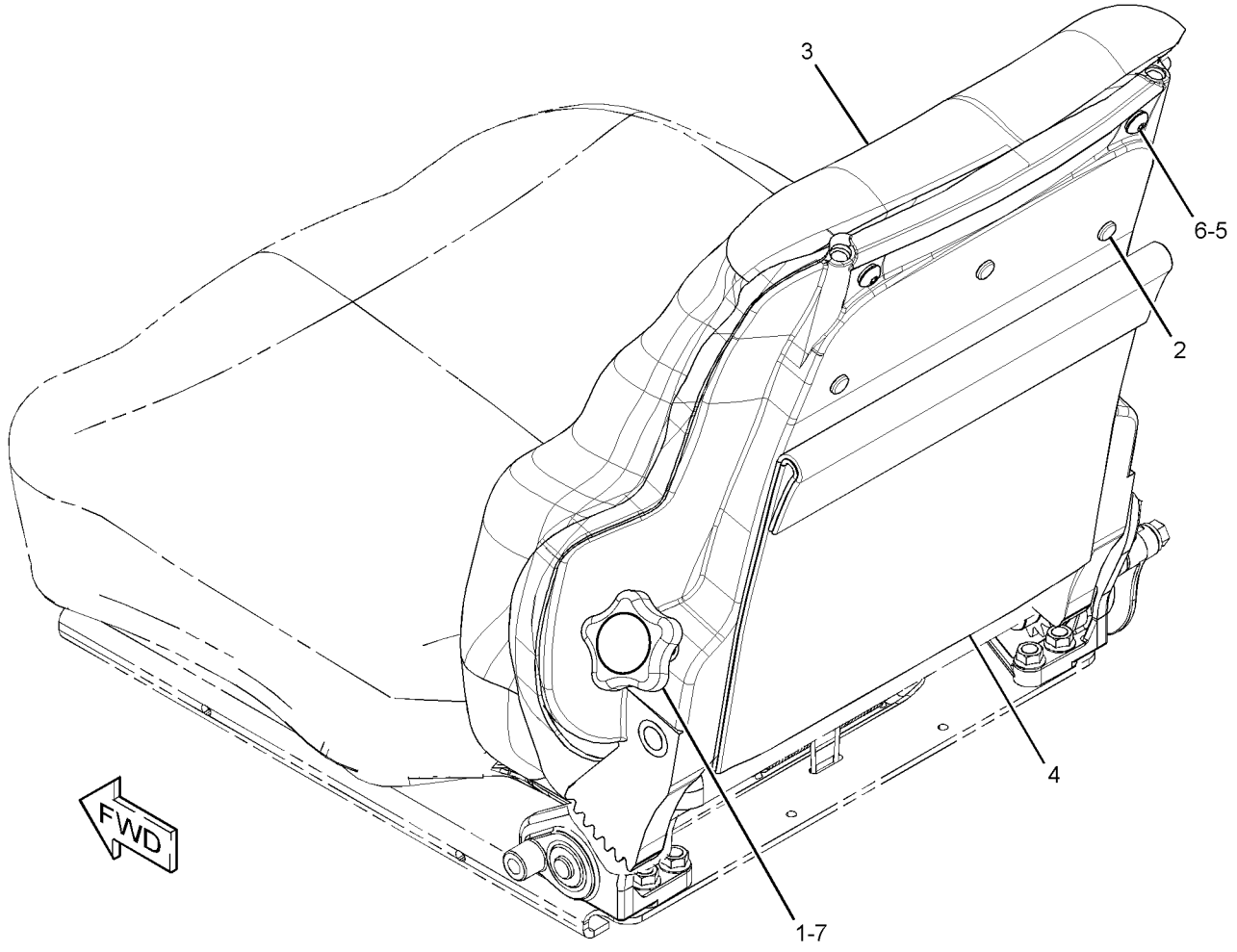

GRAPHIC #1 **<END>** g01341782

OPERATOR STATION

231-9290 PANEL GP-CONTROL

S/N: J8B1-UP
OVERHEAD WIPER, A/C, HEATER SWITCHES
PART OF 214-4763 WIRING GP-CAB
ALSO AN ATTACHMENT

SMCS-4490, 7332, 7451 **i02993957**

NOTE	REF NO	GRAPHIC REF	PART NUMBER	QTY	PART NAME 1 2 3 4 5 6 (PRODUCT LEVEL)	SEE PAGE
	1	1	**2P-4339**	1	NUT-JAM (7/16-28-THD)	
	2	1	**7F-6998**	1	LOCKWASHER	
	3	1	**9X-1138**	1	CONTROL AS-ELECTRONIC (DASH LIGHT)	
M	4	1	**096-3773**	8	SCREW-MACHINE (M4X0.7X25-MM)	
	5	1	**110-6109**	1	KNOB-CONTROL (WIPER, WASHER REAR)	
	5A	1	**110-6109**	1	KNOB-CONTROL (WIPER, WASHER, RH DOOR)	
	5B	1	**110-6109**	1	KNOB-CONTROL (WIPER, WASHER, LH DOOR)	
	5C	1	**110-6109**	1	KNOB-CONTROL (WIPER, WASHER FRONT)	
	5D	1	**110-6109**	1	KNOB-CONTROL (TEMPERATURE CONTROL)	
	5E	1	**110-6109**	1	KNOB-CONTROL (BLOWER FAN SPEED)	
Y	6	1	**275-7741**	1	SWITCH GP-WIPER (24-VOLT, INTERMITTENT) (FRONT INTERMITTENT)	382
Y	6A	1	**275-7741**	1	SWITCH GP-WIPER (24-VOLT, INTERMITTENT) (LH DOOR)	382
Y	6B	1	**275-7741**	1	SWITCH GP-WIPER (24-VOLT, INTERMITTENT) (RH DOOR)	382
Y	6C	1	**275-7741**	1	SWITCH GP-WIPER (24-VOLT, INTERMITTENT) (REAR INTERMITTENT)	382
	7	1	**157-1361**	1	SWITCH AS-ROTARY (A/C CONTROL)	
		1	**3E-3383**	1	WEDGE-RECEPTACLE LOCK (6-PIN)	
		1	**9W-0852**	6	PIN-CONNECTOR (14-GA)	
		1	**102-8805**	1	KIT-RECEPTACLE (6-PIN)	
					(INCLUDES RECEPTACLE AS & WEDGE)	
	8	1	**229-2578**	1	SWITCH AS-ROCKER (AIR CONDITIONER ON, OFF)	
	9	1	**230-3023**	1	PLATE	
	10	1	**291-2165**	1	POTENTIOMETER AS (TEMPERATURE CONTROL)	
		1	**236-8722**	1	WASHER (10.5X22.2X1.6-MM THK)	
		1	**102-8803**	1	KIT-RECEPTACLE (3-PIN)	
					(INCLUDES RECEPTACLE AS & WEDGE)	
		1	**186-3735**	1	PIN-CONNECTOR (16-GA TO 18-GA)	
	11	1	**245-2760**	8	SPACER (6.5X12.7X9.5-MM THK)	
	12	1	**246-4296**	1	CONTROL GP-HEAT & AIR COND	
		1	**102-8802**	1	KIT-RECEPTACLE (2-PIN)	
					(INCLUDES RECEPTACLE AS & WEDGE)	
		1	**186-3735**	2	PIN-CONNECTOR (16-GA TO 18-GA)	
	13	1	**246-5785**	1	FILM-PANEL	
M	14	1	**5C-8312**	19	NUT (M4X0.7-THD)	

M-METRIC PART
Y-SEPARATE ILLUSTRATION

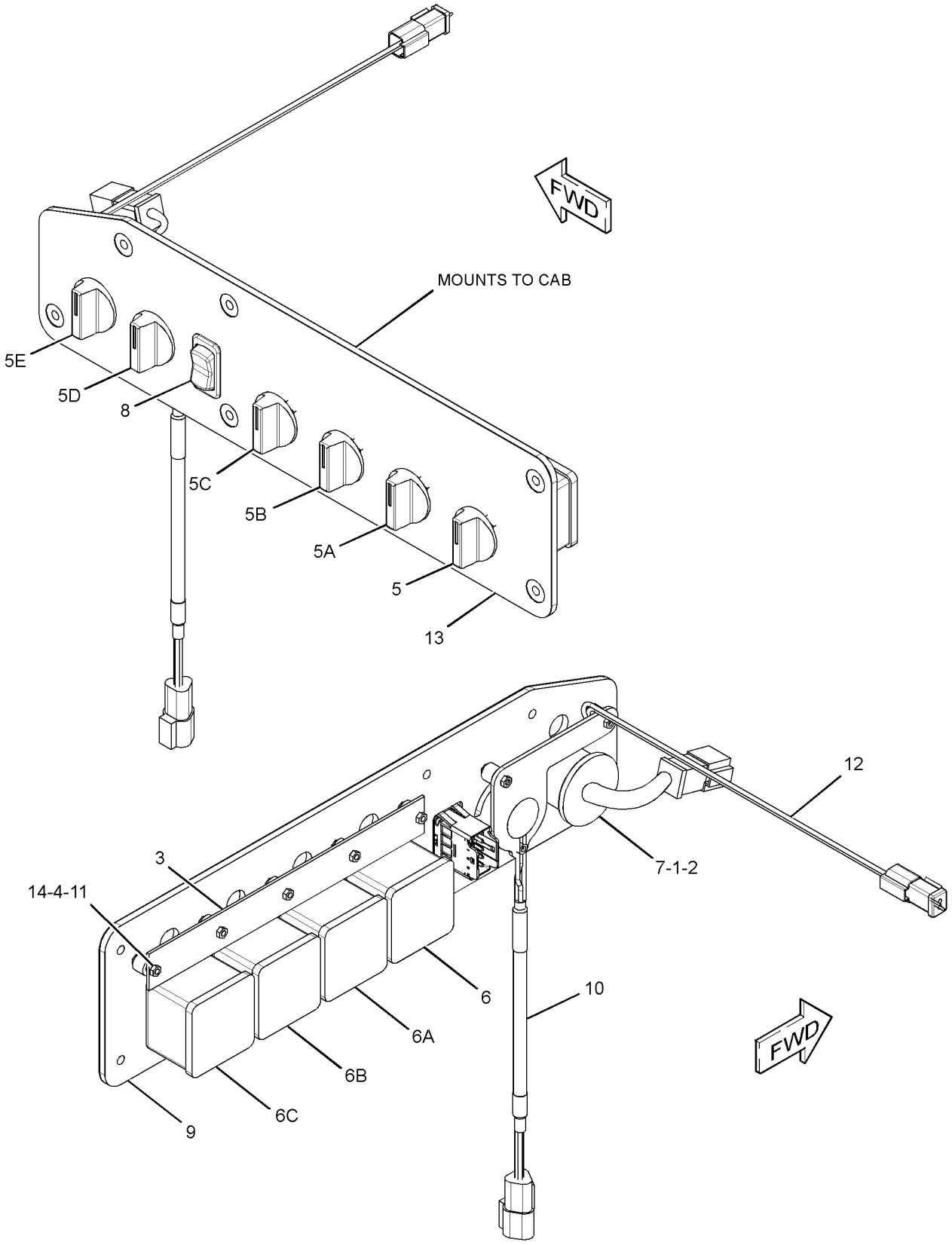

GRAPHIC #1 **<END>** g01523941

OPERATOR STATION

231-7314 PEDAL GP-GOVERNOR & BRAKE

S/N: J8B1-1391

PART OF 232-6622 CONTROL & MTG GP-PEDAL

SMCS-4122 **i02499541**

NOTE	REF NO	GRAPHIC REF	PART NUMBER	QTY	PART NAME 1 2 3 4 5 6 (PRODUCT LEVEL)	SEE PAGE
	1	2	**1B-8706**	1	KEY-WOODRUFF	
	2	2	**1B-8714**	1	KEY-WOODRUFF	
	3	2	**2J-6356**	4	RING-RETAINING	
	4	2	**7P-4190**	4	BEARING-ROLLER	
	5	1	**9M-5731**	2	RIVET-POP	
M	6	1	**9X-6615**	4	BOLT (M5X0.8X30-MM)	
	7	1	**110-8379**	1	PEDAL (BRAKE) (SERVICE)	
	8	2	**111-3780**	1	SPRING	
	9	1	**111-3781**	2	BOLT-ANCHOR (M10X1.5X23-MM)	
	10	1	**132-7077**	1	SWITCH AS-LIMIT (SERVICE BRAKE PEDAL)	
		1	**6V-8376**	3	SCREW-MACHINE (8-32X0.25-IN)	
		1	**9B-7233**	3	LOCKWASHER	
	11	1	**145-3405**	2	SPACER (10.3X16.7X8-MM THK)	
	12	1	**160-1433**	1	LEVER	
	13	2	**160-1434**	1	LEVER	
Y	14	1	**160-2443**	1	SENSOR GP-POSITION (ROTARY) (DECELERATOR PEDAL)	342
	15	1	**164-9541**	1	HARNESS AS-SWITCH (SERVICE BRAKE)	
		1	**102-8804**	1	KIT-RECEPTACLE (4-PIN)	
					(INCLUDES RECEPTACLE AS & WEDGE)	
	16	1	**165-9100**	1	LINK	
	17	1	**165-9103**	1	SPRING	
	18	1	**165-9104**	1	SPACER (6.5X9.5X10-MM THK)	
	19	1	**280-1653**	1	SPRING	
	20	1	**205-7331**	1	SPACER (20.32X28.01X0.41-MM THK)	
Y	21	1	**224-5530**	1	SENSOR GP-POSITION (SERVICE BRAKE PEDAL)	343
	22	1	**231-7306**	1	PEDAL (DECELERATOR)	
	23	1	**231-7307**	1	PLATE	
	24	1	**231-7308**	1	GASKET	
	25	2	**231-7309**	1	PLATE	
	26	1	**231-7310**	1	BRACKET AS	
	27	2	**231-7311**	1	SHAFT	
	28	2	**231-7312**	1	SHAFT	
	29	1	**231-7313**	1	HOUSING	
	30	1	**096-5962**	2	WASHER-HARD (3.4X7X0.8-MM THK)	
M	31	2	**106-5472**	1	SETSCREW-HEX SOCKET (M5X0.8X20-MM)	
	32	2	**111-9251**	4	WASHER-HARD (20X35X1.6-MM THK)	
M	33	1	**127-2170**	2	SCREW-TRUSS HEAD (M8X1.25X20-MM)	
	34	1	**4B-3609**	1	SETSCREW-SQUARE HEAD (3/8-16X1.5-IN)	
	35	2	**6V-0894**	2	SEAL-O-RING	
M	36	1	**6V-7357**	1	BOLT (M6X1X25-MM)	
M	37	1	**6V-7744**	2	LOCKNUT (M10X1.5-THD)	
	38	1	**6V-8801**	1	NUT (3/8-16-THD)	
	39	1	**7X-7729**	2	WASHER (11X25X3-MM THK)	
	40	2	**8F-7702**	2	SEAL-LIP TYPE	
	41	1	**8T-4121**	4	WASHER-HARD (11X21X2.5-MM THK)	
M	42	1	**8T-4136**	2	BOLT (M10X1.5X25-MM)	
M	43	1	**8T-4186**	2	BOLT (M10X1.5X40-MM)	
M	44	1	**8T-4195**	2	BOLT (M10X1.5X30-MM)	
	45	1	**171-2988**	2	WASHER-HARD (8X14X1.6-MM THK)	
M	46	2	**8T-4970**	2	BOLT (M6X1X14-MM)	
	47	1	**9X-6281**	2	SCREW-MACHINE (4-40X1-IN)	
	48	2	**9X-8256**	2	WASHER (6.6X12X2-MM THK)	

M-METRIC PART
Y-SEPARATE ILLUSTRATION

231-7314 PEDAL GP-GOVERNOR & BRAKE *(contd.)* i02499541

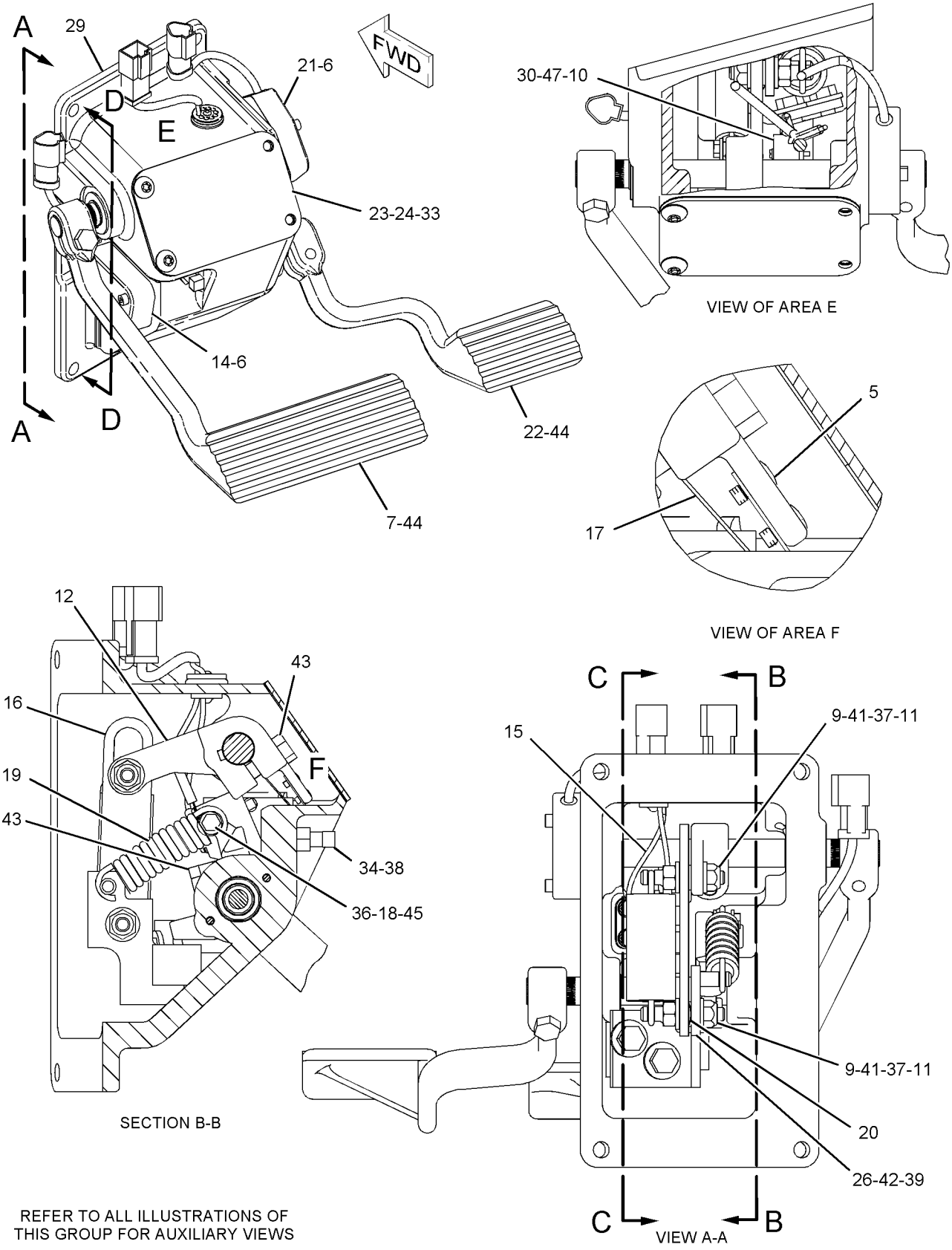

REFER TO ALL ILLUSTRATIONS OF THIS GROUP FOR AUXILIARY VIEWS

GRAPHIC #1 g01110949

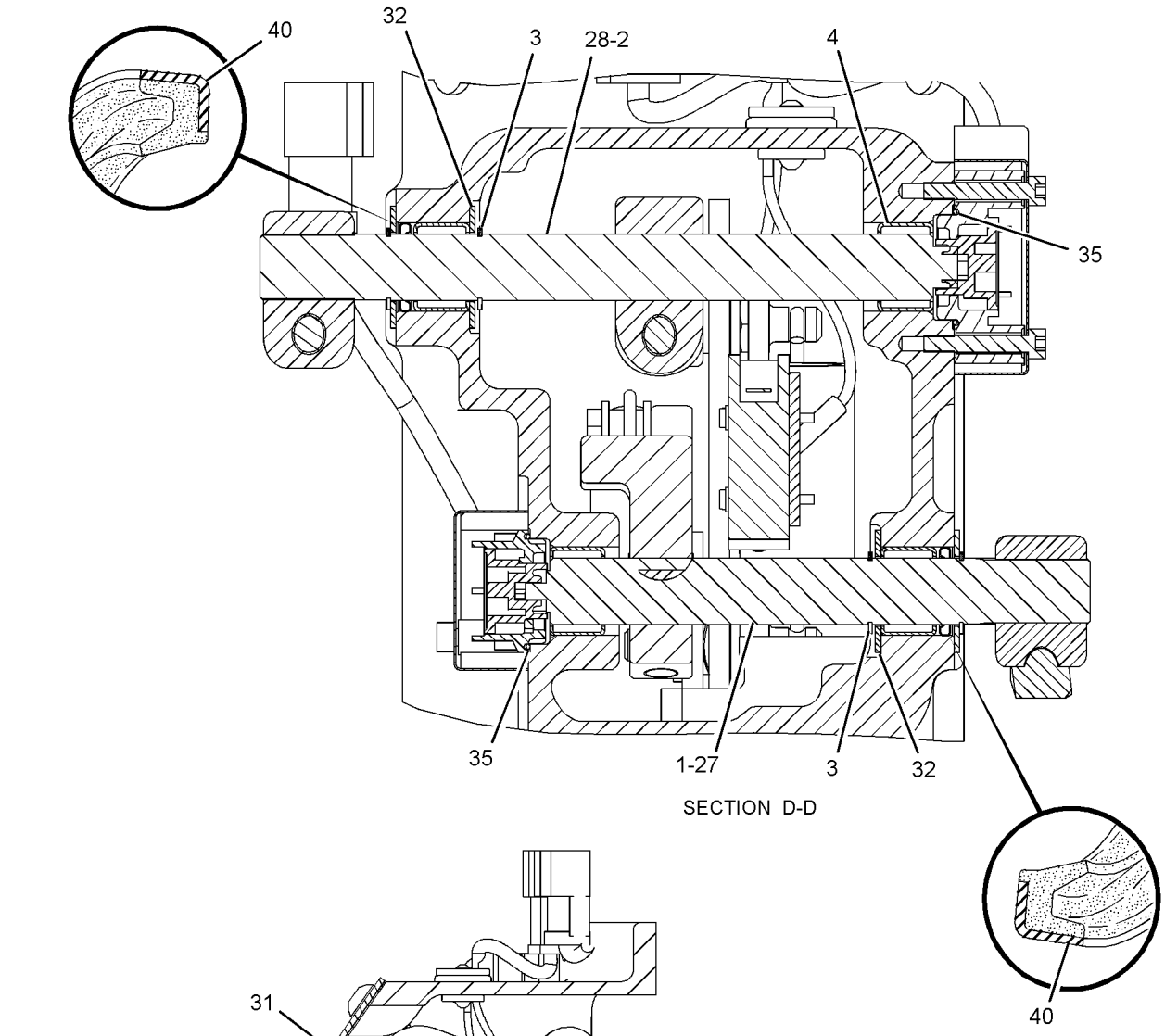

SECTION D-D

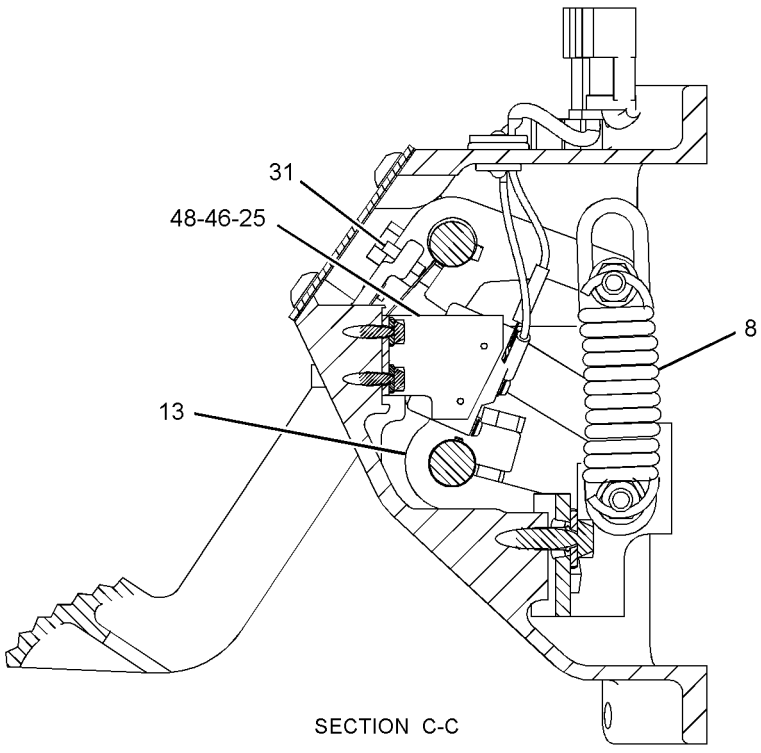

SECTION C-C

REFER TO ALL ILLUSTRATIONS OF THIS GROUP FOR AUXILIARY VIEWS

GRAPHIC #2 **<END>** g01111651

OPERATOR STATION

231-7314 PEDAL GP-GOVERNOR & BRAKE

S/N: J8B1392-UP

PART OF 232-6622 CONTROL & MTG GP-PEDAL

SMCS-4122 **i02976222**

NOTE	REF NO	GRAPHIC REF	PART NUMBER	QTY	PART NAME 1 2 3 4 5 6 (PRODUCT LEVEL)	SEE PAGE
	1	1	**1B-8706**	1	KEY-WOODRUFF	
	2	1	**1B-8714**	1	KEY-WOODRUFF	
	3	1	**2J-6356**	4	RING-RETAINING	
	4	1	**7P-4190**	4	BEARING-ROLLER	
	5	2	**9M-5731**	2	RIVET-POP	
M	6	1,2	**9X-6615**	4	BOLT (M5X0.8X30-MM)	
	7	2	**110-8379**	1	PEDAL (BRAKE) (SERVICE)	
	8	2	**111-3780**	1	SPRING	
	9	2	**111-3781**	2	BOLT-ANCHOR (M10X1.5X23-MM)	
	11	2	**145-3405**	2	SPACER (10.3X16.7X8-MM THK)	
	12	2	**160-1433**	1	LEVER	
	13	2	**160-1434**	1	LEVER	
	14	1	**132-7077**	1	SWITCH AS-LIMIT (SERVICE BRAKE PEDAL)	
		1	**6V-8376**	3	SCREW-MACHINE (8-32X0.25-IN)	
		1	**9B-7233**	3	LOCKWASHER	
	15	2	**164-9541**	1	HARNESS AS-SWITCH (SERVICE BRAKE)	
	16	2	**165-9100**	1	LINK	
	17	2	**165-9103**	1	SPRING	
CY	18	1	**266-1467**	1	SENSOR GP-POSITION (ROTARY) (DECELERATOR PEDAL)	344
	19	2	**205-7331**	1	SPACER (20.32X28.01X0.41-MM THK)	
Y	20	1	**224-5530**	1	SENSOR GP-POSITION (SERVICE BRAKE PEDAL)	343
	21	2	**231-7306**	1	PEDAL (DECELERATOR)	
	22	2	**231-7307**	1	PLATE	
	23	2	**231-7308**	1	GASKET	
	24	2	**231-7309**	1	PLATE	
	25	2	**231-7310**	1	BRACKET AS	
	26	1	**231-7311**	1	SHAFT	
	27	1	**231-7312**	1	SHAFT	
	28	2	**231-7313**	1	HOUSING	
	29	2	**318-9461**	1	SPRING	
	30	1	**096-5962**	2	WASHER-HARD (3.4X7X0.8-MM THK)	
M	31	2	**106-5472**	1	SETSCREW-HEX SOCKET (M5X0.8X20-MM)	
	32	1	**111-9251**	4	WASHER-HARD (20X35X1.6-MM THK)	
M	33	2	**127-2170**	2	SCREW-TRUSS HEAD (M8X1.25X20-MM)	
	34	2	**4B-3609**	1	SETSCREW-SQUARE HEAD (3/8-16X1.5-IN)	
	35	1	**6V-0894**	2	SEAL-O-RING	
	36	2	**165-9104**	1	SPACER (6.5X9.5X10-MM THK)	
M	37	2	**6V-7744**	2	LOCKNUT (M10X1.5-THD)	
	38	2	**6V-8801**	1	NUT (3/8-16-THD)	
	39	2	**7X-7729**	2	WASHER (11X25X3-MM THK)	
	40	1	**8F-7702**	2	SEAL-LIP TYPE	
	41	2	**8T-4121**	4	WASHER-HARD (11X21X2.5-MM THK)	
M	42	2	**8T-4136**	2	BOLT (M10X1.5X25-MM)	
M	43	2	**8T-4186**	2	BOLT (M10X1.5X40-MM)	
M	44	2	**8T-4195**	2	BOLT (M10X1.5X30-MM)	
	45	2	**171-2988**	2	WASHER-HARD (8X14X1.6-MM THK)	
M	46	2	**8T-4970**	2	BOLT (M6X1X14-MM)	
	47	1	**9X-6281**	2	SCREW-MACHINE (4-40X1-IN)	
	48	2	**9X-8256**	2	WASHER (6.6X12X2-MM THK)	
M	49	2	**6V-7357**	1	BOLT (M6X1X25-MM)	

C-CHANGE FROM PREVIOUS TYPE
M-METRIC PART
Y-SEPARATE ILLUSTRATION

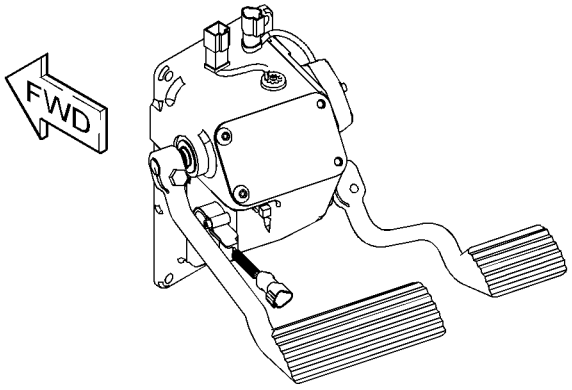

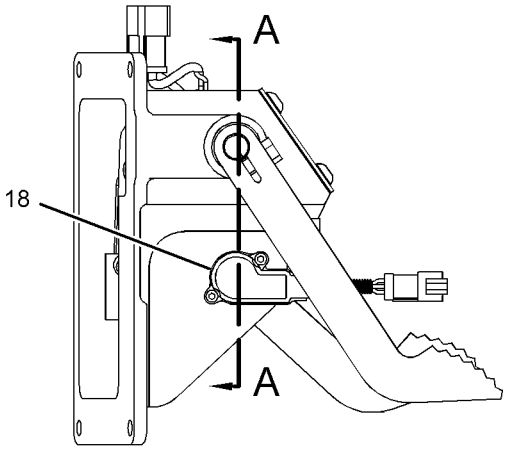

LEFT SIDE VIEW

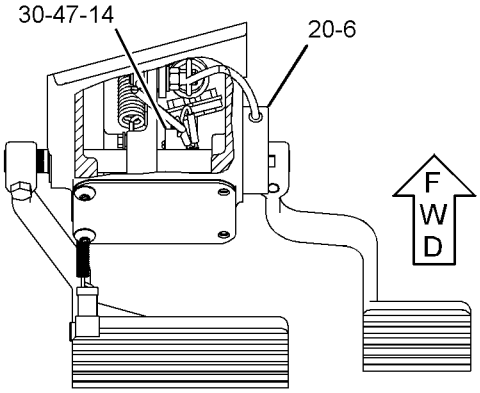

TOP VIEW

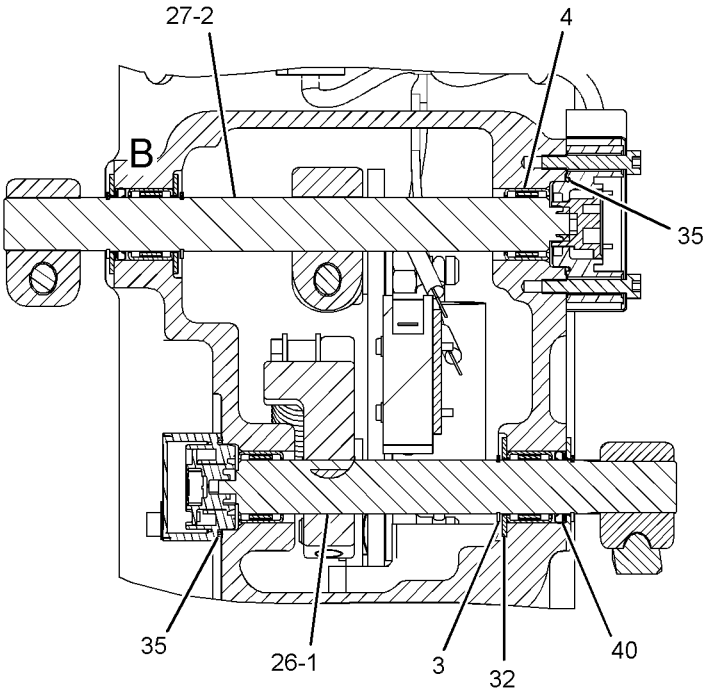

SECTION A-A

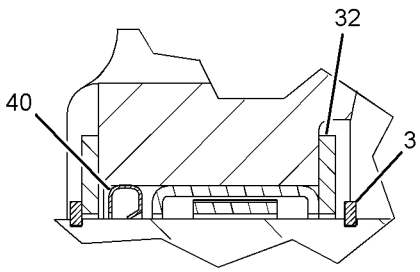

VIEW OF AREA B

GRAPHIC #1

g01423672

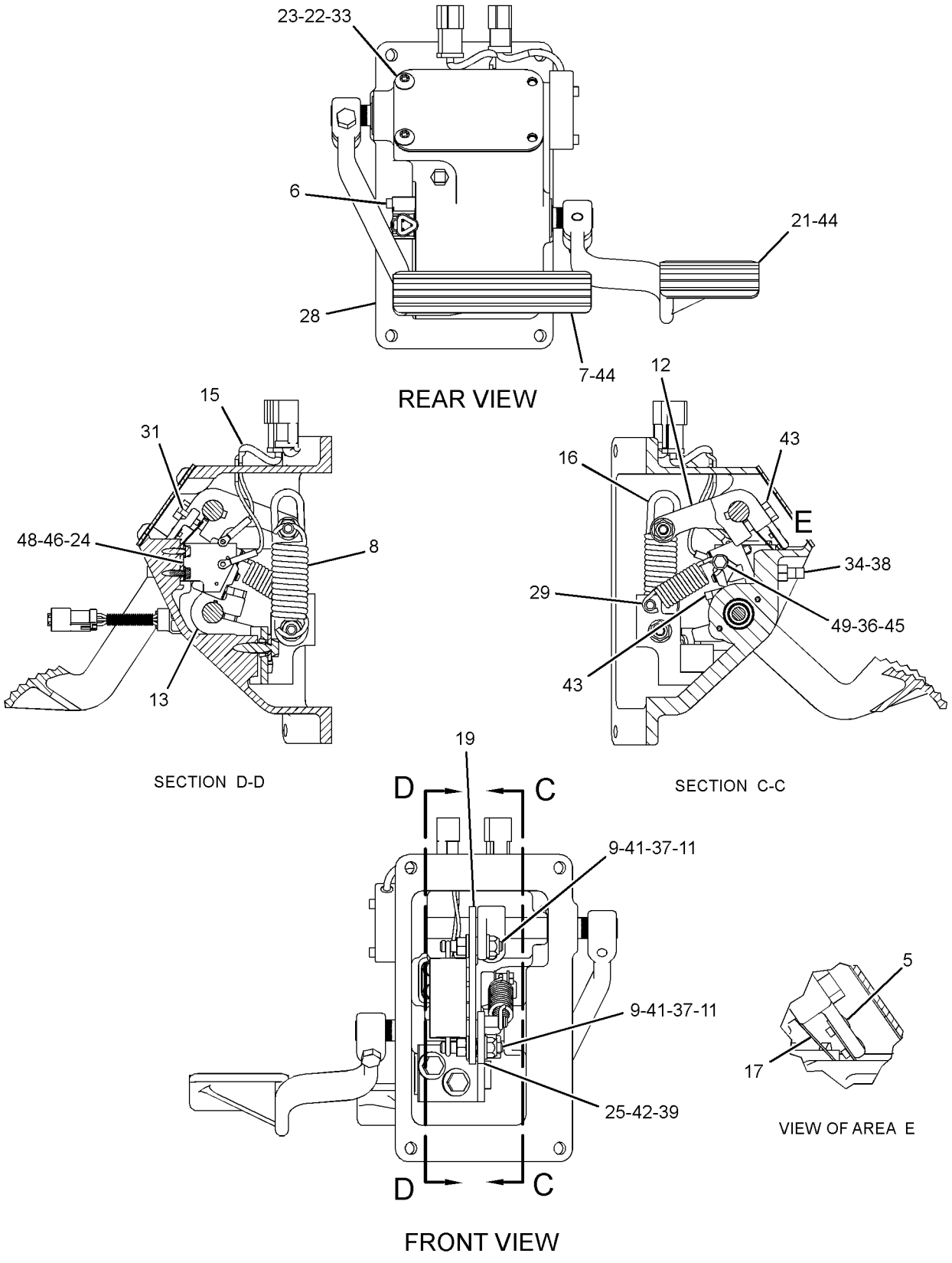

GRAPHIC #2 **<END>** g01423673

OPERATOR STATION

209-9700 PLATFORM AR

S/N: J8B1-UP

PART OF 206-6780 CHASSIS AR

SMCS-7253 **i02237273**

NOTE	PART NUMBER	QTY	PART NAME 1 2 3 4 5 6 (PRODUCT LEVEL)	SEE PAGE
Y	*214-2014*	1	CONSOLE GP-FRONT	1033
Y	*209-5154*	1	CONSOLE GP-OPERATOR	1034
Y	*207-1407*	1	HEATER GP-CAB	1097
Y	*203-8680*	1	PLATFORM GP-OPERATOR	1174
Y	*209-7731*	1	WIRING GP-PLATFORM	402

Y-SEPARATE ILLUSTRATION

<END>

OPERATOR STATION

237-0200 PLATFORM AR—OPEN ROPS

S/N: J8B1-UP

PART OF 237-2884 CANOPY AR-OPEN ROPS

AN ATTACHMENT

SMCS-7253 **i02243173**

NOTE	REF NO	GRAPHIC REF	PART NUMBER	QTY	PART NAME 1 2 3 4 5 6 (PRODUCT LEVEL)	SEE PAGE
	1	1	**6P-6926**	1	SCREW-KNURLED	
	2	1	**6Y-0206**	4	RETAINER	
	3	1	**7G-4824**	2	STRAP	
	4	1	**8E-7791**	2	STRAP	
	5	1	**142-0860**	1	PIVOT-LIGHT	
	6	1	**184-1704**	1	HOLDER	
	7	1	**201-1459**	1	FLOORPLATE AS	
	8	1	**203-8681**	1	FLOORPLATE AS	
	9	1	**217-4245**	1	GASKET	
	10	1	**217-4246**	1	GASKET	
	12	1	**237-0195**	1	PLATE AS	
	13	1	**237-0197**	1	PLATE	
	14	1	**237-0199**	1	COVER	
	15	1	**237-2854**	1	GUARD AS	
	16	1	**237-3985**	1	GUARD AS	
	17	1	**237-4271**	1	RETAINER AS	
	18	1	**237-6345**	1	HANDHOLD (GRAB)	
	19	1	**237-6347**	1	PLATE AS	
	20	1	**237-6349**	1	PLATE	
	21	1	**237-9135**	1	PLATE	
	22	1	**237-9136**	1	PLATE	
	23	1	**237-9137**	1	PLATE	
	24	1	**237-9138**	1	COVER	
	25	1	**239-5107**	1	FLOOR MAT (PLATFORM FLOOR)	
	26	1	**242-8396**	1	PANEL	
	27	1	**5P-1076**	17	WASHER-HARD (13.5X30X4-MM THK)	
	28	1	**7X-7729**	5	WASHER (11X25X3-MM THK)	
	29	1	**8T-4121**	14	WASHER-HARD (11X21X2.5-MM THK)	
M	30	1	**8T-4136**	9	BOLT (M10X1.5X25-MM)	
M	31	1	**8T-4137**	10	BOLT (M10X1.5X20-MM)	
M	32	1	**8T-4139**	15	BOLT (M12X1.75X30-MM)	
M	33	1	**8T-4171**	4	BOLT (M6X1X12-MM)	
M	34	1	**8T-6868**	2	BOLT (M12X1.75X80-MM)	
M	35	1	**9X-2042**	4	SCREW-TRUSS HEAD (M6X1X12-MM)	
M	36	1	**9X-2045**	3	SCREW-TRUSS HEAD (M6X1X20-MM)	
M	37	1	**9X-2046**	2	SCREW-TRUSS HEAD (M6X1X35-MM)	
	38	1	**9X-8256**	4	WASHER (6.6X12X2-MM THK)	

M-METRIC PART

237-0200 **PLATFORM AR** *(contd.)* **i02243173**

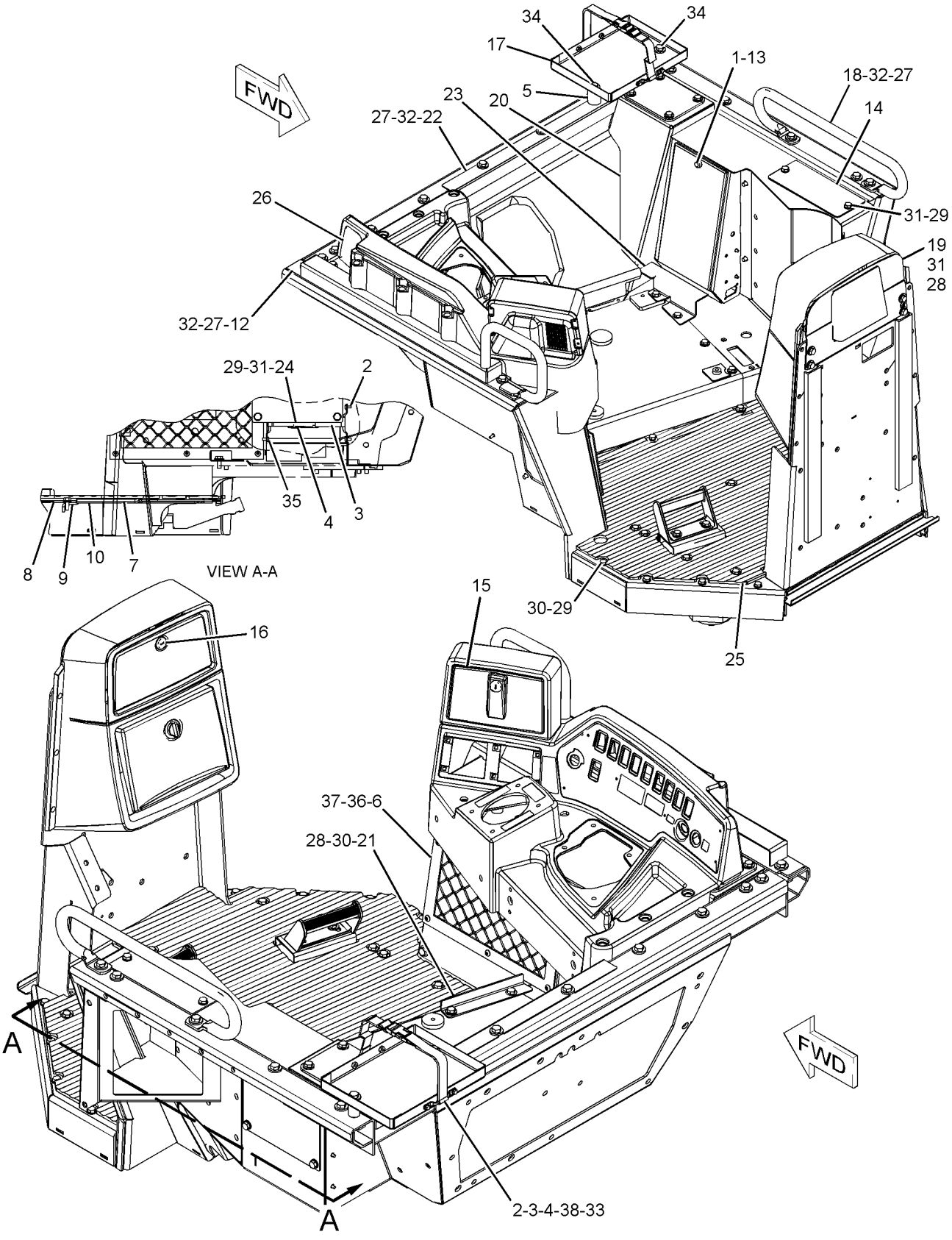

GRAPHIC #1 **<END>** g01130975

OPERATOR STATION

203-8680 PLATFORM GP-OPERATOR

S/N: J8B1-UP

PART OF 209-9700 PLATFORM AR

SMCS-7253 **i03202501**

NOTE	REF NO	GRAPHIC REF	PART NUMBER	QTY	PART NAME 1 2 3 4 5 6 (PRODUCT LEVEL)	SEE PAGE
	1	1	**209-1332**	1	COVER AS	
	2	1	**209-9706**	2	STRIP	
	3	1	**217-4250**	1	GASKET	
	5	1	**4H-0407**	7	PLUG-PROTECTION	
	6	1	**4H-0408**	1	PLUG-PROTECTION	
	7	1	**6H-3615**	2	PLUG-PROTECTION	
	8	1	**117-8131**	8	MOUNT AS	
	9	1	**185-3666**	4	SLEEVE	
	10	1	**203-8679**	1	PLATE AS	
	11	1	**203-8690**	1	PLATFORM AS	
	12	1	**209-1333**	2	COVER AS	
	13	1	**217-4248**	2	GASKET	
	14	1	**220-2802**	1	PLATE	
	15	1	**233-6313**	2	SUPPORT	
	16	1	**237-9134**	1	PLATE AS	
	17	1	**256-4309**	1	COVER AS	
	18	1	**256-4310**	1	GASKET	
	19	1	**256-4311**	1	FLOORPLATE AS	
		1	**201-1459**	1	FLOORPLATE AS	
		1	**217-4246**	1	GASKET	
		1	**220-2798**	1	PANEL	
	20	1	**256-4312**	1	FLOORPLATE AS	
		1	**203-8681**	1	FLOORPLATE AS	
		1	**217-4245**	1	GASKET	
		1	**220-2799**	1	PANEL	
	21	1	**256-4316**	1	PLATE	
M	22	1	**5C-9553**	2	BOLT (M6X1X16-MM)	
	23	1	**6T-8714**	4	WASHER-HARD (28X125X12-MM THK)	
	24	1	**7X-7729**	44	WASHER (11X25X3-MM THK)	
M	25	1	**8T-4136**	30	BOLT (M10X1.5X25-MM)	
M	26	1	**8T-4137**	2	BOLT (M10X1.5X20-MM)	
M	27	1	**8T-4138**	2	BOLT (M6X1X20-MM)	
	28	1	**8T-4167**	4	WASHER-HARD (26X44X4-MM THK)	
M	29	1	**8T-4182**	3	BOLT (M10X1.5X45-MM)	
M	30	1	**8T-4195**	7	BOLT (M10X1.5X30-MM)	
M	31	1	**8T-4196**	2	BOLT (M10X1.5X35-MM)	
M	32	1	**8T-4649**	4	BOLT (M24X3X140-MM)	
	33	1	**9X-8256**	2	WASHER (6.6X12X2-MM THK)	
	34	1	**9X-8267**	2	WASHER (6.6X12X2-MM THK)	
M	35	1	**9X-2040**	8	SCREW-TRUSS HEAD (M10X1.5X25-MM)	

M-METRIC PART

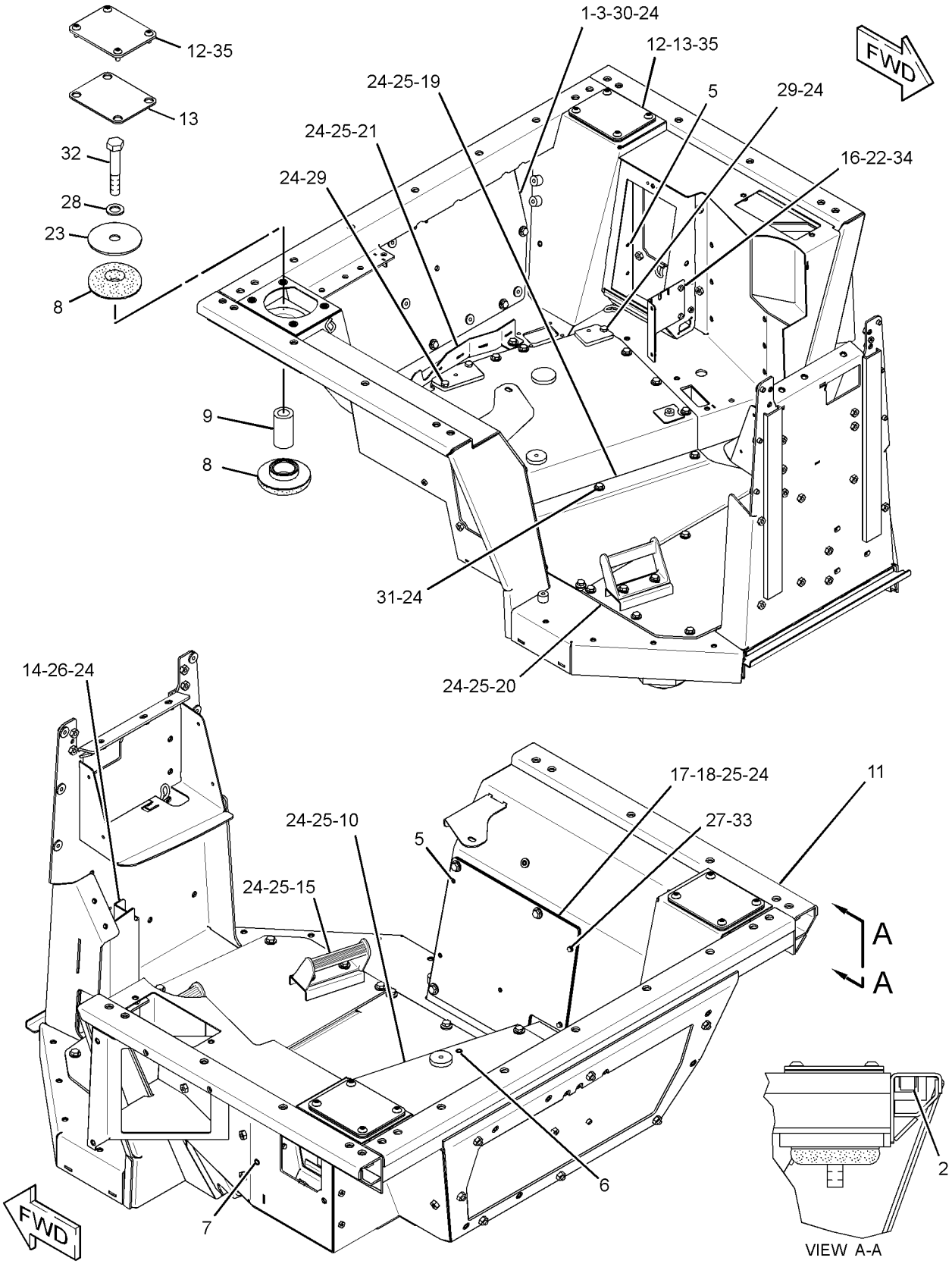

GRAPHIC #1 **<END>** g01659133

OPERATOR STATION

210-2270 RECLINER GP-SEAT

S/N: J8B1-UP
PART OF 178-0603, 180-7304 SEAT GP
ALSO AN ATTACHMENT

SMCS-7312 **i02733467**

NOTE	REF NO	GRAPHIC REF	PART NUMBER	QTY	PART NAME 1 2 3 4 5 6 (PRODUCT LEVEL)	SEE PAGE
	1	1	**177-1862**	1	BRACKET (SEAT BELT)	
	2	1	**210-2262**	1	BRACKET AS	
	3	1	**210-2263**	1	BRACKET AS	
	4	1	**210-2266**	1	GEAR-LOCK (14-TEETH)	
	5	1	**293-2911**	1	SHAFT AS	
		1	**2L-5893**	2	PIN-SPRING	
		1	**170-8590**	1	SPRING	
	6	1	**217-7933**	1	LATCH	
	7	1	**236-5197**	1	SPRING	
	8	1	**031-0214**	1	BOLT-LOCKING (1/4-20X0.5-IN)	
	9	1	**101-2867**	1	WASHER-HARD (7.2X25X2-MM THK)	
	10	1	**4M-6425**	1	BOLT (5/16-18X1-IN)	
	11	1	**5M-2894**	1	WASHER-HARD (10.2X18.5X2.5-MM THK)	
	12	1	**5S-7383**	1	BOLT (3/8-16X1.75-IN)	
	13	1	**8T-4224**	1	WASHER-HARD (8.8X16X2-MM THK)	

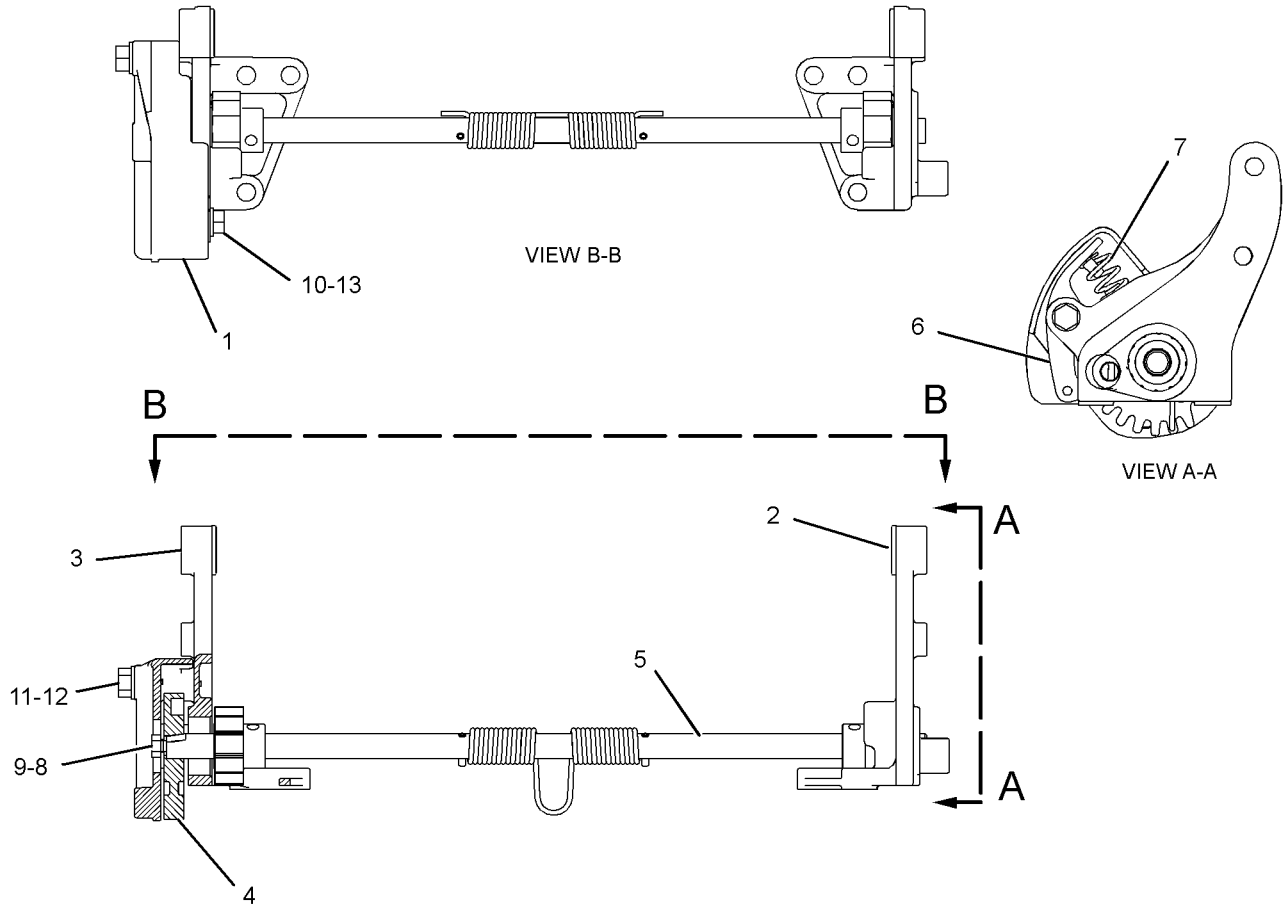

GRAPHIC #1 **<END>** g01296294

OPERATOR STATION

210-0220 ROPS GP

S/N: J8B1-UP

PART OF 206-6780 CHASSIS AR

SMCS-7177, 7301 **i02237791**

NOTE	REF NO	GRAPHIC REF	PART NUMBER	QTY	PART NAME 1 2 3 4 5 6 (PRODUCT LEVEL)	SEE PAGE
	1	1	**180-6600**	1	HANDRAIL	
	2	1	**210-0216**	1	ROPS AS	
	3	1	**5P-1076**	3	WASHER-HARD (13.5X30X4-MM THK)	
M	4	1	**8C-8723**	12	BOLT (M30X3.5X80-MM)	
M	5	1	**8T-4139**	2	BOLT (M12X1.75X30-MM)	
	6	1	**9X-8258**	12	WASHER (33X56X6-MM THK)	

M-METRIC PART

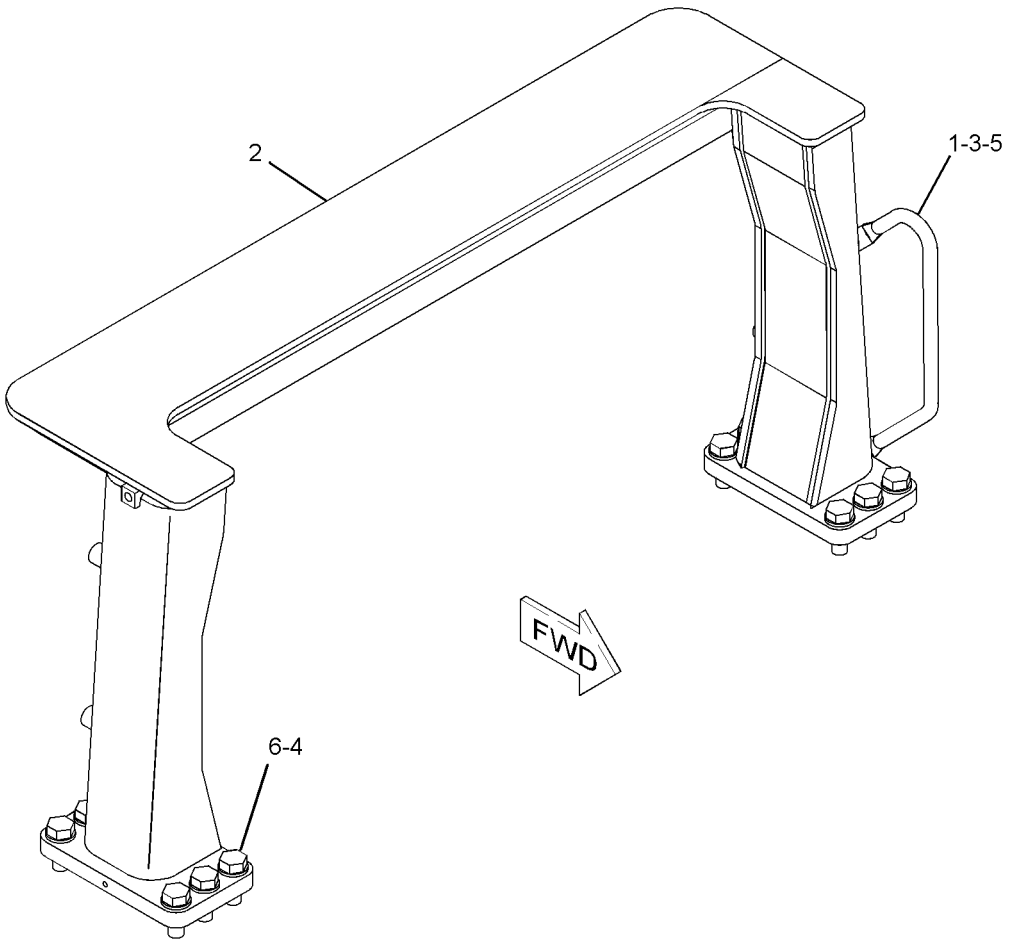

GRAPHIC #1 **<END>** g01106459

OPERATOR STATION

234-7952 ROPS GP-OPEN

S/N: J8B1-UP
PART OF 237-2884 CANOPY AR-OPEN ROPS
AN ATTACHMENT

SMCS-7323 **i02243171**

NOTE	REF NO	GRAPHIC REF	PART NUMBER	QTY	PART NAME 1 2 3 4 5 6 (PRODUCT LEVEL)	SEE PAGE
	1	1	**1P-2772**	4	SPACER (1.031X1.219X0.75-IN THK)	
	2	1	**9G-0992**	2	HANDRAIL	
Y	3	1	*9P-9392*	1	MIRROR GP-REAR VIEW	1139
	4	1	**9S-5187**	2	MOUNTING	
	5	1	**180-6600**	1	HANDRAIL	
	6	1	**198-6574**	10	WASHER (16X75X3.5-MM THK)	
	7	1	**198-6575**	10	BUTTON	
	8	1	**234-7951**	1	ROPS AS	
	9	1	**234-7983**	1	TUBE AS (LH)	
	10	1	**234-7984**	1	TUBE AS (RH)	
	11	1	**235-5546**	1	LINER-CAB	
	12	1	**237-6230**	1	PLATE AS (RH)	
	13	1	**237-6231**	1	PLATE AS (LH)	
	14	1	**237-6292**	1	PLATE (RH)	
	15	1	**237-6293**	1	PLATE (LH)	
	16	1	**239-5616**	1	PLATE (RH)	
	17	1	**239-5617**	1	PLATE (LH)	
	18	1	**5P-1076**	7	WASHER-HARD (13.5X30X4-MM THK)	
	19	1	**6K-3632**	2	LOCKNUT (1-8-THD)	
M	20	1	**7X-2563**	4	BOLT (M20X2.5X60-MM)	
M	21	1	**8C-8585**	18	SCREW-BUTTON HEAD (M10X1.5X20-MM)	
M	22	1	**8C-8723**	12	BOLT (M30X3.5X80-MM)	
	23	1	**8C-8843**	2	BOLT (1-8X4.5-IN)	
	24	1	**8P-5244**	4	WASHER (33.3X69.8X6.35-MM THK)	
M	25	1	**8T-4139**	6	BOLT (M12X1.75X30-MM)	
	26	1	**8T-5439**	4	WASHER-HARD (21.5X45X6-MM THK)	
	27	1	**9X-8258**	12	WASHER (33X56X6-MM THK)	

M-METRIC PART
Y-SEPARATE ILLUSTRATION

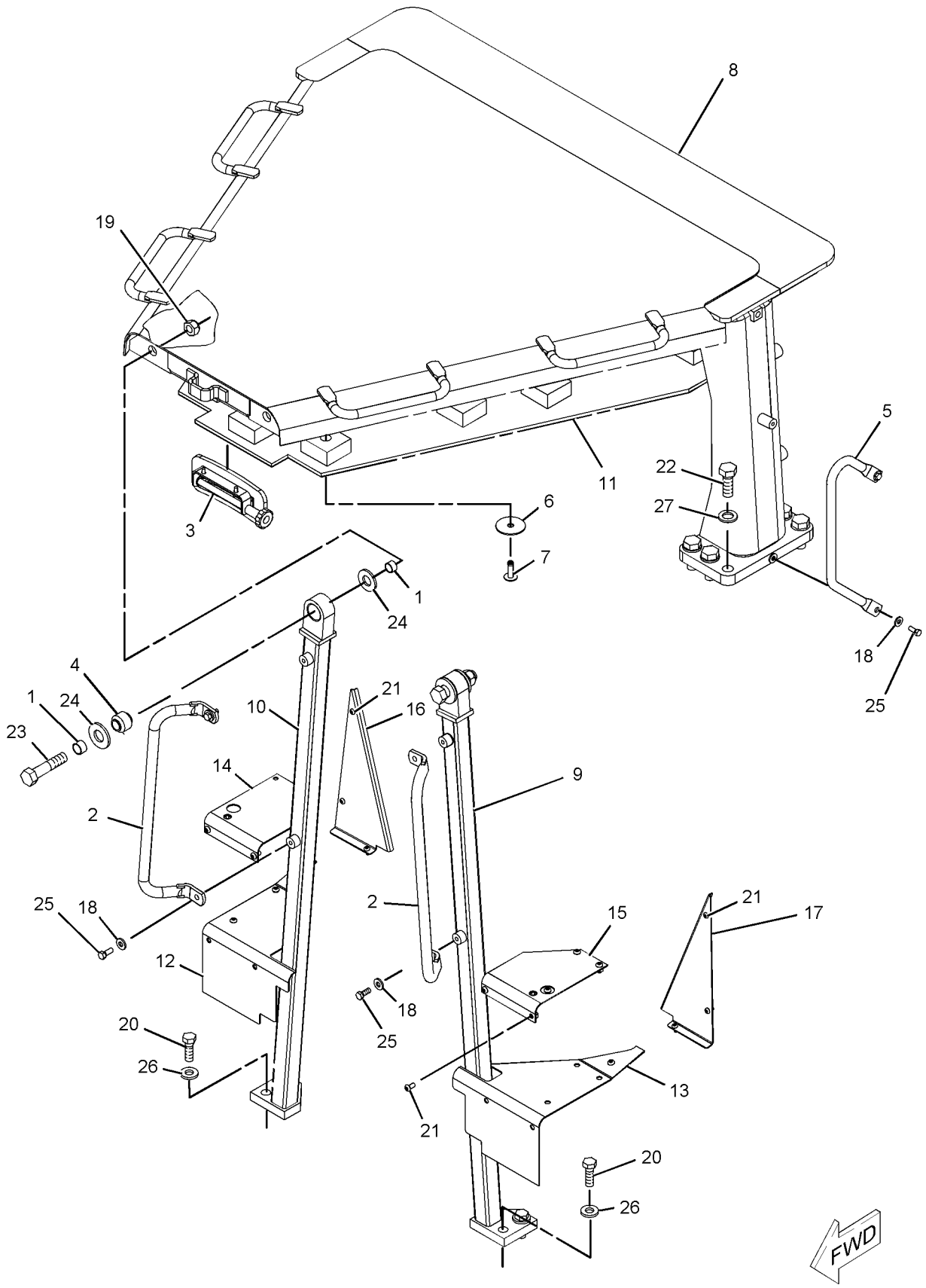

GRAPHIC #1 **<END>** g01112102

OPERATOR STATION

219-2892 SCREEN GP-PROTECTION–REAR

S/N: J8B1-UP

CANNOT BE USED WITH 259-5854–PAGE 1181, 218-2995–PAGE 275, 218-2996–PAGE 280, 218-2997–PAGE 285, 218-2998–PAGE 290, 235-3417–PAGE 294, 236-5468–PAGE 302

AN ATTACHMENT

SMCS-7165 **i02237576**

NOTE	REF NO	GRAPHIC REF	PART NUMBER	QTY	PART NAME 1 2 3 4 5 6 (PRODUCT LEVEL)	SEE PAGE
	1	1	**221-1942**	1	SCREEN AS	
	2	1	**8T-5439**	4	WASHER-HARD (21.5X45X6-MM THK)	
M	3	1	**8T-6430**	4	BOLT (M20X2.5X50-MM)	

M-METRIC PART

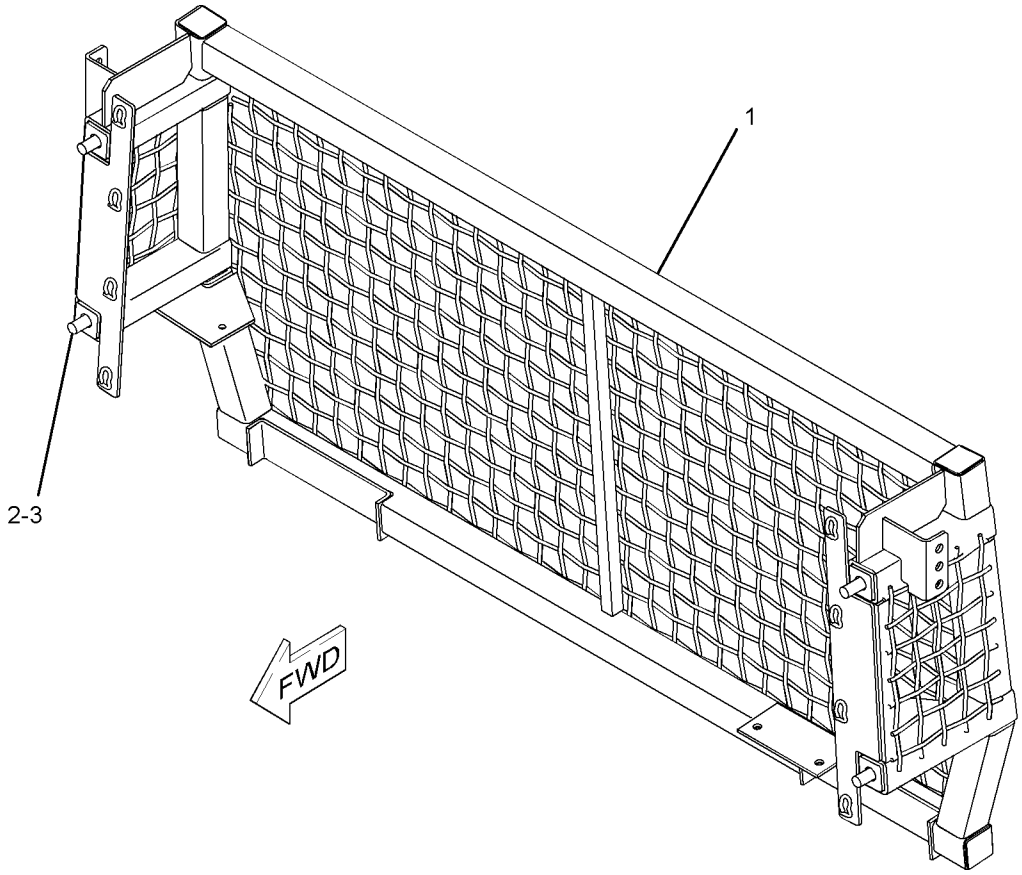

GRAPHIC #1 **<END>** g01021829

259-5854 SCREEN GP-PROTECTION–REAR

S/N: J8B1-UP

FOR USE WITH 218-2995–PAGE 275, 218-2996–PAGE 280, 218-2997–PAGE 285, 218-2998–PAGE 290. CANNOT BE USED WITH 219-2892–PAGE 1180, 235-3417–PAGE 294, 236-5468–PAGE 302

AN ATTACHMENT

SMCS-7165 **i02246530**

NOTE	REF NO	GRAPHIC REF	PART NUMBER	QTY	PART NAME 1 2 3 4 5 6 (PRODUCT LEVEL)	SEE PAGE
	1	1	**111-8314**	2	BRACKET AS	
	2	1	**221-1942**	1	SCREEN AS	
Y	3	1	**153-2073**	2	LAMP GP-FLOOD (24-VOLT) (REAR)	268
	4	1	**5M-3062**	2	BOLT (3/8-16X0.75-IN)	
	5	1	**5P-1075**	2	WASHER-HARD (10.2X22.5X3-MM THK)	
	6	1	**5P-2955**	2	BOLT (5/16-18X2.5-IN)	
	7	1	**6V-8189**	2	NUT (5/16-18-THD)	
	8	1	**8T-4224**	4	WASHER-HARD (8.8X16X2-MM THK)	
	9	1	**8T-5439**	4	WASHER-HARD (21.5X45X6-MM THK)	
M	10	1	**8T-6430**	4	BOLT (M20X2.5X50-MM)	

M-METRIC PART
Y-SEPARATE ILLUSTRATION

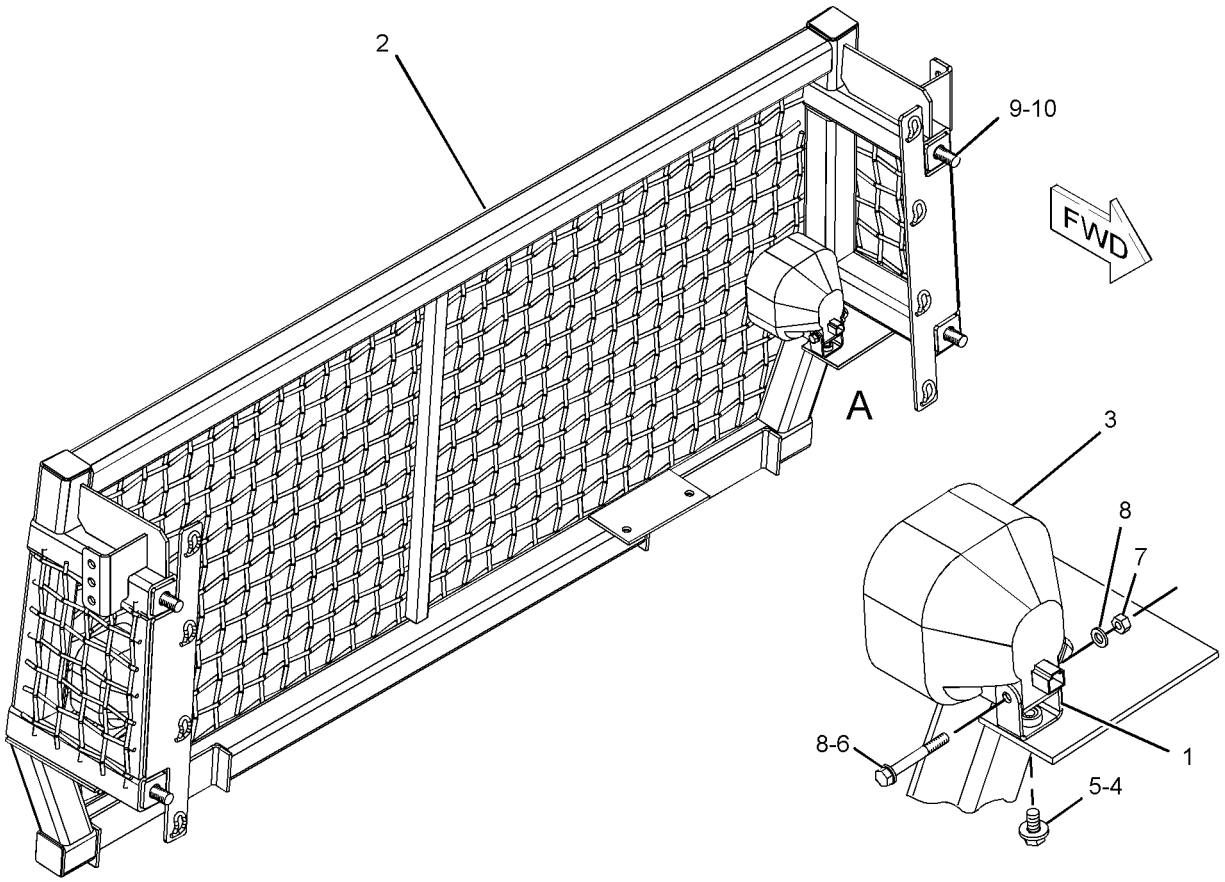

VIEW OF AREA A
(EXPLODED)

GRAPHIC #1 **<END>** g01110938

OPERATOR STATION

214-1096 SEAT & MOUNTING GP—CLOTH

S/N: J8B1-UP

PART OF 206-6780 CHASSIS AR

SMCS-7312 **i02238187**

NOTE	REF NO	GRAPHIC REF	PART NUMBER	QTY	PART NAME 1 2 3 4 5 6 (PRODUCT LEVEL)	SEE PAGE
Y	1	1	**160-7186**	1	SEAT GP-SUSPENSION	1195
	2	1	**7X-7729**	4	WASHER (11X25X3-MM THK)	
M	3	1	**9X-2125**	4	BOLT-LOCKING (M10X1.5X25-MM)	

M-METRIC PART
Y-SEPARATE ILLUSTRATION

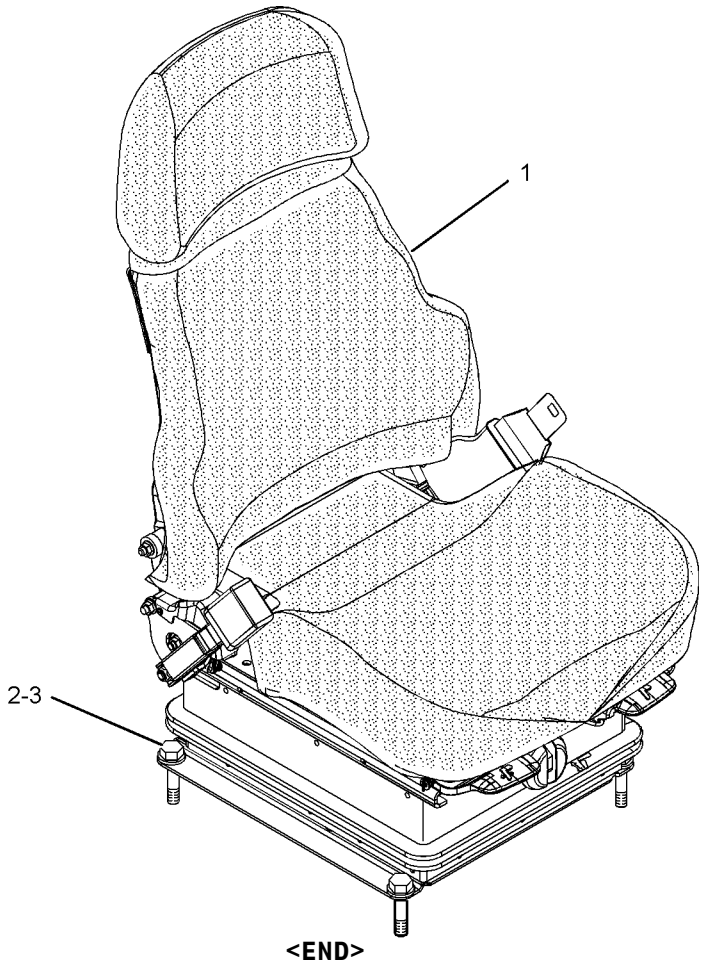

GRAPHIC #1 **<END>** g01017306

OPERATOR STATION

178-0603 SEAT GP–CLOTH

S/N: J8B1-UP
PART OF 178-0606 SEAT GP
ALSO AN ATTACHMENT
TYPE 1

SMCS-7312 **i02755935**

NOTE	REF NO	GRAPHIC REF	PART NUMBER	QTY	PART NAME 1 2 3 4 5 6 (PRODUCT LEVEL)	SEE PAGE
	1	1	**218-0861**	1	PAN AS	
		1	**8T-9082**	5	RIVET-POP	
		1	**217-9049**	1	CUSHION AS	
	2	1	**143-1288**	8	LOCKNUT-FLANGE (3/8-16-THD)	
	3	1	**171-1230**	6	SCREW-BUTTON HEAD (3/8-16X1-IN)	
	4	1	**171-6682**	1	BAR	
	5	1	**172-2416**	2	PIN	
Y	6	1	*173-1028*	1	ADJUSTER GP-SEAT	1006
	7	1	**177-1863**	2	BOLT-PIVOT (3/8-16X2.89-IN)	
Y	8	1	*210-2270*	1	RECLINER GP-SEAT	1176
Y	9	1	*178-0604*	1	PAN GP-BACKREST (CLOTH)	1157
	10	1	**184-2298**	1	ROD	
	11	1	**184-2299**	4	WASHER (7X25.4X2.54-MM THK)	
	12	1	**095-0843**	2	PIN-COTTER	
	13	1	**5V-1496**	2	RETAINER	
	14	1	**6V-7646**	2	WASHER-HARD (7.2X25X2-MM THK)	
	15	1	**8T-0328**	1	WASHER-HARD (5.5X10X1-MM THK)	
	16	1	**8T-4205**	1	WASHER-HARD (7.2X14.5X2-MM THK)	
	17	1	**8Y-6277**	2	SPACER (10.5X28.6X10-MM THK)	

Y-SEPARATE ILLUSTRATION

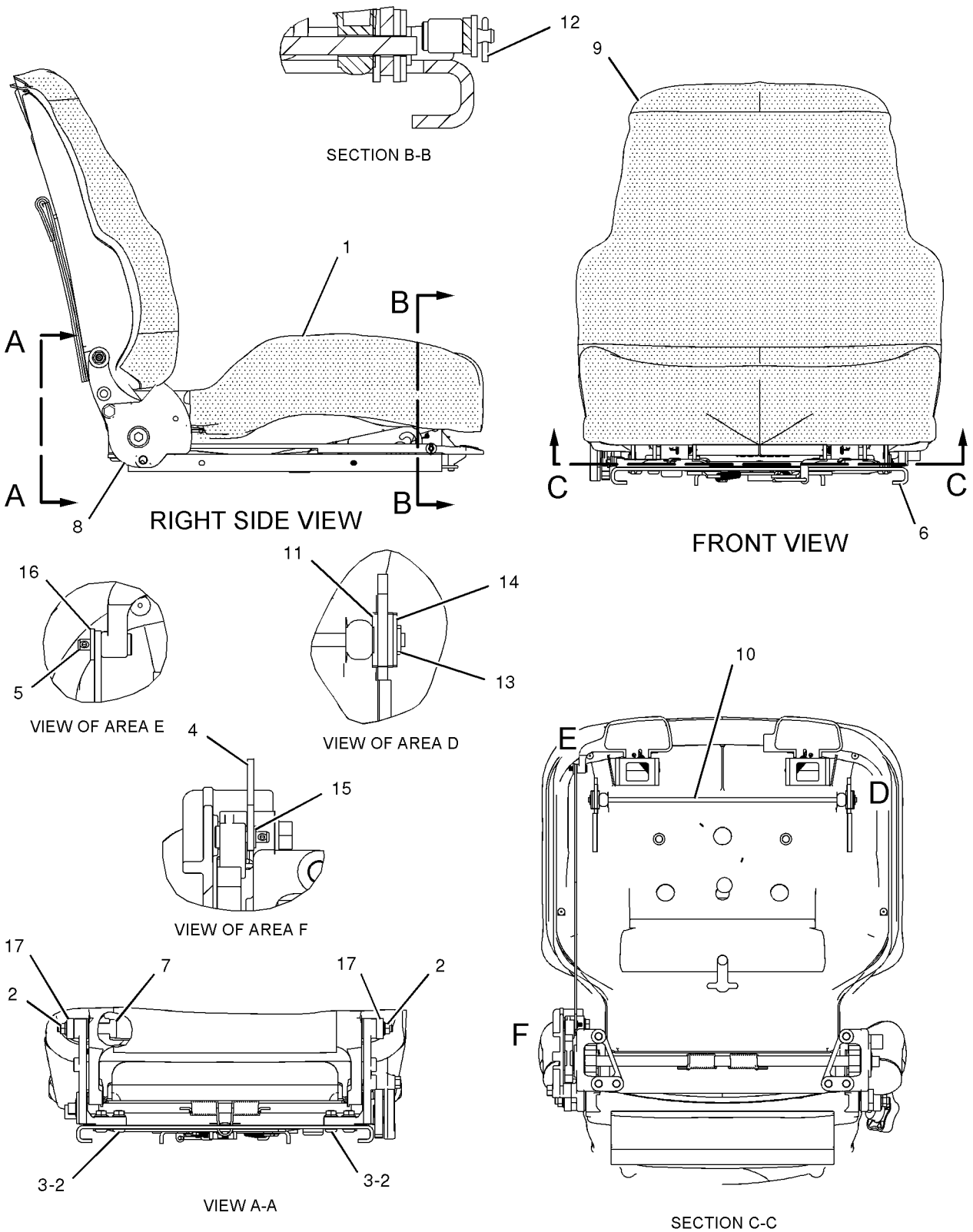

GRAPHIC #1 **<END>** g01023456

OPERATOR STATION

178-0603 SEAT GP–CLOTH

S/N: J8B1-UP
PART OF 178-0606 SEAT GP
ALSO AN ATTACHMENT
TYPE 2

SMCS-7312 **i02679176**

NOTE	REF NO	GRAPHIC REF	PART NUMBER	QTY	PART NAME 1 2 3 4 5 6 (PRODUCT LEVEL)	SEE PAGE
	1	1	**218-0861**	1	PAN AS	
		1	**8T-9082**	5	RIVET-POP	
		1	**217-9049**	1	CUSHION AS	
	2	1	**143-1288**	8	LOCKNUT-FLANGE (3/8-16-THD)	
	3	1	**171-1230**	6	SCREW-BUTTON HEAD (3/8-16X1-IN)	
	4	1	**171-6682**	1	BAR	
	5	1	**172-2416**	2	PIN	
Y	6	1	*173-1028*	1	ADJUSTER GP-SEAT	1006
	7	1	**177-1863**	2	BOLT-PIVOT (3/8-16X2.89-IN)	
Y	8	1	*210-2270*	1	RECLINER GP-SEAT	1176
CY	9	1	*292-9237*	1	PAN GP-BACKREST	1161
	10	1	**184-2298**	1	ROD	
	11	1	**184-2299**	4	WASHER (7X25.4X2.54-MM THK)	
	12	1	**095-0843**	2	PIN-COTTER	
	13	1	**5V-1496**	2	RETAINER	
	14	1	**6V-7646**	2	WASHER-HARD (7.2X25X2-MM THK)	
	15	1	**8T-0328**	1	WASHER-HARD (5.5X10X1-MM THK)	
	16	1	**8T-4205**	1	WASHER-HARD (7.2X14.5X2-MM THK)	
C	17	1	**294-5042**	2	SPACER (11.1X19.5X9.67-MM THK)	

C-CHANGE FROM PREVIOUS TYPE
Y-SEPARATE ILLUSTRATION

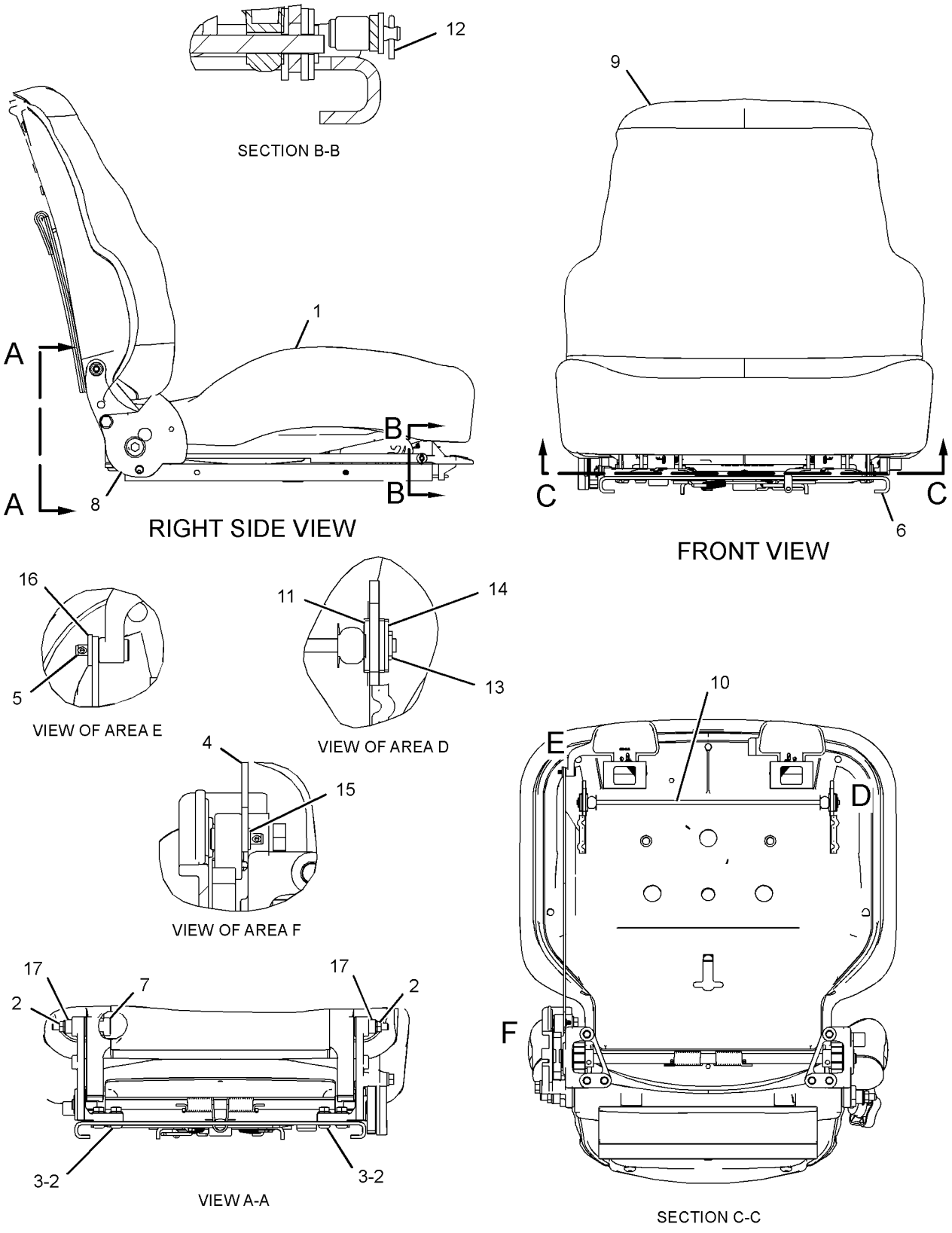

GRAPHIC #1 **<END>** g01336990

OPERATOR STATION

178-0606 SEAT GP–CLOTH

S/N: J8B1-UP
PART OF 160-7186, 200-3174 SEAT GP-SUSPENSION
ALSO AN ATTACHMENT

SMCS-7312 **i02123119**

NOTE	REF NO	GRAPHIC REF	PART NUMBER	QTY	PART NAME 1 2 3 4 5 6 (PRODUCT LEVEL)	SEE PAGE
	1	1	**177-4937**	1	SPACER (11.7X19.8X20.3-MM THK)	
Y	2	1	**178-0603**	1	SEAT GP (CLOTH)	1183
	3	1	**222-0345**	1	SEAT BELT GP (RETRACTABLE)	
C	4	1	**229-1494**	1	EXTENSION GP-BACKREST (CLOTH)	
	5	1	**0T-0244**	1	BOLT (7/16-20X1.25-IN)	
	6	1	**205-6388**	1	BOLT (7/16-20X1.75-IN)	

C-CHANGE FROM PREVIOUS TYPE
Y-SEPARATE ILLUSTRATION

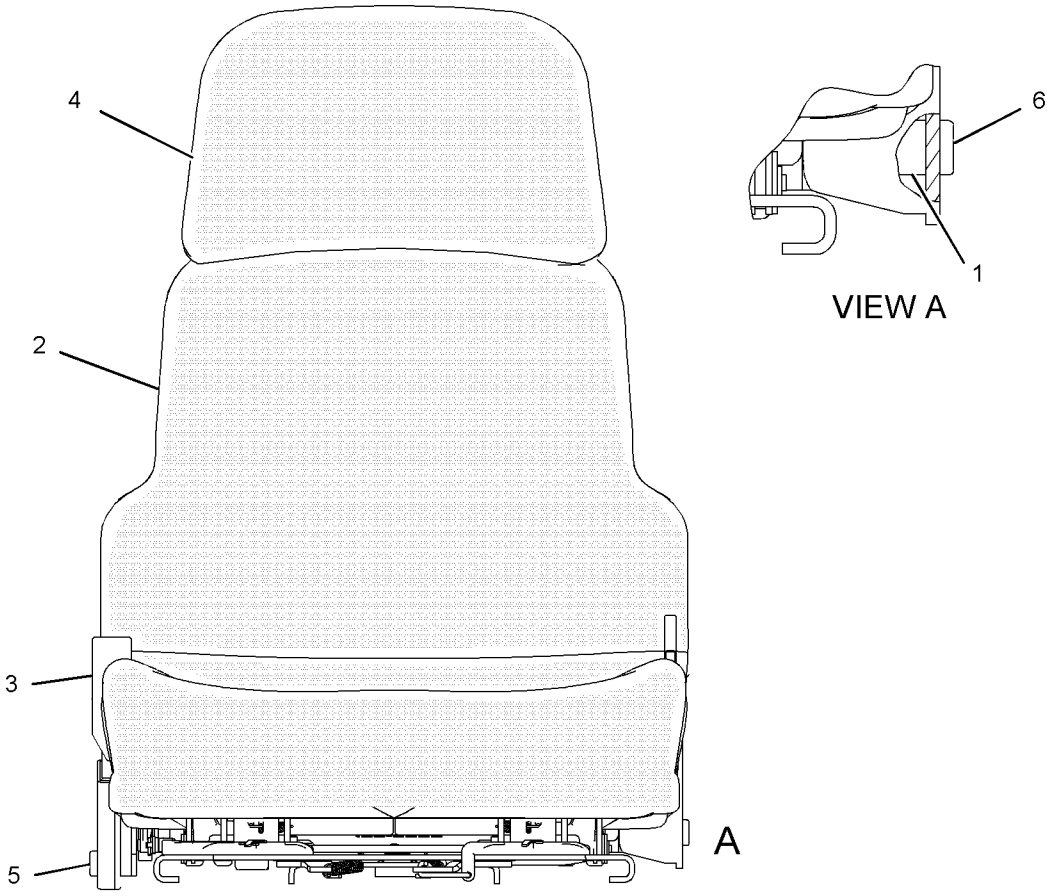

GRAPHIC #1

<END>

g01084230

OPERATOR STATION

180-7304 SEAT GP–VINYL

S/N: J8B1-UP
PART OF 184-6011 SEAT GP
AN ATTACHMENT
TYPE 1

SMCS-7312 **i02857362**

NOTE	REF NO	GRAPHIC REF	PART NUMBER	QTY	PART NAME 1 2 3 4 5 6 (PRODUCT LEVEL)	SEE PAGE
	1	1	**143-1288**	8	LOCKNUT-FLANGE (3/8-16-THD)	
	2	1	**171-1230**	6	SCREW-BUTTON HEAD (3/8-16X1-IN)	
	3	1	**171-6682**	1	BAR	
	4	1	**172-2416**	2	PIN	
Y	5	1	*173-1028*	1	ADJUSTER GP-SEAT	1006
	6	1	**173-3283**	1	PAN AS (VINYL)	
		1	**169-1026**	1	CUSHION AS	
		1	**6K-3273**	5	RIVET-POP	
	7	1	**177-1863**	2	BOLT-PIVOT (3/8-16X2.89-IN)	
Y	8	1	*180-7305*	1	PAN GP-BACKREST (VINYL)	1159
	9	1	**184-2298**	1	ROD	
	10	1	**184-2299**	4	WASHER (7X25.4X2.54-MM THK)	
CY	11	1	*210-2270*	1	RECLINER GP-SEAT	1176
	12	1	**095-0843**	2	PIN-COTTER	
	13	1	**5V-1496**	2	RETAINER	
	14	1	**6V-7646**	2	WASHER-HARD (7.2X25X2-MM THK)	
	15	1	**8T-0328**	1	WASHER-HARD (5.5X10X1-MM THK)	
	16	1	**8T-4205**	1	WASHER-HARD (7.2X14.5X2-MM THK)	
	17	1	**8Y-6277**	2	SPACER (10.5X28.6X10-MM THK)	

C-CHANGE FROM PREVIOUS TYPE
Y-SEPARATE ILLUSTRATION

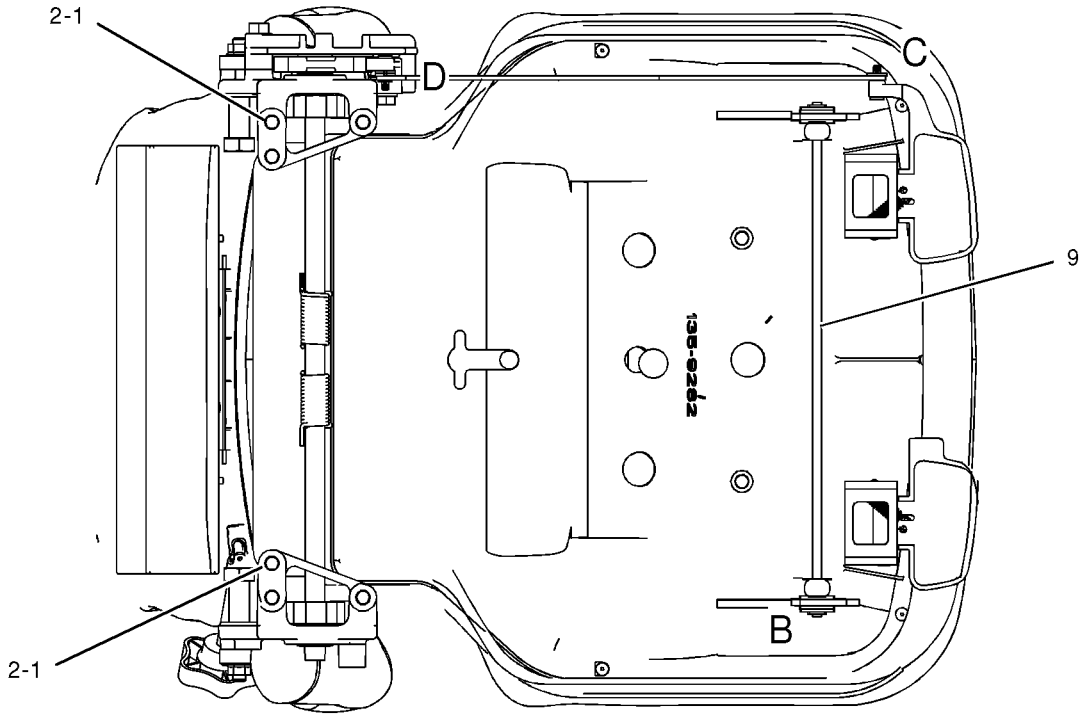

SECTION A-A

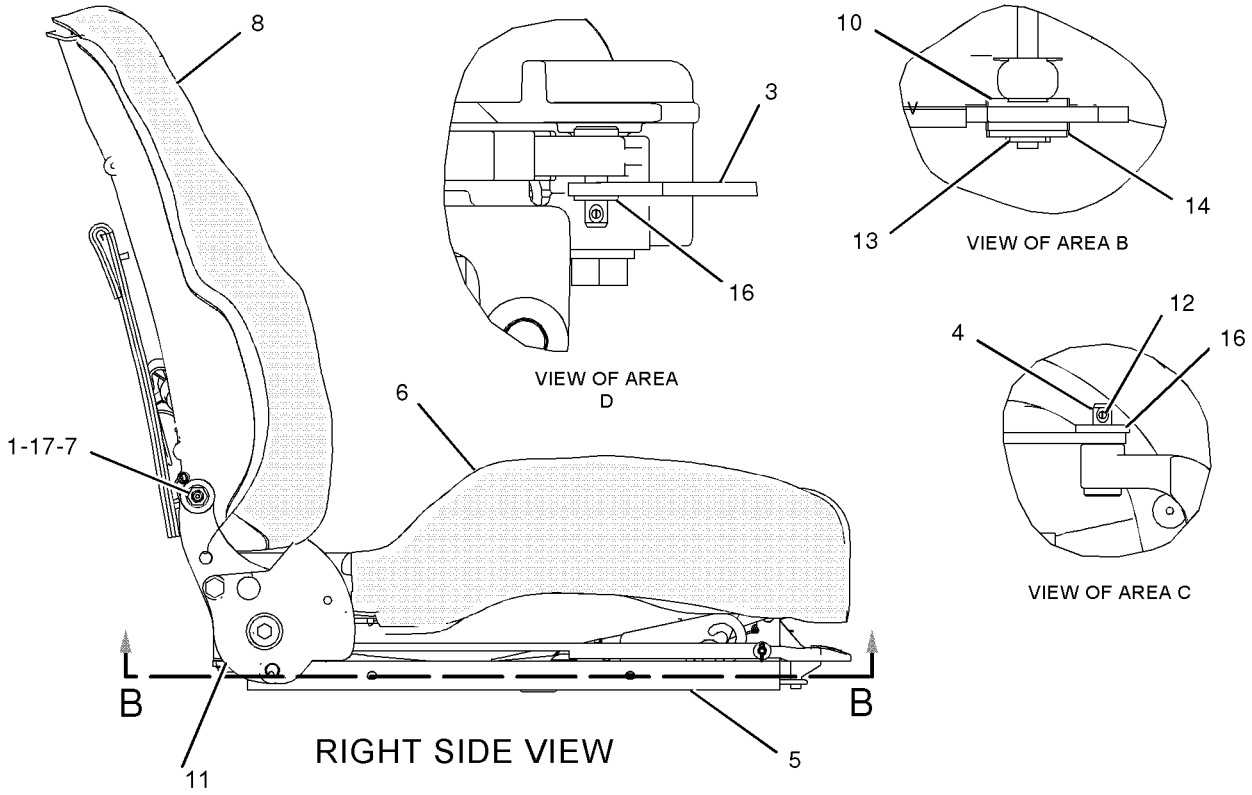

GRAPHIC #1 **<END>** g01037175

OPERATOR STATION

180-7304 SEAT GP–VINYL

S/N: J8B1-UP
PART OF 184-6011 SEAT GP
AN ATTACHMENT
TYPE 2

SMCS-7312 **i02762440**

NOTE	REF NO	GRAPHIC REF	PART NUMBER	QTY	PART NAME 1 2 3 4 5 6 (PRODUCT LEVEL)	SEE PAGE
	1	1	**143-1288**	8	LOCKNUT-FLANGE (3/8-16-THD)	
	2	1	**171-1230**	6	SCREW-BUTTON HEAD (3/8-16X1-IN)	
	3	1	**171-6682**	1	BAR	
	4	1	**172-2416**	2	PIN	
Y	5	1	*173-1028*	1	ADJUSTER GP-SEAT	1006
	6	1	**173-3283**	1	PAN AS (VINYL)	
		1	**169-1026**	1	CUSHION AS	
		1	**6K-3273**	5	RIVET-POP	
	7	1	**177-1863**	2	BOLT-PIVOT (3/8-16X2.89-IN)	
	8	1	**184-2298**	1	ROD	
	9	1	**184-2299**	4	WASHER (7X25.4X2.54-MM THK)	
Y	10	1	*210-2270*	1	RECLINER GP-SEAT	1176
CY	11	1	*292-9238*	1	PAN GP-BACKREST (VINYL)	1162
C	12	1	**294-5042**	2	SPACER (11.1X19.5X9.67-MM THK)	
	13	1	**095-0843**	2	PIN-COTTER	
	14	1	**5V-1496**	2	RETAINER	
	15	1	**6V-7646**	2	WASHER-HARD (7.2X25X2-MM THK)	
	16	1	**8T-0328**	1	WASHER-HARD (5.5X10X1-MM THK)	
	17	1	**8T-4205**	1	WASHER-HARD (7.2X14.5X2-MM THK)	

C-CHANGE FROM PREVIOUS TYPE
Y-SEPARATE ILLUSTRATION

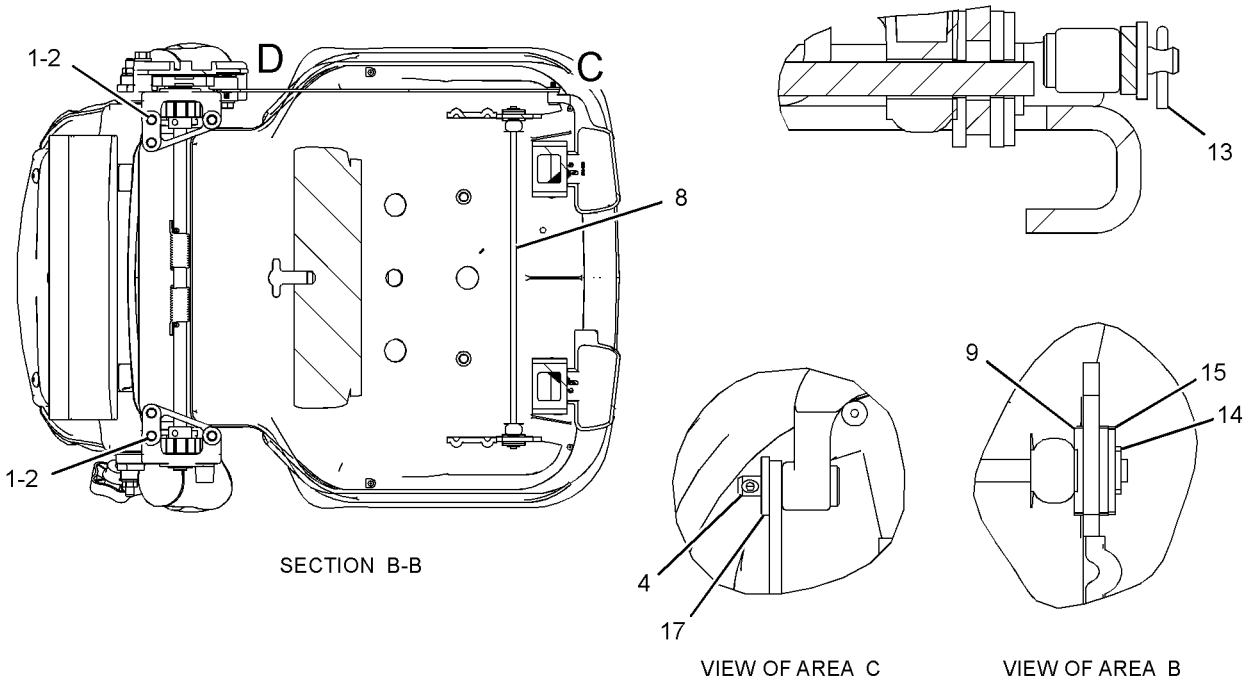

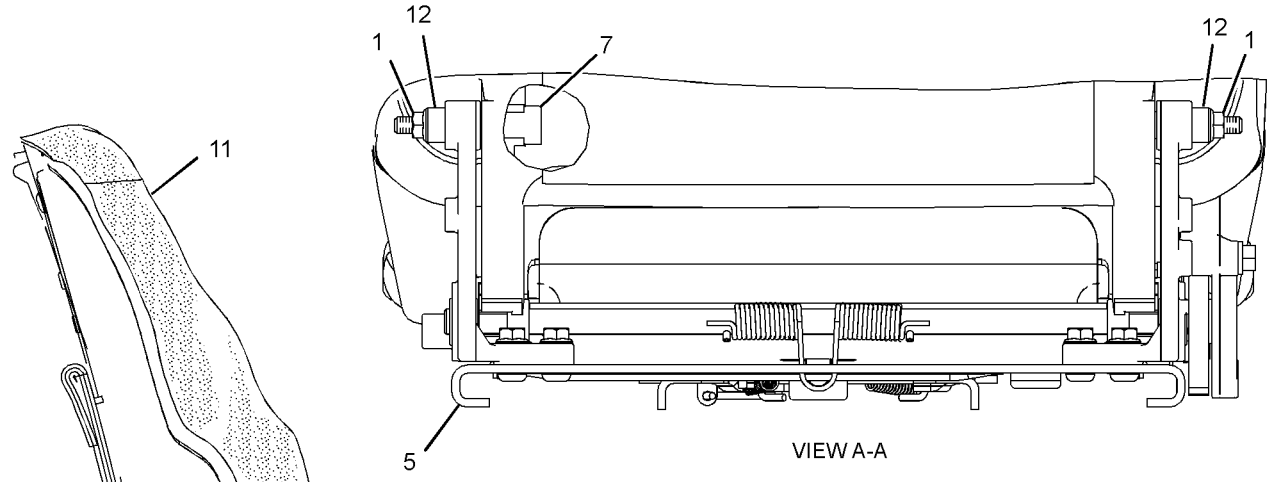

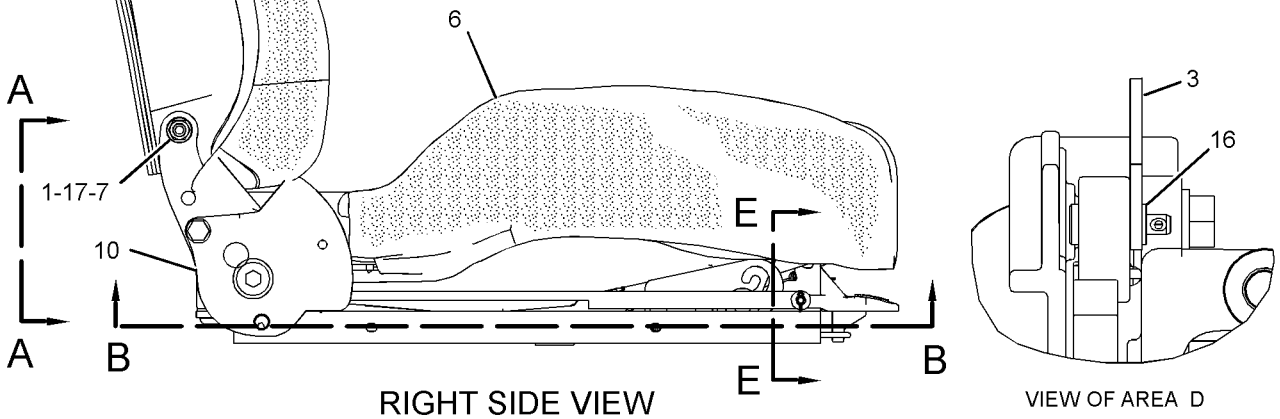

GRAPHIC #1 **<END>** g01393648

OPERATOR STATION

184-6011 SEAT GP–VINYL

S/N: J8B1-UP
PART OF 159-2950 SEAT GP-SUSPENSION
AN ATTACHMENT

SMCS-7312 **i02994880**

NOTE	REF NO	GRAPHIC REF	PART NUMBER	QTY	PART NAME 1 2 3 4 5 6 (PRODUCT LEVEL)	SEE PAGE
	1	1	**173-3083**	1	EXTENSION GP-BACKREST (VINYL)	
		1	**117-4491**	1	ROD	
	2	1	**177-4937**	1	SPACER (11.7X19.8X20.3-MM THK)	
	3	1	**205-6388**	1	BOLT (7/16-20X1.75-IN)	
	4	1	**0T-0244**	1	BOLT (7/16-20X1.25-IN)	
Y	5	1	**180-7304**	1	SEAT GP (VINYL)	1188
	6	1	**222-0345**	1	SEAT BELT GP (RETRACTABLE)	

Y-SEPARATE ILLUSTRATION

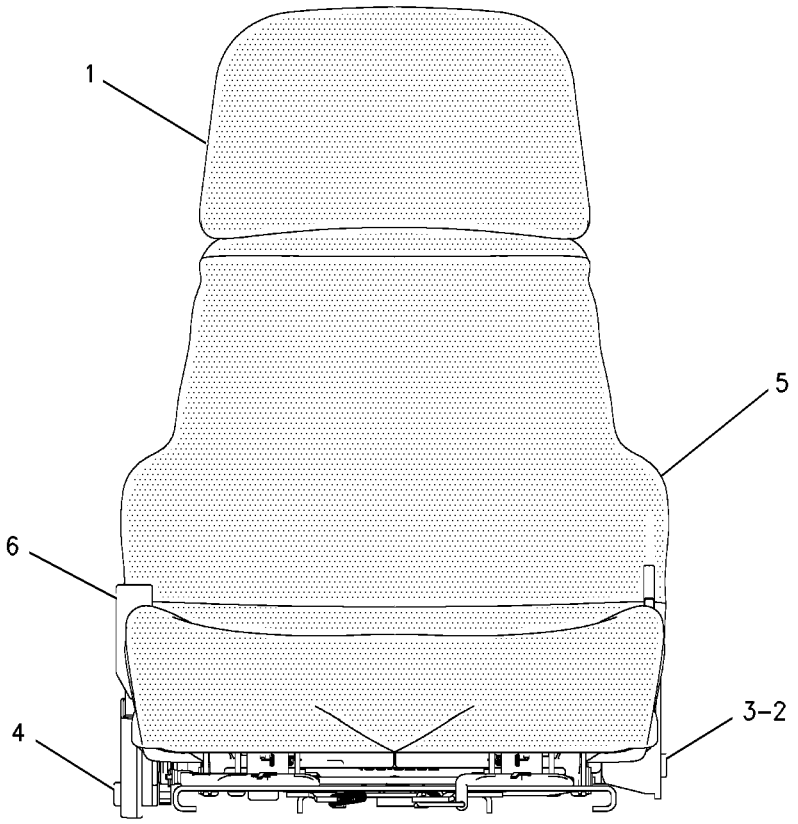

FRONT VIEW

GRAPHIC #1 **<END>** g00683843

OPERATOR STATION

214-1196 SEAT GP—AIR SUSPENSION, CLOTH

S/N: J8B1-UP

AN ATTACHMENT

SMCS-7312 **i02954238**

NOTE	REF NO	GRAPHIC REF	PART NUMBER	QTY	PART NAME 1 2 3 4 5 6 (PRODUCT LEVEL)	SEE PAGE
Y	1	1	**200-3174**	1	SEAT GP-SUSPENSION (CLOTH, AIR)	1196
	2	1	**9V-2818**	1	GROMMET	

Y-SEPARATE ILLUSTRATION

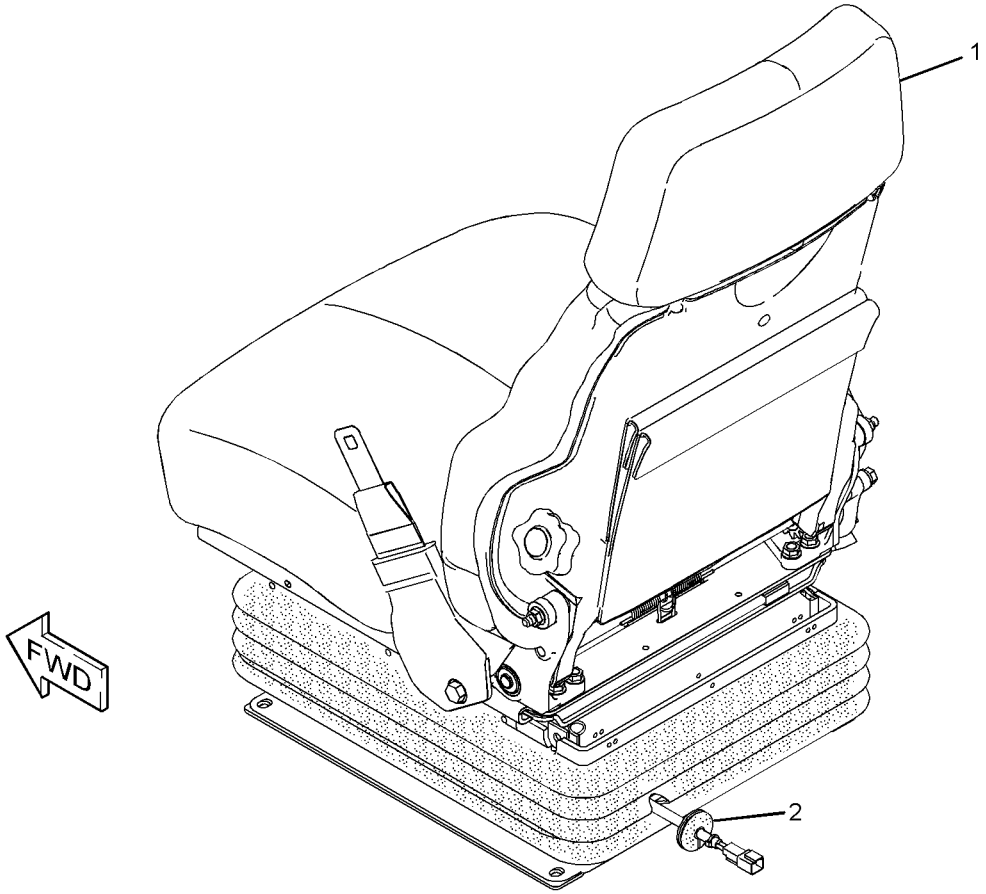

GRAPHIC #1 **<END>** g01391305

OPERATOR STATION

159-2950 SEAT GP-SUSPENSION—VINYL

S/N: J8B1-UP

PART OF 237-2884 CANOPY AR-OPEN ROPS, 214-1197, 277-2272 SEAT GP-SUSPENSION AN ATTACHMENT

SMCS-7321, 7324, 7336 **i03397666**

NOTE	REF NO	GRAPHIC REF	PART NUMBER	QTY	PART NAME 1 2 3 4 5 6 (PRODUCT LEVEL)	SEE PAGE
Y	1	1	**160-7165**	1	SUSPENSION GP-SEAT	1200
Y	2	1	*184-6011*	1	SEAT GP (VINYL)	1192
JZ	3	1		4	BLOCK-SLIDER	
J	4	1	**4F-4879**	1	BOLT (3/8-16X0.5-IN)	
J	5	1	**203-7703**	2	WASHER-HARD (10.2X22.22X2.38-MM THK)	
J	6	1	**173-5787**	4	SETSCREW (1/4-20-THD)	
					AVAILABLE REPAIR KIT(S):	
J			**173-7035**	1	KIT-SLIDER BLOCK (SUSPENSION SEAT)	

J-KIT MARKED J INCLUDES PART(S) MARKED J
Y-SEPARATE ILLUSTRATION
Z-NOT SERVICED SEPARATELY

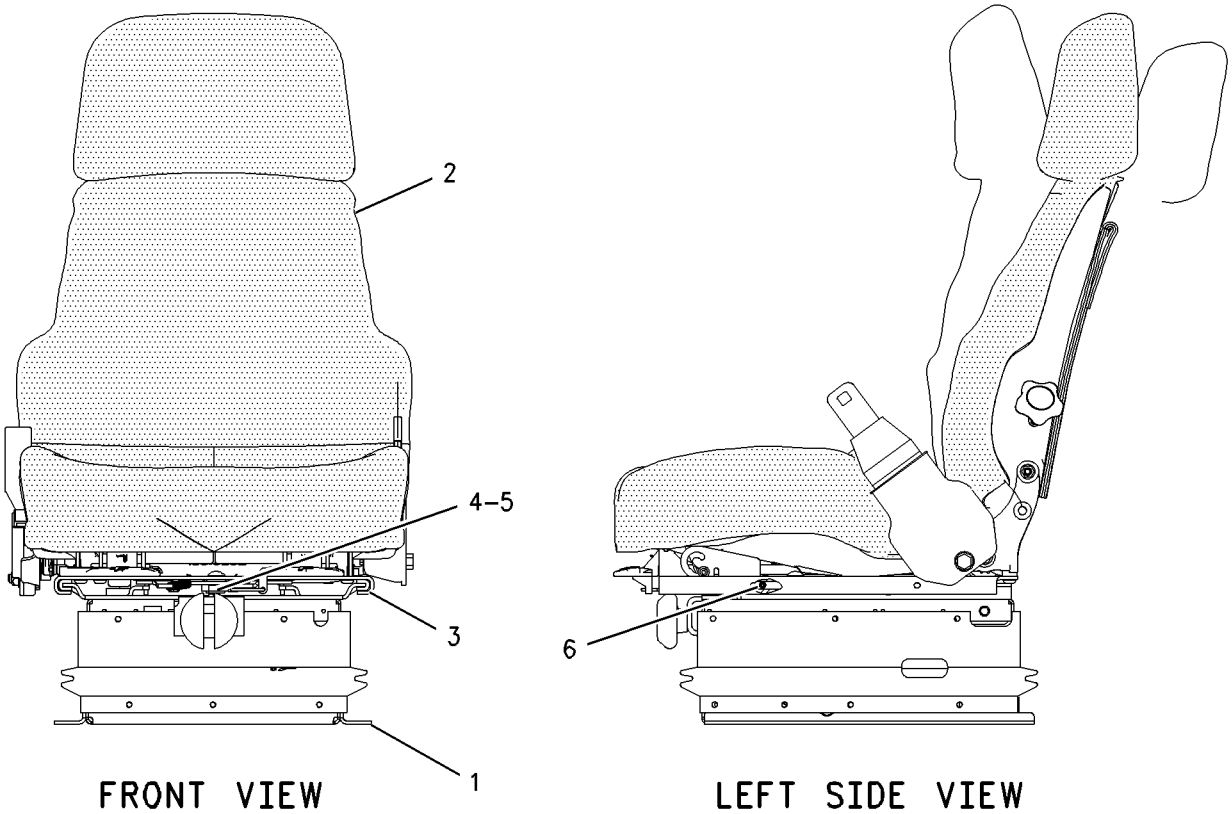

GRAPHIC #1 **<END>** g00819547

160-7186 SEAT GP-SUSPENSION–CLOTH

S/N: J8B1-UP

PART OF 214-1096 SEAT & MOUNTING GP

SMCS-7321, 7324, 7336 **i02946570**

NOTE	REF NO	GRAPHIC REF	PART NUMBER	QTY	PART NAME 1 2 3 4 5 6 (PRODUCT LEVEL)	SEE PAGE
Y	1	1	**160-7165**	1	SUSPENSION GP-SEAT	1200
Y	2	1	**178-0606**	1	SEAT GP (CLOTH)	1187
	3	1	**173-5787**	4	SETSCREW (1/4-20-THD)	
	4	1	**4F-4879**	1	BOLT (3/8-16X0.5-IN)	
		1	**203-7703**	2	WASHER-HARD (10.2X22.22X2.38-MM THK)	
					AVAILABLE REPAIR KIT(S):	
			173-7035	1	KIT-SLIDER BLOCK (SUSPENSION SEAT)	

Y-SEPARATE ILLUSTRATION

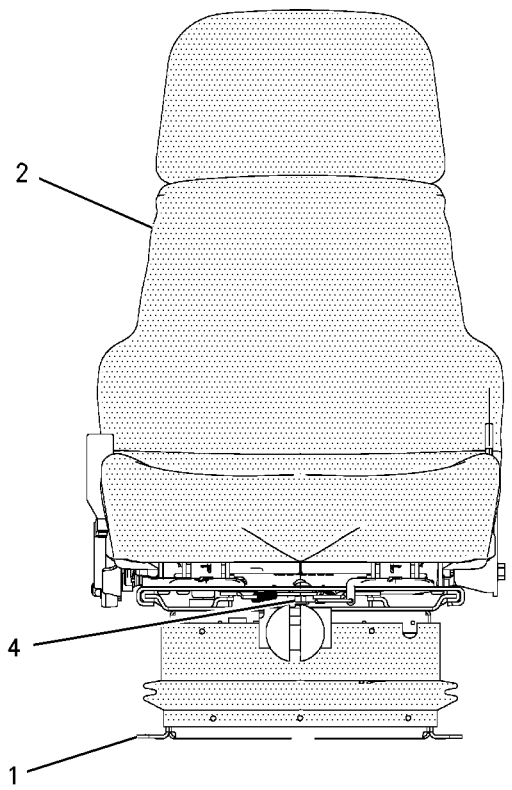

FRONT VIEW

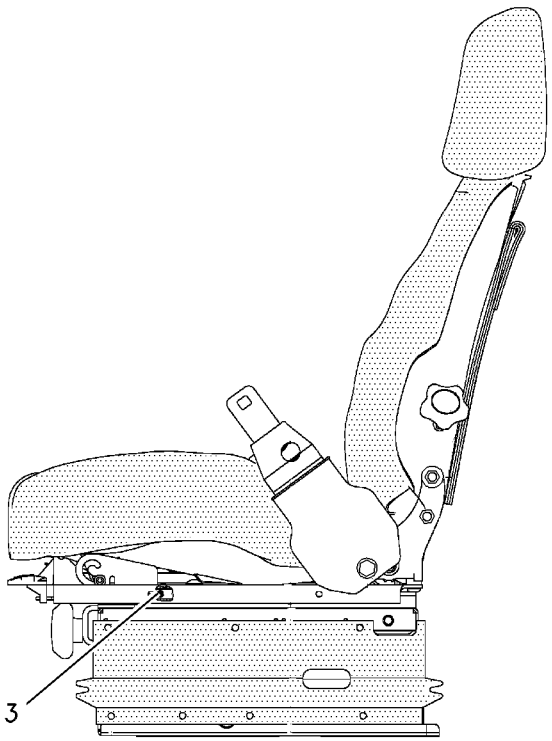

LEFT SIDE VIEW

GRAPHIC #1 **<END>** g00825453

OPERATOR STATION

200-3174 SEAT GP-SUSPENSION—CLOTH, AIR

S/N: J8B1-UP

PART OF 214-1196 SEAT GP, 318-8519 SEAT GP-SUSPENSION

AN ATTACHMENT

SMCS-7321, 7324, 7336 **i02946557**

NOTE	REF NO	GRAPHIC REF	PART NUMBER	QTY	PART NAME 1 2 3 4 5 6 (PRODUCT LEVEL)	SEE PAGE
J	1	1	**161-9289**	4	BLOCK-SLIDER	
J	2	1	**173-5787**	4	SETSCREW (1/4-20-THD)	
Y	3	1	**178-0606**	1	SEAT GP (CLOTH)	1187
Y	4	1	**191-2933**	1	SUSPENSION GP-SEAT (AIR)	1202
J	5	1	**203-7703**	2	WASHER-HARD (10.2X22.22X2.38-MM THK)	
J	6	1	**4F-4879**	1	BOLT (3/8-16X0.5-IN)	
					AVAILABLE REPAIR KIT(S):	
J			**173-7035**	1	KIT-SLIDER BLOCK (SUSPENSION SEAT)	

J-KIT MARKED J INCLUDES PARTS MARKED J
Y-SEPARATE ILLUSTRATION

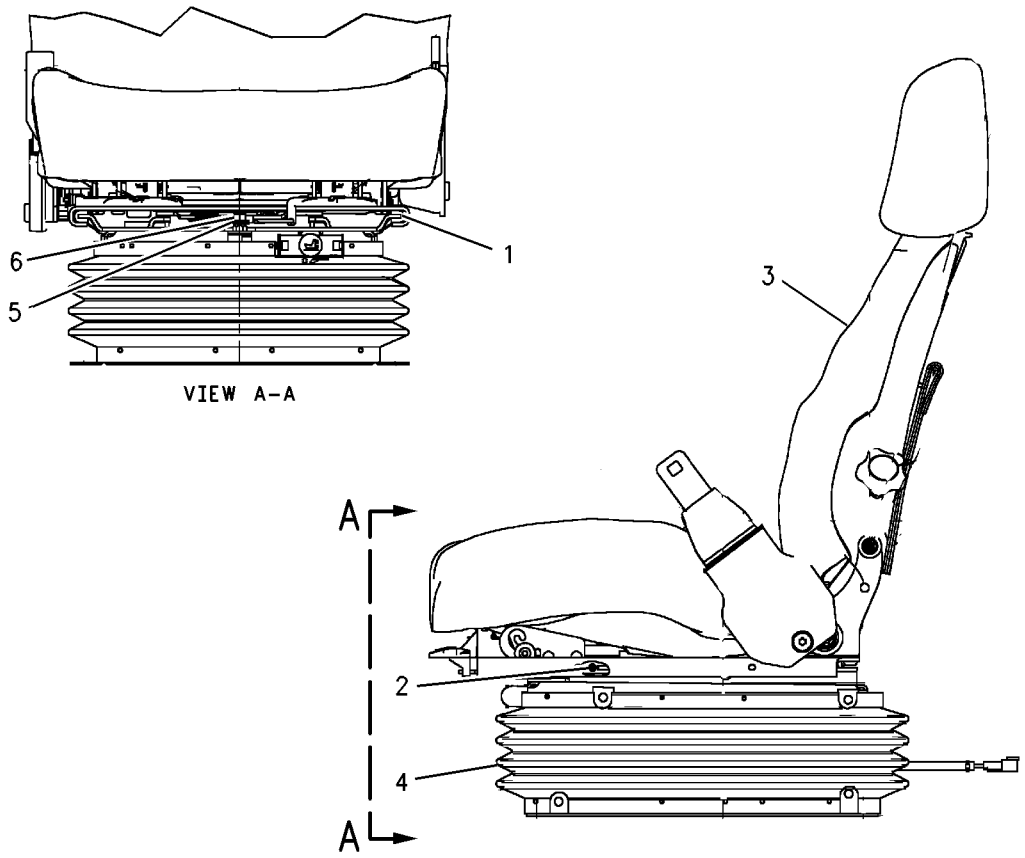

GRAPHIC #1 **<END>** g00933544

OPERATOR STATION

214-1197 SEAT GP-SUSPENSION–VINYL

S/N: J8B1-UP

AN ATTACHMENT

SMCS-7321, 7324, 7336 **i02246066**

NOTE	REF NO	GRAPHIC REF	PART NUMBER	QTY	PART NAME 1 2 3 4 5 6 (PRODUCT LEVEL)	SEE PAGE
Y	1	1	**159-2950**	1	SEAT GP-SUSPENSION	1194

Y-SEPARATE ILLUSTRATION

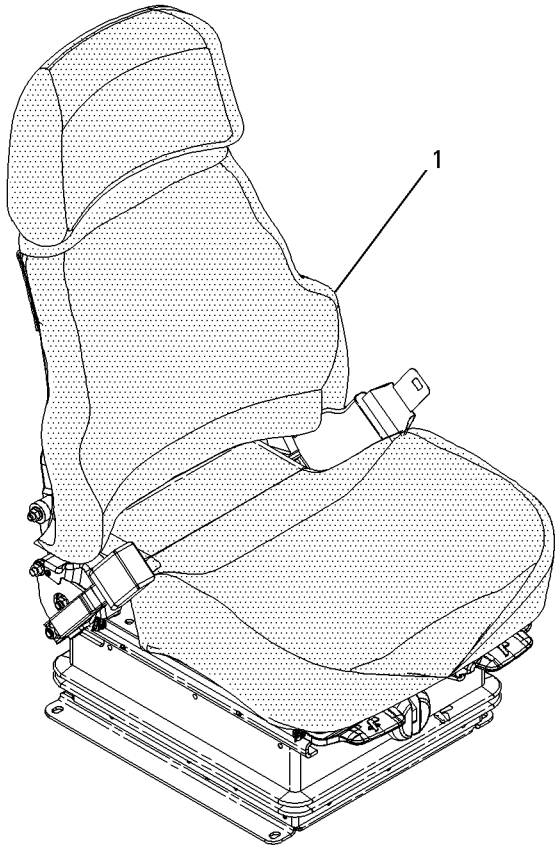

GRAPHIC #1 **<END>** g00695004

OPERATOR STATION

277-2272 SEAT GP-SUSPENSION—VINYL

S/N: J8B576-UP
PART OF 237-2884 CANOPY AR-OPEN ROPS
AN ATTACHMENT

SMCS-7321, 7324, 7336 **i02490541**

NOTE	REF NO	GRAPHIC REF	PART NUMBER	QTY	PART NAME 1 2 3 4 5 6 (PRODUCT LEVEL)	SEE PAGE
Y	1	1	**159-2950**	1	SEAT GP-SUSPENSION	1194
	2	1	**7X-7729**	4	WASHER (11X25X3-MM THK)	
M	3	1	**9X-2125**	4	BOLT-LOCKING (M10X1.5X25-MM)	

M-METRIC PART
Y-SEPARATE ILLUSTRATION

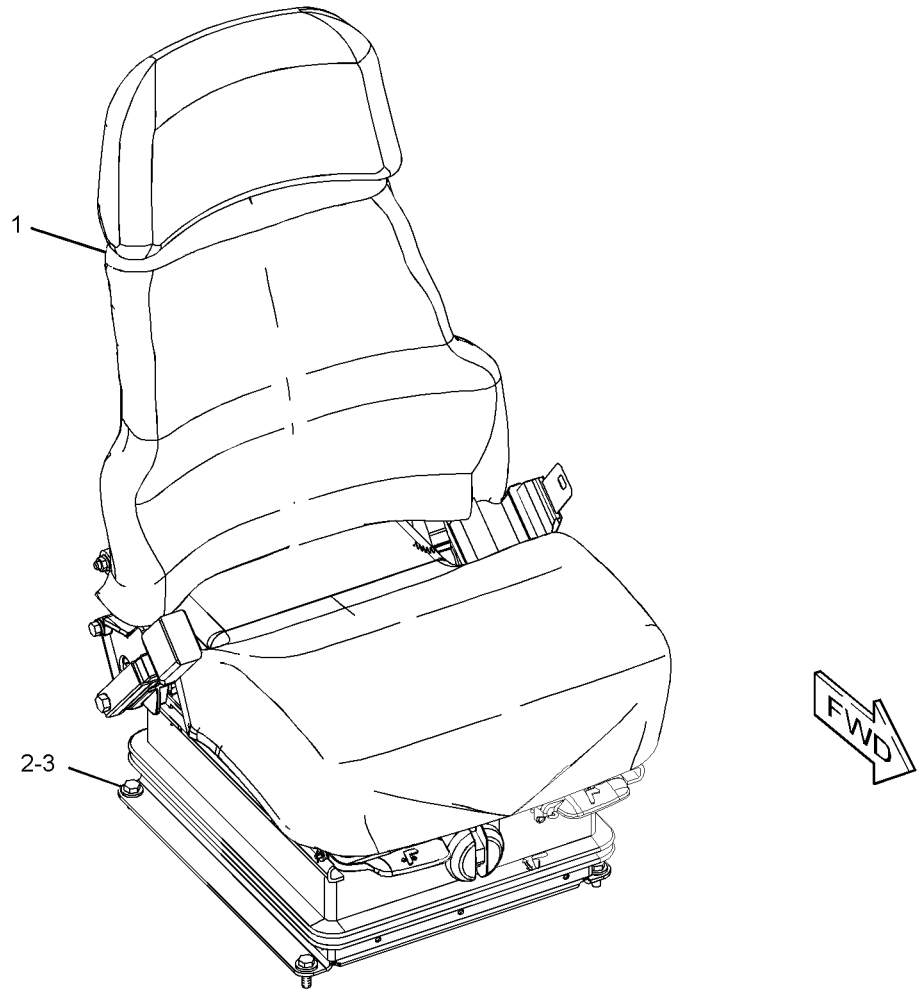

GRAPHIC #1 **<END>** g01315194

OPERATOR STATION

318-8519 SEAT GP-SUSPENSION—CLOTH, AIR

S/N: J8B1-UP

AN ATTACHMENT

SMCS-7321, 7324, 7336 **i02942302**

NOTE	REF NO	GRAPHIC REF	PART NUMBER	QTY	PART NAME 1 2 3 4 5 6 (PRODUCT LEVEL)	SEE PAGE
Y	1	1	**200-3174**	1	SEAT GP-SUSPENSION (CLOTH, AIR)	1196

Y-SEPARATE ILLUSTRATION

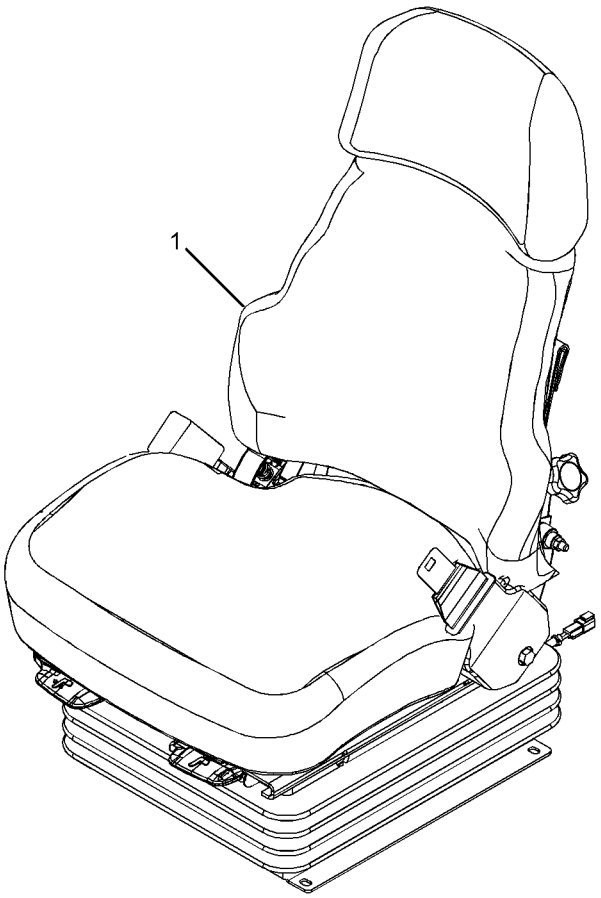

GRAPHIC #1 **<END>** g01422174

OPERATOR STATION

160-7165 SUSPENSION GP-SEAT

S/N: J8B1-UP

PART OF 159-2950, 160-7186 SEAT GP-SUSPENSION

ALSO AN ATTACHMENT

SMCS-7324 **i02964600**

NOTE	REF NO	GRAPHIC REF	PART NUMBER	QTY	PART NAME 1 2 3 4 5 6 (PRODUCT LEVEL)	SEE PAGE
	1	1	**2K-4973**	2	LOCKNUT (3/8-16-THD)	
	2	1	**4V-7884**	2	BEARING	
	3	1	**4V-8577**	4	BEARING	
	4	1	**5V-1497**	1	RETAINER	
	5	1	**8Y-5965**	1	ABSORBER AS-SHOCK	
	6	1	**8Y-6012**	1	ARM AS-SUSPENSION	
	7	1	**8Y-6014**	1	HOUSING AS (LOWER)	
	8	1	**8Y-6024**	2	SHAFT AS	
J	9	1	**101-0003**	20	FASTENER	
J	10	1	**166-6781**	6	FASTENER	
J	11	1	**163-1146**	3	FASTENER	
	12	1	**145-0326**	1	FILM-INSTRUCTION (SEAT ADJUSTMENT)	
	13	1	**169-7380**	1	BOLT-SOCKET HEAD (3/8-16X0.375-IN)	
Y	14	1	**174-2231**	1	HOUSING GP-SEAT SUSPENSION	1099
J	15	1	**197-7689**	3	FASTENER	
					AVAILABLE REPAIR KIT(S):	
J				1	KIT-SUSPENSION BOOT (SEAT)	
					(INCLUDES BOOT, RETAINER & FASTENERS)	
				1	KIT-TETHER BELT (SUSPENSION SEAT)	
					(INCLUDES BELTS)	
				1	KIT-SUSPENSION ROLLER (SUSPENSION SEAT)	
					(INCLUDES ROLLERS)	

J-KIT MARKED J INCLUDES PARTS MARKED J
Y-SEPARATE ILLUSTRATION

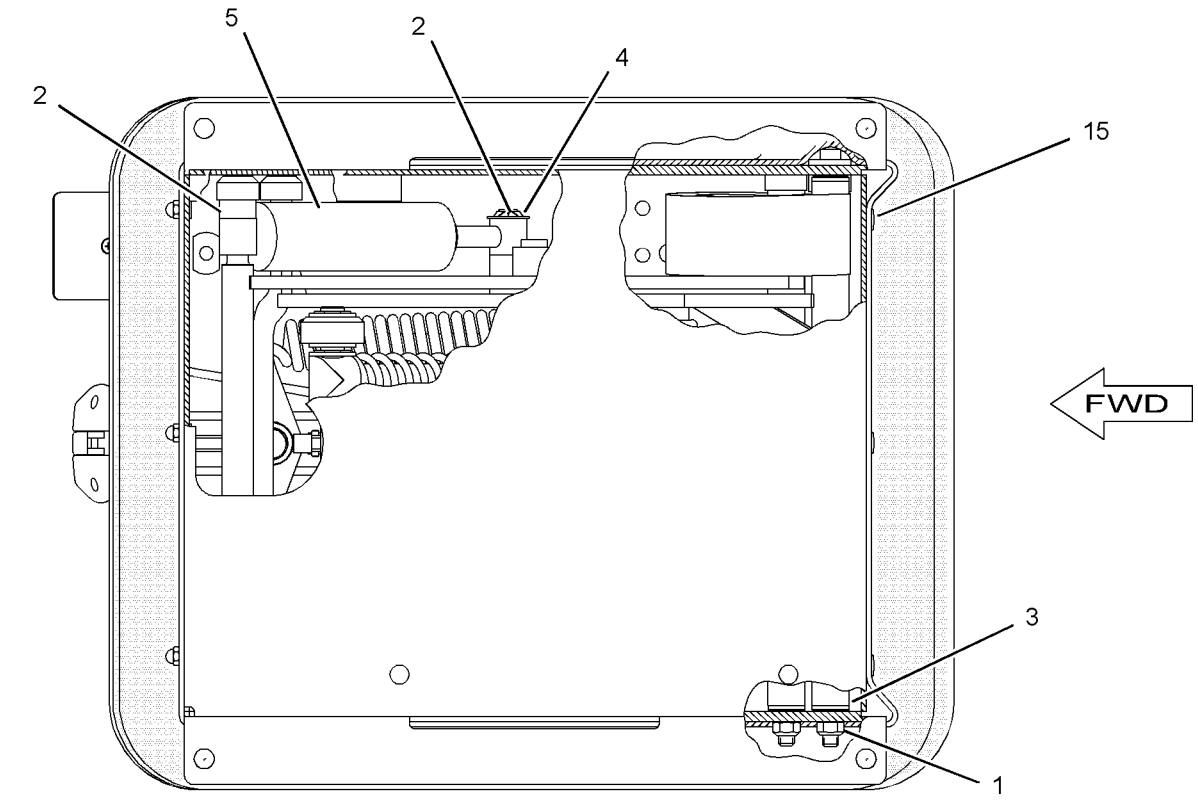

BOTTOM VIEW

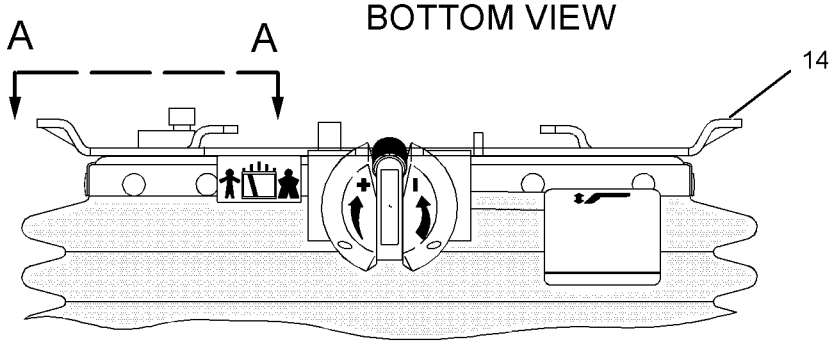

FRONT VIEW

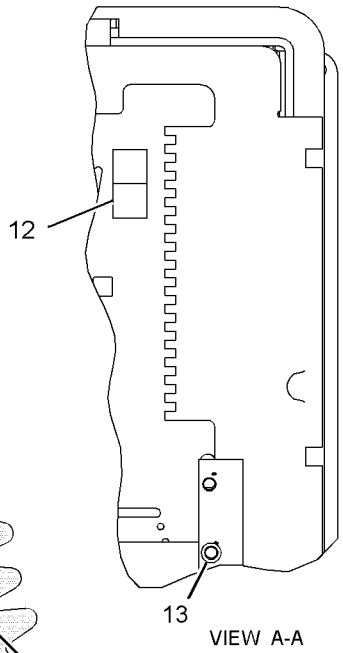

VIEW A-A

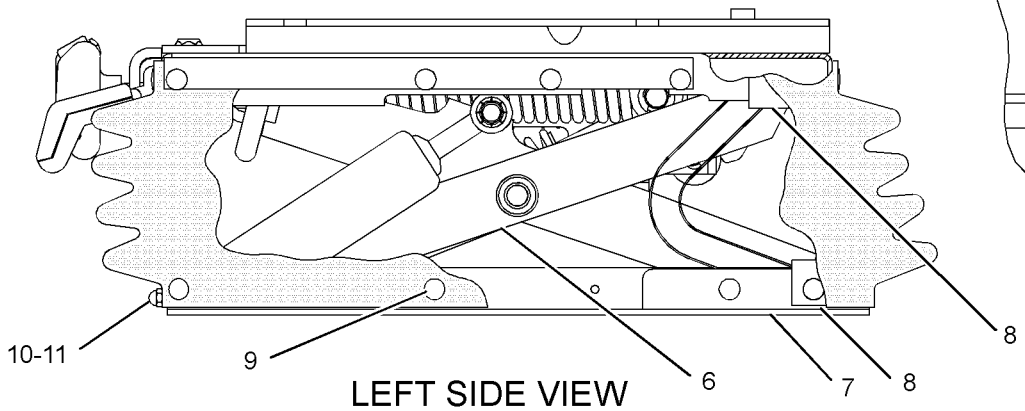

LEFT SIDE VIEW

GRAPHIC #1 **<END>** g01486873

OPERATOR STATION

191-2933 SUSPENSION GP-SEAT–AIR

S/N: J8B1-UP
PART OF 200-3174 SEAT GP-SUSPENSION
AN ATTACHMENT

SMCS-7324 **i03176251**

NOTE	REF NO	GRAPHIC REF	PART NUMBER	QTY	PART NAME 1 2 3 4 5 6 (PRODUCT LEVEL)	SEE PAGE
	1	1	**3P-9900**	5	WASHER (10.5X30X3-MM THK)	
	2	1	**4B-4278**	2	WASHER (10.2X20.5X1.6-MM THK)	
	3	1	**4V-8577**	12	BEARING	
	4	1	**8L-8413**	1	STRAP-CABLE	
	5	1	**145-0326**	1	FILM-INSTRUCTION (SEAT ADJUSTMENT)	
	6	1	**164-1234**	1	PLATE	
	7	1	**101-0003**	33	FASTENER	
	8	1	**169-7380**	1	BOLT-SOCKET HEAD (3/8-16X0.375-IN)	
	9	1	**186-5107**	2	SCREW-DRIVE (NO 8X1.25-IN)	
	10	1	**192-7752**	4	SHAFT AS	
	11	1	**192-7755**	1	HOUSING AS (LOWER)	
	12	1	**192-7760**	1	SHAFT	
	13	1	**192-7767**	1	SCISSORS AS	
	14	1	**192-7783**	1	TOGGLE AS (WIDE)	
	15	1	**192-7787**	1	TOGGLE AS (NARROW)	
	16	1	**192-7790**	1	HOUSING AS (UPPER)	
	17	1	**192-7795**	1	BOOT	
	18	1	**192-7805**	1	HARNESS AS-VALVE (SEAT AIR COMPRESSOR)	
	19	1	**192-7810**	1	SPRING AS-AIR	
		1	**5P-4423**	1	ELBOW	
		1	**163-1135**	1	SPRING	
J	20	1	**192-7812**	1	BOLT-SHOULDER (3/8-16X2-IN)	
	21	1	**192-7820**	3	BUMPER	
	22	1	**192-7822**	1	SHAFT	
	23	1	**237-3943**	1	BRACKET	
Y	24	1	**237-3970**	1	AIR COMPRESSOR GP-SEAT	1008
	25	1	**108-4311**	1	SCREW-MACHINE (3/8-16X0.75-IN)	
J	26	1	**2K-4973**	8	LOCKNUT (3/8-16-THD)	
J	27	1	**3J-4818**	1	LOCKWASHER	
M	28	1	**5C-2890**	3	NUT (M6X1-THD)	
	29	1	**8T-9371**	1	BOLT (3/8-16X0.5-IN)	
E	30	1	**211-5358**		CONDUIT-FLEXIBLE (36-CM)	
E	30A	1	**211-5358**		CONDUIT-FLEXIBLE (27-CM)	
D	31	1	**5P-6010**		TUBE (0.4-M)	
D	31A	1	**5P-6010**		TUBE (0.3-M)	
					AVAILABLE REPAIR KIT(S):	
			192-7799	1	KIT-AIR VALVE (SUSPENSION SEAT)	
					(INCLUDES KNOB AS, NUT, VALVE, LOCKWASHER & FITTING)	
J			**192-7848**	1	KIT-SHOCK ABSORBER (SUSPENSION SEAT)	
					(ALSO INCLUDES SHOCK ABSORBER, BEARINGS, WASHERS & BOLT)	
			211-9294	1	KIT-TETHER (SUSPENSION SEAT)	
					(INCLUDES TETHERS)	

D-ORDER BY THE METER
E-ORDER BY THE CENTIMETER
J-KIT MARKED J SERVICES PARTS MARKED J
M-METRIC PART
Y-SEPARATE ILLUSTRATION

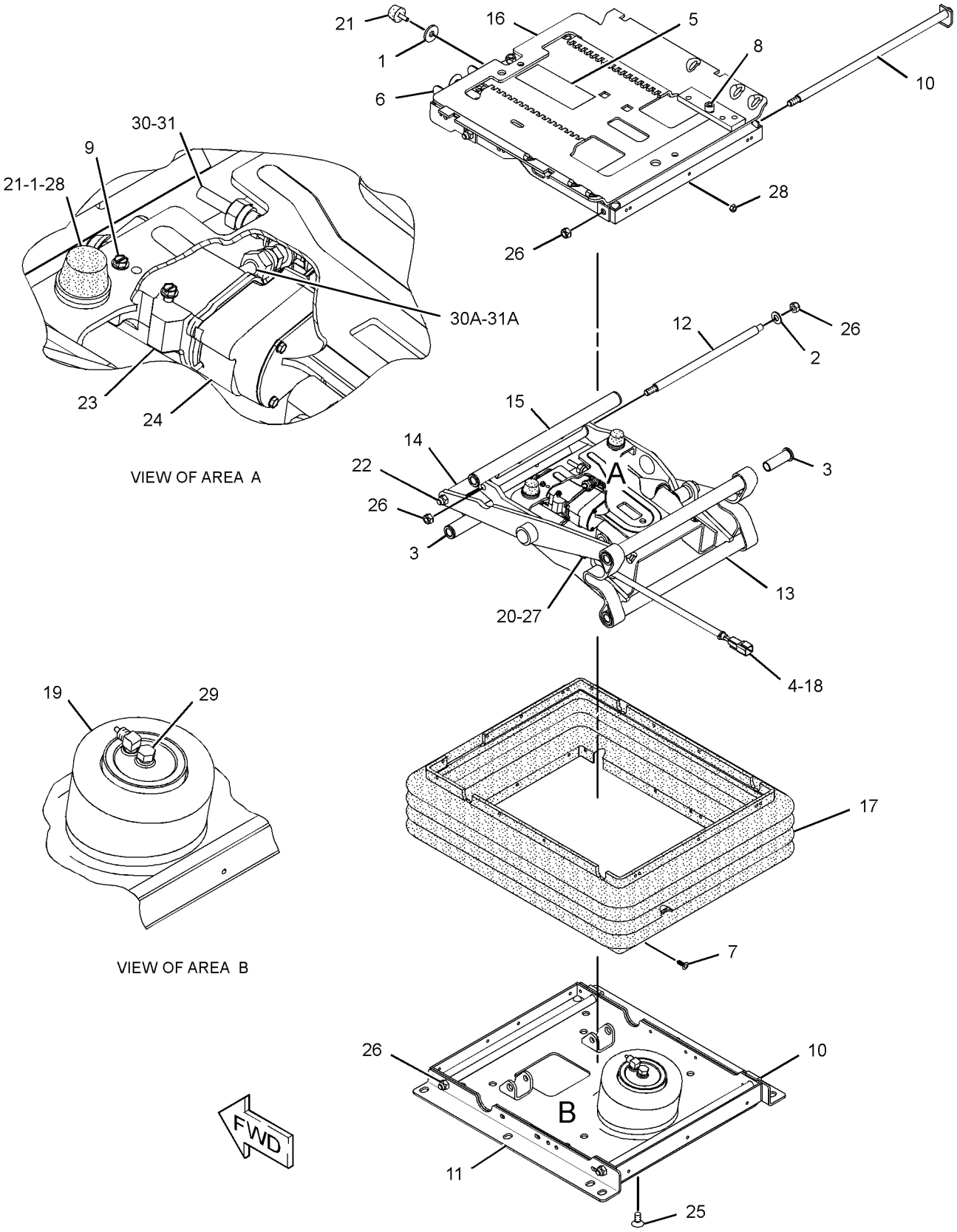

GRAPHIC #1 **<END>** g01598864

OPERATOR STATION

228-4981 TANK GP-WINDOW WASHER

S/N: J8B1-UP

PART OF 208-9607 CAB AR

SMCS-7306 **i03030262**

NOTE	REF NO	GRAPHIC REF	PART NUMBER	QTY	PART NAME 1 2 3 4 5 6 (PRODUCT LEVEL)	SEE PAGE
	1	1	**3S-2093**	1	STRAP-CABLE	
Y	2	1	**228-6535**	1	TANK GP-WINDOW WASHER	1205
	3	1	**5P-4115**	4	WASHER-HARD (7.2X19X2-MM THK)	
M	4	1	**6V-7357**	4	BOLT (M6X1X25-MM)	
	5	1	**9X-6772**	1	STRAP-CABLE	

M-METRIC PART
Y-SEPARATE ILLUSTRATION

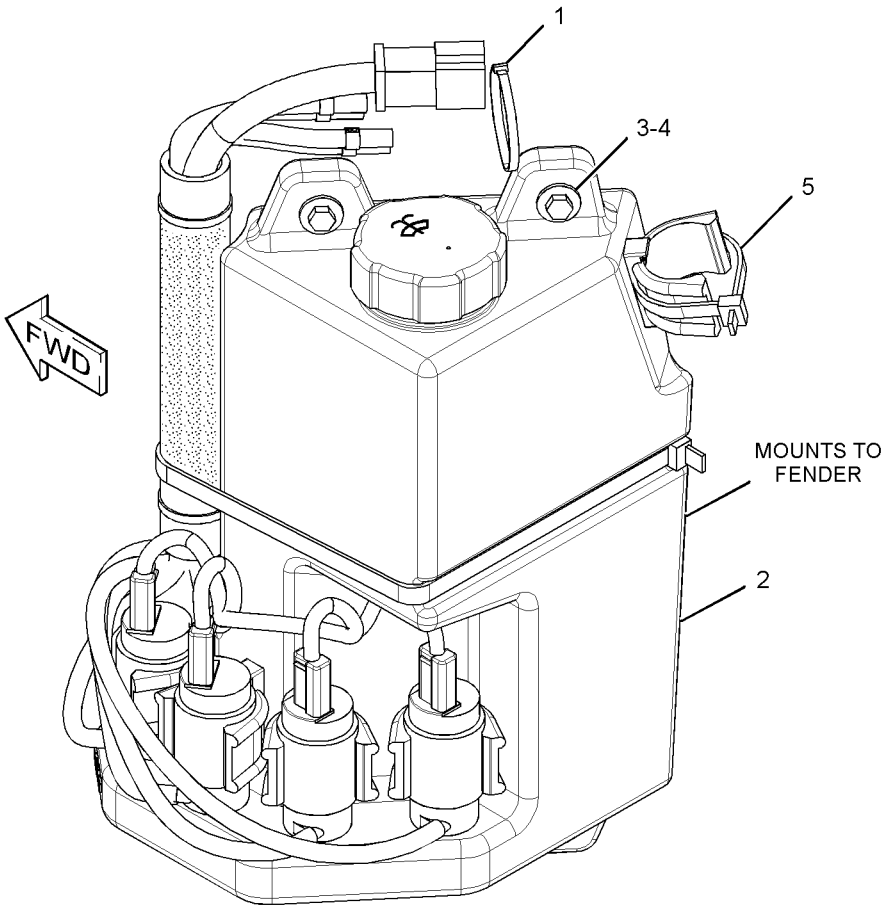

GRAPHIC #1 **<END>** g01475059

OPERATOR STATION

228-6535 TANK GP-WINDOW WASHER

S/N: J8B1-UP

PART OF 228-4981 TANK GP-WINDOW WASHER

SMCS-7306 **i02462410**

NOTE	REF NO	GRAPHIC REF	PART NUMBER	QTY	PART NAME 1 2 3 4 5 6 (PRODUCT LEVEL)	SEE PAGE
	1	1	**3S-2093**	2	STRAP-CABLE	
	2	1	**7T-8891**	4	PUMP AS-WASHER	
	3	1	**8E-8292**	1	CAP-VENTED (WASHER FLUID)	
	4	1	**8E-8293**	4	GROMMET	
	5	1	**110-8760**	1	STRAP	
	6	1	**228-1600**	1	TANK	
	7	1	**271-4961**	1	HARNESS AS-PUMP (WINDOW WASHER)	
		1	**102-8805**	1	KIT-RECEPTACLE (6-PIN)	
					(INCLUDES RECEPTACLE AS & WEDGE)	
D	8	1	**6V-5817**		CONDUIT-FLEXIBLE (0.2-M)	
E	9	1	**144-0195**		HOSE (47-CM)	
E	9A	1	**144-0195**		HOSE (46-CM)	
E	9B	1	**144-0195**		HOSE (49-CM)	
E	9C	1	**144-0195**		HOSE (56-CM)	
B	10	1	**7X-7927**		TAPE-IDENTIFICATION (LETTER A)	
B	11	1	**7X-7928**		TAPE-IDENTIFICATION (LETTER B)	
B	12	1	**7X-7929**		TAPE-IDENTIFICATION (LETTER C)	
B	13	1	**7X-7930**		TAPE-IDENTIFICATION (LETTER D)	

B-USE AS REQUIRED
D-ORDER BY THE METER
E-ORDER BY THE CENTIMETER

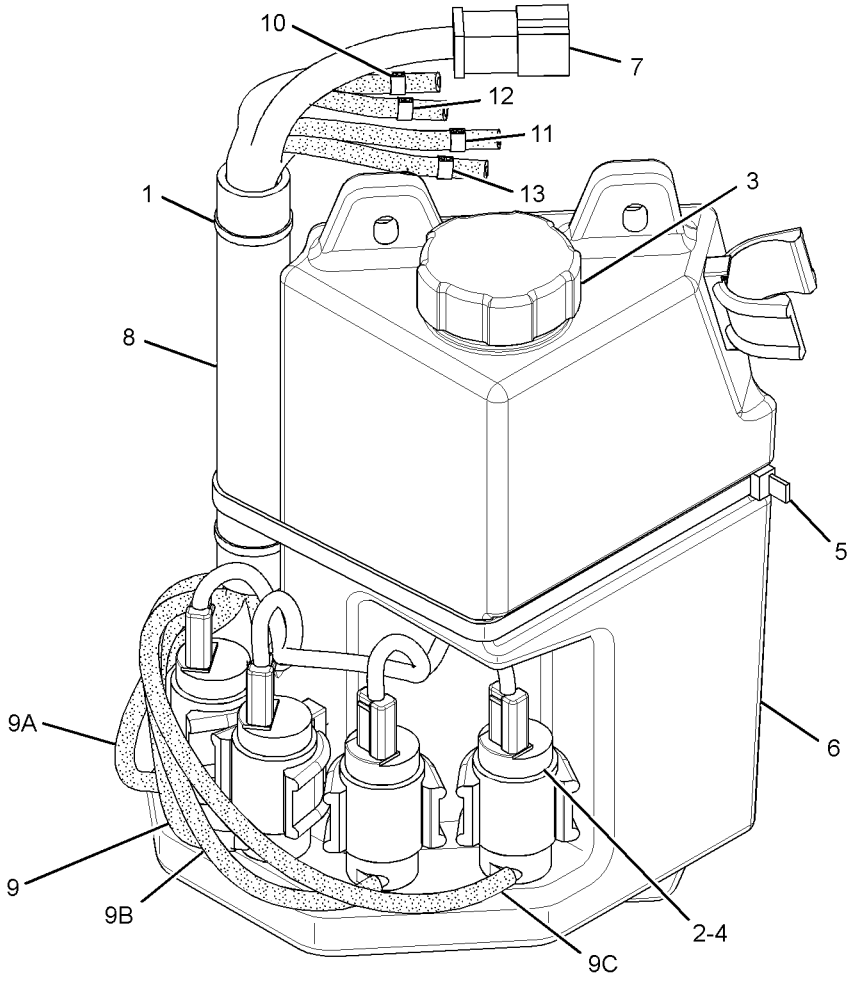

GRAPHIC #1 **<END>** g01306413

OPERATOR STATION

214-1780 WASHER GP-WINDOW

S/N: J8B1-UP
PART OF 213-1100, 286-9188, 295-0710 CAB AR
ALSO AN ATTACHMENT

SMCS-7306 **i02469959**

NOTE	REF NO	GRAPHIC REF	PART NUMBER	QTY	PART NAME 1 2 3 4 5 6 (PRODUCT LEVEL)	SEE PAGE
B	1	1	**3S-2093**	19	STRAP-CABLE	
	2	1	**8T-5400**	6	CONNECTOR AS	
	3	1	**145-7328**	2	ELBOW-HOSE	
	4	1	**204-2581**	4	VALVE AS-CHECK	
	5	1	**6K-9632**	2	TEE	
D	6	1	**6V-5818**		CONDUIT-FLEXIBLE (0.4-M EACH)	
E	7	1	**7X-7702**		CONDUIT-FLEXIBLE (83-CM)	
E	8	1	**144-0195**		HOSE (490-CM)	
E	8A	1	**144-0195**		HOSE (390-CM)	
E	8B	1	**144-0195**		HOSE (3-CM EACH)	
E	8C	1	**144-0195**		HOSE (5-CM EACH)	
E	8D	1	**144-0195**		HOSE (40-CM EACH)	
E	8E	1	**144-0195**		HOSE (345-CM)	
E	8F	1	**144-0195**		HOSE (310-CM)	
B	9	1	**7X-7927**		TAPE-IDENTIFICATION (LETTER A)	
B	10	1	**7X-7928**		TAPE-IDENTIFICATION (LETTER B)	
B	11	1	**7X-7929**		TAPE-IDENTIFICATION (LETTER C)	
B	12	1	**7X-7930**		TAPE-IDENTIFICATION (LETTER D)	

B-USE AS REQUIRED
D-ORDER BY THE METER
E-ORDER BY THE CENTIMETER

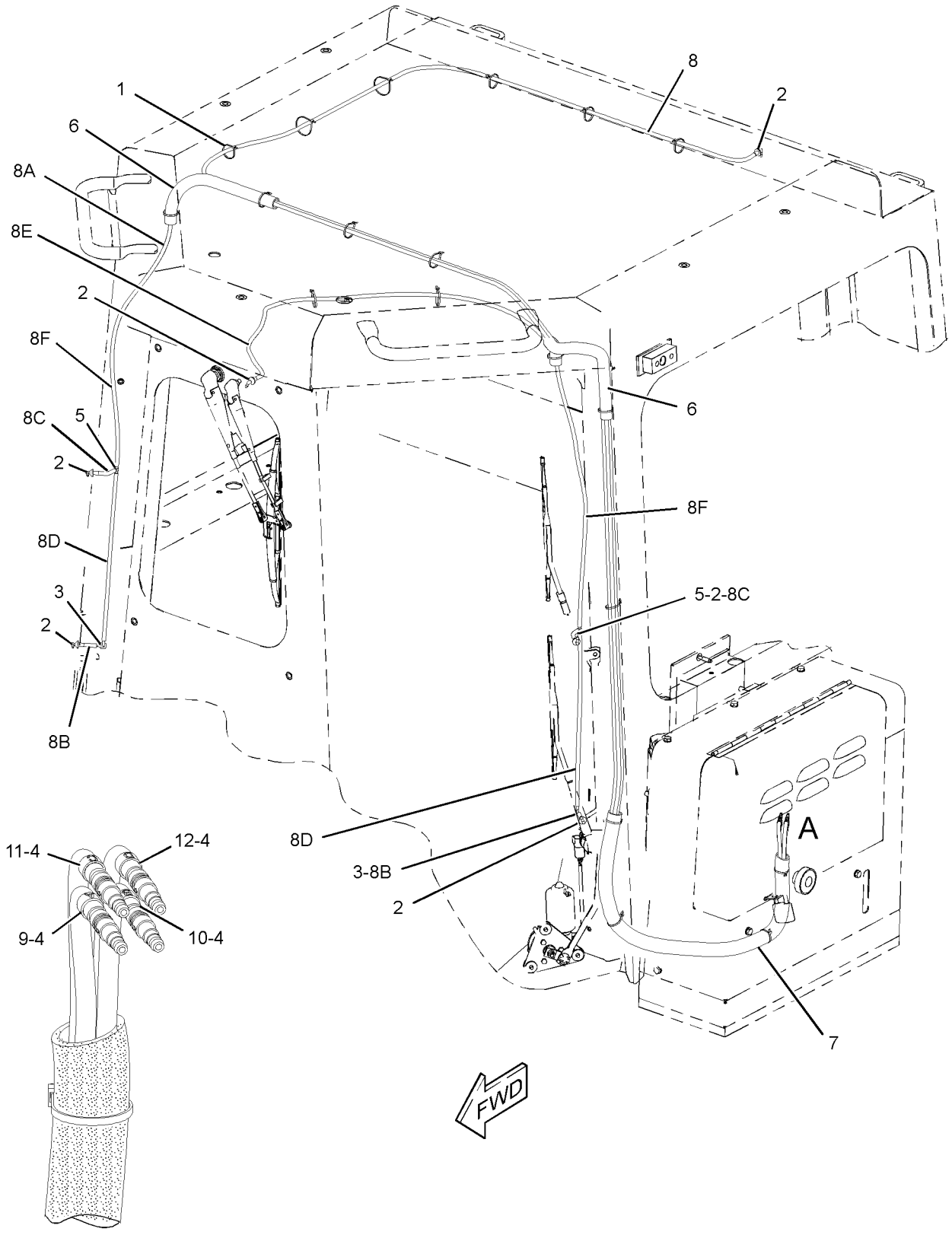

VIEW OF AREA A

GRAPHIC #1 **<END>** g01249872

OPERATOR STATION

244-1735 WINDOW GP-CAB

S/N: J8B1-UP
40-PSI GLASS
FIELD INSTALLATION

SMCS-7310 **i02810110**

NOTE	REF NO	GRAPHIC REF	PART NUMBER	QTY	PART NAME 1 2 3 4 5 6 (PRODUCT LEVEL)	SEE PAGE
	1	1	**222-2824**	1	GLASS-FRONT	
	2	1	**222-2825**	2	GLASS-CAB (DOOR)	
	3	1	**222-2828**	1	GLASS-REAR	
	4	1	**280-2751**	2	GLASS (SIDE)	
	5	1	**280-2752**	1	FRAME-RH	
	6	1	**280-2753**	1	FRAME-LH	

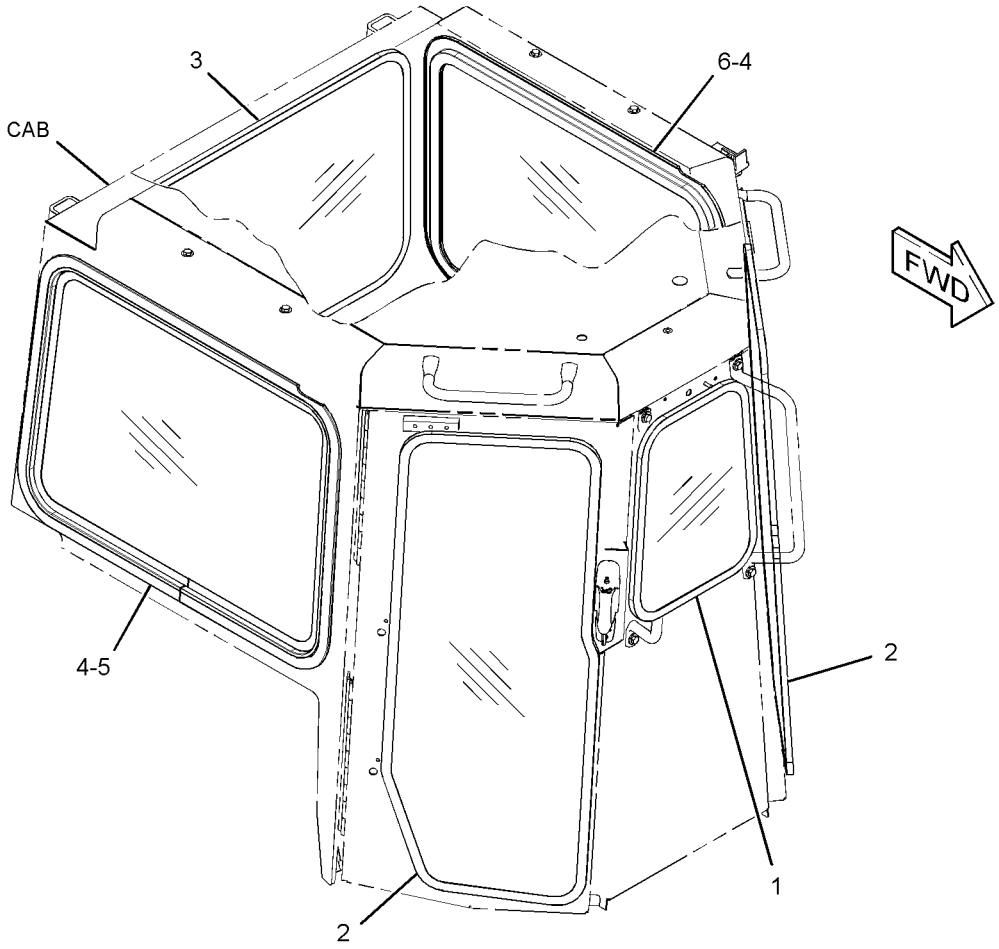

GRAPHIC #1 **<END>** g01402074

OPERATOR STATION

247-8271 WINDOW GP-CAB

S/N: J8B1-UP
40-PSI GLASS
PART OF 295-0710 CAB AR
AN ATTACHMENT

SMCS-7310 **i03210888**

NOTE	REF NO	GRAPHIC REF	PART NUMBER	QTY	PART NAME 1 2 3 4 5 6 (PRODUCT LEVEL)	SEE PAGE
	1	2	**3H-6660**	4	PIN-SPRING	
	2	2	**5M-8500**	2	KNOB	
	3	1	**6V-8928**	1	HOOK-COAT	
	4	2	**6Y-3732**	1	BRACKET	
	5	2	**8C-3442**	2	SPRING-COIL	
	6	2	**8E-2685**	1	BRACKET	
	7	2	**8E-5922**	2	LATCH	
	8	1	**9N-1995**	4	RIVET-POP	
	9	2	**9P-6572**	1	PLUG	
	10	2	**214-1808**	2	HANDHOLD	
B	11	2	**214-9186**	15	BUTTON	
	12	2	**222-2824**	1	GLASS-FRONT	
	13	2	**222-2828**	1	GLASS-REAR	
	14	2	**225-6169**	1	ROD	
	15	2	**225-6170**	1	ROD	
	16	2	**236-1300**	1	CAB AS	
	17	1	**239-9961**	2	STRIKER AS	
Y	18	1	*261-3768*	1	BRACKET GP-MOUNTING (FIRST AID KIT)	1012
	19	2	**270-5001**	3	ANGLE	
	20	2	**270-5002**	3	ANGLE	
	21	2	**280-2751**	2	GLASS (SIDE)	
	22	2	**280-2752**	1	FRAME-RH	
	23	2	**280-2753**	1	FRAME-LH	
	24	2	**304-0326**	2	CLIP	
	25	1,2	**304-5292**	2	CLIP	
Y	26	2	*304-8557*	1	DOOR GP-CAB (RH)	1088
Y	27	2	*304-8558*	1	DOOR GP-CAB (LH)	1090
B	28	2	**110-7524**	18	BUTTON	
	29	1	**131-5879**	8	WASHER (11X32X3-MM THK)	
M	30	1	**195-0937**	6	INSERT-THREADED (M8X1.25-THD)	
M	31	1	**224-6208**	2	INSERT-THREADED (M10X1.5-THD)	
M	32	1	**3E-4304**	2	INSERT-THREADED (M6X1-THD)	
M	33	1	**3E-8020**	1	SCREW-TRUSS HEAD (M6X1X25-MM)	
	34	2	**3K-6235**	2	SEAL-LIP TYPE	
	35	2	**5P-1076**	9	WASHER-HARD (13.5X30X4-MM THK)	
	36	2	**7X-7729**	4	WASHER (11X25X3-MM THK)	
	37	1	**8E-6856**	1	COVER	
	38	2	**8T-2501**	4	BOLT (3/8-16X2-IN)	
	39	1	**8T-4121**	4	WASHER-HARD (11X21X2.5-MM THK)	
M	40	2	**8T-4139**	4	BOLT (M12X1.75X30-MM)	
M	41	2	**8T-4183**	5	BOLT (M12X1.75X40-MM)	
M	42	1	**8T-4191**	4	BOLT (M10X1.5X16-MM)	
	43	2	**9M-5884**	2	BUMPER	
	44	1	**9R-5616**	1	PLUG	
M	45	1	**9X-2040**	4	SCREW-TRUSS HEAD (M10X1.5X25-MM)	
D	46	2	**5P-5969**		SEAL (0.65-M EACH)	
M	47	1	**6V-3940**	3	BOLT (M8X1.25X25-MM)	
	48	1	**9M-1974**	3	WASHER-HARD (8.8X16X2-MM THK)	

B-USE AS REQUIRED
D-ORDER BY THE METER
M-METRIC PART
Y-SEPARATE ILLUSTRATION

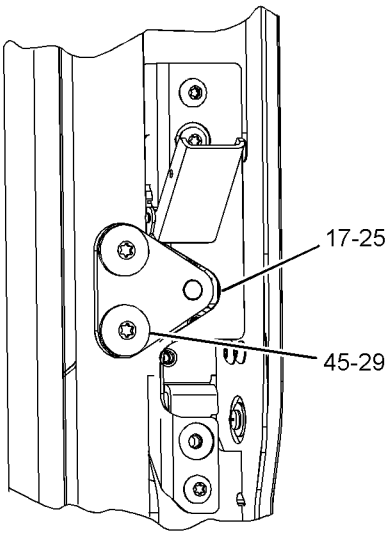

VIEW OF AREA D

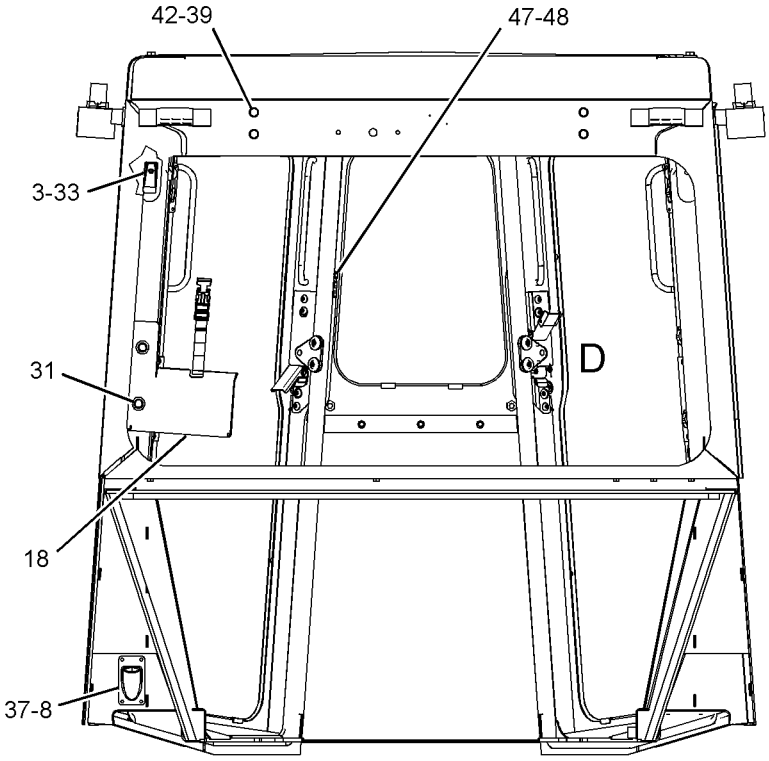

REAR VIEW
(REAR GLASS REMOVED)

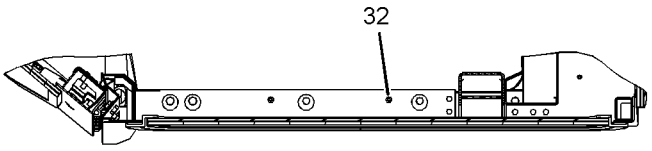

VIEW F-F

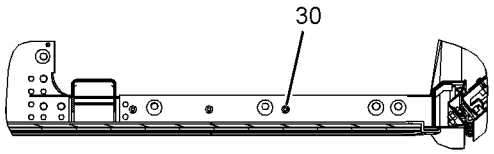

VIEW E-E

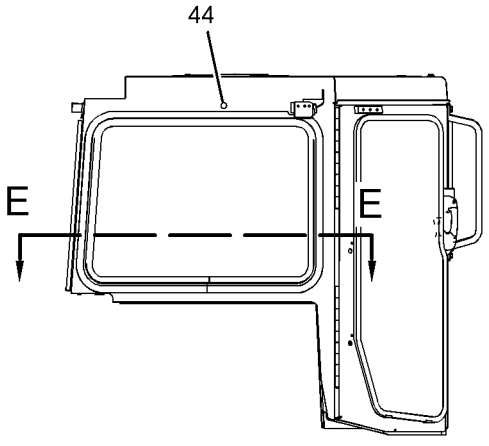

RIGHT SIDE VIEW

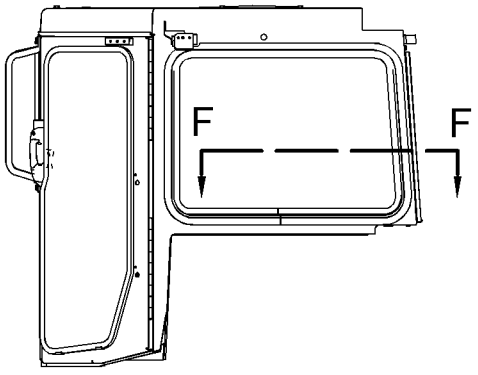

LEFT SIDE VIEW

GRAPHIC #1

g01659093

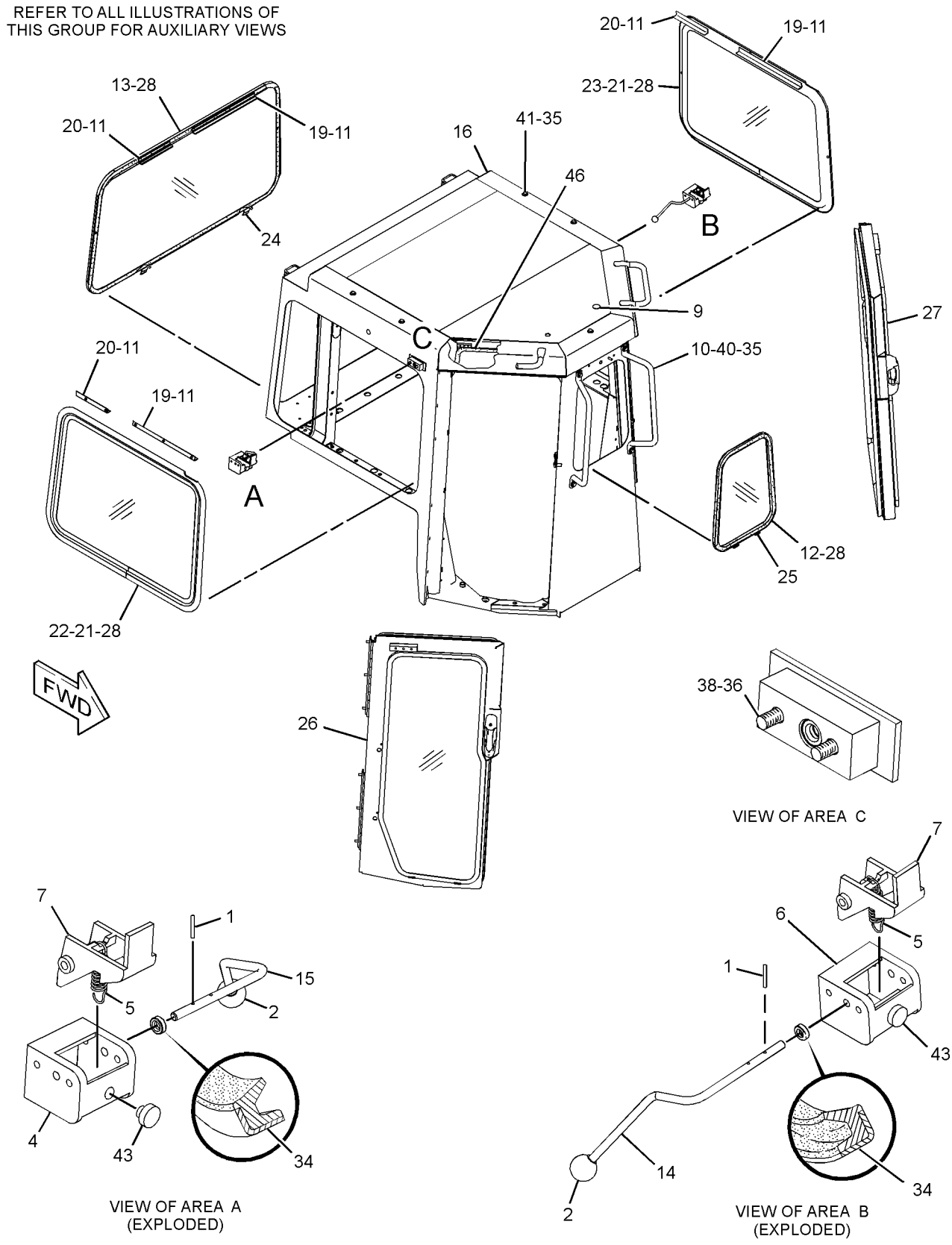

GRAPHIC #2 **<END>** g01660733

OPERATOR STATION

214-7244 WINDOW GP-SLIDING—RH

S/N: J8B1-UP

PART OF 214-1800 CAB GP

SMCS-7310 **i02464985**

NOTE	REF NO	GRAPHIC REF	PART NUMBER	QTY	PART NAME 1 2 3 4 5 6 (PRODUCT LEVEL)	SEE PAGE
	1	1	**271-5039**	1	CATCH	
	2	1	**271-5053**	1	GLASS	
	3	1	**271-5055**	1	GLASS	
	4	1	**271-5041**	1	LOCK AS	
	5	1	**271-5045**	1	LOCK AS	
	6	1	**4V-8046**	1	PLATE	
	7	1	**271-5043**	1	PLATE	
	8	1	**2F-7306**	4	SCREW-MACHINE (6-32X0.25-IN)	
	9	1	**4B-1234**	2	SCREW-MACHINE (10-24X1.25-IN)	
	10	1	**4B-1274**	6	SCREW-MACHINE (10-24X0.625-IN)	
	11	1	**8C-8514**	2	SCREW-MACHINE (8-32X0.375-IN)	
	12	1	**271-5057**	1	KIT-SEAL (WINDOW)	
					(INCLUDES WEATHERSTRIPS, TRIM, VINYLS, & FLOCKED RUBBER)	

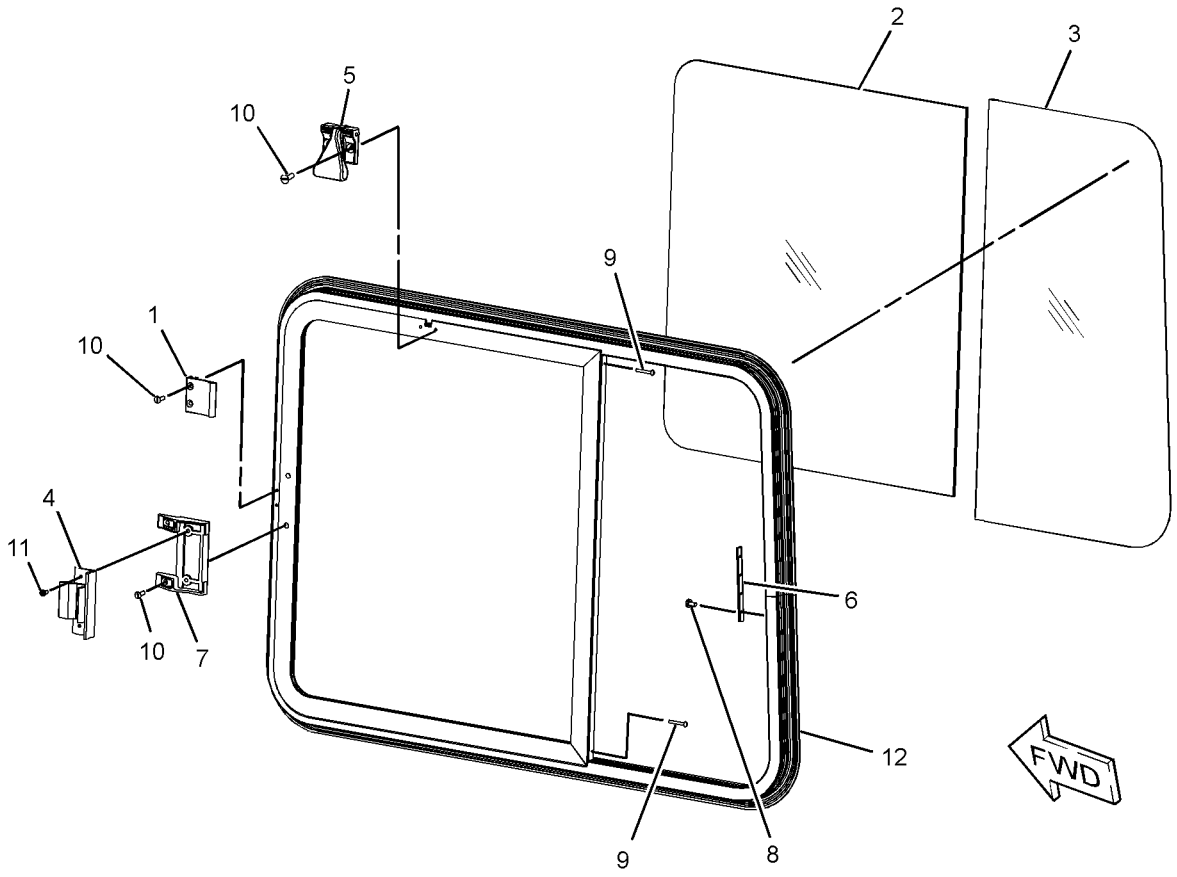

GRAPHIC #1 **<END>** g01318730

OPERATOR STATION

214-7245 WINDOW GP-SLIDING

S/N: J8B1-UP

PART OF 214-1800 CAB GP

SMCS-7310 **i02464990**

NOTE	REF NO	GRAPHIC REF	PART NUMBER	QTY	PART NAME 1 2 3 4 5 6 (PRODUCT LEVEL)	SEE PAGE
	1	1	**271-5039**	1	CATCH	
	2	1	**271-5041**	1	LOCK AS	
	3	1	**271-5043**	1	PLATE	
	4	1	**271-5045**	1	LOCK AS	
	5	1	**271-5053**	1	GLASS	
	6	1	**271-5055**	1	GLASS	
	7	1	**271-5057**	1	KIT-SEAL (WINDOW)	
					(INCLUDES WEATHERSTRIP, TRIM, VINYL, & RUBBER)	
	8	1	**4V-8046**	1	PLATE	
	9	1	**2F-7306**	4	SCREW-MACHINE (6-32X0.25-IN)	
	10	1	**4B-1234**	2	SCREW-MACHINE (10-24X1.25-IN)	
	11	1	**4B-1274**	6	SCREW-MACHINE (10-24X0.625-IN)	
	12	1	**8C-8514**	2	SCREW-MACHINE (8-32X0.375-IN)	

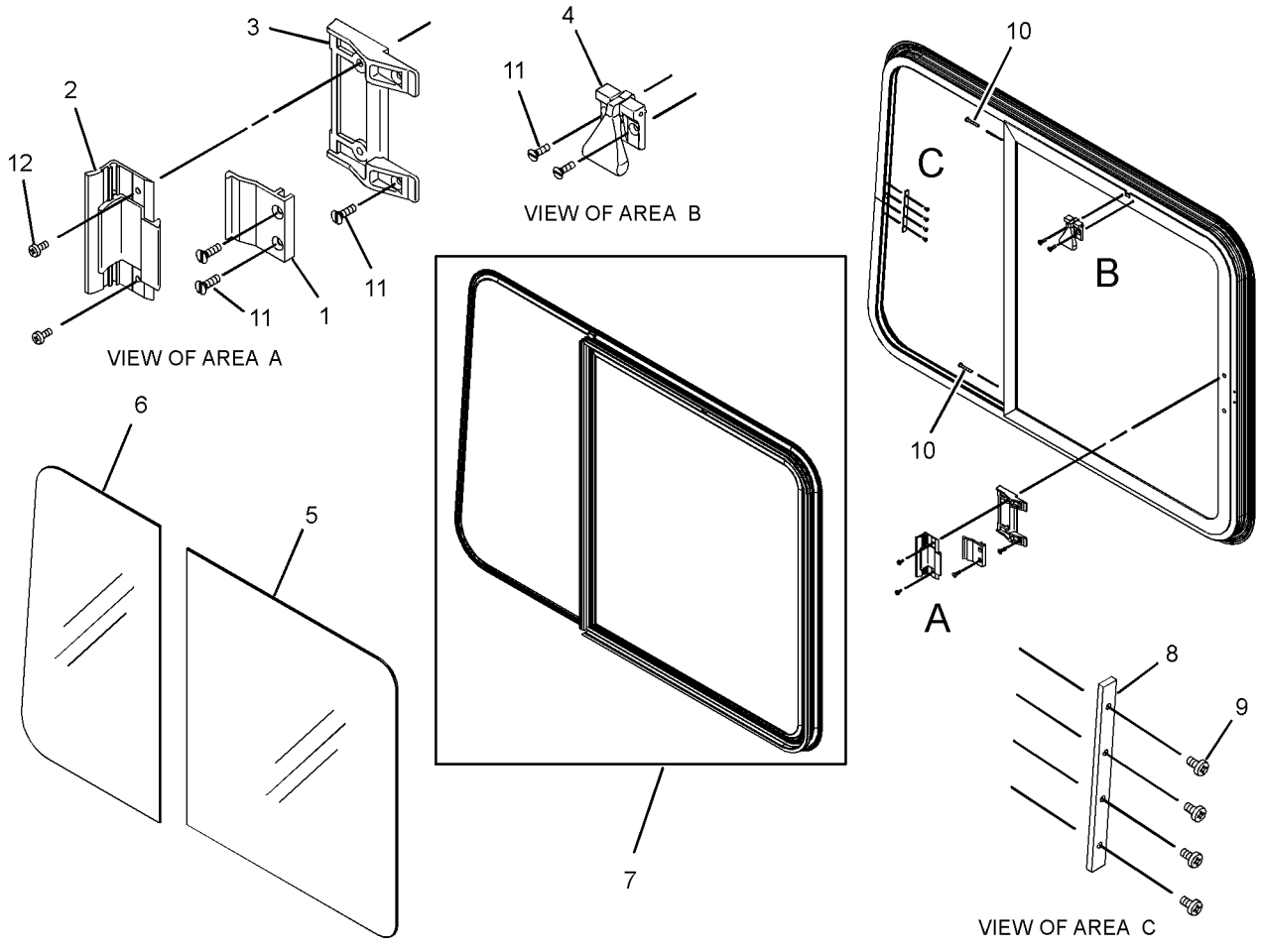

GRAPHIC #1 **<END>** g01234073

OPERATOR STATION

214-7246 WINDOW GP-SLIDING

S/N: J8B1-UP

PART OF 214-1800 CAB GP

SMCS-7310 **i02464993**

NOTE	REF NO	GRAPHIC REF	PART NUMBER	QTY	PART NAME 1 2 3 4 5 6 (PRODUCT LEVEL)	SEE PAGE
	1	1	**271-5039**	1	CATCH	
	2	1	**271-5054**	1	GLASS	
	3	1	**271-5056**	1	GLASS	
	4	1	**271-5041**	1	LOCK AS	
	5	1	**271-5045**	1	LOCK AS	
	6	1	**4V-8046**	1	PLATE	
	7	1	**271-5043**	1	PLATE	
	8	1	**2F-7306**	4	SCREW-MACHINE (6-32X0.25-IN)	
	9	1	**4B-1230**	1	SCREW-MACHINE (10-24X0.625-IN)	
	10	1	**4B-1234**	2	SCREW-MACHINE (10-24X1.25-IN)	
	11	1	**4B-1274**	6	SCREW-MACHINE (10-24X0.625-IN)	
	12	1	**8C-8514**	2	SCREW-MACHINE (8-32X0.375-IN)	
	13	1	**271-5040**	1	STOP	
	14	1	**271-5057**	1	KIT-SEAL (WINDOW)	
					(INCLUDES WEATHERSTRIPS, TRIM, VINYLS, & FLOCKED RUBBER)	

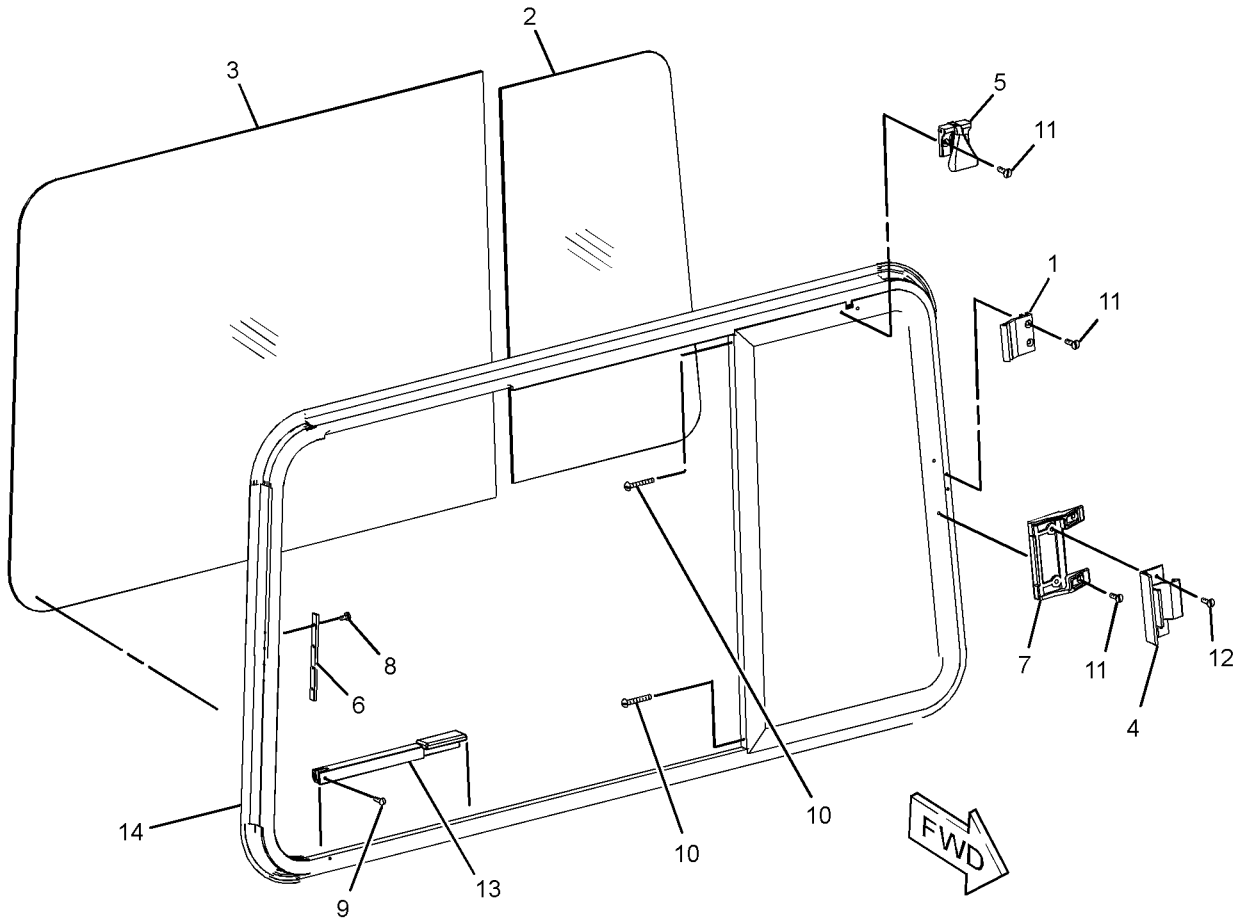

GRAPHIC #1 **<END>** g01319837

OPERATOR STATION

214-1770 WIPER GP-WINDOW

S/N: J8B1-UP

PART OF 213-1100 CAB AR

SMCS-7305 **i02816082**

NOTE	REF NO	GRAPHIC REF	PART NUMBER	QTY	PART NAME 1 2 3 4 5 6 (PRODUCT LEVEL)	SEE PAGE
	1	1	**4N-9915**	6	GROMMET AS	
	2	1	**5C-8811**	1	BLADE AS-WIPER (500-MM) (REAR)	
	3	1	**6V-5851**	1	BLADE AS-WIPER (400-MM) (FRONT)	
	4	1	**6V-6888**	2	WASHER-SPRING	
	5	1	**128-5040**	4	BLADE AS-WIPER (330-MM) (SIDE)	
	6	1	**222-5374**	2	ARM GP-WINDOW WIPER (RH, FRONT)	
					(EACH INCLUDES)	
		1	**305-9194**	1	NOZZLE AS-WASHER	
E		1	**194-5171**		HOSE (33-CM)	
	7	1	**8Y-6343**	1	ARM GP-WINDOW WIPER (REAR)	
		1	**136-3193**	1	NOZZLE AS-WASHER	
	8	1	**146-6346**	1	CLIP	
	9	1	**175-3761**	1	ARM GP-WINDOW WIPER (FRONT, CENTER)	
		1	**136-3189**	3	CLIP	
		1	**136-3191**	1	NOZZLE AS-WASHER	
E		1	**194-5171**		HOSE (50-CM)	
	10	1	**214-1838**	2	PLATE	
	11	1	**222-5369**	2	CRANK AS (WIPER)	
	12	1	**222-5370**	1	LINKAGE AS (BOTTOM, RH)	
	12A	1	**222-5370**	1	LINKAGE AS (BOTTOM, LH)	
	13	1	**222-5371**	1	SHAFT AS (BOTTOM, RH)	
	14	1	**222-5372**	1	SHAFT AS (TOP, RH)	
	14A	1	**222-5372**	1	SHAFT AS (TOP, LH)	
	15	1	**222-5373**	1	LINKAGE AS (TOP, RH)	
	15A	1	**222-5373**	1	LINKAGE AS (TOP, LH)	
	16	1	**135-0611**	1	MOTOR GP-WINDOW WIPER (24-VOLT, 2-SPEED) (RH, FRONT)	
	17	1	**222-5376**	1	MOTOR GP-WINDOW WIPER (24-VOLT, 2-SPEED) (LH, FRONT)	
					(EACH MOTOR GP INCLUDES)	
		1	**186-3735**	5	PIN-CONNECTOR (16-GA TO 18-GA)	
		1	**8T-8737**	1	PLUG-SEAL	
		1	**102-8805**	1	KIT-RECEPTACLE (6-PIN)	
					(INCLUDES RECEPTACLE AS & WEDGE)	
	18	1	**222-5377**	1	SHAFT AS (BOTTOM, LH)	
		1	**3F-9556**	1	LOCKWASHER	
M		1	**5C-7261**	1	NUT (M8X1.25-THD)	
M		1	**6V-6213**	2	NUT (M20X1-THD)	
		1	**206-5823**	1	CAP	
	19	1	**222-5378**	2	ARM GP-WINDOW WIPER (LH, FRONT)	
					(EACH INCLUDES)	
		1	**136-3193**	1	NOZZLE AS-WASHER	
E		1	**194-5171**		HOSE (33-CM)	
	20	1	**222-5379**	1	MOTOR GP-WINDOW WIPER (24-VOLT, 2-SPEED) (CENTER, FRONT)	
	21	1	**222-5382**	1	MOTOR GP-WINDOW WIPER (24-VOLT, 2-SPEED) (REAR)	
					(EACH MOTOR GP INCLUDES)	
		1	**186-3735**	5	PIN-CONNECTOR (16-GA TO 18-GA)	
		1	**8T-8737**	1	PLUG-SEAL	
		1	**3F-9556**	1	LOCKWASHER	
		1	**102-8805**	1	KIT-RECEPTACLE (6-PIN)	
					(INCLUDES RECEPTACLE AS & WEDGE)	
M		1	**5C-7261**	1	NUT (M8X1.25-THD)	
	22	1	**2M-6102**	1	PIPE	
	23	1	**3E-4356**	6	WASHER-HARD (17.5X30X6-MM THK)	
M	24	1	**5C-7261**	2	NUT (M8X1.25-THD)	

214-1770 **WIPER GP-WINDOW** *(contd.)* **i02816082**

NOTE	REF NO	GRAPHIC REF	PART NUMBER	QTY	PART NAME 1 2 3 4 5 6 (PRODUCT LEVEL)	SEE PAGE
M	25	1	**6V-7357**	6	BOLT (M6X1X25-MM)	
	26	1	**6V-7646**	6	WASHER-HARD (7.2X25X2-MM THK)	
M	27	1	**8T-4171**	6	BOLT (M6X1X12-MM)	
	28	1	**9X-2038**	1	WASHER (7X19X2-MM THK)	
M	29	1	**121-9870**	1	SCREW-MACHINE (M6X1X40-MM)	

E-ORDER BY THE CENTIMETER
M-METRIC PART

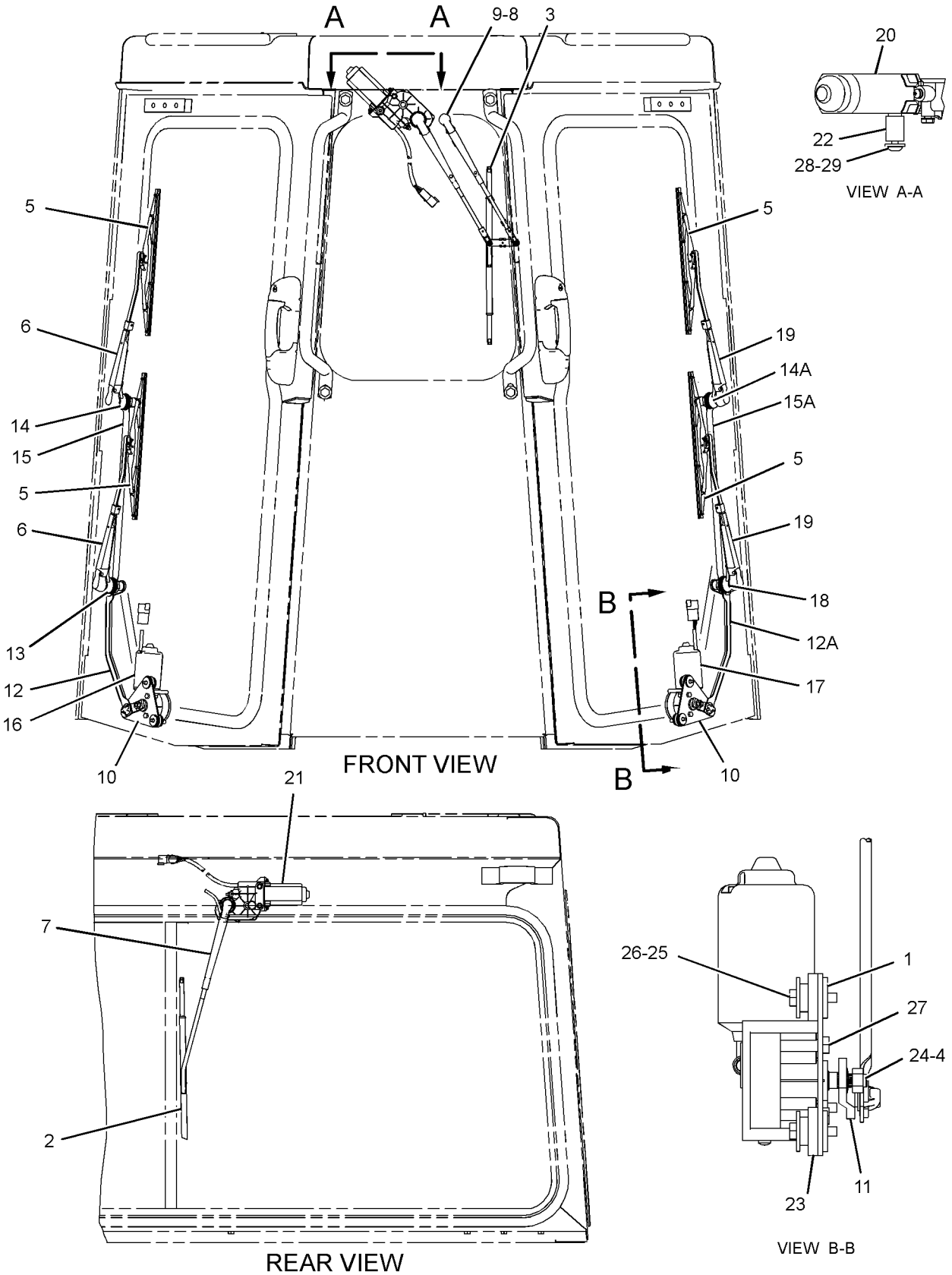

GRAPHIC #1 **<END>** g01178662

OPERATOR STATION

254-9371 WIPER GP-WINDOW

S/N: J8B1-UP
PART OF 286-9188, 295-0710 CAB AR
AN ATTACHMENT

SMCS-7305 **i03210760**

NOTE	REF NO	GRAPHIC REF	PART NUMBER	QTY	PART NAME 1 2 3 4 5 6 (PRODUCT LEVEL)	SEE PAGE
	1	1	**4N-9915**	6	GROMMET AS	
	2	1	**6V-5851**	1	BLADE AS-WIPER (400-MM) (FRONT)	
	3	1	**128-5040**	4	BLADE AS-WIPER (330-MM) (DOOR, RH, LH)	
	4	1	**135-0611**	1	MOTOR GP-WINDOW WIPER (24-VOLT, 2-SPEED) (DOOR, RH)	
		1	**102-8805**	1	KIT-RECEPTACLE (6-PIN)	
					(INCLUDES RECEPTACLE AS & WEDGE)	
		1	**8T-8737**	1	PLUG-SEAL	
		1	**186-3735**	5	PIN-CONNECTOR (16-GA TO 18-GA)	
	5	1	**146-6346**	1	CLIP	
	6	1	**175-3761**	1	ARM GP-WINDOW WIPER (FRONT)	
		1	**136-3189**	3	CLIP	
		1	**136-3191**	1	NOZZLE AS-WASHER	
E		1	**194-5171**		HOSE (50-CM)	
	7	1	**214-1838**	2	PLATE	
	8	1	**222-5369**	2	CRANK AS	
	9	1	**222-5370**	2	LINKAGE AS	
	10	1	**222-5371**	1	SHAFT AS	
	11	1	**222-5372**	2	SHAFT AS	
					(EACH SHAFT AS INCLUDES)	
		1	**3F-9556**	1	LOCKWASHER	
M		1	**5C-7261**	1	NUT (M8X1.25-THD)	
M		1	**6V-6213**	2	NUT (M20X1-THD)	
		1	**206-5823**	1	CAP	
	12	1	**222-5373**	2	LINKAGE AS	
	13	1	**222-5374**	2	ARM GP-WINDOW WIPER (DOOR, RH)	
					(EACH INCLUDES)	
		1	**305-9194**	1	NOZZLE AS-WASHER	
E		1	**194-5171**		HOSE (33-CM)	
	14	1	**222-5376**	1	MOTOR GP-WINDOW WIPER (24-VOLT, 2-SPEED) (DOOR, LH)	
		1	**8T-8737**	1	PLUG-SEAL	
		1	**102-8805**	1	KIT-RECEPTACLE (6-PIN)	
					(INCLUDES RECEPTACLE AS & WEDGE)	
		1	**186-3735**	5	PIN-CONNECTOR (16-GA TO 18-GA)	
	15	1	**222-5377**	1	SHAFT AS	
		1	**3F-9556**	1	LOCKWASHER	
M		1	**5C-7261**	1	NUT (M8X1.25-THD)	
		1	**206-5823**	1	CAP	
M		1	**6V-6213**	2	NUT (M20X1-THD)	
	16	1	**222-5378**	2	ARM GP-WINDOW WIPER (DOOR, LH)	
					(EACH INCLUDES)	
		1	**305-9195**	1	NOZZLE AS-WASHER	
E		1	**194-5171**		HOSE (33-CM)	
	17	1	**222-5379**	1	MOTOR GP-WINDOW WIPER (24-VOLT, 2-SPEED) (FRONT)	
		1	**3F-9556**	1	LOCKWASHER	
M		1	**5C-7261**	1	NUT (M8X1.25-THD)	
		1	**8T-8737**	1	PLUG-SEAL	
		1	**102-8805**	1	KIT-RECEPTACLE (6-PIN)	
					(INCLUDES RECEPTACLE AS & WEDGE)	
		1	**186-3735**	5	PIN-CONNECTOR (16-GA TO 18-GA)	
Y	18	2	*310-5931*	1	WIPER GP-WINDOW (REAR)	1222
M	19	1	**121-9870**	1	SCREW-MACHINE (M6X1X40-MM)	
	20	1	**2M-6102**	1	PIPE	

254-9371 **WIPER GP-WINDOW** *(contd.)* **i03210760**

NOTE	REF NO	GRAPHIC REF	PART NUMBER	QTY	PART NAME 1 2 3 4 5 6 (PRODUCT LEVEL)	SEE PAGE
	21	1	**3E-4356**	6	WASHER-HARD (17.5X30X6-MM THK)	
	22	1	**3F-9556**	1	LOCKWASHER	
M	23	1	**5C-7261**	2	NUT (M8X1.25-THD)	
	24	1	**5P-4115**	1	WASHER-HARD (7.2X19X2-MM THK)	
M	25	1	**6V-7357**	6	BOLT (M6X1X25-MM)	
	26	1	**6V-7646**	6	WASHER-HARD (7.2X25X2-MM THK)	
M	27	1	**8T-4171**	6	BOLT (M6X1X12-MM)	

E-ORDER BY THE CENTIMETER
M-METRIC PART
Y-SEPARATE ILLUSTRATION

REFER TO ALL ILLUSTRATIONS OF THIS GROUP FOR AUXILIARY VIEWS

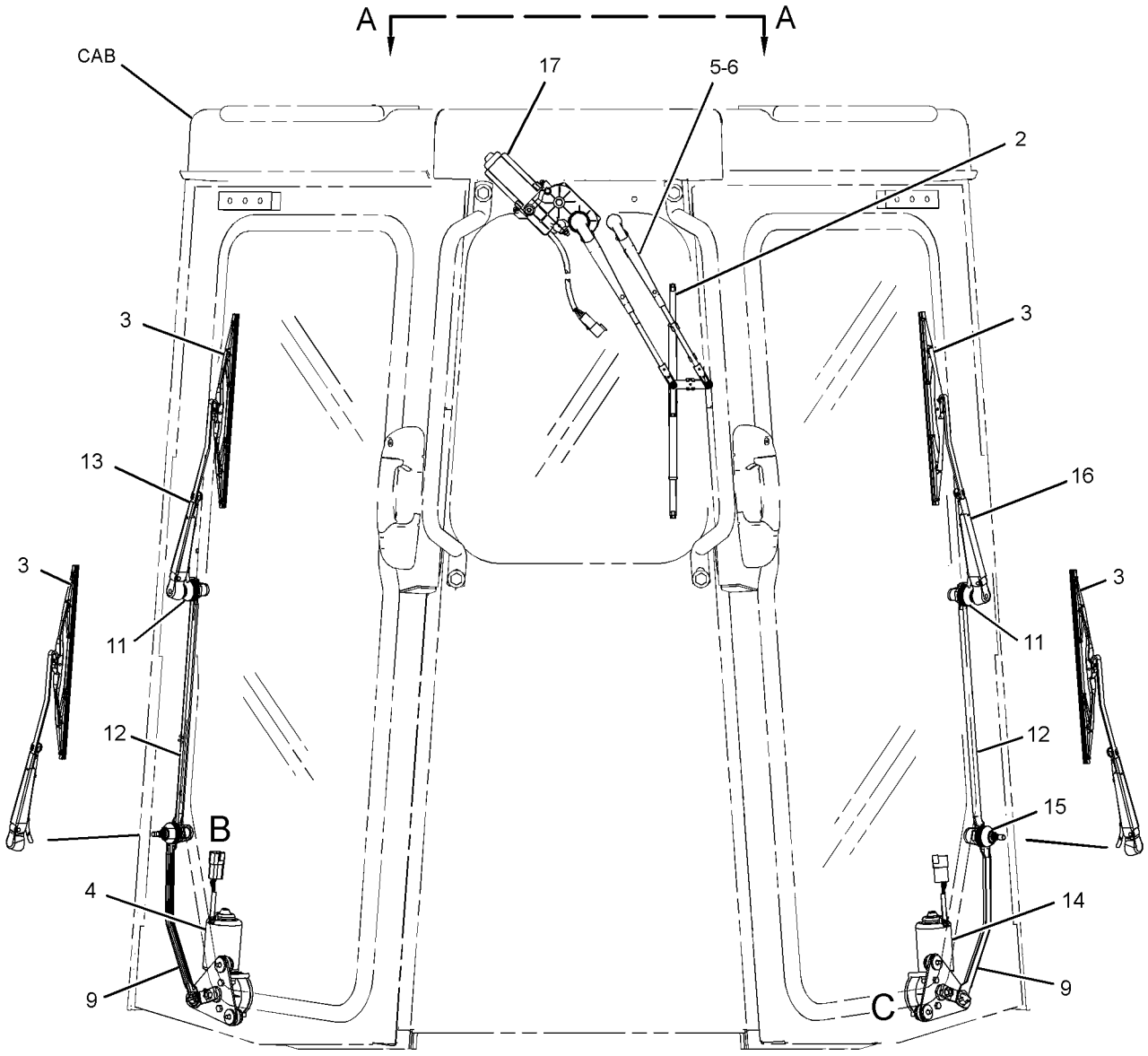

FRONT VIEW

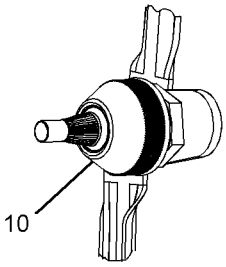

VIEW OF AREA B

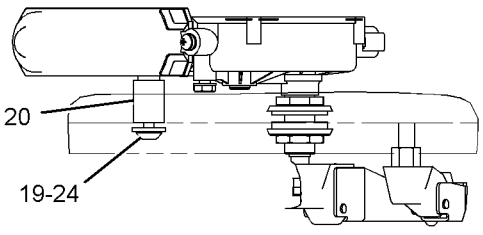

VIEW A-A

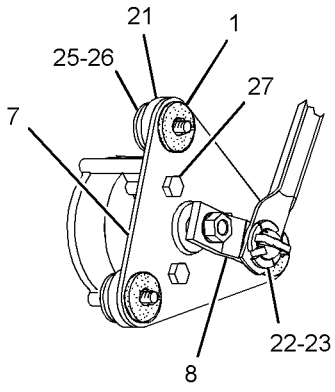

VIEW OF AREA C

GRAPHIC #1

g01398707

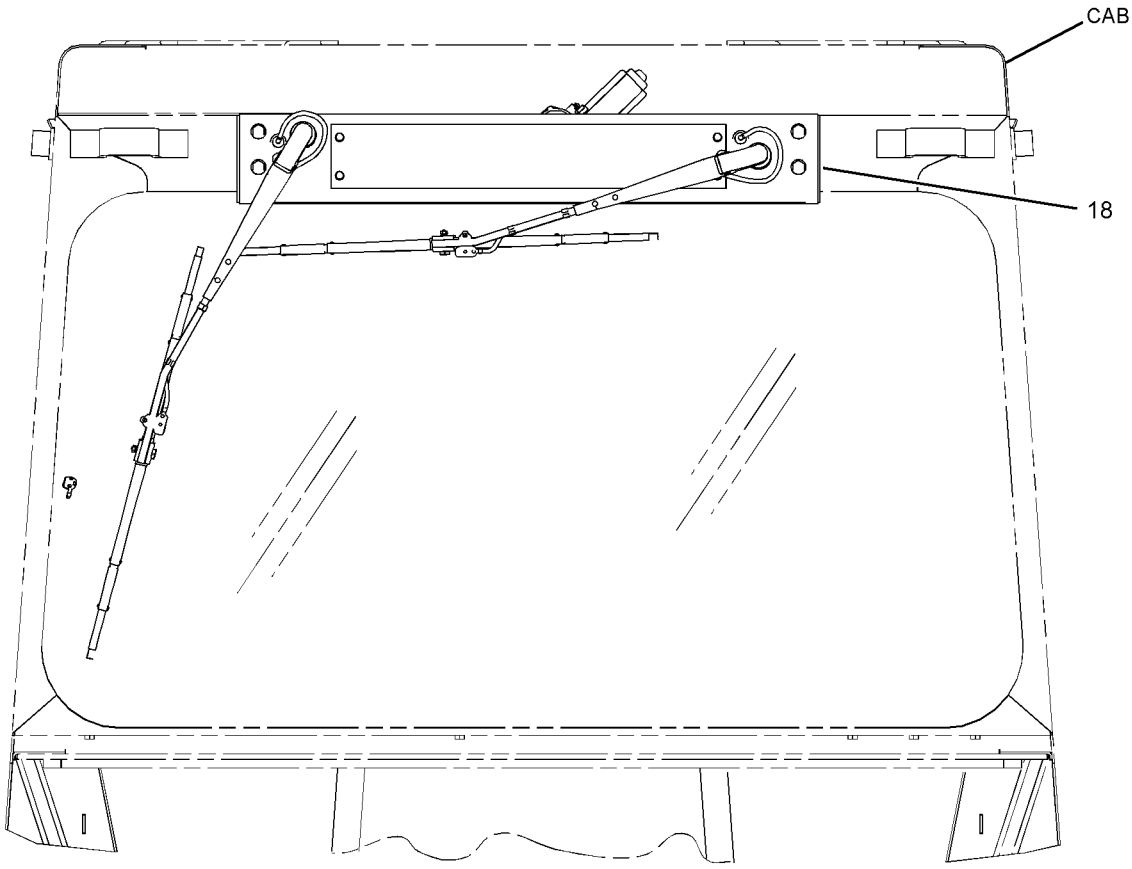

REAR VIEW

GRAPHIC #2 **<END>** g01398708

OPERATOR STATION

310-5931 WIPER GP-WINDOW—REAR

S/N: J8B1-UP

PART OF 313-4095 KIT-WINDOW, 254-9371 WIPER GP-WINDOW

AN ATTACHMENT

SMCS-7305 **i03031861**

NOTE	REF NO	GRAPHIC REF	PART NUMBER	QTY	PART NAME 1 2 3 4 5 6 (PRODUCT LEVEL)	SEE PAGE
	1	1	**3S-2093**	3	STRAP-CABLE	
	2	1	**6V-6864**	2	BLADE AS-WIPER (600-MM) (RH, LH, REAR)	
	3	1	**8T-5400**	2	CONNECTOR AS	
	4	1	**135-0611**	1	MOTOR GP-WINDOW WIPER (24-VOLT, 2-SPEED) (REAR)	
		1	**8T-8737**	1	PLUG-SEAL	
		1	**186-3735**	5	PIN-CONNECTOR (16-GA TO 18-GA)	
		1	**102-8805**	1	KIT-RECEPTACLE (6-PIN)	
					(INCLUDES RECEPTACLE AS & WEDGE)	
	5	1	**144-4107**	1	FASTENER	
Y	6	1	**254-8961**	1	WIPER PIVOT GP (REAR, LH)	1224
Y	7	1	**254-8962**	1	WIPER PIVOT GP (REAR, RH)	1225
	8	1	**254-8974**	1	ARM GP-WINDOW WIPER (REAR, RH)	
		1	**136-3188**	2	CLIP	
		1	**136-3196**	1	NOZZLE AS-WASHER	
E		1	**194-5171**		HOSE (57-CM)	
	9	1	**254-8982**	1	ARM GP-WINDOW WIPER (REAR, LH)	
		1	**136-3188**	2	CLIP	
		1	**136-3196**	1	NOZZLE AS-WASHER	
E		1	**194-5171**		HOSE (58-CM)	
	10	1	**254-8986**	1	HOUSING AS	
	11	1	**3F-9556**	1	LOCKWASHER	
M	12	1	**5C-7261**	1	NUT (M8X1.25-THD)	
	13	1	**6K-9632**	1	TEE	
	14	1	**6V-5839**	4	WASHER (11X21X2.5-MM THK)	
M	15	1	**6V-8836**	3	BOLT (M6X1X14-MM)	
M	16	1	**8T-0644**	4	BOLT (M10X1.5X90-MM)	
	17	1	**9R-4398**	1	BUMPER	
	18	1	**9X-8267**	3	WASHER (6.6X12X2-MM THK)	
E	19	1	**144-0195**		HOSE (13-CM)	
E	19A	1	**144-0195**		HOSE (30-CM)	
E	19B	1	**144-0195**		HOSE (40.5-CM)	

E-ORDER BY THE CENTIMETER
M-METRIC PART
Y-SEPARATE ILLUSTRATION

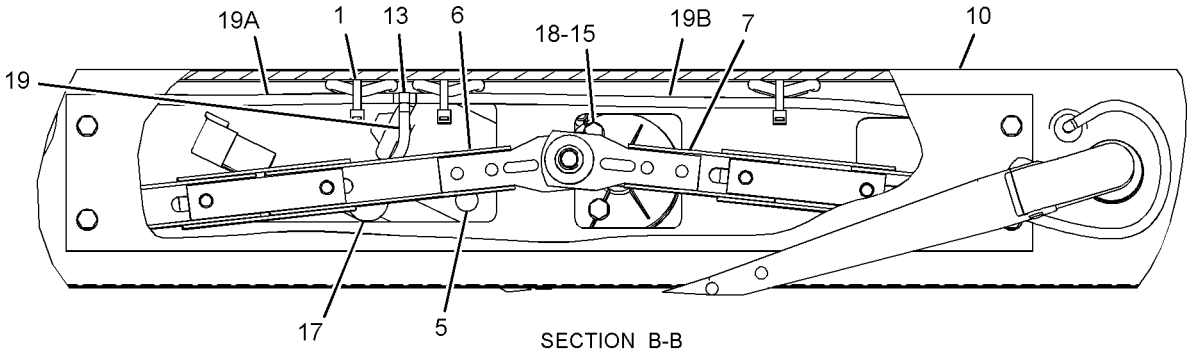

SECTION B-B

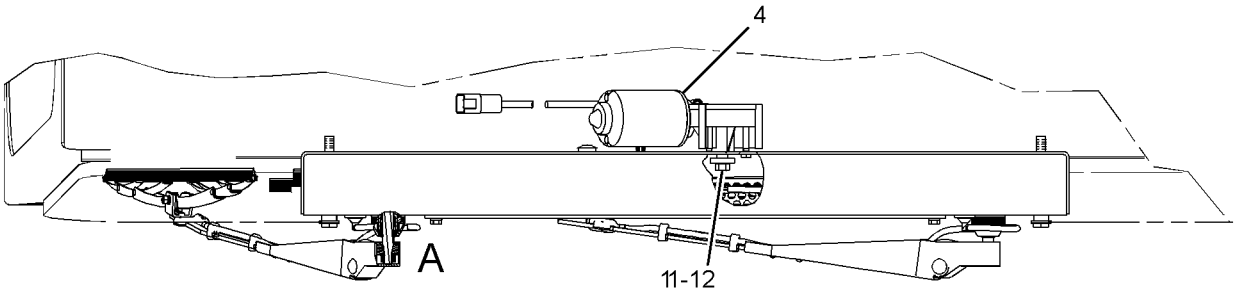

TOP VIEW OF CAB

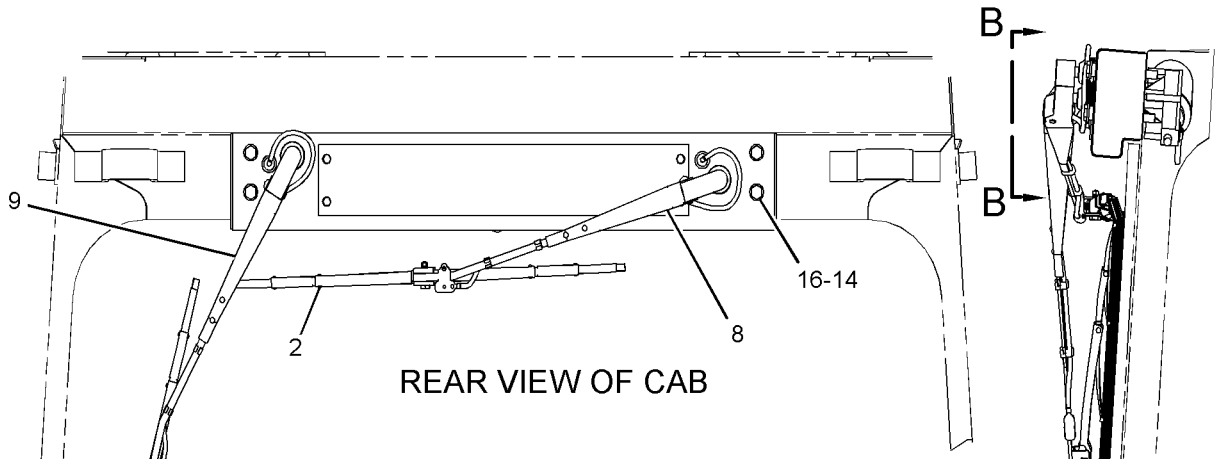

REAR VIEW OF CAB

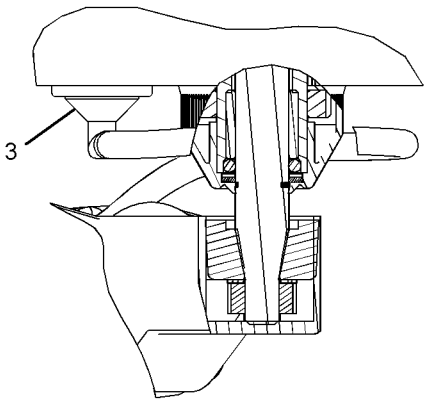

VIEW OF AREA A

RIGHT SIDE VIEW

GRAPHIC #1

<END>

g01398965

OPERATOR STATION

254-8961 WIPER PIVOT GP–REAR, LH

S/N: J8B1-UP
PART OF 310-5931 WIPER GP-WINDOW
AN ATTACHMENT

SMCS-7305 **i02245981**

NOTE	REF NO	GRAPHIC REF	PART NUMBER	QTY	PART NAME 1 2 3 4 5 6 (PRODUCT LEVEL)	SEE PAGE
	1	1	**206-5823**	1	CAP	
	2	1	**261-1173**	1	SHAFT AS-PIVOT	
	3	1	**261-1175**	1	LINK AS-WIPER	
	4	1	**261-1177**	1	DRIVE AS (WIPER)	
	5	1	**3F-9556**	1	LOCKWASHER	
M	6	1	**5C-7261**	1	NUT (M8X1.25-THD)	

M-METRIC PART

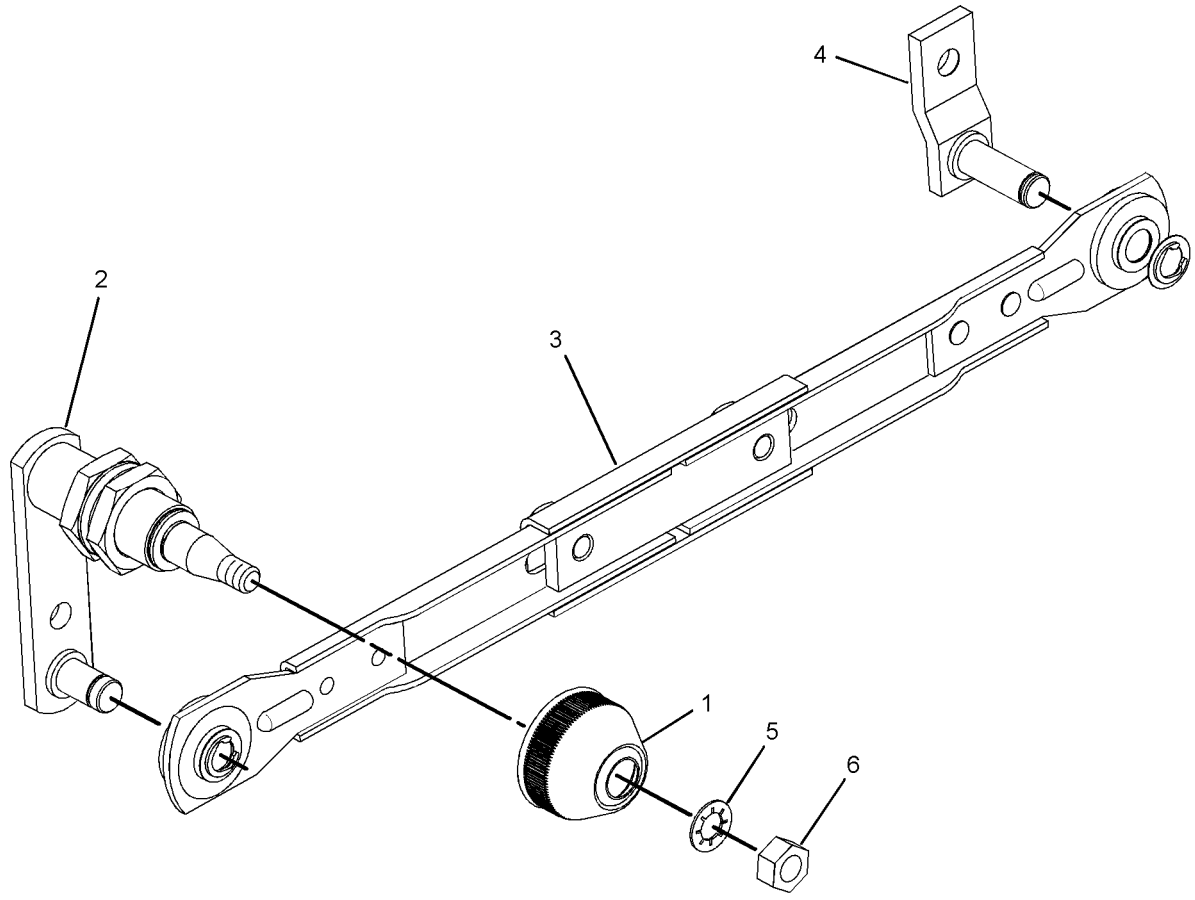

GRAPHIC #1 **<END>** g01125780

OPERATOR STATION

254-8962 WIPER PIVOT GP–REAR, RH

S/N: J8B1-UP
PART OF 310-5931 WIPER GP-WINDOW
AN ATTACHMENT

SMCS-7305 **i02245978**

NOTE	REF NO	GRAPHIC REF	PART NUMBER	QTY	PART NAME 1 2 3 4 5 6 (PRODUCT LEVEL)	SEE PAGE
	1	1	**206-5823**	1	CAP	
	2	1	**261-1174**	1	SHAFT AS-PIVOT	
	3	1	**261-1176**	1	LINK AS	
	4	1	**3F-9556**	1	LOCKWASHER	
M	5	1	**5C-7261**	1	NUT (M8X1.25-THD)	

M-METRIC PART

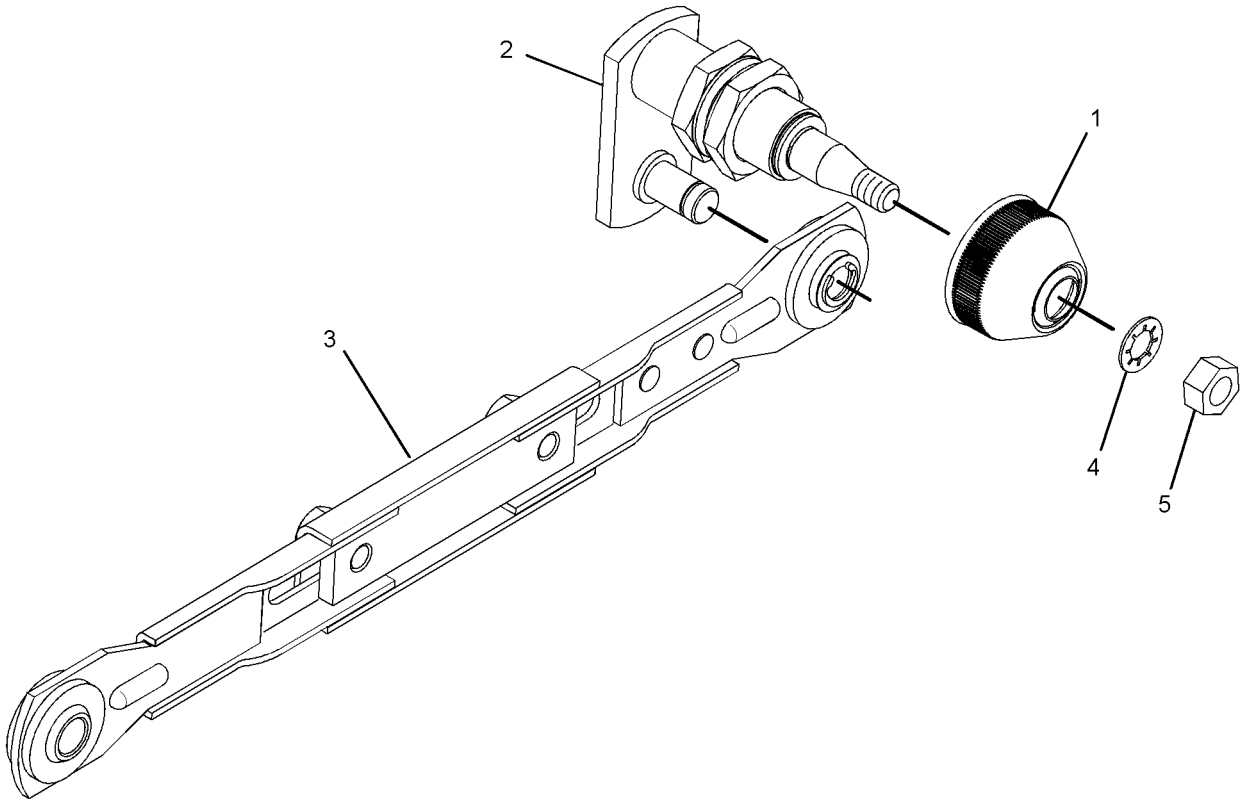

GRAPHIC #1 **<END>** g01125803

SERVICE EQUIPMENT AND SUPPLIES

219-5890 FILM GP

S/N: J8B1-1139

PART OF 210-6169 PLATE & FILM GP

SMCS-7000 **i02237797**

NOTE	REF NO	GRAPHIC REF	PART NUMBER	QTY	PART NAME 1 2 3 4 5 6 (PRODUCT LEVEL)	SEE PAGE
	1	1	**242-4009**	1	FILM-STRIPE (CAT HOOD, LH)	
	2	1	**242-9398**	1	FILM-STRIPE (FRONT, LH)	
	3	1	**242-4005**	1	FILM-STRIPE (D8T, REAR, LH)	
	4	1	**242-4007**	1	FILM-STRIPE (D8T, REAR, RH)	
	5	1	**242-9400**	1	FILM-STRIPE (MIDDLE, RH)	
	6	1	**242-9399**	1	FILM-STRIPE (FRONT, RH)	
	7	1	**242-4011**	1	FILM-STRIPE (CAT HOOD, RH)	
	8	1	**253-0861**	2	FILM-INFORMATION (CAT POWER, ACERT TECHNOLOGY)	
	9	1	**255-1528**	1	FILM-STRIPE (REAR, LH)	
	10	1	**255-1529**	1	FILM-IDENTIFICATION (CAT)	
	11	1	**242-4016**	1	FILM-STRIPE (REAR, RH)	
	12	1	**190-5386**	2	FILM-REFLECTOR (ROUND RED REFLECTIVE)	
	13	1	**242-3996**	1	FILM-IDENTIFICATION (CATERPILLAR, RADIATOR)	

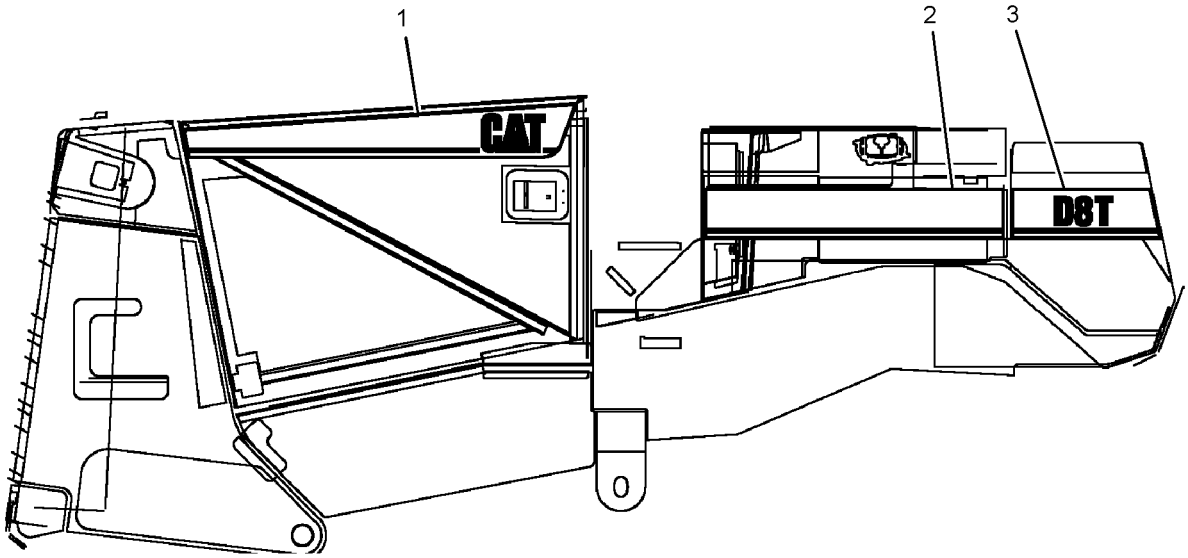

LEFT SIDE VIEW

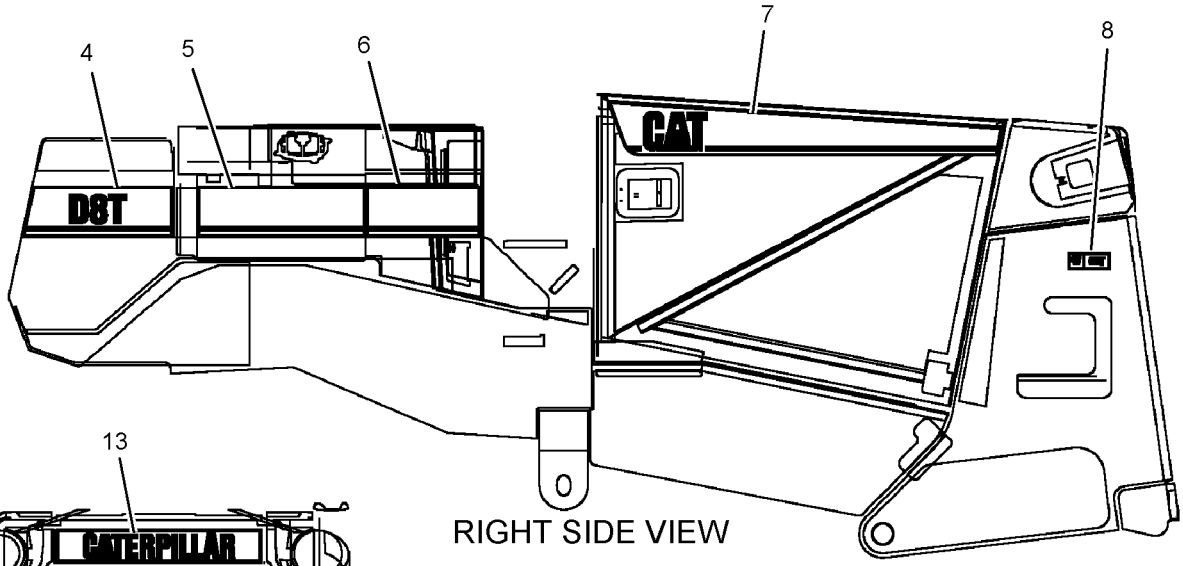

RIGHT SIDE VIEW

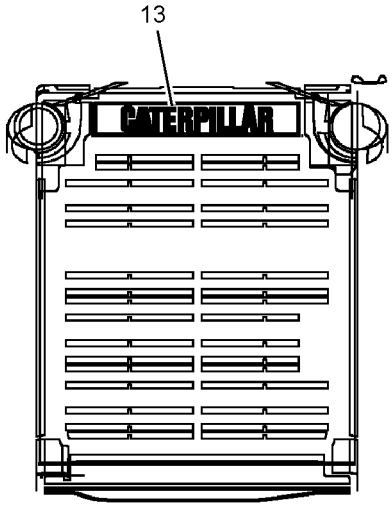

FRONT VIEW

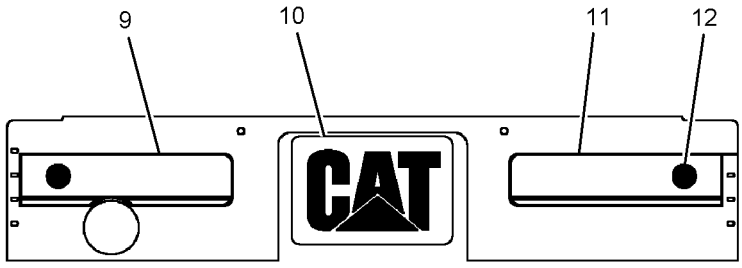

REAR VIEW

GRAPHIC #1 **<END>** g01117239

SERVICE EQUIPMENT AND SUPPLIES

304-4609 FILM GP

S/N: J8B1140-UP

PART OF 210-6169 PLATE & FILM GP

SMCS-7000 **i02809244**

NOTE	REF NO	GRAPHIC REF	PART NUMBER	QTY	PART NAME 1 2 3 4 5 6 (PRODUCT LEVEL)	SEE PAGE
	1	1	**304-4611**	1	FILM-IDENTIFICATION (D8T, LH)	
	2	1	**304-4613**	1	FILM-IDENTIFICATION (D8T, RH)	
	3	1	**304-4623**	1	FILM-IDENTIFICATION (CAT, LH)	
	4	1	**304-4624**	1	FILM-IDENTIFICATION (CAT, RH)	
	5	1	**304-4602**	1	FILM-IDENTIFICATION (CATERPILLAR)	
	6	1	**304-6763**	1	FILM-IDENTIFICATION (CAT)	
	7	1	**253-0861**	2	FILM-INFORMATION (CAT POWER, ACERT TECHNOLOGY)	

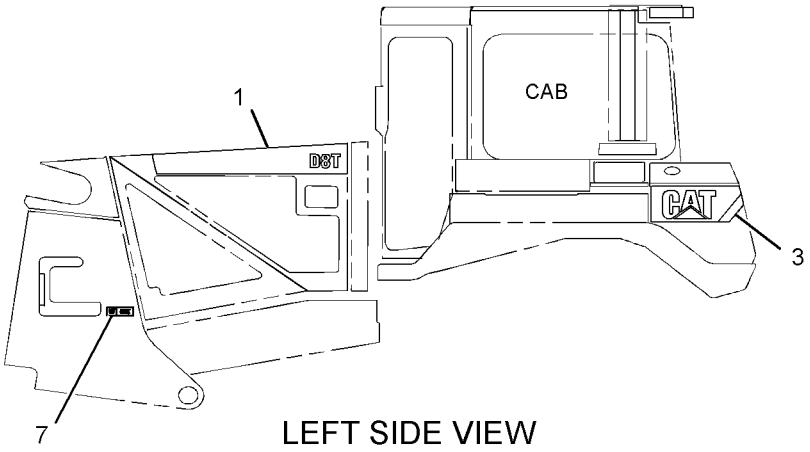

LEFT SIDE VIEW

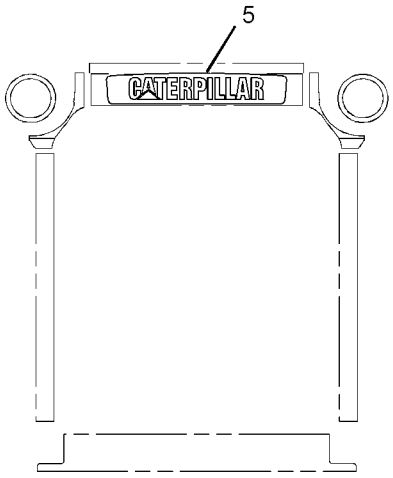

FRONT VIEW

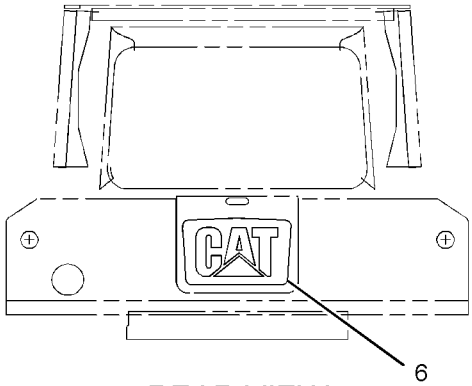

REAR VIEW

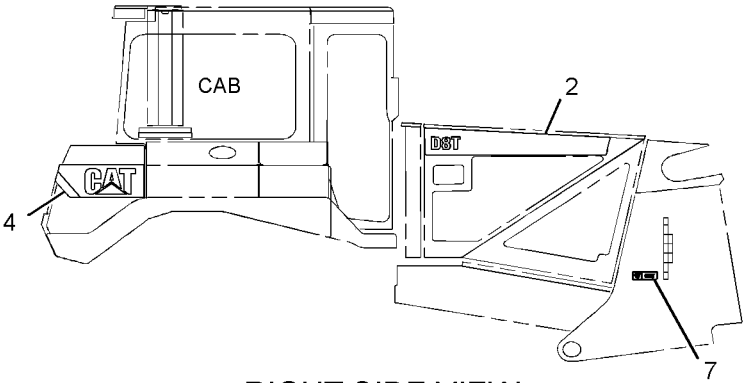

RIGHT SIDE VIEW

GRAPHIC #1 **<END>** g01404428

307-7370 FILM GP

S/N: J8B1-UP
PART OF 271-0130 TANK GP-FUEL
AN ATTACHMENT

SMCS-7000 **i03211411**

NOTE	REF NO	GRAPHIC REF	PART NUMBER	QTY	PART NAME 1 2 3 4 5 6 (PRODUCT LEVEL)	SEE PAGE
	1	1	**310-9435**	1	FILM-STRIPE (LH)	
	2	1	**310-9434**	1	FILM-STRIPE (RH)	
	3	1	**307-7368**	2	FILM (CAT)	
	4	1	**304-6763**	1	FILM-IDENTIFICATION (CAT)	

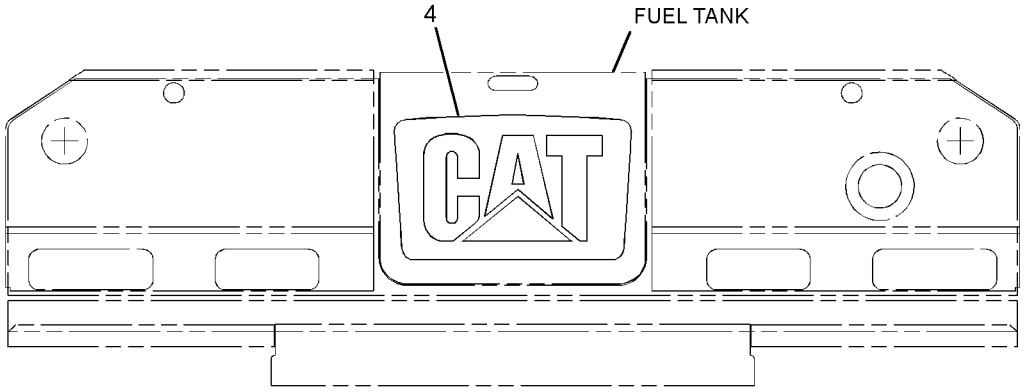

REAR VIEW

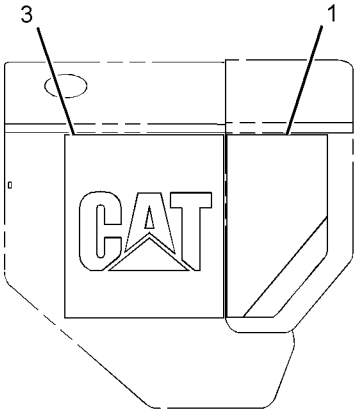

LEFT SIDE VIEW

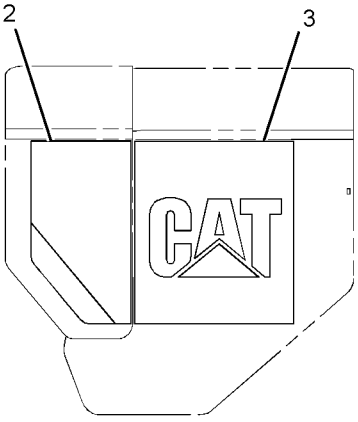

RIGHT SIDE VIEW

GRAPHIC #1 **<END>** g01503794

SERVICE EQUIPMENT AND SUPPLIES

210-6169 PLATE & FILM GP

S/N: J8B1-UP

PART OF 206-6780 CHASSIS AR

SMCS-7557, 7563 **i02809210**

NOTE	PART NUMBER	QTY	PART NAME 1 2 3 4 5 6 (PRODUCT LEVEL)	SEE PAGE
Y	*219-5890*	1	FILM GP	1226
			S/N: J8B1-1139	
Y	*304-4609*	1	FILM GP	1228
			S/N: J8B1140-UP	
	239-6987	1	PLATE-SERIAL NUMBER (MACHINE)	
			(ON TOP LH CORNER OF REAR FACE OF CASE & FRAME)	
	8T-9905	1	PLATE-IDENTIFICATION (TRANSMISSION OIL FILL TUBE)	
			(ON TRANSMISSION OIL FILL CAP)	
	174-4590	1	PLATE-INFORMATION (SERVICE INFORMATION NUMBERS)	
			(ON STEEL AREA OF LH DASH UPRIGHT)	
A	**4W-1413**	1	PLATE-SERIAL NUMBER (ENGINE)	
			(ON LOWER RH SIDE OF CYLINDER BLOCK)	
	9F-6656	1	RING-RETAINING	
			(ON TOP LINK OF FILLER CAP CHAIN)	
	8T-9530	6	TACK-FASTENER	
			(ON BRACKET NEXT TO SWITCH ASSEMBLY)	
	245-1750	1	FILM-IDENTIFICATION (FUSE PANEL)	
			(ON INSIDE FACE OF FUSE PANEL DOOR NEXT TO FUSE)	
	137-3937	1	FILM-IDENTIFICATION (ACTION LIGHT)	
			(IN DEPRESSED AREA NEXT TO ACTION LIGHT ON RH CONSOLE)	
	169-2876	1	FILM-IDENTIFICATION (POWER RECEPTACLE, 12-VOLT)	
			(IN DEPRESSION NEXT TO POWER OUTLET ON RH CONSOLE)	
	215-3192	1	FILM-IDENTIFICATION (FUSE)	
			(POSITION AROUND INDICATOR LAMPS & BREAKER SWITCHES)	
	233-7895	1	FILM-IDENTIFICATION (IGNITION)	
			(IN DEPRESSION NEXT TO IGNITION SWITCH ON RH CONSOLE)	
	245-8456	1	FILM-IDENTIFICATION (FUEL PUMP)	
			(NEXT TO FUEL PRIMING PUMP SWITCH)	
	248-6862	1	FILM-IDENTIFICATION (WORK LIGHT)	
			(ON BRACKET NEXT TO SWITCH ASSEMBLY)	
	211-1808	2	FILM-IDENTIFICATION (EQUALIZER BAR LUBRICATION)	
			(ON RH & LH SIDE OF TRACTOR ABOVE EQUALIZER BAR)	
	190-5386	2	FILM-REFLECTOR (ROUND RED REFLECTIVE)	
			S/N: J8B1140-UP	
			(1 - ON REAR LH SIDE OF MACHINE)	
			(1 - ON REAR RH SIDE OF MACHINE)	
	1P-2807	4	FILM-INFORMATION (LIFT EYE LOCATION)	
			(WITHOUT RIPPER (4 REQUIRED))	
			(2-ON RH & LH TRACK ROLLER FRAME BETWEEN FRONT IDLER & FRONT ROLLER)	
			(2-ON RH & LH TRACK ROLLER FRAME BETWEEN REAR IDLER & REAR ROLLER)	
			(WITH RIPPER (3 REQUIRED))	

210-6169 **PLATE & FILM GP** *(contd.)* **i02809210**

NOTE	PART NUMBER	QTY	PART NAME 1 2 3 4 5 6 (PRODUCT LEVEL)	SEE PAGE
			(2-ON RH & LH TRACK ROLLER FRAME BETWEEN FRONT IDLER & FRONT ROLLER)	
			(1-ON REAR OF RIPPER FRAME)	
	134-7258	1	FILM-INFORMATION (EXTENDED LIFE COOLANT,READ OMM)	
			(TO SIDE OF RADIATOR FILL DOOR)	
	229-0887	1	FILM-INFORMATION (AIR CLEANER)	
			(ON COVER OF AIR CLEANER CANNISTER)	
	233-7892	1	FILM-INFORMATION (BLADE, SINGLE TILT)	
			(IN DEPRESSION TO REAR OF BULLDOZER CONTROL HANDLE)	
	233-7893	1	FILM-INFORMATION (BLADE, LOWER, RAISE)	
			(IN DEPRESSION TO RIGHT OF BULLDOZER CONTROL HANDLE)	
	235-8026	1	FILM-INFORMATION (TRANSMISSION OIL LEVEL)	
			(ON INSIDE OF HYDRAULIC ENCLOSURE GP)	
	244-2620	1	FILM-CERTIFICATION (OPS, READ OMM)	
			(ON TOP LH SIDE OF CAB, VISIBLE FROM THE GROUND)	
	146-6747	2	FILM-INFORMATION (24-VOLT)	
			(1-ON UNDERSIDE OF BATTERY BOX DOOR)	
			(1-ON JUMP START RECEPTACLE BRACKET)	
	7X-7644	8	FILM-INFORMATION (TIE-DOWN)	
			(WITH RIPPER OR HITCH (8 REQUIRED))	
			(1-BY FRONT TOWING EYE)	
			(3-ON RH TRACK ROLLER FRAMES AT FRONT & REAR MAJOR CARTRIDGE PINS & CENTERED BETWEEN FRONT & REAR IDLERS)	
			(3-ON LH TRACK ROLLER FRAMES AT FRONT & REAR MAJOR CARTRIDGE PINS & CENTERED BETWEEN FRONT & REAR IDLERS)	
			(1-AT REAR ON RETRIEVAL HITCH OR RIPPER FRAME)	
			(WITHOUT RIPPER OR HITCH (7 REQUIRED))	
			(1-BY FRONT TOWING EYE)	
			(3-ON RH TRACK ROLLER FRAMES AT FRONT & REAR MAJOR CARTRIDGE PINS & CENTERED BETWEEN FRONT & REAR IDLERS)	
			(3-ON LH TRACK ROLLER FRAMES AT FRONT & REAR MAJOR CARTRIDGE PINS & CENTERED BETWEEN FRONT & REAR IDLERS)	
	250-0801	1	FILM-INFORMATION (ROPS, READ OMM)	
			(ON LH ROPS POST)	
	281-2723	2	FILM-INFORMATION (UNLOCK)	
			(ON RH & LH DAMPER AS ALIGNED WITH THE RELEASE TAB)	
	3E-2378	1	FILM-INSTRUCTION (PIVOT SHAFT LUBRICATION)	
			(ON TOP OF PIVOT SHAFT BOTTLE)	
	8T-4999	1	FILM-INSTRUCTION (BATTERY DISCONNECT)	
			(ON FACE OF BATTERY DISCONNECT SWITCH)	
	9X-6340	1	FILM-INSTRUCTION (ENGINE OIL)	
			(ON OIL FILL TUBE)	
	158-7864	1	FILM-IDENTIFICATION (HYDRAULIC OIL)	
			(ON HYDRAULIC TANK)	
	241-4167	1	FILM-INSTRUCTION (READ OMM, STEERING)	
			(ON LH CONSOLE COVER)	
	260-1811	1	FILM-INSTRUCTION (ALTERNATOR BELT MOUNTING)	
			(ON INSIDE RH DOOR ASSEMBLY)	
	225-0313	1	FILM-WARNING (JUMP START, READ OMM)	
			(ON UNDERSIDE OF BATTERY COMPARTMENT COVER)	
	263-6901	1	FILM-WARNING (HOT FLUID)	
			(TO SIDE OF RADIATOR FILL DOOR)	

210-6169 **PLATE & FILM GP** *(contd.)* **i02809210**

NOTE	PART NUMBER	QTY	PART NAME 1 2 3 4 5 6 (PRODUCT LEVEL)	SEE PAGE
	232-2960	1	FILM-WARNING (SHOCK HAZARD)	
			(ON INSIDE FACE OF FUSE PANEL DOOR NEXT TO FUSE)	
	239-4990	2	FILM-WARNING (HIGH PRESSURE CYLINDER)	
			(1-ON UPPER RH AREA OF IMPLEMENT VALVE COVER IN MID-SECTION OF FUEL TANK)	
			(1-ON REAR COVER PLATE OF PLATFORM)	
	247-6875	1	FILM-WARNING (READ OMM)	
			(ON LH POST ABOVE STEERING CONTROL HANDLE IN CAB)	
	263-9112	1	FILM-WARNING (ROTATING SHAFT)	
			(ON TOP OF SHAFT COVER)	
	247-6877	1	FILM-WARNING (SEAT BELT)	
			(ON LH POST ABOVE STEERING CONTROL HANDLE IN CAB)	
	219-0305	2	FILM-WARNING (NO WELD, NO DRILL, READ OMM)	
			(1-ON RH ROPS POST)	
			(1-ON TOP RH SIDE OF CAB, VISIBLE FROM THE GROUND)	

A-NOT PART OF THIS GROUP
Y-SEPARATE ILLUSTRATION

<END>

251-1319 PLATE & FILM GP

S/N: J8B1-UP
AN ATTACHMENT

SMCS-7557, 7563 **i02337649**

NOTE	PART NUMBER	QTY	PART NAME 1 2 3 4 5 6 (PRODUCT LEVEL)	SEE PAGE
	232-3402	1	FILM-WARNING (ELECTRICAL SHOCK)	
			ON INSIDE FACE OF FUSE PANEL DOOR NEXT TO FUSE	
	239-4991	2	FILM-WARNING (HIGH PRESSURE CYLINDER)	
			1-UPPER RH AREA OF IMPLEMENT VALVE COVER IN MID-SECTION OF FUEL TANK	
			1-ON REAR COVER PLATE OF PLATFORM	
	263-6902	1	FILM-WARNING (HOT FLUID)	
			TO SIDE OF RADIATOR FILL DOOR	
	225-0312	1	FILM-WARNING (JUMP START, READ OMM, INTL)	
			ON UNDERSIDE OF BATTERY COMPARTMENT COVER	
	260-7653	1	FILM-WARNING (PRODUCT LINK 300, INTL)	
			ON RH POST IN REAR OF CAB	
	247-6878	1	FILM-WARNING (SEAT BELT)	
			ON LH POST ABOVE STEERING CONTROL HANDLE IN CAB	
	247-6876	1	FILM-WARNING (DO NOT OPERATE, READ OMM) (READ OMM)	
			ON LH POST ABOVE STEERING CONTROL HANDLE IN CAB	
	264-3818	1	FILM-WARNING (CRUSH HAZARD, STAY BACK)	
			ON TOP OF SHAFT COVER	

<END>

SERVICE EQUIPMENT AND SUPPLIES

224-3978 PLATE GP-ENGINE IDENTIFICATION

S/N: LHX1-12436
PART OF 225-0097, 237-9123 ENGINE AR-COMPLETE
ALSO AN ATTACHMENT

SMCS-7557 **i02682767**

NOTE	REF NO	GRAPHIC REF	PART NUMBER	QTY	PART NAME 1 2 3 4 5 6 (PRODUCT LEVEL)	SEE PAGE
	1	1	**229-5667**	1	PLATE-IDENTIFICATION (C15 ACERT)	
	2	1	**234-1400**	1	PLATE-IDENTIFICATION (BLANK)	
	3	1	**234-1401**	1	PLATE-IDENTIFICATION (CAT)	

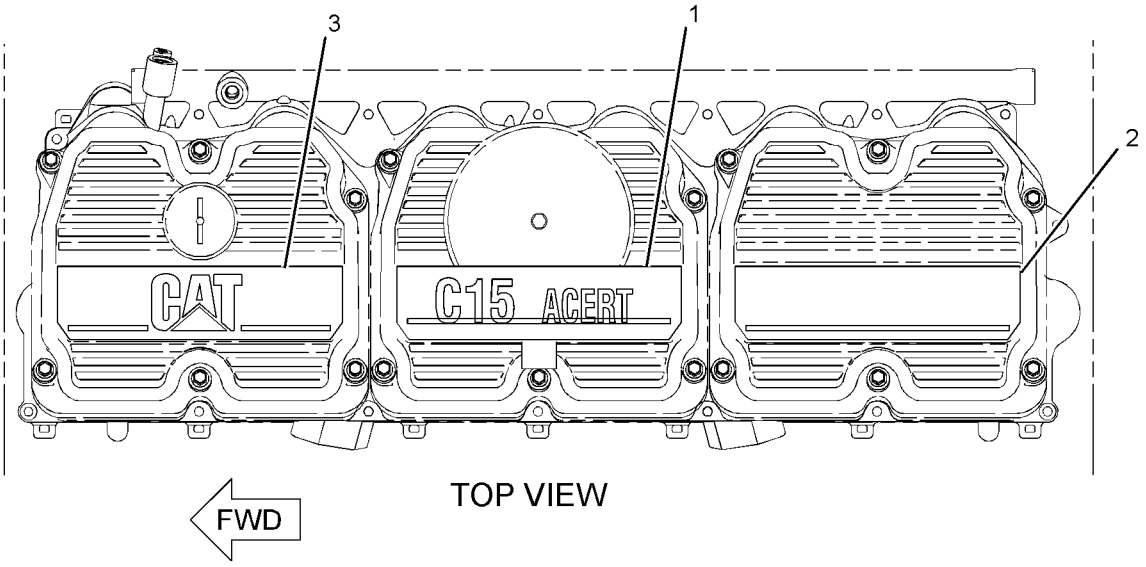

TOP VIEW

GRAPHIC #1 **<END>** g01348267

MEMORANDA

PART NUMBER INDEX

Part	Page
0	
0L-1143	28
	117
	124
	413
0L-1169	429
0L-1351	82
	85
	88
	90
	140
	195
	198
	200
	386
0L-1352	140
	195
	424
	426
0L-2070	71
	73
	81
	119
	140
	195
	198
0S-0484	488
	497
0S-0509	123
	177
	217
	219
	224
	386
	424
	426
	1111
	1114
	1120
	1122
	1125
	1131
	1134
0S-0699	203
0S-1569	429
0S-1571	65
	124
	166
0S-1573	388
	393
0S-1576	386
0S-1585	417
	419
0S-1587	82
	85
	88
	90
0S-1588	71
	73
	82
	88
	93
	119
	144
	163
	200
	587
0S-1589	111
0S-1590	117
	140
	446
0S-1591	73
	82
	85
	88
	90
	93
	113
	118
	119
	140
	146
	186
	188
	190
	338
	340
	429
0S-1594	24
	60
	76
	82
	85
	88
	90
	118
	119
	123
	138
	140
	144
	195
	198
	200
	388
	393
	422
0S-1595	75
0S-1614	413
0S-1617	506
0S-1618	124
0S-1619	200
	388
	393
	474
0S-1620	423
0S-2353	63
0T-0055	71
	73
0T-0065	140
0T-0102	419
0T-0244	1187
	1192
0V-0375	140
1	
1A-0075	429
1A-1135	146
1A-1460	413
	414
	417
1A-2029	73
	119
	144
	413
	417
1A-2223	413
	473
1A-2610	422
1A-4273	386
1A-5183	474
1A-5822	429
1A-5964	73
1B-2886	140
1B-3623	58
1B-3867	18
1B-3908	816
1B-3909	816
1B-7182	146
1B-8705	65
	479
1B-8706	1037
	1039
	1078
	1165
	1168
1B-8714	479
	481
	1037
	1039
	1165
	1168
1B-9575	239
1C-0569	417
1C-2251	165
	195
	198
	200
	386
1D-4538	182
	184
1D-4540	424
	426
1D-4569	140
1D-4601	429
1D-4706	388
	393
1F-0748	224
1F-0750	82
	85
	90
	119
	140
	144
	165
	200
	273
	275
	278
	292
	294
	297
	300
	305
	309
	547
	582
	1078
1F-7958	61
	118
	386
1G-8878	698
	699
1H-1023	369
	869
	872
	875
	877
	880
	883
	886
	889
1H-1200	472
1H-2629	369
1H-3244	215
1H-3338	378
1H-4106	512
	522
	539
1H-7459	516
1H-7855	1137
1H-8128	180
	208
	211
1H-8647	18
1J-0245	992
1J-2674	746
	749
	755
	757
1J-6740	932
	933
	934
1J-6744	926
1J-9671	69
	180
	181
	388
	393
	698
	699
	842
	844
	846
	848
	850
	852
	856
	859
	886
	889
	901
1K-4129	335
1K-4649	393
1K-6870	576
	578
1K-6872	560

► **PRIMARY REFERENCE**

PART NUMBER INDEX

Part	Page	Part	Page	Part	Page	Part	Page
	562		859	1Q-3000	6		230
1K-7095	744		867		8		231
1L-4418	514	1P-3703	777	1Q-3039	5		392
1L-5072	825		784		618	1S-7252	227
	829		990	1Q-3042	5		231
1L-5081	661	1P-3704	704		618		374
	663	1P-3705	448	1Q-3053	521	1S-7446	369
	665		454	1Q-3054	▶432	1S-9540	39
1L-6957	429		460		618		41
1L-7388	474		466	1Q-3056	5		43
1M-0644	130	1P-3706	901		▶411	1S-9593	508
1M-1571	661	1P-3934	429		618		509
	663	1P-3935	429	1Q-3057	411		724
	665	1P-4278	151	1Q-3059	411		909
1M-3419	167		155	1Q-3302	585		910
	169		193	1Q-3677	556		911
	171	1P-4574	780		558		912
1M-3780	479	1P-4576	751	1Q-3783	1155		1046
1M-3909	479		753	1Q-4621	667		1047
1M-4986	368	1P-4577	751		676		1048
1M-6119	227		753	1Q-4622	▶667		1050
	228		773	1Q-4654	▶667		1052
	230	1P-4578	448	1Q-4675	▶668	1S-9799	493
1M-6120	227		454	1Q-4676	▶668	1T-0068	598
	228		460	1Q-4677	▶669		599
	230		466	1Q-4683	▶669		600
1M-7911	432		773	1Q-4684	▶670		601
	434		840	1Q-4685	▶670		602
	436		854	1Q-4686	▶671	1T-0679	490
	439		867	1Q-4703	▶671	1T-0680	490
	441	1P-4579	449	1Q-4739	▶672	1T-0720	326
	444		455	1Q-4991	635	1T-0738	726
1M-7912	432		461	1R-0716	119	1T-0765	203
	434		467	1R-0762	186	1T-1278	490
	436		763		188	1T-1281	490
	439		767		190	1T-1282	490
	441		825	1R-0777	825	1T-1402	493
	444		829		829	1T-1589	490
1M-8657	474	1P-4584	773	1R-0778	500	1T-1590	490
1M-9011	434		774	1R-1809	503	1U-0183	957
	436		825	1S-0994	193		959
	439		829		195		962
	441	1P-5760	777		198	1U-0990	987
	444		854		990		989
	472	1P-5767	704	1S-0996	128	1U-1738	757
1M-9968	370	1P-6356	1107	1S-2342	384	1U-2182	749
1M-9971	369		1110	1S-4295	179		755
1N-4403	160		1113	1S-4915	222		757
1N-5724	1044		1116		226	1U-2472	948
1N-5999	419		1119		227		952
1P-1744	707		1122		228		953
1P-2624	345		1125		230		966
1P-2772	593		1128		231		967
	1178		1131		392		969
1P-2807	1230		1134	1S-6420	193		971
1P-2841	514	1P-7346	65		773		973
1P-3702	840	1P-7405	661		1108		974
	842		663		1111		975
	844		665		1114		976
	846	1Q-2130	6		1128		980
	848		581		1131	1U-2533	926
	850	1Q-2423	6		1134		933
	852		8	1S-7251	226	1U-2716	746
	854	1Q-2983	6		227	1U-2827	825
	856		8		228		829

▶ **PRIMARY REFERENCE**

PART NUMBER INDEX

Part	Page	Part	Page	Part	Page	Part	Page
1U-4961	957	2D-6506	472		1058	2P-2772	69
	959	2D-6642	429		1064	2P-2975	388
1U-4962	957	2F-5326	595		1066		392
	959		597	2K-4973	82	2P-3203	82
1U-8846	414	2F-6678	370		85		88
	417	2F-7306	1212		88	2P-3205	130
	481		1213		90	2P-3760	119
1V-7753	388		1214		514	2P-3761	119
	393	2G-9245	548		556	2P-4301	119
1V-9365	128		576		558	2P-4304	119
1W-3014	114		578		1006	2P-4305	119
1W-3088	166	2H-2534	539		1200	2P-4339	1163
1W-3136	69	2H-3429	369		1202	2R-0098	432
1W-4724	317	2H-3755	338	2K-5069	413		434
1W-6448	338		340	2K-5986	492		436
	340		474	2K-6830	748		439
	345	2H-3920	382	2K-8257	811		441
	696	2H-3922	373		812		444
	1072		374	2K-8467	514	2R-1236	481
1W-7238	130		381	2K-9295	413	2R-5001	696
1W-7239	130	2H-3931	431	2L-1224	1108	2S-0795	140
1W-8620	167	2H-3932	424		1111	2S-2251	493
	169		426		1113	2S-2596	869
	171		604		1116		872
1W-9860	505		607		1119		875
1Y-7927	1099		610		1122		877
1Z-9277	6		612		1125		880
	8		615		1128		883
1Z-9417	670	2H-6124	825		1131		886
	681		829		1134		889
1Z-9422	670	2H-9233	773	2L-3650	490	2S-2760	130
	677	2H-9445	345	2L-5893	1176	2S-4071	419
1Z-9425	671	2J-0564	749	2L-5894	1072	2S-4078	419
	681		751	2L-6679	369		432
1Z-9787	514		753	2L-8078	248		434
1Z-9960	668		757	2M-3432	228		436
1Z-9983	669	2J-1227	1001		231		439
		2J-3118	65	2M-3530	691		441
		2J-3507	981		692		444
2			982	2M-3974	481		500
			983	2M-6102	1215		503
2A-1162	69		984		1218		737
2A-3746	492	2J-6356	345	2M-7041	506		739
2A-4429	52		501	2M-7819	1099		773
	53		1037	2M-9780	128	2S-5925	661
	55		1039		419		663
2A-4639	165		1165		703	2S-5926	661
	413		1168		704		663
2B-0176	576	2J-7686	746		710		665
	578	2J-7761	825		712	2S-7905	130
2B-2695	71		829		718	2S-9727	246
	73	2J-8163	369		813	2V-2043	126
	140	2J-8333	489		818	2V-4868	178
2B-9373	479	2K-0337	479		836	2V-5019	552
2D-1523	493		481		901	2V-8259	322
2D-1690	604	2K-2939	749		905	2W-2072	67
	606	2K-2940	749		906	2Y-5429	322
	609	2K-3219	246		907		396
	612	2K-4472	604	2N-3350	119		398
	615		606	2N-3479	246		400
2D-4202	825		609	2N-8109	115	2Y-5503	811
	829		612	2P-1286	126	2Y-5829	1147
2D-4295	582		615	2P-1293	763	2Y-6448	144
2D-6235	1099	2K-4821	215		767	2Y-9790	919
2D-6392	369	2K-4898	1054	2P-2508	159		921

► **PRIMARY REFERENCE**

PART NUMBER INDEX

Part	Page
	922
	923
	924
	925
3	
3B-0551	82
	85
	88
	90
	994
3B-0623	46
	49
3B-0645	46
	49
3B-1915	85
	90
	124
	386
3B-4124	413
3B-4501	248
	381
	1093
3B-4508	323
3B-4512	323
3B-4605	696
3B-4610	516
3B-4615	576
	578
3B-4617	514
3B-4640	560
	562
	565
	566
3B-7255	1137
3B-8489	553
	554
	595
	597
	746
	751
	753
	755
	757
	809
	916
	937
	987
	989
3D-2824	126
	155
	372
	703
	718
	763
	766
	773
	784
	816
	833
	838
	839
	1137
3D-2895	432
	434
	436
	439
	441
	444
3D-2975	1099
3D-7943	707
3E-2310	990
3E-2378	1231
3E-3000	1019
	1022
3E-3364	388
3E-3365	227
	231
	361
	372
	376
	381
	508
	803
	911
	1107
	1116
	1128
3E-3368	347
3E-3371	275
	280
	285
	288
	292
	294
	297
	302
	309
	342
	343
	344
	354
	384
	803
	1072
3E-3377	335
	909
	1072
3E-3383	377
	1076
	1163
3E-3389	1044
3E-4041	155
3E-4044	516
	547
3E-4051	1107
	1110
	1113
	1116
	1119
	1122
	1125
	1128
	1131
	1134
3E-4052	1108
	1111
	1113
3E-4057	1107
	1110
	1113
	1116
	1119
	1122
	1125
	1128
	1131
	1134
3E-4058	1108
	1111
	1113
	1116
	1119
	1122
	1125
	1128
	1131
	1134
3E-4304	1019
	1022
	1084
	1085
	1086
	1087
	1088
	1090
	1209
3E-4319	782
3E-4334	714
3E-4352	474
	1034
3E-4353	200
	825
	829
3E-4354	417
3E-4356	1102
	1215
	1219
3E-5239	402
	406
	1031
	1093
3E-5464	1093
3E-6328	▶214
	402
	406
3E-6756	987
	989
3E-6757	987
	989
3E-6761	810
3E-6772	54
	56
3E-6773	181
3E-6924	1105
3E-7404	175
3E-7433	447
	453
	459
	465
3E-7771	370
3E-7990	260
3E-8008	701
3E-8020	384
	1017
	1019
	1022
	1074
	1105
	1209
3E-8575	834
	▶909
3E-8581	909
	910
3E-9205	892
	▶910
3E-9850	926
	932
	933
	934
3F-3442	422
3F-3727	490
3F-5022	473
3F-9556	215
	1215
	1218
	1219
	1222
	1224
	1225
3G-0910	744
3G-0911	744
3G-4214	126
3G-4218	126
3G-5596	1003
	1004
	1005
3G-5999	746
	751
	753
3G-7016	917
	935
	936
	937
	938
3G-8047	772
3G-8054	449
	455
	461
	467
	704
	772
3G-8057	449
	455
	461
	467
	704
	772
3G-9571	926
3G-9598	932
	933

▶ **PRIMARY REFERENCE**

PART NUMBER INDEX

Part	Page	Part	Page	Part	Page	Part	Page
	934		846		877	3L-5893	155
3G-9626	926		848		880	3L-8187	246
3H-0240	1010		850		883	3N-0759	731
3H-0442	894		852		908	3N-3763	370
	908		854		990	3P-1155	338
3H-0702	345		856	3K-0360	69		340
3H-1996	492		859		128	3P-2404	773
3H-6660	582		862		138	3P-9900	1202
	1017		863		155	3R-8797	369
	1019		867		186	3R-8801	370
	1022		869		188	3S-0004	479
	1209		872		190		836
3H-7180	1031		875		193	3S-1223	604
3H-7654	490		877		414		612
3J-1907	134		880		417		615
	193		883		432	3S-1349	598
	228		886		434		599
	231		889		436		600
	388		892		439	3S-1356	691
	393		894		441		692
	419		990		444	3S-2093	140
	447	3J-3679	886		448		195
	448		889		454		198
	449	3J-4818	1202		460		200
	453	3J-5190	917		466		386
	454	3J-7189	556		506		424
	455		558		641		426
	459		576		703		500
	460		578		763		503
	461		581		766		726
	465	3J-7354	69		772		1031
	466		138		773		1076
	467		155		798		1094
	498		388		800		1204
	499		393		807		1205
	500		448		808		1206
	503		449		865		1222
	505		454		866	3S-2708	413
	506		455		894		417
	518		460		896		473
	520		461		903		492
	521		466		913	3S-3439	483
	698		467		914	3S-3440	483
	699		500		915	3S-3875	483
	704		503		990	3S-7023	749
	712		701		1137	3S-8652	500
	732		712	3K-0715	711	3S-9557	327
	763		798		815	3S-9643	140
	766		800		820	3T-0304	402
	767		804	3K-2511	474		406
	772		825	3K-2889	512	3T-0688	500
	773		829	3K-4897	1072	3T-0849	1034
	784		840	3K-6113	623	3T-3418	369
	798		842		624	3T-3422	369
	800		844		625	3T-3423	369
	804		846		626		370
	806		848		629	3T-3424	369
	808		850		630		370
	816		852	3K-6235	1017	3T-3434	369
	834		854		1019	3T-4238	518
	836		856		1022		520
	838		859		1209	3T-4243	604
	840		867	3K-8460	119		606
	842		869	3L-3380	369		609
	844		872	3L-3813	901		612

► **PRIMARY REFERENCE**

PART NUMBER INDEX

Part	Page
	615
3T-4244	604
	606
	609
	612
	615
3T-4377	473
3T-4568	413
3T-4709	369
3T-4710	369
3T-4824	413
3T-5021	413
3T-5200	413
3T-5294	596
3T-5356	481
3T-5760	226
	230
3T-5807	417
3T-5851	411
	412
3T-5898	604
	606
	609
	612
	615
3T-5923	432
	434
	436
	439
	441
	444
3T-6469	447
	453
	459
	465
3T-6471	447
	453
	459
	465
3T-6742	429
3T-6963	413
3T-8729	473
3T-9118	634
	637
3T-9272	413
3T-9494	369
	370
3T-9524	370
3T-9525	369
3V-9244	576
	578
3W-1852	417
3W-3819	540
	542
3W-3896	548
	576
	578
3W-9207	527
	529
	531
	533
	535
	537
3W-9208	527
	529

4

Part	Page
	531
	533
	535
	537
4B-1230	1214
4B-1234	1212
	1213
	1214
4B-1270	1072
4B-1274	1212
	1213
	1214
4B-2049	370
4B-3609	1037
	1039
	1165
	1168
4B-4158	10
	603
	604
	606
	609
	612
	615
	919
	921
	922
	923
	924
	925
	999
	1000
4B-4274	1033
	1150
4B-4278	869
	872
	875
	877
	880
	883
	886
	889
	1202
4B-4311	118
4B-4863	322
	1150
	1151
4B-5059	1099
4B-7739	493
4B-9782	104
	106
	108
	422
4B-9785	422
4B-9808	1054
	1056
	1060
	1061
	1062
	1063
	1064

Part	Page
	1068
	1069
	1070
	1071
4B-9880	429
4D-0514	248
4D-3704	63
	111
4D-6466	449
	455
	461
	467
4D-7388	121
	126
4D-7733	1108
	1111
	1114
	1117
	1120
	1122
	1125
4D-9517	123
	449
	455
	461
	467
4E-1437	763
	766
4F-0411	140
4F-2294	379
4F-3508	184
4F-4042	984
4F-4879	1194
	1195
	1196
4F-6024	67
4F-7390	115
4F-7957	18
	19
	20
	21
4F-8711	327
4H-0019	429
4H-0407	992
	1174
4H-0408	1174
4H-1225	825
	829
4H-1641	516
	547
	582
4J-0519	782
	784
4J-0520	737
	739
	760
	763
	767
	773
	776
	782
	790
	792
	796
	990

Part	Page
4J-0522	449
	455
	461
	467
	773
	840
	854
	867
	892
4J-0524	449
	455
	461
	467
	763
	767
	773
4J-0527	180
	181
4J-2043	941
4J-3745	744
4J-4968	917
4J-5140	780
4J-5267	776
	780
	782
	784
	788
	790
	792
	794
	796
4J-5351	869
	872
	875
	877
	880
	883
	886
	889
4J-5401	968
4J-5477	448
	454
	460
	466
4J-6888	755
4J-7533	726
	798
	800
	834
	869
	872
	875
	877
	880
	883
	886
	889
	892
	894
4J-8251	825
	829
4J-8252	825
	829
4J-8997	840
	854

► **PRIMARY REFERENCE**

PART NUMBER INDEX

Part	Page	Part	Page	Part	Page	Part	Page
	867	4M-8547	61		224		275
4J-9058	981	4M-9592	474		228		280
	982	4N-0683	39		231		285
	983		41		256		294
4K-1388	604		43		258		297
	606		114		280		302
	609	4N-0684	35		283		305
	612		67		285		1108
	615	4N-0699	23		288		1111
	737		24		314		1114
	739	4N-0826	119		335		1129
	840	4N-0933	69		386		1132
	854	4N-0995	82		388		1134
	867		85		393	4S-1962	138
	869		88		396	4S-9134	479
	872		90		398	4T-0137	▶1003
	875	4N-1059	368		400	4T-0203	989
	877	4N-1114	26		403	4T-1005	904
	880	4N-1151	82		406	4T-1009	904
	883		88		409	4T-1011	904
	886	4N-1199	140		424	4T-1073	840
	889	4N-1216	119		426	4T-1108	869
	894	4N-1294	123		803		872
4K-2039	500	4N-1650	39	4P-7582	386		875
	503		41		389		877
	913		43		393		880
	914	4N-2481	11	4P-8134	128		883
	915		13		228		886
4K-8302	1108		▶117		231		889
	1111	4N-2514	63		313	4T-1389	987
	1117	4N-2927	1099		314		989
	1120	4N-3808	431		386	4T-1649	869
	1122	4N-3841	140		389		872
	1128	4N-6257	140		393		875
	1131	4N-7082	119		396		877
4K-8864	1128	4N-7266	82		398		880
	1131		88		400		883
	1134		93		403		886
4K-9429	1158	4N-8150	119		406		889
	1160	4N-9915	1102		409	4T-1701	869
4L-2729	370		1215		424		872
4L-6454	290		1218		426		875
	292	4P-0519	82		825		877
	552		85		829		880
	606		88		842		883
	609		90		844		886
4L-9337	128	4P-2383	147		846		889
4M-0189	69	4P-4278	104		848	4T-1859	867
4M-1827	369	4P-4279	104		850	4T-2069	604
4M-1828	369	4P-6846	11		852		607
4M-1831	369		13		856		610
4M-1853	369		▶60		859		612
4M-1854	369	4P-7371	104		1031		615
4M-1896	370	4P-7428	386		1093	4T-2479	1002
4M-2442	474		388		1108		1005
4M-5317	367		393		1111	4T-3132	500
4M-5905	506		1108		1114		501
4M-6425	323		1111		1117	4T-3522	987
	1176		1114		1120		989
4M-6480	25		1147		1123	4T-3981	790
4M-6582	1093	4P-7429	313		1125		792
4M-6921	825		1147		1128		796
	829	4P-7581	128		1132	4T-4511	869
4M-6980	901		217		1134		872
4M-8239	505		219	4S-1936	193		875

▶ **PRIMARY REFERENCE**

PART NUMBER INDEX

Part	Page
	877
	880
	883
	886
	889
4T-4659	901
4T-4875	809
4T-4935	804
	▶903
4T-4942	903
4T-5071	863
4T-5072	869
	872
	875
	877
	880
	883
	886
	889
4T-5073	869
	872
	875
	877
	880
	883
	886
	889
4T-5074	869
	872
	875
	877
	880
	883
	886
	889
4T-5075	904
4T-5896	804
	▶863
4T-6378	983
4T-6381	982
4T-6907	748
4T-7534	935
	936
	937
	938
	948
	952
	953
	966
	967
	969
	971
	973
	974
	975
	976
	980
4T-7571	903
4T-8986	1002
	▶1004
4T-8987	1001
	▶1005
4T-9751	553
	987
4V-6981	696
4V-7884	1200
4V-8046	1212
	1213
	1214
4V-8256	1006
4V-8577	1200
	1202
4W-1413	1230
4W-5698	35
4W-5699	35
4W-5700	35
4W-5701	35
4W-9822	▶131
	140
4W-9890	24
4Z-0670	▶942
4Z-0672	6
	8
	▶779
4Z-8984	553
	554
4Z-8985	553
	554
4Z-9057	945
	946
	975
	▶981
4Z-9058	981
4Z-9507	948
	▶954
4Z-9508	948
	954
	▶955
4Z-9509	955
5	
5A-3604	730
5B-3180	506
5B-5821	67
5B-9603	140
5C-2873	810
5C-2890	280
	283
	302
	305
	309
	322
	327
	378
	449
	455
	461
	467
	1031
	1044
	1074
	1102
	1202
5C-7261	128
	271
	313
	335
	1215
	1218
	1219
	1222
	1224
	1225
5C-8312	1163
5C-8811	1215
5C-9553	206
	209
	262
	335
	403
	406
	1017
	1033
	1034
	1084
	1085
	1086
	1087
	1088
	1090
	1097
	1098
	1174
5D-1911	825
	829
5D-4822	1099
5D-5957	449
	455
	461
	467
5D-5958	714
5D-7635	231
5D-7927	825
	829
5E-8771	65
5F-0304	69
5F-1678	595
	597
5F-2465	432
	434
	436
	439
	441
	444
5F-3106	646
	647
	648
	649
	650
	651
	652
	654
5F-3144	314
5F-3488	825
	829
5F-4899	81
	424
	426
5F-7054	432
	434
	436
	439
	441
	444
	904
5F-9144	698
	699
5G-9973	576
	578
5G-9974	576
	578
5H-1472	863
5H-1504	54
	56
5H-2168	539
5H-4018	782
5H-4279	481
	489
5H-6733	825
	829
5H-6734	180
	208
	211
5H-9899	1076
5J-2383	731
5J-3576	1002
	1005
5J-4407	746
5J-4408	746
5J-4592	751
5J-4593	751
5J-4991	751
	753
5J-4993	746
	749
	757
5J-5314	369
5J-5402	748
5J-5793	69
5J-5794	62
	69
5J-7386	492
5J-8118	556
	558
	576
	578
	581
5K-5120	419
	424
	426
5K-5338	193
5K-8454	432
	434
	436
	439
	441
	444
5K-9090	126
	128
	448
	449
	454
	455
	460
	461
	466
	467
	703

▶ **PRIMARY REFERENCE**

PART NUMBER INDEX

Part	Page	Part	Page	Part	Page	Part	Page
	737		340		169		1129
	739		386		171		1132
	763		389		317		1134
	766		393		825		1139
	767		414		829		1181
	777		417	5P-0695	222	5P-1076	6
5K-9107	414		419		226		8
5K-9179	1139		424		228		152
	1140		426		230		155
5K-9246	419		429		231		294
5K-9988	419		446		392		302
5L-3708	239		474	5P-0746	222		449
	240		571		368		455
5L-4751	595		572	5P-0747	227		461
	597		1111		230		467
5L-4758	707		1114		374		514
5L-7200	374		1120		388		540
	381		1123		392		542
5M-0578	413		1125	5P-0761	226		548
	417		1132		227		556
5M-1179	345		1134		228		558
5M-2057	825		1176		230		573
	829	5M-3034	369		231		574
	869	5M-3038	473		388		576
	872	5M-3062	273		392		578
	875		274	5P-0767	138		581
	877		275		1137		590
	880		278	5P-0840	39		593
	883		280		41		596
	886		283		43		607
	889		285		54		610
5M-2894	24		288		56		657
	28		290	5P-1075	128		659
	60		292		228		788
	71		294		231		790
	73		297		273		792
	76		300		274		794
	81		302		275		796
	82		305		278		809
	85		309		280		992
	88		1181		283		1017
	90	5M-4987	479		285		1019
	93	5M-6126	473		288		1022
	117	5M-6214	576		290		1143
	118		578		292		1144
	119		926		294		1145
	123	5M-7878	492		297		1147
	124	5M-7925	413		300		1172
	130	5M-8500	1017		302		1177
	138		1019		305		1178
	140		1022		309		1209
	144		1209		374	5P-1251	155
	163	5M-9548	500		449	5P-1255	121
	186		503		455	5P-1262	138
	188	5N-2840	1132		461	5P-1291	829
	190		1134		467	5P-1327	999
	195	5P-0047	990		732		1000
	198	5P-0370	917		1031	5P-1404	182
	200	5P-0537	19		1108		184
	203		20		1111		836
	217		21		1114	5P-1442	193
	219		1161		1117	5P-1465	154
	224		1162		1120		155
	326	5P-0597	161		1123	5P-1471	161
	338		167		1125		167

► **PRIMARY REFERENCE**

PART NUMBER INDEX

Part	Page	Part	Page	Part	Page	Part	Page
	169	5P-4924	193	5P-7465	780		651
	171	5P-5045	474	5P-7466	763		652
	317	5P-5296	473		767		654
5P-1680	1091	5P-5297	474	5P-7467	763		815
5P-2228	657	5P-5374	604		767		820
	659		606	5P-7468	449	5P-8247	215
5P-2424	555		609		455		238
5P-2546	623		612		461		386
	624		615		467		429
	625	5P-5598	124		773	5P-8249	601
	626	5P-5623	227	5P-7469	449		602
	629		231		455	5P-8250	981
	630		402		461		982
5P-2566	560		406		467		983
	562	5P-5639	175		773		984
	606		1093	5P-7483	540	5P-8435	1048
	609	5P-5649	560		542		1050
5P-2618	180		562		1091		1052
	181		566	5P-7513	560	5P-8441	1031
5P-2955	273	5P-5672	1031		562	5P-8444	773
	274	5P-5677	265		1146	5P-8445	1099
	275	5P-5678	19	5P-7514	566	5P-8472	432
	278		20	5P-7592	429		434
	280	5P-5908	1031	5P-7593	746		436
	283	5P-5924	1031		755		439
	285	5P-5931	1091		757		441
	288	5P-5969	1019	5P-7665	484		444
	290		1022		485	5P-8500	1
	292		1105		487		193
	294		1209	5P-7679	492		206
	297	5P-5991	193	5P-7701	119		209
	300	5P-6010	1202	5P-7814	119		516
	302	5P-6025	228	5P-7957	1158		540
	305		232		1160		542
	309	5P-6298	369	5P-7970	1034		547
	1181	5P-6313	367	5P-8066	479		833
5P-3620	500	5P-6314	367		481		835
5P-3930	474	5P-6605	1017	5P-8068	119	5P-8522	275
5P-3948	1107		1019	5P-8112	763		278
	1110		1022		767		280
	1113		1084	5P-8194	474		283
5P-4057	419		1085	5P-8210	449		285
5P-4115	384		1086		455		288
	1204		1087		461		294
	1219	5P-6863	462		467		297
5P-4116	175		468	5P-8245	61		300
	242	5P-6864	462		69		302
	1034		468		75		305
	1091	5P-6874	1139		140		309
5P-4142	65		1140		386	5P-8525	175
5P-4255	71	5P-6882	1097		389	5P-8998	419
	73	5P-6944	188		393	5P-9186	816
5P-4295	990		190		413	5P-9299	144
5P-4325	317		193		414	5P-9439	481
5P-4423	1007	5P-7070	1094		417	5P-9658	431
	1202	5P-7086	384		419	5S-0003	124
5P-4432	1007	5P-7211	526		423		393
5P-4868	138		588		429	5S-0581	146
5P-4869	167		590		474	5S-7001	904
	169		1091		481	5S-7008	472
	171	5P-7213	488		646	5S-7349	215
5P-4889	449		497		647		1143
	455	5P-7462	200		648		1152
	461	5P-7463	200		649	5S-7379	275
	467	5P-7464	780		650		278

PART NUMBER INDEX

Part	Page	Part	Page	Part	Page	Part	Page
	280		▶749		278	6J-2245	358
	283	6E-0398	749		280	6J-2419	424
	285	6E-0402	749		283		426
	288	6E-1108	744		285		718
	294	6E-1109	744		288	6J-2680	773
	297	6E-1111	744		294	6J-2797	748
	300	6E-1183	755		297	6J-3473	429
	302	6E-1571	716		300	6J-3774	968
	305	6E-1607	721		302	6J-3991	661
	309	6E-1752	825		305		663
	1139		829		309		665
5S-7382	514	6E-1835	903	6H-9361	825	6J-5179	917
	661	6E-2059	825		829		935
	663		829	6I-0213	204		936
	665	6E-2060	825	6I-0901	104		937
5S-7383	1176		829	6I-0928	52		938
5S-7816	500	6E-3113	▶748		53		948
	503		997		55		952
5S-8712	780	6E-3976	748	6I-1055	39		953
5V-0594	167	6E-3980	748		41		966
	169	6E-4096	714		43		967
	171	6E-4098	714	6I-1418	239		969
5V-0770	1099	6E-4100	720		240		971
5V-1474	1093	6E-4102	720		402		973
5V-1496	1183	6E-4240	723		406		974
	1185	6E-4350	712	6I-1458	77		975
	1188	6E-4351	712		78		976
	1190	6E-4352	712		79		980
5V-1497	1200	6E-4353	712		80	6J-6439	903
5W-1437	323	6E-4358	716	6I-2431	152	6J-6680	1005
		6E-4363	716	6I-2435	152	6J-6703	1002
		6E-4364	716		157	6J-9121	746
6		6E-4365	716	6I-2505	160	6J-9482	987
		6E-4366	716	6I-2506	160	6J-9747	751
6A-5591	69	6E-4367	716	6I-3623	65		753
6B-6205	195	6E-4370	716	6I-3624	65	6J-9748	751
	198	6E-4373	716	6I-3625	65		753
6B-6863	474	6E-4374	716	6I-3638	11	6K-3273	1188
6C-3060	206	6E-4382	701		13		1190
	209	6E-4383	701		▶446	6K-3630	998
6C-3680	1093	6E-4385	712	6I-4025	54	6K-3632	593
6D-1641	1108	6E-4392	701		56		1178
	1111		▶721	6I-4421	39	6K-4934	275
	1114	6E-4401	721		41		278
	1117	6E-4403	723		43		280
	1120	6E-4404	723	6I-4465	160		283
	1123	6E-4614	712	6I-4575	18		285
	1126	6E-4626	714	6I-6547	1137		288
	1129	6E-4907	901	6I-8500	473		294
	1132	6E-4976	748	6I-8507	429		298
	1134	6E-5066	798	6I-8511	429		300
	1137		800	6I-8514	796		302
6D-1746	516	6E-5479	701	6I-8516	790		305
6D-2667	1107		712		792		309
	1116	6F-0711	518		796	6K-4935	275
6D-3033	395		520	6I-8675	928		278
	398		521		929		280
	400	6F-4161	994	6I-8724	413		283
6D-4247	389	6F-4855	345	6I-9784	473		285
	393	6F-6673	471	6I-9785	473		288
6D-5801	327	6F-7045	373	6I-9786	473		294
6D-6099	317		374	6I-9788	473		298
6E-0381	865	6H-3615	1174	6J-1038	661		300
	866	6H-3956	586		663		303
6E-0397	741	6H-4005	275		665		306

▶ **PRIMARY REFERENCE**

PART NUMBER INDEX

Part	Page
	309
6K-6307	447
	453
	459
	465
	703
	763
	767
	798
	800
	802
6K-8162	901
6K-8498	419
6K-8714	481
6K-9632	1206
	1222
6L-4783	481
6L-5359	449
	455
	461
	467
6L-9952	1137
6L-9965	419
6M-5062	722
	913
	914
	915
6N-1931	130
6N-2944	138
6N-2985	118
	447
	453
	459
	465
6N-3279	369
6N-3826	369
6N-7523	206
	209
6N-8744	1029
6P-1301	1093
6P-1735	413
6P-1736	413
6P-2216	544
6P-4977	424
	426
6P-5317	414
	417
6P-5332	500
6P-6926	1172
6P-7704	474
6P-8269	540
	542
6P-8931	604
	606
	609
	612
	615
6S-2828	429
6S-2829	429
6T-0062	413
6T-0064	413
6T-0363	369
6T-0364	429
6T-0371	369
6T-0372	369
6T-0465	227
	230
	374
6T-0850	413
6T-1140	601
6T-1142	▶601
	643
	644
	645
	691
	692
	693
	694
6T-1698	206
	209
	540
	542
	593
6T-2173	432
	434
	436
	439
	441
	444
6T-3382	909
6T-3631	184
	246
	275
	278
	280
	283
	285
	288
	292
	294
	297
	300
	302
	309
6T-3632	184
	246
	275
	278
	280
	283
	285
	288
	292
	294
	297
	300
	302
6T-3633	184
	246
	275
	278
	280
	283
	285
	288
	292
	294
	297
	300
6T-3643	327
	1107
	1110
	1113
	1116
	1119
	1122
	1125
6T-3714	447
	453
	459
	465
6T-3852	429
6T-3853	429
6T-6708	334
6T-6970	246
6T-7058	402
	406
6T-7405	667
6T-8089	526
	590
6T-8115	384
6T-8714	1174
6T-8801	604
	606
	609
	612
	615
6T-9222	500
	503
6T-9244	910
6T-9927	540
	542
6V-0128	19
	20
	21
6V-0273	809
6V-0400	990
6V-0473	473
6V-0484	182
	184
	698
	699
	836
	875
	877
	880
	883
	886
	889
6V-0662	432
	434
	436
	439
	441
	444
6V-0663	432
	434
	436
	439
	441
	444
6V-0664	432
	434
	436
	439
	441
	444
6V-0683	200
6V-0852	119
	188
	190
	419
	447
	453
	459
	465
	703
	763
	766
	798
	800
	802
	804
	836
	869
	872
	875
	877
	880
	883
	886
	889
	990
6V-0855	413
6V-0894	1037
	1039
	1072
	1165
	1168
6V-0974	704
6V-1051	1076
6V-1179	481
	807
	808
6V-1193	592
6V-1197	22
	710
6V-1232	1076
6V-1249	780
6V-1322	369
6V-1355	155
6V-1438	138
6V-1581	138
6V-1582	138
6V-1614	1042
	1045
6V-1668	334
6V-1720	419
6V-1722	1137
6V-1723	667
	668
	669
	670
	671
	672
	673
	674

▶ **PRIMARY REFERENCE**

PART NUMBER INDEX

Part	Page	Part	Page	Part	Page	Part	Page
	675		400		704		770
	676	6V-1971	1		763		773
	677	6V-2226	10		767	6V-5188	483
	678	6V-2314	1076		798	6V-5200	816
	679	6V-2381	121		800	6V-5201	821
	680	6V-2382	121		802	6V-5230	1147
	681	6V-2404	429		804	6V-5266	449
	682	6V-2478	474		836		455
	683	6V-2491	327		869		461
	684	6V-2495	1108		872		467
	685		1111		875	6V-5326	712
	686		1114		877		723
	687		1117		880	6V-5387	447
	688		1120		883		453
	689		1123		886		459
	690		1126		889		465
6V-1724	667		1129		990	6V-5393	904
	668		1132	6V-4248	25	6V-5555	840
	669		1135		69		842
	670	6V-2689	377		490		844
	671		402	6V-4298	314		846
	672		406	6V-4349	773		848
	673		1076	6V-4429	26		850
	674	6V-2722	235	6V-4589	43		852
	675	6V-3251	103		119		854
	676	6V-3263	604		182		856
	677		606		184		859
	678		609		186		867
	679		612		188	6V-5556	869
	680		615		212		872
	681	6V-3266	940		380		875
	682	6V-3298	432	6V-4636	813		877
	683		434		818		880
	684		436	6V-5048	119		883
6V-1725	667		439		163		886
	668		441		186		889
	669		444		188	6V-5586	701
	670	6V-3545	1076		190		721
	671	6V-3668	490		338		722
	672		815		340	6V-5645	327
	673		820		353	6V-5654	1091
	674	6V-3669	755		355	6V-5683	327
	675		757	6V-5049	54	6V-5758	193
	676	6V-3677	65		56	6V-5764	221
	677	6V-3683	326		119	6V-5817	1205
	678	6V-3823	490		182	6V-5818	1206
	679	6V-3830	82		184	6V-5839	25
	680		85		195		69
	681		88		198		195
	682		90		200		198
	683	6V-3940	236		338		389
	684		1019		340		393
	685		1022		352		490
	686		1209	6V-5050	1137		505
	687	6V-3964	239	6V-5063	140		825
	688		240	6V-5064	140		829
	689	6V-3965	119	6V-5065	102		1222
	690		188	6V-5142	897	6V-5841	484
6V-1820	200		190		898		485
	490		419	6V-5185	763		487
6V-1889	278		449		767	6V-5842	481
	283		455		770	6V-5845	746
	288		461		773	6V-5851	1215
	300		467	6V-5186	763		1218
	310		499		767	6V-6213	1215

► **PRIMARY REFERENCE**

PART NUMBER INDEX

Part	Page	Part	Page	Part	Page	Part	Page
	1218		323		848	6V-8637	763
6V-6228	722		370		850		766
6V-6609	100		840		852		773
	101		854		856		838
	103		867		859	6V-8638	193
	140	6V-8189	215		869		703
	363		273		872	6V-8639	990
	366		274		990	6V-8641	448
6V-6718	248		275	6V-8398	193		454
6V-6789	314		278		448		460
6V-6864	1222		281		454		466
6V-6888	1215		283		460	6V-8642	703
6V-6923	213		285		466	6V-8647	448
6V-7238	138		288		703		454
6V-7357	260		290		763		460
	264		292		766		466
	526		294		772	6V-8716	126
	590		298		990		128
	1093		300	6V-8400	447		448
	1165		303		448		454
	1168		306		453		460
	1204		309		454		466
	1216		1181		459		766
	1219	6V-8200	901		460		770
6V-7646	413	6V-8212	195		465	6V-8721	182
	1102		198		466		184
	1183	6V-8218	862		722	6V-8723	193
	1185	6V-8237	748		737	6V-8724	195
	1188	6V-8245	155		739		198
	1190	6V-8260	118		773		200
	1216	6V-8336	593	6V-8556	784		732
	1219	6V-8351	721	6V-8625	144		773
6V-7687	514	6V-8369	382		193		784
6V-7688	987	6V-8370	381		195	6V-8740	766
	989	6V-8374	246		198	6V-8777	784
6V-7732	826	6V-8376	327		200	6V-8801	238
	830		1037		448		273
6V-7743	526		1039		454		274
	590		1107		460		290
6V-7744	472		1110		466		292
	527		1113		763		294
	529		1116		766		298
	531		1119		772		300
	533		1122	6V-8627	448		303
	535		1125		454		306
	537		1165		460		309
	826		1168		466		552
	830	6V-8397	134	6V-8632	124		661
	1037		155		128		663
	1039		193	6V-8634	195		665
	1165		448		198		1037
	1168		449		200		1039
6V-7981	481		454		448		1165
6V-8002	821		455		454		1168
6V-8097	826		460		460	6V-8836	1222
	830		461		466	6V-8928	1017
6V-8109	1151		466	6V-8635	119		1019
6V-8133	751		467		126		1022
6V-8149	737		732		703		1209
	739		773	6V-8636	134	6V-8936	155
6V-8185	696		784		195	6V-8937	773
6V-8188	126		836		198	6V-8941	784
	217		842		200	6V-8969	1161
	219		844		784		1162
	224		846		836	6V-8988	763

► **PRIMARY REFERENCE**

PART NUMBER INDEX

Part	Page
	766
6V-8990	763
	767
6V-8994	134
	195
	198
	200
	784
6V-9001	773
6V-9002	772
	990
6V-9007	703
	763
	766
6V-9008	448
	454
	460
	466
	703
6V-9023	328
6V-9156	1141
6V-9168	134
	195
	198
	200
	449
	455
	461
	467
	784
	836
6V-9169	764
	767
6V-9182	448
	454
	460
	466
	641
	766
	770
6V-9189	269
	272
	1034
6V-9313	987
	989
6V-9335	175
6V-9632	175
	1078
6V-9746	126
	128
	448
	449
	454
	455
	460
	461
	466
	467
	641
	703
	704
	763
	766
	767
	770
	773
	784
	838
6V-9829	848
	850
	852
6V-9832	128
6V-9833	126
6V-9839	703
	766
	770
6V-9853	126
	128
6V-9872	990
6V-9873	772
6V-9874	703
6V-9875	737
	739
6V-9876	155
6V-9877	641
6W-6672	200
6Y-0061	473
6Y-0206	1081
	1172
6Y-0469	633
	636
6Y-0473	2
	623
	624
	625
	626
	627
	628
	629
	630
	631
	632
	633
	634
	636
	637
	639
	640
	646
	647
	648
	649
	650
	651
	652
	654
	655
	657
	659
6Y-0553	623
	625
	628
6Y-0556	624
	626
	627
6Y-0611	524
6Y-0859	434
	436
	439
	441
	444
6Y-0860	432
6Y-0926	413
6Y-0984	413
6Y-1336	432
	434
	436
	439
	441
	444
6Y-2065	112
6Y-2130	428
6Y-2704	413
	417
6Y-2736	816
6Y-2737	816
6Y-2811	473
6Y-3394	1003
	1004
	1005
6Y-3526	▶731
	759
6Y-3732	1017
	1019
	1022
	1209
6Y-3914	633
	634
	635
	636
	637
6Y-3982	413
6Y-3988	731
6Y-4124	▶672
6Y-4638	506
6Y-4771	473
6Y-4834	473
6Y-4846	473
6Y-5010	479
6Y-5094	1033
6Y-5113	1140
6Y-5540	981
	982
6Y-5911	473
6Y-5912	474
6Y-7243	965
	978
	▶995
6Y-7244	995
6Y-7245	995
6Y-7246	995
6Y-7385	1102
6Y-9373	413
	417
6Y-9508	596
6Y-9509	596
7B-3028	447
	453
	459
	465
7B-3039	825
	829
7B-3235	140
	429
7B-9665	512
	525
7C-1445	71
	73
7C-6514	29
7C-8634	136
7D-1195	826
	830
7D-1649	231
	429
	1141
7D-1677	488
7D-4108	788
	790
	792
	794
	796
7D-5962	217
7D-7233	155
7E-0659	112
7E-6455	161
7E-6508	19
	20
	21
7E-9898	869
	872
7F-0560	235
7F-3488	369
7F-3491	369
7F-3525	369
7F-6998	1163
7F-8607	1107
	1110
	1113
7F-9090	119
7G-1596	413
7G-2343	474
7G-2830	474
7G-3228	228
	231
	396
	398
	400
	409
7G-3832	782
	790
7G-3833	777
	782
	790
7G-3834	777
	782
	790
7G-4332	633
	634
	636
	637
	638
	639
	640
7G-4824	1012
	1081

7

▶ **PRIMARY REFERENCE**

PART NUMBER INDEX

Part	Page	Part	Page	Part	Page	Part	Page
	1172	7J-0204	228		306		703
7G-5221	655		231		309		712
	657		389		314		766
	659		393		327		770
7G-5831	432		419		374		870
	434		500		384		873
	436		503		389		875
	439	7J-2036	646		392		877
	441		647		393		880
	444		648		396		883
7G-5832	432		649		398		886
	434		650		400		889
	436		651		403		904
	439		652		406	7M-8651	369
	441		654		409	7N-0452	60
	444	7J-3296	937		560	7N-0718	226
7G-5984	760	7J-3297	755		562		230
	990		757		732		▶373
7G-5985	760		937		842	7N-1210	114
	990	7J-4169	998		844	7N-1996	402
7G-5986	760	7J-8611	419		846		406
	990		449		848	7N-2059	367
7G-6442	667		455		850	7N-2156	130
	668		461		852	7N-4333	886
	669		467		856		889
	670	7J-8956	751		859	7N-7559	124
	671		753		1031	7N-7628	144
	672	7J-9108	128		1093	7N-7878	144
	673		703		1097	7N-8008	246
	674	7J-9933	870		1108	7N-9801	383
	675		873		1111	7P-4190	345
	676		875		1114		1037
	677		877	7K-3176	1107		1039
	678		880		1110		1165
	679		883		1113		1168
	680		886	7K-6058	731	7P-7427	582
	681		889	7L-2894	369	7R-3029	395
	682		903	7L-9061	186		398
	683	7K-1181	128		188		400
	684		217		380	7S-2042	516
7G-6448	673		219	7M-0324	369		547
7G-6454	674		224	7M-0325	370	7S-3916	198
7G-6623	512		226	7M-0326	369	7S-3919	198
	522		230	7M-0327	369	7S-5005	35
7G-7379	604		236	7M-1201	422	7S-8920	449
	606		246	7M-7219	1099		455
	609		256	7M-8485	82		461
	612		258		85		467
	615		259		88	7S-8921	449
7G-7541	490		260		90		455
7G-8427	490		262		126		461
7G-8664	595		264		128		467
	597		265		155	7T-0628	784
7G-8666	595		275		258	7T-1099	200
	597		278		448		236
7H-1447	825		281		454		246
	829		283		460		297
7H-3608	484		285		466		321
	485		288		500		540
	487		290		503		1078
7H-4566	413		292		506	7T-1149	604
7H-7628	429		294		518		606
7H-7658	474		298		520		609
7H-9737	696		300		521		612
7I-2272	236		303		641		615

▶ **PRIMARY REFERENCE**

PART NUMBER INDEX

Part	Page	Part	Page	Part	Page	Part	Page
7T-1150	604	7T-4214	661		439	7W-6534	414
	606	7T-4501	998		444	7W-7381	447
	609	7T-4502	998	7T-8130	413		453
	612	7T-4515	508	7T-8136	417		459
	615		509	7T-8148	▶412		465
7T-1151	5	7T-4532	1027		478		869
	604	7T-4616	661	7T-8330	604		872
	606	7T-4697	655		612		875
	609	7T-4699	655		615		877
	612		657	7T-8555	655		880
	615		659		657		883
	618	7T-4700	655		659		886
7T-1152	5		657	7T-8816	473		889
	604		659	7T-8875	419	7X-0307	655
	606	7T-4924	226	7T-8876	419	7X-0326	449
	609		230	7T-8891	1205		455
	612	7T-5067	582	7T-9123	370		461
	615	7T-5140	926	7T-9147	917		467
	618		932	7T-9153	916		560
7T-1153	5		933	7T-9272	473		562
	604		934	7T-9307	655	7X-0339	217
	606	7T-5147	582		657		219
	609	7T-5156	582		659		224
	612	7T-5558	943	7T-9333	788	7X-0342	604
	615		947		794	7X-0345	604
	618		948	7T-9369	474		606
7T-1474	429		966	7T-9515	381		609
7T-1475	429		973	7T-9518	182		612
7T-1885	413		974	7T-9526	432		615
	417		975		434	7X-0349	512
7T-2390	672		▶982		436	7X-0366	432
	675	7T-5559	950		439		434
	679		951		441		436
7T-2392	672		952		444		439
	680		953	7T-9527	432		441
7T-2394	669		966		434		444
	683		967		436	7X-0369	621
7T-2524	432		980		439		622
	434		▶983		441	7X-0399	604
	436	7T-5793	539		444		612
	439	7T-5798	539	7T-9788	413		615
	441	7T-5856	1031	7T-9832	413	7X-0402	513
	444	7T-6079	604	7T-9837	413	7X-0406	513
7T-2530	432		606		417		643
	434		609	7T-9946	429		644
	436		612	7U-4892	327	7X-0408	609
	439		615	7V-0762	585		645
	441	7T-6578	473	7V-5191	1099	7X-0474	479
	444	7T-6580	473	7V-6571	198	7X-0513	548
7T-2540	▶655	7T-6581	473		200	7X-0515	206
	▶657	7T-6660	994	7W-0570	140		209
	691	7T-6799	402	7W-0843	82		548
	694		406		88	7X-0531	691
7T-3746	553	7T-6850	968		93		692
	554	7T-6922	575	7W-0844	82		764
	987	7T-6923	575		88		767
	989	7T-6924	575		93	7X-0537	998
7T-3974	369	7T-6994	413	7W-0845	82	7X-0562	370
7T-4200	661		417		88	7X-0578	1031
	663	7T-7054	633		93		1034
	665		636	7W-2297	178		1078
7T-4209	661	7T-7305	987	7W-3447	790	7X-0582	134
7T-4213	661		989		792		290
	663	7T-7370	248		796		292
	665	7T-8001	434	7W-5444	23		784

▶ **PRIMARY REFERENCE**

PART NUMBER INDEX

Part	Page
7X-0584	1076
7X-0594	562
	565
	566
7X-0608	1006
7X-0616	604
	612
	615
7X-0618	1146
7X-0766	586
7X-0818	403
	406
7X-0851	744
	749
7X-2049	1107
	1110
	1113
	1119
	1122
	1125
	1131
7X-2438	816
7X-2532	560
	562
	565
	566
7X-2533	265
	270
	1143
	1152
7X-2537	718
7X-2538	1028
	1034
7X-2540	1034
7X-2541	726
7X-2548	327
	943
7X-2549	449
	455
	461
	467
	514
	773
	842
	844
	846
	848
	850
	852
	856
	859
7X-2550	773
7X-2551	449
	455
	461
	467
	481
7X-2552	968
7X-2555	136
	522
	540
	542
	548
7X-2559	788
	790
	792
	794
	796
7X-2562	926
	994
7X-2563	275
	278
	281
	283
	285
	288
	295
	298
	300
	303
	306
	309
	548
	593
	1178
7X-2564	575
7X-2565	206
	209
	560
	562
	565
	566
	575
	593
	926
7X-2567	916
7X-2568	809
	987
	989
7X-2573	935
7X-2574	917
	935
	936
	937
	938
	948
	952
	953
	966
	967
	969
	971
	973
	974
	975
	976
	980
7X-2576	596
7X-2578	206
	209
	928
	929
7X-2580	512
	582
7X-2581	539
	994
	1153
7X-2582	522
7X-2584	523
7X-2585	512
	522
7X-2619	1083
7X-3159	1072
7X-3373	369
7X-3391	590
	998
7X-3392	1146
7X-4736	167
	169
	171
7X-4777	432
	434
	436
	439
	441
	444
7X-6222	259
	403
7X-6315	248
	249
	251
7X-7644	1231
7X-7700	208
	211
7X-7702	1206
7X-7729	126
	138
	151
	152
	157
	158
	166
	193
	206
	236
	298
	300
	306
	310
	320
	449
	455
	461
	467
	516
	527
	529
	531
	533
	535
	537
	540
	542
	547
	560
	562
	565
	566
	568
	569
	581
	588
	590
	641
	736
	737
	739
	760
	764
	767
	773
	782
	784
	1011
	1017
	1019
	1022
	1029
	1034
	1037
	1039
	1084
	1085
	1086
	1087
	1088
	1090
	1097
	1108
	1111
	1114
	1117
	1120
	1123
	1126
	1129
	1132
	1134
	1141
	1146
	1155
	1165
	1168
	1172
	1174
	1182
	1198
	1209
7X-7877	403
	407
7X-7900	1080
7X-7927	1205
	1206
7X-7928	1205
	1206
7X-7929	1205
	1206
7X-7930	1205
	1206
7Y-0467	816
7Y-4224	886
	889
7Y-5226	1076
7Y-8763	770
	842
	844
	846
	848
	850
	856

► **PRIMARY REFERENCE**

PART NUMBER INDEX

Part	Page
	859
8	
8B-2026	155
8B-4624	516
8B-7789	490
8B-9294	314
8C-0573	826
	830
8C-3085	863
8C-3089	163
	369
	730
8C-3093	119
8C-3101	500
	503
8C-3110	813
	818
8C-3174	777
	782
8C-3205	780
	782
	784
	788
	790
	792
	794
	796
	892
8C-3206	449
	455
	461
	467
	737
	739
	746
	760
	764
	767
	777
	792
	796
	804
	826
	830
	840
	854
	867
	892
	901
	990
8C-3222	749
8C-3334	423
8C-3364	448
	454
	460
	466
8C-3442	1017
	1019
	1022
	1209
8C-3445	119
8C-3446	119
8C-3447	447
	453
	459
	465
8C-3451	698
	699
8C-3681	155
8C-4436	604
	606
	609
	612
	615
8C-5193	712
8C-5226	1075
8C-5230	119
8C-5237	711
8C-5245	755
	757
8C-5607	259
	260
	265
	1143
	1152
8C-5608	259
	260
	262
	264
	265
	270
	1143
	1152
8C-5917	227
	230
8C-5918	227
	228
	230
	231
8C-6354	395
8C-6358	235
8C-6362	939
8C-6364	1033
8C-6561	437
	442
8C-6712	840
	854
	867
8C-6857	731
8C-6877	627
	628
	631
	632
8C-6913	112
	471
	560
	571
	572
8C-6921	235
8C-7581	334
	1010
8C-8431	763
	766
	869
	872
8C-8451	259
	260
	262
	264
8C-8514	1212
	1213
	1214
8C-8585	516
	527
	529
	531
	533
	535
	537
	548
	550
	551
	1080
	1178
8C-8722	539
8C-8723	596
	1177
	1178
8C-8843	1178
8C-8844	593
8C-8992	998
8C-9161	744
8C-9660	369
8C-9987	911
8D-1817	429
8D-1819	429
8D-3932	1148
8D-4771	471
8D-9671	732
8D-9739	474
8D-9947	1132
	1134
8E-0618	411
	412
8E-0719	604
	606
	609
	612
	615
8E-1118	1102
8E-1205	516
	547
8E-1454	583
8E-1455	583
8E-1497	▶583
	970
8E-1848	1003
	1004
	1005
8E-2139	648
	649
8E-2481	432
	434
	439
8E-2685	1017
	1019
	1022
	1209
8E-2837	604
	606
	609
	612
	615
8E-2898	604
	606
	609
	612
	615
8E-2899	604
	606
	609
	612
	615
8E-3039	▶741
8E-3518	412
8E-3519	412
8E-3600	790
	792
	796
8E-4051	417
8E-4059	634
	635
	637
8E-4060	634
	635
	637
8E-4061	633
	636
8E-4062	633
	636
8E-4193	981
	982
	983
	984
8E-4194	981
	982
	983
	984
8E-4205	▶584
	977
8E-4206	584
8E-4209	584
8E-4216	584
8E-4218	584
8E-4272	635
8E-4457	633
	634
	635
	636
	637
8E-4458	633
	634
	635
	636
	637
8E-4505	634
	635
	637
8E-4506	634
	635
	637
8E-4513	633
	636

▶ **PRIMARY REFERENCE**

PART NUMBER INDEX

Part	Page
8E-4514	633
	636
8E-4517	▶633
	667
	672
	677
	680
	681
	682
	684
8E-4518	▶634
	667
	668
	669
	670
	671
	672
	673
	674
	675
	676
	677
	678
	679
	683
8E-4743	1003
	1004
	1005
8E-4832	527
	529
	531
	533
	535
	537
8E-5170	428
8E-5340	1003
8E-5346	1005
8E-5347	1004
8E-5818	917
8E-5922	1017
	1019
	1022
	1209
8E-6176	916
8E-6183	788
	794
8E-6303	737
	739
8E-6304	737
	739
8E-6305	809
8E-6306	809
8E-6439	▶916
	917
8E-6443	926
8E-6444	926
8E-6579	741
	▶780
8E-6580	780
8E-6581	780
8E-6619	623
	624
	625
	626
	627
	628
	629
	630
	631
	632
8E-6752	948
	952
	953
	966
	967
	969
	971
	973
	974
	975
	976
	980
8E-6758	948
	952
	953
	966
	967
	969
	971
	973
	974
	975
	976
	980
8E-6856	1017
	1019
	1022
	1084
	1085
	1086
	1087
	1088
	1090
	1209
8E-7510	646
	647
	648
	649
	650
	651
	652
	654
8E-7532	432
	434
	436
	439
	441
	444
8E-7533	432
	434
	436
	439
	441
	444
8E-7534	432
	434
	436
	439
	441
	444
8E-7561	516
	547
8E-7696	▶673
	691
	694
8E-7697	▶673
8E-7698	▶674
8E-7699	▶674
8E-7700	▶675
8E-7791	1012
	1081
	1172
8E-8292	1205
8E-8293	1205
8E-8299	474
8E-8301	492
8E-8303	473
8E-8304	473
8E-8307	413
	417
8E-8310	413
8E-8334	737
	739
8E-9289	512
	522
8E-9799	671
8F-1434	370
8F-3437	374
8F-4028	596
8F-7702	345
	1037
	1039
	1165
	1168
8F-8151	1137
8F-9516	623
	624
	625
	626
	627
	628
	629
	630
	631
	632
8G-4014	540
	542
8H-1603	419
8H-2768	488
8H-3127	19
	20
	21
8H-3532	749
	757
8H-5303	373
	374
8H-5306	373
8H-5352	473
8H-8769	182
8H-8830	661
	663
	665
8H-9818	493
8H-9819	493
8J-1665	432
	434
	436
	439
	441
	444
8J-4351	326
	449
	455
	461
	467
8J-4867	916
8J-6709	505
8J-6815	804
8J-6913	825
	829
8J-8197	1108
	1111
	1114
	1117
	1120
	1123
	1126
	1129
	1132
	1135
8J-8621	892
8J-8782	825
	829
8J-8783	825
	829
8J-9152	916
8J-9180	749
	916
8K-1433	1102
8L-2777	104
	106
	107
8L-2779	195
	198
	200
8L-2786	100
	101
	124
	144
	186
	188
	190
	195
	198
	200
	362
	364
	365
8L-6565	863
8L-7905	175
8L-8413	62
	1099
	1202
8M-2530	419
8M-4390	472
8M-4432	419
	424
	426
8M-4438	414
	417

▶ **PRIMARY REFERENCE**

PART NUMBER INDEX

Part	Page	Part	Page	Part	Page	Part	Page
8M-4553	144	8S-2331	604	8T-1158	816		558
8M-4986	449		606	8T-1159	807		604
	455		609		808		606
	461		612	8T-1445	473		609
	467		615	8T-1579	514		612
	505	8S-2634	388	8T-1583	596		615
8M-4987	449		392	8T-1714	746	8T-2659	322
	455	8S-3020	227		751		1150
	461		230		753		1151
	467	8S-4755	655	8T-1718	703	8T-2922	722
8M-4992	505		657	8T-1779	193	8T-3282	755
8M-5010	473		659	8T-1790	755		757
8M-5254	836	8S-6511	130	8T-1885	449	8T-3298	825
8M-5255	474	8S-6824	167		455		829
8M-5266	474		169		461	8T-3490	76
8M-5661	419		171		467		154
8M-6393	500	8S-7803	1099	8T-1886	449		165
8M-8157	424	8S-9008	493		455		166
	426	8S-9094	39		461		200
	449		41		467		224
	455	8S-9130	419	8T-1887	764		231
	461	8S-9191	71		767		317
	467		204		773		540
8M-8489	130	8T-0081	193		784		547
8N-0869	222	8T-0119	193	8T-1888	764		770
	226	8T-0164	448		767		784
	228		454		774	8T-3518	235
	230		460		784	8T-3519	235
	231		466	8T-1889	119	8T-3597	165
	388	8T-0267	327		200	8T-3611	773
8N-4617	160	8T-0269	722	8T-1890	119	8T-3612	165
8N-8741	167	8T-0273	711		200		321
	169	8T-0285	1083	8T-1893	774	8T-3647	726
	171	8T-0315	703		784	8T-3957	710
8N-8846	155		763	8T-1894	774	8T-4001	916
8P-0058	419		767		784		928
8P-1916	474	8T-0323	228	8T-1895	641		929
8P-1964	474		396		704	8T-4121	121
8P-2019	473		398	8T-1896	641		126
8P-2022	473		400		704		136
8P-2023	474		409	8T-1905	195		138
8P-2051	473	8T-0326	403		198		151
8P-2053	473		407		200		154
8P-2575	206	8T-0328	314	8T-2185	661		155
	209		370		663		167
8P-5244	593		403		665		169
	1178		407	8T-2223	807		171
8P-5411	317		696		808		180
8P-6363	1031		1072	8T-2225	222		181
8P-8357	414		1183		226		193
	417		1185		227		208
8P-9770	926		1188		228		209
	929		1190		230		211
	933	8T-0389	830		231		217
	934	8T-0638	219		392		219
	941		224	8T-2275	826		224
	957	8T-0643	69		830		228
	962	8T-0644	481	8T-2351	206		231
	1002		1222		209		313
8R-1803	331	8T-0666	751	8T-2501	128		314
	332		753		1017		317
8S-0527	417	8T-0671	744		1019		327
8S-0948	1111	8T-0672	749		1022		335
	1120	8T-0722	228		1209		384
	1123		231	8T-2502	556		389

► **PRIMARY REFERENCE**

PART NUMBER INDEX

Part	Page	Part	Page	Part	Page	Part	Page
	393		850		298		1114
	396		852		300		1117
	398		854		303		1120
	400		856		306		1123
	404		859		309		1126
	407		867		525		1129
	409		892		575		1132
	428		901		576		1135
	449		990		578		1155
	455		994		764	8T-4136	126
	461		1012		767		138
	467		1017		811		151
	472		1019		812		155
	483		1022		926		180
	493		1029		994		181
	505		1031	8T-4131	525		193
	526		1036		560		206
	527		1037		562		208
	529		1039		565		211
	531		1075		566		228
	533		1078		575		231
	535		1108		926		236
	537		1111		994		275
	548		1114	8T-4133	193		278
	552		1117		228		281
	560		1120		231		283
	562		1123		275		286
	570		1126		278		288
	575		1129		281		290
	576		1132		283		292
	578		1135		285		295
	641		1137		288		298
	704		1140		295		300
	732		1146		298		303
	737		1147		300		306
	739		1150		303		309
	746		1151		306		317
	751		1155		309		320
	753		1165		389		327
	760		1168		393		335
	764		1172		449		389
	767		1209		455		393
	770	8T-4122	540		461		396
	772		542		467		398
	774		604		483		400
	777		606		527		404
	780		609		529		407
	782		612		531		409
	784		615		533		449
	788		620		535		455
	790		780		537		461
	792		788		590		467
	794		790		704		493
	796		792		736		505
	803		794		782		514
	804		796		784		527
	826		939		790		529
	830		940		826		531
	835	8T-4123	275		830		533
	838		278		1031		535
	840		281		1036		537
	842		283		1075		540
	844		285		1097		542
	846		288		1108		547
	848		295		1111		548

PART NUMBER INDEX

Part	Page	Part	Page	Part	Page	Part	Page
	560		171		231		206
	562		193		259		209
	565		209		262		539
	566		228		281		548
	575		231		283	8T-4141	548
	576		313		303		575
	578		314		306		994
	588		317		309	8T-4144	481
	590		374		314	8T-4145	869
	704		384		404		872
	732		389		407		875
	737		393		1044		877
	739		404		1074		880
	760		407		1091		883
	764		449		1174		886
	767		455	8T-4139	159		889
	774		461		295	8T-4154	271
	784		467		303	8T-4167	206
	790		500		449		209
	792		503		455		596
	796		516		461		998
	826		540		467		1174
	830		542		493	8T-4171	407
	842		547		548		842
	844		552		576		844
	846		570		578		846
	848		590		596		848
	850		641		774		850
	852		737		780		852
	856		739		782		856
	859		774		784		859
	990		782		788		943
	994		784		790		1083
	1011		790		792		1098
	1029		826		794		1102
	1034		830		796		1172
	1037		835		803		1216
	1039		842		839		1219
	1075		844		842	8T-4172	217
	1084		846		844		219
	1085		848		846		224
	1086		850		848	8T-4175	917
	1087		852		850	8T-4176	493
	1088		856		852		585
	1090		859		856		774
	1108		1031		859	8T-4177	726
	1111		1078		990	8T-4178	449
	1114		1108		1017		455
	1117		1111		1019		461
	1120		1114		1022		467
	1123		1117		1108		505
	1126		1120		1111		732
	1129		1123		1114		767
	1132		1126		1143		770
	1135		1129		1144		1146
	1141		1132		1145	8T-4179	313
	1155		1135		1146		540
	1165		1137		1148		542
	1168		1146		1172	8T-4182	428
	1172		1150		1177		471
	1174		1151		1178		527
8T-4137	126		1172		1209		529
	158		1174	8T-4140	132		531
	167	8T-4138	175		133		533
	169		228		136		535

► **PRIMARY REFERENCE**

PART NUMBER INDEX

Part	Page
	537
	777
	782
	784
	790
	792
	796
	854
	1174
8T-4183	152
	449
	455
	461
	467
	556
	558
	576
	578
	764
	767
	777
	809
	992
	1017
	1019
	1022
	1108
	1111
	1114
	1209
8T-4184	449
	455
	461
	467
	514
	540
	542
	774
	826
	830
	990
8T-4185	133
	393
	428
	784
	788
	790
	792
	794
	796
	870
	873
	875
	877
	880
	883
	886
	889
	1108
	1111
	1114
	1117
	1120
	1123
	1126
8T-4186	132
	166
	217
	219
	224
	449
	455
	461
	467
	560
	562
	565
	566
	737
	739
	760
	774
	776
	782
	835
	838
	1037
	1039
	1078
	1155
	1165
	1168
8T-4187	575
8T-4189	175
	1078
8T-4190	389
	393
8T-4191	228
	231
	327
	384
	400
	516
	540
	542
	803
	842
	844
	846
	848
	850
	852
	856
	859
	1017
	1019
	1022
	1078
	1209
8T-4192	228
	231
	236
	314
	540
	542
	576
	578
	582
	588
	590
	732
	777
	780
	842
	844
	846
	848
	850
	852
	856
	859
	991
	1031
	1091
8T-4193	576
	578
	806
8T-4194	6
	8
	317
	449
	455
	461
	467
	556
	558
	581
	704
	737
	739
	842
	844
	846
	848
	850
	852
	856
	859
	1148
8T-4195	121
	126
	136
	138
	151
	152
	157
	166
	193
	217
	228
	231
	317
	404
	407
	449
	455
	461
	467
	493
	526
	531
	533
	535
	537
	540
8T-4196	136
	154
	228
	231
	396
	398
	400
	409
	449
	455
	461
	467
	472
	641
	737
	739
	746
	751
	753
	760
	764
	767
	774
	777
	780
	782
	542
	547
	568
	569
	581
	704
	736
	760
	764
	767
	770
	772
	774
	777
	782
	784
	826
	830
	838
	991
	1012
	1036
	1037
	1039
	1078
	1117
	1120
	1123
	1126
	1129
	1132
	1135
	1137
	1140
	1146
	1155
	1165
	1168
	1174

► **PRIMARY REFERENCE**

PART NUMBER INDEX

Part	Page	Part	Page	Part	Page	Part	Page
	784		441		867		449
	788		444		991		455
	790		449		993		461
	792		455		1031		467
	794		461		1091		576
	796		467		1108		993
	804		472		1111		1146
	826		493		1114	8T-4649	1174
	830		500		1148	8T-4778	522
	840		503	8T-4224	215		539
	854		514		269		788
	867		540		271		790
	892		542		273		792
	901		555		274		794
	991		556		275		796
	1029		558		278	8T-4779	540
	1135		560		281		542
	1174		562		283		833
8T-4199	327		576		286	8T-4835	661
8T-4200	327		578		288		663
	404		580		290		665
	407		582		292	8T-4895	449
	1034		585		295		455
8T-4205	175		588		298		461
	215		590		300		467
	314		596		303	8T-4896	238
	334		604		306		389
	369		606		309		393
	696		609		313		432
	1031		612		327		434
	1076		615		335		436
	1083		661		367		439
	1091		663		404		441
	1093		665		407		444
	1097		704		436		500
	1098		732		441		503
	1152		737		527		514
	1183		739		529		527
	1185		760		531		529
	1188		764		533		531
	1190		767		535		533
8T-4222	514		774		537		535
	560		777		540		537
	562		780		542		552
	565		782		718		556
	566		784		780		558
8T-4223	126		788		1028		606
	157		790		1074		610
	159		792		1078	8T-4897	661
	180		794		1176		663
	181		796		1181		665
	217		803	8T-4226	531	8T-4908	242
	219		826		533		335
	224		830		535		367
	228		839		537		404
	231		840		1029		407
	236		842		1147		1074
	313		844	8T-4231	710		1091
	314		846	8T-4241	716	8T-4910	136
	317		848	8T-4244	317		314
	327		850		596		555
	432		852		780		573
	434		854		782		574
	436		856		993		578
	439		859	8T-4648	181		580

► **PRIMARY REFERENCE**

PART NUMBER INDEX

Part	Page
	604
	606
	609
	612
	615
	780
	1146
8T-4934	599
	600
8T-4956	155
	157
	228
	232
	449
	455
	461
	467
	573
	574
	596
	760
	782
	826
	830
	1147
8T-4970	1037
	1039
	1165
	1168
8T-4994	345
	432
	434
	436
	439
	441
	444
	576
	578
	607
	610
	621
	655
	657
	659
	693
	731
8T-4999	374
	1231
8T-5001	472
8T-5005	449
	455
	461
	467
	641
8T-5030	836
8T-5041	472
	774
8T-5071	606
	609
	615
8T-5092	774
8T-5360	472
	627
	628
	631
	632
	655
8T-5361	513
	604
	609
	612
	615
	643
	644
	645
8T-5400	1206
	1222
8T-5410	1044
	1072
	1078
8T-5439	206
	209
	525
	548
	560
	562
	565
	566
	593
	994
	1178
	1180
	1181
8T-5460	276
	278
	281
	283
	286
	288
	290
	292
	295
	298
	300
	303
	306
	309
	560
	562
	565
	566
	987
	989
8T-5677	1072
8T-5911	560
	562
8T-6430	575
	576
	578
	811
	812
	994
	1180
	1181
8T-6466	155
	1097
	1108
	1111
	1114
	1117
	1120
	1123
	1126
	1129
	1132
	1135
	1137
8T-6631	1093
8T-6639	193
8T-6684	126
8T-6685	784
	1031
8T-6757	46
	49
8T-6762	419
	493
8T-6764	131
8T-6868	270
	449
	455
	461
	467
	481
	790
	792
	796
	1146
	1172
8T-6869	272
	313
8T-6871	620
8T-6912	269
8T-6936	317
8T-7044	228
	232
	389
	393
8T-7338	112
	780
	998
8T-7525	813
	818
8T-7547	242
	718
	780
8T-7566	516
	547
	1157
	1159
	1161
	1162
8T-7926	703
	763
	767
8T-7927	448
	454
	460
	466
8T-7929	449
	455
	461
	467
	774
8T-7934	82
	88
8T-8379	751
	753
8T-8381	746
	755
	757
8T-8442	813
	818
	899
	900
8T-8729	342
	361
	724
8T-8736	395
8T-8737	182
	184
	195
	236
	322
	382
	724
	803
	1044
	1046
	1047
	1048
	1050
	1052
	1054
	1058
	1061
	1062
	1063
	1064
	1066
	1069
	1070
	1071
	1142
	1215
	1218
	1222
8T-8827	388
	392
8T-8899	641
8T-8917	432
	434
	436
	439
	441
	444
8T-8919	439
	442
8T-8924	607
	610
	655
	657
	659
8T-9005	175
	1091
8T-9044	755
	757
8T-9082	1183
	1185
8T-9358	447
	453

► **PRIMARY REFERENCE**

PART NUMBER INDEX

Part	Page	Part	Page	Part	Page	Part	Page
	459		1188	9G-1930	488		829
	465	8Y-6343	1215	9G-3695	1072	9J-8126	870
	836	8Y-6388	1105		1076		873
8T-9371	1202	8Y-6400	514	9G-4101	369		875
8T-9383	323		552		370		877
8T-9386	128		556	9G-4872	2		880
8T-9388	331		558		623		883
	332		▶586		624	9K-0416	71
8T-9389	180	8Y-6859	1099		625		73
8T-9391	219	8Y-6860	1099		626	9L-5854	37
	224	8Y-8306	586		627		38
8T-9398	621				628		45
	693				629	9L-6770	215
8T-9496	514	**9**			630	9L-8925	19
	527				631		20
	529	9B-0453	323		632		21
	531	9B-0576	413		655	9L-9068	726
	533	9B-1117	1042		657	9L-9132	414
	535		1046		659	9M-0853	119
	537		1048	9G-5127	641	9M-1974	71
	552		1050	9G-5664	646		73
	556		1052		647		140
	558	9B-2596	160		648		236
8T-9527	446	9B-7233	327		649		239
8T-9530	1230		374		650		240
8T-9655	182		1037		651		338
	184		1039		652		340
	239		1107		654		393
	240		1110	9G-6744	473		424
	402		1113	9G-7516	655		426
	406		1116		657		506
8T-9756	227		1119		659		1019
	230		1122	9G-8020	474		1022
	231		1125	9G-8140	59		1209
8T-9757	227		1165	9G-8615	419	9M-1976	493
	230		1168	9G-8629	500	9M-1986	500
8T-9905	1230	9B-7237	571	9H-0362	490	9M-2008	492
8Y-3966	586		572	9H-0846	432	9M-2904	121
8Y-3998	586	9D-0630	180		434		776
8Y-4000	527		181		436	9M-3786	147
	529	9D-3767	1034		439		606
	531	9D-4439	166		441		609
	533	9D-6621	246		444	9M-4007	490
	535	9F-3691	526		493	9M-4313	500
	537		590	9H-1031	36		503
8Y-4489	392	9F-5599	369		38	9M-4355	474
8Y-5747	586	9F-5644	373		45	9M-5731	1037
8Y-5945	1099		374	9H-2082	374		1039
8Y-5965	1200	9F-6656	1230	9H-3757	369		1165
8Y-6012	1200	9F-8125	246	9H-6454	826		1168
8Y-6014	1200	9F-8999	140		830	9M-5733	1010
8Y-6024	1200	9G-0002	227	9H-8712	493	9M-5870	516
8Y-6041	1099		230	9J-0123	926	9M-5884	1017
8Y-6045	1099		231		959		1019
8Y-6046	1099	9G-0005	227		962		1022
8Y-6047	1099		230	9J-1722	892		1209
8Y-6060	1099		231	9J-1979	825	9M-6527	146
8Y-6062	1099	9G-0278	863		829	9M-7002	472
8Y-6063	1099	9G-0284	473	9J-1985	825	9M-7394	825
8Y-6064	1099	9G-0286	473		829		829
8Y-6066	1099	9G-0289	474	9J-1986	825	9M-7539	449
8Y-6067	1099	9G-0290	474		829		455
8Y-6068	1099	9G-0832	429	9J-1988	825		461
8Y-6069	1099	9G-0992	1178		829		467
8Y-6277	1183	9G-1307	1091	9J-7031	825	9M-7609	369

▶ **PRIMARY REFERENCE**

PART NUMBER INDEX

Part	Page
9M-7783	238
9M-8406	124
9M-9647	419
9N-0720	162
9N-0869	182
	184
	239
	240
	404
	407
9N-1756	908
9N-1940	162
9N-1941	162
9N-1995	606
	609
	1017
	1019
	1022
	1084
	1085
	1086
	1087
	1088
	1090
	1209
9N-2038	178
9N-6108	28
9P-0356	497
9P-1475	419
9P-1478	429
9P-1921	429
9P-1922	429
9P-2661	673
9P-2665	674
	682
9P-5708	604
	612
	615
9P-6571	1105
9P-6572	1017
	1019
	1022
	1209
9P-6911	596
9P-7072	429
9P-7121	208
	211
9P-7390	473
9P-7823	655
	657
	659
9P-8626	473
9P-9150	726
9P-9388	1139
	1140
9P-9390	1139
9P-9392	►1139
	1178
9R-1004	200
9R-1005	200
9R-2216	1107
	1110
	1113
	1116
	1119
	1122
	1125
9R-3141	447
	453
	459
	465
9R-4398	1222
9R-5616	1019
	1022
	1209
9R-6247	328
9R-7960	548
9S-1240	219
	224
9S-1305	696
9S-1351	602
9S-1366	140
9S-2544	369
9S-4167	186
	188
	190
9S-4180	869
	872
	877
	880
	883
	886
	889
9S-4181	82
	85
	88
	90
	140
	448
	454
	460
	466
	518
	520
	521
9S-4182	69
	326
	500
	503
	804
	825
	829
	840
	854
	867
	990
9S-4183	140
9S-4185	69
	140
	432
	434
	436
	439
	441
	444
	506
	773
	990
9S-4188	840
	854
	867
9S-4190	718
9S-4191	447
	453
	459
	465
	498
	500
	505
	506
	518
	520
	521
	806
	838
	862
	990
9S-5187	593
	1178
9S-5754	227
	230
9S-6130	419
9S-7710	419
9S-8001	798
	800
	869
	872
	875
	877
	880
	883
	886
	889
	892
	894
9S-8002	100
	101
	163
	479
	701
	712
	798
	800
	840
	854
	867
	869
	872
	877
	880
	883
9S-8003	69
	886
	889
	901
9S-8004	54
	56
	103
	186
	188
	190
	500
	503
	712
	808
	816
	834
	892
	894
9S-8005	69
	100
	101
	103
	186
	188
	190
	414
	417
	798
	800
	807
	808
	894
9S-8006	43
	101
	103
	119
	182
	184
	710
	712
	813
	818
	901
9S-8007	500
	503
9S-8008	718
	816
9S-8009	604
	606
	609
	612
	615
9S-8010	102
9S-8230	516
	547
	582
9S-8752	65
	71
	73
	119
	177
	203
	446
9S-9334	712
9T-0094	749
9T-0096	751
	753
9T-0098	751
	753
9T-0584	746
9T-1576	714
9T-1579	714
9T-1637	714
9T-1642	714
9T-1643	714
9T-2856	854
9T-3493	748
9T-3928	712
9T-3929	701

► **PRIMARY REFERENCE**

PART NUMBER INDEX

Part	Page	Part	Page	Part	Page	Part	Page
	712		606	9W-6990	490		652
9T-4977	749		609	9W-7416	655		654
9T-5900	749		612	9W-7417	655	9W-9916	112
	757		615	9W-7553	606	9W-9917	112
9T-9836	901	9W-3372	432	9W-7554	606	9W-9925	112
9U-8069	500		434	9W-7586	607	9W-9982	429
	503		436		610	9X-0199	381
9U-8263	1102		439	9W-7587	607	9X-0262	338
9U-8746	1102		441		610		340
9U-9229	548		444	9W-7594	10	9X-0358	1107
	576	9W-3373	432		606		1110
	578		434		607		1113
9U-9409	641		436		609	9X-1046	322
9U-9660	492		439		610		404
9V-2818	1193		441	9W-7602	926		407
9W-0194	780		444		932		1102
9W-0197	780	9W-3377	432		933		1150
9W-0198	780		434		934		1151
9W-0645	474		436	9W-7882	599	9X-1054	402
9W-0742	226		439	9W-7884	600		1031
	230		441	9W-7925	417		1093
	▶235		444	9W-7926	417	9X-1138	1163
9W-0852	175	9W-3378	432	9W-7990	994	9X-1365	248
	1031		434	9W-8269	474	9X-1386	356
	1091		436	9W-8270	474		1107
	1093		439	9W-8612	429		1110
	1163		441	9W-8681	780		1113
9W-1441	327		444	9W-8934	479		1116
9W-1442	327	9W-4159	419	9W-8940	527		1119
9W-1446	327	9W-4361	273		529		1122
9W-1447	933		274		531		1125
9W-1464	1076		290		533		1128
9W-1569	429		292		535		1131
9W-1570	429		294		537		1134
9W-1571	413		297	9W-9205	▶599	9X-1813	186
9W-1686	447		300		691		188
	453		302		692		227
	459		305	9W-9206	▶600		231
	465		309		691		343
9W-1694	641	9W-4414	917		692		347
9W-1771	996	9W-4477	▶598	9W-9392	432		348
9W-2451	1003		691		434		349
	1004		692		436		350
9W-2452	1005		693		439		351
9W-2466	606		694		441		354
	609	9W-4480	598		444		372
9W-2707	954	9W-4481	655	9W-9393	432		376
	970		657		434		378
	▶996		659		436		380
9W-2756	958	9W-4813	606		439		402
9W-2757	996		609		441		406
9W-2760	996	9W-4931	916		444		698
9W-2822	576	9W-5232	983	9W-9394	432		699
	578	9W-5334	419		434		1072
9W-2853	413	9W-5343	1014		436	9X-2027	471
9W-2938	226	9W-5541	668		439		788
	230		682		441		790
9W-2992	429	9W-5588	634		444		792
9W-3232	432		637	9W-9603	▶434		794
	434	9W-6074	661	9W-9844	646		796
	436		663		647		892
	439		665		648	9X-2038	18
	441	9W-6102	413		649		1081
	444	9W-6103	413		650		1105
9W-3301	604	9W-6359	472		651		1216

▶ **PRIMARY REFERENCE**

PART NUMBER INDEX

Part	Page
9X-2040	1019
	1022
	1174
	1209
9X-2041	1017
9X-2042	250
	327
	404
	407
	1084
	1085
	1086
	1087
	1088
	1090
	1172
9X-2043	1074
	1081
9X-2045	1074
	1081
	1172
9X-2046	1105
	1172
9X-2125	419
	424
	426
	1182
	1198
9X-2185	1093
9X-2205	208
	211
9X-2235	126
	128
9X-2475	525
9X-2480	260
	345
	1152
9X-2546	264
9X-2858	716
9X-3401	344
	381
	384
	1044
9X-3402	322
	347
	1142
9X-3452	1031
9X-3463	267
	268
	269
	271
9X-4244	269
	271
9X-4385	409
9X-4493	384
9X-4584	604
	606
	609
	612
	615
9X-4609	450
	456
	462
	468
9X-4610	1076
9X-5699	227
	230
9X-6151	596
9X-6153	228
	232
9X-6165	259
	260
	262
	264
	265
	270
	1143
	1152
9X-6257	248
9X-6281	1037
	1039
	1165
	1168
9X-6340	1231
9X-6382	1105
9X-6385	524
9X-6395	903
9X-6458	65
	73
	82
	85
	88
	90
	165
	166
	177
	200
	422
	587
9X-6615	1037
	1039
	1165
	1168
9X-6772	313
	1078
	1204
9X-7202	508
9X-7269	744
9X-7287	181
9X-7317	204
9X-7345	516
9X-7373	1031
9X-7378	479
	1027
	1108
	1111
	1114
	1117
	1123
	1126
	1129
	1132
	1135
9X-7380	1108
	1111
	1114
	1117
	1120
	1123
	1126
	1129
	1132
	1135
9X-7381	1108
	1111
	1114
	1117
	1120
	1123
	1126
	1129
	1132
	1135
9X-7382	1107
	1108
	1110
	1111
	1113
	1114
	1116
	1117
	1119
	1120
	1122
	1123
	1125
	1126
	1128
	1129
	1131
	1132
	1134
	1135
9X-7383	1108
	1111
	1114
	1117
	1120
	1123
	1126
	1129
	1132
	1135
9X-7385	1027
	1108
	1111
	1114
	1117
	1120
	1123
	1126
	1129
	1132
	1135
9X-7412	744
9X-7430	46
	49
9X-7505	595
	597
9X-8256	219
	224
	228
	232
	259
	260
	262
	264
	281
	283
	303
	306
	309
	322
	327
	335
	345
	404
	407
	450
	456
	462
	468
	526
	590
	842
	844
	846
	848
	850
	852
	856
	859
	870
	873
	875
	877
	880
	883
	886
	890
	1017
	1033
	1037
	1039
	1074
	1076
	1083
	1084
	1085
	1086
	1087
	1088
	1090
	1093
	1102
	1143
	1165
	1168
	1172
	1174
9X-8257	112
	136
	389
	393
	540
	542
	806
	833
	998

► **PRIMARY REFERENCE**

PART NUMBER INDEX

Part	Page
9X-8258	512
	522
	523
	524
	539
	582
	596
	926
	932
	933
	934
	994
	1080
	1153
	1177
	1178
9X-8260	737
	739
9X-8266	540
	542
9X-8267	1034
	1174
	1222
9X-8268	26
	450
	456
	462
	468
9X-8281	450
	456
	462
	468
9X-8399	596
9X-8408	703
9X-8600	208
	211
9X-8872	64
9X-8876	114
9X-8918	1099
9X-8979	813
	818
9X-9120	222
	388
	392
9X-9825	392
9X-9896	262
	264
	270
9Y-1792	130
9Y-6089	26
9Y-9236	155
9Z-9214	514
9Z-9407	525

0

Part	Page
002-3136	492
005-4834	413
012-0380	378
030-1707	222
	368
030-2135	413
030-7571	23
030-8538	474
031-0214	1176
031-0218	419
	424
	426
031-1119	155
031-3185	65
031-4155	27
032-9313	104
033-5853	100
	101
033-6027	193
033-6033	144
	195
	198
	200
	213
	899
	900
033-6039	193
	816
033-6042	186
	188
	190
	193
033-6043	899
	900
033-8248	155
033-9412	151
	154
034-3557	432
	434
	436
	439
	441
	444
036-9821	369
036-9823	369
045-4065	221
	370
061-6711	473
061-8561	448
	454
	460
	466
061-8639	104
	106
	109
	123
061-9455	71
	73
067-2551	163
	195
	198
	200
067-3161	655
	657
	659
068-4209	327
	1108
	1111
	1114
	1116
	1119
	1122
	1125
068-8093	473
081-8353	419
083-7784	901
090-8635	140
	141
090-9555	542
091-0081	766
	770
095-0670	813
	818
095-0843	1183
	1185
	1188
	1190
095-0878	1099
095-0939	823
095-0942	695
	816
095-0944	821
095-1207	500
	503
095-1513	894
095-1750	896
096-0015	824
096-3773	1163
096-5516	714
096-5962	1037
	1039
	1165
	1168
096-6095	712
096-6166	256
	258
	1083

1

Part	Page
100-3224	1100
100-5072	204
100-5179	1100
100-5218	19
	20
	21
100-5219	19
	20
	21
100-6211	901
100-7399	39
	41
	43
100-8010	869
	872
	875
	877
	880
	883
	886
	889
100-8011	869
	872
	875
	877
	880
	883
	886
	889
100-8012	869
	872
	880
	883
	886
	889
101-0003	1200
	1202
101-2867	1105
	1176
101-3120	165
	166
101-3125	163
101-3129	193
	228
	232
	1107
	1110
	1113
	1116
	1119
	1122
	1125
	1128
	1131
	1134
101-6603	238
101-8296	1108
	1111
	1114
	1116
	1119
	1122
	1125
	1128
	1131
	1134
101-9754	500
	503
102-2828	698
	699
102-4373	▶2
102-5861	65
102-6331	▶510
	560
	562
102-8801	226
	227
	228
	260
	388
	392
	395
	402
	403
	409
	842
	844
	846
	848
	850
	852
	1050
	1052
102-8802	128

▶ **PRIMARY REFERENCE**

PART NUMBER INDEX

Part	Page	Part	Page	Part	Page	Part	Page
	175		226		1113	103-8134	20
	184		227		1116	103-9527	1009
	186		275		1119		▶1031
	188		278		1122	104-1844	809
	195		280		1125	104-2091	322
	198		283		1128		1105
	214		285		1131	104-4820	28
	226		288		1134	104-6202	386
	227		292		1165		388
	231		294	102-8805	236		393
	265		297		244	104-6371	661
	275		300		245	104-6372	661
	280		302		290		663
	285		305		377		665
	288		309		388	104-6374	661
	294		342		392	104-6729	424
	297		343		395		426
	302		344		402	104-6730	424
	305		354		403		426
	314		384		562	104-6931	825
	356		386		1060		829
	361		388		1061	104-7574	804
	372		392		1062		▶904
	376		402		1063	105-3035	813
	378		403		1068		818
	381		803		1069	105-3484	180
	383		842		1070		181
	386		844		1071	105-8034	384
	388		846		1107	105-8183	474
	392		848		1110	105-9659	1014
	393		850		1116		1015
	395		852		1119		1016
	402		990		1128		▶1140
	406		1031		1131	106-1017	744
	409		1072		1163	106-1419	780
	508		1108		1205	106-1420	780
	509		1111		1215	106-1792	164
	698		1163		1218	106-3881	749
	699	102-8804	226		1222	106-3922	904
	803		275	102-8806	195	106-4150	419
	842		280		198		▶431
	844		285		259	106-4572	151
	846		288		260	106-5472	1037
	848		290		265		1039
	850		294		382		1165
	852		297		395		1168
	911		302		402	106-5673	54
	912		305		409		56
	1027		335		424	106-8186	518
	1031		395		1044		520
	1091		402	102-9089	22		521
	1093		403	103-0126	64	106-8187	518
	1107		406	103-0870	413		520
	1110		409	103-0871	413		521
	1113		724	103-6100	1107	106-8704	732
	1116		909		1110	106-9212	506
	1119		910		1113	106-9214	506
	1122		1037		1116	107-0583	65
	1125		1039		1119	107-3114	816
	1128		1058		1122	107-3786	403
	1131		1066		1125		406
	1134		1072		1128	107-3945	646
	1163		1076		1131		647
102-8803	195		1107		1134		648
	198		1110	103-6262	1076		649

▶ PRIMARY REFERENCE

PART NUMBER INDEX

Part	Page	Part	Page	Part	Page	Part	Page
	650	108-4086	1100		38		302
	651	108-4087	1100		45		305
	652	108-4103	1100	110-2445	155		309
	654	108-4311	1202	110-2842	718		1181
107-3946	623	108-4430	718	110-2966	957	111-8897	722
	624	108-6259	228		959	111-9251	1037
	625	108-6523	500		962		1039
	626		503	110-3292	518		1165
	629	108-6981	737		520		1168
	630		739		521	112-0858	1044
107-3947	623	108-6982	737	110-4344	75		1072
	624		739	110-4506	1148		1078
	625	108-7930	146	110-6109	1163	112-1574	448
	626	108-9372	154	110-6393	1009		454
	629	109-0072	82	110-7524	1017		460
	630		85		1088		466
107-4057	623		88		1090	112-4511	473
	624		90		1104	112-5585	473
	625	109-0077	140		1209	112-8111	246
	626		147	110-7887	402	112-8115	246
	627	109-0078	82		406	112-8116	246
	628		85	110-8318	126	112-8117	▶246
	629		88	110-8319	126		560
	630		90	110-8379	1165		562
	631	109-0119	490		1168	112-8118	246
	632	109-1633	1108	110-8760	1205	112-8124	246
107-4393	1107		1111	110-8826	126	112-9217	65
	1110		1114	110-8827	126	112-9416	246
	1113		1116	110-9734	500	112-9736	588
107-4394	1107		1120		503		590
	1110		1122	111-0343	911	113-0693	331
	1113		1125	111-1729	▶623		332
107-4399	1107		1128		691	113-2115	525
	1110		1131		692	113-4420	714
	1113		1134		693	113-5304	119
107-5769	203	109-1634	1108		694	113-5819	246
107-6174	560		1111	111-1730	▶624	114-3929	510
	562		1114		691	114-5333	1107
	565		1116		693		1110
	566		1120		694		1113
107-8084	646		1122	111-2355	11		1116
	647		1125		13		1119
	648		1128		▶75		1122
	649		1131	111-3780	1037		1125
	650		1134		1039		1128
	651	109-1657	15		1165		1131
	652		16		1168		1134
	654		▶62	111-3781	1037	114-8843	227
107-8085	646	109-3874	556		1039		230
	647		558		1165		231
	648	109-3968	506		1168		305
	649	109-4203	163	111-4919	481		392
	650	109-5674	933	111-8314	273	114-9224	641
	651	109-5675	932		274	114-9363	274
	652		934		275	114-9981	510
	654	109-5839	82		278	114-9990	510
108-1225	790		85		280	114-9998	510
	792		88		283	115-0001	510
	796		90		285	115-0482	505
108-1226	790	109-5840	82		288	115-1024	275
	792		85		290		278
	796		88		292		280
108-1847	901		90		294		283
108-3138	1102	110-0203	384		297		285
108-3612	164	110-2220	37		300		288

▶ **PRIMARY REFERENCE**

PART NUMBER INDEX

Part	Page	Part	Page	Part	Page	Part	Page
	294		1091		459		1034
	297	117-9066	175		465		1037
	300		1093	124-7562	576		1039
	302	118-4977	548		578		1084
	305	118-8586	448		▶592		1085
	309		454	124-8335	862		1086
115-1025	275		460	124-8490	1031		1087
	278		466	124-9401	423		1088
	280	118-8706	481	125-0434	140		1090
	283	119-0036	22	125-1302	327		1165
	285	119-3662	305		▶378		1168
	288	119-6058	609	125-2001	▶273	127-4832	816
	294	119-6059	609		275	127-6356	130
	297	119-6109	720		278	127-7443	367
	300	119-6110	720		285	127-9483	813
	302	119-6112	720		288		818
	305	119-6113	720		294	127-9485	813
	309	119-6114	714		297		818
115-1027	280		▶720		300	127-9490	813
	283	119-7845	701	125-5341	424		818
	302	120-4394	813	125-5835	326	128-0302	5
	305		816	125-6535	370		▶436
	309		818	125-6536	370	128-0317	146
115-1385	680	120-9027	270	125-6537	370	128-2779	864
	683		272	125-9740	334	128-2780	▶864
115-2353	82	120-9243	71	126-0747	766		894
	85		73		770	128-5040	1215
	88	121-2844	392		▶862		1218
	90	121-3307	1147	126-0748	862	128-6157	327
115-2421	234	121-9870	1216	126-1756	65	129-0997	513
115-3072	404		1218	126-1757	71	129-1000	513
	406	122-0447	46		73	129-1609	479
115-3514	505		49	126-1767	344	129-3178	264
115-6433	516	122-0450	236	126-1768	347		334
115-7087	178	122-1133	912	126-1774	402		1093
116-2810	833	122-1472	19	126-1813	842	129-3180	270
116-3211	766		20		844	129-5082	790
	770		21		846		792
116-4794	609	122-2281	516		848		796
116-6202	1107	122-3771	726		850	129-5427	71
	1110	122-3772	147		852		73
	1113	122-6606	716		856	129-5428	71
	1116	122-6607	716		859		73
	1119	122-7375	46	126-4233	▶602	129-6369	552
	1122		49		691	129-8331	275
	1125	122-8612	46		692		278
	1128		49	126-4935	140		280
	1131	122-9088	703	126-5512	447		283
	1134	123-1373	234		453		285
116-7885	82	123-2017	701		459		288
	88	123-3202	19		465		290
	93		20	126-5948	909		292
117-1385	474		21		910		294
117-2311	327	123-5150	128	126-7535	514		297
	402	123-5748	714	126-7536	514		300
	406	123-7556	701	126-7574	249		302
117-4013	595	123-7582	712		251		305
	597	124-1854	54	126-7631	11		309
117-4491	1192		56		13	129-9907	146
117-4492	1006	124-1855	54		▶238	130-1977	776
117-4897	119		56	126-8449	238	130-3139	595
117-7826	473	124-2463	180	127-0929	163		597
117-8131	1174		181	127-2170	244	130-3232	275
117-8801	65	124-6656	447		245		278
117-8929	175		453		1033		280

▶ **PRIMARY REFERENCE**

PART NUMBER INDEX

Part	Page	Part	Page	Part	Page	Part	Page
	283		527	133-7810	784		442
	285		529	133-8715	1093	137-4491	441
	288		531	133-9012	334	137-4492	436
	294		533	133-9116	203		441
	297		535	133-9906	18	137-5817	1072
	300		537	133-9907	▶18	137-6603	718
	302		540		446	137-6645	359
	305		542	134-0165	1148		365
	309	131-3981	226	134-1251	726		366
130-3233	275		230	134-2540	392	137-8793	707
	278	131-4091	473		395	137-8794	707
	280	131-4242	1099		402	137-9810	437
	283	131-5167	1099		409		441
	285	131-5879	1019	134-4126	249	138-2515	222
	288		1022		251	138-3759	473
	294		1209	134-6054	140	138-6744	146
	297	132-0338	1006		▶376	138-8175	824
	300	132-5182	749	134-7258	1231	138-8717	▶675
	302		757	134-7489	701	138-9470	675
	305	132-5183	749	135-0611	1215	139-1537	825
	309		757		1218		829
130-3265	1076	132-5789	278		1222	139-2116	275
130-3281	173		283	135-3254	388		278
	174		288	135-4928	146		280
130-4701	65		300	135-5102	998		283
130-5300	126		310	135-5105	998		285
	228		388	135-5109	998		288
	231		393	135-5111	997		290
	388		406		▶998		292
	393		500	135-5113	998		294
	395		503	135-5114	998		297
	398		1078	135-9373	984		300
	400	132-7077	1037	135-9374	941		302
	403		1039		▶984		305
	406		1165	136-1107	146		309
	409		1168	136-1122	1107	139-2455	776
	500	132-7419	1076		1110	139-2456	776
	503	132-7450	1072		1113	139-2609	676
	842		1076	136-1543	1158	139-2612	▶676
	844	132-7994	987		1160	139-2840	821
	846	132-8487	395	136-1544	1006	140-0860	388
	848		398	136-1596	413		392
	850	132-8502	588	136-3188	1222	140-7480	1143
	852		590	136-3189	1215		1152
	856	132-8876	500		1218	141-1480	162
	859	132-9455	709	136-3191	1215	141-5169	1105
130-5301	228	132-9770	338		1218	141-9784	334
	231		340	136-3193	1215	142-0860	1172
	314	132-9899	726	136-3196	1222	142-2329	39
130-6366	998	132-9900	726	136-3742	146		41
130-9191	776	133-0125	140	136-4183	67		43
130-9811	362	133-0261	357		335	142-2526	1072
	363	133-1279	500	136-4303	141	142-5867	110
130-9984	1110	133-2199	500	136-6505	1093	142-5868	69
	1113		503	136-6820	436	142-6217	37
	1122	133-2249	724	136-6821	436		38
	1125	133-3359	164	136-7226	124		45
131-0447	1076	133-5545	905	136-7227	101	142-7072	37
131-1289	432		906	137-3928	242		38
131-1651	601		907	137-3937	1230		45
	602	133-5631	595	137-4488	436	142-8620	1031
131-3093	1093		597		441	143-1288	1183
131-3539	1034	133-5901	934	137-4489	436		1185
131-3540	403	133-6614	1002		441		1188
	406	133-7023	1028	137-4490	436		1190

▶ **PRIMARY REFERENCE**

PART NUMBER INDEX

Part	Page
143-2466	294
	297
	300
	302
	305
	309
143-3553	941
143-6020	322
144-0195	1205
	1206
	1222
144-0331	1042
	1045
	1046
	1047
	1048
	1050
	1052
	1069
	1071
	1072
	1076
144-0367	138
	1091
144-1636	356
	380
144-4107	1222
144-4284	473
144-7878	474
144-9088	711
144-9101	701
145-0326	1200
	1202
145-3405	1037
	1039
	1165
	1168
145-3849	140
145-6669	173
145-7028	226
	230
	▶361
	388
	392
145-7328	1206
145-9987	173
	174
146-6346	1215
	1218
146-6669	422
146-6670	422
146-6747	1231
146-7578	990
146-9505	941
146-9506	941
147-0319	▶267
	273
	274
	275
	278
	280
	283
	285
	288
	290
	292
	294
	297
	300
	302
	305
	309
	313
147-1444	403
147-1445	402
147-1446	402
147-3527	941
147-7109	163
148-1928	447
	453
	459
	465
148-7482	15
	▶77
148-8313	193
148-8315	703
148-8316	448
	454
	460
	466
148-8318	448
	454
	460
	466
148-8323	737
	739
148-8324	703
148-8325	448
	454
	460
	466
148-8326	990
148-8327	763
	766
	773
	838
148-8333	448
	454
	460
	466
148-8334	773
148-8335	126
	703
148-8336	134
	784
	836
148-8339	126
	128
	448
	454
	460
	466
	766
	770
148-8340	990
148-8342	128
148-8345	703
148-8347	703
	763
	766
148-8353	773
148-8354	990
148-8357	448
	454
	460
	466
	703
148-8359	641
148-8360	448
	454
	460
	466
	641
	766
	770
148-8362	126
148-8363	155
148-8364	193
	448
	454
	460
	466
148-8368	448
	454
	460
	466
148-8373	448
	454
	460
	466
148-8374	193
148-8378	732
	773
	784
148-8380	763
	766
148-8392	126
	128
148-8395	69
	186
	188
	190
148-8407	806
	838
	862
	990
148-8409	718
148-8410	707
	718
148-8411	69
	773
	990
148-8415	155
148-8417	784
148-8449	703
	766
	770
149-5268	61
149-5452	134
	784
149-5933	512
	588
	590
149-6371	1107
	1110
	1113
	1116
	1119
	1122
	1125
	1128
	1131
	1134
149-7378	33
149-9107	65
149-9110	65
150-1293	1058
	1066
150-3024	193
150-3033	448
	454
	460
	466
150-3035	703
150-3058	763
	766
	869
	872
150-3065	836
	875
	877
	880
	883
	886
	889
150-4027	990
150-4046	836
150-4279	11
	13
	▶203
150-5931	228
	231
	396
	398
	400
	409
151-1150	▶941
	968
151-1151	919
	920
	▶968
151-2898	1028
151-2900	217
	219
	224
	1028
151-3015	155
151-4977	403
	406
	1054
	1056
	1058
	1064
	1066
151-5925	94
	96
	98
151-5966	65

▶ PRIMARY REFERENCE

PART NUMBER INDEX

Part	Page
151-9275	1076
152-2638	821
152-5221	490
152-7160	490
152-7162	493
152-7582	48
152-8073	633
	634
	636
	637
152-8338	911
152-8340	894
	▶911
152-8427	▶274
	280
	283
	285
	288
	302
	305
	309
152-9072	155
153-1256	146
153-2073	▶268
	290
	292
	1181
153-3129	1000
	▶1001
153-3132	999
	▶1002
153-4247	506
153-4846	▶776
	999
	1000
153-4906	103
153-5043	361
153-6230	128
153-6235	447
	453
	459
	465
153-6251	737
	739
153-6252	703
153-6259	784
153-7023	52
	53
153-7024	52
	53
	55
153-9023	146
153-9650	490
154-2558	490
154-3230	1002
154-3298	623
	624
	626
	627
	628
	629
	630
	631
	632
154-3307	623
	624
	625
	626
	627
	628
	629
	630
	631
	632
154-3322	603
154-3325	▶661
	691
	692
154-3326	661
154-3327	661
154-3329	661
154-3330	5
	▶603
154-8079	1034
154-9023	138
154-9838	10
	606
	609
154-9839	6
	8
	▶585
155-0696	239
	240
155-0698	239
	240
155-0755	512
155-2255	226
	227
	228
	260
	386
	395
	402
	403
	409
	842
	844
	846
	848
	850
	852
	1093
155-2256	402
155-2257	392
	395
	403
	409
155-2260	226
	227
	347
	348
	349
	350
	351
	386
	388
	392
	395
	402
	403
	409
	732
	990
	1072
	1108
	1111
155-2265	386
	395
	402
	409
	424
155-2269	195
	386
155-2270	182
	184
	198
	226
	227
	265
	275
	280
	285
	288
	290
	294
	297
	302
	305
	313
	314
	379
	386
	388
	392
	395
	402
	403
	409
	424
	426
	562
	732
	842
	844
	846
	848
	850
	852
	990
	1031
	1093
	1107
	1110
	1116
	1119
	1128
	1131
155-2271	395
	409
	732
155-2272	226
	227
	244
	245
	395
155-2274	388
	392
	395
	402
	403
	409
	562
155-2276	350
155-2754	620
155-2756	604
155-3624	69
	503
	804
	825
	829
	840
	854
	867
	990
155-3652	▶751
	999
	1000
155-3653	▶746
	999
	1000
155-3849	746
155-3850	746
155-3856	751
	753
155-3857	751
155-3860	753
155-4325	429
155-4327	429
155-4877	1001
155-5161	493
155-5619	69
155-6345	763
	766
155-6647	490
155-6648	490
155-7321	1137
155-9524	71
	73
156-0214	698
	699
156-4124	917
156-4125	917
156-4126	917
156-4127	917
156-4128	917
156-4283	703
	763
	766
156-4406	473
156-4575	493
156-5341	432
	436

▶ **PRIMARY REFERENCE**

PART NUMBER INDEX

Part	Page
	439
	441
	▶484
	▶485
156-5545	1006
156-5970	508
	509
	724
	912
156-6175	280
	302
	305
	403
	406
156-7239	490
156-7485	490
157-0387	821
157-0388	821
157-0389	821
157-0395	821
157-0401	821
157-0403	821
157-0527	▶635
	679
157-0670	138
157-0687	492
157-0688	492
157-1350	492
157-1361	1163
157-2284	909
	910
157-3101	606
	609
157-3109	5
	10
157-4822	226
	230
157-5072	▶439
	478
157-5075	432
	434
	436
	439
	441
	444
158-0248	267
	268
158-0250	267
	268
158-0252	267
	268
158-2734	1076
158-2735	1076
158-3026	751
	753
158-3027	746
	755
158-3416	65
158-3653	917
158-3657	917
158-6403	▶676
158-6632	182
	▶381
	402
	406
158-7864	1231
158-9956	798
	800
	802
	▶865
159-0867	790
	792
	796
159-1503	138
	1137
159-1533	65
159-2950	1026
	▶1194
	1197
	1198
159-3880	565
159-3881	565
159-5977	566
159-5978	566
159-6159	11
	13
	▶27
159-7351	1078
159-7941	▶441
	564
159-8047	222
	388
	392
159-8050	374
159-8142	919
	920
	▶926
159-8143	926
159-8144	926
159-8153	▶917
	919
	920
159-8524	65
159-8807	968
159-8838	5
	10
	▶564
159-8862	▶677
159-8939	926
160-1433	1037
	1039
	1165
	1168
160-1434	1037
	1039
	1165
	1168
160-1660	926
160-2443	▶342
	1037
	1165
160-3616	▶997
160-3619	▶772
	997
160-5120	35
160-5843	909
	910
160-5844	909
	910
160-6307	928
	929
160-6309	749
	916
160-7165	1194
	1195
	▶1200
160-7186	1182
	▶1195
160-7271	27
160-7689	388
	392
	402
160-7690	260
160-8497	224
160-8742	419
161-4113	11
	13
	▶130
161-5718	146
161-5719	▶146
	147
161-5967	1099
161-6149	695
	701
	722
	896
	905
	906
	907
161-6154	865
	866
161-6161	896
	905
	906
	907
161-6958	178
161-6960	178
161-6963	178
161-7419	239
	240
161-7614	730
161-9289	1196
161-9926	▶347
	388
	392
162-0177	503
162-0384	776
162-0385	776
162-0386	776
162-0387	776
162-0388	776
162-0390	994
162-2166	646
	647
	648
	649
	650
	651
	652
	654
162-2167	623
	624
	625
	626
	627
	628
	629
	630
	631
	632
162-2191	838
	▶894
162-2266	115
162-5218	994
162-5220	994
162-5357	▶707
	726
162-5358	707
162-6448	419
162-7220	994
162-7222	994
162-7862	646
	647
	648
	649
	650
	651
	652
	654
162-7863	623
	624
	625
	626
	627
	628
	629
	630
	631
	632
162-8378	1046
	1048
	1050
	1052
162-8387	1042
	1046
	1048
	1050
	1052
162-8389	1042
	1046
	1048
	1050
	1052
163-1135	1202
163-1146	1200
163-2013	926
163-2415	620
163-2478	52
	53
	55
163-4061	150
	154
163-4565	27
163-5116	917
163-5455	180
163-5745	560
	562
163-6474	744
164-1234	1202
164-1342	516

▶ **PRIMARY REFERENCE**

PART NUMBER INDEX

Part	Page
164-2108	498
	499
	725
164-3417	208
	211
164-3651	226
	230
164-4180	82
	85
	88
	90
	448
	454
	460
	466
	518
	520
	521
164-4187	94
	96
	98
164-4531	1006
164-4883	1157
	1159
	1161
	1162
164-4940	732
164-5567	419
	804
	869
	872
	875
	877
	880
	883
	886
	889
164-5616	419
164-5619	901
164-5798	317
164-6963	1041
164-6964	1048
164-7556	269
	271
164-7577	226
	230
	▶372
164-8101	313
164-9541	1037
	1039
	1165
	1168
164-9904	703
165-0101	753
165-0102	▶753
	999
	1000
165-3930	69
165-3932	69
165-4854	493
165-4933	763
	767
165-5007	1137
165-6170	123
165-6365	447
	453
	459
	465
	869
	872
	875
	877
	880
	883
	886
	889
165-6970	714
165-7637	576
	578
165-8079	500
165-8084	576
	578
165-9100	1037
	1039
	1165
	1168
165-9103	1037
	1039
	1165
	1168
165-9104	1165
	1168
166-0344	813
	818
166-2287	525
166-2340	140
166-2903	49
166-2904	46
	49
166-3324	627
	628
	631
	632
166-3501	140
166-3777	1044
166-4427	5
	10
	▶618
166-4428	5
	▶619
166-5229	402
166-6358	217
	219
	224
	1028
166-6781	1200
166-8498	894
	▶905
166-9144	71
	73
166-9159	703
167-0642	48
167-0643	48
167-1884	273
	275
	278
	280
	283
	285
	288
	290
	292
	294
	297
	300
	302
	305
	309
167-2190	748
167-2208	744
	746
	749
	751
	753
167-2211	755
	757
167-2300	748
167-2319	746
	749
	751
	753
167-2324	755
	757
167-4407	140
167-8081	36
	38
	45
167-8083	36
	38
	45
167-8126	58
167-8610	1143
	1152
167-8712	395
167-8713	395
167-8987	395
167-9524	498
	499
168-2100	58
168-2198	813
	818
168-3504	813
	818
168-7314	243
	▶248
168-7800	164
	179
168-7861	813
	818
168-7871	813
	818
168-7940	824
168-7941	824
168-7942	824
168-7943	824
168-7944	824
168-8656	290
	292
168-8772	1102
169-0697	1159
169-1026	1188
	1190
169-2876	1230
169-4736	490
169-4737	490
169-4738	490
169-4739	490
169-4740	490
169-5862	840
	854
	867
169-7380	1200
	1202
169-7443	1107
	1110
	1113
	1116
	1119
	1122
	1125
	1128
	1131
	1134
169-7451	836
170-1112	1006
170-1114	1006
170-1115	1006
170-1574	776
170-1575	776
170-3357	798
	800
	802
	▶896
170-3461	402
	406
170-3793	222
	392
170-4672	11
	13
	▶23
170-4737	48
170-4738	48
170-5293	1107
	1110
	1113
	1116
	1119
	1122
	1125
	1128
	1131
	1134
170-5632	256
	258
170-8590	1176
171-1230	1183
	1185
	1188
	1190
171-2988	1037
	1039
	1165
	1168
171-3054	714
171-3055	714
171-3057	714
171-3058	714
171-3059	714
171-3060	714
171-3061	714

▶ **PRIMARY REFERENCE**

PART NUMBER INDEX

Part	Page
171-4047	1105
171-4358	140
171-5349	356
171-5989	714
171-6682	1183
	1185
	1188
	1190
171-6723	641
171-7077	1036
	1075
171-8772	912
172-0197	140
172-2391	724
172-2392	709
	▶724
172-2416	1183
	1185
	1188
	1190
172-4863	327
172-4864	226
	230
172-4880	1107
	1110
	1113
	1116
	1119
	1122
	1125
	1128
	1131
	1134
172-6526	▶677
172-6564	677
	684
172-9287	869
	872
172-9966	472
173-0887	500
	503
173-0948	484
173-1028	▶1006
	1183
	1185
	1188
	1190
173-1957	587
173-2052	1158
	1160
173-3083	1192
173-3283	1188
	1190
173-3993	869
	872
	875
	877
	880
	883
	886
	889
173-5787	1194
	1195
	1196
173-7035	1194
	1195
	1196
173-9682	744
173-9779	748
	753
174-0503	388
	392
	395
	402
	409
174-2231	▶1099
	1200
174-2237	1099
174-3091	1046
	1047
	1048
	1050
	1052
	1054
	1061
	1062
	1063
	1064
	1069
	1070
	1071
174-3874	13
	▶587
174-4590	1230
174-4895	173
	174
174-4909	707
	▶725
174-5986	11
	13
	▶147
174-7875	226
	230
174-7876	228
	231
174-9169	367
174-9570	▶192
	205
175-1366	27
175-1367	27
175-1529	1054
	1056
175-3265	1054
	1058
	1064
	1066
175-3617	48
175-3721	69
175-3761	1215
	1218
175-4165	1046
	1048
	1050
	1052
	1060
	1068
175-4170	1042
	1046
	1048
	1050
	1052
175-4291	269
	271
175-4292	269
	271
175-4972	▶709
	726
175-5058	1007
175-7162	1107
	1110
	1113
	1116
	1119
	1122
	1125
	1128
	1131
	1134
175-7900	748
175-7902	744
176-0259	726
176-7507	816
176-7509	816
	▶823
176-7511	816
176-7512	816
176-7513	816
176-7517	816
176-7518	816
176-7520	816
	▶897
176-7692	816
177-1862	1176
177-1863	1183
	1185
	1188
	1190
177-4152	19
	20
177-4937	1187
	1192
177-9653	402
177-9656	402
178-0266	1010
178-0603	▶1183
	▶1185
	1187
178-0604	▶1157
	1183
178-0605	1157
	▶1158
	1159
178-0606	▶1187
	1195
	1196
178-3339	248
178-4164	701
178-4171	701
178-7907	1158
	1160
178-9037	894
179-4324	314
	1150
179-7209	790
	792
	796
179-7210	790
	792
	796
179-7376	1042
	1046
	1048
	1050
	1052
179-9348	182
	184
179-9387	▶728
179-9938	821
180-0050	244
	245
180-0929	772
180-1274	821
180-1275	821
180-1276	821
180-1277	821
180-1278	821
180-1279	821
180-1288	821
180-1375	821
180-1376	821
180-3748	1017
180-3998	704
180-6600	1177
	1178
180-7180	1107
	1108
	1110
	1111
	1113
	1116
	1119
	1122
	1125
	1128
	1131
	1134
180-7181	1107
	1116
	1119
	1128
180-7304	▶1188
	▶1190
	1192
180-7305	▶1159
	1188
180-7350	94
	96
	98
180-9339	354
	1027
180-9340	348
	349
183-3408	103
183-3409	100
	101
183-3873	447
	453
	459
	465
183-5106	▶1027

▶ **PRIMARY REFERENCE**

PART NUMBER INDEX

Part	Page	Part	Page	Part	Page	Part	Page
	1028	185-2658	215		1066		889
183-5408	792	185-3503	726		1068	188-0210	85
183-7205	790	185-3666	1174		1069		90
	792	185-5872	217		1070	188-1079	▶1041
183-7206	790		219		1071		1056
	792		224		1072	188-1080	1058
183-7263	840	185-6393	368		1076	188-2128	182
	854	185-9464	327		1107		184
	867	186-2001	52		1110	188-3034	155
	869		53		1113	188-3530	444
	872		55		1116	188-5095	180
	877	186-2002	163		1119	188-6140	732
	880	186-3075	493		1122		▶834
	883	186-3401	500		1125	188-6141	834
183-7264	698		503		1128	188-6298	894
	699	186-3735	184		1131	188-7067	718
183-8408	711		186		1134	188-7068	718
183-8409	701		188		1163	188-7069	718
	▶723		214		1215	188-8749	572
183-8410	723		227		1218	188-8849	267
183-8412	723		231		1222		268
183-8413	723		236	186-3736	379	188-9040	571
183-8416	701		265		1072		572
	711		275	186-5107	1007	188-9644	320
183-8417	▶695		278		1202	189-0189	911
	730		280	186-6189	1107	189-0852	357
183-8427	695		283		1110	189-1839	724
183-8428	695		285		1113	189-2305	1058
183-8429	695		288		1116		1066
183-8430	712		292		1119	189-3158	327
	▶730		297		1122	189-5609	113
183-8431	730		300		1125		▶444
183-8442	730		302		1128	189-5746	▶356
183-8443	730		309		1131		388
183-8444	730		335		1134		392
183-8446	716		343	187-0541	896	189-6123	67
183-8447	716		372	187-0671	479	189-9240	231
183-8449	716		376	187-1679	208		236
183-8450	716		377		211		992
183-8451	716		378	187-4421	762	190-0009	15
183-8452	716		382	187-4422	762		▶78
183-8453	716		383	187-4423	762		▶79
183-8454	712		402	187-4658	▶762	190-1475	776
184-1704	1172		406	187-5420	73	190-2277	429
184-2298	1183		508	187-8001	712	190-2278	419
	1185		509	187-8567	810		▶422
	1188		698	187-8661	1107		423
	1190		699		1110	190-3635	217
184-2299	1183		803		1113		219
	1185		909		1116		224
	1188		910		1119	190-5153	▶234
	1190		911		1122	190-5386	573
184-6011	▶1192		912		1125		1226
	1194		1046		1128		1230
185-2638	215		1047		1131	190-7613	388
185-2639	215		1048		1134		392
185-2644	215		1050	187-9194	825		395
185-2645	215		1052		829		403
185-2647	215		1054	187-9630	869	190-8505	1081
185-2648	215		1058		872	190-8609	665
185-2650	215		1060		875	190-8970	205
185-2651	215		1061		877	190-8977	182
185-2653	215		1062		880		184
185-2654	215		1063		883		▶205
185-2655	215		1064		886	190-9822	▶678

▶ **PRIMARY REFERENCE**

PART NUMBER INDEX

Part	Page
191-0921	678
	684
191-1443	▶803
	990
191-1782	182
	184
191-1783	182
191-2128	899
	900
191-2933	1196
	▶1202
191-3583	755
	757
191-7585	823
191-7587	823
191-7589	823
191-7591	823
191-7594	823
191-7596	823
191-7597	823
191-7600	898
191-7605	898
191-7607	897
191-7608	898
191-8283	560
191-8303	359
191-8304	474
191-8305	474
191-9247	899
	900
	915
191-9917	678
191-9945	▶678
192-0542	11
	14
	▶114
192-0938	716
192-2576	▶604
	691
192-2577	643
	644
192-2599	3
	4
	▶643
	▶644
	▶645
192-4151	104
	106
	109
192-4370	722
	899
	900
192-4658	1054
	1056
	1058
	1064
	1066
192-7752	1202
192-7755	1202
192-7760	1202
192-7767	1202
192-7783	1202
192-7787	1202
192-7790	1202
192-7795	1202
192-7799	1202
192-7805	1202
192-7810	1202
192-7812	1202
192-7820	1202
192-7822	1202
192-7848	1202
192-8862	807
	808
192-9908	486
193-1598	180
	181
193-3063	926
	932
	933
	934
193-3973	447
	453
	459
	465
193-4476	1054
	1056
	1058
	1064
	1066
193-5768	180
	181
193-9131	784
194-2895	821
194-2903	193
194-3279	898
194-3280	898
194-3284	898
194-3285	897
	898
194-3286	▶810
	897
	898
194-3287	897
194-3288	897
194-3289	897
194-3899	816
	▶898
194-5171	1215
	1218
	1222
194-5226	350
194-6030	576
	578
194-6722	▶348
	352
194-6725	186
	188
	190
	▶349
	353
194-6849	810
194-8031	1083
195-0937	1019
	1022
	1209
195-3253	222
195-3324	810
195-3325	810
195-6283	926
	932
	933
	934
195-7430	912
195-7869	1072
195-7870	1072
195-7871	1072
195-7872	1072
196-4250	722
196-4254	722
196-5069	104
	106
	109
196-5070	104
	106
	109
196-8884	423
196-9444	722
196-9946	▶646
	691
	692
196-9947	643
	▶650
	691
	692
196-9948	646
	647
196-9949	650
	651
196-9987	▶242
	734
197-1762	813
	818
197-1932	1091
197-4971	65
197-7508	444
	▶486
197-7689	1200
197-7701	911
197-8391	186
	188
	338
	▶362
197-8392	338
	▶363
197-8820	▶215
	217
	219
197-9322	37
	45
197-9361	98
198-0971	221
198-2914	899
	900
	915
198-4604	112
198-4605	508
198-4607	500
	▶508
198-4776	128
198-5351	813
	818
198-5389	265
198-6574	1178
198-6575	1178
198-9220	773
	▶906
198-9706	1034
	1150
198-9898	77
	▶104
199-2794	634
	637
199-3401	486
199-5128	256
	258
199-5142	258
199-7077	780
199-7891	215
199-8185	▶663
	691
199-8186	663
199-8187	663
199-8188	663
	665
199-8194	663
	665
199-8202	663
	665
199-8204	604
199-8210	603
	604
	612
	615
199-8211	663
	665
199-8436	215
199-9137	486
	2
200-0750	▶729
	839
200-2279	217
	219
	224
200-2445	82
	85
	88
	90
200-2964	834
200-3174	1193
	▶1196
	1199
200-4074	679
200-4075	▶679
200-5125	265
200-6345	447
	453
	459
	465
	1107
	1116
200-7136	514
	560
	562
	566
200-7836	1084
	1085

PART NUMBER INDEX

Part	Page
	1086
	1087
	1088
	1090
201-0714	▶679
201-0950	798
	800
	802
	▶912
201-1459	1172
	1174
201-2194	560
	562
201-2195	560
	562
201-4340	43
	119
	182
	184
201-6617	▶357
	360
201-7269	▶718
	726
201-7274	▶726
	836
202-0465	140
202-4327	327
202-6535	722
202-6614	269
	271
203-1095	816
203-2070	1031
203-2198	▶680
203-2288	419
203-2921	766
	770
203-7703	1194
	1195
	1196
203-8609	813
	818
203-8679	1174
203-8680	1171
	▶1174
203-8681	1172
	1174
203-8690	236
	1174
203-8822	104
203-8824	104
	106
203-9163	813
	818
204-2281	217
	228
	231
	317
	388
	392
	400
	402
	406
	560
	562
	1107
	1116
204-2578	▶813
	815
204-2581	1206
204-3334	816
204-6101	236
204-6102	1150
	1151
204-6204	226
	230
	▶358
204-6499	419
204-6501	424
	426
204-6502	506
204-8000	126
	200
	217
	219
	224
	226
	230
	317
	327
	388
	392
	395
	398
	400
	402
	406
	409
	842
	844
	846
	848
	850
	852
	856
	859
204-8758	728
	729
204-9316	▶64
	65
204-9530	1031
204-9531	1031
204-9532	1031
205-0208	572
205-0210	571
205-0211	571
205-0252	571
205-0256	572
205-0626	215
205-0826	265
205-1820	132
	133
	▶807
205-1821	806
	▶808
205-1823	▶712
	815
	820
205-2941	1054
	1056
205-3079	388
	698
	699
	842
	844
	846
	848
	850
	852
	856
	859
205-3645	▶1093
	1098
205-5314	417
205-5796	▶680
205-6388	1187
	1192
205-7048	1017
205-7205	424
	426
205-7331	1037
	1039
	1165
	1168
205-7875	490
205-7876	493
205-8257	265
206-0492	490
206-4197	67
206-4198	67
206-4223	67
206-4224	67
206-4225	67
206-4230	67
206-4231	67
206-4234	67
206-4236	67
206-4473	479
206-4475	481
206-5162	265
206-5165	265
206-5823	1215
	1218
	1224
	1225
206-6779	2
	▶691
206-6780	▶1
	2
206-6781	2
	▶478
206-6782	2
	▶759
206-6783	▶2
206-6876	182
	184
206-7421	1054
206-8671	481
206-8688	479
206-8691	479
206-8697	479
206-8700	▶479
	481
206-8703	447
	453
	459
	465
	▶481
206-8714	479
206-8716	479
207-1407	▶1097
	1171
207-5248	104
207-5295	490
207-5296	492
207-5297	492
207-5298	▶490
	492
207-5299	▶492
	493
207-5300	478
	▶493
207-5364	492
207-6941	184
207-7434	869
	872
	875
	877
	880
	883
	886
	889
207-7435	869
	872
	875
	877
	880
	883
	886
	889
207-7436	869
	872
207-7437	869
	872
	875
	877
	880
	883
	886
	889
207-7438	869
	872
207-7899	840
	854
	867
207-8209	67
207-8211	67
207-8212	67
207-8213	67
207-8218	503
208-0443	290
	292
208-3015	447
	453
	459
	▶500
208-3019	447
	453
	459
	465
	▶505

▶ **PRIMARY REFERENCE**

PART NUMBER INDEX

Part	Page
208-3023	447
208-4701	259
208-5837	173
208-6067	1042
	1046
208-6070	▶1042
	1054
208-6072	735
	▶1054
208-6074	759
	▶1056
208-6075	244
	▶1058
208-6081	1042
	1054
	1064
208-7448	163
208-7524	481
208-7635	493
208-9292	581
208-9490	15
	16
	▶65
208-9521	▶447
	▶453
	▶459
	▶465
	478
208-9522	759
	▶760
208-9523	759
	▶782
208-9524	759
	▶773
208-9525	▶703
	759
208-9526	759
	▶763
208-9527	759
	▶839
208-9528	734
	▶777
208-9529	734
	▶990
208-9607	1
	▶1014
208-9647	1044
208-9721	1
	▶518
208-9726	518
208-9751	703
208-9752	703
208-9753	703
208-9754	703
208-9756	703
208-9757	703
208-9758	703
208-9759	703
208-9760	703
208-9932	763
	766
208-9933	763
	766
208-9934	703
208-9935	763
208-9937	763
	766
208-9938	763
	766
208-9939	763
	766
208-9993	777
208-9994	777
209-0381	402
	406
209-0613	500
209-0614	500
	503
209-0792	479
209-0849	▶681
209-0871	2
	▶251
209-0873	251
	▶252
209-0874	251
	▶252
209-0875	251
	▶252
209-1332	1174
209-1333	1174
209-1372	842
	844
	846
	848
	850
	852
	856
	859
209-1376	842
	844
	846
	848
	850
	852
	856
	859
209-1380	760
209-1381	760
209-1382	782
209-1392	773
209-1402	773
209-1404	773
209-1405	773
209-1406	773
209-1407	773
209-1438	447
	453
	459
	465
209-1439	447
	453
	459
	465
209-1440	447
	453
	459
	465
209-1441	447
	453
209-1449	447
	453
	459
	465
209-1451	447
	453
209-1452	447
	453
	459
	465
209-1453	447
	453
	459
	465
209-1454	447
	453
	459
	465
209-1455	447
	453
	459
	465
209-1456	447
	453
	459
	465
209-1457	447
	453
	459
	465
209-1458	447
	453
	459
	465
209-1459	447
	453
	459
	465
209-1460	447
	453
	459
	465
209-1461	447
	453
	459
	465
209-1462	447
	453
	459
	465
209-1463	447
	453
	459
	465
209-1464	447
	453
	459
	465
209-1496	447
	453
	459
	465
209-2123	1009
	▶1107
	▶1110
	▶1113
209-2124	1009
	▶1116
	▶1119
	▶1122
	▶1125
209-2125	1009
	▶1128
	▶1131
	▶1134
209-2126	1
	▶193
209-2127	1
	▶1137
209-2608	▶244
	▶245
	734
209-2678	292
209-3299	772
209-3416	▶113
209-3418	▶691
209-3419	▶692
209-3420	▶428
	478
209-3421	428
	▶489
209-3424	489
209-3425	489
209-3430	▶734
209-3431	▶734
209-3569	27
209-3652	1
	▶548
209-3858	1
	▶206
209-3862	▶573
	▶574
209-3863	206
	▶208
209-5034	1
	▶540
	▶542
209-5036	113
	▶544
209-5037	1
	▶516
209-5097	3
209-5099	▶5
209-5100	▶512
209-5101	▶3
	▶4
209-5102	▶735
209-5103	▶560
	▶562
209-5106	▶169
209-5107	▶171
209-5115	618
209-5117	▶618
209-5118	▶5
209-5119	▶3
209-5154	▶1034
	1171
209-5155	1033
209-5157	1010
209-5161	1105

▶ **PRIMARY REFERENCE**

PART NUMBER INDEX

Part	Page
209-5162	1105
209-5193	1105
209-5194	1105
209-5198	1081
209-5199	1081
209-5204	1105
209-5457	2
	▶17
209-5636	478
	▶495
	▶496
209-6379	848
	850
	852
	▶867
209-6638	272
209-6685	825
	829
209-6686	▶825
	▶829
	833
209-6727	402
	406
209-7193	417
209-7705	217
	219
	224
209-7731	▶402
	▶406
	1171
209-7732	1
	▶226
	▶230
209-7733	226
209-7734	226
	230
209-7735	388
	392
209-7736	226
209-7738	842
	844
	846
	848
	850
	852
209-7741	226
	230
209-7743	226
	230
209-7744	227
	230
209-7745	227
	230
209-7746	227
	230
209-7747	388
	392
209-7749	227
	231
209-7755	1014
	▶1081
209-8217	1097
209-8294	▶1009
209-8305	1009
	▶1029
209-8363	17
	▶157
209-8364	157
209-8369	17
	▶162
209-8372	17
	▶163
209-8374	17
	▶159
209-8375	17
	▶166
209-8376	17
	▶161
209-8378	17
	▶736
209-8384	17
	▶217
	▶219
209-8385	3
	▶150
209-8389	17
	▶367
209-8394	136
209-8396	17
	▶136
209-8401	17
	▶151
209-8402	151
	▶152
209-8408	17
	▶155
209-8409	155
209-8415	17
	▶121
209-8421	17
	▶138
209-8423	17
	▶368
209-8621	67
209-8622	69
209-8624	67
209-8625	67
209-9254	547
209-9286	1
	▶576
209-9287	576
	578
209-9598	206
	209
209-9700	1
	▶1171
209-9706	1174
209-9751	▶1009
209-9752	▶1009
209-9770	67
209-9771	67
210-0084	▶419
	495
	496
210-0085	▶429
	495
	496
210-0091	419
210-0092	▶473
	495
	496
210-0214	1153
210-0215	1153
210-0216	1177
210-0219	1
	▶1153
210-0220	1
	▶1177
210-2213	570
210-2214	1
	▶570
210-2262	1176
210-2263	1176
210-2266	1176
210-2270	▶1176
	1183
	1185
	1188
	1190
210-4454	492
210-4458	493
210-4631	505
210-6114	1
	▶641
210-6169	1
	▶1230
210-6600	759
	▶811
210-6601	759
	▶812
210-6603	759
	▶833
210-6605	759
	▶835
210-6607	759
	▶806
210-7115	1060
	1061
	1062
	1063
210-7775	▶854
	856
	859
210-7776	▶840
	842
	844
	846
210-9246	124
211-1083	259
211-1084	259
211-1751	840
	854
	867
211-1808	1230
211-3122	52
	53
	55
211-3123	52
	55
211-3686	327
211-3703	327
211-4232	402
	406
211-4323	447
	453
	459
	465
	▶483
211-4326	483
211-4482	1
	▶547
211-5012	11
	13
	▶67
211-5212	447
	453
	459
	465
211-5358	1202
211-6053	▶698
	▶699
	703
211-6636	162
211-6644	163
211-6645	163
211-9085	428
211-9087	428
211-9294	1202
211-9491	777
211-9495	▶126
211-9496	126
211-9497	126
211-9498	126
211-9501	▶732
211-9513	735
	▶784
211-9573	784
211-9574	784
211-9576	784
211-9995	488
	▶497
211-9996	478
	▶488
212-0271	812
	▶815
212-0760	492
212-0927	▶681
212-2001	151
212-2002	151
212-2004	151
212-2222	550
212-2223	551
212-2227	548
212-2228	548
212-2229	551
212-2230	550
212-2231	548
212-2232	548
212-2233	548
212-2301	481
212-4998	1081
212-4999	1081
212-5090	516
212-5804	782
212-5805	782
212-5835	▶798
	842
	848
	856
212-6157	327

▶ **PRIMARY REFERENCE**

PART NUMBER INDEX

Part	Page	Part	Page	Part	Page	Part	Page
212-6167	327	213-5003	990	214-4763	▶384	216-0805	1031
212-6168	327	213-5088	▶682		1014	216-0855	516
212-6169	327	213-6377	479		1015	216-0862	527
212-6273	447	213-7507	113		1016		531
	453		▶177	214-6457	227		535
	459	213-8053	1009		231	216-0863	529
	465		▶1028	214-6458	227		533
212-6322	840	213-9100	227		231		537
	854		231	214-6460	856	216-0864	540
	867	213-9242	899		859		542
	▶869		900	214-6461	227	216-0867	527
	▶872	213-9247	899		231	216-0868	529
212-6323	840		900	214-6462	227	216-0871	516
	854	214-0628	447		231	216-1319	403
	867	214-0783	▶1007	214-6463	▶256		406
	▶875	214-0784	1007	214-6464	▶258	216-1337	641
	▶877	214-1091	811	214-6465	▶128	216-1479	825
212-6324	854		▶816	214-6466	▶250		829
	▶880	214-1096	1	214-7244	1017	216-1680	825
	▶883		▶1182		1019		829
212-7670	1084	214-1196	▶1193		▶1212	216-1683	825
	1085	214-1197	▶1197	214-7245	1017		829
	1086	214-1703	327		1019	216-1696	345
	1087	214-1740	1014		▶1213	216-2212	162
	1088		▶1146	214-7246	1017	216-2813	1105
	1090	214-1751	1105		1019	216-3002	1054
212-8237	576	214-1760	1014		▶1214		1056
	578		1015	214-7566	326		1064
212-8725	1014		1016	214-7568	899	216-4436	547
	1015		▶1102		900	216-4591	417
	1016	214-1770	1014	214-7737	1105	216-4998	1097
	▶1105		▶1215	214-9186	1022	216-5540	11
212-8948	1105	214-1780	1014		1209		13
212-9973	1105		1015	214-9408	419		▶25
212-9974	1105		1016	215-1469	641	216-5541	11
212-9975	1105		▶1206		763		13
212-9976	1105	214-1800	1014	215-1933	270		▶111
213-0065	500		▶1017	215-2630	259	216-5582	46
	503		▶1019	215-2899	892		49
213-1100	▶1014	214-1801	1017	215-3192	1230	216-6202	419
213-1303	▶593		1019	215-3712	327	216-8732	1093
213-2304	327	214-1802	1084	215-5568	▶221	216-9032	▶472
213-3064	327		1085		222		478
213-3217	94	214-1808	1017	215-5615	734	216-9231	527
	96		1019		▶856		531
	98		1022		▶859	216-9232	529
213-3945	540		1209	215-6415	994		533
	542	214-1838	1215	215-6420	994	216-9978	514
213-3964	540		1218	215-6421	▶994	216-9981	514
	542	214-1962	1044		999	216-9982	514
213-4325	▶804	214-2014	▶1033		1000	217-0015	167
	840		1171	215-6422	▶999		169
	854	214-2015	1010	215-6423	▶1000		171
	867		1151	215-6822	734	217-0018	169
213-4326	840	214-2484	338		▶842		171
	▶886		340		▶844	217-0041	798
	▶889		▶359		▶846		800
213-4504	290	214-3316	1105	215-7292	773		802
	292	214-3573	413	215-7446	1078	217-0751	46
213-4539	▶424		417	215-8171	1147		49
	495	214-4176	▶1010	215-9613	548	217-0752	46
213-4540	424		1033	215-9614	548		49
	426	214-4208	226	216-0273	429	217-1546	144
	▶506		402	216-0380	1044	217-1547	144
213-4998	270		403	216-0381	696	217-2293	413

▶ **PRIMARY REFERENCE**

PART NUMBER INDEX

Part	Page
217-3063	▶259
217-3603	1
	▶565
217-3607	565
217-3616	3
	6
	8
	▶566
217-3621	560
	562
	565
	566
217-3631	566
217-3639	▶575
217-3640	575
217-3646	575
217-3648	▶522
217-3650	▶582
217-3653	▶539
217-3654	522
217-3655	525
	560
	562
	565
	566
217-3660	11
	13
	▶182
	▶184
217-3665	892
217-3725	63
217-4205	▶682
217-4245	1155
	1172
	1174
217-4246	552
	1172
	1174
217-4248	1174
217-4250	1174
217-4326	735
	▶892
217-4455	539
217-4627	424
217-4951	138
217-4958	159
	▶160
217-4959	159
217-5257	▶683
217-5742	132
	133
	▶838
217-5854	763
	766
217-5870	838
217-5871	838
217-5872	838
217-5900	25
217-6458	516
217-6886	760
217-6887	782
217-7388	138
217-7901	▶180
	▶181
217-7919	573
	574
217-7920	573
	574
217-7931	12
217-7933	1176
217-8192	825
	829
217-8433	1102
217-8947	163
217-9049	1183
	1185
218-0114	▶471
	478
218-0404	265
218-0861	1183
	1185
218-1966	825
	829
218-2240	1108
	1110
	1113
	1116
	1119
	1122
	1125
	1128
	1131
	1134
218-2241	1108
	1117
	1128
218-2242	1108
	1117
	1128
218-2243	1128
	1131
	1134
218-2244	1128
	1131
	1134
218-2245	1117
218-2246	1117
	1120
	1122
	1125
218-2249	193
218-2252	1128
	1131
	1134
218-2373	725
218-2994	▶313
218-2995	▶275
	▶278
218-2996	▶280
	▶283
218-2997	▶285
	▶288
218-2998	▶290
	▶292
218-3241	1009
	▶1147
218-3266	1034
218-3269	1034
218-3397	▶132
	▶133
	134
218-4159	138
218-4166	177
218-4169	162
218-4170	162
218-4840	111
218-4879	763
218-5134	17
	▶112
218-5135	112
218-5136	112
218-5138	1029
218-7136	1042
	1045
	1046
	1047
	1048
	1050
	1052
218-7227	782
218-7316	842
	844
	846
	848
	850
	852
	856
	859
218-7347	▶683
219-0305	1026
	1232
219-0938	152
219-1918	732
219-1919	732
219-2178	166
219-2390	1072
219-2391	1072
	1076
219-2635	486
219-2646	486
219-2892	▶1180
219-3587	1009
	▶1148
219-4458	94
	96
	98
219-4481	471
219-5735	596
219-5743	596
219-5803	345
219-5804	345
219-5890	▶1226
	1230
219-6100	540
	542
219-6224	777
219-6225	777
219-6314	265
219-6487	▶269
	275
	280
	285
	290
	294
	297
219-6500	1147
219-6631	540
	542
219-7912	1058
	1066
219-8051	990
219-8689	1028
219-9759	516
220-0211	▶596
	691
	692
	693
	694
220-0504	544
220-0538	152
220-0546	206
	209
220-0771	368
220-1411	473
220-1430	162
220-1622	1107
	1110
	1113
	1116
	1119
	1122
	1125
220-1626	388
220-2756	217
	317
220-2798	1174
220-2799	1155
	1174
220-2802	1174
220-3296	217
	219
	224
220-3375	576
	578
220-3439	1034
220-3462	166
220-3987	1105
220-3988	1105
220-3989	1105
220-3990	1078
220-4324	424
	426
	▶498
220-6126	1034
220-6367	11
	13
	▶123
220-6372	11
	13
	▶164
220-6374	11
	13
	▶118
220-6384	17
	▶388
	▶392
220-6390	11
	13

▶ **PRIMARY REFERENCE**

PART NUMBER INDEX

Part	Page	Part	Page	Part	Page	Part	Page
	▶26	222-4869	206		53	225-2338	1093
220-7167	228		209		55	225-2339	1093
	231	222-5314	11	223-8173	327	225-3186	447
220-7243	123		13	223-8175	327		453
220-7244	123		▶165	223-8176	▶327		459
220-8044	▶555	222-5369	1215		403		465
220-8397	228		1218		406	225-3194	696
	231	222-5370	1215	223-8177	403	225-3195	1044
220-8678	192		1218	223-9250	▶52	225-3201	696
221-0812	641	222-5371	1215		▶53	225-3202	345
221-0851	384		1218		54	225-3252	11
221-0877	419	222-5372	1215	223-9252	15		13
221-1425	140		1218		16		▶195
221-1426	164	222-5373	1215		▶39		▶198
221-1427	11		1218		▶41		▶200
	13	222-5374	1215		▶43	225-3284	744
	▶63		1218	223-9731	15		746
221-1428	11	222-5376	1215		16		749
	13		1218		▶35		751
	▶61	222-5377	1215	223-9787	11		753
221-1737	118		1218		▶59	225-3286	755
221-1942	1180	222-5378	1215	224-3245	94		757
	1181		1218		96	225-3797	327
221-2105	161	222-5379	1215		98	225-3903	11
221-5298	155		1218	224-3246	94		▶71
221-5400	784	222-5382	1215		96	225-3961	119
221-7643	835	222-6926	▶595		98	225-4126	11
221-8640	576		596	224-3978	11		13
	578	222-6998	633		13		▶124
221-9360	35		634		▶1233	225-4127	11
221-9409	1034	222-7877	403	224-3983	46		13
	1078		406	224-4535	▶350		▶144
222-0345	1187	222-7879	403		698	225-4174	1093
	1192		406	224-4905	1010	225-5928	327
222-0827	583	222-7880	403	224-4973	1078	225-6169	1017
222-1462	1044		406	224-5122	54		1019
	▶1076	222-7881	335		56		1022
222-1546	▶1044	222-7882	784	224-5530	▶343		1209
	1078	222-7883	403		1037	225-6170	1017
222-1976	▶38		406		1039		1019
	39	222-7884	403		1165		1022
222-2824	1104		406		1168		1209
	1208	222-7887	132	224-5871	242	225-6329	11
	1209		133	224-6208	1017		13
222-2825	1088	222-7888	734		1019		▶100
	1090	222-7889	732		1022	225-6515	290
	1104	222-8843	1093		1209		292
	1208	223-0533	71	225-0097	2	225-8026	798
222-2828	1104		73		▶11		800
	1208	223-2113	696	225-0312	1232		802
	1209	223-2115	▶696	225-0313	1231		▶907
222-3145	582		1044	225-0910	128	225-8553	327
222-4562	11	223-4296	259	225-0911	128	226-2333	319
	13	223-4297	259	225-0912	128	226-2751	1072
	▶81	223-4422	69	225-1144	30	226-2811	384
222-4604	11	223-4423	11	225-1147	▶29	226-3799	798
	13		13		33		800
	▶140		▶69	225-1148	▶30	226-3800	798
222-4737	869	223-4445	892		32		800
	872	223-4461	1072		34		802
	877	223-4903	69	225-1150	▶31		▶866
	880	223-5813	140		32	226-4222	140
	883	223-5814	119	225-1494	11	226-4909	317
	886	223-7263	▶46		13	226-5561	46
	889		49		▶119	226-6583	462

▶ **PRIMARY REFERENCE**

PART NUMBER INDEX

Part	Page	Part	Page	Part	Page	Part	Page
	468		852	229-5667	1233		13
226-7295	1072		856	229-5746	388		▶338
226-7420	242		859	229-6259	94		▶340
	▶1072	228-3102	856		96	231-3539	748
226-7480	1072		859		98	231-6270	327
226-7665	1010	228-3103	848	229-6711	11	231-7064	544
226-7906	782		850		13	231-7065	544
226-9170	255		852		▶103	231-7066	544
226-9423	1076		856	229-8568	38	231-7067	544
226-9622	499		859		45	231-7306	1165
	725	228-3104	856	229-8608	516		1168
226-9649	842		859	229-8907	275	231-7307	1037
	844	228-3105	842		280		1039
	846		844		285		1165
	848		846		294		1168
	850	228-3106	842		297	231-7308	1037
	852		844		302		1039
	856		846		305		1165
	859	228-3323	395	229-9477	11		1168
227-0181	195	228-4006	821		13	231-7309	1037
	198	228-4219	784		▶101		1039
	200	228-4412	11	229-9744	809		1165
227-0210	388		13	229-9967	▶413		1168
	392		▶24		478	231-7310	1037
227-1204	39	228-4832	228	229-9968	▶417		1039
	41		231		478		1165
	43	228-4947	359	229-9974	272		1168
227-2451	413		360	230-0093	1034	231-7311	1037
227-3814	58	228-4981	1014	230-1340	243		1039
227-4002	386		▶1204		264		1165
227-4158	1105	228-6089	403	230-1341	243		1168
227-4239	49		406		264	231-7312	1037
227-4398	911	228-6535	1204	230-1434	367		1039
227-5148	11		▶1205	230-2569	94		1165
	13	228-7495	388		96		1168
	▶186		392		98	231-7313	1037
	▶188	228-7929	157	230-3023	1163		1039
	▶190	228-8553	128	230-3046	▶620		1165
227-5437	▶921	228-9936	732	230-3525	256		1168
227-5439	▶922	229-0625	716	230-3728	204	231-7314	1036
227-6315	▶809	229-0774	403	230-3775	204		▶1165
	919		406	230-3818	11		▶1168
	921	229-0857	448		13	231-8855	473
	924		454		▶32	231-9290	384
227-6718	1054		460	230-4011	198		▶1163
	1056		466		380	232-0253	104
	1064	229-0887	1231	230-4012	198	232-1318	317
227-8406	809	229-1494	1187	230-4086	313	232-1374	184
227-8851	140	229-2013	▶578	230-4691	1146	232-1376	184
227-8852	140		▶580	230-5008	322	232-1693	240
227-9542	236		735	230-5009	1142	232-2960	1232
	1009	229-2578	1163	230-5565	957	232-3235	94
228-0389	388	229-2681	193		959		96
	392		1107		962		98
228-0390	228		1110	230-7622	▶1011	232-3236	94
	231		1113		1014		96
228-0913	760		1116	230-7668	544		98
228-1600	1205		1119	230-7669	544	232-3402	1232
228-1786	195		1122	230-9702	140	232-3583	175
228-1850	836		1125	231-0336	388		1091
228-1871	▶987	229-2863	15		393	232-3870	1050
	999		16		784		1052
228-1872	987		▶94	231-0858	317	232-6622	478
228-3101	848		▶96	231-1403	243		▶1036
	850		▶98	231-1973	11	232-6668	1033

▶ **PRIMARY REFERENCE**

PART NUMBER INDEX

Part	Page	Part	Page	Part	Page	Part	Page
232-7432	473	234-7984	1178		34		852
233-0065	813	234-9970	319	236-4460	825		856
	818		▶323		829		859
233-0891	239	234-9994	473	236-4540	773	237-1962	368
	240	235-0320	175	236-5197	1176		▶369
233-2804	228		1091	236-5468	▶302	237-2209	474
233-5070	128	235-0540	593		▶305	237-2305	119
233-6313	1174	235-0541	593		▶309	237-2455	275
233-6742	186	235-0544	593	236-5605	55		278
	188	235-0545	593	236-5824	531		280
	190	235-1401	15		535		283
	▶212		16	236-5825	533		285
233-6745	1157		▶204		537		288
233-6942	842	235-1587	130	236-6223	12		294
	844	235-2416	490		14		297
	846	235-2974	15		▶386		300
	848		16	236-6731	576		302
	850		▶54	236-6732	576		305
	852	235-3411	548	236-7649	182		309
	856		▶550	236-8122	13	237-2457	128
	859	235-3412	548		▶73	237-2580	560
233-7892	1231		▶551	236-8722	1163		562
233-7893	1231	235-3417	▶294	236-8804	81	237-2789	144
233-7894	735		▶297	236-8807	531	237-2854	1172
233-7895	1230		▶300		533	237-2884	▶1026
233-7920	177	235-3525	▶265		535	237-3882	6
233-7921	177	235-3560	1034		537		8
233-7922	177	235-3561	1034	236-8826	320	237-3943	1202
233-9161	1034	235-3595	190		321	237-3970	▶1008
233-9782	5	235-3596	186	236-9857	388		1202
	▶6		188		392	237-3985	1172
	▶8		190	236-9858	403	237-4021	784
	10	235-4587	254		406	237-4132	323
234-1400	1233	235-5202	447	236-9890	448	237-4133	323
234-1401	1233		453		454	237-4134	323
234-1489	6		459		460	237-4135	323
	8		465		466	237-4227	813
234-1498	6	235-5546	1178	237-0145	345		818
	8	235-5801	244	237-0149	1074	237-4271	1172
234-2916	31		245	237-0151	▶377	237-4332	73
	▶115	235-6229	593		1076	237-4366	921
	116	235-6232	593	237-0152	1074		922
234-3042	835	235-7068	6	237-0153	1078		▶969
	▶901		8	237-0154	1074	237-4367	▶943
234-3043	901	235-7152	734	237-0155	1074		969
234-3404	735	235-8026	1231	237-0156	1074	237-4368	921
234-3451	901	236-1300	1017	237-0158	1074		922
234-5002	19		1019		▶1078		924
234-5005	15		1022	237-0160	▶1074		925
	16		1209		1075		▶935
	▶19	236-1665	119	237-0190	1081	237-4369	▶788
234-5013	190	236-1666	119	237-0195	1172		921
	▶364	236-1687	140	237-0197	1172		922
234-5880	327	236-2226	1108	237-0199	1172		924
234-5997	41		1110	237-0200	1026		925
	▶45		1113		▶1172	237-4370	919
234-6845	327	236-2227	1108	237-0336	392		920
234-7900	22		1110	237-0957	▶351		921
234-7935	15		1113		388		922
	16	236-2228	1108		392		924
	▶22	236-2229	1108		842		925
234-7951	1178		1110		844		▶939
234-7952	1026		1113		846	237-4872	926
	▶1178	236-2230	31		848	237-4977	1128
234-7983	1178		▶33		850		1131

▶ **PRIMARY REFERENCE**

PART NUMBER INDEX

Part	Page	Part	Page	Part	Page	Part	Page
	1134	238-5097	990	239-3341	928	239-6942	138
237-6035	773	238-5103	▶520	239-3344	788	239-6943	113
237-6230	1178		560		790	239-6944	113
237-6231	1178		562		792	239-6987	1230
237-6292	1178	238-5104	520		796	239-7034	136
237-6293	1178	238-5472	▶571	239-3345	788	239-7035	136
237-6345	1172	238-5530	1108		794	239-7071	790
237-6347	1172		1111	239-3350	788		792
237-6349	1172		1113	239-3478	▶354		796
237-7252	323	238-6900	512		355	239-7072	790
237-7307	290		▶514	239-3497	573		792
	292	238-7545	571		574		796
237-7362	▶737		572	239-3902	250	239-7074	790
	919	238-8034	265	239-4170	943		792
	921	238-8187	576		955	239-7075	790
	924		578		▶957	239-7076	790
237-7363	▶739	238-8637	744		958	239-7078	790
	919	238-8643	217		970		792
	921		219		972	239-7383	136
	924		222	239-4172	957	239-7852	222
237-7552	993		224		959	239-7854	219
237-8210	604	238-8683	▶178	239-4176	957	239-7943	636
237-8211	604		179	239-4191	959		637
237-9123	▶13	238-9166	512		962	239-8022	568
	113		588	239-4212	▶932		569
237-9134	1174		590		935	239-8030	568
237-9135	1172	238-9612	737		937	239-8051	258
237-9136	1172		739	239-4215	932	239-8107	327
237-9137	1172	238-9658	132	239-4218	932	239-8160	1029
237-9138	1172		133	239-4224	▶933	239-9271	319
237-9140	253		▶568		935	239-9275	928
	▶1143	238-9659	568		936		929
	▶1144		569		937	239-9347	578
	▶1145	238-9660	568		938		580
237-9234	▶742		569	239-4225	933	239-9368	1093
237-9235	742	238-9807	737	239-4227	933	239-9670	928
	▶790	239-0221	739		934		929
	▶792	239-0617	894	239-4237	935	239-9940	935
237-9236	742	239-0718	514		937		937
	▶936	239-1134	367	239-4263	928	239-9950	253
237-9259	590		▶383		929		▶331
237-9310	186	239-1460	555	239-4990	1232	239-9954	▶249
	188	239-1461	555	239-4991	1232		260
	190		578	239-5103	1143		262
237-9320	▶684		580		1144	239-9961	1017
237-9482	773	239-1497	939	239-5107	1172		1019
237-9601	474		940	239-5157	894		1022
237-9606	424	239-2314	256	239-5173	516		1209
238-0294	94	239-2395	338	239-5616	1080	239-9970	779
	96		340		1178	240-0332	128
	98		▶352	239-5617	1080	240-0808	138
238-0479	1097	239-2396	338		1178	240-3395	▶934
238-1177	▶523		340	239-5660	138		936
238-1178	523		▶353	239-5674	338		938
238-1262	13	239-3185	222		340	240-3396	934
	▶28	239-3212	777		▶355	240-5475	265
238-1265	1105	239-3213	777	239-5777	▶222	240-5841	265
238-2700	38	239-3214	777	239-5928	338	240-6673	688
238-2753	839	239-3283	540		340	240-6674	687
	▶848	239-3285	540		▶360	240-6822	508
	▶850		542	239-5929	386		509
	▶852	239-3327	990	239-5953	11	240-7347	▶755
238-4665	164	239-3340	▶928		14		935
238-5017	265		935		▶179		937
238-5096	990		936	239-6941	138	240-7348	755

▶ **PRIMARY REFERENCE**

PART NUMBER INDEX

Part	Page
240-7349	755
240-7356	908
240-7359	178
240-7837	▶1045
	1064
241-0550	742
	743
	▶757
241-0551	757
241-0552	757
241-1781	335
241-1855	646
	647
	648
	649
	650
	651
	652
	654
241-2501	206
	209
241-2943	808
241-3811	▶513
241-3812	513
241-3814	513
241-3816	513
241-3821	513
241-4167	1231
241-5929	11
	13
	▶15
241-6186	338
	340
241-6234	500
	503
241-7877	790
	792
241-7920	253
	▶1150
241-8368	327
	▶379
242-1583	1097
242-1931	689
242-3633	581
242-3996	1226
242-3999	573
242-4002	573
242-4005	1226
242-4007	1226
242-4009	1226
242-4011	1226
242-4013	6
242-4016	573
	1226
242-5123	825
	829
242-5198	478
	▶1075
242-5199	1078
242-5202	1076
242-5204	1078
242-5205	1072
242-5206	696
242-5207	1076
242-6207	759
	▶1060
242-6208	735
	▶1061
	▶1062
242-6209	253
	735
	▶1063
242-7104	604
	606
	609
	612
	615
242-7205	▶243
	259
242-7246	503
242-7954	869
	872
	875
	877
	880
	883
242-7955	869
	872
	875
	877
	880
	883
	886
	889
242-8396	1172
242-9230	260
242-9398	1226
242-9399	1226
242-9400	1226
242-9537	30
	33
242-9964	259
243-0943	▶48
	49
243-1159	30
	33
243-1560	11
	13
	▶239
	▶240
243-1949	825
	829
243-2746	825
243-3766	178
243-5300	▶10
243-6329	▶684
243-6741	▶49
	52
244-0878	2
	▶625
244-0879	2
	▶626
244-0880	2
	▶651
244-0881	2
	▶647
244-1323	619
	▶627
244-1324	618
	619
	▶628
244-1716	1083
244-1717	331
	332
244-1735	▶1208
244-2310	417
244-2620	1231
244-3114	▶499
244-3457	167
	171
	▶173
244-3459	169
	▶174
244-3462	173
	174
244-6529	1033
244-7617	▶989
	1000
244-7618	989
245-1596	1093
245-1737	839
245-1750	1230
245-2760	1163
245-3557	▶923
245-3558	▶743
245-3559	▶931
245-3561	▶949
245-3562	924
	925
	▶976
245-3563	▶949
245-3564	▶944
245-3565	▶944
245-3566	▶924
245-3567	▶925
245-3569	▶949
245-3856	1072
245-4178	972
	973
	979
	980
	▶992
245-4179	992
245-4243	992
245-4252	992
245-4747	319
245-7725	253
245-8150	950
	▶962
	964
	977
	979
245-8151	▶977
	978
	979
	980
245-8152	▶970
	972
	973
245-8153	▶958
	973
	974
245-8220	▶175
	1014
245-8404	448
	454
	460
	466
245-8456	1230
246-0775	644
	645
	▶652
	691
	692
	693
	694
246-0779	▶648
	691
	692
	694
246-0780	648
	649
246-1156	714
246-2641	1
	193
	206
	209
	516
	540
	542
	547
	833
	835
246-2925	317
246-2984	1108
	1111
	1113
	1116
	1119
	1122
	1125
	1128
	1131
	1134
246-4296	1163
246-4311	403
	406
	732
	734
246-5625	275
	278
	280
	283
	285
	288
	290
	292
	294
	297
	300
	302
	305
	309
246-5626	280
	283
	285
	288
	294

▶ **PRIMARY REFERENCE**

PART NUMBER INDEX

Part	Page
	297
	300
	302
	305
	309
246-5785	1163
246-5804	711
246-5959	253
	▶320
246-5960	320
246-5961	320
246-6036	124
246-6720	270
246-7483	685
246-7486	685
246-7493	685
246-9346	195
246-9822	3
	4
	5
	10
	▶588
	▶590
247-0293	▶270
	294
	302
247-0747	253
	735
	▶1064
247-0850	923
	▶971
247-0851	923
	▶937
247-0852	923
	▶940
247-0854	945
	▶959
	961
	973
247-1836	58
247-3761	816
247-4144	1146
247-4151	1150
247-4152	1150
247-4156	1012
247-4223	195
	198
	200
247-6123	94
	96
	98
247-6130	94
	96
	98
247-6875	1232
247-6876	1232
247-6877	1232
247-6878	1232
247-6958	178
247-7625	722
247-7788	773
247-8271	1016
	▶1209
247-9908	53
247-9926	11
	13
	▶58
248-0903	195
	198
	200
248-0904	195
	198
	200
248-0905	195
	198
	200
248-0906	195
	198
	200
248-1272	757
248-1500	319
248-2921	▶334
	1093
248-2922	334
248-2923	1093
248-2929	1097
248-2930	1097
248-2931	1093
248-2939	1009
	▶1141
248-2985	314
248-2986	314
248-2987	607
	610
	655
	657
	659
248-4068	239
248-4172	▶1014
248-4175	▶1015
248-4176	▶1015
248-4178	1015
	▶1022
248-4221	193
248-4773	1026
248-5513	140
248-6220	134
248-6221	134
248-6772	1093
248-6862	1230
248-6973	236
248-6975	236
248-6979	236
248-6991	760
249-0313	224
249-0951	327
249-0992	3
	▶546
249-0993	535
249-0994	537
249-5293	699
249-5592	314
249-5648	335
249-6878	388
	392
249-8549	335
249-9311	1093
250-0466	39
	41
	43
250-0801	1231
250-0855	▶113
250-0874	253
	▶395
	▶398
	▶400
250-1830	395
	398
	409
250-1832	395
	398
250-1843	395
	398
250-1911	136
250-1989	121
250-1990	121
250-2250	807
	808
	▶821
250-2251	807
250-2253	808
250-2273	821
250-2274	808
250-3076	314
250-3077	314
250-4628	1157
	1159
	1161
	1162
250-5861	737
	739
	▶744
250-6102	560
	562
250-7721	760
250-9132	588
	590
250-9133	588
	590
250-9136	588
	590
250-9137	588
	590
250-9138	588
	590
251-1319	▶1232
251-1721	553
251-1722	▶553
	985
251-1723	▶985
251-1724	554
251-1725	▶554
	986
251-1726	▶986
251-2459	816
251-2460	816
251-4160	236
251-4162	236
251-4252	82
	85
	88
	90
251-4300	11
	▶82
	▶85
251-4552	222
251-4603	▶134
251-5810	▶253
251-5811	▶735
251-6358	808
251-7544	13
	▶88
	▶90
251-8248	236
251-9682	▶148
252-0031	816
252-0032	816
252-0166	▶569
252-0759	166
252-4730	1141
252-5078	529
	533
	537
252-5079	527
	531
	535
252-5109	253
252-5110	1150
252-5111	1150
	1151
252-5112	1150
	1151
252-5114	1034
252-5115	1034
252-5127	▶710
	759
252-5617	625
252-5788	▶335
	735
252-5805	181
252-5806	181
252-5830	735
252-5878	403
252-6473	335
252-6517	790
	792
	796
252-6949	395
252-7134	1029
252-8073	808
252-8686	▶572
252-8744	993
252-9202	710
	▶714
252-9203	710
252-9204	714
252-9628	331
	332
253-0000	119
253-0039	395
	398
	400
	409
253-0040	395
	398
	400
253-0241	395
253-0274	148
253-0615	204
253-0861	1226

▶ **PRIMARY REFERENCE**

PART NUMBER INDEX

Part	Page	Part	Page	Part	Page	Part	Page
	1228	254-9371	1015	256-5701	1105		576
253-1344	606		1016	256-6453	364		578
	609		▶1218	256-6803	264		581
253-1346	604	254-9951	255	256-6804	264	258-8721	104
	612	255-0844	1085	256-7619	816		106
	615		1086	256-8685	▶951		107
253-1752	35		1090	256-8790	953	258-8885	1017
253-2626	124	255-0845	1084		▶964	258-8886	260
253-2673	698		1087		965	259-0607	409
	699		1088	256-9990	565	259-4746	322
253-3352	1061	255-0848	1085	257-0005	952		▶1152
253-3974	128		1086		▶965	259-4756	11
253-4125	76		1090	257-0267	869		13
253-4622	556	255-0849	1084		875		▶326
	558		1087		880	259-5746	▶1046
253-4623	556		1088		886		1062
	558	255-0939	331		▶913		1069
253-5149	14		332	257-0390	825	259-5747	▶1047
253-7529	▶701	255-1528	573		829		1063
	712		1226	257-1729	331	259-5750	1060
253-7530	▶711	255-1529	1226	257-2529	1054		1068
	712	255-4206	▶260		1056	259-5751	▶1048
253-7531	712		▶262		1058		1061
	▶722	255-4517	260		1064	259-5854	▶1181
253-8324	314	255-4518	260		1066	259-8353	▶527
253-8329	331	255-6899	1017	257-2530	1058		540
253-8967	323		1019		1066		542
253-8969	323		▶1084	257-2532	1054	259-8354	▶529
253-8981	323	255-6900	1017		1056		540
253-8988	▶524		1019		1064		542
254-0059	813		▶1085	257-4385	816	259-8355	6
	818	255-8188	962	257-5092	3		8
	▶824	255-8189	962		4		▶531
254-0060	824	255-8707	▶950		5	259-8356	6
254-0061	824		976		10		8
254-1686	603	256-0189	▶1155		▶317		▶533
	604	256-0194	1015	257-5525	4	259-9275	▶535
	606		▶1091		▶149		546
	609	256-0270	260	257-5547	▶946	259-9276	▶537
	612	256-0271	1017	257-5548	946		546
	615	256-0313	712		▶961	260-1453	735
254-4957	326		▶716	257-6926	690	260-1577	560
254-5570	124	256-0501	264	257-6928	689		562
254-5571	124	256-1278	701	257-6929	685	260-1811	1231
254-7334	119	256-4309	1174	257-7285	1044	260-1982	244
254-8155	▶271	256-4310	1174	257-9363	264		245
	278	256-4311	1174	258-0768	518	260-2017	836
	283	256-4312	1174		520	260-3178	403
	288	256-4316	1174		521		406
	292	256-4889	▶945	258-0769	518	260-3884	▶314
	300		971		520	260-3885	▶374
	309	256-4890	959		521	260-3902	521
254-8195	403	256-4901	▶929	258-0883	186	260-3903	5
254-8961	1222		937		188		▶521
	▶1224		938	258-0978	1037		618
254-8962	1222	256-4902	929		1039	260-4695	5
	▶1225	256-4904	940	258-0980	1037		▶597
254-8974	1222	256-4905	▶794		1039		618
254-8982	1222		923	258-2305	556	260-5923	588
254-8984	1026	256-4907	794		558		590
254-8986	1222		796		576	260-6224	409
254-9114	243	256-4909	794		578	260-6231	▶409
254-9115	243	256-5314	952		581		735
254-9136	254		▶978	258-2308	556	260-7555	11
	255		980		558		13

▶ **PRIMARY REFERENCE**

PART NUMBER INDEX

Part	Page
	▶76
260-7614	▶606
	691
260-7615	▶609
	692
260-7652	260
	262
260-7653	1232
260-8590	869
	872
	875
	877
	880
	883
	886
	889
	▶908
261-0634	256
	258
261-0664	773
261-0665	773
261-0967	773
261-1173	1224
261-1174	1225
261-1175	1224
261-1176	1225
261-1177	1224
261-1582	132
	133
261-2351	▶919
261-2352	▶920
261-2903	▶1080
261-2904	▶1080
261-2966	1080
261-3223	236
261-3224	236
261-3429	46
261-3430	46
261-3768	▶1012
	1017
	1019
	1022
	1209
261-4284	253
261-4671	790
261-4801	743
	▶938
261-4802	743
	▶796
261-4843	796
261-4844	796
261-4929	478
	▶836
261-5694	1158
	1160
261-5733	128
261-7170	763
	766
261-8820	1091
261-8821	175
	1091
261-8822	1091
261-8823	1091
261-8824	1091
261-9672	627
	628
	631
	632
261-9673	627
	628
	631
	632
262-1408	403
262-1421	▶251
	264
262-2043	▶251
	260
	262
262-2878	240
262-3065	167
	169
	171
262-4089	314
262-4090	374
262-4091	374
262-4092	374
262-4093	374
262-4097	782
262-5228	175
262-5229	175
262-5230	175
262-7701	722
263-0009	314
263-3278	1097
	▶1098
263-3280	1034
263-3318	▶1037
	▶1039
	1155
263-4081	426
263-4920	46
263-6901	1231
263-6902	1232
263-9088	262
	264
	▶331
263-9112	1232
263-9973	165
264-0072	1034
264-0461	1093
264-0462	1093
264-0465	1093
264-0466	1093
264-0467	1093
264-0468	1093
264-1476	1093
264-3177	252
264-3818	1232
264-4297	365
	366
265-0959	175
	1091
265-5278	▶426
	496
265-6974	1119
265-6975	1111
	1114
	1119
	1122
	1125
	1131
	1134
265-6976	1119
265-6977	1111
	1114
	1119
	1122
	1125
	1131
	1134
265-6978	393
265-6979	393
266-1467	▶344
	1039
	1168
266-3152	2
266-3447	1093
266-3450	1098
266-6038	39
	41
	43
266-9237	317
267-2060	▶55
	56
267-2257	590
267-2910	158
267-2911	158
267-3059	453
	459
	465
267-3363	590
267-3365	590
267-3367	590
267-3368	590
267-4631	▶36
	37
267-4632	▶37
	43
267-5678	590
267-7504	690
267-8575	1093
267-8828	1034
268-0196	479
268-3695	1047
	1048
268-4737	1078
268-8792	1093
268-8849	453
	459
	465
269-4105	6
	8
269-5771	503
	▶509
269-5772	509
269-7050	345
269-9346	1066
269-9388	245
	▶1066
270-4414	552
270-5001	1022
	1209
270-5002	1022
	1209
270-5320	192
271-0130	▶209
271-0131	209
	▶211
271-0449	▶525
271-4961	1205
271-5039	1212
	1213
	1214
271-5040	1214
271-5041	1212
	1213
	1214
271-5043	1212
	1213
	1214
271-5045	1212
	1213
	1214
271-5053	1212
	1213
271-5054	1214
271-5055	1212
	1213
271-5056	1214
271-5057	1212
	1213
	1214
271-9250	1022
271-9251	1086
271-9252	1087
271-9253	1022
271-9254	1022
271-9255	1022
271-9256	1022
271-9257	1022
271-9258	1022
271-9408	1034
	1151
272-0390	21
272-2583	29
272-3163	▶685
272-3164	▶685
272-3165	▶685
272-3166	▶686
272-3167	▶686
272-3168	▶686
272-3169	▶687
272-3170	▶687
272-3171	▶687
272-3178	686
272-3179	686
272-3180	686
272-3181	687
272-3182	687
272-3183	687
272-5514	590
272-6009	▶636
	667
	672
	677
	680
	681
	682
	683
	684

▶ **PRIMARY REFERENCE**

PART NUMBER INDEX

Part	Page
272-6010	▶637
	667
	668
	669
	670
	671
	672
	673
	674
	675
	676
	677
	678
	679
	683
272-9879	193
273-5723	▶264
273-5725	▶264
273-8806	685
	686
	687
	688
	689
	690
273-9929	406
274-1645	1155
274-1953	15
	▶56
274-3625	▶556
	▶558
274-3626	556
274-3627	556
274-3629	556
	558
274-3646	556
	558
274-3647	556
	558
274-3648	236
274-3649	558
274-3650	558
274-3651	558
274-3652	558
274-3653	558
274-4491	106
	107
274-5527	749
274-6754	552
274-6800	4
	5
	10
	▶552
274-7395	340
	▶365
274-7396	340
	▶366
274-9204	1155
274-9205	1155
274-9206	1155
275-1253	190
	▶380
275-7741	▶382
	1163
276-0533	688
276-0535	▶688
276-0537	688
276-0539	▶688
276-0541	688
276-0543	▶688
276-0545	689
276-0547	▶689
276-0550	▶689
276-0552	689
276-0554	▶689
276-0764	331
276-3095	198
	200
276-3734	796
276-4637	94
	96
276-4647	167
276-4878	1052
276-5311	345
276-5312	▶345
	1078
276-5317	104
	106
	107
276-6146	255
277-0467	▶272
	297
	300
	305
	309
277-0661	526
277-0662	4
	▶526
277-2272	1026
	▶1198
277-3082	272
277-5273	1155
277-5274	1155
277-6370	262
278-1365	106
	109
278-1929	78
	80
	▶106
278-2363	485
278-2375	487
278-3354	1093
278-5657	20
278-5662	15
	▶20
	▶21
278-7129	1034
278-9539	2
	▶654
278-9540	2
	▶649
279-1260	11
	13
	▶16
280-1472	198
	200
280-1653	1037
	1165
280-1654	1037
	1039
280-1655	1037
	1039
280-2167	16
	▶80
280-2691	236
280-2751	1104
	1208
	1209
280-2752	1104
	1208
	1209
280-2753	1104
	1208
	1209
280-3365	592
280-3367	592
280-6995	▶423
280-7870	813
	818
	899
	900
280-8785	1097
280-9041	4
	▶158
281-2723	1231
281-2725	212
	▶213
281-8261	54
	56
282-0935	4
282-0936	4
282-0937	4
282-0938	4
282-0939	4
282-0941	4
282-3007	321
282-4082	527
	529
	531
	533
	535
	537
	540
	542
282-7740	▶951
282-7741	▶947
282-7742	951
	▶979
282-7743	947
	▶972
282-8243	1151
282-8249	1151
282-8250	253
	▶1151
282-8252	253
282-8271	1151
283-4426	1083
283-9503	206
283-9530	1083
283-9854	231
	496
284-2728	699
284-3502	124
284-3599	490
284-5456	652
	654
284-7985	429
284-7986	429
284-8532	262
284-8906	406
285-0150	1060
	1062
	1063
	1068
	1069
	1070
	1071
285-1133	249
285-5730	872
	877
	883
	889
	▶914
285-8028	459
	465
285-8029	459
	465
286-0134	254
	255
	▶1083
286-0136	255
	▶331
286-0137	254
	▶332
286-0732	▶690
286-3017	332
286-3046	335
286-5841	345
286-7168	11
	13
	▶34
286-8209	11
	13
	▶116
286-9124	254
	255
	▶1142
286-9188	1015
286-9193	1022
	▶1086
286-9194	1022
	▶1087
287-3293	645
288-4883	46
288-4884	46
289-6304	217
	219
	224
289-8215	21
289-8449	331
	332
290-0461	823
290-5570	▶254
290-5571	▶254
290-6112	1083
291-1913	332
	333
291-2165	1163
292-0279	▶255
292-0280	▶255
292-0281	253

▶ **PRIMARY REFERENCE**

PART NUMBER INDEX

Part	Page
	254
	▶319
292-0285	254
	▶331
292-0290	254
	255
	▶319
292-0291	254
	▶332
292-0292	255
	▶332
292-0293	▶253
292-0296	254
	255
	▶322
292-0302	319
	▶993
292-0303	319
	▶993
292-0309	253
	254
	▶1083
292-0311	1083
292-0312	▶254
292-1268	331
292-2016	413
292-2441	331
	332
292-4906	224
292-6097	1161
292-6098	1162
292-6402	▶1160
	1161
	1162
292-9237	▶1161
	1185
292-9238	▶1162
	1190
293-2851	718
293-2911	1176
293-4661	4
294-5042	1185
	1190
295-0710	1014
	1015
	▶1016
295-0890	573
	574
295-4155	1072
295-5502	703
295-6897	788
	794
295-8281	166
295-8282	177
295-9961	686
295-9962	688
295-9963	685
295-9964	687
295-9965	687
295-9966	689
295-9967	686
295-9968	685
296-1372	689
296-1373	688
296-1391	▶800
296-1396	686
296-1498	711
296-1499	711
296-7759	272
296-8541	▶947
296-8542	▶972
	974
296-8543	▶947
296-8544	▶972
	975
296-8545	▶947
296-8546	966
	▶973
296-8547	▶951
296-8548	966
	▶979
296-8549	▶951
296-8550	967
	▶979
296-8551	▶952
296-8552	967
	▶980
296-8553	▶948
296-8554	▶973
	975
297-0693	253
297-1813	27
297-4986	779
	792
	796
297-5587	736
	3
300-2118	▶333
300-3919	1085
	1086
	1090
300-3920	1084
	1087
	1088
300-8743	690
300-8744	▶690
300-9112	690
301-0097	552
301-0219	552
301-0589	262
301-2269	▶802
	846
	852
	859
301-4136	332
301-4869	944
	▶973
301-4871	944
	▶974
301-4872	931
	▶948
301-4873	942
	▶948
301-4874	947
	▶974
301-4875	947
	▶975
301-4876	947
	▶966
301-4877	949
	▶952
301-4878	949
	▶980
301-4879	949
	▶952
301-4880	951
	▶953
301-4881	951
	▶966
301-4882	951
	▶967
301-4883	952
	▶967
301-4884	948
	▶975
301-9821	154
302-4032	957
	959
	962
303-3104	562
	565
	566
303-4370	406
303-4426	766
	770
303-5933	149
	▶766
	▶770
303-7505	154
303-8708	154
303-8789	149
	▶154
303-8791	736
303-8792	1111
	1122
	1131
303-8804	417
304-0326	1088
	1090
	1104
	1209
304-0391	1122
	1125
304-4602	1228
304-4609	▶1228
	1230
304-4611	1228
304-4613	1228
304-4623	1228
304-4624	1228
304-5292	1104
	1209
304-5680	638
304-5687	406
304-5688	▶638
	685
	686
	687
	688
	689
	690
304-6763	1228
	1229
304-8557	▶1088
	1209
304-8558	▶1090
	1209
304-9262	1111
	1114
305-2781	766
	770
305-3684	184
305-9194	1215
	1218
305-9195	1218
305-9196	43
	▶102
306-0278	417
306-2050	398
	400
306-3998	369
306-9437	599
306-9439	600
306-9441	598
306-9992	1093
307-0047	262
307-1611	21
307-1613	▶252
307-4488	149
	▶581
307-4489	581
307-4490	581
307-6264	8
307-6507	766
	770
307-7367	149
307-7368	1229
307-7370	209
	▶1229
307-8322	106
	108
308-1395	400
308-4362	629
	631
308-4363	630
	632
308-4364	▶629
	692
308-4365	▶630
	692
308-4366	619
	▶631
308-4367	619
	▶632
308-6335	1031
308-7280	581
309-0110	▶167
309-2803	802
309-5130	326
309-9542	▶1050
	1070
310-1512	132
	133
310-1523	813
	▶899

▶ **PRIMARY REFERENCE**

PART NUMBER INDEX

Part	Page
310-2181	516
310-2182	516
310-2847	▶612
	692
310-2848	▶692
310-2849	▶693
310-2850	2
	▶694
310-2851	▶615
	693
	694
310-2852	615
310-2853	612
310-2854	615
310-2855	612
310-2866	657
	659
310-2870	612
310-2871	612
310-2888	615
310-2889	615
310-2901	657
310-2902	657
310-2905	659
310-2906	659
310-2909	621
	693
310-2910	▶621
	692
310-2911	▶622
310-2912	621
	622
310-2913	621
	622
310-2920	▶665
	692
	693
	694
310-2924	▶659
	692
	693
310-5931	1104
	1218
	▶1222
310-9434	1229
310-9435	1229
311-2117	957
	959
	962
311-4065	175
	1091
311-4862	254
	255
311-4864	255
311-7135	132
	133
312-2959	384
312-3420	735
312-8629	914
	915
313-3754	85
	90
	▶93
313-4095	▶1104
313-7668	▶915
314-4018	1027
314-5463	▶487
	692
	693
314-6917	262
314-7924	665
314-7925	665
315-5491	621
	622
316-6864	203
316-8641	321
316-8642	321
316-9825	253
	▶321
317-2656	1145
317-3741	465
	▶503
317-3836	542
317-7378	252
317-7379	252
317-8766	35
317-9191	209
318-2082	370
318-3130	818
	▶900
318-5033	638
	639
	640
318-5081	1083
318-6248	692
	693
318-8519	▶1199
318-9461	1039
	1168
318-9690	735
319-1858	▶1052
	1071
319-3593	▶818
	820
319-3594	133
	▶820
319-6071	▶619
319-7401	35
	▶110
319-7444	▶224
319-8076	152
320-2796	▶107
	108
320-2797	107
321-2018	▶639
321-2019	▶640
321-3374	175
321-5716	473
321-5717	473
321-5718	473
321-5719	474
321-5720	474
321-5967	503
321-8376	400
321-8377	400
321-8597	278
	283
	288
	300
	309
322-3161	1160
323-2173	479
323-9531	498
324-6111	262
324-9111	230
	400
325-1288	1011
325-1289	1011
325-4730	230
325-5686	1085
	1086
	1090
325-5687	1084
	1087
	1088
325-7769	252
325-7770	252
325-7778	252
325-7779	252
326-1644	192
327-3541	1068
	1069
	1070
	1071
327-3542	759
	▶1068
327-3543	▶1069
327-3548	735
	▶1070
327-3550	253
	▶1071
327-5880	392
328-0731	1014
328-1704	236
328-3106	▶236
328-4236	79
	▶108
328-4238	108
	▶109
329-5070	219
329-5071	224
330-3408	331
330-3409	251
330-3410	251
330-6563	1114
	1125
	1134
331-1560	957

▶ PRIMARY REFERENCE



© 2008 CATERPILLAR
ALL RIGHTS
RESERVED

CAT, CATERPILLAR, THEIR RESPECTIVE LOGOS, “CATERPILLAR YELLOW” AND THE POWER EDGE TRADE DRESS, AS WELL AS CORPORATE AND PRODUCT IDENTITY USED HEREIN, ARE TRADEMARKS OF CATERPILLAR AND MAY NOT BE USED WITHOUT PERMISSION.

PRINTED IN
U.S.A.

SEBP4195-44
VOLUME II
Pages 595-1234

D8T TRACK-TYPE TRACTOR

J8B1-Up