CATERPILLAR®

SEBP2932-06
December 2001

RUTHZIL TRATOR COMERCIAL DE PEÇAS LTDA 11 97083-6812 ROLANDO CITRANGULO

Parts Manual



See "General Information" for New Parts Manual Features.

D9R Track-Type Tractor
Differential Steering

ABK1-Up (Machine)
48W41541-Up (Engine)
5XD1-Up (Engine)
4XX1-Up (Transmission)
9MP1-Up (Bulldozer)
9RP1-Up (Bulldozer)
5RP1-Up (Ripper)
7HP1-Up (Ripper)
6ZT1-Up (Torque Converter)

Powered By 3408 Engine

Product and Dealer Information

Note: For product identification plate locations, see the section “Product Identification Information” in the Operation and Maintenance Manual.

Delivery Date: _____

Product Information

Model: _____

Product Identification Number: _____

Engine Serial Number: _____

Transmission Serial Number: _____

Generator Serial Number: _____

Attachment Serial Numbers: _____

Attachment Information: _____

Customer Equipment Number: _____

Dealer Equipment Number: _____

Dealer Information

Name: _____ Branch: _____

Address: _____

_____

_____

	Dealer Contact	Phone Number	Hours
Sales:	_____	_____	_____
Parts:	_____	_____	_____
Service:	_____	_____	_____

Informations produit et concessionnaire

Nota: Voir l'emplacement de la plaque signalétique du produit au chapitre "Informations produit" du guide d'utilisation et d'entretien.

Date de livraison: _____

Informations produit

Modèle: _____

Numéro d'identification produit: _____

Numéro de série du moteur: _____

Numéro de série de la boîte de vitesses: _____

Numéro de série de l'alternateur: _____

Numéros de série d'équipement: _____

Informations sur l'équipement: _____

Numéro matériel client: _____

Numéro matériel concessionnaire: _____

Informations concessionnaire

Nom: _____ Agence: _____

Adresse: _____

_____

_____

	Contact concessionnaire	Numéro de téléphone	Heures
Ventes:			
Pièces:			
Service:			

Información del Producto/Distribuidor

Nota: Para saber la ubicación de las placas de identificación del producto, ver la sección “Información sobre identificación del producto” en el Manual de Operación y Mantenimiento.

Fecha de entrega: _____

Información del producto

Modelo: _____

Número de identificación del producto: _____

Número de serie del motor: _____

Número de serie de la transmisión: _____

Número de serie del generador: _____

Números de serie de los accesorios: _____

Información sobre los accesorios: _____

Número del equipo del cliente: _____

Número del equipo del distribuidor: _____

Información del distribuidor

Nombre: _____ Sucursal: _____

Dirección: _____

_____

_____

	Comunicación con el distribuidor	Número de teléfono	Horas
Ventas:	_____	_____	_____
Piezas:	_____	_____	_____
Servicio:	_____	_____	_____

Informações Sobre Produto e Revendedor

Nota: Para localizações da placa de identificação do produto, consulte a seção, “Informações Sobre Identificação do Produto” no Manual de Operação e Manutenção.

Data de Entrega: _____

Informações Sobre o Produto

Modelo: _____

Número de Identificação do Produto: _____

Número de Série do Motor: _____

Número de Série da Transmissão: _____

Número de Série do Gerador: _____

Números de Série de Acessórios: _____

Informações Sobre Acessórios: _____

Número do Equipamento do Cliente: _____

Número do Equipamento do Revendedor: _____

Informações Sobre o Revendedor

Nome: _____ Filial: _____

Endereço: _____

_____

_____

	Contato do Revendedor	Telefone	Horas
Vendas:	_____	_____	_____
Peças:	_____	_____	_____
Serviço:	_____	_____	_____

Produkt- und Händlerinformation

Anmerkung: Für die Lage der Produkt-Identnummer und Seriennummern siehe Abschnitt "Produkt-Identinformation" im Betriebs- und Wartungshandbuch.

Lieferdatum: _____

Produkt-Identinformation

Modell: _____

Produkt-Identnummer: _____

Seriennummer des Motors: _____

Seriennummer des Getriebes: _____

Seriennummer des Generators: _____

Seriennummern der Arbeitsgeräte: _____

Arbeitsgeräteinformation: _____

Kundennummer: _____

Händlernummer: _____

Händlerinformation

Name: _____ Niederlassung: _____

Adresse: _____

_____

_____

	Kontaktperson beim Händler	Telefon	Dienststunden
Verkauf:	_____	_____	_____
Ersatzteile:	_____	_____	_____
Service:	_____	_____	_____

MEMORANDA

TABLE OF CONTENTS

Name	Page
GENERAL INFORMATION	A24
REPAIR ALTERNATIVES	A43
SUPPLEMENTAL COOLANT ADDITIVES	A48
MAINTENANCE PARTS	A53
INDEX	A89
MACHINE ARRANGEMENT	1
GENERAL AR	1
ENGINE ARRANGEMENT	2
CONVERSION AR-ENGINE	2
ENGINE AR	4
INSTALLATION AR-ENGINE	7
BASIC ENGINE	8
BELT TIGHTENER GP	8
CAMSHAFT GP	10
COVER GP-CYLINDER BLOCK	12
COVER GP-FLYWHEEL HOUSING	16
COVER GP-FRONT HOUSING	18
COVER GP-VALVE MECHANISM	20
CRANKSHAFT AS	22
CRANKSHAFT GP	23
CYLINDER BLOCK AS	24
CYLINDER BLOCK GP	26
CYLINDER HEAD AS	29
CYLINDER HEAD GP	32
DAMPER & PULLEY GP	40
DRIVE GP-FAN	42
FLYWHEEL GP	47
GEAR GP-FRONT	48
GEAR GP-REAR	52
HOUSING GP-FLYWHEEL	56
HOUSING GP-FRONT	60
LIFTING GP-ENGINE	62
PAN GP-OIL	64
PISTON & ROD GP	66
PLUG GP-CYLINDER BLOCK	70
PLUG GP-CYLINDER HEAD	71
ROCKER ARM GP	72
SUPPORT GP-ENGINE	74
TRUNNION GP-ENGINE	76
VALVE MECHANISM GP	77
LUBRICATION SYSTEM	79
BREATHER GP	79
FASTENER GP-OIL PUMP MOUNTING	80
FILLER GP-ENGINE OIL	81
FILTER GP-ENGINE OIL	84
FUMES DISPOSAL GP	86
GAUGE GP-OIL LEVEL (DIPSTICK)	90
LINES GP-ENGINE OIL	92
LINES GP-OIL SUPPLY	96
LINES GP-TURBOCHARGER OIL	98
OIL CHANGE GP-HIGH SPEED	102
PRELUBRICATION AR-ENGINE	104
PUMP GP-ENGINE OIL	108
COOLING SYSTEM	114
FAN GP-BLOWER	114
LINES GP-AFTERCOOLER WATER	116
LINES GP-WATER	117
PUMP GP-WATER	132
RADIATOR GP	140
TANK GP-COOLANT	149
TANK GP-WATER	150
AIR INLET AND EXHAUST SYSTEM	154
AFTERCOOLER GP-WATER	154
AIR CLEANER GP	158
CAP AS-RAIN	164
CARTRIDGE GP-TURBOCHARGER	166
DUST EJECTOR GP	168
LINES GP-AIR	170
MANIFOLD GP-EXHAUST	178
MUFFLER GP	180
SHIELD GP-MANIFOLD	182
TURBOCHARGER GP	184
FUEL SYSTEM	188
ADAPTER GP-FAST FILL FUEL	188
CONTROL GP-DECELERATOR	198
CONTROL GP-FUEL RATIO	200
CONTROL GP-GOVERNOR	204
DRIVE GP-GOVERNOR & FUEL PUMP	208
DRIVE GP-TACHOMETER	209
DRIVE GP-UNIT INJ HYD PUMP	210
FASTENER GP-FUEL INJ PUMP	214
FILTER & LINES GP-FUEL	216
FILTER GP-FUEL	223
FILTER GP-WATER SEP & FUEL	224
GOVERNOR GP	226
HOUSING GP-FUEL PUMP	229
INJECTOR GP-FUEL	230
KIT-SEAL	231
LINES GP-FUEL DRAIN	232
LINES GP-FUEL FILTER	234
LINES GP-FUEL INJECTION	240
LINES GP-INJECTOR HYD PUMP	244
PLATE GP-GOVERNOR ADAPTER	246
PUMP & MTG GP-UNIT INJ HYD	248
PUMP GP-FUEL INJECTION	252
PUMP GP-FUEL TRANSFER	258

TABLE OF CONTENTS

Name	Page
PUMP GP-GOV, FUEL INJ & TFR	260
PUMP GP-UNIT INJECTOR HYD	262
TANK GP-FUEL	268
TORQUE CONTROL GP	270
VALVE GP-PRESSURE CONTROL	271
VALVE GP-SOLENOID	272
ELECTRICAL AND STARTING SYSTEM	273
ALARM GP	273
ALTERNATOR GP-CHARGING	274
BATTERY & WIRING GP	278
BLOCK GP-POWER	293
CONNECTION GP-ELECTRICAL	294
CONTROL & MTG GP-ENGINE ELEK	296
CONTROL GP-ENGINE ELECTRONIC	298
CONVERTER GP-ELECTRICAL	300
HEATER GP-FUEL	302
HEATER GP-JACKET WATER	305
JUNCTION BLOCK GP	307
LAMP GP-DOME	308
LAMP GP-FLOOD	309
LIGHTING AR-CYLINDER	312
LIGHTING AR-REAR	314
LIGHTING GP	315
LIGHTING GP-AUXILIARY	316
LIGHTING GP-FLOOD	318
LIGHTING GP-FRONT	322
LIGHTING GP-REAR	324
MAGNETIC PICKUP GP	326
SENSOR GP-FUEL LEVEL	328
SENSOR GP-POSITION	329
SENSOR GP-PRESSURE	330
SENSOR GP-SPEED	338
SENSOR GP-TEMPERATURE	341
SOLENOID AS-STARTING MOTOR	343
STARTING AID GP-ETHER	344
STARTING AR-COLD WEATHER	348
STARTING MOTOR GP-ELECTRIC	352
SWITCH GP-BYPASS	365
SWITCH GP-DISCONNECT	366
SWITCH GP-FLOW	367
SWITCH GP-HANDLE	369
SWITCH GP-MAGNETIC	370
SWITCH GP-START	371
WIRING GP-CONSOLE	372
WIRING GP-ENGINE	376
WIRING GP-PLATFORM	378
WIRING GP-UNIT INJECTOR	383
POWER TRAIN	384
AXLE GP-POWER TRAIN	384
CASE & PARTS GP-PLANETARY	386
CONTROL GP-TRANSMISSION HYD	390
COOLER GP-TRANSMISSION OIL	392
COUPLING GP-PUMP	393
DRAIN GP-ECOLOGY	394
FILTER GP-OIL	396
FINAL DRIVE GP	398
GEAR GP-BEVEL & TRANSFER	410
GUARD GP-DRIVE SHAFT	412
GUARD GP-POWER TRAIN	413
LINES GP-POWER TRAIN OIL	416
MOUNTING GP-TRANSMISSION	420
PLANETARY GP-TRANSMISSION	422
POWER TRAIN AR	427
PUMP GP-GEAR	428
SEGMENT GP-SPROCKET	432
SHAFT GP-DRIVE	433
SLIP JOINT GP	434
TORQUE CONVERTER GP	436
TRANSMISSION AR	442
UNIVERSAL JOINT GP	443
VALVE & MTG GP-PILOT	444
VALVE GP	445
VALVE GP-FLUSHING	446
VALVE GP-MODULATING	447
VALVE GP-PRIORITY	448
VALVE GP-RELIEF	449
VALVE GP-SELECTOR & PRESS CONT	450
FRAME AND BODY	452
CASE & FRAME GP	452
CHASSIS AR	456
COUNTERWEIGHT GP	458
COVER GP-TRUNNION	462
DOOR GP-LH	463
DOOR GP-RH	466
DRAWBAR GP	470
ENCLOSURE GP	472
ENCLOSURE GP-ENGINE	474
FENDER GP	482
GRID GP-SAND BLAST ERODING	486
GUARD AR-FINAL DRIVE	487
GUARD AR-IDLER	488
GUARD GP-BOTTOM	489
GUARD GP-FUEL TANK	492
GUARD GP-IDLER	494
GUARD GP-PIVOT SHAFT	495
GUARD GP-RADIATOR	496
GUARD GP-ROCK	498
GUARD GP-SEAL	500
HOOD & GUARD GP	502
SUPPRESSION AR-SOUND	506
UNDERCARRIAGE	507
BAR AR-STRIKER	507
BEARING-SLEEVE	508
CAP GP-TRACK IDLER	510
CAP GP-TRACK ROLLER	512

TABLE OF CONTENTS

Name	Page
EQUALIZER BAR AS	513
EQUALIZER BAR GP	514
FRAME AR-TRACK ROLLER	517
FRAME GP-TELESCOPING RECOIL	518
IDLER GP-TRACK	521
LINK AS-TRACK	524
LUBRICATION GP-PIVOT SHAFT	530
REINFORCEMENT GP-ROLLER FRAME	532
ROLLER & IDLER AR	533
ROLLER AR-TRACK CARRIER	534
ROLLER GP-TRACK-DOUBLE FLANGE	538
ROLLER GP-TRACK-SINGLE FLANGE	542
SUSPENSION GP-BOGIE	546
TRACK ADJUSTER & RECOIL GP	548
TRACK GP	550
TUBE AS-ROLLER FRAME	562
UNDERCARRIAGE AR	563
STEERING AND BRAKING SYSTEM	564
BRAKE GP-SERVICE	564
CONTROL AR-HYDRAULIC STEERING	566
CONTROL GP-FOOT BRAKE	568
CONTROL GP-STEERING	570
CONTROL GP-STEERING & TMSN	572
DRIVE GP-DIFFERENTIAL STEERING	576
DRIVE GP-STEERING	578
FILTER GP-OIL	579
LINES GP-STEERING	580
MOTOR GP-PISTON	586
PUMP GP-CHARGE	587
PUMP GP-PISTON	588
ROTATING GP-MOTOR	592
VALVE GP	594
VALVE GP-BRAKE CONTROL	596
VALVE GP-CONTROL	598
VALVE GP-PILOT	602
VALVE GP-PRESSURE CONTROL	604
VALVE GP-RELIEF	606
HYDRAULIC SYSTEM	608
CONTROL AR-HYDRAULIC	608
CONTROL AR-HYDRAULIC IMPLEMENT	610
COOLER & MTG GP-HYDRAULIC OIL	612
COVER GP-HYDRAULIC TANK CAP	614
CYLINDER & LINES GP-DUAL TILT	615
CYLINDER & LINES GP-LIFT	616
CYLINDER & LINES GP-RIPPER	620
CYLINDER AR-DUAL TILT	621
CYLINDER GP-BULLDOZER LIFT	622
CYLINDER GP-DUAL TILT	624
CYLINDER GP-RIPPER LIFT	628
CYLINDER GP-RIPPER PIN PULLER	632
CYLINDER GP-RIPPER TIP	634
CYLINDER GP-TILT	638
LEVER GP	644
LEVER GP-CONTROL VALVE	645
LINES GP-LIFT CYLINDER	646
LINES GP-PIN PULLER	650
LINES GP-PIN PULLER CYLINDER	652
LINES GP-PUMP	654
LINES GP-RIPPER	658
LINES GP-TILT	662
LINES GP-TILT CYLINDER	666
MANIFOLD GP-VALVE	672
PUMP GP-GEAR	673
PUMP GP-PISTON	674
PUMP GP-PISTON & GEAR	676
ROTATING GP-PUMP	677
SWASHPLATE GP	678
TANK & FILTER GP-HYDRAULIC	680
VALVE & MTG GP-CONTROL	684
VALVE GP-BANK 4	686
VALVE GP-CHECK	688
VALVE GP-CHECK & RELIEF	689
VALVE GP-CONTROL	690
VALVE GP-PRESS & FLOW CMPNSTR	698
VALVE GP-QUICK-DROP	700
VALVE GP-RELIEF	702
VALVE GP-SHUTTLE	706
VALVE GP-SOLENOID	707
VALVE GP-TILT CONTROL	710
IMPLEMENTS	711
BULLDOZER AR-SEMI-UNIVERSAL	711
BULLDOZER AR-UNIVERSAL	713
CONTROL AR-BULLDOZER	715
FRAME GP-RIPPER	716
KIT-OVERPACK	720
LINK GP-STABILIZER	724
LINKAGE GP-IMPLEMENT	726
MODIFICATION AR-BULLDOZER	731
MOUNTING GP-CYLINDER	733
MOUNTING GP-RIPPER	734
PULLER AR-PIN	736
PULLER GP-PIN	737
PUSH ARM GP-LH	738
PUSH ARM GP-RH	739
PUSH ARM GP-STABILIZER	740
RIPPER AR	741
TRUNNION AR-BULLDOZER	743
TRUNNION GP-BULLDOZER	744
WORK TOOLS	745
BIT & CUTTING EDGE GP	745
BIT GP-END	752

TABLE OF CONTENTS

Name	Page
BLADE & EDGE GP	754
BLADE & EDGE GP-SEMI-UNIVERSAL	757
BLADE AS	759
BLADE AS-SEMI-UNIVERSAL	760
BLADE AS-UNIVERSAL	763
BLADE GP-SEMI-UNIVERSAL	765
BLADE GP-UNIVERSAL	766
PLATE GP-WEAR	767
RIPPER GP	768
TOOTH GP-RIPPER	770
OPERATOR STATION	773
AIR CONDITIONER AR	773
AIR CONDITIONER GP	776
CAB AR	779
CAB GP	788
COMPRESSOR GP-REFRIGERANT	792
CONDENSER GP-REFRIGERANT	798
CONTROL GP-MONITOR SYS DIMMER	800
CONVERSION AR	801
CONVERSION AR-NON-ROPS	802
FAN GP-DEFROSTER	804
FLOORPLATE AR	806
GUARD GP-VANDALISM	807
HEATER GP-CAB	808
HOUSING GP-SEAT SUSPENSION	816
INSTALLATION GP-RADIO	819
KIT-WINDOW	820
LATCH GP	821
LINER GP-CAB	822
LINES GP-AIR CONDITIONER	824
LINES GP-HEATER	836
MIRROR GP	838
MIRROR GP-REAR VIEW	839
MODULE GP-QUAD GAUGE	841
MODULE GP-SPEEDOMETER & TACH	842
MOUNTING GP-CAB	844
MOUNTING GP-CB	846
MOUNTING GP-ROPS	847
OPERATOR AR	848
PAN GP-BACKREST	851
PANEL GP-INSTRUMENT	854
PLATE GP-SLIDE	856
PLATFORM GP	860
RECLINER GP-SEAT	863
ROPS AS	864
ROPS GP	865
SCREEN GP-PROTECTION	867
SEAT AR	868
SEAT GP	870
SEAT GP-SUSPENSION	878
SUSPENSION GP-SEAT	882
TANK GP-WINDOW WASHER	886
WASHER GP-WINDOW	890
WINDOW AS-SLIDING	893
WINDOW GP-CAB	895
WIPER GP-WINDOW	912
WIPER PIVOT GP	920
SERVICE EQUIPMENT AND SUPPLIES	921
FILM GP	921
PLATE & FILM GP	922
PART NUMBER INDEX	B1

TABLE DES MATIÈRES

Désignation	Page
GÉNÉRALITÉS	A27
OPTIONS DE RÉPARATION	A44
ADDITIFS POUR LIQUIDE DE REFROIDISSEMENT	A49
PIÈCES DE RECHANGE	A59
INDEX	A101
VERSION DE MACHINE	1
VUE DU MODÈLE	1
VERSION DE MOTEUR	2
TRANSFORMATION DE MOTEUR (VERSION)	2
MOTEUR (VERSION)	4
MONTAGE DE MOTEUR (VERSION)	7
MOTEUR STANDARD	8
TENDEUR DE COURROIE (ASS)	8
ARBRE A CAMES (ASS)	10
BLOC-CYLINDRES - COUVERCLE (ASS)	12
COUVERCLE DE CARTER DE VOLANT (ASS)	16
COUVERCLE DE CARTER AV (ASS)	18
CACHE-SOUPAPES (ASS)	20
VILEBREQUIN (ENS)	22
VILEBREQUIN (ASS)	23
BLOC-CYLINDRES (ENS)	24
BLOC-CYLINDRES (ASS)	26
CULASSE (ENS)	29
CULASSE (ASS)	32
AMORTISSEUR DE VIBRATIONS ET POULIE (ASS)	40
ENTRAÎNEMENT DE VENTILATEUR (ASS)	42
VOLANT MOTEUR (ASS)	47
PIGNONNERIE AV (ASS)	48
PIGNON AR (ASS)	52
CARTER DE VOLANT (ASS)	56
CARTER AV (ASS)	60
OEILLETONS DE LEVAGE MOTEUR (ASS)	62
HUILE MOTEUR - CARTER (ASS)	64
PISTON ET BIELLE (ASS)	66
BOUCHON - BLOC-CYLINDRES	70
BOUCHON - CULASSE (ASS)	71
AXE DE CULBUTEUR (ASS)	72
SUPPORT DE MOTEUR (ASS)	74
TOURILLON DE MOTEUR (ASS)	76
CULBUTERIE (ASS)	77
CIRCUIT DE GRAISSAGE	79
RENIFLARD (ASS)	79
BOULONNERIE DE MONTAGE DE LA POMPE A HUILE (ASS)	80
BOUCHON DE REMPLISSAGE D'HUILE MOTEUR (ASS)	81
FILTRE À HUILE MOTEUR (ASS)	84
DISPOSITIF D'EVACUATION DES VAPEURS DE CARTER	86
JAUGE D'HUILE MOTEUR (BAIONNETTE) (ASS)	90
CANALISATIONS D'HUILE MOTEUR (ASS)	92
CANALISATIONS D'ALIMENTATION D'HUILE (ASS)	96
CANALISATIONS D'HUILE DE TURBOCOMPRESSEUR (ASS)	98
DISPOSITIF DE VIDANGE RAPIDE D'HUILE (ASS)	102
VERSION DE PRÉGRAISSAGE DE MOTEUR	104
POMPE A HUILE MOTEUR (ASS)	108
CIRCUIT DE REFROIDISSEMENT	114
VENTILATEUR SOUFFLANT (ASS)	114
CANALIS. D'EAU - REFROIDISSEUR D'ADMISSION (ASS)	116
CANALISATIONS D'EAU (ASS)	117
POMPE A EAU (ASS)	132
RADIATEUR (ASS)	140
RÉSERVOIR DU LIQUIDE DE REFROIDISSEMENT (ASS)	149
RÉSERVOIR D'EAU (ASS)	150
CIRCUIT D'ADMISSION D'AIR ET D'ECHAPPEMENT	154
ADMISSION REFROIDIE PAR EAU (ASS)	154
FILTRE A AIR (ASS)	158
DÉFLECTEUR DE PLUIE (ENS)	164
TURBOCOMPRESSEUR - CARTOUCHE (ASS)	166
ÉJECTEUR AUTOMATIQUE DE POUSSIÈRE (ASS)	168
CANALISATIONS D'AIR (ASS)	170
COLLECTEUR D'ÉCHAPPEMENT (ASS)	178
SILENCIEUX (ASS)	180
ÉCRAN DE COLLECTEUR (ASS)	182
TURBOCOMPRESSEUR (ASS)	184
CIRCUIT DE CARBURANT	188
ADAPTATEUR DE REMPLIS. RAPIDE DE CARBURANT (ASS)	188

TABLE DES MATIÈRES

Désignation	Page
COMMANDE DE DECELERATEUR (ASS)	198
LIMITEUR D'INJECTION (ASS)	200
COMMANDE DE RÉGULATEUR (ASS)	204
ENTR. DE RÉGULATEUR ET POMPE À CARBURANT (ASS)	208
ENTRAÎNEMENT DE COMPTE-TOURS (ASS)	209
ENTRAINEMENT D'INJECTEURS-POMPES HYDRAULIQUES	210
BOULONNERIE - POMPE D'INJECTION DE CARB. (ASS)	214
FILTRE ET CANALISATIONS DE CARBURANT (ASS)	216
FILTRE A CARBURANT (ASS)	223
FILTRE DE SÉPARATEUR D'EAU ET DE CARBURANT (ASS)	224
REGULATEUR (ASS)	226
BOÎTIER DE POMPE À CARBURANT	229
INJECTEUR DE CARBURANT (ASS)	230
KIT DE JOINTS	231
CARBURANT - CANALISATIONS DE VIDANGE (ASS)	232
CANALISATIONS DU FILTRE A CARBURANT (ASS)	234
CANALISATIONS D'INJECTION DE CARBURANT (ASS)	240
CANALISATIONS - INJECTEURS-POMPES HYDRAULIQUES	244
PLAQUE D'ADAPTEUR DE REGULATEUR (ASS)	246
POMPE D'INJECTEURS-POMPES HYDRAU. ET MONTAGE	248
POMPE D'INJECTION DE CARBURANT (ASS)	252
POMPE D'ALIMENTATION EN CARBURANT (ASS)	258
REGULATEUR ET POMPES D'INJECTION ET D'ALIMENTATION	260
INJECTEURS-POMPES HYDRAULIQUES (ENS)	262
RÉSERVOIR DE CARBURANT (ASS)	268
BUTÉE ÉLASTIQUE (ASS)	270
DISTRIBUTEUR DE PRESSION (ASS)	271
SOUPAPE - SOLÉNOÏDE (ASS)	272
CIRCUIT DE DÉMARRAGE ET ÉLECTRIQUE	273
AVERTISSEUR (ASS)	273
ALTERNATEUR DE CHARGE (ASS)	274
BATTERIE ET CÂBLAGE	278
BLOC-PUISSANCE (ASS)	293
BRANCHEMENT ÉLECTRIQUE (ASS)	294
COMMANDE ET MONTAGE - MOTEUR	296
COMMANDE ELECTRONIQUE DE MOTEUR (ASS)	298
TRANSFORMATION ELECTRIQUE (ASS)	300
RECHAUFFEUR DE CARBURANT (ASS)	302
EAU DES CHEMISES - RECHAUFFEUR (ASS)	305
BLOC DE BRANCHEMENT (ASS)	307
PLAFONNIER (ASS)	308
LAMPE - PHARE (ASS)	309
VERSION DÉCLAIRAGE DE VÉRIN	312
VERSION D'ÉCLAIRAGE ARRIÈRE	314
ÉCLAIRAGE (ASS)	315
ÉCLAIRAGE - AUXILIAIRE (ASS)	316
ÉCLAIRAGE - PROJECTEURS (ASS)	318
ECLAIRAGE AV (ASS)	322
ECLAIRAGE AR (ASS)	324
CAPTEUR MAGNÉTIQUE (ASS)	326
CAPTEUR DE NIVEAU DE CARBURANT (ASS)	328
SONDE - CIRCUIT DE CARBURANT	329
CAPTEUR DE PRESSION (ASS)	330
CAPTEUR DE VITESSE (ASS)	338
CAPTEUR DE TEMPERATURE (ASS)	341
SOLÉNOÏDE DE DÉMARREUR (ENS)	343
AUXILIAIRE DE DÉMARRAGE À L'ÉTHER	344
DÉMARRAGE PAR TEMPS FROID (VERSION)	348
DÉMARREUR ÉLECTRIQUE (ASS)	352
INTERRUPTEUR - DÉRIVATION (ASS)	365
ROBINET DE BATTERIE (ASS)	366
CONTACTEUR DE DEBIT (ASS)	367
CONTACTEUR-POIGNÉE (ASS)	369
CONTACTEUR MAGNETIQUE (ASS)	370
INTERRUPTEUR DE DÉMARRAGE (ASS)	371
CABLAGE DE CONSOLE (ASS)	372
CABLAGE DE MOTEUR (ASS)	376
CABLAGE - PLATE-FORME (ASS)	378
CABLAGE D'INJECTEUR	383
TRANSMISSION	384
ARBRE DE TRANSMISSION (ASS)	384
TRAINS PLANÉTAIRES - CARTER ET PIÈCES	386
COMMANDE HYDRAULIQUE DE BOÎTE (ASS)	390
REFROIDISSEUR D'HUILE DE BOÎTE (ASS)	392
ACCOUPLEMENT DE POMPE (ASS)	393
VIDANGE-ÉCOLOGIE (ASS)	394
FILTRE A HUILE (ASS)	396
RÉDUCTEURS (ASS)	398

TABLE DES MATIÈRES

Désignation	Page
COURONNE ET ENGRENAGES DE TRANSFERT (ASS)	410
BLINDAGE D'ARBRE DE TRANSMISSION (ASS)	412
BLINDAGE DE TRANSMISSION (ASS)	413
CANALISATIONS D'HUILE DE TRANSMISSION (ASS)	416
REDUCTEUR MARIN - MONTAGE (ASS)	420
BOÎTE PLANÉTAIRE (ASS)	422
TRANSMISSION (VERSION)	427
POMPE A ENGRENAGES (ASS)	428
SEGMENT DE BARBOTIN (ASS)	432
ARBRE D'ENTRAÎNEMENT (ASS)	433
CARDAN COULISSANT (ASS)	434
CONVERTISSEUR DE COUPLE (ASS)	436
BOÎTE DE VITESSES (VERSION)	442
JOINT UNIVERSEL (ASS)	443
SOUPAPE PILOTE ET MONTAGE (ASS)	444
CLAPET (ASS)	445
VANNE DE RINÇAGE (ASS)	446
SOUPAPE DE MODULATION (ASS)	447
SOUPAPE DE PRIORITE (ASS)	448
CLAPET DE DECHARGE (ASS)	449
SOUPAPE SELECTRICE ET REGULATRICE DE PRESSION	450
CHÂSSIS ET BENNE	452
CHÂSSIS ET CARTER (ASS)	452
VERSION DE CHASSIS	456
CONTREPOIDS (ASS)	458
COUVERCLE DE TOURILLON (ASS)	462
PORTIERE GAUCHE (ASS)	463
PORTIERE DROITE (ASS)	466
BARRE D'ATTELAGE (ASS)	470
CARENAGE (ASS)	472
CARENAGE DE MOTEUR (ASS)	474
GARDE-BOUE (ASS)	482
DEFLECTEUR PARE-SABLE (ASS)	486
PROTECTEUR DE RÉDUCTEURS (VERSION)	487
PROTECTION DE ROUE LIBRE (VERSION)	488
BLINDAGE INFÉRIEUR (ASS)	489
PROTECTION DU RÉSERVOIR DE CARBURANT (ASS)	492
BLINDAGE DE ROUE AV (ASS)	494
PROTECTION D'ARBRE PIVOT (ASS)	495
PROTÈGE-RADIATEUR (ASS)	496
PARE-PIERRES (ASS)	498
PROTECTION DE JOINT (ASS)	500
CAPOT ET PROTECTION (ASS)	502
INSONORISATION (VERSION)	506
TRAIN DE ROULEMENT	507
BARRE DÉFLECTRICE (VERSION)	507
BAGUE	508
CHAPEAU DE ROUE AV (CHAINE) (ASS)	510
CHAPEAU DE GALET INFERIEUR (ASS)	512
BALANCIER DE SUSPENSION (ENS)	513
BALANCIER DE SUSPENSION (ASS)	514
CHÂSSIS PORTEUR (VERSION)	517
CARTER TELESCOPIQUE DE MECANISME AMORTISSEUR	518
ROUE AV - CHAINES (ASS)	521
MAILLON DE CHAINE (ENS)	524
GRAISSAGE DE LA TRAVERSE-PIVOT	530
RENFORCEMENT-CHÂSSIS PORTEUR (ASS)	532
VERSION DE GALET ET ROUE AVANT	533
GALET SUPERIEUR (VERSION)	534
GALET A BOUDIN DOUBLE (ASS)	538
GALET A BOUDIN SIMPLE (ASS)	542
SUSPENSION A BOGIES (ASS)	546
MECANISME AMORTISSEUR ET REGLAGE DE CHAINES (ASS)	548
CHAINES (ASS)	550
TUYAU-CHÂSSIS PORTEUR (ENS)	562
TRAIN DE ROULEMENT	563
CIRCUIT DE DIRECTION ET DE FREIN	564
FREIN DE MANOEUVRE (ASS)	564
VERSION DE COMMANDE DE DIRECTION HYDRAULIQUE	566
COMMANDE DE LA PÉDALE DE FREIN (ASS)	568
COMMANDE DE DIRECTION (ASS)	570
COMMANDE DE DIRECTION ET BOITE DE VITESSES	572
ENTRAÎNEMENT DE DIRECTION DIFFÉRENTIELLE (ASS)	576
ENTRAÎNEMENT DE DIRECTION (ASS)	578
FILTRE A HUILE (ASS)	579
CANALISATIONS DE DIRECTION (ASS)	580
GROUPE DE MOTEUR A PISTONS	586
POMPE DE GAVAGE (ASS)	587
POMPE A PISTONS (ASS)	588
GROUPE DE ROTATION DE MOTEUR	592
CLAPET (ASS)	594
DISTRIBUTEUR DE FREIN (ASS)	596
DISTRIBUTEUR (ASS)	598
SOUPAPE PILOTE (ASS)	602
DISTRIBUTEUR DE PRESSION (ASS)	604

TABLE DES MATIÈRES

Désignation	Page
CLAPET DE DECHARGE (ASS)	606
CIRCUIT HYDRAULIQUE	608
COMMANDE HYDRAULIQUE (VERSION)	608
VERSION DE COMMANDE D'ÉQUIPEMENT HYDRAULIQUE	610
REFROIDISSEUR D'HUILE HYDRAULIQUE ET MONTAGE (ASS)	612
COUVERCLE DE RÉSERVOIR HYDRAULIQUE	614
VÉRIN ET CANALISATIONS - DOUBLE INCLINAISON (ASS)	615
VÉRIN DE LEVAGE ET CANALISATIONS (ASS)	616
VÉRIN DE RIPPER ET CANALISATIONS (ASS)	620
VÉRIN À DOUBLE INCLINAISON (VERSION)	621
VÉRIN DE LEVAGE DE LAME DE BULLDOZER (ASS)	622
VÉRIN D'INCLINAISON DOUBLE (ASS)	624
VERIN DE LEVAGE DE RIPPER (ASS)	628
VERIN D'EXTRACTEUR DE BROCHE DE RIPPER (ASS)	632
VERIN D'INCLINAISON DE RIPPER (ASS)	634
VÉRIN D'INCLINAISON (ASS)	638
LEVIER (ASS)	644
LEVIER DE DISTRIBUTEUR (ASS)	645
CANALISATIONS DE VÉRIN DE LEVAGE (ASS)	646
CANALISATIONS D'EXTRACTEUR DE BROCHE (ASS)	650
CANALISATIONS DE POMPE (ASS)	654
CANALISATIONS DU RIPPER (ASS)	658
CANALISATIONS D'INCLINAISON (ASS)	662
CANALISATIONS DU VÉRIN D'INCLINAISON (ASS)	666
COLLECTEUR - SOUPAPE (ASS)	672
POMPE A ENGRENAGES (ASS)	673
POMPE A PISTONS (ASS)	674
POMPES DE PISTONS ET ENGRENAGES (ASS)	676
GROUPE DE ROTATION DE POMPE	677
PLATEAU OSCILLANT (ASS)	678
RÉSERVOIR HYDRAULIQUE ET FILTRE (ASS)	680
DISTRIBUTEUR ET MONTAGE (ASS)	684
DISTRIBUTEUR 4 ÉLÉMENTS (ASS)	686
CLAPET DE RETENUE (ENS)	688
CLAPET DE DECHARGE ET ANTI-RETOUR	689
DISTRIBUTEUR (ASS)	690
SOUPAPE RÉGULATRICE DE PRESSION ET DÉBIT	698
SOUPAPE D'ABAISSEMENT RAPIDE (ASS)	700
CLAPET DE DECHARGE (ASS)	702
VANNE PILOTE (ASS)	706
SOUPAPE - SOLÉNOÏDE (ASS)	707
DISTRIBUTEUR D'INCLINAISON (ASS)	710
ÉQUIPEMENTS	711
LAME DE BULLDOZER SEMI-UNIVERSELLE (VERSION)	711
LAME DE BULLDOZER UNIVERSELLE (VERSION)	713
COMMANDE DE BULLDOZER (VERSION)	715
BATI DE RIPPER (ASS)	716
KIT DE BOULONNERIE, JOINTS ET CALES D'ÉPAISSEUR	720
STABILISATEUR - BRAS DE POUSSEE (ASS)	724
TRINGLERIE D'ÉQUIPEMENT (ASS)	726
MODIFICATION -BULLDOZER	731
MONTAGE DE VÉRIN (ASS)	733
MONTAGE DE RIPPER (ASS)	734
EXTRACTEUR DE BROCHE (VERSION)	736
EXTRACTEUR DE BROCHE (ASS)	737
BRAS DE POUSSEE - GAUCHE (ASS)	738
BRAS DE POUSSEE - DROITE (ASS)	739
STABILISATEUR DU BRAS DE POUSSEE (ASS)	740
RIPPER (VERSION)	741
TOURILLON DE BULLDOZER (VERSION)	743
TOURILLON DE BULLDOZER (ASS)	744
OUTILS DE TRAVAIL	745
EMBOUT ET LAME DE COUPE (ASS)	745
EMBOUT D'EXTRÉMITÉ (ASS)	752
LAME DE COUPE (ASS)	754
LAME DE COUPE SEMI-UNIVERSELLE (ASS)	757
BALAI D'ESSUIE-GLACE (ENS)	759
LAME SEMI-UNIVERSELLE (ENS)	760
LAME UNIVERSELLE (ENS)	763
LAME SEMI-UNIVERSELLE (ASS)	765
LAME UNIVERSELLE (ASS)	766
PLAQUE D'USURE (ASS)	767
RIPPER (ASS)	768
DENT DE RIPPER (ASS)	770

TABLE DES MATIÈRES

Désignation	Page
POSTE DE CONDUITE	773
CLIMATISEUR (VERSION)	773
CLIMATISEUR (ASS)	776
CABINE (VERSION)	779
CABINE (ASS)	788
COMPRESSEUR DE REFRIGERANT (ASS)	792
CONDENSEUR DE RÉFRIGÉRANT	798
COMMANDE D'INVERSION DE LA CENTRALE DE SURVEILLANCE (ASS)	800
VERSION DE TRANSFORMATION	801
VERSION DE TRANSFORMATION - SANS ROPS	802
VENTILATEUR DÉGIVREUR (ASS)	804
TOLE DE PLANCHER (VERSION)	806
PROTECTION ANTIVANDALISME (ASS)	807
CHAUFFAGE DE CABINE (ASS)	808
SUSPENSION DE SIEGE - CARTER (ASS)	816
MONTAGE DE RADIO (ASS)	819
KIT-FENETRE	820
VERROU (ASS)	821
CABINE - REVÊTEMENT (ASS)	822
CANALISATIONS DE CLIMATISEUR (ASS)	824
CANALISATIONS DE CHAUFFAGE (ASS)	836
RÉTROVISEUR (ASS)	838
MODULE - QUATRE INSTRUMENTS (ASS)	841
MODULE D'INDICATEUR DE VITESSE ET COMPTE-TOURS (ASS)	842
MONTAGE DE CABINE (ASS)	844
GROUPE DE MONTAGE	846
MONTAGE DU TOIT ROPS (ASS)	847
POSTE DE CONDUITE (VERSION)	848
COUVERCLE INFÉRIEUR-DOSSIER (ASS)	851
TABLEAU DE BORD (ASS)	854
PLAQUE-GLISSIÈRE (ASS)	856
PLATE-FORME (ASS)	860
SIÈGE INCLINABLE (ASS)	863
TOIT ROPS (ENS)	864
TOIT ROPS (ASS)	865
GRILLE DE PROTECTION (ASS)	867
SIEGE (VERSION)	868
SIÈGE (ASS)	870
SIÈGE AVEC SUSPENSION (ASS)	878
RÉSERVOIR - LAVE-GLACE (ASS)	886
LAVE-GLACE - VITRE (ASS)	890
VITRE COULISSANTE (ENS)	893
VITRE DE CABINE (ASS)	895
ESSUIE-GLACE (ASS)	912
PIVOT D'ESSUIE-GLACE (ASS)	920
MATÉRIEL ET FOURNITURES D'ENTRETIEN	921
PLAQUE SIGNALÉTIQUE (ASS)	921
PLAQUES SIGNALETIQUES ET AUTOCOLLANTS (ASS)	922
INDEX DE NUMÉROS DE PIÈCES	B1

CONTENIDO

Nombre	Página
INFORMACIÓN GENERAL	A31
ALTERNATIVAS DE REPARACIÓN	A45
ADITIVOS DE REFRIGERANTE SUPLEMENTARIOS	A50
PIEZAS DE MANTENIMIENTO	A67
INDICE	A115
CONFIGURACIÓN DE MÁQUINA	1
CONFIGURACIÓN GENERAL	1
CONFIGURACIÓN DE MOTOR	2
CONVERSION DE MOTOR (CONFIG)	2
CONFIGURACIÓN DE MOTORES	4
CONFIGURACIÓN DE INSTALACIÓN DEL MOTOR	7
MOTOR BÁSICO	8
AJUSTADOR DE CORREA (GR)	8
ÁRBOL DE LEVAS (GR)	10
TAPA DEL BLOQUE MOTOR (GR)	12
TAPA DE LA CAJA DE VOLANTE (GR)	16
TAPA DE LA CAJA DELANTERA (GR)	18
TAPA DEL MECANISMO DE VÁLVULAS (GR)	20
CIGÜEÑAL (CONJ)	22
CIGÜEÑAL (GR)	23
BLOQUE MOTOR (CONJ)	24
BLOQUE MOTOR (GR)	26
CULATA DE CILINDROS (CONJ)	29
CULATA DE CILINDROS (GR)	32
AMORTIGUADOR Y POLEA (GR)	40
IMPULSOR DE VENTILADOR (GR)	42
VOLANTE (GR)	47
ENGRANAJE DELANTERO (GR)	48
ENGRANAJE TRASERO (GR)	52
VOLANTE - CAJA DE (GR)	56
CAJA DELANTERA (GR)	60
CÁNCAMOS DE LEVANTAMIENTO DEL MOTOR (GR)	62
CÁRTER - COLECTOR DEL (GR)	64
PISTÓN Y BIELA (GR)	66
TAPÓN DEL BLOQUE MOTOR (GR)	70
TAPÓN DE CULATA (GR)	71
BALANCÍN (GR)	72
MOTOR - SOPORTE DEL (GR)	74
MUÑÓN DEL MOTOR (GR)	76
MECANISMO DE VÁLVULAS (GR)	77
SISTEMA DE LUBRICACIÓN	79
RESPIRADERO (GR)	79
TORNILLERÍA DE MONT. DE LA BOMBA DE ACEITE (GR)	80
TUBO DE LLENADO DE ACEITE (GR)	81
FILTRO DE ACEITE DEL MOTOR (GR)	84
ESCAPE DE GASES (GR)	86
INDICADOR DEL NIVEL DE ACEITE (VARILLA) (GR)	90
TUBERÍAS DE ACEITE DEL MOTOR (GR)	92
TUBERIAS DE ACEITE (GR)	96
TURBOCOMPRESOR - TUBERÍAS DE ACEITE DEL (GR)	98
CAMBIO RÁPIDO DE ACEITE (GR)	102
PRELUBRICACION DEL MOTOR (CONFIG)	104
BOMBA DE ACEITE DEL MOTOR (GR)	108
SISTEMA DE ENFRIAMIENTO	114
SOPLADOR - VENTILADOR (GR)	114
TUBERÍAS DEL AGUA - POSENFRIADOR (GR)	116
TUBERÍAS DEL AGUA (GR)	117
BOMBA DE AGUA (GR)	132
RADIADOR (GR)	140
TANQUE DE REFRIGERANTE (GR)	149
TANQUE DEL AGUA (GR)	150
SISTEMA DE ADMISIÓN Y ESCAPE DE AIRE	154
POSENFRIADOR DE AGUA (GR)	154
FILTRO DE AIRE (GR)	158
TAPA CONTRA LA LLUVIA (CONJ)	164
NÚCLEO DE TURBOCOMPRESOR (GR)	166
EXPULSOR DE POLVO (GR)	168
AIRE - TUBERÍAS DE (GR)	170
MÚLTIPLE DE ESCAPE (GR)	178
SILENCIADOR (GR)	180
MULTIPLE - PROTECTOR DEL	182
TURBOCOMPRESOR (GR)	184
SISTEMA DE COMBUSTIBLE	188
ADAPTADOR DE LLENADO RÁPIDO DE COMBUSTIBLE (GR)	188
CONTROL DEL DECELERADOR (GR)	198
CONTROL DE LA RELACIÓN DE COMBUSTIBLE (GR)	200
CONTROL DE REGULADOR (GR)	204
MANDO DE REGULADOR Y BOMBA DE COMBUSTIBLE (GR)	208
MANDO DE TACÓMETRO (GR)	209
MANDO DE BOMBA HIDRÁULICA INYECTORA (GR)	210
TORNILLERÍA DE LA BOMBA DE INYECCIÓN DE COMB.	214

CONTENIDO

Nombre	Página
FILTRO Y TUBERÍAS DE COMBUSTIBLE (GR)	216
FILTRO DE COMBUSTIBLE (GR)	223
FILTRO DE COMBUSTIBLE Y SEPARADOR DE AGUA (GR)	224
REGULADOR (GR)	226
CAJA DE LA BOMBA DE COMBUSTIBLE (GR)	229
INYECTOR DE COMBUSTIBLE (GR)	230
JUEGO DE SELLOS	231
COMBUSTIBLE - TUBERÍAS DE DRENAJE DE (GR)	232
TUBERÍAS DEL FILTRO DE COMBUSTIBLE	234
TUBERÍAS DE INYECCIÓN DE COMBUSTIBLE (GR)	240
TUBERÍAS DE BOMBA HIDRÁULICA DE INYECCIÓN (GR)	244
PLANCHA ADAPTADORA DEL REGULADOR (GR)	246
BOMBA HIDRÁULICA DEL INYECTOR UNITARIO Y MONTAJE	248
BOMBA DE INYECCIÓN DE COMBUSTIBLE (GR)	252
BOMBA DE TRANSFERENCIA DE COMBUSTIBLE (GR)	258
REGULADOR Y BOMBAS DE INYEC. Y DE TRANSF. DE COMB. (GR)	260
BOMBA HIDRÁULICA DEL INYECTOR UNITARIO (GR)	262
COMBUSTIBLE - TANQUE DE (GR)	268
CONTROL DE PAR (GR)	270
PRESIÓN - VÁLVULA DE CONTROL DE (GR)	271
VÁLVULA DE SOLENOIDE (GR)	272
SISTEMA ELÉCTRICO Y DE ARRANQUE	273
ALARMA (GR)	273
CARGA - ALTERNADOR DE (GR)	274
BATERÍA Y CABLES (GR)	278
BLOQUE DE POTENCIA (GR)	293
CONEXIÓN ELÉCTRICA (GR)	294
CONTROL ELECTRÓNICO DEL MOTOR Y MONTAJE	296
CONTROL ELECTRÓNICO DEL MOTOR (GR)	298
CONVERTIDOR ELÉCTRICO (GR)	300
CALENTADOR DEL COMBUSTIBLE (GR)	302
AGUA DE LAS CAMISAS - CALENTADOR DEL (GR)	305
BLOQUE DE EMPALME (GR)	307
LÁMPARA DEL TECHO (GR)	308
REFLECTOR (GR)	309
LUCES DEL CILINDRO (CONFIG)	312
ILUMINACION TRASERA (CONFIG)	314
GRUPO DE LUCES	315
LUCES AUXILIARES (GR)	316
LUCES DE REFLECTOR (GR)	318
LUCES DELANTERAS (GR)	322
LUCES TRASERAS (GR)	324
DETECTOR MAGNÉTICO (GR)	326
SENSOR DE NIVEL DE COMBUSTIBLE (GR)	328
DETECTOR DE POSICIÓN (SISTEMA DE COMBUST.) (GR)	329
SENSOR DE PRESIÓN (GR)	330
SENSOR DE VELOCIDAD (GR)	338
SENSOR DE TEMPERATURA (GR)	341
SOLENOIDE DEL MOTOR DE ARRANQUE (CONJ)	343
AUXILIAR DE ARRANQUE CON ÉTER (GR)	344
ARRANQUE EN TIEMPO FRIO (CONFIG)	348
MOTOR DE ARRANQUE ELÉCTRICO (GR)	352
INTERRUPTOR DE DERIVACIÓN	365
DISYUNTOR (GR)	366
INTERRUPTOR DE FLUJO (GR)	367
EMPUÑADURA DEL INTERRUPTOR (GR)	369
INTERRUPTOR MAGNÉTICO (GR)	370
ARRANQUE - INTERRUPTOR DE (GR)	371
CABLES DE LA CONSOLA (GR)	372
CABLES DEL MOTOR (GR)	376
CABLES DE LA PLATAFORMA (GR)	378
CABLES DE INYECTOR (GR)	383
TREN DE FUERZA	384
EJE DEL TREN DE FUERZA (GR)	384
CAJA Y PIEZAS DE LOS PLANETARIOS	386
CONTROL HIDRÁULICO DE LA TRANSMISIÓN (GR)	390
ENFRIADOR DE ACEITE DE LA TRANSMISIÓN (GR)	392
ACOPLAMIENTO DE BOMBA (GR)	393
DRENAJE DE SEGURIDAD ECOLÓGICA (GR)	394
FILTRO DE ACEITE (GR)	396
MANDO FINAL (GR)	398
ENGRANAJE DE TRANSFERENCIA Y CORONA (GR)	410
PROTECTOR DEL EJE IMPULSOR (GR)	412
PROTECTOR DEL TREN DE FUERZA (GR)	413

CONTENIDO

Nombre	Página
TUBERÍAS DE ACEITE DEL TREN DE FUERZA (GR)	416
MONTAJE DE LA TRANSMISIÓN (GR)	420
TRANSMISIÓN PLANETARIA (GR)	422
TREN DE FUERZA (CONFIG)	427
BOMBA DE ENGRANAJES (GR)	428
SEGMENTO DE RUEDA MOTRIZ (GR)	432
EJE DE MANDO (GR)	433
JUNTA DESLIZANTE (GR)	434
CONVERTIDOR DE PAR (GR)	436
TRANSMISION (CONFIG)	442
JUNTA UNIVERSAL (GR)	443
VALVULA PILOTO Y MONTAJE (GR)	444
GRUPO DE VÁLVULAS	445
VÁLVULA DE DESCARGA (GR)	446
VÁLVULA DE MODULACIÓN (GR)	447
PRIORIDAD - VÁLVULA DE (GR)	448
VÁLVULA DE ALIVIO (GR)	449
VÁLVULA SELECTORA Y DE CONTROL DE PRESIÓN (GR)	450
BASTIDOR Y CAJA	452
CAJA Y BASTIDOR (GR)	452
CHASIS (CONFIG)	456
CONTRAPESO (GR)	458
TAPA DEL MUÑÓN (GR)	462
PUERTA IZQUIERDA (GR)	463
PUERTA DERECHA (GR)	466
BARRA DE TIRO (GR)	470
COMPARTIMIENTO (GR)	472
COMPARTIMIENTO DEL MOTOR (GR)	474
GUARDABARROS (GR)	482
PROTECTOR CONTRA ARENA (GR)	486
PROTECTOR DE MANDO FINAL (GR)	487
PROTECTOR DE LA RUEDA GUÍA (CONFIG)	488
PROTECTOR INFERIOR (GR)	489
PROTECTOR DEL TANQUE DE COMBUSTIBLE (GR)	492
PROTECTOR DE RUEDA GUÍA	494
PROTECTOR DEL EJE PIVOTE (GR)	495
PROTECTOR DEL RADIADOR (GR)	496
PROTECTOR CONTRA ROCAS (GR)	498
PROTECTOR DE SELLO (GR)	500
CAPO Y PROTECTOR (GR)	502
INSONORIZADOR (CONFIG)	506
TREN DE RODAJE	507
BARRA LIMPIADORA(CONFIG)	507
COJINETE	508
TAPA DE RUEDA GUÍA (GR)	510
TAPA DE RODILLO INFERIOR	512
BARRA COMPENSADORA (CONJ)	513
BARRA COMPENSADORA (GR)	514
BASTIDOR DE RODILLOS INFERIORES (CONFIG)	517
BASTIDOR TELESCÓPICO DEL RESORTE TENSOR (GR)	518
RUEDA GUÍA DE CADENA (GR)	521
ESLABÓN DE CADENA (CONJ)	524
LUBRICACIÓN DE EJE PIVOTE (GR)	530
BASTIDOR DE RODILLOS - GRUPO DE REFUERZO	532
RODILLO Y RUEDA GUIA (CONFIG)	533
RODILLO SUPERIOR DE CADENAS (CONFIG)	534
RODILLOS DE PESTAÑA DOBLE (GR)	538
RODILLOS DE PESTAÑA SIMPLE (GR)	542
SOPORTE BASCULANTE (GR)	546
RESORTE TENSOR Y AJUSTADOR DE LA CADENA (GR)	548
CADENAS (GR)	550
TUBERIA DEL BASTIDOR DE RODILLO (CONJ)	562
TREN DE RODAJE (CONFIG)	563
SISTEMA DE FRENOS Y DIRECCIÓN	564
FRENO DE SERVICIO (GR)	564
CONTROL HIDRAULICO DE LA DIRECCION (CONFIG)	566
CONTROL DEL PEDAL DE FRENO (GR)	568
CONTROL DE DIRECCIÓN (GR)	570
CONTROL DE DIRECCIÓN Y TRANSMISIÓN (GR)	572
MANDO DE DIRECCION DE DIFERENCIAL (GR)	576
MANDO DE DIRECCION (GR)	578
FILTRO DE ACEITE (GR)	579
TUBERÍAS DE DIRECCIÓN (GR)	580
PISTONES DEL MOTOR (GR)	586
BOMBA DE CARGA HIDRÁULICA (GR)	587
BOMBA DE PISTONES (GR)	588
GRUPO DE ROTACIÓN DEL MOTOR (GR)	592
GRUPO DE VÁLVULAS	594
VÁLVULA DE CONTROL DEL FRENO (GR)	596
VÁLVULA DE CONTROL (GR)	598
VÁLVULA PILOTO (GR)	602
PRESIÓN - VÁLVULA DE CONTROL DE (GR)	604
VÁLVULA DE ALIVIO (GR)	606
SISTEMA HIDRÁULICO	608
CONTROL HIDRÁULICO (CONFIG)	608

CONTENIDO

Nombre	Página
CONTROL HIDRAULICO DE IMPLEMENTO (CONFIG)	610
ENFRIADOR DE ACEITE HIDRÁULICO Y MONTAJE (GR)	612
TAPA DEL TAPÓN DEL TANQUE HIDRÁULICO (GR)	614
CILINDRO DE DOBLE INCLINACION Y TUBERIAS (GR)	615
CILINDRO DE LEVANTAMIENTO Y TUBERÍAS (GR)	616
CILINDRO DE DESGARRADOR Y TUBERÍAS (GR)	620
CILINDRO DE DOBLE INCLINACION (CONFIG)	621
CILINDRO DE LEVANTAMIENTO DE LA HOJA TOPADORA (GR)	622
CILINDRO DE DOBLE INCLINACIÓN (GR)	624
CILINDRO DE LEVANTAMIENTO DEL DESGARRADOR (GR)	628
CILINDRO DEL EXTRACTOR DE PASADOR DEL DESGARRADOR (GR)	632
CILINDRO DE INCLINACION DEL DESGARRADOR (GR)	634
INCLINACIÓN HORIZONTAL - CILINDRO DE (GR)	638
PALANCA (GR)	644
PALANCA DE VÁLVULA DE CONTROL (GR)	645
CILINDRO DE LEVANTAMIENTO - TUBERÍAS DEL (GR)	646
TUBERIAS DE EXTRACTOR DE PASADORES (GR)	650
TUBERÍAS DE CILINDRO DE EXTRACTOR DE PASADORES	652
BOMBA - TUBERÍAS DE (GR)	654
TUBERÍAS DEL DESGARRADOR (GR)	658
TUBERÍAS DE INCLINACIÓN	662
TUBERÍAS DEL CILINDRO DE INCLINACIÓN (GR)	666
MULTIPLE DE VALVULA (GR)	672
BOMBA DE ENGRANAJES (GR)	673
BOMBA DE PISTONES (GR)	674
BOMBAS DE PISTONES Y ENGRANAJES (GR)	676
GRUPO GIRATORIO DE BOMBA	677
PLATO OSCILANTE (GR)	678
TANQUE Y FILTRO HIDRÁULICOS (GR)	680
VÁLVULA DE CONTROL Y MONTAJE (GR)	684
GRUPO DE 4 VÁLVULAS HIDRÁULICAS	686
VÁLVULA DE RETENCIÓN (GR)	688
VALVULA DE RETENCIÓN Y ALIVIO (GR)	689
VÁLVULA DE CONTROL (GR)	690
VÁLVULA COMPENSADORA DE FLUJO Y PRESIÓN (GR)	698
VÁLVULA DE CAÍDA RÁPIDA (GR)	700
VÁLVULA DE ALIVIO (GR)	702
VÁLVULA DE LANZADERA (GR)	706
VÁLVULA DE SOLENOIDE (GR)	707
VALVULA DE CONTROL DE INCLINACION (GR)	710
IMPLEMENTOS	711
HOJA TOPADORA SEMIUNIVERSAL	711
HOJA TOPADORA UNIVERSAL (CONFIG)	713
CONTROL DE HOJA TOPADORA (CONFIG)	715
BASTIDOR DEL DESGARRADOR (GR)	716
JUEGO DE TORNILLERÍA, JUNTAS Y CALCES	720
ESTABILIZADOR DEL BRAZO DE EMPUJE (GR)	724
VARILLAJE DE LOS IMPLEMENTOS	726
MODIFICACIÓN DEL TRACTOR TOPADOR (CONFIG)	731
MONTAJE DE CILINDRO (GR)	733
MONTAJE DEL DESGARRADOR (GR)	734
EXTRACTOR DE PASADOR (CONFIG)	736
EXTRACTOR DE PASADOR (GR)	737
BRAZO DE EMPUJE IZQUIERDO (GR)	738
BRAZO DE EMPUJE DERECHO (GR)	739
ESTABILIZADOR DEL BRAZO DE EMPUJE (GR)	740
DESGARRADOR (CONFIG)	741
MUÑÓN DE LA HOJA TOPADORA (CONFIG)	743
MUÑÓN DE LA HOJA TOPADORA (GR)	744
HERRAMIENTAS	745
CANTONERA Y CUCHILLA (GR)	745
CANTONERA DE EXTREMO (GR)	752
HOJA Y CUCHILLA (GR)	754
HOJA Y CUCHILLA SEMIUNIVERSAL (GR)	757
HOJA DE LIMPIAPARABRISAS (CONJ)	759
HOJA SEMIUNIVERSAL (CONJ)	760
HOJA UNIVERSAL (CONJ)	763
HOJA SEMIUNIVERSAL (GR)	765
HOJA UNIVERSAL (GR)	766
PLANCHA DE DESGASTE (GR)	767
DESGARRADOR (GR)	768

CONTENIDO

Nombre	Página
DIENTE DE DESGARRADOR (GR)	770
CABINA DEL OPERADOR	773
ACONDICIONADOR DE AIRE (CONFIG)	773
ACONDICIONADOR DE AIRE (GR)	776
CABINA (CONFIG)	779
CABINA (GR)	788
COMPRESOR DE REFRIGERANTE (GR)	792
CONDENSADOR DE REFRIGERANTE (GR)	798
CONTROL ELECTRONICO DEL REDUCTOR DE LA LUZ INTERIOR DEL SISTEMA MONITOR (GR)	800
CONFIGURACIÓN DE TRANSFORMACIÓN	801
CONJUNTO DE MODIFICACIÓN (SIN ROPS)	802
VENTILADOR DESCONGELADOR (GR)	804
PLANCHA DEL PISO (CONFIG)	806
PROTECTOR CONTRA EL VANDALISMO (GR)	807
CALEFACCIÓN DE LA CABINA (GR)	808
CAJA DE LA SUSPENSIÓN DEL ASIENTO (GR)	816
INSTALACIÓN DE RADIO (GR)	819
JUEGO DE VENTANAS	820
RETÉN (GR)	821
REVESTIMIENTO DE LA CABINA (GR)	822
TUBERÍAS DE ACONDICIONADOR DE AIRE (GR)	824
TUBERÍAS DE LA CALEFACCIÓN (GR)	836
ESPEJO (GR)	838
RETROVISOR (GR)	839
MODULO ELECTRÓNICO DE CUATRO INDICADORES (GR)	841
MÓDULO DEL TACÓMETRO Y DEL VELOCÍMETRO (GR)	842
GRUPO DE MONTAJE DE LA CABINA	844
GRUPO DE MONTAJE	846
MONTAJE DE LA ESTRUCTURA ROPS (GR)	847
COMPARTIMIENTO DEL OPERADOR (CONFIG)	848
SOPORTE DEL RESPALDO (GR)	851
TABLERO DE INSTRUMENTOS (GR)	854
PLANCHA CORREDERA (GR)	856
PLATAFORMA (GR)	860
RECLINACION DE ASIENTO (GR)	863
SISTEMA ROPS (CONJ)	864
ESTRUCTURA ROPS (GR)	865
REJILLA PROTECTORA (GR)	867
CONFIGURACIÓN DE ASIENTO	868
ASIENTO (GR)	870
SUSPENSIÓN - ASIENTO CON (GR)	878
ASIENTO CON SUSPENSIÓN (GR)	882
TANQUE DEL LAVAPARABRISAS (GR)	886
LAVAPARABRISAS DE LA VENTANA (GR)	890
VENTANA CORREDIZA (CONJ)	893
VENTANA DE LA CABINA (GR)	895
LIMPIAPARABRISAS DE LA VENTANA (GR)	912
PIVOTE DEL LIMPIADOR (GR)	920
EQUIPOS Y SUMINISTRO DE SERVICIOS	921
ETIQUETA DE ADVERTENCIA (GR)	921
CALCOMANÍAS Y PLACAS DE IDENTIFICACIÓN (GR)	922
INDICE DE NUMEROS DE PIEZA	B1

ÍNDICE

Designação	Página
INFORMAÇÃO GERAL	A35
ALTERNATIVAS DE REPARO	A46
ADITIVOS SUPLEMENTARES DO LÍQUIDO ARREFECEDOR	A51
PEÇAS DE MANUTENÇÃO	A75
ÍNDICE	A130
MÁQUINA - ARRANJO	1
ARRANJO GERAL	1
MOTOR - ARRANJO	2
GR. DE CONVERSÃO - MOTOR	2
MOTOR	4
GRUPO DE INSTALAÇÃO - MOTOR	7
MOTOR BÁSICO	8
AJUSTADOR DE CORREIAS	8
EIXO-COMANDO DE VÁLVULA	10
TAMPA - BLOCO DO MOTOR	12
TAMPA - CAIXA DO VOLANTE	16
TAMPA - CAIXA DIANTEIRA	18
TAMPA - MECANISMO DAS VÁLVULAS	20
VIRABREQUIM	22
BLOCO DO MOTOR	24
CABEÇOTE DO MOTOR	29
AMORTECEDOR DE VIBRAÇÕES E POLIA	40
COMANDO DO VENTILADOR	42
VOLANTE DO MOTOR	47
ENGRENAGENS DE DISTRIBUIÇÃO	48
ENGRENAGENS DE COMANDO TRASEIRO	52
CAIXA DO VOLANTE DO MOTOR	56
CAIXA DIANTEIRA	60
LEVANTAMENTO DO MOTOR	62
CÁRTER DO ÓLEO DO MOTOR	64
PISTÃO E BIELA	66
BUJÃO DO BLOCO DO CILINDRO	70
BUJÃO - CABEÇA DO CILINDRO	71
BALANCIM	72
SUPORTE DO MOTOR	74
MUNHÃO DO MOTOR	76
MECANISMO DAS VÁLVULAS	77
SISTEMA DE LUBRIFICAÇÃO	79
RESPIRO	79
FIXADORES - BOMBA DE ÓLEO DO MOTOR	80
BOCAL DE ENCHIMENTO DE ÓLEO DO MOTOR	81
FILTRO - ÓLEO DO MOTOR	84
ELIMINAÇÃO DE VAPORES DO CÁRTER	86
INDICADOR - NÍVEL DO ÓLEO (VARETA)	90
TUBOS - ÓLEO DO MOTOR	92
TUBOS - SUPRIMENTO DE ÓLEO	96
TUBOS - ÓLEO DO TURBOALIMENTADOR	98
ÓLEO - ARRANJO PARA TROCA RÁPIDA	102
PRÊ-LUBRIFICAÇÃO	104
BOMBA DE ÓLEO - MOTOR	108
SISTEMA DE ARREFECIMENTO	114
VENTILADOR DE SOPRO	114
TUBOS - ÁGUA DO PÓS-ARREFECEDOR	116
TUBOS - ÁGUA	117
BOMBA DE ÁGUA	132
RADIADOR	140
TANQUE - LÍQUIDO ARREFECEDOR	149
TANQUE DE ÁGUA	150
SISTEMA DA ADMISSÃO DE AR E DE ESCAPE	154
PÓS-ARREFECEDOR A ÁGUA	154
PURIFICADOR DE AR	158
PROTETOR CONTRA CHUVA	164
CARTUCHO DO TURBOALIMENTADOR	166
EJETOR DE POEIRA	168
TUBOS - AR	170
COLETOR DE ESCAPE	178
SILENCIADOR	180
BLINDAGEM DO COLETOR	182
TURBOALIMENTADOR	184
SISTEMA DE COMBUSTÍVEL	188
ADAPTADOR - ABASTECIMENTO RÁPIDO DE COMBUSTÍVEL	188
CONTROLE DO DESACELERADOR	198
LIMITADOR DE COMBUSTÍVEL	200
CONTROLE DO GOVERNADOR	204
COMANDO DO GOVERNADOR E DA BOMBA DE COMBUSTÍVEL	208
COMANDO DO TACÔMETRO	209
COMANDO DA BOMBA HIDRÁULICA DO INJETOR	210
FIXADORES - BOMBA INJETORA DE COMBUSTÍVEL	214
FILTRO E TUBOS - COMBUSTÍVEL	216
FILTRO - COMBUSTÍVEL	223
FILTRO DE COMBUSTÍVEL E SEPARADOR DE ÁGUA	224

ÍNDICE

Designação	Página
GOVERNADOR	226
ALOJAMENTO DA BOMBA DE COMBUSTÍVEL	229
INJETOR DE COMBUSTÍVEL	230
JOGO DE RETENTOR	231
TUBOS - DRENAGEM DO COMBUSTÍVEL	232
TUBOS - FILTRO DO COMBUSTÍVEL	234
TUBOS - INJEÇÃO DO COMBUSTÍVEL	240
TUBOS - INJETOR DA BOMBA HIDRÁULICA	244
PLACA - ADAPTADOR DO GOVERNADOR	246
BOMBA HIDRÁULICA E MONTAGEM - UNIDADE INJETORA	248
BOMBA DE INJEÇÃO DO COMBUSTÍVEL	252
BOMBA DE TRANSFERÊNCIA DO COMBUSTÍVEL	258
BOMBA DE INJEÇÃO E TRANSFERÊNCIA E COMANDO DO GOVERNADOR	260
BOMBA HIDRÁULICA - UNIDADE INJETORA	262
TANQUE DE COMBUSTÍVEL	268
MOLA DE CONTROLE DO TORQUE	270
VÁLVULA DE CONTROLE DE PRESSÃO	271
VÁLVULA SOLENÓIDE	272
SISTEMA ELÉTRICO E DE PARTIDA	273
ALARME	273
ALTERNADOR DE CORRENTE	274
BATERIA E CABOS / FIOS ELÉTRICOS	278
BLOCO - FORÇA	293
CONEXÃO - ELÉTRICA	294
CONTROLE ELETRÔNICO E MONTAGEM - MOTOR	296
CONTROLE ELETRÔNICO - MOTOR	298
CONVERSOR ELÉTRICO	300
AQUECEDOR DO COMBUSTÍVEL	302
AQUECEDOR DA ÁGUA DO MOTOR	305
BLOCO DE JUNÇÃO	307
LÂMPADA - TETO	308
LÂMPADA - FAROL	309
SIST. DE ILUMINAÇÃO - CILINDRO	312
ILUMINAÇÃO TRASEIRA	314
ILUMINAÇÃO	315
ILUMINAÇÃO - AUXILIAR	316
SISTEMA DE ILUMINAÇÃO - FARÓIS	318
ILUMINAÇÃO - DIANTEIRA	322
ILUMINAÇÃO - TRASEIRA	324
SENSOR MAGNÉTICO	326
SENSOR - NÍVEL DE COMBUSTÍVEL	328
EMISSOR - POSIÇÃO	329
SENSOR - PRESSÃO	330
SENSOR DE VELOCIDADE	338
SENSOR - TEMPERATURA	341
SOLENÓIDE DO MOTOR DE ARRANQUE	343
AUXILIAR DE PARTIDA A ÉTER	344
PARTIDA EM TEMPO FRIO - ARRANJO	348
MOTOR ELÉTRICO DE PARTIDA	352
INTERRUPTOR DE DERIVAÇÃO	365
CHAVE GERAL	366
INTERRUPTOR - FLUXO	367
INTERRUPTOR - ALAVANCA	369
INTERRUPTOR - MAGNÉTICO	370
INTERRUPTOR - PARTIDA	371
CABOS/FIOS ELÉTRICOS DO CONSOLE	372
CABOS/FIOS ELÉTRICOS - MOTOR	376
CABOS/FIOS ELÉTRICOS - PLATAFORMA	378
CABOS/FIOS ELÉTRICOS - INJETOR	383
TREM DE FORÇA	384
SEMI-EIXO - TREM DE FORÇA	384
CARCAÇA DAS ENGRENAGENS PLANETÁRIAS E COMPONENTES	386
CONTROLE HIDRÁULICO DA TRANSMISSÃO	390
ARREFECEDOR DE ÓLEO DA TRANSMISSÃO	392
ACOPLAMENTO DA BOMBA	393
DRENO - ECOLOGIA	394
FILTRO - ÓLEO	396
COMANDO FINAL	398
COROA E ENGRENAGEM DE TRANFERÊNCIA	410
PROTETOR - EIXO DE TRANSMISSÃO	412
PROTETOR - TREM DE FORÇA	413
TUBOS - ÓLEO DA TRANSMISSÃO	416
MONTAGEM - TRANSMISSÃO	420
ENGRENAGENS PLANETÁRIAS - TRANSMISSÃO	422
TREM DE FORÇA	427
BOMBA DE ENGRENAGENS	428
SEGMENTO DA RODA MOTRIZ	432
EIXO DE TRANSMISSÃO	433
JUNTA CORREDIÇA	434
CONVERSOR DE TORQUE	436
TRANSMISSÃO	442
JUNTA UNIVERSAL	443
VÁLVULA PILOTO E MONTAGEM	444
VÁLVULA	445
VÁLVULA DE ENXAGUAR	446

ÍNDICE

Designação	Página
VÁLVULA DE MODULAÇÃO	447
VÁLVULA DE PRIORIDADE	448
VÁLVULA DE ALÍVIO	449
VÁLVULA SELETORA E CONTROLE DE PRESSÃO	450
CHASSI E CARROCERIA	452
CAIXA E CHASSI	452
CHASSI	456
CONTRAPESO	458
TAMPA - MUNHÃO	462
PORTA - LADO ESQUERDO	463
PORTA - LADO DIREITO	466
BARRA DE TRAÇÃO	470
COBERTURA	472
COBERTURA DO MOTOR	474
PÁRA-LAMA	482
GRADE DO RADIADOR CONTRA EROSÃO	486
PROTETOR - COMANDO FINAL	487
PROTETOR - RODA-GUIA	488
PROTETOR INFERIOR	489
PROTETOR - TANQUE DE COMBUSTÍVEL	492
PROTETOR - RODA-GUIA	494
PROTETOR - EIXO PIVÔ	495
PROTETOR - RADIADOR	496
PROTETOR - ROCHA	498
GUIA - VEDADOR	500
CAPÔ E PROTETOR	502
RUÍDO - ARRANJO PARA SUPRESSÃO	506
MATERIAL RODANTE	507
BARRA LIMPADORA DOS ROLOS	507
BRONZINA TIPO LUVA	508
TAMPA DA RODA-GUIA	510
TAMPA - ROLETE DAS ESTEIRAS	512
BARRA EQUALIZADORA	513
ARMAÇÃO DOS ROLETES DA ESTEIRA	517
ARMAÇÃO TELESCÓPICA DA MOLA TENSORA	518
RODA-GUIA DAS ESTEIRAS	521
ELO DA ESTEIRA	524
EIXO PIVÔ - LUBRIFICAÇÃO	530
REFORCO - ARMACAO DOS ROLETES	532
ROLETE E RODA-GUIA	533
ROLETE SUPERIOR DA ESTEIRA	534
ROLETE DE ESTEIRA DE FLANGE DUPLO	538
ROLETE DE ESTEIRA DE FLANGE SIMPLES	542
SUSPENSÃO - TRUQUE	546
AJUSTADOR DE ESTEIRAS E MOLA TENSORA	548
ESTEIRA	550
TUBO - ARMAÇÃO DOS ROLETES	562
MATERIAL RODANTE	563
SISTEMA DE DIREÇÃO E DE FREIO	564
FREIO DE SERVIÇO	564
CONTROLE HIDRÁULICO DA DIREÇÃO	566
CONTROLE DO PEDAL DO FREIO	568
CONTROLE DE DIREÇÃO	570
CONTROLE DE DIREÇÃO E TRANSMISSÃO	572
COMANDO DA DIREÇÃO - DIFERENCIAL	576
COMANDO DA DIREÇÃO	578
FILTRO - ÓLEO	579
TUBOS - DIREÇÃO	580
MOTOR - PISTÃO	586
BOMBA DE CARGA	587
BOMBA DE PISTÃO	588
MOTOR DO GRUPO ROTATIVO	592
VÁLVULA	594
VÁLVULA DE CONTROLE DOS FREIOS	596
VÁLVULA DE CONTROLE	598
VÁLVULA DE CONTROLE PILOTO	602
VÁLVULA DE CONTROLE DE PRESSÃO	604
VÁLVULA DE ALÍVIO	606
SISTEMA HIDRÁULICO	608
CONTROLE HIDRÁULICO	608
CONTROLE HIDRÁULICO DO ACESSÓRIO	610
ARREFECEDOR DE ÓLEO HIDRÁULICO E MONTAGEM	612
TAMPA - TANQUE HIDRÁULICO	614
CILINDRO DUPLO DE INCLINAÇÃO E TUBOS	615
CILINDRO DE LEVANTAMENTO E TUBOS	616
CILINDROS E TUBOS - RÍPER	620
CILINDRO DUPLO DE INCLINAÇÃO	621
CILINDRO - LEVANTAMENTO DA LÂMINA	622
CILINDRO DE INCLINAÇÃO DUAL	624
CILINDRO DE LEVANTAMENTO DO RIPER	628
CILINDRO DO SACADOR DE PINO DO RIPER	632
CILINDRO DE TOMBAMENTO DO RIPER	634
CILINDRO DE INCLINAÇÃO	638

ÍNDICE

Designação	Página
ALAVANCA	644
ALAVANCA - VÁLVULA DE CONTROLE	645
TUBOS - CILINDRO DE LEVANTAMENTO	646
TUBOS - SACA-PINO	650
TUBOS - CILINDRO DO SACA-PINO	652
TUBOS - BOMBA	654
TUBOS - RIPER	658
TUBOS - INCLINACÃO	662
TUBOS - CILINDRO DE INCLINAÇÃO	666
COLETOR - VÁLVULA	672
BOMBA DE ENGRENAGENS	673
BOMBA DE PISTÃO	674
BOMBA DE PISTÃO E ENGRENAGEM	676
GRUPO ROTATIVO DA BOMBA	677
PLACA BASCULANTE	678
TANQUE HIDRÁULICO E FILTRO	680
VÁLVULA DE CONTROLE E MONTAGEM	684
GRUPO DE VÁLVULAS DE CONTROLE - QUÁDRUPLO	686
VÁLVULA DE RETENÇÃO	688
VÁLVULA DE RETENÇÃO E DE ALÍVIO	689
VÁLVULA DE CONTROLE	690
VÁLVULA DE CONTROLE - PRESSÃO E COMPENSAÇÃO DE FLUXO	698
VÁLVULA DE QUEDA RÁPIDA	700
VÁLVULA DE ALÍVIO	702
VÁLVULA DE SEPARAÇÃO	706
VÁLVULA SOLENÓIDE	707
VÁLVULA DE CONTROLE DE INCLINAÇÃO	710
ACESSÓRIOS	711
LÂMINA SEMI-UNIVERSAL	711
LÂMINA UNIVERSAL	713
CONTROLE DA LÂMINA	715
ARMAÇÃO DO RIPER	716
JOGO DE GAXETA	720
ELO ESTABILIZADOR	724
ARTICULAÇÃO DO ACESSÓRIO	726
GRUPO DE CONVERSÃO - LÂMINA	731
MONTAGEM - CILINDRO	733
MONTAGEM - RIPER	734
SACA-PINO	736
BRAÇO DE EMPUXO - ESQUERDO	738
BRAÇO DE EMPUXO - DIREITO	739
BRAÇO DE EMPUXO - ESTABILIZADOR	740
RIPER	741
MUNHÃO DA LÂMINA	743
FERRAMENTAS DE TRABALHO	745
CANTO E BORDA CORTANTE	745
CANTO DE LÂMINA	752
LÂMINA E BORDA CORTANTE	754
LÂMINA E BORDA CORTANTE SEMI-UNIVERSAL	757
LÂMINA	759
LÂMINA SEMI-UNIVERSAL	760
LÂMINA UNIVERSAL	763
LÂMINA SEMI-UNIVERSAL	765
LÂMINA UNIVERSAL	766
PLACA DE DESGASTE	767
RIPER	768
DENTE DO RÍPER	770
POSTO DO OPERADOR	773
CONDICIONADOR DE AR	773
CABINE	779
COMPRESSOR DE REFRIGERANTE	792
CONDENSADOR DE REFRIGERANTE	798
CONTROLE - REDUTOR DE LUMINOSIDADE DO SIST. DE MONITORIZAÇÃO	800
GR. DE CONVERSÃO	801
CONVERSÃO PARA ESTRUTURA NÃO ROPS	802
DESCONGELADOR	804
CHAPA DO PISO	806
PROTETOR CONTRA VANDALISMO	807
AQUECEDOR DA CABINE	808
CAIXA - SUSPENSÃO DO ASSENTO	816
INSTALAÇÃO DO RÁDIO	819
JOGO-JANELA	820
TRINCO	821
REVESTIMENTO DA CABINE	822
TUBOS - AR CONDICIONADO	824
TUBOS - AQUECEDOR	836
ESPELHO	838
ESPELHO RETROVISOR	839
MÓDULO ELETRÔNICO DE QUATRO INDICADORES	841
MÓDULO - VELOCÍMETRO E TACÔMETRO	842
MONTAGEM - CABINE	844
MONTAGEM DE RÁDIO DE FAIXA DE ONDA CIVIL	846
MONTAGEM - ESTRUTURA ROPS	847
CABINE	848
FUNDO - ENCOSTO	851
PAINEL DE INSTRUMENTOS	854
PLACA DESLIZANTE	856
PLATAFORMA	860
RECLINAÇÃO - ASSENTO	863
ESTRUTURA ROPS	864
TELA DE PROTEÇÃO	867

ÍNDICE

Designação	Página	Designação	Página
ASSENTO	868		
ASSENTO COM SUSPENSÃO	878		
SUSPENSÃO - ASSENTO	882		
TANQUE - LAVADOR DE JANELA	886		
LAVADOR DO VIDRO	890		
JANELA DESLIZANTE	893		
JANELA DA CABINE	895		
LIMPADOR DO VIDRO	912		
PIVÔ DO LIMPADOR	920		
EQUIPAMENTO DE SERVIÇO E SUPRIMENTOS	921		
DECALQUE	921		
PLACA E DECALQUE	922		
ÍNDICE DE NÚMERO DE PEÇA	B1		

INHALTSVERZEICHNIS

Bezeichnung	Seite
ALLGEMEINE HINWEISE	A39
REPARATURALTERNATIVEN	A47
KÜHLMITTELZUSATZ	A52
WARTUNGSTEILE	A82
STICHWORTVERZEICHNIS	A144
MASCHINE	1
GRUNDAUSFÜHRUNG	1
MOTORAUSFÜHRUNG	2
MOTOR-UMBAUSATZ	2
MOTORAUSFÜHRUNG	4
MOTOR-EINBAUSATZ	7
MOTOR (GRUNDAUSFÜHRUNG)	8
RIEMENSPANNER	8
NOCKENWELLE	10
MOTORBLOCKDECKEL	12
SCHWUNGRADGEHÄUSEDECKEL	16
STIRNRADGEHÄUSEDECKEL	18
VENTILDECKEL	20
KURBELWELLE	22
MOTORBLOCK	24
ZYLINDERKOPF	29
DÄMPFER UND RIEMENSCHEIBE	40
LÜFTERANTRIEB	42
SCHWUNGRAD	47
STIRNRAD	48
ZAHNRADVORGELEGE	52
SCHWUNGRADGEHÄUSE	56
STIRNRADGEHÄUSE	60
MOTORHUBÖSE	62
ÖLWANNE	64
PLEUELSTANGE UND KOLBEN	66
ZYLINDERBLOCKSCHRAUBE	70
ZYLINDERKOPFSTOPFEN	71
VENTILKIPPHEBEL	72
MOTORAUFHÄNGUNG	74
MONTAGEZAPFEN	76
VENTILSTEUERUNG	77
SCHMIERSYSTEM	79
ENTLÜFTER	79
ÖLPUMPEN-BEFESTIGUNGSTEILE	80
MOTORÖLEINFÜLLSTUTZEN	81
ÖLFILTER	84
ENTDUNSTER	86
ÖLMESSSTAB	90
MOTORÖLLEITUNGEN	92
ÖLZUFUHRLEITUNGEN	96
TURBOLADERÖLLEITUNGEN	98
ÖLSCHNELLWECHSELANSCHLUSS	102
MOTORVORSCHMIERUNG	104
SCHMIERPUMPE	108
KÜHLSYSTEM	114
DRUCKLÜFTER	114
KÜHLWASSERLEITUNGEN (LADELUFT-KÜHLER)	116
KÜHLWASSERLEITUNGEN	117
KÜHLWASSERPUMPE	132
KÜHLER	140
KÜHLMITTELBEHÄLTER	149
WASSERTANK	150
LUFTEINLASS- UND ABGASSYSTEM	154
LADELUFTKÜHLER, WASSERGE-KÜHLT	154
LUFTREINIGER	158
REGENKAPPE	164
TURBOLADEREINSATZ	166
STAUBAUSWERFER	168
DRUCKLUFTLEITUNGEN	170
AUSPUFFKRÜMMER	178
SCHALLDÄMPFER	180
KRÜMMERSCHILD	182
TURBOLADER	184
KRAFTSTOFFSYSTEM	188
SCHNELLBETANKUNGSAN-SCHLUSS	188
GASREDUZIERGESTÄNGE	198
KRAFTSTOFFGEMISCHREGLER	200
REGLERSTEUERUNG	204
REGLER UND KRAFTSTOFFPUMPENAN-TRIEB	208
DREHZAHLMESSERANTRIEB	209
HYDRAULIKPUMPENANTRIEB	210
HALTETEILE (KRAFTSTOFFEINSPRITZ-PUMPE)	214
KRAFTSTOFFILTER UND LEITUN-GEN	216
KRAFTSTOFFILTER	223
WASSERABSCHEIDER- U. KRAFTSTOFFIL-TER	224
REGLER	226
KRAFTSTOFFPUMPENGEHÄUSE	229
KRAFTSTOFFEINSPRITZDÜSE	230
DICHTUNGSSATZ	231
KRAFTSTOFFABLASSLEITUNGEN	232
KRAFTSTOFFILTERLEITUNGEN	234
KRAFTSTOFFEINSPRITZLEITUN-GEN	240
EINSPRITZLEITUNGEN - HYDRAULIKPUM-PE	244
REGLER-ANSCHLUSSPLATTE	246

INHALTSVERZEICHNIS

Bezeichnung	Seite
PUMPE UND BEFESTIGUNGSTEILE	248
KRAFTSTOFFEINSPRITZPUMPE	252
KRAFTSTOFFÖRDERPUMPE	258
REGLER, KRAFTSTOFFEINSPRITZ- U. FÖRDERPUMPE	260
PUMPENDÜSE, HYDRAULISCH	262
KRAFTSTOFFTANK	268
DREHMOMENTSTEUERHEBEL	270
DRUCKSTEUERVENTIL	271
MAGNETVENTIL	272
ELEKTRISCHE ANLAGE UND STARTSYSTEM	273
WARNVORRICHTUNG	273
DREHSTROMGENERATOR	274
BATTERIE UND VERDRAHTUNG	278
STROMBLOCK	293
ANSCHLUSS, ELEKTR.	294
STEUERUNGSEINHEIT, ELEKTRON. FÜR MOTOR UND BEFEST.	296
MOTORSTEUERUNG, ELEKTRON.	298
ELEKTR. UMFORMER	300
KRAFTSTOFFHEIZUNG	302
UMLAUFKÜHLWASSERHEIZUNG	305
KLEMMLEISTE	307
FAHRERHAUSBELEUCHTUNG	308
ARBEITSLEUCHTEN	309
BELEUCHTUNGSANLAGE -ZYLINDER	312
HECKBELEUCHTUNG	314
BELEUCHTUNGSANLAGE	315
ZUSATZBELEUCHTUNG	316
ARBEITSLEUCHTEN	318
FRONTBELEUCHTUNG	322
HECKBELEUCHTUNG	324
AUSSCHALTER, MAGN.	326
KRAFTSTOFFSTANDSENSOR	328
STELLUNGSSENSOR	329
DRUCKSENSOR	330
DREHZAHLSENSOR	338
TEMPERATURSENSOR	341
MAGNETSPULE - ANLASSMOTOR (ELEKTR.)	343
ÄTHERSTARTHILFE	344
KALTWETTERSTARTANLAGE	348
STARTERMOTOR	352
UMGEHUNGSSCHALTER	365
TRENNSCHALTER	366
STRÖMUNGSSCHALTER	367
HANDGRIFFSCHALTER	369
MAGNETSCHALTER	370
STARTSCHALTER	371
KONSOLENVERDRAHTUNG	372
MOTORVERDRAHTUNG	376
FAHRERPLATTFORMVERDRAHTUNG	378
VERDRAHTUNG (EINSPRITZEINHEIT)	383
KRAFTÜBERTRAGUNG	384
KRAFTÜBERTRAGUNGSACHSE	384
PLANETENANTRIEBSGEHÄUSE U. TEILE	386
GETRIEBEHYDRAULIK	390
GETRIEBEÖLKÜHLER	392
PUMPENANSCHLUSS	393
ABLASS (UMWELTFREUNDLICH)	394
ÖLFILTER	396
SEITENANTRIEB	398
TELLERRAD- UND VORGELEGERADSATZ	410
ANTRIEBSWELLENVERKLEIDUNG	412
ANTRIEBSSCHUTZ	413
ÖLLEITUNGEN - KRAFTÜBERTRAGUNG	416
GETRIEBEAUFLAGER	420
PLANETENGETRIEBE	422
KRAFTÜBERTRAGUNG	427
ZAHNRADPUMPE	428
KETTENRADSEGMENT	432
ANTRIEBSWELLE	433
ANTRIEBSWELLEN-KEILVERZAHNUNG	434
DREHMOMENTWANDLER	436
GETRIEBE	442
KREUZGELENK	443
VORSTEUERVENTIL UND BEFESTIGUNGSTEILE	444
VENTIL	445
SPÜLVENTIL	446
MODULATORVENTIL	447
VORRANGVENTIL	448
ÜBERDRUCKVENTIL	449
VENTIL - SCHALT- UND DRUCKSTEUERUNG	450
RAHMEN UND AUFBAU	452
RAHMEN UND GEHÄUSE	452
FAHRWERK	456
GEGENGEWICHT	458
MONTAGEZAPFENVERKLEIDUNG	462
FAHRERHAUSTÜR (LINKS)	463
FAHRERHAUSTÜR (RECHTS)	466
ZUGHAKEN	470
VERKLEIDUNG	472
MOTORVERKLEIDUNG	474
SCHUTZBLECHE	482
SANDSTRAHLSCHUTZGITTER	486
SEITENANTRIEBSVERKLEIDUNG	487

INHALTSVERZEICHNIS

Bezeichnung	Seite
LEITRADSCHUTZ	488
PANZERWANNE	489
KRAFTSTOFFTANKVERKLEIDUNG	492
LEITRADSCHUTZ	494
DREHZAPFENVERKLEIDUNG	495
KÜHLERSCHUTZ	496
STEINSCHUTZ	498
SCHUTZDICHTUNG	500
MOTORHAUBE UND VERKLEIDUNG	502
SCHALLDÄMPFUNG	506
LAUFWERK	507
ABSTREIFBALKEN	507
GLEITLAGER	508
LEITRADAUFSATZ	510
LAUFROLLENAUFSATZ	512
QUERTRAVERSE	513
LAUFROLLENRAHMEN	517
LAUFROLLENRAHMEN (TELESKOPRÜCKLAUF)	518
LEITRAD	521
KETTENGLIEDER	524
ACHSWELLENSCHMIERUNG	530
LAUFROLLEN-RAHMENVERSTÄRKUNG	532
LAUFROLLEN U. LEITRAD	533
TRAGROLLEN	534
DOPPELFLANSCHROLLEN	538
EINZELFLANSCHROLLEN	542
LAUFROLLENRAHMEN-KNICKFEDERUNG	546
KETTENSPANNER UND -FEDERRÜCKLAUF	548
LAUFWERKSKETTE	550
LAUFROLLENRAHMENROHR	562
LAUFWERKSRAHMEN	563
LENK- UND BREMSSYSTEM	564
BETRIEBSBREMSE	564
LENKSTEUERUNG, HYDRAULISCH	566
FUSSBREMSGESTÄNGE	568
LENKBETÄTIGUNG	570
LENK- UND GETRIEBESTEUERUNG	572
DIFFERENTIALLENKANTRIEB	576
LENKANTRIEB	578
ÖLFILTER	579
LENKÖLLEITUNGEN	580
KOLBENMOTOR	586
LADEPUMPE	587
KOLBENPUMPE	588
MOTORDREHVORRICHTUNG	592
VENTIL	594
BREMSSTEUERVENTIL	596
STEUERVENTIL	598
VORSTEUERVENTIL	602
DRUCKSTEUERVENTIL	604
ÜBERDRUCKVENTIL	606
HYDRAULIKSYSTEM	608
HYDRAULIKSTEUERUNG	608
ARBEITSGERÄT - HYDRAULIKSTEUERUNG	610
HYDRAULIKÖLKÜHLERBEFESTIGUNG	612
ZUGANGSKLAPPE - HYDRAULIKTANKKAPPE	614
DOPPELKIPPZYLINDER UND LEITUNGEN	615
HUBZYLINDER U. LEITUNGEN	616
AUFREISSERZYLINDER UND -LEITUNGEN	620
DOPPELKIPPZYLINDER	621
PLANIERSCHILDHUBZYLINDER	622
DOPPELNEIGEZYLINDER	624
AUFREISSERHUBZYLINDER	628
AUFREISSER-BOLZENZIEHERZYLINDER	632
AUFREISSERZAHNSPITZE - ZYLINDER	634
KIPPZYLINDER	638
HEBELSATZ	644
STEUERVENTILHEBEL	645
HUBZYLINDERLEITUNGEN	646
LEITUNGSBOLZENZIEHER	650
BOLZENZIEHERZYLINDERLEITUNGEN	652
HYDRAULIKPUMPE UND LEITUNGEN	654
AUFREISSERLEITUNGEN	658
KIPPZYLINDERLEITUNGEN	662
NEIGEZYLINDERLEITUNGEN	666
KRÜMMERVENTIL	672
ZAHNRADPUMPE	673
KOLBENPUMPE	674
KOLBEN- UND ZAHNRADPUMPE	676
KOLBENPUMPENUMLAUFSATZ	677
SCHWENKSCHEIBE	678
HYDRAULIKTANK UND SCHMIERFILTER	680
STEUERVENTIL UND BEFESTIGUNGSTEILE	684
VENTILSATZ (4-VENTIL)	686
SPERRVENTIL	688
RÜCKSCHLAG- U. DRUCKBEGRENZUNGSVENTIL	689
STEUERVENTIL	690
DRUCK- U. STROMAUSGLEICHSVENTIL	698
SCHNELLSENKVENTIL	700
ÜBERDRUCKVENTIL	702

INHALTSVERZEICHNIS

Bezeichnung	Seite
PENDELVENTIL	706
MAGNETVENTIL	707
KIPPSTEUERVENTIL	710
ARBEITSGERÄTE	711
SU-SCHILD	711
U-PLANIERSCHILDEINRICHTUNG	713
PLANIERSCHILDSTEUERUNG	715
AUFREISSERRAHMEN	716
DICHTUNGSSATZ	720
STABILISATORGELENK	724
ARBEITSGERÄTEGESTÄNGE	726
PLANIERSCHILD-UMRÜSTSATZ	731
ZYLINDERAUFHÄNGUNG	733
AUFREISSERBEFESTIGUNG	734
BOLZENZIEHER	736
SCHUBARM, LINKS	738
SCHUBARM, RECHTS	739
SCHUBARM - STABILISATOR	740
AUFREISSER - TEILLISTE	741
MONTAGEZAPFEN (PLANIERSCHILDEINRICHTUNG)	743
ARBEITSGERÄTE	745
ECK- UND SCHNEIDMESSER	745
ENDMESSER	752
SCHILD UND SCHNEIDMESSER	754
SU-PLANIERSCHILD U. ECKMESSER	757
SCHEIBENWISCHERBLATT	759
SU-SCHILD	760
U-SCHILD	763
SU-SCHILD	765
U-SCHILD	766
VERSCHLEISSPLATTEN	767
AUFREISSER	768
AUFREISSERZAHN	770
FAHRERHAUS	773
KLIMAANLAGE	773
FAHRERHAUS	779
KÄLTEMITTELKOMPRESSOR	792
KÄLTEMITTELKONDENSATOR	798
ÜBERWACHUNGSSYSTEMDIMMER - STEUERUNG	800
UMBAUSATZ	801
UMBAUSATZ - OHNE ÜBERROLLSCHUTZ	802
ENTFROSTERGEBLÄSE	804
BODENPLATTE	806
SCHUTZVERKLEIDUNG	807
FAHRERHAUSHEIZUNG	808
FAHRERSITZFEDERUNGSGEHÄUSE	816
RADIOEINBAUSATZ	819
FENSTERSATZ	820
VERRIEGELUNG	821
FAHRERHAUSAUSKLEIDUNG	822
KLIMAANLAGENLEITUNGEN	824
HEIZUNGSLEITUNGEN	836
SPIEGEL	838
RÜCKSPIEGEL	839
MODUL - VIER ELEKTRON. ANZEIGEN	841
GESCHWINDIGKEITS- U. DREHZAHLMESSERMODUL	842
FAHRERHAUSANBAUSATZ	844
ÜBERROLLSCHUTZAUFLAGER	847
FAHRERHAUS	848
SCHALE - RÜCKENLEHNE	851
INSTRUMENTENTAFEL	854
GLEITPLATTE	856
PLATTFORM	860
VERSTELLBARER SITZ	863
ÜBERROLLSCHUTZ	864
SCHUTZGITTER	867
FAHRERSITZ	868
SCHWINGSITZ	878
FAHRERSITZFEDERUNG	882
SCHEIBENWASCHMITTELBEHÄLTER	886
SCHEIBENWASCHANLAGE	890
SCHIEBEFENSTER	893
FAHRERHAUSFENSTER	895
SCHEIBENWISCHER	912
WISCHERARM	920
WARTUNGSAUSRÜSTUNG UND -ZUBEHÖR	921
AUFKLEBER	921
SCHILD UND AUFKLEBER	922
ERSATZTEILNUMMERNINDEX	B1

GENERAL INFORMATION

1. MACHINE IDENTIFICATION

Caterpillar machines are identified by Product Identification Numbers (PIN). Some components included in a machine may be identified by Serial Numbers (S/N). Typical components that will be serialized include engines, transmissions, bulldozers, and rippers. The machine and engine are further identified by arrangement numbers and in some cases modification numbers. These numbers are shown on the product identification plate(s) and on the master plate in the operator's compartment.

Caterpillar dealers need all of these numbers to determine accurate parts identification.

SIS ***New Feature***

Effective First Quarter 2001 the Caterpillar Product Identification Number (PIN) will change from 8 to 17 characters. In an effort to provide uniform equipment identification, Caterpillar and other construction equipment manufacturers are moving to comply with the latest version of the product identification numbering standard. Non-road machine PINs are defined by ISO 10261. The new PIN format will apply to all Caterpillar machines and generator sets. The PIN plates and frame marking will display the 17 character PIN. The new format will look like the following:

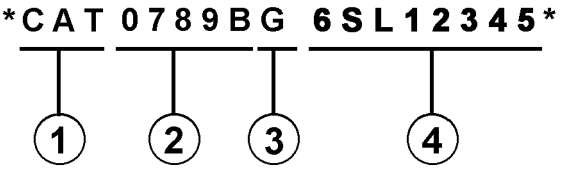

Where:

1. Caterpillar's World Manufacturing Code (characters 1-3)

2. Machine Descriptor (characters 4-8)

3. Check Character (character 9)

4. Machine Indicator Section (MIS) or Product Sequence Number (characters 10-17). These were previously referred to as the Serial Number.

Machines and generator sets produced before First Quarter 2001 will maintain their 8 character PIN format.

Components such as engines, transmissions, axles, etc. and work tools will continue to use an 8 character Serial Number (S/N).

2. ORDERING PARTS

⚠ WARNING

When replacement parts are required for this product Caterpillar recommends using Caterpillar replacement parts or parts with equivalent specifications including, but not limited to, physical dimensions, type, strength and material.

Failure to heed this warning can lead to premature failures, product damage, personal injury or death.

Quality Caterpillar replacement parts are available from Caterpillar dealers throughout the world. Their parts inventories are up to date and include all parts normally required to protect your investment in Caterpillar machines. Dealers may offer repair kits or remanufactured parts to allow selection of the most effective repair alternative for a particular situation. When ordering parts, your order should specify the quantity, part number, part name, and the serial number/product identification number of the machine for which the parts are needed.

3. PARTS MANUAL ORGANIZATION

Product information in this manual is presented as "information elements" that represent all of the components for the specific model. Engine Arrangement and Seat Group are examples of information elements. The information elements are organized alphabetically by part name and secondarily by part number within each major section of the manual.

4. TABLE OF CONTENTS

SIS ***New Feature***

A table of contents (TOC) is found at the beginning of the manual. The TOC lists each section of the manual with a complete list of all information elements organized as they appear in the manual. Page numbers are provided for quick reference to detailed parts identification illustrations and serviceable consist lists.

5. MAINTENANCE PARTS INDEX

The Maintenance Parts Index, located near the beginning of the manual, references most frequently used maintenance part numbers, providing description, quantity, usage and page number. This information is organized alphabetically by part description.

6. INDEX

The index located near the front of the manual is an alphabetical listing of all information elements included in the manual. Page numbers are provided for quick reference to detailed parts identification illustrations and serviceable consist lists.

7. PART NUMBER INDEX

A numerical index listing all part numbers and the corresponding page number(s) appears at the back of the manual.

8. CAPTIONS

Captions located at the top of each page of an information element identify the part number and part name along with additional descriptive information. PIN and S/N information found in each caption should be used to select correct information for a specific machine. Field replacement options, identification of optional attachment components, and where used ("part of") information is also provided.

SIS ***New Feature***

The first line of a caption is shown in larger type font to indicate the beginning of an information element. Captions for additional pages that may be required to illustrate an information element will be shown in standard type font and will include the term *(contd.)* .

9. NON-SERVICED PARTS

SIS ***New Feature***

In some instances it is necessary to display non-serviced parts that are a link to a lower level serviceable consist lists. These non-serviced part numbers are shown in *italic* type indicating that they are not available.

10. PARTS LIST REFERENCE NUMBERS

SIS ***New Feature***

Numbers shown in the Ref No column correspond to numbers used in the associated graphic(s). An alphabetic suffix may be added to a reference number to identify lower level consist items. Numbers shown in the Graphic Ref column refer to the graphic number identifier displayed in the lower left corner of each illustration. The Graphic Ref number may be used in combination with the item Ref No to determine the correct part number. There may be intentional omission of a Ref No in a consist list as information is updated to reflect the latest serviceable part numbers.

11. INDENTED PART NAMES

When a part name is indented in a parts list, it is part of (included in) the group or assembly under which it is indented.

12. ILLUSTRATION REFERENCE LETTERS

When necessary, illustrations contain reference letters (A, B, C etc.) that are intended to track lines and harnesses from one point to another. They are also used to show where to reconnect illustrations that have been separated.

13. ABBREVIATIONS AND SYMBOLS

O.D. – Outside Diameter
I.D. – Inside Diameter
A – Not Part Of This Group
B – Use As Required
C – Change From Previous Type
D – Order By The Meter
E – Order By The Centimeter
F – Not Shown
G – Order By The Inch
I – See Hose Fabrication Guide
M – Metric Part
R – Remfg Part May Be Available
Y – Separate Illustration
Z – Not Serviced Separately

NOTE:

Continuing improvement and advancement of product design may cause changes to your machine which may not be included in this publication. Whenever a question arises regarding your Caterpillar product or this publication, please consult your Caterpillar dealer for the latest available information.

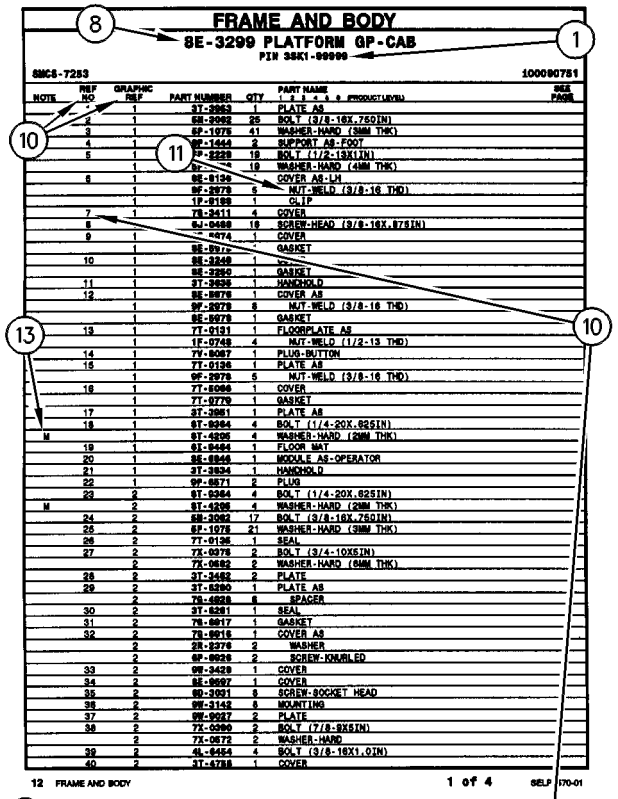
FRAME AND BODY
8E-3299 PLATFORM GP-CAB
PIN 38K1-99999
SMCS-7283
100090751
12 FRAME AND BODY
1 of 4
SELP4570-01

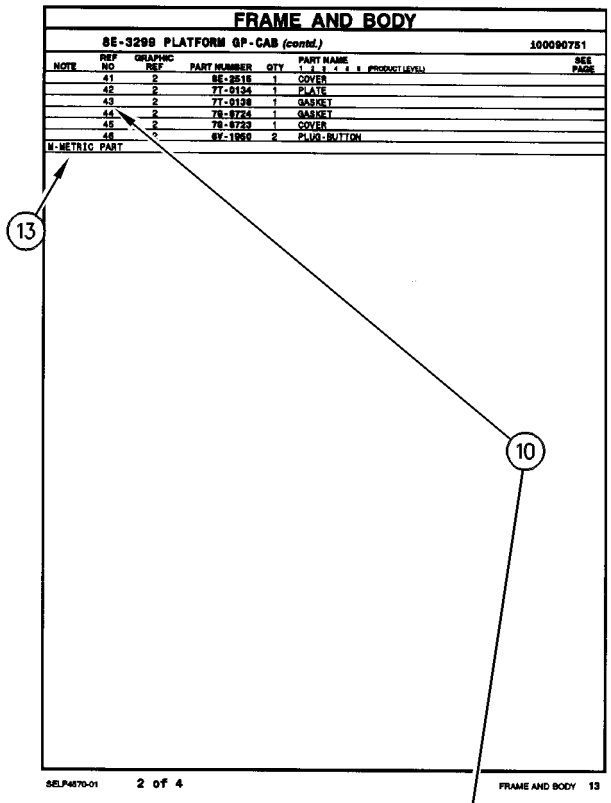
FRAME AND BODY
8E-3299 PLATFORM GP-CAB (contd.)
100090751
SELP4570-01
2 of 4
FRAME AND BODY 13

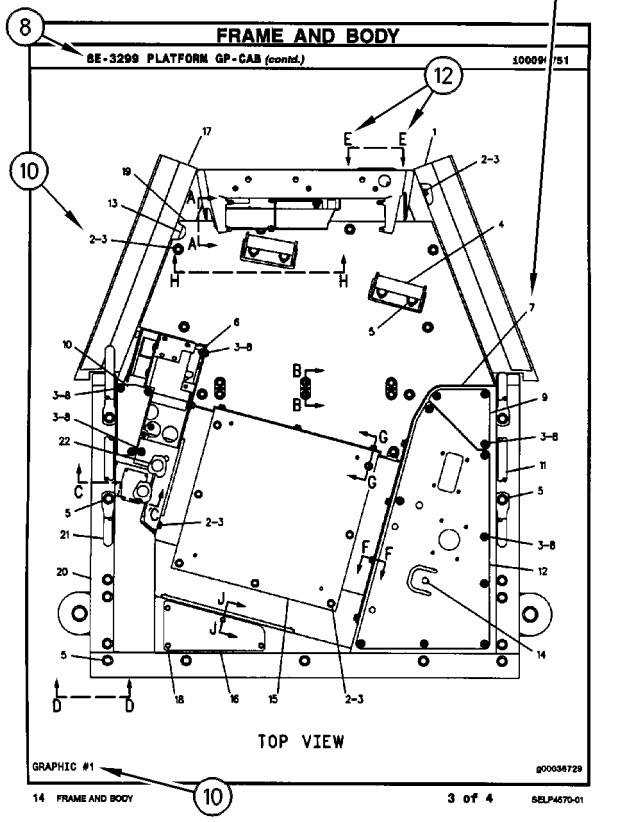
FRAME AND BODY
8E-3299 PLATFORM GP-CAB (contd.)
TOP VIEW
GRAPHIC #1
g00036729
14 FRAME AND BODY
3 of 4
SELP4570-01

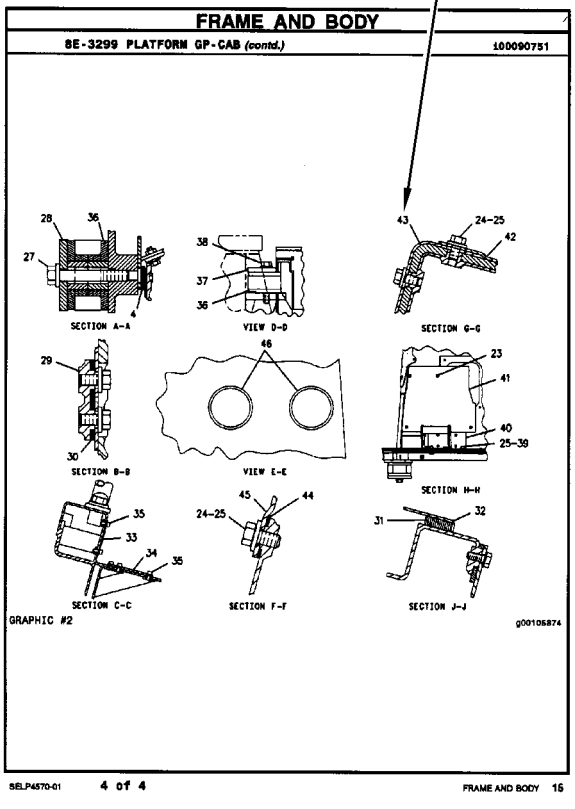
FRAME AND BODY
8E-3299 PLATFORM GP-CAB (contd.)
100090751
SECTION A-A
VIEW D-D
SECTION G-G
SECTION B-B
VIEW E-E
SECTION H-H
SECTION C-C
SECTION F-F
SECTION J-J
GRAPHIC #2
g00105874
SELP4570-01
4 of 4
FRAME AND BODY 16

1. IDENTIFICATION DE LA MACHINE

Toutes les machines Caterpillar portent un numéro d'identification (PIN). Certains composants des machines peuvent porter des numéros de série (S/N). En général, parmi les composants qui portent des numéros de série il y a les moteurs, les transmissions, les bulldozers et les rippers. En plus, la machine et le moteur peuvent recevoir des numéros de version, et dans certains cas, de modification. Ces numéros figurent sur les plaques de numéro de série et sur la plaque signalétique principale qui se trouve dans le poste de conduite.

Les concessionnaires Caterpillar doivent connaître tous ces numéros pour identifier correctement les pièces.

SIS *Nouvelle Caractéristique*

À partir du premier trimestre 2001, le numéro d'identification produit (PIN) Caterpillar passe de 8 à 17 caractères. Afin de permettre une identification uniforme des matériels, Caterpillar et d'autres constructeurs de machines de travaux publics s'efforcent de se conformer à la norme la plus récente portant sur les numéros d'identification des produits. Les numéros d'identification (PIN) de machines de chantier sont définis par la norme ISO 10261. Le nouveau format du numéro d'identification est valable pour toutes les machines et tous les groupes électrogènes Caterpillar. Le numéro d'identification produit (PIN) figurant sur la plaque et sur le châssis se composera de 17 caractères. Le nouveau format ressemblera à ceci:

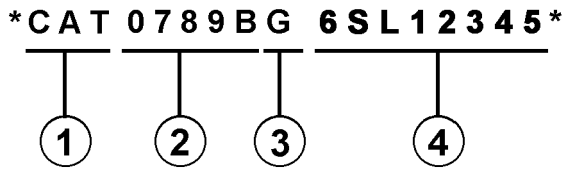

Il se décomposera de la façon suivante:

1. Code international de fabrication de Caterpillar (caractères 1 à 3)

2. Descriptif de la machine (caractères 4 à 8)

3. Contrôle (caractère 9)

4. Indicateur machine (MIS) ou numéro de séquence produit (caractères 10 à 17). Ceux-ci étaient auparavant désignés sous le terme de numéro de série.

Les machines et les groupes électrogènes construits avant le premier trimestre 2001 garderont le format à 8 caractères du numéro d'identification produit (PIN).

Les organes tels que les moteurs, les boîtes de vitesses, les essieux, etc., continueront d'être désignés par un numéro de série (S/N) à 8 caractères.

2. COMMANDE DE PIÈCES

⚠ DANGER

Lorsqu'il faut remplacer des pièces de rechange pour ce produit Caterpillar recommande d'utiliser les pièces de rechange Caterpillar ou les pièces qui ont des spécifications équivalentes dont les dimensions physiques, le type, la force et le matériau. Ces équivalences ne se limitent pas à l'énoncé précédent.

L'inobservation de cette mise en garde peut entraîner des défaillances prématurées, des dommages au produit, des blessures ou même la mort.

Les concessionnaires Caterpillar fournissent dans le monde entier des pièces de rechange de qualité Caterpillar. Leurs stocks de pièces sont constamment réapprovisionnés et comptent toutes les pièces nécessaires pour assurer la bonne marche de vos machines Caterpillar. Certains concessionnaires proposent également des kits de réparation ou des pièces rénovées, ce qui permet de choisir la solution la plus économique dans une situation donnée. Lors des commandes de pièces, mentionner la quantité, le numéro et la désignation des pièces ainsi que le numéro de série ou le numéro d'identification (PIN) de la machine pour laquelle ces pièces sont requises.

3. ORGANISATION DU CATALOGUE DE PIÈCES

Les renseignements sur les produits sont présentés sous forme de "Information element" (élément d'information) représentant tous les composants d'un modèle donné. "Engine Arrangement" (version de moteur) et "Seat Group" (assemblage de siège)" sont des exemples d'éléments d'information. Les éléments d'information sont classés par ordre alphabétique par la désignation standard des pièces et par numéros de pièces dans chaque partie importante du manuel.

4. TABLE DES MATIÈRES

Nouvelle Caractéristique

La table des matières se trouve au début du manuel. La table des matières fournit la liste de tous les chapitres du manuel avec une liste complète de tous les éléments d'information classés par ordre d'apparition dans le manuel. Les numéros de page sont fournis afin que l'utilisateur puisse trouver rapidement les illustrations détaillées concernant l'identification des pièces et les listes des pièces d'entretien.

5. INDEX DES PIÈCES D'ENTRETIEN

La rubrique "Index des pièces d'entretien" qui se trouve au début du manuel renvoie aux pièces d'entretien les plus fréquemment utilisées en précisant la désignation, la quantité, là où la pièce est utilisée et le numéro de page. Ces pièces sont classés par ordre alphabétique.

6. INDEX

L'index qui se trouve vers le début du manuel est une liste alphabétique de tous les éléments d'information du manuel. Les numéros de page sont fournis afin que l'utilisateur puisse trouver rapidement les illustrations détaillées concernant l'identification des pièces et les listes des pièces d'entretien.

7. INDEX DES NUMÉROS DE PIÈCES

Une liste numérique de tous les numéros de pièces et des pages correspondantes se trouve à la fin du manuel.

8. LÉGENDES

Les légendes qui se trouvent en haut de chaque page de chaque élément d'information fournissent le numéro de pièce, la désignation ainsi que des renseignements supplémentaires sur les pièces. Les renseignements concernant les numéros de série (S/N) qui se trouvent dans chaque légende doivent être utilisés pour sélectionner les informations correctes pour un moteur donné. Les informations concernant les options de remplacement sur le chantier, l'identification des composants des équipements offerts en option et les lieux d'application sont aussi fournies.

Nouvelle Caractéristique

Les lettres de la première ligne d'une légende sont présentées en police plus grande afin d'indiquer le début d'une unité d'information. Les légendes qui pourraient être requises pour des pages supplémentaires afin d'illustrer une unité d'information seront présentées en police standard et comprendront le terme (à suivre).

9. PIÈCES NON FOURNIES

Nouvelle Caractéristique

Dans certains cas, il est nécessaire d'indiquer les pièces non fournies qui sont en aval de la liste des pièces d'entretien. Les numéros des pièces non fournies dans la liste des pièces et les légendes seront en italique pour signaler qu'ils ne sont pas disponibles.

10. NUMÉROS DE RÉFÉRENCE DE LA LISTE DES PIÈCES

Nouvelle Caractéristique

Les numéros indiqués dans la colonne des numéros de références correspondent aux numéros utilisés dans les illustrations auxquelles ils sont associés. Un suffixe alphabétique peut être ajouté à un numéro de référence pour identifier la liste des articles en aval. Les numéros indiqués dans la colonne de référence de l'illustration renvoient à l'identification du numéro affiché dans le coin inférieur gauche de chaque illustration. Le numéro de référence de l'illustration pourrait être utilisé avec le numéro de référence de l'article pour déterminer le numéro de pièce correct. Il peut y avoir une omission intentionnelle d'un numéro de référence dans une liste de pièces suite à la mise à jour des informations en vue de refléter les numéros de pièces les plus récentes.

11. DÉSIGNATIONS DE PIÈCES EN RETRAIT

Lorsqu'une désignation de pièce est en retrait, cela veut dire que l'article en regard fait partie de l'ensemble sous lequel il figure.

12. LETTRES DE RÉFÉRENCE DES ILLUSTRATIONS

Quand cela est nécessaire, les illustrations comportent des lettres de référence (A, B, C, etc.) pour montrer le trajet des canalisations et faisceaux de câbles d'un point à l'autre. Elles sont utilisées également pour indiquer où relier les illustrations séparées auparavant.

13. ABRÉVIATIONS ET SYMBOLES

O.D. – Diamètre extérieur
I.D. – Diamètre intérieur
A – Ne fait pas partie de ce groupe
B – Utiliser selon besoin
C – Modification
D – Commander par mètre
E – Commander par centimètre
F – Non représenté
G – Commander par pouce
I – Voir "Hose Fabrication Guide"
M – Pièce métrique
R – Pièce rénovée éventuellement disponible
Y – Illustration séparée
Z – Non fourni séparément

NOTA:

En raison du progrès technique et des améliorations continuelles apportées au matériel, votre machine comporte peut-être des modifications qui n'apparaissent pas dans la présente publication. En cas de doute sur un détail de votre machine Caterpillar ou sur le texte de la présente publication, adressez-vous à votre concessionnaire Caterpillar.

FRAME AND BODY

8E-3299 PLATFORM GP-CAB

PIN 38K1-99999

SMCS-7283 — 100090751

NOTE	REF NO	GRAPHIC REF	PART NUMBER	QTY	PART NAME (1 2 3 4 5 6 PRODUCT LEVEL)	SEE PAGE
	1	1	3T-3953	1	PLATE AS	
	2	1	6B-3062	25	BOLT (3/8-16X.750IN)	
	3	1	6P-1075	41	WASHER-HARD (9MM THK)	
	4	1	9P-1444	2	SUPPORT AS-FOOT	
	5	1	7P-2229	19	BOLT (1/2-13X1IN)	
		1	6P-[illegible]	19	WASHER-HARD (4MM THK)	
	6	1	8E-8194	1	COVER AS-LH	
		1	9P-2979	5	NUT-WELD (3/8-16 THD)	
		1	1P-8199	1	CLIP	
	7	1	7S-3411	4	COVER	
	8		6J-0468	19	SCREW-HEAD (3/8-16X.875IN)	
	9	1	[illegible]-4674	1	COVER	
		1	8E-8972	1	GASKET	
	10	1	8E-3248	1	[illegible]	
		1	8E-3250	1	GASKET	
	11	1	3T-3939	1	HANDHOLD	
	12	1	8E-8978	1	COVER AS	
		1	9P-2978	8	NUT-WELD (3/8-16 THD)	
		1	8E-8979	1	GASKET	
	13	1	7T-0131	1	FLOORPLATE AS	
		1	1P-0748	4	NUT-WELD (1/2-13 THD)	
	14	1	7Y-8087	1	PLUG-BUTTON	
	15	1	7T-0136	1	PLATE AS	
		1	9P-2979	5	NUT-WELD (3/8-16 THD)	
	16	1	7T-8096	1	COVER	
		1	7T-0779	1	GASKET	
	17	1	3T-3951	1	PLATE AS	
	18	1	6T-8364	4	BOLT (1/4-20X.625IN)	
M		1	9T-4205	4	WASHER-HARD (2MM THK)	
	19	1	8X-8464	1	FLOOR MAT	
	20	1	8E-8946	1	MODULE AS-OPERATOR	
	21	1	3T-3934	1	HANDHOLD	
	22	1	9P-8871	2	PLUG	
	23	2	6T-8364	4	BOLT (1/4-20X.625IN)	
M		2	9T-4205	4	WASHER-HARD (2MM THK)	
	24	2	6B-3062	17	BOLT (3/8-16X.750IN)	
	25	2	6P-1075	21	WASHER-HARD (9MM THK)	
	26	2	7T-0136	1	SEAL	
	27	2	7X-0378	2	BOLT (3/4-10X5IN)	
		2	7X-0682	2	WASHER-HARD (6MM THK)	
	28	2	3T-3482	2	PLATE	
	29	2	3T-8290	1	PLATE AS	
		2	7S-4838	6	SPACER	
	30	2	3T-8291	1	SEAL	
	31	2	7S-8817	1	GASKET	
	32	2	7S-8916	1	COVER AS	
		2	2R-2376	2	WASHER	
		2	6P-8826	2	SCREW-KNURLED	
	33	2	9W-3429	1	COVER	
	34	2	8E-8697	1	COVER	
	35	2	6D-3091	8	SCREW-SOCKET HEAD	
	36	2	9W-3142	8	MOUNTING	
	37	2	9W-9027	2	PLATE	
	38	2	7X-0360	2	BOLT (7/8-9X6IN)	
		2	7X-0672	2	WASHER-HARD	
	39	2	6L-4454	4	BOLT (3/8-16X1.0IN)	
	40	2	3T-4788	1	COVER	

12 FRAME AND BODY — 1 of 4 — SELP4570-01

FRAME AND BODY

8E-3299 PLATFORM GP-CAB (contd.)

100090751

NOTE	REF NO	GRAPHIC REF	PART NUMBER	QTY	PART NAME (1 2 3 4 5 6 PRODUCT LEVEL)	SEE PAGE
	41	2	8E-2515	1	COVER	
	42	2	7T-0134	1	PLATE	
	43	2	7T-0138	1	GASKET	
	44	2	7S-8724	1	GASKET	
	45	2	7S-8723	1	COVER	
	46	[illegible]	6V-1958	2	PLUG-BUTTON	
M-METRIC PART						

SELP4570-01 — 2 of 4 — FRAME AND BODY 13

FRAME AND BODY

8E-3299 PLATFORM GP-CAB (contd.)

100090751

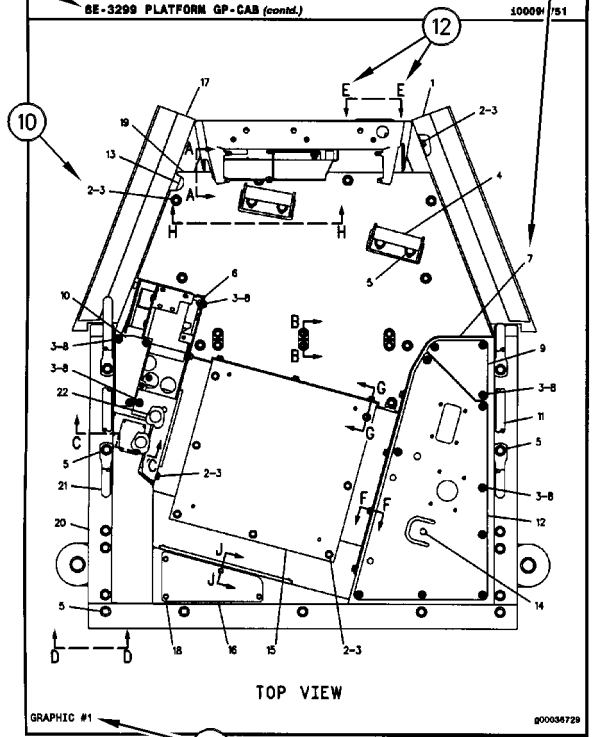

GRAPHIC #1 — g00036729

14 FRAME AND BODY — 3 of 4 — SELP4570-01

FRAME AND BODY

8E-3299 PLATFORM GP-CAB (contd.)

100090751

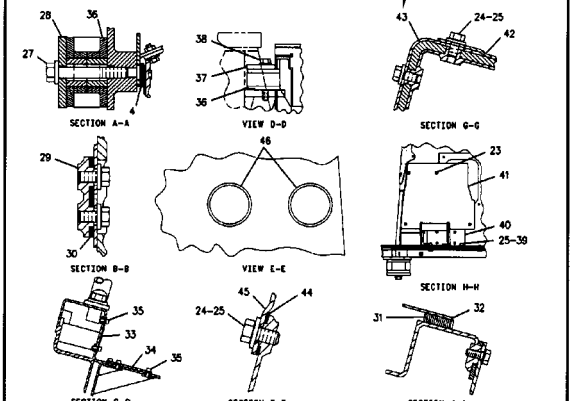

GRAPHIC #2 — g00105874

SELP4570-01 — 4 of 4 — FRAME AND BODY 16

1. MÁQUINAS

Las máquinas Caterpillar se identifican con Números de Identificación del Producto (PIN). Algunos componentes incluídos en la máquina pueden estar identificados con Números de Serie (N/S). Los componentes que tienen típicamente esta identificación incluyen motores, transmisiones, hojas topadoras y desgarradores. La máquina y el motor se identifican además con Números de Configuración y en algunos casos, Números de Modificación. Estos números están en las placas de identificación del producto o en la placa principal en la cabina del operador.

Los distribuidores Caterpillar necesitan estos números para identificar con exactitud los números de piezas de repuesto.

SIS *Nueva Característica*

A partir del primer trimestre del 2001, el Número de Identificación de Producto (PIN) de Caterpillar cambiará de 8 a 17 caracteres. Para hacer más uniforme el método de identificación de equipos, Caterpillar y otros fabricantes de equipo de construcción han tomado medidas para cumplir con la versión más reciente de la norma de numeración de identificación de productos. Los Números de Identificación de Producto para máquinas que no se operan en carreteras son definidos por la norma ISO 10261. El nuevo formato PIN corresponderá a todas las máquinas y grupos electrógenos Caterpillar. Las placas y los caracteres PIN estampados en el bastidor mostrarán el PIN de 17 caracteres. El nuevo formato tendrá la apariencia siguiente:

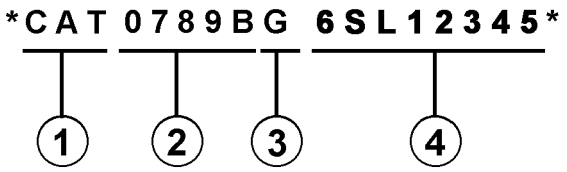

Significado de los caracteres:

1. Código de Fabricación Mundial de Caterpillar (caracteres 1-3)

2. Sección Descriptor de la Máquina (caracteres 4-8)

3. Carácter de Verificación (carácter 9)

4. Sección Indicador de la Máquina (MIS) o Número de Secuencia de Producto (caracteres 10-17). Anteriormente, estos caracteres constituían el Número de Serie.

Las máquinas y grupos electrógenos producidos antes del primer semestre del 2001 mantendrán su formato PIN de 8 caracteres.

Los componentes como motores, transmisiones, ejes, herramientas de trabajo, etc., continuarán usando un Número de Serie (S/N) de 8 caracteres.

2. COMO PEDIR REPUESTOS

⚠ ADVERTENCIA

Cuando se necesiten piezas de repuesto para este producto, Caterpillar recomienda usar piezas de repuesto Caterpillar o piezas que tengan especificaciones equivalentes incluyendo, pero sin estar limitadas a, dimensiones físicas, tipo, fortaleza y material.

El no hacer caso de esta advertencia puede llevar a fallas prematuras, daños al producto y lesiones graves o mortales.

Las piezas de repuesto Caterpillar de calidad están a la disposición de los distribuidores Caterpillar en todo el mundo. Sus existencias actualizadas incluyen todas las piezas normalmente requeridas para proteger su inversión en máquinas Caterpillar. Los distribuidores pueden tener juegos de reparación o piezas remanufacturadas para permitir la selección de la mejor alternativa de reparación en un caso en particular. Al pedir piezas de repuesto, especifique en su pedido la cantidad, el número de pieza, el nombre de la pieza y el número de serie/número de identificación del producto, de la máquina para la cual se necesitan estas piezas.

3. ORGANIZACION DEL MANUAL DE PIEZAS

La información sobre el producto, se presenta en este manual, como "elementos de información" que representan todos los componentes de un modelo específico. Las configuraciones de motores y los grupos de asientos son ejemplos de elementos de información. Los elementos de información están organizados primeramente por nombres de piezas en orden alfabético y en segundo lugar, por el número de pieza dentro de cada sección principal del manual.

4. CONTENIDO

Nueva Característica

La página de Contenido se encuentra al principio del manual. El Contenido indica cada sección del manual con una lista completa de todos los elementos de información organizados en el orden que aparecen en el manual. Los números de página proporcionan una referencia rápida a las ilustraciones detalladas de identificación de piezas y a las listas de componentes de repuesto de dichas piezas.

5. ÍNDICE DE PIEZAS DE MANTENIMIENTO

Al principio de este catálogo se encuentra un índice de los números de piezas utilizadas más frecuentemente para el mantenimiento, que incluye descripción, cantidad necesaria, lugar de utilización y número de página. Esta información está organizada alfabéticamente, por descripción de la pieza.

6. ÍNDICE

El Índice, ubicado cerca del principio del manual, es una lista en orden alfabético de todos los elementos de información incluídos en el manual. Los números de página proporcionan una referencia rápida a las ilustraciones detalladas de identificación de piezas y a las listas de componentes de repuesto de dichas piezas.

7. INDICE NUMÉRICO DE PIEZAS

Un índice numérico de piezas con el correspondiente número de página aparece al final de este catálogo.

8. TÍTULOS

Los títulos ubicados en la parte superior de cada página de elementos de información identifican el número y el nombre de la pieza junto con información descriptiva adicional para ayudar al usuario a determinar las piezas necesarias para una máquina en particular. También se suministra información sobre las opciones de reparación en el campo, la identificación de componentes de accesorios optativos y el lugar de ubicación de la pieza ("es parte de").

Nueva Característica

La primera línea del título se muestra con un tipo de letra más grande para indicar el comienzo de un elemento de información. Si se requieren páginas adicionales para ilustrar un elemento de información, los títulos se muestran con un tipo de letra normal y la continuación se indica entre paréntesis.

9. PIEZAS QUE NO SE SUMINISTRAN COMO REPUESTO

Nueva Característica

En algunos casos es necesario indicar piezas que no se suministran como repuesto pero que pueden estar conectadas a listas de componentes de otras piezas de repuesto. En tal caso, dichas piezas se muestran en cursiva para indicar que no son piezas disponibles.

10. NÚMEROS DE REFERENCIA

Nueva Característica

Los números en la columna de No. de Referencia corresponden a los números indicados en la ilustración que pertenece a ese número de pieza. Los números que tienen un sufijo alfabético identifican artículos de las listas de componentes de piezas. Los números en la columna de Referencia de la ilustración se identifican en la esquina inferior izquierda de cada ilustración. Para determinar el número de pieza correcto se puede utilizar tanto el No. de Referencia de la ilustración como el No. de Referencia del artículo. A medida que se actualiza la información para indicar los más recientes números de piezas de repuesto, puede omitirse intencionalmente un No. de Referencia en una lista de componentes de piezas.

11. NOMBRES DE PIEZA SANGRADOS

Cuando el nombre de una pieza está sangrado en una lista, significa que esta pieza forma parte del grupo o conjunto del renglón inmediatamente superior.

12. LETRAS DE REFERENCIA DE ILUSTRACIONES

Las ilustraciones contienen algunas veces letras de referencia (A, B, C etc.) cuyo propósito es seguir el trayecto de líneas y mazos de cables de un punto a otro. También se utilizan para mostrar dónde volver a unir ilustraciones que se habían separado.

13. ABREVIATURAS Y SIMBOLOS

O.D. – Diámetro exterior
I.D. – Diámetro interior
A – No es pieza de este grupo
B – Utilizado según la demanda
C – Indica cambio
D – Se pide por metro
E – Se pide por centímetro
F – No se muestra
G – Se pide por pulgada
I – Ver "Hose Fabrication Guide"
M – Pieza métrica
R – Puede estar disponible como pieza remanufacturada
Y – Ilustración separada
Z – No se suministra por separado

NOTA:

Las contínuas mejoras y adelantos en diseño podrían originar cambios a su máquina que no se incluyen en esta publicación. Cuando tenga alguna pregunta acerca de su producto Caterpillar o de esta publicación, consulte al distribuidor Caterpillar para obtener la información más reciente.

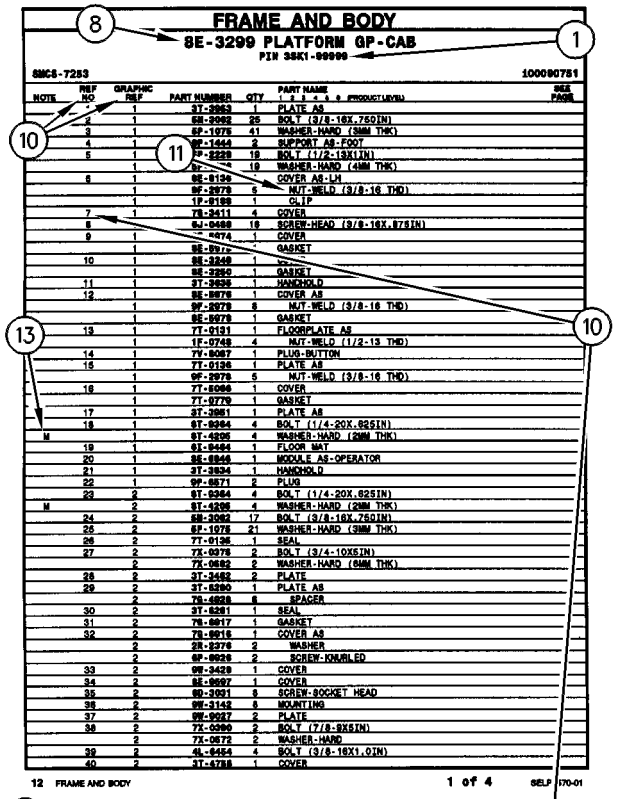

FRAME AND BODY

8E-3299 PLATFORM GP-CAB

PIN 38K1-99999

SMCS-7283 100090751

NOTE	REF NO	GRAPHIC REF	PART NUMBER	QTY	PART NAME 1 2 3 4 5 6 (PRODUCT LEVEL)	SEE PAGE
	1	1	3T-3953	1	PLATE AS	
	2	1	5B-3062	25	BOLT (3/8-16X.750IN)	
	3	1	6P-1075	41	WASHER-HARD (9MM THK)	
	4	1	9F-1444	2	SUPPORT AS-FOOT	
	5	1	7P-2229	19	BOLT (1/2-13X1IN)	
		1	6P-[illegible]	19	WASHER-HARD (4MM THK)	
	6	1	8E-8194	1	COVER AS-LH	
		1	9F-2979	5	NUT-WELD (3/8-16 THD)	
		1	1P-8199	1	CLIP	
	7	1	7S-3411	4	COVER	
	8		5J-0468	19	SCREW-HEAD (3/8-16X.875IN)	
	9	1	[illegible]-4674	1	COVER	
		1	8E-8972	[illegible]	GASKET	
	10	1	8E-3248	1	[illegible]	
		1	8E-3250	1	GASKET	
	11	1	3T-3939	1	HANDHOLD	
	12	1	8E-8978	1	COVER AS	
		1	9F-2978	8	NUT-WELD (3/8-16 THD)	
		1	8E-8978	1	GASKET	
	13	1	7T-0131	1	FLOORPLATE AS	
		1	1F-0748	4	NUT-WELD (1/2-13 THD)	
	14	1	7V-8087	1	PLUG-BUTTON	
	15	1	7T-0136	1	PLATE AS	
		1	9F-2979	5	NUT-WELD (3/8-16 THD)	
	16	1	7T-8098	1	COVER	
		1	7T-0779	1	GASKET	
	17	1	3T-3951	1	PLATE AS	
	18	1	6T-8364	4	BOLT (1/4-20X.625IN)	
M		1	6T-4205	4	WASHER-HARD (2MM THK)	
	19	1	8X-8464	1	FLOOR MAT	
	20	1	8E-8946	1	MODULE AS-OPERATOR	
	21	1	3T-3934	1	HANDHOLD	
	22	1	9P-8871	2	PLUG	
	23	2	6T-8364	4	BOLT (1/4-20X.625IN)	
M		2	6T-4205	4	WASHER-HARD (2MM THK)	
	24	2	5B-3062	17	BOLT (3/8-16X.750IN)	
	25	2	6P-1075	21	WASHER-HARD (9MM THK)	
	26	2	7T-0136	1	SEAL	
	27	2	7X-0378	2	BOLT (3/4-10X5IN)	
		2	7X-0682	2	WASHER-HARD (6MM THK)	
	28	2	3T-3482	2	PLATE	
	29	2	3T-8290	1	PLATE AS	
		2	7S-4838	6	SPACER	
	30	2	3T-8291	1	SEAL	
	31	2	7S-8817	1	GASKET	
	32	2	7S-8816	1	COVER AS	
		2	2R-2376	2	WASHER	
		2	6P-8826	2	SCREW-KNURLED	
	33	2	9W-3429	1	COVER	
	34	2	8E-8697	1	COVER	
	35	2	9D-3091	8	SCREW-SOCKET HEAD	
	36	2	9W-3142	8	MOUNTING	
	37	2	9W-9027	2	PLATE	
	38	2	7X-0360	2	BOLT (7/8-9X5IN)	
		2	7X-0672	2	WASHER-HARD	
	39	2	4L-4454	4	BOLT (3/8-16X1.0IN)	
	40	2	3T-4788	1	COVER	

12 FRAME AND BODY 1 of 4 SELP4570-01

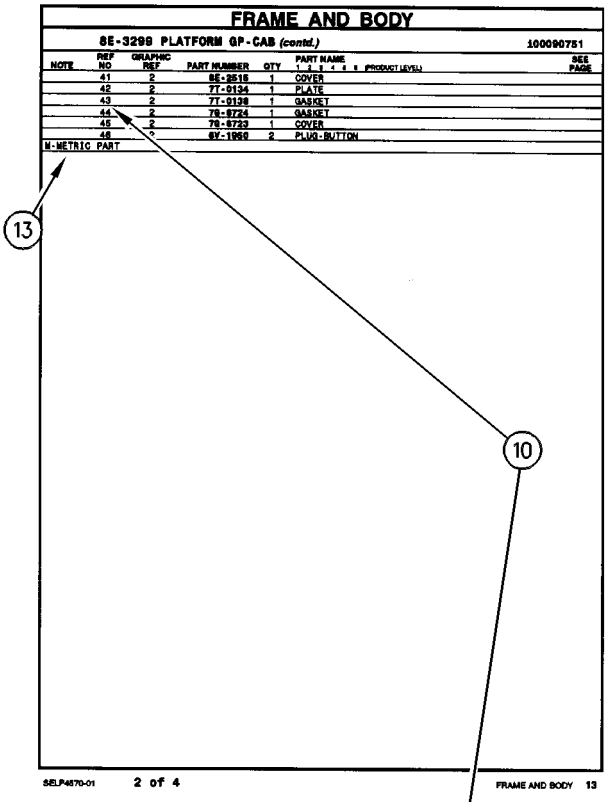

FRAME AND BODY

8E-3299 PLATFORM GP-CAB (contd.) 100090751

NOTE	REF NO	GRAPHIC REF	PART NUMBER	QTY	PART NAME 1 2 3 4 5 6 (PRODUCT LEVEL)	SEE PAGE
	41	2	8E-2515	1	COVER	
	42	2	7T-0134	1	PLATE	
	43	2	7T-0138	1	GASKET	
	44	2	7S-8724	1	GASKET	
	45	2	7S-8723	1	COVER	
	46	[illegible]	6V-1958	2	PLUG-BUTTON	
M-METRIC PART						

SELP4570-01 2 of 4 FRAME AND BODY 13

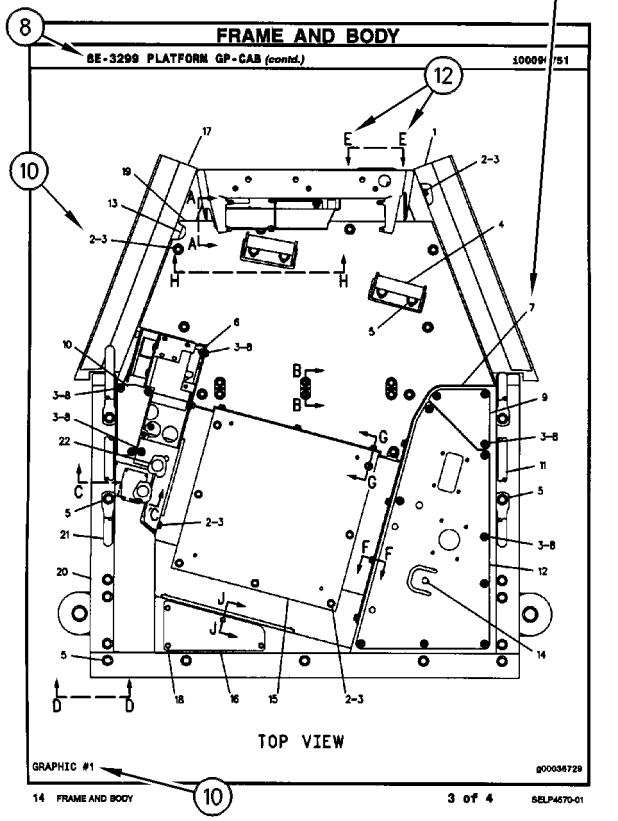

FRAME AND BODY

8E-3299 PLATFORM GP-CAB (contd.) 100090751

TOP VIEW

GRAPHIC #1 g00036729

14 FRAME AND BODY 3 of 4 SELP4570-01

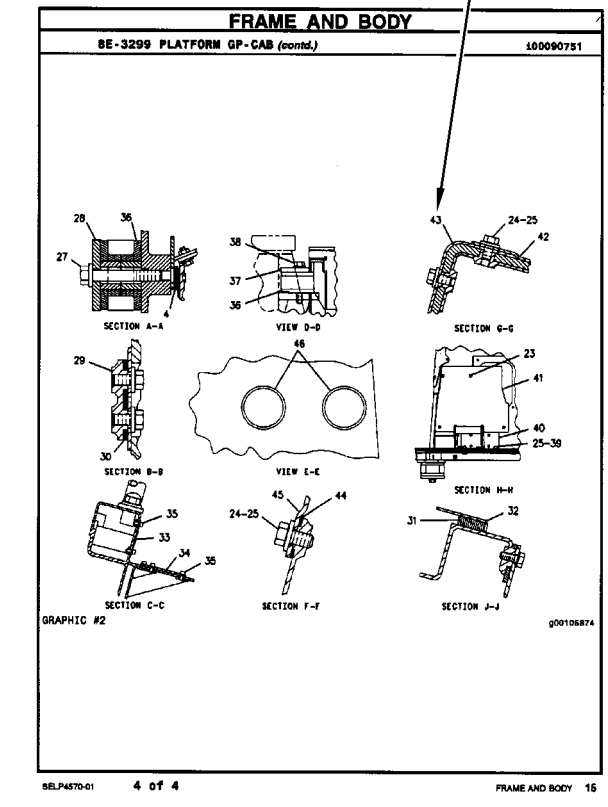

FRAME AND BODY

8E-3299 PLATFORM GP-CAB (contd.) 100090751

SECTION A-A

VIEW D-D

SECTION G-G

SECTION B-B

VIEW E-E

SECTION H-H

SECTION C-C

SECTION F-F

SECTION J-J

GRAPHIC #2 g00105874

SELP4570-01 4 of 4 FRAME AND BODY 16

1. IDENTIFICAÇÃO DA MÁQUINA

As máquinas Caterpillar são identificadas pelos Números de Informação do Produto (PIN). Alguns componentes incluídos numa máquina podem ser identificados por Números de Série (S/N). Componentes típicos que serão enumerados com números de série incluem motores, transmissões, lâminas e ríperes. Além do número de série, a máquina e o motor são ainda identificados por números de arranjo e, em alguns casos, números de modificações. Tais números encontram-se na(s) placa(s) de identificação do produto e na placa mestre no compartimento do operador.

SIS ***Novidades***

A partir do primeiro trimestre de 2001 o Número de Identificação de Produto da Caterpillar (PIN) vai mudar de 8 para 17 caracteres. Esforçando-se para fornecer uma identificação uniforme de equipamentos, a Caterpillar e outros fabricantes de equipamento de construção estão mudando para atender a versão mais atualizada do padrão de identificação de produtos. Os números de PIN para produtos de aplicações não rodoviárias são definidos pela ISO 10261. O novo formato de número PIN será adotado em todas as máquinas e grupos geradores Caterpillar. As placas e as marcações do chassi mostrarão os 17 dígitos de PIN. O novo formato terá a seguinte disposição:

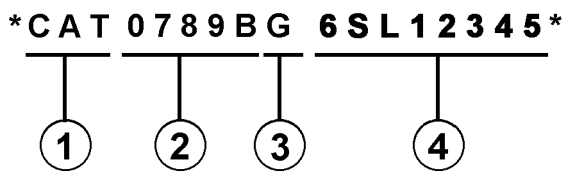

Onde:

1. Código de Fabricação Mundial da Caterpillar (dígitos 1-3)

2. Descrição da Máquina (dígitos 4-8)

3. Dígito de Verificação (dígito 9)

4. Seção de Indicador da Máquina (MIS) ou Número de Seqüência de Produto (dígitos 10-17). Estes eram anteriormente chamados de Número de Série.

Máquinas e grupos geradores produzidos antes do primeiro trimestre de 2001 manterão o formato de 8 caracteres de PIN.

Componentes como motores, transmissões, eixos, ferramentas de trabalho, etc. continuarão a usar Número de Série (S/N) com oito caracteres.

2. COMO OBTER PEÇAS

⚠ CUIDADO

Quando peças de substituição são exigidas para este produto, a Caterpillar recomenda a utilização de peças de substituição Caterpillar ou peças com as especificações equivalentes incluindo, mas não limitadas, à dimensões físicas, tipos, resistência e materiais.

A inobservância desta advertência poderá resultar em falhas prematuras, danos ao produto, ferimentos ou morte.

As Peças de Reposição de Qualidade Caterpillar encontram-se disponíveis nos revendedores Caterpillar no mundo inteiro. Seus estoques de peças são atualizados e incluem todas as peças normalmente necessárias para proteger seu investimento em máquinas Caterpillar. Alguns revendedores podem oferecer jogos de reparo ou peças de troca/remanufaturadas disponíveis como uma opção da alternativa de reparo mais eficaz para uma situação específica. Ao encomendar peças, seu pedido deve especificar a quantidade, o número e o nome da peça e o número de série/número de identificação do produto referentes à máquina para a qual as peças se destinam.

3. ORGANIZAÇÃO DO MANUAL DE PEÇAS

A informação do produto neste manual é apresentada em forma de "elementos de informação" que representam todos os componentes para o modelo específico. Arranjo de Motor e Grupo de Assento são exemplos de elementos de informação. Os elementos de informação são organizados em ordem alfabética por nome de peça ou secundariamente, por número de peça incluído em cada seção principal do manual.

4. LISTA DE CONTEÚDOS

SIS ***Novidades***

A Lista de Conteúdos (TOC) se encontra no princípio do manual. A Lista de Conteúdos (TOC) relaciona em cada seção do manual uma lista completa com todos os elementos de informação organizados conforme aparecem no manual. Números de página são fornecidos para que se tenha referência rápida de ilustrações de peças detalhadas e listas de conteúdos que podem receber serviço de manutenção.

5. ÍNDICE DE PEÇAS DE MANUTENÇÃO

O Índice de Peças de Manutenção, localizado perto do princípio do manual, faz referência aos números de peça de manutenção usados com maior frequência, fornecendo uma descrição, a quantidade, o uso e o número de página. Esta informação é organizada com a descrição da peça em ordem alfabética.

6. ÍNDICE

O Índice localizado perto do princípio do manual, consiste de uma lista em ordem alfabética de todos os elementos de informação incluídos no manual. Números de página são fornecidos para que se tenha referência rápida de ilustrações de peças detalhadas e listas de conteúdos que podem receber serviço de manutenção.

7. ÍNDICE DE NÚMERO DE PEÇA

Um índice numérico relacionando todos os números de peça e a(s) página(s) correspondentes, aparece no final do manual.

8. LEGENDAS

As legendas localizadas na parte de cima de cada página de um elemento de informação identifica o número de peça e o nome da peça, juntamente com informação descritiva adicional. Informações sobre o Número de Informação do Produto (PIN) e o Número de Série (S/N) encontradas em cada legenda devem ser usadas para selecionar a informação correta sobre uma máquina específica. Opções de substituição no campo, identificação de componentes de acessórios opcionais e informações sobre onde são utilizados ("parte de") são também fornecidas.

SIS ***Novidades***

A primeira linha de uma legenda é indicada em tipo maior para indicar o princípio de um elemento de informação. Legendas para páginas adicionais que podem ser necessárias para ilustrar um elemento de informação serão apresentadas em tipo padrão e incluirão o termo *(continua)* .

9. NÃO DISPONÍVEL SEPARADAMENTE

SIS ***Novidades***

Em alguns casos, é necessário mostrar peças não disponíveis separadamente que têm uma ligação com listas de conteúdos de nível inferior que podem receber serviço de manutenção. Os números de peça destes componentes não disponíveis aparecerão em *itálico* , a fim de indicar que não estão disponíveis.

10. NÙMEROS DE REFERÊNCIA À LISTA DE PEÇAS

SIS ***Novidades***

Os números indicados na coluna Ref No (No. de Referência) correspondem-se aos números usados no(s) gráfico(s) correspondente(s). Um sufixo com letras pode ser acrescentado a um número de referência para identificar itens de conteúdo de nível inferior. Os números indicados na coluna Graphic Ref (Referência de Gráfico) referem-se ao identificador de número de gráfico presente no canto esquerdo inferior de cada ilustração. O número de Referência de Gráfico pode ser usado em combinação com o item Ref No para determinar-se o número de peça correto. Poderá haver omissão intencional de um número de referência (Ref No) de uma lista de conteúdos uma vez que as informações são atualizadas para refletir os números de peça mais recentes que podem receber serviço de manutenção.

11. NOMES DE PEÇAS DESALINHADOS

Quando um nome de peça encontra-se desalinhado numa lista de peças, significa que tal item faz parte do (está incluído no) grupo ou conjunto sob o qual está relacionado.

12. LETRAS DE REFERÊNCIA NAS ILUSTRAÇÕES

Quando necessário, as ilustrações contêm letras de referência (A, B, C, etc.) que são utilizadas para seguir tubulações e cabos elétricos de um ponto a outro. Também foram utilizadas para indicar onde se pode reconectar as ilustrações que foram separadas.

13. ABREVIAÇÕES E SÍMBOLOS

O.D. – "Outside Diameter" (Diâmetro Externo)
I.D. – "Inside Diameter" (Diâmetro Interno)
A – Não faz parte deste grupo
B – Use conforme necessário
C – Indica modificação
D – Vendido por metro
E – Vendido por centímetro
F – Não ilustrado
G – Vendido por polegada
I – Consulte o seu revendedor quanto a mangueira
M – Peça métrica
R – Peça remanufaturada pode estar disponível; consulte o seu revendedor Cat
Y – Ilustração separada
Z – Não disponível separadamente

NOTA:

Os contínuos aperfeiçoamentos e avanços no projeto do produto podem ocasionar modificações em sua máquina que talvez ainda não estejam incluídas nesta publicação. Sempre que surgirem dúvidas quanto a um produto Caterpillar ou quanto à presente publicação, consulte o seu revendedor Caterpillar para obter as informações mais recentes disponíveis.

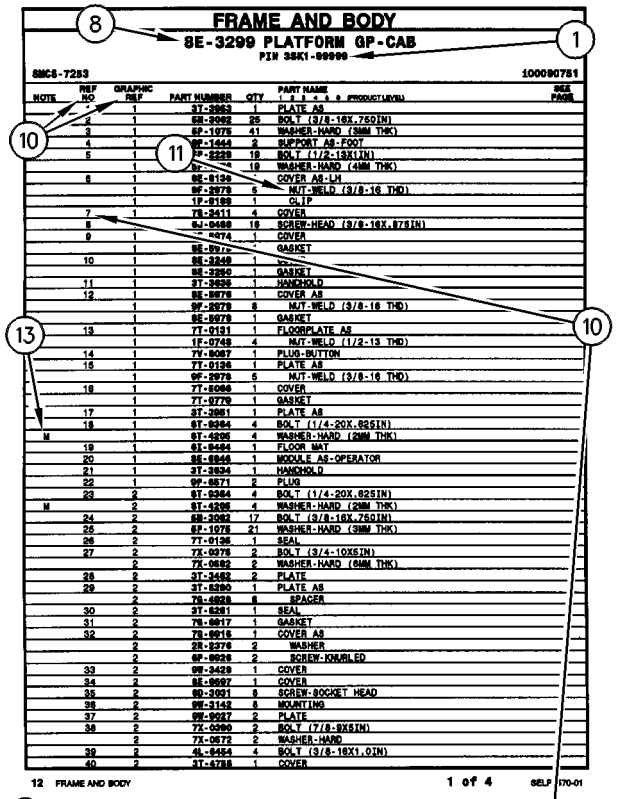

FRAME AND BODY

8E-3299 PLATFORM GP-CAB

PIN 38K1-99999

SMCS-7283 100090751

NOTE	REF NO	GRAPHIC REF	PART NUMBER	QTY	PART NAME 1 2 3 4 5 6 (PRODUCT LEVEL)	SEE PAGE
	1	1	3T-3953	1	PLATE AS	
	2	1	6B-3062	25	BOLT (3/8-16X.750IN)	
	3	1	6P-1075	41	WASHER-HARD (9MM THK)	
	4	1	9F-1444	2	SUPPORT AS-FOOT	
	5	1	7P-2229	19	BOLT (1/2-13X1IN)	
		1	6P-[illegible]	19	WASHER-HARD (4MM THK)	
	6	1	8E-8134	1	COVER AS-LH	
		1	9F-2979	5	NUT-WELD (3/8-16 THD)	
		1	1P-8188	1	CLIP	
	7	1	7S-2411	4	COVER	
	8		6J-0468	19	SCREW-HEAD (3/8-16X.875IN)	
	9	1	[illegible]-4674	1	COVER	
		1	8E-8972	1	GASKET	
	10	1	8E-3248	1	[illegible]	
		1	8E-3250	1	GASKET	
	11	1	3T-3939	1	HANDHOLD	
	12	1	8E-8978	1	COVER AS	
		1	9F-2978	8	NUT-WELD (3/8-16 THD)	
		1	8E-8978	1	GASKET	
	13	1	7T-0131	1	FLOORPLATE AS	
		1	1F-0748	4	NUT-WELD (1/2-13 THD)	
	14	1	7V-8087	1	PLUG-BUTTON	
	15	1	7T-0136	1	PLATE AS	
		1	9F-2979	5	NUT-WELD (3/8-16 THD)	
	16	1	7T-8098	1	COVER	
		1	7T-0779	1	GASKET	
	17	1	3T-3951	1	PLATE AS	
	18	1	6T-8364	4	BOLT (1/4-20X.625IN)	
M		1	6T-4205	4	WASHER-HARD (2MM THK)	
	19	1	8X-8464	1	FLOOR MAT	
	20	1	8E-8946	1	MODULE AS-OPERATOR	
	21	1	3T-3934	1	HANDHOLD	
	22	1	9P-8871	2	PLUG	
	23	2	6T-8364	4	BOLT (1/4-20X.625IN)	
M		2	6T-4205	4	WASHER-HARD (2MM THK)	
	24	2	6B-3062	17	BOLT (3/8-16X.750IN)	
	25	2	6P-1075	21	WASHER-HARD (9MM THK)	
	26	2	7T-0136	1	SEAL	
	27	2	7X-0378	2	BOLT (3/4-10X5IN)	
		2	7X-0682	2	WASHER-HARD (6MM THK)	
	28	2	3T-3482	2	PLATE	
	29	2	3T-8290	1	PLATE AS	
		2	7S-4838	6	SPACER	
	30	2	3T-8291	1	SEAL	
	31	2	7S-8817	1	GASKET	
	32	2	7S-8916	1	COVER AS	
		2	2R-2376	2	WASHER	
		2	6P-8826	2	SCREW-KNURLED	
	33	2	9W-3429	1	COVER	
	34	2	8E-8937	1	COVER	
	35	2	9D-3931	8	SCREW-SOCKET HEAD	
	36	2	9W-3142	8	MOUNTING	
	37	2	9W-9027	2	PLATE	
	38	2	7X-0360	2	BOLT (7/8-9X6IN)	
		2	7X-0672	2	WASHER-HARD	
	39	2	6L-4454	4	BOLT (3/8-16X1.0IN)	
	40	2	3T-4788	1	COVER	

12 FRAME AND BODY 1 of 4 SELP4570-01

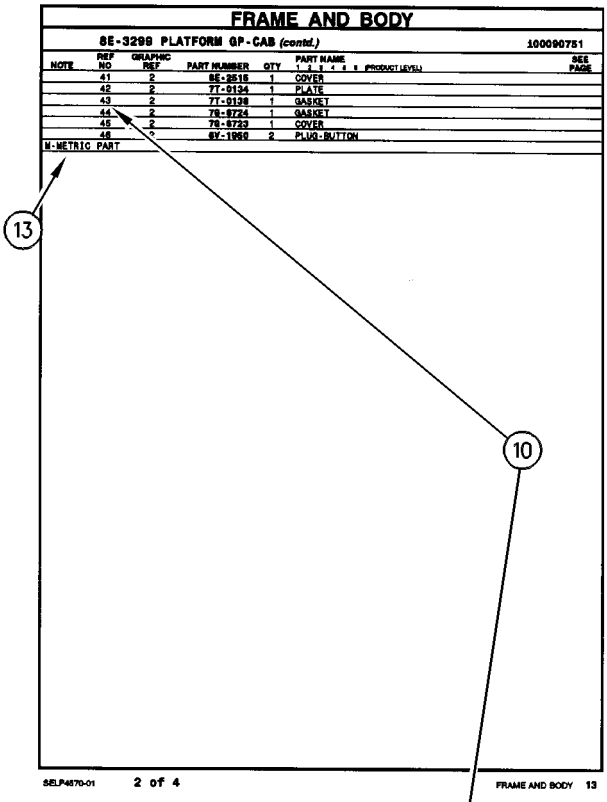

FRAME AND BODY

8E-3299 PLATFORM GP-CAB (contd.) 100090751

NOTE	REF NO	GRAPHIC REF	PART NUMBER	QTY	PART NAME 1 2 3 4 5 6 (PRODUCT LEVEL)	SEE PAGE
	41	2	8E-2515	1	COVER	
	42	2	7T-0134	1	PLATE	
	43	2	7T-0138	1	GASKET	
	44	2	7S-8724	1	GASKET	
	45	2	7S-8723	1	COVER	
	46	[illegible]	6V-1958	2	PLUG-BUTTON	
M-METRIC PART						

SELP4570-01 2 of 4 FRAME AND BODY 13

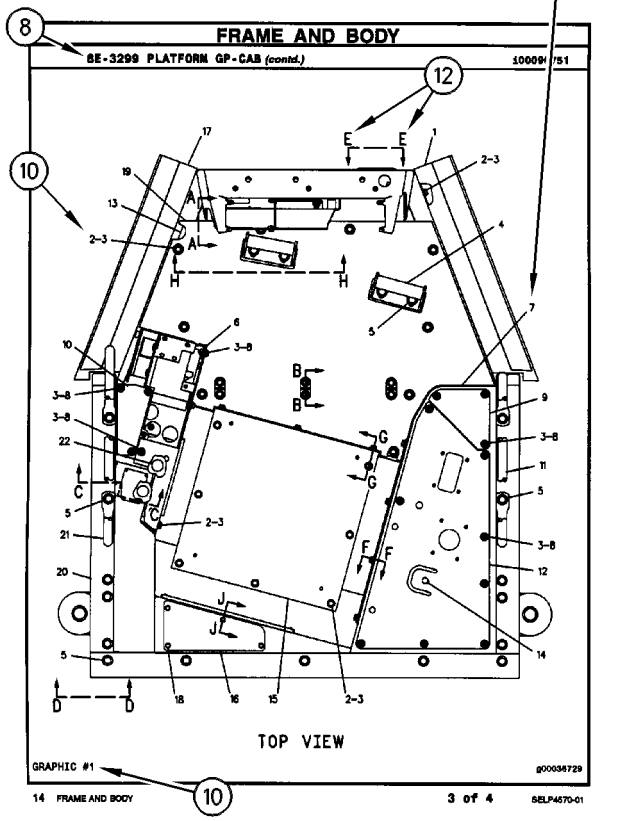

FRAME AND BODY

8E-3299 PLATFORM GP-CAB (contd.) 100090751

TOP VIEW

GRAPHIC #1 g00036729

14 FRAME AND BODY 3 of 4 SELP4570-01

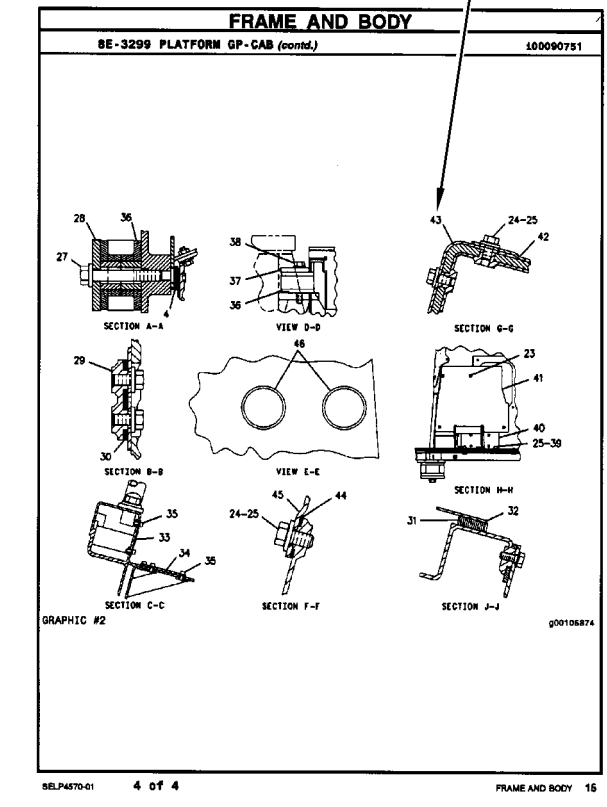

FRAME AND BODY

8E-3299 PLATFORM GP-CAB (contd.) 100090751

SECTION A-A

VIEW D-D

SECTION G-G

SECTION B-B

VIEW E-E

SECTION H-H

SECTION C-C

SECTION F-F

SECTION J-J

GRAPHIC #2 g00105874

SELP4570-01 4 of 4 FRAME AND BODY 16

ALLGEMEINE HINWEISE

1. MASCHINENKENNZEICHNUNG

Caterpillar-Maschinen sind mit PRODUCT IDENTIFICATION NUMBERS (PIN) (Produkt-Identnummern) gekennzeichnet. Einige Baugruppen, z.B. Motoren, Getriebe, Planierschilde und Aufreißer, sind mit SERIAL NUMBERS (S/N) (Seriennummern) gekennzeichnet. An der Maschine und am Motor befinden sich außerdem ARRANGEMENT NUMBERS (Ausrüstungsnummern) sowie in einigen Fällen MODIFICATION NUMBERS (Änderungsnummern). Sie befinden sich auf den PIN-Schildern und auf dem Typenschild im Fahrerhaus.

Bei Ersatzteilbestellungen müssen dem Händler alle diese Nummern zur Verfügung gestellt werden.

SIS ***Neu im Parts Manual***

Vom ersten Quartal 2001 ab wird die Caterpillar Produkt-Identnummer (PIN) von 8 auf 17 Zeichen geändert. Um zur Standardisierung der Produkt-Identnummer beizutragen, sind Caterpillar und andere Baumaschinenhersteller bestrebt, die aktuellste Norm zur Produkt-Identnummerierung einzuführen. Produkt-Identnummern für Baumaschinen sind durch ISO 10261 definiert. Das neue Format der Produkt-Identnummern gilt für alle Caterpillar-Maschinen und -Stromaggregate. Die Produkt-Identschilder und -Identrahmenmarkierung enthalten die aus 17 Zeichen bestehende Identnummer. Das neue Format hat folgende Abschnitte:

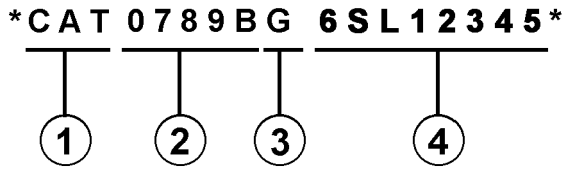

Abschnitte:

1. Caterpillars weltweiter Herstellungscode (Zeichen 1-3)

2. Modell (Zeichen 4-8)

3. Kontrollzeichen (Zeichen 9)

4. Maschinenspezifische Kennung (MIS) oder Produktsequenznummer (Zeichen 10-17). Diese wurde früher als Seriennummer bezeichnet.

Für vor dem ersten Quartal 2001 hergestellte Maschinen und Stromaggregate wird das aus 8 Zeichen bestehende PIN-Format beibehalten.

Bauteile wie z.B. Motoren, Getriebe, Achsen sowie Arbeitsgeräte werden weiterhin eine aus 8 Zeichen bestehende Seriennummer (S/N) aufweisen.

2. BESTELLEN VON ERSATZTEILEN

⚠ WARNUNG

Wenn für diese Maschine Ersatzteile benötigt werden, empfiehlt Caterpillar, ausschließlich Caterpillar-Ersatzteile oder solche zu verwenden, die die gleichen technischen Merkmale hinsichtlich Typ, Festigkeit, Werkzeugeigenschaften und die gleichen Maße aufweisen.

Bei Nichtbeachtung dieser Warnung besteht Verletzungs- oder sogar Lebensgefahr! Ferner kann Nichtbeachtung vorzeitige Ausfälle der Teile und Beschädigung der Maschine zur Folge haben.

Original Caterpillar-Ersatzteile können weltweit bei jedem Caterpillar-Händlern bestellt werden. Die umfangreichen Händlerlager enthalten normalerweise alle Teile, die Sie für Ihre Caterpillar-Maschine benötigen. Einige Händler bieten Reparatursätze, Austausch- oder werküberholte Teile an, so daß Sie eine Auswahl unter verschiedenen Reparaturmöglichkeiten treffen können. Ihre Bestellung muß folgende Angaben enthalten: Anzahl der benötigten Teile, Bestellnummer, Bezeichnung des Teils, Serien-Nr./Produkt-Ident-Nr., Ausrüstungs-Nr. und Änderungs-Nr. der Maschine, für die diese Teile benötigt werden.

3. AUFBAU DES PARTS MANUAL

Die Produktinformationen für alle Komponenten eines bestimmten Modells sind in INFORMATION ELEMENTS (Informationseinheiten) gegliedert. ENGINE ARRANGEMENT (Motorausführung) und SEAT GROUP (Fahrersitz) sind Beispiele für solche Informationseinheiten. Sie sind innerhalb jeder Gruppe alphabetisch, entsprechend der Ersatzteilbezeichnung, und zusätzlich numerisch, entsprechend der Ersatzteilnummer, geordnet.

ALLGEMEINE HINWEISE

4. INHALTSVERZEICHNIS

SIS *Neu im Parts Manual*

Das Inhaltsverzeichnis befindet sich am Anfang des Buches. Im Inhaltsverzeichnis werden die einzelnen Abschnitte des Buches aufgeführt. Die Abschnitte enthalten eine vollständige Aufstellung aller Informationseinheiten. Diese sind entsprechend ihrem Erscheinen im Buch geordnet. Das Inhaltsverzeichnis enthält Seitenangaben für Schnellverweise auf detaillierte Abbildungen und Teillisten.

5. INDEX FÜR WARTUNGSTEILE

Der Index für Wartungsteile vorn im Buch enthält die Bestellnummern, Seitenangaben, Mengenangaben und Informationen über den Einsatzbereich für die am häufigsten benötigten Ersatzteile. Die Angaben sind alphabetisch entsprechend der Teilebezeichnung geordnet.

6. INDEX

Der Index vorn im Buch enthält eine alphabetische Liste aller Informationseinheiten. Er enthält Seitenangaben für Schnellverweise auf detaillierte Abbildungen und Teillisten.

7. INDEX FÜR BESTELLNUMMERN

Hinten im Buch befindet sich ein numerischer Index, mit allen Bestellnummern und dem Hinweis auf die Seite, auf der sich die betreffende Abbildung befindet.

8. ÜBERSCHRIFTEN

Die Überschriften, die sich oben auf den Seiten der Informationseinheiten befinden, enthalten Bestellnummern, Ersatzteilbezeichnungen und zusätzliche beschreibende Informationen. Produkt-Ident- und Seriennummern in den Überschriften sollten zur Auswahl der richtigen Informationen für die betreffende Maschine verwendet werden. Die Überschriften enthalten außerdem Informationen über möglichen Außendienstersatz, mögliche Baugerätekomponenten und die Baugruppe, zu der das Teil gehört.

SIS *Neu im Parts Manual*

Die erste Zeile einer Überschrift erscheint in einer größeren Schriftart, um den Anfang einer Informationseinheit zu kennzeichnen. Überschriften für zusätzliche Seiten, die zur Erläuterung einer Informationseinheit notwendig sind, erscheinen in normaler Schriftart und enthalten den Begriff "(contd.)".

9. NICHT EINZELN LIEFERBARE TEILE

SIS *Neu im Parts Manual*

In einigen Fällen ist es notwendig nicht lieferbare Teile, die selbst mit einer eigenen Teilliste im Buch vertreten sind, aufzuführen. Die Bestellnummern dieser nicht einzeln lieferbaren Teile erscheinen kursiv, wodurch angezeigt wird, daß sie nur in Verbindung mit anderen Teilen lieferbar sind.

10. REFERENZNUMMER FÜR ERSATZTEILE

SIS *Neu im Parts Manual*

Die Zahlen, die in der Spalte "Ref No" aufgeführt sind, stimmen mit den Zahlen in den beigefügten Abbildungen überein. Ein Buchstaben-Suffix kann zu einer Referenznummer hinzugefügt werden, um zu kennzeichnen, daß das Teil mit einer eigenen Teilliste im Buch aufgeführt ist. Die in der Spalte "Graphic Ref" angeführten Zahlen verweisen auf die Identifikationsnummer der Abbildung, die sich in der linken unteren Ecke der Abbildung befindet. Diese Nummer kann zusammen mit der Referenznummer des Teils angegeben werden, um die richtige Ersatzteilnummer zu ermitteln. Referenznummern können absichtlich weggelassen werden, da die Nummern der lieferbaren Ersatzteile ständig aktualisiert werden.

11. EINGERÜCKTE BEZEICHNUNGEN

Wenn eine Bezeichnung eingerückt ist, wird dadurch angezeigt, daß das Teil zu einer Baugruppe gehört, unter deren Bezeichnung es eingerückt ist.

12. REFERENZBUCHSTABEN

Falls erforderlich sind in den Abbildungen Referenzbuchstaben enthalten (z.B. A, B, C, usw.), die Leitungen und Kabelbäume von einem Punkt zum anderen verfolgen. Außerdem geben sie die Stelle an, an der getrennte Abbildungen fortgesetzt werden.

13. ABKÜRZUNGEN UND SYMBOLE

O.D. – Außendurchmesser
I.D. – Innendurchmesser
A – kein Teil dieser Gruppe
B – nach Bedarf verwenden
C – Hinweis auf eine Änderung
D – in Meter-Länge bestellen
E – in Zentimeter-Länge bestellen
F – nicht gezeigt
G – in Zoll-Länge bestellen
I – siehe "Hose Fabrication Guide"
M – metrisches Teil
R – werküberholtes Teil unter Umständen lieferbar
Y – separate Abbildung
Z – nicht einzeln lieferbar

ANMERKUNG:

Ständig vorgenommene Verbesserungen und Weiterentwicklungen an Ihrer Maschine können Änderungen verursachen, die in der vorliegenden Ausgabe noch nicht berücksichtigt sind. Fragen zu Ihrer Caterpillar-Maschine oder diesem Ersatzteilbuch beantwortet Ihr Caterpillar-Händler.

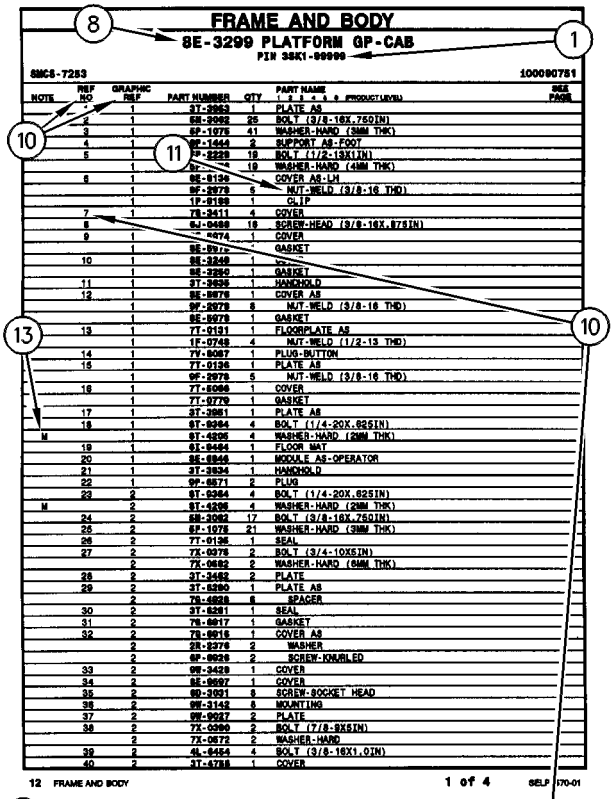

FRAME AND BODY

8E-3299 PLATFORM GP-CAB

PIN 38K1-99999

SMCS-7283 100090751

NOTE	REF NO	GRAPHIC REF	PART NUMBER	QTY	PART NAME 1 2 3 4 5 6 (PRODUCT LEVEL)	SEE PAGE
	1	1	3T-3953	1	PLATE AS	
	2	1	5B-3062	25	BOLT (3/8-16X.750IN)	
	3	1	6P-1075	41	WASHER-HARD (9MM THK)	
	4	1	9F-1444	2	SUPPORT AS-FOOT	
	5	1	7P-2229	19	BOLT (1/2-13X1IN)	
		1	6P-[illegible]	19	WASHER-HARD (4MM THK)	
	6	1	8E-8134	1	COVER AS-LH	
		1	9F-2979	5	NUT-WELD (3/8-16 THD)	
		1	1P-8188	1	CLIP	
	7	1	7S-2411	4	COVER	
	8		5J-0468	19	SCREW-HEAD (3/8-16X.875IN)	
	9	1	[illegible]-4674	1	COVER	
		1	8E-8972	1	GASKET	
	10	1	8E-3248	1	[illegible]	
		1	8E-3250	1	GASKET	
	11	1	3T-3939	1	HANDHOLD	
	12	1	8E-8978	1	COVER AS	
		1	9F-2978	8	NUT-WELD (3/8-16 THD)	
		1	8E-8978	1	GASKET	
	13	1	7T-0131	1	FLOORPLATE AS	
		1	1F-0748	4	NUT-WELD (1/2-13 THD)	
	14	1	7Y-8087	1	PLUG-BUTTON	
	15	1	7T-0136	1	PLATE AS	
		1	9F-2979	5	NUT-WELD (3/8-16 THD)	
	16	1	7T-8098	1	COVER	
		1	7T-0779	1	GASKET	
	17	1	3T-3951	1	PLATE AS	
	18	1	9T-9364	4	BOLT (1/4-20X.625IN)	
M		1	9T-4205	4	WASHER-HARD (2MM THK)	
	19	1	9I-9464	1	FLOOR MAT	
	20	1	8E-8946	1	MODULE AS-OPERATOR	
	21	1	3T-3934	1	HANDHOLD	
	22	1	9P-8871	2	PLUG	
	23	2	9T-9364	4	BOLT (1/4-20X.625IN)	
M		2	9T-4205	4	WASHER-HARD (2MM THK)	
	24	2	5B-3062	17	BOLT (3/8-16X.750IN)	
	25	2	6P-1075	21	WASHER-HARD (9MM THK)	
	26	2	7T-0136	1	SEAL	
	27	2	7X-0378	2	BOLT (3/4-10X5IN)	
		2	7X-0682	2	WASHER-HARD (6MM THK)	
	28	2	3T-3482	2	PLATE	
	29	2	3T-8290	1	PLATE AS	
		2	7S-4888	6	SPACER	
	30	2	3T-8281	1	SEAL	
	31	2	7S-8817	1	GASKET	
	32	2	7S-8916	1	COVER AS	
		2	2R-2376	2	WASHER	
		2	6P-8826	2	SCREW-KNURLED	
	33	2	9M-3429	1	COVER	
	34	2	8E-8937	1	COVER	
	35	2	9D-3931	8	SCREW-SOCKET HEAD	
	36	2	9M-3142	8	MOUNTING	
	37	2	9M-9027	2	PLATE	
	38	2	7X-0360	2	BOLT (7/8-9X5IN)	
		2	7X-0672	2	WASHER-HARD	
	39	2	9L-4454	4	BOLT (3/8-16X1.0IN)	
	40	2	3T-4788	1	COVER	

12 FRAME AND BODY 1 of 4 SELP4570-01

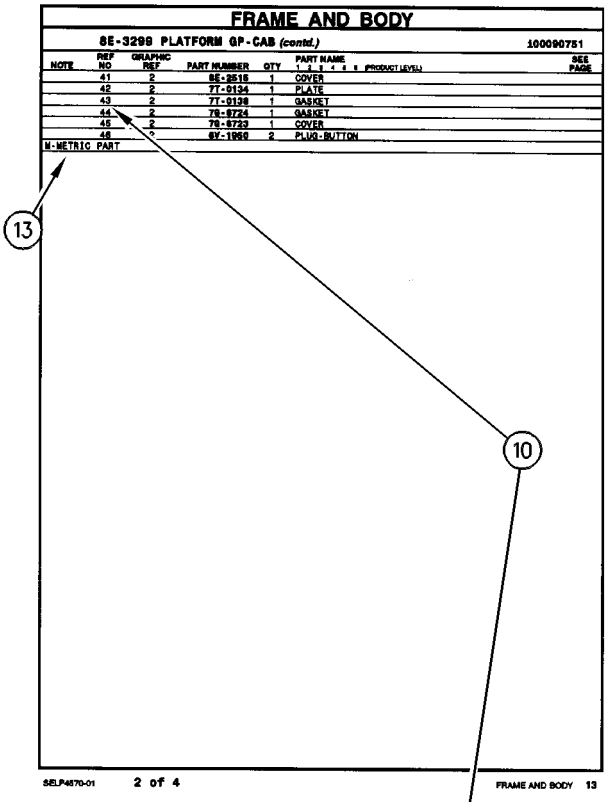

FRAME AND BODY

8E-3299 PLATFORM GP-CAB (contd.) 100090751

NOTE	REF NO	GRAPHIC REF	PART NUMBER	QTY	PART NAME 1 2 3 4 5 6 (PRODUCT LEVEL)	SEE PAGE
	41	2	8E-2515	1	COVER	
	42	2	7T-0134	1	PLATE	
	43	2	7T-0138	1	GASKET	
	44	2	7S-8724	1	GASKET	
	45	2	7S-8723	1	COVER	
	46	[illegible]	6V-1958	2	PLUG-BUTTON	
M-METRIC PART						

SELP4570-01 2 of 4 FRAME AND BODY 13

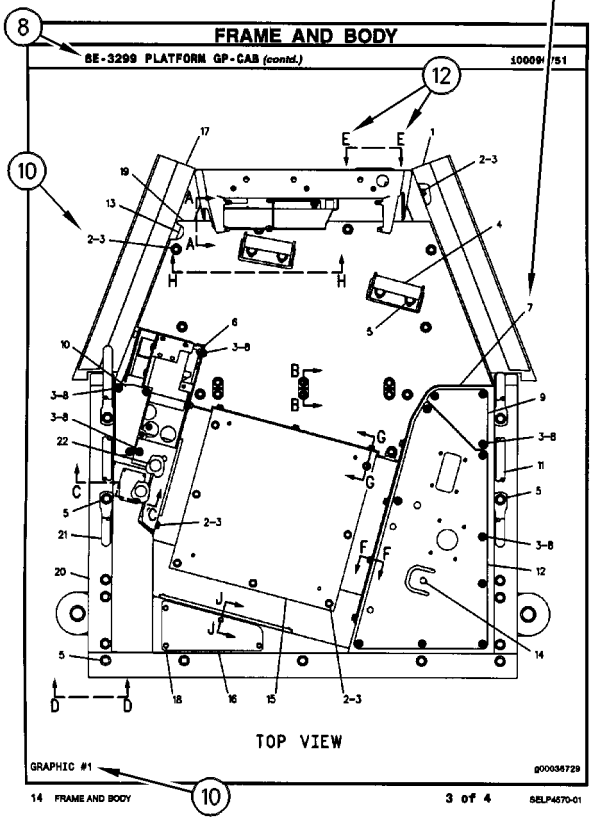

FRAME AND BODY

8E-3299 PLATFORM GP-CAB (contd.) 100090751

TOP VIEW

GRAPHIC #1 g00036729

14 FRAME AND BODY 3 of 4 SELP4570-01

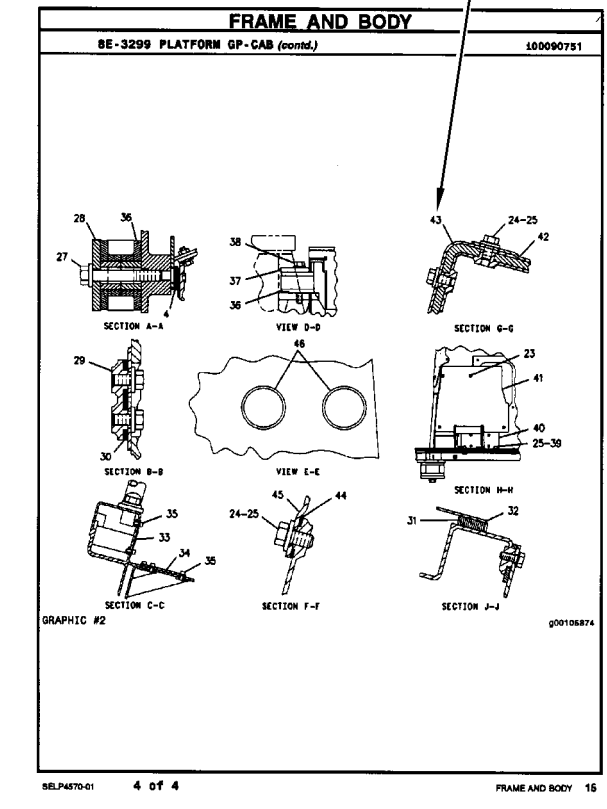

FRAME AND BODY

8E-3299 PLATFORM GP-CAB (contd.) 100090751

SECTION A-A

VIEW D-D

SECTION G-G

SECTION B-B

VIEW E-E

SECTION H-H

SECTION C-C

SECTION F-F

SECTION J-J

GRAPHIC #2 g00105874

SELP4570-01 4 of 4 FRAME AND BODY 16

REMANUFACTURED COMPONENTS

As an option when making repairs consider Caterpillar Remanufactured Components. Components that are available through the Caterpillar Remanufactured Program are identified three ways in the parts book:

- with the letter R in the note field of the parts list
- with an R* at the beginning of the first line of the caption
- with an *R at the end of the first line of the caption

Typical components included in the Remanufacturing Program include:

ALTERNATORS
CONNECTING RODS
CRANKSHAFTS - UNDERSIZE
CRANKSHAFTS - UPGRADE TO NEW
CYLINDER HEADS
ELECTRONIC CONTROL MODULES (ECM)
ELECTRONIC SENSORS
FUEL INJECTORS
FUEL NOZZLES
FUEL PUMPS
GOVERNORS
OIL PUMPS
PISTONS
SHORT BLOCKS
STARTERS
TURBOCHARGERS - COMPLETE
TURBOCHARGER CARTRIDGES
WATER PUMPS

Caterpillar Remanufactured engines for many engine arrangements are also available.

OPTIONS DE RÉPARATION

COMPOSANTS RÉNOVÉS

Comme option de réparation, considérer les composants rénovés Caterpillar. Les composants disponibles dans le cadre du programme Caterpillar de composants rénovés sont identifiés de trois façons dans le catalogue de pièces:

- avec la lettre "R" dans l'espace note de la liste des pièces
- avec R* au début de la première ligne des légendes
- avec *R à la fin de la première ligne des légendes

Les composants suivants figurent parmi les composants typiques du programme de rénovation:

ALTERNATEURS
BIELLES
VILEBREQUINS - SOUS-DIMENSIONNÉS
VILEBREQUINS - REMIS À NEUF
CULASSES
MODULES DE COMMANDE ÉLECTRONIQUE (ECM)
CAPTEURS ÉLECTRONIQUES
INJECTEURS
TÊTES D'INJECTEURS
POMPES À CARBURANT
RÉGULATEURS
POMPES À HUILE
PISTONS
BLOCS EMBIELLÉS
DÉMARREURS
TURBOCOMPRESSEURS - COMPLETS
CARTOUCHES DE TURBOCOMPRESSEUR
POMPES À EAU

Des moteurs rénovés sont aussi disponibles pour plusieurs versions de moteur.

COMPONENTES REMANUFACTURADOS

Al hacer reparaciones, tenga en cuenta la opción de Componentes Remanufacturados Caterpillar. Los componentes que están disponibles por medio del programa de Productos Remanufacturados Caterpillar se identifican de tres maneras en el manual de piezas:

- con la letra R en el espacio de Nota de la lista de piezas
- con una R* al comienzo de la primera línea de la leyenda
- con una *R al final de la primera línea de la leyenda

Los componentes que se incluyen típicamente en el Programa de Productos Remanufacturados son:

ALTERNADORES
BIELAS
CIGÜEÑALES - BAJOMEDIDA
CIGÜEÑALES - REMANUFACTURADOS A NUEVO
CULATAS
MÓDULOS DE CONTROL ELECTRÓNICO (ECM)
SENSORES ELECTRONICOS
INYECTORES
BOQUILLAS
BOMBAS DE COMBUSTIBLE
REGULADORES
BOMBAS DE ACEITE
PISTONES
MONOBLOQUES
MOTORES DE ARRANQUE
TURBOCOMPRESORES - COMPLETOS
NÚCLEOS DE TURBOCOMPRESOR
BOMBAS DE AGUA

También hay disponibles motores Remanufacturados Caterpillar para muchas de las configuraciones de motores.

COMPONENTES REMANUFATURADOS

Considere o uso de Componentes Remanufaturados Caterpillar ao efetuar reparos. Os componentes disponíveis através do Programa de Remanufatura Caterpillar são identificados de três formas no manual de peças:

- com um R na área da nota da lista de peças
- com um R* no princípio da primeira linha da legenda
- com um *R no final da primeira linha da legenda

Os componentes típicos que constam no Programa de Remanufatura incluem:

ALTERNADORES
BIELAS
VIRABREQUINS - SUBMEDIDAS
VIRABREQUINS - ATUALIZAÇÃO
CABEÇOTES
MÓDULOS DE CONTROLE ELETRÔNICO (ECM)
SENSORES ELETRÔNICOS
INJETORES DE COMBUSTÍVEL
BICOS DE ABASTECIMENTO DE COMBUSTÍVEL
BOMBAS DE COMBUSTÍVEL
GOVERNADORES
BOMBAS DE ÓLEO
PISTÕES
BLOCOS BÁSICOS DO MOTOR
MOTORES DE PARTIDA
TURBOALIMENTADORES - COMPLETOS
CARTUCHOS DE TURBOALIMENTADORES
BOMBAS D'ÁGUA

Motores Remanufaturados Caterpillar também encontram-se disponíveis para diversos arranjos de motor.

WERKÜBERHOLTE AT-PRODUKTE

Bei Reparaturen sollten werküberholte AT-Produkte von Caterpillar in Betracht gezogen werden. Die durch das AT-Programm von Caterpillar erhältlichen Teile sind im Parts Book auf drei verschiedene Arten gekennzeichnet:

- mit dem Buchstaben R in der Spalte NOTE der Ersatzteilliste
- mit einem R* am Anfang der ersten Zeile der Überschrift
- mit einem *R am Ende der ersten Zeile der Überschrift

Das AT-Programm umfaßt u.a. folgende Produkte:

DREHSTROMGENERATOREN
PLEUELSTANGEN
KURBELWELLEN - MIT UNTERMASS
KURBELWELLEN - MIT ORIGINALMASS
ZYLINDERKÖPFE
ELEKTRONISCHE STEUEREINHEITEN (EMC)
ELEKTRONISCHE SENSOREN
PUMPENDÜSEN
EINSPRITZDÜSEN
KRAFTSTOFFPUMPEN
DREHZAHLREGLER
ÖLPUMPEN
KOLBEN
TEILMOTOREN
ANLASSER
TURBOLADER - KOMPLETT
TURBOLADERLAUFZEUGE
KÜHLWASSERPUMPEN

Viele Motoren können durch werküberholte AT-Motoren von Caterpillar ersetzt werden.

SUPPLEMENTAL COOLANT ADDITIVES

CUSTOMER BENEFITS:

Protects against cavitation, foam, erosion, corrosion, and scale buildup in cooling systems.

- Provides measured coolant conditioner.

DESCRIPTION:

Additives deplete from the coolant with normal operation. For this reason, Supplemental Coolant Additives (SCA) must be added to all heavy duty coolants at regular intervals. In addition, when not using a fully formulated, pre-charged antifreeze, like Caterpillar's DEAC, an initial charge of SCA must be added to the cooling system. The amount of SCA added to the system is dependent on the capacity of the system.

The SCA for initial fill is provided as a liquid. SCA's for maintenance intervals are available in liquid form and as a spin-on element. (No Spin-on available for 3600 Family of Engines)

NOTE:

The amount of SCA added at initial fill is not the same as the amount added at maintenance intervals.

The coolant additive elements can be used with any ethylene or propylene glycol type antifreeze which meets ASTM D4985 or ASTM D5345 Specifications.

NOTE:

For use with standard heavy duty coolant only, not for use with Extended Life Coolant.

PARTS NEEDED:

Cooling System Capacity		Liquid SCA at Initial Fill	Liquid SCA at Maintenance*	Spin-on SCA Maintenance Element*
Liters	Gallons			
22-30	(6-8)	3P-2044 (1)	6V-3542 (1)	111-2370 (1)
30-38	(8-10)	3P-2044 (1) 6V-3542 (1)	111-2372 (1)	111-2369 (1)
38-49	(10-13)	3P-2044 (1) 8T-1589 (1)	111-2372 (1)	111-2369 (1)
49-64	(13-17)	3P-2044 (2)	8T-1589 (1)	9N-3368 (1)
64-83	(17-22)	3P-2044 (2) 8T-1589 (1)	111-2372 (1) 6V-3542 (1)	111-2371 (1)
83-114	(22-30)	3P-2044 (3) 8T-1589 (1)	3P-2044 (1)	9N-3718 (1)
114-163	(30-43)	3P-2044 (5)	3P-2044 (1) 6V-3542 (1)	111-2371 (2)
163-242	(43-64)	3P-2044 (8)	3P-2044 (2)	9N-3718 (2)

** Normal maintenance period is 250 hrs. See your Operation and Maintenance Manual for complete coolant maintenance instructions.*

( ) Indicates quantity required.

ADDITIFS POUR LIQUIDE DE REFROIDISSEMENT

AVANTAGES POUR LE CLIENT

L'additif protège contre la cavitation, la mousse, l'érosion, la corrosion et l'accumulation de dépôts dans le circuit de refroidissement.

- L'additif complémentaire fournit une quantité mesurée d'additif.

DESCRIPTION:

Les additifs s'épuisent pendant l'utilisation du moteur. C'est pourquoi l'on doit ajouter de l'additif au liquide de refroidissement/antigel pour moteurs diesel à intervalles réguliers. En plus, si l'on n'utilise pas de l'antigel entièrement formulé et pré-chargé comme le liquide de refroidissement/antigel Caterpillar pour moteurs diesel, une quantité initiale d'additif doit être ajoutée au circuit de refroidissement. La quantité d'additif à ajouter au circuit dépend de la contenance du circuit.

L'additif pour le remplissage initial est fourni sous forme liquide. L'additif pour l'entretien ultérieur est disponible sous forme liquide et sous forme d'élément à visser. (Il n'y a pas d'élément à visser pour les moteurs de la famille 3600).

NOTA:

La quantité d'additif à ajouter au remplissage initial diffère de la quantité à ajouter aux intervalles d'entretien.

Les éléments d'additif peuvent être utilisés avec tout antigel de type éthylène ou propylène-glycol conforme à la norme ASTM D4985 ou ASTM D5345.

NOTA:

A utiliser uniquement avec du liquide de refroidissement pour moteurs diesel et non avec le liquide de refroidissement longue durée.

PIÈCES NÉCESSAIRES:

Contenance du circuit de refroidissement		Additif liquide au remplissage initial	Additif liquide aux intervalles d'entretien*	Elément d'additif à visser aux intervalles d'entretien*
Litres	Gallons U.S.			
22-30	(6-8)	3P-2044 (1)	6V-3542 (1)	111-2370 (1)
30-38	(8-10)	3P-2044 (1) 6V-3542 (1)	111-2372 (1)	111-2369 (1)
38-49	(10-13)	3P-2044 (1) 8T-1589 (1)	111-2372 (1)	111-2369 (1)
49-64	(13-17)	3P-2044 (2)	8T-1589 (1)	9N-3368 (1)
64-83	(17-22)	3P-2044 (2) 8T-1589 (1)	111-2372 (1) 6V-3542 (1)	111-2371 (1)
83-114	(22-30)	3P-2044 (3) 8T-1589 (1)	3P-2044 (1)	9N-3718 (1)
114-163	(30-43)	3P-2044 (5)	3P-2044 (1) 6V-3542 (1)	111-2371 (2)
163-242	(43-64)	3P-2044 (8)	3P-2044 (2)	9N-3718 (2)

** L'intervalle d'entretien normal est de 250 heures-service. Voir le Guide d'utilisation et d'entretien pour de plus amples renseignements concernant l'entretien du circuit de refroidissement.*

( ) Indique la quantité exigée.

ADITIVOS DE REFRIGERANTE SUPLEMENTARIOS

VENTAJAS PARA EL USUARIO:

Protegen contra la cavitación, la formación de espuma, la corrosión y la acumulación de escamas en los sistemas de enfriamiento.

- Suministra un acondicionador dosificado de refrigerante.

DESCRIPCIÓN:

Los aditivos en el refrigerante se agotan con la operación normal. Por esta razón, se debe agregar Aditivo de refrigerante suplementario (SCA) a todos los refrigerantes para servicio pesado, a intervalos regulares. Además, cuando no se usa un anticongelante de precarga completo, tal como el DEAC de Caterpillar, es necesario agregar una cantidad de aditivo de refrigerante suplementario inicial al sistema de enfriamiento. La cantidad de aditivo que se debe agregar depende de la capacidad del sistema.

El SCA de llenado inicial es líquido. El que se usa para el mantenimiento está disponible tanto en líquido como en un elemento enroscable. (No hay elemento enroscable disponible para la Familia de Motores 3600).

NOTA:

La cantidad de aditivo de llenado inicial no es la misma que se agrega en los intervalos de mantenimiento.

Los elementos de aditivo de refrigerante se pueden usar con cualquier anticongelante de tipo glicol etilénico o propílico que esté de acuerdo con las especificaciones de las normas ASTM D4985 o ASTM D5345.

NOTA:

Se debe utilizar únicamente con refrigerante estándar para servicio pesado; no se debe usar con Refrigerante de Larga Duración.

PIEZAS NECESARIAS:

Capacidad del Sistema de Enfriamiento		SCA líquido de llenado inicial	SCA líquido de mantenimiento*	Elemento de mantenimiento enroscable*
litros	gal EE.UU.			
22-30	6-8	3P-2044 (1)	6V-3542 (1)	111-2370 (1)
30-38	8-10	3P-2044 (1) 6V-3542 (1)	111-2372 (1)	111-2369 (1)
38-49	10-13	3P-2044 (1) 8T-1589 (1)	111-2372 (1)	111-2369 (1)
49-64	13-17	3P-2044 (2)	8T-1589 (1)	9N-3368 (1)
64-83	17-22	3P-2044 (2) 8T-1589 (1)	111-2372 (1) 6V-3542 (1)	111-2371 (1)
83-114	22-30	3P-2044 (3) 8T-1589 (1)	3P-2044 (1)	9N-3718 (1)
114-163	30-43	3P-2044 (5)	3P-2044 (1) 6V-3542 (1)	111-2371 (2)
163-242	43-64	3P-2044 (8)	3P-2044 (2)	9N-3718 (2)

** El período normal de mantenimiento es de 250 horas. Para ver las instrucciones completas sobre el mantenimiento del refrigerante, consulte el Manual de Operación y Mantenimiento.*

( ) Indica la cantidad necesaria.

ADITIVOS SUPLEMENTARES DO LÍQUIDO ARREFECEDOR

BENEFÍCIOS PARA O CLIENTE:

Protege contra cavitação, espuma, erosão, corrosão e acúmulo de crostas nos sistemas de arrefecimento.

- Fornece uma quantidade pré-determinada de condicionador de arrefecimento.

DESCRIÇÃO:

Com a operação normal, os aditivos se esgotam do líquido arrefecedor. Por isso, Aditivos Suplementares do Líquido Arrefecedor (SCA) devem ser acrescentados a todos os líquidos arrefecedores para serviço pesado em intervalos regulares. Além disso, quando um anticongelante pré-carregado, totalmente formulado não for usado, como o DEAC Caterpillar, uma carga inicial de SCA deve ser acrescentada ao sistema de arrefecimento. A quantidade de SCA acrescentada ao sistema depende da capacidade do sistema.

O SCA para abastecimento inicial é fornecido em forma de líquido. Os aditivos suplementares (SCA) para intervalos de manutenção estão à disposição em forma líquida e como um elemento com roscas. (Exceto os Motores da Família 3600)

NOTA:

A quantidade de SCA adicionada no abastecimento inicial não é a mesma que a acrescentada nos intervalos de manutenção.

Os elementos do aditivo do líquido arrefecedor podem ser usados com qualquer tipo de anticongelante etileno ou propileno que satisfaz as Especificações ASTM D4985 ou ASTM D5345.

NOTA:

Para uso apenas com líquido arrefecedor para serviço pesado padrão, não deve ser usado com Líquido Arrefecedor de Vida Longa.

PEÇAS NECESSÁRIAS:

Capacidade do Sistema de Arrefecimento		Líquido SCA Durante Abastecimento Inicial	Líquido SCA Durante Manutenção*	Elemento de Manutenção de SCA com Roscas*
Litros	Galões			
22-30	6-8	3P-2044 (1)	6V-3542 (1)	111-2370 (1)
30-38	8-10	3P-2044 (1) 6V-3542 (1)	111-2372 (1)	111-2369 (1)
38-49	10-13	3P-2044 (1) 8T-1589 (1)	111-2372 (1)	111-2369 (1)
49-64	13-17	3P-2044 (2)	8T-1589 (1)	9N-3368 (1)
64-83	17-22	3P-2044 (2) 8T-1589 (1)	111-2372 (1) 6V-3542 (1)	111-2371 (1)
83-114	22-30	3P-2044 (3) 8T-1589 (1)	3P-2044 (1)	9N-3718 (1)
114-163	30-43	3P-2044 (5)	3P-2044 (1) 6V-3542 (1)	111-2371 (2)
163-242	43-64	3P-2044 (8)	3P-2044 (2)	9N-3718 (2)

** O período normal de manutenção é de 250 horas. Consulte o Manual de Operação e Manutenção para obter instruções completas quanto à manutenção do líquido arrefecedor.*

( ) Indica a quantidade exigida.

KÜHLMITTELZUSATZ

VORTEILE FÜR DEN KUNDEN:

Schutz gegen Kavitation, Schaumbildung, Erosion, Korrosion und Kesselsteinbildung in Kühlsystemen.

- Richtig dosierter Kühlmittelzusatz

BESCHREIBUNG:

Additive erschöpfen sich während des Motorbetriebs. Deshalb muß allen HD-Kühlmitteln regelmäßig Kühlmittelzusatz beigefügt werden. Wenn bei Erstfüllung kein vollwertiges Fertigkühlmittel, wie das Frostschutz- und Kühlmittel für Dieselmotoren von Caterpiller (DEAC), verwendet wird, muß bei Erstfüllung Kühlmittelzusatz beigefügt werden. Wieviel Kühlmittelzusatz beigefügt werden muß, hängt vom Inhalt des Kühlsystems ab.

Für Erstfüllung ist Kühlmittelzusatz nur in flüssiger Form erhältlich. Für Wartungsintervalle ist Kühlmittelzusatz in flüssiger Form und als Zusatzelement erhältlich. (Für die Motorbaureihe 3600 sind keine Zusatzelemente erhältlich.)

ANMERKUNG:

Die Kühlmittelmenge bei Erstfüllung ist nicht die gleiche Menge, die bei Wartungsintervallen beigefügt werden muß.

Die Kühlmittelzusatzelemente können mit allen Frostschutzmitteln auf Ethylen- oder Propylenglykolbasis verwendet werden, die den Standards nach ASTM D4985 oder ASTM D5345 entsprechen.

ANMERKUNG:

Den Kühlmittelzusatz nicht mit Langzeitkühlmittel (ELC) von Caterpillar verwenden. Der Kühlmittelzusatz ist nur für HD-Kühlmittel bestimmt.

TEILEBEZEICHNUNG:

Kühlsysteminhalt		Kühlmittelzusatz bei Erstfüllung	Flüssiger Kühlmittelzusatz bei Wartung*	Kühlmittelzusatzelement bei Wartung*
Liter	US-Gall.			
22-30	(6-8)	3P-2044 (1)	6V-3542 (1)	111-2370 (1)
30-38	(8-10)	3P-2044 (1) 6V-3542 (1)	111-2372 (1)	111-2369 (1)
38-49	(10-13)	3P-2044 (1) 8T-1589 (1)	111-2372 (1)	111-2369 (1)
49-64	(13-17)	3P-2044 (2)	8T-1589 (1)	9N-3368 (1)
64-83	(17-22)	3P-2044 (2) 8T-1589 (1)	111-2372 (1) 6V-3542 (1)	111-2371 (1)
83-114	(22-30)	3P-2044 (3) 8T-1589 (1)	3P-2044 (1)	9N-3718 (1)
114-163	(30-43)	3P-2044 (5)	3P-2044 (1) 6V-3542 (1)	111-2371 (2)
163-242	(43-64)	3P-2044 (8)	3P-2044 (2)	9N-3718 (2)

** Der normale Wartungsintervall beträgt 250 Betriebsstunden. Für vollständige Anweisungen zur Wartung des Kühlsystems, siehe Betriebs- und Wartungshandbuch.*

( ) Erforderliche Anzahl

MAINTENANCE PARTS

DESCRIPTION	PART NUMBER	QTY	WHERE USED	PAGE
AIR INLET AND EXHAUST SYSTEM				
CAP AS-RAIN	7S-5003	1	DUST EJECTOR GP	168
ELEMENT AS-PRIMARY (AIR CLEANER) (HIGH EFFICIENCY)	132-7166	1	AIR CLEANER GP	162
ELEMENT AS-PRIMARY (AIR CLEANER) (STANDARD)	6I-2507	1	AIR CLEANER GP	162
ELEMENT AS-SECONDARY (AIR CLEANER)	6I-2508	1	AIR CLEANER GP	160
		1	AIR CLEANER GP	162
ELEMENT-FILTER	7M-1674	1	LINES GP-AIR	172
ELEMENT-FILTER (AIR FILTER SERVICE INDICATOR)	7M-1674	1	LINES GP-AIR	176
FILTER ELEMENT AS-PRIMARY AIR	165-1689	1	AIR CLEANER GP	160
GASKET-EXHAUST MANIFOLD	129-9452	8	MANIFOLD GP-EXHAUST	178
INDICATOR-AIR FILTER SERVICE	8N-2694	1	LINES GP-AIR	176
BASIC ENGINE				
BREATHER AS	4N-4668	2	COVER GP-VALVE MECHANISM	21
CAP-DUST	6V-0852	1	PLUG GP-CYLINDER BLOCK	70
FITTING-GREASE	3B-8489	1	DRIVE GP-FAN	44
FITTING-GREASE (1/8-27 THD)(45 DEGREE)	3B-8485	1	BELT TIGHTENER GP	8
PLUG-O-RING (7/16-20 THD)	9S-4190	2	CYLINDER BLOCK GP	26
PLUG-OIL DRAIN	4P-0513	1	PAN GP-OIL	64
PLUG-PIPE	8T-6757	2	PLUG GP-CYLINDER BLOCK	70
PLUG-PIPE (1-11-1/2 NPTF THD)	8T-6761	1	HOUSING GP-FLYWHEEL	58
PLUG-PIPE (1/8-27 NPTF THD)	8T-6764	1	HOUSING GP-FLYWHEEL	58
SEAL	5P-5678		COVER GP-VALVE MECHANISM	20
V-BELT SET	169-0147	1	DRIVE GP-FAN	42
V-BELT SET (INCLUDES 4 BELTS)	115-2460	1	DRIVE GP-FAN	44
COOLING SYSTEM				
CAP	111-7421	4	RADIATOR GP	140
		2	RADIATOR GP	144
CAP AS-RADIATOR	031-1119	1	TANK GP-COOLANT	149
CAP-DUST	157-0670	1	LINES GP-WATER	122
		1	LINES GP-WATER	126
FILTER-WATER	119-3025	1	PUMP GP-WATER	137
FILTER (WATER PUMP)	111-2721	1	PUMP GP-WATER	134
PLUG-DRAIN	4B-7739	1	LINES GP-WATER	118
		1	LINES GP-WATER	130
REGULATOR-WATER TEMPERATURE (92 DEG C.)	4W-4794	2	LINES GP-WATER	122
		2	LINES GP-WATER	126

DESCRIPTION	PART NUMBER	QTY	WHERE USED	PAGE
ELECTRICAL AND STARTING SYSTEM				
BATTERY (12 VOLT/DRY)	9X-9730	2	BATTERY & WIRING GP	281
		2	BATTERY & WIRING GP	289
		2	STARTING AR-COLD WEATHER	349
BRUSH AS	3T-9524	6	STARTING MOTOR GP-ELECTRIC	362
CAP-DUST	6V-0852	1	BATTERY & WIRING GP	286
CIRCUIT BREAKER AS (10 AMP) (ELECTRONIC CLUTCH BRAKE)	6T-3642	1	WIRING GP-CONSOLE	372
CIRCUIT BREAKER AS (10 AMP) (START KEY SWITCH)	6T-3642	1	WIRING GP-CONSOLE	372
CIRCUIT BREAKER AS (15 AMP) (BLOWER)	6T-3643	1	WIRING GP-CONSOLE	372
CIRCUIT BREAKER AS (15 AMP) (ENGINE)	6T-3643	1	WIRING GP-CONSOLE	372
CIRCUIT BREAKER AS (15 AMP) (FRONT FLOODS)	3T-2662	1	WIRING GP-CONSOLE	372
CIRCUIT BREAKER AS (15 AMP) (IMPLEMENT)	6T-3643	1	WIRING GP-CONSOLE	372
CONVERTER-POWER (24 VOLT TO 12 VOLT)(25 AMP)	3E-8646	1	CONVERTER GP-ELECTRICAL	300
ELEMENT AS-JACKET WATER HEATER	6T-3764	2	HEATER GP-JACKET WATER	306
ELEMENT AS-JACKET WATER HEATER (120 VOLTS/1500 WATTS)	9G-6655	2	HEATER GP-JACKET WATER	305
FILTER-FOAM (FUEL LEVEL SENSOR)	111-4402	1	BATTERY & WIRING GP	279
		1	BATTERY & WIRING GP	287
FUSE (10 AMP)	9W-1442	10	WIRING GP-CONSOLE	373
FUSE (15 AMP)	9W-1441	3	WIRING GP-CONSOLE	373
FUSE (20 AMP)	9W-1446	3	WIRING GP-CONSOLE	373
FUSE (30 AMP)	8T-9636	2	CONVERTER GP-ELECTRICAL	300
KEY (BATTERY DISCONNECT)	8H-5306	1	SWITCH GP-DISCONNECT	366
LAMP (24 VOLT)	3E-8825	2	WIRING GP-PLATFORM	378
	7N-5876	3	WIRING GP-PLATFORM	378
LAMP (24 VOLT) (DOME)	7N-9943	1	LAMP GP-DOME	308
LAMP (24 VOLT) (FLOOD)	9X-3463	1	LAMP GP-FLOOD	310
LAMP (24 VOLT) (FLOOD)(65 WATT)	9X-3463	1	LAMP GP-FLOOD	309
LAMP (28 VOLT)	7N-1996	1	WIRING GP-PLATFORM	380
LENS AS (FLOODLIGHT)	158-0248	1	LAMP GP-FLOOD	309
		1	LAMP GP-FLOOD	310
LENS (DOME)	7T-0020	1	LAMP GP-DOME	308
LENS-RED	6T-7058	1	WIRING GP-PLATFORM	380
SEAL-O-RING (11.89MM ID)	3J-1907	2	BATTERY & WIRING GP	281
		7	BATTERY & WIRING GP	289
SPRING-BRUSH	3T-9494	6	STARTING MOTOR GP-ELECTRIC	363
V-BELT (INCLUDES 2 BELTS)	199-6601	1	ALTERNATOR GP-CHARGING	274
VENT AS	7N-0060	6	STARTING AR-COLD WEATHER	349
ENGINE ARRANGEMENT				
KEY	5P-8500	1	INSTALLATION AR-ENGINE	7
PADLOCK GP	5P-8502	1	INSTALLATION AR-ENGINE	7
V-BELT SET (ALTERNATOR/NON-EMISSIONS ENG)	9L-6130	1	CONVERSION AR-ENGINE	2

MAINTENANCE PARTS

DESCRIPTION	PART NUMBER	QTY	WHERE USED	PAGE
FRAME AND BODY				
KEY	5P-8500	1	ENCLOSURE GP	472
		1	ENCLOSURE GP-ENGINE	476
		1	ENCLOSURE GP-ENGINE	480
		1	FENDER GP	482
PADLOCK GP	5P-8502	1	ENCLOSURE GP	472
		2	ENCLOSURE GP-ENGINE	476
		2	ENCLOSURE GP-ENGINE	480
		1	FENDER GP	482
		1	HOOD & GUARD GP	502
FUEL SYSTEM				
CAP AS-FUEL TANK	7X-7700	1	TANK GP-FUEL	269
CAP-DUST (FAST FILL FUEL ADAPTER)	9D-0630	1	ADAPTER GP-FAST FILL FUEL	192
		1	ADAPTER GP-FAST FILL FUEL	194
CAP-TACHOMETER DRIVE	9B-2232	1	DRIVE GP-TACHOMETER	209
COVER-DUST (FAST FILL FUEL ADAPTER)	9D-0630	1	ADAPTER GP-FAST FILL FUEL	190
		1	ADAPTER GP-FAST FILL FUEL	196
FILTER AS-FUEL	1R-0749	1	FILTER GP-FUEL	223
FILTER AS (WATER SEPARATOR & FUEL)	1R-0769	1	FILTER GP-WATER SEP & FUEL	224
FILTER (UNIT INJ HYD PUMP)	125-5835	1	DRIVE GP-UNIT INJ HYD PUMP	212
GASKET (FUEL PRIMING PUMP)	1P-0436	1	FILTER & LINES GP-FUEL	220
KEY	5P-8500	1	FILTER & LINES GP-FUEL	216
		1	FILTER & LINES GP-FUEL	220
		1	TANK GP-FUEL	268
PADLOCK GP	5P-8502	1	FILTER & LINES GP-FUEL	216
		1	FILTER & LINES GP-FUEL	220
		1	TANK GP-FUEL	268
PLUG-O-RING	9S-8008	1	GOVERNOR GP	226
		1	PLATE GP-GOVERNOR ADAPTER	246
SCREEN-SUMP (FUEL TANK)	5G-4109	1	FILTER & LINES GP-FUEL	216
		1	FILTER & LINES GP-FUEL	220
STRAINER-FUEL	9P-7121	1	TANK GP-FUEL	268

MAINTENANCE PARTS

DESCRIPTION	PART NUMBER	QTY	WHERE USED	PAGE
HYDRAULIC SYSTEM				
CAP-DUST	6V-0852	2	LINES GP-PUMP	654
	8C-3451	1	TANK & FILTER GP-HYDRAULIC	681
CAP-FILLER (HYDRAULIC TANK)	7H-1447	1	TANK & FILTER GP-HYDRAULIC	680
FILTER ELEMENT AS-OIL (CLEAN OUT/HIGHER PERFORMANCE)	139-1537	2	TANK & FILTER GP-HYDRAULIC	681
FILTER ELEMENT AS-OIL (HYDRAULIC) (FIRE RESISTANT FLUID/HIGH PRFM)	4T-3134	1	TANK & FILTER GP-HYDRAULIC	680
FILTER ELEMENT AS-OIL (HYDRAULIC/REVERSE FLOW) (CLEAN OUT/HIGHER PERFORMANCE)	139-1536	1	TANK & FILTER GP-HYDRAULIC	680
FILTER ELEMENT AS-OIL (HYDRAULIC/REVERSE FLOW) (DISPOSABLE)	1R-0722	1	TANK & FILTER GP-HYDRAULIC	680
	1R-0735	2	TANK & FILTER GP-HYDRAULIC	681
FILTER ELEMENT AS-OIL (REVERSE FLOW) (FIRE RESISTANT FLUID/HIGH PRFM)	104-6931	2	TANK & FILTER GP-HYDRAULIC	681
FITTING-GREASE	3B-8489	2	CYLINDER GP-RIPPER LIFT	630
		2	CYLINDER GP-RIPPER TIP	634
		2	CYLINDER GP-RIPPER TIP	636
		1	CYLINDER GP-TILT	638
		1	CYLINDER GP-TILT	640
		1	CYLINDER GP-TILT	642
FITTING-GREASE (1/8-27 THD)	3B-8489	2	CYLINDER GP-RIPPER LIFT	628
GASKET	9H-6454	1	TANK & FILTER GP-HYDRAULIC	680
KEY	5P-8500	1	COVER GP-HYDRAULIC TANK CAP	614
PADLOCK GP	5P-8502	1	COVER GP-HYDRAULIC TANK CAP	614
PLUG-O-RING (7/16-20 THD)	9S-4190	1	PUMP GP-PISTON	674
SCREEN AS	9T-7571	1	TANK & FILTER GP-HYDRAULIC	680
STRAINER AS	5D-7927	1	TANK & FILTER GP-HYDRAULIC	680
IMPLEMENTS				
FITTING-GREASE	3B-8489	2	FRAME GP-RIPPER	718
		2	KIT-OVERPACK	722
		2	MOUNTING GP-CYLINDER	733
FITTING-GREASE (1/8-27 NPTF)	3B-8489	2	FRAME GP-RIPPER	716
LUBRICATION SYSTEM				
BREATHER AS (CRANKCASE)	4N-4668	1	BREATHER GP	79
CAP AS-FILLER	6N-2206	1	FILLER GP-ENGINE OIL	81
		1	FILLER GP-ENGINE OIL	82
CAP-DUST	8C-3445	1	FILTER GP-ENGINE OIL	84
FILTER AS-ENGINE OIL	1R-0716	2	FILTER GP-ENGINE OIL	84
HOSE (87CM EACH)	5P-1255		FUMES DISPOSAL GP	88
HOSE (9CM EACH)	5P-1255		FUMES DISPOSAL GP	88
SCREEN AS-BELL	4N-0913	1	LINES GP-ENGINE OIL	92

MAINTENANCE PARTS

DESCRIPTION	PART NUMBER	QTY	WHERE USED	PAGE
OPERATOR STATION				
BLADE AS-WIPER (FRONT)	6V-5851	1	WIPER GP-WINDOW	916
BLADE AS-WIPER (LH DOOR)	6V-5849	4	WIPER GP-WINDOW	916
BLADE AS-WIPER (REAR)	5C-8811	1	WIPER GP-WINDOW	916
CAP-SEAL (AIR CONDITIONER)	172-4880	1	LINES GP-AIR CONDITIONER	825
		1	LINES GP-AIR CONDITIONER	831
CAP-SEAL (AIR CONDITIONER)(HIGH SIDE)	3E-4052	1	LINES GP-AIR CONDITIONER	825
CAP-SEAL (AIR CONDITIONER)(LOW SIDE)	3E-4051	1	LINES GP-AIR CONDITIONER	825
CAP-VENTED	8E-8292	1	TANK GP-WINDOW WASHER	886
CIRCUIT BREAKER AS (15 AMP) (A/C REMOTE CONDENSER)	6T-3643	1	LINES GP-AIR CONDITIONER	824
		1	LINES GP-AIR CONDITIONER	830
FILTER-AIR (CAB) (HIGH EFFICIENCY)	175-2839	1	HEATER GP-CAB	808
FILTER-AIR (CAB) (ODOR REDUCTION)	175-2832	1	HEATER GP-CAB	808
FILTER-AIR (CAB) (STANDARD)	7T-1890	1	HEATER GP-CAB	808
FILTER-CAB AIR	107-0266	1	HEATER GP-CAB	809
LAMP (28 VOLT)	7N-1996	1	PANEL GP-INSTRUMENT	854
LENS-RED	6T-7058	1	PANEL GP-INSTRUMENT	854
SEAT BELT GP	183-3648	1	SEAT GP	876
		1	SEAT GP	877
V-BELT (AIR CONDITIONER COMPRESSOR)	199-6602	1	COMPRESSOR GP-REFRIGERANT	794
		1	COMPRESSOR GP-REFRIGERANT	796
POWER TRAIN				
BREATHER (POWER TRAIN)	9G-5127	1	LINES GP-POWER TRAIN OIL	417
CAP AS-FILLER (POWER TRAIN OIL)	6N-2985	1	LINES GP-POWER TRAIN OIL	416
CAP-DUST	6V-0852	1	CASE & PARTS GP-PLANETARY	386
		5	LINES GP-POWER TRAIN OIL	417
		1	VALVE & MTG GP-PILOT	444
		1	VALVE GP-RELIEF	449
	8C-3447	1	LINES GP-POWER TRAIN OIL	417
FILTER ELEMENT AS-OIL (POWER TRAIN)	1R-0719	1	FILTER GP-OIL	396
	4T-3131	1	FILTER GP-OIL	396
	132-8875	1	FILTER GP-OIL	396
PLUG-MAGNETIC	6V-3298	1	FINAL DRIVE GP	398
		1	FINAL DRIVE GP	406
SCREEN-SUCTION	8S-9130	1	TORQUE CONVERTER GP	440
SCREEN-SUCTION (POWER TRAIN OIL PUMP INLET)	3S-3875	1	LINES GP-POWER TRAIN OIL	416
SCREEN-SUCTION (TRANSMISSION SCAVENGE)	8S-9130	1	CASE & PARTS GP-PLANETARY	386
STEERING AND BRAKING SYSTEM				
CAP-DUST	6V-0852	1	FILTER GP-OIL	579
		7	LINES GP-STEERING	580
		1	VALVE GP-BRAKE CONTROL	596
FILTER ELEMENT AS-OIL (HYDRAULIC)	132-8875	1	FILTER GP-OIL	579

MAINTENANCE PARTS

DESCRIPTION	PART NUMBER	QTY	WHERE USED	PAGE
UNDERCARRIAGE				
CAP AS-OIL LEVEL	9W-8277	1	LUBRICATION GP-PIVOT SHAFT	530
FITTING-GREASE	3B-8489	2	EQUALIZER BAR GP	514
FITTING-GREASE (1/8-27 THD)	3B-8489	2	EQUALIZER BAR GP	516
PLUG-DRAIN	4T-2069	6	FRAME GP-TELESCOPING RECOIL	518

PIÈCES DE RECHANGE

DESCRIPTION	NUMÉRO DE PIECÈS	QTÉ	DOMAINE D'APPLICATION	PAGE
CHÂSSIS ET BENNE				
CADENAS (ASS)	5P-8502	1	CAPOT ET PROTECTION (ASS)	502
		1	CARENAGE (ASS)	472
		2	CARENAGE DE MOTEUR (ASS)	476
		2	CARENAGE DE MOTEUR (ASS)	480
		1	GARDE-BOUE (ASS)	482
CLÉ	5P-8500	1	CARENAGE (ASS)	472
		1	CARENAGE DE MOTEUR (ASS)	476
		1	CARENAGE DE MOTEUR (ASS)	480
		1	GARDE-BOUE (ASS)	482
CIRCUIT D'ADMISSION D'AIR ET D'ECHAPPEMENT				
DÉFLECTEUR DE PLUIE (ENS)	7S-5003	1	ÉJECTEUR AUTOMATIQUE DE POUSSIÈRE (ASS)	168
ÉLÉMENT DE FILTRE	7M-1674	1	CANALISATIONS D'AIR (ASS)	172
ÉLÉMENT DE FILTRE À AIR PRIMAIRE (ENS)	165-1689	1	FILTRE A AIR (ASS)	160
ÉLÉMENT DE FILTRE (INDICATEUR DE COLMATAGE DU FILTRE À AIR)	7M-1674	1	CANALISATIONS D'AIR (ASS)	176
ÉLÉMENT PRINCIPAL (ENS) (FILTRE À AIR) (GRANDE EFFICACITÉ)	132-7166	1	FILTRE A AIR (ASS)	162
ÉLÉMENT PRINCIPAL (ENS) (FILTRE À AIR) (STANDARD)	6I-2507	1	FILTRE A AIR (ASS)	162
ÉLÉMENT SECONDAIRE (ENS) (FILTRE À AIR)	6I-2508	1	FILTRE A AIR (ASS)	160
		1	FILTRE A AIR (ASS)	162
INDICATEUR DE COLMATAGE DE FILTRE A AIR	8N-2694	1	CANALISATIONS D'AIR (ASS)	176
JOINT PLAT DU COLLECTEUR D'ECHAPPEMENT	129-9452	8	COLLECTEUR D'ÉCHAPPEMENT (ASS)	178

PIÈCES DE RECHANGE

DESCRIPTION	NUMÉRO DE PIECÈS	QTÉ	DOMAINE D'APPLICATION	PAGE
CIRCUIT DE CARBURANT				
BOUCHON DE RÉSERVOIR DE CARBURANT (ENS)	7X-7700	1	RÉSERVOIR DE CARBURANT (ASS)	269
BOUCHON-JOINT TORIQUE	9S-8008	1	PLAQUE D'ADAPTEUR DE REGULATEUR (ASS)	246
		1	REGULATEUR (ASS)	226
CADENAS (ASS)	5P-8502	1	FILTRE ET CANALISATIONS DE CARBURANT (ASS)	216
		1	FILTRE ET CANALISATIONS DE CARBURANT (ASS)	220
		1	RÉSERVOIR DE CARBURANT (ASS)	268
CHAPEAU D'ENTRAÎNEMENT DE COMPTE-TOURS	9B-2232	1	ENTRAÎNEMENT DE COMPTE-TOURS (ASS)	209
CLÉ	5P-8500	1	FILTRE ET CANALISATIONS DE CARBURANT (ASS)	216
		1	FILTRE ET CANALISATIONS DE CARBURANT (ASS)	220
		1	RÉSERVOIR DE CARBURANT (ASS)	268
COUVERCLE ANTI-POUSSIÈRE (RACCORD DE REMPLISSAGE RAPIDE DE CARBURANT)	9D-0630	1	ADAPTATEUR DE REMPLIS. RAPIDE DE CARBURANT (ASS)	190
		1	ADAPTATEUR DE REMPLIS. RAPIDE DE CARBURANT (ASS)	196
FILTRE À CARBURANT	9P-7121	1	RÉSERVOIR DE CARBURANT (ASS)	268
FILTRE A CARBURANT (ENS)	1R-0749	1	FILTRE A CARBURANT (ASS)	223
FILTRE (ENS) (SÉPARATEUR D'EAU ET CARBURANT)	1R-0769	1	FILTRE DE SÉPARATEUR D'EAU ET DE CARBURANT (ASS)	224
FILTRE (POMPE HYDRAULIQUE D'INJECTEUR-POMPE)	125-5835	1	ENTRAINEMENT D'INJECTEURS-POMPES HYDRAULIQUES	212
JOINT PLAT (POMPE D'AMORÇAGE DE CARBURANT)	1P-0436	1	FILTRE ET CANALISATIONS DE CARBURANT (ASS)	220
PARE-POUSSIERE (RACCORD DE REMPLISSAGE RAPIDE DE CARBURANT)	9D-0630	1	ADAPTATEUR DE REMPLIS. RAPIDE DE CARBURANT (ASS)	192
		1	ADAPTATEUR DE REMPLIS. RAPIDE DE CARBURANT (ASS)	194
TAMIS DE CARTER (RÉSERVOIR DE CARBURANT)	5G-4109	1	FILTRE ET CANALISATIONS DE CARBURANT (ASS)	216
		1	FILTRE ET CANALISATIONS DE CARBURANT (ASS)	220
CIRCUIT DE DÉMARRAGE ET ÉLECTRIQUE				
AMPOULE (24 VOLTS)	3E-8825	2	CABLAGE - PLATE-FORME (ASS)	378
	7N-5876	3	CABLAGE - PLATE-FORME (ASS)	378
AMPOULE (24 VOLTS) (PLAFONNIER)	7N-9943	1	PLAFONNIER (ASS)	308
AMPOULE (24 VOLTS) (PROJECTEUR)	9X-3463	1	LAMPE - PHARE (ASS)	310
AMPOULE (24 VOLTS) (PROJECTEUR)(65 WATTS)	9X-3463	1	LAMPE - PHARE (ASS)	309
AMPOULE (28 VOLTS)	7N-1996	1	CABLAGE - PLATE-FORME (ASS)	380
BATTERIE (12 VOLTS/SEC)	9X-9730	2	BATTERIE ET CÂBLAGE	281
		2	BATTERIE ET CÂBLAGE	289
		2	DÉMARRAGE PAR TEMPS FROID (VERSION)	349

PIÈCES DE RECHANGE

DESCRIPTION	NUMÉRO DE PIECÈS	QTÉ	DOMAINE D'APPLICATION	PAGE
BROSSE (ENS)	3T-9524	6	DÉMARREUR ÉLECTRIQUE (ASS)	362
CLÉ (COUPE-BATTERIE)	8H-5306	1	ROBINET DE BATTERIE (ASS)	366
COURROIE TRAPEZOIDALE (COMPREND 2 COURROIES)	199-6601	1	ALTERNATEUR DE CHARGE (ASS)	274
DISJONCTEUR (ENS) (10A) (CONTACTEUR DE DÉMARRAGE À CLÉ)	6T-3642	1	CABLAGE DE CONSOLE (ASS)	372
DISJONCTEUR (ENS) (10A) (FREIN D'EMBRAYAGE ÉLECTRONIQUE)	6T-3642	1	CABLAGE DE CONSOLE (ASS)	372
DISJONCTEUR (ENS) (15A) (ÉQUIPEMENT)	6T-3643	1	CABLAGE DE CONSOLE (ASS)	372
DISJONCTEUR (ENS) (15A) (MOTEUR)	6T-3643	1	CABLAGE DE CONSOLE (ASS)	372
DISJONCTEUR (ENS) (15A) (PROJECTEURS AVANT)	3T-2662	1	CABLAGE DE CONSOLE (ASS)	372
DISJONCTEUR (ENS) (15A) (SOUFFLANT)	6T-3643	1	CABLAGE DE CONSOLE (ASS)	372
ÉLÉMENT DU RÉCHAUFFEUR D'EAU DES CHEMISES (ENS)	6T-3764	2	EAU DES CHEMISES - RECHAUFFEUR (ASS)	306
ÉLÉMENT DU RÉCHAUFFEUR D'EAU DES CHEMISES (ENS) (120 VOLTS/1500 WATTS)	9G-6655	2	EAU DES CHEMISES - RECHAUFFEUR (ASS)	305
ÉVENT (ENS)	7N-0060	6	DÉMARRAGE PAR TEMPS FROID (VERSION)	349
FILTRE A MOUSSE (CAPTEUR DE NIVEAU DE CARBURANT)	111-4402	1	BATTERIE ET CÂBLAGE	279
		1	BATTERIE ET CÂBLAGE	287
FUSIBLE (10A)	9W-1442	10	CABLAGE DE CONSOLE (ASS)	373
FUSIBLE (15A)	9W-1441	3	CABLAGE DE CONSOLE (ASS)	373
FUSIBLE (20 A)	9W-1446	3	CABLAGE DE CONSOLE (ASS)	373
FUSIBLE (30A)	8T-9636	2	TRANSFORMATION ELECTRIQUE (ASS)	300
JOINT TORIQUE (DIA INT 11,89 MM)	3J-1907	2	BATTERIE ET CÂBLAGE	281
		7	BATTERIE ET CÂBLAGE	289
LENTILLE (ENS) (PLAFONNIER)	158-0248	1	LAMPE - PHARE (ASS)	309
		1	LAMPE - PHARE (ASS)	310
LENTILLE (PLAFONNIER)	7T-0020	1	PLAFONNIER (ASS)	308
LENTILLE ROUGE	6T-7058	1	CABLAGE - PLATE-FORME (ASS)	380
PARE-POUSSIERE	6V-0852	1	BATTERIE ET CÂBLAGE	286
RESSORT DE BALAI	3T-9494	6	DÉMARREUR ÉLECTRIQUE (ASS)	363
TRANSFORMATEUR DE PUISSANCE (DE 24 VOLTS À 12 VOLTS)(25 AMP)	3E-8646	1	TRANSFORMATION ELECTRIQUE (ASS)	300
CIRCUIT DE DIRECTION ET DE FREIN				
ÉLÉMENT DE FILTRE À HUILE (ENS) (HYDRAULIQUE)	132-8875	1	FILTRE A HUILE (ASS)	579
PARE-POUSSIERE	6V-0852	7	CANALISATIONS DE DIRECTION (ASS)	580
		1	DISTRIBUTEUR DE FREIN (ASS)	596
		1	FILTRE A HUILE (ASS)	579

PIÈCES DE RECHANGE

DESCRIPTION	NUMÉRO DE PIECÈS	QTÉ	DOMAINE D'APPLICATION	PAGE
CIRCUIT DE GRAISSAGE				
BOUCHON DE GOULOTTE DE REMPLISSAGE (ENS)	6N-2206	1	BOUCHON DE REMPLISSAGE D'HUILE MOTEUR (ASS)	81
		1	BOUCHON DE REMPLISSAGE D'HUILE MOTEUR (ASS)	82
FILTRE A HUILE MOTEUR (ENS)	1R-0716	2	FILTRE À HUILE MOTEUR (ASS)	84
FLEXIBLE (87 CM CHACUN)	5P-1255		DISPOSITIF D'EVACUATION DES VAPEURS DE CARTER	88
FLEXIBLE (9CM CHACUN)	5P-1255		DISPOSITIF D'EVACUATION DES VAPEURS DE CARTER	88
PARE-POUSSIERE	8C-3445	1	FILTRE À HUILE MOTEUR (ASS)	84
RENIFLARD (ENS) (CARTER)	4N-4668	1	RENIFLARD (ASS)	79
TAMIS DE CLOCHE (ENS)	4N-0913	1	CANALISATIONS D'HUILE MOTEUR (ASS)	92
CIRCUIT DE REFROIDISSEMENT				
BOUCHON DE RADIATEUR (ENS)	031-1119	1	RÉSERVOIR DU LIQUIDE DE REFROIDISSEMENT (ASS)	149
BOUCHON DE VIDANGE	4B-7739	1	CANALISATIONS D'EAU (ASS)	118
		1	CANALISATIONS D'EAU (ASS)	130
CHAPEAU	111-7421	4	RADIATEUR (ASS)	140
		2	RADIATEUR (ASS)	144
FILTRE -EAU	119-3025	1	POMPE A EAU (ASS)	137
FILTRE (POMPE À EAU)	111-2721	1	POMPE A EAU (ASS)	134
PARE-POUSSIERE	157-0670	1	CANALISATIONS D'EAU (ASS)	122
		1	CANALISATIONS D'EAU (ASS)	126
THERMOSTAT-TEMPÉRATURE D'EAU (92 DEGRÉS C)	4W-4794	2	CANALISATIONS D'EAU (ASS)	122
		2	CANALISATIONS D'EAU (ASS)	126

PIÈCES DE RECHANGE

DESCRIPTION	NUMÉRO DE PIECÈS	QTÉ	DOMAINE D'APPLICATION	PAGE
CIRCUIT HYDRAULIQUE				
BOUCHON DE GOULOTTE DE REMPLISSAGE (RÉSERVOIR HYDRAULIQUE)	7H-1447	1	RÉSERVOIR HYDRAULIQUE ET FILTRE (ASS)	680
BOUCHON-JOINT TORIQUE (FILET 7/16-20)	9S-4190	1	POMPE A PISTONS (ASS)	674
CADENAS (ASS)	5P-8502	1	COUVERCLE DE RÉSERVOIR HYDRAULIQUE	614
CLÉ	5P-8500	1	COUVERCLE DE RÉSERVOIR HYDRAULIQUE	614
CREPINE (ENS)	5D-7927	1	RÉSERVOIR HYDRAULIQUE ET FILTRE (ASS)	680
ÉCRAN (ENS)	9T-7571	1	RÉSERVOIR HYDRAULIQUE ET FILTRE (ASS)	680
ÉLÉMENT DE FILTRE À HUILE (ENS) (DÉBIT HYDRAULIQUE/RETOUR DE DÉBIT) (JETABLE)	1R-0722	1	RÉSERVOIR HYDRAULIQUE ET FILTRE (ASS)	680
	1R-0735	2	RÉSERVOIR HYDRAULIQUE ET FILTRE (ASS)	681
ÉLÉMENT DE FILTRE À HUILE (ENS) (DÉBIT HYDRAULIQUE/RETOUR DE DÉBIT) (NETTOYAGE/PERFORMANCE SUPÉRIEURE)	139-1536	1	RÉSERVOIR HYDRAULIQUE ET FILTRE (ASS)	680
ÉLÉMENT DE FILTRE À HUILE (ENS) (HYDRAULIQUE) (LIQUIDE RÉSISTANT AU FEU/PERFORMANCE SUPÉRIEURE)	4T-3134	1	RÉSERVOIR HYDRAULIQUE ET FILTRE (ASS)	680
ÉLÉMENT DE FILTRE À HUILE (ENS) (NETTOYAGE/PERFORMANCE SUPÉRIEURE)	139-1537	2	RÉSERVOIR HYDRAULIQUE ET FILTRE (ASS)	681
ÉLÉMENT DE FILTRE À HUILE (ENS) (RETOUR DE DÉBIT) (LIQUIDE RÉSISTANT AU FEU/PERFORMANCE SUPÉRIEURE)	104-6931	2	RÉSERVOIR HYDRAULIQUE ET FILTRE (ASS)	681
GRAISSEUR	3B-8489	2	VERIN DE LEVAGE DE RIPPER (ASS)	630
		1	VÉRIN D'INCLINAISON (ASS)	638
		1	VÉRIN D'INCLINAISON (ASS)	640
		1	VÉRIN D'INCLINAISON (ASS)	642
		2	VERIN D'INCLINAISON DE RIPPER (ASS)	634
		2	VERIN D'INCLINAISON DE RIPPER (ASS)	636
GRAISSEUR (FILET 1/8-27)	3B-8489	2	VERIN DE LEVAGE DE RIPPER (ASS)	628
JOINT PLAT	9H-6454	1	RÉSERVOIR HYDRAULIQUE ET FILTRE (ASS)	680
PARE-POUSSIERE	6V-0852	2	CANALISATIONS DE POMPE (ASS)	654
	8C-3451	1	RÉSERVOIR HYDRAULIQUE ET FILTRE (ASS)	681

PIÈCES DE RECHANGE

DESCRIPTION	NUMÉRO DE PIECÈS	QTÉ	DOMAINE D'APPLICATION	PAGE
ÉQUIPEMENTS				
GRAISSEUR	3B-8489	2	BATI DE RIPPER (ASS)	718
		2	KIT DE BOULONNERIE, JOINTS ET CALES D'ÉPAISSEUR	722
		2	MONTAGE DE VÉRIN (ASS)	733
GRAISSEUR (RACCORD AU PAS DU GAZ DE 1/8 - 27)	3B-8489	2	BATI DE RIPPER (ASS)	716
MOTEUR STANDARD				
BOUCHON DE VIDANGE D'HUILE	4P-0513	1	HUILE MOTEUR - CARTER (ASS)	64
BOUCHON FILETÉ	8T-6757	2	BOUCHON - BLOC-CYLINDRES	70
BOUCHON FILETÉ (FILET DE 1-11-1/2 NPTF)	8T-6761	1	CARTER DE VOLANT (ASS)	58
BOUCHON FILETÉ (FILET 1/8-27 NPTF)	8T-6764	1	CARTER DE VOLANT (ASS)	58
BOUCHON-JOINT TORIQUE (FILET 7/16-20)	9S-4190	2	BLOC-CYLINDRES (ASS)	26
BOURRELET D'ÉTANCHÉITÉ	5P-5678		CACHE-SOUPAPES (ASS)	20
GRAISSEUR	3B-8489	1	ENTRAÎNEMENT DE VENTILATEUR (ASS)	44
GRAISSEUR (FILETAGE 1/8-27)(45 DEGRÉS)	3B-8485	1	TENDEUR DE COURROIE (ASS)	8
JEU DE COURROIES TRAPEZOIDALES	169-0147	1	ENTRAÎNEMENT DE VENTILATEUR (ASS)	42
JEU DE COURROIES TRAPEZOIDALES (COMPREND 4 COURROIES)	115-2460	1	ENTRAÎNEMENT DE VENTILATEUR (ASS)	44
PARE-POUSSIERE	6V-0852	1	BOUCHON - BLOC-CYLINDRES	70
RENIFLARD (ENS)	4N-4668	2	CACHE-SOUPAPES (ASS)	21

PIÈCES DE RECHANGE

DESCRIPTION	NUMÉRO DE PIECÈS	QTÉ	DOMAINE D'APPLICATION	PAGE
POSTE DE CONDUITE				
AMPOULE (28 VOLTS)	7N-1996	1	TABLEAU DE BORD (ASS)	854
BALAI D'ESSUIE-GLACE (ENS) (ARRIÈRE)	5C-8811	1	ESSUIE-GLACE (ASS)	916
BALAI D'ESSUIE-GLACE (ENS) (AVANT)	6V-5851	1	ESSUIE-GLACE (ASS)	916
BALAI D'ESSUIE-GLACE (ENS) (PORTE GAUCHE)	6V-5849	4	ESSUIE-GLACE (ASS)	916
BOUCHON À ÉVENT	8E-8292	1	RÉSERVOIR - LAVE-GLACE (ASS)	886
BOUCHON D'ÉTANCHÉITÉ (CLIMATISEUR)	172-4880	1	CANALISATIONS DE CLIMATISEUR (ASS)	825
		1	CANALISATIONS DE CLIMATISEUR (ASS)	831
BOUCHON D'ÉTANCHÉITÉ (CLIMATISEUR)(CÔTÉ BAS)	3E-4051	1	CANALISATIONS DE CLIMATISEUR (ASS)	825
BOUCHON D'ÉTANCHÉITÉ (CLIMATISEUR)(CÔTÉ ÉLEVÉ)	3E-4052	1	CANALISATIONS DE CLIMATISEUR (ASS)	825
CEINTURE DE SECURITE (ASS)	183-3648	1	SIÈGE (ASS)	876
		1	SIÈGE (ASS)	877
COURROIE TRAPEZOIDALE (COMPRESSEUR DE CLIMATISEUR)	199-6602	1	COMPRESSEUR DE REFRIGERANT (ASS)	794
		1	COMPRESSEUR DE REFRIGERANT (ASS)	796
DISJONCTEUR (ENS) (15A) (CONDENSEUR DE CLIMATISEUR À DISTANCE)	6T-3643	1	CANALISATIONS DE CLIMATISEUR (ASS)	824
		1	CANALISATIONS DE CLIMATISEUR (ASS)	830
FILTRE À AIR (CABINE) (GRANDE EFFICACITÉ)	175-2839	1	CHAUFFAGE DE CABINE (ASS)	808
FILTRE À AIR (CABINE) (RÉDUCTION DES ODEURS)	175-2832	1	CHAUFFAGE DE CABINE (ASS)	808
FILTRE À AIR (CABINE) (STANDARD)	7T-1890	1	CHAUFFAGE DE CABINE (ASS)	808
FILTRE À AIR DE CABINE	107-0266	1	CHAUFFAGE DE CABINE (ASS)	809
LENTILLE ROUGE	6T-7058	1	TABLEAU DE BORD (ASS)	854
TRAIN DE ROULEMENT				
BOUCHON DE CONTROLE DE NIVEAU D'HUILE (ENS)	9W-8277	1	GRAISSAGE DE LA TRAVERSE-PIVOT	530
BOUCHON DE VIDANGE	4T-2069	6	CARTER TELESCOPIQUE DE MECANISME AMORTISSEUR	518
GRAISSEUR	3B-8489	2	BALANCIER DE SUSPENSION (ASS)	514
GRAISSEUR (FILET 1/8-27)	3B-8489	2	BALANCIER DE SUSPENSION (ASS)	516

PIÈCES DE RECHANGE

DESCRIPTION	NUMÉRO DE PIECÈS	QTÉ	DOMAINE D'APPLICATION	PAGE
TRANSMISSION				
BOUCHON AIMANTÉ	6V-3298	1	RÉDUCTEURS (ASS)	398
		1	RÉDUCTEURS (ASS)	406
BOUCHON DE GOULOTTE DE REMPLISSAGE (ENS) (HUILE DE TRANSMISSION)	6N-2985	1	CANALISATIONS D'HUILE DE TRANSMISSION (ASS)	416
ÉLÉMENT DE FILTRE À HUILE (ENS) (TRANSMISSION)	1R-0719	1	FILTRE A HUILE (ASS)	396
	4T-3131	1	FILTRE A HUILE (ASS)	396
	132-8875	1	FILTRE A HUILE (ASS)	396
PARE-POUSSIERE	6V-0852	5	CANALISATIONS D'HUILE DE TRANSMISSION (ASS)	417
		1	CLAPET DE DECHARGE (ASS)	449
		1	SOUPAPE PILOTE ET MONTAGE (ASS)	444
		1	TRAINS PLANÉTAIRES - CARTER ET PIÈCES	386
	8C-3447	1	CANALISATIONS D'HUILE DE TRANSMISSION (ASS)	417
RENIFLARD (TRANSMISSION)	9G-5127	1	CANALISATIONS D'HUILE DE TRANSMISSION (ASS)	417
TAMIS D'ASPIRATION	8S-9130	1	CONVERTISSEUR DE COUPLE (ASS)	440
TAMIS D'ASPIRATION (ADMISSION DE POMPE À HUILE DE TRANSMISSION)	3S-3875	1	CANALISATIONS D'HUILE DE TRANSMISSION (ASS)	416
TAMIS D'ASPIRATION (REPRISE DE BOÎTE)	8S-9130	1	TRAINS PLANÉTAIRES - CARTER ET PIÈCES	386
VERSION DE MOTEUR				
CADENAS (ASS)	5P-8502	1	MONTAGE DE MOTEUR (VERSION)	7
CLÉ	5P-8500	1	MONTAGE DE MOTEUR (VERSION)	7
JEU DE COURROIES TRAPEZOIDALES (ALTERNATEUR/MOTEUR A FAIBLES EMISSIONS)	9L-6130	1	TRANSFORMATION DE MOTEUR (VERSION)	2

PIEZAS DE MANTENIMIENTO

DESCRIPCION	NUMERO DE PIEZA	CANT	SE UTILIZA EN	PAGINA
BASTIDOR Y CAJA				
CANDADO (GR)	5P-8502	1	CAPO Y PROTECTOR (GR)	502
		2	COMPARTIMIENTO DEL MOTOR (GR)	476
		2	COMPARTIMIENTO DEL MOTOR (GR)	480
		1	COMPARTIMIENTO (GR)	472
		1	GUARDABARROS (GR)	482
LLAVE	5P-8500	1	COMPARTIMIENTO DEL MOTOR (GR)	476
		1	COMPARTIMIENTO DEL MOTOR (GR)	480
		1	COMPARTIMIENTO (GR)	472
		1	GUARDABARROS (GR)	482
CABINA DEL OPERADOR				
CINTURÓN DE SEGURIDAD (GR)	183-3648	1	ASIENTO (GR)	876
		1	ASIENTO (GR)	877
CORREA TRAPEZOIDAL (COMPRESOR DE AIRE ACONDICIONADO)	199-6602	1	COMPRESOR DE REFRIGERANTE (GR)	794
		1	COMPRESOR DE REFRIGERANTE (GR)	796
DISYUNTOR (CONJ) (15 A) (CONDENSADOR REMOTE DE ACOND. DE AIRE)	6T-3643	1	TUBERÍAS DE ACONDICIONADOR DE AIRE (GR)	824
		1	TUBERÍAS DE ACONDICIONADOR DE AIRE (GR)	830
FILTRO DE AIRE (CABINA) (ALTA EFICIENCIA)	175-2839	1	CALEFACCIÓN DE LA CABINA (GR)	808
FILTRO DE AIRE (CABINA) (ESTANDAR)	7T-1890	1	CALEFACCIÓN DE LA CABINA (GR)	808
FILTRO DE AIRE (CABINA) (REDUCCION DE OLORES)	175-2832	1	CALEFACCIÓN DE LA CABINA (GR)	808
FILTRO DE AIRE DE CABINA	107-0266	1	CALEFACCIÓN DE LA CABINA (GR)	809
HOJA DE LIMPIAPARABRISAS (CONJ) (FRENTE)	6V-5851	1	LIMPIAPARABRISAS DE LA VENTANA (GR)	916
HOJA DE LIMPIAPARABRISAS (CONJ) (PARTE TRASERA)	5C-8811	1	LIMPIAPARABRISAS DE LA VENTANA (GR)	916
HOJA DE LIMPIAPARABRISAS (CONJ) (PUERTA IZQUIERDA)	6V-5849	4	LIMPIAPARABRISAS DE LA VENTANA (GR)	916
LÁMPARA (28 VOLTIOS)	7N-1996	1	TABLERO DE INSTRUMENTOS (GR)	854
LENTE-ROJO	6T-7058	1	TABLERO DE INSTRUMENTOS (GR)	854
TAPA CON RESPIRADERO	8E-8292	1	TANQUE DEL LAVAPARABRISAS (GR)	886
TAPA DE SELLO (ACONDICIONADOR DE AIRE)	172-4880	1	TUBERÍAS DE ACONDICIONADOR DE AIRE (GR)	825
		1	TUBERÍAS DE ACONDICIONADOR DE AIRE (GR)	831
TAPA DE SELLO (ACONDICIONADOR DE AIRE)(LADO ALTO)	3E-4052	1	TUBERÍAS DE ACONDICIONADOR DE AIRE (GR)	825
TAPA DE SELLO (ACONDICIONADOR DE AIRE)(LADO BAJO)	3E-4051	1	TUBERÍAS DE ACONDICIONADOR DE AIRE (GR)	825

PIEZAS DE MANTENIMIENTO

DESCRIPCION	NUMERO DE PIEZA	CANT	SE UTILIZA EN	PAGINA
CONFIGURACIÓN DE MOTOR				
CANDADO (GR)	5P-8502	1	CONFIGURACIÓN DE INSTALACIÓN DEL MOTOR	7
JUEGO DE CORREAS TRAPEZOIDALES (ALTERNADOR/MOTOR SIN EMISIONES)	9L-6130	1	CONVERSION DE MOTOR (CONFIG)	2
LLAVE	5P-8500	1	CONFIGURACIÓN DE INSTALACIÓN DEL MOTOR	7
IMPLEMENTOS				
CONEXIÓN DE ENGRASE	3B-8489	2	BASTIDOR DEL DESGARRADOR (GR)	718
		2	JUEGO DE TORNILLERÍA, JUNTAS Y CALCES	722
		2	MONTAJE DE CILINDRO (GR)	733
CONEXIÓN DE ENGRASE (ROSCA 1/8-27 NPTF)	3B-8489	2	BASTIDOR DEL DESGARRADOR (GR)	716
MOTOR BÁSICO				
CONEXIÓN DE ENGRASE	3B-8489	1	IMPULSOR DE VENTILADOR (GR)	44
CONEXIÓN DE ENGRASE (ROSCA 1/8-27)(45 GRADO)	3B-8485	1	AJUSTADOR DE CORREA (GR)	8
JUEGO DE CORREAS TRAPEZOIDALES	169-0147	1	IMPULSOR DE VENTILADOR (GR)	42
JUEGO DE CORREAS TRAPEZOIDALES (INCLUYE 4 CORREAS)	115-2460	1	IMPULSOR DE VENTILADOR (GR)	44
RESPIRADERO (CONJ)	4N-4668	2	TAPA DEL MECANISMO DE VÁLVULAS (GR)	21
SELLO	5P-5678		TAPA DEL MECANISMO DE VÁLVULAS (GR)	20
TAPA CONTRA EL POLVO	6V-0852	1	TAPÓN DEL BLOQUE MOTOR (GR)	70
TAPON DE DRENAJE DE ACEITE	4P-0513	1	CÁRTER - COLECTOR DEL (GR)	64
TAPON DE TUBO	8T-6757	2	TAPÓN DEL BLOQUE MOTOR (GR)	70
TAPON DE TUBO (ROSCA 1-11-1/2 NPTF)	8T-6761	1	VOLANTE - CAJA DE (GR)	58
TAPON DE TUBO (ROSCA 1/8-27 NPTF)	8T-6764	1	VOLANTE - CAJA DE (GR)	58
TAPÓN (ROSCA 7/16-20)	9S-4190	2	BLOQUE MOTOR (GR)	26

PIEZAS DE MANTENIMIENTO

DESCRIPCION	NUMERO DE PIEZA	CANT	SE UTILIZA EN	PAGINA
SISTEMA DE ADMISIÓN Y ESCAPE DE AIRE				
ELEMENTO DE FILTRO	7M-1674	1	AIRE - TUBERÍAS DE (GR)	172
ELEMENTO DE FILTRO (INDICADOR DE SERVICIO DE FILTRO DE AIRE)	7M-1674	1	AIRE - TUBERÍAS DE (GR)	176
ELEMENTO PRIMARIO (CONJ) (FILTRO DE AIRE) (ALTA EFICIENCIA)	132-7166	1	FILTRO DE AIRE (GR)	162
ELEMENTO PRIMARIO (CONJ) (FILTRO DE AIRE) (ESTANDAR)	6I-2507	1	FILTRO DE AIRE (GR)	162
ELEMENTO PRIMARIO DEL FILTRO DE AIRE (CONJ)	165-1689	1	FILTRO DE AIRE (GR)	160
ELEMENTO SECUNDARIO (CONJ) (FILTRO DE AIRE)	6I-2508	1	FILTRO DE AIRE (GR)	160
		1	FILTRO DE AIRE (GR)	162
EMPAQUETADURA DE MULTIPLE DE ESCAPE	129-9452	8	MÚLTIPLE DE ESCAPE (GR)	178
INDICADOR DE SERVICIO DEL FILTRO DE AIRE	8N-2694	1	AIRE - TUBERÍAS DE (GR)	176
TAPA CONTRA LA LLUVIA (CONJ)	7S-5003	1	EXPULSOR DE POLVO (GR)	168

PIEZAS DE MANTENIMIENTO

DESCRIPCION	NUMERO DE PIEZA	CANT	SE UTILIZA EN	PAGINA
SISTEMA DE COMBUSTIBLE				
CANDADO (GR)	5P-8502	1	FILTRO Y TUBERÍAS DE COMBUSTIBLE (GR)	216
		1	FILTRO Y TUBERÍAS DE COMBUSTIBLE (GR)	220
		1	COMBUSTIBLE - TANQUE DE (GR)	268
COLADOR DE COMBUSTIBLE	9P-7121	1	COMBUSTIBLE - TANQUE DE (GR)	268
EMPAQUETADURA (BOMBA DE CEBADO DE COMBUSTIBLE)	1P-0436	1	FILTRO Y TUBERÍAS DE COMBUSTIBLE (GR)	220
FILTRO (BOMBA HIDR. DE INYECTOR UNITARIO)	125-5835	1	MANDO DE BOMBA HIDRÁULICA INYECTORA (GR)	212
FILTRO (CONJ) (SEPARADOR DE AGUA Y COMBUSTIBLE)	1R-0769	1	FILTRO DE COMBUSTIBLE Y SEPARADOR DE AGUA (GR)	224
FILTRO DE COMBUSTIBLE (CONJ)	1R-0749	1	FILTRO DE COMBUSTIBLE (GR)	223
LLAVE	5P-8500	1	COMBUSTIBLE - TANQUE DE (GR)	268
		1	FILTRO Y TUBERÍAS DE COMBUSTIBLE (GR)	216
		1	FILTRO Y TUBERÍAS DE COMBUSTIBLE (GR)	220
REJILLA DE SUMIDERO (TANQUE DE COMBUSTIBLE)	5G-4109	1	FILTRO Y TUBERÍAS DE COMBUSTIBLE (GR)	216
		1	FILTRO Y TUBERÍAS DE COMBUSTIBLE (GR)	220
TAPA CONTRA EL POLVO (ADAPTADOR DE REABASTECIMIENTO RAPIDO DE COMBUSTIBLE)	9D-0630	1	ADAPTADOR DE LLENADO RÁPIDO DE COMBUSTIBLE (GR)	190
		1	ADAPTADOR DE LLENADO RÁPIDO DE COMBUSTIBLE (GR)	192
		1	ADAPTADOR DE LLENADO RÁPIDO DE COMBUSTIBLE (GR)	194
		1	ADAPTADOR DE LLENADO RÁPIDO DE COMBUSTIBLE (GR)	196
TAPA DEL MANDO DE TACÓMETRO	9B-2232	1	MANDO DE TACÓMETRO (GR)	209
TAPA DEL TANQUE DE COMBUSTIBLE (CONJ)	7X-7700	1	COMBUSTIBLE - TANQUE DE (GR)	269
TAPÓN	9S-8008	1	PLANCHA ADAPTADORA DEL REGULADOR (GR)	246
		1	REGULADOR (GR)	226
SISTEMA DE ENFRIAMIENTO				
FILTRO (BOMBA DE AGUA)	111-2721	1	BOMBA DE AGUA (GR)	134
FILTRO DE AGUA	119-3025	1	BOMBA DE AGUA (GR)	137
REGULADOR DE TEMPERATURA DEL AGUA (92 GR C)	4W-4794	2	TUBERÍAS DEL AGUA (GR)	122
		2	TUBERÍAS DEL AGUA (GR)	126
TAPA	111-7421	4	RADIADOR (GR)	140
		2	RADIADOR (GR)	144
TAPA CONTRA EL POLVO	157-0670	1	TUBERÍAS DEL AGUA (GR)	122
		1	TUBERÍAS DEL AGUA (GR)	126
TAPA DE RADIADOR (CONJ)	031-1119	1	TANQUE DE REFRIGERANTE (GR)	149
TAPÓN DE DRENAJE	4B-7739	1	TUBERÍAS DEL AGUA (GR)	118
		1	TUBERÍAS DEL AGUA (GR)	130

PIEZAS DE MANTENIMIENTO

DESCRIPCION	NUMERO DE PIEZA	CANT	SE UTILIZA EN	PAGINA
SISTEMA DE FRENOS Y DIRECCIÓN				
ELEMENTO DE FILTRO DE ACEITE (CONJ) (HIDRÁULICO)	132-8875	1	FILTRO DE ACEITE (GR)	579
TAPA CONTRA EL POLVO	6V-0852	1	FILTRO DE ACEITE (GR)	579
		7	TUBERÍAS DE DIRECCIÓN (GR)	580
		1	VÁLVULA DE CONTROL DEL FRENO (GR)	596
SISTEMA DE LUBRICACIÓN				
FILTRO DE ACEITE DEL MOTOR (CONJ)	1R-0716	2	FILTRO DE ACEITE DEL MOTOR (GR)	84
MANGUERA (87CM CADA UNA)	5P-1255		ESCAPE DE GASES (GR)	88
MANGUERA (9CM CADA UNA)	5P-1255		ESCAPE DE GASES (GR)	88
REJILLA ACAMPANADA (CONJ)	4N-0913	1	TUBERÍAS DE ACEITE DEL MOTOR (GR)	92
RESPIRADERO (CONJ) (CÁRTER DEL MOTOR)	4N-4668	1	RESPIRADERO (GR)	79
TAPA CONTRA EL POLVO	8C-3445	1	FILTRO DE ACEITE DEL MOTOR (GR)	84
TAPA DE LLENADO (CONJ)	6N-2206	1	TUBO DE LLENADO DE ACEITE (GR)	81
		1	TUBO DE LLENADO DE ACEITE (GR)	82
SISTEMA ELÉCTRICO Y DE ARRANQUE				
ABERTURA DE DESCARGA (CONJ)	7N-0060	6	ARRANQUE EN TIEMPO FRIO (CONFIG)	349
BATERÍA (12 VOLTIOS/SECO)	9X-9730	2	ARRANQUE EN TIEMPO FRIO (CONFIG)	349
		2	BATERÍA Y CABLES (GR)	281
		2	BATERÍA Y CABLES (GR)	289
CONVERTIDOR DE VOLTAJE (24 VOLTIOS A 12 VOLTIOS)(25 AMPERIOS)	3E-8646	1	CONVERTIDOR ELÉCTRICO (GR)	300
CORREA TRAPEZOIDAL (INCLUYE 2 CORREAS)	199-6601	1	CARGA - ALTERNADOR DE (GR)	274
CRISTAL (CÚPULA)	7T-0020	1	LÁMPARA DEL TECHO (GR)	308
DISYUNTOR (CONJ) (10 A) (FRENO DE EMBRAGUE ELECTRONICO)	6T-3642	1	CABLES DE LA CONSOLA (GR)	372
DISYUNTOR (CONJ) (10 A) (INTERRUPTOR DE LLAVE DE ARRANQUE)	6T-3642	1	CABLES DE LA CONSOLA (GR)	372
DISYUNTOR (CONJ) (15 A) (FAROLES DELANTEROS)	3T-2662	1	CABLES DE LA CONSOLA (GR)	372
DISYUNTOR (CONJ) (15 A) (IMPLEMENTO)	6T-3643	1	CABLES DE LA CONSOLA (GR)	372
DISYUNTOR (CONJ) (15 A) (MOTOR)	6T-3643	1	CABLES DE LA CONSOLA (GR)	372
DISYUNTOR (CONJ) (15 A) (VENTILADOR SOPLADOR)	6T-3643	1	CABLES DE LA CONSOLA (GR)	372
ELEMENTO DEL CALENTADOR DEL AGUA DE LAS CAMISAS	6T-3764	2	AGUA DE LAS CAMISAS - CALENTADOR DEL (GR)	306
ELEMENTO DEL CALENTADOR DEL AGUA DE LAS CAMISAS (120 VOLTIOS/1500 VATIOS)	9G-6655	2	AGUA DE LAS CAMISAS - CALENTADOR DEL (GR)	305
ESCOBILLA (CONJ)	3T-9524	6	MOTOR DE ARRANQUE ELÉCTRICO (GR)	362
FILTRO ESPONJOSO (SENSOR DE NIVEL DE COMBUSTIBLE)	111-4402	1	BATERÍA Y CABLES (GR)	279

PIEZAS DE MANTENIMIENTO

DESCRIPCION	NUMERO DE PIEZA	CANT	SE UTILIZA EN	PAGINA
		1	BATERÍA Y CABLES (GR)	287
FUSIBLE (10 A)	9W-1442	10	CABLES DE LA CONSOLA (GR)	373
FUSIBLE (15 A)	9W-1441	3	CABLES DE LA CONSOLA (GR)	373
FUSIBLE (20 A)	9W-1446	3	CABLES DE LA CONSOLA (GR)	373
FUSIBLE (30 A)	8T-9636	2	CONVERTIDOR ELÉCTRICO (GR)	300
LÁMPARA (24 VOLTIOS)	3E-8825	2	CABLES DE LA PLATAFORMA (GR)	378
	7N-5876	3	CABLES DE LA PLATAFORMA (GR)	378
LÁMPARA (24 VOLTIOS) (CÚPULA)	7N-9943	1	LÁMPARA DEL TECHO (GR)	308
LÁMPARA (24 VOLTIOS) (REFLECTOR)	9X-3463	1	REFLECTOR (GR)	310
LÁMPARA (24 VOLTIOS) (REFLECTORES DE 65 VATIOS)	9X-3463	1	REFLECTOR (GR)	309
LÁMPARA (28 VOLTIOS)	7N-1996	1	CABLES DE LA PLATAFORMA (GR)	380
LENTE-ROJO	6T-7058	1	CABLES DE LA PLATAFORMA (GR)	380
LLAVE (DESCONECTAR BATERIA)	8H-5306	1	DISYUNTOR (GR)	366
RESORTE DE ESCOBILLA	3T-9494	6	MOTOR DE ARRANQUE ELÉCTRICO (GR)	363
SELLO ANULAR (11,89MM DI)	3J-1907	2	BATERÍA Y CABLES (GR)	281
		7	BATERÍA Y CABLES (GR)	289
TAPA CONTRA EL POLVO	6V-0852	1	BATERÍA Y CABLES (GR)	286
VIDRIO (CONJ) (REFLECTOR)	158-0248	1	REFLECTOR (GR)	309
		1	REFLECTOR (GR)	310

PIEZAS DE MANTENIMIENTO

DESCRIPCION	NUMERO DE PIEZA	CANT	SE UTILIZA EN	PAGINA
SISTEMA HIDRÁULICO				
CANDADO (GR)	5P-8502	1	TAPA DEL TAPÓN DEL TANQUE HIDRÁULICO (GR)	614
COLADOR (CONJ)	5D-7927	1	TANQUE Y FILTRO HIDRÁULICOS (GR)	680
CONEXIÓN DE ENGRASE	3B-8489	2	CILINDRO DE INCLINACION DEL DESGARRADOR (GR)	634
		2	CILINDRO DE INCLINACION DEL DESGARRADOR (GR)	636
		2	CILINDRO DE LEVANTAMIENTO DEL DESGARRADOR (GR)	630
		1	INCLINACIÓN HORIZONTAL - CILINDRO DE (GR)	638
		1	INCLINACIÓN HORIZONTAL - CILINDRO DE (GR)	640
		1	INCLINACIÓN HORIZONTAL - CILINDRO DE (GR)	642
CONEXIÓN DE ENGRASE (ROSCA DE 1/8-27)	3B-8489	2	CILINDRO DE LEVANTAMIENTO DEL DESGARRADOR (GR)	628
ELEMENTO DE FILTRO DE ACEITE (CONJ) (FLUJO INVERSO) (FLUIDO RESISTENTE AL FUEGO/DE ALTO RENDIMIENTO)	104-6931	2	TANQUE Y FILTRO HIDRÁULICOS (GR)	681
ELEMENTO DE FILTRO DE ACEITE (CONJ) (HIDRAULICO) (FLUIDO RESISTENTE AL FUEGO/DE ALTO RENDIMIENTO)	4T-3134	1	TANQUE Y FILTRO HIDRÁULICOS (GR)	680
ELEMENTO DE FILTRO DE ACEITE (CONJ) (HIDRAULICO/FLUJO INVERSO) (DESECHABLE)	1R-0722	1	TANQUE Y FILTRO HIDRÁULICOS (GR)	680
	1R-0735	2	TANQUE Y FILTRO HIDRÁULICOS (GR)	681
ELEMENTO DE FILTRO DE ACEITE (CONJ) (HIDRAULICO/FLUJO INVERSO) (LIMPIAR/ RENDIMIENTO MAS ALTO)	139-1536	1	TANQUE Y FILTRO HIDRÁULICOS (GR)	680
ELEMENTO DE FILTRO DE ACEITE (CONJ) (LIMPIAR/ RENDIMIENTO MAS ALTO)	139-1537	2	TANQUE Y FILTRO HIDRÁULICOS (GR)	681
EMPAQUETADURA	9H-6454	1	TANQUE Y FILTRO HIDRÁULICOS (GR)	680
LLAVE	5P-8500	1	TAPA DEL TAPÓN DEL TANQUE HIDRÁULICO (GR)	614
PANTALLA (CONJ)	9T-7571	1	TANQUE Y FILTRO HIDRÁULICOS (GR)	680
TAPA CONTRA EL POLVO	6V-0852	2	BOMBA - TUBERÍAS DE (GR)	654
	8C-3451	1	TANQUE Y FILTRO HIDRÁULICOS (GR)	681
TAPA DEL TUBO DE LLENADO (TANQUE HIDRÁULICO)	7H-1447	1	TANQUE Y FILTRO HIDRÁULICOS (GR)	680
TAPÓN (ROSCA 7/16-20)	9S-4190	1	BOMBA DE PISTONES (GR)	674

PIEZAS DE MANTENIMIENTO

DESCRIPCION	NUMERO DE PIEZA	CANT	SE UTILIZA EN	PAGINA
TREN DE FUERZA				
ELEMENTO DE FILTRO DE ACEITE (CONJ) (TREN DE FUERZA)	1R-0719	1	FILTRO DE ACEITE (GR)	396
	4T-3131	1	FILTRO DE ACEITE (GR)	396
	132-8875	1	FILTRO DE ACEITE (GR)	396
REJILLA DE SUCCIÓN	8S-9130	1	CONVERTIDOR DE PAR (GR)	440
REJILLA DE SUCCIÓN (BARRIDO DE TRANSMISION)	8S-9130	1	CAJA Y PIEZAS DE LOS PLANETARIOS	386
REJILLA DE SUCCIÓN (ENTRADA DE BOMBA DE ACEITE DE TREN DE FUERZA)	3S-3875	1	TUBERÍAS DE ACEITE DEL TREN DE FUERZA (GR)	416
RESPIRADERO (TREN DE FUERZA)	9G-5127	1	TUBERÍAS DE ACEITE DEL TREN DE FUERZA (GR)	417
TAPA CONTRA EL POLVO	6V-0852	1	CAJA Y PIEZAS DE LOS PLANETARIOS	386
		5	TUBERÍAS DE ACEITE DEL TREN DE FUERZA (GR)	417
		1	VÁLVULA DE ALIVIO (GR)	449
		1	VALVULA PILOTO Y MONTAJE (GR)	444
	8C-3447	1	TUBERÍAS DE ACEITE DEL TREN DE FUERZA (GR)	417
TAPA DE LLENADO (CONJ) (ACEITE DEL TREN DE FUERZA)	6N-2985	1	TUBERÍAS DE ACEITE DEL TREN DE FUERZA (GR)	416
TAPÓN MAGNÉTICO	6V-3298	1	MANDO FINAL (GR)	398
		1	MANDO FINAL (GR)	406
TREN DE RODAJE				
CONEXIÓN DE ENGRASE	3B-8489	2	BARRA COMPENSADORA (GR)	514
CONEXIÓN DE ENGRASE (ROSCA DE 1/8-27)	3B-8489	2	BARRA COMPENSADORA (GR)	516
TAPA DE NIVEL DE ACEITE (CONJ)	9W-8277	1	LUBRICACIÓN DE EJE PIVOTE (GR)	530
TAPÓN DE DRENAJE	4T-2069	6	BASTIDOR TELESCÓPICO DEL RESORTE TENSOR (GR)	518

PEÇAS DE MANUTENÇÃO

DESCRIÇÃO	NÚMERO DE PEÇA	QUANT	UTILIZADA EM	PÁGINA
ACESSÓRIOS				
GRAXEIRA	3B-8489	2	ARMAÇÃO DO RIPER	718
		2	JOGO DE GAXETA	722
		2	MONTAGEM - CILINDRO	733
GRAXEIRA (ROSCA DE 1/8-27 DO PADRÃO AMERICANO NPTF)	3B-8489	2	ARMAÇÃO DO RIPER	716
CHASSI E CARROCERIA				
CADEADO	5P-8502	1	CAPÔ E PROTETOR	502
		1	COBERTURA	472
		2	COBERTURA DO MOTOR	476
		2	COBERTURA DO MOTOR	480
		1	PÁRA-LAMA	482
CHAVE	5P-8500	1	COBERTURA	472
		1	COBERTURA DO MOTOR	476
		1	COBERTURA DO MOTOR	480
		1	PÁRA-LAMA	482
MATERIAL RODANTE				
BUJÃO DO DRENO	4T-2069	6	ARMAÇÃO TELESCÓPICA DA MOLA TENSORA	518
GRAXEIRA	3B-8489	2	BARRA EQUALIZADORA	514
GRAXEIRA (ROSCA 1/8-27 POL)	3B-8489	2	BARRA EQUALIZADORA	516
TAMPA - NÍVEL DO ÓLEO	9W-8277	1	EIXO PIVÔ - LUBRIFICAÇÃO	530
MOTOR - ARRANJO				
CADEADO	5P-8502	1	GRUPO DE INSTALAÇÃO - MOTOR	7
CHAVE	5P-8500	1	GRUPO DE INSTALAÇÃO - MOTOR	7
JOGO DE CORREIAS EM V (ALTERNADOR - MOTOR SEM EMISSÕES)	9L-6130	1	GR. DE CONVERSÃO - MOTOR	2
MOTOR BÁSICO				
BUJÃO - ANEL O (7/16-20 THD)	9S-4190	2	BLOCO DO MOTOR	26
BUJÃO - CANO/TUBO	8T-6757	2	BUJÃO DO BLOCO DO CILINDRO	70
BUJÃO - CANO/TUBO (ROSCA NPTF 1/8-27)	8T-6764	1	CAIXA DO VOLANTE DO MOTOR	58
BUJÃO - CANO/TUBO (ROSCA 1-11-1/2 NPTF)	8T-6761	1	CAIXA DO VOLANTE DO MOTOR	58
BUJÃO - DRENAGEM DO ÓLEO	4P-0513	1	CÁRTER DO ÓLEO DO MOTOR	64
GRAXEIRA	3B-8489	1	COMANDO DO VENTILADOR	44
GRAXEIRA (ROSCA 1/8-27 45 GRAUS)	3B-8485	1	AJUSTADOR DE CORREIAS	8
JOGO DE CORREIAS EM V	169-0147	1	COMANDO DO VENTILADOR	42
JOGO DE CORREIAS EM V (INCLUI 4 CORREIAS)	115-2460	1	COMANDO DO VENTILADOR	44
RESPIRO	4N-4668	2	TAMPA - MECANISMO DAS VÁLVULAS	21
RETENTOR	5P-5678		TAMPA - MECANISMO DAS VÁLVULAS	20
TAMPA CONTRA POEIRA	6V-0852	1	BUJÃO DO BLOCO DO CILINDRO	70

PEÇAS DE MANUTENÇÃO

DESCRIÇÃO	NÚMERO DE PEÇA	QUANT	UTILIZADA EM	PÁGINA
POSTO DO OPERADOR				
CINTO DE SEGURANÇA	183-3648	1	ASSENTO	876
		1	ASSENTO	877
CORREIA EM V (COMPRESSOR DO AR CONDICIONADO)	199-6602	1	COMPRESSOR DE REFRIGERANTE	794
		1	COMPRESSOR DE REFRIGERANTE	796
DISJUNTOR AUTOMÁTICO DE CIRCUITO (15 A) (CONDENSADOR REMOTO DO CONDICIONADOR DE AR)	6T-3643	1	TUBOS - AR CONDICIONADO	824
		1	TUBOS - AR CONDICIONADO	830
FILTRO - AR (CABINE) (ALTA EFICIÊNCIA)	175-2839	1	AQUECEDOR DA CABINE	808
FILTRO - AR (CABINE) (PADRÃO)	7T-1890	1	AQUECEDOR DA CABINE	808
FILTRO - AR (CABINE) (REDUÇÃO DE ODOR)	175-2832	1	AQUECEDOR DA CABINE	808
FILTRO DE AR DE CABINA	107-0266	1	AQUECEDOR DA CABINE	809
LÂMINA DO LIMPADOR DE PÁRA-BRISA (DIANTEIRO)	6V-5851	1	LIMPADOR DO VIDRO	916
LÂMINA DO LIMPADOR DE PÁRA-BRISA (PORTA - LADO ESQUERDO)	6V-5849	4	LIMPADOR DO VIDRO	916
LÂMINA DO LIMPADOR DE PÁRA-BRISA (TRASEIRO)	5C-8811	1	LIMPADOR DO VIDRO	916
LÂMPADA (28 V)	7N-1996	1	PAINEL DE INSTRUMENTOS	854
LENTE VERMELHA	6T-7058	1	PAINEL DE INSTRUMENTOS	854
TAMPA - RETENTOR (CONDICIONADOR DE AR)	172-4880	1	TUBOS - AR CONDICIONADO	825
		1	TUBOS - AR CONDICIONADO	831
TAMPA - RETENTOR (CONDICIONADOR DE AR)(ALTO LADO)	3E-4052	1	TUBOS - AR CONDICIONADO	825
TAMPA - RETENTOR (CONDICIONADOR DE AR)(LADO BAIXO)	3E-4051	1	TUBOS - AR CONDICIONADO	825
TAMPA COM RESPIRO	8E-8292	1	TANQUE - LAVADOR DE JANELA	886
SISTEMA DA ADMISSÃO DE AR E DE ESCAPE				
ELEMENTO - FILTRANTE	7M-1674	1	TUBOS - AR	172
ELEMENTO - FILTRANTE (INDICADOR DE SERVIÇO DO FILTRO DE AR)	7M-1674	1	TUBOS - AR	176
ELEMENTO - PRIMÁRIO (PURIFICADOR DE AR) (ALTA EFICIÊNCIA)	132-7166	1	PURIFICADOR DE AR	162
ELEMENTO - PRIMÁRIO (PURIFICADOR DE AR) (PADRÃO)	6I-2507	1	PURIFICADOR DE AR	162
ELEMENTO - SECUNDÁRIO (PURIFICADOR DE AR)	6I-2508	1	PURIFICADOR DE AR	160
		1	PURIFICADOR DE AR	162
ELEMENTO DO FILTRO PRIMÁRIO DE AR	165-1689	1	PURIFICADOR DE AR	160
INDICADOR - LIMPEZA DO FILTRO DE AR	8N-2694	1	TUBOS - AR	176
JUNTA - COLETOR DE ESCAPE	129-9452	8	COLETOR DE ESCAPE	178
PROTETOR CONTRA CHUVA	7S-5003	1	EJETOR DE POEIRA	168

PEÇAS DE MANUTENÇÃO

DESCRIÇÃO	NÚMERO DE PEÇA	QUANT	UTILIZADA EM	PÁGINA
SISTEMA DE ARREFECIMENTO				
BUJÃO DO DRENO	4B-7739	1	TUBOS - ÁGUA	118
		1	TUBOS - ÁGUA	130
FILTRO - ÁGUA	119-3025	1	BOMBA DE ÁGUA	137
FILTRO (BOMBA D'ÁGUA)	111-2721	1	BOMBA DE ÁGUA	134
REGULADOR DE TEMPERATURA DA ÁGUA (92 GRAUS CENTÍGRADOS)	4W-4794	2	TUBOS - ÁGUA	122
		2	TUBOS - ÁGUA	126
TAMPA	111-7421	4	RADIADOR	140
		2	RADIADOR	144
TAMPA - RADIADOR	031-1119	1	TANQUE - LÍQUIDO ARREFECEDOR	149
TAMPA CONTRA POEIRA	157-0670	1	TUBOS - ÁGUA	122
		1	TUBOS - ÁGUA	126
SISTEMA DE COMBUSTÍVEL				
BUJÃO - ANEL O	9S-8008	1	GOVERNADOR	226
		1	PLACA - ADAPTADOR DO GOVERNADOR	246
CADEADO	5P-8502	1	FILTRO E TUBOS - COMBUSTÍVEL	216
		1	FILTRO E TUBOS - COMBUSTÍVEL	220
		1	TANQUE DE COMBUSTÍVEL	268
CHAVE	5P-8500	1	FILTRO E TUBOS - COMBUSTÍVEL	216
		1	FILTRO E TUBOS - COMBUSTÍVEL	220
		1	TANQUE DE COMBUSTÍVEL	268
FILTRO - COMBUSTÍVEL	1R-0749	1	FILTRO - COMBUSTÍVEL	223
	9P-7121	1	TANQUE DE COMBUSTÍVEL	268
FILTRO (BOMBA HIDR. DE UNIDADE INJETORA)	125-5835	1	COMANDO DA BOMBA HIDRÁULICA DO INJETOR	212
FILTRO (SEPARADOR DE ÁGUA E COMBUSTÍVEL)	1R-0769	1	FILTRO DE COMBUSTÍVEL E SEPARADOR DE ÁGUA	224
JUNTA (BOMBA DE ESCORVA DE COMBUSTÍVEL)	1P-0436	1	FILTRO E TUBOS - COMBUSTÍVEL	220
PROTETOR CONTRA POEIRA (ADAPTADOR DE ABASTECIMENTO RÁPIDO DE COMBUSTÍVEL)	9D-0630	1	ADAPTADOR - ABASTECIMENTO RÁPIDO DE COMBUSTÍVEL	190
		1	ADAPTADOR - ABASTECIMENTO RÁPIDO DE COMBUSTÍVEL	196
TAMPA CONTRA POEIRA (ADAPTADOR DE ABASTECIMENTO RÁPIDO DE COMBUSTÍVEL)	9D-0630	1	ADAPTADOR - ABASTECIMENTO RÁPIDO DE COMBUSTÍVEL	192
		1	ADAPTADOR - ABASTECIMENTO RÁPIDO DE COMBUSTÍVEL	194
TAMPA DO COMANDO DO TACÔMETRO	9B-2232	1	COMANDO DO TACÔMETRO	209
TAMPA DO TANQUE DE COMBUSTÍVEL	7X-7700	1	TANQUE DE COMBUSTÍVEL	269
TELA - RESERVATÓRIO (TANQUE DE COMBUSTÍVEL)	5G-4109	1	FILTRO E TUBOS - COMBUSTÍVEL	216
		1	FILTRO E TUBOS - COMBUSTÍVEL	220

PEÇAS DE MANUTENÇÃO

DESCRIÇÃO	NÚMERO DE PEÇA	QUANT	UTILIZADA EM	PÁGINA
SISTEMA DE DIREÇÃO E DE FREIO				
ELEMENTO FILTRANTE - ÓLEO (HIDRÁULICO)	132-8875	1	FILTRO - ÓLEO	579
TAMPA CONTRA POEIRA	6V-0852	1	FILTRO - ÓLEO	579
		7	TUBOS - DIREÇÃO	580
		1	VÁLVULA DE CONTROLE DOS FREIOS	596
SISTEMA DE LUBRIFICAÇÃO				
FILTRO - ÓLEO DO MOTOR	1R-0716	2	FILTRO - ÓLEO DO MOTOR	84
MANGUEIRA (87 CM CADA)	5P-1255		ELIMINAÇÃO DE VAPORES DO CÁRTER	88
MANGUEIRA (9 CM CADA)	5P-1255		ELIMINAÇÃO DE VAPORES DO CÁRTER	88
RESPIRO (CÁRTER DO MOTOR)	4N-4668	1	RESPIRO	79
TAMPA - BOCAL DE ENCHIMENTO	6N-2206	1	BOCAL DE ENCHIMENTO DE ÓLEO DO MOTOR	81
		1	BOCAL DE ENCHIMENTO DE ÓLEO DO MOTOR	82
TAMPA CONTRA POEIRA	8C-3445	1	FILTRO - ÓLEO DO MOTOR	84
TELA	4N-0913	1	TUBOS - ÓLEO DO MOTOR	92
SISTEMA ELÉTRICO E DE PARTIDA				
BATERIA (12 VOLT/SECO)	9X-9730	2	BATERIA E CABOS / FIOS ELÉTRICOS	281
		2	BATERIA E CABOS / FIOS ELÉTRICOS	289
		2	PARTIDA EM TEMPO FRIO - ARRANJO	349
CHAVE (DESCONECTAR A BATERIA)	8H-5306	1	CHAVE GERAL	366
CONVERSOR DE POTÊNCIA (24 VOLTS A 12 VOLTS)(25 AMP)	3E-8646	1	CONVERSOR ELÉTRICO	300
CORREIA EM V (INCLUI 2 CORREIAS)	199-6601	1	ALTERNADOR DE CORRENTE	274
DISJUNTOR AUTOMÁTICO DE CIRCUITO (10 A) (FREIO/EMBREAGEM ELETRÔNICOS)	6T-3642	1	CABOS/FIOS ELÉTRICOS DO CONSOLE	372
DISJUNTOR AUTOMÁTICO DE CIRCUITO (10 A) (INTERRUPTOR DA CHAVE DE PARTIDA)	6T-3642	1	CABOS/FIOS ELÉTRICOS DO CONSOLE	372
DISJUNTOR AUTOMÁTICO DE CIRCUITO (15 A) (FARÓIS DIANTEIROS)	3T-2662	1	CABOS/FIOS ELÉTRICOS DO CONSOLE	372
DISJUNTOR AUTOMÁTICO DE CIRCUITO (15 A) (IMPLEMENTO)	6T-3643	1	CABOS/FIOS ELÉTRICOS DO CONSOLE	372
DISJUNTOR AUTOMÁTICO DE CIRCUITO (15 A) (MOTOR)	6T-3643	1	CABOS/FIOS ELÉTRICOS DO CONSOLE	372
DISJUNTOR AUTOMÁTICO DE CIRCUITO (15 A) (VENTILADOR)	6T-3643	1	CABOS/FIOS ELÉTRICOS DO CONSOLE	372
ELEMENTO - AQUECEDOR DE ÁGUA DA CAMISA	6T-3764	2	AQUECEDOR DA ÁGUA DO MOTOR	306
ELEMENTO - AQUECEDOR DE ÁGUA DA CAMISA (120 VOLTS/1500 WATTS)	9G-6655	2	AQUECEDOR DA ÁGUA DO MOTOR	305
ESCOVA	3T-9524	6	MOTOR ELÉTRICO DE PARTIDA	362
FILTRO - ESPUMA (SENSOR DO NÍVEL DO COMBUSTÍVEL)	111-4402	1	BATERIA E CABOS / FIOS ELÉTRICOS	279
		1	BATERIA E CABOS / FIOS ELÉTRICOS	287

PEÇAS DE MANUTENÇÃO

DESCRIÇÃO	NÚMERO DE PEÇA	QUANT	UTILIZADA EM	PÁGINA
FUSÍVEL (10 A)	9W-1442	10	CABOS/FIOS ELÉTRICOS DO CONSOLE	373
FUSÍVEL (15 A)	9W-1441	3	CABOS/FIOS ELÉTRICOS DO CONSOLE	373
FUSÍVEL (20 A)	9W-1446	3	CABOS/FIOS ELÉTRICOS DO CONSOLE	373
FUSÍVEL (30 A)	8T-9636	2	CONVERSOR ELÉTRICO	300
LÂMPADA (24 V)	3E-8825	2	CABOS/FIOS ELÉTRICOS - PLATAFORMA	378
	7N-5876	3	CABOS/FIOS ELÉTRICOS - PLATAFORMA	378
LÂMPADA (24 V) (FAROL)	9X-3463	1	LÂMPADA - FAROL	310
LÂMPADA (24 V) (FAROL)(65 WATTS)	9X-3463	1	LÂMPADA - FAROL	309
LÂMPADA (24 V) (TETO)	7N-9943	1	LÂMPADA - TETO	308
LÂMPADA (28 V)	7N-1996	1	CABOS/FIOS ELÉTRICOS - PLATAFORMA	380
LENTE (HOLOFOTE)	158-0248	1	LÂMPADA - FAROL	309
		1	LÂMPADA - FAROL	310
LENTE (TETO)	7T-0020	1	LÂMPADA - TETO	308
LENTE VERMELHA	6T-7058	1	CABOS/FIOS ELÉTRICOS - PLATAFORMA	380
MOLA - ESCOVA	3T-9494	6	MOTOR ELÉTRICO DE PARTIDA	363
RESPIRO	7N-0060	6	PARTIDA EM TEMPO FRIO - ARRANJO	349
RETENTOR DE ANEL-O (11,89 MM DE DIÂMETRO INTERNO)	3J-1907	2	BATERIA E CABOS / FIOS ELÉTRICOS	281
		7	BATERIA E CABOS / FIOS ELÉTRICOS	289
TAMPA CONTRA POEIRA	6V-0852	1	BATERIA E CABOS / FIOS ELÉTRICOS	286

PEÇAS DE MANUTENÇÃO

DESCRIÇÃO	NÚMERO DE PEÇA	QUANT	UTILIZADA EM	PÁGINA
SISTEMA HIDRÁULICO				
BUJÃO - ANEL O (7/16-20 THD)	9S-4190	1	BOMBA DE PISTÃO	674
CADEADO	5P-8502	1	TAMPA - TANQUE HIDRÁULICO	614
CHAVE	5P-8500	1	TAMPA - TANQUE HIDRÁULICO	614
ELEMENTO FILTRANTE - ÓLEO (FLUXO HIDRÁULICO/REVERSO) (DESCARTÁVEL)	1R-0722	1	TANQUE HIDRÁULICO E FILTRO	680
	1R-0735	2	TANQUE HIDRÁULICO E FILTRO	681
ELEMENTO FILTRANTE - ÓLEO (FLUXO HIDRÁULICO/REVERSO) (LIMPADOR - ALTO DESEMPENHO)	139-1536	1	TANQUE HIDRÁULICO E FILTRO	680
ELEMENTO FILTRANTE - ÓLEO (FLUXO INVERSO) (FLUIDO RESISTENTE A FOGO - ALTO DESEMPENHO)	104-6931	2	TANQUE HIDRÁULICO E FILTRO	681
ELEMENTO FILTRANTE - ÓLEO (HIDRÁULICO) (FLUIDO RESISTENTE A FOGO - ALTO DESEMPENHO)	4T-3134	1	TANQUE HIDRÁULICO E FILTRO	680
ELEMENTO FILTRANTE - ÓLEO (LIMPADOR - ALTO DESEMPENHO)	139-1537	2	TANQUE HIDRÁULICO E FILTRO	681
GRAXEIRA	3B-8489	1	CILINDRO DE INCLINAÇÃO	638
		1	CILINDRO DE INCLINAÇÃO	640
		1	CILINDRO DE INCLINAÇÃO	642
		2	CILINDRO DE LEVANTAMENTO DO RIPER	630
		2	CILINDRO DE TOMBAMENTO DO RIPER	634
		2	CILINDRO DE TOMBAMENTO DO RIPER	636
GRAXEIRA (ROSCA 1/8-27 POL)	3B-8489	2	CILINDRO DE LEVANTAMENTO DO RIPER	628
JUNTA	9H-6454	1	TANQUE HIDRÁULICO E FILTRO	680
TAMPA - BOCAL DE ENCHIMENTO (TANQUE HIDRÁULICO)	7H-1447	1	TANQUE HIDRÁULICO E FILTRO	680
TAMPA CONTRA POEIRA	6V-0852	2	TUBOS - BOMBA	654
	8C-3451	1	TANQUE HIDRÁULICO E FILTRO	681
TELA FILTRANTE	5D-7927	1	TANQUE HIDRÁULICO E FILTRO	680
	9T-7571	1	TANQUE HIDRÁULICO E FILTRO	680

PEÇAS DE MANUTENÇÃO

DESCRIÇÃO	NÚMERO DE PEÇA	QUANT	UTILIZADA EM	PÁGINA
TREM DE FORÇA				
BUJÃO MAGNÉTICO	6V-3298	1	COMANDO FINAL	398
		1	COMANDO FINAL	406
ELEMENTO FILTRANTE - ÓLEO (TREM DE FORÇA)	1R-0719	1	FILTRO - ÓLEO	396
	4T-3131	1	FILTRO - ÓLEO	396
	132-8875	1	FILTRO - ÓLEO	396
RESPIRO (TREM DE FORÇA)	9G-5127	1	TUBOS - ÓLEO DA TRANSMISSÃO	417
TAMPA - BOCAL DE ENCHIMENTO (ÓLEO DO TREM DE FORÇA)	6N-2985	1	TUBOS - ÓLEO DA TRANSMISSÃO	416
TAMPA CONTRA POEIRA	6V-0852	1	CARCAÇA DAS ENGRENAGENS PLANETÁRIAS E COMPONENTES	386
		5	TUBOS - ÓLEO DA TRANSMISSÃO	417
		1	VÁLVULA DE ALÍVIO	449
		1	VÁLVULA PILOTO E MONTAGEM	444
	8C-3447	1	TUBOS - ÓLEO DA TRANSMISSÃO	417
TELA DE SUCÇÃO	8S-9130	1	CONVERSOR DE TORQUE	440
TELA DE SUCÇÃO (ENTRADA DA BOMBA DE ÓLEO DO TREM DE FORÇA)	3S-3875	1	TUBOS - ÓLEO DA TRANSMISSÃO	416
TELA DE SUCÇÃO (RETORNO - TRANSMISSÃO)	8S-9130	1	CARCAÇA DAS ENGRENAGENS PLANETÁRIAS E COMPONENTES	386

WARTUNGSTEILE

BESCHREIBUNG	ERSATZTEIL-NUMMER	MENGE	VERWENDET IN	SEITE
ARBEITSGERÄTE				
SCHMIERNIPPEL	3B-8489	2	AUFREISSERRAHMEN	718
		2	DICHTUNGSSATZ	722
		2	ZYLINDERAUFHÄNGUNG	733
SCHMIERNIPPEL (1/8-27 GEWINDE)	3B-8489	2	AUFREISSERRAHMEN	716

WARTUNGSTEILE

BESCHREIBUNG	ERSATZTEIL-NUMMER	MENGE	VERWENDET IN	SEITE
ELEKTRISCHE ANLAGE UND STARTSYSTEM				
ABDECKGLAS (ARBEITSSCHEIN-WERFER)	158-0248	1	ARBEITSLEUCHTEN	310
		1	ARBEITSLEUCHTEN	309
ABDECKGLAS (FAHRERHAUSDACH)	7T-0020	1	FAHRERHAUSBELEUCHTUNG	308
BATTERIE (12 V/TROCKEN)	9X-9730	2	BATTERIE UND VERDRAHTUNG	281
		2	BATTERIE UND VERDRAHTUNG	289
		2	KALTWETTERSTARTANLAGE	349
BÜRSTENFEDER	3T-9494	6	STARTERMOTOR	363
BÜRSTENSATZ	3T-9524	6	STARTERMOTOR	362
ELEKTR. UMFORMER (24 V BIS 12 V)(25 A)	3E-8646	1	ELEKTR. UMFORMER	300
ENTLÜFTUNGSVORRICHTUNG	7N-0060	6	KALTWETTERSTARTANLAGE	349
KEILRIEMEN (EINSCHL. ZWEI RIEMEN)	199-6601	1	DREHSTROMGENERATOR	274
LEUCHTE (24 V)	3E-8825	2	FAHRERPLATTFORMVERDRAHTUNG	378
	7N-5876	3	FAHRERPLATTFORMVERDRAHTUNG	378
LEUCHTE (24 V) (ARBEITSSCHEINWERFER)	9X-3463	1	ARBEITSLEUCHTEN	310
LEUCHTE (24 V) (FAHRERHAUSDACH)	7N-9943	1	FAHRERHAUSBELEUCHTUNG	308
LEUCHTE (24 V) (SCHEINWERFER)(60 W)	9X-3463	1	ARBEITSLEUCHTEN	309
LEUCHTE (28 V)	7N-1996	1	FAHRERPLATTFORMVERDRAHTUNG	380
LINSE - ROT	6T-7058	1	FAHRERPLATTFORMVERDRAHTUNG	380
O-RING-DICHTUNG (11,89 MM ID)	3J-1907	2	BATTERIE UND VERDRAHTUNG	281
		7	BATTERIE UND VERDRAHTUNG	289
SCHAUMFILTER (KRAFTSTOFFS-TANDSENOR)	111-4402	1	BATTERIE UND VERDRAHTUNG	279
		1	BATTERIE UND VERDRAHTUNG	287
SCHLÜSSEL (HAUPTSCHALTER)	8H-5306	1	TRENNSCHALTER	366
SICHERUNG (10 A)	9W-1442	10	KONSOLENVERDRAHTUNG	373
SICHERUNG (15 A)	9W-1441	3	KONSOLENVERDRAHTUNG	373
SICHERUNG (20 A)	9W-1446	3	KONSOLENVERDRAHTUNG	373
SICHERUNG (30 A)	8T-9636	2	ELEKTR. UMFORMER	300
STAUBKAPPE	6V-0852	1	BATTERIE UND VERDRAHTUNG	286
UMLAUFKÜHLWASSERHEIZUNGS-ELEMENT	6T-3764	2	UMLAUFKÜHLWASSERHEIZUNG	306
UMLAUFKÜHLWASSERHEIZUNGS-ELEMENT (120 V/1500 W)	9G-6655	2	UMLAUFKÜHLWASSERHEIZUNG	305
UNTERBRECHER (10 A) (ELEKTRONISCHE KUPPLUNGSBREMSE)	6T-3642	1	KONSOLENVERDRAHTUNG	372
UNTERBRECHER (10 A) (STARTSCHLÜSSELSCHALTER)	6T-3642	1	KONSOLENVERDRAHTUNG	372
UNTERBRECHER (15 A) (ARBEITSGERÄT)	6T-3643	1	KONSOLENVERDRAHTUNG	372
UNTERBRECHER (15 A) (ARBEITSLEUCHTEN, VORNE)	3T-2662	1	KONSOLENVERDRAHTUNG	372
UNTERBRECHER (15 A) (LÜFTER)	6T-3643	1	KONSOLENVERDRAHTUNG	372
UNTERBRECHER (15 A) (MOTOR)	6T-3643	1	KONSOLENVERDRAHTUNG	372

WARTUNGSTEILE

BESCHREIBUNG	ERSATZTEIL-NUMMER	MENGE	VERWENDET IN	SEITE
FAHRERHAUS				
DICHTUNGSKAPPE (KLIMAANLAGE)	172-4880	1	KLIMAANLAGENLEITUNGEN	825
		1	KLIMAANLAGENLEITUNGEN	831
DICHTUNGSKAPPE (KLIMAANLAGE)(OBERE SEITE)	3E-4052	1	KLIMAANLAGENLEITUNGEN	825
DICHTUNGSKAPPE (KLIMAANLAGE)(UNTERE SEITE)	3E-4051	1	KLIMAANLAGENLEITUNGEN	825
FAHRERHAUSLUFTFILTER	107-0266	1	FAHRERHAUSHEIZUNG	809
KAPPE MIT ENTLÜFTER	8E-8292	1	SCHEIBENWASCHMITTELBEHÄLTER	886
KEILRIEMEN (KLIMAANLAGEN-KOMRESSOR)	199-6602	1	KÄLTEMITTELKOMPRESSOR	794
		1	KÄLTEMITTELKOMPRESSOR	796
LEUCHTE (28 V)	7N-1996	1	INSTRUMENTENTAFEL	854
LINSE - ROT	6T-7058	1	INSTRUMENTENTAFEL	854
LUFTFILTER (FAHRERHAUS) (GERUCHSREDUZIERUNG)	175-2832	1	FAHRERHAUSHEIZUNG	808
LUFTFILTER (FAHRERHAUS) (HOCHLEISTUNG)	175-2839	1	FAHRERHAUSHEIZUNG	808
LUFTFILTER (FAHRERHAUS) (STANDARD)	7T-1890	1	FAHRERHAUSHEIZUNG	808
SCHEIBENWISCHERBLATT (HINTEN)	5C-8811	1	SCHEIBENWISCHER	916
SCHEIBENWISCHERBLATT (LINKE TÜR)	6V-5849	4	SCHEIBENWISCHER	916
SCHEIBENWISCHERBLATT (VORNE)	6V-5851	1	SCHEIBENWISCHER	916
SICHERHEITSGURT	183-3648	1	FAHRERSITZ	876
		1	FAHRERSITZ	877
UNTERBRECHER (15 A) (KLIMAANLAGE - ENTFERNT ANGEBRACHTER KONSENSATOR)	6T-3643	1	KLIMAANLAGENLEITUNGEN	824
		1	KLIMAANLAGENLEITUNGEN	830

WARTUNGSTEILE

BESCHREIBUNG	ERSATZTEIL-NUMMER	MENGE	VERWENDET IN	SEITE
HYDRAULIKSYSTEM				
DICHTUNG	9H-6454	1	HYDRAULIKTANK UND SCHMIERFILTER	680
EINFÜLLSTUTZENKAPPE (HYDRAULIKTANK)	7H-1447	1	HYDRAULIKTANK UND SCHMIERFILTER	680
FILTERSIEB	5D-7927	1	HYDRAULIKTANK UND SCHMIERFILTER	680
O-RING-STOPFEN (7/16-20 GEWINDE)	9S-4190	1	KOLBENPUMPE	674
ÖLFILTERELEMENT (HYDRAULIK/STROMUMKEHRUNG) (NICHT WIEDERVERWENDBAR)	1R-0735	2	HYDRAULIKTANK UND SCHMIERFILTER	681
	1R-0722	1	HYDRAULIKTANK UND SCHMIERFILTER	680
ÖLFILTERELEMENT (HYDRAULIK/STROMUMKEHRUNG) (SÄUBERN/HÖHERE LEISTUNG)	139-1536	1	HYDRAULIKTANK UND SCHMIERFILTER	680
ÖLFILTERELEMENT (HYDRAULISCH) (FEUERBESTÄNDIG/HOCHLEISTUNG)	4T-3134	1	HYDRAULIKTANK UND SCHMIERFILTER	680
ÖLFILTERELEMENT (RÜCKFLUSS) (FEUERBESTÄNDIG/HOCHLEISTUNG)	104-6931	2	HYDRAULIKTANK UND SCHMIERFILTER	681
ÖLFILTERELEMENT (SÄUBERN/HÖHERE LEISTUNG)	139-1537	2	HYDRAULIKTANK UND SCHMIERFILTER	681
SCHLÜSSEL	5P-8500	1	ZUGANGSKLAPPE - HYDRAULIKTANKKAPPE	614
SCHMIERNIPPEL	3B-8489	2	AUFREISSERHUBZYLINDER	630
		2	AUFREISSERZAHNSPITZE - ZYLINDER	634
		2	AUFREISSERZAHNSPITZE - ZYLINDER	636
		1	KIPPZYLINDER	638
		1	KIPPZYLINDER	640
		1	KIPPZYLINDER	642
SCHMIERNIPPEL (1/8-27-GEWINDE)	3B-8489	2	AUFREISSERHUBZYLINDER	628
SIEB	9T-7571	1	HYDRAULIKTANK UND SCHMIERFILTER	680
STAUBKAPPE	6V-0852	2	HYDRAULIKPUMPE UND LEITUNGEN	654
	8C-3451	1	HYDRAULIKTANK UND SCHMIERFILTER	681
VORHÄNGESCHLOSS	5P-8502	1	ZUGANGSKLAPPE - HYDRAULIKTANKKAPPE	614

WARTUNGSTEILE

BESCHREIBUNG	ERSATZTEIL-NUMMER	MENGE	VERWENDET IN	SEITE
KRAFTSTOFFSYSTEM				
DICHTUNG (KRAFTSTOFFENTLÜFTUNGSPUMPE)	1P-0436	1	KRAFTSTOFFILTER UND LEITUNGEN	220
DREHZAHLMESSERANTRIEBSKAPPE	9B-2232	1	DREHZAHLMESSERANTRIEB	209
FILTER (PUMPENDÜSE)	125-5835	1	HYDRAULIKPUMPENANTRIEB	212
FILTERSATZ (WASSERABSCHEIDER U. KRAFTSTOFFILTER)	1R-0769	1	WASSERABSCHEIDER- U. KRAFTSTOFFILTER	224
KRAFTSTOFFILTER	1R-0749	1	KRAFTSTOFFILTER	223
KRAFTSTOFFSIEB	9P-7121	1	KRAFTSTOFFTANK	268
KRAFTSTOFFTANKKAPPE	7X-7700	1	KRAFTSTOFFTANK	269
O-RING-STOPFEN	9S-8008	1	REGLER	226
		1	REGLER-ANSCHLUSSPLATTE	246
SCHLÜSSEL	5P-8500	1	KRAFTSTOFFILTER UND LEITUNGEN	216
		1	KRAFTSTOFFILTER UND LEITUNGEN	220
		1	KRAFTSTOFFTANK	268
STAUBDECKEL (SCHNELLBETANKUNGSADAPTER)	9D-0630	1	SCHNELLBETANKUNGSANSCHLUSS	190
		1	SCHNELLBETANKUNGSANSCHLUSS	196
STAUBKAPPE (SCHNELLBETANKUNGSADAPTER)	9D-0630	1	SCHNELLBETANKUNGSANSCHLUSS	192
		1	SCHNELLBETANKUNGSANSCHLUSS	194
SUMPFSIEB (KRAFTSTOFFTANK)	5G-4109	1	KRAFTSTOFFILTER UND LEITUNGEN	216
		1	KRAFTSTOFFILTER UND LEITUNGEN	220
VORHÄNGESCHLOSS	5P-8502	1	KRAFTSTOFFILTER UND LEITUNGEN	216
		1	KRAFTSTOFFILTER UND LEITUNGEN	220
		1	KRAFTSTOFFTANK	268
KRAFTÜBERTRAGUNG				
ANSAUGSIEB	8S-9130	1	DREHMOMENTWANDLER	440
ANSAUGSIEB (GETRIEBEABSAUGPUMPE)	8S-9130	1	PLANETENANTRIEBSGEHÄUSE U. TEILE	386
ANSAUGSIEB (KRAFTÜBERTRAGUNGSÖLPUMPENEINLASS)	3S-3875	1	ÖLLEITUNGEN - KRAFTÜBERTRAGUNG	416
EINFÜLLKAPPE (KRAFTÜBERTRAGUNGSÖL)	6N-2985	1	ÖLLEITUNGEN - KRAFTÜBERTRAGUNG	416
ENTLÜFTER (KRAFTÜBERTRAGUNG)	9G-5127	1	ÖLLEITUNGEN - KRAFTÜBERTRAGUNG	417
MAGNETSTOPFEN	6V-3298	1	SEITENANTRIEB	398
		1	SEITENANTRIEB	406
ÖLFILTERELEMENT (KRAFTÜBERTRAGUNG)	1R-0719	1	ÖLFILTER	396
	4T-3131	1	ÖLFILTER	396
	132-8875	1	ÖLFILTER	396
STAUBKAPPE	6V-0852	5	ÖLLEITUNGEN - KRAFTÜBERTRAGUNG	417
		1	PLANETENANTRIEBSGEHÄUSE U. TEILE	386
		1	ÜBERDRUCKVENTIL	449
		1	VORSTEUERVENTIL UND BEFESTIGUNGSTEILE	444
	8C-3447	1	ÖLLEITUNGEN - KRAFTÜBERTRAGUNG	417

WARTUNGSTEILE

BESCHREIBUNG	ERSATZTEIL-NUMMER	MENGE	VERWENDET IN	SEITE
KÜHLSYSTEM				
ABLASSSTOPFEN	4B-7739	1	KÜHLWASSERLEITUNGEN	118
		1	KÜHLWASSERLEITUNGEN	130
FILTER (WASSERPUMPE)	111-2721	1	KÜHLWASSERPUMPE	134
KAPPE	111-7421	4	KÜHLER	140
		2	KÜHLER	144
KÜHLERKAPPE	031-1119	1	KÜHLMITTELBEHÄLTER	149
STAUBKAPPE	157-0670	1	KÜHLWASSERLEITUNGEN	122
		1	KÜHLWASSERLEITUNGEN	126
WASSERFILTER	119-3025	1	KÜHLWASSERPUMPE	137
WASSERTEMPERATURREGLER (92 GRAD CELSIUS)	4W-4794	2	KÜHLWASSERLEITUNGEN	122
		2	KÜHLWASSERLEITUNGEN	126
LAUFWERK				
ABLASSSTOPFEN	4T-2069	6	LAUFROLLENRAHMEN (TELESKOPRÜCKLAUF)	518
ÖLSTANDKAPPE	9W-8277	1	ACHSWELLENSCHMIERUNG	530
SCHMIERNIPPEL	3B-8489	2	QUERTRAVERSE	514
SCHMIERNIPPEL (1/8-27-GEWINDE)	3B-8489	2	QUERTRAVERSE	516
LENK- UND BREMSSYSTEM				
ÖLFILTERELEMENT (HYDRAULIK)	132-8875	1	ÖLFILTER	579
STAUBKAPPE	6V-0852	1	BREMSSTEUERVENTIL	596
		7	LENKÖLLEITUNGEN	580
		1	ÖLFILTER	579
LUFTEINLASS- UND ABGASSYSTEM				
ABGASKRÜMMERDICHTUNG	129-9452	8	AUSPUFFKRÜMMER	178
FILTER	7M-1674	1	DRUCKLUFTLEITUNGEN	172
FILTER (LUFTFILTERWARTUNGS-ANZEIGE)	7M-1674	1	DRUCKLUFTLEITUNGEN	176
HAUPTFILTER	165-1689	1	LUFTREINIGER	160
HAUPTFILTER (LUFTREINIGER) (HOCHLEISTUNG)	132-7166	1	LUFTREINIGER	162
HAUPTFILTER (LUFTREINIGER) (STANDARD)	6I-2507	1	LUFTREINIGER	162
LUFTFILTER-WARTUNGSANZEIGE	8N-2694	1	DRUCKLUFTLEITUNGEN	176
REGENKAPPE	7S-5003	1	STAUBAUSWERFER	168
SICHERHEITSFILTER (LUFTREINIGER)	6I-2508	1	LUFTREINIGER	160
		1	LUFTREINIGER	162

WARTUNGSTEILE

BESCHREIBUNG	ERSATZTEIL-NUMMER	MENGE	VERWENDET IN	SEITE
MOTOR (GRUNDAUSFÜHRUNG)				
DICHTUNG	5P-5678		VENTILDECKEL	20
ENTLÜFTER	4N-4668	2	VENTILDECKEL	21
KEILRIEMENSATZ	169-0147	1	LÜFTERANTRIEB	42
KEILRIEMENSATZ (EINSCHL. 4 RIEMEN)	115-2460	1	LÜFTERANTRIEB	44
O-RING-STOPFEN (7/16-20 GEWINDE)	9S-4190	2	MOTORBLOCK	26
ÖLABLASSSCHRAUBE	4P-0513	1	ÖLWANNE	64
ROHRSTOPFEN	8T-6757	2	ZYLINDERBLOCKSCHRAUBE	70
ROHRSTOPFEN (1-11-1/2 NPTF-GEWINDE)	8T-6761	1	SCHWUNGRADGEHÄUSE	58
ROHRSTOPFEN (1/8-27 NPTF-GEWINDE)	8T-6764	1	SCHWUNGRADGEHÄUSE	58
SCHMIERNIPPEL	3B-8489	1	LÜFTERANTRIEB	44
SCHMIERNIPPEL (1/8-27 GEWINDE(45 GRAD)	3B-8485	1	RIEMENSPANNER	8
STAUBKAPPE	6V-0852	1	ZYLINDERBLOCKSCHRAUBE	70
MOTORAUSFÜHRUNG				
KEILRIEMENSATZ (DREHSTROMGENERATOR/MOTOR OHNE EMISSIONEN)	9L-6130	1	MOTOR-UMBAUSATZ	2
SCHLÜSSEL	5P-8500	1	MOTOR-EINBAUSATZ	7
VORHÄNGESCHLOSS	5P-8502	1	MOTOR-EINBAUSATZ	7
RAHMEN UND AUFBAU				
SCHLÜSSEL	5P-8500	1	MOTORVERKLEIDUNG	476
		1	MOTORVERKLEIDUNG	480
		1	SCHUTZBLECHE	482
		1	VERKLEIDUNG	472
VORHÄNGESCHLOSS	5P-8502	1	MOTORHAUBE UND VERKLEIDUNG	502
		2	MOTORVERKLEIDUNG	476
		2	MOTORVERKLEIDUNG	480
		1	SCHUTZBLECHE	482
		1	VERKLEIDUNG	472
SCHMIERSYSTEM				
EINFÜLLKAPPE	6N-2206	1	MOTORÖLEINFÜLLSTUTZEN	81
		1	MOTORÖLEINFÜLLSTUTZEN	82
ENTLÜFTER (KURBELGEHÄUSE)	4N-4668	1	ENTLÜFTER	79
ÖLFILTER	1R-0716	2	ÖLFILTER	84
SAUGGLOCKENSIEB	4N-0913	1	MOTORÖLLEITUNGEN	92
SCHLAUCHLEITUNG (JE 87 CM)	5P-1255		ENTDUNSTER	88
SCHLAUCHLEITUNG (JE 9CM)	5P-1255		ENTDUNSTER	88
STAUBKAPPE	8C-3445	1	ÖLFILTER	84

INDEX

Name	Page
A	
ACCUMULATOR-AIR CONDITIONER	824, 830
ADAPTER GP-FAST FILL FUEL	188, 190, 192, 194, 196
AFTERCOOLER GP-WATER	154, 156
AIR CLEANER GP	158, 160, 162
AIR CONDITIONER AR	773, 774
AIR CONDITIONER GP	776
ALARM AS-BACKUP	279, 287
ALARM GP	273
ALTERNATOR GP-CHARGING	274, 276, 277
AXLE GP-POWER TRAIN	384
B	
BAR AR-STRIKER	507
BATTERY & WIRING GP	278, 286
BATTERY (12 VOLT/DRY)	281, 289, 349
BEARING-SLEEVE	508, 509
BELT TIGHTENER GP	8
BIT & CUTTING EDGE GP	745, 746, 747, 748, 749, 750, 751
BIT GP-END	752, 753
BLADE & EDGE GP	754, 755, 756
BLADE & EDGE GP-SEMI-UNIVERSAL	757, 758
BLADE AS	759
BLADE AS-SEMI-UNIVERSAL	760, 762
BLADE AS-UNIVERSAL	763, 764
BLADE AS-WIPER (FRONT)	916
BLADE AS-WIPER (LH DOOR)	916
BLADE AS-WIPER (REAR)	916
BLADE GP-SEMI-UNIVERSAL	765
BLADE GP-UNIVERSAL	766
BLOCK AS-FUSE (16 POLE)	373
BLOCK GP-POWER	293
BODY AS-OIL PUMP (CONVERTER CHARGING)	430
BODY AS-OIL PUMP (TRANSMISSION CHARGING)	430
BODY AS-OIL PUMP (TRANSMISSION SCAVENGE)	430
BRAKE GP-SERVICE	564
BREATHER AS	21
BREATHER AS (CRANKCASE)	79
BREATHER GP	79
BREATHER (POWER TRAIN)	417
BRUSH AS	362
BULLDOZER AR-SEMI-UNIVERSAL	711, 712
BULLDOZER AR-UNIVERSAL	713, 714
C	
CAB AR	779, 780, 781, 782, 784, 786
CAB GP	788
CAMSHAFT GP	10, 11
CAP	140, 144
CAP AS	220
CAP AS-FILLER	81, 82
CAP AS-FILLER (POWER TRAIN OIL)	416
CAP AS-FUEL TANK	269
CAP AS-OIL LEVEL	530
CAP AS-RADIATOR	149
CAP AS-RAIN	164, 168
CAP AS-TRACK ROLLER	534, 536
CAP-DUST	70, 84, 122, 126, 286, 386, 417

INDEX

Name	Page
	444
	449
	579
	580
	596
	654
	681
CAP-DUST (FAST FILL FUEL ADAPTER)	192
	194
CAP-FILLER (HYDRAULIC TANK)	680
CAP GP-TRACK IDLER	510
	511
CAP GP-TRACK ROLLER	512
CAP-SEAL (AIR CONDITIONER)	825
	831
CAP-SEAL (AIR CONDITIONER)(HIGH SIDE)	825
CAP-SEAL (AIR CONDITIONER)(LOW SIDE)	825
CAP-TACHOMETER DRIVE	209
CAP-TRACK ROLLER	534
	536
CAP-VENTED	886
CARTRIDGE GP-TURBOCHARGER	166
	187
CASE & FRAME GP	452
	454
CASE & PARTS GP-PLANETARY	386
CHASSIS AR	456
CIRCUIT BREAKER AS (10 AMP) (ELECTRONIC CLUTCH BRAKE)	372
CIRCUIT BREAKER AS (10 AMP) (START KEY SWITCH)	372
CIRCUIT BREAKER AS (125 AMP) (MAIN)	372
CIRCUIT BREAKER AS (15 AMP) (A/C REMOTE CONDENSER)	824
	830
CIRCUIT BREAKER AS (15 AMP) (BLOWER)	372
CIRCUIT BREAKER AS (15 AMP) (ENGINE)	372
CIRCUIT BREAKER AS (15 AMP) (FRONT FLOODS)	372
CIRCUIT BREAKER AS (15 AMP) (IMPLEMENT)	372
CLAMP-BOOT	362
COMPRESSOR GP-REFRIGERANT	792
	794
	796
CONDENSER GP-REFRIGERANT	798
CONNECTION GP-ELECTRICAL	294
CONTROL & MTG GP-ENGINE ELEK	296
CONTROL AR-BULLDOZER	715
CONTROL AR-HYDRAULIC	608
CONTROL AR-HYDRAULIC IMPLEMENT	610
CONTROL AR-HYDRAULIC STEERING	566
CONTROL AS-ELECTRONIC (DASH LIGHT)	854
CONTROL GP-DECELERATOR	198
CONTROL GP-ENGINE ELECTRONIC	298
	299
CONTROL GP-FOOT BRAKE	568
CONTROL GP-FUEL RATIO	200
	202
CONTROL GP-GOVERNOR	204
	207
CONTROL GP-MONITOR (CATERPILLAR MONITORING SYSTEM)	854
CONTROL GP-MONITOR SYS DIMMER	800
CONTROL GP-STEERING	570
CONTROL GP-STEERING & TMSN	572
CONTROL GP-TRANSMISSION HYD	390
CONVERSION AR	801
CONVERSION AR-ENGINE	2
CONVERSION AR-NON-ROPS	802
	803
CONVERTER GP-ELECTRICAL	300
CONVERTER-POWER (24 VOLT TO 12 VOLT)(25 AMP)	300
CONVERTER-POWER (24 VOLTS TO 12 VOLTS)	378
COOLANT HEATER LINES	836
COOLER & MTG GP-HYDRAULIC OIL	612
COOLER GP-TRANSMISSION OIL	392
COUNTERWEIGHT GP	458
	460
	461
COUPLING GP-PUMP	393
COVER-DUST (FAST FILL FUEL ADAPTER)	190
	196
COVER GP-CYLINDER BLOCK	12
	13
	14
COVER GP-FLYWHEEL HOUSING	16
COVER GP-FRONT HOUSING	18
COVER GP-HYDRAULIC TANK CAP	614
COVER GP-TRUNNION	462
COVER GP-VALVE MECHANISM	20
	21
CRANKSHAFT AS	22
CRANKSHAFT GP	23
CYLINDER & LINES GP-DUAL TILT	615
CYLINDER & LINES GP-LIFT–LH	618
CYLINDER & LINES GP-LIFT–RH	616
CYLINDER & LINES GP-LIFT (LH)	711
	713
CYLINDER & LINES GP-LIFT (RH)	711
	713
CYLINDER & LINES GP-RIPPER	620
CYLINDER AR-DUAL TILT	621
CYLINDER AS (ETHER)	344
	346
CYLINDER BLOCK AS	24
CYLINDER BLOCK GP	26
	28

INDEX

Name	Page
CYLINDER GP-BULLDOZER LIFT	622
CYLINDER GP-DUAL TILT	624
	626
CYLINDER GP-RIPPER LIFT	628
	630
CYLINDER GP-RIPPER PIN PULLER	632
CYLINDER GP-RIPPER TIP	634
	636
CYLINDER GP-TILT	638
CYLINDER GP-TILT–LH	642
CYLINDER GP-TILT–RH	640
CYLINDER GP-TILT (LH)	621
CYLINDER GP-TILT (RH)	621
CYLINDER HEAD AS	29
	30
CYLINDER HEAD GP	32
	35
	36
	38

D

DAMPER & PULLEY GP	40
	41
DOOR GP-LH	463
	464
DOOR GP-RH	466
	468
DRAIN GP-ECOLOGY	394
DRAWBAR GP	470
DRIVE GP-DIFFERENTIAL STEERING	576
DRIVE GP-FAN	42
	44
	46
DRIVE GP-GOVERNOR & FUEL PUMP	208
DRIVE GP-STEERING	578
DRIVE GP-TACHOMETER	209
DRIVE GP-UNIT INJ HYD PUMP	210
	212
DUST EJECTOR GP	168

E

ELEMENT AS-JACKET WATER HEATER	306
ELEMENT AS-JACKET WATER HEATER (120 VOLTS/1500 WATTS)	305
ELEMENT AS-PRIMARY (AIR CLEANER) (HIGH EFFICIENCY)	162
ELEMENT AS-PRIMARY (AIR CLEANER) (STANDARD)	162
ELEMENT AS-SECONDARY (AIR CLEANER)	160
	162
ELEMENT-FILTER	172
ELEMENT-FILTER (AIR FILTER SERVICE INDICATOR)	176
ENCLOSURE GP	472
ENCLOSURE GP-ENGINE	474
	476
	480
ENGINE AR	4
	6
EQUALIZER BAR AS	513
EQUALIZER BAR GP	514
	516
EXTENSION GP-BACKREST	876
	877

F

FAN GP-BLOWER	114
FAN GP-DEFROSTER	804
FASTENER GP-CYLINDER HEAD	38
FASTENER GP-FUEL INJ PUMP	214
FASTENER GP-OIL PUMP MOUNTING	80
FENDER GP	482
FILLER GP-ENGINE OIL	81
	82
FILM (D9R)(LH SIDE)	492
FILM (D9R)(RH SIDE)	492
FILM (EXTERIOR SOUND)	506
FILM GP	921
FILM-IDENTIFICATION (CIRCUIT BREAKER)	372
FILM-IDENTIFICATION (ENGINE OIL FILTER)	922
FILM-IDENTIFICATION (EXCLAMATION SYMBOL)	923
FILM-IDENTIFICATION (EXTENDED LIFE COOLANT)	923
FILM-IDENTIFICATION (FUSE)	372
FILM-IDENTIFICATION (GROUP & SEQUENCE NO.)	798
FILM-IDENTIFICATION (GROUP & SEQUENCE NO.) (AIR CONDITIONER/HEATER UNIT)	776
	812
FILM-INFORMATION (ENGINE WIRING CONNECTION)	923
FILM-INSTRUCTION	916
FILM-INSTRUCTION (CAB TEMPERATURE CONTROL)	808
FILM (INSTRUCTION) (DOZER CONTROL)	730
FILM-INSTRUCTION (RIPPER PIN PULLER SWITCH)	608
FILM-INSTRUCTION (SEAT ADJUSTMENT)	882
	884
FILM-INSTRUCTION (WATER IN/WATER OUT) (AIR CONDITIONER/HEATER UNIT)	776
	812
FILM (LIFT EYE LOCATION)	922

INDEX

Name	Page
FILM-MONITOR (SMART ELEK MONITORING SYSTEM) (NON-EMISSIONS ENGINE)	2
FILM-NOTICE	819, 846
FILM-NOTICE (PRE-LUBRICATION PUMP)	104
FILM-OPERATOR	506
FILM-PANEL (AIR CONDITIONER & BLOWER)	808
FILM-REFLECTOR (RED)	922
FILM (SEAT CUSHION IDENTIFICATION)	852, 853
FILM-STRIPE (REAR)	492
FILM-TIE DOWN	922
FILM-WARNING (FUEL INJECTOR)	923
FILM-WARNING (JUMPER CABLE)	348, 922
FILM-WARNING (RECOIL SPRING)	518
FILTER & LINES GP-FUEL	216, 220
FILTER-AIR (CAB) (HIGH EFFICIENCY)	808
FILTER-AIR (CAB) (ODOR REDUCTION)	808
FILTER-AIR (CAB) (STANDARD)	808
FILTER AS-ENGINE OIL	84
FILTER AS-FUEL	223
FILTER AS (WATER SEPARATOR & FUEL)	224
FILTER-CAB AIR	809
FILTER ELEMENT AS-OIL (CLEAN OUT/HIGHER PERFORMANCE)	681
FILTER ELEMENT AS-OIL (HYDRAULIC)	579
FILTER ELEMENT AS-OIL (HYDRAULIC) (FIRE RESISTANT FLUID/HIGH PRFM)	680
FILTER ELEMENT AS-OIL (HYDRAULIC/REVERSE FLOW) (CLEAN OUT/HIGHER PERFORMANCE)	680
FILTER ELEMENT AS-OIL (HYDRAULIC/REVERSE FLOW) (DISPOSABLE)	680
FILTER ELEMENT AS-OIL (HYDRAULIC/REVERSE FLOW) (DISPOSABLE)	681
FILTER ELEMENT AS-OIL (POWER TRAIN)	396
FILTER ELEMENT AS-OIL (REVERSE FLOW) (FIRE RESISTANT FLUID/HIGH PRFM)	681
FILTER ELEMENT AS-PRIMARY AIR	160
FILTER-FOAM (FUEL LEVEL SENSOR)	279, 287
FILTER GP-ENGINE OIL	84
FILTER GP-FUEL	223
FILTER GP-OIL	396
FILTER GP-OIL–STEERING	579
FILTER GP-OIL (POWER TRAIN)	416
FILTER GP-OIL (STEERING)	580
FILTER GP-WATER SEP & FUEL	224, 225
FILTER (UNIT INJ HYD PUMP)	212
FILTER-WATER	137
FILTER (WATER PUMP)	134
FINAL DRIVE GP	398, 402, 406
FITTING AS-AIR CONDITIONER	825, 830
FITTING-GREASE	44, 514, 630, 634, 636, 638, 640, 642, 718, 722, 733
FITTING-GREASE (1/8-27 NPTF)	716
FITTING-GREASE (1/8-27 THD)	516, 628
FITTING-GREASE (1/8-27 THD)(45 DEGREE)	8
FLOAT AS (FUEL LEVEL SENSOR)	278, 286
FLOOR MAT	844, 848, 860
FLOORPLATE AR	806
FLYWHEEL GP	47
FRAME AR-TRACK ROLLER–REAR	517
FRAME GP-RIPPER	716, 718
FRAME GP-TELESCOPING RECOIL	518
FUMES DISPOSAL GP	86, 88
FUSE (10 AMP)	373
FUSE (15 AMP)	373
FUSE (20 AMP)	373
FUSE (30 AMP)	300

G

GASKET	680
GASKET-EXHAUST MANIFOLD	178
GASKET (FUEL PRIMING PUMP)	220
GAUGE AS-OIL LEVEL (DIPSTICK) (POWER TRAIN)	416
GAUGE GP-OIL LEVEL (DIPSTICK)	90
GEAR GP-BEVEL & TRANSFER	410
GEAR GP-FRONT	50
GEAR GP-FRONT–TIMING	48
GEAR GP-REAR	52
GENERAL AR	1
GLASS-FIXED-LH (TINTED)	902

INDEX

Name	Page
GLASS-FIXED-RH (TINTED)	901
GLASS-SLIDER (LH) (TINTED)	904
GLASS-SLIDER-RH (TINTED)	906
GLASS (TINTED)	895
	896
	907
	908
GLASS (TINTED) (CAB DOORS-FIXED)	788
GLASS (TINTED) (CAB-FRONT-FIXED)	788
GLASS (TINTED) (CAB-SIDE-FIXED)	788
GLASS (TINTED)(GREEN)	909
	910
GOVERNOR, FUEL INJ & TFR PUMP	260
GOVERNOR GP	226
GRID GP-SAND BLAST ERODING	486
GUARD AR-FINAL DRIVE	487
GUARD AR-IDLER	488
GUARD GP-BOTTOM	489
	490
GUARD GP-DRIVE SHAFT	412
GUARD GP-FUEL TANK	492
GUARD GP-IDLER	494
GUARD GP-PIVOT SHAFT	495
GUARD GP-POWER TRAIN	413
	414
GUARD GP-RADIATOR	496
GUARD GP-ROCK	498
	499
GUARD GP-SEAL	500
GUARD GP-VANDALISM	807

H

HARNESS AS (PRESSURE SENSOR)	331
HEATER GP-CAB	808
	812
HEATER GP-FUEL	302
	304
HEATER GP-JACKET WATER	305
	306
HOOD & GUARD GP	502
HORN AS (24 VOLT)(HIGH TONE)	281
	289
HORN AS (24 VOLT)(LOW TONE)	281
	289
HOSE (87CM EACH)	88
HOSE (9CM EACH)	88
HOUSING GP-FLYWHEEL	56
	58
HOUSING GP-FRONT	60
	61
HOUSING GP-FUEL PUMP	229
HOUSING GP-SEAT SUSPENSION	816

I

IDLER GP-TRACK	521
	522
	523
INDICATOR-AIR FILTER SERVICE	176
INJECTOR GP-FUEL	230
INSERT-INLET VALVE (INTAKE)	30
INSERT-VALVE SEAT (EXHAUST)	29
	30
INSERT-VALVE SEAT (INTAKE)	29
INSTALLATION AR-ENGINE	7
INSTALLATION GP-RADIO	819

J

JUNCTION BLOCK AS	307
JUNCTION BLOCK GP	307

K

KEY	7
	216
	220
	268
	472
	476
	480
	482
	614
KEY (BATTERY DISCONNECT)	366
KIT-BEARING	166
	266
	592
	817
KIT-BEARING (STANDARD)	68
KIT-BEARING (STARTER)	362
KIT-BEARING (YOKE)	262
KIT-BEARING (1.27MM US)	68
KIT-BEARING (.635MM US)	68
KIT-BELT TETHER	882
KIT-BIAS PISTON	674
KIT-BUMPER	816
KIT-CAB WINDOW (FACTORY)	909
KIT-CAP FILTER (FUEL TANK)	269
KIT-CATCH	904
	906
KIT-COMPENSATOR	266
KIT-CONNECTING PLUG (12 PIN)	379
KIT-CONNECTING PLUG (2 PIN)	2
	104
	279
	280
	287
	288

INDEX

Name	Page
	289
	349
	370
	373
	376
	379
	424
	776
	813
	824
KIT-CONNECTING PLUG (3 PIN)	104
	279
	280
	288
	334
	335
	336
	337
	376
	378
	379
KIT-CONNECTING PLUG (3 PIN) (ENGINE SPEED TIMING SENSOR)	339
KIT-CONNECTING PLUG (3 PIN) (PRESSURE SENSOR)	331
	332
KIT-CONNECTING PLUG (4 PIN)	280
	288
	289
	373
	376
	379
	825
	890
KIT-CONNECTING PLUG (6 PIN)	104
	280
	288
	378
	379
KIT-CONNECTING PLUG (6 PINS)	890
KIT-CONNECTING PLUG (8 PIN)	2
	280
	288
	379
KIT-FASTENER	884
KIT-FOLLOWER	817
KIT-FUEL INJECTION PUMP (REBUILD)	262
KIT-INDICATOR	816
KIT-LEAF SPRING	901
	902
KIT-OVERHAUL	46
KIT-OVERPACK	720
	722
KIT-PISTON	674
KIT-PLUG	262
KIT-PLUG (INCLUDES SEALS)	266
KIT-PUMP REBUILD (WATER)	134
KIT-RECEPTACLE (12 PIN)	279
	280
	288
	379
KIT-RECEPTACLE (2 PIN)	104
	273
	278
	279
	280
	286
	287
	288
	289
	326
	327
	340
	344
	346
	348
	349
	365
	372
	373
	376
	378
	379
	580
	709
	776
	777
	798
	812
	813
	824
	830
KIT-RECEPTACLE (3 PIN)	104
	122
	170
	236
	279
	280
	287
	308
	329
	338
	341
	342
	373
	376
	378
	379
	608
	730

INDEX

Name	Page
	890
KIT-RECEPTACLE (4 PIN)	279
	280
	288
	328
	373
	376
	379
	707
	708
	824
	830
	890
KIT-RECEPTACLE (6 PIN)	279
	288
	379
	800
	808
	824
	841
	842
	912
	914
	916
KIT-RECEPTACLE (8 PIN)	279
	280
	288
	378
	777
	813
KIT-ROLLER	884
KIT-RUNNER GUIDE	904
	906
KIT-SEAL	46
	231
	266
	447
	673
	707
	709
KIT-SEAL (FUEL SOLENOID VALVE)	272
KIT-SEAL (UNIT INJECTOR HYDRAULIC)	262
KIT-SLIDER BLOCK	879
	880
	881
KIT-SPRING	816
KIT-STARTING MOTOR GEAR	363
KIT-SUSPENSION BOOT	882
KIT-SUSPENSION KNOB	816
KIT-SUSPENSION ROLLER	882
KIT-TERMINAL	353
	357
	363
KIT-TERMINAL LOCK (FUSE BLOCK)	373
KIT-TETHER	884
KIT-UNIT INJ HYD PUMP COMP	262
KIT-WINDOW	820
KIT-WIPER BLADE	917
KIT-WIRING HARNESS (AIR SUSPENSION SEAT)	884
KNOB	788
KNOB (CAB TEMPERATURE CONTROL)	808
KNOB-CONTROL (BLOWER SPEED)	809
KNOB-HORN	378
KNOB-LUMBAR	853
L	
LAMP GP-DOME	308
LAMP GP-DOME (24 VOLT)(WITH SWITCH)	788
LAMP GP-FLOOD	309
	310
LAMP GP-FLOOD (24 VOLT)(SUSPENDED)	315
	319
LAMP GP-FLOOD (24 VOLT)(VERTICAL)	318
	320
LAMP (24 VOLT)	378
LAMP (24 VOLT) (DOME)	308
LAMP (24 VOLT) (FLOOD)	310
LAMP (24 VOLT) (FLOOD)(65 WATT)	309
LAMP (28 VOLT)	380
	854
LATCH GP	821
LENS AS (FLOODLIGHT)	309
	310
LENS (DOME)	308
LENS-RED	380
	854
LEVER GP	644
LEVER GP-CONTROL VALVE	645
LEVER (IDLE SPEED CONTROL)	782
LIFTING GP-ENGINE	62
LIGHTING AR-CYLINDER	312
LIGHTING AR-REAR	314
LIGHTING GP	315
LIGHTING GP-AUXILIARY	316
LIGHTING GP-FLOOD	318
	319
	320
	742
LIGHTING GP-FRONT	322
LIGHTING GP-REAR	324
LINER GP-CAB	822
LINES GP-AFTERCOOLER WATER	116
LINES GP-AIR	170
	172
	174
	176
LINES GP-AIR CONDITIONER	824
	830

INDEX

Name	Page
LINES GP-ENGINE OIL	92
LINES GP-FUEL DRAIN	232
LINES GP-FUEL FILTER	234, 236
LINES GP-FUEL INJECTION	240, 242
LINES GP-HEATER	836
LINES GP-INJECTOR HYD PUMP	244
LINES GP-LIFT CYLINDER	646
LINES GP-OIL SUPPLY	96
LINES GP-PIN PULLER	650
LINES GP-PIN PULLER CYLINDER	652
LINES GP-POWER TRAIN OIL	416
LINES GP-PUMP	654
LINES GP-RIPPER	658, 660
LINES GP-STEERING	580
LINES GP-TILT	662, 664
LINES GP-TILT CYLINDER	666, 668, 670
LINES GP-TURBOCHARGER OIL	98, 100
LINES GP-WATER	6, 117, 118, 120, 121, 122, 126, 130
LINK AS-TRACK	524, 525, 526, 527, 528, 529
LINK GP-STABILIZER	724, 725
LINKAGE GP-IMPLEMENT	610, 726, 728, 730
LUBRICATION GP-PIVOT SHAFT	530

M

MAGNETIC PICKUP GP	326, 327
MANIFOLD GP-EXHAUST	178
MANIFOLD GP-VALVE	672
MANIFOLD GP-VALVE (RIPPER/DOZER BANK VALVE)	686
MIRROR GP	838
MIRROR GP-REAR VIEW	839, 840
MODIFICATION AR-BULLDOZER	731, 732
MODULE GP-QUAD GAUGE	841
MODULE GP-SPEEDOMETER & TACH	842
MOTOR GP-ELECTRIC	798
MOTOR GP-ELECTRIC (27 VOLT) (CAB BLOWER)	776, 812
MOTOR GP-PISTON	586
MOUNTING GP-CAB	844
MOUNTING GP-CB	846
MOUNTING GP-CYLINDER	733
MOUNTING GP-RIPPER	734
MOUNTING GP-ROPS	847
MOUNTING GP-TRANSMISSION	420
MUFFLER GP	180

O

OIL CHANGE GP-HIGH SPEED	102
OPERATOR AR	848

P

PADLOCK GP	7, 216, 220, 268, 472, 476, 480, 482, 502, 614
PAN GP-BACKREST	851, 852, 853
PAN GP-OIL	64
PANEL GP-INSTRUMENT	854
PISTON & ROD GP	66, 68
PLANETARY GP-TRANSMISSION	422
PLATE & FILM GP	922
PLATE GP-GOVERNOR ADAPTER	246
PLATE GP-SLIDE	856, 858
PLATE GP-WEAR	767
PLATE-INSTRUCTION (AIR CONDITIONER)	773, 774
PLATE (PRODUCT I.D.)	922
PLATE-SERVICE INFORMATION	922
PLATE-WARNING (RECOIL SPRING)	518, 562

INDEX

Name	Page
PLATE-WARNING (RECOIL SPRING OIL)	518
PLATFORM GP	860
PLUG-DRAIN	118, 130, 518
PLUG GP-CYLINDER BLOCK	70
PLUG GP-CYLINDER HEAD	71
PLUG-MAGNETIC	398, 406
PLUG-O-RING	226, 246
PLUG-O-RING (7/16-20 THD)	26, 674
PLUG-OIL DRAIN	64
PLUG-PIPE	70
PLUG-PIPE (1-11-1/2 NPTF THD)	58
PLUG-PIPE (1/8-27 NPTF THD)	58
POWER TRAIN AR	427
PRELUBRICATION AR-ENGINE	104
PULLER AR-PIN	736
PULLER GP-PIN	737
PUMP & MTG GP-UNIT INJ HYD	248, 250
PUMP GP-CHARGE	587
PUMP GP-ENGINE OIL	108, 110, 112
PUMP GP-FUEL INJECTION	252, 254, 257
PUMP GP-FUEL TRANSFER	258, 259, 262
PUMP GP-GEAR	428, 430, 673
PUMP GP-GEAR (POWER TRAIN OIL)	416
PUMP GP-GEAR (3 SECTION) (TMSN SCAV/TMSN CHRG/CONV CHRG)	428
PUMP GP-GOV, FUEL INJ & TFR	260
PUMP GP-PISTON	588, 674
PUMP GP-PISTON & GEAR	676
PUMP GP-UNIT INJECTOR HYD	262, 264, 266
PUMP GP-WATER	132, 134, 136, 137, 138
PUSH ARM GP-LH	738
PUSH ARM GP-RH	739
PUSH ARM GP-STABILIZER	740

R

Name	Page
RADIATOR GP	140, 144
RECEIVER-DRYER GP (AIR CONDITIONER)	824
RECEIVER-DRYER GP (REFRIGERANT)	830
RECEPTACLE AS (JUMP START)	278, 286
RECLINER GP-SEAT	863
REGULATOR-WATER TEMPERATURE (92 DEG C.)	122, 126
REINFORCEMENT GP-ROLLER FRAME	532
RIPPER AR	741, 742
RIPPER GP	768, 769
ROCKER ARM GP	72, 73
ROLLER & IDLER AR	533
ROLLER AR-TRACK CARRIER	534, 536
ROLLER GP-TRACK-DOUBLE FLANGE	538, 539, 540, 541
ROLLER GP-TRACK-SINGLE FLANGE	542, 543, 544, 545
ROPS AS	864
ROPS GP	865, 866
ROTATING GP-MOTOR	592
ROTATING GP-PUMP	677

S

Name	Page
SCREEN AS	680
SCREEN AS-BELL	92
SCREEN GP-PROTECTION	867
SCREEN-SUCTION	440
SCREEN-SUCTION (POWER TRAIN OIL PUMP INLET)	416
SCREEN-SUCTION (TRANSMISSION SCAVENGE)	386
SCREEN-SUMP (FUEL TANK)	216, 220
SEAL	20
SEAL GP-CRANKSHAFT	23
SEAL-O-RING (11.89MM ID)	281, 289
SEALANT-GASKET	14
SEALANT-GASKET (14 ML)	18
SEAT AR	868

INDEX

Name	Page
SEAT BELT GP	876
	877
SEAT GP	870
	872
	874
	876
	877
SEAT GP-SUSPENSION	878
	880
	881
SEAT GP-SUSPENSION–VINYL	879
SEGMENT GP-SPROCKET	432
SENSOR GP-FUEL LEVEL–ULTRASONIC	328
SENSOR GP-POSITION	329
SENSOR GP-PRESSURE	330
	331
	332
	333
	334
	335
	336
	337
SENSOR GP-PRESSURE (ATMOSPHERE)	172
SENSOR GP-PRESSURE (ENGINE OIL)	248
	287
SENSOR GP-PRESSURE (INJECTION ACTUATION)	38
SENSOR GP-PRESSURE (TURBO OUTLET)	38
SENSOR GP-SPEED	60
	326
	327
	340
SENSOR GP-SPEED–ENGINE SPEED/TIMING	339
SENSOR GP-SPEED–FAN	338
SENSOR GP-SPEED (FAN)	46
SENSOR GP-SPEED (TRANSMISSION OUTPUT)	423
SENSOR GP-TEMPERATURE	341
	342
SENSOR GP-TEMPERATURE (COOLANT)	289
SENSOR GP-TEMPERATURE (ENGINE COOLANT)	122
SENSOR GP-TEMPERATURE (FUEL)	236
SENSOR GP-TEMPERATURE (HYDRAULIC OIL)	279
	287
SENSOR GP-TEMPERATURE (INLET AIR)	170
SENSOR GP-TEMPERATURE (POWER TRAIN OIL)	281
	289
SHAFT GP-DRIVE	433
SHIELD GP-MANIFOLD	182
SLEEVE-BOTTOM LINER	26
SLEEVE-LIFTER BORE	26
SLIDE	897
	899
	909
SLIP JOINT GP	434
SOLENOID AS	352
SOLENOID AS-STARTING MOTOR	343
	356
SPRING-BRUSH	363
STARTING AID GP-ETHER	344
	346
STARTING AR-COLD WEATHER	348
STARTING MOTOR GP-ELECTRIC	352
	356
	359
	360
	362
STRAINER AS	680
STRAINER-FUEL	268
SUPPORT GP-ENGINE	74
	75
SUPPRESSION AR-SOUND	506
SUSPENSION GP-BOGIE	546
SUSPENSION GP-SEAT	882
	884
SWASHPLATE GP	678
	679
SWITCH AS (BLOWER SPEED)	808
SWITCH AS (FRONT LIGHT)	380
SWITCH AS (FRONT,REAR,RH & LH DOOR)	916
SWITCH AS-HORN	378
SWITCH AS-LIMIT (BACKUP ALARM)	572
SWITCH AS-LIMIT (NEUTRAL START)	572
SWITCH AS-MAGNETIC (STARTER ON-OFF)	104
SWITCH AS-PRESSURE (AIR CONDITIONER/HIGH)	824
	830
SWITCH AS-PRESSURE (AIR CONDITIONER/LOW)	824
	830
SWITCH AS-PRESSURE (OIL)	104
SWITCH AS (REAR LIGHT)	378
SWITCH AS-ROCKER (AIR CONDITIONER ON/OFF)	809
SWITCH AS-ROCKER (AUXILIARY)	380
SWITCH AS-ROCKER (ETHER AID)	380
SWITCH AS-ROCKER (OPERATOR)	378
SWITCH AS-ROCKER (SIDE LIGHT)	378
SWITCH AS-ROCKER (24 VOLT)(SEALED)(ILLUMINATED)(THROTTLE)	378
SWITCH AS (SINGLE/DUAL TILT CONTROL)	369
SWITCH AS-TEMPERATURE (ETHER AID)	286
SWITCH AS-TEMPERATURE (POWER TRAIN FILTER BYPASS)	278
	286

INDEX

Name	Page
SWITCH AS-TEMPERATURE (STEERING FILTER)	580
SWITCH AS-THERMOSTAT (AIR CONDITIONER COMPRESSOR)	776
SWITCH AS (TIP CONTROL)	369
SWITCH AS-TOGGLE (LOCKING)(RIPPER PIN PULLER)	608
SWITCH AS (24 VOLT)(ILLUMINATED)	378
SWITCH GP	694
SWITCH GP-BYPASS	365
SWITCH GP-BYPASS (POWER TRAIN OIL FILTER)	281
	289
SWITCH GP-BYPASS (STEERING FILTER)	579
SWITCH GP-DISCONNECT	366
SWITCH GP-DISCONNECT (BATTERY)	278
	286
SWITCH GP-FLOW	4
	6
SWITCH GP-FLOW–COOLANT	367
	368
SWITCH GP-HANDLE	369
	730
SWITCH GP-MAGNETIC	370
SWITCH GP-MAGNETIC (MAIN RELAY)	372
SWITCH GP-MAGNETIC (START RELAY)	348
	372
SWITCH GP-START	371
	378
SWITCH GP-TOGGLE (FAN CONTROL)	804

T

Name	Page
TANK & FILTER GP-HYDRAULIC	680
TANK GP-COOLANT	149
TANK GP-FUEL	268
	269
TANK GP-WATER	150
TANK GP-WINDOW WASHER	886
	888
TIMER	104
TIMER AS-ON DELAY (24 VOLT)	824
	830
TOOTH GP-RIPPER	770
	771
	772
TORQUE CONTROL GP	270
TORQUE CONVERTER GP	436
	438
	440
TRACK ADJUSTER & RECOIL GP	548
TRACK GP	555
	556
	557
	558
	559
	560
	561
TRACK GP–2 REQUIRED	550
	551
	552
	553
	554
TRANSMISSION AR	442
TRUNNION AR-BULLDOZER	743
TRUNNION GP-BULLDOZER	744
TRUNNION GP-ENGINE	76
TUBE AS-ROLLER FRAME	562
TURBOCHARGER GP	184
	185
	186
	187

U

Name	Page
UNDERCARRIAGE AR	563
UNIVERSAL JOINT GP	443

V

Name	Page
V-BELT (AIR CONDITIONER COMPRESSOR)	794
	796
V-BELT (INCLUDES 2 BELTS)	274
V-BELT SET	42
V-BELT SET (ALTERNATOR/NON-EMISSIONS ENG)	2
V-BELT SET (INCLUDES 4 BELTS)	44
VALVE	606
VALVE & MTG GP-CONTROL	684
VALVE & MTG GP-PILOT	444
VALVE AS	150
	194
	830
VALVE AS-AIR CONDITIONER (HIGH SIDE)	825
VALVE AS-AIR CONDITIONER (LOW SIDE)	825
VALVE AS-CHECK (WIPER/WASHER SYSTEM)	888
VALVE AS (ETHER START)(24 VOLT)	344
	346
VALVE AS-FLUID SAMPLING	84
	417
	681
VALVE AS-LIMITER	200
VALVE AS-WATER (CAB HEATER)	777
	812
VALVE-BALL	216
	220
VALVE-BYPASS	681
VALVE-CHECK	216
	220

INDEX

Name	Page
VALVE-CHECK (HYDRAULIC TANK)	654
VALVE-DRAIN (CASE)	452
	454
VALVE-DRAIN (HYDRAULIC TANK)	654
VALVE-EXHAUST	35
	36
VALVE (FILL) (TRACK ADJUSTER)	548
VALVE GP	445
	594
	602
	606
	702
VALVE GP-BANK 4	686
VALVE GP-BRAKE CONTROL	596
VALVE GP-CHECK	688
VALVE GP-CHECK & RELIEF	689
VALVE GP-CHECK (MAKEUP OIL)	604
VALVE GP-CHECK (REVERSE FLOW)	672
VALVE GP-CONTROL	598
	600
	690
	692
	694
	696
VALVE GP-CONTROL (BLADE LIFT)	686
VALVE GP-CONTROL (BLADE TILT)	686
VALVE GP-CONTROL (RIPPER LIFT)	686
VALVE GP-CONTROL (RIPPER TILT)	686
VALVE GP-FLUSHING	446
VALVE GP-MODULATING	447
VALVE GP-PILOT	602
VALVE GP-PRESS & FLOW CMPNSTR	698
VALVE GP-PRESS & FLOW CMPNSTR (PUMP OUTLET CONTROL)	674
VALVE GP-PRESSURE CONTROL	271
	604
VALVE GP-PRESSURE CONTROL (FUEL)	236
VALVE GP-PRIORITY	448
VALVE GP-QUICK-DROP	700
VALVE GP-RELIEF	418
	449
	606
	607
	702
	703
	704
	705
VALVE GP-RELIEF (CHARGING)	672
VALVE GP-RELIEF (COLD OIL)	604
VALVE GP-RELIEF (COOLER BYPASS)	416
VALVE GP-RELIEF (MAIN)	672
VALVE GP-SELECTOR & PRESS CONT	450
VALVE GP-SHUTTLE	706
VALVE GP-SOLENOID	272
	707
	708
	709
VALVE GP-SOLENOID (PRESSURE CONTROL)	262
VALVE GP-SOLENOID (TILT/TIP FUNCTION)	710
VALVE GP-TILT CONTROL–DUAL	710
VALVE-INLET	35
	36
VALVE MECHANISM GP	77
	78
VALVE (RELIEF) (TRACK ADJUSTER)	548
VALVE-SAMPLING	126
VALVE (TORQUE CONVERTER INLET)	418
VENT AS	349

W

Name	Page
WASHER GP-WINDOW	890
WEATHERSTRIP	901
	902
	904
	906
WINDOW AS-SLIDING–LH	894
WINDOW AS-SLIDING–RH	893
WINDOW GP-CAB	907
	908
WINDOW GP-CAB–LH	896
	899
	900
	902
	904
WINDOW GP-CAB–REAR	909
	910
WINDOW GP-CAB–RH	895
	897
	898
	901
	906
WINDOW GP-CAB (LH)	896
WINDOW GP-CAB (LH)(SLIDING)	894
WINDOW GP-CAB (REAR-SLIDING)	788
WINDOW GP-CAB (RH)	895
	901
WINDOW GP-CAB (RH)(SLIDING)	893
WIPER GP-WINDOW	912
	914
	916
WIPER PIVOT GP	920
WIRING GP-CONSOLE	372
WIRING GP-ENGINE	376
WIRING GP-PLATFORM	378
WIRING GP-UNIT INJECTOR	383

INDEX

Désignation	Page

A

ACCOUPLEMENT DE POMPE (ASS)	393
ACCUMULATEUR DE CLIMATISEUR	824 830
ADAPTATEUR DE REMPLIS. RAPIDE DE CARBURANT (ASS)	188 190 192 194 196
ADMISSION REFROIDIE PAR EAU (ASS)	154 156
ALTERNATEUR DE CHARGE (ASS)	274 276 277
ALTERNATEUR DE CHARGE (ASS)	274
AMORTISSEUR DE VIBRATIONS ET POULIE (ASS)	40 41
AMPOULE (24 VOLTS)	378
AMPOULE (24 VOLTS) (PLAFONNIER)	308
AMPOULE (24 VOLTS) (PROJECTEUR)	310
AMPOULE (24 VOLTS) (PROJECTEUR)(65 WATTS)	309
AMPOULE (28 VOLTS)	380 854
ARBRE A CAMES (ASS)	10 11
ARBRE DE TRANSMISSION (ASS)	384
ARBRE D'ENTRAÎNEMENT (ASS)	433
AUTOCOLLANT - CONDUCTEUR	506
AUTOCOLLANT-ARRIMAGE	922
AUTOCOLLANT DE MISE EN GARDE (CÂBLES VOLANTS)	348 922
AUTOCOLLANT DE MISE EN GARDE (INJECTEUR DE CARBURANT)	923
AUTOCOLLANT DE MISE EN GARDE (RESSORT AMORTISSEUR)	518
AUTOCOLLANT D'IDENTIFICATION (ASSEMBLAGE ET NO DE SÉQUENCE)	798
AUTOCOLLANT D'IDENTIFICATION (ASSEMBLAGE ET NO DE SÉQUENCE) (GROUPE CLIMATISEUR/CHAUFFAGE)	776 812
AUTOCOLLANT D'IDENTIFICATION (DISJONCTEUR)	372
AUTOCOLLANT D'IDENTIFICATION (FILTRE À HUILE MOTEUR)	922
AUTOCOLLANT D'IDENTIFICATION (FUSIBLE)	372
AUTOCOLLANT D'IDENTIFICATION (LIQUIDE DE REFROIDISSEMENT LONGUE DURÉE)	923
AUTOCOLLANT D'IDENTIFICATION (SYMBOLE D'EXCLAMATION)	923
AUTOCOLLANT DU PANNEAU (CLIMATISEUR ET VENTILATEUR)	808
AUTOCOLLANT (D9R)(COTE DROIT)	492
AUTOCOLLANT (D9R)(COTE GAUCHE)	492
AUTOCOLLANT (EMPLACEMENT D'OEILLETON DE LEVAGE)	922
AUTOCOLLANT (IDENTIFICATION DU COUSSIN DE SIÈGE)	852 853
AUTOCOLLANT-INFORMATION (CONNEXION CABLAGE MOTEUR)	923
AUTOCOLLANT (INSTRUCTION) (COMMANDE DE BULLDOZER)	730
AUTOCOLLANT (NIVEAU SONORE EXTÉRIEUR)	506
AUTOCOLLANT-RÉFLECTEUR (ROUGE)	922
AUXILIAIRE DE DÉMARRAGE À L'ÉTHER	344 346
AVERTISSEUR (ASS)	273
AVERTISSEUR DE RECUL (ENS)	287
AVERTISSEUR DE RECUL (ENS)	279
AXE DE CULBUTEUR (ASS)	72 73

B

BAGUE	508 509
BALAI D'ESSUIE-GLACE (ENS)	759
BALAI D'ESSUIE-GLACE (ENS) (ARRIÈRE)	916
BALAI D'ESSUIE-GLACE (ENS) (AVANT)	916
BALAI D'ESSUIE-GLACE (ENS) (PORTE GAUCHE)	916
BALANCIER DE SUSPENSION (ASS)	514 516
BALANCIER DE SUSPENSION (ENS)	513
BANDE AUTOCOLLANTE (ARRIÈRE)	492
BANDE MÉTÉOROLOGIQUE	901 902 904 906
BARRE D'ATTELAGE (ASS)	470
BARRE DÉFLECTRICE (VERSION)	507
BATI DE RIPPER (ASS)	716 718
BATTERIE ET CÂBLAGE	278 286
BATTERIE (12 VOLTS/SEC)	281 289 349
BLINDAGE D'ARBRE DE TRANSMISSION (ASS)	412
BLINDAGE DE ROUE AV (ASS)	494

INDEX

Désignation	Page
BLINDAGE DE TRANSMISSION (ASS)	413, 414
BLINDAGE INFÉRIEUR (ASS)	489, 490
BLOC-CYLINDRES - COUVERCLE (ASS)	12, 13, 14
BLOC-CYLINDRES (ASS)	26
BLOC-CYLINDRES (ASS)	28
BLOC-CYLINDRES (ENS)	24
BLOC DE BRANCHEMENT (ASS)	307
BLOC DE BRANCHEMENT (ENS)	307
BLOC-FUSIBLE (ENS) (16 POLES)	373
BLOC-PUISSANCE (ASS)	293
BOÎTE DE VITESSES (VERSION)	442
BOÎTE PLANÉTAIRE (ASS)	422
BOÎTIER DE POMPE À CARBURANT	229
BOUCHON - BLOC-CYLINDRES	70
BOUCHON - CULASSE (ASS)	71
BOUCHON À ÉVENT	886
BOUCHON AIMANTÉ	398, 406
BOUCHON DE CONTROLE DE NIVEAU D'HUILE (ENS)	530
BOUCHON DE GOULOTTE DE REMPLISSAGE (ENS)	81, 82
BOUCHON DE GOULOTTE DE REMPLISSAGE (ENS) (HUILE DE TRANSMISSION)	416
BOUCHON DE GOULOTTE DE REMPLISSAGE (RÉSERVOIR HYDRAULIQUE)	680
BOUCHON DE RADIATEUR (ENS)	149
BOUCHON DE REMPLISSAGE D'HUILE MOTEUR (ASS)	81, 82
BOUCHON DE RÉSERVOIR DE CARBURANT (ENS)	269
BOUCHON DE VIDANGE	118, 130, 518
BOUCHON DE VIDANGE D'HUILE	64
BOUCHON D'ÉTANCHÉITÉ (CLIMATISEUR)	825, 831
BOUCHON D'ÉTANCHÉITÉ (CLIMATISEUR)(CÔTÉ BAS)	825
BOUCHON D'ÉTANCHÉITÉ (CLIMATISEUR)(CÔTÉ ÉLEVÉ)	825
BOUCHON FILETÉ	70
BOUCHON FILETÉ (FILET DE 1-11-1/2 NPTF)	58
BOUCHON FILETÉ (FILET 1/8-27 NPTF)	58
BOUCHON-JOINT TORIQUE	226, 246
BOUCHON-JOINT TORIQUE (FILET 7/16-20)	26, 674
BOULONNERIE - POMPE D'INJECTION DE CARB. (ASS)	214
BOULONNERIE DE LA CULASSE (ASS)	38
BOULONNERIE DE MONTAGE DE LA POMPE A HUILE (ASS)	80
BOURRELET D'ÉTANCHÉITÉ	20
BOUTON	788
BOUTON-AVERTISSEUR	378
BOUTON (COMMANDE DE TEMPÉRATURE DE CABINE)	808
BOUTON DE COMMANDE (VENTILATEUR SOUFFLANT)	809
BOUTON-LOMBAIRE	853
BRANCHEMENT ÉLECTRIQUE (ASS)	294
BRAS DE POUSSEE - DROITE (ASS)	739
BRAS DE POUSSEE - GAUCHE (ASS)	738
BROSSE (ENS)	362
BUTÉE ÉLASTIQUE (ASS)	270

C

Désignation	Page
CABINE - REVÊTEMENT (ASS)	822
CABINE (ASS)	788
CABINE (VERSION)	779, 780, 781, 782
CABINE (VERSION)	784, 786
CABLAGE - PLATE-FORME (ASS)	378
CABLAGE DE CONSOLE (ASS)	372
CABLAGE DE MOTEUR (ASS)	376
CABLAGE D'INJECTEUR	383
CACHE-SOUPAPES (ASS)	21
CACHE-SOUPAPES (ASS)	20
CADENAS (ASS)	7, 216, 220, 268, 472, 476, 480, 482, 502, 614
CANALIS. D'EAU - REFROIDISSEUR D'ADMISSION (ASS)	116
CANALISATIONS - INJECTEURS-POMPES HYDRAULIQUES	244
CANALISATIONS D'AIR (ASS)	170, 174, 176
CANALISATIONS D'AIR (ASS)	172
CANALISATIONS D'ALIMENTATION D'HUILE (ASS)	96

INDEX

Désignation	Page
CANALISATIONS DE CHAUFFAGE (ASS)	836
CANALISATIONS DE CLIMATISEUR (ASS)	830
CANALISATIONS DE CLIMATISEUR (ASS)	824
CANALISATIONS DE DIRECTION (ASS)	580
CANALISATIONS DE POMPE (ASS)	654
CANALISATIONS DE RÉCHAUFFEUR DE LIQUIDE DE REFROIDISSEMENT	836
CANALISATIONS DE VÉRIN DE LEVAGE (ASS)	646
CANALISATIONS D'EAU (ASS)	117
	118
	120
	121
	122
	130
CANALISATIONS D'EAU (ASS)	6
CANALISATIONS D'EAU (ASS)	126
CANALISATIONS D'EXTRACTEUR DE BROCHE (ASS)	650
	652
CANALISATIONS D'HUILE DE TRANSMISSION (ASS)	416
CANALISATIONS D'HUILE DE TURBOCOMPRESSEUR (ASS)	98
	100
CANALISATIONS D'HUILE MOTEUR (ASS)	92
CANALISATIONS D'INCLINAISON (ASS)	662
	664
CANALISATIONS D'INJECTION DE CARBURANT (ASS)	240
	242
CANALISATIONS DU FILTRE A CARBURANT (ASS)	234
	236
CANALISATIONS DU RIPPER (ASS)	658
	660
CANALISATIONS DU VÉRIN D'INCLINAISON (ASS)	666
	668
	670
CAPOT ET PROTECTION (ASS)	502
CAPTEUR DE NIVEAU DE CARBURANT (ASS)	328
CAPTEUR DE PRESSION (ASS)	333
	334
	335
	336
	337
CAPTEUR DE PRESSION (ASS)	330
	331
CAPTEUR DE PRESSION (ASS)	332
CAPTEUR DE PRESSION (ASS) (ATMOSPHÉRIQUE)	172
CAPTEUR DE PRESSION (ASS) (COMMANDE D'INJECTION)	38
CAPTEUR DE PRESSION (ASS) (HUILE MOTEUR)	248
	287
CAPTEUR DE PRESSION (ASS) (SORTIE DE TURBOCOMPRESSEUR)	38
CAPTEUR DE TEMPERATURE (ASS)	341
	342
CAPTEUR DE TEMPERATURE (ASS) (ADMISION D'AIR)	170
CAPTEUR DE TEMPERATURE (ASS) (CARBURANT)	236
CAPTEUR DE TEMPERATURE (ASS) (HUILE DE TRANSMISSION)	281
	289
CAPTEUR DE TEMPERATURE (ASS) (HUILE HYDRAULIQUE)	279
	287
CAPTEUR DE TEMPERATURE (ASS) (LIQUIDE DE REFROIDISSEMENT)	289
CAPTEUR DE TEMPERATURE (ASS) (LIQUIDE DE REFROIDISSEMENT DU MOTEUR)	122
CAPTEUR DE VITESSE (ASS)	60
	327
	338
	339
	340
CAPTEUR DE VITESSE (ASS)	326
CAPTEUR DE VITESSE (ASS) (SORTIE DE BOÎTE DE VITESSES)	423
CAPTEUR DE VITESSE (ASS) (VENTILATEUR)	46
CAPTEUR MAGNÉTIQUE (ASS)	327
CAPTEUR MAGNÉTIQUE (ASS)	326
CARBURANT - CANALISATIONS DE VIDANGE (ASS)	232
CARDAN COULISSANT (ASS)	434
CARENAGE (ASS)	472
CARENAGE DE MOTEUR (ASS)	474
	476
	480
CARTER AV (ASS)	61
CARTER AV (ASS)	60
CARTER DE VOLANT (ASS)	56
	58
CARTER TELESCOPIQUE DE MECANISME AMORTISSEUR	518
CEINTURE DE SECURITE (ASS)	876
	877
CHAINES (ASS)	550
	551
	552
	553
	554
	555
	556

INDEX

Désignation	Page
	557
	558
	559
	560
	561
CHAPEAU	140
	144
CHAPEAU DE GALET INFÉRIEUR	534
	536
CHAPEAU DE GALET INFERIEUR (ASS)	512
CHAPEAU DE ROUE AV (CHAINE) (ASS)	510
	511
CHAPEAU D'ENTRAÎNEMENT DE COMPTE-TOURS	209
CHAPEAU (ENS)	220
CHÂSSIS ET CARTER (ASS)	452
	454
CHÂSSIS PORTEUR (VERSION)	517
CHAUFFAGE DE CABINE (ASS)	808
	812
CHEMISE INFERIEURE	26
CLAPET	606
CLAPET A BILLE	216
	220
CLAPET ANTI-RETOUR	216
	220
CLAPET ANTI-RETOUR (RÉSERVOIR HYDRAULIQUE)	654
CLAPET (ASS)	445
	594
	602
	606
	702
CLAPET DE DECHARGE (ASS)	418
	449
	702
	703
	704
	705
CLAPET DE DECHARGE (ASS)	606
	607
CLAPET DE DECHARGE (ASS) (CHARGE)	672
CLAPET DE DECHARGE (ASS) (DÉRIVATION DE REFROIDISSEUR)	416
CLAPET DE DECHARGE (ASS) (HUILE FROIDE)	604
CLAPET DE DECHARGE (ASS) (PRINCIPAL)	672
CLAPET DE DECHARGE ET ANTI-RETOUR	689
CLAPET DE RETENUE (ENS)	688
CLAPET DE RETENUE (ENS) (HUILE DE COMPENSATION)	604
CLAPET DE RETENUE (ENS) (RETOUR DE DÉBIT)	672
CLAPET DE RETENUE (ENS) (SYSTÈME D'ESSUIE GLACE/LAVE-GLACE)	888
CLAPET (DÉTENTE) (DISPOSITIF DE RÉGLAGE DE CHAINE)	548
CLAPET (ENS)	830
CLAPET (ENS)	194
	830
CLAPET (ENS)	150
CLAPET (ENS) (DÉMARRAGE À L'ÉTHER)(24 VOLTS)	344
	346
CLAPET (ENTRÉE DU CONVERTISSEUR DE COUPLE)	418
CLAPET (REMPLISSAGE) (DISPOSITIF DE RÉGLAGE DE CHAINE)	548
CLÉ	7
	216
	220
	268
	472
	476
	480
	482
	614
CLÉ (COUPE-BATTERIE)	366
CLIMATISEUR (ASS)	776
CLIMATISEUR (VERSION)	774
CLIMATISEUR (VERSION)	773
COLLECTEUR - SOUPAPE (ASS)	672
COLLECTEUR - SOUPAPE (ASS) (SOUPAPE DE DISTRIBUTEUR DE RIPPER/BULLDOZER)	686
COLLECTEUR D'ÉCHAPPEMENT (ASS)	178
COLLIER-GAINE	362
COMMANDE DE BULLDOZER (VERSION)	715
COMMANDE DE DECELERATEUR (ASS)	198
COMMANDE DE DIRECTION (ASS)	570
COMMANDE DE DIRECTION ET BOITE DE VITESSES	572
COMMANDE DE LA PÉDALE DE FREIN (ASS)	568
COMMANDE DE RÉGULATEUR (ASS)	204
	207
COMMANDE D'INVERSION DE LA CENTRALE DE SURVEILLANCE (ASS)	800
COMMANDE ELECTRONIQUE DE MOTEUR (ASS)	298
	299
COMMANDE ELECTRONIQUE (ENS) (LAMPE DE TABLEAU DE BORD)	854
COMMANDE ET MONTAGE - MOTEUR	296
COMMANDE HYDRAULIQUE DE BOÎTE (ASS)	390
COMMANDE HYDRAULIQUE (VERSION)	608
COMPRESSEUR DE REFRIGERANT (ASS)	796
COMPRESSEUR DE REFRIGERANT (ASS)	792
	794

INDEX

Désignation	Page
CONDENSEUR DE RÉFRIGÉRANT	798
CONTACTEUR DE DEBIT (ASS)	4
	6
CONTACTEUR DE DEBIT (ASS)	367
	368
CONTACTEUR (ENS) (COMMANDE D'INCLINAISON)	369
CONTACTEUR (ENS) (COMMANDE D'INCLINAISON SIMPLE/DOUBLE)	369
CONTACTEUR (ENS) (FEU AR)	378
CONTACTEUR (ENS) (FEUX AVANT)	380
CONTACTEUR (ENS) (PORTIERE AVANT,ARRIERE,DROITE ET GAUCHE)	916
CONTACTEUR (ENS) (VENTILATEUR SOUFFLANT)	808
CONTACTEUR (ENS) (24 VOLTS) (ILLUMINÉ)	378
CONTACTEUR MAGNETIQUE (ASS)	370
CONTACTEUR MAGNETIQUE (ASS) (RELAIS DE DÉMARRAGE)	348
	372
CONTACTEUR MAGNETIQUE (ASS) (RELAIS PRINCIPAL)	372
CONTACTEUR MAGNETIQUE (ENS) (DÉMARREUR MARCHE/ARRÊT)	104
CONTACTEUR-POIGNÉE (ASS)	369
	730
CONTREPOIDS (ASS)	458
	460
	461
CONVERTISSEUR DE COUPLE (ASS)	436
	438
	440
CORPS-POMPE À HUILE (ENS) (CHARGE DE BOÎTE DE VITESSES)	430
CORPS-POMPE À HUILE (ENS) (CHARGE DE CONVERTISSEUR)	430
CORPS-POMPE À HUILE (ENS) (REPRISE DE BOÎTE)	430
COURONNE ET ENGRENAGES DE TRANSFERT (ASS)	410
COURROIE TRAPEZOIDALE (COMPREND 2 COURROIES)	274
COURROIE TRAPEZOIDALE (COMPRESSEUR DE CLIMATISEUR)	794
	796
COUVERCLE ANTI-POUSSIÈRE (RACCORD DE REMPLISSAGE RAPIDE DE CARBURANT)	190
	196
COUVERCLE DE CARTER AV (ASS)	18
COUVERCLE DE CARTER DE VOLANT (ASS)	16
COUVERCLE DE RÉSERVOIR HYDRAULIQUE	614
COUVERCLE DE TOURILLON (ASS)	462
COUVERCLE INFÉRIEUR-DOSSIER (ASS)	853
COUVERCLE INFÉRIEUR-DOSSIER (ASS)	851
	852
CREPINE (ENS)	680
CULASSE (ASS)	32
	35
	36
	38
CULASSE (ENS)	29
	30
CULBUTERIE (ASS)	77
	78

D

DÉFLECTEUR DE PLUIE (ENS)	164
	168
DEFLECTEUR PARE-SABLE (ASS)	486
DÉMARRAGE PAR TEMPS FROID (VERSION)	348
DÉMARREUR ÉLECTRIQUE (ASS)	352
	356
DÉMARREUR ÉLECTRIQUE (ASS)	359
	360
	362
DENT DE RIPPER (ASS)	770
	771
	772
DISJONCTEUR DE SECURITE (ENS) (AVERTISSEUR DE RECUL)	572
DISJONCTEUR DE SECURITE (ENS) (DISPOSITIF ANTI-DÉMARRAGE)	572
DISJONCTEUR (ENS) (10A) (CONTACTEUR DE DÉMARRAGE À CLÉ)	372
DISJONCTEUR (ENS) (10A) (FREIN D'EMBRAYAGE ÉLECTRONIQUE)	372
DISJONCTEUR (ENS) (125A) (PRINCIPAL)	372
DISJONCTEUR (ENS) (15A) (CONDENSEUR DE CLIMATISEUR À DISTANCE)	824
	830
DISJONCTEUR (ENS) (15A) (ÉQUIPEMENT)	372
DISJONCTEUR (ENS) (15A) (MOTEUR)	372
DISJONCTEUR (ENS) (15A) (PROJECTEURS AVANT)	372
DISJONCTEUR (ENS) (15A) (SOUFFLANT)	372
DISPOSITIF DE VIDANGE RAPIDE D'HUILE (ASS)	102
DISPOSITIF D'EVACUATION DES VAPEURS DE CARTER	86
	88
DISTRIBUTEUR (ASS)	598
	600
	690
	692
	694

INDEX

Désignation	Page
	696
DISTRIBUTEUR (ASS) (INCLINAISON DE LAME)	686
DISTRIBUTEUR (ASS) (INCLINAISON DE RIPPER)	686
DISTRIBUTEUR (ASS) (LEVAGE DE LAME)	686
DISTRIBUTEUR (ASS) (LEVAGE DE RIPPER)	686
DISTRIBUTEUR DE FREIN (ASS)	596
DISTRIBUTEUR DE PRESSION (ASS)	271
DISTRIBUTEUR DE PRESSION (ASS)	604
DISTRIBUTEUR DE PRESSION (ASS) (CARBURANT)	236
DISTRIBUTEUR D'INCLINAISON (ASS)	710
DISTRIBUTEUR ET MONTAGE (ASS)	684
DISTRIBUTEUR 4 ÉLÉMENTS (ASS)	686

E

EAU DES CHEMISES - RECHAUFFEUR (ASS)	306
EAU DES CHEMISES - RECHAUFFEUR (ASS)	305
ÉCLAIRAGE - AUXILIAIRE (ASS)	316
ÉCLAIRAGE - PROJECTEURS (ASS)	319
	320
	742
ÉCLAIRAGE - PROJECTEURS (ASS)	318
ECLAIRAGE AR (ASS)	324
ÉCLAIRAGE (ASS)	315
ECLAIRAGE AV (ASS)	322
ÉCRAN DE COLLECTEUR (ASS)	182
ÉCRAN (ENS)	680
ÉJECTEUR AUTOMATIQUE DE POUSSIÈRE (ASS)	168
ÉLÉMENT DE FILTRE	172
ÉLÉMENT DE FILTRE À AIR PRIMAIRE (ENS)	160
ÉLÉMENT DE FILTRE À HUILE (ENS) (DÉBIT HYDRAULIQUE/RETOUR DE DÉBIT) (JETABLE)	680
	681
ÉLÉMENT DE FILTRE À HUILE (ENS) (DÉBIT HYDRAULIQUE/RETOUR DE DÉBIT) (NETTOYAGE/PERFORMANCE SUPÉRIEURE)	680
ÉLÉMENT DE FILTRE À HUILE (ENS) (HYDRAULIQUE)	579
ÉLÉMENT DE FILTRE À HUILE (ENS) (HYDRAULIQUE) (LIQUIDE RÉSISTANT AU FEU/PERFORMANCE SUPÉRIEURE)	680
ÉLÉMENT DE FILTRE À HUILE (ENS) (NETTOYAGE/PERFORMANCE SUPÉRIEURE)	681
ÉLÉMENT DE FILTRE À HUILE (ENS) (RETOUR DE DÉBIT) (LIQUIDE RÉSISTANT AU FEU/PERFORMANCE SUPÉRIEURE)	681
ÉLÉMENT DE FILTRE À HUILE (ENS) (TRANSMISSION)	396
ÉLÉMENT DE FILTRE (INDICATEUR DE COLMATAGE DU FILTRE À AIR)	176
ÉLÉMENT DU RÉCHAUFFEUR D'EAU DES CHEMISES (ENS)	306
ÉLÉMENT DU RÉCHAUFFEUR D'EAU DES CHEMISES (ENS) (120 VOLTS/1500 WATTS)	305
ÉLÉMENT PRINCIPAL (ENS) (FILTRE À AIR) (GRANDE EFFICACITÉ)	162
ÉLÉMENT PRINCIPAL (ENS) (FILTRE À AIR) (STANDARD)	162
ÉLÉMENT SECONDAIRE (ENS) (FILTRE À AIR)	160
	162
EMBOUT D'EXTRÉMITÉ (ASS)	752
	753
EMBOUT ET LAME DE COUPE (ASS)	745
	746
	747
	748
	749
	750
	751
ENTR. DE RÉGULATEUR ET POMPE À CARBURANT (ASS)	208
ENTRAÎNEMENT DE COMPTE-TOURS (ASS)	209
ENTRAÎNEMENT DE DIRECTION (ASS)	578
ENTRAÎNEMENT DE DIRECTION DIFFÉRENTIELLE (ASS)	576
ENTRAÎNEMENT DE VENTILATEUR (ASS)	42
	44
	46
ENTRAINEMENT D'INJECTEURS-POMPES HYDRAULIQUES	210
	212
ESSUIE-GLACE (ASS)	912
	914
	916
ÉVENT (ENS)	349
EXTRACTEUR DE BROCHE (ASS)	737
EXTRACTEUR DE BROCHE (VERSION)	736

F

FAISCEAU DE CABLES (ENS) (CAPTEUR DE PRESSION)	331
FILTRE -EAU	137
FILTRE A AIR (ASS)	158
	160

INDEX

Désignation	Page
	162
FILTRE À AIR (CABINE) (GRANDE EFFICACITÉ)	808
FILTRE À AIR (CABINE) (RÉDUCTION DES ODEURS)	808
FILTRE À AIR (CABINE) (STANDARD)	808
FILTRE À AIR DE CABINE	809
FILTRE À CARBURANT	268
FILTRE A CARBURANT (ASS)	223
FILTRE A CARBURANT (ENS)	223
FILTRE A HUILE (ASS)	396
	579
FILTRE A HUILE (ASS) (DIRECTION)	580
FILTRE A HUILE (ASS) (TRANSMISSION)	416
FILTRE À HUILE MOTEUR (ASS)	84
FILTRE A HUILE MOTEUR (ENS)	84
FILTRE A MOUSSE (CAPTEUR DE NIVEAU DE CARBURANT)	279
	287
FILTRE DE SÉPARATEUR D'EAU ET DE CARBURANT (ASS)	225
FILTRE DE SÉPARATEUR D'EAU ET DE CARBURANT (ASS)	224
FILTRE (ENS) (SÉPARATEUR D'EAU ET CARBURANT)	224
FILTRE ET CANALISATIONS DE CARBURANT (ASS)	216
FILTRE ET CANALISATIONS DE CARBURANT (ASS)	220
FILTRE (POMPE À EAU)	134
FILTRE (POMPE HYDRAULIQUE D'INJECTEUR-POMPE)	212
FLEXIBLE (87 CM CHACUN)	88
FLEXIBLE (9CM CHACUN)	88
FREIN DE MANOEUVRE (ASS)	564
FUSIBLE (10A)	373
FUSIBLE (15A)	373
FUSIBLE (20 A)	373
FUSIBLE (30A)	300

G

GALET A BOUDIN DOUBLE (ASS)	538
	539
	540
	541
GALET A BOUDIN SIMPLE (ASS)	542
	543
	544
	545
GALET SUPERIEUR (VERSION)	534
	536
GARDE-BOUE (ASS)	482
GLISSIÈRE	897
	899
	909
GRAISSAGE DE LA TRAVERSE-PIVOT	530
GRAISSEUR	44
	514
	630
	634
	636
	638
	640
	642
	718
	722
	733
GRAISSEUR (FILET 1/8-27)	516
	628
GRAISSEUR (FILETAGE 1/8-27)(45 DEGRÉS)	8
GRAISSEUR (RACCORD AU PAS DU GAZ DE 1/8 - 27)	716
GRILLE DE PROTECTION (ASS)	867
GROUPE DE CONTROLE (SYSTÈME DE SURVEILLANCE CATERPILLAR)	854
GROUPE DE MONTAGE	846
GROUPE DE MOTEUR A PISTONS	586
GROUPE DE ROTATION DE MOTEUR	592
GROUPE DE ROTATION DE POMPE	677

H

HUILE MOTEUR - CARTER (ASS)	64

I

INDICATEUR DE COLMATAGE DE FILTRE A AIR	176
INJECTEUR DE CARBURANT (ASS)	230
INJECTEURS-POMPES HYDRAULIQUES (ENS)	262
	264
	266
INSONORISATION (VERSION)	506
INTERRUPTEUR - DÉRIVATION (ASS)	365
INTERRUPTEUR - DÉRIVATION (ASS) (FILTRE À HUILE DE TRANSMISSION)	281
	289
INTERRUPTEUR - DÉRIVATION (ASS) (FILTRE DE DIRECTION)	579
INTERRUPTEUR À BASCULE (ASS) (COMMANDE DU VENTILATEUR)	804
INTERRUPTEUR À BASCULE (ENS) (VERROUILLAGE)(EXTRACTEUR DE BROCHE DE RIPPER)	608
INTERRUPTEUR (ASS)	694
INTERRUPTEUR BALANCIER (ENS) (AUXILIAIRE)	380

INDEX

Désignation	Page
INTERRUPTEUR BALANCIER (ENS) (AUXILIAIRE DE DÉMARRAGE À L'ÉTHER)	380
INTERRUPTEUR BALANCIER (ENS) (CLIMATISEUR MARCHE/ARRÊT)	809
INTERRUPTEUR BALANCIER (ENS) (CONDUCTEUR)	378
INTERRUPTEUR BALANCIER (ENS) (FEU LATÉRAL)	378
INTERRUPTEUR BALANCIER (ENS) (24 VOLTS)(SCELLÉ)(ALLUMÉ) (ACCÉLÉRATEUR)	378
INTERRUPTEUR DE DÉMARRAGE (ASS)	378
INTERRUPTEUR DE DÉMARRAGE (ASS)	371
INTERRUPTEUR DE KLAXON (ENS)	378
INTERRUPTEUR DE THERMOSTAT (ENS) (COMPRESSEUR DE CLIMATISEUR)	776

J

JAUGE D'HUILE MOTEUR (BAIONNETTE) (ASS)	90
JAUGE D'HUILE MOTEUR (BAÏONNETTE) (ENS) (TRANSMISSION)	416
JEU DE COURROIES TRAPEZOIDALES	42
JEU DE COURROIES TRAPEZOIDALES (ALTERNATEUR/MOTEUR A FAIBLES EMISSIONS)	2
JEU DE COURROIES TRAPEZOIDALES (COMPREND 4 COURROIES)	44
JOINT DE VILEBREQUIN (ASS)	23
JOINT-PÂTE	14
JOINT-PÂTE (14ML)	18
JOINT PLAT	680
JOINT PLAT DU COLLECTEUR D'ECHAPPEMENT	178
JOINT PLAT (POMPE D'AMORÇAGE DE CARBURANT)	220
JOINT TORIQUE (DIA INT 11,89 MM)	281
	289
JOINT UNIVERSEL (ASS)	443

K

KIT - BLOCAGE DE BORNE (BLOC FUSIBLE)	373
KIT D'ATTACHE	884
KIT D'ATTACHE DE CEINTURE DE SECURITE	882
KIT DE BALAI D'ESSUIE-GLACE	917
KIT DE BEC	904
	906
KIT DE BLOC COULISSANT	879
	880
	881
KIT DE BORNE	353
	357
	363
KIT DE BOUCHON	262
KIT DE BOUCHON (COMPREND JOINTS)	266
KIT DE BOUGIE (12 BROCHES)	379
KIT DE BOUGIE (2 BROCHES)	2
	104
	279
	280
	287
	288
	289
	349
	370
	373
	376
	379
	424
	776
	813
	824
KIT DE BOUGIE (3 BROCHES)	104
	279
	280
	288
	334
	335
	336
	337
	376
	378
	379
KIT DE BOUGIE (3 BROCHES) (CAPTEUR DE PRESSION)	331
	332
KIT DE BOUGIE (3 BROCHES) (CAPTEUR DE VITESSE-CALAGE DU MOTEUR)	339
KIT DE BOUGIE (4 BROCHES)	280
	288
	289
	373
	376
	379
	825
	890
KIT DE BOUGIE (6 BROCHES)	104
	280
	288
	378
	379
	890
KIT DE BOUGIE (8 BROCHES)	2
	280
	288
	379
KIT DE BOULONNERIE	884

INDEX

Désignation	Page
KIT DE BOULONNERIE, JOINTS ET CALES D'ÉPAISSEUR	720
	722
KIT DE BOUTON	816
KIT DE CHAPEAU DE FILTRE (RÉSERVOIR DE CARBURANT)	269
KIT DE COMPENSATEUR	266
KIT DE COMPENSATEUR DE POMPE HYDRAULIQUE D'INJECTEUR INDIVIDUEL	262
KIT DE COUSSINET	166
	266
	592
	817
KIT DE COUSSINET (DÉMARREUR)	362
KIT DE COUSSINET (ÉTRIER)	262
KIT DE COUSSINET (STANDARD)	68
KIT DE COUSSINET (0,635 MM SOUS-DIMENSIONNÉ)	68
KIT DE COUSSINET (1,27 MM SOUS-DIMENSIONNÉ)	68
KIT DE FAISCEAU DE CABLAGE (SIÈGE À SUSPENSION PNEUMATIQUE)	884
KIT DE GAINE	882
KIT DE GLACE DE CABINE (USINE)	909
KIT DE GUIDE	904
	906
KIT DE JOINTS	46
	231
	266
	447
	673
	707
	709
KIT DE JOINTS (ÉLECTROVANNE DE CARBURANT)	272
KIT DE JOINTS (INJECTEUR HYDRAULIQUE)	262
KIT DE LA POMPE D'INJECTION DE CARBURANT (RÉNOVATION)	262
KIT DE PARE-CHOCS	816
KIT DE PISTON	674
KIT DE PISTON EXCENTRIQUE	674
KIT DE POUSSOIR	817
KIT DE PRISE FEMELLE (12 BROCHES)	279
	280
	288
	379
KIT DE PRISE FEMELLE (2 BROCHES)	104
	273
	278
	279
	280
	286
	287
	288
	289
	326
	327
	340
	344
	346
	348
	349
	365
	372
	373
	376
	378
	379
	580
	709
	776
	777
	798
	812
	813
	824
	830
KIT DE PRISE FEMELLE (3 BROCHES)	104
	122
	170
	236
	279
	280
	287
	308
	329
	338
	341
	342
	373
	376
	378
	379
	608
	730
	890
KIT DE PRISE FEMELLE (4 BROCHES)	279
	280
	288
	328
	373
	376
	379
	707
	708
	824
	830
	890

INDEX

Désignation	Page
KIT DE PRISE FEMELLE (6 BROCHES)	279, 288, 379, 800, 808, 824, 841, 842, 912, 914, 916
KIT DE PRISE FEMELLE (8 BROCHES)	279, 280, 288, 378, 777, 813
KIT DE RÉNOVATION DE LA POMPE À EAU (EAU)	134
KIT DE RESSORT	901, 902
KIT DE RESSORTS	816
KIT DE REVISION GENERALE	46
KIT DE ROULEAU	882, 884
KIT D'ENGRENAGE DE DÉMARREUR	363
KIT D'INDICATEUR	816
KIT-FENETRE	820
KLAXON (ENS) (24 VOLTS)(TON FAIBLE)	281, 289
KLAXON (ENS) (24 VOLTS)(TON FORT)	281, 289

L

Désignation	Page
LAME DE BULLDOZER SEMI-UNIVERSELLE (VERSION)	711, 712
LAME DE BULLDOZER UNIVERSELLE (VERSION)	713
LAME DE BULLDOZER UNIVERSELLE (VERSION)	714
LAME DE COUPE (ASS)	754, 755, 756
LAME DE COUPE SEMI-UNIVERSELLE (ASS)	757, 758
LAME SEMI-UNIVERSELLE (ASS)	765
LAME SEMI-UNIVERSELLE (ENS)	760, 762
LAME UNIVERSELLE (ASS)	766
LAME UNIVERSELLE (ENS)	763, 764
LAMPE - PHARE (ASS)	310
LAMPE - PHARE (ASS)	309
LAMPE - PHARE (ASS) (24 VOLTS)(SUSPENDU)	315, 319
LAMPE - PHARE (ASS) (24 VOLTS)(VERTICAL)	318, 320
LAVE-GLACE - VITRE (ASS)	890
LENTILLE (ENS) (PLAFONNIER)	309, 310
LENTILLE (PLAFONNIER)	308
LENTILLE ROUGE	380, 854
LEVIER (ASS)	644
LEVIER (COMMANDE DE RÉGIME DE RALENTI)	782
LEVIER DE DISTRIBUTEUR (ASS)	645
LIBRE (ENS) (CAPTEUR DE NIVEAU DE CARBURANT)	278, 286
LIMITEUR D'INJECTION (ASS)	200
LIMITEUR D'INJECTION (ASS)	202
LIMITEUR (ENS)	200

M

Désignation	Page
MAILLON DE CHAINE (ENS)	524, 525, 526, 527, 528, 529
MANCHON POUR L'ALESAGE DE POUSSOIR	26
MANOCONTACT (ENS) (CLIMATISEUR/BAS)	824, 830
MANOCONTACT (ENS) (CLIMATISEUR/ÉLEVÉ)	824, 830
MANOCONTACT (ENS) (HUILE)	104
MECANISME AMORTISSEUR ET REGLAGE DE CHAINES (ASS)	548
MINUTERIE	104
MINUTERIE (ENS) À TEMPORISATION (24 VOLTS)	824, 830
MODIFICATION -BULLDOZER	731, 732
MODULE - QUATRE INSTRUMENTS (ASS)	841
MODULE D'INDICATEUR DE VITESSE ET COMPTE-TOURS (ASS)	842
MONTAGE DE CABINE (ASS)	844
MONTAGE DE MOTEUR (VERSION)	7
MONTAGE DE RADIO (ASS)	819
MONTAGE DE RIPPER (ASS)	734

INDEX

Désignation	Page
MONTAGE DE VÉRIN (ASS)	733
MONTAGE DU TOIT ROPS (ASS)	847
MOTEUR ELECTRIQUE (ASS)	798
MOTEUR ELECTRIQUE (ASS) (27 VOLTS) (VENTILATEUR SOUFFLANT DE CABINE)	776 812
MOTEUR (VERSION)	4 6
O	
OEILLETONS DE LEVAGE MOTEUR (ASS)	62
P	
PARE-PIERRES (ASS)	498 499
PARE-POUSSIERE	70 84 122 126 286 386 417 444 449 579 580 596 654 681
PARE-POUSSIERE (RACCORD DE REMPLISSAGE RAPIDE DE CARBURANT)	192 194
PIGNON AR (ASS)	52
PIGNONNERIE AV (ASS)	48 50
PISTON ET BIELLE (ASS)	66 68
PIVOT D'ESSUIE-GLACE (ASS)	920
PLAFONNIER (ASS)	308
PLAFONNIER (ASS) (24 VOLTS)(AVEC INTERRUPTEUR)	788
PLAQUE - AVERTISSEMENT (HUILE DE RESSORT AMORTISSEUR)	518
PLAQUE - AVERTISSEMENT (RESSORT AMORTISSEUR)	518 562
PLAQUE D'ADAPTEUR DE REGULATEUR (ASS)	246
PLAQUE D'INSTRUCTIONS (CLIMATISEUR)	773 774
PLAQUE D'USURE (ASS)	767
PLAQUE-GLISSIÈRE (ASS)	856 858
PLAQUE (ID PRODUIT)	922
PLAQUE-INFORMATION TECHNIQUE	922
PLAQUE SIGNALÉTIQUE (ASS)	921
PLAQUE SIGNALÉTIQUE DE CONTROLEUR (SYSTÈME DE SURVEILLANCE ÉLECTRIQUE INTELLIGENT) (MOTEUR NON POLLUANT)	2
PLAQUE SIGNALÉTIQUE (REMARQUE)	846
PLAQUE SIGNALÉTIQUE (REMARQUE)	819
PLAQUE SIGNALÉTIQUE (REMARQUE) (POMPE DE PRÉ-GRAISSAGE)	104
PLAQUES SIGNALETIQUES ET AUTOCOLLANTS (ASS)	922
PLATE-FORME (ASS)	860
PLATEAU OSCILLANT (ASS)	678 679
POMPE A EAU (ASS)	132 134 136 137 138
POMPE A ENGRENAGES (ASS)	428
POMPE A ENGRENAGES (ASS)	430 673
POMPE A ENGRENAGES (ASS) (HUILE DE TRANSMISSION)	416
POMPE A ENGRENAGES (ASS) (3 ÉLÉMENTS) (REPRISE DE BOÎTE/CHARGE DE BOÎTE/CHARGE DE CONVERTISSEUR)	428
POMPE A HUILE MOTEUR (ASS)	108 110 112
POMPE A PISTONS (ASS)	588 674
POMPE D'ALIMENTATION EN CARBURANT (ASS)	258 259 262
POMPE DE GAVAGE (ASS)	587
POMPE D'INJECTEURS-POMPES HYDRAU. ET MONTAGE	248 250
POMPE D'INJECTION DE CARBURANT (ASS)	252 254 257
POMPES DE PISTONS ET ENGRENAGES (ASS)	676
PORTIERE DROITE (ASS)	466 468
PORTIERE GAUCHE (ASS)	463 464
POSTE DE CONDUITE (VERSION)	848

INDEX

Désignation	Page
PRISE FEMELLE (ENS) (DÉMARRAGE À L'AIDE DE CÂBLES VOLANTS)	278, 286
PROTECTEUR DE RÉDUCTEURS (VERSION)	487
PROTECTION ANTIVANDALISME (ASS)	807
PROTECTION D'ARBRE PIVOT (ASS)	495
PROTECTION DE JOINT (ASS)	500
PROTECTION DE ROUE LIBRE (VERSION)	488
PROTECTION DU RÉSERVOIR DE CARBURANT (ASS)	492
PROTÈGE-RADIATEUR (ASS)	496

R

RACCORD DE CLIMATISEUR (ENS)	825
RACCORD DE CLIMATISEUR (ENS)	830
RADIATEUR (ASS)	140, 144
RALLONGE DU DOSSIER DE SIEGE	876, 877
RÉCEPTEUR-DÉSHYDRATEUR (ASS) (CLIMATISEUR)	824
RÉCEPTEUR-DÉSHYDRATEUR (ASS) (RÉFRIGÉRANT)	830
RECHAUFFEUR DE CARBURANT (ASS)	302, 304
REDUCTEUR MARIN - MONTAGE (ASS)	420
RÉDUCTEURS (ASS)	398, 402, 406
REFROIDISSEUR D'HUILE DE BOÎTE (ASS)	392
REFROIDISSEUR D'HUILE HYDRAULIQUE ET MONTAGE (ASS)	612
REGULATEUR (ASS)	226
REGULATEUR ET POMPES D'INJECTION ET D'ALIMENTATION	260
RÉGULATEUR, POMPE D'INJEC. ET DE TRANSFERT DE CARBU.	260
RENFORCEMENT-CHÂSSIS PORTEUR (ASS)	532
RENIFLARD (ASS)	79
RENIFLARD (ENS)	21
RENIFLARD (ENS) (CARTER)	79
RENIFLARD (TRANSMISSION)	417
RÉSERVOIR - LAVE-GLACE (ASS)	886, 888
RÉSERVOIR DE CARBURANT (ASS)	268, 269
RÉSERVOIR D'EAU (ASS)	150
RÉSERVOIR DU LIQUIDE DE REFROIDISSEMENT (ASS)	149
RÉSERVOIR HYDRAULIQUE ET FILTRE (ASS)	680
RESSORT DE BALAI	363
RÉTROVISEUR (ASS)	838, 839, 840
RIPPER (ASS)	768, 769
RIPPER (VERSION)	741, 742
ROBINET DE BATTERIE (ASS)	366
ROBINET DE BATTERIE (ASS) (BATTERIE)	278, 286
ROBINET-ÉCHANTILLON DE LIQUIDE (ENS)	84
ROBINET-ÉCHANTILLON DE LIQUIDE (ENS)	417
ROBINET-ÉCHANTILLON DE LIQUIDE (ENS)	681
ROTATION DE LA ROUE DU VENTILATEUR SOUFFLANT	916
ROTATION DE LA ROUE DU VENTILATEUR SOUFFLANT (COMMANDE DE TEMPÉRATURE DE CABINE)	808
ROTATION DE LA ROUE DU VENTILATEUR SOUFFLANT (CONTACTEUR D'EXTRACTEUR DE BROCHE DE RIPPER)	608
ROTATION DE LA ROUE DU VENTILATEUR SOUFFLANT (ENTRÉE D'EAU/SORTIE D'EAU) (GROUPE CLIMATISEUR/CHAUFFAGE)	776, 812
ROTATION DE LA ROUE DU VENTILATEUR SOUFFLANT (RÉGLAGE DU SIÈGE)	882, 884
ROUE AV - CHAINES (ASS)	521, 522, 523

S

SEGMENT DE BARBOTIN (ASS)	432
SIÈGE (ASS)	870, 872, 874, 876, 877
SIÈGE AVEC SUSPENSION (ASS)	884
SIÈGE AVEC SUSPENSION (ASS)	878, 879, 880, 881, 882
SIÈGE INCLINABLE (ASS)	863
SIEGE RAPPORTE DE SOUPAPE D'ADMISSION (ADMISSION)	30
SIEGE RAPPORTE (SOUPAPE) (ADMISSION)	29
SIEGE RAPPORTE (SOUPAPE) (ÉCHAPPEMENT)	29

INDEX

Désignation	Page
	30
SIEGE (VERSION)	868
SILENCIEUX (ASS)	180
SOLÉNOÏDE DE DÉMARREUR (ENS)	356
SOLÉNOÏDE DE DÉMARREUR (ENS)	343
SOLÉNOÏDE (ENS)	352
SONDE - CIRCUIT DE CARBURANT	329
SOUPAPE - CLIMATISEUR (ENS) (COTÉ BAS)	825
SOUPAPE - CLIMATISEUR (ENS) (COTÉ ÉLEVÉ)	825
SOUPAPE - EAU (CHAUFFAGE DE CABINE)	777
	812
SOUPAPE - SOLÉNOÏDE (ASS)	272
SOUPAPE - SOLÉNOÏDE (ASS)	708
	709
SOUPAPE - SOLÉNOÏDE (ASS)	707
SOUPAPE - SOLÉNOÏDE (ASS) (COMMANDE DE PRESSION)	262
SOUPAPE - SOLÉNOÏDE (ASS) (FONCTION INCLINAISON/ INCIDENCE)	710
SOUPAPE D'ABAISSEMENT RAPIDE (ASS)	700
SOUPAPE D'ADMISSION	35
	36
SOUPAPE DE DÉRIVATION	681
SOUPAPE DE MODULATION (ASS)	447
SOUPAPE DE PRIORITE (ASS)	448
SOUPAPE DE VIDANGE (CARTER)	452
	454
SOUPAPE DE VIDANGE (RÉSERVOIR HYDRAULIQUE)	654
SOUPAPE D'ÉCHAPPEMENT	35
	36
SOUPAPE-ÉCHANTILLON	126
SOUPAPE PILOTE (ASS)	602
SOUPAPE PILOTE ET MONTAGE (ASS)	444
SOUPAPE RÉGULATRICE DE PRESSION ET DÉBIT	698
SOUPAPE RÉGULATRICE DE PRESSION ET DÉBIT (COMMANDE DE SORTIE DE POMPE)	674
SOUPAPE SELECTRICE ET REGULATRICE DE PRESSION	450
STABILISATEUR - BRAS DE POUSSEE (ASS)	724
	725
STABILISATEUR DU BRAS DE POUSSEE (ASS)	740
SUPPORT DE MOTEUR (ASS)	74
	75
SUSPENSION A BOGIES (ASS)	546
SUSPENSION DE SIEGE - CARTER (ASS)	816

T

Désignation	Page
TABLEAU DE BORD (ASS)	854
TAMIS D'ASPIRATION	440
TAMIS D'ASPIRATION (ADMISSION DE POMPE À HUILE DE TRANSMISSION)	416
TAMIS D'ASPIRATION (REPRISE DE BOÎTE)	386
TAMIS DE CARTER (RÉSERVOIR DE CARBURANT)	216
	220
TAMIS DE CLOCHE (ENS)	92
TAPIS DE PLANCHER	844
	848
	860
TENDEUR DE COURROIE (ASS)	8
THERMOCONTACT (ENS) (AUXILIAIRE DE DÉMARRAGE À L'ÉTHER)	286
THERMOCONTACT (ENS) (DÉRIVATION DE FILTRE DE TRANSMISSION)	278
	286
THERMOCONTACT (ENS) (FILTRE DE DIRECTION)	580
THERMOSTAT-TEMPÉRATURE D'EAU (92 DEGRÉS C)	122
	126
TOIT ROPS (ASS)	865
	866
TOIT ROPS (ENS)	864
TOLE DE PLANCHER (VERSION)	806
TOURILLON DE BULLDOZER (ASS)	744
TOURILLON DE BULLDOZER (VERSION)	743
TOURILLON DE MOTEUR (ASS)	76
TRAIN DE ROULEMENT	563
TRAINS PLANÉTAIRES - CARTER ET PIÈCES	386
TRANSFORMATEUR DE PUISSANCE (DE 24 VOLTS À 12 VOLTS)(25 AMP)	300
TRANSFORMATEUR DE PUISSANCE (24 VOLTS À 12 VOLTS)	378
TRANSFORMATION DE MOTEUR (VERSION)	2
TRANSFORMATION ELECTRIQUE (ASS)	300
TRANSMISSION (VERSION)	427
TRINGLERIE D'ÉQUIPEMENT (ASS)	610
	726
	728
	730
TURBOCOMPRESSEUR - CARTOUCHE (ASS)	166
	187
TURBOCOMPRESSEUR (ASS)	184
	185
	186
	187
TUYAU-CHÂSSIS PORTEUR (ENS)	562

INDEX

Désignation	Page

V

VANNE DE RINÇAGE (ASS)	446
VANNE PILOTE (ASS)	706
VENTILATEUR DÉGIVREUR (ASS)	804
VENTILATEUR SOUFFLANT (ASS)	114
VÉRIN À DOUBLE INCLINAISON (VERSION)	621
VÉRIN DE LEVAGE DE LAME DE BULLDOZER (ASS)	622
VERIN DE LEVAGE DE RIPPER (ASS)	628
VERIN DE LEVAGE DE RIPPER (ASS)	630
VÉRIN DE LEVAGE ET CANALISATIONS (ASS)	616 618
VÉRIN DE LEVAGE ET CANALISATIONS (ASS) (DROITE)	711 713
VÉRIN DE LEVAGE ET CANALISATIONS (ASS) (GAUCHE)	711 713
VÉRIN DE RIPPER ET CANALISATIONS (ASS)	620
VERIN D'EXTRACTEUR DE BROCHE DE RIPPER (ASS)	632
VÉRIN D'INCLINAISON (ASS)	638 640 642
VÉRIN D'INCLINAISON (ASS) (DROITE)	621
VÉRIN D'INCLINAISON (ASS) (GAUCHE)	621
VERIN D'INCLINAISON DE RIPPER (ASS)	634 636
VÉRIN D'INCLINAISON DOUBLE (ASS)	624 626
VERIN (ENS) (ÉTHER)	344 346
VÉRIN ET CANALISATIONS - DOUBLE INCLINAISON (ASS)	615
VERROU (ASS)	821
VERSION DE CHASSIS	456
VERSION DE COMMANDE DE DIRECTION HYDRAULIQUE	566
VERSION DE COMMANDE D'ÉQUIPEMENT HYDRAULIQUE	610
VERSION DE GALET ET ROUE AVANT	533
VERSION DE PRÉGRAISSAGE DE MOTEUR	104
VERSION DE TRANSFORMATION	801
VERSION DE TRANSFORMATION - SANS ROPS	802 803
VERSION D'ÉCLAIRAGE ARRIÈRE	314
VERSION DÉCLAIRAGE DE VÉRIN	312
VIDANGE-ÉCOLOGIE (ASS)	394
VILEBREQUIN (ASS)	23
VILEBREQUIN (ENS)	22
VITRE COULISSANTE (ENS)	893 894
VITRE DE CABINE (ASS)	895 896 897 898 899 900 901 908 909 910
VITRE DE CABINE (ASS)	902 904 907
VITRE DE CABINE (ASS)	906
VITRE DE CABINE (ASS) (ARRIÈRE-GLISSEMENT)	788
VITRE DE CABINE (ASS) (CÔTÉ DROIT)(COULISSANT)	893
VITRE DE CABINE (ASS) (CÔTÉ GAUCHE)(COULISSANT)	894
VITRE DE CABINE (ASS) (DROITE)	895 901
VITRE DE CABINE (ASS) (GAUCHE)	896
VITRE-FIXE-DROITE (TEINTÉ)	901
VITRE-FIXE-GAUCHE (TEINTÉ)	902
VITRE-PATIN-DROIT (TEINTÉ)	906
VITRE-PATIN (GAUCHE) (TEINTÉ)	904
VITRE (TEINTÉ)	895 896 907 908
VITRE (TEINTÉ) (CABINE-AVANT-FIXE)	788
VITRE (TEINTÉ) (CABINE-CÔTÉ-FIXE)	788
VITRE (TEINTÉ) (PORTES DE LA CABINE-FIXES)	788
VITRE (TEINTÉ)(VERT)	909 910
VOLANT MOTEUR (ASS)	47
VUE DU MODÈLE	1

INDICE

Nombre	Página
A	
ABERTURA DE DESCARGA (CONJ)	349
ABRAZADERA DE FUNDA	362
ACONDICIONADOR DE AIRE (CONFIG)	773
ACONDICIONADOR DE AIRE (CONFIG)	774
ACONDICIONADOR DE AIRE (GR)	776
ACOPLAMIENTO DE BOMBA (GR)	393
ACUMULADOR DE ACONDICIONADOR DE AIRE	824
	830
ADAPTADOR DE LLENADO RÁPIDO DE COMBUSTIBLE (GR)	188
	190
	192
	194
	196
AGUA DE LAS CAMISAS - CALENTADOR DEL (GR)	305
AGUA DE LAS CAMISAS - CALENTADOR DEL (GR)	306
AIRE - TUBERÍAS DE (GR)	172
AIRE - TUBERÍAS DE (GR)	170
AIRE - TUBERÍAS DE (GR)	174
	176
AJUSTADOR DE CORREA (GR)	8
ALARMA DE RETROCESO (CONJ)	279
	287
ALARMA (GR)	273
ALFOMBRILLA DEL PISO	844
	848
	860
AMORTIGUADOR Y POLEA (GR)	40
	41
ÁRBOL DE LEVAS (GR)	10
	11
ARRANQUE - INTERRUPTOR DE (GR)	378
ARRANQUE - INTERRUPTOR DE (GR)	371
ARRANQUE EN TIEMPO FRIO (CONFIG)	348
ASIENTO CON SUSPENSIÓN (GR)	882
	884
ASIENTO DE VÁLVULA-CASQUILLO (ADMISION)	29
ASIENTO DE VÁLVULA-CASQUILLO (ESCAPE)	29
	30
ASIENTO (GR)	870
	872
	874
	876
	877
AUXILIAR DE ARRANQUE CON ÉTER (GR)	344
AUXILIAR DE ARRANQUE CON ÉTER (GR)	346

Nombre	Página
B	
BALANCÍN (GR)	72
	73
BARRA COMPENSADORA (CONJ)	513
BARRA COMPENSADORA (GR)	514
	516
BARRA DE TIRO (GR)	470
BARRA LIMPIADORA(CONFIG)	507
BASTIDOR DE RODILLOS - GRUPO DE REFUERZO	532
BASTIDOR DE RODILLOS INFERIORES (CONFIG)	517
BASTIDOR DEL DESGARRADOR (GR)	718
BASTIDOR DEL DESGARRADOR (GR)	716
BASTIDOR TELESCÓPICO DEL RESORTE TENSOR (GR)	518
BATERÍA Y CABLES (GR)	278
	286
BATERÍA (12 VOLTIOS/SECO)	281
	289
	349
BLOQUE DE EMPALME (CONJ)	307
BLOQUE DE EMPALME (GR)	307
BLOQUE DE FUSIBLES (CONJ) (16 POLOS)	373
BLOQUE DE POTENCIA (GR)	293
BLOQUE DESLIZANTE-JUEGO	879
	880
	881
BLOQUE MOTOR (CONJ)	24
BLOQUE MOTOR (GR)	26
	28
BOCINA (CONJ) (24 VOLTIOS)(TONO ALTO)	281
	289
BOCINA (CONJ) (24 VOLTIOS)(TONO BAJO)	281
	289
BOMBA - TUBERÍAS DE (GR)	654
BOMBA DE ACEITE DEL MOTOR (GR)	108
	110
	112
BOMBA DE AGUA (GR)	132
	134
	136
	137
	138
BOMBA DE CARGA HIDRÁULICA (GR)	587
BOMBA DE ENGRANAJES (GR)	673
BOMBA DE ENGRANAJES (GR)	428
BOMBA DE ENGRANAJES (GR)	430
BOMBA DE ENGRANAJES (GR) (ACEITE DEL TREN DE FUERZA)	416
BOMBA DE ENGRANAJES (GR) (3 SECCIONES) (BARRIDO DE TRANSMISION/CARGA DE TRANS./CARGA DE CONVERTIDOR)	428

INDICE

Nombre	Página
BOMBA DE INYECCIÓN DE COMBUSTIBLE (GR)	252, 254, 257
BOMBA DE PISTONES (GR)	588, 674
BOMBA DE TRANSFERENCIA DE COMBUSTIBLE (GR)	258, 259, 262
BOMBA HIDRÁULICA DEL INYECTOR UNITARIO (GR)	262, 264, 266
BOMBA HIDRÁULICA DEL INYECTOR UNITARIO Y MONTAJE	248, 250
BOMBAS DE PISTONES Y ENGRANAJES (GR)	676
BRAZO DE EMPUJE DERECHO (GR)	739
BRAZO DE EMPUJE IZQUIERDO (GR)	738

C

Nombre	Página
CABINA (CONFIG)	779, 780, 781, 782, 784, 786
CABINA (GR)	788
CABLES DE INYECTOR (GR)	383
CABLES DE LA CONSOLA (GR)	372
CABLES DE LA PLATAFORMA (GR)	378
CABLES DEL MOTOR (GR)	376
CADENAS (GR)	550, 551, 552, 553, 554, 555, 556, 557, 558, 559, 560, 561
CAJA DE LA BOMBA DE COMBUSTIBLE (GR)	229
CAJA DE LA BOMBA DEL ACEITE (CONJ) (BARRIDO DE TRANSMISION)	430
CAJA DE LA BOMBA DEL ACEITE (CONJ) (CARGADO DE CONVERTIDOR)	430
CAJA DE LA BOMBA DEL ACEITE (CONJ) (CARGADO DE TRANSMISION)	430
CAJA DE LA SUSPENSIÓN DEL ASIENTO (GR)	816
CAJA DELANTERA (GR)	61
CAJA DELANTERA (GR)	60
CAJA Y BASTIDOR (GR)	452
CAJA Y BASTIDOR (GR)	454
CAJA Y PIEZAS DE LOS PLANETARIOS	386
CALCOMANIA-AMARRAR	922
CALCOMANÍA DE ADVERTENCIA	819, 846, 916
CALCOMANÍA DE ADVERTENCIA (AGUA ADENTRO/AGUA AFUERA) (ACONDICIONADOR DE AIRE/CALENTADOR)	776, 812
CALCOMANÍA DE ADVERTENCIA (ASIENTO AJUSTABLE)	882, 884
CALCOMANÍA DE ADVERTENCIA (BOMBA DE PRELUBRICACION)	104
CALCOMANÍA DE ADVERTENCIA (CABLES AUXILIARES DE ARRANQUE)	348, 922
CALCOMANÍA DE ADVERTENCIA (CONTROL DE TEMPERATURA DE CABINA)	808
CALCOMANÍA DE ADVERTENCIA (INTERRUPTOR DE EXTRACTOR DE PASADORES DE DESGARRADOR)	608
CALCOMANÍA DE ADVERTENCIA (INYECTOR DE COMBUSTIBLE)	923
CALCOMANÍA DE ADVERTENCIA (RESORTE DE AMORTIGUACION)	518
CALCOMANÍA DE IDENTIFICACIÓN (DISYUNTOR)	372
CALCOMANÍA DE IDENTIFICACIÓN (FILTRO DE ACEITE DE MOTOR)	922
CALCOMANÍA DE IDENTIFICACIÓN (FUSIBLE)	372
CALCOMANÍA DE IDENTIFICACIÓN (NUMERO DE GRUPO Y SECUENCIA)	798
CALCOMANÍA DE IDENTIFICACIÓN (NUMERO DE GRUPO Y SECUENCIA) (ACONDICIONADOR DE AIRE/CALENTADOR)	776, 812
CALCOMANÍA DE IDENTIFICACIÓN (PUNTO DE ADMIRACION)	923
CALCOMANÍA DE IDENTIFICACIÓN (REFRIGERANTE DE VIDA UTIL EXTENDIDA)	923
CALCOMANÍA DE RAYAS (TRASERO/A)	492
CALCOMANÍA DEL TABLERO	506
CALCOMANÍA (D9R)(LADO DERECHO)	492
CALCOMANÍA (D9R)(LADO IZQ.)	492

INDICE

Nombre	Página
CALCOMANÍA (IDENTIFICACION DE COJIN DE ASIENTO)	852
	853
CALCOMANÍA (INSTRUCCION) (CONTROL DE HOJA TOPADORA)	730
CALCOMANÍA (SONIDO EXTERIOR)	506
CALCOMANÍA (UBICACIÓN DEL CONECTOR DE LEVANTAMIENTO)	922
CALCOMANÍAS Y PLACAS DE IDENTIFICACIÓN (GR)	922
CALEFACCIÓN DE LA CABINA (GR)	808
CALEFACCIÓN DE LA CABINA (GR)	812
CALENTADOR DEL COMBUSTIBLE (GR)	302
	304
CAMBIO RÁPIDO DE ACEITE (GR)	102
CAMISA INFERIOR	26
CÁNCAMOS DE LEVANTAMIENTO DEL MOTOR (GR)	62
CANDADO (GR)	7
	216
	220
	268
	472
	476
	480
	482
	502
	614
CANTONERA DE EXTREMO (GR)	752
	753
CANTONERA Y CUCHILLA (GR)	745
	746
	747
	748
	749
	750
	751
CAPO Y PROTECTOR (GR)	502
CARGA - ALTERNADOR DE (GR)	274
	276
	277
CARGA - ALTERNADOR DE (GR)	274
CÁRTER - COLECTOR DEL (GR)	64
CHASIS (CONFIG)	456
CIGÜEÑAL (CONJ)	22
CIGÜEÑAL (GR)	23
CILINDRO (CONJ) (ETER)	344
	346
CILINDRO DE DESGARRADOR Y TUBERÍAS (GR)	620
CILINDRO DE DOBLE INCLINACION (CONFIG)	621
CILINDRO DE DOBLE INCLINACIÓN (GR)	624
	626
CILINDRO DE DOBLE INCLINACION Y TUBERIAS (GR)	615
CILINDRO DE INCLINACION DEL DESGARRADOR (GR)	634
	636
CILINDRO DE LEVANTAMIENTO - TUBERÍAS DEL (GR)	646
CILINDRO DE LEVANTAMIENTO DE LA HOJA TOPADORA (GR)	622
CILINDRO DE LEVANTAMIENTO DEL DESGARRADOR (GR)	628
CILINDRO DE LEVANTAMIENTO DEL DESGARRADOR (GR)	630
CILINDRO DE LEVANTAMIENTO Y TUBERÍAS (GR)	616
	618
CILINDRO DE LEVANTAMIENTO Y TUBERÍAS (GR) (IZQUIERDO)	711
	713
CILINDRO DE LEVANTAMIENTO Y TUBERÍAS (GR) (LADO DERECHO)	711
	713
CILINDRO DEL EXTRACTOR DE PASADOR DEL DESGARRADOR (GR)	632
CINTA AISLANTE	901
	902
	904
	906
CINTURÓN DE SEGURIDAD (GR)	876
	877
COJINETE	508
	509
COLADOR (CONJ)	680
COLADOR DE COMBUSTIBLE	268
COMBUSTIBLE - TANQUE DE (GR)	268
	269
COMBUSTIBLE - TUBERÍAS DE DRENAJE DE (GR)	232
COMPARTIMIENTO DEL MOTOR (GR)	474
	476
	480
COMPARTIMIENTO DEL OPERADOR (CONFIG)	848
COMPARTIMIENTO (GR)	472
COMPRESOR DE REFRIGERANTE (GR)	796
COMPRESOR DE REFRIGERANTE (GR)	792
	794
CONDENSADOR DE REFRIGERANTE (GR)	798
CONEXION DE ACONDICIONADOR DE AIRE (CONJ)	830
CONEXION DE ACONDICIONADOR DE AIRE (CONJ)	825
CONEXIÓN DE ENGRASE	44
	514
	630

INDICE

Nombre	Página
	634
	636
	638
	640
	642
	718
	722
	733
CONEXIÓN DE ENGRASE (ROSCA DE 1/8-27)	516
	628
CONEXIÓN DE ENGRASE (ROSCA 1/8-27 NPTF)	716
CONEXIÓN DE ENGRASE (ROSCA 1/8-27)(45 GRADO)	8
CONEXIÓN ELÉCTRICA (GR)	294
CONFIGURACIÓN DE ASIENTO	868
CONFIGURACIÓN DE INSTALACIÓN DEL MOTOR	7
CONFIGURACIÓN DE MOTORES	4
	6
CONFIGURACIÓN DE TRANSFORMACIÓN	801
CONFIGURACIÓN GENERAL	1
CONJUNTO DE MODIFICACIÓN (SIN ROPS)	802
	803
CONJUNTO DE VÁLVULA DEL ACONDICIONADOR DE AIRE (LADO ALTO)	825
CONJUNTO DE VÁLVULA DEL ACONDICIONADOR DE AIRE (LADO BAJO)	825
CONTRAPESO (GR)	458
	460
	461
CONTROL DE DIRECCIÓN (GR)	570
CONTROL DE DIRECCIÓN Y TRANSMISIÓN (GR)	572
CONTROL DE HOJA TOPADORA (CONFIG)	715
CONTROL DE LA PERILLA (VELOCIDAD DEL VENTILADOR)	809
CONTROL DE LA RELACIÓN DE COMBUSTIBLE (GR)	200
	202
CONTROL DE MONITOR (GR) (SISTEMA MONITOR CATERPILLAR)	854
CONTROL DE PAR (GR)	270
CONTROL DE REGULADOR (GR)	204
	207
CONTROL DEL DECELERADOR (GR)	198
CONTROL DEL PEDAL DE FRENO (GR)	568
CONTROL ELECTRÓNICO (CONJ) (LUZ DE TABLERO)	854
CONTROL ELECTRÓNICO DEL MOTOR (GR)	298
	299
CONTROL ELECTRÓNICO DEL MOTOR Y MONTAJE	296
CONTROL ELECTRONICO DEL REDUCTOR DE LA LUZ INTERIOR DEL SISTEMA MONITOR (GR)	800
CONTROL HIDRÁULICO (CONFIG)	608
CONTROL HIDRAULICO DE IMPLEMENTO (CONFIG)	610
CONTROL HIDRAULICO DE LA DIRECCION (CONFIG)	566
CONTROL HIDRÁULICO DE LA TRANSMISIÓN (GR)	390
CONVERSION DE MOTOR (CONFIG)	2
CONVERTIDOR DE PAR (GR)	436
	438
	440
CONVERTIDOR DE VOLTAJE (DE 24 VOLTIOS A 12 VOLTIOS)	378
CONVERTIDOR DE VOLTAJE (24 VOLTIOS A 12 VOLTIOS)(25 AMPERIOS)	300
CONVERTIDOR ELÉCTRICO (GR)	300
CORREA TRAPEZOIDAL (COMPRESOR DE AIRE ACONDICIONADO)	794
	796
CORREA TRAPEZOIDAL (INCLUYE 2 CORREAS)	274
CRISTAL (CÚPULA)	308
CRONOMETRO DE DEMORA DE ACTIVACION (CONJ) (24 VOLTIOS)	824
	830
CULATA DE CILINDROS - TORNILLERÍA DE LA (GR)	38
CULATA DE CILINDROS (CONJ)	29
	30
CULATA DE CILINDROS (GR)	32
	35
	36
	38

D

DESGARRADOR (CONFIG)	741
	742
DESGARRADOR (GR)	768
	769
DESLIZANTE	897
	899
	909
DETECTOR DE POSICIÓN (SISTEMA DE COMBUST.) (GR)	329
DETECTOR MAGNÉTICO (GR)	326
	327
DIENTE DE DESGARRADOR (GR)	770
	771
	772

INDICE

Nombre	Página
DISYUNTOR (CONJ) (10 A) (FRENO DE EMBRAGUE ELECTRONICO)	372
DISYUNTOR (CONJ) (10 A) (INTERRUPTOR DE LLAVE DE ARRANQUE)	372
DISYUNTOR (CONJ) (125 AMPERIOS) (PRINCIPAL)	372
DISYUNTOR (CONJ) (15 A) (CONDENSADOR REMOTE DE ACOND. DE AIRE)	824 830
DISYUNTOR (CONJ) (15 A) (FAROLES DELANTEROS)	372
DISYUNTOR (CONJ) (15 A) (IMPLEMENTO)	372
DISYUNTOR (CONJ) (15 A) (MOTOR)	372
DISYUNTOR (CONJ) (15 A) (VENTILADOR SOPLADOR)	372
DISYUNTOR (GR)	366
DISYUNTOR (GR) (BATERÍA)	278 286
DRENAJE DE SEGURIDAD ECOLÓGICA (GR)	394

E

EJE DE MANDO (GR)	433
EJE DEL TREN DE FUERZA (GR)	384
ELEMENTO DE FILTRO	172
ELEMENTO DE FILTRO DE ACEITE (CONJ) (FLUJO INVERSO) (FLUIDO RESISTENTE AL FUEGO/DE ALTO RENDIMIENTO)	681
ELEMENTO DE FILTRO DE ACEITE (CONJ) (HIDRÁULICO)	579
ELEMENTO DE FILTRO DE ACEITE (CONJ) (HIDRAULICO) (FLUIDO RESISTENTE AL FUEGO/DE ALTO RENDIMIENTO)	680
ELEMENTO DE FILTRO DE ACEITE (CONJ) (HIDRAULICO/FLUJO INVERSO) (DESECHABLE)	680 681
ELEMENTO DE FILTRO DE ACEITE (CONJ) (HIDRAULICO/FLUJO INVERSO) (LIMPIAR/ RENDIMIENTO MAS ALTO)	680
ELEMENTO DE FILTRO DE ACEITE (CONJ) (LIMPIAR/ RENDIMIENTO MAS ALTO)	681
ELEMENTO DE FILTRO DE ACEITE (CONJ) (TREN DE FUERZA)	396
ELEMENTO DE FILTRO (INDICADOR DE SERVICIO DE FILTRO DE AIRE)	176
ELEMENTO DEL CALENTADOR DEL AGUA DE LAS CAMISAS	306
ELEMENTO DEL CALENTADOR DEL AGUA DE LAS CAMISAS (120 VOLTIOS/1500 VATIOS)	305
ELEMENTO PRIMARIO (CONJ) (FILTRO DE AIRE) (ALTA EFICIENCIA)	162
ELEMENTO PRIMARIO (CONJ) (FILTRO DE AIRE) (ESTANDAR)	162
ELEMENTO PRIMARIO DEL FILTRO DE AIRE (CONJ)	160
ELEMENTO SECUNDARIO (CONJ) (FILTRO DE AIRE)	160 162
EMPAQUETADURA	680
EMPAQUETADURA (BOMBA DE CEBADO DE COMBUSTIBLE)	220
EMPAQUETADURA DE MULTIPLE DE ESCAPE	178
EMPUÑADURA DEL INTERRUPTOR (GR)	730
EMPUÑADURA DEL INTERRUPTOR (GR)	369
ENFRIADOR DE ACEITE DE LA TRANSMISIÓN (GR)	392
ENFRIADOR DE ACEITE HIDRÁULICO Y MONTAJE (GR)	612
ENGRANAJE DE TRANSFERENCIA Y CORONA (GR)	410
ENGRANAJE DELANTERO (GR)	48 50
ENGRANAJE TRASERO (GR)	52
ESCAPE DE GASES (GR)	86 88
ESCOBILLA (CONJ)	362
ESLABÓN DE CADENA (CONJ)	524 525 526 527 528 529
ESPEJO (GR)	838
ESTABILIZADOR DEL BRAZO DE EMPUJE (GR)	724 725
ESTABILIZADOR DEL BRAZO DE EMPUJE (GR)	740
ESTRUCTURA ROPS (GR)	865 866
ETIQUETA DE ADVERTENCIA (GR)	921
ETIQUETA REFLECTORA (ROJO)	922
EXPULSOR DE POLVO (GR)	168
EXTENSIÓN DEL RESPALDO (GR)	876
EXTENSIÓN DEL RESPALDO (GR)	877
EXTRACTOR DE PASADOR (CONFIG)	736
EXTRACTOR DE PASADOR (GR)	737

F

FILTRO (BOMBA DE AGUA)	134
FILTRO (BOMBA HIDR. DE INYECTOR UNITARIO)	212
FILTRO (CONJ) (SEPARADOR DE AGUA Y COMBUSTIBLE)	224

INDICE

Nombre	Página
FILTRO DE ACEITE DEL MOTOR (CONJ)	84
FILTRO DE ACEITE DEL MOTOR (GR)	84
FILTRO DE ACEITE (GR)	396 579
FILTRO DE ACEITE (GR) (DIRECCIÓN)	580
FILTRO DE ACEITE (GR) (TREN DE FUERZA)	416
FILTRO DE AGUA	137
FILTRO DE AIRE (CABINA) (ALTA EFICIENCIA)	808
FILTRO DE AIRE (CABINA) (ESTANDAR)	808
FILTRO DE AIRE (CABINA) (REDUCCION DE OLORES)	808
FILTRO DE AIRE DE CABINA	809
FILTRO DE AIRE (GR)	158 160 162
FILTRO DE COMBUSTIBLE (CONJ)	223
FILTRO DE COMBUSTIBLE (GR)	223
FILTRO DE COMBUSTIBLE Y SEPARADOR DE AGUA (GR)	225
FILTRO DE COMBUSTIBLE Y SEPARADOR DE AGUA (GR)	224
FILTRO ESPONJOSO (SENSOR DE NIVEL DE COMBUSTIBLE)	279 287
FILTRO Y TUBERÍAS DE COMBUSTIBLE (GR)	216 220
FLOTADOR (CONJ) (SENSOR DE NIVEL DE COMBUSTIBLE)	278 286
FRENO DE SERVICIO (GR)	564
FUSIBLE (10 A)	373
FUSIBLE (15 A)	373
FUSIBLE (20 A)	373
FUSIBLE (30 A)	300

G

Nombre	Página
GRUPO DE LUCES	315
GRUPO DE MONTAJE	846
GRUPO DE MONTAJE DE LA CABINA	844
GRUPO DE ROTACIÓN DEL MOTOR (GR)	592
GRUPO DE VÁLVULAS	445 594 602 606 702
GRUPO DE 4 VÁLVULAS HIDRÁULICAS	686
GRUPO GIRATORIO DE BOMBA	677
GUARDABARROS (GR)	482

H

Nombre	Página
HOJA DE LIMPIAPARABRISAS (CONJ)	759
HOJA DE LIMPIAPARABRISAS (CONJ) (FRENTE)	916
HOJA DE LIMPIAPARABRISAS (CONJ) (PARTE TRASERA)	916
HOJA DE LIMPIAPARABRISAS (CONJ) (PUERTA IZQUIERDA)	916
HOJA SEMIUNIVERSAL (CONJ)	760 762
HOJA SEMIUNIVERSAL (GR)	765
HOJA TOPADORA SEMIUNIVERSAL	711 712
HOJA TOPADORA UNIVERSAL (CONFIG)	713 714
HOJA UNIVERSAL (CONJ)	763 764
HOJA UNIVERSAL (GR)	766
HOJA Y CUCHILLA (GR)	754 755 756
HOJA Y CUCHILLA SEMIUNIVERSAL (GR)	757 758

I

Nombre	Página
ILUMINACION TRASERA (CONFIG)	314
IMPULSOR DE VENTILADOR (GR)	42 44 46
INCLINACIÓN HORIZONTAL - CILINDRO DE (GR)	638 640 642
INCLINACIÓN HORIZONTAL - CILINDRO DE (GR) (IZQUIERDO)	621
INCLINACIÓN HORIZONTAL - CILINDRO DE (GR) (LADO DERECHO)	621
INDICADOR DE SERVICIO DEL FILTRO DE AIRE	176
INDICADOR DEL NIVEL DE ACEITE (VARILLA) (GR)	90
INDICADOR DEL NIVEL DEL ACEITE (VARILLA) (CONJ) (TREN DE FUERZA)	416
INSERTO DE VÁLVULA DE ADMISIÓN (ADMISION)	30
INSONORIZADOR (CONFIG)	506
INSTALACIÓN DE RADIO (GR)	819
INTERRUPTOR (CONJ) (CONTROL DE LA PUNTA)	369
INTERRUPTOR (CONJ) (ILUMINADO CON 24 VOLTIOS)	378
INTERRUPTOR (CONJ) (LUZ DELANTERA)	380
INTERRUPTOR (CONJ) (LUZ TRASERA)	378
INTERRUPTOR (CONJ) (PUERTA DELANTERA, TRASERA, LATERAL IZQUIERDA Y DERECHA)	916

INDICE

Nombre	Página
INTERRUPTOR (CONJ) (SENCILLO/DOBLE CONTROL DE INCLINACIÓN)	369
INTERRUPTOR (CONJ) (VELOCIDAD DEL VENTILADOR)	808
INTERRUPTOR DE DERIVACIÓN	365
INTERRUPTOR DE DERIVACIÓN (FILTRO DE ACEITE DEL TREN DE FUERZA)	281 289
INTERRUPTOR DE DERIVACIÓN (FILTRO DE DIRECCION)	579
INTERRUPTOR DE FLUJO (GR)	4 6 367 368
INTERRUPTOR DE LA BOCINA (CONJ)	378
INTERRUPTOR DE LÍMITE (CONJ) (ALARMA DE RETROCESO)	572
INTERRUPTOR DE LÍMITE (CONJ) (ARRANQUE EN PUNTO MUERTO)	572
INTERRUPTOR DE PRESIÓN (CONJ) (ACEITE)	104
INTERRUPTOR DE PRESIÓN (CONJ) (ACONDICIONADOR DE AIRE/ALTA)	824 830
INTERRUPTOR DE PRESIÓN (CONJ) (ACONDICIONADOR DE AIRE/BAJA)	824 830
INTERRUPTOR DE TEMPERATURA (CONJ) (DERIVACION DE FILTRO DE TREN DE FUERZA)	278 286
INTERRUPTOR DE TEMPERATURA (CONJ) (ÉTER PARA EL AUXILIAR DE ARRANQUE)	286
INTERRUPTOR DE TEMPERATURA (CONJ) (FILTRO DE DIRECCION)	580
INTERRUPTOR DE VOLQUETE (CONJ) (ACONDICIONADOR DE AIRE ACTIVACION/DESACTIV.)	809
INTERRUPTOR DE VOLQUETE (CONJ) (AUXILIAR)	380
INTERRUPTOR DE VOLQUETE (CONJ) (DE TRABA)(EXTRACTOR DE PASADORES DE DESGARRADOR)	608
INTERRUPTOR DE VOLQUETE (CONJ) (ÉTER PARA EL AUXILIAR DE ARRANQUE)	380
INTERRUPTOR DE VOLQUETE (CONJ) (LUZ LATERAL)	378
INTERRUPTOR DE VOLQUETE (CONJ) (OPERADOR)	378
INTERRUPTOR DE VOLQUETE (CONJ) (24 VOLTIOS)(SELLADO)(ILUMINADO) (ACELERACIÓN)	378
INTERRUPTOR DE VOLQUETE (GR) (CONTROL DEL VENTILADOR)	804
INTERRUPTOR DEL TERMOSTATO (CONJ) (COMPRESOR DE AIRE ACONDICIONADO)	776
INTERRUPTOR (GR)	694
INTERRUPTOR MAGNÉTICO (CONJ) (ACTIVACION-DESACTIV. DE MOTOR DE ARRANQUE)	104
INTERRUPTOR MAGNÉTICO (GR)	370
INTERRUPTOR MAGNÉTICO (GR) (RELÉ DE ARRANQUE)	348 372
INTERRUPTOR MAGNÉTICO (GR) (RELE PRINCIPAL)	372
INYECTOR DE COMBUSTIBLE (GR)	230

J

Nombre	Página
JUEGO - BOMBA DE INYECCCION DE COMBUSTIBLE (RECONSTRUCCION)	262
JUEGO DE ALDABA	904 906
JUEGO DE ATADURA	884
JUEGO DE BOTÓN	816
JUEGO DE COJINETES	166 266 592 817
JUEGO DE COJINETES (ARRANQUE)	362
JUEGO DE COJINETES (ESTANDAR)	68
JUEGO DE COJINETES (HORQUILLA)	262
JUEGO DE COJINETES (0,635 MM BAJOMEDIDA)	68
JUEGO DE COJINETES (1,27 MM BAJOMEDIDA)	68
JUEGO DE COMPENSADOR	266
JUEGO DE COMPENSADOR DE BOMBA HIDRAULICA INJECTORA	262
JUEGO DE CORREAS TRAPEZOIDALES	42
JUEGO DE CORREAS TRAPEZOIDALES (ALTERNADOR/MOTOR SIN EMISIONES)	2
JUEGO DE CORREAS TRAPEZOIDALES (INCLUYE 4 CORREAS)	44
JUEGO DE ENCHUFE (12 PASADORES)	379
JUEGO DE ENCHUFE (2 CLAVIJAS)	2 104 279 280 287 288 289 349 370 373 376 379

INDICE

Nombre	Página
	424
	776
	813
	824
JUEGO DE ENCHUFE (3 CLAVIJAS)	104
	279
	280
	288
	334
	335
	336
	337
	376
	378
	379
JUEGO DE ENCHUFE (3 CLAVIJAS) (SENSOR DE LA PRESIÓN)	331
	332
JUEGO DE ENCHUFE (3 CLAVIJAS) (SENSOR DE VELOCIDAD DEL SINCRONIZADOR DEL MOTOR)	339
JUEGO DE ENCHUFE (4 CLAVIJAS)	280
	288
	289
	373
	376
	379
	825
	890
JUEGO DE ENCHUFE (6 CLAVIJAS)	104
	280
	288
	378
	379
JUEGO DE ENCHUFE (6 PASADORES)	890
JUEGO DE ENCHUFE (8 CLAVIJAS)	2
	280
	288
	379
JUEGO DE ENGRANAJE DEL MOTOR DE ARRANQUE	363
JUEGO DE FILTRO DE TAPA (TANQUE DE COMBUSTIBLE)	269
JUEGO DE FUNDA DE LA SUSPENSIÓN DEL ASIENTO	882
JUEGO DE GUÍA	904
	906
JUEGO DE HOJA DE LIMPIAPARABRISAS	917
JUEGO DE INDICADOR	816
JUEGO DE MAZO DE CABLES (ASIENTO CON SUSPENSIÓN DE AIRE)	884
JUEGO DE PARAGOLPES	816
JUEGO DE PISTÓN	674
JUEGO DE REACONDICIONAMIENTO	46
JUEGO DE RECEPTÁCULO (12 PASADORES)	279
	280
	288
	379
JUEGO DE RECEPTÁCULO (2 CLAVIJAS)	104
	273
	278
	279
	280
	286
	287
	288
	289
	326
	327
	340
	344
	346
	348
	349
	365
	372
	373
	376
	378
	379
	580
	709
	776
	777
	798
	812
	813
	824
	830
JUEGO DE RECEPTÁCULO (3 CLAVIJAS)	104
	122
	170
	236
	279
	280
	287
	308
	329
	338
	341
	342
	373
	376
	378
	379
	608
	730
	890

INDICE

Nombre	Página
JUEGO DE RECEPTÁCULO (4 CLAVIJAS)	279, 280, 288, 328, 373, 376, 379, 707, 708, 824, 830, 890
JUEGO DE RECEPTÁCULO (6 CLAVIJAS)	279, 288, 379, 800, 808, 824, 841, 842, 912, 914, 916
JUEGO DE RECEPTÁCULO (8 CLAVIJAS)	279, 280, 288, 378, 777, 813
JUEGO DE RECONSTRUCCIÓN DE LA BOMBA (AGUA)	134
JUEGO DE RESORTE DE HOJA DE BALLESTA	901, 902
JUEGO DE RESORTES	816
JUEGO DE RESTRICCIÓN DEL CINTURÓN	882
JUEGO DE RODILLO	882, 884
JUEGO DE SEGUIDOR	817
JUEGO DE SELLOS	46, 231, 266, 447, 673, 707, 709
JUEGO DE SELLOS (UNIDAD INYECTORA HIDRAULICA)	262
JUEGO DE SELLOS (VÁLVULA SOLENOIDE DE COMBUSTIBLE)	272
JUEGO DE TAPÓN	262
JUEGO DE TAPÓN (INCLUYE SELLOS)	266
JUEGO DE TERMINAL	353, 357, 363
JUEGO DE TORNILLERÍA	884
JUEGO DE TORNILLERÍA, JUNTAS Y CALCES	720, 722
JUEGO DE TRABA DE TERMINAL (BLOQUE DE FUSIBLES)	373
JUEGO DE VENTANAS	820
JUEGO-VENTANA DE CABINA (FABRICA)	909
JUNTA DESLIZANTE (GR)	434
JUNTA UNIVERSAL (GR)	443

L

LÁMPARA DEL TECHO (GR)	308
LÁMPARA DEL TECHO (GR) (24 VOLTIOS)(CON INTERRUPTOR)	788
LÁMPARA (24 VOLTIOS)	378
LÁMPARA (24 VOLTIOS) (CÚPULA)	308
LÁMPARA (24 VOLTIOS) (REFLECTOR)	310
LÁMPARA (24 VOLTIOS) (REFLECTORES DE 65 VATIOS)	309
LÁMPARA (28 VOLTIOS)	380, 854
LAVAPARABRISAS DE LA VENTANA (GR)	890
LENTE-ROJO	380, 854
LIMPIAPARABRISAS DE LA VENTANA (GR)	914, 916
LIMPIAPARABRISAS DE LA VENTANA (GR)	912
LLAVE	7, 216, 220, 268, 472, 476, 480, 482, 614
LLAVE (DESCONECTAR BATERIA)	366
LUBRICACIÓN DE EJE PIVOTE (GR)	530
LUCES AUXILIARES (GR)	316
LUCES DE REFLECTOR (GR)	318, 319, 320, 742
LUCES DEL CILINDRO (CONFIG)	312
LUCES DELANTERAS (GR)	322
LUCES TRASERAS (GR)	324

M

MANDO DE BOMBA HIDRÁULICA INYECTORA (GR)	210, 212

INDICE

Nombre	Página
MANDO DE DIRECCION DE DIFERENCIAL (GR)	576
MANDO DE DIRECCION (GR)	578
MANDO DE REGULADOR Y BOMBA DE COMBUSTIBLE (GR)	208
MANDO DE TACÓMETRO (GR)	209
MANDO FINAL (GR)	398, 402, 406
MANGUERA (87CM CADA UNA)	88
MANGUERA (9CM CADA UNA)	88
MANGUITO PARA CALIBRE DE LEVANTAVÁLVULAS	26
MAZO DE CABLES (SENSOR DE LA PRESIÓN)	331
MECANISMO DE VÁLVULAS (GR)	77, 78
MODIFICACIÓN DEL TRACTOR TOPADOR (CONFIG)	731, 732
MÓDULO DEL TACÓMETRO Y DEL VELOCÍMETRO (GR)	842
MODULO ELECTRÓNICO DE CUATRO INDICADORES (GR)	841
MONTAJE DE CILINDRO (GR)	733
MONTAJE DE LA ESTRUCTURA ROPS (GR)	847
MONTAJE DE LA TRANSMISIÓN (GR)	420
MONTAJE DEL DESGARRADOR (GR)	734
MOTOR - SOPORTE DEL (GR)	74, 75
MOTOR DE ARRANQUE ELÉCTRICO (GR)	359, 360, 362
MOTOR DE ARRANQUE ELÉCTRICO (GR)	352, 356
MOTOR ELÉCTRICO (GR)	798
MOTOR ELÉCTRICO (GR) (27 VOLTIOS) (ABANICO DE CABINA)	776, 812
MULTIPLE - PROTECTOR DEL	182
MÚLTIPLE DE ESCAPE (GR)	178
MULTIPLE DE VALVULA (GR)	672
MULTIPLE DE VALVULA (GR) (GRUPO DE VALVULAS DE DESGARRADOR/HOJA TOPADORA)	686
MUÑÓN DE LA HOJA TOPADORA (CONFIG)	743
MUÑÓN DE LA HOJA TOPADORA (GR)	744
MUÑÓN DEL MOTOR (GR)	76

N

Nombre	Página
NÚCLEO DE TURBOCOMPRESOR (GR)	187
NÚCLEO DE TURBOCOMPRESOR (GR)	166

P

Nombre	Página
PALANCA (CONTROL DE VELOCIDAD EN VACIO)	782
PALANCA DE VÁLVULA DE CONTROL (GR)	645
PALANCA (GR)	644
PANTALLA (CONJ)	680
PERILLA	788
PERILLA (CONTROL DE TEMPERATURA DE CABINA)	808
PERILLA DE BOCINA	378
PERILLA LUMBAR	853
PISTÓN Y BIELA (GR)	66, 68
PISTONES DEL MOTOR (GR)	586
PIVOTE DEL LIMPIADOR (GR)	920
PLACA DE ADVERTENCIA (ACEITE DE RESORTE TENSOR)	518
PLACA DE ADVERTENCIA (RESORTE DE AMORTIGUACION)	518, 562
PLACA DE CONTROL (SISTEMA MONITOR ELECTRICO RAPIDO) (MOTOR SIN EMISIONES)	2
PLACA DE INFORMACION (CONEXION DE ALAMBRADO DE MOTOR)	923
PLACA DE INSTRUCCIONES (ACONDICIONADOR DE AIRE)	773, 774
PLACA DEL TABLERO (ACONDICIONADOR DE AIRE Y ABANICO)	808
PLACA (IDENTIFICACION DE PRODUCTO)	922
PLACA-INFORMACION DE SERVICIO	922
PLANCHA ADAPTADORA DEL REGULADOR (GR)	246
PLANCHA CORREDERA (GR)	856, 858
PLANCHA DE DESGASTE (GR)	767
PLANCHA DEL PISO (CONFIG)	806
PLATAFORMA (GR)	860
PLATO OSCILANTE (GR)	678, 679
POSENFRIADOR DE AGUA (GR)	154, 156
PRELUBRICACION DEL MOTOR (CONFIG)	104
PRESIÓN - VÁLVULA DE CONTROL DE (GR)	604
PRESIÓN - VÁLVULA DE CONTROL DE (GR)	271
PRESIÓN - VÁLVULA DE CONTROL DE (GR) (COMBUSTIBLE)	236
PRIORIDAD - VÁLVULA DE (GR)	448
PROTECTOR CONTRA ARENA (GR)	486
PROTECTOR CONTRA EL VANDALISMO (GR)	807
PROTECTOR CONTRA ROCAS (GR)	498, 499

INDICE

Nombre	Página
PROTECTOR DE LA RUEDA GUÍA (CONFIG)	488
PROTECTOR DE MANDO FINAL (GR)	487
PROTECTOR DE RUEDA GUÍA	494
PROTECTOR DE SELLO (GR)	500
PROTECTOR DEL EJE IMPULSOR (GR)	412
PROTECTOR DEL EJE PIVOTE (GR)	495
PROTECTOR DEL RADIADOR (GR)	496
PROTECTOR DEL TANQUE DE COMBUSTIBLE (GR)	492
PROTECTOR DEL TREN DE FUERZA (GR)	413
	414
PROTECTOR INFERIOR (GR)	489
	490
PUERTA DERECHA (GR)	466
	468
PUERTA IZQUIERDA (GR)	463
	464

R

RADIADOR (GR)	140
	144
RECEPTACULO CONJ) (ARRANQUE CON FUENTE AUXILIAR)	278
	286
RECEPTOR-SECADOR (GR) (ACONDICIONADOR DE AIRE)	824
RECEPTOR-SECADOR (GR) (REFRIGERANTE)	830
RECLINACION DE ASIENTO (GR)	863
REFLECTOR (GR)	309
REFLECTOR (GR)	310
REFLECTOR (GR) (24 VOLTIOS)(SUSPENDIDA)	315
	319
REFLECTOR (GR) (24 VOLTIOS)(VERTICAL)	318
	320
REGULADOR DE TEMPERATURA DEL AGUA (92 GR C)	122
	126
REGULADOR (GR)	226
REGULADOR Y BOMBAS DE INYEC. Y DE TRANSF. DE COMB. (GR)	260
REGULADOR Y BOMBAS DE INYECCION Y DE TRANSFERENCIA	260
REJILLA ACAMPANADA (CONJ)	92
REJILLA DE SUCCIÓN	440
REJILLA DE SUCCIÓN (BARRIDO DE TRANSMISION)	386
REJILLA DE SUCCIÓN (ENTRADA DE BOMBA DE ACEITE DE TREN DE FUERZA)	416
REJILLA DE SUMIDERO (TANQUE DE COMBUSTIBLE)	216
	220
REJILLA PROTECTORA (GR)	867
RESORTE DE ESCOBILLA	363
RESORTE TENSOR Y AJUSTADOR DE LA CADENA (GR)	548
RESPIRADERO (CONJ)	21
RESPIRADERO (CONJ) (CÁRTER DEL MOTOR)	79
RESPIRADERO (GR)	79
RESPIRADERO (TREN DE FUERZA)	417
RETÉN (GR)	821
RETROVISOR (GR)	839
	840
REVESTIMIENTO DE LA CABINA (GR)	822
RODILLO SUPERIOR DE CADENAS (CONFIG)	534
	536
RODILLO Y RUEDA GUIA (CONFIG)	533
RODILLOS DE PESTAÑA DOBLE (GR)	538
	539
	540
	541
RODILLOS DE PESTAÑA SIMPLE (GR)	542
	543
	544
	545
RUEDA GUÍA DE CADENA (GR)	521
	522
	523

S

SEGMENTO DE RUEDA MOTRIZ (GR)	432
SELLANTE DE EMPAQUETADURA	14
SELLANTE DE EMPAQUETADURA (14ML)	18
SELLO	20
SELLO ANULAR (11,89MM DI)	281
	289
SELLO DE CIGÜEÑAL (GR)	23
SENSOR DE NIVEL DE COMBUSTIBLE (GR)	328
SENSOR DE PRESIÓN (GR)	332
SENSOR DE PRESIÓN (GR)	330
	331
SENSOR DE PRESIÓN (GR)	333
	334
	335
	336
	337
SENSOR DE PRESIÓN (GR) (ACCIONAMIENTO DE INYECCIÓN)	38
SENSOR DE PRESIÓN (GR) (ACEITE DEL MOTOR)	248
	287
SENSOR DE PRESIÓN (GR) (ATMÓSFERA)	172
SENSOR DE PRESIÓN (GR) (SALIDA DE TURBOCOMPRESOR)	38
SENSOR DE TEMPERATURA (GR)	341

INDICE

Nombre	Página
	342
SENSOR DE TEMPERATURA (GR) (ACEITE DEL TREN DE FUERZA)	281
	289
SENSOR DE TEMPERATURA (GR) (ACEITE HIDRÁULICO)	279
	287
SENSOR DE TEMPERATURA (GR) (AIRE DE ADMISIÓN)	170
SENSOR DE TEMPERATURA (GR) (COMBUSTIBLE)	236
SENSOR DE TEMPERATURA (GR) (REFRIGERANTE)	289
SENSOR DE TEMPERATURA (GR) (REFRIGERANTE DEL MOTOR)	122
SENSOR DE VELOCIDAD (GR)	338
	339
	340
SENSOR DE VELOCIDAD (GR)	326
	327
SENSOR DE VELOCIDAD (GR)	60
SENSOR DE VELOCIDAD (GR) (SALIDA DE LA TRANSMISION)	423
SENSOR DE VELOCIDAD (GR) (VENTILADOR)	46
SILENCIADOR (GR)	180
SINCRONIZADOR	104
SISTEMA ROPS (CONJ)	864
SOLENOIDE (CONJ)	352
SOLENOIDE DEL MOTOR DE ARRANQUE (CONJ)	343
SOLENOIDE DEL MOTOR DE ARRANQUE (CONJ)	356
SOPLADOR - VENTILADOR (GR)	114
SOPORTE BASCULANTE (GR)	546
SOPORTE DEL RESPALDO (GR)	851
	852
	853
SUSPENSIÓN - ASIENTO CON (GR)	878
	879
	880
	881

T

Nombre	Página
TABLERO DE INSTRUMENTOS (GR)	854
TANQUE DE REFRIGERANTE (GR)	149
TANQUE DEL AGUA (GR)	150
TANQUE DEL LAVAPARABRISAS (GR)	886
	888
TANQUE Y FILTRO HIDRÁULICOS (GR)	680
TAPA	140
	144
TAPA CON RESPIRADERO	886
TAPA CONTRA EL POLVO	70
	84
	122
	126
	286
	386
	417
	444
	449
	579
	580
	596
	654
	681
TAPA CONTRA EL POLVO (ADAPTADOR DE REABASTECIMIENTO RAPIDO DE COMBUSTIBLE)	190
	192
	194
	196
TAPA CONTRA LA LLUVIA (CONJ)	168
TAPA CONTRA LA LLUVIA (CONJ)	164
TAPA DE LA CAJA DE VOLANTE (GR)	16
TAPA DE LA CAJA DELANTERA (GR)	18
TAPA DE LLENADO (CONJ)	81
	82
TAPA DE LLENADO (CONJ) (ACEITE DEL TREN DE FUERZA)	416
TAPA DE NIVEL DE ACEITE (CONJ)	530
TAPA DE RADIADOR (CONJ)	149
TAPA DE RODILLO INFERIOR	512
	534
	536
TAPA DE RODILLO INFERIOR (CONJ)	534
	536
TAPA DE RUEDA GUÍA (GR)	510
	511
TAPA DE SELLO (ACONDICIONADOR DE AIRE)	825
	831
TAPA DE SELLO (ACONDICIONADOR DE AIRE)(LADO ALTO)	825
TAPA DE SELLO (ACONDICIONADOR DE AIRE)(LADO BAJO)	825
TAPA DEL BLOQUE MOTOR (GR)	12
	13
	14
TAPA DEL MANDO DE TACÓMETRO	209
TAPA DEL MECANISMO DE VÁLVULAS (GR)	20
	21
TAPA DEL MUÑÓN (GR)	462
TAPA DEL TANQUE DE COMBUSTIBLE (CONJ)	269
TAPA DEL TAPÓN DEL TANQUE HIDRÁULICO (GR)	614

INDICE

Nombre	Página
TAPA DEL TUBO DE LLENADO (TANQUE HIDRÁULICO)	680
TAPÓN	226
	246
TAPÓN (CONJ)	220
TAPÓN DE CULATA (GR)	71
TAPÓN DE DRENAJE	118
	130
	518
TAPON DE DRENAJE DE ACEITE	64
TAPON DE TUBO	70
TAPON DE TUBO (ROSCA 1-11-1/2 NPTF)	58
TAPON DE TUBO (ROSCA 1/8-27 NPTF)	58
TAPÓN DEL BLOQUE MOTOR (GR)	70
TAPÓN MAGNÉTICO	398
	406
TAPÓN (ROSCA 7/16-20)	26
	674
TORNILLERÍA DE LA BOMBA DE INYECCIÓN DE COMB.	214
TORNILLERÍA DE MONT. DE LA BOMBA DE ACEITE (GR)	80
TRANSMISION (CONFIG)	442
TRANSMISIÓN PLANETARIA (GR)	422
TREN DE FUERZA (CONFIG)	427
TREN DE RODAJE (CONFIG)	563
TUBERIA DEL BASTIDOR DE RODILLO (CONJ)	562
TUBERÍAS DE ACEITE DEL MOTOR (GR)	92
TUBERÍAS DE ACEITE DEL TREN DE FUERZA (GR)	416
TUBERIAS DE ACEITE (GR)	96
TUBERÍAS DE ACONDICIONADOR DE AIRE (GR)	830
TUBERÍAS DE ACONDICIONADOR DE AIRE (GR)	824
TUBERÍAS DE BOMBA HIDRÁULICA DE INYECCIÓN (GR)	244
TUBERIAS DE CALEFACCION	836
TUBERÍAS DE CILINDRO DE EXTRACTOR DE PASADORES	652
TUBERÍAS DE DIRECCIÓN (GR)	580
TUBERIAS DE EXTRACTOR DE PASADORES (GR)	650
TUBERÍAS DE INCLINACIÓN	662
	664
TUBERÍAS DE INYECCIÓN DE COMBUSTIBLE (GR)	240
	242
TUBERÍAS DE LA CALEFACCIÓN (GR)	836
TUBERÍAS DEL AGUA - POSENFRIADOR (GR)	116
TUBERÍAS DEL AGUA (GR)	6
	117
	118
	120
	121
	122
	130
TUBERÍAS DEL AGUA (GR)	126
TUBERÍAS DEL CILINDRO DE INCLINACIÓN (GR)	666
	668
	670
TUBERÍAS DEL DESGARRADOR (GR)	658
	660
TUBERÍAS DEL FILTRO DE COMBUSTIBLE	234
	236
TUBO DE LLENADO DE ACEITE (GR)	81
	82
TURBOCOMPRESOR - TUBERÍAS DE ACEITE DEL (GR)	98
	100
TURBOCOMPRESOR (GR)	184
	185
	186
	187

V

VALVULA	216
	220
VÁLVULA	606
VÁLVULA - ESFERA	216
	220
VÁLVULA COMPENSADORA DE FLUJO Y PRESIÓN (GR)	698
VÁLVULA COMPENSADORA DE FLUJO Y PRESIÓN (GR) (CONTROL DE SALIDA DE BOMBA)	674
VÁLVULA (CONJ)	150
	194
	830
VÁLVULA (CONJ) (ARRANQUE CON ETER)(24 VOLTIOS)	344
	346
VÁLVULA DE AGUA (CONJ) (CALENTADOR DE CABINA)	777
	812
VÁLVULA DE ALIVIO (GR)	418
	449
	702
	703
	704
	705
VÁLVULA DE ALIVIO (GR)	606
	607
VÁLVULA DE ALIVIO (GR) (ACEITE FRIO)	604
VÁLVULA DE ALIVIO (GR) (CARGANDO)	672

INDICE

Nombre	Página
VÁLVULA DE ALIVIO (GR) (ENFRIADOR DE LA DERIVACION)	416
VÁLVULA DE ALIVIO (GR) (PRINCIPAL)	672
VÁLVULA DE CAÍDA RÁPIDA (GR)	700
VALVULA DE CONTROL DE INCLINACION (GR)	710
VÁLVULA DE CONTROL DEL FRENO (GR)	596
VÁLVULA DE CONTROL (GR)	598
	600
	690
	692
	694
	696
VÁLVULA DE CONTROL (GR) (HOJA DE LEVANTAMIENTO)	686
VÁLVULA DE CONTROL (GR) (INCLINACION DE DESGARRADOR)	686
VÁLVULA DE CONTROL (GR) (INCLINACION DE HOJA)	686
VÁLVULA DE CONTROL (GR) (SUBIR EL DESGARRADOR)	686
VÁLVULA DE CONTROL Y MONTAJE (GR)	684
VALVULA DE DERIVACION	681
VÁLVULA DE DESCARGA (GR)	446
VÁLVULA DE DRENAJE (RECIPIENTE)	452
	454
VÁLVULA DE DRENAJE (TANQUE HIDRÁULICO)	654
VÁLVULA DE ENTRADA	35
	36
VÁLVULA DE ESCAPE	35
	36
VÁLVULA DE LANZADERA (GR)	706
VÁLVULA DE MODULACIÓN (GR)	447
VALVULA DE MUESTRA DE FLUIDO (CONJ)	681
VALVULA DE MUESTRA DE FLUIDO (CONJ)	84
VALVULA DE MUESTRA DE FLUIDO (CONJ)	417
VALVULA DE MUESTREAR	126
VÁLVULA DE RETENCIÓN (CONJ) (SISTEMA DE LIMPIA/LAVAPARABRISAS)	888
VÁLVULA DE RETENCIÓN (GR)	688
VÁLVULA DE RETENCIÓN (GR) (ACEITE DE COMPENSACION)	604
VÁLVULA DE RETENCIÓN (GR) (FLUJO INVERSO)	672
VALVULA DE RETENCIÓN Y ALIVIO (GR)	689
VÁLVULA DE SOLENOIDE (GR)	272
VÁLVULA DE SOLENOIDE (GR)	707
VÁLVULA DE SOLENOIDE (GR)	708
	709
VÁLVULA DE SOLENOIDE (GR) (CONTROL DE PRESION)	262
VÁLVULA DE SOLENOIDE (GR) (FUNCIÓN INCLINACIÓN/PUNTA)	710
VÁLVULA (ENTRADA DEL CONVERTIDOR DE PAR)	418
VALVULA LIMITADORA (CONJ)	200
VÁLVULA (LLENADO) (AJUSTADOR DE CADENA)	548
VÁLVULA PILOTO (GR)	602
VALVULA PILOTO Y MONTAJE (GR)	444
VÁLVULA SELECTORA Y DE CONTROL DE PRESIÓN (GR)	450
VALVULA (TANQUE HIDRÁULICO)	654
VÁLVULA (VACIADO) (AJUSTADOR DE CADENA)	548
VARILLAJE DE LOS IMPLEMENTOS	610
	726
	728
	730
VENTANA CORREDIZA (CONJ)	894
VENTANA CORREDIZA (CONJ)	893
VENTANA DE LA CABINA (GR)	910
VENTANA DE LA CABINA (GR)	904
	906
	907
VENTANA DE LA CABINA (GR)	902
VENTANA DE LA CABINA (GR)	895
	896
	897
	898
	899
	900
	901
	908
	909
VENTANA DE LA CABINA (GR) (DERECHA)(DESLIZANTE)	893
VENTANA DE LA CABINA (GR) (IZQUIERDA)(DESLIZANTE)	894
VENTANA DE LA CABINA (GR) (LADO DERECHO)	895
	901
VENTANA DE LA CABINA (GR) (LADO IZQUIERDO)	896
VENTANA DE LA CABINA (GR) (TRASERA-DESLIZANTE)	788
VENTILADOR DESCONGELADOR (GR)	804
VIDRIO (AHUMADO)	895
	896
	907
	908
VIDRIO (AHUMADO) (LADO DE CABINA-FIJO)	788
VIDRIO (AHUMADO) (PARTE DELANTERA DE CABINA-FIJO)	788
VIDRIO (AHUMADO) (PUERTAS DE CABINA-FIJO)	788
VIDRIO (AHUMADO)(VERDE)	909

INDICE

Nombre	Página	Nombre	Página
	910		
VIDRIO (CONJ) (REFLECTOR)	309		
	310		
VIDRIO-DESLIZANTE-DERECHO (AHUMADO)	906		
VIDRIO-DESLIZANTE (IZQUIERDO) (AHUMADO)	904		
VIDRIO-FIJO-DERECHO (AHUMADO)	901		
VIDRIO-FIJO-LADO IZQUIERDO (AHUMADO)	902		
VOLANTE - CAJA DE (GR)	56		
	58		
VOLANTE (GR)	47		

ÍNDICE

Designação	Página

A

ABRAÇADEIRA DO PROTETOR 362
ACOPLAMENTO DA BOMBA 393
ACUMULADOR DO AR CONDICIONADO 824
830
ADAPTADOR - ABASTECIMENTO RÁPIDO DE COMBUSTÍVEL 188
190
192
194
196
AJUSTADOR DE CORREIAS 8
AJUSTADOR DE ESTEIRAS E MOLA TENSORA 548
ALARME 273
ALARME DE MARCHA À RÉ 279
287
ALAVANCA 644
ALAVANCA - VÁLVULA DE CONTROLE 645
ALAVANCA (CONTROLE DE MARCHA LENTA) 782
ALOJAMENTO DA BOMBA DE COMBUSTÍVEL 229
ALTERNADOR DE CORRENTE 274
276
277
AMORTECEDOR DE VIBRAÇÕES E POLIA 40
41
AQUECEDOR DA ÁGUA DO MOTOR 305
306
AQUECEDOR DA CABINE 808
812
AQUECEDOR DO COMBUSTÍVEL 302
304
ARMAÇÃO DO RIPER 716
718
ARMAÇÃO DOS ROLETES DA ESTEIRA 517
ARMAÇÃO TELESCÓPICA DA MOLA TENSORA 518
ARRANJO GERAL 1
ARREFECEDOR DE ÓLEO DA TRANSMISSÃO 392
ARREFECEDOR DE ÓLEO HIDRÁULICO E MONTAGEM 612
ARTICULAÇÃO DO ACESSÓRIO 610
726
728
730
ASSENTO 868
870
872
874
876
877
ASSENTO COM SUSPENSÃO 878
879
880
881
AUXILIAR DE PARTIDA A ÉTER 344
346

B

BALANCIM 72
73
BARRA DE TRAÇÃO 470
BARRA EQUALIZADORA 513
514
516
BARRA LIMPADORA DOS ROLOS 507
BATERIA E CABOS / FIOS ELÉTRICOS 278
286
BATERIA (12 VOLT/SECO) 281
289
349
BLINDAGEM DO COLETOR 182
BLOCO - FORÇA 293
BLOCO DE FUSÍVEIS (16 POLOS) 373
BLOCO DE JUNÇÃO 307
BLOCO DO MOTOR 24
26
28
BOCAL DE ENCHIMENTO DE ÓLEO DO MOTOR 81
82
BOMBA DE ÁGUA 132
134
136
137
138
BOMBA DE CARGA 587
BOMBA DE ENGRENAGENS 428
430
673
BOMBA DE ENGRENAGENS (ÓLEO DO TREM DE FORÇA) 416
BOMBA DE ENGRENAGENS (3 SEÇÕES) (RETORNO E CARGA DA TRANSMISSÃO - CARGA DO CONVERSOR) 428
BOMBA DE INJEÇÃO DO COMBUSTÍVEL 252
254
257
BOMBA DE INJEÇÃO E TRANSFERÊNCIA E COMANDO DO GOVERNADOR 260
BOMBA DE ÓLEO - MOTOR 108
110
112
BOMBA DE PISTÃO 588
674

ÍNDICE

Designação	Página
BOMBA DE PISTÃO E ENGRENAGEM	676
BOMBA DE TRANSFERÊNCIA DO COMBUSTÍVEL	258
	259
	262
BOMBA HIDRÁULICA - UNIDADE INJETORA	262
	264
	266
BOMBA HIDRÁULICA E MONTAGEM - UNIDADE INJETORA	248
	250
BOTÃO - CHICOTE	378
BOTÃO - LOMBAR	853
BRAÇO DE EMPUXO - DIREITO	739
BRAÇO DE EMPUXO - ESQUERDO	738
BRAÇO DE EMPUXO - ESTABILIZADOR	740
BRONZINA TIPO LUVA	508
	509
BUJÃO - ANEL O	226
	246
BUJÃO - ANEL O (7/16-20 THD)	26
	674
BUJÃO - CABEÇA DO CILINDRO	71
BUJÃO - CANO/TUBO	70
BUJÃO - CANO/TUBO (ROSCA NPTF 1/8-27)	58
BUJÃO - CANO/TUBO (ROSCA 1-11-1/2 NPTF)	58
BUJÃO - DRENAGEM DO ÓLEO	64
BUJÃO DO BLOCO DO CILINDRO	70
BUJÃO DO DRENO	118
	130
	518
BUJÃO MAGNÉTICO	398
	406
BUZINA (24 VOLTS - ALTA TONALIDADE)	281
	289
BUZINA (24 VOLTS)(TONALIDADE BAIXA)	281
	289

C

CABEÇOTE DO MOTOR	29
	30
	32
	35
	36
	38
CABINE	779
	780
	781
	782
	784
	786
	788
	848
CABO - CONTROLE (VELOCIDADE DO VENTILADOR)	809
CABOS/FIOS ELÉTRICOS - INJETOR	383
CABOS/FIOS ELÉTRICOS - MOTOR	376
CABOS/FIOS ELÉTRICOS - PLATAFORMA	378
CABOS/FIOS ELÉTRICOS DO CONSOLE	372
CADEADO	7
	216
	220
	268
	472
	476
	480
	482
	502
	614
CAIXA - SUSPENSÃO DO ASSENTO	816
CAIXA DIANTEIRA	60
	61
CAIXA DO VOLANTE DO MOTOR	56
	58
CAIXA E CHASSI	452
	454
CANTO DE LÂMINA	752
	753
CANTO E BORDA CORTANTE	745
	746
	747
	748
	749
	750
	751
CAPÔ E PROTETOR	502
CARCAÇA DAS ENGRENAGENS PLANETÁRIAS E COMPONENTES	386
CÁRTER DO ÓLEO DO MOTOR	64
CARTUCHO DO TURBOALIMENTADOR	166
	187
CHAPA DO PISO	806
CHASSI	456
CHAVE	7
	216
	220
	268
	472
	476
	480
	482
	614
CHAVE (DESCONECTAR A BATERIA)	366
CHAVE GERAL	366
CHAVE GERAL (BATERIA)	278
	286
CHICOTE (SENSOR DE PRESSÃO)	331
CILINDRO - LEVANTAMENTO DA LÂMINA	622

ÍNDICE

Designação	Página
CILINDRO DE INCLINAÇÃO	638, 640, 642
CILINDRO DE INCLINAÇÃO DUAL	624, 626
CILINDRO DE INCLINAÇÃO (LADO DIREITO)	621
CILINDRO DE INCLINAÇÃO (LADO ESQUERDO)	621
CILINDRO DE LEVANTAMENTO DO RIPER	628, 630
CILINDRO DE LEVANTAMENTO E TUBOS	616, 618
CILINDRO DE LEVANTAMENTO E TUBOS (LADO DIREITO)	711, 713
CILINDRO DE LEVANTAMENTO E TUBOS (LADO ESQUERDO)	711, 713
CILINDRO DE TOMBAMENTO DO RIPER	634, 636
CILINDRO DO SACADOR DE PINO DO RIPER	632
CILINDRO DUPLO DE INCLINAÇÃO	621
CILINDRO DUPLO DE INCLINAÇÃO E TUBOS	615
CILINDRO (ÉTER)	344, 346
CILINDROS E TUBOS - RÍPER	620
CINTO DE SEGURANÇA	876, 877
COBERTURA	472
COBERTURA DO MOTOR	474, 476, 480
COLETOR - VÁLVULA	672
COLETOR - VÁLVULA (GRUPO DE VÁLVULAS - RÍPER E LÂMINA)	686
COLETOR DE ESCAPE	178
COMANDO DA BOMBA HIDRÁULICA DO INJETOR	210, 212
COMANDO DA DIREÇÃO	578
COMANDO DA DIREÇÃO - DIFERENCIAL	576
COMANDO DO GOVERNADOR E DA BOMBA DE COMBUSTÍVEL	208
COMANDO DO TACÔMETRO	209
COMANDO DO VENTILADOR	42, 44, 46
COMANDO FINAL	398, 402, 406
COMPRESSOR DE REFRIGERANTE	792, 794, 796
CONDENSADOR DE REFRIGERANTE	798
CONDICIONADOR DE AR	773, 774, 776
CONEXÃO - AR CONDICIONADO	825, 830
CONEXÃO - ELÉTRICA	294
CONJUNTO DESLIZADOR	897, 899, 909
CONTRAPESO	458, 460, 461
CONTROLE - REDUTOR DE LUMINOSIDADE DO SIST. DE MONITORIZAÇÃO	800
CONTROLE DA LÂMINA	715
CONTROLE DE DIREÇÃO	570
CONTROLE DE DIREÇÃO E TRANSMISSÃO	572
CONTROLE DO DESACELERADOR	198
CONTROLE DO GOVERNADOR	204, 207
CONTROLE DO PAINEL MONITOR (SISTEMA DE MONITORIZAÇÃO CATERPILLAR)	854
CONTROLE DO PEDAL DO FREIO	568
CONTROLE ELETRÔNICO - MOTOR	298, 299
CONTROLE ELETRÔNICO E MONTAGEM - MOTOR	296
CONTROLE ELETRÔNICO (LUZ DO PAINEL DE INSTRUMENTOS)	854
CONTROLE HIDRÁULICO	608
CONTROLE HIDRÁULICO DA DIREÇÃO	566
CONTROLE HIDRÁULICO DA TRANSMISSÃO	390
CONTROLE HIDRÁULICO DO ACESSÓRIO	610
CONVERSÃO PARA ESTRUTURA NÃO ROPS	802, 803
CONVERSOR DE POTÊNCIA (DE 24 VOLTS A 12 VOLTS)	378
CONVERSOR DE POTÊNCIA (24 VOLTS A 12 VOLTS)(25 AMP)	300
CONVERSOR DE TORQUE	436, 438, 440
CONVERSOR ELÉTRICO	300
COROA E ENGRENAGEM DE TRANFERÊNCIA	410
CORREIA EM V (COMPRESSOR DO AR CONDICIONADO)	794, 796
CORREIA EM V (INCLUI 2 CORREIAS)	274
CRONÔMETRO-ESPERA DE LIGAÇÃO (24 V)	824, 830

ÍNDICE

Designação	Página

D

DECALQUE 921
DECALQUE - ADVERTÊNCIA (CABO AUXILIAR DE PARTIDA) 348 922
DECALQUE - ADVERTÊNCIA (INJETOR DE COMBUSTÍVEL) 923
DECALQUE - ADVERTÊNCIA (MOLA TENSORA) 518
DECALQUE - AMARRAÇÃO 922
DECALQUE - AVISO 819 846
DECALQUE - AVISO (BOMBA DE PRÉ-LUBRIFICAÇÃO) 104
DECALQUE - IDENTIFICAÇÃO (DISJUNTOR) . . . 372
DECALQUE - IDENTIFICAÇÃO (FILTRO DE ÓLEO DO MOTOR) 922
DECALQUE - IDENTIFICAÇÃO (FUSÍVEL) 372
DECALQUE - IDENTIFICAÇÃO (LÍQUIDO ARREFECEDOR DE VIDA PROLONGADA) 923
DECALQUE - IDENTIFICAÇÃO (NO. DE SEQÜÊNCIA E GRUPO) 798
DECALQUE - IDENTIFICAÇÃO (NO. DE SEQÜÊNCIA E GRUPO) (AR CONDICIONADO/AQUECEDOR) 776 812
DECALQUE - IDENTIFICAÇÃO (SÍMBOLO DE EXCLAMAÇÃO) 923
DECALQUE - INFORMAÇÕES (CONEXÃO DA FIAÇÃO DO MOTOR) 923
DECALQUE - INSTRUÇÃO 916
DECALQUE - INSTRUÇÃO (AJUSTE DO ASSENTO) 882 884
DECALQUE - INSTRUÇÃO (CONTROLE DE TEMPERATURA DA CABINE) 808
DECALQUE - INSTRUÇÃO (ENTRADA E SAÍDA DE ÁGUA) (AR CONDICIONADO/AQUECEDOR) 776 812
DECALQUE - INSTRUÇÃO (INTERUPTOR DO SACA-PINO DO RIPER) . . . 608
DECALQUE - INSTRUÇÕES 506
DECALQUE - PAINEL (AR CONDICIONADO E VENTILADOR) 808
DECALQUE - TIRA (PARTE TRASEIRA) 492
DECALQUE (ALMOFADA DO ASSENTO - IDENTIFICAÇÃO) 852 853
DECALQUE (D9R)(LADO DIREITO) 492
DECALQUE (D9R)(LADO ESQUERDO) 492
DECALQUE (INSTRUÇÃO) (CONTROLE DA LÂMINA) 730
DECALQUE (LOCAL DO OLHAL DE LEVANTAMENTO) . . . 922
DECALQUE MONITOR (SISTEMA INTELIGENTE DE MONITORIZAÇÃO DE MOTORES) (MOTOR SEM EMISSÕES) 2
DECALQUE-REFLETOR (COR VERMELHA) 922
DECALQUE (RUÍDO EXTERNO) 506
DENTE DO RÍPER 770 771 772
DESCONGELADOR 804
DESLIZADOR DO VIDRO - LADO DIREITO (MATIZADO) 906
DISJUNTOR AUTOMÁTICO DE CIRCUITO (10 A) (FREIO/EMBREAGEM ELETRÔNICOS) 372
DISJUNTOR AUTOMÁTICO DE CIRCUITO (10 A) (INTERRUPTOR DA CHAVE DE PARTIDA) . . . 372
DISJUNTOR AUTOMÁTICO DE CIRCUITO (125 AMP) (PRINCIPAL) 372
DISJUNTOR AUTOMÁTICO DE CIRCUITO (15 A) (CONDENSADOR REMOTO DO CONDICIONADOR DE AR) 824 830
DISJUNTOR AUTOMÁTICO DE CIRCUITO (15 A) (FARÓIS DIANTEIROS) 372
DISJUNTOR AUTOMÁTICO DE CIRCUITO (15 A) (IMPLEMENTO) 372
DISJUNTOR AUTOMÁTICO DE CIRCUITO (15 A) (MOTOR) 372
DISJUNTOR AUTOMÁTICO DE CIRCUITO (15 A) (VENTILADOR) 372
DRENO - ECOLOGIA 394

E

EIXO-COMANDO DE VÁLVULA 10 11
EIXO DE TRANSMISSÃO 433
EIXO PIVÔ - LUBRIFICAÇÃO 530
EJETOR DE POEIRA 168
ELEMENTO - AQUECEDOR DE ÁGUA DA CAMISA 306
ELEMENTO - AQUECEDOR DE ÁGUA DA CAMISA (120 VOLTS/1500 WATTS) 305
ELEMENTO - FILTRANTE 172
ELEMENTO - FILTRANTE (INDICADOR DE SERVIÇO DO FILTRO DE AR) 176
ELEMENTO - PRIMÁRIO (PURIFICADOR DE AR) (ALTA EFICIÊNCIA) 162
ELEMENTO - PRIMÁRIO (PURIFICADOR DE AR) (PADRÃO) 162
ELEMENTO - SECUNDÁRIO (PURIFICADOR DE AR) 160 162

ÍNDICE

Designação	Página
ELEMENTO DO FILTRO PRIMÁRIO DE AR	160
ELEMENTO FILTRANTE - ÓLEO (FLUXO HIDRÁULICO/REVERSO) (DESCARTÁVEL)	680
	681
ELEMENTO FILTRANTE - ÓLEO (FLUXO HIDRÁULICO/REVERSO) (LIMPADOR - ALTO DESEMPENHO)	680
ELEMENTO FILTRANTE - ÓLEO (FLUXO INVERSO) (FLUIDO RESISTENTE A FOGO - ALTO DESEMPENHO)	681
ELEMENTO FILTRANTE - ÓLEO (HIDRÁULICO)	579
ELEMENTO FILTRANTE - ÓLEO (HIDRÁULICO) (FLUIDO RESISTENTE A FOGO - ALTO DESEMPENHO)	680
ELEMENTO FILTRANTE - ÓLEO (LIMPADOR - ALTO DESEMPENHO)	681
ELEMENTO FILTRANTE - ÓLEO (TREM DE FORÇA)	396
ELIMINAÇÃO DE VAPORES DO CÁRTER	86
	88
ELO DA ESTEIRA	524
	525
	526
	527
	528
	529
ELO ESTABILIZADOR	724
	725
EMISSOR - POSIÇÃO	329
ENGRENAGENS DE COMANDO TRASEIRO	52
ENGRENAGENS DE DISTRIBUIÇÃO	48
	50
ENGRENAGENS PLANETÁRIAS - TRANSMISSÃO	422
ESCOVA	362
ESPELHO	838
ESPELHO RETROVISOR	839
	840
ESTEIRA	550
	551
	552
	553
	554
	555
	556
	557
	558
	559
	560
	561
ESTRUTURA - BOMBA DE ÓLEO (CARREGAMENTO DA TRANSMISSÃO)	430
ESTRUTURA - BOMBA DE ÓLEO (CARREGAMENTO DO CONVERSOR)	430
ESTRUTURA - BOMBA DE ÓLEO (RETORNO - TRANSMISSÃO)	430
ESTRUTURA ROPS	864
	865
	866
EXTENSÃO - ENCOSTO	876
	877

F

FILTRO - ÁGUA	137
FILTRO - AR (CABINE) (ALTA EFICIÊNCIA)	808
FILTRO - AR (CABINE) (PADRÃO)	808
FILTRO - AR (CABINE) (REDUÇÃO DE ODOR)	808
FILTRO - COMBUSTÍVEL	223
	268
FILTRO - ESPUMA (SENSOR DO NÍVEL DO COMBUSTÍVEL)	279
	287
FILTRO - ÓLEO	396
	579
FILTRO - ÓLEO (DIREÇÃO)	580
FILTRO - ÓLEO DO MOTOR	84
FILTRO - ÓLEO (TREM DE FORÇA)	416
FILTRO (BOMBA D'ÁGUA)	134
FILTRO (BOMBA HIDR. DE UNIDADE INJETORA)	212
FILTRO DE AR DE CABINA	809
FILTRO DE COMBUSTÍVEL E SEPARADOR DE ÁGUA	224
	225
FILTRO E TUBOS - COMBUSTÍVEL	216
	220
FILTRO (SEPARADOR DE ÁGUA E COMBUSTÍVEL)	224
FIXADORES - BOMBA DE ÓLEO DO MOTOR	80
FIXADORES - BOMBA INJETORA DE COMBUSTÍVEL	214
FIXADORES - CABEÇOTE DO MOTOR	38
FLUTUAÇÃO (SENSOR DO NÍVEL DO COMBUSTÍVEL)	278
	286
FREIO DE SERVIÇO	564
FUNDO - ENCOSTO	851
	852
	853
FUSÍVEL (10 A)	373
FUSÍVEL (15 A)	373
FUSÍVEL (20 A)	373
FUSÍVEL (30 A)	300

ÍNDICE

Designação	Página
G	
GOVERNADOR	226
GOVERNADOR, BOMBA DE INJEÇÃO DE COMBUSTÍVEL E DE TRANSFERÊNCIA	260
GR. DE CONVERSÃO	801
GR. DE CONVERSÃO - MOTOR	2
GRADE DO RADIADOR CONTRA EROSÃO	486
GRAXEIRA	44
	514
	630
	634
	636
	638
	640
	642
	718
	722
	733
GRAXEIRA (ROSCA DE 1/8-27 DO PADRÃO AMERICANO NPTF)	716
GRAXEIRA (ROSCA 1/8-27 POL)	516
	628
GRAXEIRA (ROSCA 1/8-27 45 GRAUS)	8
GRUPO DE CONVERSÃO - LÂMINA	731
	732
GRUPO DE INSTALAÇÃO - MOTOR	7
GRUPO DE VÁLVULAS DE CONTROLE - QUÁDRUPLO	686
GRUPO ROTATIVO DA BOMBA	677
GUIA - VEDADOR	500
I	
ILUMINAÇÃO	315
ILUMINAÇÃO - AUXILIAR	316
ILUMINAÇÃO - DIANTEIRA	322
ILUMINAÇÃO - TRASEIRA	324
ILUMINAÇÃO TRASEIRA	314
INDICADOR - LIMPEZA DO FILTRO DE AR	176
INDICADOR - NÍVEL DO ÓLEO (VARETA)	90
INDICADOR - VARETA DO NÍVEL DE ÓLEO (TREM DE FORÇA)	416
INJETOR DE COMBUSTÍVEL	230
INSERTO - SEDE DE VÁLVULA (ADMISSÃO)	29
INSERTO - SEDE DE VÁLVULA (ESCAPE)	29
	30
INSERTO - VÁLVULA DE ENTRADA (ADMISSÃO)	30
INSTALAÇÃO DO RÁDIO	819
INTERRUPTOR	694
INTERRUPTOR - ALAVANCA	369
	730
INTERRUPTOR - BALANCIM (AUXILIAR)	380
INTERRUPTOR - BALANCIM (AUXILIAR A ÉTER)	380
INTERRUPTOR - BALANCIM (CONTROLE DO VENTILADOR)	804
INTERRUPTOR - BALANCIM (LIGAR - DESLIGAR AR CONDICIONADO)	809
INTERRUPTOR - BALANCIM (LUZ LATERAL)	378
INTERRUPTOR - BALANCIM (OPERADOR)	378
INTERRUPTOR - BALANCIM (TRAVAMENTO)(SACA-PINO DO RIPER)	608
INTERRUPTOR - BALANCIM (24 VOLTS)(VEDADO)(ILUMINADO) (ACELERADOR)	378
INTERRUPTOR - BUZINA	378
INTERRUPTOR - FLUXO	4
	6
	367
	368
INTERRUPTOR - LIMITADOR (ALARME DE MARCHA-À-RÉ)	572
INTERRUPTOR - LIMITADOR (PARTIDA EM NEUTRO)	572
INTERRUPTOR - MAGNÉTICO	370
INTERRUPTOR - MAGNÉTICO (LIGAR - DESLIGAR MOTOR DE PARTIDA)	104
INTERRUPTOR - MAGNÉTICO (RELÉ DE PARTIDA)	348
	372
INTERRUPTOR - MAGNÉTICO (RELÉ PRINCIPAL)	372
INTERRUPTOR - PARTIDA	371
	378
INTERRUPTOR - PRESSÃO (AR CONDICIONADO - ALTO)	824
	830
INTERRUPTOR - PRESSÃO (AR CONDICIONADO - BAIXO)	824
	830
INTERRUPTOR - PRESSÃO (ÓLEO)	104
INTERRUPTOR - TEMPERATURA (AUXILIAR A ÉTER)	286
INTERRUPTOR - TEMPERATURA (DERIVAÇÃO DO FILTRO DO TREM DE FORÇA)	278
	286
INTERRUPTOR - TEMPERATURA (FILTRO DA DIREÇÃO)	580
INTERRUPTOR - TERMOSTATO (COMPRESSOR DO AR CONDICIONADO)	776
INTERRUPTOR (CONTROLE DE INCLINAÇÃO ÚNICO - DUPLO)	369
INTERRUPTOR (CONTROLE DE TOMBAMENTO)	369
INTERRUPTOR DE DERIVAÇÃO	365
INTERRUPTOR DE DERIVAÇÃO (FILTRO DA DIREÇÃO)	579

ÍNDICE

Designação	Página
INTERRUPTOR DE DERIVAÇÃO (FILTRO DE ÓLEO DO TREM DE FORÇA)	281
	289
INTERRUPTOR (LUZ DIANTEIRA)	380
INTERRUPTOR (LUZ TRASEIRA)	378
INTERRUPTOR (PORTAS-DIANTEIRA, TRASEIRA, LADO DIREITO & LADO ESQUERDO)	916
INTERRUPTOR (VELOCIDADE DO VENTILADOR)	808
INTERRUPTOR (24 VOLT)(ILUMINADO)	378
J	
JANELA DA CABINE	895
	896
	897
	898
	899
	900
	901
	902
	904
	906
	907
	908
	909
	910
JANELA DA CABINE (DIREITO)	895
	901
JANELA DA CABINE (ESQUERDO)	896
JANELA DA CABINE (LADO DIREITO - DESLIZANTE)	893
JANELA DA CABINE (LADO ESQUERDO - DESLIZANTE)	894
JANELA DA CABINE (TRASEIRA - DESLIZANTE)	788
JANELA DESLIZANTE	893
	894
JOGO - COMPENSADOR	266
JOGO - COMPONENTE DA BOMBA HIDRÁULICA DA UNIDADE INJETORA	262
JOGO - VIDRO DA CABINE (FÁBRICA)	909
JOGO DE ACONDICIONAMENTO DA BOMBA D'ÁGUA (ÁGUA)	134
JOGO DE BLOCO DESLIZADOR	879
	880
	881
JOGO DE BOMBA INJETORA DE COMBUSTÍVEL (RECONDICIONAR)	262
JOGO DE BOTÃO DE SUSPENSÃO	816
JOGO DE BUJÃO	262
JOGO DE BUJÃO (INCLUI RETENTORES)	266
JOGO DE CHICOTE (ASSENTO COM SUSPENSÃO A AR)	884
JOGO DE COIFA DE SUSPENSÃO	882
JOGO DE CORDÃO	884
JOGO DE CORREIAS EM V	42
JOGO DE CORREIAS EM V (ALTERNADOR - MOTOR SEM EMISSÕES)	2
JOGO DE CORREIAS EM V (INCLUI 4 CORREIAS)	44
JOGO DE ENGRENAGENS DO MOTOR DE PARTIDA	363
JOGO DE FILTRO DA TAMPA (TANQUE DE COMBUSTÍVEL)	269
JOGO DE FIXADOR DE CORREIA	882
JOGO DE FIXADORES	884
JOGO DE GAXETA	720
	722
JOGO DE GUIA DE TRILHO	904
	906
JOGO DE INDICADOR	816
JOGO DE LÂMINA DO LIMPADOR DE PÁRA-BRISA	917
JOGO DE MANCAL	166
	266
	592
	817
JOGO DE MANCAL (GARFO)	262
JOGO DE MANCAL (MOTOR DE PARTIDA)	362
JOGO DE MANCAL (PADRÃO)	68
JOGO DE MANCAL (SUBMEDIDA DE 0,635 MM)	68
JOGO DE MANCAL (SUBMEDIDA DE 1,27 MM)	68
JOGO DE MOLA	816
JOGO DE MOLA DE FOLHA	901
	902
JOGO DE PÁRA-CHOQUE	816
JOGO DE PISTÃO	674
JOGO DE RECEPTÁCULO (12 PINOS)	279
	280
	288
	379
JOGO DE RECEPTÁCULO (2 PINOS)	104
	273
	278
	279
	280
	286
	287
	288
	289
	326
	327
	340
	344
	346
	348

ÍNDICE

Designação	Página
	349
	365
	372
	373
	376
	378
	379
	580
	709
	776
	777
	798
	812
	813
	824
	830
JOGO DE RECEPTÁCULO (3 PINOS)	104
	122
	170
	236
	279
	280
	287
	308
	329
	338
	341
	342
	373
	376
	378
	379
	608
	730
	890
JOGO DE RECEPTÁCULO (4 PINOS)	279
	280
	288
	328
	373
	376
	379
	707
	708
	824
	830
	890
JOGO DE RECEPTÁCULO (6 PINOS)	279
	288
	379
	800
	808
	824
	841
	842
	912
	914
	916
JOGO DE RECEPTÁCULO (8 PINOS)	279
	280
	288
	378
	777
	813
JOGO DE RETENTOR	46
	231
	266
	447
	673
	707
	709
JOGO DE RETENTOR (UNIDADE INJETORA HIDRÁULICA)	262
JOGO DE RETENTOR (VÁLVULA SOLENÓIDE DE COMBUSTÍVEL)	272
JOGO DE REVISÃO	46
JOGO DE ROLETE DE SUSPENSÃO	882
JOGO DE ROLO	884
JOGO DE SEGUIDOR	817
JOGO DE TERMINAL	353
	357
	363
JOGO DE TOMADA DE CONEXÃO (12 PINOS)	379
JOGO DE TOMADA DE CONEXÃO (2 PINOS) . . .	2
	104
	279
	280
	287
	288
	289
	349
	370
	373
	376
	379
	424
	776
	813
	824
JOGO DE TOMADA DE CONEXÃO (3 PINOS) . . .	104
	279
	280
	288
	334
	335
	336
	337
	376
	378

ÍNDICE

Designação	Página
	379
JOGO DE TOMADA DE CONEXÃO (3 PINOS) (SENSOR DE PRESSÃO)	331
	332
JOGO DE TOMADA DE CONEXÃO (3 PINOS) (SENSOR DE SINCRONIZAÇÃO DA ROTAÇÃO DO MOTOR)	339
JOGO DE TOMADA DE CONEXÃO (4 PINOS)	280
	288
	289
	373
	376
	379
	825
	890
JOGO DE TOMADA DE CONEXÃO (6 PINOS)	104
	280
	288
	378
	379
	890
JOGO DE TOMADA DE CONEXÃO (8 PINOS)	2
	280
	288
	379
JOGO DE TRAVA DE TERMINAL (BLOCO DE FUSÍVEIS)	373
JOGO DE TRINCO	904
	906
JOGO-JANELA	820
JUNTA	680
JUNTA - COLETOR DE ESCAPE	178
JUNTA (BOMBA DE ESCORVA DE COMBUSTÍVEL)	220
JUNTA CORREDIÇA	434
JUNTA UNIVERSAL	443

Designação	Página
	762
	765
LÂMINA UNIVERSAL	713
	714
	763
	764
	766
LÂMPADA - FAROL	309
	310
LÂMPADA - FAROL (24 VOLT)(SUSPENSO)	315
	319
LÂMPADA - FAROL (24 VOLTS)(VERTICAL)	318
	320
LÂMPADA - TETO	308
LÂMPADA - TETO (24 VOLTS - COM INTERRUPTOR)	788
LÂMPADA (24 V)	378
LÂMPADA (24 V) (FAROL)	310
LÂMPADA (24 V) (FAROL)(65 WATTS)	309
LÂMPADA (24 V) (TETO)	308
LÂMPADA (28 V)	380
	854
LAVADOR DO VIDRO	890
LENTE (HOLOFOTE)	309
	310
LENTE (TETO)	308
LENTE VERMELHA	380
	854
LEVANTAMENTO DO MOTOR	62
LIMITADOR DE COMBUSTÍVEL	200
	202
LIMPADOR DO VIDRO	912
	914
	916
LUVA - REVESTIMENTO INFERIOR	26
LUVA DO TUCHO	26

L

LÂMINA	759
LÂMINA DO LIMPADOR DE PÁRA-BRISA (DIANTEIRO)	916
LÂMINA DO LIMPADOR DE PÁRA-BRISA (PORTA - LADO ESQUERDO)	916
LÂMINA DO LIMPADOR DE PÁRA-BRISA (TRASEIRO)	916
LÂMINA E BORDA CORTANTE	754
	755
	756
LÂMINA E BORDA CORTANTE SEMI-UNIVERSAL	757
	758
LÂMINA SEMI-UNIVERSAL	711
	712
	760

M

MAÇANETA	788
MAÇANETA (CONTROLE DE TEMPERATURA DA CABINE)	808
MANGUEIRA (87 CM CADA)	88
MANGUEIRA (9 CM CADA)	88
MATERIAL RODANTE	563
MECANISMO DAS VÁLVULAS	77
	78
MÓDULO - VELOCÍMETRO E TACÔMETRO	842
MÓDULO ELETRÔNICO DE QUATRO INDICADORES	841
MOLA - ESCOVA	363
MOLA DE CONTROLE DO TORQUE	270
MONTAGEM - CABINE	844
MONTAGEM - CILINDRO	733
MONTAGEM - ESTRUTURA ROPS	847

ÍNDICE

Designação	Página
MONTAGEM - RIPER	734
MONTAGEM - TRANSMISSÃO	420
MONTAGEM DE RÁDIO DE FAIXA DE ONDA CIVIL	846
MOTOR	4
	6
MOTOR - PISTÃO	586
MOTOR DO GRUPO ROTATIVO	592
MOTOR ELÉTRICO	798
MOTOR ELÉTRICO DE PARTIDA	352
	356
	359
	360
	362
MOTOR ELÉTRICO (27 VOLT) (VENTILADOR DA CABINE)	776
	812
MUNHÃO DA LÂMINA	743
	744
MUNHÃO DO MOTOR	76

O

ÓLEO - ARRANJO PARA TROCA RÁPIDA	102

P

PACA - INFORMAÇÃO DE SERVIÇOS	922
PAINEL DE INSTRUMENTOS	854
PÁRA-LAMA	482
PARTIDA EM TEMPO FRIO - ARRANJO	348
PISTÃO E BIELA	66
	68
PIVÔ DO LIMPADOR	920
PLACA - ADAPTADOR DO GOVERNADOR	246
PLACA BASCULANTE	678
	679
PLACA DE ADVERTÊNCIA (MOLA TENSORA)	518
	562
PLACA DE ADVERTÊNCIA (ÓLEO DE MOLA TENSORA)	518
PLACA DE DESGASTE	767
PLACA DE INSTRUÇÃO (CONDICIONADOR DE AR)	773
	774
PLACA DESLIZANTE	856
	858
PLACA E DECALQUE	922
PLACA/CHAPA (IDENTIFICAÇÃO DO PRODUTO)	922
PLATAFORMA	860
PORTA - LADO DIREITO	466
	468
PORTA - LADO ESQUERDO	463
	464
PÓS-ARREFECEDOR A ÁGUA	154
	156
PRÊ-LUBRIFICAÇÃO	104
PROTETOR - COMANDO FINAL	487
PROTETOR - EIXO DE TRANSMISSÃO	412
PROTETOR - EIXO PIVÔ	495
PROTETOR - RADIADOR	496
PROTETOR - ROCHA	498
	499
PROTETOR - RODA-GUIA	488
	494
PROTETOR - TANQUE DE COMBUSTÍVEL	492
PROTETOR - TREM DE FORÇA	413
	414
PROTETOR CONTRA CHUVA	164
	168
PROTETOR CONTRA POEIRA (ADAPTADOR DE ABASTECIMENTO RÁPIDO DE COMBUSTÍVEL)	190
	196
PROTETOR CONTRA VANDALISMO	807
PROTETOR INFERIOR	489
	490
PURIFICADOR DE AR	158
	160
	162

R

RADIADOR	140
	144
RECEPTÁCULO (AUXÍLIO DE PARTIDA)	278
	286
RECEPTOR - SECADOR (CONDICIONADOR DE AR)	824
RECEPTOR - SECADOR (REFRIGERANTE)	830
RECLINAÇÃO - ASSENTO	863
REFORCO - ARMACAO DOS ROLETES	532
REGULADOR DE TEMPERATURA DA ÁGUA (92 GRAUS CENTÍGRADOS)	122
	126
RESPIRO	21
	79
	349
RESPIRO (CÁRTER DO MOTOR)	79
RESPIRO (TREM DE FORÇA)	417
RETENTOR	20
RETENTOR DE ANEL-O (11,89 MM DE DIÂMETRO INTERNO)	281
	289
RETENTOR DO VIRABREQUIM	23
REVESTIMENTO DA CABINE	822
RIPER	741
	742

ÍNDICE

Designação	Página
	768
	769
RODA-GUIA DAS ESTEIRAS	521
	522
	523
ROLETE DE ESTEIRA DE FLANGE DUPLO	538
	539
	540
	541
ROLETE DE ESTEIRA DE FLANGE SIMPLES	542
	543
	544
	545
ROLETE E RODA-GUIA	533
ROLETE SUPERIOR DA ESTEIRA	534
	536
RUÍDO - ARRANJO PARA SUPRESSÃO	506

S

SACA-PINO	736
	737
SEGMENTO DA RODA MOTRIZ	432
SEMI-EIXO - TREM DE FORÇA	384
SENSOR - NÍVEL DE COMBUSTÍVEL	328
SENSOR - PRESSÃO	330
	331
	332
	333
	334
	335
	336
	337
SENSOR - PRESSÃO (ACIONAMENTO DA INJEÇÃO)	38
SENSOR - PRESSÃO (ATMOSFERA)	172
SENSOR - PRESSÃO (ÓLEO DO MOTOR)	248
	287
SENSOR - PRESSÃO (SAÍDA DO TURBOALIMENTADOR)	38
SENSOR - TEMPERATURA	341
	342
SENSOR - TEMPERATURA (COMBUSTÍVEL)	236
SENSOR - TEMPERATURA (ENTRADA DO AR)	170
SENSOR - TEMPERATURA (LÍQUIDO ARREFECEDOR)	289
SENSOR - TEMPERATURA (LÍQUIDO ARREFECEDOR DO MOTOR)	122
SENSOR - TEMPERATURA (ÓLEO DO TREM DE FORÇA)	281
	289
SENSOR - TEMPERATURA (ÓLEO HIDRÁULICO)	279
	287
SENSOR DE VELOCIDADE	60
	326
	327
	338
	339
	340
SENSOR DE VELOCIDADE (SAÍDA DA TRANSMISSÃO)	423
SENSOR DE VELOCIDADE (VENTILADOR)	46
SENSOR MAGNÉTICO	326
	327
SILENCIADOR	180
SINCRONIZADOR	104
SIST. DE ILUMINAÇÃO - CILINDRO	312
SISTEMA DE ILUMINAÇÃO - FARÓIS	318
	319
	320
	742
SOLENÓIDE	352
SOLENÓIDE DO MOTOR DE ARRANQUE	343
	356
SUPORTE DO MOTOR	74
	75
SUSPENSÃO - ASSENTO	882
	884
SUSPENSÃO - TRUQUE	546

T

TAMPA	140
	144
	220
TAMPA - BLOCO DO MOTOR	12
	13
	14
TAMPA - BOCAL DE ENCHIMENTO	81
	82
TAMPA - BOCAL DE ENCHIMENTO (ÓLEO DO TREM DE FORÇA)	416
TAMPA - BOCAL DE ENCHIMENTO (TANQUE HIDRÁULICO)	680
TAMPA - CAIXA DIANTEIRA	18
TAMPA - CAIXA DO VOLANTE	16
TAMPA - MECANISMO DAS VÁLVULAS	20
	21
TAMPA - MUNHÃO	462
TAMPA - NÍVEL DO ÓLEO	530
TAMPA - RADIADOR	149
TAMPA - RELETE DE ESTEIRA	534
	536
TAMPA - RETENTOR (CONDICIONADOR DE AR)	825
	831
TAMPA - RETENTOR (CONDICIONADOR DE AR)(ALTO LADO)	825

ÍNDICE

Designação	Página
TAMPA - RETENTOR (CONDICIONADOR DE AR)(LADO BAIXO)	825
TAMPA - ROLETE DAS ESTEIRAS	512, 534, 536
TAMPA - TANQUE HIDRÁULICO	614
TAMPA COM RESPIRO	886
TAMPA CONTRA POEIRA	70, 84, 122, 126, 286, 386, 417, 444, 449, 579, 580, 596, 654, 681
TAMPA CONTRA POEIRA (ADAPTADOR DE ABASTECIMENTO RÁPIDO DE COMBUSTÍVEL)	192, 194
TAMPA DA RODA-GUIA	510, 511
TAMPA DO COMANDO DO TACÔMETRO	209
TAMPA DO TANQUE DE COMBUSTÍVEL	269
TANQUE - LAVADOR DE JANELA	886, 888
TANQUE - LÍQUIDO ARREFECEDOR	149
TANQUE DE ÁGUA	150
TANQUE DE COMBUSTÍVEL	268, 269
TANQUE HIDRÁULICO E FILTRO	680
TAPETE	844, 848, 860
TELA	92
TELA - RESERVATÓRIO (TANQUE DE COMBUSTÍVEL)	216, 220
TELA DE PROTEÇÃO	867
TELA DE SUCÇÃO	440
TELA DE SUCÇÃO (ENTRADA DA BOMBA DE ÓLEO DO TREM DE FORÇA)	416
TELA DE SUCÇÃO (RETORNO - TRANSMISSÃO)	386
TELA FILTRANTE	680
TIRA	901, 902, 904, 906
TRANSMISSÃO	442
TREM DE FORÇA	427
TRINCO	821
TUBO - ARMAÇÃO DOS ROLETES	562
TUBOS - ÁGUA	6, 117, 118, 120, 121, 122, 126, 130
TUBOS - ÁGUA DO PÓS-ARREFECEDOR	116
TUBOS - AQUECEDOR	836
TUBOS - AR	170, 172, 174, 176
TUBOS - AR CONDICIONADO	824, 830
TUBOS - BOMBA	654
TUBOS - CILINDRO DE INCLINAÇÃO	666, 668, 670
TUBOS - CILINDRO DE LEVANTAMENTO	646
TUBOS - CILINDRO DO SACA-PINO	652
TUBOS - DIREÇÃO	580
TUBOS - DRENAGEM DO COMBUSTÍVEL	232
TUBOS - FILTRO DO COMBUSTÍVEL	234, 236
TUBOS - INCLINACÃO	662, 664
TUBOS - INJEÇÃO DO COMBUSTÍVEL	240, 242
TUBOS - INJETOR DA BOMBA HIDRÁULICA	244
TUBOS - ÓLEO DA TRANSMISSÃO	416
TUBOS - ÓLEO DO MOTOR	92
TUBOS - ÓLEO DO TURBOALIMENTADOR	98, 100
TUBOS - RIPER	658, 660
TUBOS - SACA-PINO	650
TUBOS - SUPRIMENTO DE ÓLEO	96
TUBOS DO AQUECEDOR	836
TURBOALIMENTADOR	184, 185, 186, 187

V

Designação	Página
VÁLVULA	150, 194, 445, 594, 602

ÍNDICE

Designação	Página
	606
	702
	830
VÁLVULA - AMOSTRA DE FLUIDOS	84
	417
	681
VÁLVULA - CONDICIONADOR DE AR (LADO ALTO)	825
VÁLVULA - CONDICIONADOR DE AR (LADO BAIXO)	825
VÁLVULA - ESFERA	216
	220
VÁLVULA (ABASTECIMENTO) (TENSOR DA ESTEIRA)	548
VÁLVULA (ALÍVIO) (TENSOR DA ESTEIRA)	548
VÁLVULA DE ADMISSÃO	35
	36
VÁLVULA DE ÁGUA (AQUECEDOR DA CABINE)	777
	812
VÁLVULA DE ALÍVIO	418
	449
	606
	607
	702
	703
	704
	705
VÁLVULA DE ALÍVIO (CARGA)	672
VÁLVULA DE ALÍVIO (DERIVAÇÃO DO ARREFECEDOR)	416
VÁLVULA DE ALÍVIO (ÓLEO FRIO)	604
VÁLVULA DE ALÍVIO (PRINCIPAL)	672
VÁLVULA DE AMOSTRAGEM	126
VÁLVULA DE CONTROLE	598
	600
	690
	692
	694
	696
VÁLVULA DE CONTROLE - PRESSÃO E COMPENSAÇÃO DE FLUXO	698
VÁLVULA DE CONTROLE - PRESSÃO E COMPENSAÇÃO DE FLUXO (CONTROLE DE SAÍDA DA BOMBA)	674
VÁLVULA DE CONTROLE DE INCLINAÇÃO	710
VÁLVULA DE CONTROLE DE PRESSÃO	271
	604
VÁLVULA DE CONTROLE DE PRESSÃO (COMBUSTÍVEL)	236
VÁLVULA DE CONTROLE DOS FREIOS	596
VÁLVULA DE CONTROLE E MONTAGEM	684
VÁLVULA DE CONTROLE (INCLINAÇÃO DA LÂMINA)	686
VÁLVULA DE CONTROLE (INCLINAÇÃO DO RÍPER)	686
VÁLVULA DE CONTROLE (LEVANTAMENTO DA LÂMINA)	686
VÁLVULA DE CONTROLE (LEVANTAMENTO DO RÍPER)	686
VÁLVULA DE CONTROLE PILOTO	602
VÁLVULA DE DESVIO	681
VÁLVULA DE DRENAGEM (CAIXA)	452
	454
VÁLVULA DE DRENAGEM (TANQUE HIDRÁULICO)	654
VÁLVULA DE ENXAGUAR	446
VÁLVULA DE ESCAPE	35
	36
VÁLVULA DE MODULAÇÃO	447
VÁLVULA DE PRIORIDADE	448
VÁLVULA DE QUEDA RÁPIDA	700
VÁLVULA DE RETENÇÃO	216
	220
	688
VÁLVULA DE RETENÇÃO E DE ALÍVIO	689
VÁLVULA DE RETENÇÃO (FLUXO INVERSO)	672
VÁLVULA DE RETENÇÃO (ÓLEO DE COMPENSAÇÃO)	604
VÁLVULA DE RETENÇÃO (SISTEMA DO LAVADOR E LIMPADOR)	888
VÁLVULA DE RETENÇÃO (TANQUE HIDRÁULICO)	654
VÁLVULA DE SEPARAÇÃO	706
VÁLVULA (ENTRADA DO CONVERSOR DE TORQUE)	418
VÁLVULA LIMITADORA	200
VÁLVULA (PARTIDA A ÉTER)(24 VOLTS)	344
	346
VÁLVULA PILOTO E MONTAGEM	444
VÁLVULA SELETORA E CONTROLE DE PRESSÃO	450
VÁLVULA SOLENÓIDE	272
	707
	708
	709
VÁLVULA SOLENÓIDE (CONTROLE DE PRESSÃO)	262
VÁLVULA SOLENÓIDE (FUNÇÃO DE INCLINAÇÃO - TOMBAMENTO)	710
VEDADOR DE JUNTA	14
VEDADOR DE JUNTA (14 ML)	18
VENTILADOR DE SOPRO	114
VIDRO - DESLIZADOR (LADO ESQUERDO) (MATIZADO)	904
VIDRO FIXO - LADO DIREITO (MATIZADO)	901
VIDRO FIXO - LADO ESQUERDO (MATIZADO)	902

ÍNDICE

Designação	Página	Designação	Página
VIDRO (MATIZADO)	895		
	896		
	907		
	908		
VIDRO (MATIZADO) (DIANTEIRA DA CABINE - FIXA)	788		
VIDRO (MATIZADO) (LATERAL DA PORTA - FIXA)	788		
VIDRO (MATIZADO) (PORTAS DA CABINE - FIXAS)	788		
VIDRO (VIDRO MATIZADO - VERDE)	909		
	910		
VIRABREQUIM	22		
	23		
VOLANTE DO MOTOR	47		

STICHWORTVERZEICHNIS

Bezeichnung	Seite

A

ABDECKGLAS (ARBEITSSCHEINWERFER)	310
ABDECKGLAS (ARBEITSSCHEINWERFER)	309
ABDECKGLAS (FAHRERHAUSDACH)	308
ABGASKRÜMMERDICHTUNG	178
ABLASS (UMWELTFREUNDLICH)	394
ABLASSSTOPFEN	118
	130
	518
ABLASSVENTIL (HYDRAULIKTANK)	654
ABLASSVENTIL (VENTIL F. DRUCKLOSEN RÜCKLAUF)	452
	454
ABSTREIFBALKEN	507
ACHSWELLENSCHMIERUNG	530
ANSAUGSIEB	440
ANSAUGSIEB (GETRIEBEABSAUGPUMPE)	386
ANSAUGSIEB (KRAFTÜBERTRAGUNGSÖL-PUMPENEINLASS)	416
ANSCHLUSS, ELEKTR.	294
ANSCHLUSS (STARTHILFE)	278
	286
ANSCHLUSSKLEMMENSATZ	353
	357
	363
ANSCHLUSSSPERRSATZ (SICHERUNGS-BLOCK)	373
ANTRIEBSSCHUTZ	413
	414
ANTRIEBSWELLE	433
ANTRIEBSWELLEN-KEILVERZAHNUNG	434
ANTRIEBSWELLENVERKLEIDUNG	412
ANZEIGEN-EINBAUSATZ	816
ANZUGSLEINE	884
ARBEITSGERÄT - HYDRAULIKSTEUERUNG	610
ARBEITSGERÄTEGESTÄNGE	610
	726
	728
	730
ARBEITSLEUCHTEN	309
	310
	318
	319
	320
	742
ARBEITSLEUCHTEN (24 VOLT)(HÄNGEND)	315
ARBEITSLEUCHTEN (24 VOLT)(HÄNGEND)	319
ARBEITSLEUCHTEN (24 V)(SENKRECHT)	318
	320
ARRETIERUNGSEINBAUSATZ	904
	906
ÄTHERSTARTHILFE	344
	346
AUFKLEBER	819
	846
	921
AUFKLEBER - FESTZURREN	922
AUFKLEBER - INFORMATION (MOTORVER-DRAHTUNGSVERBINDUNG)	923
AUFKLEBER - MONITOR (ÜBERWACHUNGS-SYSTEM SMART) (EMISSIONSFREI - MOTOR)	2
AUFKLEBER (ANWEISUNG) (PLANIERSCHILD-STEUERUNG)	730
AUFKLEBER (AUSSENGERÄUSCH)	506
AUFKLEBER (D9R)(LINKE SEITE)	492
AUFKLEBER (D9R)(RECHTE SEITE)	492
AUFKLEBER (FAHRER)	506
AUFKLEBER (HINTEN)	492
AUFKLEBER (HUBÖSE)	922
AUFKLEBER (SITZKISSENKENNUNG)	852
	853
AUFKLEBER (VORSCHMIERPUMPE)	104
AUFREISSER	768
	769
AUFREISSER - TEILLISTE	741
	742
AUFREISSER-BOLZENZIEHERZYLINDER	632
AUFREISSERBEFESTIGUNG	734
AUFREISSERHUBZYLINDER	628
	630
AUFREISSERLEITUNGEN	658
	660
AUFREISSERRAHMEN	716
	718
AUFREISSERZAHN	770
	771
	772
AUFREISSERZAHNSPITZE - ZYLINDER	634
	636
AUFREISSERZYLINDER UND -LEITUNGEN	620
AUSGLEICHER-EINBAUSATZ	266
AUSLASSVENTIL	35
	36
AUSPUFFKRÜMMER	178
AUSSCHALTER, MAGN.	326
	327

B

BATTERIE UND VERDRAHTUNG	278
	286
BATTERIE (12 V/TROCKEN)	281
	289
	349
BEGRENZERVENTIL	200
BELEUCHTUNGSANLAGE	315
BELEUCHTUNGSANLAGE -ZYLINDER	312
BETRIEBSBREMSE	564

STICHWORTVERZEICHNIS

Bezeichnung	Seite
BLATTFEDERSATZ	901
	902
BODENPLATTE	806
BOLZENZIEHER	736
	737
BOLZENZIEHERZYLINDERLEITUNGEN	652
BREMSSTEUERVENTIL	596
BUCHSENLAUFFLÄCHE, UNTEN	26
BÜRSTENFEDER	363
BÜRSTENSATZ	362
D	
DÄMPFER UND RIEMENSCHEIBE	40
	41
DICHTUNG	20
	680
	901
	902
	904
	906
DICHTUNG (KRAFTSTOFFENTLÜFTUNGS-PUMPE)	220
DICHTUNGS-ABDICHTMITTEL	14
DICHTUNGS-ABDICHTMITTEL (14 ML)	18
DICHTUNGSKAPPE (KLIMAANLAGE)	825
	831
DICHTUNGSKAPPE (KLIMAANLAGE)(OBERE SEITE)	825
DICHTUNGSKAPPE (KLIMAANLAGE)(UNTERE SEITE)	825
DICHTUNGSSATZ	46
	231
	266
	447
	673
	707
	709
	720
	722
DICHTUNGSSATZ (HYDRAULISCHE PUMPENDÜSE)	262
DICHTUNGSSATZ (KRAFTSTOFFSOLENOID-VENTIL)	272
DIFFERENTIALLENKANTRIEB	576
DOPPELFLANSCHROLLEN	538
	539
	540
	541
DOPPELKIPPZYLINDER	621
DOPPELKIPPZYLINDER UND LEITUNGEN	615
DOPPELNEIGEZYLINDER	624
	626
DREHMOMENTSTEUERHEBEL	270
DREHMOMENTWANDLER	436
	438
	440
DREHSTROMGENERATOR	274
	276
	277
DREHZAHLMESSERANTRIEB	209
DREHZAHLMESSERANTRIEBSKAPPE	209
DREHZAHLSENSOR	60
	326
	327
	338
	339
	340
DREHZAHLSENSOR (GETRIEBEAUSGANG)	423
DREHZAHLSENSOR (LÜFTER)	46
DREHZAPFENVERKLEIDUNG	495
DRUCK- U. STROMAUSGLEICHSVENTIL	698
DRUCK- U. STROMAUSGLEICHSVENTIL (PUMPENAUSLASS-STEUERUNG)	674
DRUCKLÜFTER	114
DRUCKLUFTLEITUNGEN	170
	172
	174
	176
DRUCKSCHALTER (KLIMAANLAGE/HOCH)	824
	830
DRUCKSCHALTER (KLIMAANLAGE/ NIEDRIG)	824
	830
DRUCKSCHALTER (ÖL)	104
DRUCKSENSOR	330
	331
	332
	333
	334
	335
	336
	337
DRUCKSENSOR (ATMOSPHÄRENDRUCK)	172
DRUCKSENSOR (EINSPRITZBETÄTIGUNG)	38
DRUCKSENSOR (MOTORÖL)	248
	287
DRUCKSENSOR (TURBOLADERAUSLASS)	38
DRUCKSTEUERVENTIL	271
	604
DRUCKSTEUERVENTIL (KRAFTSTOFF)	236
E	
ECK- UND SCHNEIDMESSER	745
	746
	747
	748
	749
	750

STICHWORTVERZEICHNIS

Bezeichnung	Seite
	751
EINFÜLLKAPPE	81
	82
EINFÜLLKAPPE (KRAFTÜBERTRAGUNGS-ÖL)	416
EINFÜLLSTUTZENKAPPE (HYDRAULIK-TANK)	680
EINLASSVENTIL	35
	36
EINLASSVENTILEINSATZ (EINLASS)	30
EINSPRITZLEITUNGEN - HYDRAULIKPUM-PE	244
EINZELFLANSCHROLLEN	542
	543
	544
	545
ELEKTR. UMFORMER	300
ELEKTR. UMFORMER (24 V BIS 12 V)(25 A)	300
ELEKTR. UMFORMER (24 V ZU 12 V)	378
ELEKTRON. STEUERUNG (INSTRUMENTEN-BRETTBELEUCHTUNG)	854
ENDMESSER	752
	753
ENDSCHALTER (NEUTRALSTART)	572
ENDSCHALTER (RÜCKFAHRALARM)	572
ENTDUNSTER	86
	88
ENTFROSTERGEBLÄSE	804
ENTLÜFTER	21
	79
ENTLÜFTER (KRAFTÜBERTRAGUNG)	417
ENTLÜFTER (KURBELGEHÄUSE)	79
ENTLÜFTUNGSVORRICHTUNG	349

F

FAHRERHAUS	779
	780
	781
	782
	784
	786
	788
	848
FAHRERHAUSANBAUSATZ	844
	846
FAHRERHAUSAUSKLEIDUNG	822
FAHRERHAUSBELEUCHTUNG	308
FAHRERHAUSBELEUCHTUNG (24 V)(MIT SCHALTER)	788
FAHRERHAUSFENSTER	895
	896
	897
	898
	899
	900
	901
	902
	904
	906
	907
	908
	909
	910
FAHRERHAUSFENSTER-EINBAUSATZ (WERK)	909
FAHRERHAUSFENSTER (HECK - SCHIEBBAR)	788
FAHRERHAUSFENSTER (LINKS)	896
FAHRERHAUSFENSTER (LINKS) (SCHIEBEFENSTER)	894
FAHRERHAUSFENSTER (RECHTS)	895
	901
FAHRERHAUSFENSTER (RECHTS) (SCHIEBEFENSTER)	893
FAHRERHAUSHEIZUNG	808
	812
FAHRERHAUSLUFTFILTER	809
FAHRERHAUSTÜR (LINKS)	463
	464
FAHRERHAUSTÜR (RECHTS)	466
	468
FAHRERPLATTFORMVERDRAHTUNG	378
FAHRERSITZ	868
	870
	872
	874
	876
	877
FAHRERSITZFEDERUNG	882
	884
FAHRERSITZFEDERUNGSGEHÄUSE	816
FAHRWERK	456
FEDER-EINBAUSATZ	816
FEDERUNGS-EINBAUSATZ (EINSTELL-KNOPF)	816
FEDERUNGS-EINBAUSATZ (MANSCHETTE)	882
FEDERUNGS-EINBAUSATZ (ROLLE)	882
FENSTERSATZ	820
FILTER	172
FILTER (LUFTFILTERWARTUNGSANZEIGE)	176
FILTER (PUMPENDÜSE)	212
FILTER (WASSERPUMPE)	134
FILTERSATZ (WASSERABSCHEIDER U. KRAFTSTOFFILTER)	224
FILTERSIEB	680
FRONTBELEUCHTUNG	322
FUSSBREMSGESTÄNGE	568
FUSSMATTE	844
	848

STICHWORTVERZEICHNIS

Bezeichnung	Seite
	860

G

GASREDUZIERGESTÄNGE	198
GEGENGEWICHT	458
	460
	461
GESCHWINDIGKEITS- U. DREHZAHLMESSER-MODUL	842
GETRIEBE	442
GETRIEBEAUFLAGER	420
GETRIEBEHYDRAULIK	390
GETRIEBEÖLKÜHLER	392
GLAS (GETÖNT)	895
	896
	907
	908
GLAS (GETÖNT) (FAHRERHAUSFRONT - NICHT VERSTELLBAR)	788
GLAS (GETÖNT) (FAHRERHAUSSEITE - NICHT VERSTELLBAR)	788
GLAS (GETÖNT) (FAHRERHAUSTÜREN - NICHT VERSTELBAR)	788
GLAS (GETÖNT)(GRÜN)	909
	910
GLASSCHEIBEFENSTER, LINKS (GETÖNT)	904
GLEITLAGER	508
	509
GLEITPLATTE	856
	858
GLEITSCHIENENBLOCK-EINBAUSATZ	879
	880
	881
GRUNDAUSFÜHRUNG	1

H

HALTETEILE (KRAFTSTOFFEINSPRITZPUMPE)	214
HALTETEILESATZ	884
HANDGRIFFSCHALTER	369
	730
HAUPTFILTER	160
HAUPTFILTER (LUFTREINIGER) (HOCHLEISTUNG)	162
HAUPTFILTER (LUFTREINIGER) (STANDARD)	162
HEBEL (LEERLAUFDREHZAHLSTEUERUNG)	782
HEBELSATZ	644
HECKBELEUCHTUNG	314
	324
HEIZUNGSLEITUNGEN	836
HUBZYLINDER U. LEITUNGEN	616
	618
HUBZYLINDER U. LEITUNGEN (LINKS)	711
	713
HUBZYLINDER U. LEITUNGEN (RECHTS)	711
HUBZYLINDER U. LEITUNGEN (RECHTS)	713
HUBZYLINDERLEITUNGEN	646
HYDRAULIKÖLKÜHLERBEFESTIGUNG	612
HYDRAULIKPUMPE UND LEITUNGEN	654
HYDRAULIKPUMPENANTRIEB	210
	212
HYDRAULIKSTEUERUNG	608
HYDRAULIKTANK UND SCHMIERFILTER	680

I

IDENTIFIZIERUNGS-AUFKLEBER (AUSRUFEZEICHEN)	923
IDENTIFIZIERUNGS-AUFKLEBER (FÜR UNTERBRECHER)	372
IDENTIFIZIERUNGS-AUFKLEBER (GRUPPEN- U. SEQUENZNR.)	798
IDENTIFIZIERUNGS-AUFKLEBER (GRUPPEN- U. SEQUENZNR.) (KLIMAANLAGE/HEIZUNG)	776
	812
IDENTIFIZIERUNGS-AUFKLEBER (LANGZEITKÜHLMITTEL)	923
IDENTIFIZIERUNGS-AUFKLEBER (MOTORÖLFILTER)	922
IDENTIFIZIERUNGS-AUFKLEBER (SICHERUNG)	372
INSTRUKTIONS-AUFKLEBER	916
INSTRUKTIONS-AUFKLEBER (AUFREISSER - BOLZENZIEHSCHALTER)	608
INSTRUKTIONS-AUFKLEBER (FAHRERHAUS - TEMPERATURREGELUNG)	808
INSTRUKTIONS-AUFKLEBER (FÜR SITZVERSTELLUNG)	882
	884
INSTRUKTIONS-AUFKLEBER (WASSER - EINLASS/AUSLASS) (KLIMAANLAGE/ HEIZUNG)	776
	812
INSTRUKTONSSCHILD (KLIMAANLAGE)	773
	774
INSTRUMENTENBRETT-AUFKLEBER (KLIMAANLAGE U. GEBLÄSE)	808
INSTRUMENTENTAFEL	854

K

KABELSTRANG (DRUCKSENSOR)	331
KÄLTEMITTELKOMPRESSOR	792
	794
	796

STICHWORTVERZEICHNIS

Bezeichnung	Seite
KÄLTEMITTELKONDENSATOR	798
KÄLTEMITTELTROCKNER (KLIMAANLAGE)	824
KÄLTEMITTELTROCKNER (KÜHLMITTEL)	830
KALTWETTERSTARTANLAGE	348
KAPPE	140
	144
	220
KAPPE MIT ENTLÜFTER	886
KAPPENFILTERSATZ (KRAFTSTOFFTANK)	269
KEILRIEMEN (EINSCHL. ZWEI RIEMEN)	274
KEILRIEMEN (KLIMAANLAGENKOMRESSOR)	794
	796
KEILRIEMENSATZ	42
KEILRIEMENSATZ (DREHSTROMGENERATOR/MOTOR OHNE EMISSIONEN)	2
KEILRIEMENSATZ (EINSCHL. 4 RIEMEN)	44
KETTENGLIEDER	524
	525
	526
	527
	528
	529
KETTENRADSEGMENT	432
KETTENSPANNER UND -FEDERRÜCKLAUF	548
KIPPSCHALTER (ÄTHERSTARTHILFE)	380
KIPPSCHALTER (FAHRER)	378
KIPPSCHALTER (GEBLÄSEREGELUNG)	804
KIPPSCHALTER (KLIMAANLAGE EIN/AUS)	809
KIPPSCHALTER (SEITENLEUCHTE)	378
KIPPSCHALTER (SPERREN) (AUFREISSEBOLZENZIEHER)	608
KIPPSCHALTER (ZUSATZ)	380
KIPPSCHALTER (24 V)(ABGEDICHTET) (BELEUCHTET) (GASSTEUERUNG)	378
KIPPSTEUERVENTIL	710
KIPPZYLINDER	638
	640
	642
KIPPZYLINDER (LINKS)	621
KIPPZYLINDER (RECHTS)	621
KIPPZYLINDERLEITUNGEN	662
	664
KLEMMLEISTE	307
KLIMAANLAGE	773
	774
	776
KLIMAANLAGEN-ANSCHLUSSSTÜCK	825
	830
KLIMAANLAGEN-DRUCKSPEICHER	824
	830
KLIMAANLAGENLEITUNGEN	824
	830
KLIMAANLAGENVENTIL (OBERE SEITE)	825
KLIMAANLAGENVENTIL (UNTERE SEITE)	825
KNOPF	788
KNOPF (FAHRERHAUS - TEMPERATURREGELUNG)	808
KOLBEN- UND ZAHNRADPUMPE	676
KOLBENMOTOR	586
KOLBENPUMPE	588
	674
KOLBENPUMPENUMLAUFSATZ	677
KOLBENSATZ	674
KONSOLENVERDRAHTUNG	372
KRAFTSTOFFABLASSLEITUNGEN	232
KRAFTSTOFFEINSPRITZDÜSE	230
KRAFTSTOFFEINSPRITZLEITUNGEN	240
	242
KRAFTSTOFFEINSPRITZPUMPE	252
	254
	257
KRAFTSTOFFEINSPRITZPUMPE - EINBAUSATZ (ZUR ÜBERHOLUNG)	262
KRAFTSTOFFGEMISCHREGLER	200
	202
KRAFTSTOFFHEIZUNG	302
	304
KRAFTSTOFFILTER	223
KRAFTSTOFFILTER UND LEITUNGEN	216
	220
KRAFTSTOFFILTERLEITUNGEN	234
	236
KRAFTSTOFFÖRDERPUMPE	258
	259
	262
KRAFTSTOFFPUMPENGEHÄUSE	229
KRAFTSTOFFSIEB	268
KRAFTSTOFFSTANDSENSOR	328
KRAFTSTOFFTANK	268
	269
KRAFTSTOFFTANKKAPPE	269
KRAFTSTOFFTANKVERKLEIDUNG	492
KRAFTÜBERTRAGUNG	427
KRAFTÜBERTRAGUNGSACHSE	384
KREUZGELENK	443
KRÜMMERSCHILD	182
KRÜMMERVENTIL	672
KRÜMMERVENTIL (AUFREISSER/PLANIERSCHILD - VENTILANORDNUNG)	686
KUGELVENTIL	216
	220
KÜHLER	140
	144
KÜHLERKAPPE	149
KÜHLERSCHUTZ	496
KÜHLMITTELBEHÄLTER	149
KÜHLWASSERLEITUNGEN	6
	117
	118

STICHWORTVERZEICHNIS

Bezeichnung	Seite
	120
	121
	122
	126
	130
KÜHLWASSERLEITUNGEN (LADELUFTKÜHLER)	116
KÜHLWASSERPUMPE	132
	134
	136
	137
	138
KÜHLWASSERPUMPEN-REGENERIERSATZ (WASSER)	134
KURBELWELLE	22
	23
KURBELWELLENDICHTUNG	23

L

LADELUFTKÜHLER, WASSERGEKÜHLT	154
	156
LADEPUMPE	587
LAGERSATZ	166
	266
	592
	817
LAGERSATZ (JOCH)	262
LAGERSATZ (STANDARD)	68
LAGERSATZ (STARTER)	362
LAGERSATZ (0,635 MM UNTERGRÖSSE)	68
LAGERSATZ (1,27 MM UNTERGRÖSSE)	68
LAUFFÜHRUNGSSATZ	904
	906
LAUFROLLEN-RAHMENVERSTÄRKUNG	532
LAUFROLLEN U. LEITRAD	533
LAUFROLLENAUFSATZ	512
LAUFROLLENKAPPE	534
	536
LAUFROLLENRAHMEN	517
LAUFROLLENRAHMEN-KNICKFEDERUNG	546
LAUFROLLENRAHMEN (TELESKOPRÜCKLAUF)	518
LAUFROLLENRAHMENROHR	562
LAUFWERKSKETTE	550
	551
	552
	553
	554
	555
	556
	557
	558
	559
	560
	561
LAUFWERKSRAHMEN	563
LEITRAD	521
	522
	523
LEITRADAUFSATZ	510
	511
LEITRADSCHUTZ	488
	494
LEITUNGSBOLZENZIEHER	650
LENK- UND GETRIEBESTEUERUNG	572
LENKANTRIEB	578
LENKBETÄTIGUNG	570
LENKÖLLEITUNGEN	580
LENKSTEUERUNG, HYDRAULISCH	566
LEUCHTE (24 V)	378
LEUCHTE (24 V)	378
LEUCHTE (24 V) (ARBEITSSCHEINWERFER)	310
LEUCHTE (24 V) (FAHRERHAUSDACH)	308
LEUCHTE (24 V) (SCHEINWERFER)(60 W)	309
LEUCHTE (28 V)	854
LEUCHTE (28 V)	380
LINSE - ROT	380
	854
LÜFTERANTRIEB	42
	44
	46
LUFTFILTER (FAHRERHAUS) (GERUCHSREDUZIERUNG)	808
LUFTFILTER (FAHRERHAUS) (HOCHLEISTUNG)	808
LUFTFILTER (FAHRERHAUS) (STANDARD)	808
LUFTFILTER-WARTUNGSANZEIGE	176
LUFTREINIGER	158
	160
	162

M

MAGNETSCHALTER	370
MAGNETSCHALTER (HAUPTRELAIS)	372
MAGNETSCHALTER (STARTER EIN-AUS)	104
MAGNETSCHALTER (STARTRELAIS)	372
MAGNETSCHALTER (STARTRELAIS)	348
MAGNETSPULE	352
MAGNETSPULE - ANLASSMOTOR (ELEKTR.)	343
	356
MAGNETSTOPFEN	398
	406
MAGNETVENTIL	272
	707
	708
	709

STICHWORTVERZEICHNIS

Bezeichnung	Seite
MAGNETVENTIL (DRUCKBEGRENZUNG)	262
MAGNETVENTIL (NEIGE-/KIPPFUNKTION)	710
MANSCHETTENKLEMME	362
MODUL - VIER ELEKTRON. ANZEIGEN	841
MODULATORVENTIL	447
MONITORSTEUERUNG (CATERPILLAR ÜBERWACHUNGSSYSTEM)	854
MONTAGEZAPFEN	76
MONTAGEZAPFEN (PLANIERSCHILDEINRICHTUNG)	743
	744
MONTAGEZAPFENVERKLEIDUNG	462
MOTOR-EINBAUSATZ	7
MOTOR, ELEKTR.	798
MOTOR, ELEKTR. (27 V) (VENTILATOR)	776
	812
MOTOR-UMBAUSATZ	2
MOTORAUFHÄNGUNG	74
	75
MOTORAUSFÜHRUNG	4
	6
MOTORBLOCK	24
	26
	28
MOTORBLOCKDECKEL	12
	13
	14
MOTORDREHVORRICHTUNG	592
MOTORHAUBE UND VERKLEIDUNG	502
MOTORHUBÖSE	62
MOTORÖLEINFÜLLSTUTZEN	81
	82
MOTORÖLLEITUNGEN	92
MOTORSTEUERUNG, ELEKTRON.	298
	299
MOTORVERDRAHTUNG	376
MOTORVERKLEIDUNG	474
	476
	480
MOTORVORSCHMIERUNG	104

N

Bezeichnung	Seite
NEIGEZYLINDERLEITUNGEN	666
	668
	670
NOCKENWELLE	10
	11

O

Bezeichnung	Seite
O-RING-DICHTUNG (11,89 MM ID)	281
	289
O-RING-STOPFEN	226
	246
O-RING-STOPFEN (7/16-20 GEWINDE)	26
	674
ÖLABLASSSCHRAUBE	64
ÖLFILTER	84
	396
	579
ÖLFILTER (KRAFTÜBERTRAGUNG)	416
ÖLFILTER (LENKUNG)	580
ÖLFILTERELEMENT (HYDRAULIK)	579
ÖLFILTERELEMENT (HYDRAULIK/STROMUMKEHRUNG) (NICHT WIEDERVERWENDBAR)	680
	681
ÖLFILTERELEMENT (HYDRAULIK/STROMUMKEHRUNG) (SÄUBERN/HÖHERE LEISTUNG)	680
ÖLFILTERELEMENT (HYDRAULISCH) (FEUERBESTÄNDIG/HOCHLEISTUNG)	680
ÖLFILTERELEMENT (KRAFTÜBERTRAGUNG)	396
ÖLFILTERELEMENT (RÜCKFLUSS) (FEUERBESTÄNDIG/HOCHLEISTUNG)	681
ÖLFILTERELEMENT (SÄUBERN/HÖHERE LEISTUNG)	681
ÖLLEITUNGEN - KRAFTÜBERTRAGUNG	416
ÖLMESSSTAB	90
ÖLMESSSTAB (KRAFTÜBERTRAGUNG)	416
ÖLPUMPEN-BEFESTIGUNGSTEILE	80
ÖLPUMPENGEHÄUSE (DREHMOMENTWANDLER-FÜLLUNG)	430
ÖLPUMPENGEHÄUSE (GETRIEBEABSAUGPUMPE)	430
ÖLPUMPENGEHÄUSE (GETRIEBESPEISUNG)	430
ÖLSCHNELLWECHSELANSCHLUSS	102
ÖLSTANDKAPPE	530
ÖLWANNE	64
ÖLZUFUHRLEITUNGEN	96

P

Bezeichnung	Seite
PANZERWANNE	489
	490
PENDELVENTIL	706
PLANETENANTRIEBSGEHÄUSE U. TEILE	386
PLANETENGETRIEBE	422
PLANIERSCHILD-UMRÜSTSATZ	731
	732
PLANIERSCHILDHUBZYLINDER	622
PLANIERSCHILDSTEUERUNG	715
PLATTE (PRODUKTIDENTNR.)	922
PLATTFORM	860
PLEUELSTANGE UND KOLBEN	66
	68
PROBEENTNAHMEVENTIL	126

STICHWORTVERZEICHNIS

Bezeichnung	Seite
PROBEENTNAHMEVENTIL F. WARTUNGS-FL.	417, 681
PROBEENTNAHMEVENTIL F. WARTUNGS-FL.	84
PUMPE UND BEFESTIGUNGSTEILE	248, 250
PUMPENANSCHLUSS	393
PUMPENDÜSE, HYDRAULISCH	262, 264, 266
PUMPENDÜSEN-HYDRAULIKPUMPE - KOMPENSATORSATZ	262

Q

QUERTRAVERSE	513, 514, 516

R

RADIOEINBAUSATZ	819
RAHMEN UND GEHÄUSE	452, 454
RECHTES SCHIEBEGLASFENSTER (GETÖNT)	906
REFLEKTORAUFKLEBER (ROT)	922
REGENKAPPE	164, 168
REGLER	226
REGLER-ANSCHLUSSPLATTE	246
REGLER, KRAFTSTOFFEINSPRITZ- U. FÖRDERPUMPE	260
REGLER UND KRAFTSTOFFPUMPENAN-TRIEB	208
REGLERSTEUERUNG	204, 207
RIEMENSPANNER	8
ROHRSTOPFEN	70
ROHRSTOPFEN (1-11-1/2 NPTF-GEWINDE)	58
ROHRSTOPFEN (1/8-27 NPTF-GEWINDE)	58
ROLLENSATZ	884
RÜCKENSTÜTZEN-EINSTELLKNOPF	853
RÜCKFAHRWARNHORN	279, 287
RÜCKLEHNENVERLÄNGERUNG	876, 877
RÜCKSCHLAG- U. DRUCKBEGRENZUNGS-VENTIL	689
RÜCKSPIEGEL	839, 840

S

SANDSTRAHLSCHUTZGITTER	486
SAUGGLOCKENSIEB	92
SCHALE - RÜCKENLEHNE	851, 852, 853
SCHALLDÄMPFER	180
SCHALLDÄMPFUNG	506
SCHALTER	694
SCHALTER (FRONTBELEUCHTUNG)	380
SCHALTER (GEBLÄSEGESCHWINDIGKEIT)	808
SCHALTER (RÜCKLEUCHTE)	378
SCHALTER (STEUERUNG - SPITZE)	369
SCHALTER (STEUERUNG FÜR EINEN/ZWEI KIPPZYLINDER(N))	369
SCHALTER (VORNE, HINTEN, RECHTS U. LINKS TÜR)	916
SCHALTER (24 V)(ERLEUCHTET)	378
SCHAUMFILTER (KRAFTSTOFFSTANDSE-NOR)	279
SCHAUMFILTER (KRAFTSTOFFSTANDSE-NOR)	287
SCHEIBENWASCHANLAGE	890
SCHEIBENWASCHMITTELBEHÄLTER	886, 888
SCHEIBENWISCHER	912, 914, 916
SCHEIBENWISCHERBLATT	759
SCHEIBENWISCHERBLATT (HINTEN)	916
SCHEIBENWISCHERBLATT (LINKE TÜR)	916
SCHEIBENWISCHERBLATT (VORNE)	916
SCHEIBENWISCHERBLATTSATZ	917
SCHIEBEFENSTER	893, 894, 897, 899, 909
SCHILD-SERVICEINFORMATIONEN	922
SCHILD UND AUFKLEBER	922
SCHILD UND SCHNEIDMESSER	754, 755, 756
SCHLAUCHLEITUNG (JE 87 CM)	88
SCHLAUCHLEITUNG (JE 9CM)	88
SCHLÜSSEL	7, 216, 220, 268, 472, 476, 480, 482, 614

STICHWORTVERZEICHNIS

Bezeichnung	Seite
SCHLÜSSEL (HAUPTSCHALTER)	366
SCHMIERNIPPEL	44
	514
	630
	634
	636
	638
	640
	642
	718
	722
	733
SCHMIERNIPPEL (1/8-27 GEWINDE)	716
SCHMIERNIPPEL (1/8-27-GEWINDE)	628
SCHMIERNIPPEL (1/8-27-GEWINDE)	516
SCHMIERNIPPEL (1/8-27 GEWINDE(45 GRAD)	8
SCHMIERPUMPE	108
	110
	112
SCHNELLBETANKUNGSANSCHLUSS	188
	190
	192
	194
	196
SCHNELLSENKVENTIL	700
SCHRÄGKOLBEN-EINBAUSATZ	674
SCHUBARM - STABILISATOR	740
SCHUBARM, LINKS	738
SCHUBARM, RECHTS	739
SCHUTZBLECHE	482
SCHUTZDICHTUNG	500
SCHUTZGITTER	867
SCHUTZVERKLEIDUNG	807
SCHWENKSCHEIBE	678
	679
SCHWIMMSTELLUNGSSATZ (KRAFTSTOFFS-TANDSENOR)	278
	286
SCHWINGSITZ	878
	879
	880
	881
SCHWUNGRAD	47
SCHWUNGRADGEHÄUSE	56
	58
SCHWUNGRADGEHÄUSEDECKEL	16
SEITENANTRIEB	398
	402
	406
SEITENANTRIEBSVERKLEIDUNG	487
SENSORANSCHLUSSSATZ (12POLIG)	379
SENSORANSCHLUSSSATZ (2POLIG)	2
	104
	279
	280
	287
	288
	289
	349
	370
	379
	424
	813
	824
SENSORANSCHLUSSSATZ (2POLIG)	776
SENSORANSCHLUSSSATZ (2POLIG)	376
SENSORANSCHLUSSSATZ (2POLIG)	373
SENSORANSCHLUSSSATZ (3POLIG)	104
	279
	280
	288
	334
	335
	336
	337
	376
	378
	379
SENSORANSCHLUSSSATZ (3POLIG) (DRUCKSENSOR)	331
	332
SENSORANSCHLUSSSATZ (3POLIG) (SENSOR FÜR DREHZAHL UND EINSPRITZZEITPUNKT)	339
SENSORANSCHLUSSSATZ (4 POLIG)	289
	376
	890
SENSORANSCHLUSSSATZ (4 POLIG)	280
	288
	379
	825
SENSORANSCHLUSSSATZ (4 POLIG)	373
SENSORANSCHLUSSSATZ (6POLIG)	104
	280
	288
	378
	379
	890
SENSORANSCHLUSSSATZ (8POLIG)	2
	280
	288
	379
SICHERHEITSFILTER (LUFTREINIGER)	160
	162
SICHERHEITSGURT	876
	877
SICHERUNG (10 A)	373
SICHERUNG (15 A)	373
SICHERUNG (20 A)	373

STICHWORTVERZEICHNIS

Bezeichnung	Seite
SICHERUNG (30 A)	300
SICHERUNGSBLOCK (16POLIG)	373
SIEB	680
SITZGURT-HALTESEIL	882
SPERRVENTIL	216
	220
	688
SPERRVENTIL (HYDRAULIKTANK)	654
SPERRVENTIL (NACHSAUGÖL)	604
SPERRVENTIL (RÜCKFLUSS)	672
SPERRVENTIL (SCHEIBENWISCHER- U. -WASCHERANLAGE)	888
SPIEGEL	838
SPÜLVENTIL	446
STABILISATORGELENK	724
	725
STARTERMOTOR	352
	356
	359
	360
	362
STARTERMOTORZAHNRAD	363
STARTSCHALTER	371
	378
STAUBAUSWERFER	168
STAUBDECKEL (SCHNELLBETANKUNGSADAPTER)	190
STAUBDECKEL (SCHNELLBETANKUNGSADAPTER)	196
STAUBKAPPE	70
	84
	122
	126
	286
	386
	417
	444
	449
	579
	580
	596
	654
	681
STAUBKAPPE (SCHNELLBETANKUNGSADAPTER)	192
	194
STECKDOSEN - EINBAUSATZ (12POLIG)	279
	280
	288
	379
STECKDOSEN - EINBAUSATZ (2POLIG)	104
	273
	278
	279
	280
	286
	287
	288
	289
	326
	327
	344
	346
	348
	349
	365
	372
	373
	376
	378
	379
	580
	709
	777
	798
	813
	824
	830
STECKDOSEN - EINBAUSATZ (2POLIG)	340
STECKDOSEN - EINBAUSATZ (2POLIG)	776
	812
STECKDOSEN - EINBAUSATZ (3POLIG)	104
	122
	170
	236
	279
	280
	287
	308
	329
	373
	376
	378
	379
	608
	890
STECKDOSEN - EINBAUSATZ (3POLIG)	338
	341
	342
STECKDOSEN - EINBAUSATZ (3POLIG)	730
STECKDOSEN - EINBAUSATZ (4 POLIG)	707
	708
STECKDOSEN - EINBAUSATZ (4 POLIG)	279
	280
	288
	328
	373
	376
	379
	824

STICHWORTVERZEICHNIS

Bezeichnung	Seite
	830
	890
STECKDOSEN - EINBAUSATZ (6POLIG)	279
	288
	379
	800
	808
	824
	841
	842
	912
	914
	916
STECKDOSEN - EINBAUSATZ (8POLIG)	279
	280
	288
	378
	777
	813
STEINSCHUTZ	498
	499
STELLUNGSSENSOR	329
STEUERKNOPF (GEBLÄSEGESCHWINDIGKEIT)	809
STEUERUNGSEINHEIT, ELEKTRON. FÜR MOTOR UND BEFEST.	296
STEUERVENTIL	598
	600
	690
	692
	694
	696
STEUERVENTIL (AUFREISSER ANHEBEN)	686
STEUERVENTIL (AUFREISSERNEIGUNG)	686
STEUERVENTIL (SCHARHUB)	686
STEUERVENTIL (SCHILDNEIGUNG)	686
STEUERVENTIL UND BEFESTIGUNGSTEILE	684
STEUERVENTILHEBEL	645
STIRNRAD	48
	50
STIRNRADGEHÄUSE	60
	61
STIRNRADGEHÄUSEDECKEL	18
STOPFENSATZ	262
STOPFENSATZ (EINSCHL. DICHTUNGEN)	266
STÖSSELLAUFFLÄCHE	26
STOSSSTANGEN-EINBAUSATZ	816
STROMBLOCK	293
STRÖMUNGSSCHALTER	4
	6
	367
	368
SU-PLANIERSCHILD U. ECKMESSER	757
	758
SU-SCHILD	711
	712
	760
	762
	765
SUMPFSIEB (KRAFTSTOFFTANK)	216
SUMPFSIEB (KRAFTSTOFFTANK)	220

T

TELLERRAD- UND VORGELEGERADSATZ	410
TEMPERATURSCHALTER (ÄTHERSTARTHILFE)	286
TEMPERATURSCHALTER (KRAFTÜBERTRAGUNG - FILTERUMGEHUNG)	278
	286
TEMPERATURSCHALTER (LENKUNGSFILTER)	580
TEMPERATURSENSOR	341
	342
TEMPERATURSENSOR (ANSAUGLUFT)	170
TEMPERATURSENSOR (HYDRAULIKÖL)	279
	287
TEMPERATURSENSOR (KRAFTSTOFF)	236
TEMPERATURSENSOR (KRAFTÜBERTRAGUNGSÖL)	281
	289
TEMPERATURSENSOR (KÜHLMITTEL)	289
TEMPERATURSENSOR (MOTORKÜHLMITTEL)	122
THERMOSTATSCHALTER (KLIMAANLAGENKOMRESSOR)	776
TRAGROLLEN	534
	536
TRENNSCHALTER	366
TRENNSCHALTER (BATTERIE)	278
	286
TURBOLADER	184
	185
	186
	187
TURBOLADEREINSATZ	166
	187
TURBOLADERÖLLEITUNGEN	98
	100

U

U-PLANIERSCHILDEINRICHTUNG	713
	714
U-SCHILD	763
	764
	766
ÜBERDRUCKVENTIL	418
	449

STICHWORTVERZEICHNIS

Bezeichnung	Seite
	606
	607
	702
	703
	704
	705
ÜBERDRUCKVENTIL (FÜLLVENTIL)	672
ÜBERDRUCKVENTIL (HAUPTUNTERBRECHER)	672
ÜBERDRUCKVENTIL (KALTES ÖL)	604
ÜBERDRUCKVENTIL (KÜHLERUMGEHUNG)	416
ÜBERHOLSATZ	46
ÜBERROLLSCHUTZ	864
	865
	866
ÜBERROLLSCHUTZAUFLAGER	847
ÜBERWACHUNGSSYSTEMDIMMER - STEUERUNG	800
UMBAUSATZ	801
UMBAUSATZ - OHNE ÜBERROLLSCHUTZ	802
	803
UMGEHUNGSSCHALTER	365
UMGEHUNGSSCHALTER (LENKUNGSFILTER)	579
UMGEHUNGSSCHALTER (ÖLFILTER - KRAFTÜBERTRAGUNG)	281
	289
UMGEHUNGSVENTIL	681
UMLAUFKÜHLWASSERHEIZUNG	305
	306
UMLAUFKÜHLWASSERHEIZUNGS-ELEMENT	306
UMLAUFKÜHLWASSERHEIZUNGS-ELEMENT (120 V/1500 W)	305
UNTERBRECHER (10 A) (ELEKTRONISCHE KUPPLUNGSBREMSE)	372
UNTERBRECHER (10 A) (STARTSCHLÜSSELSCHALTER)	372
UNTERBRECHER (125 A) (HAUPTUNTERBRECHER)	372
UNTERBRECHER (15 A) (ARBEITSGERÄT)	372
UNTERBRECHER (15 A) (ARBEITSLEUCHTEN, VORNE)	372
UNTERBRECHER (15 A) (KLIMAANLAGE - ENTFERNT ANGEBRACHTER KONSENSATOR)	824
	830
UNTERBRECHER (15 A) (LÜFTER)	372
UNTERBRECHER (15 A) (MOTOR)	372
	194
	445
	594
	602
	606
	702
	830
VENTIL - SCHALT- UND DRUCKSTEUERUNG	450
VENTIL (ÄTHERSTARTHILFE)(24 V)	344
	346
VENTIL (DREHMOMENTWANDLEREINLASS)	418
VENTIL (DRUCKBEGRENZUNG) (KETTENSPANNER)	548
VENTIL (FÜLLEN) (KETTENSPANNER)	548
VENTILDECKEL	20
	21
VENTILKIPPHEBEL	72
	73
VENTILSATZ (4-VENTIL)	686
VENTILSITZEINSATZ (AUSLASS)	30
VENTILSITZEINSATZ (AUSLASS)	29
VENTILSITZEINSATZ (EINLASS)	29
VENTILSTEUERUNG	77
	78
VENTILSTÖSSELSATZ	817
VERDRAHTUNG (EINSPRITZEINHEIT)	383
VERDRAHTUNGSSATZ (LUFTGEFEDERTER SITZ)	884
VERGLASUNG, LINKS (GETÖNT)	902
VERGLASUNG, RECHTS (GETÖNT)	901
VERKLEIDUNG	472
VERRIEGELUNG	821
VERSCHLEISSPLATTEN	767
VERSTELLBARER SITZ	863
VERTEILERBLOCK	307
VERZÖGERUNGSZEITGEBER (24 V)	824
	830
VORHÄNGESCHLOSS	7
	216
	220
	268
	472
	476
	480
	482
	502
	614
VORRANGVENTIL	448
VORSTEUERVENTIL	602
VORSTEUERVENTIL UND BEFESTIGUNGSTEILE	444

V

VENTIL	150

STICHWORTVERZEICHNIS

Bezeichnung	Seite
W	
WARNAUFKLEBER (KETTENSPANNFEDER)	518
WARNAUFKLEBER (KRAFTSTOFFEINSPRITZDÜSE)	923
WARNAUFKLEBER (ÜBERBRÜCKUNGSKABEL)	348
	922
WARNHORN (24 VOLT)(HOCHTON)	281
	289
WARNHORN (24V)(NIEDERTON)	281
	289
WARNHORNKNOPF	378
WARNHORNSCHALTER	378
WARNSCHILD (KETTENSPANNFEDER)	518
	562
WARNSCHILD (KETTENSPANNFEDERÖL)	518
WARNVORRICHTUNG	273
WASSERABSCHEIDER- U. KRAFTSTOFFILTER	224
	225
WASSERFILTER	137
WASSERTANK	150
WASSERTEMPERATURREGLER (92 GRAD CELSIUS)	122
	126
WASSERVENTIL (FAHRERHAUSHEIZUNG)	777
	812
WISCHERARM	920
Z	
ZAHNRADPUMPE	428
	430
	673
ZAHNRADPUMPE (KRAFTÜBERTRAGUNGSÖL)	416
ZAHNRADPUMPE (3 KAMMERN) (GETRIEBERÜCKSPÜL-/-LADE-/WANDLERPUMPE)	428
ZAHNRADVORGELEGE	52
ZEITGEBER	104
ZUGANGSKLAPPE - HYDRAULIKTANKKAPPE	614
ZUGHAKEN	470
ZUSATZBELEUCHTUNG	316
ZYLINDER (ÄTHER)	344
	346
ZYLINDERAUFHÄNGUNG	733
ZYLINDERBLOCKSCHRAUBE	70
ZYLINDERKOPF	29
	30
	32
	35
	36
	38
ZYLINDERKOPF-HALTETEILE	38
ZYLINDERKOPFSTOPFEN	71

MACHINE ARRANGEMENT

162-9500 GENERAL AR

S/N: ABK1-UP

SMCS-7000 **i01445921**

NOTE	PART NUMBER	QTY	PART NAME 1 2 3 4 5 6 (PRODUCT LEVEL)	SEE PAGE
Y	*162-9501*	1	CHASSIS AR	456
Y	*162-9504*	1	CONTROL AR-HYDRAULIC IMPLEMENT	610
Y	**163-5784**	1	ENGINE AR	4
Y	*162-9505*	1	INSTALLATION AR-ENGINE	7
Y	*162-9503*	1	POWER TRAIN AR	427
Y	*187-2015*	1	UNDERCARRIAGE AR	563

Y-SEPARATE ILLUSTRATION

ENGINE ARRANGEMENT

162-9502 CONVERSION AR-ENGINE

S/N: ABK1-UP
NON-EMISSIONS REGULATED ENGINE
AN ATTACHMENT

SMCS-1000 **i01515952**

NOTE	PART NUMBER	QTY	PART NAME 1 2 3 4 5 6 (PRODUCT LEVEL)	SEE PAGE
Y	*167-3945*	1	AIR CLEANER GP	162
Y	*163-5395*	1	BATTERY & WIRING GP	286
Y	*6Y-7668*	1	CONTROL GP-GOVERNOR	204
Y	*169-3701*	1	DRIVE GP-FAN	44
Y	*198-9948*	1	ENGINE AR	6
Y	*171-6465*	1	FILTER & LINES GP-FUEL	220
Y	*7W-6988*	1	FUMES DISPOSAL GP	86
Y	*169-3704*	1	LINES GP-AIR	176
Y	*123-5739*	1	LINES GP-WATER	118
Y	*164-2877*	1	RADIATOR GP	144
Y	*103-7574*	1	STARTING AID GP-ETHER	344
	4L-9337	8	BOLT (3/8-16X1.5 IN)	
	8C-4436	6	BOLT (1/2-13X1.375 IN)	
	7N-6886	1	BRACKET AS	
	8M-2773	1	CLIP	
	8E-5974	1	COVER	
	137-3944	1	FILM-MONITOR (SMART ELEK MONITORING SYSTEM) (NON-EMISSIONS ENGINE)	
	8E-5975	1	GASKET	
	152-5231	1	HARNESS AS (ETHER AID STARTING SWITCH)	
	155-2270	1	KIT-CONNECTING PLUG (2 PIN)	
			(INCLUDES PLUG AS, WEDGE & INTERFACE SEAL)	
	7N-2851	1	PLATE	
	164-5796	1	PLUG AS	
D	**5P-5677**		WIRE (18 GA) (0.4M)	
	9G-3695	5	PLUG (GROMMET SEALING)	
BE	**119-3662**		TUBE-SHRINKABLE	
	9X-3402	3	SOCKET-CONNECTOR	
	155-2265	1	KIT-CONNECTING PLUG (8 PIN)	
			(INCLUDES PLUG AS, WEDGE & INTERFACE SEAL)	
	155-2259	1	WEDGE-PLUG LOCK	
	197-6336	1	SPIDER AS-FAN (8 BLADES) (BLOWER)	
	9L-6130	1	V-BELT SET (ALTERNATOR/NON-EMISSIONS ENG)	
	5P-1075	1	WASHER-HARD (10.2X22.5X3MM THK)	
	8T-4223	6	WASHER-HARD (13.5X25.5X3MM THK)	
	8T-4896	8	WASHER-HARD (10.2X18.5X2.5MM THK)	

B-USE AS REQUIRED
D-ORDER BY THE METER
E-ORDER BY THE CENTIMETER
Y-SEPARATE ILLUSTRATION

MEMORANDA

ENGINE ARRANGEMENT

163-5784 ENGINE AR

S/N: 5XD1-UP

PART OF 162-9500 GENERAL AR

SMCS-1000 **i01529018**

NOTE	PART NUMBER	QTY	PART NAME 1 2 3 4 5 6 (PRODUCT LEVEL)	SEE PAGE
Y	*163-5804*	1	AFTERCOOLER GP-WATER	156
Y	*186-2397*	1	CAMSHAFT GP	11
Y	*165-5068*	1	CONNECTION GP-ELECTRICAL	294
Y	*196-3736*	1	CONTROL & MTG GP-ENGINE ELEK	296
Y	*163-5799*	1	COVER GP-CYLINDER BLOCK	14
Y	*130-7301*	1	COVER GP-CYLINDER BLOCK	13
Y	*4N-6876*	1	COVER GP-FLYWHEEL HOUSING	16
Y	*130-7302*	1	COVER GP-VALVE MECHANISM	21
Y	*1W-5010*	1	CRANKSHAFT GP	23
YR	*109-9009*	1	CYLINDER BLOCK GP	28
Y	*164-2208*	1	CYLINDER HEAD GP	38
Y	*163-5798*	1	DAMPER & PULLEY GP	40
Y	*125-3428*	1	DRIVE GP-UNIT INJ HYD PUMP	210
	186-4919	1	ELECTRONICS GP-ENGINE RATINGS	
Y	*4N-2481*	1	FASTENER GP-OIL PUMP MOUNTING	80
Y	*127-9374*	1	FILLER GP-ENGINE OIL	82
Y	*163-5800*	1	FILTER GP-ENGINE OIL	84
Y	*107-3752*	1	FLYWHEEL GP	47
Y	*130-7306*	1	GAUGE GP-OIL LEVEL (DIPSTICK)	90
Y	*168-4592*	1	GEAR GP-FRONT	50
Y	*112-3440*	1	GEAR GP-REAR	52
Y	*153-3050*	1	HOUSING GP-FLYWHEEL	56
Y	*127-3514*	1	HOUSING GP-FRONT	60
Y	*124-4461*	1	LIFTING GP-ENGINE	62
Y	*163-5803*	1	LINES GP-AIR	170
Y	*7N-6700*	1	LINES GP-ENGINE OIL	92
Y	*163-5806*	1	LINES GP-FUEL FILTER	236
Y	*163-8406*	1	LINES GP-INJECTOR HYD PUMP	244
Y	*169-6547*	1	LINES GP-TURBOCHARGER OIL	100
Y	*130-7310*	1	LINES GP-WATER	120
Y	*163-5801*	1	LINES GP-WATER	121
Y	*165-5137*	1	LINES GP-WATER	122
Y	*128-5109*	1	MAGNETIC PICKUP GP	327
Y	*179-7023*	1	MANIFOLD GP-EXHAUST	178
Y	*7W-6381*	1	PAN GP-OIL	64
Y	*192-8809*	8	PISTON & ROD GP	68
Y	*134-2596*	1	PLUG GP-CYLINDER BLOCK	70
Y	*124-4456*	1	PLUG GP-CYLINDER HEAD	71
Y	*126-7292*	1	PUMP & MTG GP-UNIT INJ HYD	248
Y	**168-0365**	1	PUMP GP-ENGINE OIL	110
			S/N: 5XD1-354	
Y	**202-3575**	1	PUMP GP-ENGINE OIL	112
			S/N: 5XD355-UP	
Y	*163-5805*	8	PUMP GP-FUEL INJECTION	257
Y	*4N-5837*	1	PUMP GP-WATER	132
Y	*163-8398*	1	PUMP GP-WATER	136
Y	*190-4184*	1	SUPPORT GP-ENGINE	75
Y	*100-4417*	1	SWITCH GP-FLOW	367
Y	*179-7086*	1	TRUNNION GP-ENGINE	76
Y	*163-5802*	1	TURBOCHARGER GP	186
Y	*108-1551*	1	VALVE MECHANISM GP	78
Y	*163-5809*	1	WIRING GP-ENGINE	376
Y	*109-0401*	4	WIRING GP-UNIT INJECTOR	383
			GASKET KITS WILL BE PROVIDED WHEN AVAILABLE	

R-REMFG PART MAY BE AVAILABLE
Y-SEPARATE ILLUSTRATION

ENGINE ARRANGEMENT

198-9948 ENGINE AR

S/N: 48W41541-UP
PART OF 162-9502 CONVERSION AR-ENGINE
AN ATTACHMENT

SMCS-1000 **i01579810**

NOTE	PART NUMBER	QTY	PART NAME 1 2 3 4 5 6 (PRODUCT LEVEL)	SEE PAGE
Y	*9N-6613*	1	AFTERCOOLER GP-WATER	154
Y	*9Y-2989*	2	BREATHER GP	79
Y	*4N-0963*	1	CAMSHAFT GP	10
Y	*165-5068*	1	CONNECTION GP-ELECTRICAL	294
Y	*8N-5021*	1	CONTROL GP-FUEL RATIO	202
Y	*4W-5390*	1	COVER GP-CYLINDER BLOCK	12
Y	*4N-6876*	1	COVER GP-FLYWHEEL HOUSING	16
Y	*169-3691*	1	COVER GP-FRONT HOUSING	18
Y	*4W-6827*	1	COVER GP-VALVE MECHANISM	20
Y	*1W-5010*	1	CRANKSHAFT GP	23
Y	*1W-5082*	1	CYLINDER BLOCK GP	26
Y	*4W-7005*	1	CYLINDER HEAD GP	32
Y	*169-1822*	1	DAMPER & PULLEY GP	41
Y	*105-1513*	1	DRIVE GP-GOVERNOR & FUEL PUMP	208
Y	*2W-2094*	1	DRIVE GP-TACHOMETER	209
Y	*4N-2481*	1	FASTENER GP-OIL PUMP MOUNTING	80
Y	*7C-9789*	1	FILLER GP-ENGINE OIL	81
			S/N: 48W41541-41903	
Y	*127-9374*	1	FILLER GP-ENGINE OIL	82
			S/N: 48W41904-UP	
Y	*163-5800*	1	FILTER GP-ENGINE OIL	84
Y	*107-3752*	1	FLYWHEEL GP	47
Y	*130-7306*	1	GAUGE GP-OIL LEVEL (DIPSTICK)	90
Y	*7N-2840*	1	GEAR GP-FRONT	48
Y	*112-3440*	1	GEAR GP-REAR	52
Y	*157-3561*	1	HOUSING GP-FLYWHEEL	58
Y	*127-5561*	1	HOUSING GP-FRONT	61
Y	*124-4461*	1	LIFTING GP-ENGINE	62
Y	*8N-2304*	1	LINES GP-AFTERCOOLER WATER	116
Y	*169-3698*	1	LINES GP-AIR	174
Y	*7N-6700*	1	LINES GP-ENGINE OIL	92
Y	*7N-8243*	1	LINES GP-FUEL DRAIN	232
Y	*7W-9545*	1	LINES GP-FUEL FILTER	234
Y	*117-0015*	1	LINES GP-FUEL INJECTION	242
Y	*4W-1931*	1	LINES GP-TURBOCHARGER OIL	98
Y	*118-1293*	1	LINES GP-WATER	117
Y	*173-5562*	1	LINES GP-WATER	126
Y	*113-5276*	1	MAGNETIC PICKUP GP	326
Y	*179-7023*	1	MANIFOLD GP-EXHAUST	178
Y	*7W-6381*	1	PAN GP-OIL	64
Y	*2W-9054*	8	PISTON & ROD GP	66
YR	**161-4110**	1	PUMP GP-ENGINE OIL	108
Y	*104-7032*	1	PUMP GP-GOV, FUEL INJ & TFR	260
Y	*4N-5837*	1	PUMP GP-WATER	132
Y	*190-4184*	1	SUPPORT GP-ENGINE	75
Y	*100-4417*	1	SWITCH GP-FLOW	367
Y	*179-7086*	1	TRUNNION GP-ENGINE	76
Y	*4P-8729*	1	TURBOCHARGER GP	184
Y	*4N-4298*	1	VALVE MECHANISM GP	77
			GASKET KITS WILL BE PROVIDED WHEN AVAILABLE	

R-REMFG PART MAY BE AVAILABLE
Y-SEPARATE ILLUSTRATION

ENGINE ARRANGEMENT

162-9505 INSTALLATION AR-ENGINE

S/N: ABK1-UP

PART OF 162-9500 GENERAL AR

SMCS-1000 **i01540988**

NOTE	PART NUMBER	QTY	PART NAME 1 2 3 4 5 6 (PRODUCT LEVEL)	SEE PAGE
Y	*163-5812*	1	AIR CLEANER GP	158
Y	*163-5820*	1	ALTERNATOR GP-CHARGING	274
Y	*114-5540*	1	BELT TIGHTENER GP	8
Y	*169-7163*	1	COOLER & MTG GP-HYDRAULIC OIL	612
Y	*111-3261*	1	COOLER GP-TRANSMISSION OIL	392
Y	*165-9055*	1	DRIVE GP-FAN	42
Y	*163-5815*	1	DUST EJECTOR GP	168
Y	*163-5811*	1	FAN GP-BLOWER	114
Y	*190-3472*	1	FUMES DISPOSAL GP	88
Y	*163-5817*	1	LINES GP-AIR	172
Y	*168-9243*	1	LINES GP-OIL SUPPLY	96
Y	*184-3648*	1	LINES GP-WATER	130
Y	*163-8416*	1	MUFFLER GP	180
	5P-8502	1	PADLOCK GP	
A	**5P-8500**	1	KEY	
A	**8Y-6364**	1	SLEEVE	
Y	*163-5813*	1	RADIATOR GP	140
Y	*126-5396*	1	SHIELD GP-MANIFOLD	182
Y	**7N-7049**	1	STARTING MOTOR GP-ELECTRIC	359
Y	*4P-5545*	1	SUPPORT GP-ENGINE	74
Y	*163-5814*	1	TANK GP-WATER	150

A-NOT PART OF THIS GROUP
Y-SEPARATE ILLUSTRATION

114-5540 BELT TIGHTENER GP

S/N: ABK1-UP

PART OF 162-9505 INSTALLATION AR-ENGINE

SMCS-1358 **i01390153**

NOTE	REF NO	GRAPHIC REF	PART NUMBER	QTY	PART NAME 1 2 3 4 5 6 (PRODUCT LEVEL)	SEE PAGE
	1	1	**114-4246**	1	ARM AS-TIGHTENER	
		1	**2S-6196**	1	SHAFT-PULLEY	
		1	**4S-5367**	1	BUSHING AS	
		1	**7N-5352**	1	DOWEL	
	2	1	**136-0866**	1	STUD	
	3	1	**6S-6308**	1	PIN	
	4	1	**114-4294**	1	PULLEY-TIGHTENER	
	5	1	**8T-4223**	1	WASHER-HARD (13.5X25.5X3MM THK)	
	6	1	**161-7128**	1	SPRING AS	
		1	**7I-1334**	1	HOSE	
		1	**159-7623**	1	SPRING AS	
		1	**7I-1334**	1	HOSE	
	7	1	**2K-4973**	1	LOCKNUT (3/8-16 THD)	
	8	1	**2M-2742**	1	PLATE-RETAINER	
	9	1	**4L-6454**	1	BOLT (3/8-16X1 IN)	
	10	1	**4M-6425**	4	BOLT (5/16-18X1 IN)	
	11	1	**1S-8687**	1	SPACER	
	12	1	**5M-9735**	1	SEAL-LIP	
	13	1	**8B-2327**	1	RING-RETAINING	
	14	1	**0S-0509**	1	BOLT (3/8-16X.75 IN)	
	15	1	**6B-1124**	2	BALL BEARING	
	16	1	**2S-6151**	1	GASKET	
	17	1	**2S-6150**	1	COVER-PULLEY	
	18	1	**2S-6160**	1	WASHER-HARD (10.2X32X5MM THK)	
	19	1	**8T-4896**	2	WASHER-HARD (10.2X18.5X2.5MM THK)	
	20	1	**3B-4617**	1	COTTER	
	21	1	**3B-8485**	1	FITTING-GREASE (1/8-27 THD)(45 DEGREE)	

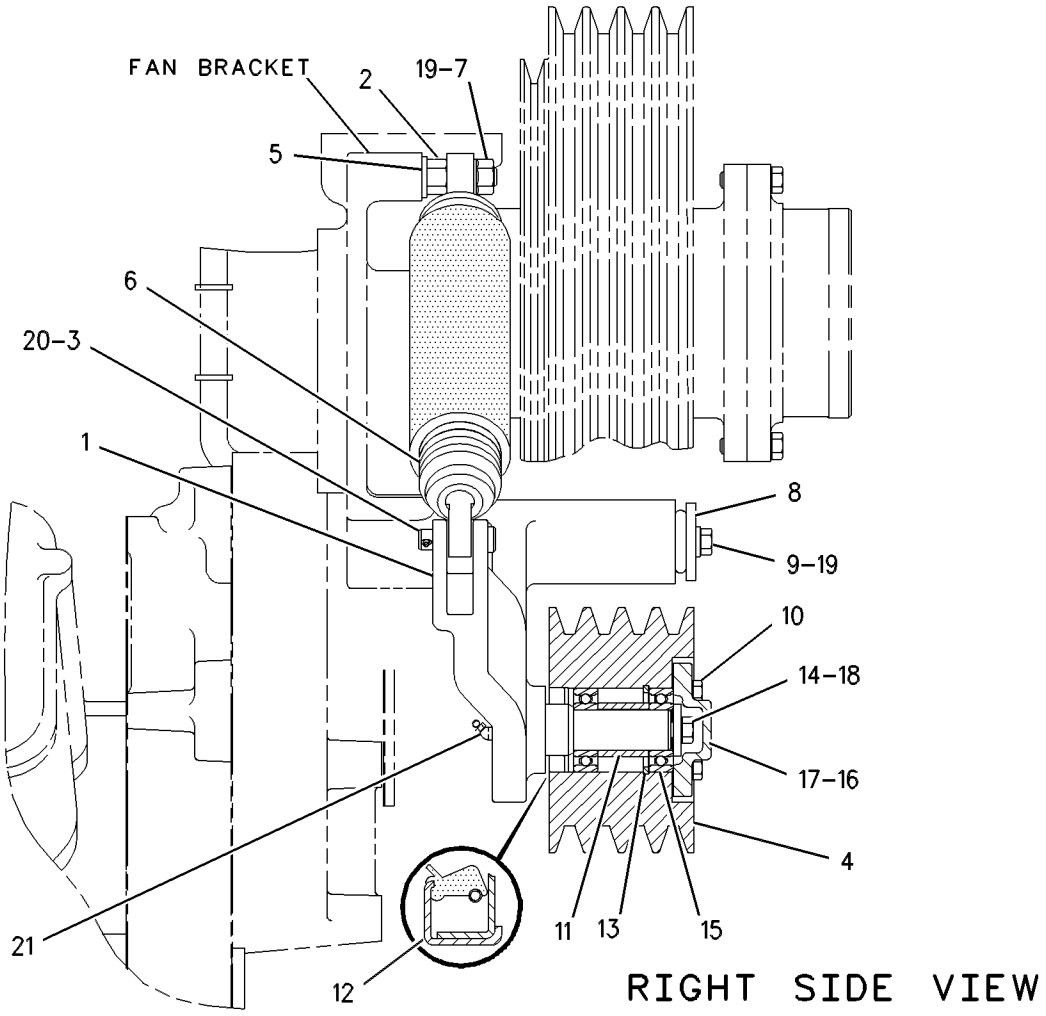

GRAPHIC #1

g00476999

4N-0963 CAMSHAFT GP

S/N: 48W41541-UP
PART OF 198-9948 ENGINE AR
AN ATTACHMENT

SMCS-1210, 1211, 1212 **i01471629**

NOTE	REF NO	GRAPHIC REF	PART NUMBER	QTY	PART NAME 1 2 3 4 5 6 (PRODUCT LEVEL)	SEE PAGE
CR	1	1	**2W-7980**	1	CAMSHAFT AS	
	2	1	**101-3374**	1	GEAR-CAMSHAFT DRIVE (86 TEETH)	
	3	1	**1B-8705**	1	KEY-WOODRUFF	
	4	1	**4N-0955**	1	DOWEL	
	5	1	**0S-0509**	2	BOLT (3/8-16X0.75 IN)	
	6	1	**4N-0342**	1	PLATE-CAMSHAFT THRUST	

C-CHANGE FROM PREVIOUS TYPE
R-REMFG PART MAY BE AVAILABLE

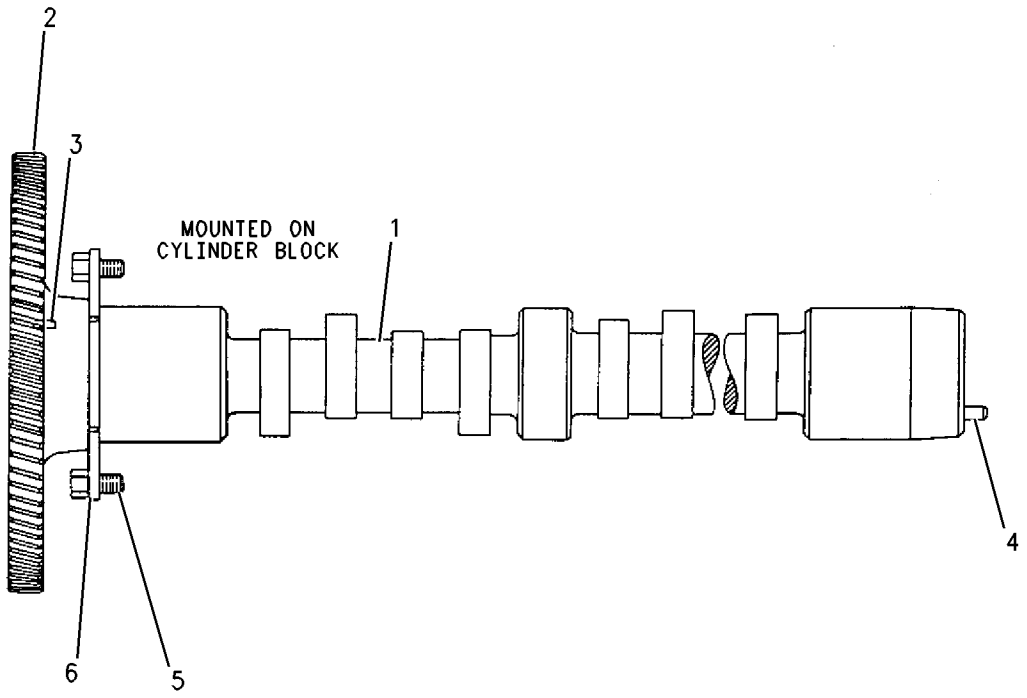

GRAPHIC #1 g00767845

186-2397 CAMSHAFT GP

S/N: 5XD1-UP

PART OF 163-5784 ENGINE AR

SMCS-1210, 1211, 1212 **i01446332**

NOTE	REF NO	GRAPHIC REF	PART NUMBER	QTY	PART NAME 1 2 3 4 5 6 (PRODUCT LEVEL)	SEE PAGE
	1	1	**186-2396**	1	CAMSHAFT AS	
	2	1	**1B-8705**	1	KEY-WOODRUFF	
	3	1	**4N-0955**	1	DOWEL	
	4	1	**101-3374**	1	GEAR-CAMSHAFT DRIVE (86 TEETH)	
	5	1	**0S-0509**	2	BOLT (3/8-16X0.75 IN)	
	6	1	**4N-0342**	1	PLATE-CAMSHAFT THRUST	

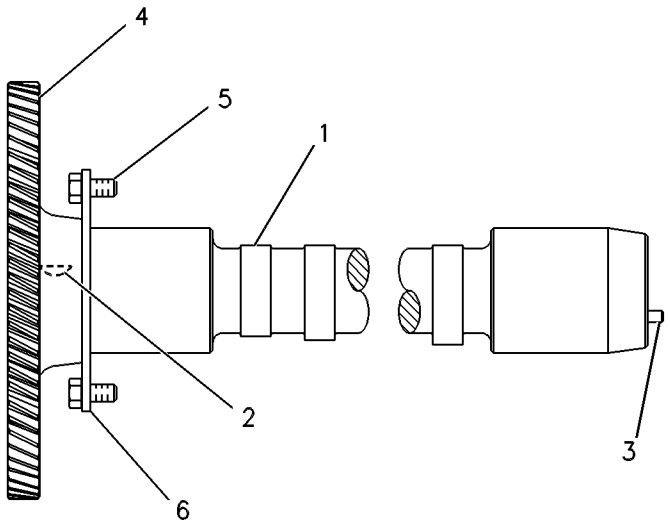

GRAPHIC #1 g00086812

4W-5390 COVER GP-CYLINDER BLOCK

S/N: 48W41541-UP
PART OF 198-9948 ENGINE AR
AN ATTACHMENT

SMCS-1201 **i01390167**

NOTE	REF NO	GRAPHIC REF	PART NUMBER	QTY	PART NAME 1 2 3 4 5 6 (PRODUCT LEVEL)	SEE PAGE
C	1	1	**0S-1594**	3	BOLT (3/8-16X1 IN)	
C		1	**5M-2894**	3	WASHER-HARD (10.2X18.5X2.5MM THK)	
	2	1	**4N-1683**	1	COVER	
		1	**4N-1684**	1	GASKET	
B	3	1	**4N-1682**	1	COVER	
B		1	**4N-0864**	1	GASKET	
B	4	1	**0S-1594**	6	BOLT (3/8-16X1 IN)	
B		1	**5M-2894**	6	WASHER-HARD (10.2X18.5X2.5MM THK)	

B-USE AS REQUIRED
C-CHANGE FROM PREVIOUS TYPE

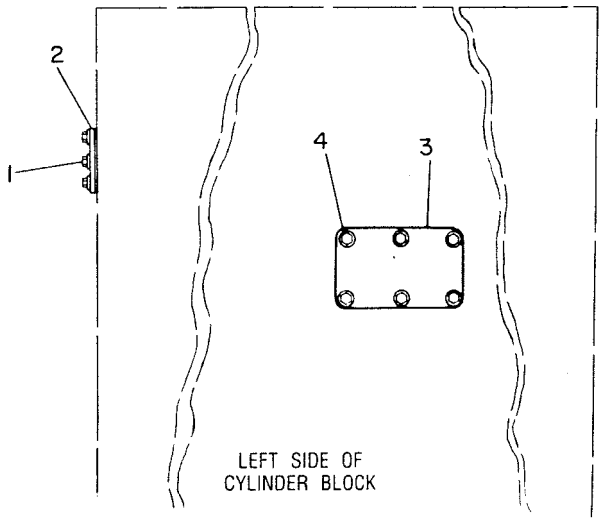

GRAPHIC #1 g00192499

BASIC ENGINE

130-7301 COVER GP-CYLINDER BLOCK

S/N: 5XD1-UP

PART OF 163-5784 ENGINE AR

SMCS-1201 **i01390179**

NOTE	REF NO	GRAPHIC REF	PART NUMBER	QTY	PART NAME 1 2 3 4 5 6 (PRODUCT LEVEL)	SEE PAGE
	1	1	**4N-1683**	1	COVER	
	2	1	**4N-1684**	1	GASKET	
	3	1	**0S-1594**	9	BOLT (3/8-16X1 IN)	
	4	1	**5M-2894**	9	WASHER-HARD (10.2X18.5X2.5MM THK)	
	5	1	**4N-0864**	1	GASKET	
	6	1	**4N-1682**	1	COVER	
	7	1	**4P-8134**	1	CLIP	

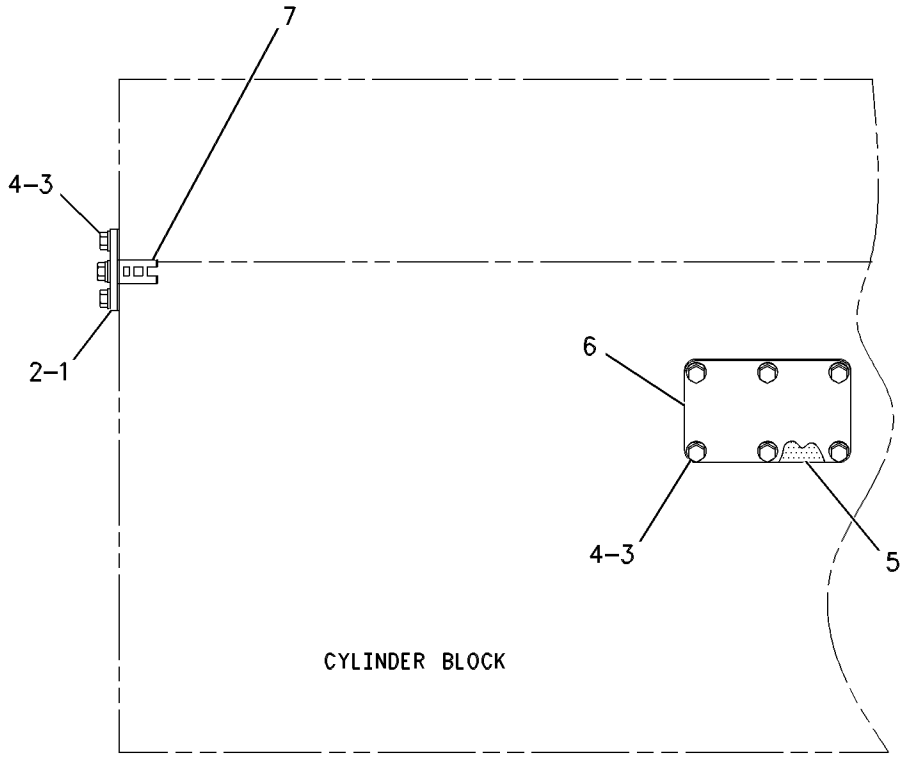

LEFT SIDE VIEW

GRAPHIC #1 g00595782

BASIC ENGINE

163-5799 COVER GP-CYLINDER BLOCK

S/N: 5XD1-UP

PART OF 163-5784 ENGINE AR

SMCS-1201 **i01446333**

NOTE	REF NO	GRAPHIC REF	PART NUMBER	QTY	PART NAME 1 2 3 4 5 6 (PRODUCT LEVEL)	SEE PAGE
	1	1	**6N-2508**	1	GASKET	
	2	1	**6N-2509**	1	COVER	
	3	1	**9R-1685**	1	SPACER	
	4	1	**133-3868**	1	BRACKET AS	
	5	1	**134-6446**	1	COVER-PUMP GEAR	
	6	1	**163-8411**	1	BRACKET	
	7	1	**167-6837**	1	BRACKET AS	
	8	1	**167-6940**	1	PLATE	
	9	1	**172-8595**	1	PLATE-FAN SUPPORT	
	10	1	**0S-1588**	2	BOLT (3/8-16X1.25 IN)	
	11	1	**0S-1590**	2	BOLT (3/8-16X2 IN)	
	12	1	**0S-1591**	4	BOLT (3/8-16X1.5 IN)	
	13	1	**0S-1594**	7	BOLT (3/8-16X1 IN)	
	14	1	**0T-0065**	1	BOLT (3/8-16X3.5 IN)	
	15	1	**0T-0573**	5	BOLT (3/8-16X2.75 IN)	
	16	1	**2B-2471**	1	STUD	
	17	1	**5B-9603**	2	BOLT (3/8-16X5 IN)	
	18	1	**5F-6044**	1	BOLT (3/8-16X9 IN)	
	19	1	**5M-2894**	9	WASHER-HARD (10.2X18.5X2.5MM THK)	
	20	1	**6V-4589**	1	SEAL-O-RING (19.18MM ID)	
	21	1	**8F-6350**	1	BOLT (3/8-16X8 IN)	
	22	1	**8M-1871**	1	STUD-TAPERLOCK	
	23	1	**9S-4190**	1	PLUG-O-RING	
	24	1	**9S-8752**	4	NUT-FULL (3/8-16 THD)	
	25	1	**9X-6458**	10	WASHER-HARD (10.2X22.5X3MM THK)	
B	26	1	**1U-8846**		SEALANT-GASKET	

B-USE AS REQUIRED

163-5799 **COVER GP-CYLINDER BLOCK** ***(contd.)*** **i01446333**

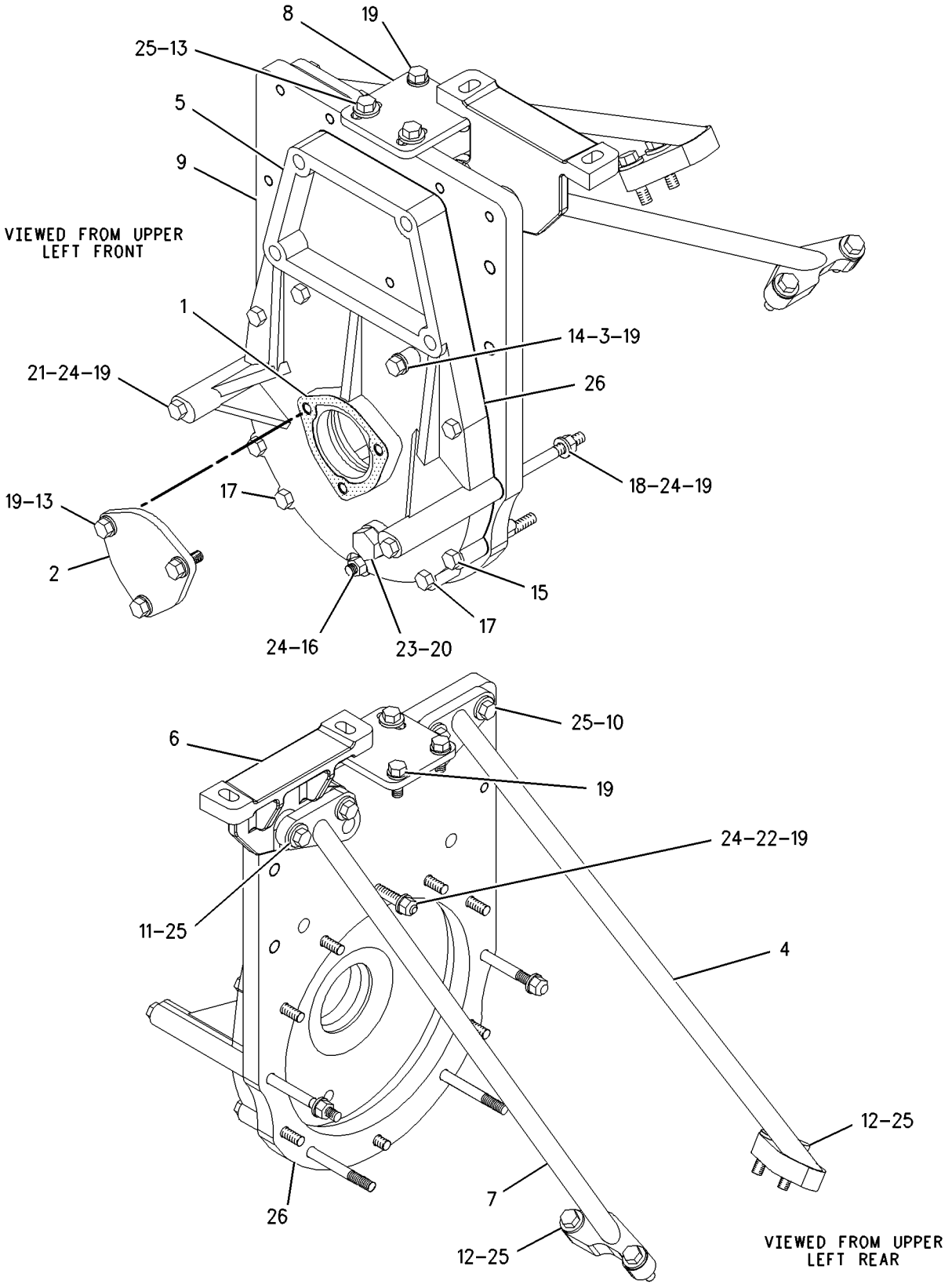

GRAPHIC #1 g00687260

4N-6876 COVER GP-FLYWHEEL HOUSING

S/N: 5XD1-UP; 48W41541-UP
PART OF 163-5784, 198-9948 ENGINE AR
ALSO AN ATTACHMENT

SMCS-1157 **i01446334**

NOTE	REF NO	GRAPHIC REF	PART NUMBER	QTY	PART NAME 1 2 3 4 5 6 (PRODUCT LEVEL)	SEE PAGE
	1	1	**4N-1114**	1	COVER	
		1	**9Y-6089**	1	GASKET	
	2	1	**0S-1566**	3	BOLT (5/8-11X1.5 IN)	
		1	**5P-8247**	3	WASHER-HARD (17X32X3.5MM THK)	

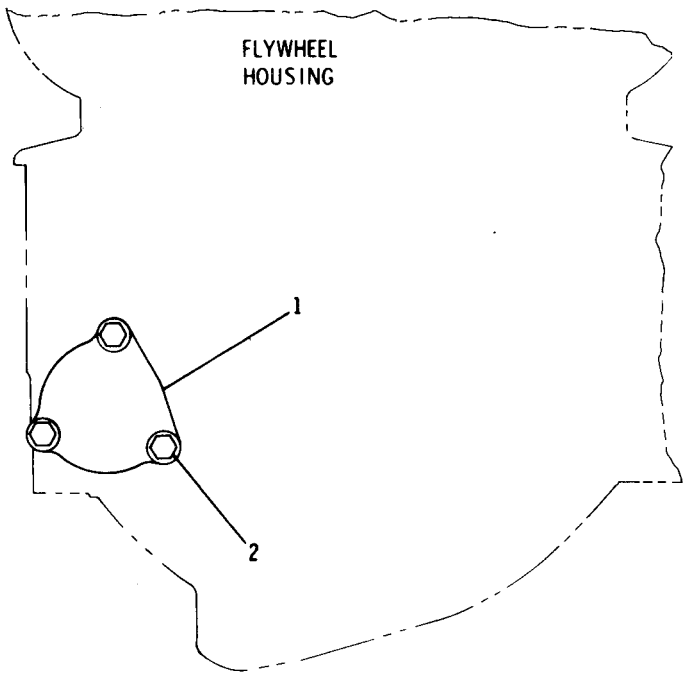

GRAPHIC #1 g00082168

MEMORANDA

169-3691 COVER GP-FRONT HOUSING

S/N: 48W41541-UP
PART OF 198-9948 ENGINE AR
AN ATTACHMENT

SMCS-1151, 1162, 1166 **i01446337**

NOTE	REF NO	GRAPHIC REF	PART NUMBER	QTY	PART NAME 1 2 3 4 5 6 (PRODUCT LEVEL)	SEE PAGE
	1	1	**2P-2772**	1	COVER	
	2	1	**6N-2508**	1	GASKET	
	3	1	**6N-2509**	1	COVER	
	4	1	**9R-1685**	1	SPACER	
	5	1	**134-6446**	1	COVER-PUMP GEAR	
	6	1	**172-8595**	1	PLATE-FAN SUPPORT	
	7	1	**0S-1594**	3	BOLT (3/8-16X1 IN)	
	8	1	**0T-0065**	1	BOLT (3/8-16X3.5 IN)	
	9	1	**0T-0573**	5	BOLT (3/8-16X2.75 IN)	
	10	1	**1A-2029**	2	BOLT (3/8-16X1.125 IN)	
	11	1	**2B-2471**	1	STUD	
	12	1	**4N-0933**	1	GASKET	
	13	1	**5B-9603**	2	BOLT (3/8-16X5 IN)	
	14	1	**5F-6044**	1	BOLT (3/8-16X9 IN)	
	15	1	**5M-2894**	9	WASHER-HARD (10.2X18.5X2.5MM THK)	
	16	1	**6V-4589**	1	SEAL-O-RING (19.18MM ID)	
	17	1	**8F-6350**	1	BOLT (3/8-16X8 IN)	
	18	1	**8M-1871**	1	STUD-TAPERLOCK	
	19	1	**9S-4190**	1	PLUG-O-RING	
	20	1	**9S-8752**	4	NUT-FULL (3/8-16 THD)	
B	21	1	**1U-8846**		SEALANT-GASKET (14 ML)	

B-USE AS REQUIRED

169-3691 **COVER GP-FRONT HOUSING** *(contd.)* **i01446337**

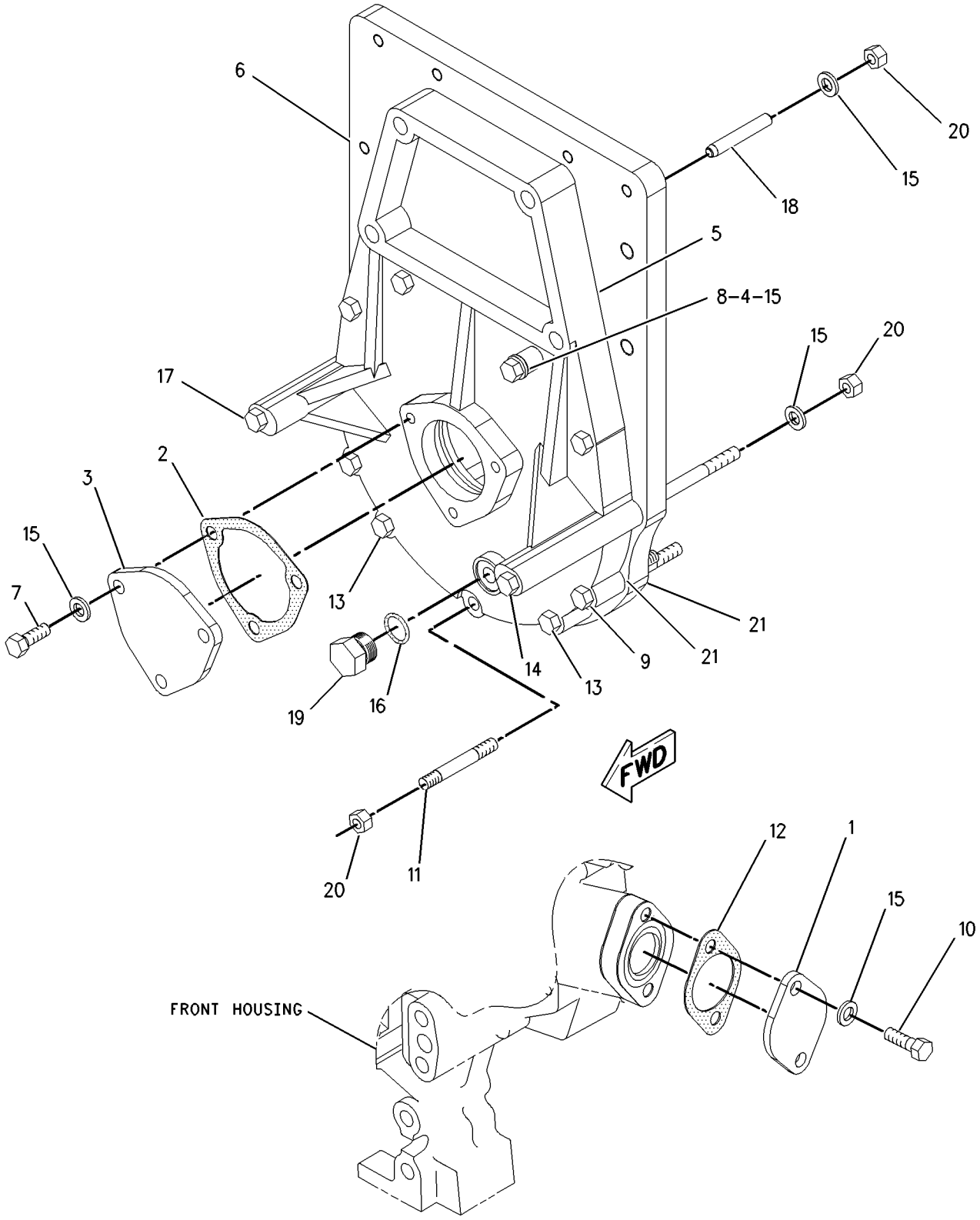

GRAPHIC #1 g00692592

4W-6827 COVER GP-VALVE MECHANISM

S/N: 48W41541-UP
PART OF 198-9948 ENGINE AR
AN ATTACHMENT

SMCS-1107, 1120 **i01390348**

NOTE	REF NO	GRAPHIC REF	PART NUMBER	QTY	PART NAME 1 2 3 4 5 6 (PRODUCT LEVEL)	SEE PAGE
	1	1	**9L-8925**	37	BOLT (5/16-18X1.25IN)	
C	2	1	**7C-6514**	3	ADAPTER	
C	3	1	**7C-9621**	1	PLUG	
	4	1	**4W-6822**	2	BASE-COVER	
BD	5	1	**5P-5678**		SEAL	
C	6	1	**7C-9635**	2	COVER-ROCKER ARM	
C	7	1	**8C-5196**	4	SEAL-O-RING (53.64MM ID)	

B-USE AS REQUIRED
C-CHANGE FROM PREVIOUS TYPE
D-ORDER BY THE METER

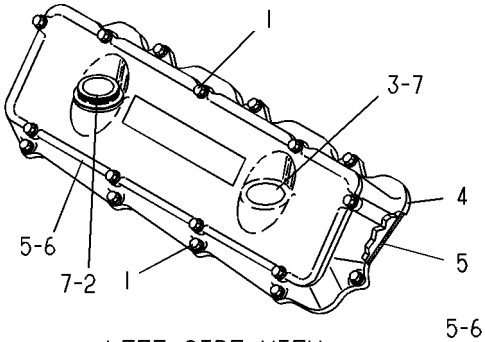

LEFT SIDE VIEW

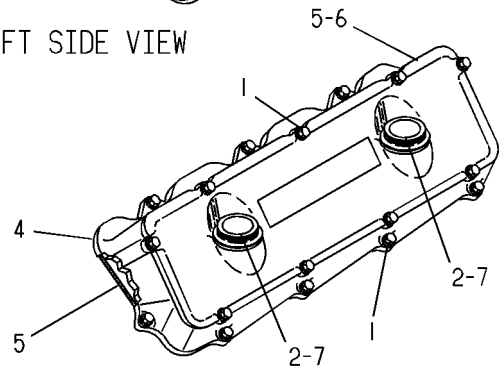

RIGHT SIDE VIEW

GRAPHIC #1 g00194318

130-7302 COVER GP-VALVE MECHANISM

S/N: 5XD1-UP

PART OF 163-5784 ENGINE AR

SMCS-1107, 1120 **i01390197**

NOTE	REF NO	GRAPHIC REF	PART NUMBER	QTY	PART NAME 1 2 3 4 5 6 (PRODUCT LEVEL)	SEE PAGE
	1	1	**119-9015**	3	COVER AS-VALVE	
					(EACH INCLUDES)	
		1	**6V-5100**	1	SEAL-O-RING (53.64MM ID)	
		1	**7C-6514**	1	ADAPTER	
	2	1	**114-8684**	1	COVER-VALVE MECHANISM	
	3	1	**1B-2790**	44	BOLT (5/16-18X1.375 IN)	
	4	1	**9M-1974**	44	WASHER-HARD (8.8X16X2MM THK)	
	5	1	**106-9488**	4	BASE-VALVE COVER	
	6	1	**108-3956**	8	SEAL-DIAMOND	
	7	1	**4N-4668**	2	BREATHER AS	
	8	1	**6V-3831**	2	SEAL-O-RING (53.34MM ID)	
	9	1	**2N-8109**	2	CLAMP	

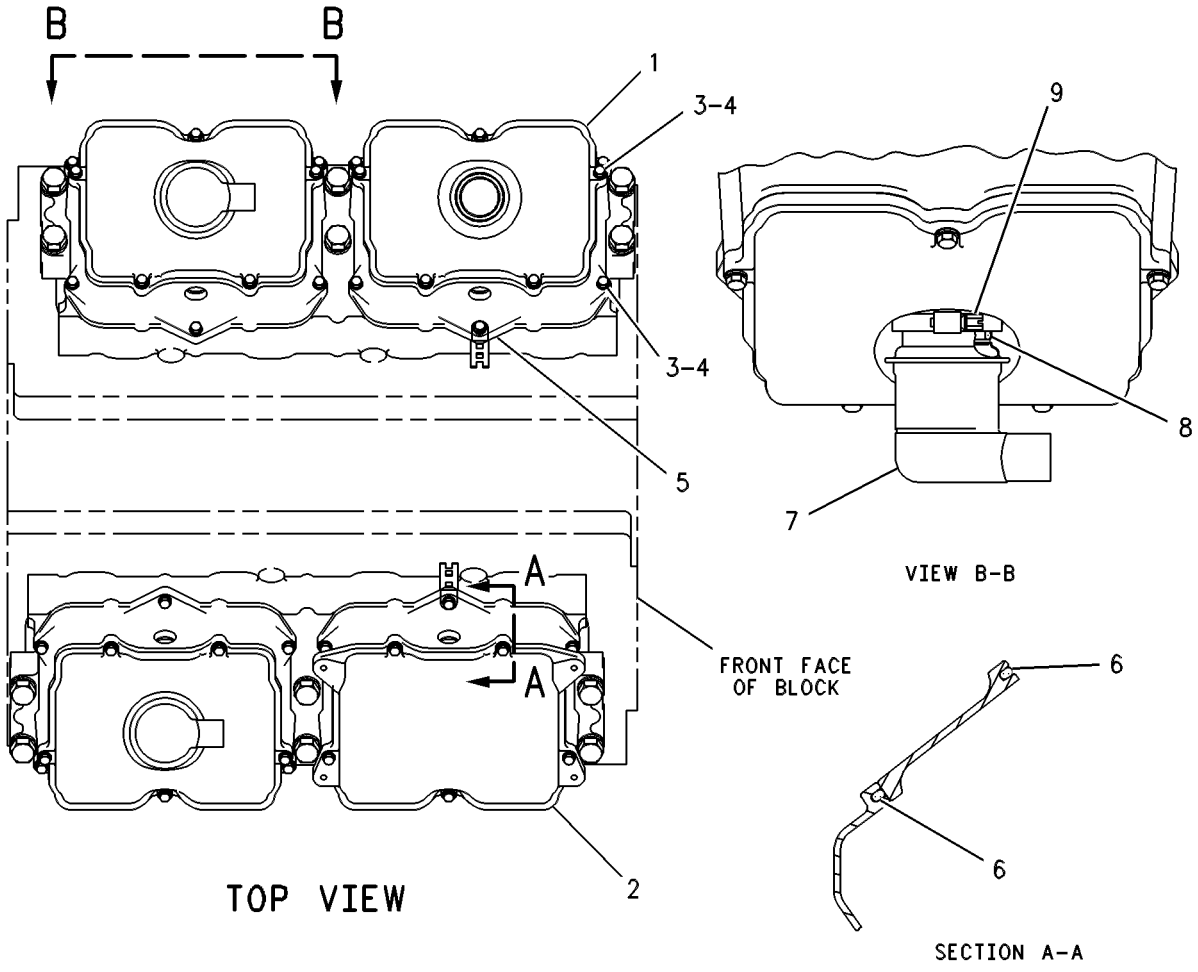

GRAPHIC #1 g00268987

1W-5009 CRANKSHAFT AS*R

S/N: 5XD1-UP; 48W41541-UP
PART OF 1W-5010 CRANKSHAFT GP
ALSO AN ATTACHMENT

SMCS-1202, 1203, 1204, 1230, 1231, 1232 **i01407299**

NOTE	REF NO	GRAPHIC REF	PART NUMBER	QTY	PART NAME 1 2 3 4 5 6 (PRODUCT LEVEL)	SEE PAGE
	1	1	**4N-0684**	1	DOWEL	
	2	1	**8T-6757**	5	PLUG-PIPE	
	3	1	**7S-5005**	1	DOWEL	
	4	1	**7N-7591**	1	GEAR-CRANKSHAFT (80 TEETH)	

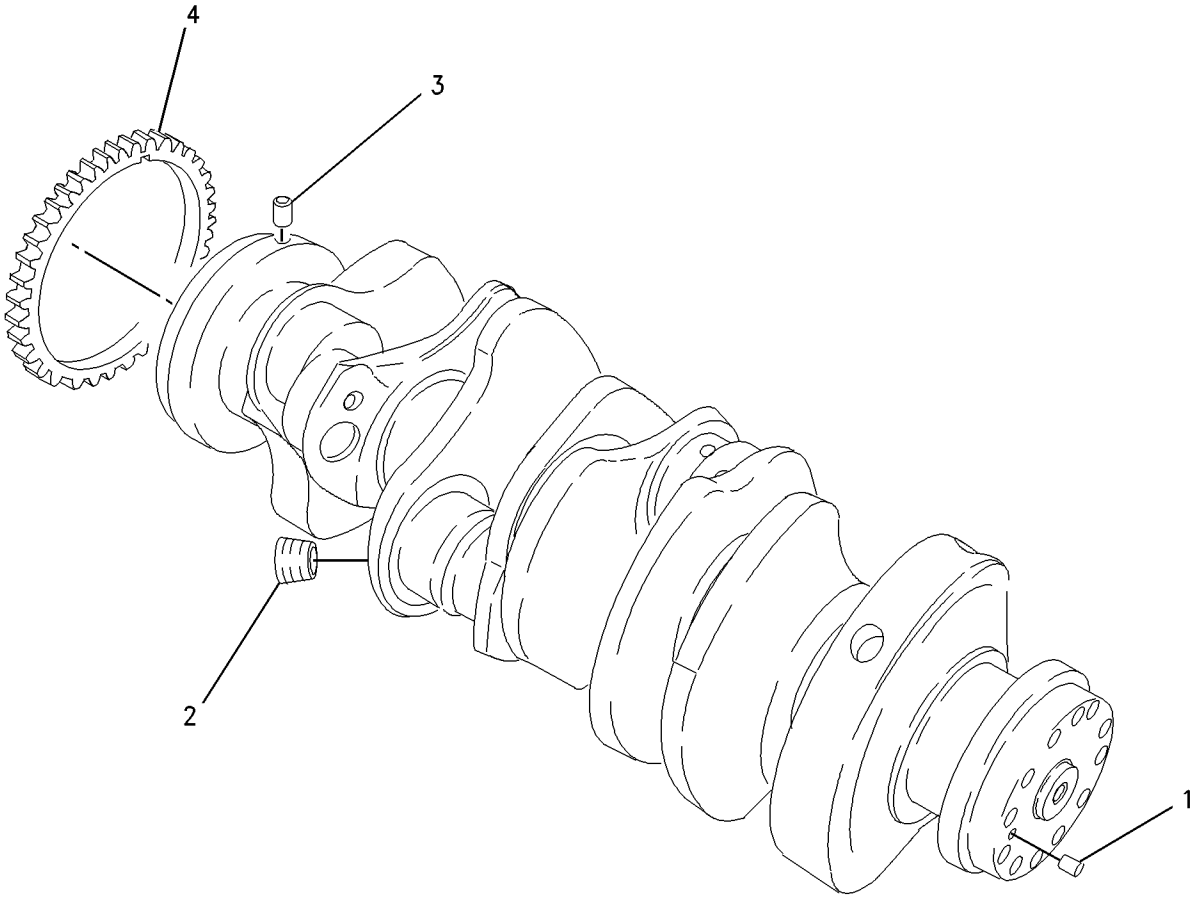

GRAPHIC #1 g00741524

1W-5010 CRANKSHAFT GP

S/N: 5XD1-UP; 48W41541-UP
PART OF 163-5784, 198-9948 ENGINE AR
ALSO AN ATTACHMENT

SMCS-1202, 1203, 1204, 1230, 1231, 1232 **i01506877**

NOTE	REF NO	GRAPHIC REF	PART NUMBER	QTY	PART NAME 1 2 3 4 5 6 (PRODUCT LEVEL)	SEE PAGE
YR	1	1	**1W-5009**	1	CRANKSHAFT AS	22
	2	1	**4W-5492**	5	BEARING-MAIN (STANDARD)	
ABC		1	**4W-5698**		BEARING-MAIN (0.63MM U.S.)	
ABC		1	**4W-5699**		BEARING-MAIN (1.27MM U.S.)	
ABC		1	**4W-5700**		BEARING-MAIN (0.63MM O.S.)	
ABC		1	**4W-5701**		BEARING-MAIN (0.63MM U.S./0.63MM O.S.)	
	3	1	**7E-9262**	2	PLATE-THRUST	
C	4	1	**2W-1733**	1	SEAL GP-CRANKSHAFT	
C	5	1	**2W-1734**	1	SEAL GP-CRANKSHAFT	

A-NOT PART OF THIS GROUP
B-USE AS REQUIRED
C-CHANGE FROM PREVIOUS TYPE
R-REMFG PART MAY BE AVAILABLE
Y-SEPARATE ILLUSTRATION

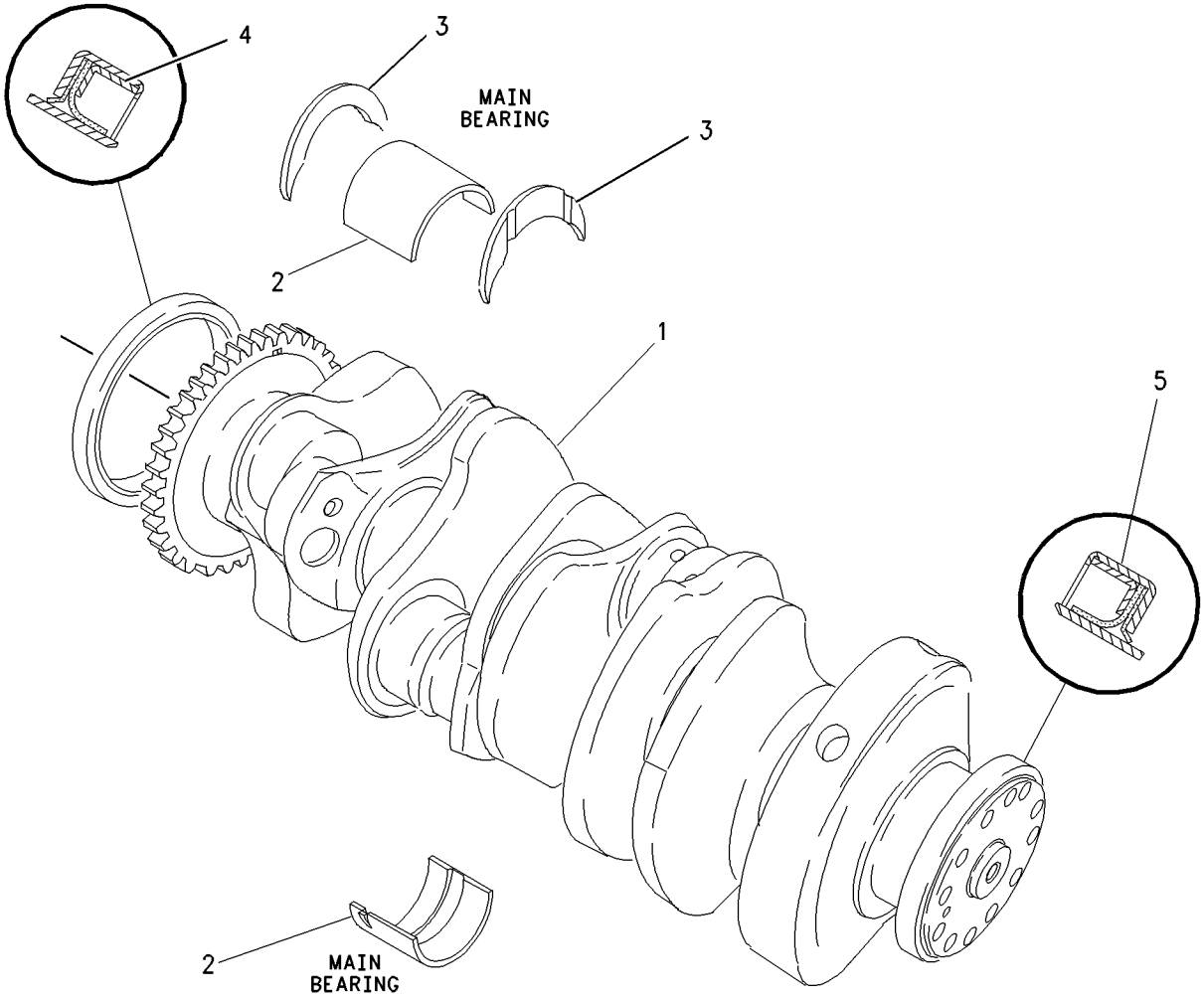

GRAPHIC #1 g00741525

117-9509 CYLINDER BLOCK AS

S/N: 5XD1-UP; 48W41541-UP
PART OF 109-9009, 1W-5082 CYLINDER BLOCK GP
FIELD REPLACEMENT ORDER 8-7W-4990 TUBE AS-OIL JET, 8-111-8606 BOLT-OIL JET
ALSO AN ATTACHMENT

SMCS-1117, 1201, 1211, 1216, 1217, 1221, 1222, 1223, 1224, 1238, 1239, 1240, 1331 **i01390206**

NOTE	REF NO	GRAPHIC REF	PART NUMBER	QTY	PART NAME 1 2 3 4 5 6 (PRODUCT LEVEL)	SEE PAGE
	1	1	**4N-5858**	5	CAP (CRANKSHAFT BEARING)	
	2	1	**3P-1323**	10	BOLT (BEARING CAP)	
		1	**9H-1031**	10	WASHER-HARD (24X41.5X6MM THK)	
	3	1	**4N-6658**	2	BEARING-SLEEVE	
	4	1	**4N-0685**	3	BEARING-SLEEVE	
	5	1	**7W-6492**	2	PLUG-PIPE (1/2-14 NPTF THD)	
	6	1	**9L-5854**	8	BAND-FILLER (5.125MM ID)	
	7	1	**2W-6000**	8	LINER-CYLINDER	
	8	1	**110-2220**	8	SEAL-LINER (141MM ID)	
	9	1	**142-7072**	8	SEAL-LINER (140.20MM ID)	
	10	1	**142-6217**	8	SEAL-LINER (140.20MM ID)	

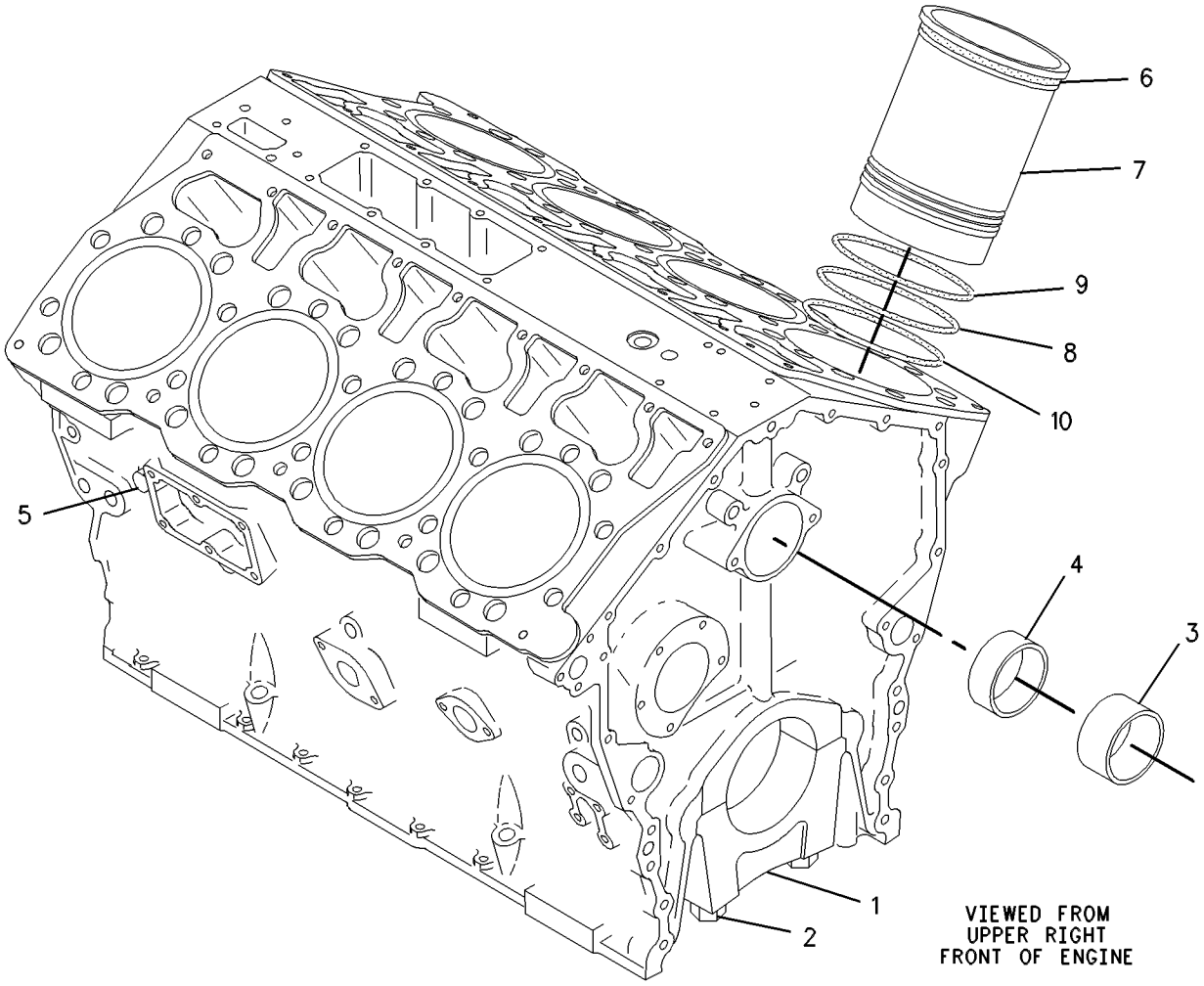

GRAPHIC #1 g00590538

MEMORANDA

BASIC ENGINE

1W-5082 CYLINDER BLOCK GP

S/N: 48W41541-UP
PART OF 198-9948 ENGINE AR
AN ATTACHMENT

SMCS-1201 **i01190159**

NOTE	REF NO	GRAPHIC REF	PART NUMBER	QTY	PART NAME 1 2 3 4 5 6 (PRODUCT LEVEL)	SEE PAGE
	1	1	**7W-4990**	8	TUBE AS-OIL JET	
	2	1	**4N-1650**	4	DOWEL	
	3	1	**8T-6763**	4	PLUG-PIPE (1/4-18 NPTF THD)	
CY	4	1	**117-9509**	1	CYLINDER BLOCK AS	24
	5	1	**8T-6757**	7	PLUG-PIPE (1/8-27 NPTF)	
	6	1	**6N-9133**	2	GASKET-PLATE	
	7	1	**6I-4613**	2	PLATE-SPACER	
	8	1	**4N-0693**	3	PLUG-TAPERLOCK (38.10MM)	
					-OR-	
		1	**7C-9614**	3	PLUG-TAPERLOCK (41.28MM)	
	9	1	**4N-0683**	4	DOWEL	
	10	1	**7E-6479**	8	BOLT-OIL JET	
	11	1	**3B-0645**	1	PLUG-CUP (32.08MM AVG OD)	
	12	1	**6L-4428**	3	STUD-TAPERLOCK	
C	13	1	**114-4427**	2	SEAL-O-RING (19.18MM ID)	
	14	1	**7W-6534**	2	PLUG-PIPE (3/8-18 NPTF THD)	
	15	1	**5P-8356**	2	SEAL-O-RING (21.89MM ID)	
	16	1	**3S-6605**	2	PLUG-CUP	
	17	1	**9S-4190**	2	PLUG-O-RING (7/16-20 THD)	
B	18	1	**8T-6764**	1	PLUG-PIPE (1/8-27 NPTF THD)	
	19	1	**7C-7407**	1	STUD	
J	20	1	**7W-6534**	1	PLUG-PIPE (3/8-18 NPTF THD)	
BJ	21	1	**9S-4190**	2	PLUG-O-RING (7/16-20 THD)	
BCJ		1	**114-4427**	2	SEAL-O-RING (19.18MM ID)	
J	22	1	**7W-6534**	1	PLUG-PIPE (3/8-18 NPTF THD)	
B	23	1	**7W-6534**	1	PLUG-PIPE (3/8-18 NPTF THD)	
B	24	1	**7W-6534**	1	PLUG-PIPE (3/8-18 NPTF THD)	
AFL			**4W-6061**		SLEEVE-BOTTOM LINER	
AFN			**4W-4588**		SLEEVE-LIFTER BORE	
AFN			**9Y-3368**		INSERT-LINER SEAT (.834MM THK)	
AFN			**2W-3815**		INSERT-SEAT (1.59MM THK)	
AFN			**5N-0093**		INSERT-SEAT (2.7MM THK)	
AFN			**101-0523**		INSERT-LINER SEAT (5.21MM THK)	

A-NOT PART OF THIS GROUP
B-USE AS REQUIRED
C-CHANGE FROM PREVIOUS TYPE
F-NOT SHOWN
J-MOUNTED ON LH SIDE OF CYLINDER BLOCK
L-FOR SALVAGE OF BOTTOM LINER O-RING BORE, QUANTITY TO BE DETERMINED BY USER
N-FOR SALVAGE OF DAMAGED CYL BLOCK LIFTER BORES, QUANTITY TO BE DETERMINED BY USER
Y-SEPARATE ILLUSTRATION

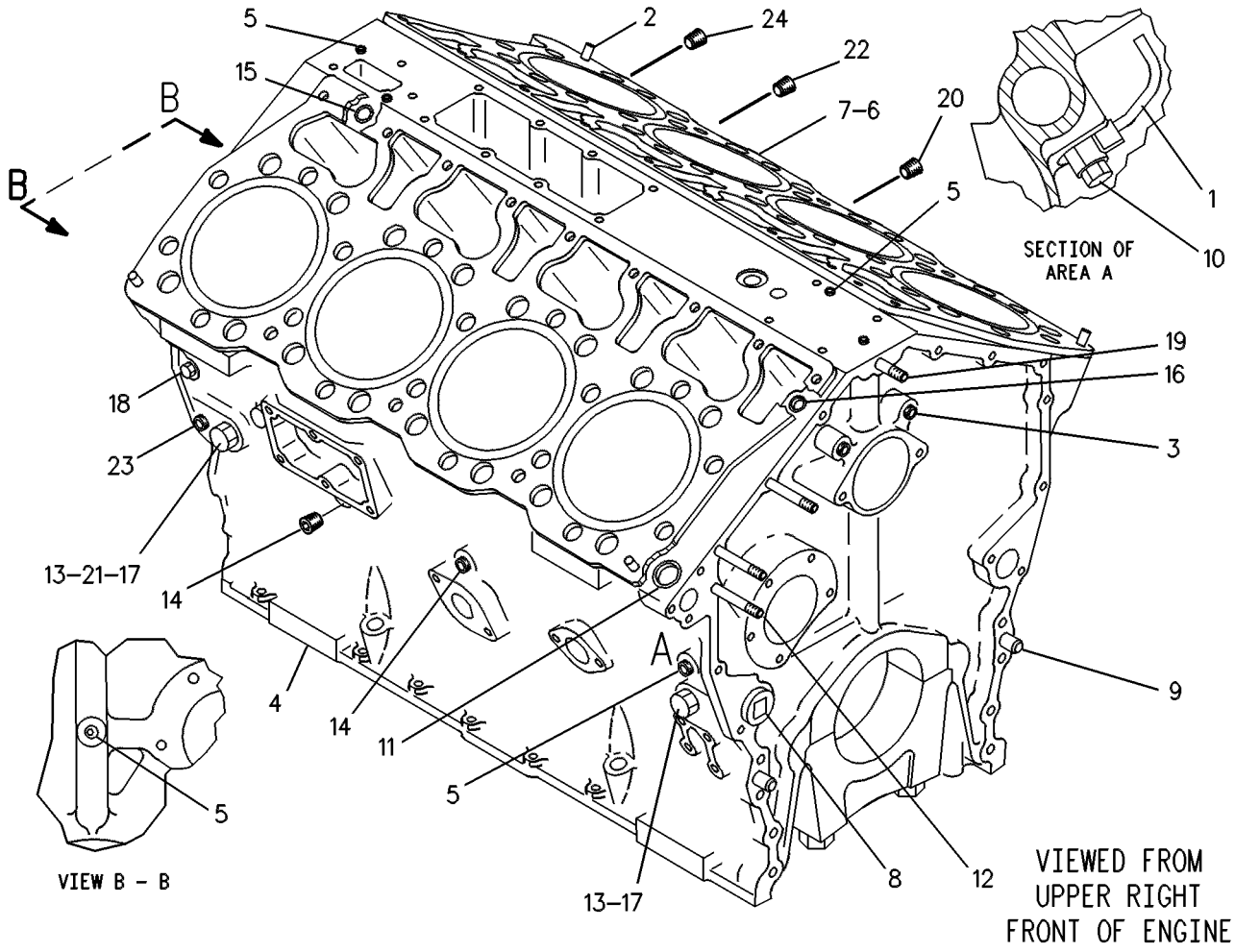

GRAPHIC #1

g00106161

BASIC ENGINE

109-9009 CYLINDER BLOCK GP*R

S/N: 5XD1-UP

PART OF 163-5784 ENGINE AR

SMCS-1201 **i01113238**

NOTE	REF NO	GRAPHIC REF	PART NUMBER	QTY	PART NAME 1 2 3 4 5 6 (PRODUCT LEVEL)	SEE PAGE
	1	1	**4N-1650**	4	DOWEL	
	2	1	**8T-6763**	4	PLUG-PIPE (1/4-18 NPTF THD)	
	3	1	**101-8917**	18	STUD-TAPERLOCK	
Y	4	1	**117-9509**	1	CYLINDER BLOCK AS	24
	5	1	**7C-7407**	1	STUD	
	6	1	**6N-9133**	2	GASKET-PLATE	
	7	1	**6I-4613**	2	PLATE-SPACER	
	8	1	**5P-8356**	2	SEAL-O-RING (21.89MM ID)	
	9	1	**8T-6757**	6	PLUG-PIPE (1/8-27 NPTF)	
	10	1	**3S-6605**	2	PLUG-CUP	
	11	1	**6L-4428**	3	STUD-TAPERLOCK	
	12	1	**3B-0645**	1	PLUG-CUP (32.08MM AVG OD)	
	14	1	**7C-9614**	3	PLUG-TAPERLOCK	
	15	1	**4N-0683**	4	DOWEL	

Y-SEPARATE ILLUSTRATION

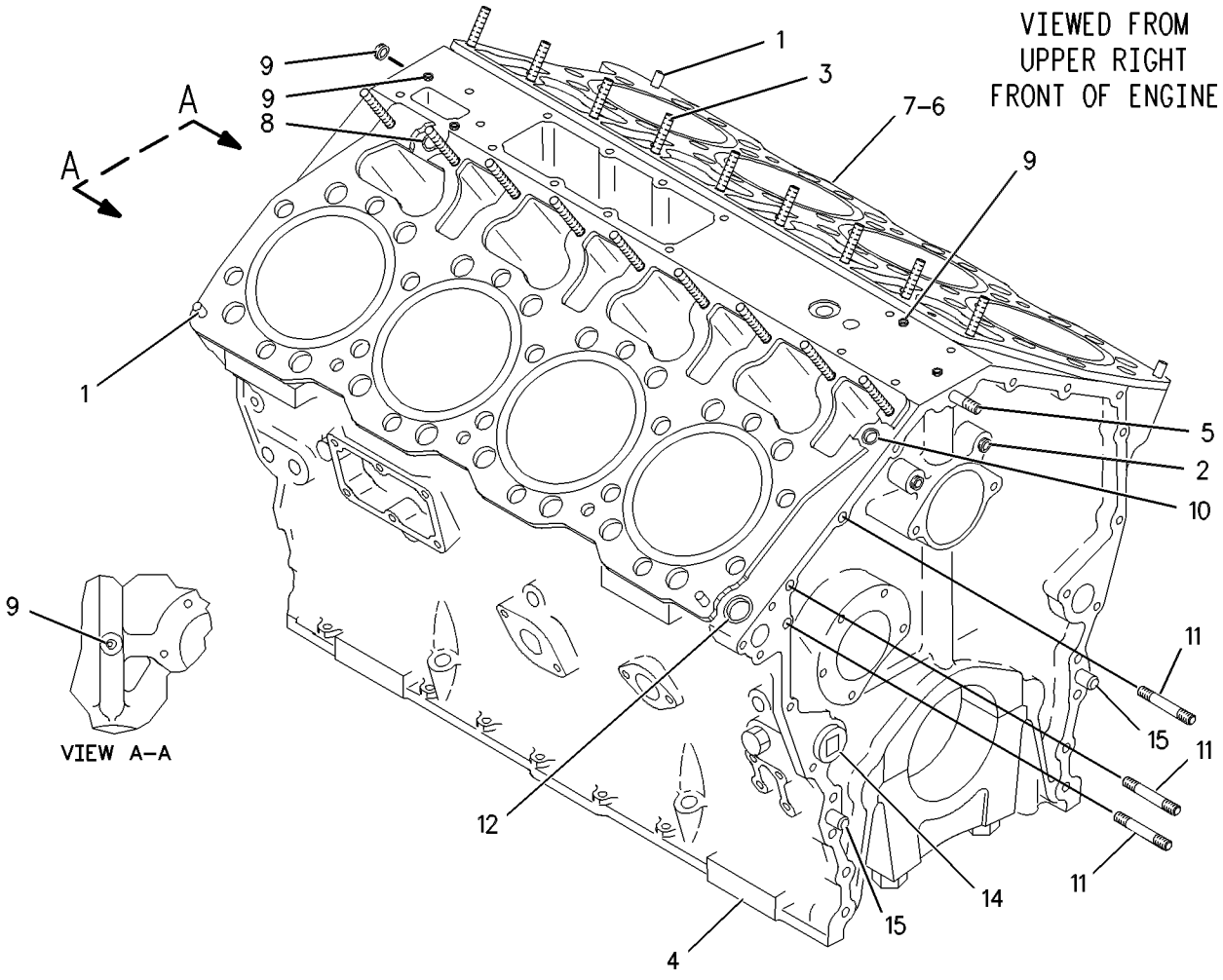

GRAPHIC #1 g00588369

143-0040 CYLINDER HEAD AS

S/N: 48W41541-UP
PART OF 141-1207 CYLINDER HEAD GP
AN ATTACHMENT

SMCS-1100, 1101, 1103, 1104, 1105, 1106, 1108, 1109, 1115, 1117, 1121, 1124, 1125

i01146897

NOTE	REF NO	GRAPHIC REF	PART NUMBER	QTY	PART NAME 1 2 3 4 5 6 (PRODUCT LEVEL)	SEE PAGE
	1	1	**3B-0645**	6	PLUG-CUP (32.08MM AVG OD)	
	2	1	**4N-5893**	8	INSERT-VALVE SEAT (INTAKE)	
	3	1	**1W-5283**	8	INSERT-VALVE SEAT (EXHAUST)	
	4	1	**3B-0623**	8	PLUG-CUP (25.73MM OD)	

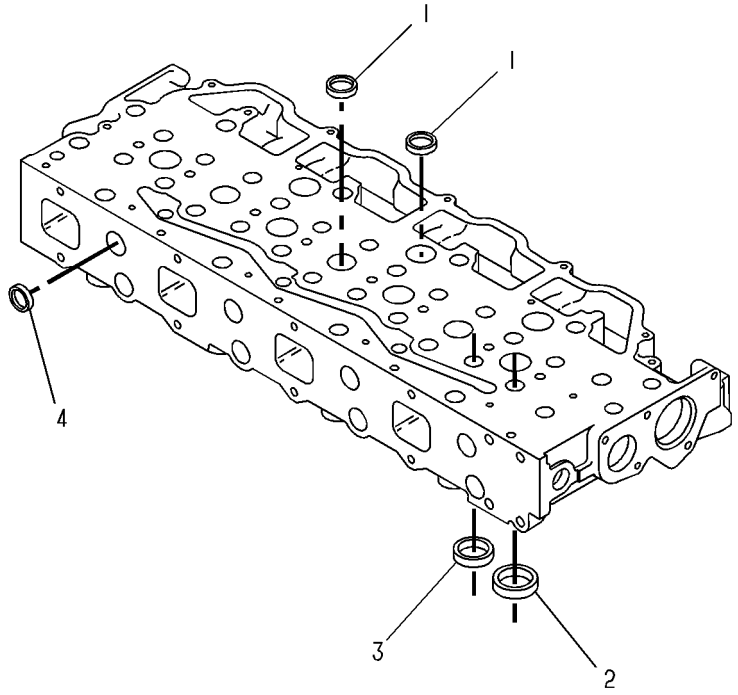

GRAPHIC #1

g00081810

BASIC ENGINE

143-3613 CYLINDER HEAD AS

S/N: 5XD1-UP

PART OF 107-7320 CYLINDER HEAD GP

SMCS-1100, 1101, 1103, 1104, 1105, 1106, 1108, 1109, 1115, 1117, 1121, 1124, 1125 **i00865088**

NOTE	REF NO	GRAPHIC REF	PART NUMBER	QTY	PART NAME 1 2 3 4 5 6 (PRODUCT LEVEL)	SEE PAGE
	1	1	**3B-0645**	6	PLUG-CUP (32.08MM AVG OD)	
	2	1	**4N-5893**	8	INSERT-INLET VALVE (INTAKE)	
	3	1	**1W-5283**	8	INSERT-VALVE SEAT (EXHAUST)	
	4	1	**3B-0623**	8	PLUG-CUP (25.73MM AVG OD)	

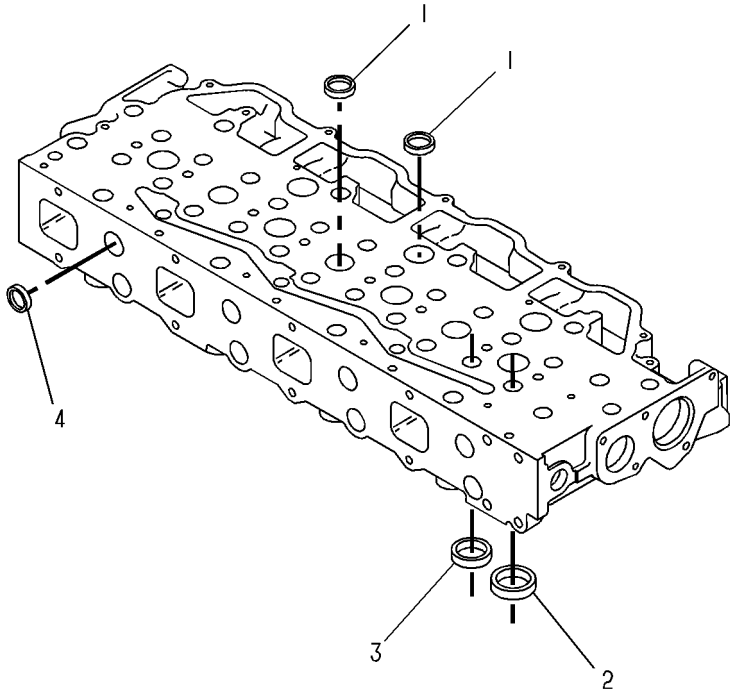

GRAPHIC #1 g00081810

MEMORANDA

4W-7005 CYLINDER HEAD GP

S/N: 48W41541-UP
PART OF 198-9948 ENGINE AR
AN ATTACHMENT

SMCS-1100, 1103, 1104, 1105, 1106, 1108, 1109, 1115, 1117, 1121, 1124, 1125

i01446339

NOTE	REF NO	GRAPHIC REF	PART NUMBER	QTY	PART NAME 1 2 3 4 5 6 (PRODUCT LEVEL)	SEE PAGE
	1	1	**7W-8071**	1	BRACKET-FUEL PUMP	
	2	1	**3B-1915**	1	BOLT (3/8-16X1.37 IN)	
	3	1	**5M-2894**	2	WASHER-HARD (10.2X18.5X2.5MM THK)	
	4	1	**0S-1608**	1	BOLT (3/8-16X3.75 IN)	
	5	1	**1A-5183**	1	BOLT (3/8-16X4.75 IN)	
	6	1	**5B-2638**	1	BOLT (3/8-16X5.25 IN)	
	7	1	**6N-6731**	1	SUPPORT-HOUSING (LH)	
	8	1	**7E-7308**	2	GASKET-CYLINDER HEAD	
	9	1	**2H-3750**	28	BOLT (3/4-16X7.5IN)	
	10	1	**5H-1504**	28	WASHER-HARD (20X33.5X5MM THK)	
YCR	11	1	*141-1207*	2	CYLINDER HEAD GP	36
	12	1	**0L-1352**	7	BOLT (3/8-16X3.25 IN)	
	13	1	**8T-6764**	1	PLUG-PIPE	
B	14	1	**0L-1352**	4	BOLT (3/8-16X3.25 IN)	
B	15	2	**4N-0932**	2	PLUG-CUP (57.53MM AVG OD)	
B	16	2	**5P-0063**	4	PLUG-CUP (1.764IN OD)	
	17	2	**100-6920**	8	ADAPTER-NOZZLE	
	18	2	**3E-6772**	32	SEAL-WATER	
	19	2	**106-1792**	16	STUD-TAPERLOCK (3/8-16X3.93IN)	
	20	2	**7X-7731**	2	PLUG-PIPE	
	21	2	**8T-6762**	4	PLUG-PIPE	
	22	2	**4N-7253**	8	GASKET-CHAMBER	
	23	2	**8T-6764**	1	PLUG-PIPE	
	24	2	**6N-6732**	1	SUPPORT-HOUSING (RH)	
	25	2	**5B-2638**	1	BOLT (3/8-16X5.25 IN)	
	26	2	**1A-5183**	1	BOLT (3/8-16X4.75 IN)	
	27	2	**5M-2894**	3	WASHER-HARD (10.2X18.5X2.5MM THK)	
	28	2	**0S-1591**	1	BOLT (3/8-16X1.5 IN)	
	29	2	**8S-9191**	2	BOLT (3/8-16X4 IN)	
	30	2	**1W-5207**	1	BRACKET-FUEL PUMP	
	31	2	**8M-5249**	8	SEAL-O-RING (34.52MM ID)	
B	32	2	**8T-6762**	2	PLUG-PIPE (LH)	

B-USE AS REQUIRED
C-CHANGE FROM PREVIOUS TYPE
R-REMFG PART MAY BE AVAILABLE
Y-SEPARATE ILLUSTRATION

4W-7005 **CYLINDER HEAD GP** *(contd.)* **i01446339**

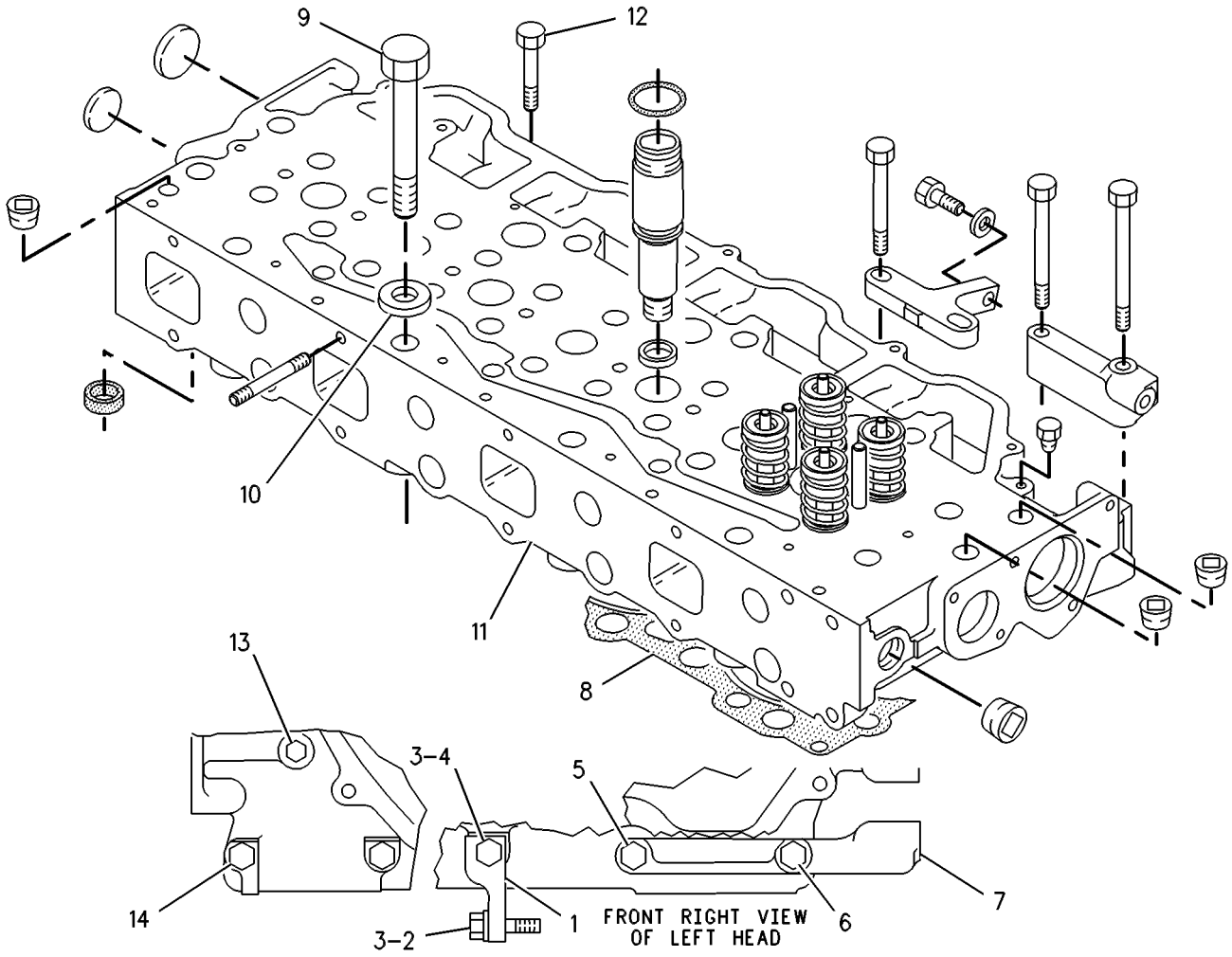

GRAPHIC #1 g00106453

4W-7005 **CYLINDER HEAD GP** ***(contd.)*** **i01446339**

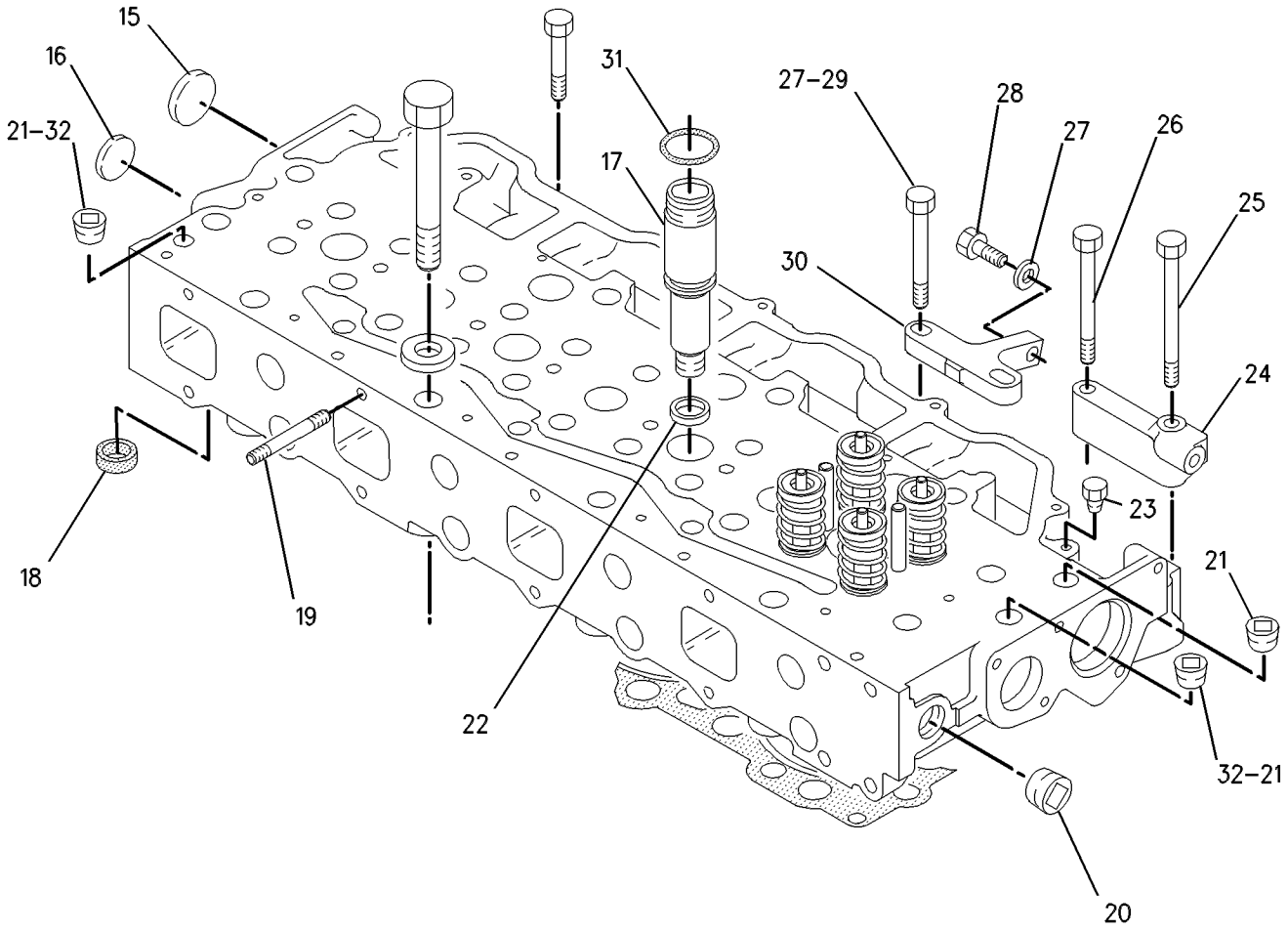

GRAPHIC #2 g00344368

BASIC ENGINE

107-7320 CYLINDER HEAD GP*R

S/N: 5XD1-UP

PART OF 164-2208 CYLINDER HEAD GP

SMCS-1100, 1103, 1104, 1105, 1106, 1108, 1109, 1115, 1117, 1121, 1124, 1125 **i01643851**

NOTE	REF NO	GRAPHIC REF	PART NUMBER	QTY	PART NAME 1 2 3 4 5 6 (PRODUCT LEVEL)	SEE PAGE
YC	1	1	*143-3613*	1	CYLINDER HEAD AS	30
	2	1	**122-0322**	8	VALVE-INLET	
	3	1	**102-7494**	2	DOWEL	
	4	1	**2A-4429**	32	LOCK-RETAINER	
	5	1	**137-6500**	16	ROTOCOIL AS	
					(EACH INCLUDES)	
	5A	1	**137-6501**		SHIELD-OIL	
		1	**6N-7154**	1	ROTOCOIL AS	
	6	1	**4N-5906**	16	SPRING-VALVE	
	7	1	**122-0321**	8	VALVE-EXHAUST	
	8	1	**173-7188**	16	GUIDE-VALVE	

C-CHANGE FROM PREVIOUS TYPE
Y-SEPARATE ILLUSTRATION

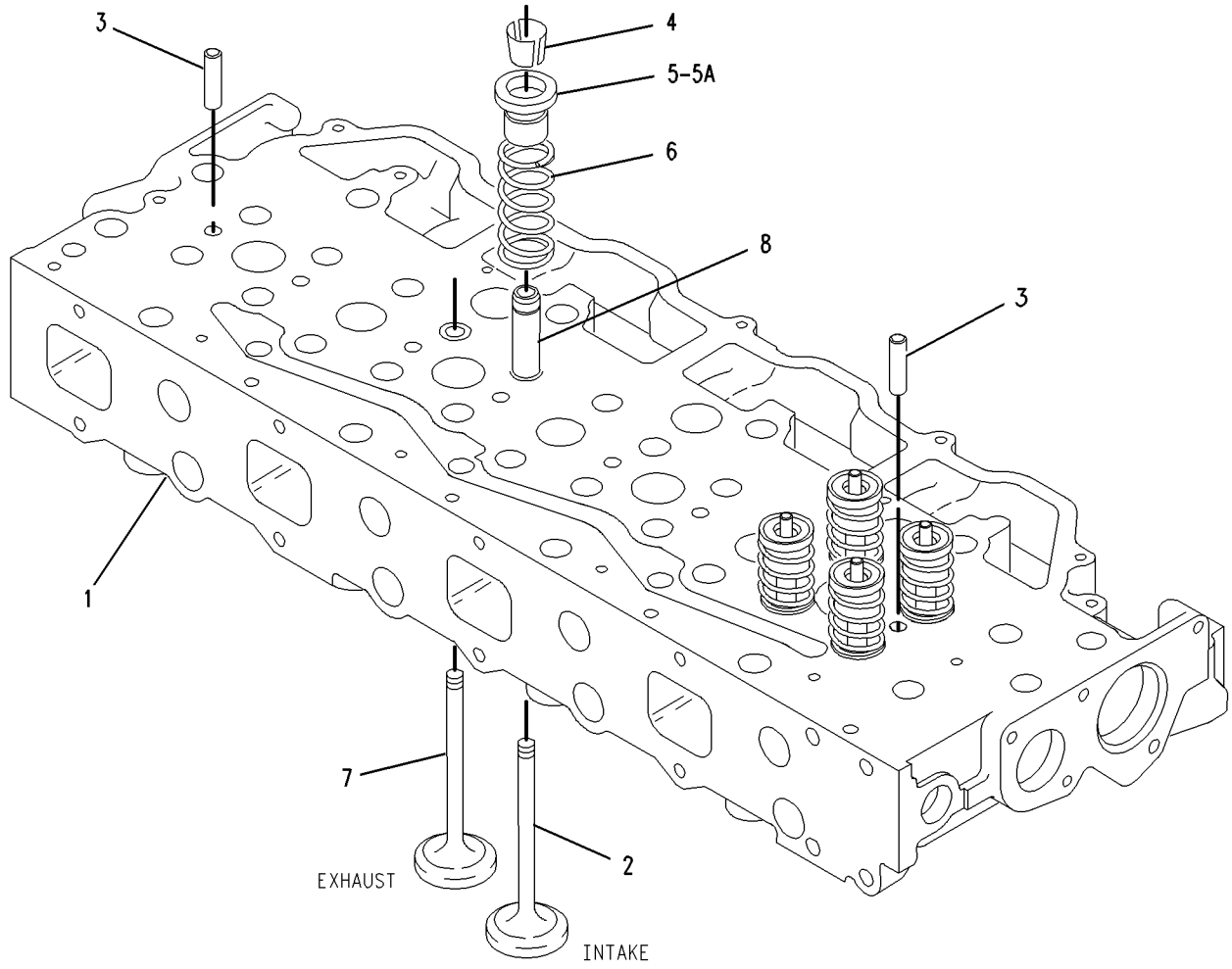

GRAPHIC #1 g00849629

141-1207 CYLINDER HEAD GP*R

S/N: 48W41541-UP
PART OF 4W-7005 CYLINDER HEAD GP
AN ATTACHMENT

SMCS-1100, 1103, 1104, 1105, 1106, 1108, 1109, 1115, 1117, 1121, 1124, 1125

i01455221

NOTE	REF NO	GRAPHIC REF	PART NUMBER	QTY	PART NAME 1 2 3 4 5 6 (PRODUCT LEVEL)	SEE PAGE
Y	1	1	*143-0040*	1	CYLINDER HEAD AS	29
	2	1	**122-0322**	8	VALVE-INLET	
	3	1	**173-7188**	16	GUIDE-VALVE	
	4	1	**2A-4429**	32	LOCK-RETAINER	
	5	1	**6N-7175**	16	ROTOCOIL AS	
					(EACH INCLUDES)	
		1	**6N-7154**	1	ROTOCOIL AS	
	5A	1	**6N-7174**	1	SHIELD-OIL	
	6	1	**4N-5906**	16	SPRING-VALVE	
	7	1	**122-0321**	8	VALVE-EXHAUST	

Y-SEPARATE ILLUSTRATION

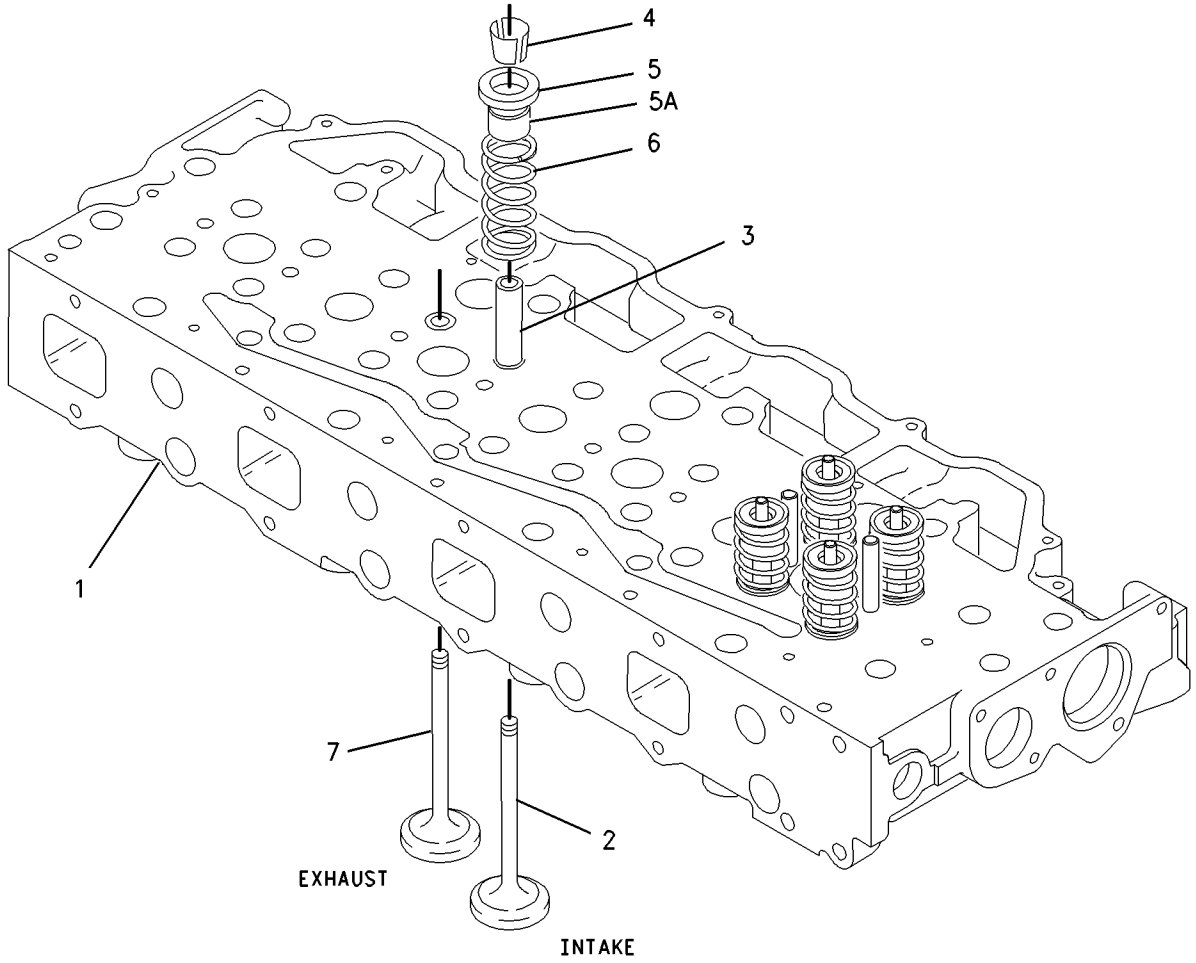

GRAPHIC #1

g00761026

MEMORANDA

BASIC ENGINE

164-2208 CYLINDER HEAD GP

S/N: 5XD1-UP

PART OF 163-5784 ENGINE AR

SMCS-1100, 1103, 1104, 1105, 1106, 1108, 1109, 1115, 1117, 1121, 1124, 1125 **i01547534**

NOTE	REF NO	GRAPHIC REF	PART NUMBER	QTY	PART NAME 1 2 3 4 5 6 (PRODUCT LEVEL)	SEE PAGE
YR	1	1	*107-7320*	2	CYLINDER HEAD GP	35
	2	1	**141-6605**	2	MANIFOLD (HEUI FLUID)	
	3	1	**106-1792**	16	STUD-TAPERLOCK (3/8-16X3.93IN)	
	4	1	**1D-4541**	8	BOLT (5/16-18X3 IN)	
	5	1	**5P-7684**	4	PLUG	
	6	1	**108-5806**	4	SEAL-O-RING	
	7	1	**8T-6764**	1	PLUG-PIPE	
	8	1	**5M-2894**	14	WASHER-HARD (10.2X18.5X2.5MM THK)	
	9	1	**9S-8752**	18	NUT-FULL (3/8-16 THD)	
	10	1	**124-6625**	1	PLATE	
	11	1	**9S-8006**	2	PLUG	
	12	1	**108-5803**	2	SEAL-O-RING	
	13	1	**1N-5999**	1	PLUG	
	14	1	**033-6027**	2	SEAL-O-RING	
Y	15	1	**167-1709**	1	SENSOR GP-PRESSURE (INJECTION ACTUATION)	334
	16	1	**7W-3447**	4	SPACER (10.2X19.05X10.2MM THK)	
Y	17	1	**194-6724**	1	SENSOR GP-PRESSURE (TURBO OUTLET)	336
	18	1	**9X-0263**	1	ADAPTER	
	19	1	**6V-5048**	1	SEAL-O-RING	
	20	1	**9S-8004**	4	PLUG	
	21	1	**6V-5049**	4	SEAL-O-RING	
	22	1	**107-7322**	28	FASTENER GP-CYLINDER HEAD	
	23	1	**061-8561**	8	SEAL-O-RING	
	24	1	**6V-5266**	8	SEAL-O-RING	
	25	1	**107-9570**	16	SEAL-O-RING	
	26	1	**108-0219**	8	SLEEVE	
	27	1	**7E-7308**	2	GASKET-CYLINDER HEAD	
	28	1	**2N-7174**	8	GASKET-ADAPTER	
	29	1	**3E-6772**	32	SEAL-WATER	
B	30	1	**1U-8846**		SEALANT-GASKET	
	31	1	**124-6626**	1	PLATE	

B-USE AS REQUIRED
R-REMFG PART MAY BE AVAILABLE
Y-SEPARATE ILLUSTRATION

164-2208 **CYLINDER HEAD GP** *(contd.)* **i01547534**

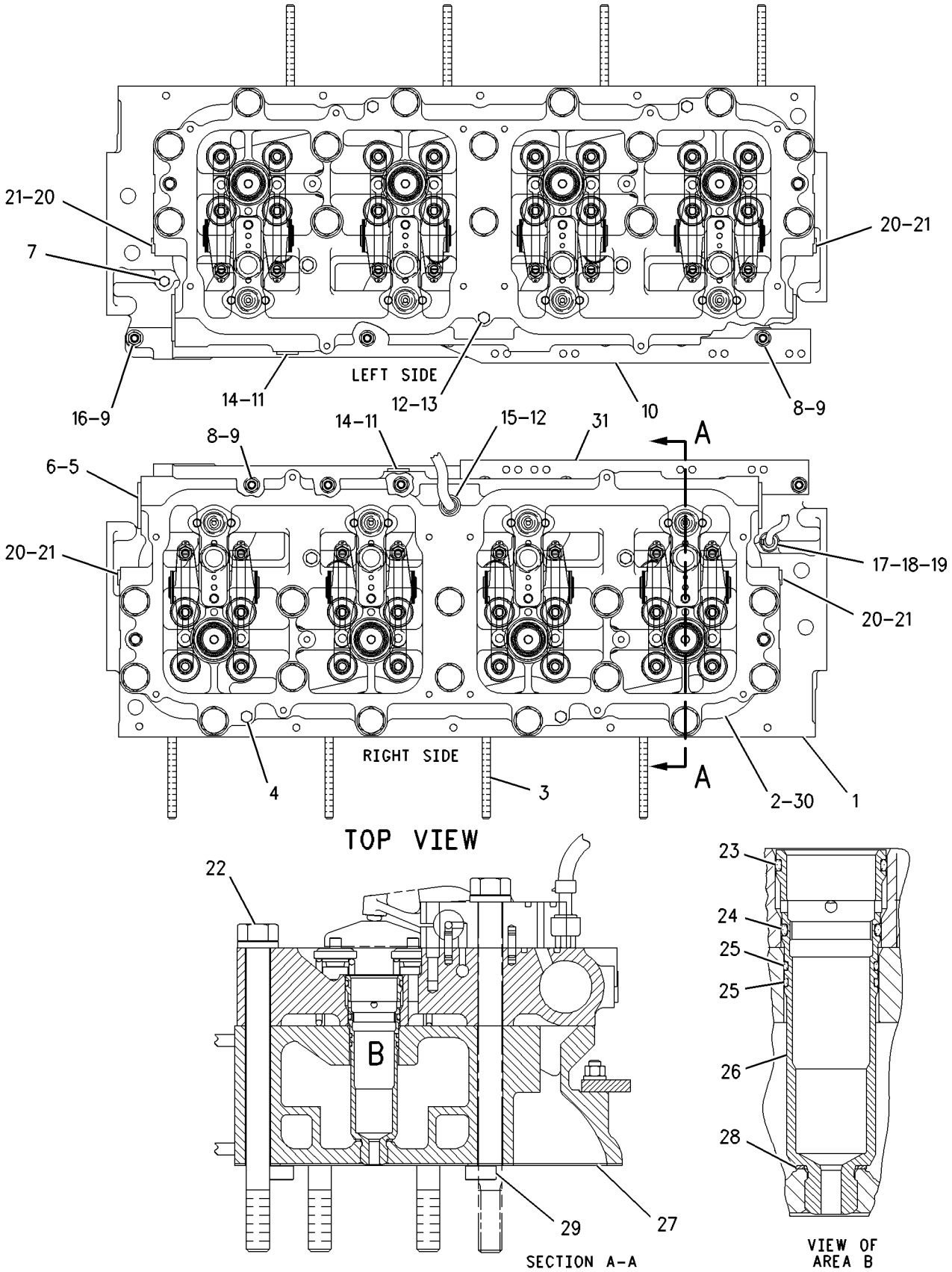

GRAPHIC #1 g00754446

163-5798 DAMPER & PULLEY GP

S/N: 5XD1-UP
RUBBER
PART OF 163-5784 ENGINE AR

SMCS-1205 **i01296577**

NOTE	REF NO	GRAPHIC REF	PART NUMBER	QTY	PART NAME 1 2 3 4 5 6 (PRODUCT LEVEL)	SEE PAGE
	1	1	**4N-2109**	1	ADAPTER-DAMPER	
	2	1	**4W-8089**	1	DAMPER AS	
	3	1	**7W-2338**	1	SPACER	
	4	1	**113-9122**	6	BOLT-HEX HEAD	
	5	1	**163-1965**	1	PULLEY-CRANKSHAFT	

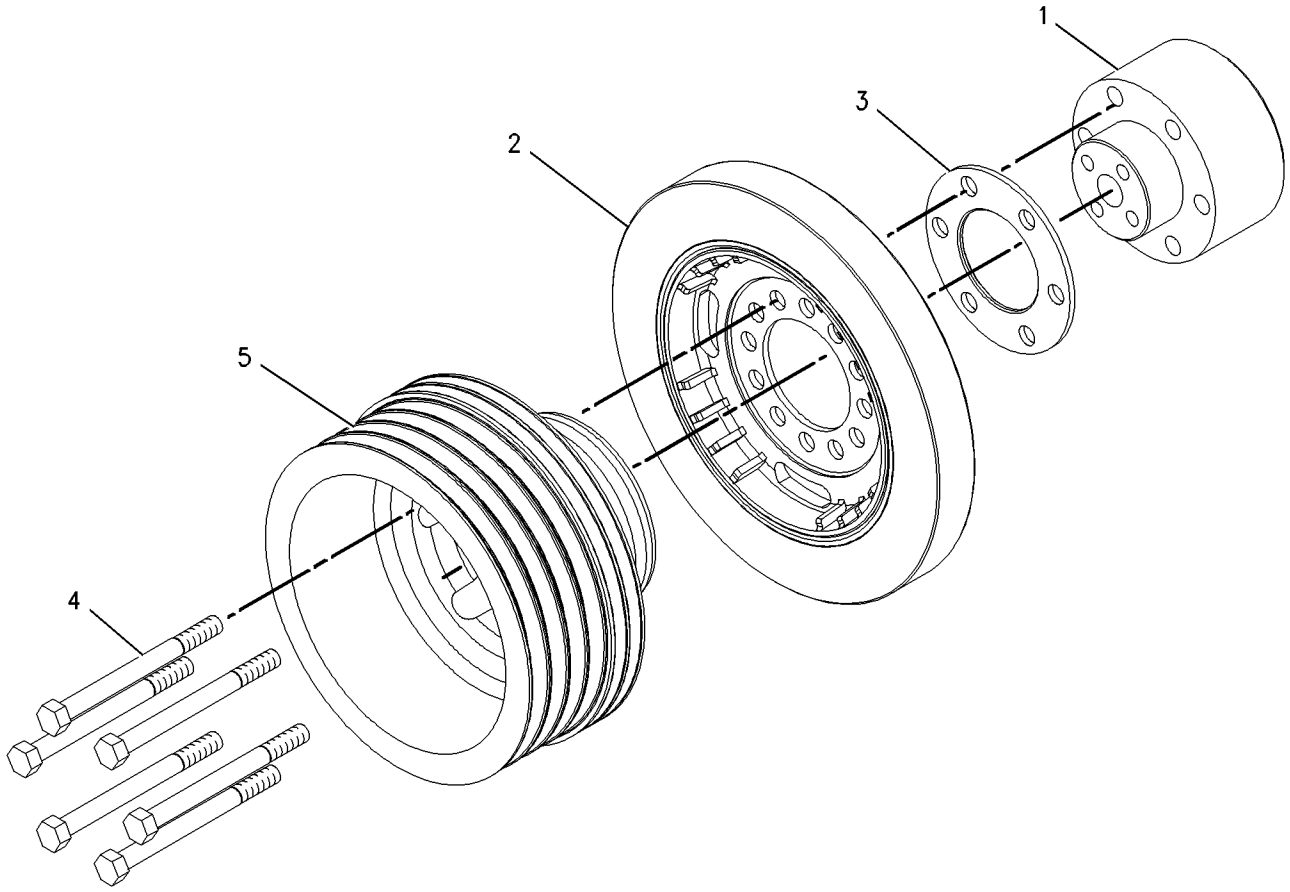

GRAPHIC #1 g00687284

BASIC ENGINE

169-1822 DAMPER & PULLEY GP

S/N: 48W41541-UP
PART OF 198-9948 ENGINE AR
AN ATTACHMENT

SMCS-1205 **i01305595**

NOTE	REF NO	GRAPHIC REF	PART NUMBER	QTY	PART NAME 1 2 3 4 5 6 (PRODUCT LEVEL)	SEE PAGE
	1	1	**4N-2109**	1	ADAPTER-DAMPER	
	2	1	**4W-8089**	1	DAMPER AS	
	3	1	**7W-2338**	1	SPACER	
	4	1	**113-9122**	6	BOLT-HEX HEAD	
	5	1	**169-1821**	1	PULLEY-CRANKSHAFT	

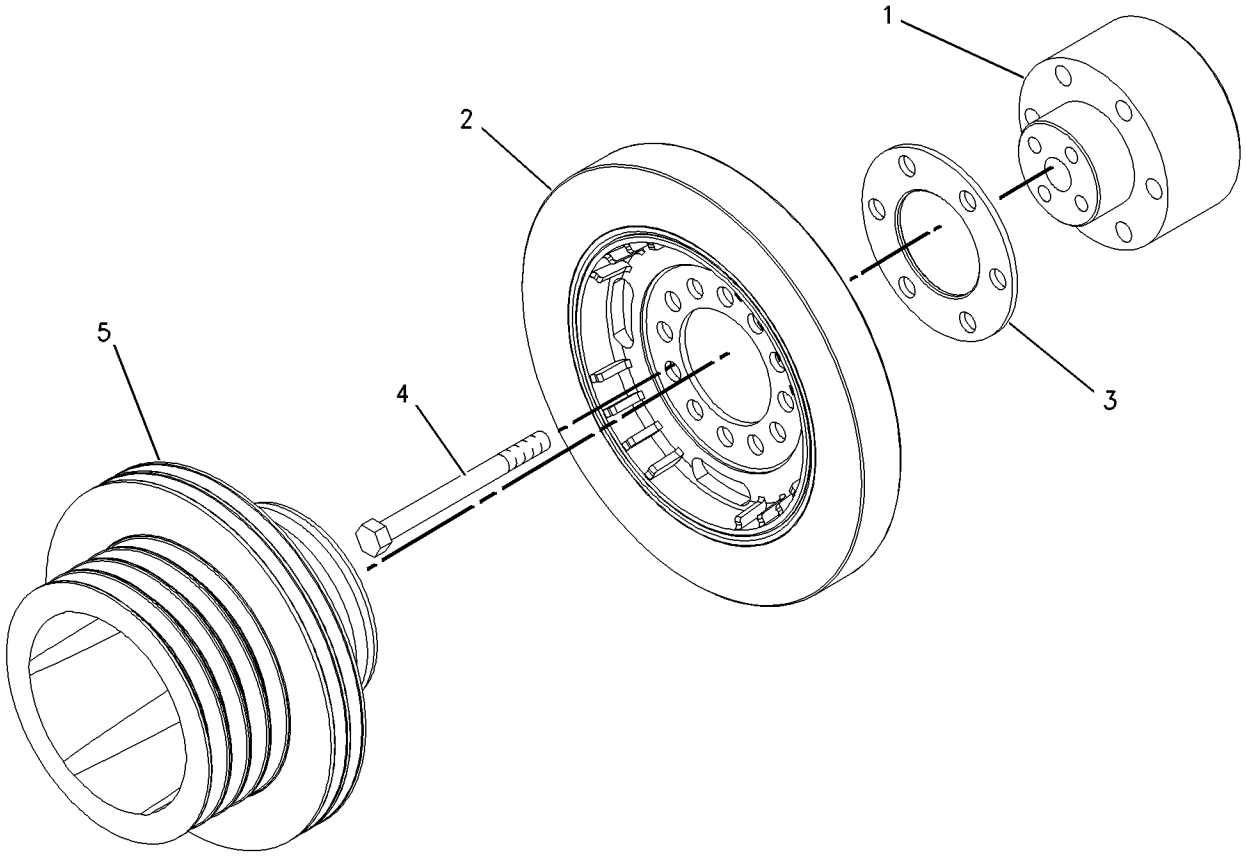

GRAPHIC #1 g00692930

BASIC ENGINE

165-9055 DRIVE GP-FAN

S/N: ABK1-UP

PART OF 162-9505 INSTALLATION AR-ENGINE

SMCS-1357, 1358, 1359, 1390 **i01459481**

NOTE	REF NO	GRAPHIC REF	PART NUMBER	QTY	PART NAME 1 2 3 4 5 6 (PRODUCT LEVEL)	SEE PAGE
	1	1	**133-3316**	1	BRACKET AS-FAN	
	1A	1	**1S-9209**	1	SHAFT-TIGHTENER	
	1B	1	**8H-9189**	1	DOWEL	
	2	1	**133-9016**	1	PULLEY	
Y	3	1	**183-5116**	1	DRIVE GP-FAN	46
	4	1	**169-0147**	1	V-BELT SET	
					(INCLUDES 4 BELTS)	
	5	1	**4P-7428**	2	CLIP	
	7	1	**5P-2228**	1	BOLT (1/2-13X1 IN)	
	8	1	**7X-0326**	2	BOLT (1/2-13X3 IN)	
	9	1	**7X-0328**	1	BOLT (1/2-13X3.50 IN)	
	10	1	**7X-0331**	1	BOLT (1/2-13X4.25 IN)	
	11	1	**8T-4223**	9	WASHER-HARD (13.5X25.5X3MM THK)	
	12	1	**8T-8919**	4	BOLT (1/2-13X1.75 IN)	
	13	1	**9B-7237**	6	BOLT (3/8-16X1.25 IN)	

Y-SEPARATE ILLUSTRATION

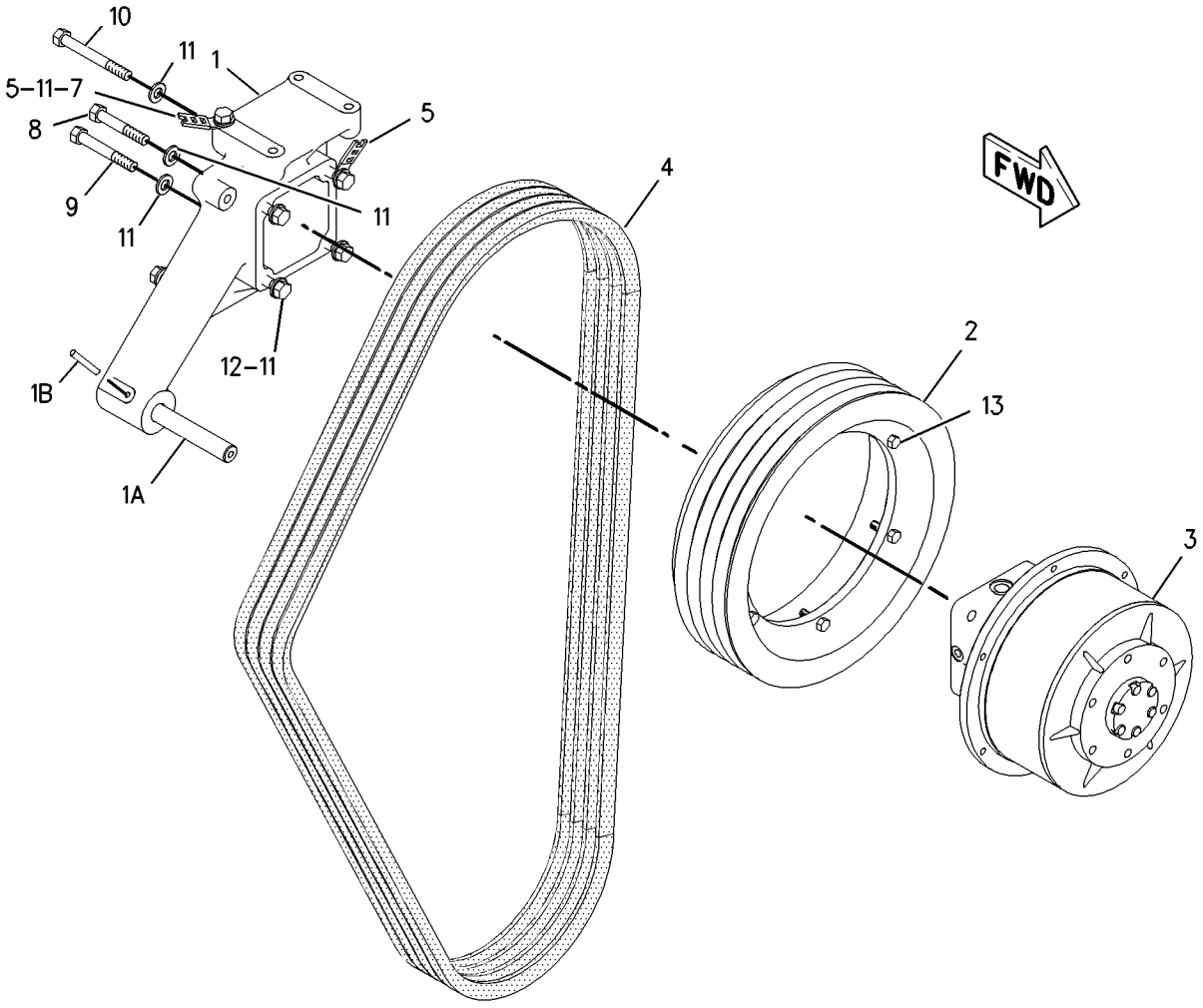

GRAPHIC #1 g00762806

MEMORANDA

169-3701 DRIVE GP-FAN

S/N: ABK1-UP
BELT
PART OF 162-9502 CONVERSION AR-ENGINE
AN ATTACHMENT

SMCS-1357, 1358, 1359, 1390 **i01446343**

NOTE	REF NO	GRAPHIC REF	PART NUMBER	QTY	PART NAME 1 2 3 4 5 6 (PRODUCT LEVEL)	SEE PAGE
	1	1	**149-7756**	1	BRACKET AS	
	2	1	**1S-9209**	1	SHAFT-TIGHTENER	
		1	**8H-9189**	1	DOWEL	
	3	1	**115-0448**	1	SHAFT	
	4	1	**149-2969**	1	PULLEY	
	5	1	**115-0776**	1	HUB	
	6	1	**5F-3999**	1	SEAL-O-RING (123.42MM ID)	
	7	1	**5M-8009**	1	PIN-SPRING	
	8	1	**115-0775**	1	ADAPTER	
	9	1	**5P-4626**	1	BOLT (5/8-11X10.5 IN)	
	10	1	**6I-1684**	1	PLATE	
	11	1	**9B-7237**	14	BOLT (3/8-16X1.25 IN)	
	12	1	**6Y-7652**	2	CUP-ROLLER BEARING	
	13	1	**6Y-7651**	2	CONE-ROLLER BEARING	
	14	1	**115-2460**	1	V-BELT SET (INCLUDES 4 BELTS)	
	15	1	**8C-5222**	1	SEAL-LIP	
	16	1	**7X-0326**	4	BOLT (1/2-13X3 IN)	
	17	1	**3B-8489**	1	FITTING-GREASE	
	18	1	**3V-4943**	1	HOSE AS	
	19	1	**8T-4223**	4	WASHER-HARD (13.5X25.5X3MM THK)	
	20	1	**6I-0976**	1	SLEEVE	
	21	1	**6I-0977**	1	SPACER	

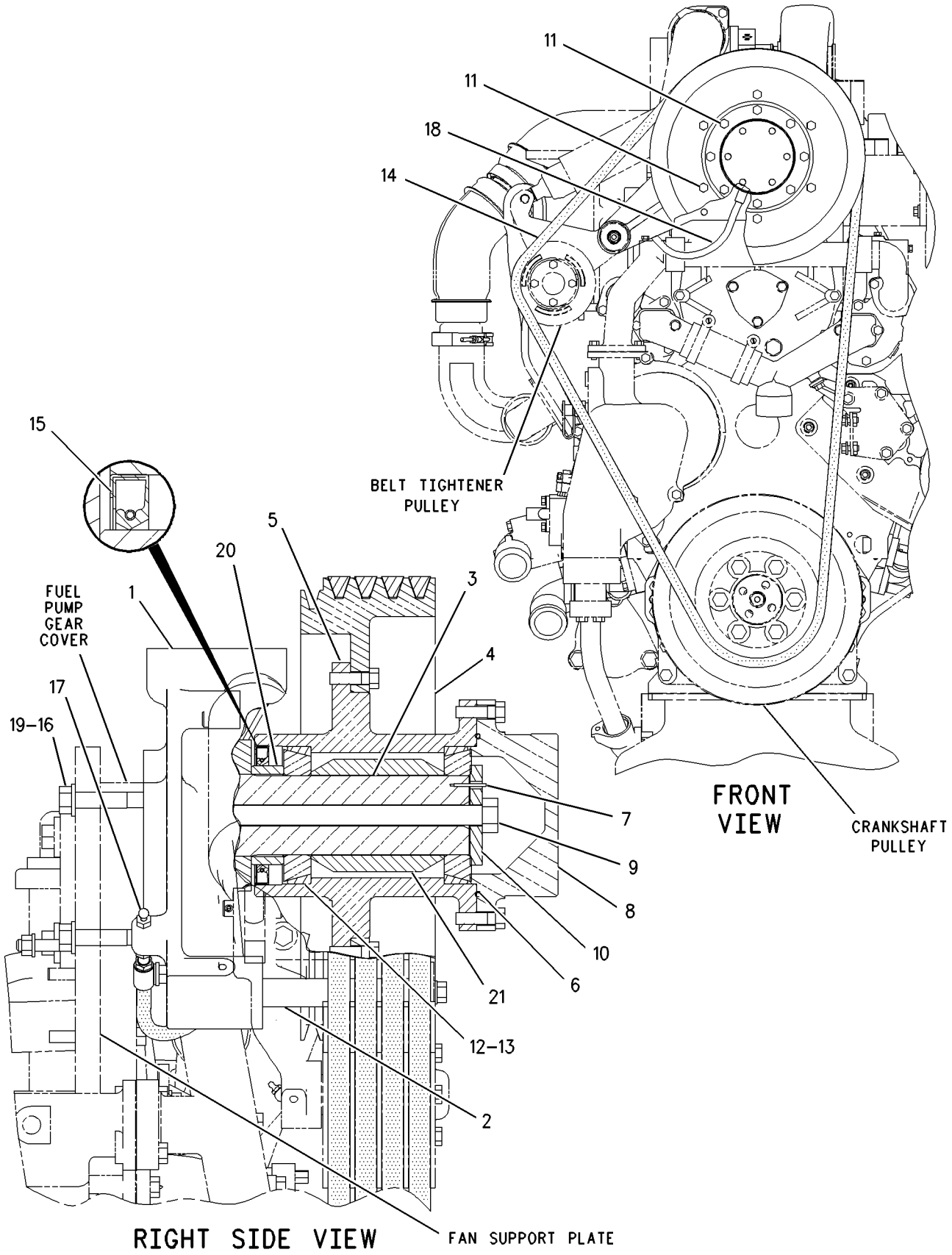

GRAPHIC #1 g00686579

183-5116 DRIVE GP-FAN

S/N: ABK1-UP

PART OF 165-9055 DRIVE GP-FAN

SMCS-1357, 1358, 1359, 1390 **i01446345**

NOTE	REF NO	GRAPHIC REF	PART NUMBER	QTY	PART NAME 1 2 3 4 5 6 (PRODUCT LEVEL)	SEE PAGE
Y	1	1	**119-4166**	1	SENSOR GP-SPEED (FAN)	338
					AVAILABLE REPAIR KIT(S):	
			188-3548		KIT-SEAL	
					(INCLUDES SLEEVES, SEALS, O-RINGS, NAMEPLATE KIT, PLATE, RETAINERS & INSTRUCTION SHEET)	
			188-3549		KIT-OVERHAUL	
					(INCLUDES SEAL KIT, BEARINGS, KEYS, RINGS-SNAP, CLUTCH PLATES, FACING PLATES & SPRING WASHER)	

Y-SEPARATE ILLUSTRATION

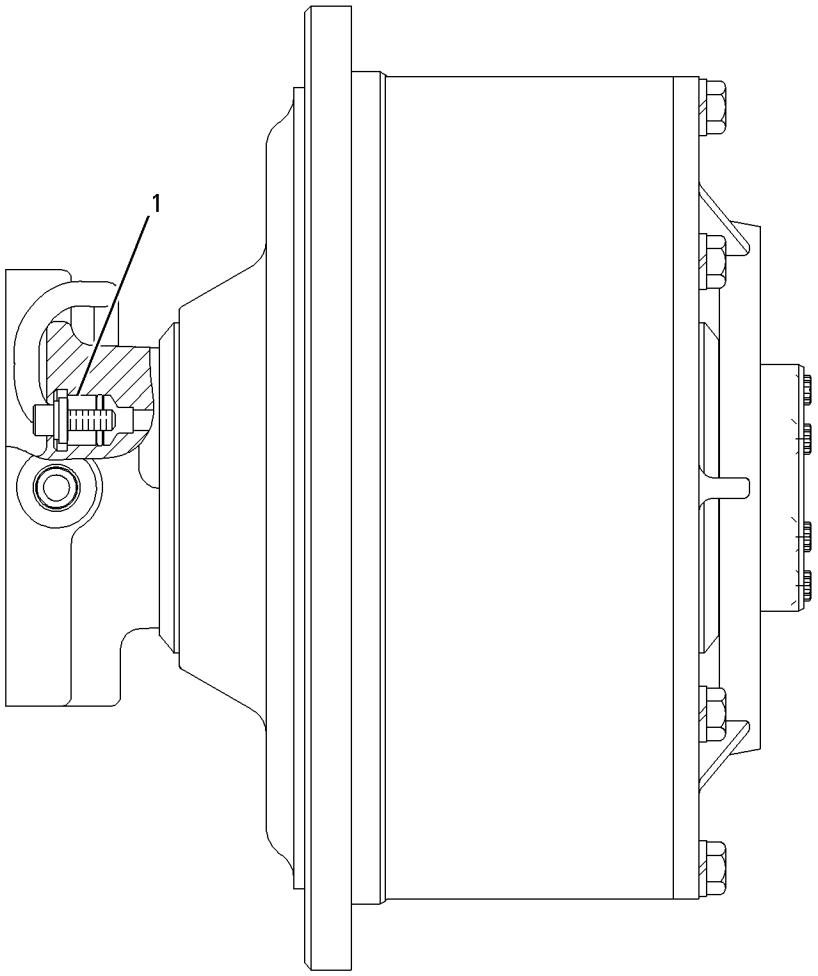

GRAPHIC #1 g00712261

107-3752 FLYWHEEL GP

S/N: 5XD1-UP; 48W41541-UP
PART OF 163-5784, 198-9948 ENGINE AR
ALSO AN ATTACHMENT

SMCS-1156, 1158 **i01390245**

NOTE	REF NO	GRAPHIC REF	PART NUMBER	QTY	PART NAME 1 2 3 4 5 6 (PRODUCT LEVEL)	SEE PAGE
	1	1	**6I-2922**	1	FLYWHEEL AS	
	2	1	**4N-2514**	1	GEAR (113 TEETH)	
	3	1	**5L-2683**	12	BOLT	
		1	**4D-3704**	12	WASHER-HARD (17X30X5MM THK)	

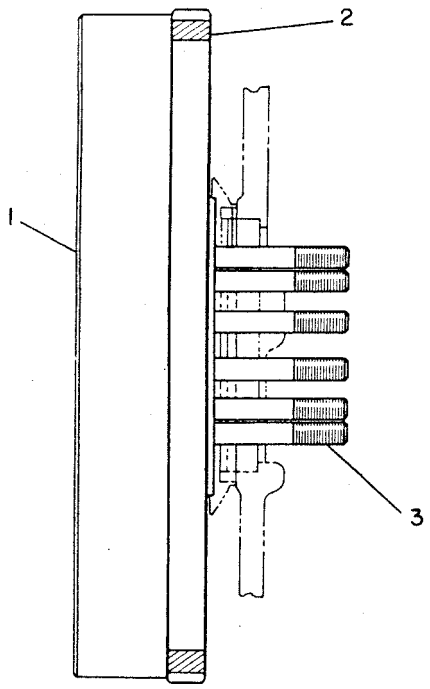

GRAPHIC #1 g00165398

BASIC ENGINE

7N-2840 GEAR GP-FRONT—TIMING

S/N: 48W41541-UP
PART OF 198-9948 ENGINE AR
AN ATTACHMENT

SMCS-1206 **i01472577**

NOTE	REF NO	GRAPHIC REF	PART NUMBER	QTY	PART NAME 1 2 3 4 5 6 (PRODUCT LEVEL)	SEE PAGE
	1	1	**2B-2695**	4	BOLT (5/16-18X0.875 IN)	
	2	1	**112-9217**	1	PLATE-THRUST	
C	3	1	**7N-7586**	1	GEAR AS-IDLER & WEIGHT (43/80 TEETH)	
		1	**1B-8705**	1	KEY-WOODRUFF	
	4	1	**7N-2483**	1	BEARING-SLEEVE	
	5	1	**3G-2292**	5	BOLT-LOCKING (3/8-16X22.22MM)	
	6	1	**117-9712**	1	SHAFT-DRIVE IDLER	
C	7	1	**7E-5661**	1	GEAR-OIL PUMP DRIVE (69 TEETH)	
		1	**1B-8705**	1	KEY-WOODRUFF	
	8	1	**0S-1571**	1	BOLT (3/8-16X1.75 IN)	
	9	1	**1P-7346**	1	WASHER-HARD (10.2X35X6MM THK)	
	10	1	**7N-2443**	1	WASHER-THRUST (2.51X2.89X0.188IN THK)	

C-CHANGE FROM PREVIOUS TYPE

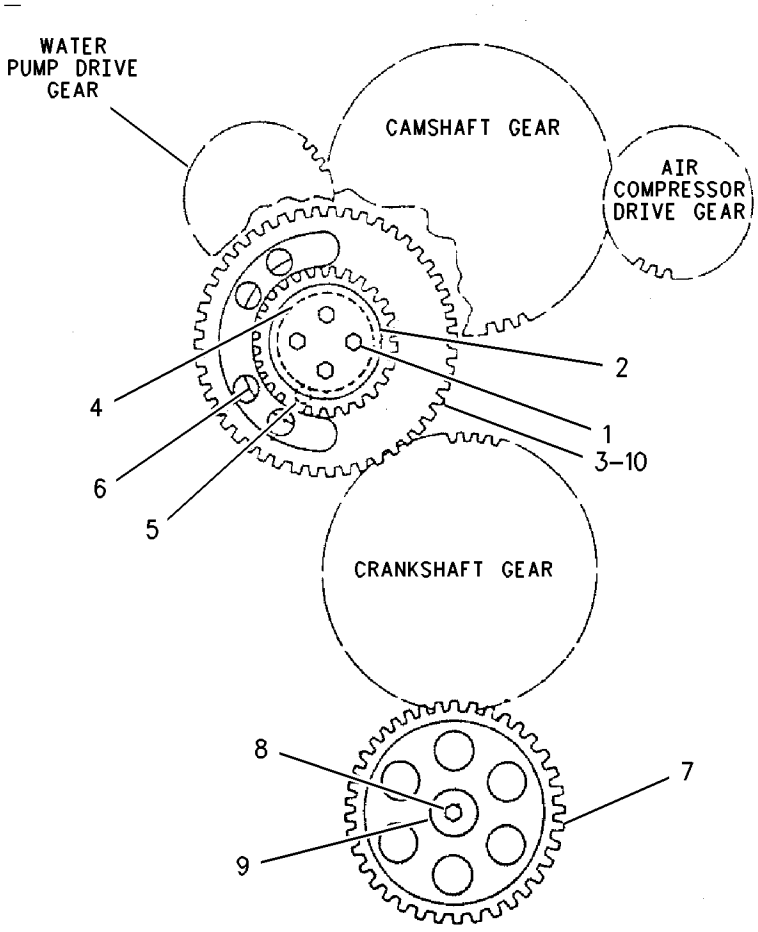

GRAPHIC #1 g00740967

MEMORANDA

BASIC ENGINE

168-4592 GEAR GP-FRONT

S/N: 5XD1-UP

TIMING

PART OF 163-5784 ENGINE AR

SMCS-1206 **i01443035**

NOTE	REF NO	GRAPHIC REF	PART NUMBER	QTY	PART NAME 1 2 3 4 5 6 (PRODUCT LEVEL)	SEE PAGE
	1	1	**124-7609**	1	GEAR-PUMP IDLER (86 TEETH)	
	2	1	**101-6713**	1	PLATE-RETAINING	
	3	1	**5P-5855**	4	BOLT-12 POINT HEAD (1/2-13X1.75 IN)	
	4	1	**112-9217**	1	PLATE-THRUST	
	5	1	**2B-2695**	4	BOLT (5/16-18X0.875 IN)	
	6	1	**7N-7584**	1	GEAR AS-IDLER & WEIGHT (43 TEETH)	
	7	1	**7N-2443**	1	WASHER-THRUST (2.51X2.89X0.188IN THK)	
	8	1	**117-9712**	1	SHAFT-DRIVE IDLER	
	9	1	**3G-2292**	5	BOLT-LOCKING (3/8-16X22.22MM)	
	10	1	**0T-0573**	1	BOLT (3/8-16X2.75 IN)	
	11	1	**5M-2894**	3	WASHER-HARD (10.2X18.5X2.5MM THK)	
	12	1	**6N-1027**	1	PLATE-THRUST	
	13	1	**1B-8705**	1	KEY-WOODRUFF	
	14	1	**0S-1571**	1	BOLT (3/8-16X1.75 IN)	
	15	1	**1P-7346**	1	WASHER-HARD (10.2X35X6MM THK)	
	16	1	**160-8152**	1	GEAR-OIL PUMP DRIVE (44 TEETH)	
	17	1	**3B-1915**	2	BOLT (3/8-16X1.37 IN)	
	18	1	**100-8181**	1	SHAFT AS-IDLER	
		1	**4H-1641**	1	PIN-SPRING	
		1	**7S-5005**	2	DOWEL	
	19	1	**192-3834**	1	GEAR AS-IDLER (27 TEETH)	
		1	**100-8180**	1	BEARING-SLEEVE	

168-4592 **GEAR GP-FRONT** ***(contd.)*** **i01443035**

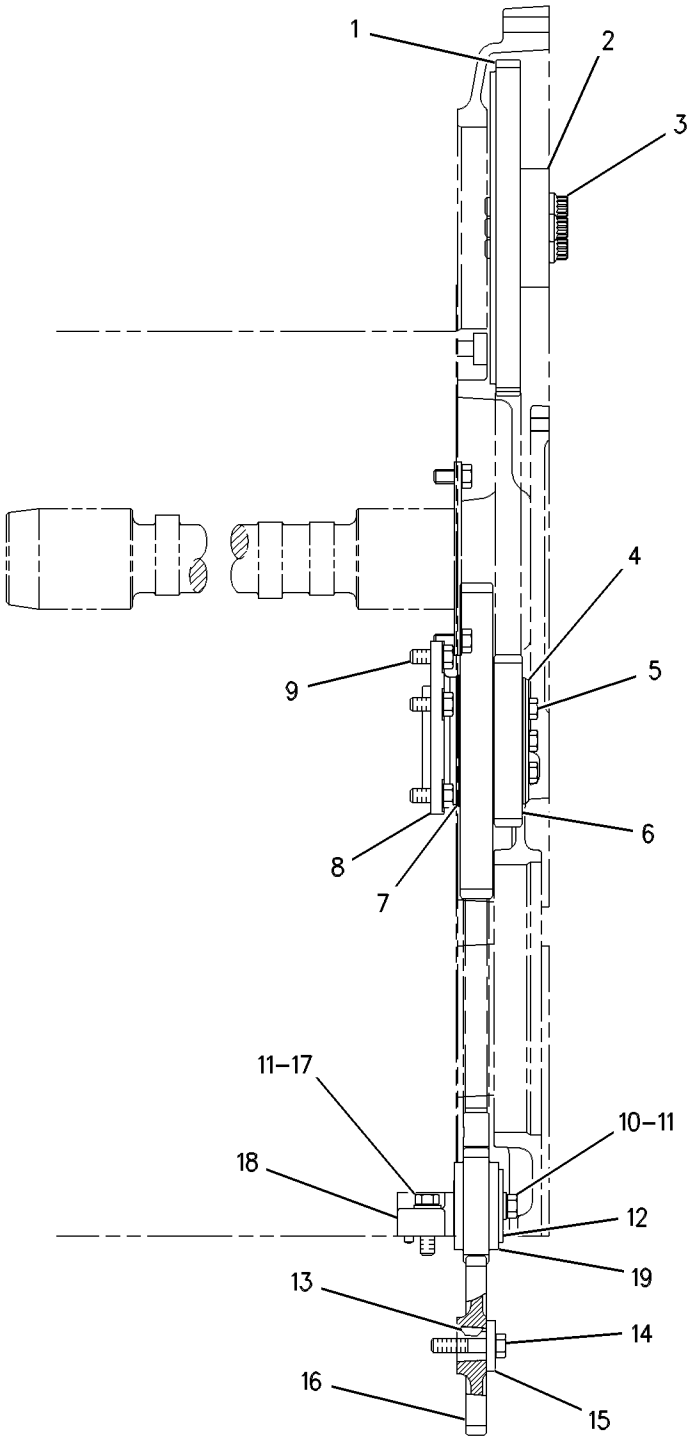

GRAPHIC #1 g00563864

BASIC ENGINE

112-3440 GEAR GP-REAR

S/N: 5XD1-UP; 48W41541-UP
PART OF 163-5784, 198-9948 ENGINE AR
ALSO AN ATTACHMENT

SMCS-1204 **i01365711**

NOTE	REF NO	GRAPHIC REF	PART NUMBER	QTY	PART NAME 1 2 3 4 5 6 (PRODUCT LEVEL)	SEE PAGE
	1	1	**6V-4589**	1	SEAL-O-RING (19.18MM ID)	
	2	1	**030-8194**	1	CONNECTOR-FLARED	
	3	1	**8N-7806**	1	HOSE AS	
	4	1	**032-1267**	1	CONNECTOR-FLARED	
	5	2	**5F-7404**	1	LOCKNUT-BEARING	
	6	2	**3G-2292**	4	BOLT-LOCKING	
	7	2	**0S-1595**	2	BOLT (1/2-13X1.25 IN)	
	8	2	**5M-2894**	6	WASHER-HARD (2.5MM THK)	
	9	2	**8N-0605**	1	COVER-FLYWHEEL HOUSING	
	10	2	**1A-2029**	6	BOLT (3/8-16X1.125 IN)	
	11	2	**5P-8245**	2	WASHER-HARD (3MM THK)	
	12	2	**9X-7371**	1	SEAL-O-RING (126.59MM ID)	
	13	2	**2W-7615**	1	GEAR-IDLER (64 TEETH)	
	14	2	**2W-7614**	1	GEAR-CRANKSHAFT (64 TEETH)	
	15	2	**4N-1235**	2	SHAFT-IDLER GEAR	
	16	2	**112-3445**	1	GEAR-HYDRAULIC PUMP DRIVE (64 TEETH)	
	17	2	**4N-7183**	1	RING-RETAINING	
	18	2	**4N-0684**	1	DOWEL	
	19	2	**5P-1370**	1	BEARING AS-ROLLER	
	20	2	**1D-4566**	8	BOLT (1/2-13X3.5IN)	
	21	2	**1T-0720**	6	BOLT-12 POINT HEAD (3/8-16X1.25 IN)	
	22	2	**6V-7423**	2	BEARING AS-ROLLER	
	23	2	**4N-0848**	1	SLEEVE-WEAR	
	24	2	**5P-8429**	1	SEAL-O-RING (208.92MM ID)	
	25	2	**6V-3319**	1	SEAL-O-RING (158.34MM ID)	
	26	2	**5K-9065**	2	RING-RETAINING (5.4MM OD)	
	27	2	**5F-7403**	1	LOCK-NUT	
	28	2	**4N-1720**	1	COVER-BALANCE WEIGHT	
	29	2	**112-3444**	1	ADAPTER AS	
	30	2	**1T-0550**	2	PIN-SPRING	
	31	2	**2W-7611**	1	GEAR-BALANCER (64 TEETH)	
	32	2	**9S-8752**	2	NUT-FULL (3/8-16 THD)	
	33	2	**5P-8247**	2	WASHER-HARD (3.5MM THK)	

112-3440 **GEAR GP-REAR** *(contd.)* **i01365711**

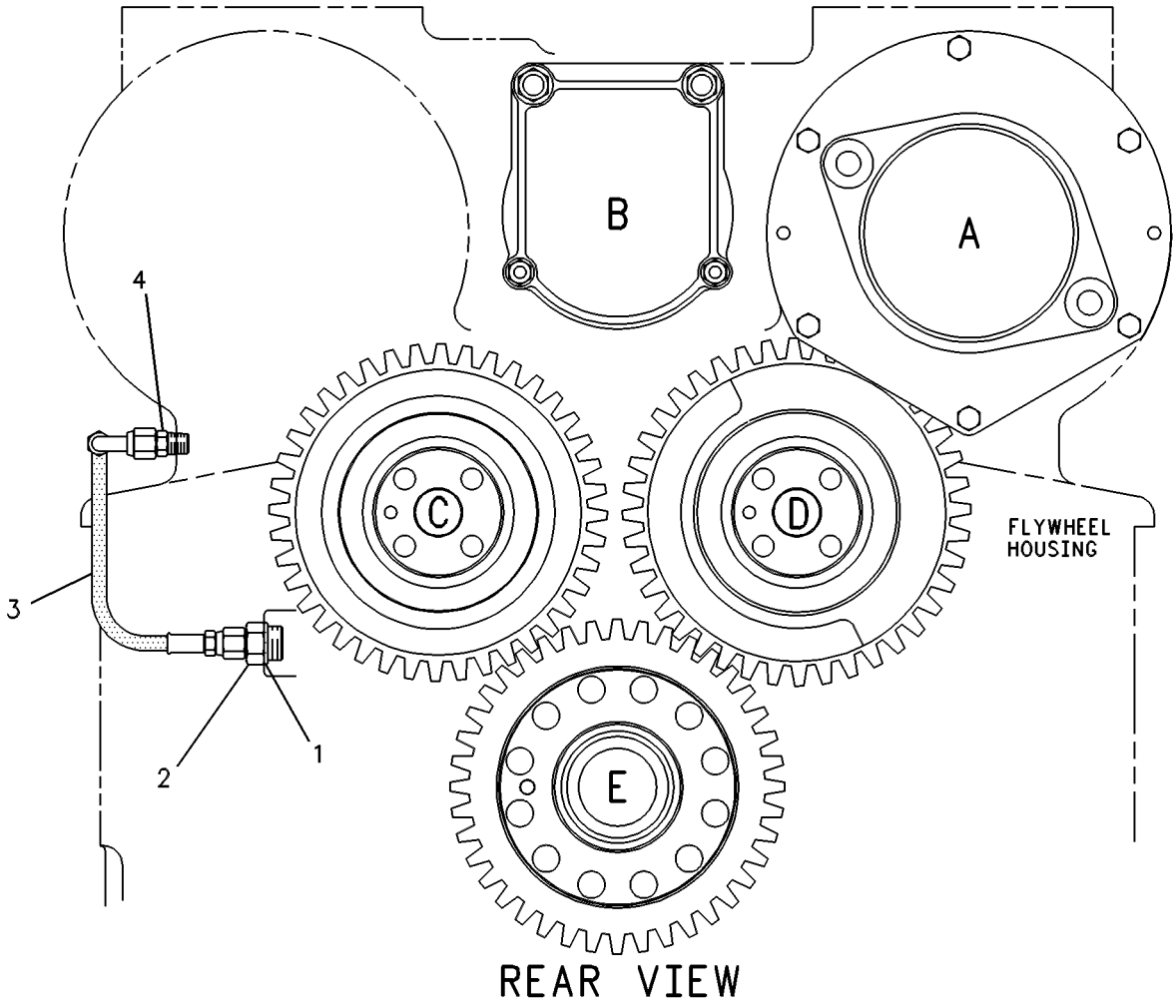

GRAPHIC #1 g00249480

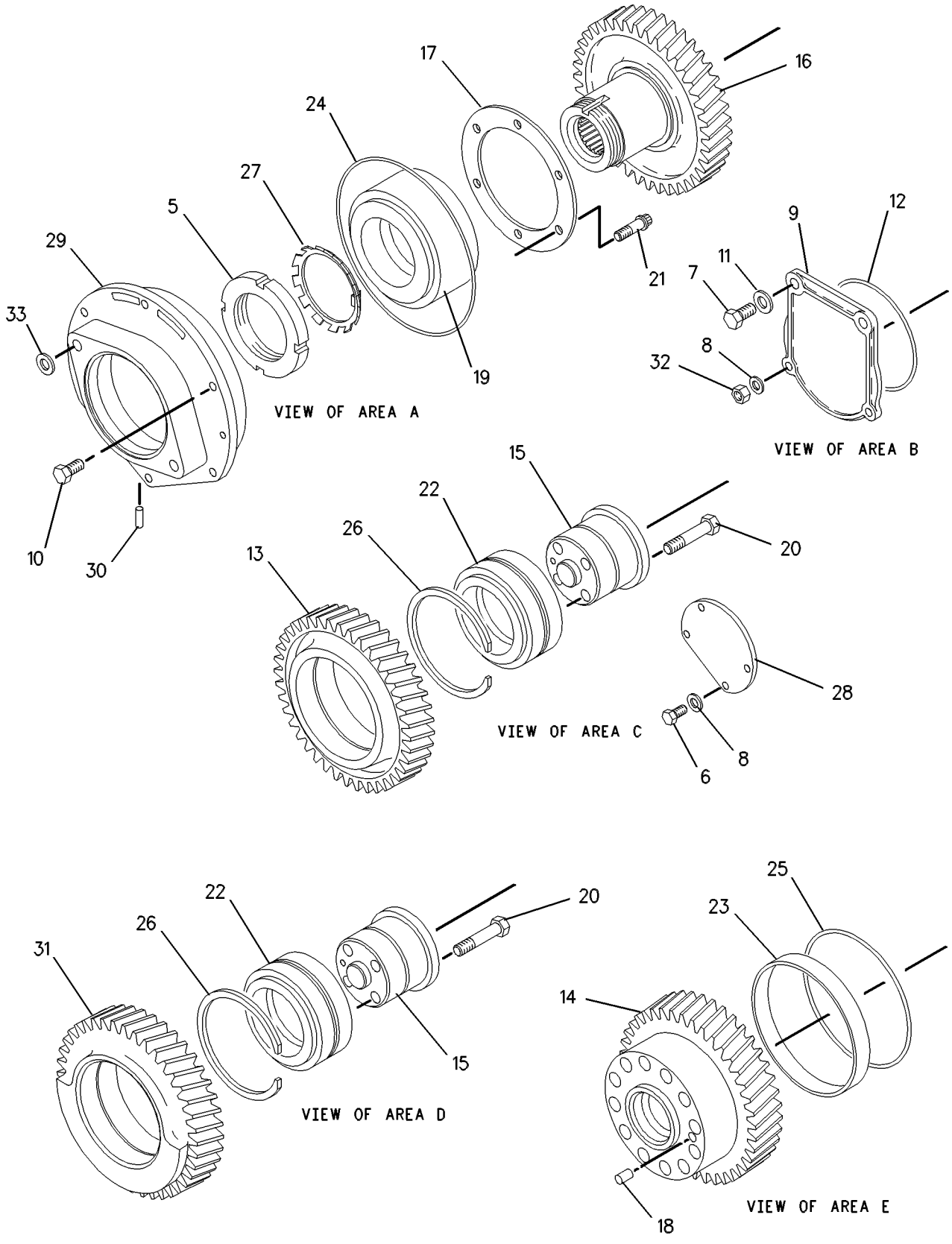

GRAPHIC #2 g00428958

MEMORANDA

BASIC ENGINE

153-3050 HOUSING GP-FLYWHEEL

S/N: 5XD1-UP

PART OF 163-5784 ENGINE AR

SMCS-1157 **i01200396**

NOTE	REF NO	GRAPHIC REF	PART NUMBER	QTY	PART NAME 1 2 3 4 5 6 (PRODUCT LEVEL)	SEE PAGE
	1	1	**127-3605**	1	HOUSING AS	
		1	**1W-3136**	1	BAFFLE	
	2	1	**0S-1619**	4	BOLT (3/8-16X3.0IN)	
	3	1	**8T-6764**	1	PLUG-PIPE (1/8-27 NPTF THD)	
	4	1	**161-7293**	1	GASKET-CYLINDER	
	5	1	**9M-4225**	2	BOLT (3/8 NC X 4 3/8)	
	6	1	**1A-5964**	2	BOLT (3/8-16X4.5IN)	
	7	1	**2P-2772**	2	COVER	
	8	1	**4N-0933**	2	GASKET	
	9	1	**1A-2029**	2	BOLT (3/8-16X1.125IN)	
	10	1	**5M-2894**	13	WASHER (2.5MM THK)	
	11	1	**8T-6765**	4	PLUG-PIPE (1/4-18 NPTF THD)	
	12	1	**5P-8245**	8	WASHER-HARD (3MM THK)	
	13	1	**0S-1590**	3	BOLT (3/8-16X2 IN)	
	14	1	**3S-0036**	2	PLUG-CORE	
	15	1	**3D-2871**	2	STUD	
	16	1	**8T-6761**	1	PLUG-PIPE (1-11-1/2 NPTF THD)	
	17	1	**0L-1352**	1	BOLT (3/8-16X3.25IN)	
	18	1	**8M-9124**	1	WASHER (8MM THK)	
	19	1	**2H-6488**	8	BOLT (1/2-13X5IN)	
	20	1	**5F-0304**	1	PLUG-DRAIN (5/8-18 THD)	
	21	1	**2A-1162**	1	GASKET	
	22	1	**1W-3189**	3	SPACER	
	23	1	**0S-1588**	3	BOLT (3/8-16X1.25IN)	

153-3050 **HOUSING GP-FLYWHEEL** *(contd.)* **i01200396**

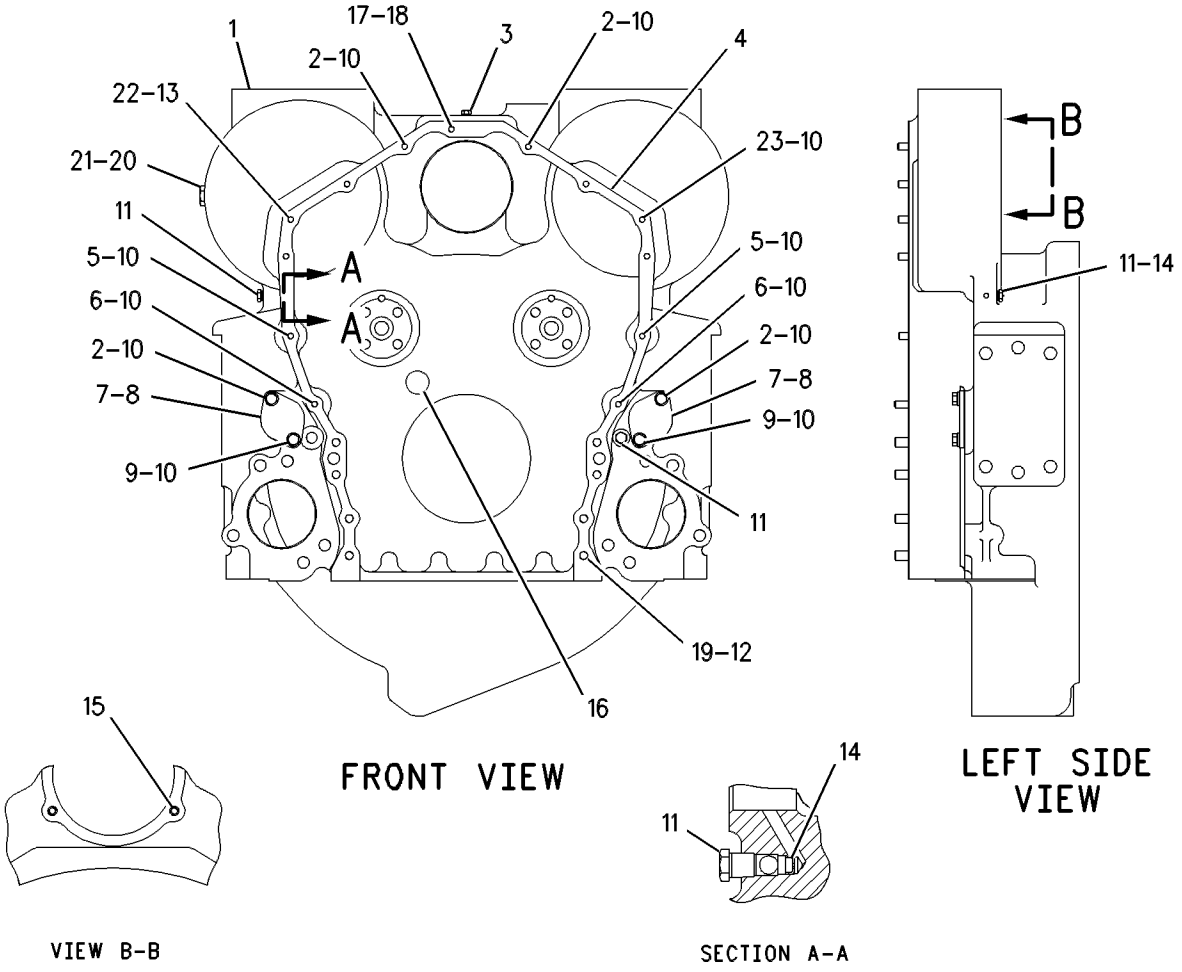

GRAPHIC #1 g00333460

BASIC ENGINE

157-3561 HOUSING GP-FLYWHEEL

S/N: 48W41541-UP
PART OF 198-9948 ENGINE AR
AN ATTACHMENT

SMCS-1157 **i01341949**

NOTE	REF NO	GRAPHIC REF	PART NUMBER	QTY	PART NAME 1 2 3 4 5 6 (PRODUCT LEVEL)	SEE PAGE
	1	1	**1W-3136**	1	BAFFLE	
	2	1	**105-6140**	1	HOUSING-FLYWHEEL	
	3	1	**8T-6764**	1	PLUG-PIPE (1/8-27 NPTF THD)	
	4	1	**0L-1352**	1	BOLT (3/8-16X3.25 IN)	
	5	1	**8M-9124**	1	WASHER (8MM THK)	
	6	1	**0S-1619**	4	BOLT (3/8-16X3.0 IN)	
	7	1	**5M-2894**	13	WASHER-HARD (2.5MM THK)	
	8	1	**8T-6765**	5	PLUG-PIPE (1/4-18 NPTF THD)	
	9	1	**3S-0036**	2	PLUG-CORE	
	10	1	**9M-4225**	2	BOLT (3/8 NC X 4 3/8)	
	11	1	**1A-5964**	2	BOLT (3/8-16X4.5IN)	
	12	1	**1A-2029**	2	BOLT (3/8-16X1.125 IN)	
	13	1	**2H-6488**	8	BOLT (1/2-13X5IN) (HOLES MARKED X)	
	14	1	**5P-8245**	8	WASHER-HARD (3MM THK) (HOLES MARKED X)	
	15	1	**0S-1588**	3	BOLT (3/8-16X1.25 IN) (HOLES MARKED Z)	
	16	1	**3D-2871**	2	STUD	
	17	1	**8T-6761**	1	PLUG-PIPE (1-11-1/2 NPTF THD)	
	18	1	**4N-0933**	2	GASKET	
	19	1	**2P-2772**	2	COVER	
	20	1	**0S-1590**	3	BOLT (3/8-16X2 IN) (HOLES MARKED Y)	
	21	1	**1W-3189**	3	SPACER (HOLES MARKED Y)	
	22	1	**161-7293**	1	GASKET-CYLINDER	

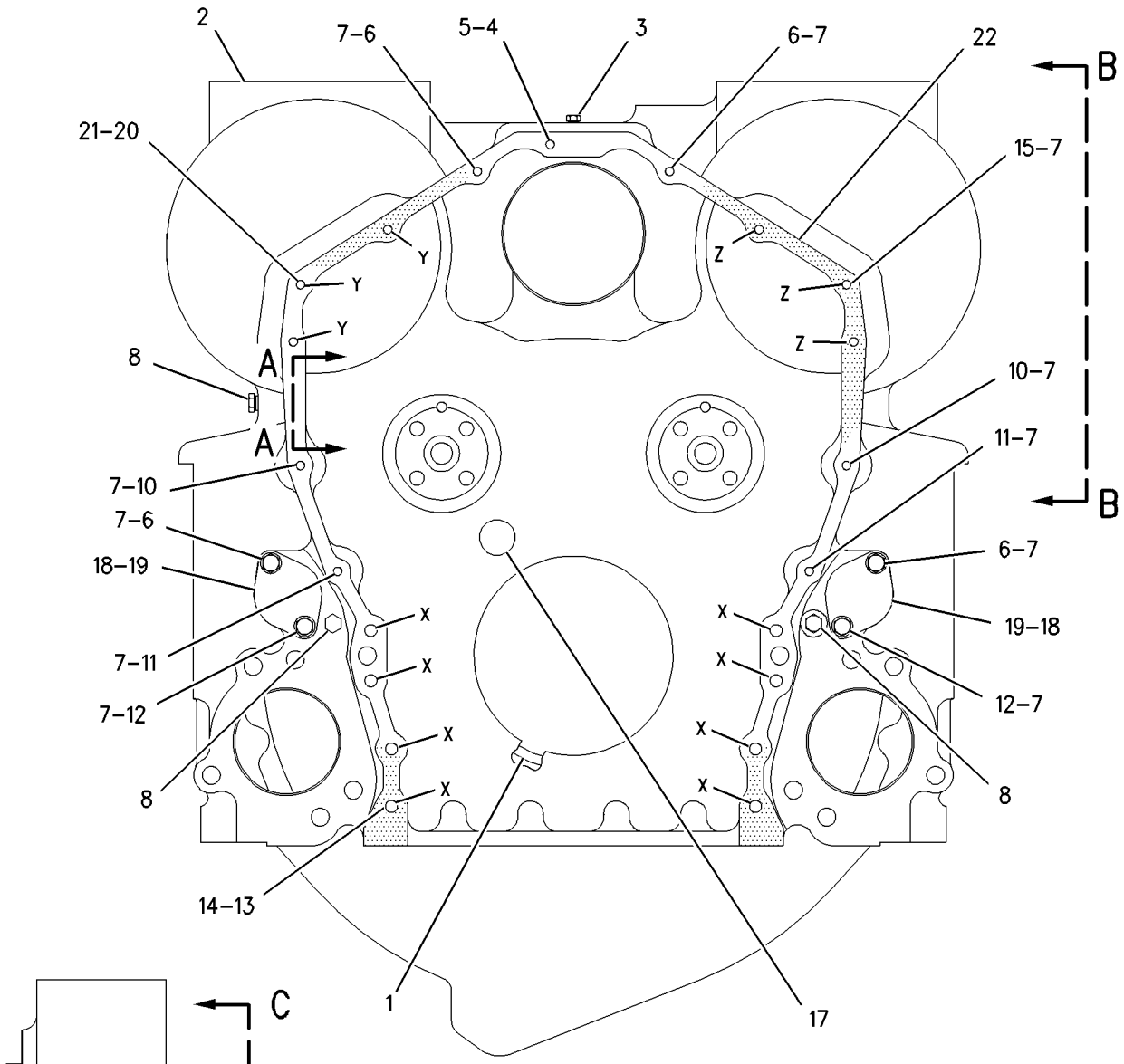

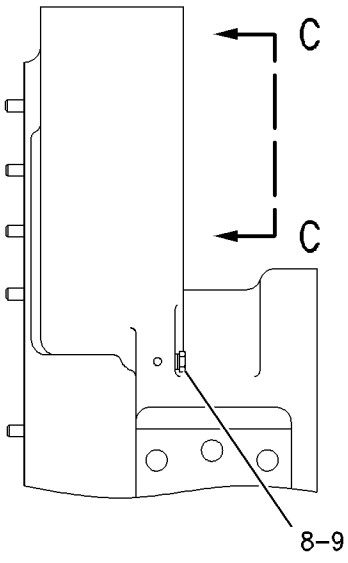

VIEW B-B

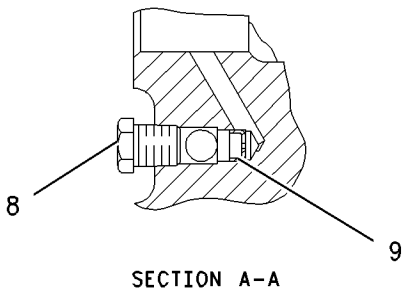

SECTION A-A

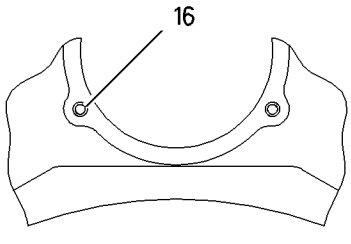

VIEW C-C

GRAPHIC #1

g00722440

127-3514 HOUSING GP-FRONT

S/N: 5XD1-UP

PART OF 163-5784 ENGINE AR

SMCS-1151, 1162, 1166 **i01390290**

NOTE	REF NO	GRAPHIC REF	PART NUMBER	QTY	PART NAME 1 2 3 4 5 6 (PRODUCT LEVEL)	SEE PAGE
	1	1	**166-9145**	1	GASKET-CYLINDER BLOCK	
	2	1	**172-9313**	1	HOUSING-TIMING GEAR	
	3	1	**3K-3256**	1	STUD	
	4	1	**2K-4973**	1	LOCKNUT (3/8-16 THD)	
	5	1	**0L-1352**	2	BOLT (3/8-16X3.25 IN)	
	6	1	**5M-2894**	6	WASHER-HARD (10.2X18.5X2.5MM THK)	
	7	1	**0T-0573**	3	BOLT (3/8-16X2.75 IN)	
	8	1	**4B-8641**	1	STUD	
YC	9	1	**129-6628**	2	SENSOR GP-SPEED	339

C-CHANGE FROM PREVIOUS TYPE
Y-SEPARATE ILLUSTRATION

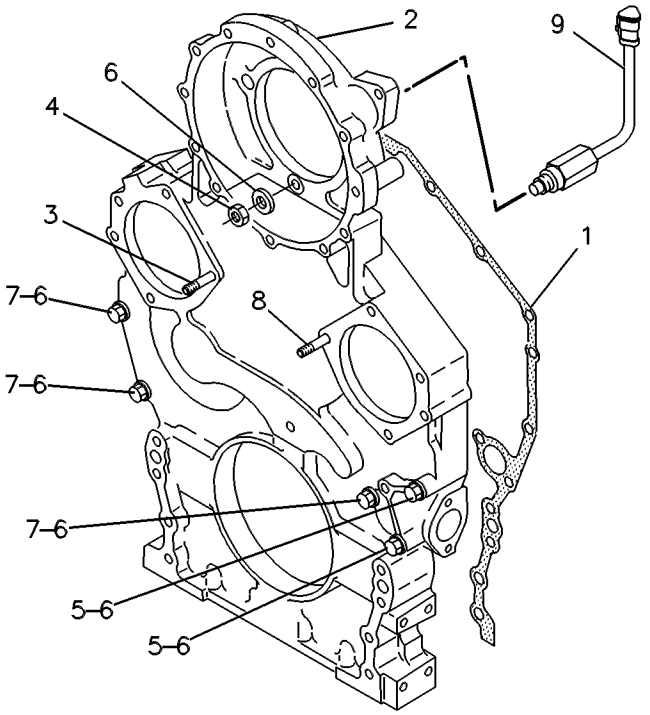

GRAPHIC #1 g00253089

BASIC ENGINE

127-5561 HOUSING GP-FRONT

S/N: 48W41541-UP
PART OF 198-9948 ENGINE AR
AN ATTACHMENT

SMCS-1151, 1162, 1166 **i01446351**

NOTE	REF NO	GRAPHIC REF	PART NUMBER	QTY	PART NAME 1 2 3 4 5 6 (PRODUCT LEVEL)	SEE PAGE
	1	1	**166-9145**	1	GASKET-CYLINDER BLOCK	
	2	1	**172-9314**	1	HOUSING-TIMING GEAR	
	3	1	**3K-3256**	1	STUD	
	4	1	**2K-4973**	1	LOCKNUT	
	5	1	**0L-1352**	2	BOLT (3/8-16X3.25 IN)	
	6	1	**5M-2894**	6	WASHER-HARD (10.2X18.5X2.5MM THK)	
	7	1	**0L-1143**	3	BOLT (3/8-16X2.50 IN)	
	8	1	**4B-8641**	1	STUD	

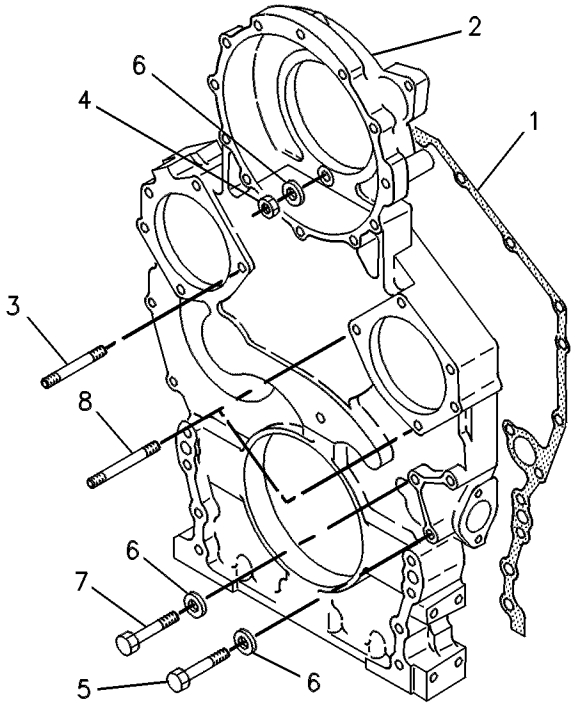

GRAPHIC #1 g00247264

124-4461 LIFTING GP-ENGINE

S/N: 5XD1-UP; 48W41541-UP
PART OF 163-5784, 198-9948 ENGINE AR
ALSO AN ATTACHMENT

SMCS-1122 **i01390310**

NOTE	REF NO	GRAPHIC REF	PART NUMBER	QTY	PART NAME 1 2 3 4 5 6 (PRODUCT LEVEL)	SEE PAGE
	1	1	**5P-8245**	8	WASHER-HARD (13.5X25.5X3MM THK)	
	2	1	**118-8475**	1	BRACKET-LIFTING (RIGHT)	
	3	1	**7B-3235**	8	BOLT (1/2-13X1.375 IN)	
	4	1	**118-9115**	1	BRACKET-LIFTING (LEFT)	

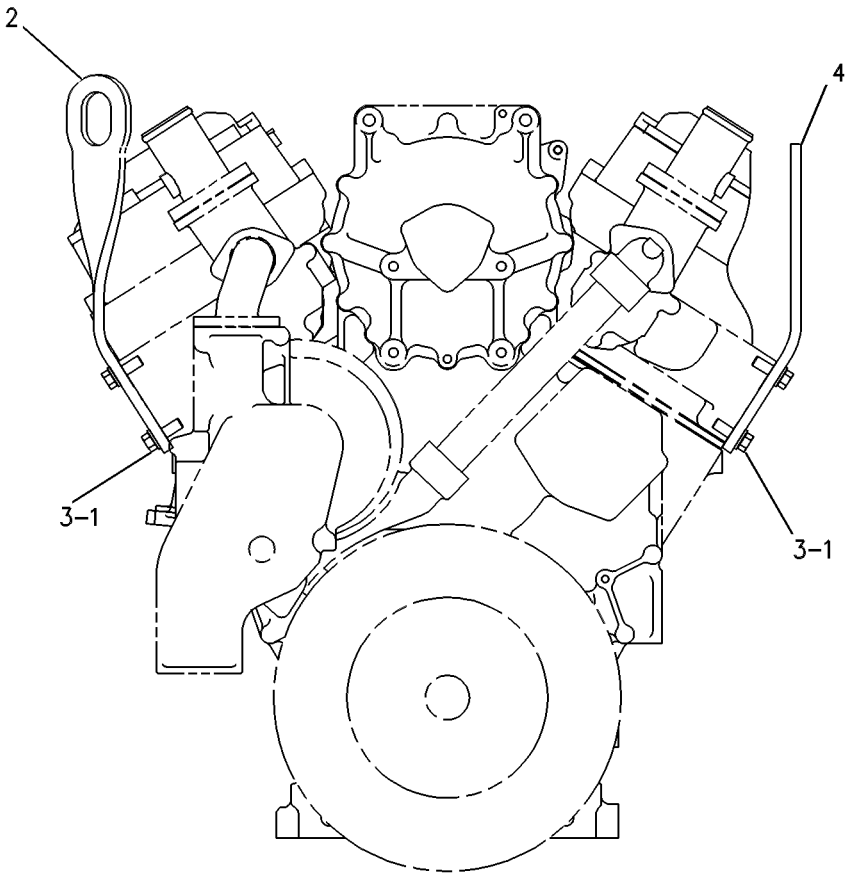

FRONT VIEW

GRAPHIC #1 g00086666

MEMORANDA

7W-6381 PAN GP-OIL

S/N: 5XD1-UP; 48W41541-UP
PART OF 163-5784, 198-9948 ENGINE AR
ALSO AN ATTACHMENT

SMCS-1302 **i01434427**

NOTE	REF NO	GRAPHIC REF	PART NUMBER	QTY	PART NAME 1 2 3 4 5 6 (PRODUCT LEVEL)	SEE PAGE
	1	1	**4N-1151**	1	GASKET	
	2	1	**9S-4181**	1	PLUG-STRAIGHT THREAD	
	3	1	**7M-8485**	1	SEAL-O-RING (29.74MM ID)	
	4	1	**5M-2894**	24	WASHER-HARD (10.2X18.5X2.5MM THK)	
	5	1	**2P-3203**	26	BOLT-WASHER HEAD (3/8-16X1.25 IN)	
	6	1	**6V-3830**	1	SEAL-O-RING (34.29MM ID)	
	7	1	**4P-0519**	1	ADAPTER AS-DRAIN	
		1	**4P-0520**	1	ADAPTER-PLUG	
	8	1	**4P-0513**	1	PLUG-OIL DRAIN	
	9	1	**0S-1587**	2	BOLT (1/2-13X1.75 IN)	
	10	1	**8T-6761**	1	PLUG-PIPE	
	11	1	**180-5738**	1	PAN-OIL	
	12	1	**9S-8752**	6	NUT-FULL (3/8-16 THD)	
	13	1	**3B-1915**	6	BOLT (3/8-16X1.37 IN)	
	14	1	**1C-2251**	6	BOLT (3/8-16X1.87 IN)	
	15	1	**1W-5814**	1	PAN-OIL	
	16	1	**1W-5813**	1	GASKET-OIL PAN	
	17	1	**8S-9191**	4	BOLT (3/8-16X4 IN)	
	18	1	**1W-5817**	1	PAN-REAR OIL	
	19	1	**6N-2469**	1	GASKET-OIL PAN	
	20	1	**2P-3204**	2	BOLT-WASHER HEAD	
	21	1	**0S-1594**	2	BOLT (3/8-16X1 IN)	
	22	1	**2M-1656**	1	COVER	
	23	1	**2M-5407**	1	GASKET	

7W-6381 **PAN GP-OIL** ***(contd.)*** **i01434427**

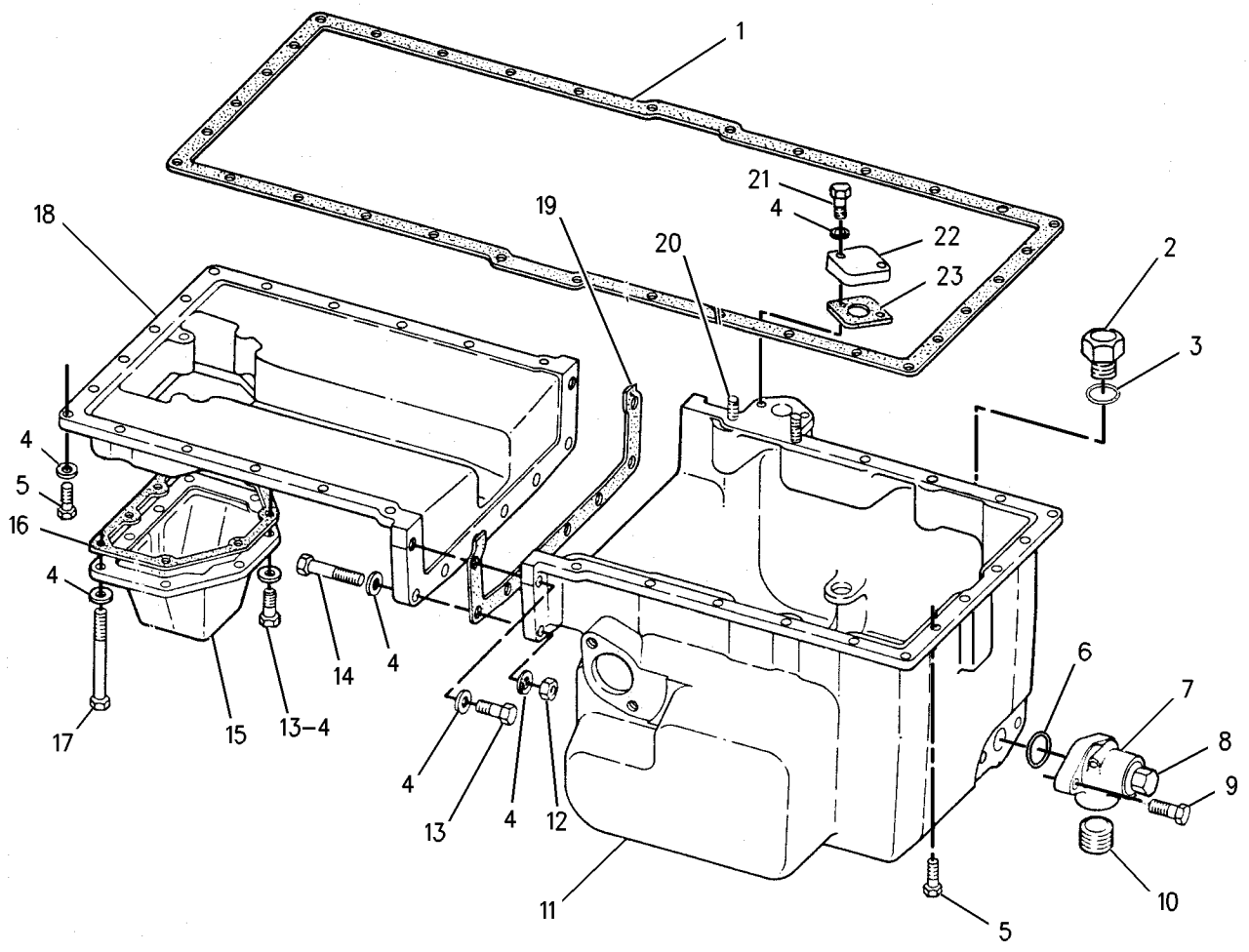

GRAPHIC #1 g00751751

2W-9054 PISTON & ROD GP

S/N: 48W41541-UP
15.6:1 RATIO, 14.5:1 RATIO
PART OF 198-9948 ENGINE AR
AN ATTACHMENT

SMCS-1213, 1214, 1215, 1218, 1219, 1225, 1239 **i01263327**

NOTE	REF NO	GRAPHIC REF	PART NUMBER	QTY	PART NAME 1 2 3 4 5 6 (PRODUCT LEVEL)	SEE PAGE
	1	1	**8N-1608**	1	PIN-PISTON	
	2	1	**7E-5665**	2	RETAINER-PIN	
	3	1	**160-8178**	1	ROD AS-CONNECTING	
		1	**4P-8495**	1	BEARING-SLEEVE	
	4	1	**8L-3441**	2	NUT	
	4A	1	**6N-8942**	2	BOLT-CONNECTING ROD	
	5	1	**9Y-9497**	1	BEARING-CONNECTING ROD	
A		1	**4W-5702**	1	BEARING-CONNECTING ROD (.635MM US)	
A		1	**4W-5703**	1	BEARING-CONNECTING ROD (1.27MM US)	
	6	1	**9Y-7212**	1	BODY AS-PISTON	
	7	1	**1W-9460**	1	RING-PISTON (TOP)	
	8	1	**2P-2817**	1	RING-PISTON (INTERMEDIATE)	
	9	1	**7N-7078**	1	RING-OIL	

A-NOT PART OF THIS GROUP

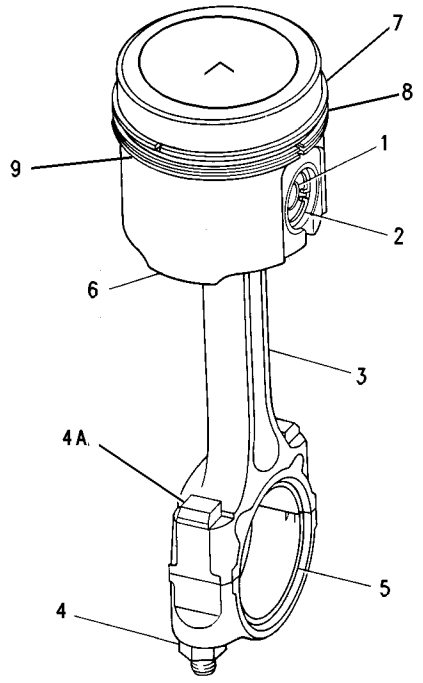

GRAPHIC #1 g00671792

MEMORANDA

192-8809 PISTON & ROD GP

S/N: 5XD1-UP
16:1 RATIO
PART OF 163-5784 ENGINE AR

SMCS-1213, 1214, 1215, 1218, 1219, 1225, 1239 **i01431495**

NOTE	REF NO	GRAPHIC REF	PART NUMBER	QTY	PART NAME 1 2 3 4 5 6 (PRODUCT LEVEL)	SEE PAGE
	1	1	**7E-5665**	2	RETAINER-PIN	
J	2	1	**9Y-9497**	1	BEARING-CONNECTING ROD (STANDARD)	
AL		1	**4W-5702**	1	BEARING-CONNECTING ROD (.635MM US)	
AN		1	**4W-5703**	1	BEARING-CONNECTING ROD (1.27MM US)	
	3	1	**150-1156**	1	BOLT-OIL JET	
	4	1	**160-8178**	1	ROD AS-CONNECTING	
	4A	1	**6N-8942**	2	BOLT-CONNECTING ROD	
	4B	1	**8L-3441**	2	NUT (9/16-18 THD)	
	5	1	**173-0147**	1	TUBE AS-OIL JET	
	6	1	**173-0148**	1	PIN-PISTON	
	7	1	**177-7496**	1	RING-PISTON (TOP)	
	8	1	**187-1507**	1	RING-PISTON (OIL CONTROL)	
	9	1	**192-2209**	1	BODY AS-PISTON	
	10	1	**192-8807**	1	RING-INTERMEDIATE	
					AVAILABLE REPAIR KIT(S):	
J			**9Y-6188**		KIT-BEARING (STANDARD)	
L			**9Y-6189**		KIT-BEARING (.635MM US)	
N			**9Y-6190**		KIT-BEARING (1.27MM US)	

A-NOT PART OF THIS GROUP
J-KIT MARKED J INCLUDES PART MARKED J
L-KIT MARKED L INCLUDES PART MARKED L
N-KIT MARKED N INCLUDES PART MARKED N

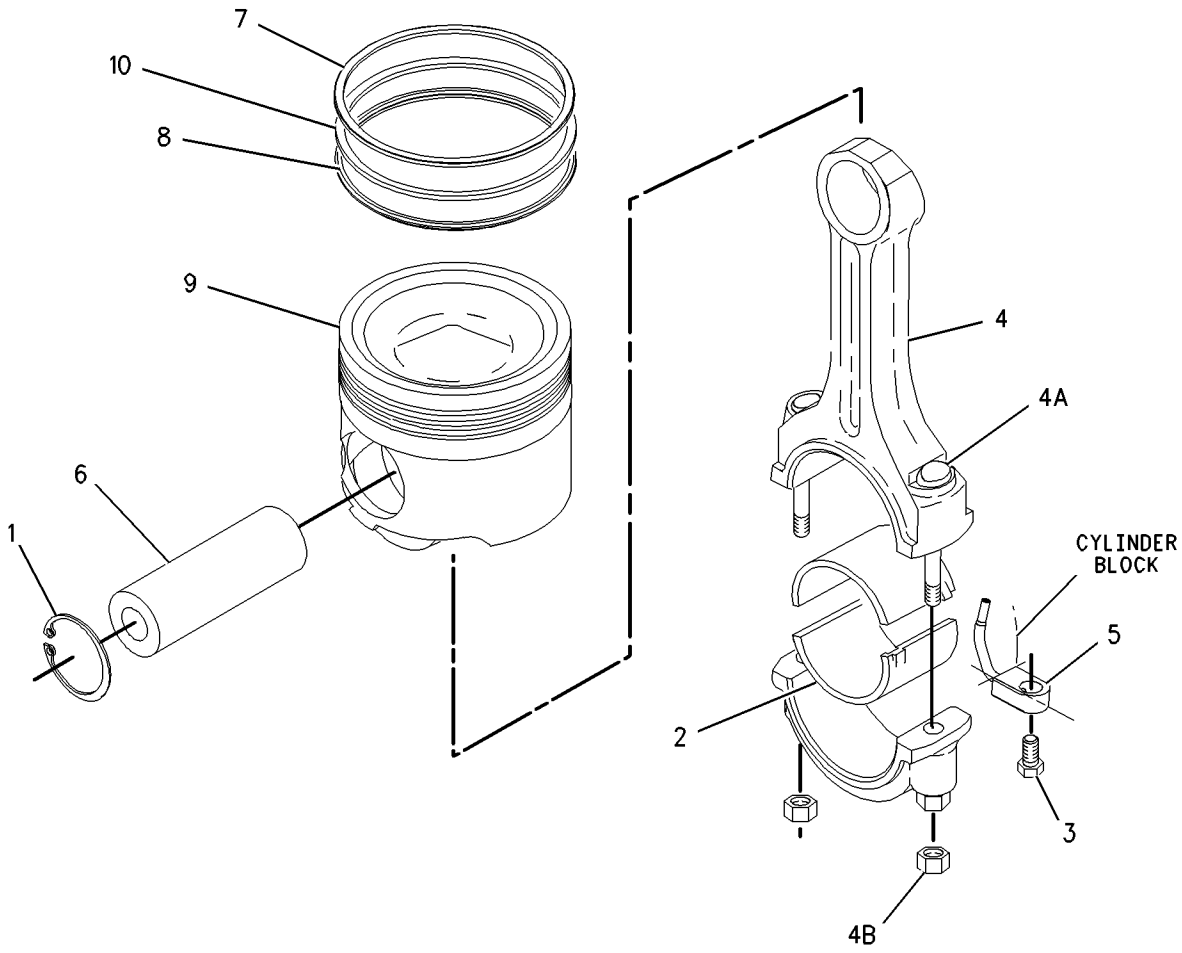

GRAPHIC #1 g00753788

134-2596 PLUG GP-CYLINDER BLOCK

S/N: 5XD1-UP

PART OF 163-5784 ENGINE AR

SMCS-1201 **i01390317**

NOTE	REF NO	GRAPHIC REF	PART NUMBER	QTY	PART NAME 1 2 3 4 5 6 (PRODUCT LEVEL)	SEE PAGE
	1	1	**9S-4190**	1	PLUG-O-RING (7/16-20 THD)	
	2	1	**6V-4589**	2	SEAL-O-RING (19.18MM ID)	
	3	1	**7W-6534**	6	PLUG-PIPE	
	4	1	**8T-6757**	2	PLUG-PIPE	
	5	1	**6V-3965**	1	FITTING AS	
	6	1	**6V-5049**	1	SEAL-O-RING (11.89MM ID)	
	7	1	**5P-1404**	1	ADAPTER-O-RING (STRAIGHT THREAD)	
	8	1	**6V-0852**	1	CAP-DUST	

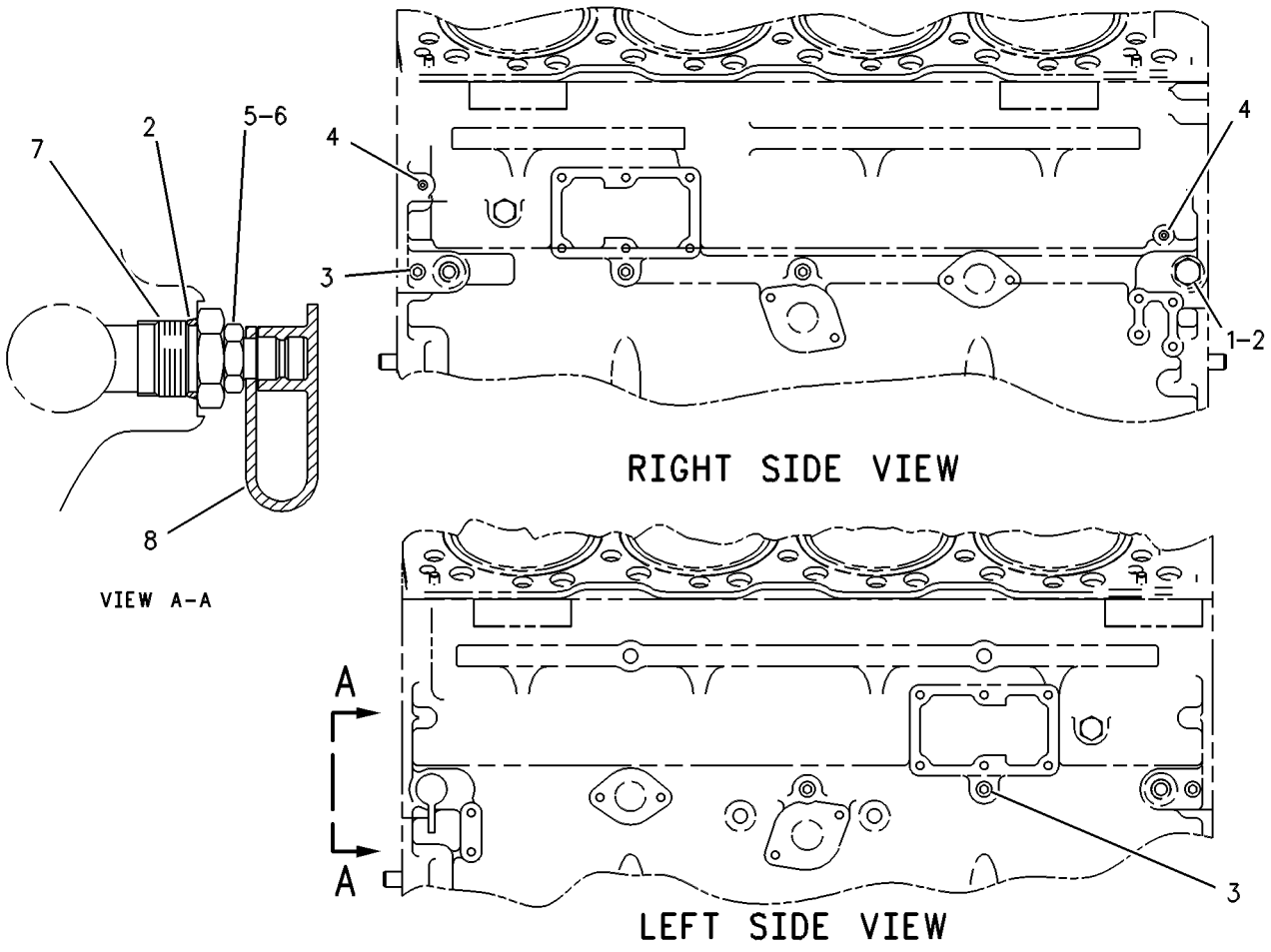

GRAPHIC #1 g00257640

124-4456 PLUG GP-CYLINDER HEAD

S/N: 5XD1-UP

PART OF 163-5784 ENGINE AR

SMCS-1100 **i01644653**

NOTE	REF NO	GRAPHIC REF	PART NUMBER	QTY	PART NAME 1 2 3 4 5 6 (PRODUCT LEVEL)	SEE PAGE
	1	1	**8T-6762**	6	PLUG-PIPE (1/2-14 NPTF THD)	
	2	1	**7X-7731**	2	PLUG-PIPE (3/4-14 NPTF THD) (3/4-14 NPTF THD)	
	3	1	**5P-0063**	3	PLUG-CUP (1.764 IN OD)	
	4	1	**4N-0932**	2	PLUG-CUP	

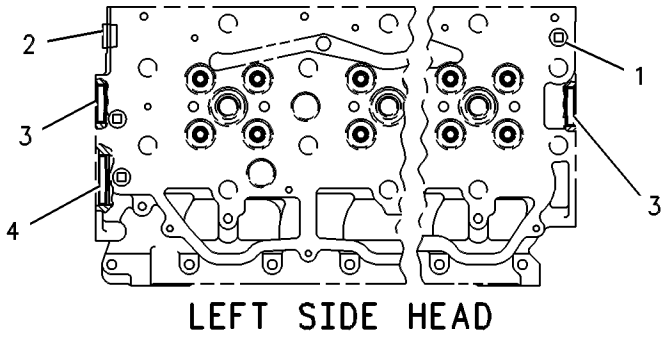

LEFT SIDE HEAD

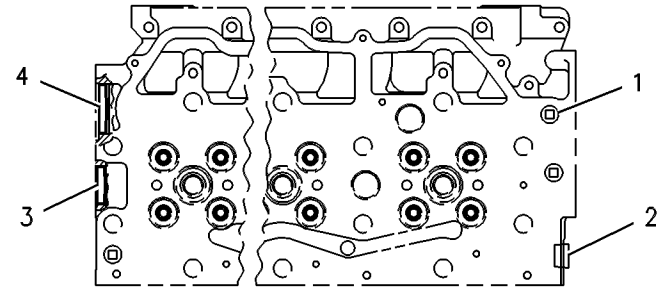

RIGHT SIDE HEAD

GRAPHIC #1 g00086474

4N-1718 ROCKER ARM GP

S/N: 48W41541-UP
PART OF 4N-4298 VALVE MECHANISM GP
AN ATTACHMENT

SMCS-1102, 1123 **i00119750**

NOTE	REF NO	GRAPHIC REF	PART NUMBER	QTY	PART NAME 1 2 3 4 5 6 (PRODUCT LEVEL)	SEE PAGE
	1	1	**006-7403**	2	RING-RETAINING	
	2	1	**2N-7228**	4	WASHER	
	3	1	**4N-0955**	2	DOWEL	
	4	1	**2N-7229**	3	SPRING	
	5	1	**4N-1106**	1	SHAFT AS-ROCKER ARM	
	6	1	**0L-1022**	2	PLUG-CUP	
C	7	1	**9Y-4384**	3	BRACKET-SHAFT	
	8	1	**4N-5614**	8	ROCKER ARM AS	
	9	1	**108-5603**	8	SCREW-ROCKER ADJUSTMENT	
	10	1	**9L-7712**	8	NUT (3/8-24 THD)	
C	11	1	**9Y-4385**	1	BRACKET AS-SHAFT	
		1	**2D-6642**	1	BALL (6.35MM DIA)	
	12	1	**4B-9880**	1	BALL (7.93MM DIA)	

C-CHANGE FROM PREVIOUS TYPE

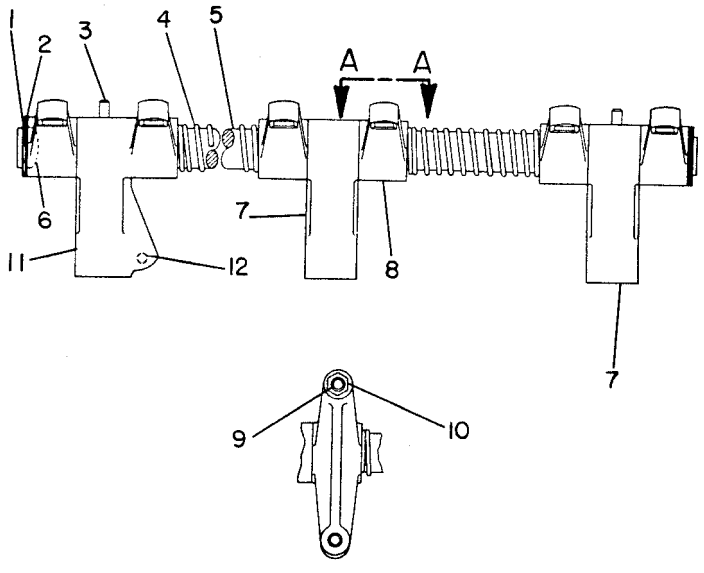

VIEW A-A

GRAPHIC #1 g00097978

107-1954 ROCKER ARM GP

S/N: 5XD1-UP

PART OF 108-1551 VALVE MECHANISM GP

SMCS-1102, 1123 **i01390323**

NOTE	REF NO	GRAPHIC REF	PART NUMBER	QTY	PART NAME 1 2 3 4 5 6 (PRODUCT LEVEL)	SEE PAGE
	1	1	**134-2263**	2	RING-RETAINING	
	2	1	**2N-7228**	2	WASHER (1X1.5X.03 IN THK)	
	3	1	**4N-5614**	2	ROCKER ARM AS	
	4	1	**108-5603**	2	SCREW-ROCKER ADJUSTMENT	
	5	1	**9L-7712**	2	NUT (3/8-24 THD)	
	6	1	**122-0163**	1	BRACKET-SHAFT	
	7	1	**6V-3536**	2	DOWEL	
	8	1	**135-3225**	1	SHAFT AS	

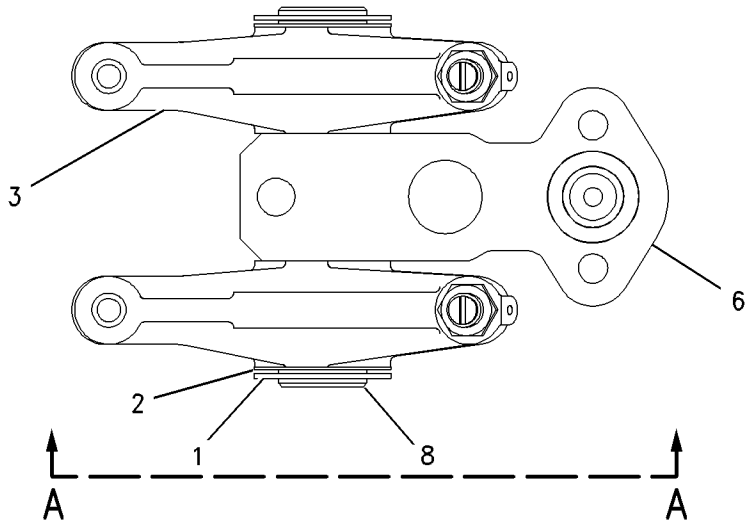

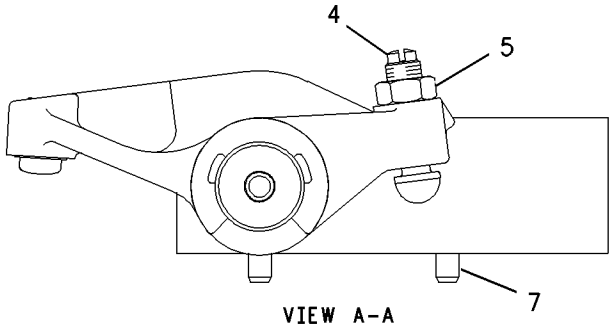

GRAPHIC #1 g00678432

4P-5545 SUPPORT GP-ENGINE

S/N: ABK1-UP

PART OF 162-9505 INSTALLATION AR-ENGINE

SMCS-1152, 1153, 1154 **i01390325**

NOTE	REF NO	GRAPHIC REF	PART NUMBER	QTY	PART NAME 1 2 3 4 5 6 (PRODUCT LEVEL)	SEE PAGE
	1	1	**6N-3897**	2	SUPPORT-ENGINE	
	2	1	**2A-1538**	12	BOLT (3/4-10X2.25 IN)	
	3	1	**6Y-2090**	2	MOUNT AS	
	4	1	**6N-3896**	2	CAP	
	5	1	**4P-5546**	2	SUPPORT	
	6	1	**3B-2968**	4	BOLT (3/4-10X3.5 IN)	
	7	1	**1D-4627**	4	BOLT (7/8-9X3 IN)	
	8	1	**1D-4631**	2	BOLT (7/8-9X4.25 IN)	
	9	1	**5P-8248**	16	WASHER-HARD (20X36.5X3.5MM THK)	
	10	1	**5P-8249**	8	WASHER-HARD (24X41.5X4MM THK)	
B	11	1	**1D-4627**	2	BOLT (7/8-9X3 IN)	
B	12	1	**1D-4631**	2	BOLT (7/8-9X4.25 IN)	

B-USE AS REQUIRED

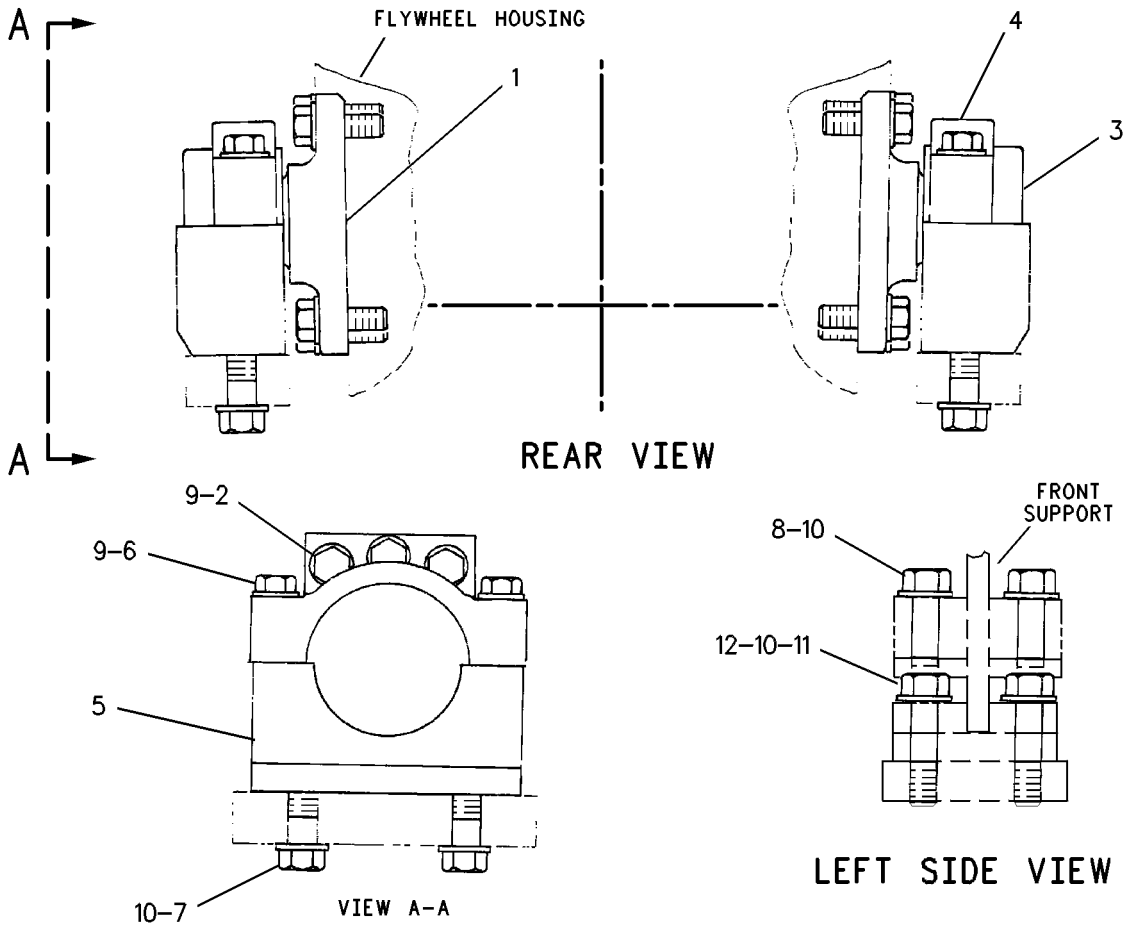

GRAPHIC #1 g00234898

190-4184 SUPPORT GP-ENGINE

S/N: 5XD1-UP; 48W41541-UP
FRONT
PART OF 163-5784, 198-9948 ENGINE AR
ALSO AN ATTACHMENT

SMCS-1152, 1153, 1154 **i01391679**

NOTE	REF NO	GRAPHIC REF	PART NUMBER	QTY	PART NAME 1 2 3 4 5 6 (PRODUCT LEVEL)	SEE PAGE
	1	1	**190-3127**	1	SUPPORT AS-ENGINE	
	2	1	**7X-0345**	4	BOLT (5/8-11X1.75 IN)	
	3	1	**8T-4122**	4	WASHER-HARD (17X32X3.5MM THK)	

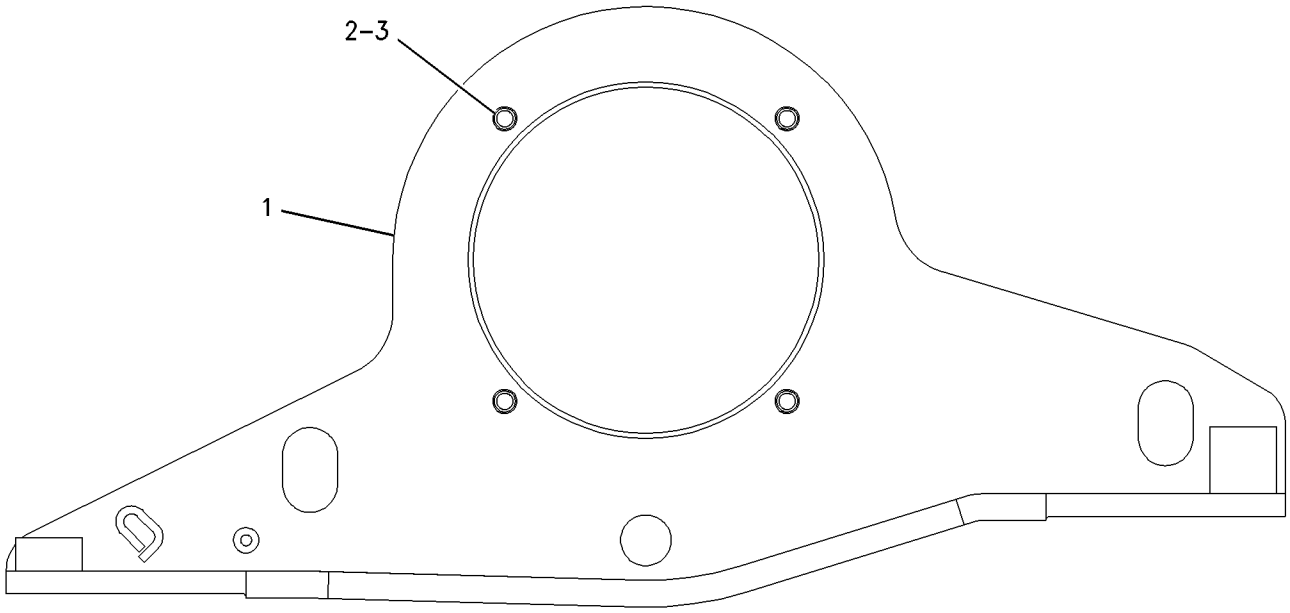

GRAPHIC #1 g00735507

179-7086 TRUNNION GP-ENGINE

S/N: 5XD1-UP; 48W41541-UP
PART OF 163-5784, 198-9948 ENGINE AR
ALSO AN ATTACHMENT

SMCS-1152, 1153, 1154 **i01446354**

NOTE	REF NO	GRAPHIC REF	PART NUMBER	QTY	PART NAME 1 2 3 4 5 6 (PRODUCT LEVEL)	SEE PAGE
	1	1	**1W-3014**	1	ADAPTER AS	
	1A	1	**4N-0683**	2	DOWEL	
	2	1	**7N-1210**	1	MOUNT AS	
	3	1	**0S-1573**	8	BOLT (1/2-13X4 IN)	

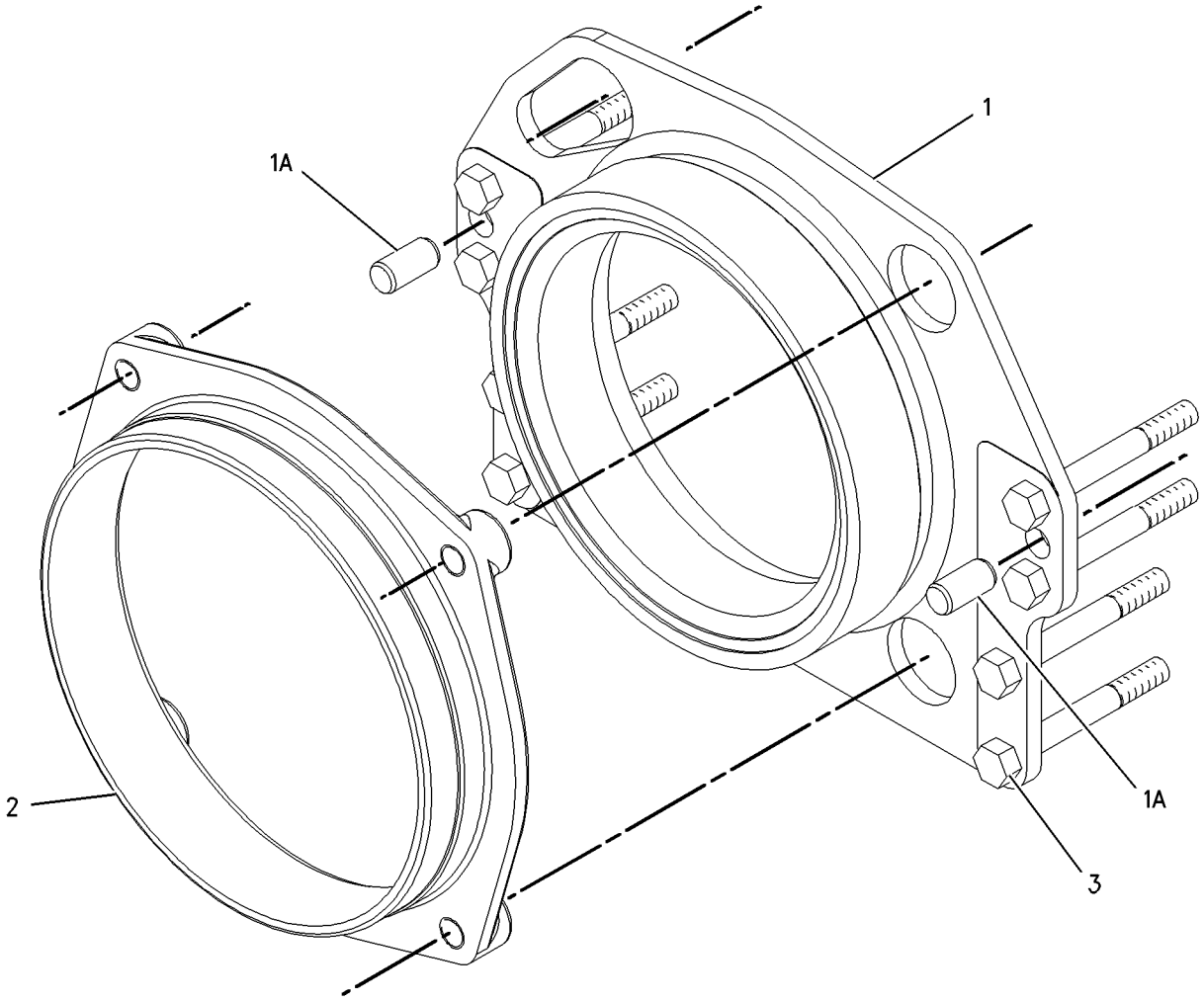

GRAPHIC #1 g00725950

4N-4298 VALVE MECHANISM GP

S/N: 48W41541-UP
PART OF 198-9948 ENGINE AR
AN ATTACHMENT

SMCS-1102, 1112, 1121, 1123, 1208, 1209 **i01446355**

NOTE	REF NO	GRAPHIC REF	PART NUMBER	QTY	PART NAME 1 2 3 4 5 6 (PRODUCT LEVEL)	SEE PAGE
	1	1	**2P-9845**	8	BOLT (3/4-16X11.5 IN)	
		1	**5H-1504**	8	WASHER-HARD (20X33.5X5MM THK)	
Y	2	1	*4N-1718*	2	ROCKER ARM GP	72
C	3	1	**100-6889**	16	BRIDGE-VALVE	
	4	1	**4W-5998**	16	PUSHROD AS	
	5	1	**101-7788**	16	LIFTER AS-VALVE	
	6	1	**6N-6872**	16	SPRING-GUIDE	

C-CHANGE FROM PREVIOUS TYPE
Y-SEPARATE ILLUSTRATION

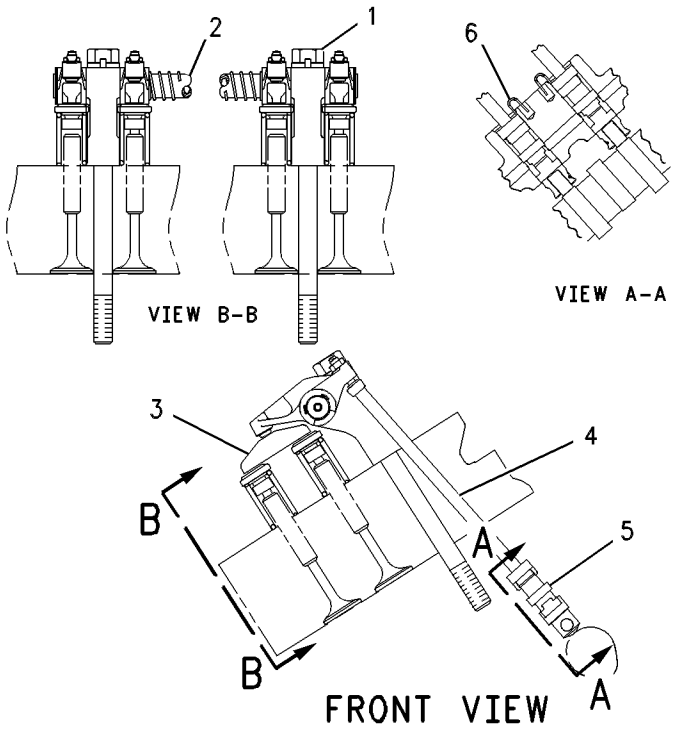

GRAPHIC #1 g00282222

108-1551 VALVE MECHANISM GP

S/N: 5XD1-UP

PART OF 163-5784 ENGINE AR

SMCS-1102, 1112, 1121, 1123, 1208, 1209 **i01446357**

NOTE	REF NO	GRAPHIC REF	PART NUMBER	QTY	PART NAME 1 2 3 4 5 6 (PRODUCT LEVEL)	SEE PAGE
Y	1	1	*107-1954*	8	ROCKER ARM GP	73
	2	1	**100-6889**	16	BRIDGE-VALVE	
	3	1	**2P-9845**	8	BOLT (3/4-16X11.5 IN)	
		1	**5H-1504**	8	WASHER-HARD (20X33.5X5MM THK)	
	4	1	**4W-5998**	16	PUSHROD AS	
	5	1	**6N-6872**	16	SPRING-GUIDE	
	6	1	**101-7788**	16	LIFTER AS-VALVE	
	7	1	**5M-2894**	8	WASHER-HARD (10.2X18.5X2.5MM THK)	
	8	1	**0L-1143**	8	BOLT (3/8-16X2.50 IN)	
	9	1	**116-7220**	8	SEAL-RECTANGULAR	

Y-SEPARATE ILLUSTRATION

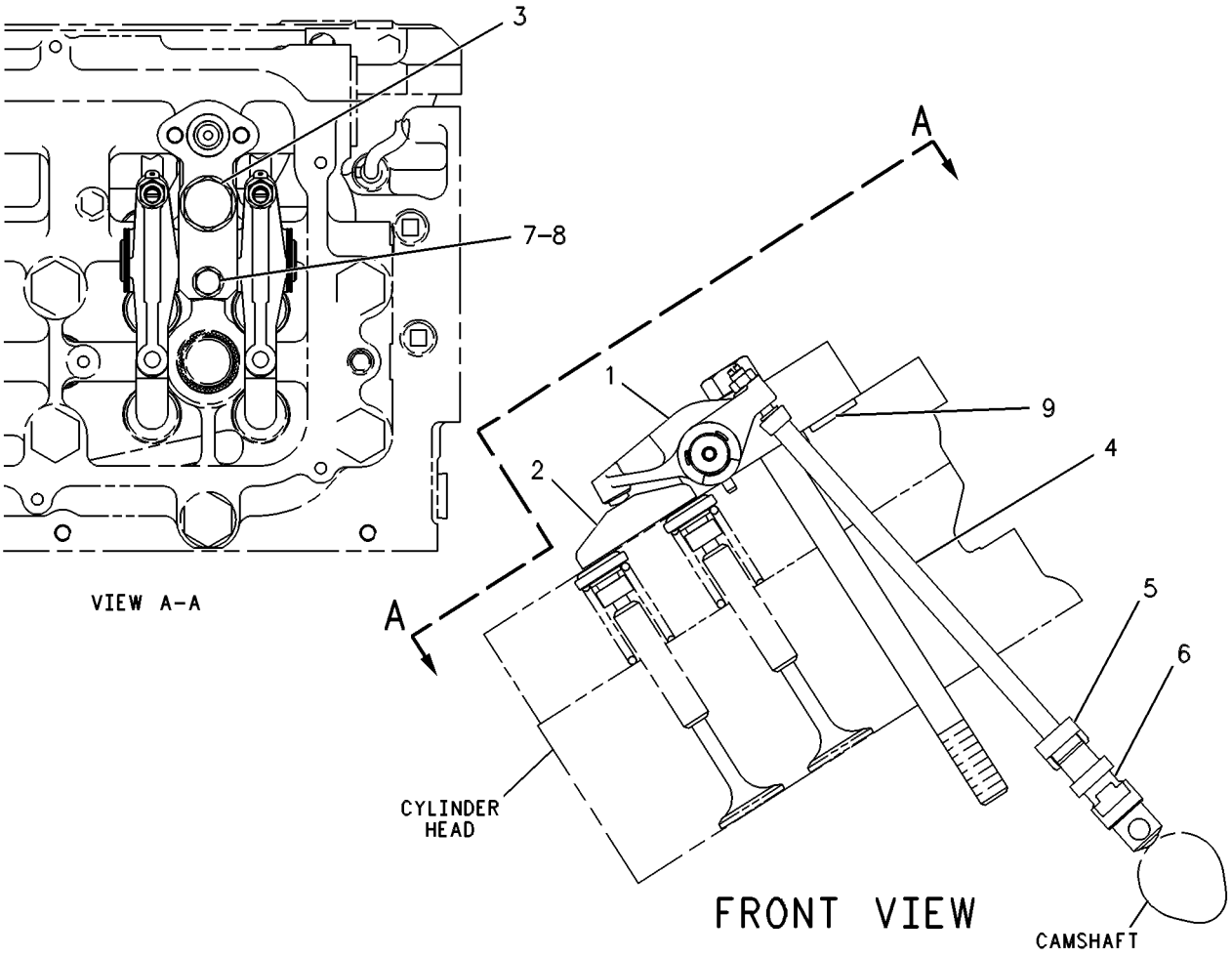

GRAPHIC #1 g00086438

9Y-2989 BREATHER GP

S/N: 48W41541-UP
PART OF 198-9948 ENGINE AR
FOR USE WITH OPEN FUMES DISPOSAL
AN ATTACHMENT

SMCS-1317 **i01612298**

NOTE	REF NO	GRAPHIC REF	PART NUMBER	QTY	PART NAME 1 2 3 4 5 6 (PRODUCT LEVEL)	SEE PAGE
	1	1	**2N-8109**	1	CLAMP	
	2	1	**4F-7390**	1	SEAL-O-RING	
	3	1	**4N-4668**	1	BREATHER AS (CRANKCASE)	

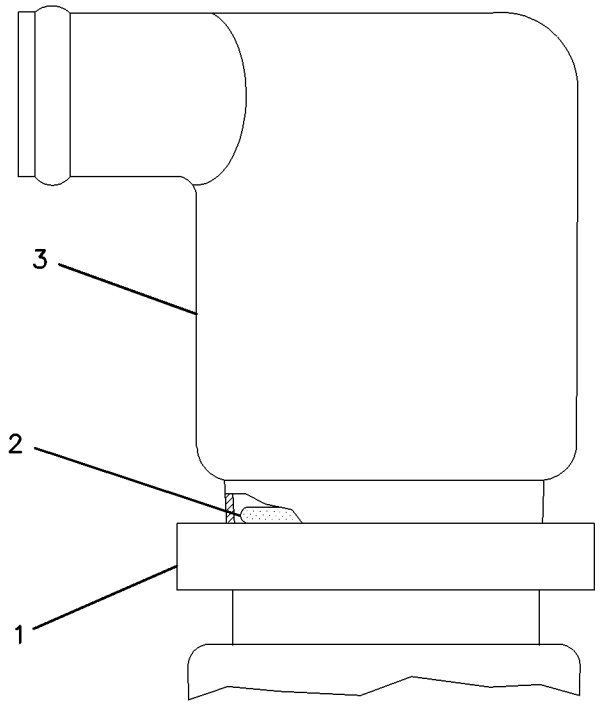

GRAPHIC #1 g00099372

4N-2481 FASTENER GP-OIL PUMP MOUNTING

S/N: 5XD1-UP; 48W41541-UP
PART OF 163-5784, 198-9948 ENGINE AR
ALSO AN ATTACHMENT

SMCS-1304 **i01446823**

NOTE	REF NO	GRAPHIC REF	PART NUMBER	QTY	PART NAME 1 2 3 4 5 6 (PRODUCT LEVEL)	SEE PAGE
	1	1	**0L-1143**	2	BOLT (3/8-16X2.50 IN)	
	2	1	**0S-1590**	1	BOLT (3/8-16X2 IN)	
	3	1	**5M-2894**	3	WASHER-HARD (10.2X18.5X2.5MM THK)	

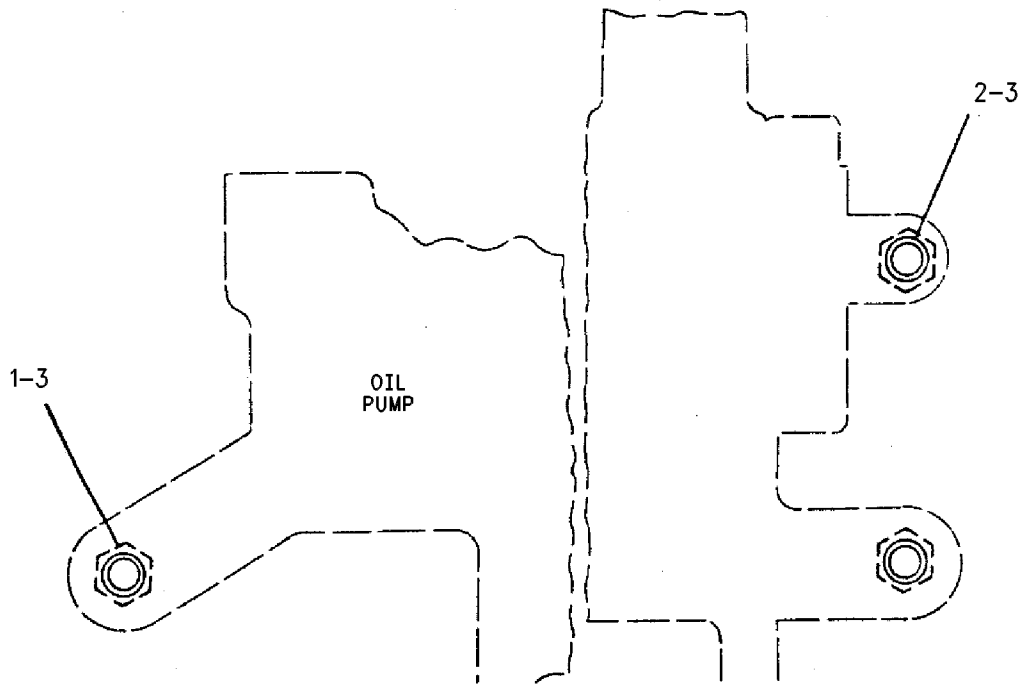

GRAPHIC #1 g00604525

LUBRICATION SYSTEM

7C-9789 FILLER GP-ENGINE OIL

S/N: 48W41541-41903
PART OF 198-9948 ENGINE AR
AN ATTACHMENT

SMCS-1316 **i01238865**

NOTE	REF NO	GRAPHIC REF	PART NUMBER	QTY	PART NAME 1 2 3 4 5 6 (PRODUCT LEVEL)	SEE PAGE
	1	1	**128-0598**	1	TUBE AS-OIL FILLER	
		1	**1W-3862**	1	HASP-OIL FILLER	
		1	**6N-2206**	1	CAP AS-FILLER	
		1	**8S-4212**	1	RIVET	
	2	1	**2N-8109**	1	CLAMP	
	3	1	**4F-7390**	1	SEAL-O-RING (53.34MM ID)	

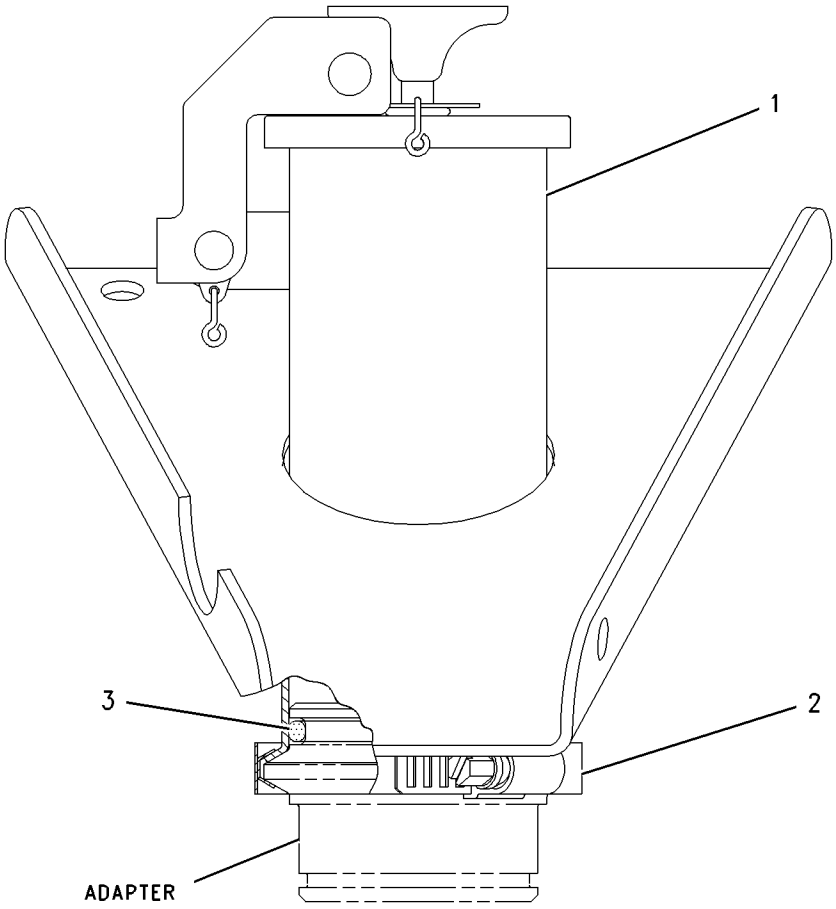

GRAPHIC #1 g00670944

127-9374 FILLER GP-ENGINE OIL

S/N: 5XD1-UP; 48W41904-UP
PART OF 163-5784, 198-9948 ENGINE AR
ALSO AN ATTACHMENT

SMCS-1316 **i00764837**

NOTE	REF NO	GRAPHIC REF	PART NUMBER	QTY	PART NAME 1 2 3 4 5 6 (PRODUCT LEVEL)	SEE PAGE
	1	1	**128-0598**	1	TUBE AS-OIL FILLER	
	2	1	**8S-4212**	1	RIVET	
	3	1	**1W-3862**	1	HASP-OIL FILLER	
	4	1	**6N-2206**	1	CAP AS-FILLER	
	5	1	**2N-8109**	1	CLAMP	
	6	1	**6V-3831**	1	SEAL-O-RING (53.34MM ID)	

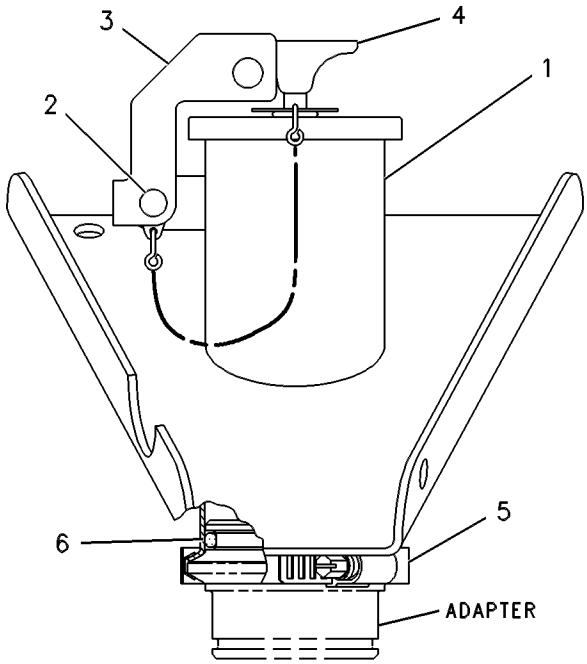

GRAPHIC #1 g00253350

MEMORANDA

LUBRICATION SYSTEM

163-5800 FILTER GP-ENGINE OIL

S/N: 5XD1-UP; 48W41541-UP
PART OF 163-5784, 198-9948 ENGINE AR
ALSO AN ATTACHMENT

SMCS-1306, 1308, 1318 **i01493677**

NOTE	REF NO	GRAPHIC REF	PART NUMBER	QTY	PART NAME 1 2 3 4 5 6 (PRODUCT LEVEL)	SEE PAGE
	1	1	**3L-3825**	1	SPACER (1-3/8 IN LG)	
	2	1	**7W-3447**	1	SPACER (10.2X19.05X10.2MM THK)	
	3	1	**8C-3445**	1	CAP-DUST	
	4	1	**8C-3446**	1	VALVE AS-FLUID SAMPLING	
	5	1	**8N-6739**	2	RING-RETAINING	
	6	1	**114-3824**	1	GASKET	
	7	1	**114-3825**	1	ELBOW	
	8	1	**115-2249**	1	TUBE AS	
	9	1	**115-8384**	4	RETAINER	
	10	1	**117-8301**	1	SHIELD	
	11	1	**124-4177**	1	TUBE AS	
	12	1	**189-0981**	1	BASE AS-OIL FILTER	
		1	**2W-8225**	2	STUD-TAPERLOCK	
	13	1	**127-6256**	1	PLATE	
	14	1	**163-8393**	1	BRACKET	
	15	1	**061-7540**	1	SEAL-O-RING	
	16	1	**6V-1525**	1	STUD-TAPERLOCK	
	17	1	**0L-1143**	1	BOLT (3/8-16X2.50 IN)	
	18	1	**0L-1351**	4	BOLT (3/8-16X0.875 IN)	
	19	1	**0L-2070**	4	BOLT (3/8-16X2.25 IN)	
	20	1	**0S-1585**	2	BOLT (1/2-13X1.50 IN)	
	21	1	**0S-1588**	1	BOLT (3/8-16X1.25 IN)	
	22	1	**0S-1571**	4	BOLT (3/8-16X1.75 IN)	
	23	1	**0S-1594**	1	BOLT (3/8-16X1 IN)	
	24	1	**0S-1619**	4	BOLT (3/8-16X3 IN)	
	25	1	**125-9794**	1	SEAL-O-RING	
	26	1	**1A-2029**	1	BOLT (3/8-16X1.125 IN)	
	27	1	**1R-0716**	2	FILTER AS-ENGINE OIL	
	28	1	**4B-4161**	6	SCREW-DRIVE (NO.6X3/8)	
	29	1	**5M-2894**	19	WASHER-HARD (10.2X18.5X2.5MM THK)	
	30	1	**2P-1974**	3	STUD-TAPERLOCK (3/8IN NC X 4-7/32)	
	31	1	**6V-3830**	2	SEAL-O-RING	
	32	1	**6V-4589**	1	SEAL-O-RING	
	33	1	**7D-1649**	2	WASHER-HARD (13.5X32X5MM THK)	
	34	1	**8C-5230**	1	SEAL-O-RING	
	35	1	**9S-4190**	1	PLUG-O-RING	
	36	1	**9S-8752**	5	NUT-FULL (3/8-16 THD)	
	37	1	**9X-6458**	5	WASHER-HARD (10.2X22.5X3MM THK)	
	38	1	**6V-5048**	1	SEAL-O-RING	

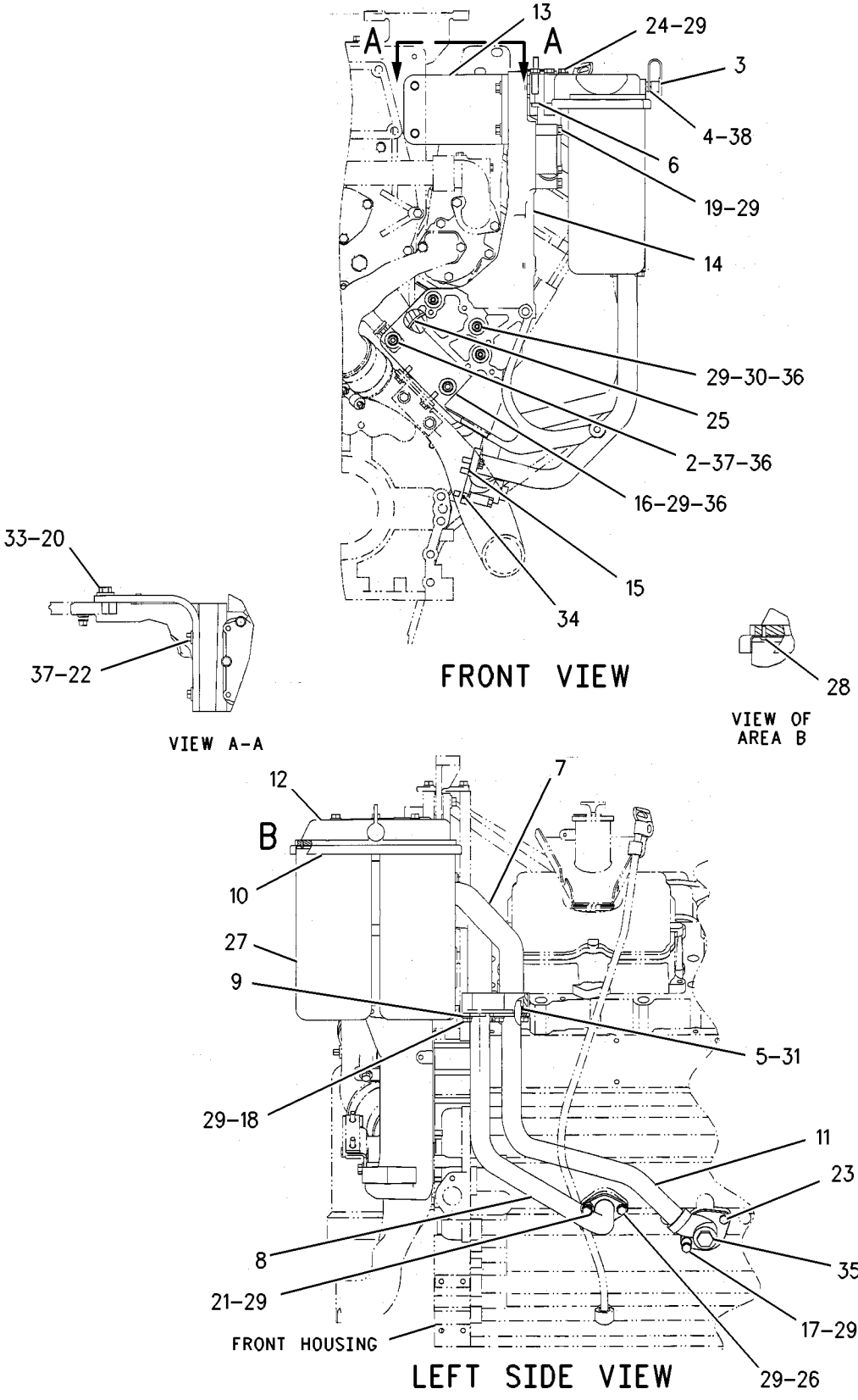

GRAPHIC #1 g00775563

7W-6988 FUMES DISPOSAL GP

S/N: ABK1-UP
PART OF 162-9502 CONVERSION AR-ENGINE
AN ATTACHMENT

SMCS-1317 **i01446364**

NOTE	REF NO	GRAPHIC REF	PART NUMBER	QTY	PART NAME 1 2 3 4 5 6 (PRODUCT LEVEL)	SEE PAGE
BE	1	1	**1W-2835**	2	HOSE	
	2	1	**9M-2904**	4	CLAMP-HOSE	
	3	1	**7W-6978**	1	TUBE AS	
	4	1	**7W-7078**	1	BRACKET AS	
	5	1	**5P-0597**	1	CLAMP-HOSE	
E	6	1	**5P-1259**		HOSE (76CM)	
	7	1	**6V-2235**	2	CLIP	
	8	1	**0S-0509**	2	BOLT (3/8-16X0.75 IN)	
	9	1	**5M-2894**	2	WASHER-HARD (10.2X18.5X2.5MM THK)	

B-USE AS REQUIRED
E-ORDER BY THE CENTIMETER

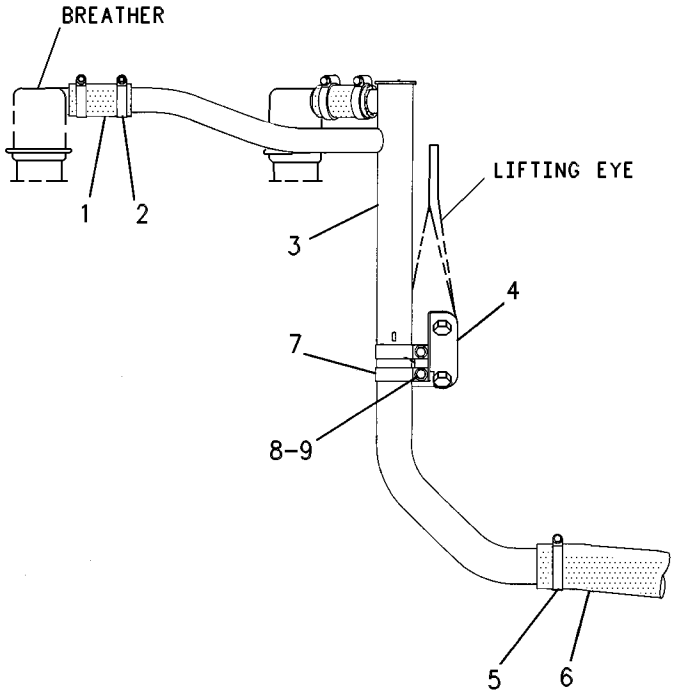

GRAPHIC #1 g00248784

MEMORANDA

LUBRICATION SYSTEM

190-3472 FUMES DISPOSAL GP

S/N: ABK1-UP

PART OF 162-9505 INSTALLATION AR-ENGINE

SMCS-1317 **i01431953**

NOTE	REF NO	GRAPHIC REF	PART NUMBER	QTY	PART NAME 1 2 3 4 5 6 (PRODUCT LEVEL)	SEE PAGE
E	1	1	**5P-1255**		HOSE (9CM EACH)	
	2	1	**4D-7388**	3	CLIP	
	3	1	**7K-1181**	1	STRAP-CABLE	
	4	1	**7N-6886**	1	BRACKET AS	
	5	1	**9M-2904**	6	CLAMP-HOSE	
	6	1	**9W-9320**	2	ANGLE	
	7	1	**9Y-9194**	1	BRACKET	
	8	1	**190-3474**	1	TUBE	
	9	1	**4L-6454**	3	BOLT (3/8-16X1 IN)	
	10	1	**4L-9337**	2	BOLT (3/8-16X1.5 IN)	
	11	1	**4P-7428**	1	CLIP	
	12	1	**5P-1075**	8	WASHER-HARD (10.2X22.5X3MM THK)	
	13	1	**5P-2228**	1	BOLT (1/2-13X1 IN)	
	14	1	**6V-8801**	4	NUT (3/8-16 THD)	
	15	1	**8T-4223**	1	WASHER-HARD (13.5X25.5X3MM THK)	
	16	1	**8T-4896**	2	WASHER-HARD (10.2X18.5X2.5MM THK)	
	17	1	**9B-7237**	1	BOLT (3/8-16X1.25 IN)	
E	18	1	**5P-1255**		HOSE (87CM EACH)	
E	18A	1	**5P-1255**		HOSE (87CM EACH)	
	19	1	**127-0561**	1	TUBE	

E-ORDER BY THE CENTIMETER

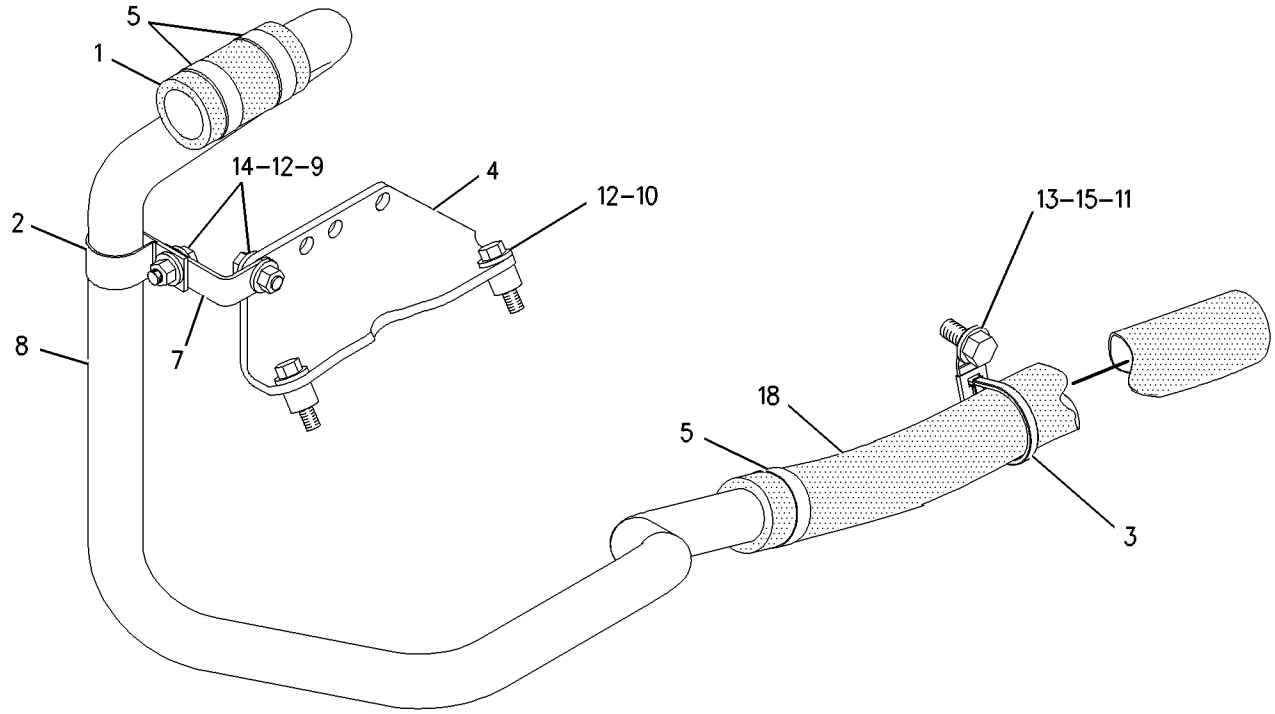

LEFT SIDE

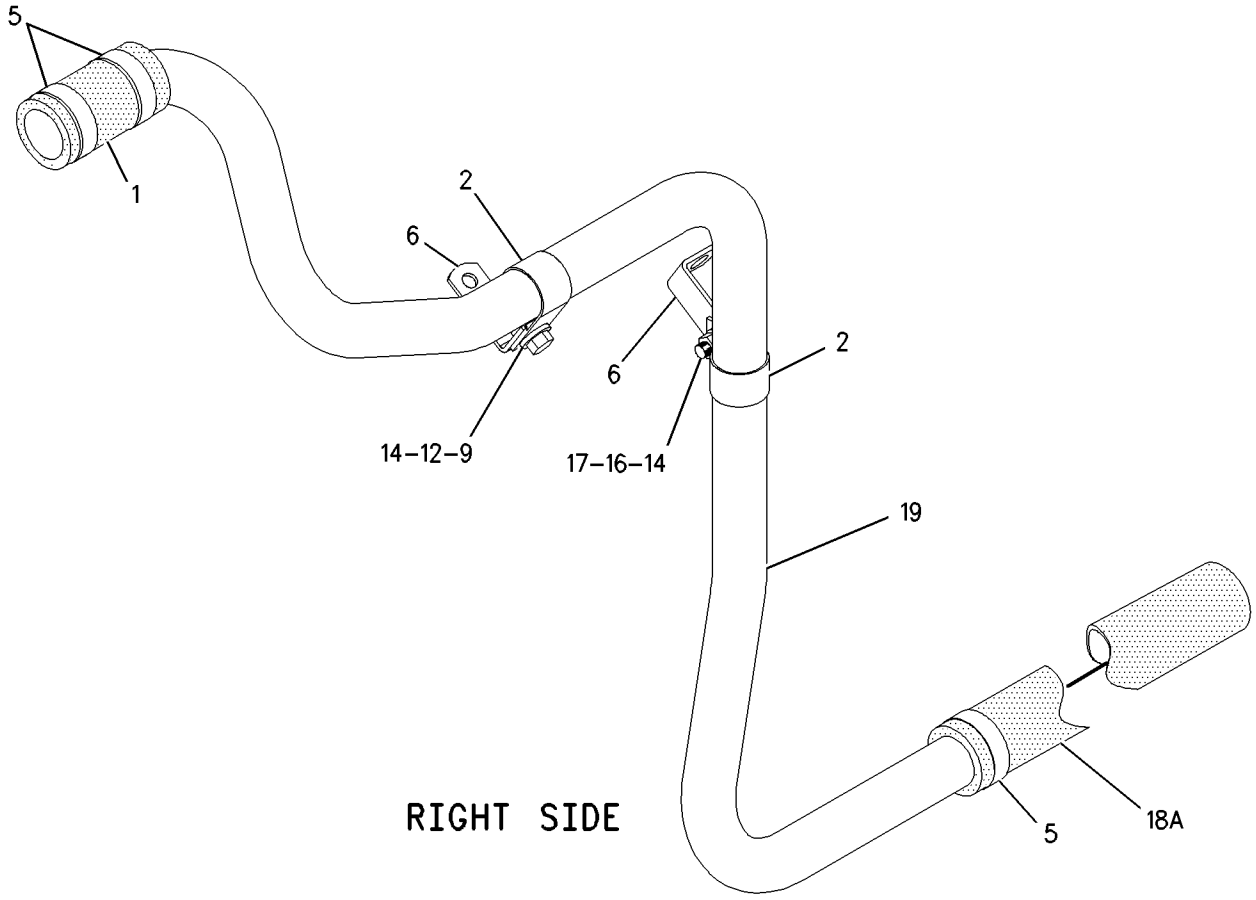

RIGHT SIDE

GRAPHIC #1 g00750237

130-7306 GAUGE GP-OIL LEVEL (DIPSTICK)

S/N: 5XD1-UP; 48W41541-UP
PART OF 163-5784, 198-9948 ENGINE AR
ALSO AN ATTACHMENT

SMCS-1326 **i01446366**

NOTE	REF NO	GRAPHIC REF	PART NUMBER	QTY	PART NAME 1 2 3 4 5 6 (PRODUCT LEVEL)	SEE PAGE
	1	1	**134-8250**	1	GAUGE AS-OIL LEVEL (DIPSTICK)	
	2	1	**4P-0707**	2	CLAMP AS	
	3	1	**0L-1143**	1	BOLT (3/8-16X2.50 IN)	
	4	1	**5M-2894**	2	WASHER-HARD (10.2X18.5X2.5MM THK)	
	5	1	**9S-8752**	1	NUT-FULL (3/8-16 THD)	
	6	1	**132-7536**	1	TUBE AS	
		1	**4N-1294**	1	ADAPTER	
	7	1	**118-5068**	1	SEAL-O-RING (15.54MM ID)	

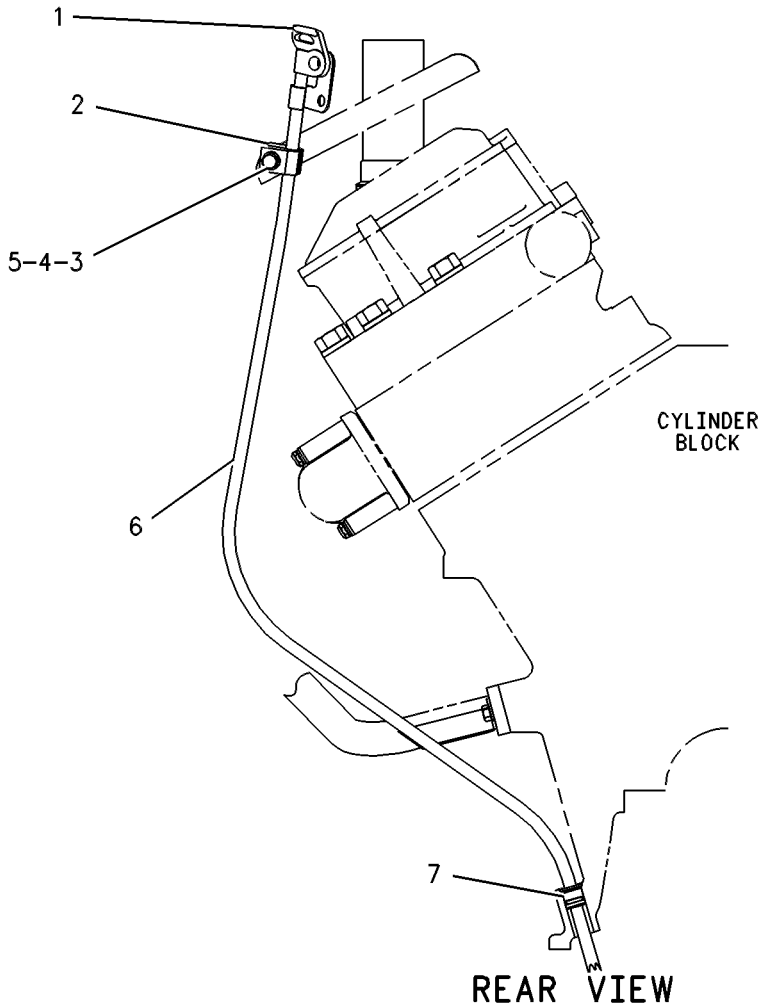

GRAPHIC #1 g00256706

MEMORANDA

LUBRICATION SYSTEM

7N-6700 LINES GP-ENGINE OIL

S/N: 5XD1-UP; 48W41541-UP
PART OF 163-5784, 198-9948 ENGINE AR
ALSO AN ATTACHMENT

SMCS-1307 **i01446368**

NOTE	REF NO	GRAPHIC REF	PART NUMBER	QTY	PART NAME 1 2 3 4 5 6 (PRODUCT LEVEL)	SEE PAGE
	1	1	**0S-1594**	10	BOLT (3/8-16X1 IN)	
	2	1	**1P-3705**	1	SEAL-RECTANGULAR	
	3	1	**0L-1351**	1	BOLT (3/8-16X0.875 IN)	
	4	1	**5M-2894**	10	WASHER-HARD (10.2X18.5X2.5MM THK)	
	5	1	**6V-3830**	1	SEAL-O-RING (34.29MM ID)	
	6	1	**7N-6253**	1	ELBOW	
	7	1	**0S-1588**	2	BOLT (3/8-16X1.25 IN)	
	8	1	**0S-1591**	2	BOLT (3/8-16X1.5 IN)	
	9	1	**7N-6251**	1	TUBE AS	
	10	1	**0S-1595**	1	BOLT (1/2-13X1.25 IN)	
		1	**5P-8245**	1	WASHER-HARD (13.5X25.5X3MM THK)	
C	11	1	**1W-8795**	1	BRACKET	
	12	1	**9S-8752**	2	NUT-FULL (3/8-16 THD)	
	13	1	**1W-6012**	1	TUBE AS	
	14	1	**9K-4430**	1	CLAMP	
	15	1	**1W-5996**	1	PLATE-FRONT PAN	
	16	1	**109-0078**	2	SEAL-O-RING (33.47MM ID)	
	17	1	**0S-1608**	1	BOLT (3/8-16X3.75 IN)	
	18	1	**1W-5992**	1	PIPE AS-PUMP SUCTION	
	19	1	**8J-4351**	1	SEAL-O-RING (44.04MM ID)	
	20	1	**4N-0914**	1	CLIP	
	21	1	**4N-0913**	1	SCREEN AS-BELL	
	22	1	**8N-2104**	1	BELL AS-SUCTION	
		1	**9F-2978**	2	NUT-WELD (3/8-16 THD)	
	23	1	**0L-1352**	2	BOLT (3/8-16X3.25 IN)	
C	24	1	**2W-1010**	1	SUPPORT	
	25	1	**7N-6255**	1	TUBE AS-OUTLET	
	26	1	**0T-0768**	4	BOLT (7/16-14X1.75IN)	
	27	1	**2S-2053**	1	CLIP	
	28	1	**8N-6740**	1	RETAINER	
		1	**8N-6739**	1	RING-RETAINING	
	29	1	**9L-9132**	2	WASHER (10.2X25.5X2.5MM THK)	
	30	2	**0T-0065**	1	BOLT (3/8-16X3.5 IN)	
	31	2	**109-0076**	3	SEAL-O-RING (50.17MM ID)	
	32	2	**4F-8965**	4	BOLT (7/16-14X1.125IN)	
	33	2	**5P-8244**	4	WASHER (12X22.5X2.5MM THK)	
	34	2	**5H-2068**	1	COVER	
		2	**118-7214**	1	SEAL-O-RING (37.69MM ID)	
	35	2	**0S-1594**	8	BOLT (3/8-16X1 IN)	
	36	2	**5M-2894**	3	WASHER-HARD (10.2X18.5X2.5MM THK)	
	37	2	**4N-0861**	1	COVER	
	38	2	**4N-0865**	1	GASKET	
C	39	2	**9F-6304**	2	SPRING	
	40	2	**9M-0853**	2	PLUNGER-RELIEF VALVE	
	41	2	**0L-2070**	1	BOLT (3/8-16X2.25 IN)	
	42	2	**1W-1116**	1	BODY-BYPASS	
	43	2	**109-0078**	2	SEAL-O-RING (33.47MM ID)	
	44	2	**4N-8410**	1	TUBE-COOLER BYPASS	
	45	2	**114-2687**	2	SEAL-O-RING (23.16MM ID)	
	46	2	**4N-9753**	1	ELBOW-COOLER OUTLET	
	47	2	**7N-6252**	1	TUBE AS-LH	
	48	2	**5H-0135**	1	GASKET	
	49	2	**6V-3830**	1	SEAL-O-RING (34.29MM ID)	
	50	2	**0S-1591**	2	BOLT (3/8-16X1.5 IN)	

C-CHANGE FROM PREVIOUS TYPE

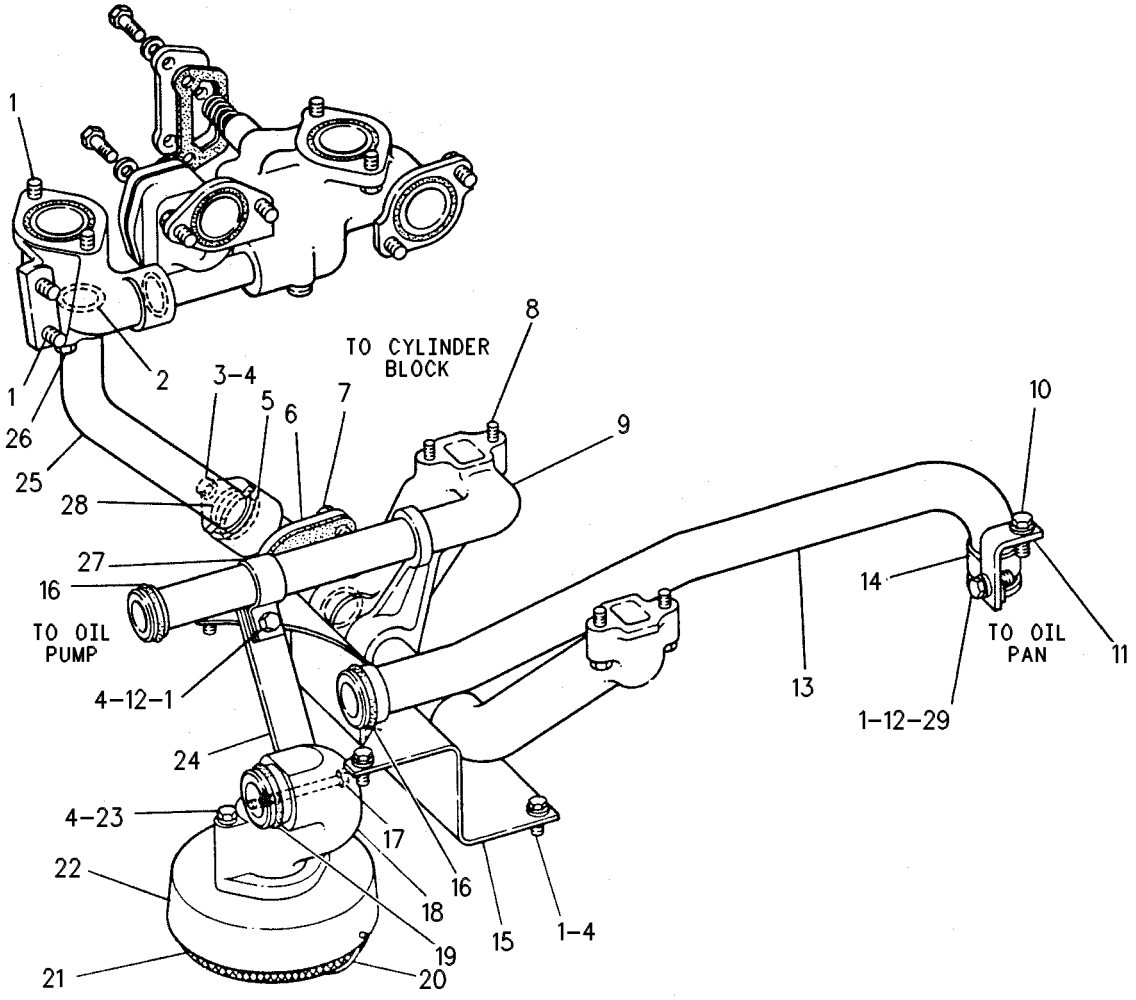

GRAPHIC #1 g00257559

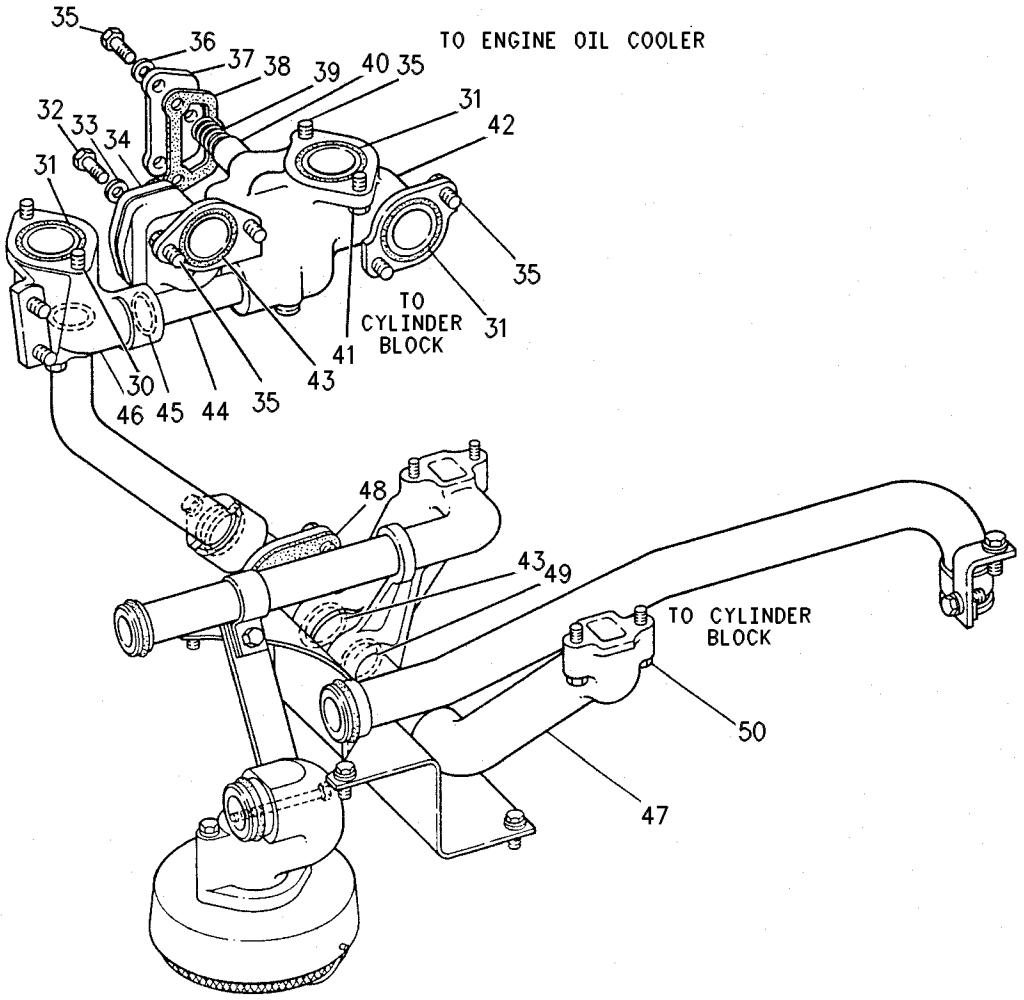

GRAPHIC #2

g00493903

MEMORANDA

LUBRICATION SYSTEM

168-9243 LINES GP-OIL SUPPLY

S/N: ABK1-UP

PART OF 162-9505 INSTALLATION AR-ENGINE

SMCS-1307 **i01629200**

NOTE	REF NO	GRAPHIC REF	PART NUMBER	QTY	PART NAME 1 2 3 4 5 6 (PRODUCT LEVEL)	SEE PAGE
	1	1	**4N-1684**	1	GASKET	
	2	1	**9W-8687**	1	PLATE AS	
		1	**1F-0750**	1	NUT-WELD (3/8-16 THD)	
I	3	1	**123-5895**	2	HOSE AS	
	4	1	**123-9052**	1	COVER	
Y	5	1	**192-0729**	1	VALVE & MTG GP-PILOT	444
	6	1	**6V-8642**	1	CONNECTOR	
		1	**136-7226**	1	SEAL-O-RING	
		1	**136-7227**	1	SEAL-O-RING	
I	7	1	**138-6793**	1	HOSE AS	
I	8	1	**110-9672**	1	HOSE AS	
	9	1	**198-7247**	1	TUBE AS	
	10	1	*183-3398*	1	CONNECTOR AS	
		1	**8L-2779**	1	SEAL-O-RING	
		1	**6V-5049**	1	SEAL-O-RING	
	11	1	**033-6033**	2	SEAL-O-RING	
	12	1	**136-7226**	7	SEAL-O-RING	
	13	1	**5S-7379**	2	BOLT (3/8-16X0.875 IN)	
	14	1	**6V-5048**	1	SEAL-O-RING	
	15	1	**6V-5049**	3	SEAL-O-RING	
	16	1	**6V-8555**	2	NUT-FACE SEAL (1-14THD)	
	17	1	**6V-8722**	1	ELBOW	
	18	1	**6V-8632**	1	CONNECTOR	
	19	1	**6V-8724**	1	ELBOW	
	20	1	**6V-8938**	1	REDUCER-O-RING	
	21	1	**6V-8939**	1	REDUCER	
	22	1	**6V-9838**	2	TEE-SWIVEL	
	23	1	**6V-9872**	1	CONNECTOR	
	24	1	**8C-6758**	1	CONNECTOR	
	25	1	**8L-2779**	3	SEAL-O-RING	
	26	1	**8L-2786**	2	SEAL-O-RING	
	27	1	**8M-2773**	2	CLIP	
	28	1	**8T-4896**	7	WASHER-HARD (10.2X18.5X2.5MM THK)	
	29	1	**8T-6876**	1	ELBOW	
	30	1	**8T-9377**	2	BOLT (3/8-16X2.25 IN)	
	31	1	**9B-7237**	3	BOLT (3/8-16X1.25 IN)	

I-SEE HOSE FABRICATION GUIDE
Y-SEPARATE ILLUSTRATION

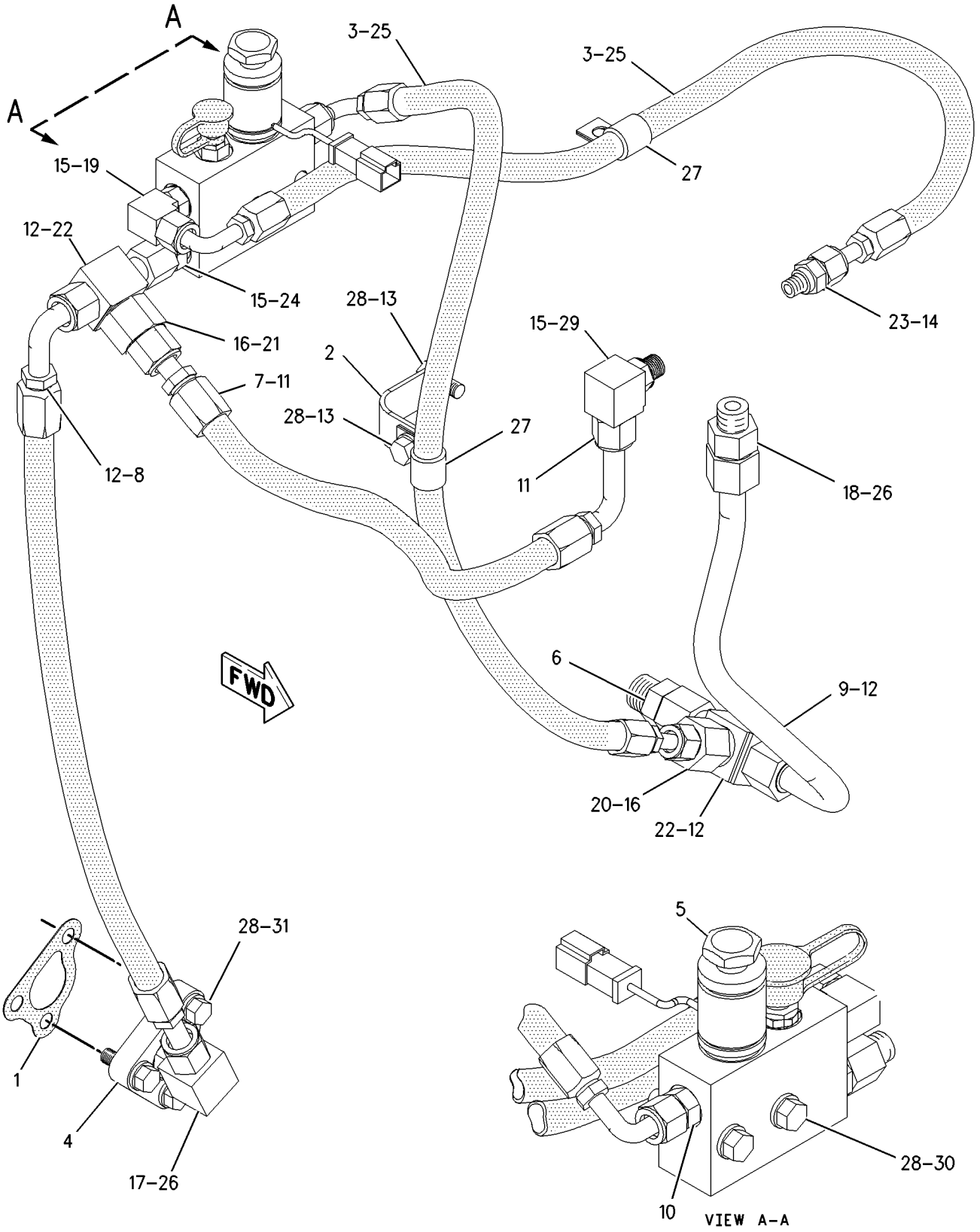

GRAPHIC #1 g00759981

LUBRICATION SYSTEM

4W-1931 LINES GP-TURBOCHARGER OIL

S/N: 48W41541-UP
PART OF 198-9948 ENGINE AR
AN ATTACHMENT

SMCS-1052, 1307 **i01446370**

NOTE	REF NO	GRAPHIC REF	PART NUMBER	QTY	PART NAME 1 2 3 4 5 6 (PRODUCT LEVEL)	SEE PAGE
	1	1	**4W-7197**	1	TUBE AS-OIL	
	2	1	**8S-9191**	2	BOLT (3/8-16X4 IN)	
	3	1	**4H-9541**	1	GASKET	
	4	1	**7N-7559**	1	GASKET	
	5	1	**1N-4734**	2	CLAMP	
	6	1	**0L-1143**	1	BOLT (3/8-16X2.50 IN)	
	7	1	**5M-2894**	5	WASHER-HARD (10.2X18.5X2.5MM THK)	
	8	1	**9S-8752**	1	NUT-FULL (3/8-16 THD)	
	9	1	**061-8248**	1	UNION-FLARED	
	10	1	**1W-7999**	1	BRACKET	
	11	1	**1W-5378**	1	ELBOW-DRAIN	
	12	1	**4N-6672**	1	GASKET	
	13	1	**4W-1890**	1	FLANGE-DRAIN	
	14	1	**4W-2109**	2	RETAINER	
	15	1	**6M-7476**	1	ELBOW	
	16	1	**4W-2110**	1	RING-RETAINING	
	17	1	**1A-2029**	4	BOLT (3/8-16X1.125 IN)	
	18	1	**0L-1351**	2	BOLT (3/8-16X0.875 IN)	
	19	1	**114-4427**	1	SEAL-O-RING (19.18MM ID)	
	20	1	**4W-7195**	1	TUBE AS	
	21	1	**114-2687**	2	SEAL-O-RING (23.16MM ID)	
BE	22	1	**7C-9463**	1	TUBE	
	23	1	**0S-1571**	1	BOLT (3/8-16X1.75 IN)	

B-USE AS REQUIRED
E-ORDER BY THE CENTIMETER

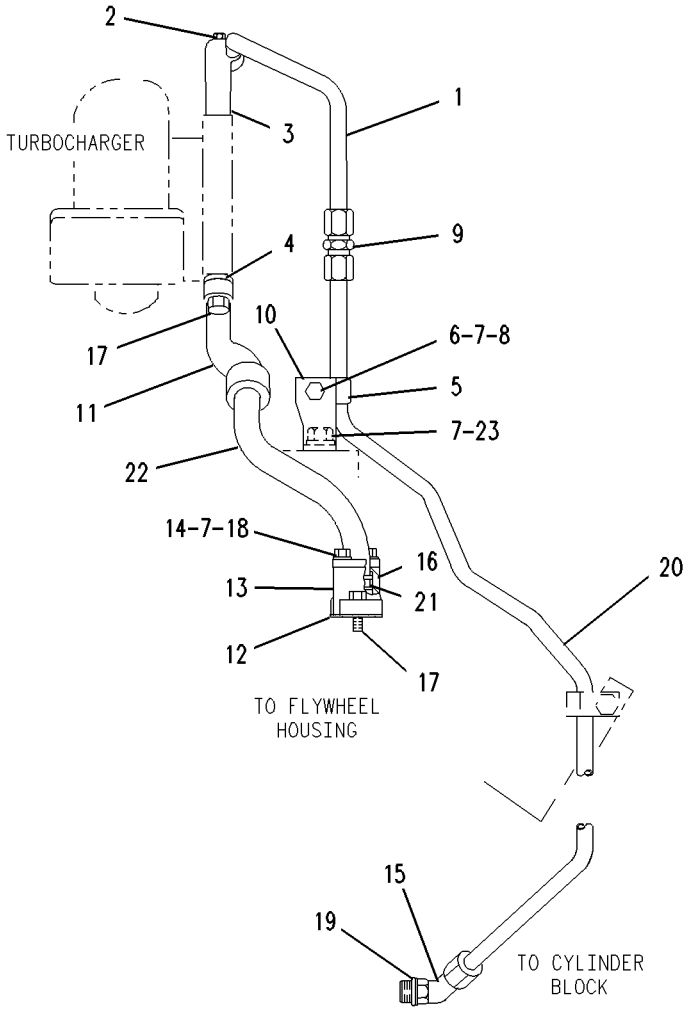

GRAPHIC #1 g00218822

LUBRICATION SYSTEM

169-6547 LINES GP-TURBOCHARGER OIL

S/N: 5XD1-UP

PART OF 163-5784 ENGINE AR

SMCS-1052, 1307 **i01446372**

NOTE	REF NO	GRAPHIC REF	PART NUMBER	QTY	PART NAME 1 2 3 4 5 6 (PRODUCT LEVEL)	SEE PAGE
	1	1	**1W-5378**	1	ELBOW-DRAIN	
	2	1	**4N-6672**	1	GASKET	
	3	1	**4P-0692**	2	CLAMP AS	
		1	**7C-2199**	1	CLAMP	
		1	**108-1434**	1	GROMMET	
	4	1	**4W-1890**	1	FLANGE-DRAIN	
	5	1	**4W-2109**	2	RETAINER	
	6	1	**4W-2110**	1	RING-RETAINING	
	7	1	**7N-7559**	1	GASKET	
	8	1	**108-9432**	1	TUBE	
	9	1	**123-8179**	1	TUBE AS-OIL SUPPLY	
		1	**6V-8555**	1	NUT-FACE SEAL (M1-14THD)	
		1	**6V-8562**	1	SLEEVE-FACE SEAL	
		1	**6V-8720**	1	CONNECTOR	
	10	1	**169-6548**	1	TUBE AS	
		1	**6V-8555**	1	NUT-FACE SEAL (M1-14THD)	
		1	**6V-8562**	1	SLEEVE-FACE SEAL	
	11	1	**0L-1143**	1	BOLT (3/8-16X2.50 IN)	
	12	1	**0L-1351**	2	BOLT (3/8-16X0.875 IN)	
	13	1	**0S-1608**	2	BOLT (3/8-16X3.75 IN)	
	14	1	**1A-2029**	4	BOLT (3/8-16X1.125 IN)	
	15	1	**5M-2894**	2	WASHER-HARD (10.2X18.5X2.5MM THK)	
	16	1	**5P-5598**	1	SEAL-O-RING (15.5MM ID)	
	17	1	**5P-9890**	2	SEAL-O-RING (23.16MM ID)	
	18	1	**6V-4589**	1	SEAL-O-RING (19.18MM ID)	
	19	1	**6V-9003**	1	ELBOW	
	20	1	**8L-2746**	2	SEAL-O-RING (15.6MM ID)	
	21	1	**9X-6458**	1	WASHER-HARD (10.2X22.5X3MM THK)	

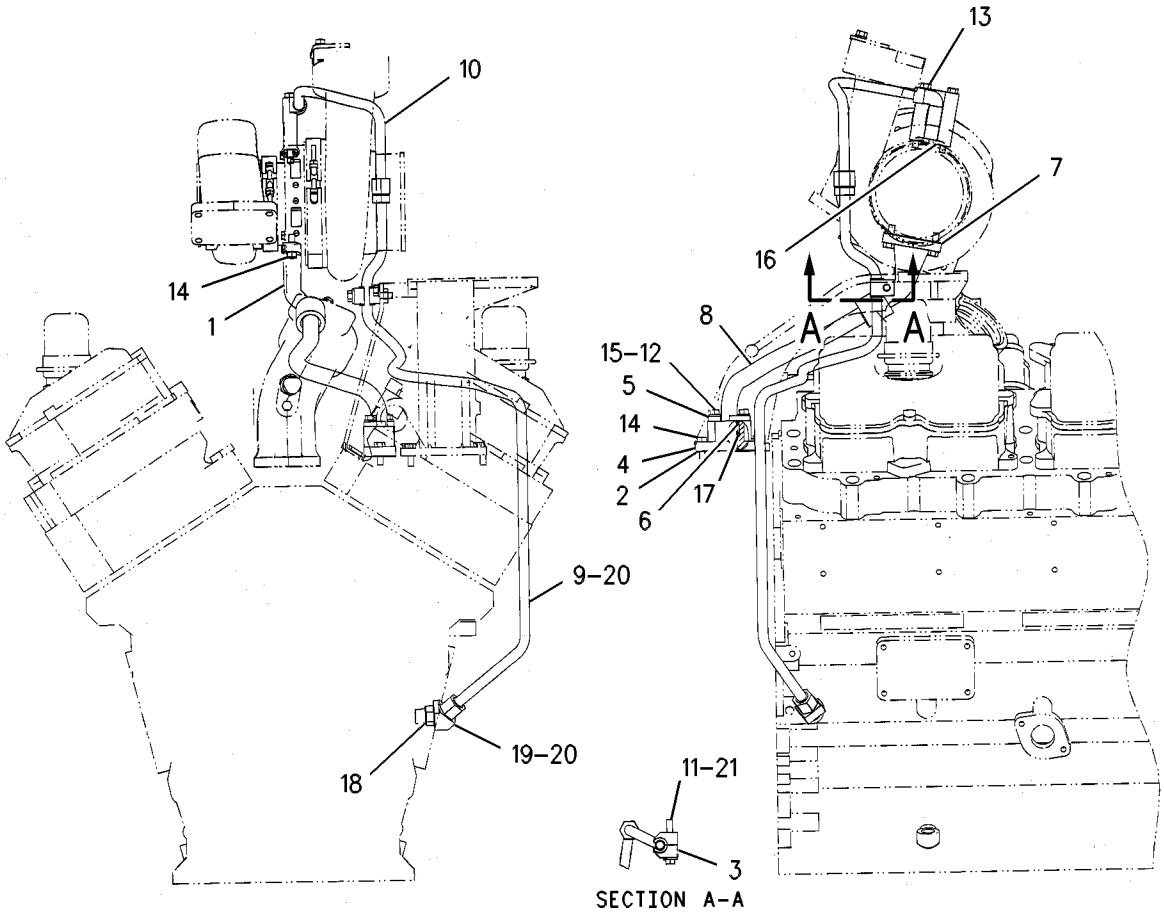

GRAPHIC #1

g00564406

LUBRICATION SYSTEM

8E-7117 OIL CHANGE GP-HIGH SPEED

S/N: ABK1-UP
AN ATTACHMENT

SMCS-1325 **i01422973**

NOTE	REF NO	GRAPHIC REF	PART NUMBER	QTY	PART NAME 1 2 3 4 5 6 (PRODUCT LEVEL)	SEE PAGE
	1	1	**2P-1286**	1	LOCKNUT-BULKHEAD	
	2	1	**2V-2043**	1	LOCKNUT-FLARED	
C	3	1	**6V-9833**	1	CAP AS	
	4	1	**6N-5650**	1	TUBE AS-OIL CHANGE	
	5	1	**9U-9557**	1	BRACKET	
C	6	1	**091-9035**	1	SPACER (11X25X20MM THK)	
I	7	1	**110-5980**	1	HOSE AS	
	8	1	**110-5981**	1	BRACKET AS	
		1	**9F-2978**	1	NUT-WELD (3/8-16 THD)	
	9	1	**110-8319**	1	RECEIVER AS (POWER TRAIN OIL)	
		1	**110-8318**	1	CAP	
	10	1	**110-8827**	1	RECEIVER AS (ENGINE OIL)	
CI	11	1	**131-1721**	1	HOSE AS	
	12	1	*148-8317*	1	CONNECTOR GP	
		1	**3D-2824**	1	SEAL-O-RING (23.47MM ID)	
		1	**5K-9090**	1	SEAL-O-RING (23.52MM ID)	
		1	**6V-8714**	1	CONNECTOR	
	13	1	*148-8335*	2	CONNECTOR GP	
					(EACH INCLUDES)	
		1	**6V-8635**	1	CONNECTOR	
		1	**7M-8485**	1	SEAL-O-RING (29.74MM ID)	
		1	**5K-9090**	1	SEAL-O-RING (23.52MM ID)	
	14	1	*148-8355*	1	ELBOW GP	
		1	**5K-9090**	1	SEAL-O-RING (23.52MM ID)	
		1	**7M-8485**	1	SEAL-O-RING (29.74MM ID)	
		1	**6V-9005**	1	ELBOW	
C	15	1	*148-8429*	1	FITTING GP	
		1	**5K-9090**	2	SEAL-O-RING (23.52MM ID)	
		1	**6V-9840**	1	TEE-SWIVEL	
	16	1	**1S-0004**	1	SEAL-O-RING (18.42MM ID)	
C	17	1	**4L-6454**	1	BOLT (3/8-16X1 IN)	
C	18	1	**4S-4455**	1	CLIP	
	19	1	**5N-2840**	1	CLIP	
B	20	1	**5P-1075**	1	WASHER-HARD (10.2X22.5X3MM THK)	
C	21	1	**5S-7383**	1	BOLT (3/8-16X1.75 IN)	
C	22	1	**8T-4896**	1	WASHER-HARD (10.2X18.5X2.5MM THK)	
BC	23	1	**195-7619**	1	PLATE AS	
		1	**1F-0750**	1	NUT-WELD (3/8-16 THD)	
B	24	1	**5P-1075**	2	WASHER-HARD (10.2X22.5X3MM THK)	
B	25	1	**7C-4355**	1	CLIP	
B	26	1	**4L-6454**	2	BOLT (3/8-16X1 IN)	
AF			**126-7538**	1	NOZZLE AS (POWER TRAIN OIL)	
AF			**126-7539**	1	NOZZLE AS (ENGINE OIL)	

A-NOT PART OF THIS GROUP
B-USE AS REQUIRED
C-CHANGE FROM PREVIOUS TYPE
F-NOT SHOWN
I-SEE HOSE FABRICATION GUIDE

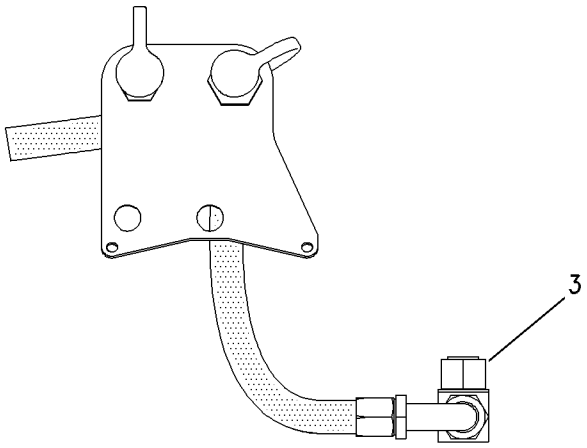

VIEW C-C

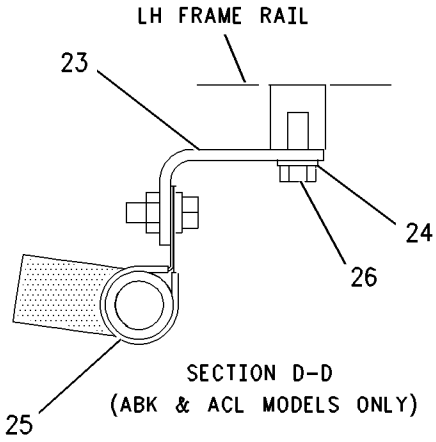

SECTION D-D
(ABK & ACL MODELS ONLY)

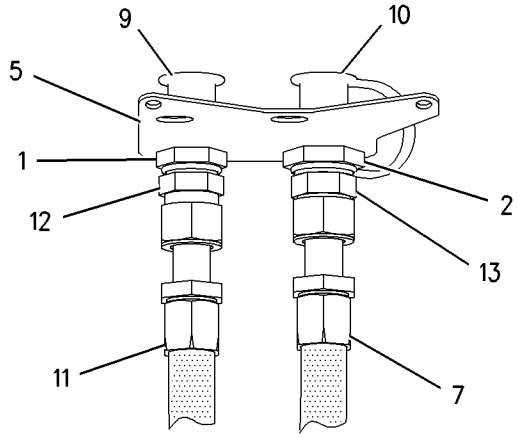

VIEW OF AREA A

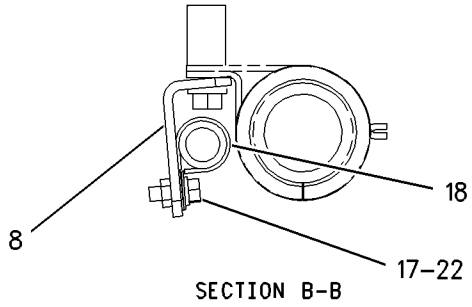

SECTION B-B

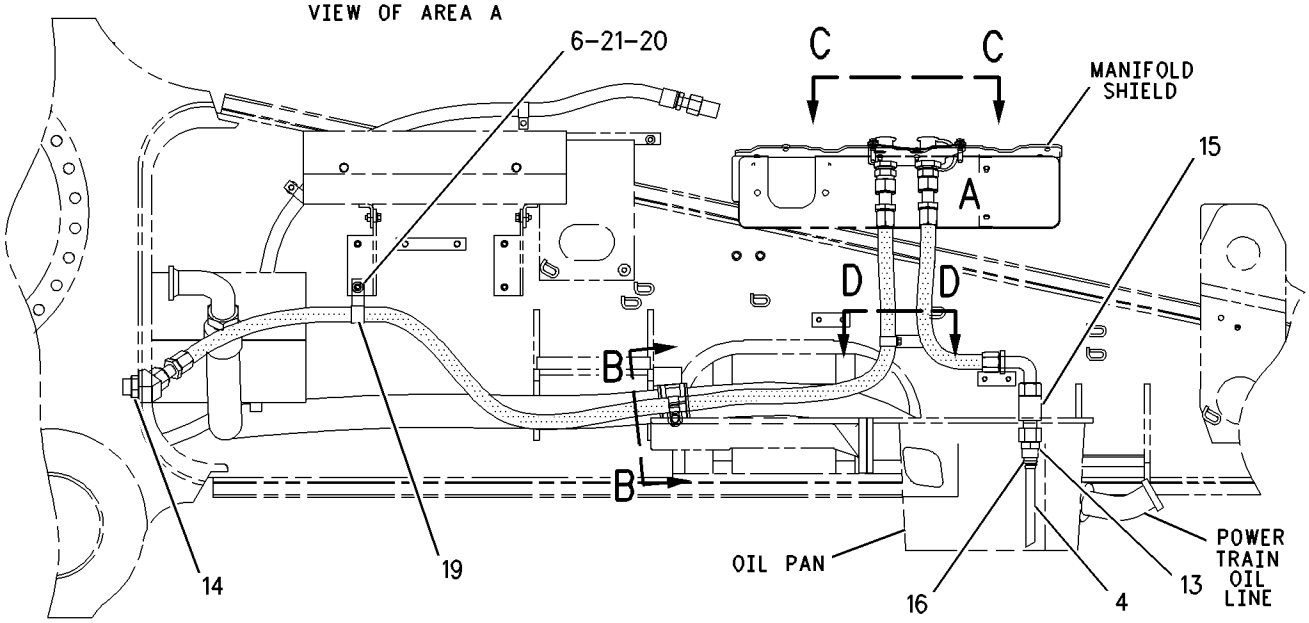

RIGHT SIDE VIEW

GRAPHIC #1 g00747596

LUBRICATION SYSTEM

125-4653 PRELUBRICATION AR-ENGINE

S/N: ABK1-UP
AN ATTACHMENT

SMCS-1319 **i01358181**

NOTE	REF NO	GRAPHIC REF	PART NUMBER	QTY	PART NAME 1 2 3 4 5 6 (PRODUCT LEVEL)	SEE PAGE
	1	1	**6N-5650**	1	TUBE AS-OIL CHANGE	
	2	1	**6V-9833**	1	CAP AS	
BC	3	1	**7K-1181**	2	STRAP-CABLE	
	4	1	**8T-8737**	3	PLUG-SEAL (3.07MM ID)	
	5	1	**105-9152**	1	SWITCH AS-PRESSURE (OIL)	
		1	**8T-8729**	2	PIN-CONNECTOR	
		1	**102-8802**	1	KIT-RECEPTACLE (2 PIN)	
					(INCLUDES RECEPTACLE AS & WEDGE)	
I	6	1	**123-4079**	1	HOSE AS	
I	7	1	**123-4080**	1	HOSE AS	
	8	1	**123-5150**	1	VALVE-CHECK	
YR	9	1	**123-8686**	1	STARTING MOTOR GP-ELECTRIC	362
	10	1	**125-0473**	1	FILM-NOTICE (PRE-LUBRICATION PUMP)	
C	11	1	**140-3108**	1	TIMER	
	12	1	**6V-8632**	1	CONNECTOR	
	12A	1	**3K-0360**	1	SEAL-O-RING (16.36MM ID)	
	13	1	**6V-9840**	1	TEE-SWIVEL	
		1	**5K-9090**	2	SEAL-O-RING (23.52MM ID)	
	14	1	**8C-4000**	1	CONNECTOR	
	14A	1	**5K-9090**	1	SEAL-O-RING (23.52MM ID)	
C	15	1	**177-4308**	1	PLATE AS	
C	16	1	**179-0006**	1	SWITCH AS-MAGNETIC (STARTER ON-OFF)	
		1	**1B-2578**	2	NUT (3/8-16 THD)	
		1	**4D-1326**	2	LOCKWASHER	
		1	**4L-6499**	2	WASHER (0.38X0.88X0.02 IN THK)	
		1	**6V-8378**	2	NUT (10-32 THD)	
		1	**7X-0620**	2	WASHER-HARD (5.5X13X1.6MM THK)	
		1	**8F-1434**	2	LOCKWASHER	
BC	17	1	**186-2847**	1	PLATE	
C	18	1	**187-1985**	1	HARNESS AS	
		1	**155-2270**	1	KIT-CONNECTING PLUG (2 PIN)	
					(INCLUDES PLUG AS & WEDGE)	
		1	**155-2274**	1	KIT-CONNECTING PLUG (6 PIN)	
					(INCLUDES PLUG AS & WEDGE)	
		1	**102-8803**	1	KIT-RECEPTACLE (3 PIN)	
					(INCLUDES RECEPTACLE AS & WEDGE)	
	19	1	**6V-8635**	1	CONNECTOR	
	19A	1	**7M-8485**	1	SEAL-O-RING (29.74MM ID)	
	19B	1	**5K-9090**	1	SEAL-O-RING (23.52MM ID)	
C	20	1	**6V-9852**	1	ELBOW-SWIVEL	
C		1	**7J-9108**	1	SEAL-O-RING (15.72MM ID)	
C	21	1	**155-2260**	1	KIT-CONNECTING PLUG (3 PIN)	
					(INCLUDES PLUG AS & WEDGE)	
	22	1	**1S-0004**	1	SEAL-O-RING (18.42MM ID)	
C	23	1	**2M-9780**	1	SEAL-O-RING (19.18MM ID)	
	24	1	**3B-7721**	1	BUSHING-REDUCER	
C	25	1	**4M-5281**	4	BOLT (1/4-20X.750 IN)	
C	26	1	**4P-8134**	1	CLIP	
BC	27	1	**5M-3062**	2	BOLT (3/8-16X.75 IN)	
	28	1	**5P-4115**	2	WASHER-HARD (7.2X19X2MM THK)	
BC	29	1	**5S-7383**	1	BOLT (3/8-16X1.75 IN)	
	30	1	**7J-9108**	1	SEAL-O-RING (15.72MM ID)	
C	31	1	**8T-4205**	4	WASHER-HARD (7.2X14.5X2MM THK)	
	32	1	**8T-4896**	2	WASHER-HARD (10.2X18.5X2.5MM THK)	
	33	1	**8T-9367**	2	BOLT (1/4-20X2 IN)	

125-4653 **PRELUBRICATION AR-ENGINE** ***(contd.)*** **i01358181**

B-USE AS REQUIRED
C-CHANGE FROM PREVIOUS TYPE
I-SEE HOSE FABRICATION GUIDE
R-REMFG PART MAY BE AVAILABLE
Y-SEPARATE ILLUSTRATION

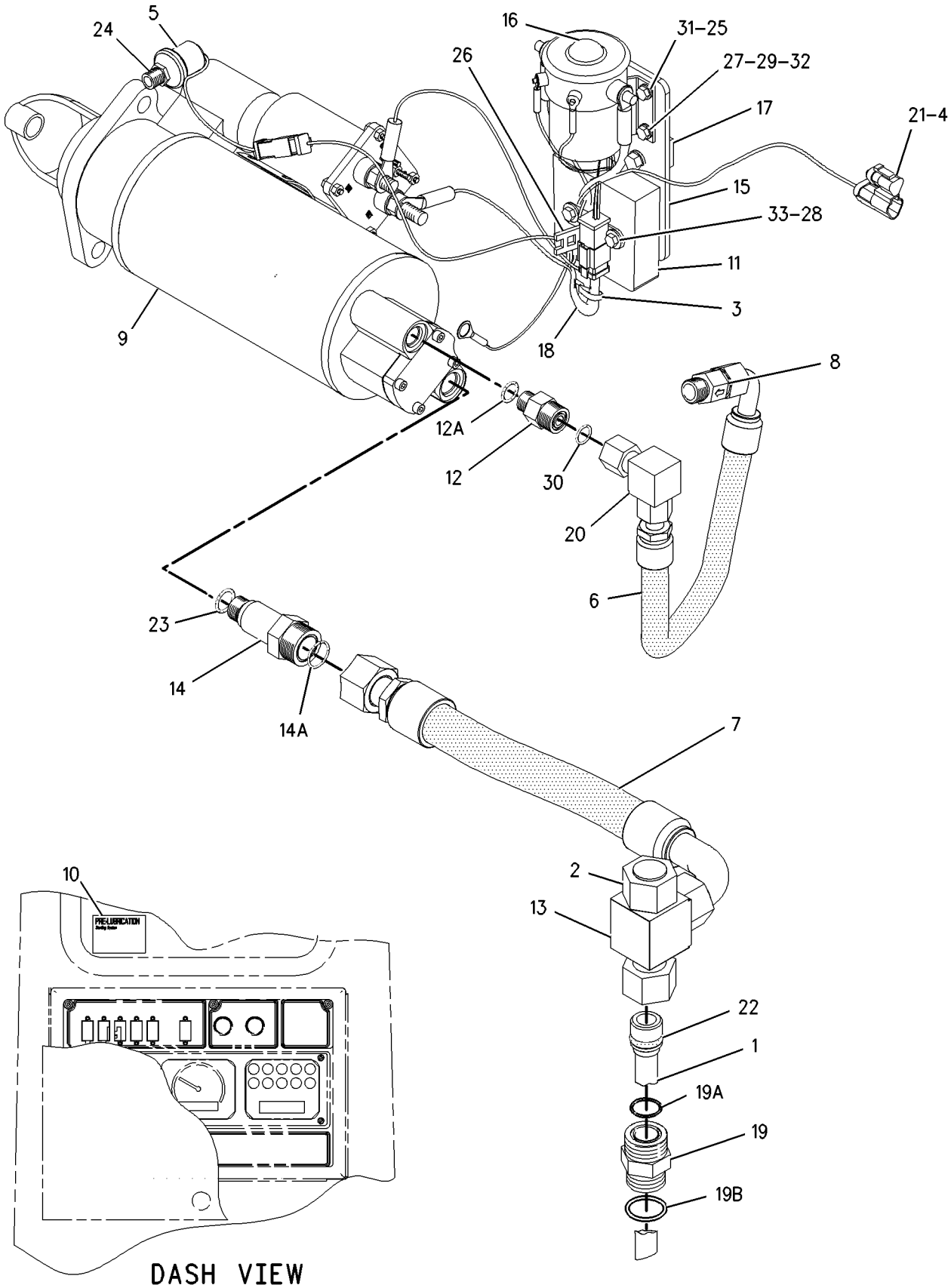

GRAPHIC #1

g00734681

MEMORANDA

161-4110 PUMP GP-ENGINE OIL

S/N: 48W41541-UP
TWO SECTION GEAR
PART OF 198-9948 ENGINE AR
AN ATTACHMENT

SMCS-1304, 1315 **i01486921**

NOTE	REF NO	GRAPHIC REF	PART NUMBER	QTY	PART NAME 1 2 3 4 5 6 (PRODUCT LEVEL)	SEE PAGE
	1	1	**4N-0513**	1	BODY AS-OIL PUMP	
	1A	1	**7N-2156**	2	BEARING-SLEEVE	
	1B	1	**8M-8489**	2	DOWEL	
	2	1	**1M-0644**	2	BOLT (3/8-16X2-1/4 IN)	
	3	1	**5M-2894**	2	WASHER-HARD (10.2X18.5X2.5MM THK)	
	4	1	**5F-4899**	2	BOLT (3/8-16X5.5 IN)	
	5	1	**1D-4706**	2	BOLT (3/8-16X6 IN)	
	6	1	**7G-2176**	4	DAMPER-BOLT	
	7	1	**9Y-1792**	1	RETAINER	
	8	1	**2S-2760**	1	SPRING	
	9	1	**6N-1931**	1	PLUNGER-RELIEF	
	10	1	**202-3572**	1	SHAFT AS-DRIVE	
	11	1	**145-8503**	1	SHAFT AS-IDLER	
	12	1	**4N-5339**	1	SPACER AS-OIL PUMP	
	13	1	**6N-2343**	1	BODY AS-PUMP	
	13A	1	**7N-2213**	2	BEARING-SLEEVE	
	14	1	**7W-7141**	1	GEAR-PUMP (8 TEETH)	
	15	1	**1W-5994**	1	COVER-SCAVENGE PUMP	
	16	1	**7W-6528**	1	GEAR-PUMP (8 TEETH)	

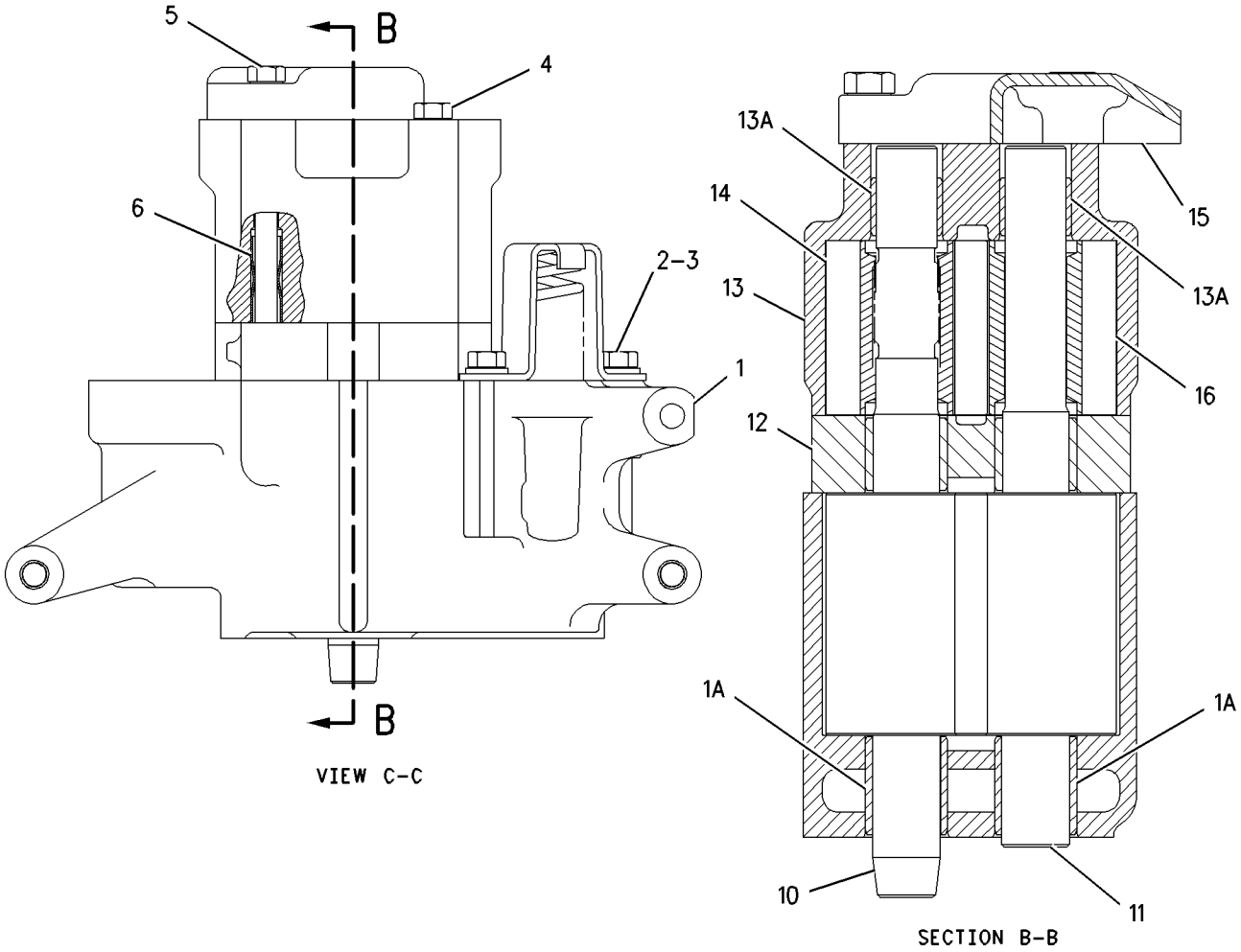

GRAPHIC #1

g00772962

LUBRICATION SYSTEM

168-0365 PUMP GP-ENGINE OIL

S/N: 5XD1-354
TWO SECTION GEAR
PART OF 163-5784 ENGINE AR

SMCS-1304, 1315 **i01540977**

NOTE	REF NO	GRAPHIC REF	PART NUMBER	QTY	PART NAME 1 2 3 4 5 6 (PRODUCT LEVEL)	SEE PAGE
	1	1	**5B-4274**	2	BOLT (3/8-16X3.5 IN)	
	2	1	**6N-1029**	1	BODY AS-OIL PUMP	
		1	**7N-2156**	2	BEARING-SLEEVE	
		1	**8M-8489**	2	DOWEL	
	3	1	**5M-2894**	2	WASHER-HARD (10.2X18.5X2.5MM THK)	
	4	1	**5F-4899**	2	BOLT (3/8-16X5.5 IN)	
	5	1	**1D-4706**	2	BOLT (3/8-16X6 IN)	
	6	1	**7G-2176**	4	DAMPER-BOLT	
	7	1	**9Y-1800**	1	RETAINER	
	8	1	**2S-2760**	1	SPRING	
	9	1	**7C-1512**	1	PLUNGER-RELIEF	
	10	1	**145-8502**	1	SHAFT AS-DRIVE	
	11	1	**145-8503**	1	SHAFT AS-IDLER	
	12	1	**4N-5339**	1	SPACER AS-OIL PUMP	
	13	1	**6N-2343**	1	BODY AS-PUMP	
		1	**7N-2213**	1	BEARING-SLEEVE	
	14	1	**7W-7141**	1	GEAR-PUMP (8 TEETH)	
	15	1	**1W-5994**	1	COVER-SCAVENGE PUMP	
	16	1	**7W-6528**	1	GEAR-PUMP (8 TEETH)	
	17	1	**7C-1527**	1	SPACER	
	18	1	**7C-1511**	1	RING-PLUNGER	

168-0365 PUMP GP-ENGINE OIL *(contd.)* i01540977

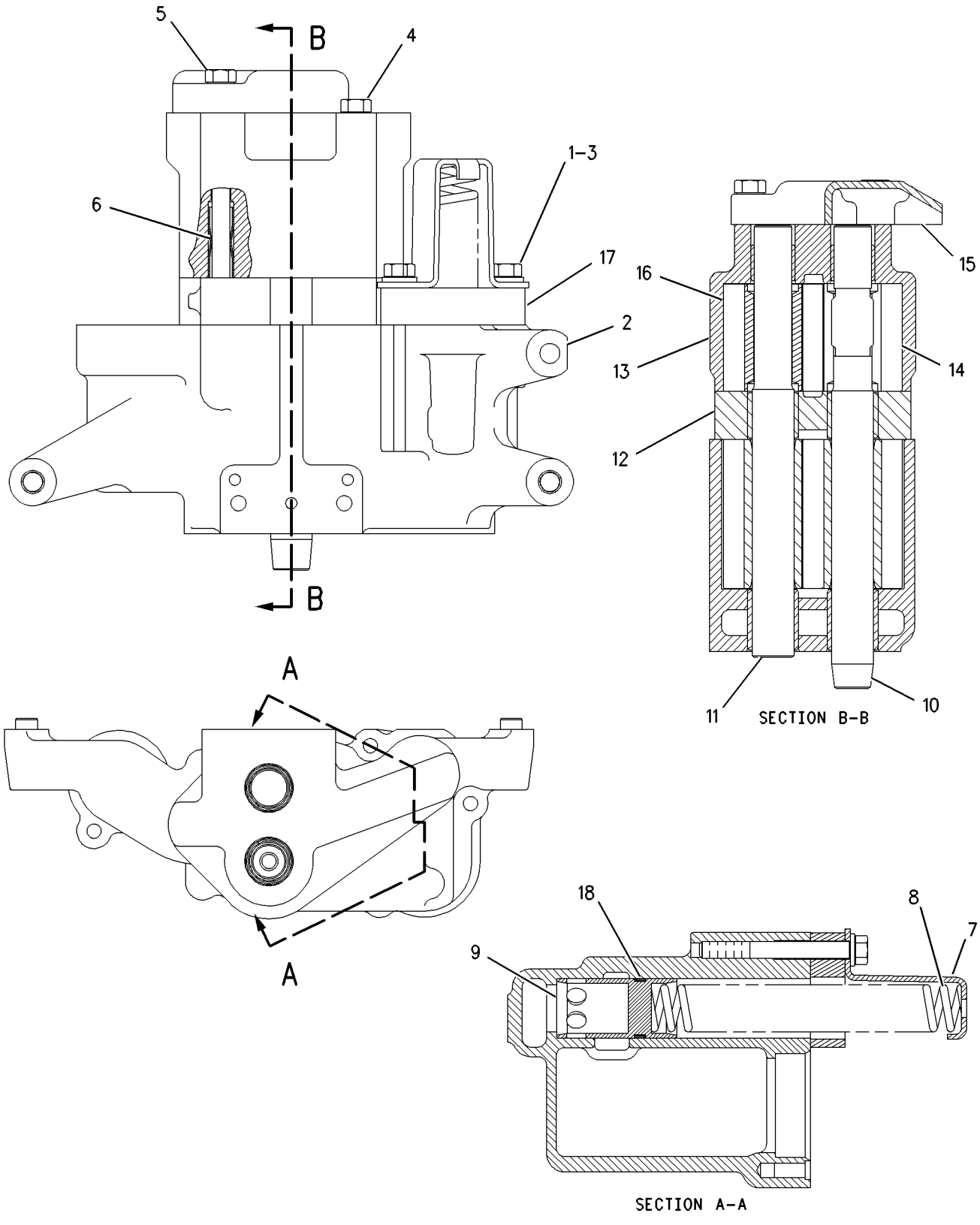

GRAPHIC #1 g00564004

LUBRICATION SYSTEM

202-3575 PUMP GP-ENGINE OIL

S/N: 5XD355-UP
CONTAINS A SHAFT WITH INDUCTION HARDENED SPLINES
PART OF 163-5784 ENGINE AR

SMCS-1304, 1315 **i01528576**

NOTE	REF NO	GRAPHIC REF	PART NUMBER	QTY	PART NAME 1 2 3 4 5 6 (PRODUCT LEVEL)	SEE PAGE
	1	1	**1D-4706**	2	BOLT (3/8-16X6 IN)	
	2	1	**1W-5994**	1	COVER-SCAVENGE PUMP	
	3	1	**2S-2760**	1	SPRING	
	4	1	**4N-5339**	1	SPACER AS-OIL PUMP	
		1	**7N-2155**	2	BEARING-SLEEVE	
	5	1	**5B-4274**	2	BOLT (3/8-16X3.5 IN)	
	6	1	**5F-4899**	2	BOLT (3/8-16X5.5 IN)	
	7	1	**5M-2894**	2	WASHER-HARD (10.2X18.5X2.5MM THK)	
	8	1	**6N-1029**	1	BODY AS-OIL PUMP	
		1	**7N-2156**	2	BEARING-SLEEVE	
		1	**8M-8489**	2	DOWEL	
	9	1	**6N-2343**	1	BODY AS-PUMP	
		1	**7N-2213**	2	BEARING-SLEEVE	
	10	1	**7C-1511**	1	RING-PLUNGER	
	11	1	**7C-1512**	1	PLUNGER-RELIEF	
	12	1	**7C-1527**	1	SPACER	
	13	1	**7G-2176**	4	DAMPER-BOLT	
	14	1	**7W-6528**	1	GEAR-PUMP (8 TEETH)	
	15	1	**7W-7141**	1	GEAR-PUMP (8 TEETH)	
	16	1	**9Y-1800**	1	RETAINER	
	17	1	**145-8503**	1	SHAFT AS-IDLER	
	18	1	**202-3572**	1	SHAFT AS-DRIVE	

202-3575 PUMP GP-ENGINE OIL *(contd.)* i01528576

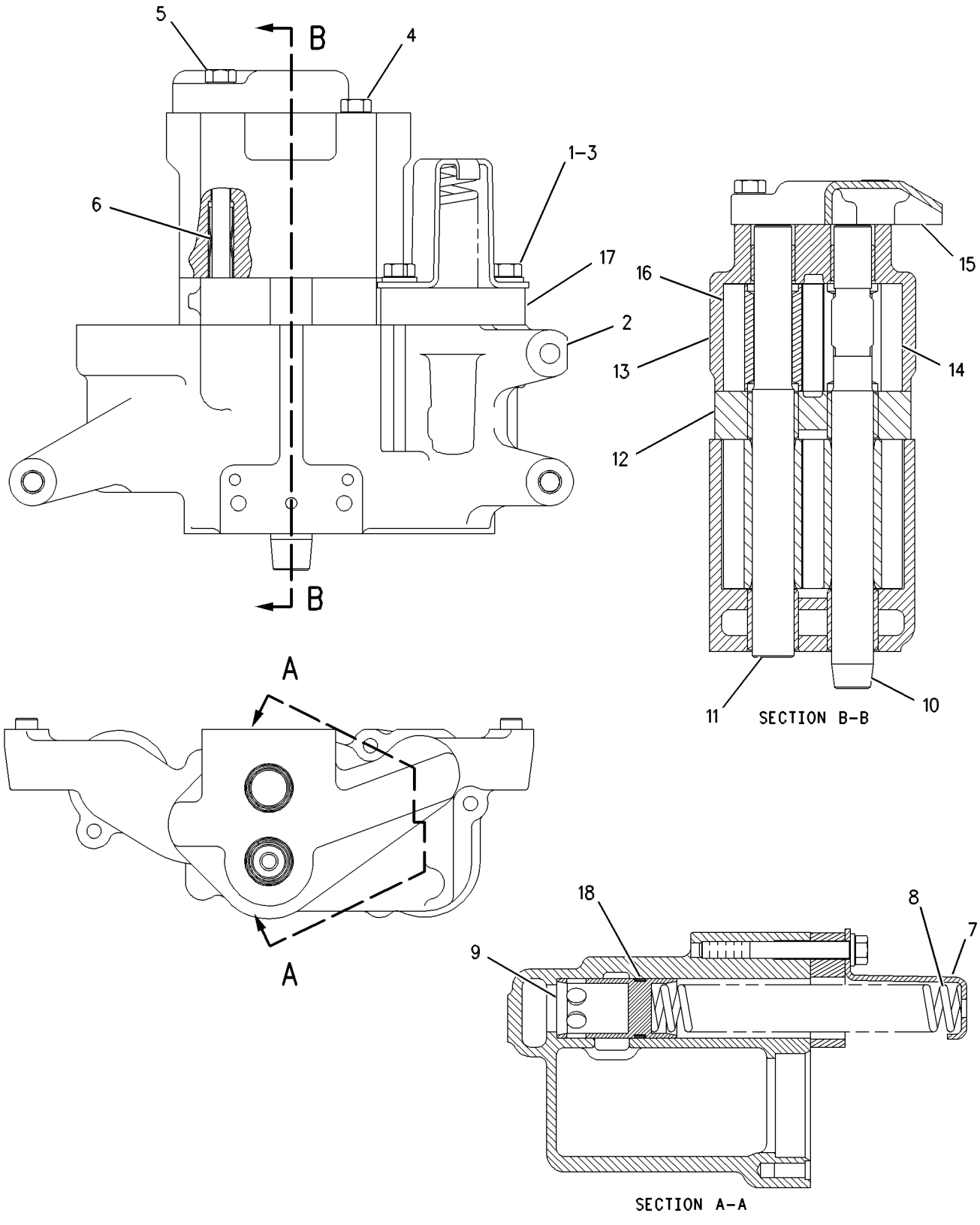

GRAPHIC #1 g00564004

163-5811 FAN GP-BLOWER

S/N: ABK1-UP

PART OF 162-9505 INSTALLATION AR-ENGINE

SMCS-1356, 1360 **i01432225**

NOTE	REF NO	GRAPHIC REF	PART NUMBER	QTY	PART NAME 1 2 3 4 5 6 (PRODUCT LEVEL)	SEE PAGE
	1	1	**6E-5102**	2	PLATE	
	2	1	**9L-8781**	12	WASHER (.406X1.5X.188 IN THK)	
	3	1	**197-6335**	1	SPIDER AS-FAN	
	4	1	**169-0908**	12	MOUNT AS	
	5	1	**170-6677**	1	GUARD AS-FAN (LOWER RH)	
	6	1	**170-6679**	1	GUARD AS-FAN (LOWER LH)	
	7	1	**171-1184**	1	BRACKET (RH)	
	8	1	**171-1185**	1	BRACKET (LH)	
	9	1	**8T-2501**	10	BOLT (3/8-16X2 IN)	
	10	1	**5K-0906**	4	BOLT (5/16-18X0.63 IN)	
	11	1	**5P-2566**	6	BOLT (1/2-13X1.5 IN)	
	12	1	**5P-4116**	4	WASHER-HARD (8.8X20.5X2MM THK)	
	14	1	**6V-8801**	2	NUT (3/8-16 THD)	
	15	1	**8T-4223**	6	WASHER-HARD (13.5X25.5X3MM THK)	

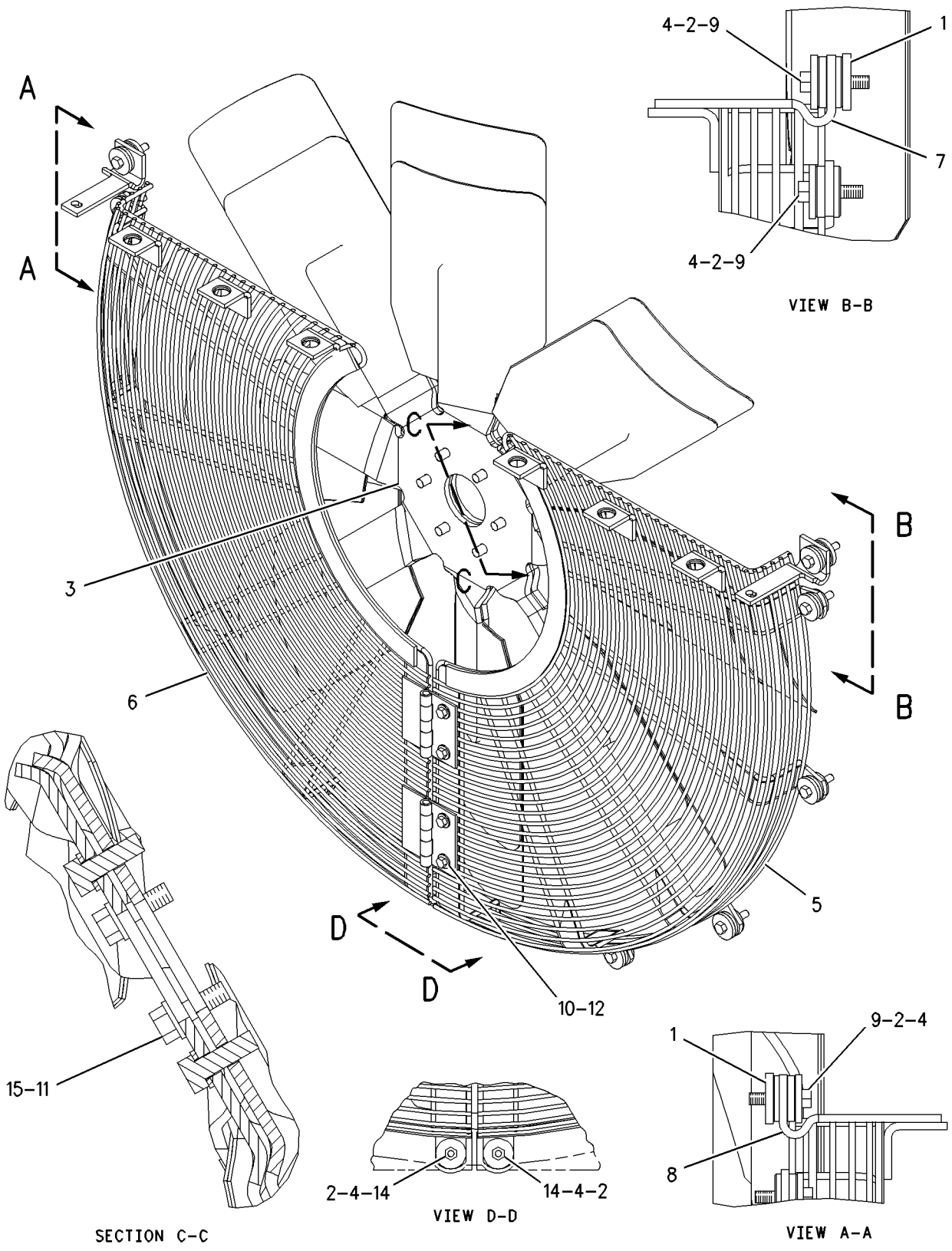

GRAPHIC #1 g00750375

COOLING SYSTEM

8N-2304 LINES GP-AFTERCOOLER WATER

S/N: 48W41541-UP
PART OF 198-9948 ENGINE AR
AN ATTACHMENT

SMCS-1380 **i01446381**

NOTE	REF NO	GRAPHIC REF	PART NUMBER	QTY	PART NAME 1 2 3 4 5 6 (PRODUCT LEVEL)	SEE PAGE
	1	1	**0S-1588**	1	BOLT (3/8-16X1.25 IN)	
	2	1	**4N-4307**	1	GASKET	
	3	1	**0S-1571**	7	BOLT (3/8-16X1.75 IN)	
	4	1	**112-3258**	5	SEAL-O-RING (46.99MM ID)	
	5	1	**1W-0390**	1	TUBE	
	6	1	**6N-3025**	1	TUBE AS	
	7	1	**6N-3026**	1	ELBOW	
	8	1	**0T-0573**	2	BOLT (3/8-16X2.75 IN)	
	9	1	**7C-0307**	1	GASKET	
	10	1	**6N-3024**	1	PLATE	
	11	1	**6F-6405**	2	SPACER (3/8IN THK)	
	12	1	**3B-1915**	1	BOLT (3/8-16X1.37 IN)	
	13	1	**5M-2894**	1	WASHER-HARD (10.2X18.5X2.5MM THK)	
	14	1	**0S-1594**	1	BOLT (3/8-16X1 IN)	
	15	1	**8N-2291**	1	ELBOW	
	16	1	**8N-2113**	1	CONNECTOR	
	17	1	**109-0073**	2	SEAL-O-RING (43.82MM ID)	
	18	1	**8N-2306**	1	COUPLING	
	19	1	**8N-2282**	1	ELBOW	
	20	1	**8T-6767**	4	PLUG-PIPE	

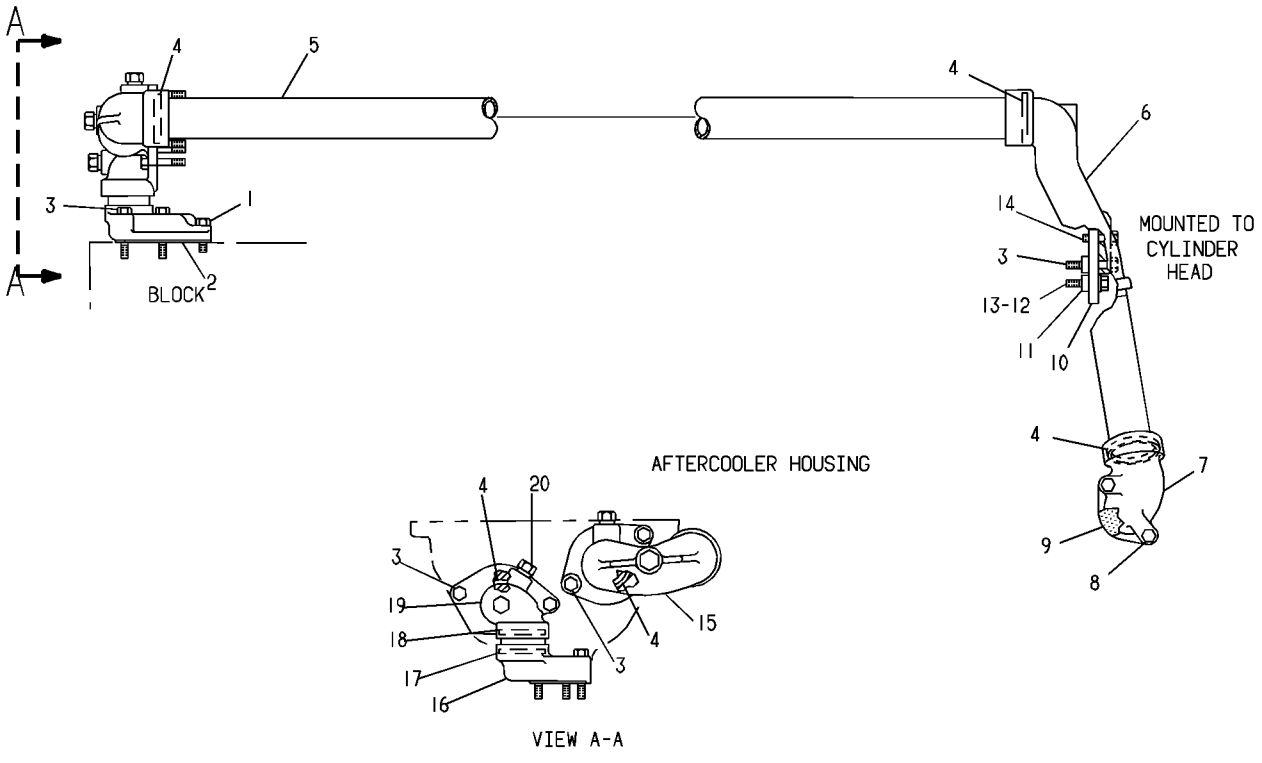

GRAPHIC #1 g00110598

COOLING SYSTEM

118-1293 LINES GP-WATER

S/N: 48W41541-UP
TURBOCHARGER
PART OF 198-9948 ENGINE AR
AN ATTACHMENT

SMCS-1355, 1380, 1393 **i01446382**

NOTE	REF NO	GRAPHIC REF	PART NUMBER	QTY	PART NAME 1 2 3 4 5 6 (PRODUCT LEVEL)	SEE PAGE
	1	1	**0S-1594**	8	BOLT (3/8-16X1 IN)	
	2	1	**5M-2894**	8	WASHER-HARD (10.2X18.5X2.5MM THK)	
	3	1	**7N-7878**	2	PLATE-COVER	
	4	1	**7N-7628**	4	GASKET	
	5	1	**8N-0788**	2	COVER	
	6	1	**135-8287**	1	HOSE AS	
	7	1	**8M-0755**	1	CONNECTOR	
	8	1	**5P-9299**	1	CLIP	
	9	1	**7L-7262**	1	ELBOW-FLARED	
C	10	1	**1A-9579**	1	BOLT (5/16-18X1.5 IN)	
C		1	**9M-1974**	1	WASHER-HARD (8.8X16X2MM THK)	

C-CHANGE FROM PREVIOUS TYPE

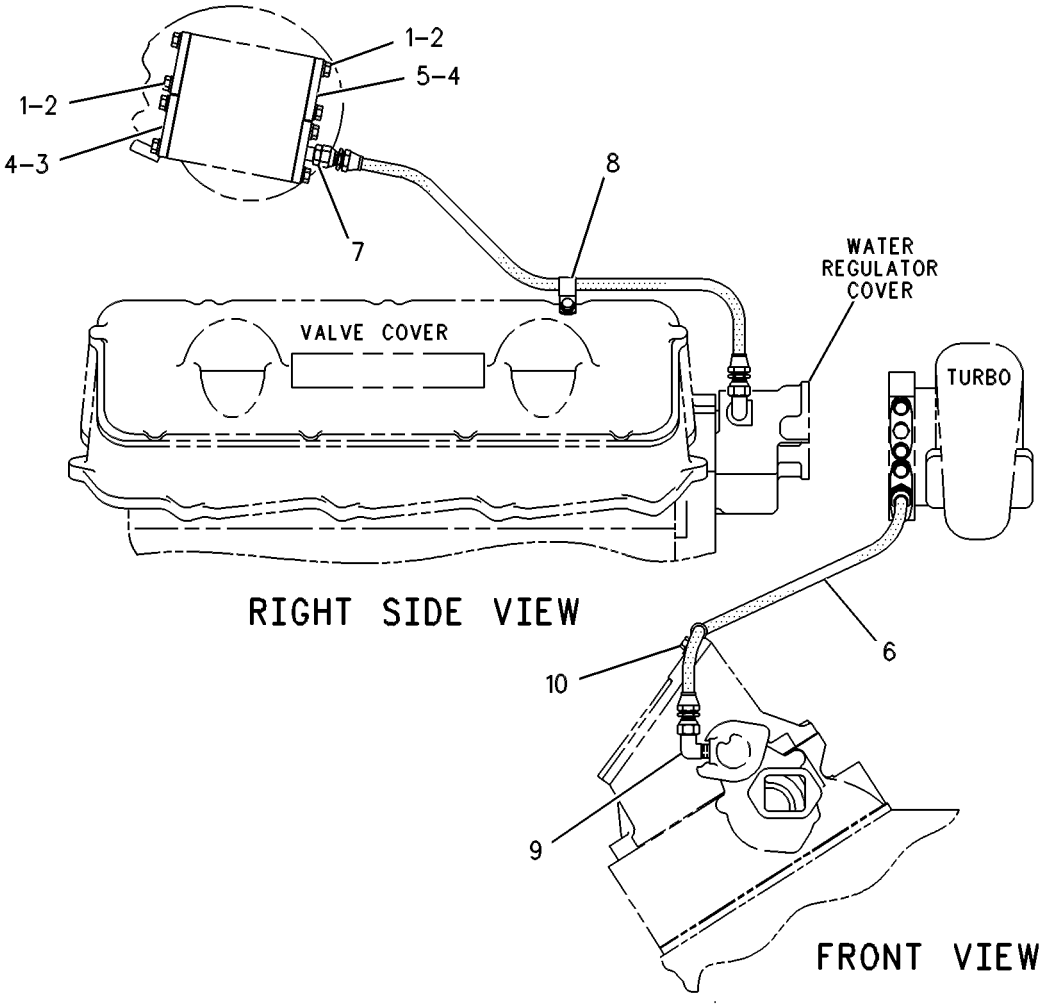

GRAPHIC #1 g00277019

COOLING SYSTEM

123-5739 LINES GP-WATER

S/N: ABK1-UP
PART OF 162-9502 CONVERSION AR-ENGINE
AN ATTACHMENT

SMCS-1355, 1380, 1393 **i01446383**

NOTE	REF NO	GRAPHIC REF	PART NUMBER	QTY	PART NAME 1 2 3 4 5 6 (PRODUCT LEVEL)	SEE PAGE
	1	1	**7X-0345**	4	BOLT (5/8-11X1.75 IN)	
	2	1	**8T-4122**	4	WASHER-HARD (17X32X3.5MM THK)	
	3	1	**4B-7739**	1	PLUG-DRAIN	
	4	1	**8H-9819**	1	ADAPTER-PLUG	
	5	1	**1F-4417**	2	GASKET	
C	6	1	**9B-7237**	4	BOLT (3/8-16X1.25 IN)	
	7	1	**8T-4896**	2	WASHER-HARD (10.2X18.5X2.5MM THK)	
C	8	1	**188-7197**	1	ADAPTER	
C	9	1	**189-2514**	1	BONNET	
	10	1	**5H-0244**	1	GASKET	
	11	1	**8T-2502**	2	BOLT (3/8-16X1.125 IN)	
	12	1	**5P-1717**	2	CLAMP-HOSE	
E	13	1	**5P-1268**		HOSE (101.6MM ID) (12.7CM)	
	14	1	**105-8627**	1	ELBOW	
	15	1	**8N-0301**	1	VALVE AS	
		1	**7N-7688**	1	FERRULE	
		1	**9M-5590**	1	BALL	
	16	1	**8T-6675**	4	CLAMP-HOSE	
E	17	1	**5P-1262**	2	HOSE (63.5MM ID) (45CM EACH)	
C	18	1	**8T-6764**	2	PLUG-PIPE	
	19	1	**118-9644**	1	SUPPORT AS	
		1	**3J-5169**	2	NUT (5/8-11 THD)	
	20	1	**119-6637**	1	BONNET	

C-CHANGE FROM PREVIOUS TYPE
E-ORDER BY THE CENTIMETER

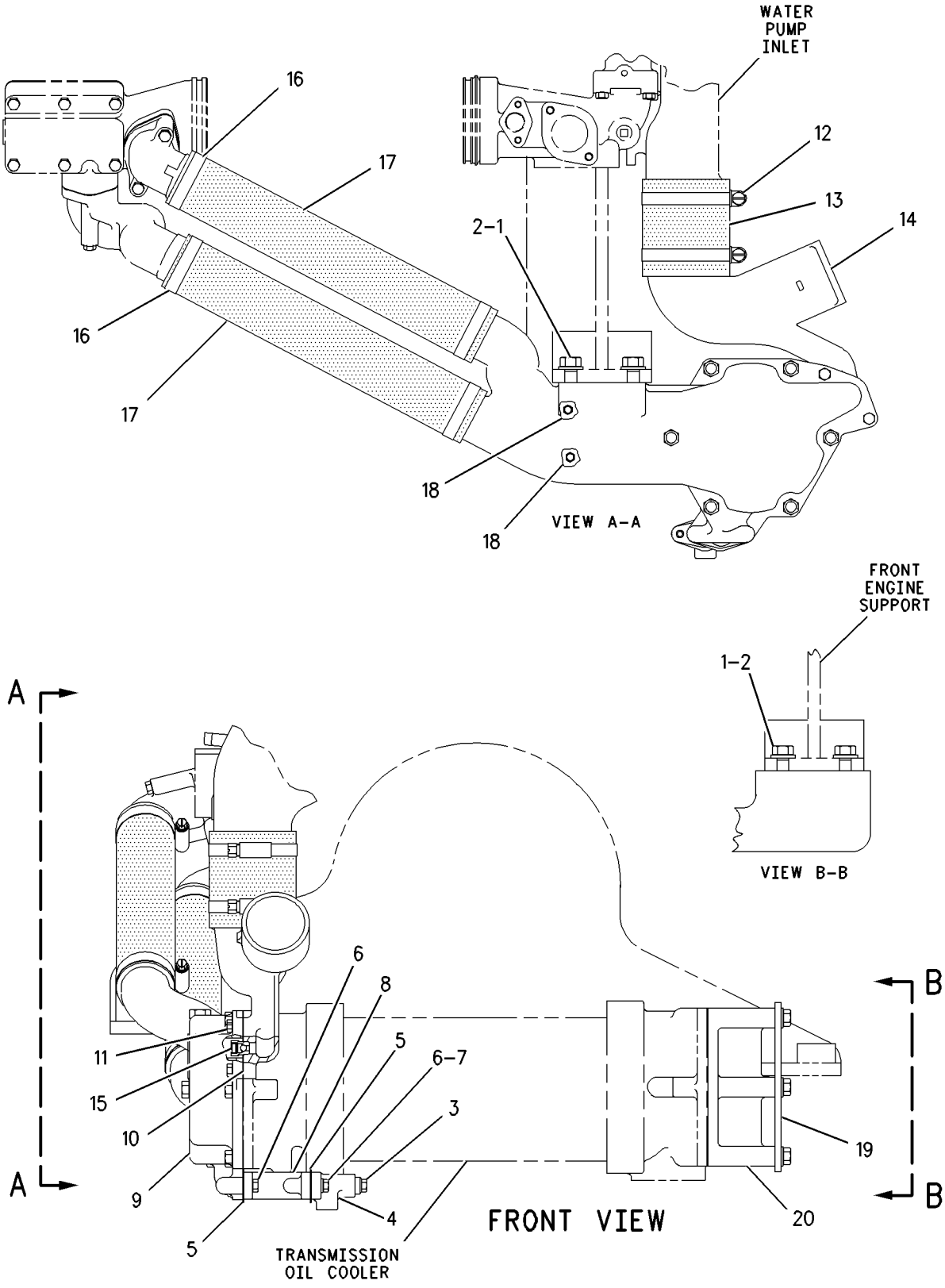

GRAPHIC #1

g00687059

COOLING SYSTEM

130-7310 LINES GP-WATER

S/N: 5XD1-UP

PART OF 163-5784 ENGINE AR

SMCS-1355, 1380, 1393 **i01446386**

NOTE	REF NO	GRAPHIC REF	PART NUMBER	QTY	PART NAME 1 2 3 4 5 6 (PRODUCT LEVEL)	SEE PAGE
	1	1	**0S-1594**	8	BOLT (3/8-16X1 IN)	
	2	1	**5M-2894**	8	WASHER-HARD (10.2X18.5X2.5MM THK)	
	3	1	**7N-7878**	2	PLATE-COVER	
	4	1	**7N-7628**	4	GASKET	
	5	1	**8N-0788**	2	COVER	
	6	1	**8M-0755**	1	CONNECTOR	
	7	1	**135-8287**	1	HOSE AS	
	8	1	**7L-7262**	1	ELBOW-FLARED	

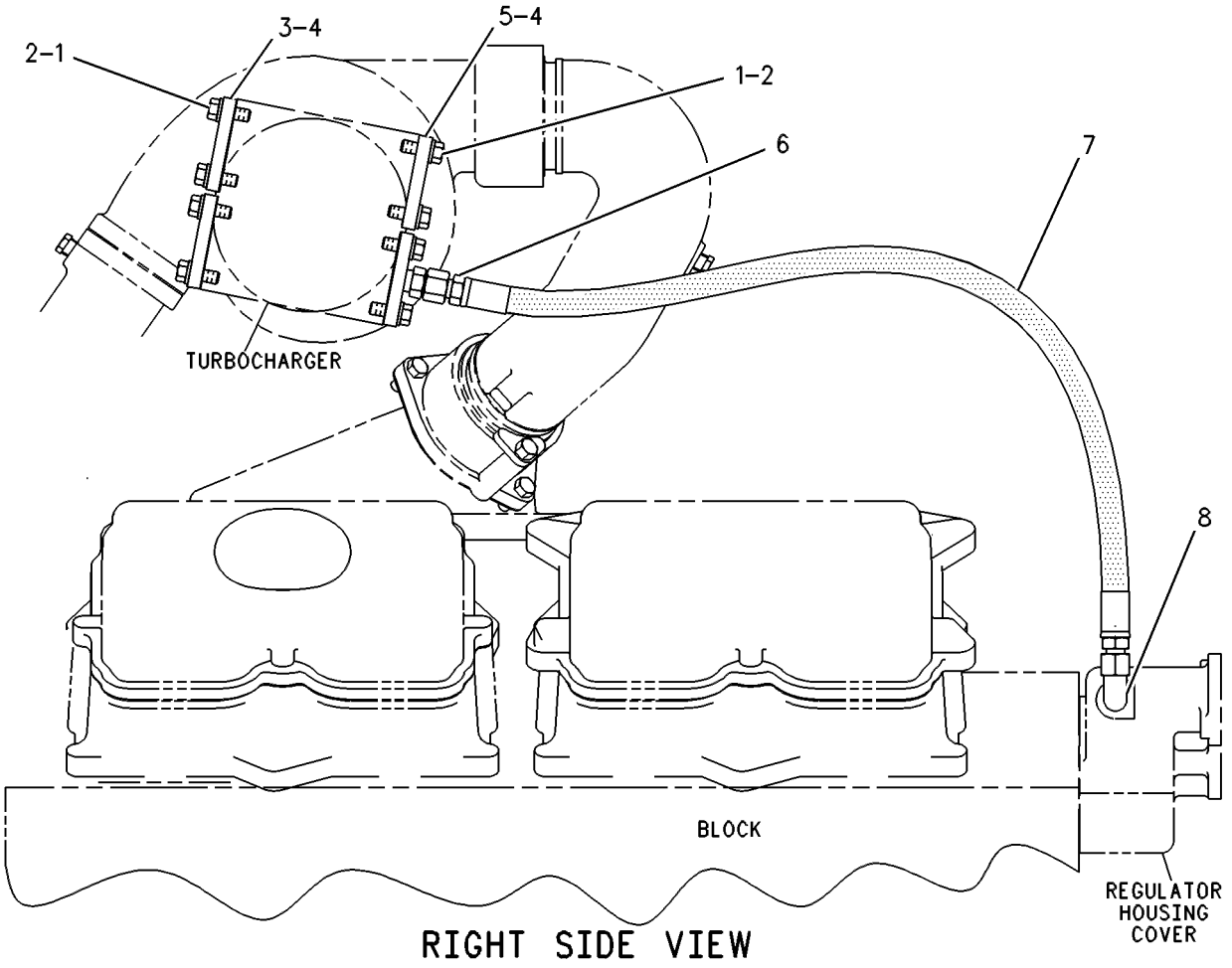

RIGHT SIDE VIEW

GRAPHIC #1 g00256709

COOLING SYSTEM

163-5801 LINES GP-WATER

S/N: 5XD1-UP

PART OF 163-5784 ENGINE AR

SMCS-1355, 1380, 1393 **i01548799**

NOTE	REF NO	GRAPHIC REF	PART NUMBER	QTY	PART NAME 1 2 3 4 5 6 (PRODUCT LEVEL)	SEE PAGE
	1	1	**8T-4983**	1	CLAMP-HOSE	
	2	1	**8T-4984**	5	CLAMP-HOSE	
	3	1	**163-8395**	1	TUBE	
	4	1	**163-8397**	1	TUBE	
	5	1	**165-7870**	1	ELBOW	
	6	1	**169-5446**	1	PLATE	
	7	1	**0S-0509**	4	BOLT (3/8-16X0.75 IN)	
	9	1	**130-3374**	4	CLIP	
	10	1	**5M-2894**	4	WASHER-HARD (10.2X18.5X2.5MM THK)	
E	11	1	**5P-1259**		HOSE (22CM)	
E	11A	1	**5P-1259**		HOSE (17CM)	

E-ORDER BY THE CENTIMETER

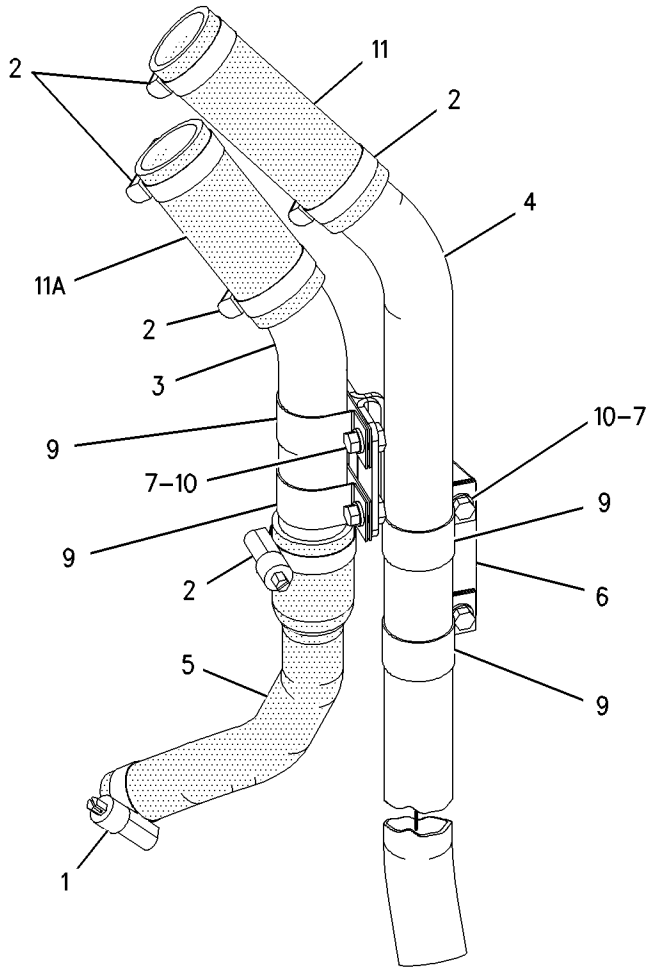

GRAPHIC #1 g00727961

COOLING SYSTEM

165-5137 LINES GP-WATER

S/N: 5XD1-UP

PART OF 163-5784 ENGINE AR

SMCS-1355, 1380, 1393 **i01442335**

NOTE	REF NO	GRAPHIC REF	PART NUMBER	QTY	PART NAME 1 2 3 4 5 6 (PRODUCT LEVEL)	SEE PAGE
	1	1	**4N-0794**	2	COVER	
	2	1	**4N-0864**	1	GASKET	
	3	1	**4N-1156**	2	GASKET-REGULATOR COVER	
	4	1	**4N-1779**	1	COVER	
	5	2	**4N-1799**	1	FLANGE	
	6	1	**4N-1946**	1	GASKET	
	7	1	**4N-2199**	1	GASKET	
	8	1	**7N-6654**	1	ELBOW	
	9	1	**4N-4307**	1	GASKET	
	10	2	**4P-3864**	1	COVER-WATER PUMP	
	11	1	**4W-4794**	2	REGULATOR-WATER TEMPERATURE (92 DEG C.)	
	12	2	**6L-3942**	1	HOSE	
	13	2	**6L-4364**	1	HOSE	
	14	1	**6N-0008**	1	ADAPTER	
	15	1	**6N-7145**	1	BONNET-COOLER INLET	
R	16	1	**7C-3039**	1	CORE AS	
	18	2	**8T-4984**	2	CLAMP-HOSE	
	19	2	**8T-4895**	2	WASHER (13.5X50X5MM THK)	
	20	1	**102-2240**	1	SENSOR GP-TEMPERATURE (ENGINE COOLANT)	
		1	**102-8803**		KIT-RECEPTACLE (3 PIN)	
					(INCLUDES RECEPTACLE AS & WEDGE)	
		1	**8T-8729**	3	PIN-CONNECTOR	
BE		1	**9X-1813**		SLEEVE	
	21	2	**105-9678**	1	ELBOW	
	22	2	**108-1462**	1	TUBE	
	23	2	**108-8105**	2	GASKET	
	24	2	**109-2811**	1	PLATE-COVER	
	25	2	**111-4639**	1	COVER AS	
		2	**3S-9643**	1	SEAL-LIP	
		2	**7M-7410**	1	PLUG (3/8-18 NPTF)	
	26	1	**111-4640**	1	COVER AS	
		1	**3S-9643**	1	SEAL-LIP	
		1	**7M-7410**	1	PLUG (3/8-18 NPTF)	
	27	1	**126-0189**	1	ELBOW-COOLER OUTLET	
	28	2	**154-9024**	1	VALVE-SAMPLING	
	29	2	**157-0670**	1	CAP-DUST	
	30	2	**165-5069**	1	ELBOW	
	31	2	**165-5070**	1	ELBOW	
	32	2	**166-4452**	1	ELBOW	
	33	2	**167-3851**	1	PLATE	
	34	2	**167-3852**	1	PLATE	
	35	1	**168-7488**	1	BRACKET	
	36	2	**169-3615**	1	PIPE	
	37	1	**169-3616**	1	BRACKET	
	38	1	**184-3647**	1	BONNET	
	39	2	**0L-1143**	1	BOLT (3/8-16X2.50 IN)	
	40	1	**0L-1351**	3	BOLT (3/8-16X.875 IN)	
	42	1,2	**0S-1588**	9	BOLT (3/8-16X1.25 IN)	
	43	1,2	**0S-1591**	4	BOLT (3/8-16X1.5 IN)	
	44	1,2	**0S-1594**	9	BOLT (3/8-16X1 IN)	
	45	1,2	**0S-1619**	3	BOLT (3/8-16X3 IN)	
	46	2	**0T-0055**	6	BOLT (3/8-16X4.25 IN)	
	47	1	**0T-0065**	3	BOLT (3/8-16X3.5 IN)	
	48	2	**109-0072**	2	SEAL-O-RING (40.64MM ID)	
	49	1	**109-0073**	1	SEAL-O-RING (43.82MM ID)	
	50	1	**109-0074**	1	SEAL-O-RING (91.44MM ID)	

165-5137 **LINES GP-WATER** ***(contd.)*** **i01442335**

NOTE	REF NO	GRAPHIC REF	PART NUMBER	QTY	PART NAME 1 2 3 4 5 6 (PRODUCT LEVEL)	SEE PAGE
	51	1,2	**109-0076**	3	SEAL-O-RING (50.17MM ID)	
	52	1	**109-0077**	2	SEAL-O-RING (100.97MM ID)	
	53	1	**112-1574**	2	SEAL-O-RING (69.44MM ID)	
	54	1	**112-5282**	1	SEAL-O-RING (16.36MM ID)	
	55	1	**1A-2029**	4	BOLT (3/8-16X1.125 IN)	
	57	1	**1A-5964**	3	BOLT (3/8-16X4.5 IN)	
	58	2	**3B-1915**	1	BOLT (3/8-16X1.37 IN)	
	59	1	**4P-8134**	1	CLIP	
	60	2	**1A-5183**	3	BOLT (3/8-16X4.75 IN)	
	61	1,2	**5M-2894**	11	WASHER-HARD (10.2X18.5X2.5MM THK)	
	62	1,2	**6B-4661**	1	BUSHING-REDUCER	
M	63	1	**6V-3940**	2	BOLT (M8X1.25X25MM)	
	64	1,2	**7C-0307**	6	GASKET	
	65	1	**7X-7731**	2	PLUG-PIPE	
	66	1	**8T-6761**	1	PLUG-PIPE	
	67	1	**8T-6762**	1	PLUG-PIPE	
	68	1,2	**8T-6764**	3	PLUG-PIPE	
	69	1	**9M-1974**	2	WASHER-HARD (8.8X16X2MM THK)	
	70	1,2	**9X-6458**	4	WASHER-HARD (10.2X22.5X3MM THK)	

B-USE AS REQUIRED
E-ORDER BY THE CENTIMETER
M-METRIC PART
R-REMFG PART MAY BE AVAILABLE

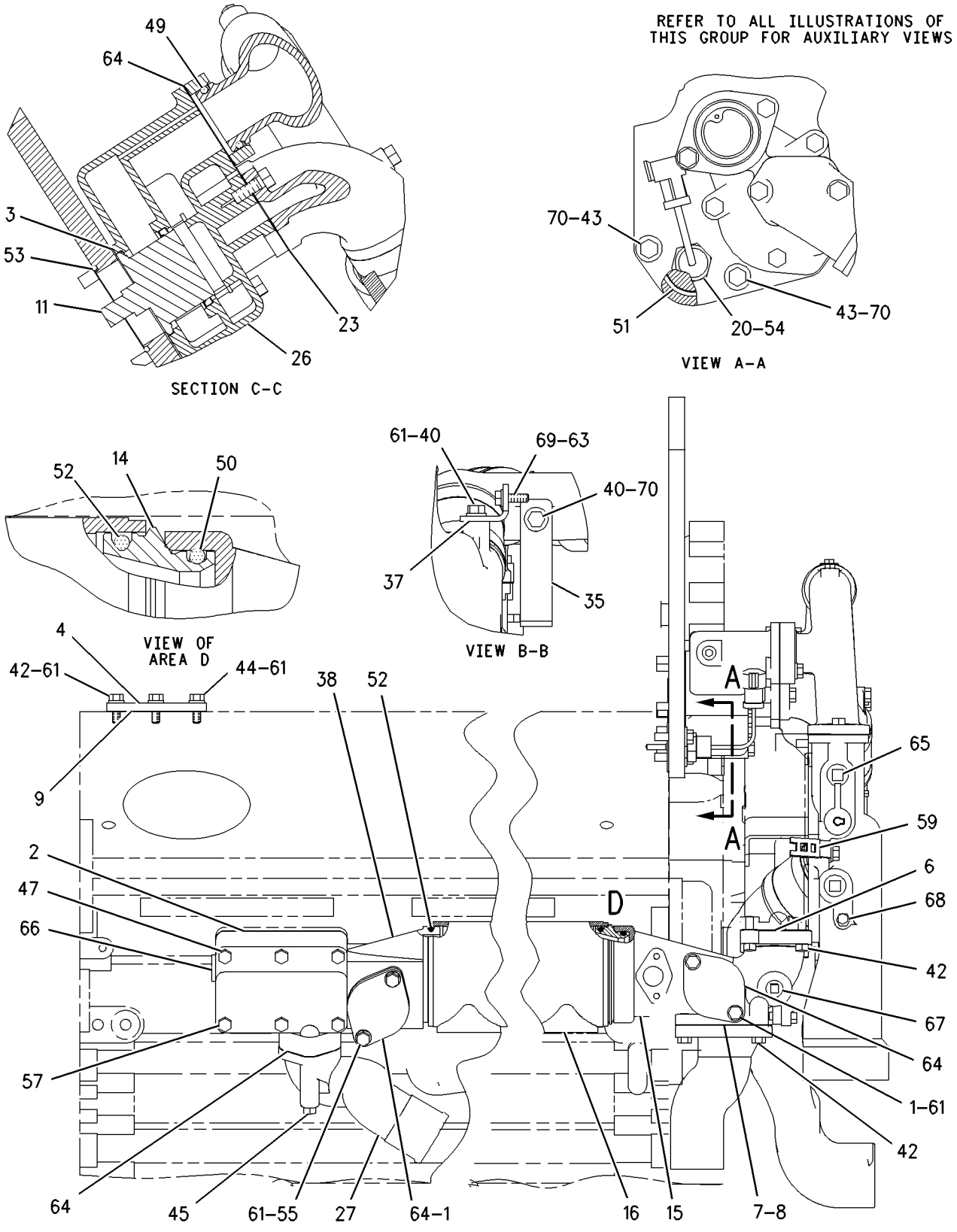

RIGHT SIDE VIEW

GRAPHIC #1 g00755716

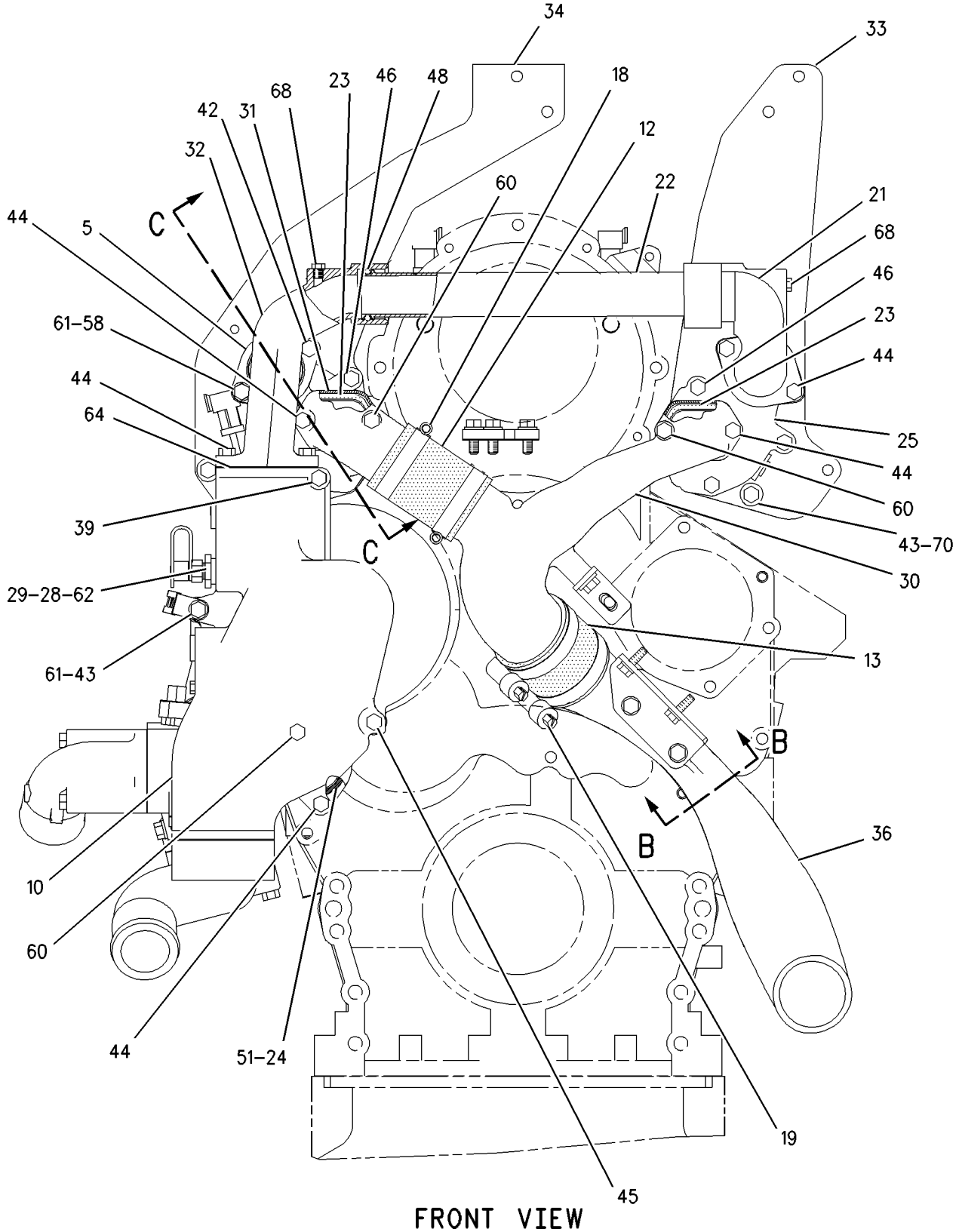

FRONT VIEW

GRAPHIC #2 g00755720

COOLING SYSTEM

173-5562 LINES GP-WATER

S/N: 48W41541-UP
PART OF 198-9948 ENGINE AR
AN ATTACHMENT

SMCS-1355, 1380, 1393 **i01446388**

NOTE	REF NO	GRAPHIC REF	PART NUMBER	QTY	PART NAME 1 2 3 4 5 6 (PRODUCT LEVEL)	SEE PAGE
	1	1	**4N-0864**	1	GASKET	
	2	1	**4N-1156**	2	GASKET-REGULATOR COVER	
	3	1	**4N-1799**	1	FLANGE	
	4	1	**4N-1946**	1	GASKET	
	5	1	**4N-2199**	1	GASKET	
	6	1	**4N-3152**	1	COVER	
	7	1	**4P-3864**	1	COVER-WATER PUMP	
	8	1	**4W-4794**	2	REGULATOR-WATER TEMPERATURE (92 DEG C.)	
	9	1	**6N-0008**	1	ADAPTER	
	10	1	**6N-7145**	1	BONNET-COOLER INLET	
R	11	1	**7C-3039**	1	CORE AS	
	12	1	**7W-6752**	1	BONNET	
	13	1	**7W-7000**	1	ELBOW	
	14	1	**8T-4984**	2	CLAMP-HOSE	
	15	1	**105-8655**	1	ELBOW	
	16	1	**105-9678**	1	ELBOW	
	17	1	**108-1462**	1	TUBE	
	18	1	**108-8105**	2	GASKET	
	19	1	**109-2811**	1	PLATE-COVER	
	20	1	**111-4639**	1	COVER AS	
		1	**3S-9643**	1	SEAL-LIP	
		1	**7M-7410**	1	PLUG (3/8-18 NPTF)	
		1	**119-4739**	1	COVER-REGULATOR HOUSING	
	21	1	**111-4640**	1	COVER AS	
		1	**3S-9643**	1	SEAL-LIP	
	22	1	**126-0189**	1	ELBOW-COOLER OUTLET	
	23	1	**131-8428**	1	ELBOW	
	24	1	**132-5125**	1	ELBOW	
	25	1	**132-7370**	1	HOSE	
	26	1	**154-9024**	1	VALVE-SAMPLING	
	27	1	**157-0670**	1	CAP-DUST	
	28	1	**170-1882**	1	BRACKET AS	
		1	**8T-5912**	3	NUT-WELD (3/8-16 THD)	
	29	1	**0L-1143**	1	BOLT (3/8-16X2.50 IN)	
	30	1	**0L-1351**	5	BOLT (3/8-16X0.875 IN)	
	31	1	**0L-1352**	2	BOLT (3/8-16X3.25 IN)	
	32	1	**0S-1588**	7	BOLT (3/8-16X1.25 IN)	
	33	1	**0S-1594**	10	BOLT (3/8-16X1 IN)	
	34	1	**0S-1619**	3	BOLT (3/8-16X3 IN)	
	35	1	**0T-0065**	9	BOLT (3/8-16X3.5 IN)	
	36	1	**109-0072**	2	SEAL-O-RING (40.64MM ID)	
	37	1	**109-0073**	1	SEAL-O-RING (43.82MM ID)	
	38	1	**109-0074**	1	SEAL-O-RING (91.44MM ID)	
	39	1	**109-0076**	1	SEAL-O-RING (50.17MM ID)	
	40	1	**109-0077**	2	SEAL-O-RING (100.97MM ID)	
	41	1	**1A-5183**	1	BOLT (3/8-16X4.75 IN)	
	42	1	**1A-5964**	3	BOLT (3/8-16X4.5 IN)	
	43	1	**5B-9603**	2	BOLT (3/8-16X5 IN)	
	44	1	**5M-2894**	3	WASHER-HARD (10.2X18.5X2.5MM THK)	
	45	1	**6B-4661**	1	BUSHING-REDUCER	
	46	1	**7C-0307**	5	GASKET	
	47	1	**7X-7731**	2	PLUG-PIPE	
	48	1	**8T-6761**	1	PLUG-PIPE	
	49	1	**8T-6762**	1	PLUG-PIPE	
	50	1	**8T-6764**	3	PLUG-PIPE	

173-5562 **LINES GP-WATER** ***(contd.)*** **i01446388**

NOTE	REF NO	GRAPHIC REF	PART NUMBER	QTY	PART NAME 1 2 3 4 5 6 (PRODUCT LEVEL)	SEE PAGE
	51	1	**9X-6458**	5	WASHER-HARD (10.2X22.5X3MM THK)	
R-REMFG PART MAY BE AVAILABLE						

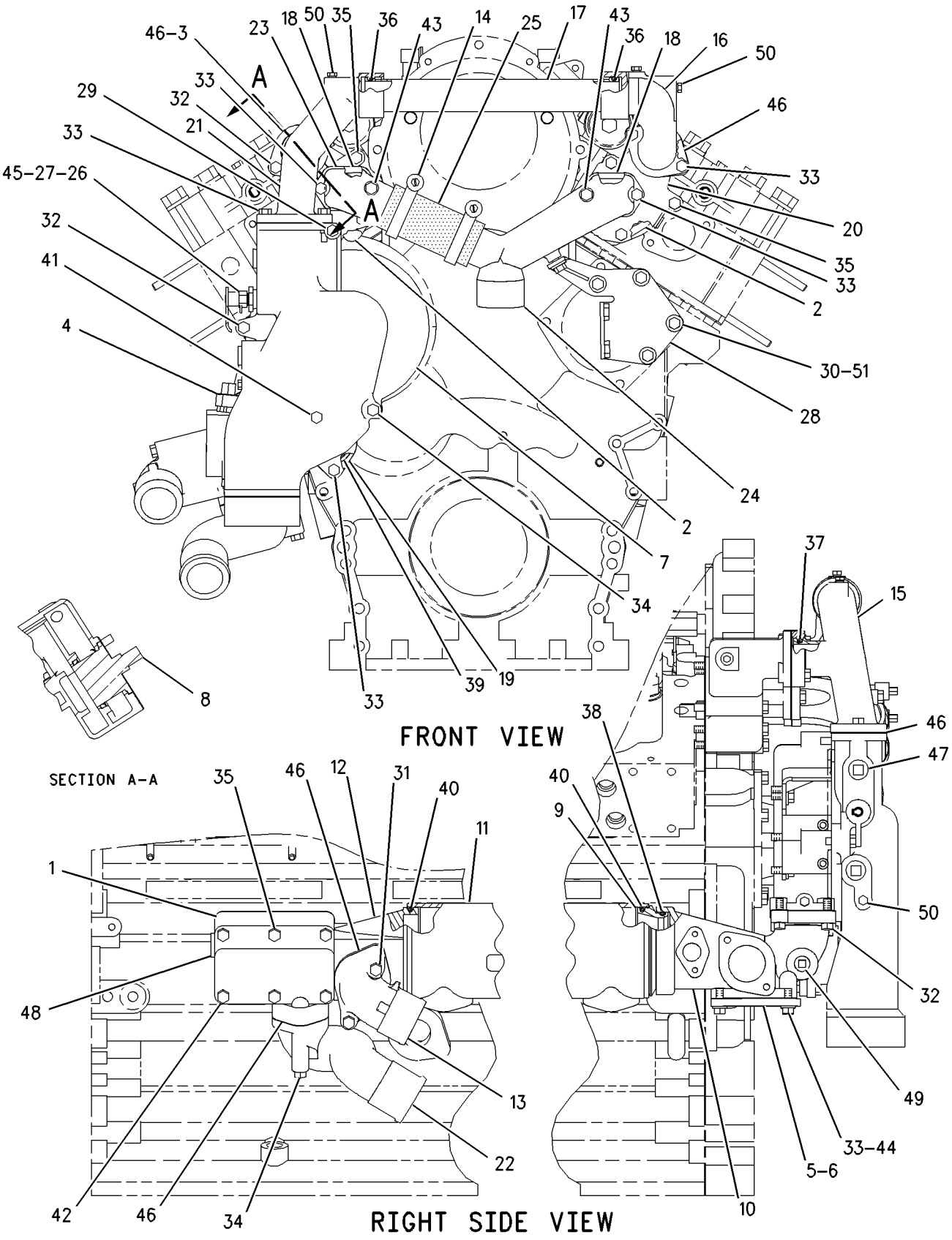

GRAPHIC #1 g00693150

MEMORANDA

COOLING SYSTEM

184-3648 LINES GP-WATER

S/N: ABK1-UP

PART OF 162-9505 INSTALLATION AR-ENGINE

SMCS-1355, 1380, 1393 **i01589383**

NOTE	REF NO	GRAPHIC REF	PART NUMBER	QTY	PART NAME 1 2 3 4 5 6 (PRODUCT LEVEL)	SEE PAGE
	1	1	**1F-4417**	2	GASKET	
	2	1	**4B-7739**	1	PLUG-DRAIN	
	3	1	**5H-0244**	1	GASKET	
E	4	1	**5P-1268**		HOSE (101.6MM ID) (12.7CM)	
	5	1	**5P-1717**	2	CLAMP-HOSE	
	6	1	**8H-9819**	1	ADAPTER-PLUG	
	7	1	**8N-0301**	1	VALVE AS	
		1	**7N-7688**	1	FERRULE	
		1	**9M-5590**	1	BALL	
	8	1	**105-8627**	1	ELBOW	
	9	1	**118-9644**	1	SUPPORT AS	
		1	**3J-5169**	2	NUT (5/8-11 THD)	
	10	1	**119-6637**	1	BONNET	
	11	1	**210-9479**	1	HOSE	
	12	1	**188-7197**	1	ADAPTER	
	13	1	**194-2483**	1	BONNET	
	14	1	**7X-0345**	4	BOLT (5/8-11X1.75 IN)	
	15	1	**8T-2502**	2	BOLT (3/8-16X1.125 IN)	
	16	1	**8T-4122**	4	WASHER-HARD (17X32X3.5MM THK)	
	17	1	**8T-4896**	2	WASHER-HARD (10.2X18.5X2.5MM THK)	
	18	1	**8T-6675**	4	CLAMP-HOSE	
	19	1	**8T-6764**	2	PLUG-PIPE	
	20	1	**9B-7237**	4	BOLT (3/8-16X1.25 IN)	
E	21	1	**5P-1262**		HOSE (43CM)	

E-ORDER BY THE CENTIMETER

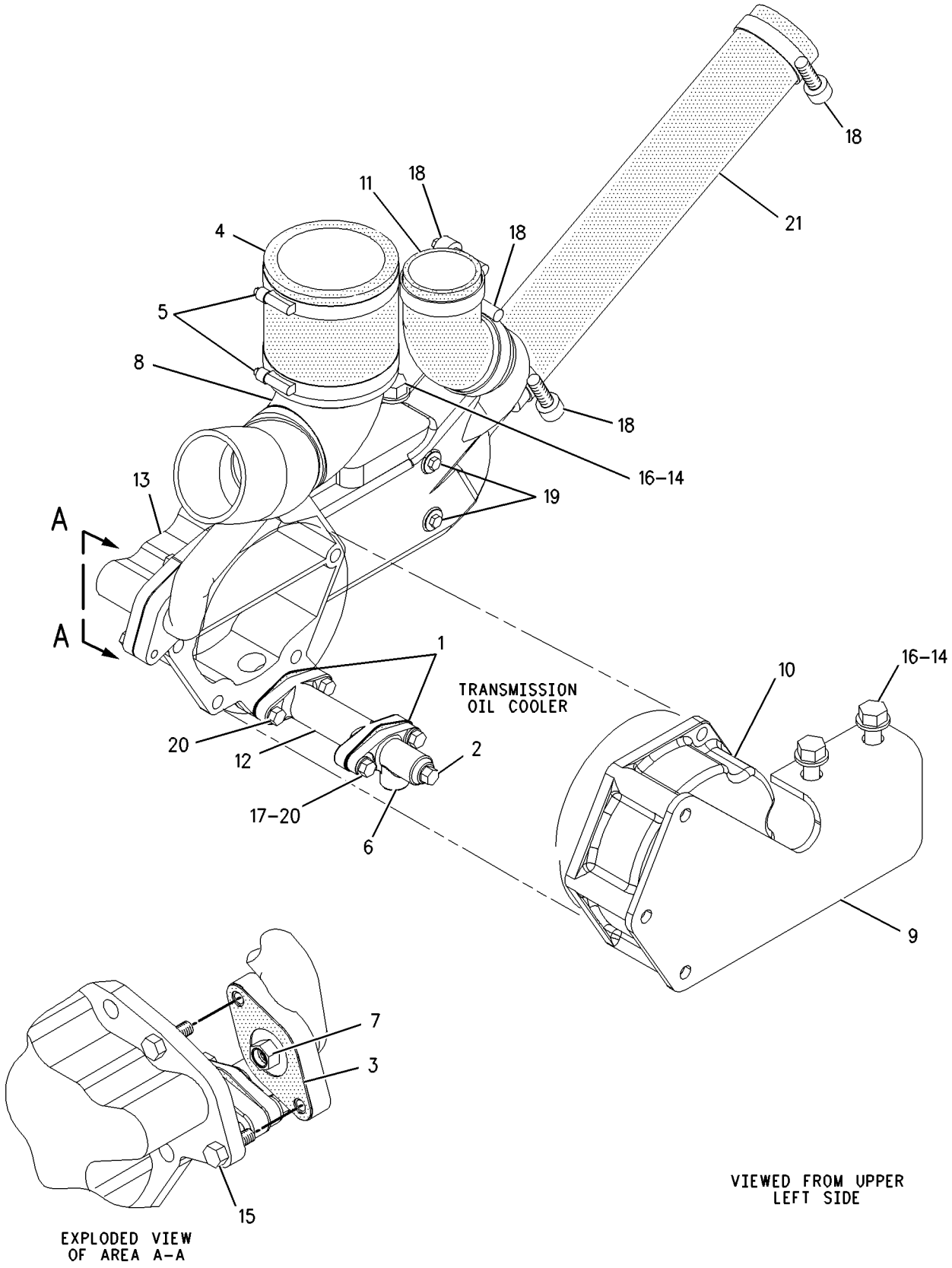

GRAPHIC #1

g00751742

4N-5837 PUMP GP-WATER

S/N: 5XD1-UP; 48W41541-UP
PART OF 163-5784, 198-9948 ENGINE AR
ALSO AN ATTACHMENT

SMCS-1361, 1363, 1364, 1373, 1384, 1389, 1394 **i01321275**

NOTE	REF NO	GRAPHIC REF	PART NUMBER	QTY	PART NAME 1 2 3 4 5 6 (PRODUCT LEVEL)	SEE PAGE
CYR	1	1	**137-1339**	1	PUMP GP-WATER	134
	2	1	**112-1579**	1	SEAL-O-RING (158.12MM ID)	
	3	1	**101-2749**	1	ADAPTER-INLET	
	4	1	**9X-7371**	1	SEAL-O-RING (126.59MM ID)	
	5	1	**112-1580**	1	SEAL-O-RING (113.66MM ID)	
	6	1	**9S-8752**	4	NUT-FULL (3/8-16 THD)	
	7	1	**0S-1594**	1	BOLT (3/8-16X1 IN)	

C-CHANGE FROM PREVIOUS TYPE
R-REMFG PART MAY BE AVAILABLE
Y-SEPARATE ILLUSTRATION

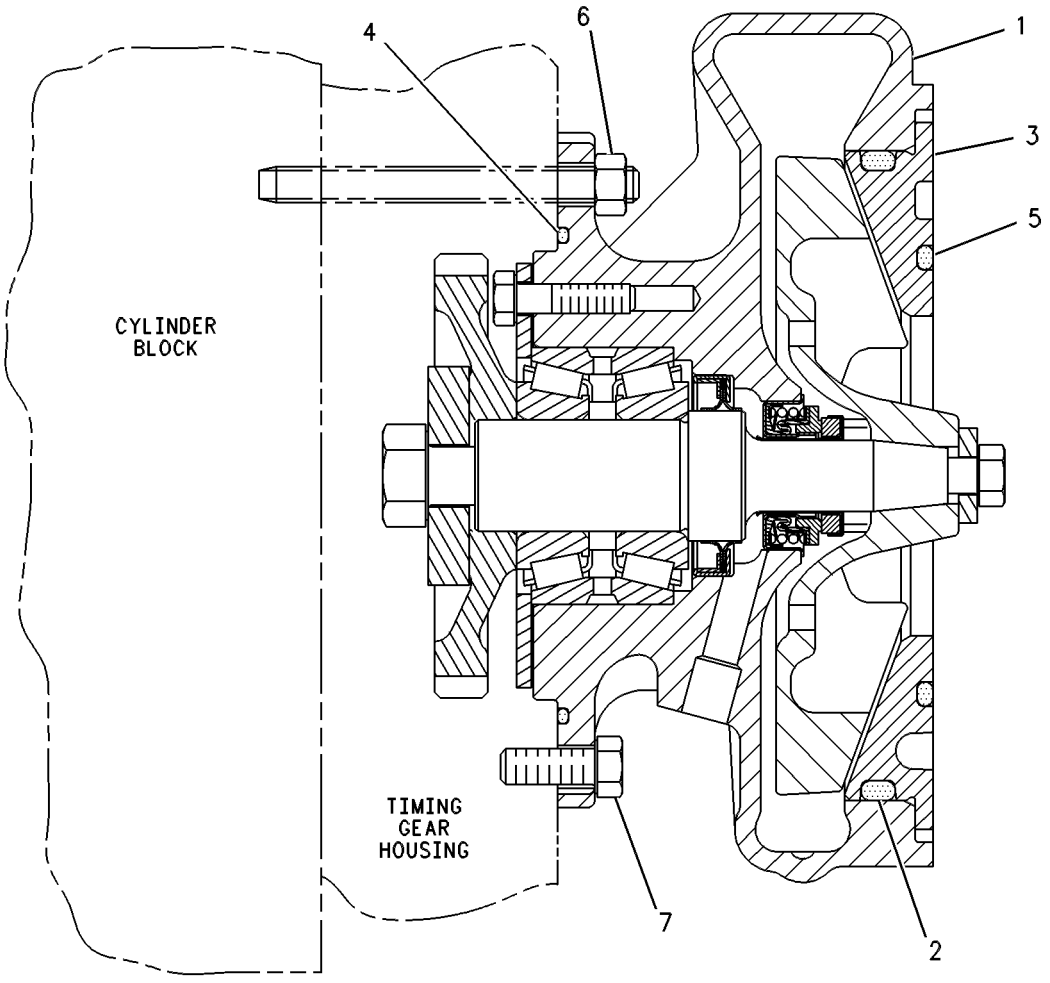

GRAPHIC #1 g00277057

MEMORANDA

COOLING SYSTEM

137-1339 PUMP GP-WATER*R

S/N: 5XD1-UP; 48W41541-UP
PART OF 4N-5837 PUMP GP-WATER
ALSO AN ATTACHMENT

SMCS-1361, 1363, 1364, 1373, 1384, 1389, 1394 **i01509276**

NOTE	REF NO	GRAPHIC REF	PART NUMBER	QTY	PART NAME 1 2 3 4 5 6 (PRODUCT LEVEL)	SEE PAGE
	1	1	**137-1344**	1	HOUSING AS-PUMP	
J	2	1	**111-2721**	1	FILTER (WATER PUMP)	
		1	**4M-1336**	1	FERRULE	
		1	**5H-8985**	1	PIN-SPRING	
		1	**8T-6764**	1	PLUG-PIPE	
J	3	1	**128-0317**	1	SEAL GP	
J	4	1	**9M-6527**	1	WASHER-HARD (10.2X25.5X5MM THK)	
J	5	1	**0S-1591**	1	BOLT (3/8-16X1.5 IN)	
J	6	1	**108-7930**	1	BEARING AS-ROLLER	
J	7	1	**153-1256**	1	SEAL-LIP TYPE	
	8	1	**1B-7182**	4	BOLT (5/16-18X1.25 IN)	
	9	1	**4N-1948**	1	GEAR (43 TEETH)	
	10	1	**1A-1135**	1	BOLT (5/8-11X2 IN)	
J	11	1	**135-4928**	1	SHAFT-WATER PUMP	
J	12	1	**136-1107**	1	RETAINER	
J	13	1	**5S-0581**	1	WASHER-HARD (17X38X8MM THK)	
	14	1	**137-1970**	1	IMPELLER-PUMP	
					AVAILABLE REPAIR KIT(S):	
AJ			**138-6744**	1	KIT-PUMP REBUILD (WATER)	

A-NOT PART OF THIS GROUP
J-KIT(S) MARKED J INCLUDES PART(S) MARKED J

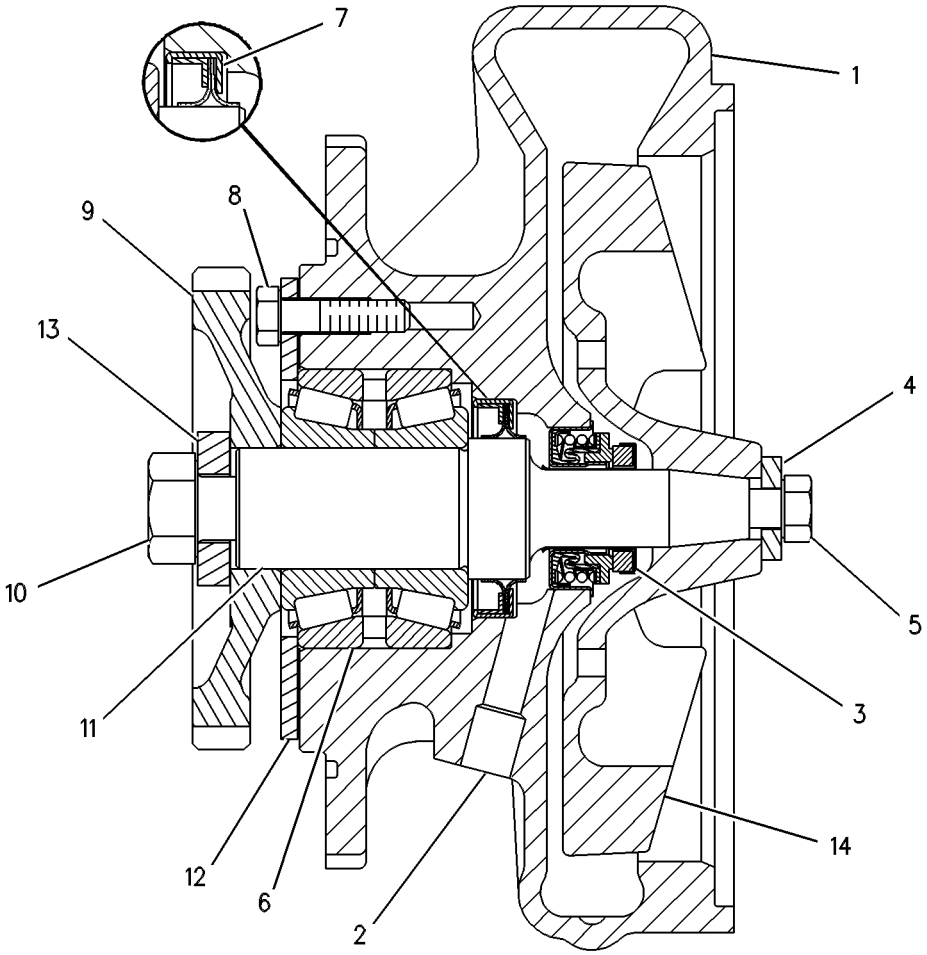

GRAPHIC #1 g00277052

COOLING SYSTEM

163-8398 PUMP GP-WATER

S/N: 5XD1-UP

PART OF 163-5784 ENGINE AR

SMCS-1361, 1363, 1364, 1373, 1384, 1389, 1394 **i01431947**

NOTE	REF NO	GRAPHIC REF	PART NUMBER	QTY	PART NAME 1 2 3 4 5 6 (PRODUCT LEVEL)	SEE PAGE
	2	1	**175-4020**	1	PULLEY	
Y	3	1	**175-4023**	1	PUMP GP-WATER	138
	4	1	**0T-0065**	4	BOLT (3/8-16X3.5 IN)	
M	5	1	**6V-8214**	6	BOLT (M6X20MM)	
	6	1	**9X-8267**	6	WASHER (6.6X12X2MM THK)	

M-METRIC PART
Y-SEPARATE ILLUSTRATION

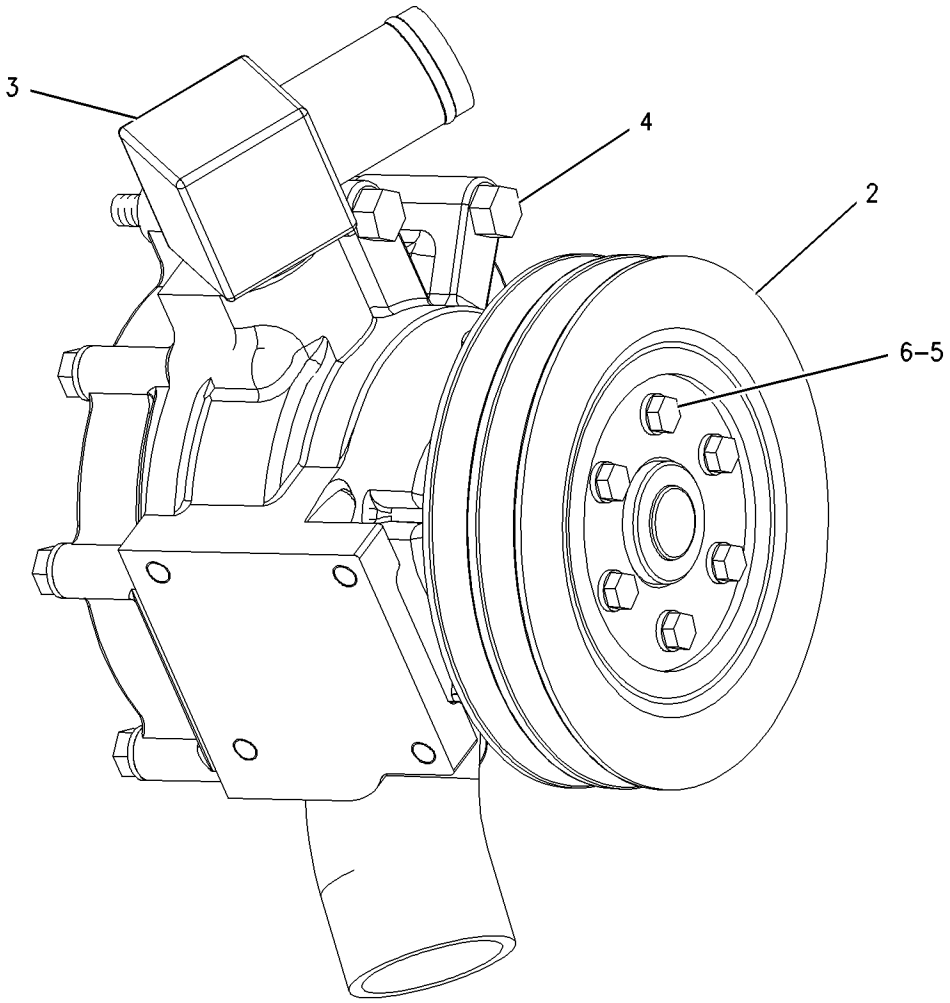

GRAPHIC #1 g00687956

COOLING SYSTEM

175-4022 PUMP GP-WATER

S/N: 5XD1-UP

PART OF 175-4023 PUMP GP-WATER

SMCS-1361, 1363, 1364, 1373, 1384, 1389, 1394 **i01296798**

NOTE	REF NO	GRAPHIC REF	PART NUMBER	QTY	PART NAME 1 2 3 4 5 6 (PRODUCT LEVEL)	SEE PAGE
	1	1	**119-3025**	1	FILTER-WATER	
	2	1	**129-1170**	1	SHAFT AS	
	3	1	**147-5088**	1	SEAL AS-WATER PUMP	
	4	1	**152-3952**	1	IMPELLER-PUMP	
	5	1	**175-4019**	1	HOUSING AS-PUMP	
	6	1	**175-4021**	1	HUB	

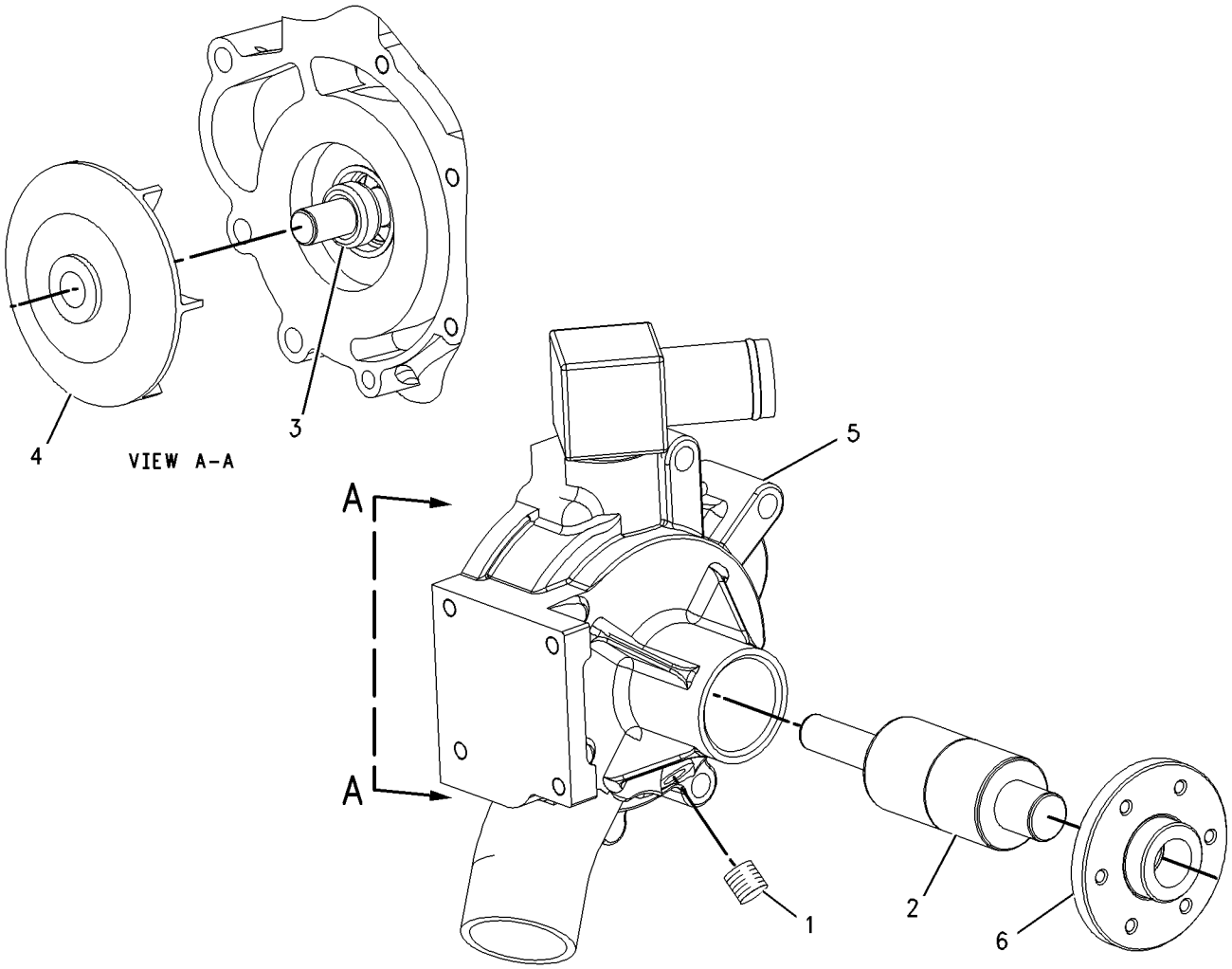

GRAPHIC #1 g00687604

COOLING SYSTEM

175-4023 PUMP GP-WATER

S/N: 5XD1-UP

PART OF 163-8398 PUMP GP-WATER

SMCS-1361, 1363, 1364, 1373, 1384, 1389, 1394 **i01296786**

NOTE	REF NO	GRAPHIC REF	PART NUMBER	QTY	PART NAME 1 2 3 4 5 6 (PRODUCT LEVEL)	SEE PAGE
	1	1	**4W-7592**	1	GASKET	
	2	1	**175-4018**	1	COVER	
Y	3	1	**175-4022**	1	PUMP GP-WATER	137
M	4	1	**6V-3918**	4	BOLT (M8X1.25X50MM)	
	5	1	**9M-1974**	4	WASHER-HARD (2MM THK)	

M-METRIC PART
Y-SEPARATE ILLUSTRATION

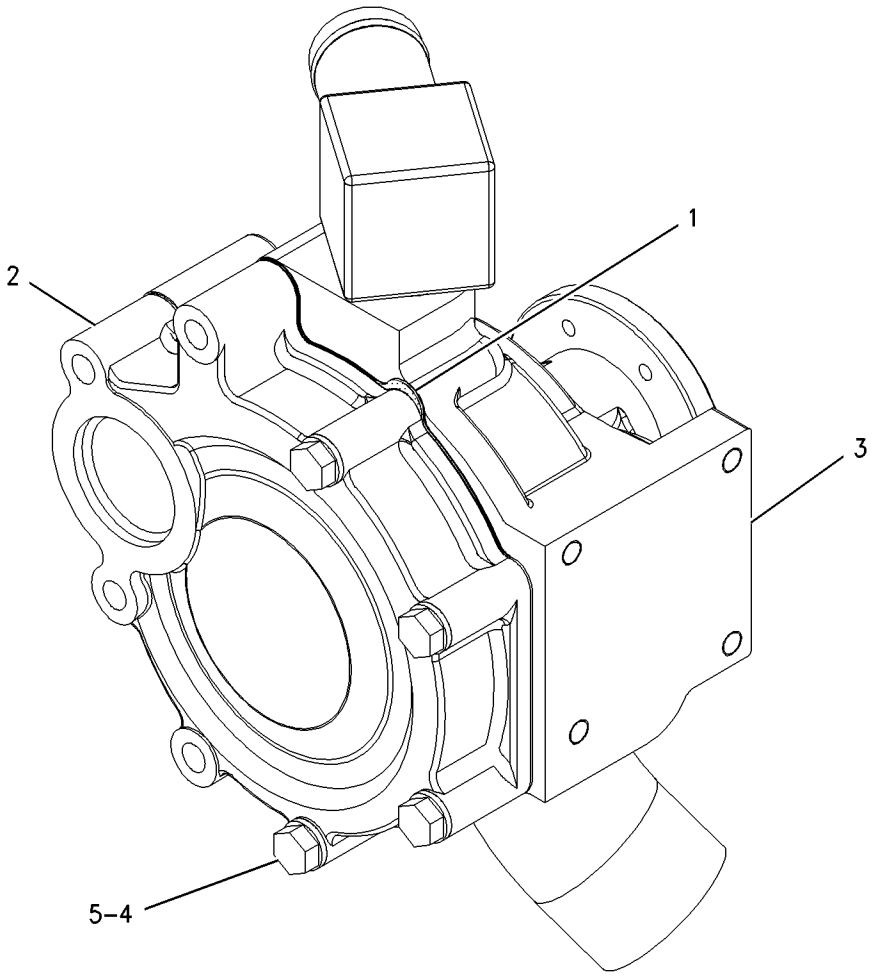

GRAPHIC #1 g00687631

MEMORANDA

COOLING SYSTEM

163-5813 RADIATOR GP

S/N: ABK1-UP

PART OF 162-9505 INSTALLATION AR-ENGINE

SMCS-1351 **i01572514**

NOTE	REF NO	GRAPHIC REF	PART NUMBER	QTY	PART NAME 1 2 3 4 5 6 (PRODUCT LEVEL)	SEE PAGE
	1	1	**1P-4278**	24	CLAMP-HOSE	
	2	1	**1S-4305**	4	WASHER (0.531X1X0.56 IN THK)	
	3	1	**6I-2431**	10	SEAL	
	4	1	**6I-2435**	10	SPACER	
	5	1	**6I-2436**	10	RETAINER	
E	6	1	**5P-1265**		HOSE (76.2MM ID) (20.0CM)	
	7	1	**8T-4985**	4	CLAMP-HOSE	
	8	1	**8T-6703**	6	CLAMP-HOSE	
E	9	1	**5P-0764**		HOSE (88.9 MM ID) (13.67CM)	
	10	1	**9S-4191**	2	PLUG-STRAIGHT THREAD	
	12	1	**106-4572**	8	HOSE	
I	13	1	**109-5760**	1	HOSE AS	
	14	1	**192-5425**	2	TEE	
	15	1	**111-7421**	4	CAP	
	16	1	**133-0819**	1	BAFFLE AS-RH	
		1	**6B-4594**	7	RIVET	
	17	1	**133-0822**	1	BAFFLE AS-LH	
		1	**6B-4594**	7	RIVET	
	18	1	**144-0367**	2	CLAMP-HOSE	
	19	1	**163-8391**	1	BAFFLE AS-RH	
		1	**6B-4594**	3	RIVET	
	20	1	**163-8405**	1	TUBE AS	
	21	1	**163-8422**	1	BAFFLE AS-FRONT	
		1	**6B-4594**	11	RIVET	
	22	1	**198-1864**	1	SHIELD AS	
		1	**168-3410**	1	PLATE AS	
		1	**1L-9551**	5	RIVET	
	23	1	**198-1865**	1	SHIELD AS	
		1	**1L-9551**	5	RIVET	
	24	1	**165-5067**	1	TUBE AS	
	25	1	**165-9905**	1	BAFFLE AS-LH	
		1	**6B-4594**	3	RIVET	
	26	1	**166-2088**	1	HOSE	
	27	1	**6I-2433**	2	CORE AS	
	28	1	**119-4774**	8	CORE AS-RADIATOR	
	29	1	**167-1066**	1	TANK AS-BOTTOM	
		1	**1F-0750**	10	NUT-WELD (3/8-16 THD)	
		1	**8T-6764**	1	PLUG-PIPE	
E		1	**8T-9472**		TUBE (37CM)	
	30	1	**198-1862**	1	BRACKET AS	
		1	**1F-0750**	6	NUT-WELD (3/8-16 THD)	
	31	1	**172-5768**	1	SHIELD AS	
		1	**1L-9551**	4	RIVET	
	32	1	**172-5769**	1	SHIELD AS	
		1	**1L-9551**	4	RIVET	
	33	1	**198-1863**	1	PLATE AS	
		1	**1F-0750**	6	NUT-WELD (3/8-16 THD)	
		1	**8T-1266**	2	STUD-WELD	
	34	1	**174-9485**	1	HOSE	
	35	1	**030-7949**	1	ELBOW-FLARED	
	36	1	**030-8537**	6	BOLT-LOCKING (3/8-16X1.5 IN)	
	37	1	**030-9620**	4	BOLT (1/2-13X1.45 IN)	
	38	1	**114-4427**	1	SEAL-O-RING	
	39	1	**3J-1907**	2	SEAL-O-RING	
	40	1	**4L-6454**	34	BOLT (3/8-16X1 IN)	
	41	1	**4L-6459**	1	BOLT (3/8-16X2.5 IN)	

163-5813 **RADIATOR GP** *(contd.)*

i01572514

NOTE	REF NO	GRAPHIC REF	PART NUMBER	QTY	PART NAME 1 2 3 4 5 6 (PRODUCT LEVEL)	SEE PAGE
	42	1	**4S-1962**	1	CLIP	
	43	1	**5M-3062**	8	BOLT (3/8-16X0.75 IN)	
	44	1	**5P-1075**	34	WASHER-HARD (10.2X22.5X3MM THK)	
	47	1	**7X-0515**	4	WASHER-HARD (17X35X5MM THK)	
	48	1	**8T-2561**	26	WASHER-HARD (10.5X28.5X5MM THK)	
	49	1	**8T-4896**	9	WASHER-HARD (10.2X18.5X2.5MM THK)	
	50	1	**8T-9056**	20	BOLT (3/8-16X1.25 IN)	
	51	1	**8T-9393**	4	BOLT (5/8-11X1.5 IN)	
	52	1	**9M-6522**	1	CONNECTOR-FLARED	
E	53	1	**5P-1259**		HOSE (20CM)	
	54	1	**5P-1265**		HOSE (76.2MM ID) (23CM)	
E	55	1	**5P-1465**		HOSE (6.35MM ID) (21CM EACH)	

E-ORDER BY THE CENTIMETER
I-SEE HOSE FABRICATION GUIDE

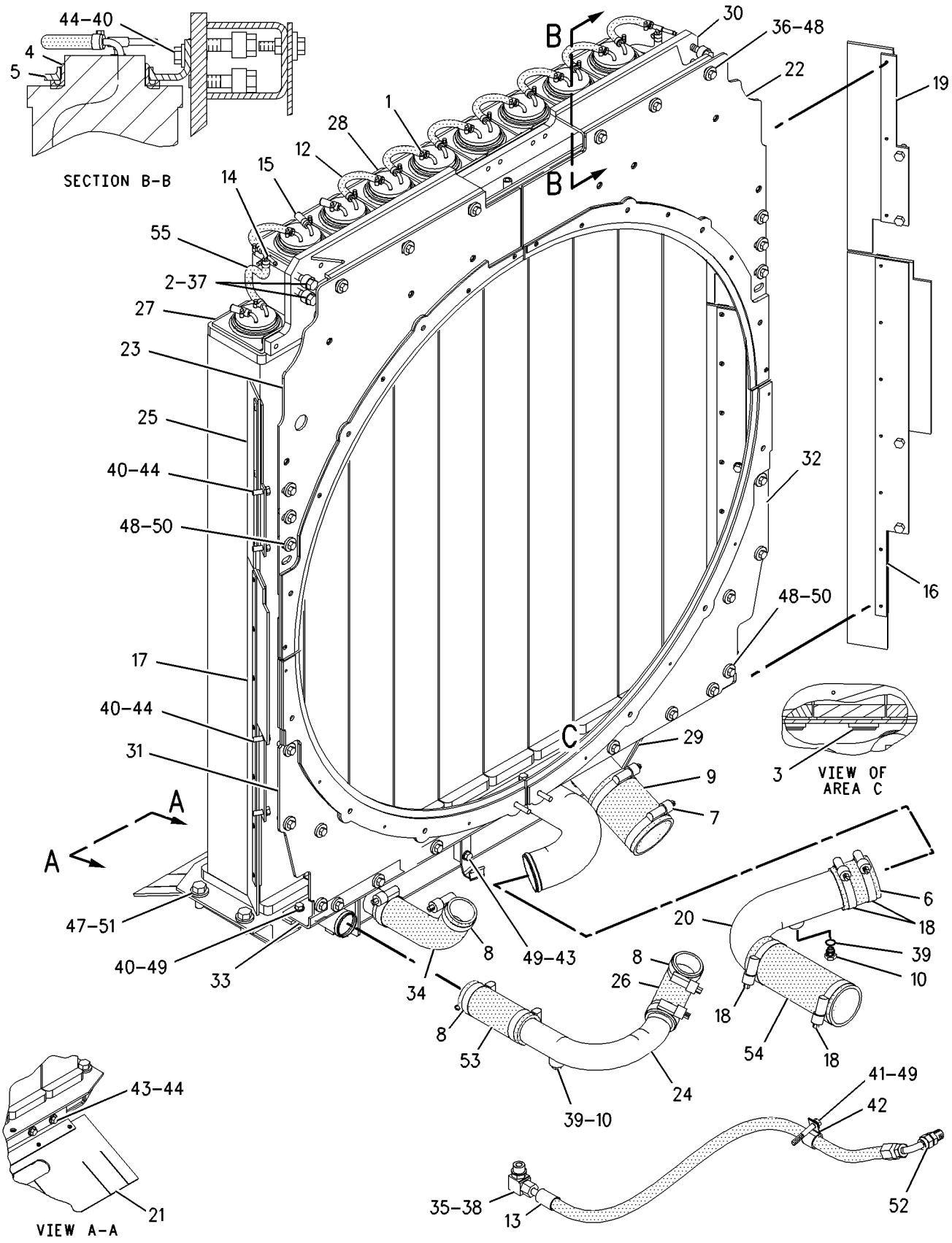

GRAPHIC #1 g00759371

MEMORANDA

COOLING SYSTEM

164-2877 RADIATOR GP

S/N: ABK1-UP
ADVANCED MODULAR COOLING SYSTEM
PART OF 162-9502 CONVERSION AR-ENGINE
AN ATTACHMENT

SMCS-1351 **i01566071**

NOTE	REF NO	GRAPHIC REF	PART NUMBER	QTY	PART NAME 1 2 3 4 5 6 (PRODUCT LEVEL)	SEE PAGE
	1	3	**134-7321**	1	HOSE	
	2	2	**1P-4278**	24	CLAMP-HOSE	
	3	2	**1S-4305**	4	WASHER (0.531X1X0.56 IN THK)	
	4	1	**6I-2430**	1	TANK AS-BOTTOM	
		1	**1F-0750**	10	NUT-WELD (3/8-16 THD)	
BE		1	**125-6743**		SEAL-RUBBER	
	5	1	**6I-2431**	10	SEAL	
	6	3	**6I-2435**	10	SPACER	
	7	3	**6I-2436**	10	RETAINER	
	8	2	**8T-4985**	2	CLAMP-HOSE	
	9	1,3	**8T-6675**	4	CLAMP-HOSE	
E	10	2	**5P-0764**		HOSE (88.9 MM ID) (13.67CM)	
	11	2	**106-4572**	9	HOSE	
I	12	3	**109-5760**	1	HOSE AS	
	13	2	**111-7421**	2	CAP	
	14	2	**133-0819**	1	BAFFLE AS-RH	
		2	**6B-4594**	7	RIVET	
	15	3	**133-0822**	1	BAFFLE AS-LH	
		3	**6B-4594**	7	RIVET	
	16	3	**134-7431**	1	TUBE AS	
	17	1	**161-0018**	1	HOSE	
	18	2	**163-8391**	1	BAFFLE AS-RH	
		2	**6B-4594**	3	RIVET	
	19	3	**163-8422**	1	BAFFLE AS-FRONT	
		3	**6B-4594**	11	RIVET	
	20	3	**165-9905**	1	BAFFLE AS-LH	
		3	**6B-4594**	3	RIVET	
	21	2	**6I-2433**	2	CORE AS	
	22	2	**119-4774**	8	CORE AS-RADIATOR	
	23	1	**172-5768**	1	SHIELD AS	
		1	**1L-9551**	4	RIVET	
	24	1	**172-5769**	1	SHIELD AS	
		1	**1L-9551**	4	RIVET	
	25	1	**192-5425**	2	TEE	
	26	1	**198-1862**	1	BRACKET AS	
		1	**1F-0750**	6	NUT-WELD (3/8-16 THD)	
	27	1	**198-1863**	1	PLATE AS	
		1	**1F-0750**	6	NUT-WELD (3/8-16 THD)	
	28	1	**198-1864**	1	SHIELD AS	
		1	**1L-9551**	5	RIVET	
	29	1	**198-1865**	1	SHIELD AS	
		1	**1L-9551**	5	RIVET	
	30	3	**030-7949**	1	ELBOW-FLARED	
	31	1	**030-8537**	6	BOLT-LOCKING (3/8-16X1.5 IN)	
	32	2	**030-9620**	4	BOLT (1/2-13X1.45 IN)	
	33	1	**0L-1351**	3	BOLT (3/8-16X0.875 IN)	
	34	3	**114-4427**	1	SEAL-O-RING	
	35	3	**3J-7354**	1	SEAL-O-RING	
	36	2,3	**4L-6454**	34	BOLT (3/8-16X1 IN)	
	37	3	**4L-6459**	1	BOLT (3/8-16X2.5 IN)	
	38	3	**4S-1962**	1	CLIP	
	39	3	**5M-3062**	6	BOLT (3/8-16X0.75 IN)	
	40	2,3	**5P-1075**	34	WASHER-HARD (10.2X22.5X3MM THK)	
	41	2	**7X-0515**	4	WASHER-HARD (17X35X5MM THK)	

164-2877 **RADIATOR GP** *(contd.)*

i01566071

NOTE	REF NO	GRAPHIC REF	PART NUMBER	QTY	PART NAME 1 2 3 4 5 6 (PRODUCT LEVEL)	SEE PAGE
	42	1	**8T-2561**	26	WASHER-HARD (10.5X28.5X5MM THK)	
	43	3	**8T-4896**	7	WASHER-HARD (10.2X18.5X2.5MM THK)	
	44	1	**8T-9056**	20	BOLT (3/8-16X1.25 IN)	
	45	2	**8T-9393**	4	BOLT (5/8-11X1.5 IN)	
	46	3	**9M-6522**	1	CONNECTOR-FLARED	
	47	3	**9S-4182**	1	PLUG-O-RING	
	48	1	**9X-6458**	3	WASHER-HARD (10.2X22.5X3MM THK)	
E	49	2	**5P-1465**		HOSE (6.35MM ID) (21CM EACH)	

B-USE AS REQUIRED
E-ORDER BY THE CENTIMETER
I-SEE HOSE FABRICATION GUIDE

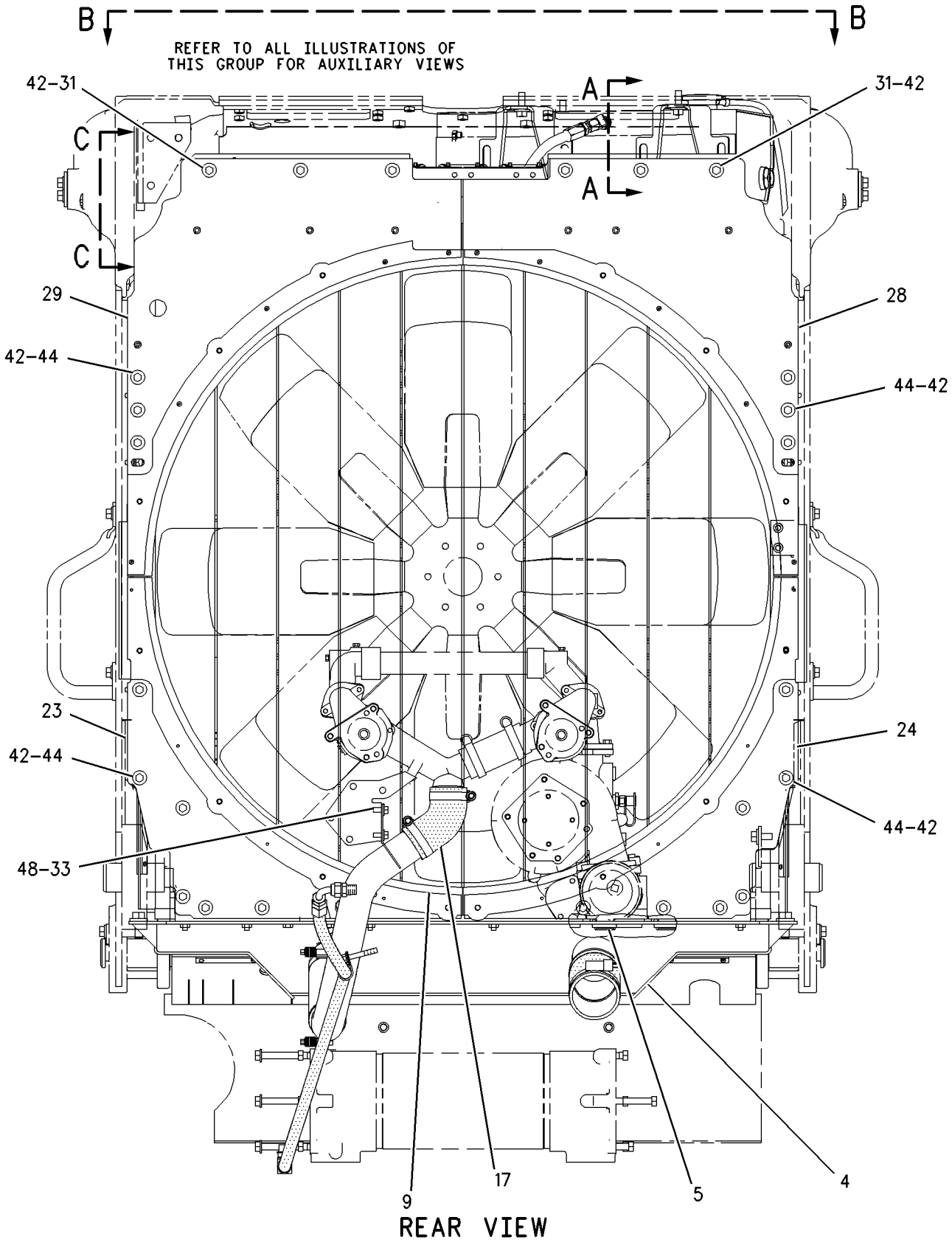

GRAPHIC #1 g00754695

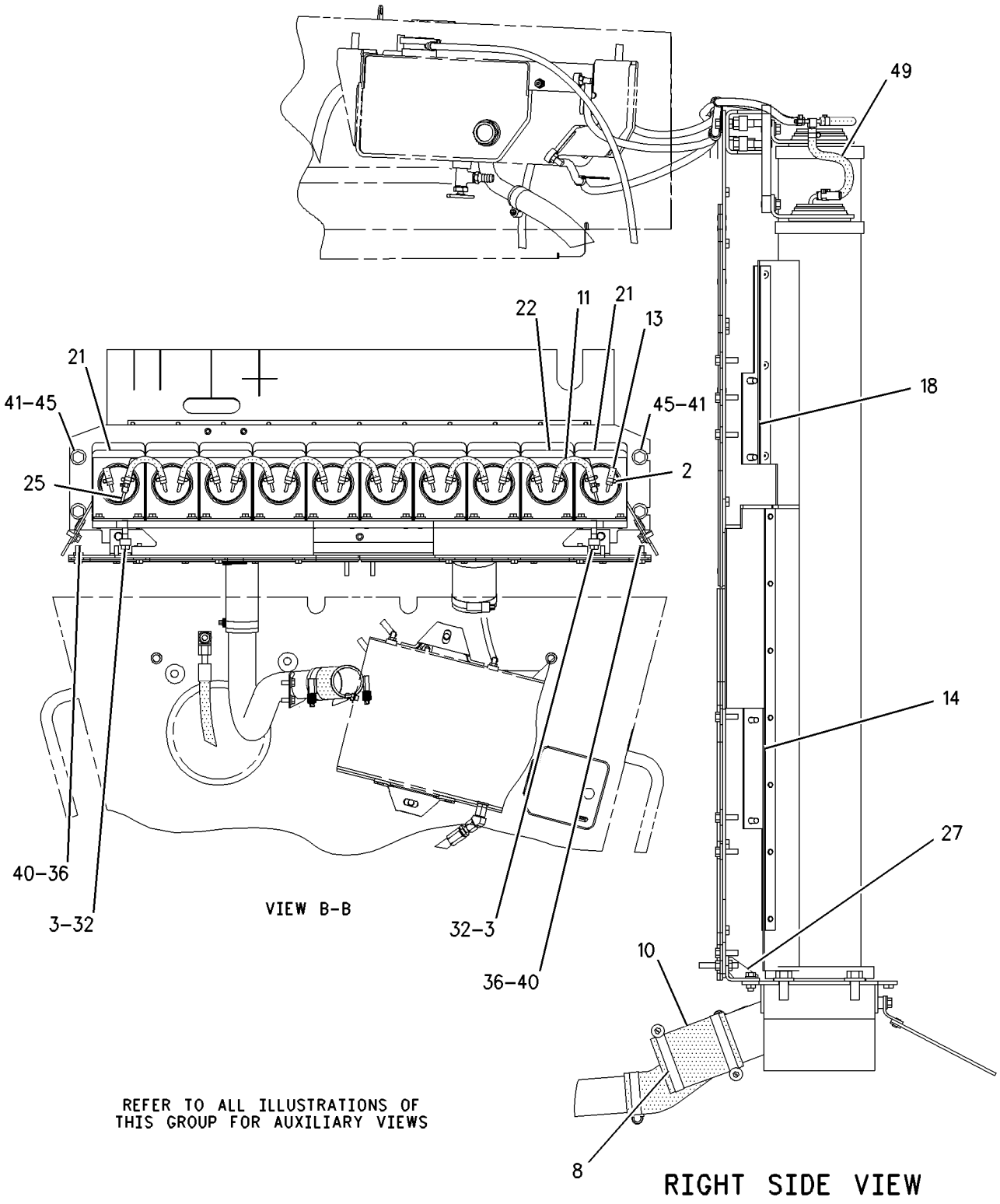

GRAPHIC #2 g00754696

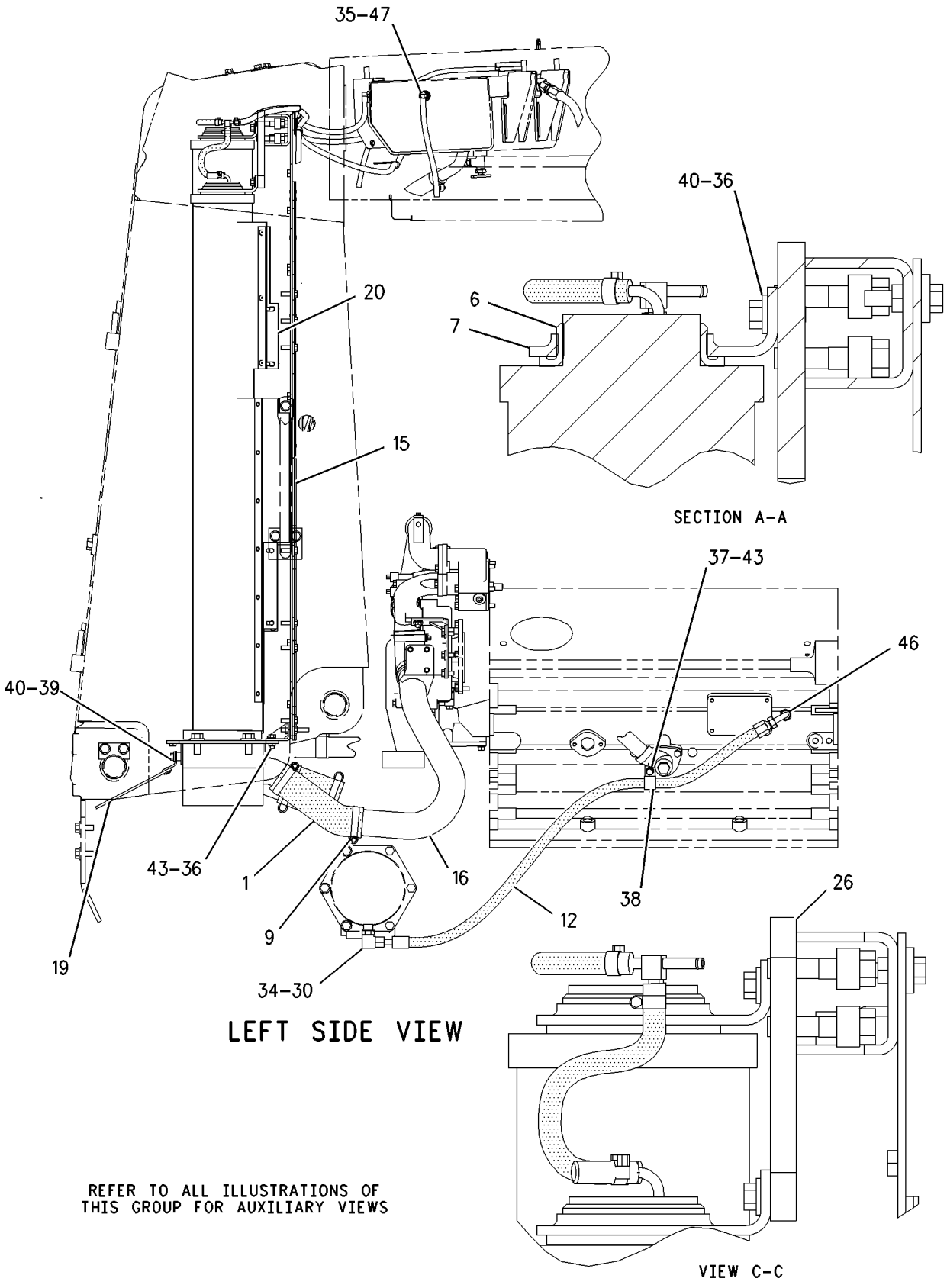

GRAPHIC #3 g00800607

COOLING SYSTEM

169-0156 TANK GP-COOLANT

S/N: ABK1-UP

PART OF 163-5814 TANK GP-WATER

SMCS-1354, 1377 **i01348368**

NOTE	REF NO	GRAPHIC REF	PART NUMBER	QTY	PART NAME 1 2 3 4 5 6 (PRODUCT LEVEL)	SEE PAGE
	1	1	**031-1119**	1	CAP AS-RADIATOR	
	2	1	**169-0152**	1	TANK AS-COOLANT	
		1	**1F-0750**	1	NUT-WELD (3/8-16 THD)	

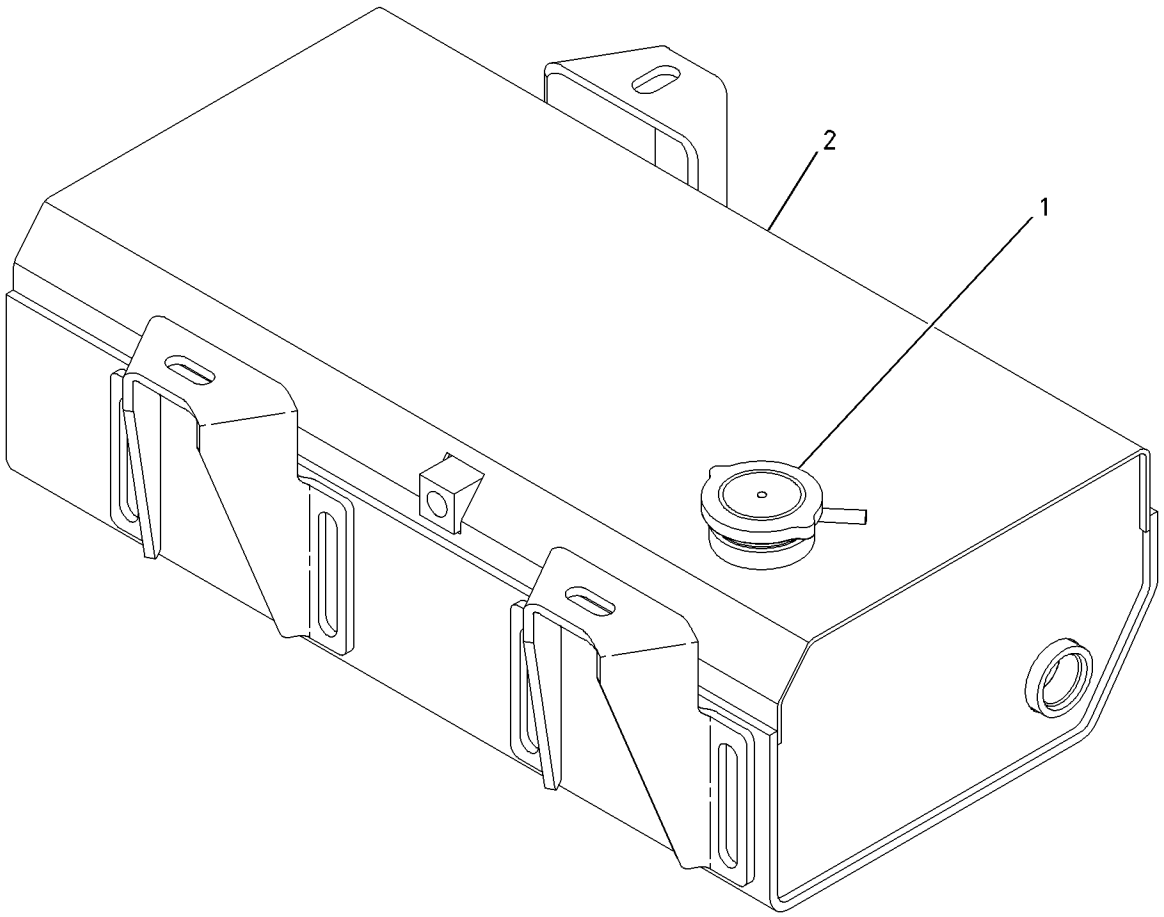

GRAPHIC #1 g00712182

COOLING SYSTEM

163-5814 TANK GP-WATER

S/N: ABK1-UP

PART OF 162-9505 INSTALLATION AR-ENGINE

SMCS-1377 **i01590494**

NOTE	REF NO	GRAPHIC REF	PART NUMBER	QTY	PART NAME 1 2 3 4 5 6 (PRODUCT LEVEL)	SEE PAGE
	1	2	**1P-4278**	3	CLAMP-HOSE	
I	2	2	**2G-4561**	1	HOSE AS	
	3	2	**2V-4868**	2	FITTING (1/8-27 PTF)	
	4	1	**3B-7732**	1	ELBOW-STREET	
	5	1	**5P-2230**	2	CLAMP-HOSE	
	6	2	**6V-1355**	4	ELBOW	
	7	1	**6V-2492**	1	CONNECTOR	
	8	2	**9M-7961**	1	FITTING	
	9	2	**9N-3666**	1	VALVE AS	
	10	2	**9Y-9236**	1	BODY AS-GAUGE	
Y	11	1	*169-0156*	1	TANK GP-COOLANT	149
	12	2	**030-7963**	2	ELBOW-FLARED	
	13	2	**3J-7354**	4	SEAL-O-RING	
	14	1	**4D-9517**	5	CLIP	
	15	1	**4L-6454**	1	BOLT (3/8-16X1 IN)	
	16	1	**5P-1076**	3	WASHER-HARD (13.5X30X4MM THK)	
	17	1	**5P-2566**	3	BOLT (1/2-13X1.5 IN)	
	18	2	**7D-7233**	1	CLIP	
	19	2	**7M-8485**	1	SEAL-O-RING	
	20	2	**8M-0755**	2	CONNECTOR	
	21	1,2	**8M-2770**	6	CLIP	
	22	1,2	**8T-4896**	6	WASHER-HARD (10.2X18.5X2.5MM THK)	
E	23	1	**5P-1251**		HOSE (129 CM)	
E	24	1,2	**8C-3681**		HOSE (210CM)	
E	25	1	**5P-1465**		HOSE (6.35MM ID) (206CM)	
E	25A	1	**5P-1465**		HOSE (6.35MM ID) (51CM)	
E	25B	2	**5P-1465**		HOSE (6.35MM ID) (118CM)	
E	25C	2	**5P-1465**		HOSE (6.35MM ID) (73CM)	

E-ORDER BY THE CENTIMETER
I-SEE HOSE FABRICATION GUIDE
Y-SEPARATE ILLUSTRATION

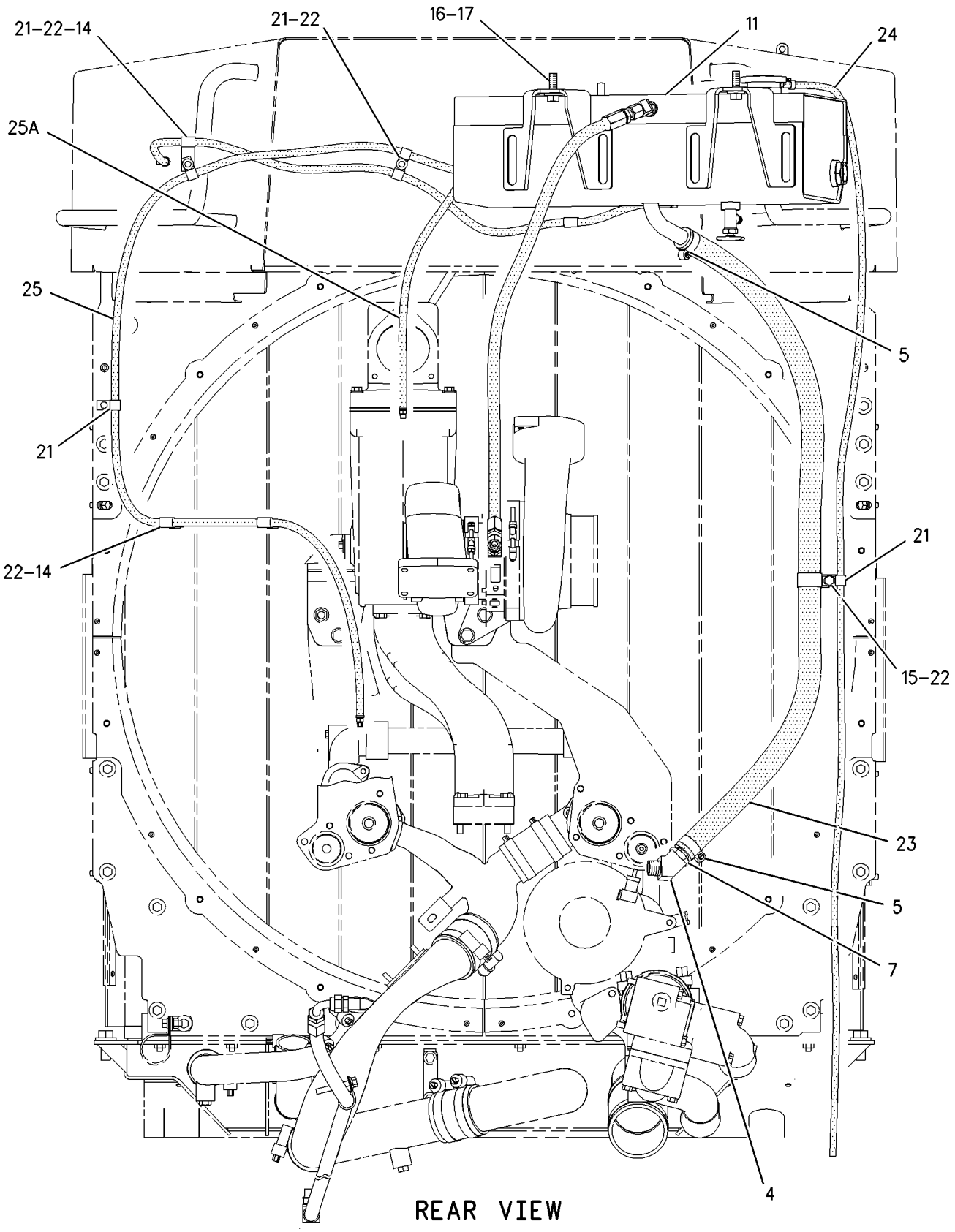

GRAPHIC #1

g00750704

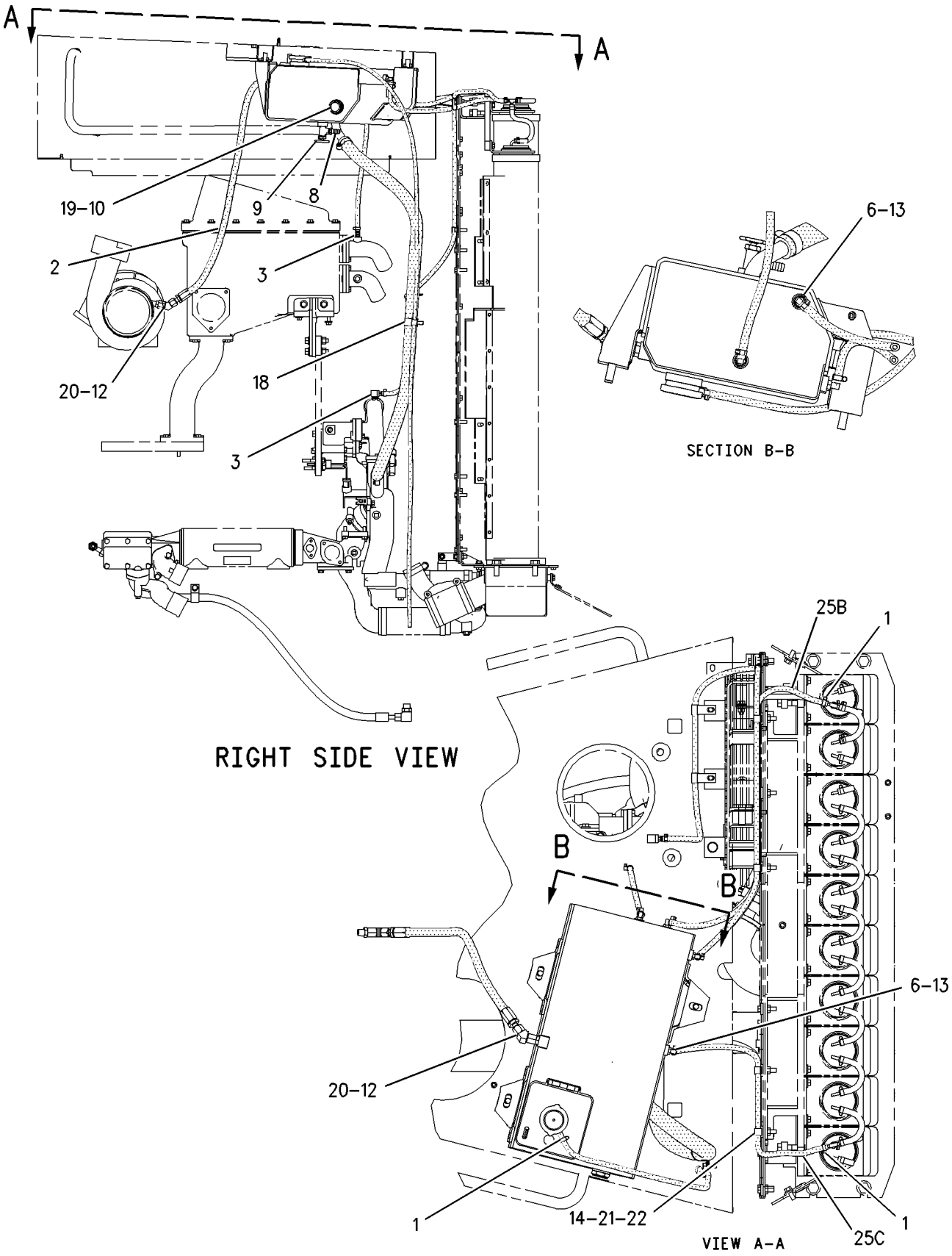

GRAPHIC #2

g00750706

MEMORANDA

AIR INLET AND EXHAUST SYSTEM

9N-6613 AFTERCOOLER GP-WATER

S/N: 48W41541-UP
PART OF 198-9948 ENGINE AR
AN ATTACHMENT

SMCS-1063, 1064, 1079 **i01446415**

NOTE	REF NO	GRAPHIC REF	PART NUMBER	QTY	PART NAME 1 2 3 4 5 6 (PRODUCT LEVEL)	SEE PAGE
	1	1	**5M-2894**	21	WASHER-HARD (10.2X18.5X2.5MM THK)	
	2	1	**8N-2299**	2	ADAPTER-AFTERCOOLER	
	3	1	**1B-7182**	8	BOLT (5/16-18X1.25 IN)	
		1	**9M-1974**	8	WASHER-HARD (8.8X16X2MM THK)	
	4	1	**4W-1072**	1	COVER-AFTERCOOLER	
	5	1	**0S-1571**	11	BOLT (3/8-16X1.75 IN)	
	6	1	**4N-5795**	1	GASKET	
B	7	1	**7W-6492**	2	PLUG-PIPE	
	8	1	**4W-1737**	1	HOUSING-AFTERCOOLER	
	9	1	**0S-1619**	2	BOLT (3/8-16X3 IN)	
	10	1	**0T-0573**	6	BOLT (3/8-16X2.75 IN)	
	11	1	**4N-1848**	1	GASKET	
	12	1	**109-0079**	2	SEAL-O-RING (78.74MM ID)	
	13	1	**2W-6687**	2	ADAPTER-AFTERCOOLER	
	14	1	**7C-3385**	1	CORE AS-AFTERCOOLER	
	15	1	**109-0073**	4	SEAL-O-RING (43.82MM ID)	
	16	1	**0S-1590**	2	BOLT (3/8-16X2 IN)	
CB	17	1	**0S-1571**	2	BOLT (3/8-16X1.75 IN)	
CB		1	**5M-2894**	2	WASHER-HARD (10.2X18.5X2.5MM THK)	

B-USE AS REQUIRED
C-CHANGE FROM PREVIOUS TYPE

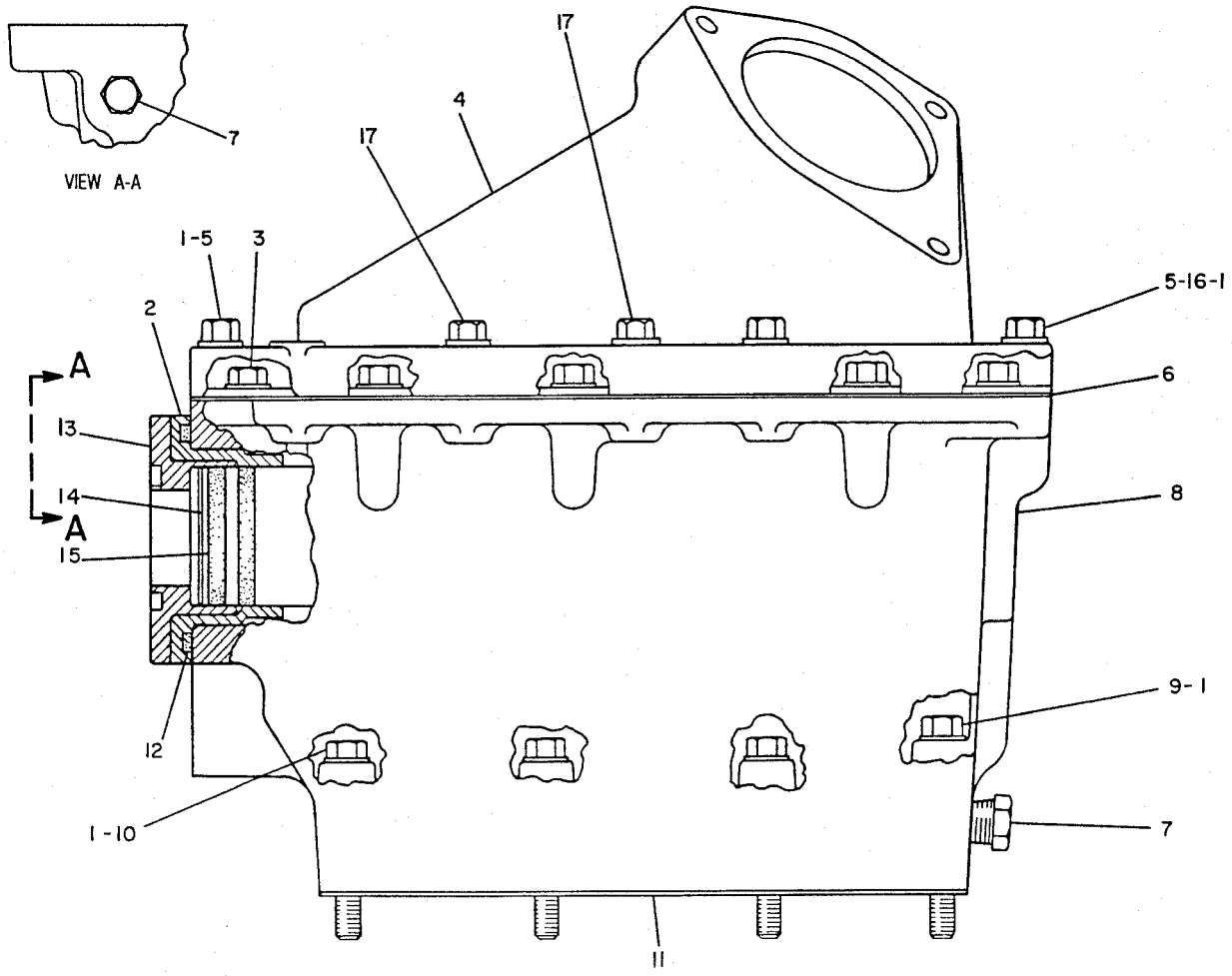

GRAPHIC #1 g00110695

AIR INLET AND EXHAUST SYSTEM

163-5804 AFTERCOOLER GP-WATER

S/N: 5XD1-UP

PART OF 163-5784 ENGINE AR

SMCS-1063, 1064, 1079 **i01431604**

NOTE	REF NO	GRAPHIC REF	PART NUMBER	QTY	PART NAME 1 2 3 4 5 6 (PRODUCT LEVEL)	SEE PAGE
	1	1	**4N-1848**	1	GASKET	
	2	1	**4N-4193**	2	ADAPTER	
	3	1	**4W-4775**	2	ADAPTER	
	4	1	**159-0226**	1	CORE AS-AFTERCOOLER	
	5	1	**161-6291**	2	GASKET	
	6	1	**163-8407**	1	COVER	
	7	1	**163-8408**	1	HOUSING-AFTERCOOLER	
	8	1	**165-5676**	1	SUPPORT	
	9	1	**165-5680**	1	PLATE	
	10	1	**167-6835**	2	BRACKET	
	11	1	**168-9241**	1	PLATE	
	12	1	**169-9073**	1	TUBE AS	
	13	1	**169-9074**	1	TUBE AS	
	14	1	**0S-1590**	2	BOLT (3/8-16X2 IN)	
	15	1	**0S-1591**	6	BOLT (3/8-16X1.5 IN)	
	16	1	**109-0078**	2	SEAL-O-RING (33.47MM ID)	
	17	1	**7B-3235**	2	BOLT (1/2-13X1.375 IN)	
	20	1	**1H-7339**	4	SEAL-O-RING (75.79MM ID)	
	21	1	**2B-2694**	4	BOLT (5/16-18X2 IN)	
	22	1	**2J-5245**	2	BOLT (3/8-16X1.25 IN)	
	23	1	**3B-1915**	4	BOLT (3/8-16X1.37 IN)	
	24	1	**5M-2894**	17	WASHER-HARD (10.2X18.5X2.5MM THK)	
	25	1	**5P-7204**	2	SEAL-O-RING (34.29 ID)	
	27	1	**8T-6764**	1	PLUG-PIPE	
	28	1	**0S-1587**	2	BOLT (1/2-13X1.75 IN)	
	29	1	**9X-6458**	16	WASHER-HARD (10.2X22.5X3MM THK)	
	30	1	**0L-1143**	17	BOLT (3/8-16X2.50 IN)	
	31	1	**0S-1588**	4	BOLT (3/8-16X1.25 IN)	
	32	1	**7D-1649**	4	WASHER-HARD (13.5X32X5MM THK)	

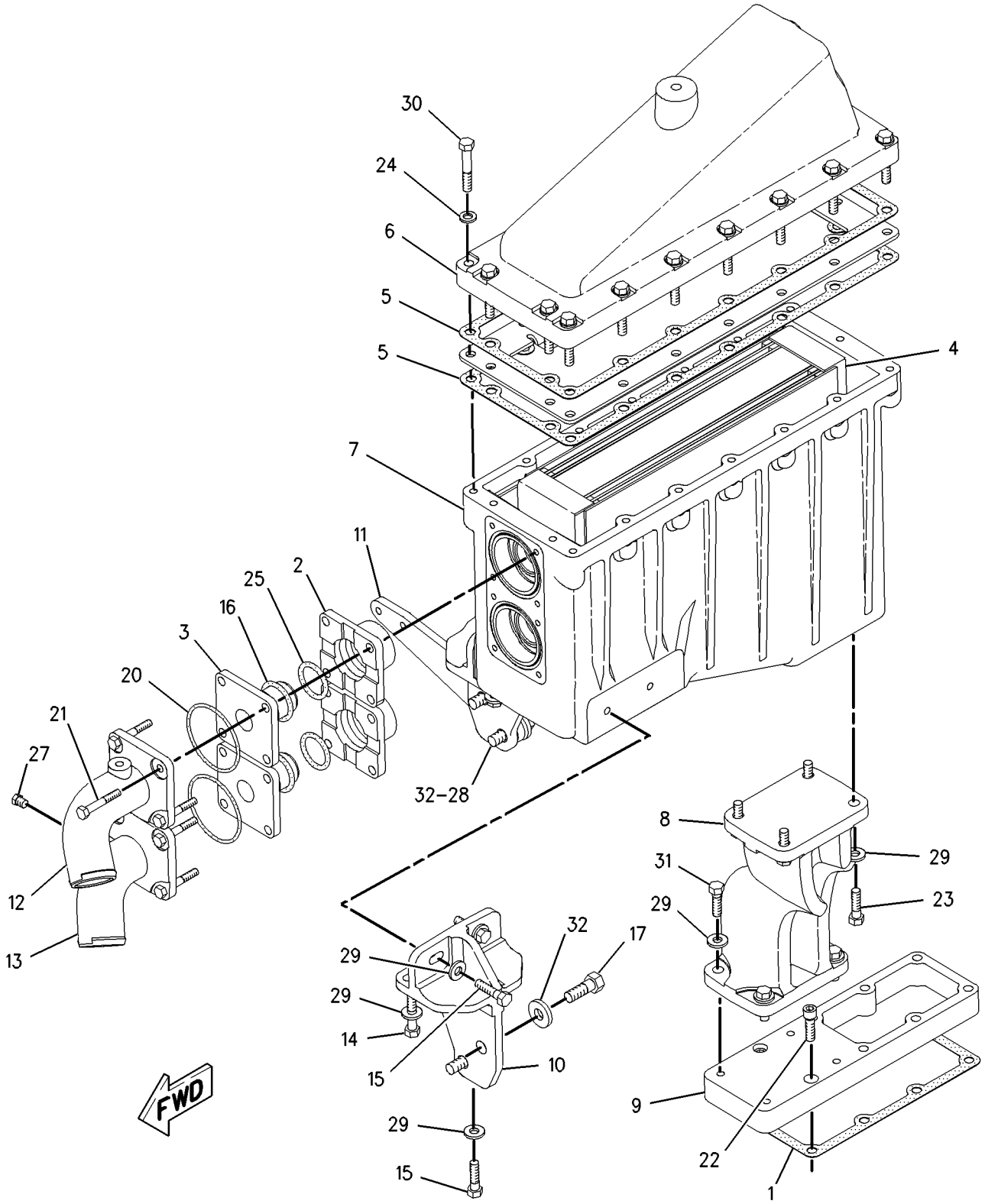

GRAPHIC #1

g00688152

AIR INLET AND EXHAUST SYSTEM

163-5812 AIR CLEANER GP

S/N: ABK1-UP

PART OF 162-9505 INSTALLATION AR-ENGINE

SMCS-1051, 1054 **i01446419**

NOTE	REF NO	GRAPHIC REF	PART NUMBER	QTY	PART NAME 1 2 3 4 5 6 (PRODUCT LEVEL)	SEE PAGE
	1	1	**1P-9390**	1	GASKET-OUTLET	
	2	1	**1W-6903**	1	HOSE-HUMP	
	3	1	**5P-4869**	2	CLAMP-HOSE	
	4	1	**7S-8817**	1	PRECLEANER AS	
		1	**6V-8801**	1	NUT (3/8-16 THD)	
Y	5	1	**165-1684**	1	AIR CLEANER GP	160
	6	1	**165-4217**	1	BODY AS-PRECLEANER	
	7	1	**5M-3062**	4	BOLT (3/8-16X0.75 IN)	
	8	1	**2K-4973**	10	LOCKNUT	
	9	1	**8T-4896**	4	WASHER-HARD (10.2X18.5X2.5MM THK)	
	10	1	**9M-2151**	10	STUD-TAPERLOCK (3/8-16X1.38 IN)	

Y-SEPARATE ILLUSTRATION

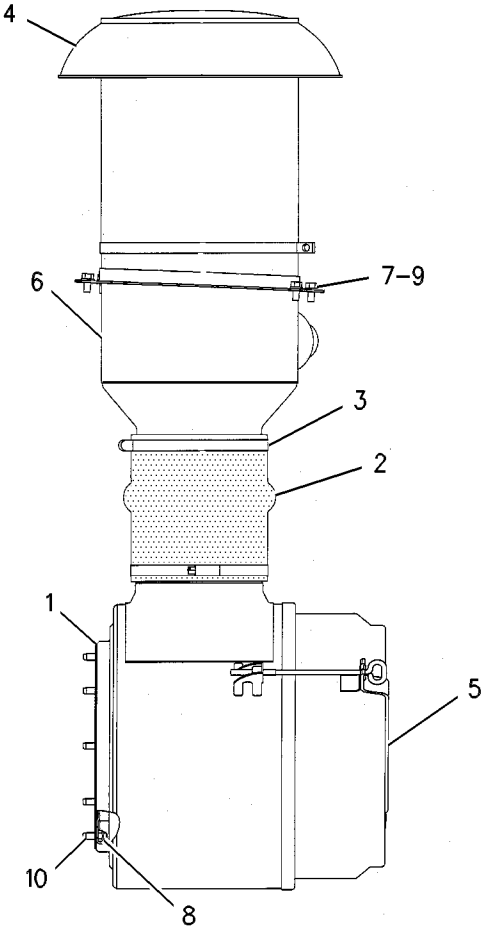

GRAPHIC #1 g00568311

MEMORANDA

AIR INLET AND EXHAUST SYSTEM

165-1684 AIR CLEANER GP

S/N: ABK1-UP

PART OF 163-5812 AIR CLEANER GP

SMCS-1051, 1054 **i01446420**

NOTE	REF NO	GRAPHIC REF	PART NUMBER	QTY	PART NAME 1 2 3 4 5 6 (PRODUCT LEVEL)	SEE PAGE
	1	1	**6I-2508**	1	ELEMENT AS-SECONDARY (AIR CLEANER)	
	2	1	**6N-6460**	2	ROD AS	
	3	1	**165-1687**	1	CUP AS-AIR CLEANER	
	3A	1	**165-5030**	1	SEAL-AIR CLEANER CUP	
	4	1	**165-1689**	1	FILTER ELEMENT AS-PRIMARY AIR	

165-1684 AIR CLEANER GP *(contd.)* **i01446420**

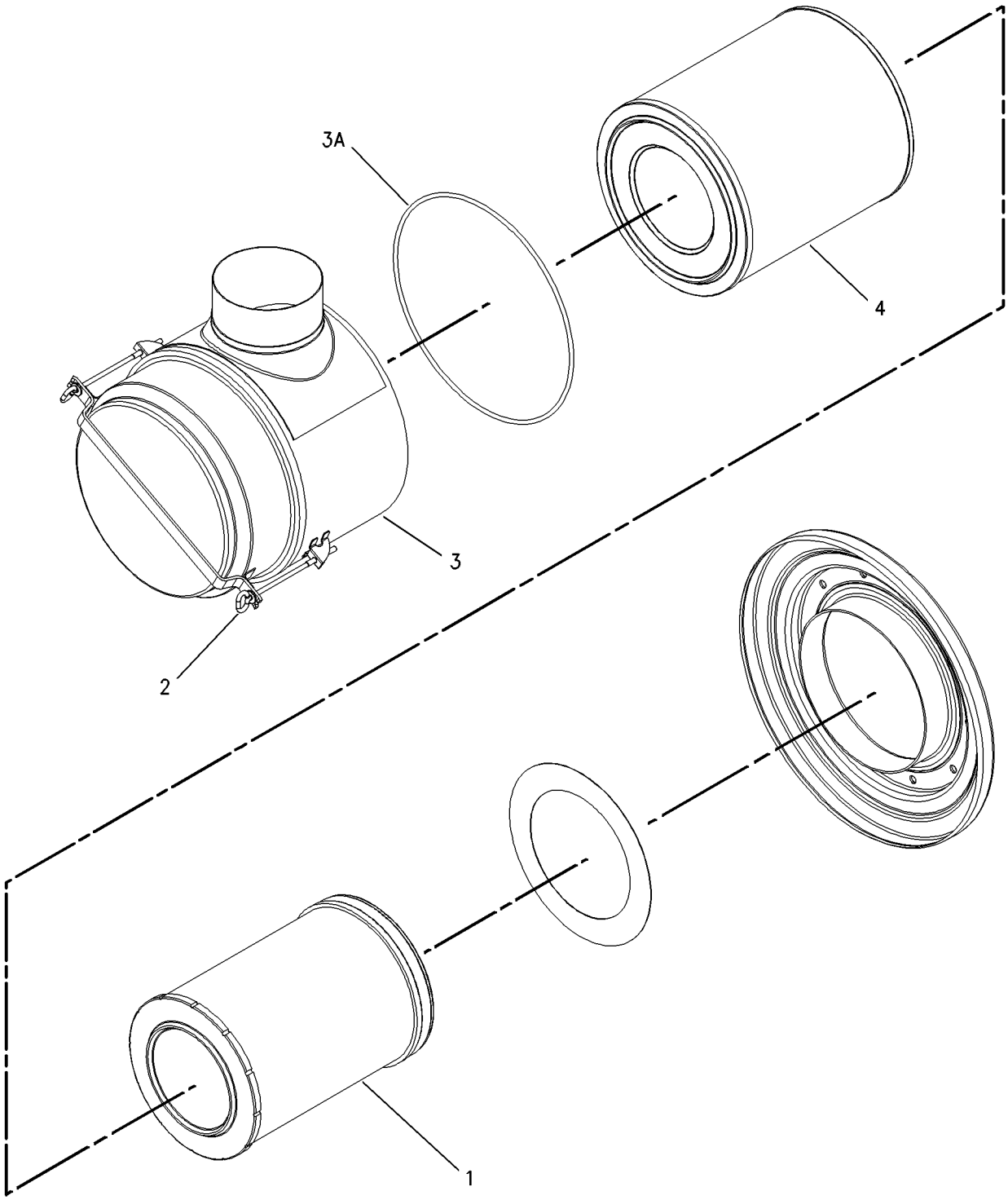

GRAPHIC #1 g00715361

AIR INLET AND EXHAUST SYSTEM

167-3945 AIR CLEANER GP

S/N: ABK1-UP
PART OF 162-9502 CONVERSION AR-ENGINE
AN ATTACHMENT

SMCS-1051, 1054 **i01446421**

NOTE	REF NO	GRAPHIC REF	PART NUMBER	QTY	PART NAME 1 2 3 4 5 6 (PRODUCT LEVEL)	SEE PAGE
	1	1	**6I-2594**	1	AIR CLEANER GP	
		1	**6I-2508**	1	ELEMENT AS-SECONDARY (AIR CLEANER)	
		1	**6I-2507**	1	ELEMENT AS-PRIMARY (AIR CLEANER) (STANDARD)	
					—OR—	
A		1	**132-7166**	1	ELEMENT AS-PRIMARY (AIR CLEANER) (HIGH EFFICIENCY)	
	2	1	**6N-6223**	1	CUP AS-AIR CLEANER	
		1	**6N-7692**	1	GASKET	
	3	1	**6N-6460**	2	ROD AS	
	4	1	**5P-4869**	2	CLAMP-HOSE	
	5	1	**167-3949**	1	ELBOW	
	6	1	**5M-3062**	4	BOLT (3/8-16X0.75 IN)	
		1	**8T-4896**	4	WASHER-HARD (10.2X18.5X2.5MM THK)	
	7	1	**165-4217**	1	BODY AS-PRECLEANER	
	8	1	**7S-8817**	1	PRECLEANER AS	
	9	1	**0S-1591**	1	BOLT (3/8-16X1.5 IN)	
		1	**6V-8801**	1	NUT (3/8-16 THD)	
	10	1	**9M-2151**	10	STUD-TAPERLOCK (3/8-16X1.38 IN)	
		1	**2K-4973**	10	LOCKNUT	
	11	1	**1P-9390**	1	GASKET-OUTLET	

A-NOT PART OF THIS GROUP

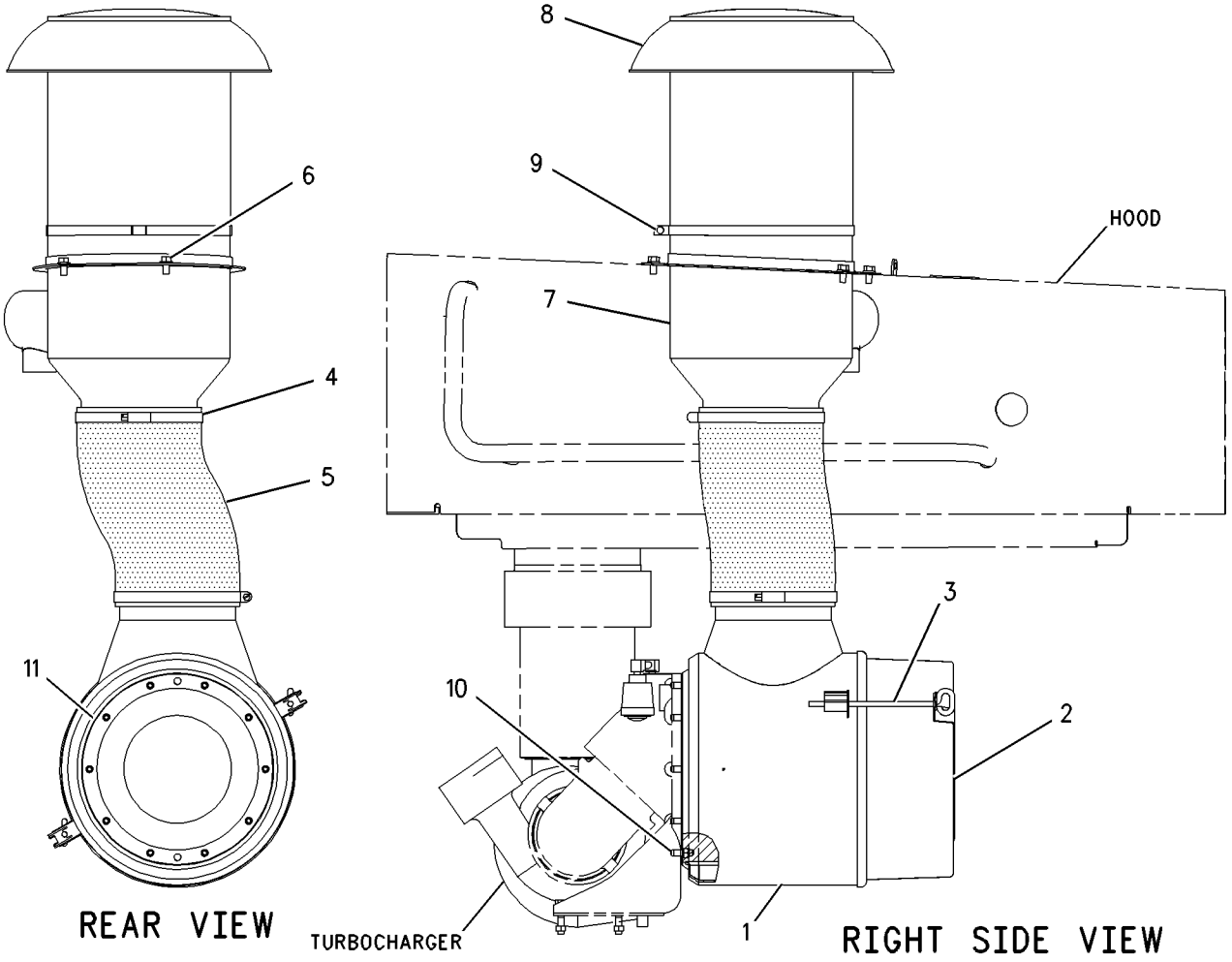

GRAPHIC #1 g00688047

AIR INLET AND EXHAUST SYSTEM

7S-5003 CAP AS-RAIN

S/N: ABK1-UP
6.75IN (171MM) EXHAUST
PART OF 163-5815 DUST EJECTOR GP

SMCS-1072 **i01447299**

NOTE	REF NO	GRAPHIC REF	PART NUMBER	QTY	PART NAME 1 2 3 4 5 6 (PRODUCT LEVEL)	SEE PAGE
					(NO SERVICED PARTS)	

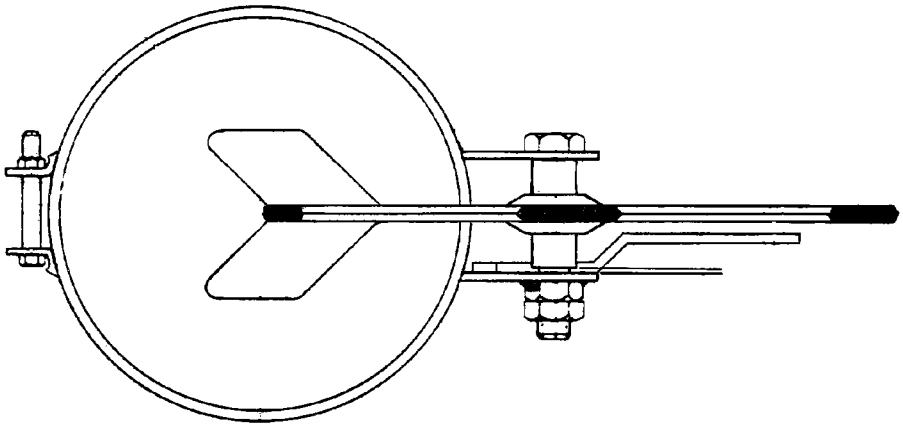

GRAPHIC #1 g00759415

MEMORANDA

AIR INLET AND EXHAUST SYSTEM

4P-8731 CARTRIDGE GP-TURBOCHARGER*R

S/N: 48W41541-UP
PART OF 4P-8730 TURBOCHARGER GP
AN ATTACHMENT

SMCS-1053, 1056, 1077 **i00591299**

NOTE	REF NO	GRAPHIC REF	PART NUMBER	QTY	PART NAME 1 2 3 4 5 6 (PRODUCT LEVEL)	SEE PAGE
	1	1	**4P-8736**	1	PLATE-COMPRESSOR BACK	
	2	1	**1P-1120**	1	RING-SEAL	
	3	1	**4P-3817**	1	BEARING-THRUST	
	4	1	**7N-6608**	1	RING-PISTON	
M	5	1	**4P-3819**	4	BOLT	
	6	1	**4P-3823**	1	SHAFT AS-TURBINE	
	7	1	**9M-8915**	3	RING-RETAINING	
	8	1	**4P-8735**	1	HOUSING-BEARING	
		1	**1W-4795**	1	PLATE-IDENTIFICATION	
		1	**2F-0808**	2	SCREW	
	9	1	**4P-3816**	1	COLLAR-THRUST	
	10	1	**9M-8919**	1	RING-SEAL	
	11	1	**1S-1770**	1	LOCKNUT-TURBOCHARGER	
	12	1	**4P-8734**	1	WHEEL-COMPRESSOR	
M	13	1	**4P-3818**	3	BOLT	
					AVAILABLE REPAIR KIT(S):	
			9N-2041	1	KIT-BEARING	

M-METRIC PART

4P-8731 CARTRIDGE GP-TURBOCHARGER *(contd.)* **i00591299**

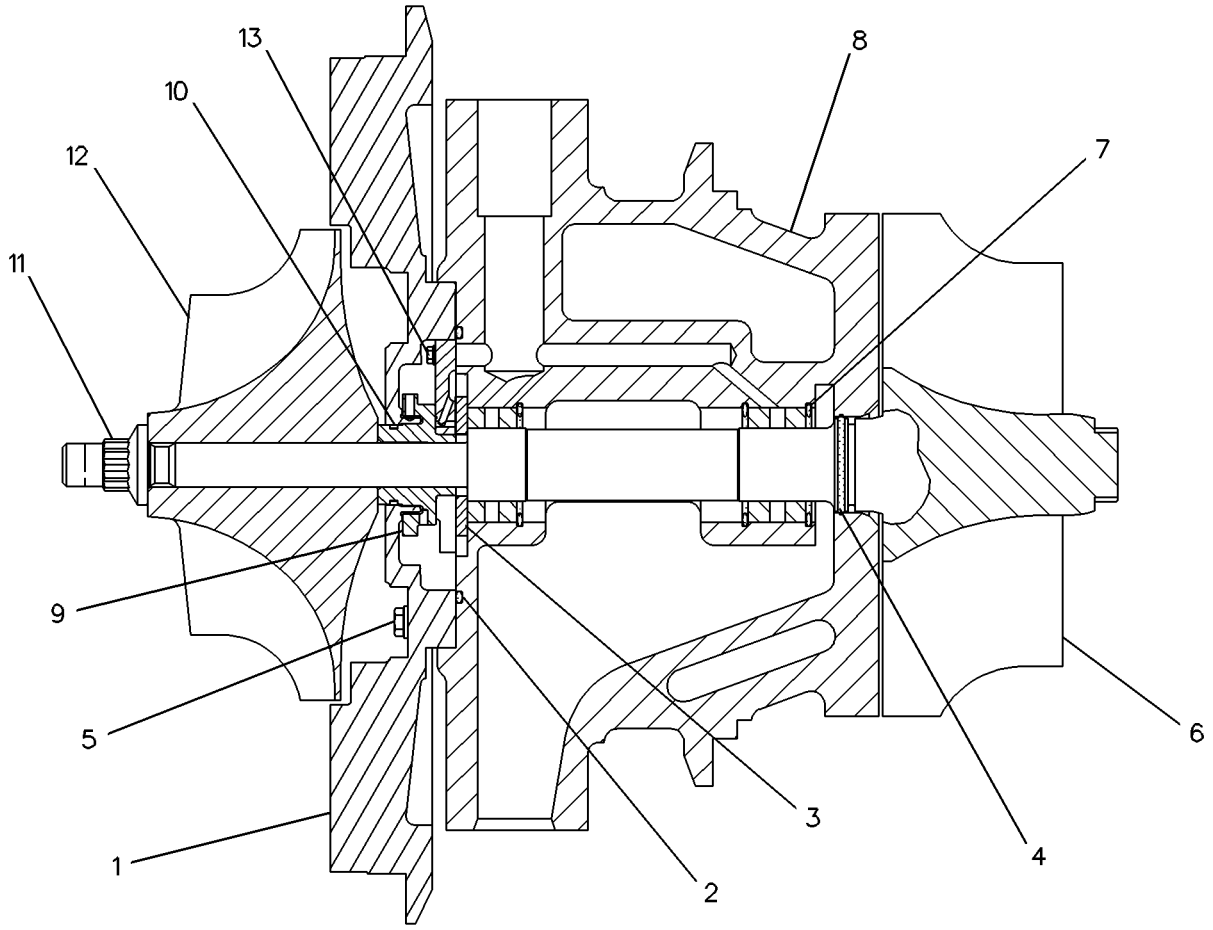

GRAPHIC #1 g00222735

AIR INLET AND EXHAUST SYSTEM

163-5815 DUST EJECTOR GP

S/N: ABK1-UP

PART OF 162-9505 INSTALLATION AR-ENGINE

SMCS-1068 **i01492006**

NOTE	REF NO	GRAPHIC REF	PART NUMBER	QTY	PART NAME 1 2 3 4 5 6 (PRODUCT LEVEL)	SEE PAGE
Y	1	1	**7S-5003**	1	CAP AS-RAIN	164
	2	1	**7W-1208**	1	CLAMP	
	3	1	**7W-5524**	1	EJECTOR AS-EXHAUST	
	4	1	**5P-0597**	2	CLAMP-HOSE	
	5	1	**174-8830**	1	ELBOW	
	6	1	**2K-4973**	1	LOCKNUT (3/8-16 THD)	
	7	1	**9B-7237**	1	BOLT (3/8-16X1.25 IN)	
	8	1	**7W-2478**	1	GASKET	
	9	1	**7X-0290**	1	BOLT (3/8-16X3.50 IN)	
	10	1	**8T-4896**	1	WASHER-HARD (10.2X18.5X2.5MM THK)	
	11	1	**8T-8915**	1	BOLT (3/8-16X3.25 IN)	
E	12	1	**5P-1471**		HOSE (67CM)	

E-ORDER BY THE CENTIMETER
Y-SEPARATE ILLUSTRATION

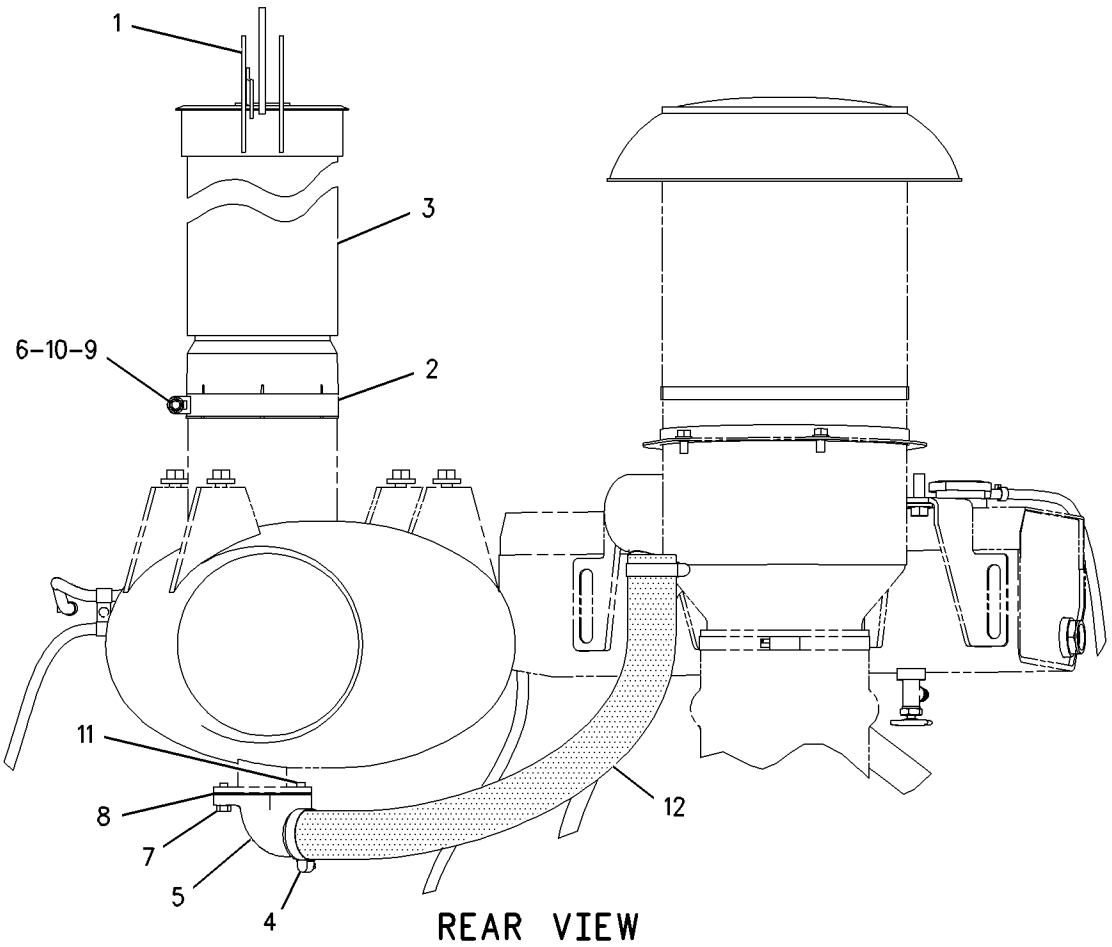

GRAPHIC #1 g00712343

MEMORANDA

AIR INLET AND EXHAUST SYSTEM

163-5803 LINES GP-AIR

S/N: 5XD1-UP

PART OF 163-5784 ENGINE AR

SMCS-1058 **i01446423**

NOTE	REF NO	GRAPHIC REF	PART NUMBER	QTY	PART NAME 1 2 3 4 5 6 (PRODUCT LEVEL)	SEE PAGE
	1	1	**1W-0481**	2	RING-EXHAUST SEAL	
	2	1	**4W-4314**	1	SUPPORT-TURBOCHARGER	
	3	1	**4W-7062**	2	ADAPTER	
	4	1	**6N-2331**	1	GASKET	
	5	1	**7E-3205**	1	MANIFOLD-INLET	
	6	1	**171-6768**	1	PLATE AS	
		1	**8T-5912**	1	NUT-WELD (3/8-16 THD)	
	7	1	**174-3999**	1	SUPPORT-AIR CLEANER	
	8	1	**7W-1944**	3	RETAINER	
	9	1	**7W-3145**	1	PLATE	
	10	1	**8N-0878**	2	CLAMP	
	11	1	**8N-0879**	4	CLAMP	
	12	1	**8N-2258**	1	SHIELD AS-BOTTOM	
		1	**6V-5044**	7	NUT-WELD (5/16-18 THD)	
		1	**9M-4136**	5	SPACER (12.7MM THK)	
	13	1	**106-9408**	2	SEAL-EXHAUST	
	14	1	**107-8618**	1	SENSOR GP-TEMPERATURE (INLET AIR)	
		1	**102-8803**	1	KIT-RECEPTACLE (3 PIN)	
					(INCLUDES RECEPTACLE AS & WEDGE)	
		1	**8T-8729**	3	PIN-CONNECTOR	
BE		1	**112-4550**		SLEEVE	
	15	1	**121-5455**	1	TUBE AS-EXHAUST	
	16	1	**121-5457**	1	TUBE AS-EXHAUST	
	17	1	**121-5459**	1	TUBE AS-EXHAUST	
	18	1	**121-5461**	1	TUBE AS-EXHAUST	
	19	1	**129-9416**	2	GASKET	
	20	1	**165-5677**	1	PIPE-AIR	
	21	1	**165-5678**	1	PIPE-AIR	
	22	1	**165-5679**	1	ADAPTER	
	23	1	**0S-0509**	3	BOLT (3/8-16X0.75 IN)	
	24	1	**0L-1143**	6	BOLT (3/8-16X2.50 IN)	
	25	1	**0S-1590**	2	BOLT (3/8-16X2 IN)	
	26	1	**0S-1594**	1	BOLT (3/8-16X1 IN)	
	27	1	**1A-2029**	14	BOLT (3/8-16X1.125 IN)	
	28	1	**5B-7890**	2	PLUG-PIPE (1/4-18 NPTF)	
	29	1	**4L-8337**	6	SEAL-O-RING (81MM ID)	
	30	1	**5H-7704**	2	SEAL-O-RING (94.61MM ID)	
	31	1	**5M-2894**	9	WASHER-HARD (10.2X18.5X2.5MM THK)	
	32	1	**8T-6765**	3	PLUG-PIPE	
	33	1	**5P-2755**	4	BOLT-HIGH TEMPERATURE (3/8-16X69.85MM)	
	34	1	**5P-9959**	2	BOLT (5/16-18X0.5 IN)	
	35	1	**1W-6186**	1	SHIELD AS	
	36	1	**9M-1974**	2	WASHER-HARD (8.8X16X2MM THK)	
	37	1	**8L-2786**	1	SEAL-O-RING (16.36MM ID)	
	38	1	**0L-1351**	2	BOLT (3/8-16X0.875 IN)	

B-USE AS REQUIRED
E-ORDER BY THE CENTIMETER

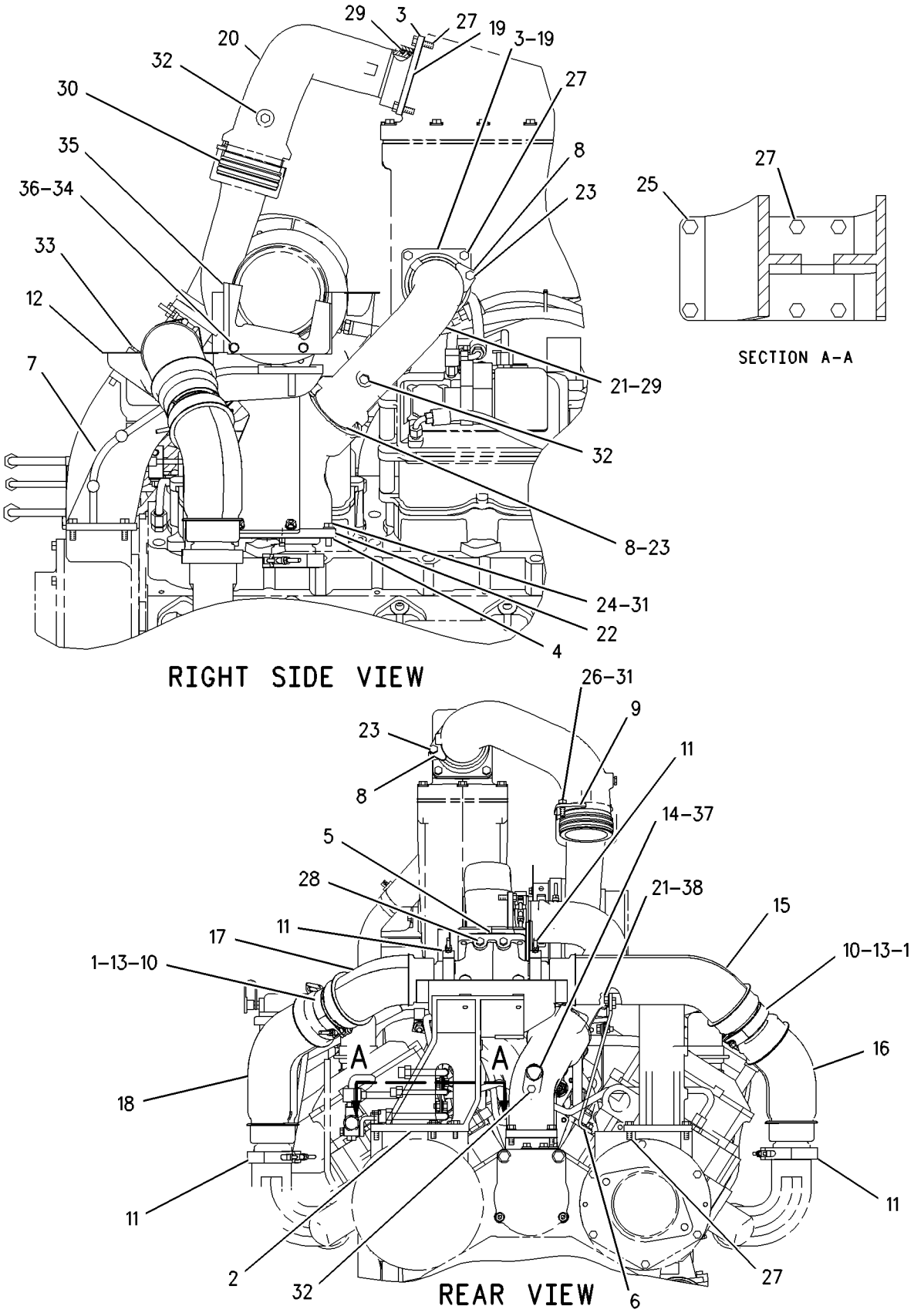

GRAPHIC #1 g00750472

AIR INLET AND EXHAUST SYSTEM

163-5817 LINES GP-AIR

S/N: ABK1-UP

PART OF 162-9505 INSTALLATION AR-ENGINE

SMCS-1058 **i01348501**

NOTE	REF NO	GRAPHIC REF	PART NUMBER	QTY	PART NAME 1 2 3 4 5 6 (PRODUCT LEVEL)	SEE PAGE
	1	1	**1W-6694**	1	CLAMP	
	2	1	**2W-1080**	1	ELBOW AS-EXHAUST	
	3	1	**2W-6965**	1	COUPLING	
	4	1	**2W-6967**	1	ELBOW AS	
	5	1	**8N-2729**	1	RING-METAL SEAL	
	6	1	**8N-2730**	1	RING-METAL SEAL	
	7	1	**8N-2745**	1	CLAMP	
	8	1	**9M-1869**	1	PIPE-AIR TRANSFER	
	9	1	**9X-0263**	1	ADAPTER	
Y	10	1	**161-9926**	1	SENSOR GP-PRESSURE (ATMOSPHERE)	331
	11	1	**163-8419**	1	SUPPORT AS	
		1	**7M-1674**	1	ELEMENT-FILTER	
	12	1	**2M-5173**	4	SEAL-O-RING (126.36MM ID)	
	13	1	**3J-7354**	1	SEAL-O-RING (8.92MM ID)	
	14	1	**5S-7383**	2	BOLT (3/8-16X1.75 IN)	
	15	1	**6V-8801**	2	NUT (3/8-16 THD)	
	16	1	**8L-2786**	1	SEAL-O-RING (16.36MM ID)	
	17	1	**9B-7237**	2	BOLT (3/8-16X1.25 IN)	
	18	1	**9S-4185**	1	PLUG-O-RING (3/4-16 THD)	

Y-SEPARATE ILLUSTRATION

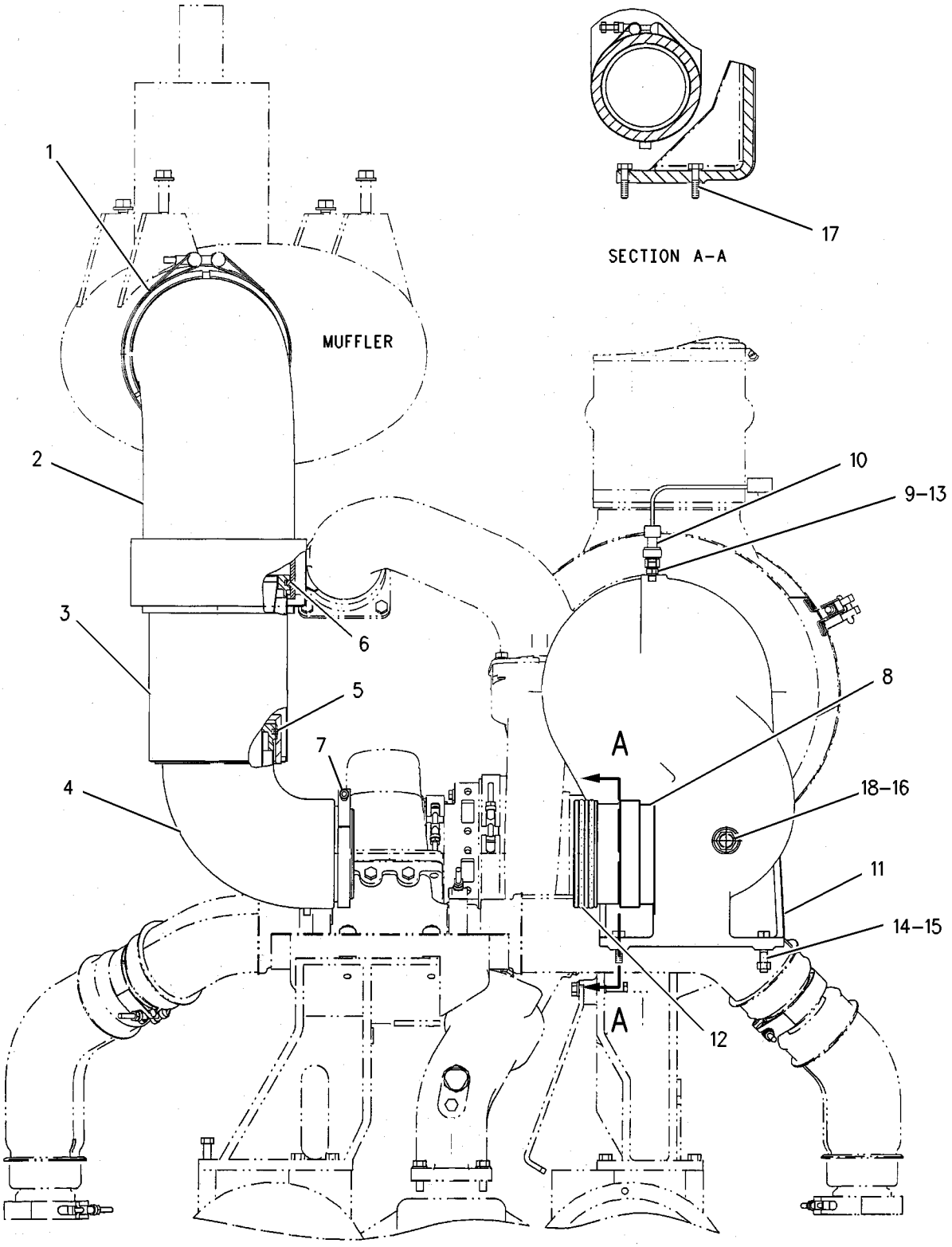

REAR VIEW

GRAPHIC #1 g00712073

AIR INLET AND EXHAUST SYSTEM

169-3698 LINES GP-AIR

S/N: 48W41541-UP
PART OF 198-9948 ENGINE AR
AN ATTACHMENT

SMCS-1058 **i01446428**

NOTE	REF NO	GRAPHIC REF	PART NUMBER	QTY	PART NAME 1 2 3 4 5 6 (PRODUCT LEVEL)	SEE PAGE
	1	1	**1W-0481**	2	RING-EXHAUST SEAL	
	2	1	**1W-3795**	1	BRACKET	
	3	1	**1W-6186**	1	SHIELD AS	
		1	**6V-5044**	2	NUT-WELD (5/16-18 THD)	
	4	1	**4W-1073**	1	PIPE-AIR	
	5	1	**4W-4314**	1	SUPPORT-TURBOCHARGER	
	6	1	**4W-7062**	1	ADAPTER	
	7	1	**7E-3205**	1	MANIFOLD-INLET	
	8	1	**7W-1367**	1	SUPPORT-AIR CLEANER	
	9	1	**7W-1944**	2	RETAINER	
	10	1	**8N-0878**	2	CLAMP	
	11	1	**8N-0879**	4	CLAMP	
	12	1	**8N-2258**	1	SHIELD AS-BOTTOM	
		1	**6V-5044**	7	NUT-WELD (5/16-18 THD)	
		1	**9M-4136**	5	SPACER (12.7MM THK)	
	13	1	**8N-2574**	1	BRACKET	
	14	1	**8T-6765**	1	PLUG-PIPE	
	15	1	**9W-5830**	1	ANGLE AS	
		1	**1F-0750**	1	NUT-WELD (3/8-16 THD)	
	16	1	**106-9408**	2	SEAL-EXHAUST	
	17	1	**121-5455**	1	TUBE AS-EXHAUST	
	18	1	**121-5457**	1	TUBE AS-EXHAUST	
	19	1	**121-5459**	1	TUBE AS-EXHAUST	
	20	1	**121-5461**	1	TUBE AS-EXHAUST	
	21	1	**129-9416**	1	GASKET	
	22	1	**0S-0509**	2	BOLT (3/8-16X0.75 IN)	
	23	1	**0S-1590**	2	BOLT (3/8-16X2 IN)	
	24	1	**0S-1594**	4	BOLT (3/8-16X1 IN)	
	25	1	**1A-2029**	11	BOLT (3/8-16X1.125 IN)	
	26	1	**1C-2251**	2	BOLT (3/8-16X1.87 IN)	
	27	1	**3E-7428**	2	PLUG-PIPE	
	28	1	**4L-8337**	4	SEAL-O-RING (81MM ID)	
	29	1	**5M-2894**	6	WASHER-HARD (10.2X18.5X2.5MM THK)	
	30	1	**5P-2755**	4	BOLT-HIGH TEMPERATURE (3/8-16X69.85MM)	
	31	1	**5P-9959**	2	BOLT (5/16-18X0.5 IN)	
	32	1	**9M-1974**	2	WASHER-HARD (8.8X16X2MM THK)	

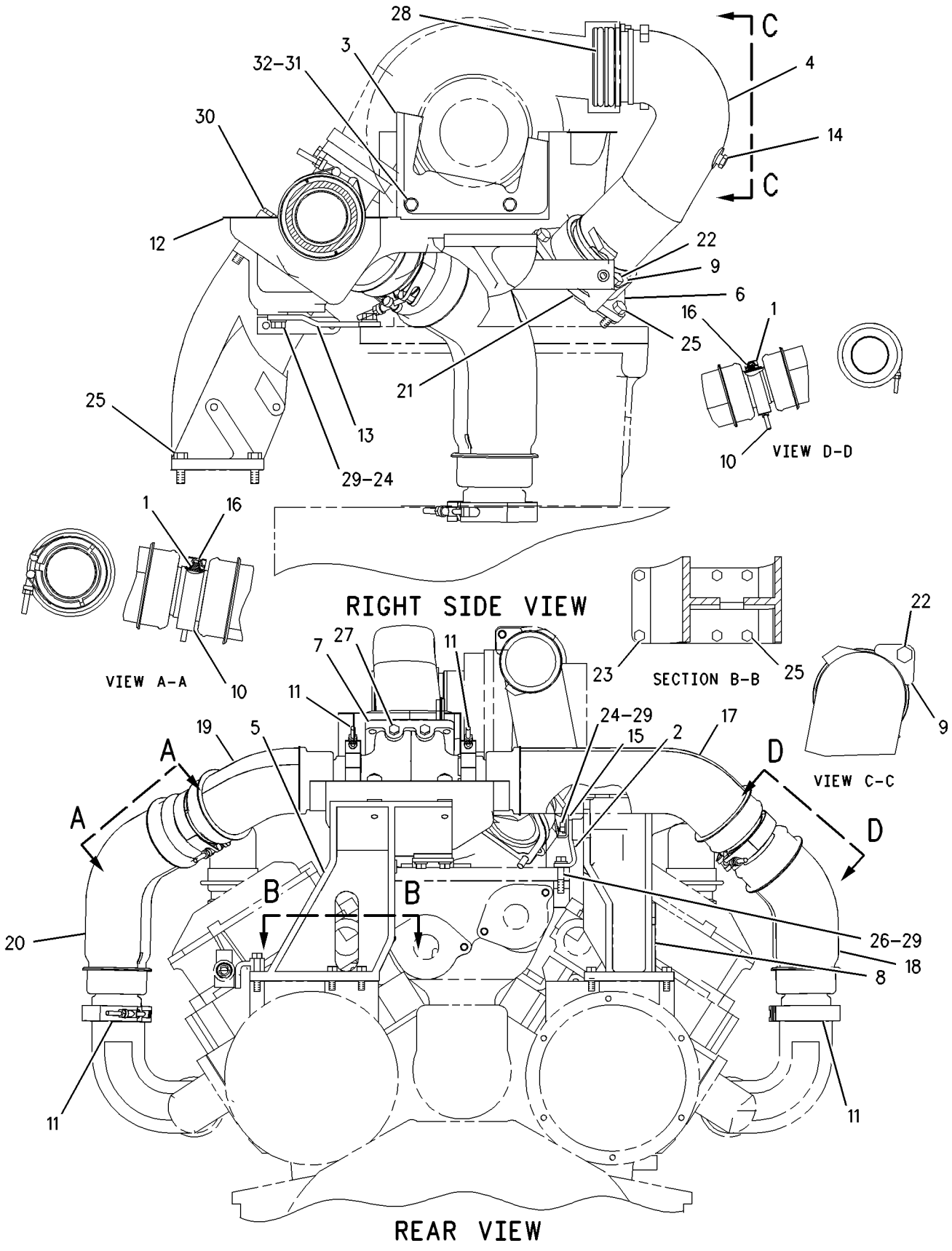

GRAPHIC #1

g00693263

AIR INLET AND EXHAUST SYSTEM

169-3704 LINES GP-AIR

S/N: ABK1-UP
PART OF 162-9502 CONVERSION AR-ENGINE
AN ATTACHMENT

SMCS-1058 **i01446430**

NOTE	REF NO	GRAPHIC REF	PART NUMBER	QTY	PART NAME 1 2 3 4 5 6 (PRODUCT LEVEL)	SEE PAGE
	1	1	**1W-6694**	1	CLAMP	
		1	**8T-0193**	1	NUT-FULL (5/16-24 THD)	
	2	1	**2W-1080**	1	ELBOW AS-EXHAUST	
	3	1	**2W-6305**	1	SUPPORT AS	
		1	**7M-1674**	1	ELEMENT-FILTER (AIR FILTER SERVICE INDICATOR)	
		1	**8T-6765**	1	PLUG-PIPE	
	4	1	**2W-6307**	1	ELBOW	
	5	1	**2W-6965**	1	COUPLING	
	6	1	**2W-6967**	1	ELBOW AS	
	7	1	**8N-2694**	1	INDICATOR-AIR FILTER SERVICE	
	8	1	**8N-2729**	1	RING-METAL SEAL	
	9	1	**8N-2730**	1	RING-METAL SEAL	
	10	1	**8N-2745**	1	CLAMP	
		1	**8T-0122**	1	NUT-FULL (HIGH TEMPERATURE)	
	11	1	**2M-5173**	4	SEAL-O-RING (126.36MM ID)	
	12	1	**3B-6552**	2	ELBOW	
	13	1	**3B-7285**	1	NIPPLE-PIPE	
	14	1	**5S-7383**	4	BOLT (3/8-16X1.75 IN)	
	15	1	**6V-8801**	4	NUT (3/8-16 THD)	

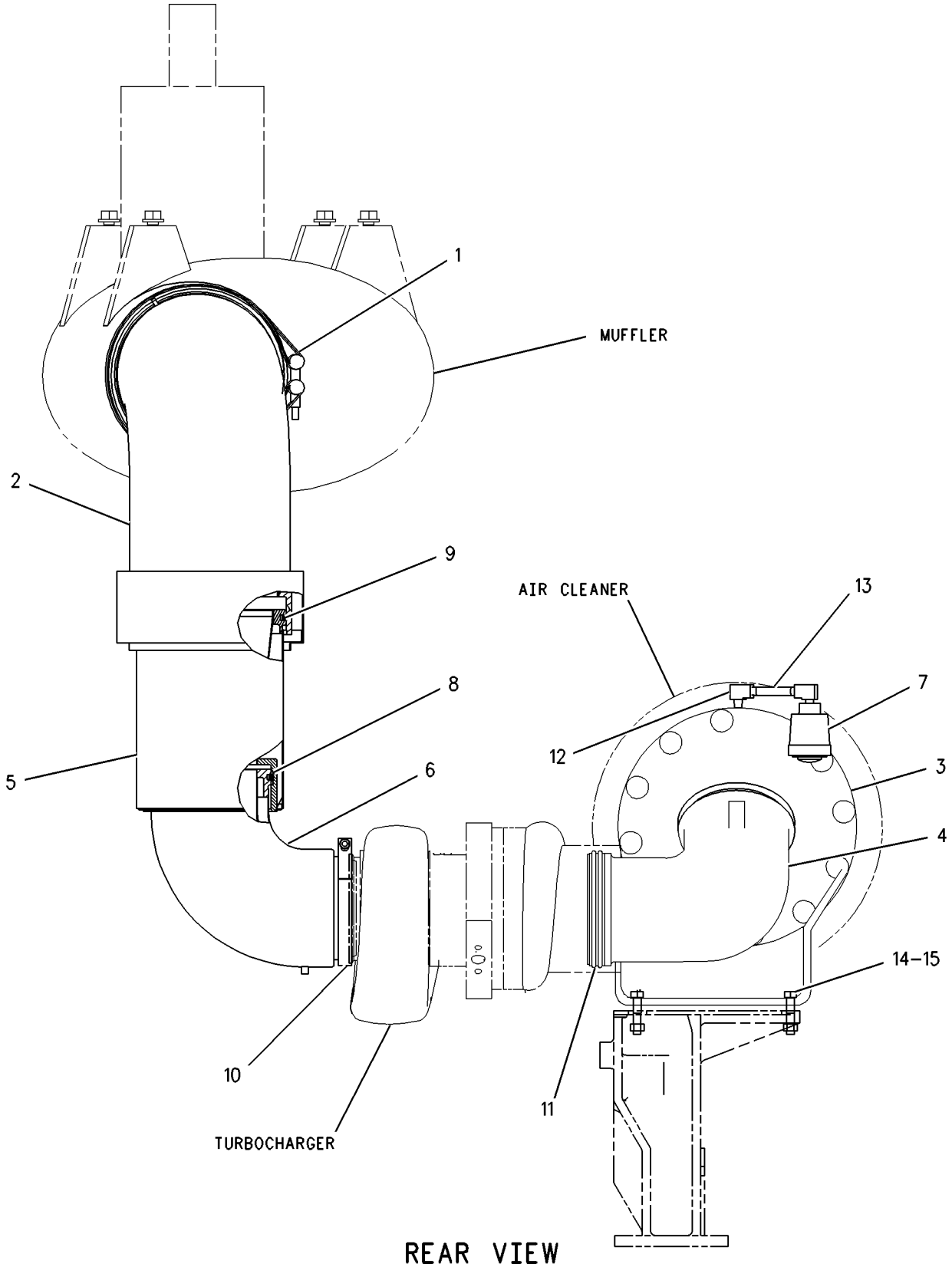

GRAPHIC #1 g00687149

AIR INLET AND EXHAUST SYSTEM

179-7023 MANIFOLD GP-EXHAUST

S/N: 5XD1-UP; 48W41541-UP
PART OF 163-5784, 198-9948 ENGINE AR
ALSO AN ATTACHMENT

SMCS-1059 **i01586664**

NOTE	REF NO	GRAPHIC REF	PART NUMBER	QTY	PART NAME 1 2 3 4 5 6 (PRODUCT LEVEL)	SEE PAGE
	1	1	**100-7401**	4	SEAL AS-EXHAUST	
	2	1	**108-3612**	16	SPACER (11.13X19.05X53MM THK)	
	3	1	**112-7750**	1	MANIFOLD-EXHAUST (REAR-LH)	
	4	1	**112-7751**	1	MANIFOLD-EXHAUST (REAR-RH)	
	5	1	**129-9452**	8	GASKET-EXHAUST MANIFOLD	
	6	1	**163-3103**	2	MANIFOLD-EXHAUST	
	7	1	**2N-2766**	16	LOCKNUT	
	8	1	**5M-2894**	16	WASHER-HARD (10.2X18.5X2.5MM THK)	

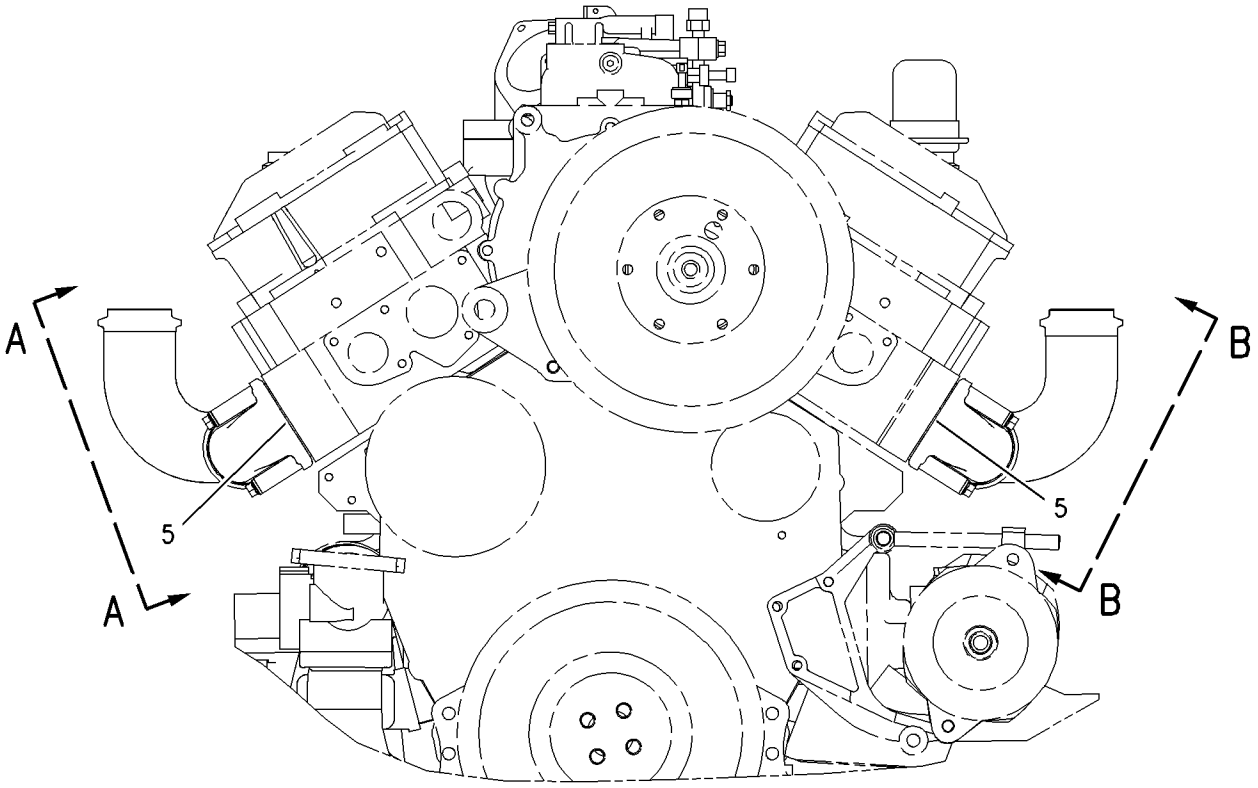

FRONT VIEW

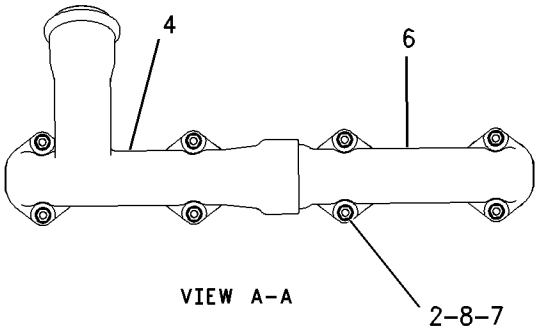

VIEW A-A

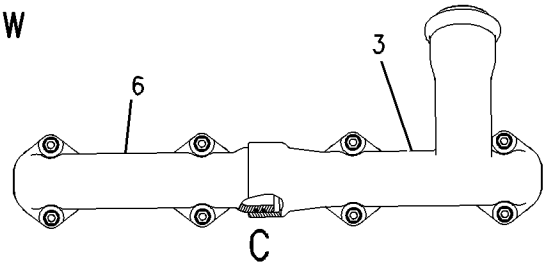

VIEW B-B

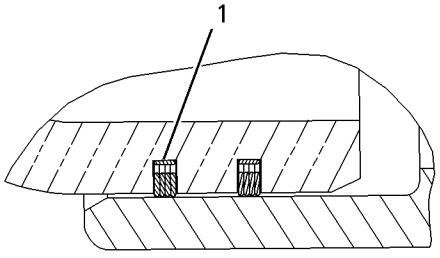

VIEW OF AREA C

GRAPHIC #1 g00821427

AIR INLET AND EXHAUST SYSTEM

163-8416 MUFFLER GP

S/N: ABK1-UP

PART OF 162-9505 INSTALLATION AR-ENGINE

SMCS-1062 **i01348443**

NOTE	REF NO	GRAPHIC REF	PART NUMBER	QTY	PART NAME 1 2 3 4 5 6 (PRODUCT LEVEL)	SEE PAGE
	1	1	**7W-3659**	1	MUFFLER AS-LH	
	2	1	**0S-1587**	4	BOLT (1/2-13X1.75 IN)	
	3	1	**7D-1649**	4	WASHER (5.0MM THK)	

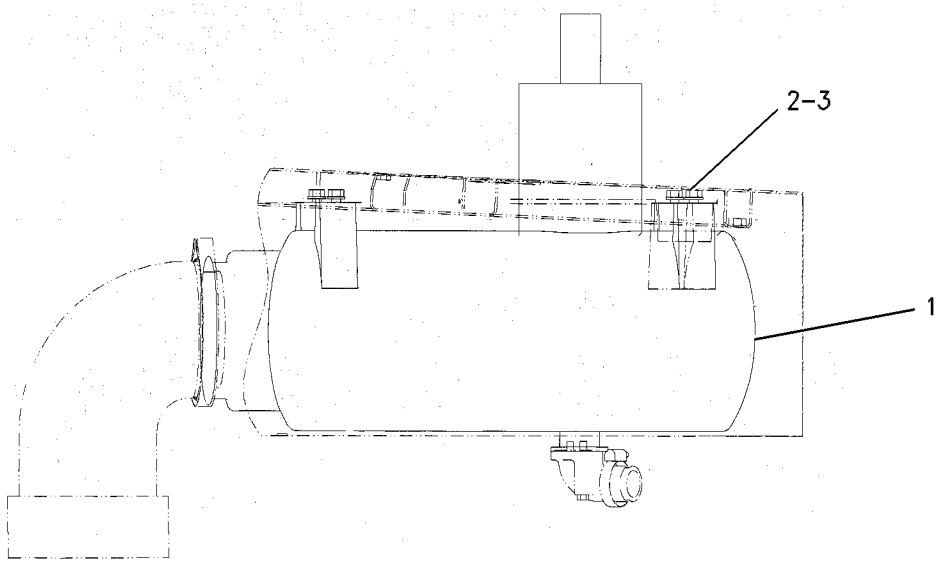

GRAPHIC #1 g00571367

MEMORANDA

AIR INLET AND EXHAUST SYSTEM

126-5396 SHIELD GP-MANIFOLD

S/N: ABK1-UP

PART OF 162-9505 INSTALLATION AR-ENGINE

SMCS-1067 **i01397610**

NOTE	REF NO	GRAPHIC REF	PART NUMBER	QTY	PART NAME 1 2 3 4 5 6 (PRODUCT LEVEL)	SEE PAGE
	1	1	**8N-7954**	2	PLATE	
	2	1	**1C-0569**	9	BOLT (5/16-18X.5 IN)	
	3	1	**3E-4352**	7	WASHER-HARD (8.8X20.5X2.5MM THK)	
	4	1	**126-5056**	1	SHIELD AS-MANIFOLD-LH	
		1	**6V-5044**	6	NUT-WELD (5/16-18 THD)	
	5	1	**001-3232**	4	STUD	
	6	1	**5S-0003**	28	NUT (5/16-18 THD)	
	7	1	**9M-1974**	41	WASHER-HARD (8.8X16X2MM THK)	
	8	1	**8N-1594**	2	SHIELD AS	
	9	1	**2H-3755**	23	BOLT (5/16-18X0.62 IN)	
	10	1	**8N-1619**	2	SHIELD AS	
	11	1	**114-0917**	2	SHIELD AS	
	12	1	**1N-3300**	4	SHIELD AS	
	13	1	**8N-2368**	1	SHIELD AS (TURBO TOP)	
	14	1	**0S-1587**	4	BOLT (1/2-13X1.75 IN)	
	15	1	**8N-7953**	2	PLATE	
	16	1	**0S-1594**	5	BOLT (3/8-16X1 IN)	
	17	1	**6V-2712**	8	STUD	
	18	1	**113-5421**	2	PLATE	
	19	1	**114-0915**	1	SHIELD AS	
		1	**6V-5044**	8	NUT-WELD (5/16-18 THD)	
	20	1	**0S-1571**	2	BOLT (3/8-16X1.75 IN)	
	21	1	**9X-6458**	4	WASHER-HARD (10.2X22.5X3MM THK)	
	22	1	**5M-2894**	6	WASHER-HARD (10.2X18.5X2.5MM THK)	
	23	1	**126-5057**	1	SHIELD AS-MANIFOLD-LH	
		1	**6V-5044**	5	NUT-WELD (5/16-18 THD)	
	24	1	**1W-6185**	1	SHIELD AS	
		1	**6V-5044**	2	NUT-WELD (5/16-18 THD)	
	25	1	**0L-1143**	1	BOLT (3/8-16X2.50IN)	
	26	1	**9S-8752**	1	NUT-FULL (3/8-16 THD)	
	27	1	**2P-0911**	1	ANGLE	
	28	1	**4P-0692**	2	CLAMP AS	
	29	1	**7D-1649**	4	WASHER-HARD (13.5X32X5MM THK)	
	30	1	**0S-1588**	1	BOLT (3/8-16X1.25 IN)	

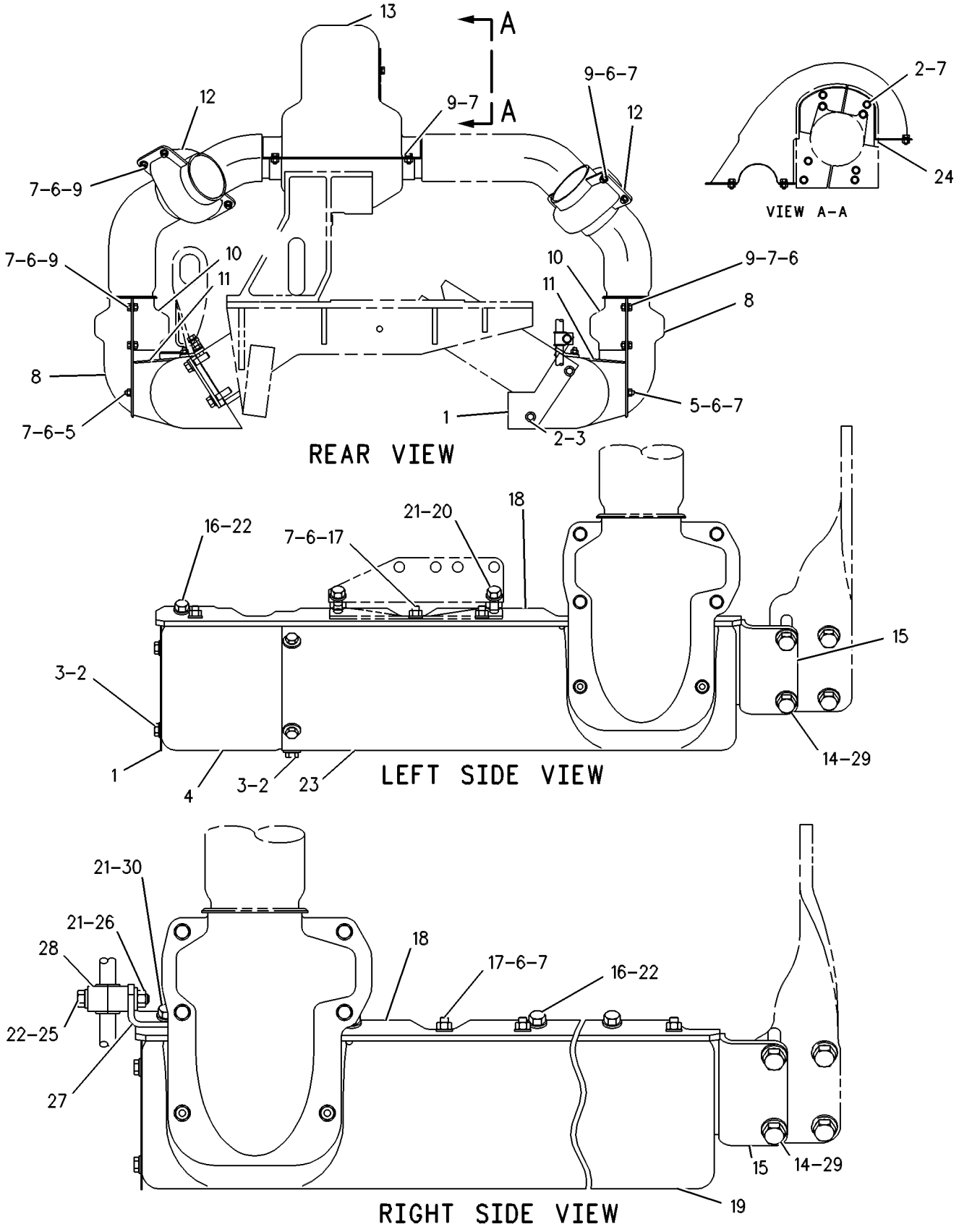

GRAPHIC #1 g00256717

AIR INLET AND EXHAUST SYSTEM

4P-8729 TURBOCHARGER GP

S/N: 48W41541-UP
PART OF 198-9948 ENGINE AR
AN ATTACHMENT

SMCS-1052, 1053, 1056, 1060, 1065, 1066, 1077 **i00591594**

NOTE	REF NO	GRAPHIC REF	PART NUMBER	QTY	PART NAME 1 2 3 4 5 6 (PRODUCT LEVEL)	SEE PAGE
	1	1	**2N-2765**	4	BOLT-HIGH TEMPERATURE	
		1	**2N-2766**	4	LOCKNUT (3/8-16 NPTF THD)	
YR	2	1	**4P-8730**	1	TURBOCHARGER GP	185
	3	1	**1S-4295**	1	GASKET-TURBOCHARGER	

R-REMFG PART MAY BE AVAILABLE
Y-SEPARATE ILLUSTRATION

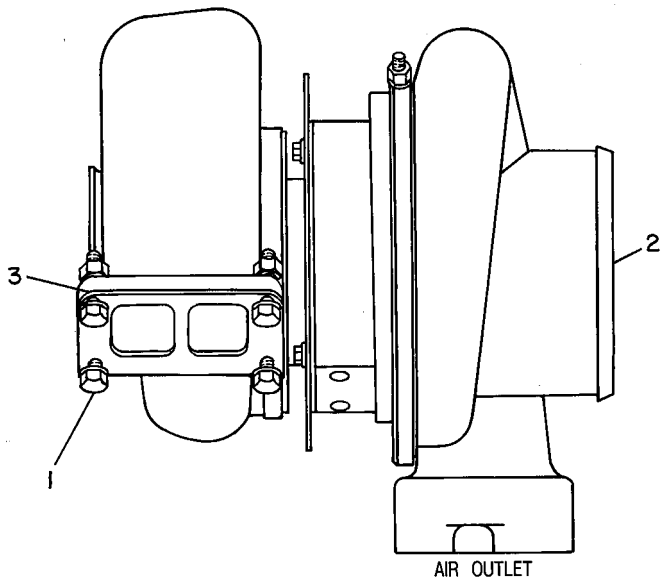

GRAPHIC #1 g00161109

AIR INLET AND EXHAUST SYSTEM

4P-8730 TURBOCHARGER GP*R

S/N: 48W41541-UP
PART OF 4P-8729 TURBOCHARGER GP
AN ATTACHMENT

SMCS-1052, 1053, 1056, 1060, 1065, 1066, 1077 **i01446432**

NOTE	REF NO	GRAPHIC REF	PART NUMBER	QTY	PART NAME 1 2 3 4 5 6 (PRODUCT LEVEL)	SEE PAGE
	1	1	**4P-8733**	1	HOUSING (TURBINE)	
	2	1	**9N-2038**	1	CLAMP AS (TURBINE)	
	3	1	**8N-9104**	1	PLATE	
YR	4	1	**4P-8731**	1	CARTRIDGE GP-TURBOCHARGER	166
	5	1	**9N-2039**	1	CLAMP AS (COMPRESSOR)	
	6	1	**4P-8732**	1	HOUSING (COMPRESSOR)	
	7	1	**8N-9103**	1	PLATE	
	8	1	**0S-1614**	4	BOLT (1/4-20X0.5 IN)	
		1	**5P-0537**	4	WASHER-HARD (7.2X14.5X2MM THK)	
F		1	**1W-4795**	1	PLATE-IDENTIFICATION	
F		1	**2F-0808**	2	SCREW (NO 6 X 1/4IN)	

F-NOT SHOWN
R-REMFG PART MAY BE AVAILABLE
Y-SEPARATE ILLUSTRATION

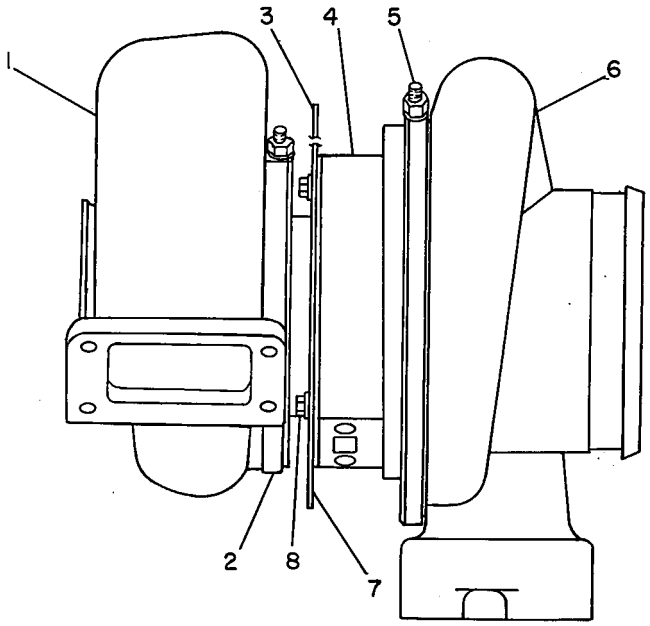

GRAPHIC #1 g00115822

AIR INLET AND EXHAUST SYSTEM

163-5802 TURBOCHARGER GP

S/N: 5XD1-UP

PART OF 163-5784 ENGINE AR

SMCS-1052, 1053, 1056, 1060, 1065, 1066, 1077 **i01446422**

NOTE	REF NO	GRAPHIC REF	PART NUMBER	QTY	PART NAME 1 2 3 4 5 6 (PRODUCT LEVEL)	SEE PAGE
YR	1	1	**174-1472**	1	TURBOCHARGER GP	187
	2	1	**1S-4295**	1	GASKET-TURBOCHARGER	
	3	1	**2N-2765**	4	BOLT-HIGH TEMPERATURE (3/8-16X1.75 IN)	
	4	1	**2N-2766**	4	LOCKNUT	

R-REMFG PART MAY BE AVAILABLE
Y-SEPARATE ILLUSTRATION

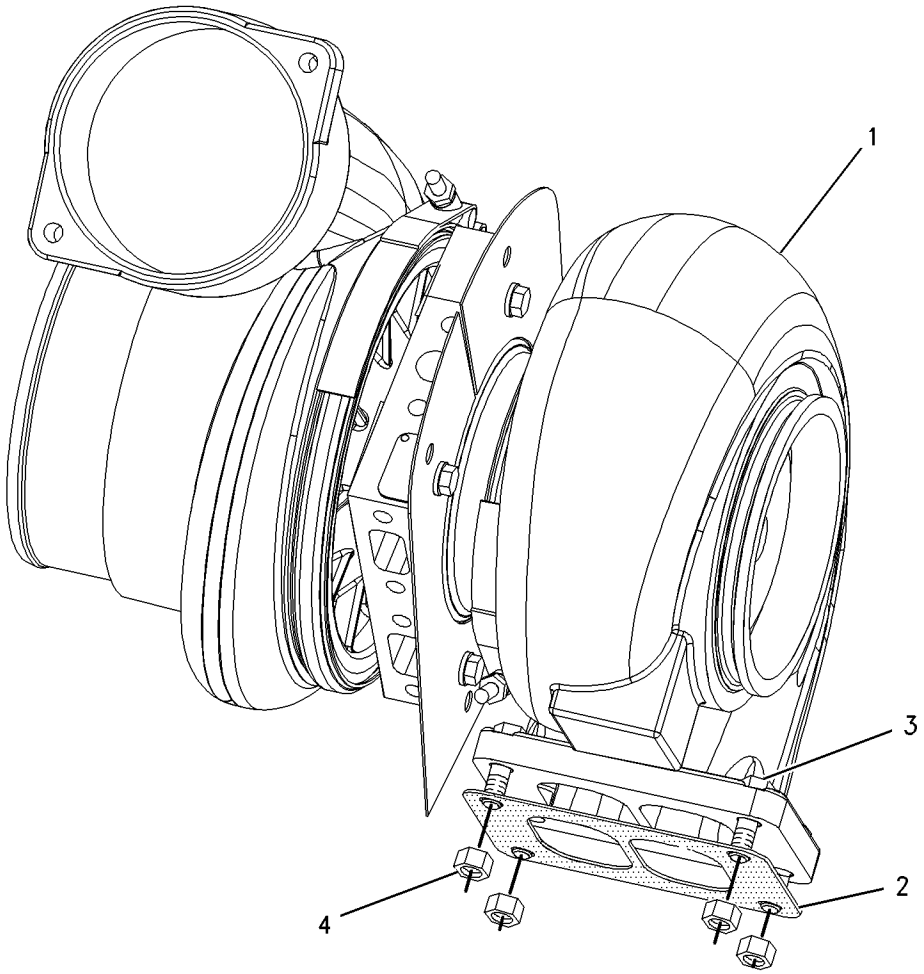

GRAPHIC #1 g00687430

AIR INLET AND EXHAUST SYSTEM

174-1472 TURBOCHARGER GP*R

S/N: 5XD1-UP

PART OF 163-5802 TURBOCHARGER GP

SMCS-1052, 1053, 1056, 1060, 1065, 1066, 1077 **i01446434**

NOTE	REF NO	GRAPHIC REF	PART NUMBER	QTY	PART NAME 1 2 3 4 5 6 (PRODUCT LEVEL)	SEE PAGE
	1	1	**8N-9103**	1	PLATE	
	2	1	**8N-9104**	1	PLATE	
	3	1	**9N-2038**	1	CLAMP AS (TURBINE)	
	4	1	**134-9918**	1	COVER-COMPRESSOR	
	5	1	**137-4550**	1	CLAMP AS-COMPRESSOR	
	6	1	**167-1327**	1	HOUSING-TURBINE	
	7	1	**167-9270**	1	CARTRIDGE GP-TURBOCHARGER	
	8	1	**0S-1614**	4	BOLT (1/4-20X0.5 IN)	
	9	1	**5P-0537**	4	WASHER-HARD (7.2X14.5X2MM THK)	

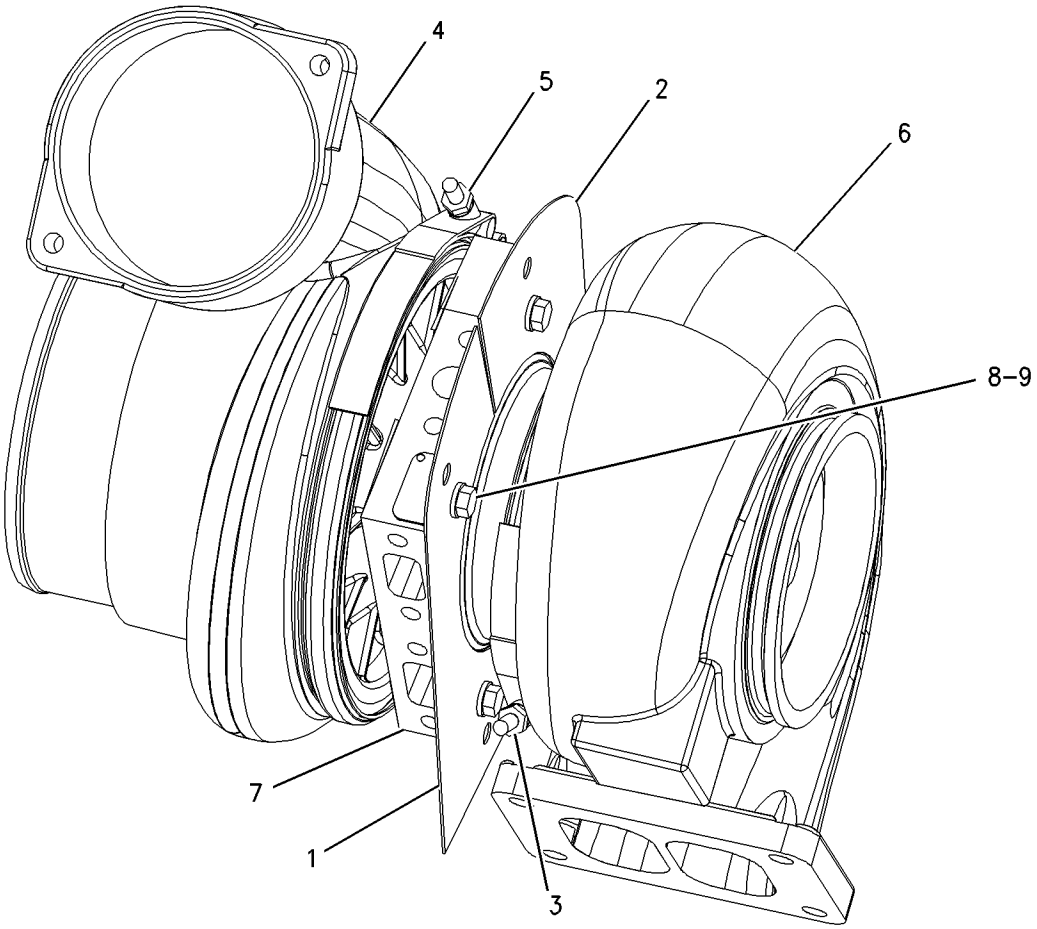

GRAPHIC #1 g00687453

2G-9000 ADAPTER GP-FAST FILL FUEL

S/N: ABK1-UP

PART OF 163-5459, 175-4828, 177-9383, 187-5279 ADAPTER GP-FAST FILL FUEL AN ATTACHMENT

SMCS-1710 **i01395752**

NOTE	REF NO	GRAPHIC REF	PART NUMBER	QTY	PART NAME 1 2 3 4 5 6 (PRODUCT LEVEL)	SEE PAGE
Z	1	1		1	PLUNGER	
Z	2	1		1	RING-RETAINING	
Z	3	1		1	SPRING	

Z-NOT SERVICED SEPARATELY

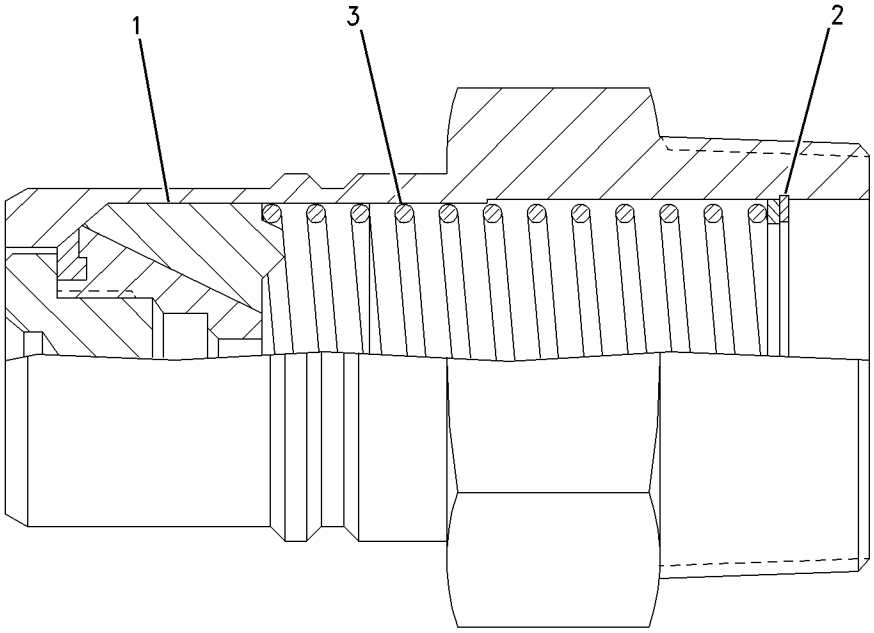

GRAPHIC #1 g00735689

MEMORANDA

163-5459 ADAPTER GP-FAST FILL FUEL

S/N: ABK1-UP
FOR USE WITH MACHINES EQUIPPED WITH RIPPER
AN ATTACHMENT

SMCS-1710 **i01427893**

NOTE	REF NO	GRAPHIC REF	PART NUMBER	QTY	PART NAME 1 2 3 4 5 6 (PRODUCT LEVEL)	SEE PAGE
Y	1	1	**2G-9000**	1	ADAPTER GP-FAST FILL FUEL	188
	2	1	**6Y-0091**	1	BLOCK AS	
	3	1	**9D-0630**	1	COVER-DUST (FAST FILL FUEL ADAPTER)	
	4	1	**113-0715**	1	CLAMP	
	5	1	**113-0716**	1	CLAMP AS	
	6	1	**163-5455**	1	VALVE AS	
I	7	1	**163-5456**	1	HOSE AS	
I	8	1	**173-9431**	1	HOSE AS	
	9	1	**188-5095**	1	VENT AS	
	10	1	**1H-8128**	1	SEAL-O-RING (94.84MM ID)	
	11	1	**1J-9671**	2	SEAL-O-RING (10.52MM ID)	
	12	1	**1K-6872**	6	LOCKNUT (1/2-13 THD)	
	13	1	**1P-4582**	4	FLANGE-HALF	
	14	1	**2D-4534**	6	BOLT-SOCKET HEAD (3/8-16X1 IN)	
	15	1	**4J-0527**	2	SEAL-O-RING (56.74MM ID)	
	16	1	**4L-6454**	7	BOLT (3/8-16X1 IN)	
	17	1	**5H-6734**	1	SEAL-O-RING (113.89MM ID)	
	18	1	**5P-2618**	2	CONNECTOR	
	19	1	**6V-2686**	1	CLIP	
	20	1	**6V-8801**	1	NUT (3/8-16 THD)	
	21	1	**7X-0339**	2	BOLT (1/2-13X6.25 IN)	
	22	1	**8T-4223**	16	WASHER-HARD (13.5X25.5X3MM THK)	
	23	1	**8T-4835**	6	BOLT (1/2-13X2 IN)	
	24	1	**8T-4896**	14	WASHER-HARD (10.2X18.5X2.5MM THK)	
	25	1	**5P-2566**	4	BOLT (1/2-13X1.5 IN)	
	26	1	**8T-8919**	4	BOLT (1/2-13X1.75 IN)	

I-SEE HOSE FABRICATION GUIDE
Y-SEPARATE ILLUSTRATION

163-5459 **ADAPTER GP-FAST FILL FUEL** ***(contd.)*** **i01427893**

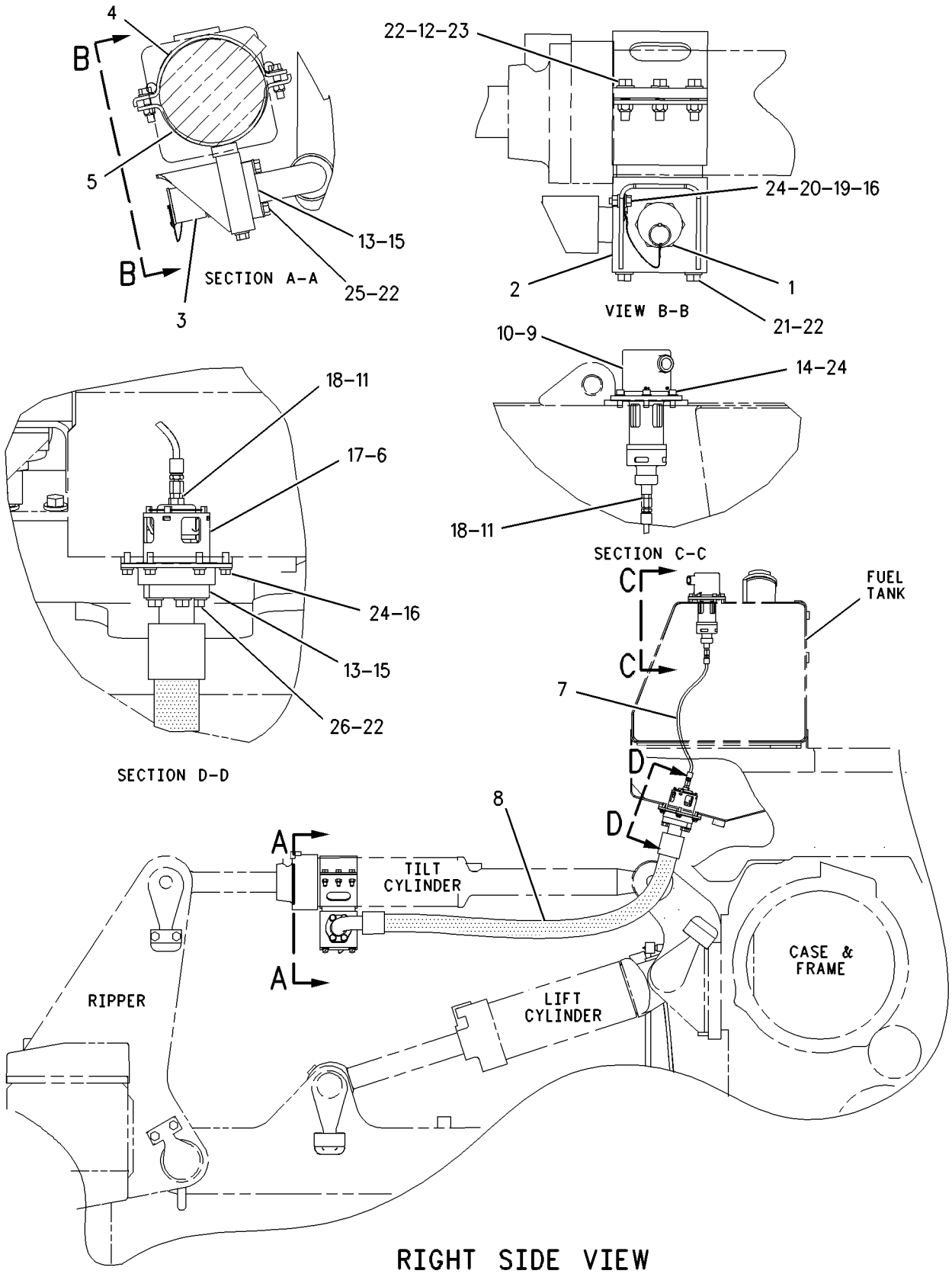

RIGHT SIDE VIEW

GRAPHIC #1 g00754508

FUEL SYSTEM

175-4828 ADAPTER GP-FAST FILL FUEL

S/N: ABK1-UP
CANNOT BE USED WITH MACHINES EQUIPPED WITH RIPPER AN ATTACHMENT

SMCS-1710 **i01509631**

NOTE	REF NO	GRAPHIC REF	PART NUMBER	QTY	PART NAME 1 2 3 4 5 6 (PRODUCT LEVEL)	SEE PAGE
Y	1	1	**2G-9000**	1	ADAPTER GP-FAST FILL FUEL	188
	2	1	**6Y-7669**	1	TUBE AS	
	3	1	**9D-0630**	1	CAP-DUST (FAST FILL FUEL ADAPTER)	
	4	1	**163-5455**	1	VALVE AS	
I	5	1	**163-5456**	1	HOSE AS	
	6	1	**188-5095**	1	VENT AS	
	7	1	**1H-8128**	1	SEAL-O-RING	
	8	1	**1J-9671**	2	SEAL-O-RING	
	9	1	**2D-4534**	6	BOLT-SOCKET HEAD (3/8-16X1 IN)	
	10	1	**4J-0527**	1	SEAL-O-RING	
	11	1	**4L-6454**	6	BOLT (3/8-16X1 IN)	
	12	1	**5H-6734**	1	SEAL-O-RING	
	13	1	**5P-2618**	2	CONNECTOR	
	14	1	**8T-4896**	12	WASHER-HARD (10.2X18.5X2.5MM THK)	
	15	1	**8T-8919**	4	BOLT (1/2-13X1.75 IN)	

I-SEE HOSE FABRICATION GUIDE
Y-SEPARATE ILLUSTRATION

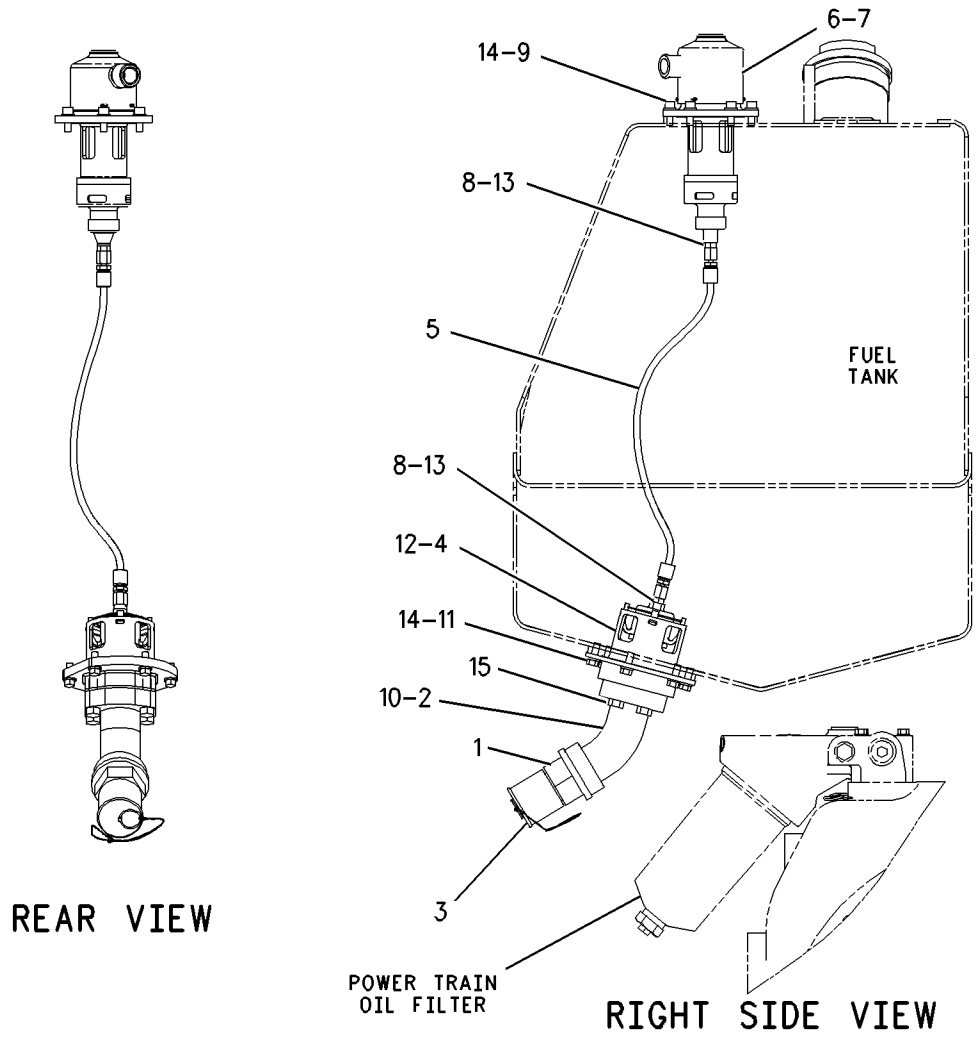

GRAPHIC #1 g00790377

MEMORANDA

177-9383 ADAPTER GP-FAST FILL FUEL

S/N: ABK1-UP
FOR USE WITH MACHINES EQUIPPED WITH WINCH
AN ATTACHMENT

SMCS-1710 **i01615100**

NOTE	REF NO	GRAPHIC REF	PART NUMBER	QTY	PART NAME 1 2 3 4 5 6 (PRODUCT LEVEL)	SEE PAGE
Y	1	1	**2G-9000**	1	ADAPTER GP-FAST FILL FUEL	188
	2	1	**9D-0630**	1	CAP-DUST (FAST FILL FUEL ADAPTER)	
	3	1	**121-8886**	1	PLATE AS	
	4	1	**163-5455**	1	VALVE AS	
I	5	1	**163-5456**	1	HOSE AS	
I	6	1	**187-5275**	1	HOSE AS	
	7	1	**188-5095**	1	VENT AS	
	8	1	**1H-8128**	1	SEAL-O-RING	
	9	1	**1J-9671**	2	SEAL-O-RING	
	10	1	**1P-4582**	4	FLANGE-HALF	
	11	1	**2D-4534**	6	BOLT-SOCKET HEAD (3/8-16X1 IN)	
	12	1	**4J-0527**	2	SEAL-O-RING	
	13	1	**4L-6454**	6	BOLT (3/8-16X1 IN)	
	14	1	**5H-6734**	1	SEAL-O-RING	
	15	1	**5P-2618**	2	CONNECTOR	
	16	1	**6V-8190**	2	NUT (1-8 THD)	
	17	1	**7X-0408**	2	BOLT (1-8X3.50 IN)	
	18	1	**8T-4223**	8	WASHER-HARD (13.5X25.5X3MM THK)	
	19	1	**8T-4896**	12	WASHER-HARD (10.2X18.5X2.5MM THK)	
	20	1	**8T-5361**	4	WASHER-HARD (28X49X5MM THK)	
	21	1	**5P-2566**	4	BOLT (1/2-13X1.5 IN)	
	22	1	**8T-8919**	4	BOLT (1/2-13X1.75 IN)	

I-SEE HOSE FABRICATION GUIDE
Y-SEPARATE ILLUSTRATION

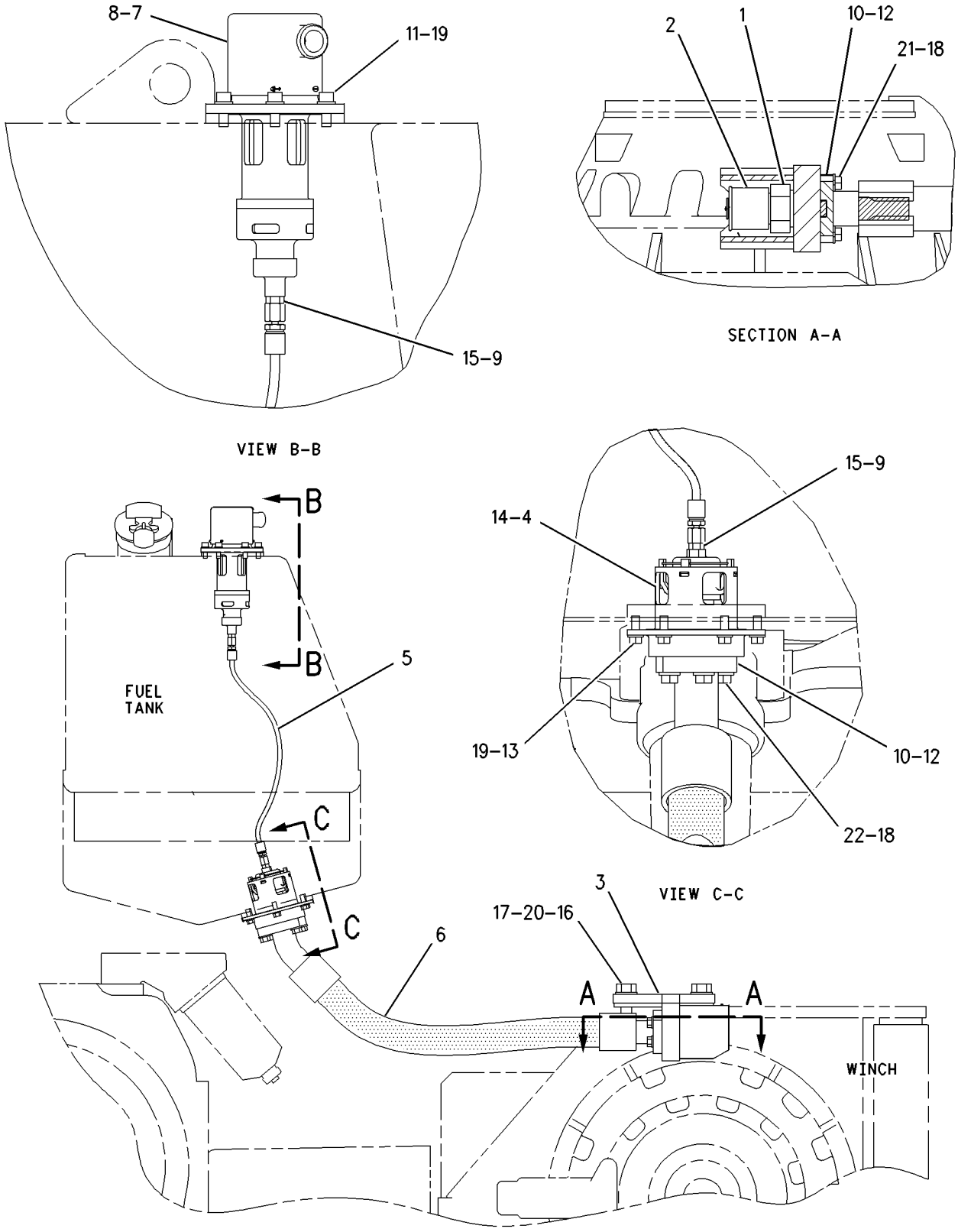

GRAPHIC #1

g00754552

FUEL SYSTEM

187-5279 ADAPTER GP-FAST FILL FUEL

S/N: ABK1-UP
FOR USE WITH MACHINES EQUIPPED WITH STRIKER BAR AN ATTACHMENT

SMCS-1710 **i01428755**

NOTE	REF NO	GRAPHIC REF	PART NUMBER	QTY	PART NAME 1 2 3 4 5 6 (PRODUCT LEVEL)	SEE PAGE
I	1	1	**1Q-3160**	1	HOSE AS	
	2	1	**1Q-3162**	1	BRACKET AS	
		1	**8T-5911**	2	NUT-WELD (1/2-13 THD)	
Y	3	1	**2G-9000**	1	ADAPTER GP-FAST FILL FUEL	188
	4	1	**6Y-0091**	1	BLOCK AS	
	5	1	**9D-0630**	1	COVER-DUST (FAST FILL FUEL ADAPTER)	
	6	1	**163-5455**	1	VALVE AS	
I	7	1	**163-5456**	1	HOSE AS	
	8	1	**188-5095**	1	VENT AS	
	9	1	**1H-8128**	1	SEAL-O-RING (94.84MM ID)	
	10	1	**1J-9671**	2	SEAL-O-RING (10.52MM ID)	
	11	1	**1P-4582**	4	FLANGE-HALF	
	12	1	**2D-4534**	6	BOLT-SOCKET HEAD (3/8-16X1 IN)	
	13	1	**4J-0527**	2	SEAL-O-RING (56.74MM ID)	
	14	1	**4L-6454**	7	BOLT (3/8-16X1 IN)	
	15	1	**5H-6734**	1	SEAL-O-RING (113.89MM ID)	
	16	1	**5P-2618**	2	CONNECTOR	
	17	1	**6V-2686**	1	CLIP	
	18	1	**6V-8801**	1	NUT (3/8-16 THD)	
	19	1	**7X-0340**	2	BOLT (1/2-13X6.5 IN)	
	20	1	**8T-4223**	10	WASHER-HARD (13.5X25.5X3MM THK)	
	21	1	**8T-4896**	14	WASHER-HARD (10.2X18.5X2.5MM THK)	
	22	1	**5P-2566**	4	BOLT (1/2-13X1.5 IN)	
	23	1	**8T-8919**	4	BOLT (1/2-13X1.75 IN)	

I-SEE HOSE FABRICATION GUIDE
Y-SEPARATE ILLUSTRATION

187-5279 **ADAPTER GP-FAST FILL FUEL** ***(contd.)*** **i01428755**

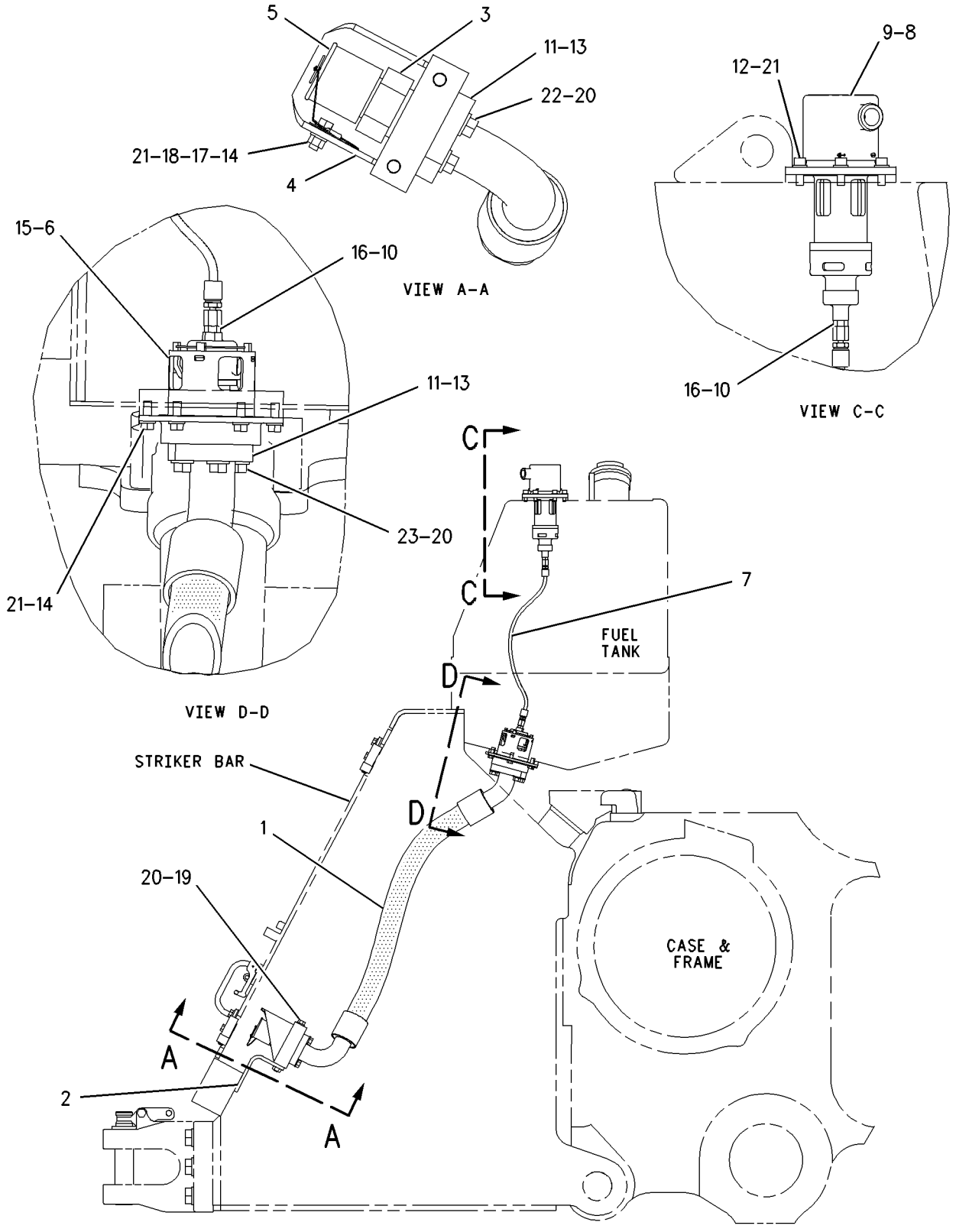

RIGHT SIDE VIEW

GRAPHIC #1 g00754576

172-7938 CONTROL GP-DECELERATOR

S/N: ABK1-UP

PART OF 162-9501 CHASSIS AR

SMCS-1276 **i01516020**

NOTE	REF NO	GRAPHIC REF	PART NUMBER	QTY	PART NAME 1 2 3 4 5 6 (PRODUCT LEVEL)	SEE PAGE
	1	1	**6I-8363**	1	HOUSING AS	
		1	**1F-0750**	2	NUT-WELD (3/8-16 THD)	
	2	1	**7G-7684**	1	LEVER	
	3	1	**6I-8361**	1	SHAFT	
	4	1	**6V-7607**	2	WASHER-HARD (20X30X2.5MM THK)	
	5	1	**9B-7237**	5	BOLT (3/8-16X1.25 IN)	
	6	1	**5P-1075**	4	WASHER-HARD (10.2X22.5X3MM THK)	
	7	1	**9G-0772**	1	PEDAL	
	8	1	**2N-3162**	2	SCREW-MACHINE (10-24X1.25 IN)	
Y	9	1	**160-2443**	1	SENSOR GP-POSITION	329
	10	1	**2J-6356**	1	RING-RETAINING	
	11	1	**1B-8706**	1	KEY-WOODRUFF	
	12	1	**2K-7979**	2	BEARING-SLEEVE	
	13	1	**8T-2502**	1	BOLT (3/8-16X1.125 IN)	
	14	1	**4B-3609**	1	SETSCREW-SQUARE HEAD	
	15	1	**1B-2578**	2	NUT (3/8-16 THD)	
	16	1	**194-7034**	1	SPRING	
	17	1	**4B-3611**	1	SETSCREW-SQUARE HEAD	
	18	1	**105-1515**	1	GASKET	
	19	1	**8C-5608**	1	SPACER (6.5X9.5X25.4MM THK)	
	20	1	**7X-3178**	1	BOLT (1/4-20X1.625 IN)	
	21	1	**8T-4205**	2	WASHER-HARD (7.2X14.5X2MM THK)	

Y-SEPARATE ILLUSTRATION

172-7938 **CONTROL GP-DECELERATOR** ***(contd.)*** **i01516020**

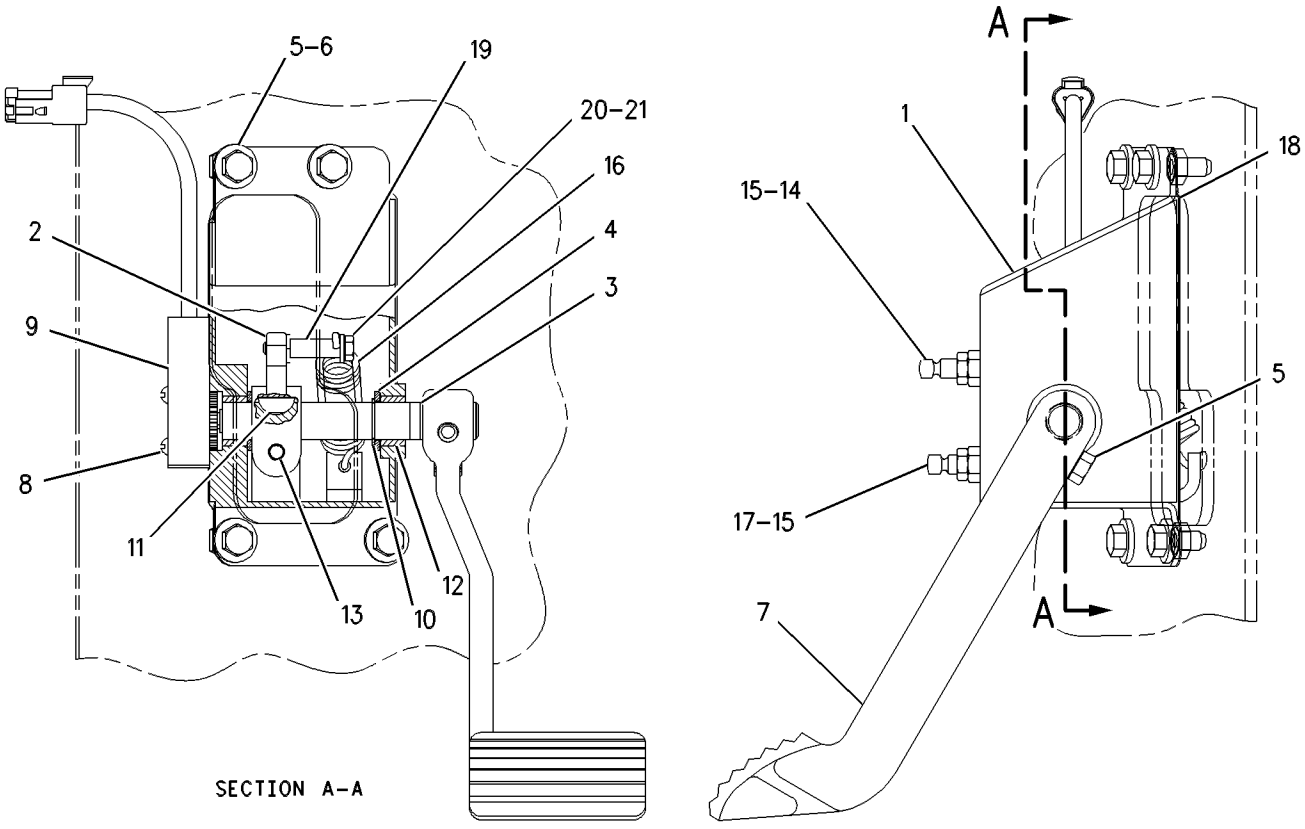

GRAPHIC #1 g00580709

2W-3157 CONTROL GP-FUEL RATIO*R

S/N: 48W41541-UP
PART OF 8N-5021 CONTROL GP-FUEL RATIO
AN ATTACHMENT

SMCS-1278 **i01397618**

NOTE	REF NO	GRAPHIC REF	PART NUMBER	QTY	PART NAME 1 2 3 4 5 6 (PRODUCT LEVEL)	SEE PAGE
	1	1	**2W-3156**	1	VALVE AS-LIMITER	
	2	1	**2P-8225**	1	HOUSING-DIAPHRAGM	
C	3	1	**4P-1639**	1	SEAL-CONTROL	
C	4	1	**4P-0246**	1	VALVE	
	5	1	**1W-2567**	1	RETAINER-SPRING	
	6	1	**7N-0209**	1	SPRING (OUTER)	
	7	1	**6N-0515**	1	SPRING (INNER)	
	8	1	**110-2469**	1	EXTENSION	
	9	1	**124-4668**	1	GASKET-FUEL RATIO CONTROL	
	10	1	**125-8828**	1	COVER-FUEL RATIO CONTROL	
	11	1	**9S-8748**	1	NUT-FULL (1/4-28 THD)	
	12	1	**110-2468**	1	RETAINER	
	13	1	**2P-8226**	1	COVER-DIAPHRAGM	
	14	1	**6N-0513**	1	SPRING	
	15	1	**2P-8803**	1	WASHER (1.09X1.88X.036 IN THK)	
	16	1	**1W-4797**	1	DIAPHRAGM	
	17	1	**5B-7040**	3	BOLT (1/4X20X1IN)	
	18	1	**5P-0537**	3	WASHER-HARD (7.2X14.5X2MM THK)	
	19	1	**4B-3388**	2	BOLT (5/16-18X1.125 IN)	
	20	1	**8T-4224**	2	WASHER-HARD (8.8X16X2MM THK)	
C	21	1	**9N-1754**	1	SPRING	
	22	1	**3E-6760**	1	SEAL-O-RING (7.65MM ID)	

C-CHANGE FROM PREVIOUS TYPE

2W-3157 CONTROL GP-FUEL RATIO *(contd.)* i01397618

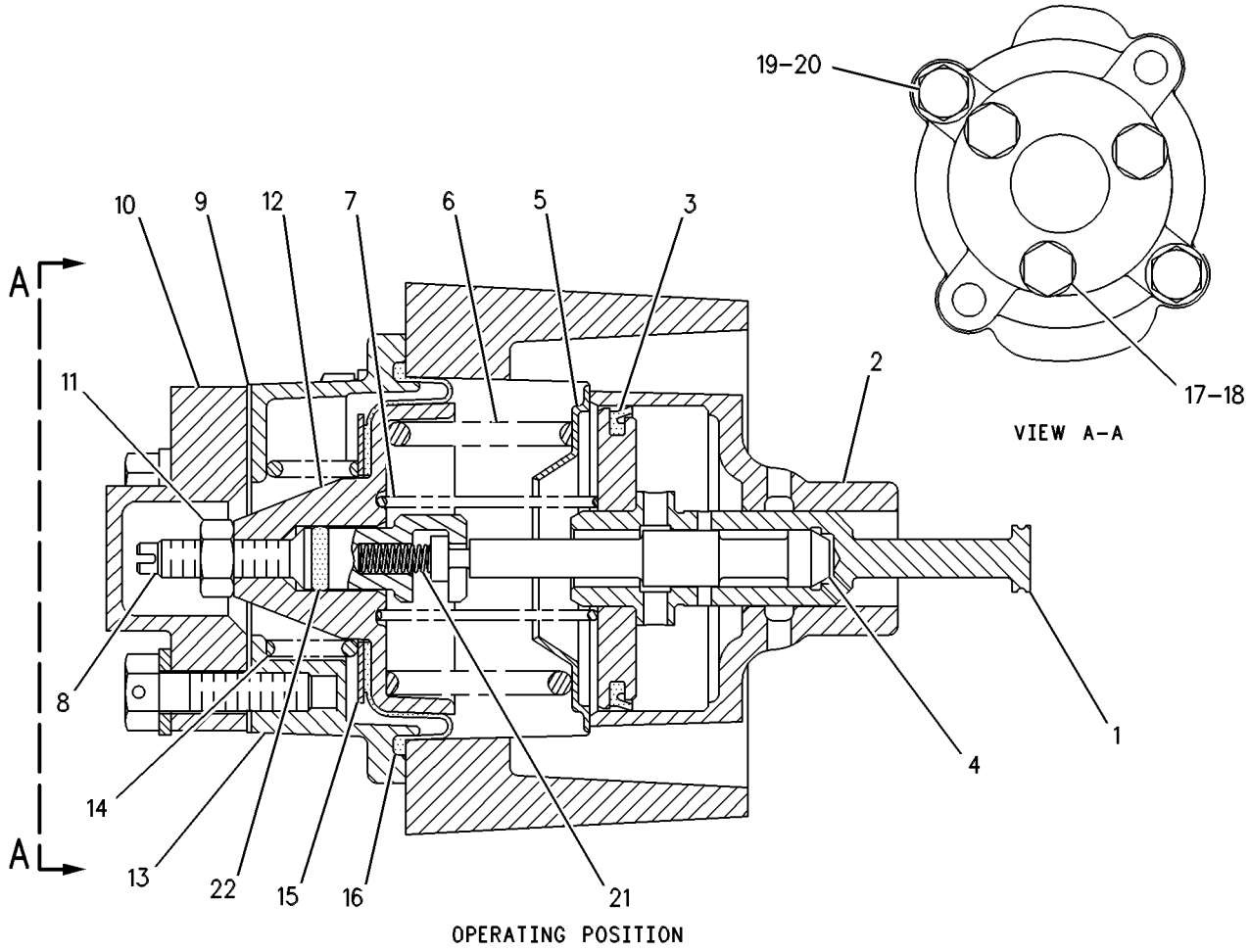

GRAPHIC #1 g00106376

8N-5021 CONTROL GP-FUEL RATIO

S/N: 48W41541-UP
PART OF 198-9948 ENGINE AR
AN ATTACHMENT

SMCS-1278 **i01397620**

NOTE	REF NO	GRAPHIC REF	PART NUMBER	QTY	PART NAME 1 2 3 4 5 6 (PRODUCT LEVEL)	SEE PAGE
	1	1	**2N-1287**	1	ELBOW-FLARED (90 DEGREES-37 DEGREE)	
	2	1	**4N-8112**	2	BOLT	
		1	**8F-7242**	2	WASHER (15.9X8.7X1.6MM THK)	
CI	3	1	**6N-3169**	1	HOSE AS (.61M)	
	4	1	**3B-4505**	2	LOCKWASHER	
C	5	1	**2H-5547**	1	BUSHING-REDUCER	
	6	1	**2P-8643**	1	GASKET	
YR	7	1	**2W-3157**	1	CONTROL GP-FUEL RATIO	200
	8	1	**124-0174**	1	CLIP	

C-CHANGE FROM PREVIOUS TYPE
I-SEE HOSE FABRICATION GUIDE
R-REMFG PART MAY BE AVAILABLE
Y-SEPARATE ILLUSTRATION

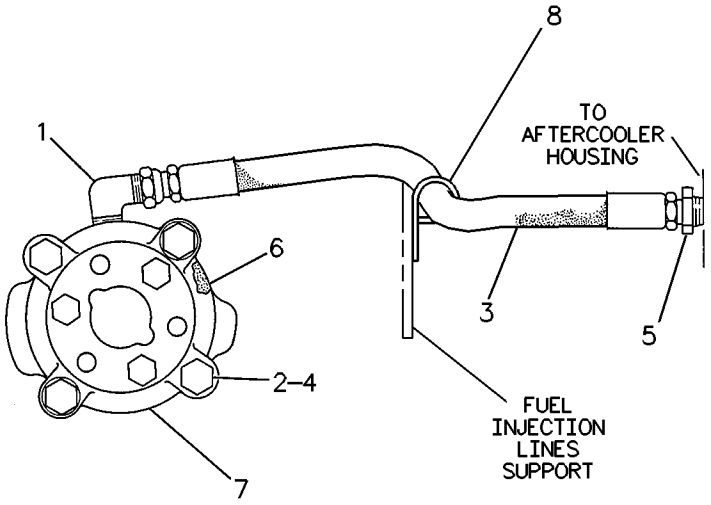

GRAPHIC #1 g00105419

MEMORANDA

FUEL SYSTEM

6Y-7668 CONTROL GP-GOVERNOR

S/N: ABK1-UP
PART OF 162-9502 CONVERSION AR-ENGINE
AN ATTACHMENT

SMCS-1265 **i01446444**

NOTE	REF NO	GRAPHIC REF	PART NUMBER	QTY	PART NAME 1 2 3 4 5 6 (PRODUCT LEVEL)	SEE PAGE
	1	1	**9G-3737**	1	HOUSING	
	2	1	**3T-0371**	1	PLATE	
	3	1	**2A-1736**	1	HANDLE (GEARSHIFT LEVER)	
	4	1	**110-9526**	1	LEVER	
	5	1	**1B-8706**	1	KEY-WOODRUFF	
	6	1	**8T-9375**	1	BOLT (3/8-16X1.75 IN)	
	7	1	**6V-8801**	3	NUT (3/8-16 THD)	
	8	1	**5L-4041**	4	BOLT-12 POINT HEAD (1/4-20X1.5 IN)	
	9	1	**4B-3609**	4	SETSCREW-SQUARE HEAD	
	10	1	**9G-0772**	1	PEDAL	
	11	1	**9B-7237**	5	BOLT (3/8-16X1.25 IN)	
	12	1	**4M-5283**	2	BOLT (1/4-20X0.625 IN)	
		1	**9G-4512**	1	BRACKET	
	13	1	**131-3313**	1	ROD AS	
		1	**1M-1341**	1	END-YOKE ROD	
	14	1	**8M-1019**	1	SPRING	
	15	1	**4D-4064**	2	ROD END	
	16	1	**130-8579**	1	LEVER	
	17	1	**1B-8704**	2	KEY-WOODRUFF	
	18	1	**4L-9337**	2	BOLT (3/8-16X1.5 IN)	
	19	1	**6P-0593**	2	BEARING-ROLLER	
	20	1	**6T-6358**	1	SHAFT-GOVERNOR CONTROL	
		1	**1K-0502**	1	WASHER (25.4X16.3X1.2MM THK)	
	21	1	**7X-0860**	1	BOLT (3/8X16X1.5 IN)	
	22	1	**2K-4973**	2	LOCKNUT	
	23	1	**4M-0061**	2	BOLT (5/16-18X0.750 IN)	
		1	**031-4155**	2	LOCKNUT	
	24	1	**112-8004**	1	ROD	
	25	1	**6V-8183**	3	NUT-FULL (3/8-24 THD)	
	26	1	**5D-6857**	1	LEVER	
	27	1	**5P-1075**	7	WASHER-HARD (10.2X22.5X3MM THK)	
	28	1	**9W-2611**	1	BRACKET	
	29	1	**4B-6493**	1	SPRING-ROD	
	30	1	**1B-0676**	1	PIN	
		1	**3B-4615**	1	PIN-COTTER	
	31	1	**1B-2578**	6	NUT (3/8-16 THD)	
	32	1	**8T-2502**	3	BOLT (3/8-16X1.125 IN)	
	33	1	**7X-2501**	1	BOLT (1/4-20X1.25 IN)	
Y	34	1	*9N-1822*	1	CONTROL GP-GOVERNOR	207
	35	1	**091-1745**	2	WASHER (16.6X24X1.2MM THK)	
	36	1	**7V-9799**	1	PIN	
		1	**3B-4610**	1	COTTER	
	37	1	**1A-9252**	1	END-ADJUSTMENT ROD	
	38	1	**7F-0192**	1	BOLT (3/8-16X2 IN)	
C	39	1	**3E-4374**	2	STUD	
	40	1	**7W-0534**	1	WASHER (10.3X22.2X4MM THK)	
	41	2	**1F-4166**	2	WASHER (19.5X32X3MM THK)	
	42	2	**2J-6356**	1	RING-RETAINING	
	43	2	**7G-7682**	1	SHAFT-GOVERNOR CONTROL	
	44	2	**6V-7634**	1	BOLT-LOCKING (1/4-20X1.125 IN)	
		2	**6D-3886**	1	BALL BEARING	
	45	2	**1B-8704**	1	KEY-WOODRUFF	
	46	2	**7G-7655**	1	SHAFT AS	
	47	2	**6P-0593**	1	BEARING-ROLLER	
	48	2	**9G-1913**	1	PLATE	

6Y-7668 CONTROL GP-GOVERNOR *(contd.)*

i01446444

NOTE	REF NO	GRAPHIC REF	PART NUMBER	QTY	PART NAME 1 2 3 4 5 6 (PRODUCT LEVEL)	SEE PAGE
		2	**7M-6955**	2	GASKET	
	49	2	**6D-5974**	1	BEARING-ROLLER	
	50	2	**7G-7681**	1	SHAFT AS	
		2	**2S-6091**	3	DOWEL	
	51	2	**9W-3551**	1	COVER	
	52	2	**3W-4104**	1	SPRING-DISC	
	53	2	**1B-8706**	1	KEY-WOODRUFF	
	54	2	**8H-9180**	1	SEAL-LIP	
	55	2	**8T-2502**	2	BOLT (3/8-16X1.125 IN)	
	56	2	**9W-4657**	1	LEVER	
	57	2	**7G-7684**	1	LEVER	
	58	2	**8H-9182**	2	ROLLER-GOVERNOR CONTROL	
	59	2	**8H-9186**	2	SPRING	
	60	2	**5H-7152**	1	SPRING	
	61	2	**6Y-0145**	1	PLATE-LOCKING	
		2	**8T-5353**	1	DOWEL (9.4MM DIA X 19.5MM OAL)	
	62	2	**7P-4190**	2	BEARING-ROLLER	
	63	2	**4F-7508**	1	WASHER (22/32X1 5/16X0.109 IN THK)	
	64	2	**3W-3828**	1	HOUSING	
	65	2	**091-9915**	1	WASHER-HARD (20X35X1.6MM THK)	

C-CHANGE FROM PREVIOUS TYPE
Y-SEPARATE ILLUSTRATION

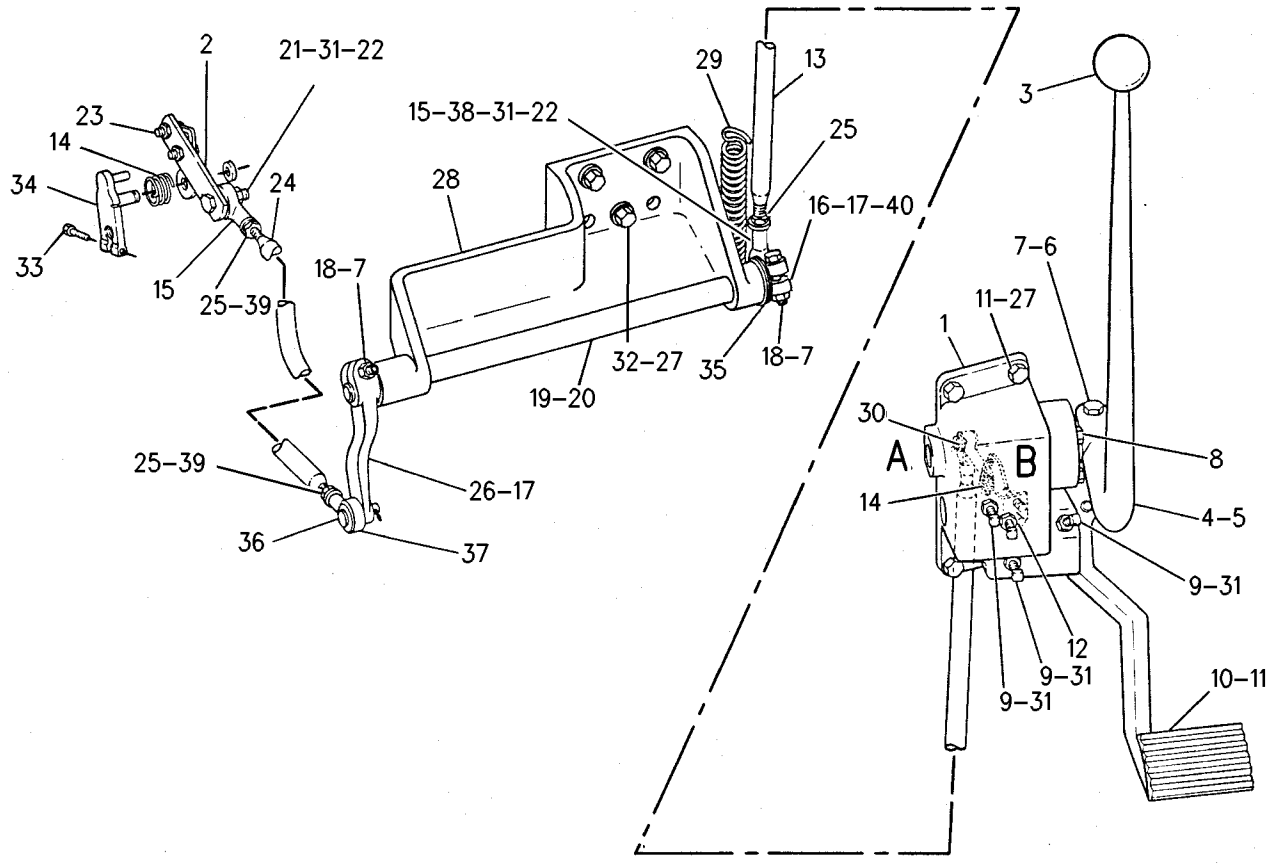

REFER TO ALL ILLUSTRATIONS OF THIS GROUP FOR AUXILIARY VIEWS

GRAPHIC #1

g00736491

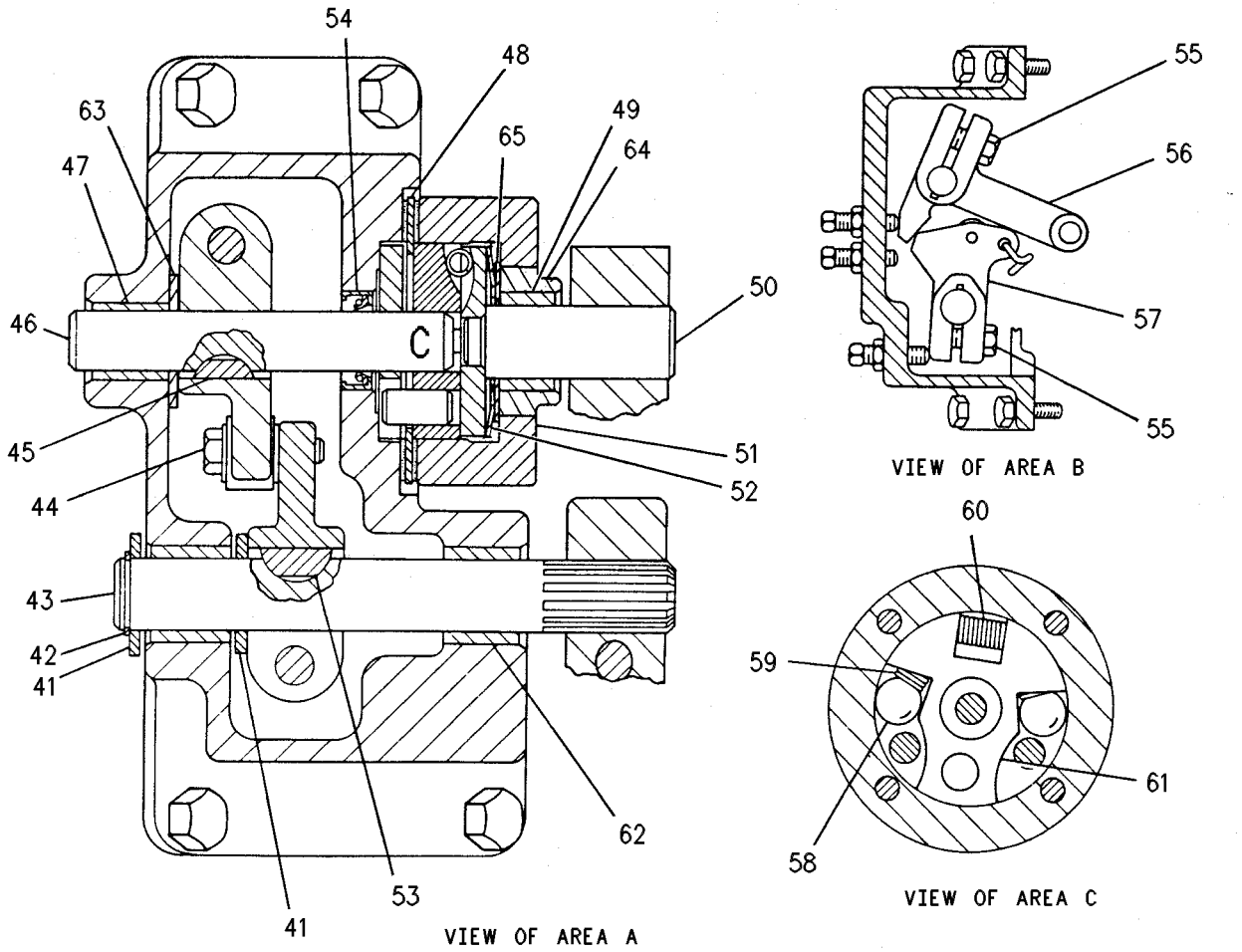

GRAPHIC #2 g00389061

FUEL SYSTEM

9N-1822 CONTROL GP-GOVERNOR

S/N: ABK1-UP

PART OF 6Y-7668 CONTROL GP-GOVERNOR

AN ATTACHMENT

SMCS-1265 **i00581286**

NOTE	REF NO	GRAPHIC REF	PART NUMBER	QTY	PART NAME 1 2 3 4 5 6 (PRODUCT LEVEL)	SEE PAGE
	1	1	**8S-7803**	1	RING-RETAINING	
	2	1	**6I-1936**	1	SPRING	
	3	1	**9N-3735**	1	LEVER	
	4	1	**9N-3736**	1	LEVER	

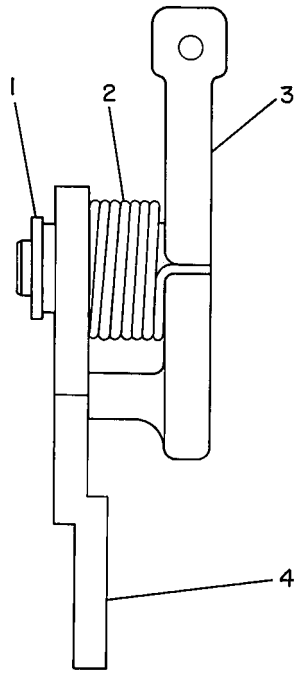

GRAPHIC #1 g00152023

105-1513 DRIVE GP-GOVERNOR & FUEL PUMP

S/N: 48W41541-UP
PART OF 198-9948 ENGINE AR
AN ATTACHMENT

SMCS-1288 **i01446449**

NOTE	REF NO	GRAPHIC REF	PART NUMBER	QTY	PART NAME 1 2 3 4 5 6 (PRODUCT LEVEL)	SEE PAGE
	1	1	**5J-5793**	4	BOLT-12 POINT HEAD (1/2-13X1.75 IN)	
	2	1	**6N-3927**	1	RETAINER	
	3	1	**6N-5653**	1	FLANGE AS	
	4	1	**6N-2533**	1	GEAR AS-ADVANCE (86 TEETH)	
	5	1	**8H-0333**	2	PISTON	
	6	1	**6N-2523**	2	SLIDE	
	7	1	**8N-8997**	2	WEIGHT-ADVANCE	
	8	1	**6N-0493**	1	RING	
	9	1	**6N-5164**	2	SPRING-OUTER	
	10	1	**6N-5163**	2	SPRING-INNER	
	11	1	**6N-5165**	2	SPRING-MIDDLE	

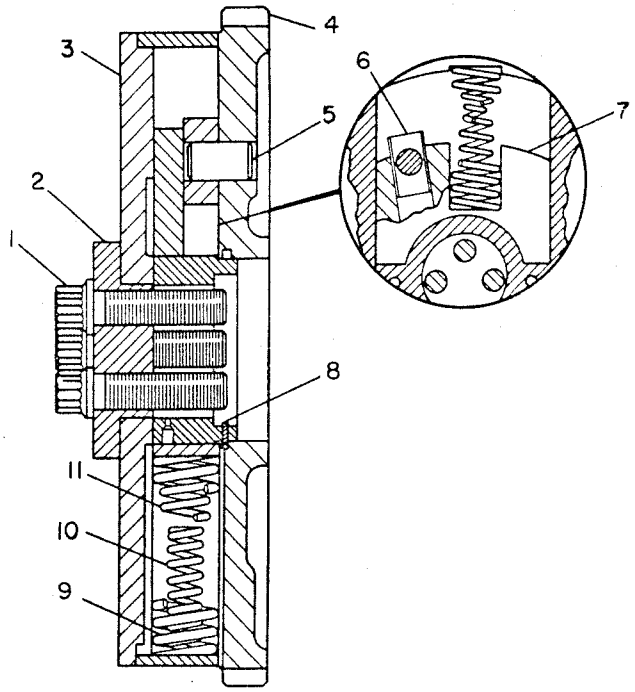

GRAPHIC #1 g00096680

2W-2094 DRIVE GP-TACHOMETER

S/N: 48W41541-UP
PART OF 198-9948 ENGINE AR
AN ATTACHMENT

SMCS-7487 **i00176426**

NOTE	REF NO	GRAPHIC REF	PART NUMBER	QTY	PART NAME 1 2 3 4 5 6 (PRODUCT LEVEL)	SEE PAGE
	1	1	**4M-8303**	1	SEAL-O-RING (20.29MM ID)	
	2	1	**9S-3032**	2	CLAMP	
C	3	1	**4W-6538**	1	ADAPTER AS-DRIVE	
	4	1	**0S-1617**	2	BOLT (5/16-18X.75IN)	
C	5	1	**9B-2232**	1	CAP-TACHOMETER DRIVE	
C	6	1	**7H-9899**	1	SEAL	

C-CHANGE FROM PREVIOUS TYPE

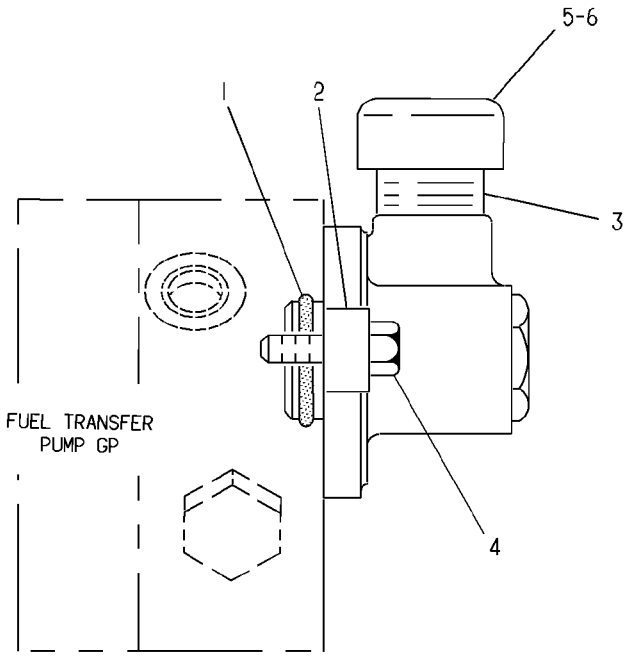

GRAPHIC #1 g00112608

125-3428 DRIVE GP-UNIT INJ HYD PUMP

S/N: 5XD1-UP

PART OF 163-5784 ENGINE AR

SMCS-1714 **i01541119**

NOTE	REF NO	GRAPHIC REF	PART NUMBER	QTY	PART NAME 1 2 3 4 5 6 (PRODUCT LEVEL)	SEE PAGE
CY	1	1	**180-6649**	1	DRIVE GP-UNIT INJ HYD PUMP	212
	2	1	**6V-3549**	1	SEAL-O-RING	
	3	1	**5P-0076**	4	BOLT-12 POINT HEAD (3/8-16X1.50 IN)	
Y	4	1	**194-6722**	1	SENSOR GP-PRESSURE (ATMOSPHERIC)	335
	5	1	**5M-2894**	4	WASHER-HARD (10.2X18.5X2.5MM THK)	
	7	1	**6V-5049**	1	SEAL-O-RING	
	8	1	**118-6335**	1	PIN	
	9	1	**6V-4589**	1	SEAL-O-RING	
	10	1	**5P-9890**	2	SEAL-O-RING	

C-CHANGE FROM PREVIOUS TYPE
Y-SEPARATE ILLUSTRATION

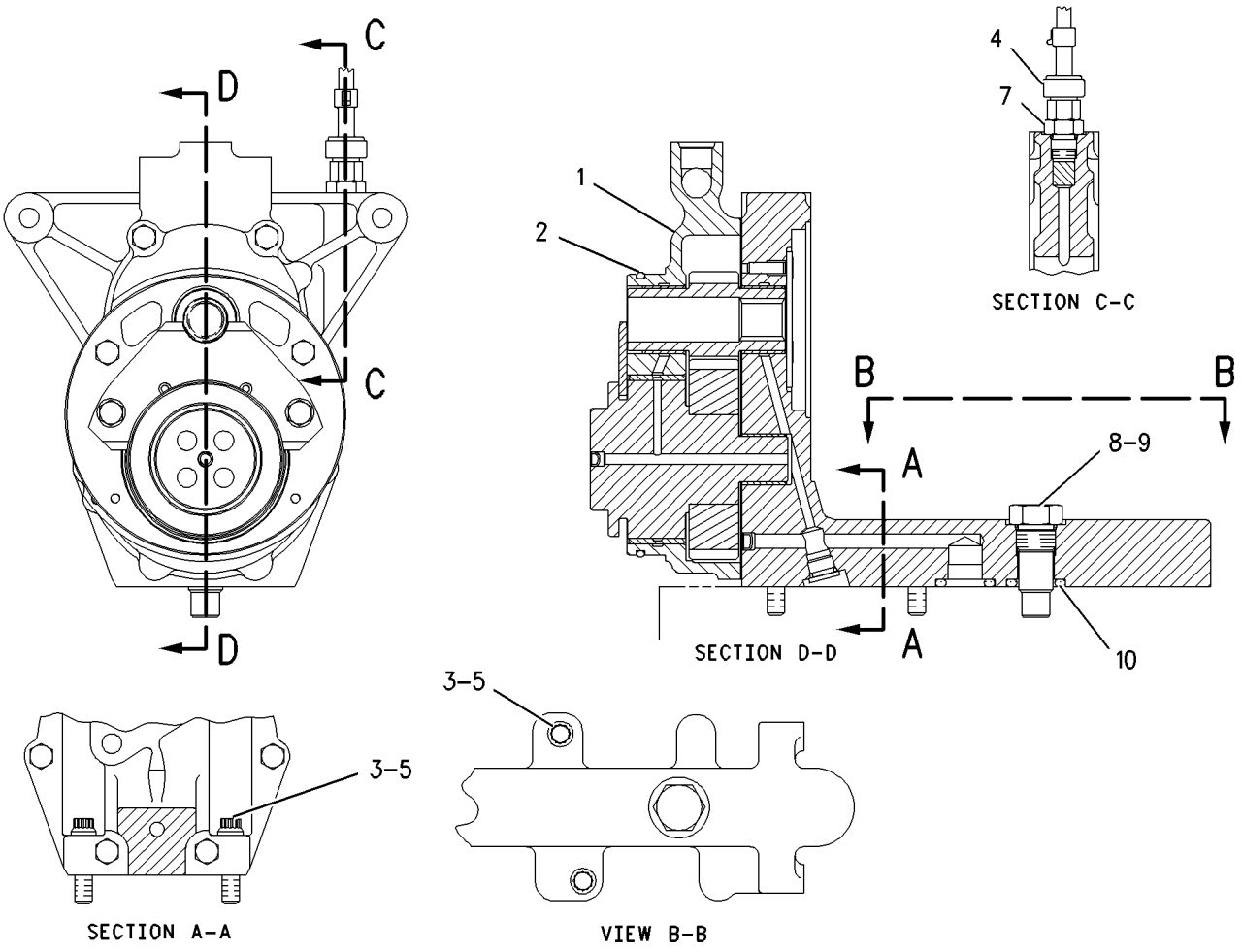

GRAPHIC #1 g00656070

MEMORANDA

180-6649 DRIVE GP-UNIT INJ HYD PUMP

S/N: 5XD1-UP

PART OF 125-3428 DRIVE GP-UNIT INJ HYD PUMP

SMCS-1714 **i01544209**

NOTE	REF NO	GRAPHIC REF	PART NUMBER	QTY	PART NAME 1 2 3 4 5 6 (PRODUCT LEVEL)	SEE PAGE
	1	1	**180-6645**	1	SHAFT AS	
		1	**3S-6605**	1	PLUG-CUP	
		1	**155-6636**	1	GEAR-OIL DRIVE (42 TEETH)	
	2	1	**150-2392**	1	PLATE-THRUST	
	3	1	**180-6646**	1	GASKET	
	4	1	**180-6647**	1	HOUSING AS	
		1	**2H-1190**	2	DOWEL	
		1	**162-0151**	1	BEARING-SLEEVE	
		1	**162-0152**	1	BEARING-SLEEVE	
	5	1	**162-0161**	1	HOUSING AS	
		1	**2A-3746**	1	PLUG-CUP	
		1	**162-0150**	1	BEARING-SLEEVE	
		1	**162-0151**	1	BEARING-SLEEVE	
	6	1	**125-5835**	1	FILTER (UNIT INJ HYD PUMP)	
	7	1	**1B-9575**	4	BOLT (5/16-18X1.75 IN)	
	8	1	**0S-1618**	2	BOLT (5/16-18X1 IN)	
	9	1	**9N-0869**	2	WASHER-HARD (8.8X25.5X2MM THK)	
	10	1	**9S-8004**	1	PLUG	
	11	1	**6V-5049**	1	SEAL-O-RING	
	12	1	**1D-4541**	2	BOLT (5/16-18X3 IN)	
	13	1	**8M-6802**	3	SCREW-HEX SOCKET	
	14	1	**155-6637**	1	GEAR-OIL DRIVE (13 TEETH)	
	15	1	**124-6640**	1	PLATE	
	16	1	**031-2701**	2	BOLT-LOCKING (5/16-18X1.25 IN)	

180-6649 **DRIVE GP-UNIT INJ HYD PUMP** *(contd.)* **i01544209**

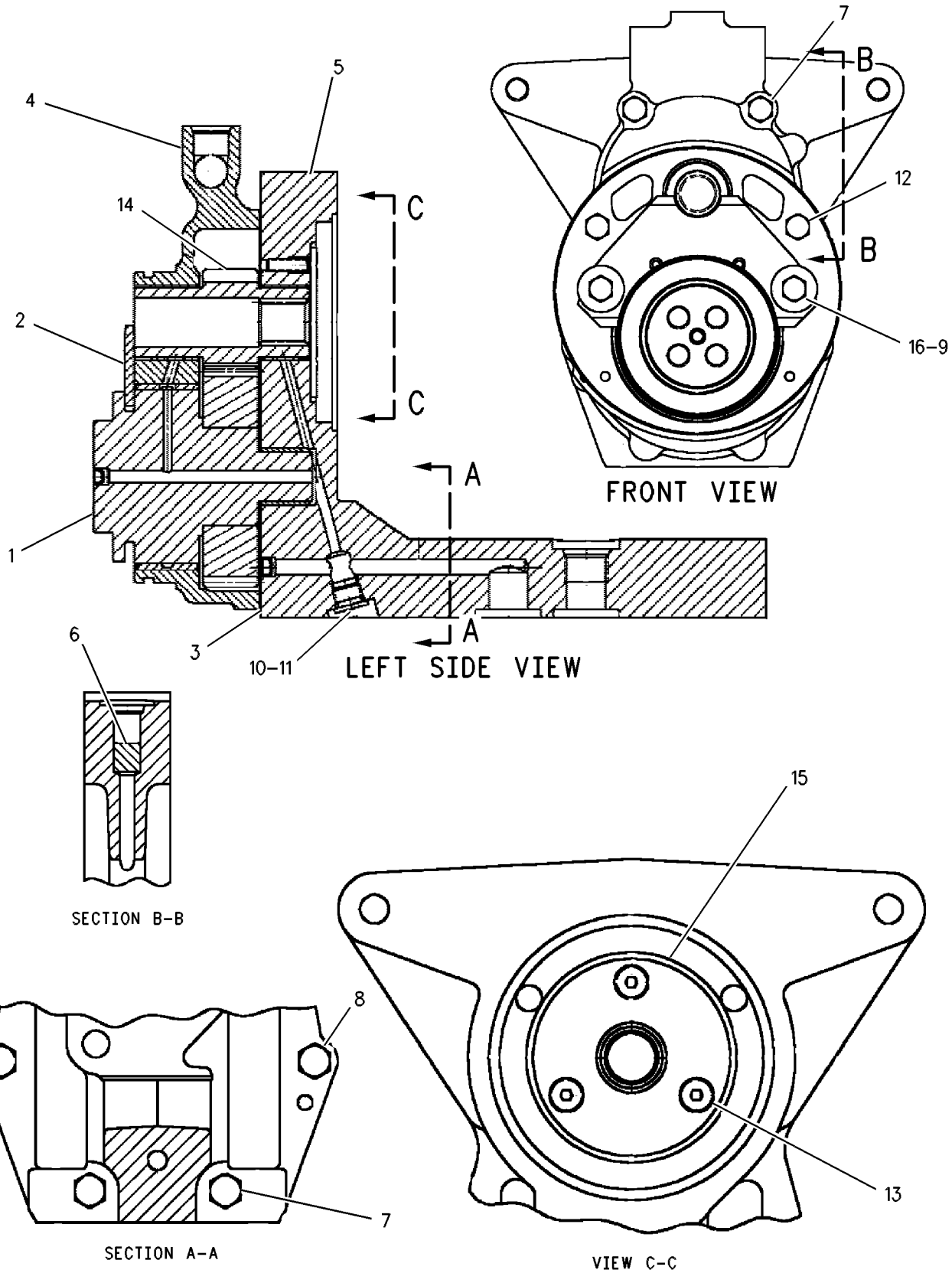

GRAPHIC #1 g00646329

9Y-3336 FASTENER GP-FUEL INJ PUMP

S/N: 48W41541-UP

PART OF 104-7032 PUMP GP-GOV, FUEL INJ & TFR

AN ATTACHMENT

SMCS-1251 **i01446458**

NOTE	REF NO	GRAPHIC REF	PART NUMBER	QTY	PART NAME 1 2 3 4 5 6 (PRODUCT LEVEL)	SEE PAGE
	1	1	**0S-1594**	4	BOLT (3/8-16X1 IN)	
	2	1	**0S-1591**	2	BOLT (3/8-16X1.5 IN)	
	3	1	**0S-1571**	4	BOLT (3/8-16X1.75 IN)	
	4	1	**0L-1143**	1	BOLT (3/8-16X2.50 IN)	
	5	1	**053-2294**	1	BOLT-12 POINT HEAD (3/8-16X1.75 IN)	
	6	1	**3B-1915**	4	BOLT (3/8-16X1.37 IN)	

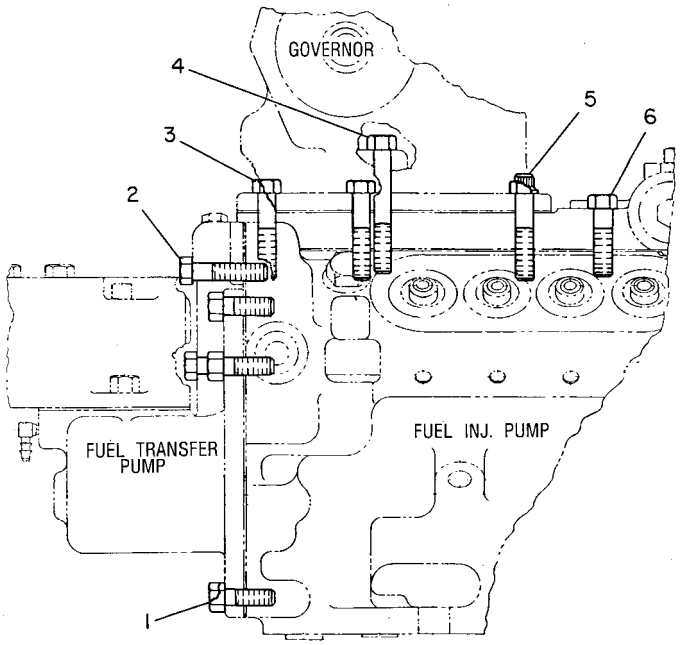

RIGHT SIDE VIEW

GRAPHIC #1 g00099026

MEMORANDA

FUEL SYSTEM

171-6464 FILTER & LINES GP-FUEL

S/N: ABK1-UP

PART OF 162-9501 CHASSIS AR

SMCS-1261 **i01446462**

NOTE	REF NO	GRAPHIC REF	PART NUMBER	QTY	PART NAME 1 2 3 4 5 6 (PRODUCT LEVEL)	SEE PAGE
	1	1	**1P-0436**	1	GASKET (FUEL PRIMING PUMP)	
	2	1	**1W-2860**	1	BRACKET	
	3	1	**3E-7403**	1	ADAPTER	
	4	1	**5G-4109**	1	SCREEN-SUMP (FUEL TANK)	
	5	1	**5P-8502**	1	PADLOCK GP	
A		1	**5P-8500**	1	KEY	
A		1	**8Y-6364**	1	SLEEVE	
	6	1	**6N-4414**	1	COVER-FILTER BASE	
	7	1	**6V-8358**	1	VALVE-BALL	
	8	1	**6V-9830**	1	CAP AS	
	9	1	**8T-3491**	1	ELBOW	
	10	1	**8T-6639**	1	VALVE-BALL	
	11	1	**9W-1599**	1	VALVE-CHECK	
I	12	1	**9W-1706**	1	HOSE AS	
I	13	1	**9W-1707**	1	HOSE AS	
I	14	1	**9W-1710**	1	HOSE AS	
	15	1	**034-3679**	1	FITTING	
	16	1	**130-1831**	1	BRACKET	
I	17	1	**130-2570**	1	HOSE AS	
I	18	1	**131-4427**	1	HOSE AS	
Y	19	1	*133-3225*	1	FILTER GP-FUEL	223
	20	1	**133-6529**	1	PLATE AS	
		1	**1F-0750**	2	NUT-WELD (3/8-16 THD)	
	21	1	**134-1038**	1	TUBE AS	
	22	1	*148-8328*	1	CONNECTOR AS	
		1	**3D-2824**	1	SEAL-O-RING (23.47MM ID)	
		1	**6V-8398**	1	SEAL-O-RING (12.47MM ID)	
		1	**6V-8633**	1	CONNECTOR	
	23	1	*148-8340*	1	CONNECTOR GP	
		1	**3K-0360**	1	SEAL-O-RING (16.36MM ID)	
		1	**6V-8398**	1	SEAL-O-RING (12.47MM ID)	
		1	**6V-8639**	1	CONNECTOR	
	24	1	*148-8364*	1	ELBOW GP	
		1	**3K-0360**	1	SEAL-O-RING (16.36MM ID)	
		1	**6V-8398**	1	SEAL-O-RING (12.47MM ID)	
		1	**6V-8625**	1	ELBOW	
	25	1	*148-8365*	2	ELBOW AS	
					(EACH ELBOW AS INCLUDES)	
		1	**3J-1907**	1	SEAL-O-RING (11.89MM ID)	
		1	**6V-8398**	1	SEAL-O-RING (12.47MM ID)	
		1	**8T-6876**	1	ELBOW-ORFS	
	26	1	*148-8371*	1	ELBOW GP	
		1	**6V-8397**	1	SEAL-O-RING (9.27MM ID)	
		1	**8C-8988**	1	ELBOW	
	27	1	*148-8378*	1	ELBOW GP	
		1	**3J-1907**	1	SEAL-O-RING (11.89MM ID)	
		1	**6V-8397**	1	SEAL-O-RING (9.27MM ID)	
		1	**6V-8724**	1	ELBOW	
	28	1	**153-6240**	1	TEE AS	
		1	**2M-9780**	1	SEAL-O-RING (19.18MM ID)	
		1	**6V-8398**	1	SEAL-O-RING (12.47MM ID)	
		1	**8C-7514**	1	TEE	
	29	1	*153-6241*	1	ELBOW GP	
		1	**6V-8398**	1	SEAL-O-RING (12.47MM ID)	
		1	**8C-8989**	1	ELBOW	
	30	1	*153-6256*	1	ELBOW AS	

171-6464 FILTER & LINES GP-FUEL *(contd.)* i01446462

NOTE	REF NO	GRAPHIC REF	PART NUMBER	QTY	PART NAME 1 2 3 4 5 6 (PRODUCT LEVEL)	SEE PAGE
		1	**7J-9108**	1	SEAL-O-RING (15.72MM ID)	
		1	**8C-7563**	1	ELBOW	
Y	31	1	*185-9977*	1	FILTER GP-WATER SEP & FUEL	225
	32	1	**1B-7182**	1	BOLT (5/16-18X1.25 IN)	
	33	1	**2M-9780**	1	SEAL-O-RING (19.18MM ID)	
	34	1	**3D-2824**	2	SEAL-O-RING (23.47MM ID)	
	35	1	**3K-0360**	2	SEAL-O-RING (16.36MM ID)	
	36	1	**4D-7733**	2	CLIP	
	37	1	**4L-6454**	2	BOLT (3/8-16X1 IN)	
	38	1	**5M-3062**	1	BOLT (3/8-16X0.75 IN)	
	39	1	**5P-0537**	1	WASHER-HARD (7.2X14.5X2MM THK)	
	40	1	**5S-7379**	2	BOLT (3/8-16X0.875 IN)	
	41	1	**5S-7382**	2	BOLT (3/8-16X1.375 IN)	
	42	1	**6D-1641**	1	CLIP	
	43	1	**6D-4247**	2	CLIP	
	44	1	**6D-4636**	1	CLIP	
	45	1	**6V-1889**	1	CLIP	
	46	1	**6V-5048**	1	SEAL-O-RING (8.92MM ID)	
	47	1	**6V-8398**	3	SEAL-O-RING (12.47MM ID)	
	48	1	**6V-8801**	1	NUT (3/8-16 THD)	
	49	1	**6V-8981**	1	ELBOW	
	50	1	**6V-9169**	1	NUT-BULKHEAD (13/16-16 THD)	
	51	1	**7B-2742**	1	BOLT (1/4-20X1.25 IN)	
	52	1	**7J-9108**	1	SEAL-O-RING (15.72MM ID)	
	53	1	**8T-4896**	10	WASHER-HARD (10.2X18.5X2.5MM THK)	
	54	1	**9B-7237**	2	BOLT (3/8-16X1.25 IN)	
	55	1	**9M-1974**	1	WASHER-HARD (8.8X16X2MM THK)	
	56	1	**9S-8002**	1	PLUG-O-RING (7/16-20 THD)	
D	57	1	**5P-1908**		HOSE (.7M)	
E	58	1	**5P-1505**		HOSE (64CM)	

A-NOT PART OF THIS GROUP
D-ORDER BY THE METER
E-ORDER BY THE CENTIMETER
I-SEE HOSE FABRICATION GUIDE
Y-SEPARATE ILLUSTRATION

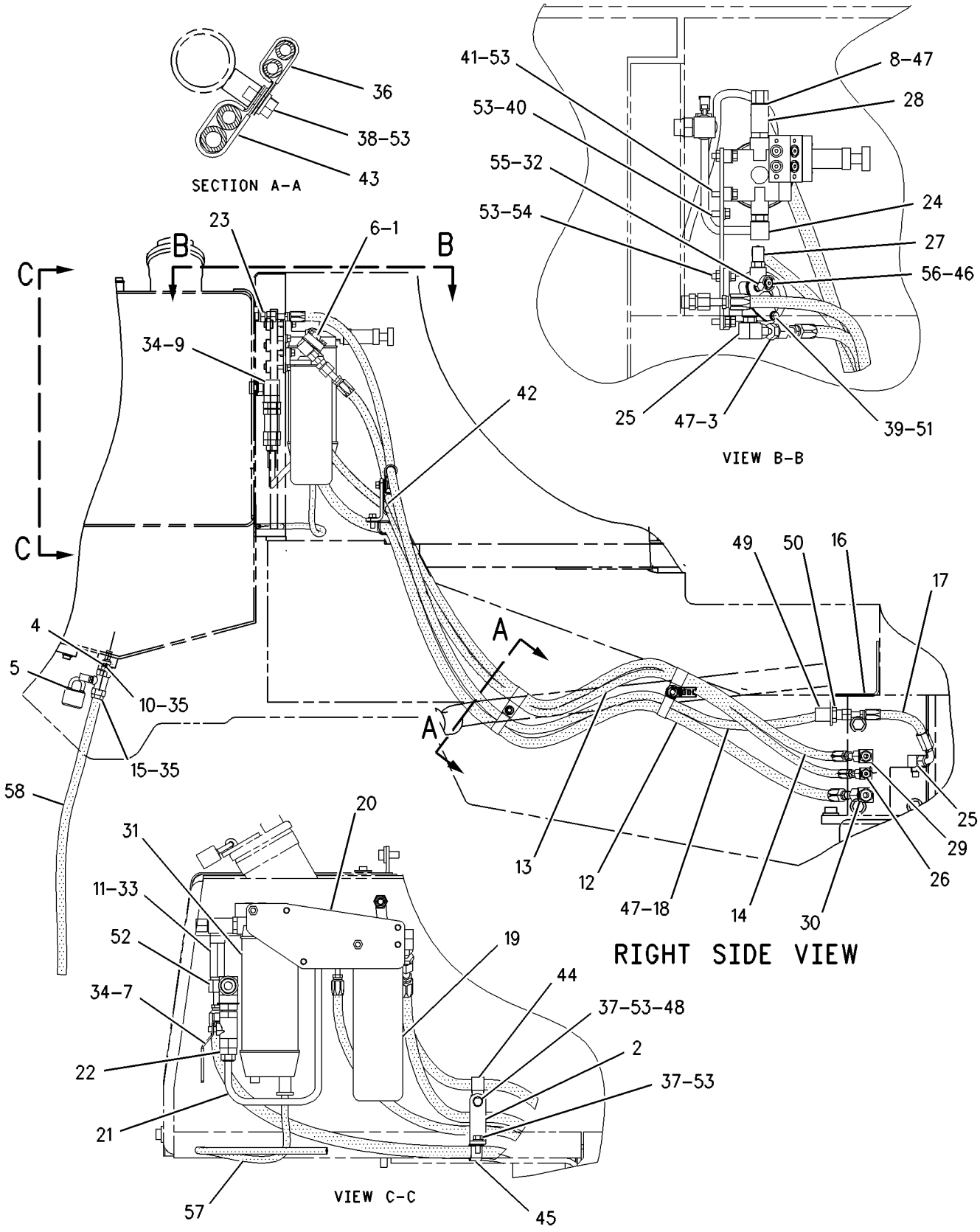

GRAPHIC #1 g00689458

MEMORANDA

FUEL SYSTEM

171-6465 FILTER & LINES GP-FUEL

S/N: ABK1-UP
PART OF 162-9502 CONVERSION AR-ENGINE
AN ATTACHMENT

SMCS-1261 **i01590527**

NOTE	REF NO	GRAPHIC REF	PART NUMBER	QTY	PART NAME 1 2 3 4 5 6 (PRODUCT LEVEL)	SEE PAGE
	1	1	**1P-0436**	1	GASKET (FUEL PRIMING PUMP)	
	2	1	**1W-2860**	1	BRACKET	
	3	1	**5G-4109**	1	SCREEN-SUMP (FUEL TANK)	
	4	1	**5P-8502**	1	PADLOCK GP	
A		1	**5P-8500**	1	KEY	
A		1	**8Y-6364**	1	SLEEVE	
	5	1	**6N-4414**	1	COVER-FILTER BASE	
	6	1	**6V-8358**	1	VALVE-BALL	
	7	1	**6V-9830**	1	CAP AS	
	8	1	**8T-3491**	1	ELBOW	
	9	1	**8T-6639**	1	VALVE-BALL	
	10	1	**9W-1599**	1	VALVE-CHECK	
I	11	1	**9W-1706**	1	HOSE AS	
I	12	1	**9W-1707**	1	HOSE AS	
I	13	1	**9W-1710**	1	HOSE AS	
	14	1	**034-3679**	1	FITTING	
	15	1	**101-4845**	1	PLUG-ORIFICE	
Y	16	1	*133-3225*	1	FILTER GP-FUEL	223
	17	1	**133-6529**	1	PLATE AS	
		1	**1F-0750**	2	NUT-WELD (3/8-16 THD)	
	18	1	**134-1038**	1	TUBE AS	
	19	1	*148-8326*	1	CONNECTOR GP	
		1	**3J-7354**	1	SEAL-O-RING	
		1	**6V-8397**	1	SEAL-O-RING	
		1	**6V-9872**	1	CONNECTOR	
	20	1	*148-8328*	1	CONNECTOR GP	
		1	**3D-2824**	1	SEAL-O-RING	
		1	**6V-8398**	1	SEAL-O-RING	
		1	**6V-8633**	1	CONNECTOR	
	21	1	*148-8364*	1	ELBOW GP	
		1	**3K-0360**	1	SEAL-O-RING	
		1	**6V-8398**	1	SEAL-O-RING	
		1	**6V-8625**	1	ELBOW	
	22	1	*148-8371*	1	ELBOW GP	
		1	**6V-8397**	1	SEAL-O-RING	
		1	**8C-8988**	1	ELBOW	
	23	1	*148-8378*	2	ELBOW GP	
					(EACH INCLUDES)	
		1	**3J-1907**	1	SEAL-O-RING	
		1	**6V-8397**	1	SEAL-O-RING	
		1	**6V-8724**	1	ELBOW	
	24	1	**148-9849**	1	TUBE AS	
	25	1	*153-6240*	1	TEE AS	
		1	**2M-9780**	1	SEAL-O-RING	
		1	**6V-8398**	1	SEAL-O-RING	
		1	**8C-7514**	1	TEE	
	26	1	*153-6241*	1	ELBOW GP	
		1	**6V-8398**	1	SEAL-O-RING	
		1	**8C-8989**	1	ELBOW	
	27	1	*153-6256*	1	ELBOW AS	
		1	**7J-9108**	1	SEAL-O-RING	
		1	**8C-7563**	1	ELBOW	
	28	1	*155-3502*	1	ADAPTER AS	
		1	**3E-7403**	1	ADAPTER	
		1	**6V-8398**	1	SEAL-O-RING	

171-6465 FILTER & LINES GP-FUEL *(contd.)* i01590527

NOTE	REF NO	GRAPHIC REF	PART NUMBER	QTY	PART NAME 1 2 3 4 5 6 (PRODUCT LEVEL)	SEE PAGE
	29	1	*155-3505*	1	CONNECTOR AS	
		1	**3K-0360**	1	SEAL-O-RING	
		1	**6V-8397**	1	SEAL-O-RING	
		1	**107-7509**	1	CONNECTOR	
Y	30	1	*185-9977*	1	FILTER GP-WATER SEP & FUEL	225
	31	1	**1B-7182**	1	BOLT (5/16-18X1.25 IN)	
	32	1	**2M-9780**	1	SEAL-O-RING	
	33	1	**3D-2824**	2	SEAL-O-RING	
	34	1	**3K-0360**	2	SEAL-O-RING	
	35	1	**4D-7733**	2	CLIP	
	36	1	**4L-6454**	2	BOLT (3/8-16X1 IN)	
	37	1	**5M-3062**	1	BOLT (3/8-16X0.75 IN)	
	38	1	**5P-0537**	1	WASHER-HARD (7.2X14.5X2MM THK)	
	39	1	**5S-7379**	2	BOLT (3/8-16X0.875 IN)	
	40	1	**5S-7382**	2	BOLT (3/8-16X1.375 IN)	
	41	1	**6D-1641**	1	CLIP	
	42	1	**6D-4244**	2	CLIP	
	43	1	**6V-1889**	1	CLIP	
	44	1	**6V-8801**	1	NUT (3/8-16 THD)	
	45	1	**7B-2742**	1	BOLT (1/4-20X1.25 IN)	
	46	1	**7J-9108**	1	SEAL-O-RING	
	47	1	**8T-4896**	10	WASHER-HARD (10.2X18.5X2.5MM THK)	
	48	1	**9B-7237**	2	BOLT (3/8-16X1.25 IN)	
	49	1	**9M-1974**	1	WASHER-HARD (8.8X16X2MM THK)	
D	50	1	**5P-5991**		HOSE (.6M)	
E	51	1	**5P-1505**		HOSE (60CM)	

A-NOT PART OF THIS GROUP
D-ORDER BY THE METER
E-ORDER BY THE CENTIMETER
I-SEE HOSE FABRICATION GUIDE
Y-SEPARATE ILLUSTRATION

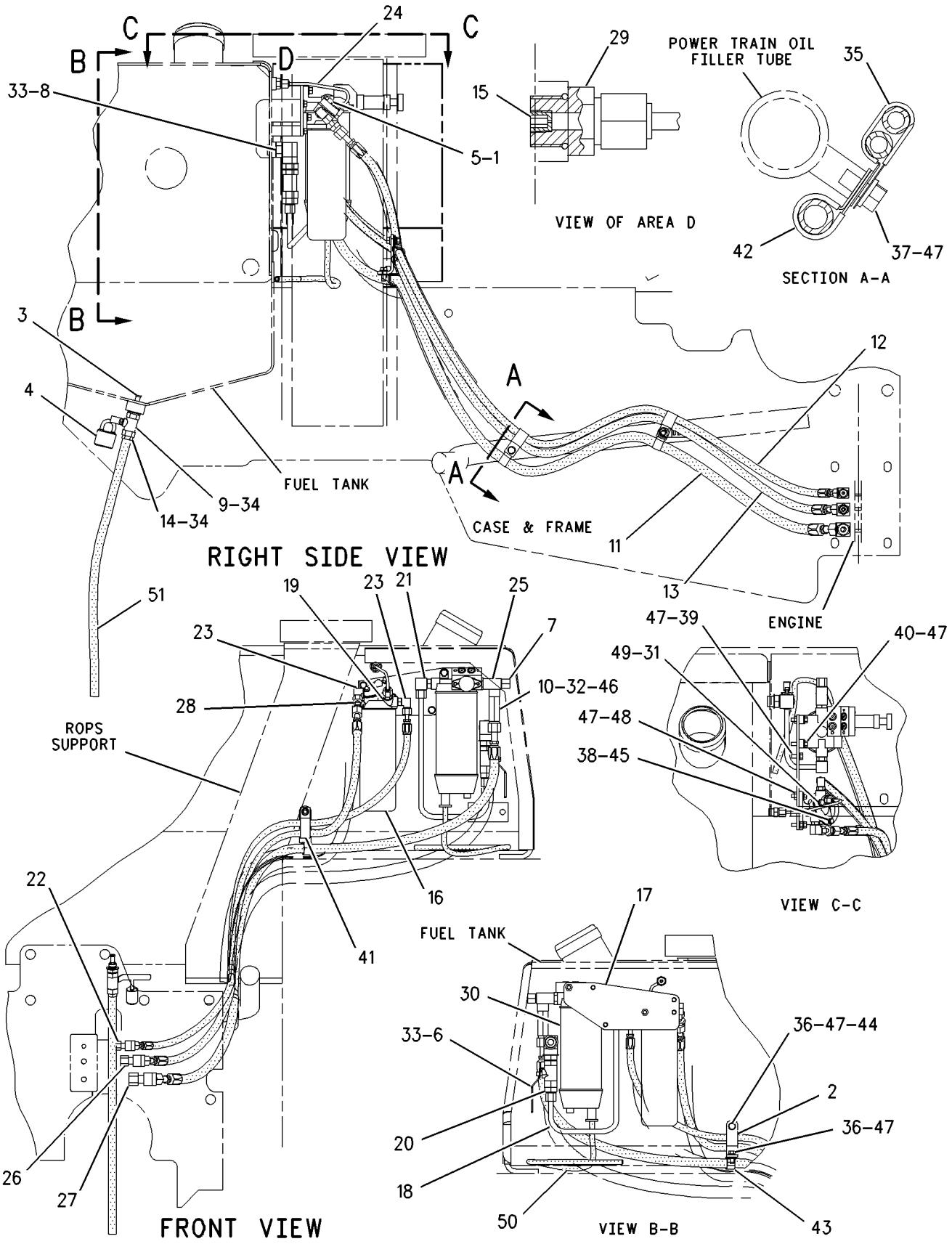

GRAPHIC #1 g00687150

133-3225 FILTER GP-FUEL

S/N: ABK1-UP

PART OF 171-6464, 171-6465 FILTER & LINES GP-FUEL

ALSO AN ATTACHMENT

SMCS-1261 **i00543717**

NOTE	REF NO	GRAPHIC REF	PART NUMBER	QTY	PART NAME 1 2 3 4 5 6 (PRODUCT LEVEL)	SEE PAGE
	1	1	**1N-3789**	1	BASE AS-FILTER	
	2	1	**9S-4167**	1	STUD-HOLLOW	
	3	1	**1R-0749**	1	FILTER AS-FUEL	

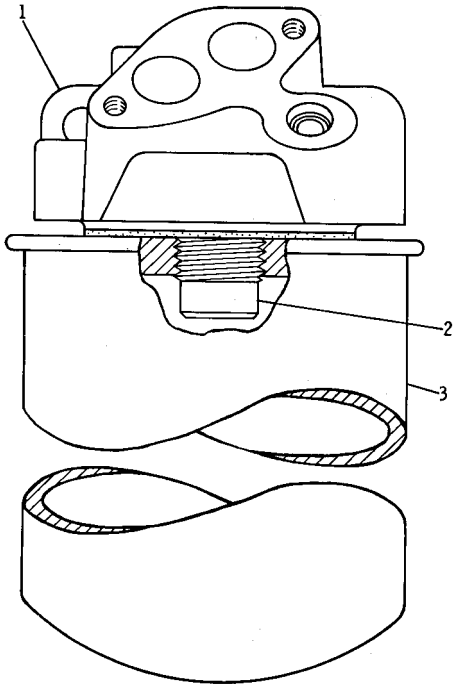

GRAPHIC #1 g00096553

176-5618 FILTER GP-WATER SEP & FUEL

S/N: ABK1-UP

PART OF 185-9977 FILTER GP-WATER SEP & FUEL

ALSO AN ATTACHMENT

SMCS-1261, 1263 **i01305521**

NOTE	REF NO	GRAPHIC REF	PART NUMBER	QTY	PART NAME 1 2 3 4 5 6 (PRODUCT LEVEL)	SEE PAGE
	1	1	**1R-0769**	1	FILTER AS (WATER SEPARATOR & FUEL)	
	2	1	**173-7126**	1	BOWL AS	
		1	**5F-9144**	1	SEAL-O-RING (7.65MM ID)	
		1	**6V-5049**	1	SEAL-O-RING (11.89MM ID)	

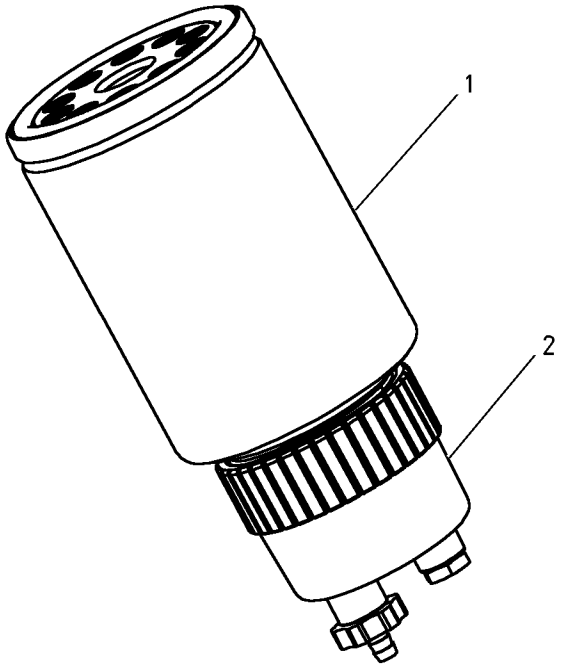

GRAPHIC #1 g00691582

185-9977 FILTER GP-WATER SEP & FUEL

S/N: ABK1-UP

PART OF 171-6464, 171-6465 FILTER & LINES GP-FUEL

ALSO AN ATTACHMENT

SMCS-1261, 1263 **i01446471**

NOTE	REF NO	GRAPHIC REF	PART NUMBER	QTY	PART NAME 1 2 3 4 5 6 (PRODUCT LEVEL)	SEE PAGE
	1	1	**1P-0436**	1	GASKET (FUEL PRIMING PUMP)	
Y	2	1	**176-5618**	1	FILTER GP-WATER SEP & FUEL	224
J	3	1	**105-2508**	1	PUMP AS-FUEL PRIMING	
	4	1	**128-8557**	1	BASE AS-FILTER	
		1	**7E-5346**	1	VALVE AS	
		1	**9S-4167**	1	STUD-HOLLOW	
	5	1	**9S-8002**	4	PLUG-O-RING (7/16-20 THD)	
	6	1	**1B-7182**	1	BOLT (5/16-18X1.25 IN)	
	7	1	**5P-0537**	1	WASHER-HARD (7.2X14.5X2MM THK)	
	8	1	**6V-5048**	4	SEAL-O-RING (8.92MM ID)	
	9	1	**7B-2742**	1	BOLT (1/4-20X1.25 IN)	
	10	1	**9M-1974**	1	WASHER-HARD (8.8X16X2MM THK)	

J-THE INDIVIDUAL PARTS OF THIS ASSEMBLY ARE NOT SERVICED SEPARATELY
Y-SEPARATE ILLUSTRATION

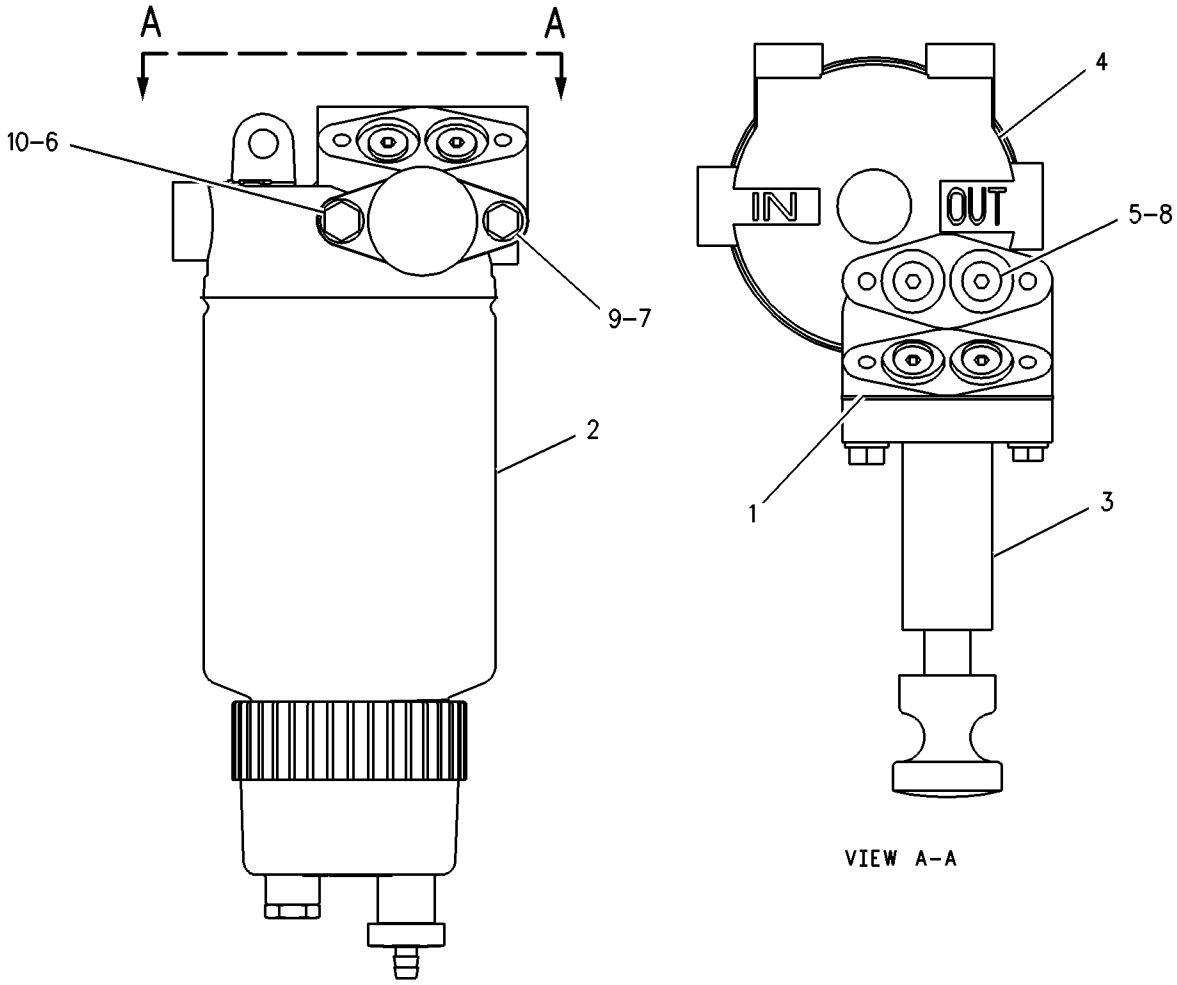

GRAPHIC #1 g00687313

FUEL SYSTEM

4W-6013 GOVERNOR GP

S/N: 48W41541-UP

PART OF 104-7032 PUMP GP-GOV, FUEL INJ & TFR

AN ATTACHMENT

SMCS-1264 **i01483987**

NOTE	REF NO	GRAPHIC REF	PART NUMBER	QTY	PART NAME 1 2 3 4 5 6 (PRODUCT LEVEL)	SEE PAGE
	1	1	**9N-3363**	1	HOUSING AS-GOVERNOR	
	2	1	**7E-8940**	1	BEARING-SLEEVE	
	3	1	**8M-8403**	1	SPRING-GUIDE	
	4	1	**9S-8001**	1	PLUG	
		1	**4J-7533**	1	SEAL-O-RING	
	5	1	**7E-8941**	1	BEARING-SLEEVE	
C	6	1	**138-9507**	2	SEAL-LIP TYPE	
	7	1	**8L-4308**	1	BOLT	
	8	1	**3F-9556**	5	LOCKWASHER	
	9	1	**2B-2695**	1	BOLT (5/16-18X0.875 IN)	
	10	1	**2P-8707**	1	PLATE AS-GOVERNOR	
	11	1	**8L-4175**	1	DOWEL	
	12	1	**0S-1594**	1	BOLT (3/8-16X1 IN)	
	13	1	**1D-4540**	3	BOLT (5/16-18X2.75 IN)	
C	14	1	**1N-4656**	1	SHAFT-GOVERNOR CONTROL	
	15	1	**9N-1917**	1	COVER AS-GOVERNOR	
	16	1	**3P-0009**	1	INSULATOR-STUD	
	17	1	**9N-1916**	1	LEVER-SHUTOFF	
	18	1	**5M-6228**	1	BEARING AS-NEEDLE	
C	19	1	**033-5359**	4	SCREW-HEAD BOLT	
	20	1	**9N-2165**	1	LEVER-SOLENOID	
	21	1	**1S-7984**	1	BEARING-SLEEVE	
	22	1	**1K-4703**	1	WASHER	
	23	1	**5P-0796**	2	SEAL-LIP	
	24	1	**4N-0951**	1	SHAFT-SHUTOFF	
	25	1	**9N-3324**	1	SCREW-ADJUSTMENT (HI-IDLE)	
	26	1	**8H-9204**	2	WASHER-FELT	
	27	1	**7N-7325**	1	SCREW-ADJUSTMENT (LO-IDLE)	
	28	1	**2J-0157**	2	SEAL-O-RING	
	29	2	**5L-8992**	1	COVER-ADJUSTMENT	
	30	2	**5P-6945**	1	BOLT (1/4-20X1.25 IN)	
		2	**4B-9747**	1	WASHER	
	31	2	**8L-4155**	1	SETSCREW	
		2	**1B-4201**	1	NUT-FULL (1/4-28 THD)	
	32	2	**9M-4704**	1	BOLT	
	33	2	**8L-4154**	1	COLLAR-LOAD STOP	
C	34	2	**7C-5279**	1	COVER	
C	35	2	**4B-9365**	2	BOLT (1/4-20X3 IN)	
		2	**1B-4330**	2	NUT (1/4-20 THD)	
		2	**5P-0537**	4	WASHER-HARD (7.2X14.5X2MM THK)	
C	36	2	**8L-3873**	2	GASKET	
	37	2	**2P-8669**	1	GASKET	
	38	2	**2W-1491**	1	LEVER-CONTROL	
	39	2	**9M-9788**	1	PLUNGER-STOP	
	40	2	**7M-7316**	1	SPRING	
	41	2	**5H-1351**	1	PIN-SPRING	
	42	2	**2P-8679**	1	STRAINER AS	
	43	2	**2P-8697**	1	GASKET	
	44	2	**6N-3504**	1	SEAT-GOVERNOR SPRING	
	45	2	**4N-1870**	1	GASKET-HOUSING	
	46	2	**9S-8008**	1	PLUG-O-RING	
		2	**3D-2824**	1	SEAL-O-RING	
	47	2	**9S-4182**	1	PLUG-O-RING	
		2	**3J-7354**	1	SEAL-O-RING	
Y	48	2	*4W-7374*	1	PLATE GP-GOVERNOR ADAPTER	246

4W-6013 GOVERNOR GP *(contd.)*

i01483987

NOTE	REF NO	GRAPHIC REF	PART NUMBER	QTY	PART NAME 1 2 3 4 5 6 (PRODUCT LEVEL)	SEE PAGE
	49	2	**6N-9040**	1	DRIVE AS-FLEXIBLE	
		2	**6D-9953**	1	PIN-SPRING	
		2	**9N-2428**	1	RIVET	
	50	2	**2W-9780**	1	PIN AS	
	51	2	**1B-9575**	1	BOLT (5/16-18X1.75 IN)	
	52	2	**6N-8780**	1	STOP	
	53	2	**8H-9181**	1	SPRING-BUMPER	
	54	2	**5L-8991**	1	GASKET-COVER	
	55	2	**4W-7654**	1	BOLT	
	56	2	**6N-8793**	1	SPRING	
	57	2	**3L-5987**	1	COVER	

C-CHANGE FROM PREVIOUS TYPE
Y-SEPARATE ILLUSTRATION

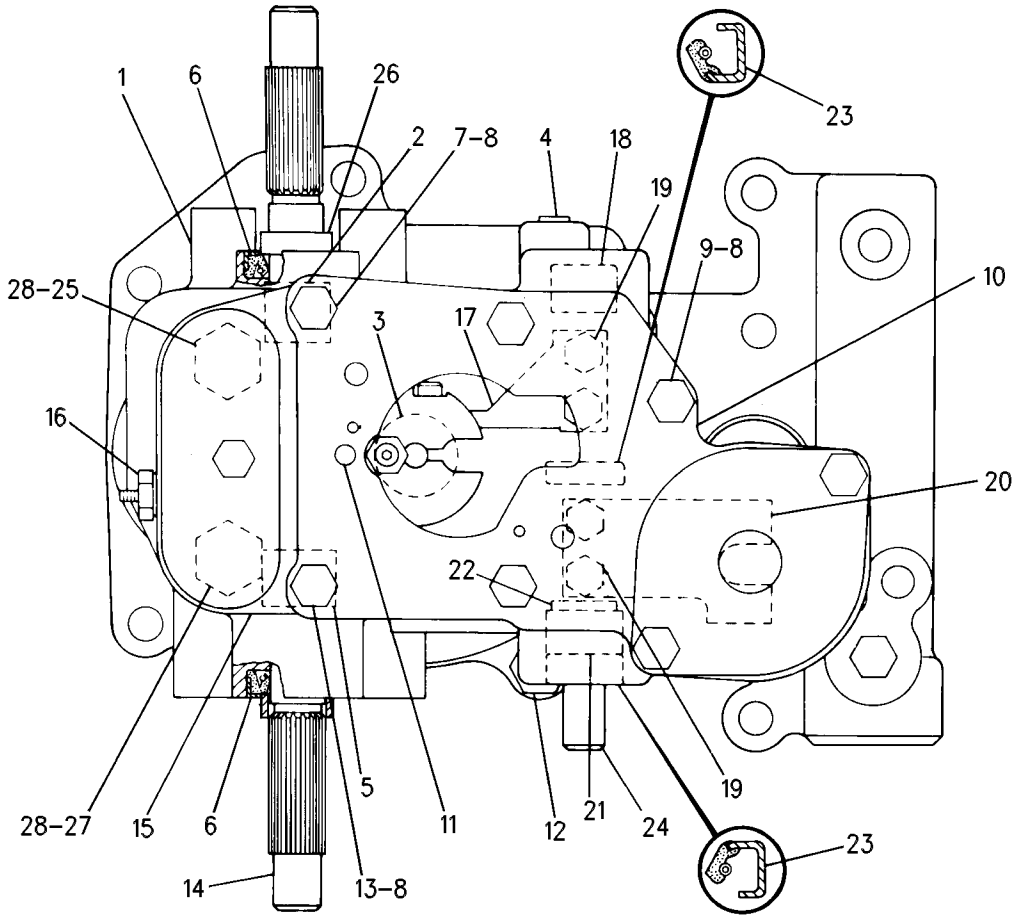

GRAPHIC #1

g00452060

4W-6013 GOVERNOR GP *(contd.)* **i01483987**

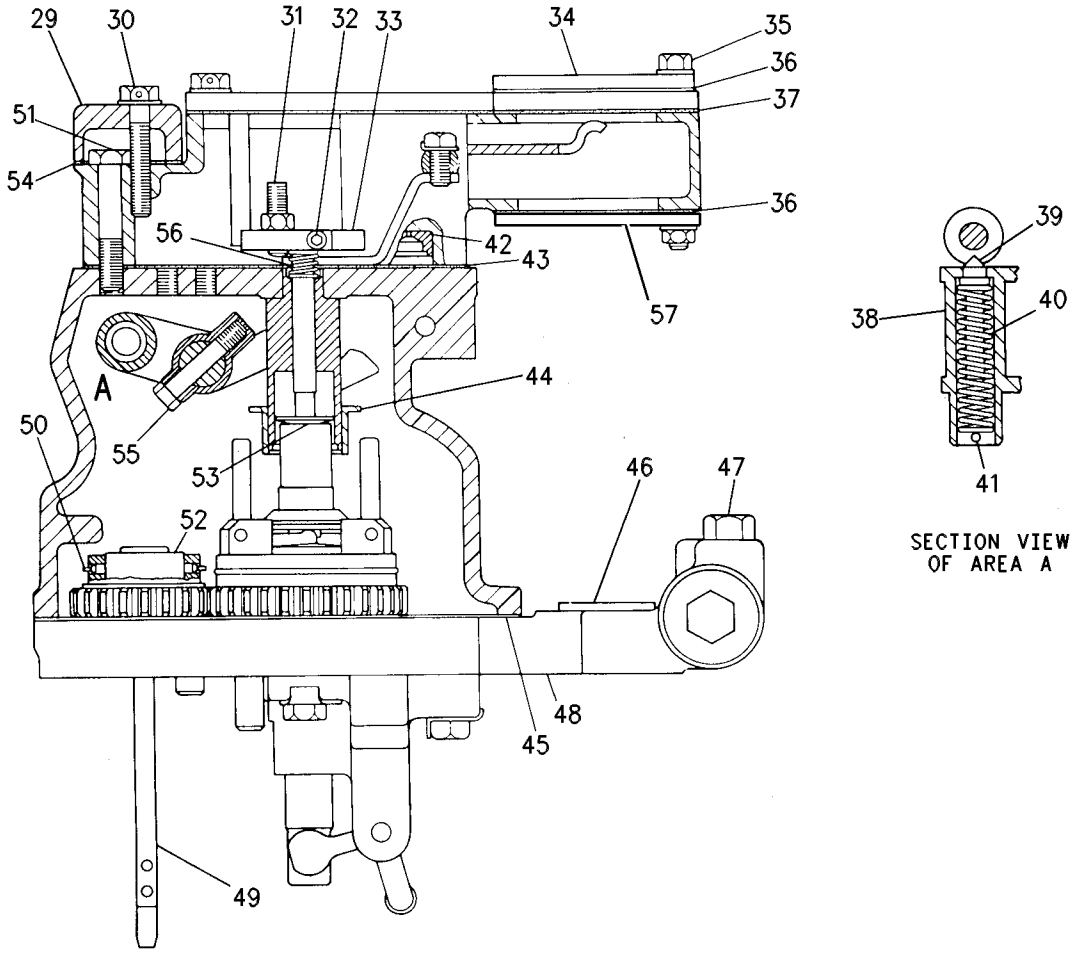

GRAPHIC #2 g00452061

7N-4574 HOUSING GP-FUEL PUMP

S/N: 48W41541-UP
PART OF 7W-1983 PUMP GP-FUEL INJECTION
AN ATTACHMENT

SMCS-1253 **i00952158**

NOTE	REF NO	GRAPHIC REF	PART NUMBER	QTY	PART NAME 1 2 3 4 5 6 (PRODUCT LEVEL)	SEE PAGE
	1	1	**6N-7266**	1	SHAFT-PUMP IDLER	
	2	1	**7N-0242**	2	BEARING-SLEEVE	
	3	1	**5B-9318**	1	BALL (4.76MM)	
	4	1	**4N-0775**	2	DOWEL-HOLLOW	
	5	1	**8L-6565**	1	PIN-SPRING	
	6	1	**9S-4160**	2	BEARING-SLEEVE	
	7	1	**4M-1474**	4	PIN-LIFTER GUIDE	
	8	1	**9L-9766**	2	PIN-PLUNGER LIFT	
	9	1	**6N-8441**	2	BEARING-SLEEVE	
	10	1	**4N-0899**	1	DOWEL-HOLLOW	
	11	1	**1P-0232**	8	BALL	
		1	**1P-0234**	8	DOWEL	
C	12	1	**4N-0952**	1	PLUG-CUP	

C-CHANGE FROM PREVIOUS TYPE

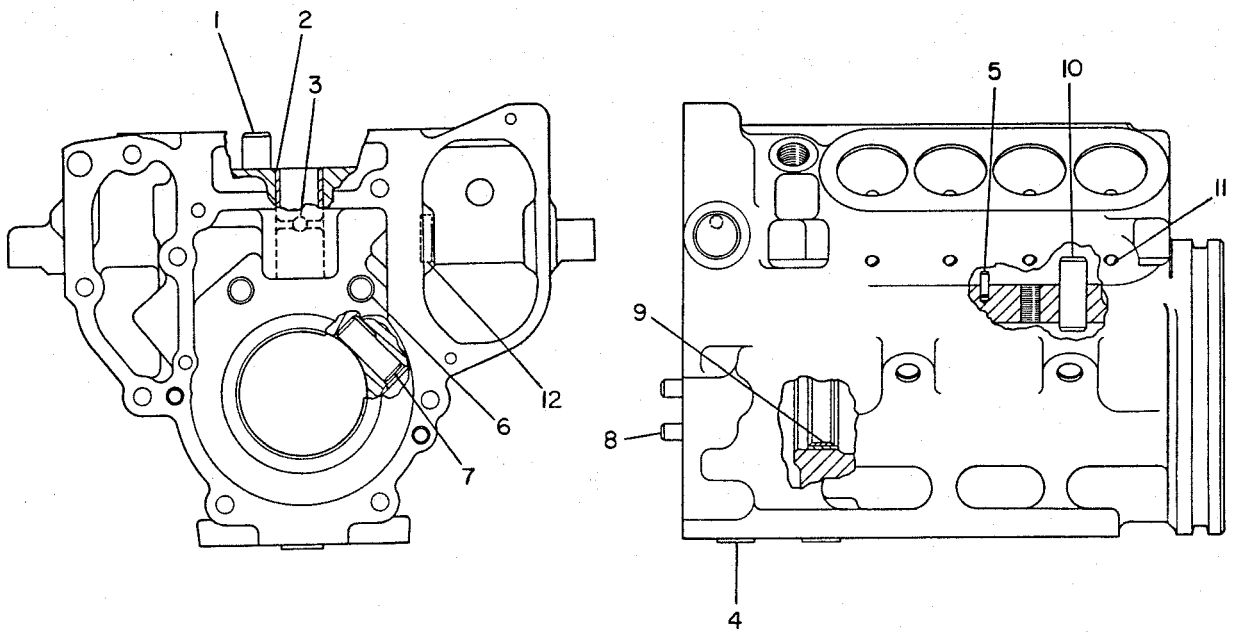

END VIEW SIDE VIEW

GRAPHIC #1 g00096674

184-7687 INJECTOR GP-FUEL

S/N: 5XD1-UP

PART OF 163-5805 PUMP GP-FUEL INJECTION

SMCS-1254, 1290, 1713 **i01434495**

NOTE	REF NO	GRAPHIC REF	PART NUMBER	QTY	PART NAME 1 2 3 4 5 6 (PRODUCT LEVEL)	SEE PAGE
	1	1	**115-3598**	1	ADAPTER-INJECTION	
	2	1	**116-7222**	1	SEAL-RECTANGULAR	
	3	1	**136-1869**	2	BOLT-SOCKET HEAD	
	4	1	**179-6020**	1	INJECTOR GP-FUEL	

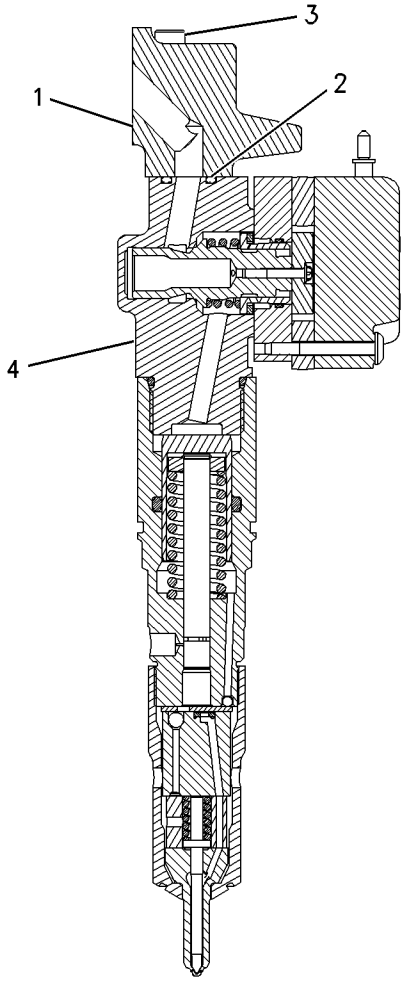

GRAPHIC #1 g00751805

138-6256 KIT-SEAL

S/N: 5XD1-UP

PART OF 144-0835, 201-4202 PUMP GP-UNIT INJECTOR HYD

SMCS-1714 **i01229048**

NOTE	REF NO	GRAPHIC REF	PART NUMBER	QTY	PART NAME 1 2 3 4 5 6 (PRODUCT LEVEL)	SEE PAGE
	1	1	**109-9685**	4	SEAL-O-RING (6.07MM ID)	
	2	1	**033-5853**	3	SEAL-O-RING (8.92MM ID)	
	3	1	**109-3206**	1	SEAL-O-RING (10.52MM ID)	
	4	1	**033-6042**	4	SEAL-O-RING (11.89MM ID)	
	5	1	**108-5803**	1	SEAL-O-RING (7.65MM ID)	
	6	1	**6V-5142**	2	SEAL-O-RING (15.6MM ID)	
	7	1	**9X-7680**	6	SEAL-O-RING (7.65MM ID)	
	8	1	**033-6027**	2	SEAL-O-RING (19.18MM ID)	
	9	1	**033-6039**	1	SEAL-O-RING (9.25MM ID)	
	10	1	**133-1705**	1	GASKET-HOUSING	
	11	1	**6V-8676**	1	SEAL-O-RING (48.90MM ID)	
	12	1	**135-2655**	2	SEAL-O-RING (55.24MM ID)	
	13	1	**135-2652**	1	SEAL-O-RING (17.17MM ID)	

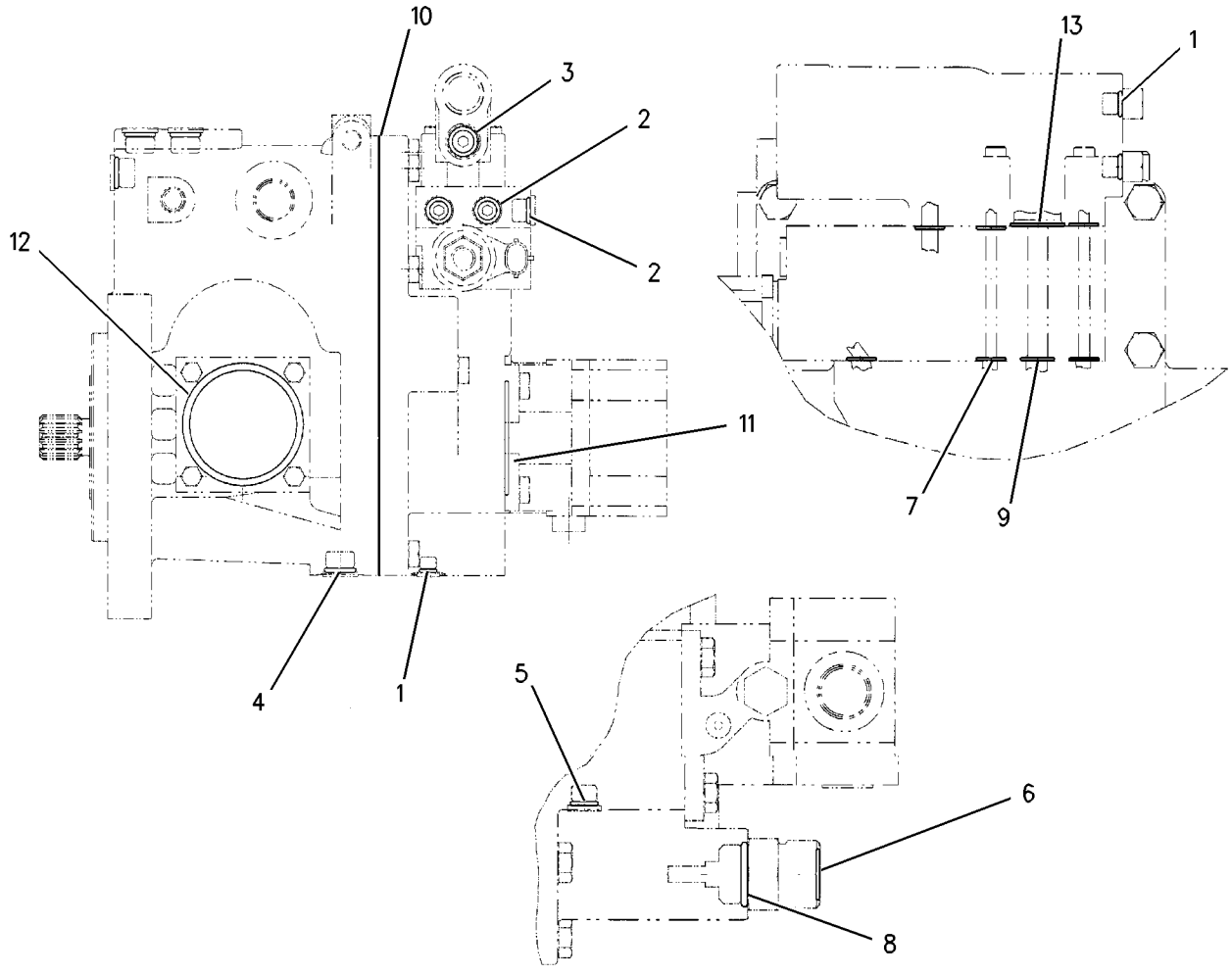

GRAPHIC #1 g00642811

7N-8243 LINES GP-FUEL DRAIN

S/N: 48W41541-UP
FUEL TRANSFER PUMP
PART OF 198-9948 ENGINE AR
AN ATTACHMENT

SMCS-1274 **i01446480**

NOTE	REF NO	GRAPHIC REF	PART NUMBER	QTY	PART NAME 1 2 3 4 5 6 (PRODUCT LEVEL)	SEE PAGE
BCD	1	1	**5P-6011**		TUBE	
	2	1	**2B-2404**	1	CLIP	

B-USE AS REQUIRED
C-CHANGE FROM PREVIOUS TYPE
D-ORDER BY THE METER

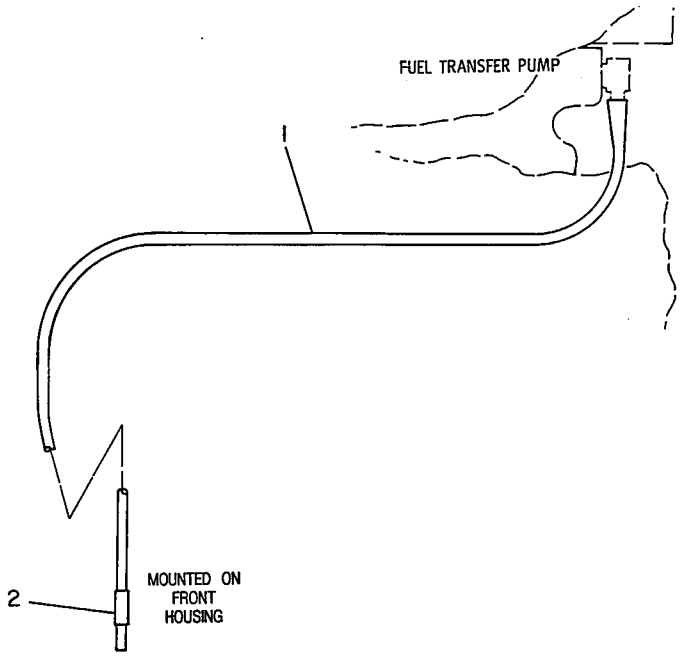

GRAPHIC #1 g00096870

MEMORANDA

FUEL SYSTEM

7W-9545 LINES GP-FUEL FILTER

S/N: 48W41541-UP
PART OF 198-9948 ENGINE AR
AN ATTACHMENT

SMCS-1261, 1274 **i01446482**

NOTE	REF NO	GRAPHIC REF	PART NUMBER	QTY	PART NAME 1 2 3 4 5 6 (PRODUCT LEVEL)	SEE PAGE
	1	1	**030-7947**	1	ELBOW	
	2	1	**0L-1351**	1	BOLT (3/8-16X0.875 IN)	
	3	1	**5M-2894**	6	WASHER-HARD (10.2X18.5X2.5MM THK)	
	4	1	**4W-4591**	1	BRACKET AS	
		1	**1F-0750**	1	NUT-WELD (3/8-16 THD)	
	5	1	**5P-9297**	3	CLIP	
	6	1	**8M-0506**	1	CONNECTOR	
	7	1	**4K-6297**	1	ELBOW-FLARED	
	8	1	**4W-4592**	1	BRACKET AS	
		1	**1F-0750**	1	NUT-WELD (3/8-16 THD)	
	9	1	**3J-1907**	3	SEAL-O-RING (11.89MM ID)	
	10	1	**6I-3800**	1	TUBE AS	
	11	1	**7W-9546**	1	TUBE AS-SUPPLY (TRANS PUMP)	
	12	1	**124-0174**	2	CLIP	
	13	1	**1B-2790**	2	BOLT (5/16-18X1.375 IN)	
	14	1	**5P-4116**	2	WASHER-HARD (8.8X20.5X2MM THK)	
	15	1	**6I-3799**	1	TUBE AS	
	16	1	**5P-9299**	3	CLIP	
	17	1	**4W-4590**	1	BRACKET AS	
		1	**1F-0750**	2	NUT-WELD (3/8-16 THD)	
	18	1	**0S-0509**	4	BOLT (3/8-16X0.75 IN)	
	19	1	**3B-1915**	1	BOLT (3/8-16X1.37 IN)	

7W-9545 **LINES GP-FUEL FILTER** ***(contd.)*** **i01446482**

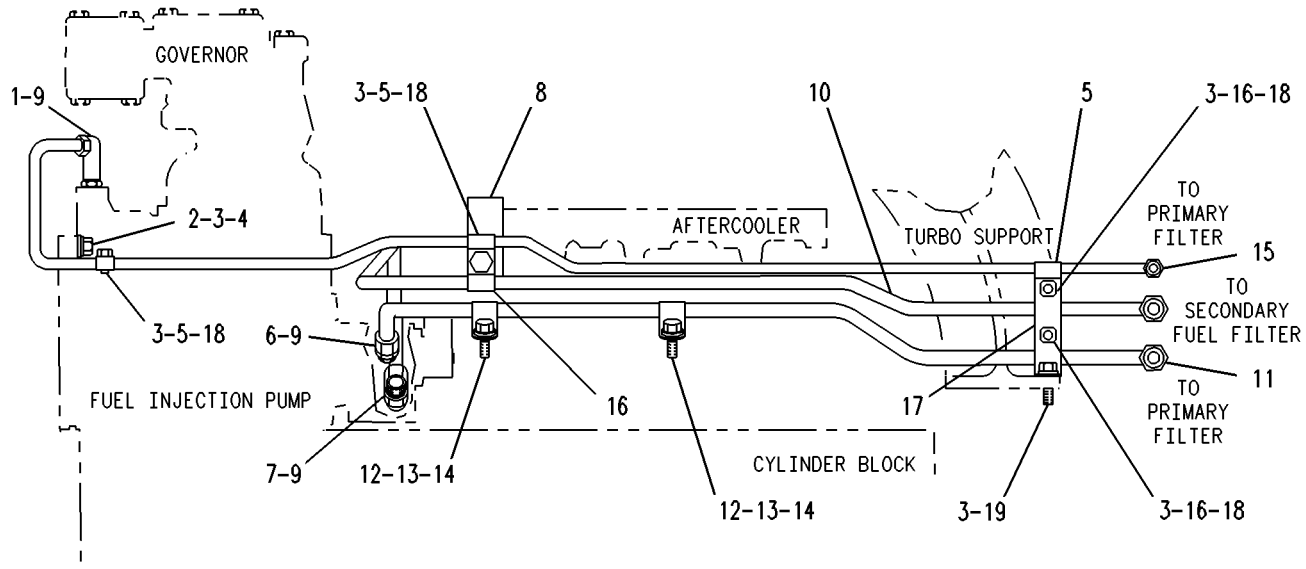

GRAPHIC #1 g00228676

FUEL SYSTEM

163-5806 LINES GP-FUEL FILTER

S/N: 5XD1-UP

PART OF 163-5784 ENGINE AR

SMCS-1261, 1274 **i01547618**

NOTE	REF NO	GRAPHIC REF	PART NUMBER	QTY	PART NAME 1 2 3 4 5 6 (PRODUCT LEVEL)	SEE PAGE
	1	1	**4W-4590**	1	BRACKET AS	
		1	**1F-0750**	2	NUT-WELD (3/8-16 THD)	
	2	1	**6S-9720**	1	BRACKET	
	3	1	**8P-5210**	1	BRACKET	
	4	2	**102-2240**	1	SENSOR GP-TEMPERATURE (FUEL)	
		2	**8T-8729**	3	PIN-CONNECTOR	
BE		2	**9X-1813**		SLEEVE	
		2	**102-8803**	1	KIT-RECEPTACLE (3 PIN)	
					(INCLUDES RECEPTACLE AS & WEDGE)	
Y	5	1	**102-7535**	1	VALVE GP-PRESSURE CONTROL (FUEL)	271
	6	1	**115-4322**	1	TUBE AS	
	7	1	**116-5819**	1	BRACKET	
	8	1	**123-0555**	1	MANIFOLD	
	9	1	**123-8176**	1	TUBE AS	
I	10	2	**138-8745**	1	HOSE AS	
I	11	2	**125-6796**	1	HOSE AS	
I	12	2	**125-6797**	1	HOSE AS	
	13	1	**163-8413**	1	TUBE AS	
	14	1	**168-8768**	1	TUBE AS	
	15	2	**170-5673**	1	BRACKET	
	16	2	**170-5675**	1	BRACKET	
	17	1	**194-3217**	1	TUBE AS	
I	18	1	**194-6590**	1	HOSE AS	
	19	1	**033-6033**	5	SEAL-O-RING	
	20	2	**098-5687**	1	TEE	
	21	1,2	**0L-1351**	2	BOLT (3/8-16X0.875 IN)	
	22	1,2	**0S-0509**	4	BOLT (3/8-16X0.75 IN)	
	23	1,2	**0S-1594**	4	BOLT (3/8-16X1 IN)	
	24	1	**1B-3057**	1	CLIP	
	25	1	**1B-9575**	2	BOLT (5/16-18X1.75 IN)	
	26	1	**4B-0418**	1	CLIP	
	27	2	**4D-9517**	1	CLIP	
	28	1,2	**5M-2894**	8	WASHER-HARD (10.2X18.5X2.5MM THK)	
	29	2	**8B-6561**	1	SPACER	
	30	1,2	**5P-9297**	4	CLIP	
	31	1,2	**5P-9299**	5	CLIP	
	32	1,2	**6V-5049**	12	SEAL-O-RING	
	33	2	**6V-8634**	1	CONNECTOR	
	34	2	**6V-8636**	2	CONNECTOR	
	35	1	**6V-9873**	2	CONNECTOR-SEAL	
	36	1,2	**8L-2779**	7	SEAL-O-RING	
	37	2	**8L-2786**	3	SEAL-O-RING	
	38	1,2	**8M-2773**	3	CLIP	
	39	2	**8T-1779**	1	CONNECTOR	
	40	1	**8T-6876**	2	ELBOW	
	41	1	**9M-1974**	2	WASHER-HARD (8.8X16X2MM THK)	
	42	1	**9S-4191**	1	PLUG-STRAIGHT THREAD	
	43	1,2	**9S-8004**	4	PLUG	
	44	1,2	**9S-8752**	4	NUT-FULL (3/8-16 THD)	
	45	1,2	**9X-6458**	8	WASHER-HARD (10.2X22.5X3MM THK)	
	46	2	**0S-1608**	1	BOLT (3/8-16X3.75 IN)	
	47	2	**5P-7854**	1	CLIP	

B-USE AS REQUIRED
E-ORDER BY THE CENTIMETER
I-SEE HOSE FABRICATION GUIDE
Y-SEPARATE ILLUSTRATION

163-5806 **LINES GP-FUEL FILTER** *(contd.)* **i01547618**

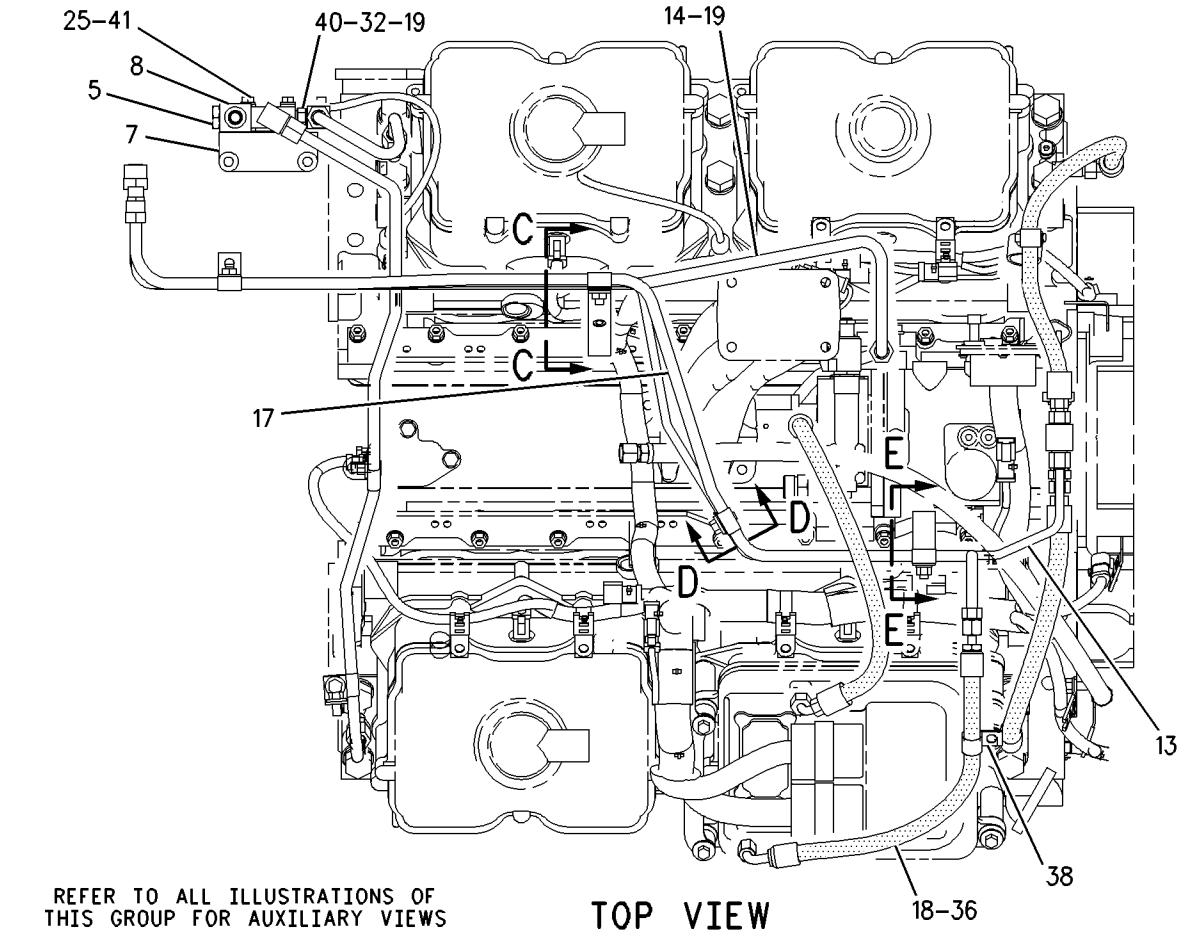

REFER TO ALL ILLUSTRATIONS OF THIS GROUP FOR AUXILIARY VIEWS

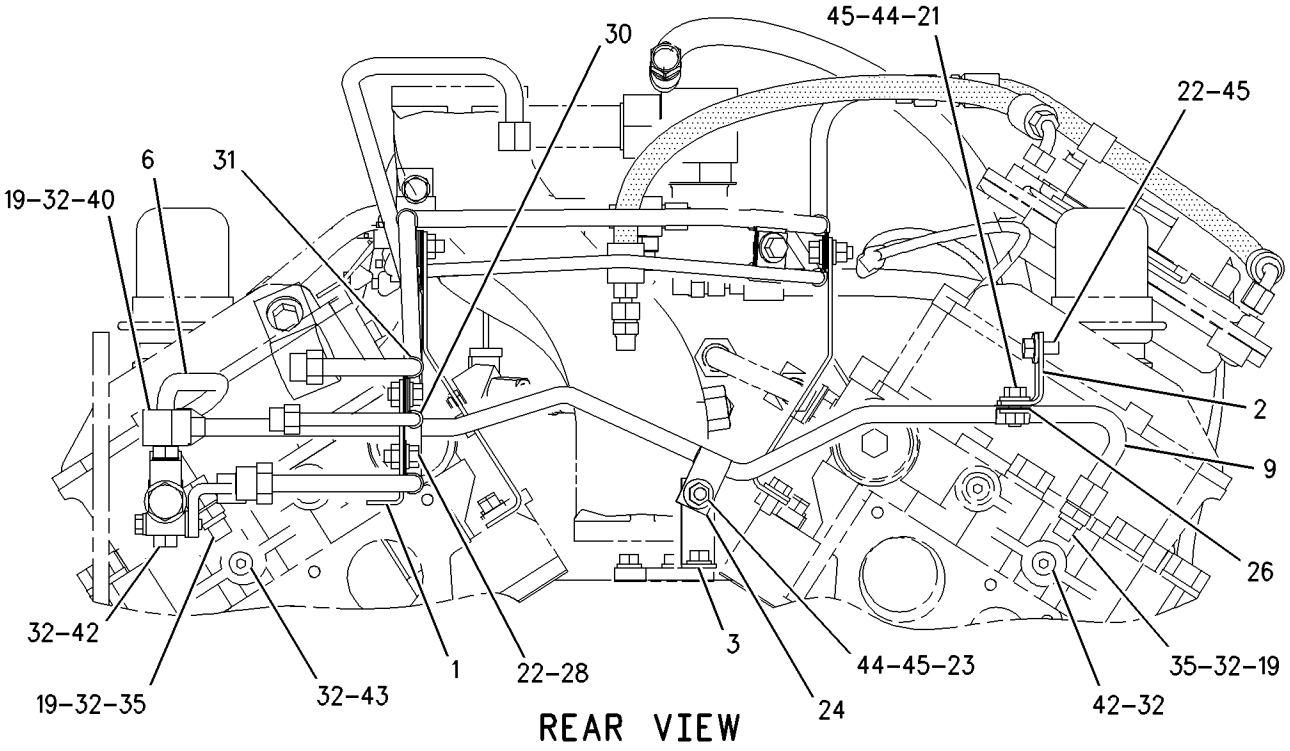

GRAPHIC #1 g00824429

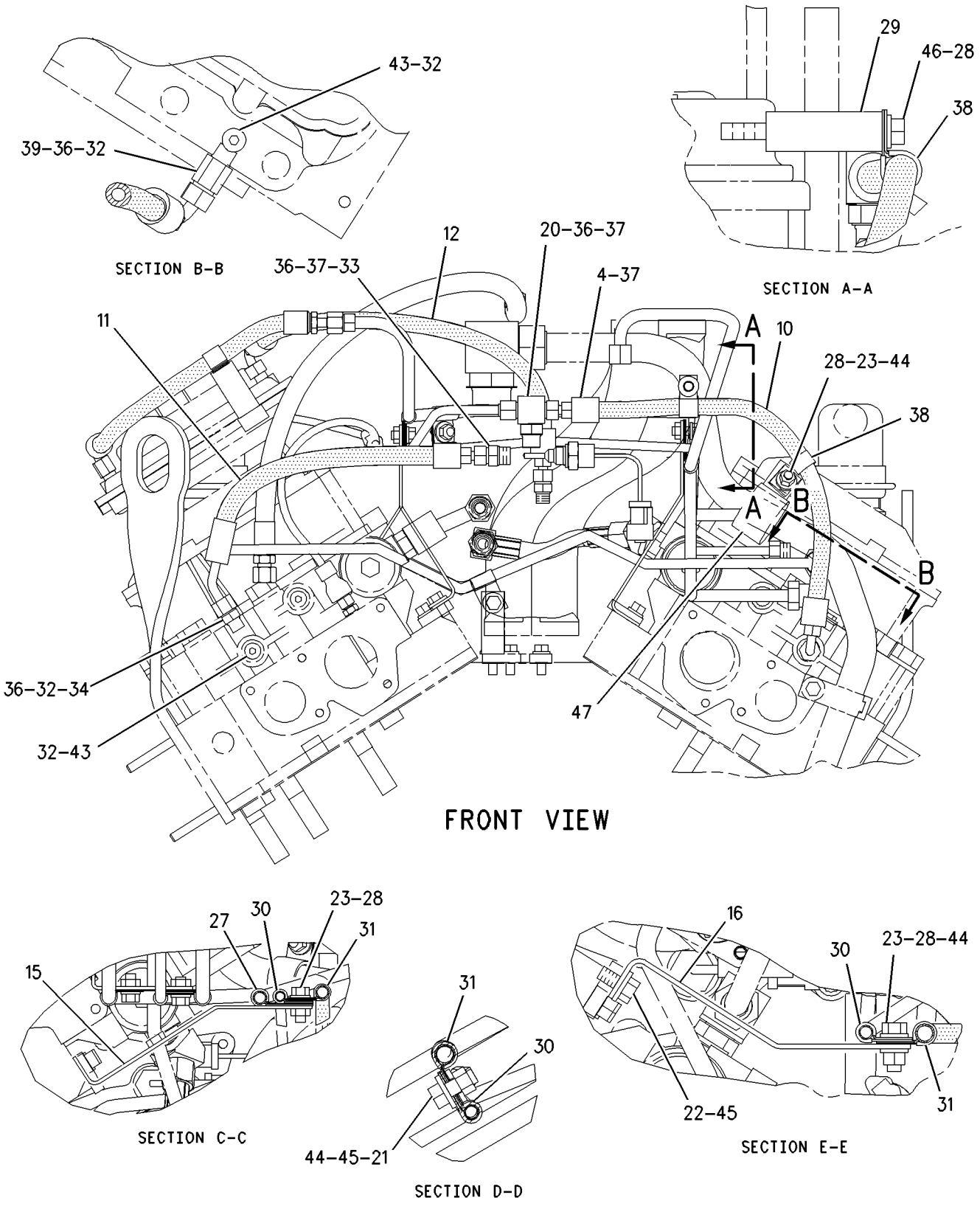

GRAPHIC #2 g00824383

MEMORANDA

6I-0030 LINES GP-FUEL INJECTION

S/N: 48W41541-UP

PART OF 117-0015 LINES GP-FUEL INJECTION

AN ATTACHMENT

SMCS-1252, 1254 **i00119709**

NOTE	REF NO	GRAPHIC REF	PART NUMBER	QTY	PART NAME 1 2 3 4 5 6 (PRODUCT LEVEL)	SEE PAGE
	1	1	**6I-0031**	1	LINE AS-FUEL INJ	
	2	1	**6I-0032**	1	LINE AS-FUEL INJ	
	3	1	**6I-0033**	1	LINE AS-FUEL INJ	
	4	1	**6I-0034**	1	LINE AS-FUEL INJ	
	5	1	**124-5945**	1	LINE AS-FUEL INJ	
	6	1	**6I-0036**	1	LINE AS-FUEL INJ	
	7	1	**124-5947**	1	LINE AS-FUEL INJ	
	8	1	**6I-0038**	1	LINE AS-FUEL INJ	
	9	1	**7C-6589**	2	CLAMP-FUEL LINE (THREADED)	
	10	1	**7C-6525**	4	CLAMP-FUEL LINE (NON-THREADED)	
	11	1	**5P-4939**	11	SCREW AS-MACHINE	
	12	1	**104-3038**	1	SCREW-MACHINE	
	13	1	**104-3039**	2	SCREW AS	
	14	1	**7C-6591**	7	CLAMP-FUEL LINE (THREADED)	
	15	1	**7C-7747**	12	CLAMP-FUEL LINE (NON-THREADED)	
	16	1	**6I-2318**	1	BRACKET	
	17	1	**6I-2319**	1	BRACKET	
	18	1	**9Y-4578**	1	SPACER	
	19	1	**1W-9168**	1	CLAMP (UNTAPPED)	
	20	1	**1W-9169**	1	CLAMP (TAPPED)	
	21	1	**7M-9910**	3	SCREW-MACHINE	
	22	1	**2W-7264**	2	CLAMP-FUEL LINE	
	23	1	**4B-4274**	8	WASHER (1.2MM THK)	
	24	1	**4P-8487**	1	PLATE	
	25	1	**4P-8260**	1	BRACKET	
	26	1	**4B-2047**	4	NUT (10-24 THD)	

6I-0030 LINES GP-FUEL INJECTION *(contd.)* i00119709

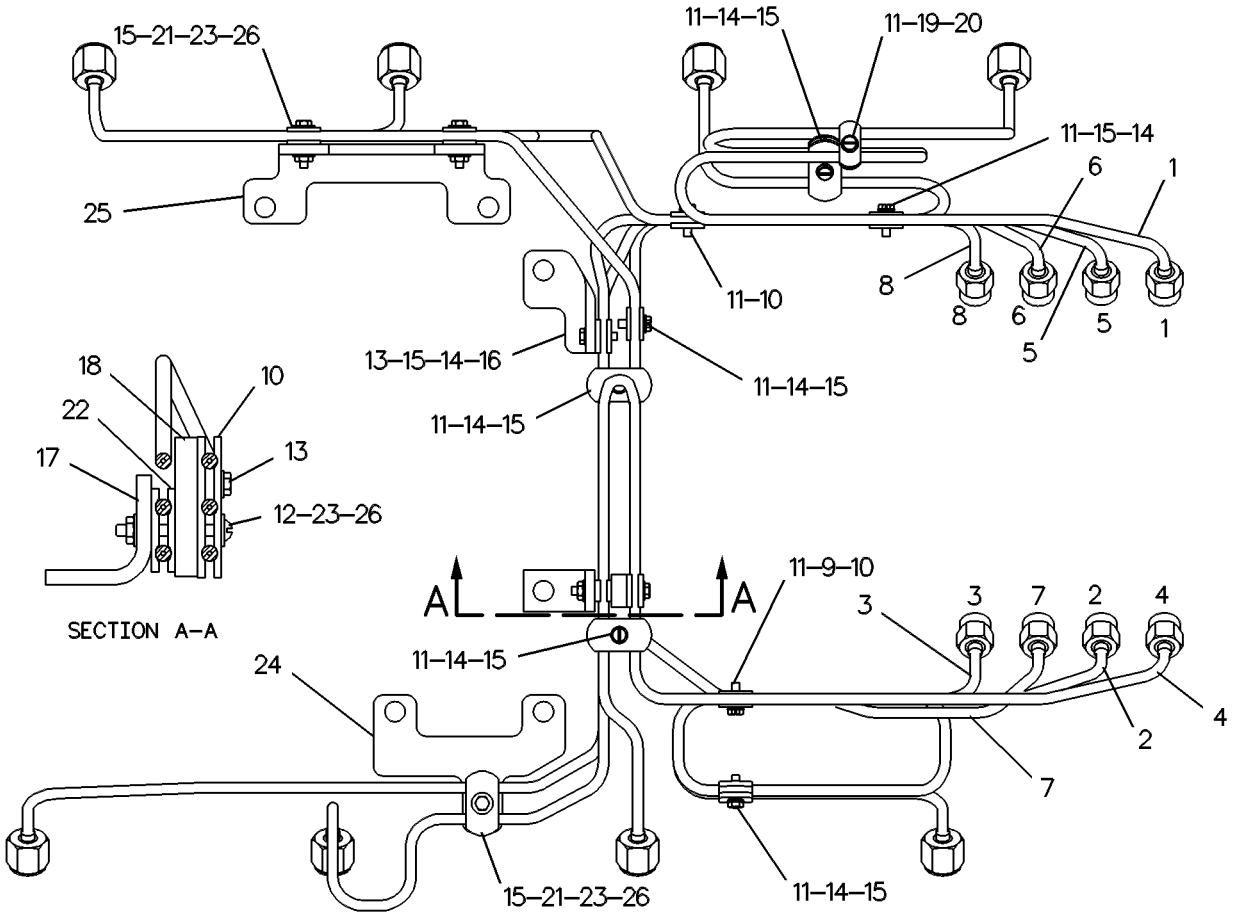

GRAPHIC #1 g00106349

117-0015 LINES GP-FUEL INJECTION

S/N: 48W41541-UP
PART OF 198-9948 ENGINE AR
AN ATTACHMENT

SMCS-1252, 1254 **i01397630**

NOTE	REF NO	GRAPHIC REF	PART NUMBER	QTY	PART NAME 1 2 3 4 5 6 (PRODUCT LEVEL)	SEE PAGE
Y	1	1	**6I-0030**	1	LINES GP-FUEL INJECTION	240
	2	1	**6V-4314**	1	SEAL-O-RING (129.54MM ID)	
	3	1	**068-8438**	4	SPACER	
	4	1	**0S-1591**	4	BOLT (3/8-16X1.5 IN)	
	5	1	**5M-2894**	7	WASHER-HARD (10.2X18.5X2.5MM THK)	
	6	1	**1S-0004**	2	SEAL-O-RING (18.42MM ID)	
	7	1	**5P-8119**	8	SEAL-O-RING (17.04MM ID)	
	8	1	**5B-1484**	8	NUT	
	9	1	**9Y-3969**	8	LINE AS-FUEL INJECTION	
		1	**1H-1023**	1	SEAL-O-RING (9.25MM ID)	
	10	1	**9Y-3358**	2	SPACER	
	11	1	**7W-2315**	8	RETAINER	
	12	1	**9Y-4577**	1	BRACKET	
	13	1	**7C-6589**	2	CLAMP-FUEL LINE (THREADED)	
	14	1	**7C-6525**	2	CLAMP-FUEL LINE	
	15	1	**7M-9831**	4	SCREW-MACHINE	
	16	1	**4B-4274**	4	WASHER (5.5X13X1.2MM THK)	
	17	1	**1C-2251**	3	BOLT (3/8-16X1.87 IN)	
R	18	1	**7W-7026**	8	NOZZLE AS-FUEL VALVE	
					(EACH INCLUDES)	
M	19	1	**9X-2836**	1	SCREW-BUTTON HEAD	
		1	**114-3364**	1	WASHER (SEALING)	
	20	1	**7W-4487**	1	WASHER (17X9.76X1.6MM THK)	
	21	1	**9L-9098**	1	SEAL-CARBON STOP (3/8 IN OD)	

M-METRIC PART
R-REMFG PART MAY BE AVAILABLE
Y-SEPARATE ILLUSTRATION

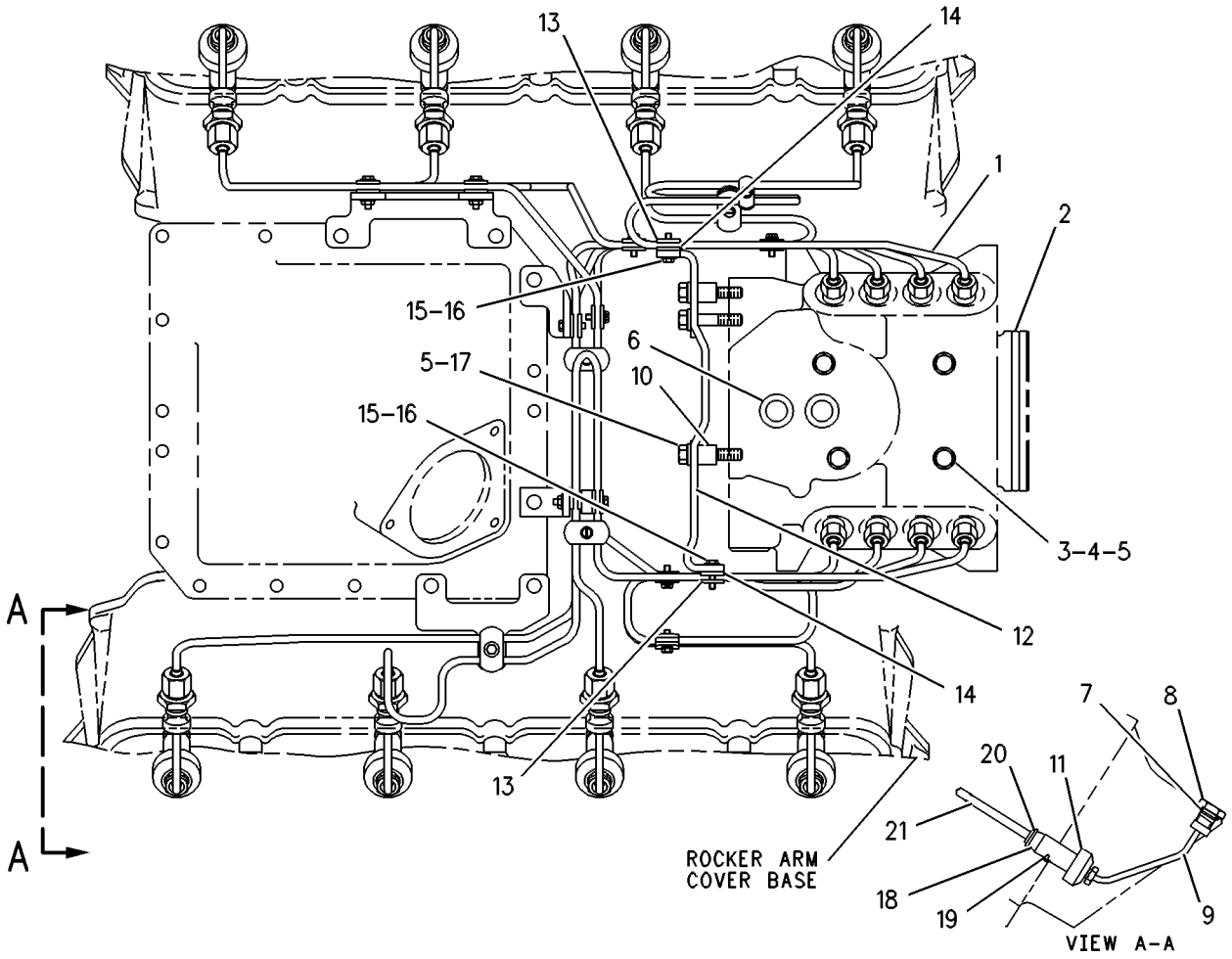

GRAPHIC #1

g00248485

163-8406 LINES GP-INJECTOR HYD PUMP

S/N: 5XD1-UP
HEUI
PART OF 163-5784 ENGINE AR

SMCS-1307 **i01446494**

NOTE	REF NO	GRAPHIC REF	PART NUMBER	QTY	PART NAME 1 2 3 4 5 6 (PRODUCT LEVEL)	SEE PAGE
	1	1	**9M-4594**	1	SPACER (0.406X0.875X0.75 IN THK)	
	2	1	**107-3202**	1	TUBE AS	
	3	1	**113-1921**	1	ELBOW	
	4	1	**117-9650**	1	TUBE AS	
	5	1	**152-2938**	4	SEAL-O-RING (19.28MM ID)	
	6	1	**152-2939**	2	SEAL-O-RING (19.18MM ID)	
I	7	1	**162-2501**	1	HOSE AS	
	8	1	**0L-1143**	3	BOLT (3/8-16X2.50 IN)	
	9	1	**4N-0933**	1	GASKET	
	10	1	**5P-7815**	1	SEAL-O-RING (37.46MM ID)	
	11	1	**6V-5134**	1	SEAL-O-RING (31.12MM ID)	
	12	1	**6V-8626**	1	ELBOW	
	13	1	**6V-9003**	1	ELBOW	
	14	1	**6V-9009**	1	ELBOW	
	15	1	**8S-0023**	1	CLIP (SLOT)	
	16	1	**8S-0024**	1	CLIP (TAB)	
	17	1	**9L-9132**	1	WASHER (10.2X25.5X2.5MM THK)	
	18	1	**9X-7734**	1	SEAL-O-RING (29.87MM ID)	

I-SEE HOSE FABRICATION GUIDE

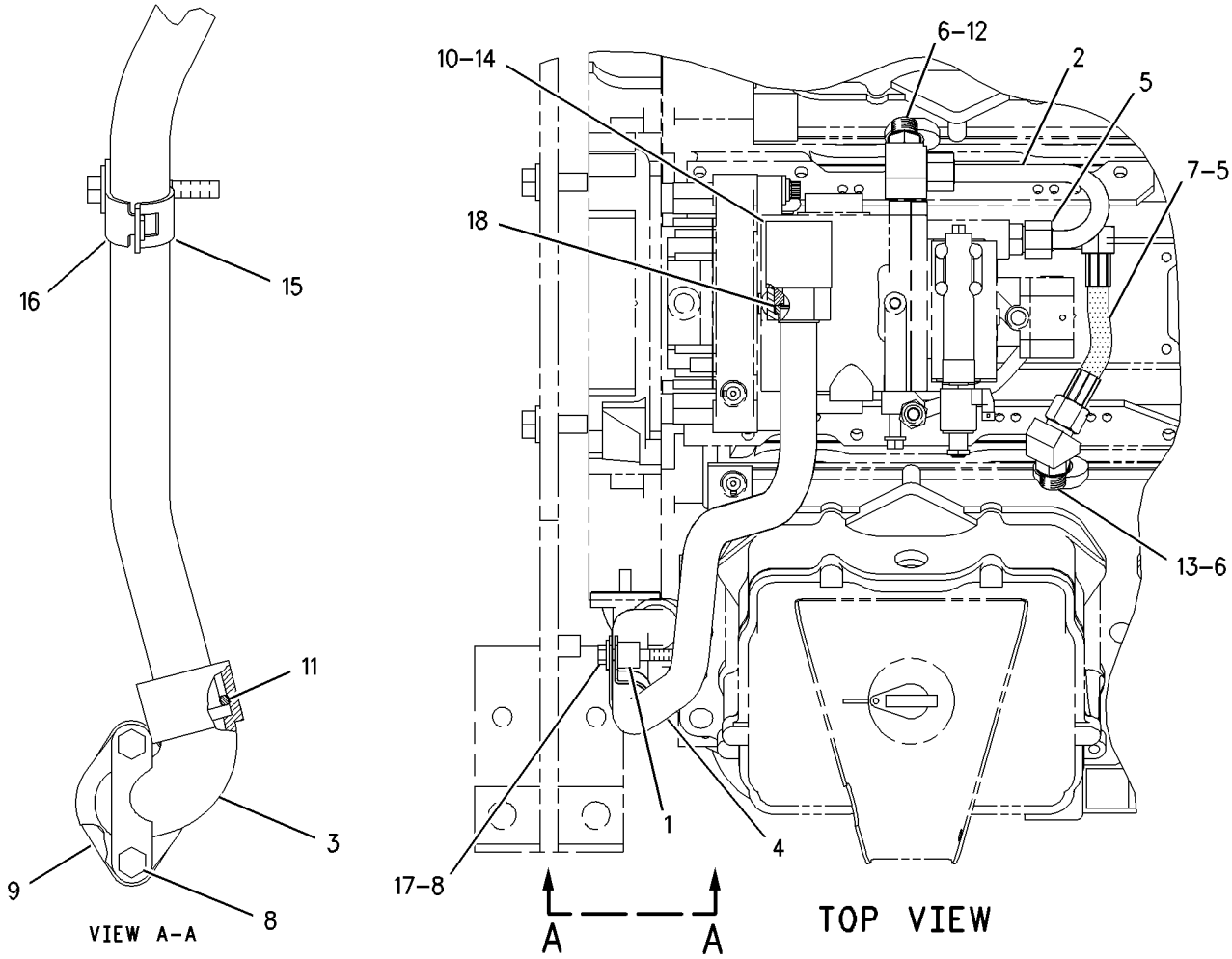

GRAPHIC #1

g00688612

4W-7374 PLATE GP-GOVERNOR ADAPTER

S/N: 48W41541-UP
PART OF 4W-6013 GOVERNOR GP
AN ATTACHMENT

SMCS-1264 **i01502650**

NOTE	REF NO	GRAPHIC REF	PART NUMBER	QTY	PART NAME 1 2 3 4 5 6 (PRODUCT LEVEL)	SEE PAGE
	1	1	**8M-8739**	1	BOLT-LOAD STOP	
	2	1	**114-4812**	1	RISER-GOVERNOR	
	3	1	**1W-4640**	1	SEAT-SPRING	
	4	1	**2P-8630**	1	DOWEL	
	5	1	**7M-7193**	1	RACE-THRUST BEARING	
	6	1	**7M-7219**	1	BEARING-THRUST	
	7	1	**3K-0810**	1	LOCK RING	
	8	1	**6N-7818**	1	LOCK RING	
	9	1	**5P-5601**	2	SEAL-O-RING	
	10	1	**9S-8008**	1	PLUG-O-RING	
		1	**3D-2824**	1	SEAL-O-RING	
	11	1	**4W-2169**	1	PLATE AS-ADAPTER	
		1	**6N-3175**	1	DOWEL	
	12	1	**4N-0898**	1	DOWEL-HOLLOW	
	13	1	**9M-2089**	1	DOWEL	
	14	1	**7N-0579**	1	BEARING-SLEEVE	
	15	1	**6N-8195**	1	RACE-THRUST BEARING	
	16	1	**4W-7653**	1	BOLT-GROUND BODY	
	17	1	**114-6306**	1	PIN-DOWEL	
	18	1	**114-4811**	1	SLEEVE-VALVE	
	19	1	**9M-6302**	2	WASHER-SPECIAL (0.125X0.49X0.03 IN THK)	
		1	**114-6305**	1	WASHER-SPRING (5.87X12.45X1.27MM THK)	
	20	1	**7N-2351**	1	PIN-CONTROL	
	21	1	**034-4160**	2	BOLT-LOCKING (5/16-18X1 IN)	
	22	1	**8M-6393**	1	RING-RETAINING	
	23	1	**6N-8783**	1	GEAR (42 TEETH)	
	24	1	**9L-6509**	1	WEIGHT AS-GOVERNOR	
	25	1	**1S-5440**	2	DOWEL	
	26	1	**9L-4989**	2	WEIGHT-GOVERNOR	
	27	1	**9N-3323**	1	BRACKET AS-CONTROL (RACK)	
	28	1	**2S-7316**	1	DOWEL	
	29	1	**7W-7129**	1	LEVER-RACK CONTROL	
	30	1	**122-6043**	1	PISTON AS	
		1	**4N-1807**	1	CYLINDER-SERVO	
	31	1	**5P-9757**	1	SEAL-O-RING	
	32	1	**8N-6983**	1	SLEEVE	

4W-7374 PLATE GP-GOVERNOR ADAPTER *(contd.)* i01502650

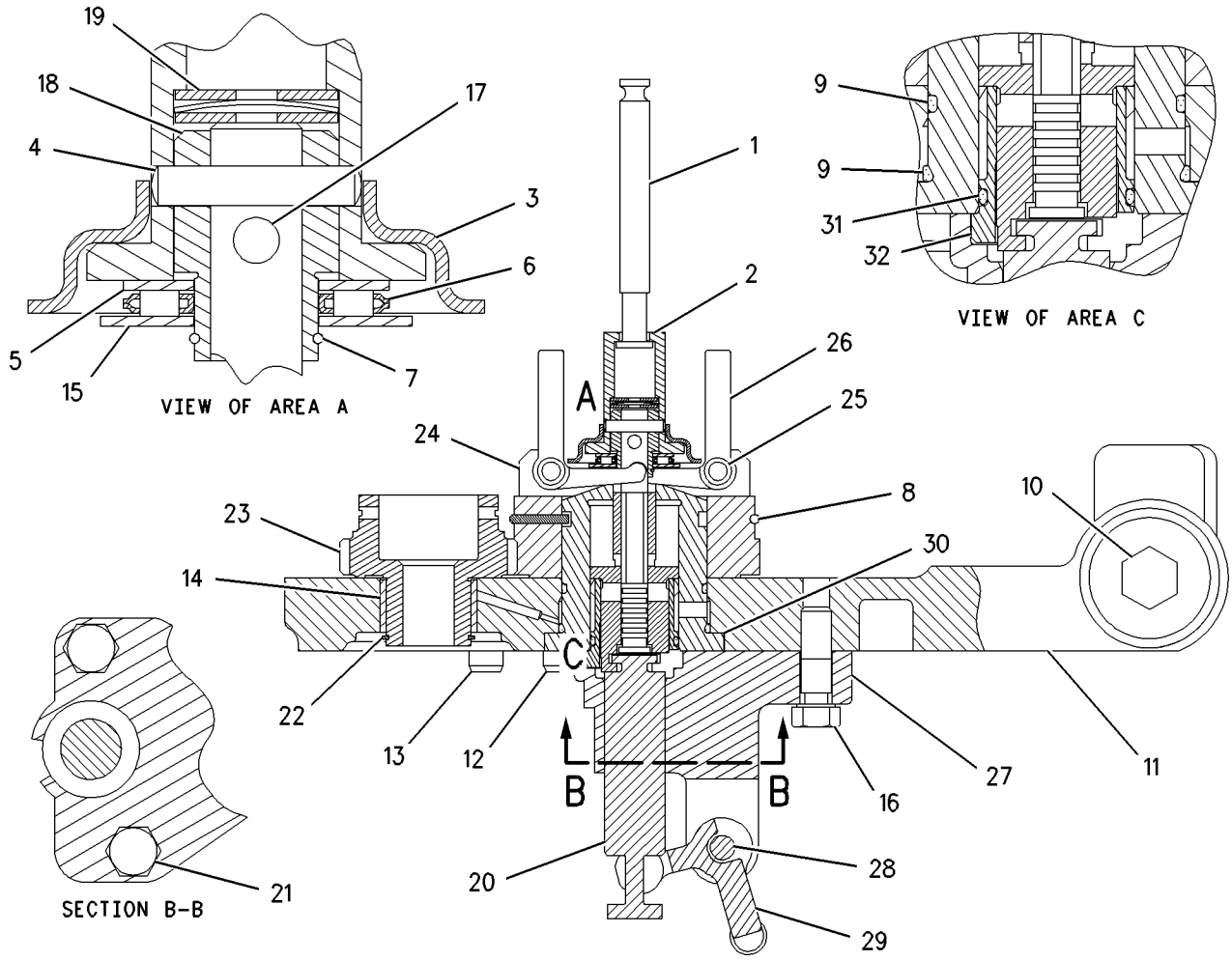

GRAPHIC #1 g00779361

126-7292 PUMP & MTG GP-UNIT INJ HYD

S/N: 5XD1-388

PART OF 163-5784 ENGINE AR

SMCS-1714 **i01558530**

NOTE	REF NO	GRAPHIC REF	PART NUMBER	QTY	PART NAME 1 2 3 4 5 6 (PRODUCT LEVEL)	SEE PAGE
	1	1	**5P-5855**	3	BOLT-12 POINT HEAD (1/2-13X1.75 IN)	
	2	1	**5P-8245**	3	WASHER-HARD (13.5X25.5X3MM THK)	
CY	3	1	**144-0835**	1	PUMP GP-UNIT INJECTOR HYD	262
	4	1	**0S-1617**	4	BOLT (5/16-18X0.75 IN)	
	5	1	**9M-1974**	4	WASHER-HARD (8.8X16X2MM THK)	
	6	1	**118-8157**	1	SUPPORT-PUMP	
	7	1	**6V-1197**	1	SEAL-O-RING	
Y	8	1	**161-9931**	1	SENSOR GP-PRESSURE (ENGINE OIL)	332
	9	1	**9X-0262**	1	ADAPTER	
	10	1	**6V-5048**	2	SEAL-O-RING	
Y	11	1	**106-0735**	1	SENSOR GP-TEMPERATURE (ENGINE OIL)	341
	12	1	**8L-2786**	2	SEAL-O-RING	
	13	1	**4P-0707**	2	CLAMP AS	
	14	1	**0L-2070**	1	BOLT (3/8-16X2.25 IN)	
	15	1	**5M-2894**	1	WASHER-HARD (10.2X18.5X2.5MM THK)	
	16	1	**8T-1686**	1	ELBOW	
	17	1	**033-6033**	1	SEAL-O-RING	
	18	1	**127-1969**	1	TUBE AS	

C-CHANGE FROM PREVIOUS TYPE
Y-SEPARATE ILLUSTRATION

126-7292 **PUMP & MTG GP-UNIT INJ HYD** ***(contd.)*** **i01558530**

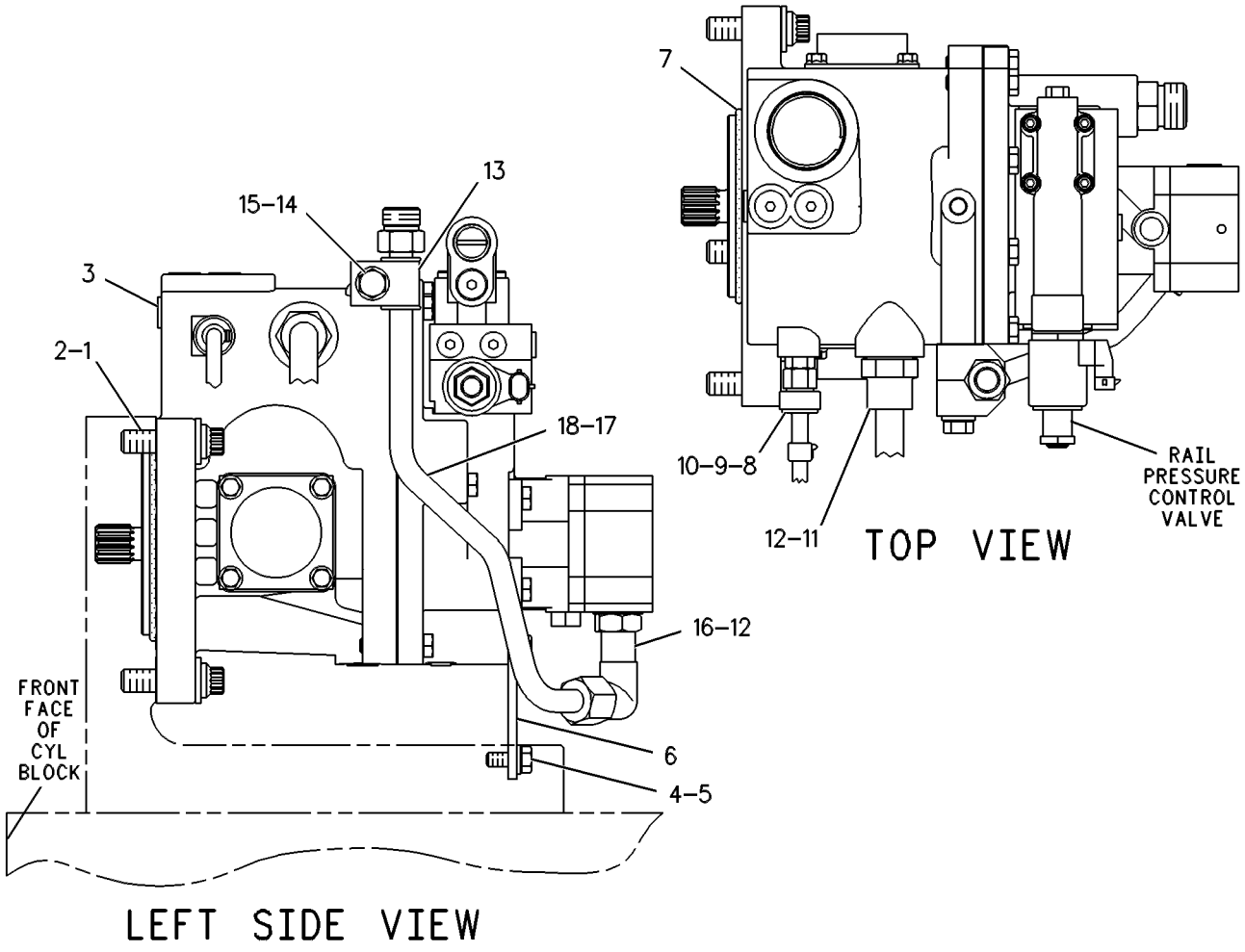

GRAPHIC #1 g00086494

126-7292 PUMP & MTG GP-UNIT INJ HYD

S/N: 5XD389-UP

PART OF 163-5784 ENGINE AR

SMCS-1714 **i01557064**

NOTE	REF NO	GRAPHIC REF	PART NUMBER	QTY	PART NAME 1 2 3 4 5 6 (PRODUCT LEVEL)	SEE PAGE
	1	1	**5P-5855**	3	BOLT-12 POINT HEAD (1/2-13X1.75 IN)	
	2	1	**5P-8245**	3	WASHER-HARD (13.5X25.5X3MM THK)	
CY	3	1	**201-4201**	1	PUMP GP-UNIT INJECTOR HYD	264
	4	1	**0S-1617**	4	BOLT (5/16-18X0.75 IN)	
	5	1	**9M-1974**	4	WASHER-HARD (8.8X16X2MM THK)	
	6	1	**118-8157**	1	SUPPORT-PUMP	
	7	1	**6V-1197**	1	SEAL-O-RING	
Y	8	1	**194-6725**	1	SENSOR GP-PRESSURE (ENGINE OIL)	337
	9	1	**9X-0262**	1	ADAPTER	
	10	1	**6V-5048**	2	SEAL-O-RING	
Y	11	1	**106-0735**	1	SENSOR GP-TEMPERATURE (ENGINE OIL)	341
	12	1	**8L-2786**	2	SEAL-O-RING	
	13	1	**4P-0707**	2	CLAMP AS	
	14	1	**0L-2070**	1	BOLT (3/8-16X2.25 IN)	
	15	1	**5M-2894**	1	WASHER-HARD (10.2X18.5X2.5MM THK)	
	16	1	**8T-1686**	1	ELBOW	
	17	1	**033-6033**	1	SEAL-O-RING	
	18	1	**127-1969**	1	TUBE AS	

C-CHANGE FROM PREVIOUS TYPE
Y-SEPARATE ILLUSTRATION

126-7292 **PUMP & MTG GP-UNIT INJ HYD** ***(contd.)*** **i01557064**

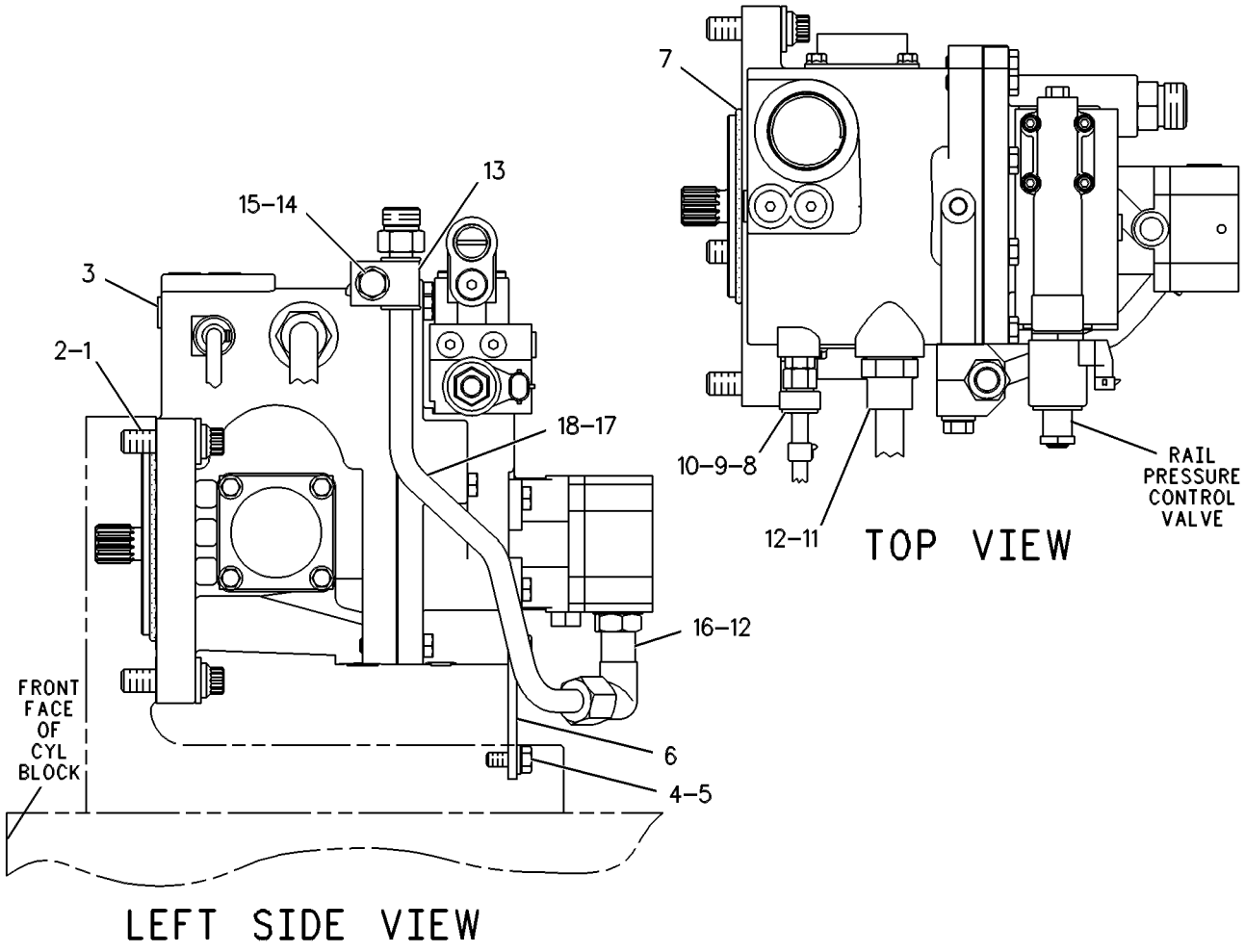

GRAPHIC #1 g00086494

7W-0561 PUMP GP-FUEL INJECTION

S/N: 48W41541-UP
PART OF 7W-1983 PUMP GP-FUEL INJECTION
AN ATTACHMENT

SMCS-1251, 1253, 1272, 1281, 1290, 1292, 1299 **i00119949**

NOTE	REF NO	GRAPHIC REF	PART NUMBER	QTY	PART NAME 1 2 3 4 5 6 (PRODUCT LEVEL)	SEE PAGE
	1	1	**1W-9171**	1	BONNET-VALVE	
	2	1	**8N-1415**	1	SPRING-CHECK	
	3	1	**1W-6987**	1	VALVE AS-CHECK	
	4	1	**7W-1927**	1	RING-RETAINER	
	5	1	**7W-0182**	1	PLUNGER & BARREL AS	
C	6	1	**7C-5278**	1	BOLT-GEAR	
C	7	1	**7N-1066**	1	WASHER-RETAINER	

C-CHANGE FROM PREVIOUS TYPE

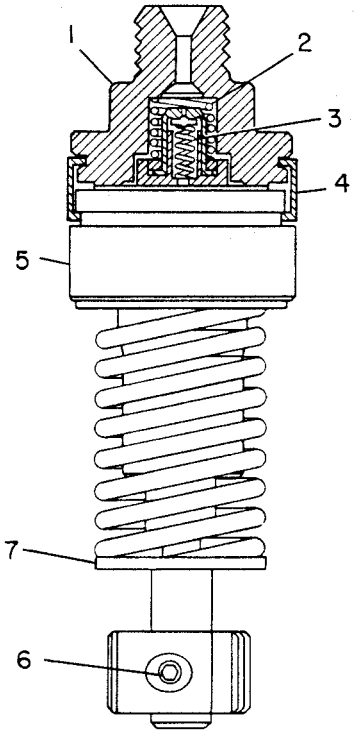

GRAPHIC #1 g00098273

MEMORANDA

7W-1983 PUMP GP-FUEL INJECTION

S/N: 48W41541-UP
DIRECT INJECTION
PART OF 104-7032 PUMP GP-GOV, FUEL INJ & TFR
AN ATTACHMENT

SMCS-1251, 1253, 1272, 1281, 1290, 1292, 1299 **i01446505**

NOTE	REF NO	GRAPHIC REF	PART NUMBER	QTY	PART NAME 1 2 3 4 5 6 (PRODUCT LEVEL)	SEE PAGE
C	1	1	**7W-3956**	1	CAMSHAFT-FUEL PUMP	
	2	1	**8N-6981**	8	LIFTER AS	
	3	1	**9S-4191**	1	PLUG	
		1	**3J-1907**	1	SEAL-O-RING (11.89MM ID)	
Y	4	1	**7N-4574**	1	HOUSING GP-FUEL PUMP	229
	5	1	**8H-9204**	8	WASHER-FELT	
	6	1	**7E-5085**	8	BUSHING-TERMINAL	
	7	1	**9S-8008**	2	PLUG-O-RING	
		1	**3D-2824**	2	SEAL-O-RING (23.47MM ID)	
	8	1	**1T-0284**	1	BOLT-SOCKET HEAD (5/16-18X1 IN)	
	9	1	**7N-2694**	1	BRACKET AS-CONTROL	
	10	1	**6N-9655**	1	PIN	
	11	1	**7N-2693**	1	SPRING-TORSION	
	12	1	**4N-1572**	1	LINK-RACK	
	13	1	**4N-0900**	1	RACK-REGULATOR-RH	
		1	**4N-0901**	1	RACK-REGULATOR-LH	
	14	1	**114-8718**	8	SEAL-O-RING (26.64MM ID)	
YC	15	1	**7W-0561**	8	PUMP GP-FUEL INJECTION	252
B	16	1	**9N-6496**	8	SPACER (.162 IN THK)	
B		1	**9N-6495**	8	SPACER (.166 IN THK)	
B		1	**5M-2697**	8	SPACER (0.170 IN THK)	
B		1	**2M-4208**	8	SPACER (0.174 IN THK)	
B		1	**2M-4209**	8	SPACER (0.178 IN THK)	
B		1	**2M-4210**	8	SPACER (0.182 IN THK)	
B		1	**2M-4211**	8	SPACER (0.186 IN THK)	
B		1	**2M-4212**	8	SPACER (0.190 IN THK)	
B		1	**5M-2691**	8	SPACER (0.194 IN THK)	
B		1	**5S-7189**	8	SPACER (0.198 IN THK)	
	17	2	**4N-0824**	1	VALVE AS-BYPASS	
		2	**7L-8696**	1	SPRING-BYPASS	
	18	2	**3K-0360**	1	SEAL-O-RING (16.36MM ID)	
	19	2	**8N-0561**	1	GEAR (IDLER-9 TEETH)	
	20	2	**6N-7695**	1	COVER-OIL PUMP	
		2	**6L-5897**	2	BOLT (1/4-20X7/8 IN)	
	21	2	**6N-4165**	1	PINION AS-GOVERNOR DRIVE (12 TEETH)	
	22	2	**6N-4090**	1	DOWEL	
	23	2	**8N-0560**	1	GEAR (11 TEETH)	
	24	2	**0S-1618**	3	BOLT (5/16-18X1 IN)	
	25	2	**5M-6214**	1	PLUG-PIPE	
	26	2	**5F-9144**	1	SEAL-O-RING (7.65MM ID)	
	27	2	**4N-0905**	1	GEAR-BEVEL (42 TEETH)	
	28	2	**4N-0776**	1	RETAINER	

B-USE AS REQUIRED
C-CHANGE FROM PREVIOUS TYPE
Y-SEPARATE ILLUSTRATION

7W-1983 PUMP GP-FUEL INJECTION *(contd.)* i01446505

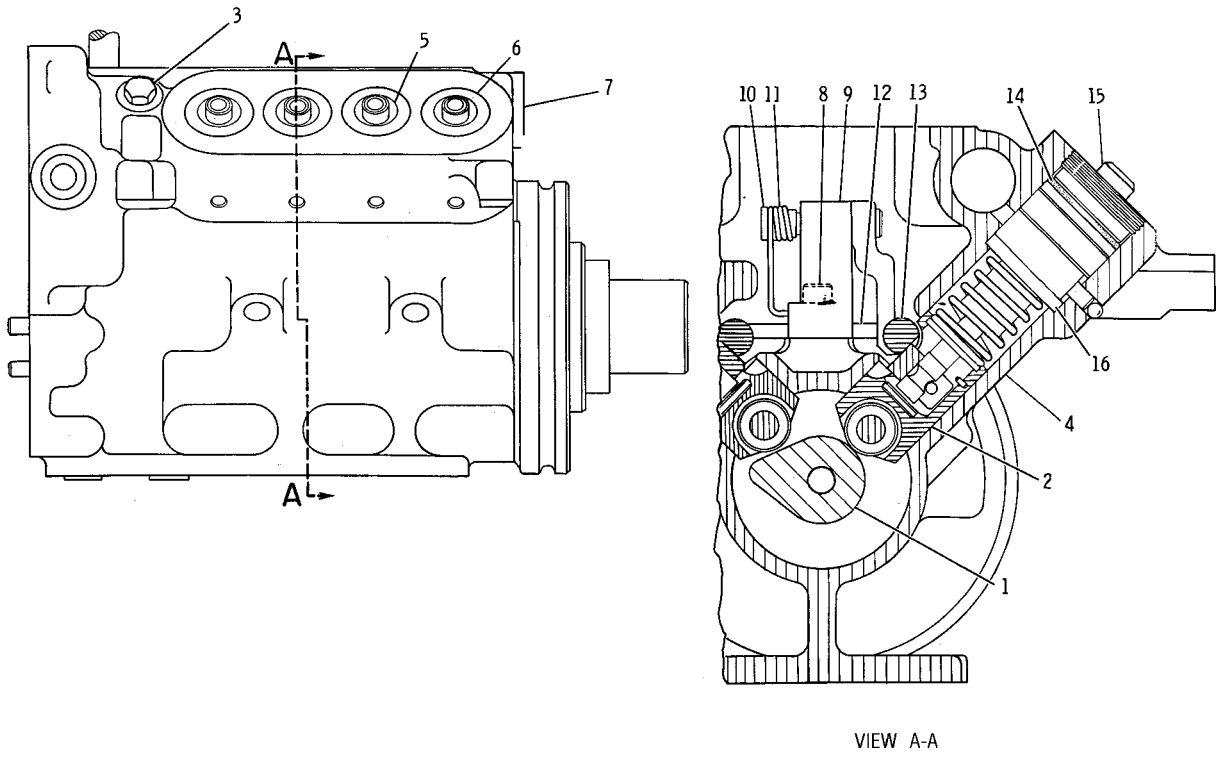

VIEW A-A

GRAPHIC #1 g00113484

7W-1983 PUMP GP-FUEL INJECTION *(contd.)* i01446505

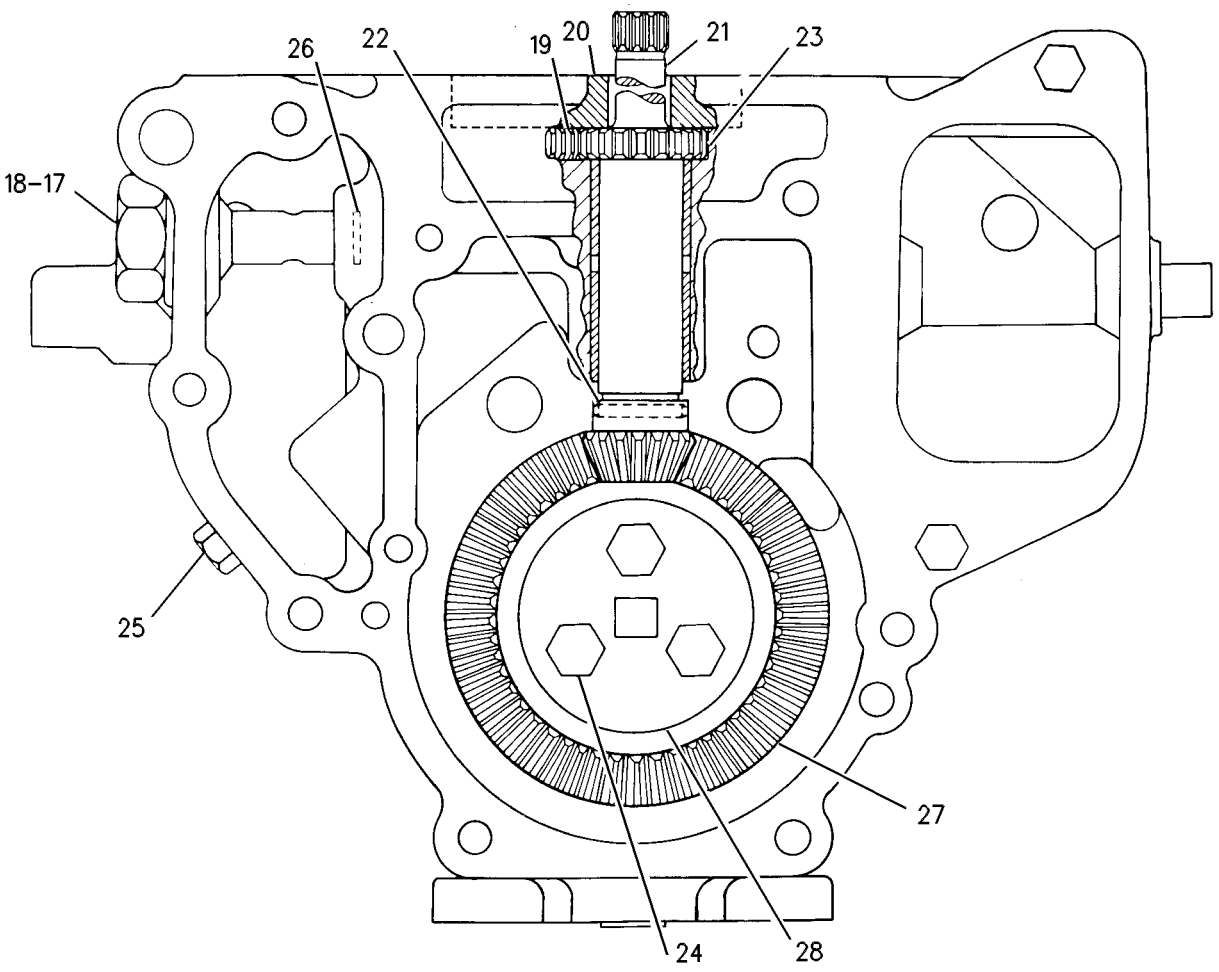

GRAPHIC #2 g00330611

163-5805 PUMP GP-FUEL INJECTION

S/N: 5XD1-UP

PART OF 163-5784 ENGINE AR

SMCS-1251, 1253, 1272, 1281, 1290, 1292, 1299 **i01446506**

NOTE	REF NO	GRAPHIC REF	PART NUMBER	QTY	PART NAME 1 2 3 4 5 6 (PRODUCT LEVEL)	SEE PAGE
	1	1	**2P-3206**	4	BOLT-WASHER HEAD	
	2	1	**1A-5964**	1	BOLT (3/8-16X4.5 IN)	
	3	1	**119-1708**	1	ELBOW-INJECTOR	
Y	4	1	**184-7687**	1	INJECTOR GP-FUEL	230
	5	1	**107-9326**	1	CLAMP-INJECTOR	
	6	1	**3E-6747**	1	SEAL-O-RING (32.99MM ID)	
	7	1	**9X-7681**	1	SEAL-O-RING (18.77MM ID)	
	8	1	**116-7221**	2	SEAL-RECTANGULAR	

Y-SEPARATE ILLUSTRATION

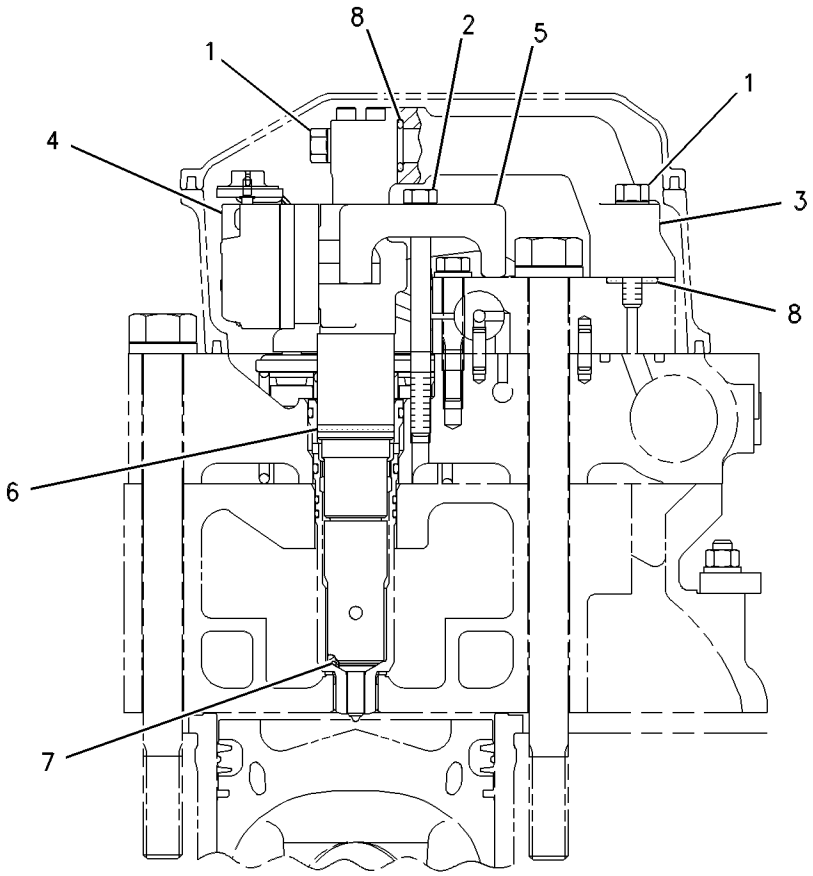

GRAPHIC #1 g00572118

4W-5479 PUMP GP-FUEL TRANSFER

S/N: 48W41541-UP
ONE SECTION GEAR
PART OF 8N-1630 PUMP GP-FUEL TRANSFER
AN ATTACHMENT

SMCS-1255, 1256 **i01586753**

NOTE	REF NO	GRAPHIC REF	PART NUMBER	QTY	PART NAME 1 2 3 4 5 6 (PRODUCT LEVEL)	SEE PAGE
	1	1	**2B-2694**	3	BOLT (5/16-18X2 IN)	
	2	1	**8N-1628**	1	SHAFT AS	
	3	1	**7S-4440**	1	BOLT	
		1	**4N-7465**	1	GASKET	
	4	1	**6V-8977**	1	SEAL-LIP	
	5	1	**5J-5314**	3	BOLT (5/16-18X1.5 IN)	
	6	1	**7N-6128**	1	COVER-TRANSFER PUMP	
	7	1	**4N-1119**	1	GEAR-TRANSFER PUMP (10 TEETH)	
	8	1	**4W-5478**	1	BODY AS-TRANSFER PUMP	
	9	1	**7S-4433**	1	FERRULE	
	10	1	**1P-2298**	1	VALVE AS	
	11	1	**8F-6058**	1	BEARING	
	12	1	**5P-9294**	1	SEAL-LIP	
	13	1	**4N-7357**	1	BEARING-SLEEVE	
	14	1	**6V-8977**	1	SEAL-LIP	
	15	1	**1W-6177**	1	SHAFT-IDLER	
	16	1	**6N-1069**	1	SPRING	
	17	1	**2W-3294**	1	PLUNGER AS-VALVE	
	18	1	**3K-8460**	1	PLUG	
		1	**1J-9671**	1	SEAL-O-RING	
	19	1	**6J-2419**	1	SEAL-O-RING	
F		1	**4B-4863**	2	WASHER (4.7X11X1.2MM THK)	

F-NOT SHOWN

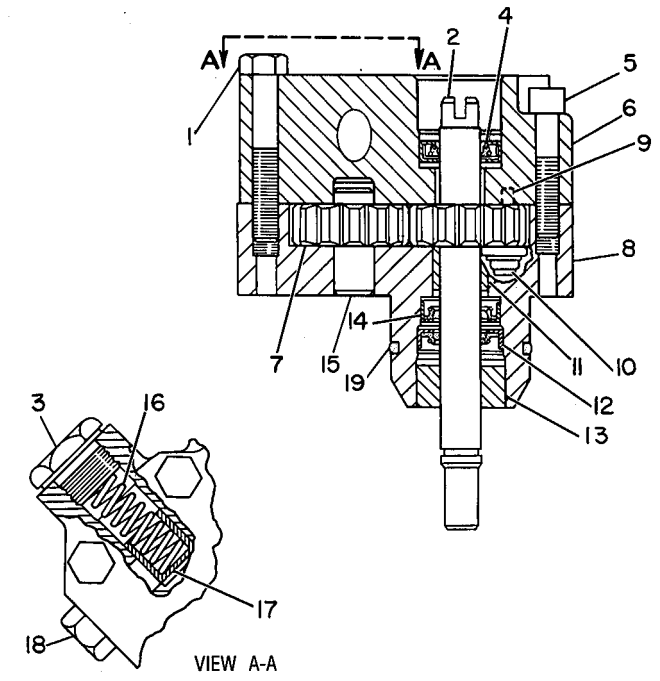

GRAPHIC #1 g00118420

FUEL SYSTEM

8N-1630 PUMP GP-FUEL TRANSFER

S/N: 48W41541-UP
PART OF 104-7032 PUMP GP-GOV, FUEL INJ & TFR
AN ATTACHMENT

SMCS-1255, 1256 **i01446509**

NOTE	REF NO	GRAPHIC REF	PART NUMBER	QTY	PART NAME 1 2 3 4 5 6 (PRODUCT LEVEL)	SEE PAGE
	1	1	**9S-4191**	1	PLUG	
	2	1	**3J-1907**	1	SEAL-O-RING (11.89MM ID)	
	3	1	**9S-4182**	1	PLUG-O-RING	
	4	1	**3J-7354**	1	SEAL-O-RING (8.92MM ID)	
	5	1	**8N-1189**	1	ADAPTER-PUMP MOUNTING	
	6	1	**4N-7437**	1	PLUG-O-RING	
	7	1	**7J-0204**	1	SEAL-O-RING (7.65MM ID)	
YC	8	1	**4W-5479**	1	PUMP GP-FUEL TRANSFER	258
	9	1	**4N-1105**	1	GASKET	
	10	1	**8N-1626**	1	COUPLING-PUMP DRIVE	
	11	1	**2B-2695**	2	BOLT (5/16-18X0.875 IN)	
	12	1	**9S-9332**	1	FITTING-ELBOW	

C-CHANGE FROM PREVIOUS TYPE
Y-SEPARATE ILLUSTRATION

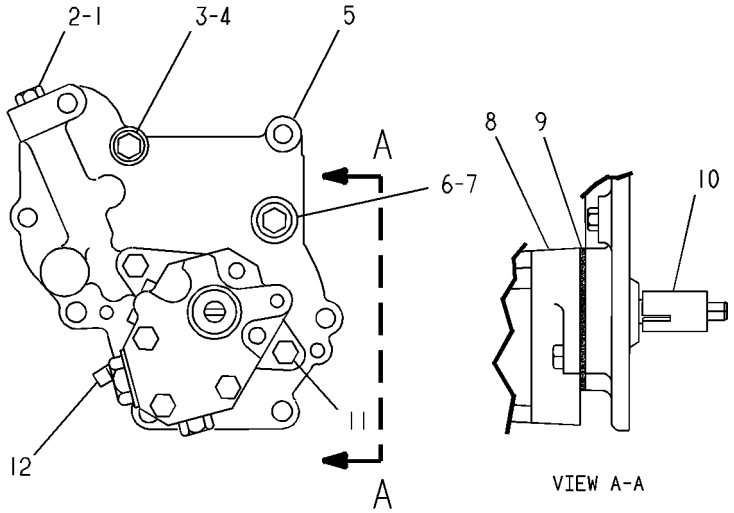

GRAPHIC #1 g00118419

104-7032 PUMP GP-GOV, FUEL INJ & TFR

S/N: 48W41541-UP
PART OF 198-9948 ENGINE AR
AN ATTACHMENT

SMCS-1251, 1256, 1264, 1286, 1908 **i01577082**

NOTE	REF NO	GRAPHIC REF	PART NUMBER	QTY	PART NAME 1 2 3 4 5 6 (PRODUCT LEVEL)	SEE PAGE
	1	1	**2P-8643**	1	GASKET	
	2	1	**5L-7812**	2	BOLT	
	3	1	**4N-1868**	1	GASKET	
Y	4	1	**7W-1983**	1	PUMP GP-FUEL INJECTION	254
Y	5	1	**8N-1630**	1	PUMP GP-FUEL TRANSFER	259
	6	1	**4N-1104**	1	GASKET	
	7	1	**9L-6447**	1	SPRING-GOVERNOR	
	8	1	**2N-0828**	2	WASHER (SPRING)	
		1	**2P-9556**	1	WASHER (1.17X1.5X0.06 IN THK)	
Y	9	1	**4W-6013**	1	GOVERNOR GP	226
	10	1	**5N-4185**	2	WASHER-SEALING	
	11	1	**4N-5656**	1	COVER-GOVERNOR	
Y	12	1	*9Y-3336*	1	FASTENER GP-FUEL INJ PUMP	214
Y	13	1	*9N-5071*	1	TORQUE CONTROL GP	270

Y-SEPARATE ILLUSTRATION

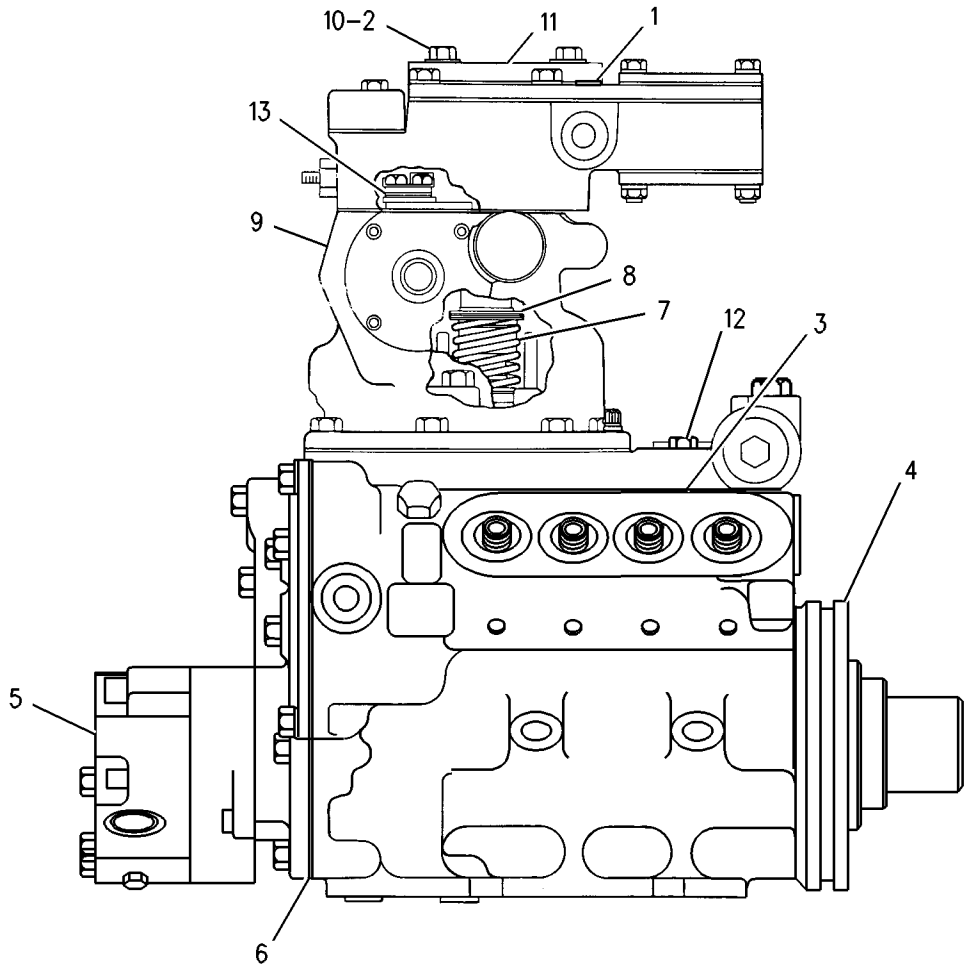

GRAPHIC #1 g00821119

MEMORANDA

FUEL SYSTEM

144-0835 PUMP GP-UNIT INJECTOR HYD

S/N: 5XD1-388

PART OF 126-7292 PUMP & MTG GP-UNIT INJ HYD

SMCS-1714 **i01357466**

NOTE	REF NO	GRAPHIC REF	PART NUMBER	QTY	PART NAME 1 2 3 4 5 6 (PRODUCT LEVEL)	SEE PAGE
Y	1	1	**107-0677**	1	VALVE GP-SOLENOID (PRESSURE CONTROL)	272
B	2	1	**161-8627**	1	KIT-PLUG	
					(INCLUDES PLUGS & SEALS)	
					(SELECT APPROPRIATE PLUG FROM KIT)	
	3	1	**9S-4180**	2	PLUG-O-RING (5/16-24 THD)	
	4	1	**9S-8001**	2	PLUG-O-RING (5/16-24 THD)	
	5	1	**9S-8002**	3	PLUG-O-RING (7/16-20 THD)	
	6	1	**9S-8004**	4	PLUG-O-RING (9/16-18 THD)	
	7	1	**9S-8007**	1	PLUG-O-RING (3/8-24 THD)	
	8	1	**138-4309**	2	FITTING	
	9	1	**138-4311**	2	SPRING	
	10	1	**138-4313**	2	VALVE	
J	11	1	**144-0837**	1	PUMP GP-UNIT INJECTOR HYD	
	12	1	**149-1950**	1	PUMP GP-FUEL TRANSFER	
	13	1	**0S-1617**	4	BOLT (5/16-18X.75 IN)	
F			**117-1620**	1	COUPLING (FUEL TRANSFER)	
F			**154-6734**	1	BEARING (REAR)	
F			**6V-8676**	1	SEAL-O-RING (48.90MM ID) (FUEL TRANSFER)	
F			**9X-7680**	3	SEAL-O-RING (7.65MM ID) (COMPENSATOR TO ADAPTER)	
F			**135-2652**	1	SEAL-O-RING (17.17MM ID) (COMPENSATOR TO ADAPTER)	
F			**164-0759**	4	BOLT-SOCKET HEAD (COMPENSATOR)	
F			**165-6881**	1	SEAL-LIP TYPE	
F			**174-8943**	1	SLEEVE (COMPENSATOR)	
					AVAILABLE REPAIR KIT(S):	
			154-6735	1	KIT-BEARING (YOKE)	
					(INCLUDES A SET OF TWO YOKE BEARINGS)	
J			**154-6732**	1	KIT-FUEL INJECTION PUMP (REBUILD)	
					(INCLUDES YOKE, SHAFT, CONTROL PISTON, SEAL KIT & FRONT BEARING)	
Y			**138-6256**	1	KIT-SEAL (UNIT INJECTOR HYDRAULIC)	231
			166-5985	1	KIT-UNIT INJ HYD PUMP COMP	
					(INCLUDES COMPENSATOR SUB ASSEMBLY, SEAL-O-RINGS, SLEEVE, WIRE SEAL, LOCK WIRE, AND COMPENSATOR PLUGS)	

B-USE AS REQUIRED
F-NOT SHOWN
J-KIT MARKED J AVAILABLE FOR PART MARKED J
Y-SEPARATE ILLUSTRATION

144-0835 PUMP GP-UNIT INJECTOR HYD *(contd.)* i01357466

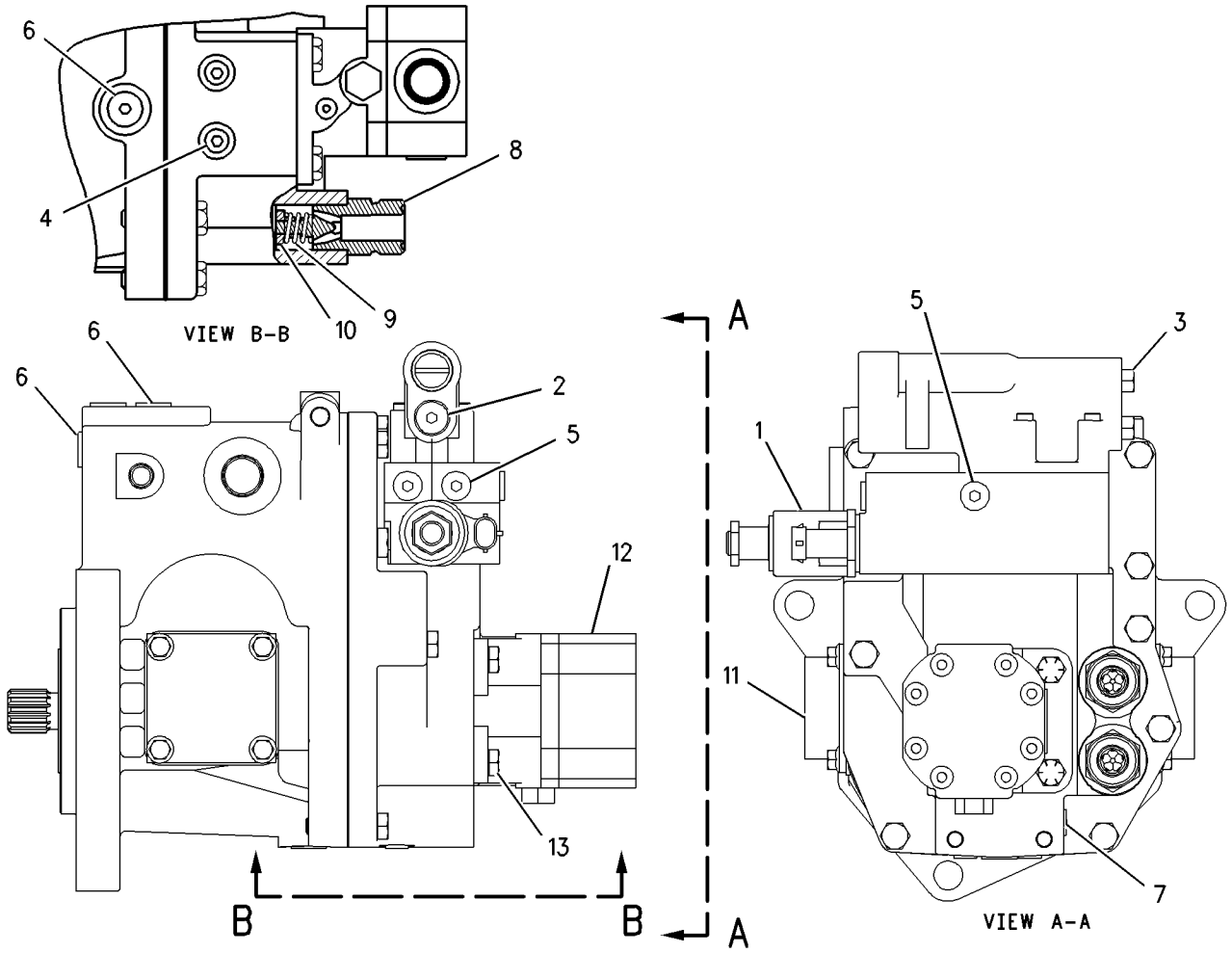

GRAPHIC #1 g00633271

201-4201 PUMP GP-UNIT INJECTOR HYD

S/N: 5XD389-UP

PART OF 126-7292 PUMP & MTG GP-UNIT INJ HYD

SMCS-1714 **i01601804**

NOTE	REF NO	GRAPHIC REF	PART NUMBER	QTY	PART NAME 1 2 3 4 5 6 (PRODUCT LEVEL)	SEE PAGE
	1	1	**117-1620**	1	COUPLING	
	2	1	**149-1950**	1	PUMP GP-FUEL TRANSFER	
YR	3	1	**201-4202**	1	PUMP GP-UNIT INJECTOR HYD	266
	4	1	**0S-1617**	4	BOLT (5/16-18X0.75 IN)	
	5	1	**6V-8676**	1	SEAL-O-RING	

R-REMFG PART MAY BE AVAILABLE
Y-SEPARATE ILLUSTRATION

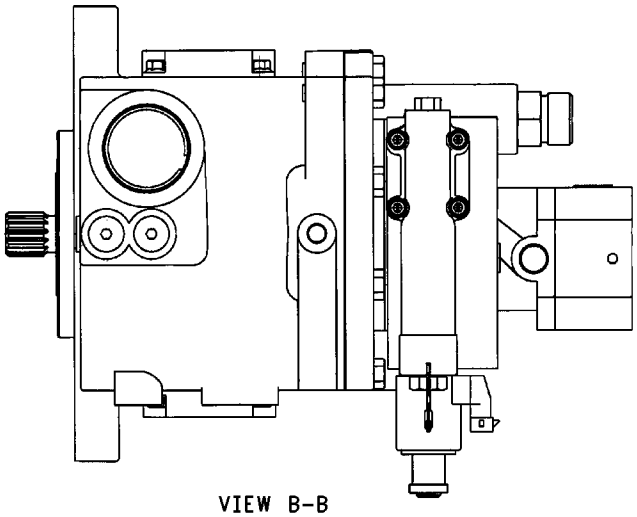

VIEW B-B

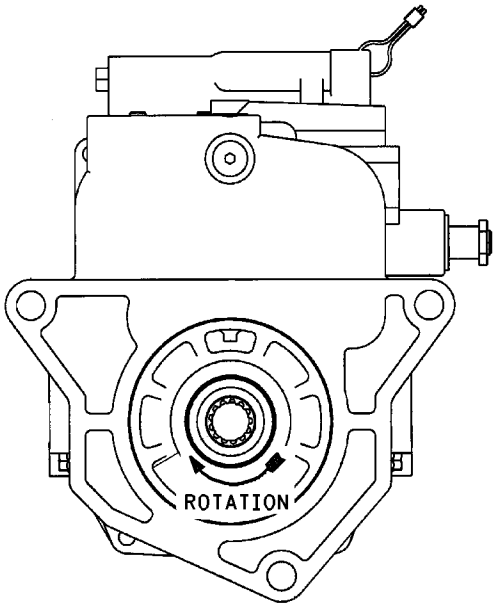

VIEW A-A

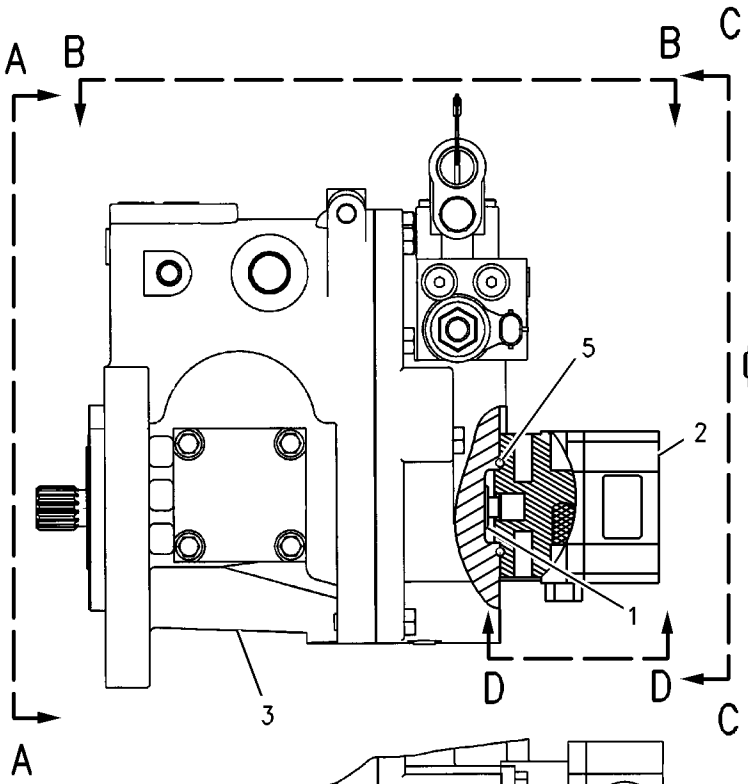

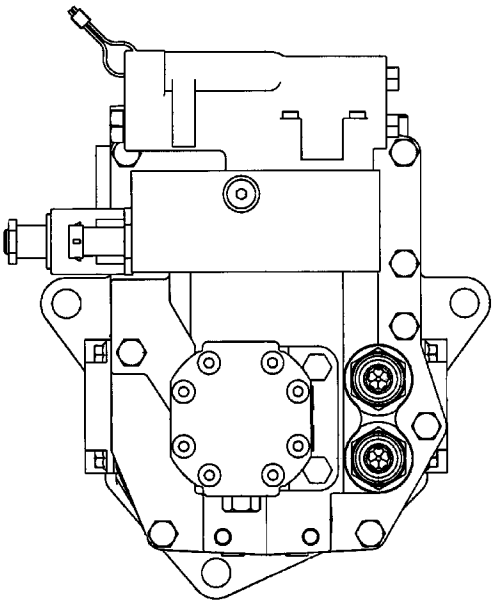

VIEW C-C

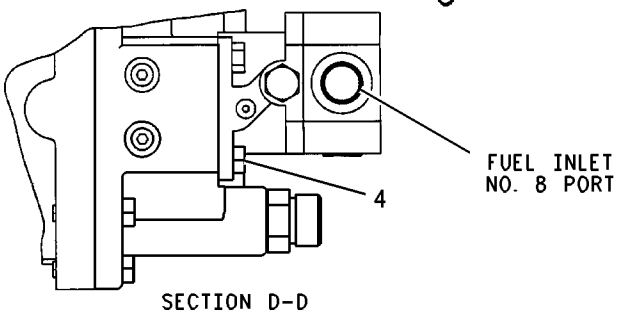

SECTION D-D

GRAPHIC #1 g00830144

201-4202 PUMP GP-UNIT INJECTOR HYD*R

S/N: 5XD389-UP

PART OF 201-4201 PUMP GP-UNIT INJECTOR HYD

SMCS-1714 **i01605125**

NOTE	REF NO	GRAPHIC REF	PART NUMBER	QTY	PART NAME 1 2 3 4 5 6 (PRODUCT LEVEL)	SEE PAGE
Y	1	1	**107-0677**	1	VALVE GP-SOLENOID	272
	2	1	**161-8627**	1	KIT-PLUG (INCLUDES SEALS)	
	3	1	**9S-4180**	2	PLUG-O-RING	
	4	1	**9S-8001**	2	PLUG	
	5	1	**9S-8002**	3	PLUG-O-RING	
	6	1	**9S-8004**	3	PLUG	
	7	1	**9S-8007**	1	PLUG-O-RING	
	8	1	**138-4309**	2	FITTING	
	9	1	**138-4311**	2	SPRING	
	10	1	**138-4313**	2	VALVE	
	12	1	**164-0759**	4	BOLT-SOCKET HEAD	
	13	1	**201-4155**	1	SEAL-LIP TYPE	
F		1	**154-6734**	1	BEARING	
F		1	**154-6735**	1	KIT-BEARING	
					(INCLUDES A SET OF 2 YOKE BEARINGS)	
F		1	**166-5985**	1	KIT-COMPENSATOR	
					(INCLUDES COMPENSATOR SUB ASSEMBLY, O-RING SEALS, SLEEVE, WIRE SEAL, LOCK WIRE & COMPENSATOR PLUGS)	
F		1	**201-4203**	1	KIT-PUMP	
					(INCLUDES YOKE, SHAFT, CONTROL PISTON, SEAL KIT & FRONT BEARING)	
FY		1	**138-6256**	1	KIT-SEAL	231
F		1	**9X-7680**	3	SEAL-O-RING	
F		1	**135-2652**	1	SEAL-O-RING	
F		1	**174-8943**	1	SLEEVE	

F-NOT SHOWN
Y-SEPARATE ILLUSTRATION

201-4202 PUMP GP-UNIT INJECTOR HYD *(contd.)* i01605125

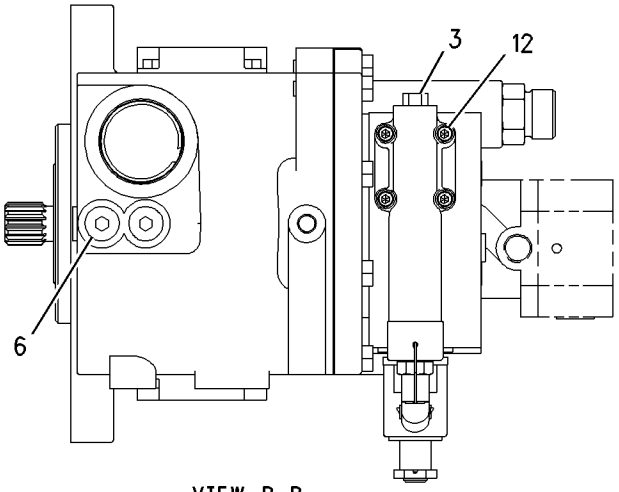

VIEW B-B

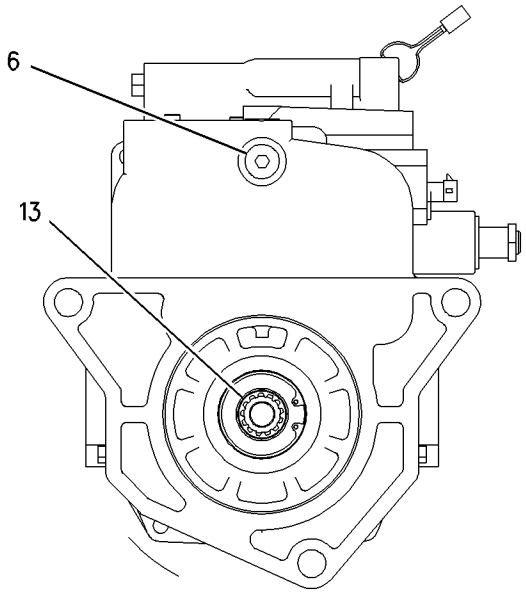

VIEW A-A

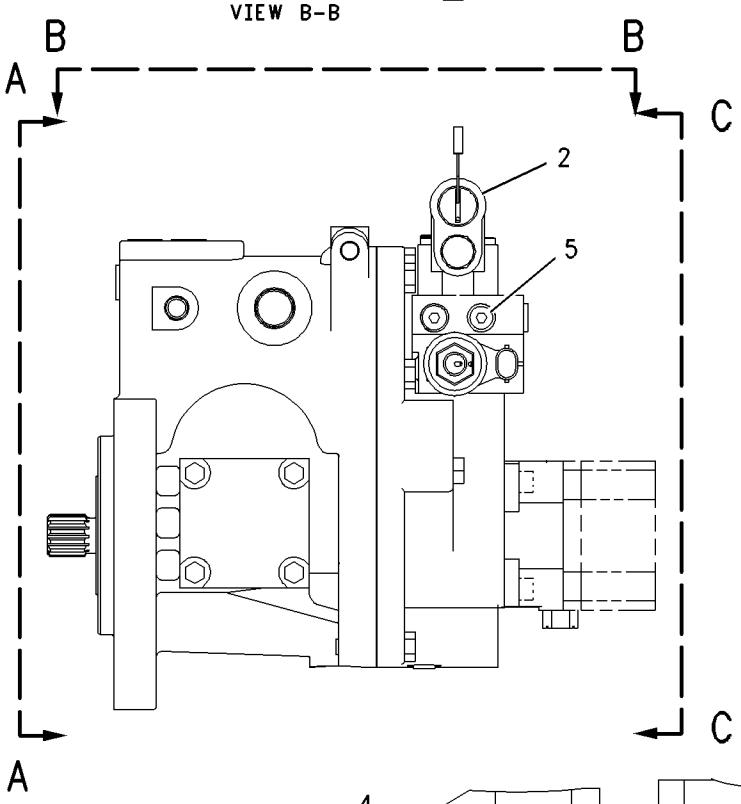

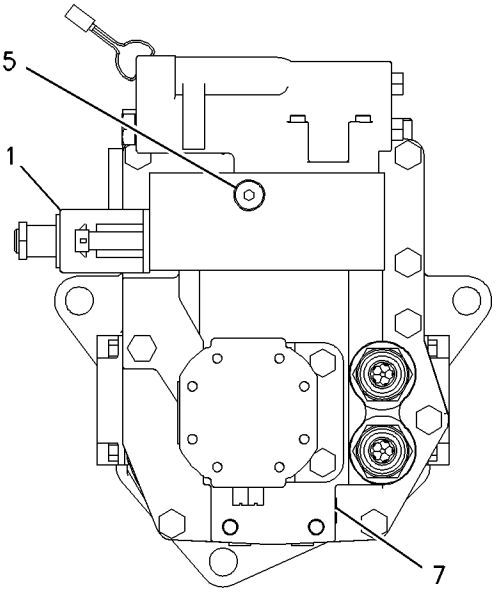

VIEW C-C

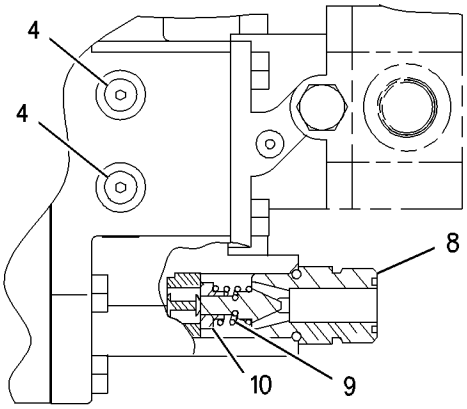

SECTION D-D

GRAPHIC #1 g00830342

FUEL SYSTEM

163-9277 TANK GP-FUEL

S/N: ABK1-UP

PART OF 162-9501 CHASSIS AR

SMCS-1273 **i01582742**

NOTE	REF NO	GRAPHIC REF	PART NUMBER	QTY	PART NAME 1 2 3 4 5 6 (PRODUCT LEVEL)	SEE PAGE
	1	1	**2G-0493**	4	WASHER-RETAINING (20X82.55X11MM THK)	
	2	1	**5P-8502**	1	PADLOCK GP	
A		1	**5P-8500**	1	KEY	
A		1	**8Y-6364**	1	SLEEVE	
	3	1	**6T-1698**	8	MOUNTING	
	4	1	**9P-7121**	1	STRAINER-FUEL	
Y	5	1	*205-4275*	1	TANK GP-FUEL	269
	6	1	**5P-6652**	4	WASHER (20X44.5X6MM THK)	
	7	1	**7X-0369**	4	BOLT (3/4-10X3.25 IN)	

A-NOT PART OF THIS GROUP
Y-SEPARATE ILLUSTRATION

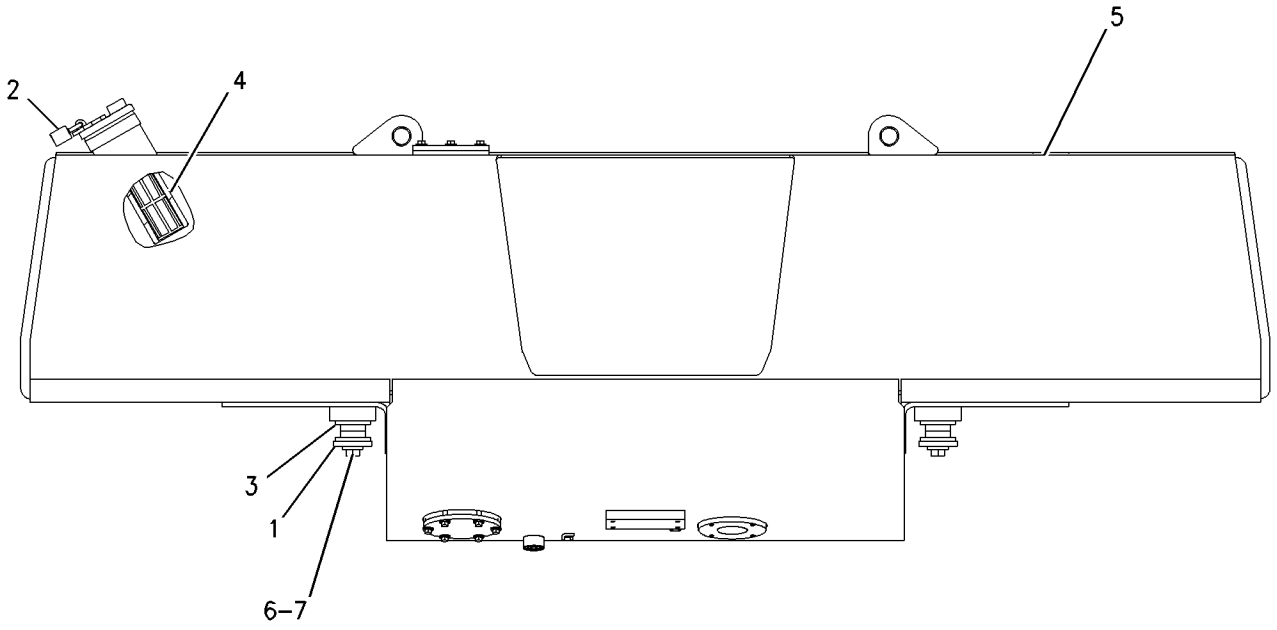

REAR VIEW

GRAPHIC #1 g00838081

FUEL SYSTEM

205-4275 TANK GP-FUEL

S/N: ABK1-UP

PART OF 163-9277 TANK GP-FUEL

SMCS-1273 **i01564999**

NOTE	REF NO	GRAPHIC REF	PART NUMBER	QTY	PART NAME 1 2 3 4 5 6 (PRODUCT LEVEL)	SEE PAGE
	1	1	**7X-7700**	1	CAP AS-FUEL TANK	
		1	**9X-2205**	1	KIT-CAP FILTER (FUEL TANK)	
		1	**9X-8600**	1	SEAL-O-RING	
	2	1	**164-3417**	1	COVER	
	3	1	**164-3422**	1	TANK AS-FUEL	
	4	1	**187-1679**	1	COVER	
	5	1	**1H-8128**	1	SEAL-O-RING	
	6	1	**4L-6454**	12	BOLT (3/8-16X1 IN)	
	7	1	**5H-6734**	1	SEAL-O-RING	
	8	1	**8T-4896**	12	WASHER-HARD (10.2X18.5X2.5MM THK)	

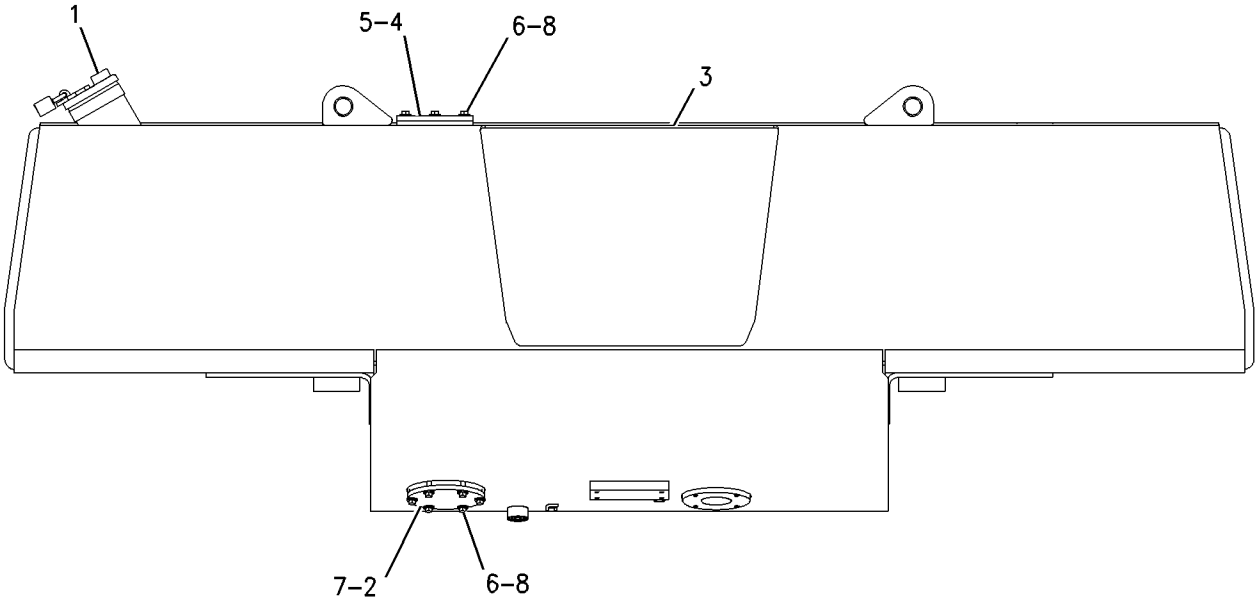

REAR VIEW

GRAPHIC #1 g00813771

9N-5071 TORQUE CONTROL GP

S/N: 48W41541-UP
PART OF 104-7032 PUMP GP-GOV, FUEL INJ & TFR
AN ATTACHMENT

SMCS-1257 **i01489196**

NOTE	REF NO	GRAPHIC REF	PART NUMBER	QTY	PART NAME 1 2 3 4 5 6 (PRODUCT LEVEL)	SEE PAGE
	1	1	**1P-6452**	1	INSULATOR	
	2	1	**1P-9958**	1	INSULATOR	
	3	1	**2S-7391**	1	BAR-STOP	
	4	1	**3S-0602**	1	RETAINER-SPRING	
	5	1	**4N-4218**	1	CONTACT	
	6	1	**7N-4012**	1	SPACER (0.305MM THK)	
	7	1	**7N-4330**	1	SPACER (0.750MM THK)	
	8	1	**8M-9062**	1	RETAINER-SPRING (3.05MM THK)	
	9	1	**9L-3625**	1	SPRING-TORQUE	
	10	1	**9L-9347**	1	SHIM-TORQUE SPRING (0.510MM THK)	
	11	1	**6L-5897**	2	BOLT (1/4-20X7/8 IN)	

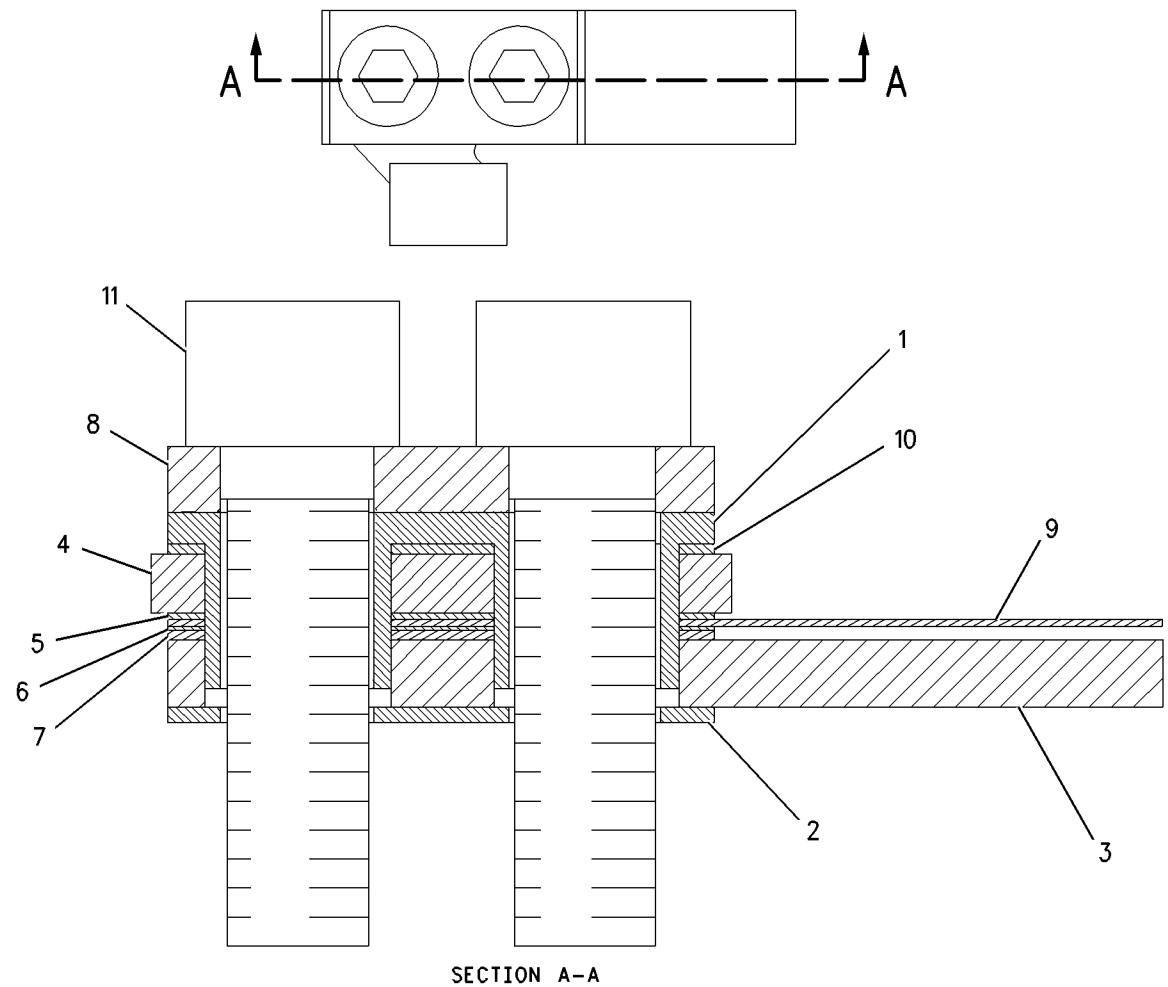

SECTION A–A

GRAPHIC #1 g00775420

102-7535 VALVE GP-PRESSURE CONTROL

S/N: 5XD1-UP

PART OF 163-5806 LINES GP-FUEL FILTER

SMCS-1715 **i01022640**

NOTE	REF NO	GRAPHIC REF	PART NUMBER	QTY	PART NAME 1 2 3 4 5 6 (PRODUCT LEVEL)	SEE PAGE
	1	1	**033-6033**	1	SEAL-O-RING (12.42MM ID)	
	2	1	**6V-6923**	1	RING-BACKUP (13.16MM ID)	
	3	1	**6V-4589**	1	SEAL-O-RING (19.18MM ID)	

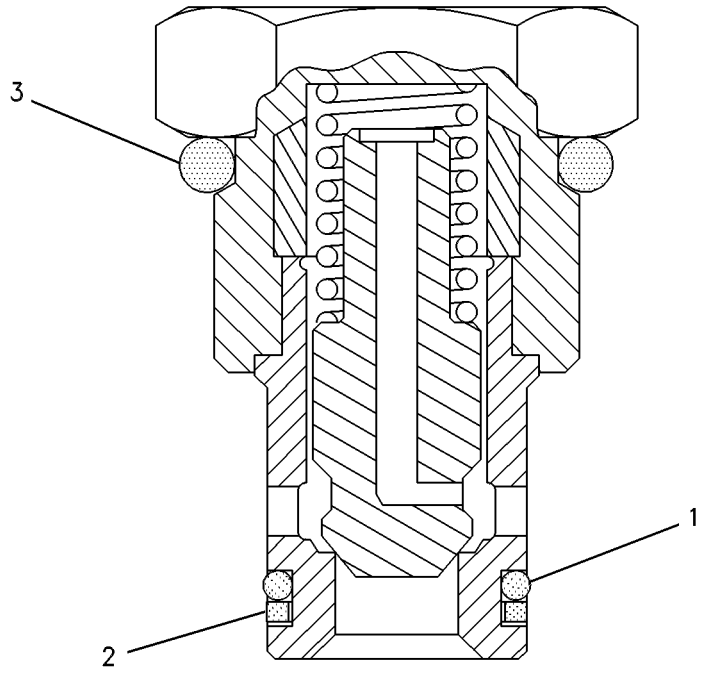

GRAPHIC #1 g00278840

107-0677 VALVE GP-SOLENOID

S/N: 5XD1-UP

PART OF 144-0835, 201-4202 PUMP GP-UNIT INJECTOR HYD

SMCS-1259 **i01545003**

NOTE	REF NO	GRAPHIC REF	PART NUMBER	QTY	PART NAME 1 2 3 4 5 6 (PRODUCT LEVEL)	SEE PAGE
J	1	1	**033-6039**	1	SEAL-O-RING	
J	2	1	**123-3132**	1	RING-BACKUP	
J	3	1	**9X-5535**	1	SPACER	
J	4	1	**8C-6711**	1	NUT-RETAINER	
J	5	1	**033-6028**	1	SEAL-O-RING	
					AVAILABLE REPAIR KIT(S):	
J			**9X-1484**	1	KIT-SEAL (FUEL SOLENOID VALVE)	

J-KIT MARKED J INCLUDES PARTS MARKED J

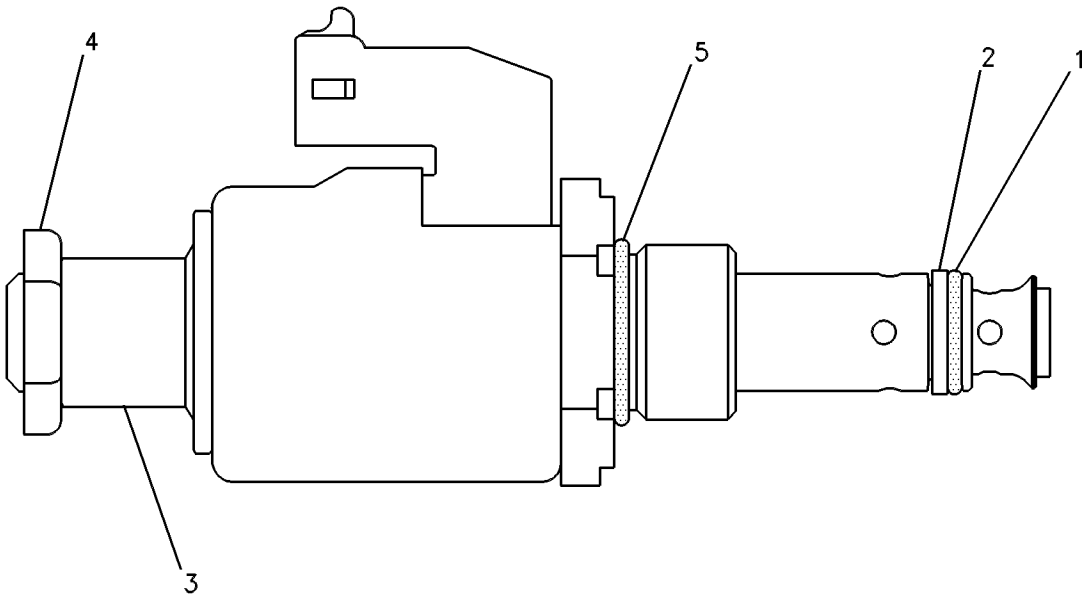

GRAPHIC #1 g00452590

3E-6328 ALARM GP

S/N: ABK1-UP
24 VOLT
PART OF 163-5399 WIRING GP-PLATFORM

SMCS-7402 **i01644629**

NOTE	REF NO	GRAPHIC REF	PART NUMBER	QTY	PART NAME 1 2 3 4 5 6 (PRODUCT LEVEL)	SEE PAGE
	1	1	**102-8802**	1	KIT-RECEPTACLE (2 PIN)	
					(INCLUDES RECEPTACLE AS AND WEDGE)	
	2	1	**186-3735**	2	PIN-CONNECTOR	
	3	1	**3E-3365**	1	WEDGE-RECEPTACLE LOCK (2 PIN)	

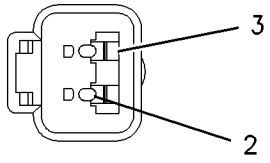

VIEW A–A

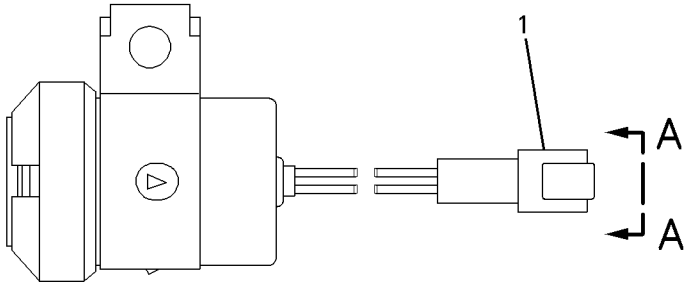

GRAPHIC #1 g00826023

163-5820 ALTERNATOR GP-CHARGING

S/N: ABK1-UP
24 VOLTS, 75 AMPS
PART OF 162-9505 INSTALLATION AR-ENGINE

SMCS-1405, 1410, 1425 **i01457108**

NOTE	REF NO	GRAPHIC REF	PART NUMBER	QTY	PART NAME 1 2 3 4 5 6 (PRODUCT LEVEL)	SEE PAGE
	1	1	**4S-5780**	1	ROD	
	2	1	**199-6601**	1	V-BELT (INCLUDES 2 BELTS)	
	3	1	**7C-3938**	1	PULLEY-ALTERNATOR	
	4	1	**8S-5383**	1	BLOCK	
R	5	1	**167-7812**	1	ALTERNATOR GP-CHARGING	
	6	1	**177-3908**	1	CABLE AS	
	7	1	**188-2034**	1	PAN AS-DRIP	
		1	**1F-0750**	2	NUT-WELD (3/8-16 THD)	
	8	1	**4L-6454**	2	BOLT (3/8-16X1 IN)	
	9	1	**5P-1075**	2	WASHER-HARD (10.2X22.5X3MM THK)	
	10	1	**7X-0346**	1	BOLT (5/8-11X2 IN)	
	11	1	**7X-0448**	2	NUT (5/8-11 THD)	
	12	1	**7X-0591**	2	WASHER-HARD (17X29X3MM THK)	
	13	1	**8T-4122**	1	WASHER-HARD (17X32X3.5MM THK)	
	14	1	**8T-4223**	3	WASHER-HARD (13.5X25.5X3MM THK)	
	15	1	**8T-4835**	1	BOLT (1/2-13X2 IN)	
	16	1	**8T-8919**	2	BOLT (1/2-13X1.75 IN)	
	17	1	**9H-1024**	1	WASHER-HARD (17X30X6MM THK)	

R-REMFG PART MAY BE AVAILABLE

163-5820 **ALTERNATOR GP-CHARGING** ***(contd.)*** **i01457108**

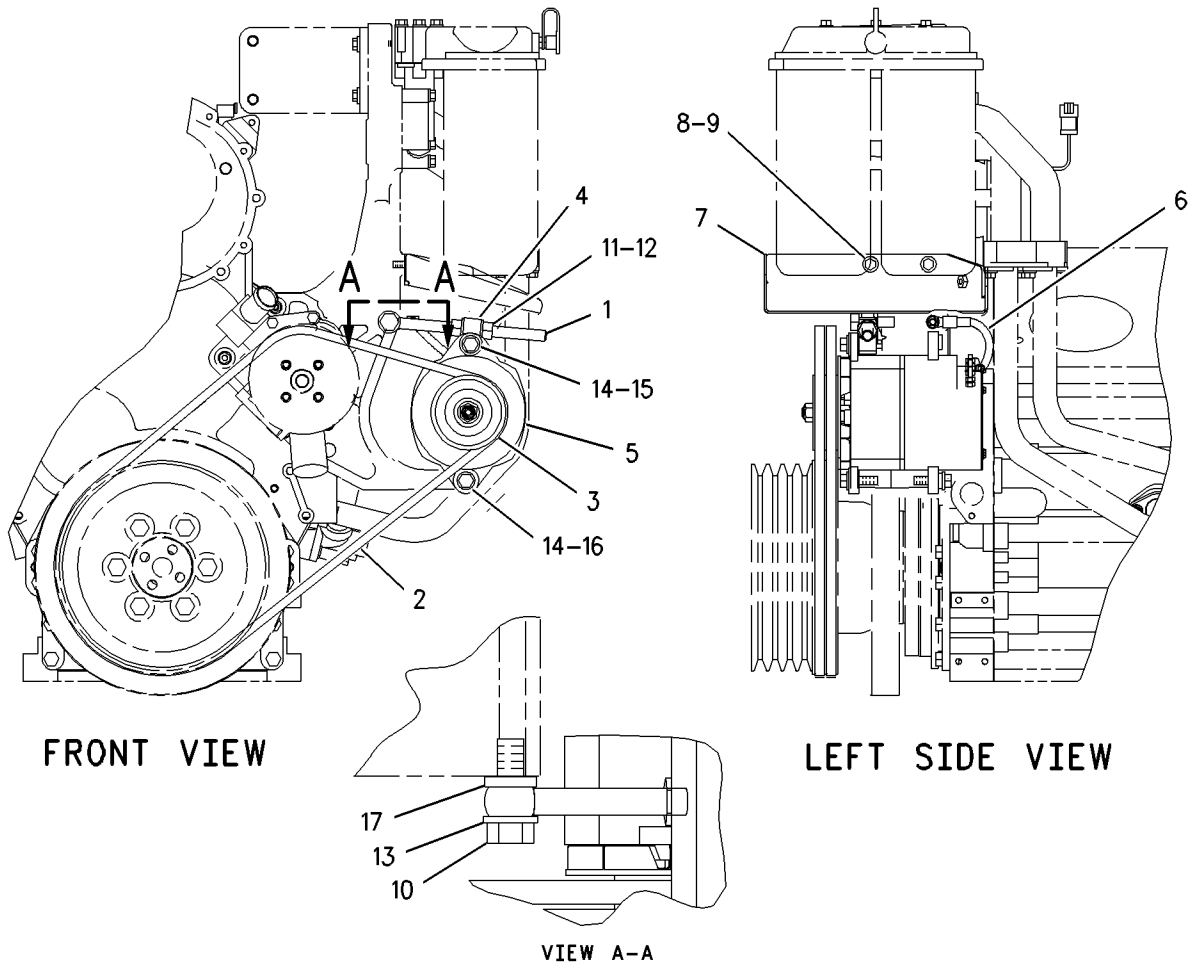

GRAPHIC #1 g00711909

ELECTRICAL AND STARTING SYSTEM

165-5140 ALTERNATOR GP-CHARGING

S/N: ABK1-UP
24 VOLT, 100 AMPERE
PART OF 169-8367 ALTERNATOR GP-CHARGING
AN ATTACHMENT

SMCS-1405, 1410, 1425 **i01242199**

NOTE	PART NUMBER	QTY	PART NAME 1 2 3 4 5 6 (PRODUCT LEVEL)	SEE PAGE
			(NO SERVICED PARTS)	

ELECTRICAL AND STARTING SYSTEM

169-8367 ALTERNATOR GP-CHARGING

S/N: ABK1-UP
24 VOLT, 100 AMP
AN ATTACHMENT

SMCS-1405, 1410, 1425 **i01288760**

NOTE	REF NO	GRAPHIC REF	PART NUMBER	QTY	PART NAME 1 2 3 4 5 6 (PRODUCT LEVEL)	SEE PAGE
	1	1	**9Y-4056**	1	PULLEY-ALTERNATOR	
Y	2	1	**165-5140**	1	ALTERNATOR GP-CHARGING	276

Y-SEPARATE ILLUSTRATION

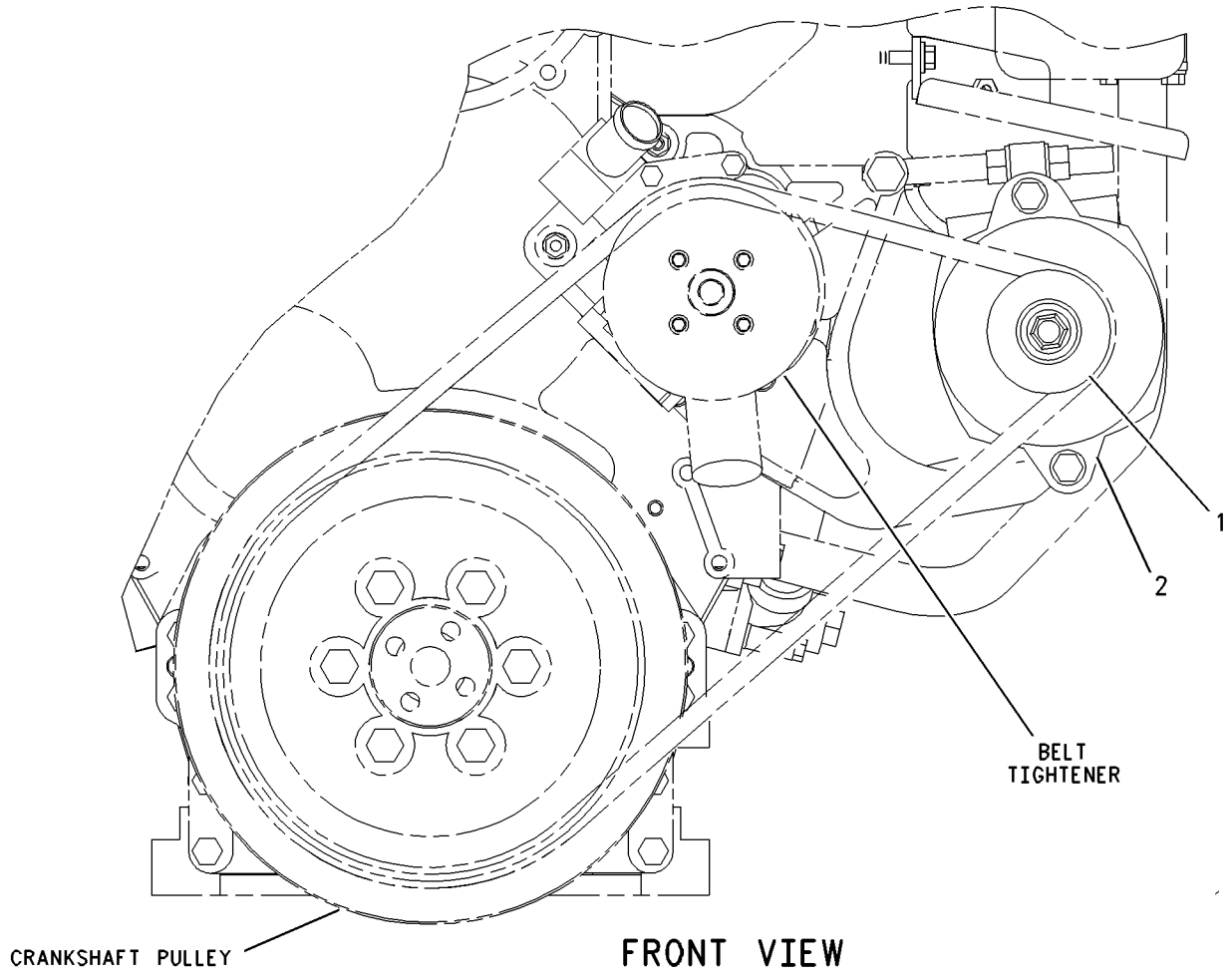

GRAPHIC #1 g00683141

ELECTRICAL AND STARTING SYSTEM

163-5393 BATTERY & WIRING GP

S/N: ABK1-UP

PART OF 162-9501 CHASSIS AR

SMCS-1401, 1402, 1408 **i01441928**

NOTE	REF NO	GRAPHIC REF	PART NUMBER	QTY	PART NAME 1 2 3 4 5 6 (PRODUCT LEVEL)	SEE PAGE
	1	2	**3E-5239**	1	RELAY AS (24 VOLT) (ETHER AID)	
	2	2	**3E-7753**	1	FLOAT AS (FUEL LEVEL SENSOR)	
	3	2	**3E-9350**	1	SWITCH AS-TEMPERATURE (POWER TRAIN FILTER BYPASS)	
		2	**3E-3365**	1	WEDGE-RECEPTACLE LOCK (2 PIN)	
		2	**186-3735**	2	PIN-CONNECTOR	
		2	**102-8802**	1	KIT-RECEPTACLE (2 PIN)	
					(INCLUDES RECEPTACLE AS & WEDGE)	
	4	1	**6T-0463**	1	CABLE AS	
		1	**1S-7251**	1	TERMINAL-RING (FOR 1/2 IN BOLT)	
		1	**1S-7252**	1	TERMINAL-RING (FOR 3/8IN BOLT)	
E		1	**5P-0747**		CABLE (00GA) (70CM)(BLACK)	
	5	2	**6Y-6584**	1	STRAP AS-GROUND	
	6	2	**7G-1060**	4	STRAP AS-GROUND	
Y	7	1	**7N-0719**	1	SWITCH GP-DISCONNECT (BATTERY)	366
	8	1	**7T-7777**	1	CABLE AS	
E		1	**5P-0761**		CABLE (00GA)(RED) (109CM)	
		1	**1S-7251**	2	TERMINAL-RING (FOR 1/2 IN BOLT)	
		1	**8N-0869**	2	COVER-TERMINAL (RED)	
E		1	**5P-0695**		CONDUIT (86CM)	
		1	**1S-4915**	2	LINER-CONDUIT	
BE		1	**8T-2225**		TUBE-SHRINKABLE	
	9	1	**7T-7778**	1	RECEPTACLE AS (JUMP START)	
		1	**1S-7251**	2	TERMINAL-RING (FOR 1/2 IN BOLT)	
E		1	**5P-0747**		CABLE (00GA) (125CM)(BLACK)	
E		1	**5P-0761**		CABLE (00GA)(RED) (115CM)	
BE		1	**8T-2225**		TUBE-SHRINKABLE	
E		1	**5P-0695**		CONDUIT (89CM)	
		1	**1S-4915**	2	LINER-CONDUIT	
	10	2	**153-6281**	1	HOLD DOWN AS	
	11	1	**8S-2634**	1	COVER AS	
		1	**2P-2975**	2	SEAL-O-RING (17.17MM ID)	
	12	1	**8S-4211**	2	PLATE	
	13	2	**8V-0622**	1	CABLE AS	
		2	**8T-9757**	1	TERMINAL AS-BATTERY (NEGATIVE)	
		2	**8C-5917**	1	TERMINAL AS-BATTERY (POSITIVE)	
					(EACH TERMINAL AS INCLUDES)	
		2	**1M-6119**	1	BOLT-BATTERY TERMINAL (5/16-18X1.375 IN)	
		2	**1M-6120**	1	NUT-BATTERY TERMINAL (5/16-18 THD)	
E		2	**5P-0761**		CABLE (00GA)(RED) (14CM)	
		2	**9G-0003**	1	COVER-TERMINAL (BLACK)	
		2	**9G-0004**	1	COVER-TERMINAL (RED)	
	14	2	**9P-1503**	1	CABLE AS	
		2	**1S-4915**	2	LINER-CONDUIT	
		2	**1S-7252**	1	TERMINAL-RING (FOR 3/8IN BOLT)	
		2	**3S-2093**	1	STRAP-CABLE	
E		2	**5P-0695**		CONDUIT (92CM)	
E		2	**5P-0747**		CABLE (00GA) (134CM)(BLACK)	
		2	**7N-5274**	1	COVER-TERMINAL (BLACK) (BATTERY TERMINAL)	
BE		2	**8T-2225**		TUBE-SHRINKABLE	
		2	**9G-8909**	1	COVER-TERMINAL (BLACK) (RING TERMINAL)	
		2	**3S-6050**	1	TERMINAL AS-BATTERY (NEGATIVE)	
		2	**1M-6119**	1	BOLT-BATTERY TERMINAL (5/16-18X1.375 IN)	
		2	**1M-6120**	1	NUT-BATTERY TERMINAL (5/16-18 THD)	
Y	15	1	**9W-0742**	1	JUNCTION BLOCK GP	307
	16	1	**9W-2938**	1	COVER AS	

163-5393 **BATTERY & WIRING GP** ***(contd.)*** **i01441928**

NOTE	REF NO	GRAPHIC REF	PART NUMBER	QTY	PART NAME 1 2 3 4 5 6 (PRODUCT LEVEL)	SEE PAGE
		1	**4D-6716**	3	RIVET-POP	
	17	2	**9W-9472**	1	CABLE AS	
		2	**3S-6049**	1	TERMINAL AS-BATTERY (POSITIVE)	
		2	**1M-6119**	1	BOLT-BATTERY TERMINAL (5/16-18X1.375 IN)	
		2	**1M-6120**	1	NUT-BATTERY TERMINAL (5/16-18 THD)	
E		2	**5P-0761**		CABLE (00GA)(RED) (152CM)	
		2	**1S-7251**	1	TERMINAL-RING (FOR 1/2 IN BOLT)	
		2	**8N-0869**	1	COVER-TERMINAL (RED) (RING TERMINAL)	
E		2	**5P-0695**		CONDUIT (121CM)	
		2	**8N-1725**	1	COVER-TERMINAL (RED) (BATTERY TERMINAL)	
		2	**1S-4915**	2	LINER-CONDUIT	
BE		2	**8T-2225**		TUBE-SHRINKABLE	
		2	**3S-2093**	1	STRAP-CABLE	
B	18	1,2,3	**9X-6772**	110	STRAP-CABLE	
	19	1	**061-7661**	1	CABLE AS	
E		1	**5P-0747**		CABLE (00GA) (42CM)(BLACK)	
		1	**1S-7251**	2	TERMINAL-RING (FOR 1/2 IN BOLT)	
	20	3	**102-9445**	1	PLATE AS	
		3	**9D-4439**	2	STUD-WELD (3/8-16X1.0 IN)	
		3	**7T-1099**	1	LINK	
	21	2	**111-4402**	1	FILTER-FOAM (FUEL LEVEL SENSOR)	
	22	1	**118-6365**	2	PLATE AS	
					(EACH INCLUDES)	
		1	**109-1645**	1	CLIP	
		1	**6V-6716**	2	RIVET-TRUSS HEAD	
	23	3	**121-2844**	1	HARNESS AS (CRANK WITHOUT INJECTION)	
		3	**155-2260**	1	KIT-CONNECTING PLUG (3 PIN)	
					(INCLUDES PLUG AS, WEDGE & INTERFACE SEAL)	
		3	**102-8803**	2	KIT-RECEPTACLE (3 PIN)	
					(EACH INCLUDES RECEPTACLE AS & WEDGE)	
		3	**8T-8737**	5	PLUG-SEAL	
	24	2	**123-6449**	1	ALARM AS-BACKUP	
		2	**3E-3365**	1	WEDGE-RECEPTACLE LOCK (2 PIN)	
		2	**186-3735**	2	PIN-CONNECTOR	
		2	**102-8802**	1	KIT-RECEPTACLE (2 PIN)	
					(INCLUDES RECEPTACLE AS & WEDGE)	
Y	25	2	**124-9325**	1	SENSOR GP-FUEL LEVEL	328
Y	26	2	**134-2252**	1	SENSOR GP-TEMPERATURE (HYDRAULIC OIL)	342
	27	2	**137-9441**	1	PLATE AS	
		2	**6C-3680**	2	RIVET-POP	
		2	**109-1645**	1	CLIP	
	28	2	**139-2903**	1	HARNESS AS (ETHER AID)	
		2	**155-2270**	1	KIT-CONNECTING PLUG (2 PIN)	
		2	**155-2260**	1	KIT-CONNECTING PLUG (3 PIN)	
					(EACH PLUG KIT INCLUDES PLUG AS, WEDGE & INTERFACE SEAL)	
		2	**102-8802**	1	KIT-RECEPTACLE (2 PIN)	
					(INCLUDES RECEPTACLE AS & WEDGE)	
	29	2	**163-5426**	1	HARNESS AS (LH MAINFRAME)	
		2	**102-8802**	2	KIT-RECEPTACLE (2 PIN)	
		2	**102-8803**	2	KIT-RECEPTACLE (3 PIN)	
		2	**102-8804**	1	KIT-RECEPTACLE (4 PIN)	
		2	**102-8805**	2	KIT-RECEPTACLE (6 PIN)	
		2	**102-8806**	2	KIT-RECEPTACLE (8 PIN)	
		2	**102-8801**	1	KIT-RECEPTACLE (12 PIN)	
					(EACH RECEPTACLE KIT INCLUDES RECEPTACLE AS & WEDGE)	
		2	**8T-8737**	52	PLUG-SEAL	
		2	**9G-3695**	1	PLUG (GROMMET SEALING)	

163-5393 **BATTERY & WIRING GP** ***(contd.)*** **i01441928**

NOTE	REF NO	GRAPHIC REF	PART NUMBER	QTY	PART NAME 1 2 3 4 5 6 (PRODUCT LEVEL)	SEE PAGE
		2	**113-0582**	1	RECEPTACLE AS (40 PIN)	
					(INCLUDES DUST CAP)	
		2	**106-4155**	1	KIT-BOLT	
					(INCLUDES BOLT, RETAINING RING AND TWO O-RING SEALS)	
		2	**127-5486**	1	RECEPTACLE AS (1 PIN)	
		2	**155-2270**	9	KIT-CONNECTING PLUG (2 PIN)	
		2	**155-2260**	2	KIT-CONNECTING PLUG (3 PIN)	
		2	**155-2271**	2	KIT-CONNECTING PLUG (4 PIN)	
		2	**155-2274**	1	KIT-CONNECTING PLUG (6 PIN)	
		2	**155-2265**	3	KIT-CONNECTING PLUG (8 PIN)	
					(EACH PLUG KIT INCLUDES PLUG AS, WEDGE & INTERFACE SEAL)	
	30	2	**163-5427**	1	HARNESS AS (RH FENDER)	
		2	**102-8802**	3	KIT-RECEPTACLE (2 PIN)	
		2	**102-8804**	1	KIT-RECEPTACLE (4 PIN)	
					(EACH RECEPTACLE KIT INCLUDES RECEPTACLE AS & WEDGE)	
		2	**113-0580**	1	RECEPTACLE AS (40 PIN) (IN LINE-A)	
		2	**113-0582**	1	RECEPTACLE AS (40 PIN) (IN LINE-C)	
					(EACH RECEPTACLE AS INCLUDES)	
		2	**106-4155**	1	KIT-BOLT	
					(INCLUDES BOLT, RETAINING RING AND TWO O-RING SEALS)	
					(EACH RECEPTACLE AS ALSO INCLUDES A DUST CAP)	
		2	**155-2270**	8	KIT-CONNECTING PLUG (2 PIN)	
		2	**155-2260**	3	KIT-CONNECTING PLUG (3 PIN)	
		2	**155-2271**	1	KIT-CONNECTING PLUG (4 PIN)	
					(EACH PLUG KIT INCLUDES PLUG AS, WEDGE & INTERFACE SEAL)	
	31	2	**163-5428**	1	HARNESS AS (ENGINE)	
		2	**102-8803**	1	KIT-RECEPTACLE (3 PIN)	
		2	**102-8804**	1	KIT-RECEPTACLE (4 PIN)	
		2	**102-8801**	2	KIT-RECEPTACLE (12 PIN)	
					(EACH RECEPTACLE KIT INCLUDES RECEPTACLE AS & WEDGE)	
		2	**155-2270**	2	KIT-CONNECTING PLUG (2 PIN)	
		2	**155-2260**	2	KIT-CONNECTING PLUG (3 PIN)	
		2	**155-2271**	2	KIT-CONNECTING PLUG (4 PIN)	
		2	**155-2274**	1	KIT-CONNECTING PLUG (6 PIN)	
					(EACH PLUG KIT INCLUDES PLUG AS, WEDGE & INTERFACE SEAL)	
		2	**8T-8737**	14	PLUG-SEAL	
		2	**9G-3695**	14	PLUG (GROMMET SEALING)	
	32	3	**163-5429**	1	HARNESS AS (RADIATOR GUARD)	
		3	**102-8802**	3	KIT-RECEPTACLE (2 PIN)	
		3	**102-8804**	1	KIT-RECEPTACLE (4 PIN)	
		3	**102-8806**	1	KIT-RECEPTACLE (8 PIN)	
					(EACH RECEPTACLE KIT INCLUDES RECEPTACLE AS & WEDGE)	
		3	**155-2270**	10	KIT-CONNECTING PLUG (2 PIN)	
		3	**155-2271**	1	KIT-CONNECTING PLUG (4 PIN)	
					(EACH PLUG KIT INCLUDES PLUG AS, WEDGE & INTERFACE SEAL)	
		3	**9G-3695**	8	PLUG (GROMMET SEALING)	
	33	2	**163-5472**	2	HARNESS AS (LIGHTS)	
					(EACH INCLUDES)	
		2	**102-8802**	1	KIT-RECEPTACLE (2 PIN)	
					(INCLUDES RECEPTACLE AS & WEDGE)	
		2	**155-2270**	1	KIT-CONNECTING PLUG (2 PIN)	
					(INCLUDES PLUG AS, WEDGE & INTERFACE SEAL)	

163-5393 **BATTERY & WIRING GP** *(contd.)* **i01441928**

NOTE	REF NO	GRAPHIC REF	PART NUMBER	QTY	PART NAME 1 2 3 4 5 6 (PRODUCT LEVEL)	SEE PAGE
Y	34	2	**164-7577**	1	SWITCH GP-BYPASS (POWER TRAIN OIL FILTER)	365
Y	35	1	**164-9436**	1	BLOCK GP-POWER	293
	36	3	**174-7875**	1	HORN AS (24 VOLT)(HIGH TONE)	
	37	3	**163-1201**	1	HORN AS (24 VOLT)(LOW TONE)	
	38	1	**178-1781**	1	CLIP	
	39	3	**186-0272**	1	BRACKET AS	
		3	**1F-0750**	1	NUT-WELD (3/8-16 THD)	
	40	2,3	**1A-2029**	2	BOLT (3/8-16X1.125 IN)	
	41	2	**2G-8097**	1	MOUNTING	
	42	2	**2V-8259**	1	GROMMET	
	43	3	**3D-5279**	1	GROMMET	
	44	2	**3J-1907**	2	SEAL-O-RING (11.89MM ID)	
	45	2	**3K-0360**	1	SEAL-O-RING (16.36MM ID)	
	46	2	**3K-6060**	2	LOCKNUT	
	47	1,3	**4P-7428**	4	CLIP	
	48	2	**4P-7429**	3	CLIP	
	49	1,2,3	**4P-7581**	12	CLIP	
	50	1,2,3	**4P-8134**	14	CLIP	
	51	1	**5C-6565**	2	BOLT (1/2-13X1.25 IN)	
	52	2	**5I-8307**	2	GROMMET	
	53	1,2,3	**5M-3062**	9	BOLT (3/8-16X0.75 IN)	
	54	2	**5P-1075**	7	WASHER-HARD (10.2X22.5X3MM THK)	
	55	2	**5S-7349**	1	BOLT (1/4-20X0.5 IN)	
	56	1	**5S-7379**	9	BOLT (3/8-16X0.875 IN)	
	57	3	**5S-7382**	1	BOLT (3/8-16X1.375 IN)	
	58	2	**6V-5051**	1	SEAL-O-RING (75.57MM ID)	
	59	1	**6V-8188**	3	NUT (1/2-13 THD)	
	60	2,3	**6V-8801**	12	NUT (3/8-16 THD)	
	61	2	**7B-1251**	4	GROMMET	
	62	2	**7X-0291**	2	BOLT (3/8-16X3.75 IN)	
	63	2	**8T-2501**	4	BOLT (3/8-16X2 IN)	
	64	2	**8T-4205**	1	WASHER-HARD (7.2X14.5X2MM THK)	
	65	1,2	**8T-4223**	2	WASHER-HARD (13.5X25.5X3MM THK)	
	66	1,2,3	**8T-4896**	30	WASHER-HARD (10.2X18.5X2.5MM THK)	
	67	2	**5P-1076**	1	WASHER-HARD (13.5X30X4MM THK)	
	68	2	**9X-9730**	2	BATTERY (12 VOLT/DRY)	
					(EACH INCLUDES)	
		2	**7N-0060**	6	VENT AS	
Y	69	2	**134-2252**	1	SENSOR GP-TEMPERATURE (POWER TRAIN OIL)	342
	70	1	**2D-2751**	1	GROMMET	

B-USE AS REQUIRED
E-ORDER BY THE CENTIMETER
Y-SEPARATE ILLUSTRATION

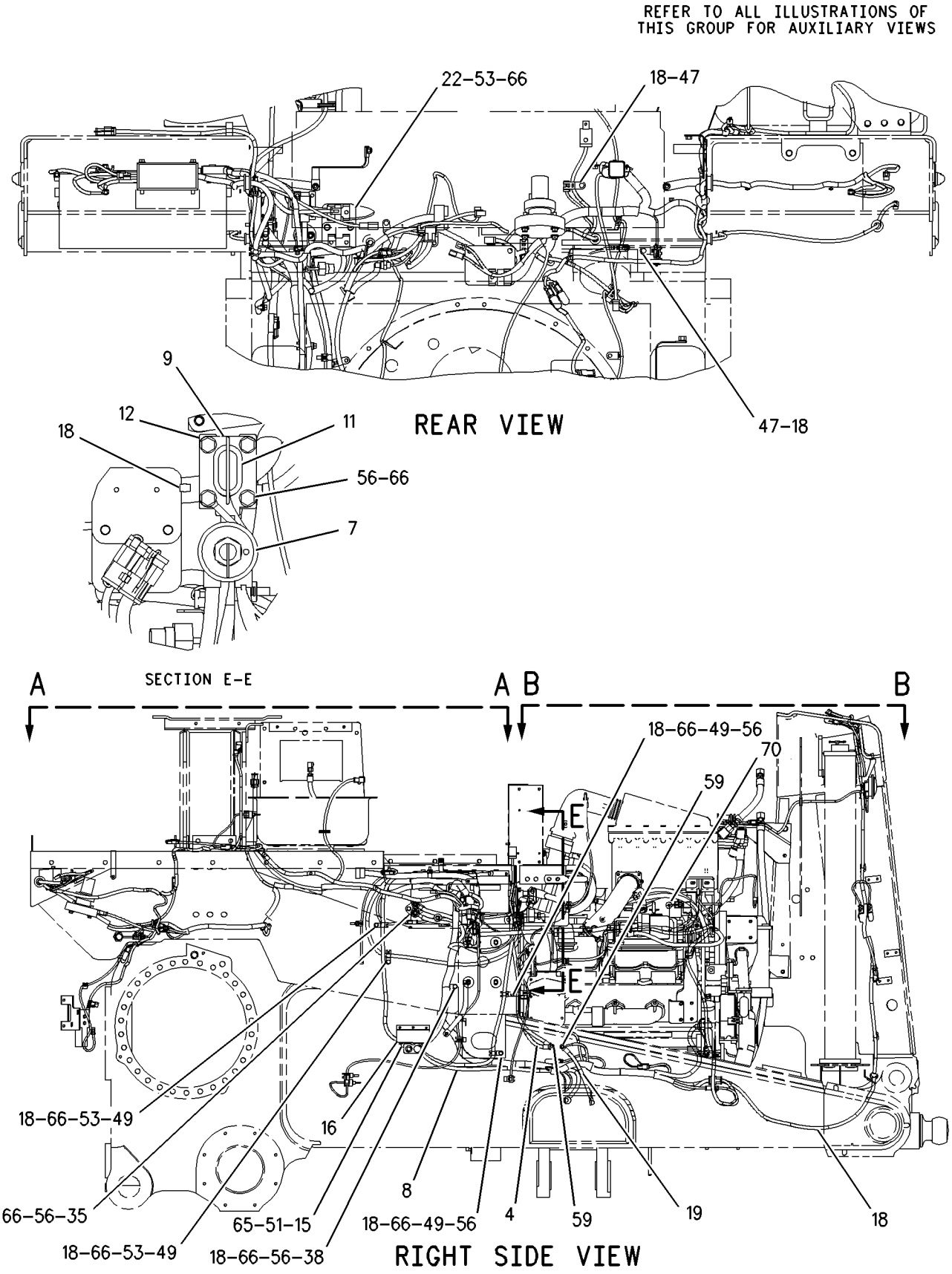

GRAPHIC #1

g00746054

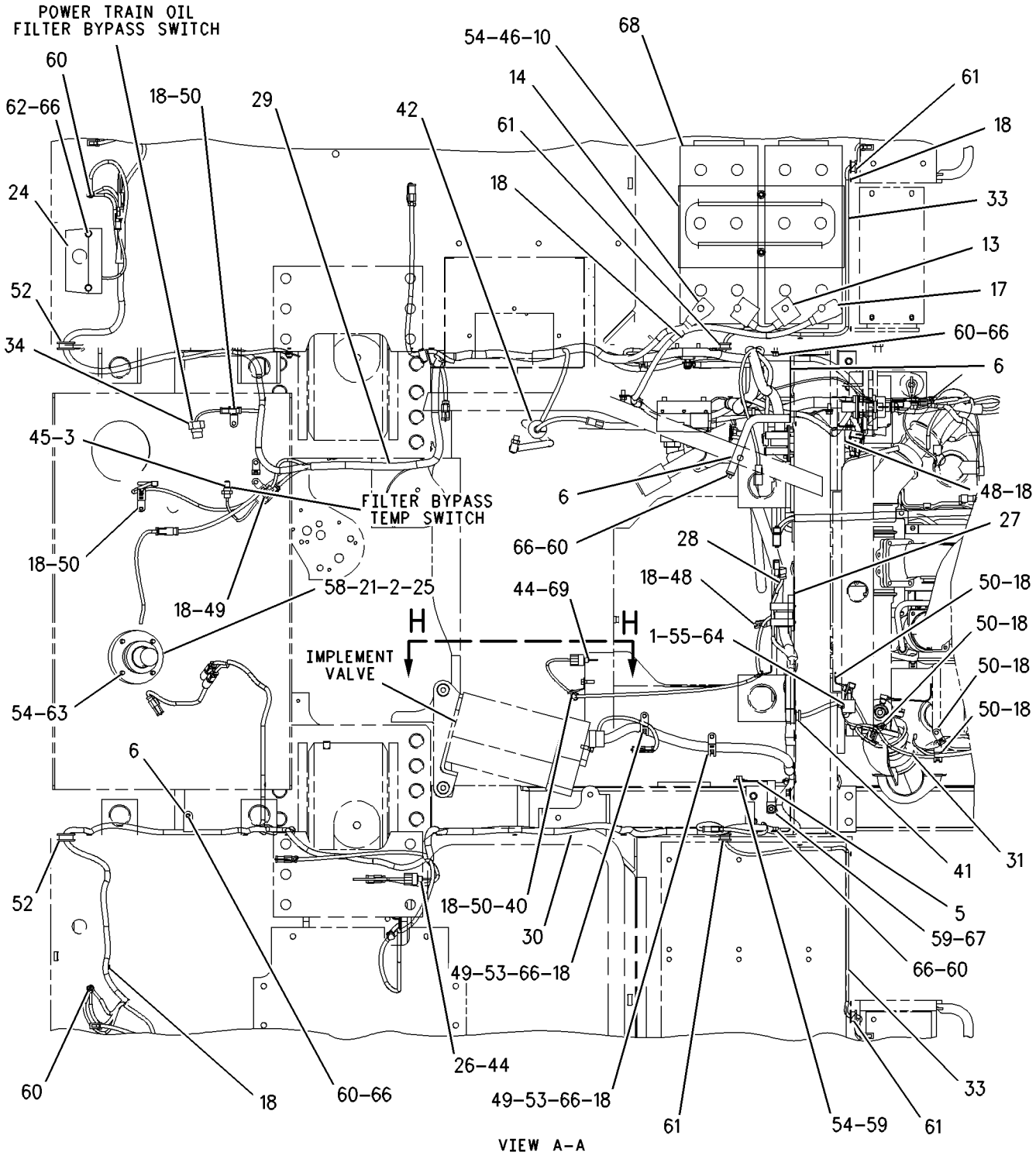

REFER TO ALL ILLUSTRATIONS OF THIS GROUP FOR AUXILIARY VIEWS

GRAPHIC #2

g00746055

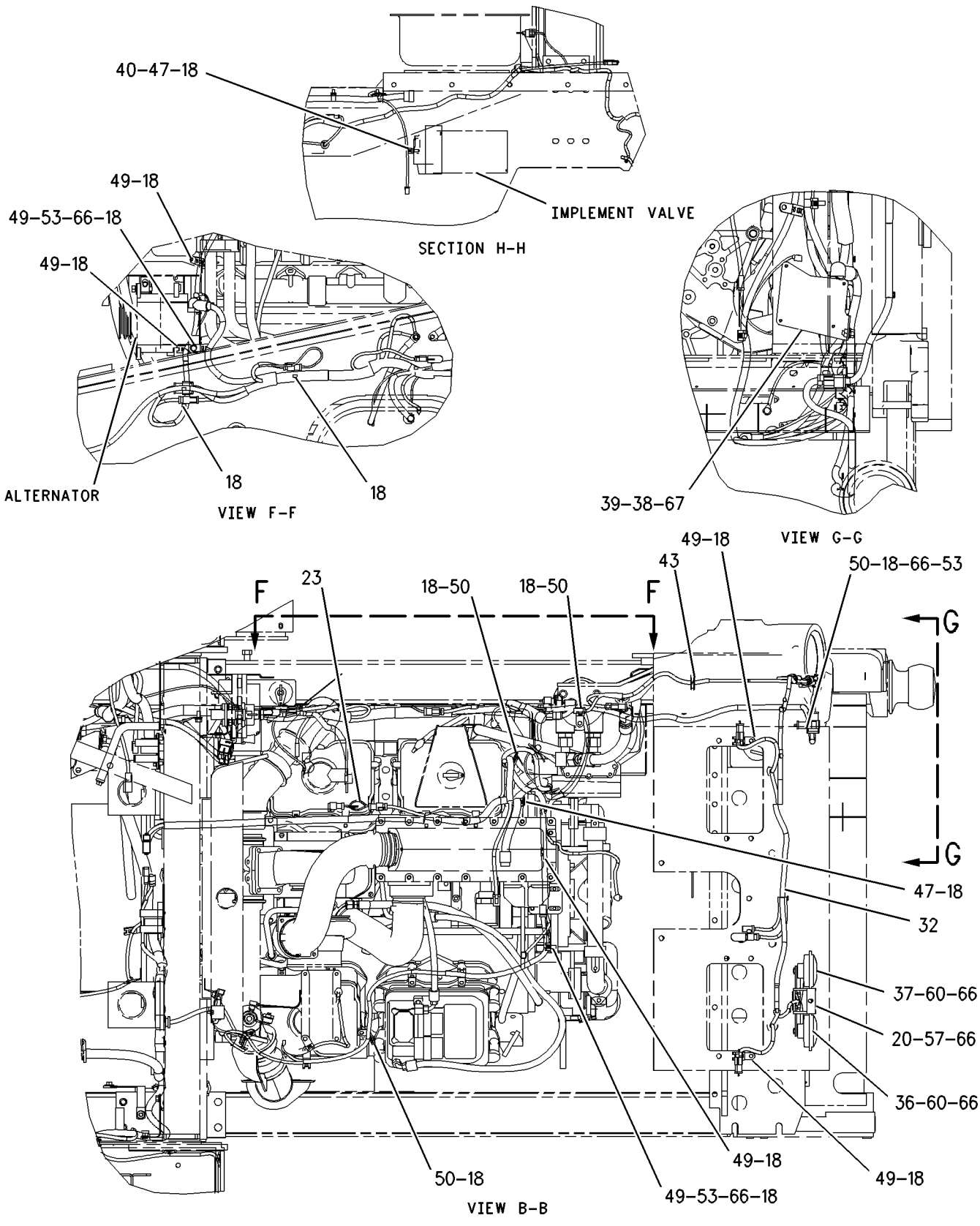

GRAPHIC #3 g00746056

MEMORANDA

ELECTRICAL AND STARTING SYSTEM

163-5395 BATTERY & WIRING GP

S/N: ABK1-UP
PART OF 162-9502 CONVERSION AR-ENGINE
AN ATTACHMENT

SMCS-1401, 1402, 1408 **i01427433**

NOTE	REF NO	GRAPHIC REF	PART NUMBER	QTY	PART NAME 1 2 3 4 5 6 (PRODUCT LEVEL)	SEE PAGE
	1	1	**3E-6425**	1	SWITCH AS-TEMPERATURE (ETHER AID)	
		1	**102-8802**	1	KIT-RECEPTACLE (2 PIN)	
					(INCLUDES RECEPTACLE AS & WEDGE)	
		1	**3E-3365**	1	WEDGE-RECEPTACLE LOCK (2 PIN)	
		1	**186-3735**	2	PIN-CONNECTOR	
	2	2	**3E-7753**	1	FLOAT AS (FUEL LEVEL SENSOR)	
	3	2	**3E-9350**	1	SWITCH AS-TEMPERATURE (POWER TRAIN FILTER BYPASS)	
		2	**102-8802**	1	KIT-RECEPTACLE (2 PIN)	
					(INCLUDES RECEPTACLE AS & WEDGE)	
		2	**3E-3365**	1	WEDGE-RECEPTACLE LOCK (2 PIN)	
		2	**186-3735**	2	PIN-CONNECTOR	
	4	3	**3T-9660**	1	FITTING-O-RING	
	5	1	**6T-0463**	1	CABLE AS	
		1	**1S-7251**	1	TERMINAL-RING (FOR 1/2 IN BOLT)	
		1	**1S-7252**	1	TERMINAL-RING (FOR 3/8IN BOLT)	
E		1	**5P-0747**		CABLE (00GA) (70CM)(BLACK)	
	6	3	**6V-0484**	1	ADAPTER-O-RING	
	7	3	**6V-0852**	1	CAP-DUST	
	8	2	**6Y-6584**	1	STRAP AS-GROUND	
	9	2	**7G-1060**	4	STRAP AS-GROUND	
Y	10	1	**7N-0719**	1	SWITCH GP-DISCONNECT (BATTERY)	366
	11	1	**7T-7777**	1	CABLE AS	
E		1	**5P-0761**		CABLE (00GA)(RED) (109CM)	
		1	**1S-7251**	2	TERMINAL-RING (FOR 1/2 IN BOLT)	
		1	**8N-0869**	2	COVER-TERMINAL (RED)	
E		1	**5P-0695**		CONDUIT (86CM)	
		1	**1S-4915**	2	LINER-CONDUIT	
BE		1	**8T-2225**		TUBE-SHRINKABLE	
	12	1	**7T-7778**	1	RECEPTACLE AS (JUMP START)	
		1	**1S-7251**	2	TERMINAL-RING (FOR 1/2 IN BOLT)	
E		1	**5P-0747**		CABLE (00GA) (125CM)(BLACK)	
E		1	**5P-0761**		CABLE (00GA)(RED) (115CM)	
BE		1	**8T-2225**		TUBE-SHRINKABLE	
E		1	**5P-0695**		CONDUIT (89CM)	
		1	**1S-4915**	2	LINER-CONDUIT	
	13	2	**153-6281**	1	HOLD DOWN AS	
	14	1	**8S-2634**	1	COVER AS	
		1	**2P-2975**	2	SEAL-O-RING (17.17MM ID)	
	15	1	**8S-4211**	2	PLATE	
	16	2	**8V-0622**	1	CABLE AS	
		2	**8T-9757**	1	TERMINAL AS-BATTERY (NEGATIVE)	
		2	**8C-5917**	1	TERMINAL AS-BATTERY (POSITIVE)	
					(EACH TERMINAL AS INCLUDES)	
		2	**1M-6119**	1	BOLT-BATTERY TERMINAL (5/16-18X1.375 IN)	
		2	**1M-6120**	1	NUT-BATTERY TERMINAL (5/16-18 THD)	
E		2	**5P-0761**		CABLE (00GA)(RED) (14CM)	
		2	**9G-0003**	1	COVER-TERMINAL (BLACK)	
		2	**9G-0004**	1	COVER-TERMINAL (RED)	
	17	2	**9P-1503**	1	CABLE AS	
		2	**1S-4915**	2	LINER-CONDUIT	
		2	**1S-7252**	1	TERMINAL-RING (FOR 3/8IN BOLT)	
		2	**3S-2093**	1	STRAP-CABLE	
E		2	**5P-0695**		CONDUIT (92CM)	
E		2	**5P-0747**		CABLE (00GA) (134CM)(BLACK)	

163-5395 **BATTERY & WIRING GP** ***(contd.)*** **i01427433**

NOTE	REF NO	GRAPHIC REF	PART NUMBER	QTY	PART NAME 1 2 3 4 5 6 (PRODUCT LEVEL)	SEE PAGE
		2	**7N-5274**	1	COVER-TERMINAL (BLACK) (BATTERY TERMINAL)	
BE		2	**8T-2225**		TUBE-SHRINKABLE	
		2	**9G-8909**	1	COVER-TERMINAL (BLACK) (RING TERMINAL)	
		2	**3S-6050**	1	TERMINAL AS-BATTERY (NEGATIVE)	
		2	**1M-6119**	1	BOLT-BATTERY TERMINAL (5/16-18X1.375 IN)	
		2	**1M-6120**	1	NUT-BATTERY TERMINAL (5/16-18 THD)	
Y	18	1	**9W-0742**	1	JUNCTION BLOCK GP	307
	19	1	**9W-2938**	1	COVER AS	
		1	**4D-6716**	3	RIVET-POP	
	20	2	**9W-9472**	1	CABLE AS	
		2	**3S-6049**	1	TERMINAL AS-BATTERY (POSITIVE)	
		2	**1M-6119**	1	BOLT-BATTERY TERMINAL (5/16-18X1.375 IN)	
		2	**1M-6120**	1	NUT-BATTERY TERMINAL (5/16-18 THD)	
E		2	**5P-0761**		CABLE (00GA)(RED) (152CM)	
		2	**1S-7251**	1	TERMINAL-RING (FOR 1/2 IN BOLT)	
		2	**8N-0869**	1	COVER-TERMINAL (RED) (RING TERMINAL)	
E		2	**5P-0695**		CONDUIT (121CM)	
		2	**8N-1725**	1	COVER-TERMINAL (RED) (BATTERY TERMINAL)	
		2	**1S-4915**	2	LINER-CONDUIT	
BE		2	**8T-2225**		TUBE-SHRINKABLE	
		2	**3S-2093**	1	STRAP-CABLE	
	21	3	**9X-0261**	1	ADAPTER	
	22	1	**9X-3271**	1	ADAPTER	
B	23	1,2,3	**9X-6772**	105	STRAP-CABLE	
	24	1	**061-7661**	1	CABLE AS	
E		1	**5P-0747**		CABLE (00GA) (42CM)(BLACK)	
		1	**1S-7251**	2	TERMINAL-RING (FOR 1/2 IN BOLT)	
	25	3	**102-9445**	1	PLATE AS	
		3	**9D-4439**	2	STUD-WELD (3/8-16X1.0 IN)	
		3	**7T-1099**	1	LINK	
Y	26	3	**107-3952**	1	SENSOR GP-PRESSURE (ENGINE OIL)	330
	27	2	**111-4402**	1	FILTER-FOAM (FUEL LEVEL SENSOR)	
	28	1	**118-6365**	2	PLATE AS	
					(EACH INCLUDES)	
		1	**109-1645**	1	CLIP	
		1	**6V-6716**	2	RIVET-TRUSS HEAD	
	29	2	**123-6449**	1	ALARM AS-BACKUP	
		2	**3E-3365**	1	WEDGE-RECEPTACLE LOCK (2 PIN)	
		2	**186-3735**	2	PIN-CONNECTOR	
		2	**102-8802**	1	KIT-RECEPTACLE (2 PIN)	
					(INCLUDES RECEPTACLE AS & WEDGE)	
Y	30	2	**124-9325**	1	SENSOR GP-FUEL LEVEL	328
Y	31	2	**134-2252**	1	SENSOR GP-TEMPERATURE (HYDRAULIC OIL)	342
	32	2	**137-9441**	1	PLATE AS	
		2	**6C-3680**	2	RIVET-POP	
		2	**109-1645**	1	CLIP	
	33	3	**145-2269**	1	HARNESS AS (SPEED SENSOR)	
		3	**102-8807**	1	KIT-CONNECTING PLUG (2 PIN)	
					(INCLUDES PLUG AS, WEDGE & INTERFACE SEAL)	
		3	**102-8802**	1	KIT-RECEPTACLE (2 PIN)	
					(INCLUDES RECEPTACLE AS & WEDGE)	
	34	3	**146-7812**	1	HARNESS AS (ETHER AID)	
		3	**102-8807**	1	KIT-CONNECTING PLUG (2 PIN)	
					(INCLUDES PLUG AS, WEDGE & INTERFACE SEAL)	
		3	**102-8802**	1	KIT-RECEPTACLE (2 PIN)	
					(INCLUDES RECEPTACLE AS & WEDGE)	
	35	2	**163-5426**	1	HARNESS AS (LH MAINFRAME)	
		2	**102-8802**	2	KIT-RECEPTACLE (2 PIN)	
		2	**102-8803**	2	KIT-RECEPTACLE (3 PIN)	

163-5395 **BATTERY & WIRING GP** ***(contd.)*** **i01427433**

NOTE	REF NO	GRAPHIC REF	PART NUMBER	QTY	PART NAME 1 2 3 4 5 6 (PRODUCT LEVEL)	SEE PAGE
		2	**102-8804**	1	KIT-RECEPTACLE (4 PIN)	
		2	**102-8805**	2	KIT-RECEPTACLE (6 PIN)	
		2	**102-8806**	2	KIT-RECEPTACLE (8 PIN)	
		2	**102-8801**	1	KIT-RECEPTACLE (12 PIN)	
					(EACH RECEPTACLE KIT INCLUDES RECEPTACLE AS & WEDGE)	
		2	**8T-8737**	52	PLUG-SEAL	
		2	**9G-3695**	1	PLUG (GROMMET SEALING)	
		2	**113-0582**	1	RECEPTACLE AS (40 PIN)	
					(INCLUDES DUST CAP)	
		2	**106-4155**	1	KIT-BOLT	
					(INCLUDES BOLT, RETAINING RING AND TWO O-RING SEALS)	
		2	**127-5486**	1	RECEPTACLE AS (1 PIN)	
		2	**155-2270**	9	KIT-CONNECTING PLUG (2 PIN)	
		2	**155-2260**	2	KIT-CONNECTING PLUG (3 PIN)	
		2	**155-2271**	2	KIT-CONNECTING PLUG (4 PIN)	
		2	**155-2274**	1	KIT-CONNECTING PLUG (6 PIN)	
		2	**155-2265**	3	KIT-CONNECTING PLUG (8 PIN)	
					(EACH PLUG KIT INCLUDES PLUG AS, WEDGE & INTERFACE SEAL)	
	36	2	**163-5427**	1	HARNESS AS (RH FENDER)	
		2	**102-8802**	3	KIT-RECEPTACLE (2 PIN)	
		2	**102-8804**	1	KIT-RECEPTACLE (4 PIN)	
					(EACH RECEPTACLE KIT INCLUDES RECEPTACLE AS & WEDGE)	
		2	**113-0580**	1	RECEPTACLE AS (40 PIN) (IN LINE-A)	
		2	**113-0582**	1	RECEPTACLE AS (40 PIN) (IN LINE-C)	
					(EACH RECEPTACLE AS INCLUDES)	
		2	**106-4155**	1	KIT-BOLT	
					(INCLUDES BOLT, RETAINING RING AND TWO O-RING SEALS)	
					(EACH RECEPTACLE AS ALSO INCLUDES A DUST CAP)	
		2	**155-2270**	8	KIT-CONNECTING PLUG (2 PIN)	
		2	**155-2260**	3	KIT-CONNECTING PLUG (3 PIN)	
		2	**155-2271**	1	KIT-CONNECTING PLUG (4 PIN)	
					(EACH PLUG KIT INCLUDES PLUG AS, WEDGE & INTERFACE SEAL)	
	37	3	**163-5429**	1	HARNESS AS (RADIATOR GUARD)	
		3	**102-8802**	3	KIT-RECEPTACLE (2 PIN)	
		3	**102-8804**	1	KIT-RECEPTACLE (4 PIN)	
		3	**102-8806**	1	KIT-RECEPTACLE (8 PIN)	
					(EACH RECEPTACLE KIT INCLUDES RECEPTACLE AS & WEDGE)	
		3	**7K-1181**	3	STRAP-CABLE	
		3	**9G-3695**	8	PLUG (GROMMET SEALING)	
		3	**155-2270**	10	KIT-CONNECTING PLUG (2 PIN)	
		3	**155-2271**	1	KIT-CONNECTING PLUG (4 PIN)	
					(EACH PLUG KIT INCLUDES PLUG AS, WEDGE & INTERFACE SEAL)	
	38	3	**163-5450**	1	HARNESS AS (ENGINE)	
		3	**102-8805**	1	KIT-RECEPTACLE (6 PIN)	
		3	**102-8801**	1	KIT-RECEPTACLE (12 PIN)	
					(EACH RECEPTACLE KIT INCLUDES RECEPTACLE AS & WEDGE)	
		3	**8T-8737**	9	PLUG-SEAL	
		3	**155-2260**	1	KIT-CONNECTING PLUG (3 PIN)	
		3	**155-2270**	2	KIT-CONNECTING PLUG (2 PIN)	
		3	**155-2274**	1	KIT-CONNECTING PLUG (6 PIN)	
					(EACH PLUG KIT INCLUDES PLUG AS, WEDGE & INTERFACE SEAL)	

163-5395 **BATTERY & WIRING GP** *(contd.)* **i01427433**

NOTE	REF NO	GRAPHIC REF	PART NUMBER	QTY	PART NAME 1 2 3 4 5 6 (PRODUCT LEVEL)	SEE PAGE
	39	2	**163-5472**	2	HARNESS AS (LIGHTS)	
					(EACH INCLUDES)	
		2	**102-8802**	1	KIT-RECEPTACLE (2 PIN)	
					(INCLUDES RECEPTACLE AS & WEDGE)	
		2	**155-2270**	1	KIT-CONNECTING PLUG (2 PIN)	
					(INCLUDES PLUG AS, WEDGE & INTERFACE SEAL)	
Y	40	2	**164-7577**	1	SWITCH GP-BYPASS (POWER TRAIN OIL FILTER)	365
Y	41	1	**164-9436**	1	BLOCK GP-POWER	293
	42	3	**174-7875**	1	HORN AS (24 VOLT)(HIGH TONE)	
	43	3	**163-1201**	1	HORN AS (24 VOLT)(LOW TONE)	
	44	2	**5P-1076**	1	WASHER-HARD (13.5X30X4MM THK)	
	45	3	**104-6202**	1	CLIP	
	46	3	**186-0272**	1	BRACKET AS	
		3	**1F-0750**	1	NUT-WELD (3/8-16 THD)	
	47	2,3	**1A-2029**	2	BOLT (3/8-16X1.125 IN)	
	48	2	**2G-8097**	1	MOUNTING	
	49	3	**2M-9780**	1	SEAL-O-RING (19.18MM ID)	
	50	2	**2V-8259**	1	GROMMET	
	51	1	**3B-7255**	1	BUSHING-REDUCING	
	52	3	**3D-5279**	1	GROMMET	
	53	1,2,3	**3J-1907**	7	SEAL-O-RING (11.89MM ID)	
	54	3	**3J-7354**	1	SEAL-O-RING (8.92MM ID)	
	55	2	**3K-0360**	1	SEAL-O-RING (16.36MM ID)	
	56	2	**3K-6060**	2	LOCKNUT	
	57	1,3	**4P-7428**	2	CLIP	
	58	2	**4P-7429**	2	CLIP	
	59	1,2,3	**4P-7581**	15	CLIP	
	60	1,2,3	**4P-8134**	12	CLIP	
	61	1	**5C-6565**	2	BOLT (1/2-13X1.25 IN)	
	62	2	**5I-8307**	2	GROMMET	
	63	1,2,3	**5M-3062**	8	BOLT (3/8-16X0.75 IN)	
	64	2	**5P-1075**	9	WASHER-HARD (10.2X22.5X3MM THK)	
	65	1	**5S-7379**	9	BOLT (3/8-16X0.875 IN)	
	66	3	**5S-7382**	1	BOLT (3/8-16X1.375 IN)	
	67	3	**6V-3965**	1	FITTING AS (QUICK DISCONNECT)	
	68	2	**6V-5051**	1	SEAL-O-RING (75.57MM ID)	
	69	1,2	**6V-8188**	3	NUT (1/2-13 THD)	
	70	2,3	**6V-8801**	12	NUT (3/8-16 THD)	
	71	2	**7B-1251**	4	GROMMET	
	72	2	**7X-0291**	2	BOLT (3/8-16X3.75 IN)	
	73	3	**8S-0023**	1	CLIP (SLOT)	
	74	3	**8S-0024**	1	CLIP (TAB)	
	75	2	**8T-2501**	4	BOLT (3/8-16X2 IN)	
	76	1	**8T-4223**	2	WASHER-HARD (13.5X25.5X3MM THK)	
	77	1,2,3	**8T-4896**	27	WASHER-HARD (10.2X18.5X2.5MM THK)	
	78	1	**178-1781**	1	CLIP	
	79	3	**9S-4191**	1	PLUG	
	80	2	**9X-9730**	2	BATTERY (12 VOLT/DRY)	
					(EACH INCLUDES)	
		2	**7N-0060**	6	VENT AS	
Y	81	2	**134-2252**	1	SENSOR GP-TEMPERATURE (POWER TRAIN OIL)	342
Y	82	1	**134-2252**	1	SENSOR GP-TEMPERATURE (COOLANT)	342
	83	2	**155-2271**	1	KIT-CONNECTING PLUG (4 PIN)	
					(INCLUDES PLUG AS, WEDGE & INTERFACE SEAL)	

B-USE AS REQUIRED
E-ORDER BY THE CENTIMETER
Y-SEPARATE ILLUSTRATION

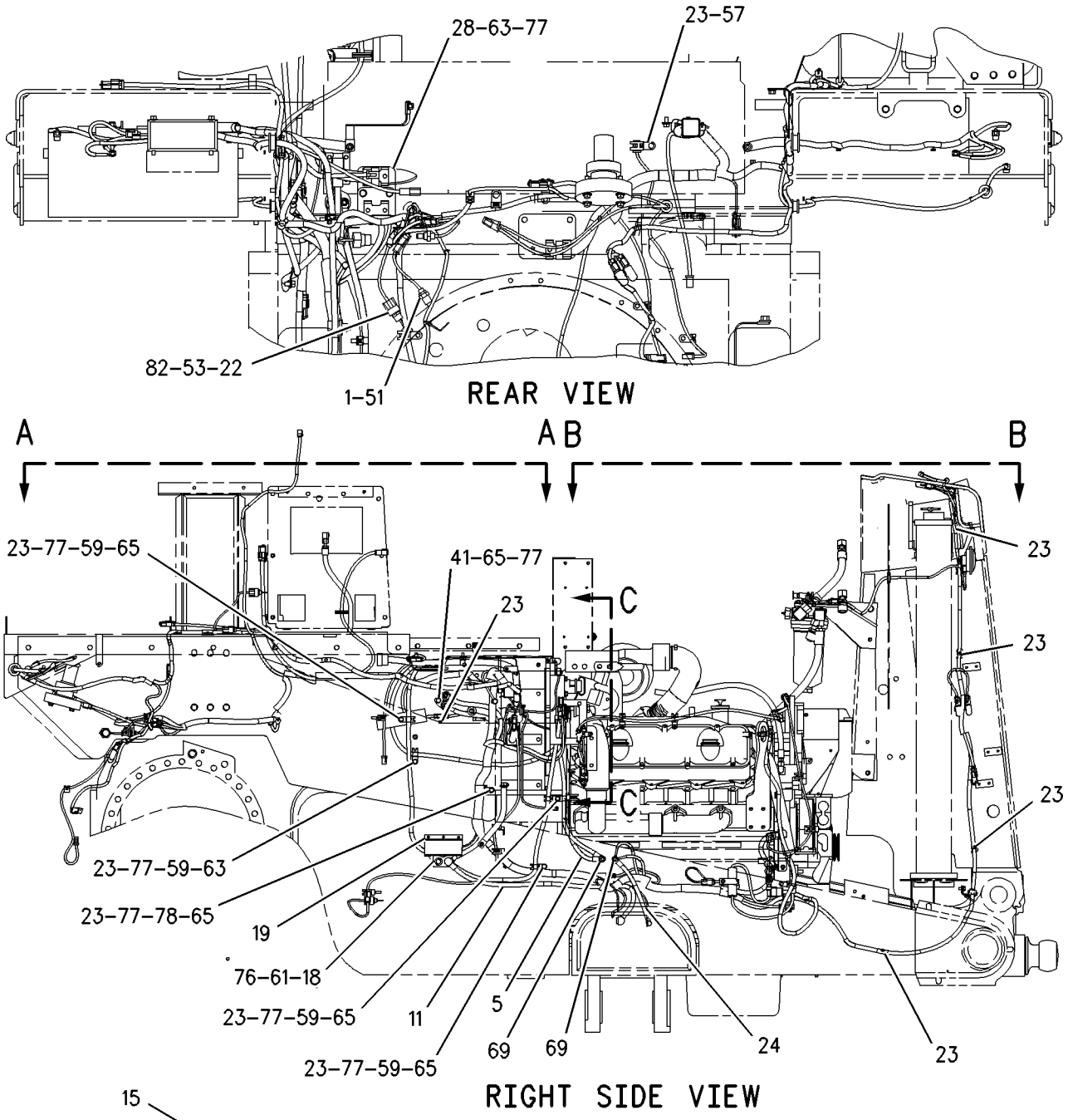

GRAPHIC #1 g00753339

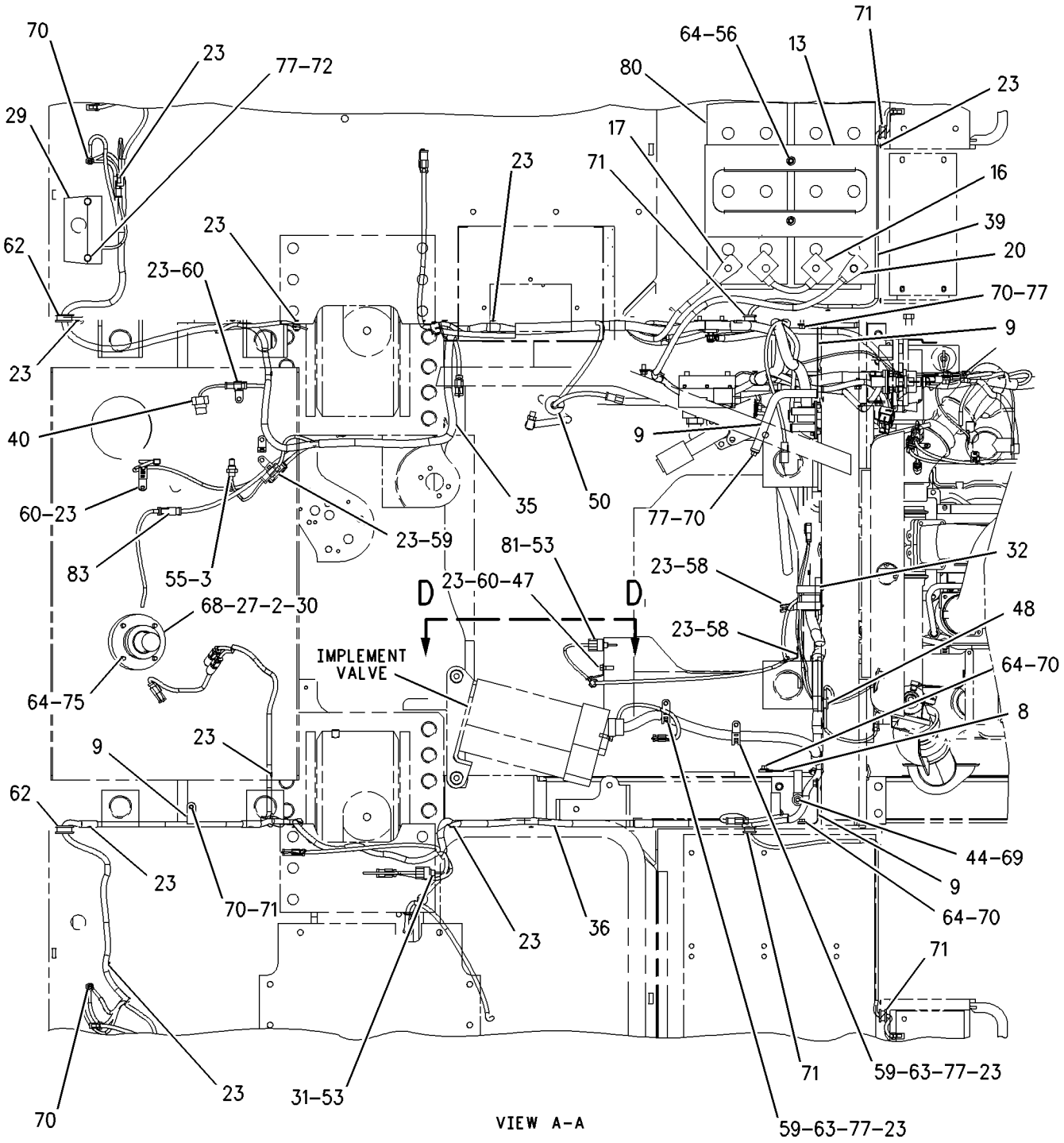

REFER TO ALL ILLUSTRATIONS OF THIS GROUP FOR AUXILIARY VIEWS

GRAPHIC #2

g00753340

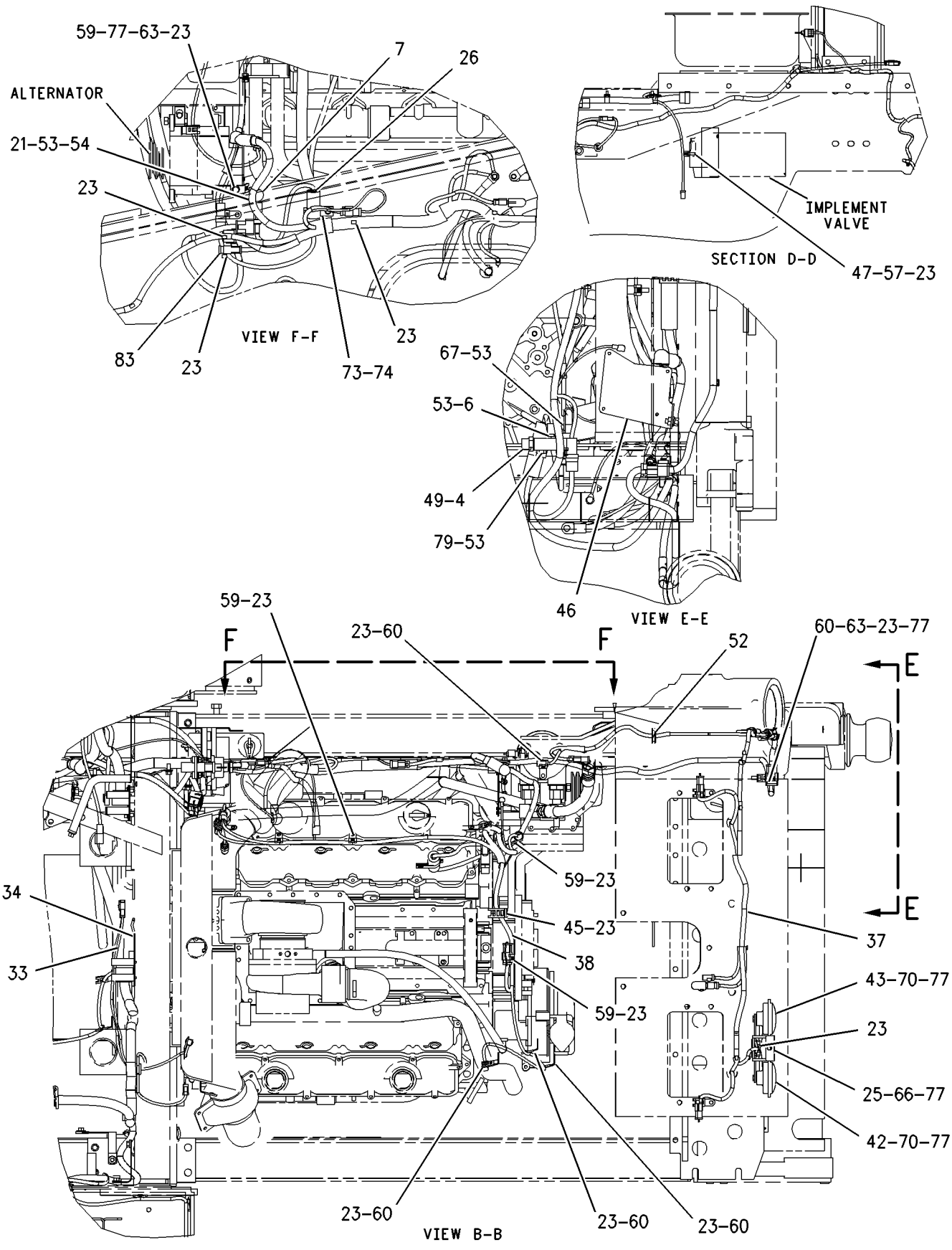

GRAPHIC #3

g00753341

164-9436 BLOCK GP-POWER

S/N: ABK1-UP
PART OF 163-5395 BATTERY & WIRING GP
AN ATTACHMENT

SMCS-1408 **i01446629**

NOTE	REF NO	GRAPHIC REF	PART NUMBER	QTY	PART NAME 1 2 3 4 5 6 (PRODUCT LEVEL)	SEE PAGE
	1	1	**1D-5117**	1	NUT-JAM (1/2-13 THD)	
	2	1	**3K-6060**	1	LOCKNUT	
	3	1	**5P-1075**	2	WASHER-HARD (10.2X22.5X3MM THK)	
	4	1	**5P-1076**	2	WASHER-HARD (13.5X30X4MM THK)	
	5	1	**6V-8801**	1	NUT (3/8-16 THD)	
	6	1	**9B-7237**	1	BOLT (3/8-16X1.25 IN)	
	7	1	**5P-2566**	1	BOLT (1/2-13X1.5 IN)	
	8	1	**9X-0941**	1	NUT (1/2-13 THD)	

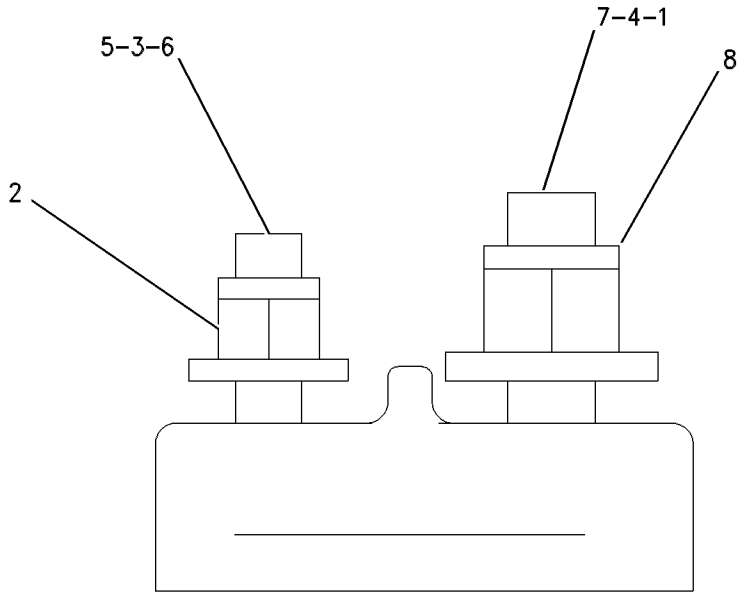

GRAPHIC #1 g00520404

165-5068 CONNECTION GP-ELECTRICAL

S/N: 5XD1-UP; 48W41541-UP
PART OF 163-5784, 198-9948 ENGINE AR
ALSO AN ATTACHMENT

SMCS-4459 **i01446630**

NOTE	REF NO	GRAPHIC REF	PART NUMBER	QTY	PART NAME 1 2 3 4 5 6 (PRODUCT LEVEL)	SEE PAGE
	1	1	**100-5725**	1	STUDBOLT (3/8-16 X 1 1/4 IN)	
	3	1	**5P-1075**	1	WASHER-HARD (10.2X22.5X3MM THK)	
	4	1	**6V-8801**	1	NUT (3/8-16 THD)	
	5	1	**8T-4896**	2	WASHER-HARD (10.2X18.5X2.5MM THK)	

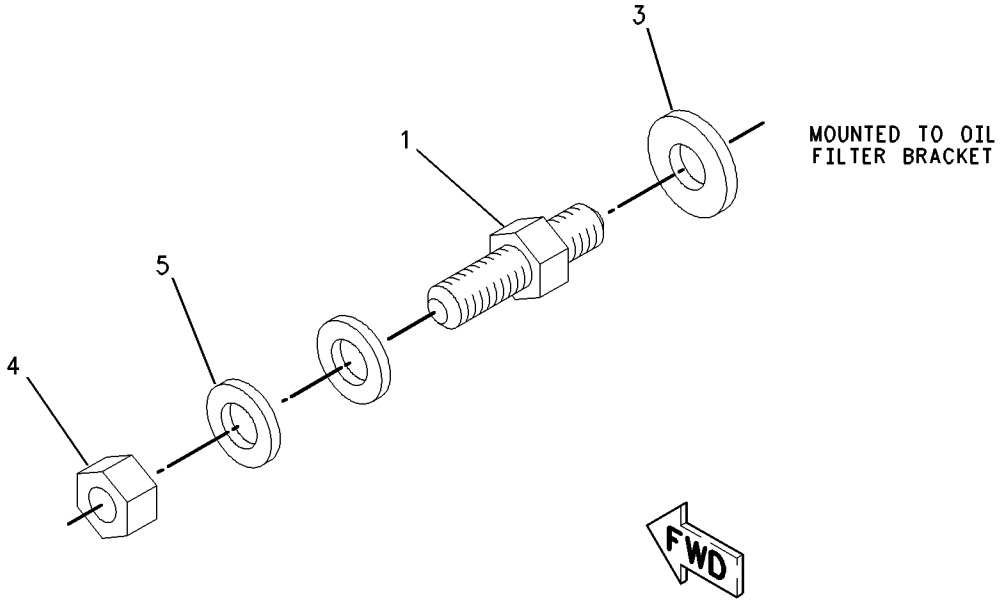

GRAPHIC #1 g00687081

MEMORANDA

196-3736 CONTROL & MTG GP-ENGINE ELEK

S/N: 5XD1-UP

PART OF 163-5784 ENGINE AR

SMCS-1901 **i01446631**

NOTE	REF NO	GRAPHIC REF	PART NUMBER	QTY	PART NAME 1 2 3 4 5 6 (PRODUCT LEVEL)	SEE PAGE
	1	1	**1B-4971**	2	SPACER (13/32X1X1 IN THK)	
	2	1	**9G-8661**	1	SPACER	
Y	3	1	*105-6122*	1	CONTROL GP-ENGINE ELECTRONIC	298
	4	1	**115-6469**	4	SPACER	
	5	1	**4F-3508**	1	BOLT (5/16-18X6.5 IN)	
	6	1	**5L-1761**	1	BOLT (5/16-18X5.5 IN)	
	7	1	**8H-8769**	2	BOLT (5/16-18X4.25 IN)	
	8	1	**8T-9655**	8	MOUNT (ISOLATION)	
	9	1	**9N-0869**	6	WASHER-HARD (8.8X25.5X2MM THK)	

Y-SEPARATE ILLUSTRATION

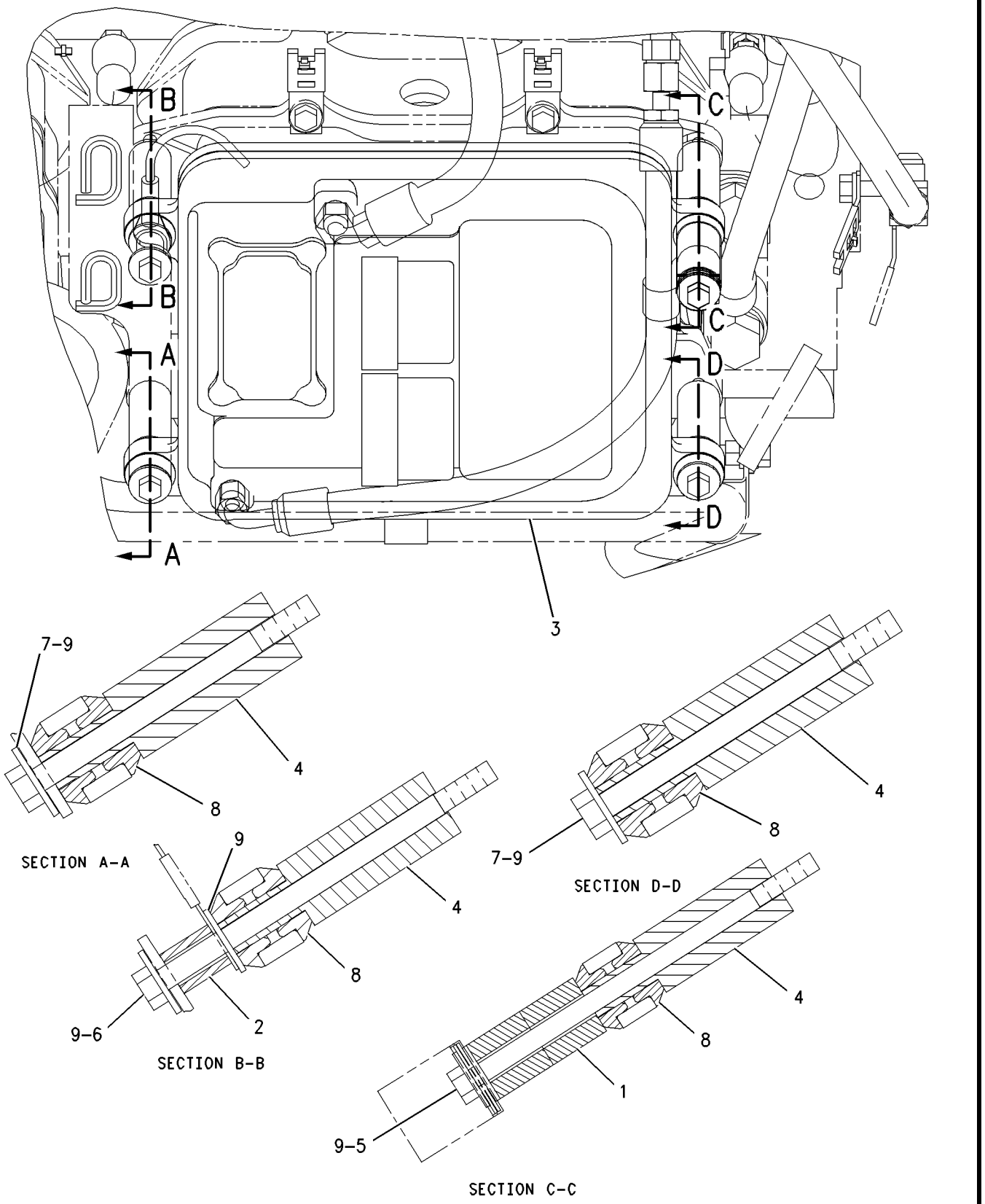

GRAPHIC #1 g00753559

105-6122 CONTROL GP-ENGINE ELECTRONIC

S/N: 5XD1-UP

ADEM-II

PART OF 196-3736 CONTROL & MTG GP-ENGINE ELEK

SMCS-1901 **i01281563**

NOTE	REF NO	GRAPHIC REF	PART NUMBER	QTY	PART NAME 1 2 3 4 5 6 (PRODUCT LEVEL)	SEE PAGE
Y	1	1	**172-0802**	1	CONTROL GP-ENGINE ELECTRONIC (ADEM-II)	299

Y-SEPARATE ILLUSTRATION

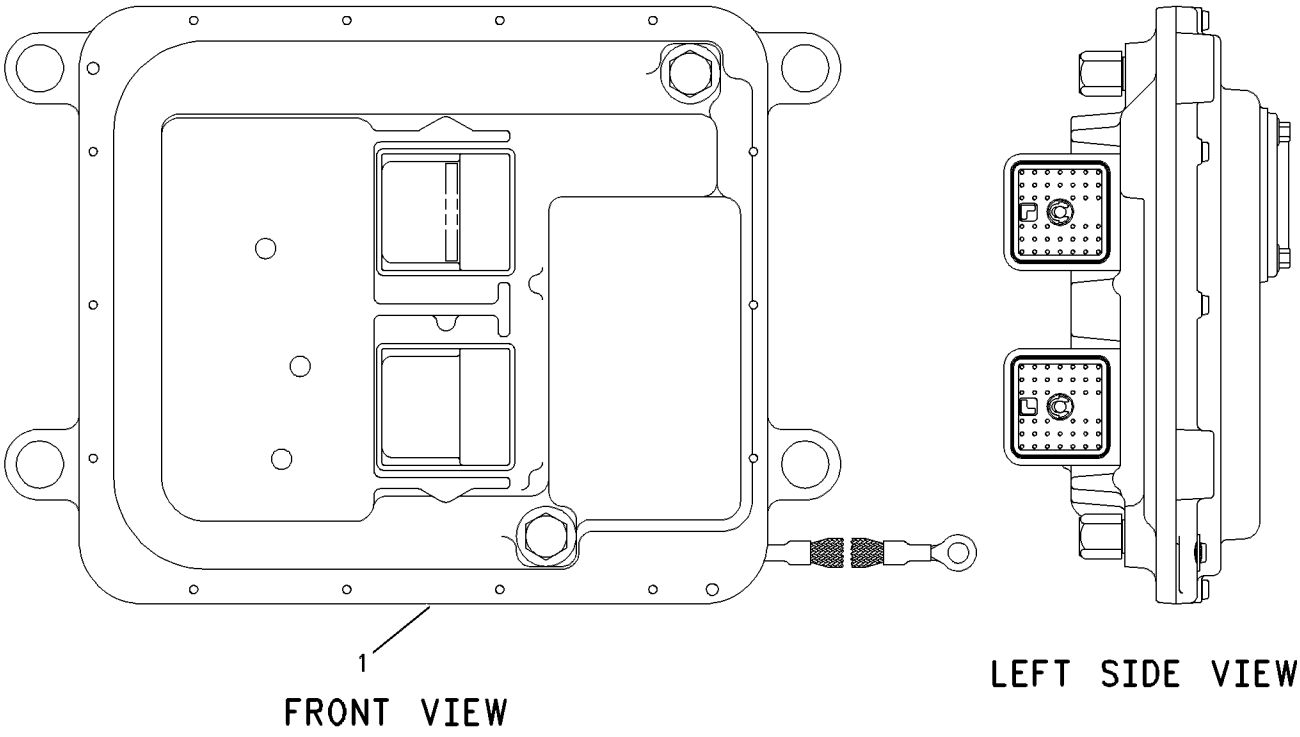

GRAPHIC #1 g00592489

ELECTRICAL AND STARTING SYSTEM

172-0802 CONTROL GP-ENGINE ELECTRONIC

S/N: 5XD1-UP
ADEM-II
PART OF 105-6122 CONTROL GP-ENGINE ELECTRONIC

SMCS-1901 **i01446632**

NOTE	REF NO	GRAPHIC REF	PART NUMBER	QTY	PART NAME 1 2 3 4 5 6 (PRODUCT LEVEL)	SEE PAGE
	2	1	**111-8411**	1	COVER	
	3	1	**6V-1179**	1	SEAL-O-RING (76.62MM ID)	
M	4	1	**3E-6900**	4	BOLT	
	5	1	**7X-6315**	1	STRAP-GROUNDING	
	6	1	**126-7574**	1	SCREW-PAN HEAD	

M-METRIC PART

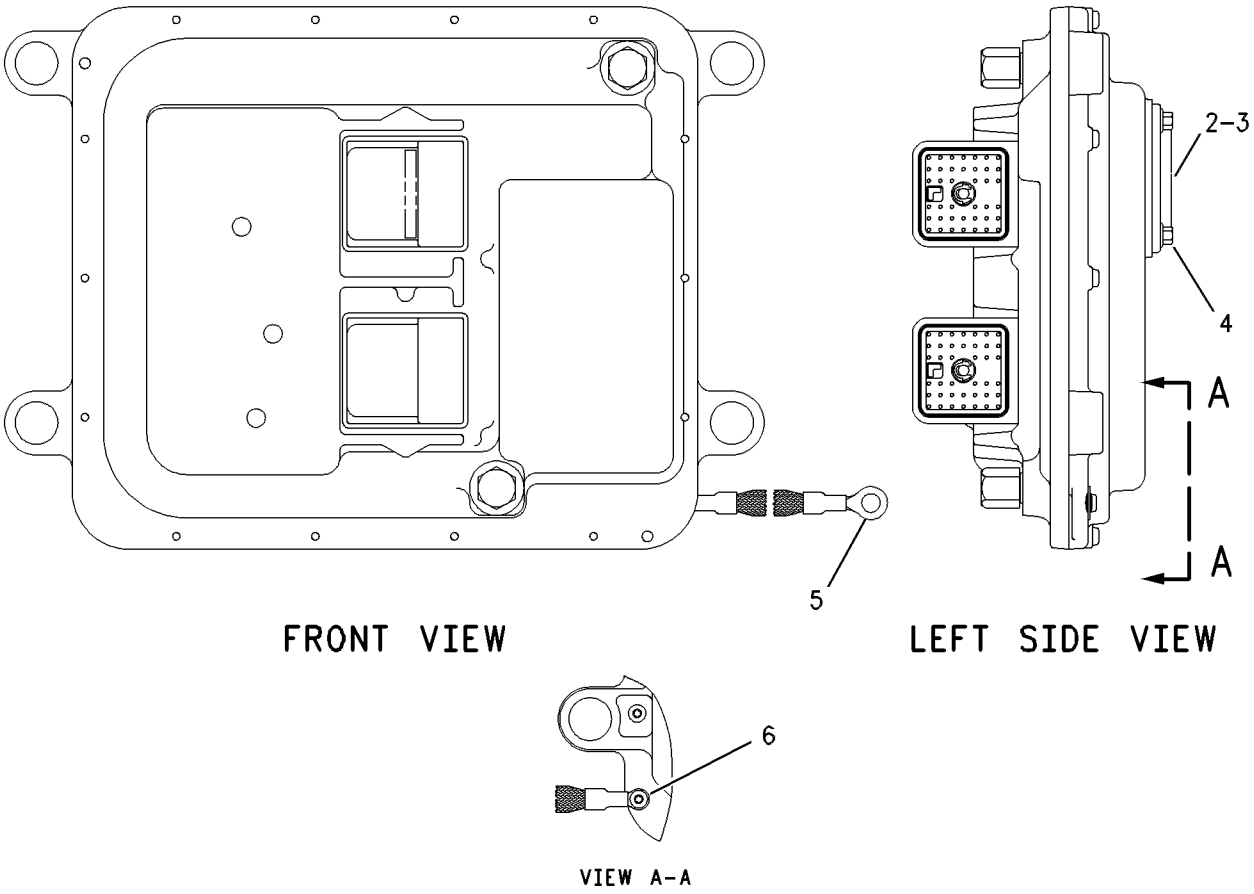

GRAPHIC #1 g00595635

ELECTRICAL AND STARTING SYSTEM

159-5200 CONVERTER GP-ELECTRICAL

S/N: ABK1-UP
(24 VOLTS TO 12 VOLTS)(25 AMP)
AN ATTACHMENT

SMCS-1421 **i01289073**

NOTE	REF NO	GRAPHIC REF	PART NUMBER	QTY	PART NAME 1 2 3 4 5 6 (PRODUCT LEVEL)	SEE PAGE
	1	1	**3E-8646**	1	CONVERTER-POWER (24 VOLT TO 12 VOLT)(25 AMP)	
		1	**8T-9636**	2	FUSE (30 AMP)	
	2	1	**9X-6772**	3	STRAP-CABLE (1.97IN DIA)	
	3	1	**160-0633**	1	HARNESS AS	
	4	1	**9X-2498**	8	SCREW-HEX FLANGE	

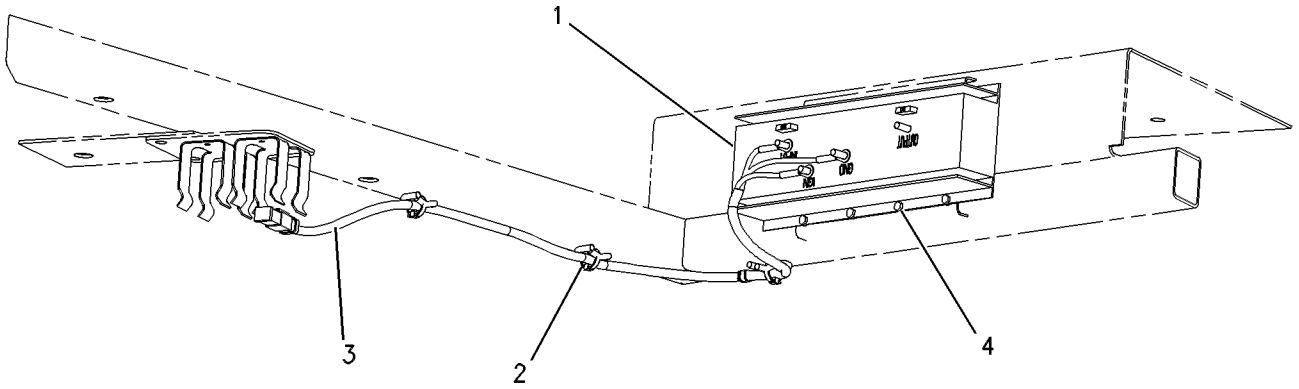

GRAPHIC #1 g00573516

MEMORANDA

6I-9228 HEATER GP-FUEL

S/N: ABK1-UP
FOR USE WITH CAB HEATER
AN ATTACHMENT

SMCS-1296 **i01623045**

NOTE	REF NO	GRAPHIC REF	PART NUMBER	QTY	PART NAME 1 2 3 4 5 6 (PRODUCT LEVEL)	SEE PAGE
I	1	1	**7E-6084**	1	HOSE AS	
	2	1	**6V-8398**	4	SEAL-O-RING	
C	3	1	**111-9289**	1	HEATER AS	
		1	**2M-9780**	2	SEAL-O-RING	
		1	**111-9827**	2	ADAPTER	
	4	1	**9X-2488**	9	CLAMP-HOSE	
C	5	1	**3K-0360**	2	SEAL-O-RING	
	6	1	**8M-2773**	2	CLIP	
	7	1	**7C-0754**	2	TEE-HOSE	
I	8	1	**9W-1709**	1	HOSE AS	
C	9	1	**6V-8639**	2	CONNECTOR	
	10	1	**5P-6994**	1	CLIP	
	11	1	**106-5823**	2	HOSE	
	12	1	**9W-8394**	1	ORIFICE	
	13	1	**101-8240**	1	BRACKET	
	14	1	**4L-6454**	6	BOLT (3/8-16X1 IN)	
		1	**8T-4896**	6	WASHER-HARD (10.2X18.5X2.5MM THK)	
	15	1	**5C-6565**	1	BOLT (1/2-13X1.125 IN)	
	16	1	**6V-8188**	1	NUT (1/2-13 THD)	
		1	**8T-4223**	2	WASHER-HARD (13.5X25.5X3MM THK)	

C-CHANGE FROM PREVIOUS TYPE
I-SEE HOSE FABRICATION GUIDE

6I-9228 **HEATER GP-FUEL** ***(contd.)*** **i01623045**

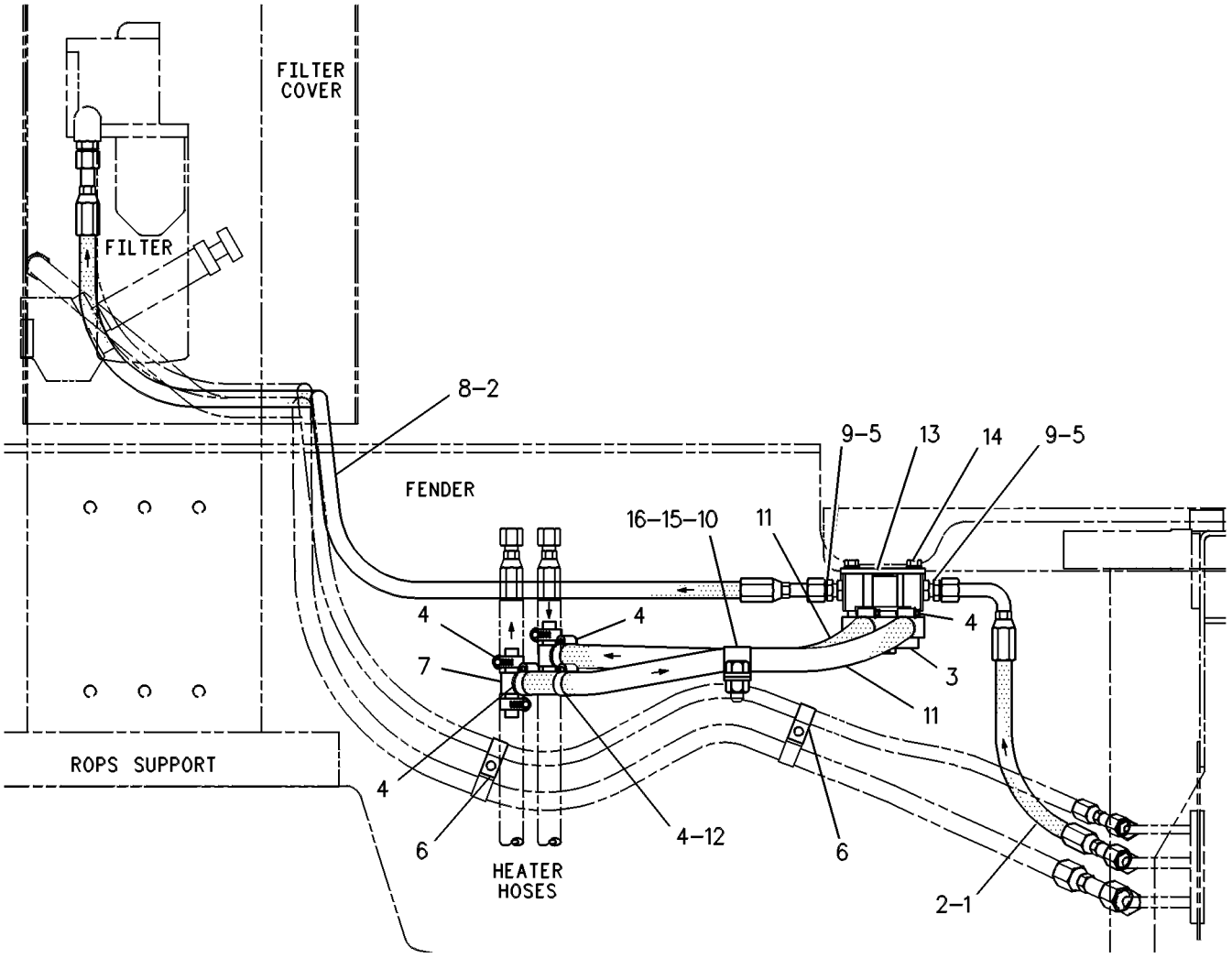

GRAPHIC #1

g00256533

163-8439 HEATER GP-FUEL

S/N: ABK1-UP
FOR USE WITH CAB HEATER
AN ATTACHMENT

SMCS-1296 **i01101089**

NOTE	PART NUMBER	QTY	PART NAME 1 2 3 4 5 6 (PRODUCT LEVEL)	SEE PAGE
	4L-6454	6	BOLT (3/8-16X1.0IN)	
	5C-6565	1	BOLT (1/2-13X1.25IN)	
	101-8240	1	BRACKET	
	9X-2488	9	CLAMP-HOSE	
	5P-6994	1	CLIP (25.5MM ID)	
	8M-2773	2	CLIP (17.46MM ID)	
	6V-8639	2	CONNECTOR-SEAL	
	111-9289	1	HEATER AS	
	2M-9780	2	SEAL-O-RING (19.18MM ID)	
	111-9827	2	ADAPTER	
	106-5823	2	HOSE	
I	**7E-6084**	1	HOSE AS	
I	**9W-1709**	1	HOSE AS	
	6V-8188	1	NUT (1/2-13 THD)	
	9W-8394	1	ORIFICE	
	6V-8398	4	SEAL-O-RING (12.47MM ID)	
	3K-0360	2	SEAL-O-RING (16.36MM ID)	
	7C-0754	2	TEE-HOSE	
	8T-4223	2	WASHER-HARD (3MM THK)	
	8T-4896	6	WASHER-HARD (2.5MM THK)	

I-SEE HOSE FABRICATION GUIDE

135-6242 HEATER GP-JACKET WATER

S/N: ABK1-UP
120 VOLT, 30 AMPERE
AN ATTACHMENT

SMCS-1383 **i01442434**

NOTE	REF NO	GRAPHIC REF	PART NUMBER	QTY	PART NAME 1 2 3 4 5 6 (PRODUCT LEVEL)	SEE PAGE
	1	1	**135-3678**	1	CORD AS-JACKET WATER HEATER	
	2	1	**4P-8134**	2	CLIP	
	3	1	**7N-0210**	1	ADAPTER-HEATER	
		1	**4N-0864**	1	GASKET	
	4	1	**8T-7008**	5	BOLT (3/8-16X3 IN)	
	5	1	**9G-6655**	2	ELEMENT AS-JACKET WATER HEATER (120 VOLTS/1500 WATTS)	
	6	1	**4L-6454**	1	BOLT (3/8-16X1 IN)	
	7	1	**4P-7581**	4	CLIP	
	8	1	**7K-1181**	9	STRAP-CABLE	
	9	1	**4P-7428**	2	CLIP	

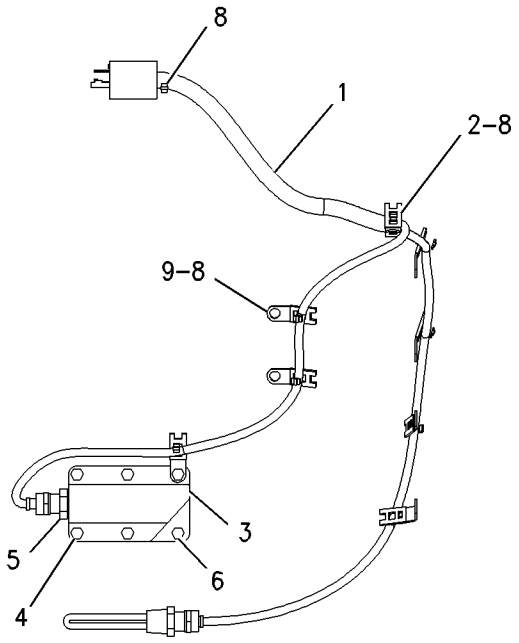

LEFT SIDE VIEW

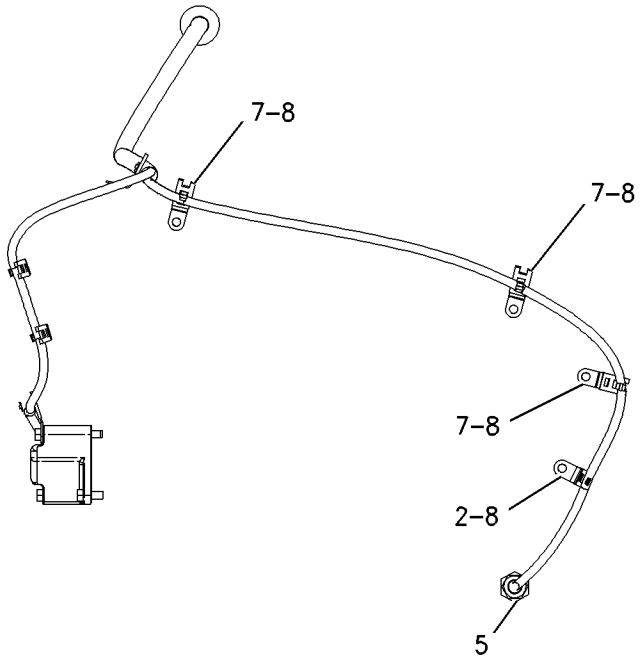

RIGHT SIDE VIEW

GRAPHIC #1 g00794240

135-6244 HEATER GP-JACKET WATER

S/N: ABK1-UP
240 VOLT, 30 AMPERE
AN ATTACHMENT

SMCS-1383 **i01365907**

NOTE	REF NO	GRAPHIC REF	PART NUMBER	QTY	PART NAME 1 2 3 4 5 6 (PRODUCT LEVEL)	SEE PAGE
	1	1	**4N-0864**	1	GASKET	
	2	1	**7N-0210**	1	ADAPTER-HEATER	
	3	1	**6T-3764**	2	ELEMENT AS-JACKET WATER HEATER	
	4	1	**9X-6772**	9	STRAP-CABLE (1.97 IN DIA)	
	5	1	**4L-6454**	1	BOLT (3/8-16X1 IN)	
	6	1	**4P-7428**	2	CLIP	
	7	1	**4P-7581**	5	CLIP	
	8	1	**4P-8134**	2	CLIP	
	9	1	**8T-7008**	5	BOLT (3/8-16X3 IN)	
	10	1	**135-3679**	1	CORD AS-JACKET WATER HEATER	

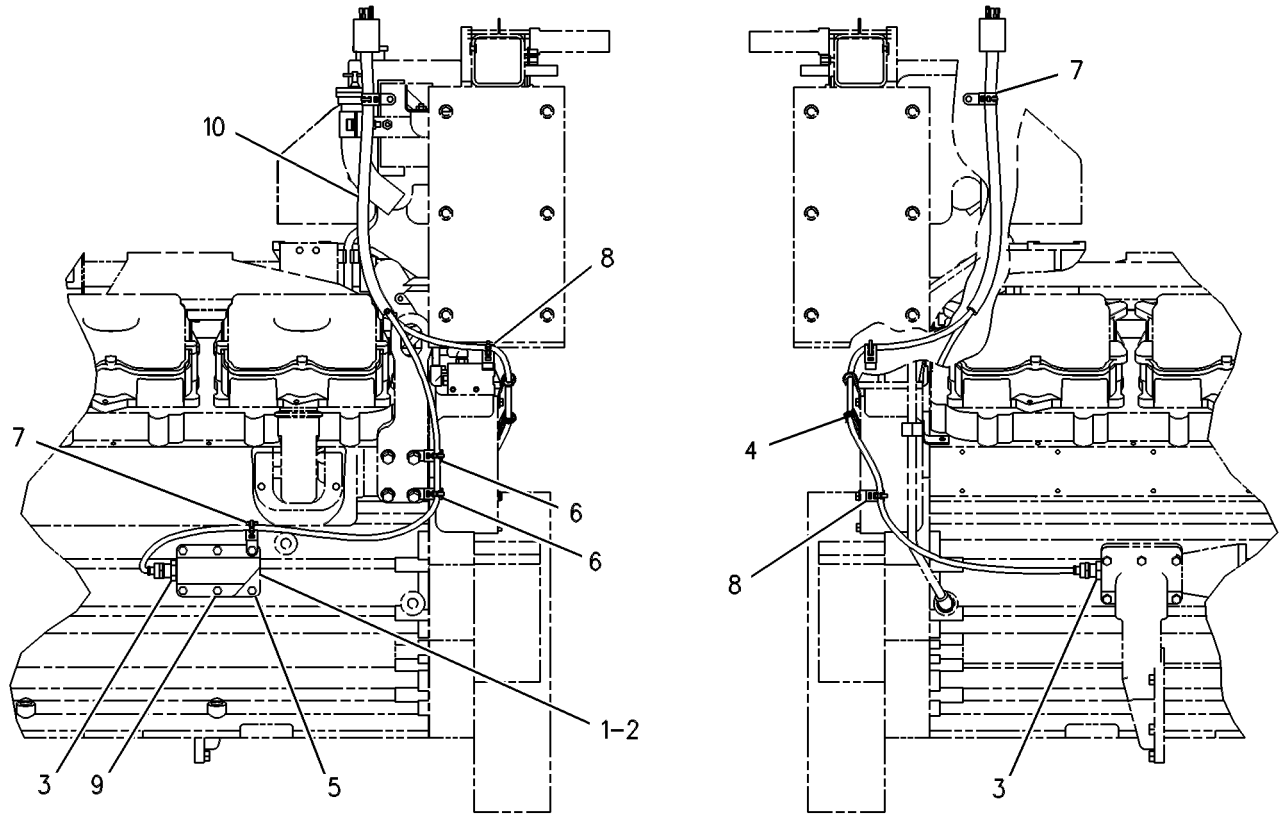

GRAPHIC #1 g00266817

9W-0742 JUNCTION BLOCK GP

S/N: ABK1-UP

PART OF 163-5395 BATTERY & WIRING GP, 148-5381 STARTING AR-COLD WEATHER AN ATTACHMENT

SMCS-1408 **i01217383**

NOTE	REF NO	GRAPHIC REF	PART NUMBER	QTY	PART NAME 1 2 3 4 5 6 (PRODUCT LEVEL)	SEE PAGE
	1	1	**8C-6358**	1	JUNCTION BLOCK AS	
	1A	1	**8T-3519**	3	BOLT-BRONZE	
BD	2	1	**6V-2722**		TUBE-SHRINKABLE	
	3	1	**7F-0560**	6	WASHER (2.57MM THK)	
	4	1	**8T-3518**	6	NUT-FULL	

B-USE AS REQUIRED
D-ORDER BY THE METER

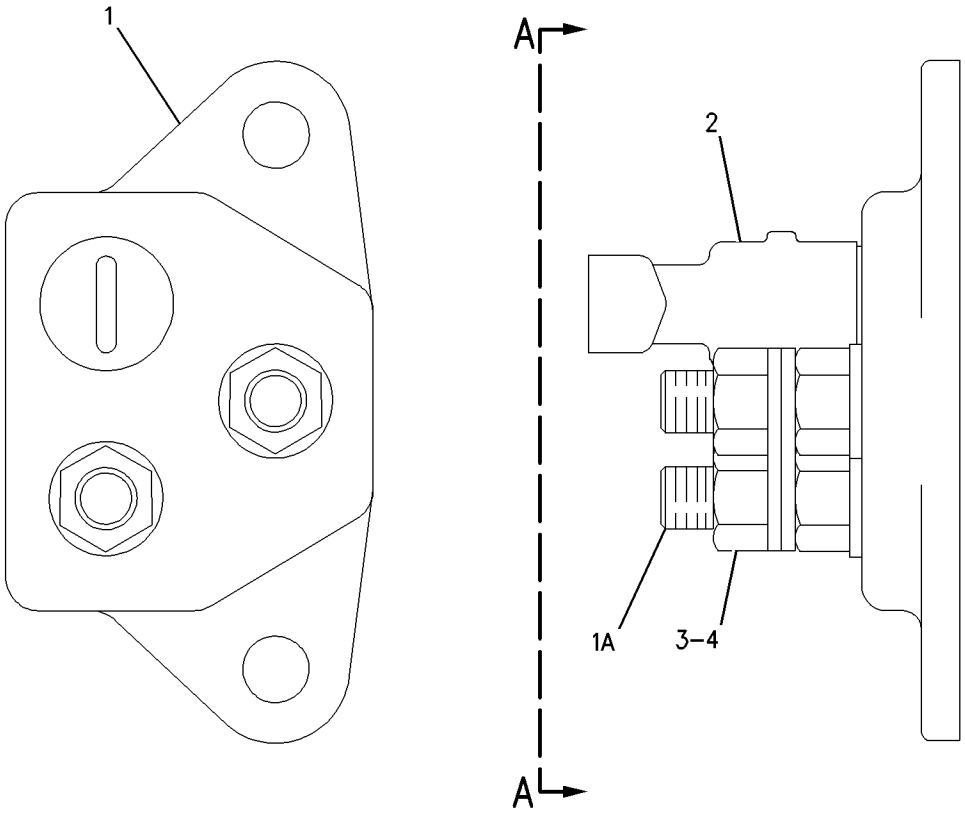

VIEW A–A

GRAPHIC #1 g00650721

3E-6389 LAMP GP-DOME

S/N: ABK1-UP
24 VOLT. WITH SWITCH
PART OF 157-3737 CAB GP
AN ATTACHMENT

SMCS-1429 **i01654414**

NOTE	REF NO	GRAPHIC REF	PART NUMBER	QTY	PART NAME 1 2 3 4 5 6 (PRODUCT LEVEL)	SEE PAGE
	1	1	**7N-9943**	1	LAMP (24 VOLT) (DOME)	
	2	1	**102-8803**	1	KIT-RECEPTACLE (3 PIN)	
					(INCLUDES RECEPTACLE AS & WEDGE)	
	3	1	**3E-3371**	1	WEDGE-RECEPTACLE LOCK (3 PIN)	
	4	1	**8T-8729**	3	PIN-CONNECTOR	
	5	1	**7T-0020**	1	LENS (DOME)	

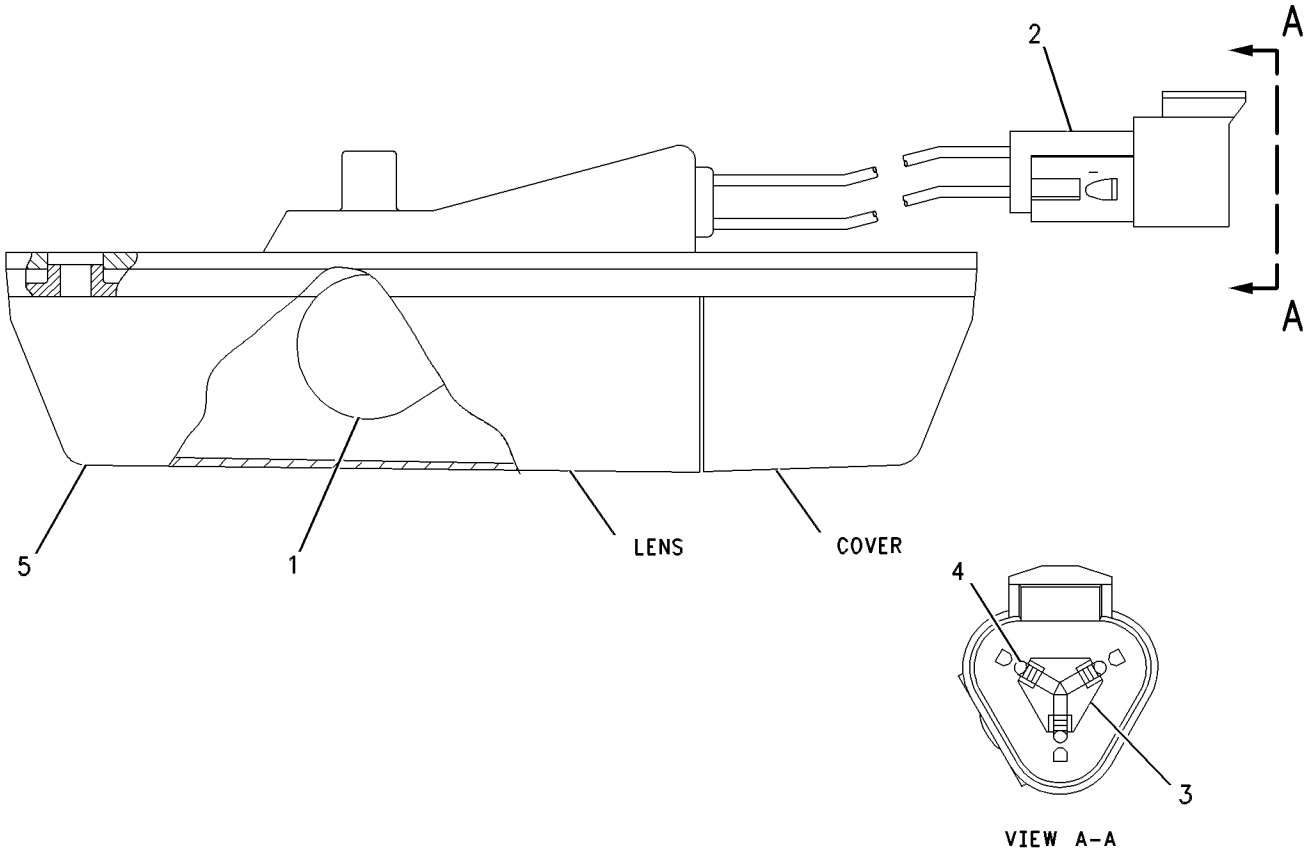

GRAPHIC #1 g00647928

147-0319 LAMP GP-FLOOD

S/N: ABK1-UP; 9MP1-UP; 9RP1-UP
24 VOLT. SUSPENDED
PART OF 152-8427 LIGHTING GP, 125-2001 LIGHTING GP-FLOOD
AN ATTACHMENT

SMCS-1434 **i01647344**

NOTE	REF NO	GRAPHIC REF	PART NUMBER	QTY	PART NAME 1 2 3 4 5 6 (PRODUCT LEVEL)	SEE PAGE
	1	1	**9X-3463**	1	LAMP (24 VOLT) (FLOOD)(65 WATT)	
	2	1	**158-0250**	1	BODY AS-LAMP	
	3	1	**158-0248**	1	LENS AS (FLOODLIGHT)	
	4	1	**158-0252**	1	BEZEL	
	5	1	**188-8849**	2	CLAMP	

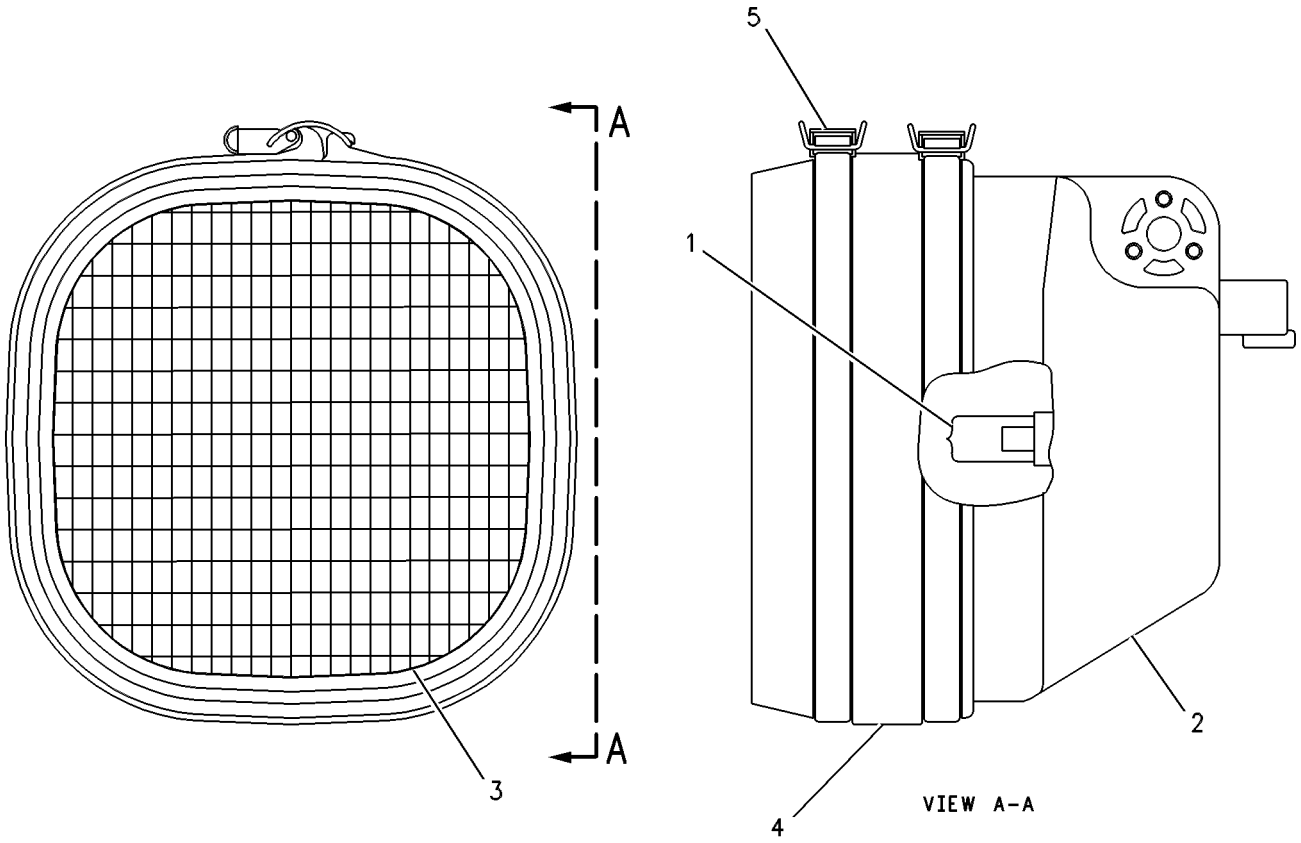

GRAPHIC #1 g00458549

153-2073 LAMP GP-FLOOD

S/N: ABK1-UP; 5RP1-UP; 7HP1-UP
24 VOLT. VERTICAL
PART OF 134-0978, 8E-7886 LIGHTING GP-FLOOD
ALSO AN ATTACHMENT

SMCS-1434 **i01644637**

NOTE	REF NO	GRAPHIC REF	PART NUMBER	QTY	PART NAME 1 2 3 4 5 6 (PRODUCT LEVEL)	SEE PAGE
	1	1	**9X-3463**	1	LAMP (24 VOLT) (FLOOD)	
	2	1	**158-0250**	1	BODY AS-LAMP	
	3	1	**158-0248**	1	LENS AS (FLOODLIGHT)	
	4	1	**158-0252**	1	BEZEL	
	5	1	**188-8849**	2	CLAMP	

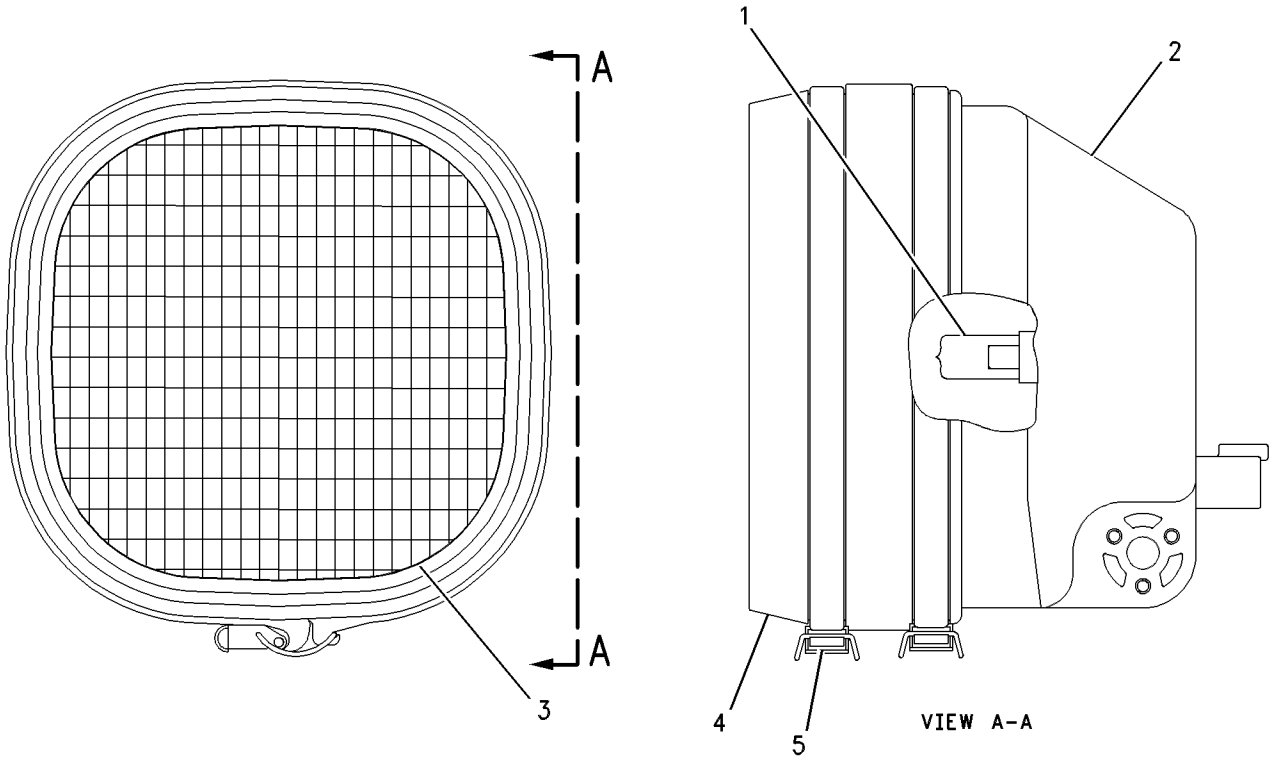

GRAPHIC #1 g00449633

MEMORANDA

114-2858 LIGHTING AR-CYLINDER

S/N: ABK1-UP

FOR USE WITH BULLDOZER LIFT CYLINDERS AND WASTE DISPOSAL AR AN ATTACHMENT

SMCS-1429 **i01514507**

NOTE	REF NO	GRAPHIC REF	PART NUMBER	QTY	PART NAME 1 2 3 4 5 6 (PRODUCT LEVEL)	SEE PAGE
CY	1	1	*152-8427*	2	LIGHTING GP	315
	2	1	**115-1032**	2	BRACKET	
	3	1	**8E-1476**	1	PLATE AS-RH	
		1	**8T-5912**	6	NUT-WELD (3/8-16 THD)	
	4	1	**115-5026**	1	PLATE AS-LH	
		1	**8T-5912**	4	NUT-WELD (3/8-16 THD)	
	5	1	**8E-1477**	2	PLATE	
	6	1	**6V-1889**	4	CLIP	
	7	1	**4D-7794**	4	CLIP	
	8	1	**8T-2502**	18	BOLT (3/8-16X1.125 IN)	
	9	1	**5P-1075**	46	WASHER-HARD (10.2X22.5X3MM THK)	
C	10	1	**6V-8801**	18	NUT (3/8-16 THD)	
C	11	1	**7K-1181**	4	STRAP-CABLE	
C	12	1	**161-6601**	2	HARNESS AS	
	13	1	**9B-7237**	12	BOLT (3/8-16X1.25 IN)	
C	14	1	**4P-7581**	4	CLIP	
C	15	1	**5S-7379**	2	BOLT (3/8-16X0.875 IN)	
C	16	1	**8T-4896**	4	WASHER-HARD (10.2X18.5X2.5MM THK)	
	17	1	**6S-4039**	2	GROMMET	

C-CHANGE FROM PREVIOUS TYPE
Y-SEPARATE ILLUSTRATION

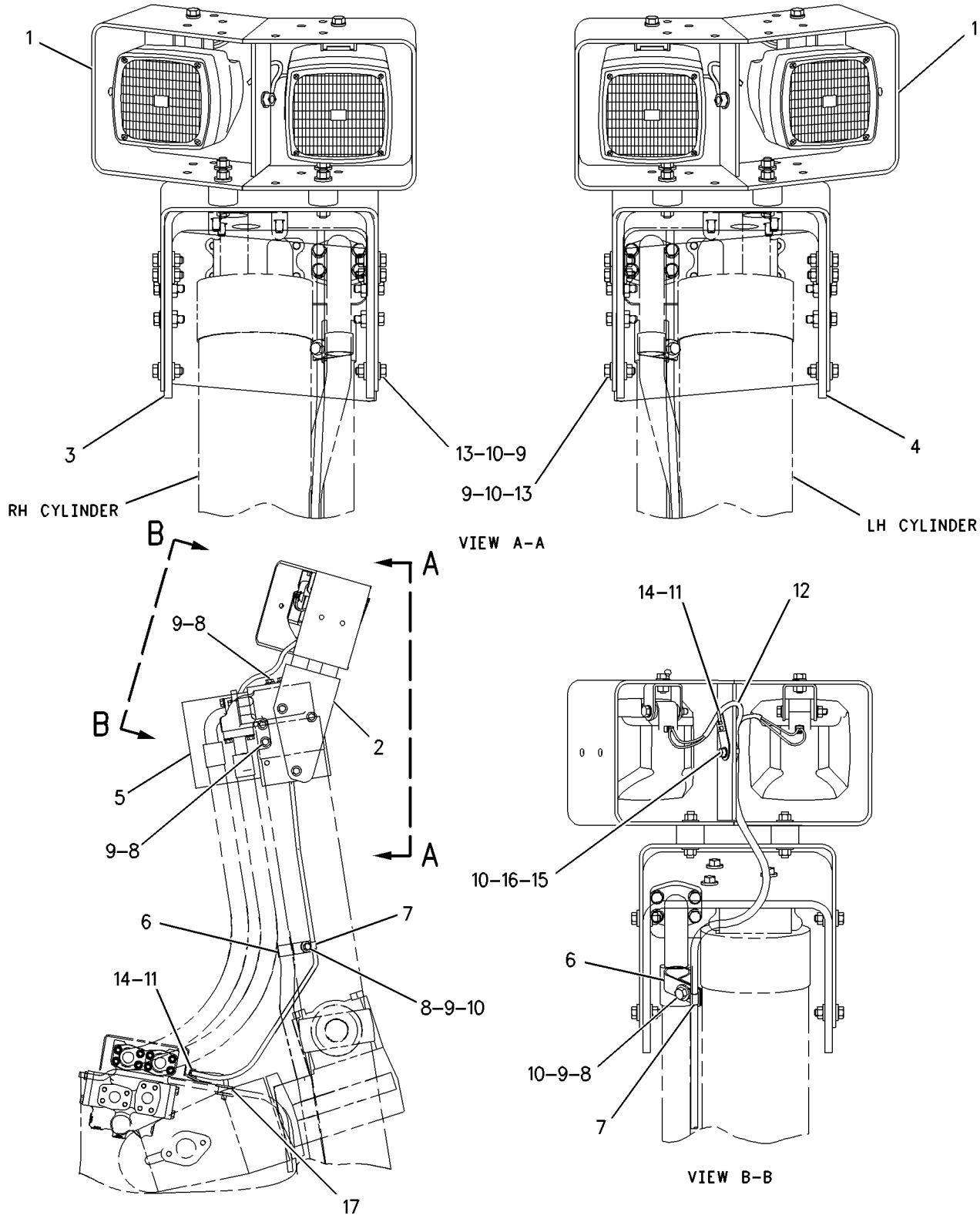

GRAPHIC #1

g00793575

102-4394 LIGHTING AR-REAR

S/N: ABK1-UP
4 LAMP
AN ATTACHMENT

SMCS-1429 **i01401034**

NOTE	REF NO	GRAPHIC REF	PART NUMBER	QTY	PART NAME 1 2 3 4 5 6 (PRODUCT LEVEL)	SEE PAGE
	1	1	**9X-6772**	17	STRAP-CABLE	
	2	1	**5D-7635**	2	GROMMET (22.22MM OD)	
B	3	1	**1Q-1592**	1	PLATE AS	
		1	**7T-1099**	4	LINK	
	4	1	**114-9365**	2	PLATE	
	5	1	**8T-9397**	2	BOLT (3/4-10X1.25 IN)	
	6	1	**7X-0582**	2	WASHER-HARD (20X44.5X6MM THK)	
C	7	1	**153-0976**	1	HARNESS AS	
CY	8	1	*152-8427*	2	LIGHTING GP	315
	9	1	**4L-6454**	8	BOLT (3/8-16X1 IN)	
	10	1	**5P-1075**	8	WASHER-HARD (10.2X22.5X3MM THK)	
	11	1	**115-1889**	1	HARNESS AS	

B-USE AS REQUIRED
C-CHANGE FROM PREVIOUS TYPE
Y-SEPARATE ILLUSTRATION

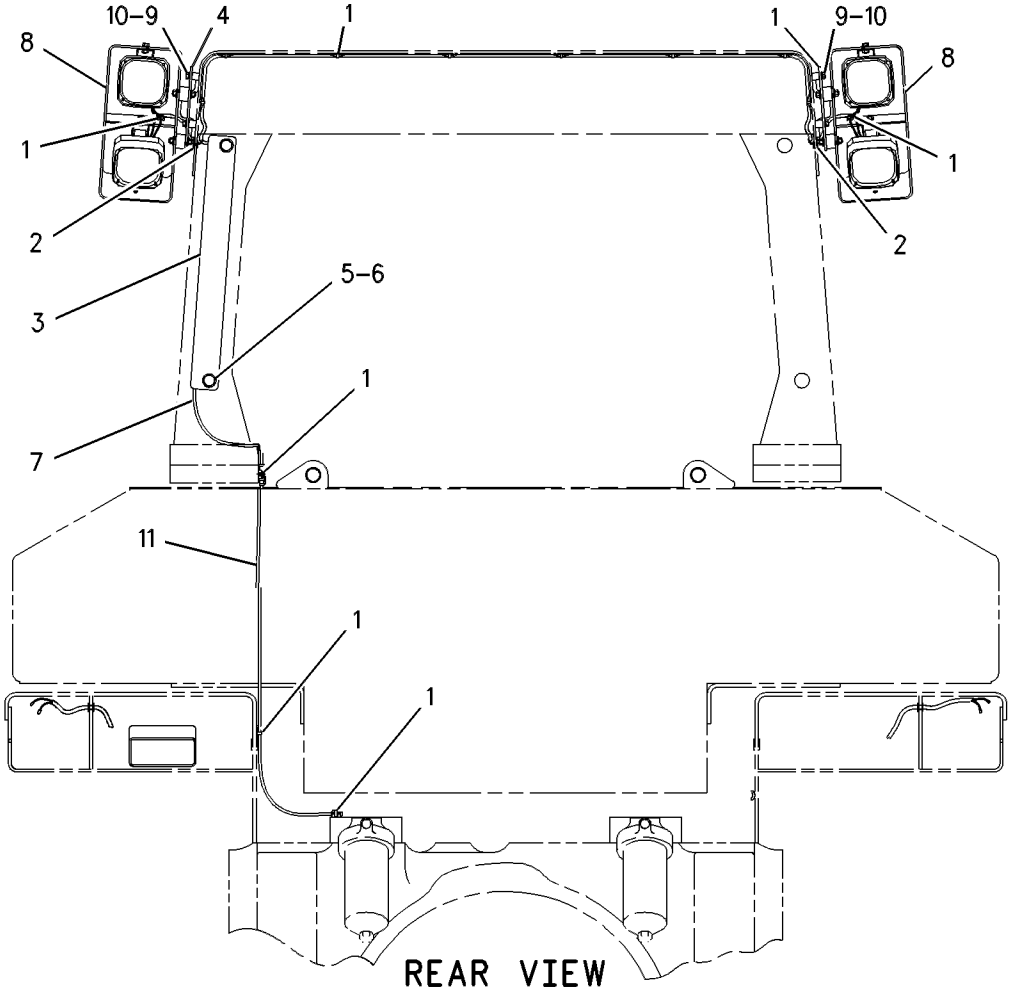

GRAPHIC #1 g00448755

152-8427 LIGHTING GP

S/N: ABK1-UP

PART OF 114-2858 LIGHTING AR-CYLINDER, 102-4394 LIGHTING AR-REAR AN ATTACHMENT

SMCS-1429 **i01401036**

NOTE	REF NO	GRAPHIC REF	PART NUMBER	QTY	PART NAME 1 2 3 4 5 6 (PRODUCT LEVEL)	SEE PAGE
	1	1	**9W-4361**	4	MOUNT	
	2	1	**8T-4896**	2	WASHER-HARD (10.2X18.5X2.5MM THK)	
	3	1	**8T-4224**	4	WASHER-HARD (8.8X16X2MM THK)	
Y	4	1	**147-0319**	2	LAMP GP-FLOOD (24 VOLT)(SUSPENDED)	309
	5	1	**5M-3062**	2	BOLT (3/8-16X.75 IN)	
	6	1	**5P-1075**	8	WASHER-HARD (10.2X22.5X3MM THK)	
	7	1	**5P-2955**	2	BOLT (5/16-18X2.50 IN)	
	8	1	**6V-8189**	2	NUT (5/16-18 THD)	
	9	1	**6V-8801**	8	NUT (3/8-16 THD)	
	10	1	**114-9363**	1	GUARD AS	
	11	1	**7T-1099**	2	LINK	
	12	1	**111-8314**	2	BRACKET AS	

Y-SEPARATE ILLUSTRATION

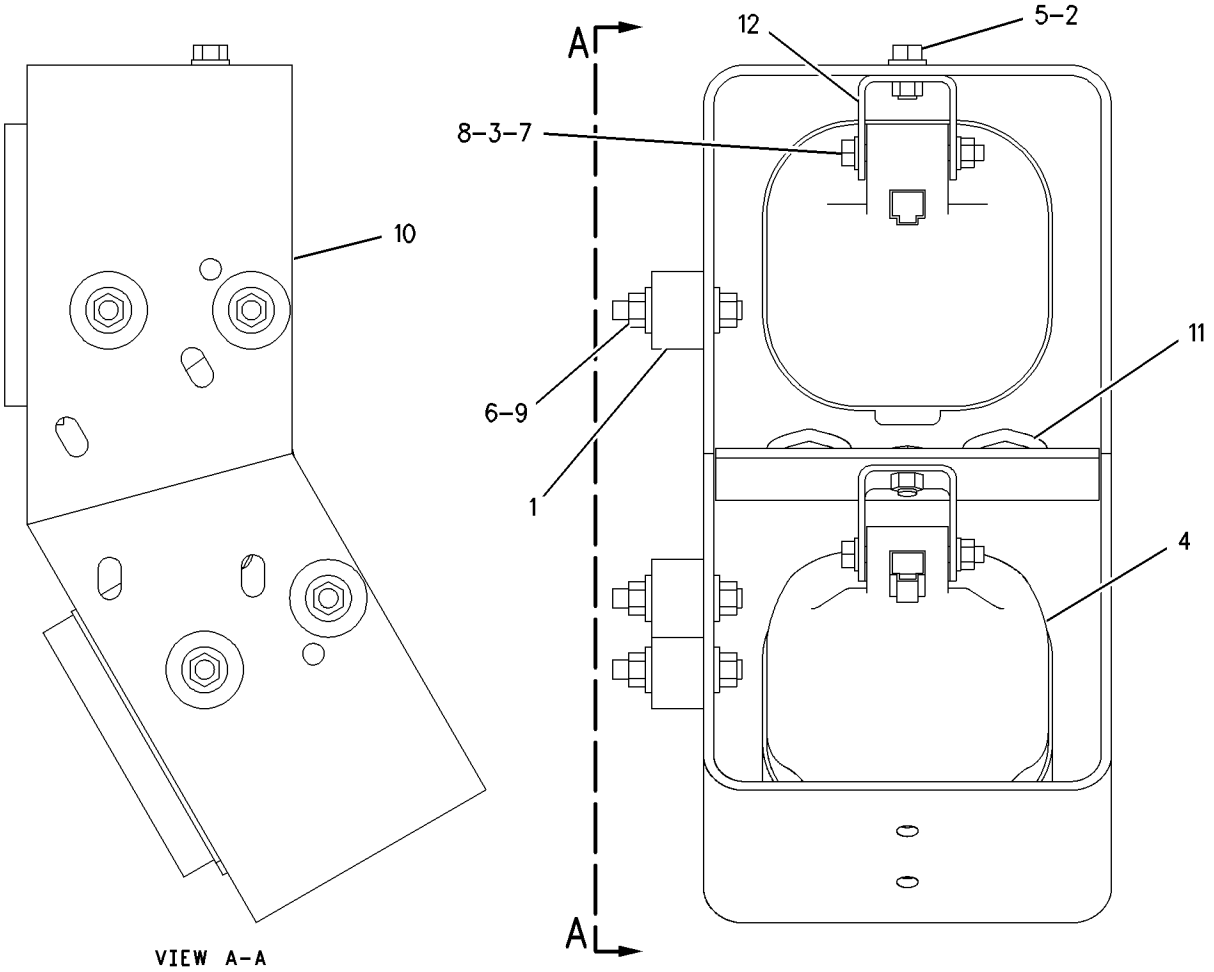

GRAPHIC #1 g00651682

104-3154 LIGHTING GP-AUXILIARY

S/N: ABK1-UP; 9MP1-UP; 9RP1-UP

2 LAMP

PART OF 163-4550 BULLDOZER AR-SEMI-UNIVERSAL, 163-4551 BULLDOZER AR-UNIVERSAL

FOR USE WITH BULLDOZER LIFT CYLINDERS

AN ATTACHMENT

SMCS-1429 **i01446633**

NOTE	REF NO	GRAPHIC REF	PART NUMBER	QTY	PART NAME 1 2 3 4 5 6 (PRODUCT LEVEL)	SEE PAGE
CY	1	1	*125-2001*	2	LIGHTING GP-FLOOD	319
	2	1	**6V-1889**	2	CLIP	
	3	1	**6S-4039**	2	GROMMET	
	4	1	**6V-8801**	2	NUT (3/8-16 THD)	
	5	1	**8E-1476**	1	PLATE AS-RH	
		1	**8T-5912**	4	NUT-WELD (3/8-16 THD)	
	6	1	**5P-1075**	18	WASHER-HARD (10.2X22.5X3MM THK)	
	7	1	**8T-2502**	16	BOLT (3/8-16X1.125 IN)	
	8	1	**9D-3768**	2	GROMMET (14.29MM ID)	
	9	1	**4D-7794**	2	CLIP	
C	10	1	**161-6601**	2	HARNESS AS	
	11	1	**9X-6772**	6	STRAP-CABLE	
	12	1	**8E-1477**	2	PLATE	
	13	1	**115-5026**	1	PLATE AS-LH	
		1	**8T-5912**	4	NUT-WELD (3/8-16 THD)	
	14	1	**4P-7581**	2	CLIP	

C-CHANGE FROM PREVIOUS TYPE
Y-SEPARATE ILLUSTRATION

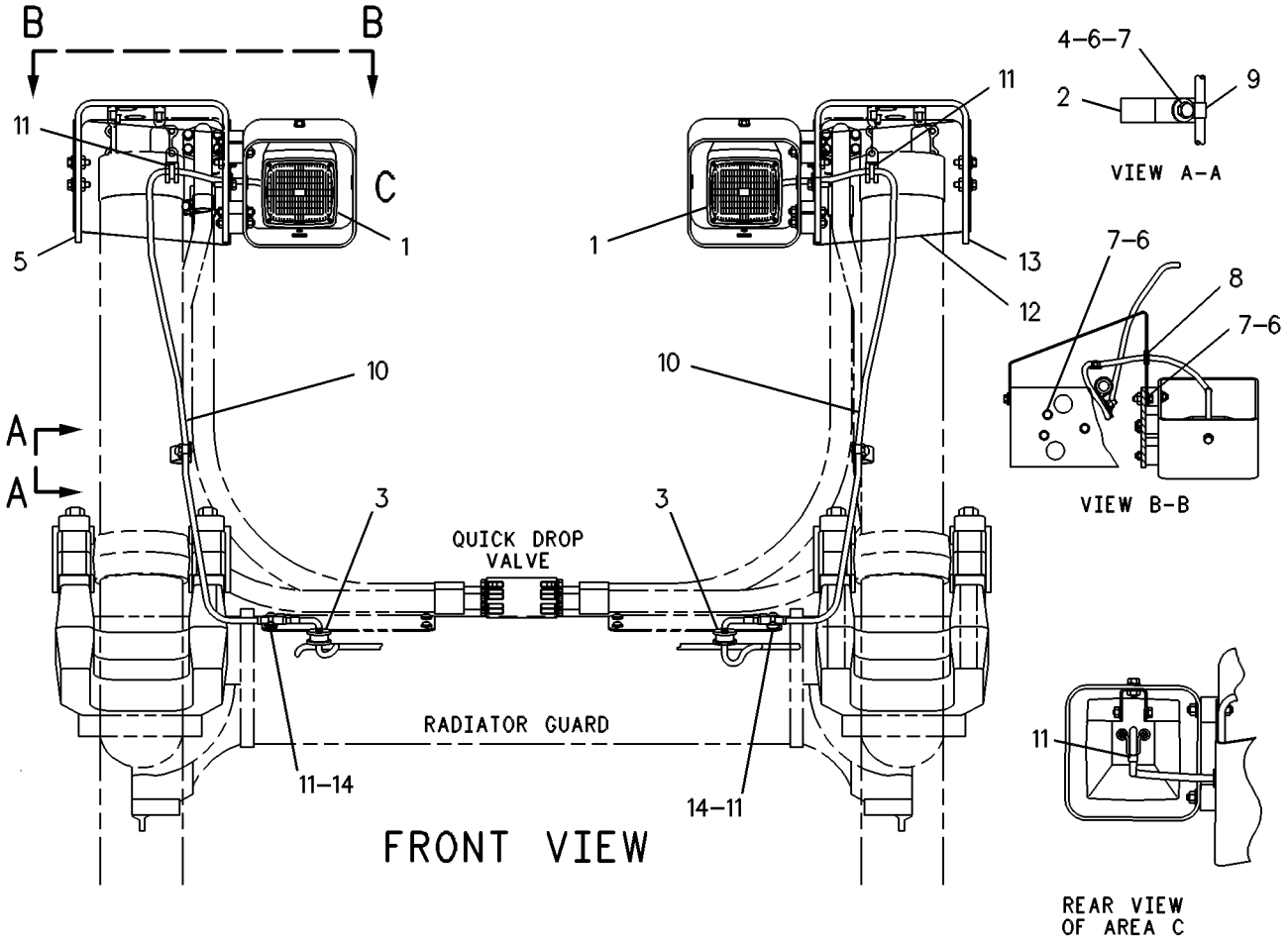

GRAPHIC #1

g00248124

8E-7886 LIGHTING GP-FLOOD

S/N: 5RP1-UP; 7HP1-UP
RIPPER
PART OF 134-6000, 165-0652 RIPPER AR
AN ATTACHMENT

SMCS-1429 **i01446634**

NOTE	REF NO	GRAPHIC REF	PART NUMBER	QTY	PART NAME 1 2 3 4 5 6 (PRODUCT LEVEL)	SEE PAGE
C	1	1	**153-1302**	1	HARNESS AS	
CY	2	1	**153-2073**	1	LAMP GP-FLOOD (24 VOLT)(VERTICAL)	310
	3	1	**115-0617**	1	BRACKET	
	4	1	**5M-3062**	1	BOLT (3/8-16X0.75 IN)	
	5	1	**5P-2955**	1	BOLT (5/16-18X2.50 IN)	
	6	1	**8T-4224**	2	WASHER-HARD (8.8X16X2MM THK)	
	7	1	**6V-8189**	1	NUT (5/16-18 THD)	
	8	1	**4P-8134**	3	CLIP	
	9	1	**9X-6772**	3	STRAP-CABLE	
	10	1	**5P-1075**	1	WASHER-HARD (10.2X22.5X3MM THK)	

C-CHANGE FROM PREVIOUS TYPE
Y-SEPARATE ILLUSTRATION

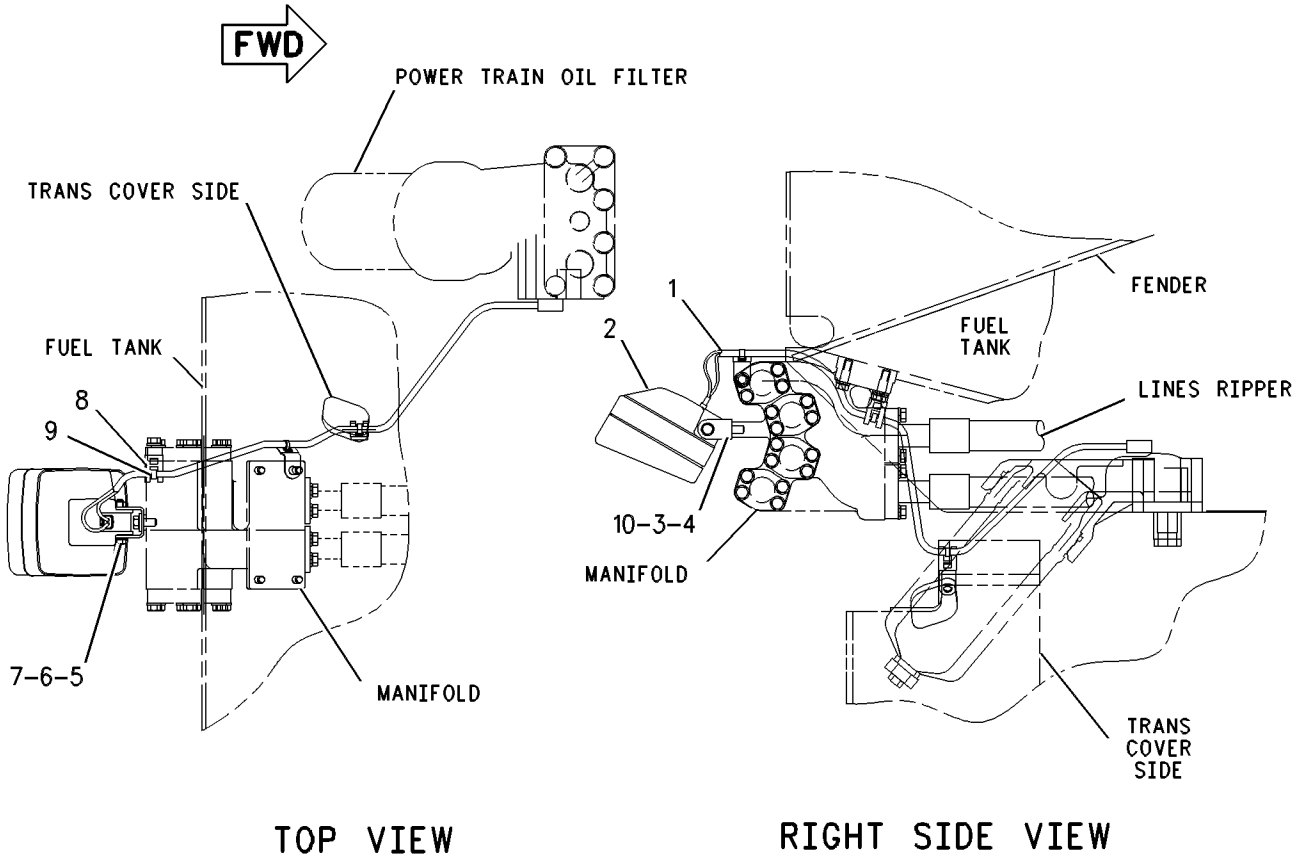

GRAPHIC #1 g00447968

125-2001 LIGHTING GP-FLOOD

S/N: ABK1-UP; 9MP1-UP; 9RP1-UP

PART OF 104-3154 LIGHTING GP-AUXILIARY, 102-4395 LIGHTING GP-FRONT, 114-3107 LIGHTING GP-REAR

AN ATTACHMENT

SMCS-1429 **i01446635**

NOTE	REF NO	GRAPHIC REF	PART NUMBER	QTY	PART NAME 1 2 3 4 5 6 (PRODUCT LEVEL)	SEE PAGE
	1	1	**9W-4361**	4	MOUNT	
	2	1	**111-8314**	1	BRACKET AS	
	3	1	**1F-0750**	1	NUT-WELD (3/8-16 THD)	
Y	4	1	**147-0319**	1	LAMP GP-FLOOD (24 VOLT)(SUSPENDED)	309
	5	1	**5M-3062**	1	BOLT (3/8-16X0.75 IN)	
	6	1	**5P-1075**	9	WASHER-HARD (10.2X22.5X3MM THK)	
	7	1	**5P-2955**	1	BOLT (5/16-18X2.50 IN)	
	8	1	**6V-8189**	1	NUT (5/16-18 THD)	
	9	1	**6V-8801**	8	NUT (3/8-16 THD)	
	10	1	**8T-4224**	2	WASHER-HARD (8.8X16X2MM THK)	
	11	1	**114-2368**	1	GUARD AS	
		1	**7T-1099**	1	LINK	

Y-SEPARATE ILLUSTRATION

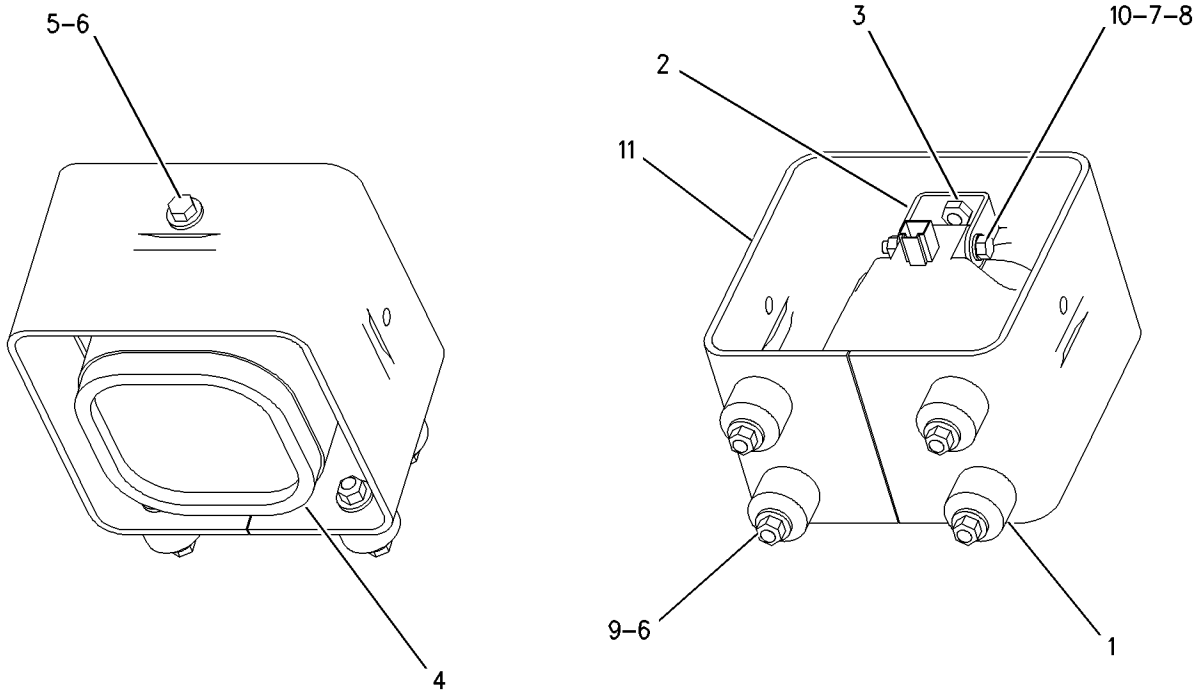

GRAPHIC #1 g00658568

134-0978 LIGHTING GP-FLOOD

S/N: ABK1-UP

4 LAMP

PART OF 162-9501 CHASSIS AR

SMCS-1429 **i01446636**

NOTE	REF NO	GRAPHIC REF	PART NUMBER	QTY	PART NAME 1 2 3 4 5 6 (PRODUCT LEVEL)	SEE PAGE
CY	1	1	**153-2073**	4	LAMP GP-FLOOD (24 VOLT)(VERTICAL)	310
	2	1	**8T-4224**	8	WASHER-HARD (8.8X16X2MM THK)	
	3	1	**5P-2955**	4	BOLT (5/16-18X2.50 IN)	
	4	1	**6V-8189**	4	NUT (5/16-18 THD)	
	5	1	**5P-1075**	8	WASHER-HARD (10.2X22.5X3MM THK)	
	6	1	**5M-3062**	4	BOLT (3/8-16X0.75 IN)	
	7	1	**111-8314**	4	BRACKET AS	
	8	1	**8E-3241**	4	BRACKET AS	
					(EACH BRACKET AS INCLUDES)	
		1	**1F-0750**	1	NUT-WELD (3/8-16 THD)	
	9	1	**8T-2502**	4	BOLT (3/8-16X1.125 IN)	

C-CHANGE FROM PREVIOUS TYPE
Y-SEPARATE ILLUSTRATION

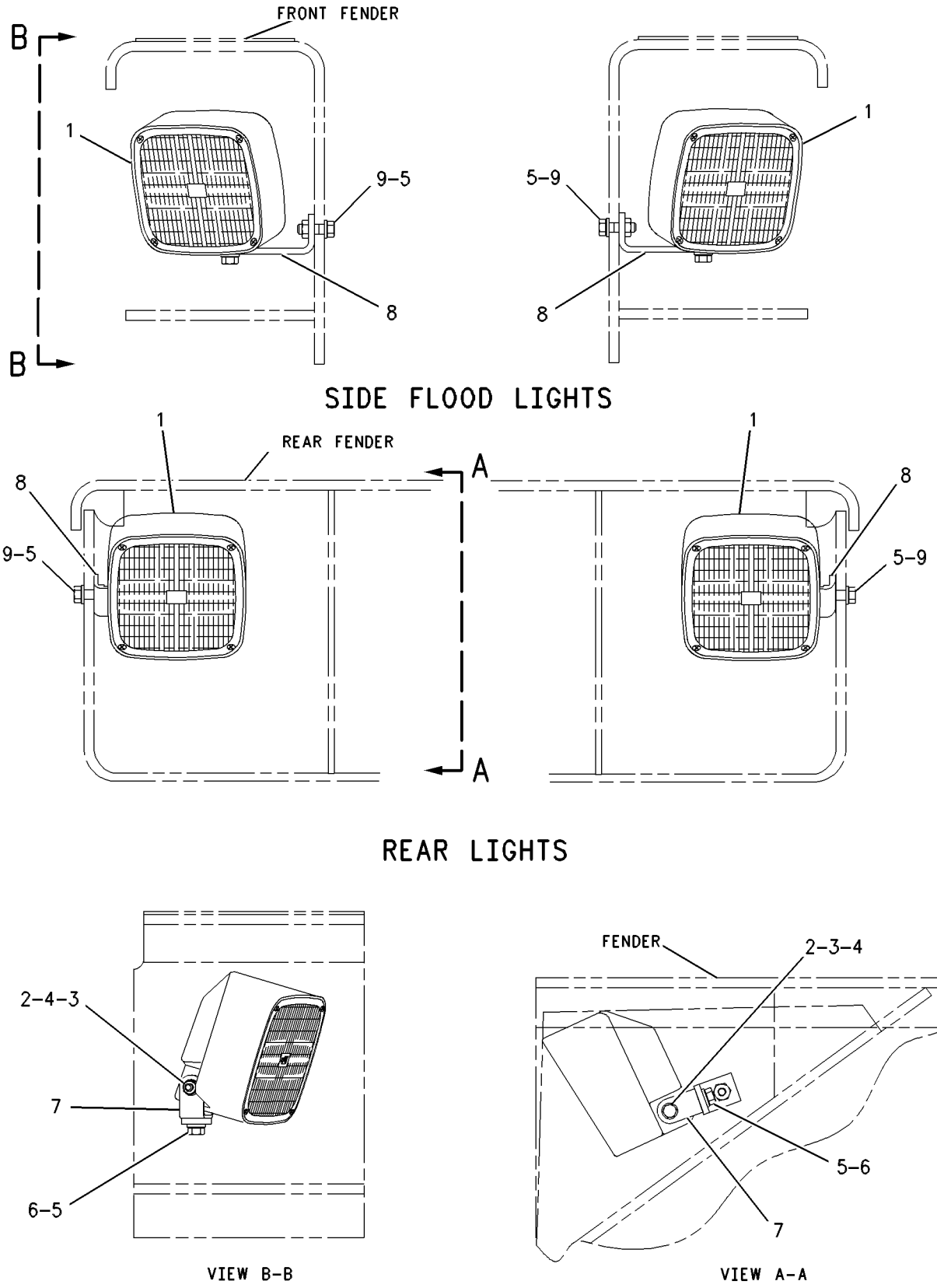

GRAPHIC #1

g00451083

102-4395 LIGHTING GP-FRONT

S/N: ABK1-UP
2 LAMP
FOR USE WITH BULLDOZER LIFT CYLINDERS
AN ATTACHMENT

SMCS-1429 **i00899020**

NOTE	REF NO	GRAPHIC REF	PART NUMBER	QTY	PART NAME 1 2 3 4 5 6 (PRODUCT LEVEL)	SEE PAGE
	1	1	**5P-8522**	2	GROMMET	
					(FOR USE ON D10R, D11R, & D11R CARRY DOZER)	
	2	1	**9D-3768**	2	GROMMET (14.29MM ID)	
					(FOR USE ON D9R)	
	3	1	**5P-8522**	2	GROMMET (9.5MM ID)	
					(FOR USE ON D8R)	
YC	4	1	*125-2001*	2	LIGHTING GP-FLOOD	319
	5	1	**9X-6772**	2	STRAP-CABLE	

C-CHANGE FROM PREVIOUS TYPE
Y-SEPARATE ILLUSTRATION

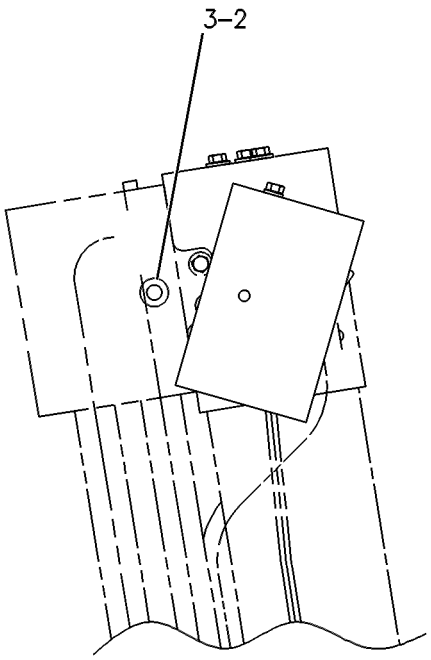

RIGHT SIDE VIEW

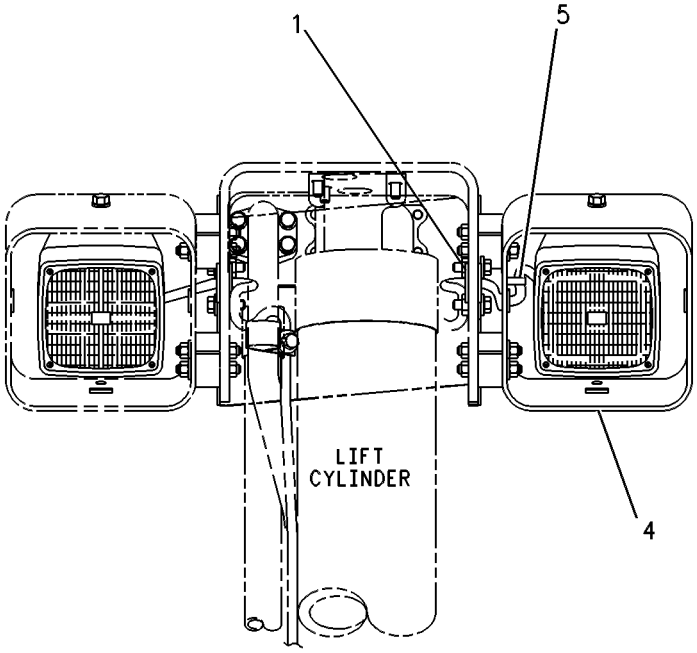

FRONT VIEW

GRAPHIC #1 g00453511

MEMORANDA

114-3107 LIGHTING GP-REAR

S/N: ABK1-UP
2 LAMP
CANNOT BE USED WITH WASTE DISPOSAL AR
AN ATTACHMENT

SMCS-1429 **i01617822**

NOTE	REF NO	GRAPHIC REF	PART NUMBER	QTY	PART NAME 1 2 3 4 5 6 (PRODUCT LEVEL)	SEE PAGE
B	1	1	**7K-1181**	21	STRAP-CABLE	
	2	1	**5D-7635**	2	GROMMET	
	3	1	**1Q-1592**	1	PLATE AS	
		1	**7T-1099**	4	LINK	
	4	1	**114-9365**	2	PLATE	
	5	1	**8T-9397**	2	BOLT (3/4-10X1.25 IN)	
	6	1	**7X-0582**	2	WASHER-HARD (20X44.5X6MM THK)	
	7	1	**115-1888**	1	HARNESS AS	
CY	8	1	*125-2001*	2	LIGHTING GP-FLOOD	319
	9	1	**4L-6454**	8	BOLT (3/8-16X1 IN)	
	10	1	**5P-1075**	8	WASHER-HARD (10.2X22.5X3MM THK)	
C	11	1	**153-0976**	1	HARNESS AS	
C	12	1	**4P-7581**	1	CLIP	
C	13	1	**5S-7379**	1	BOLT (3/8-16X0.875 IN)	
C	14	1	**8T-4896**	1	WASHER-HARD (10.2X18.5X2.5MM THK)	

B-USE AS REQUIRED
C-CHANGE FROM PREVIOUS TYPE
Y-SEPARATE ILLUSTRATION

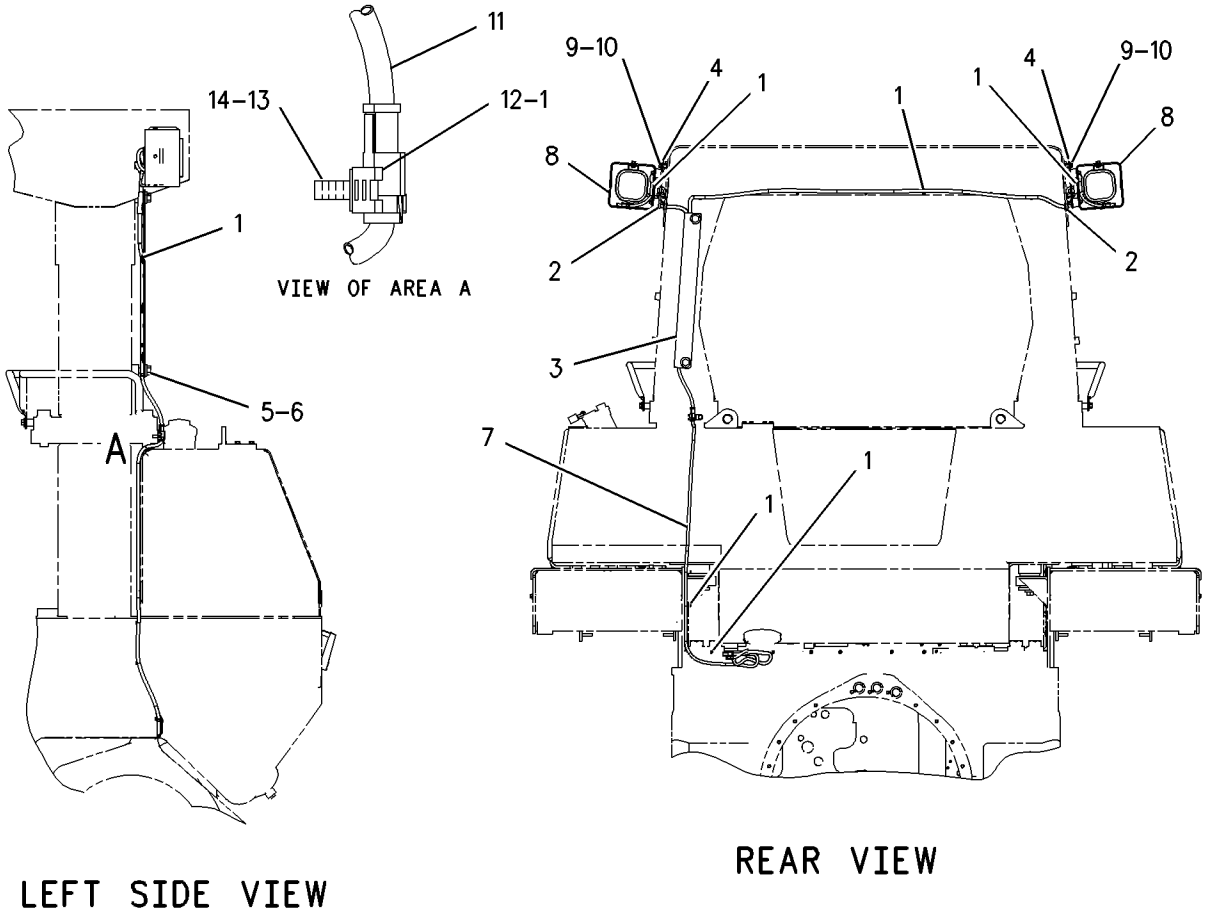

GRAPHIC #1

g00838106

113-5276 MAGNETIC PICKUP GP

S/N: 48W41541-UP
PART OF 198-9948 ENGINE AR
AN ATTACHMENT

SMCS-1905 **i01354552**

NOTE	REF NO	GRAPHIC REF	PART NUMBER	QTY	PART NAME 1 2 3 4 5 6 (PRODUCT LEVEL)	SEE PAGE
	1	1	**6V-2455**	1	SENSOR GP-SPEED	
		1	**3E-3365**	1	WEDGE-RECEPTACLE LOCK (2 PIN)	
		1	**8T-8729**	2	PIN-CONNECTOR	
E		1	**9X-1386**		SLEEVE (14 CM)	
		1	**102-8802**	1	KIT-RECEPTACLE (2 PIN)	
					(INCLUDES RECEPTACLE AS & WEDGE)	
	2	1	**1V-6341**	1	SEAL	
	3	1	**6B-6683**	1	NUT (5/8-18 THD)	

E-ORDER BY THE CENTIMETER

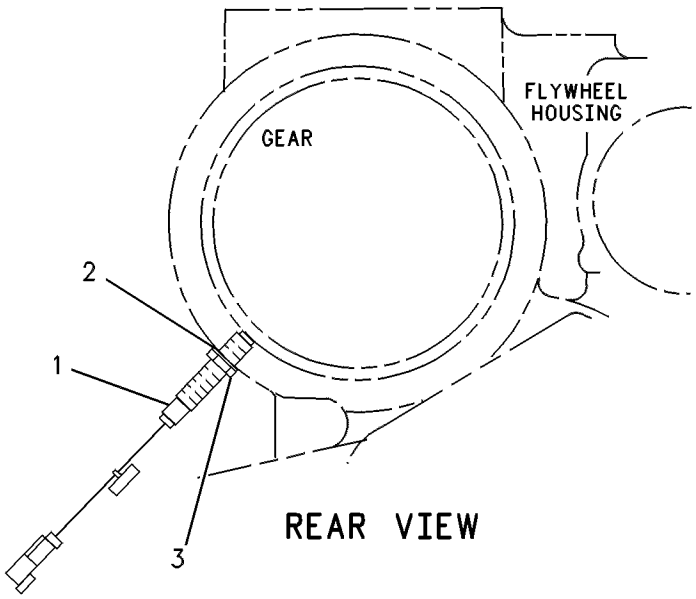

GRAPHIC #1 g00084866

128-5109 MAGNETIC PICKUP GP

S/N: 5XD1-UP

PART OF 163-5784 ENGINE AR

SMCS-1905 **i01232270**

NOTE	REF NO	GRAPHIC REF	PART NUMBER	QTY	PART NAME 1 2 3 4 5 6 (PRODUCT LEVEL)	SEE PAGE
	1	1	**6V-2455**	1	SENSOR GP-SPEED	
		1	**3E-3365**	1	WEDGE-RECEPTACLE LOCK	
		1	**102-8802**	1	KIT-RECEPTACLE (2 PIN)	
					(INCLUDES RECEPTACLE AS & WEDGE)	
		1	**8T-8729**	2	PIN-CONNECTOR	
BE		1	**9X-1386**		SLEEVE	
	2	1	**4N-3329**	1	WASHER (.79MM THK)	
	3	1	**1V-6341**	1	SEAL (30.15MM OD)	

B-USE AS REQUIRED
E-ORDER BY THE CENTIMETER

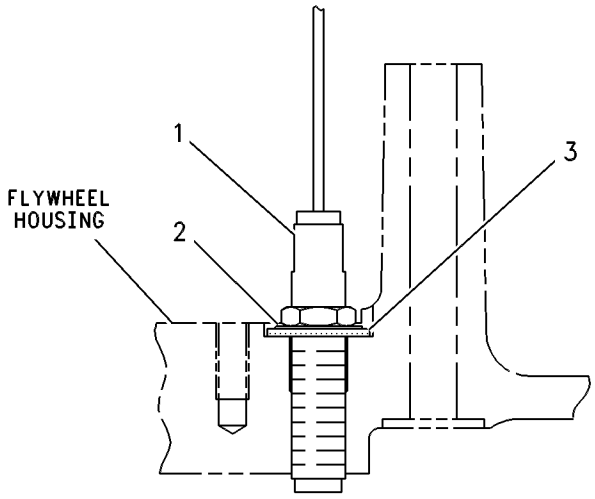

GRAPHIC #1 g00253381

124-9325 SENSOR GP-FUEL LEVEL–ULTRASONIC

S/N: ABK1-UP
PART OF 163-5395 BATTERY & WIRING GP
AN ATTACHMENT

SMCS-1273 **i01644645**

NOTE	REF NO	GRAPHIC REF	PART NUMBER	QTY	PART NAME 1 2 3 4 5 6 (PRODUCT LEVEL)	SEE PAGE
J	1	1	**102-8804**	1	KIT-RECEPTACLE (4 PIN)	
					(INCLUDES RECEPTACLE AS & WEDGE)	
J	2	1	**3E-3377**	1	WEDGE-RECEPTACLE LOCK	
	3	1	**8T-8729**	4	PIN-CONNECTOR	
E	4	1	**9X-1813**		SLEEVE (34CM)	

E-ORDER BY THE CENTIMETER
J-KIT MARKED J SERVICES PART MARKED J

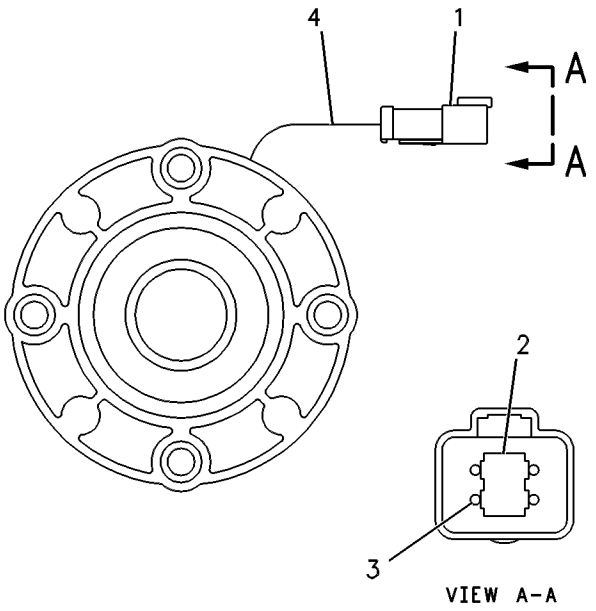

GRAPHIC #1 g00085712

160-2443 SENSOR GP-POSITION

S/N: ABK1-UP
ROTARY
PART OF 172-7938 CONTROL GP-DECELERATOR

SMCS-1408 **i01191666**

NOTE	REF NO	GRAPHIC REF	PART NUMBER	QTY	PART NAME 1 2 3 4 5 6 (PRODUCT LEVEL)	SEE PAGE
	1	1	**102-8803**	1	KIT-RECEPTACLE (3 PIN)	
					(INCLUDES RECEPTACLE AS & WEDGE)	
	2	1	**8T-8729**	3	PIN-CONNECTOR	
	3	1	**3E-3371**	1	WEDGE-RECEPTACLE LOCK	

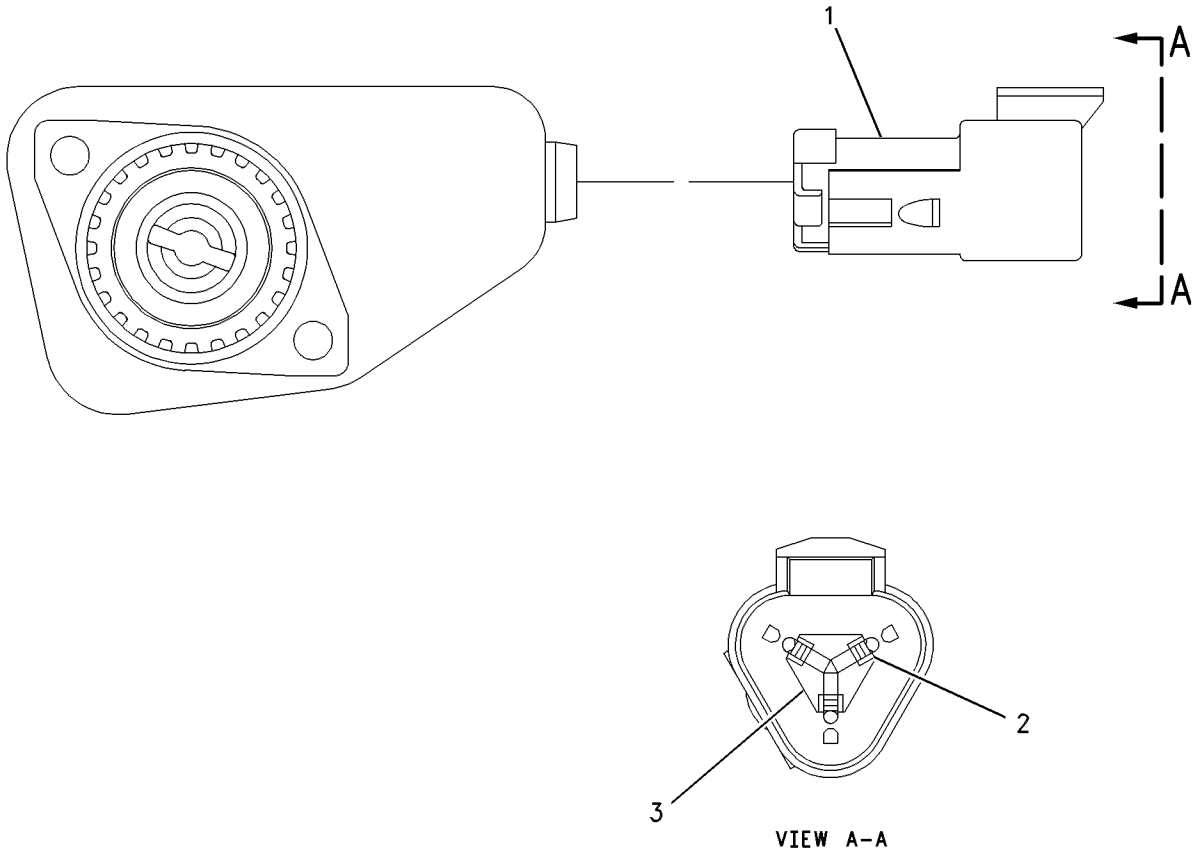

GRAPHIC #1 g00637818

107-3952 SENSOR GP-PRESSURE

S/N: ABK1-UP
PWM PRESSURE
PART OF 163-5395 BATTERY & WIRING GP
FIELD REPLACEMENT ORDER 164-3692—PAGE 333
AN ATTACHMENT

SMCS-1408 **i01424258**

NOTE	REF NO	GRAPHIC REF	PART NUMBER	QTY	PART NAME 1 2 3 4 5 6 (PRODUCT LEVEL)	SEE PAGE
	1	1	**8T-8731**	1	PLUG-CONNECTOR	
	2	1	**8T-8730**	3	SOCKET-CONNECTOR	
E	3	1	**9X-1813**		SLEEVE (24CM)	

E-ORDER BY THE CENTIMETER

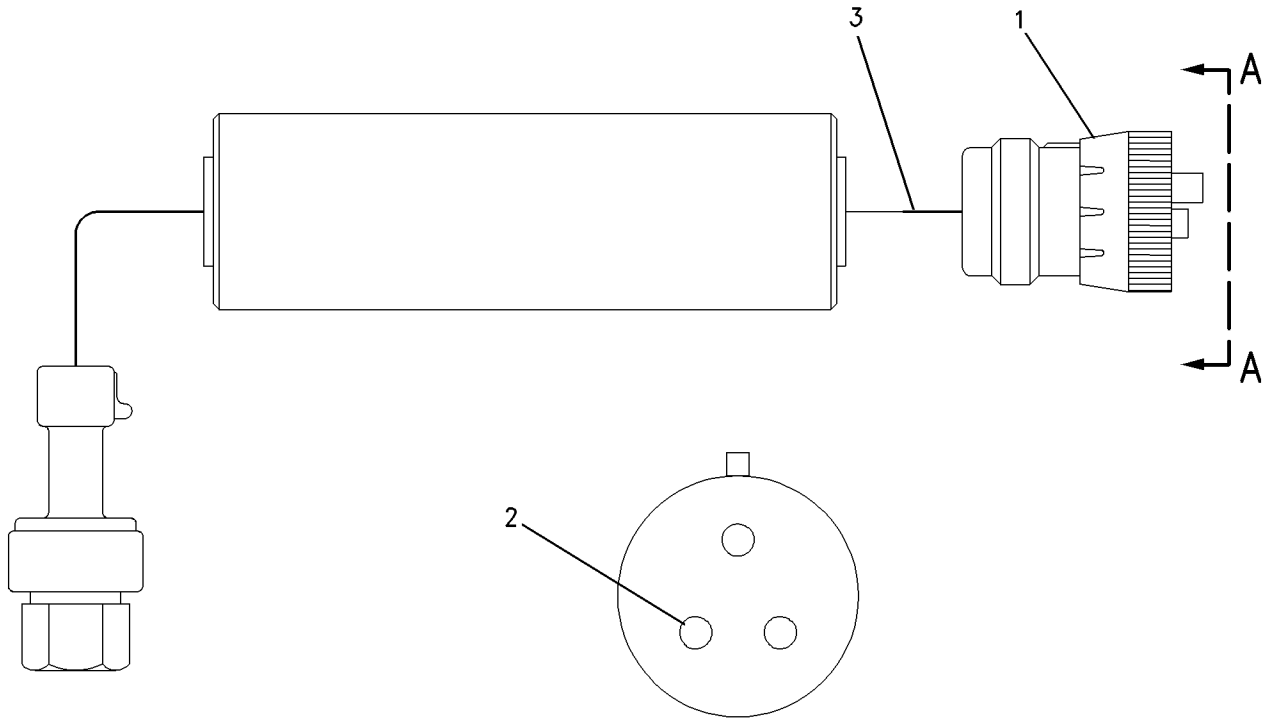

VIEW A-A

GRAPHIC #1 g00746625

161-9926 SENSOR GP-PRESSURE

S/N: ABK1-UP

PART OF 163-5817 LINES GP-AIR

SMCS-1408 **i01644686**

NOTE	REF NO	GRAPHIC REF	PART NUMBER	QTY	PART NAME 1 2 3 4 5 6 (PRODUCT LEVEL)	SEE PAGE
BE	1	1	**9X-1813**		SLEEVE	
	2	1	**155-2260**	1	KIT-CONNECTING PLUG (3 PIN) (PRESSURE SENSOR)	
					(INCLUDES PLUG AS & WEDGE)	
	3	1	**194-5226**	1	HARNESS AS (PRESSURE SENSOR)	
					(FOR 16-18 GA WIRE)	
					–OR–	
		1	**194-5227**	1	HARNESS AS (PRESSURE SENSOR)	
					(FOR 14 GA WIRE)	
	4	1	**3E-3368**	1	WEDGE-PLUG LOCK	

B-USE AS REQUIRED
E-ORDER BY THE CENTIMETER

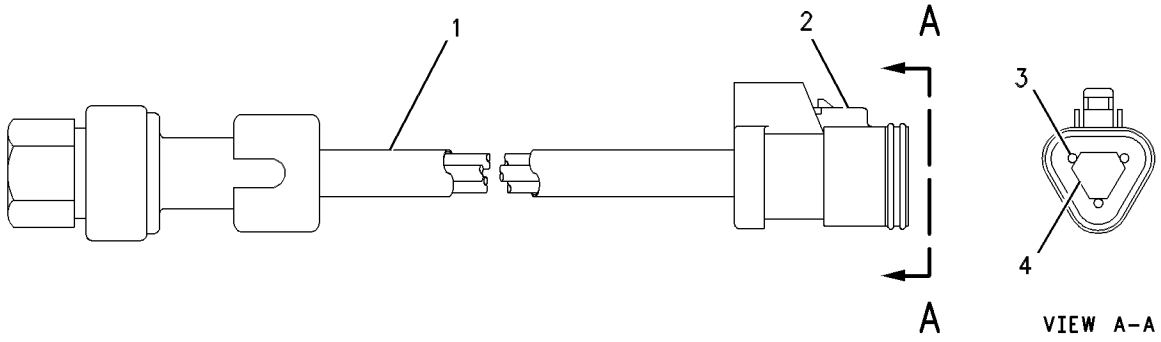

GRAPHIC #1 g00513129

161-9931 SENSOR GP-PRESSURE

S/N: 5XD1-388

PART OF 126-7292 PUMP & MTG GP-UNIT INJ HYD

FIELD REPLACEMENT ORDER 194-6725—PAGE 337

SMCS-1408 **i01644692**

NOTE	REF NO	GRAPHIC REF	PART NUMBER	QTY	PART NAME 1 2 3 4 5 6 (PRODUCT LEVEL)	SEE PAGE
BE	1	1	**9X-1813**		SLEEVE	
	2	1	**155-2260**	1	KIT-CONNECTING PLUG (3 PIN) (PRESSURE SENSOR)	
					(INCLUDES PLUG AS & WEDGE)	
	4	1	**186-3736**	3	SOCKET-CONNECTOR	
	5	1	**3E-3368**	1	WEDGE-PLUG LOCK	

B-USE AS REQUIRED
E-ORDER BY THE CENTIMETER

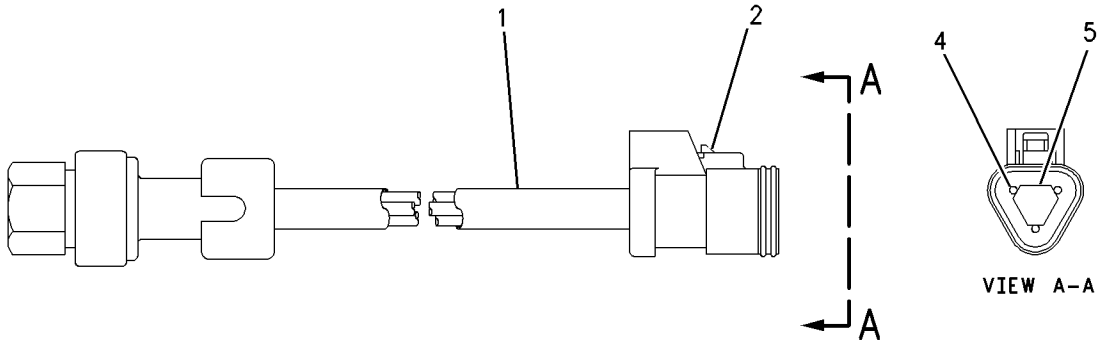

GRAPHIC #1 g00807023

164-3692 SENSOR GP-PRESSURE

S/N: ABK1-UP

FIELD REPLACEMENT FOR 107-3952—PAGE 330

SMCS-1408 **i01380923**

NOTE	REF NO	GRAPHIC REF	PART NUMBER	QTY	PART NAME 1 2 3 4 5 6 (PRODUCT LEVEL)	SEE PAGE
	1	1	**8T-8731**	1	PLUG-CONNECTOR	
	2	1	**8T-8730**	3	SOCKET-CONNECTOR	
E	3	1	**9X-1813**		SLEEVE (24 CM)	

E-ORDER BY THE CENTIMETER

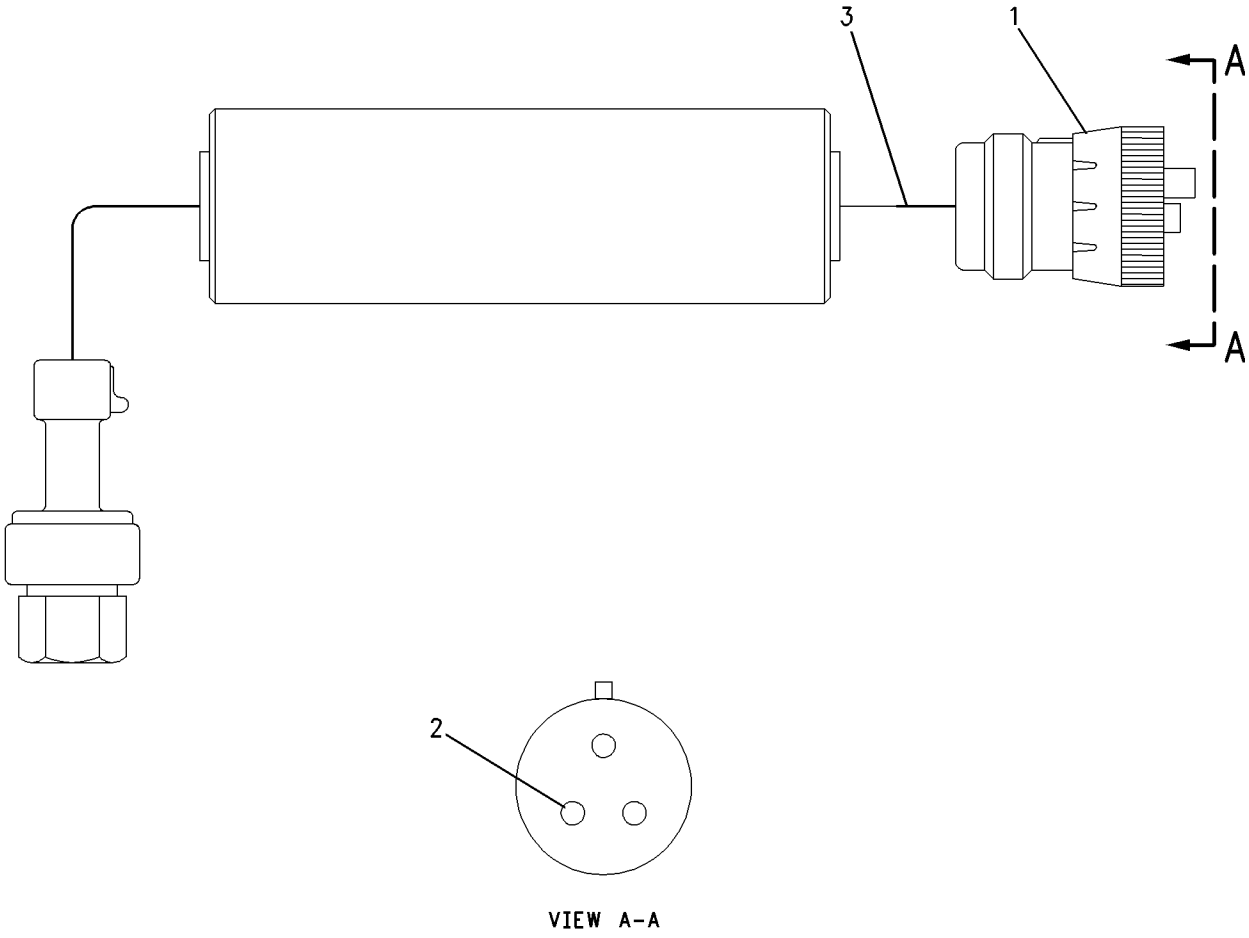

VIEW A-A

GRAPHIC #1 g00730912

167-1709 SENSOR GP-PRESSURE

S/N: 5XD1-UP

PART OF 164-2208 CYLINDER HEAD GP

SMCS-1408 **i01560203**

NOTE	REF NO	GRAPHIC REF	PART NUMBER	QTY	PART NAME 1 2 3 4 5 6 (PRODUCT LEVEL)	SEE PAGE
BE	1	1	**9X-1813**		SLEEVE	
	2	1	**155-2260**	1	KIT-CONNECTING PLUG (3 PIN)	
					(INCLUDES PLUG AS & WEDGE)	
	3	1	**9X-3402**	3	SOCKET-CONNECTOR	

B-USE AS REQUIRED
E-ORDER BY THE CENTIMETER

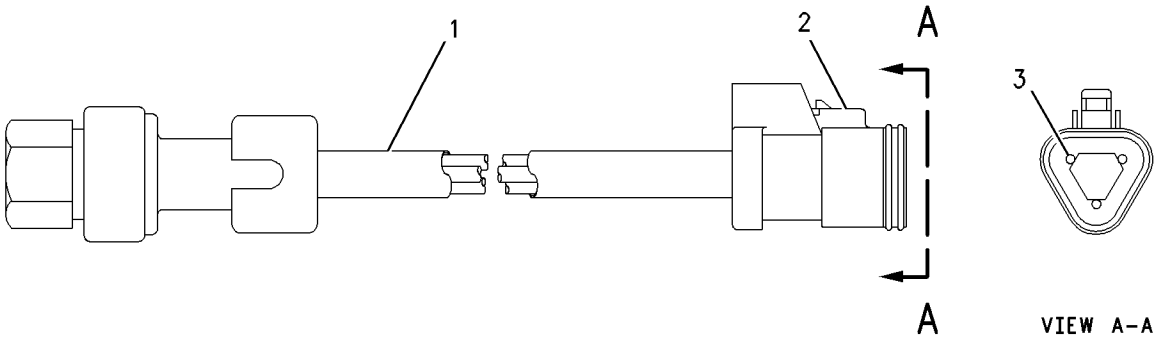

GRAPHIC #1 g00803802

194-6722 SENSOR GP-PRESSURE

S/N: 5XD1-UP

PART OF 125-3428 DRIVE GP-UNIT INJ HYD PUMP

SMCS-1408 **i01633442**

NOTE	REF NO	GRAPHIC REF	PART NUMBER	QTY	PART NAME 1 2 3 4 5 6 (PRODUCT LEVEL)	SEE PAGE
BE	1	1	**9X-1813**		SLEEVE	
	2	1	**155-2260**	1	KIT-CONNECTING PLUG (3 PIN)	
					(INCLUDES PLUG AS & WEDGE)	
	3	1	**180-9340**	3	SOCKET-CONNECTOR	
	4	1	**3E-3368**	1	WEDGE-PLUG LOCK	

B-USE AS REQUIRED
E-ORDER BY THE CENTIMETER

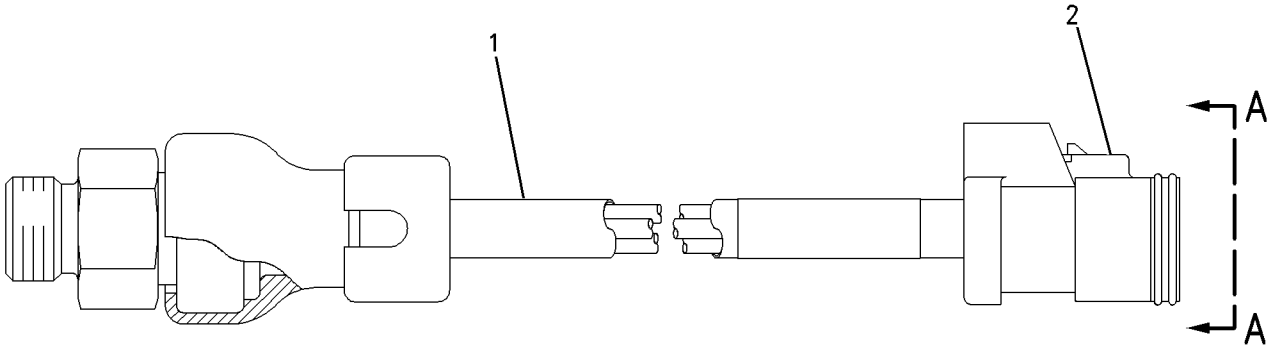

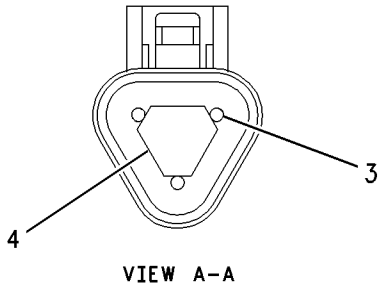

VIEW A-A

GRAPHIC #1 g00807030

194-6724 SENSOR GP-PRESSURE

S/N: 5XD1-UP

PART OF 164-2208 CYLINDER HEAD GP

SMCS-1408 **i01647642**

NOTE	REF NO	GRAPHIC REF	PART NUMBER	QTY	PART NAME 1 2 3 4 5 6 (PRODUCT LEVEL)	SEE PAGE
BE	1	1	**138-3094**		SLEEVE	
	2	1	**155-2260**	1	KIT-CONNECTING PLUG (3 PIN)	
					(INCLUDES PLUG AS & WEDGE)	
	3	1	**180-9340**	3	SOCKET-CONNECTOR	
	4	1	**3E-3368**	1	WEDGE-PLUG LOCK	

B-USE AS REQUIRED
E-ORDER BY THE CENTIMETER

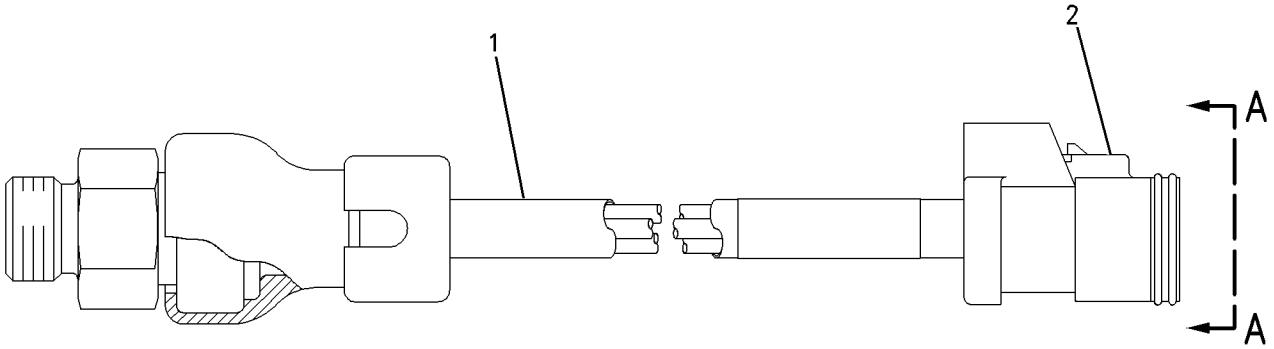

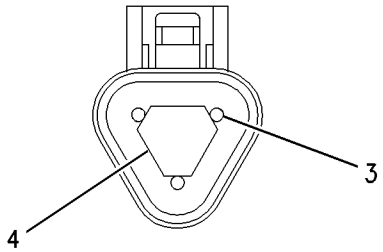

VIEW A-A

GRAPHIC #1 g00807030

194-6725 SENSOR GP-PRESSURE

S/N: 5XD389-UP

PART OF 126-7292 PUMP & MTG GP-UNIT INJ HYD

FIELD REPLACEMENT FOR 161-9931—PAGE 332

SMCS-1408 **i01647392**

NOTE	REF NO	GRAPHIC REF	PART NUMBER	QTY	PART NAME 1 2 3 4 5 6 (PRODUCT LEVEL)	SEE PAGE
B	1	1	**9X-1813**		SLEEVE	
	2	1	**155-2260**	1	KIT-CONNECTING PLUG (3 PIN)	
					(INCLUDES PLUG AS AND WEDGE)	
	3	1	**180-9340**	3	SOCKET-CONNECTOR	
	4	1	**3E-3368**	1	WEDGE-PLUG LOCK	

B-USE AS REQUIRED

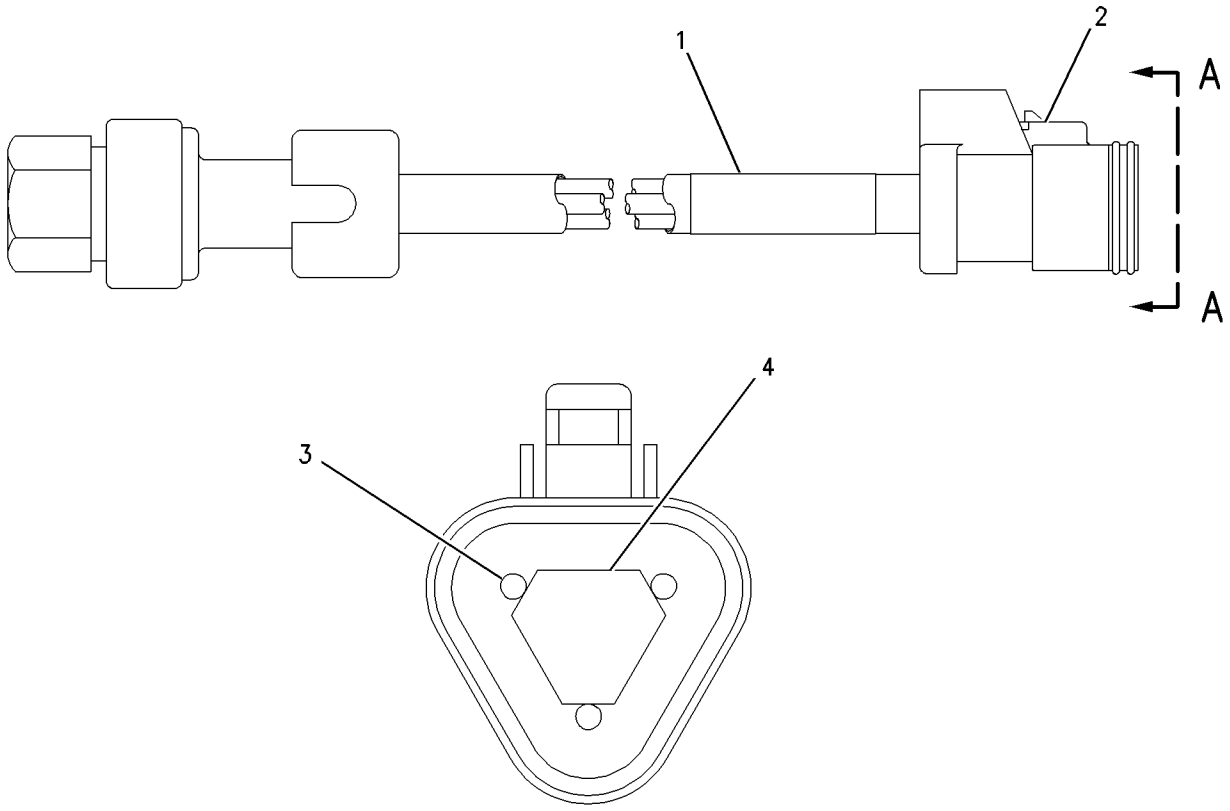

VIEW A-A

GRAPHIC #1 g00851220

119-4166 SENSOR GP-SPEED–FAN

S/N: ABK1-UP

PART OF 183-5116 DRIVE GP-FAN

SMCS-1408 **i01227204**

NOTE	REF NO	GRAPHIC REF	PART NUMBER	QTY	PART NAME 1 2 3 4 5 6 (PRODUCT LEVEL)	SEE PAGE
	1	1	**3E-3371**	1	WEDGE-RECEPTACLE LOCK	
	2	1	**033-6033**	1	SEAL-O-RING (12.42MM ID)	
	3	1	**8H-3127**	1	BOLT (1/4-20X3/4 IN)	
	4	1	**6N-7523**	1	WASHER (1.57MM THK)	
	5	1	**7X-2031**	1	RETAINER	
BE	6	1	**9X-1813**		SLEEVE (BULK)	
	7	1	**102-8803**	1	KIT-RECEPTACLE (3 PIN)	
					(INCLUDES RECEPTACLE AS & WEDGE)	
	8	1	**8T-8729**	3	PIN-CONNECTOR	

B-USE AS REQUIRED
E-ORDER BY THE CENTIMETER

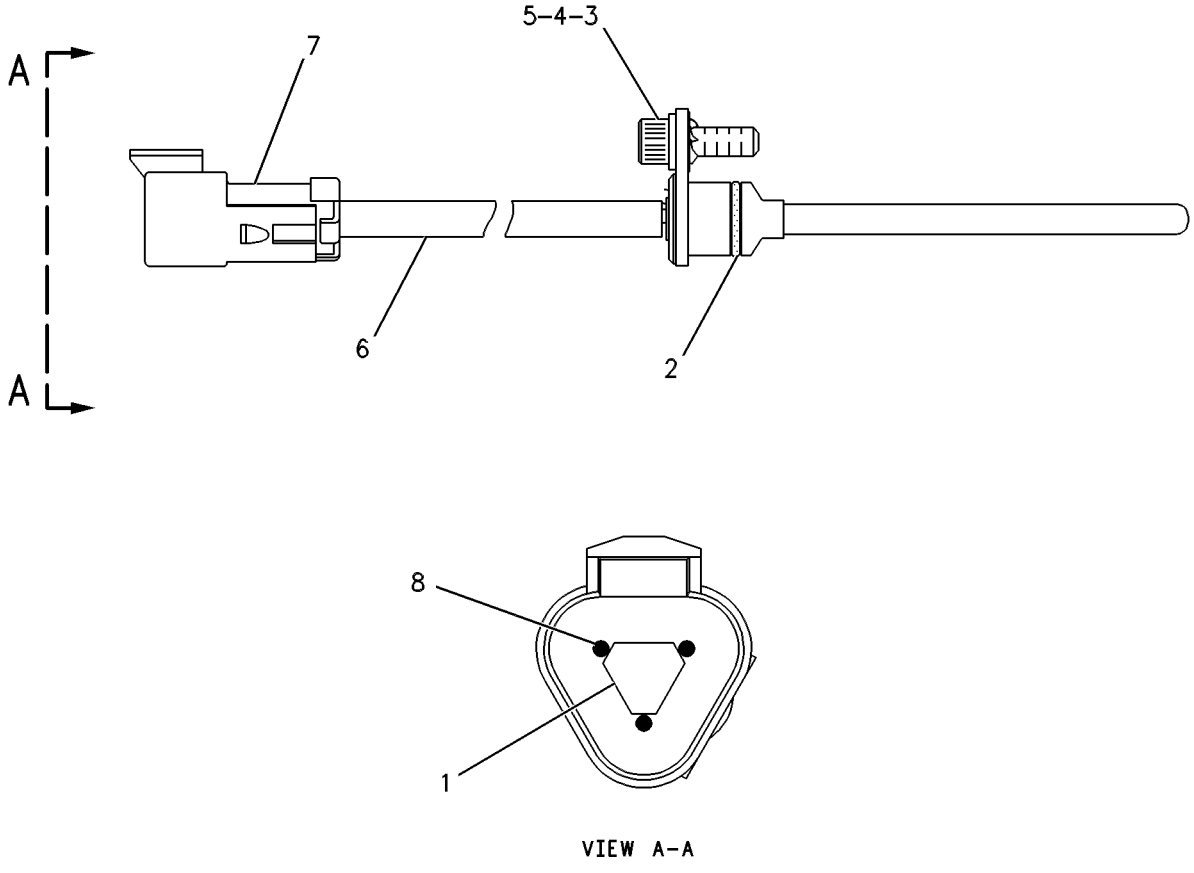

VIEW A–A

GRAPHIC #1 g00087024

129-6628 SENSOR GP-SPEED—ENGINE SPEED/TIMING

S/N: 5XD1-UP

PART OF 127-3514 HOUSING GP-FRONT

SMCS-1408 **i01613291**

NOTE	REF NO	GRAPHIC REF	PART NUMBER	QTY	PART NAME 1 2 3 4 5 6 (PRODUCT LEVEL)	SEE PAGE
BE	1	1	**9X-1813**		SLEEVE	
	2	1	**155-2260**	1	KIT-CONNECTING PLUG (3 PIN) (ENGINE SPEED TIMING SENSOR)	
					(INCLUDES PLUG AS & WEDGE)	
	3	1	**102-8813**	1	SEAL	
	4	1	**3E-3368**	1	WEDGE-PLUG LOCK	
	5	1	**8T-8730**	3	SOCKET-CONNECTOR	
	6	1	**8L-2786**	1	SEAL-O-RING	

B-USE AS REQUIRED
E-ORDER BY THE CENTIMETER

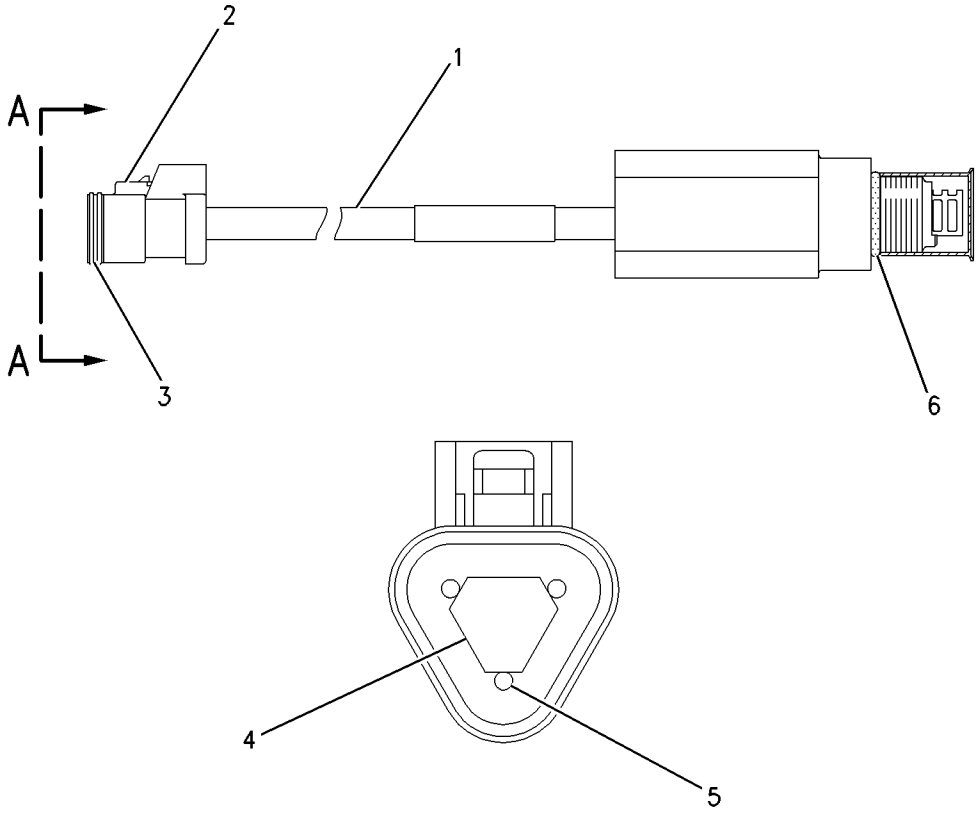

VIEW A-A

GRAPHIC #1 g00714038

193-2550 SENSOR GP-SPEED

S/N: 4XX1-UP

PART OF 163-5297 PLANETARY GP-TRANSMISSION

SMCS-1408 **i01397109**

NOTE	REF NO	GRAPHIC REF	PART NUMBER	QTY	PART NAME 1 2 3 4 5 6 (PRODUCT LEVEL)	SEE PAGE
	1	1	**171-5349**	1	STRAP-MARKER	
	2	1	**102-8802**	1	KIT-RECEPTACLE (2 PIN)	
					(INCLUDES RECEPTACLE AS & WEDGE)	
	3	1	**8T-8729**	2	PIN-CONNECTOR	
	4	1	**3E-3365**	1	WEDGE-RECEPTACLE LOCK (2 PIN)	
E	5	1	**9X-1813**		SLEEVE (14CM)	

E-ORDER BY THE CENTIMETER

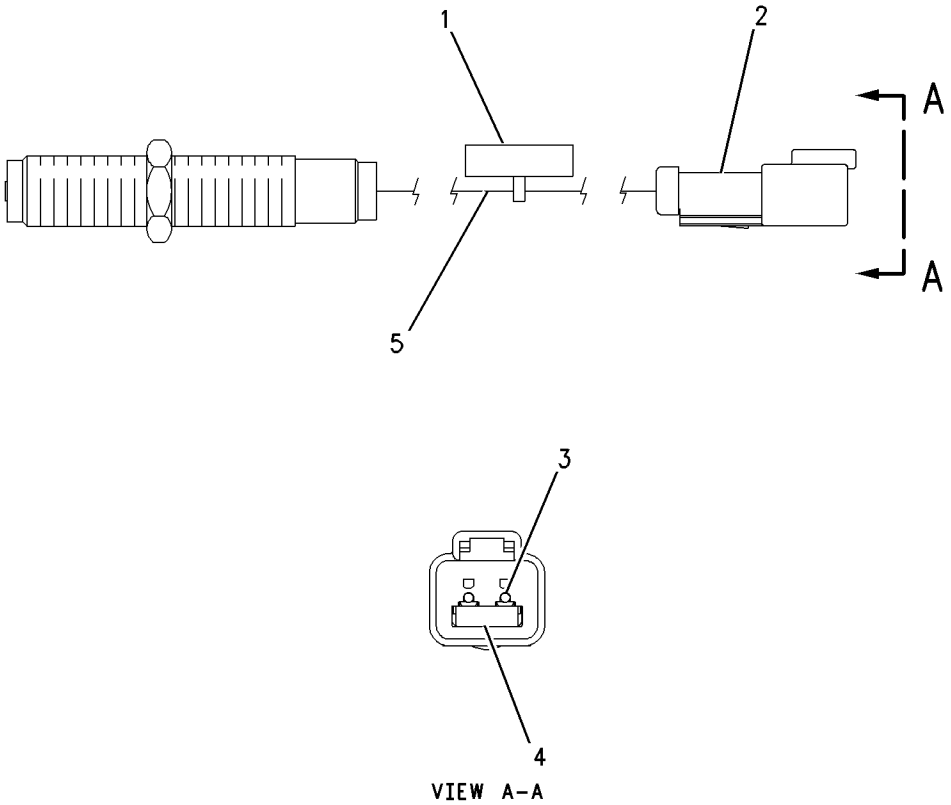

GRAPHIC #1 g00690327

106-0735 SENSOR GP-TEMPERATURE

S/N: 5XD1-UP

PART OF 126-7292 PUMP & MTG GP-UNIT INJ HYD

SMCS-1408, 1906, 1921, 1922, 7400 **i01560205**

NOTE	REF NO	GRAPHIC REF	PART NUMBER	QTY	PART NAME 1 2 3 4 5 6 (PRODUCT LEVEL)	SEE PAGE
BE	1	1	**9X-1813**		SLEEVE	
	2	1	**102-8803**	1	KIT-RECEPTACLE (3 PIN)	
					(INCLUDES RECEPTACLE AS & WEDGE)	
	3	1	**186-3735**	3	PIN-CONNECTOR	

B-USE AS REQUIRED
E-ORDER BY THE CENTIMETER

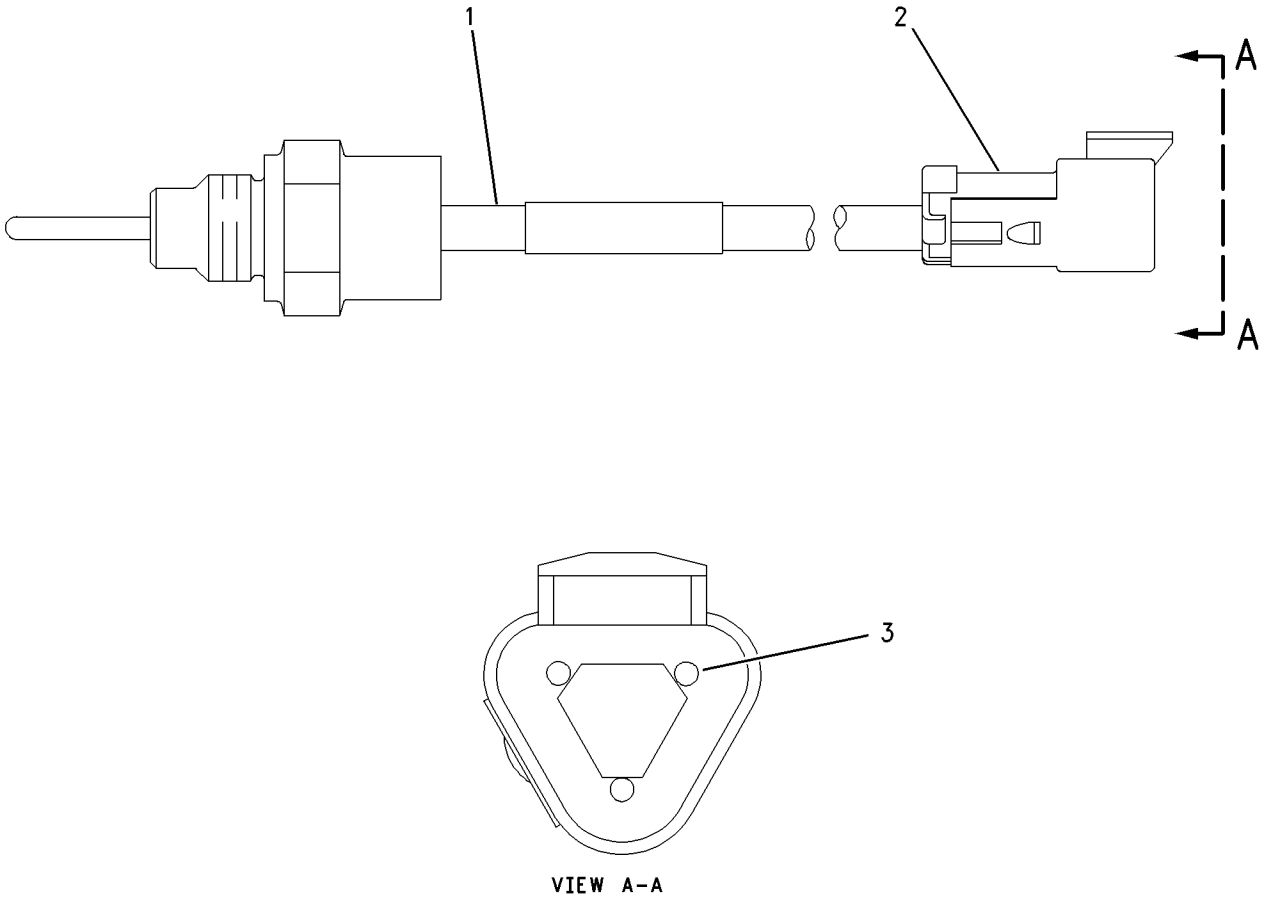

GRAPHIC #1 g00803804

134-2252 SENSOR GP-TEMPERATURE

S/N: ABK1-UP
8 VOLT. PULSE WIDTH MODULATION
PART OF 163-5395 BATTERY & WIRING GP
AN ATTACHMENT

SMCS-1408, 1906, 1921, 1922, 7400 **i01233990**

NOTE	REF NO	GRAPHIC REF	PART NUMBER	QTY	PART NAME 1 2 3 4 5 6 (PRODUCT LEVEL)	SEE PAGE
	1	1	**3E-3371**	1	WEDGE-RECEPTACLE LOCK	
BE	2	1	**9X-1386**		SLEEVE	
	3	1	**102-8803**	1	KIT-RECEPTACLE (3 PIN)	
					(INCLUDES RECEPTACLE AS & WEDGE)	
	4	1	**8T-8729**	3	PIN-CONNECTOR	

B-USE AS REQUIRED
E-ORDER BY THE CENTIMETER

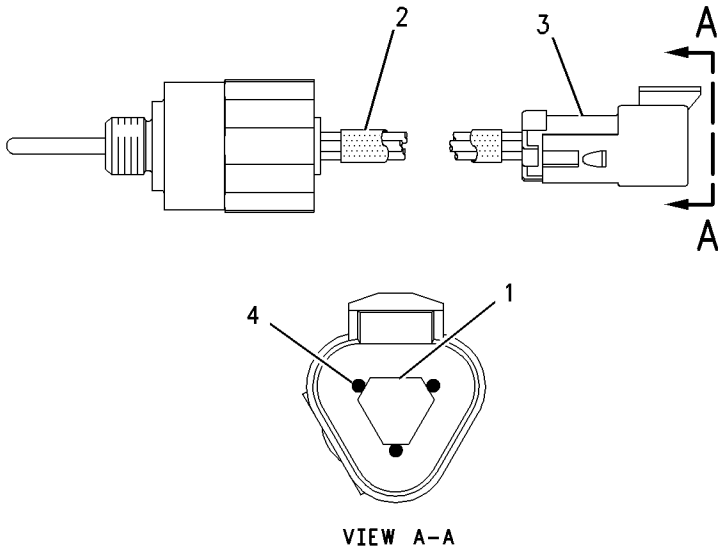

GRAPHIC #1 g00658816

3T-4704 SOLENOID AS-STARTING MOTOR

S/N: ABK1-UP
24 VOLT
PART OF 6V-0928 STARTING MOTOR GP-ELECTRIC
AN ATTACHMENT

SMCS-1467 **i01446638**

NOTE	REF NO	GRAPHIC REF	PART NUMBER	QTY	PART NAME 1 2 3 4 5 6 (PRODUCT LEVEL)	SEE PAGE
	1	1	**9G-6770**	1	CONTACT AS	
	2	1	**4M-1815**	1	SPRING-CONTACT	
	3	1	**6V-8373**	3	SCREW-MACHINE (6-32X0.187 IN)	
	4	1	**7T-9123**	1	GASKET-PLATE	
	5	1	**045-4065**	4	SCREW-MACHINE (10-32X0.75 IN)	
		1	**4B-4274**	8	WASHER (5.5X13X1.2MM THK)	
		1	**4B-2049**	4	NUT (10-32 THD)	
	6	1	**6T-1120**	1	BUSHING-TERMINAL	
	7	1	**6T-1119**	1	TERMINAL AS	
	8	1	**8T-0328**	3	WASHER-HARD (5.5X10X1MM THK)	
		1	**8F-1434**	2	LOCKWASHER	
		1	**6V-8188**	3	NUT (1/2-13 THD)	
	9	1	**4B-2049**	3	NUT (10-32 THD)	
		1	**7X-0562**	3	WASHER-HARD (13.5X19X0.8MM THK)	
	10	1	**6T-0362**	1	INSULATOR	

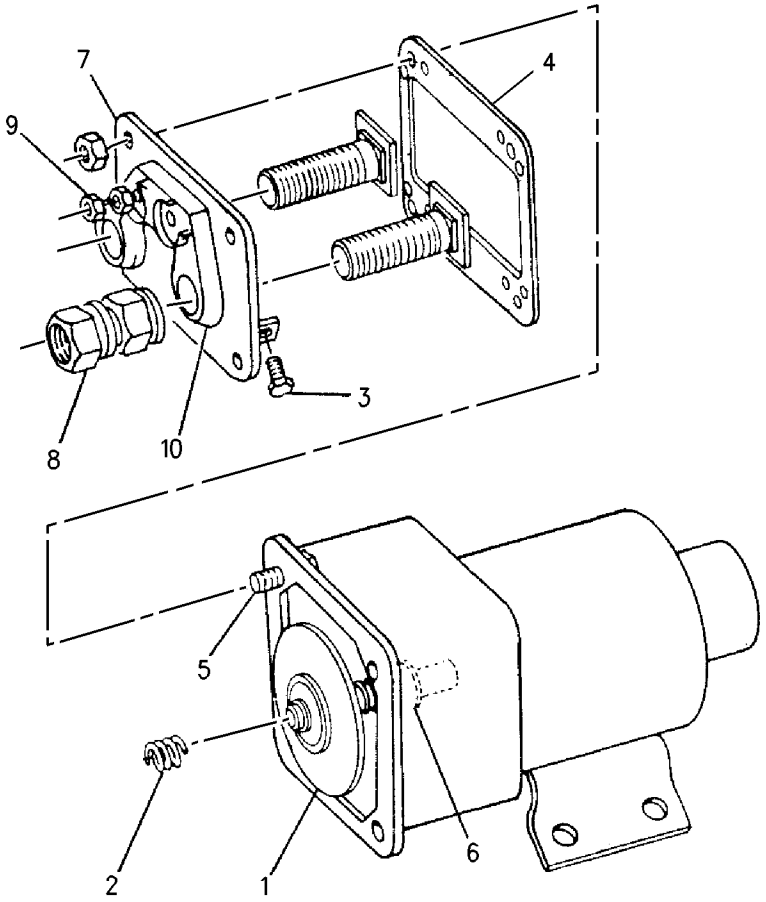

GRAPHIC #1 g00744087

103-7574 STARTING AID GP-ETHER

S/N: ABK1-UP
PART OF 162-9502 CONVERSION AR-ENGINE
AN ATTACHMENT

SMCS-1456 **i01446640**

NOTE	REF NO	GRAPHIC REF	PART NUMBER	QTY	PART NAME 1 2 3 4 5 6 (PRODUCT LEVEL)	SEE PAGE
	1	1	**5K-0906**	4	BOLT (5/16-18X0.63 IN)	
	2	1	**5P-4116**	4	WASHER-HARD (8.8X20.5X2MM THK)	
	3	1	**3E-6333**	1	VALVE AS (ETHER START)(24 VOLT)	
		1	**102-8802**	1	KIT-RECEPTACLE (2 PIN)	
					(INCLUDES RECEPTACLE AS & WEDGE)	
		1	**3E-3365**	1	WEDGE-RECEPTACLE LOCK (2 PIN)	
		1	**8T-8729**	2	PIN-CONNECTOR	
		1	**7N-9801**	1	GASKET	
	4	1	**4M-8973**	1	ELBOW	
	5	1	**5P-7907**	1	CONNECTOR	
	6	1	**5P-6314**	3	SLEEVE	
	7	1	**5P-6313**	3	NUT-FLARELESS (5/16-24 THD)	
	8	1	**133-3598**	1	TUBE AS	
	9	1	**6N-7672**	1	ATOMIZER AS	
	10	1	**6V-2686**	3	CLIP	
	11	1	**8T-4896**	2	WASHER-HARD (10.2X18.5X2.5MM THK)	
	12	1	**7N-2059**	1	CLAMP AS-CYLINDER	
D	13	1	**134-8348**		TUBE (.4M)	
	14	1	**5M-3062**	1	BOLT (3/8-16X0.75 IN)	
	15	1	**5P-6312**	1	UNION-FLARELESS	
A		1	**7N-0296**	1	CYLINDER AS (ETHER)	

A-NOT PART OF THIS GROUP
D-ORDER BY THE METER

103-7574 **STARTING AID GP-ETHER** ***(contd.)*** **i01446640**

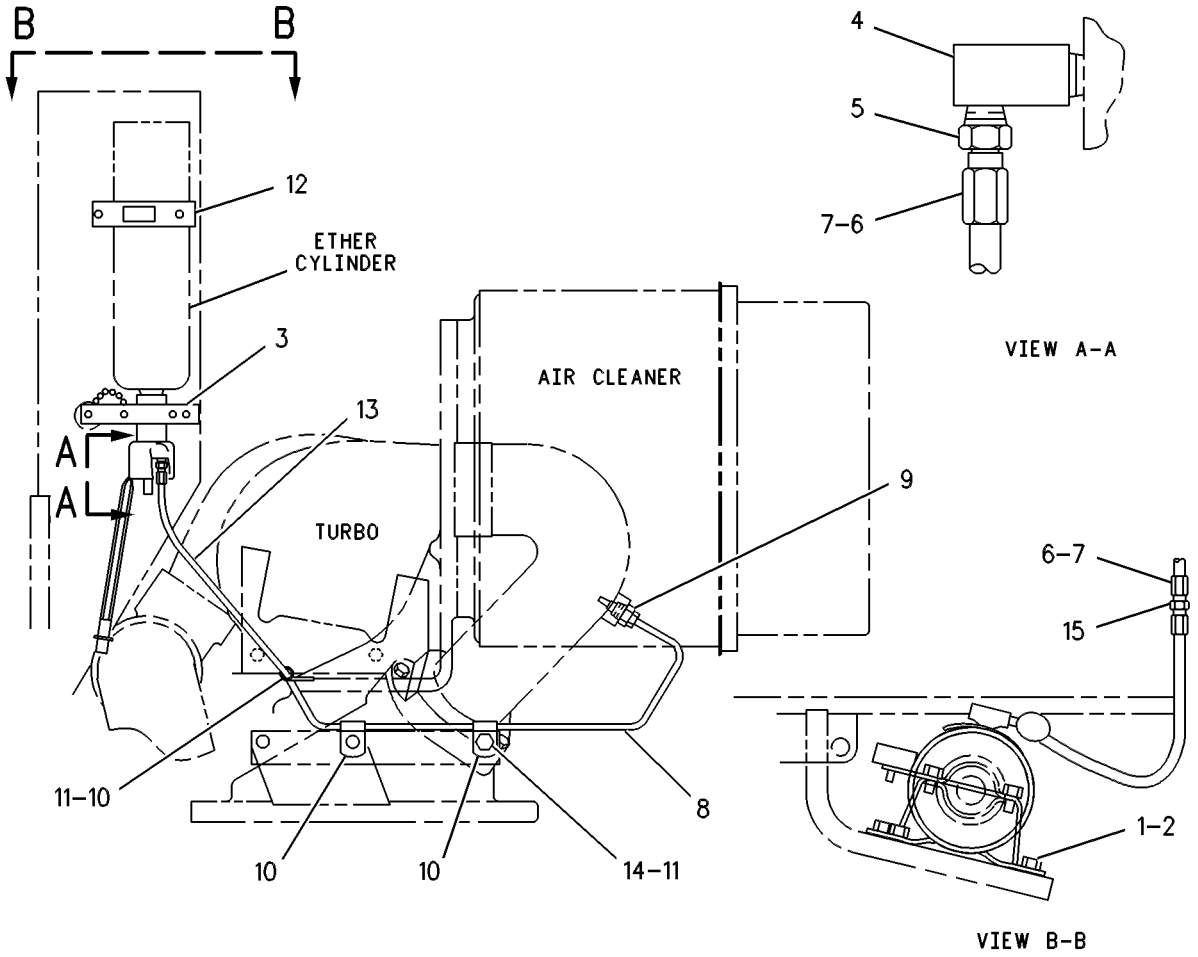

GRAPHIC #1 g00269180

163-7462 STARTING AID GP-ETHER

S/N: ABK1-UP

PART OF 162-9501 CHASSIS AR

SMCS-1456 **i01445961**

NOTE	REF NO	GRAPHIC REF	PART NUMBER	QTY	PART NAME 1 2 3 4 5 6 (PRODUCT LEVEL)	SEE PAGE
	1	1	**3E-6333**	1	VALVE AS (ETHER START)(24 VOLT)	
		1	**3E-3365**	1	WEDGE-RECEPTACLE LOCK (2 PIN)	
		1	**7N-9801**	1	GASKET	
		1	**8T-8729**	2	PIN-CONNECTOR	
		1	**102-8802**	1	KIT-RECEPTACLE (2 PIN)	
					(INCLUDES RECEPTACLE AS & WEDGE)	
	2	1	**4M-8973**	1	ELBOW	
	3	1	**5P-6312**	1	UNION-FLARELESS	
	4	1	**5P-6313**	3	NUT-FLARELESS (5/16-24 THD)	
	5	1	**5P-6314**	3	SLEEVE	
	6	1	**5P-7907**	1	CONNECTOR	
	7	1	**6N-7672**	1	ATOMIZER AS	
	8	1	**7N-2059**	1	CLAMP AS-CYLINDER	
	9	1	**172-3919**	1	TUBE	
	10	1	**5K-0906**	4	BOLT (5/16-18X0.63 IN)	
	11	1	**5P-4116**	4	WASHER-HARD (8.8X20.5X2MM THK)	
	12	1	**6V-2686**	1	CLIP	
	13	1	**8T-4896**	2	WASHER-HARD (10.2X18.5X2.5MM THK)	
BE	14	1	**174-9169**		TUBE	
A		1	**7N-0296**	1	CYLINDER AS (ETHER)	

A-NOT PART OF THIS GROUP
B-USE AS REQUIRED
E-ORDER BY THE CENTIMETER

163-7462 **STARTING AID GP-ETHER** ***(contd.)*** **i01445961**

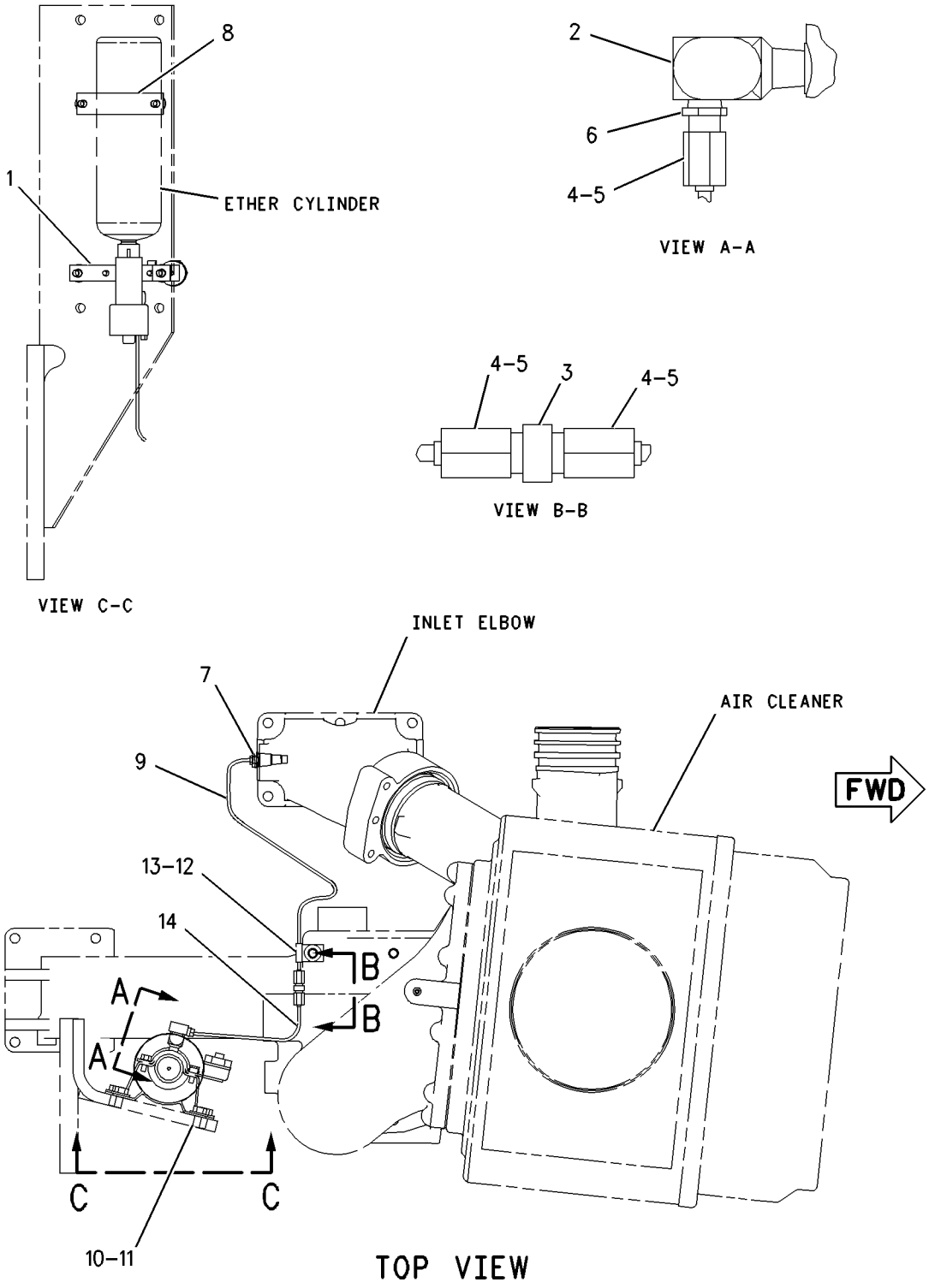

GRAPHIC #1 g00689372

ELECTRICAL AND STARTING SYSTEM

148-5381 STARTING AR-COLD WEATHER

S/N: ABK1-UP
AN ATTACHMENT

SMCS-1450 **i01542261**

NOTE	REF NO	GRAPHIC REF	PART NUMBER	QTY	PART NAME 1 2 3 4 5 6 (PRODUCT LEVEL)	SEE PAGE
	1	1	**1K-5888**	2	SPACER (.42X.67X.63 IN THK)	
	2	1	**3E-9865**	2	LOCKNUT (1/4-20 THD)	
	3	1	**4J-8265**	2	NUT (3/8-16 THD)	
	4	1	**6V-4611**	1	FILM-WARNING (JUMPER CABLE)	
	5	1	**7K-1181**	9	STRAP-CABLE	
	6	1	**7T-7777**	1	CABLE AS	
		1	**1S-4915**	2	LINER-CONDUIT	
		1	**1S-7251**	2	TERMINAL-RING (FOR 1/2 IN BOLT)	
E		1	**5P-0695**		CONDUIT (86CM)	
E		1	**5P-0761**		CABLE (00GA)(RED) (109CM)	
		1	**8N-0869**	2	COVER-TERMINAL (RED)	
BE		1	**8T-2225**		TUBE-HEAT SHRINK	
	7	1	**7T-9982**	1	CABLE AS	
		1	**1S-4915**	2	LINER-CONDUIT	
		1	**1S-7251**	1	TERMINAL-RING (FOR 1/2 IN BOLT)	
		1	**3S-2093**	1	STRAP-CABLE	
E		1	**5P-0695**		CONDUIT (152CM)	
E		1	**5P-0761**		CABLE (00GA)(RED) (160CM)	
		1	**8N-0869**	1	COVER-TERMINAL (RED) (RING TERMINAL)	
		1	**8N-1725**	1	COVER-TERMINAL (RED) (BATTERY TERMINAL)	
BE		1	**8T-2225**		TUBE-HEAT SHRINK	
		1	**3S-6049**	1	TERMINAL AS-BATTERY (POSITIVE)	
		1	**1M-6119**	1	BOLT-BATTERY TERMINAL (5/16-18X1.375 IN)	
		1	**1M-6120**	1	NUT-BATTERY TERMINAL (5/16-18 THD)	
	8	1	**8M-4969**	1	CABLE AS	
		1	**1S-7252**	1	TERMINAL-RING (FOR 3/8 IN BOLT)	
E		1	**5P-0747**		CABLE (00GA)(BLACK) (264CM)	
		1	**7N-5274**	1	COVER-TERMINAL (BLACK)	
BE		1	**8T-2225**		TUBE-HEAT SHRINK	
		1	**3S-6050**	1	TERMINAL AS-BATTERY (NEGATIVE)	
		1	**1M-6119**	1	BOLT-BATTERY TERMINAL (5/16-18X1.375 IN)	
		1	**1M-6120**	1	NUT-BATTERY TERMINAL (5/16-18 THD)	
Y	9	1	*8N-8753*	1	STARTING MOTOR GP-ELECTRIC	360
	10	1	**8T-9407**	3	BOLT-CARRIAGE (3/8-16X1.25 IN)	
	11	1	**8V-0622**	1	CABLE AS	
		1	**8C-5917**	1	TERMINAL AS-BATTERY (POSITIVE)	
		1	**8T-9757**	1	TERMINAL AS-BATTERY (NEGATIVE)	
					(EACH TERMINAL AS INCLUDES)	
		1	**1M-6119**	1	BOLT-BATTERY TERMINAL (5/16-18X1.375 IN)	
		1	**1M-6120**	1	NUT-BATTERY TERMINAL (5/16-18 THD)	
E		1	**5P-0761**		CABLE (00GA)(RED) (14CM)	
		1	**9G-0003**	1	COVER-TERMINAL (BLACK)	
		1	**9G-0004**	1	COVER-TERMINAL (RED)	
Y	12	1	*9W-0742*	1	JUNCTION BLOCK GP	307
	13	1	**9W-2938**	1	COVER AS	
		1	**4D-6716**	3	RIVET-POP	
	14	1	**061-7661**	1	CABLE AS	
		1	**1S-7251**	2	TERMINAL-RING (FOR 1/2 IN BOLT)	
E		1	**5P-0747**		CABLE (00GA)(BLACK) (42CM)	
	15	1	**125-1302**	1	SWITCH GP-MAGNETIC (START RELAY)	
		1	**102-8802**	1	KIT-RECEPTACLE (2 PIN)	
					(INCLUDES RECEPTACLE AS & WEDGE)	
		1	**3E-3365**	1	WEDGE-RECEPTACLE LOCK (2 PIN)	
M		1	**5C-2890**	2	NUT (M6X1 THD)	
		1	**8T-8729**	2	PIN-CONNECTOR	
BE		1	**9X-1386**		SLEEVE	

148-5381 STARTING AR-COLD WEATHER *(contd.)* i01542261

NOTE	REF NO	GRAPHIC REF	PART NUMBER	QTY	PART NAME 1 2 3 4 5 6 (PRODUCT LEVEL)	SEE PAGE
	16	1	**128-8405**	1	STRAP	
	17	1	**133-3801**	1	CABLE AS	
		1	**1S-4915**	2	LINER-CONDUIT	
		1	**1S-7251**	2	TERMINAL-RING (FOR 1/2 IN BOLT)	
E		1	**5P-0695**		CONDUIT (276CM)	
E		1	**5P-0761**		CABLE (00GA)(RED) (300CM)	
		1	**8N-0869**	2	COVER-TERMINAL (RED)	
BE		1	**8T-2225**		TUBE-HEAT SHRINK	
	18	1	**133-9522**	1	PLATE	
	19	1	**139-3564**	1	HARNESS AS (COLD START)	
		1	**102-8807**	1	KIT-CONNECTING PLUG (2 PIN)	
					(INCLUDES PLUG AS, WEDGE & INTERFACE SEAL)	
		1	**102-8802**	1	KIT-RECEPTACLE (2 PIN)	
					(INCLUDES RECEPTACLE AS & WEDGE)	
		1	**8T-8737**	1	PLUG-SEAL	
		1	**127-5485**	1	PLUG AS-CONNECTOR (1 PIN)	
	20	1	**153-6281**	1	HOLD DOWN AS	
	21	1	**4L-6454**	1	BOLT (3/8-16X1 IN)	
	22	1	**4L-9337**	2	BOLT (3/8-16X1.5 IN)	
	23	1	**4P-7581**	2	CLIP	
	24	1	**4P-8134**	1	CLIP	
	25	1	**5C-6565**	2	BOLT (1/2-13X1.25 IN)	
	26	1	**5M-3062**	1	BOLT (3/8-16X0.75 IN)	
	27	1	**5P-1075**	7	WASHER-HARD (10.2X22.5X3MM THK)	
	28	1	**5P-2228**	1	BOLT (1/2-13X1 IN)	
	29	1	**6D-4244**	12	CLIP	
	30	1	**6V-8188**	1	NUT (1/2-13 THD)	
	31	1	**6V-8801**	3	NUT (3/8-16 THD)	
	32	1	**8T-4205**	2	WASHER-HARD (7.2X14.5X2MM THK)	
	33	1	**8T-4223**	3	WASHER-HARD (13.5X25.5X3MM THK)	
	34	1	**9X-9730**	2	BATTERY (12 VOLT/DRY)	
					(EACH INCLUDES)	
		1	**7N-0060**	6	VENT AS	
	35	1	**1K-4649**	1	SPACER (.516X1X1 IN THK)	
	36	1	**5P-2424**	1	BOLT (1/2-13X2.25 IN)	

B-USE AS REQUIRED
E-ORDER BY THE CENTIMETER
M-METRIC PART
Y-SEPARATE ILLUSTRATION

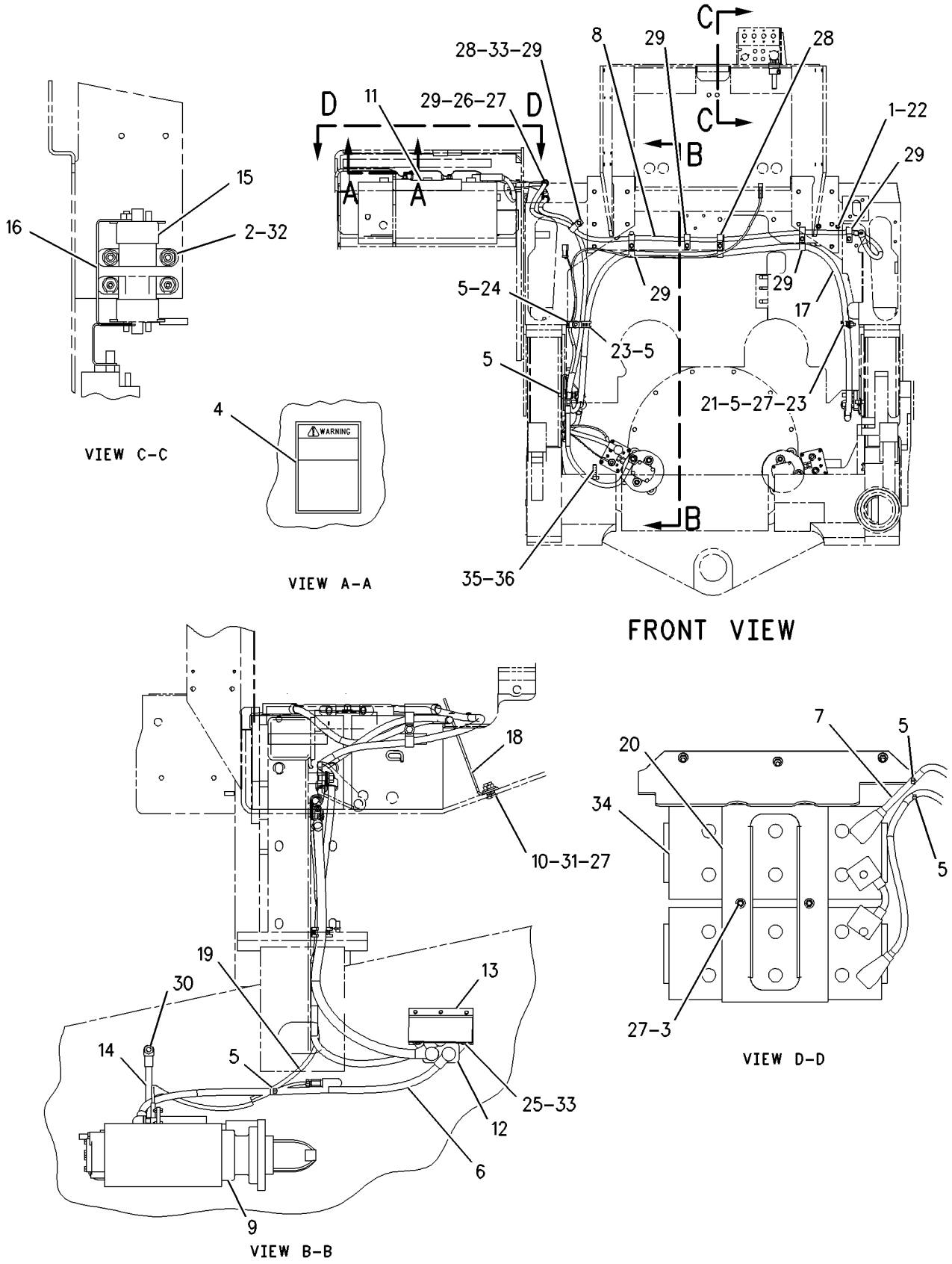

GRAPHIC #1 g00804337

MEMORANDA

ELECTRICAL AND STARTING SYSTEM

6V-0513 STARTING MOTOR GP-ELECTRIC*R

S/N: ABK1-UP

PART OF 7N-7049 STARTING MOTOR GP-ELECTRIC

FIELD REPLACEMENT FOR 6V-0928—PAGE 356

SMCS-1453, 1454, 1465 **i01562314**

NOTE	REF NO	GRAPHIC REF	PART NUMBER	QTY	PART NAME 1 2 3 4 5 6 (PRODUCT LEVEL)	SEE PAGE
	1	1	**036-9823**	13	BOLT	
	2	1	**3L-3380**	1	BUSHING-TERMINAL	
	3	1	**3T-3418**	1	FRAME AS-END	
	4	1	**3T-3423**	1	CUP	
	5	1	**9G-4101**	1	BUSHING-END	
	6	1	**3T-3424**	1	PLUG-FELT	
	7	1	**7M-0327**	1	WASHER-THRUST (17.40X25.4X1.6MM THK)	
	8	1	**7M-8651**	1	ARMATURE AS	
	9	1	**7M-0324**	1	COIL AS-FIELD	
	10	1	**9H-3757**	2	WASHER (0.516X1X0.094 IN THK)	
	11	1	**7X-0562**	6	WASHER-HARD (13.5X19X0.8MM THK)	
	12	1	**6V-8188**	6	NUT (1/2-13 THD)	
	13	1	**7M-0326**	1	CONNECTOR	
	14	1	**8T-4205**	4	WASHER-HARD (7.2X14.5X2MM THK)	
	15	1	**125-6533**	1	SOLENOID AS	
		1	**3R-8801**	1	CLAMP	
	16	1	**6V-1322**	4	BOLT (1/4-20X0.375 IN)	
	17	1	**4M-1831**	4	PLUG-LEVER HOUSING	
	18	1	**7L-2894**	4	GASKET	
	19	1	**3F-0379**	12	SCREW-POLE SHOE	
	20	1	**7M-0325**	1	INSULATOR-COIL	
	21	1	**7F-3488**	6	SHOE-POLE	
	22	1	**1S-7446**	3	SCREW-MACHINE (8-32X0.437 THD)	
	23	1	**3T-9524**	6	BRUSH AS	
	24	1	**9S-2544**	6	SCREW-HEX HEAD (8-32X11.13MM)	
	25	1	**3T-9525**	1	PLATE AS-BRUSH	
	26	1	**6T-0371**	1	INSULATOR	
	27	1	**5P-6298**	12	SCREW-MACHINE (10-32X0.5 IN)	
		1	**9F-5599**	12	LOCKWASHER	
	28	1	**7F-3525**	6	WASHER-BUSHING	
	29	1	**6T-0372**	1	PLATE	
	30	1	**3T-4709**	3	PLATE	
	31	1	**2L-6679**	3	PLATE-INSULATOR	
	32	1	**3T-4710**	3	PLATE	
	33	1	**6T-0363**	6	HOLDER AS-BRUSH	
					(EACH INCLUDES)	
	34	1	**3T-9494**	1	SPRING-BRUSH	
	35	1	**2D-6392**	1	SEAL-O-RING	
	36	1	**2J-8163**	2	SEAL-O-RING	
	37	1	**7F-3491**	2	WASHER (0.516X1X0.094 IN THK)	
	38	1	**3R-8801**	1	CLAMP	
	39	1	**6N-3826**	1	DRIVE AS-MOTOR	
	40	1	**1H-2629**	3	STRIP-INSULATION	
	41	1	**3T-3422**	1	WIRE AS	
	42	1	**9M-7606**	1	PLUNGER AS	
	43	1	**036-9821**	1	WASHER	
	44	1	**4M-1829**	1	BOOT-RUBBER	
	45	1	**4M-1828**	1	RETAINER-SPRING	
	46	1	**9M-7609**	1	SPRING	
	47	1	**1H-1023**	1	SEAL-O-RING	
	48	1	**3E-7771**	1	HOUSING AS	
	49	1	**3T-3424**	2	PLUG-FELT	
	50	1	**3T-3423**	2	CUP	
	51	1	**1M-9968**	1	BUSHING	
	52	1	**2F-6678**	1	SEAL-LIP	

6V-0513 STARTING MOTOR GP-ELECTRIC *(contd.)* i01562314

NOTE	REF NO	GRAPHIC REF	PART NUMBER	QTY	PART NAME 1 2 3 4 5 6 (PRODUCT LEVEL)	SEE PAGE
	53	1	**4L-2729**	1	WASHER (0.844X1.9X0.188 IN THK)	
	54	1	**4M-1854**	1	SHAFT-LEVER	
	55	1	**2H-3429**	2	RING-RETAINING	
	56	1	**4M-1853**	1	LEVER AS-SHIFT	
	57	1	**5M-3034**	1	LOCKNUT	
	58	1	**1M-9971**	1	SPACER (21.34X43.69X4.78MM THK)	
	59	1	**4M-1827**	1	RETAINER-SPRING	
	60	1	**8C-3089**	1	SEAL-O-RING	
	61	1	**3E-7768**	1	HOUSING AS	
	62	1	**4M-1896**	1	BUSHING-TERMINAL	
	63	1	**8C-9660**	3	WASHER (4.6X7.9X0.8MM THK)	
	64	1	**3T-9494**	6	SPRING-BRUSH	
	65	1	**5J-5314**	5	BOLT (5/16-18X1.5 IN)	
J	66	1	**3N-3763**	1	KIT-TERMINAL	
JZ		1		1	INSULATOR	
JZ	67	1		1	BUSHING	
JZ	68	1		1	BUSHING	
JZ	69	1		1	WASHER	
	70	1	**7X-3373**	1	BOLT (5/16-18X0.88 IN)	
	71	1	**6N-3279**	1	INSULATOR	
	72	1	**4B-2049**	6	NUT (10-32 THD)	
	73	1	**8T-0328**	10	WASHER-HARD (5.5X10X1MM THK)	
	74	1	**8F-1434**	2	LOCKWASHER	
B	75	1	**3T-3434**	6	PLUG	
	76	1	**6T-0362**	1	INSULATOR	
	77	1	**045-4065**	4	SCREW-MACHINE (10-32X0.75 IN)	
	78	1	**125-6535**	1	COVER-STARTING MOTOR	
	79	1	**125-6536**	1	TERMINAL AS	
	80	1	**7T-9123**	1	GASKET-PLATE	

B-USE AS REQUIRED
J-KIT MARKED J INCLUDES PART(S) MARKED J
Z-NOT SERVICED SEPARATELY

6V-0513 STARTING MOTOR GP-ELECTRIC *(contd.)* i01562314

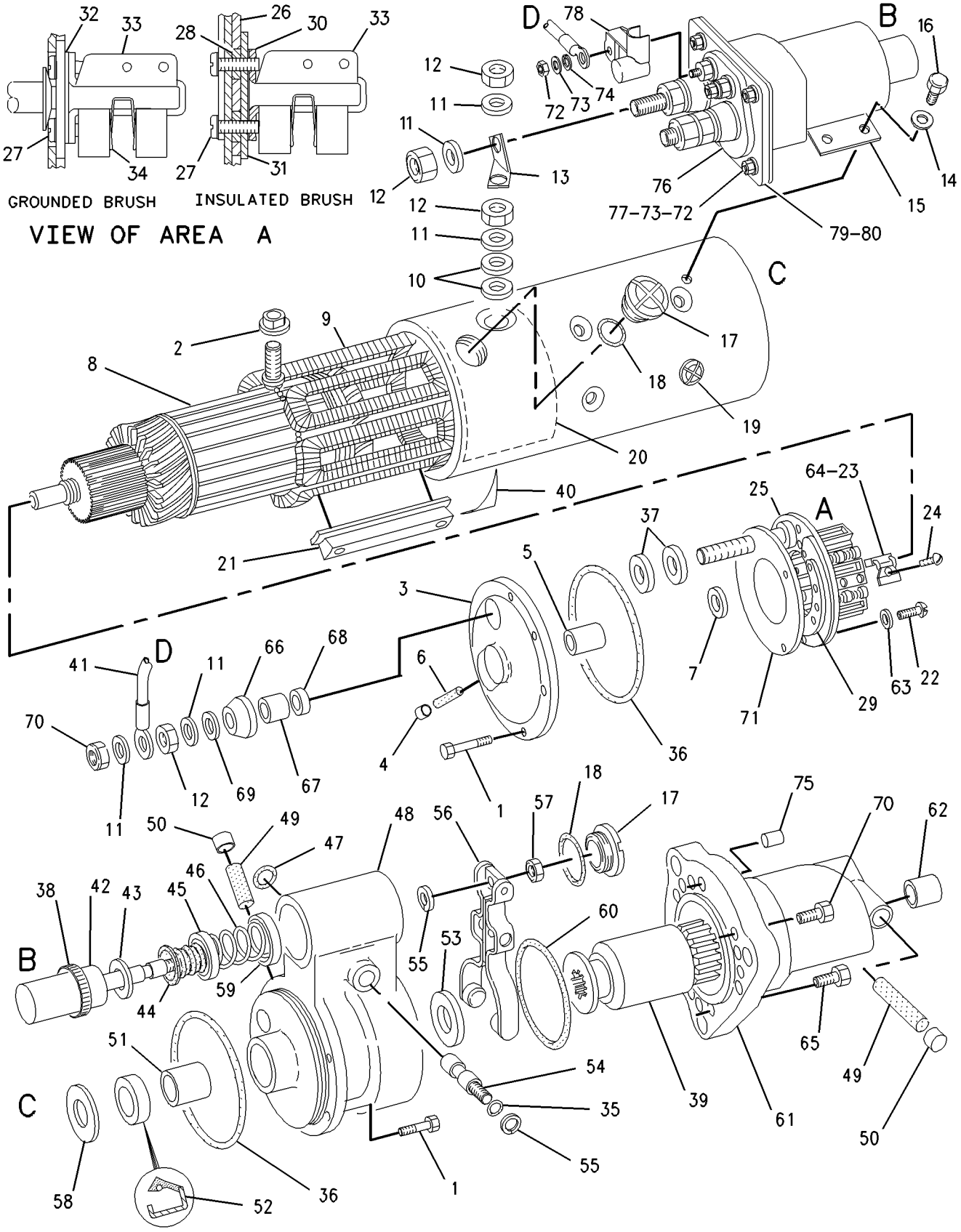

GRAPHIC #1 g00673263

MEMORANDA

ELECTRICAL AND STARTING SYSTEM

6V-0928 STARTING MOTOR GP-ELECTRIC

S/N: ABK1-UP
PART OF 8N-8753 STARTING MOTOR GP-ELECTRIC
FIELD REPLACEMENT ORDER 6V-0513—PAGE 352
AN ATTACHMENT

SMCS-1453, 1454, 1465 **i01540925**

NOTE	REF NO	GRAPHIC REF	PART NUMBER	QTY	PART NAME 1 2 3 4 5 6 (PRODUCT LEVEL)	SEE PAGE
	1	1	**036-9823**	13	BOLT	
	2	1	**3L-3380**	1	BUSHING-TERMINAL	
	3	1	**3T-3418**	1	FRAME AS-END	
	4	1	**3T-3423**	1	CUP	
	5	1	**9G-4101**	1	BUSHING-END	
	6	1	**3T-3424**	1	PLUG-FELT	
	7	1	**7M-0327**	1	WASHER-THRUST (17.40X25.4X1.6MM THK)	
	8	1	**7M-8651**	1	ARMATURE AS	
	9	1	**7M-0324**	1	COIL AS-FIELD	
	10	1	**9H-3757**	2	WASHER (0.516X1X0.094 IN THK)	
	11	1	**7X-0562**	6	WASHER-HARD (13.5X19X0.8MM THK)	
	12	1	**6V-8188**	6	NUT (1/2-13 THD)	
	13	1	**7M-0326**	1	CONNECTOR	
	14	1	**8T-4205**	4	WASHER-HARD (7.2X14.5X2MM THK)	
Y	15	1	**3T-4704**	1	SOLENOID AS-STARTING MOTOR	343
	16	1	**6V-1322**	4	BOLT (1/4-20X0.375 IN)	
	17	1	**4M-1831**	4	PLUG-LEVER HOUSING	
	18	1	**7L-2894**	4	GASKET	
	19	1	**3F-0379**	12	SCREW-POLE SHOE	
	20	1	**7M-0325**	1	INSULATOR-COIL	
	21	1	**7F-3488**	6	SHOE-POLE	
	22	1	**1S-7446**	3	SCREW-MACHINE (8-32X0.437 THD)	
	23	1	**3T-9524**	6	BRUSH AS	
	24	1	**9S-2544**	9	SCREW-HEX HEAD (8-32X11.13MM)	
	25	1	**3T-9525**	1	PLATE AS-BRUSH	
	26	1	**6T-0371**	1	INSULATOR	
	27	1	**3T-4711**	12	SCREW AS	
		1	**9F-5599**	12	LOCKWASHER	
	28	1	**7F-3525**	6	WASHER-BUSHING	
	29	1	**6T-0372**	1	PLATE	
	30	1	**3T-4709**	3	PLATE	
	31	1	**2L-6679**	3	PLATE-INSULATOR	
	32	1	**3T-4710**	3	PLATE	
	33	1	**6T-0363**	6	HOLDER AS-BRUSH	
					(EACH INCLUDES)	
	34	1	**3T-9494**	1	SPRING-BRUSH	
	35	1	**2D-6392**	1	SEAL-O-RING	
	36	1	**2J-8163**	2	SEAL-O-RING	
	37	1	**7F-3491**	2	WASHER (0.516X1X0.094 IN THK)	
	38	1	**3R-8801**	1	CLAMP-BOOT	
	39	1	**6N-3826**	1	DRIVE AS-MOTOR	
	40	1	**1H-2629**	3	STRIP-INSULATION	
	41	1	**3T-3422**	1	WIRE AS	
	42	1	**9M-7606**	1	PLUNGER AS	
	43	1	**036-9821**	1	WASHER	
	44	1	**4M-1829**	1	BOOT-RUBBER	
	45	1	**4M-1828**	1	RETAINER-SPRING	
	46	1	**9M-7609**	1	SPRING	
	47	1	**1H-1023**	1	SEAL-O-RING	
	48	1	**3E-7771**	1	HOUSING AS	
	49	1	**3T-3424**	3	PLUG-FELT	
	50	1	**3T-3423**	3	CUP	
	51	1	**1M-9968**	1	BUSHING	
	52	1	**2F-6678**	1	SEAL-LIP	

6V-0928 **STARTING MOTOR GP-ELECTRIC** *(contd.)* **i01540925**

NOTE	REF NO	GRAPHIC REF	PART NUMBER	QTY	PART NAME 1 2 3 4 5 6 (PRODUCT LEVEL)	SEE PAGE
	53	1	**4L-2729**	1	WASHER (0.844X1.9X0.188 IN THK)	
	54	1	**4M-1854**	1	SHAFT-LEVER	
	55	1	**2H-3429**	2	RING-RETAINING	
	56	1	**4M-1853**	1	LEVER AS-SHIFT	
	57	1	**5M-3034**	1	LOCKNUT	
	58	1	**1M-9971**	1	SPACER	
	59	1	**4M-1827**	1	RETAINER-SPRING	
	60	1	**8C-3089**	1	SEAL-O-RING	
	61	1	**3E-7768**	1	HOUSING AS	
	62	1	**4M-1896**	1	BUSHING-TERMINAL	
	63	1	**8C-9660**	3	WASHER (4.6X7.9X0.8MM THK)	
	64	1	**3T-9494**	6	SPRING-BRUSH	
	65	1	**5J-5314**	5	BOLT (5/16-18X1.5 IN)	
J	66	1	**3N-3763**	1	KIT-TERMINAL	
JZ		1		1	INSULATOR	
JZ	67	1		1	BUSHING	
JZ	68	1		1	BUSHING	
JZ	69	1		1	WASHER (0.38X0.88X0.02 IN THK)	
	70	1	**7X-3373**	1	BOLT (5/16-18X0.88 IN)	
	71	1	**6N-3279**	1	INSULATOR	
	72	1	**4B-2049**	6	NUT (10-32 THD)	
	73	1	**8T-0328**	10	WASHER-HARD (5.5X10X1MM THK)	
	74	1	**8F-1434**	2	LOCKWASHER	
B	75	1	**3T-3434**	6	PLUG	
	76	1	**125-6537**	1	INSULATOR	
	77	1	**045-4065**	4	SCREW-MACHINE (10-32X0.75 IN)	
	78	1	**125-6536**	1	TERMINAL AS	
		1	**7T-9123**	1	GASKET-PLATE	
	79	1	**125-6535**	1	COVER-STARTING MOTOR	

B-USE AS REQUIRED
J-KIT MARKED J INCLUDES PARTS MARKED J
Y-SEPARATE ILLUSTRATION
Z-NOT SERVICED SEPARATELY

6V-0928 **STARTING MOTOR GP-ELECTRIC** *(contd.)* **i01540925**

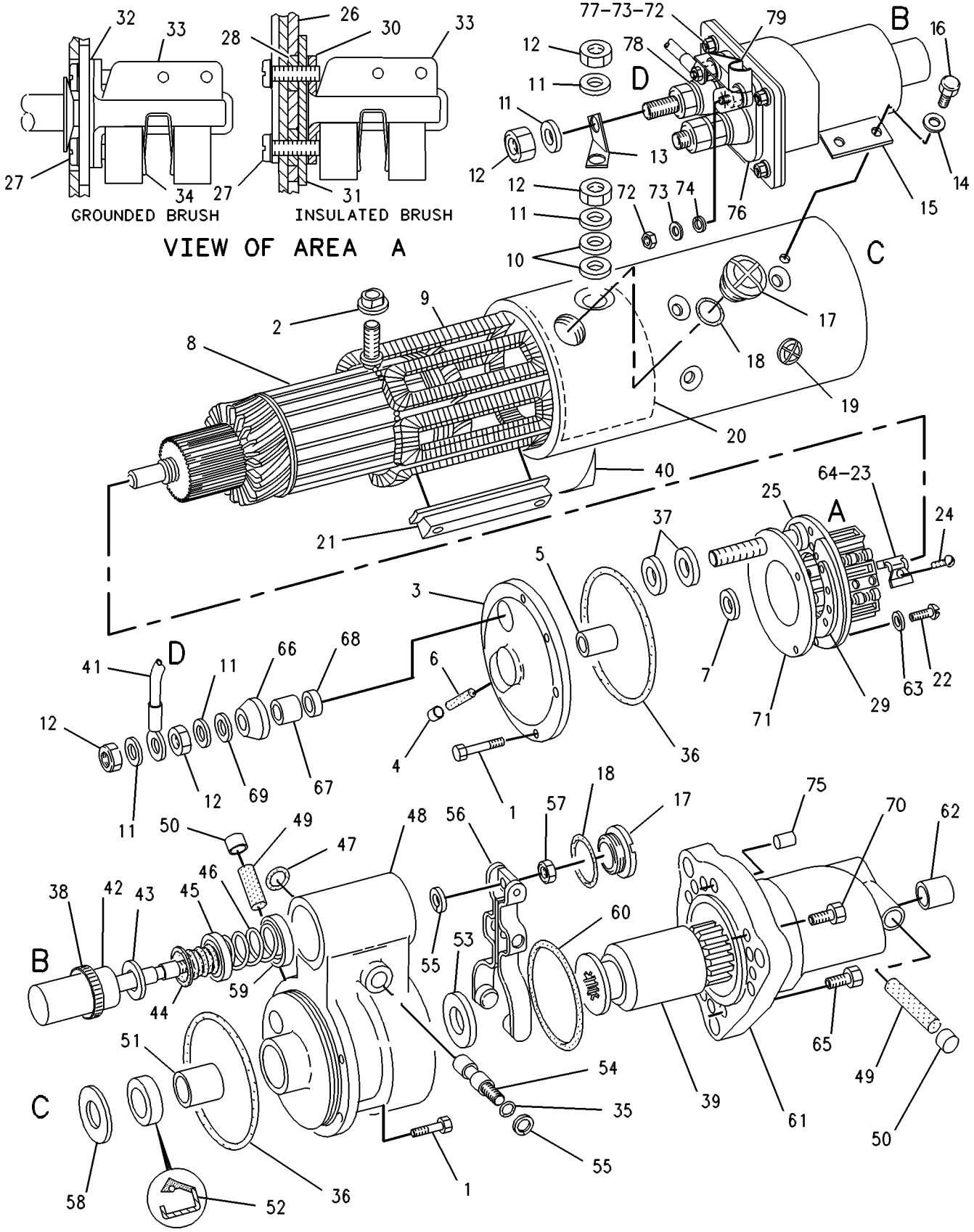

GRAPHIC #1 g00256599

7N-7049 STARTING MOTOR GP-ELECTRIC

S/N: ABK1-UP

PART OF 162-9505 INSTALLATION AR-ENGINE

SMCS-1453, 1454, 1465 **i00581500**

NOTE	REF NO	GRAPHIC REF	PART NUMBER	QTY	PART NAME 1 2 3 4 5 6 (PRODUCT LEVEL)	SEE PAGE
CYR	1	1	**6V-0513**	1	STARTING MOTOR GP-ELECTRIC	352
	2	1	**8S-2332**	3	BOLT-12 POINT HEAD (5/8-11X1.75IN)	
	3	1	**7N-6494**	1	GASKET	
	4	1	**5R-7755**	1	WIRE AS	

C-CHANGE FROM PREVIOUS TYPE
R-REMFG PART MAY BE AVAILABLE
Y-SEPARATE ILLUSTRATION

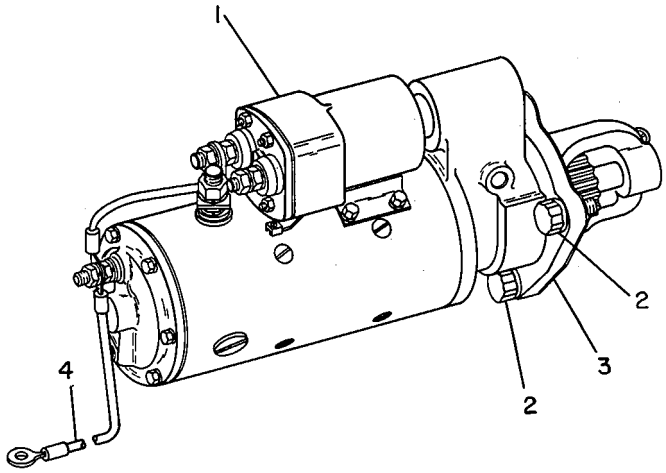

GRAPHIC #1 g00169724

8N-8753 STARTING MOTOR GP-ELECTRIC

S/N: ABK1-UP
24 VOLT
PART OF 148-5381 STARTING AR-COLD WEATHER
AN ATTACHMENT

SMCS-1453, 1454, 1465 **i00596795**

NOTE	REF NO	GRAPHIC REF	PART NUMBER	QTY	PART NAME 1 2 3 4 5 6 (PRODUCT LEVEL)	SEE PAGE
CY	1	1	*6V-0928*	1	STARTING MOTOR GP-ELECTRIC	356
	2	1	**8S-2332**	3	BOLT-12 POINT HEAD (5/8-11X1.75IN)	
	3	1	**7N-6494**	1	GASKET	
	4	1	**5R-7755**	1	WIRE AS	

C-CHANGE FROM PREVIOUS TYPE
Y-SEPARATE ILLUSTRATION

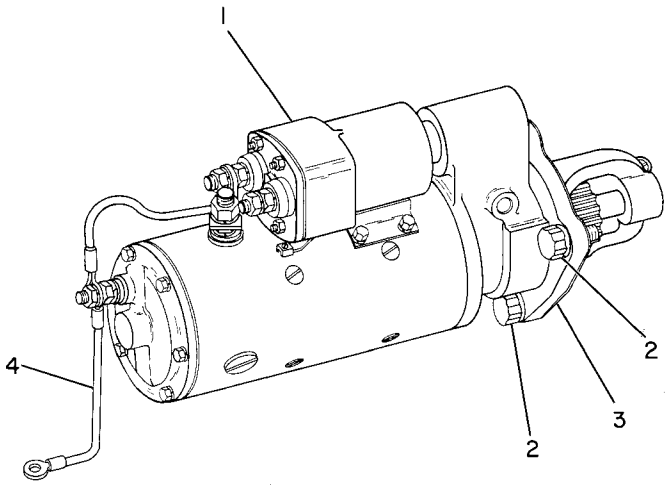

GRAPHIC #1 g00282511

MEMORANDA

123-8686 STARTING MOTOR GP-ELECTRIC*R

S/N: ABK1-UP
24 VOLT
PART OF 125-4653 PRELUBRICATION AR-ENGINE
AN ATTACHMENT

SMCS-1453, 1454, 1465 **i01446644**

NOTE	REF NO	GRAPHIC REF	PART NUMBER	QTY	PART NAME 1 2 3 4 5 6 (PRODUCT LEVEL)	SEE PAGE
	1	1	**7M-0326**	1	CONNECTOR	
	2	1	**9H-3757**	2	WASHER (0.516X1X0.094 IN THK)	
	3	1	**1S-7446**	3	SCREW-MACHINE (8-32X0.437 THD)	
	4	1	**8C-9660**	3	WASHER (4.6X7.9X0.8MM THK)	
	5	1	**9S-2544**	9	SCREW-HEX HEAD (8-32X11.13MM)	
	6	1	**4L-7124**	4	BOLT (1/4-20X1.25 IN)	
	7	1	**117-0610**	1	KIT-BEARING (STARTER)	
					(INCLUDES WASHERS & BEARING)	
	8	1	**125-6536**	1	TERMINAL AS	
	9	1	**7F-3491**	2	WASHER (0.516X1X0.094 IN THK)	
	10	1	**3T-3422**	1	WIRE AS	
	11	1	**2J-8163**	2	SEAL-O-RING (117.07MM ID)	
	12	1	**7X-3373**	1	BOLT (5/16-18X0.88 IN)	
	13	1	**3T-3434**	6	PLUG	
	14	1	**5J-5314**	5	BOLT (5/16-18X1.5 IN)	
	15	1	**3L-3380**	1	BUSHING-TERMINAL	
	16	1	**036-9821**	1	WASHER	
	17	1	**4M-1828**	1	RETAINER-SPRING	
	18	1	**4M-1829**	1	BOOT-RUBBER	
	19	1	**9M-7606**	1	PLUNGER AS	
	20	1	**9M-7609**	1	SPRING	
	21	1	**4M-1827**	1	RETAINER-SPRING	
	22	1	**8C-3089**	1	SEAL-O-RING (82.22MM ID)	
	23	1	**4M-1853**	1	LEVER AS-SHIFT	
	24	1	**5M-3034**	1	LOCKNUT	
	25	1	**7L-2894**	4	GASKET	
	26	1	**4M-1831**	4	PLUG-LEVER HOUSING	
	27	1	**4M-1854**	1	SHAFT-LEVER	
	28	1	**1H-1023**	1	SEAL-O-RING (9.25MM ID)	
	29	1	**2D-6392**	1	SEAL-O-RING (6.07MM ID)	
	30	1	**3E-7768**	1	HOUSING AS	
	31	1	**6N-3826**	1	DRIVE AS-MOTOR	
	32	1	**2H-3429**	2	RING-RETAINING	
	33	1	**6V-1322**	4	BOLT (1/4-20X0.375 IN)	
	34	1	**8T-4205**	4	WASHER-HARD (7.2X14.5X2MM THK)	
	35	1	**6N-3279**	1	INSULATOR	
	36	1	**036-9823**	13	BOLT	
	37	1	**111-9862**	1	COVER-STARTING MOTOR	
	38	1	**1H-2629**	3	STRIP-INSULATION	
	39	1	**7M-0324**	1	COIL AS-FIELD	
	40	1	**3F-0379**	12	SCREW-POLE SHOE	
	41	1	**7F-3488**	6	SHOE-POLE	
	42	1	**111-9864**	1	GASKET	
	43	1	**7M-0325**	1	INSULATOR-COIL	
	44	1	**3T-9524**	6	BRUSH AS	
	45	1	**125-6533**	1	SOLENOID AS	
		1	**3R-8801**	1	CLAMP-BOOT	
	46	1	**125-6537**	1	INSULATOR	
	47	1	**3R-8801**	1	CLAMP-BOOT	
	48	1	**8F-1434**	2	LOCKWASHER	
	49	1	**6V-8188**	6	NUT (1/2-13 THD)	
	50	1	**7X-0562**	6	WASHER-HARD (13.5X19X0.8MM THK)	
	51	1	**4B-2049**	6	NUT (10-32 THD)	
	52	1	**8T-0328**	10	WASHER-HARD (5.5X10X1MM THK)	

123-8686 STARTING MOTOR GP-ELECTRIC *(contd.)* i01446644

NOTE	REF NO	GRAPHIC REF	PART NUMBER	QTY	PART NAME 1 2 3 4 5 6 (PRODUCT LEVEL)	SEE PAGE
	53	1	**3T-9494**	6	SPRING-BRUSH	
	54	1	**123-9776**	1	ARMATURE AS-STARTING MOTOR	
	55	1	**123-9773**	1	HOUSING AS-STARTING MOTOR	
	56	1	**3T-3424**	2	PLUG-FELT	
	57	1	**3T-3423**	2	CUP	
	58	1	**1M-9968**	1	BUSHING	
	59	1	**2F-6678**	1	SEAL-LIP	
	60	1	**4M-1896**	1	BUSHING-TERMINAL	
	61	1	**045-4065**	4	SCREW-MACHINE (10-32X0.75 IN)	
	62	1	**6V-8373**	3	SCREW-MACHINE (6-32X0.187 IN)	
	63	1	**9G-6770**	1	CONTACT AS	
	64	1	**6T-1120**	1	BUSHING-TERMINAL	
	65	1	**4M-1815**	1	SPRING-CONTACT	
	66	1	**125-6535**	1	COVER-STARTING MOTOR	
	67	1	**7T-9123**	1	GASKET-PLATE	
	68	1	**3T-9525**	1	PLATE AS-BRUSH	
	69	1	**6T-0371**	1	INSULATOR	
	70	1	**5P-6298**	12	SCREW-MACHINE (10-32X0.5 IN)	
		1	**9F-5599**	12	LOCKWASHER	
	71	1	**7F-3525**	6	WASHER-BUSHING	
	72	1	**6T-0372**	1	PLATE (OUTSIDE)	
	73	1	**3T-4709**	3	PLATE (.51MM THK)	
	74	1	**2L-6679**	3	PLATE-INSULATOR	
	75	1	**3T-4710**	3	PLATE (1.6MM THK)	
	76	1	**6T-0363**	6	HOLDER AS-BRUSH	
J	77	1	**3N-3763**	1	KIT-TERMINAL	
JZ	78	1		1	BUSHING	
JZ	79	1		1	WASHER (0.38X0.88X0.02 IN THK)	
JZ	80	1		1	INSULATOR	
JZ	81	1		1	BUSHING	
	82	1	**111-9866**	1	KIT-STARTING MOTOR GEAR	
	83	1	**147-0633**	1	HOUSING AS	

J-KIT MARKED J INCLUDES PART(S) MARKED J
Z-NOT SERVICED SEPARATELY

123-8686 STARTING MOTOR GP-ELECTRIC *(contd.)* **i01446644**

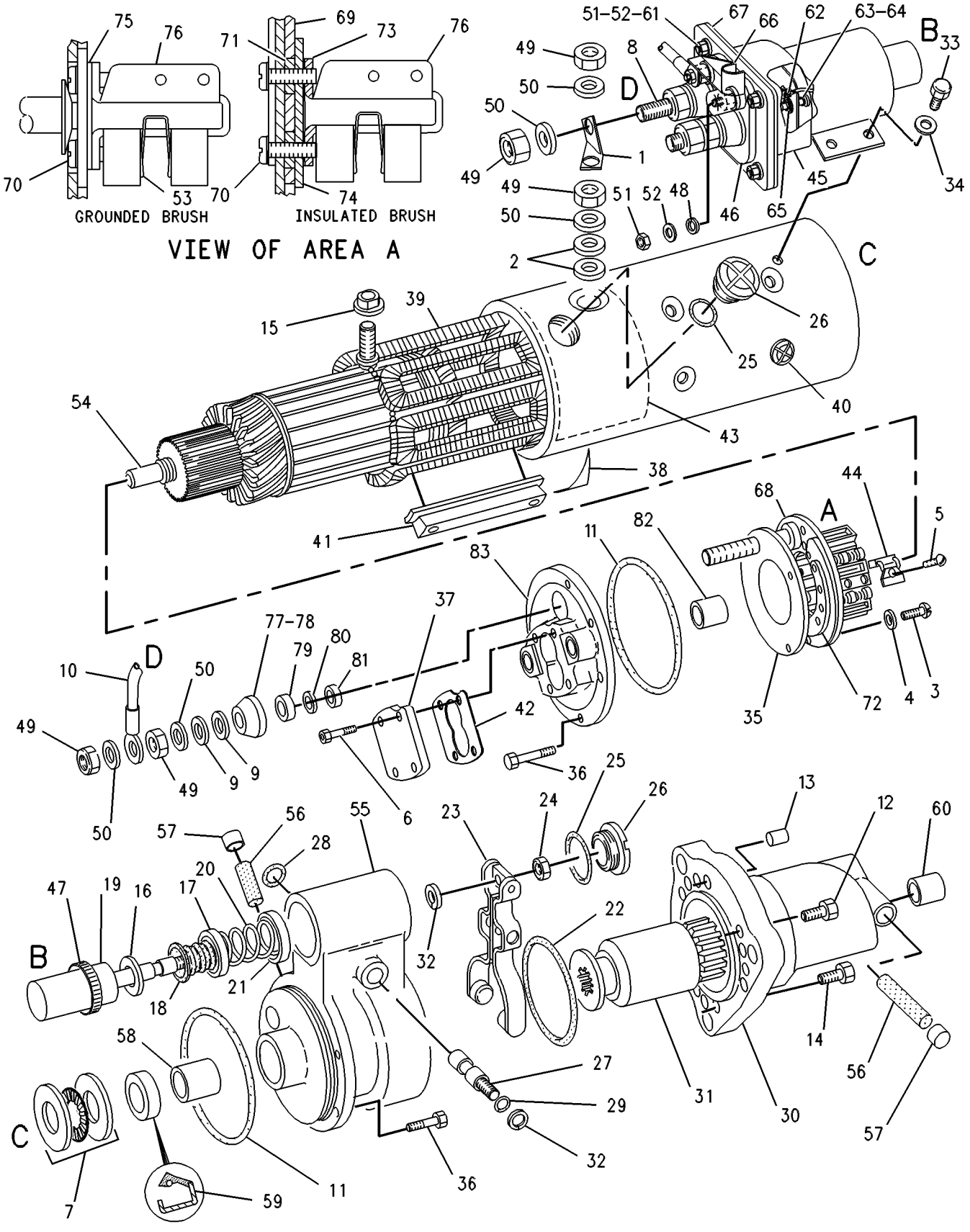

GRAPHIC #1 g00282910

164-7577 SWITCH GP-BYPASS

S/N: ABK1-UP
PART OF 163-5395 BATTERY & WIRING GP, 183-8610 FILTER GP-OIL
ALSO AN ATTACHMENT

SMCS-1408 **i01647526**

NOTE	REF NO	GRAPHIC REF	PART NUMBER	QTY	PART NAME 1 2 3 4 5 6 (PRODUCT LEVEL)	SEE PAGE
B	1	1	**9X-1813**		SLEEVE	
J	2	1	**102-8802**	1	KIT-RECEPTACLE (2 PIN)	
					(INCLUDES RECEPTACLE AS AND WEDGE)	
	3	1	**186-3735**	2	PIN-CONNECTOR	
J	4	1	**3E-3365**	1	WEDGE-RECEPTACLE LOCK (2 PIN)	
	5	1	**3D-2824**	1	SEAL-O-RING	
Z	6	1		1	SWITCH AS	

B-USE AS REQUIRED
J-KIT MARKED J INCLUDES PART(S) MARKED J
Z-NOT SERVICED SEPARATELY

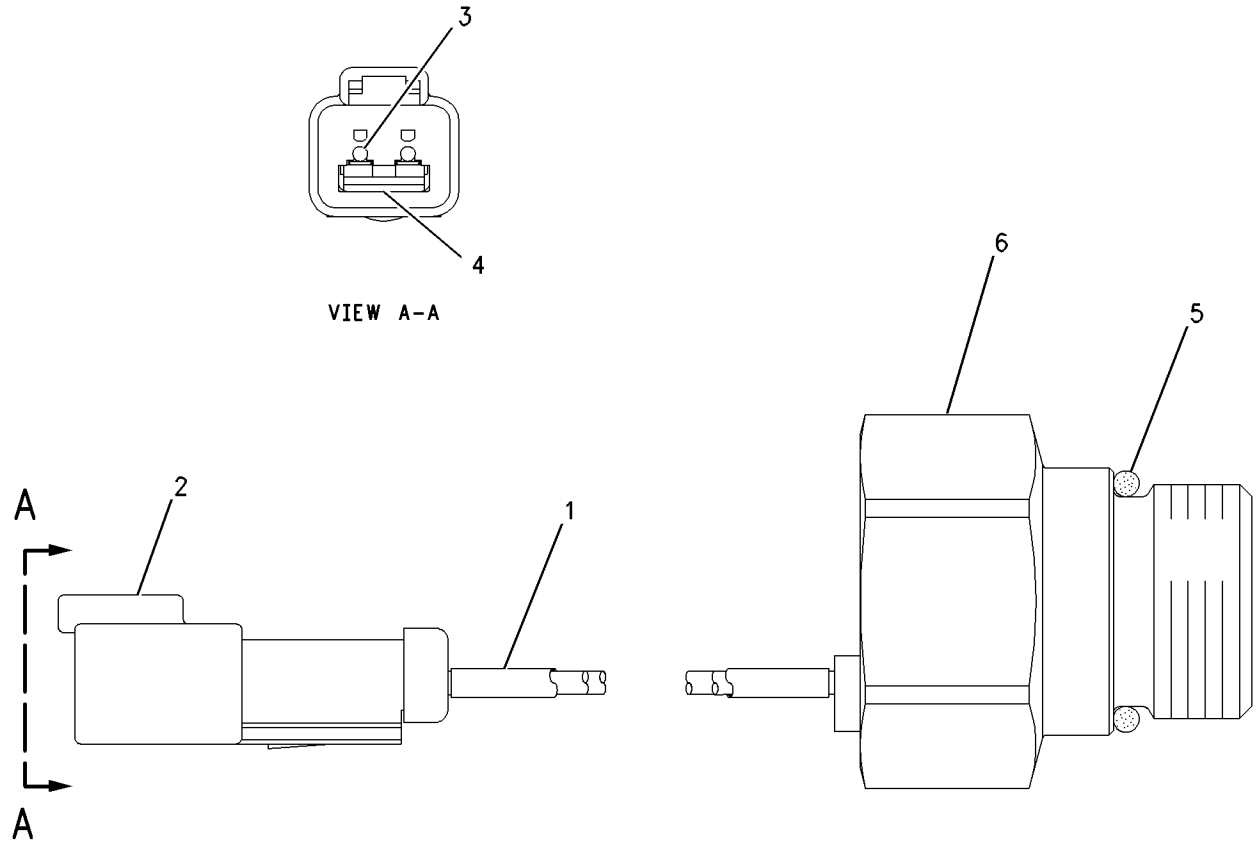

GRAPHIC #1 g00750019

7N-0719 SWITCH GP-DISCONNECT

S/N: ABK1-UP
PART OF 163-5395 BATTERY & WIRING GP
AN ATTACHMENT

SMCS-1411 **i01289277**

NOTE	REF NO	GRAPHIC REF	PART NUMBER	QTY	PART NAME 1 2 3 4 5 6 (PRODUCT LEVEL)	SEE PAGE
	1	1	**8H-5306**	1	KEY (BATTERY DISCONNECT)	
	2	1	**8H-5303**	1	NUT (3/4-16-2A THD)	
	3	1	**2H-3922**	2	LOCKWASHER (19.9X31.3X1.3MM THK)	
	4	1	**9F-5644**	2	LOCKWASHER (9.93X17.3X.9MM THK)	
	5	1	**6F-7045**	2	NUT-FULL (3/8X24 THD)	

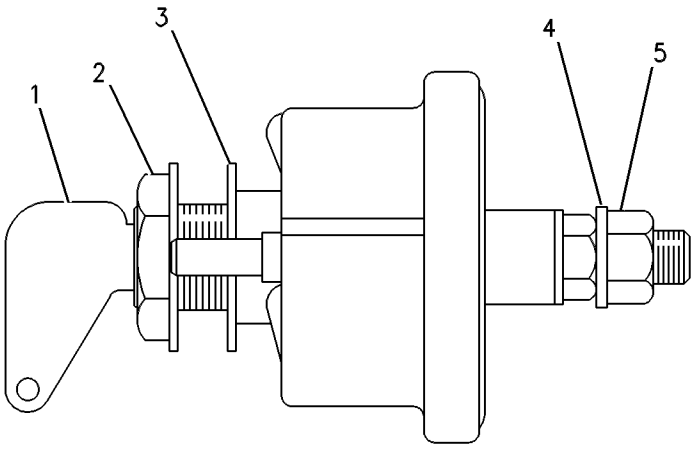

GRAPHIC #1 g00117885

100-4417 SWITCH GP-FLOW–COOLANT

S/N: 5XD1-UP; 48W41541-UP
PART OF 163-5784, 198-9948 ENGINE AR
ALSO AN ATTACHMENT

SMCS-1435 **i01547458**

NOTE	REF NO	GRAPHIC REF	PART NUMBER	QTY	PART NAME 1 2 3 4 5 6 (PRODUCT LEVEL)	SEE PAGE
Y	1	1	**171-8708**	1	SWITCH GP-FLOW (COOLANT)	368
	2	1	**2B-2695**	2	BOLT (5/16-18X0.875 IN)	
	3	1	**9M-1974**	2	WASHER-HARD (8.8X16X2MM THK)	
	4	1	**4N-3841**	1	GASKET	

Y-SEPARATE ILLUSTRATION

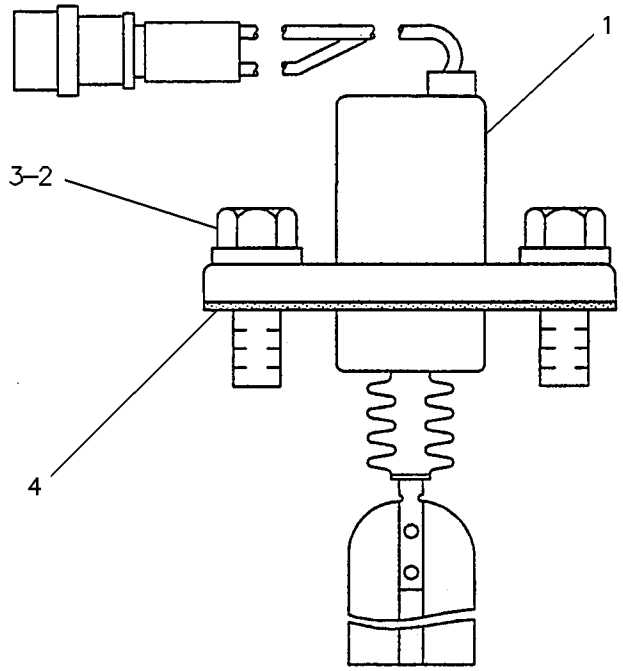

GRAPHIC #1 g00083292

171-8708 SWITCH GP-FLOW–COOLANT

S/N: 5XD1-UP; 48W41541-UP
PART OF 100-4417 SWITCH GP-FLOW
ALSO AN ATTACHMENT

SMCS-1435 **i01582521**

NOTE	REF NO	GRAPHIC REF	PART NUMBER	QTY	PART NAME 1 2 3 4 5 6 (PRODUCT LEVEL)	SEE PAGE
					(NO SERVICED PARTS)	

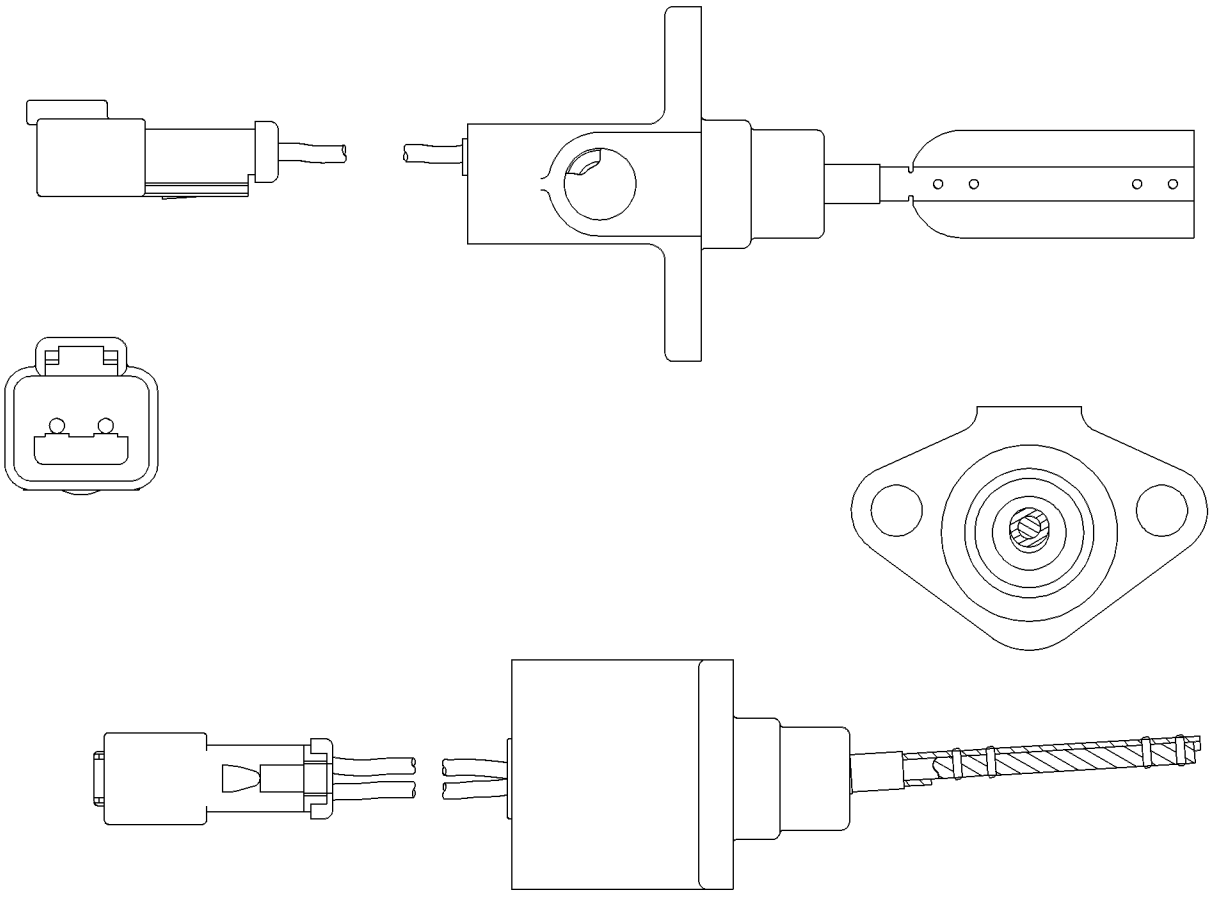

GRAPHIC #1 g00613049

3E-8680 SWITCH GP-HANDLE

S/N: ABK1-UP
PART OF 8E-9869 LINKAGE GP-IMPLEMENT
AN ATTACHMENT

SMCS-1435 **i01601795**

NOTE	REF NO	GRAPHIC REF	PART NUMBER	QTY	PART NAME 1 2 3 4 5 6 (PRODUCT LEVEL)	SEE PAGE
	1	1	**2S-6218**	2	SCREW-MACHINE (6-32X.625 IN)	
		1	**3L-8187**	2	LOCKWASHER (NO 6 INTERNAL TOOTH)	
	2	1	**6V-1965**	1	SWITCH AS (SINGLE/DUAL TILT CONTROL)	
	3	1	**6V-1966**	1	SWITCH AS (TIP CONTROL)	
BD	4	1	**8T-6342**		TUBE (3.18MM ID)	
	5	1	**7T-3810**	1	LEVER	
	6	1	**7N-7782**	1	HOUSING-PLUG (1 PIN, 2 SOCKET)	
	7	1	**7N-7780**	1	PIN-CONNECTOR (BLADE)	
	8	1	**7N-7779**	2	SOCKET-CONNECTOR	

B-USE AS REQUIRED
D-ORDER BY THE METER

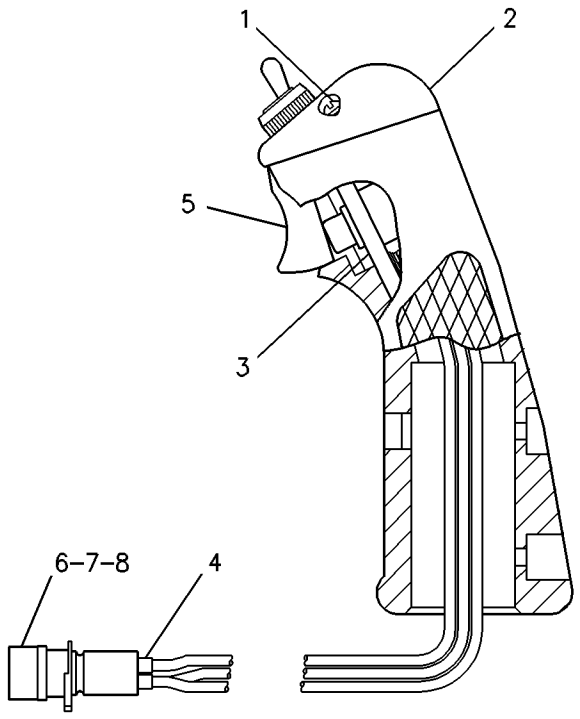

GRAPHIC #1 g00230829

167-0138 SWITCH GP-MAGNETIC

S/N: ABK1-UP

PART OF 167-7494 WIRING GP-CONSOLE

SMCS-7499 **i01605671**

NOTE	REF NO	GRAPHIC REF	PART NUMBER	QTY	PART NAME 1 2 3 4 5 6 (PRODUCT LEVEL)	SEE PAGE
	1	1	**4F-2294**	2	NUT-JAM (5/16-24 THD)	
	2	1	**6V-8186**	2	NUT-FULL (5/16-24 THD)	
	3	1	**155-2270**	1	KIT-CONNECTING PLUG (2 PIN)	
	4	1	**186-3736**	2	SOCKET-CONNECTOR	
	5	1	**155-2261**	1	WEDGE-PLUG LOCK (2 PIN)	

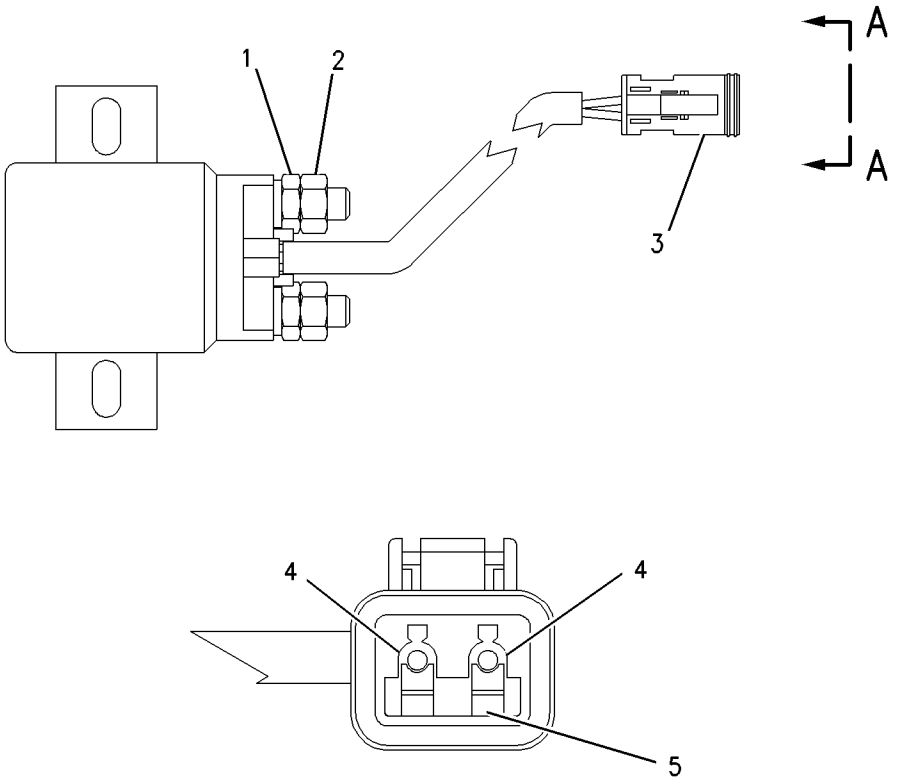

VIEW A-A

GRAPHIC #1 g00831588

9G-7641 SWITCH GP-START

S/N: ABK1-UP

KEY

PART OF 163-5399 WIRING GP-PLATFORM

SMCS-1416 **i01582627**

NOTE	REF NO	GRAPHIC REF	PART NUMBER	QTY	PART NAME 1 2 3 4 5 6 (PRODUCT LEVEL)	SEE PAGE
	1	1	**6V-8362**	4	SCREW-MACHINE (8-32X0.31 IN)	
	2	1	**9B-7233**	4	LOCKWASHER	
	3	1	**7T-6799**	1	NUT-MOUNTING (1-32 THD)	

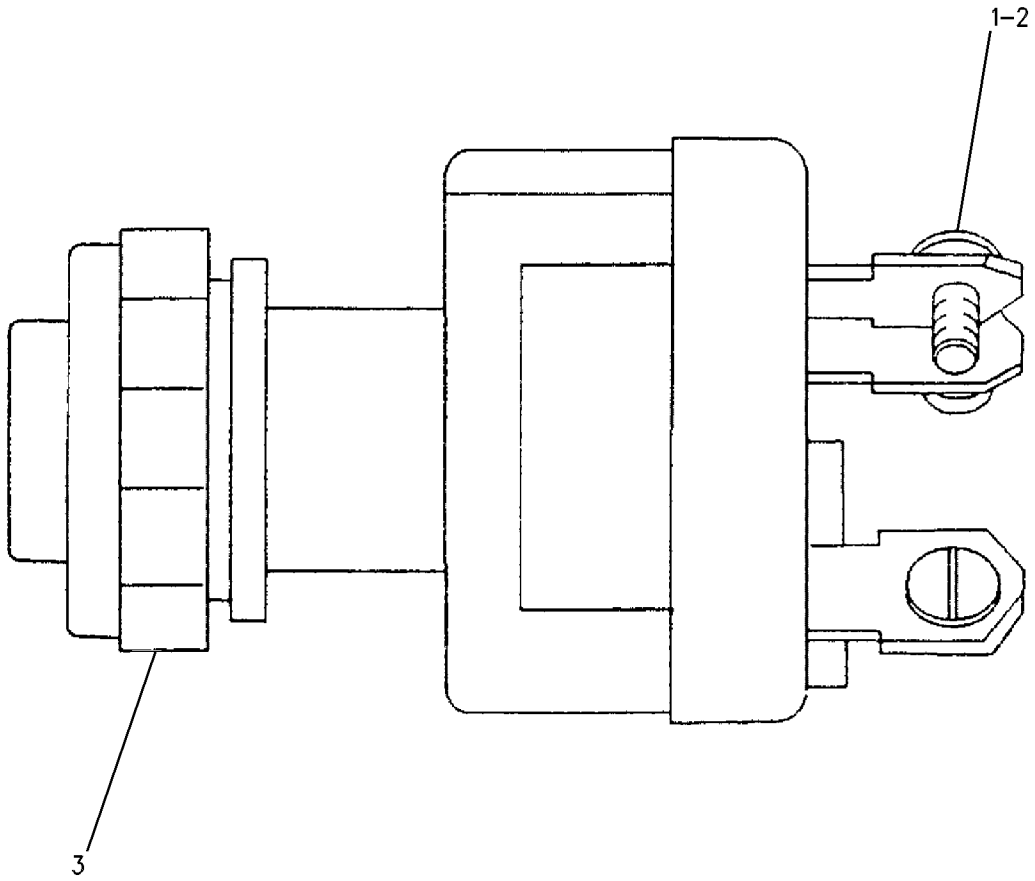

GRAPHIC #1 g00606018

ELECTRICAL AND STARTING SYSTEM

167-7494 WIRING GP-CONSOLE

S/N: ABK1-UP

PART OF 163-5399 WIRING GP-PLATFORM

SMCS-1408 **i01540923**

NOTE	REF NO	GRAPHIC REF	PART NUMBER	QTY	PART NAME 1 2 3 4 5 6 (PRODUCT LEVEL)	SEE PAGE
	1	1	**3T-2662**	1	CIRCUIT BREAKER AS (15 AMP) (FRONT FLOODS)	
		1	**6V-8376**	2	SCREW-MACHINE (8-32X0.25 IN)	
		1	**9B-7233**	2	LOCKWASHER	
	2	1	**6T-3642**	1	CIRCUIT BREAKER AS (10 AMP) (ELECTRONIC CLUTCH BRAKE)	
		1	**6V-8376**	2	SCREW-MACHINE (8-32X0.25 IN)	
		1	**9B-7233**	2	LOCKWASHER	
	3	1	**6T-3643**	1	CIRCUIT BREAKER AS (15 AMP) (BLOWER)	
		1	**6V-8376**	2	SCREW-MACHINE (8-32X0.25 IN)	
		1	**9B-7233**	2	LOCKWASHER	
	4	1	**6T-3643**	1	CIRCUIT BREAKER AS (15 AMP) (IMPLEMENT)	
		1	**6V-8376**	2	SCREW-MACHINE (8-32X0.25 IN)	
		1	**9B-7233**	2	LOCKWASHER	
	5	1	**167-7499**	1	BRACKET	
	6	1	**125-1302**	1	SWITCH GP-MAGNETIC (START RELAY)	
		1	**102-8802**	1	KIT-RECEPTACLE (2 PIN)	
					(INCLUDES RECEPTACLE AS & WEDGE)	
		1	**3E-3365**	1	WEDGE-RECEPTACLE LOCK (2 PIN)	
M		1	**5C-2890**	2	NUT (M6X1 THD)	
		1	**186-3735**	2	PIN-CONNECTOR	
BE		1	**9X-1386**		SLEEVE	
	7	1	**128-6157**	1	PLATE	
	8	1	**155-1556**	1	STRAP	
	9	1	**155-1996**	1	CLIP	
	10	1	**155-1998**	1	STUD	
	11	1	**155-2001**	1	RETAINER	
	12	1	**159-2943**	1	WIRE AS	
	13	1	**159-4689**	1	FILM-IDENTIFICATION (CIRCUIT BREAKER)	
	14	1	**159-4696**	1	FILM-IDENTIFICATION (FUSE)	
	15	1	**159-4697**	1	FILM-IDENTIFICATION (CIRCUIT BREAKER)	
	16	1	**164-9980**	1	FILM-IDENTIFICATION (CIRCUIT BREAKER)	
	17	1	**166-7164**	1	CIRCUIT BREAKER AS (125 AMP) (MAIN)	
		1	**6V-8183**	2	NUT-FULL (3/8-24 THD)	
		1	**7X-0608**	2	WASHER-HARD (10.2X16X2.0MM THK)	
		1	**9F-5644**	2	LOCKWASHER	
Y	18	1	**167-0138**	1	SWITCH GP-MAGNETIC (MAIN RELAY)	370
	19	1	**167-3830**	1	PLATE AS	
	20	1	**127-2419**	1	HINGE	
	21	1	**168-0264**	1	STRAP	
	22	1	**168-0265**	1	STRAP	
	23	1	**168-0267**	1	WIRE AS	
	24	1	**168-0270**	1	HARNESS AS (POWER)	
		1	**127-5485**	1	PLUG AS-CONNECTOR (1 PIN)	
		1	**127-5486**	1	RECEPTACLE AS (1 PIN)	
	25	1	**6T-3642**	1	CIRCUIT BREAKER AS (10 AMP) (START KEY SWITCH)	
		1	**6V-8376**	2	SCREW-MACHINE (8-32X0.25 IN)	
		1	**9B-7233**	2	LOCKWASHER	
	26	1	**033-8755**	2	SCREW (1/4-20X1 IN)	
	27	1	**068-4209**	12	SCREW (8-32X0.75 IN)	
	28	1	**2D-6235**	2	LOCKNUT (1/4-20 THD)	
	29	1	**6T-3643**	1	CIRCUIT BREAKER AS (15 AMP) (ENGINE)	
		1	**6V-8376**	2	SCREW-MACHINE (8-32X0.25 IN)	
		1	**9B-7233**	2	LOCKWASHER	
	30	1	**3S-9557**	4	SCREW-PAN HEAD (4-40X0.5 IN)	
	31	1	**6V-5645**	4	SCREW-MACHINE (10-32X0.87 IN)	
	32	1	**6V-8185**	4	NUT (1/4-20 THD)	

167-7494 **WIRING GP-CONSOLE** ***(contd.)*** **i01540923**

NOTE	REF NO	GRAPHIC REF	PART NUMBER	QTY	PART NAME 1 2 3 4 5 6 (PRODUCT LEVEL)	SEE PAGE
	33	1	**8T-4205**	4	WASHER-HARD (7.2X14.5X2MM THK)	
	34	1	**9X-6258**	2	SCREW-MACHINE (6-32X.50 IN)	
	35	1	**173-1566**	1	CAP AS	
	36	1	**155-2271**	1	KIT-CONNECTING PLUG (4 PIN)	
					(INCLUDES PLUG AS, WEDGE & INTERFACE SEAL)	
	37	1	**2L-8077**	1	TERMINAL (RING)	
	38	1	**8C-6354**	1	CAP-RECEPTACLE	
BE	39	1	**125-7875**		TUBE-SHRINKABLE	
BD	40	1	**5P-5677**		WIRE (18 GA)	
	41	1	**168-0275**	1	FUSE BLOCK & HARNESS AS	
		1	**168-0269**	1	HARNESS AS-FUSE PANEL	
		1	**102-8807**	2	KIT-CONNECTING PLUG (2 PIN)	
					(INCLUDES PLUG AS & WEDGE)	
		1	**102-8802**	1	KIT-RECEPTACLE (2 PIN)	
					(INCLUDES RECEPTACLE AS & WEDGE)	
		1	**102-8803**	1	KIT-RECEPTACLE (3 PIN)	
					(INCLUDES RECEPTACLE AS & WEDGE)	
		1	**102-8804**	1	KIT-RECEPTACLE (4 PIN)	
					(INCLUDES RECEPTACLE AS & WEDGE)	
		1	**9W-1441**	3	FUSE (15 AMP)	
		1	**9W-1442**	10	FUSE (10 AMP)	
		1	**9W-1446**	3	FUSE (20 AMP)	
	42	1	**151-1396**	1	BLOCK AS-FUSE (16 POLE)	
		1	**151-1398**	2	KIT-TERMINAL LOCK (FUSE BLOCK)	
		1	**6V-8185**	2	NUT (1/4-20 THD)	
		1	**1H-3244**	2	LOCKWASHER (6.64X11.91X.65MM THK)	
	43	1	**151-1397**	1	COVER-FUSE BLOCK	
	44	1	**7D-6922**	2	LOCKNUT (6-32 THD)	
BF		1	**3S-2093**	5	STRAP-CABLE	
BF		1	**7K-1181**	5	STRAP-CABLE	

B-USE AS REQUIRED
D-ORDER BY THE METER
E-ORDER BY THE CENTIMETER
F-NOT SHOWN
M-METRIC PART
Y-SEPARATE ILLUSTRATION

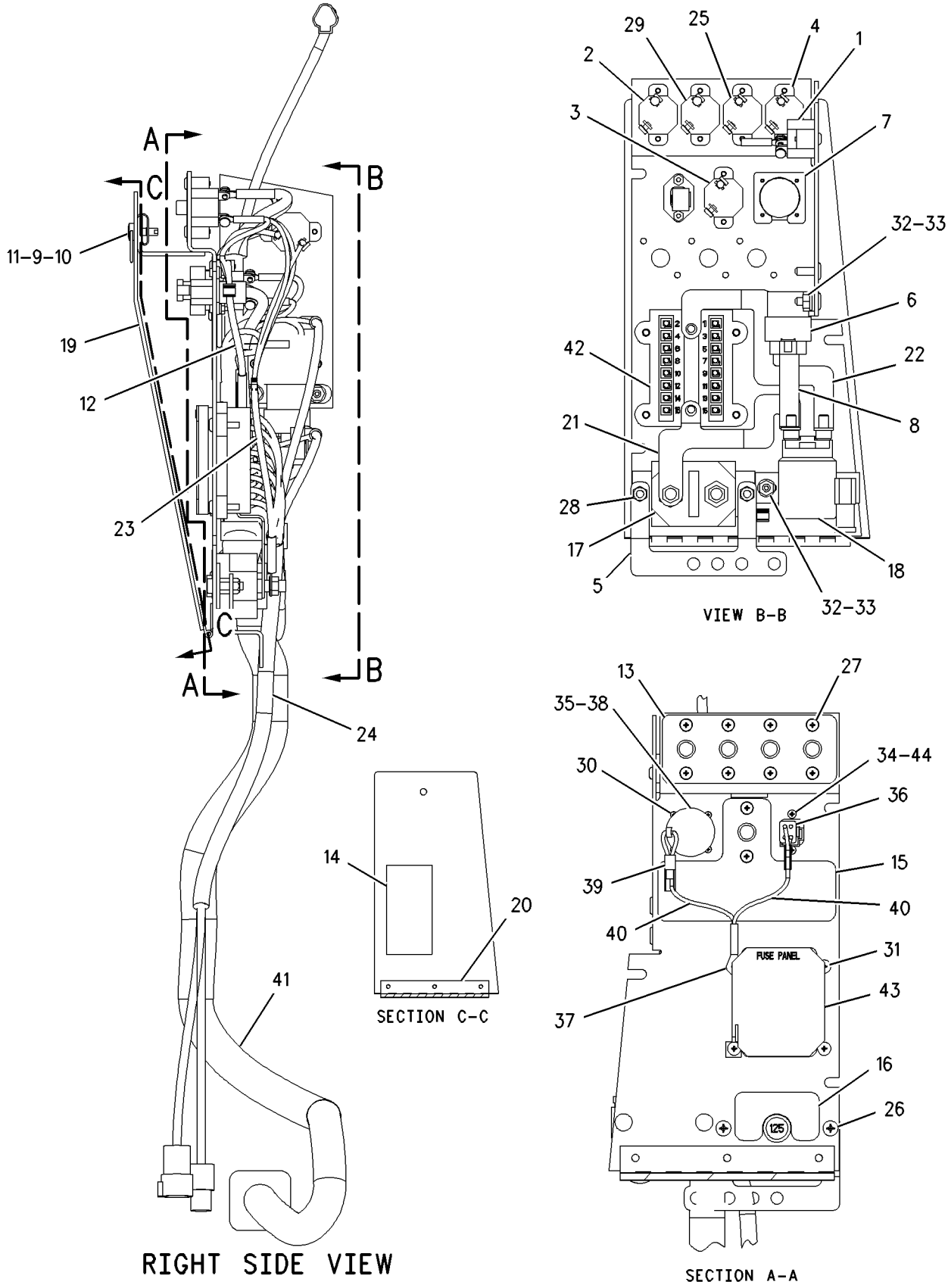

GRAPHIC #1 g00755119

MEMORANDA

ELECTRICAL AND STARTING SYSTEM

163-5809 WIRING GP-ENGINE

S/N: 5XD1-UP

PART OF 163-5784 ENGINE AR

SMCS-1403, 1408 **i01548295**

NOTE	REF NO	GRAPHIC REF	PART NUMBER	QTY	PART NAME 1 2 3 4 5 6 (PRODUCT LEVEL)	SEE PAGE
	1	1	**121-0596**	1	WIRE AS	
	2	1	**163-8415**	1	HARNESS AS-WIRING	
		1	**102-8812**	3	SEAL	
		1	**155-2270**	3	KIT-CONNECTING PLUG (2 PIN)	
					(EACH INCLUDES PLUG AS & WEDGE)	
		1	**102-8802**	1	KIT-RECEPTACLE (2 PIN)	
					(INCLUDES RECEPTACLE AS & WEDGE)	
		1	**102-8803**	6	KIT-RECEPTACLE (3 PIN)	
					(EACH INCLUDES RECEPTACLE AS & WEDGE)	
		1	**102-8814**	4	SEAL	
		1	**155-2271**	4	KIT-CONNECTING PLUG (4 PIN)	
					(EACH INCLUDES PLUG AS & WEDGE)	
		1	**102-8804**	1	KIT-RECEPTACLE (4 PIN)	
					(INCLUDES RECEPTACLE AS & WEDGE)	
		1	**155-2260**	4	KIT-CONNECTING PLUG (3 PIN)	
					(EACH INCLUDES PLUG AS & WEDGE)	
	3	1	**171-6769**	1	BRACKET	
	4	1	**194-2885**	1	BRACKET AS	
	5	1	**194-6591**	1	BRACKET AS	
B	6	1	**7K-1181**	25	STRAP-CABLE	
	7	1	**091-0081**	1	SPACER (10.5X20X10.0MM THK)	
	8	1	**0S-0509**	1	BOLT (3/8-16X0.75 IN)	
	9	1	**132-5789**	1	CLIP	
	10	1	**3B-1915**	1	BOLT (3/8-16X1.37 IN)	
	11	1	**4B-5324**	4	WASHER (3.9X9.6X1.2MM THK)	
	12	1	**4D-7735**	1	CLIP	
	13	1	**4P-7581**	8	CLIP	
	14	1	**4P-8134**	2	CLIP	
	15	1	**4S-1962**	1	CLIP	
	16	1	**8T-4896**	1	WASHER-HARD (10.2X18.5X2.5MM THK)	
	17	1	**9S-8752**	1	NUT-FULL (3/8-16 THD)	
	18	1	**9X-6258**	4	SCREW-MACHINE (6-32X.50 IN)	
	19	1	**9X-6458**	2	WASHER-HARD (10.2X22.5X3MM THK)	

B-USE AS REQUIRED

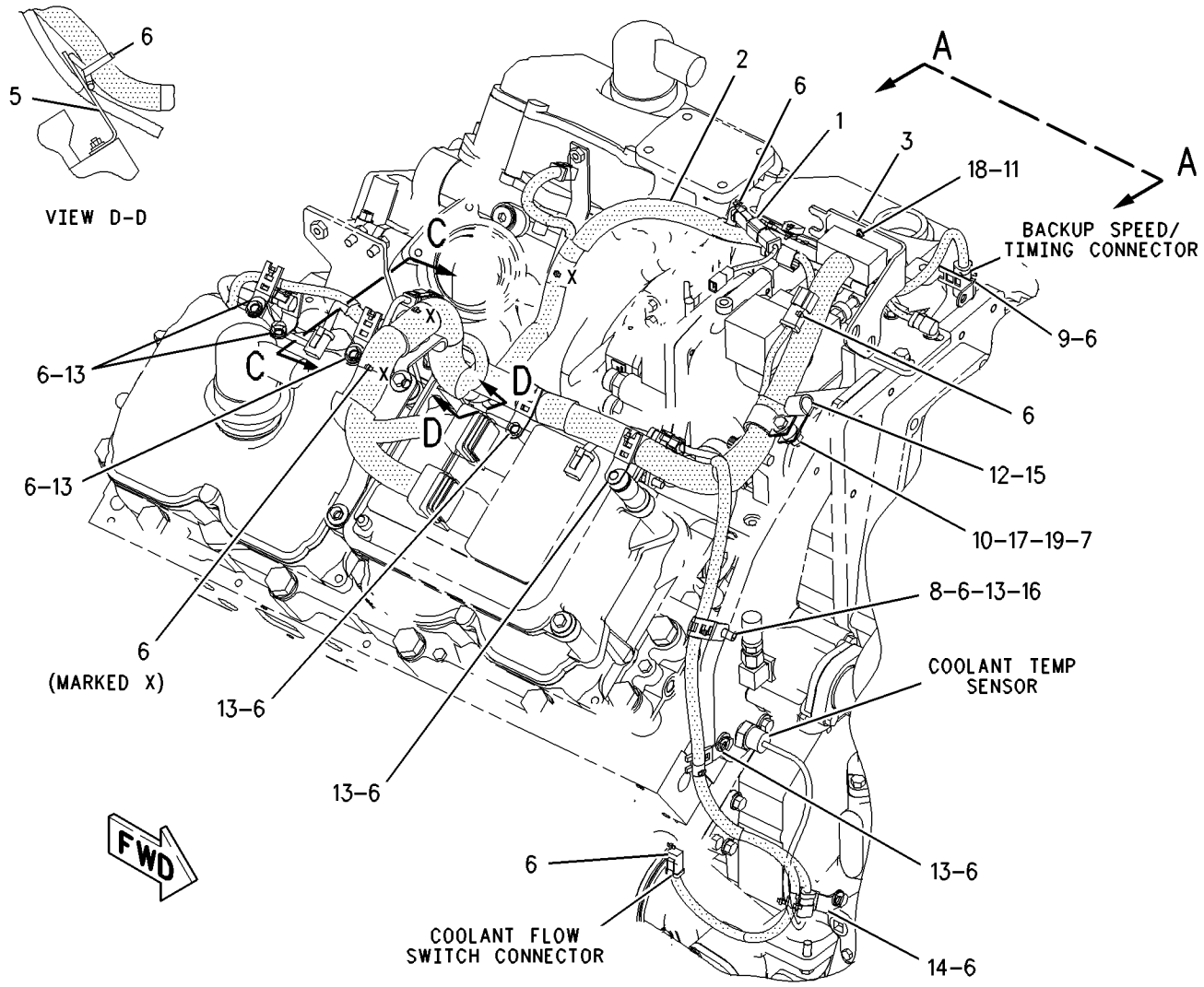

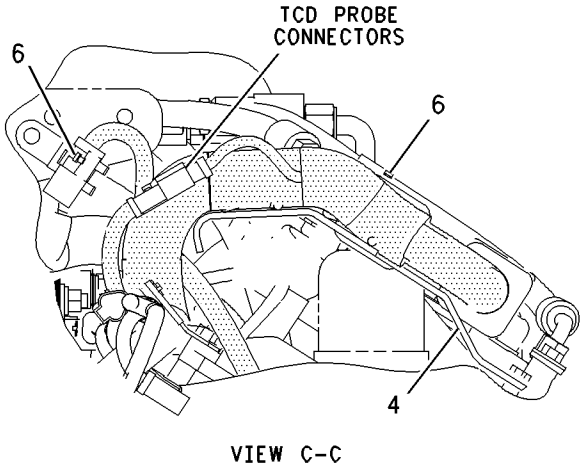

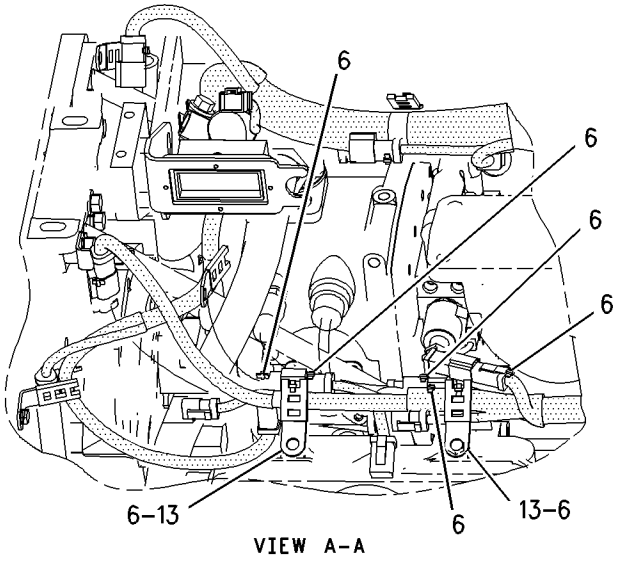

GRAPHIC #1 g00820602

ELECTRICAL AND STARTING SYSTEM

163-5399 WIRING GP-PLATFORM

S/N: ABK1-UP

PART OF 162-9501 CHASSIS AR

SMCS-1408 **i01540922**

NOTE	REF NO	GRAPHIC REF	PART NUMBER	QTY	PART NAME 1 2 3 4 5 6 (PRODUCT LEVEL)	SEE PAGE
Y	1	2	**3E-6328**	1	ALARM GP (ACTION)	273
	2	2	*3E-9044*	1	SWITCH AS-ROCKER (24 VOLT)(SEALED)(ILLUMINATED) (THROTTLE)	
		2	**105-9149**	1	SWITCH AS (24 VOLT)(ILLUMINATED)	
		2	**6V-1748**	1	ACTUATOR-ROCKER	
		2	**3E-8825**	2	LAMP (24 VOLT)	
	3	2	**6T-3990**	1	SWITCH AS-ROCKER (SIDE LIGHT)	
		2	**3L-8187**	2	LOCKWASHER	
		2	**6V-8374**	2	SCREW-MACHINE (6-32X0.25 IN)	
	4	2	**6T-5814**	1	SWITCH AS (REAR LIGHT)	
		2	**3L-8187**	4	LOCKWASHER	
		2	**6V-8374**	4	SCREW-MACHINE (6-32X0.25 IN)	
	5	2	**6T-6066**	1	SWITCH AS-ROCKER (OPERATOR)	
		2	**3L-8187**	2	LOCKWASHER	
		2	**6V-8374**	2	SCREW-MACHINE (6-32X0.25 IN)	
	6	2	**6V-8927**	12	BOLT-SOCKET HEAD (6-32X0.5 IN)	
	7	1	**7G-7919**	1	PLUG-SEAL	
	8	2	**7N-5876**	3	LAMP (24 VOLT)	
	9	1,2	**8T-8737**	25	PLUG-SEAL	
Y	10	2	**9G-7641**	1	SWITCH GP-START	371
	11	1,2	**7K-1181**	28	STRAP-CABLE	
Y	12	1	**103-5526**	1	CONTROL GP-MONITOR SYS DIMMER	800
	13	2	**118-6365**	1	PLATE AS	
		2	**6V-6716**	2	RIVET-TRUSS HEAD	
		2	**109-1645**	1	CLIP	
	14	2	**125-4490**	1	CLIP	
	15	1	**127-5485**	1	PLUG AS-CONNECTOR (1 PIN)	
	16	2	**189-2319**	1	SEAL	
	17	2	**2G-1133**	1	GROMMET	
	18	1	**155-2276**	1	WEDGE-PLUG LOCK	
	19	2	**158-6632**	1	SWITCH AS-HORN	
		2	**2H-3922**	1	LOCKWASHER	
		2	**3B-4501**	1	LOCKWASHER	
		2	**3E-3365**	1	WEDGE-RECEPTACLE LOCK (2 PIN)	
		2	**5L-7200**	1	SCREW (8-32X0.375 IN)	
		2	**6V-8370**	1	NUT-HEX (3/4-32 THD)	
		2	**7T-9515**	1	KNOB-HORN	
		2	**9X-0199**	1	BOOT-SWITCH	
		2	**9X-3401**	2	PIN-CONNECTOR	
		2	**102-8802**	1	KIT-RECEPTACLE (2 PIN)	
					(INCLUDES RECEPTACLE AS & WEDGE)	
	20	1	**159-1549**	1	CONVERTER-POWER (24 VOLTS TO 12 VOLTS)	
	21	2	**159-3449**	1	SOCKET AS (12 VOLT POWER OUTLET)	
		2	**102-8802**	1	KIT-RECEPTACLE (2 PIN)	
					(INCLUDES RECEPTACLE AS & WEDGE)	
	22	2	**163-5403**	1	HARNESS AS-DASH	
		2	**155-2274**	3	KIT-CONNECTING PLUG (6 PIN)	
		2	**155-2260**	1	KIT-CONNECTING PLUG (3 PIN)	
					(EACH PLUG KIT INCLUDES PLUG AS, WEDGE & INTERFACE SEAL)	
		2	**102-8806**	1	KIT-RECEPTACLE (8 PIN)	
					(INCLUDES RECEPTACLE AS & WEDGE)	
	23	2	**163-5404**	1	HARNESS AS (RH CONSOLE)	
		2	**102-8802**	3	KIT-RECEPTACLE (2 PIN)	
		2	**102-8803**	2	KIT-RECEPTACLE (3 PIN)	

163-5399 **WIRING GP-PLATFORM** ***(contd.)*** **i01540922**

NOTE	REF NO	GRAPHIC REF	PART NUMBER	QTY	PART NAME 1 2 3 4 5 6 (PRODUCT LEVEL)	SEE PAGE
		2	**102-8805**	1	KIT-RECEPTACLE (6 PIN)	
					(EACH RECEPTACLE KIT INCLUDES RECEPTACLE AS & WEDGE)	
		2	**155-2260**	2	KIT-CONNECTING PLUG (3 PIN)	
		2	**155-2270**	7	KIT-CONNECTING PLUG (2 PIN)	
		2	**155-2274**	2	KIT-CONNECTING PLUG (6 PIN)	
					(EACH PLUG KIT INCLUDES PLUG AS, WEDGE & INTERFACE SEAL)	
	24	1	**163-5405**	1	PLUG AS	
BD		1	**5P-5677**		WIRE (18 GA)	
		1	**9G-3695**	3	PLUG (GROMMET SEALING)	
BE		1	**119-3662**		TUBE-SHRINKABLE	
		1	**126-1766**	5	SOCKET-CONNECTOR	
		1	**155-2259**	1	WEDGE-PLUG LOCK (8 PIN)	
		1	**155-2265**	1	KIT-CONNECTING PLUG (8 PIN)	
					(INCLUDES PLUG AS, WEDGE & INTERFACE SEAL)	
	25	2	**163-5407**	1	HARNESS AS-POWER (PEDESTAL)	
		2	**155-2255**	1	KIT-CONNECTING PLUG (12 PIN)	
		2	**155-2260**	1	KIT-CONNECTING PLUG (3 PIN)	
		2	**155-2270**	3	KIT-CONNECTING PLUG (2 PIN)	
		2	**155-2271**	3	KIT-CONNECTING PLUG (4 PIN)	
					(EACH PLUG KIT INCLUDES PLUG AS, WEDGE & INTERFACE SEAL)	
		2	**106-4155**	2	KIT-BOLT	
		2	**102-8802**	2	KIT-RECEPTACLE (2 PIN)	
		2	**102-8803**	2	KIT-RECEPTACLE (3 PIN)	
		2	**102-8804**	3	KIT-RECEPTACLE (4 PIN)	
					(EACH RECEPTACLE KIT INCLUDES RECEPTACLE AS & WEDGE)	
Y	26	1	*167-7494*	1	WIRING GP-CONSOLE	372
	27	1	**171-8693**	1	CABLE AS	
E		1	**159-8047**		CABLE-ELECTRICAL (0 GA)(RED) (132CM)	
		1	**1S-4915**	2	LINER-CONDUIT	
E		1	**5P-0695**		CONDUIT (118CM)	
		1	**8N-0869**	1	COVER-TERMINAL (RED)	
BE		1	**8T-2225**		TUBE-SHRINKABLE	
		1	**170-3793**	1	RING-TERMINAL (FOR 3/8 IN BOLT)	
		1	**170-3795**	1	RING-TERMINAL (FOR 1/2 IN BOLT)	
	28	1	**171-8696**	1	CABLE AS	
E		1	**159-8047**		CABLE-ELECTRICAL (0 GA)(RED) (123CM)	
		1	**1S-4915**	2	LINER-CONDUIT	
E		1	**5P-0695**		CONDUIT (110CM)	
		1	**8N-0869**	1	COVER-TERMINAL (RED)	
BE		1	**8T-2225**		TUBE-SHRINKABLE	
		1	**170-3793**	2	RING-TERMINAL	
	29	1	**187-8677**	1	PLATE AS	
		1	**7T-1099**	2	LINK	
	30	1	**155-2260**	2	KIT-CONNECTING PLUG (3 PIN)	
					(EACH INCLUDES PLUG AS, WEDGE & INTERFACE SEAL)	
	31	2	**170-3461**	1	BASE AS-LIGHT	
	32	1	**102-8803**	1	KIT-RECEPTACLE (3 PIN)	
	33	1	**3E-3371**	1	WEDGE-RECEPTACLE LOCK (3 PIN)	
	34	1	**102-8804**	1	KIT-RECEPTACLE (4 PIN)	
	35	2	**102-8801**	1	KIT-RECEPTACLE (12 PIN)	
					(EACH RECEPTACLE KIT INCLUDES RECEPTACLE AS & WEDGE)	
	36	1	**3P-3839**	1	GROMMET	
	37	1	**4M-5281**	3	BOLT (1/4-20X0.750 IN)	
	38	2	**4P-8134**	1	CLIP	
	39	1,2	**5M-3062**	6	BOLT (3/8-16X0.75 IN)	

163-5399 **WIRING GP-PLATFORM** ***(contd.)*** **i01540922**

NOTE	REF NO	GRAPHIC REF	PART NUMBER	QTY	PART NAME 1 2 3 4 5 6 (PRODUCT LEVEL)	SEE PAGE
	40	2	**5S-7349**	2	BOLT (1/4-20X0.5 IN)	
	41	2	**6V-8801**	1	NUT (3/8-16 THD)	
	42	1	**9X-2498**	4	SCREW-HEX FLANGE (10-24X0.5 IN)	
	43	1,2	**8T-4205**	7	WASHER-HARD (7.2X14.5X2MM THK)	
	44	1,2	**8T-4896**	5	WASHER-HARD (10.2X18.5X2.5MM THK)	
	45	1	**8T-9367**	2	BOLT (1/4-20X2 IN)	
BD	46	2	**5P-5901**		SEAL	
	47	2	**6T-3990**	1	SWITCH AS-ROCKER (AUXILIARY)	
		2	**3L-8187**	2	LOCKWASHER	
		2	**6V-8374**	2	SCREW-MACHINE (6-32X0.25 IN)	
	48	2	**6T-5814**	1	SWITCH AS (FRONT LIGHT)	
		2	**3L-8187**	4	LOCKWASHER	
		2	**6V-8374**	4	SCREW-MACHINE (6-32X0.25 IN)	
	49	2	**6T-6066**	1	SWITCH AS-ROCKER (ETHER AID)	
		2	**3L-8187**	2	LOCKWASHER	
		2	**6V-8374**	2	SCREW-MACHINE (6-32X0.25 IN)	
	50	2	**6T-7058**	1	LENS-RED	
	51	2	**7N-1996**	1	LAMP (28 VOLT)	
	52	1	**193-3973**	1	TIE-WRAP	
	53	1	**5P-1075**	1	WASHER-HARD (10.2X22.5X3MM THK)	
	54	1	**6D-4244**	2	CLIP	

B-USE AS REQUIRED
D-ORDER BY THE METER
E-ORDER BY THE CENTIMETER
Y-SEPARATE ILLUSTRATION

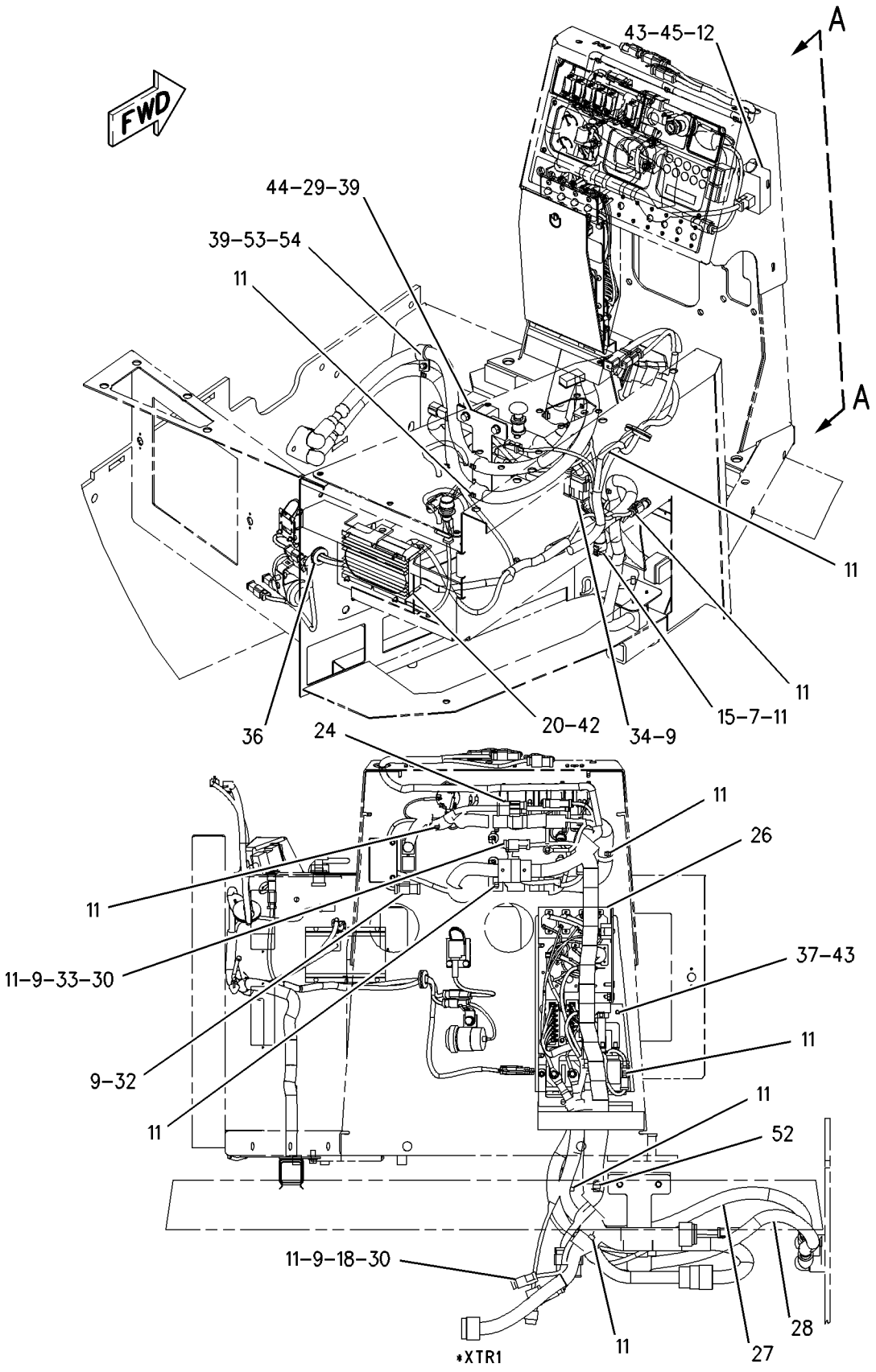

GRAPHIC #1

g00793997

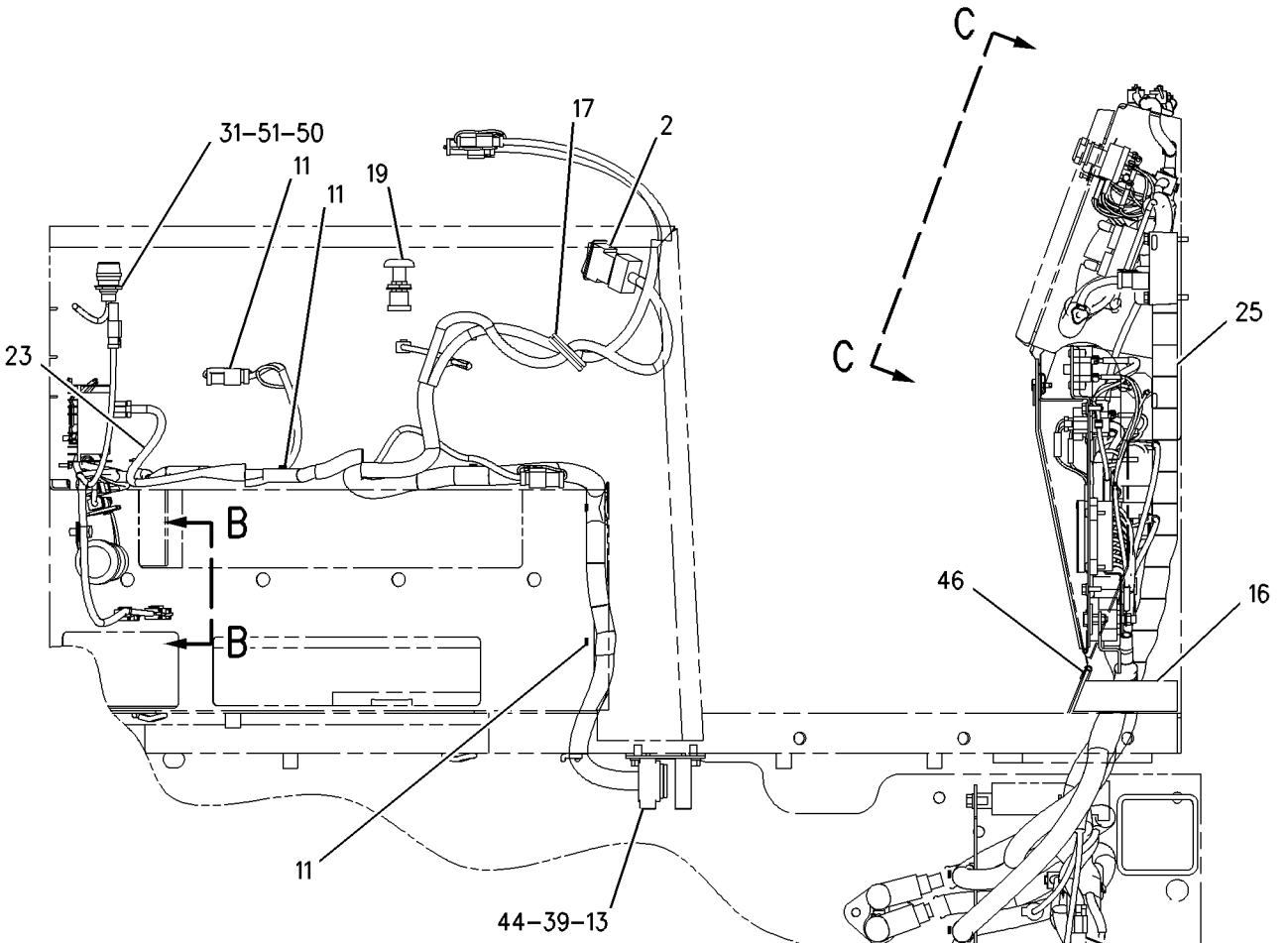

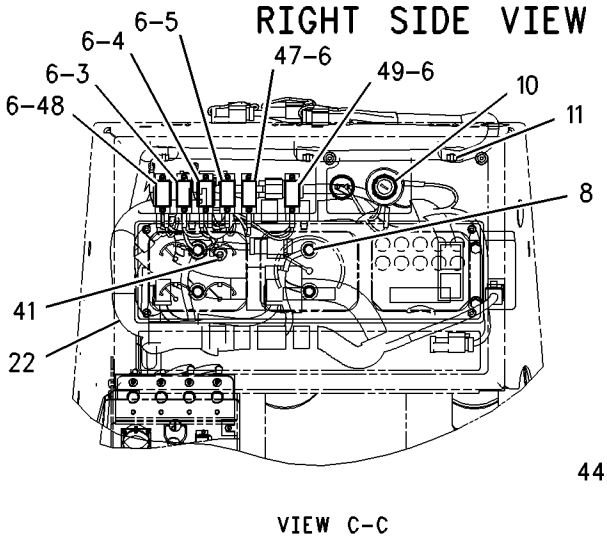

VIEW C-C

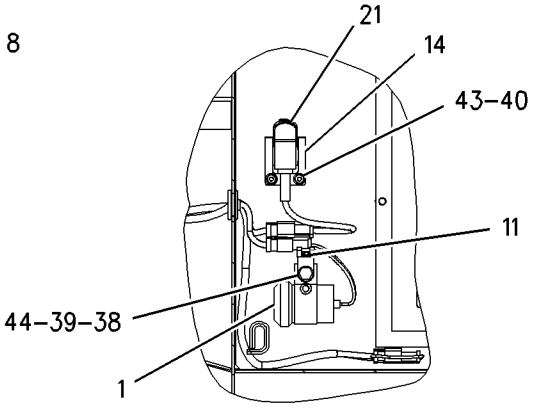

VIEW B-B

GRAPHIC #2

g00722608

109-0401 WIRING GP-UNIT INJECTOR

S/N: 5XD1-UP

PART OF 163-5784 ENGINE AR

SMCS-1290, 1408 **i01612740**

NOTE	REF NO	GRAPHIC REF	PART NUMBER	QTY	PART NAME 1 2 3 4 5 6 (PRODUCT LEVEL)	SEE PAGE
	1	1	**7E-6508**	2	CAP AS (UNIT INJECTOR)	
	2	1	**107-6761**	1	CLIP	
	3	1	**2H-3755**	1	BOLT (5/16-18X0.62 IN)	
	4	1	**9M-1974**	1	WASHER-HARD (8.8X16X2MM THK)	
	5	1	**179-7087**	1	HARNESS AS-ENGINE (UNIT INJECTOR)	
	6	1	**033-6034**	1	SEAL-O-RING	
	7	1	**5L-4019**	1	RING-RETAINING	

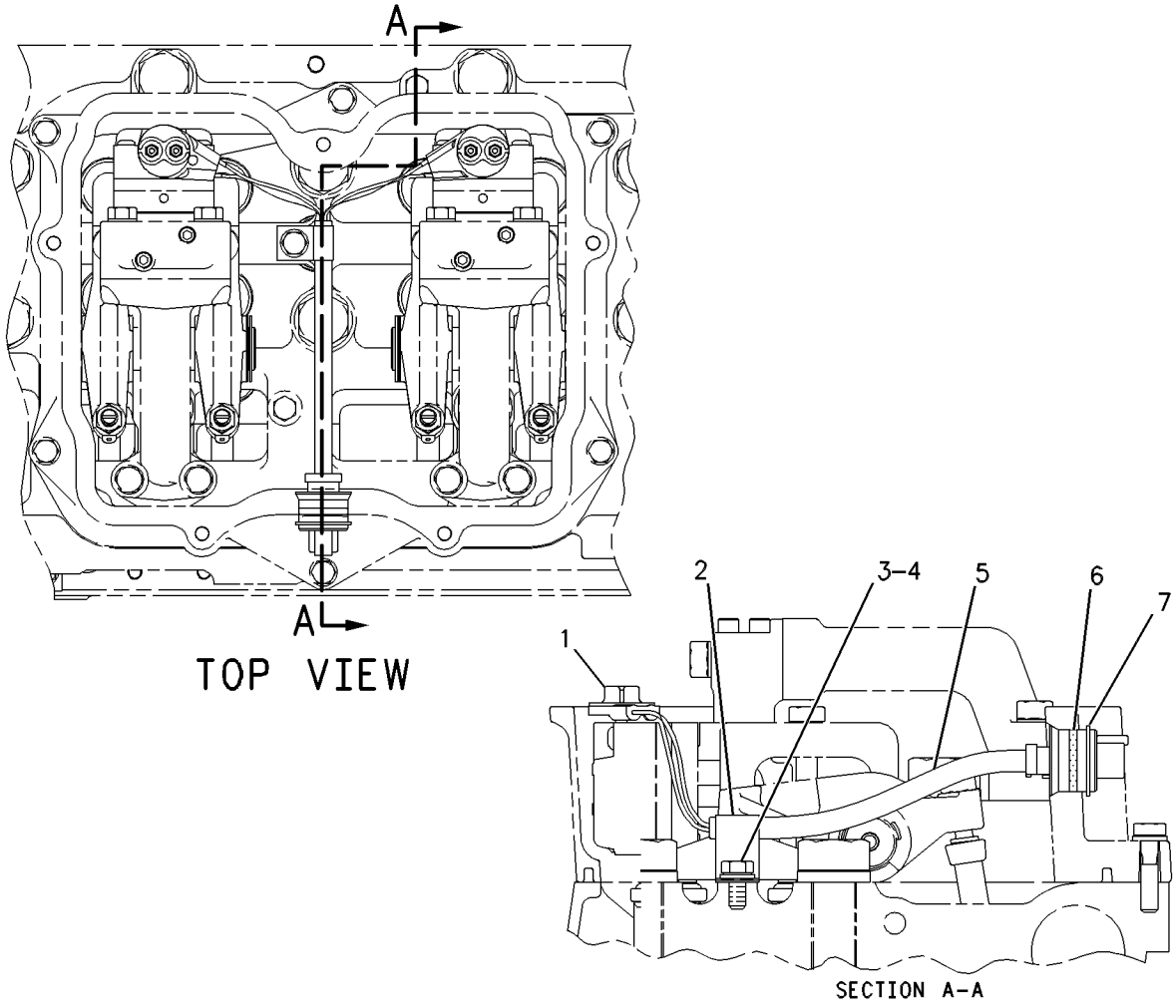

GRAPHIC #1 g00586543

9W-9154 AXLE GP-POWER TRAIN

S/N: ABK1-UP

PART OF 162-9503 POWER TRAIN AR

SMCS-3013, 3259, 3278 **i00591842**

NOTE	REF NO	GRAPHIC REF	PART NUMBER	QTY	PART NAME 1 2 3 4 5 6 (PRODUCT LEVEL)	SEE PAGE
	1	1	**104-3132**	1	SHAFT AS (R.H.)	
	2	1	**8E-0618**	1	BEARING-THRUST	
	3	1	**8E-3523**	1	SHAFT AS (L.H.)	
	4	1	**8E-0618**	1	BEARING-THRUST	
	5	1	**7D-7705**	2	RING-RETAINING	

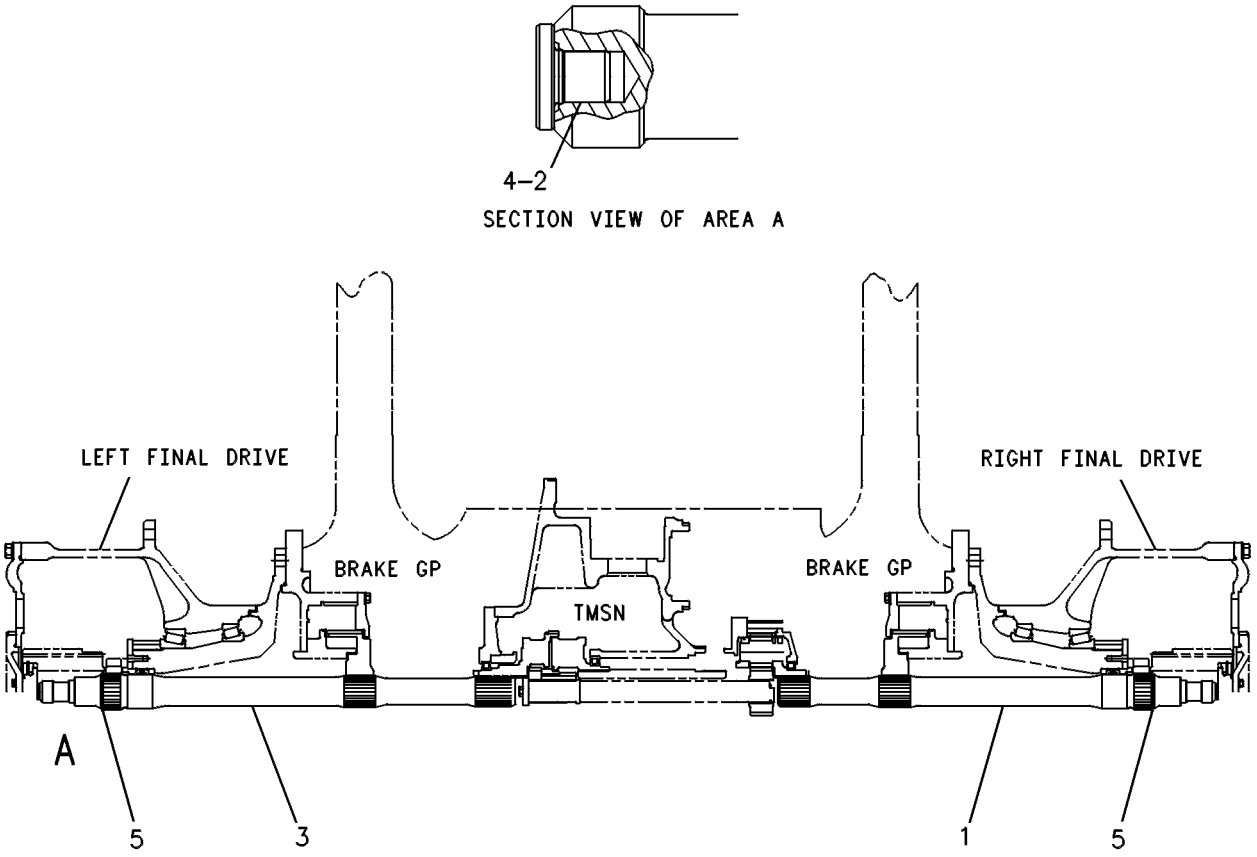

GRAPHIC #1 g00240040

MEMORANDA

POWER TRAIN

163-5298 CASE & PARTS GP-PLANETARY

S/N: 4XX1-UP

PART OF 163-5294 TRANSMISSION AR

SMCS-3064 **i01540921**

NOTE	REF NO	GRAPHIC REF	PART NUMBER	QTY	PART NAME 1 2 3 4 5 6 (PRODUCT LEVEL)	SEE PAGE
	1	1	**9S-6130**	2	PLUG-O-RING	
	2	1	**2S-4078**	3	SEAL-O-RING	
	3	1	**9S-4191**	3	PLUG-STRAIGHT THREAD (9/16-18 THD)	
	4	1	**3J-1907**	4	SEAL-O-RING	
	5	1	**8J-5914**	1	PLUG-O-RING	
	6	1	**6V-3965**	1	FITTING	
	7	1	**6V-0852**	1	CAP-DUST	
	8	1	**030-8535**	6	BOLT-LOCKING (3/8-16X0.875 IN)	
	9	1	**9G-7498**	1	COVER AS	
	10	1	**186-3161**	1	GASKET-COVER	
	11	1	**166-7267**	1	COVER AS	
		1	**7M-8480**	2	DOWEL	
	12	1	**9M-9647**	3	SEAL-O-RING	
	13	1	**6V-8625**	2	ELBOW	
	14	1	**6Y-9108**	1	TUBE AS	
	15	1	**6Y-9107**	1	TUBE AS	
	16	1	**6V-8639**	1	CONNECTOR	
	17	1	**8T-1686**	1	ELBOW	
	18	1	**7G-5751**	1	SLEEVE	
	19	1	**5K-9107**	1	BOLT-LOCKING (3/8-16X0.75 IN)	
	20	1	**5K-5120**	1	STRIP	
	21	1	**8M-2530**	4	BOLT-12 POINT HEAD (1/2-13X1.25 IN)	
	22	1	**2J-3118**	19	BOLT-LOCKING (3/8-16X1.25 IN)	
	23	1	**7W-3447**	19	SPACER (10.2X19.05X10.2MM THK)	
	24	1	**0S-1589**	15	BOLT (5/8-11X1.75 IN)	
	25	1	**5P-8247**	15	WASHER-HARD (17X32X3.5MM THK)	
	26	1	**5P-9519**	1	SEAL-O-RING	
	27	1	**6L-9284**	1	SEAL-O-RING	
	28	1	**8S-9130**	1	SCREEN-SUCTION (TRANSMISSION SCAVENGE)	
	29	1	**6L-9965**	1	SEAL-O-RING	
Y	30	1	**106-4150**	1	DRAIN GP-ECOLOGY	394
	31	1	**8T-2501**	4	BOLT (3/8-16X2 IN)	
	32	1	**8P-0058**	1	GASKET-COVER	
	33	1	**9G-8615**	1	COVER	
	34	1	**5P-0537**	1	WASHER-HARD (7.2X14.5X2MM THK)	
	35	1	**8M-4432**	2	SEAL-O-RING	
	36	1	**3K-0360**	4	SEAL-O-RING	
	37	1	**6V-3250**	4	SEAL-O-RING	
	38	1	**8T-6762**	1	PLUG-PIPE	
	39	1	**9X-0352**	1	RECEPTACLE AS	
	40	1	**6J-2245**	1	SEAL-O-RING	
	41	1	**031-0216**	1	BOLT (1/4-20X0.75 IN)	
	42	1	**6Y-9101**	1	CASE AS-TRANSMISSION	
	43	2	**2D-6642**	2	BALL	
	44	2	**3D-4072**	3	BALL-CHECK VALVE	
	45	2	**3F-3152**	1	BALL	
	46	2	**4B-9782**	2	BALL	
	47	2	**4B-9784**	1	BALL	
	48	1	**5B-5821**	2	DOWEL	
	49	2	**9M-4007**	1	DOWEL	
	50	1	**4D-8148**	2	DOWEL	
	51	1	**5J-5793**	17	BOLT-12 POINT HEAD (1/2-13X1.75 IN)	
	52	1	**1A-1135**	18	BOLT (5/8-11X2 IN)	
		1	**5P-8247**	18	WASHER-HARD (17X32X3.5MM THK)	

Y-SEPARATE ILLUSTRATION

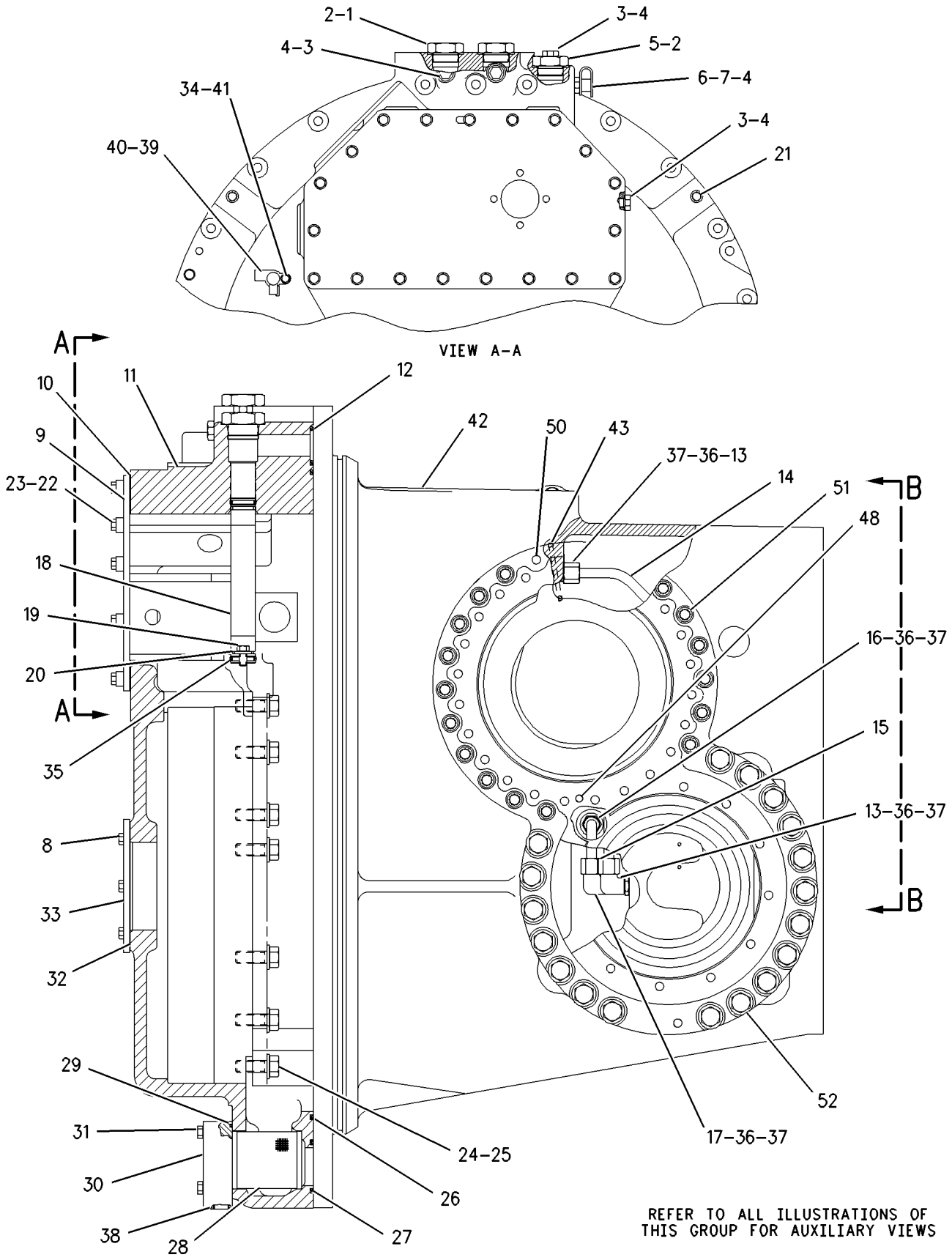

GRAPHIC #1

g00687833

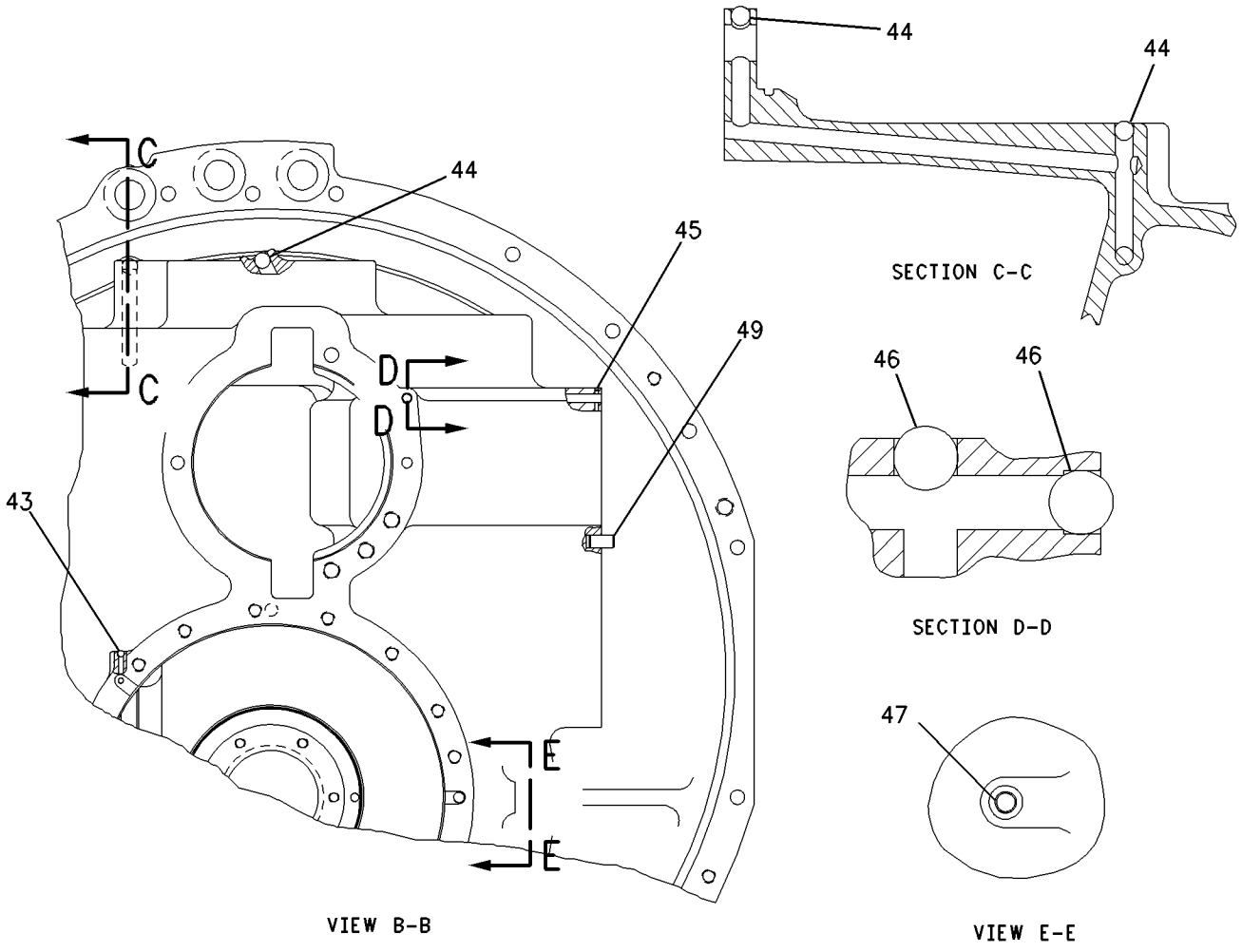

GRAPHIC #2

g00691399

MEMORANDA

9W-8626 CONTROL GP-TRANSMISSION HYD

S/N: 4XX1-UP

PART OF 163-5294 TRANSMISSION AR

SMCS-3073 **i00591817**

NOTE	REF NO	GRAPHIC REF	PART NUMBER	QTY	PART NAME 1 2 3 4 5 6 (PRODUCT LEVEL)	SEE PAGE
Y	1	1	*9W-8625*	1	VALVE GP	445
	2	1	**6B-1557**	4	BOLT (3/8-16X7.5IN)	
	3	1	**5M-2894**	8	WASHER (2.5MM THK)	
	4	1	**3T-6457**	2	SLEEVE	
	5	1	**8M-4432**	4	SEAL-O-RING	
	6	1	**116-2236**	2	SPRING	
Y	7	1	**6T-2313**	1	VALVE GP-PRIORITY	448
	8	1	**1D-4539**	4	BOLT (5/16-18X2.5IN)	
		1	**9M-1974**	4	WASHER-HARD (2MM THK)	
	9	1	**8M-4986**	2	SEAL-O-RING (37.69MM ID)	
	10	1	**4H-1394**	4	WASHER (1.2MM THK)	
	11	1	**9P-5977**	2	LEVER AS	
					(EACH INCLUDES)	
	12	1	**8H-8175**	1	BEARING	
	13	1	**2H-3429**	2	RING-RETAINING	
	14	1	**9P-6217**	1	DOWEL	
	15	1	**6V-4365**	4	SEAL-O-RING (9.19MM ID)	
	16	1	**3J-1907**	2	SEAL-O-RING (11.89MM ID)	
		1	**9S-4191**	2	PLUG-O-RING (9/16-18 THD)	
	17	1	**7G-5964**	2	SLEEVE	
	18	1	**0S-1594**	4	BOLT (3/8-16X1IN)	
	19	1	**2J-4672**	1	GASKET	
	20	1	**7G-5963**	1	ADAPTER	
	21	1	**6S-6646**	2	PIN	

Y-SEPARATE ILLUSTRATION

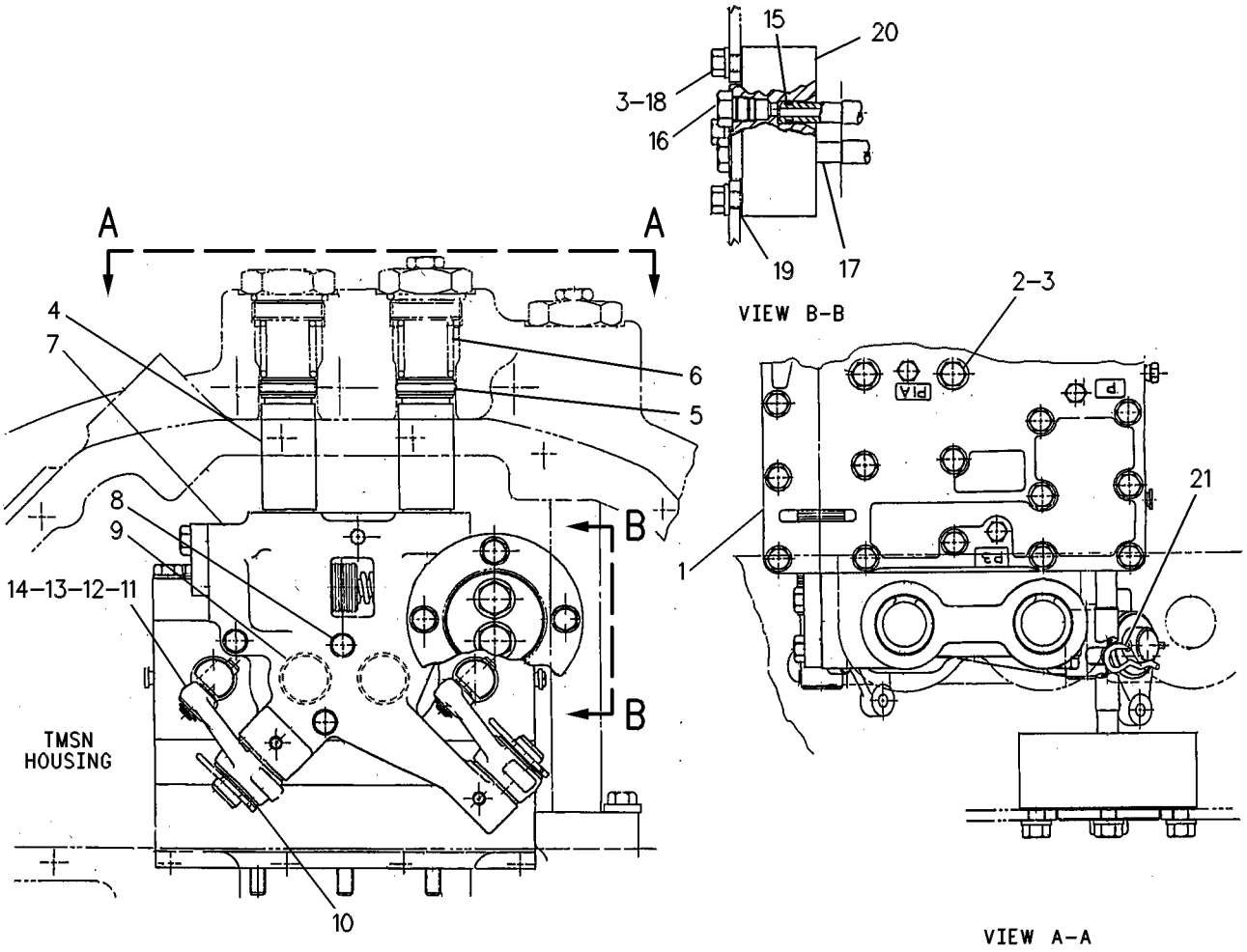

GRAPHIC #1

g00246208

111-3261 COOLER GP-TRANSMISSION OIL

S/N: ABK1-UP

PART OF 162-9505 INSTALLATION AR-ENGINE

SMCS-1375 **i01446657**

NOTE	REF NO	GRAPHIC REF	PART NUMBER	QTY	PART NAME 1 2 3 4 5 6 (PRODUCT LEVEL)	SEE PAGE
R	1	1	**101-1741**	1	CORE AS	
	2	1	**105-8901**	2	GASKET	
	3	1	**8T-8917**	7	BOLT (1/2-13X1.25 IN)	
	4	1	**7X-0328**	1	BOLT (1/2-13X3.50 IN)	
	5	1	**5P-2424**	1	BOLT (1/2-13X2.25 IN)	
	6	1	**7X-0333**	3	BOLT (1/2-13X4.75 IN)	
	7	1	**8T-4223**	3	WASHER-HARD (13.5X25.5X3MM THK)	

R-REMFG PART MAY BE AVAILABLE

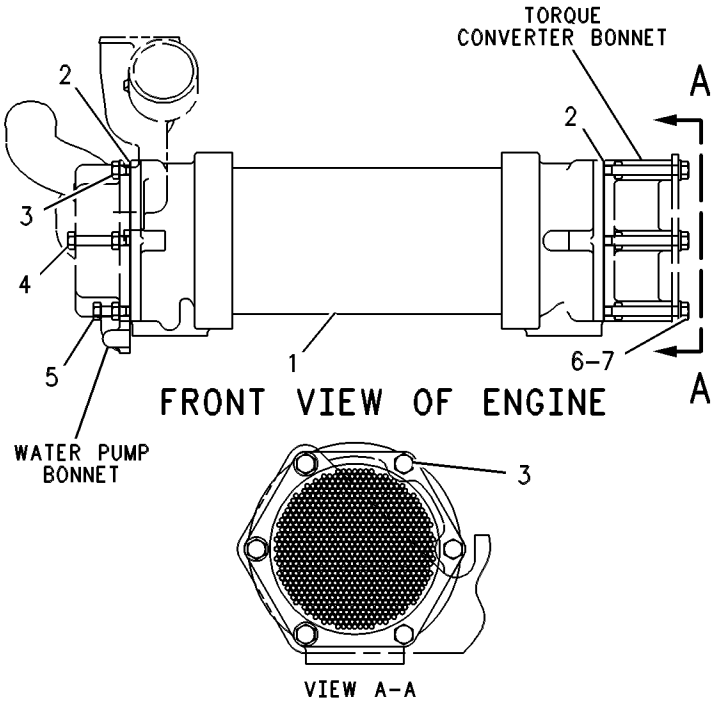

GRAPHIC #1 g00248802

6Y-4941 COUPLING GP-PUMP

S/N: ABK1-UP

PART OF 162-9503 POWER TRAIN AR

SMCS-5062 **i00591934**

NOTE	REF NO	GRAPHIC REF	PART NUMBER	QTY	PART NAME 1 2 3 4 5 6 (PRODUCT LEVEL)	SEE PAGE
	1	1	**3E-4880**	2	COUPLING AS	
		1	**3E-4876**	3	BUSHING AS	
		1	**6Y-2130**	3	BUSHING AS	
	2	1	**8T-2501**	12	BOLT (3/8-16X2IN)	
	3	1	**8T-4896**	12	WASHER-HARD (2.5MM THK)	
Y	4	1	**8E-8546**	1	SLIP JOINT GP	434

Y-SEPARATE ILLUSTRATION

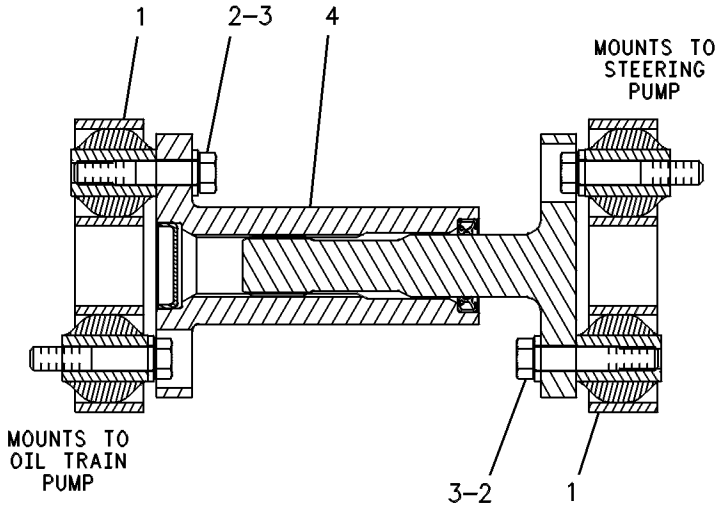

GRAPHIC #1 g00239990

106-4150 DRAIN GP-ECOLOGY

S/N: ABK1-UP; 4XX1-UP

PART OF 163-5298 CASE & PARTS GP-PLANETARY, 163-9364 TORQUE CONVERTER GP

SMCS-3100 **i01590582**

NOTE	REF NO	GRAPHIC REF	PART NUMBER	QTY	PART NAME 1 2 3 4 5 6 (PRODUCT LEVEL)	SEE PAGE
	1	1	**4N-3808**	1	PIN-SPRING	
	2	1	**5P-9658**	1	SEAL-O-RING	
A	3	1	**2H-3931**	1	SEAL-O-RING	

A-NOT PART OF THIS GROUP

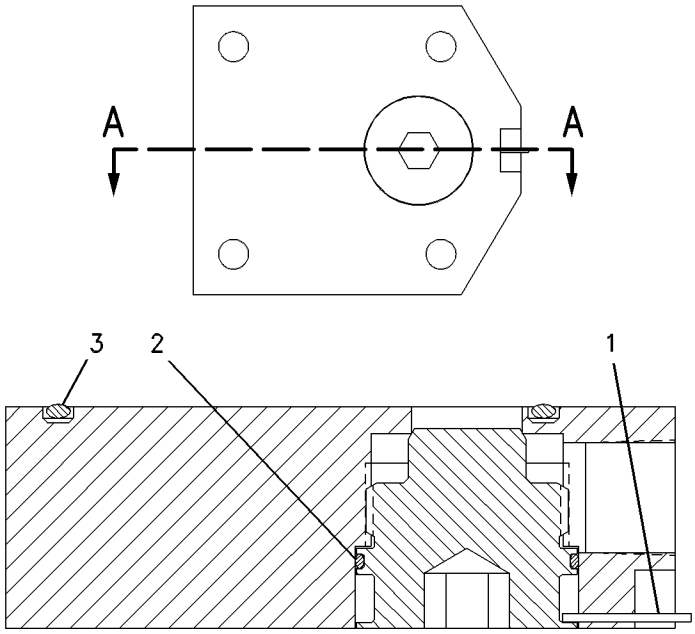

SECTION A-A

GRAPHIC #1 g00543496

MEMORANDA

9U-9286 FILTER GP-OIL

S/N: ABK1-UP
WITH HOUSING
PART OF 164-9919 LINES GP-POWER TRAIN OIL

SMCS-3004 **i01623088**

NOTE	REF NO	GRAPHIC REF	PART NUMBER	QTY	PART NAME 1 2 3 4 5 6 (PRODUCT LEVEL)	SEE PAGE
A	1	1	**1R-0719**	1	FILTER ELEMENT AS-OIL (POWER TRAIN)	
					(DISPOSABLE)	
					—OR—	
A		1	**4T-3131**	1	FILTER ELEMENT AS-OIL (POWER TRAIN)	
					(FIRE RESISTANT FLUID/HIGH PERFORMANCE)	
					—OR—	
A		1	**132-8875**	1	FILTER ELEMENT AS-OIL (POWER TRAIN)	
					(CLEAN OUT/HIGH PERFORMANCE)	
	2	1	**3P-0887**	1	HOUSING AS	
	3	1	**9S-4191**	2	PLUG-STRAIGHT THREAD	
		1	**3J-1907**	2	SEAL-O-RING	
	4	1	**2J-6356**	1	RING-RETAINING	
	5	1	**7S-6745**	1	RETAINER	
	6	1	**3S-8652**	1	SPRING	
	7	1	**2S-8439**	1	SEAL-O-RING	
	8	1	**3D-2824**	2	SEAL-O-RING	
	9	1	**9S-8008**	2	PLUG-O-RING	
	10	1	**6T-9222**	1	SPOOL	
	11	1	**6T-9223**	1	SPRING	
	12	1	**9U-9285**	1	BASE-HOUSING	
	13	1	**9S-9334**	1	PLUG	
		1	**7M-8485**	1	SEAL-O-RING	
	14	1	**8T-8915**	6	BOLT (3/8-16X3.25 IN)	
		1	**8T-4896**	6	WASHER-HARD (10.2X18.5X2.5MM THK)	

A-NOT PART OF THIS GROUP

9U-9286 **FILTER GP-OIL** ***(contd.)*** **i01623088**

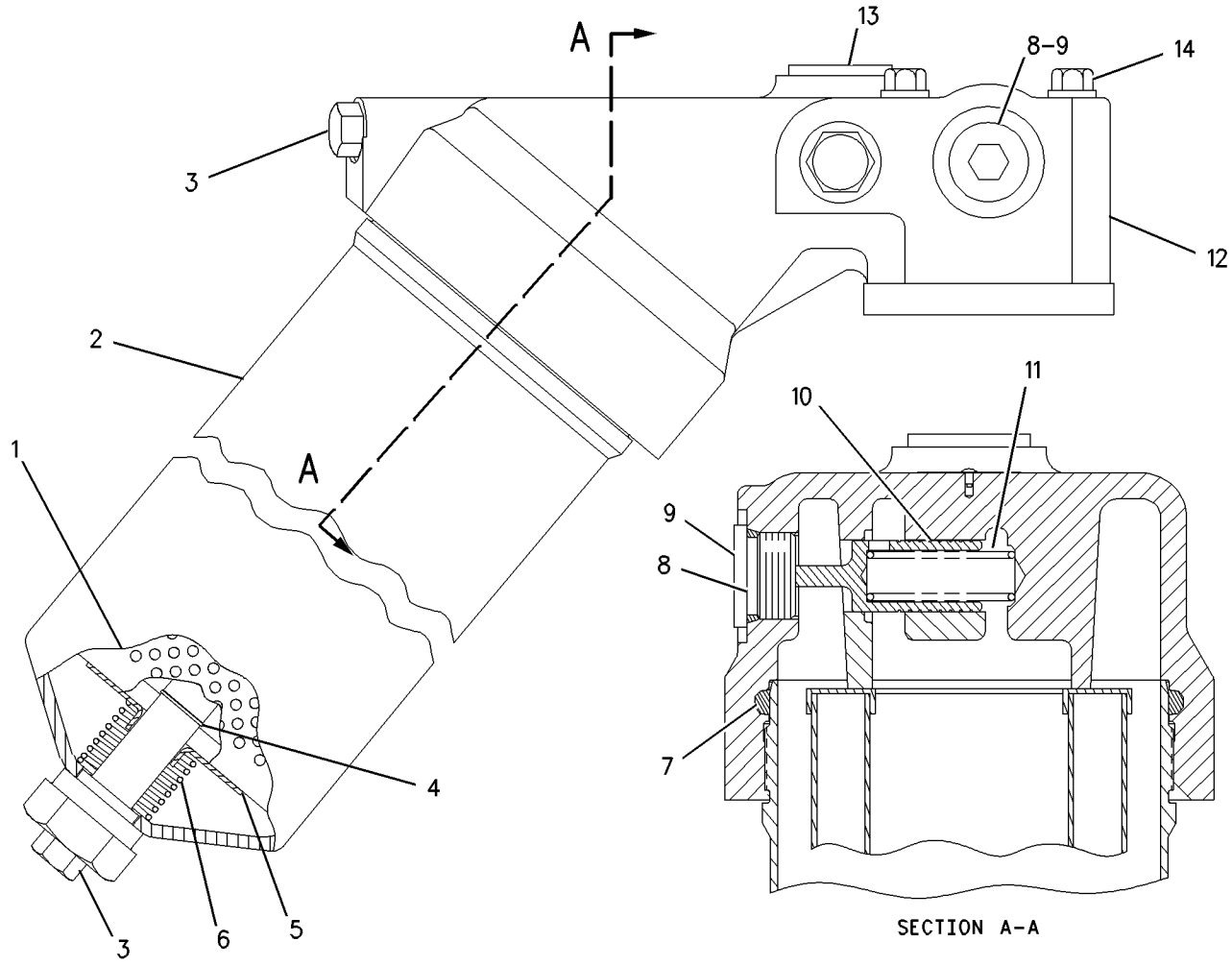

GRAPHIC #1 g00700630

POWER TRAIN

164-4210 FINAL DRIVE GP

S/N: ABK1-UP

PART OF 162-9503 POWER TRAIN AR

FIELD REPLACEMENT ORDER 185-7593—PAGE 402

SMCS-4050 **i01590590**

NOTE	REF NO	GRAPHIC REF	PART NUMBER	QTY	PART NAME 1 2 3 4 5 6 (PRODUCT LEVEL)	SEE PAGE
	1	1	**8T-2502**	3	BOLT (3/8-16X1.125 IN)	
	2	1	**8T-4896**	3	WASHER-HARD (10.2X18.5X2.5MM THK)	
	3	1	**030-8538**	18	BOLT (1/2-13X1.25 IN)	
	4	1	**5P-8245**	6	WASHER-HARD (13.5X25.5X3MM THK)	
	5	1	**9P-3474**	1	COVER	
	6	1	**6V-3298**	1	PLUG-MAGNETIC	
	7	1	**2S-4078**	1	SEAL-O-RING	
	8	1	**9S-4185**	1	PLUG-O-RING	
	9	1	**3K-0360**	1	SEAL-O-RING	
	10	1	**5F-7054**	1	SEAL-O-RING	
	11	1	**9P-3468**	1	CARRIER-PLANETARY	
	12	1	**3D-8422**	1	SEAL-O-RING	
	13	1	**9M-5894**	1	SEAL-O-RING	
	14	1	**2S-0613**	1	RING-RETAINING	
	15	1	**3P-8827**	3	PLATE	
	16	1	**6V-1653**	3	SEAL-QUAD RING	
	17	1	**8T-8924**	35	BOLT (3/4-10X2.50 IN)	
	18	1	**8T-4994**	35	WASHER-HARD (20X36.5X3.5MM THK)	
	19	1	**6I-8849**	6	CONE-BEARING	
	20	1	**6I-8860**	6	CUP-BEARING	
	21	1	**9P-3366**	3	GEAR (24 TEETH)	
	22	1	**9P-3471**	1	GEAR-SUN (24 TEETH)	
	23	1	**7S-4326**	1	DOWEL	
	24	1	**104-3133**	1	CARRIER-PLANETARY	
	25	1	**3P-8820**	1	RING-THRUST	
	26	1	**6F-8146**	1	SEAL-O-RING	
	27	1	**8E-3124**	1	RETAINER	
	28	1	**8D-4771**	1	SEAL-O-RING	
	29	1	**110-2665**	3	SHAFT-PLANETARY	
	30	1	**5P-7911**	1	RING-RETAINING	
	31	1	**8P-5698**	3	PLATE	
	32	1	**5D-0353**	6	BOLT-LOCKING (3/8-16X1 IN)	
	33	1	**164-5808**	1	GEAR-SUN (18 TEETH)	
	34	1	**9P-3467**	3	SHAFT-PLANET	
	35	1	**137-4835**	1	BEARING-THRUST	
	36	1	**104-3136**	1	RETAINER	
	37	1	**9P-3320**	1	GEAR-RING (72 TEETH)	
	38	1	**166-6930**	6	CONE	
	39	1	**166-6931**	6	CUP	
	40	1	**9P-3429**	3	GEAR (27 TEETH)	
	41	1	**9P-3657**	3	LOCK RING	
	42	1	**3T-6882**	12	PIN	
	43	1	**104-3140**	1	HUB	
	44	1	**9P-4959**	1	RING-RETAINING	
	45	1	**104-3153**	1	SEAL-DOUBLE LIP	
	46	1	**107-7088**	1	CONE-BEARING	
	47	1	**107-7089**	1	CUP-BEARING	
R	48	1	**104-3139**	1	HUB-SPINDLE	
	49	1	**3D-9133**	1	CUP-BEARING	
	50	1	**126-0588**	1	CONE-SPECIAL TAPERED	
	51	1	**173-3071**	1	SEAL GP-DUO-CONE	
		1	**127-0116**	2	RING-TORIC	
	52	1	**104-3137**	1	HUB	
	53	1	**8T-4223**	3	WASHER-HARD (13.5X25.5X3MM THK)	
	54	1	**8T-8917**	3	BOLT (1/2-13X1.25 IN)	

164-4210 **FINAL DRIVE GP** *(contd.)* **i01590590**

NOTE	REF NO	GRAPHIC REF	PART NUMBER	QTY	PART NAME 1 2 3 4 5 6 (PRODUCT LEVEL)	SEE PAGE
	55	1	**137-4836**	1	BEARING-SLEEVE	
	56	1	**1D-4640**	30	BOLT (1-8X4.25 IN)	
		1	**5P-8250**	30	WASHER (28X49X5MM THK)	
Y	57	1	*160-4927*	1	SEGMENT GP-SPROCKET	432
	58	1	**8T-9412**	3	BOLT-12 POINT HEAD (1/2-13X1.5 IN)	

R-REMFG PART MAY BE AVAILABLE
Y-SEPARATE ILLUSTRATION

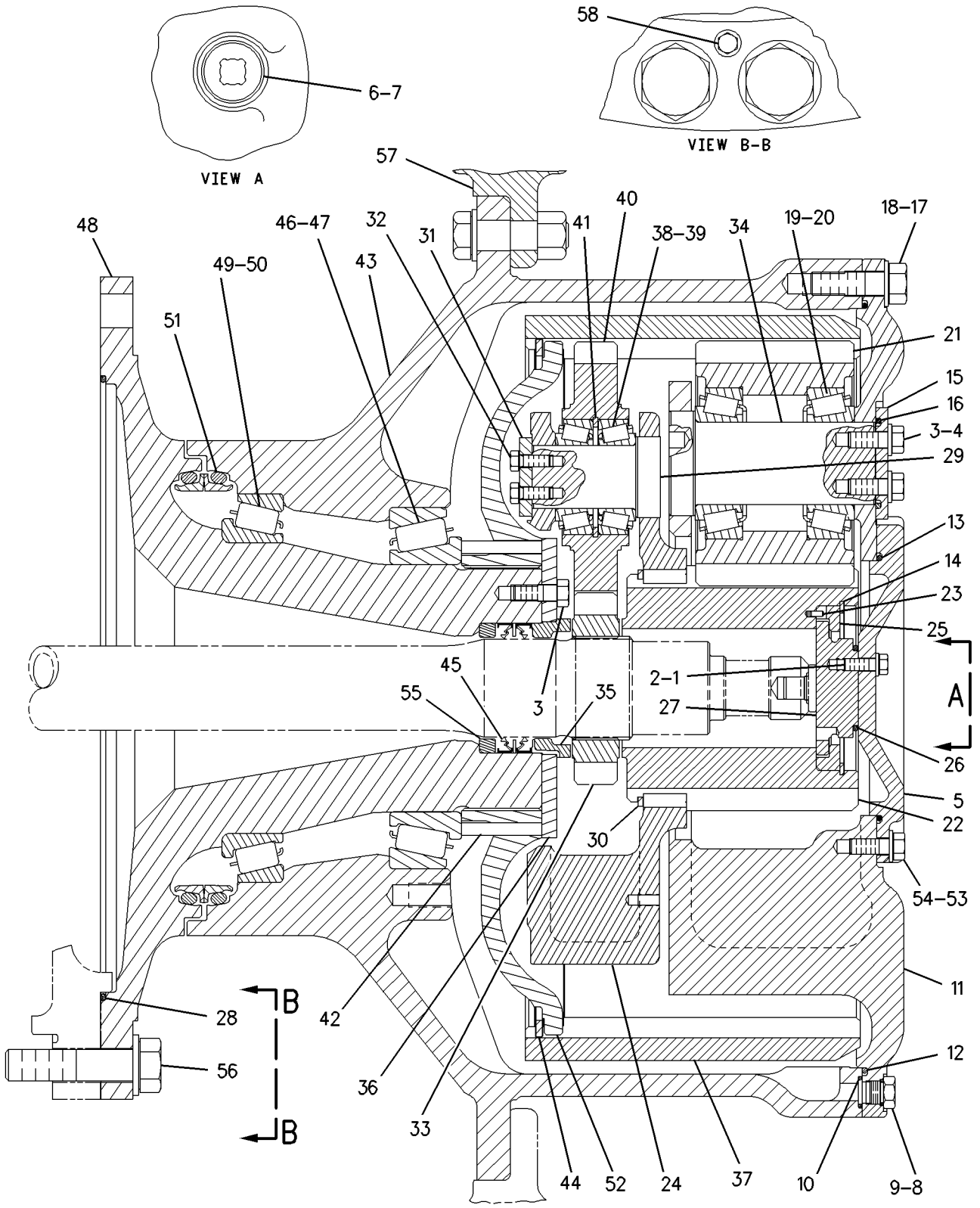

GRAPHIC #1 g00700275

MEMORANDA

POWER TRAIN

185-7593 FINAL DRIVE GP*R

S/N: ABK1-UP

FIELD REPLACEMENT FOR 164-4210—PAGE 398

SMCS-4050 **i01445962**

NOTE	REF NO	GRAPHIC REF	PART NUMBER	QTY	PART NAME 1 2 3 4 5 6 (PRODUCT LEVEL)	SEE PAGE
R	1	1	**104-3139**	1	HUB-SPINDLE	
	2	1	**173-3071**	1	SEAL GP-DUO-CONE	
		1	**127-0116**	2	RING-TORIC	
	3	1	**3D-9133**	1	CUP-ROLLER BEARING	
	4	1	**126-0588**	1	CONE-SPECIAL TAPERED	
	5	1	**107-7089**	1	CUP-ROLLER BEARING	
	6	1	**107-7088**	1	CONE-ROLLER BEARING	
	7	1	**104-3140**	1	HUB	
	8	1	**5D-0353**	6	BOLT-LOCKING (3/8-16X1 IN)	
	9	1	**8P-5698**	3	PLATE	
	10	1	**9P-3429**	3	GEAR (27 TEETH)	
	11	1	**9P-3657**	3	LOCK RING	
	12	1	**166-6930**	6	CONE	
	13	1	**166-6931**	6	CUP	
	14	1	**9P-3467**	3	SHAFT-PLANET	
	15	1	**6I-8860**	6	CUP-ROLLER BEARING	
	16	1	**6I-8849**	6	CONE-ROLLER BEARING	
	17	1	**8T-8924**	35	BOLT (3/4-10X2.50 IN)	
	18	1	**8T-4994**	35	WASHER-HARD (20X36.5X5MM THK)	
	19	1	**9P-3366**	3	GEAR (24 TEETH)	
	20	1	**6V-1653**	3	SEAL-QUAD RING	
	21	1	**3P-8827**	3	PLATE	
	22	1	**030-8538**	18	BOLT (1/2-13X1.25 IN)	
	23	1	**5P-8245**	6	WASHER-HARD (13.5X25.5X3MM THK)	
	24	1	**110-2665**	3	SHAFT-PLANETARY	
	25	1	**9M-5894**	1	SEAL-O-RING (202.56MM ID)	
	26	1	**2S-4078**	1	SEAL-O-RING (37.46MM ID)	
	27	1	**6V-3298**	1	PLUG-MAGNETIC	
	28	1	**3T-6882**	12	PIN	
	29	1	**9P-3474**	1	COVER	
	30	1	**8T-8917**	3	BOLT (1/2-13X1.25 IN)	
	31	1	**9P-3471**	1	GEAR-SUN (24 TEETH)	
	32	1	**2S-0613**	1	RING-RETAINING	
	33	1	**9P-3468**	1	CARRIER-PLANETARY	
	34	1	**9S-4185**	1	PLUG	
	35	1	**8D-4771**	1	SEAL-O-RING (481.41MM ID)	
	36	1	**3K-0360**	1	SEAL-O-RING (16.36MM ID)	
	37	1	**5F-7054**	1	SEAL-O-RING (18.64MM ID)	
	38	1	**3D-8422**	1	SEAL-O-RING (582.68MM ID)	
	39	1	**9P-3320**	1	GEAR-RING (72 TEETH)	
	40	1	**5P-7911**	1	RING-RETAINING	
	41	1	**164-5808**	1	GEAR-SUN (18 TEETH)	
	42	1	**104-3137**	1	HUB	
	43	1	**137-4835**	1	BEARING-THRUST	
	44	1	**104-3136**	1	RETAINER	
	45	1	**9P-4959**	1	RING-RETAINING	
	46	1	**104-3133**	1	CARRIER-PLANETARY	
	47	1	**104-3153**	1	SEAL-DOUBLE LIP	
	48	1	**7S-4326**	1	DOWEL	
	49	1	**3P-8820**	1	RING-THRUST	
	50	1	**6F-8146**	1	SEAL-O-RING (59.69MM ID)	
	51	1	**8T-2502**	3	BOLT (3/8-16X1.125 IN)	
	52	1	**8T-4896**	3	WASHER-HARD (10.2X18.5X2.5MM THK)	
	53	1	**8T-4223**	3	WASHER-HARD (13.5X25.5X3MM THK)	
	54	1	**8E-3124**	1	RETAINER	
	55	1	**137-4836**	1	BEARING-SLEEVE	

R-REMFG PART MAY BE AVAILABLE

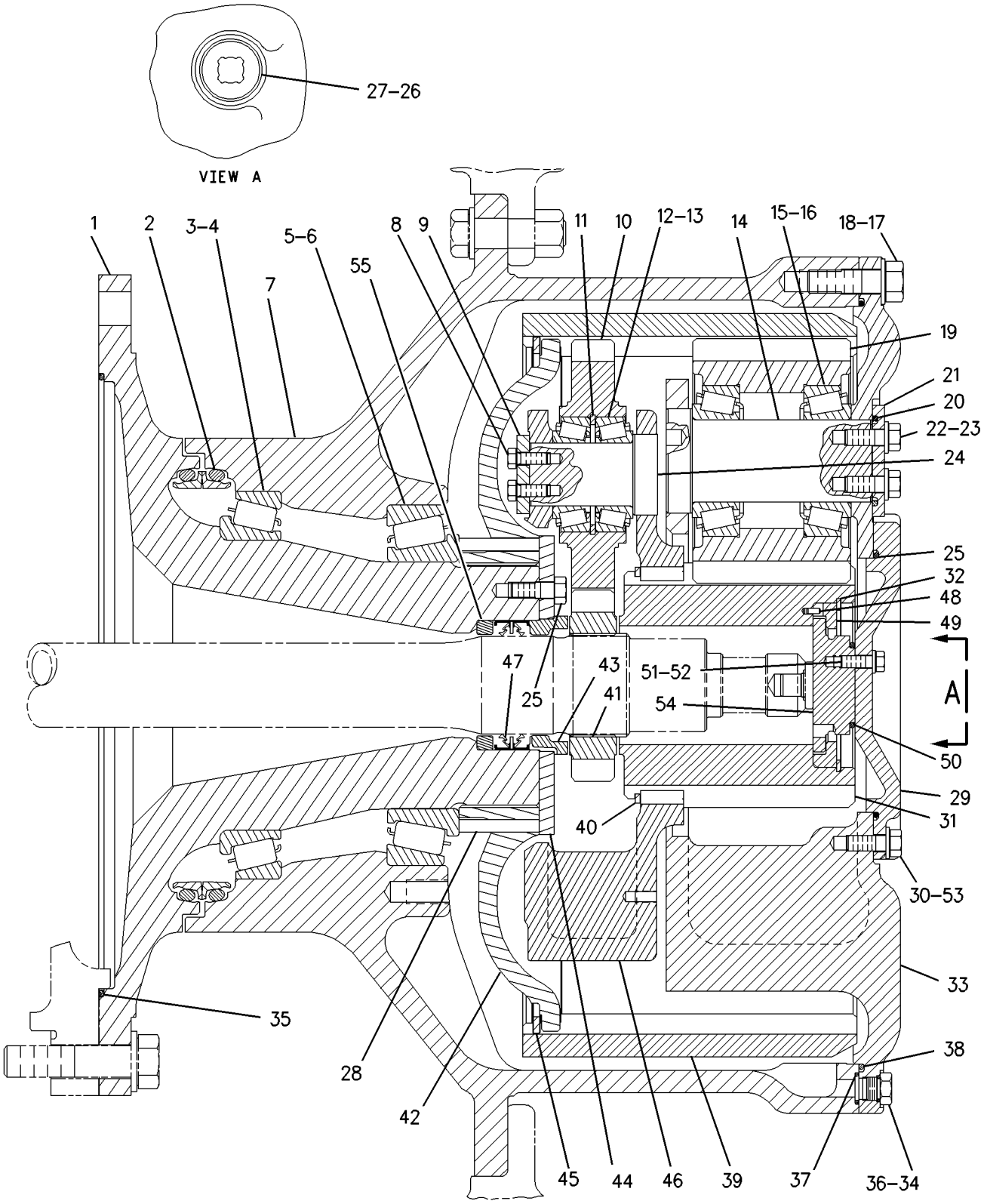

GRAPHIC #1 g00681104

MEMORANDA

192-9147 FINAL DRIVE GP

S/N: ABK1-UP
DUO-CONE GUARD
PART OF 188-0532 GUARD AR-FINAL DRIVE
AN ATTACHMENT

SMCS-4050 **i01629828**

NOTE	REF NO	GRAPHIC REF	PART NUMBER	QTY	PART NAME 1 2 3 4 5 6 (PRODUCT LEVEL)	SEE PAGE
	1	1	**189-8867**	1	HUB AS	
	1A	1	**189-3064**	1	GUARD	
	2	1	**173-3071**	1	SEAL GP-DUO-CONE	
		1	**127-0116**	2	RING-TORIC	
	3	1	**3D-9133**	1	CUP-BEARING	
	4	1	**126-0588**	1	CONE-SPECIAL TAPERED	
	5	1	**107-7089**	1	CUP-BEARING	
	6	1	**107-7088**	1	CONE-BEARING	
	7	1	**189-8868**	1	HUB AS	
	7A	1	**189-3065**	1	GUARD	
	8	1	**5D-0353**	6	BOLT-LOCKING (3/8-16X1 IN)	
	9	1	**8P-5698**	3	PLATE	
	10	1	**9P-3429**	3	GEAR-PLANET (27 TEETH)	
	11	1	**9P-3657**	3	LOCK RING	
	12	1	**166-6930**	6	CONE	
	13	1	**166-6931**	6	CUP	
	14	1	**9P-3467**	3	SHAFT-PLANET	
	15	1	**6I-8860**	6	CUP-BEARING	
	16	1	**6I-8849**	6	CONE-BEARING	
	17	1	**8T-8924**	35	BOLT (3/4-10X2.50 IN)	
	18	1	**8T-4994**	35	WASHER-HARD (20X36.5X3.5MM THK)	
	19	1	**9P-3366**	3	GEAR-PLANET (24 TEETH)	
	20	1	**6V-1653**	3	SEAL-QUAD RING	
	21	1	**3P-8827**	3	PLATE	
	22	1	**030-8538**	18	BOLT (1/2-13X1.25 IN)	
	23	1	**5P-8245**	6	WASHER-HARD (13.5X25.5X3MM THK)	
	24	1	**110-2665**	3	SHAFT-PLANETARY	
	25	1	**9M-5894**	1	SEAL-O-RING	
	26	1	**8T-9412**	3	BOLT-12 POINT HEAD (1/2-13X1.5 IN)	
	27	1	**2S-4078**	1	SEAL-O-RING	
	28	1	**6V-3298**	1	PLUG-MAGNETIC	
	29	1	**1D-4640**	30	BOLT (1-8X4.25 IN)	
	30	1	**3T-6882**	12	PIN	
	31	1	**9P-3474**	1	COVER	
Y	32	1	*160-4927*	1	SEGMENT GP-SPROCKET	432
	33	1	**5P-8250**	30	WASHER (28X49X5MM THK)	
	34	1	**8T-8917**	3	BOLT (1/2-13X1.25 IN)	
	35	1	**9P-3471**	1	GEAR-SUN (24 TEETH)	
	36	1	**2S-0613**	1	RING-RETAINING	
	37	1	**9P-3468**	1	CARRIER-PLANETARY	
	38	1	**9S-4185**	1	PLUG-O-RING	
	39	1	**8D-4771**	1	SEAL-O-RING	
	40	1	**3K-0360**	1	SEAL-O-RING	
	41	1	**5F-7054**	1	SEAL-O-RING	
	42	1	**3D-8422**	1	SEAL-O-RING	
	43	1	**9P-3320**	1	GEAR-RING (72 TEETH)	
	44	1	**5P-7911**	1	RING-RETAINING	
	45	1	**164-5808**	1	GEAR-SUN (18 TEETH)	
	46	1	**104-3137**	1	HUB	
	47	1	**137-4835**	1	BEARING-THRUST	
	48	1	**104-3136**	1	RETAINER	
	49	1	**9P-4959**	1	RING-RETAINING	
	50	1	**104-3133**	1	CARRIER-PLANETARY	
	51	1	**104-3153**	1	SEAL-DOUBLE LIP	

192-9147 FINAL DRIVE GP *(contd.)* i01629828

NOTE	REF NO	GRAPHIC REF	PART NUMBER	QTY	PART NAME 1 2 3 4 5 6 (PRODUCT LEVEL)	SEE PAGE
	52	1	**7S-4326**	1	DOWEL	
	53	1	**3P-8820**	1	RING-THRUST	
	54	1	**6F-8146**	1	SEAL-O-RING	
	55	1	**8T-2502**	3	BOLT (3/8-16X1.125 IN)	
	56	1	**8T-4896**	3	WASHER-HARD (10.2X18.5X2.5MM THK)	
	57	1	**8T-4223**	3	WASHER-HARD (13.5X25.5X3MM THK)	
	58	1	**8E-3124**	1	RETAINER	
	59	1	**137-4836**	1	BEARING-SLEEVE	
	60	1	**189-6244**	2	SEAL	
	61	1	**8C-6561**	16	BOLT (5/16-18X1.375 IN)	
	62	1	**8T-4224**	16	WASHER-HARD (8.8X16X2MM THK)	
	63	1	**189-3063**	2	RETAINER	

Y-SEPARATE ILLUSTRATION

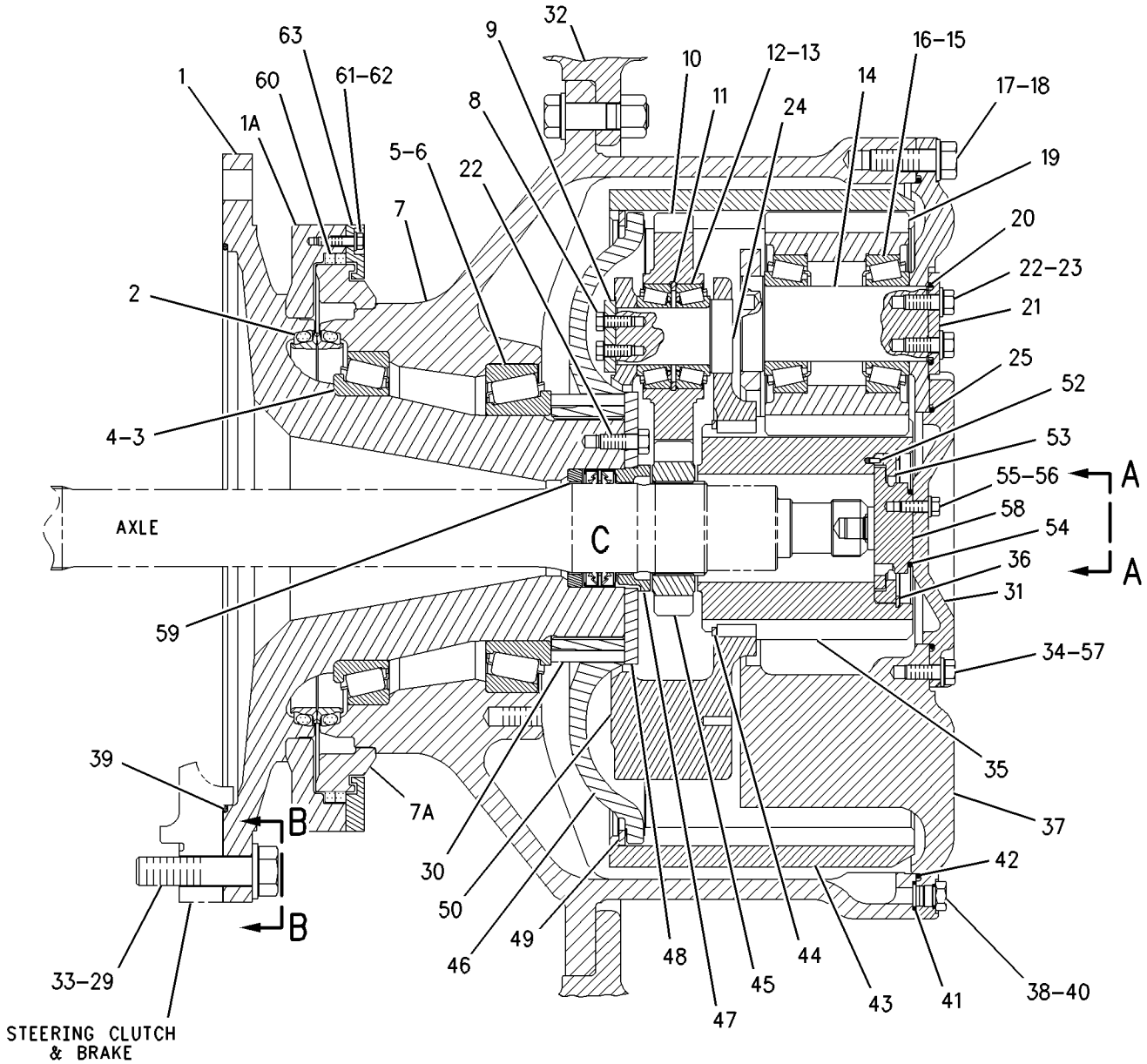

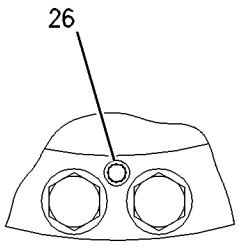

VIEW B-B

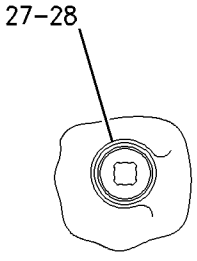

VIEW A-A

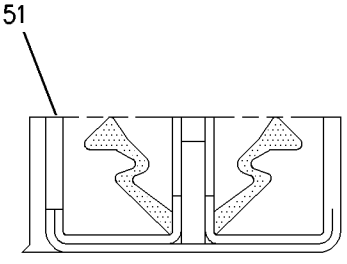

VIEW OF AREA C

GRAPHIC #1 g00751425

MEMORANDA

6Y-9047 GEAR GP-BEVEL & TRANSFER

S/N: 4XX1-UP

PART OF 163-5294 TRANSMISSION AR

SMCS-3011 **i01540920**

NOTE	REF NO	GRAPHIC REF	PART NUMBER	QTY	PART NAME 1 2 3 4 5 6 (PRODUCT LEVEL)	SEE PAGE
	1	1	**6Y-9057**	1	CAGE-BEARING	
	2	1	**8C-3075**	1	SEAL-LIP	
	3	1	**7H-7628**	1	BEARING-RACE & ROLLER	
	4	1	**5F-1248**	1	CONE-ROLLER BEARING	
	5	1	**5D-7449**	1	CUP-ROLLER BEARING	
	6	1	**0S-1585**	9	BOLT (1/2-13X1.50 IN)	
	7	1	**5P-8245**	27	WASHER-HARD (13.5X25.5X3MM THK)	
B	8	1	**6Y-9065**	1	SHIM PACK (INCLUDES 14 SHIMS)	
	9	1	**0S-1587**	11	BOLT (1/2-13X1.75 IN)	
	10	1	**6Y-9064**	1	CAGE-BEARING	
	11	1	**4B-8393**	1	CUP-ROLLER BEARING	
	12	1	**1B-4034**	1	CONE-ROLLER BEARING	
	13	1	**6Y-9063**	1	GEAR-TRANSFER (40 TEETH)	
	14	1	**0S-1600**	18	BOLT (5/8-18X2.5IN)	
	15	1	**7M-1419**	2	RACE-BEARING OUTER	
	16	1	**8H-8819**	2	BEARING-INNER	
	17	1	**6Y-9066**	1	GEAR-TRANSFER (38 TEETH)	
	18	1	**6Y-9061**	1	GEAR-BEVEL (25 TEETH)	
	19	1	**9U-9501**	1	PLATE	
B	20	1	**6Y-9055**	1	SHIM PACK (INCLUDES 15 SHIMS)	
	21	1	**1J-2860**	1	CUP-ROLLER BEARING	
	22	1	**1J-4757**	1	CONE-BEARING	
	23	1	**5M-2894**	6	WASHER-HARD (10.2X18.5X2.5MM THK)	
	24	1	**3B-1915**	6	BOLT (3/8-16X1.37 IN)	
B	25	1	**6Y-9062**	1	SHIM PACK (INCLUDES 15 SHIMS)	
	26	1	**6Y-9054**	1	SPACER-BEARING	
	27	1	**6Y-9322**	1	CUP-ROLLER BEARING	
	28	1	**6Y-9321**	1	CONE-ROLLER BEARING	
	29	1	**6Y-9053**	1	PINION-BEVEL	
B	30	1	**6Y-9058**	1	SHIM PACK (INCLUDES 14 SHIMS)	
	31	1	**8E-8215**	1	WASHER-THRUST	
	32	1	**9X-8874**	2	BOLT (1/2-13X3 IN)	
	33	1	**7D-1649**	2	WASHER-HARD (13.5X32X5MM THK)	
	34	1	**9G-3464**	2	BUSHING-TERMINAL	
	35	1	**8E-7706**	1	BRACKET AS	
	36	1	**1A-1460**	7	BOLT (1/2-13X2 IN)	
	37	1	**8E-7707**	1	BRACKET AS	

B-USE AS REQUIRED

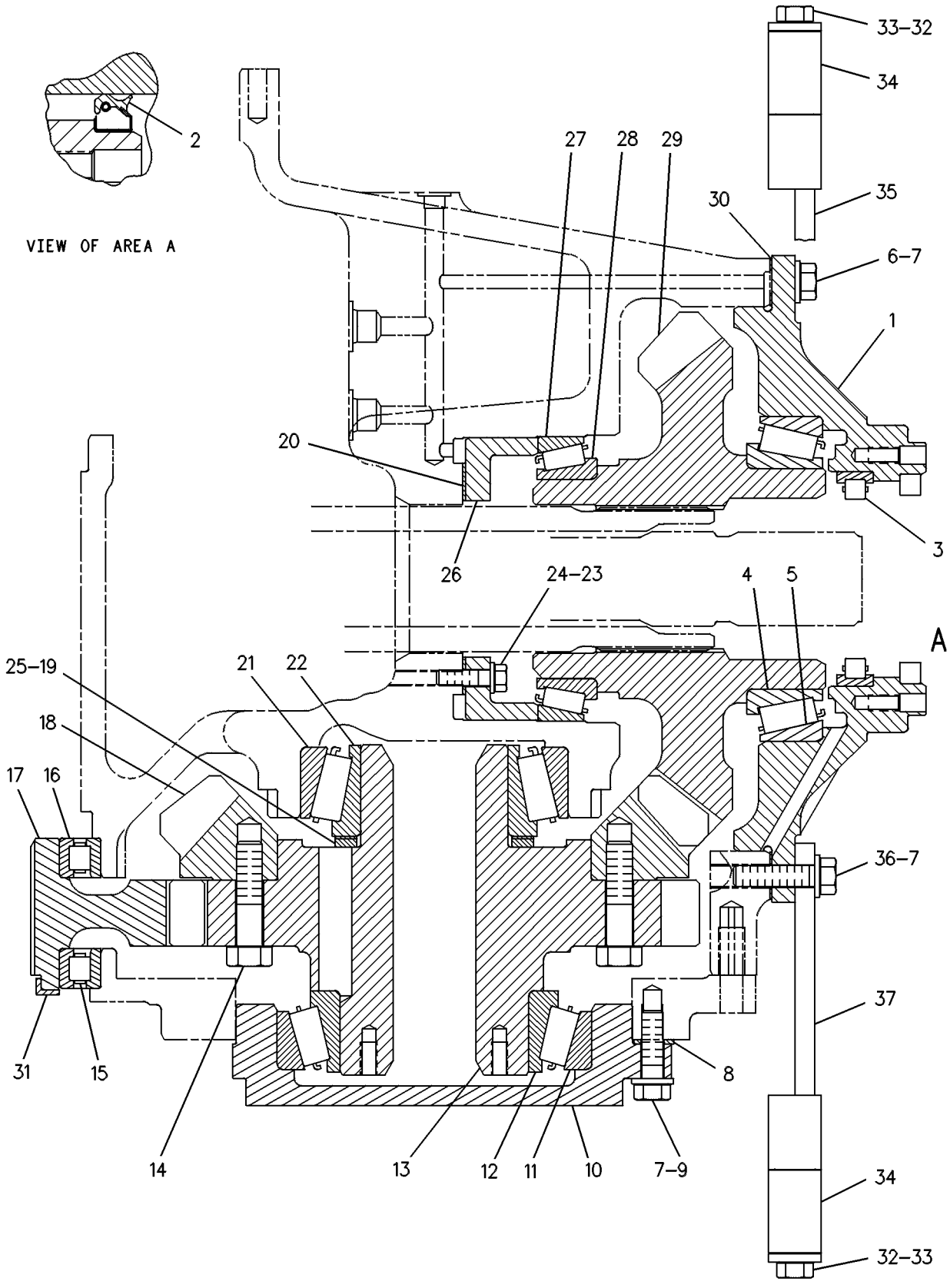

GRAPHIC #1 g00240063

8E-9853 GUARD GP-DRIVE SHAFT

S/N: ABK1-UP

PART OF 162-9501 CHASSIS AR

SMCS-7153 **i01540919**

NOTE	REF NO	GRAPHIC REF	PART NUMBER	QTY	PART NAME 1 2 3 4 5 6 (PRODUCT LEVEL)	SEE PAGE
	1	1	**5M-3062**	5	BOLT (3/8-16X0.75 IN)	
	2	1	**8T-4896**	4	WASHER-HARD (10.2X18.5X2.5MM THK)	
	3	1	**5P-1075**	4	WASHER-HARD (10.2X22.5X3MM THK)	
	4	1	**9U-8689**	1	GUARD AS	
		1	**1F-0750**	2	NUT-WELD (3/8-16 THD)	
	5	1	**103-1996**	1	GUARD AS	
	6	1	**9U-8690**	1	GUARD AS	
		1	**1F-0750**	2	NUT-WELD (3/8-16 THD)	
	7	1	**5C-6565**	6	BOLT (1/2-13X1.25 IN)	
	8	1	**8T-4223**	6	WASHER-HARD (13.5X25.5X3MM THK)	
	9	1	**4L-6454**	2	BOLT (3/8-16X1 IN)	
	10	1	**118-0628**	1	GUARD AS	
		1	**6H-3609**	1	BOSS	
	11	1	**9B-7237**	1	BOLT (3/8-16X1.25 IN)	

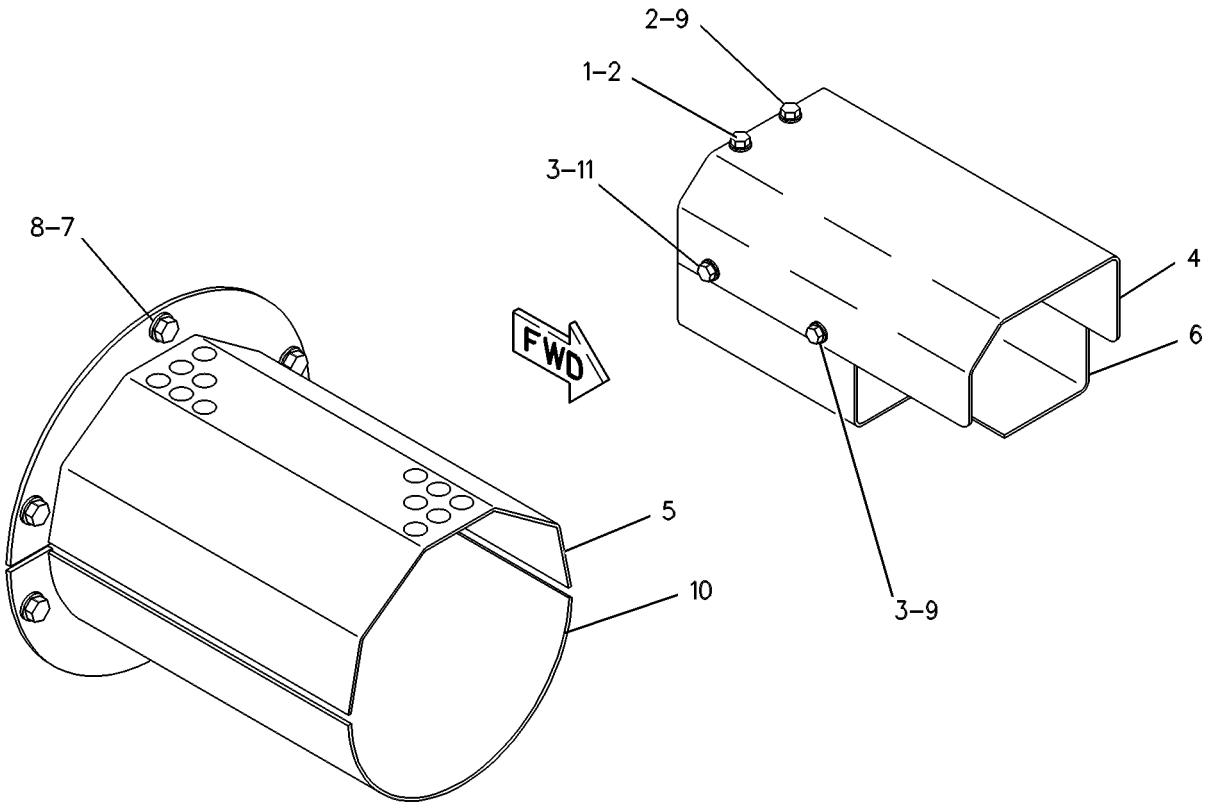

GRAPHIC #1 g00271003

9W-4649 GUARD GP-POWER TRAIN

S/N: ABK1-UP
REAR
FOR USE WITH RIGID DRAWBAR GROUP
AN ATTACHMENT

SMCS-7153 **i01540918**

NOTE	REF NO	GRAPHIC REF	PART NUMBER	QTY	PART NAME 1 2 3 4 5 6 (PRODUCT LEVEL)	SEE PAGE
C	1	1	**9U-9709**	1	GUARD AS	
	2	1	**8T-9399**	10	BOLT (3/4-10X2.25 IN)	
	3	1	**8T-4994**	26	WASHER-HARD (20X36.5X3.5MM THK)	
	4	1	**4L-6454**	4	BOLT (3/8-16X1 IN)	
	5	1	**8T-4896**	4	WASHER-HARD (10.2X18.5X2.5MM THK)	
C	6	1	**114-2194**	1	PLATE	
C	7	1	**114-2195**	1	GUARD AS	
C	8	1	**114-2197**	2	BRACKET AS	
	9	1	**8C-6857**	8	BOLT (3/4-10X2.75 IN)	
	10	1	**6V-8182**	8	NUT (3/4-10 THD)	

C-CHANGE FROM PREVIOUS TYPE

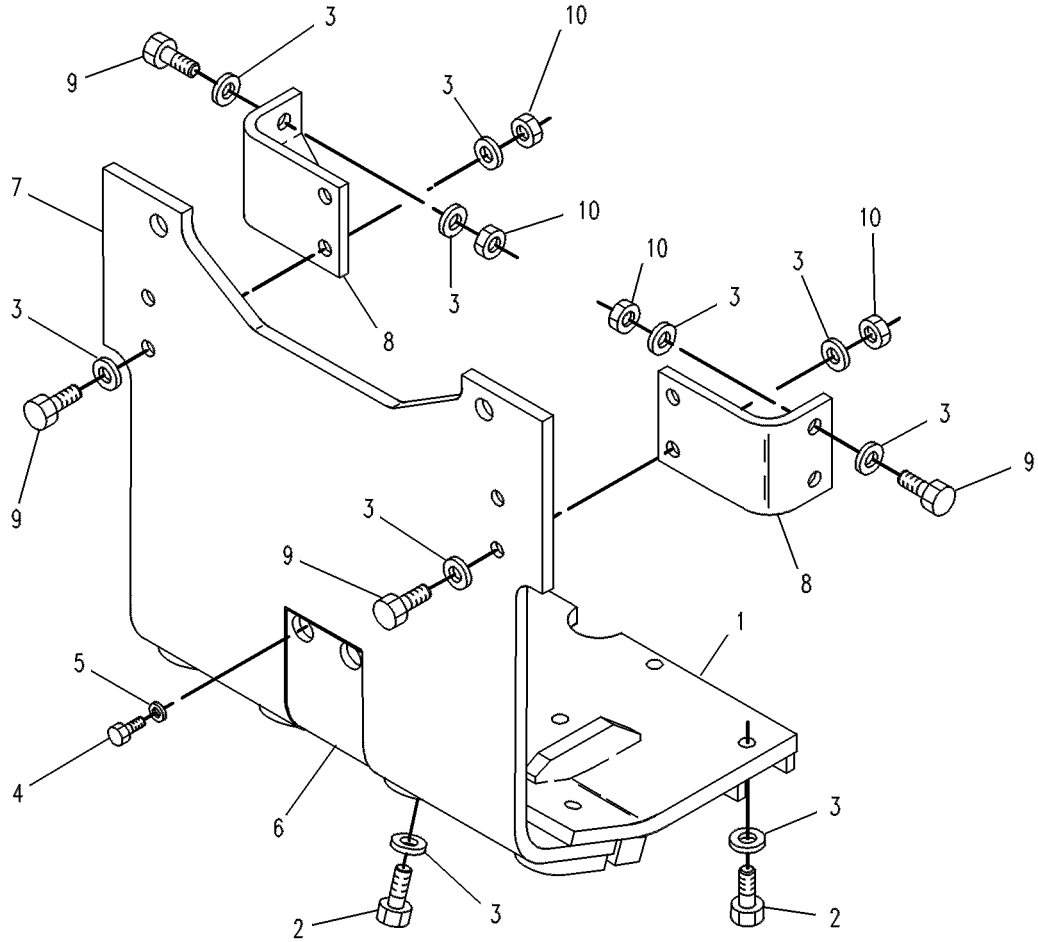

GRAPHIC #1 g00246100

200-0856 GUARD GP-POWER TRAIN

S/N: ABK1-UP
AN ATTACHMENT

SMCS-7153 **i01618147**

NOTE	REF NO	GRAPHIC REF	PART NUMBER	QTY	PART NAME 1 2 3 4 5 6 (PRODUCT LEVEL)	SEE PAGE
	1	1	**2J-8239**	2	ADAPTER	
	2	1	**3B-4610**	1	PIN-COTTER	
	3	1	**4D-6082**	1	BOLT (1/2-13X1.5 IN)	
B	4	1	**7G-9592**	1	SHIM (1.8MM)	
	5	1	**113-3394**	1	STRAP	
	6	1	**200-7958**	1	PLATE	
	7	1	**200-7959**	1	PLATE	
	8	1	**200-7961**	1	PLATE AS	
		1	**2K-2794**	2	WASHER (22.6X34.9X9.52MM THK)	
	9	1	**200-7963**	1	GUARD AS	
		1	**1F-0748**	19	NUT-WELD (1/2-13 THD)	
	10	1	**5P-2566**	4	BOLT (1/2-13X1.5 IN)	
	11	1	**7X-0550**	13	WASHER-HARD (13.5X32X5MM THK)	
	12	1	**7X-0590**	2	WASHER-HARD (13.5X44.5X6MM THK)	
	13	1	**8C-4436**	12	BOLT (1/2-13X1.375 IN)	
	14	1	**8T-4223**	4	WASHER-HARD (13.5X25.5X3MM THK)	
	15	1	**8T-4994**	2	WASHER-HARD (20X36.5X3.5MM THK)	
	16	1	**8T-8919**	2	BOLT (1/2-13X1.75 IN)	
	17	1	**8T-9398**	2	BOLT (3/4-10X1.75 IN)	

B-USE AS REQUIRED

200-0856 **GUARD GP-POWER TRAIN** *(contd.)* **i01618147**

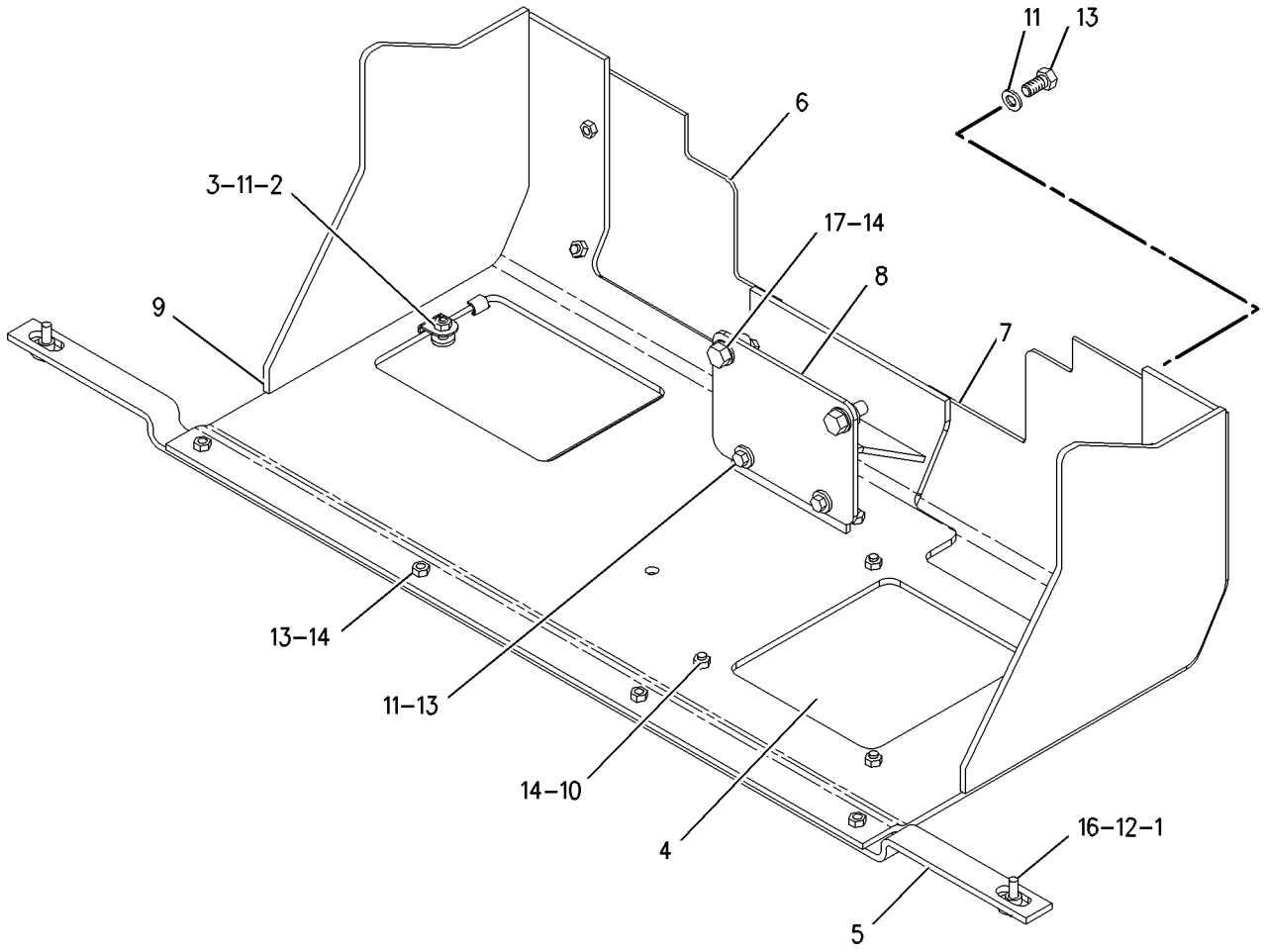

GRAPHIC #1 g00777925

164-9919 LINES GP-POWER TRAIN OIL

S/N: ABK1-UP

PART OF 162-9503 POWER TRAIN AR

SMCS-3016 **i01540917**

NOTE	REF NO	GRAPHIC REF	PART NUMBER	QTY	PART NAME 1 2 3 4 5 6 (PRODUCT LEVEL)	SEE PAGE
Y	1	1	*9U-9286*	2	FILTER GP-OIL (POWER TRAIN)	396
	2	1	**9M-9647**	2	SEAL-O-RING	
I	3	1	**124-9317**	1	HOSE AS	
	4	1	*148-8356*	1	ELBOW GP	
		1	**6V-9009**	1	ELBOW	
		1	**6V-8400**	1	SEAL-O-RING	
		1	**2S-4078**	1	SEAL-O-RING	
	5	1	**5P-2424**	5	BOLT (1/2-13X2.25 IN)	
	6	1	*150-3059*	1	TEE GP	
		1	**8T-1674**	1	TEE	
		1	**5K-9090**	1	SEAL-O-RING	
		1	**7M-8485**	1	SEAL-O-RING	
	7	1	*150-4043*	1	CONNECTOR GP	
		1	**6V-9873**	1	CONNECTOR-SEAL	
		1	**3J-1907**	1	SEAL-O-RING	
		1	**6V-8398**	1	SEAL-O-RING	
	8	1	**5H-7153**	2	SEAL-O-RING	
	9	1	**5F-8000**	1	SEAL-O-RING	
	10	1	**7X-0326**	1	BOLT (1/2-13X3 IN)	
	11	1	**3J-1907**	6	SEAL-O-RING	
	12	1	**7X-0325**	2	BOLT (1/2-13X2.5 IN)	
	13	1	**8T-4223**	57	WASHER-HARD (13.5X25.5X3MM THK)	
	14	1	**8T-8920**	4	BOLT (1/2-13X3.25 IN)	
Y	15	1	**160-6416**	1	PUMP GP-GEAR (POWER TRAIN OIL)	428
	16	1	**9P-9826**	1	TUBE AS	
	17	1	**9W-3705**	1	TUBE AS	
E	18	1	**5P-1293**		HOSE (50.8MM ID) (13CM)	
	19	1	**6N-2985**	1	CAP AS-FILLER (POWER TRAIN OIL)	
	20	1	**6T-6805**	1	GAUGE AS-OIL LEVEL (DIPSTICK) (POWER TRAIN)	
	21	1	**5P-0597**	2	CLAMP-HOSE	
	22	1	**5S-7379**	1	BOLT (3/8-16X0.875 IN)	
	23	1	**8E-6083**	1	HOUSING-SUCTION SCREEN	
	24	1	**3T-1105**	1	TUBE	
	25	1	**6V-5101**	1	SEAL-O-RING	
	26	1	**5K-9090**	2	SEAL-O-RING	
	27	1	**8M-8157**	1	SEAL-O-RING	
	28	1	**5K-9238**	1	CONNECTOR-FLARED	
I	29	1	**5G-8288**	1	HOSE AS	
I	30	1	**6Y-9398**	1	HOSE AS	
	31	1	*148-8317*	1	CONNECTOR GP	
		1	**6V-8714**	1	CONNECTOR	
		1	**3D-2824**	1	SEAL-O-RING	
		1	**5K-9090**	1	SEAL-O-RING	
I	32	1	**124-9318**	1	HOSE AS	
I	33	1	**6Y-9401**	1	HOSE AS	
	34	1	**5P-2566**	30	BOLT (1/2-13X1.5 IN)	
I	35	1	**124-9319**	1	HOSE AS	
	36	1	**9B-7237**	6	BOLT (3/8-16X1.25 IN)	
	37	1	**3S-3875**	1	SCREEN-SUCTION (POWER TRAIN OIL PUMP INLET)	
	38	1	**9U-8419**	1	TUBE AS	
	39	1	**5S-7382**	4	BOLT (3/8-16X1.375 IN)	
	40	1	**4B-0418**	2	CLIP	
	41	1	**3K-0360**	1	SEAL-O-RING	
Y	42	1	**115-1146**	1	VALVE GP-RELIEF (COOLER BYPASS)	449
	43	1	**6V-1867**	3	CLIP (SLOT)	
	44	1	**6V-1868**	3	CLIP (TAB)	

164-9919 LINES GP-POWER TRAIN OIL *(contd.)* i01540917

NOTE	REF NO	GRAPHIC REF	PART NUMBER	QTY	PART NAME 1 2 3 4 5 6 (PRODUCT LEVEL)	SEE PAGE
	45	1	**1S-1015**	2	CLIP	
	46	1	**4J-5267**	1	SEAL-O-RING	
	47	1	**1P-4576**	2	FLANGE	
	48	1	**4J-0527**	5	SEAL-O-RING	
	49	1	**1P-4582**	8	FLANGE-HALF	
	50	1	**4J-0524**	4	SEAL-O-RING	
	51	1	**9G-5127**	1	BREATHER (POWER TRAIN)	
	52	1	**3T-2710**	1	FLANGE	
	53	1	**153-1157**	1	SEAL-O-RING	
	54	1	**7X-0290**	3	BOLT (3/8-16X3.50 IN)	
	55	1	**8M-4443**	1	SEAL-O-RING	
	56	1	**8C-4436**	4	BOLT (1/2-13X1.375 IN)	
	57	1	**141-9497**	2	SEAL-RECTANGULAR	
	58	1	**6V-0852**	5	CAP-DUST	
	59	1	**6V-3965**	5	FITTING	
	60	1	**5K-1770**	2	SEAL-O-RING	
	61	1	**6L-1651**	2	SEAL-O-RING	
	62	1	**8T-8917**	4	BOLT (1/2-13X1.25 IN)	
	63	1	**6V-5656**	1	SEAL-O-RING	
	64	1	**6T-1127**	1	TUBE AS	
	65	1	**5P-7468**	2	CLIP (SLOT)	
	66	1	**5P-7469**	2	CLIP (TAB)	
	67	1	**8T-4205**	1	WASHER-HARD (7.2X14.5X2MM THK)	
	68	1	**5S-7349**	1	BOLT (1/4-20X0.5 IN)	
	69	1	**7X-0291**	1	BOLT (3/8-16X3.75 IN)	
	70	1	**3D-0471**	4	STUD-TAPERLOCK (1/2-13 THD)	
	71	1	**6V-8188**	4	NUT (1/2-13 THD)	
	72	1	**6F-0711**	4	SEAL-O-RING	
	73	1	**1H-5728**	1	SEAL-O-RING	
	74	1	**2K-8257**	1	SEAL-O-RING	
	75	1	**3S-3439**	1	COVER-TOP	
	76	1	**7G-4993**	1	TUBE	
	77	1	**3P-1932**	1	ADAPTER	
	78	1	**124-2967**	1	MANIFOLD	
	79	1	**1P-4579**	6	FLANGE-HALF	
	80	1	**6G-0584**	1	ELBOW	
	81	1	**7X-3392**	6	WASHER-HARD (13.5X22.5X3MM THK)	
	82	1	**8T-4835**	1	BOLT (1/2-13X2 IN)	
	83	1	**5M-3062**	1	BOLT (3/8-16X0.75 IN)	
	84	1	**3J-2903**	1	COVER	
	85	1	**5C-6565**	1	BOLT (1/2-13X1.25 IN)	
	86	1	**3J-7354**	1	SEAL-O-RING	
	87	1	**8C-3447**	1	CAP-DUST	
	88	1	**8C-3446**	1	VALVE AS-FLUID SAMPLING	
	89	1	**5P-3501**	1	ADAPTER	
	90	1	**7M-8485**	2	SEAL-O-RING	
	91	1	**8T-4896**	12	WASHER-HARD (10.2X18.5X2.5MM THK)	
	92	1	*148-8339*	1	CONNECTOR GP	
		1	**6V-8716**	1	CONNECTOR	
		1	**6V-9746**	1	SEAL-O-RING	
		1	**7M-8485**	1	SEAL-O-RING	
	93	1	**5P-2228**	4	BOLT (1/2-13X1 IN)	
	94	1	*148-8328*	1	CONNECTOR GP	
		1	**6V-8633**	1	CONNECTOR	
		1	**3D-2824**	1	SEAL-O-RING	
		1	**6V-8398**	1	SEAL-O-RING	
	95	1	**3H-1461**	1	SEAL-O-RING	
	96	1	**5P-1075**	4	WASHER-HARD (10.2X22.5X3MM THK)	
	97	1	**3G-8710**	1	PLUG-O-RING	

164-9919 **LINES GP-POWER TRAIN OIL** ***(contd.)*** **i01540917**

NOTE	REF NO	GRAPHIC REF	PART NUMBER	QTY	PART NAME 1 2 3 4 5 6 (PRODUCT LEVEL)	SEE PAGE
	98	1	**9S-4181**	1	PLUG-STRAIGHT THREAD	
	99	1	**3G-3475**	1	SPRING	
	100	1	**6E-4343**	1	VALVE (TORQUE CONVERTER INLET)	
	101	1	**6Y-2103**	1	VALVE GP-RELIEF	
	102	1	**9X-4609**	1	SEAL-O-RING	
	103	1	**6V-1869**	3	GROMMET	
	104	1	**6V-4432**	5	BOLT (1/2-13X4 IN)	

E-ORDER BY THE CENTIMETER
I-SEE HOSE FABRICATION GUIDE
Y-SEPARATE ILLUSTRATION

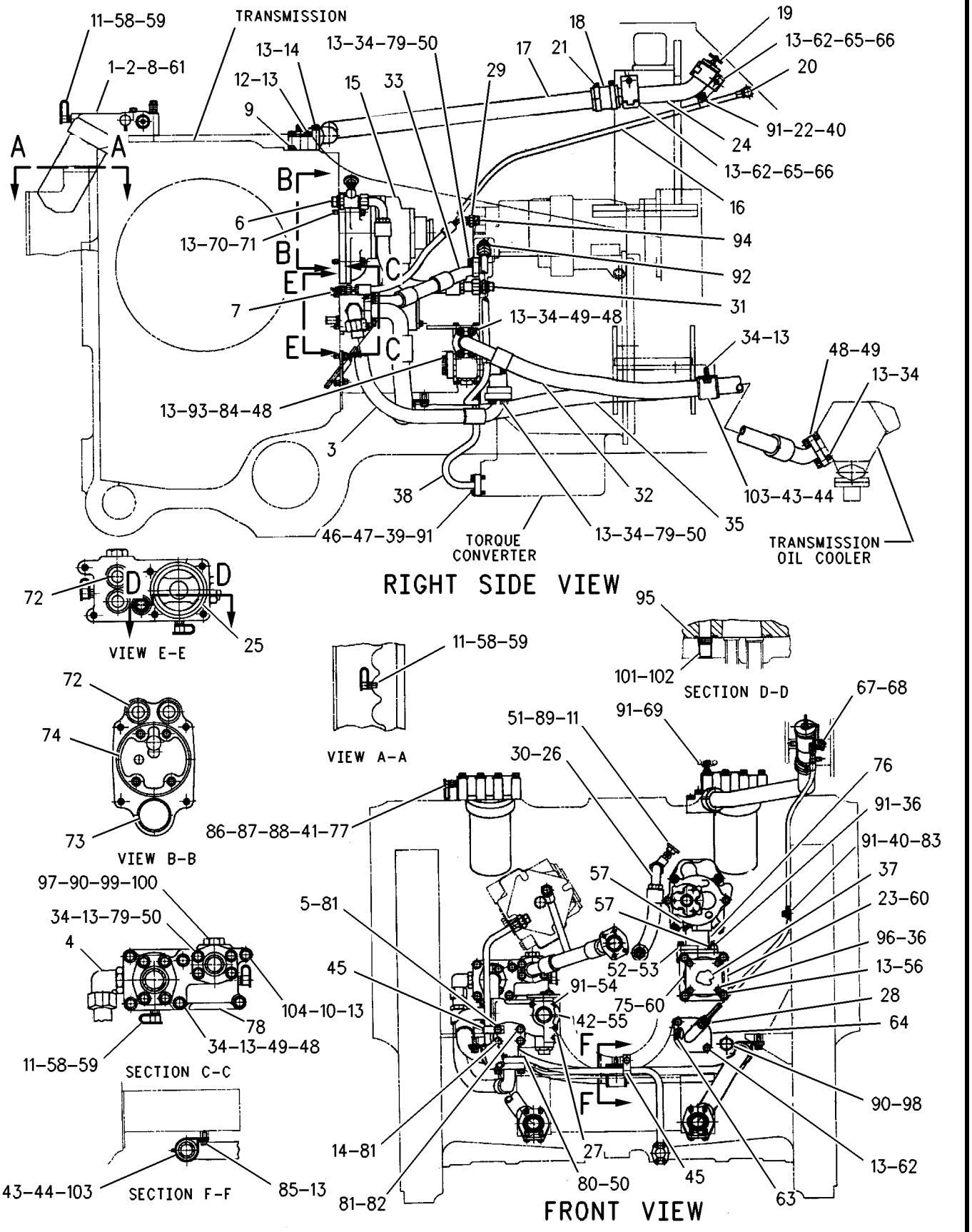

GRAPHIC #1 g00702529

8E-7695 MOUNTING GP-TRANSMISSION

S/N: ABK1-UP

PART OF 162-9503 POWER TRAIN AR

SMCS-3030 **i01421811**

NOTE	REF NO	GRAPHIC REF	PART NUMBER	QTY	PART NAME 1 2 3 4 5 6 (PRODUCT LEVEL)	SEE PAGE
	1	1	**6J-2515**	2	BOLT-12 POINT HEAD	
	2	1	**1S-4305**	18	WASHER (.531X1X.56 IN THK)	
	3	1	**0V-0375**	16	BOLT (1/2-13X3.25 IN)	
	4	1	**1A-7669**	3	BOLT (1/2-13X7 IN)	
	5	1	**5P-8245**	3	WASHER-HARD (13.5X25.5X3MM THK)	
	6	1	**9M-9647**	3	SEAL-O-RING (40.64MM ID)	
	7	1	**6L-9284**	1	SEAL-O-RING (59.7MM ID)	
	8	1	**5P-9519**	1	SEAL-O-RING (843.0MM ID)	
	9	1	**7M-0475**	1	RING-SEALING	
	10	1	**3T-5830**	1	PLATE	
	11	1	**4L-9337**	4	BOLT (3/8-16X1.5 IN)	
	12	1	**8T-4896**	4	WASHER-HARD (10.2X18.5X2.5MM THK)	
	13	1	**9W-6612**	1	RING-SEALING	
	14	1	**5D-9514**	6	BOLT (5/8-11X6.25 IN)	
	15	1	**5P-8247**	6	WASHER-HARD (17X32X3.5MM THK)	

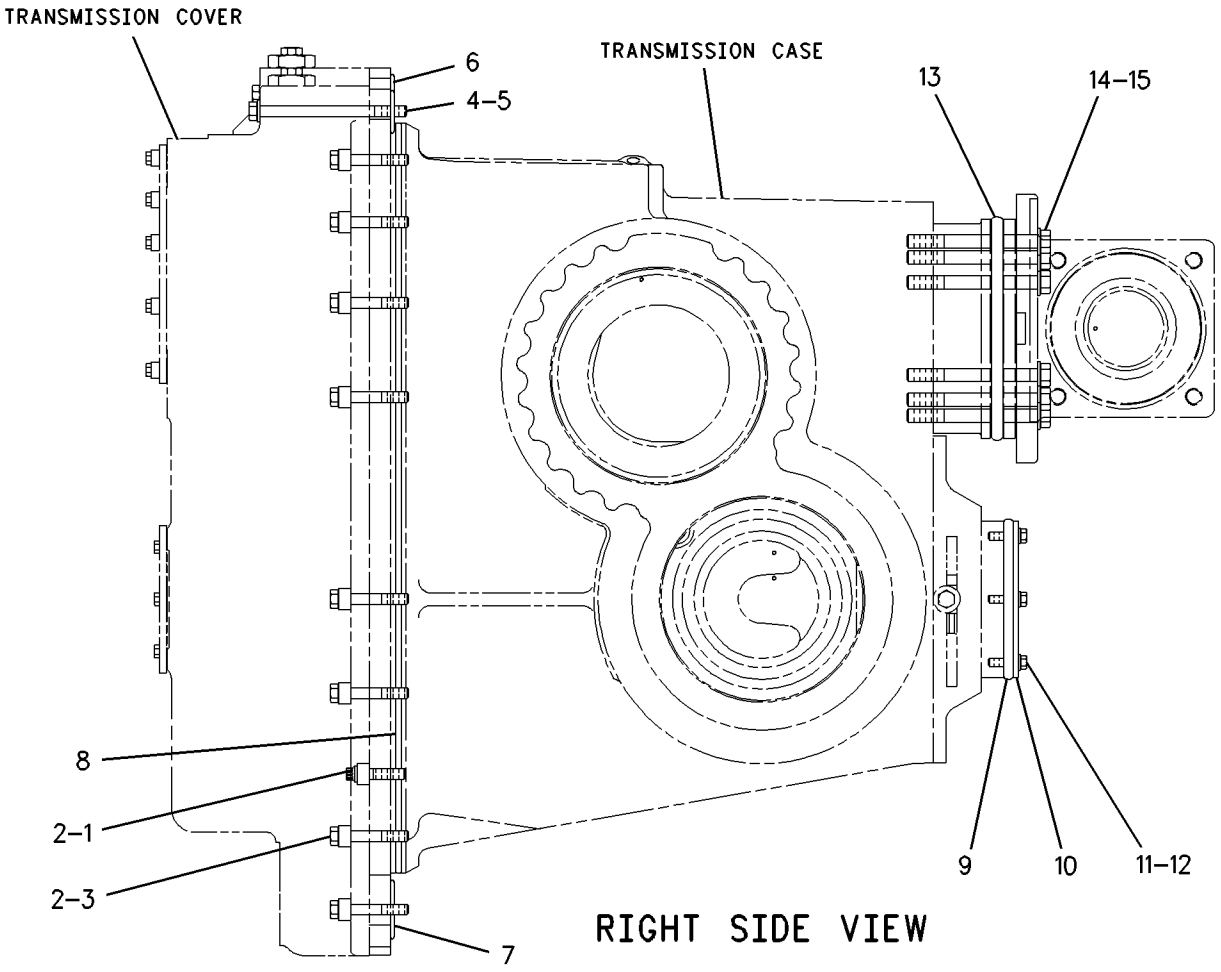

GRAPHIC #1 g00746402

MEMORANDA

POWER TRAIN

163-5297 PLANETARY GP-TRANSMISSION

S/N: 4XX1-UP

PART OF 163-5294 TRANSMISSION AR

SMCS-3155, 3160, 3169, 3170, 3187, 3189, 3190, 3304 **i01421860**

NOTE	REF NO	GRAPHIC REF	PART NUMBER	QTY	PART NAME 1 2 3 4 5 6 (PRODUCT LEVEL)	SEE PAGE
	1	3	**8T-1141**	3	RING-RETAINING	
	2	3	**6Y-3484**	3	BALL BEARING	
	3	3	**5K-9107**	2	BOLT-LOCKING (3/8-16X0.75 IN)	
	4	3	**5M-2894**	24	WASHER-HARD (10.2X18.5X2.5MM THK)	
	5	2	**6V-0836**	3	RING-RETAINING	
	6	3	**8S-6212**	2	BOLT (1/2-13X13 IN)	
	7	1,2,3	**5P-8245**	22	WASHER-HARD (13.5X25.5X3MM THK)	
	8	3	**6Y-9957**	1	MANIFOLD AS	
		3	**7M-8480**	2	DOWEL	
	9	2	**1P-9261**	1	SEAL-RING	
	10	2	**3P-2768**	1	PISTON-CLUTCH	
	11	2	**3P-2792**	1	SEAL-RING	
	12	3	**0T-0065**	20	BOLT (3/8-16X3.5 IN)	
	13	3	**6Y-9956**	1	TUBE AS	
	14	3	**6L-3616**	2	CONNECTOR-FLARED	
	15	3	**9W-2979**	1	HOUSING AS-ROTATION	
		3	**6P-7564**	1	CARRIER-RING	
		3	**4S-8537**	1	DOWEL	
		3	**6B-6863**	1	PIN-SPRING	
		3	**7T-4155**	1	BEARING-SLEEVE	
	16	3	**6P-7379**	1	HOUSING AS	
		3	**8B-1312**	3	DOWEL	
	17	3	**9W-2977**	1	HUB AS	
		3	**4S-8537**	1	DOWEL	
	18	3	**6I-9255**	5	DISC-FRICTION	
R	19	3	**3P-7489**	4	PLATE-CLUTCH	
	20	3	**8M-5266**	1	SEAL-O-RING (24.77MM ID)	
	21	3	**3P-2685**	2	PISTON-CLUTCH	
	22	3	**3P-2791**	1	HOUSING-CLUTCH	
	23	3	**3P-3738**	1	HOUSING AS-CLUTCH	
		3	**7M-8480**	4	DOWEL	
	24	3	**9P-5531**	1	GEAR-SUN (50 TEETH)	
	25	3	**7G-6772**	1	CARRIER AS	
		3	**2D-6642**	2	BALL	
	26	3	**108-2735**	1	LOCK RING	
	27	3	**9M-4355**	20	DAMPER-BOLT	
	28	3	**9M-1503**	1	RING-METAL SEAL	
	29	3	**8F-8544**	2	BOLT (3/8-16X6.25IN)	
	30	3	**0S-1608**	2	BOLT (3/8-16X3.75 IN)	
	31	3	**5M-6187**	1	RING-METAL SEAL	
	32	3	**6S-1753**	1	RING-RETAINING	
	33	3	**7G-5746**	1	HOUSING-CLUTCH	
	34	3	**8P-0056**	2	SLEEVE	
	35	3	**3P-3059**	1	GEAR-SUN (42 TEETH)	
	36	3	**112-7308**	1	CARRIER-PLANETARY	
	37	3	**108-2736**	2	LOCK RING	
	38	3	**166-3544**	1	PLATE AS	
		3	**7M-5130**	1	PIN-SPRING	
		3	**8T-1443**	1	DOWEL (14.1MM OD X 31.75MM LONG)	
		3	**8T-1444**	2	DOWEL (14.1MM OD X 50.8MM LONG)	
	39	3	**8P-4617**	1	SEAL-METAL RING	
	40	3	**6Y-9955**	1	TUBE AS	
	41	3	**7B-3235**	1	BOLT (1/2-13X1.375 IN)	
	42	3	**3T-2139**	1	HOUSING AS-CLUTCH	
		3	**9S-1343**	1	PLUG-CUP	
	43	3	**9W-6099**	1	PISTON-CLUTCH	

163-5297 PLANETARY GP-TRANSMISSION *(contd.)* i01421860

NOTE	REF NO	GRAPHIC REF	PART NUMBER	QTY	PART NAME 1 2 3 4 5 6 (PRODUCT LEVEL)	SEE PAGE
	44	3	**6T-3726**	1	CARRIER AS	
		3	**4S-8537**	1	DOWEL	
	45	3	**3P-3321**	2	SEAL-METAL RING	
	46	3	**8S-9104**	2	RING-RETAINING	
	47	3	**9F-3788**	1	RING-METAL SEAL	
	48	3	**106-7798**	2	BALL BEARING	
	49	3	**9G-1918**	1	GEAR-SUN (34 TEETH)	
	50	3	**6F-0156**	1	RING-METAL SEAL	
	51	3	**8K-2692**	1	RING-RETAINING	
	52	3	**6P-3458**	1	SPACER	
	53	2	**8M-5661**	1	SEAL-O-RING (47.22MM ID)	
	54	3	**8C-6761**	1	RING-RETAINING	
	55	2	**2D-5658**	1	BALL BEARING	
	56	2	**112-4511**	4	PIN-SPRING	
	57	2	**8M-4390**	2	SEAL-O-RING (56.74MM ID)	
	58	2	**5P-6254**	4	BEARING	
	59	2	**8P-4047**	4	SHAFT-PLANETARY	
	60	2	**3S-2708**	8	PIN-SPRING	
	61	2	**9G-1919**	4	GEAR (25 TEETH)	
	62	2	**7G-4818**	1	RING-SEAL	
	63	2	**8E-8310**	24	DISC-THRUST	
	64	2	**6T-3720**	1	GEAR-RING	
	65	2	**9W-5768**	1	GEAR-RING (86 TEETH)	
	66	2	**9W-8297**	6	DOWEL	
	67	2	**8E-2729**	4	DISC AS-FRICTION	
R	68	2	**3P-7447**	10	PLATE-CLUTCH	
	69	2	**7H-7658**	12	SPRING	
	70	2	**7G-3435**	1	GEAR-RING (90 TEETH)	
	71	2	**9W-9856**	5	DISC AS-FRICTION	
	72	2	**112-7309**	4	SHAFT-PLANETARY	
	73	2	**5M-7925**	8	BEARING-ROLLER	
	74	2	**9W-6098**	1	PISTON-CLUTCH	
	75	2	**7G-4817**	1	RING-SEAL	
	76	2	**7G-3457**	8	GEAR (25 TEETH)	
	77	2	**3P-3098**	1	GEAR-RING (90 TEETH)	
	78	2	**9H-5537**	24	SPRING	
	79	2	**9W-8298**	6	DOWEL	
	80	1	**6P-6739**	4	SHAFT-PLANETARY	
	81	1	**5M-6126**	4	BEARING	
	82	1	**8E-8304**	8	DISC-THRUST	
	83	1	**7G-2476**	4	GEAR (20 TEETH)	
	84	1	**6P-5751**	1	GEAR-RING (90 TEETH)	
	85	2	**169-7055**	5	DISC-CLUTCH	
	86	2	**3P-2793**	4	SEAL-RING	
	87	2	**3P-2794**	2	SEAL-RING	
	88	2	**5M-7900**	16	BOLT (7/16-14X14 IN)	
		2	**2S-8926**	1	BOLT (1/2-13X13.375IN)	
	89	1	**8P-6997**	3	SPRING-DISC	
	90	1	**8P-6986**	1	PLATE-RETAINER	
	91	1	**5P-3119**	1	RING-RETAINING	
	92	1	**5P-3150**	1	RING-RETAINING	
	93	2	**9W-6991**	2	RING-SEAL	
	94	2	**7T-5617**	1	SEAL AS	
	95	2	**165-5632**	1	SHAFT AS-OUTPUT	
	96	2	**3P-3103**	1	CARRIER-RING	
	97	2	**5P-6721**	1	BEARING-ROLLER	
	98	2	**6Y-9959**	1	SHAFT-TRANSMISSION INPUT	
Y	99	1	**193-2550**	1	SENSOR GP-SPEED (TRANSMISSION OUTPUT)	340
	100	2	**165-5629**	1	ROTOR	

163-5297 **PLANETARY GP-TRANSMISSION** *(contd.)* **i01421860**

NOTE	REF NO	GRAPHIC REF	PART NUMBER	QTY	PART NAME 1 2 3 4 5 6 (PRODUCT LEVEL)	SEE PAGE
	101	2	**7J-6525**	2	RING-RETAINING	
	102	2	**165-5631**	1	BRACKET	
	103	2	**2P-3538**	1	SEAL-O-RING (85.32MM ID)	
	104	1	**166-7262**	1	HARNESS AS	
		1	**3S-2093**	2	STRAP-CABLE	
		1	**4P-7429**	2	CLIP	
		1	**155-2270**	2	KIT-CONNECTING PLUG (2 PIN)	
					(EACH INCLUDES PLUG AS, WEDGE & INTERFACE SEAL)	
	105	1	**166-7265**	1	CLIP AS	
	106	1	**2H-3855**	2	BOLT (1/2-13X0.875IN)	
	107	2	**2J-3118**	2	BOLT-LOCKING (3/8-16X1.25 IN)	

R-REMFG PART MAY BE AVAILABLE
Y-SEPARATE ILLUSTRATION

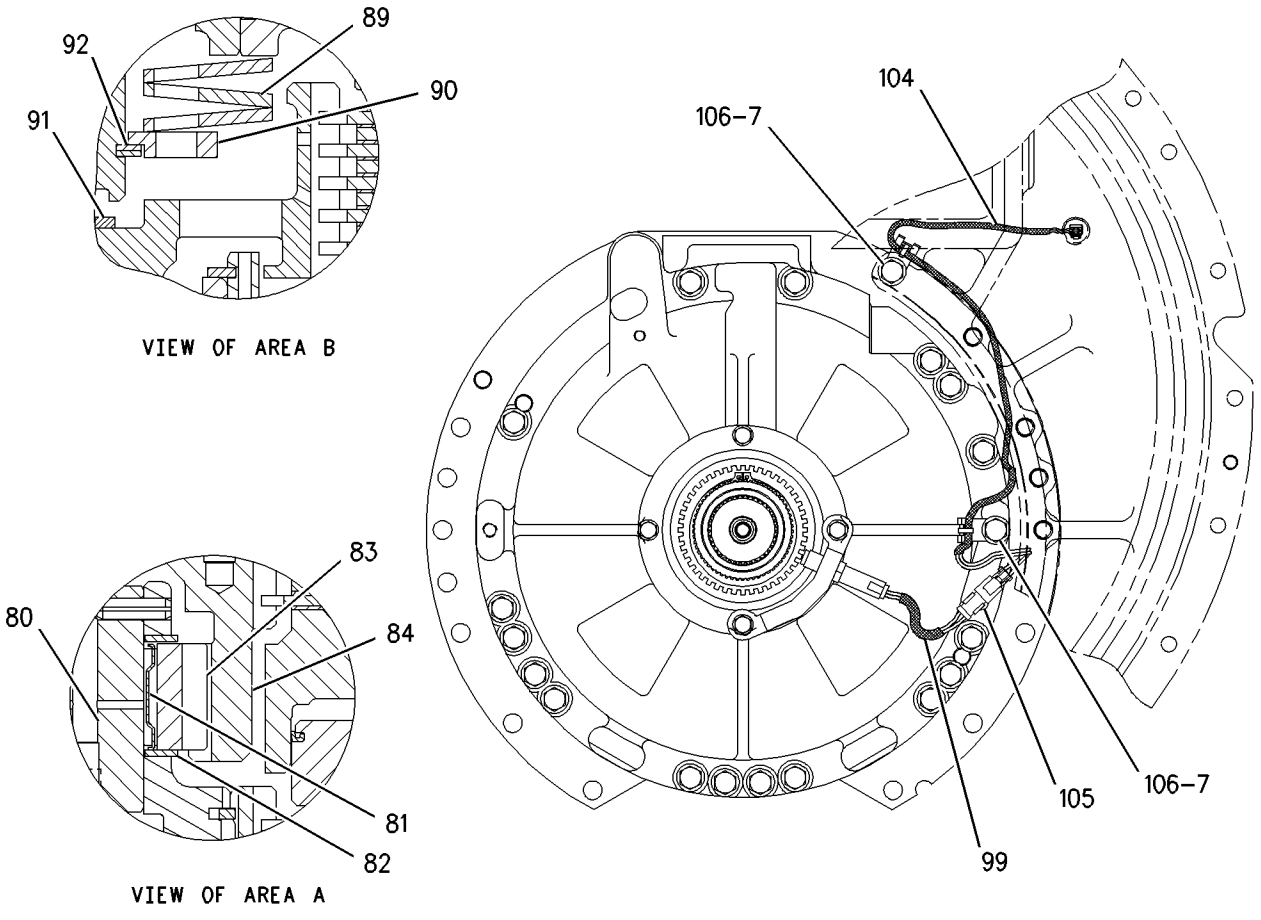

GRAPHIC #1 g00681443

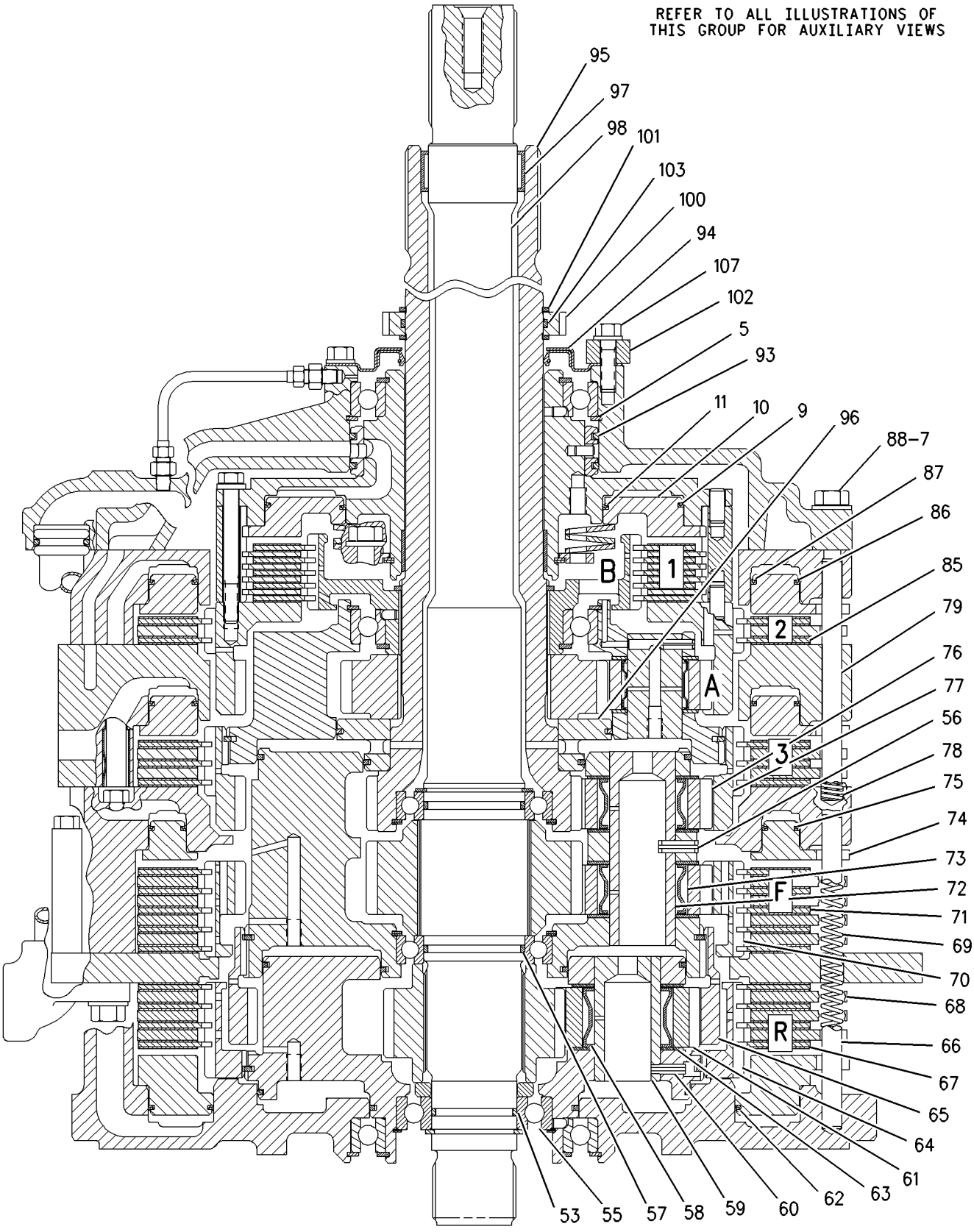

GRAPHIC #2

g00681444

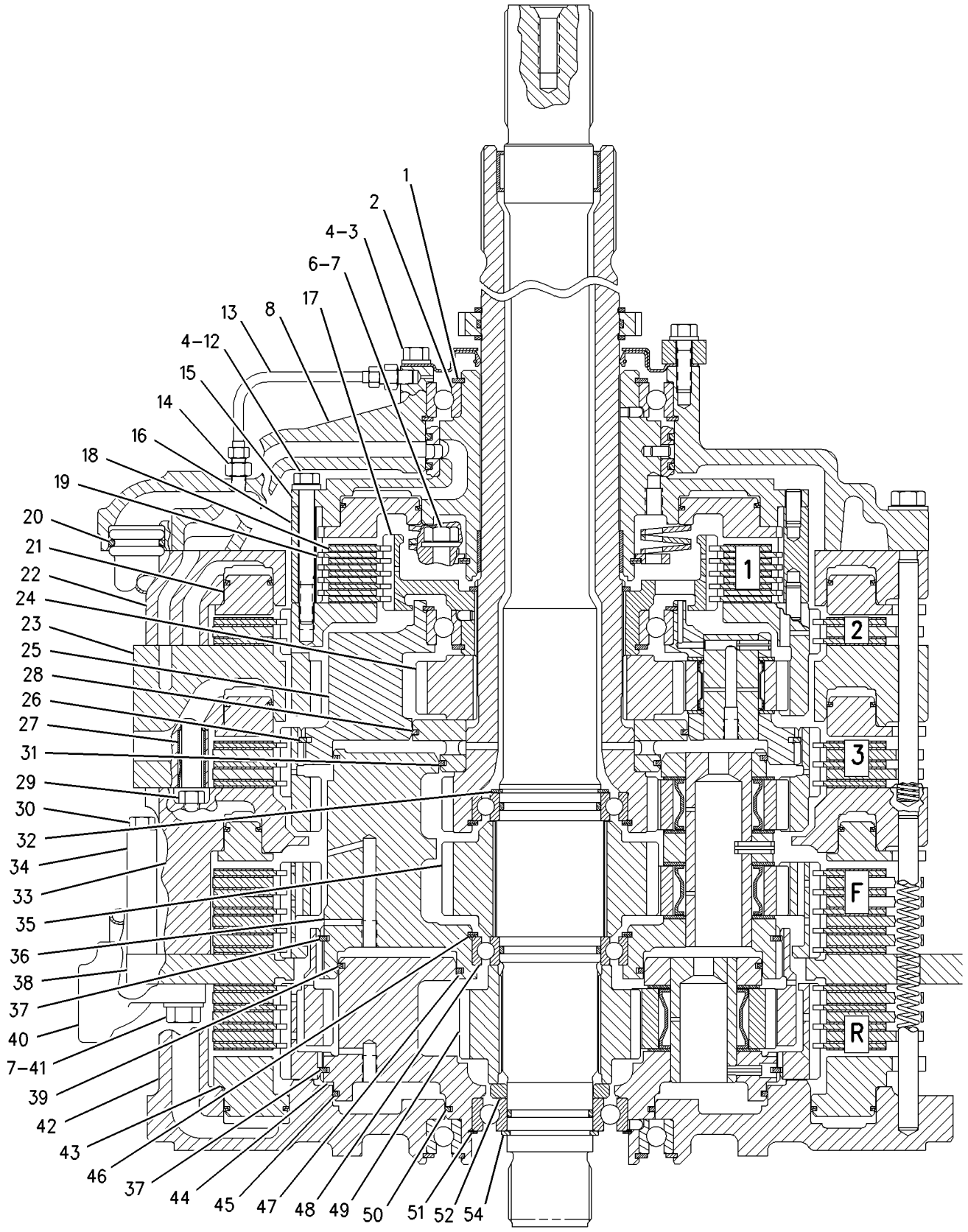

GRAPHIC #3

g00681445

162-9503 POWER TRAIN AR

S/N: ABK1-UP

PART OF 162-9500 GENERAL AR

SMCS-3000 **i01445924**

NOTE	PART NUMBER	QTY	PART NAME 1 2 3 4 5 6 (PRODUCT LEVEL)	SEE PAGE
Y	*9W-9154*	1	AXLE GP-POWER TRAIN	384
YR	**8E-2231**	2	BRAKE GP-SERVICE	564
Y	*162-9507*	1	CONTROL AR-HYDRAULIC STEERING	566
Y	*6Y-4957*	1	CONTROL GP-FOOT BRAKE	568
Y	*163-9280*	1	CONTROL GP-STEERING	570
Y	*6Y-4941*	1	COUPLING GP-PUMP	393
Y	*6Y-9052*	1	DRIVE GP-STEERING	578
Y	*164-4210*	2	FINAL DRIVE GP	398
Y	*164-9919*	1	LINES GP-POWER TRAIN OIL	416
Y	*8E-7695*	1	MOUNTING GP-TRANSMISSION	420
Y	*8E-8545*	1	SHAFT GP-DRIVE	433
Y	**163-9364**	1	TORQUE CONVERTER GP	440
Y	*163-5294*	1	TRANSMISSION AR	442

R-REMFG PART MAY BE AVAILABLE
Y-SEPARATE ILLUSTRATION

160-6416 PUMP GP-GEAR

S/N: ABK1-UP
3 SECTION
PART OF 164-9919 LINES GP-POWER TRAIN OIL

SMCS-3115, 3153 **i01445918**

NOTE	REF NO	GRAPHIC REF	PART NUMBER	QTY	PART NAME 1 2 3 4 5 6 (PRODUCT LEVEL)	SEE PAGE
Y	1	1	**160-6417**	1	PUMP GP-GEAR (3 SECTION) (TMSN SCAV/TMSN CHRG/CONV CHRG)	430
	2	1	**2M-3974**	1	RING-RETAINING	
	3	1	**5P-9439**	1	BALL BEARING	
	4	1	**3T-5356**	1	CAGE-BEARING	
	5	1	**6H-3977**	1	SEAL-O-RING (72.6MM ID)	
	6	1	**111-4919**	1	SEAL-LIP TYPE	
	7	1	**6L-4783**	4	BOLT-12 POINT HEAD (5/16-18X1.25 IN)	
	8	1	**8E-8549**	1	FLANGE	
	9	1	**5H-4279**	1	PLUG-CUP	

Y-SEPARATE ILLUSTRATION

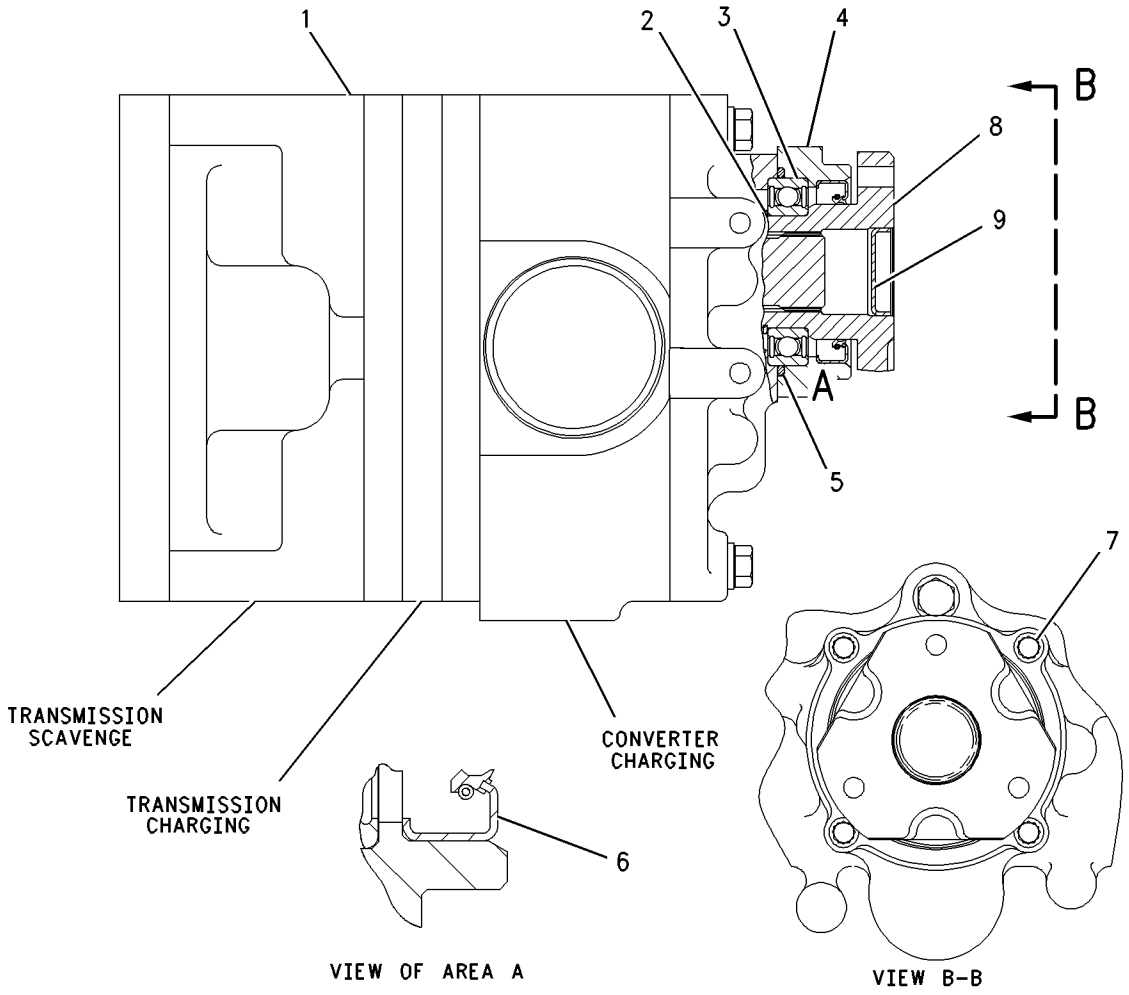

GRAPHIC #1 g00680638

MEMORANDA

160-6417 PUMP GP-GEAR

S/N: ABK1-UP
3 SECTION
PART OF 160-6416 PUMP GP-GEAR

SMCS-3115, 3153 **i01445919**

NOTE	REF NO	GRAPHIC REF	PART NUMBER	QTY	PART NAME 1 2 3 4 5 6 (PRODUCT LEVEL)	SEE PAGE
	1	1	**8E-4471**	1	COVER-OIL PUMP	
	2	1	**160-6609**	1	BODY AS-OIL PUMP (TRANSMISSION SCAVENGE)	
	2A	1	**131-0167**	2	BEARING-SLEEVE	
	3	1	**2B-9373**	1	KEY-WOODRUFF	
	4	1	**134-8213**	2	BODY AS-OIL PUMP (TRANSMISSION CHARGING)	
					(EACH INCLUDES)	
	4A	1	**9M-4388**	2	DOWEL	
	5	1	**9G-1496**	1	SPACER-OIL PUMP	
	6	1	**1B-8705**	2	KEY-WOODRUFF	
	7	1	**160-6611**	1	BODY AS-OIL PUMP (CONVERTER CHARGING)	
	7A	1	**131-0167**	2	BEARING-SLEEVE	
	7B	1	**8M-8489**	2	DOWEL	
	8	1	**8E-4830**	1	COVER AS-OIL PUMP	
	8A	1	**1M-3780**	2	BEARING-SLEEVE	
	9	1	**9U-9330**	1	GEAR AS-OIL PUMP (12 TEETH)	
	10	1	**9U-9329**	1	GEAR AS-OIL PUMP (12 TEETH)	
	11	1	**5M-2894**	6	WASHER-HARD (10.2X18.5X2.5MM THK)	
	12	1	**9G-1499**	4	GEAR-OIL PUMP (8 TEETH)	
	13	1	**3T-1447**	2	GEAR-OIL PUMP (8 TEETH)	
	14	1	**2D-8009**	6	SEAL-O-RING (142.47MM ID)	
	15	1	**8M-5248**	6	SEAL-O-RING (28.17MM ID)	
	16	1	**1H-5728**	1	SEAL-O-RING (63MM ID)	
	17	1	**5F-6044**	4	BOLT (3/8-16X9 IN)	
	18	1	**4H-3283**	2	BOLT (3/8-16X9.5IN)	
	19	1	**5M-4987**	2	DOWEL	

160-6417 PUMP GP-GEAR *(contd.)* **i01445919**

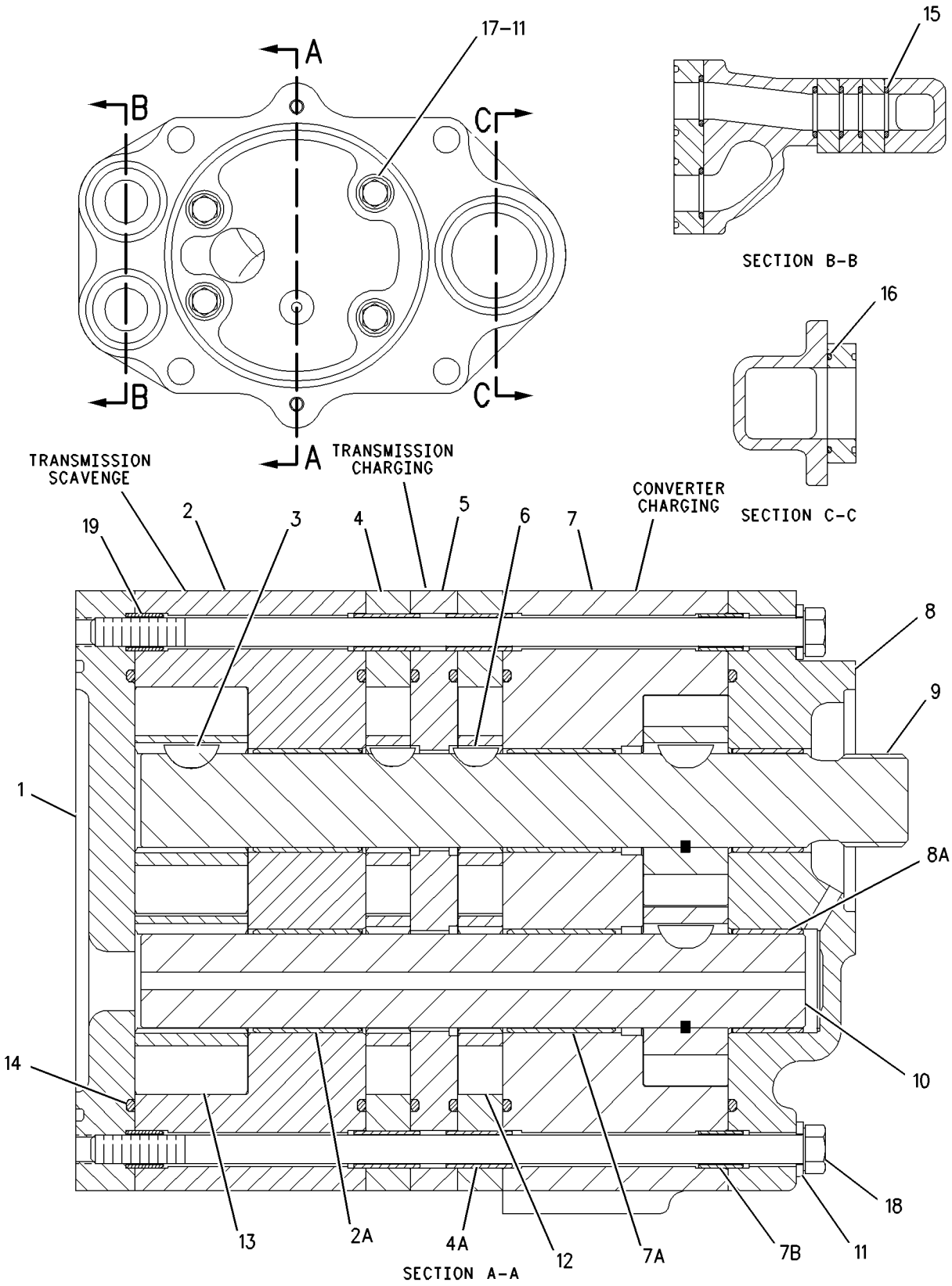

GRAPHIC #1 g00680565

160-4927 SEGMENT GP-SPROCKET

S/N: ABK1-UP
PART OF 164-4210, 192-9147 FINAL DRIVE GP
ALSO AN ATTACHMENT

SMCS-4155 **i01629838**

NOTE	REF NO	GRAPHIC REF	PART NUMBER	QTY	PART NAME 1 2 3 4 5 6 (PRODUCT LEVEL)	SEE PAGE
	1	1	**7H-3609**	30	NUT (7/8-14 THD)	
	2	1	**7T-1248**	30	BOLT (7/8-14X2.9 IN)	
	3	1	**160-4926**	5	SEGMENT-SPROCKET	
	4	1	**5P-8249**	30	WASHER-HARD (24X41.5X4MM THK)	

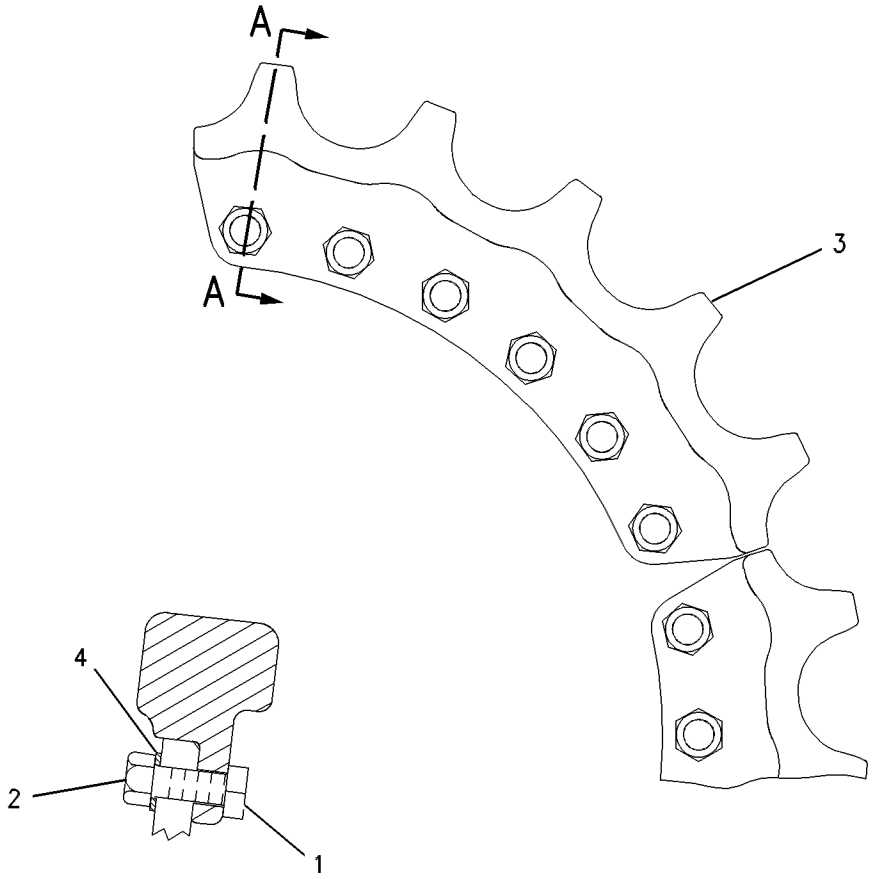

SECTION A-A

GRAPHIC #1 g00561254

8E-8545 SHAFT GP-DRIVE

S/N: ABK1-UP

PART OF 162-9503 POWER TRAIN AR

SMCS-3253 **i00590363**

NOTE	REF NO	GRAPHIC REF	PART NUMBER	QTY	PART NAME 1 2 3 4 5 6 (PRODUCT LEVEL)	SEE PAGE
	1	1	**7D-1677**	1	RACE-BEARING INNER	
	2	1	**8E-9487**	1	YOKE AS	
		1	**4F-8503**	1	PLUG-CUP	
Y	3	1	**8E-8562**	1	UNIVERSAL JOINT GP	443
	4	1	**0S-0484**	8	BOLT (1/2-20X2.25IN)	

Y-SEPARATE ILLUSTRATION

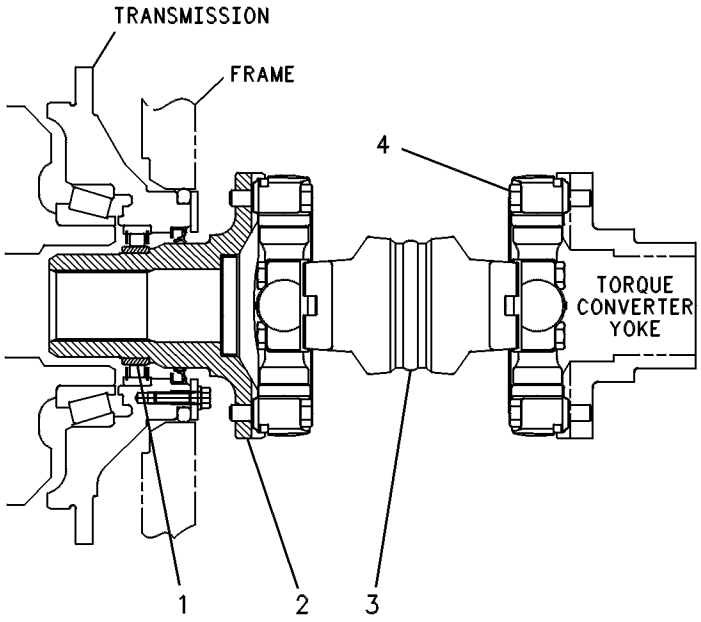

GRAPHIC #1 g00240038

8E-8546 SLIP JOINT GP

S/N: ABK1-UP

PART OF 6Y-4941 COUPLING GP-PUMP

SMCS-3251, 3253 **i00590370**

NOTE	REF NO	GRAPHIC REF	PART NUMBER	QTY	PART NAME 1 2 3 4 5 6 (PRODUCT LEVEL)	SEE PAGE
	1	1	**8E-8547**	1	YOKE	
	2	1	**8E-8548**	1	YOKE	
	3	1	**5H-4279**	1	PLUG-CUP	
	4	1	**2J-8333**	1	SEAL-LIP	

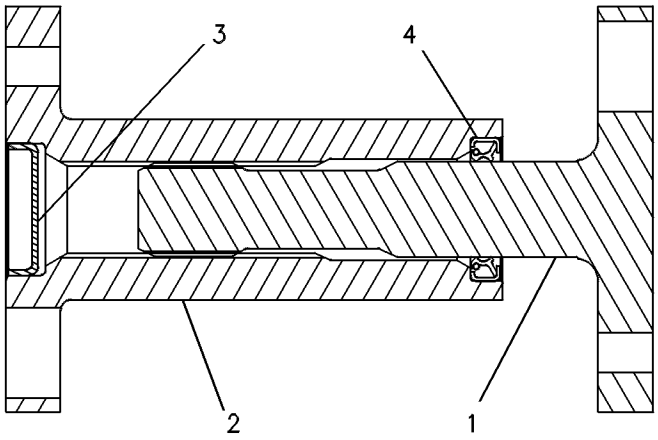

GRAPHIC #1 g00239992

MEMORANDA

POWER TRAIN

163-9362 TORQUE CONVERTER GP

S/N: 6ZT1-UP

PART OF 163-9363 TORQUE CONVERTER GP

SMCS-3101, 3102, 3105, 3127, 3128, 3129, 3130, 3131, 3134, 3135, 3136

i01591088

NOTE	REF NO	GRAPHIC REF	PART NUMBER	QTY	PART NAME 1 2 3 4 5 6 (PRODUCT LEVEL)	SEE PAGE
	1	1	**3T-3811**	1	SUPPORT-STATOR	
	2	1	**7G-6115**	1	PLATE-THRUST	
	3	1	**8E-8159**	1	CARRIER-STATOR	
	4	1	**2L-3650**	5	PIN-SPRING	
	5	1	**6H-1717**	36	BOLT (1/2-13X1.125 IN)	
	6	1	**5P-8245**	36	WASHER-HARD (13.5X25.5X3MM THK)	
	7	1	**7T-7678**	1	STATOR-CONVERTER	
	8	1	**7G-6059**	1	CARRIER-RING	
	9	1	**9W-6991**	2	RING-SEAL	
	10	1	**6H-3956**	1	PIN	
	11	1	**9P-6477**	1	IMPELLER-CONVERTER	
	12	1	**165-7783**	1	FLANGE AS	
		1	**9M-4007**	2	DOWEL	
		1	**9S-4191**	2	PLUG-STRAIGHT THREAD	
		1	**033-6042**	2	SEAL-O-RING	
	13	1	**7G-6114**	1	SLEEVE-WEAR	
	14	1	**8E-8160**	1	HUB-IMPELLER	
	15	1	**1A-5822**	12	BOLT (1/2-13X2.75 IN)	
	16	1	**4F-2041**	1	CUP-BEARING	
	17	1	**2D-9457**	1	CONE-BEARING	
	18	1	**9U-9100**	1	RACE-FREEWHEEL	
	19	1	**9S-4368**	1	RING-RETAINING	
	20	1	**1T-1423**	1	CAM-FREEWHEEL	
	21	1	**1T-1910**	2	PLATE-SIDE	
	22	1	**1T-0795**	3	RING-RETAINING	
	23	1	**1T-1410**	13	ROLLER-FREEWHEEL	
	24	1	**1T-0680**	13	SPRING-FREEWHEEL	
	25	1	**1T-0786**	2	BEARING-THRUST	
	26	1	**1T-0807**	2	RACE-THRUST BEARING	
	27	1	**1T-0806**	2	RETAINER-BEARING	
	28	1	**8E-8153**	1	HUB-TURBINE	
	29	1	**8P-9265**	1	TURBINE-CONVERTER	
	30	1	**9U-8241**	1	BALL BEARING	
	31	1	**8E-8161**	1	CARRIER-SEAL	
	32	1	**5P-5297**	1	RING-RETAINING	
	33	1	**8E-8155**	1	FLANGE AS	
		1	**1T-0278**	2	BEARING-SLEEVE	
	34	1	**8E-8157**	1	SPACER	
	35	1	**5P-3629**	1	RING-RETAINING	
	36	1	**8E-8152**	1	HOUSING-ROTATING	
	37	1	**8E-8162**	1	SLEEVE	
	38	1	**117-8806**	1	RING-RETAINING	
	39	1	**1A-2029**	36	BOLT (3/8-16X1.125 IN)	
	40	1	**5M-2894**	36	WASHER-HARD (10.2X18.5X2.5MM THK)	
	41	1	**6V-4315**	1	SEAL-O-RING	

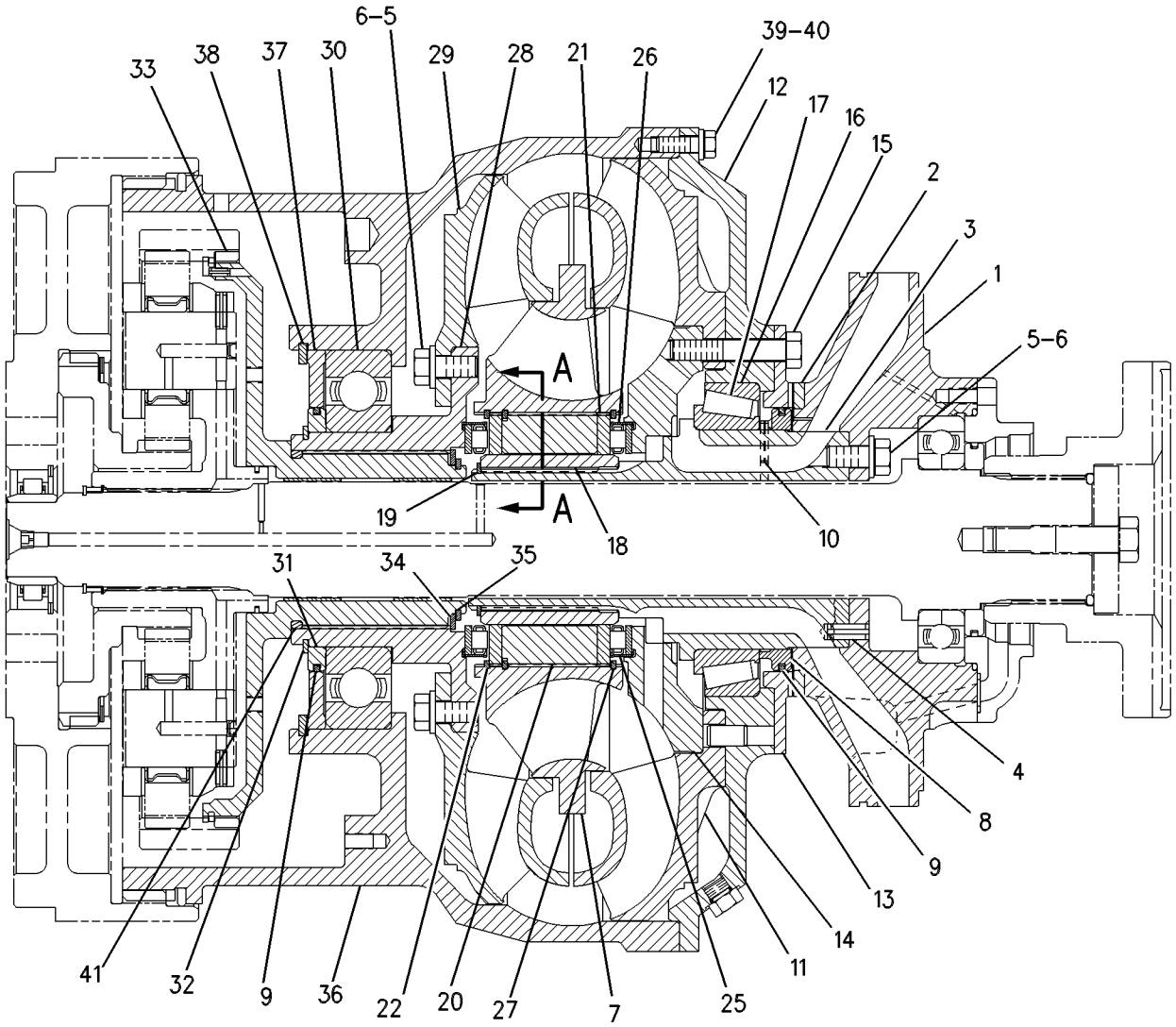

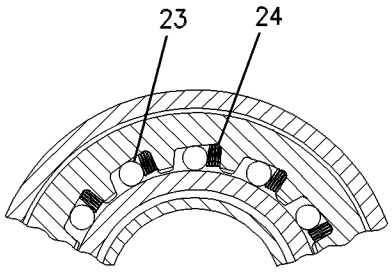

SECTION A-A

GRAPHIC #1 g00567328

163-9363 TORQUE CONVERTER GP

S/N: 6ZT1-UP

PART OF 163-9364 TORQUE CONVERTER GP

SMCS-3101, 3102, 3105, 3127, 3128, 3129, 3130, 3131, 3134, 3135, 3136

i01445976

NOTE	REF NO	GRAPHIC REF	PART NUMBER	QTY	PART NAME 1 2 3 4 5 6 (PRODUCT LEVEL)	SEE PAGE
Y	1	1	*163-9362*	1	TORQUE CONVERTER GP	436
	2	1	**9M-2076**	1	RING-SNAP	
	3	1	**9M-2074**	1	GEAR-RING	
	4	1	**5H-8985**	2	PIN-SPRING	
	5	1	**106-7099**	1	CARRIER-PLANETARY	
	6	1	**6L-6560**	1	RING-RETAINING	
	7	1	**9P-4057**	1	SPACER	
	8	1	**8J-8322**	1	RING-RETAINING (52.73MM ID)	
	9	1	**6P-3901**	3	SHAFT AS	
					(EACH INCLUDES)	
		1	**2A-3746**	1	PLUG-CUP	
	10	1	**8E-8316**	6	DISC-THRUST	
	11	1	**7G-5622**	3	GEAR-PLANETARY (35 TEETH)	
	12	1	**1S-9110**	3	ROLLER AS	
	13	1	**3S-2708**	3	PIN-SPRING	
	14	1	**5P-5405**	1	RACE-BEARING INNER	
	15	1	**104-4485**	1	SHAFT AS	
		1	**5J-7386**	1	PLUG-ORIFICE (1/8-27 THD)	
	16	1	**7L-9061**	1	SEAL-O-RING (18.72MM ID)	
	17	1	**6Y-5888**	1	RING-SEAL	
	18	1	**8P-5056**	1	CARRIER-RING	
	19	1	**8P-5189**	1	RETAINER-BEARING	
	20	1	**1A-2029**	8	BOLT (3/8-16X1.125 IN)	
	21	1	**5M-2894**	8	WASHER-HARD (10.2X18.5X2.5MM THK)	
	22	1	**6V-5553**	1	SEAL-O-RING (151.99MM ID)	
	23	1	**6V-9176**	1	BALL BEARING	
	24	1	**1T-0141**	1	RING-METAL SEAL	

Y-SEPARATE ILLUSTRATION

163-9363 **TORQUE CONVERTER GP** ***(contd.)*** **i01445976**

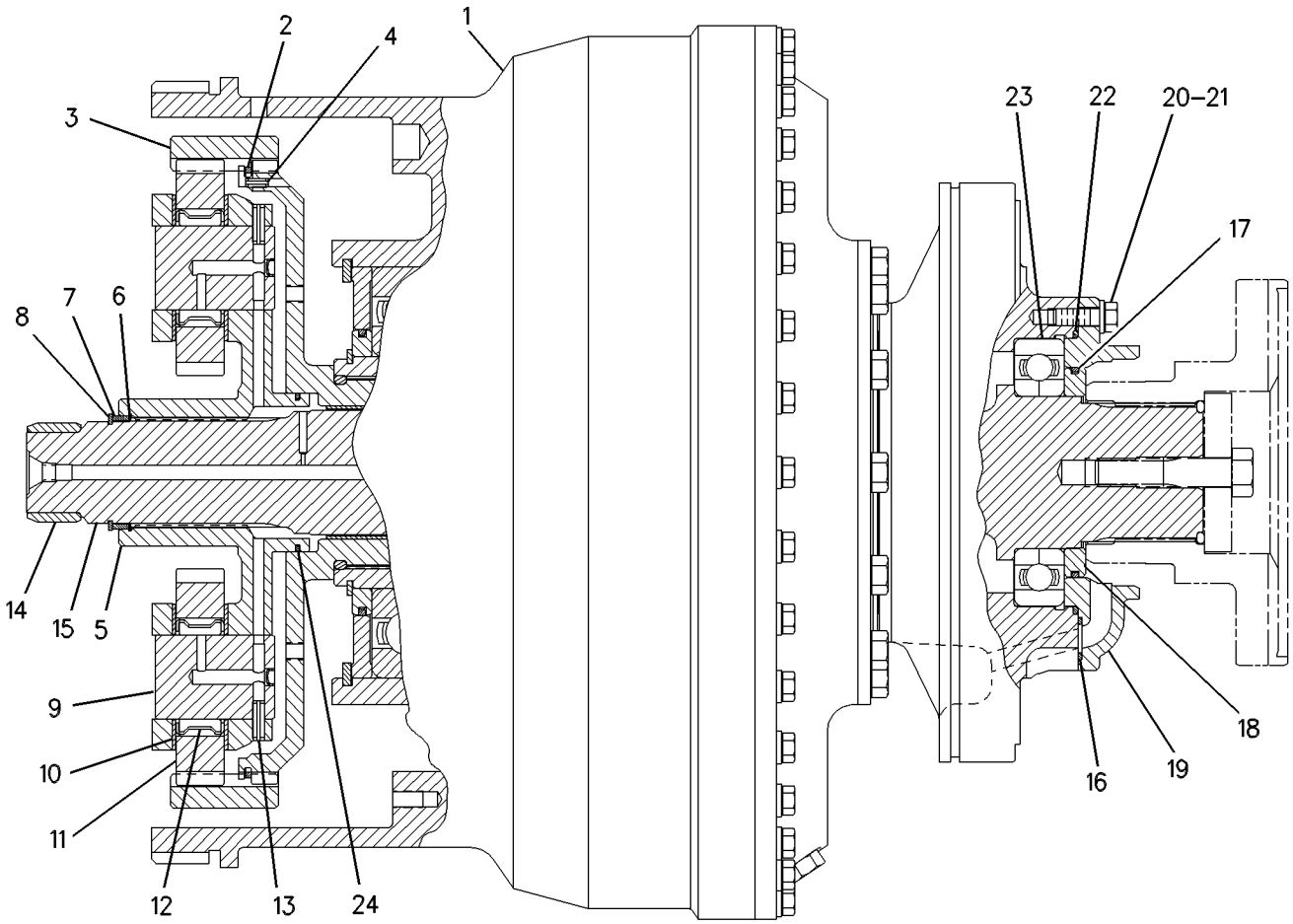

GRAPHIC #1 g00567261

POWER TRAIN

163-9364 TORQUE CONVERTER GP

S/N: ABK1-UP

PART OF 162-9503 POWER TRAIN AR

SMCS-3101, 3102, 3105, 3127, 3128, 3129, 3130, 3131, 3134, 3135, 3136 **i01590665**

NOTE	REF NO	GRAPHIC REF	PART NUMBER	QTY	PART NAME 1 2 3 4 5 6 (PRODUCT LEVEL)	SEE PAGE
Y	1	1	*163-9363*	1	TORQUE CONVERTER GP	438
	2	1	**8E-8158**	1	COVER-TORQUE CONVERTER	
	3	1	**0S-1585**	12	BOLT (1/2-13X1.50 IN)	
	4	1	**5P-8245**	12	WASHER-HARD (13.5X25.5X3MM THK)	
	5	1	**4M-8910**	1	RING-RETAINING	
	6	1	**2K-5254**	1	BEARING-OUTER	
	7	1	**8E-7838**	1	GEAR-SUN (35 TEETH)	
	8	1	**7X-2623**	1	RING-RETAINING	
	9	1	**3D-8241**	1	SEAL-O-RING	
	10	1	**165-4854**	1	SEAL-O-RING	
	11	1	**6P-8339**	1	LOCK	
	12	1	**6P-8340**	1	SLEEVE	
	13	1	**5S-7379**	1	BOLT (3/8-16X0.875 IN)	
	14	1	**8T-4896**	1	WASHER-HARD (10.2X18.5X2.5MM THK)	
	15	1	**8S-9130**	1	SCREEN-SUCTION	
Y	16	1	**106-4150**	1	DRAIN GP-ECOLOGY	394
	17	1	**8T-2501**	4	BOLT (3/8-16X2 IN)	
	18	1	**2B-0858**	1	PLUG-PIPE	
	19	1	**165-4852**	2	SEAL-O-RING	
	20	1	**9S-4191**	1	PLUG-STRAIGHT THREAD	
	21	1	**033-6042**	1	SEAL-O-RING	
	22	1	**3P-0653**	1	SEAL-O-RING	
	23	1	**8P-6083**	1	YOKE-UNIVERSAL JOINT	
	24	1	**9S-4372**	1	RETAINER	
	25	1	**1B-4367**	1	BOLT (5/8-11X3 IN)	
	26	1	**8T-8919**	1	BOLT (1/2-13X1.75 IN)	
	27	1	**8C-3075**	1	SEAL-LIP	
	28	1	**8T-4223**	12	WASHER-HARD (13.5X25.5X3MM THK)	
	29	1	**5P-2566**	11	BOLT (1/2-13X1.5 IN)	
	30	1	**8E-8994**	1	SEAL-RING	
	31	1	**6V-1196**	1	SEAL-O-RING	

Y-SEPARATE ILLUSTRATION

163-9364 **TORQUE CONVERTER GP** ***(contd.)*** **i01590665**

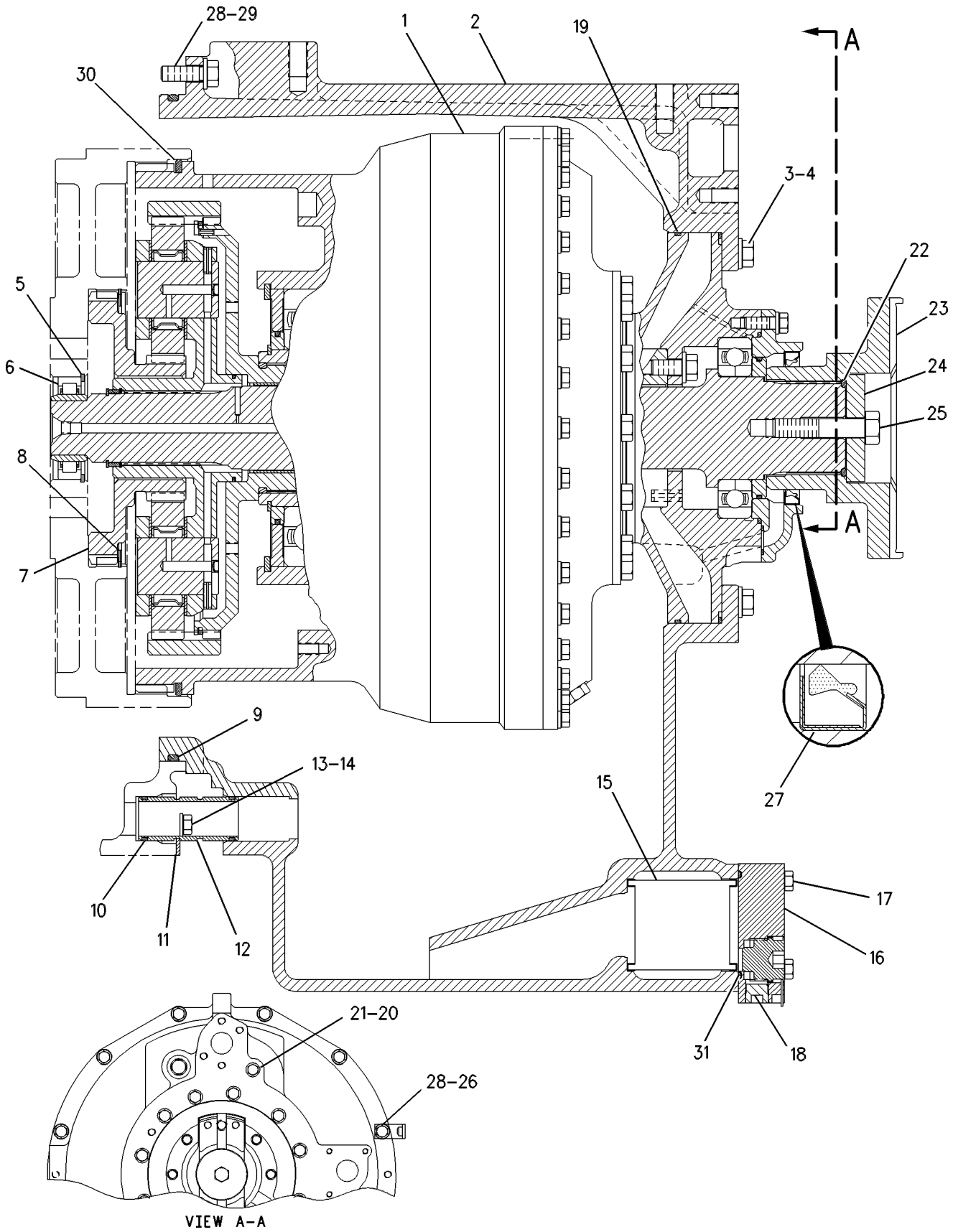

GRAPHIC #1

g00567267

163-5294 TRANSMISSION AR

S/N: 4XX1-UP

PART OF 162-9503 POWER TRAIN AR

SMCS-3030, 3060, 3160 **i01445971**

NOTE	PART NUMBER	QTY	PART NAME 1 2 3 4 5 6 (PRODUCT LEVEL)	SEE PAGE
Y	*163-5298*	1	CASE & PARTS GP-PLANETARY	386
Y	*9W-8626*	1	CONTROL GP-TRANSMISSION HYD	390
Y	*166-0666*	1	DRIVE GP-DIFFERENTIAL STEERING	576
Y	*6Y-9047*	1	GEAR GP-BEVEL & TRANSFER	410
Y	*163-5297*	1	PLANETARY GP-TRANSMISSION	422

Y-SEPARATE ILLUSTRATION

8E-8562 UNIVERSAL JOINT GP

S/N: ABK1-UP

PART OF 8E-8545 SHAFT GP-DRIVE

SMCS-3251, 3253 **i01446697**

NOTE	REF NO	GRAPHIC REF	PART NUMBER	QTY	PART NAME 1 2 3 4 5 6 (PRODUCT LEVEL)	SEE PAGE
	1	1	**9P-4809**	2	SPIDER & BEARING AS	
	2	1	**0S-0484**	8	BOLT (1/2-20X2.25IN)	
		1	**5P-7213**	8	WASHER-HARD (13.5X20.5X2MM THK)	

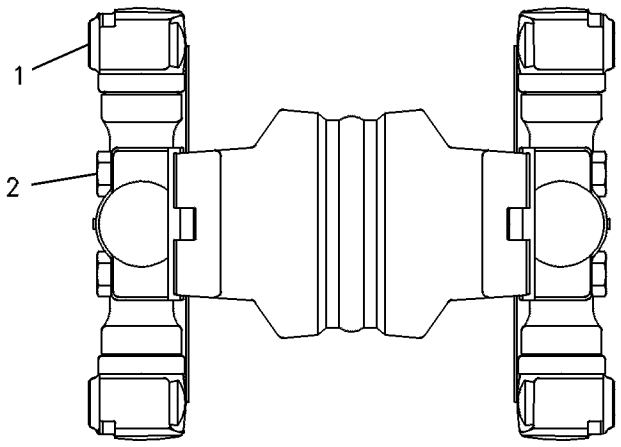

GRAPHIC #1 g00240001

192-0729 VALVE & MTG GP-PILOT

S/N: ABK1-UP

PART OF 168-9243 LINES GP-OIL SUPPLY

SMCS-5059 **i01431506**

NOTE	REF NO	GRAPHIC REF	PART NUMBER	QTY	PART NAME 1 2 3 4 5 6 (PRODUCT LEVEL)	SEE PAGE
	1	1	**175-3616**	1	MANIFOLD AS	
	1A	1	**6V-0852**	1	CAP-DUST	
	1B	1	**6V-3965**	1	FITTING AS (QUICK DISCONNECT)	
Y	2	1	**176-5321**	1	VALVE GP-MODULATING	447

Y-SEPARATE ILLUSTRATION

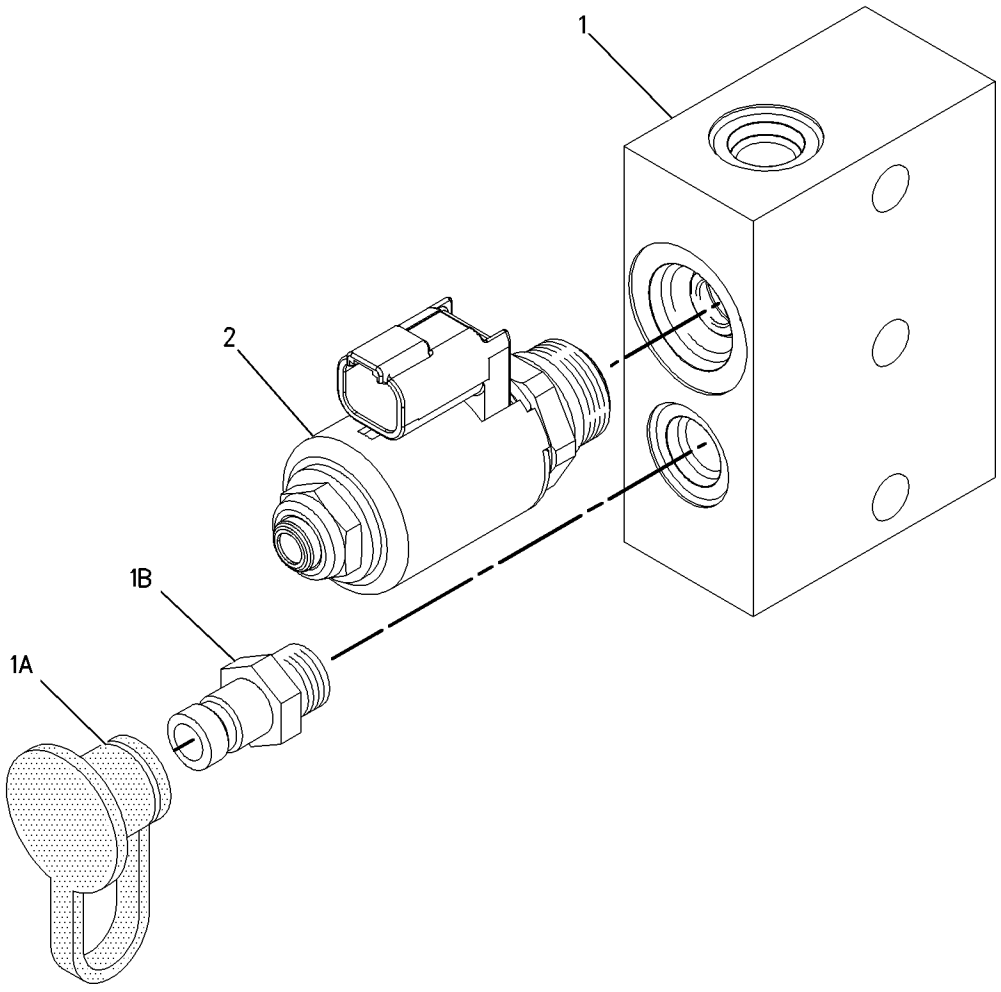

GRAPHIC #1 g00756312

9W-8625 VALVE GP

S/N: 4XX1-UP

PART OF 9W-8626 CONTROL GP-TRANSMISSION HYD

SMCS-3073 **i00591814**

NOTE	REF NO	GRAPHIC REF	PART NUMBER	QTY	PART NAME 1 2 3 4 5 6 (PRODUCT LEVEL)	SEE PAGE
	1	1	**6P-6877**	1	MANIFOLD-BOTTOM	
	2	1	**6T-7628**	1	PLATE-DIVIDER	
Y	3	1	**108-2224**	1	VALVE GP-SELECTOR & PRESS CONT	450
	4	1	**6T-7630**	1	MANIFOLD	
	5	1	**5L-1761**	26	BOLT (5/16-18X5.5IN)	
		1	**9M-1974**	26	WASHER-HARD (2MM THK)	
	6	1	**5M-6214**	4	PLUG-PIPE (1/8-27 THD)	

Y-SEPARATE ILLUSTRATION

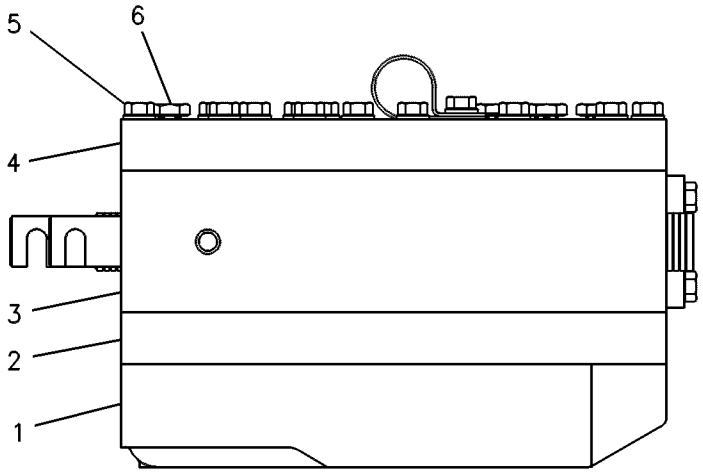

GRAPHIC #1 g00240064

119-6114 VALVE GP-FLUSHING

S/N: ABK1-UP

PART OF 171-3065 ROTATING GP-MOTOR

SMCS-5066 **i00591895**

NOTE	REF NO	GRAPHIC REF	PART NUMBER	QTY	PART NAME 1 2 3 4 5 6 (PRODUCT LEVEL)	SEE PAGE
	1	1	**119-6109**	1	PLATE	
	2	1	**6E-4100**	1	PIN-FLUSHING	
	3	1	**119-6110**	2	RETAINER	
	4	1	**6E-4102**	2	SPRING	
	5	1	**119-6112**	2	PIN	
	6	1	**119-6113**	2	BUSHING	

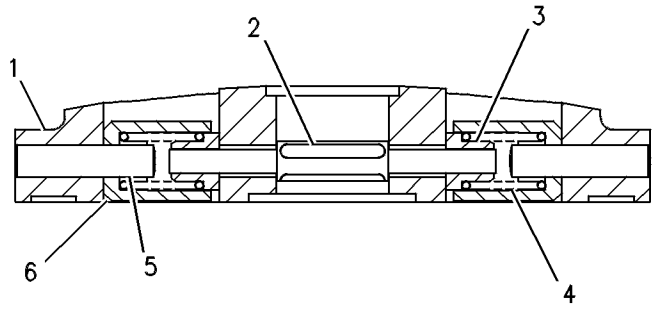

GRAPHIC #1 g00246170

176-5321 VALVE GP-MODULATING

S/N: ABK1-UP

PART OF 192-0729 VALVE & MTG GP-PILOT

SMCS-3139 **i01446701**

NOTE	REF NO	GRAPHIC REF	PART NUMBER	QTY	PART NAME 1 2 3 4 5 6 (PRODUCT LEVEL)	SEE PAGE
	1	1	**155-4426**	1	COIL AS	
	2	1	**164-2108**	1	WASHER (13.03X25.4X2.38MM THK)	
	3	1	**167-9524**	1	NUT-SELF LOCKING (1/2-28 THD)	
	4	1	**176-5322**	1	VALVE AS	
					AVAILABLE REPAIR KIT(S):	
			111-3203	1	KIT-SEAL	

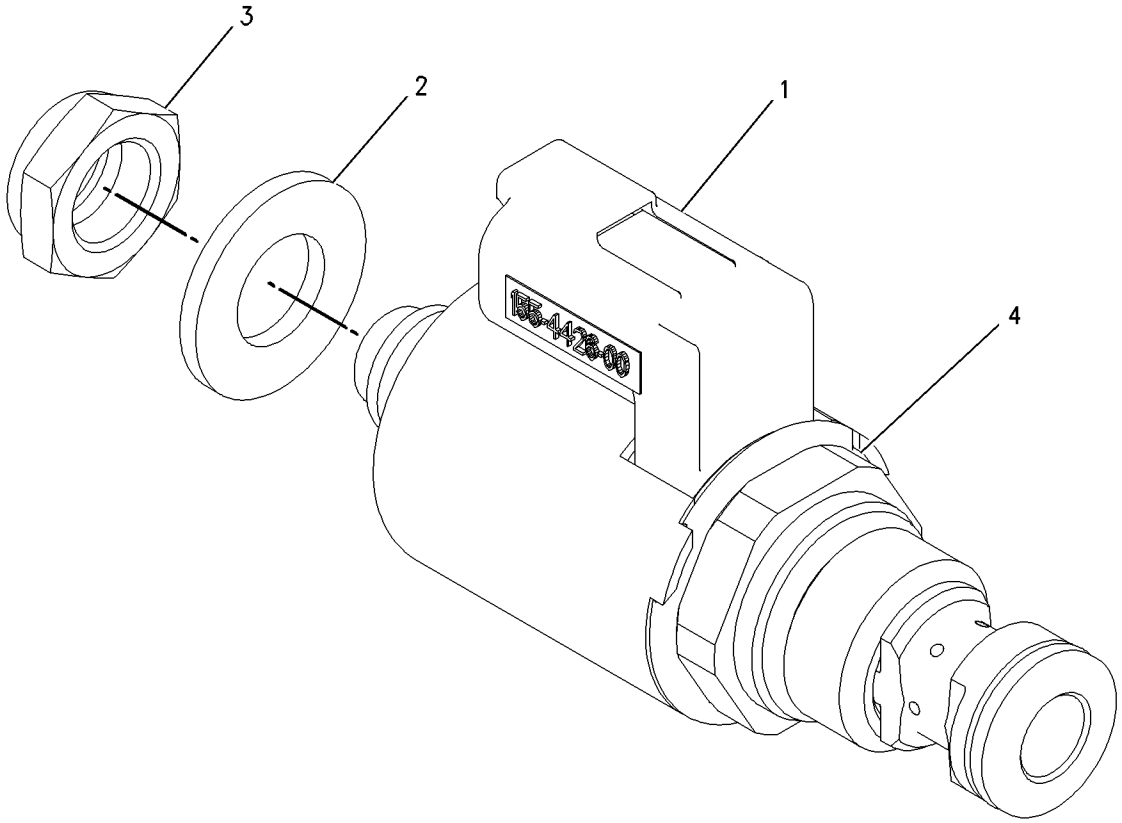

GRAPHIC #1 g00752727

6T-2313 VALVE GP-PRIORITY

S/N: 4XX1-UP

PART OF 9W-8626 CONTROL GP-TRANSMISSION HYD

SMCS-3180, 4320 **i00582486**

NOTE	REF NO	GRAPHIC REF	PART NUMBER	QTY	PART NAME 1 2 3 4 5 6 (PRODUCT LEVEL)	SEE PAGE
	1	1	**2M-7041**	1	SLUG	
	2	1	**0L-1351**	2	BOLT (3/8-16X.875IN)	
	3	1	**9S-2792**	1	COVER	
	4	1	**5S-4437**	1	SPOOL AS	
	5	1	**4B-9880**	1	BALL	
	6	1	**3D-8317**	1	RING-RETAINING	
	7	1	**8M-1013**	1	RETAINER	
	8	1	**4M-2381**	1	SPRING	
B	9	1	**5M-9624**	6	SPACER (.25MM THK)	
B		1	**5M-9623**	1	SPACER (.9MM THK)	
B		1	**5M-9622**	1	SPACER (1.6MM THK)	
	10	1	**3T-3772**	1	SPRING (OUTER)	
	11	1	**3T-3771**	1	SPRING (INNER)	
	12	1	**6T-2307**	1	BODY-VALVE	
	13	1	**4H-4737**	2	PIN-SPRING	
	14	1	**8P-0311**	2	SHAFT-GOVERNOR CONTROL	

B-USE AS REQUIRED

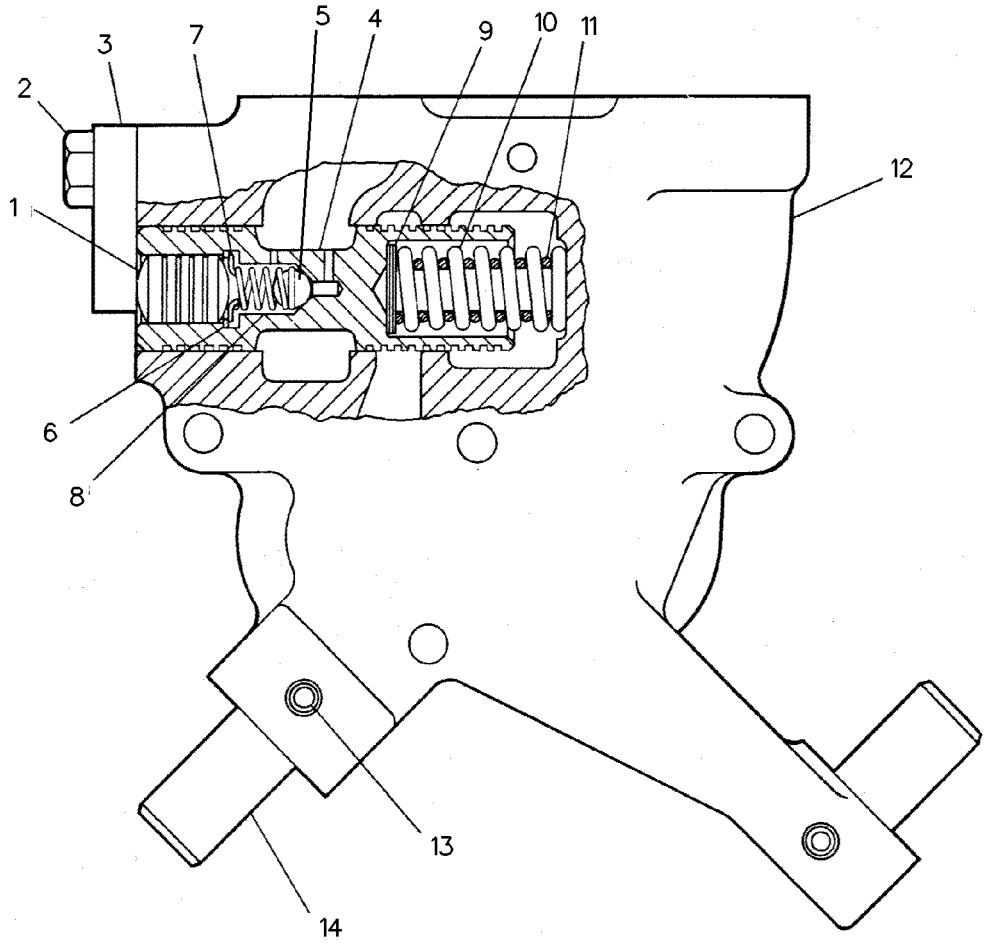

GRAPHIC #1 g00214351

115-1146 VALVE GP-RELIEF

S/N: ABK1-UP

PART OF 164-9919 LINES GP-POWER TRAIN OIL

SMCS-3133, 3182 **i01357977**

NOTE	REF NO	GRAPHIC REF	PART NUMBER	QTY	PART NAME 1 2 3 4 5 6 (PRODUCT LEVEL)	SEE PAGE
	1	1	**4M-8239**	1	COVER	
	2	1	**0S-1594**	4	BOLT (3/8-16X1 IN)	
	3	1	**8E-6927**	1	PLATE	
	4	1	**3J-1907**	1	SEAL-O-RING (11.89MM ID)	
	5	1	**6V-3965**	1	FITTING AS	
	6	1	**6V-0852**	1	CAP-DUST	
	7	1	**6P-3206**	1	VALVE AS-CONTROL	
	8	1	**3P-0774**	1	GASKET	
	9	1	**1W-9860**	1	SPRING	
B	10	1	**8J-6709**	4	SHIM (.25MM THK)	
	11	1	**8M-4992**	1	SEAL-O-RING (40.87MM ID)	
	12	1	**115-0482**	1	SPOOL	
	13	1	**115-3514**	1	SPRING	
	14	1	**115-1955**	1	BODY	
	15	1	**8M-4986**	1	SEAL-O-RING (37.69MM ID)	
	16	1	**2R-4330**	1	WASHER	

B-USE AS REQUIRED

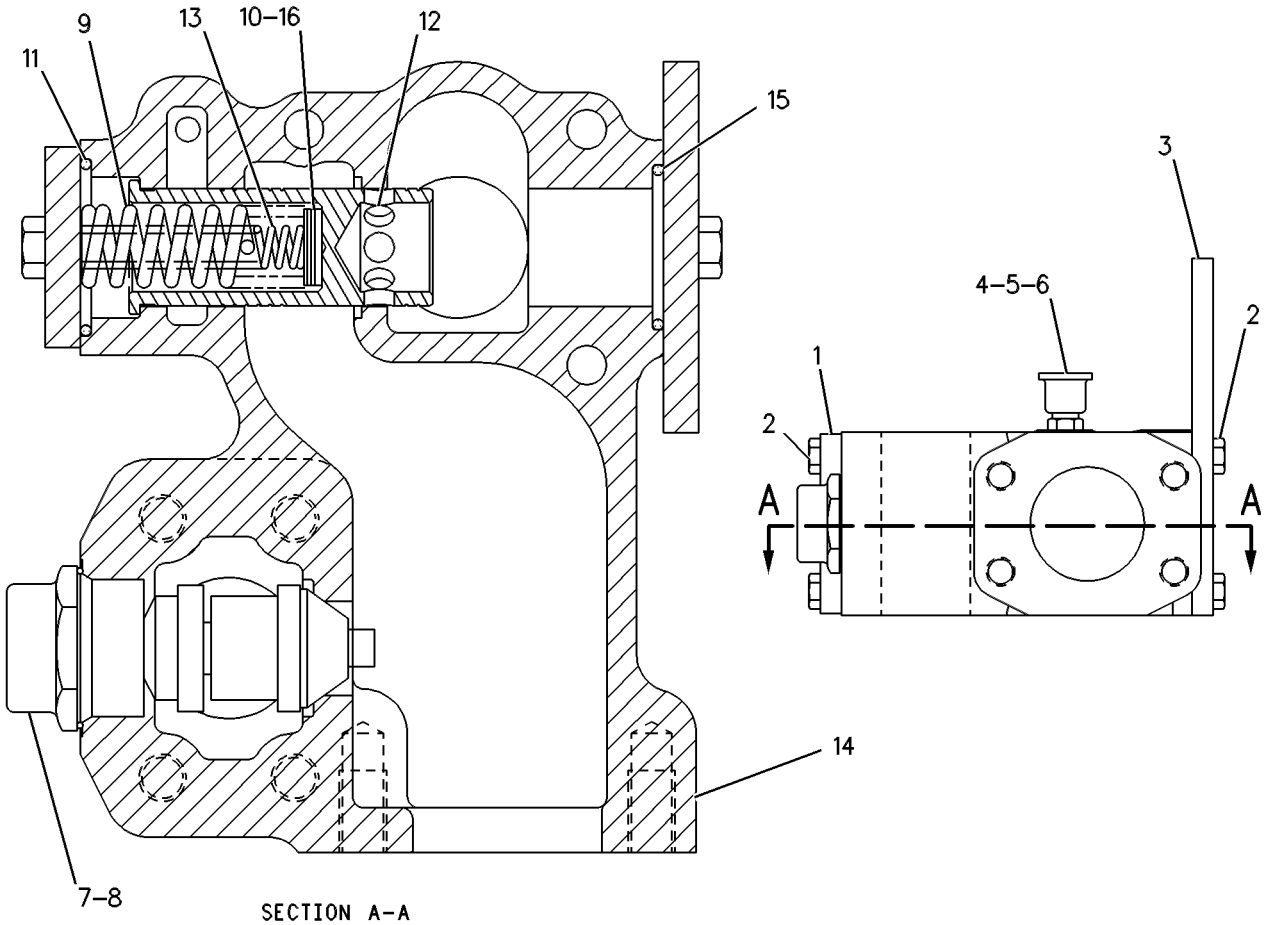

GRAPHIC #1 g00270953

108-2224 VALVE GP-SELECTOR & PRESS CONT

S/N: 4XX1-UP

PART OF 9W-8625 VALVE GP

SMCS-3083 **i01097918**

NOTE	REF NO	GRAPHIC REF	PART NUMBER	QTY	PART NAME 1 2 3 4 5 6 (PRODUCT LEVEL)	SEE PAGE
	1	1	**1P-8116**	4	SEAL-O-RING	
	2	1	**5H-8985**	4	PIN-SPRING	
	3	1	**3T-8269**	1	PLUG-ORIFICE	
	4	1	**9W-5568**	1	SLUG	
	5	1	**9W-5567**	1	SPOOL AS-RELIEF	
	6	1	**8M-1013**	1	RETAINER	
		1	**3D-8317**	1	RING-RETAINING	
	7	1	**4M-2381**	1	SPRING	
	8	1	**4B-9880**	1	BALL	
	9	1	**8E-8393**	1	PISTON-LOAD	
B	10	1	**5M-9622**	1	SPACER (1.6MM THK)	
B		1	**5M-9623**	1	SPACER (0.9MM THK)	
B		1	**5M-9624**	3	SPACER (0.25MM THK)	
	11	1	**2H-2995**	1	SETSCREW (10-24THD X 7/16)	
	12	1	**1J-5353**	2	PIN-SPRING	
	13	1	**6F-6673**	2	SEAL-O-RING (31.34MM ID)	
	14	1	**6P-4938**	1	COVER	
	15	1	**6Y-4082**	1	SPOOL-SPEED SELECTOR	
	16	1	**6P-9785**	1	SPRING	
	17	1	**6P-4940**	1	STOP	
	18	1	**6Y-2280**	1	SPOOL AS-DIFFERENTIAL	
	19	1	**7G-4842**	1	SPRING	
	20	1	**9P-3041**	1	SPRING	
	21	1	**6Y-5500**	1	SPOOL-SELECTOR	
	22	1	**2S-4872**	1	STOP	
	23	1	**3T-4215**	1	SLUG	
	24	1	**3T-3494**	1	SPOOL-RATIO	
	25	1	**8P-6321**	1	DOWEL	
	26	1	**2S-0696**	2	DOWEL	
	27	1	**7G-9476**	1	ORIFICE-PLUG	
	28	1	**9U-8388**	4	DETENT AS	
					(EACH INCLUDES)	
	29	1	**9U-8376**	1	SLIDE	
	30	1	**6I-8654**	1	SPRING	
	31	1	**8E-9868**	1	ROLLER	
	32	1	**8L-8501**	1	DOWEL	
	33	1	**6D-3044**	1	PIN-SPRING	
	34	1	**2B-2695**	3	BOLT (5/16-18X.875IN)	
	35	1	**9W-9830**	1	ORIFICE-SCREEN	
		1	**5H-8853**	1	SEAL-O-RING (9.3MM ID)	
	36	1	**6P-4971**	2	STOP	

B-USE AS REQUIRED

108-2224 VALVE GP-SELECTOR & PRESS CONT *(contd.)* i01097918

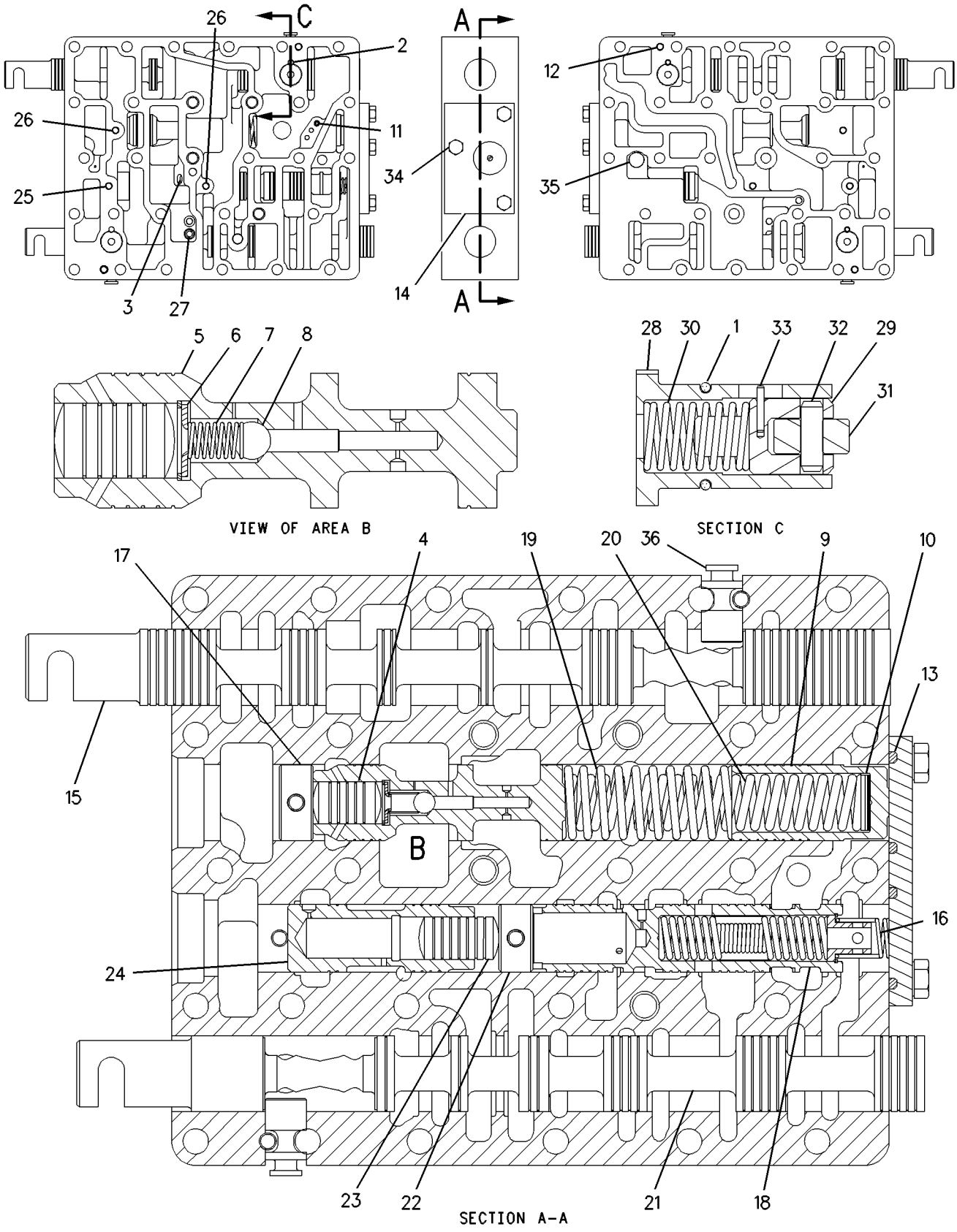

GRAPHIC #1 g00577037

FRAME AND BODY

162-9330 CASE & FRAME GP

S/N: ABK1-UP

PART OF 162-9501 CHASSIS AR

SMCS-7051 **i01298666**

NOTE	REF NO	GRAPHIC REF	PART NUMBER	QTY	PART NAME 1 2 3 4 5 6 (PRODUCT LEVEL)	SEE PAGE
	1	1	**106-8186**	1	VALVE-DRAIN (CASE)	
	2	1	**6Y-2446**	2	TUBE AS	
	3	1	**3G-6402**	2	BEARING-SLEEVE	
	4	1	**8T-2502**	4	BOLT (3/8-16X1.125 IN)	
	5	1	**3P-8845**	2	BEARING-SLEEVE	
	6	1	**8T-4896**	4	WASHER-HARD (2.5MM THK)	
	7	1	**6F-0711**	1	SEAL-O-RING	
	8	1	**106-8187**	1	PLUG	
	9	1	**8P-0420**	2	BEARING	
	10	1	**9W-0330**	4	BEARING	
	11	1	**7M-8480**	1	DOWEL (14.1MM OD X 31.75MM LONG)	
	12	1	**162-9329**	1	CASE & FRAME AS	
	13	1	**7T-1099**	15	LINK	
	14	1	**3Y-7829**	4	BOSS (3/8-16 THD)	
	15	1	**9K-3050**	4	STUD-WELD (1/2-13X1.38IN OAL)	
	16	1	**1F-0750**	4	NUT-WELD (3/8-16 THD)	
	17	1	**5P-1075**	1	WASHER-HARD (3MM THK)	
	18	1	**2K-4973**	1	LOCKNUT (3/8-16 THD)	
	19	1	**188-5141**	1	PLATE	
	20	1	**2R-1694**	1	SPACER	
	21	1	**7S-3916**	1	CLIP (TAB)	
	22	1	**7S-3919**	1	CLIP (SLOT)	
	23	1	**7G-8947**	1	PLATE	
	24	1	**3H-4776**	2	BOSS (3/8-16 THD)	
	25	1	**8P-6334**	16	LUG	
	26	1	**9W-0329**	2	PLATE	
	27	1	**9W-0332**	1	SUPPORT	
	28	1	**9W-0333**	1	SUPPORT	
	29	1	**9P-6544**	1	SUPPORT	
	30	1	**9W-2345**	2	PLATE	
	31	1	**1F-0748**	6	NUT-WELD (1/2-13 THD)	
	32	1	**110-2966**	1	TRUNNION	
	33	1	**7J-5225**	1	FITTING (1 1/16X12 THD)	

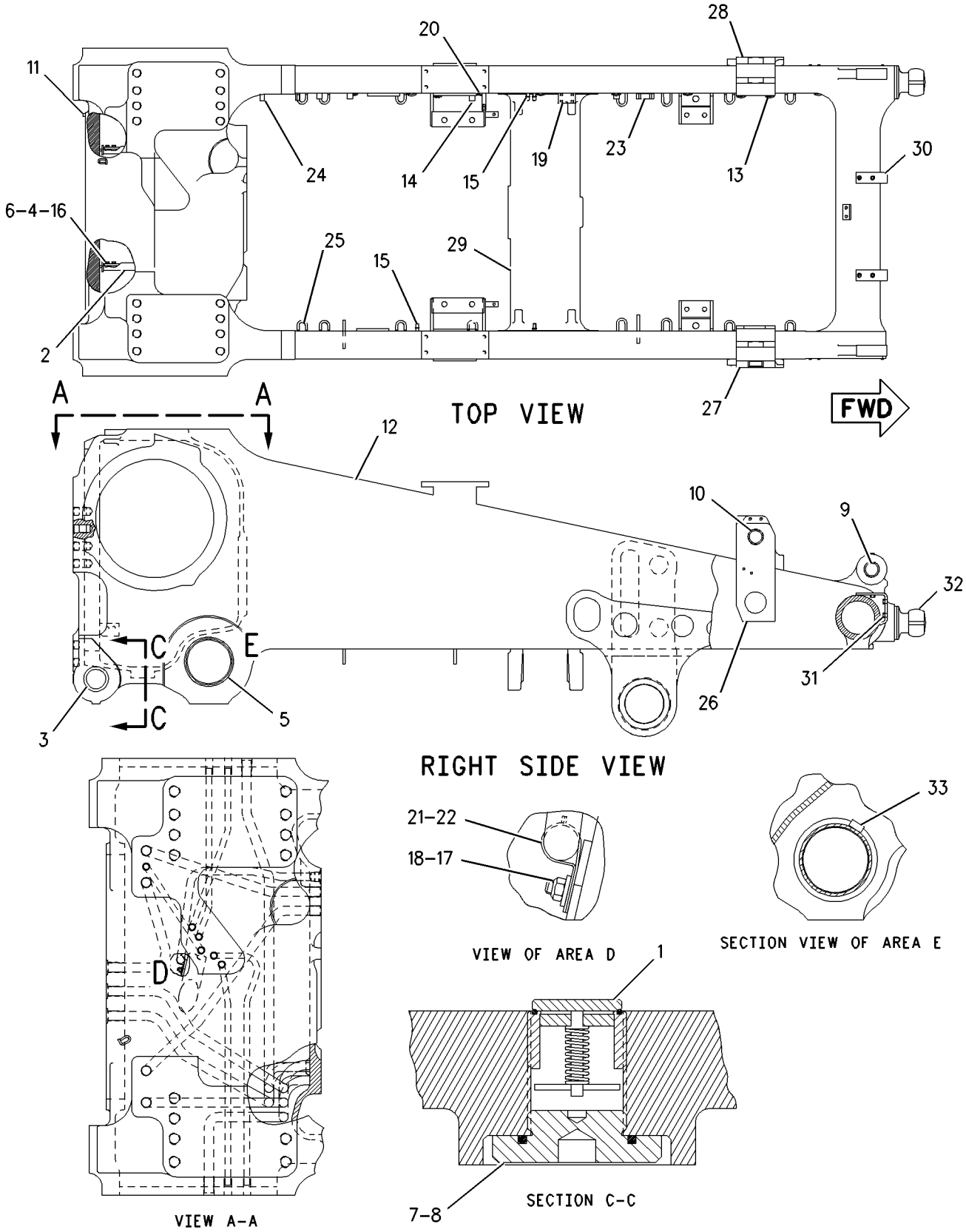

GRAPHIC #1 g00691658

164-7956 CASE & FRAME GP

S/N: ABK1-UP
PART OF 164-5055 TRUNNION AR-BULLDOZER
AN ATTACHMENT

SMCS-7051 **i01288332**

NOTE	REF NO	GRAPHIC REF	PART NUMBER	QTY	PART NAME 1 2 3 4 5 6 (PRODUCT LEVEL)	SEE PAGE
	1	1	**106-8186**	1	VALVE-DRAIN (CASE)	
	2	1	**8E-5437**	2	TUBE AS	
	3	1	**3G-6402**	2	BEARING-SLEEVE	
	4	1	**8T-2502**	4	BOLT (3/8-16X1.125 IN)	
	5	1	**3P-8845**	2	BEARING-SLEEVE	
	6	1	**8T-4896**	4	WASHER-HARD (2.5MM THK)	
	7	1	**6F-0711**	1	SEAL-O-RING	
	8	1	**106-8187**	1	PLUG	
	9	1	**8P-0420**	2	BEARING	
	10	1	**9W-0330**	4	BEARING	
	11	1	**7M-8480**	1	DOWEL (14.1MM OD X 31.75MM LONG)	
	12	1	**162-9331**	1	CASE & FRAME AS	
	13	1	**7T-1099**	13	LINK	
	14	1	**3Y-7829**	4	BOSS (3/8-16 THD)	
	15	1	**9K-3050**	4	STUD-WELD (1/2-13X1.38IN OAL)	
	16	1	**1F-0750**	4	NUT-WELD (3/8-16 THD)	
	17	1	**5P-1075**	1	WASHER-HARD (3MM THK)	
	18	1	**2K-4973**	1	LOCKNUT (3/8-16 THD)	
	19	1	**130-4625**	4	LUG	
	20	1	**2R-1694**	1	SPACER	
	21	1	**7S-3916**	1	CLIP (TAB)	
	22	1	**7S-3919**	1	CLIP (SLOT)	
	23	1	**6J-5653**	2	TRUNNION	
	24	1	**3H-4776**	2	BOSS (3/8-16 THD)	
	25	1	**8P-6334**	12	LUG	
	26	1	**9W-0329**	2	PLATE	
	27	1	**9W-0332**	1	SUPPORT	
	28	1	**9W-0333**	1	SUPPORT	
	29	1	**9P-6544**	1	SUPPORT	
	30	1	**9W-2345**	2	PLATE	
	31	1	**1F-0748**	6	NUT-WELD (1/2-13 THD)	
	32	1	**110-2966**	1	TRUNNION	
	33	1	**7J-5225**	1	FITTING (1 1/16X12 THD)	
	34	1	**188-5141**	1	PLATE	
	35	1	**7G-8947**	1	PLATE	

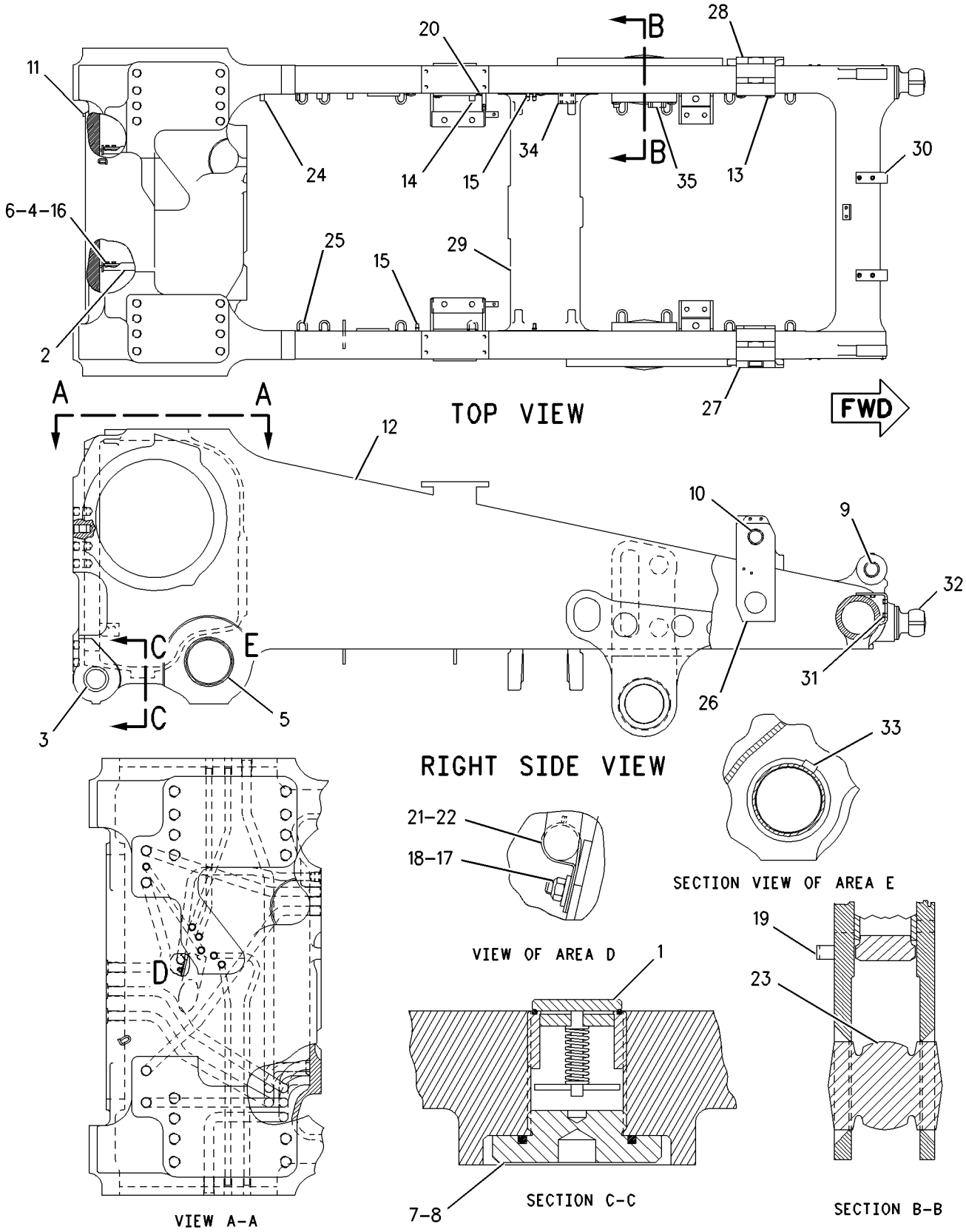

GRAPHIC #1

g00689317

FRAME AND BODY

162-9501 CHASSIS AR

S/N: ABK1-UP

PART OF 162-9500 GENERAL AR

SMCS-7000 **i01357658**

NOTE	PART NUMBER	QTY	PART NAME 1 2 3 4 5 6 (PRODUCT LEVEL)	SEE PAGE
Y	*163-5393*	1	BATTERY & WIRING GP	278
Y	*162-9330*	1	CASE & FRAME GP	452
Y	*172-7938*	1	CONTROL GP-DECELERATOR	198
Y	*8E-7212*	1	ENCLOSURE GP	472
Y	*164-1949*	1	FENDER GP	482
Y	*171-6464*	1	FILTER & LINES GP-FUEL	216
Y	*7T-8745*	1	GUARD GP-BOTTOM	490
Y	*8E-9853*	1	GUARD GP-DRIVE SHAFT	412
Y	*163-9106*	1	GUARD GP-RADIATOR	496
Y	*8E-7802*	1	GUARD GP-VANDALISM	807
Y	*163-8826*	1	HOOD & GUARD GP	502
Y	*134-0978*	1	LIGHTING GP-FLOOD	320
Y	*9W-6259*	1	LUBRICATION GP-PIVOT SHAFT	530
Y	*110-0781*	1	MOUNTING GP-ROPS	847
Y	*170-7081*	1	PANEL GP-INSTRUMENT	854
Y	*159-8068*	1	PLATE & FILM GP	922
Y	*138-3754*	1	PLATFORM GP	860
Y	*105-4649*	1	ROPS GP	866
Y	*163-0879*	1	SEAT GP	870
Y	*163-7462*	1	STARTING AID GP-ETHER	346
Y	*163-9277*	1	TANK GP-FUEL	268
Y	*163-5399*	1	WIRING GP-PLATFORM	378

Y-SEPARATE ILLUSTRATION

MEMORANDA

8E-9051 COUNTERWEIGHT GP

S/N: ABK1-UP
AN ATTACHMENT

SMCS-7056 **i01446712**

NOTE	REF NO	GRAPHIC REF	PART NUMBER	QTY	PART NAME 1 2 3 4 5 6 (PRODUCT LEVEL)	SEE PAGE
	1	1	**6T-3594**	1	COUNTERWEIGHT AS	
		1	**5H-8803**	2	SUPPORT-PIN	
	2	1	**9G-1935**	1	PIN AS-DRAWBAR	
	3	1	**6V-8970**	8	BOLT (1 1/2-6 THD)	
		1	**3S-6162**	8	WASHER-HARD (40.5X67X6MM THK)	
		1	**5T-4896**	8	SPACER (12MM THK)	
	4	1	**5P-2566**	12	BOLT (1/2-13X1.5 IN)	
		1	**8T-4223**	12	WASHER-HARD (13.5X25.5X3MM THK)	
	5	1	**1K-9415**	4	BOLT (1 1/8-7X11 IN)	
		1	**4K-0684**	4	WASHER-HARD (34X55X6MM THK)	
	6	1	**6T-3591**	1	PLATE AS (RIGHT SIDE)	
	7	1	**8E-8630**	2	LINK AS	
	8	1	**7X-0347**	1	BOLT (5/8-11X2.25 IN)	
		1	**3K-2889**	1	LOCKNUT	
	9	1	**6T-3590**	1	PLATE AS (LEFT SIDE)	
	10	1	**8E-9289**	1	LATCH	
	11	1	**3T-7566**	6	PIN	
	12	1	**3T-7567**	6	BAR	
	13	1	**6T-3589**	2	PLATE	
	14	1	**6T-3588**	1	PLATE	

8E-9051 **COUNTERWEIGHT GP** ***(contd.)*** **i01446712**

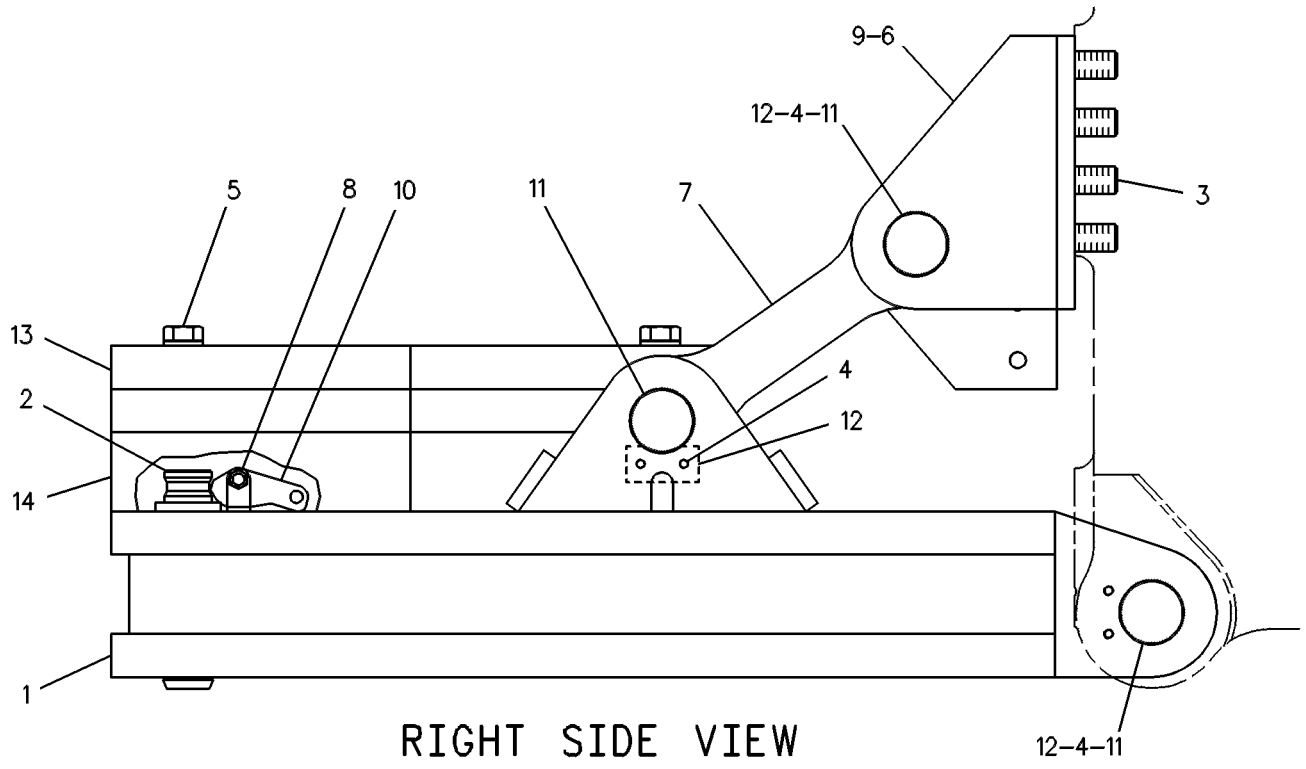

RIGHT SIDE VIEW

GRAPHIC #1 g00234776

8E-9052 COUNTERWEIGHT GP

S/N: ABK1-UP
1270 KG (2794 LBS)
FOR USE WITH BASIC REAR COUNTERWEIGHTS
AN ATTACHMENT

SMCS-7056 **i00590414**

NOTE	REF NO	GRAPHIC REF	PART NUMBER	QTY	PART NAME 1 2 3 4 5 6 (PRODUCT LEVEL)	SEE PAGE
	1	1	**6T-3588**	2	PLATE	
	2	1	**033-0512**	4	BOLT	

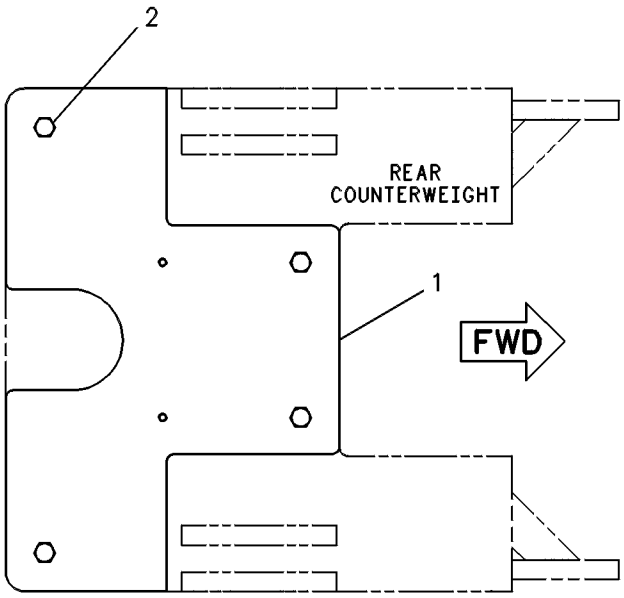

TOP VIEW

GRAPHIC #1 g00234780

FRAME AND BODY

9W-2972 COUNTERWEIGHT GP

S/N: ABK1-UP
AN ATTACHMENT

SMCS-7056 **i01446715**

NOTE	REF NO	GRAPHIC REF	PART NUMBER	QTY	PART NAME 1 2 3 4 5 6 (PRODUCT LEVEL)	SEE PAGE
	1	1	**6P-8829**	2	RETAINER	
	2	1	**6J-4081**	2	BOLT (7/8-9X13 IN)	
					OR	
		1	**7K-4363**	2	BOLT (7/8-9X11.5 IN)	
	3	1	**2J-3507**	2	NUT-FULL (1-8 THD)	
	4	1	**5P-8250**	10	WASHER (28X49X5MM THK)	
	5	1	**9W-2971**	1	COUNTERWEIGHT AS	
	6	1	**1D-4645**	2	BOLT (1-8X8.5 IN)	
	7	1	**7X-0418**	6	BOLT (1-8X9.5 IN)	
	8	1	**170-1761**	1	PLATE	
	9	1	**5P-1076**	4	WASHER-HARD (13.5X30X4MM THK)	
	10	1	**8C-4436**	4	BOLT (1/2-13X1.375 IN)	

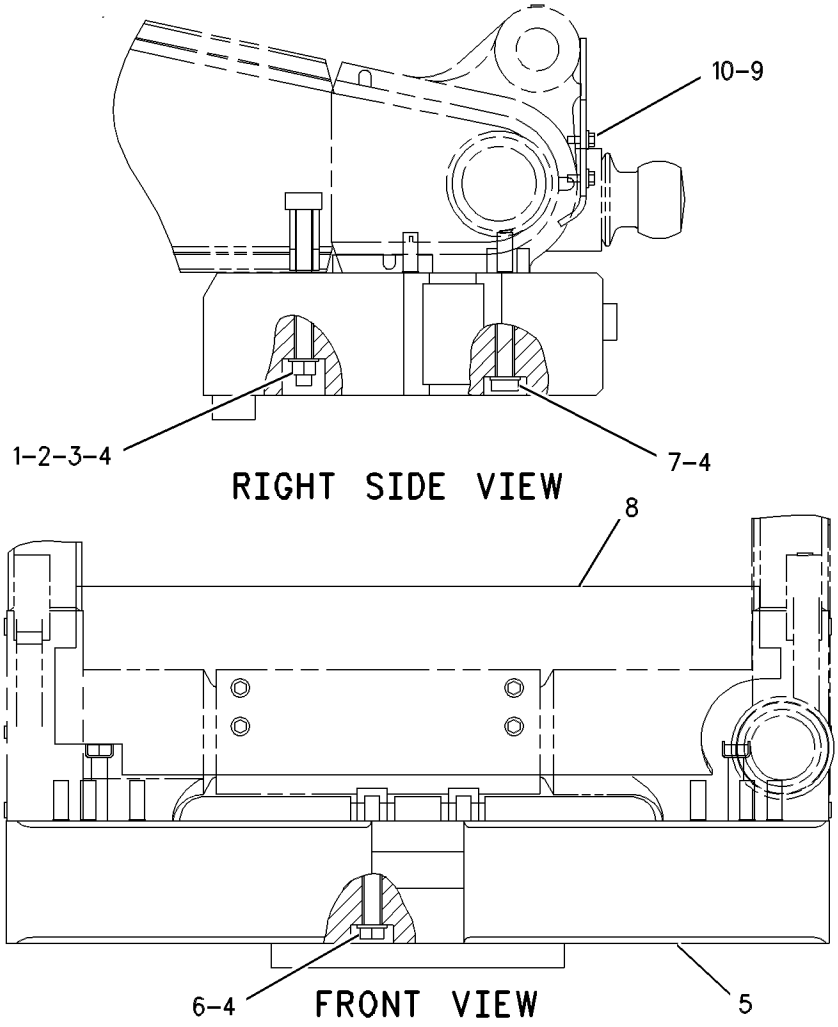

GRAPHIC #1 g00572299

7T-6040 COVER GP-TRUNNION

S/N: ABK1-UP
CANNOT BE USED WITH BULLDOZER TRUNNIONS
AN ATTACHMENT

SMCS-7050, 7250 **i01446721**

NOTE	REF NO	GRAPHIC REF	PART NUMBER	QTY	PART NAME 1 2 3 4 5 6 (PRODUCT LEVEL)	SEE PAGE
	1	1	**6P-8901**	2	COVER	
	2	1	**7X-0403**	12	BOLT (1-8X2.25 IN)	
	3	1	**8T-5361**	12	WASHER-HARD (28X49X5MM THK)	

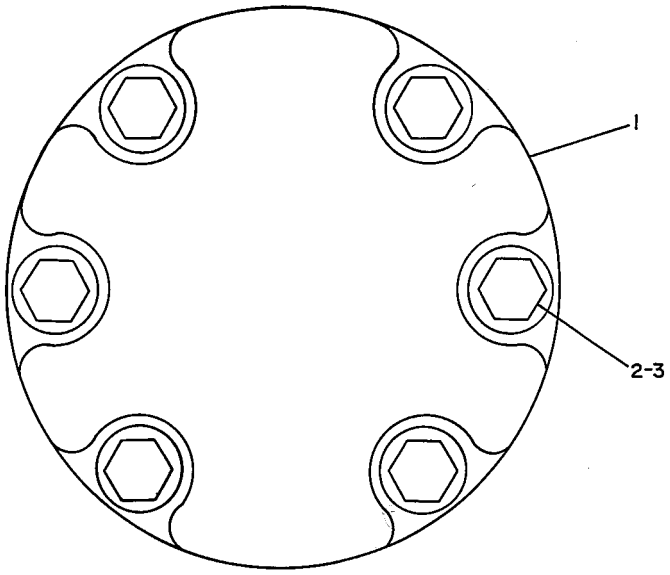

GRAPHIC #1 g00172067

FRAME AND BODY

130-9195 DOOR GP-LH

S/N: ABK1-UP
PART OF 164-5840 ENCLOSURE GP-ENGINE
AN ATTACHMENT

SMCS-7263 **i01547200**

NOTE	REF NO	GRAPHIC REF	PART NUMBER	QTY	PART NAME 1 2 3 4 5 6 (PRODUCT LEVEL)	SEE PAGE
	1	1	**3B-4605**	1	PIN-COTTER	
	2	1	**3V-9399**	1	ROD AS	
	3	1	**4B-4278**	1	WASHER (10.2X20.5X1.6MM THK)	
	4	1	**4H-2558**	1	GROMMET	
	5	1	**8C-8584**	1	PAWL-T-BAR LATCH	
	6	1	**8Y-4000**	1	LATCH AS (T-BAR/COMPARTMENT)	
		1	**7X-0766**	1	SPRING-LATCH	
	6A	1	**6H-3956**	1	PIN	
	6B	1	**8Y-3999**	1	BRACKET-MOUNTING	
	6C	1	**8Y-3998**	1	HANDLE-LATCH	
	6D	1	**8Y-3966**	1	WASHER (14.7X35X1.57MM THK)	
	6E	1	**8Y-8306**	1	SHAFT-LATCH	
	7	1	**4M-7470**	1	GROMMET	
	8	1	**4L-6454**	2	BOLT (3/8-16X1 IN)	
	9	1	**2K-4973**	2	LOCKNUT (3/8-16 THD)	
	10	1	**8T-9496**	2	LOCKNUT (9/16-18 THD)	
	11	1	**131-8045**	1	DOOR AS-LH	
	12	1	**8T-4896**	4	WASHER-HARD (10.2X18.5X2.5MM THK)	

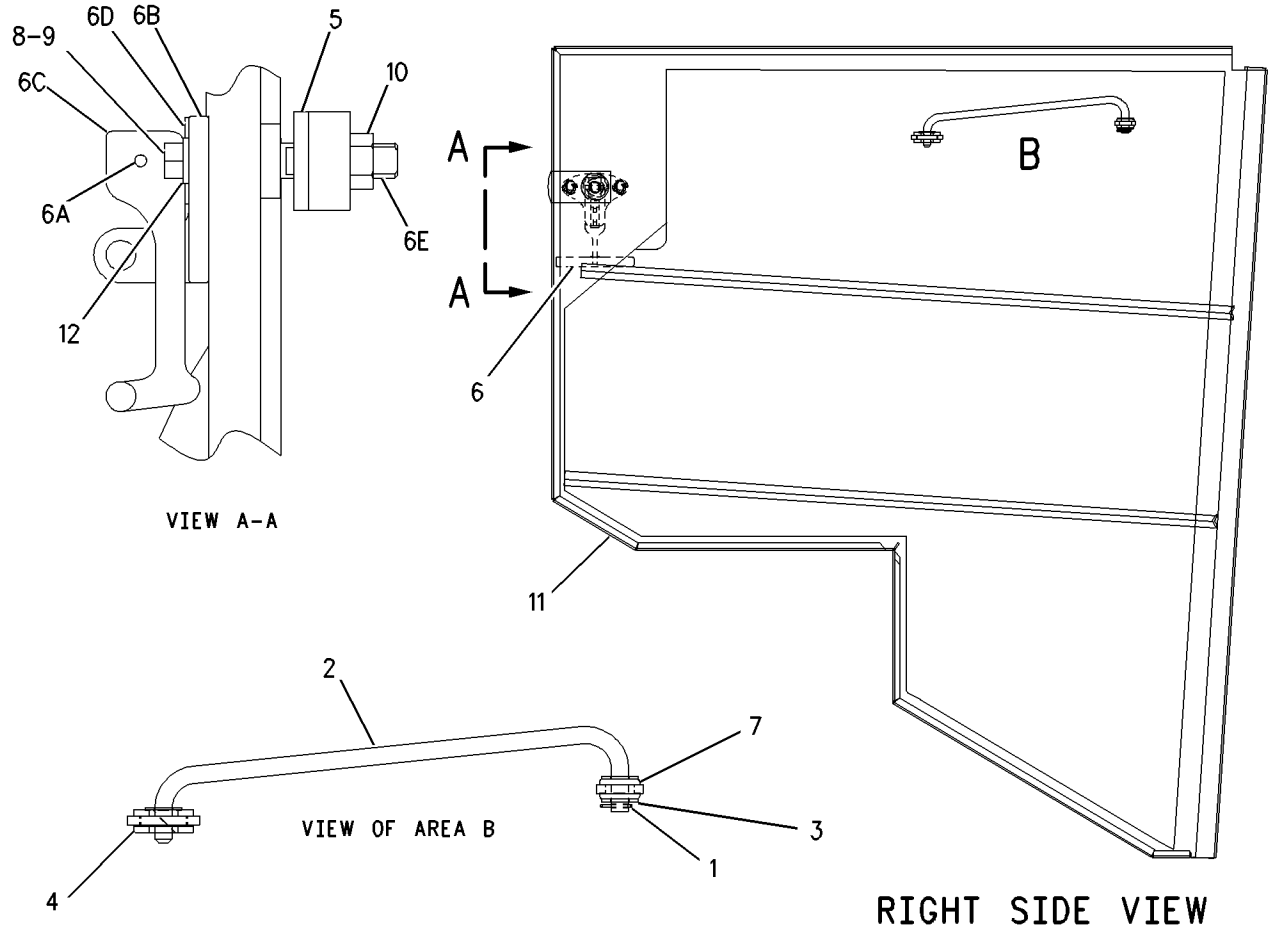

GRAPHIC #1 g00806314

131-8556 DOOR GP-LH

S/N: ABK1-UP
PART OF 164-5843 ENCLOSURE GP-ENGINE
AN ATTACHMENT

SMCS-7263 **i01547205**

NOTE	REF NO	GRAPHIC REF	PART NUMBER	QTY	PART NAME 1 2 3 4 5 6 (PRODUCT LEVEL)	SEE PAGE
	1	1	**3B-4605**	1	PIN-COTTER	
	2	1	**3V-9399**	1	ROD AS	
	3	1	**4B-4278**	1	WASHER (10.2X20.5X1.6MM THK)	
	4	1	**4H-2558**	1	GROMMET	
	5	1	**8C-8584**	1	PAWL-T-BAR LATCH	
	6	1	**8T-9496**	2	LOCKNUT (9/16-18 THD)	
	7	1	**131-8051**	1	DOOR AS-LH	
		1	**3L-5549**	11	STUD-WELD (3/8-16X0.625 IN OAL)	
	8	1	**2K-4973**	2	LOCKNUT (3/8-16 THD)	
	9	1	**4L-6454**	2	BOLT (3/8-16X1 IN)	
	10	1	**4M-7470**	1	GROMMET	
	11	1	**8T-4896**	4	WASHER-HARD (10.2X18.5X2.5MM THK)	
	12	1	**8Y-4000**	1	LATCH AS (T-BAR/COMPARTMENT)	
		1	**7X-0766**	1	SPRING-LATCH	
	12A	1	**6H-3956**	1	PIN	
	12B	1	**8Y-8306**	1	SHAFT-LATCH	
	12C	1	**8Y-3966**	1	WASHER (14.7X35X1.57MM THK)	
	12D	1	**8Y-3998**	1	HANDLE-LATCH	
	12E	1	**8Y-3999**	1	BRACKET-MOUNTING	

131-8556 **DOOR GP-LH** ***(contd.)*** **i01547205**

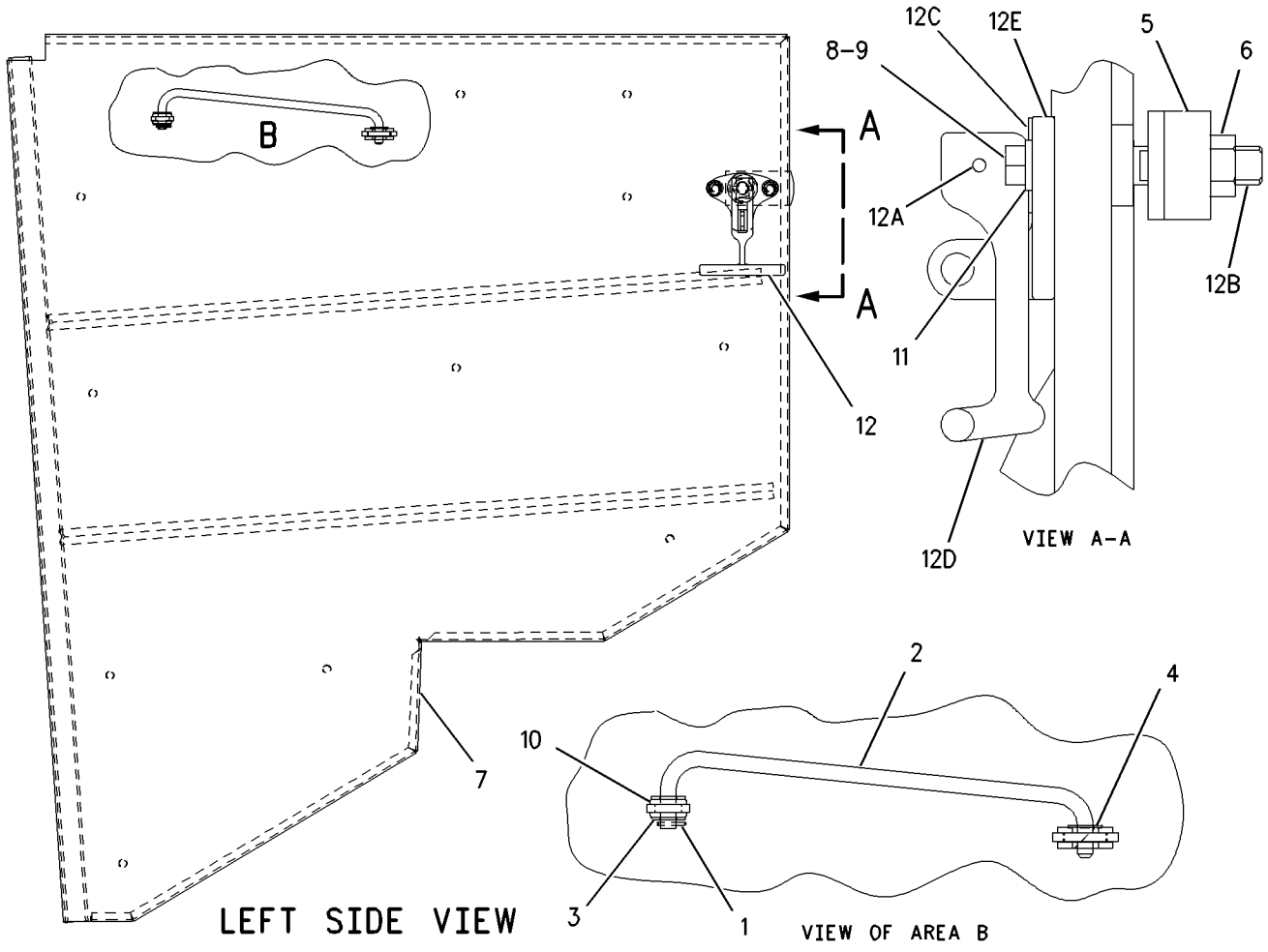

GRAPHIC #1 g00806311

170-1845 DOOR GP-RH

S/N: ABK1-UP
PART OF 164-5840 ENCLOSURE GP-ENGINE
AN ATTACHMENT

SMCS-7263 **i01515981**

NOTE	REF NO	GRAPHIC REF	PART NUMBER	QTY	PART NAME 1 2 3 4 5 6 (PRODUCT LEVEL)	SEE PAGE
	1	1	**3B-4605**	1	COTTER	
	2	1	**3V-9399**	1	ROD AS	
	3	1	**4B-4278**	1	WASHER (10.2X20.5X1.6MM THK)	
	4	1	**4H-2558**	1	GROMMET	
	5	1	**8C-8584**	1	PAWL-T-BAR LATCH	
	6	1	**8Y-4000**	1	LATCH AS (T-BAR/COMPARTMENT)	
	7	1	**7X-0766**	1	SPRING-LATCH	
	8	1	**8Y-3999**	1	BRACKET-MOUNTING	
	9	1	**8Y-3998**	1	HANDLE-LATCH	
	10	1	**8Y-3966**	1	WASHER (14.7X35X1.57MM THK)	
	11	1	**8Y-8306**	1	SHAFT-LATCH	
	12	1	**6H-3956**	1	PIN	
	13	1	**170-1847**	1	DOOR AS-RH	
	14	1	**2K-4973**	2	LOCKNUT (3/8-16 THD)	
	15	1	**4L-6454**	2	BOLT (3/8-16X1 IN)	
	16	1	**4M-7470**	1	GROMMET	
	17	1	**8T-4896**	4	WASHER-HARD (10.2X18.5X2.5MM THK)	
	18	1	**8T-9496**	2	LOCKNUT	

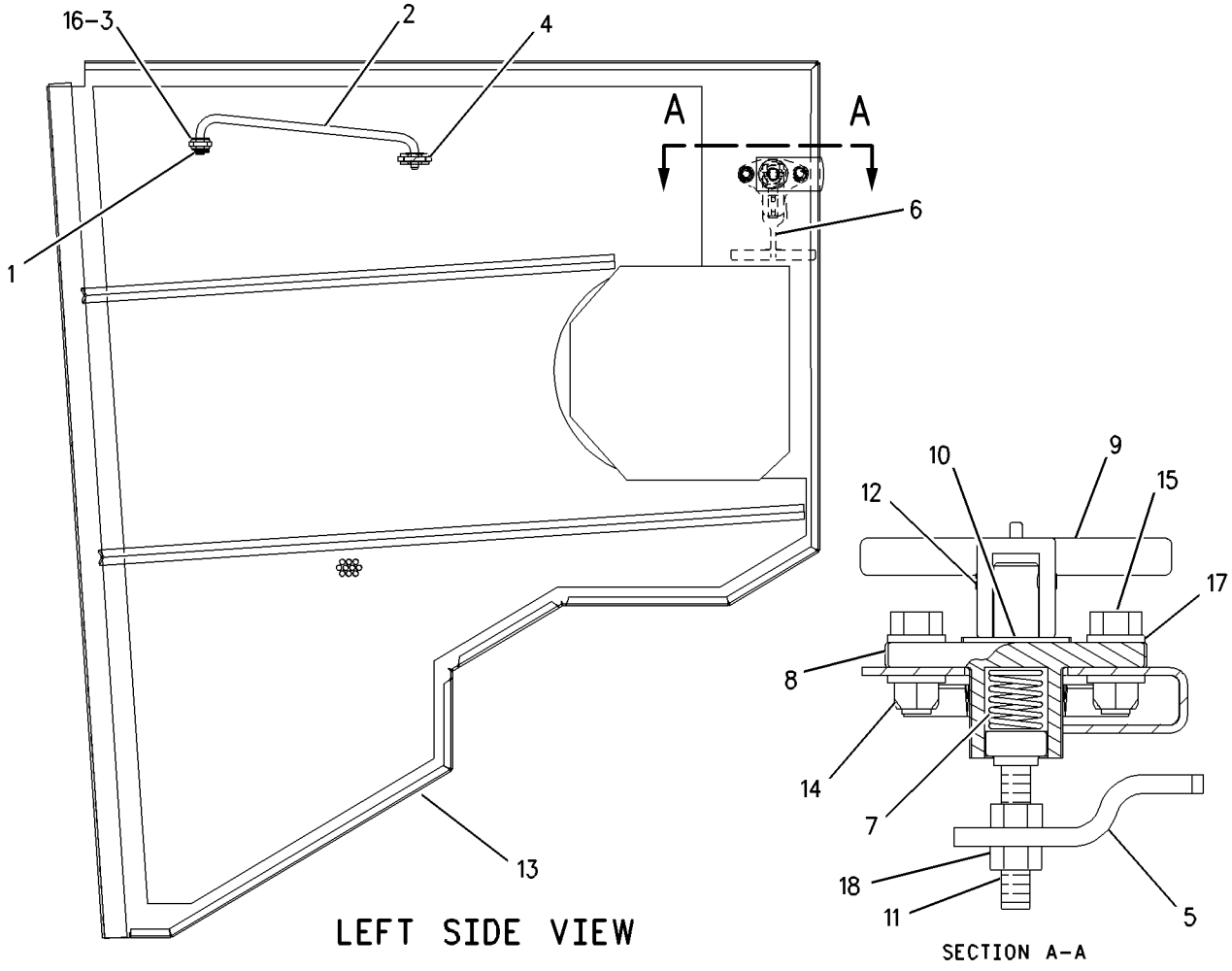

GRAPHIC #1 g00754305

MEMORANDA

170-1852 DOOR GP-RH

S/N: ABK1-UP
PART OF 164-5843 ENCLOSURE GP-ENGINE
AN ATTACHMENT

SMCS-7263 **i01515980**

NOTE	REF NO	GRAPHIC REF	PART NUMBER	QTY	PART NAME 1 2 3 4 5 6 (PRODUCT LEVEL)	SEE PAGE
	1	1	**3B-4605**	1	COTTER	
	2	1	**3V-9399**	1	ROD AS	
	3	1	**4B-4278**	1	WASHER (10.2X20.5X1.6MM THK)	
	4	1	**4H-2558**	1	GROMMET	
	5	1	**8C-8584**	1	PAWL-T-BAR LATCH	
	6	1	**8Y-4000**	1	LATCH AS (T-BAR/COMPARTMENT)	
		1	**7X-0766**	1	SPRING-LATCH	
	7	1	**6H-3956**	1	PIN	
	8	1	**8Y-3999**	1	BRACKET-MOUNTING	
	9	1	**8Y-3998**	1	HANDLE-LATCH	
	10	1	**8Y-3966**	1	WASHER (14.7X35X1.57MM THK)	
	11	1	**8Y-8306**	1	SHAFT-LATCH	
	12	1	**8T-4896**	4	WASHER-HARD (10.2X18.5X2.5MM THK)	
	13	1	**170-1854**	1	DOOR AS-RH	
	14	1	**3L-5549**	10	STUD-WELD (3/8-16X0.625 IN OAL)	
	15	1	**2K-4973**	2	LOCKNUT (3/8-16 THD)	
	16	1	**4L-6454**	2	BOLT (3/8-16X1 IN)	
	17	1	**4M-7470**	1	GROMMET	
	18	1	**8T-9496**	2	LOCKNUT	

170-1852 **DOOR GP-RH** *(contd.)* **i01515980**

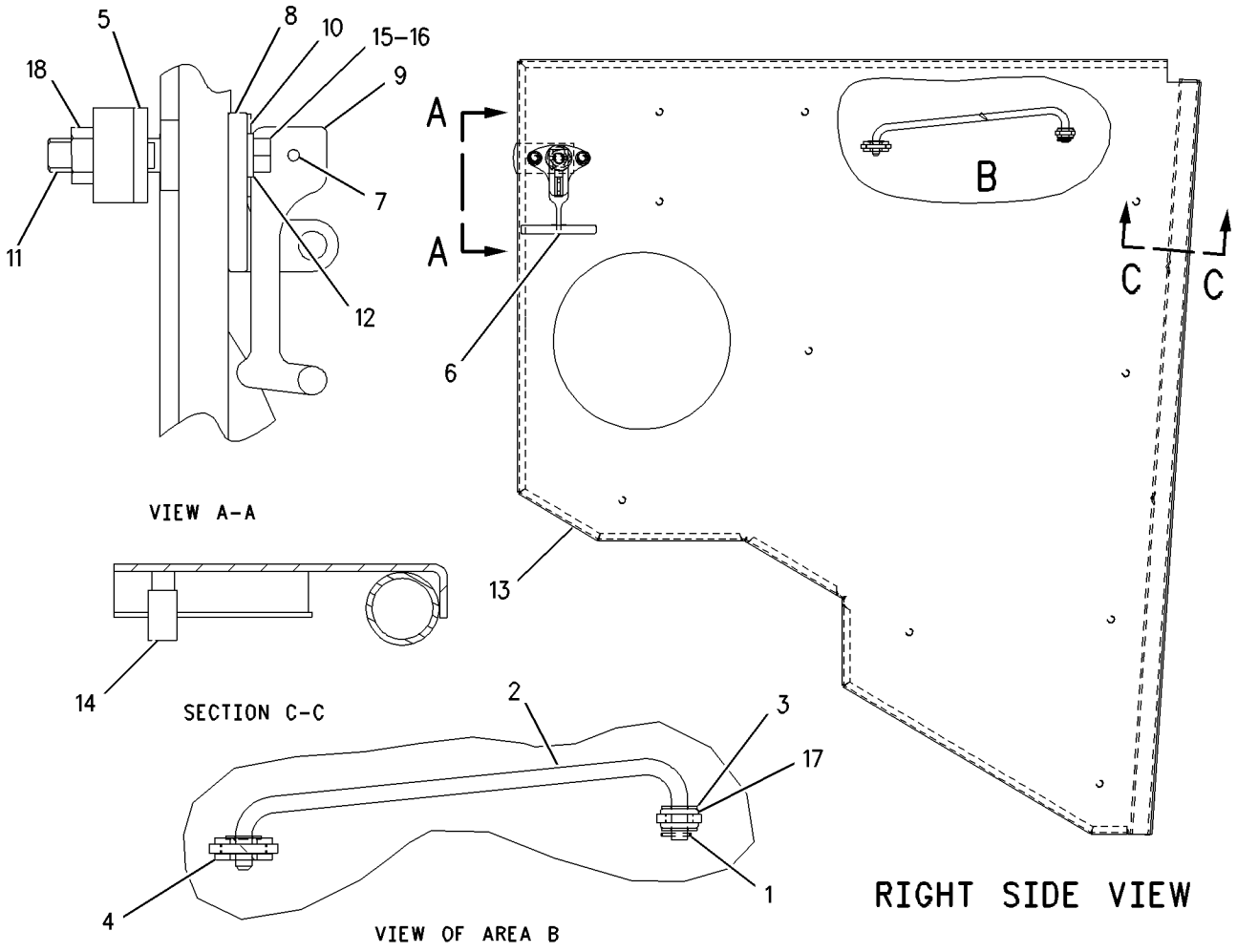

GRAPHIC #1 g00753465

7T-3896 DRAWBAR GP

S/N: ABK1-UP
AN ATTACHMENT

SMCS-7105, 7119 **i01446723**

NOTE	REF NO	GRAPHIC REF	PART NUMBER	QTY	PART NAME 1 2 3 4 5 6 (PRODUCT LEVEL)	SEE PAGE
	1	1	**3T-7566**	2	PIN	
	2	1	**3T-8792**	1	BRACKET AS	
	3	1	**7X-0349**	1	BOLT (5/8-11X3 IN)	
	4	1	**3K-2889**	1	LOCKNUT	
	5	1	**3T-8791**	1	BRACKET AS	
	6	1	**8E-9289**	1	LATCH	
	7	1	**1H-4106**	1	PIN AS-DRAWBAR	
	8	1	**7G-6623**	1	HITCH	
	9	1	**2H-1537**	6	BOLT (1 1/4-7X6IN)	
	10	1	**3K-9770**	6	NUT-FULL (1 1/4X7 THD)	
		1	**4K-0684**	12	WASHER-HARD (34X55X6MM THK)	
	11	1	**7T-8733**	1	DRAWBAR AS	
	12	1	**5M-0544**	8	BOLT (1 1/8-7X4.5 IN)	
		1	**3S-1349**	16	WASHER-HARD (31X52.5X6MM THK)	
		1	**7F-5711**	8	WASHER (1 9/32X3X5/8 IN THK)	
	13	1	**3D-8012**	8	SPACER	
	14	1	**4J-5977**	8	NUT-FULL (1-1/8-7 THD)	
	15	1	**6V-8970**	6	BOLT (1 1/2-6 THD)	
		1	**3S-6162**	6	WASHER-HARD (40.5X67X6MM THK)	
		1	**5T-4896**	6	SPACER (12MM THK)	
	16	1	**3T-7567**	2	BAR	
	17	1	**5P-2566**	4	BOLT (1/2-13X1.5 IN)	
		1	**8T-4223**	4	WASHER-HARD (13.5X25.5X3MM THK)	

7T-3896 **DRAWBAR GP** ***(contd.)*** **i01446723**

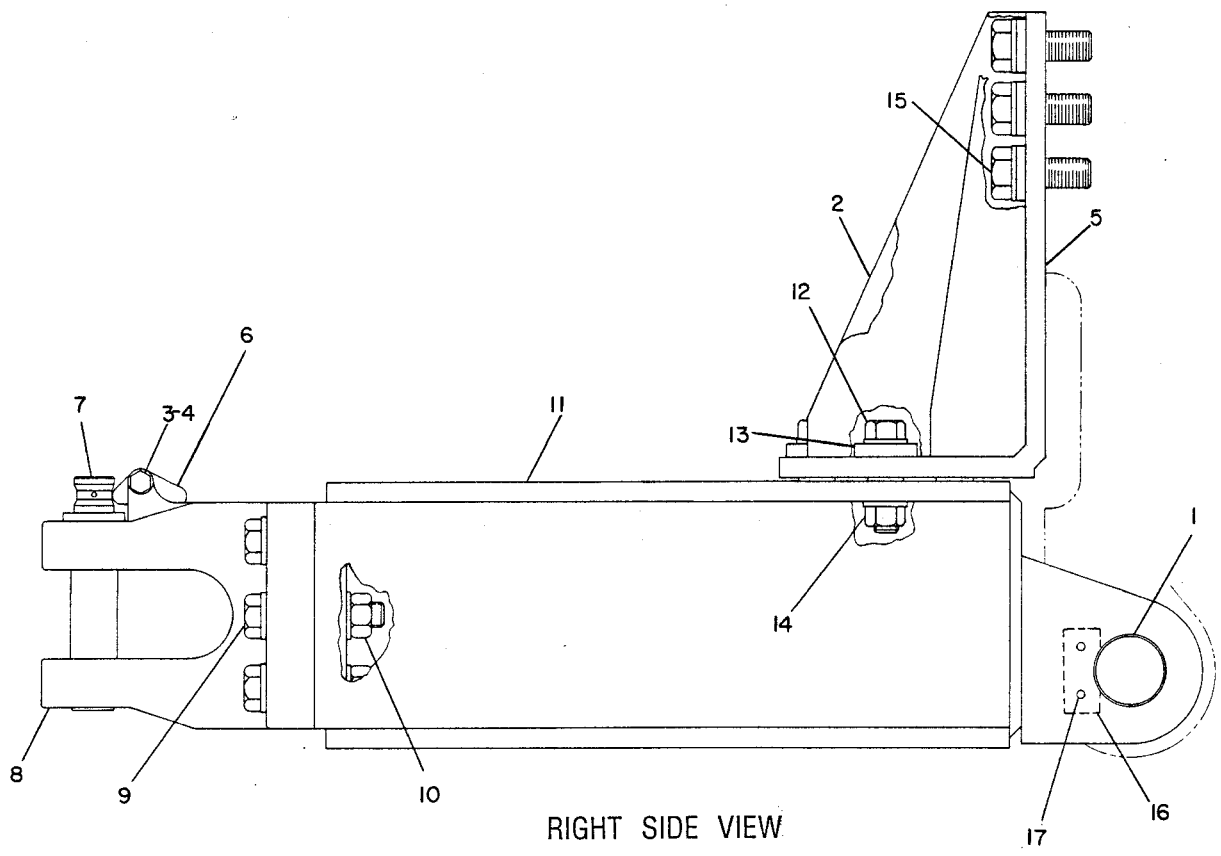

GRAPHIC #1 g00189355

FRAME AND BODY

8E-7212 ENCLOSURE GP

S/N: ABK1-UP

PART OF 162-9501 CHASSIS AR

SMCS-7153 **i01446724**

NOTE	REF NO	GRAPHIC REF	PART NUMBER	QTY	PART NAME 1 2 3 4 5 6 (PRODUCT LEVEL)	SEE PAGE
	1	1	**8T-2561**	1	WASHER-HARD (10.5X28.5X5MM THK)	
	2	1	**7X-0772**	8	WASHER-HARD (10.2X25.5X2.5MM THK)	
	3	1	**7G-1239**	2	SPACER (4.5MM LG X 10.5MM ID)	
	4	1	**106-5008**	1	COVER AS	
	5	1	**7X-0578**	4	WASHER-HARD (10.2X32X2.5MM THK)	
	6	1	**5C-6565**	9	BOLT (1/2-13X1.25 IN)	
	7	1	**5P-1076**	9	WASHER-HARD (13.5X30X4MM THK)	
	8	1	**6H-3615**	4	PLUG-PROTECTION	
	9	1	**7T-4385**	1	BOX AS	
		1	**1F-0750**	4	NUT-WELD (3/8-16 THD)	
	10	1	**4L-6454**	12	BOLT (3/8-16X1 IN)	
C	11	1	**188-9314**	1	COVER AS	
		1	**3P-3604**	4	STUD-WELD (1/4-20X.620IN OAL)	
		1	**7T-1099**	2	LINK	
		1	**1F-0748**	1	NUT-WELD (1/2-13 THD)	
		1	**4F-9101**	4	LUG (1/4-20 THD)	
	12	1	**5P-8502**	1	PADLOCK GP	
A		1	**5P-8500**	1	KEY	
A		1	**8Y-6364**	1	SLEEVE	
	13	1	**6D-1746**	1	BOLT (1/2-13X1.32 IN)	
		1	**3B-4610**	1	COTTER	
	14	1	**8T-4223**	5	WASHER-HARD (13.5X25.5X3MM THK)	
	15	1	**4H-1641**	1	PIN-SPRING	
	16	1	**5P-7705**	1	PLUG-BUTTON	
BD	17	1	**5P-5639**		SEAL	
	18	1	**8E-3720**	2	PLATE AS	
					(EACH INCLUDES)	
		1	**1F-0750**	2	NUT-WELD (3/8-16 THD)	
	19	1	**9S-8230**	1	PLATE AS	
		1	**1F-0750**	1	NUT-WELD (3/8-16 THD)	
	20	1	**104-5771**	1	PLATE	
	21	1	**5P-2566**	4	BOLT (1/2-13X1.5 IN)	
	22	1	**104-5773**	1	PLATE	
	23	1	**8E-7561**	1	KNOB AS	
		1	**7S-2042**	1	STUD	
		1	**8T-7566**	1	PIN-SPRING	

A-NOT PART OF THIS GROUP
B-USE AS REQUIRED
C-CHANGE FROM PREVIOUS TYPE
D-ORDER BY THE METER

8E-7212 **ENCLOSURE GP** *(contd.)* **i01446724**

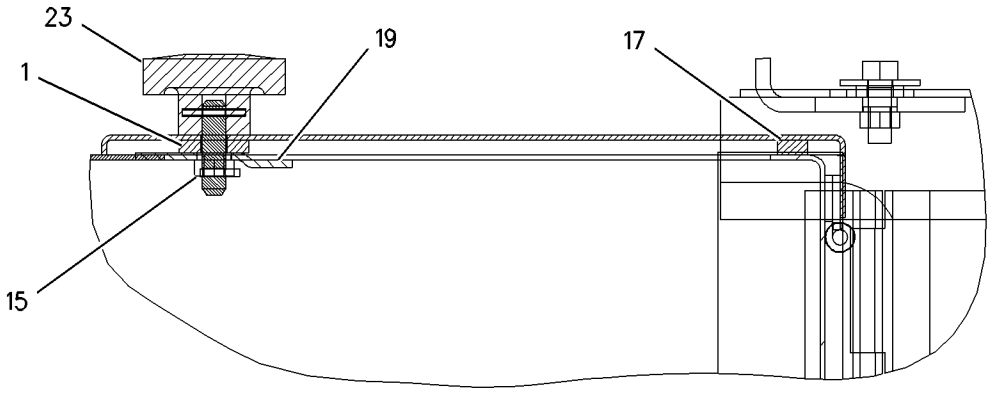

SECTION C-C

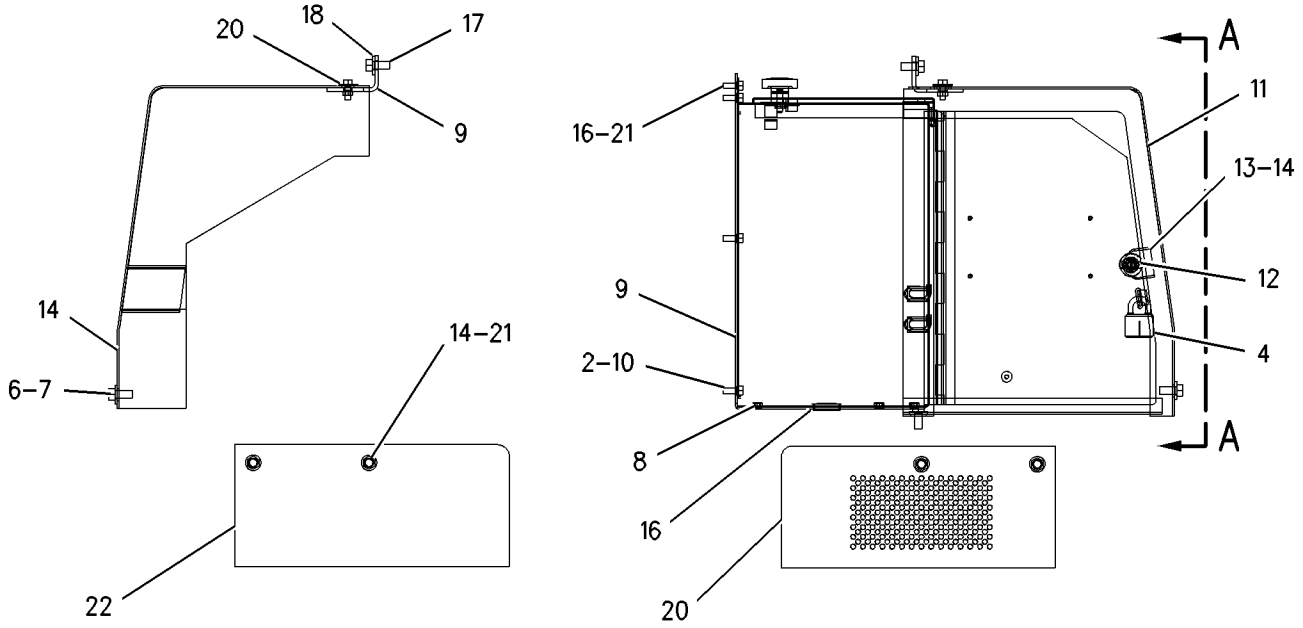

FRONT VIEW

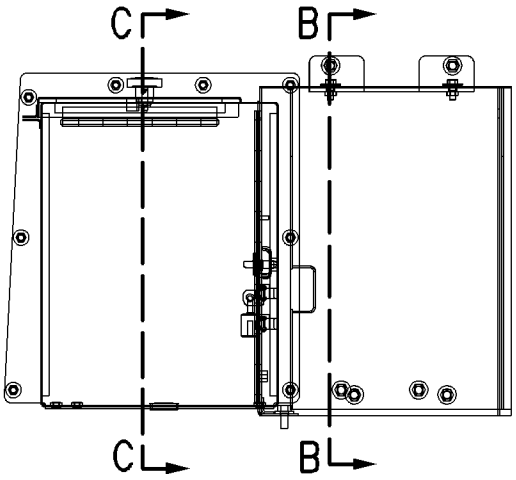

VIEW A-A

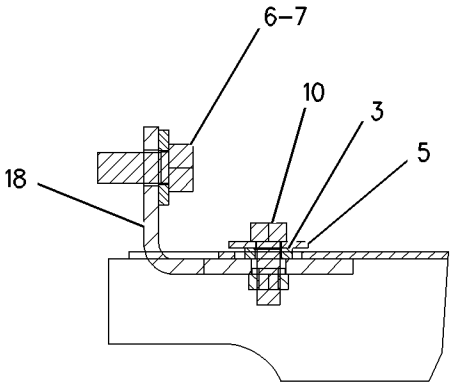

SECTION B-B

GRAPHIC #1 g00685357

133-8702 ENCLOSURE GP-ENGINE

S/N: ABK1-UP
AN ATTACHMENT

SMCS-7263 **i01396813**

NOTE	REF NO	GRAPHIC REF	PART NUMBER	QTY	PART NAME 1 2 3 4 5 6 (PRODUCT LEVEL)	SEE PAGE
	1	1	**1Q-2112**	1	PIN AS	
	2	1	**1Q-2113**	1	PIN AS	
	3	1	**1Q-2118**	1	PLATE AS	
	4	1	**1Q-2120**	1	PLATE AS	
	5	1	**1Q-3754**	1	GUARD AS	
	6	1	**133-8703**	1	PLATE AS	
		1	**9Z-9377**	1	BAR	
		1	**8F-9836**	1	LUG (3/8-16 THD)	
		1	**9K-8590**	2	BOSS (26.9CM LG)	
	7	1	**9P-9548**	1	PIN (FRONT)	
	8	1	**9P-9549**	1	PIN (REAR)	
	9	1	**133-8704**	1	PLATE AS	
		1	**9Z-9377**	1	BAR	
	10	1	**9P-9548**	1	PIN (FRONT)	
	11	1	**9P-9549**	1	PIN (REAR)	
	12	1	**4L-9337**	4	BOLT (3/8-16X1.5 IN)	
	13	1	**5P-1075**	4	WASHER-HARD (10.2X22.5X3MM THK)	
	14	1	**5P-1076**	4	WASHER-HARD (13.5X30X4MM THK)	
	15	1	**6V-8801**	4	NUT (3/8-16 THD)	
	16	1	**8T-4994**	4	WASHER-HARD (20X36.5X5MM THK)	
	17	1	**8T-8919**	4	BOLT (1/2-13X1.75 IN)	
	18	1	**8T-9399**	4	BOLT (3/4-10X2.25IN)	

133-8702 **ENCLOSURE GP-ENGINE** ***(contd.)*** **i01396813**

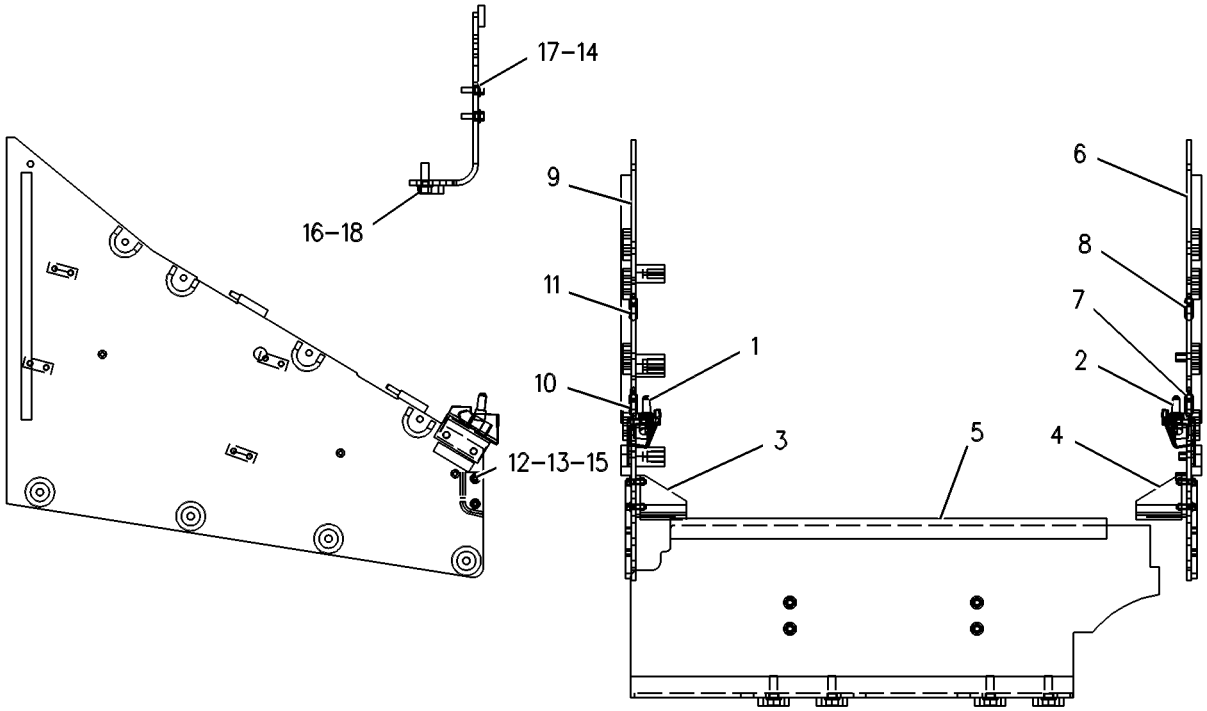

GRAPHIC #1 g00264492

FRAME AND BODY

164-5840 ENCLOSURE GP-ENGINE

S/N: ABK1-UP
AN ATTACHMENT

SMCS-7263 **i01427918**

NOTE	REF NO	GRAPHIC REF	PART NUMBER	QTY	PART NAME 1 2 3 4 5 6 (PRODUCT LEVEL)	SEE PAGE
	1	1	**5P-1075**	4	WASHER-HARD (10.2X22.5X3MM THK)	
	2	1	**8T-9383**	6	BOLT (1/2-13X0.75 IN)	
		1	**8T-4223**	6	WASHER-HARD (13.5X25.5X3MM THK)	
					(LH SIDE FOR CLUTCH/BRAKE MACHINES ONLY)	
	3	1	**5P-8502**	2	PADLOCK GP	
					(EACH INCLUDES)	
A		1	**5P-8500**	1	KEY	
A		1	**8Y-6364**	1	SLEEVE	
	4	1	**6T-5385**	1	PLATE	
	5	1	**8D-6542**	4	GROMMET	
	6	1	**9F-3691**	1	SPACER (0.28X0.44X0.26IN THK)	
	7	1	**9W-4829**	1	BAFFLE AS-RH	
		1	**6B-4594**	6	RIVET	
	8	1	**110-5358**	1	PLATE AS	
		1	**3H-5366**	1	STUD-WELD	
	9	1	**116-3291**	1	BAFFLE AS-RH	
		1	**6B-4594**	3	RIVET	
	10	1	**116-3292**	1	BAFFLE AS	
		1	**6B-4594**	3	RIVET	
Y	11	1	*130-9195*	1	DOOR GP-LH	463
	12	1	**131-8037**	1	PLATE AS-LH	
	13	1	**131-8039**	1	PLATE AS-RH	
	14	1	**131-8041**	1	PLATE AS-LH	
		1	**9P-9550**	2	TUBE	
	15	1	**131-8043**	1	PLATE AS-RH	
		1	**9P-9550**	2	TUBE	
	16	1	**162-8727**	1	PIN AS	
	17	1	**162-8728**	1	PIN AS	
BD	18	1	**5P-7483**		SEAL	
	19	1	**170-0781**	1	HINGE AS-RH	
	20	1	**170-0783**	1	HINGE AS-LH	
Y	21	1	*170-1845*	1	DOOR GP-RH	466
	22	1	**2D-6235**	2	LOCKNUT (1/4-20 THD)	
BD	23	1	**5P-7036**		SEAL	
	24	1	**5P-1076**	8	WASHER-HARD (13.5X30X4MM THK)	
	25	1	**5P-2228**	8	BOLT (1/2-13X1 IN)	
	26	1	**5P-2566**	4	BOLT (1/2-13X1.5 IN)	
	27	1	**5P-4115**	2	WASHER-HARD (7.2X19X2MM THK)	
	28	1	**8T-4223**	6	WASHER-HARD (13.5X25.5X3MM THK)	
	29	1	**164-5841**	1	HOOD AS	
		1	**8J-7236**	5	NUT-WELD (3/4-10 THD)	
		1	**1F-0748**	3	NUT-WELD (1/2-13 THD)	
		1	**1F-0750**	4	NUT-WELD (3/8-16 THD)	
	29A	1	**2S-2110**	2	BRACKET	
	29B	1	**7G-9913**	1	DOOR	
	29C	1	**053-6846**	1	SPRING	
	29D	1	**9B-2052**	1	HINGE	
	29E	1	**053-6845**	2	BRACKET	
	29F	1	**6T-4294**	1	HANDHOLD (LH)	
	29G	1	**170-9096**	1	HANDHOLD (RH)	
	29H	1	**1F-3856**	2	PIPE	
B	30	1	**8T-4994**	2	WASHER-HARD (20X36.5X5MM THK)	
	31	1	**8T-8908**	1	BOLT (1/4-20X1 IN)	
	32	1	**8T-9383**	2	BOLT (1/2-13X0.75 IN)	
	33	1	**8T-9377**	4	BOLT (3/8-16X2.25 IN)	

A-NOT PART OF THIS GROUP
B-USE AS REQUIRED
D-ORDER BY THE METER
Y-SEPARATE ILLUSTRATION

164-5840 **ENCLOSURE GP-ENGINE** *(contd.)* **i01427918**

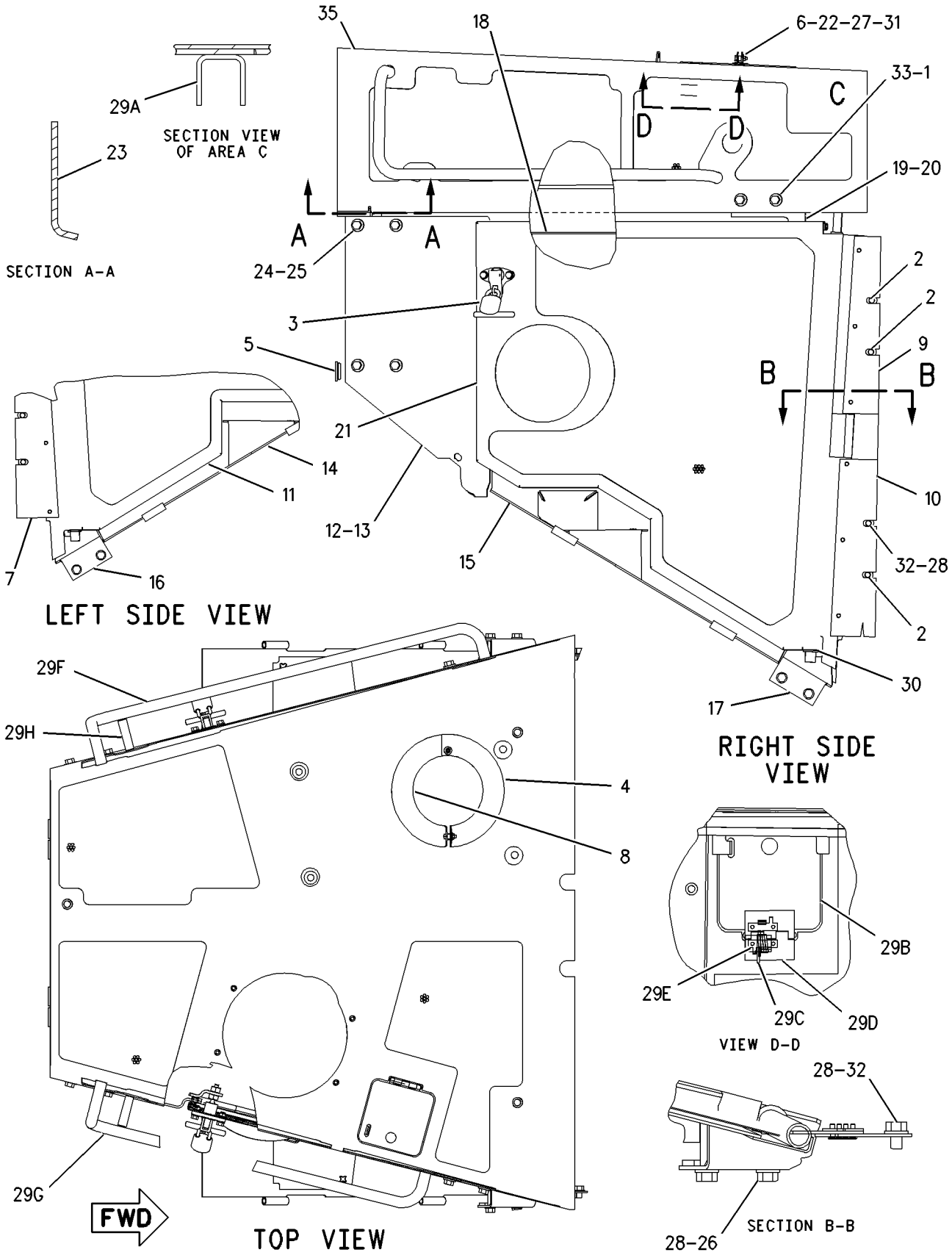

GRAPHIC #1

g00755074

MEMORANDA

FRAME AND BODY

164-5843 ENCLOSURE GP-ENGINE

S/N: ABK1-432
SOUND SUPPRESSION
PART OF 166-3785 SUPPRESSION AR-SOUND
AN ATTACHMENT

SMCS-7263 **i01442116**

NOTE	REF NO	GRAPHIC REF	PART NUMBER	QTY	PART NAME 1 2 3 4 5 6 (PRODUCT LEVEL)	SEE PAGE
	1	1	**3K-6060**	21	LOCKNUT	
BD	2	1	**5P-7483**		SEAL	
	3	1	**5P-8502**	2	PADLOCK GP	
					(EACH INCLUDES)	
A		1	**5P-8500**	1	KEY	
A		1	**8Y-6364**	1	SLEEVE	
	4	1	**8D-6542**	4	GROMMET	
	5	1	**9W-4829**	1	BAFFLE AS-RH	
		1	**6B-4594**	6	RIVET	
	6	1	**116-3291**	1	BAFFLE AS-RH	
		1	**6B-4594**	3	RIVET	
	7	1	**116-3292**	1	BAFFLE AS	
		1	**6B-4594**	3	RIVET	
	8	1	**131-8037**	1	PLATE AS-LH	
	9	1	**131-8039**	1	PLATE AS-RH	
	10	1	**131-8041**	1	PLATE AS-LH	
	11	1	**131-8043**	1	PLATE AS-RH	
	12	1	**131-8061**	1	LINER-RH	
	13	1	**131-8062**	1	LINER-LH	
Y	14	1	*131-8556*	1	DOOR GP-LH	464
	15	1	**162-8727**	1	PIN AS	
	16	1	**162-8728**	1	PIN AS	
	17	1	**8T-9383**	6	BOLT (1/2-13X0.75 IN)	
		1	**8T-4223**	6	WASHER-HARD (13.5X25.5X3MM THK)	
					(LH SIDE FOR CLUTCH/BRAKE MACHINES ONLY)	
	18	1	**170-0781**	1	HINGE AS-RH	
	19	1	**170-0783**	1	HINGE AS-LH	
Y	20	1	*170-1852*	1	DOOR GP-RH	468
	21	1	**5P-1076**	8	WASHER-HARD (13.5X30X4MM THK)	
	22	1	**5P-2228**	8	BOLT (1/2-13X1 IN)	
	23	1	**5P-2566**	4	BOLT (1/2-13X1.5 IN)	
	24	1	**7X-0578**	21	WASHER-HARD (10.2X32X2.5MM THK)	
	25	1	**8T-4223**	6	WASHER-HARD (13.5X25.5X3MM THK)	
B	26	1	**8T-4994**	2	WASHER-HARD (20X36.5X5MM THK)	
	27	1	**8T-9383**	2	BOLT (1/2-13X0.75 IN)	
	28	1	**8T-9377**	4	BOLT (3/8-16X2.25 IN)	
		1	**5P-1075**	4	WASHER-HARD (10.2X22.5X3MM THK)	
BD	29	1	**5P-7036**		SEAL	
	30	1	**164-5841**	1	HOOD AS	
		1	**8J-7236**	5	NUT-WELD (3/4-10 THD)	
		1	**1F-0748**	3	NUT-WELD (1/2-13 THD)	
		1	**1F-0750**	4	NUT-WELD (3/8-16 THD)	
	30A	1	**2S-2110**	2	BRACKET	
	30B	1	**7G-9913**	1	DOOR	
	30C	1	**053-6846**	1	SPRING	
	30D	1	**9B-2052**	1	HINGE	
	30E	1	**053-6845**	2	BRACKET	
	30F	1	**6T-4294**	1	HANDHOLD (LH)	
		1	**170-9096**	1	HANDHOLD (RH)	
		1	**1F-3856**	2	PIPE	

A-NOT PART OF THIS GROUP
B-USE AS REQUIRED
D-ORDER BY THE METER
Y-SEPARATE ILLUSTRATION

164-5843 **ENCLOSURE GP-ENGINE** *(contd.)* **i01442116**

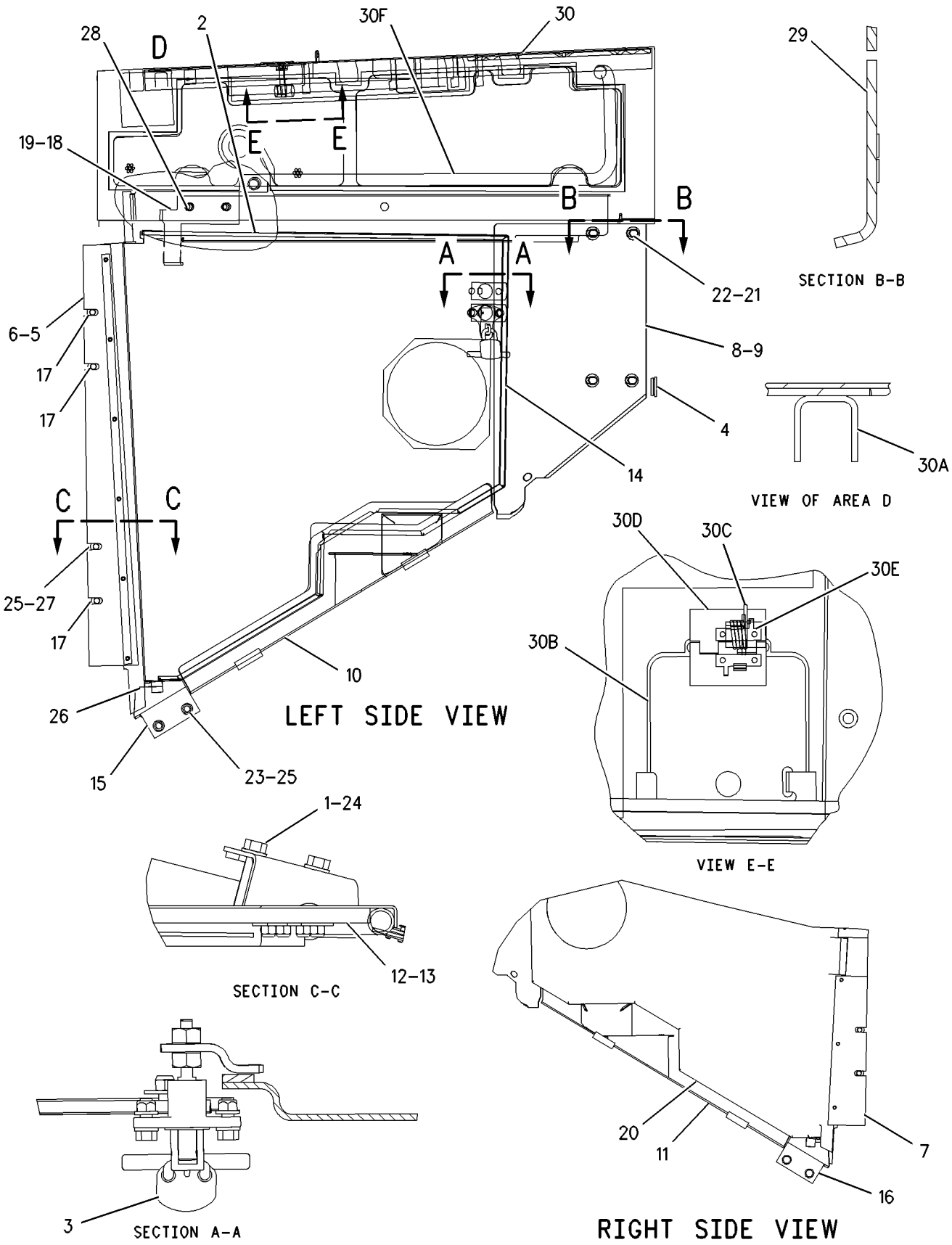

GRAPHIC #1

g00755533

FRAME AND BODY

164-1949 FENDER GP

S/N: ABK1-UP

PART OF 162-9501 CHASSIS AR

SMCS-7252 **i01445951**

NOTE	REF NO	GRAPHIC REF	PART NUMBER	QTY	PART NAME 1 2 3 4 5 6 (PRODUCT LEVEL)	SEE PAGE
	1	1	**3T-2977**	2	PLATE	
	2	2	**3W-3110**	4	LOCKPIN	
	3	1	**5P-8502**	1	PADLOCK GP	
A		1	**5P-8500**	1	KEY	
A		1	**8Y-6364**	1	SLEEVE	
	4	1	**5V-1496**	4	RETAINER	
	5	1	**6T-9352**	1	PLATE	
	6	1	**6T-9354**	1	PLATE	
	7	1	**6T-9355**	1	PLATE	
	8	1	**7G-4849**	2	PLATE	
	9	1	**7G-6171**	2	STEP	
	10	1	**7J-8814**	1	PLUG	
	11	1	**9M-3835**	4	LATCH-RUBBER	
	12	2	**9W-0352**	2	LINK	
	13	2	**9W-6958**	2	HANDHOLD	
	14	2	**9W-9173**	2	HANDHOLD	
	15	2	**100-5518**	2	PLATE AS	
					(EACH INCLUDES)	
	16	2	**8T-5911**	6	NUT-WELD (1/2-13 THD)	
	17	1	**111-8268**	1	COVER AS	
	18	1	**1F-0750**	5	NUT-WELD (3/8-16 THD)	
	19	1	**8M-8382**	1	COLLAR	
	20	1	**140-7477**	1	BEAM AS	
		1	**1F-0750**	11	NUT-WELD (3/8-16 THD)	
		1	**8D-3508**	1	BOSS	
		1	**8J-1196**	1	LUG (3/8-16 THD)	
		1	**8K-0273**	2	BOSS (1/2-13 THD)	
	21	1	**7T-1099**	6	LINK	
	22	1	**8F-9836**	5	LUG (3/8-16 THD)	
	23	1	**2M-5795**	4	PIN-CLEVIS	
	24	1	**4L-6454**	4	BOLT (3/8-16X1 IN)	
	25	1	**5P-1075**	12	WASHER-HARD (10.2X22.5X3MM THK)	
	26	2	**5P-1076**	26	WASHER-HARD (13.5X30X4MM THK)	
	27	1	**5S-7379**	8	BOLT (3/8-16X0.875 IN)	
	28	1	**6J-0488**	14	SCREW-BUTTON HEAD (3/8-16X0.875 IN)	
	29	1	**6V-1193**	28	SCREW-HEX SOCKET (3/8-16X.625 IN)	
	30	2	**7X-0345**	8	BOLT (5/8-11X1.75 IN)	
	31	1	**7X-0346**	8	BOLT (5/8-11X2 IN)	
	32	2	**7X-0349**	12	BOLT (5/8-11X3 IN)	
	33	1,2	**7X-0515**	32	WASHER-HARD (17X35X5MM THK)	
	34	1	**7X-0578**	2	WASHER-HARD (10.2X32X2.5MM THK)	
	35	1	**8T-4226**	8	WASHER-PLATED (10.5X45X3MM THK)	
	36	1	**8T-6871**	4	BOLT (5/8-11X2.50 IN)	
	37	2	**8T-8917**	10	BOLT (1/2-13X1.25 IN)	
	38	2	**8T-8919**	12	BOLT (1/2-13X1.75 IN)	
	39	1	**9B-7237**	12	BOLT (3/8-16X1.25 IN)	
E	40	1	**112-9736**		SEAL (129CM)	
	41	1	**111-8269**	1	COVER AS	
	42	1	**1F-0750**	5	NUT-WELD (3/8-16 THD)	
	43	1	**8M-8382**	1	COLLAR	
	44	1	**118-2112**	1	BARRIER AS	
	45	1	**8T-7971**	10	WASHER-HARD (13.5X25.5X5MM THK)	
	46	1	**164-1950**	1	FENDER AS-LH	
		1	**1F-0750**	2	NUT-WELD (3/8-16 THD)	
	47	1	**9W-0648**	1	HINGE	
	48	1	**7T-1099**	18	LINK	

164-1949 **FENDER GP** *(contd.)*

i01445951

NOTE	REF NO	GRAPHIC REF	PART NUMBER	QTY	PART NAME 1 2 3 4 5 6 (PRODUCT LEVEL)	SEE PAGE
	49	2	**1F-0748**	4	NUT-WELD (1/2-13 THD)	
	50	1	**8T-5911**	12	NUT-WELD (1/2-13 THD)	
	51	1	**8T-5912**	12	NUT-WELD (3/8-16 THD)	
	52	1	**164-1951**	1	FENDER AS-RH	
		1	**1F-0748**	4	NUT-WELD (1/2-13 THD)	
		1	**1F-0750**	2	NUT-WELD (3/8-16 THD)	
	53	1	**8T-5912**	6	NUT-WELD (3/8-16 THD)	
	54	1	**9W-0648**	1	HINGE	
	55	1	**8T-5911**	15	NUT-WELD (1/2-13 THD)	
	56	1	**7T-1099**	18	LINK	
	57	1	**104-5784**	1	GROMMET	

A-NOT PART OF THIS GROUP
E-ORDER BY THE CENTIMETER

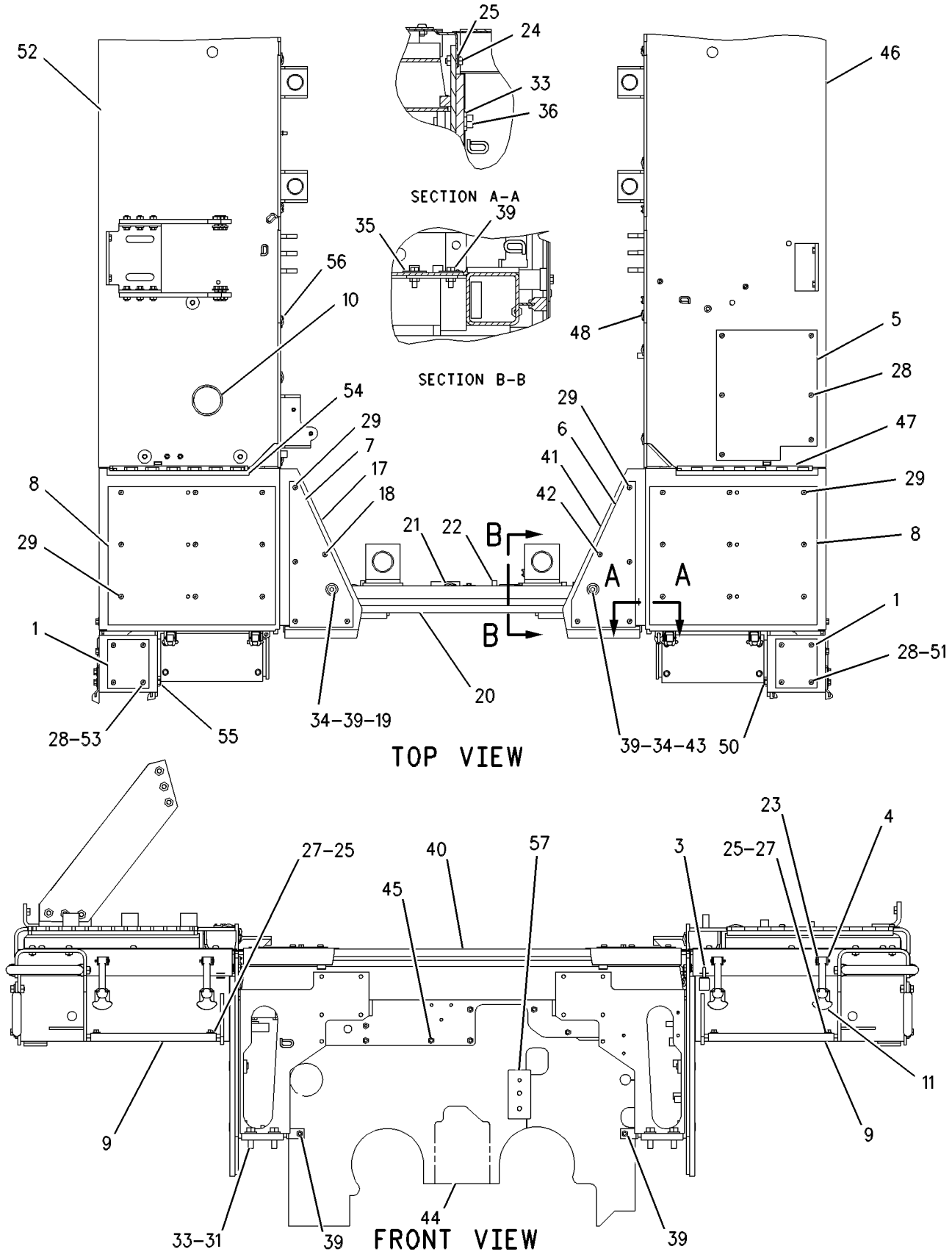

GRAPHIC #1 g00561899

164-1949 **FENDER GP** ***(contd.)*** **i01445951**

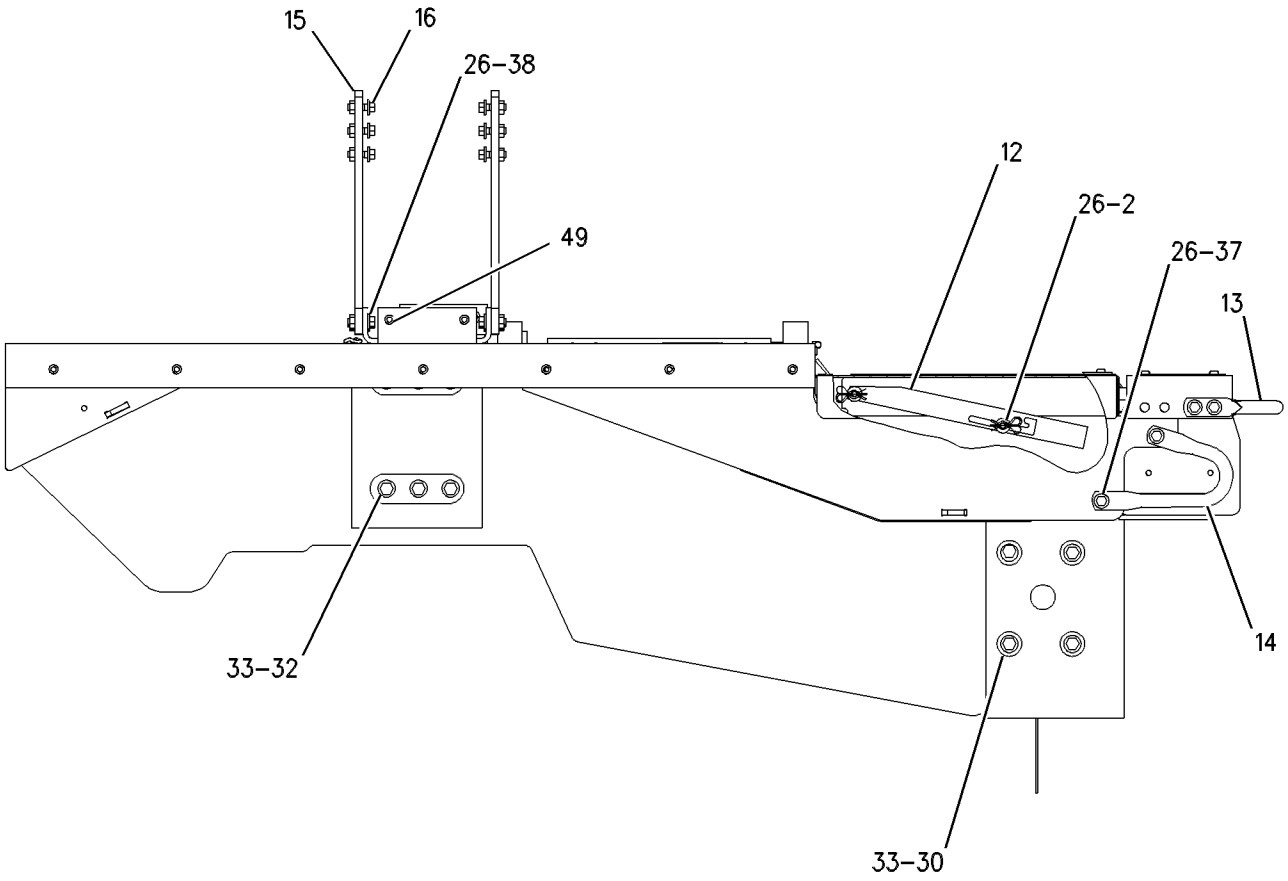

LEFT SIDE VIEW

GRAPHIC #2 g00561900

FRAME AND BODY

168-4593 GRID GP-SAND BLAST ERODING

S/N: ABK1-UP
AN ATTACHMENT

SMCS-7179 **i01445955**

NOTE	REF NO	GRAPHIC REF	PART NUMBER	QTY	PART NAME 1 2 3 4 5 6 (PRODUCT LEVEL)	SEE PAGE
	1	1	**168-4591**	1	GRID AS	
	2	1	**164-2134**	1	GRID AS	
	3	1	**5P-1075**	14	WASHER-HARD (10.2X22.5X3MM THK)	
	4	1	**8T-2502**	4	BOLT (3/8-16X1.125 IN)	
	5	1	**5P-4116**	5	WASHER-HARD (8.8X20.5X2MM THK)	
	6	1	**8T-5391**	5	BOLT (5/16-18X.5 IN)	
	7	1	**5S-7379**	4	BOLT (3/8-16X0.875 IN)	
	8	1	**132-4933**	1	BRACKET AS	
		1	**1F-0750**	4	NUT-WELD (3/8-16 THD)	

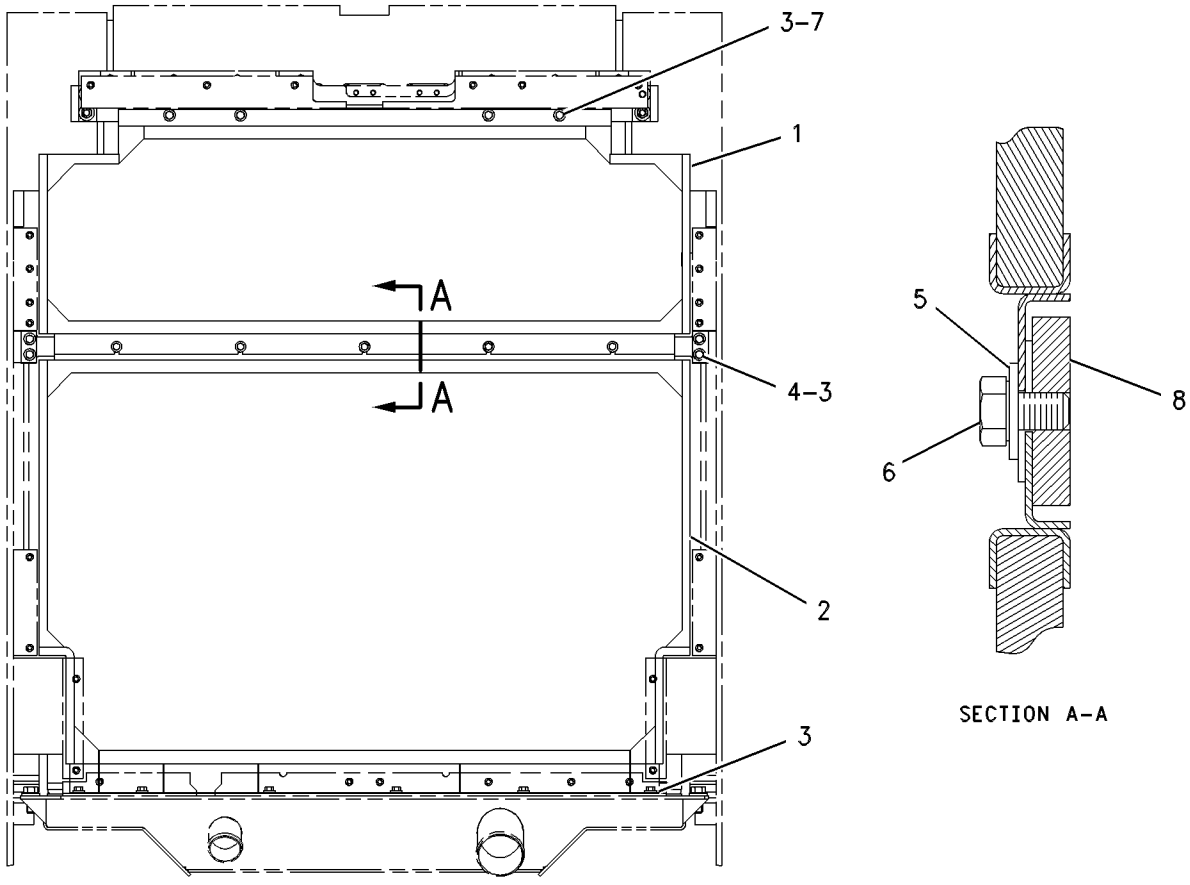

FRONT VIEW

GRAPHIC #1 g00577351

FRAME AND BODY

188-0532 GUARD AR-FINAL DRIVE

S/N: ABK1-UP
DUO-CONE GUARD AND PACKING SEAL
AN ATTACHMENT

SMCS-7172 **i01428810**

NOTE	PART NUMBER	QTY	PART NAME 1 2 3 4 5 6 (PRODUCT LEVEL)	SEE PAGE
Y	**192-9147**	2	FINAL DRIVE GP	406

Y-SEPARATE ILLUSTRATION

196-1353 GUARD AR-IDLER

S/N: ABK1-UP

AN ATTACHMENT

SMCS-4159 **i01429005**

NOTE	PART NUMBER	QTY	PART NAME 1 2 3 4 5 6 (PRODUCT LEVEL)	SEE PAGE
Y	**167-1947**	4	IDLER GP-TRACK	523

Y-SEPARATE ILLUSTRATION

FRAME AND BODY

1Q-3647 GUARD GP-BOTTOM

S/N: ABK1-UP
AN ATTACHMENT

SMCS-7153 **i01396924**

NOTE	REF NO	GRAPHIC REF	PART NUMBER	QTY	PART NAME 1 2 3 4 5 6 (PRODUCT LEVEL)	SEE PAGE
	1	1	**1Q-3642**	1	GUARD AS	
	2	1	**1Q-3644**	1	GUARD AS	
	3	1	**1Q-3645**	1	GUARD AS	
	4	1	**3B-5317**	4	COTTER	
		1	**6T-5941**	4	PIN-SECONDARY BAR	
		1	**8T-5361**	4	WASHER-HARD (28X49X5MM THK)	
	5	1	**6P-8829**	16	RETAINER	
		1	**1J-5929**	16	BOLT (1-8X6 IN)	
		1	**6V-8190**	16	NUT (1-8 THD)	
	6	1	**7X-0405**	6	BOLT (1-8X2.75 IN)	
	7	1	**7G-0339**	1	GUARD AS	
	8	1	**7G-6495**	2	COVER	
	9	1	**124-8331**	1	GUARD AS	
		1	**8B-1910**	2	BOSS (3/8-16 THD)	
	10	1	**7X-0549**	24	WASHER-HARD (28X52.5X8MM THK)	
	11	1	**8T-4994**	8	WASHER-HARD (20X36.5X5MM THK)	
		1	**8T-9398**	8	BOLT (3/4-10X1.75 IN)	
	12	1	**7X-0401**	2	BOLT (1-8X1.75 IN)	
	13	1	**8T-2502**	2	BOLT (3/8-16X1.125 IN)	

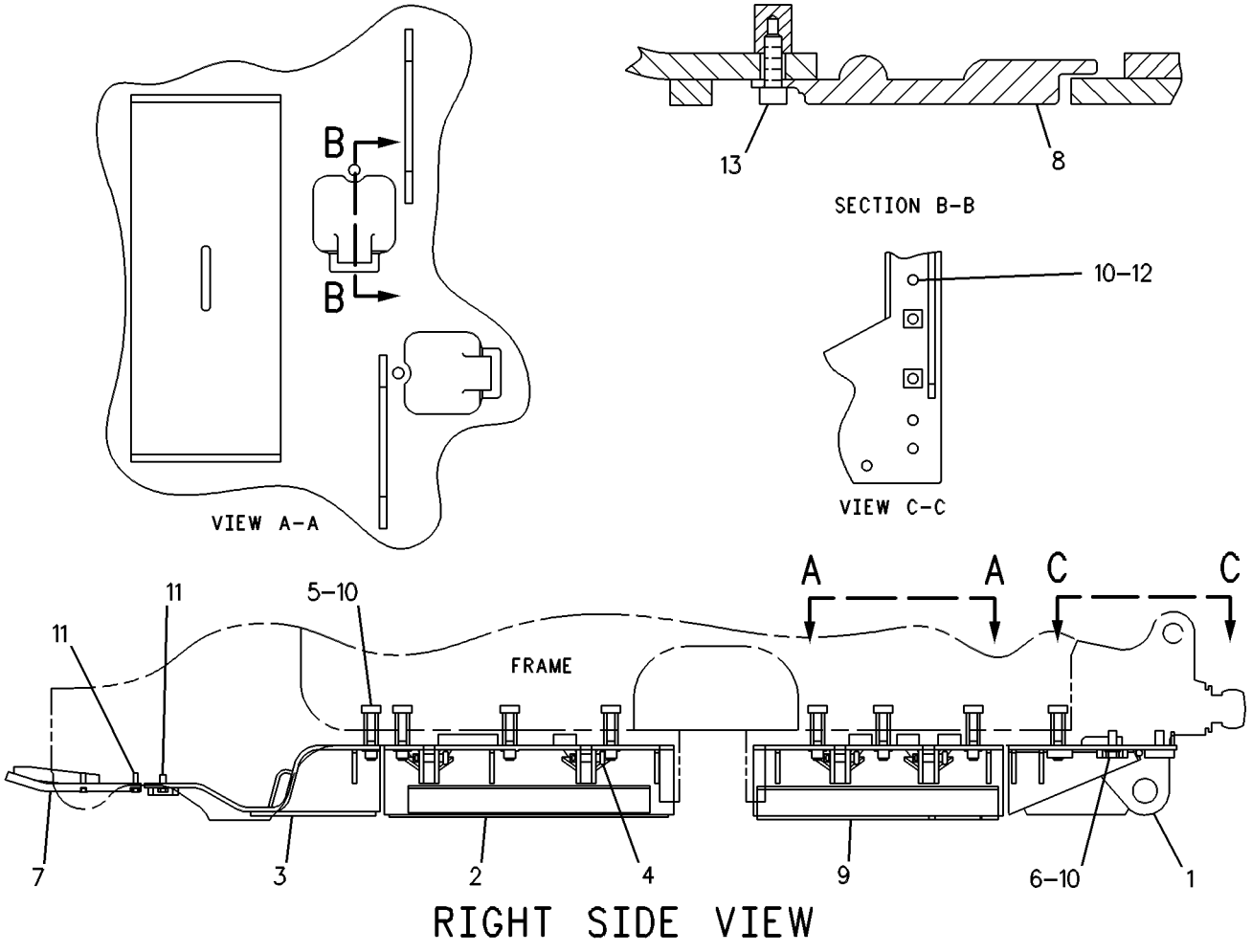

GRAPHIC #1 g00249444

7T-8745 GUARD GP-BOTTOM

S/N: ABK1-UP

PART OF 162-9501 CHASSIS AR

SMCS-7153 **i01396930**

NOTE	REF NO	GRAPHIC REF	PART NUMBER	QTY	PART NAME 1 2 3 4 5 6 (PRODUCT LEVEL)	SEE PAGE
	1	1	**7G-0339**	1	GUARD AS	
C	2	1	**7X-0549**	24	WASHER-HARD (28X52.5X8MM THK)	
	3	1	**8T-4994**	8	WASHER-HARD (20X36.5X5MM THK)	
	4	1	**8T-9398**	8	BOLT (3/4-10X1.75 IN)	
	5	1	**6P-8829**	16	RETAINER	
	6	1	**6T-5941**	4	PIN-SECONDARY BAR	
		1	**3B-5317**	4	COTTER	
	7	1	**7T-6228**	1	GUARD AS	
	8	1	**7X-0405**	6	BOLT (1-8X2.75 IN)	
	9	1	**8T-5361**	4	WASHER-HARD (28X49X5MM THK)	
	10	1	**7X-0401**	2	BOLT (1-8X1.75 IN)	
C	11	1	**8T-2502**	2	BOLT (3/8-16X1.125 IN)	
C	12	1	**7G-6495**	2	COVER	
C	13	1	**124-7629**	1	GUARD AS	
	14	1	**6V-8190**	16	NUT (1-8 THD)	
		1	**1J-5929**	16	BOLT (1-8X6 IN)	
	15	1	**7T-6242**	1	GUARD AS	
	16	1	**7T-6246**	1	GUARD AS	

C-CHANGE FROM PREVIOUS TYPE

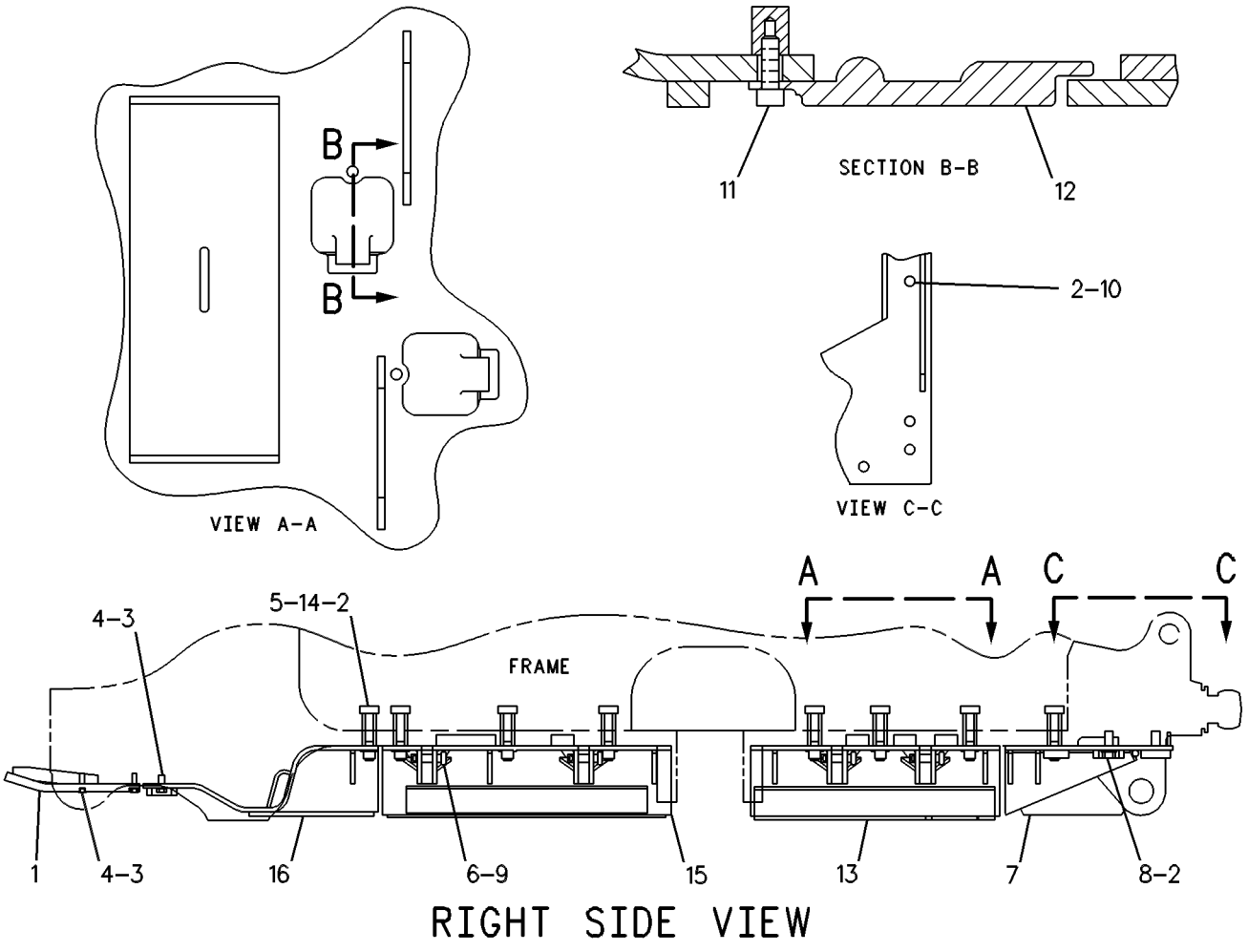

GRAPHIC #1 g00248476

MEMORANDA

166-1209 GUARD GP-FUEL TANK

S/N: ABK1-UP
AN ATTACHMENT

SMCS-1273 **i01445956**

NOTE	REF NO	GRAPHIC REF	PART NUMBER	QTY	PART NAME 1 2 3 4 5 6 (PRODUCT LEVEL)	SEE PAGE
	1	1	**111-2622**	1	GUARD	
	2	1	**166-1207**	1	GUARD AS-RH	
	3	1	**166-1206**	1	GUARD AS-LH	
					(EACH GUARD AS INCLUDES)	
		1	**8T-5911**	4	NUT-WELD (1/2-13 THD)	
	4	1	**8T-8919**	14	BOLT (1/2-13X1.75 IN)	
	5	1	**7X-0550**	22	WASHER-HARD (13.5X32X5MM THK)	
	6	1	**4V-6366**	4	SPACER	
	7	1	**8T-9391**	4	BOLT (1/2-13X3.75IN)	
	8	1	**7X-0590**	4	WASHER-HARD (13.5X44.5X6MM THK)	
	9	1	**5P-2566**	8	BOLT (1/2-13X1.5 IN)	
	10	1	**114-2492**	2	FILM-STRIPE (REAR)	
	11	1	**187-9209**	1	FILM (D9R)(RH SIDE)	
	12	1	**187-9210**	1	FILM (D9R)(LH SIDE)	

166-1209 **GUARD GP-FUEL TANK** ***(contd.)*** **i01445956**

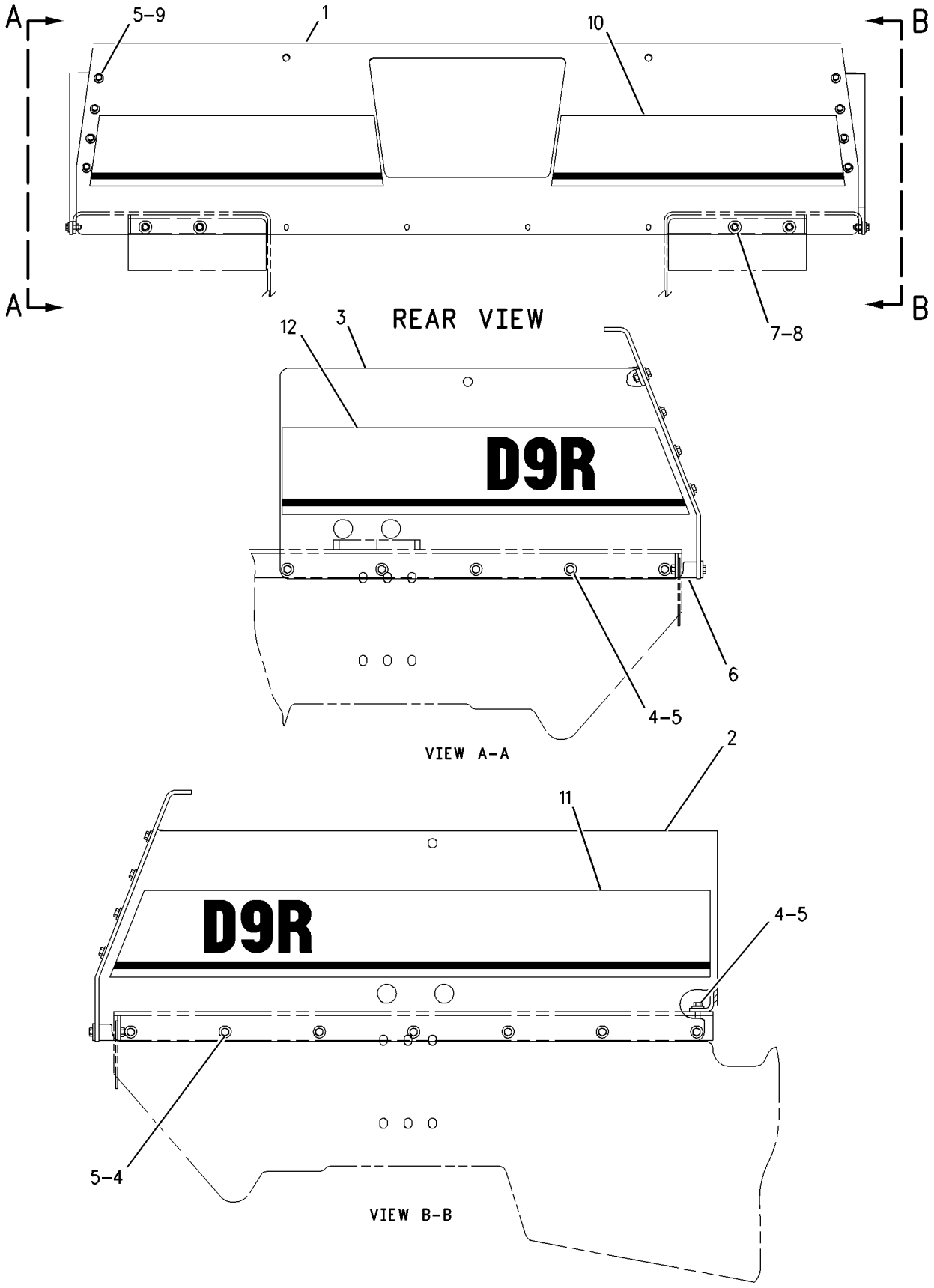

GRAPHIC #1 g00682964

139-7711 GUARD GP-IDLER

S/N: ABK1-UP
CANNOT BE USED WITH WASTE DISPOSAL AR
AN ATTACHMENT

SMCS-4159 **i01426293**

NOTE	REF NO	GRAPHIC REF	PART NUMBER	QTY	PART NAME 1 2 3 4 5 6 (PRODUCT LEVEL)	SEE PAGE
	1	1	**165-7855**	4	GUARD AS-IDLER	
	2	1	**8T-6871**	12	BOLT (5/8-11X2.50 IN)	
	3	1	**165-7861**	2	GUARD AS-RH	
	4	1	**165-7862**	2	GUARD AS-LH	
	5	1	**7X-0345**	12	BOLT (5/8-11X1.75 IN)	
	6	1	**8T-4122**	24	WASHER-HARD (17X32X3.5MM THK)	
	7	1	**165-7860**	4	BAR	
QUANTITIES SHOWN ARE THOSE REQUIRED FOR BOTH LH AND RH SIDES						

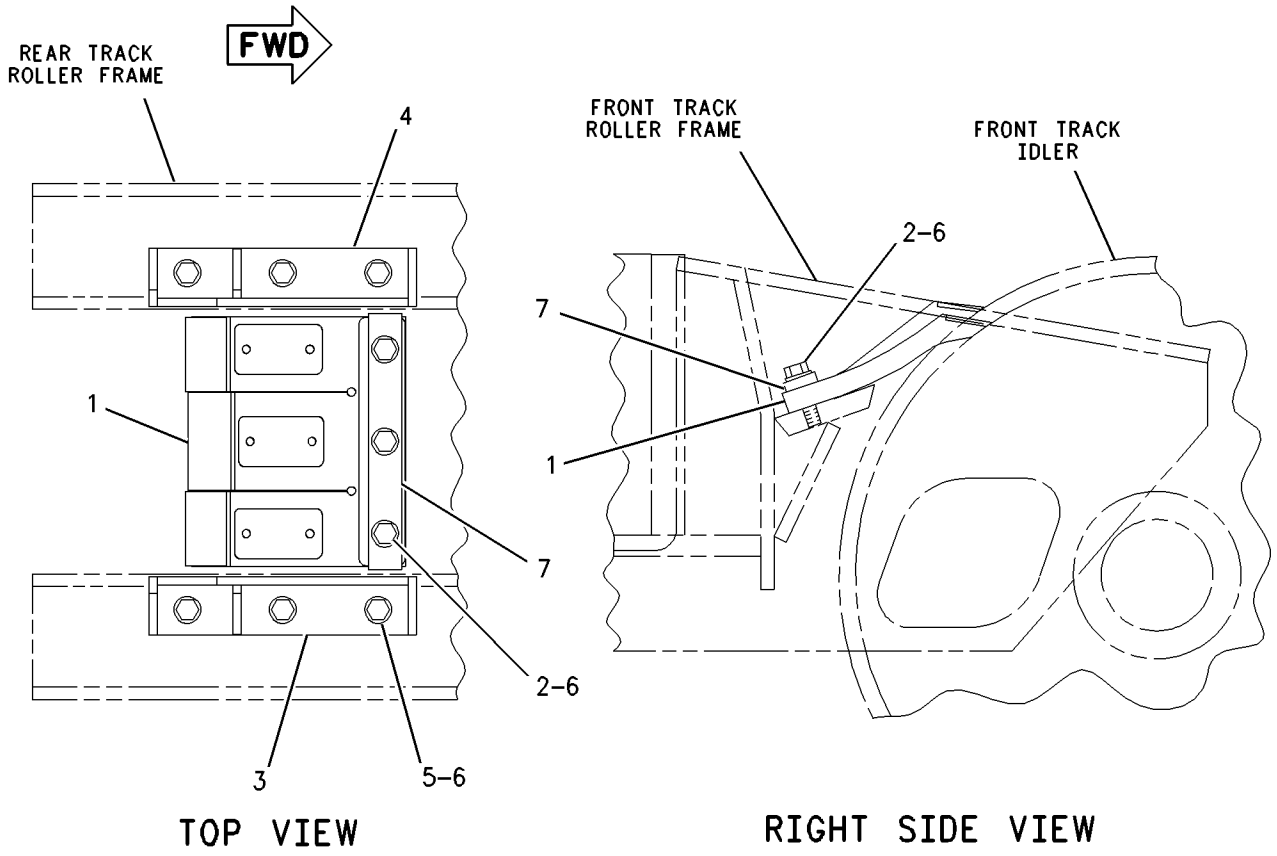

GRAPHIC #1 g00752037

FRAME AND BODY

1Z-0749 GUARD GP-PIVOT SHAFT

S/N: ABK1-UP
AN ATTACHMENT

SMCS-7150 **i01446727**

NOTE	REF NO	GRAPHIC REF	PART NUMBER	QTY	PART NAME 1 2 3 4 5 6 (PRODUCT LEVEL)	SEE PAGE
	1	1	**1Q-3627**	2	GUARD	
	2	1	**1Q-3626**	2	RETAINER	
	3	1	**8T-9389**	16	BOLT (1/2-13X2.75 IN)	
		1	**8T-4223**	16	WASHER-HARD (13.5X25.5X3MM THK)	

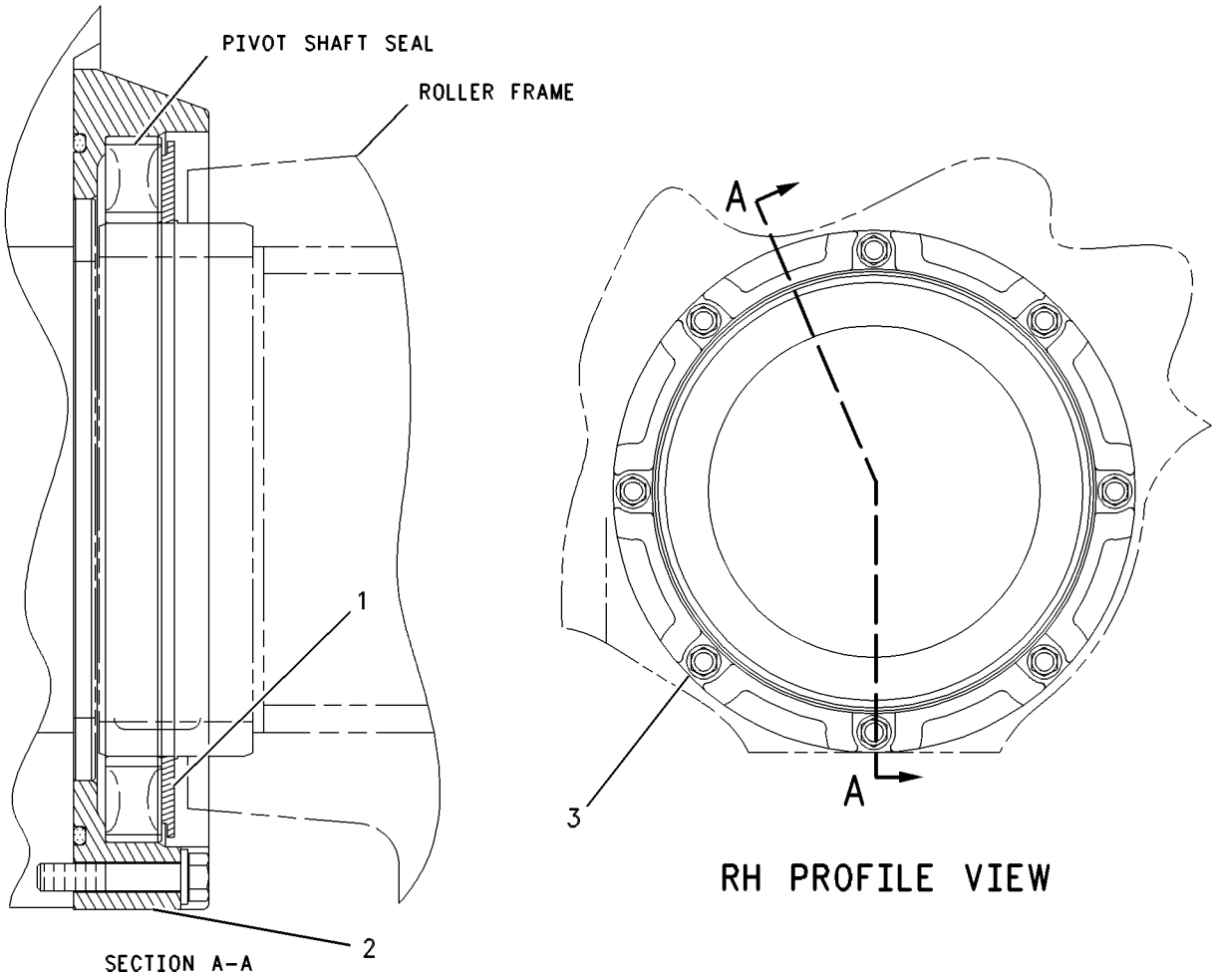

GRAPHIC #1 g00344482

163-9106 GUARD GP-RADIATOR

S/N: ABK1-UP

PART OF 162-9501 CHASSIS AR

SMCS-7155 **i01590681**

NOTE	REF NO	GRAPHIC REF	PART NUMBER	QTY	PART NAME 1 2 3 4 5 6 (PRODUCT LEVEL)	SEE PAGE
	1	1	**6I-8418**	1	BAR AS	
		1	**1F-0750**	2	NUT-WELD (3/8-16 THD)	
J	2	1	**8E-1050**	4	PLATE	
	3	1	**8E-4112**	1	PLATE	
	4	1	**8E-9963**	2	PLATE	
	5	1	**9C-6984**	2	PLATE	
	6	1	**9G-9239**	2	HANDHOLD AS	
	7	1	**9W-0725**	2	RETAINER	
	8	1	**9W-2822**	2	ROD	
	9	1	**9W-7006**	2	PIN	
	10	1	**103-6293**	2	PIN	
	11	1	**164-1962**	1	GUARD AS	
	12	1	**8P-0420**	2	BEARING	
	13	1	**9W-0330**	4	BEARING	
	14	1	**7J-1335**	2	BEARING (139.802MM OD)	
		1	**7J-1336**	2	BEARING (114.389MM OD)	
J	15	1	**7X-0346**	2	BOLT (5/8-11X2 IN)	
	16	1	**3B-4615**	4	PIN-COTTER	
	17	1	**4L-6454**	8	BOLT (3/8-16X1 IN)	
	18	1	**5C-6565**	8	BOLT (1/2-13X1.25 IN)	
	19	1	**5M-6214**	2	PLUG-PIPE	
	20	1	**5P-1075**	8	WASHER-HARD (10.2X22.5X3MM THK)	
	21	1	**5P-1076**	8	WASHER-HARD (13.5X30X4MM THK)	
	22	1	**7X-0346**	4	BOLT (5/8-11X2 IN)	
	23	1	**8C-4436**	4	BOLT (1/2-13X1.375 IN)	
	24	1	**8T-4122**	12	WASHER-HARD (17X32X3.5MM THK)	
	25	1	**8T-4223**	14	WASHER-HARD (13.5X25.5X3MM THK)	
	26	1	**8T-4896**	8	WASHER-HARD (10.2X18.5X2.5MM THK)	
	27	1	**8T-8917**	10	BOLT (1/2-13X1.25 IN)	
	28	1	**8T-9393**	8	BOLT (5/8-11X1.5 IN)	
	29	1	**9B-7237**	4	BOLT (3/8-16X1.25 IN)	
	30	1	**9J-5717**	2	COVER	
	31	1	**9J-5718**	2	GASKET	
	32	1	**164-1975**	1	DOOR AS	
	33	1	**164-1976**	1	DOOR AS	
	34	1	**164-1981**	1	BAFFLE AS	
	35	1	**164-1982**	1	BAFFLE AS	
					(EACH BAFFLE AS INCLUDES)	
		1	**6B-4594**	7	RIVET	
J	36	1	**198-9172**	2	PLUG	

J-PARTS MARKED J FOR USE WHEN SHIPPING MACHINE WITHOUT BLADE

163-9106 **GUARD GP-RADIATOR** ***(contd.)*** **i01590681**

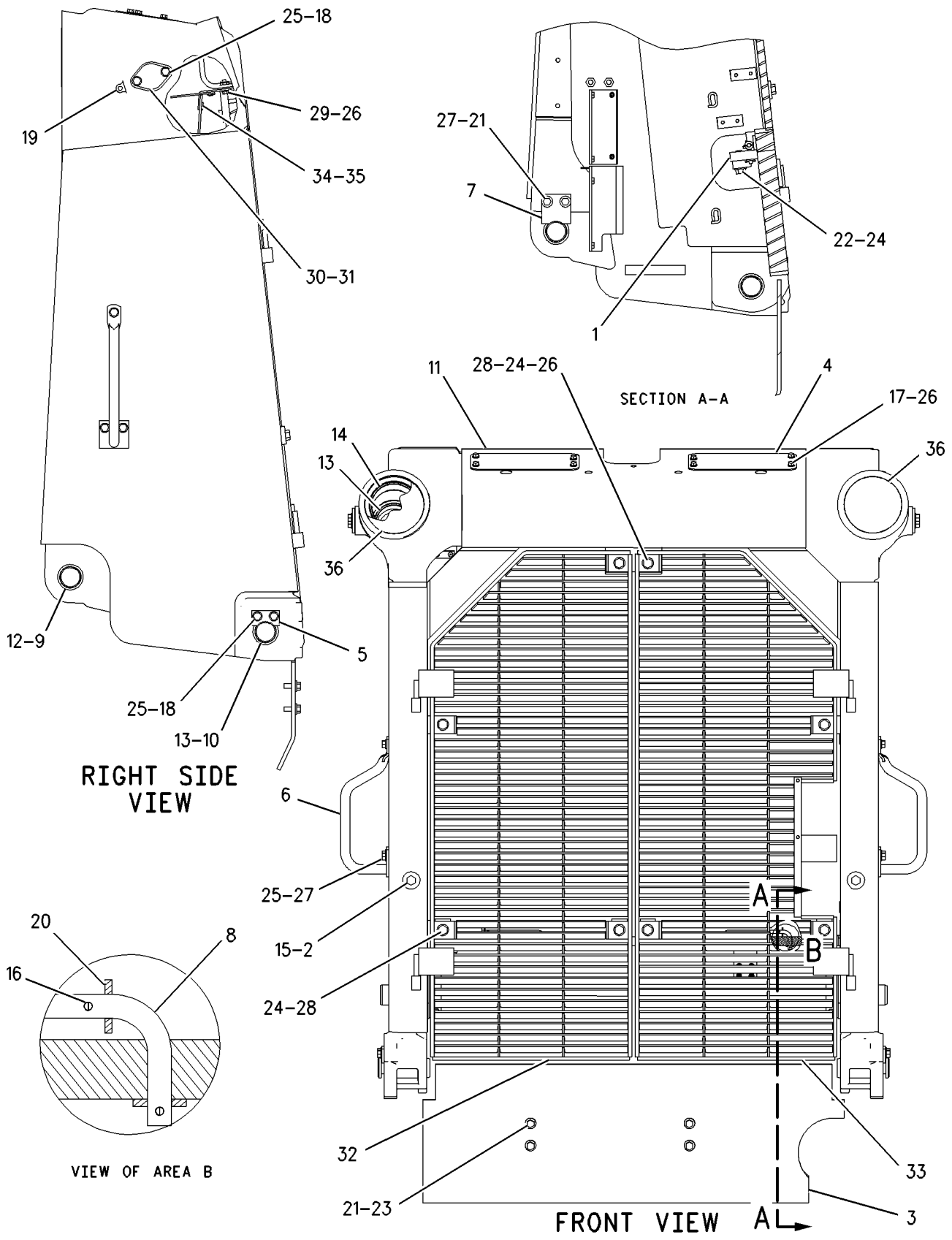

GRAPHIC #1

g00824902

102-1937 GUARD GP-ROCK

S/N: ABK1-UP
PART OF 102-1938 BLADE AS-SEMI-UNIVERSAL
AN ATTACHMENT

SMCS-7182 **i00589904**

NOTE	REF NO	GRAPHIC REF	PART NUMBER	QTY	PART NAME 1 2 3 4 5 6 (PRODUCT LEVEL)	SEE PAGE
	1	1	**102-6348**	1	GUARD AS-CENTER	
	2	1	**8K-5818**	4	BAR	
	3	1	**102-6351**	1	GUARD AS-RH	
	4	1	**102-6357**	1	GUARD AS-LH	

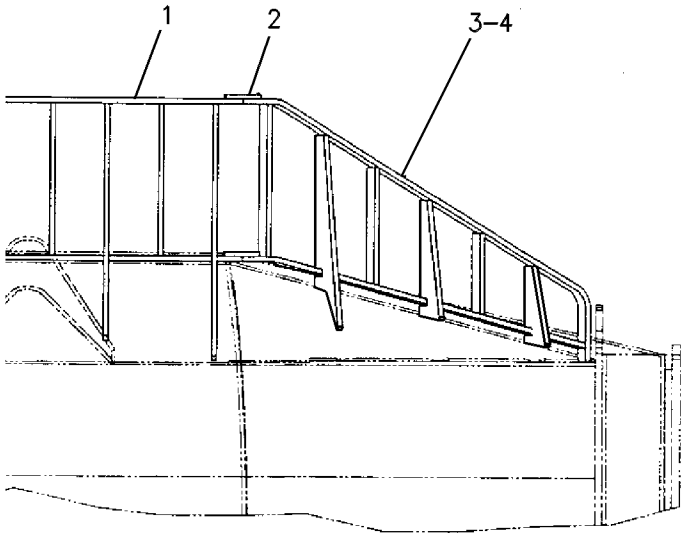

REAR VIEW

GRAPHIC #1 g00234797

113-6041 GUARD GP-ROCK

S/N: ABK1-UP
PART OF 113-3241 BLADE AS-UNIVERSAL
AN ATTACHMENT

SMCS-7182 **i00591655**

NOTE	REF NO	GRAPHIC REF	PART NUMBER	QTY	PART NAME 1 2 3 4 5 6 (PRODUCT LEVEL)	SEE PAGE
	1	1	**102-6348**	1	GUARD AS-CENTER	
	2	1	**8K-5818**	4	BAR	
	3	1	**113-6317**	1	GUARD AS-RH	
	4	1	**113-6318**	1	GUARD AS-LH	

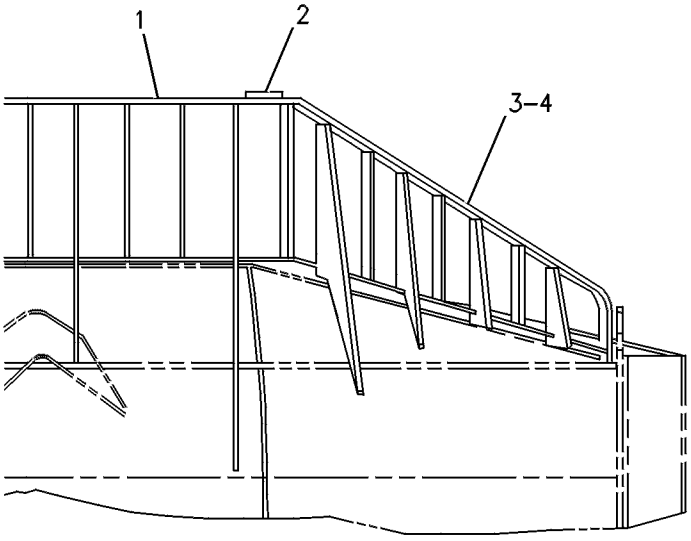

REAR VIEW

GRAPHIC #1 g00240724

FRAME AND BODY

203-9380 GUARD GP-SEAL

S/N: ABK1-UP
AN ATTACHMENT

SMCS-7150 **i01612775**

NOTE	REF NO	GRAPHIC REF	PART NUMBER	QTY	PART NAME 1 2 3 4 5 6 (PRODUCT LEVEL)	SEE PAGE
	1	1	**203-9381**	2	RING	
	2	1	**203-9382**	2	GUARD-SEAL	
	3	1	**203-9383**	2	PLATE	
	4	1	**1K-6872**	6	LOCKNUT (1/2-13 THD)	
	5	1	**7X-0328**	8	BOLT (1/2-13X3.50 IN)	
	6	1	**8T-4223**	20	WASHER-HARD (13.5X25.5X3MM THK)	
	7	1	**8T-4835**	6	BOLT (1/2-13X2 IN)	

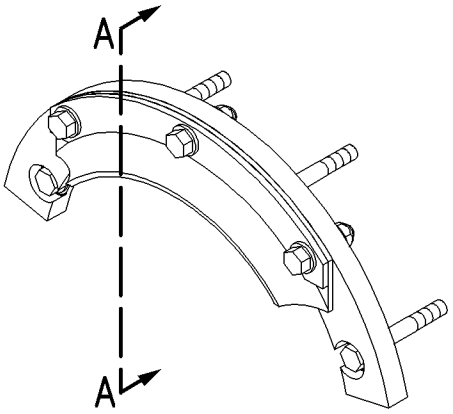

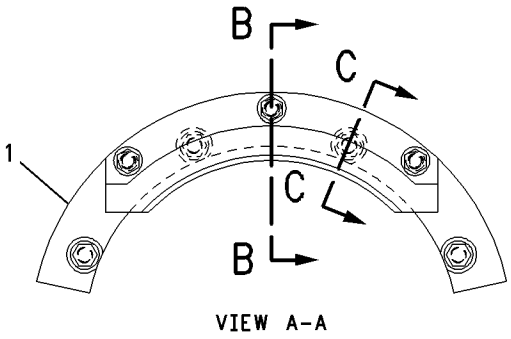

VIEW A-A

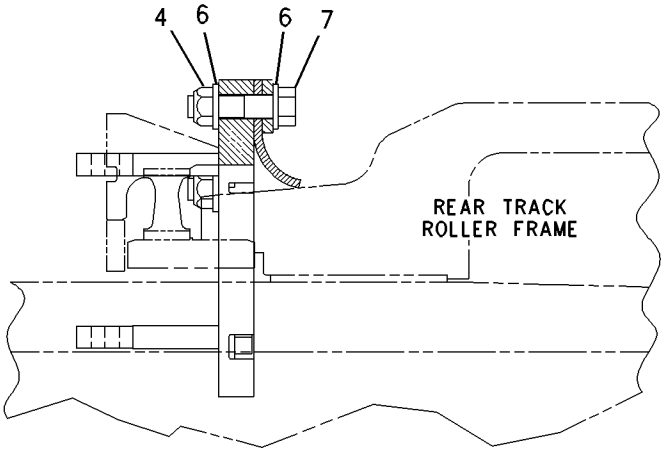

SECTION B-B

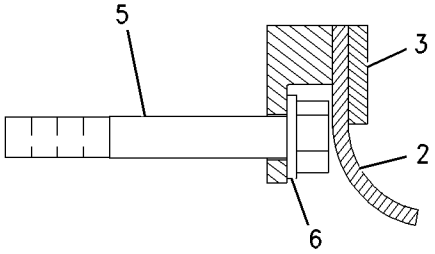

SECTION C-C

GRAPHIC #1 g00854824

MEMORANDA

FRAME AND BODY

163-8826 HOOD & GUARD GP

S/N: ABK1-UP

PART OF 162-9501 CHASSIS AR

SMCS-7251 **i01534162**

NOTE	REF NO	GRAPHIC REF	PART NUMBER	QTY	PART NAME 1 2 3 4 5 6 (PRODUCT LEVEL)	SEE PAGE
	1	1	**5P-7705**	4	PLUG-BUTTON	
	2	2	**5P-8502**	1	PADLOCK GP	
A		2	**5P-8500**	1	KEY	
A		2	**8Y-6364**	1	SLEEVE	
	3	2	**6V-9197**	2	LOCKPIN	
	4	1	**7T-1775**	1	SUPPORT AS	
		1	**1F-0750**	2	NUT-WELD (3/8-16 THD)	
		1	**7T-1099**	4	LINK	
	5	1	**7V-8791**	2	STRIP AS	
		1	**1F-0750**	2	NUT-WELD (3/8-16 THD)	
	6	2	**9M-3835**	2	LATCH-RUBBER	
	7	1	**9P-3066**	2	MOUNTING	
	8	2	**9W-4220**	1	PLATE	
	9	2	**9W-4222**	1	PLATE	
	10	1	**9W-4229**	2	PLATE	
	11	1	**129-0898**	1	PLATE AS-RH	
	11A	1	**9P-9548**	1	PIN (FRONT)	
	11B	1	**9P-9549**	1	PIN (REAR)	
	12	1	**129-0901**	1	PLATE AS-LH	
		1	**8F-9836**	3	BOSS-THREADED (3/8-16X.75 IN)	
	12A	1	**9P-9548**	1	PIN (FRONT)	
	12B	1	**9P-9549**	1	PIN (REAR)	
	13	1	**129-0903**	1	PLATE AS-RH	
		1	**1F-0748**	2	NUT-WELD (1/2-13 THD)	
	14	2	**129-0905**	1	PLATE AS-LH	
		2	**1F-0748**	2	NUT-WELD (1/2-13 THD)	
	14A	2	**9G-8040**	1	HINGE	
		2	**1K-8850**	1	SPRING	
		2	**4K-8501**	2	CLIP	
	14B	2	**129-0906**	1	COVER	
	15	1	**129-0908**	1	DOOR AS-RH	
		1	**9W-8151**	1	STEP	
	15A	1	**9P-9550**	2	TUBE	
	15B	2	**2M-6095**	1	HANDLE	
	15C	2	**6B-0533**	1	SPRING	
	15D	2	**9S-2075**	1	SPACER	
	15E	2	**5M-9498**	2	GUIDE	
	15F	2	**6H-3956**	1	PIN	
	16	1	**129-0910**	1	DOOR AS-LH	
		1	**9W-8152**	1	STEP	
	16A	1	**9P-9550**	2	TUBE	
	16B	2	**5M-9498**	2	GUIDE	
	16C	2	**6B-0533**	1	SPRING	
	16D	2	**6H-3956**	1	PIN	
	16E	2	**9S-2075**	1	SPACER	
	16F	2	**125-9610**	1	HANDLE	
	17	1	**129-0912**	1	PLATE-RH	
	18	1	**129-0913**	1	PLATE-LH	
	19	2	**130-1241**	1	PLATE AS-LH	
		2	**1F-0748**	5	NUT-WELD (1/2-13 THD)	
	20	2	**130-1244**	1	PLATE AS-RH	
		2	**1F-0748**	5	NUT-WELD (1/2-13 THD)	
	21	1	**164-5502**	1	HOOD AS	
		1	**8J-7236**	2	NUT-WELD (3/4-10 THD)	
		1	**1F-0748**	5	NUT-WELD (1/2-13 THD)	
		1	**1F-0750**	4	NUT-WELD (3/8-16 THD)	

163-8826 **HOOD & GUARD GP** *(contd.)* **i01534162**

NOTE	REF NO	GRAPHIC REF	PART NUMBER	QTY	PART NAME 1 2 3 4 5 6 (PRODUCT LEVEL)	SEE PAGE
	21A	1	**6T-4294**	1	HANDHOLD	
	21B	1	**170-9096**	1	HANDHOLD	
		1	**1F-3856**	2	PIPE	
	21C	2	**7G-9913**	1	DOOR	
	21D	2	**2S-2110**	2	BRACKET	
	21E	2	**9B-2052**	1	HINGE	
	21F	2	**053-6845**	2	BRACKET	
	21G	2	**053-6846**	1	SPRING	
	22	2	**170-0262**	1	SUPPORT AS-RH	
		2	**170-0263**	1	SUPPORT AS-LH	
					(EACH INCLUDES)	
		2	**033-9412**	9	RIVET	
	22A	2	**6S-9470**	1	PLATE	
	22B	2	**3T-6191**	1	PAD	
	22C	2	**6T-8426**	1	PAD	
	23	1	**9B-7237**	4	BOLT (3/8-16X1.25 IN)	
	24	1	**030-7335**	8	BOLT-LOCKING (5/8-11X1.5 IN)	
	25	2	**2M-5795**	2	PIN-CLEVIS	
	26	1,2	**5C-6565**	10	BOLT (1/2-13X1.25 IN)	
	27	1	**5M-3062**	2	BOLT (3/8-16X0.75 IN)	
	28	1	**5P-1075**	2	WASHER-HARD (10.2X22.5X3MM THK)	
	29	2	**5P-1076**	4	WASHER-HARD (13.5X30X4MM THK)	
	30	1,2	**5P-2228**	8	BOLT (1/2-13X1 IN)	
	31	1	**5P-2566**	10	BOLT (1/2-13X1.5 IN)	
	32	1	**6P-8269**	1	WASHER (20.5X88X6MM THK)	
	33	2	**7X-0343**	6	BOLT (5/8-11X1.25 IN)	
	34	1	**7X-0370**	1	BOLT (3/4-10X3.50 IN)	
	35	1,2	**8T-4122**	14	WASHER-HARD (17X32X3.5MM THK)	
	36	1,2	**8T-4223**	24	WASHER-HARD (13.5X25.5X3MM THK)	
	37	1	**8T-4896**	4	WASHER-HARD (10.2X18.5X2.5MM THK)	
	38	1	**8T-4994**	1	WASHER-HARD (20X36.5X3.5MM THK)	

A-NOT PART OF THIS GROUP

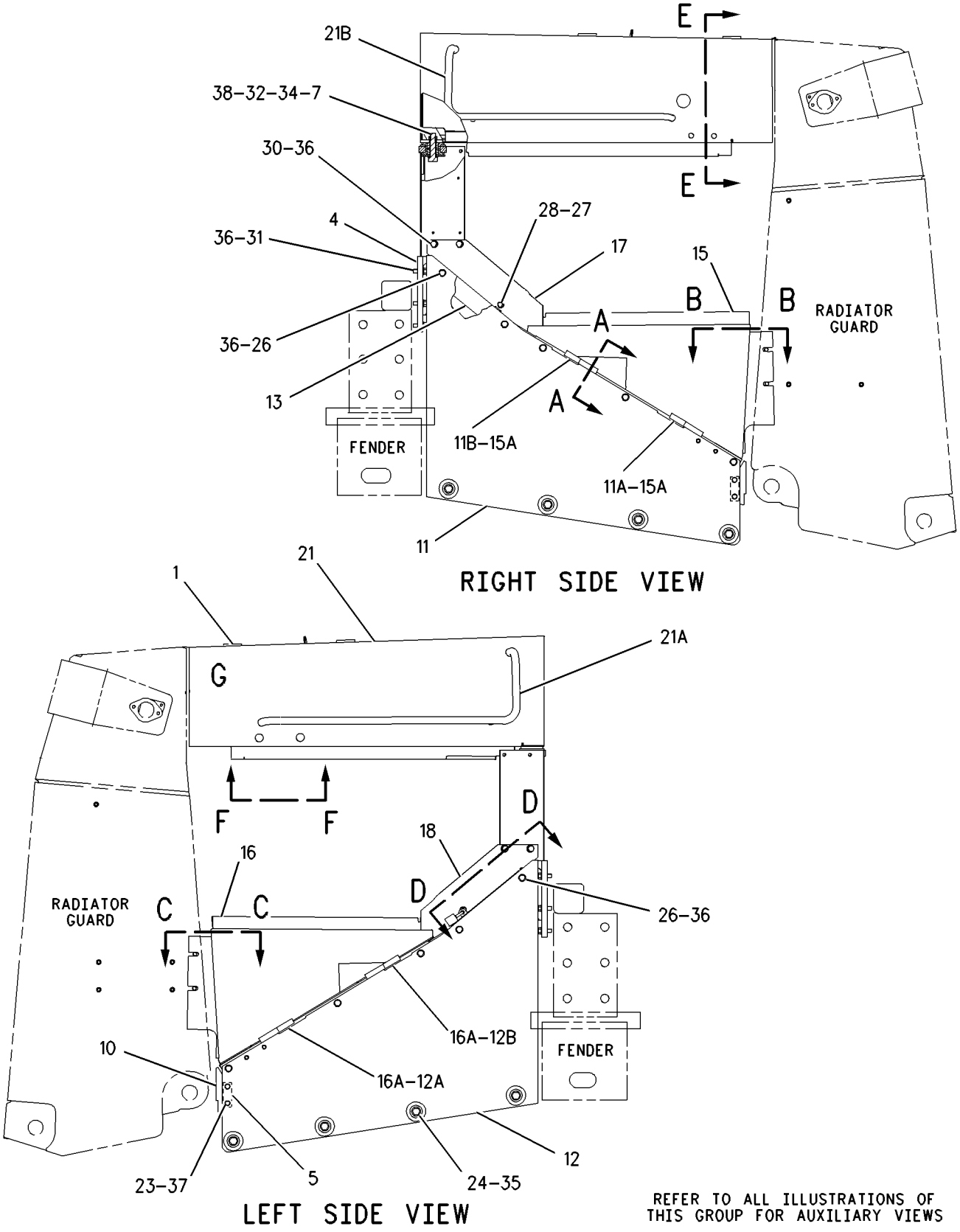

GRAPHIC #1 g00745703

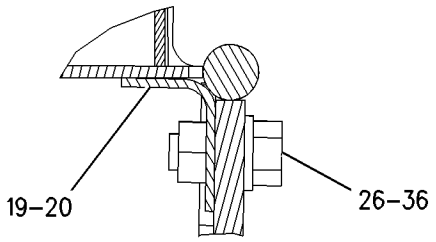

SECTION A-A

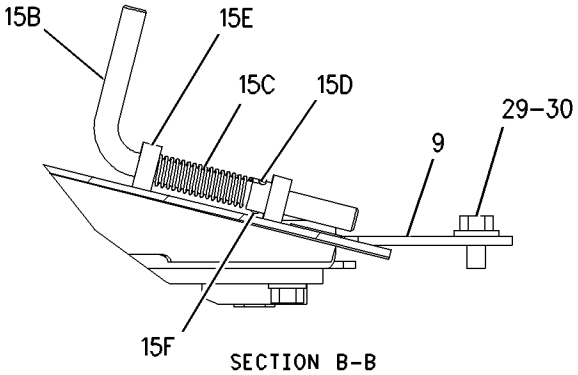

SECTION B-B

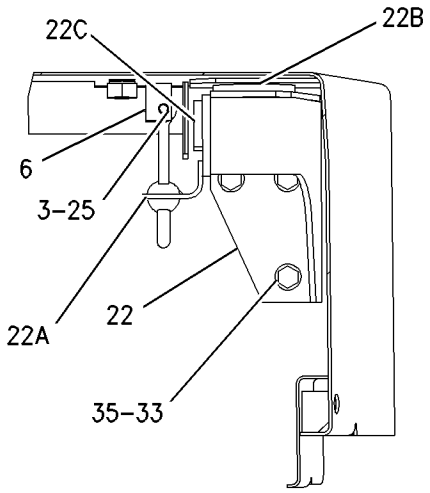

SECTION E-E

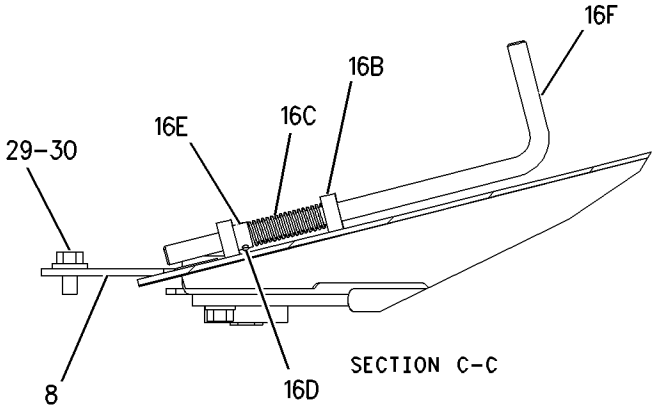

SECTION C-C

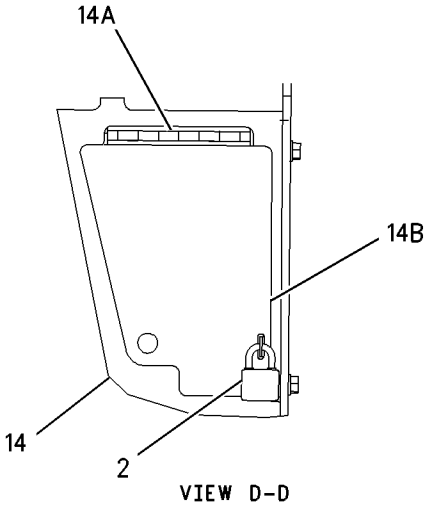

VIEW D-D

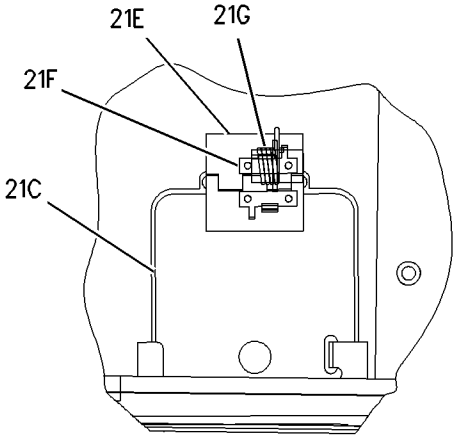

VIEW F-F

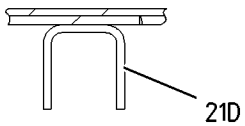

SECTION VIEW
OF AREA G

GRAPHIC #2

g00797914

166-3785 SUPPRESSION AR-SOUND

S/N: ABK1-UP
114 DECIBEL . EEC
FOR USE WITH MACHINES EQUIPPED WITH CAB
AN ATTACHMENT

SMCS-7076 **i01479392**

NOTE	PART NUMBER	QTY	PART NAME 1 2 3 4 5 6 (PRODUCT LEVEL)	SEE PAGE
Y	*164-5843*	1	ENCLOSURE GP-ENGINE	480
	130-5159	1	FILM (EXTERIOR SOUND)	
	130-5097	1	FILM-OPERATOR	
			FILMS LOCATED INSIDE CAB ENCLOSURE	

Y-SEPARATE ILLUSTRATION

UNDERCARRIAGE

125-2139 BAR AR-STRIKER

S/N: ABK1-UP
CANNOT BE USED WITH TRACK WIDER THAN 690MM (27 IN)
AN ATTACHMENT

SMCS-7180 **i01396964**

NOTE	REF NO	GRAPHIC REF	PART NUMBER	QTY	PART NAME 1 2 3 4 5 6 (PRODUCT LEVEL)	SEE PAGE
	1	1	**118-3287**	1	PLATE AS-LH	
	2	1	**118-3288**	1	PLATE AS-LH	
	3	1	**118-3289**	1	PLATE AS-LH	
	4	1	**118-3290**	1	PLATE AS-RH	
	5	1	**118-3291**	1	PLATE AS-RH	
	6	1	**118-3292**	1	PLATE AS-RH	
	7	1	**7X-0420**	24	BOLT (1/1/8-7 THD)	
	8	1	**7X-0421**	12	BOLT (1-1/8-7 THD)	
	9	1	**7X-0531**	36	WASHER-HARD (31X52.5X6MM THK)	

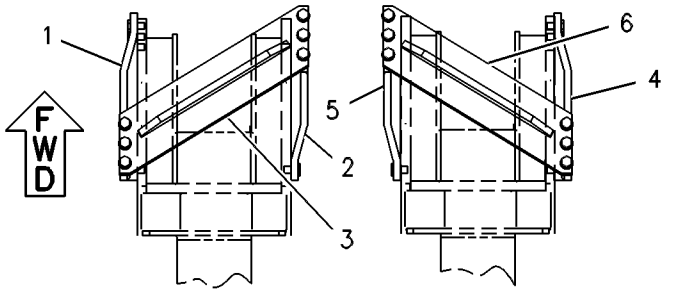

TOP VIEW

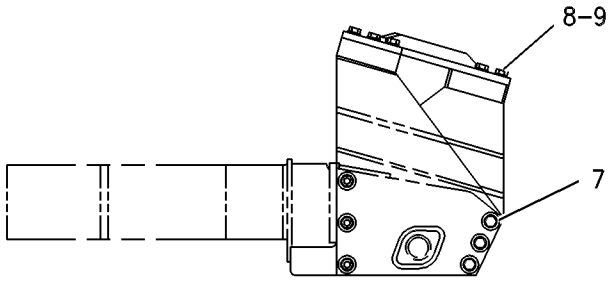

RIGHT SIDE VIEW

GRAPHIC #1 g00271555

9W-3990 BEARING-SLEEVE

S/N: ABK1-UP
FOR USE WITH RECONDITIONED PIVOT SHAFTS
FIELD INSTALLATION

SMCS-4153, 7551 **i01069358**

NOTE	REF NO	GRAPHIC REF	PART NUMBER	QTY	PART NAME 1 2 3 4 5 6 (PRODUCT LEVEL)	SEE PAGE
					(NO SERVICED PARTS)	

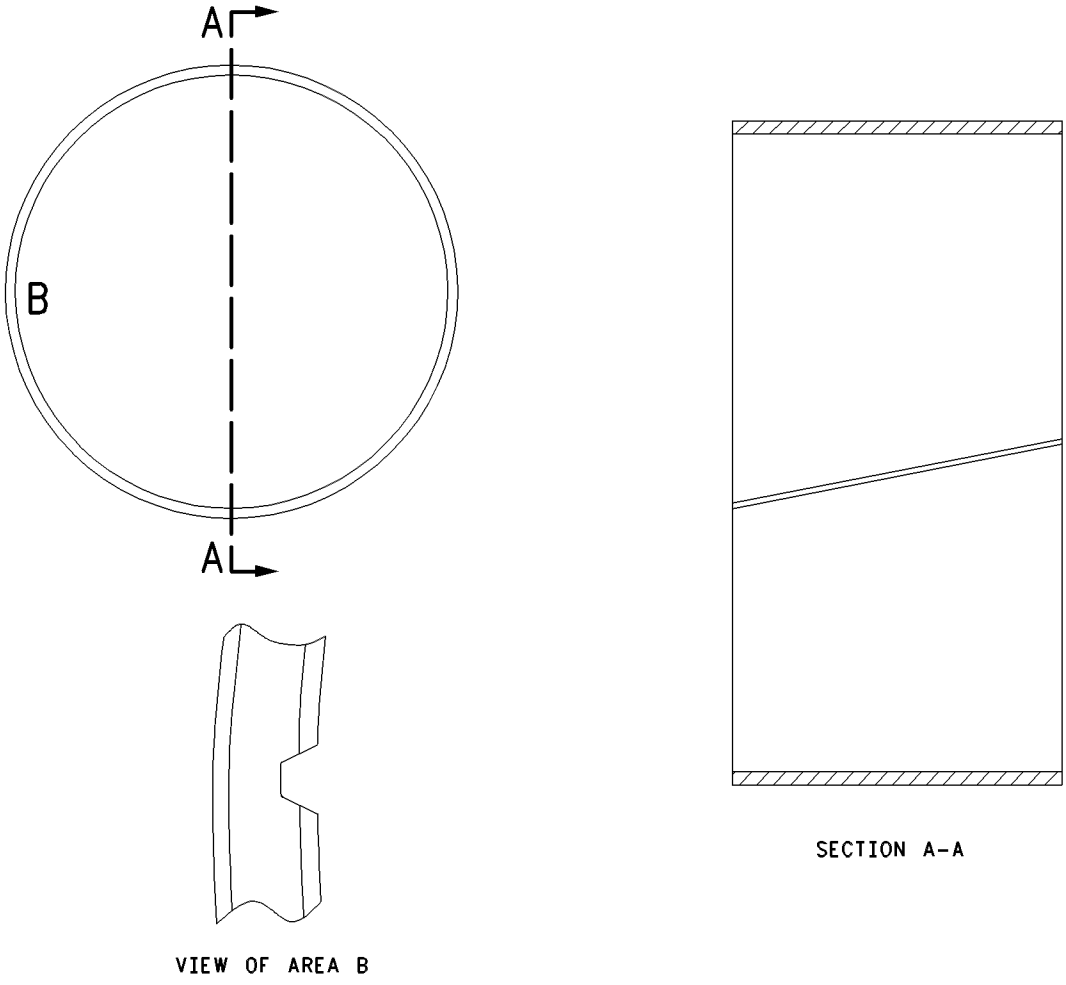

GRAPHIC #1 g00558216

9W-7919 BEARING-SLEEVE

S/N: ABK1-UP

FOR USE WITH RECONDITIONED (2MM UNDERSIZE) PIVOT SHAFTS

FIELD INSTALLATION

SMCS-4153, 7551 **i01423211**

NOTE	REF NO	GRAPHIC REF	PART NUMBER	QTY	PART NAME 1 2 3 4 5 6 (PRODUCT LEVEL)	SEE PAGE
					(NO SERVICED PARTS)	

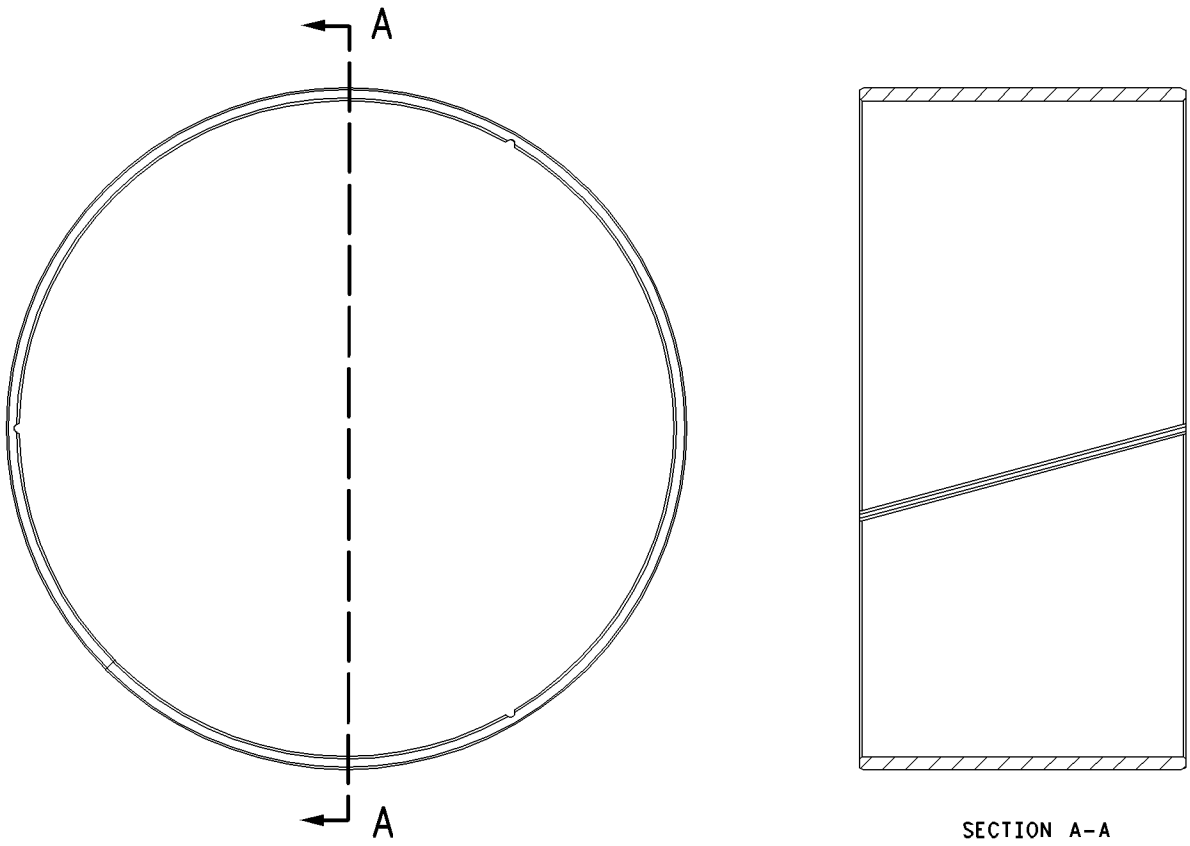

GRAPHIC #1 g00748816

131-1625 CAP GP-TRACK IDLER

S/N: ABK1-UP

PART OF 187-2015 UNDERCARRIAGE AR

SMCS-4159 **i01446737**

NOTE	REF NO	GRAPHIC REF	PART NUMBER	QTY	PART NAME 1 2 3 4 5 6 (PRODUCT LEVEL)	SEE PAGE
	1	1	**131-1642**	1	CAP AS-TRACK IDLER	
		1	**1T-0068**	1	PIN-SPRING	
	2	1	**3S-1349**	3	WASHER-HARD (31X52.5X6MM THK)	
	3	1	**9W-4480**	3	BOLT	

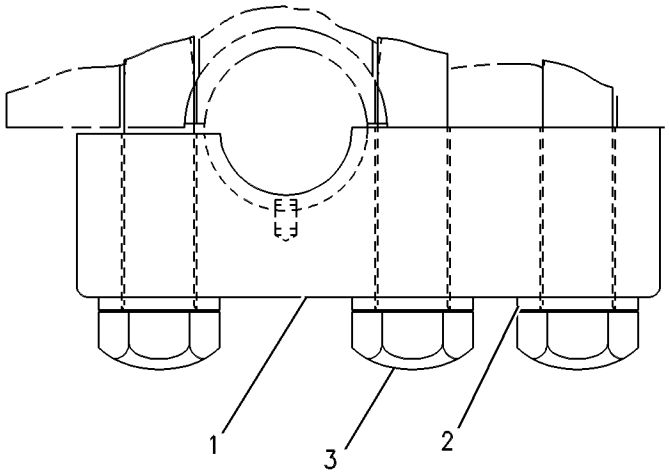

GRAPHIC #1 g00270925

131-1626 CAP GP-TRACK IDLER

S/N: ABK1-UP

PART OF 187-2015 UNDERCARRIAGE AR

SMCS-4159 **i01446739**

NOTE	REF NO	GRAPHIC REF	PART NUMBER	QTY	PART NAME 1 2 3 4 5 6 (PRODUCT LEVEL)	SEE PAGE
	1	1	**131-1643**	1	CAP AS-TRACK IDLER	
		1	**1T-0068**	1	PIN-SPRING	
	2	1	**3S-1349**	3	WASHER-HARD (31X52.5X6MM THK)	
	3	1	**9W-4480**	3	BOLT	

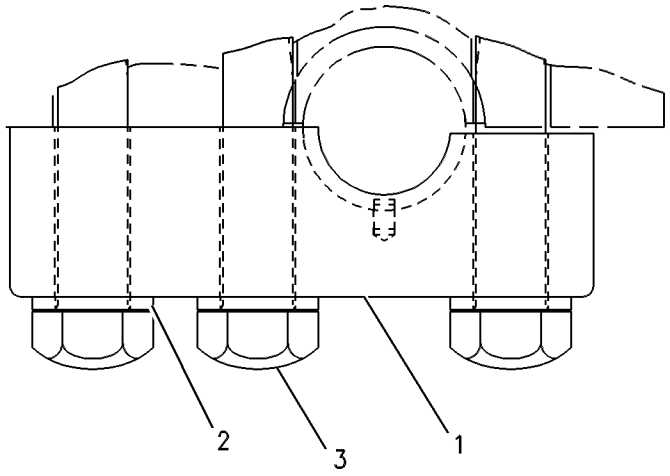

GRAPHIC #1 g00270926

6T-1142 CAP GP-TRACK ROLLER

S/N: ABK1-UP

PART OF 187-2015 UNDERCARRIAGE AR

SMCS-4180 **i01624792**

NOTE	REF NO	GRAPHIC REF	PART NUMBER	QTY	PART NAME 1 2 3 4 5 6 (PRODUCT LEVEL)	SEE PAGE
	1	1	**6T-1140**	2	BOLT-ROLLER MOUNTING	
	2	1	**5P-8249**	2	WASHER-HARD (24X41.5X4MM THK)	
	3	1	**131-1651**	1	CAP AS-TRACK ROLLER	
	4	1	**1T-0068**	1	PIN-SPRING	

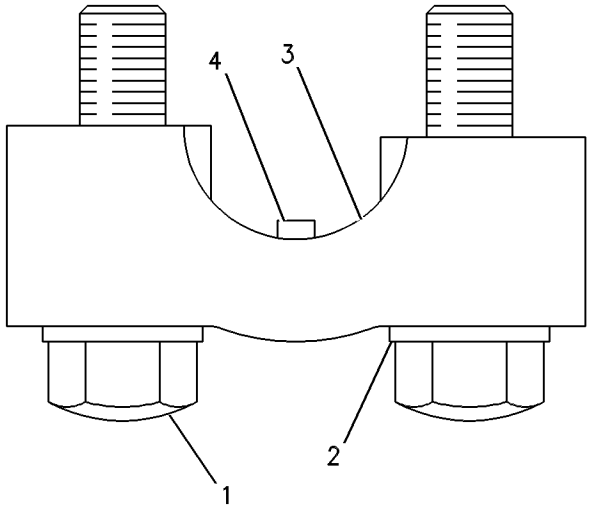

GRAPHIC #1 g00465296

160-6349 EQUALIZER BAR AS

S/N: ABK1-UP

PART OF 160-2539 EQUALIZER BAR GP

FIELD REPLACEMENT ORDER 177-4651—PAGE 516

SMCS-7206, 7207, 7210 **i01188561**

NOTE	REF NO	GRAPHIC REF	PART NUMBER	QTY	PART NAME 1 2 3 4 5 6 (PRODUCT LEVEL)	SEE PAGE
	1	1	**6P-8369**	1	SEAL	
	2	1	**9G-7127**	1	SEAL	
	3	1	**9X-7505**	4	SEAL AS	
	4	1	**117-4013**	2	BEARING-SELF ALIGNING	
	5	1	**117-4015**	2	BEARING-SLEEVE	
	6	1	**5L-4751**	4	RING-RETAINING	

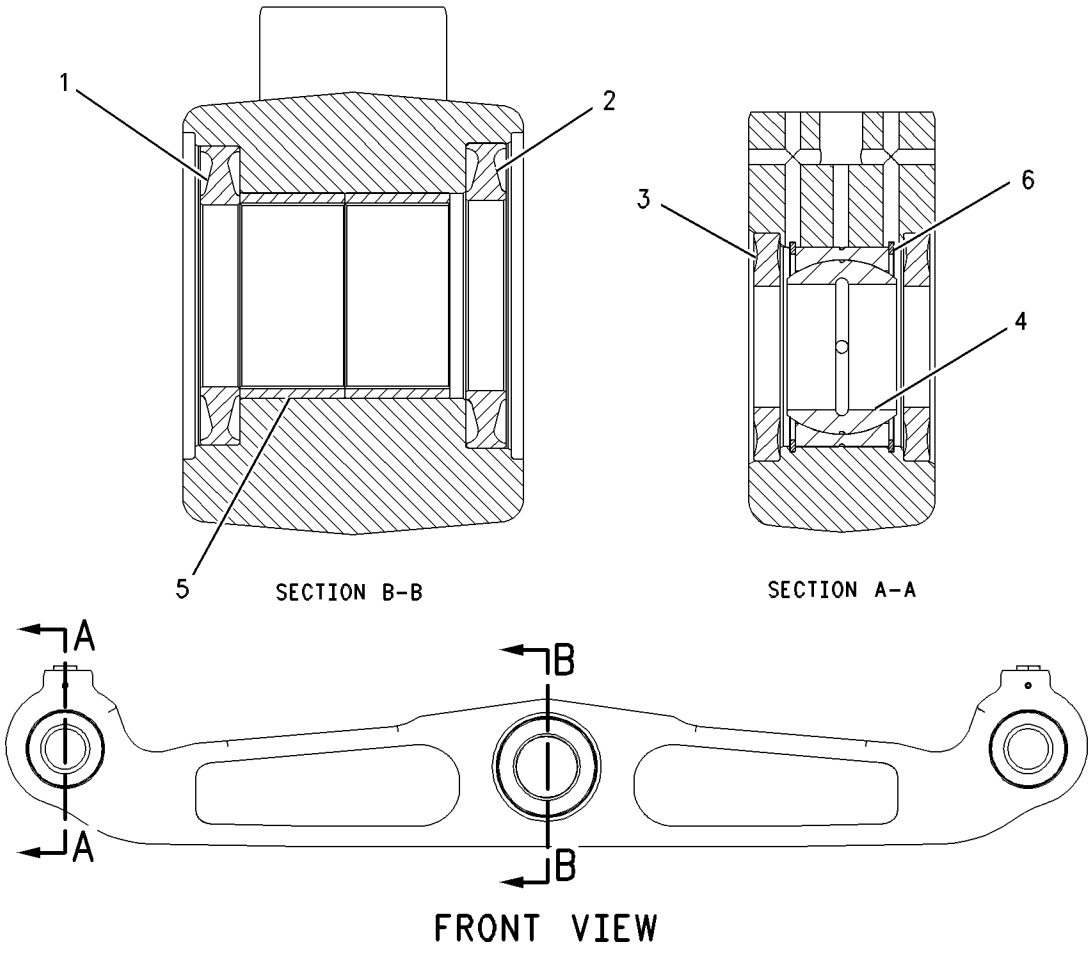

GRAPHIC #1 g00636535

UNDERCARRIAGE

160-2539 EQUALIZER BAR GP

S/N: ABK1-UP

PART OF 187-2015 UNDERCARRIAGE AR

SMCS-7206, 7207, 7210 **i01446742**

NOTE	REF NO	GRAPHIC REF	PART NUMBER	QTY	PART NAME 1 2 3 4 5 6 (PRODUCT LEVEL)	SEE PAGE
	1	1	**2H-3745**	2	BOLT (1-14X2.75 IN)	
	2	1	**3B-8489**	2	FITTING-GREASE	
	3	1	**3J-4278**	4	SPACER	
	4	1	**3S-1356**	4	NUT-FULL (1-1/8-12 THD)	
	5	1	**7F-6112**	1	BOLT (1 1/4-12X3 IN)	
	6	1	**9G-1696**	2	PAD AS	
					(EACH INCLUDES)	
		1	**1F-0748**	4	NUT-WELD (1/2-13 THD)	
	7	1	**9G-1697**	2	PAD AS	
	8	1	**9G-2790**	2	SPACER	
	9	1	**9P-6911**	1	PLATE	
	10	1	**9P-6912**	1	PIN	
	11	1	**133-5631**	2	PLUG	
Y	12	1	**160-6349**	1	EQUALIZER BAR AS	513
	13	1	**2F-5326**	8	SETSCREW	
	14	1	**2M-3530**	4	BOLT	
	15	1	**5C-6565**	12	BOLT (1/2-13X1.25 IN)	
	16	1	**5F-1678**	2	SEAL-O-RING (24.99MM ID)	
	17	1	**7T-4865**	2	PIN	
	18	1	**7X-0531**	8	WASHER-HARD (31X52.5X6MM THK)	
	19	1	**7X-0533**	1	WASHER-HARD (34X55X6MM THK)	
	20	1	**7X-0590**	4	WASHER-HARD (13.5X44.5X6MM THK)	
	21	1	**8T-4223**	8	WASHER-HARD (13.5X25.5X3MM THK)	
	22	1	**8T-5361**	2	WASHER-HARD (28X49X5MM THK)	

Y-SEPARATE ILLUSTRATION

160-2539 **EQUALIZER BAR GP** ***(contd.)*** **i01446742**

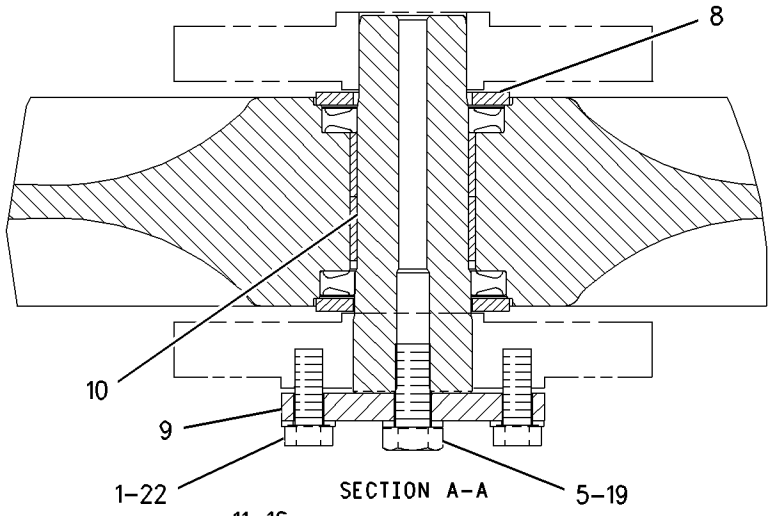

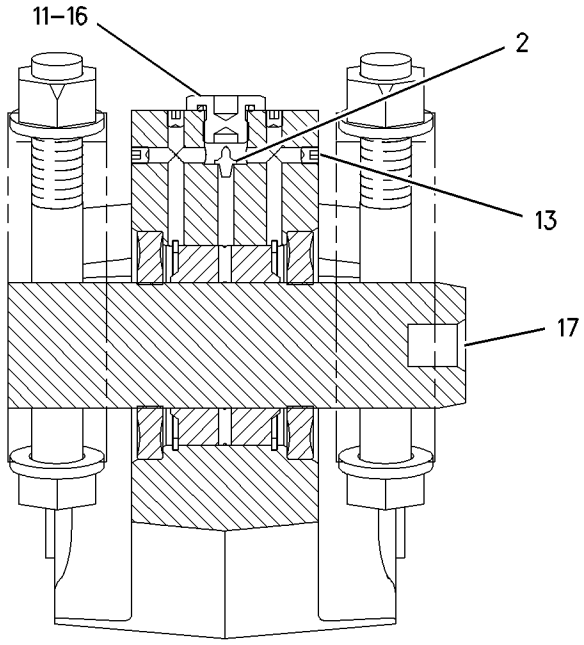

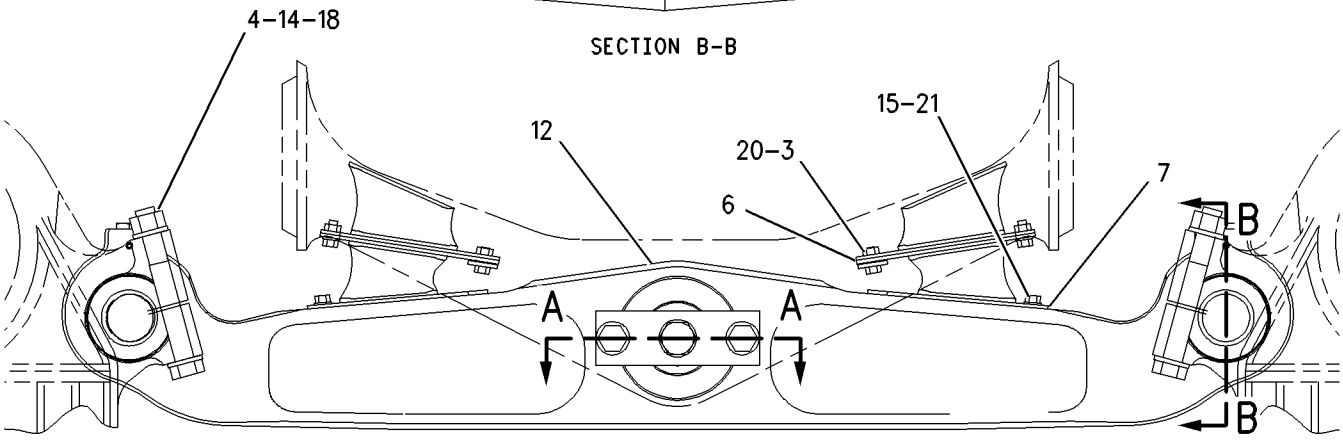

REAR VIEW

GRAPHIC #1 g00640273

UNDERCARRIAGE

177-4651 EQUALIZER BAR GP

S/N: ABK1-UP

FIELD REPLACEMENT FOR 160-6349—PAGE 513

SMCS-7206, 7207, 7210 **i01188518**

NOTE	REF NO	GRAPHIC REF	PART NUMBER	QTY	PART NAME 1 2 3 4 5 6 (PRODUCT LEVEL)	SEE PAGE
	1	1	**3B-8489**	2	FITTING-GREASE (1/8-27 THD)	
	2	1	**6P-8369**	1	SEAL	
	3	1	**9G-7127**	1	SEAL	
	4	1	**9X-7505**	4	SEAL AS	
	5	1	**117-4013**	2	BEARING-SELF ALIGNING	
	6	1	**117-4015**	2	BEARING-SLEEVE	
	7	1	**133-5631**	2	PLUG	
	8	1	**5L-4751**	4	RING-RETAINING	
	9	1	**2F-5326**	8	SETSCREW	
	10	1	**5F-1678**	2	SEAL-O-RING (24.99MM ID)	

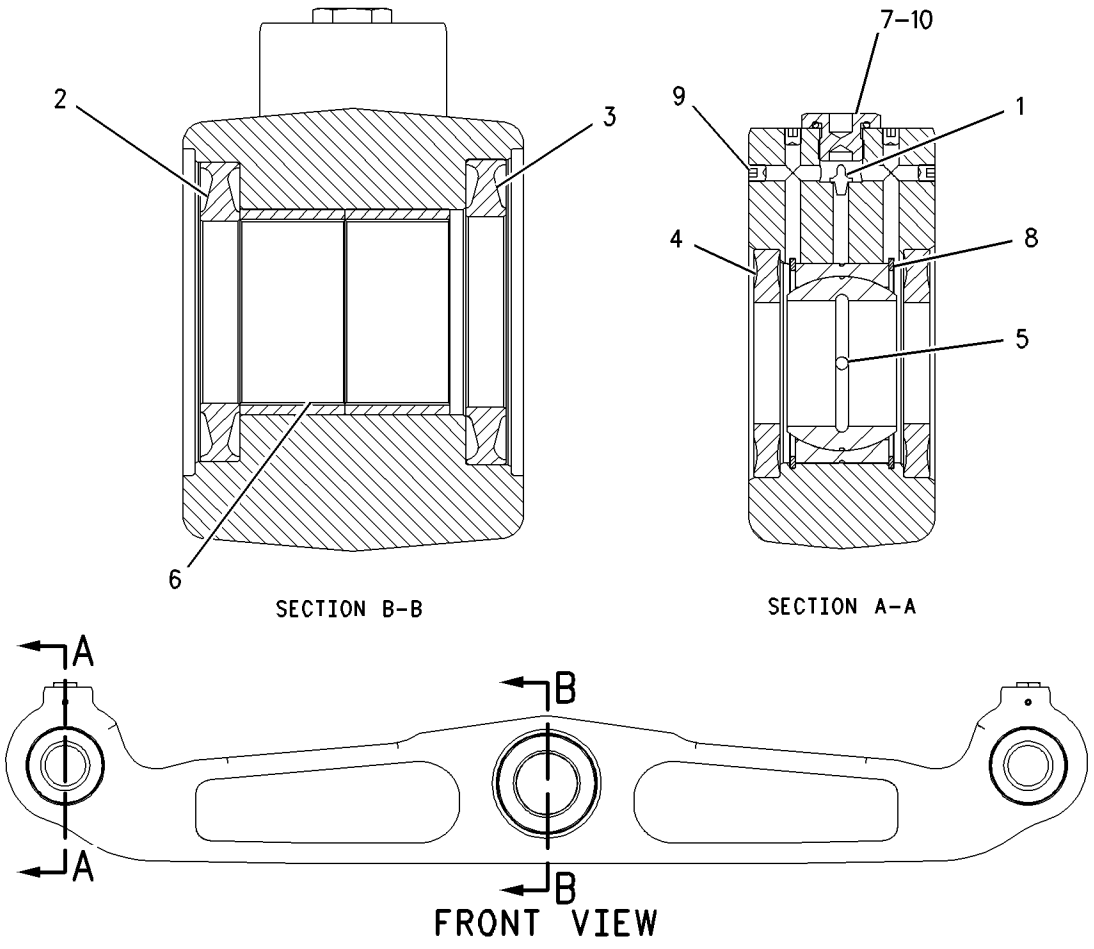

GRAPHIC #1 g00636526

UNDERCARRIAGE

195-8746 FRAME AR-TRACK ROLLER–REAR

S/N: ABK1-UP
REINFORCED
AN ATTACHMENT

SMCS-4151 **i01428992**

NOTE	REF NO	GRAPHIC REF	PART NUMBER	QTY	PART NAME 1 2 3 4 5 6 (PRODUCT LEVEL)	SEE PAGE
	1	1	**195-8745**	1	FRAME AS-LH	
		1	**195-8744**	1	FRAME AS-RH	
					(EACH FRAME AS INCLUDES)	
	2	1	**7T-3877**	1	HOOK	
	3	1	**9P-5708**	2	SUPPORT	
	4	1	**7X-0342**	9	BOLT (5/8-11X.74 IN)	
	5	1	**8T-4122**	9	WASHER-HARD (17X32X3.5MM THK)	
	6	1	**6T-3793**	2	SUPPORT	
QUANTITIES SHOWN ARE THOSE REQUIRED FOR BOTH LH AND RH SIDES						

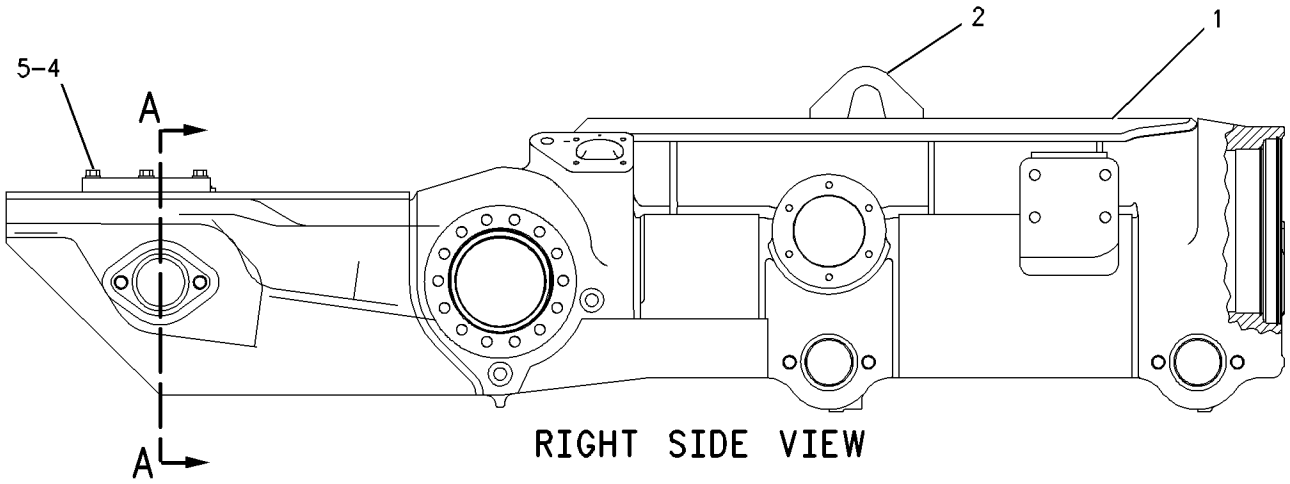

RIGHT SIDE VIEW

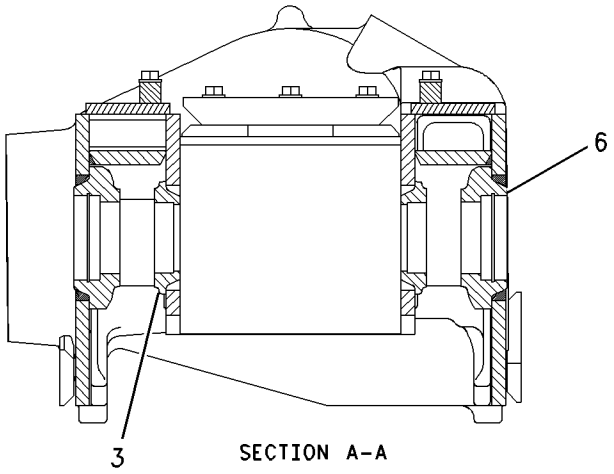

SECTION A–A

GRAPHIC #1 g00749318

UNDERCARRIAGE

196-8560 FRAME GP-TELESCOPING RECOIL

S/N: ABK1-UP

PART OF 187-2015 UNDERCARRIAGE AR

SMCS-4151 **i01590793**

NOTE	REF NO	GRAPHIC REF	PART NUMBER	QTY	PART NAME 1 2 3 4 5 6 (PRODUCT LEVEL)	SEE PAGE
	1	1	**3T-7920**	2	SLEEVE	
	2	1	**6P-8931**	4	COVER	
	3	1	**6T-8801**	4	GUIDE AS	
					(EACH INCLUDES)	
	4	1	**6T-8258**	1	FILM-WARNING (RECOIL SPRING)	
	5	1	**6Y-0210**	2	BEARING-SLEEVE	
	6	1	**7G-9708**	2	PLATE-THRUST	
	7	1	**7G-9709**	2	BEARING-SLEEVE	
	8	1	**7T-4132**	2	RING-THRUST	
	9	1	**7T-5430**	2	COVER	
	10	1	**8E-5445**	1	SHAFT-PIVOT	
	11	1	**8T-0208**	2	SEAL-PIVOT SHAFT	
	12	1	**9G-0296**	2	BEARING	
	13	1	**9G-7516**	32	PLUG	
	14	1	**9P-7053**	2	PLATE-THRUST	
	15	1	**9W-2380**	2	RETAINER	
	16	1	**9W-5575**	2	COVER AS	
					(EACH INCLUDES)	
		1	**3H-9675**	1	PIN-SPRING	
		1	**5P-7179**	2	PLATE-WARNING (RECOIL SPRING OIL)	
		1	**9N-1995**	6	RIVET-POP	
	17	1	**9X-4586**	2	SEAL AS	
	18	1	**155-8097**	1	FRAME AS-RH	
	18A	1	**7T-3877**	1	HOOK	
	18B	1	**7X-0342**	9	BOLT (5/8-11X0.74 IN)	
		1	**8T-4122**	9	WASHER-HARD (17X32X3.5MM THK)	
	18C	1	**6T-3793**	2	SUPPORT (OUTER)	
		1	**9P-5708**	2	SUPPORT (INNER)	
	19	1	**155-8098**	1	FRAME AS-LH	
	19A	1	**7T-3877**	1	HOOK	
	19B	1	**7X-0342**	9	BOLT (5/8-11X0.74 IN)	
		1	**8T-4122**	9	WASHER-HARD (17X32X3.5MM THK)	
	19C	1	**6T-3793**	2	SUPPORT (OUTER)	
		1	**9P-5708**	2	SUPPORT (INNER)	
	20	1	**188-2557**	2	FRAME AS-TRACK ROLLER (FRONT)	
					(EACH INCLUDES)	
		1	**6V-0709**	1	PLATE-WARNING (RECOIL SPRING)	
		1	**4B-4158**	4	SCREW-DRIVE (3/16X0.25 IN)	
	20A	1	**7X-0342**	3	BOLT (5/8-11X0.74 IN)	
		1	**8T-4122**	3	WASHER-HARD (17X32X3.5MM THK)	
	20B	1	**9P-7990**	1	BEARING-SLEEVE	
	20C	1	**6T-3793**	2	SUPPORT (OUTER)	
	20D	1	**9P-5708**	2	SUPPORT (INNER)	
	21	1	**1A-8537**	24	BOLT (5/8-11X2.75IN)	
	22	1	**1P-9254**	2	RING-RETAINING	
	23	1	**2H-3932**	6	SEAL-O-RING	
	24	1	**2K-4472**	4	SEAL-O-RING	
	25	1	**2P-1692**	2	SEAL-O-RING	
	26	1	**3K-0360**	2	SEAL-O-RING	
	27	1	**4D-4508**	2	SEAL-O-RING	
	28	1	**4T-2069**	6	PLUG-DRAIN	
	29	1	**5H-6734**	2	SEAL-O-RING	
	30	1	**7T-8004**	2	RING-RETAINING	
	31	1	**7X-0345**	24	BOLT (5/8-11X1.75 IN)	
	32	1	**8E-2819**	2	RING-RETAINING	
	33	1	**8T-4122**	24	WASHER-HARD (17X32X3.5MM THK)	

196-8560 **FRAME GP-TELESCOPING RECOIL** ***(contd.)*** **i01590793**

NOTE	REF NO	GRAPHIC REF	PART NUMBER	QTY	PART NAME 1 2 3 4 5 6 (PRODUCT LEVEL)	SEE PAGE
	34	1	**8T-4223**	24	WASHER-HARD (13.5X25.5X3MM THK)	
	35	1	**8T-8917**	8	BOLT (1/2-13X1.25 IN)	
	36	1	**8T-9389**	16	BOLT (1/2-13X2.75 IN)	
	37	1	**9M-5894**	2	SEAL-O-RING	
	38	1	**9S-4185**	2	PLUG-O-RING	
QUANTITIES SHOWN ARE THOSE REQUIRED FOR BOTH LH AND RH SIDES						

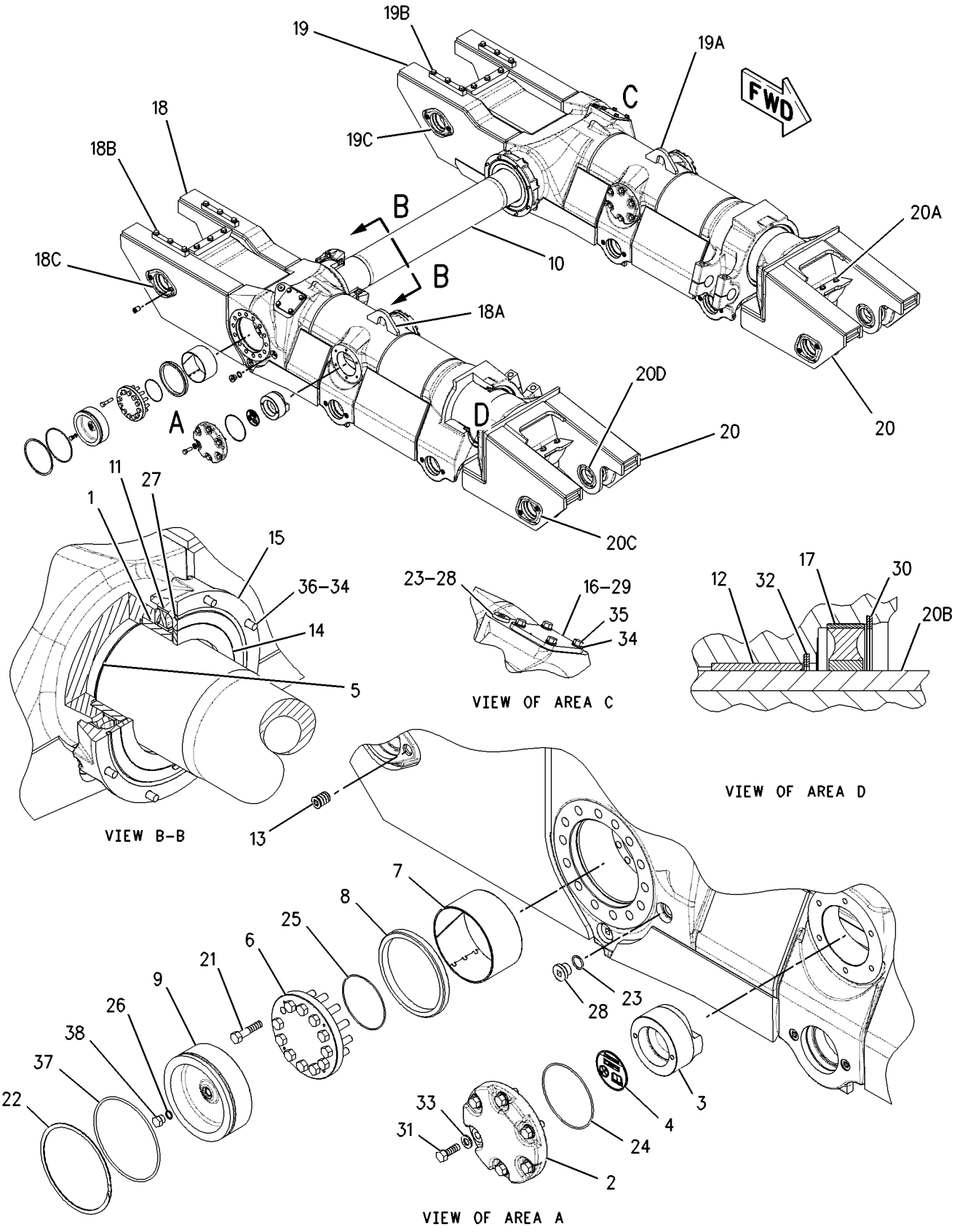

GRAPHIC #1 g00749846

UNDERCARRIAGE

107-2690 IDLER GP-TRACK

S/N: ABK1-UP
ARCTIC
PART OF 125-2140 ROLLER & IDLER AR
AN ATTACHMENT

SMCS-4159 **i00979757**

NOTE	REF NO	GRAPHIC REF	PART NUMBER	QTY	PART NAME 1 2 3 4 5 6 (PRODUCT LEVEL)	SEE PAGE
	1	1	**7T-2770**	1	IDLER & BEARING AS	
		1	**9W-9499**	2	BEARING-SLEEVE	
	2	1	**8F-9516**	2	SEAL-O-RING (139.29MM ID)	
	3	1	**107-3947**	2	COLLAR-SEAL	
	4	1	**8E-6619**	2	WASHER-THRUST	
	5	1	**6Y-0473**	1	PLUG	
	6	1	**9G-4872**	1	STOPPER-RUBBER	
	7	1	**9W-8878**	2	SEAL GP-DUO-CONE	
					(EACH INCLUDES)	
		1	**107-4888**	2	RING-SEALING	
	8	1	**3K-6113**	24	WASHER-HARD (3MM THK)	
		1	**5P-2546**	24	BOLT-12 POINT HEAD (7/16-14X1.25IN)	
	9	1	**107-4057**	2	SEAL-O-RING (67.94MM ID)	
	10	1	**107-3946**	2	RETAINER	
	11	1	**154-3309**	1	SHAFT-TRACK IDLER	

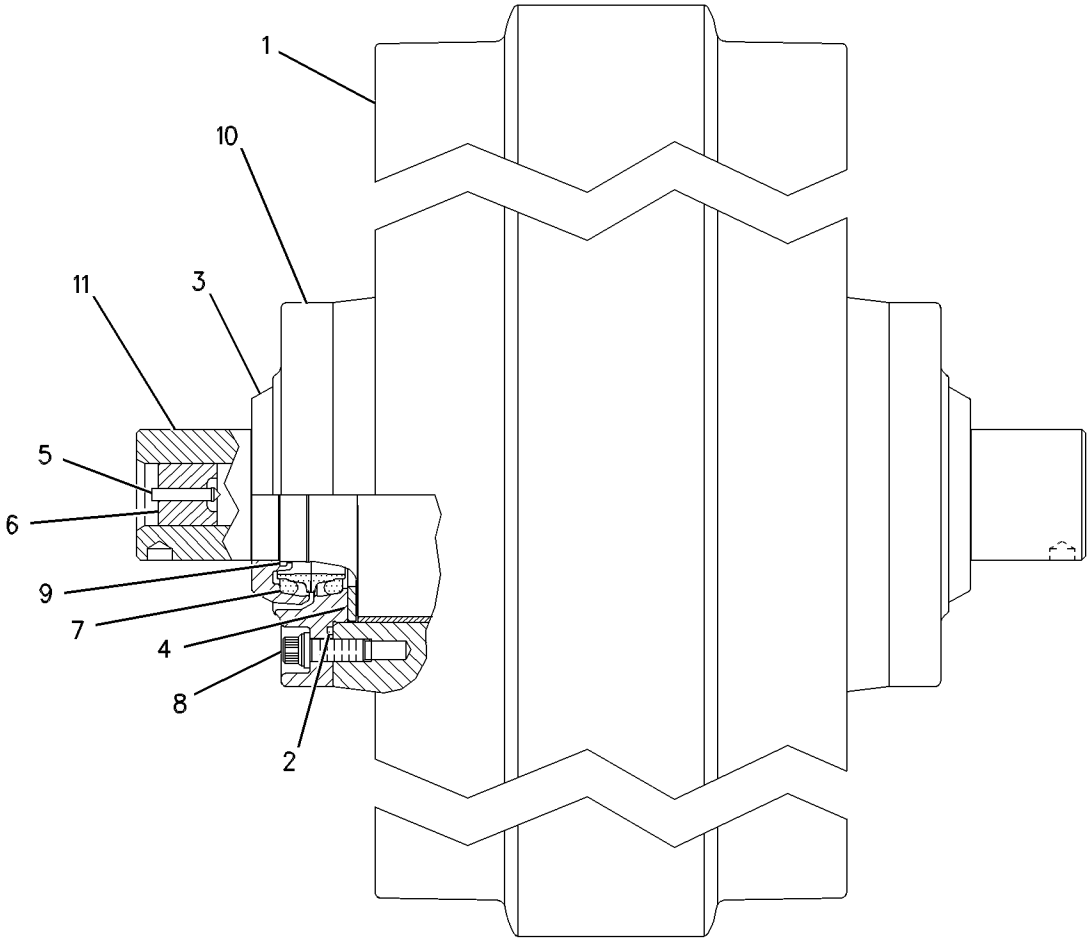

GRAPHIC #1 g00365937

UNDERCARRIAGE

125-4655 IDLER GP-TRACK

S/N: ABK1-UP

PART OF 187-2015 UNDERCARRIAGE AR

SMCS-4159 **i01590797**

NOTE	REF NO	GRAPHIC REF	PART NUMBER	QTY	PART NAME 1 2 3 4 5 6 (PRODUCT LEVEL)	SEE PAGE
	1	1	**7T-2770**	1	IDLER & BEARING AS	
		1	**9W-9499**	2	BEARING-SLEEVE	
	2	1	**107-3946**	2	RETAINER	
	3	1	**107-3947**	2	COLLAR-SEAL	
	4	1	**154-3309**	1	SHAFT-TRACK IDLER	
	5	1	**8E-6619**	2	WASHER-THRUST	
	6	1	**107-4057**	2	SEAL-O-RING	
	7	1	**162-7863**	2	SEAL GP-DUO-CONE	
					(EACH INCLUDES)	
		1	**162-2167**	2	RING-TORIC	
	8	1	**3K-6113**	24	WASHER-HARD (12X18.5X3MM THK)	
	9	1	**5P-2546**	24	BOLT-12 POINT HEAD (7/16-14X1.25 IN)	
	10	1	**8F-9516**	2	SEAL-O-RING	
	11	1	**6Y-0473**	1	PLUG-CLEAR	
	12	1	**9G-4872**	1	STOPPER-RUBBER	

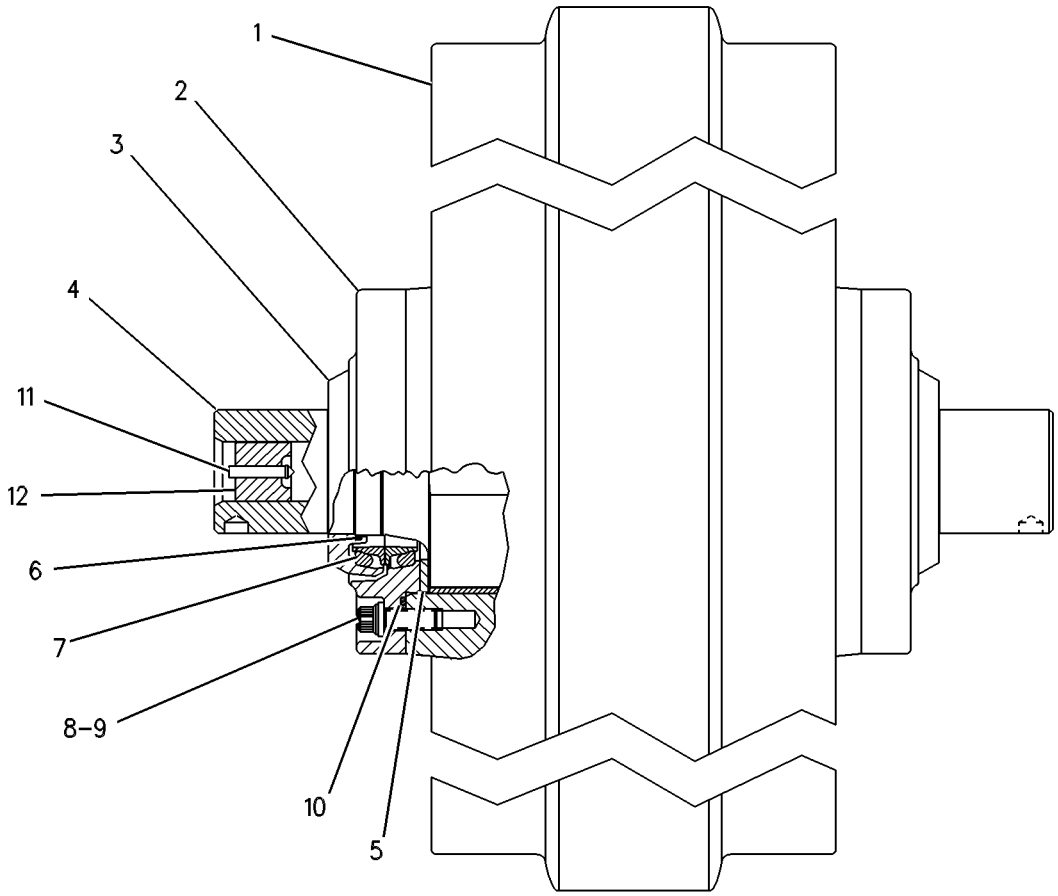

GRAPHIC #1 g00272232

UNDERCARRIAGE

167-1947 IDLER GP-TRACK

S/N: ABK1-UP
PART OF 196-1353 GUARD AR-IDLER
AN ATTACHMENT

SMCS-4159 **i01446746**

NOTE	REF NO	GRAPHIC REF	PART NUMBER	QTY	PART NAME 1 2 3 4 5 6 (PRODUCT LEVEL)	SEE PAGE
	1	1	**7T-2770**	1	IDLER & BEARING AS	
	2	1	**9W-9499**	2	BEARING-SLEEVE	
	3	1	**166-3321**	2	COLLAR-SEAL	
	4	1	**154-3309**	1	SHAFT-TRACK IDLER	
	5	1	**6Y-0473**	1	PLUG-CLEAR	
		1	**9G-4872**	1	STOPPER-RUBBER	
	6	1	**107-4057**	2	SEAL-O-RING (67.94MM ID)	
	7	1	**162-7863**	2	SEAL GP-DUO-CONE	
					(EACH INCLUDES)	
		1	**162-2167**	2	RING-TORIC	
	8	1	**8C-6877**	24	BOLT (7/16-14X1.75 IN)	
	9	1	**8T-5360**	24	WASHER (12X22.5X2.5MM THK)	
	10	1	**8F-9516**	2	SEAL-O-RING (139.29MM ID)	
	11	1	**8E-6619**	2	WASHER-THRUST	
	12	1	**166-3320**	2	RETAINER	
	13	1	**166-3322**	2	SEAL	
	14	1	**166-3324**	4	PLATE	

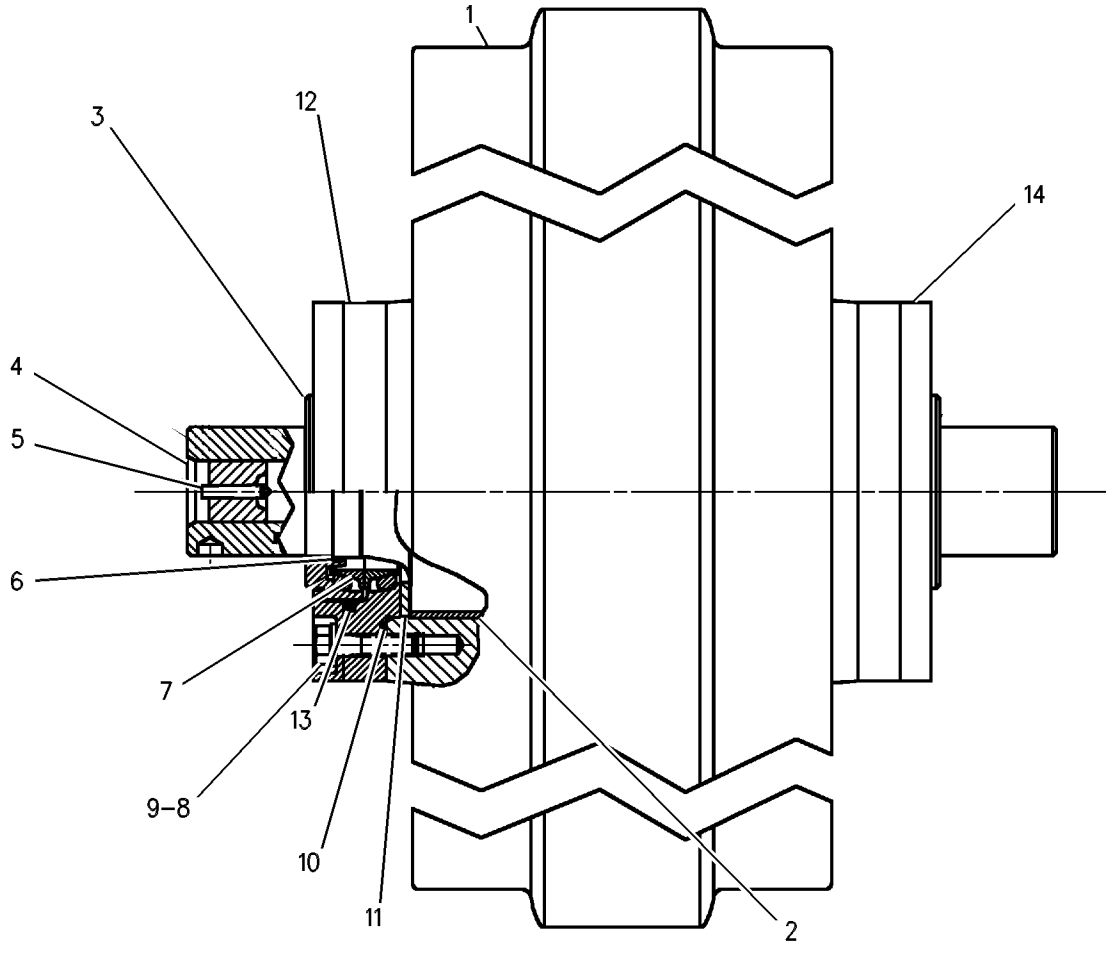

GRAPHIC #1 g00563197

6Y-1130 LINK AS-TRACK

S/N: ABK1-UP
SEALED & LUBRICATED
PART OF 9W-2754 TRACK GP
AN ATTACHMENT

SMCS-4169, 4171 **i01358066**

NOTE	REF NO	GRAPHIC REF	PART NUMBER	QTY	PART NAME 1 2 3 4 5 6 (PRODUCT LEVEL)	SEE PAGE
	1	1	**6K-3631**	2	RING	
	2	1	**7T-2279**	1	LINK-MASTER-RH (BUSHING END)	
	3	1	**6Y-2143**	42	PIN-TRACK	
	4	1	**9W-2743**	42	LINK-TRACK-RH	
	5	1	**6Y-2145**	1	PIN-TRACK (MASTER)	
	6	1	**7G-4332**	43	STOPPER	
	7	1	**6Y-0473**	43	PLUG	
	8	1	**9W-2755**	86	RING-THRUST	
	9	1	**9W-2745**	1	LINK-MASTER-RH (PIN END)	
	10	1	**6Y-2142**	43	BUSHING-TRACK	
	11	1	**9U-8536**	86	SEAL AS	
	12	1	**9W-2746**	1	LINK-MASTER-LH (PIN END)	
	13	1	**9W-2744**	42	LINK-TRACK-LH	
	14	1	**7T-2280**	1	LINK-MASTER-LH (BUSHING END)	

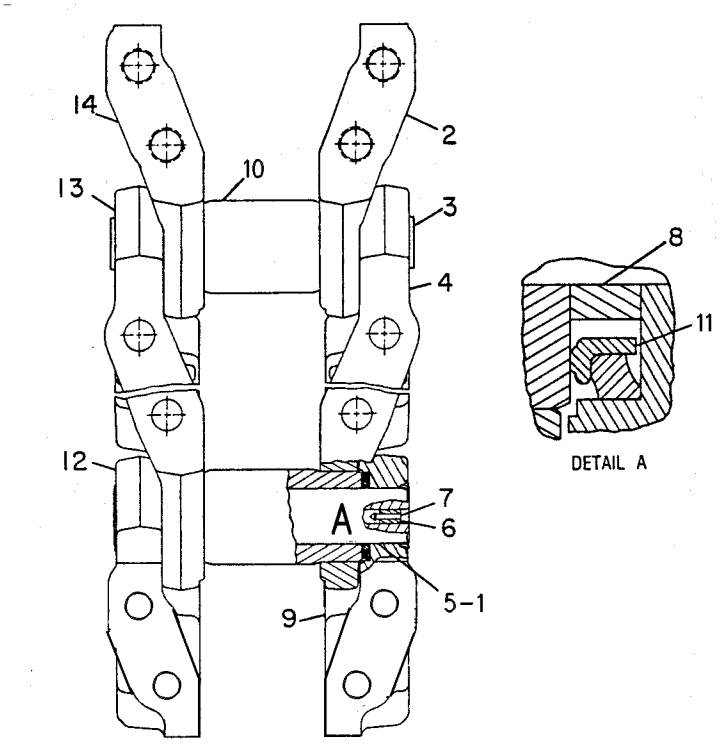

GRAPHIC #1 g00240697

UNDERCARRIAGE

6Y-8193 LINK AS-TRACK

S/N: ABK1-UP
SEALED & LUBRICATED - ARCTIC
PART OF 6Y-8194 TRACK GP
AN ATTACHMENT

SMCS-4169, 4171 **i01358069**

NOTE	REF NO	GRAPHIC REF	PART NUMBER	QTY	PART NAME 1 2 3 4 5 6 (PRODUCT LEVEL)	SEE PAGE
	1	1	**6Y-0470**	86	RING-RETAINING	
	2	1	**7T-2279**	1	LINK-MASTER-RH (BUSHING END)	
	3	1	**6Y-2144**	43	PIN-TRACK	
	4	1	**7T-2275**	42	LINK-TRACK-RH	
	5	1	**9U-8536**	86	SEAL AS	
	6	1	**7G-4332**	43	STOPPER	
	7	1	**6Y-0473**	43	PLUG	
	8	1	**9W-2755**	86	RING-THRUST	
	9	1	**7T-2277**	1	LINK-MASTER-RH (PIN END)	
	10	1	**7T-2280**	1	LINK-MASTER-LH (BUSHING END)	
	11	1	**6Y-2142**	43	BUSHING-TRACK	
	12	1	**7T-2278**	1	LINK-MASTER-LH (PIN END)	
	13	1	**7T-2276**	42	LINK-TRACK-LH	

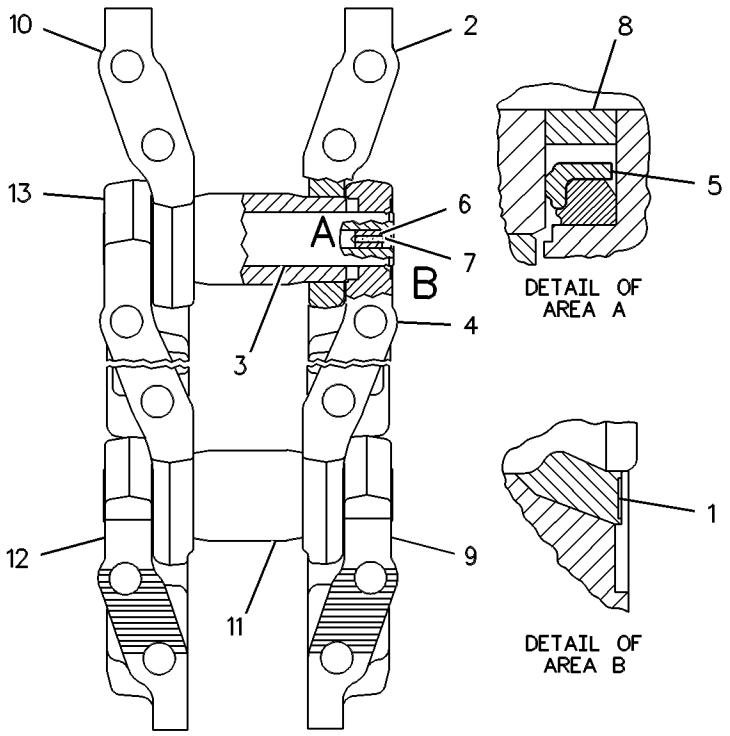

GRAPHIC #1 g00269331

8E-7962 LINK AS-TRACK

S/N: ABK1-515
SEALED & LUBRICATED-POSITIVE PIN RETENTION
PART OF 183-2120, 203-2199, 7T-2289, 7T-2295, 7T-3935 TRACK GP
ALSO AN ATTACHMENT

SMCS-4169, 4171 **i01358071**

NOTE	REF NO	GRAPHIC REF	PART NUMBER	QTY	PART NAME 1 2 3 4 5 6 (PRODUCT LEVEL)	SEE PAGE
	1	1	**6Y-0473**	43	PLUG	
		1	**7G-4332**	43	STOPPER	
	2	1	**6Y-0470**	86	RING-RETAINING	
	3	1	**6Y-2142**	43	BUSHING-TRACK	
	4	1	**6Y-2144**	43	PIN-TRACK	
	5	1	**7T-2275**	42	LINK-TRACK-RH	
	6	1	**7T-2276**	42	LINK-TRACK-LH	
	7	1	**7T-2277**	1	LINK-MASTER-RH (PIN END)	
	8	1	**7T-2278**	1	LINK-MASTER-LH (PIN END)	
	9	1	**7T-2279**	1	LINK-MASTER-RH (BUSHING END)	
	10	1	**7T-2280**	1	LINK-MASTER-LH (BUSHING END)	
	11	1	**9U-8536**	86	SEAL AS	
	12	1	**9W-2755**	86	RING-THRUST	

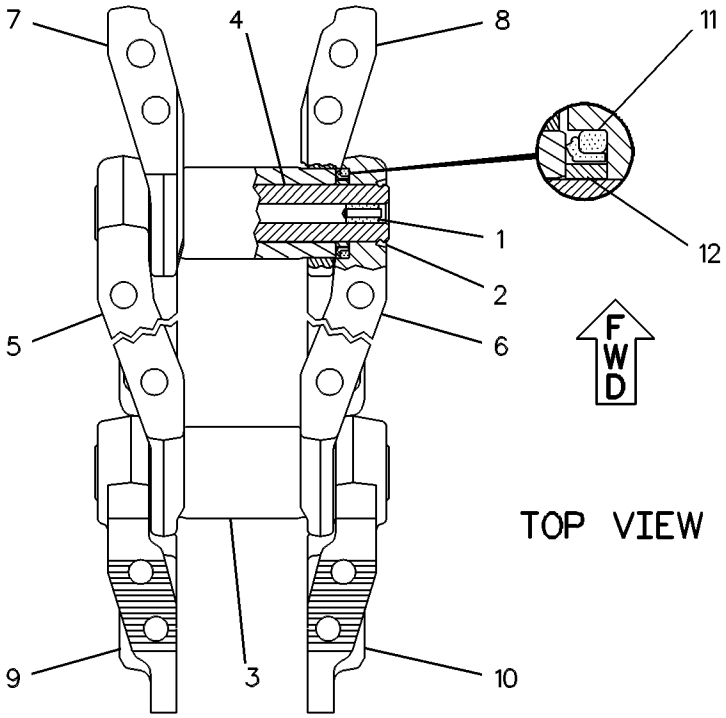

GRAPHIC #1 g00248614

160-4766 LINK AS-TRACK

S/N: ABK1-UP
PART OF 160-4769 TRACK GP
AN ATTACHMENT

SMCS-4169, 4171 **i01445916**

NOTE	REF NO	GRAPHIC REF	PART NUMBER	QTY	PART NAME 1 2 3 4 5 6 (PRODUCT LEVEL)	SEE PAGE
	1	1	**160-4765**	43	BUSHING-TRACK	
	2	1	**7T-2279**	1	LINK-MASTER-RH (BUSHING END)	
	3	1	**7T-2275**	42	LINK-TRACK-RH	
	4	1	**9U-8536**	86	SEAL AS	
	5	1	**9W-2755**	86	RING-THRUST	
	6	1	**7T-2280**	1	LINK-MASTER-LH (BUSHING END)	
	7	1	**6Y-0473**	43	PLUG-CLEAR	
		1	**7G-4332**	43	STOPPER	
	8	1	**6Y-0470**	86	RING-RETAINING	
	9	1	**6Y-2144**	43	PIN-TRACK	
	10	1	**7T-2278**	1	LINK-MASTER-LH (PIN END)	
	11	1	**7T-2276**	42	LINK-TRACK-LH	
	12	1	**7T-2277**	1	LINK-MASTER-RH (PIN END)	

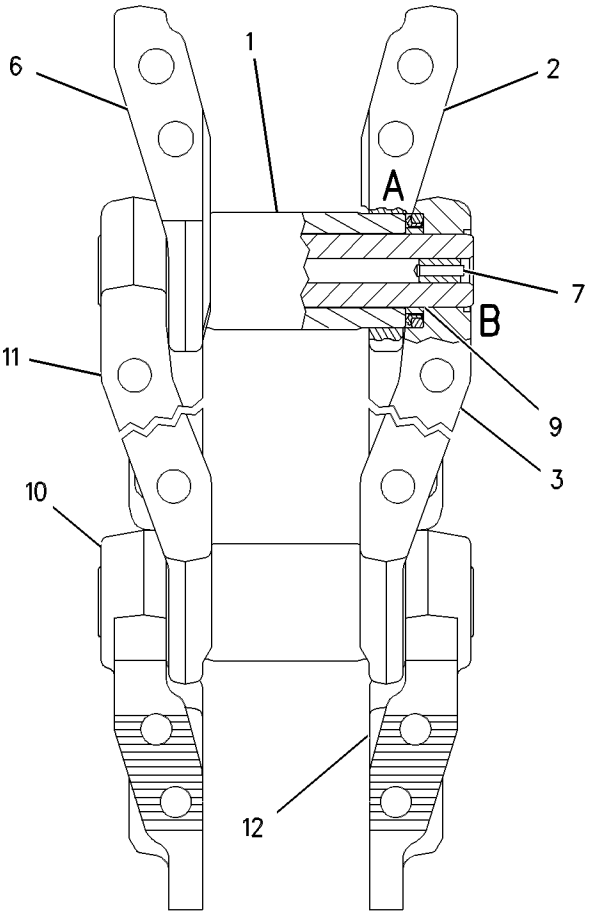

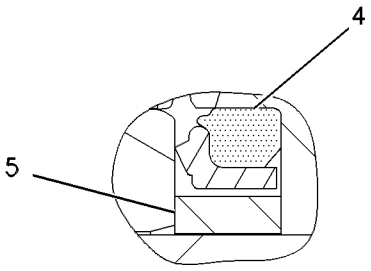

VIEW OF AREA A

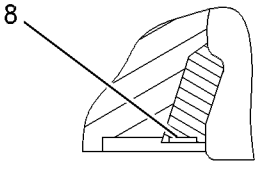

VIEW OF AREA B

GRAPHIC #1 g00563784

199-5525 LINK AS-TRACK

S/N: ABK516-UP
SEALED & LUBRICATED, POSITIVE PIN RETENTION
PART OF 199-5536, 199-5537, 199-5538, 203-2199, 203-2200, 7T-2289 TRACK GP
ALSO AN ATTACHMENT

SMCS-4169, 4171 **i01502395**

NOTE	REF NO	GRAPHIC REF	PART NUMBER	QTY	PART NAME 1 2 3 4 5 6 (PRODUCT LEVEL)	SEE PAGE
	1	1	**6Y-0473**	43	PLUG-CLEAR	
		1	**7G-4332**	43	STOPPER	
	2	1	**6Y-0470**	86	RING-RETAINING	
	3	1	**186-0781**	43	BUSHING-TRACK	
	4	1	**186-0780**	43	PIN-TRACK	
	5	1	**7T-2275**	42	LINK-TRACK-RH	
	6	1	**7T-2276**	42	LINK-TRACK-LH	
	7	1	**7T-2277**	1	LINK-MASTER-RH (PIN END)	
	8	1	**7T-2278**	1	LINK-MASTER-LH (PIN END)	
	9	1	**7T-2279**	1	LINK-MASTER-RH (BUSHING END)	
	10	1	**7T-2280**	1	LINK-MASTER-LH (BUSHING END)	
	11	1	**9U-8536**	86	SEAL AS	
	12	1	**9W-2755**	86	RING-THRUST	

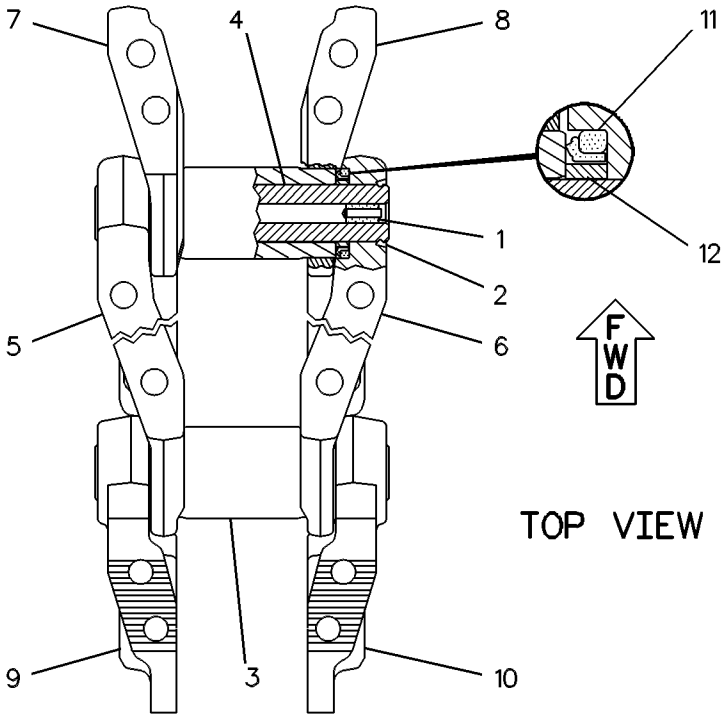

GRAPHIC #1 g00248614

199-5528 LINK AS-TRACK

S/N: ABK1-UP
SEALED & LUBRICATED, POSITIVE PIN RETENTION,ARCTIC
PART OF 6Y-8194 TRACK GP
AN ATTACHMENT

SMCS-4169, 4171 **i01546637**

NOTE	REF NO	GRAPHIC REF	PART NUMBER	QTY	PART NAME 1 2 3 4 5 6 (PRODUCT LEVEL)	SEE PAGE
	1	1	**6Y-0470**	86	RING-RETAINING	
	2	1	**7T-2279**	1	LINK-MASTER-RH (BUSHING END)	
	3	1	**186-0780**	43	PIN-TRACK	
	4	1	**7T-2275**	42	LINK-TRACK (RH)	
	5	1	**9U-8536**	86	SEAL AS	
	6	1	**7G-4332**	43	STOPPER	
	7	1	**6Y-0473**	43	PLUG-CLEAR	
	8	1	**9W-2755**	86	RING-THRUST	
	9	1	**7T-2277**	1	LINK-MASTER-RH (PIN END)	
	10	1	**7T-2280**	1	LINK-MASTER-LH (BUSHING END)	
	11	1	**186-0781**	43	BUSHING-TRACK	
	12	1	**7T-2278**	1	LINK-MASTER-LH (PIN END)	
	13	1	**7T-2276**	42	LINK-TRACK (LH)	

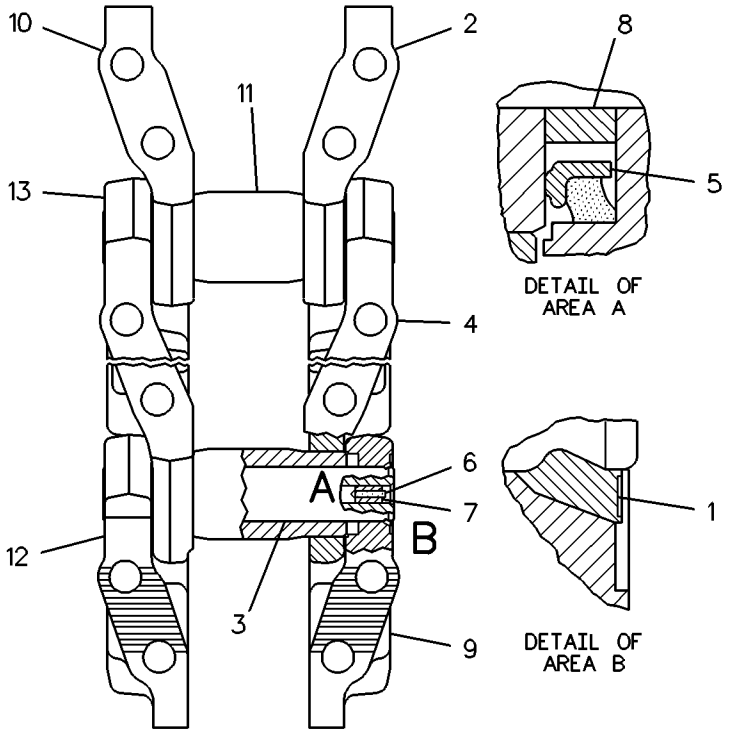

GRAPHIC #1 g00218769

9W-6259 LUBRICATION GP-PIVOT SHAFT

S/N: ABK1-UP

PART OF 162-9501 CHASSIS AR

SMCS-3286 **i01623822**

NOTE	REF NO	GRAPHIC REF	PART NUMBER	QTY	PART NAME 1 2 3 4 5 6 (PRODUCT LEVEL)	SEE PAGE
	1	1	**6V-9746**	2	SEAL-O-RING	
	2	1	**6V-9004**	1	ELBOW	
C	3	1	**3D-2824**	1	SEAL-O-RING	
	4	1	**6V-1889**	2	CLIP	
I	5	1	**9W-6261**	1	HOSE AS	
	6	1	**9W-6403**	1	PLATE	
	7	1	**5P-1075**	9	WASHER-HARD (10.2X22.5X3MM THK)	
C	8	1	**9W-8277**	1	CAP AS-OIL LEVEL	
C	9	1	**9U-9409**	1	BOTTLE	
	10	1	**5S-7379**	9	BOLT (3/8-16X0.875 IN)	
	11	1	**9W-6402**	1	PLATE	
C	12	1	**9W-6260**	2	SPACER	
C	13	1	**6V-9877**	1	ELBOW	
	14	1	**5S-7349**	1	BOLT (1/4-20X0.5 IN)	
	15	1	**8T-4205**	1	WASHER-HARD (7.2X14.5X2MM THK)	
	16	1	**9W-1694**	2	PAD	
	17	1	**8T-1786**	1	FITTING-90 DEGREE	
	18	1	**4M-5317**	1	BUSHING-REDUCING	
	19	1	**7K-1181**	1	STRAP-CABLE	
D	20	1	**5P-5992**		HOSE (.20M)	
	21	1	**9W-6262**	1	PLATE AS	
		1	**9F-2978**	1	NUT-WELD (3/8-16 THD)	
		1	**9F-6445**	1	NUT-WELD (1/4-20 THD)	
	22	1	**9W-6263**	1	PLATE AS	
		1	**9F-2978**	1	NUT-WELD (3/8-16 THD)	
		1	**1F-0748**	1	NUT-WELD (1/2-13 THD)	
		1	**9F-6445**	1	NUT-WELD (1/4-20 THD)	
C	23	1	**3K-0360**	1	SEAL-O-RING	

C-CHANGE FROM PREVIOUS TYPE
D-ORDER BY THE METER
I-SEE HOSE FABRICATION GUIDE

9W-6259 **LUBRICATION GP-PIVOT SHAFT** ***(contd.)*** **i01623822**

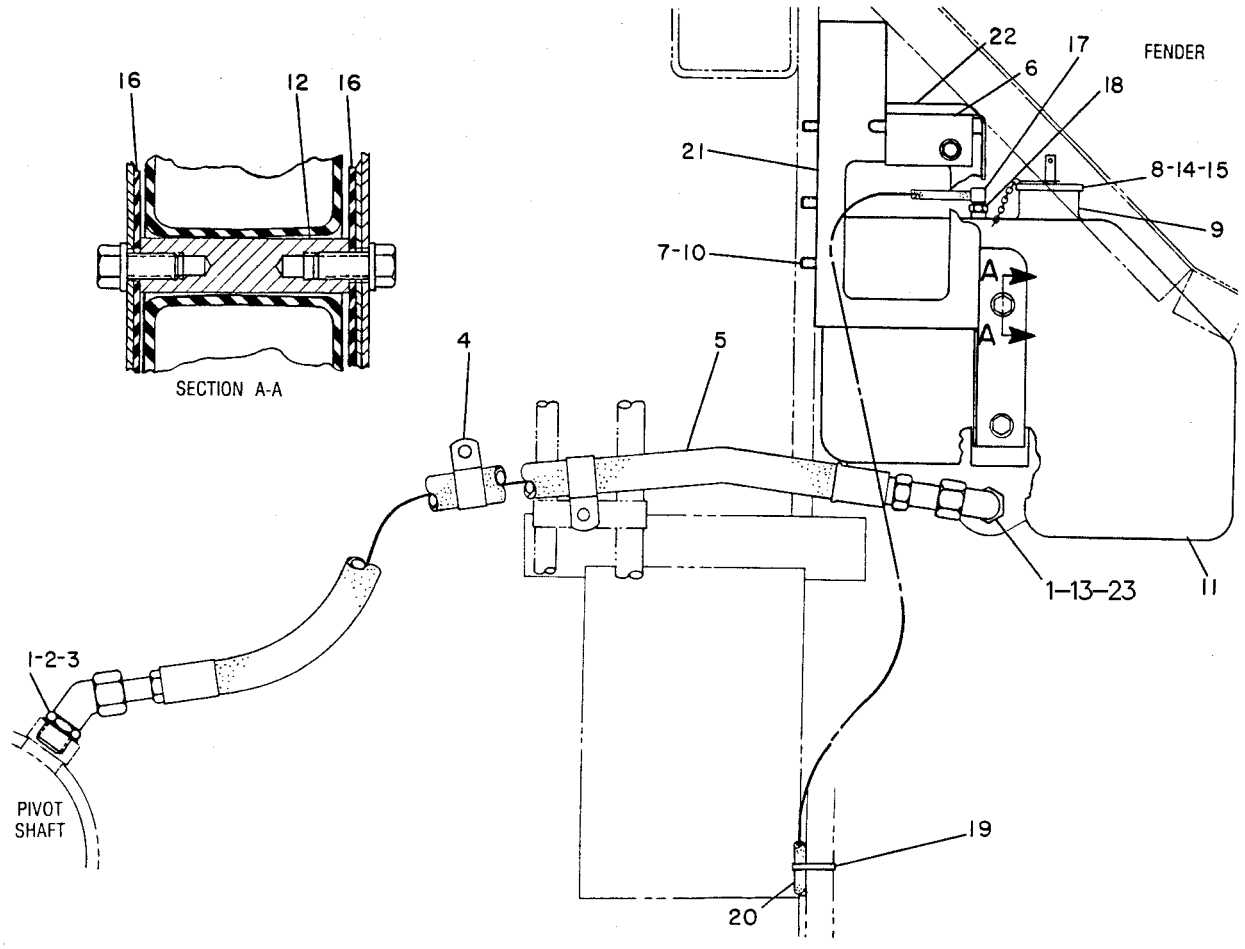

GRAPHIC #1

g00232764

135-6140 REINFORCEMENT GP-ROLLER FRAME

S/N: ABK1-UP

INCLUDES PARTS TO REINFORCE BOTH RH AND LH REAR TRACK ROLLER FRAMES FOR ONE MACHINE AFTER CRACKS HAVE BEEN REPAIRED

FIELD INSTALLATION

SMCS-4151 **i01425117**

NOTE	REF NO	GRAPHIC REF	PART NUMBER	QTY	PART NAME 1 2 3 4 5 6 (PRODUCT LEVEL)	SEE PAGE
	1	1	**7T-3877**	2	HOOK	
	2	1	**135-6137**	4	PLATE	
	3	1	**139-7718**	4	PLATE	
	4	1	**180-0095**	2	BAR	
	5	1	**193-8944**	1	PLATE	
	6	1	**193-8945**	1	PLATE	
	7	1	**193-8946**	1	PLATE	
	8	1	**193-8947**	1	PLATE	
QUANTITIES SHOWN ARE THOSE REQUIRED FOR BOTH LH AND RH SIDES						

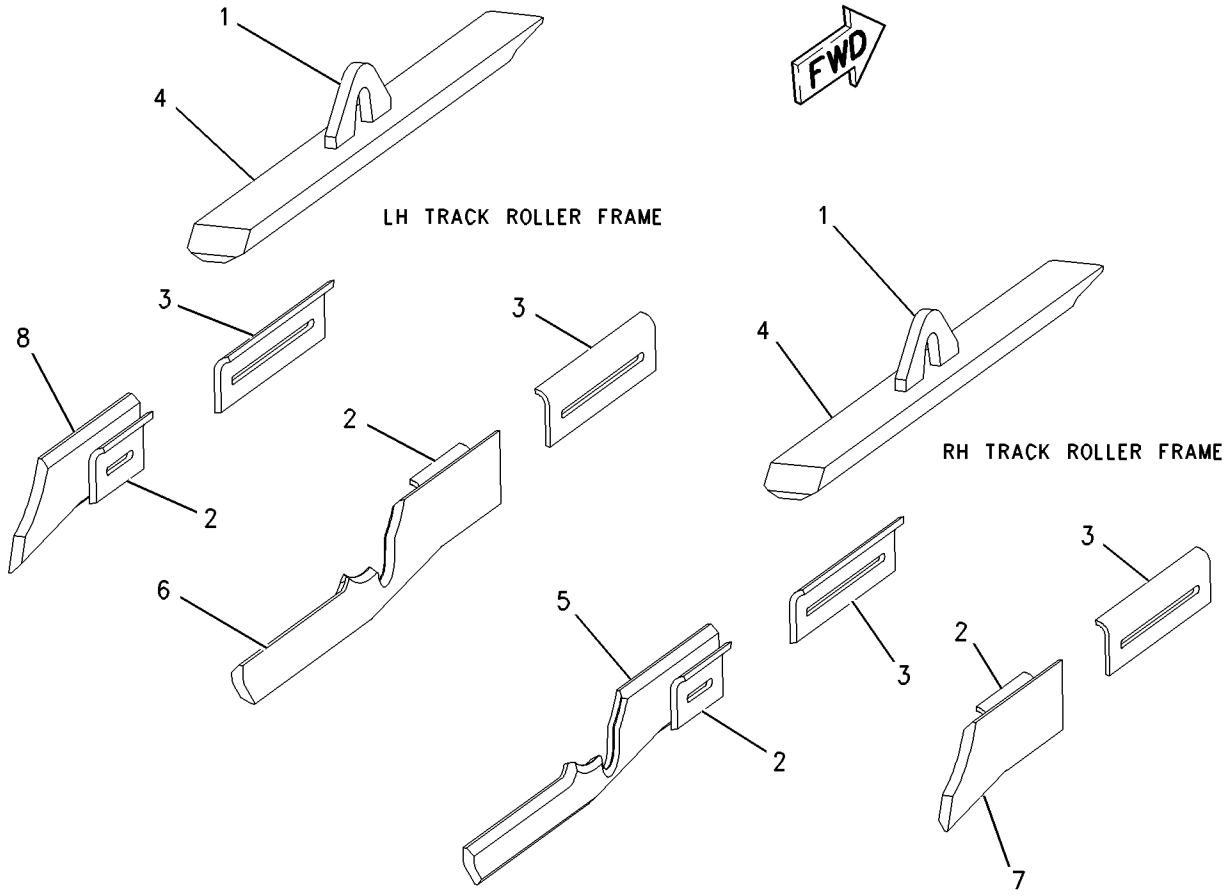

GRAPHIC #1 g00753131

125-2140 ROLLER & IDLER AR

S/N: ABK1-UP

SYMMETRICAL DUO-CONE, SILICONE RUBBER TORICS AND SYNTHETIC OIL. ARCTIC AN ATTACHMENT

SMCS-4159, 4180 **i01504358**

NOTE	PART NUMBER	QTY	PART NAME 1 2 3 4 5 6 (PRODUCT LEVEL)	SEE PAGE
Y	**107-2690**	4	IDLER GP-TRACK	521
Y	**107-2689**	8	ROLLER GP-TRACK-DOUBLE FLANGE	539
			—OR—	
Y	**197-8228**	8	ROLLER GP-TRACK-DOUBLE FLANGE	541
Y	**107-2688**	8	ROLLER GP-TRACK-SINGLE FLANGE	543
			—OR—	
Y	**197-8229**	8	ROLLER GP-TRACK-SINGLE FLANGE	545

Y-SEPARATE ILLUSTRATION

UNDERCARRIAGE

139-7704 ROLLER AR-TRACK CARRIER

S/N: ABK1-UP
AN ATTACHMENT
TYPE 1

SMCS-4154 **i01426221**

NOTE	REF NO	GRAPHIC REF	PART NUMBER	QTY	PART NAME 1 2 3 4 5 6 (PRODUCT LEVEL)	SEE PAGE
	1	1	**155-8099**	1	FRAME AS-RH	
		1	**155-8100**	1	FRAME AS-LH	
					(EACH FRAME AS INCLUDES)	
		1	**6T-3793**	2	SUPPORT (OUTER)	
		1	**9P-5708**	2	SUPPORT (INNER)	
	1A	1	**7T-3877**	1	HOOK	
	2	1	**8T-5361**	16	WASHER-HARD (28X49X5MM THK)	
	3	1	**1Q-3691**	2	PLATE AS (RH INNER/LH OUTER)	
	4	1	**1Q-3690**	2	PLATE AS (RH OUTER/LH INNER)	
	5	1	**7X-0406**	16	BOLT (1-8X3 IN)	
	6	1	**8C-6913**	8	WASHER-HARD (24X41.5X4MM THK)	
Y	7	1	**104-3495**	2	ROLLER GP-TRACK-SINGLE FLANGE	542
	8	1	**6T-4504**	4	CAP AS-TRACK ROLLER	
					(EACH MAY INCLUDE)	
		1	**1T-0068**	1	PIN-SPRING	
	9	1	**6T-4376**	4	CAP-TRACK ROLLER	
	10	1	**7X-0393**	8	BOLT	

QUANTITIES SHOWN ARE THOSE REQUIRED FOR BOTH LH AND RH SIDES
Y-SEPARATE ILLUSTRATION

139-7704 **ROLLER AR-TRACK CARRIER** ***(contd.)*** **i01426221**

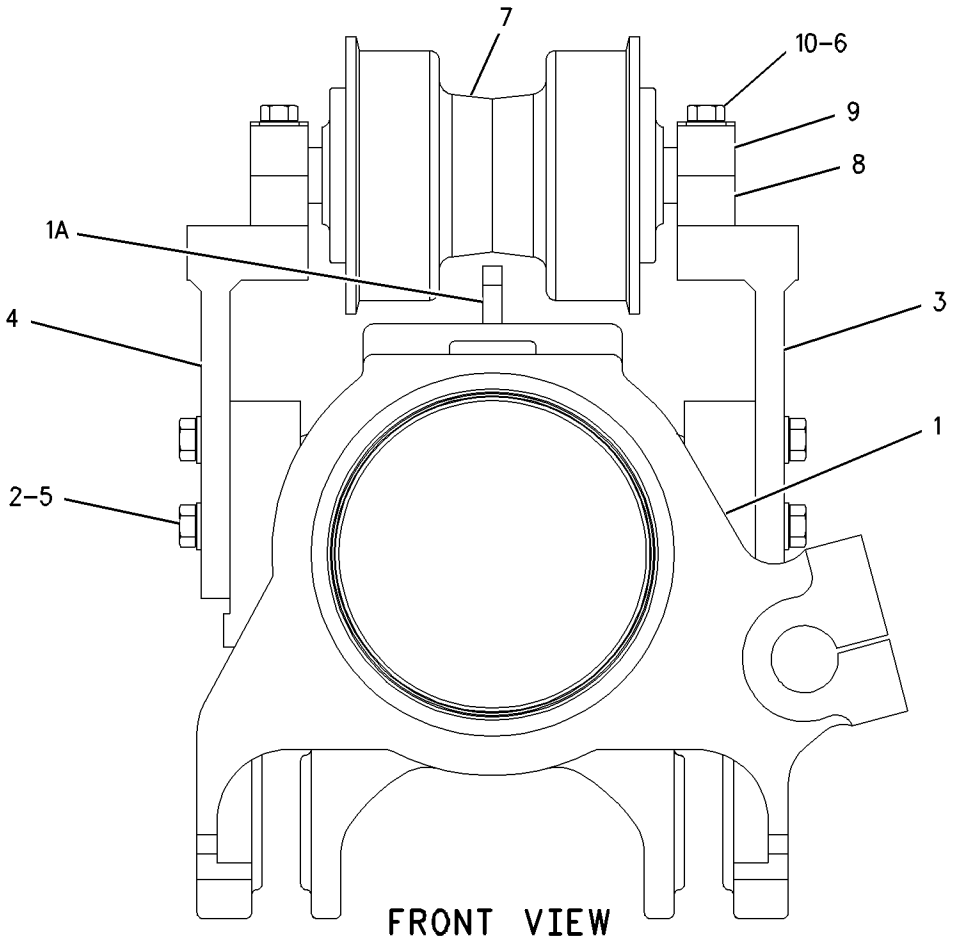

GRAPHIC #1 g00747178

UNDERCARRIAGE

139-7704 ROLLER AR-TRACK CARRIER

S/N: ABK1-UP
AN ATTACHMENT
TYPE 2

SMCS-4154 **i01504287**

NOTE	REF NO	GRAPHIC REF	PART NUMBER	QTY	PART NAME 1 2 3 4 5 6 (PRODUCT LEVEL)	SEE PAGE
	1	1	**1Q-3690**	2	PLATE AS (RH OUTER/LH INNER)	
	2	1	**1Q-3691**	2	PLATE AS (RH INNER/LH OUTER)	
	3	1	**6T-4376**	4	CAP-TRACK ROLLER	
	4	1	**6T-4504**	4	CAP AS-TRACK ROLLER	
					(EACH INCLUDES)	
		1	**1T-0068**	1	PIN-SPRING	
	5	1	**8C-6913**	8	WASHER-HARD (24X41.5X4MM THK)	
	6	1	**8T-5361**	16	WASHER-HARD (28X49X5MM THK)	
CY	7	1	**196-9955**	2	ROLLER GP-TRACK-SINGLE FLANGE	544
	8	1	**7X-0393**	8	BOLT	
	9	1	**7X-0406**	16	BOLT (1-8X3 IN)	
	10	1	**155-8099**	1	FRAME AS-RH	
	11	1	**155-8100**	1	FRAME AS-LH	
					(EACH FRAME AS INCLUDES)	
		1	**6T-3793**	2	SUPPORT (OUTER)	
		1	**9P-5708**	2	SUPPORT (INNER)	
	12	1	**7T-3877**	1	HOOK	

C-CHANGE FROM PREVIOUS TYPE
Y-SEPARATE ILLUSTRATION

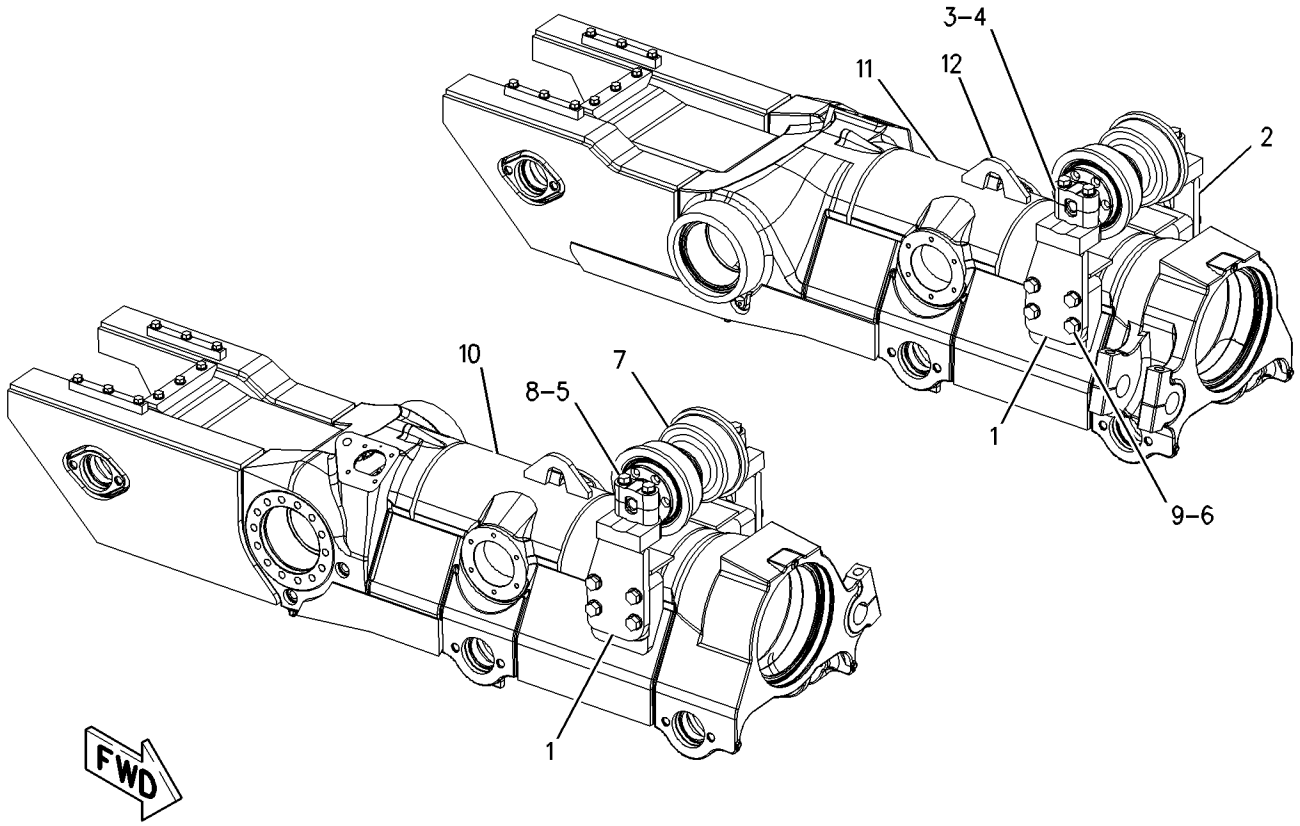

GRAPHIC #1 g00793906

UNDERCARRIAGE

104-3496 ROLLER GP-TRACK-DOUBLE FLANGE

S/N: ABK1-470

PART OF 187-2015 UNDERCARRIAGE AR

SMCS-4180 **i01335859**

NOTE	REF NO	GRAPHIC REF	PART NUMBER	QTY	PART NAME 1 2 3 4 5 6 (PRODUCT LEVEL)	SEE PAGE
	1	1	**104-8577**	1	ROLLER & BEARING AS	
		1	**9W-9844**	2	BEARING-SLEEVE	
	2	1	**107-3944**	2	RETAINER	
	3	1	**0S-1595**	12	BOLT (1/2-13X1.25 IN)	
	4	1	**5F-3106**	2	SEAL-O-RING (126.59MM ID)	
	5	1	**162-7862**	2	SEAL GP-DUO-CONE	
					(EACH INCLUDES)	
		1	**162-2166**	2	RING-TORIC	
	6	1	**7J-2036**	2	SEAL-O-RING	
	7	1	**107-3945**	2	COLLAR-SEAL	
	8	1	**104-3494**	1	SHAFT-TRACK ROLLER	
	9	1	**6Y-0473**	1	PLUG	
		1	**9G-4872**	1	STOPPER-RUBBER	
	10	1	**8E-7510**	2	WASHER-THRUST	
	11	1	**5P-8245**	12	WASHER-HARD (3MM THK)	

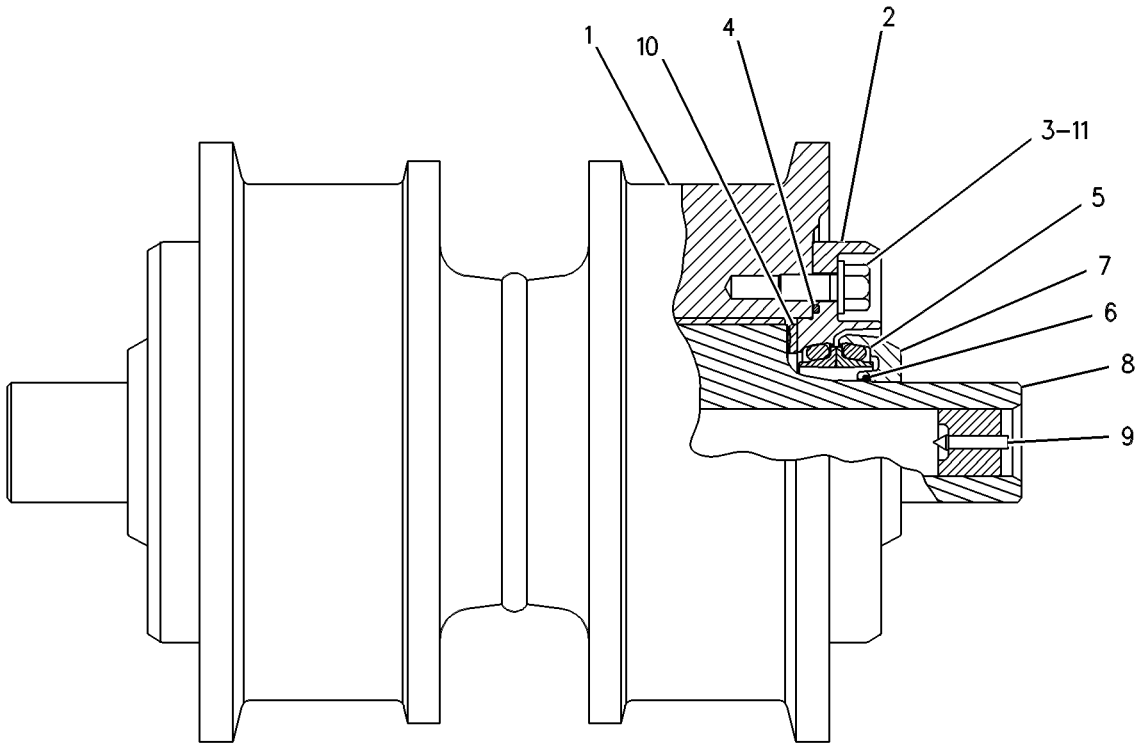

GRAPHIC #1 g00279174

UNDERCARRIAGE

107-2689 ROLLER GP-TRACK-DOUBLE FLANGE

S/N: ABK1-UP
ARCTIC
PART OF 125-2140 ROLLER & IDLER AR
AN ATTACHMENT

SMCS-4180 **i01397525**

NOTE	REF NO	GRAPHIC REF	PART NUMBER	QTY	PART NAME 1 2 3 4 5 6 (PRODUCT LEVEL)	SEE PAGE
	1	1	**104-8577**	1	ROLLER & BEARING AS	
		1	**9W-9844**	2	BEARING-SLEEVE	
	2	1	**107-3944**	2	RETAINER	
	3	1	**0S-1595**	12	BOLT (1/2-13X1.25 IN)	
		1	**5P-8245**	12	WASHER-HARD (13.5X25.5X3MM THK)	
	4	1	**5F-3106**	2	SEAL-O-RING (126.59MM ID)	
	5	1	**107-4889**	2	SEAL GP-DUO-CONE	
					(EACH INCLUDES)	
		1	**9M-9730**	2	RING-SEALING	
	6	1	**7J-2036**	2	SEAL-O-RING (58.42MM ID)	
	7	1	**107-3945**	2	COLLAR-SEAL	
	8	1	**104-3494**	1	SHAFT-TRACK ROLLER	
	9	1	**6Y-0473**	1	PLUG-CLEAR	
		1	**9G-4872**	1	STOPPER-RUBBER	
	10	1	**8E-7510**	2	WASHER-THRUST	

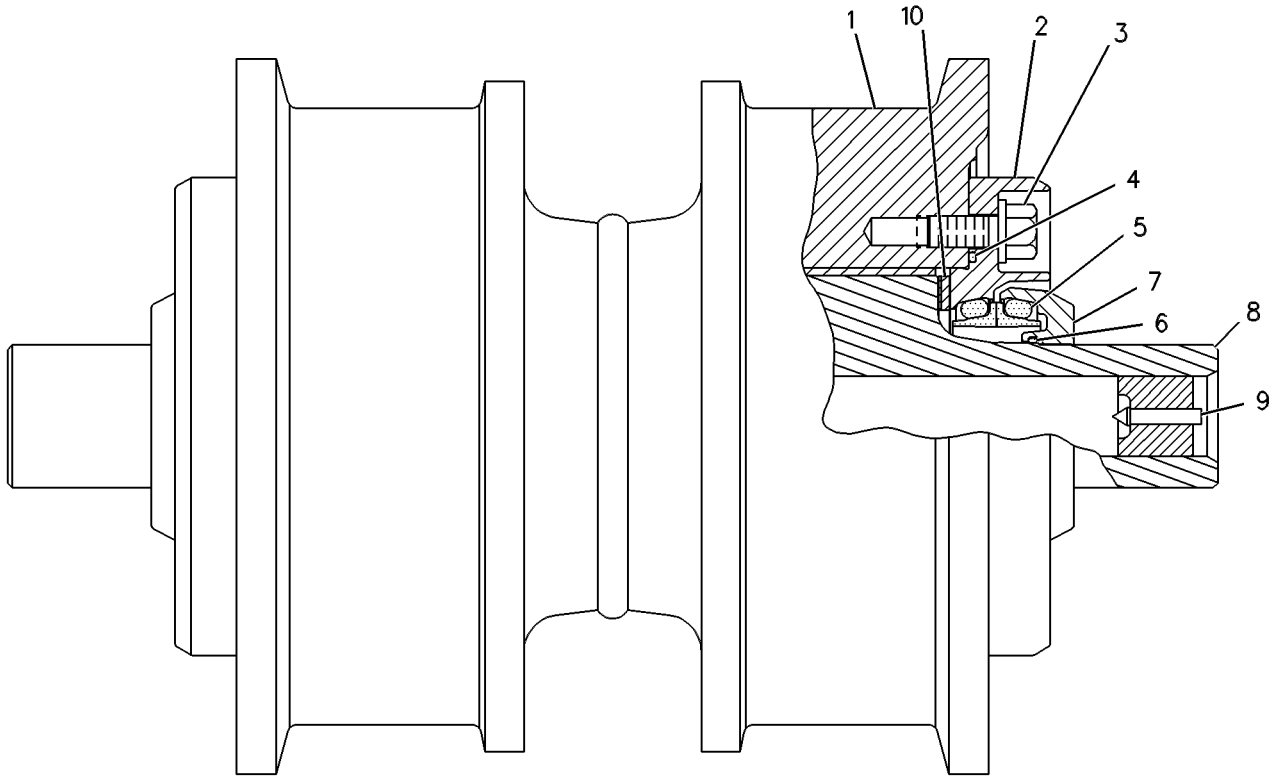

GRAPHIC #1 g00248814

UNDERCARRIAGE

196-9954 ROLLER GP-TRACK-DOUBLE FLANGE

S/N: ABK471-UP

PART OF 187-2015 UNDERCARRIAGE AR

SMCS-4180 **i01590829**

NOTE	REF NO	GRAPHIC REF	PART NUMBER	QTY	PART NAME 1 2 3 4 5 6 (PRODUCT LEVEL)	SEE PAGE
	1	1	**196-9956**	1	ROLLER & BEARING AS	
		1	**9W-9844**	2	BEARING-SLEEVE	
	2	1	**107-3944**	2	RETAINER	
	3	1	**1A-1460**	12	BOLT (1/2-13X2 IN)	
	4	1	**5F-3106**	2	SEAL-O-RING	
	5	1	**162-7862**	2	SEAL GP-DUO-CONE	
					(EACH INCLUDES)	
		1	**162-2166**	2	RING-TORIC	
	6	1	**7J-2036**	2	SEAL-O-RING	
	7	1	**107-3945**	2	COLLAR-SEAL	
	8	1	**104-3494**	1	SHAFT-TRACK ROLLER	
	9	1	**6Y-0473**	1	PLUG-CLEAR	
		1	**9G-4872**	1	STOPPER-RUBBER	
	10	1	**8E-7510**	2	WASHER-THRUST (86X120.27X4.52MM THK)	
	11	1	**5P-8245**	12	WASHER-HARD (13.5X25.5X3MM THK)	

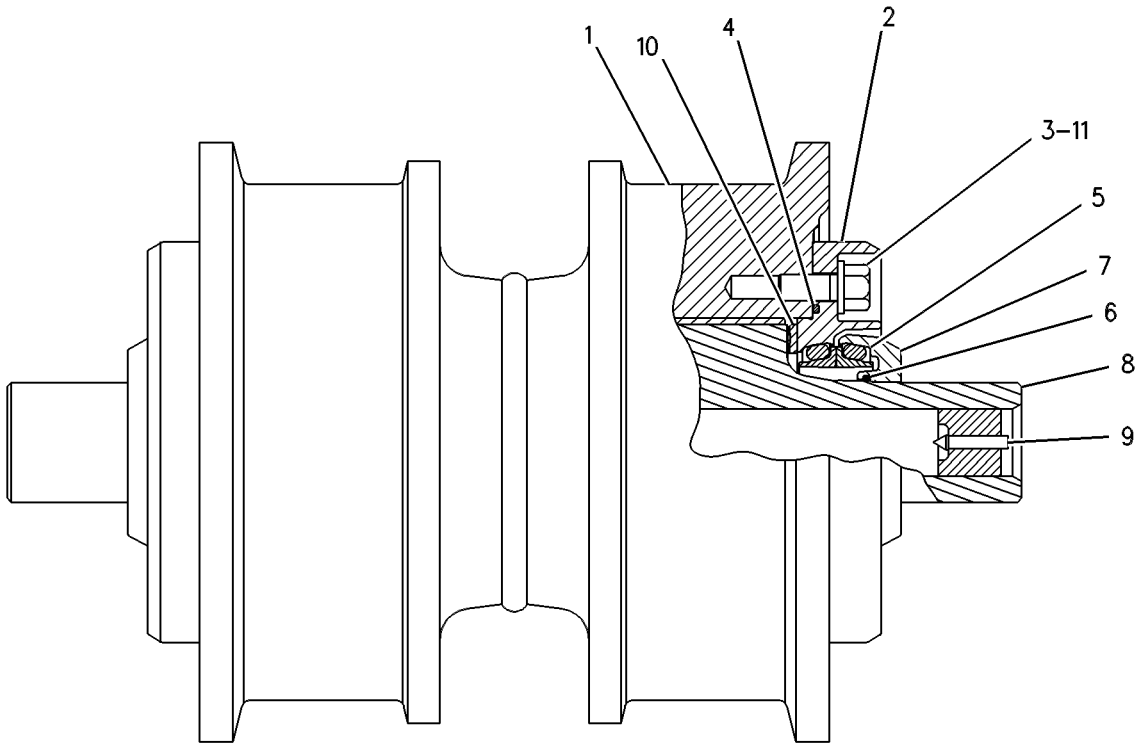

GRAPHIC #1 g00279174

UNDERCARRIAGE

197-8228 ROLLER GP-TRACK-DOUBLE FLANGE

S/N: ABK1-UP
EXTREME TEMPERATURE
PART OF 125-2140 ROLLER & IDLER AR
AN ATTACHMENT

SMCS-4180 **i01504359**

NOTE	REF NO	GRAPHIC REF	PART NUMBER	QTY	PART NAME 1 2 3 4 5 6 (PRODUCT LEVEL)	SEE PAGE
	1	1	**4S-5898**	2	SEAL-O-RING	
	2	1	**7J-2036**	2	SEAL-O-RING	
	3	1	**8E-7510**	2	WASHER-THRUST	
	4	1	**104-3494**	1	SHAFT-TRACK ROLLER	
	5	1	**107-3944**	2	RETAINER	
	6	1	**107-3945**	2	COLLAR-SEAL	
	7	1	**107-4889**	2	SEAL GP-DUO-CONE	
					(EACH INCLUDES)	
		1	**9M-9730**	2	RING-SEALING	
	8	1	**128-6191**	2	STOP AS	
					(EACH INCLUDES)	
		1	**3T-3799**	1	PLUG-HIGH TEMPERATURE	
	9	1	**196-9956**	1	ROLLER & BEARING AS	
		1	**9W-9844**	2	BEARING-SLEEVE	
	10	1	**1A-1460**	12	BOLT (1/2-13X2 IN)	
	11	1	**5P-8245**	12	WASHER-HARD (13.5X25.5X3MM THK)	

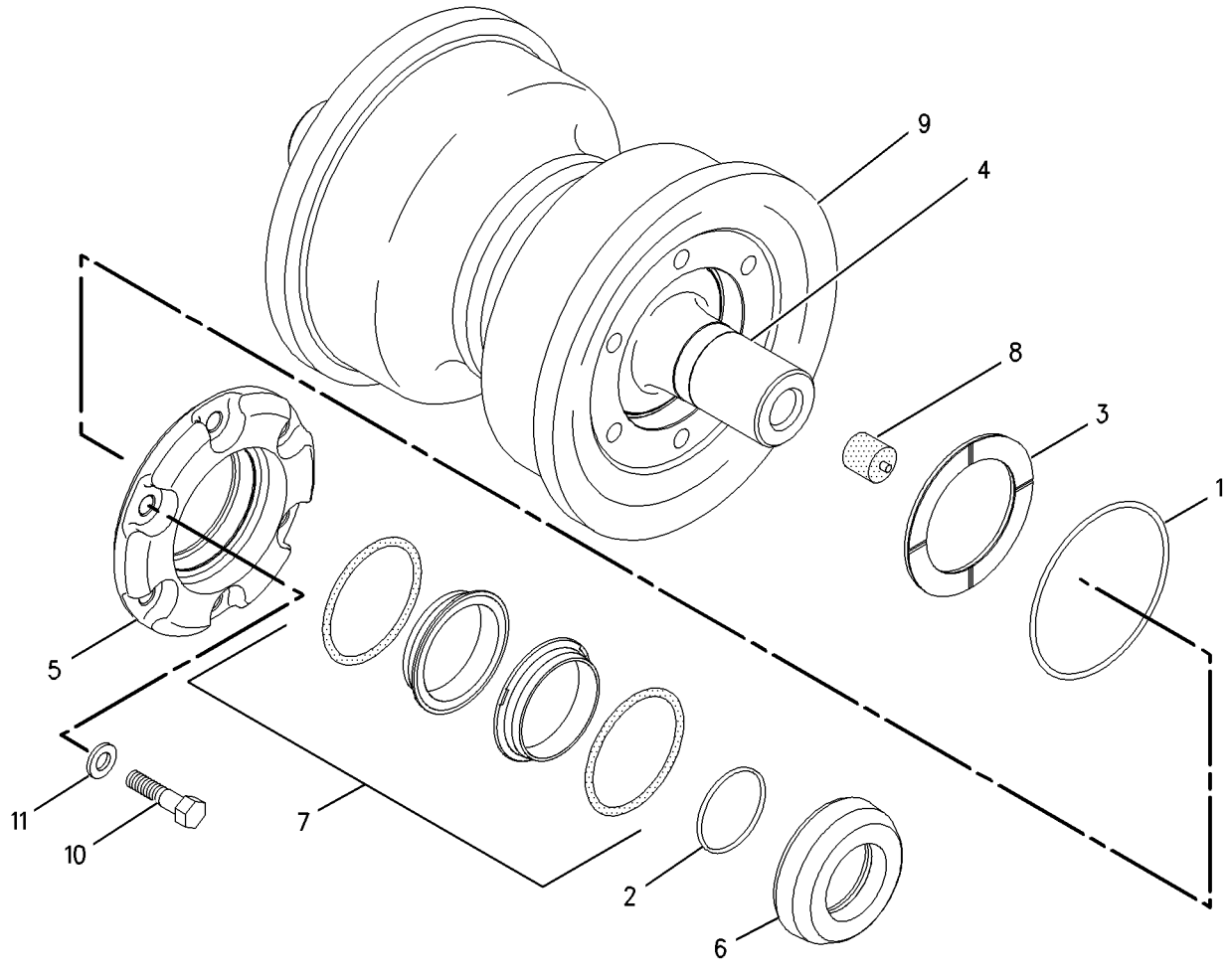

GRAPHIC #1 g00793989

104-3495 ROLLER GP-TRACK-SINGLE FLANGE

S/N: ABK1-470

PART OF 139-7704 ROLLER AR-TRACK CARRIER, 187-2015 UNDERCARRIAGE AR

ALSO AN ATTACHMENT

SMCS-4180 **i01624785**

NOTE	REF NO	GRAPHIC REF	PART NUMBER	QTY	PART NAME 1 2 3 4 5 6 (PRODUCT LEVEL)	SEE PAGE
	1	1	**104-8576**	1	ROLLER & BEARING AS	
		1	**9W-9844**	2	BEARING-SLEEVE	
	2	1	**107-3944**	2	RETAINER	
	3	1	**0S-1595**	12	BOLT (1/2-13X1.25 IN)	
	4	1	**5F-3106**	2	SEAL-O-RING	
	5	1	**162-7862**	2	SEAL GP-DUO-CONE	
					(EACH INCLUDES)	
		1	**162-2166**	2	RING-TORIC	
	6	1	**7J-2036**	2	SEAL-O-RING	
	7	1	**107-3945**	2	COLLAR-SEAL	
	8	1	**104-3494**	1	SHAFT-TRACK ROLLER	
	9	1	**6Y-0473**	1	PLUG-CLEAR	
		1	**9G-4872**	1	STOPPER-RUBBER	
	10	1	**8E-7510**	2	WASHER-THRUST (86X120.27X4.52MM THK)	
	11	1	**5P-8245**	12	WASHER-HARD (13.5X25.5X3MM THK)	

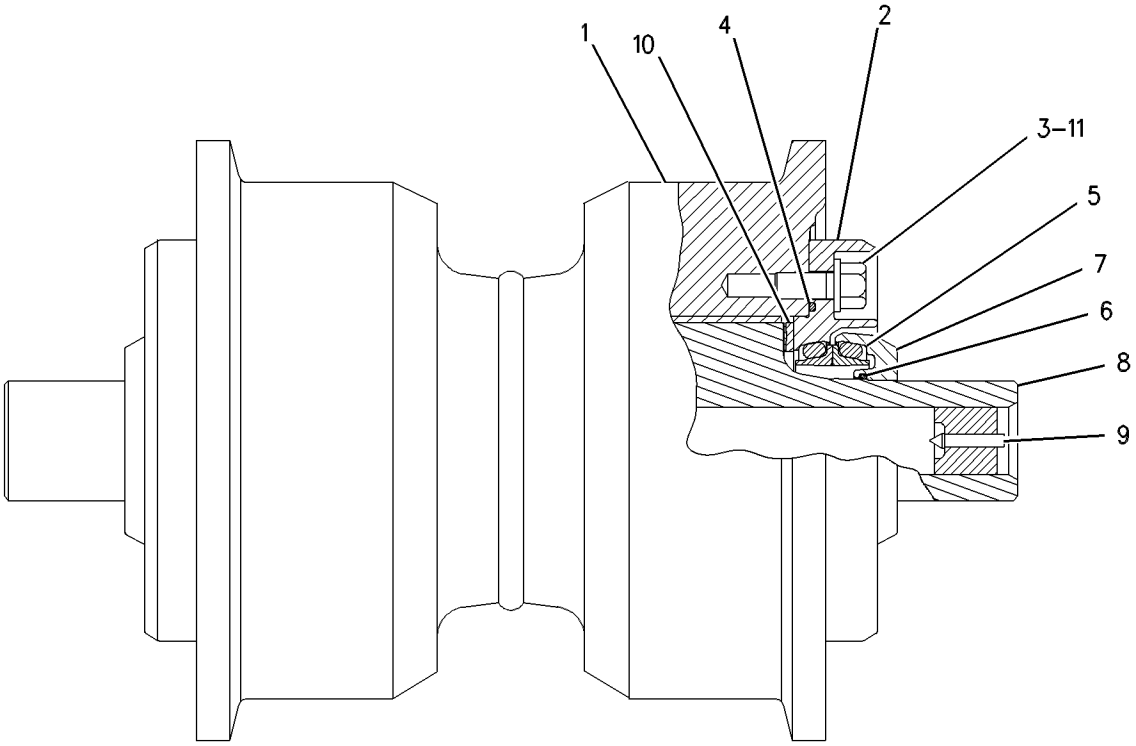

GRAPHIC #1 g00576837

UNDERCARRIAGE

107-2688 ROLLER GP-TRACK-SINGLE FLANGE

S/N: ABK1-UP
ARCTIC
PART OF 125-2140 ROLLER & IDLER AR
AN ATTACHMENT

SMCS-4180 **i01397036**

NOTE	REF NO	GRAPHIC REF	PART NUMBER	QTY	PART NAME 1 2 3 4 5 6 (PRODUCT LEVEL)	SEE PAGE
	1	1	**104-8576**	1	ROLLER & BEARING AS	
		1	**9W-9844**	2	BEARING-SLEEVE	
	2	1	**107-3944**	2	RETAINER	
	3	1	**0S-1595**	12	BOLT (1/2-13X1.25 IN)	
		1	**5P-8245**	12	WASHER-HARD (13.5X25.5X3MM THK)	
	4	1	**5F-3106**	2	SEAL-O-RING (126.59MM ID)	
	5	1	**107-4889**	2	SEAL GP-DUO-CONE	
					(EACH INCLUDES)	
		1	**9M-9730**	2	RING-SEALING	
	6	1	**7J-2036**	2	SEAL-O-RING (58.42MM ID)	
	7	1	**107-3945**	2	COLLAR-SEAL	
	8	1	**104-3494**	1	SHAFT-TRACK ROLLER	
	9	1	**6Y-0473**	1	PLUG-CLEAR	
		1	**9G-4872**	1	STOPPER-RUBBER	
	10	1	**8E-7510**	2	WASHER-THRUST	

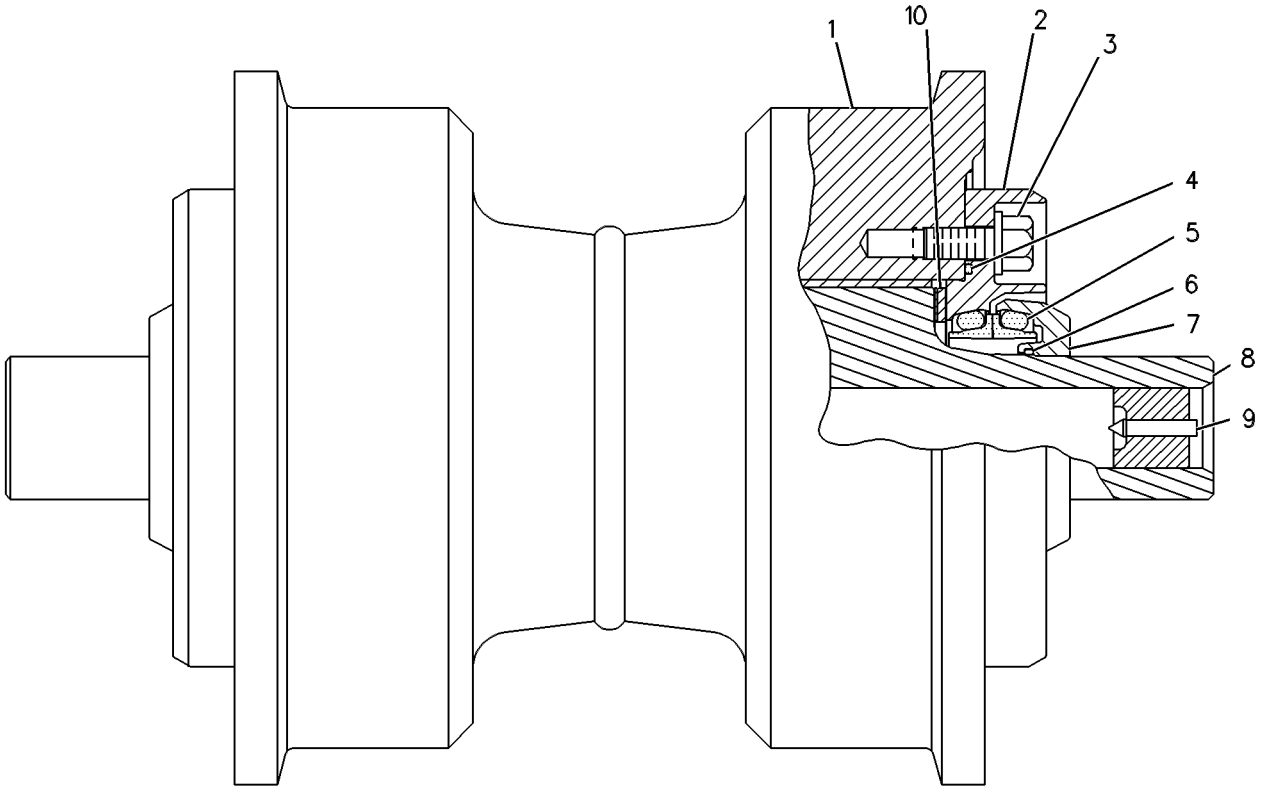

GRAPHIC #1 g00248808

UNDERCARRIAGE

196-9955 ROLLER GP-TRACK-SINGLE FLANGE

S/N: ABK471-UP

PART OF 139-7704 ROLLER AR-TRACK CARRIER, 187-2015 UNDERCARRIAGE AR

ALSO AN ATTACHMENT

SMCS-4180 **i01591082**

NOTE	REF NO	GRAPHIC REF	PART NUMBER	QTY	PART NAME 1 2 3 4 5 6 (PRODUCT LEVEL)	SEE PAGE
	1	1	**5F-3106**	2	SEAL-O-RING	
	2	1	**7J-2036**	2	SEAL-O-RING	
	3	1	**6Y-0473**	1	PLUG-CLEAR	
		1	**9G-4872**	1	STOPPER-RUBBER	
	4	1	**8E-7510**	2	WASHER-THRUST (86X120.27X4.52MM THK)	
	5	1	**104-3494**	1	SHAFT-TRACK ROLLER	
	6	1	**107-3944**	2	RETAINER	
	7	1	**107-3945**	2	COLLAR-SEAL	
	8	1	**162-7862**	2	SEAL GP-DUO-CONE	
					(EACH INCLUDES)	
		1	**162-2166**	2	RING-TORIC	
	9	1	**196-9957**	1	ROLLER & BEARING AS	
		1	**9W-9844**	2	BEARING-SLEEVE	
	10	1	**1A-1460**	12	BOLT (1/2-13X2 IN)	
	11	1	**5P-8245**	12	WASHER-HARD (13.5X25.5X3MM THK)	

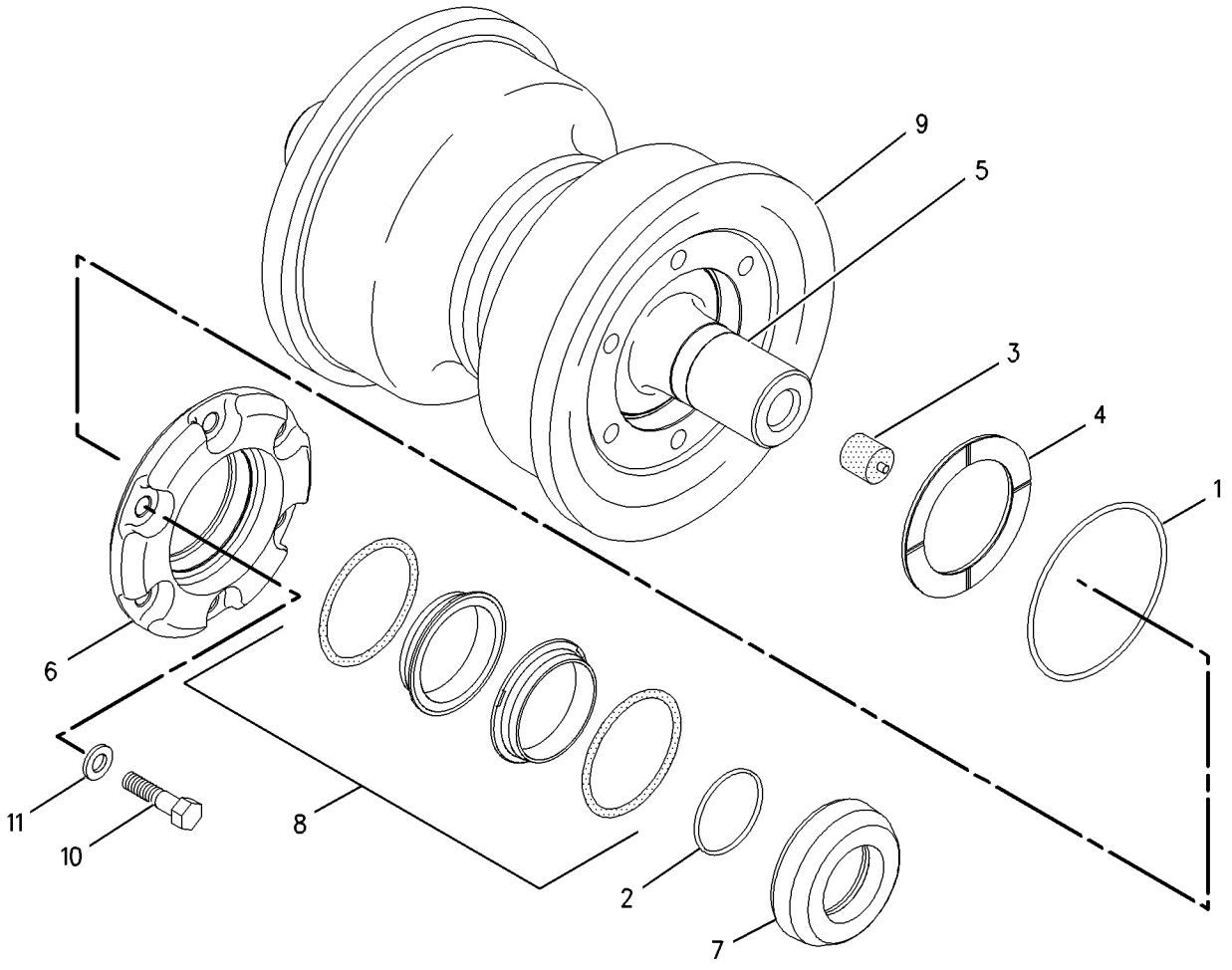

GRAPHIC #1 g00793975

UNDERCARRIAGE

197-8229 ROLLER GP-TRACK-SINGLE FLANGE

S/N: ABK1-UP
EXTREME TEMPERATURE
PART OF 125-2140 ROLLER & IDLER AR
AN ATTACHMENT

SMCS-4180 **i01504363**

NOTE	REF NO	GRAPHIC REF	PART NUMBER	QTY	PART NAME 1 2 3 4 5 6 (PRODUCT LEVEL)	SEE PAGE
	1	1	**4S-5898**	2	SEAL-O-RING	
	2	1	**7J-2036**	2	SEAL-O-RING	
	3	1	**8E-7510**	2	WASHER-THRUST	
	4	1	**104-3494**	1	SHAFT-TRACK ROLLER	
	5	1	**107-3944**	2	RETAINER	
	6	1	**107-3945**	2	COLLAR-SEAL	
	7	1	**107-4889**	2	SEAL GP-DUO-CONE	
					(EACH INCLUDES)	
		1	**9M-9730**	2	RING-SEALING	
	8	1	**128-6191**	2	STOP AS	
					(EACH INCLUDES)	
		1	**3T-3799**	1	PLUG-HIGH TEMPERATURE	
	9	1	**196-9957**	1	ROLLER & BEARING AS	
		1	**9W-9844**	2	BEARING-SLEEVE	
	10	1	**1A-1460**	12	BOLT (1/2-13X2 IN)	
	11	1	**5P-8245**	12	WASHER-HARD (13.5X25.5X3MM THK)	

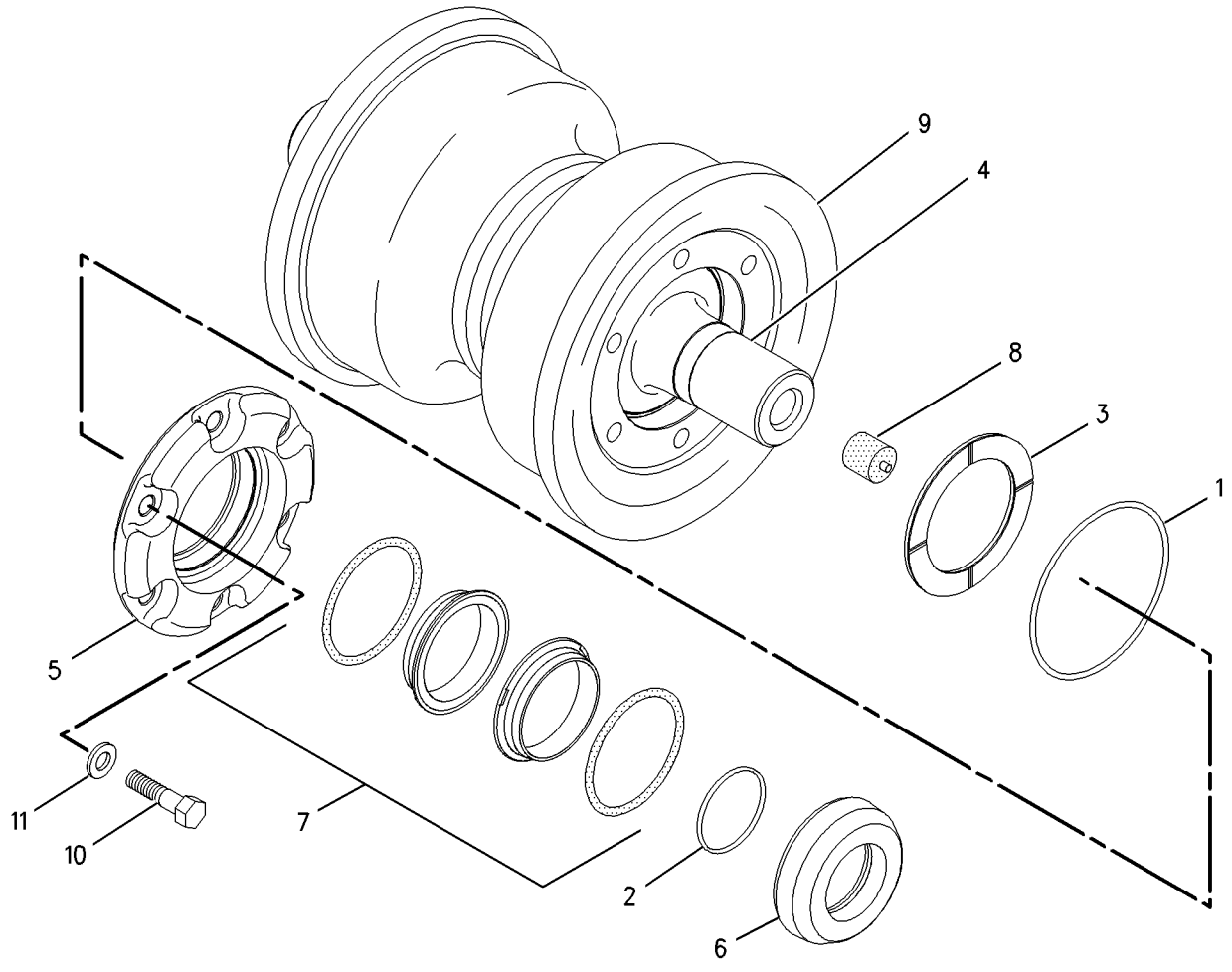

GRAPHIC #1 g00793982

UNDERCARRIAGE

155-8096 SUSPENSION GP-BOGIE

S/N: ABK1-UP

PART OF 187-2015 UNDERCARRIAGE AR

SMCS-7217 **i01509543**

NOTE	REF NO	GRAPHIC REF	PART NUMBER	QTY	PART NAME 1 2 3 4 5 6 (PRODUCT LEVEL)	SEE PAGE
	1	1	**134-2679**	2	BOGIE AS-FRONT	
	2	1	**7T-5417**	4	BOGIE AS-MIDDLE	
	3	1	**134-2680**	2	BOGIE AS-REAR	
	4	1	**157-3106**	8	BOGIE-MINOR (RH)	
	5	1	**7T-9307**	32	PIN AS-CARTRIDGE	
					(EACH INCLUDES)	
		1	**6Y-0473**	2	PLUG-CLEAR	
		1	**9G-4872**	2	STOPPER-RUBBER	
	6	1	**184-4395**	16	GUIDE	
	7	1	**8C-6857**	32	BOLT (3/4-10X2.75 IN)	
	8	1	**8T-4994**	32	WASHER-HARD (20X36.5X3.5MM THK)	
	9	1	**7T-5419**	16	PAD AS-RESILIENT	
					(EACH INCLUDES)	
	10	1	**7T-5422**	1	PLATE	
	11	1	**5P-1076**	64	WASHER-HARD (13.5X30X4MM THK)	
	12	1	**7G-5221**	16	PLATE-RETAINER	
	13	1	**067-3161**	16	RING-RETAINING	
	14	1	**9W-4481**	8	INSERT	
	15	1	**8S-4755**	32	BOLT (1-14X1.5IN)	
	16	1	**9P-7823**	16	COVER	
	17	1	**157-3107**	8	BOGIE-MINOR (LH)	
	18	1	**5P-2228**	64	BOLT (1/2-13X1 IN)	

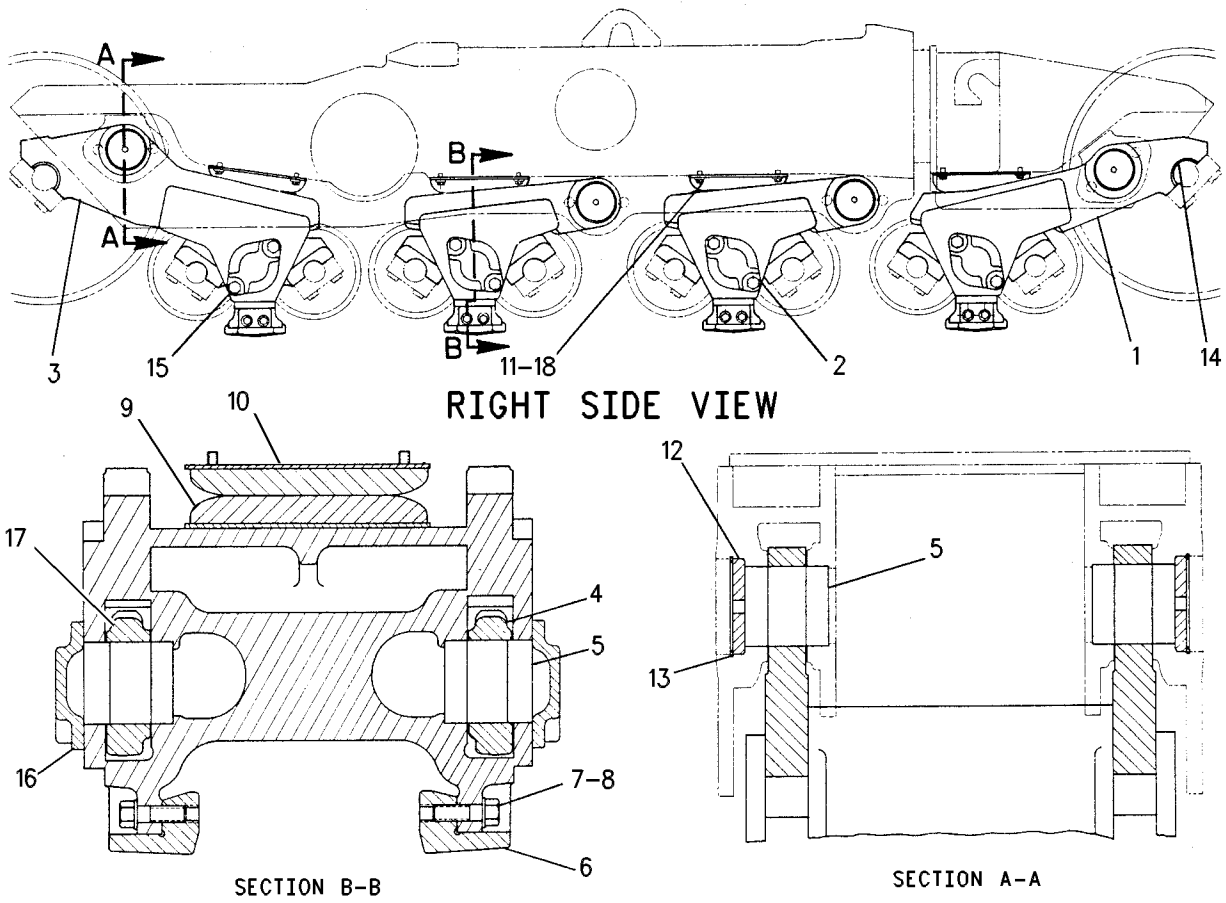

GRAPHIC #1 g00577627

UNDERCARRIAGE

196-8561 TRACK ADJUSTER & RECOIL GP

S/N: ABK1-UP

PART OF 187-2015 UNDERCARRIAGE AR

SMCS-4157, 4158 **i01422425**

NOTE	REF NO	GRAPHIC REF	PART NUMBER	QTY	PART NAME 1 2 3 4 5 6 (PRODUCT LEVEL)	SEE PAGE
	1	1	**1L-5081**	2	SPACER (0.41X0.75X0.56 IN THK)	
	2	1	**2S-5925**	2	VALVE (FILL) (TRACK ADJUSTER)	
	3	1	**2S-5926**	2	VALVE (RELIEF) (TRACK ADJUSTER)	
	4	1	**6T-0209**	2	GUIDE	
	5	1	**6T-0481**	8	RING	
	6	1	**6V-6900**	2	SEAL-U-CUP	
	7	1	**7G-8282**	2	CABLE AS	
					(EACH INCLUDES)	
		1	**1P-7405**	1	EYEBOLT	
	8	1	**7T-5351**	2	PISTON	
	9	1	**7T-5352**	2	SPRING	
	10	1	**9G-0611**	4	STOP	
	11	1	**9P-7255**	4	RING	
	12	1	**9P-7256**	2	RING	
	13	1	**9P-7380**	2	SLEEVE	
	14	1	**138-7772**	2	RETAINER	
	15	1	**139-7700**	1	CYLINDER AS-RH	
	16	1	**139-7701**	1	CYLINDER AS-LH	
	17	1	**192-5112**	2	SUPPORT AS	
	18	1	**0L-1178**	8	BOLT (3/4-10X2 IN)	
	19	1	**1P-7346**	2	WASHER-HARD (10.2X35X6MM THK)	
	20	1	**3B-1915**	2	BOLT (3/8-16X1.37 IN)	
	21	1	**6V-2360**	8	WASHER-HARD (20X32X3MM THK)	
	22	1	**6V-8801**	2	NUT (3/8-16 THD)	
	23	1	**7J-6580**	2	RING-RETAINING	

QUANTITIES SHOWN ARE THOSE REQUIRED FOR BOTH LH AND RH SIDES

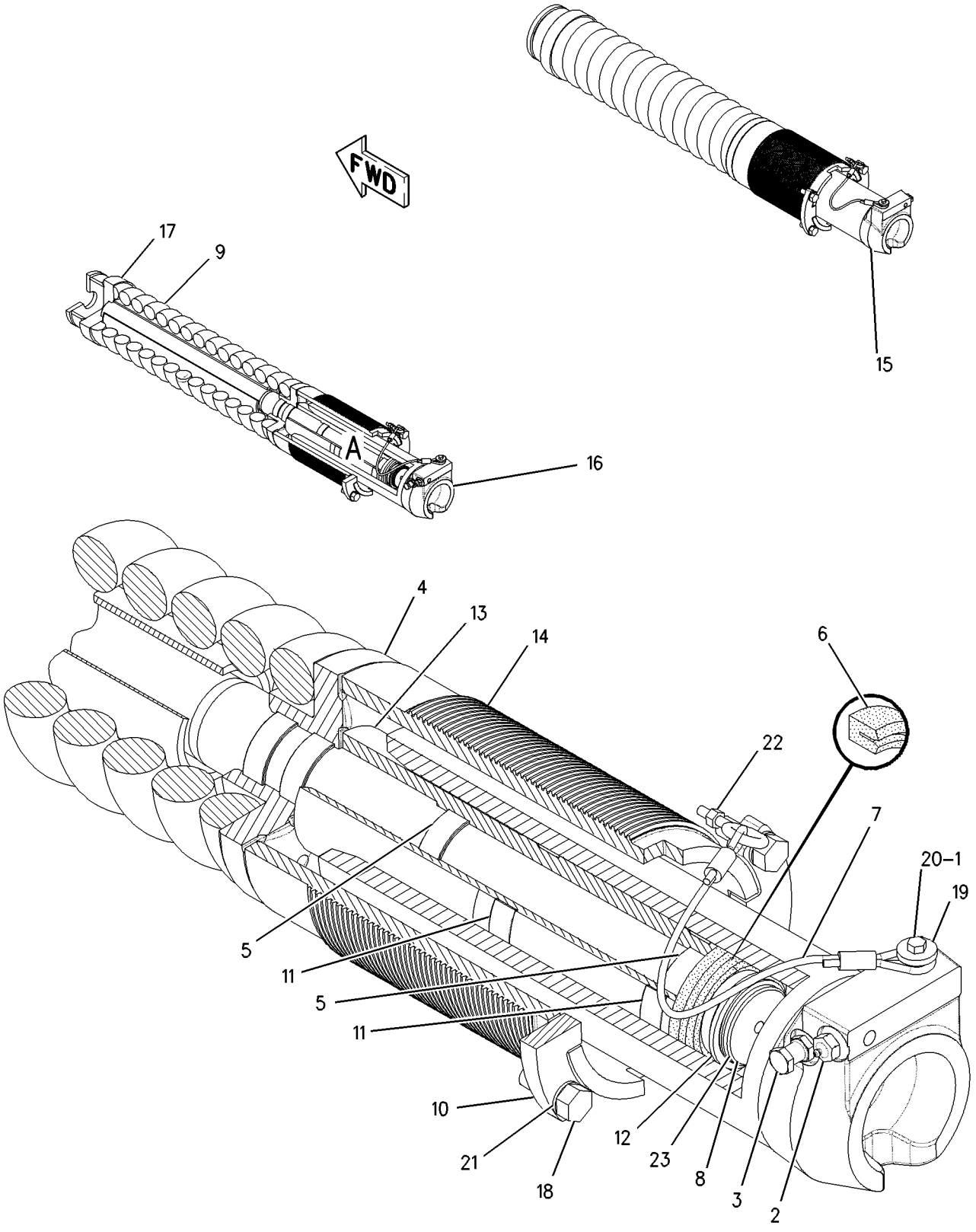

VIEW OF AREA A

GRAPHIC #1 g00750004

6Y-8194 TRACK GP–2 REQUIRED

S/N: ABK1-UP

685MM (27 IN) GROUSER SHOE.

SEALED & LUBRICATED-EXTREME SERVICE-POSITIVE PIN RETENTION. ARCTIC AN ATTACHMENT

SMCS-4170 **i01546624**

NOTE	PART NUMBER	QTY	PART NAME 1 2 3 4 5 6 (PRODUCT LEVEL)	SEE PAGE
Y	**6Y-8193**	1	LINK AS-TRACK	525
			–OR–	
Y	**199-5528**	1	LINK AS-TRACK	529
	6V-1728	2	BOLT-MASTER TRACK (1-14X5.83 IN)	
	7T-2283	2	BOLT-MASTER TRACK (1-14X4.84 IN)	
	6T-2638	168	BOLT-TRACK (1-14X3.54 IN)	
	7G-0343	168	NUT-TRACK (1-14 THD)	
	9W-2738	43	SHOE-TRACK	

Y-SEPARATE ILLUSTRATION

UNDERCARRIAGE

7T-2289 TRACK GP–2 REQUIRED

S/N: ABK1-UP

560MM (22 IN.) GROUSER SHOE.

SEALED & LUBRICATED-EXTREME SERVICE-POSITIVE PIN RETENTION

AN ATTACHMENT

SMCS-4170 **i01546856**

NOTE	PART NUMBER	QTY	PART NAME 1 2 3 4 5 6 (PRODUCT LEVEL)	SEE PAGE
Y	**8E-7962**	1	LINK AS-TRACK	526
			–OR–	
Y	**199-5525**	1	LINK AS-TRACK	528
	6T-2638	168	BOLT-TRACK (1-14X3.54 IN)	
	6V-1728	2	BOLT-MASTER TRACK (1-14X5.83 IN)	
	7T-2283	2	BOLT-MASTER TRACK (1-14X4.84 IN)	
	7G-0343	168	NUT-TRACK (1-14 THD)	
	7T-2288	43	SHOE-TRACK	

Y-SEPARATE ILLUSTRATION

UNDERCARRIAGE

7T-2295 TRACK GP–2 REQUIRED

S/N: ABK1-515

610MM (24 IN.) GROUSER SHOE. SEALED & LUBRICATED-EXTREME SERVICE

PART OF 187-2015 UNDERCARRIAGE AR

SMCS-4170 **i01335873**

NOTE	PART NUMBER	QTY	PART NAME 1 2 3 4 5 6 (PRODUCT LEVEL)	SEE PAGE
Y	**8E-7962**	1	LINK AS-TRACK	526
	6T-2638	168	BOLT-TRACK (1-14X3.54 IN)	
	6V-1728	2	BOLT-MASTER TRACK (1-14X5.83 IN)	
	7T-2283	2	BOLT-MASTER TRACK (1-14X4.84 IN)	
	7G-0343	168	NUT-TRACK (1-14 THD)	
	7T-2294	43	SHOE-TRACK	

Y-SEPARATE ILLUSTRATION

UNDERCARRIAGE

7T-3935 TRACK GP–2 REQUIRED

S/N: ABK1-UP
685MM (27 IN.) GROUSER SHOE.
SEALED & LUBRICATED-EXTREME SERVICE-POSITIVE PIN RETENTION
AN ATTACHMENT

SMCS-4170 **i01335874**

NOTE	PART NUMBER	QTY	PART NAME 1 2 3 4 5 6 (PRODUCT LEVEL)	SEE PAGE
Y	**8E-7962**	1	LINK AS-TRACK	526
	6T-2638	168	BOLT-TRACK (1-14X3.54 IN)	
	6V-1728	2	BOLT-MASTER TRACK (1-14X5.83 IN)	
	7T-2283	2	BOLT-MASTER TRACK (1-14X4.84 IN)	
	7G-0343	168	NUT-TRACK (1-14 THD)	
	9W-2738	43	SHOE-TRACK	

Y-SEPARATE ILLUSTRATION

UNDERCARRIAGE

9W-2754 TRACK GP–2 REQUIRED

S/N: ABK1-UP

685MM (27 IN) GROUSER SHOE. SEALED & LUBRICATED-EXTREME SERVICE

AN ATTACHMENT

SMCS-4170 **i01623849**

NOTE	PART NUMBER	QTY	PART NAME 1 2 3 4 5 6 (PRODUCT LEVEL)	SEE PAGE
Y	*6Y-1130*	1	LINK AS-TRACK	524
	6T-2638	168	BOLT-TRACK (1-14X3.54 IN)	
	6V-1728	2	BOLT-MASTER TRACK (1-14X5.83 IN)	
	7T-2283	2	BOLT-MASTER TRACK (1-14X4.84 IN)	
	7G-0343	168	NUT-TRACK (1-14 THD)	
	9W-2738	43	SHOE-TRACK	

Y-SEPARATE ILLUSTRATION

160-4769 TRACK GP

S/N: ABK1-UP
685MM (27 IN.) GROUSER SHOE.
SEALED & LUBRICATED-EXTREME SERVICE, POSITIVE PIN RETENTION
AN ATTACHMENT

SMCS-4170 **i01445917**

NOTE	PART NUMBER	QTY	PART NAME 1 2 3 4 5 6 (PRODUCT LEVEL)	SEE PAGE
Y	**160-4766**	1	LINK AS-TRACK	527
	6V-1728	2	BOLT-MASTER TRACK (1-14X5.83 IN)	
	7T-2283	2	BOLT-MASTER TRACK (1-14X4.84 IN)	
	6T-2638	168	BOLT-TRACK (1-14X3.54 IN)	
	7G-0343	168	NUT-TRACK (1-14 THD)	
	9W-2738	43	SHOE-TRACK	

Y-SEPARATE ILLUSTRATION

UNDERCARRIAGE

183-2120 TRACK GP

S/N: ABK1-UP
760MM (30 IN.) GROUSER SHOE.
MODERATE SERVICE, SEALED & LUBRICATED, POSITIVE PIN RETENTION
CANNOT BE USED WITH MACHINES EQUIPPED WITH RIPPER
AN ATTACHMENT

SMCS-4170 **i01276889**

NOTE	PART NUMBER	QTY	PART NAME 1 2 3 4 5 6 (PRODUCT LEVEL)	SEE PAGE
Y	**8E-7962**	1	LINK AS-TRACK	526
	6V-1728	2	BOLT-MASTER TRACK (1-14X5.83 IN)	
	7T-2283	2	BOLT-MASTER TRACK (1-14X4.84 IN)	
	6T-2638	168	BOLT-TRACK (1-14X3.54 IN)	
	7G-0343	168	NUT-TRACK (1-14 THD)	
	121-5907	43	SHOE-TRACK	

Y-SEPARATE ILLUSTRATION

UNDERCARRIAGE

199-5536 TRACK GP

S/N: ABK1-UP
760MM (30 IN) GROUSER SHOE.
SEALED & LUBRICATED, MODERATE SERVICE,POSITIVE PIN RETENTION
AN ATTACHMENT

SMCS-4170 **i01550575**

NOTE	PART NUMBER	QTY	PART NAME 1 2 3 4 5 6 (PRODUCT LEVEL)	SEE PAGE
Y	**199-5525**	1	LINK AS-TRACK	528
	6V-1728	2	BOLT-MASTER TRACK (1-14X5.83 IN)	
	7T-2283	2	BOLT-MASTER TRACK (1-14X4.84 IN)	
	6T-2638	168	BOLT-TRACK (1-14X3.54 IN)	
	7G-0343	168	NUT-TRACK (1-14 THD)	
	121-5907	43	SHOE-TRACK	

Y-SEPARATE ILLUSTRATION

199-5537 TRACK GP

S/N: ABK516-UP
610MM (24 IN) GROUSER SHOE.
SEALED & LUBRICATED,EXTREME SERVICE,POSITIVE PIN RETENTION
PART OF 187-2015 UNDERCARRIAGE AR

SMCS-4170 **i01595960**

NOTE	PART NUMBER	QTY	PART NAME 1 2 3 4 5 6 (PRODUCT LEVEL)	SEE PAGE
Y	**199-5525**	1	LINK AS-TRACK	528
	6V-1728	2	BOLT-MASTER TRACK (1-14X5.83 IN)	
	7T-2283	2	BOLT-MASTER TRACK (1-14X4.84 IN)	
	6T-2638	168	BOLT-TRACK (1-14X3.54 IN)	
	7G-0343	168	NUT-TRACK (1-14 THD)	
	7T-2294	43	SHOE-TRACK	

Y-SEPARATE ILLUSTRATION

199-5538 TRACK GP

S/N: ABK1-UP
685MM (27 IN) GROUSER SHOE.
SEALED & LUBRICATED, EXTREME SERVICE, POSITIVE PIN RETENTION
AN ATTACHMENT

SMCS-4170 **i01551172**

NOTE	PART NUMBER	QTY	PART NAME 1 2 3 4 5 6 (PRODUCT LEVEL)	SEE PAGE
Y	**199-5525**	1	LINK AS-TRACK	528
	6T-2638	168	BOLT-TRACK (1-14X3.54 IN)	
	6V-1728	2	BOLT-MASTER TRACK (1-14X5.83 IN)	
	7T-2283	2	BOLT-MASTER TRACK (1-14X4.84 IN)	
	7G-0343	168	NUT-TRACK (1-14 THD)	
	9W-2738	43	SHOE-TRACK	

Y-SEPARATE ILLUSTRATION

203-2199 TRACK GP

S/N: ABK1-UP
610MM (24 IN) GROUSER SHOE.
SEALED & LUBRICATED, EXTREME SERVICE, POSITIVE PIN RETENTION
FIELD INSTALLATION

SMCS-4170 **i01551757**

NOTE	PART NUMBER	QTY	PART NAME 1 2 3 4 5 6 (PRODUCT LEVEL)	SEE PAGE
Y	**199-5525**	1	LINK AS-TRACK	528
	6V-1728	2	BOLT-MASTER TRACK (1-14X5.83 IN)	
	7T-2283	2	BOLT-MASTER TRACK (1-14X4.84 IN)	
	6T-2638	168	BOLT-TRACK (1-14X3.54 IN)	
	7G-0343	168	NUT-TRACK (1-14 THD)	
	139-0617	43	SHOE-TRACK	

Y-SEPARATE ILLUSTRATION

UNDERCARRIAGE

203-2200 TRACK GP

S/N: ABK1-UP
685MM (27 IN) GROUSER SHOE.
SEALED & LUBRICATED, EXTREME SERVICE, POSITIVE PIN RETENTION
FIELD INSTALLATION

SMCS-4170 **i01502386**

NOTE	PART NUMBER	QTY	PART NAME 1 2 3 4 5 6 (PRODUCT LEVEL)	SEE PAGE
Y	**199-5525**	1	LINK AS-TRACK	528
	6V-1728	2	BOLT-MASTER TRACK (1-14X5.83 IN)	
	7T-2283	2	BOLT-MASTER TRACK (1-14X4.84 IN)	
	6T-2638	168	BOLT-TRACK (1-14X3.54 IN)	
	7G-0343	168	NUT-TRACK (1-14 THD)	
	1Q-4755	43	SHOE-TRACK	

Y-SEPARATE ILLUSTRATION

175-2962 TUBE AS-ROLLER FRAME

S/N: ABK1-UP

FOR FIELD REPAIR OF FRONT TRACK ROLLER FRAMES

FIELD INSTALLATION

SMCS-4151 **i01428378**

NOTE	REF NO	GRAPHIC REF	PART NUMBER	QTY	PART NAME 1 2 3 4 5 6 (PRODUCT LEVEL)	SEE PAGE
	1	1	**4B-4158**	4	SCREW-DRIVE (3/16X0.25 IN)	
	2	1	**6V-2226**	1	PLATE-WARNING (RECOIL SPRING)	
Z	3	1			TUBE	

Z-NOT SERVICED SEPARATELY

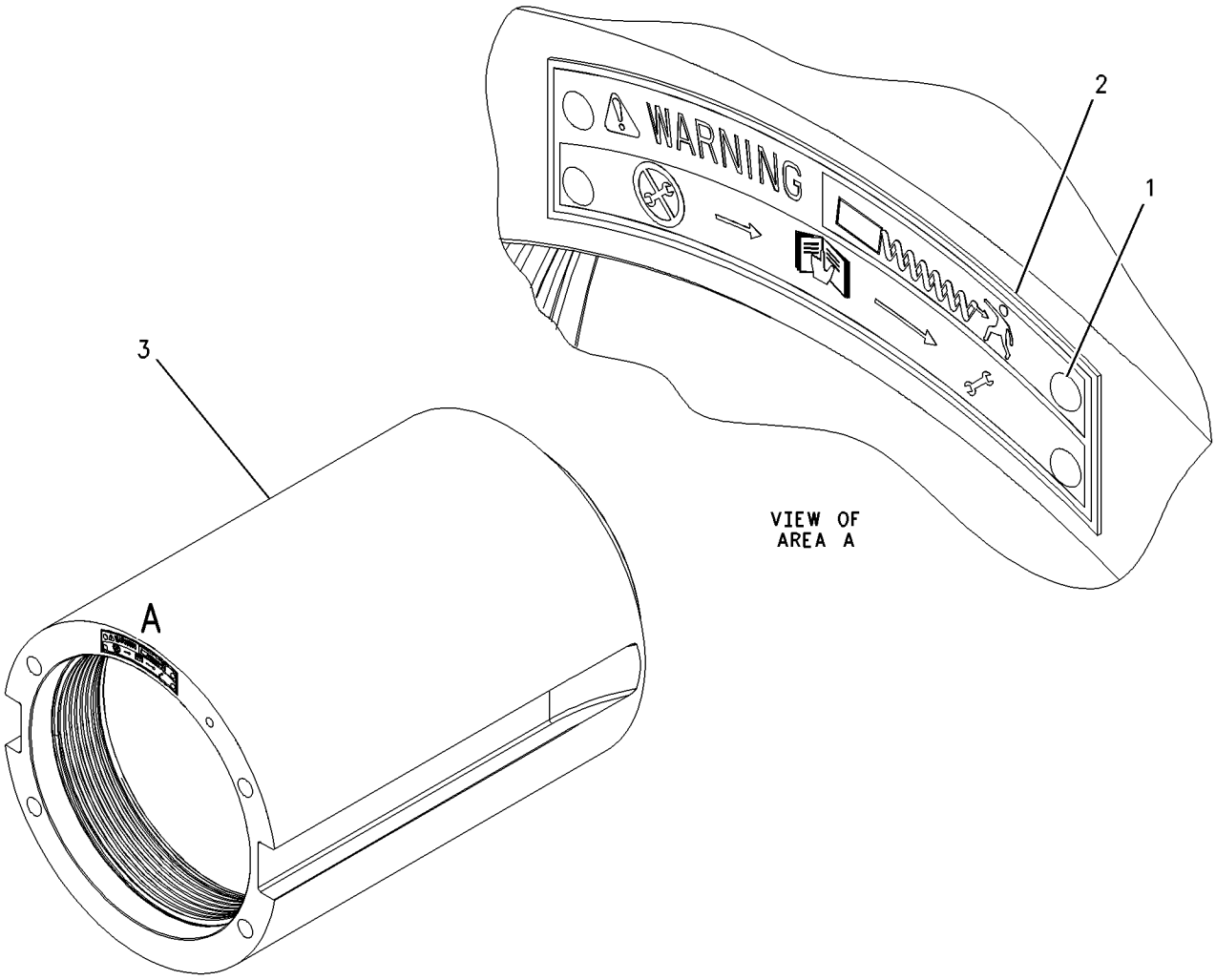

GRAPHIC #1 g00755089

187-2015 UNDERCARRIAGE AR

S/N: ABK1-UP

PART OF 162-9500 GENERAL AR

SMCS-4150 **i01595948**

NOTE	PART NUMBER	QTY	PART NAME 1 2 3 4 5 6 (PRODUCT LEVEL)	SEE PAGE
Y	*131-1625*	4	CAP GP-TRACK IDLER	510
Y	*131-1626*	4	CAP GP-TRACK IDLER	511
Y	*6T-1142*	32	CAP GP-TRACK ROLLER	512
Y	*160-2539*	1	EQUALIZER BAR GP	514
Y	*196-8560*	1	FRAME GP-TELESCOPING RECOIL	518
Y	**125-4655**	4	IDLER GP-TRACK	522
Y	**104-3496**	8	ROLLER GP-TRACK-DOUBLE FLANGE	538
			S/N: ABK1-470	
Y	**196-9954**	8	ROLLER GP-TRACK-DOUBLE FLANGE	540
			S/N: ABK471-UP	
Y	**104-3495**	8	ROLLER GP-TRACK-SINGLE FLANGE	542
			S/N: ABK1-470	
Y	**196-9955**	8	ROLLER GP-TRACK-SINGLE FLANGE	544
			S/N: ABK471-UP	
Y	*155-8096*	1	SUSPENSION GP-BOGIE	546
Y	*196-8561*	1	TRACK ADJUSTER & RECOIL GP	548
Y	**7T-2295**	2	TRACK GP	552
			S/N: ABK471-515	
Y	**199-5537**	2	TRACK GP	558
			S/N: ABK516-UP	

Y-SEPARATE ILLUSTRATION

8E-2231 BRAKE GP-SERVICE

S/N: ABK1-UP

PART OF 162-9503 POWER TRAIN AR

SMCS-4251, 4255 **i00593047**

NOTE	REF NO	GRAPHIC REF	PART NUMBER	QTY	PART NAME 1 2 3 4 5 6 (PRODUCT LEVEL)	SEE PAGE
	1	1	**8E-2232**	1	HOUSING-BRAKE	
	2	1	**3T-3601**	1	RING-SPACER	
	3	1	**3T-4717**	2	SPRING-DISC	
	4	1	**3T-3602**	1	RING-SPACER	
	5	1	**6P-5317**	1	RING-SEAL	
	6	1	**6T-2037**	1	RING-SEAL	
	7	1	**8E-2233**	1	RETAINER	
	8	1	**6D-9953**	1	PIN-SPRING	
	9	1	**6J-7836**	1	RING-SNAP	
	10	1	**124-8966**	1	SPOOL	
	11	1	**6T-7863**	1	SLEEVE	
	12	1	**8E-1676**	1	SPRING-CUSHION	
	13	1	**110-2631**	8	DISC-FRICTION	
	14	1	**7T-6994**	8	PLATE-CLUTCH & BRAKE	
	15	1	**9U-9821**	1	RETAINER	
	16	1	**5P-8245**	20	WASHER (3MM THK)	
	17	1	**8E-2234**	1	HUB	
	18	1	**8M-4389**	1	SEAL-O-RING	
	19	1	**7T-1885**	1	RING	
	20	1	**6T-0850**	2	WASHER-THRUST	
	21	1	**0S-1585**	10	BOLT (1/2-13X1.50IN)	
	22	1	**9N-4541**	1	PISTON	
	23	1	**9H-3360**	1	SEAL-O-RING	
	24	1	**4F-7389**	2	SEAL-O-RING (37.47MM ID)	
	25	1	**9S-8006**	2	PLUG-O-RING (7/8-14 THD)	
	26	1	**2M-9780**	2	SEAL-O-RING (19.18MM ID)	
	27	1	**0S-1587**	7	BOLT (1/2-13X1.75IN)	
	28	1	**9S-1366**	3	BOLT (1/2-13X2.5IN)	

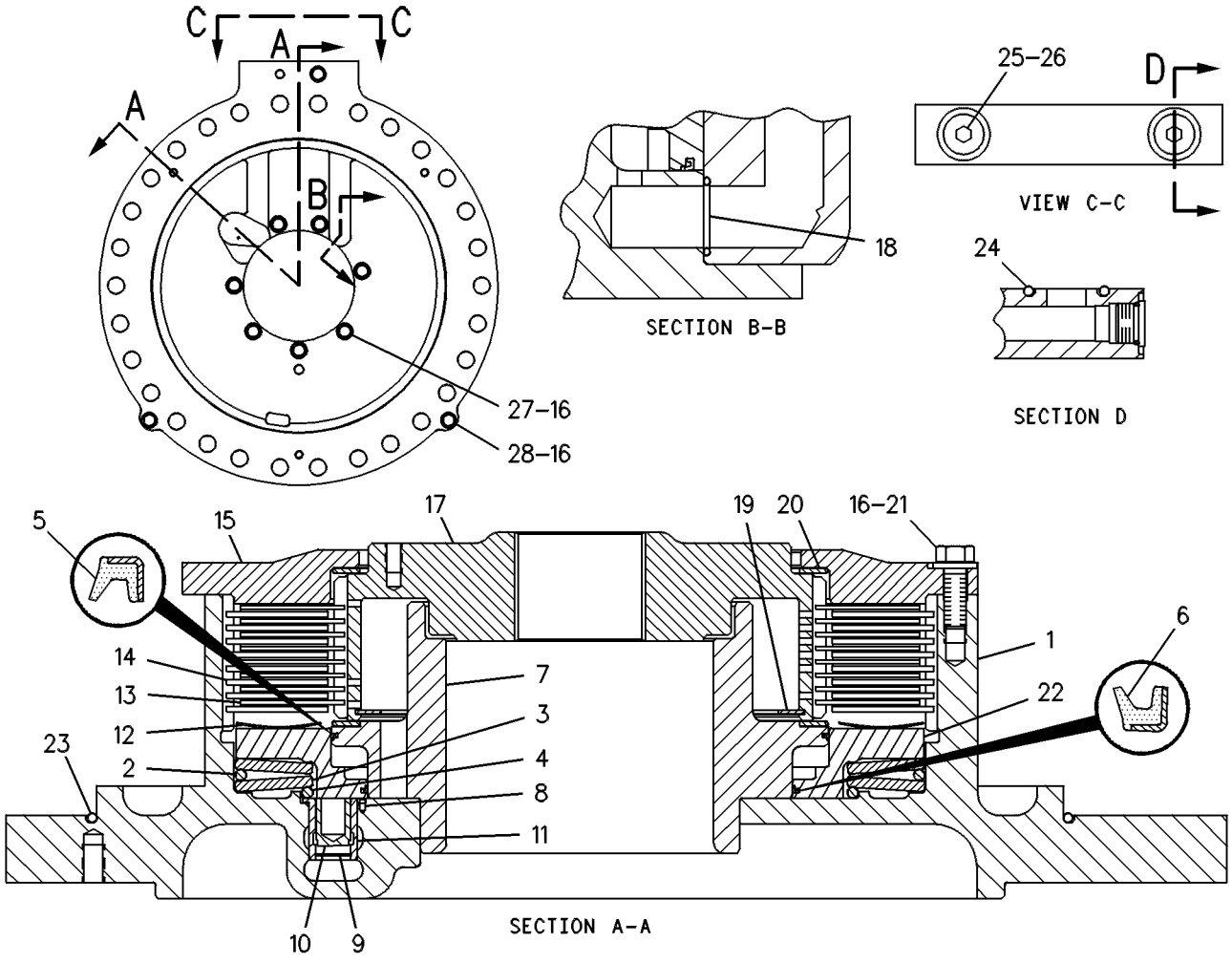

GRAPHIC #1 g00246205

STEERING AND BRAKING SYSTEM

162-9507 CONTROL AR-HYDRAULIC STEERING

S/N: ABK1-UP

PART OF 162-9503 POWER TRAIN AR

SMCS-4135 **i01445927**

NOTE	PART NUMBER	QTY	PART NAME 1 2 3 4 5 6 (PRODUCT LEVEL)	SEE PAGE
Y	*163-1584*	1	LINES GP-STEERING	580
YR	**159-7161**	1	MOTOR GP-PISTON	586
Y	**6E-4847**	1	PUMP GP-PISTON	588
Y	**6E-4641**	1	VALVE GP-PRESSURE CONTROL	604

R-REMFG PART MAY BE AVAILABLE
Y-SEPARATE ILLUSTRATION

MEMORANDA

STEERING AND BRAKING SYSTEM

6Y-4957 CONTROL GP-FOOT BRAKE

S/N: ABK1-UP

PART OF 162-9503 POWER TRAIN AR

SMCS-4257, 4265, 4269 **i01540914**

NOTE	REF NO	GRAPHIC REF	PART NUMBER	QTY	PART NAME 1 2 3 4 5 6 (PRODUCT LEVEL)	SEE PAGE
	1	1	**3S-0004**	6	WASHER (0.406X0.728X0.09 IN THK)	
	2	1	**4H-6520**	1	SEAL-O-RING	
	3	1	**0S-1608**	2	BOLT (3/8-16X3.75 IN)	
	4	1	**6F-6673**	3	SEAL-O-RING	
	5	1	**9S-1018**	12	WASHER (9.73X19.05X.84MM THK)	
	6	1	**0T-0573**	4	BOLT (3/8-16X2.75 IN)	
	7	1	**117-3328**	1	CABLE AS	
Y	8	1	**108-3895**	1	VALVE GP-CONTROL	600
	9	1	**114-4283**	1	LEVER	
	10	1	**9B-7237**	6	BOLT (3/8-16X1.25 IN)	
	11	1	**124-0186**	1	SHAFT	
	12	1	**1B-8701**	2	KEY-WOODRUFF	
	13	1	**5P-6438**	1	END-YOKE ROD	
	14	1	**8T-8932**	1	PIN AS-SPRING	
	15	1	**6V-8187**	1	NUT (1/4-28 THD)	
	16	1	**9S-1354**	1	NUT (5/8-18 THD)	
	17	1	**8T-2502**	2	BOLT (3/8-16X1.125 IN)	
	18	1	**8T-4896**	15	WASHER-HARD (10.2X18.5X2.5MM THK)	
	19	1	**9G-0715**	1	COVER	
	20	1	**8M-5661**	1	SEAL-O-RING	
	21	1	**115-8057**	1	SPRING	
	22	1	**7T-0905**	2	BOLT-ANCHOR	
	23	1	**9G-5211**	2	SPACER (12.95X19.05X9.0MM THK)	
	24	1	**1K-6872**	2	LOCKNUT (1/2-13 THD)	
	25	1	**9G-5212**	1	LINK	
	26	1	**8T-4223**	3	WASHER-HARD (13.5X25.5X3MM THK)	
	27	1	**124-0187**	1	ROD	
	28	1	**4D-4065**	2	ROD END	
	29	1	**7X-3374**	2	NUT-FULL (1/2-20 THD)	
	30	1	**8C-4436**	2	BOLT (1/2-13X1.375 IN)	
	31	1	**115-3050**	1	HOUSING	
	32	1	**6T-8392**	1	GASKET	
	33	1	**8T-9101**	4	BOLT (3/8-16X2.75 IN)	
	34	1	**124-0188**	1	PLATE AS	
	35	1	**5S-7382**	3	BOLT (3/8-16X1.375 IN)	
	36	1	**7G-8420**	1	PEDAL	
	37	1	**8T-8919**	1	BOLT (1/2-13X1.75 IN)	
	38	1	**9G-5214**	1	LEVER	
	39	1	**7X-0288**	1	BOLT (3/8-16X1.625 IN)	
	40	1	**9G-5209**	1	BRACKET	
	41	1	**5D-0353**	2	BOLT-LOCKING (3/8-16X1 IN)	
	42	1	**9G-5215**	1	HOUSING-BRAKE PEDAL	
	43	1	**9G-5291**	1	SHAFT	
	44	1	**1B-8714**	1	KEY-WOODRUFF	
	45	1	**9S-6465**	2	BEARING-ROLLER	
	46	1	**8T-4167**	2	WASHER-HARD (26X44X4MM THK)	
	47	1	**001-5600**	1	RING-SNAP	
	48	1	**124-1493**	1	LEVER	
	49	1	**6V-2830**	2	BEARING-ROLLER	
	50	1	**4P-7581**	1	CLIP	
	51	1	**9X-6772**	1	STRAP-CABLE	

Y-SEPARATE ILLUSTRATION

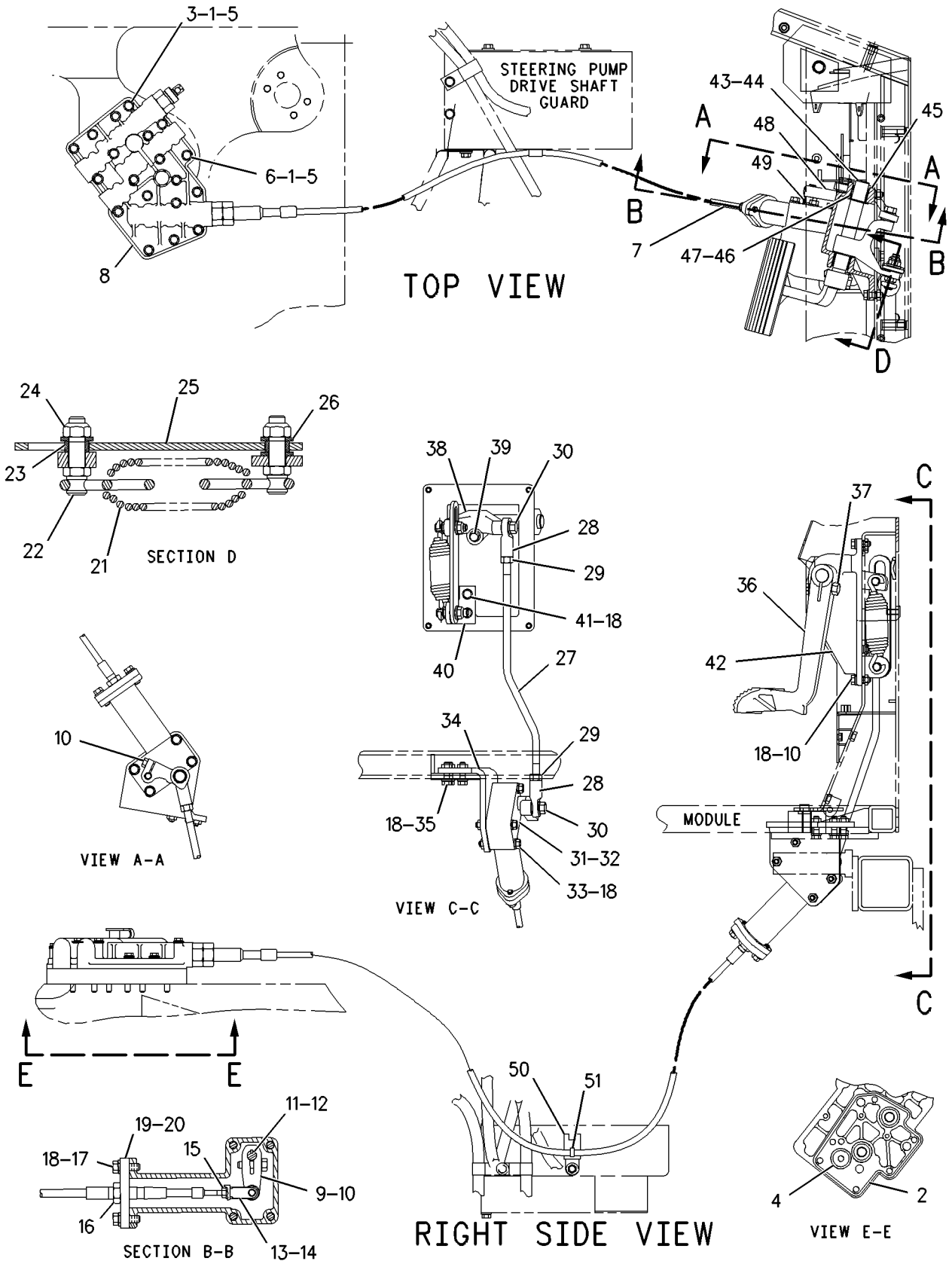

GRAPHIC #1 g00640042

STEERING AND BRAKING SYSTEM

163-9280 CONTROL GP-STEERING

S/N: ABK1-UP

PART OF 162-9503 POWER TRAIN AR

SMCS-4135 **i01613583**

NOTE	REF NO	GRAPHIC REF	PART NUMBER	QTY	PART NAME 1 2 3 4 5 6 (PRODUCT LEVEL)	SEE PAGE
	1	1	**3T-6761**	1	LEVER	
	2	1	**7X-0860**	1	BOLT (3/8X16X1.5 IN)	
	3	1	**8T-4896**	13	WASHER-HARD (10.2X18.5X2.5MM THK)	
	4	1	**2K-4973**	1	LOCKNUT (3/8-16 THD)	
	5	1	**186-3161**	1	GASKET-COVER	
	6	1	**8T-9101**	4	BOLT (3/8-16X2.75 IN)	
	7	1	**115-3050**	1	HOUSING	
	8	1	**6T-8392**	1	GASKET	
	9	1	**3E-7606**	1	CABLE AS	
	10	1	**9U-9033**	1	PLATE AS	
		1	**1F-0750**	4	NUT-WELD (3/8-16 THD)	
	11	1	**5P-6438**	3	END-YOKE ROD	
	12	1	**6V-8183**	1	NUT-FULL (3/8-24 THD)	
	13	1	**6K-5967**	2	CLIP	
	14	1	**8M-5661**	3	SEAL-O-RING	
	15	1	**9S-1354**	3	NUT (5/8-18 THD)	
	16	1	**8T-2502**	6	BOLT (3/8-16X1.125 IN)	
	17	1	**9G-0715**	3	COVER	
	18	1	**8T-8932**	3	PIN AS-SPRING	
	19	1	**1A-9252**	1	END-ADJUSTMENT ROD	
Y	20	1	**166-8625**	1	CONTROL GP-STEERING & TMSN	572
	21	1	**9G-0742**	3	BOOT	
	22	1	**5M-3062**	2	BOLT (3/8-16X0.75 IN)	
	23	1	**6J-0488**	3	SCREW-BUTTON HEAD (3/8-16X0.875 IN)	
	24	1	**5P-1075**	5	WASHER-HARD (10.2X22.5X3MM THK)	
	25	1	**6V-8187**	3	NUT (1/4-28 THD)	
	26	1	**114-4283**	1	LEVER	
	27	1	**9B-7237**	1	BOLT (3/8-16X1.25 IN)	
	28	1	**9U-9031**	1	SHAFT	
	29	1	**1B-8701**	2	KEY-WOODRUFF	
	30	1	**113-7442**	1	PLATE AS	
		1	**1F-0750**	1	NUT-WELD (3/8-16 THD)	
	31	1	**5S-7379**	3	BOLT (3/8-16X0.875 IN)	
	32	1	**6V-2830**	2	BEARING-ROLLER	
	33	1	**9X-6772**	1	STRAP-CABLE	
	34	1	**1B-0676**	1	PIN	
	35	1	**3B-4615**	1	PIN-COTTER	

Y-SEPARATE ILLUSTRATION

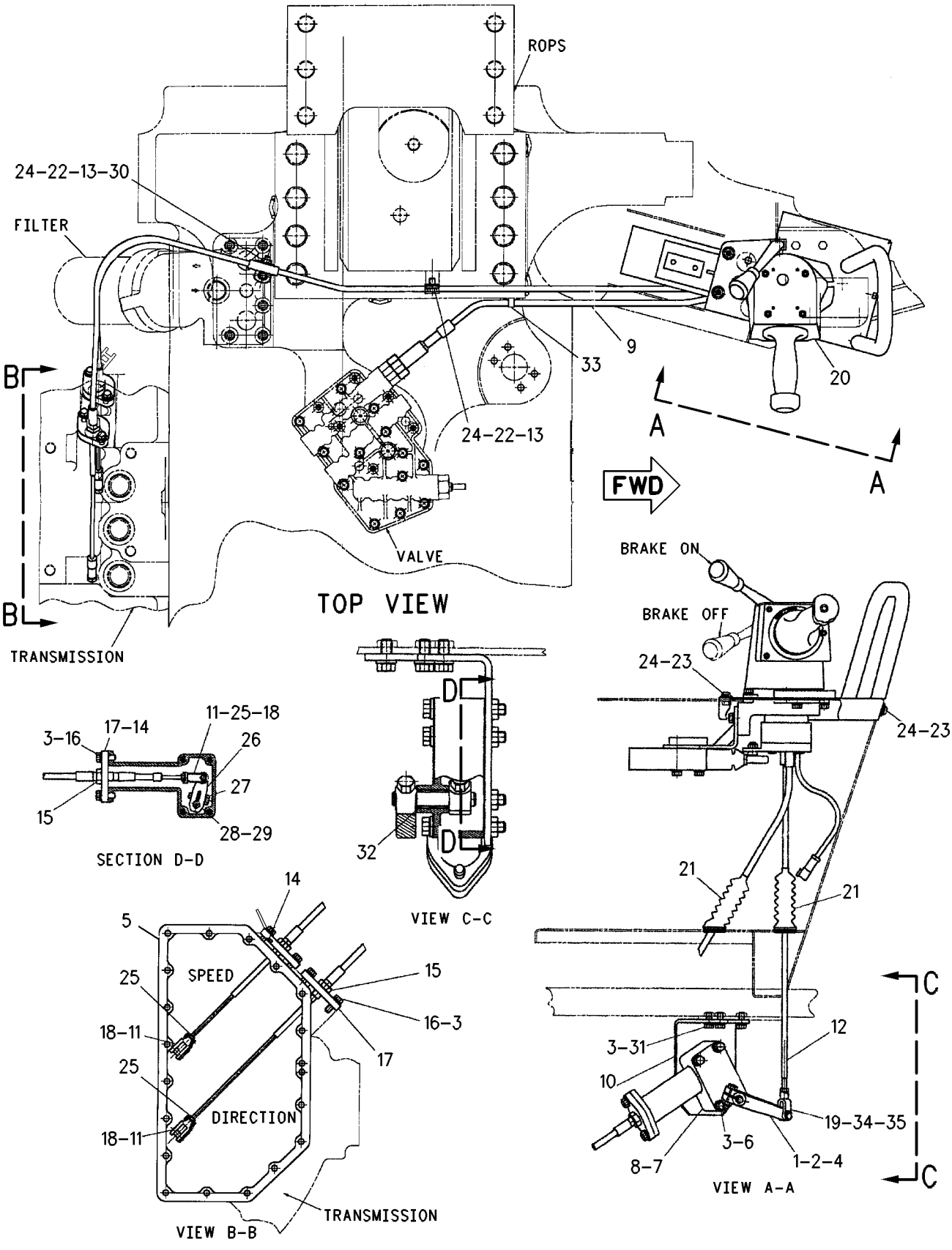

GRAPHIC #1 g00769196

STEERING AND BRAKING SYSTEM

166-8625 CONTROL GP-STEERING & TMSN

S/N: ABK1-UP

PART OF 163-9280 CONTROL GP-STEERING

SMCS-4122 **i01445969**

NOTE	REF NO	GRAPHIC REF	PART NUMBER	QTY	PART NAME 1 2 3 4 5 6 (PRODUCT LEVEL)	SEE PAGE
	1	1	**6Y-2782**	1	SHAFT	
	2	1	**6Y-2780**	1	LEVER	
	3	1	**3H-3433**	1	PIN-SPRING	
B	4	1	**6Y-2766**	2	WASHER-THRUST (2MM THK)	
	5	1	**8S-2195**	3	BEARING-ROLLER	
	6	1	**6Y-2778**	1	SHAFT	
	7	1	**6Y-6850**	1	HANDLE	
	8	1	**6Y-7579**	1	HANDLE AS	
	9	1	**8F-7702**	1	SEAL-LIP	
	10	1	**8E-2939**	1	HOUSING	
	11	1	**4B-1270**	1	SCREW-MACHINE (8-32X0.75 IN)	
	12	1	**8E-9483**	1	COLLAR (6-32 2B THD)	
	13	1	**8T-2540**	1	BOLT-SOCKET HEAD (6-32 THD)	
	14	1	**6Y-3140**	2	BALL JOINT AS	
	15	1	**187-4928**	1	CABLE AS	
	16	1,2	**8T-4896**	1	WASHER-HARD (10.2X18.5X2.5MM THK)	
	17	1	**6Y-3141**	11	ROD AS	
	18	1	**6V-8183**	1	NUT-FULL (3/8-24 THD)	
	19	1	**9S-1354**	4	NUT (5/8-18 THD)	
	20	1	**6Y-2841**	2	BALL BEARING	
	21	1,2	**8T-5410**	2	SEAL-LIP	
	22	1,2	**2N-3680**	7	SCREW-HEAD	
	23	2	**6Y-2773**	1	COVER AS	
	24	2	**6Y-7573**	1	RING	
	25	2	**6B-4541**	2	SCREW-MACHINE	
	26	2	**8E-0853**	1	BALL JOINT AS	
	27	2	**8E-0852**	1	PIN	
	28	1	**8E-2935**	1	HOUSING-BEARING	
	29	1	**9U-8667**	1	PLATE AS	
	30	1	**8E-2938**	1	HOUSING-BEARING	
	31	1	**8E-2940**	1	HOUSING-LOWER	
	32	1	**9U-8666**	1	ROD	
	33	1	**7X-0297**	2	BOLT (3/8-16X5.75 IN)	
	34	2	**166-8624**	1	HARNESS AS	
	35	1	**6Y-2763**	1	HOUSING-MAIN	
	36	1	**7X-3317**	1	SCREW-HEX SOCKET	
	37	1	**101-2868**	1	DOWEL	
	38	1	**6V-3545**	1	BEARING-ROLLER	
	39	1	**6Y-2854**	1	WASHER-THRUST	
	40	1	**6Y-2783**	1	LEVER-BRAKE	
	41	1	**037-7388**	1	KNOB	
	42	1	**6Y-2855**	1	PLATE	
	43	2	**8E-1358**	2	PLATE	
	44	2	**9X-6281**	4	SCREW-MACHINE (4-40X25.4MM)	
	45	2	**6Y-2777**	1	GASKET	
	46	2	**6Y-2847**	1	MOUNT-TOP SPRING	
	47	2	**5F-9144**	2	SEAL-O-RING (7.65MM ID)	
	48	2	**6Y-2846**	1	SPRING	
	49	2	**6Y-2779**	1	LEVER	
	50	2	**9N-1750**	1	SWITCH AS-LIMIT (NEUTRAL START)	
	51	2	**9N-1750**	1	SWITCH AS-LIMIT (BACKUP ALARM)	
					(EACH SWITCH AS-LIMIT INCLUDES)	
		2	**5S-4246**	3	LOCKWASHER	
		2	**6V-8818**	3	SCREW-MACHINE (4-40 THD)	
	52	2	**108-8174**	2	INSULATION-SWITCH	
	53	1	**4H-1641**	1	PIN-SPRING	

166-8625 CONTROL GP-STEERING & TMSN *(contd.)* i01445969

NOTE	REF NO	GRAPHIC REF	PART NUMBER	QTY	PART NAME 1 2 3 4 5 6 (PRODUCT LEVEL)	SEE PAGE
	54	2	**9X-6016**	3	SCREW-HEX SOCKET	
	55	1	**009-3138**	1	NUT-KNURL	
	56	2	**6Y-2848**	1	MOUNT-BOTTOM SPRING	
	57	2	**4B-9782**	1	BALL	
	58	2	**6V-3832**	1	SEAL-O-RING (55.24MM ID)	
	59	2	**7X-1552**	1	SEAL-VALVE RING	
	60	2	**6Y-2764**	1	RING	
	61	2	**6Y-7576**	1	PLATE	
	62	2	**6Y-2770**	1	PLATE	
	63	2	**6Y-2781**	1	WASHER-THRUST	
	64	2	**6Y-7577**	1	GASKET	
	65	2	**8E-3131**	1	ROLLER-CAM	
	66	2	**2L-6267**	1	LOCKNUT	
	67	1	**5L-2029**	2	BALL BEARING	
	68	1,2	**4L-6454**	5	BOLT (3/8-16X1 IN)	
	69	2	**8T-4205**	1	WASHER-HARD (7.2X14.5X2MM THK)	
	70	2	**5N-6096**	1	SPRING	
	71	2	**8S-7048**	1	ROD END	
	72	2	**5L-5711**	1	PIN-SPRING	
	73	2	**5S-7343**	2	WASHER	
	74	1	**8E-8242**	1	SPACER	
	75	1	**6V-8801**	2	NUT (3/8-16 THD)	
	76	2	**7V-0008**	1	BLOCK	
	77	2	**8E-2936**	1	PLATE AS	
Y	78	2	**6E-5648**	1	VALVE GP-PILOT	602
	79	2	**4L-6459**	2	BOLT (3/8-16X2.5 IN)	
	80	1	**191-2359**	1	CABLE AS	
	81	1,2	**6V-8187**	3	NUT (1/4-28 THD)	
	82	2	**8E-1203**	1	LEVER	

B-USE AS REQUIRED
Y-SEPARATE ILLUSTRATION

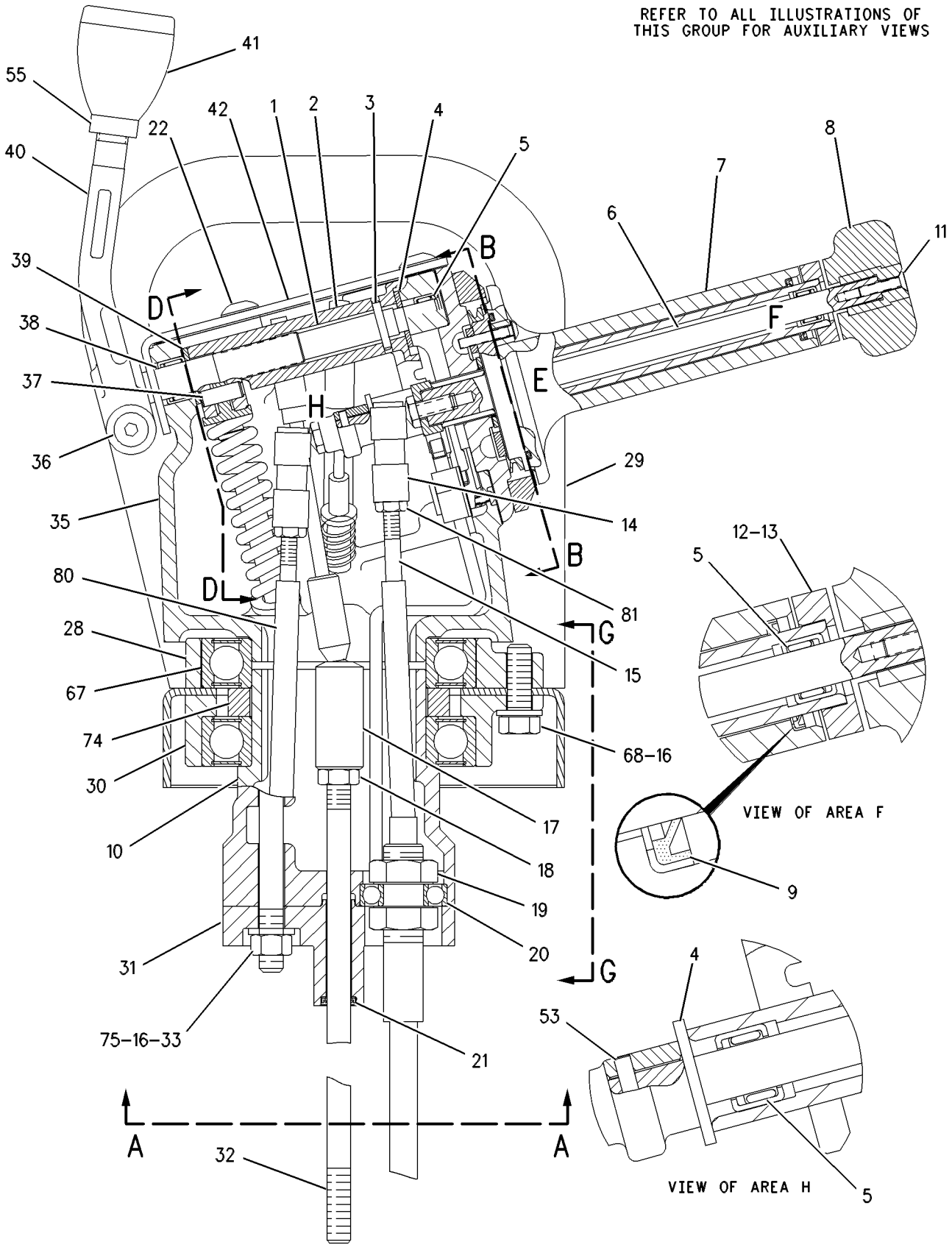

GRAPHIC #1 g00565564

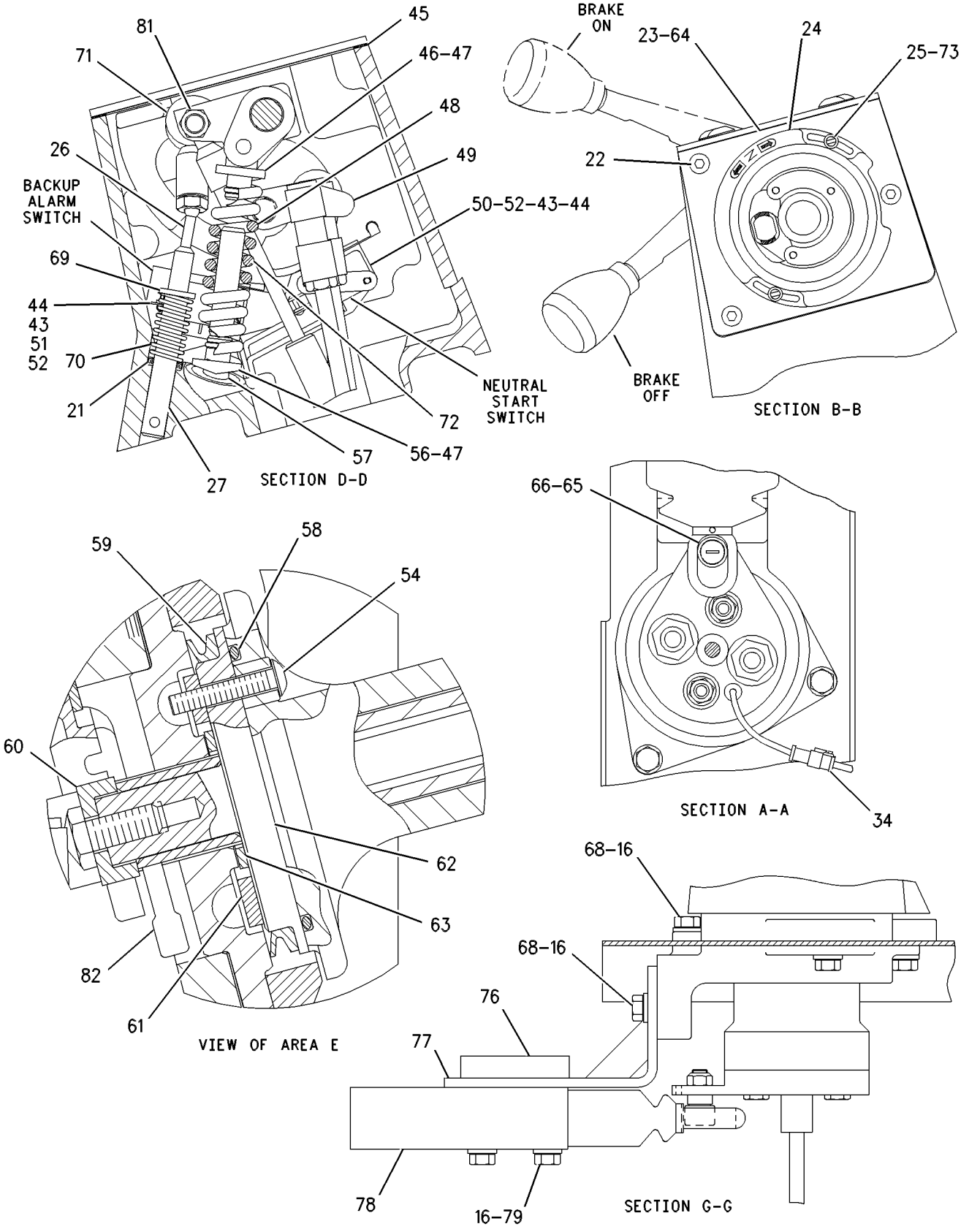

GRAPHIC #2

g00565565

STEERING AND BRAKING SYSTEM

166-0666 DRIVE GP-DIFFERENTIAL STEERING

S/N: 4XX1-UP

PART OF 163-5294 TRANSMISSION AR

SMCS-4135 **i01445960**

NOTE	REF NO	GRAPHIC REF	PART NUMBER	QTY	PART NAME 1 2 3 4 5 6 (PRODUCT LEVEL)	SEE PAGE
	1	1	**6Y-9087**	1	CAGE-BEARING	
	2	1	**2S-4570**	2	RACE-BEARING OUTER	
	3	1	**2S-4569**	2	BEARING-INNER	
	4	1	**7T-8136**	4	SHAFT-PLANETARY	
	5	1	**3S-2708**	12	PIN-SPRING	
	6	1	**8S-9089**	23	BOLT (1/2-13X4.5IN)	
	7	1	**5P-8245**	44	WASHER-HARD (13.5X25.5X3MM THK)	
	8	1	**6Y-9083**	4	GEAR-PLANETARY (24 TEETH)	
	9	1	**5M-0578**	12	BEARING AS	
	10	1	**6Y-9086**	1	GEAR-RING (80 TEETH)	
	11	1	**6Y-9067**	1	SHAFT-OUTPUT	
	12	1	**165-9143**	1	SHAFT-INPUT	
	13	1	**6Y-9068**	1	CARRIER-PLANETARY	
	14	1	**9H-5322**	1	RACE-SPECIAL ROLLER BEARING	
	15	1	**9S-5279**	1	BEARING-INNER	
	16	1	**6Y-9076**	1	GEAR-SUN (24 TEETH)	
	17	1	**6Y-9078**	1	SPACER	
	18	1	**6Y-9074**	1	GEAR-RING (84 TEETH)	
	19	1	**3T-6963**	1	SEAL-RING	
	20	1	**6Y-9077**	1	GEAR-SUN (32 TEETH)	
	21	1	**6I-8724**	1	LOCK RING	
	22	1	**6Y-9071**	1	CARRIER-PLANETARY	
	23	1	**131-9307**	1	GEAR-RING (80 TEETH)	
	24	1	**131-9306**	1	GEAR-TRANSFER (65 TEETH)	
	25	1	**8M-2530**	18	BOLT-12 POINT HEAD (1/2-13X1.25 IN)	
	26	1	**0S-1587**	21	BOLT (1/2-13X1.75 IN)	
	27	1	**106-3958**	1	SLINGER-OIL	
	28	1	**6Y-9092**	1	RACE-ROLLER BEARING	
	29	1	**2M-1156**	1	BEARING-INNER	
	30	1	**6Y-9093**	1	RING-MOUNTING	
	31	1	**1A-1460**	1	BOLT (1/2-13X2 IN)	
	32	1	**0S-1571**	8	BOLT (3/8-16X1.75 IN)	
	33	1	**5M-2894**	8	WASHER-HARD (10.2X18.5X2.5MM THK)	
	34	1	**6Y-9073**	4	SHAFT-PLANETARY	
	35	1	**5H-5339**	1	RACE-ROLLER BEARING	
	36	1	**6Y-9097**	1	BEARING-ROLLER	
	37	1	**6Y-9098**	1	GEAR-TRANSFER (18 TEETH)	
	38	1	**1T-0416**	16	BOLT (5/16-18X0.75 IN)	
	39	1	**7G-2519**	4	GEAR-PLANETARY (24 TEETH)	
	40	1	**8E-8307**	16	DISC-THRUST	
	41	1	**5P-6254**	4	BEARING	
	42	1	**6Y-9069**	4	GEAR-PLANETARY (30 TEETH)	
	43	1	**8E-8310**	8	DISC-THRUST	
	44	1	**6Y-9125**	1	RACE-ROLLER BEARING	
	45	1	**6Y-9099**	1	BEARING-ROLLER	
	46	1	**8E-1682**	1	GEAR-TRANSFER (53 TEETH)	
	47	1	**1P-6563**	2	WASHER-RETAINER (.48MM THK)	
	48	1	**6Y-9070**	4	SHAFT-PLANETARY	
	49	1	**165-9142**	1	GEAR-SUN (32 TEETH)	
	50	1	**6Y-9079**	1	CARRIER-PLANETARY	
	51	1	**166-0663**	1	RING-RETAINING	
	52	1	**106-3959**	1	SLINGER-OIL	
	53	1	**6Y-9088**	1	CAGE AS-BEARING	
	54	1	**4B-9782**	2	BALL	

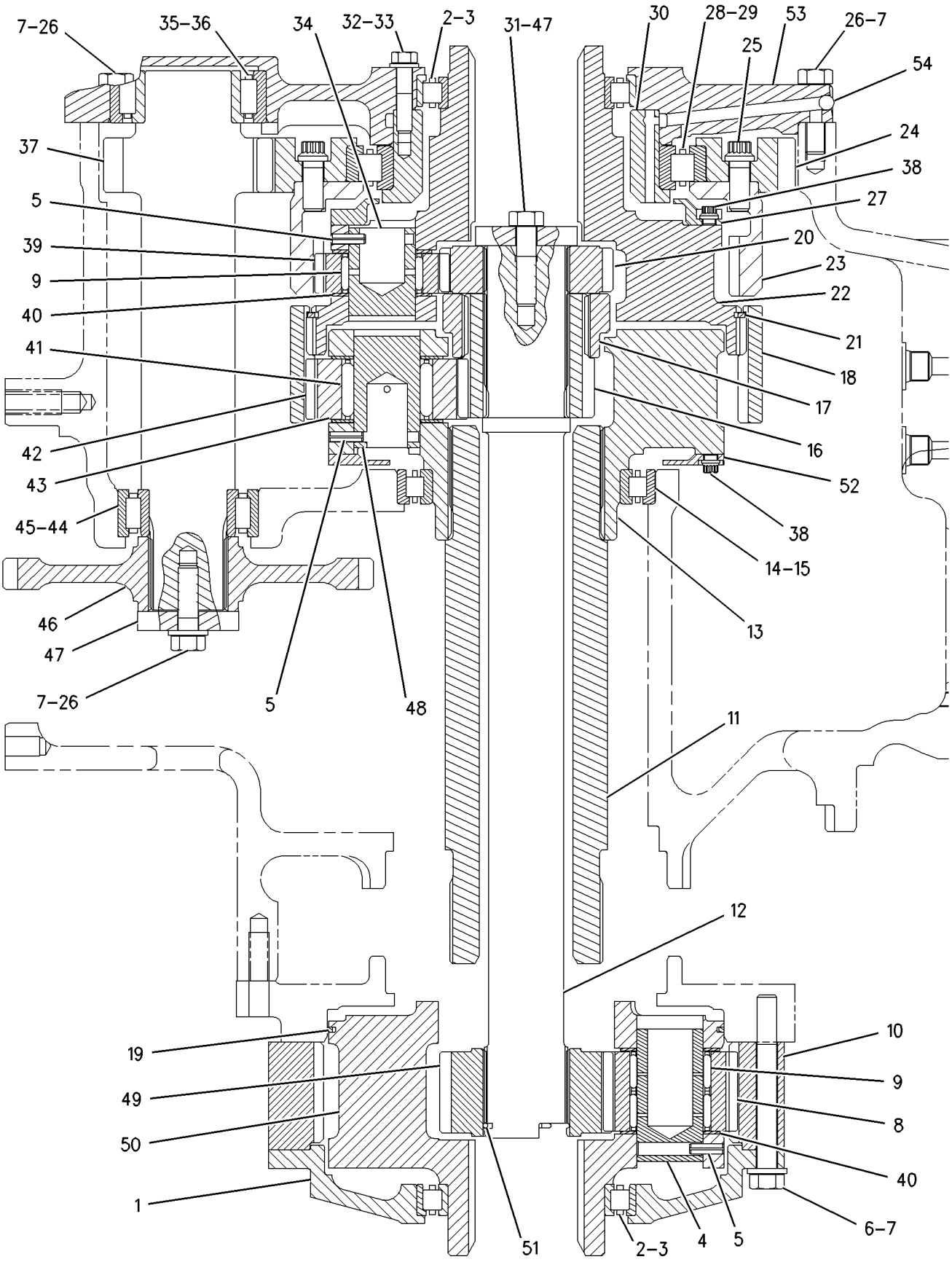

GRAPHIC #1

g00687641

STEERING AND BRAKING SYSTEM

6Y-9052 DRIVE GP-STEERING

S/N: ABK1-UP

PART OF 162-9503 POWER TRAIN AR

SMCS-3008 **i00592066**

NOTE	REF NO	GRAPHIC REF	PART NUMBER	QTY	PART NAME 1 2 3 4 5 6 (PRODUCT LEVEL)	SEE PAGE
	1	1	**8E-2126**	1	SPACER AS	
		1	**9M-4007**	2	DOWEL	
	2	1	**8E-2075**	1	HOUSING AS	
		1	**4B-9782**	1	BALL (9.52MM)	
	3	1	**1A-1460**	6	BOLT (1/2-13X2IN)	
	4	1	**5P-8245**	6	WASHER (3MM THK)	
	5	1	**8E-5553**	1	SPACER	
	6	1	**4F-2129**	1	BALL BEARING	
	7	1	**6Y-9112**	1	GEAR-TRANSFER (36 TEETH)	
	8	1	**5V-7574**	2	RING-RETAINING	
	9	1	**3S-2708**	1	PIN-SPRING	
	10	1	**1T-0295**	1	RACE-ROLLER BEARING	
	11	1	**2H-3517**	1	RACE & ROLLER AS-INNER	
	12	1	**4H-6520**	1	SEAL-O-RING (183.74MM ID)	
	13	1	**6Y-9114**	1	SHAFT-PLANETARY	
	14	1	**8E-8310**	2	DISC-THRUST	
	15	1	**6Y-9113**	1	GEAR-PLANETARY (35 TEETH)	
	16	1	**5M-7925**	2	BEARING-ROLLER	

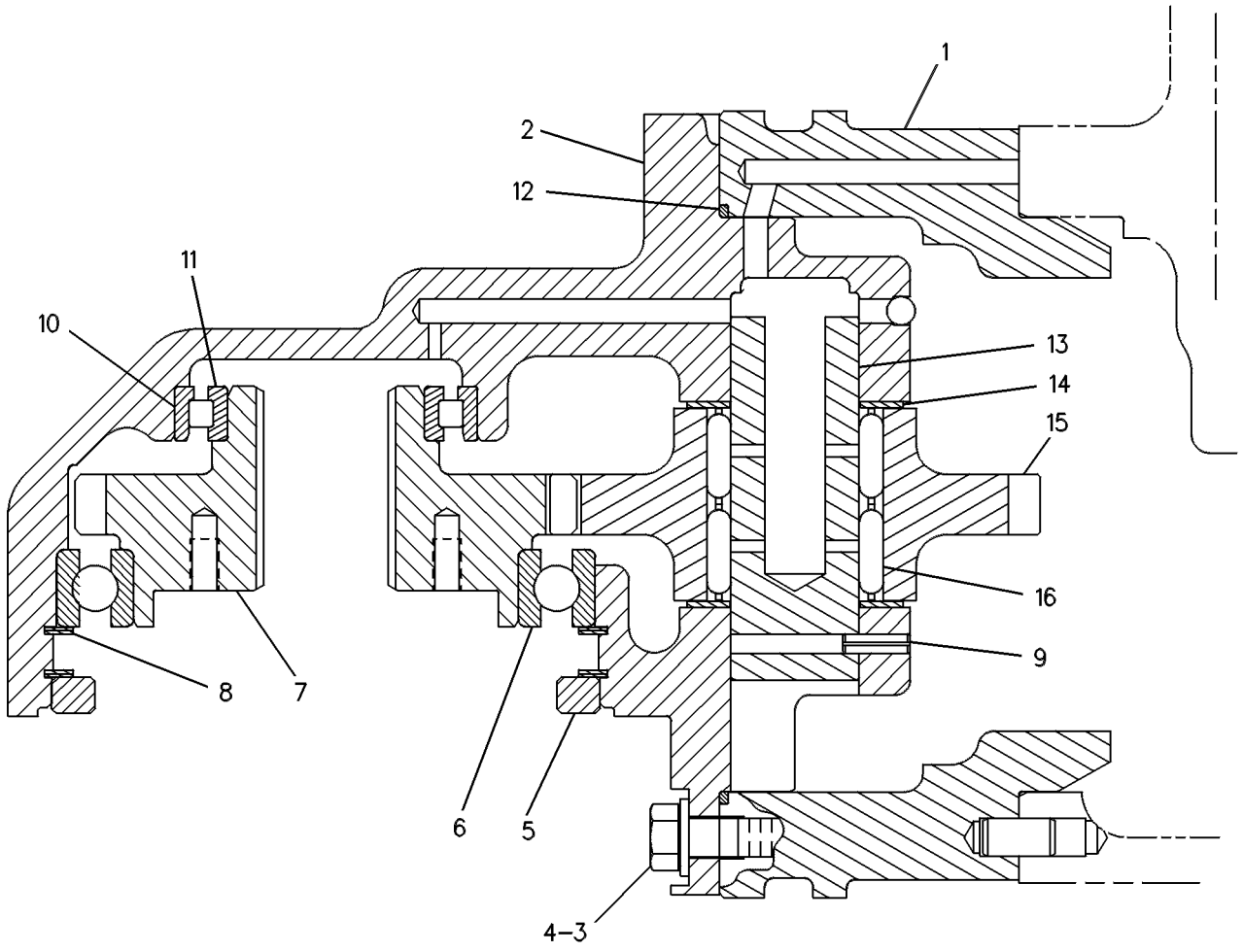

GRAPHIC #1 g00240032

183-8610 FILTER GP-OIL–STEERING

S/N: ABK1-UP

PART OF 163-1584 LINES GP-STEERING

SMCS-5068 **i01620763**

NOTE	REF NO	GRAPHIC REF	PART NUMBER	QTY	PART NAME 1 2 3 4 5 6 (PRODUCT LEVEL)	SEE PAGE
	1	1	**9T-8326**	1	BASE	
Y	2	1	**164-7577**	1	SWITCH GP-BYPASS (STEERING FILTER)	365
	3	1	**6V-0852**	1	CAP-DUST	
	4	1	**6V-3965**	1	FITTING AS (OUTLET PRESSURE)	
	5	1	**3J-1907**	2	SEAL-O-RING	
	6	1	**2S-8439**	1	SEAL-O-RING	
	7	1	**3P-0887**	1	HOUSING AS	
	8	1	**132-8875**	1	FILTER ELEMENT AS-OIL (HYDRAULIC)	
	9	1	**2J-6356**	1	RING-RETAINING	
	10	1	**7S-6745**	1	RETAINER	
	11	1	**9S-4191**	1	PLUG-STRAIGHT THREAD	
	12	1	**3S-8652**	1	SPRING	
	13	1	**9L-8388**	1	SPACER-CLAMP	
	14	1	**6T-9222**	1	SPOOL	
	15	1	**9T-8700**	1	SPRING	

Y-SEPARATE ILLUSTRATION

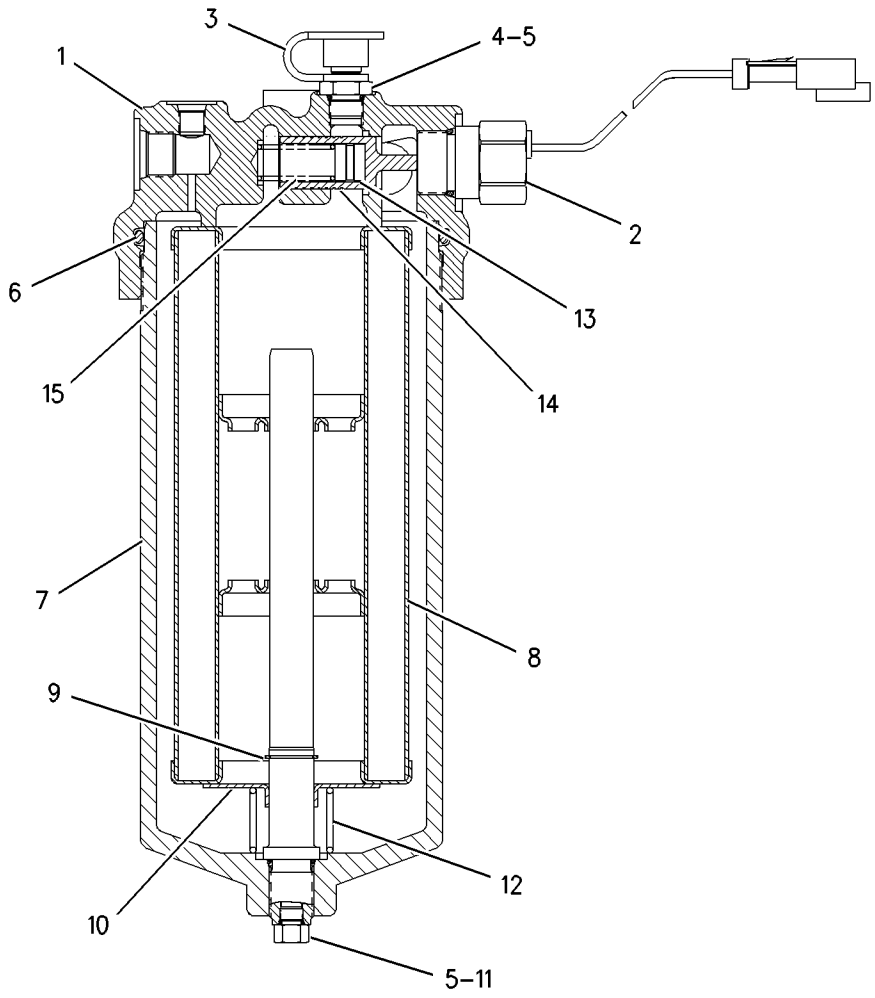

GRAPHIC #1 g00687821

STEERING AND BRAKING SYSTEM

163-1584 LINES GP-STEERING

S/N: ABK1-UP

PART OF 162-9507 CONTROL AR-HYDRAULIC STEERING

SMCS-4104, 4133, 4304 **i01550430**

NOTE	REF NO	GRAPHIC REF	PART NUMBER	QTY	PART NAME 1 2 3 4 5 6 (PRODUCT LEVEL)	SEE PAGE
BD	1	1	**6V-2495**		SEAL	
	2	1	**133-6934**	1	SPACER (11X20X25MM THK)	
	3	1	**6V-0484**	1	ADAPTER-O-RING	
	4	2,3	**6V-0852**	7	CAP-DUST	
	5	2,3	**6V-3965**	7	FITTING AS	
I	6	2	**6Y-7417**	1	HOSE AS	
I	7	2	**6Y-7418**	1	HOSE AS	
	8	3	**6Y-7429**	1	MANIFOLD	
	9	1	**7K-2828**	1	CLIP	
	10	2	**8E-4258**	1	TUBE AS	
	11	2	**8E-4259**	1	TUBE AS	
	12	1	**8E-7128**	1	BRACKET AS	
	13	1	**8E-7131**	1	BRACKET AS	
	14	1	**8E-7134**	1	PLATE AS	
I	15	1,2	**8Y-4502**	3	HOSE AS	
I	16	1	**8Y-4505**	1	HOSE AS	
Y	17	1	**183-8610**	1	FILTER GP-OIL (STEERING)	579
	18	3	**9U-8420**	1	TUBE AS	
	19	3	**9U-8421**	1	TUBE AS	
	20	1	**9U-8422**	1	TUBE AS	
I	21	2	**9U-8867**	1	HOSE AS	
	22	2	**9X-6772**	1	STRAP-CABLE	
	23	1	**106-5135**	1	BRACKET AS	
	24	2	**115-0614**	1	BRACKET AS	
I	25	1	**175-7574**	1	HOSE AS	
I	26	2	**120-1763**	1	HOSE AS	
	27	2	**124-8274**	1	SWITCH AS-TEMPERATURE (STEERING FILTER)	
		2	**102-8802**	1	KIT-RECEPTACLE (2 PIN)	
					(INCLUDES RECEPTACLE AS & WEDGE)	
		2	**3E-3365**	1	WEDGE-RECEPTACLE LOCK (2 PIN)	
		2	**8T-8729**	1	PIN-CONNECTOR	
	28	1	**128-3227**	1	BRACKET AS	
		1	**5G-6397**	1	BOSS	
I	29	3	**189-8709**	1	HOSE AS	
	30	1	**132-7203**	1	BRACKET AS	
	31	3	*148-8322*	1	CONNECTOR GP	
		3	**2M-9780**	1	SEAL-O-RING	
		3	**6V-8640**	1	CONNECTOR-SEAL	
		3	**6V-9746**	1	SEAL-O-RING	
	32	2	*148-8323*	1	CONNECTOR GP	
		2	**2S-4078**	1	SEAL-O-RING	
		2	**5K-9090**	1	SEAL-O-RING	
		2	**6V-9875**	1	CONNECTOR	
	33	3	*148-8334*	1	CONNECTOR GP	
		3	**2S-4078**	1	SEAL-O-RING	
		3	**6V-8400**	1	SEAL-O-RING	
		3	**8T-3611**	1	CONNECTOR	
	34	2,3	*148-8335*	3	CONNECTOR GP	
					(EACH INCLUDES)	
		2,3	**5K-9090**	1	SEAL-O-RING	
		2,3	**6V-8635**	1	CONNECTOR	
		2,3	**7M-8485**	1	SEAL-O-RING	
	35	2	*148-8336*	1	CONNECTOR GP	
		2	**3J-1907**	1	SEAL-O-RING	
		2	**6V-8397**	1	SEAL-O-RING	
		2	**6V-8636**	1	CONNECTOR	

163-1584 **LINES GP-STEERING** ***(contd.)*** **i01550430**

NOTE	REF NO	GRAPHIC REF	PART NUMBER	QTY	PART NAME 1 2 3 4 5 6 (PRODUCT LEVEL)	SEE PAGE
	36	2	*148-8339*	3	CONNECTOR GP	
					(EACH INCLUDES)	
		2	**6V-8716**	1	CONNECTOR	
		2	**6V-9746**	1	SEAL-O-RING	
		2	**7M-8485**	1	SEAL-O-RING	
	37	2	*148-8340*	1	CONNECTOR GP	
		2	**3K-0360**	1	SEAL-O-RING	
		2	**6V-8398**	1	SEAL-O-RING	
		2	**6V-8639**	1	CONNECTOR	
	38	3	*148-8345*	1	CONNECTOR GP	
		3	**2M-9780**	1	SEAL-O-RING	
		3	**6V-8398**	1	SEAL-O-RING	
		3	**6V-8638**	1	CONNECTOR-SEAL	
	39	3	*148-8352*	1	ELBOW GP	
		3	**5K-9090**	1	SEAL-O-RING	
		3	**6V-9854**	1	ELBOW-SWIVEL	
	40	3	*148-8357*	1	ELBOW GP	
		3	**5K-9090**	1	SEAL-O-RING	
		3	**6V-9008**	1	ELBOW	
		3	**7M-8485**	1	SEAL-O-RING	
	41	3	*148-8360*	1	ELBOW GP	
		3	**6V-9182**	1	ELBOW	
		3	**6V-9746**	1	SEAL-O-RING	
		3	**7M-8485**	1	SEAL-O-RING	
	42	1,2	*148-8378*	7	ELBOW GP	
					(EACH INCLUDES)	
		1,2	**3J-1907**	1	SEAL-O-RING	
		1,2	**6V-8397**	1	SEAL-O-RING	
		1,2	**6V-8724**	1	ELBOW	
	43	3	*148-8387*	1	ELBOW GP	
		3	**6V-8400**	1	SEAL-O-RING	
		3	**6V-9855**	1	ELBOW	
	44	3	*148-8347*	2	ELBOW GP	
					(EACH INCLUDES)	
		3	**3D-2824**	1	SEAL-O-RING	
		3	**6V-9007**	1	ELBOW	
		3	**6V-9746**	1	SEAL-O-RING	
	45	3	*148-8392*	2	ELBOW GP	
					(EACH INCLUDES)	
		3	**7J-9108**	1	SEAL-O-RING	
		3	**6V-9852**	1	ELBOW-SWIVEL	
	46	2	*148-8443*	2	TEE GP	
					(EACH INCLUDES)	
		2	**3J-1907**	1	SEAL-O-RING	
		2	**6V-8397**	1	SEAL-O-RING	
		2	**7X-2459**	1	TEE-O-RING	
	47	3	*153-6235*	2	ELBOW GP	
					(EACH INCLUDES)	
		3	**3E-7433**	1	ELBOW	
		3	**6K-6307**	1	SEAL-O-RING	
		3	**6V-8400**	1	SEAL-O-RING	
	48	2	*153-6248*	2	ADAPTER GP	
					(EACH INCLUDES)	
		2	**6V-8397**	1	SEAL-O-RING	
		2	**8T-6663**	1	ADAPTER-PORT	
I	49	1	**163-1823**	1	HOSE AS	
I	50	3	**163-1824**	1	HOSE AS	
I	51	2	**167-9258**	1	HOSE AS	
	52	3	**0L-1178**	4	BOLT (3/4-10X2 IN)	

163-1584 **LINES GP-STEERING** ***(contd.)*** **i01550430**

NOTE	REF NO	GRAPHIC REF	PART NUMBER	QTY	PART NAME 1 2 3 4 5 6 (PRODUCT LEVEL)	SEE PAGE
	53	1	**0S-1588**	6	BOLT (3/8-16X1.25 IN)	
	54	1	**9M-4972**	1	CLIP	
	55	2,3	**1P-3704**	6	SEAL-RECTANGULAR	
	56	2	**1P-5767**	8	FLANGE-HALF	
	57	1	**3D-5279**	1	GROMMET	
	58	1,2,3	**3J-1907**	10	SEAL-O-RING	
	59	2	**3K-0360**	3	SEAL-O-RING	
	60	1	**4D-7388**	1	CLIP	
	61	2	**4D-7735**	1	CLIP	
	62	3	**4H-6520**	1	SEAL-O-RING	
	63	1,2	**4L-6454**	10	BOLT (3/8-16X1 IN)	
	64	1	**4N-1230**	1	SEAL-O-RING	
	65	3	**4S-4456**	1	CLIP	
	66	1	**5D-0718**	2	CLIP	
	67	1	**5M-2894**	6	WASHER-HARD (10.2X18.5X2.5MM THK)	
	68	1,2	**5P-1075**	18	WASHER-HARD (10.2X22.5X3MM THK)	
	69	2	**5P-2424**	2	BOLT (1/2-13X2.25 IN)	
	70	1	**5P-2566**	2	BOLT (1/2-13X1.5 IN)	
	71	1	**5P-7464**	1	CLIP (SLOT)	
	72	1	**5P-7465**	1	CLIP (TAB)	
	73	3	**5P-8248**	4	WASHER-HARD (20X36.5X3.5MM THK)	
	74	1	**5S-7379**	1	BOLT (3/8-16X0.875 IN)	
	75	1	**6F-7316**	1	BOLT (5/8-18X1IN)	
	76	2	**6K-8180**	4	GROMMET	
	77	1	**6V-1249**	1	GROMMET	
	78	1	**1W-2860**	1	BRACKET	
	79	1	**6V-8801**	5	NUT (3/8-16 THD)	
	80	3	**6V-9746**	1	SEAL-O-RING	
	81	1	**7W-7381**	1	FITTING-OUTLET	
	82	2,3	**7X-0332**	11	BOLT (1/2-13X4.5 IN)	
	83	2	**8S-0023**	1	CLIP (SLOT)	
	84	2	**8S-0024**	1	CLIP (TAB)	
	85	1	**8S-0948**	1	CLIP	
	86	1	**8T-4122**	1	WASHER-HARD (17X32X3.5MM THK)	
	87	1,2,3	**8T-4223**	23	WASHER-HARD (13.5X25.5X3MM THK)	
	88	3	**8T-4835**	6	BOLT (1/2-13X2 IN)	
	89	1	**8T-4896**	2	WASHER-HARD (10.2X18.5X2.5MM THK)	
	90	1	**8T-2501**	1	BOLT (3/8-16X2 IN)	
	91	1	**8T-7529**	5	CLIP	
	92	1,2	**8T-8917**	2	BOLT (1/2-13X1.25 IN)	
	93	1	**9B-7237**	3	BOLT (3/8-16X1.25 IN)	
	94	2	**9M-5024**	1	SEAL-O-RING	
	95	1	**5P-9297**	2	CLIP	
	96	2	**9S-4185**	2	PLUG	
	97	1	**8E-4331**	1	PLATE AS	

B-USE AS REQUIRED
D-ORDER BY THE METER
I-SEE HOSE FABRICATION GUIDE
Y-SEPARATE ILLUSTRATION

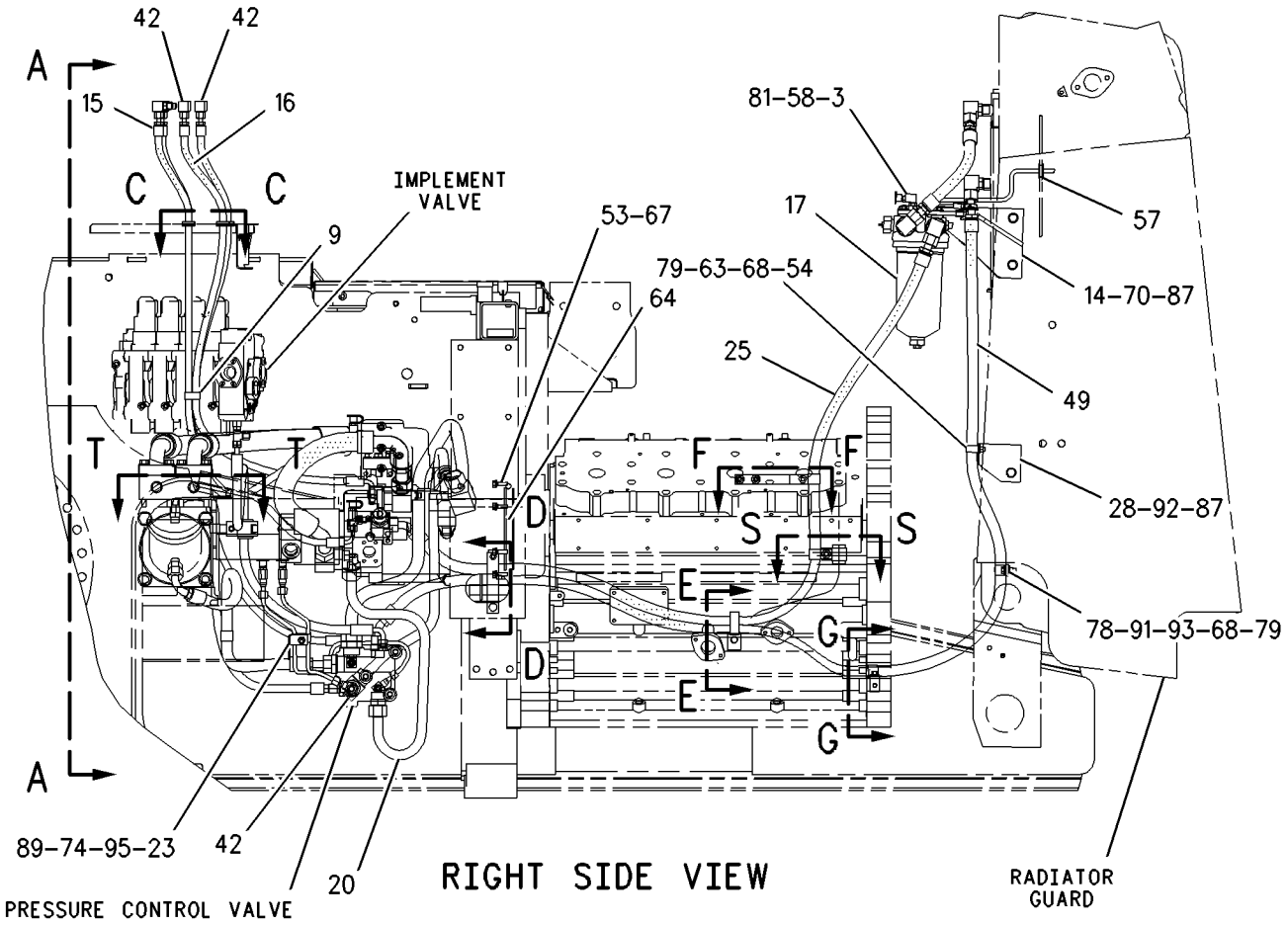

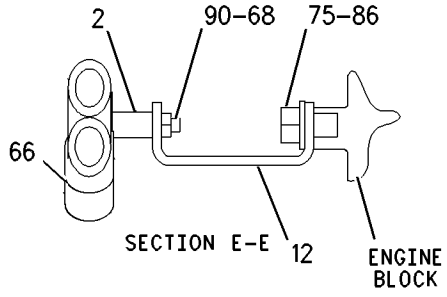

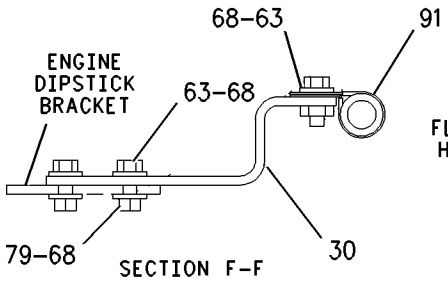

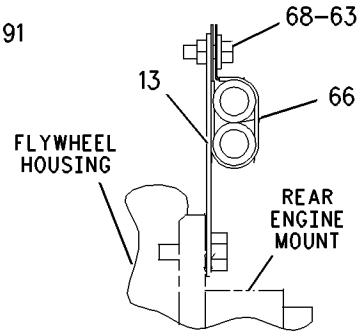

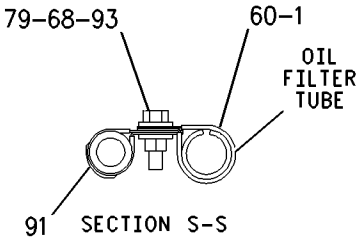

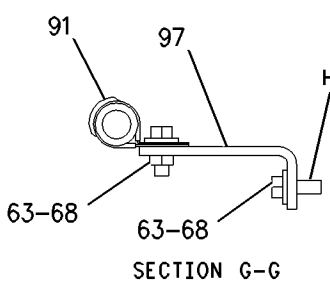

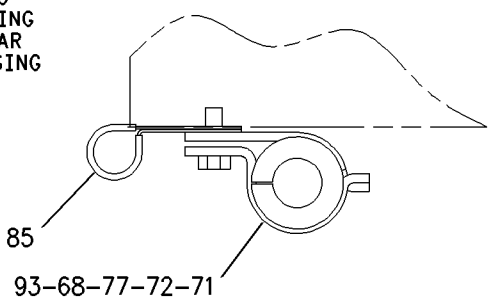

REFER TO ALL ILLUSTRATIONS OF THIS GROUP FOR AUXILIARY VIEWS

GRAPHIC #1 g00854861

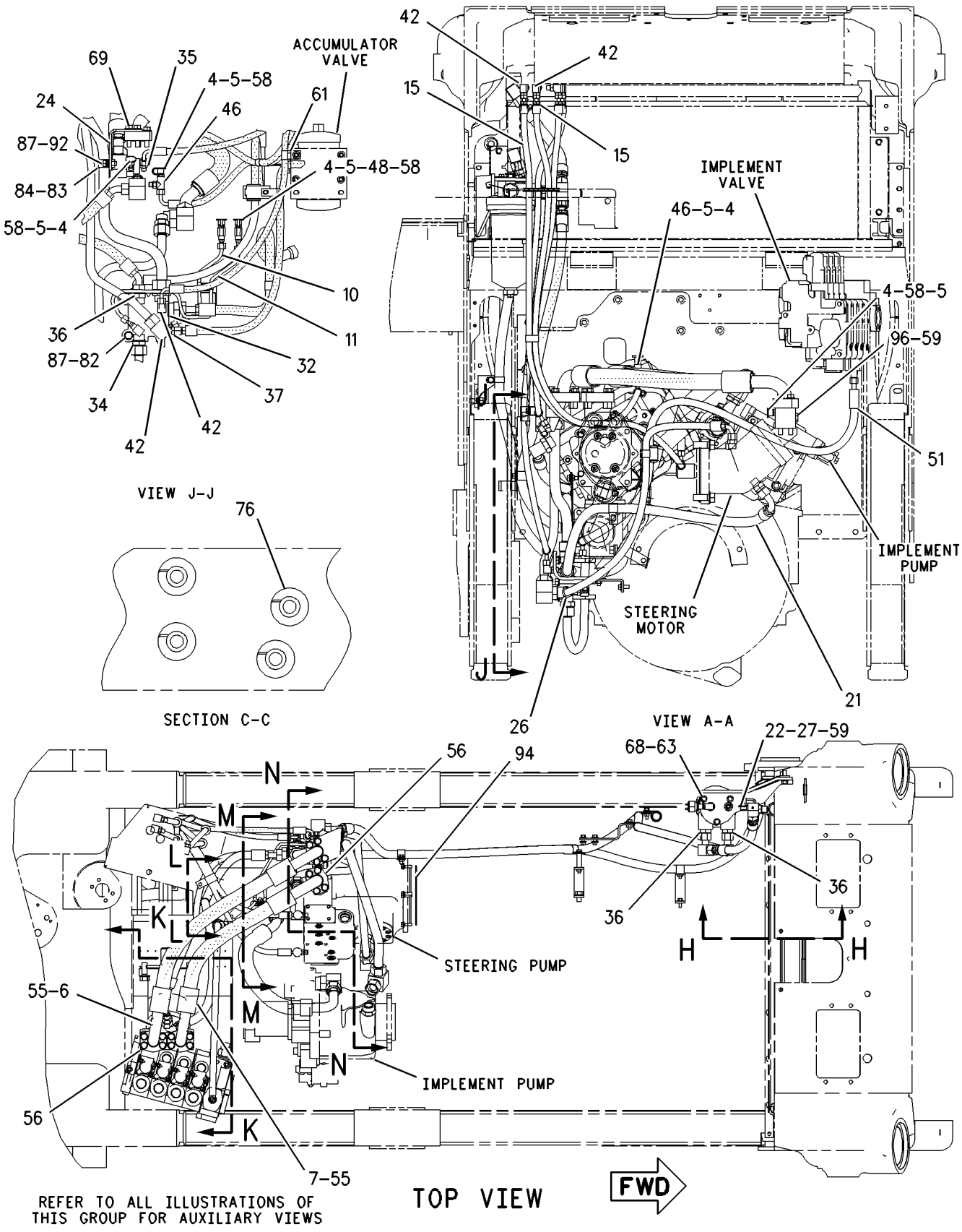

GRAPHIC #2 g00854855

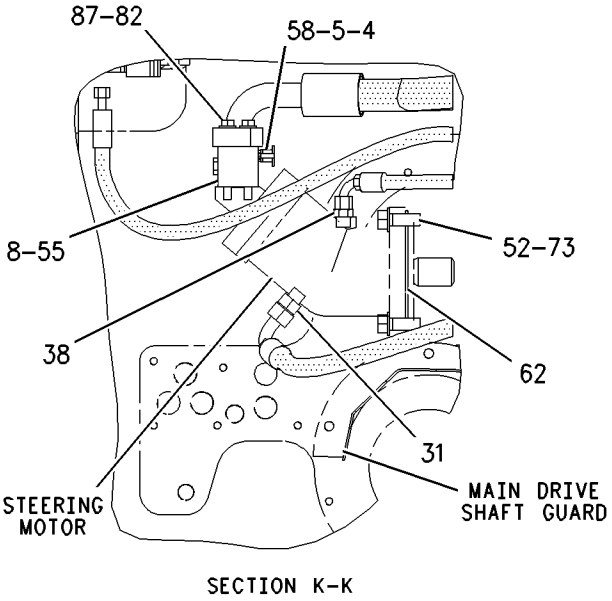

SECTION K-K

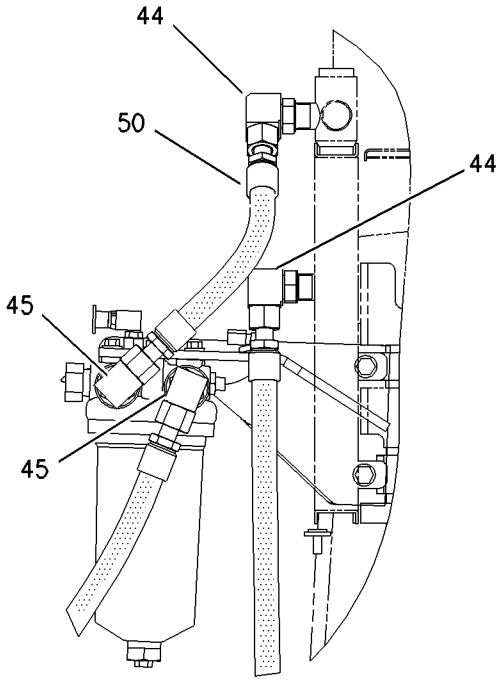

VIEW H-H

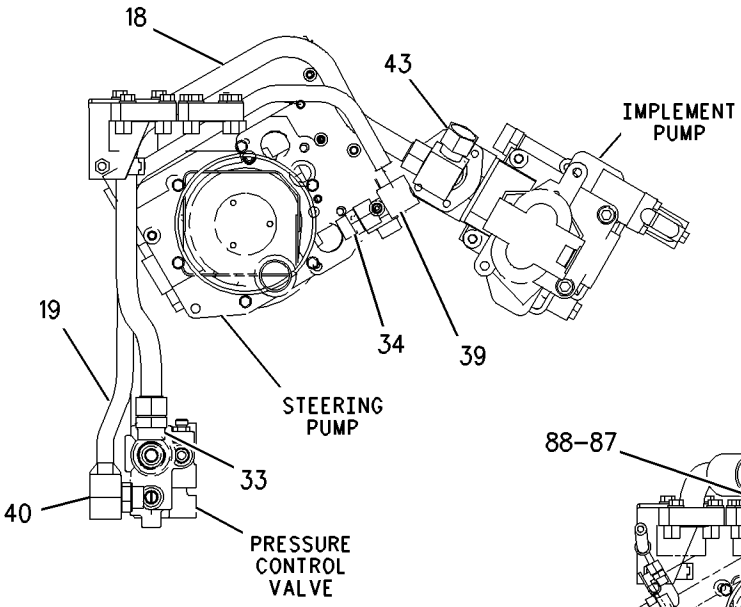

SECTION N-N

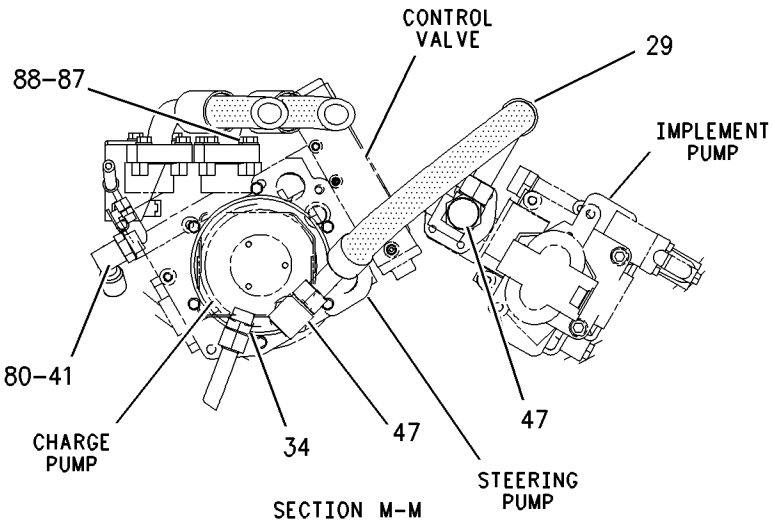

SECTION M-M

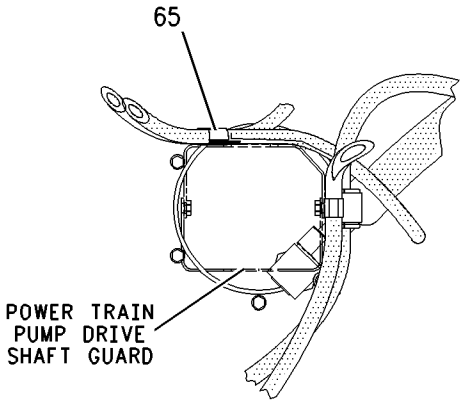

SECTION L-L

GRAPHIC #3

g00793950

159-7161 MOTOR GP-PISTON

S/N: ABK1-UP

PART OF 162-9507 CONTROL AR-HYDRAULIC STEERING

SMCS-5058 **i01141606**

NOTE	REF NO	GRAPHIC REF	PART NUMBER	QTY	PART NAME 1 2 3 4 5 6 (PRODUCT LEVEL)	SEE PAGE
Y	1	1	**171-3065**	1	ROTATING GP-MOTOR	592
	2	1	**9S-8006**	1	PLUG-O-RING (7/8-14 THD)	
	3	1	**2M-9780**	1	SEAL-O-RING (19.18MM ID)	
	4	1	**9T-1641**	1	HOUSING	
	5	1	**6V-1197**	1	SEAL-O-RING (98.02MM ID)	
	6	1	**8T-4231**	1	DOWEL	
M	7	1	**8T-3957**	6	BOLT-HEX SOCKET (M12X1.75X30MM)	
	8	1	**119-6121**	1	HEAD	

M-METRIC PART
Y-SEPARATE ILLUSTRATION

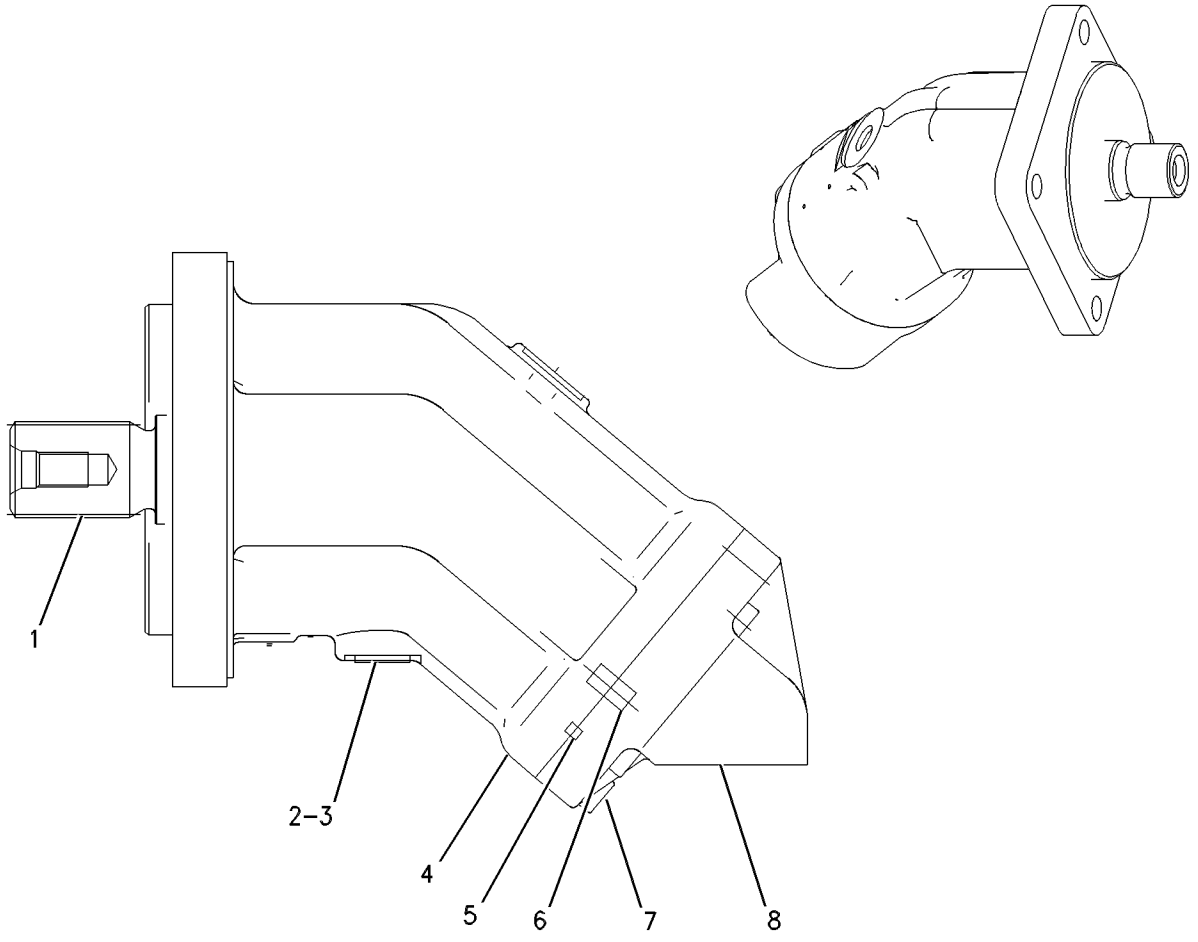

GRAPHIC #1 g00605328

6E-3974 PUMP GP-CHARGE

S/N: ABK1-UP

PART OF 6E-4847 PUMP GP-PISTON

SMCS-3204 **i01231988**

NOTE	REF NO	GRAPHIC REF	PART NUMBER	QTY	PART NAME 1 2 3 4 5 6 (PRODUCT LEVEL)	SEE PAGE
	1	1	**6E-4294**	1	SHAFT	
	2	1	**1U-1655**	1	SEAL-LIP	
	3	1	**6E-4293**	1	BEARING-SLEEVE	
	4	1	**3E-3891**	1	RING-RETAINING	

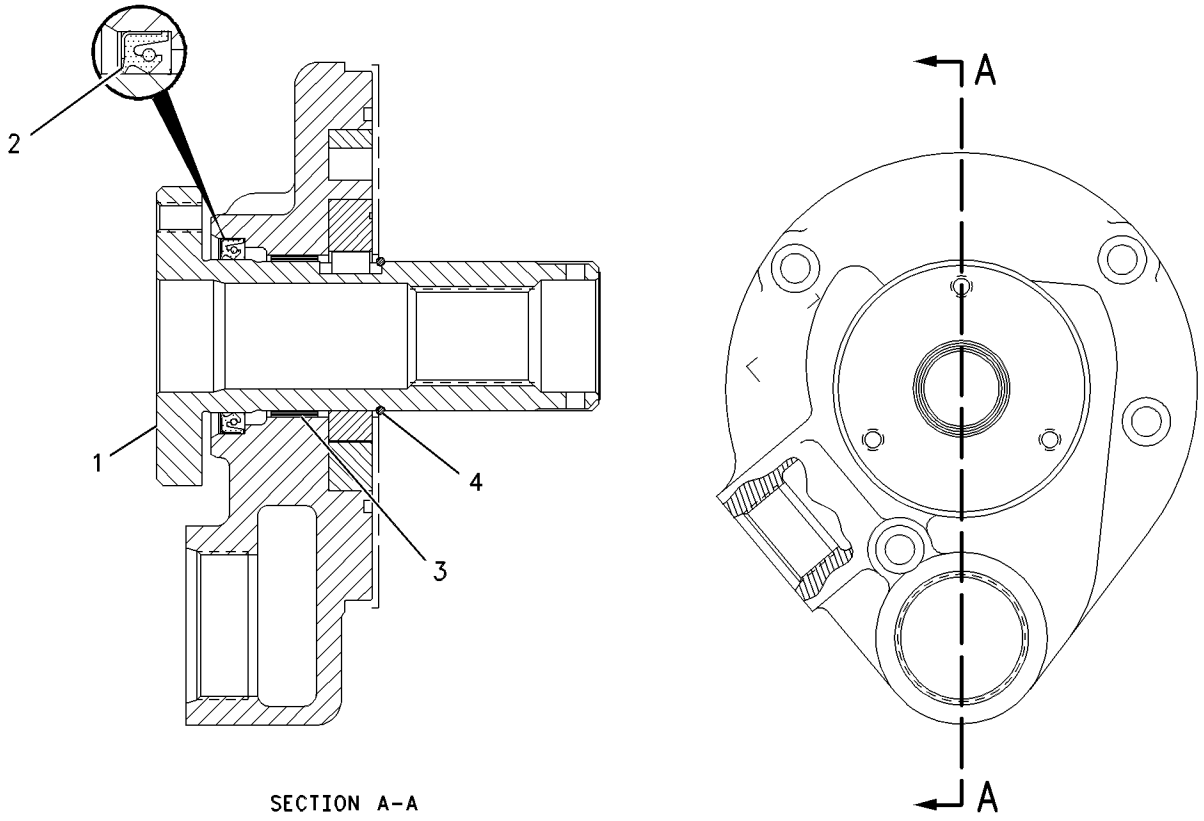

GRAPHIC #1 g00658612

6E-4847 PUMP GP-PISTON

S/N: ABK1-UP

PART OF 162-9507 CONTROL AR-HYDRAULIC STEERING

SMCS-5070 **i01453384**

NOTE	REF NO	GRAPHIC REF	PART NUMBER	QTY	PART NAME 1 2 3 4 5 6 (PRODUCT LEVEL)	SEE PAGE
	1	1	**6E-5176**	1	SHAFT	
	2	1	**2A-4758**	1	RING-SNAP	
	3	1	**6E-2960**	1	SPACER	
	4	1	**6E-6461**	1	SPRING-BELLEVILLE	
M	5	1	**8T-2223**	4	BOLT-SOCKET HEAD (M10X1.5X45MM)	
	6	1	**6E-5848**	1	GEAR (64 TEETH)	
	7	1	**9X-7286**	1	SEAL-O-RING	
	8	1	**6E-3973**	1	SWASHPLATE	
	9	1,2	**5B-5821**	7	DOWEL	
	10	1	**6E-4578**	1	PLATE-WEAR	
	11	1	**6E-2292**	1	PLATE-RETAINER	
	12	1	**6E-2293**	9	PISTON AS	
	13	1	**108-0936**	1	LEVER	
Y	14	1	**103-1179**	1	VALVE GP-CONTROL	598
M	15	1	**8T-0644**	5	BOLT (M10X1.50X90MM)	
	16	1	**4J-0528**	1	SEAL-O-RING	
	17	1	**5P-6300**	3	SEAL-O-RING	
M	18	1	**6V-5192**	1	BOLT-SOCKET HEAD (M8X1.25X30MM)	
	19	1	**9M-1974**	9	WASHER-HARD (8.8X16X2MM THK)	
	20	1	**108-4822**	1	BRACKET AS	
	21	1	**113-7449**	1	SPACER	
	22	1	**6E-6090**	1	SPRING	
	23	1	**2H-3932**	1	SEAL-O-RING	
	24	1	**6E-6089**	1	RETAINER	
	25	1	**6E-6088**	1	SPACER	
Y	26	1	**6E-3974**	1	PUMP GP-CHARGE	587
	27	1	**5F-3999**	1	SEAL-O-RING	
	28	1	**6E-4293**	1	BEARING-SLEEVE	
	29	1	**3P-1210**	1	CONE-ROLLER BEARING	
	30	1	**8J-0412**	1	CUP-ROLLER BEARING	
	31	1	**6E-3972**	1	HEAD	
	32	1	**6E-5613**	1	GASKET	
	33	1	**6E-5296**	1	PLATE	
	34	1	**2R-1236**	1	RING-RETAINING	
	35	1	**6E-2303**	1	SPRING	
	36	1	**6E-2295**	1	BARREL AS	
	37	1	**7J-8207**	2	SPACER-SPRING	
M	38	1	**8T-5093**	8	BOLT-LOCKING (M8X1.25X25MM)	
	39	1	**6E-2300**	2	BEARING	
B	40	1	**6E-2302**	4	SHIM (.12MM THK)	
B	41	1	**6E-2301**	4	SHIM (.05MM THK)	
	42	1	**116-4912**	2	COVER	
M	43	1	**6V-1820**	14	BOLT (M10X1.50X30MM)	
	44	1	**9X-2327**	14	WASHER (2.5MM THK)	
	45	1	**2H-3931**	2	SEAL-O-RING	
	46	1	**7K-8876**	2	CUP-ROLLER BEARING	
	47	1	**7K-8877**	2	CONE-ROLLER BEARING	
B	48	1	**8J-0503**	4	SHIM (.08MM THK)	
B	49	1	**8J-0504**	8	SHIM (.13MM THK)	
	50	1	**7J-8893**	1	CONE-ROLLER BEARING	
	51	1	**7J-8894**	1	CUP-ROLLER BEARING	
	52	1	**6E-4905**	1	BODY-PUMP	
	53	1	**6E-3699**	1	RETAINER	
	54	1	**2H-3928**	1	SEAL-O-RING	
B	55	1	**6E-4579**	1	SHIM (2.5MM THK)	
	56	1	**3P-7019**	2	SEAL-METAL	

6E-4847 PUMP GP-PISTON *(contd.)* i01453384

NOTE	REF NO	GRAPHIC REF	PART NUMBER	QTY	PART NAME 1 2 3 4 5 6 (PRODUCT LEVEL)	SEE PAGE
	57	1	**6V-3382**	1	SEAL-LIP	
	58	1	**100-6153**	1	SEAT	
	59	1	**4B-9782**	1	BALL	
	60	1	**100-6154**	1	SEAT	
	61	1	**9S-8005**	1	PLUG	
	62	1	**1J-9671**	1	SEAL-O-RING	
	63	1	**9T-7692**	2	RING	
	64	1,2	**3J-1907**	2	SEAL-O-RING	
	65	1	**100-7000**	2	RING-BACKUP	
	66	1	**3K-0360**	1	SEAL-O-RING	
	67	2	**9S-4191**	1	PLUG-STRAIGHT THREAD	
M	68	1	**7X-0909**	4	BOLT (M12X1.75X140MM)	
	69	1	**5P-8245**	8	WASHER-HARD (13.5X25.5X3MM THK)	
M	70	1	**6V-8004**	2	BOLT (M12X1.75X120MM)	
CY	71	1	**173-1519**	2	VALVE GP-CHECK & RELIEF	689
Y	72	1	**6E-6478**	1	VALVE GP-RELIEF	606
M	73	1	**8T-9515**	3	BOLT-SOCKET HEAD (M10X1.5X40MM)	
M	74	1	**8T-0372**	2	BOLT (M12X1.75X90MM)	
M	75	1	**8T-0341**	1	BOLT-SOCKET HEAD (M10X1.5X60MM)	
	76	1	**8J-0101**	1	PLATE	
	77	2	**9S-9334**	1	PLUG	
	78	2	**7M-8485**	1	SEAL-O-RING	
	79	1	**4B-4158**	4	SCREW-DRIVE (3/16X0.25 IN)	
C	80	2	**177-9871**	2	CARTRIDGE AS	
		2	**4T-5070**	2	RING-BACKUP	
		2	**6E-5335**	1	RETAINER	
		2	**6E-5336**	1	ADJUSTER	
		2	**6E-5343**	1	SPRING	
		2	**6V-5586**	1	SEAL-O-RING	
	81	2	**6E-5412**	2	SEAL-O-RING	
	82	2	**6E-5416**	4	RING-BACKUP	
	83	2	**6E-5413**	2	SEAL-O-RING	
	84	2	**6V-3300**	4	RING-BACKUP	
	85	2	**6E-5414**	2	SEAL-O-RING	
	86	2	**5P-9687**	4	RING-BACKUP	
	87	2	**6V-1250**	2	SEAL-O-RING	
	88	2	**6V-5586**	1	SEAL-O-RING	
M	89	2	**8T-1757**	2	NUT (M16X2.00 THD)	
M	90	2	**5P-7970**	2	NUT (M8X1.25 THD)	
	91	2	**6E-5341**	2	COVER	
	92	2	**114-5356**	1	SPACER	
	93	2	**9S-4183**	1	PLUG	
	94	2	**3D-2824**	1	SEAL-O-RING	
	95	2	**114-3438**	1	SPRING	
	96	2	**104-4195**	1	NUT (1/2-32 THD)	
	97	2	**103-1201**	1	ADJUSTER	
	98	2	**4J-7533**	4	SEAL-O-RING	
	99	2	**9S-4180**	4	PLUG-O-RING	
	100	2	**124-1444**	2	LINK	
	101	2	**4T-1941**	2	INSERT-BEARING	
	102	2	**6E-5420**	2	RETAINER	
C	103	2	**183-6651**	2	RING-RETAINING	
	104	1	**6V-5839**	5	WASHER (11X21X2.5MM THK)	

B-USE AS REQUIRED
C-CHANGE FROM PREVIOUS TYPE
M-METRIC PART
Y-SEPARATE ILLUSTRATION

6E-4847 PUMP GP-PISTON *(contd.)* i01453384

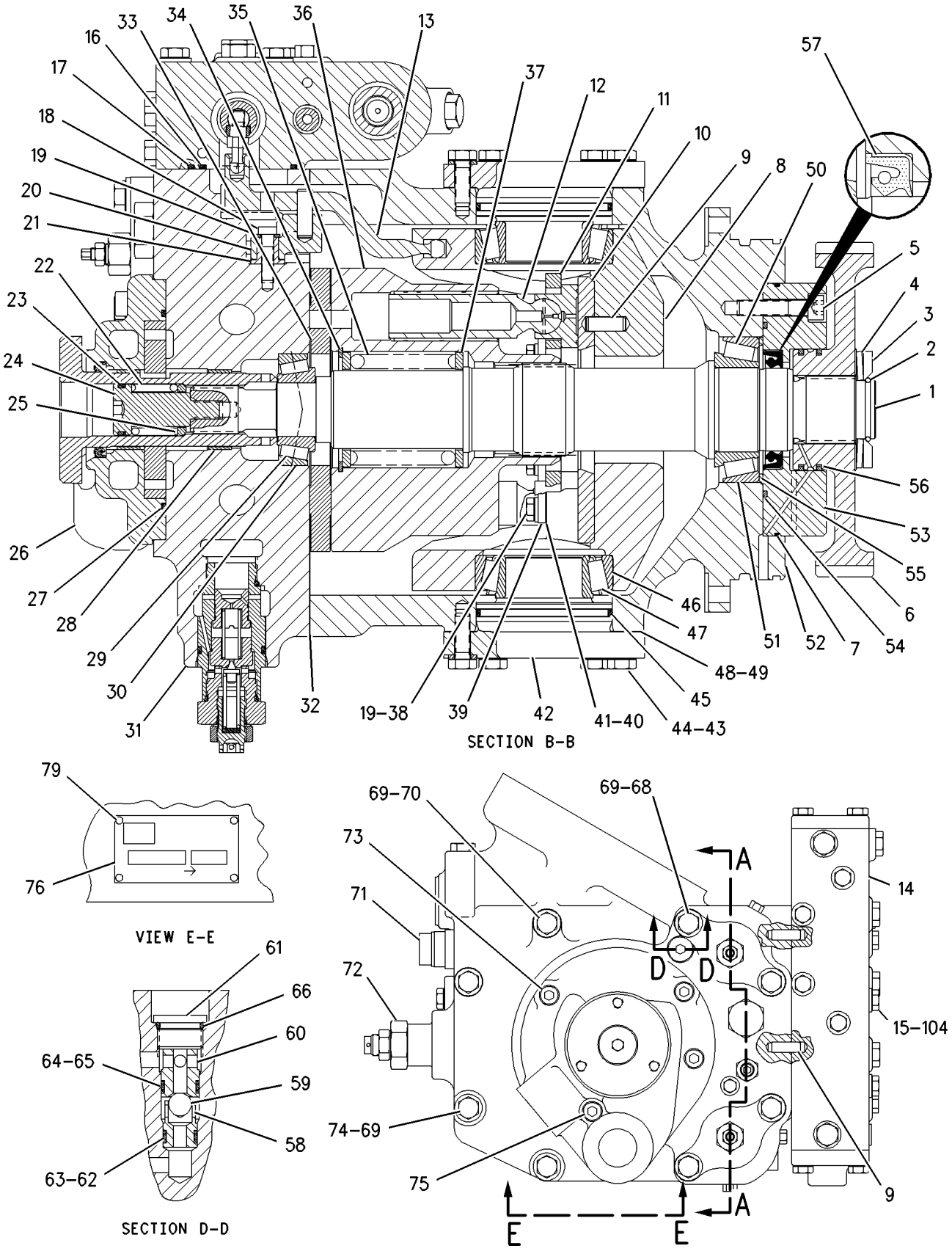

GRAPHIC #1 g00655148

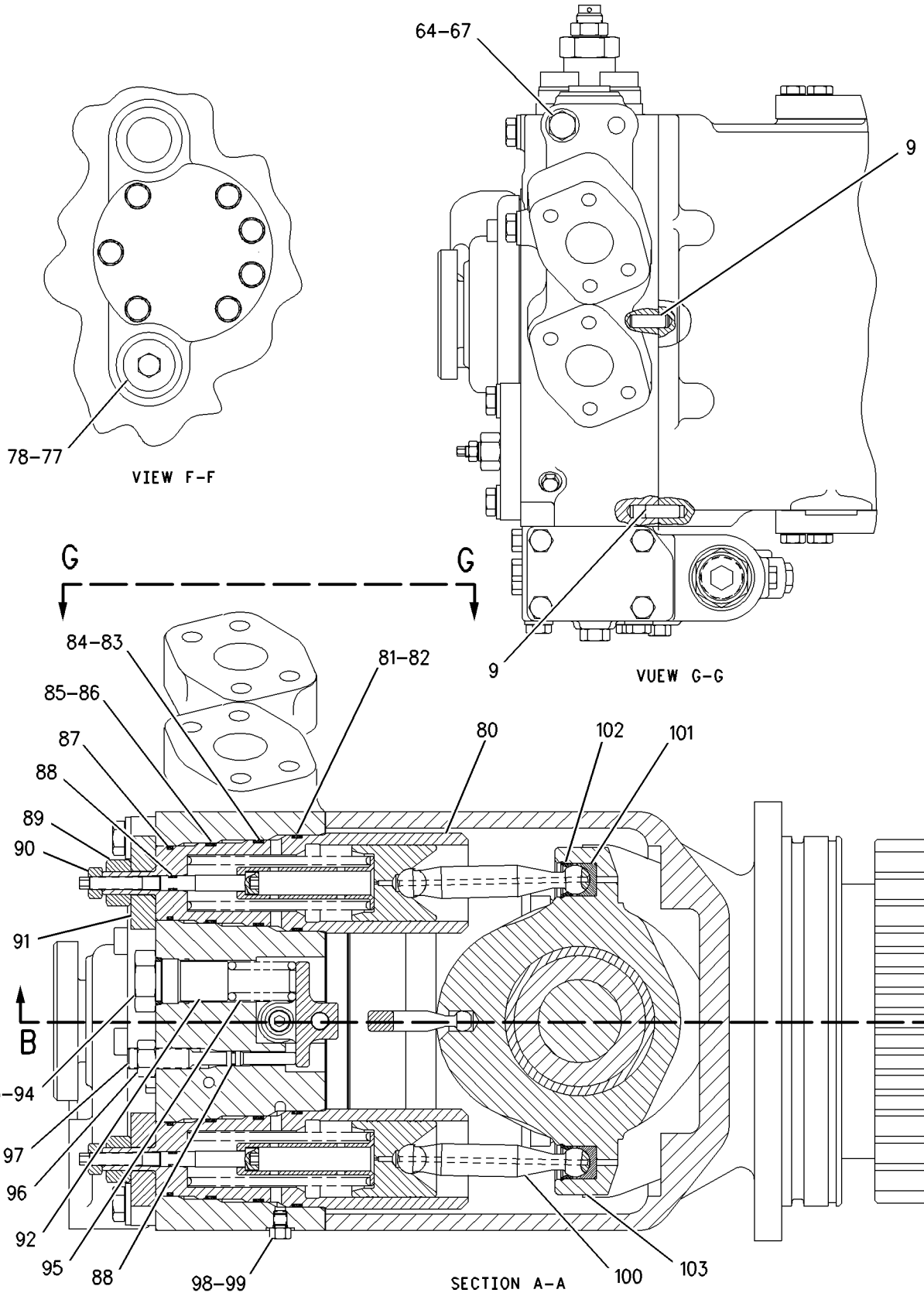

GRAPHIC #2 g00655150

171-3065 ROTATING GP-MOTOR

S/N: ABK1-UP

PART OF 159-7161 MOTOR GP-PISTON

SMCS-5058 **i01290396**

NOTE	REF NO	GRAPHIC REF	PART NUMBER	QTY	PART NAME 1 2 3 4 5 6 (PRODUCT LEVEL)	SEE PAGE
	1	1	**171-3066**	1	SHAFT-MOTOR	
	2	1	**123-5748**	1	SEAL-SHAFT	
	3	1	**9T-1637**	1	COVER-FRONT	
	4	1	**3E-4334**	1	RING-RETAINING	
	5	1	**5D-5958**	1	SEAL-O-RING	
B	6	1	**9T-1579**	1	SHIM (0.3MM THK)	
B	7	1	**9T-1576**	2	SHIM (0.1MM THK)	
M	8	1	**113-4420**	7	SCREW (M6X20MM)	
	9	1	**6E-4096**	1	BARREL	
	10	1	**171-3054**	1	PIN-CENTER	
	11	1	**171-3061**	1	SPRING	
B	12	1	**171-3055**	1	SHIM (4.0MM THK)	
B	13	1	**171-3057**	1	SHIM (3.9MM THK)	
B	14	1	**171-3058**	1	SHIM (3.8MM THK)	
B	15	1	**171-3059**	1	SHIM (3.7MM THK)	
B	16	1	**171-3060**	1	SHIM (3.6MM THK)	
	17	1	**6E-4098**	1	DISC	
Y	18	1	**119-6114**	1	VALVE GP-FLUSHING	446
	19	1	**165-6970**	7	PISTON AS	
					(EACH INCLUDES)	
		1	**6E-4626**	2	RING	
	20	1	**9T-1642**	1	PLATE-RETAINING	
	21	1	**171-5989**	1	KIT-BEARING	

B-USE AS REQUIRED
M-METRIC PART
Y-SEPARATE ILLUSTRATION

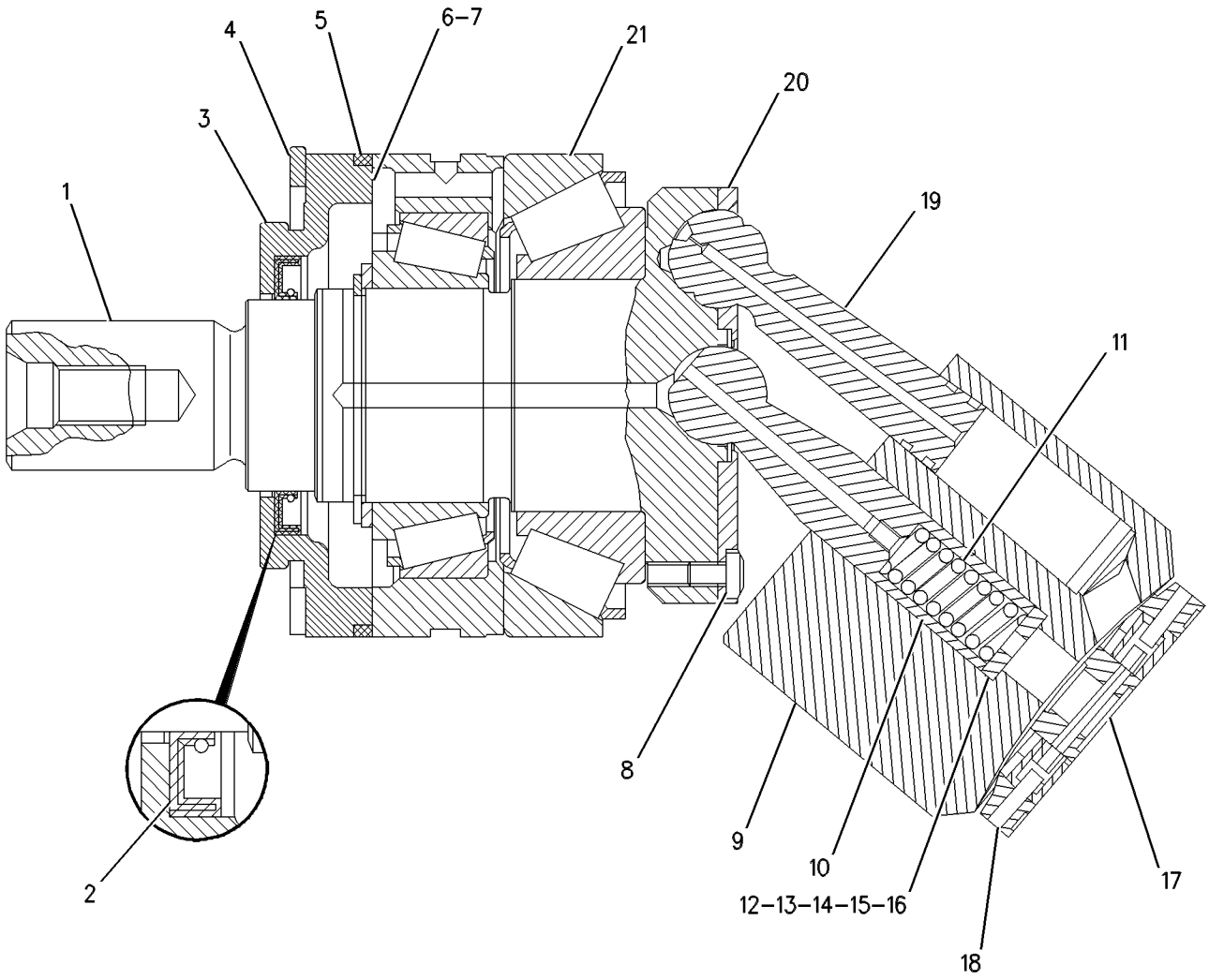

GRAPHIC #1 g00604987

103-1180 VALVE GP

S/N: ABK1-UP

PART OF 103-1179 VALVE GP-CONTROL

SMCS-4307 **i01335940**

NOTE	REF NO	GRAPHIC REF	PART NUMBER	QTY	PART NAME 1 2 3 4 5 6 (PRODUCT LEVEL)	SEE PAGE
	1	1	**103-1186**	1	SPOOL	
	2	1	**104-1942**	1	VALVE GP	
	3	1	**9S-8005**	1	PLUG-O-RING (3/4-16 THD)	
	4	1	**3K-0360**	1	SEAL-O-RING (16.36MM ID)	

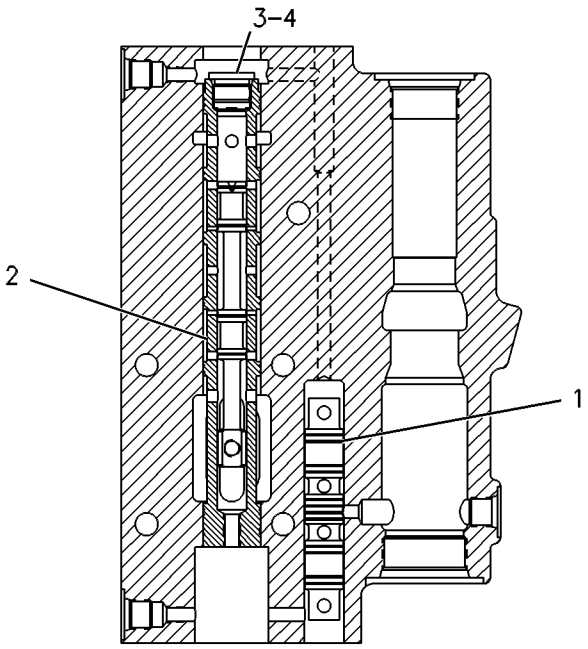

GRAPHIC #1 g00248330

MEMORANDA

108-1496 VALVE GP-BRAKE CONTROL

S/N: ABK1-UP

PART OF 108-3895 VALVE GP-CONTROL

SMCS-4265, 4282 **i01365997**

NOTE	REF NO	GRAPHIC REF	PART NUMBER	QTY	PART NAME 1 2 3 4 5 6 (PRODUCT LEVEL)	SEE PAGE
	1	1	**8F-3469**	2	SEAL-O-RING (15.54MM ID)	
	2	1	**116-9821**	2	PLUG	
		1	**7M-8485**	2	SEAL-O-RING (29.74MM ID)	
B	3	1	**6Y-7264**	4	SPACER (.01MM THK)	
B		1	**6Y-7265**	2	SPACER (0.25MM THK)	
B		1	**6Y-7266**	2	SPACER (0.5MM THK)	
	4	1	**6V-0852**	1	CAP-DUST	
		1	**6V-3965**	1	FITTING AS	
		1	**3J-1907**	1	SEAL-O-RING (11.89MM ID)	
		1	**5P-1404**	1	ADAPTER-O-RING (STRAIGHT THREAD)	
	5	1	**2M-9780**	2	SEAL-O-RING (19.18MM ID)	
	6	1	**1P-9620**	1	RING-RETAINING	
	7	1	**8E-2715**	1	SPRING	
	8	1	**8E-2711**	1	SLUG	
	9	1	**9S-4190**	1	PLUG-O-RING (7/16-20 THD)	
	10	1	**6Y-1393**	1	SPOOL	
	11	1	**8D-5295**	1	PIN	
	12	1	**8D-5294**	1	RING	
	13	1	**9U-9480**	1	PLUNGER	
	14	1	**6V-1604**	2	SEAL-LIP	
	15	1	**115-4336**	1	PLUNGER AS	
	16	1	**2L-5894**	1	PIN-SPRING	
	17	1	**8E-2713**	1	SPOOL AS	
	18	1	**4B-9880**	1	BALL (7.94MM DIA)	
	19	1	**4M-2381**	1	SPRING	
	20	1	**3P-0750**	1	RETAINER	
		1	**3D-8358**	1	RING-RETAINING	

B-USE AS REQUIRED

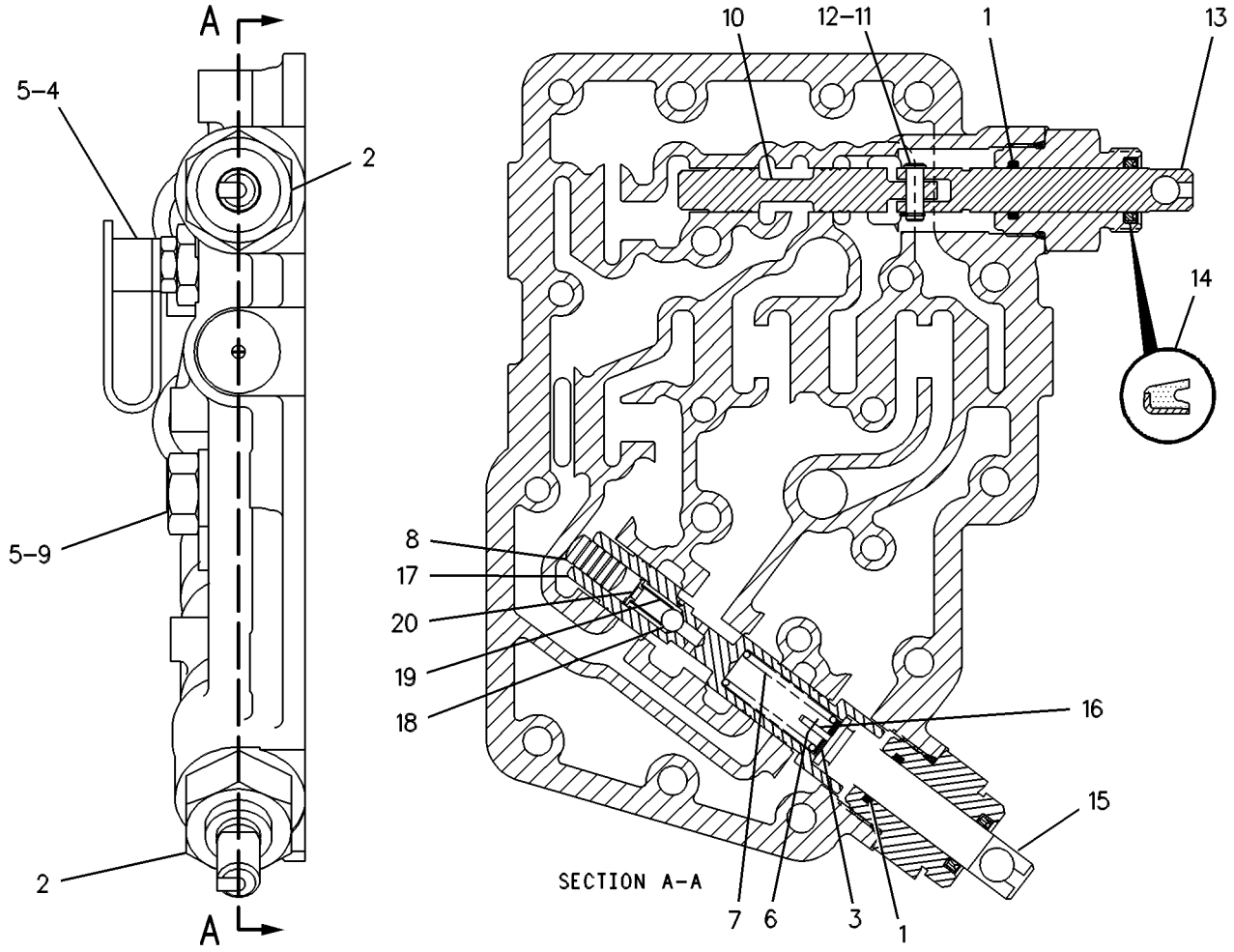

GRAPHIC #1 g00247026

STEERING AND BRAKING SYSTEM

103-1179 VALVE GP-CONTROL

S/N: ABK1-UP

PART OF 6E-4847 PUMP GP-PISTON

SMCS-4307 **i00591294**

NOTE	REF NO	GRAPHIC REF	PART NUMBER	QTY	PART NAME 1 2 3 4 5 6 (PRODUCT LEVEL)	SEE PAGE
Y	1	1	*103-1180*	1	VALVE GP	594
	2	1	**9J-8126**	2	PLUG-ORIFICE	
	3	1	**103-1188**	1	COVER	
M	4	1	**6V-4248**	8	BOLT (M10X1.50X25MM)	
	5	1	**5P-8210**	1	SEAL-O-RING (31.34MM ID)	
	6	1	**5P-6300**	2	SEAL-O-RING	
	7	1	**9S-8004**	1	PLUG-O-RING (9/16-18 THD)	
	8	1	**9S-4183**	1	PLUG (1 1/16-12 THD)	
	9	1	**6E-5630**	1	RETAINER AS	
	10	1	**6E-5677**	1	NUT	
	11	1	**7M-8485**	1	SEAL-O-RING (29.74MM ID)	
	12	1	**108-1299**	1	BUSHING	
	13	1	**113-2518**	1	SPRING	
	14	1	**6V-3548**	3	SEAL-O-RING	
	15	1	**113-1636**	1	RETAINER	
	16	1	**6V-6339**	1	SEAL-O-RING	
	17	1	**6E-5662**	2	RING-BACKUP	
	18	1	**107-1026**	1	STEM	
	19	1	**6V-4591**	1	SEAL-O-RING	
	20	1	**6E-5663**	2	RING-BACKUP	
	21	1	**103-1200**	1	SPRING	
	22	1	**103-1190**	2	RETAINER	
	23	1	**103-1187**	1	COVER	
	24	1	**2S-4078**	1	SEAL-O-RING (37.46MM ID)	
	25	1	**107-1027**	1	HOUSING	
	26	1	**3D-2824**	1	SEAL-O-RING (23.47MM ID)	
	27	1	**3J-7354**	7	SEAL-O-RING (8.92MM ID)	
	28	1	**9S-4182**	7	PLUG (7/16-20 THD)	
	29	1	**103-1202**	1	ARM	
	30	1	**5P-6719**	6	PLUG	
	31	1	**3J-1907**	7	SEAL-O-RING (11.89MM ID)	
	32	1	**3P-1156**	1	SEAL-O-RING	
B	33	1	**100-4708**	2	SHIM	
	34	1	**061-7540**	1	SEAL-O-RING (37.69MM ID)	
M	35	1	**103-1191**	1	BOLT-SHOULDER	

B-USE AS REQUIRED
M-METRIC PART
Y-SEPARATE ILLUSTRATION

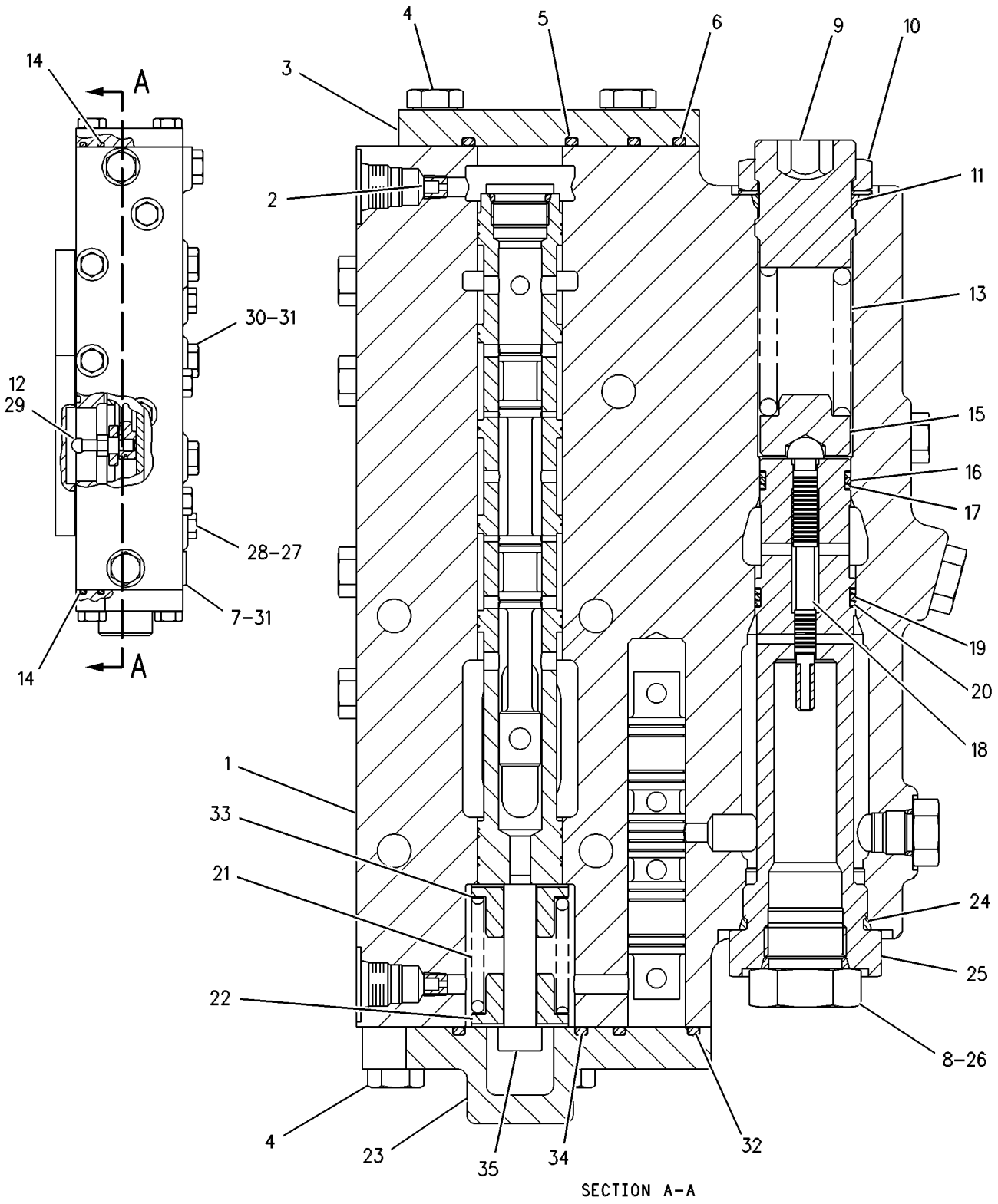

GRAPHIC #1

g00256546

STEERING AND BRAKING SYSTEM

108-3895 VALVE GP-CONTROL

S/N: ABK1-UP

PART OF 6Y-4957 CONTROL GP-FOOT BRAKE

SMCS-4307 **i01063404**

NOTE	REF NO	GRAPHIC REF	PART NUMBER	QTY	PART NAME 1 2 3 4 5 6 (PRODUCT LEVEL)	SEE PAGE
	1	1	**8E-6449**	1	ADAPTER	
Y	2	1	**108-1496**	1	VALVE GP-BRAKE CONTROL	596
	3	1	**8J-8879**	2	SEAL-O-RING (266.29MM ID)	
M	4	1	**8T-6869**	4	BOLT (M8X1.25X60MM)	
	5	1	**1T-0738**	13	WASHER (1.83MM THK)	
	6	1	**9P-9150**	26	WASHER (.84MM THK)	
M	7	1	**8T-6870**	6	BOLT (M8X70MM)	
	8	1	**8M-8489**	2	DOWEL (12.54MM DIA)	
	9	1	**8E-8616**	1	PLATE-SEPARATOR	
M	10	1	**099-3649**	3	BOLT (M8X40MM)	

M-METRIC PART
Y-SEPARATE ILLUSTRATION

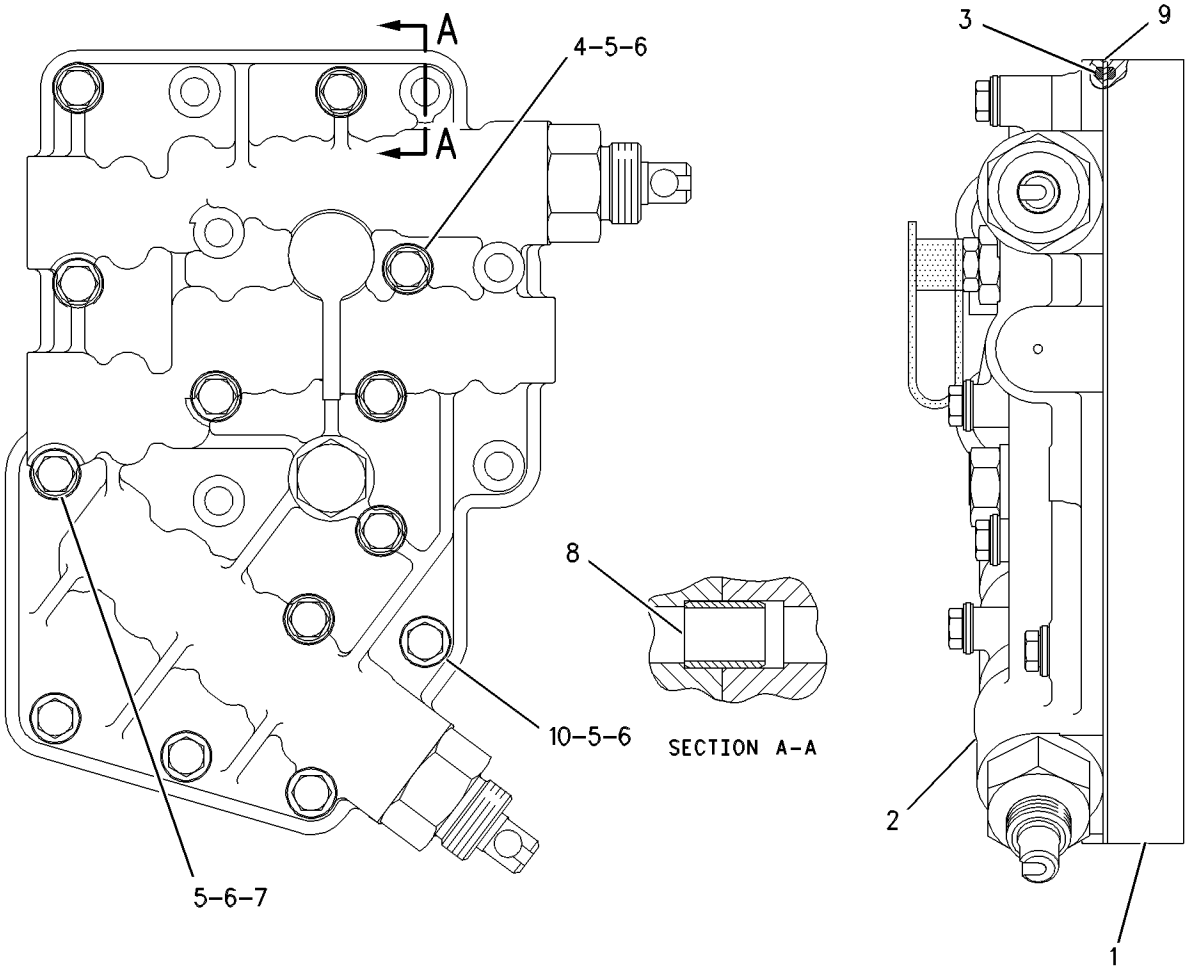

GRAPHIC #1 g00556870

MEMORANDA

6E-5648 VALVE GP-PILOT

S/N: ABK1-UP

PART OF 166-8625 CONTROL GP-STEERING & TMSN

SMCS-4307 **i01335947**

NOTE	REF NO	GRAPHIC REF	PART NUMBER	QTY	PART NAME 1 2 3 4 5 6 (PRODUCT LEVEL)	SEE PAGE
	1	1	**6E-1134**	1	LEVER	
	2	1	**1B-4427**	2	NUT-JAM (1/4-20 THD)	
	3	1	**114-5157**	2	ADJUSTER	
	4	1	**6E-1135**	1	PIN	
	5	1	**1U-3147**	4	SEAL-U-CUP	
	6	1	**033-6044**	2	SEAL-O-RING (20.35MM ID)	
	7	1	**5S-7018**	4	SPACER (.25MM THK)	
	8	1	**6E-5675**	2	SPRING (MIDDLE)	
	9	1	**113-2648**	1	VALVE GP	
	10	1	**3N-2818**	2	BEARING	
	11	1	**6E-5674**	2	SPRING (INNER)	
	12	1	**6E-1136**	2	RETAINER	
	13	1	**1U-2071**	2	RETAINER	
	14	1	**6E-1133**	1	BRACKET	
	15	1	**8J-1622**	2	NUT	
	16	1	**9T-2378**	2	SLEEVE	
	17	1	**1U-2752**	2	PLUNGER	
	18	1	**1U-2765**	1	BOOT	
	19	1	**1W-3963**	2	SPRING-OUTER	
	20	1	**6E-2193**	2	RETAINER	
	21	1	**7J-9108**	2	SEAL-O-RING (15.72MM ID)	
	22	1	**1S-8947**	2	SEAL-O-RING (17.17MM ID)	
	23	1	**3D-2824**	2	SEAL-O-RING (23.47MM ID)	

6E-5648 VALVE GP-PILOT *(contd.)* **i01335947**

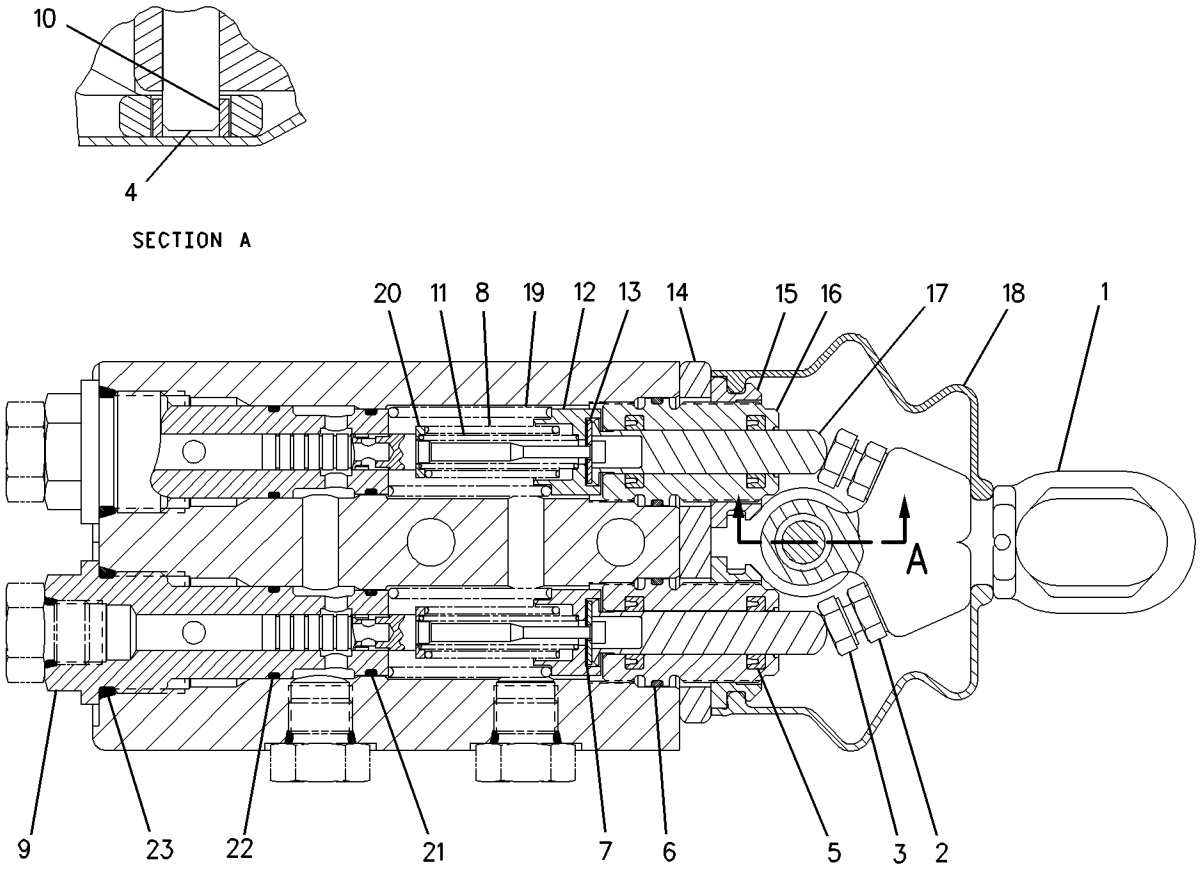

GRAPHIC #1 g00706381

6E-4641 VALVE GP-PRESSURE CONTROL

S/N: ABK1-UP

PART OF 162-9507 CONTROL AR-HYDRAULIC STEERING

SMCS-4307 **i01540904**

NOTE	REF NO	GRAPHIC REF	PART NUMBER	QTY	PART NAME 1 2 3 4 5 6 (PRODUCT LEVEL)	SEE PAGE
	1	1	**5M-2894**	1	WASHER-HARD (10.2X18.5X2.5MM THK)	
	2	1	**101-9575**	1	SPRING	
	3	1	**2M-9780**	1	SEAL-O-RING	
	4	1	**9S-8006**	1	PLUG	
	5	1	**6E-1960**	1	STOP	
	6	1	**6E-5196**	1	VALVE GP-CHECK (MAKEUP OIL)	
		1	**6V-8397**	1	SEAL-O-RING	
	6A	1	**3K-0360**	1	SEAL-O-RING	
	7	1	**3J-1907**	2	SEAL-O-RING	
	8	1	**9S-8004**	2	PLUG	
B	9	1	**6J-0450**	1	SHIM (.79MM THK)	
B	10	1	**7T-0522**	1	SHIM (.5MM THK)	
B	11	1	**6B-0387**	1	GASKET	
	12	1	**3K-6223**	1	WASHER (1.27MM THK)	
Z	13	1		1	VALVE GP	
Y	14	1	**109-7171**	1	VALVE GP-RELIEF (COLD OIL)	607
	15	1	**6V-0825**	1	BOLT-LOCKING (5/16-18X2.5 IN THD)	
	16	1	**1V-0358**	1	WASHER	
	17	1	**7T-0095**	1	SPRING	

B-USE AS REQUIRED
Y-SEPARATE ILLUSTRATION
Z-NOT SERVICED SEPARATELY

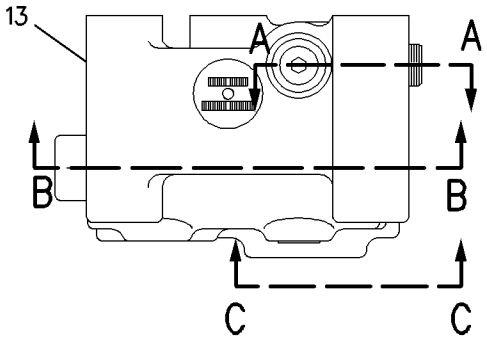

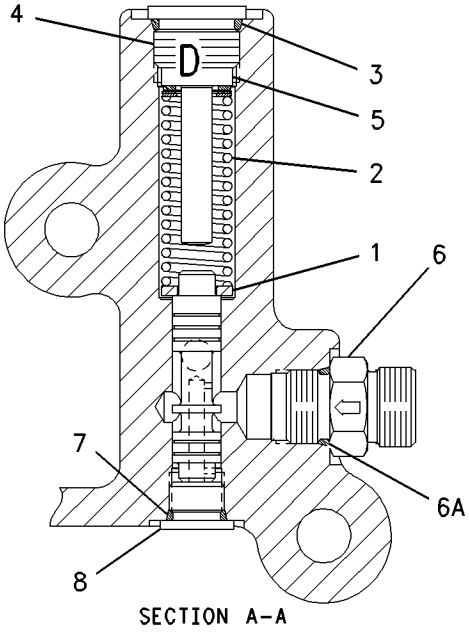

SECTION A-A

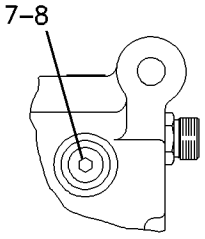

VIEW C-C

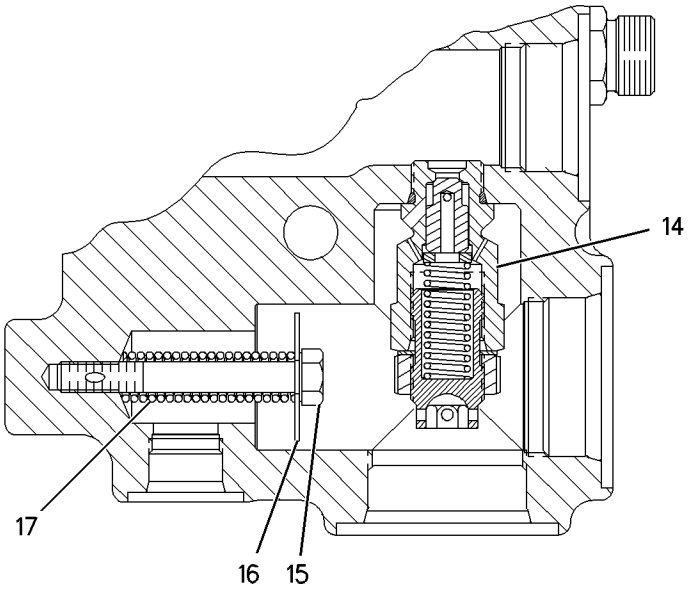

SECTION B-B

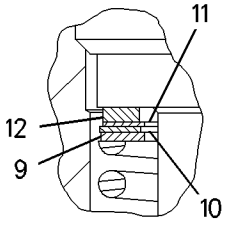

VIEW OF AREA D

GRAPHIC #1 g00720821

6E-6478 VALVE GP-RELIEF

S/N: ABK1-UP

PART OF 6E-4847 PUMP GP-PISTON

SMCS-4307 **i01335962**

NOTE	REF NO	GRAPHIC REF	PART NUMBER	QTY	PART NAME 1 2 3 4 5 6 (PRODUCT LEVEL)	SEE PAGE
	1	1	**7M-8485**	2	SEAL-O-RING (29.74MM ID)	
	2	1	**4J-0522**	1	SEAL-O-RING (37.69MM ID)	
	3	1	**8J-0322**	1	SPRING	
	4	1	**3K-0360**	1	SEAL-O-RING (16.36MM ID)	
	5	1	**4Y-5812**	1	PLATE	
	6	1	**6E-5510**	1	RETAINER AS	
	7	1	**9X-6395**	1	NUT-ORFS (3/4-16 THD)	
	8	1	**6E-1127**	1	CAP	
	9	1	**8J-0331**	1	VALVE	
	10	1	**119-7543**	1	VALVE GP	
	11	1	**8H-3532**	1	SPRING-VALVE	

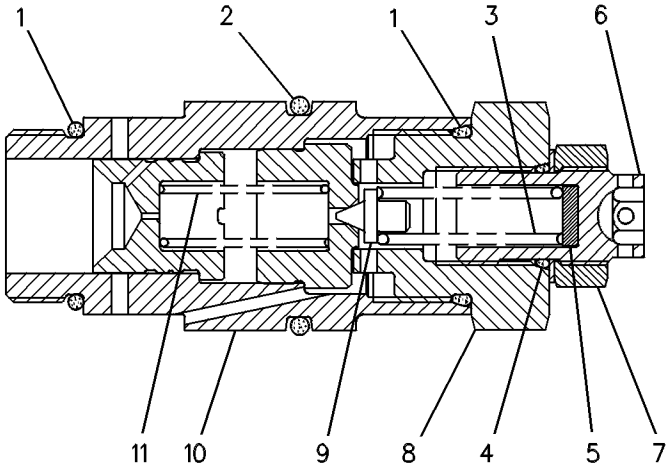

GRAPHIC #1 g00240067

109-7171 VALVE GP-RELIEF

S/N: ABK1-UP

PART OF 6E-4641 VALVE GP-PRESSURE CONTROL

SMCS-4307 **i00591370**

NOTE	REF NO	GRAPHIC REF	PART NUMBER	QTY	PART NAME 1 2 3 4 5 6 (PRODUCT LEVEL)	SEE PAGE
	1	1	**9T-7202**	1	RETAINER AS	
	2	1	**109-7163**	1	SPRING	
	3	1	**9T-6043**	1	VALVE	
	4	1	**7T-7388**	1	GUIDE	
	5	1	**3K-0360**	2	SEAL-O-RING (16.36MM ID)	
	6	1	**107-4913**	1	NUT-O-RING SEAL	

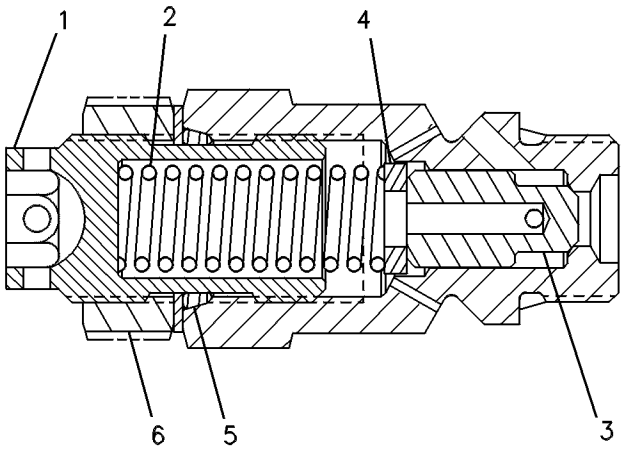

GRAPHIC #1 g00240058

HYDRAULIC SYSTEM

101-7771 CONTROL AR-HYDRAULIC

S/N: ABK1-UP
RIPPER PIN PULLER
AN ATTACHMENT

SMCS-5050 **i01423306**

NOTE	REF NO	GRAPHIC REF	PART NUMBER	QTY	PART NAME 1 2 3 4 5 6 (PRODUCT LEVEL)	SEE PAGE
C	1	1	**146-0240**	1	SWITCH AS-TOGGLE (LOCKING)(RIPPER PIN PULLER)	
					(FOR D9R MODELS WITH MACHINE S/N ABK & ACL, D10R MODELS WITH MACHINE S/N AKT)	
		1	**3E-3371**	1	WEDGE-RECEPTACLE LOCK (3 PIN)	
		1	**6T-3631**	2	NUT-HEX (15/32-32 THD)	
		1	**6T-3632**	1	LOCKWASHER	
		1	**6T-3633**	1	WASHER-TAB	
		1	**8T-8729**	3	PIN-CONNECTOR	
		1	**102-8803**	1	KIT-RECEPTACLE (3 PIN)	
					(INCLUDES RECEPTACLE AS & WEDGE)	
					-OR-	
		1	**6T-6970**	1	SWITCH AS-TOGGLE (LOCKING)(RIPPER PIN PULLER)	
					(FOR D10R MODELS WITH MACHINE S/N 3KR)	
		1	**3L-8187**	3	LOCKWASHER	
		1	**6T-3631**	2	NUT-HEX (15/32-32 THD)	
		1	**6T-3632**	1	LOCKWASHER	
		1	**6T-3633**	1	WASHER-TAB	
		1	**6V-8374**	3	SCREW-MACHINE (6-32X.25 IN)	
	2	1	**120-5821**	1	PLATE AS	
		1	**9F-2978**	2	NUT-WELD (3/8-16 THD)	
	3	1	**8T-4896**	4	WASHER-HARD (10.2X18.5X2.5MM THK)	
	4	1	**4P-7581**	2	CLIP	
	5	1	**9X-6772**	5	STRAP-CABLE	
	6	1	*148-8378*	2	ELBOW GP	
					(EACH INCLUDES)	
		1	**3J-1907**	1	SEAL-O-RING (11.89MM ID)	
		1	**6V-8397**	1	SEAL-O-RING (9.27MM ID)	
		1	**6V-8724**	1	ELBOW	
	7	1	**120-5820**	1	PLATE	
	8	1	**4L-6454**	2	BOLT (3/8-16X1 IN)	
	9	1	**102-3679**	1	TUBE AS	
	10	1	*148-8336*	2	CONNECTOR GP	
					(EACH INCLUDES)	
		1	**3J-1907**	1	SEAL-O-RING (11.89MM ID)	
		1	**6V-8397**	1	SEAL-O-RING (9.27MM ID)	
		1	**6V-8636**	1	CONNECTOR	
Y	11	1	*106-7483*	1	VALVE & MTG GP-CONTROL	684
B	12	1	**5P-9938**	2	BOLT-LOCKING (3/8-16X1.375 IN)	
	13	1	**102-3680**	1	TUBE AS	
C	14	1	**137-3936**	1	FILM-INSTRUCTION (RIPPER PIN PULLER SWITCH)	
	15	1	**8T-7008**	2	BOLT (3/8-16X3 IN)	
	16	1	**7X-0578**	4	WASHER-HARD (10.2X32X2.5MM THK)	
	17	1	**6V-8801**	2	NUT (3/8-16 THD)	

B-USE AS REQUIRED
C-CHANGE FROM PREVIOUS TYPE
Y-SEPARATE ILLUSTRATION

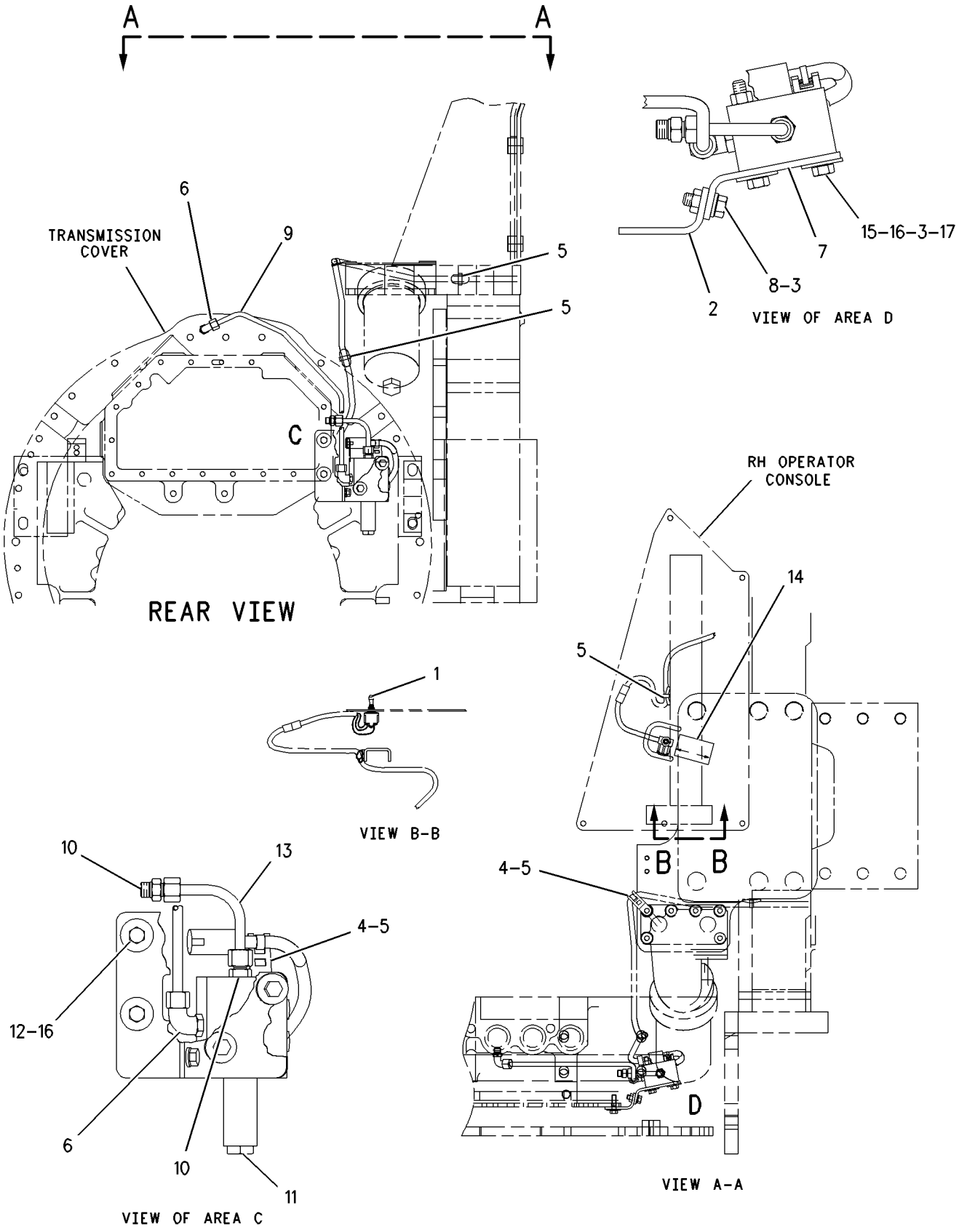

GRAPHIC #1 g00750461

HYDRAULIC SYSTEM

162-9504 CONTROL AR-HYDRAULIC IMPLEMENT

S/N: ABK1-UP

PART OF 162-9500 GENERAL AR

SMCS-5050 **i01445926**

NOTE	PART NUMBER	QTY	PART NAME 1 2 3 4 5 6 (PRODUCT LEVEL)	SEE PAGE
Y	*9G-9288*	1	COVER GP-HYDRAULIC TANK CAP	614
Y	*163-1582*	1	LINES GP-LIFT CYLINDER	646
Y	*163-1583*	1	LINES GP-PUMP	654
Y	*8E-9865*	1	LINES GP-RIPPER	658
Y	*163-1580*	1	LINES GP-TILT	662
Y	*8E-9861*	1	LINKAGE GP-IMPLEMENT	726
Y	*8E-9862*	1	LINKAGE GP-IMPLEMENT	728
Y	**6E-4863**	1	PUMP GP-PISTON & GEAR	676
Y	*163-4153*	1	TANK & FILTER GP-HYDRAULIC	680
Y	**187-8636**	1	VALVE GP-BANK 4	686
Y	**6E-4805**	1	VALVE GP-QUICK-DROP	700

Y-SEPARATE ILLUSTRATION

MEMORANDA

HYDRAULIC SYSTEM

169-7163 COOLER & MTG GP-HYDRAULIC OIL

S/N: ABK1-UP

PART OF 162-9505 INSTALLATION AR-ENGINE

SMCS-1374 **i01348924**

NOTE	REF NO	GRAPHIC REF	PART NUMBER	QTY	PART NAME 1 2 3 4 5 6 (PRODUCT LEVEL)	SEE PAGE
	1	1	**6N-6984**	4	MOUNT	
	2	1	**9L-8781**	6	WASHER (.406X1.5X.188 IN THK)	
	3	1	**169-0908**	6	MOUNT AS	
	4	1	**170-1769**	2	GUARD	
	5	1	**170-1770**	1	GUARD AS	
		1	**7F-4950**	2	WASHER	
	6	1	**170-2422**	1	SUPPORT AS (LH)	
	7	1	**170-2424**	1	SUPPORT AS (RH)	
	8	1	**172-0859**	1	SUPPORT AS	
	9	1	**174-2272**	1	GUARD	
	10	1	**176-7662**	1	CORE AS-OIL COOLER	
		1	**6V-8218**	1	SEAL-O-RING (32.99MM ID)	
	11	1	**030-8537**	2	BOLT-LOCKING (3/8-16X1.5 IN)	
	12	1	**4L-6454**	2	BOLT (3/8-16X1 IN)	
	13	1	**4L-9337**	6	BOLT (3/8-16X1.5 IN)	
	14	1	**5P-1075**	16	WASHER-HARD (3MM THK)	
	15	1	**6V-8801**	12	NUT (3/8-16 THD)	
	16	1	**8T-2561**	4	WASHER (5MM THK)	
	17	1	**8T-4896**	2	WASHER-HARD (10.2X18.5X2.5MM THK)	
	18	1	**8T-9056**	4	BOLT (3/8-16X1.25 IN)	
	19	1	**9B-7237**	2	BOLT (3/8-16X1.25 IN)	

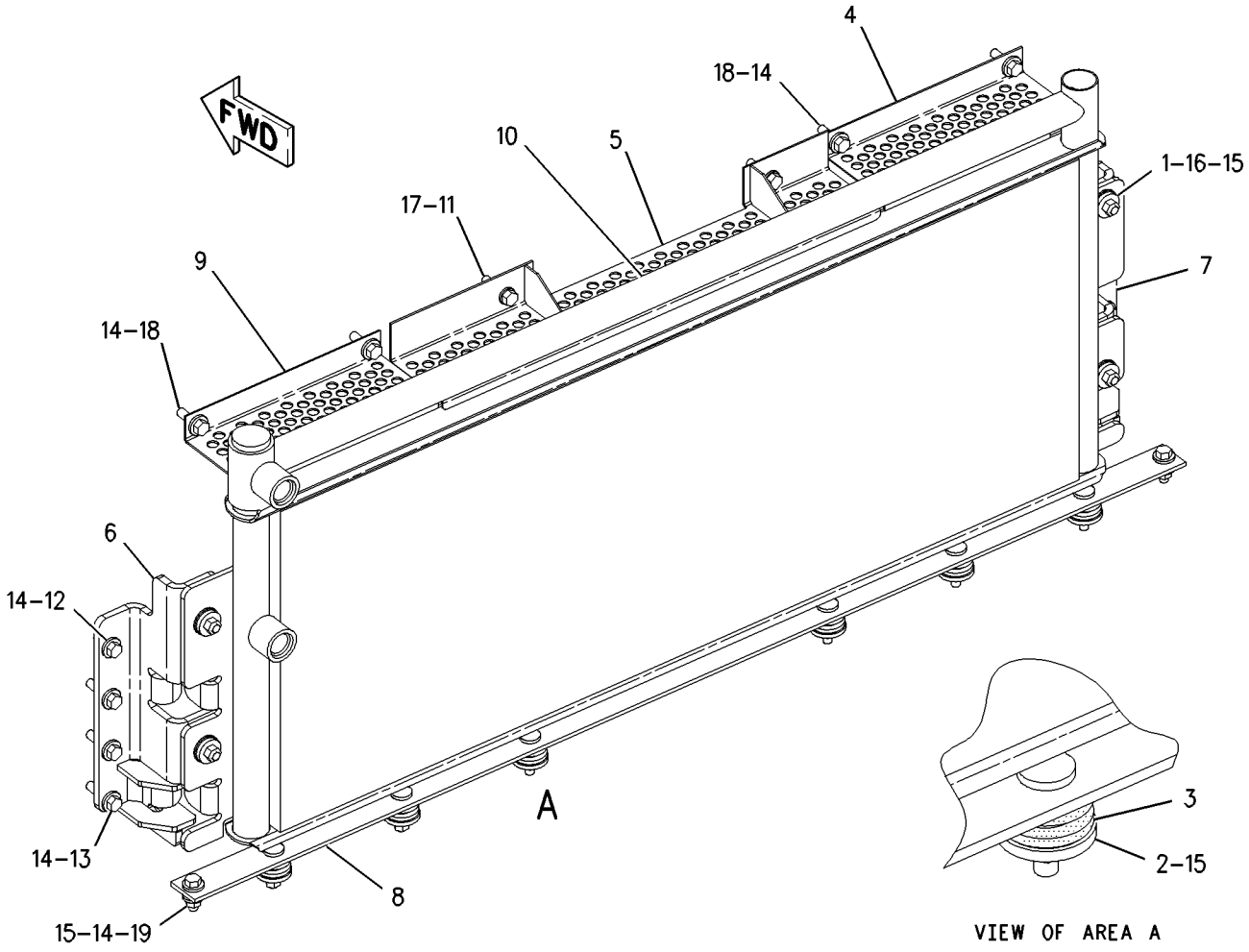

GRAPHIC #1

g00712536

HYDRAULIC SYSTEM

9G-9288 COVER GP-HYDRAULIC TANK CAP

S/N: ABK1-UP

PART OF 162-9504 CONTROL AR-HYDRAULIC IMPLEMENT

SMCS-5056, 7315 **i01632403**

NOTE	REF NO	GRAPHIC REF	PART NUMBER	QTY	PART NAME 1 2 3 4 5 6 (PRODUCT LEVEL)	SEE PAGE
	1	1	**1L-5072**	1	DOWEL	
	2	1	**9M-7394**	1	LEVER (LOCKING)	
	3	1	**5D-1911**	1	COVER-HYDRAULIC CAP	
	4	1	**2J-7761**	1	RING-RETAINING	
	5	1	**5P-8502**	1	PADLOCK GP	
		1	**5P-8500**	1	KEY	
		1	**8Y-6364**	1	SLEEVE	

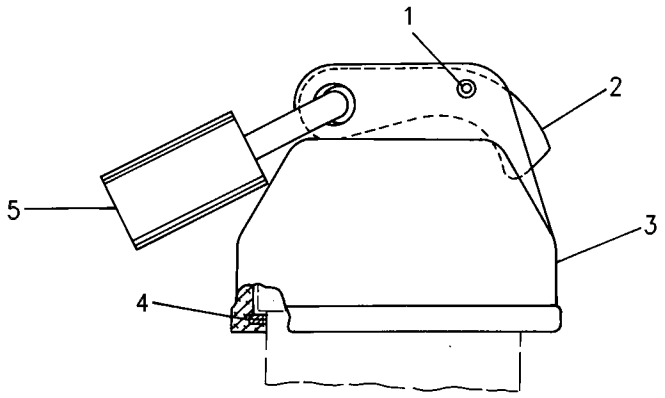

GRAPHIC #1 g00600453

137-7090 CYLINDER & LINES GP-DUAL TILT

S/N: ABK1-UP
COLD WEATHER
FOR USE WITH 106-7362—PAGE 621
AN ATTACHMENT

SMCS-5104 **i01358084**

NOTE	PART NUMBER	QTY	PART NAME 1 2 3 4 5 6 (PRODUCT LEVEL)	SEE PAGE
Y	**4Z-6356**	1	CYLINDER GP-DUAL TILT	624
Y	**4Z-6357**	1	CYLINDER GP-DUAL TILT	626
I	**145-2370**	1	HOSE AS	
I	**145-2371**	1	HOSE AS	
I	**145-2372**	1	HOSE AS	
I	**145-2373**	1	HOSE AS	
I	**137-7161**	2	HOSE AS	
I	**145-2375**	2	HOSE AS	
I	**1Q-1376**	2	HOSE AS	

I-SEE HOSE FABRICATION GUIDE
Y-SEPARATE ILLUSTRATION

HYDRAULIC SYSTEM

163-1268 CYLINDER & LINES GP-LIFT–RH

S/N: ABK1-UP; 9MP1-UP; 9RP1-UP

PART OF 163-4550 BULLDOZER AR-SEMI-UNIVERSAL, 163-4551 BULLDOZER AR-UNIVERSAL AN ATTACHMENT

SMCS-5102 **i01590857**

NOTE	REF NO	GRAPHIC REF	PART NUMBER	QTY	PART NAME 1 2 3 4 5 6 (PRODUCT LEVEL)	SEE PAGE
	1	1	**8E-1243**	1	MANIFOLD	
	2	1	**8E-1244**	1	BRACKET AS	
	3	1	**8E-9572**	1	PLATE	
	4	1	*153-6251*	1	CONNECTOR AS	
		1	**9X-8260**	1	CONNECTOR	
		1	**4K-1388**	1	SEAL-O-RING	
		1	**6V-8400**	1	SEAL-O-RING	
I	5	1	**163-1618**	1	HOSE AS	
I	6	1	**163-1619**	1	HOSE AS	
	7	1	**163-1622**	1	TUBE AS-RH	
Y	8	1	**165-8633**	1	CYLINDER GP-BULLDOZER LIFT	622
	9	1	**1P-3704**	1	SEAL-RECTANGULAR	
	10	1	**1P-4577**	4	FLANGE-HALF	
	11	1	**4J-0520**	4	SEAL-O-RING	
	12	1	**4J-0526**	1	SEAL-O-RING	
	13	1	**4P-7581**	1	CLIP	
	14	1	**5P-1075**	2	WASHER-HARD (10.2X22.5X3MM THK)	
	15	1	**7X-0353**	2	BOLT (5/8-11X4.25 IN)	
	16	1	**8T-2501**	4	BOLT (3/8-16X2 IN)	
	17	1	**8T-4122**	2	WASHER-HARD (17X32X3.5MM THK)	
	18	1	**8T-4896**	12	WASHER-HARD (10.2X18.5X2.5MM THK)	
	19	1	**9B-7237**	10	BOLT (3/8-16X1.25 IN)	

I-SEE HOSE FABRICATION GUIDE
Y-SEPARATE ILLUSTRATION

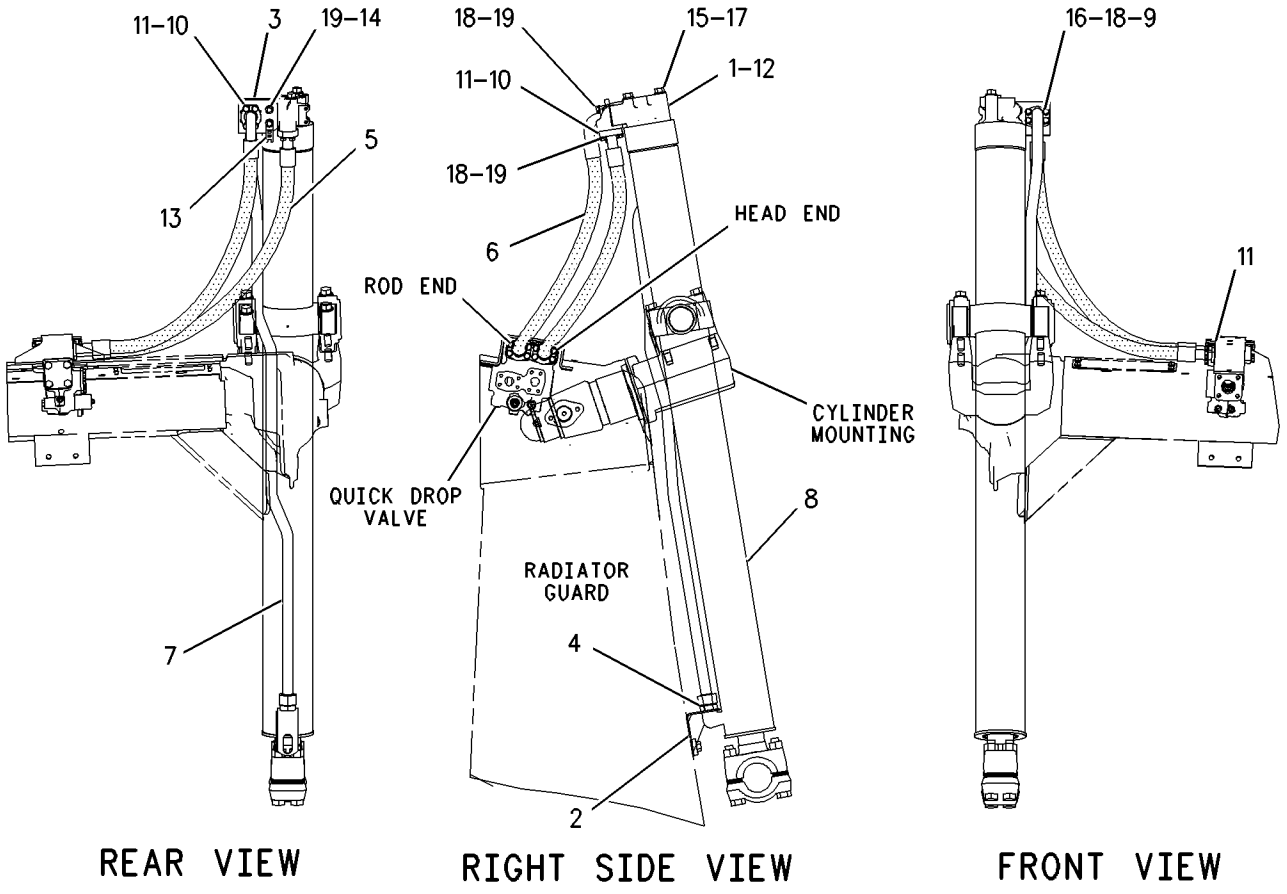

GRAPHIC #1

g00699128

HYDRAULIC SYSTEM

163-1269 CYLINDER & LINES GP-LIFT–LH

S/N: ABK1-UP; 9MP1-UP; 9RP1-UP

PART OF 163-4550 BULLDOZER AR-SEMI-UNIVERSAL, 163-4551 BULLDOZER AR-UNIVERSAL AN ATTACHMENT

SMCS-5102 **i01590859**

NOTE	REF NO	GRAPHIC REF	PART NUMBER	QTY	PART NAME 1 2 3 4 5 6 (PRODUCT LEVEL)	SEE PAGE
	1	1	**8E-1243**	1	MANIFOLD	
	2	1	**8E-1244**	1	BRACKET AS	
	3	1	**8E-9572**	1	PLATE	
	4	1	**9X-8260**	1	CONNECTOR	
		1	**4K-1388**	1	SEAL-O-RING	
		1	**6V-8400**	1	SEAL-O-RING	
I	5	1	**163-1618**	1	HOSE AS	
I	6	1	**163-1619**	1	HOSE AS	
	7	1	**163-1623**	1	TUBE AS-LH	
Y	8	1	**165-8633**	1	CYLINDER GP-BULLDOZER LIFT	622
	9	1	**1P-3704**	1	SEAL-RECTANGULAR	
	10	1	**1P-4577**	4	FLANGE-HALF	
	11	1	**4J-0520**	4	SEAL-O-RING	
	12	1	**4J-0526**	1	SEAL-O-RING	
	13	1	**4P-7581**	1	CLIP	
	14	1	**5P-1075**	2	WASHER-HARD (10.2X22.5X3MM THK)	
	15	1	**7X-0353**	2	BOLT (5/8-11X4.25 IN)	
	16	1	**8T-2501**	4	BOLT (3/8-16X2 IN)	
	17	1	**8T-4122**	2	WASHER-HARD (17X32X3.5MM THK)	
	18	1	**8T-4896**	12	WASHER-HARD (10.2X18.5X2.5MM THK)	
	19	1	**9B-7237**	10	BOLT (3/8-16X1.25 IN)	

I-SEE HOSE FABRICATION GUIDE
Y-SEPARATE ILLUSTRATION

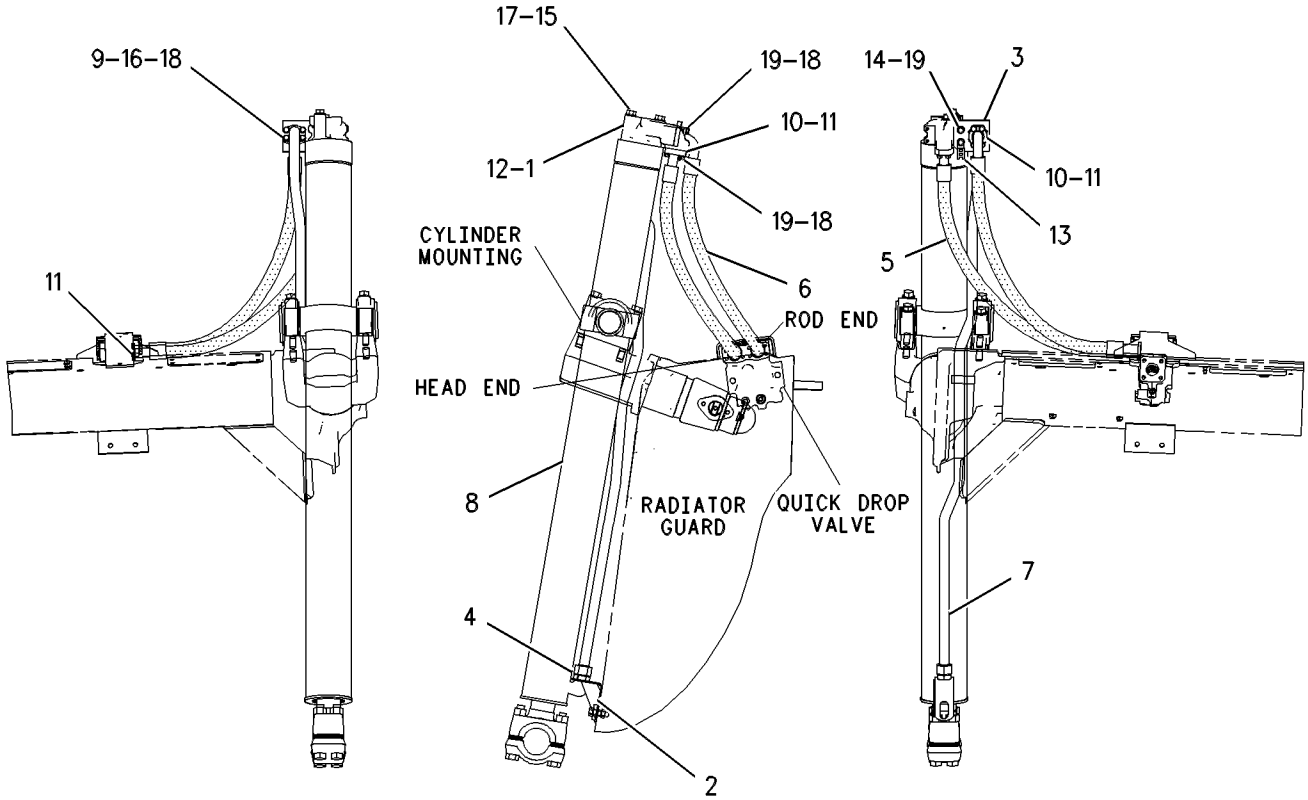

GRAPHIC #1

g00563681

HYDRAULIC SYSTEM

137-7371 CYLINDER & LINES GP-RIPPER

S/N: ABK1-UP
COLD WEATHER
AN ATTACHMENT

SMCS-5352 **i01358148**

NOTE	PART NUMBER	QTY	PART NAME 1 2 3 4 5 6 (PRODUCT LEVEL)	SEE PAGE
Y	**4Z-6363**	2	CYLINDER GP-RIPPER LIFT	628
Y	**4Z-6364**	2	CYLINDER GP-RIPPER TIP	634
I	**145-8274**	2	HOSE AS	
I	**145-8275**	2	HOSE AS	
I	**145-8276**	2	HOSE AS	
I	**145-8277**	1	HOSE AS	
I	**145-8278**	1	HOSE AS	

I-SEE HOSE FABRICATION GUIDE
Y-SEPARATE ILLUSTRATION

HYDRAULIC SYSTEM

106-7362 CYLINDER AR-DUAL TILT

S/N: ABK1-UP
AN ATTACHMENT

SMCS-5104 **i01282049**

NOTE	REF NO	GRAPHIC REF	PART NUMBER	QTY	PART NAME 1 2 3 4 5 6 (PRODUCT LEVEL)	SEE PAGE
Y	1	1	*8E-9891*	1	LINES GP-TILT CYLINDER	668
Y	2	1	*106-7363*	1	LINK GP-STABILIZER	724
Y	3	1	**109-8832**	1	CYLINDER GP-TILT (RH)	640
Y	4	1	**109-8833**	1	CYLINDER GP-TILT (LH)	642

Y-SEPARATE ILLUSTRATION

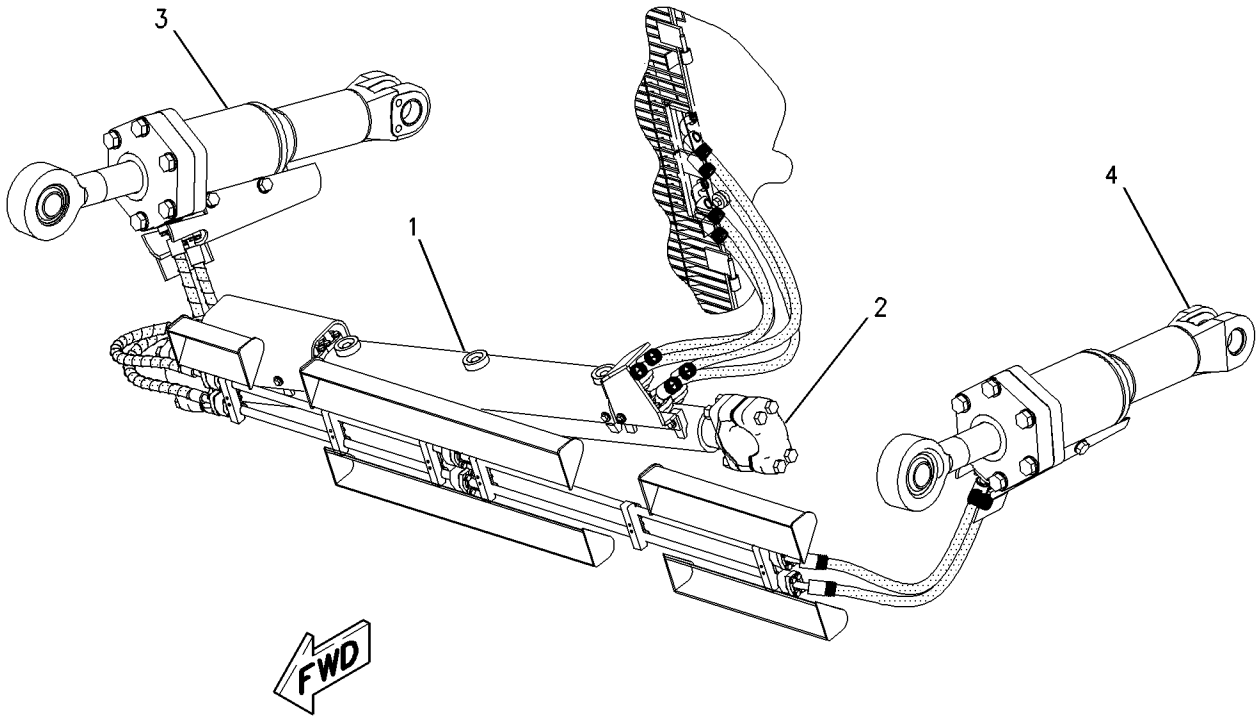

GRAPHIC #1 g00681138

HYDRAULIC SYSTEM

165-8633 CYLINDER GP-BULLDOZER LIFT

S/N: ABK1-UP; 9MP1-UP; 9RP1-UP
120.65MM (4.75 IN) BORE X 1570MM (61.8 IN) STROKE
PART OF 163-1268, 163-1269 CYLINDER & LINES GP-LIFT
AN ATTACHMENT

SMCS-5102 **i01445964**

NOTE	REF NO	GRAPHIC REF	PART NUMBER	QTY	PART NAME 1 2 3 4 5 6 (PRODUCT LEVEL)	SEE PAGE
	1	1	**166-1855**	1	CYLINDER AS	
	2	1	**5J-1192**	2	BEARING-SLEEVE	
	3	1	**106-1017**	1	WASHER (36.7X77X6MM THK)	
	4	1	**131-7823**	1	PISTON AS	
	5	1	**4T-8588**	1	SEAL AS	
	6	1	**2J-3961**	1	RING-BACKUP	
	7	1	**164-6403**	1	HEAD	
R	8	1	**6E-4497**	1	ROD AS	
	9	1	**160-6310**	1	CAP-BEARING	
M	10	1	**8T-0672**	4	BOLT (M24X3.0X160MM)	
B	11	1	**3G-0911**	28	SHIM (.8MM THK)	
M	12	1	**7X-0851**	4	NUT (M24X3.00 THD)	
	13	1	**167-2469**	1	SEAL-WIPER	
	14	1	**9X-7412**	1	SEAL-U-CUP	
	15	1	**167-2208**	1	SEAL AS-BUFFER	
	16	1	**8C-9161**	1	RING-WEAR	
	17	1	**131-7184**	1	RING-WEAR	
M	18	1	**173-9682**	1	BOLT-HEX HEAD (M36X4X100MM)	
	19	1	**175-7903**	1	SEAL-O-RING (120.24MM ID)	

B-USE AS REQUIRED
M-METRIC PART
R-REMFG PART MAY BE AVAILABLE

165-8633 CYLINDER GP-BULLDOZER LIFT *(contd.)* i01445964

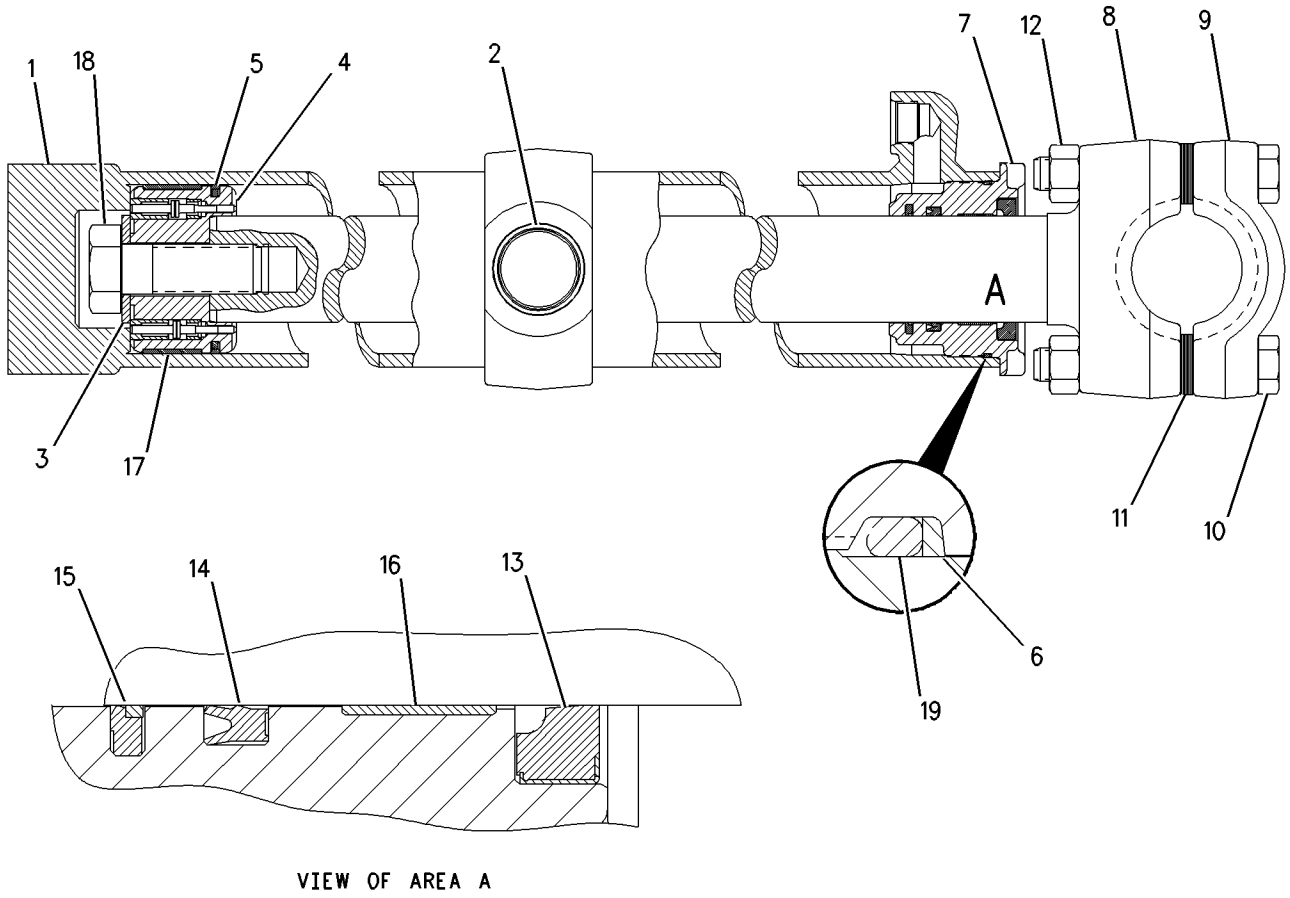

GRAPHIC #1 g00733123

HYDRAULIC SYSTEM

4Z-6356 CYLINDER GP-DUAL TILT

S/N: ABK1-UP
209.55MM (8.25 IN.) BORE X 188MM (7.4 IN.)STROKE
PART OF 137-7090 CYLINDER & LINES GP-DUAL TILT
AN ATTACHMENT

SMCS-5104 **i01386668**

NOTE	REF NO	GRAPHIC REF	PART NUMBER	QTY	PART NAME 1 2 3 4 5 6 (PRODUCT LEVEL)	SEE PAGE
R	1	1	**109-8836**	1	CYLINDER AS-RH	
		1	**109-6784**	4	LUG	
	2	1	**4J-6888**	1	LOCKNUT (2 3/4-12 THD)	
	3	1	**4J-7376**	1	RING-WEAR	
	4	1	**8T-1793**	1	SEAL AS	
	5	1	**122-9350**	1	PISTON AS	
		1	**1J-8569**	2	INSERT-PISTON	
		1	**2H-3932**	2	SEAL-O-RING (28.17MM ID)	
		1	**3K-8692**	4	RING-BACKUP	
		1	**109-4670**	2	INSERT	
		1	**122-9351**	2	PLUNGER	
	6	1	**9T-1878**	2	WASHER	
	7	1	**8J-4386**	1	SEAL-O-RING (199.39 MM ID)	
	8	1	**3G-3747**	1	RING-BACKUP	
	9	1	**109-6779**	1	HEAD	
R	10	1	**6E-4859**	1	ROD AS	
		1	**5J-9454**	1	RING-RETAINING	
		1	**7J-3297**	1	BEARING	
C	11	1	**167-2211**	1	SEAL AS-BUFFER	
	12	1	**8T-3329**	1	RING-WEAR	
M	13	1	**8T-0283**	6	BOLT (M30X3.5X110MM)	
	14	1	**9X-8399**	6	WASHER (33X56X6.0MM THK)	
	15	1	**8T-8382**	1	SEAL-HEAD	
C	16	1	**167-2474**	1	SEAL-WIPER	
	17	1	**9X-7405**	1	SEAL-U-CUP	

C-CHANGE FROM PREVIOUS TYPE
M-METRIC PART
R-REMFG PART MAY BE AVAILABLE

4Z-6356 CYLINDER GP-DUAL TILT *(contd.)* i01386668

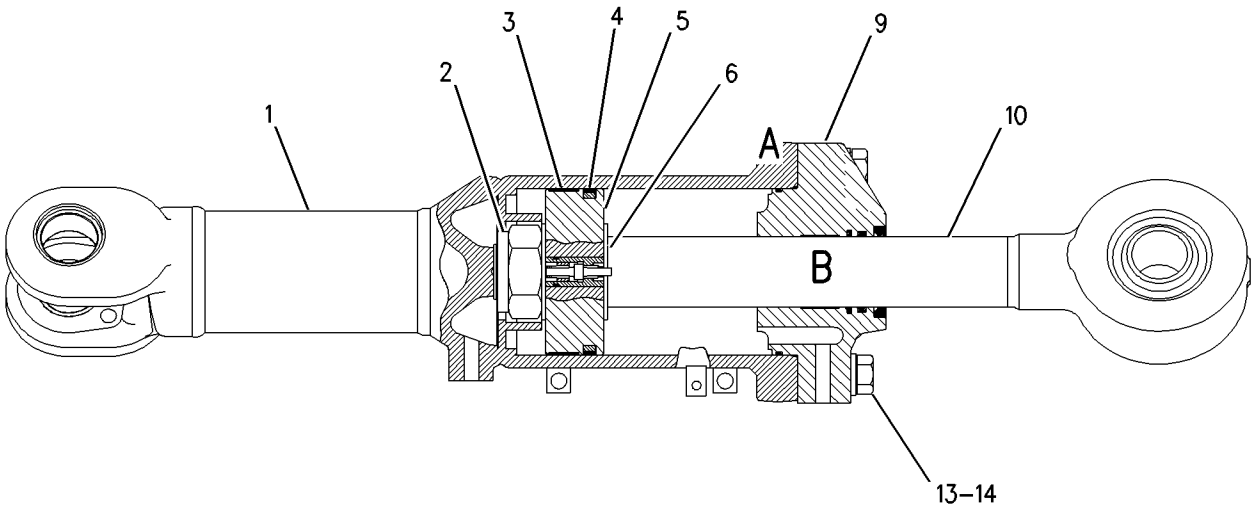

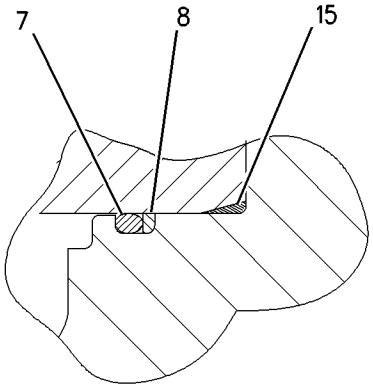

VIEW OF AREA A

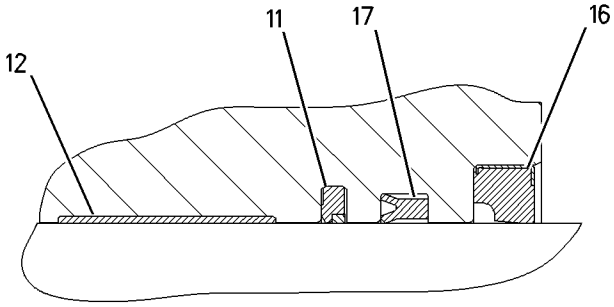

VIEW OF AREA B

GRAPHIC #1 g00731248

4Z-6357 CYLINDER GP-DUAL TILT

S/N: ABK1-UP
209.55MM (8.25 IN.)BORE X 188MM (7.4 IN.)STROKE
PART OF 137-7090 CYLINDER & LINES GP-DUAL TILT
AN ATTACHMENT

SMCS-5104 **i01386873**

NOTE	REF NO	GRAPHIC REF	PART NUMBER	QTY	PART NAME 1 2 3 4 5 6 (PRODUCT LEVEL)	SEE PAGE
R	1	1	**109-8837**	1	CYLINDER AS-LH	
		1	**109-6784**	4	LUG	
	2	1	**4J-6888**	1	LOCKNUT (2 3/4-12 THD)	
	3	1	**4J-7376**	1	RING-WEAR	
	4	1	**8T-1793**	1	SEAL AS	
	5	1	**122-9350**	1	PISTON AS	
		1	**1J-8569**	2	INSERT-PISTON	
		1	**2H-3932**	2	SEAL-O-RING (28.17MM ID)	
		1	**3K-8692**	4	RING-BACKUP	
		1	**109-4670**	2	INSERT	
		1	**122-9351**	2	PLUNGER	
	6	1	**9T-1878**	2	WASHER	
	7	1	**8J-4386**	1	SEAL-O-RING (199.39 MM ID)	
	8	1	**3G-3747**	1	RING-BACKUP	
	9	1	**109-6779**	1	HEAD	
R	10	1	**6E-4859**	1	ROD AS	
		1	**5J-9454**	1	RING-RETAINING	
		1	**7J-3297**	1	BEARING	
C	11	1	**167-2211**	1	SEAL AS-BUFFER	
	12	1	**8T-3329**	1	RING-WEAR	
M	13	1	**8T-0283**	6	BOLT (M30X3.5X110MM)	
	14	1	**9X-8399**	6	WASHER (33X56X6.0MM THK)	
	15	1	**8T-8382**	1	SEAL-HEAD	
C	16	1	**167-2474**	1	SEAL-WIPER	
	17	1	**9X-7405**	1	SEAL-U-CUP	

C-CHANGE FROM PREVIOUS TYPE
M-METRIC PART
R-REMFG PART MAY BE AVAILABLE

4Z-6357 CYLINDER GP-DUAL TILT *(contd.)* i01386873

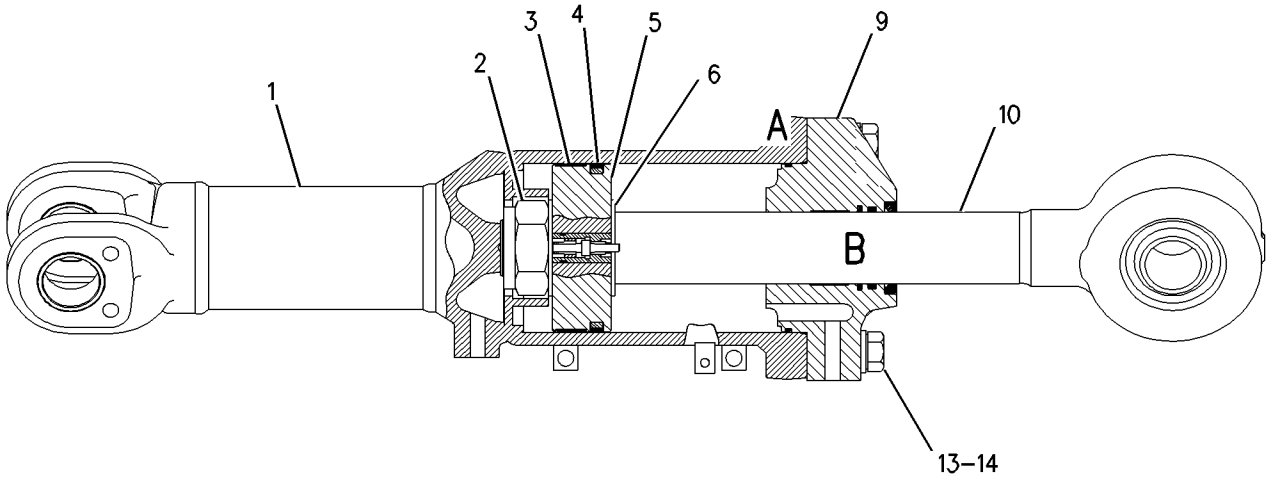

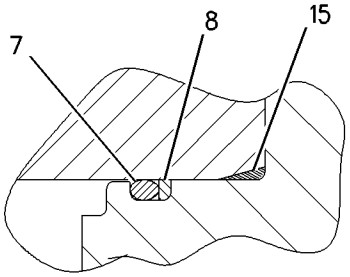

VIEW OF AREA A

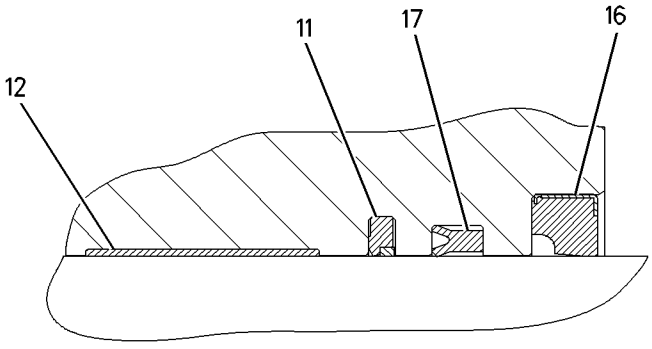

VIEW OF AREA B

GRAPHIC #1 g00730946

HYDRAULIC SYSTEM

4Z-6363 CYLINDER GP-RIPPER LIFT

S/N: ABK1-UP
184.15MM (7.25 IN.)BORE X 454MM (17.9 IN.)STROKE
PART OF 137-7371 CYLINDER & LINES GP-RIPPER
AN ATTACHMENT

SMCS-5352 **i01300049**

NOTE	REF NO	GRAPHIC REF	PART NUMBER	QTY	PART NAME 1 2 3 4 5 6 (PRODUCT LEVEL)	SEE PAGE
	1	1	**132-5121**	1	CYLINDER AS	
		1	**3G-5999**	1	BEARING-SLEEVE	
	2	1	**3B-8489**	2	FITTING-GREASE (1/8-27 THD)	
	3	1	**5J-3488**	1	LOCKNUT (2 1/4-12 THD)	
	4	1	**1J-2674**	1	RING-WEAR	
	5	1	**8T-1790**	1	SEAL AS	
	6	1	**9T-5809**	1	PISTON	
	7	1	**119-8455**	2	WASHER	
	8	1	**5P-7593**	1	SEAL-O-RING (170.82MM ID)	
	9	1	**1U-1738**	1	RING-BACKUP	
	10	1	**132-5122**	1	HEAD	
	11	1	**8T-3282**	8	WASHER-HARD (3.5MM THK)	
M	12	1	**6V-9667**	2	BOLT (M20X2.5X100MM)	
	13	1	**147-6116**	1	ROD AS	
		1	**3G-5999**	1	BEARING-SLEEVE	
	15	1	**167-2471**	1	SEAL-WIPER	
M	16	1	**6V-5845**	6	BOLT (M20X2.5X70MM)	
	17	1	**167-2209**	1	SEAL AS-BUFFER	
	18	1	**9X-7404**	1	SEAL-U-CUP	
	20	1	**8T-6745**	1	RING-WEAR	
	21	1	**1P-4576**	4	FLANGE	
M	22	1	**8T-4196**	8	BOLT (M10X1.50X35MM)	
	23	1	**8T-4121**	8	WASHER-HARD (2.5MM THK)	

M-METRIC PART

4Z-6363 CYLINDER GP-RIPPER LIFT *(contd.)* i01300049

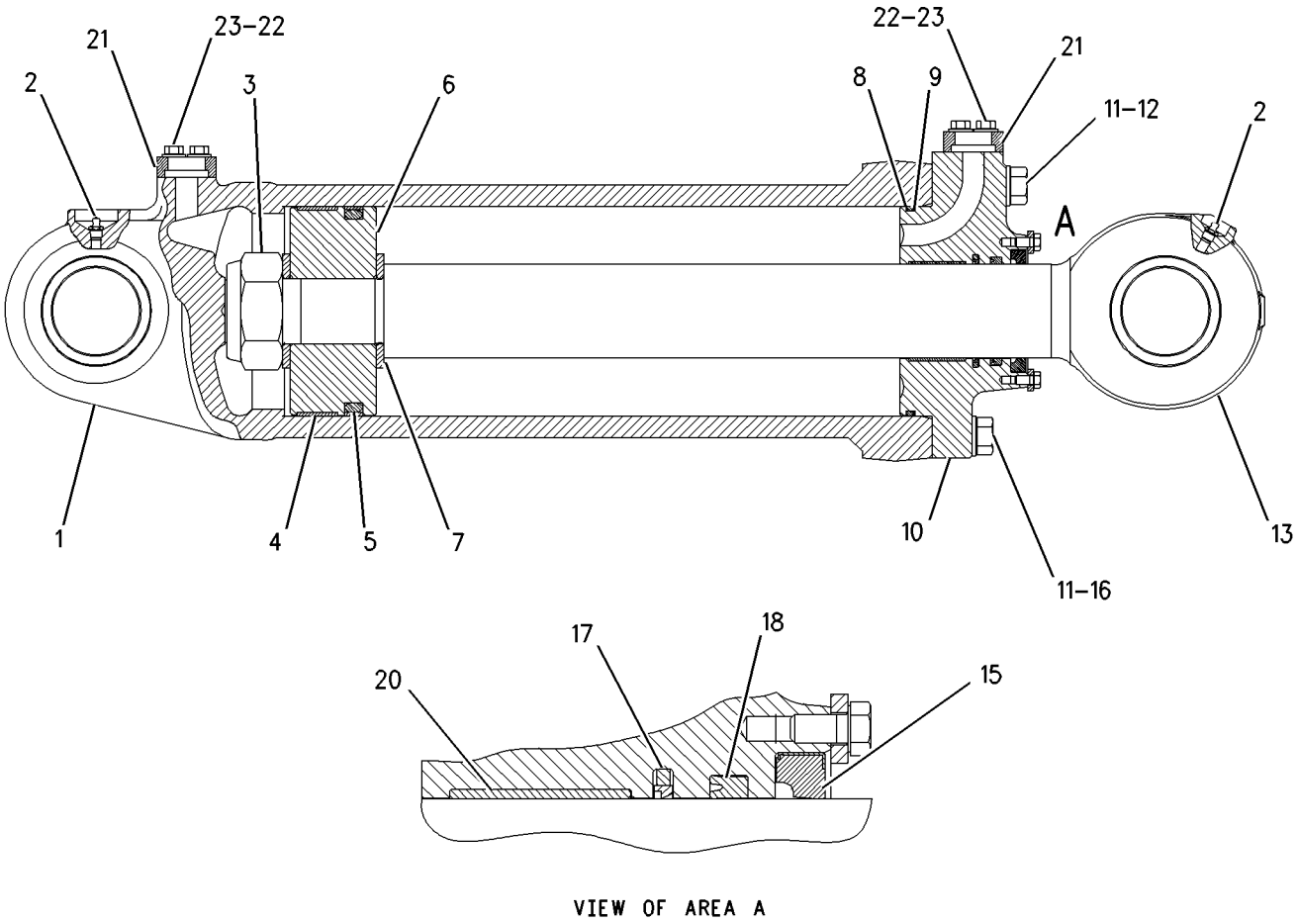

GRAPHIC #1 g00692173

HYDRAULIC SYSTEM

132-5123 CYLINDER GP-RIPPER LIFT

S/N: 5RP1-UP; 7HP1-UP
184.15MM (7.25 IN.) BORE X 454MM (17.9 IN.) STROKE
PART OF 134-6000, 165-0652 RIPPER AR
AN ATTACHMENT

SMCS-5352 **i01403970**

NOTE	REF NO	GRAPHIC REF	PART NUMBER	QTY	PART NAME 1 2 3 4 5 6 (PRODUCT LEVEL)	SEE PAGE
	1	1	**132-5121**	1	CYLINDER AS	
	1A	1	**3G-5999**	1	BEARING-SLEEVE	
	2	1	**3B-8489**	2	FITTING-GREASE	
	3	1	**5J-3488**	1	LOCKNUT	
	4	1	**1J-2674**	1	RING-WEAR	
	5	1	**8T-1790**	1	SEAL AS	
	6	1	**9T-5809**	1	PISTON	
	7	1	**119-8455**	2	WASHER (57.3X100X6.35MM THK)	
	8	1	**5P-7593**	1	SEAL-O-RING (170.82MM ID)	
	9	1	**1U-1738**	1	RING-BACKUP	
	10	1	**132-5122**	1	HEAD	
	11	1	**8T-3282**	8	WASHER-HARD (22X35X3.5MM THK)	
M	12	1	**6V-9667**	2	BOLT (M20X2.5X100MM)	
R	13	1	**147-6116**	1	ROD AS	
	13A	1	**3G-5999**	1	BEARING-SLEEVE	
M	14	1	**6V-5845**	6	BOLT (M20X2.5X70MM)	
C	15	1	**167-2471**	1	SEAL-WIPER	
C	16	1	**167-2320**	1	SEAL-U-CUP	
C	17	1	**167-2209**	1	SEAL AS-BUFFER	
	18	1	**8T-6745**	1	RING-WEAR	
	19	1	**1P-4576**	4	FLANGE	
M	20	1	**8T-4196**	8	BOLT (M10X1.5X35MM)	
	21	1	**8T-4121**	8	WASHER-HARD (11X21X2.5MM THK)	

C-CHANGE FROM PREVIOUS TYPE
M-METRIC PART
R-REMFG PART MAY BE AVAILABLE

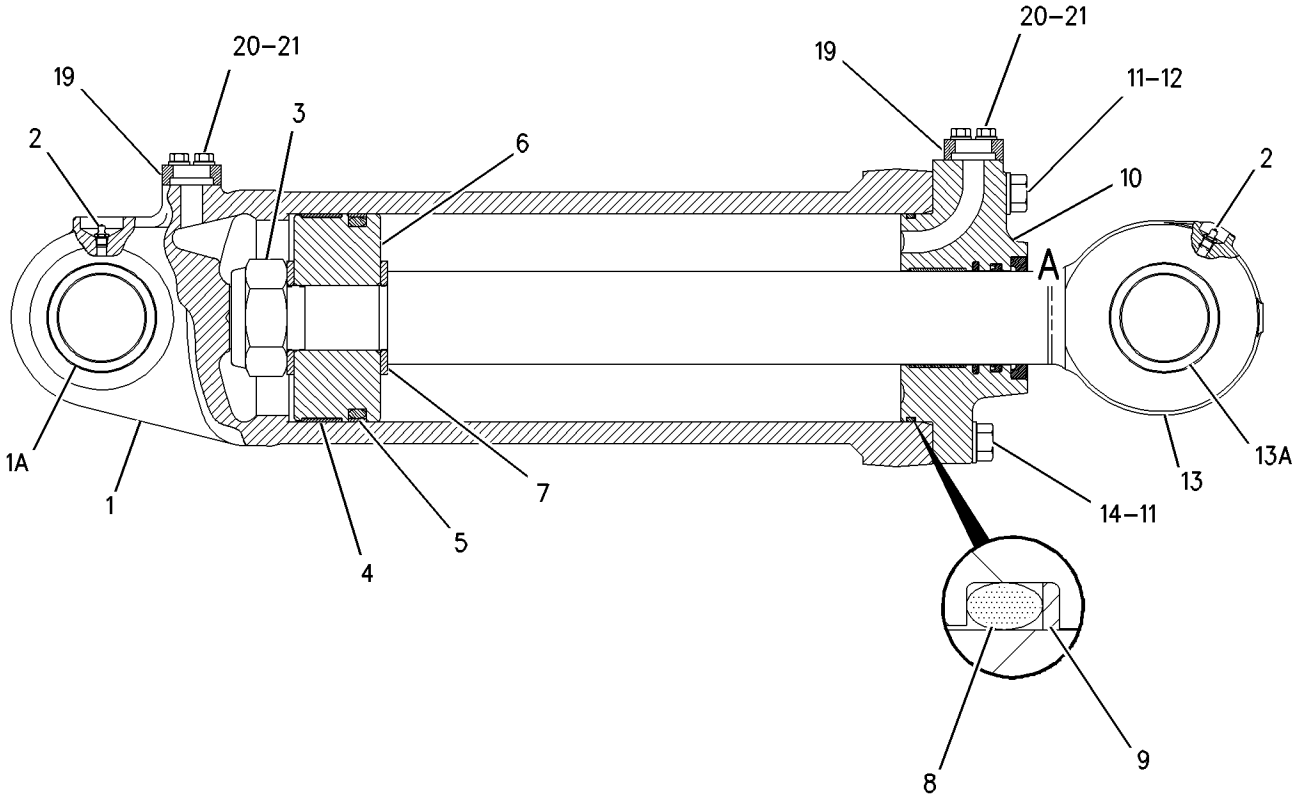

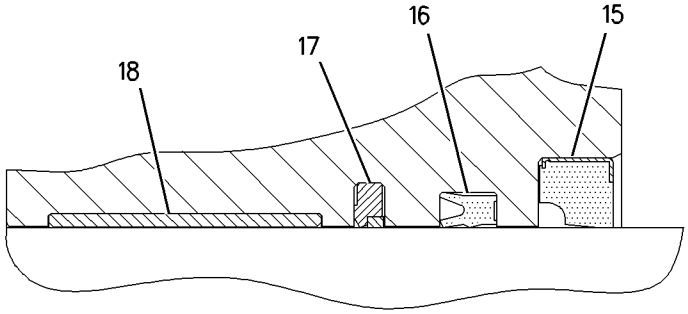

VIEW OF AREA A

GRAPHIC #1 g00756237

6E-3113 CYLINDER GP-RIPPER PIN PULLER

S/N: ABK1-UP
101.6MM (4 IN.) BORE X 138.5MM (5.5 IN.) STROKE
PART OF 135-5110 PULLER AR-PIN
AN ATTACHMENT

SMCS-5354 **i01404527**

NOTE	REF NO	GRAPHIC REF	PART NUMBER	QTY	PART NAME 1 2 3 4 5 6 (PRODUCT LEVEL)	SEE PAGE
M	1	1	**173-9779**	1	BOLT-HEX HEAD (M24X3.0X80MM)	
	2	1	**6J-2797**	1	RING-WEAR	
	3	1	**5J-5402**	1	SEAL AS	
	4	1	**9T-3493**	1	PISTON	
	5	1	**6V-8237**	1	WASHER (26X44X4MM THK)	
	6	1	**4T-6907**	1	RING-WEAR	
	7	1	**6E-3980**	1	ROD AS	
	8	1	**167-2452**	1	SEAL-WIPER	
	9	1	**167-2300**	1	SEAL-U-CUP	
	10	1	**167-2190**	1	SEAL AS-BUFFER	
	11	1	**2K-6830**	1	RING-BACKUP	
	12	1	**175-7900**	1	SEAL-O-RING (98.02MM ID)	
	13	1	**6E-4976**	1	HEAD	
	14	1	**6E-3976**	1	CYLINDER AS	

M-METRIC PART

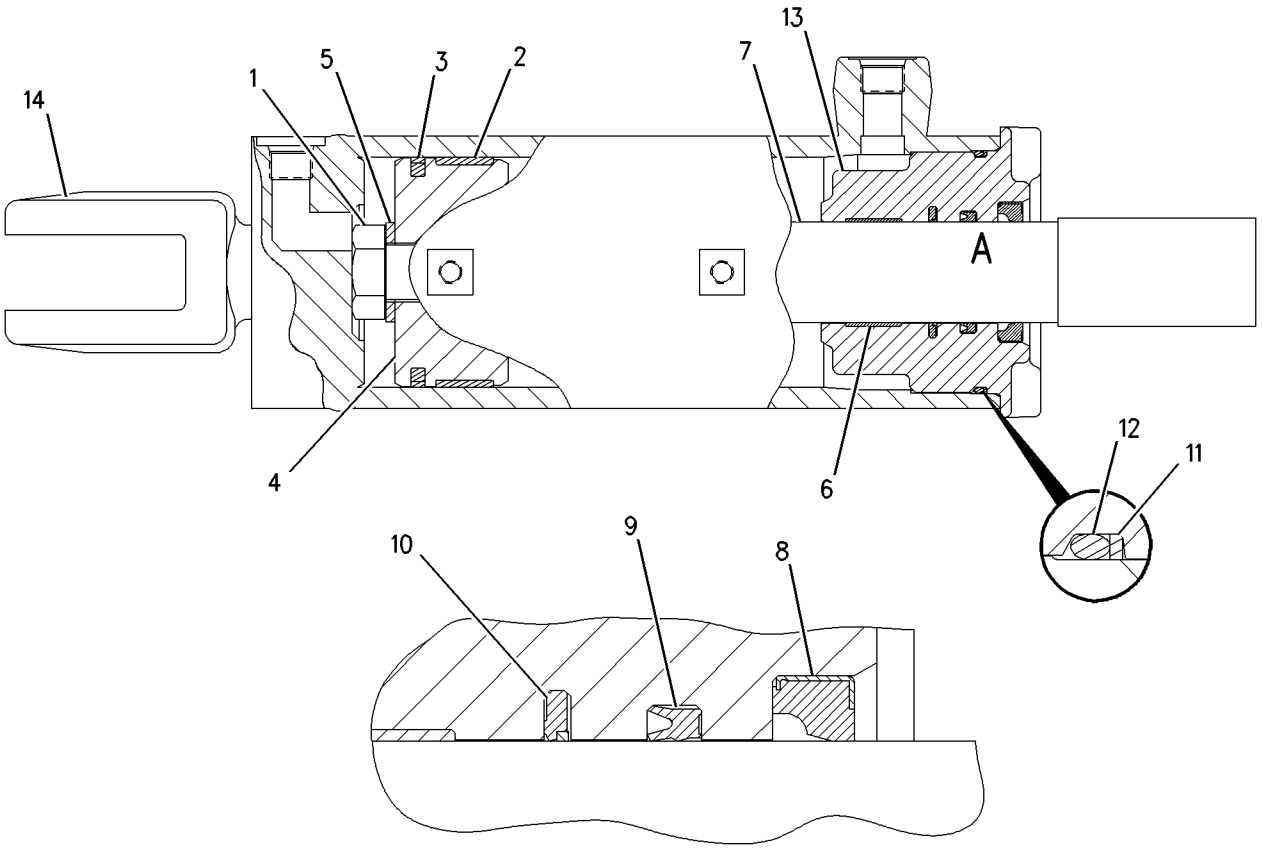

VIEW OF AREA A

GRAPHIC #1 g00719216

MEMORANDA

HYDRAULIC SYSTEM

4Z-6364 CYLINDER GP-RIPPER TIP

S/N: ABK1-UP
152.4MM (6 IN.)BORE X 456.8MM (18 IN.)STROKE
PART OF 137-7371 CYLINDER & LINES GP-RIPPER
AN ATTACHMENT

SMCS-5106 **i01386022**

NOTE	REF NO	GRAPHIC REF	PART NUMBER	QTY	PART NAME 1 2 3 4 5 6 (PRODUCT LEVEL)	SEE PAGE
	1	1	**132-5146**	1	CYLINDER AS	
		1	**3G-5999**	1	BEARING-SLEEVE	
	2	1	**3B-8489**	2	FITTING-GREASE	
	3	1	**2J-0564**	1	LOCKNUT (2-12 THD)	
	4	1	**9J-5860**	1	RING-WEAR	
	5	1	**4T-4144**	1	SEAL AS	
	6	1	**9T-5805**	1	PISTON	
	7	1	**6J-9747**	1	WASHER	
	8	1	**6D-9157**	1	SEAL-O-RING (142.24MM ID)	
	9	1	**8J-1717**	1	RING-BACKUP	
	10	1	**132-5147**	1	HEAD	
R	11	1	**9T-0098**	1	ROD AS	
		1	**3G-5999**	1	BEARING-SLEEVE	
	12	1	**8T-4121**	8	WASHER-HARD (11X21X2.5MM THK)	
M	13	1	**8T-4196**	8	BOLT (M10X1.50X35MM)	
M	14	1	**6V-5845**	4	BOLT (M20X2.5X70MM)	
	15	1	**8T-3282**	4	WASHER-HARD (22X35X3.5MM THK)	
C	16	1	**167-2469**	1	SEAL-WIPER	
	17	1	**9X-7412**	1	SEAL-U-CUP	
C	18	1	**167-2208**	1	SEAL AS-BUFFER	
	19	1	**9T-0094**	1	RING-WEAR	
	20	1	**1P-4576**	4	FLANGE	

C-CHANGE FROM PREVIOUS TYPE
M-METRIC PART
R-REMFG PART MAY BE AVAILABLE

4Z-6364 CYLINDER GP-RIPPER TIP *(contd.)* i01386022

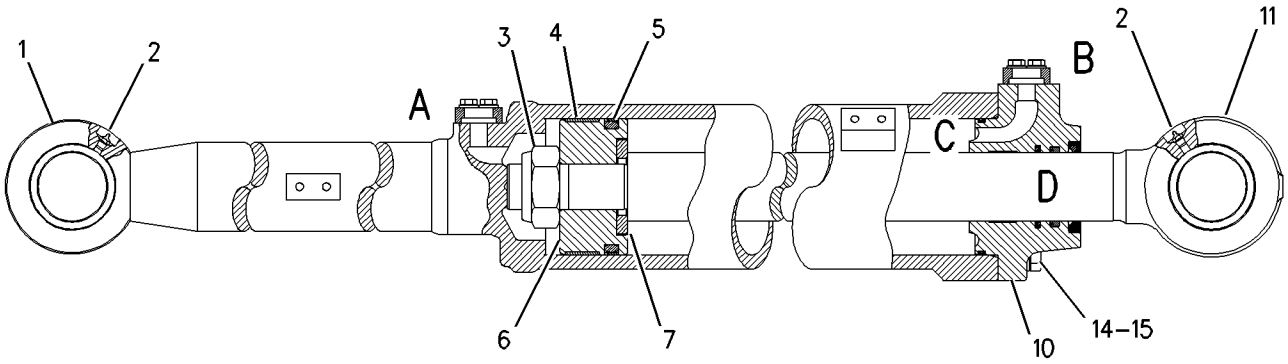

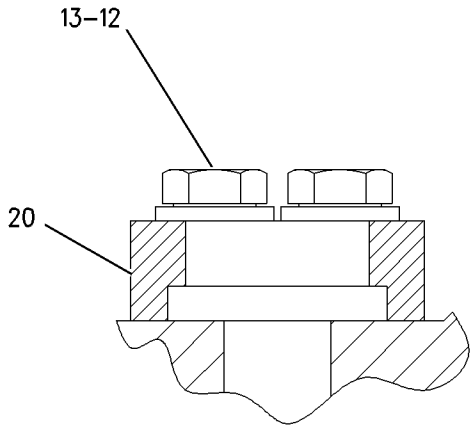

VIEW OF AREA A

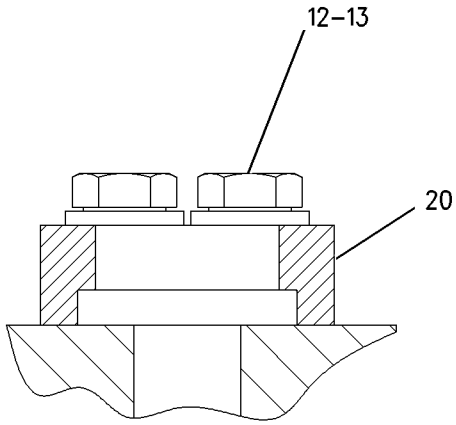

VIEW OF AREA B

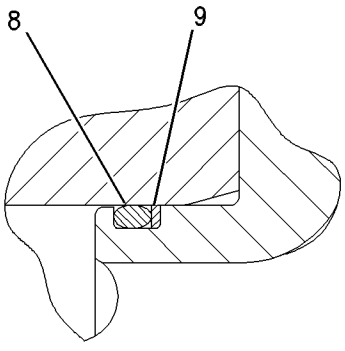

VIEW OF AREA C

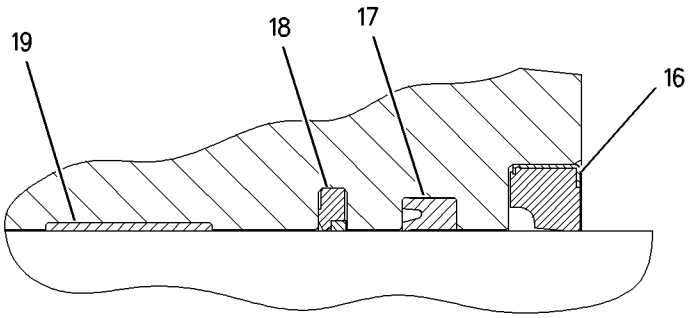

VIEW OF AREA D

GRAPHIC #1 g00730852

132-5149 CYLINDER GP-RIPPER TIP

S/N: 5RP1-UP; 7HP1-UP
152.4MM (6IN.)BORE X 456.8MM (18 IN.)STROKE
PART OF 134-6000, 165-0652 RIPPER AR
AN ATTACHMENT

SMCS-5106 **i01447001**

NOTE	REF NO	GRAPHIC REF	PART NUMBER	QTY	PART NAME 1 2 3 4 5 6 (PRODUCT LEVEL)	SEE PAGE
	1	1	**132-5146**	1	CYLINDER AS	
	1A	1	**3G-5999**	1	BEARING-SLEEVE	
	2	1	**3B-8489**	2	FITTING-GREASE	
	3	1	**2J-0564**	1	LOCKNUT	
	4	1	**9J-5860**	1	RING-WEAR	
	5	1	**4T-4144**	1	SEAL AS	
	6	1	**9T-5805**	1	PISTON	
	7	1	**6J-9747**	1	WASHER	
	8	1	**6D-9157**	1	SEAL-O-RING (142.24MM ID)	
	9	1	**8J-1717**	1	RING-BACKUP	
	10	1	**132-5147**	1	HEAD	
R	11	1	**9T-0098**	1	ROD AS	
	11A	1	**3G-5999**	1	BEARING-SLEEVE	
	12	1	**8T-4121**	8	WASHER-HARD (11X21X2.5MM THK)	
M	13	1	**8T-4196**	8	BOLT (M10X1.5X35MM)	
M	14	1	**6V-5845**	4	BOLT (M20X2.5X70MM)	
	15	1	**8T-3282**	4	WASHER-HARD (22X35X3.5MM THK)	
	16	1	**167-2469**	1	SEAL-WIPER	
	17	1	**167-2319**	1	SEAL-U-CUP	
	18	1	**167-2208**	1	SEAL AS-BUFFER	
	19	1	**9T-0094**	1	RING-WEAR	
	20	1	**1P-4576**	4	FLANGE	

M-METRIC PART
R-REMFG PART MAY BE AVAILABLE

132-5149 CYLINDER GP-RIPPER TIP *(contd.)* i01447001

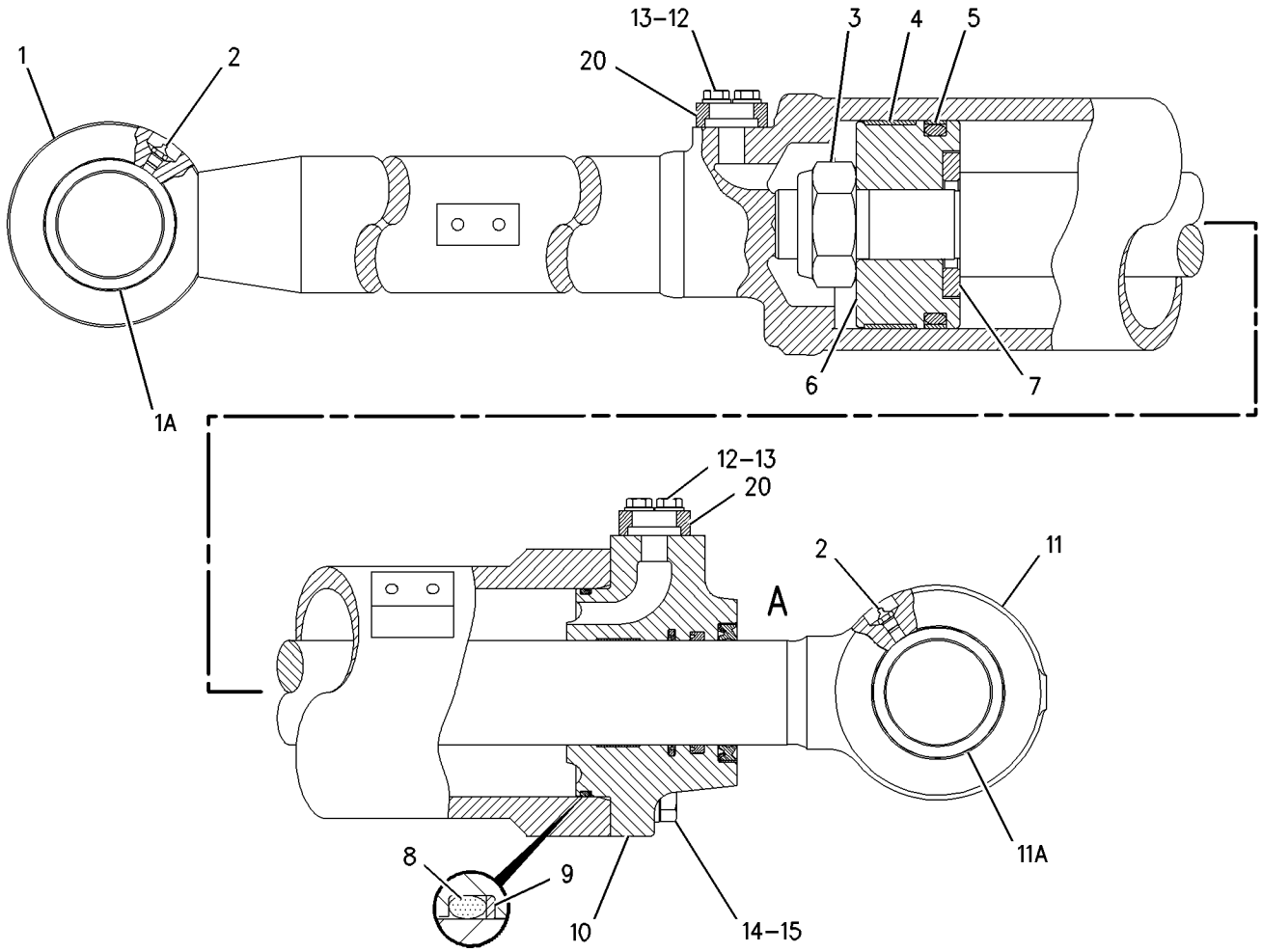

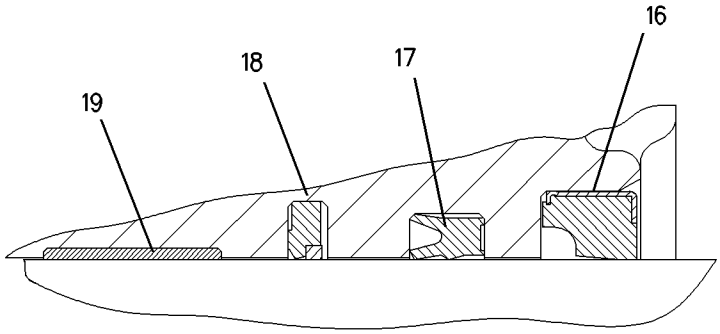

VIEW OF AREA A

GRAPHIC #1 g00733151

HYDRAULIC SYSTEM

109-6778 CYLINDER GP-TILT

S/N: 9MP1-UP; 9RP1-UP
209.5MM (8.25 IN.) BORE X 188MM (7.4 IN.) STROKE
PART OF 8E-9889 PUSH ARM GP-STABILIZER
AN ATTACHMENT

SMCS-5104 **i01395795**

NOTE	REF NO	GRAPHIC REF	PART NUMBER	QTY	PART NAME 1 2 3 4 5 6 (PRODUCT LEVEL)	SEE PAGE
R	1	1	**109-6783**	1	CYLINDER AS	
	1A	1	**1U-2182**	2	BEARING-SLEEVE	
	2	1	**8T-8382**	1	SEAL-HEAD	
	3	1	**4J-6888**	1	LOCKNUT (2 3/4-12 THD)	
	4	1	**109-6781**	1	PISTON	
	5	1	**109-6779**	1	HEAD	
	6	1	**8J-4386**	1	SEAL-O-RING (199.39 MM ID)	
M	7	1	**8T-0283**	6	BOLT (M30X3.5X110MM)	
		1	**9X-8399**	6	WASHER (33X56X6.0MM THK)	
R	8	1	**6E-4859**	1	ROD AS	
	8A	1	**5J-9454**	1	RING-RETAINING	
		1	**7J-3297**	1	BEARING	
	9	1	**3G-3747**	1	RING-BACKUP	
	10	1	**3B-8489**	1	FITTING-GREASE	
	11	1	**167-2474**	1	SEAL-WIPER	
	12	1	**167-2324**	1	SEAL-U-CUP	
	13	1	**167-2211**	1	SEAL AS-BUFFER	
	14	1	**8T-1793**	1	SEAL AS	
	15	1	**4J-7376**	1	RING-WEAR	
	16	1	**8T-3329**	1	RING-WEAR	

M-METRIC PART
R-REMFG PART MAY BE AVAILABLE

109-6778 CYLINDER GP-TILT *(contd.)* i01395795

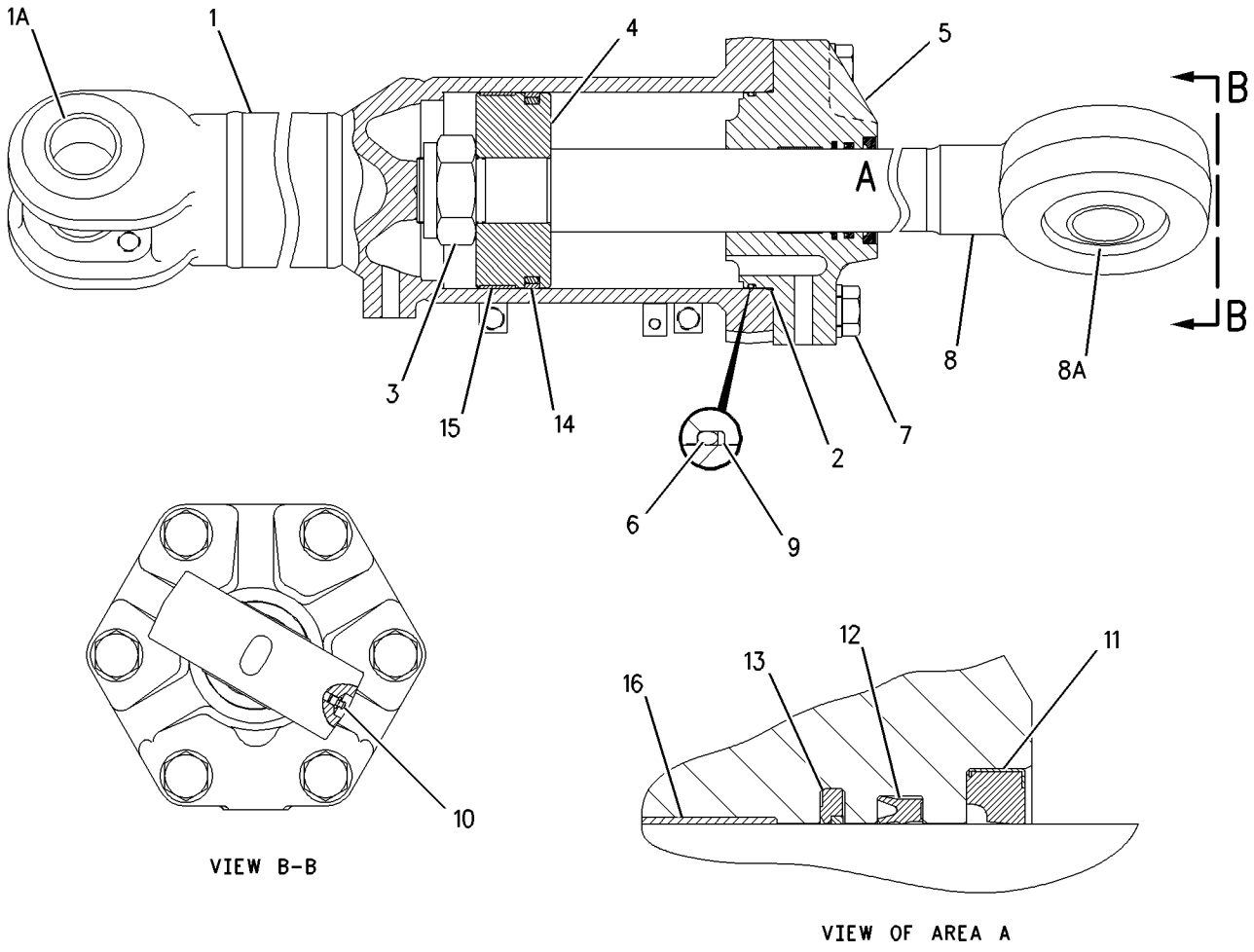

GRAPHIC #1 g00715614

HYDRAULIC SYSTEM

109-8832 CYLINDER GP-TILT–RH

S/N: ABK1-UP
209.55MM (8.25 IN.) BORE X 188MM (7.4 IN.) STROKE
PART OF 106-7362 CYLINDER AR-DUAL TILT
AN ATTACHMENT

SMCS-5104 **i01395755**

NOTE	REF NO	GRAPHIC REF	PART NUMBER	QTY	PART NAME 1 2 3 4 5 6 (PRODUCT LEVEL)	SEE PAGE
R	1	1	**109-8836**	1	CYLINDER AS-RH	
	1A	1	**1U-2182**	2	BEARING-SLEEVE	
R	2	1	**6E-4859**	1	ROD AS	
	2A	1	**6V-3340**	1	BEARING-SPHERICAL	
		1	**5J-9454**	1	RING-RETAINING	
	3	1	**4J-7376**	1	RING-WEAR	
	4	1	**8T-1793**	1	SEAL AS	
	5	1	**8T-8382**	1	SEAL-HEAD	
	6	1	**9T-1878**	2	WASHER (70.5X120X4.76MM THK)	
	7	1	**8J-4386**	1	SEAL-O-RING (199.39 MM ID)	
	8	1	**3G-3747**	1	RING-BACKUP	
	9	1	**109-6779**	1	HEAD	
	10	1	**4J-6888**	1	LOCKNUT (2 3/4-12 THD)	
M	11	1	**8T-0283**	6	BOLT (M30X3.5X110MM)	
		1	**9X-8399**	6	WASHER (33X56X6.0MM THK)	
	12	1	**3B-8489**	1	FITTING-GREASE	
	13	1	**167-2474**	1	SEAL-WIPER	
	14	1	**167-2324**	1	SEAL-U-CUP	
	15	1	**167-2211**	1	SEAL AS-BUFFER	
	16	1	**8T-3329**	1	RING-WEAR	
	17	1	**122-9350**	1	PISTON AS	
	17A	1	**1J-8569**	2	INSERT-PISTON	
	17B	1	**2H-3932**	2	SEAL-O-RING (28.17MM ID)	
	17C	1	**109-4670**	2	INSERT	
	17D	1	**122-9351**	2	PLUNGER	
	17E	1	**3K-8692**	4	RING-BACKUP	

M-METRIC PART
R-REMFG PART MAY BE AVAILABLE

109-8832 CYLINDER GP-TILT *(contd.)* i01395755

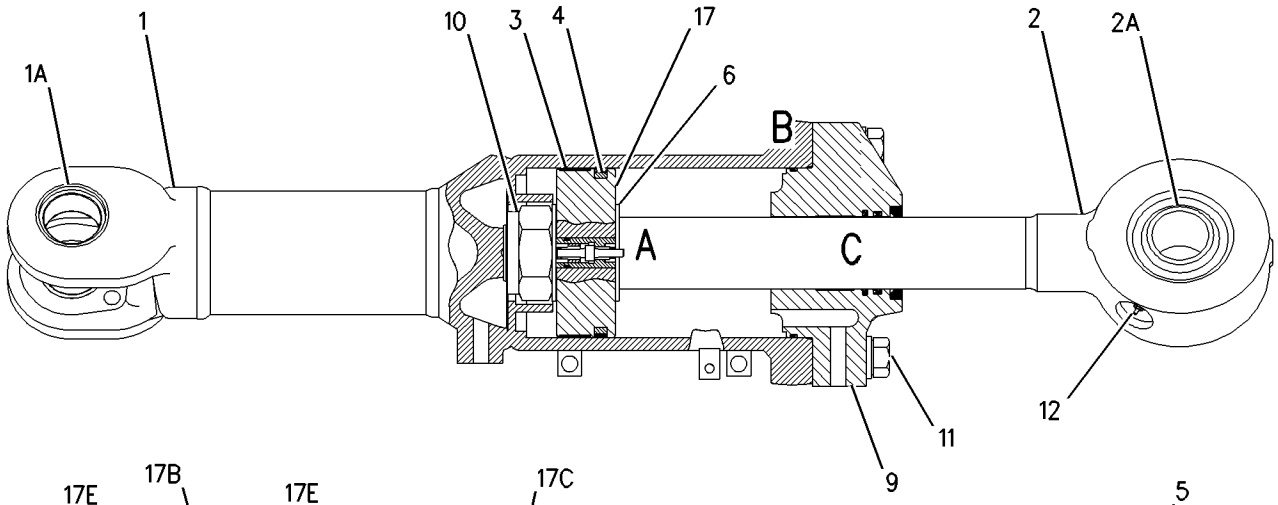

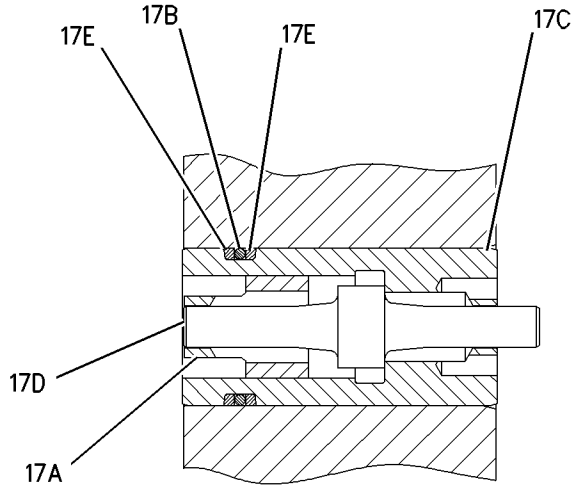

VIEW OF AREA A

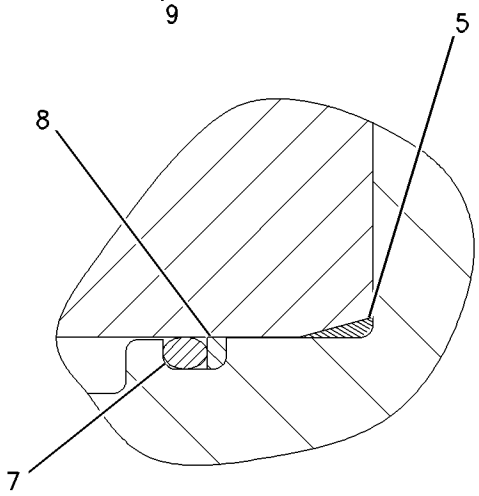

VIEW OF AREA B

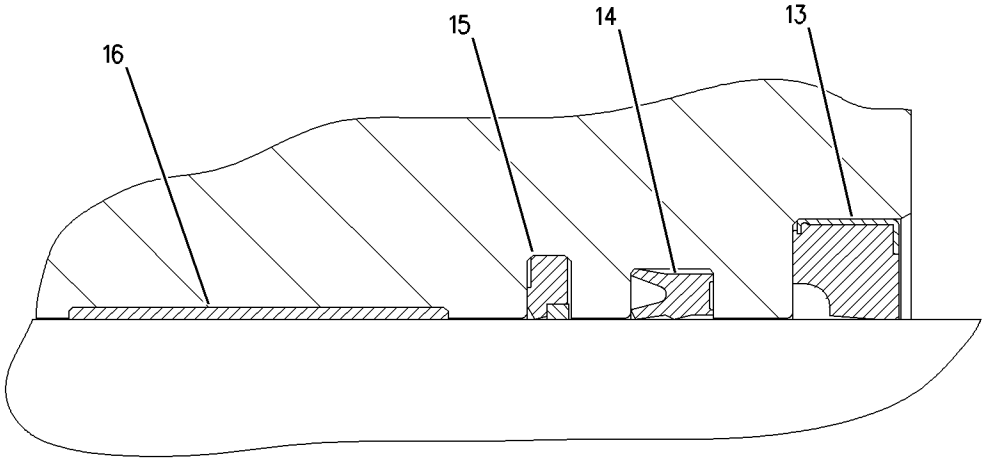

VIEW OF AREA C

GRAPHIC #1 g00735819

HYDRAULIC SYSTEM

109-8833 CYLINDER GP-TILT–LH

S/N: ABK1-UP
209.55MM (8.25 IN.) BORE X 188MM (7.4 IN.) STROKE
PART OF 106-7362 CYLINDER AR-DUAL TILT
AN ATTACHMENT

SMCS-5104 **i01395642**

NOTE	REF NO	GRAPHIC REF	PART NUMBER	QTY	PART NAME 1 2 3 4 5 6 (PRODUCT LEVEL)	SEE PAGE
R	1	1	**109-8837**	1	CYLINDER AS-LH	
	1A	1	**1U-2182**	2	BEARING-SLEEVE	
R	2	1	**6E-4859**	1	ROD AS	
	2A	1	**7J-3297**	1	BEARING	
		1	**5J-9454**	1	RING-RETAINING	
	3	1	**4J-7376**	1	RING-WEAR	
	4	1	**8T-1793**	1	SEAL AS	
	5	1	**8T-8382**	1	SEAL-HEAD	
	6	1	**9T-1878**	2	WASHER (70.5X120X4.76MM THK)	
	7	1	**8J-4386**	1	SEAL-O-RING (199.39 MM ID)	
	8	1	**3G-3747**	1	RING-BACKUP	
	9	1	**109-6779**	1	HEAD	
	10	1	**4J-6888**	1	LOCKNUT (2 3/4-12 THD)	
M	11	1	**8T-0283**	6	BOLT (M30X3.5X110MM)	
		1	**9X-8399**	6	WASHER (33X56X6.0MM THK)	
	12	1	**3B-8489**	1	FITTING-GREASE	
	13	1	**8C-5219**	1	SEAL-LIP	
	14	1	**5J-8350**	1	SEAL-U-CUP	
	15	1	**8C-9127**	1	SEAL AS	
	16	1	**8T-3329**	1	RING-WEAR	
	17	1	**122-9350**	1	PISTON AS	
	17A	1	**1J-8569**	2	INSERT-PISTON	
	17B	1	**2H-3932**	2	SEAL-O-RING (28.17MM ID)	
	17C	1	**109-4670**	2	INSERT	
	17D	1	**122-9351**	2	PLUNGER	
	17E	1	**3K-8692**	4	RING-BACKUP	

M-METRIC PART
R-REMFG PART MAY BE AVAILABLE

109-8833 CYLINDER GP-TILT *(contd.)* i01395642

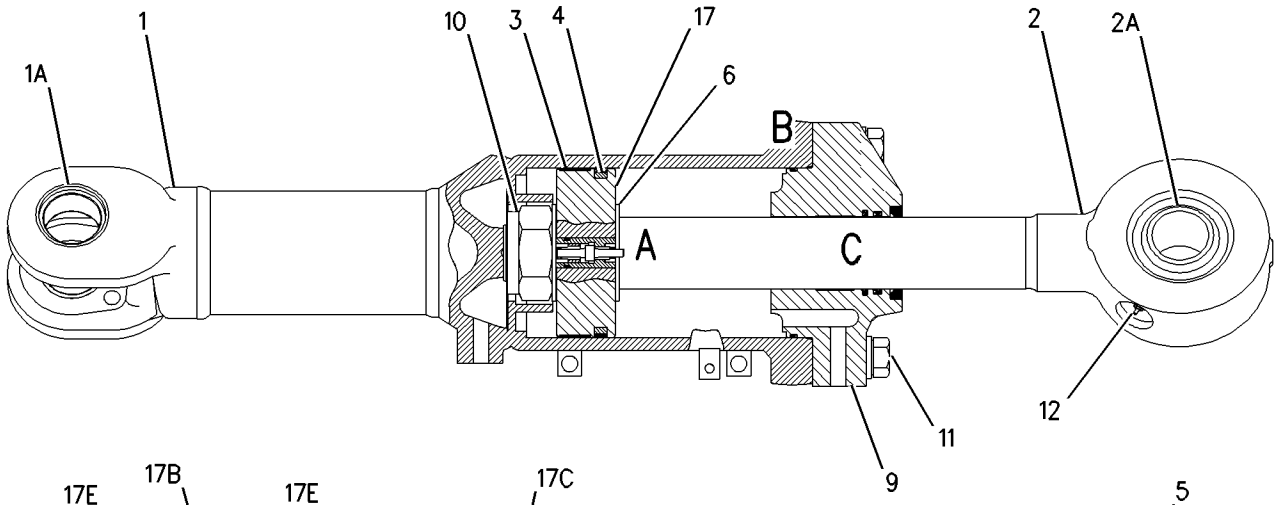

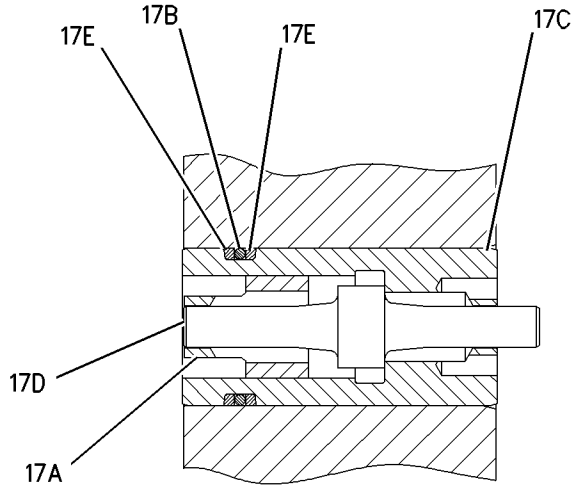

VIEW OF AREA A

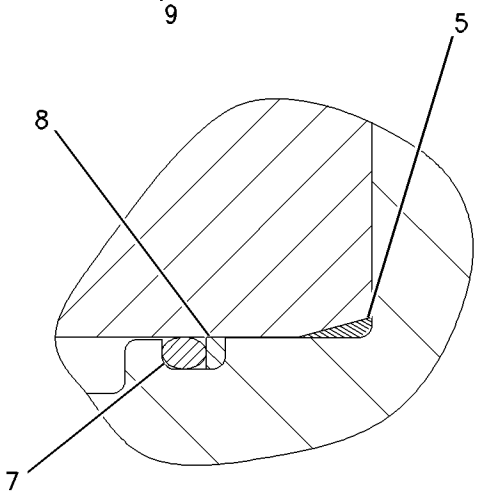

VIEW OF AREA B

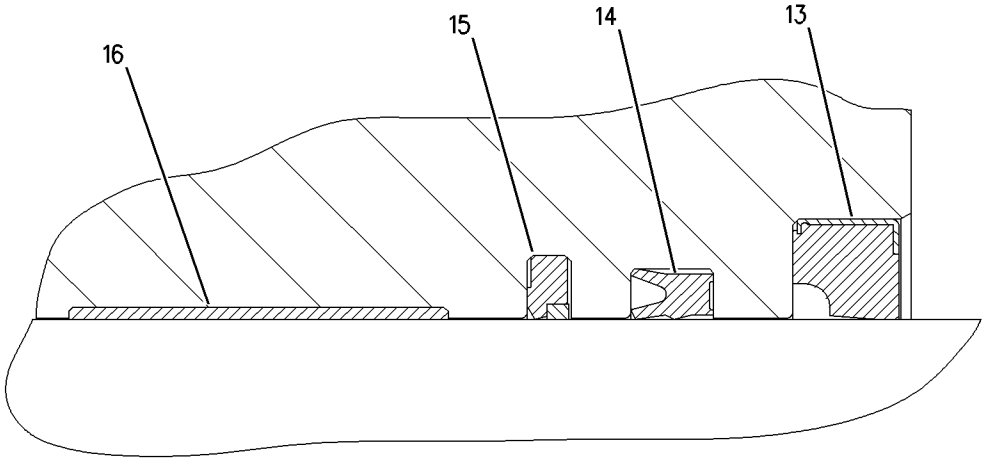

VIEW OF AREA C

GRAPHIC #1 g00735834

6E-5134 LEVER GP

S/N: ABK1-UP

PART OF 6E-5138 VALVE GP-CONTROL

SMCS-5063 **i01624413**

NOTE	REF NO	GRAPHIC REF	PART NUMBER	QTY	PART NAME 1 2 3 4 5 6 (PRODUCT LEVEL)	SEE PAGE
	1	1	**4T-5795**	2	BEARING	
B	2	1	**9T-4685**	3	SHIM (.12MM THK)	
	3	1	**4T-5945**	1	RING	
		1	**9H-6761**	1	SEAL-O-RING	
	4	1	**9T-4684**	1	HOUSING	
	5	1	**9T-4683**	1	COVER	
	6	1	**9T-4697**	1	BOOT	
	7	1	**6E-2007**	1	LEVER	
	8	1	**6L-5897**	2	BOLT (1/4-20X7/8 IN)	
		1	**8T-0334**	2	WASHER-HARD (6.6X12.5X1.6MM THK)	
	9	1	**6V-5391**	2	SEAL-O-RING	
	10	1	**5P-5874**	1	SEAL-O-RING	
	11	1	**4T-2691**	1	HOUSING	

B-USE AS REQUIRED

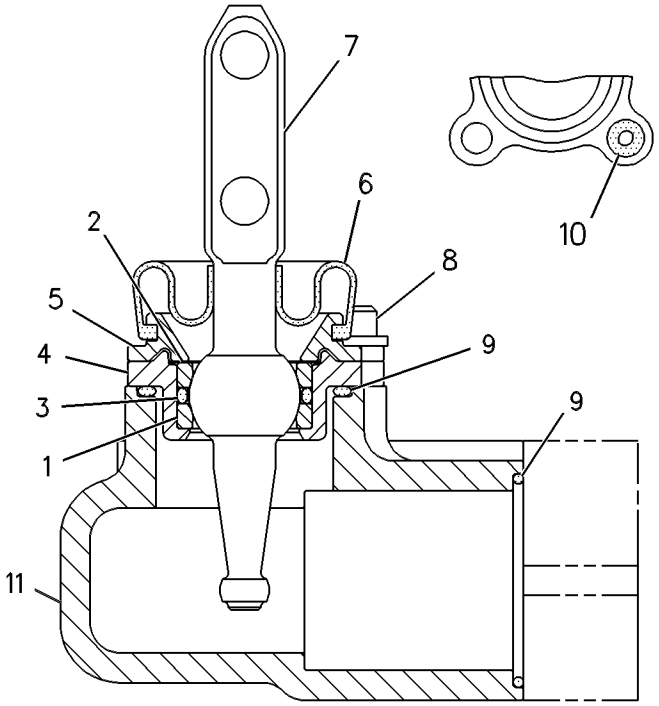

GRAPHIC #1 g00248151

HYDRAULIC SYSTEM

4T-1022 LEVER GP-CONTROL VALVE

S/N: ABK1-UP

PART OF 187-8637, 6E-4049, 6E-4051 VALVE GP-CONTROL

SMCS-5063 **i01624414**

NOTE	REF NO	GRAPHIC REF	PART NUMBER	QTY	PART NAME 1 2 3 4 5 6 (PRODUCT LEVEL)	SEE PAGE
	1	1	**4T-5795**	2	BEARING	
CB	2	1	**9T-4685**	3	SHIM (.12MM THK)	
	3	1	**4T-5945**	1	RING	
		1	**9H-6761**	1	SEAL-O-RING	
C	4	1	**9T-4684**	1	HOUSING	
C	5	1	**9T-4683**	1	COVER	
C	6	1	**9T-4697**	1	BOOT	
	7	1	**4T-0998**	1	LEVER	
	8	1	**6L-5897**	2	BOLT (1/4-20X7/8 IN)	
		1	**8T-0334**	2	WASHER-HARD (6.6X12.5X1.6MM THK)	
	9	1	**6V-5391**	2	SEAL-O-RING	
	10	1	**5P-5874**	1	SEAL-O-RING	
	11	1	**4T-2691**	1	HOUSING	

B-USE AS REQUIRED
C-CHANGE FROM PREVIOUS TYPE

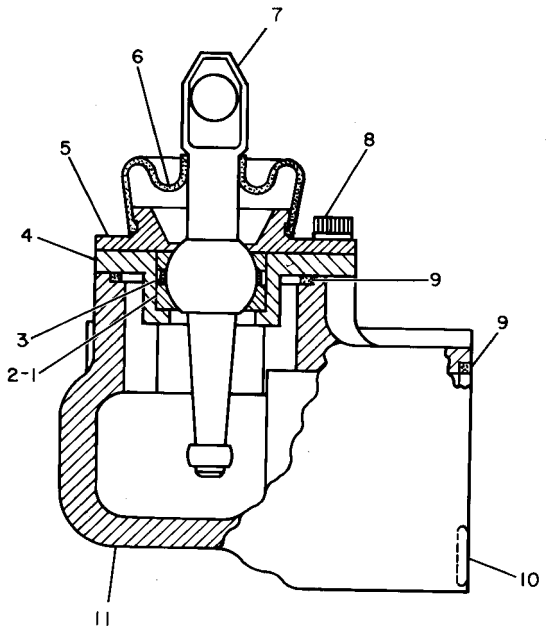

GRAPHIC #1 g00130877

HYDRAULIC SYSTEM

163-1582 LINES GP-LIFT CYLINDER

S/N: ABK1-UP

PART OF 162-9504 CONTROL AR-HYDRAULIC IMPLEMENT

SMCS-5057, 5102 **i01463923**

NOTE	REF NO	GRAPHIC REF	PART NUMBER	QTY	PART NAME 1 2 3 4 5 6 (PRODUCT LEVEL)	SEE PAGE
	1	2	**7G-3606**	1	BLOCK	
	2	2	**7G-5606**	1	PLATE	
	3	2	**7G-5984**	2	CLIP (TAB)	
	4	2	**7G-5985**	2	CLIP (SLOT)	
	5	2	**7N-1277**	1	BRACKET AS	
		2	**1F-0750**	1	NUT-WELD (3/8-16 THD)	
	6	2	**8E-1247**	1	PLATE	
I	7	1	**9U-8045**	1	HOSE AS	
	8	2	**9U-8047**	2	GROMMET	
	9	1	*148-8377*	1	ELBOW GP	
		1	**6V-8397**	2	SEAL-O-RING	
		1	**6V-8980**	1	ELBOW	
	10	2	*148-8378*	1	ELBOW GP	
		2	**3J-1907**	1	SEAL-O-RING	
		2	**6V-8397**	1	SEAL-O-RING	
		2	**6V-8724**	1	ELBOW	
	11	1	*150-3036*	1	ELBOW GP	
		1	**3J-1907**	1	SEAL-O-RING	
		1	**6V-8397**	1	SEAL-O-RING	
		1	**8T-1905**	1	ELBOW	
	12	1	**163-1790**	1	TUBE AS	
	13	1	**163-1791**	1	TUBE AS	
I	14	2	**163-1792**	1	HOSE AS	
	15	1	**163-2790**	1	MANIFOLD AS	
	16	2	**177-3243**	1	BRACKET AS	
		2	**1F-0748**	2	NUT-WELD (1/2-13 THD)	
		2	**1F-0750**	2	NUT-WELD (3/8-16 THD)	
I	17	1	**188-1599**	1	HOSE AS	
I	18	1	**115-8436**	1	HOSE AS	
	19	2	**188-1601**	1	BRACKET AS	
		2	**1F-0750**	3	NUT-WELD (3/8-16 THD)	
	20	1	*148-8367*	1	ELBOW GP	
		1	**6V-8397**	1	SEAL-O-RING	
		1	**6V-9850**	1	ELBOW-SWIVEL	
	21	1	**1P-4577**	4	FLANGE-HALF	
	22	1,2	**1S-6420**	7	CLIP	
	23	2	**2D-8155**	2	STUD-TAPERLOCK	
	24	1	**4J-0520**	4	SEAL-O-RING	
	25	2	**4L-6454**	6	BOLT (3/8-16X1 IN)	
	26	1	**5M-3062**	1	BOLT (3/8-16X0.75 IN)	
	27	1,2	**5P-1075**	7	WASHER-HARD (10.2X22.5X3MM THK)	
	28	1	**5P-2228**	1	BOLT (1/2-13X1 IN)	
	29	2	**5S-7379**	2	BOLT (3/8-16X0.875 IN)	
	30	1	**5S-7382**	11	BOLT (3/8-16X1.375 IN)	
	31	2	**6V-8188**	2	NUT (1/2-13 THD)	
	32	1	**6V-9168**	1	NUT (11/16-16 THD)	
	33	2	**7G-5986**	2	GROMMET	
	34	1	**7X-0550**	2	WASHER-HARD (13.5X32X5MM THK)	
	35	1,2	**8T-2501**	12	BOLT (3/8-16X2 IN)	
	36	1,2	**8T-4223**	10	WASHER-HARD (13.5X25.5X3MM THK)	
	37	1,2	**8T-4896**	26	WASHER-HARD (10.2X18.5X2.5MM THK)	
	38	1	**8T-4994**	1	WASHER-HARD (20X36.5X3.5MM THK)	
	39	1,2	**8T-8917**	7	BOLT (1/2-13X1.25 IN)	
	40	1	**8T-9101**	4	BOLT (3/8-16X2.75 IN)	
	41	1	**8T-2561**	3	WASHER-HARD (10.5X28.5X5MM THK)	
	42	1	**1P-3704**	4	SEAL-RECTANGULAR	

163-1582 **LINES GP-LIFT CYLINDER** *(contd.)* **i01463923**

NOTE	REF NO	GRAPHIC REF	PART NUMBER	QTY	PART NAME 1 2 3 4 5 6 (PRODUCT LEVEL)	SEE PAGE
	43	2	**8T-8919**	2	BOLT (1/2-13X1.75 IN)	
I-SEE HOSE FABRICATION GUIDE						

REFER TO ALL ILLUSTRATIONS OF
THIS GROUP FOR AUXILIARY VIEWS

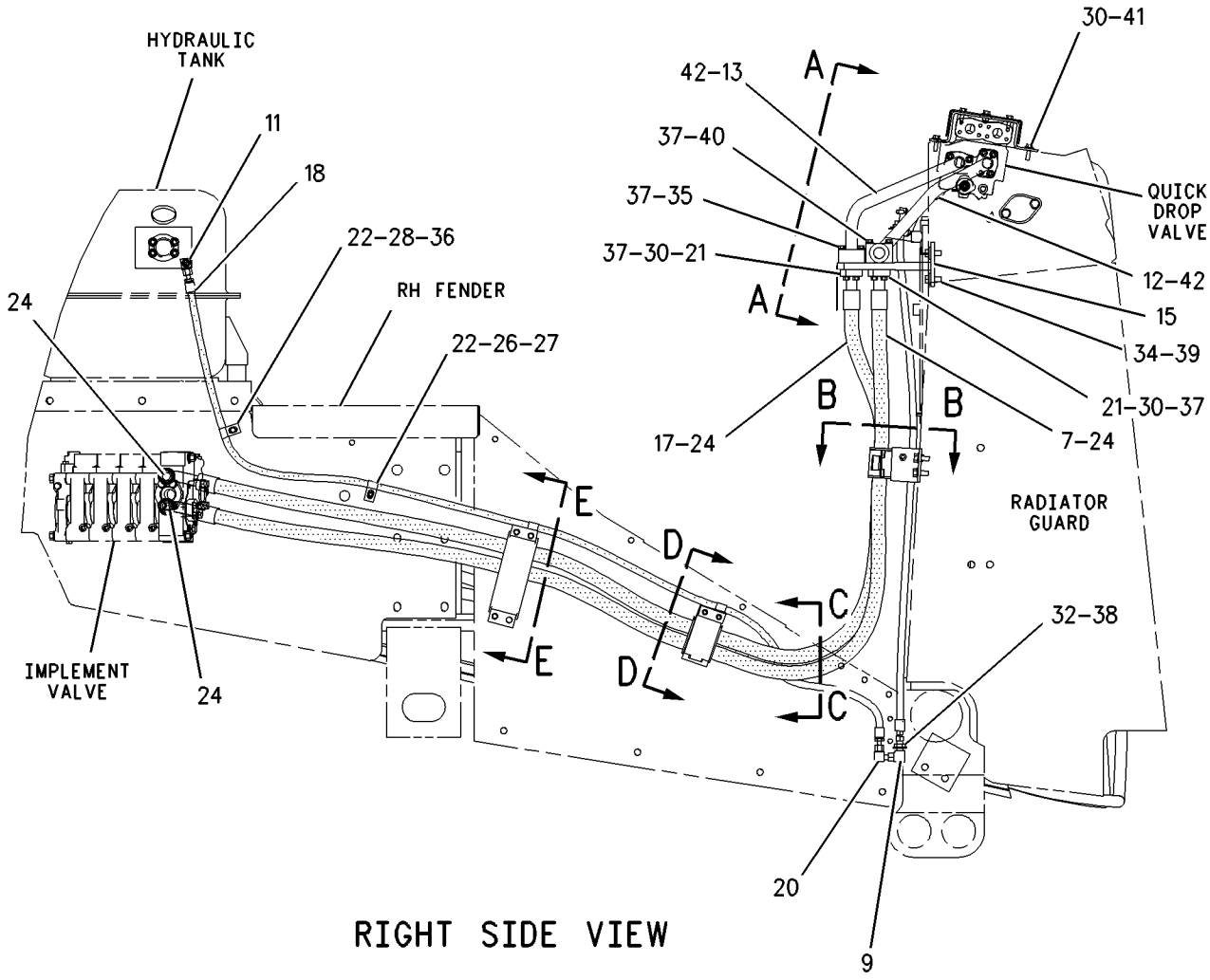

RIGHT SIDE VIEW

GRAPHIC #1 g00765099

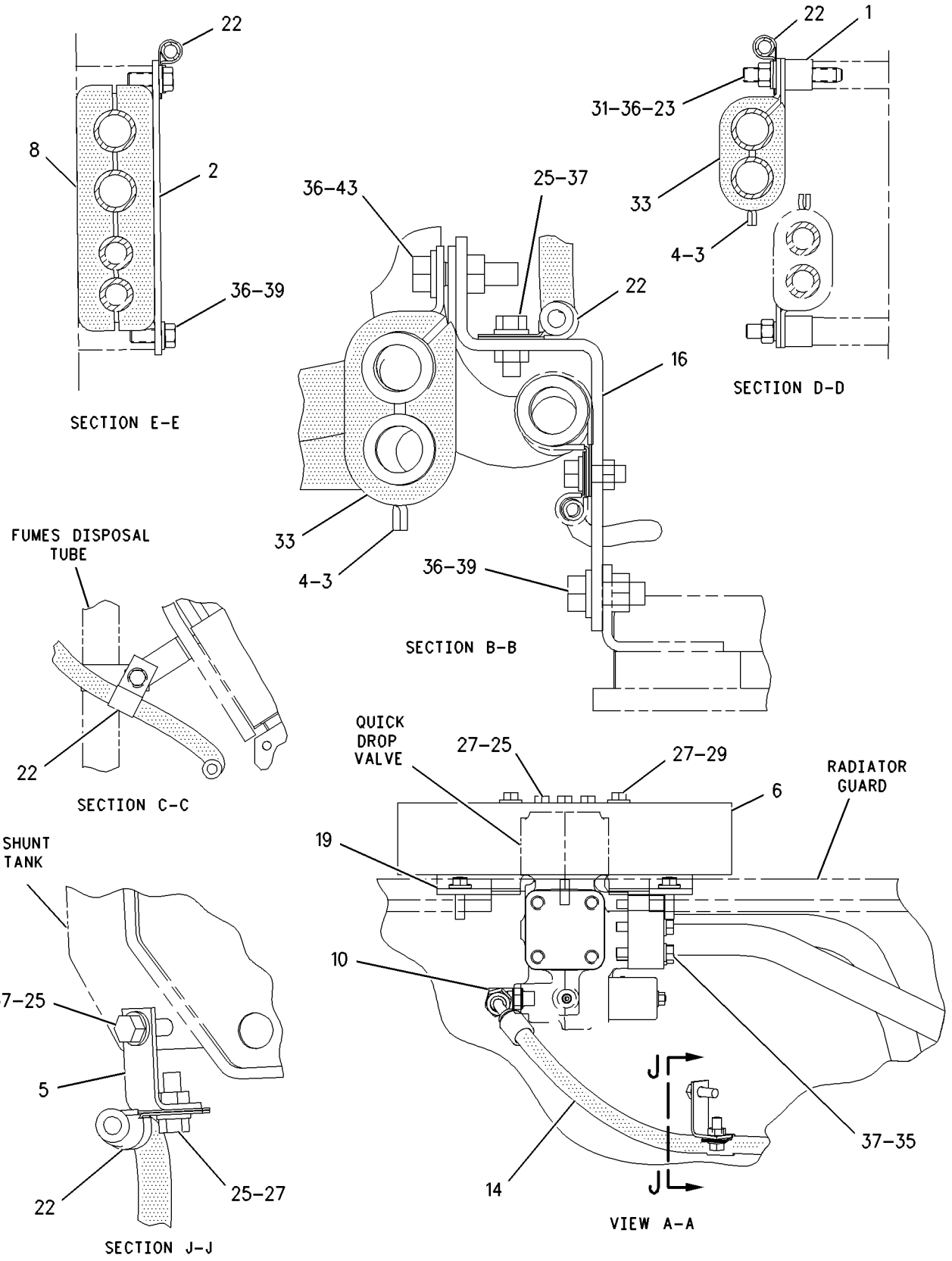

GRAPHIC #2

g00767341

HYDRAULIC SYSTEM

137-7374 LINES GP-PIN PULLER

S/N: ABK1-UP
COLD WEATHER
AN ATTACHMENT

SMCS-5354 **i01131565**

NOTE	PART NUMBER	QTY	PART NAME 1 2 3 4 5 6 (PRODUCT LEVEL)	SEE PAGE
I	**137-7081**	1	HOSE AS	
I	**146-3730**	1	HOSE AS	

I-SEE HOSE FABRICATION GUIDE

MEMORANDA

HYDRAULIC SYSTEM

135-5112 LINES GP-PIN PULLER CYLINDER

S/N: ABK1-UP
PART OF 135-5110 PULLER AR-PIN
AN ATTACHMENT

SMCS-5057, 5354 **i01590866**

NOTE	REF NO	GRAPHIC REF	PART NUMBER	QTY	PART NAME 1 2 3 4 5 6 (PRODUCT LEVEL)	SEE PAGE
CI	1	1	**154-7016**	1	HOSE AS	
I	2	1	**113-9326**	1	HOSE AS	
	3	1	**3G-8054**	3	CLIP (TAB)	
	4	1	**3G-8057**	3	CLIP (SLOT)	
	5	1	**3J-1907**	2	SEAL-O-RING	
	6	1	**3K-0360**	2	SEAL-O-RING	
	7	1	**6V-0974**	3	GROMMET	
	8	1	**6V-8397**	4	SEAL-O-RING	
	9	1	**6V-8723**	1	ELBOW	
	10	1	**6V-8724**	1	ELBOW	
	11	1	**6V-9876**	1	ELBOW	
	12	1	**8T-1905**	1	ELBOW	
	13	1	**8T-4121**	6	WASHER-HARD (11X21X2.5MM THK)	
M	14	1	**8T-4195**	6	BOLT (M10X1.5X30MM)	

C-CHANGE FROM PREVIOUS TYPE
I-SEE HOSE FABRICATION GUIDE
M-METRIC PART

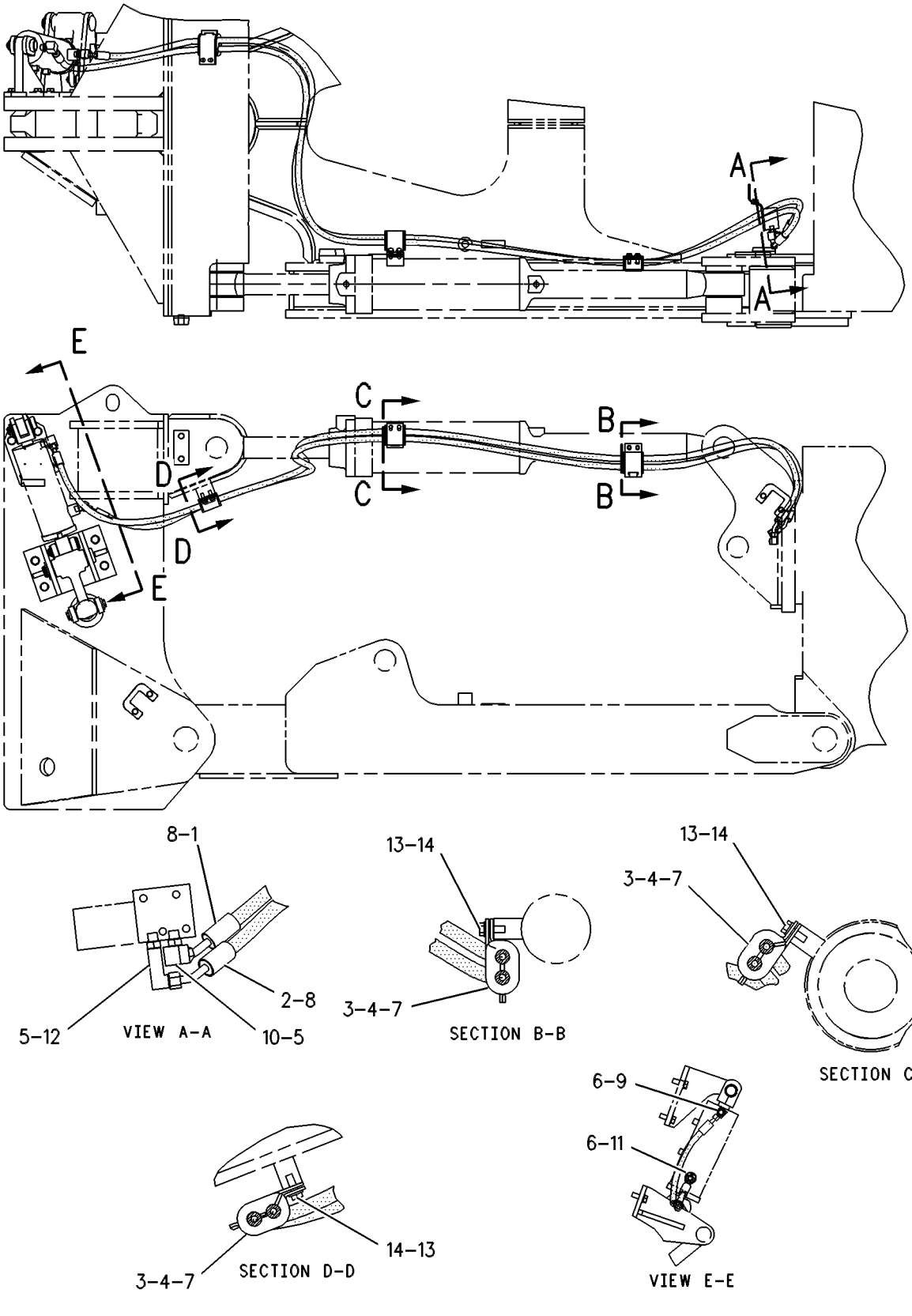

GRAPHIC #1 g00271467

HYDRAULIC SYSTEM

163-1583 LINES GP-PUMP

S/N: ABK1-UP

PART OF 162-9504 CONTROL AR-HYDRAULIC IMPLEMENT

SMCS-5057 **i01590867**

NOTE	REF NO	GRAPHIC REF	PART NUMBER	QTY	PART NAME 1 2 3 4 5 6 (PRODUCT LEVEL)	SEE PAGE
	1	1	**154-6165**	1	VALVE-CHECK (HYDRAULIC TANK)	
	2	1	**6V-0484**	1	ADAPTER-O-RING	
	3	1,2	**6V-0852**	2	CAP-DUST	
	4	1,2	**6V-3965**	2	FITTING AS	
	5	1	**6V-9829**	1	CAP AS	
	6	1	**7T-8331**	4	MOUNTING	
I	7	1	**7T-9105**	1	HOSE AS	
	8	1	**7T-9538**	1	MANIFOLD	
	9	2	**8E-7010**	1	MANIFOLD	
	10	2	**9U-8032**	1	PLATE AS	
	11	2	**9U-8033**	1	PLATE AS	
		2	**8T-5912**	2	NUT-WELD (3/8-16 THD)	
	12	2	**9U-8036**	1	PLATE AS	
I	13	1	**9U-8039**	1	HOSE AS	
I	14	1	**9U-8041**	1	HOSE AS	
I	15	1	**9U-8042**	1	HOSE AS	
I	16	1	**104-3110**	1	HOSE AS	
I	17	2	**110-4378**	1	HOSE AS	
	18	2	**110-5918**	1	VALVE-DRAIN (HYDRAULIC TANK)	
	19	1	**120-0156**	1	PLATE AS	
		1	**1F-0750**	1	NUT-WELD (3/8-16 THD)	
	20	2	**121-3813**	1	TUBE AS	
	21	2	*148-8336*	1	CONNECTOR GP	
		2	**3J-1907**	1	SEAL-O-RING	
		2	**6V-8397**	1	SEAL-O-RING	
		2	**6V-8636**	1	CONNECTOR	
	22	2	*148-8338*	1	CONNECTOR GP	
		2	**3J-1907**	1	SEAL-O-RING	
		2	**6V-8397**	1	SEAL-O-RING	
		2	**8T-0075**	1	CONNECTOR	
	23	1	*148-8387*	1	ELBOW GP (CLUTCH/BRAKE MODELS ONLY)	
		1	**6V-8400**	1	SEAL-O-RING	
		1	**6V-9855**	1	ELBOW	
	24	2	*148-8435*	1	TEE GP	
		2	**3J-1907**	1	SEAL-O-RING	
		2	**6V-8397**	2	SEAL-O-RING	
		2	**6V-8781**	1	TEE-FACE SEAL	
	25	2	*150-4044*	1	CONNECTOR GP	
		2	**3J-1907**	1	SEAL-O-RING	
		2	**6V-8397**	1	SEAL-O-RING	
		2	**8T-1779**	1	CONNECTOR	
	26	1	*153-6249*	1	CONNECTOR GP	
		1	**3J-1907**	1	SEAL-O-RING	
		1	**6V-8397**	1	SEAL-O-RING	
		1	**8T-8887**	1	CONNECTOR	
	27	1	*153-6264*	1	TEE GP (DIFFERENTIAL STEER MODELS ONLY)	
		1	**6V-8400**	2	SEAL-O-RING	
		1	**9X-6653**	1	TEE-SWIVEL	
	28	1	*153-6620*	1	CONNECTOR GP	
		1	**2M-9780**	1	SEAL-O-RING	
		1	**6V-8400**	1	SEAL-O-RING	
		1	**109-8314**	1	CONNECTOR	
	29	1	**0S-1589**	2	BOLT (5/8-11X1.75 IN)	
	30	2	**1N-5998**	1	PLUG-O-RING (CLUTCH/BRAKE MODELS ONLY)	
	31	2	**1P-3705**	1	SEAL-RECTANGULAR	
	32	2	**1P-4578**	2	FLANGE-HALF	

163-1583 **LINES GP-PUMP** *(contd.)*

i01590867

NOTE	REF NO	GRAPHIC REF	PART NUMBER	QTY	PART NAME 1 2 3 4 5 6 (PRODUCT LEVEL)	SEE PAGE
	33	2	**1P-4584**	4	FLANGE-HALF	
	34	1	**1S-6420**	1	CLIP	
	35	2	**2B-0858**	1	PLUG-PIPE	
	36	2	**2H-3908**	1	SETSCREW	
	37	2	**2M-9780**	1	SEAL-O-RING	
	38	1	**3D-2824**	1	SEAL-O-RING	
	39	1,2	**3J-1907**	4	SEAL-O-RING	
	40	2	**3K-0360**	1	SEAL-O-RING	
	41	1	**4J-0520**	1	SEAL-O-RING	
	42	1	**4J-0522**	3	SEAL-O-RING	
	43	1	**5F-3106**	1	SEAL-O-RING	
	44	2	**5P-1075**	2	WASHER-HARD (10.2X22.5X3MM THK)	
	45	1,2	**5P-1076**	2	WASHER-HARD (13.5X30X4MM THK)	
	46	2	**5P-6944**	1	ADAPTER-STRAIGHT THREAD	
	47	1	**5P-8247**	2	WASHER-HARD (17X32X3.5MM THK)	
	48	1	**5V-7190**	4	WASHER-HARD (10.5X45.2X6MM THK)	
	49	1,2	**6J-2680**	4	SEAL-O-RING	
	50	2	**6K-6307**	1	SEAL-O-RING (CLUTCH/BRAKE MODELS ONLY)	
	51	1	**6V-4432**	2	BOLT (1/2-13X4 IN)	
	52	2	**6V-8400**	1	SEAL-O-RING	
	53	1	**6V-8801**	2	NUT (3/8-16 THD)	
	54	2	**7S-8920**	1	CLIP (SLOT)	
	55	2	**7S-8921**	1	CLIP (TAB)	
	56	1	**7W-7381**	1	FITTING-OUTLET	
	57	1	**7X-0325**	2	BOLT (1/2-13X2.5 IN)	
	58	2	**7X-0331**	4	BOLT (1/2-13X4.25 IN)	
	59	2	**7X-0346**	3	BOLT (5/8-11X2 IN)	
	60	2	**8T-2502**	6	BOLT (3/8-16X1.125 IN)	
	61	2	**8T-4122**	3	WASHER-HARD (17X32X3.5MM THK)	
	62	1,2	**8T-4223**	16	WASHER-HARD (13.5X25.5X3MM THK)	
	63	1,2	**8T-4896**	10	WASHER-HARD (10.2X18.5X2.5MM THK)	
	64	2	**8T-5360**	4	WASHER (12X22.5X2.5MM THK)	
	65	2	**8T-7008**	4	BOLT (3/8-16X3 IN)	
	66	2	**8T-8916**	4	BOLT (7/16-14X1.5 IN)	
	67	1,2	**8T-8917**	2	BOLT (1/2-13X1.25 IN)	
	68	2	**8T-8919**	8	BOLT (1/2-13X1.75 IN)	
	69	1	**8T-9101**	4	BOLT (3/8-16X2.75 IN)	
	70	2	**6V-9829**	1	CAP AS (CLUTCH/BRAKE MODELS ONLY)	

I-SEE HOSE FABRICATION GUIDE

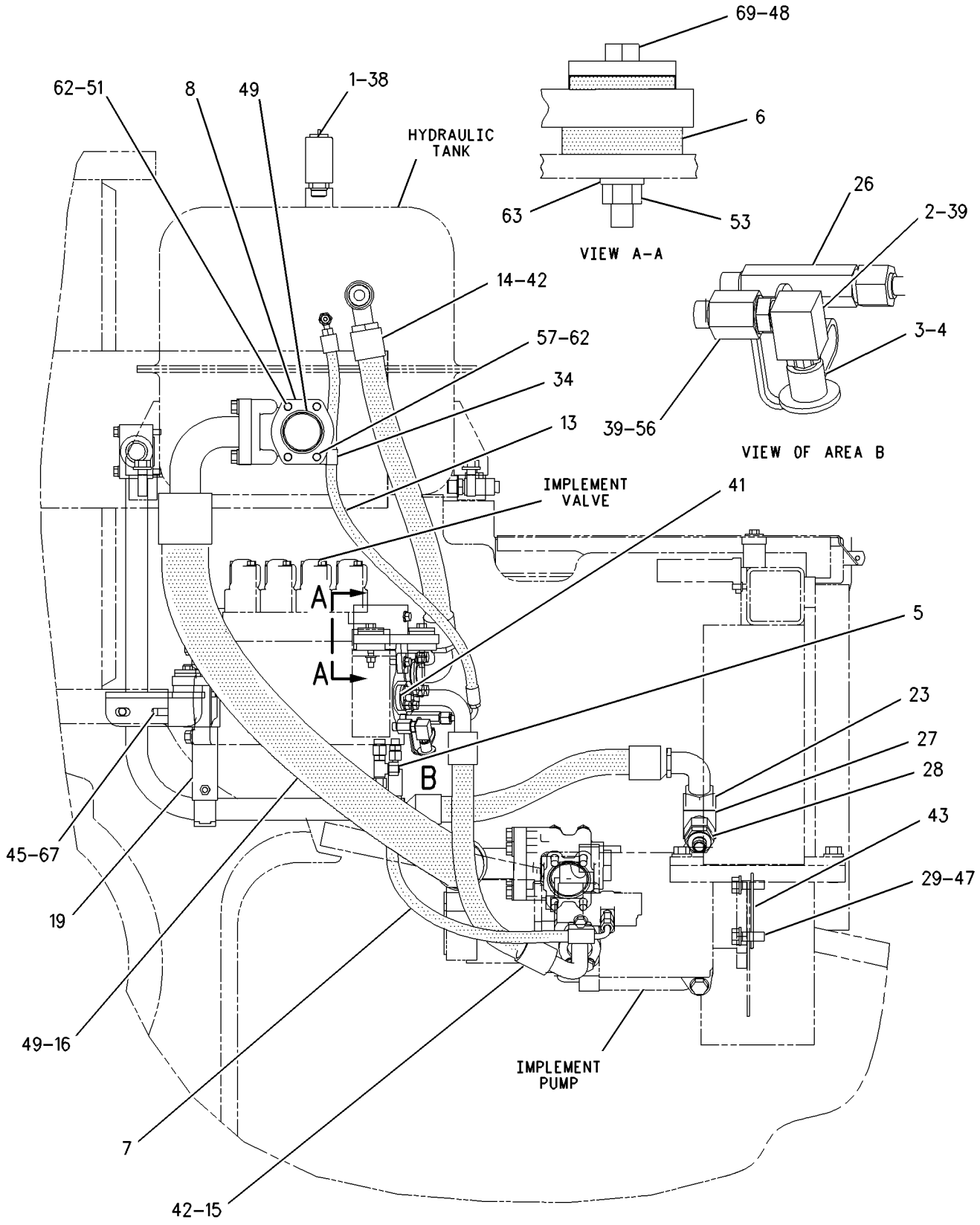

RIGHT SIDE VIEW

GRAPHIC #1

g00712112

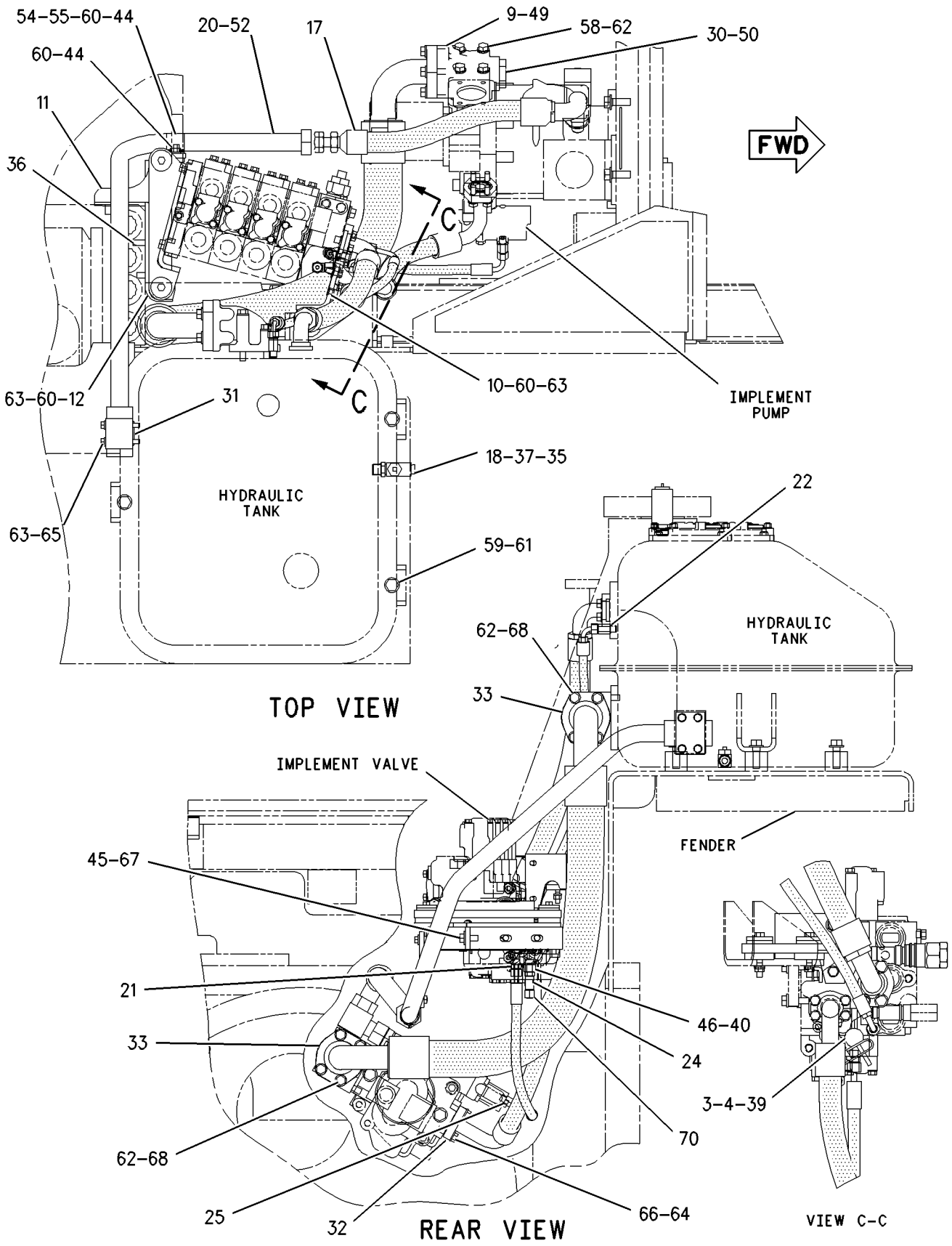

GRAPHIC #2

g00712113

HYDRAULIC SYSTEM

8E-9865 LINES GP-RIPPER

S/N: ABK1-UP

PART OF 162-9504 CONTROL AR-HYDRAULIC IMPLEMENT

SMCS-5057, 5352, 5356 **i01446767**

NOTE	REF NO	GRAPHIC REF	PART NUMBER	QTY	PART NAME 1 2 3 4 5 6 (PRODUCT LEVEL)	SEE PAGE
C	1	1	**133-8269**	1	MANIFOLD	
C	2	1	**8C-3206**	16	FLANGE-HALF	
C	3	1	**5S-7382**	12	BOLT (3/8-16X1.375 IN)	
C	4	1	**8T-4896**	22	WASHER-HARD (10.2X18.5X2.5MM THK)	
C	5	1	**5H-4019**	1	COVER	
C	6	1	**8T-4121**	32	WASHER-HARD (11X21X2.5MM THK)	
	7	1	**1P-4577**	8	FLANGE-HALF	
C	8	1	**4J-0520**	17	SEAL-O-RING (32.92MM ID)	
	9	1	**8E-7881**	1	BRACKET AS	
		1	**7G-5984**	2	CLIP (TAB)	
	10	1	**4L-6454**	2	BOLT (3/8-16X1 IN)	
	11	1	**7G-5986**	2	GROMMET	
	12	1	**7G-5985**	2	CLIP (SLOT)	
	13	1	**9B-7237**	4	BOLT (3/8-16X1.25 IN)	
	14	1	**5S-7383**	2	BOLT (3/8-16X1.75 IN)	
		1	**6V-8801**	2	NUT (3/8-16 THD)	
		1	**7X-0578**	4	WASHER-HARD (10.2X32X2.5MM THK)	
I	15	1	**8E-7883**	2	HOSE AS	
I	16	1	**8E-7882**	2	HOSE AS	
	17	1	**7X-0288**	4	BOLT (3/8-16X1.625 IN)	
	18	1	**117-8727**	1	PLATE-ORIFICE	
CM	19	1	**8T-4196**	32	BOLT (M10X1.5X35MM)	

C-CHANGE FROM PREVIOUS TYPE
I-SEE HOSE FABRICATION GUIDE
M-METRIC PART

8E-9865 **LINES GP-RIPPER** ***(contd.)*** **i01446767**

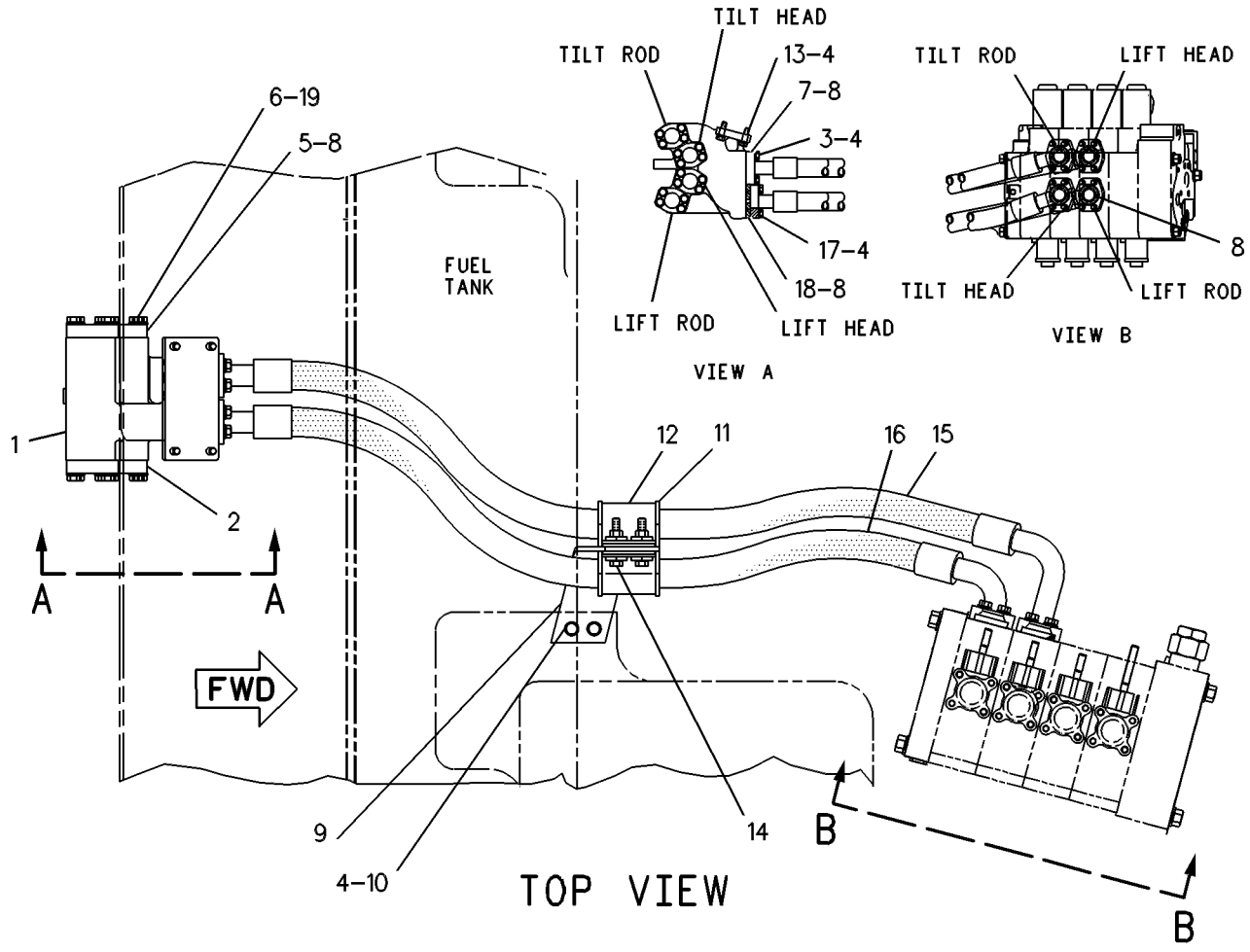

GRAPHIC #1 g00271107

HYDRAULIC SYSTEM

135-6410 LINES GP-RIPPER

S/N: 5RP1-UP; 7HP1-UP
PART OF 134-6000, 165-0652 RIPPER AR
AN ATTACHMENT

SMCS-5057, 5352, 5356 **i00594462**

NOTE	REF NO	GRAPHIC REF	PART NUMBER	QTY	PART NAME 1 2 3 4 5 6 (PRODUCT LEVEL)	SEE PAGE
	1	1	**9M-2904**	12	CLAMP-HOSE	
	2	1	**130-1977**	12	SHIELD	
	3	1	**130-9191**	6	GROMMET	
I	4	1	**135-6411**	2	HOSE AS (TILT-HEAD END)	
	5	1	**8E-6334**	2	CLIP (TAB)	
I	6	1	**135-6412**	2	HOSE AS (TILT-ROD END)	
M	7	1	**8T-4182**	4	BOLT (M10X1.5X45MM)	
I	8	1	**135-6413**	2	HOSE AS (LIFT-HEAD END)	
M	9	1	**8T-4186**	12	BOLT (M10X1.50X40MM)	
I	10	1	**135-6414**	1	HOSE AS (LIFT-ROD END-LH)	
I	11	1	**135-6415**	1	HOSE AS (LIFT-ROD END-RH)	
	12	1	**139-2455**	3	SHIELD-RH	
	13	1	**139-2456**	3	SHIELD-LH	
	14	1	**4J-0520**	8	SEAL-O-RING (32.92MM ID)	
	15	1	**4J-5267**	8	SEAL-O-RING (24.99MM ID)	
	16	1	**5P-8112**	2	GROMMET	
	17	1	**8E-6332**	2	CLIP (SLOT)	

QUANTITIES SHOWN ARE THOSE REQUIRED FOR BOTH LH AND RH SIDES
I-SEE HOSE FABRICATION GUIDE
M-METRIC PART

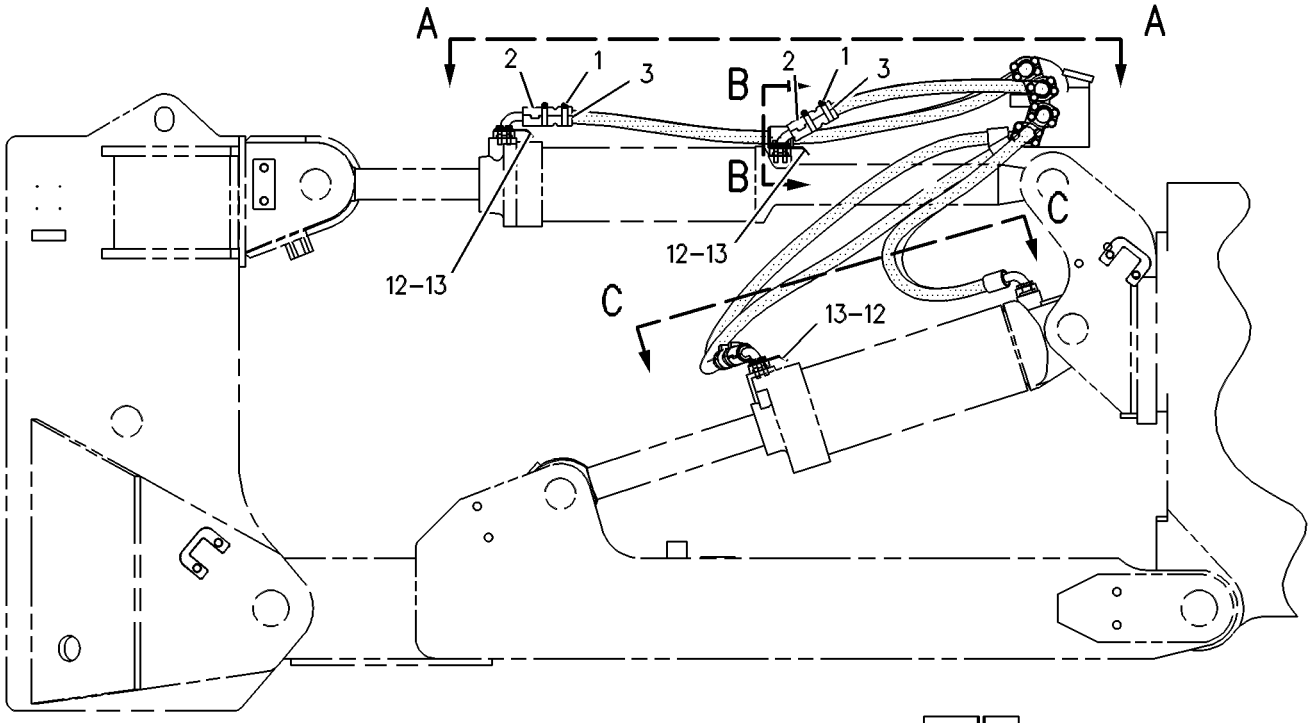

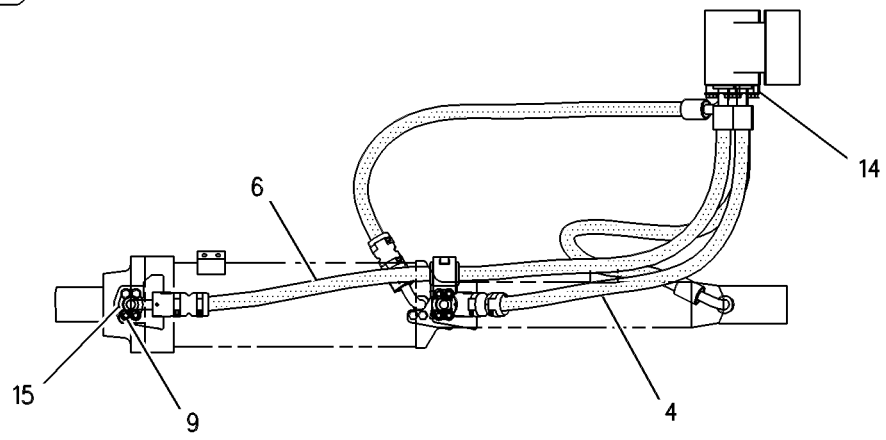

VIEW A-A

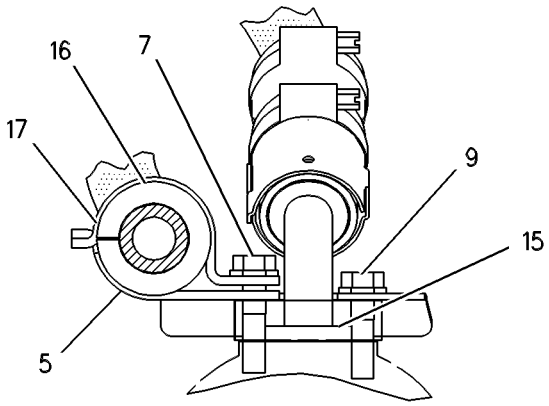

SECTION B-B

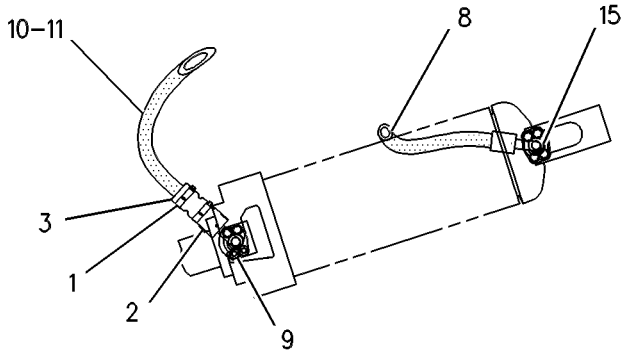

SECTION C-C

GRAPHIC #1 g00271297

HYDRAULIC SYSTEM

163-1580 LINES GP-TILT

S/N: ABK1-509

PART OF 162-9504 CONTROL AR-HYDRAULIC IMPLEMENT

SMCS-5057, 5104 **i01422205**

NOTE	REF NO	GRAPHIC REF	PART NUMBER	QTY	PART NAME 1 2 3 4 5 6 (PRODUCT LEVEL)	SEE PAGE
	1	1	**6Y-3408**	1	BRACKET AS	
		1	**1F-0748**	2	NUT-WELD (1/2-13 THD)	
	2	1	**6Y-3567**	1	ELBOW	
	3	1	**6Y-3568**	1	COVER	
	4	1	**7G-3606**	1	BLOCK	
I	5	1	**6Y-3406**	1	HOSE AS	
I	6	1	**163-1834**	1	HOSE AS	
	7	1	**1P-4576**	6	FLANGE	
	8	1	**1P-4577**	2	FLANGE-HALF	
	9	1	**2D-8155**	2	STUD-TAPERLOCK	
	10	1	**4J-0520**	3	SEAL-O-RING (32.92MM ID)	
	11	1	**4J-5267**	3	SEAL-O-RING (24.99MM ID)	
	12	1	**5C-6565**	2	BOLT (1/2-13X1.25 IN)	
	13	1	**5H-4018**	2	COVER	
	14	1	**5M-3062**	2	BOLT (3/8-16X.75 IN)	
	15	1	**5S-7382**	16	BOLT (3/8-16X1.375 IN)	
	16	1	**6V-8188**	2	NUT (1/2-13 THD)	
	17	1	**7G-3832**	3	GROMMET	
	18	1	**7G-3833**	3	CLIP (TAB)	
	19	1	**7G-3834**	3	CLIP (SLOT)	
	20	1	**8T-4121**	2	WASHER-HARD (11X21X2.5MM THK)	
	21	1	**8T-4223**	9	WASHER-HARD (13.5X25.5X3MM THK)	
	22	1	**8T-4896**	18	WASHER-HARD (10.2X18.5X2.5MM THK)	
	23	1	**8T-8915**	2	BOLT (3/8-16X3.25 IN)	
	24	1	**8T-8917**	5	BOLT (1/2-13X1.25 IN)	
	25	1	**5P-7466**	1	CLIP (SLOT)	
	26	1	**5P-7467**	1	CLIP (TAB)	
	27	1	**5P-8112**	1	GROMMET	

I-SEE HOSE FABRICATION GUIDE

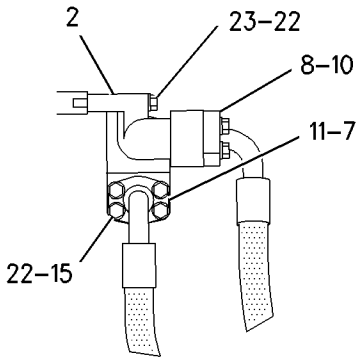

VIEW A-A

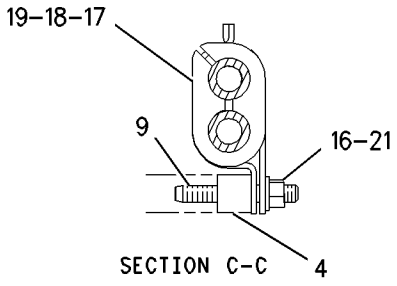

SECTION C-C

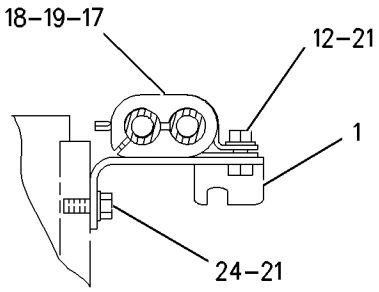

SECTION B-B

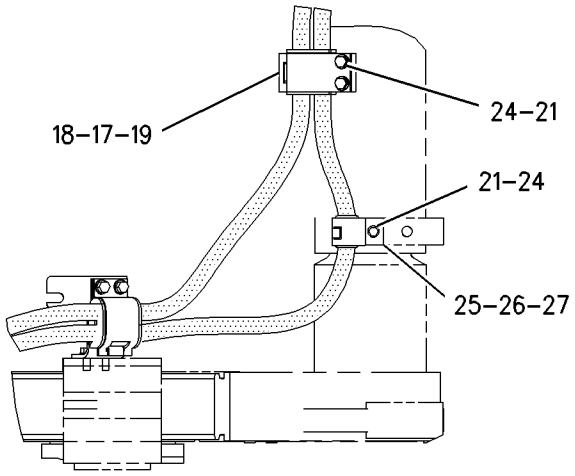

VIEW D-D

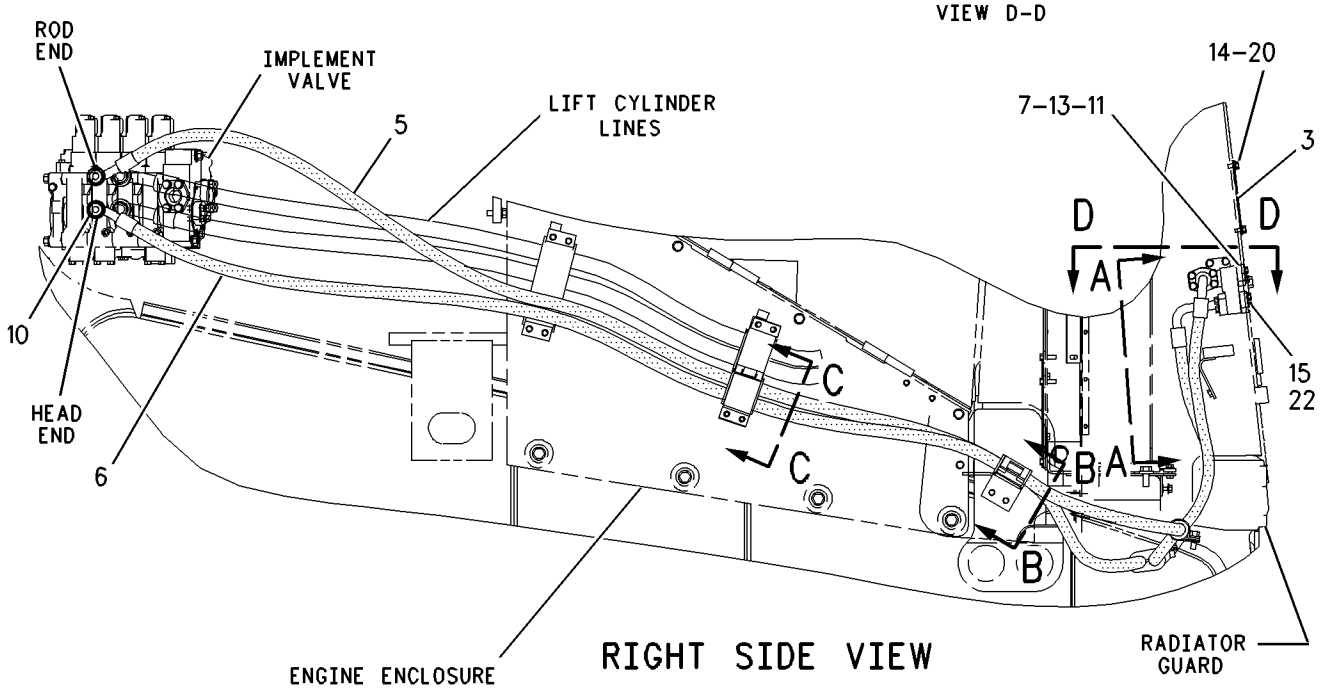

RIGHT SIDE VIEW

GRAPHIC #1 g00746042

HYDRAULIC SYSTEM

163-1580 LINES GP-TILT

S/N: ABK510-UP

PART OF 162-9504 CONTROL AR-HYDRAULIC IMPLEMENT

SMCS-5057, 5104 **i01546394**

NOTE	REF NO	GRAPHIC REF	PART NUMBER	QTY	PART NAME 1 2 3 4 5 6 (PRODUCT LEVEL)	SEE PAGE
	1	1	**6Y-3408**	1	BRACKET AS	
		1	**1F-0748**	2	NUT-WELD (1/2-13 THD)	
	2	1	**6Y-3567**	1	ELBOW	
	3	1	**6Y-3568**	1	COVER	
	4	1	**7G-3606**	1	BLOCK	
I	5	1	**6Y-3406**	1	HOSE AS	
I	6	1	**163-1834**	1	HOSE AS	
	7	1	**1P-4576**	6	FLANGE	
	8	1	**1P-4577**	2	FLANGE-HALF	
	9	1	**2D-8155**	2	STUD-TAPERLOCK	
	10	1	**4J-0520**	3	SEAL-O-RING	
	11	1	**4J-5267**	3	SEAL-O-RING	
	12	1	**5C-6565**	2	BOLT (1/2-13X1.25 IN)	
	13	1	**5H-4018**	2	COVER	
	14	1	**5M-3062**	2	BOLT (3/8-16X0.75 IN)	
	15	1	**5S-7382**	16	BOLT (3/8-16X1.375 IN)	
	16	1	**6V-8188**	2	NUT (1/2-13 THD)	
	17	1	**7G-3832**	3	GROMMET	
	18	1	**7G-3833**	3	CLIP (TAB)	
	19	1	**7G-3834**	3	CLIP (SLOT)	
	20	1	**8T-4121**	2	WASHER-HARD (11X21X2.5MM THK)	
	21	1	**8T-4223**	8	WASHER-HARD (13.5X25.5X3MM THK)	
	22	1	**8T-4896**	18	WASHER-HARD (10.2X18.5X2.5MM THK)	
	23	1	**8T-8915**	2	BOLT (3/8-16X3.25 IN)	
	24	1	**8T-8917**	4	BOLT (1/2-13X1.25 IN)	

I-SEE HOSE FABRICATION GUIDE

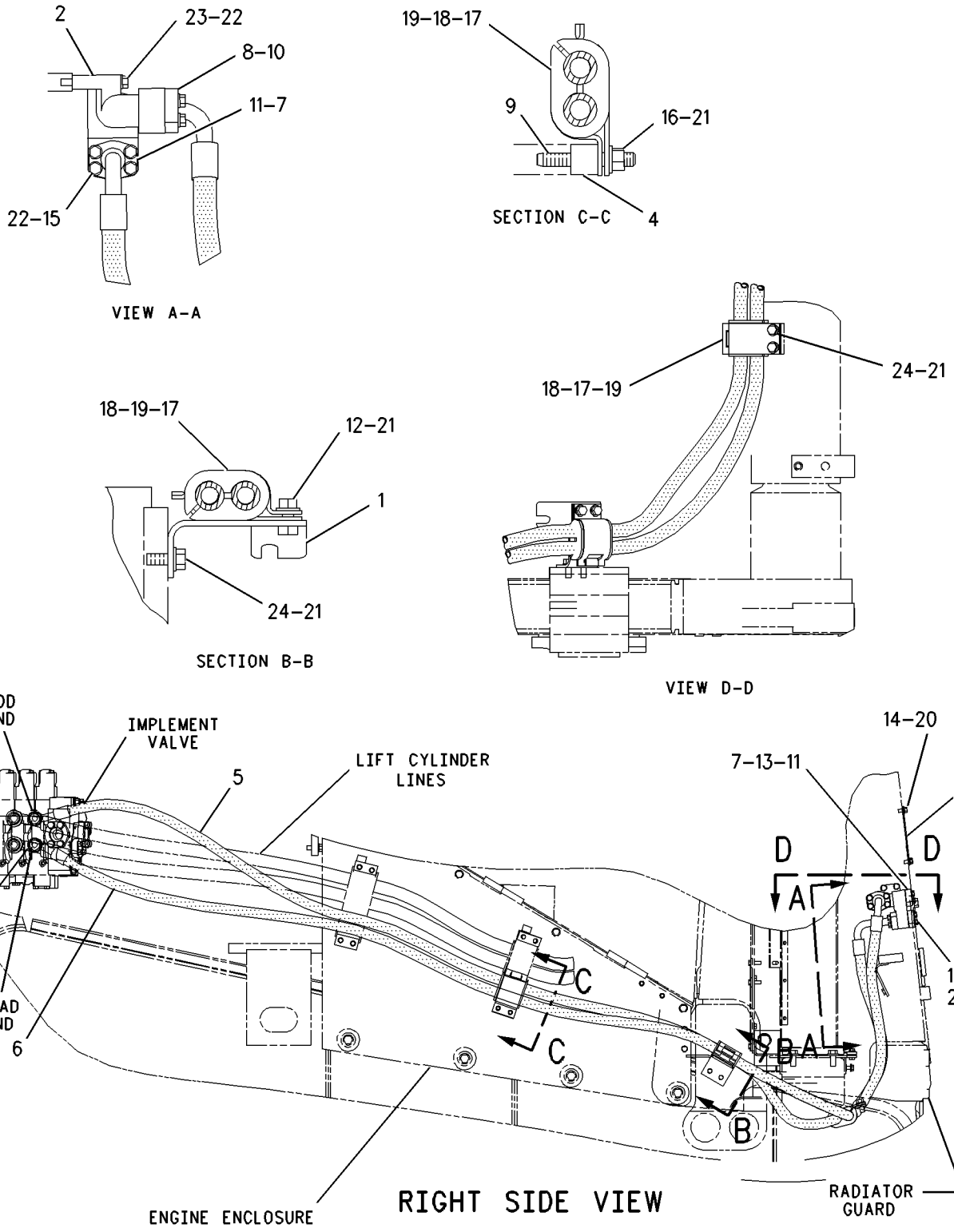

GRAPHIC #1 g00805650

HYDRAULIC SYSTEM

8E-9890 LINES GP-TILT CYLINDER

S/N: 9MP1-UP; 9RP1-UP
PART OF 163-4550, 163-4552 BULLDOZER AR-SEMI-UNIVERSAL, 163-4551, 163-4553 BULLDOZER AR-UNIVERSAL
AN ATTACHMENT

SMCS-5057, 5104 **i01397197**

NOTE	REF NO	GRAPHIC REF	PART NUMBER	QTY	PART NAME 1 2 3 4 5 6 (PRODUCT LEVEL)	SEE PAGE
I	1	1	**3G-7452**	1	HOSE AS	
	2	1	**4J-5267**	9	SEAL-O-RING (24.99MM ID)	
	3	1	**5H-2095**	4	CLAMP-TUBE	
	4	1	**5P-1076**	16	WASHER-HARD (13.5X30X4MM THK)	
	5	1	**8C-3205**	12	FLANGE-HALF	
	6	1	**8E-9445**	1	GUARD AS-RH	
I	7	1	**9W-9970**	1	HOSE AS	
	8	1	**9X-2027**	4	WASHER (11X18X2MM THK)	
	9	1	**110-5205**	2	TUBE AS	
	10	1	**110-5207**	2	GUARD	
	11	1	**110-5890**	1	TUBE AS	
I	12	1	**111-7745**	1	HOSE AS	
I	13	1	**111-7746**	1	HOSE AS	
	14	1	**115-2947**	1	GUARD AS	
		1	**8L-5771**	3	SPACER	
M	15	1	**7X-2573**	4	BOLT (M24X3.0X40MM)	
	16	1	**8T-4121**	28	WASHER-HARD (11X21X2.5MM THK)	
M	17	1	**8T-4136**	4	BOLT (M10X1.5X25MM)	
M	18	1	**8T-4139**	16	BOLT (M12X1.75X30MM)	
	19	1	**8T-4167**	4	WASHER-HARD (26X44X4MM THK)	
M	20	1	**8T-4185**	4	BOLT (M10X1.5X50MM)	
M	21	1	**8T-4196**	24	BOLT (M10X1.50X35MM)	

I-SEE HOSE FABRICATION GUIDE
M-METRIC PART

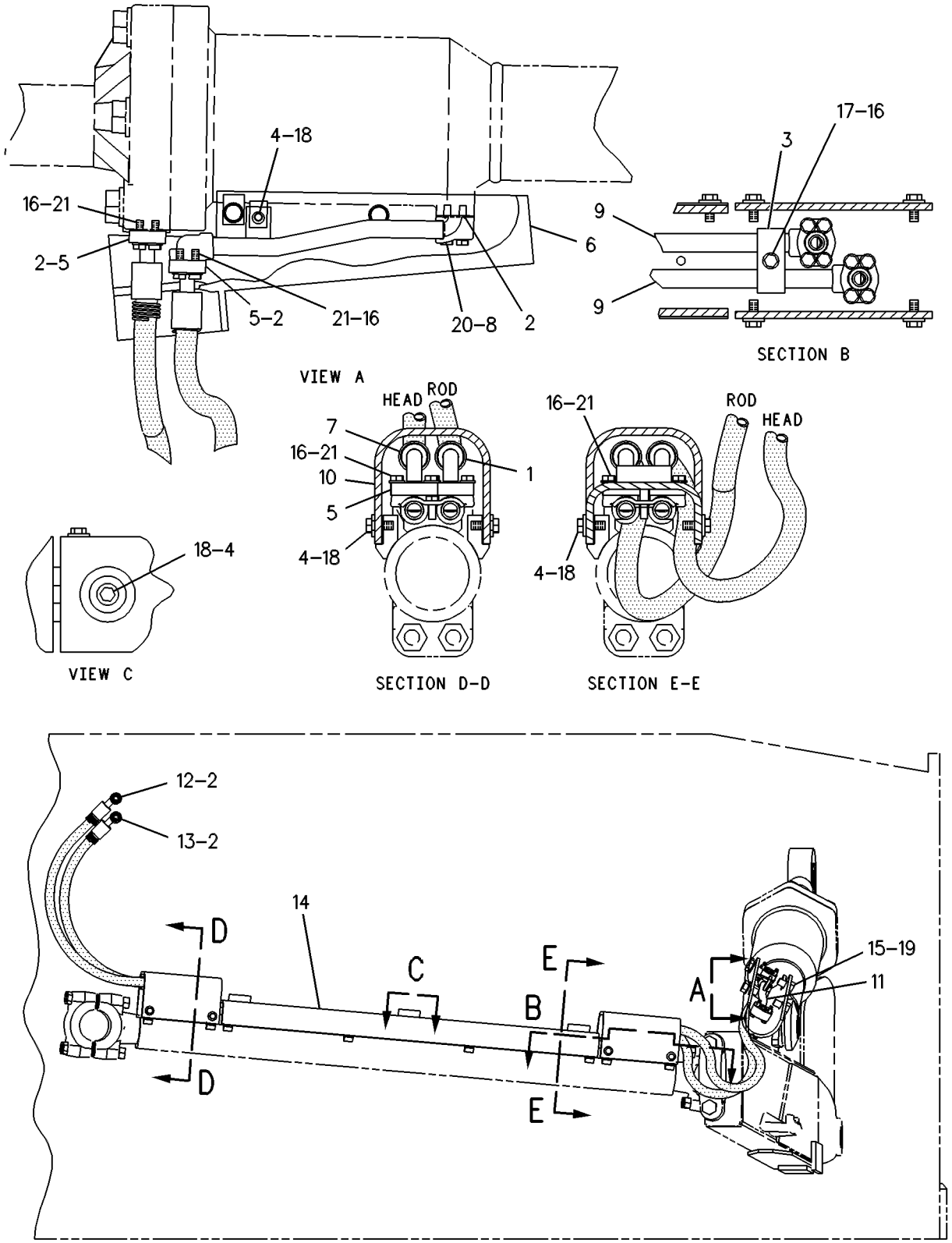

GRAPHIC #1 g00248240

HYDRAULIC SYSTEM

8E-9891 LINES GP-TILT CYLINDER

S/N: ABK1-UP
DUAL
PART OF 106-7362 CYLINDER AR-DUAL TILT
AN ATTACHMENT

SMCS-5057, 5104 **i01453401**

NOTE	REF NO	GRAPHIC REF	PART NUMBER	QTY	PART NAME 1 2 3 4 5 6 (PRODUCT LEVEL)	SEE PAGE
	1	1	**1J-7468**	6	CLAMP	
	2	1	**4J-0520**	2	SEAL-O-RING	
	3	1	**4J-5267**	22	SEAL-O-RING	
	4	1	**4T-3981**	6	CLIP	
C	5	1	**5P-1076**	12	WASHER-HARD (13.5X30X4MM THK)	
	6	1	**6I-8514**	2	ANGLE	
	7	1	**6I-8515**	1	ANGLE	
	8	1	**6I-8516**	2	ANGLE	
	9	1	**7X-0515**	3	WASHER-HARD (17X35X5MM THK)	
	10	1	**8C-3205**	32	FLANGE-HALF	
	11	1	**8C-3206**	4	FLANGE-HALF	
C	12	1	**146-3672**	1	GUARD	
	13	1	**8E-3600**	10	PLATE	
I	14	1	**118-8138**	1	HOSE AS	
I	15	1	**8E-9427**	1	HOSE AS	
I	16	1	**8E-9428**	1	HOSE AS	
	17	1	**8E-9433**	1	GUARD AS	
C	18	1	**200-2354**	1	HOSE AS	
I	19	1	**8E-9436**	2	HOSE AS	
	20	1	**8E-9438**	1	GUARD AS	
		1	**8L-5771**	3	SPACER	
C	21	1	**129-5082**	6	BLOCK	
CI	22	1	**165-3726**	2	HOSE AS	
	23	1	**8E-9445**	1	GUARD AS-RH	
	24	1	**8E-9446**	1	GUARD AS-LH	
	25	1	**9W-2877**	2	CLAMP	
	26	1	**9X-2027**	8	WASHER (11X18X2MM THK)	
	27	1	**108-1225**	2	TUBE AS	
	28	1	**108-1226**	2	TUBE AS	
	29	1	**110-5205**	2	TUBE AS	
	30	1	**110-5890**	2	TUBE AS	
	31	1	**111-1588**	2	TUBE AS	
	32	1	**7W-3447**	8	SPACER (10.2X19.05X10.2MM THK)	
I	33	1	**112-2671**	1	HOSE AS	
M	34	1	**7X-2553**	3	BOLT (M16X2X40MM)	
M	35	1	**7X-2573**	8	BOLT (M24X3.0X40MM)	
	36	1	**8T-4121**	84	WASHER-HARD (11X21X2.5MM THK)	
M	37	1	**8T-4136**	12	BOLT (M10X1.5X25MM)	
CM	38	1	**8T-4139**	14	BOLT (M12X1.75X30MM)	
	39	1	**8T-4167**	8	WASHER-HARD (26X44X4MM THK)	
M	40	1	**8T-4182**	14	BOLT (M10X1.5X45MM)	
M	41	1	**8T-4185**	8	BOLT (M10X1.5X50MM)	
M	42	1	**8T-4195**	2	BOLT (M10X1.5X30MM)	
M	43	1	**8T-4196**	64	BOLT (M10X1.5X35MM)	
	44	1	**7G-3832**	1	GROMMET	
	45	1	**7G-3833**	1	CLIP (TAB)	
	46	1	**7G-3834**	1	CLIP (SLOT)	
	47	1	**8T-4223**	4	WASHER-HARD (13.5X25.5X3MM THK)	
M	48	1	**8T-4244**	2	NUT (M12X1.75 THD)	
I	49	1	**193-7004**	1	HOSE AS	

C-CHANGE FROM PREVIOUS TYPE
I-SEE HOSE FABRICATION GUIDE
M-METRIC PART

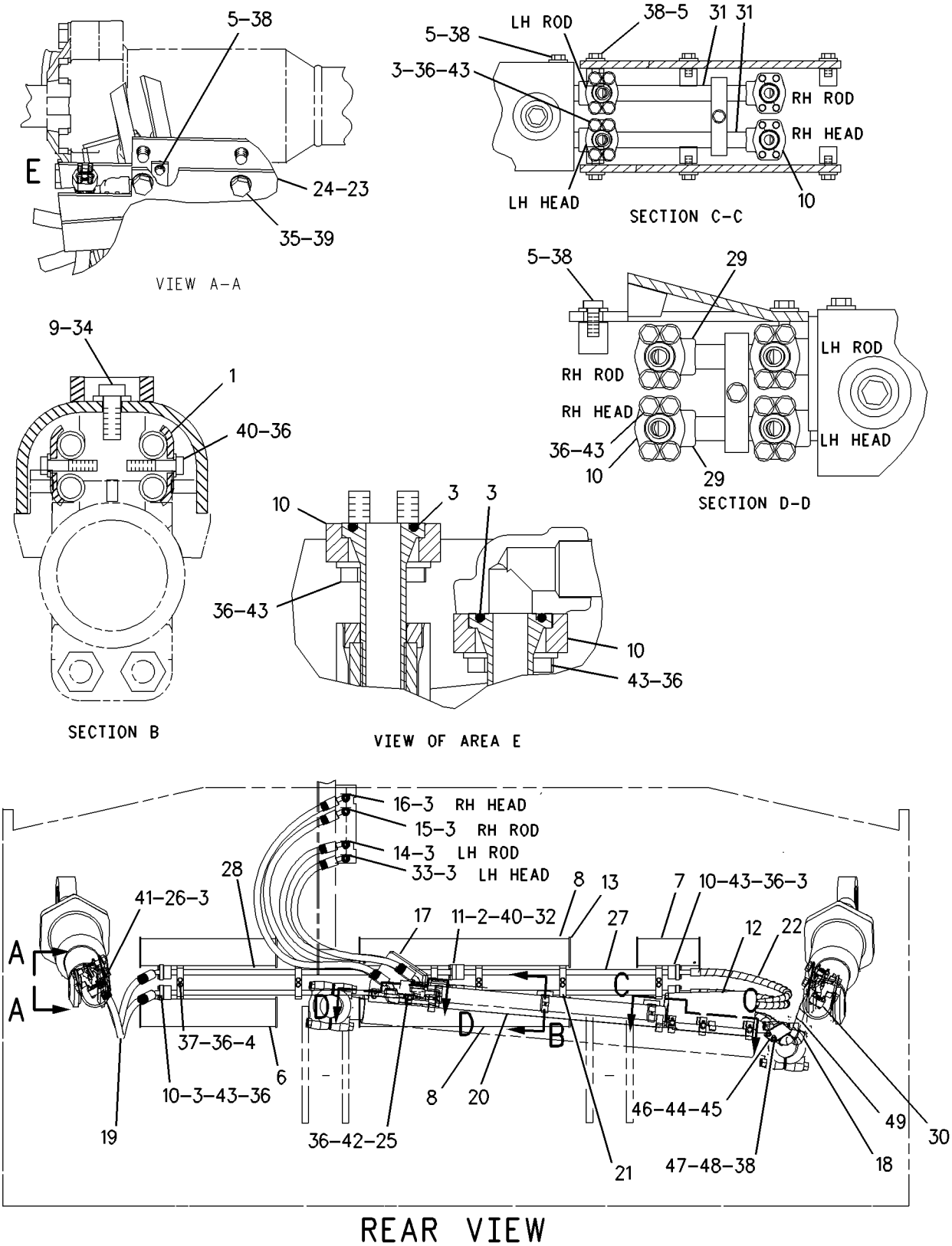

GRAPHIC #1 g00721919

HYDRAULIC SYSTEM

163-1581 LINES GP-TILT CYLINDER

S/N: ABK1-UP
DUAL
PART OF 163-1588 CONTROL AR-BULLDOZER
AN ATTACHMENT

SMCS-5057, 5104 **i01470524**

NOTE	REF NO	GRAPHIC REF	PART NUMBER	QTY	PART NAME 1 2 3 4 5 6 (PRODUCT LEVEL)	SEE PAGE
	1	1	**4V-6440**	1	SPACER (18.9X26.7X50MM THK)	
	2	1	**8E-7111**	1	PLATE	
	3	1	**8E-7112**	1	ELBOW	
I	4	1	**163-1835**	1	HOSE AS	
I	5	1	**188-3384**	1	HOSE AS	
I	6	1	**8E-7108**	1	HOSE AS	
	7	1	*148-8378*	1	ELBOW GP	
		1	**3J-1907**	1	SEAL-O-RING	
		1	**6V-8397**	1	SEAL-O-RING	
		1	**6V-8724**	1	ELBOW	
	8	1	*150-3036*	1	ELBOW GP	
		1	**3J-1907**	1	SEAL-O-RING	
		1	**6V-8397**	1	SEAL-O-RING	
		1	**8T-1905**	1	ELBOW	
	9	1	*150-4034*	1	TEE GP	
		1	**6V-8397**	3	SEAL-O-RING	
		1	**8T-0379**	1	TEE-BULKHEAD	
	10	1	**1J-8668**	1	STUD-TAPERLOCK	
	11	1	**1S-0996**	6	CLIP	
	12	1	**1S-1015**	1	CLIP	
	13	1	**1S-6420**	2	CLIP (17.46MM ID)	
	14	1	**4J-0520**	2	SEAL-O-RING	
	15	1	**4J-5267**	1	SEAL-O-RING	
	16	1	**5P-2228**	2	BOLT (1/2-13X1 IN)	
	17	1	**5P-1075**	6	WASHER-HARD (10.2X22.5X3MM THK)	
	18	1	**5P-7466**	1	CLIP (SLOT)	
	19	1	**5P-7467**	1	CLIP (TAB)	
B	20	1	**5P-8112**	1	GROMMET	
	21	1	**5S-7379**	3	BOLT (3/8-16X0.875 IN)	
	22	1	**6V-8801**	1	NUT (3/8-16 THD)	
	23	1	**1P-7009**	1	CLIP	
	24	1	**8T-4223**	2	WASHER-HARD (13.5X25.5X3MM THK)	
	25	1	**8T-4896**	4	WASHER-HARD (10.2X18.5X2.5MM THK)	
	26	1	**8T-5360**	3	WASHER (12X22.5X2.5MM THK)	
	27	1	**8T-8920**	1	BOLT (1/2-13X3.25 IN)	
	28	1	**8T-9379**	4	BOLT (3/8-16X4.25 IN)	
	29	1	**8T-9380**	3	BOLT (7/16-14X1 IN)	
	30	1	**9B-7237**	2	BOLT (3/8-16X1.25 IN)	

B-USE AS REQUIRED
I-SEE HOSE FABRICATION GUIDE

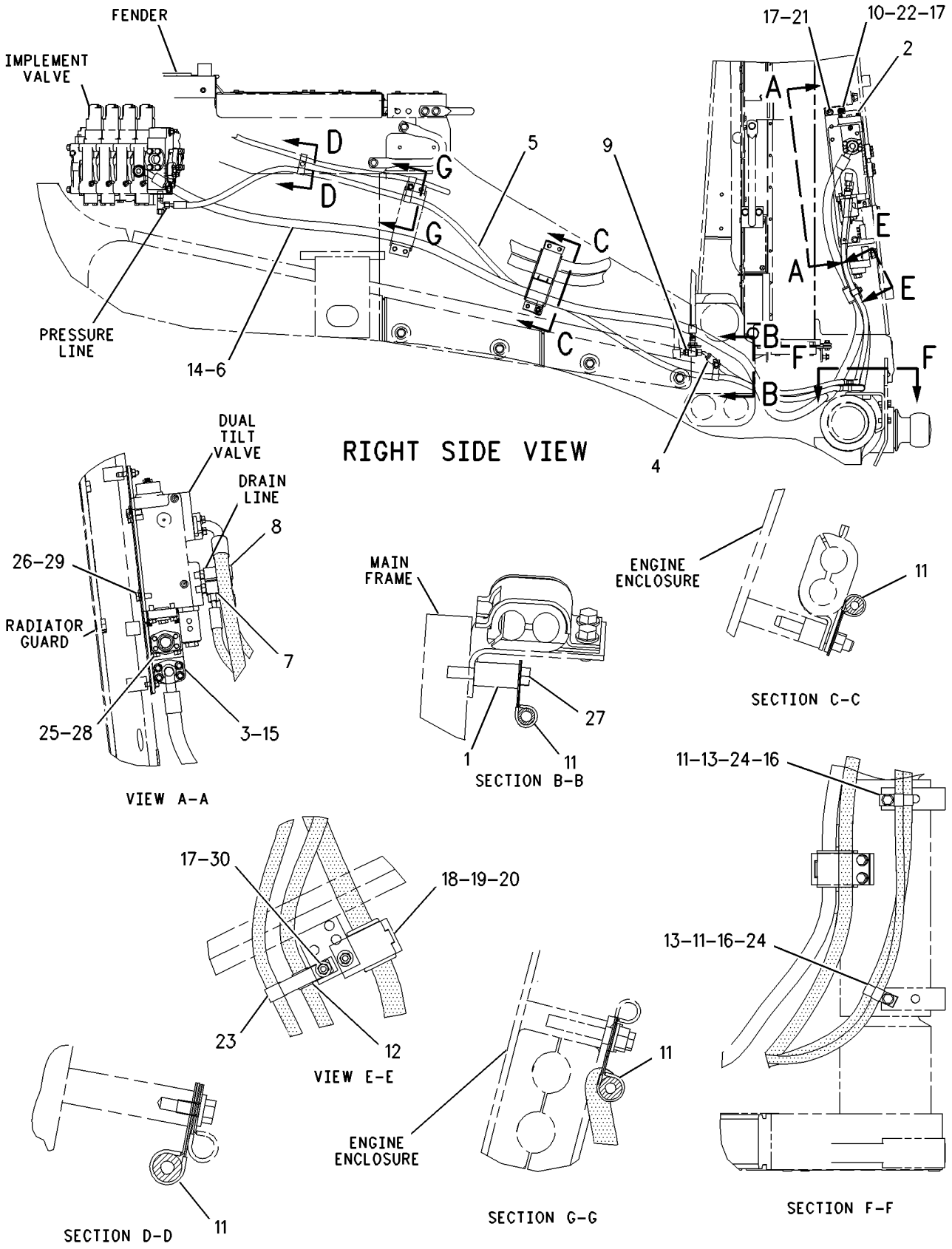

GRAPHIC #1 g00752319

6E-4138 MANIFOLD GP-VALVE

S/N: ABK1-UP

PART OF 187-8636 VALVE GP-BANK 4

SMCS-5264 **i01624425**

NOTE	REF NO	GRAPHIC REF	PART NUMBER	QTY	PART NAME 1 2 3 4 5 6 (PRODUCT LEVEL)	SEE PAGE
	1	1	**6E-1886**	1	MANIFOLD-INLET	
Y	2	1	**6E-4139**	1	VALVE GP-RELIEF (MAIN)	703
Y	3	1	**4T-5896**	1	VALVE GP-CHECK (REVERSE FLOW)	688
Y	4	1	**4T-1008**	1	VALVE GP-RELIEF (CHARGING)	702
	5	1	**9S-4182**	2	PLUG-O-RING	
	6	1	**3J-7354**	2	SEAL-O-RING	
	7	1	**8J-6815**	1	PLUG-ORIFICE	
	8	1	**9S-8005**	1	PLUG-O-RING	
	9	1	**3K-0360**	1	SEAL-O-RING	
	10	1	**9S-4191**	2	PLUG-STRAIGHT THREAD	
	11	1	**3J-1907**	2	SEAL-O-RING	

Y-SEPARATE ILLUSTRATION

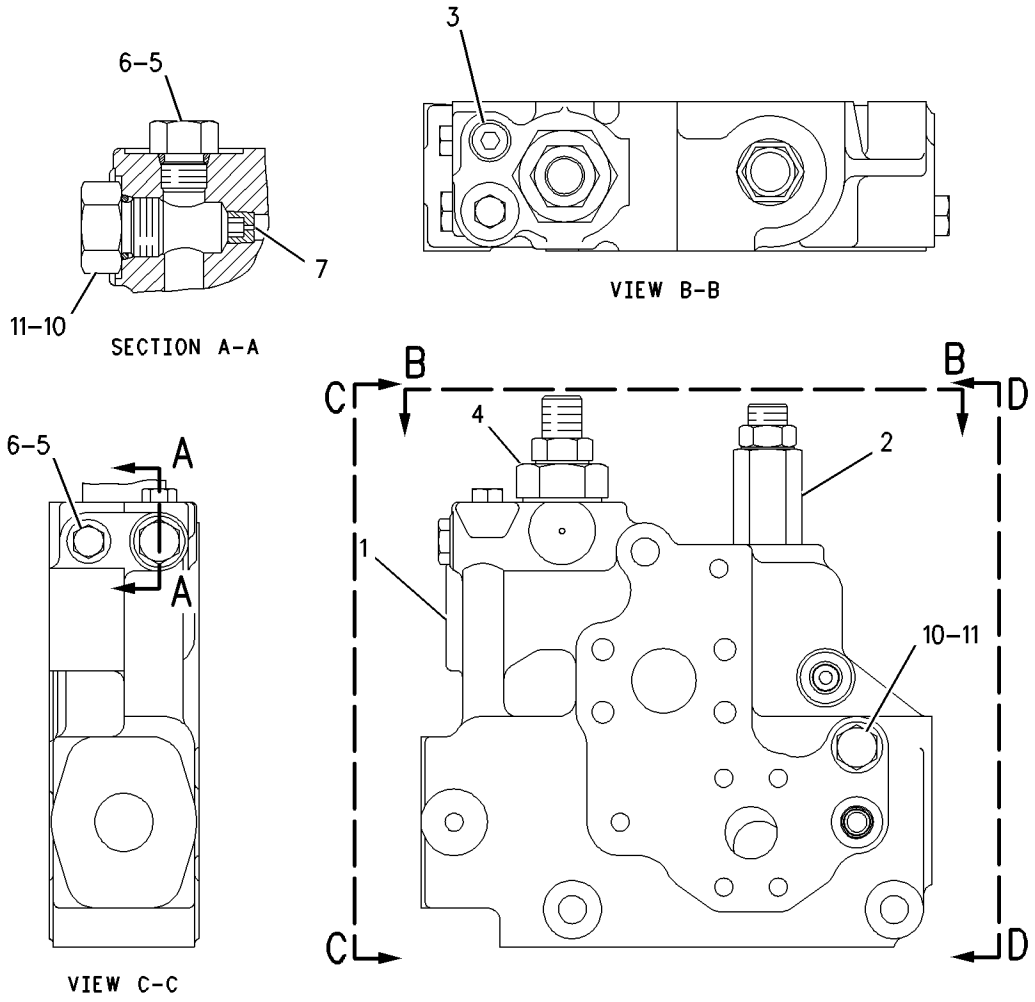

GRAPHIC #1 g00673816

HYDRAULIC SYSTEM

100-6240 PUMP GP-GEAR

S/N: ABK1-UP

PART OF 6E-4863 PUMP GP-PISTON & GEAR

SMCS-5073, 5084 **i01335933**

NOTE	REF NO	GRAPHIC REF	PART NUMBER	QTY	PART NAME 1 2 3 4 5 6 (PRODUCT LEVEL)	SEE PAGE
	1	1	**5P-7604**	1	RING-RETAINING	
	2	1	**6V-3675**	1	SEAL-LIP (INNER)	
	3	1	**1C-0148**	8	STUD	
	4	1	**5B-3254**	8	NUT-JAM (7/16-20 THD)	
		1	**5P-8244**	8	WASHER (2.5MM THK)	
	5	1	**6E-2943**	1	PLUG	
	6	1	**6V-3676**	1	SEAL-LIP (OUTER)	
					AVAILABLE REPAIR KIT(S):	
			6E-3687	1	KIT-SEAL	
					(INCLUDES PLUG, RINGS, RETAINERS AND SEALS)	

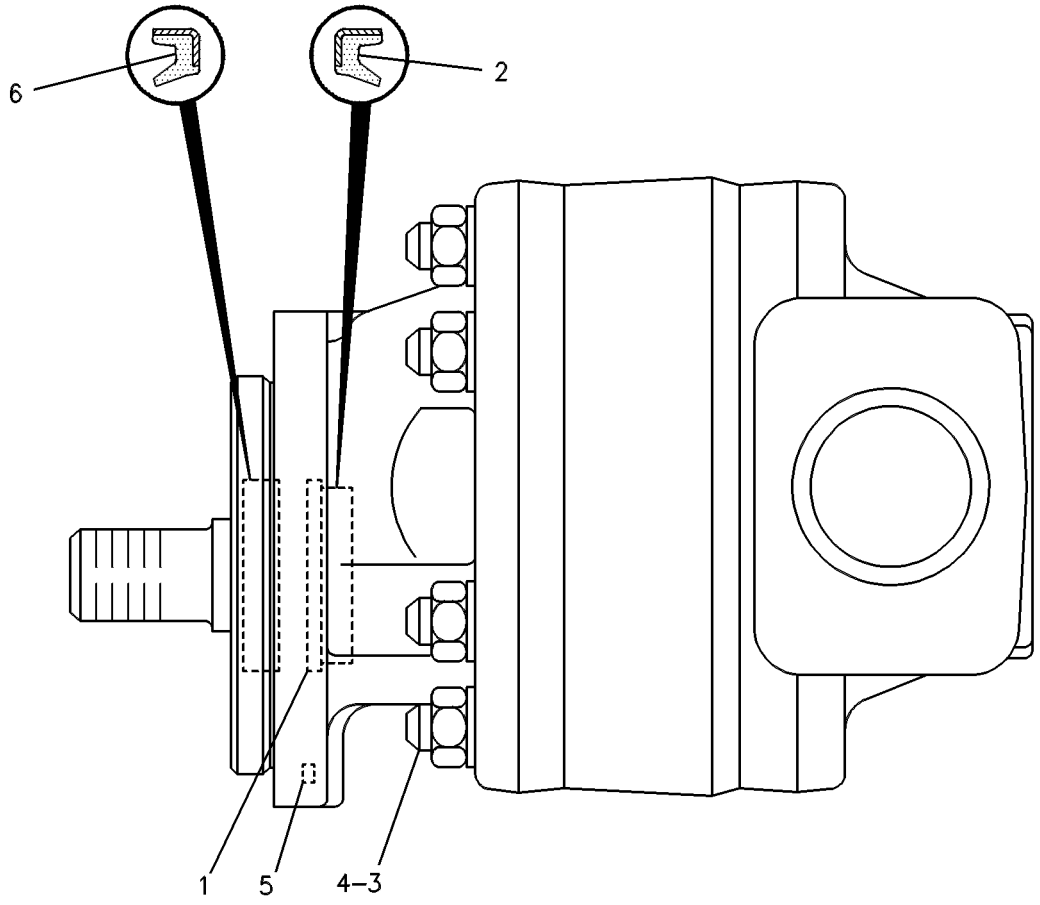

GRAPHIC #1 g00239954

HYDRAULIC SYSTEM

100-6239 PUMP GP-PISTON

S/N: ABK1-UP

PART OF 6E-4863 PUMP GP-PISTON & GEAR

SMCS-5070 **i01366024**

NOTE	REF NO	GRAPHIC REF	PART NUMBER	QTY	PART NAME 1 2 3 4 5 6 (PRODUCT LEVEL)	SEE PAGE
	1	1	**6E-4248**	1	SHAFT-GOVERNOR CONTROL	
	2	1	**6E-4237**	1	BEARING	
	3	1	**6E-4224**	1	PLUG-SWASHPLATE	
	4	1	**033-6036**	1	SEAL-O-RING (23.47MM ID)	
	5	1	**100-6337**	1	HEAD-PUMP	
	6	1	**9T-1699**	1	SPRING	
	7	1	**9T-1710**	1	POPPET	
	8	1	**9T-1636**	1	SEAT	
	9	1	**6E-4227**	1	COVER	
M	10	1	**6V-8837**	3	BOLT (M6X1X16 MM)	
	11	1	**4F-4097**	1	SEAL-O-RING (94.92MM ID)	
	12	1	**6E-4236**	1	BEARING	
M	13	1	**3E-4302**	2	SCREW-FLAT HEAD (M4X0.7X10.0MM)	
	14	1	**6L-8797**	2	RING-RETAINING	
	15	1	**095-0888**	2	PIN-SPRING	
B	16	1	**103-6282**	1	SHIM PACK (INCLUDES 17 SHIMS)	
M	17	1	**8T-0343**	4	BOLT-SOCKET HEAD	
	18	1	**9S-4190**	1	PLUG-O-RING (7/16-20 THD)	
	19	1	**033-6027**	1	SEAL-O-RING (19.18MM ID)	
Y	20	1	**100-6335**	1	VALVE GP-PRESS & FLOW CMPNSTR (PUMP OUTLET CONTROL)	698
M	21	1	**095-0705**	2	BOLT-SOCKET HEAD (M16X2X100MM)	
	22	1	**8T-5039**	3	SEAL-O-RING (10.77MM ID)	
M	23	1	**6V-8337**	4	BOLT-SOCKET HEAD (M8X1.25X35MM)	
	24	1	**6E-4245**	1	HOUSING	
	25	1	**7K-8876**	1	CUP-BEARING	
	26	1	**6E-4213**	1	KIT-BIAS PISTON	
					(INCLUDES SPRING, ROD, PISTON & PACKING)	
	27	1	**6E-4214**	1	SPRING-BIAS	
Y	28	1	**6E-4216**	1	ROTATING GP-PUMP	677
	29	1	**6E-4225**	1	GASKET	
	30	1	**7L-9061**	2	SEAL-O-RING (18.72MM ID)	
	31	1	**3E-7417**	2	PLUG (M10X1 THD)	
	32	1	**8T-7876**	2	SEAL-O-RING (8.2MM ID)	
	33	1	**6E-4233**	1	PLATE-VALVE-RH	
	34	1	**005-0471**	1	CONE-BEARING	
	35	1	**005-0469**	1	CUP-ROLLER BEARING	
	36	1	**9X-7547**	2	SEAL-LIP	
	37	1	**7K-8877**	1	CONE-BEARING	
	38	1	**9T-1652**	1	PIN	
	39	1	**6E-4215**	1	KIT-PISTON	
					(INCLUDES PACKING, ROD & PISTON)	
Y	40	1	**6E-4221**	1	SWASHPLATE GP	678
	41	1	**6E-2943**	1	PLUG	

B-USE AS REQUIRED
M-METRIC PART
Y-SEPARATE ILLUSTRATION

100-6239 PUMP GP-PISTON ***(contd.)*** **i01366024**

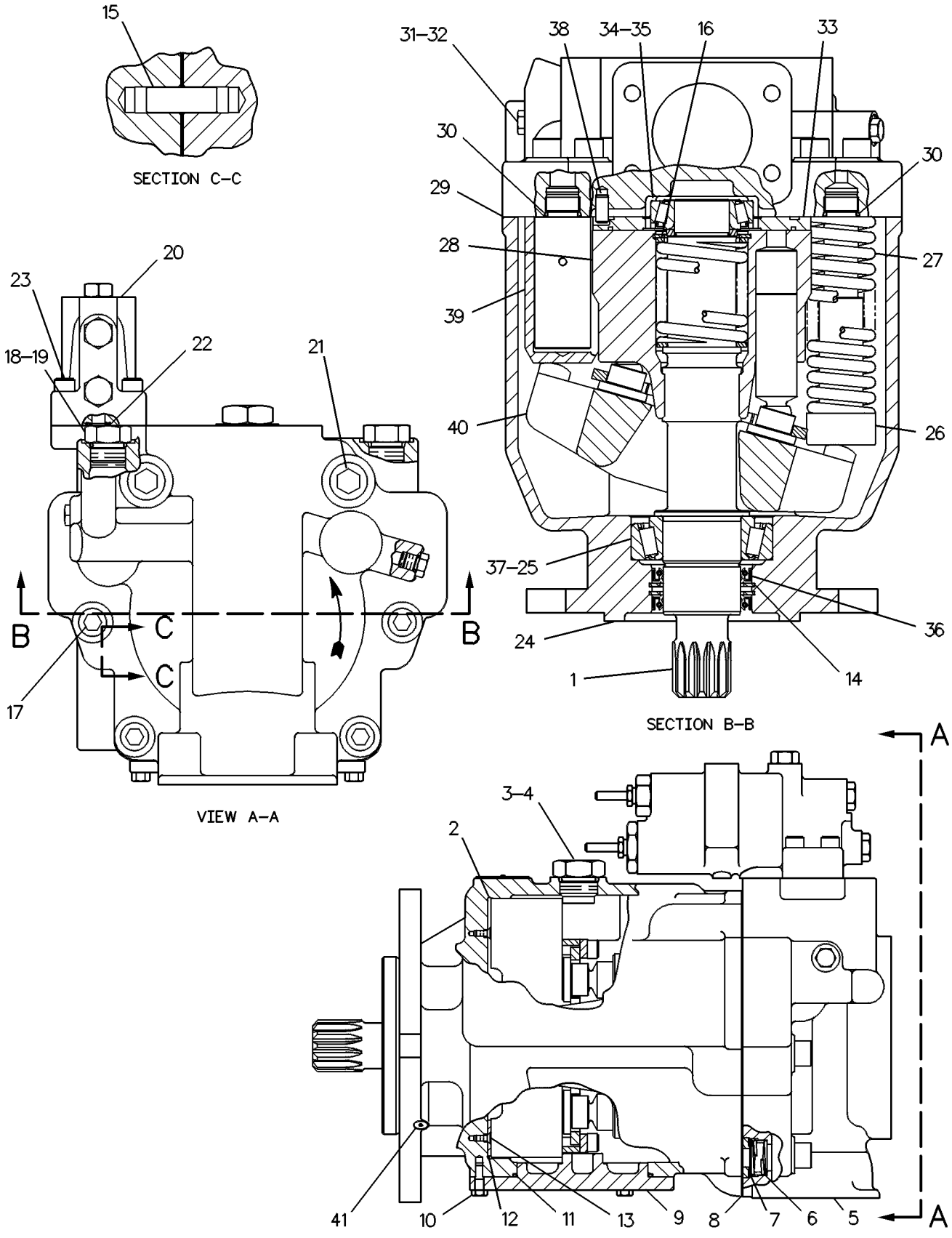

GRAPHIC #1

g00239947

6E-4863 PUMP GP-PISTON & GEAR

S/N: ABK1-UP
SLIPPER
PART OF 162-9504 CONTROL AR-HYDRAULIC IMPLEMENT

SMCS-5084 **i01156518**

NOTE	REF NO	GRAPHIC REF	PART NUMBER	QTY	PART NAME 1 2 3 4 5 6 (PRODUCT LEVEL)	SEE PAGE
Y	1	1	**100-6239**	1	PUMP GP-PISTON	674
	2	1	**0S-1594**	2	BOLT (3/8-16X1 IN)	
	3	1	**8C-3089**	1	SEAL-O-RING (82.22MM ID)	
Y	4	1	**100-6240**	1	PUMP GP-GEAR	673
	5	1	**100-6241**	1	COUPLING-SHAFT	

Y-SEPARATE ILLUSTRATION

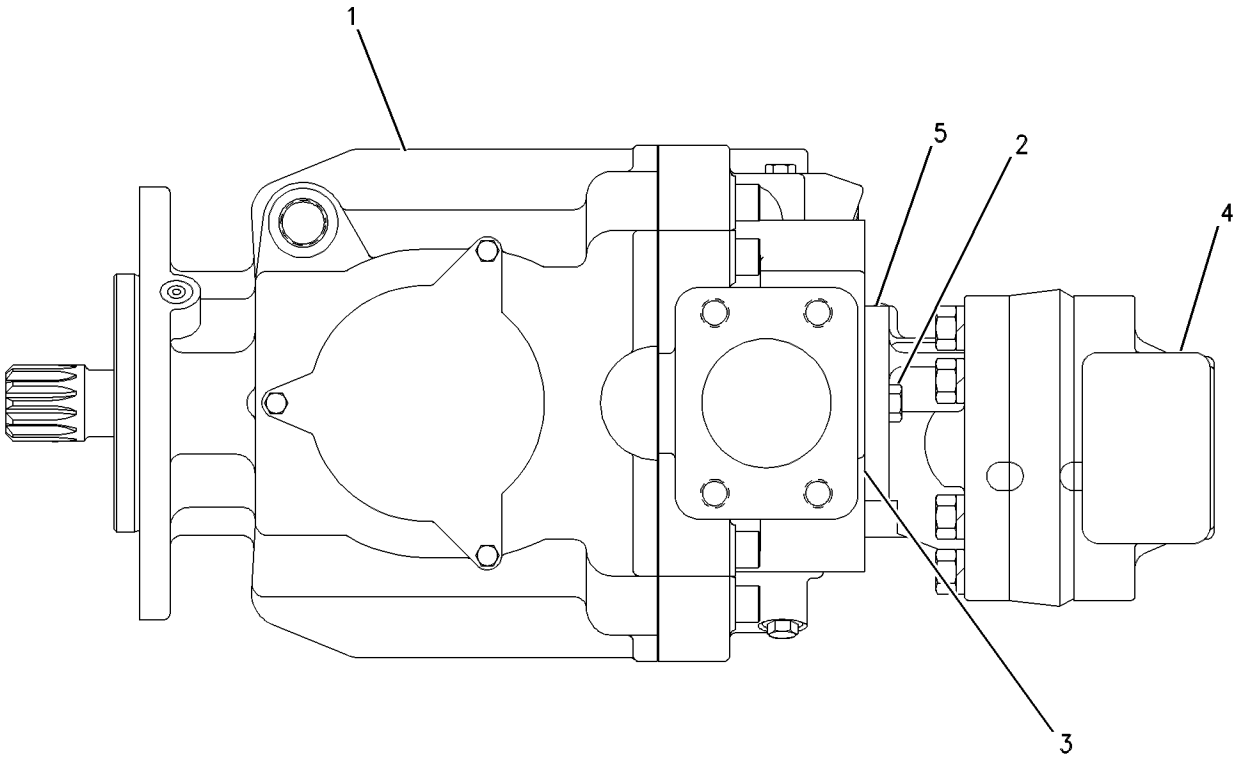

GRAPHIC #1 g00614525

HYDRAULIC SYSTEM

6E-4216 ROTATING GP-PUMP

S/N: ABK1-UP

PART OF 100-6239 PUMP GP-PISTON

SMCS-5070 **i00110729**

NOTE	REF NO	GRAPHIC REF	PART NUMBER	QTY	PART NAME 1 2 3 4 5 6 (PRODUCT LEVEL)	SEE PAGE
	1	1	**9T-4906**	1	RING-RETAINING	
	2	1	**6E-4219**	1	GUIDE	
M	3	1	**6V-5192**	4	BOLT-SOCKET HEAD (M8X1.25X30MM)	
	4	1	**6E-4218**	2	PLATE-SPACER	
	5	1	**6E-4217**	2	PLATE-LIMITER	
	6	1	**9T-8452**	9	PISTON	
	7	1	**9T-8445**	1	GUIDE	
	8	1	**9T-8446**	1	SPRING	
	9	1	**9T-8448**	1	BARREL	
	10	1	**9T-8450**	1	PLATE-RETAINING	

M-METRIC PART

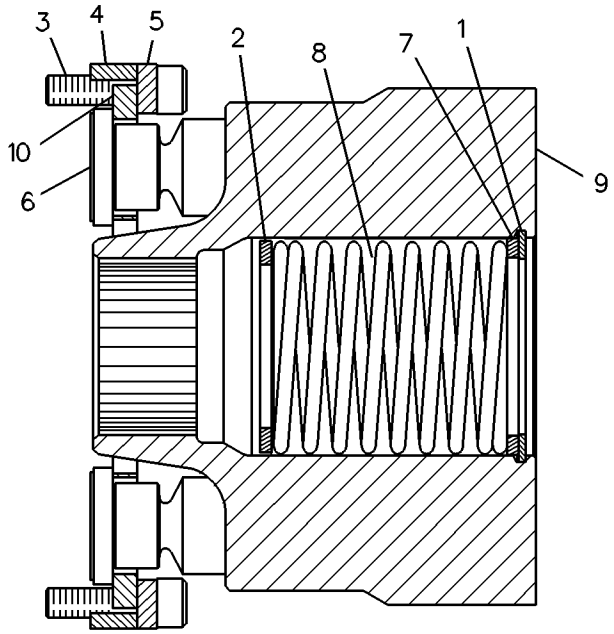

GRAPHIC #1 g00083062

6E-4221 SWASHPLATE GP

S/N: ABK1-UP
PART OF 100-6239 PUMP GP-PISTON
FIELD REPLACEMENT ORDER 184-1527—PAGE 679

SMCS-5070 **i01246590**

NOTE	PART NUMBER	QTY	PART NAME 1 2 3 4 5 6 (PRODUCT LEVEL)	SEE PAGE
	139-0532	2	BLOCK-STOP	
	8F-7219	2	SEAL-O-RING (4.47MM ID)	

HYDRAULIC SYSTEM

184-1527 SWASHPLATE GP

S/N: ABK1-UP

FIELD REPLACEMENT FOR 6E-4221—PAGE 678

SMCS-5070 **i01247539**

NOTE	PART NUMBER	QTY	PART NAME 1 2 3 4 5 6 (PRODUCT LEVEL)	SEE PAGE
	1H-3937	2	PIN	
	167-1801	2	STOP-SWASHPLATE	

HYDRAULIC SYSTEM

163-4153 TANK & FILTER GP-HYDRAULIC

S/N: ABK1-UP

PART OF 162-9504 CONTROL AR-HYDRAULIC IMPLEMENT

SMCS-5056, 5068 **i01445945**

NOTE	REF NO	GRAPHIC REF	PART NUMBER	QTY	PART NAME 1 2 3 4 5 6 (PRODUCT LEVEL)	SEE PAGE
	1	1	**166-8524**	1	TANK AS-HYDRAULIC	
	2	1	**121-4731**	1	TANK AS	
	3	1	**6E-3332**	1	TUBE AS	
	4	1	**2H-6124**	2	SEAL-O-RING (164.46MM ID)	
	5	1	**5H-6733**	2	SEAL-O-RING (139.07MM ID)	
	6	1	**9T-7578**	2	COVER AS	
	7	2	**9S-4182**	2	PLUG-O-RING	
	8	2	**3J-7354**	3	SEAL-O-RING (8.92MM ID)	
	9	2	**6H-9361**	1	RING-RETAINING	
	10	2	**5D-7927**	1	STRAINER AS	
	11	2	**9H-6454**	1	GASKET	
	12	2	**2D-4202**	1	PLATE	
	13	2	**8T-2275**	1	BALL	
	14	2	**7H-1447**	1	CAP-FILLER (HYDRAULIC TANK)	
	15	1	**5P-1843**	1	STUD-TAPERLOCK	
	16	1	**1R-0722**	1	FILTER ELEMENT AS-OIL (HYDRAULIC/REVERSE FLOW) (DISPOSABLE)	
					—OR—	
A		1	**4T-3134**	1	FILTER ELEMENT AS-OIL (HYDRAULIC) (FIRE RESISTANT FLUID/HIGH PRFM)	
					—OR—	
A		1	**139-1536**	1	FILTER ELEMENT AS-OIL (HYDRAULIC/REVERSE FLOW) (CLEAN OUT/HIGHER PERFORMANCE)	
	17	1	**9J-1979**	2	RETAINER AS	
	18	1	**4M-6921**	2	WASHER-SPRING	
M	19	1,2	**6V-7744**	76	LOCKNUT	
M	20	1,2	**6V-8097**	4	BOLT (M12X1.75X30MM)	
	21	2	**9J-1986**	1	FLANGE	
	22	1	**6E-5049**	1	TUBE AS	
	23	1	**6E-2059**	1	HOUSING	
	24	2	**9J-1988**	1	VALVE	
	25	2	**1L-4349**	1	SPRING	
	26	2	**9J-1985**	1	TUBE AS	
	27	1,2	**6V-5839**	6	WASHER (11X21X2.5MM THK)	
	28	2	**139-9281**	1	RETAINER	
	29	2	**139-9283**	1	PLATE-VIEW	
	30	2	**139-9282**	1	GROMMET	
	31	2	**170-4017**	1	PLATE	
M	32	2	**6V-7732**	2	BOLT (M10X1.5X25MM)	
	33	2	**6E-4616**	1	BRACKET	
BD	34	2	**5P-9119**		SEALANT	
M	35	1	**6V-4248**	62	BOLT (M10X1.50X25MM)	
	36	1	**8F-4994**	1	SEAL-O-RING (23.16MM ID)	
	37	2	**5P-9617**	1	ADAPTER	
	38	2	**3J-1907**	1	SEAL-O-RING (11.89MM ID)	
	39	1	**7D-1195**	2	SEAL-O-RING (56.52MM ID)	
	40	1	**5D-0353**	2	BOLT-LOCKING (3/8-16X1 IN)	
	41	1	**1P-4578**	2	FLANGE-HALF	
	42	1	**5P-8244**	4	WASHER (12X22.5X2.5MM THK)	
	43	1	**3H-5368**	4	BOLT (7/16-14X1.375IN)	
	44	1	**9T-7568**	1	BASE-FILTER	
	45	1	**8C-5230**	1	SEAL-O-RING (43.82MM ID)	
	46	1	**9S-8752**	8	NUT-FULL (3/8-16 THD)	
	47	1	**5P-1075**	2	WASHER-HARD (10.2X22.5X3MM THK)	
	48	1	**9T-7571**	1	SCREEN AS	
	49	1	**5K-9107**	2	BOLT-LOCKING (3/8-16X0.75 IN)	

163-4153 **TANK & FILTER GP-HYDRAULIC** *(contd.)* **i01445945**

NOTE	REF NO	GRAPHIC REF	PART NUMBER	QTY	PART NAME 1 2 3 4 5 6 (PRODUCT LEVEL)	SEE PAGE
	50	1	**0L-0646**	1	SPRING-VALVE	
	51	1	**9T-7572**	1	FLANGE	
	52	1	**9T-7570**	1	VALVE-BYPASS	
	53	1	**9T-7567**	1	STUD-TAPERLOCK	
	54	2	**8C-3446**	1	VALVE AS-FLUID SAMPLING	
	55	1	**2K-4973**	2	LOCKNUT	
	56	1	**1R-0735**	2	FILTER ELEMENT AS-OIL (HYDRAULIC/REVERSE FLOW) (DISPOSABLE)	
					—OR—	
A		1	**104-6931**	2	FILTER ELEMENT AS-OIL (REVERSE FLOW) (FIRE RESISTANT FLUID/HIGH PRFM)	
					—OR—	
A		1	**139-1537**	2	FILTER ELEMENT AS-OIL (CLEAN OUT/HIGHER PERFORMANCE)	
	57	1	**5F-7054**	2	SEAL-O-RING (18.64MM ID)	
	58	1	**104-3817**	1	TUBE AS	
	59	1	**5M-2894**	8	WASHER-HARD (10.2X18.5X2.5MM THK)	
	60	2	**8C-3451**	1	CAP-DUST	

A-NOT PART OF THIS GROUP
B-USE AS REQUIRED
D-ORDER BY THE METER
M-METRIC PART

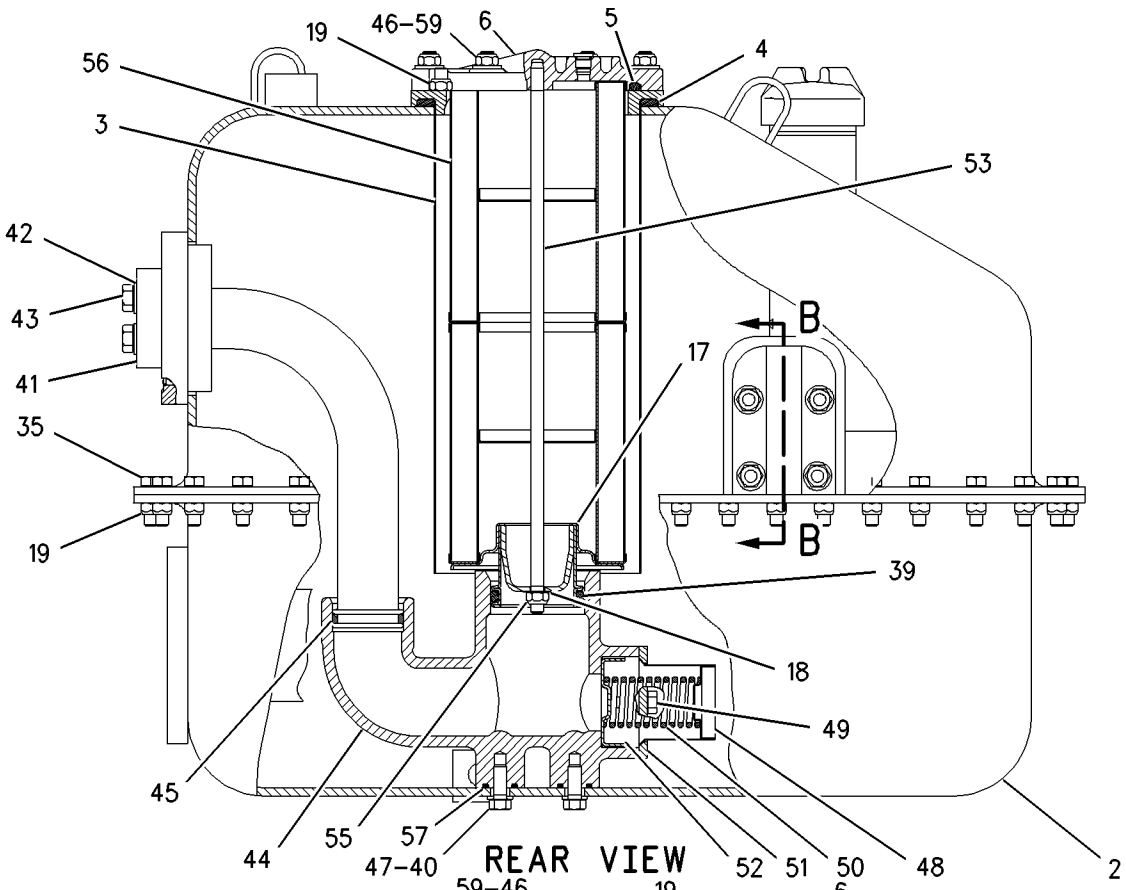

REAR VIEW

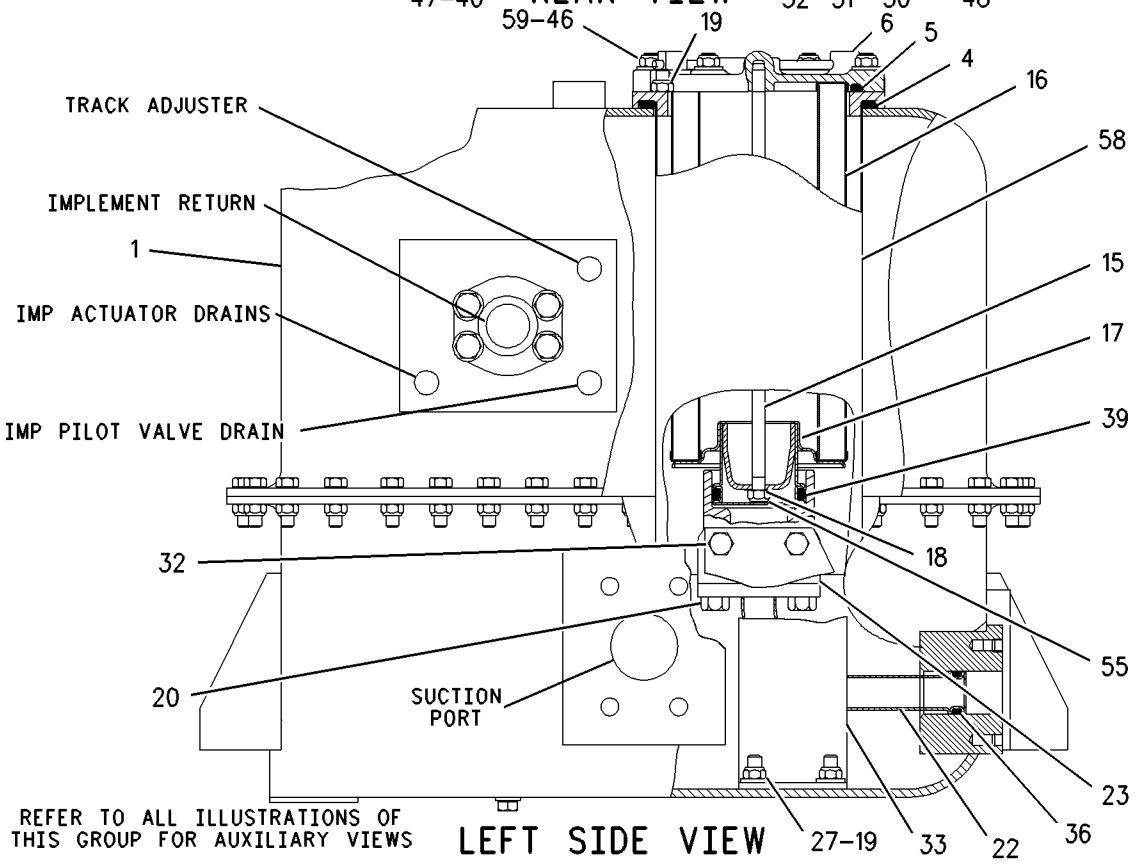

REFER TO ALL ILLUSTRATIONS OF THIS GROUP FOR AUXILIARY VIEWS

LEFT SIDE VIEW

GRAPHIC #1 g00688641

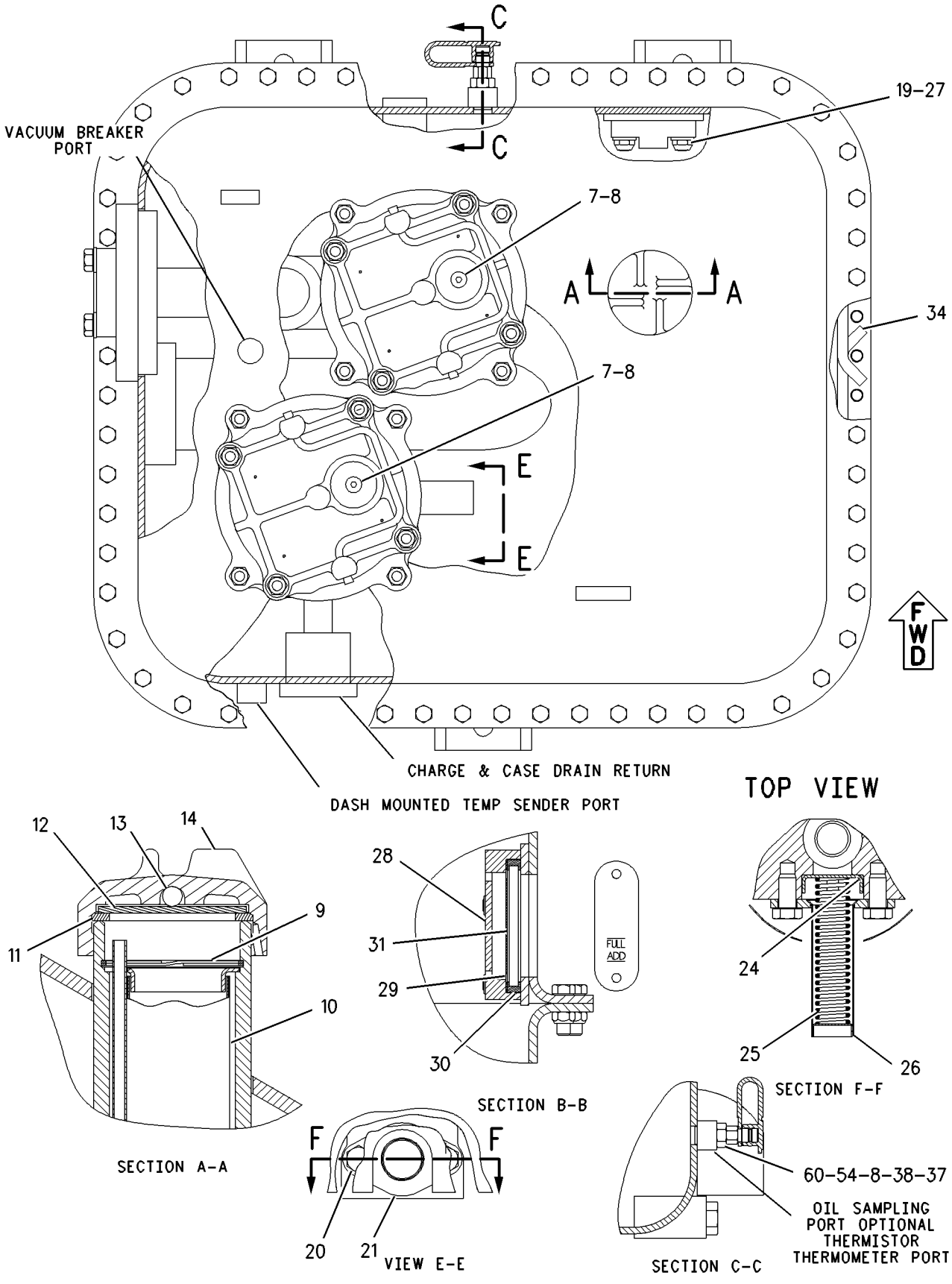

GRAPHIC #2

g00688535

106-7483 VALVE & MTG GP-CONTROL

S/N: ABK1-UP
PART OF 101-7771 CONTROL AR-HYDRAULIC
AN ATTACHMENT

SMCS-5051 **i01168455**

NOTE	REF NO	GRAPHIC REF	PART NUMBER	QTY	PART NAME 1 2 3 4 5 6 (PRODUCT LEVEL)	SEE PAGE
	1	1	**6T-9559**	1	MANIFOLD	
Y	2	1	**3E-8575**	1	VALVE GP-SOLENOID	707

Y-SEPARATE ILLUSTRATION

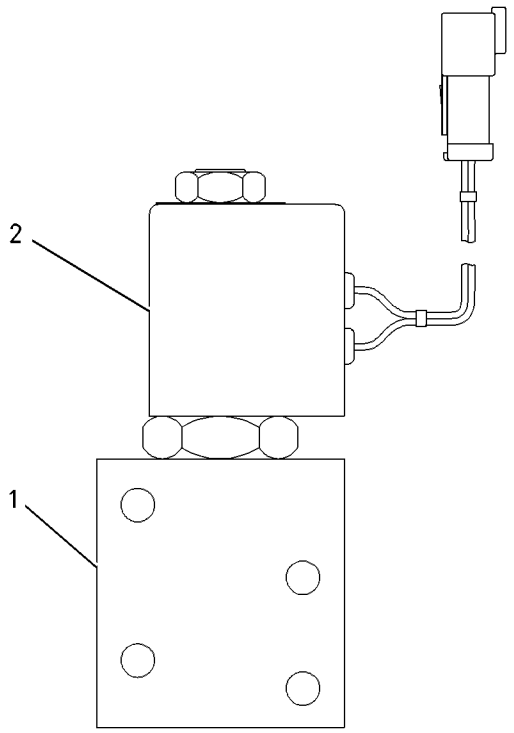

GRAPHIC #1 g00623067

MEMORANDA

HYDRAULIC SYSTEM

187-8636 VALVE GP-BANK 4

S/N: ABK1-UP

PART OF 162-9504 CONTROL AR-HYDRAULIC IMPLEMENT

SMCS-5051 **i01591070**

NOTE	REF NO	GRAPHIC REF	PART NUMBER	QTY	PART NAME 1 2 3 4 5 6 (PRODUCT LEVEL)	SEE PAGE
Y	1	1	**6E-4138**	1	MANIFOLD GP-VALVE (RIPPER/DOZER BANK VALVE)	672
Y	2	1	**6E-5138**	1	VALVE GP-CONTROL (BLADE LIFT)	694
Y	3	1	**6E-4049**	1	VALVE GP-CONTROL (BLADE TILT)	690
Y	4	1	**6E-4051**	1	VALVE GP-CONTROL (RIPPER LIFT)	692
Y	5	1	**187-8637**	1	VALVE GP-CONTROL (RIPPER TILT)	696
	6	1	**6E-5455**	1	COVER	
	7	1	**6V-8188**	6	NUT (1/2-13 THD)	
	8	1	**8T-4223**	6	WASHER-HARD (13.5X25.5X3MM THK)	
	9	1	**9T-2856**	3	ROD	
	10	1	**9S-4182**	5	PLUG-O-RING	
	11	1	**3J-7354**	5	SEAL-O-RING	
	12	1	**3J-1907**	1	SEAL-O-RING	
	13	1	**8J-9990**	1	PLUG-ORIFICE	
	14	1	**8T-5360**	8	WASHER (12X22.5X2.5MM THK)	
	15	1	**4J-8997**	4	SEAL-O-RING	
	16	1	**4J-0522**	16	SEAL-O-RING	
	17	1	**6V-5555**	15	SEAL-O-RING	
	18	1	**1P-3702**	1	SEAL-RECTANGULAR	
	19	1	**8T-8916**	8	BOLT (7/16-14X1.5 IN)	
	20	1	**1P-4578**	4	FLANGE-HALF	
	21	1	**5H-4020**	1	COVER	
	22	1	**5S-7382**	36	BOLT (3/8-16X1.375 IN)	
	23	1	**8T-4896**	36	WASHER-HARD (10.2X18.5X2.5MM THK)	
	24	1	**1P-4577**	18	FLANGE-HALF	

Y-SEPARATE ILLUSTRATION

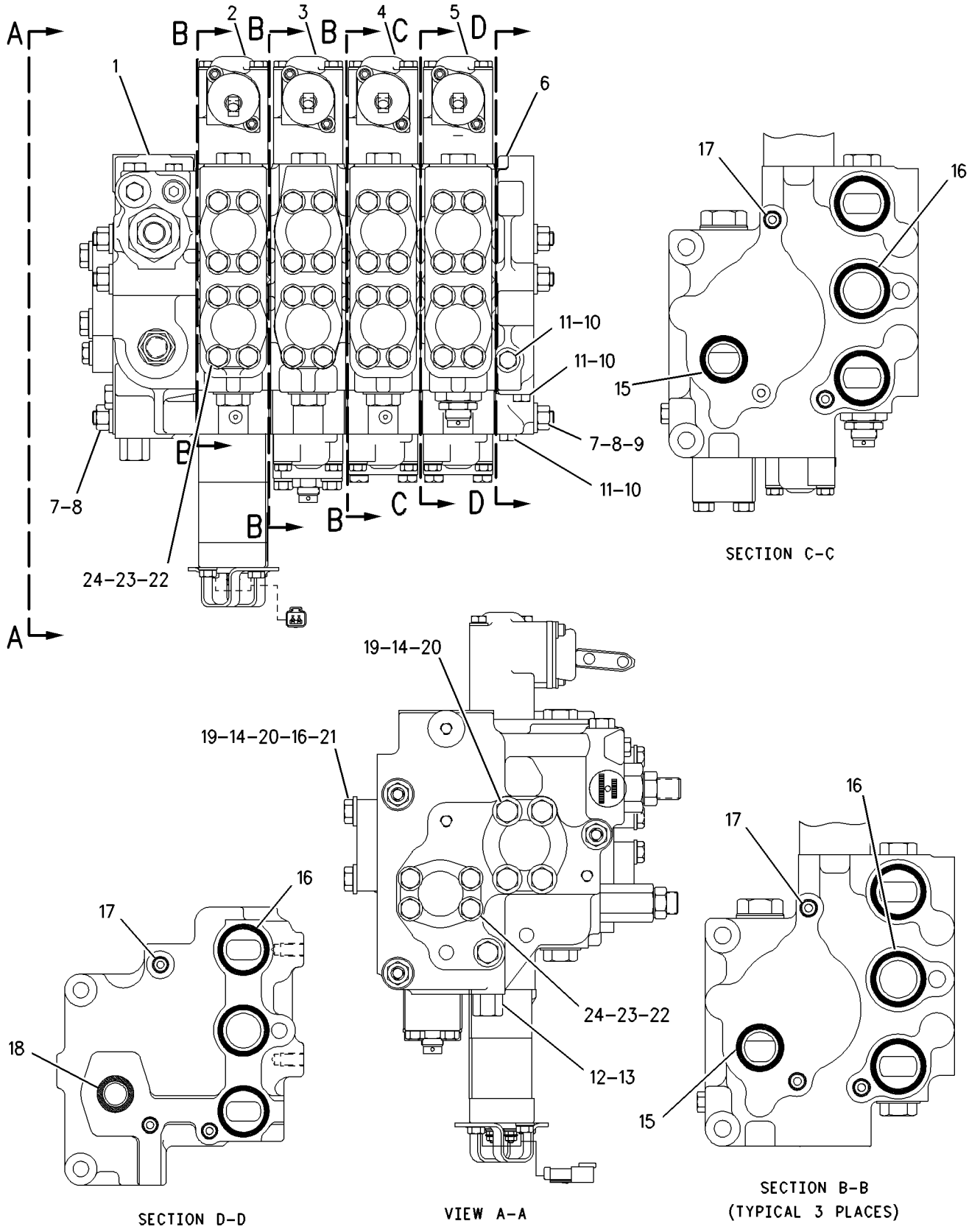

GRAPHIC #1 g00825106

HYDRAULIC SYSTEM

4T-5896 VALVE GP-CHECK

S/N: ABK1-UP

PART OF 6E-4138 MANIFOLD GP-VALVE

SMCS-5067 **i01596268**

NOTE	REF NO	GRAPHIC REF	PART NUMBER	QTY	PART NAME 1 2 3 4 5 6 (PRODUCT LEVEL)	SEE PAGE
	1	1	**5H-1472**	1	BALL	
	2	1	**9G-0278**	1	SPRING	
	3	1	**3J-1907**	1	SEAL-O-RING	
	4	1	**4T-5071**	1	RING-BACKUP	
	5	1	**8C-3085**	1	SEAL-O-RING	
	6	1	**8L-6565**	1	PIN-SPRING	

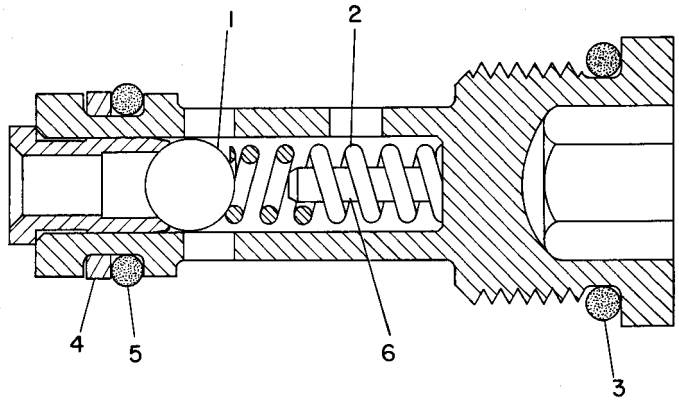

GRAPHIC #1 g00124639

HYDRAULIC SYSTEM

173-1519 VALVE GP-CHECK & RELIEF

S/N: ABK1-UP

PART OF 6E-4847 PUMP GP-PISTON

SMCS-5067, 5117 **i01223051**

NOTE	REF NO	GRAPHIC REF	PART NUMBER	QTY	PART NAME 1 2 3 4 5 6 (PRODUCT LEVEL)	SEE PAGE
	1	1	**9T-4514**	1	RETAINER	
	2	1	**9T-4513**	1	ADJUSTER	
	3	1	**4F-2294**	1	NUT-JAM (5/16-24 THD)	
	4	1	**9T-4512**	1	CAP	
	5	1	**3D-2824**	1	SEAL-O-RING (23.47MM ID)	
	6	1	**173-1518**	1	HOUSING	
	7	1	**4K-1388**	1	SEAL-O-RING (26.59MM ID)	
	8	1	**9T-4518**	1	RING-BACKUP	
	9	1	**5K-9090**	1	SEAL-O-RING (23.52MM ID)	
	10	1	**9T-4517**	1	VALVE	
	11	1	**125-6990**	1	VALVE	
	12	1	**124-7326**	3	WASHER (1.6MM THK)	
	13	1	**124-7359**	1	SPRING	
	14	1	**124-7360**	1	SPRING	
	15	1	**111-7739**	1	SPRING	
	16	1	**111-7740**	1	SPACER	

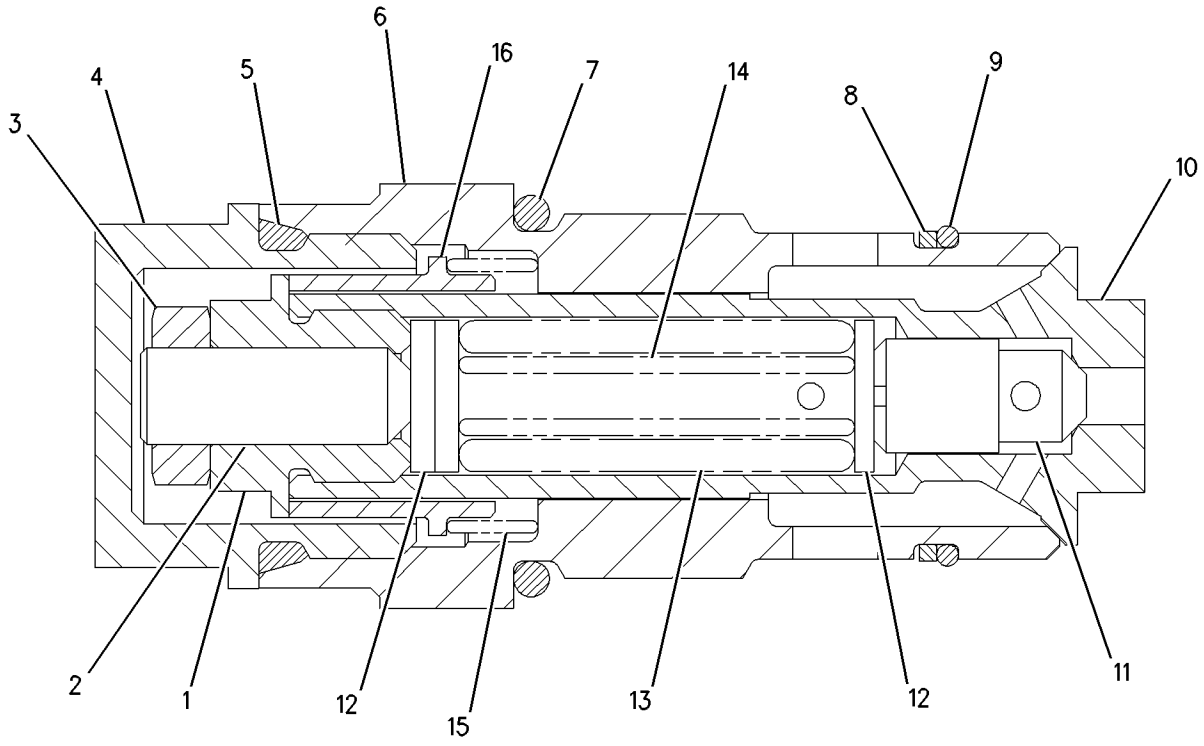

GRAPHIC #1 g00655292

HYDRAULIC SYSTEM

6E-4049 VALVE GP-CONTROL

S/N: ABK1-UP

PART OF 187-8636 VALVE GP-BANK 4

SMCS-5051 **i01624608**

NOTE	REF NO	GRAPHIC REF	PART NUMBER	QTY	PART NAME 1 2 3 4 5 6 (PRODUCT LEVEL)	SEE PAGE
	1	1	**1N-5999**	1	PLUG	
	2	1	**2D-0598**	1	SEAL-O-RING	
	3	1	**2S-2596**	1	SPRING	
	4	1	**100-8011**	1	PLUG	
	5	1	**8T-9377**	2	BOLT (3/8-16X2.25 IN)	
	6	1	**100-8010**	1	VALVE	
C	7	1	**123-9624**	1	SPRING	
	8	1	**8T-4896**	2	WASHER-HARD (10.2X18.5X2.5MM THK)	
	9	1	**9J-8126**	1	PLUG-ORIFICE	
B	10	1	**6E-1637**	4	SHIM (1.0MM THK)	
	11	1	**5M-2057**	1	SEAL-O-RING	
	12	1	**7X-0277**	2	BOLT (5/16-18X3.75 IN)	
CY	13	1	**121-6649**	1	VALVE GP-RELIEF	705
	14	1	**9S-8001**	2	PLUG	
Y	15	1	**4T-1022**	1	LEVER GP-CONTROL VALVE	645
	16	1	**4T-0993**	2	RETAINER	
	17	1	**5J-1391**	1	SPRING	
	18	1	**4T-1021**	2	RETAINER	
	19	1	**4T-1108**	2	PLUG	
	20	1	**4T-5073**	2	RING-BACKUP	
	21	1	**7J-9933**	2	SEAL-O-RING	
	22	1	**4J-5351**	2	SEAL-O-RING	
	23	1	**4T-5072**	2	RING-BACKUP	
	24	1	**7J-0204**	1	SEAL-O-RING	
	25	1	**7M-8485**	1	SEAL-O-RING	
Y	26	1	**4T-1860**	1	VALVE GP-SHUTTLE (BALL RESOLVER)	706
	27	1	**4J-7533**	2	SEAL-O-RING	
	28	1	**4K-1388**	2	SEAL-O-RING	
	29	1	**8C-3121**	2	BOLT (5/16-18X1.50 IN)	
	30	1	**8T-4224**	4	WASHER-HARD (8.8X16X2MM THK)	
C	31	1	**4T-1850**	1	HOUSING	
	32	1	**9S-4182**	1	PLUG-O-RING	
	33	1	**3J-7354**	1	SEAL-O-RING	

B-USE AS REQUIRED
C-CHANGE FROM PREVIOUS TYPE
Y-SEPARATE ILLUSTRATION

6E-4049 VALVE GP-CONTROL *(contd.)* i01624608

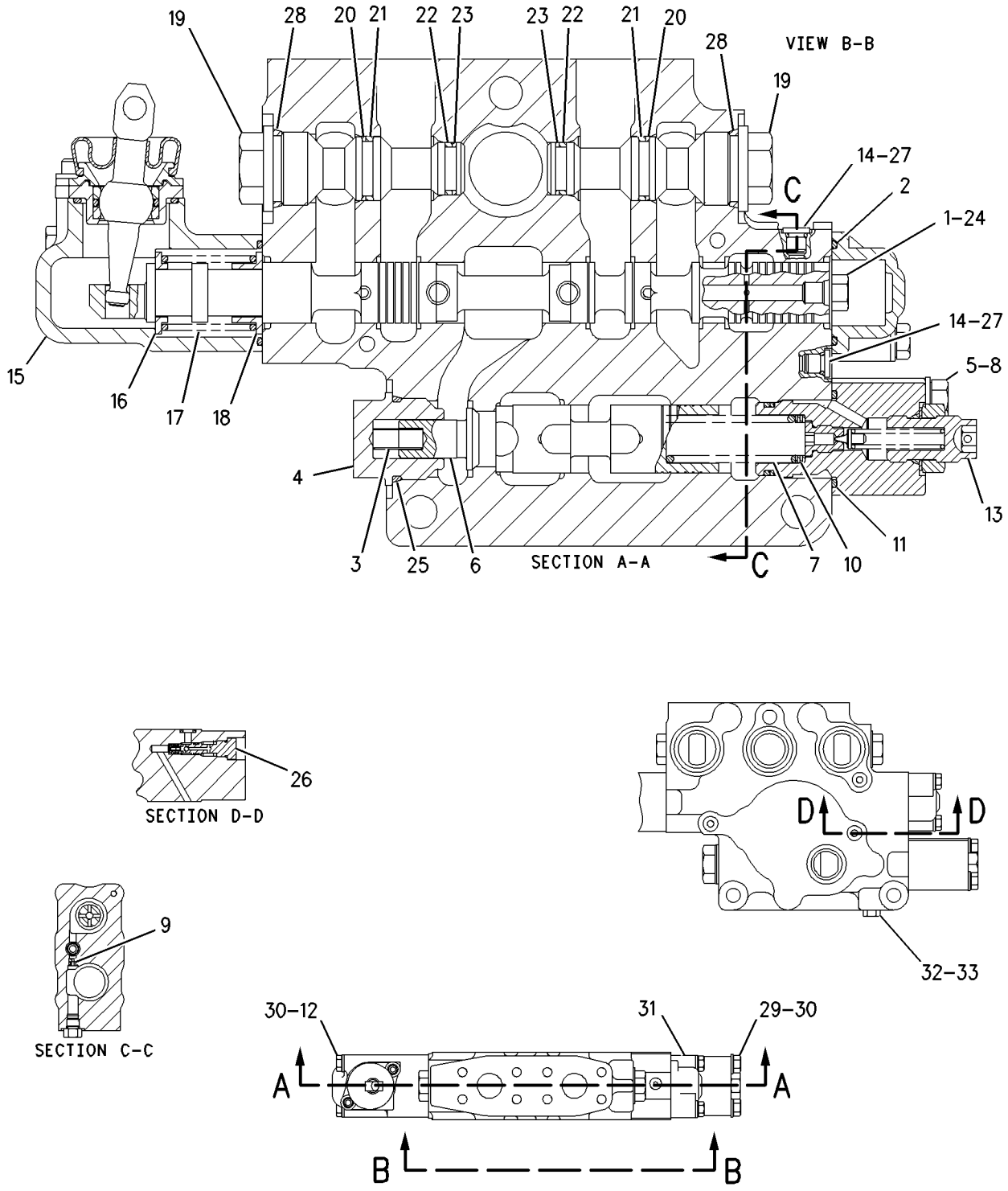

GRAPHIC #1 g00825131

HYDRAULIC SYSTEM

6E-4051 VALVE GP-CONTROL

S/N: ABK1-UP

PART OF 187-8636 VALVE GP-BANK 4

SMCS-5051 **i01624611**

NOTE	REF NO	GRAPHIC REF	PART NUMBER	QTY	PART NAME 1 2 3 4 5 6 (PRODUCT LEVEL)	SEE PAGE
	1	1	**1N-5999**	1	PLUG	
	2	1	**2D-0598**	1	SEAL-O-RING	
	3	1	**100-8011**	1	PLUG	
	4	1	**9S-8001**	2	PLUG	
	5	1	**7M-8485**	1	SEAL-O-RING	
	6	1	**100-8010**	3	VALVE	
	7	1	**4T-1701**	1	SPRING	
	8	1	**6V-5556**	1	SEAL-O-RING	
	9	1	**4T-5074**	1	RING-BACKUP	
	10	1	**4T-4511**	1	SLEEVE	
	11	1	**5M-2057**	1	SEAL-O-RING	
	12	1	**4T-1850**	1	HOUSING	
B	13	1	**4B-4278**	5	WASHER (10.2X20.5X1.6MM THK)	
	14	1	**9J-8126**	1	PLUG-ORIFICE	
Y	15	1	**4T-1022**	1	LEVER GP-CONTROL VALVE	645
	16	1	**4T-0993**	2	RETAINER	
	17	1	**4J-3832**	1	SPRING	
	18	1	**4T-1021**	2	RETAINER	
	19	1	**100-8012**	2	BODY	
	20	1	**4J-7533**	2	SEAL-O-RING	
	21	1	**2S-2596**	3	SPRING	
	22	1	**4T-5073**	2	RING-BACKUP	
	23	1	**7J-9933**	2	SEAL-O-RING	
	24	1	**8T-2501**	2	BOLT (3/8-16X2 IN)	
Y	25	1	**4T-1860**	1	VALVE GP-SHUTTLE (BALL RESOLVER)	706
	26	1	**4T-1649**	1	HOUSING	
	27	1	**7J-0204**	1	SEAL-O-RING	
	28	1	**7X-0277**	2	BOLT (5/16-18X3.75 IN)	
	29	1	**9S-4182**	1	PLUG-O-RING	
	30	1	**3J-7354**	1	SEAL-O-RING	
	31	1	**4K-1388**	2	SEAL-O-RING	
	32	1	**8C-3121**	2	BOLT (5/16-18X1.50 IN)	
	33	1	**8T-4224**	4	WASHER-HARD (8.8X16X2MM THK)	

B-USE AS REQUIRED
Y-SEPARATE ILLUSTRATION

6E-4051 VALVE GP-CONTROL *(contd.)*

i01624611

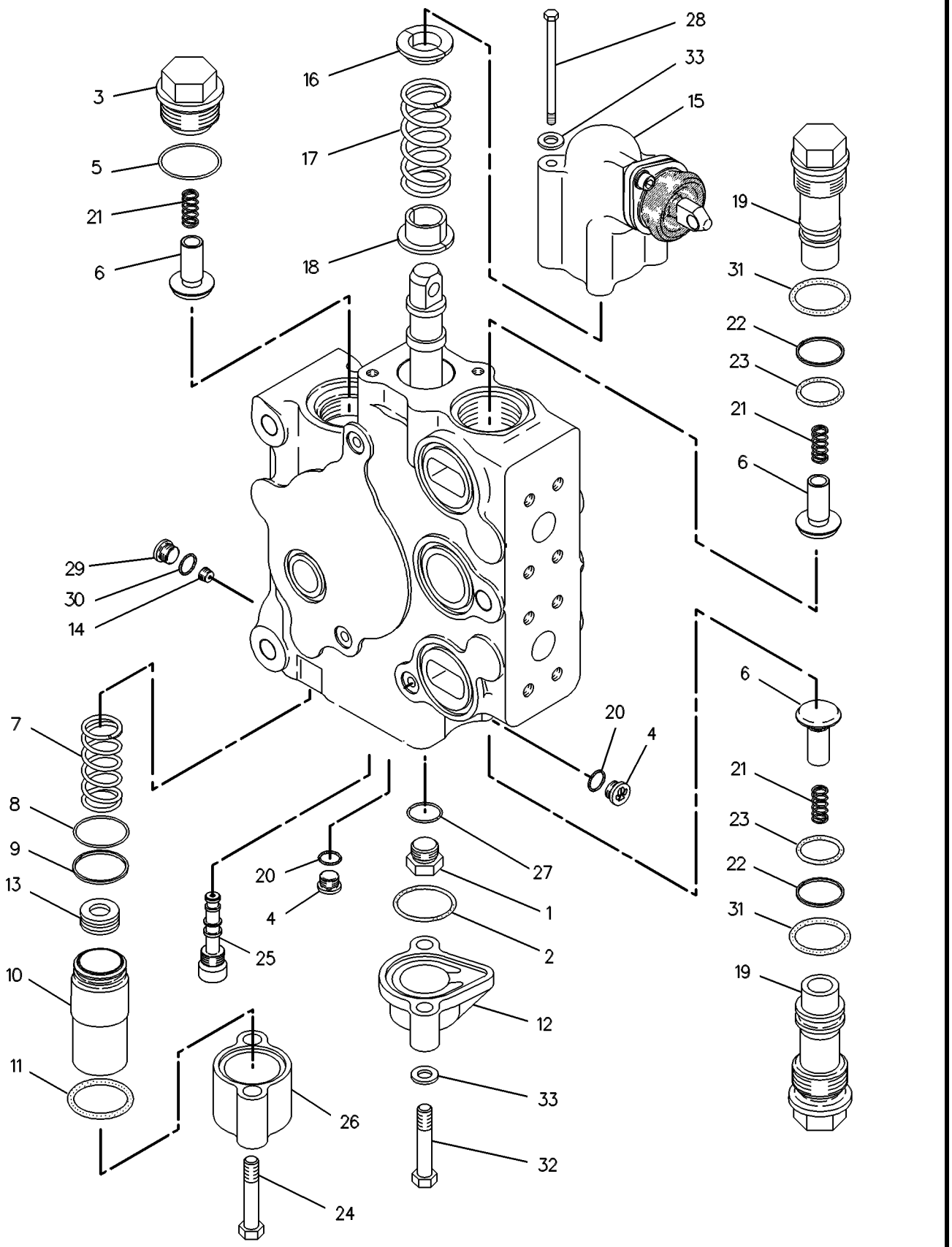

GRAPHIC #1

g00457770

HYDRAULIC SYSTEM

6E-5138 VALVE GP-CONTROL

S/N: ABK1-UP

PART OF 187-8636 VALVE GP-BANK 4

SMCS-5051 **i01624615**

NOTE	REF NO	GRAPHIC REF	PART NUMBER	QTY	PART NAME 1 2 3 4 5 6 (PRODUCT LEVEL)	SEE PAGE
	1	1	**7X-0277**	2	BOLT (5/16-18X3.75 IN)	
Y	2	1	**4T-1860**	1	VALVE GP-SHUTTLE (BALL RESOLVER)	706
	3	1	**9S-4182**	1	PLUG-O-RING	
		1	**3J-7354**	1	SEAL-O-RING	
	4	1	**4L-7711**	1	SEAL-O-RING	
	5	1	**8T-4224**	4	WASHER-HARD (8.8X16X2MM THK)	
	6	1	**8T-2501**	2	BOLT (3/8-16X2 IN)	
	7	1	**106-1791**	1	SWITCH GP	
	8	1	**7X-0280**	2	BOLT (5/16-18X5 IN)	
	9	1	**4T-1649**	1	HOUSING	
	10	1	**4T-4511**	1	SLEEVE	
	11	1	**5M-2057**	1	SEAL-O-RING	
	12	1	**4T-1849**	1	HOUSING	
	13	1	**4T-1701**	1	SPRING	
	14	1	**2D-6642**	6	BALL	
	15	1	**2D-0598**	1	SEAL-O-RING	
	16	1	**4B-4278**	4	WASHER (10.2X20.5X1.6MM THK)	
	17	1	**4T-1108**	1	PLUG	
	18	1	**4T-1851**	1	RETAINER	
	19	1	**4J-5351**	1	SEAL-O-RING	
	20	1	**108-9402**	1	SPRING	
	21	1	**4T-1852**	1	RETAINER	
	22	1	**4T-5074**	1	RING-BACKUP	
	23	1	**4T-5072**	1	RING-BACKUP	
	24	1	**2S-2596**	2	SPRING	
	25	1	**6V-5556**	1	SEAL-O-RING	
	26	1	**100-8012**	1	BODY	
	27	1	**9J-8126**	1	PLUG-ORIFICE	
	28	1	**4K-1388**	2	SEAL-O-RING	
	29	1	**9S-8001**	2	PLUG	
		1	**4J-7533**	2	SEAL-O-RING	
	30	1	**7J-9933**	2	SEAL-O-RING	
		1	**4T-5073**	2	RING-BACKUP	
	31	1	**7M-8485**	1	SEAL-O-RING	
	32	1	**100-8010**	2	VALVE	
Y	33	1	**6E-5134**	1	LEVER GP	644
	34	1	**4T-0993**	4	RETAINER	
	35	1	**3J-7694**	1	SPRING	
	36	1	**100-8011**	1	PLUG	
	37	1	**168-6861**	1	STEM AS-LIFT	
	38	1	**4T-1855**	1	DETENT	
	39	1	**7J-0204**	1	SEAL-O-RING	
	40	1	**9T-1887**	1	BOLT	
Z	41	1		1	BODY-VALVE	
Z	42	1		1	VALVE	

Y-SEPARATE ILLUSTRATION
Z-NOT SERVICED SEPARATELY

6E-5138 VALVE GP-CONTROL *(contd.)* i01624615

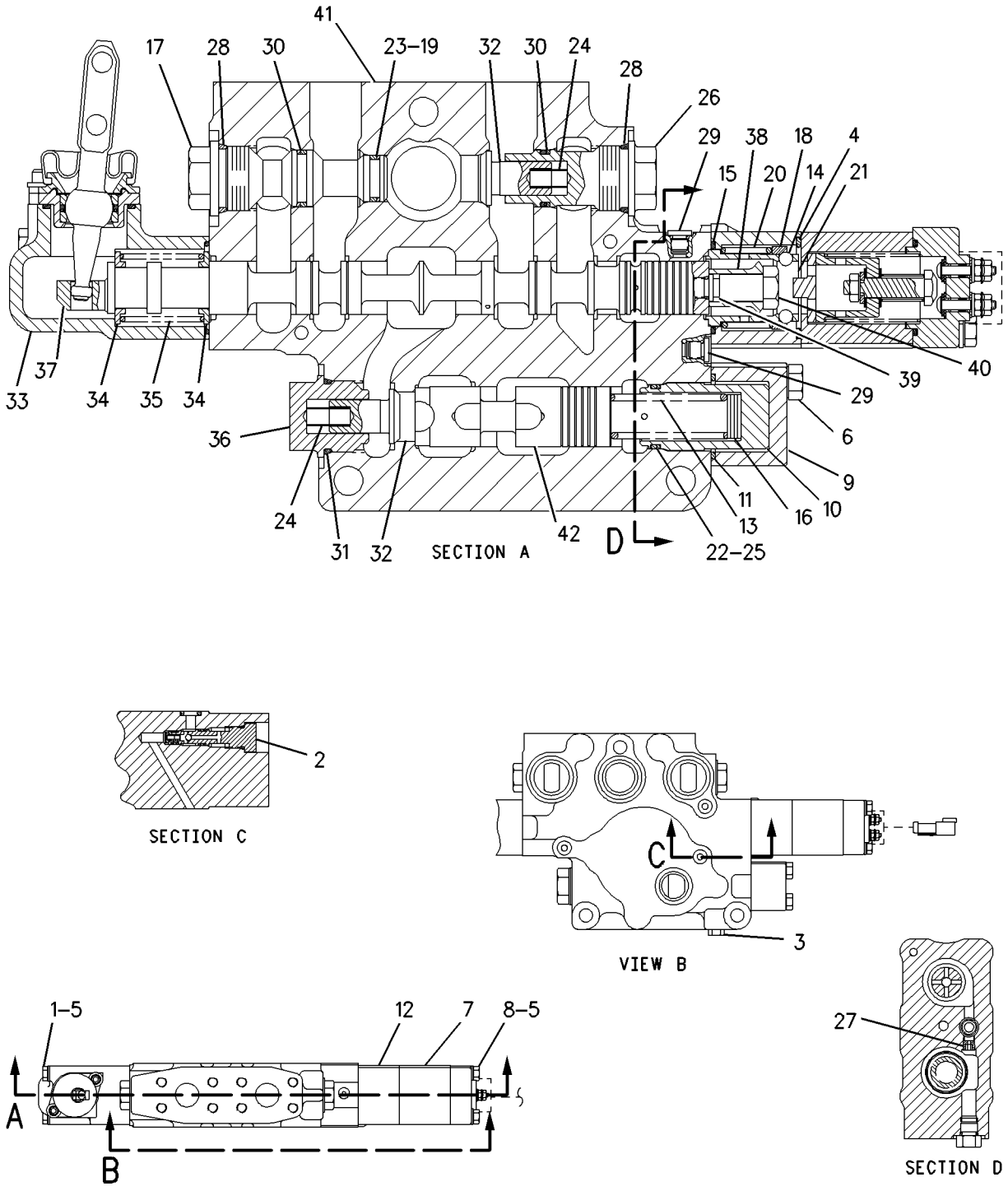

GRAPHIC #1 g00825186

HYDRAULIC SYSTEM

187-8637 VALVE GP-CONTROL

S/N: ABK1-UP

PART OF 187-8636 VALVE GP-BANK 4

SMCS-5051 **i01590880**

NOTE	REF NO	GRAPHIC REF	PART NUMBER	QTY	PART NAME 1 2 3 4 5 6 (PRODUCT LEVEL)	SEE PAGE
	1	1	**100-8012**	1	BODY	
	2	1	**7M-8485**	1	SEAL-O-RING	
	3	1	**2S-2596**	2	SPRING	
	4	1	**100-8011**	1	PLUG	
	5	1	**4T-1021**	2	RETAINER	
	6	1	**4J-3832**	1	SPRING	
	7	1	**4T-0993**	2	RETAINER	
Y	8	1	**4T-1022**	1	LEVER GP-CONTROL VALVE	645
Y	9	1	**116-1895**	1	VALVE GP-RELIEF	704
	10	1	**2D-0598**	1	SEAL-O-RING	
	11	1	**7J-0204**	1	SEAL-O-RING	
	12	1	**1N-5999**	1	PLUG	
	13	1	**8T-2501**	2	BOLT (3/8-16X2 IN)	
	14	1	**4T-1649**	1	HOUSING	
	15	1	**4T-4511**	1	SLEEVE	
B	16	1	**4B-4278**	6	WASHER (10.2X20.5X1.6MM THK)	
	17	1	**5M-2057**	1	SEAL-O-RING	
	18	1	**4T-5074**	1	RING-BACKUP	
	19	1	**6V-5556**	1	SEAL-O-RING	
	20	1	**4T-1701**	1	SPRING	
	21	1	**4T-1850**	1	HOUSING	
	22	1	**8T-4224**	4	WASHER-HARD (8.8X16X2MM THK)	
	23	1	**7X-0277**	2	BOLT (5/16-18X3.75 IN)	
	24	1	**8C-3121**	2	BOLT (5/16-18X1.50 IN)	
Y	25	1	*4T-1860*	1	VALVE GP-SHUTTLE (BALL RESOLVER)	706
	26	1	**3J-7354**	1	SEAL-O-RING	
	27	1	**9S-4182**	1	PLUG-O-RING	
	28	1	**9S-8001**	2	PLUG	
	29	1	**4J-7533**	2	SEAL-O-RING	
	30	1	**175-0453**	2	VALVE	
	31	1	**4T-5073**	1	RING-BACKUP	
	32	1	**9J-8126**	1	PLUG-ORIFICE	
	33	1	**7J-9933**	1	SEAL-O-RING	
	34	1	**4K-1388**	1	SEAL-O-RING	

B-USE AS REQUIRED
Y-SEPARATE ILLUSTRATION

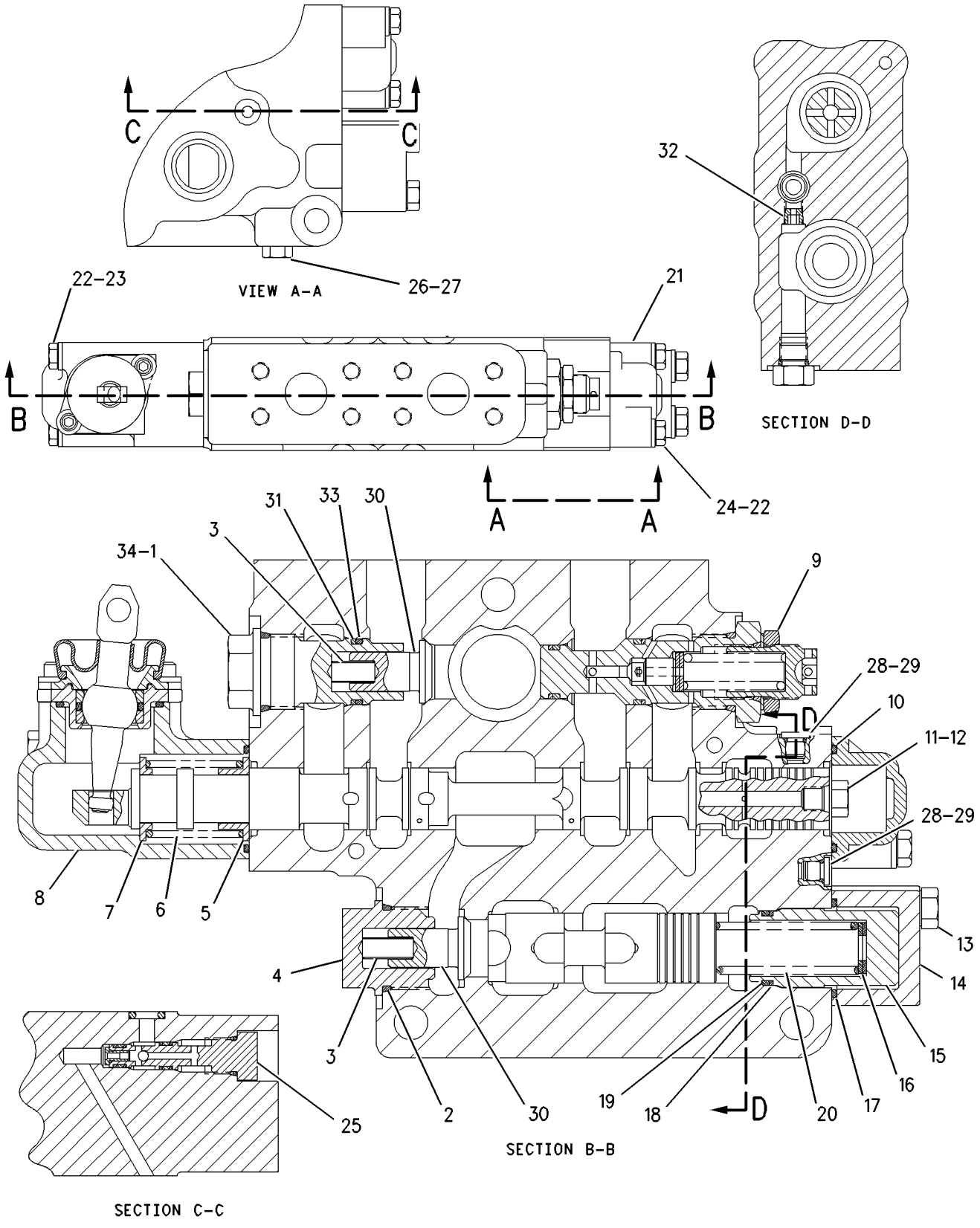

GRAPHIC #1 g00686877

HYDRAULIC SYSTEM

100-6335 VALVE GP-PRESS & FLOW CMPNSTR

S/N: ABK1-UP

PART OF 100-6239 PUMP GP-PISTON

SMCS-5086 **i01590894**

NOTE	REF NO	GRAPHIC REF	PART NUMBER	QTY	PART NAME 1 2 3 4 5 6 (PRODUCT LEVEL)	SEE PAGE
	1	1	**6E-4246**	1	SPRING-MARGIN	
	2	1	**9S-4191**	1	PLUG-STRAIGHT THREAD	
	3	1	**3J-1907**	3	SEAL-O-RING	
	4	1	**6E-4241**	1	SPOOL-MARGIN	
	5	1	**9T-2186**	2	PLUG	
	6	1	**6E-4239**	1	SPOOL-CUTOFF	
	7	1	**6E-4230**	2	GUIDE-SPRING	
	8	1	**6E-4228**	1	SPRING	
	9	1	**6E-6140**	1	PLUG-COMPENSATOR	
		1	**033-6036**	1	SEAL-O-RING	
	10	1	**6E-4318**	1	PIN-SPRING STOP	
	11	1	**6E-6141**	2	LOCKNUT-SEALING	
M	12	1	**129-7632**	2	SCREW-ADJUSTMENT	
	13	1	**6E-6142**	1	PLUG-MARGIN	
		1	**033-6027**	1	SEAL-O-RING	
	14	1	**6E-4242**	2	GUIDE-SPRING	
	15	1	**108-4814**	1	BODY-COMPENSATOR	
	16	1	**6E-6420**	1	VALVE-NEEDLE	
	17	1	**6E-6419**	1	RING	
	18	1	**9X-7680**	1	SEAL-O-RING	

M-METRIC PART

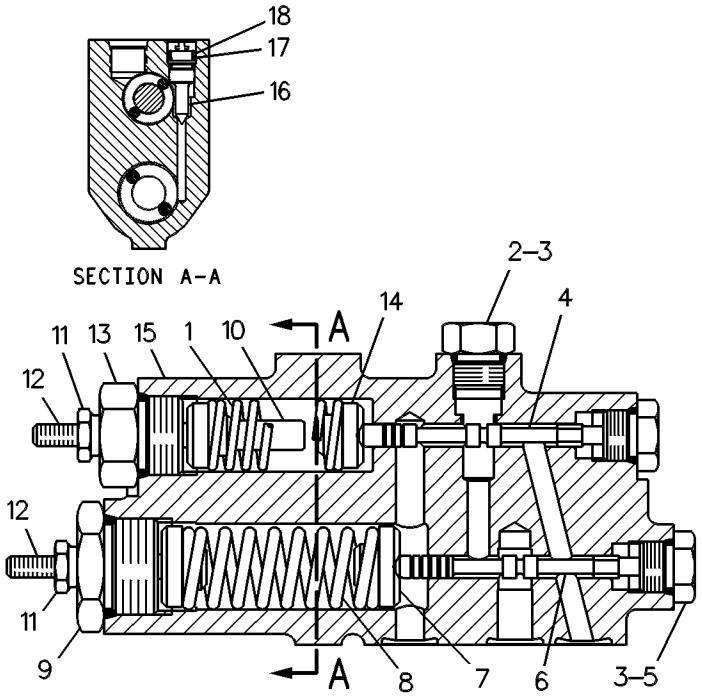

GRAPHIC #1 g00239952

MEMORANDA

HYDRAULIC SYSTEM

6E-4805 VALVE GP-QUICK-DROP

S/N: ABK1-UP

PART OF 162-9504 CONTROL AR-HYDRAULIC IMPLEMENT

SMCS-5110 **i01590899**

NOTE	REF NO	GRAPHIC REF	PART NUMBER	QTY	PART NAME 1 2 3 4 5 6 (PRODUCT LEVEL)	SEE PAGE
CY	1	1	**152-8346**	1	VALVE GP-SOLENOID	709
	2	1	**1P-3705**	2	SEAL-RECTANGULAR	
	3	1	**1P-4577**	8	FLANGE-HALF	
	4	1	**3J-1907**	2	SEAL-O-RING	
	5	1	**3P-0812**	1	SPRING	
	6	1	**4J-0520**	4	SEAL-O-RING	
	7	1	**4J-7533**	2	SEAL-O-RING	
	8	1	**5H-4019**	4	COVER	
	9	1	**5S-7382**	16	BOLT (3/8-16X1.375 IN)	
	10	1	**6E-4812**	1	SPRING (OUTER)	
	11	1	**6E-5502**	1	SPRING (INNER)	
	12	1	**6E-5503**	2	COVER	
	13	1	**7J-0204**	5	SEAL-O-RING	
	14	1	**8T-4896**	16	WASHER-HARD (10.2X18.5X2.5MM THK)	
	15	1	**8T-8917**	8	BOLT (1/2-13X1.25 IN)	
	16	1	**9S-8001**	1	PLUG	
	17	1	**5P-6719**	2	PLUG	
	18	1	**9S-8007**	2	PLUG-O-RING	
	19	1	**9S-4180**	1	PLUG-O-RING	
	20	1	**1N-5999**	3	PLUG	

C-CHANGE FROM PREVIOUS TYPE
Y-SEPARATE ILLUSTRATION

6E-4805 VALVE GP-QUICK-DROP *(contd.)* i01590899

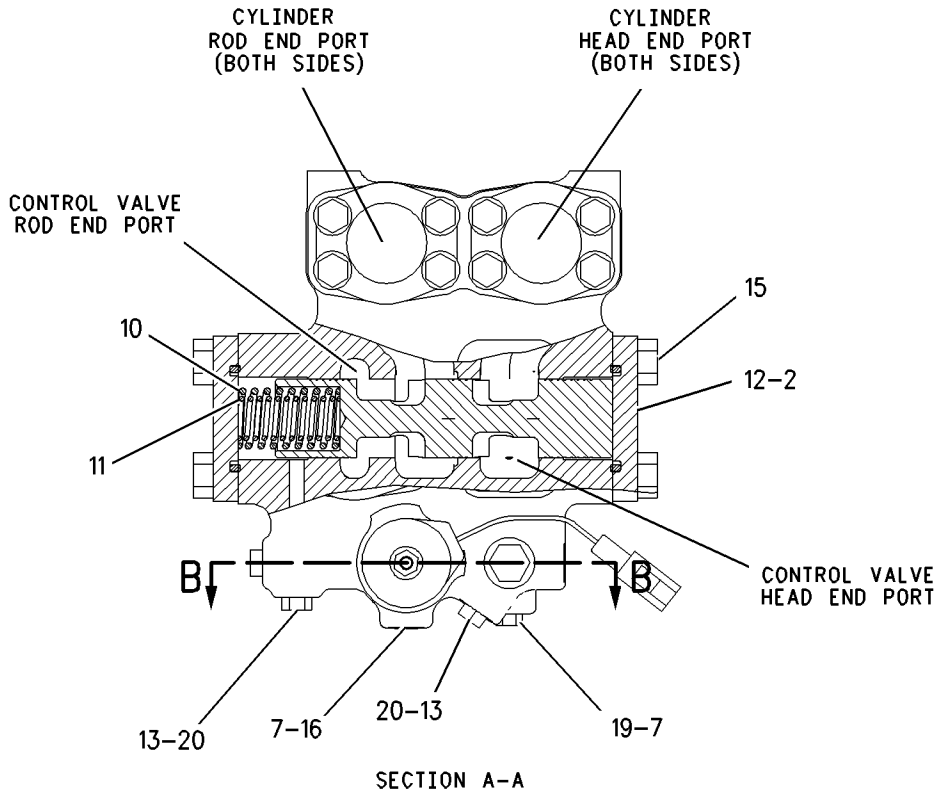

SECTION A-A

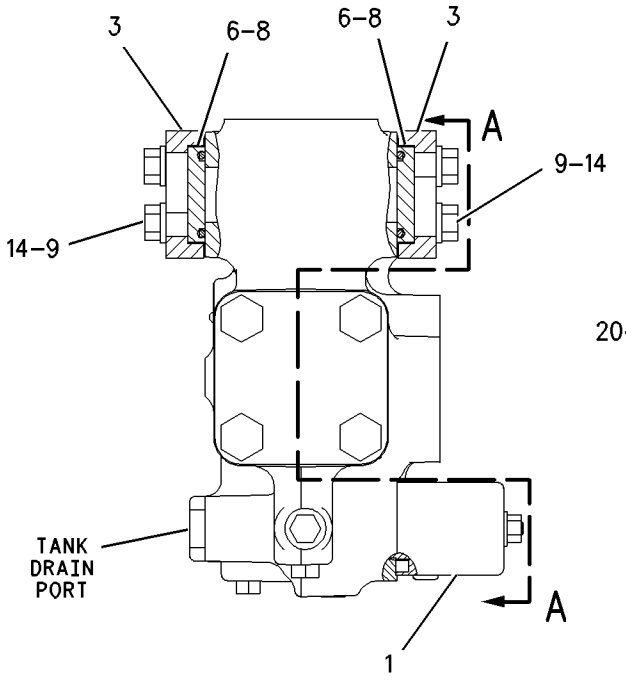

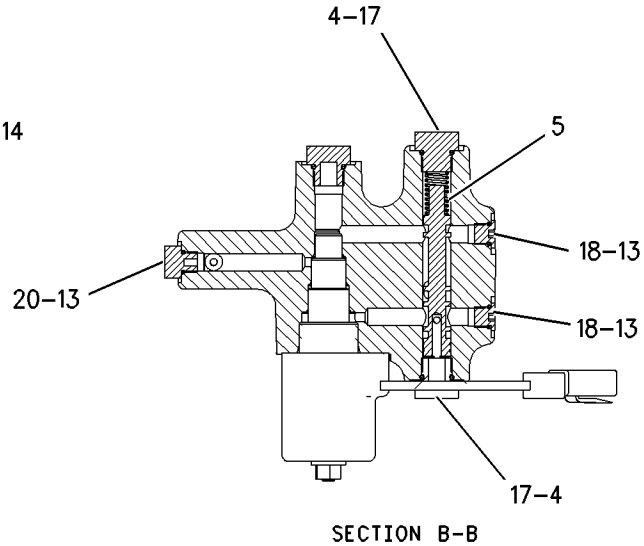

SECTION B-B

GRAPHIC #1 g00689214

HYDRAULIC SYSTEM

4T-1008 VALVE GP-RELIEF

S/N: ABK1-UP
CHARGING VALVE
PART OF 6E-4138 MANIFOLD GP-VALVE

SMCS-5069, 5117 **i01624618**

NOTE	REF NO	GRAPHIC REF	PART NUMBER	QTY	PART NAME 1 2 3 4 5 6 (PRODUCT LEVEL)	SEE PAGE
	1	1	**6E-5467**	1	PLUG	
	2	1	**7M-8485**	2	SEAL-O-RING	
	3	1	**4T-1009**	1	VALVE GP	
	4	1	**4T-5075**	1	RING-BACKUP	
	5	1	**6V-5393**	1	SEAL-O-RING	
	6	1	**4T-1011**	1	RING-SEAL	
	7	1	**5F-7054**	1	SEAL-O-RING	
	8	1	**4T-1005**	1	SPRING	
	9	1	**3K-0360**	1	SEAL-O-RING	
	10	1	**9X-6395**	1	NUT-ORFS (3/4-16 THD)	
	11	1	**6E-1835**	1	RETAINER AS	
	12	1	**5S-7001**	1	SPACER (.91MM THK)	

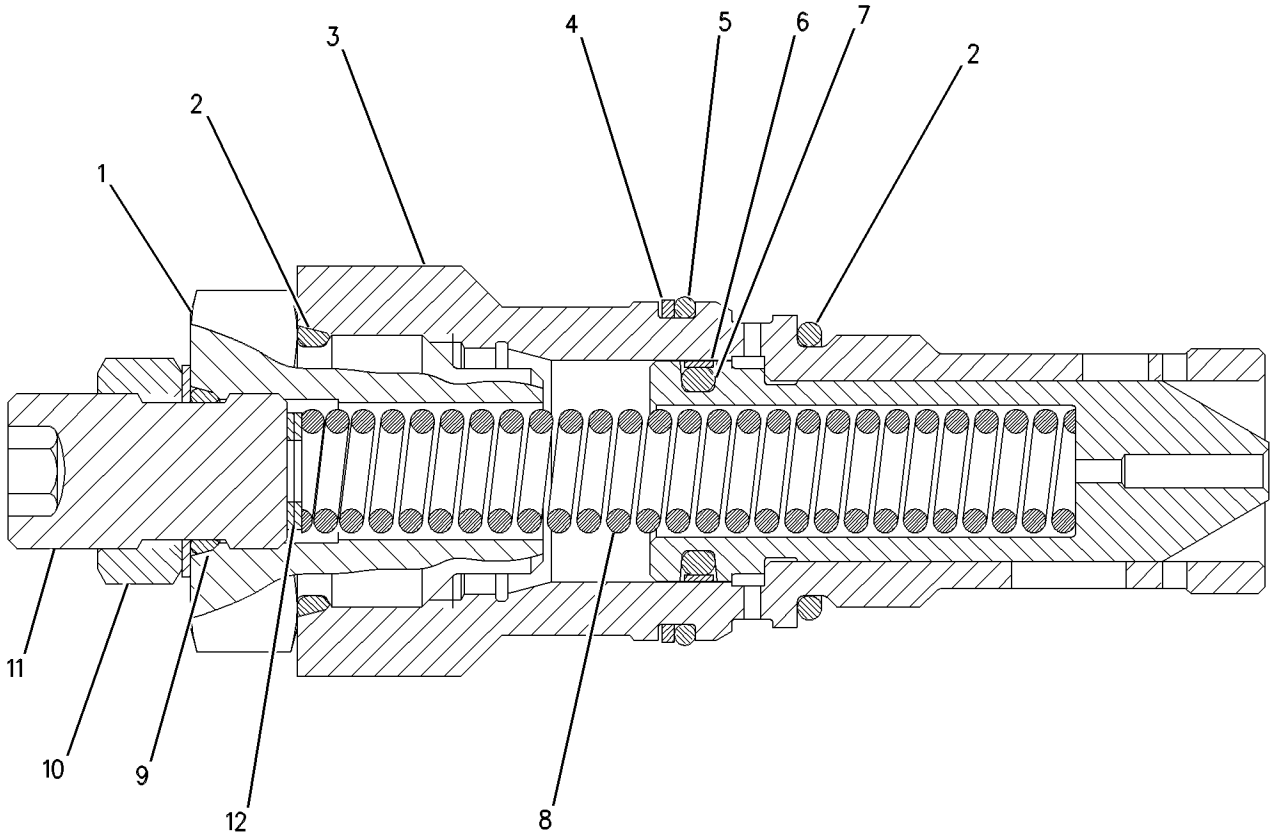

GRAPHIC #1 g00546393

HYDRAULIC SYSTEM

6E-4139 VALVE GP-RELIEF

S/N: ABK1-UP

PART OF 6E-4138 MANIFOLD GP-VALVE

SMCS-5069, 5117 **i00591467**

NOTE	REF NO	GRAPHIC REF	PART NUMBER	QTY	PART NAME 1 2 3 4 5 6 (PRODUCT LEVEL)	SEE PAGE
	1	1	**6E-1835**	1	RETAINER AS	
	2	1	**9X-6395**	1	NUT-ORFS (3/4-16 THD)	
	3	1	**3K-0360**	2	SEAL-O-RING (16.36MM ID)	
	4	1	**4T-4942**	1	SPRING	
	5	1	**7J-9933**	1	SEAL-O-RING (21.89MM ID)	
	6	1	**4T-7571**	1	PLATE	
	7	1	**6J-6439**	1	VALVE	

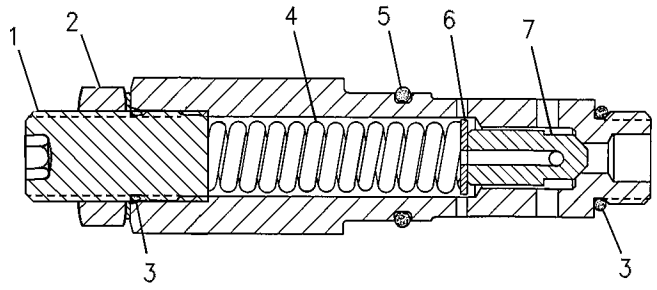

GRAPHIC #1 g00239923

HYDRAULIC SYSTEM

116-1895 VALVE GP-RELIEF

S/N: ABK1-UP

PART OF 187-8637 VALVE GP-CONTROL

SMCS-5069, 5117 **i01590908**

NOTE	REF NO	GRAPHIC REF	PART NUMBER	QTY	PART NAME 1 2 3 4 5 6 (PRODUCT LEVEL)	SEE PAGE
	1	1	**4K-1388**	1	SEAL-O-RING	
	2	1	**6E-2140**	1	RETAINER AS	
	3	1	**9T-6963**	2	SPACER	
	4	1	**4T-5073**	1	RING-BACKUP	
	5	1	**7J-9933**	1	SEAL-O-RING	
	6	1	**4T-5072**	1	RING-BACKUP	
	7	1	**4J-5351**	1	SEAL-O-RING	
	8	1	**9T-6043**	1	VALVE	
	9	1	**9T-6960**	1	SPRING	
	10	1	**6V-8371**	1	NUT-HEX	
	11	1	**2M-9780**	1	SEAL-O-RING	

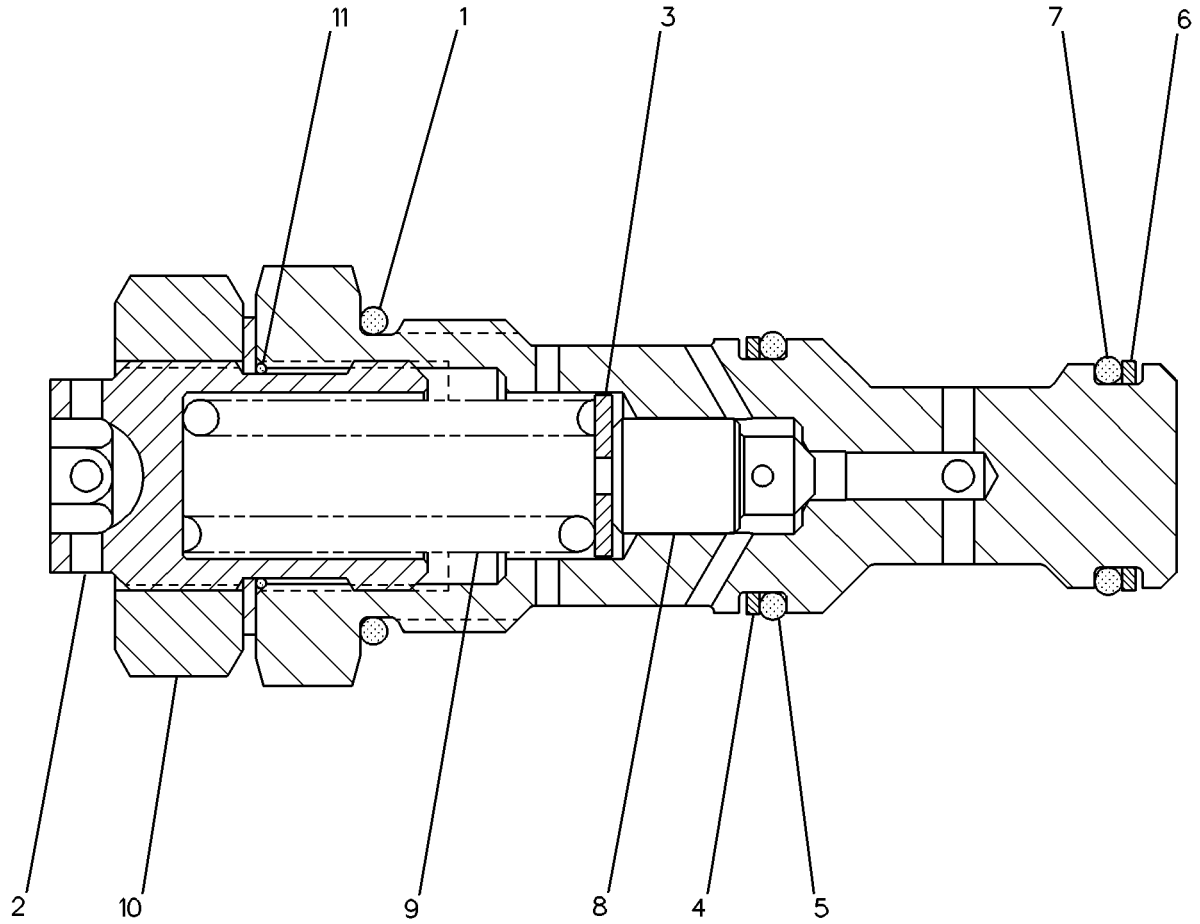

GRAPHIC #1 g00130958

HYDRAULIC SYSTEM

121-6649 VALVE GP-RELIEF

S/N: ABK1-UP

PART OF 6E-4049 VALVE GP-CONTROL

SMCS-5069, 5117 **i01625749**

NOTE	REF NO	GRAPHIC REF	PART NUMBER	QTY	PART NAME 1 2 3 4 5 6 (PRODUCT LEVEL)	SEE PAGE
	1	1	**3J-7354**	1	SEAL-O-RING	
	2	1	**4T-5074**	1	RING-BACKUP	
	3	1	**6V-5556**	1	SEAL-O-RING	
	4	1	**4T-4509**	1	SEAT	
	5	1	**108-5157**	1	VALVE	
	6	1	**4T-1700**	1	SPRING	
	7	1	**3K-0360**	1	SEAL-O-RING	
	8	1	**9X-6395**	1	NUT-ORFS (3/4-16 THD)	
	9	1	**6E-5200**	1	RETAINER AS	
B	10	1	**096-6166**	3	WASHER-HARD (4.5X9X1MM THK)	

B-USE AS REQUIRED

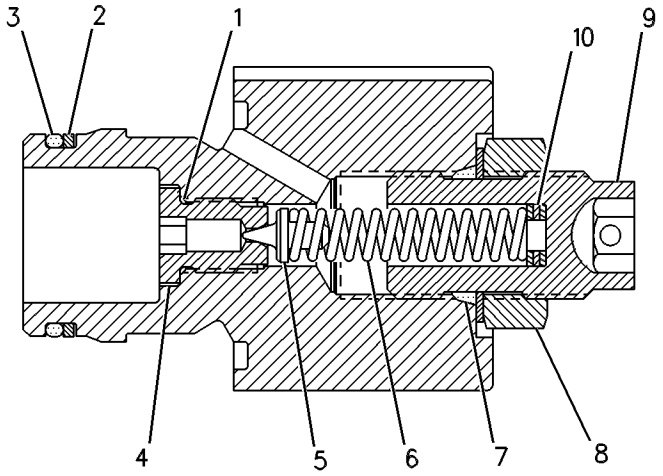

GRAPHIC #1 g00263606

HYDRAULIC SYSTEM

4T-1860 VALVE GP-SHUTTLE

S/N: ABK1-UP

PART OF 187-8637, 6E-4049, 6E-4051, 6E-5138 VALVE GP-CONTROL

SMCS-5079 **i01624620**

NOTE	REF NO	GRAPHIC REF	PART NUMBER	QTY	PART NAME 1 2 3 4 5 6 (PRODUCT LEVEL)	SEE PAGE
Z	1	1		1	SEAT	
	2	1	**1M-6718**	1	BALL	
Z	3	1		1	VALVE	
	4	1	**8C-3085**	1	SEAL-O-RING	
	5	1	**6V-5586**	1	SEAL-O-RING	
	6	1	**3J-1907**	1	SEAL-O-RING	
	7	1	**4T-5070**	2	RING-BACKUP	
	8	1	**4T-5071**	2	RING-BACKUP	

Z-NOT SERVICED SEPARATELY

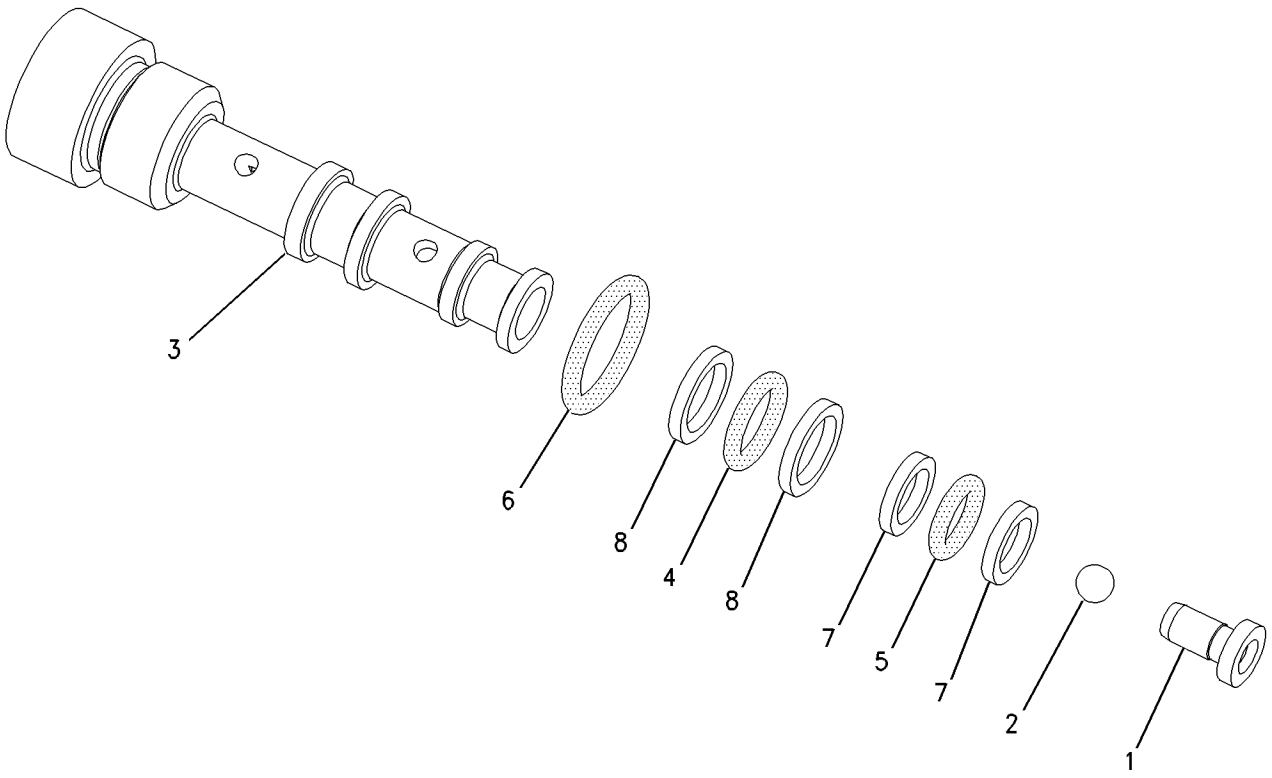

GRAPHIC #1 g00775006

3E-8575 VALVE GP-SOLENOID

S/N: ABK1-UP
PART OF 106-7483 VALVE & MTG GP-CONTROL
AN ATTACHMENT

SMCS-5479 **i01565591**

NOTE	REF NO	GRAPHIC REF	PART NUMBER	QTY	PART NAME 1 2 3 4 5 6 (PRODUCT LEVEL)	SEE PAGE
	1	1	**6T-3382**	1	CARTRIDGE AS	
	2	1	**160-5843**	1	WASHER-IDENTIFICATION	
	3	1	**157-2284**	1	LOCKNUT-SPECIAL (5/8-18 THD)	
	4	1	**160-5844**	1	WASHER-SPRING	
	5	1	**3E-8581**	1	COIL AS	
	6	1	**102-8804**	1	KIT-RECEPTACLE (4 PIN)	
					(INCLUDES RECEPTACLE AS & WEDGE)	
	7	1	**186-3735**	4	PIN-CONNECTOR	
	8	1	**1S-9593**	2	STRAP-CABLE	
	9	1	**3E-3377**	1	WEDGE-RECEPTACLE LOCK	
					AVAILABLE REPAIR KIT(S):	
			126-5948	1	KIT-SEAL	
					(INCLUDES SEAL-O-RINGS & RING-BACKUPS)	

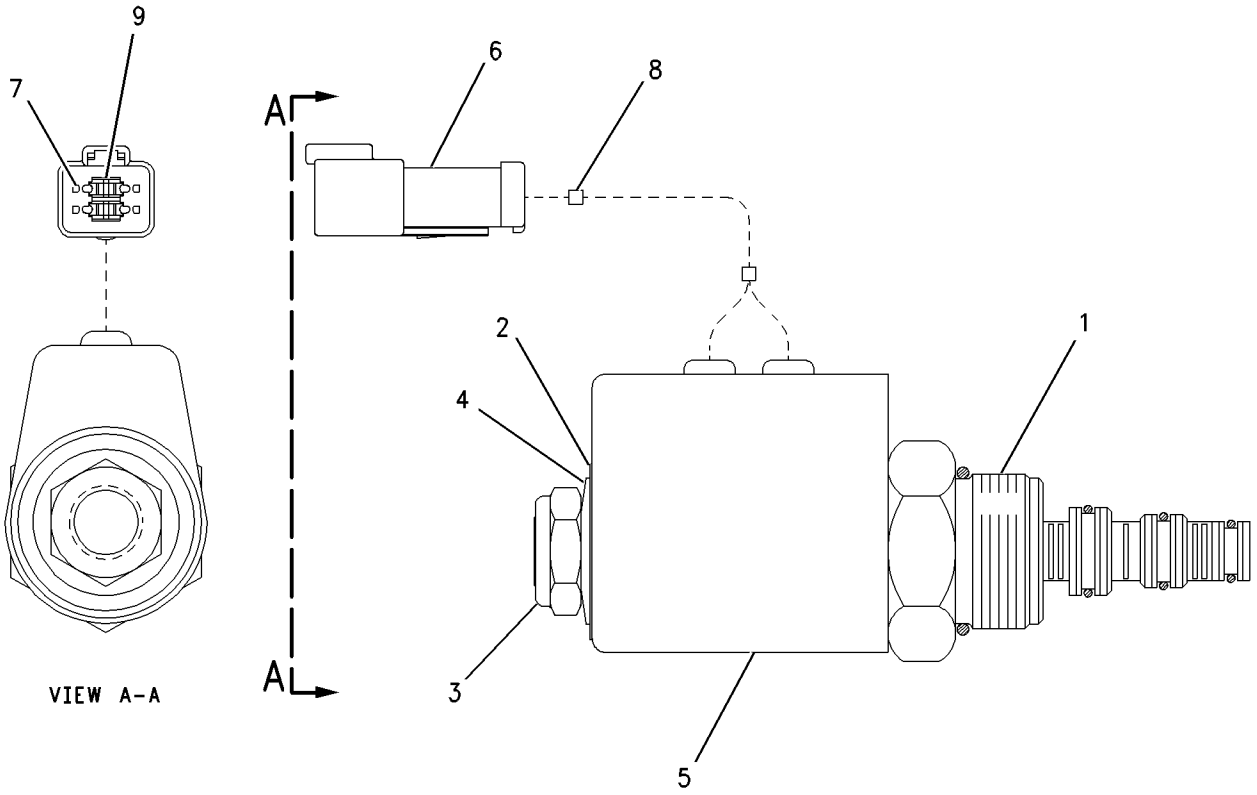

GRAPHIC #1 g00623320

3E-9205 VALVE GP-SOLENOID

S/N: ABK1-UP
24 VOLT
PART OF 106-9648 VALVE GP-TILT CONTROL
AN ATTACHMENT

SMCS-5479 **i01437288**

NOTE	REF NO	GRAPHIC REF	PART NUMBER	QTY	PART NAME 1 2 3 4 5 6 (PRODUCT LEVEL)	SEE PAGE
	1	1	**6T-9244**	1	CARTRIDGE AS	
	2	1	**3E-8581**	1	COIL AS	
	3	1	**102-8804**	1	KIT-RECEPTACLE (4 PIN)	
					(INCLUDES RECEPTACLE AS & WEDGE)	
		1	**3E-3377**	1	WEDGE-RECEPTACLE LOCK	
		1	**186-3735**	4	PIN-CONNECTOR	
	4	1	**1S-9593**	2	STRAP-CABLE	
	5	1	**157-2284**	1	LOCKNUT-SPECIAL (5/8-18 THD)	
	6	1	**160-5843**	1	WASHER-IDENTIFICATION	
	7	1	**160-5844**	1	SPRING-BELLEVILLE	
					AVAILABLE REPAIR KIT(S):	
			126-5948	1	KIT-SEAL	
					(INCLUDES SEAL-O-RINGS & RING-BACKUPS)	

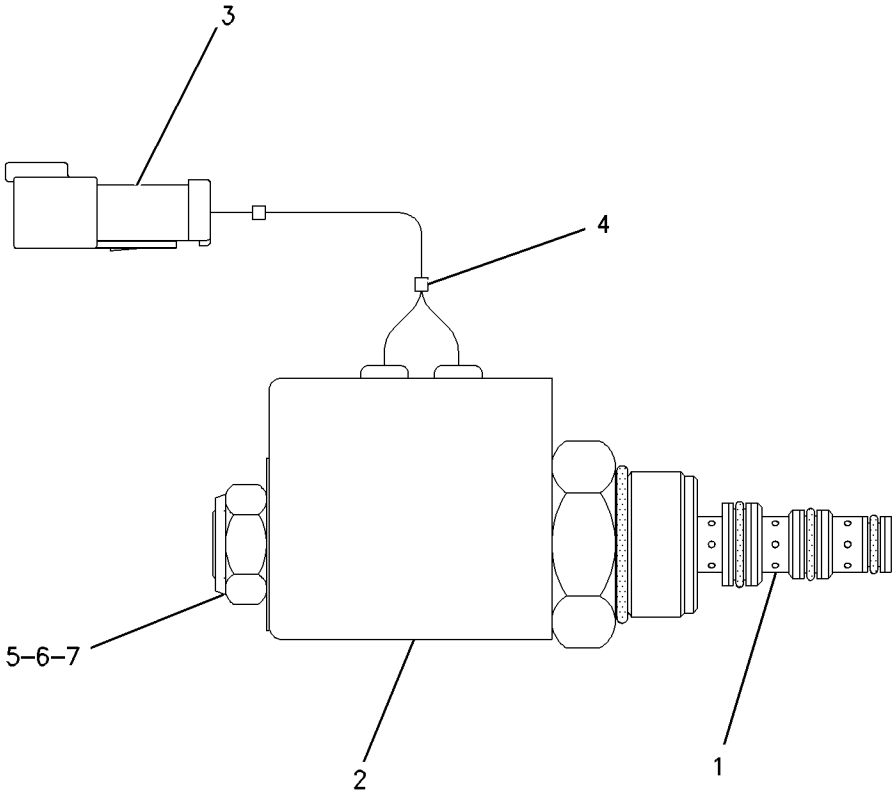

GRAPHIC #1 g00657410

HYDRAULIC SYSTEM

152-8346 VALVE GP-SOLENOID

S/N: ABK1-UP

PART OF 6E-4805 VALVE GP-QUICK-DROP

SMCS-5479 **i01633694**

NOTE	REF NO	GRAPHIC REF	PART NUMBER	QTY	PART NAME 1 2 3 4 5 6 (PRODUCT LEVEL)	SEE PAGE
	1	1	**111-0343**	1	LOCKNUT (5/16-18 THD)	
	2	1	**8C-9987**	1	WASHER (8.3X28X2.5MM THK)	
	3	1	**170-7485**	1	VALVE AS	
	4	1	**141-6787**	1	COIL AS	
		1	**102-8802**	1	KIT-RECEPTACLE (2 PIN)	
					(INCLUDES RECEPTACLE AS AND WEDGE)	
		1	**3E-3365**	1	WEDGE-RECEPTACLE LOCK (2 PIN)	
		1	**8T-8729**	2	PIN-CONNECTOR	
		1	**1S-9593**	2	STRAP-CABLE	
					AVAILABLE REPAIR KIT(S):	
			109-3036	1	KIT-SEAL	
					(INCLUDES SEALS & RINGS)	

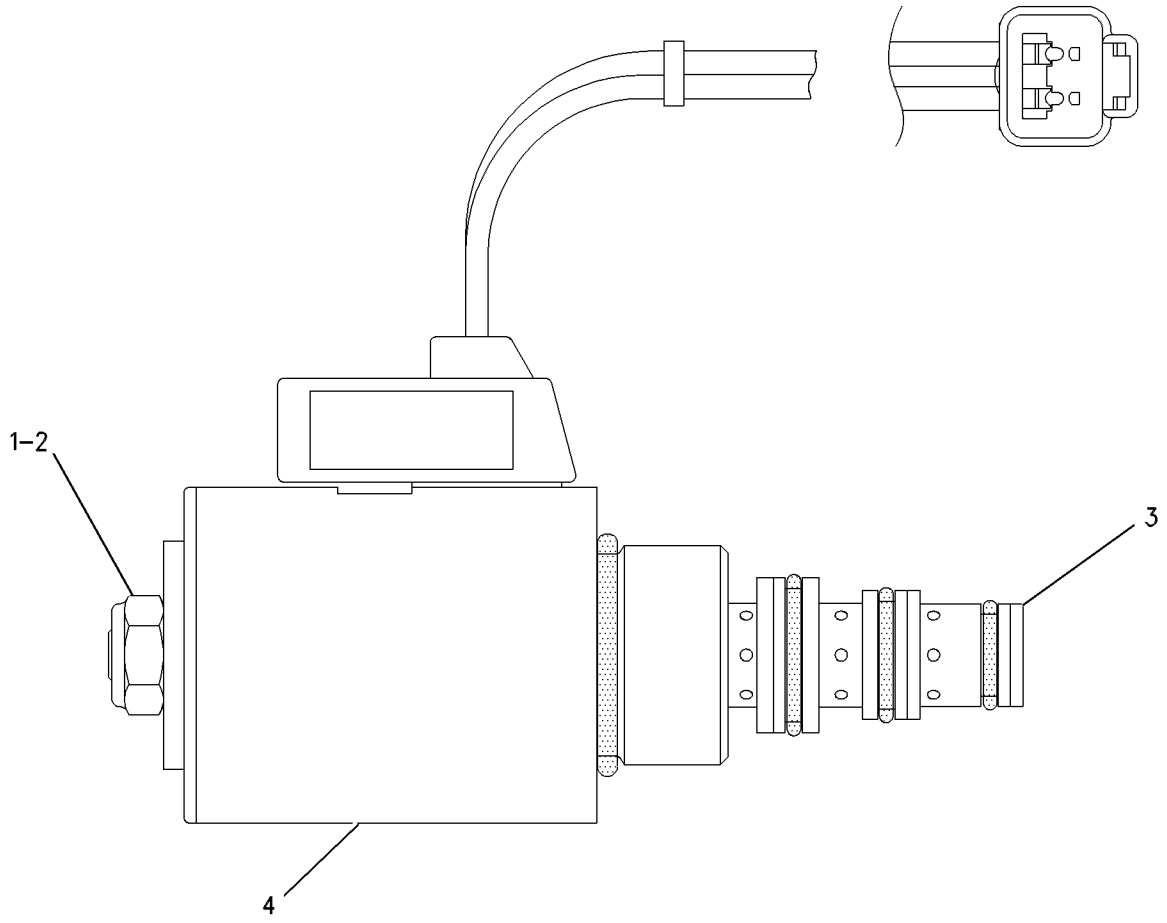

GRAPHIC #1 g00612050

HYDRAULIC SYSTEM

106-9648 VALVE GP-TILT CONTROL–DUAL

S/N: ABK1-UP
PART OF 163-1588 CONTROL AR-BULLDOZER
AN ATTACHMENT

SMCS-5051 **i01655394**

NOTE	REF NO	GRAPHIC REF	PART NUMBER	QTY	PART NAME 1 2 3 4 5 6 (PRODUCT LEVEL)	SEE PAGE
C	1	1	**9S-8001**	1	PLUG	
C		1	**4J-7533**	4	SEAL-O-RING	
	2	1	**8T-4896**	16	WASHER-HARD (10.2X18.5X2.5MM THK)	
	3	1	**8J-8621**	2	SPRING	
	4	1	**9J-1722**	2	RETAINER	
	5	1	**5P-0076**	4	BOLT-12 POINT HEAD (3/8-16X1.50 IN)	
	6	1	**1P-4576**	6	FLANGE	
	7	1	**9J-1716**	2	COVER	
	8	1	**4J-0522**	2	SEAL-O-RING	
	9	1	**9S-4191**	2	PLUG	
C	10	1	**3J-1907**	3	SEAL-O-RING	
Y	11	1	**3E-9205**	1	VALVE GP-SOLENOID (TILT/TIP FUNCTION)	708
	12	1	**1P-4577**	2	FLANGE-HALF	
C	13	1	**9S-8004**	1	PLUG	
	14	1	**5S-7382**	16	BOLT (3/8-16X1.375 IN)	

C-CHANGE FROM PREVIOUS TYPE
Y-SEPARATE ILLUSTRATION

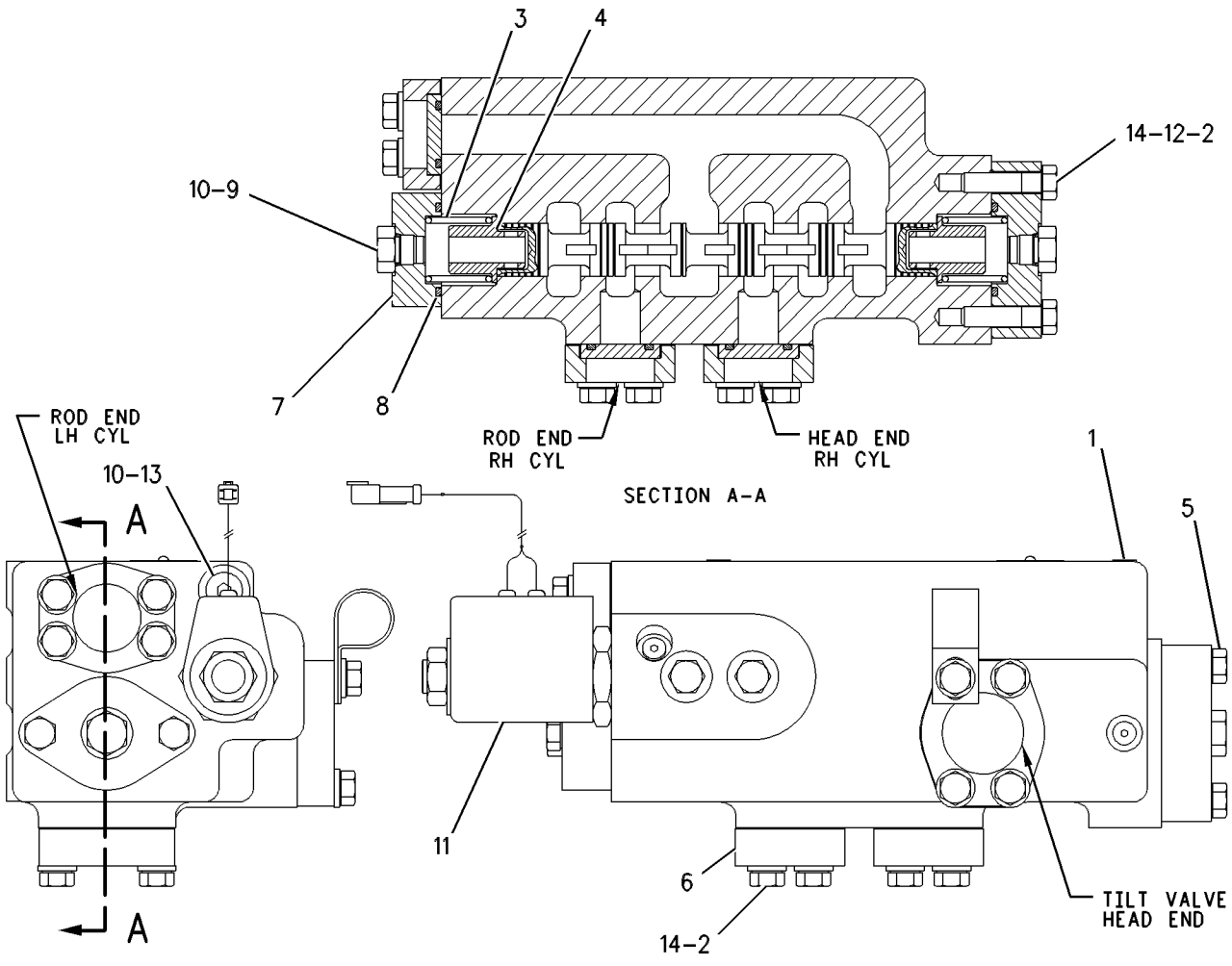

GRAPHIC #1 g00526747

IMPLEMENTS

163-4550 BULLDOZER AR-SEMI-UNIVERSAL

S/N: 9RP1-UP
AN ATTACHMENT

SMCS-6050, 6078 **i01445947**

NOTE	REF NO	GRAPHIC REF	PART NUMBER	QTY	PART NAME 1 2 3 4 5 6 (PRODUCT LEVEL)	SEE PAGE
Y	1	1	*8E-9889*	1	PUSH ARM GP-STABILIZER	740
Y	2	1	*8E-9890*	1	LINES GP-TILT CYLINDER	666
Y	3	1	*102-6345*	1	BLADE GP-SEMI-UNIVERSAL	765
Y	4	1	*104-3154*	1	LIGHTING GP-AUXILIARY	316
Y	5	1	*106-7364*	1	TRUNNION GP-BULLDOZER	744
Y	6	1	*163-1268*	1	CYLINDER & LINES GP-LIFT (RH)	616
Y	7	1	*163-1269*	1	CYLINDER & LINES GP-LIFT (LH)	618
Y	8	1	*168-6575*	1	MOUNTING GP-CYLINDER	733
F		1	**8T-7371**	1	PLATE-SERIAL NUMBER	
					(ON BACK OF MOLDBOARD NEAR TOP RH END)	
F		1	**4B-4158**	2	SCREW-DRIVE (3/16X0.25 IN)	

F-NOT SHOWN
Y-SEPARATE ILLUSTRATION

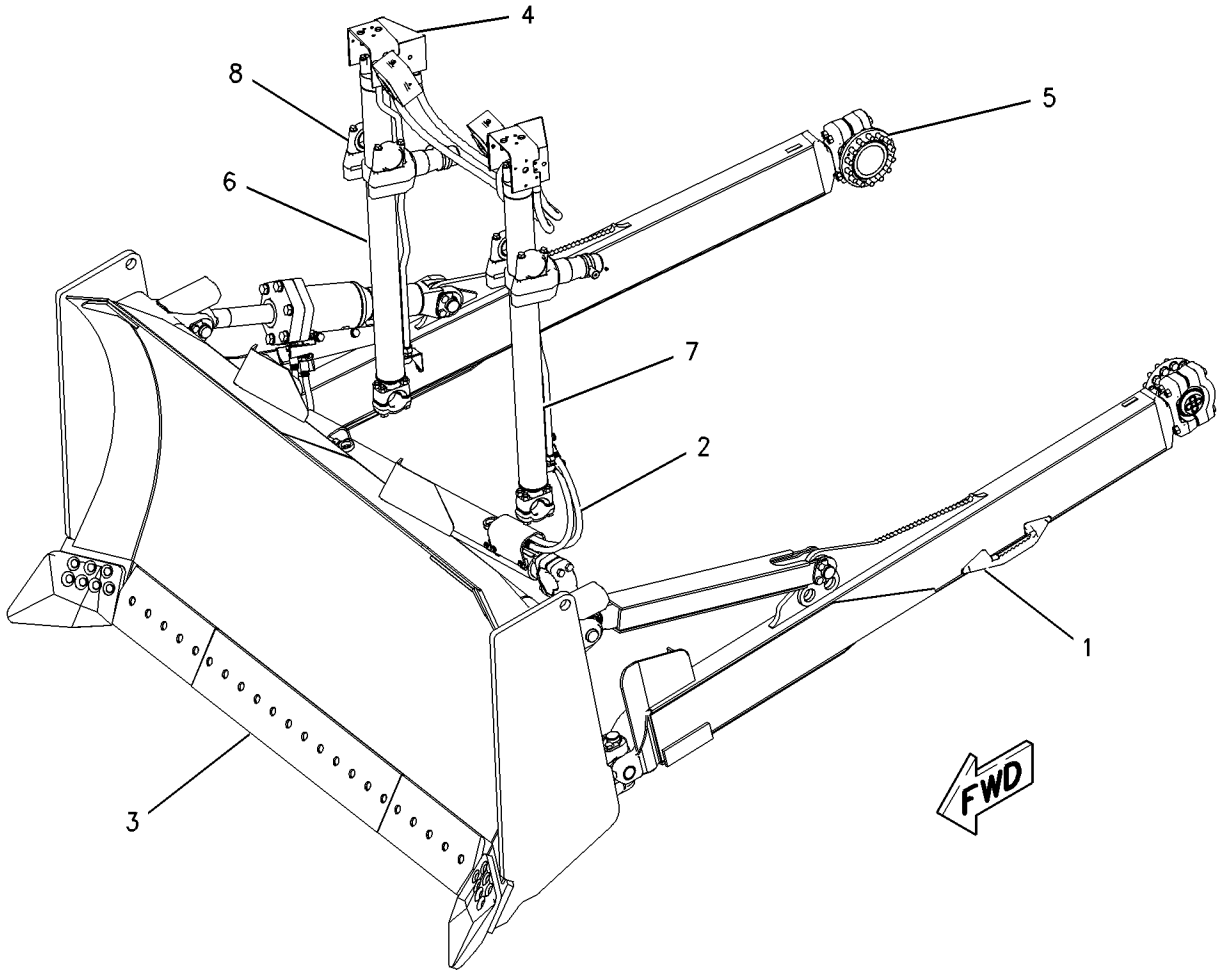

GRAPHIC #1 g00682478

IMPLEMENTS

163-4552 BULLDOZER AR-SEMI-UNIVERSAL

S/N: 9RP1-UP
AN ATTACHMENT

SMCS-6050, 6078 **i01320275**

NOTE	REF NO	GRAPHIC REF	PART NUMBER	QTY	PART NAME 1 2 3 4 5 6 (PRODUCT LEVEL)	SEE PAGE
Y	1	1	*8E-9889*	1	PUSH ARM GP-STABILIZER	740
Y	2	1	*8E-9890*	1	LINES GP-TILT CYLINDER	666
Y	3	1	*102-6345*	1	BLADE GP-SEMI-UNIVERSAL	765
Y	4	1	*106-7364*	1	TRUNNION GP-BULLDOZER	744
F		1	**8T-7371**	1	PLATE-SERIAL NUMBER	
					(ON BACK OF MOLDBOARD NEAR TOP RH END)	
F		1	**4B-4158**	2	SCREW-DRIVE	

F-NOT SHOWN
Y-SEPARATE ILLUSTRATION

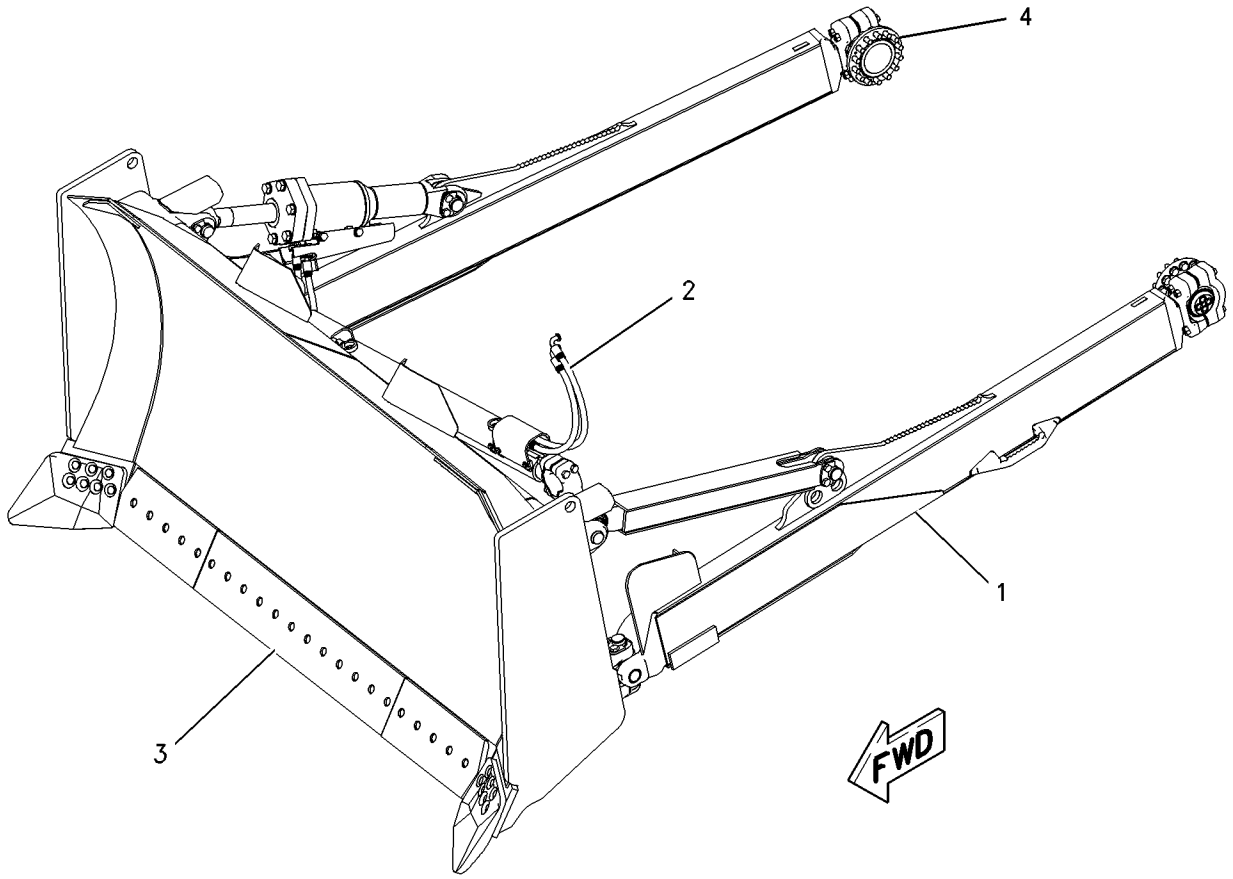

GRAPHIC #1 g00686274

IMPLEMENTS

163-4551 BULLDOZER AR-UNIVERSAL

S/N: 9MP1-UP
AN ATTACHMENT

SMCS-6050, 6053 **i01445967**

NOTE	REF NO	GRAPHIC REF	PART NUMBER	QTY	PART NAME 1 2 3 4 5 6 (PRODUCT LEVEL)	SEE PAGE
Y	1	1	*8E-9889*	1	PUSH ARM GP-STABILIZER	740
Y	2	1	*8E-9890*	1	LINES GP-TILT CYLINDER	666
Y	3	1	*104-3154*	1	LIGHTING GP-AUXILIARY	316
Y	4	1	*106-7364*	1	TRUNNION GP-BULLDOZER	744
Y	5	1	*106-7365*	1	BLADE GP-UNIVERSAL	766
Y	6	1	*163-1268*	1	CYLINDER & LINES GP-LIFT (RH)	616
Y	7	1	*163-1269*	1	CYLINDER & LINES GP-LIFT (LH)	618
Y	8	1	*168-6575*	1	MOUNTING GP-CYLINDER	733
F		1	**8T-7371**	1	PLATE-SERIAL NUMBER	
					(ON BACK OF MOLDBOARD NEAR TOP RH END)	
F		1	**4B-4158**	2	SCREW-DRIVE (3/16X0.25 IN)	

F-NOT SHOWN
Y-SEPARATE ILLUSTRATION

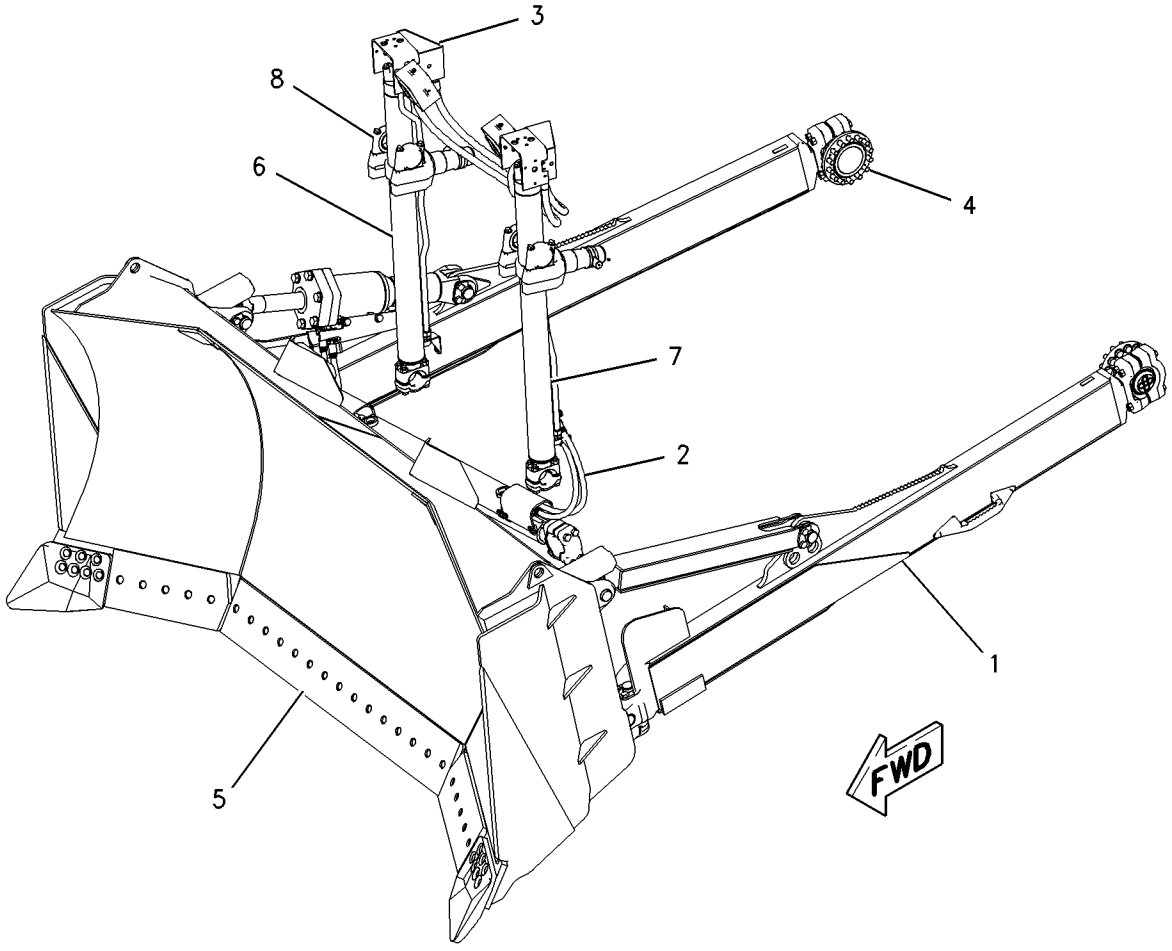

GRAPHIC #1 g00682495

163-4553 BULLDOZER AR-UNIVERSAL

S/N: 9MP1-UP
AN ATTACHMENT

SMCS-6050, 6053 **i01320276**

NOTE	REF NO	GRAPHIC REF	PART NUMBER	QTY	PART NAME 1 2 3 4 5 6 (PRODUCT LEVEL)	SEE PAGE
Y	1	1	*8E-9889*	1	PUSH ARM GP-STABILIZER	740
Y	2	1	*8E-9890*	1	LINES GP-TILT CYLINDER	666
Y	3	1	*106-7364*	1	TRUNNION GP-BULLDOZER	744
Y	4	1	*106-7365*	1	BLADE GP-UNIVERSAL	766
F		1	**8T-7371**	1	PLATE-SERIAL NUMBER	
					(ON BACK OF MOLDBOARD NEAR TOP RH END)	
F		1	**4B-4158**	2	SCREW-DRIVE	

F-NOT SHOWN
Y-SEPARATE ILLUSTRATION

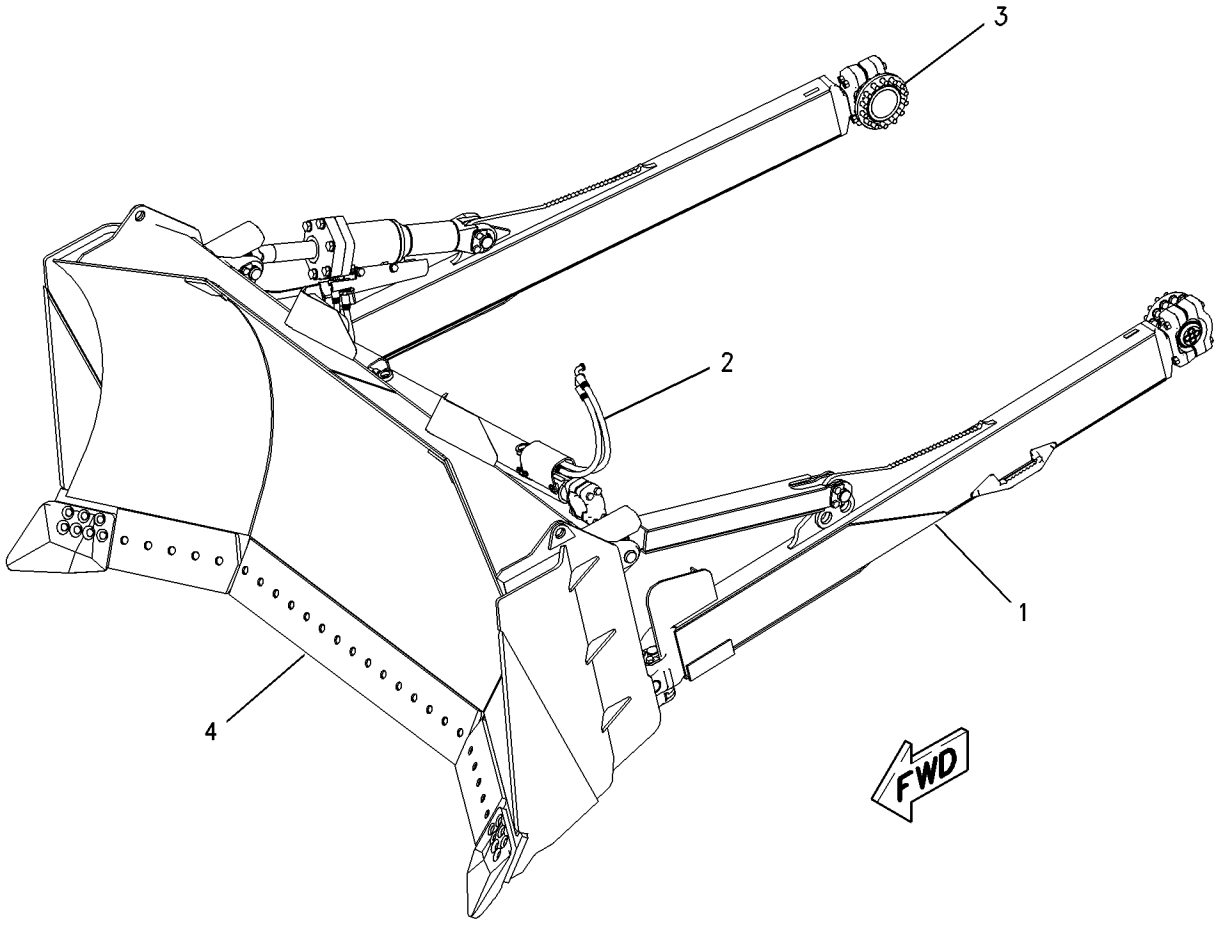

GRAPHIC #1 g00682922

IMPLEMENTS

163-1588 CONTROL AR-BULLDOZER

S/N: ABK1-UP
DUAL TILT
AN ATTACHMENT

SMCS-5050 **i01445943**

NOTE	PART NUMBER	QTY	PART NAME 1 2 3 4 5 6 (PRODUCT LEVEL)	SEE PAGE
Y	*163-1581*	1	LINES GP-TILT CYLINDER	670
Y	*8E-9869*	1	LINKAGE GP-IMPLEMENT	730
Y	**106-9648**	1	VALVE GP-TILT CONTROL	710

Y-SEPARATE ILLUSTRATION

IMPLEMENTS

135-2803 FRAME GP-RIPPER

S/N: 5RP1-UP
PART OF 134-6000 RIPPER AR
AN ATTACHMENT

SMCS-6314, 7067 **i00982748**

NOTE	REF NO	GRAPHIC REF	PART NUMBER	QTY	PART NAME 1 2 3 4 5 6 (PRODUCT LEVEL)	SEE PAGE
	1	1	**3B-8489**	2	FITTING-GREASE (1/8-27 NPTF)	
	2	1	**3E-6756**	16	SEAL-LIP	
	3	1	**3E-6757**	8	SEAL-LIP	
B	4	1	**4T-3522**	22	WASHER	
	5	1	**6J-9482**	2	PIN AS	
M	6	1	**8T-5460**	16	BOLT (M20X2.5X40MM)	
	7	1	**7T-7305**	8	PLATE	
	8	1	**9J-9055**	2	PIN AS	
I	9	1	**9R-6776**	2	HOSE AS	
	10	1	**154-4492**	2	PLUG-ADAPTER	
	11	1	**111-2104**	2	PIN AS	
	12	1	**132-7994**	2	PIN AS	
	13	1	**135-2804**	1	FRAME & BEARING AS	
		1	**3B-8489**	2	FITTING-GREASE (1/8-27 NPTF)	
		1	**4T-9751**	4	BEARING-SLEEVE	
		1	**8P-9770**	1	PLATE	
	14	1	**136-7921**	2	SPACER	
	15	1	**3J-7354**	4	SEAL-O-RING (8.92MM ID)	
	16	1	**4J-5477**	4	SEAL-O-RING (8.61MM ID)	
	17	1	**6V-8628**	2	ELBOW-90 DEGREE (9/16-18 THD)	
	18	1	**6V-9000**	2	ELBOW-SEAL	
	19	1	**6V-9313**	2	PLUG	

B-USE AS REQUIRED
I-SEE HOSE FABRICATION GUIDE
M-METRIC PART

135-2803 **FRAME GP-RIPPER** *(contd.)* **i00982748**

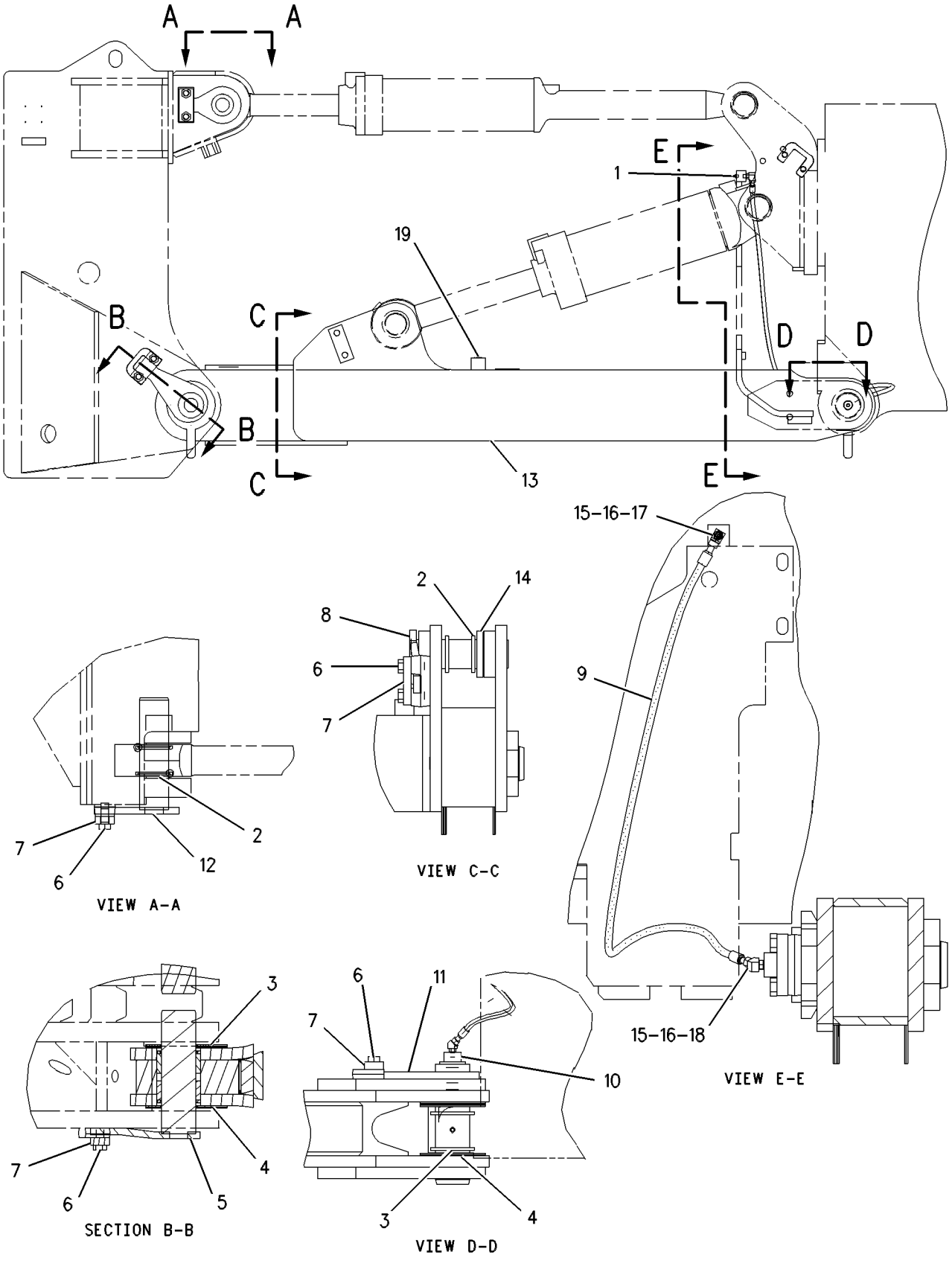

GRAPHIC #1 g00500319

159-9796 FRAME GP-RIPPER

S/N: 7HP1-UP
PART OF 165-0652 RIPPER AR
FOR USE WITH MULTI-SHANK RIPPER
AN ATTACHMENT

SMCS-6314, 7067 **i01445915**

NOTE	REF NO	GRAPHIC REF	PART NUMBER	QTY	PART NAME 1 2 3 4 5 6 (PRODUCT LEVEL)	SEE PAGE
	1	1	**3B-8489**	2	FITTING-GREASE	
	2	1	**3E-6756**	16	SEAL-LIP	
	3	1	**3E-6757**	8	SEAL-LIP	
	4	1	**4T-0204**	2	PIN AS	
B	5	1	**4T-3522**	20	WASHER	
	6	1	**4T-9762**	2	PIN AS	
	7	1	**6J-9480**	2	PIN AS	
	8	1	**6V-9313**	2	PLUG	
	9	1	**6Y-9287**	2	SPACER (76.8X170X40MM THK)	
	10	1	**7T-7305**	8	PLATE	
I	11	1	**9R-6776**	2	HOSE AS	
	12	1	**111-2104**	2	PIN AS	
	13	1	**136-7921**	2	SPACER	
	14	1	**154-4492**	2	PLUG-ADAPTER	
	15	1	**187-5341**	1	FRAME & BEARING AS	
	15A	1	**4T-0208**	4	BEARING-SLEEVE	
	15B	1	**3B-8489**	2	FITTING-GREASE	
	15C	1	**8P-9770**	1	PLATE	
	16	1	**3J-7354**	4	SEAL-O-RING (8.92MM ID)	
	17	1	**4J-5477**	4	SEAL-O-RING (7.67MM ID)	
	18	1	**6V-8628**	2	ELBOW	
	19	1	**6V-9000**	2	ELBOW	
M	20	1	**8T-5460**	16	BOLT (M20X2.5X40MM)	

B-USE AS REQUIRED
I-SEE HOSE FABRICATION GUIDE
M-METRIC PART

159-9796 **FRAME GP-RIPPER** ***(contd.)*** **i01445915**

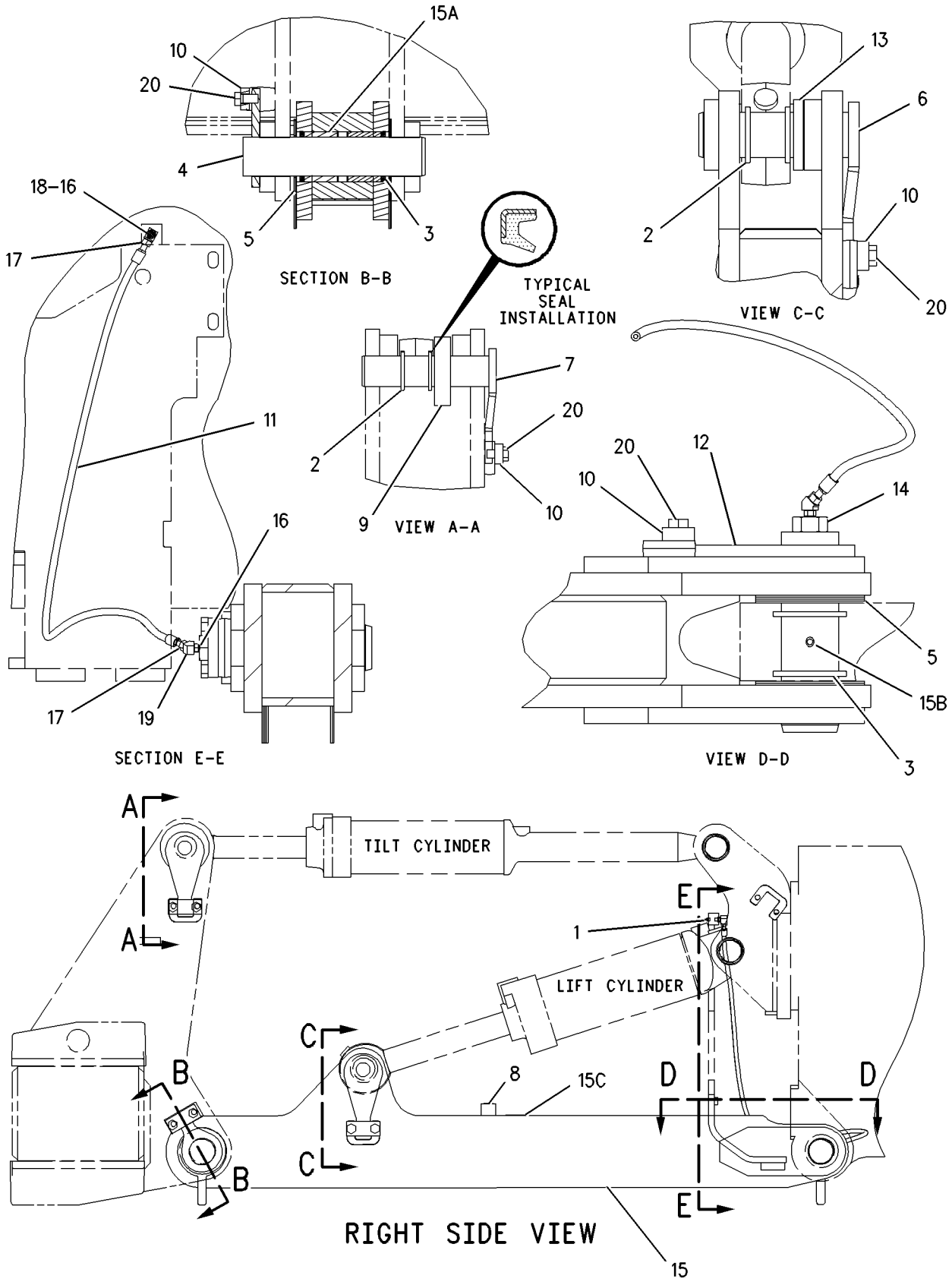

GRAPHIC #1 g00698549

IMPLEMENTS

127-8749 KIT-OVERPACK

S/N: ABK1-UP
FOR USE WITH ANY D9R BULLDOZER
AN ATTACHMENT

SMCS-6050 **i01397252**

NOTE	PART NUMBER	QTY	PART NAME 1 2 3 4 5 6 (PRODUCT LEVEL)	SEE PAGE
	7X-0404	14	BOLT (1-8X2.50IN)	
M	**7X-2578**	6	BOLT (M24X3X200MM)	
M	**8T-4136**	4	BOLT (M10X1.5X25MM)	
M	**8T-4139**	12	BOLT (M12X1.75X30MM)	
M	**8T-0672**	6	BOLT (M24X3.0X160MM)	
M	**8T-4185**	4	BOLT (M10X1.5X50MM)	
M	**8T-4196**	12	BOLT (M10X1.50X35MM)	
M	**7X-2574**	12	BOLT (M24X3.0X45MM)	
M	**7X-2573**	4	BOLT (M24X3.0X40MM)	
M	**7X-2579**	6	BOLT (M24X3X240MM)	
	5H-2095	4	CLAMP-TUBE	
	8C-3205	9	FLANGE-HALF	
M	**8T-4001**	12	NUT (M24X3 THD)	
M	**7X-0851**	6	NUT (M24X3.00 THD)	
	6J-5179	6	RETAINER	
	4J-5267	7	SEAL-O-RING (24.99MM ID)	
B	**3G-9401**	15	SHIM (.8MM THK)	
B	**3G-0911**	15	SHIM (.8MM THK)	
B	**6I-8675**	15	SHIM (.60MM THK)	
	9X-2027	4	WASHER (11X18X2MM THK)	
	8T-4167	4	WASHER-HARD (26X44X4MM THK)	
	8T-4121	14	WASHER-HARD (11X21X2.5MM THK)	
	5P-1076	12	WASHER-HARD (13.5X30X4MM THK)	

B-USE AS REQUIRED
M-METRIC PART

MEMORANDA

IMPLEMENTS

143-1349 KIT-OVERPACK

S/N: ABK1-UP
RIPPER
AN ATTACHMENT

SMCS-6050 **i01397262**

NOTE	PART NUMBER	QTY	PART NAME 1 2 3 4 5 6 (PRODUCT LEVEL)	SEE PAGE
M	**8T-4195**	6	BOLT (M10X1.5X30MM)	
M	**8T-4196**	15	BOLT (M10X1.50X35MM)	
	5M-3062	1	BOLT (3/8-16X.75 IN)	
	8T-9399	10	BOLT (3/4-10X2.25IN)	
	5P-2955	1	BOLT (5/16-18X2.50 IN)	
M	**8T-7338**	6	BOLT (M16X2.0X45MM)	
	4L-6454	4	BOLT (3/8-16X1 IN)	
M	**8T-4186**	8	BOLT (M10X1.5X40MM)	
M	**8T-4182**	4	BOLT (M10X1.5X45MM)	
M	**8T-5460**	12	BOLT (M20X2.5X40MM)	
	4L-9337	9	BOLT (3/8-16X1.5 IN)	
	5S-7382	15	BOLT (3/8-16X1.375 IN)	
	5S-7383	4	BOLT (3/8-16X1.75 IN)	
	7X-0365	12	BOLT (3/4-10X1.50 IN)	
	138-8455	9	BOLT-HEX HEAD	
M	**8C-8992**	4	BOLT-LOCKING (M12X1.75X30MM)	
	115-0617	1	BRACKET	
	9M-2904	8	CLAMP-HOSE	
	8E-6334	2	CLIP (TAB)	
	8E-6332	2	CLIP (SLOT)	
	4P-8134	3	CLIP	
	3G-8057	3	CLIP (SLOT)	
	3G-8054	3	CLIP (TAB)	
	6V-8724	1	ELBOW	
	8T-1905	1	ELBOW	
	6V-8723	1	ELBOW	
	6V-8628	2	ELBOW	
	6V-9876	1	ELBOW-ORFS	
	6V-9000	2	ELBOW	
	3B-8489	2	FITTING-GREASE	
	1P-4576	12	FLANGE	
	5P-8112	2	GROMMET (50MM OD)	
	6V-0974	3	GROMMET (62MM OD)	
	130-9191	6	GROMMET (47.5MM OD)	
	6V-8189	1	NUT (5/16-18 THD)	
	7T-4501	1	PIN (90MM OAL)	
	7T-4502	1	PIN (183MM OAL)	
	135-5114	1	PIN (107MM OAL)	
	135-5113	2	PIN (117MM OAL)	
	4T-2479	2	PIN AS	
	7T-7305	8	PLATE	
	154-4492	2	PLUG-ADAPTER	
	6K-3630	1	RING	
	7J-4169	2	RING-SNAP	
	3E-6757	6	SEAL-LIP	
	3E-6756	12	SEAL-LIP	
	3J-1907	2	SEAL-O-RING (11.89MM ID)	
	4J-5267	6	SEAL-O-RING (24.99MM ID)	
	3K-0360	2	SEAL-O-RING (16.36MM ID)	
	4J-5477	4	SEAL-O-RING (7.67MM ID)	
	4J-0520	6	SEAL-O-RING (32.92MM ID)	
	6V-8397	4	SEAL-O-RING (9.27MM ID)	
	3J-7354	4	SEAL-O-RING (8.92MM ID)	
	130-1977	8	SHIELD	
	139-2456	3	SHIELD-LH	

143-1349 **KIT-OVERPACK** ***(contd.)*** **i01397262**

NOTE	PART NUMBER	QTY	PART NAME 1 2 3 4 5 6 (PRODUCT LEVEL)	SEE PAGE
	139-2455	3	SHIELD-RH	
	136-7921	2	SPACER	
	6Y-9287	2	SPACER	
	5J-3576	1	SPRING	
	9X-6772	3	STRAP-CABLE	
	7K-1181	3	STRAP-CABLE	
	9X-8257	6	WASHER (17.5X30X3.5MM THK)	
	8T-4167	2	WASHER-HARD (26X44X4MM THK)	
	4T-3522	12	WASHER	
	8T-4121	15	WASHER-HARD (11X21X2.5MM THK)	
	8T-4994	8	WASHER-HARD (20X36.5X5MM THK)	
	7X-0537	10	WASHER-HARD (40.5X67X6MM THK)	
	7X-0582	4	WASHER-HARD (20X44.5X6MM THK)	
	7X-3391	4	WASHER-HARD (13.5X32X6MM THK)	
	8T-4224	2	WASHER-HARD (8.8X16X2MM THK)	
	5P-1075	5	WASHER-HARD (10.2X22.5X3MM THK)	
	8T-4896	15	WASHER-HARD (10.2X18.5X2.5MM THK)	

M-METRIC PART

106-7363 LINK GP-STABILIZER

S/N: ABK1-UP
PART OF 106-7362 CYLINDER AR-DUAL TILT
AN ATTACHMENT

SMCS-6071, 7203 **i01336006**

NOTE	REF NO	GRAPHIC REF	PART NUMBER	QTY	PART NAME 1 2 3 4 5 6 (PRODUCT LEVEL)	SEE PAGE
B	1	1	**6I-8675**	52	SHIM (.60MM THK)	
	2	1	**160-6307**	2	CAP-BEARING	
	3	1	**110-5889**	1	LINK AS	
		1	**6I-8676**	2	BEARING	
M	4	1	**7X-2578**	8	BOLT (M24X3X200MM)	
M	5	1	**8T-4001**	8	NUT (M24X3.00 THD)	

B-USE AS REQUIRED
M-METRIC PART

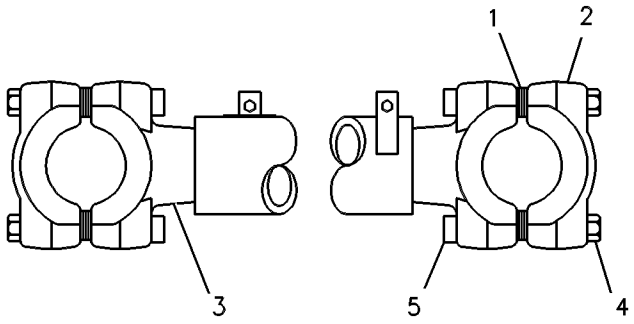

GRAPHIC #1 g00246907

110-5204 LINK GP-STABILIZER

S/N: 9MP1-UP; 9RP1-UP
PART OF 8E-9889 PUSH ARM GP-STABILIZER
AN ATTACHMENT

SMCS-6071, 7203 **i00991809**

NOTE	REF NO	GRAPHIC REF	PART NUMBER	QTY	PART NAME 1 2 3 4 5 6 (PRODUCT LEVEL)	SEE PAGE
	1	1	**160-6307**	2	CAP-BEARING	
M	2	1	**7X-2578**	8	BOLT (M24X3X200MM)	
M		1	**8T-4001**	8	NUT (M24X3.00 THD)	
	3	1	**110-5203**	1	LINK AS	
	4	1	**6I-8676**	2	BEARING	
B	5	1	**6I-8675**	52	SHIM (.60MM THK)	

B-USE AS REQUIRED
M-METRIC PART

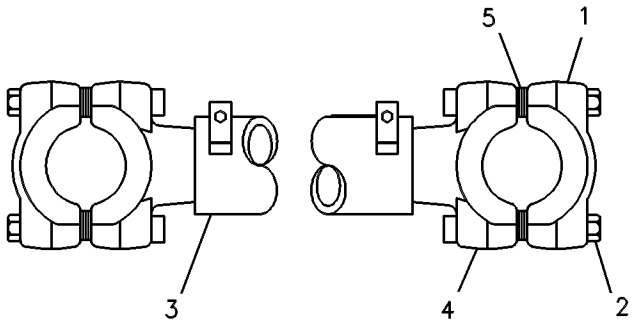

GRAPHIC #1 g00240186

8E-9861 LINKAGE GP-IMPLEMENT

S/N: ABK1-UP

PART OF 162-9504 CONTROL AR-HYDRAULIC IMPLEMENT

SMCS-5063 **i01364585**

NOTE	REF NO	GRAPHIC REF	PART NUMBER	QTY	PART NAME 1 2 3 4 5 6 (PRODUCT LEVEL)	SEE PAGE
	1	1	**7T-0145**	1	CHANNEL AS	
		1	**1F-0750**	6	NUT-WELD (3/8-16 THD)	
		1	**7T-1099**	2	LINK	
		1	**9K-6034**	1	LUG	
	2	1	**4L-6454**	3	BOLT (3/8-16X1 IN)	
	3	1	**8T-4896**	3	WASHER-HARD (10.2X18.5X2.5MM THK)	
	4	1	**6V-1193**	5	SCREW-HEX SOCKET	
	5	1	**174-5732**	1	SHAFT	
	6	1	**1B-8704**	1	KEY-WOODRUFF	
	7	1	**8T-2502**	2	BOLT (3/8-16X1.125 IN)	
	8	1	**3T-9345**	1	BRACKET	
	9	1	**5S-7383**	1	BOLT (3/8-16X1.75 IN)	
		1	**6V-8801**	1	NUT (3/8-16 THD)	
	10	1	**8E-5962**	1	PLATE	
	11	1	**7T-7921**	1	LEVER	
	12	1	**5J-5315**	2	ROD END	
	13	1	**121-9842**	2	PIN AS-SPRING	
	14	1	**4J-3044**	4	BEARING-NEEDLE	
	15	1	**169-1644**	2	BOOT	
	16	1	**2L-6267**	2	LOCKNUT (3/8-24 THD)	
	17	1	**121-6160**	1	HANDLE	
	18	1	**8T-0741**	8	SEAL-LIP	
	19	1	**119-6141**	1	LEVER AS	
	20	1	**7X-0448**	1	NUT (5/8-11 THD)	
	21	1	**6V-8183**	4	NUT-FULL (3/8-24 THD)	
	22	1	**8E-7034**	1	ROD	
	23	1	**1A-9252**	2	END-ADJUSTMENT ROD	
	24	1	**8E-7364**	1	BOOT	
	25	1	**174-5733**	1	SHAFT	
	26	1	**8E-7033**	1	ROD	
	27	1	**5P-1075**	4	WASHER-HARD (3MM THK)	
	28	1	**1H-1200**	1	PIN-SPRING	
	29	1	**3E-4374**	2	STUD	
	30	1	**119-7307**	1	PLATE AS	
	31	1	**109-0628**	1	HINGE	

8E-9861 **LINKAGE GP-IMPLEMENT** *(contd.)* **i01364585**

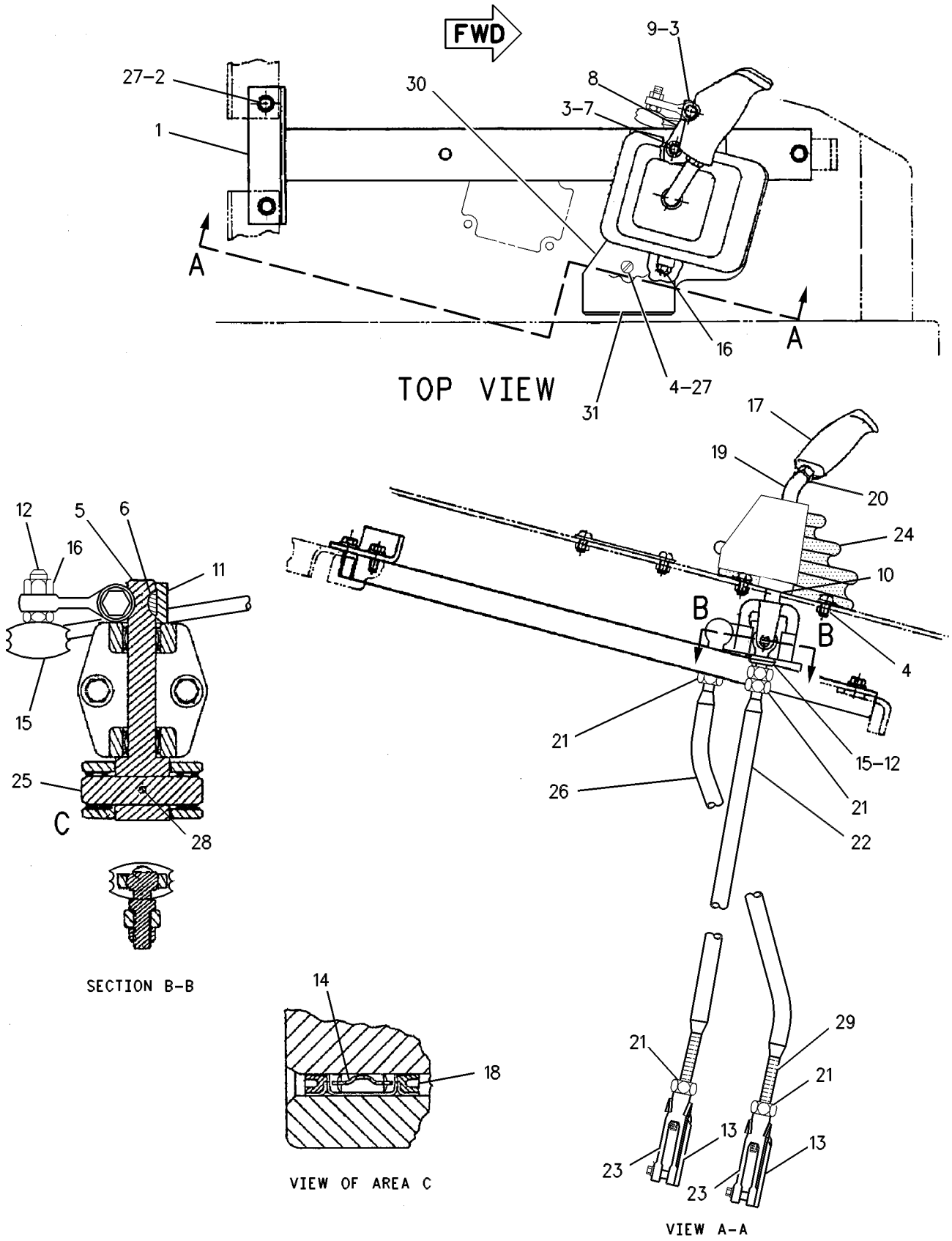

GRAPHIC #1 g00603844

8E-9862 LINKAGE GP-IMPLEMENT

S/N: ABK1-UP

ADJUSTABLE RIPPER

PART OF 162-9504 CONTROL AR-HYDRAULIC IMPLEMENT

SMCS-5063 **i01590970**

NOTE	REF NO	GRAPHIC REF	PART NUMBER	QTY	PART NAME 1 2 3 4 5 6 (PRODUCT LEVEL)	SEE PAGE
	1	1	**2A-1736**	1	HANDLE	
	2	1	**119-6140**	1	LEVER	
	3	1	**9U-9337**	1	PLATE	
	4	1	**8E-7364**	1	BOOT	
	5	1	**2L-6267**	2	LOCKNUT	
	6	1	**6T-5620**	1	LEVER	
	7	1	**174-5733**	1	SHAFT	
	8	1	**4J-3044**	4	BEARING AS-NEEDLE	
	9	1	**3T-9345**	1	BRACKET	
	10	1	**174-5732**	1	SHAFT	
	11	1	**5J-5315**	2	ROD END	
	12	1	**6V-8183**	4	NUT-FULL (3/8-24 THD)	
	13	1	**8E-7035**	1	ROD	
	14	1	**1A-9252**	2	END-ADJUSTMENT ROD	
		1	**121-9842**	2	PIN AS-SPRING	
	15	1	**8T-4896**	3	WASHER-HARD (10.2X18.5X2.5MM THK)	
	16	1	**8T-0741**	8	SEAL-LIP	
	17	1	**6V-1193**	5	SCREW-HEX SOCKET (3/8-16X.625 IN)	
	18	1	**169-1644**	2	BOOT	
	19	1	**8E-7036**	1	ROD	
	20	1	**5S-7383**	1	BOLT (3/8-16X1.75 IN)	
		1	**6V-8801**	1	NUT (3/8-16 THD)	
	21	1	**1H-1200**	1	PIN-SPRING	
	22	1	**8T-2502**	2	BOLT (3/8-16X1.125 IN)	
	23	1	**1B-8704**	1	KEY-WOODRUFF	
	24	1	**119-7308**	1	PLATE AS	
		1	**109-0628**	1	HINGE	
	25	1	**1B-4430**	2	NUT-JAM (1/2-20 THD)	
	26	1	**5P-1075**	1	WASHER-HARD (10.2X22.5X3MM THK)	

8E-9862 **LINKAGE GP-IMPLEMENT** *(contd.)* **i01590970**

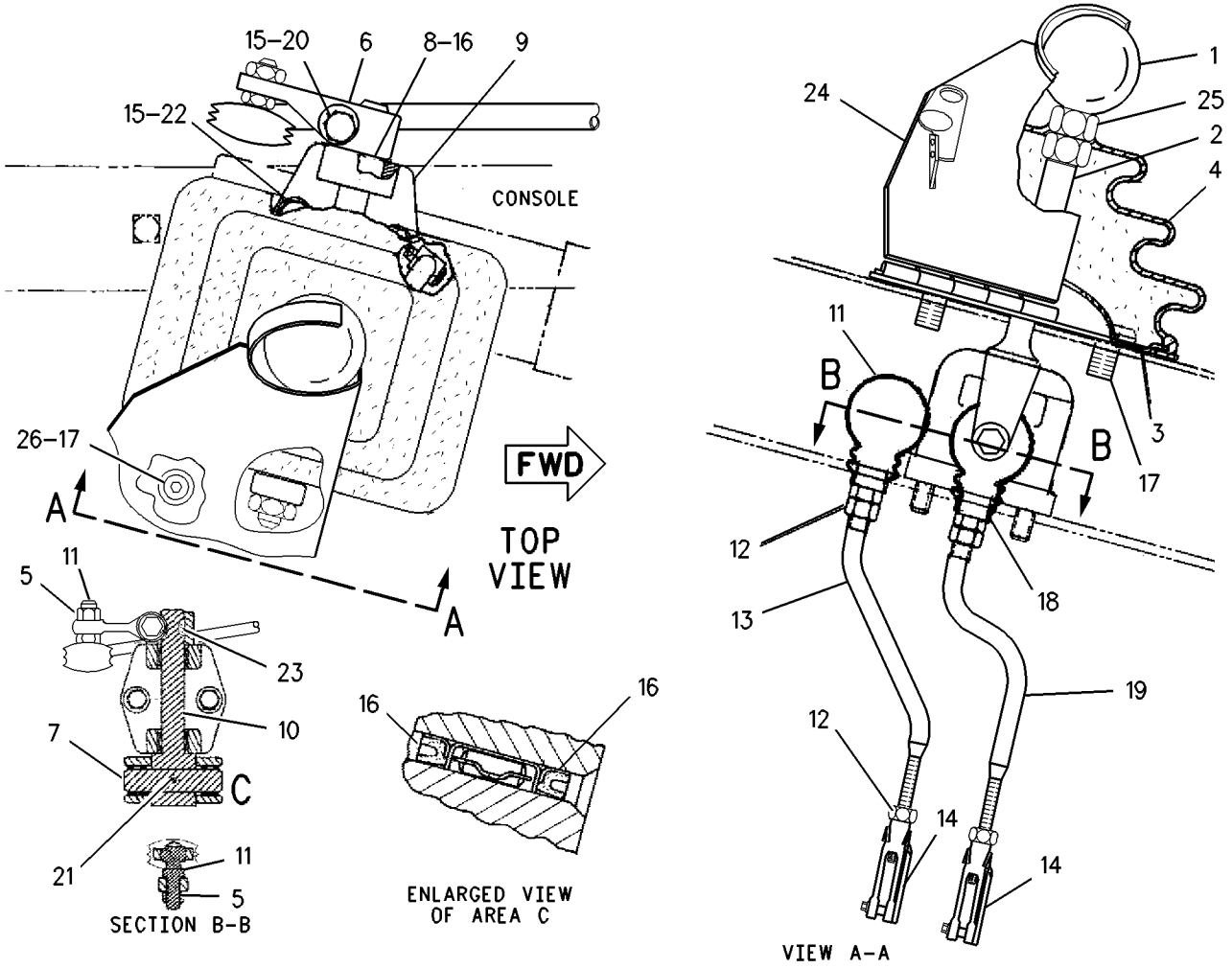

GRAPHIC #1 g00825038

8E-9869 LINKAGE GP-IMPLEMENT

S/N: ABK1-UP
DUAL TILT
PART OF 163-1588 CONTROL AR-BULLDOZER
AN ATTACHMENT

SMCS-5063 **i01453394**

NOTE	REF NO	GRAPHIC REF	PART NUMBER	QTY	PART NAME 1 2 3 4 5 6 (PRODUCT LEVEL)	SEE PAGE
	1	1	**103-8120**	1	HARNESS AS	
BD	2	1	**5P-6003**		TUBE	
Y	3	1	**3E-8680**	1	SWITCH GP-HANDLE	369
	4	1	**3E-3371**	1	WEDGE-RECEPTACLE LOCK (3 PIN)	
	5	1	**8C-8514**	2	SCREW-MACHINE (8-32X.375 IN)	
		1	**4B-4863**	2	WASHER (4.7X11X1.2MM THK)	
	6	1	**7K-1181**	2	STRAP-CABLE	
	7	1	**102-8803**	1	KIT-RECEPTACLE (3 PIN)	
					(INCLUDES RECEPTACLE AS & WEDGE)	
	8	1	**9W-2381**	1	ADAPTER	
	9	1	**197-5109**	1	FILM (INSTRUCTION) (DOZER CONTROL)	

B-USE AS REQUIRED
D-ORDER BY THE METER
Y-SEPARATE ILLUSTRATION

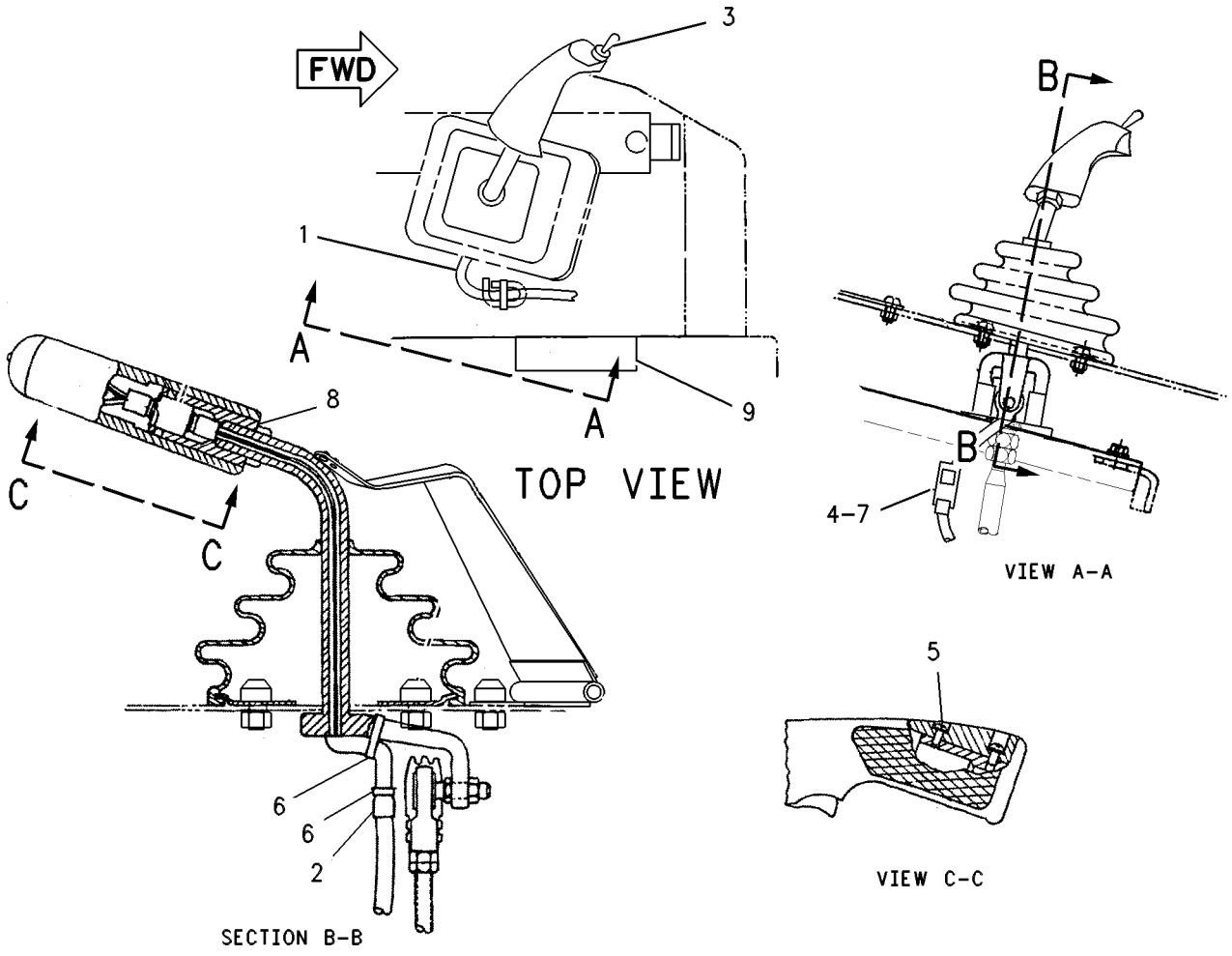

GRAPHIC #1 g00346443

IMPLEMENTS

132-9271 MODIFICATION AR-BULLDOZER

S/N: ABK1-UP
LANDFILL
FOR USE WITH MACHINES EQUIPPED WITH WASTE DISPOSAL AR AND DUAL TILT CYLINDERS
AN ATTACHMENT

SMCS-7000 **i01365683**

NOTE	PART NUMBER	QTY	PART NAME 1 2 3 4 5 6 (PRODUCT LEVEL)	SEE PAGE
I	**4Z-9189**	2	HOSE AS	
I	**132-8928**	2	HOSE AS	
I	**132-8930**	1	HOSE AS	
I	**132-8931**	1	HOSE AS	
I	**172-8833**	2	HOSE AS	
I	**4Z-9221**	2	HOSE AS	

I-SEE HOSE FABRICATION GUIDE

195-1174 MODIFICATION AR-BULLDOZER

S/N: ABK1-UP
LANDFILL
AN ATTACHMENT

SMCS-7000 **i01428989**

NOTE	PART NUMBER	QTY	PART NAME 1 2 3 4 5 6 (PRODUCT LEVEL)	SEE PAGE
I	**1Z-9375**	1	HOSE AS (900MM LONG)	
I	**4Z-9221**	1	HOSE AS (800MM LONG)	
I	**126-1103**	1	HOSE AS (1100MM LONG)	
I	**126-1104**	1	HOSE AS (910MM LONG)	

I-SEE HOSE FABRICATION GUIDE

168-6575 MOUNTING GP-CYLINDER

S/N: ABK1-UP; 9MP1-UP; 9RP1-UP
PART OF 163-4550 BULLDOZER AR-SEMI-UNIVERSAL, 163-4551 BULLDOZER AR-UNIVERSAL
AN ATTACHMENT

SMCS-6068 **i01446817**

NOTE	REF NO	GRAPHIC REF	PART NUMBER	QTY	PART NAME 1 2 3 4 5 6 (PRODUCT LEVEL)	SEE PAGE
	1	1	**3B-8489**	2	FITTING-GREASE	
	2	1	**4T-4875**	2	PIN	
	3	1	**6Y-2651**	2	YOKE	
	4	1	**9J-7625**	4	CAP AS	
	5	1	**9J-5284**	1	BEARING-SLEEVE	
	6	1	**8T-4994**	8	WASHER-HARD (20X36.5X5MM THK)	
	7	1	**8T-9312**	8	BOLT (3/4-10X6 IN)	
	8	1	**168-6448**	2	SEAL-LIP TYPE	

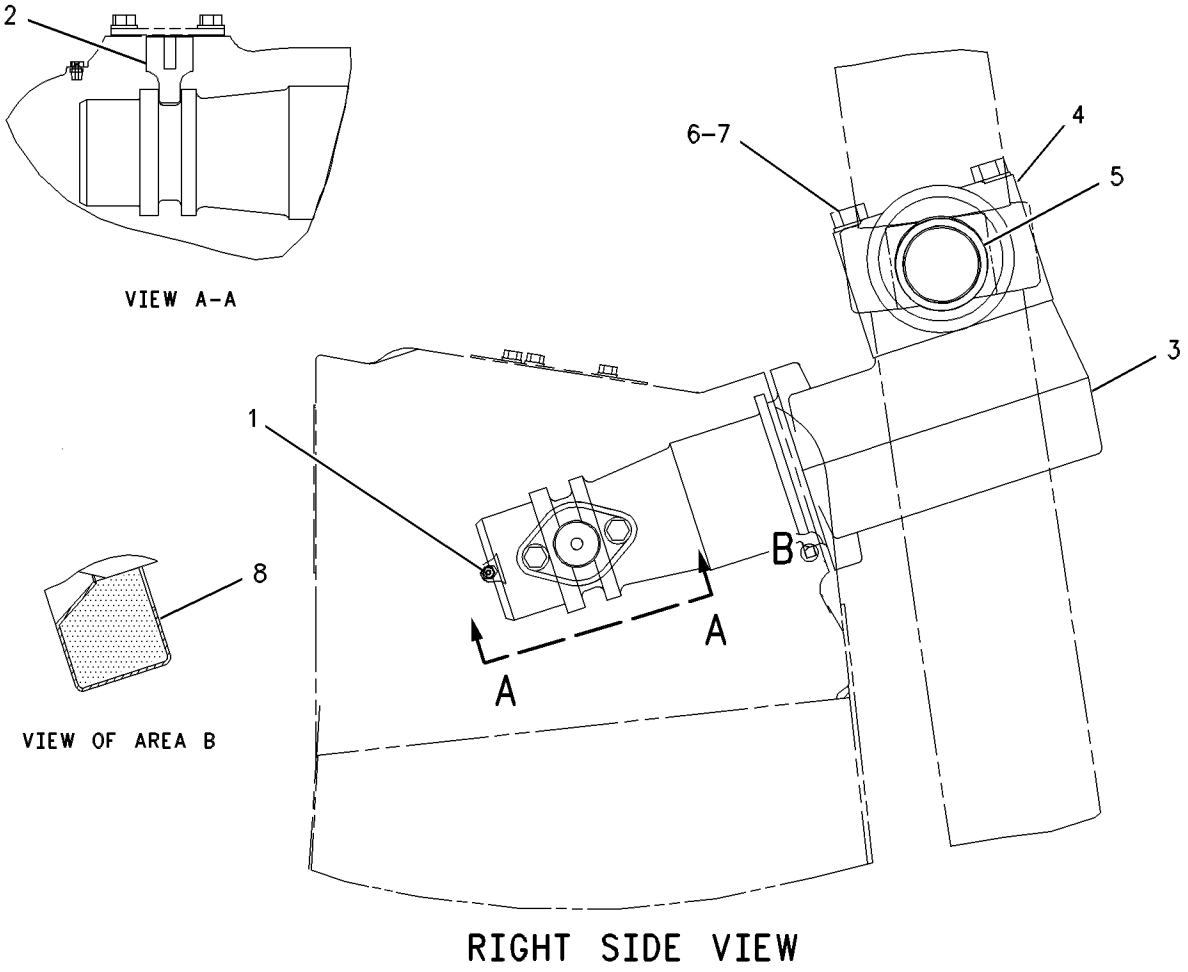

GRAPHIC #1 g00570382

137-7157 MOUNTING GP-RIPPER

S/N: 5RP1-UP; 7HP1-UP
PART OF 134-6000, 165-0652 RIPPER AR
AN ATTACHMENT

SMCS-6165, 6324 **i01397283**

NOTE	REF NO	GRAPHIC REF	PART NUMBER	QTY	PART NAME 1 2 3 4 5 6 (PRODUCT LEVEL)	SEE PAGE
BE	1	1	**4T-1843**	2	TUBE	
	2	1	**4T-9762**	2	PIN AS	
	3	1	**6T-6954**	2	BLOCK	
	4	1	**7T-7305**	4	PLATE	
	5	1	**9U-9709**	1	GUARD AS	
	6	1	**9U-9712**	1	GUARD AS	
	7	1	**9W-9243**	2	PIN AS	
	8	1	**114-2194**	1	PLATE	
	9	1	**137-7158**	1	PLATE AS-RH	
	10	1	**137-7159**	1	PLATE AS-LH	
	11	1	**138-8455**	12	BOLT-HEX HEAD	
	12	1	**7X-0537**	12	WASHER-HARD (40.5X67X6MM THK)	
	13	1	**4L-6454**	4	BOLT (3/8-16X1 IN)	
	14	1	**5P-1075**	4	WASHER-HARD (10.2X22.5X3MM THK)	
	15	1	**7X-0582**	4	WASHER-HARD (20X44.5X6MM THK)	
	16	1	**8T-4994**	10	WASHER-HARD (20X36.5X5MM THK)	
M	17	1	**8T-5460**	8	BOLT (M20X2.5X40MM)	
	18	1	**8T-9399**	14	BOLT (3/4-10X2.25IN)	

B-USE AS REQUIRED
E-ORDER BY THE CENTIMETER
M-METRIC PART

137-7157 **MOUNTING GP-RIPPER** *(contd.)* **i01397283**

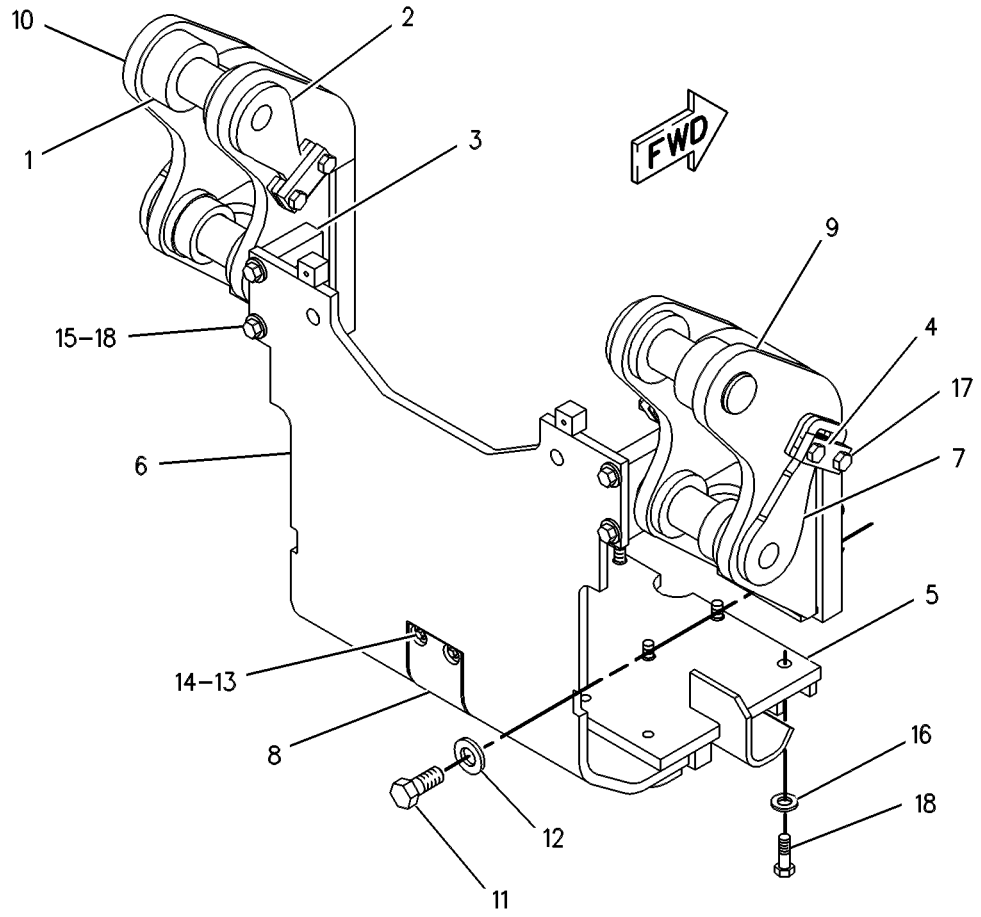

GRAPHIC #1 g00271295

135-5110 PULLER AR-PIN

S/N: ABK1-UP
FOR USE WITH 134-6000—PAGE 741
AN ATTACHMENT

SMCS-5353, 5354 **i01283099**

NOTE	REF NO	GRAPHIC REF	PART NUMBER	QTY	PART NAME 1 2 3 4 5 6 (PRODUCT LEVEL)	SEE PAGE
Y	1	1	**6E-3113**	1	CYLINDER GP-RIPPER PIN PULLER	632
Y	2	1	*135-5111*	1	PULLER GP-PIN	737
Y	3	1	*135-5112*	1	LINES GP-PIN PULLER CYLINDER	652

Y-SEPARATE ILLUSTRATION

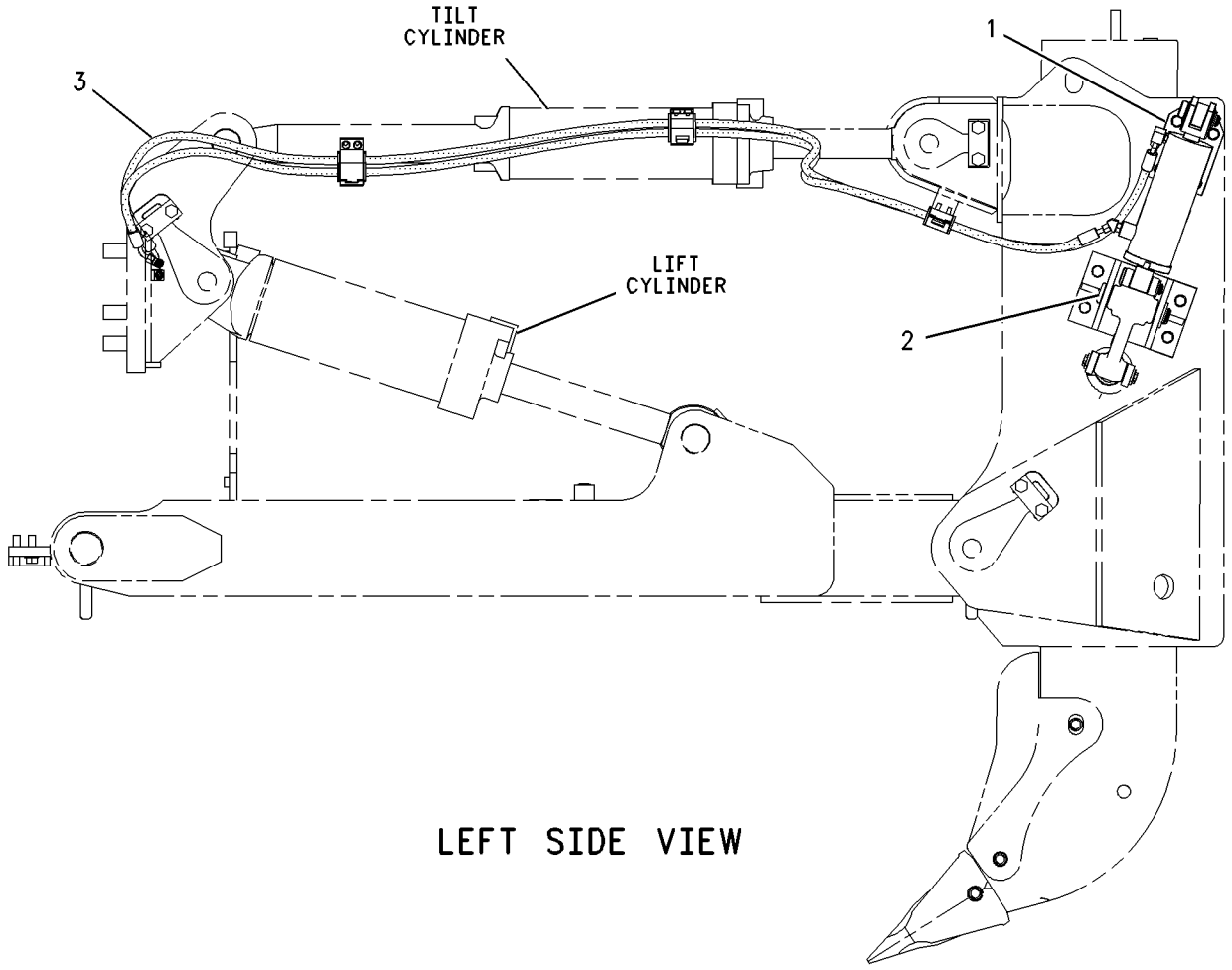

LEFT SIDE VIEW

GRAPHIC #1 g00681145

135-5111 PULLER GP-PIN

S/N: ABK1-UP
PART OF 135-5110 PULLER AR-PIN
AN ATTACHMENT

SMCS-5353, 5354 **i01397287**

NOTE	REF NO	GRAPHIC REF	PART NUMBER	QTY	PART NAME 1 2 3 4 5 6 (PRODUCT LEVEL)	SEE PAGE
	1	1	**7T-4501**	1	PIN	
	2	1	**7T-4502**	1	PIN	
	3	1	**9X-8257**	8	WASHER (17.5X30X3.5MM THK)	
	4	1	**130-6366**	2	LINK	
	5	1	**135-5102**	1	PLATE AS	
	6	1	**135-5105**	1	PLATE AS	
	7	1	**135-5109**	1	PIN	
	8	1	**135-5113**	2	PIN	
	9	1	**135-5114**	1	PIN	
	10	1	**7X-3391**	4	WASHER-HARD (13.5X32X6MM THK)	
	11	1	**6K-3630**	1	RING	
	12	1	**7J-4169**	2	RING-SNAP	
	13	1	**7X-0537**	1	WASHER-HARD (40.5X67X6MM THK)	
M	14	1	**8C-8992**	4	BOLT-LOCKING (M12X1.75X30MM)	
	15	1	**8T-4167**	2	WASHER-HARD (26X44X4MM THK)	
M	16	1	**8T-7338**	8	BOLT (M16X2.0X45MM)	

M-METRIC PART

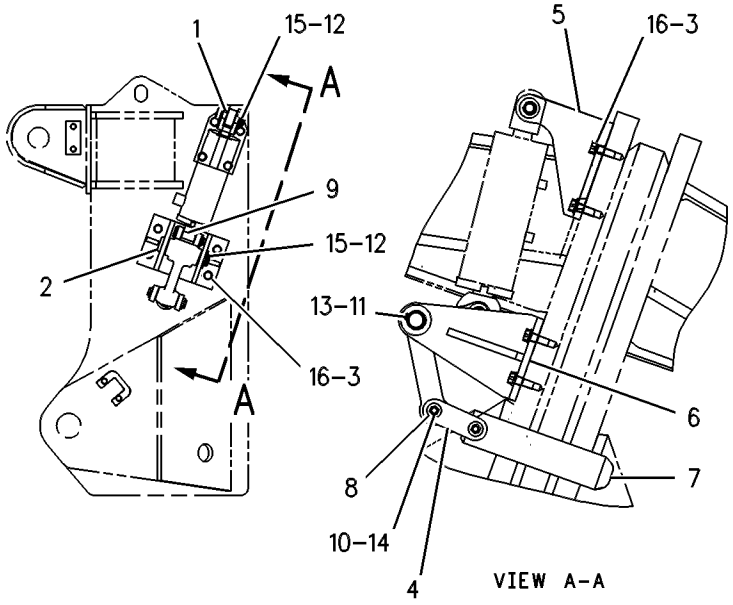

GRAPHIC #1 g00271463

108-1028 PUSH ARM GP-LH

S/N: 9MP1-UP; 9RP1-UP
PART OF 8E-9889 PUSH ARM GP-STABILIZER
AN ATTACHMENT

SMCS-6061 **i01446818**

NOTE	REF NO	GRAPHIC REF	PART NUMBER	QTY	PART NAME 1 2 3 4 5 6 (PRODUCT LEVEL)	SEE PAGE
	1	1	**108-0685**	1	PUSH ARM AS-LH	
		1	**7T-5140**	1	STEP	
	2	1	**108-1806**	1	BRACKET AS	
	3	1	**109-5675**	1	BRACKET AS-LH	
	4	1	**3G-9598**	2	BEARING-SLEEVE	
	5	1	**116-8046**	1	BEARING AS	
	6	1	**8E-9401**	1	GUARD	
	7	1	**8J-5326**	1	PLATE	
	8	1	**8P-9770**	1	PLATE	
M	9	1	**7X-2579**	4	BOLT (M24X3X240MM)	
M		1	**8T-4001**	4	NUT (M24X3 THD)	
	10	1	**116-8038**	1	CAP-BEARING	
B	11	1	**3G-9401**	26	SHIM (0.8MM THK)	

B-USE AS REQUIRED
M-METRIC PART

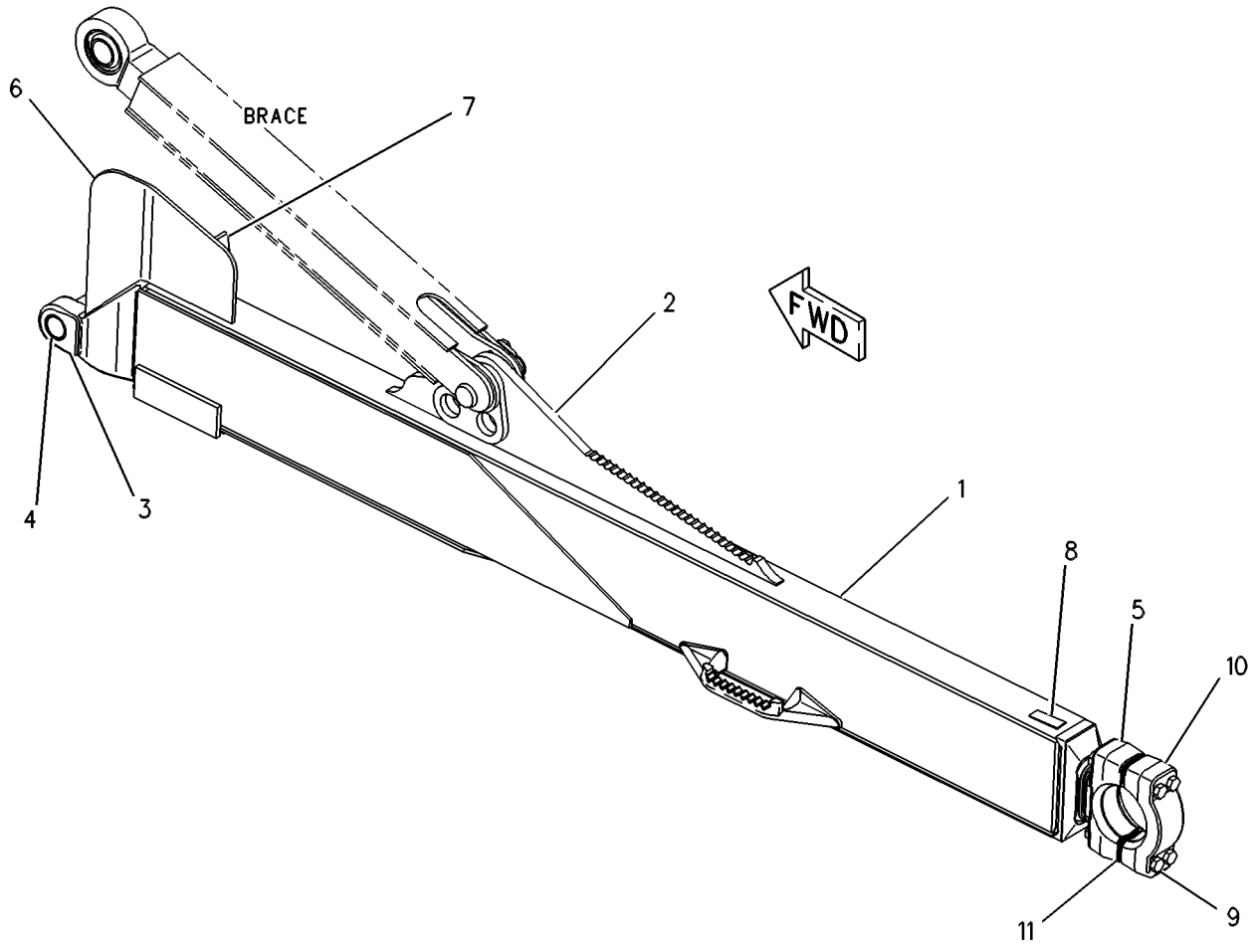

GRAPHIC #1 g00267397

110-5744 PUSH ARM GP-RH

S/N: 9MP1-UP; 9RP1-UP
PART OF 8E-9889 PUSH ARM GP-STABILIZER
AN ATTACHMENT

SMCS-6061 **i01446820**

NOTE	REF NO	GRAPHIC REF	PART NUMBER	QTY	PART NAME 1 2 3 4 5 6 (PRODUCT LEVEL)	SEE PAGE
M	1	1	**7X-2579**	4	BOLT (M24X3X240MM)	
M		1	**8T-4001**	4	NUT (M24X3 THD)	
	2	1	**116-8038**	1	CAP-BEARING	
	3	1	**109-5676**	1	PUSH ARM AS-RH	
	4	1	**116-8046**	1	BEARING AS	
	5	1	**3G-7000**	1	BRACKET AS	
	6	1	**109-5674**	1	BRACKET AS-RH	
	7	1	**3G-9598**	2	BEARING-SLEEVE	
	8	1	**8P-9770**	1	PLATE	
	9	1	**7T-5140**	1	STEP	
	10	1	**8J-5326**	1	PLATE	
B	11	1	**3G-9401**	14	SHIM (0.8MM THK)	

B-USE AS REQUIRED
M-METRIC PART

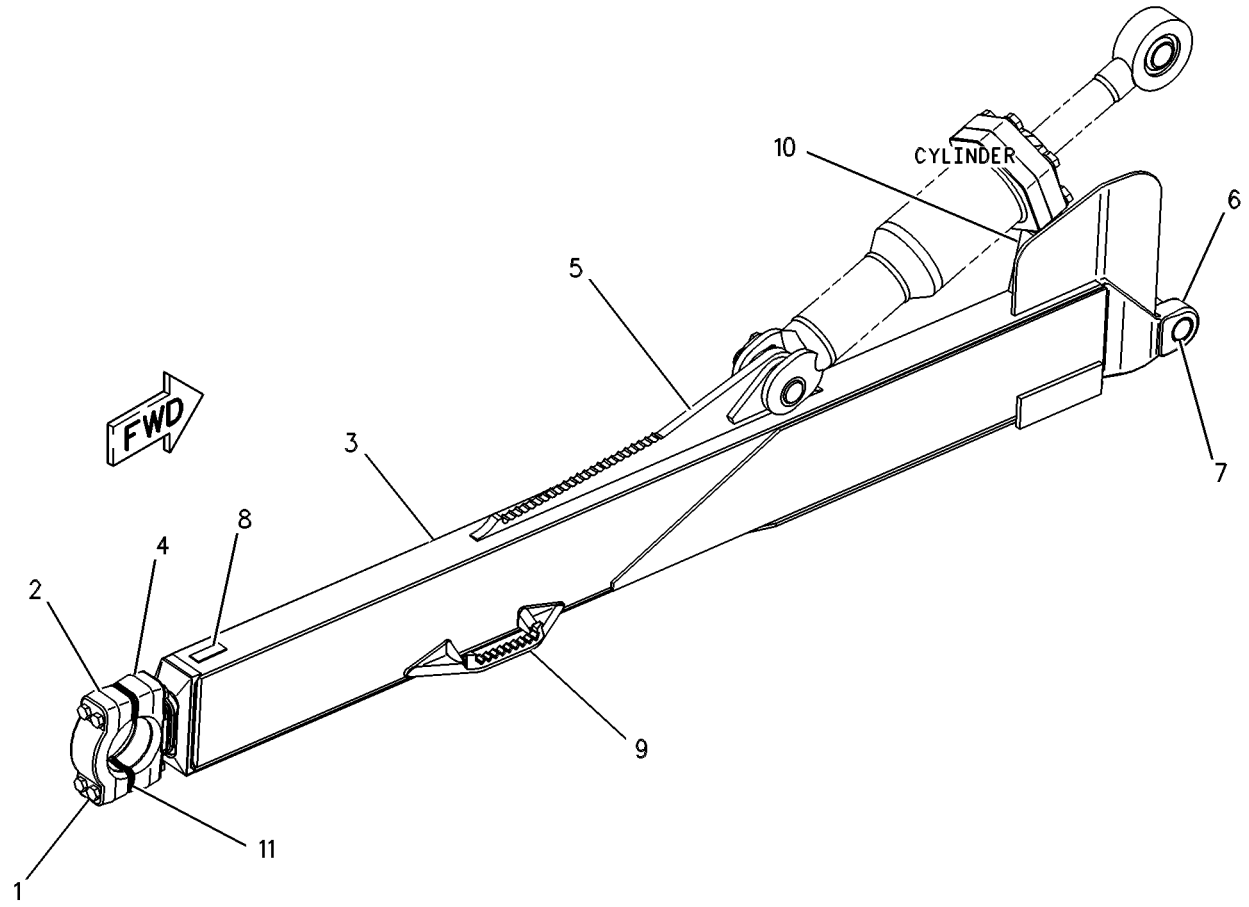

GRAPHIC #1 g00267400

8E-9889 PUSH ARM GP-STABILIZER

S/N: 9MP1-UP; 9RP1-UP
PART OF 163-4550, 163-4552 BULLDOZER AR-SEMI-UNIVERSAL, 163-4551, 163-4553 BULLDOZER AR-UNIVERSAL
AN ATTACHMENT

SMCS-6061 **i00590570**

NOTE	REF NO	GRAPHIC REF	PART NUMBER	QTY	PART NAME 1 2 3 4 5 6 (PRODUCT LEVEL)	SEE PAGE
Y	1	1	*108-1028*	1	PUSH ARM GP-LH	738
	2	1	**6J-5179**	4	RETAINER	
	3	1	**6I-8087**	1	BRACE AS	
	4	1	**3G-7016**	2	PIN	
M	5	1	**7X-2574**	8	BOLT	
	6	1	**4T-7534**	2	PIN	
Y	7	1	*110-5204*	1	LINK GP-STABILIZER	725
Y	8	1	**109-6778**	1	CYLINDER GP-TILT	638
Y	9	1	*110-5744*	1	PUSH ARM GP-RH	739

M-METRIC PART
Y-SEPARATE ILLUSTRATION

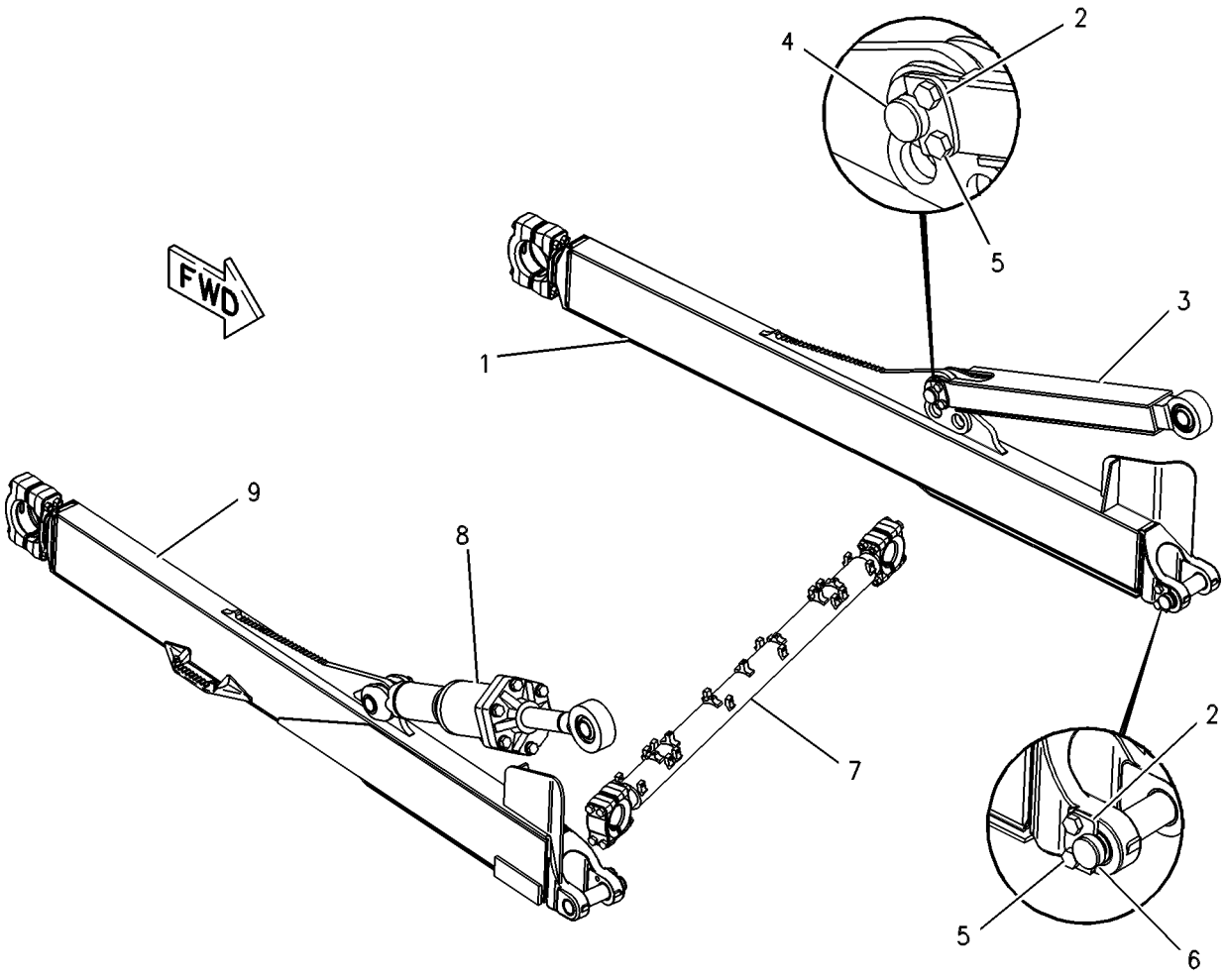

GRAPHIC #1 g00267405

134-6000 RIPPER AR

S/N: 5RP1-UP
SINGLE SHANK
AN ATTACHMENT

SMCS-6312, 6316 **i01282273**

NOTE	REF NO	GRAPHIC REF	PART NUMBER	QTY	PART NAME 1 2 3 4 5 6 (PRODUCT LEVEL)	SEE PAGE
Y	1	1	**132-5123**	2	CYLINDER GP-RIPPER LIFT	630
Y	2	1	**132-5149**	2	CYLINDER GP-RIPPER TIP	636
Y	3	1	*134-8107*	1	RIPPER GP	768
Y	4	1	*135-2803*	1	FRAME GP-RIPPER	716
Y	5	1	*135-6410*	1	LINES GP-RIPPER	660
Y	6	1	*137-7157*	1	MOUNTING GP-RIPPER	734
FY		1	*8E-7886*	1	LIGHTING GP-FLOOD	318
F		1	**5P-1327**	1	PLATE-SERIAL NUMBER	
					(ON CYLINDER TOWER)	
F		1	**4B-4158**	2	SCREW-DRIVE	

F-NOT SHOWN
Y-SEPARATE ILLUSTRATION

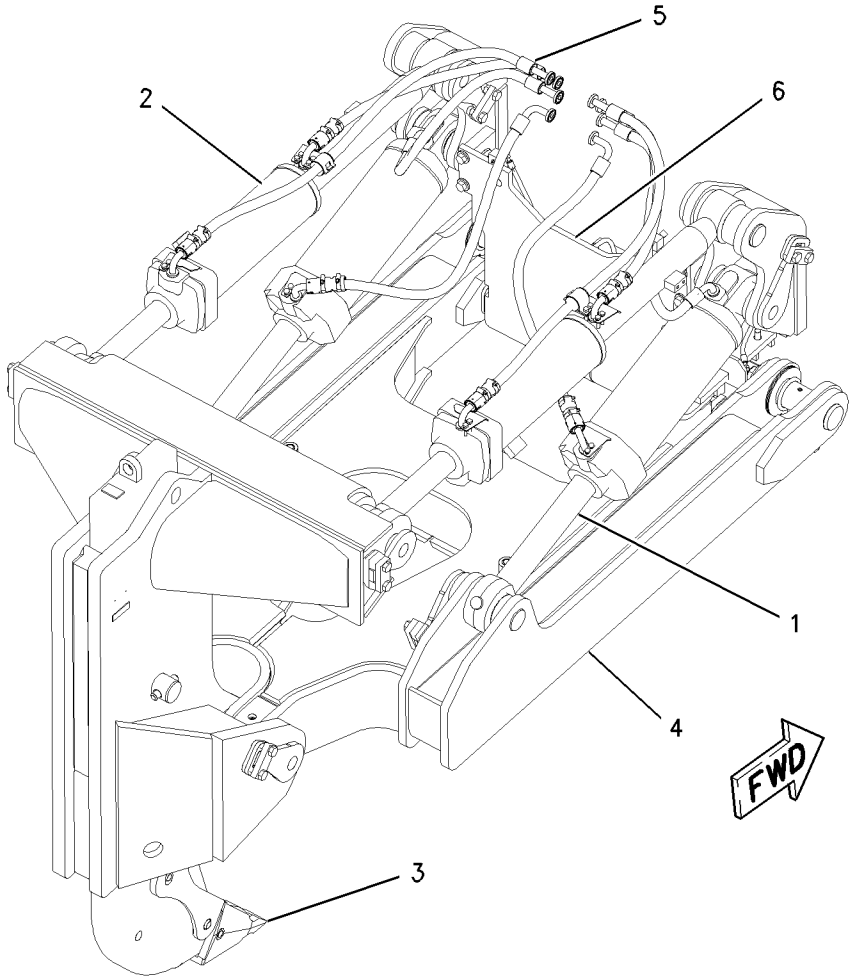

GRAPHIC #1 g00685783

IMPLEMENTS

165-0652 RIPPER AR

S/N: 7HP1-UP
MULTI-SHANK
AN ATTACHMENT

SMCS-6312, 6316 **i01445953**

NOTE	REF NO	GRAPHIC REF	PART NUMBER	QTY	PART NAME 1 2 3 4 5 6 (PRODUCT LEVEL)	SEE PAGE
Y	1	1	**132-5123**	2	CYLINDER GP-RIPPER LIFT	630
Y	2	1	**132-5149**	2	CYLINDER GP-RIPPER TIP	636
Y	3	1	*135-6410*	1	LINES GP-RIPPER	660
Y	4	1	*137-7157*	1	MOUNTING GP-RIPPER	734
Y	5	1	*138-0430*	1	RIPPER GP	769
Y	6	1	*159-9796*	1	FRAME GP-RIPPER	718
FY		1	*8E-7886*	1	LIGHTING GP-FLOOD	318
F		1	**5P-1327**	1	PLATE-SERIAL NUMBER	
					(ON CYLINDER TOWER)	
F		1	**4B-4158**	2	SCREW-DRIVE (3/16X0.25 IN)	

F-NOT SHOWN
Y-SEPARATE ILLUSTRATION

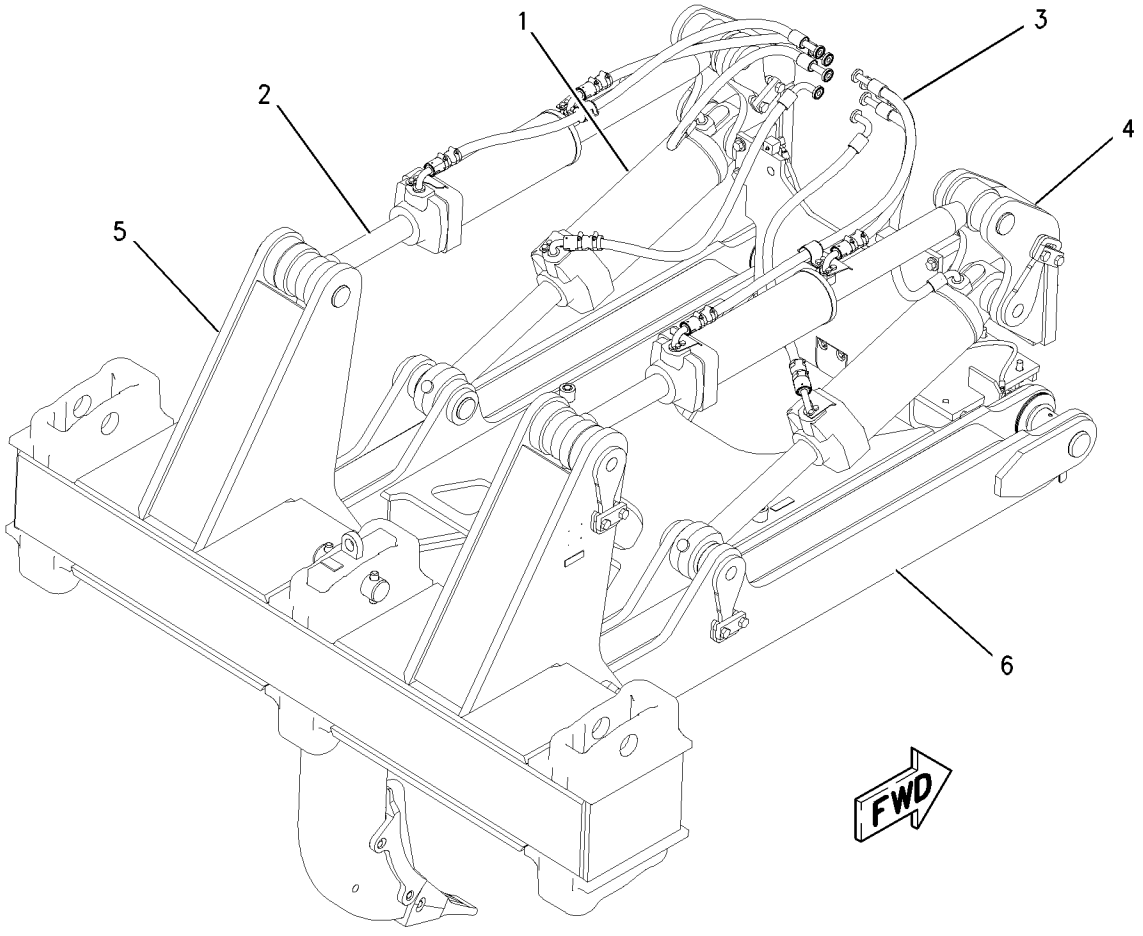

GRAPHIC #1 g00686268

IMPLEMENTS

164-5055 TRUNNION AR-BULLDOZER

S/N: ABK1-UP
CUSHION DOZER
AN ATTACHMENT

SMCS-6069 **i01101173**

NOTE	PART NUMBER	QTY	PART NAME 1 2 3 4 5 6 (PRODUCT LEVEL)	SEE PAGE
Y	*164-7956*	1	CASE & FRAME GP	454
	7X-0443	4	BOLT (1-8X5.50IN)	
	127-5087	1	GUARD AS	
	7B-3107	4	SPACER	
	8B-1910	2	BOSS (3/8-16 THD)	

Y-SEPARATE ILLUSTRATION

106-7364 TRUNNION GP-BULLDOZER

S/N: ABK1-UP; 9MP1-UP; 9RP1-UP
PART OF 163-4550, 163-4552 BULLDOZER AR-SEMI-UNIVERSAL, 163-4551, 163-4553 BULLDOZER AR-UNIVERSAL
AN ATTACHMENT

SMCS-6069 **i00591476**

NOTE	REF NO	GRAPHIC REF	PART NUMBER	QTY	PART NAME 1 2 3 4 5 6 (PRODUCT LEVEL)	SEE PAGE
	1	1	**108-8283**	2	TRUNNION AS	
					(EACH INCLUDES)	
	2	1	**116-8052**	1	BEARING	
M	3	1	**8T-4193**	4	BOLT (M16X2.0X50MM)	
	4	1	**116-8050**	1	RETAINER	
	5	1	**7X-0404**	28	BOLT (1-8X2.50IN)	

M-METRIC PART

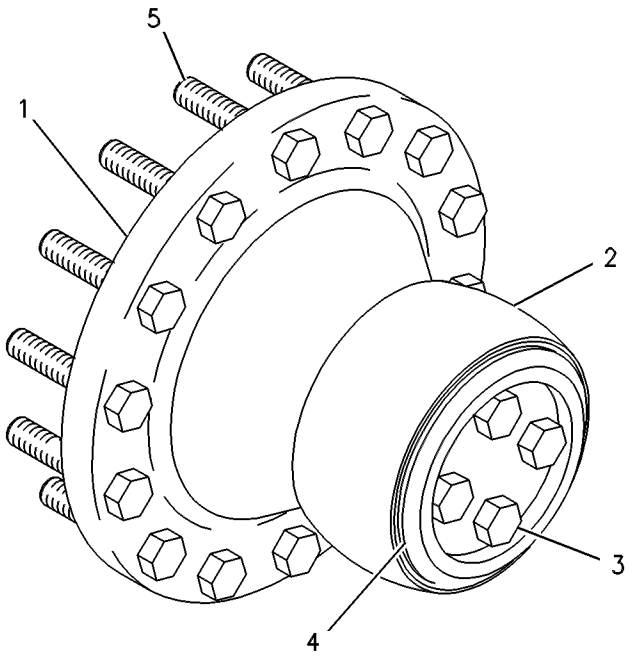

GRAPHIC #1 g00267412

WORK TOOLS

6Y-5628 BIT & CUTTING EDGE GP

S/N: ABK1-UP
THIN EDGE
FOR USE WITH SEMI-UNIVERSAL BULLDOZER BLADES
AN ATTACHMENT

SMCS-6801, 6804 **i00591855**

NOTE	REF NO	GRAPHIC REF	PART NUMBER	QTY	PART NAME 1 2 3 4 5 6 (PRODUCT LEVEL)	SEE PAGE
	1	1	**6Y-4278**	1	BIT-END-LH	
	2	1	**6Y-4277**	1	BIT-END-RH	
	3	1	**6Y-5540**	2	EDGE-CUTTING	
	4	1	**6Y-5539**	1	EDGE-CUTTING	
	5	1	**4J-9058**	36	BOLT-PLOW (1-8X3.25 IN)	
					-OR-	
		1	**4J-9208**	36	BOLT-PLOW (88.9 MM)	
		1	**5P-8250**	36	WASHER (5.0MM THK)	
		1	**2J-3507**	36	NUT-FULL (1-8 THD)	

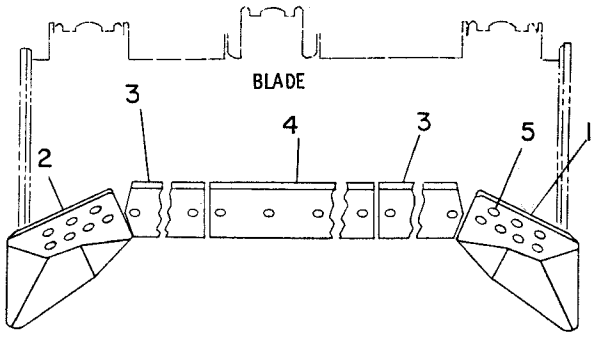

GRAPHIC #1 g00180388

6Y-5629 BIT & CUTTING EDGE GP

S/N: ABK1-UP
THIN EDGE
FOR USE WITH UNIVERSAL BULLDOZER BLADES
AN ATTACHMENT

SMCS-6801, 6804 **i00591990**

NOTE	REF NO	GRAPHIC REF	PART NUMBER	QTY	PART NAME 1 2 3 4 5 6 (PRODUCT LEVEL)	SEE PAGE
	1	1	**6Y-4278**	1	BIT-END-LH	
	2	1	**6Y-4277**	1	BIT-END-RH	
	3	1	**6Y-5540**	2	EDGE-CUTTING	
	4	1	**6Y-5538**	1	EDGE-CUTTING	
	5	1	**4J-9058**	39	BOLT-PLOW (1-8X3.25 IN)	
					-OR-	
		1	**4J-9208**	39	BOLT-PLOW (1-8X88.90MM)	
	6	1	**5P-8250**	39	WASHER (5.0MM THK)	
		1	**2J-3507**	39	NUT-FULL (1-8 THD)	

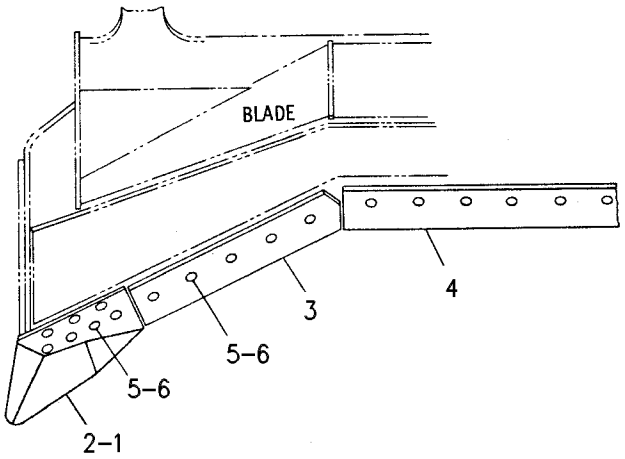

TOP VIEW

GRAPHIC #1 g00256535

7T-5391 BIT & CUTTING EDGE GP

S/N: ABK1-UP; 9RP1-UP
PART OF 108-8290 BLADE & EDGE GP, 102-6346, 102-6347 BLADE & EDGE GP-SEMI-UNIVERSAL
AN ATTACHMENT

SMCS-6801, 6804 **i00593021**

NOTE	REF NO	GRAPHIC REF	PART NUMBER	QTY	PART NAME 1 2 3 4 5 6 (PRODUCT LEVEL)	SEE PAGE
	1	1	**8E-4196**	1	BIT-END-LH	
	2	1	**8E-4197**	1	BIT-END-RH	
	3	1	**7T-9125**	2	EDGE-CUTTING	
	4	1	**7T-5702**	1	EDGE-CUTTING	
	5	1	**4J-9208**	36	BOLT-PLOW	
		1	**5P-8250**	36	WASHER (5.0MM THK)	
		1	**2J-3507**	36	NUT-FULL (1-8 THD)	

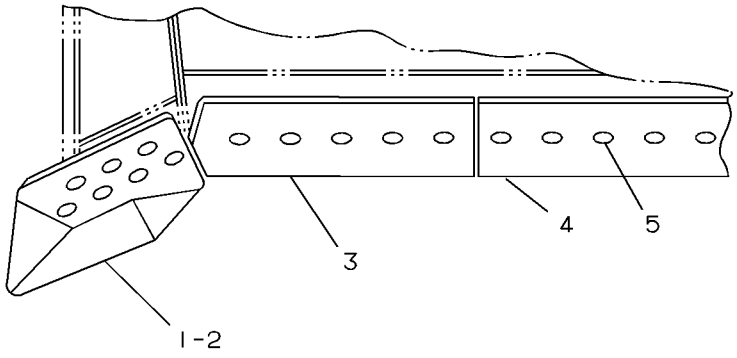

GRAPHIC #1 g00210390

7T-5394 BIT & CUTTING EDGE GP

S/N: ABK1-UP; 9MP1-UP
PART OF 108-8291, 113-3240 BLADE & EDGE GP
AN ATTACHMENT

SMCS-6801, 6804 **i01629930**

NOTE	REF NO	GRAPHIC REF	PART NUMBER	QTY	PART NAME 1 2 3 4 5 6 (PRODUCT LEVEL)	SEE PAGE
	1	1	**8E-4196**	1	BIT-END (LH)	
	2	1	**8E-4197**	1	BIT-END (RH)	
	3	1	**7T-9125**	2	EDGE-CUTTING	
	4	1	**7T-5701**	1	EDGE-CUTTING	
	5	1	**4J-9208**	39	BOLT-PLOW (1-8X3.5 IN)	
		1	**5P-8250**	39	WASHER (28X49X5MM THK)	
		1	**2J-3507**	39	NUT-FULL (1-8 THD)	

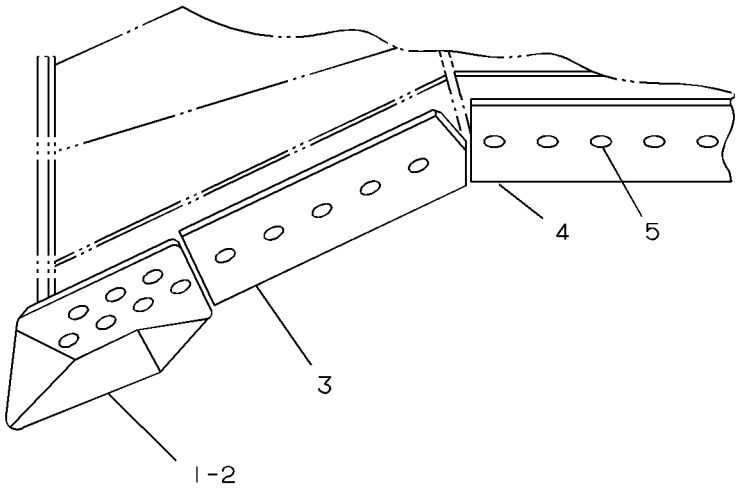

GRAPHIC #1 g00210391

WORK TOOLS

9W-7041 BIT & CUTTING EDGE GP

S/N: ABK1-UP
ABRASION
FOR USE WITH SEMI-UNIVERSAL BULLDOZER BLADES
AN ATTACHMENT

SMCS-6801, 6804 **i01629934**

NOTE	REF NO	GRAPHIC REF	PART NUMBER	QTY	PART NAME 1 2 3 4 5 6 (PRODUCT LEVEL)	SEE PAGE
	1	1	**8E-4539**	1	BIT-END (RH)	
		1	**8E-4540**	1	BIT-END (LH)	
	2	1	**9W-7043**	1	EDGE-CUTTING	
	3	1	**9W-3927**	2	EDGE-CUTTING	
	4	1	**4J-9058**	36	BOLT-PLOW (1-8X3.25 IN)	
					—OR—	
		1	**4J-9208**	36	BOLT-PLOW (1-8X3.5 IN)	
		1	**5P-8250**	36	WASHER (28X49X5MM THK)	
		1	**2J-3507**	36	NUT-FULL (1-8 THD)	

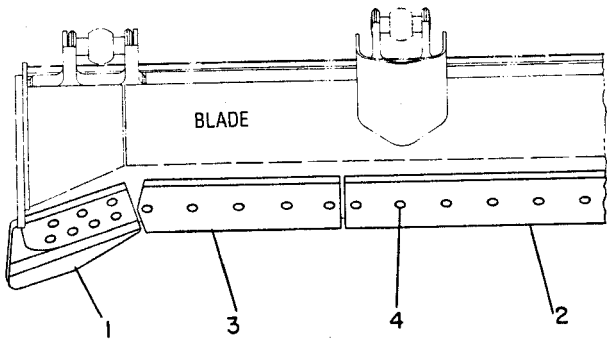

TOP VIEW

GRAPHIC #1 g00180483

9W-7042 BIT & CUTTING EDGE GP

S/N: ABK1-UP
ABRASION
FOR USE WITH UNIVERSAL BULLDOZER BLADES
AN ATTACHMENT

SMCS-6801, 6804 **i01629939**

NOTE	REF NO	GRAPHIC REF	PART NUMBER	QTY	PART NAME 1 2 3 4 5 6 (PRODUCT LEVEL)	SEE PAGE
	1	1	**8E-4539**	1	BIT-END (RH)	
		1	**8E-4540**	1	BIT-END (LH)	
	2	1	**9W-7044**	1	EDGE-CUTTING	
	3	1	**9W-3927**	2	EDGE-CUTTING	
	4	1	**4J-9058**	39	BOLT-PLOW (1-8X3.25 IN)	
					OR	
		1	**4J-9208**	39	BOLT-PLOW (1-8X3.5 IN)	
		1	**5P-8250**	39	WASHER (28X49X5MM THK)	
		1	**2J-3507**	39	NUT-FULL (1-8 THD)	

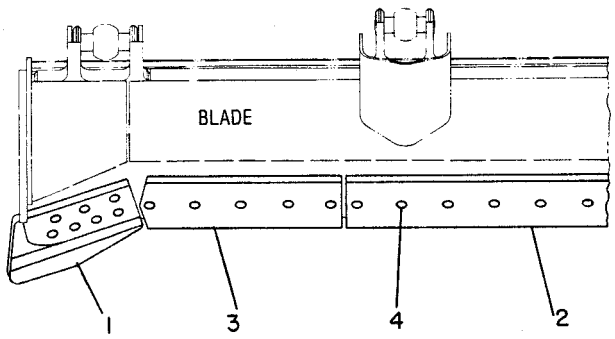

TOP VIEW

GRAPHIC #1 g00180484

WORK TOOLS

113-0320 BIT & CUTTING EDGE GP

S/N: 9RP1-UP
TACONITE
FOR USE WITH SEMI-UNIVERSAL BULLDOZERS
AN ATTACHMENT

SMCS-6801, 6804 **i01446828**

NOTE	PART NUMBER	QTY	PART NAME 1 2 3 4 5 6 (PRODUCT LEVEL)	SEE PAGE
	113-0333	1	BIT AS-LH	
	113-0332	1	BIT AS-RH	
	4J-9208	36	BOLT-PLOW (1-8X3.5 IN)	
	113-0322	1	EDGE-CUTTING	
	113-0321	2	EDGE-CUTTING	
	2J-3507	36	NUT-FULL (1-8 X38.1 THD)	
	5P-8250	36	WASHER (28X49X5MM THK)	

109-9036 BIT GP-END

S/N: ABK1-UP
EXTENDED WEAR LIFE-UTILITY
FOR USE WITH SEMI-UNIVERSAL BULLDOZERS EQUIPPED WITH, 9W-7041—PAGE 749, OR UNIVERSAL BULLDOZERS EQUIPPED WITH, 9W-7042—PAGE 750
AN ATTACHMENT

SMCS-6804 **i00686971**

NOTE	PART NUMBER	QTY	PART NAME 1 2 3 4 5 6 (PRODUCT LEVEL)	SEE PAGE
	100-3138	1	BIT-END-LH	
	100-3137	1	BIT-END-RH	

WORK TOOLS

109-9037 BIT GP-END

S/N: ABK1-UP
GENERAL DUTY-UTILITY
FOR USE WITH UNIVERSAL OR SEMI-UNIVERSAL BULLDOZERS
AN ATTACHMENT

SMCS-6804 **i00686967**

NOTE	PART NUMBER	QTY	PART NAME 1 2 3 4 5 6 (PRODUCT LEVEL)	SEE PAGE
	100-3136	1	BIT-END-LH	
	100-3135	1	BIT-END-RH	

WORK TOOLS

108-8290 BLADE & EDGE GP

S/N: ABK1-UP
SEMI-UNIVERSAL/WITH PUSH PLATE
AN ATTACHMENT

SMCS-6060 **i00686976**

NOTE	PART NUMBER	QTY	PART NAME 1 2 3 4 5 6 (PRODUCT LEVEL)	SEE PAGE
Y	*7T-5391*	1	BIT & CUTTING EDGE GP	747
Y	**113-3239**	1	BLADE AS	759

Y-SEPARATE ILLUSTRATION

WORK TOOLS

108-8291 BLADE & EDGE GP

S/N: 9MP1-UP
UNIVERSAL
PART OF 106-7365 BLADE GP-UNIVERSAL
AN ATTACHMENT

SMCS-6060 **i00686975**

NOTE	PART NUMBER	QTY	PART NAME 1 2 3 4 5 6 (PRODUCT LEVEL)	SEE PAGE
Y	*7T-5394*	1	BIT & CUTTING EDGE GP	748
Y	**108-8318**	1	BLADE AS-UNIVERSAL	763

Y-SEPARATE ILLUSTRATION

WORK TOOLS

113-3240 BLADE & EDGE GP

S/N: ABK1-UP
UNIVERSAL-WITH ROCK GUARD
AN ATTACHMENT

SMCS-6060 **i00686960**

NOTE	PART NUMBER	QTY	PART NAME 1 2 3 4 5 6 (PRODUCT LEVEL)	SEE PAGE
Y	*7T-5394*	1	BIT & CUTTING EDGE GP	748
Y	**113-3241**	1	BLADE AS-UNIVERSAL	764

Y-SEPARATE ILLUSTRATION

WORK TOOLS

102-6346 BLADE & EDGE GP-SEMI-UNIVERSAL

S/N: 9RP1-UP

PART OF 102-6345 BLADE GP-SEMI-UNIVERSAL

AN ATTACHMENT

SMCS-6060 **i00686991**

NOTE	PART NUMBER	QTY	PART NAME 1 2 3 4 5 6 (PRODUCT LEVEL)	SEE PAGE
Y	*7T-5391*	1	BIT & CUTTING EDGE GP	747
Y	**102-1904**	1	BLADE AS-SEMI-UNIVERSAL	760

Y-SEPARATE ILLUSTRATION

WORK TOOLS

102-6347 BLADE & EDGE GP-SEMI-UNIVERSAL

S/N: ABK1-UP
WITH ROCK GUARD & WEAR PLATE
AN ATTACHMENT

SMCS-6060 **i00686990**

NOTE	PART NUMBER	QTY	PART NAME 1 2 3 4 5 6 (PRODUCT LEVEL)	SEE PAGE
Y	*7T-5391*	1	BIT & CUTTING EDGE GP	747
Y	**102-1938**	1	BLADE AS-SEMI-UNIVERSAL	762

Y-SEPARATE ILLUSTRATION

113-3239 BLADE AS

S/N: ABK1-UP
WITH PUSH PLATE
PART OF 108-8290 BLADE & EDGE GP
AN ATTACHMENT

SMCS-6060 **i00686963**

NOTE	PART NUMBER	QTY	PART NAME 1 2 3 4 5 6 (PRODUCT LEVEL)	SEE PAGE
Y	**102-1904**	1	BLADE AS-SEMI-UNIVERSAL	760
	7T-5803	1	PLATE-PUSH	

Y-SEPARATE ILLUSTRATION

102-1904 BLADE AS-SEMI-UNIVERSAL

S/N: ABK1-UP; 9RP1-UP

PART OF 102-6346 BLADE & EDGE GP-SEMI-UNIVERSAL, 113-3239 BLADE AS, 102-1938 BLADE AS-SEMI-UNIVERSAL

AN ATTACHMENT

SMCS-6060 **i01084586**

NOTE	REF NO	GRAPHIC REF	PART NUMBER	QTY	PART NAME 1 2 3 4 5 6 (PRODUCT LEVEL)	SEE PAGE
	1	1	**9W-8546**	3	PLATE	
	2	1	**109-6347**	1	SUPPORT-CENTER	
	3	1	**108-8292**	2	BRACKET AS	
					(EACH INCLUDES)	
		1	**3G-9598**	2	BEARING-SLEEVE	
	4	1	**8P-9770**	1	PLATE	
	5	1	**110-7421**	1	TRUNNION AS	
	6	1	**4T-9439**	1	TRUNNION	
	7	1	**7T-5869**	1	GUARD	
	8	1	**1U-4962**	1	PLATE-LH	
		1	**1U-4961**	1	PLATE-RH	
	9	1	**9W-6118**	2	GUARD	
	10	1	**9W-4681**	2	BRACKET AS	
					(EACH INCLUDES)	
	11	1	**9J-0123**	1	TRUNNION	
	12	1	**6Y-3233**	2	DEFLECTOR	
	13	1	**8E-5590**	2	SUPPORT-OUTER	

102-1904 BLADE AS-SEMI-UNIVERSAL *(contd.)* i01084586

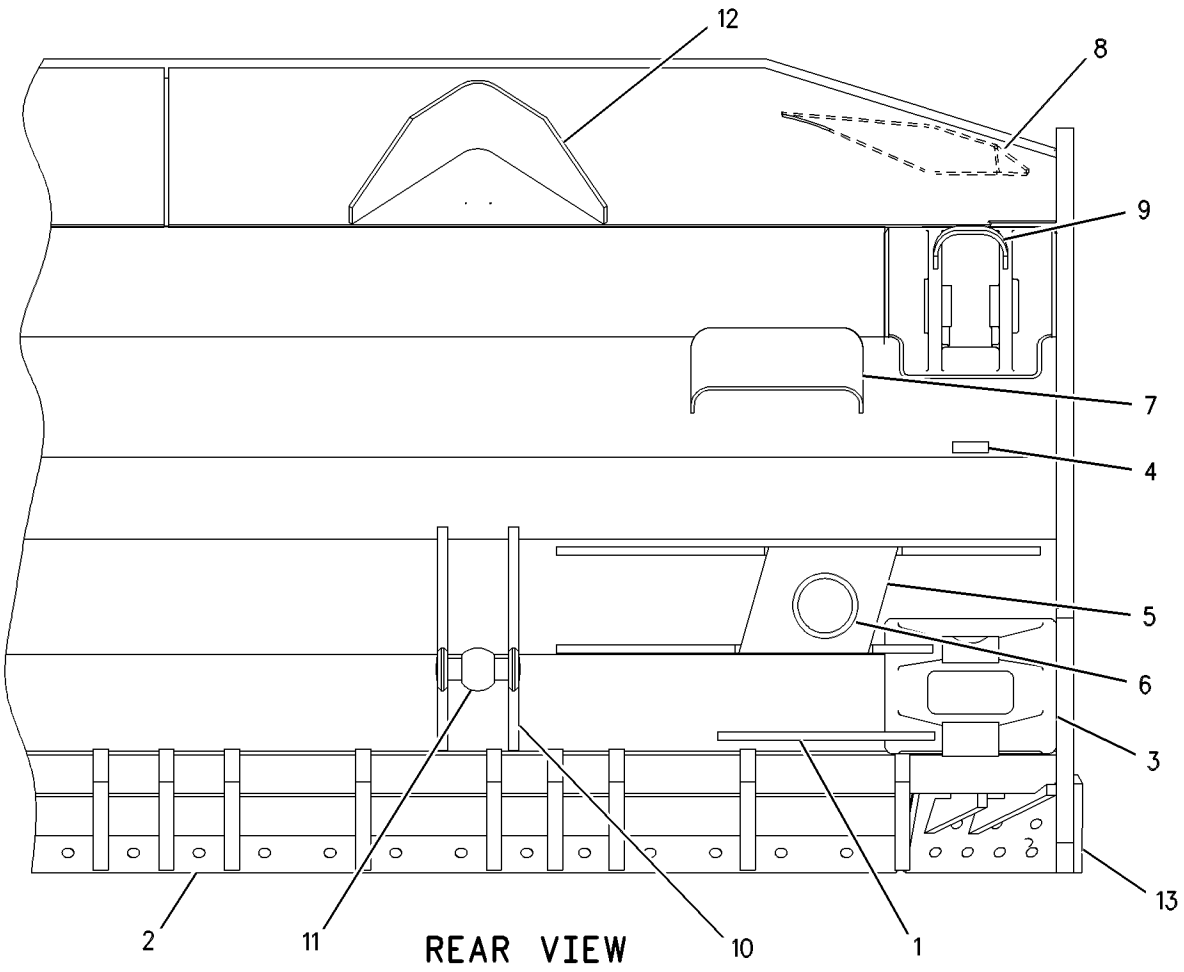

GRAPHIC #1 g00568606

102-1938 BLADE AS-SEMI-UNIVERSAL

S/N: ABK1-UP
WITH ROCK GUARD & WEAR PLATE
PART OF 102-6347 BLADE & EDGE GP-SEMI-UNIVERSAL
AN ATTACHMENT

SMCS-6060 **i00719645**

NOTE	PART NUMBER	QTY	PART NAME 1 2 3 4 5 6 (PRODUCT LEVEL)	SEE PAGE
Y	**102-1904**	1	BLADE AS-SEMI-UNIVERSAL	760
Y	*102-1937*	1	GUARD GP-ROCK	498
Y	*9W-2350*	1	PLATE GP-WEAR	767

Y-SEPARATE ILLUSTRATION

WORK TOOLS

108-8318 BLADE AS-UNIVERSAL

S/N: ABK1-UP; 9MP1-UP
PART OF 108-8291 BLADE & EDGE GP, 113-3241 BLADE AS-UNIVERSAL
AN ATTACHMENT

SMCS-6053, 6060 **i01540900**

NOTE	REF NO	GRAPHIC REF	PART NUMBER	QTY	PART NAME 1 2 3 4 5 6 (PRODUCT LEVEL)	SEE PAGE
	1	1	**6Y-3233**	2	DEFLECTOR	
	2	1	**7T-5869**	1	GUARD	
C	3	1	**8E-9228**	2	SUPPORT-OUTER	
	4	1	**8P-9770**	1	PLATE	
	5	1	**9W-4681**	2	BRACKET AS	
					(EACH INCLUDES)	
	6	1	**9J-0123**	1	TRUNNION	
	7	1	**9W-6118**	2	GUARD	
	8	1	**9W-8546**	3	PLATE	
	9	1	**108-8292**	2	BRACKET AS	
					(EACH INCLUDES)	
	10	1	**3G-9598**	2	BEARING-SLEEVE	
	11	1	**110-7421**	1	TRUNNION AS	
		1	**110-2966**	1	TRUNNION	

C-CHANGE FROM PREVIOUS TYPE

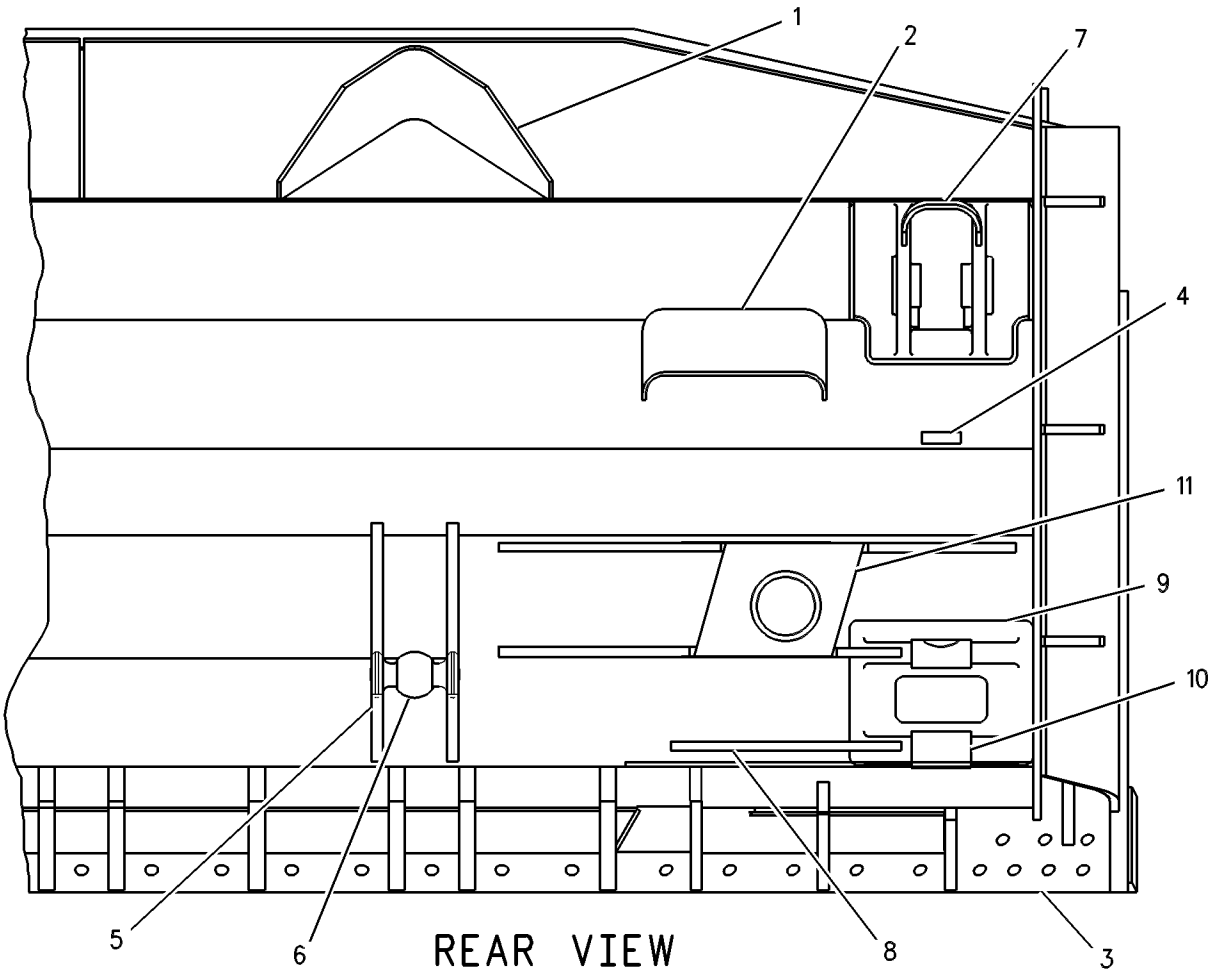

GRAPHIC #1 g00554799

113-3241 BLADE AS-UNIVERSAL

S/N: ABK1-UP
WITH ROCK GUARD
PART OF 113-3240 BLADE & EDGE GP
AN ATTACHMENT

SMCS-6053, 6060 **i00719643**

NOTE	PART NUMBER	QTY	PART NAME 1 2 3 4 5 6 (PRODUCT LEVEL)	SEE PAGE
Y	**108-8318**	1	BLADE AS-UNIVERSAL	763
Y	*113-6041*	1	GUARD GP-ROCK	499

Y-SEPARATE ILLUSTRATION

WORK TOOLS

102-6345 BLADE GP-SEMI-UNIVERSAL

S/N: 9RP1-UP

PART OF 163-4550, 163-4552 BULLDOZER AR-SEMI-UNIVERSAL

AN ATTACHMENT

SMCS-6060, 6078 **i00590028**

NOTE	REF NO	GRAPHIC REF	PART NUMBER	QTY	PART NAME 1 2 3 4 5 6 (PRODUCT LEVEL)	SEE PAGE
Y	1	1	*102-6346*	1	BLADE & EDGE GP-SEMI-UNIVERSAL	757
	2	1	**8E-6758**	2	CONNECTOR AS	
		1	**8E-6752**	4	BEARING-SLEEVE	
M	3	1	**7X-2574**	8	BOLT	
		1	**6J-5179**	4	RETAINER	
	4	1	**1U-2472**	2	PIN	
	5	1	**4T-7534**	2	PIN	

M-METRIC PART
Y-SEPARATE ILLUSTRATION

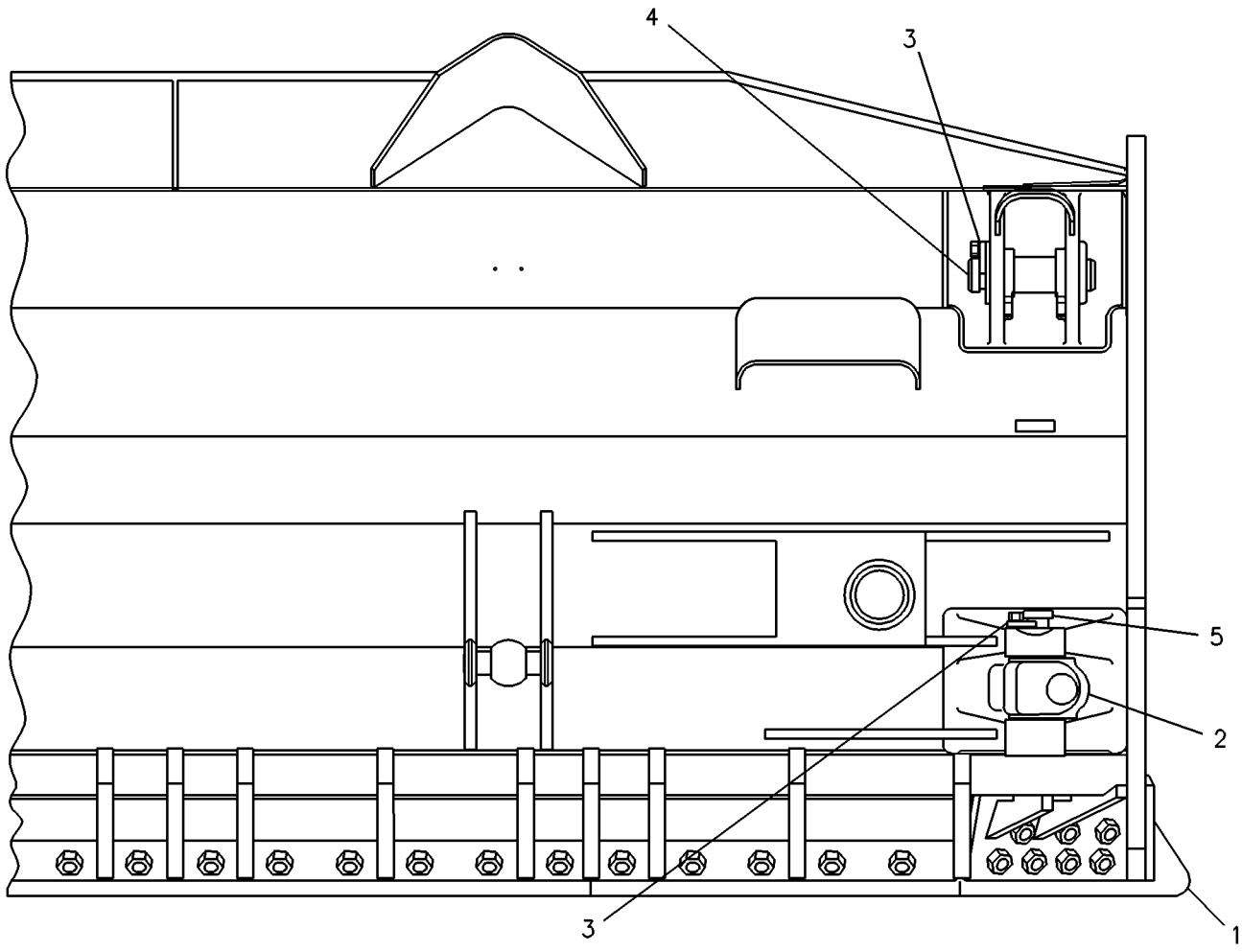

GRAPHIC #1 g00233158

WORK TOOLS

106-7365 BLADE GP-UNIVERSAL

S/N: 9MP1-UP
PART OF 163-4551, 163-4553 BULLDOZER AR-UNIVERSAL
AN ATTACHMENT

SMCS-6053, 6060 **i00591483**

NOTE	REF NO	GRAPHIC REF	PART NUMBER	QTY	PART NAME 1 2 3 4 5 6 (PRODUCT LEVEL)	SEE PAGE
	1	1	**4T-7534**	2	PIN	
M	2	1	**7X-2574**	8	BOLT	
		1	**6J-5179**	4	RETAINER	
	3	1	**8E-6758**	2	CONNECTOR AS	
					(EACH INCLUDES)	
		1	**8E-6752**	4	BEARING-SLEEVE	
Y	4	1	*108-8291*	1	BLADE & EDGE GP	755
	5	1	**1U-2472**	2	PIN	

M-METRIC PART
Y-SEPARATE ILLUSTRATION

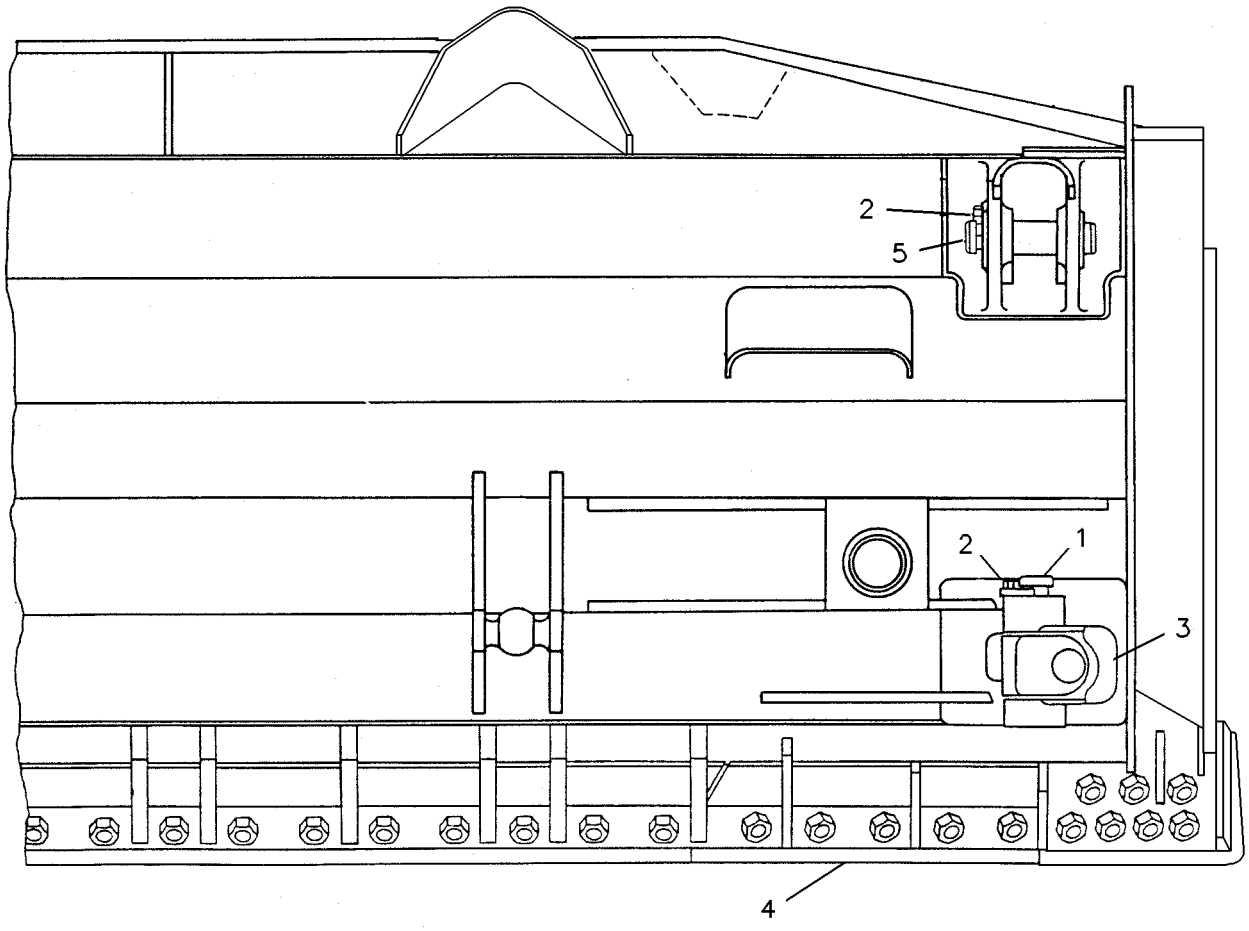

GRAPHIC #1 g00225266

9W-2350 PLATE GP-WEAR

S/N: ABK1-UP

PART OF 102-1938 BLADE AS-SEMI-UNIVERSAL

AN ATTACHMENT

SMCS-6820 **i00591616**

NOTE	REF NO	GRAPHIC REF	PART NUMBER	QTY	PART NAME 1 2 3 4 5 6 (PRODUCT LEVEL)	SEE PAGE
	1	1	**9T-0249**	1	PLATE-WEAR-RH	
C	2	1	**6Y-1255**	1	PLATE-WEAR	
	3	1	**9T-0250**	1	PLATE-WEAR-LH	

C-CHANGE FROM PREVIOUS TYPE

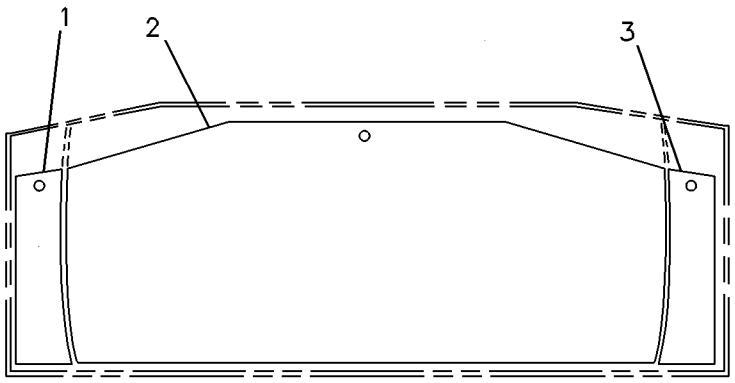

GRAPHIC #1 g00203956

WORK TOOLS

134-8107 RIPPER GP

S/N: 5RP1-UP
PART OF 134-6000 RIPPER AR
AN ATTACHMENT

SMCS-6311, 6312, 6315, 6316, 6325 **i01446830**

NOTE	REF NO	GRAPHIC REF	PART NUMBER	QTY	PART NAME 1 2 3 4 5 6 (PRODUCT LEVEL)	SEE PAGE
	1	1	**4T-2479**	2	PIN AS	
					(EACH INCLUDES)	
		1	**5J-3576**	1	SPRING	
Y	2	1	*114-4502*	1	TOOTH GP-RIPPER	772
	3	1	**134-0825**	1	CARRIAGE AS	
		1	**8P-9770**	1	PLATE	
	4	1	**6J-6703**	1	PIN	

Y-SEPARATE ILLUSTRATION

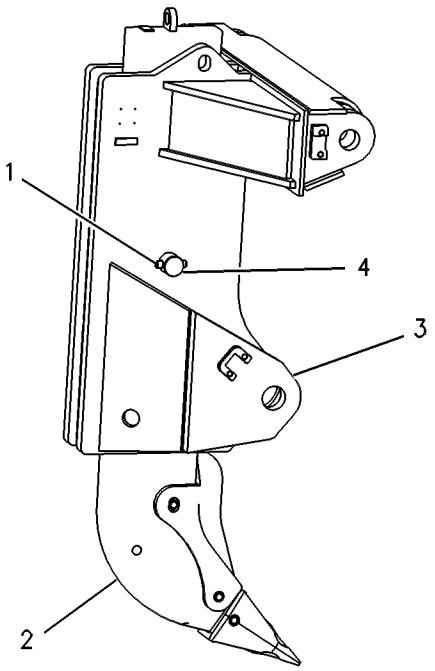

GRAPHIC #1 g00271306

WORK TOOLS

138-0430 RIPPER GP

S/N: 7HP1-UP
PART OF 165-0652 RIPPER AR
AN ATTACHMENT

SMCS-6311, 6312, 6315, 6316, 6325 **i01288550**

NOTE	REF NO	GRAPHIC REF	PART NUMBER	QTY	PART NAME 1 2 3 4 5 6 (PRODUCT LEVEL)	SEE PAGE
Y	1	1	*4T-8987*	1	TOOTH GP-RIPPER	770
	2	1	**138-0431**	1	BEAM AS	
	3	1	**8P-9770**	1	PLATE	
	4	1	**175-1447**	3	BLOCK	
	5	1	**175-1448**	3	BLOCK	

Y-SEPARATE ILLUSTRATION

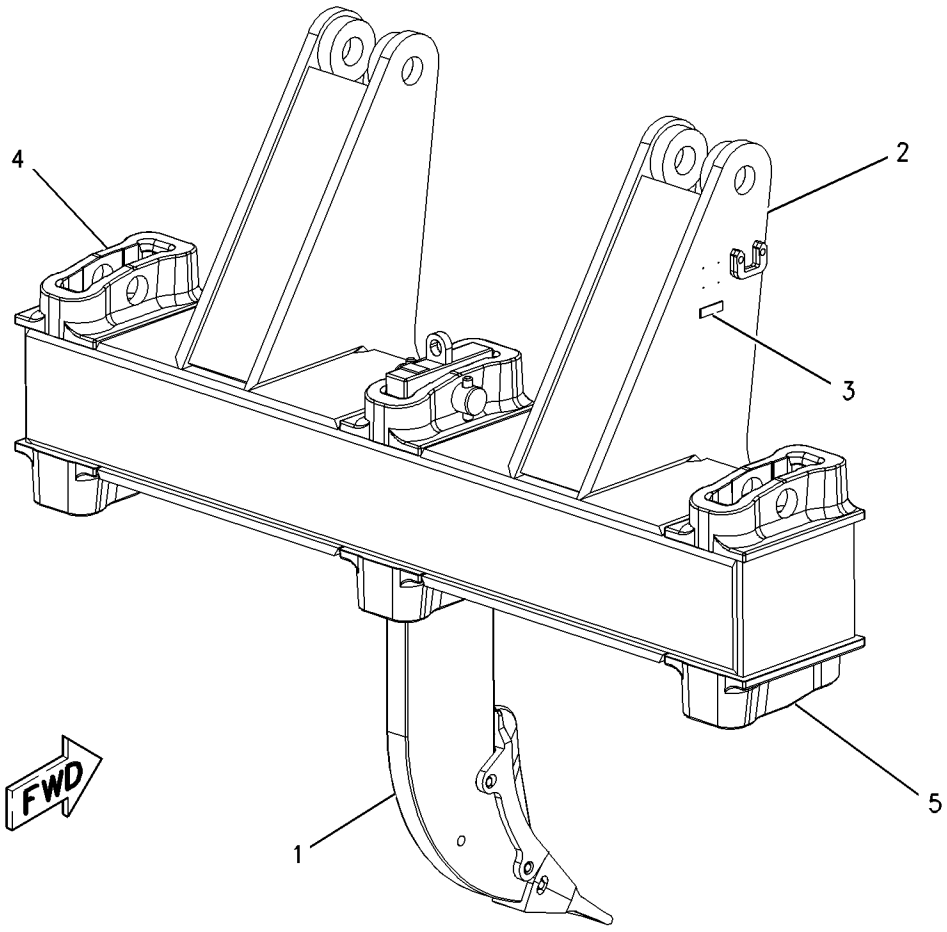

GRAPHIC #1 g00683468

4T-8987 TOOTH GP-RIPPER

S/N: ABK1-UP; 7HP1-UP
PART OF 138-0430 RIPPER GP
FOR USE WITH 165-0652—PAGE 742
AN ATTACHMENT

SMCS-6808, 6810 **i00571928**

NOTE	REF NO	GRAPHIC REF	PART NUMBER	QTY	PART NAME 1 2 3 4 5 6 (PRODUCT LEVEL)	SEE PAGE
	1	1	**4T-2479**	2	PIN AS	
					(EACH INCLUDES)	
		1	**5J-3576**	1	SPRING	
C	2	1	**6Y-3394**	3	PIN-G.E.T.	
	3	1	**9W-2452**	1	TIP-RIPPER	
	4	1	**8E-1848**	1	PROTECTOR	
C	5	1	**8E-5346**	1	SHANK AS-RIPPER	
	6	1	**3G-5596**	1	LUG	
C	7	1	**8E-4743**	3	RETAINER-G.E.T.	
	8	1	**6J-6680**	1	PIN	

C-CHANGE FROM PREVIOUS TYPE

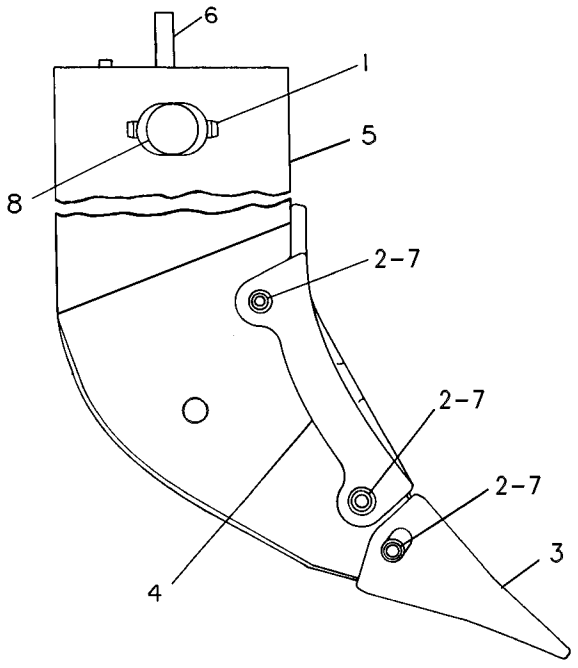

GRAPHIC #1 g00240655

WORK TOOLS

109-9113 TOOTH GP-RIPPER

S/N: ABK1-UP
FOR USE WITH 134-6000—PAGE 741
AN ATTACHMENT

SMCS-6808, 6810 **i01373891**

NOTE	REF NO	GRAPHIC REF	PART NUMBER	QTY	PART NAME 1 2 3 4 5 6 (PRODUCT LEVEL)	SEE PAGE
	1	1	**109-9114**	1	SHANK AS-RIPPER	
	2	1	**3G-5596**	1	LUG	
	3	1	**9W-8365**	1	PROTECTOR	
	4	1	**4T-5502**	1	TIP-RIPPER	
		1	**6Y-1202**	3	RETAINER AS	
					(EACH INCLUDES)	
		1	**7M-9107**	1	LOCKRING	
		1	**6Y-1204**	3	PIN-G.E.T.	

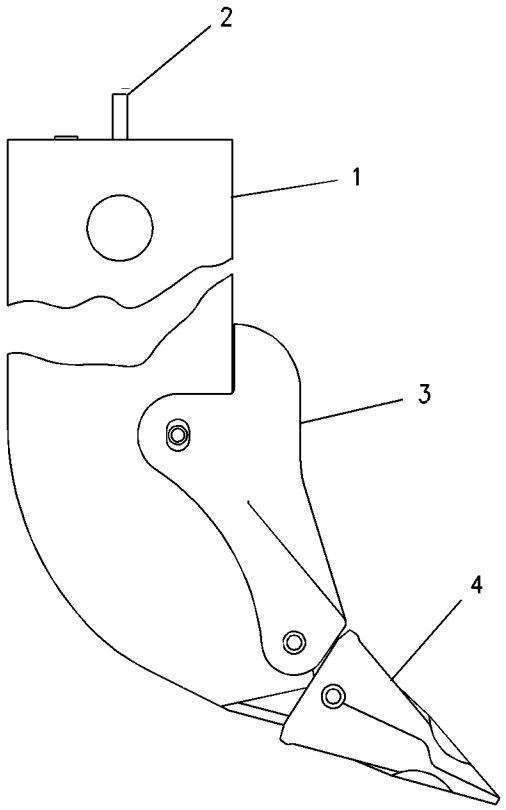

GRAPHIC #1 g00725768

WORK TOOLS

114-4502 TOOTH GP-RIPPER

S/N: 5RP1-UP
PART OF 134-8107 RIPPER GP
AN ATTACHMENT

SMCS-6808, 6810 **i01336012**

NOTE	REF NO	GRAPHIC REF	PART NUMBER	QTY	PART NAME 1 2 3 4 5 6 (PRODUCT LEVEL)	SEE PAGE
	1	1	**114-4503**	1	SHANK AS-RIPPER	
	2	1	**3G-5596**	1	LUG	
	3	1	**9W-8365**	1	PROTECTOR	
	4	1	**4T-4501**	1	TIP-RIPPER	
		1	**6Y-1202**	3	RETAINER AS	
					(EACH INCLUDES)	
		1	**7M-9107**	1	LOCKRING	
		1	**6Y-1204**	3	PIN-G.E.T.	

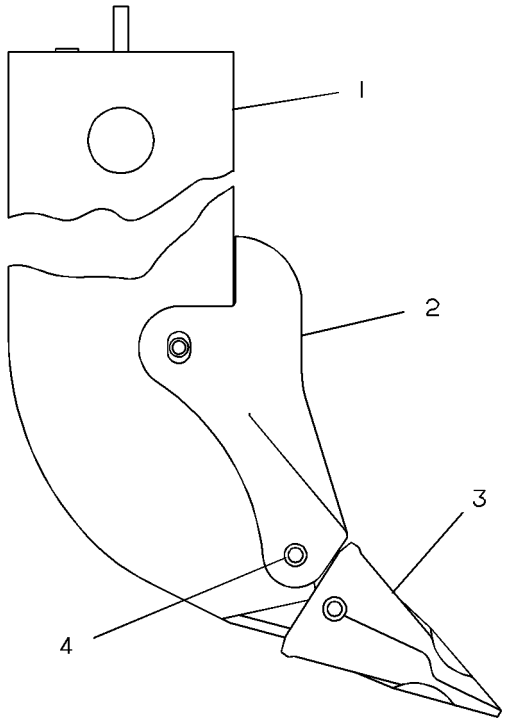

GRAPHIC #1 g00202833

OPERATOR STATION

162-8075 AIR CONDITIONER AR

S/N: ABK1-UP
R-134A REFRIGERANT. EEC
AN ATTACHMENT

SMCS-7320 **i01540895**

NOTE	PART NUMBER	QTY	PART NAME 1 2 3 4 5 6 (PRODUCT LEVEL)	SEE PAGE
Y	**162-8819**	1	AIR CONDITIONER GP	776
Y	*179-2941*	1	COMPRESSOR GP-REFRIGERANT	794
Y	**103-9527**	1	CONDENSER GP-REFRIGERANT	798
Y	*163-8441*	1	LINES GP-AIR CONDITIONER	824
Y	*133-2952*	1	MIRROR GP	838
	110-6393	1	PLATE-INSTRUCTION (AIR CONDITIONER)	
			ON LH SIDE OF DASH APPROXIMATELY 25MM FROM TOP OF DASH SO IT CAN BE SEEN THROUGH CAB DOOR AND	
			STAMP WITH 1.6 KG REFRIGERANT AMOUNT FOR MACHINE.	

Y-SEPARATE ILLUSTRATION

OPERATOR STATION

162-8076 AIR CONDITIONER AR

S/N: ABK1-UP
R-134A REFRIGERANT/ROPS MOUNTED CONDENSER
AN ATTACHMENT

SMCS-7320 **i01540891**

NOTE	PART NUMBER	QTY	PART NAME 1 2 3 4 5 6 (PRODUCT LEVEL)	SEE PAGE
Y	**162-8819**	1	AIR CONDITIONER GP	776
Y	**159-7226**	1	CAB AR	780
Y	*179-2941*	1	COMPRESSOR GP-REFRIGERANT	794
Y	**103-9527**	1	CONDENSER GP-REFRIGERANT	798
Y	*163-8442*	1	LINES GP-AIR CONDITIONER	830
Y	**1Q-1884**	1	ROPS AS	864
	110-6393	1	PLATE-INSTRUCTION (AIR CONDITIONER)	
			ON LH SIDE OF DASH APPROXIMATELY 25MM FROM TOP OF DASH SO IT CAN BE SEEN THROUGH CAB DOOR AND STAMP WITH	
			1.6 KG REFRIGERANT FOR MACHINE.	

Y-SEPARATE ILLUSTRATION

MEMORANDA

OPERATOR STATION

162-8819 AIR CONDITIONER GP

S/N: ABK1-UP

PART OF 162-8075, 162-8076 AIR CONDITIONER AR

AN ATTACHMENT

SMCS-7320 **i01426737**

NOTE	REF NO	GRAPHIC REF	PART NUMBER	QTY	PART NAME 1 2 3 4 5 6 (PRODUCT LEVEL)	SEE PAGE
E	1	1	**136-1953**		HOSE (47.5CM)	
E	2	1	**136-1953**		HOSE (30.5CM)	
	3	1	**3B-4501**	2	LOCKWASHER	
	4	1	**3E-0400**	2	WHEEL-BLOWER	
	5	1	**3E-5464**	1	SWITCH AS-THERMOSTAT (AIR CONDITIONER COMPRESSOR)	
	6	1	**174-1494**	1	MOTOR GP-ELECTRIC (27 VOLT) (CAB BLOWER)	
		1	**3E-3365**	1	WEDGE-RECEPTACLE LOCK (2 PIN)	
		1	**9W-0852**	2	PIN-CONNECTOR	
		1	**102-8802**	1	KIT-RECEPTACLE (2 PIN)	
					(INCLUDES RECEPTACLE AS AND WEDGE)	
	7	1	**3S-2093**	4	STRAP-CABLE	
M	8	1	**5C-9553**	31	BOLT (M6X1X16MM)	
	9	1	**5P-4115**	15	WASHER-HARD (7.2X19X2MM THK)	
	10	1	**5P-6670**	1	FILM-INSTRUCTION (WATER IN/WATER OUT) (AIR CONDITIONER/HEATER UNIT)	
					(FILM MUST BE CUT IN HALF)	
	11	1	**5V-1474**	4	SCREW-FORMING (10-16X0.625 IN)	
	12	1	**6T-6708**	2	WASHER (7X28.6X4.1MM THK)	
	13	1	**6V-1668**	2	WASHER (6.5X29.1X3MM THK)	
BD	14	1	**5P-5673**		SEAL	
BD	15	1	**5P-5969**		SEAL	
	16	1	**8C-3756**	1	FILM-IDENTIFICATION (GROUP & SEQUENCE NO.) (AIR CONDITIONER/HEATER UNIT)	
	17	1	**8C-4586**	2	CLAMP-MOTOR	
M	18	1	**6V-7728**	1	BOLT (M6X1.0X45MM)	
	19	1	**8P-5141**	2	PLATE-ORIFICE	
	20	1	**8T-4205**	26	WASHER-HARD (7.2X14.5X2MM THK)	
	21	1	**8T-6631**	2	SCREW-MACHINE (8-32X0.5 IN)	
	22	1	**125-9740**	1	RESISTOR	
	23	1	**132-5793**	4	SCREW-WASHER HD (4-40X0.25 IN)	
	24	1	**9X-2488**	6	CLAMP-HOSE	
M	25	1	**9X-8498**	1	BOLT (M6X1.0X180MM)	
	26	1	**091-8792**	2	CLIP	
M	27	1	**129-3178**	11	LOCKNUT	
	28	1	**130-9214**	1	GASKET	
	29	1	**130-9215**	1	GASKET	
	30	1	**130-9216**	1	GASKET	
	31	1	**130-9218**	1	GASKET	
	32	1	**130-9219**	1	GASKET	
	33	1	**130-9220**	1	GASKET	
	34	1	**130-9221**	1	GASKET	
	35	1	**172-9291**	1	HARNESS AS	
		1	**3E-5394**	1	RECEPTACLE-CONNECTING (FLANGE)	
		1	**6T-6505**	4	HOUSING-RECEPTACLE (BLADE)(POSITIVE LOCK)	
		1	**6T-6506**	4	TERMINAL (BLADE)(POSITIVE LOCK)	
		1	**155-2270**	1	KIT-CONNECTING PLUG (2 PIN)	
					(INCLUDES PLUG AS, WEDGE & INTERFACE SEAL)	
	36	1	**130-9224**	1	COIL AS-HEATER	
	37	1	**130-9225**	1	COIL AS-EVAPORATOR	
		1	**2H-3922**	1	LOCKWASHER (19.9X31.3X1.3MM THK)	
		1	**2H-3923**	1	LOCKWASHER (23X34.9X1.4MM THK)	
		1	**7F-2050**	1	LOCKNUT (3/4-16 THD)	
		1	**7F-2060**	1	LOCKNUT (7/8-14 THD)	
	38	1	**130-9226**	1	BRACKET	

162-8819 AIR CONDITIONER GP *(contd.)* i01426737

NOTE	REF NO	GRAPHIC REF	PART NUMBER	QTY	PART NAME 1 2 3 4 5 6 (PRODUCT LEVEL)	SEE PAGE
	39	1	**130-9227**	1	COVER	
	40	1	**130-9228**	1	CASE AS	
		1	**6T-6686**	2	PIN	
M		1	**6V-9632**	15	NUT-WELD (M6X1 THD)	
		1	**7T-1099**	1	LINK	
	41	1	**130-9233**	1	HOUSING AS	
M		1	**6V-9632**	2	NUT-WELD (M6X1 THD)	
	42	1	**130-9234**	1	PAN AS-HEATER	
M		1	**6V-9632**	1	NUT-WELD (M6X1 THD)	
	43	1	**131-2441**	1	COVER	
	44	1	**131-5354**	1	TUBE AS	
	45	1	**132-3871**	1	GASKET	
	46	1	**134-5378**	1	VALVE AS-WATER (CAB HEATER)	
		1	**6V-6717**	1	SCREW-WASHER HEAD	
		1	**3E-1841**	1	LEVER	
		1	**8Y-5737**	1	CLIP (COMPRESSION)	
		1	**037-4426**	1	RETAINER	
		1	**102-0341**	1	CLIP (TAB)	
	47	1	**187-3061**	1	HARNESS AS	
		1	**102-8802**	1	KIT-RECEPTACLE (2 PIN)	
		1	**102-8806**	1	KIT-RECEPTACLE (8 PIN)	
					(EACH RECEPTACLE KIT INCLUDES RECEPTACLE AS & WEDGE)	
		1	**6T-6505**	2	HOUSING-RECEPTACLE (BLADE)(POSITIVE LOCK)	
		1	**6T-6506**	2	TERMINAL (BLADE)(POSITIVE LOCK)	
		1	**8T-8733**	1	PLUG-CONNECTOR	
		1	**9G-3695**	3	PLUG (GROMMET SEALING)	
		1	**115-3018**	1	GROMMET	
	48	1	**104-6202**	1	CLIP	
E	49	1	**136-1953**		HOSE (8.0CM)	
	50	1	**6V-6110**	1	CABLE AS	
BD	51	1	**5P-5908**	1	SEAL	

B-USE AS REQUIRED
D-ORDER BY THE METER
E-ORDER BY THE CENTIMETER
M-METRIC PART

162-8819 AIR CONDITIONER GP *(contd.)*

i01426737

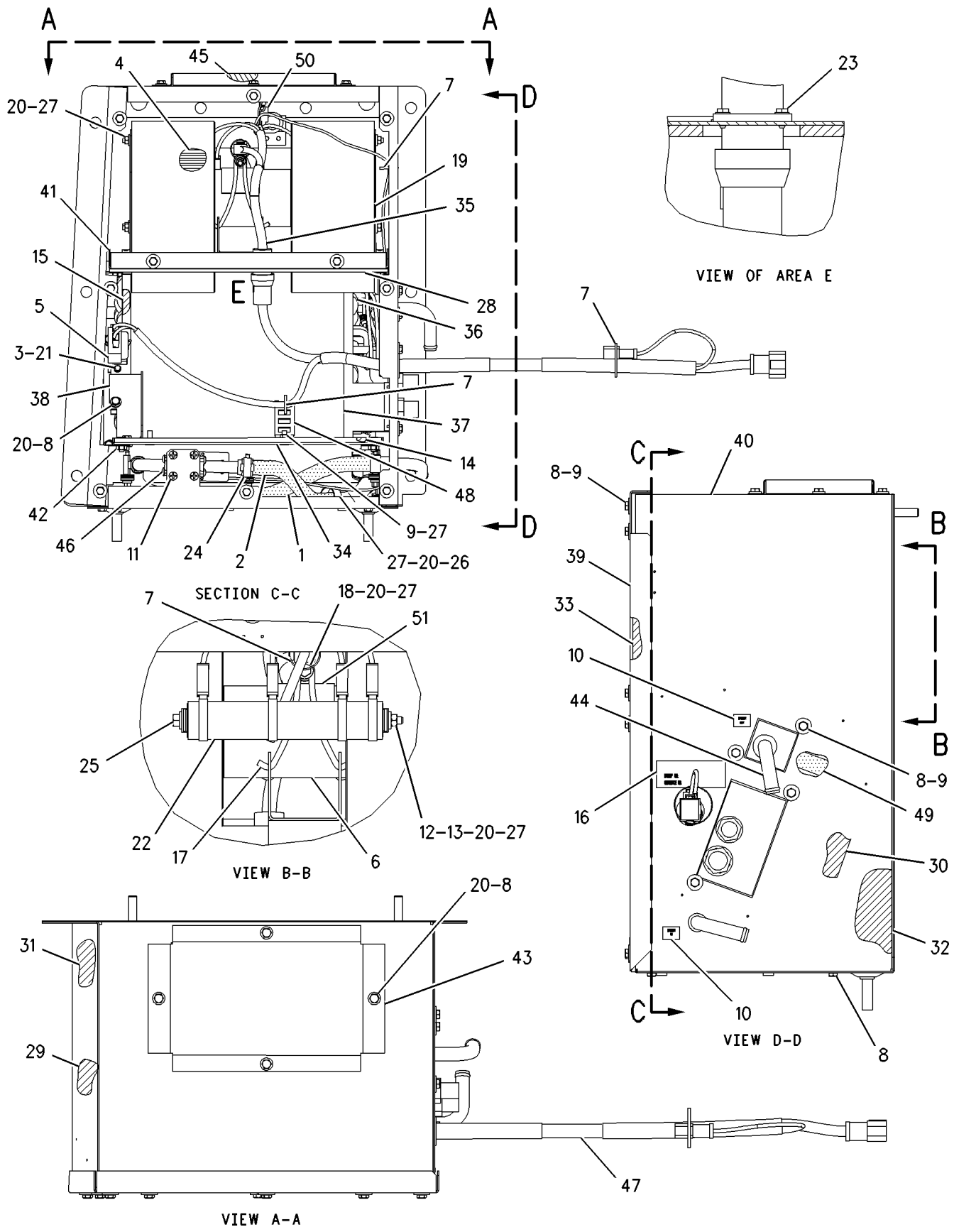

GRAPHIC #1

g00753027

OPERATOR STATION

157-4817 CAB AR

S/N: ABK1-UP

PART OF 159-7226, 163-0942, 163-0943, 201-0704 CAB AR

AN ATTACHMENT

SMCS-7301, 7325, 7335 **i01083926**

NOTE	PART NUMBER	QTY	PART NAME 1 2 3 4 5 6 (PRODUCT LEVEL)	SEE PAGE
Y	*157-3737*	1	CAB GP	788
Y	*8E-3284*	1	INSTALLATION GP-RADIO	819
Y	*8E-3270*	1	LINER GP-CAB	822
Y	*6Y-3712*	1	MIRROR GP-REAR VIEW	839
Y	*157-3736*	1	WASHER GP-WINDOW	890
Y	*157-3735*	1	WIPER GP-WINDOW	916

Y-SEPARATE ILLUSTRATION

OPERATOR STATION

159-7226 CAB AR

S/N: ABK1-UP
PART OF 162-8076 AIR CONDITIONER AR
AN ATTACHMENT

SMCS-7301, 7325, 7335 **i01446834**

NOTE	REF NO	GRAPHIC REF	PART NUMBER	QTY	PART NAME 1 2 3 4 5 6 (PRODUCT LEVEL)	SEE PAGE
Y	1	1	*157-4817*	1	CAB AR	779
	2	1	**6G-9102**	4	BOSS	
	3	1	**8T-9383**	4	BOLT (1/2-13X0.75 IN)	
	4	1	**8T-4223**	4	WASHER-HARD (13.5X25.5X3MM THK)	

Y-SEPARATE ILLUSTRATION

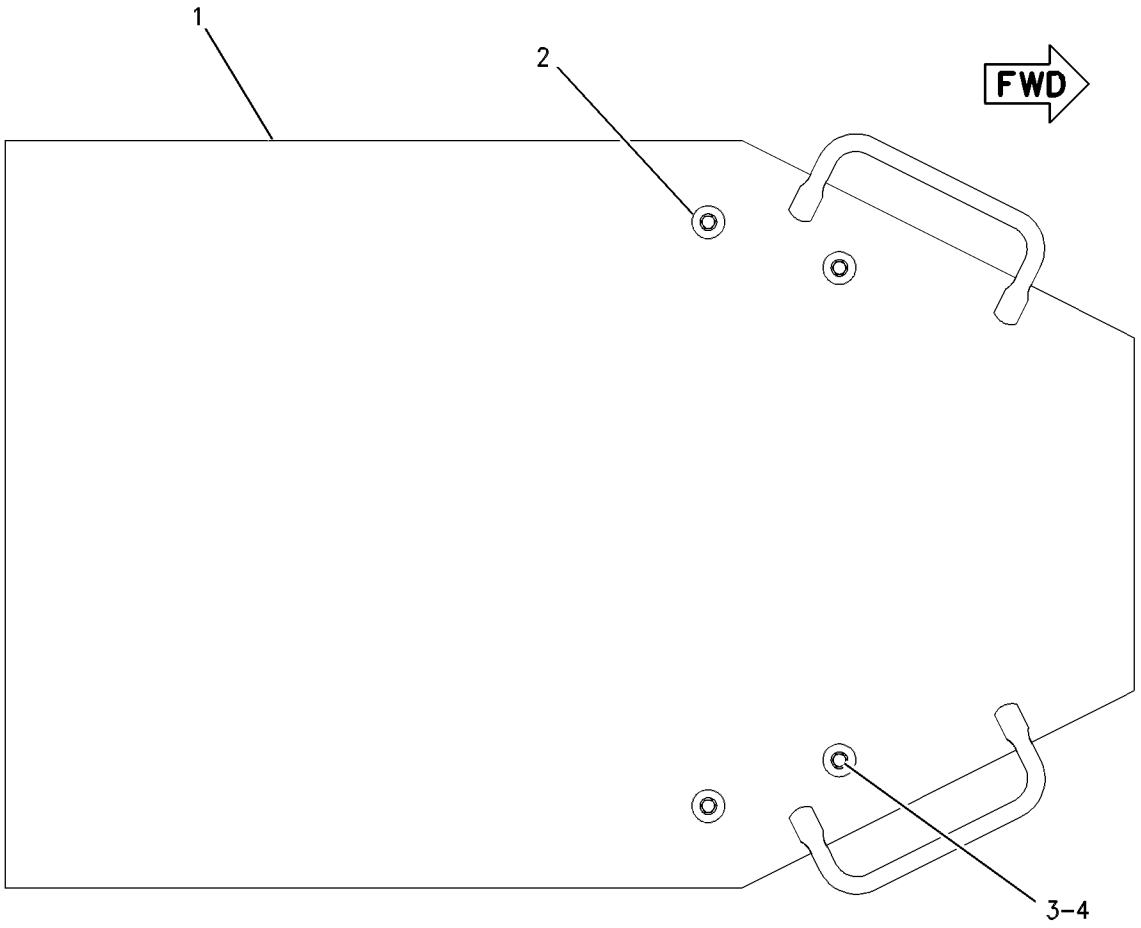

TOP VIEW

GRAPHIC #1 g00451387

OPERATOR STATION

163-0942 CAB AR

S/N: ABK1-UP
CANNOT BE USED WITH NON-HEUI ENGINE
AN ATTACHMENT

SMCS-7301, 7325, 7335 **i01540889**

NOTE	PART NUMBER	QTY	PART NAME 1 2 3 4 5 6 (PRODUCT LEVEL)	SEE PAGE
Y	*186-5899*	1	TANK GP-WINDOW WASHER	888
Y	**157-4817**	1	CAB AR	779
Y	*162-8738*	1	HEATER GP-CAB	808
Y	*130-6175*	1	LINES GP-HEATER	836
Y	*8E-7083*	1	MOUNTING GP-CAB	844
Y	*105-4261*	1	ROPS GP	865
Y	**159-2951**	1	SEAT GP-SUSPENSION	880
	8T-6539	1	PLATE-FOPS	
	9N-1995	8	RIVET-POP	
	107-9245	1	PLATE-ROPS	

Y-SEPARATE ILLUSTRATION

OPERATOR STATION

163-0943 CAB AR

S/N: ABK1-UP
CANNOT BE USED WITH HEUI ENGINE
AN ATTACHMENT

SMCS-7301, 7325, 7335 **i01540887**

NOTE	PART NUMBER	QTY	PART NAME 1 2 3 4 5 6 (PRODUCT LEVEL)	SEE PAGE
Y	*186-5899*	1	TANK GP-WINDOW WASHER	888
Y	**157-4817**	1	CAB AR	779
Y	*162-8738*	1	HEATER GP-CAB	808
Y	*130-6175*	1	LINES GP-HEATER	836
Y	*8E-7083*	1	MOUNTING GP-CAB	844
Y	*105-4261*	1	ROPS GP	865
Y	**159-2951**	1	SEAT GP-SUSPENSION	880
	8E-3664	1	LEVER (IDLE SPEED CONTROL)	
	8T-6539	1	PLATE-FOPS	
	107-9245	1	PLATE-ROPS	
	9N-1995	8	RIVET-POP	

Y-SEPARATE ILLUSTRATION

MEMORANDA

OPERATOR STATION

197-7504 CAB AR

S/N: ABK1-UP

AN ATTACHMENT

SMCS-7301, 7325, 7335 **i01606635**

NOTE	REF NO	GRAPHIC REF	PART NUMBER	QTY	PART NAME 1 2 3 4 5 6 (PRODUCT LEVEL)	SEE PAGE
	1	1	**1Q-3762**	1	PLATE AS	
		1	**9F-6445**	3	NUT-WELD (1/4-20 THD)	
	2	1	**1Q-3764**	1	COVER	
	3	1	**8T-4224**	8	WASHER-HARD (8.8X16X2MM THK)	
	4	1	**5K-0906**	8	BOLT (5/16-18X0.63 IN)	
Y	5	1	**3E-7835**	2	FAN GP-DEFROSTER	804
	6	1	**7K-1181**	1	STRAP-CABLE	
	7	1	**1Q-3800**	1	WIRE AS	
Y	8	1	*201-0704*	1	CAB AR	786
	9	1	**6V-3884**	1	SCREW-HEX SOCKET (1/4-20X0.5 IN)	
	10	1	**5P-4115**	1	WASHER-HARD (7.2X19X2MM THK)	
	11	1	**6V-8547**	1	PLUG-BUTTON	
	12	1	**9D-3768**	1	GROMMET	

Y-SEPARATE ILLUSTRATION

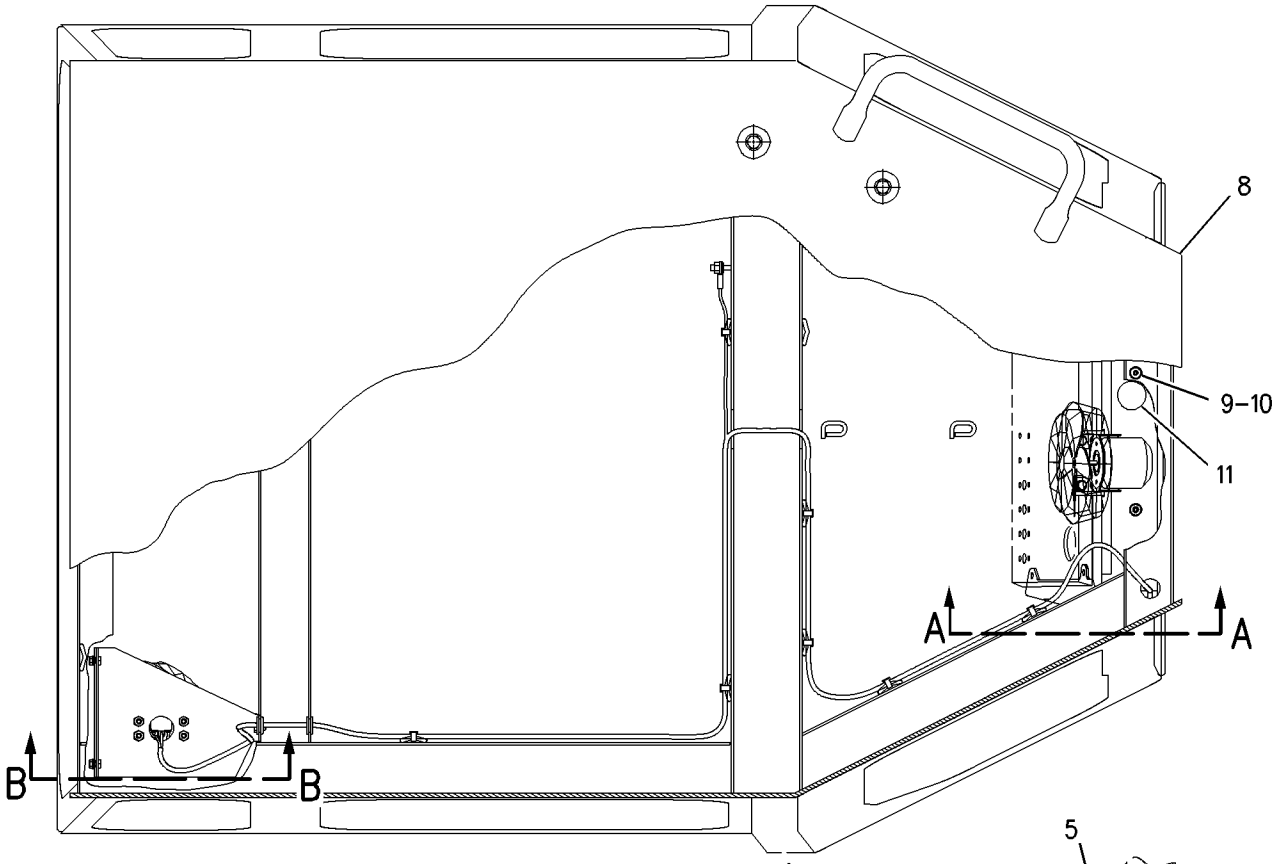

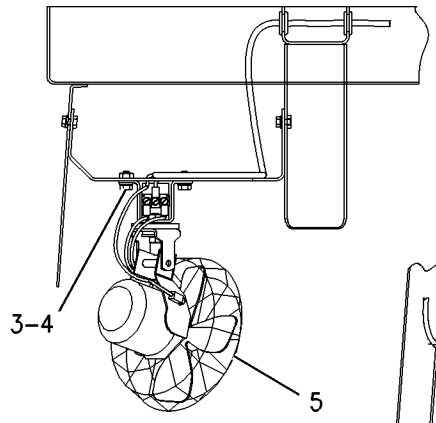

VIEW B-B

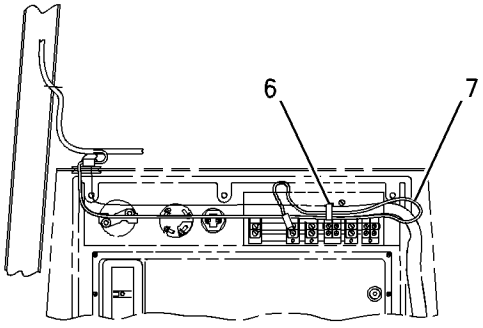

VIEW C-C

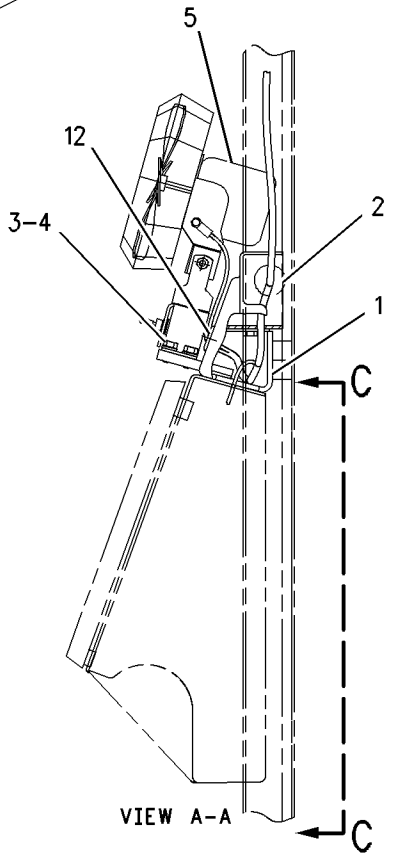

VIEW A-A

GRAPHIC #1

g00840986

OPERATOR STATION

201-0704 CAB AR

S/N: ABK1-UP
PART OF 197-7504 CAB AR
AN ATTACHMENT

SMCS-7301, 7325, 7335 **i01606647**

NOTE	REF NO	GRAPHIC REF	PART NUMBER	QTY	PART NAME 1 2 3 4 5 6 (PRODUCT LEVEL)	SEE PAGE
	1	1	**1Q-3760**	1	BRACKET AS	
		1	**4K-9097**	4	NUT-WELD (5/16-18 THD)	
		1	**9F-6445**	2	NUT-WELD (1/4-20 THD)	
	2	1	**9D-3768**	2	GROMMET	
	3	1	**1Q-3765**	1	HARNESS AS	
	4	1	**7K-1181**	7	STRAP-CABLE	
	5	1	**8T-4205**	3	WASHER-HARD (7.2X14.5X2MM THK)	
	6	1	**5S-7349**	3	BOLT (1/4-20X0.5 IN)	
Y	7	1	**157-4817**	1	CAB AR	779
	8	1	**188-2901**	1	GLASS (FRONT)	
	9	1	**208-1686**	1	GLASS (DOOR LH)	
	10	1	**188-2903**	2	GLASS (SIDE)	
	11	1	**188-2904**	2	GLASS (SIDE)	
	12	1	**208-1691**	1	GLASS (REAR LG)	
	13	1	**191-9292**	2	SHIM (22.2X56.7X0.05MM THK)	
	14	1	**208-1687**	1	GLASS (DOOR RH)	

Y-SEPARATE ILLUSTRATION

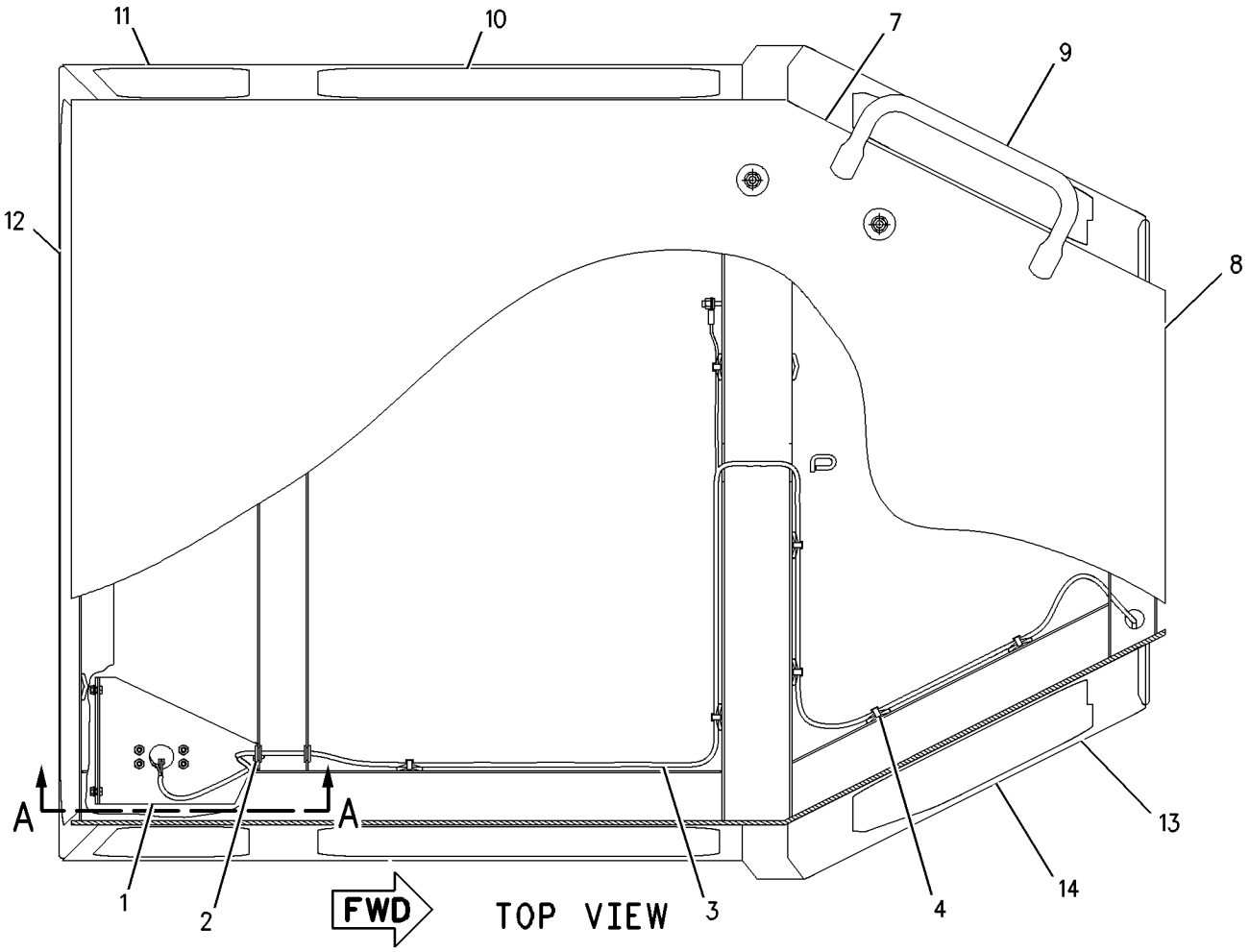

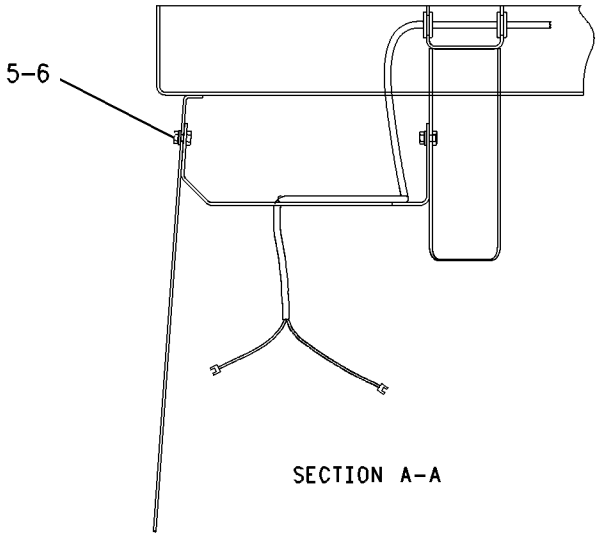

GRAPHIC #1 g00838849

OPERATOR STATION

157-3737 CAB GP

S/N: ABK1-UP
PART OF 157-4817 CAB AR
AN ATTACHMENT

SMCS-7301, 7325, 7335 **i01564902**

NOTE	REF NO	GRAPHIC REF	PART NUMBER	QTY	PART NAME 1 2 3 4 5 6 (PRODUCT LEVEL)	SEE PAGE
	1	1	**6Y-3682**	2	HANDHOLD	
	2	1	**7T-0601**	2	GLASS (TINTED) (CAB DOORS-FIXED)	
BD	3	1	**5P-6605**		SEAL	
	4	1	**9P-0575**	2	GLASS (TINTED) (CAB-SIDE-FIXED)	
Y	5	1	**8E-5114**	1	WINDOW AS-SLIDING (LH)	894
Y	6	1	**8Y-6456**	1	WINDOW GP-CAB (REAR-SLIDING)	907
	7	1	**157-3739**	1	CAB AS	
		1	**1F-0748**	6	NUT-WELD (1/2-13 THD)	
		1	**9F-6445**	27	NUT-WELD (1/4-20 THD)	
	8	1	**7G-2454**	1	GLASS (TINTED) (CAB-FRONT-FIXED)	
	9	1	**8E-5933**	1	DOOR AS (LH)	
	10	1	**8E-5932**	1	DOOR AS (RH)	
	11	1	**6V-8928**	1	HOOK-COAT	
	12	1	**4V-6981**	1	SCREW-BUTTON HEAD (1/4-20X0.75 IN)	
BD	13	2	**5P-7211**		SEAL	
	14	1	**7X-7729**	4	WASHER (11X25X3MM THK)	
	15	1	**9X-3994**	2	PLUG	
	16	2	**5P-1075**	16	WASHER-HARD (10.2X22.5X3MM THK)	
Y	17	2	**3E-6389**	1	LAMP GP-DOME (24 VOLT)(WITH SWITCH)	308
	18	2	**9S-2437**	3	SCREW-TAPPING (10-24X19.05MM)	
	19	1	**5P-2228**	4	BOLT (1/2-13X1 IN)	
Y	20	1	**8E-5113**	1	WINDOW AS-SLIDING (RH)	893
	21	1	**8T-4223**	4	WASHER-HARD (13.5X25.5X3MM THK)	
BD	22	2	**153-2681**		SEAL	
	23	2	**6V-7190**	2	LEVER AS	
					(EACH INCLUDES)	
	24	2	**6V-8129**	2	SETSCREW-SOCKET	
	25	1	**8T-2561**	6	WASHER-HARD (10.5X28.5X5MM THK)	
	26	2	**101-9398**	1	COVER (RH)	
	27	2	**101-9397**	1	COVER (LH)	
	28	2	**6V-2375**	2	HANDLE AS-INSIDE	
	29	2	**6V-3260**	8	BOLT-SOCKET HEAD (1/4-20X0.75 IN)	
	30	2	**6V-7636**	4	PIN AS-SPRING	
	31	2	**6V-8073**	2	LINK-CONNECTING	
	32	1,2	**4L-6454**	22	BOLT (3/8-16X1 IN)	
	33	2	**6V-3884**	4	SCREW-HEX SOCKET (1/4-20X0.5 IN)	
	34	2	**6V-2331**	2	HANDLE AS	
	35	2	**8T-1979**	1	LINKAGE AS (LH)	
	36	2	**8T-1980**	1	LINKAGE AS (RH)	
					(EACH LINKAGE AS INCLUDES)	
	37	2	**8T-8914**	1	SEAL-LINKAGE	
	38	2	**4M-5282**	8	BOLT (1/4-20X1.50 IN)	
	39	2	**2D-6235**	8	LOCKNUT (1/4-20 THD)	
B	40	2	**8T-0318**	14	SHIM (0.8MM THK)	
	41	1	**8T-2501**	4	BOLT (3/8-16X2 IN)	
	42	1	**184-6191**	1	BRACKET AS (RH)	
	43	1	**8E-5926**	1	BRACKET AS (LH)	
	44	1	**6Y-3732**	1	BRACKET (RH)	
	45	1	**8E-2685**	1	BRACKET (LH)	
	46	1	**5M-8500**	2	KNOB	
	47	1	**8E-5931**	2	ROD	
	48	1	**8E-5922**	2	LATCH	
	49	1	**9M-5884**	2	BUMPER	
	50	1	**3H-6660**	4	PIN-SPRING	
	51	1	**3K-6235**	2	SEAL-LIP	

157-3737 CAB GP *(contd.)*

i01564902

NOTE	REF NO	GRAPHIC REF	PART NUMBER	QTY	PART NAME 1 2 3 4 5 6 (PRODUCT LEVEL)	SEE PAGE
	52	2	**8C-3442**	2	SPRING-COIL	
	53	2	**8T-3848**	2	STRIKER AS-LATCH	
					(EACH INCLUDES)	
	54	2	**6V-4270**	1	LOCKWASHER	
	55	2	**8T-9049**	1	LATCH AS-DOOR (RH)	
	56	2	**8T-9048**	1	LATCH AS-DOOR (LH)	

B-USE AS REQUIRED
D-ORDER BY THE METER
Y-SEPARATE ILLUSTRATION

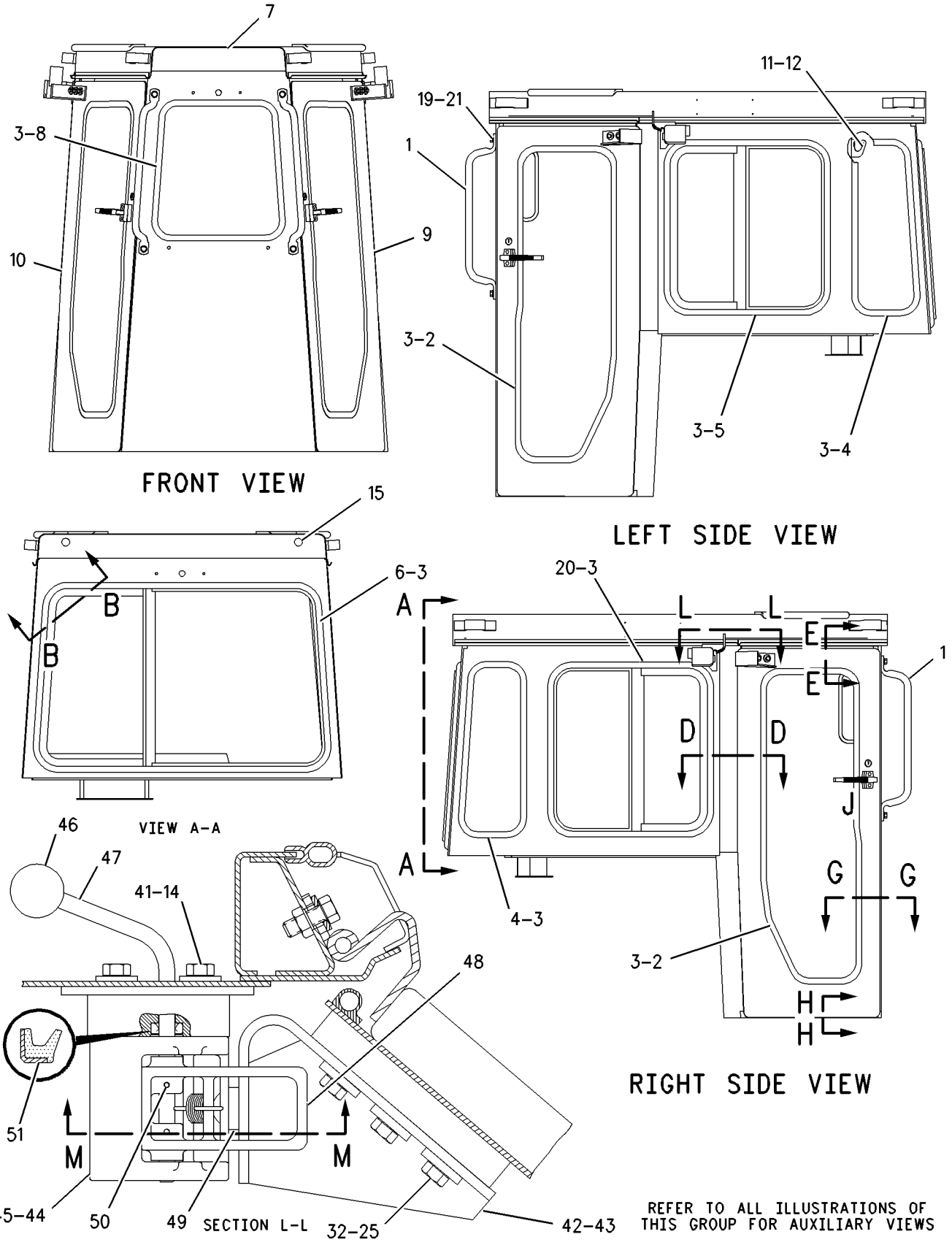

GRAPHIC #1 g00659413

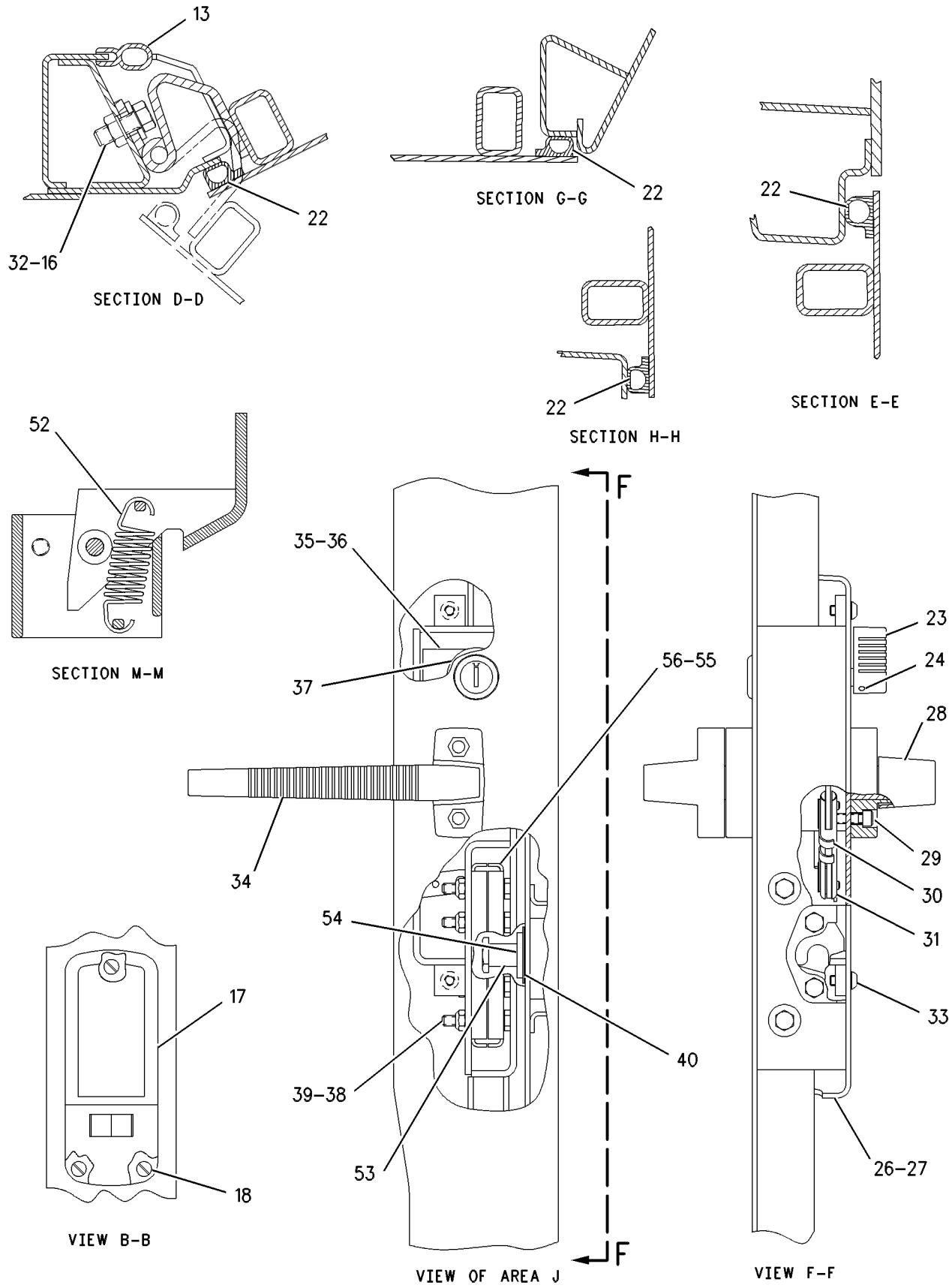

GRAPHIC #2

g00621939

106-5122 COMPRESSOR GP-REFRIGERANT

S/N: ABK1-UP

PART OF 179-2941 COMPRESSOR GP-REFRIGERANT

AN ATTACHMENT

SMCS-1802 **i00631866**

NOTE	REF NO	GRAPHIC REF	PART NUMBER	QTY	PART NAME 1 2 3 4 5 6 (PRODUCT LEVEL)	SEE PAGE
	1	1	**7T-4532**	1	PLUG AS	
	2	1	**9X-7385**	2	SEAL-O-RING (20.22MM ID)	

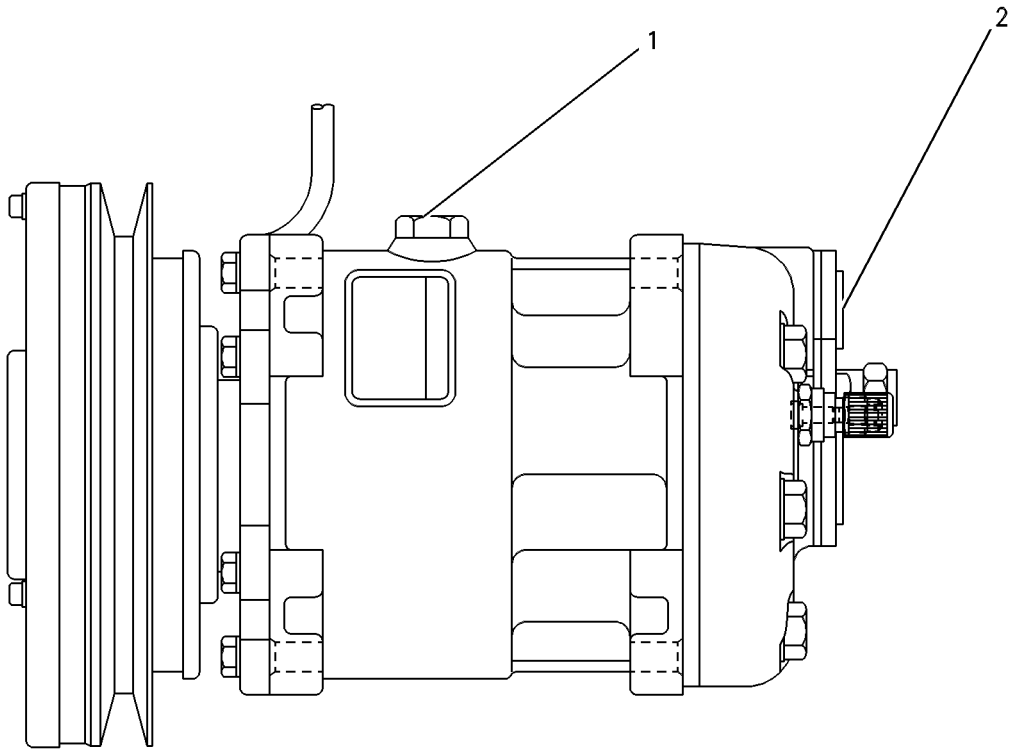

GRAPHIC #1 g00279110

MEMORANDA

OPERATOR STATION

179-2941 COMPRESSOR GP-REFRIGERANT

S/N: ABK1-UP
PART OF 162-8075, 162-8076 AIR CONDITIONER AR
AN ATTACHMENT
TYPE 1

SMCS-1802 **i01540835**

NOTE	REF NO	GRAPHIC REF	PART NUMBER	QTY	PART NAME 1 2 3 4 5 6 (PRODUCT LEVEL)	SEE PAGE
	1	1	**4W-3753**	4	SPACER	
	2	1	**7C-7595**	1	BRACKET	
Y	3	1	**106-5122**	1	COMPRESSOR GP-REFRIGERANT	792
	4	1	**115-9650**	1	BRACKET	
	5	1	**119-2285**	1	SUPPORT-COMPRESSOR	
	6	1	**129-1192**	1	BLOCK	
	7	1	**183-7426**	1	GUARD AS	
		1	**1F-0750**	3	NUT-WELD (3/8-16 THD)	
	8	1	**199-6602**	1	V-BELT (AIR CONDITIONER COMPRESSOR)	
	9	1	**1S-4698**	1	ROD	
	10	1	**4L-9337**	5	BOLT (3/8-16X1.5 IN)	
	11	1	**5P-2424**	1	BOLT (1/2-13X2.25 IN)	
	12	1	**5P-2566**	1	BOLT (1/2-13X1.5 IN)	
	13	1	**5P-8245**	1	WASHER-HARD (13.5X25.5X3MM THK)	
	14	1	**6V-8188**	1	NUT (1/2-13 THD)	
	15	1	**6V-8801**	4	NUT (3/8-16 THD)	
	16	1	**7X-0328**	2	BOLT (1/2-13X3.50 IN)	
	17	1	**7X-0347**	1	BOLT (5/8-11X2.25 IN)	
	18	1	**7X-0448**	2	NUT (5/8-11 THD)	
	19	1	**8T-2561**	1	WASHER-HARD (10.5X28.5X5MM THK)	
	20	1	**8T-4122**	1	WASHER-HARD (17X32X3.5MM THK)	
	21	1	**8T-4223**	8	WASHER-HARD (13.5X25.5X3MM THK)	
	22	1	**8T-4896**	11	WASHER-HARD (10.2X18.5X2.5MM THK)	
	23	1	**8T-8917**	1	BOLT (1/2-13X1.25 IN)	
	24	1	**8T-8920**	1	BOLT (1/2-13X3.25 IN)	
	25	1	**9B-7237**	3	BOLT (3/8-16X1.25 IN)	
	26	1	**9K-7290**	1	BOLT-12 POINT HEAD	

Y-SEPARATE ILLUSTRATION

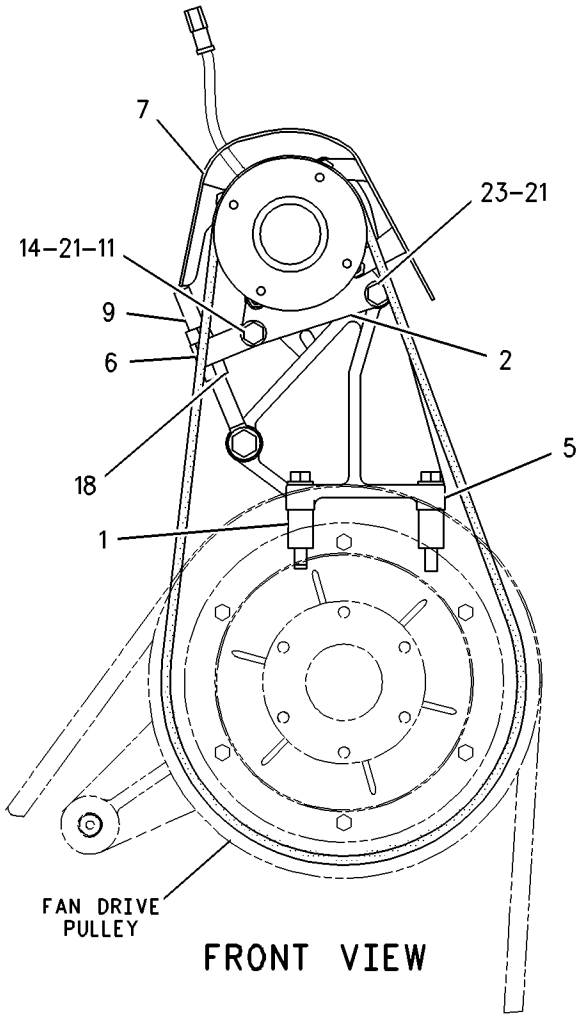

FRONT VIEW

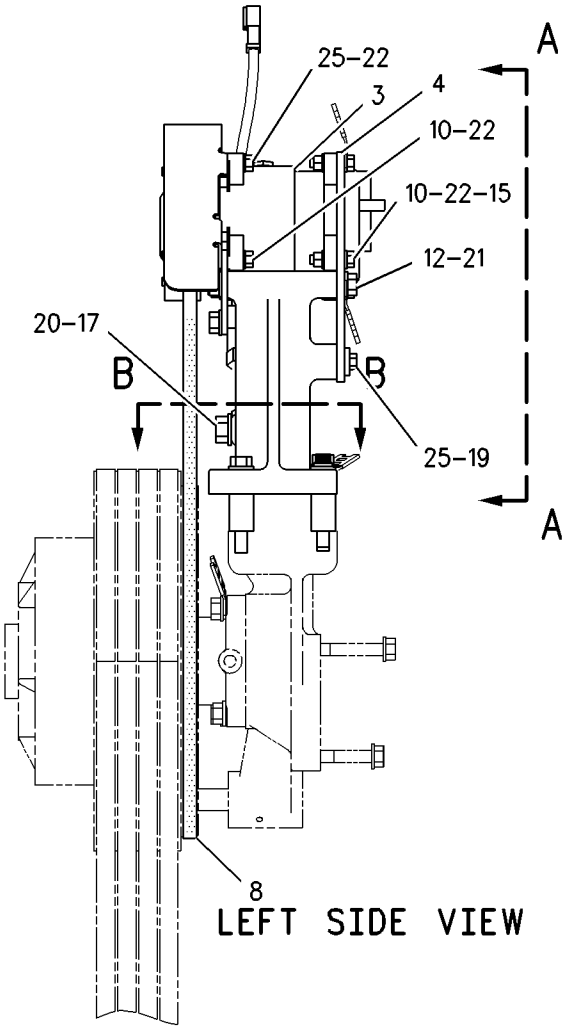

LEFT SIDE VIEW

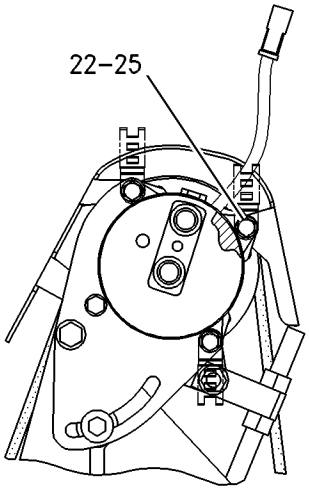

VIEW A-A

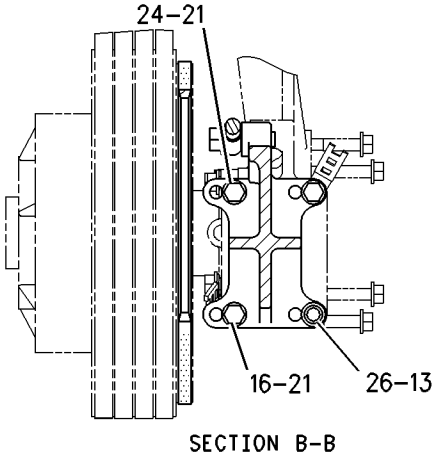

SECTION B-B

GRAPHIC #1 g00793255

OPERATOR STATION

179-2941 COMPRESSOR GP-REFRIGERANT

S/N: ABK1-UP
PART OF 162-8075, 162-8076 AIR CONDITIONER AR
AN ATTACHMENT
TYPE 2

SMCS-1802 **i01540837**

NOTE	REF NO	GRAPHIC REF	PART NUMBER	QTY	PART NAME 1 2 3 4 5 6 (PRODUCT LEVEL)	SEE PAGE
C	1	1	**8T-4835**	4	BOLT (1/2-13X2 IN)	
	2	1	**7C-7595**	1	BRACKET	
Y	3	1	**106-5122**	1	COMPRESSOR GP-REFRIGERANT	792
	4	1	**115-9650**	1	BRACKET	
C	5	1	**199-9024**	1	SUPPORT (COMPRESSOR)	
	6	1	**129-1192**	1	BLOCK	
	7	1	**183-7426**	1	GUARD AS	
		1	**1F-0750**	3	NUT-WELD (3/8-16 THD)	
	8	1	**199-6602**	1	V-BELT (AIR CONDITIONER COMPRESSOR)	
	9	1	**1S-4698**	1	ROD	
	10	1	**4L-9337**	5	BOLT (3/8-16X1.5 IN)	
	11	1	**5P-2424**	1	BOLT (1/2-13X2.25 IN)	
	12	1	**5P-2566**	1	BOLT (1/2-13X1.5 IN)	
	13	1	**9B-7237**	3	BOLT (3/8-16X1.25 IN)	
	14	1	**6V-8188**	1	NUT (1/2-13 THD)	
	15	1	**6V-8801**	4	NUT (3/8-16 THD)	
	16	1	**8T-8917**	1	BOLT (1/2-13X1.25 IN)	
	17	1	**7X-0347**	1	BOLT (5/8-11X2.25 IN)	
	18	1	**7X-0448**	2	NUT (5/8-11 THD)	
	19	1	**8T-2561**	1	WASHER-HARD (10.5X28.5X5MM THK)	
	20	1	**8T-4122**	1	WASHER-HARD (17X32X3.5MM THK)	
C	21	1	**8T-4223**	8	WASHER-HARD (13.5X25.5X3MM THK)	
	22	1	**8T-4896**	11	WASHER-HARD (10.2X18.5X2.5MM THK)	

C-CHANGE FROM PREVIOUS TYPE
Y-SEPARATE ILLUSTRATION

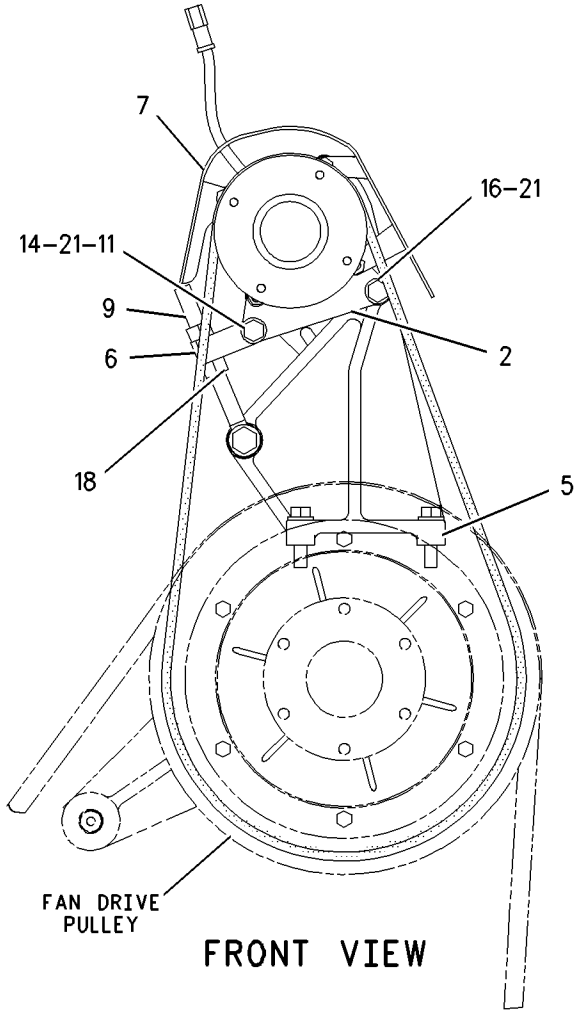

FRONT VIEW

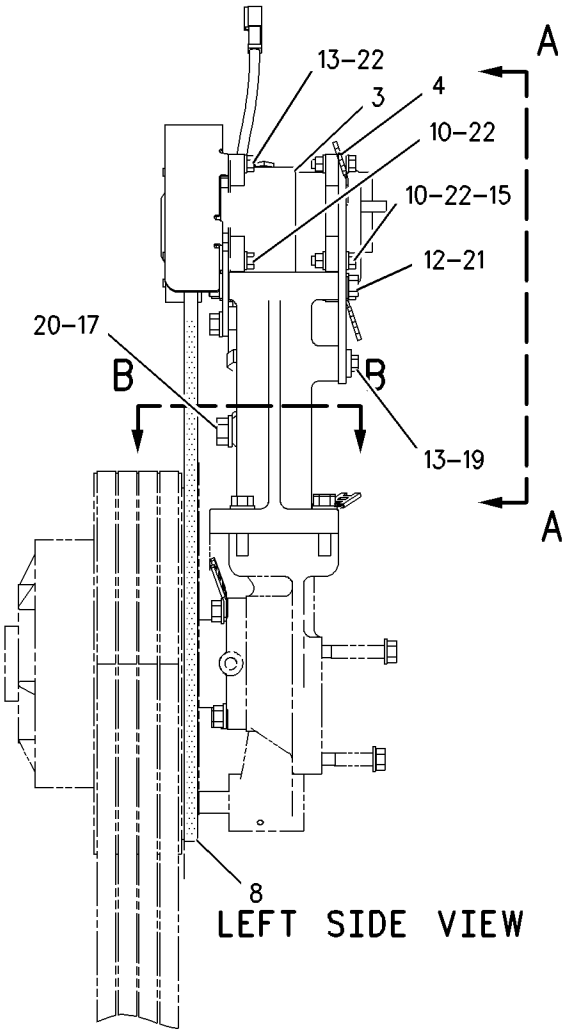

LEFT SIDE VIEW

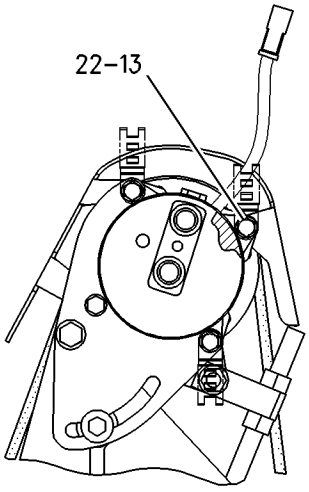

VIEW A–A

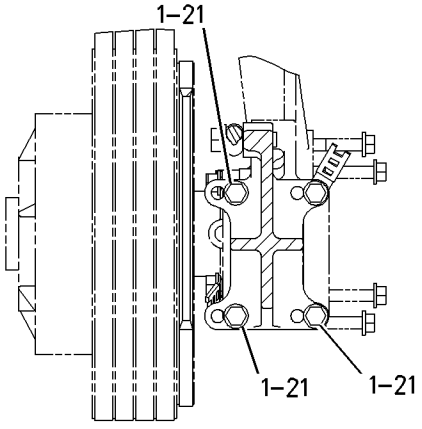

SECTION B–B

GRAPHIC #1

g00798226

OPERATOR STATION

103-9527 CONDENSER GP-REFRIGERANT

S/N: ABK1-UP
PART OF 162-8075, 162-8076 AIR CONDITIONER AR
AN ATTACHMENT

SMCS-1805 **i01563108**

NOTE	REF NO	GRAPHIC REF	PART NUMBER	QTY	PART NAME 1 2 3 4 5 6 (PRODUCT LEVEL)	SEE PAGE
	1	1	**3E-5239**	1	RELAY AS (24 VOLT) (CONDENSER BLOWER MOTOR)	
	2	1	**3S-2093**	7	STRAP-CABLE	
C	3	1	**7T-5856**	4	CLAMP	
	4	1	**8C-3756**	1	FILM-IDENTIFICATION (GROUP & SEQUENCE NO.)	
C	5	1	**8P-6363**	1	PLUG	
	6	1	**9X-3452**	2	GUARD AS-FAN	
	7	1	**124-8490**	1	HARNESS AS	
	8	1	**142-8620**	2	FAN AS	
J	9	1	**174-1495**	2	MOTOR GP-ELECTRIC	
					(EACH INCLUDES)	
		1	**3E-3365**	1	WEDGE-RECEPTACLE LOCK (2 PIN)	
		1	**9W-0852**	2	PIN-CONNECTOR	
		1	**102-8802**	1	KIT-RECEPTACLE (2 PIN)	
					(INCLUDES WEDGE & RECEPTACLE AS)	
	10	1	**203-2070**	8	MOUNT	
	11	1	**204-9530**	4	TUBE	
	12	1	**204-9531**	1	COIL-CONDENSER	
	13	1	**204-9532**	1	CASE AS	
M		1	**8T-3490**	12	NUT-WELD (M10X1.5 THD)	
		1	**9G-9151**	2	CLIP	
		1	**7T-1099**	4	LINK	
M		1	**8T-3597**	12	NUT-WELD (M12X1.75 THD)	
M	14	1	**5C-2890**	1	NUT (M6X1 THD)	
	15	1	**5P-1075**	8	WASHER-HARD (10.2X22.5X3MM THK)	
C	16	1	**5P-8441**	1	GROMMET	
	17	1	**6D-4246**	2	CLIP	
	18	1	**7X-0578**	4	WASHER-HARD (10.2X32X2.5MM THK)	
	19	1	**8T-4121**	4	WASHER-HARD (11X21X2.5MM THK)	
M	20	1	**8T-4133**	4	NUT (M10X1.5 THD)	
M	21	1	**8T-4137**	8	BOLT (M10X1.5X20MM)	
M	22	1	**8T-4192**	12	BOLT (M12X1.75X25MM)	
	23	1	**8T-4205**	1	WASHER-HARD (7.2X14.5X2MM THK)	
	24	1	**8T-4223**	12	WASHER-HARD (13.5X25.5X3MM THK)	
M	25	1	**8T-6685**	4	BOLT (M10X1.50X110MM)	
C	26	1	**9X-7373**	1	GROMMET	
BD	27	1	**5P-5924**		SEAL	
BD	28	1	**5P-5673**		SEAL	

B-USE AS REQUIRED
C-CHANGE FROM PREVIOUS TYPE
D-ORDER BY THE METER
J-REPAIR KIT(S) MARKED J AVAILABLE FOR PART MARKED J
M-METRIC PART

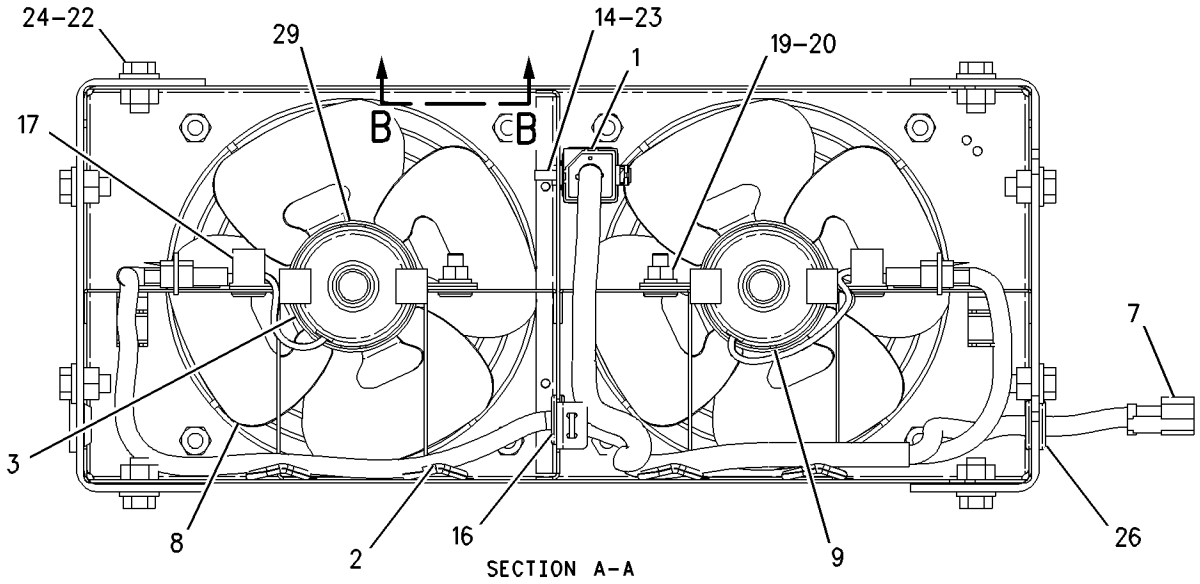

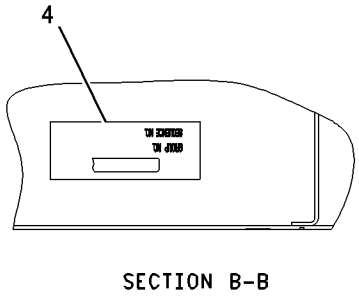

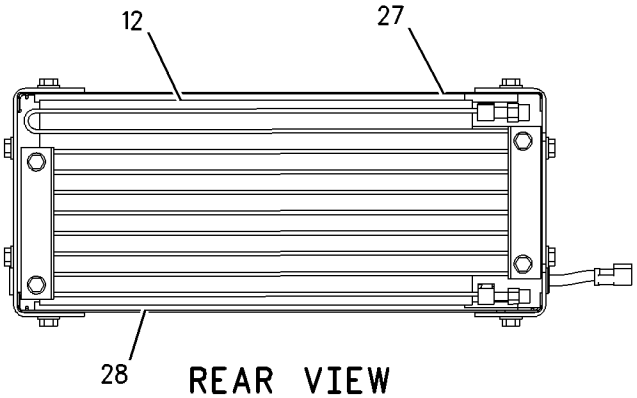

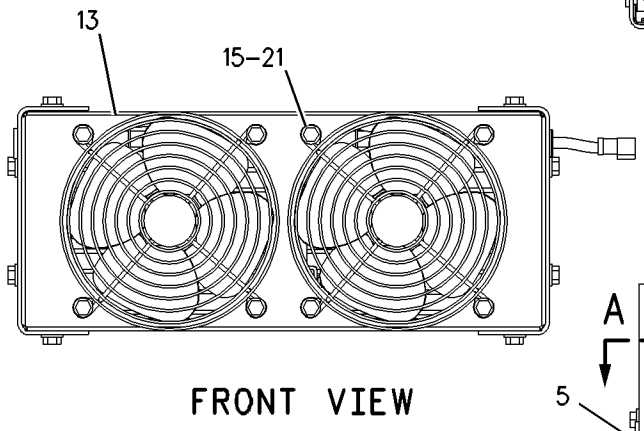

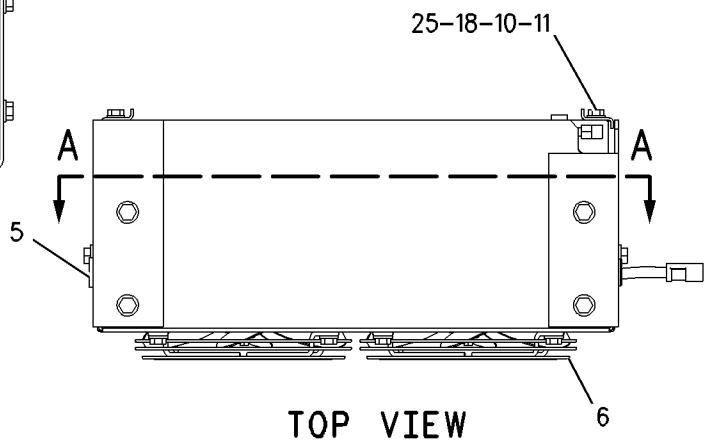

GRAPHIC #1 g00815036

OPERATOR STATION

103-5526 CONTROL GP-MONITOR SYS DIMMER

S/N: ABK1-UP

PART OF 163-5399 WIRING GP-PLATFORM

SMCS-7490 **i01632625**

NOTE	REF NO	GRAPHIC REF	PART NUMBER	QTY	PART NAME 1 2 3 4 5 6 (PRODUCT LEVEL)	SEE PAGE
	1	1	**5P-9132**	2	SCREW-WASHER HEAD (HEX) (6-32X.19 IN)	
J	2	1	**3E-3383**	1	WEDGE-RECEPTACLE LOCK	
	3	1	**186-3735**	6	PIN-CONNECTOR	
					AVAILABLE REPAIR KIT(S):	
J			**102-8805**	1	KIT-RECEPTACLE (6 PIN)	
J-KIT MARKED J INCLUDES PART MARKED J						

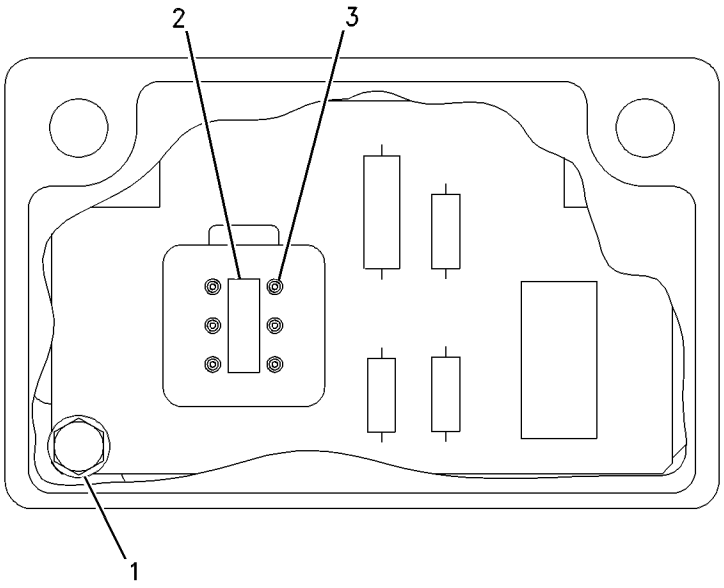

GRAPHIC #1 g00316579

OPERATOR STATION

114-0978 CONVERSION AR

S/N: ABK1-UP
NON-RIPPER CONTROL
AN ATTACHMENT

SMCS-7300 **i00686957**

NOTE	PART NUMBER	QTY	PART NAME 1 2 3 4 5 6 (PRODUCT LEVEL)	SEE PAGE
	5H-4019	4	COVER	
	8E-9299	1	PLATE	
	6V-1193	4	SCREW-HEX SOCKET	
	4J-0520	4	SEAL-O-RING (32.92MM ID)	

OPERATOR STATION

197-4096 CONVERSION AR-NON-ROPS

S/N: ABK1-UP

CANNOT BE USED WITH MACHINES EQUIPPED WITH CAB

AN ATTACHMENT

SMCS-7323 **i01429031**

NOTE	PART NUMBER	QTY	PART NAME 1 2 3 4 5 6 (PRODUCT LEVEL)	SEE PAGE
	3F-6353	8	BOLT (1 1/4-7X2.5IN)	
	5C-6565	4	BOLT (1/2-13X1.25 IN)	
	9U-9957	1	HANDHOLD-LH	
	9U-9956	1	HANDHOLD-RH	
	6I-8212	2	PLATE AS	
	4K-0684	8	WASHER-HARD (34X55X6MM THK)	
	5P-1076	4	WASHER-HARD (13.5X30X4MM THK)	

OPERATOR STATION

197-4097 CONVERSION AR-NON-ROPS

S/N: ABK1-UP
FOR USE WITH MACHINES EQUIPPED WITH CAB
AN ATTACHMENT

SMCS-7323 **i01429078**

NOTE	PART NUMBER	QTY	PART NAME 1 2 3 4 5 6 (PRODUCT LEVEL)	SEE PAGE
	5C-6565	4	BOLT (1/2-13X1.25 IN)	
	3F-6353	8	BOLT (1 1/4-7X2.5IN)	
	9U-9957	1	HANDHOLD-LH	
	9U-9956	1	HANDHOLD-RH	
	6I-8212	2	PLATE AS	
	4K-0684	8	WASHER-HARD (34X55X6MM THK)	
	5P-1076	4	WASHER-HARD (13.5X30X4MM THK)	

OPERATOR STATION

3E-7835 FAN GP-DEFROSTER

S/N: ABK1-UP
PART OF 197-7504 CAB AR
AN ATTACHMENT

SMCS-7316 **i01584329**

NOTE	REF NO	GRAPHIC REF	PART NUMBER	QTY	PART NAME 1 2 3 4 5 6 (PRODUCT LEVEL)	SEE PAGE
	1	1	**2L-8075**	2	TERMINAL (14-16 GA)	
	2	1	**7H-4543**	1	SCREW-TAPPING (NO10X.375 IN)	
	3	1	**1V-6652**	1	SWITCH GP-TOGGLE (FAN CONTROL)	
	4	1	**6T-3631**	2	NUT-HEX (15/32-32 THD)	
	5	1	**6T-3632**	1	LOCKWASHER	
		1	**6T-3633**	1	RING-LOCKING	
	6	1	**6V-8374**	3	SCREW-MACHINE (6-32X0.25 IN)	
		1	**3L-8187**	3	LOCKWASHER	
	7	1	**6N-6984**	1	MOUNT	
	8	1	**1M-1230**	2	NUT & LOCK AS	
	9	1	**4B-4274**	2	WASHER (5.5X13X1.2MM THK)	
	10	1	**9B-7237**	1	BOLT (3/8-16X1.25 IN)	
	11	1	**3E-7838**	1	BRACKET AS	
	12	1	**4B-4276**	1	WASHER (7X16X1.6MM THK)	
	13	1	**6T-9255**	1	PLATE	
	14	1	**6T-9256**	2	WASHER (7.14X12.7X1.6MM THK)	
	15	1	**6T-8943**	1	PLATE	
	16	1	**8T-4222**	1	WASHER-PLATED (11X32X2.5MM THK)	
	17	1	**2D-6235**	3	LOCKNUT (1/4-20 THD)	
	18	1	**7L-8316**	1	SETSCREW-SOCKET (10-32X.25IN)	
	19	1	**8T-9368**	1	BOLT (1/4-20X2.25 IN)	
	20	1	**3D-8748**	1	FAN AS	
	21	1	**3E-7839**	1	BRACKET AS	
	22	1	**3E-7837**	1	BASE AS	
		1	**9F-2978**	1	NUT-WELD (3/8-16 THD)	
	23	1	**3D-8749**	1	GUARD	
	24	1	**174-1503**	1	MOTOR AS-ELECTRIC	
	25	1	**2L-8075**	2	TERMINAL (14-16 GA) (FOR NO. 8 SCREW)	
	26	1	**2L-8076**	1	TERMINAL-CRIMP (14-16 GA) (FOR NO. 10 SCREW)	
	27	1	**7X-0264**	1	BOLT (1/4-20X2.50 IN)	

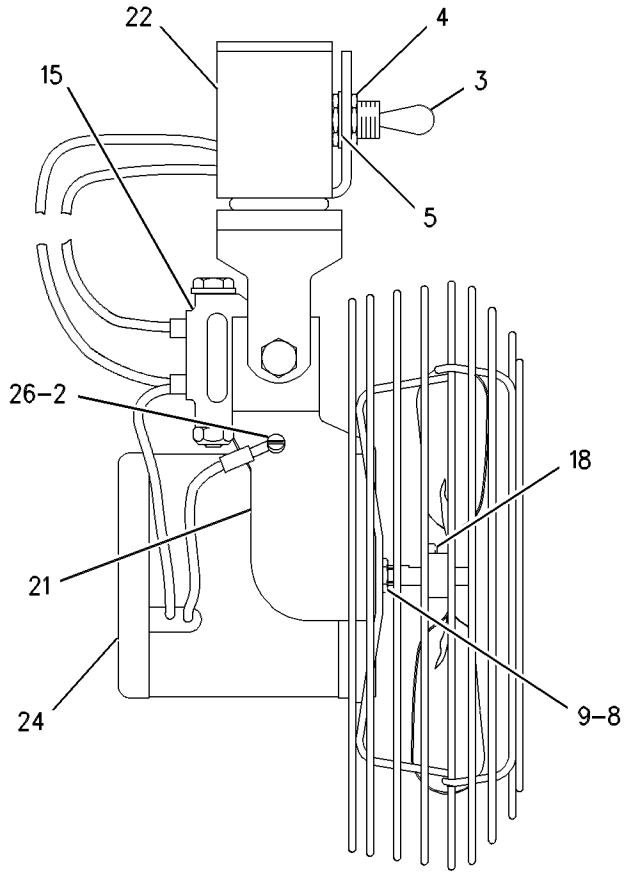

VIEW A-A

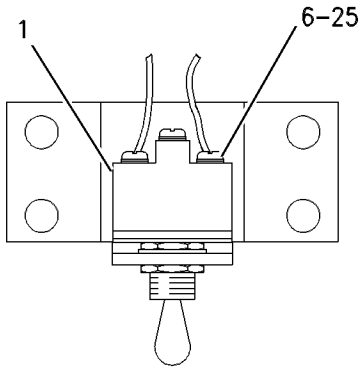

VIEW B-B

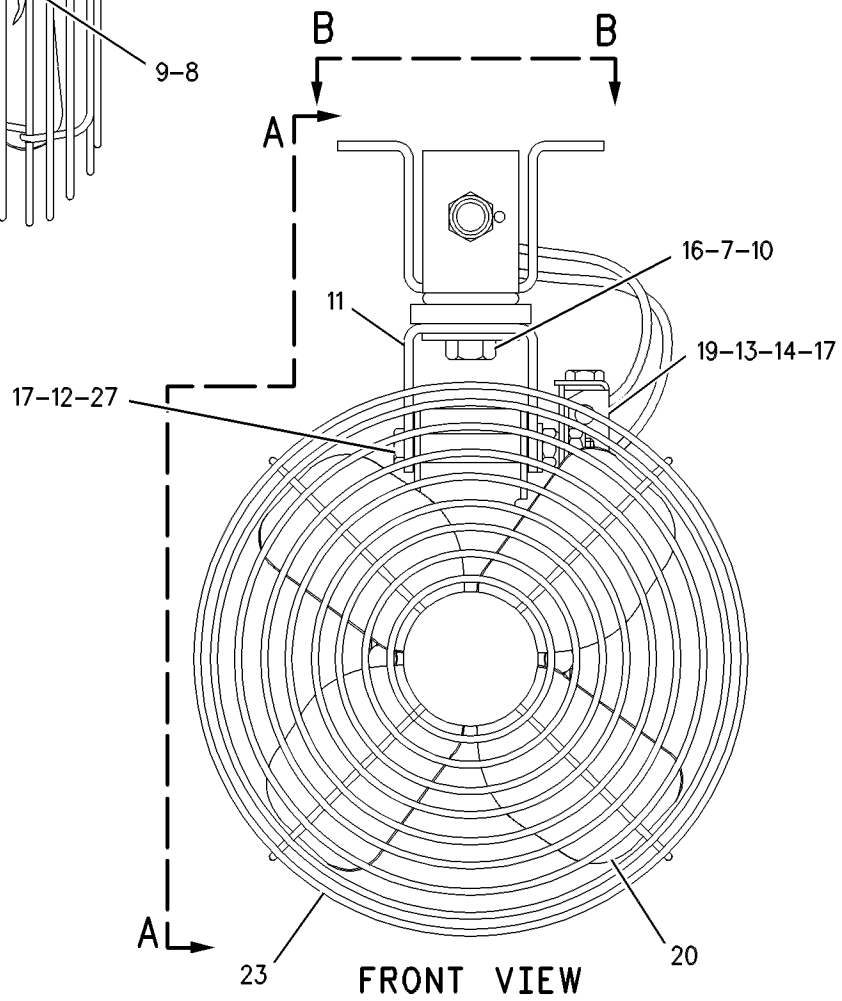

FRONT VIEW

GRAPHIC #1 g00537615

OPERATOR STATION

124-5517 FLOORPLATE AR

S/N: ABK1-UP
QUICK RELEASE
AN ATTACHMENT

SMCS-7265 **i00733899**

NOTE	REF NO	GRAPHIC REF	PART NUMBER	QTY	PART NAME 1 2 3 4 5 6 (PRODUCT LEVEL)	SEE PAGE
	1	1	**8T-9496**	4	LOCKNUT (9/16-18 THD)	
Y	2	1	**8Y-6400**	2	LATCH GP	821
	3	1	**124-5518**	1	FLOORPLATE AS	
		1	**1F-0748**	4	NUT-WELD (1/2-13 THD)	
	4	1	**124-5519**	2	COVER AS	
					(EACH INCLUDES)	
		1	**2V-5019**	1	SPRING	
	5	1	**124-5524**	2	PAWL	
	6	1	**8T-4896**	4	WASHER-HARD (2.5MM THK)	
		1	**4L-6454**	4	BOLT (3/8-16X1.0IN)	
		1	**6V-8801**	4	NUT (3/8-16 THD)	

Y-SEPARATE ILLUSTRATION

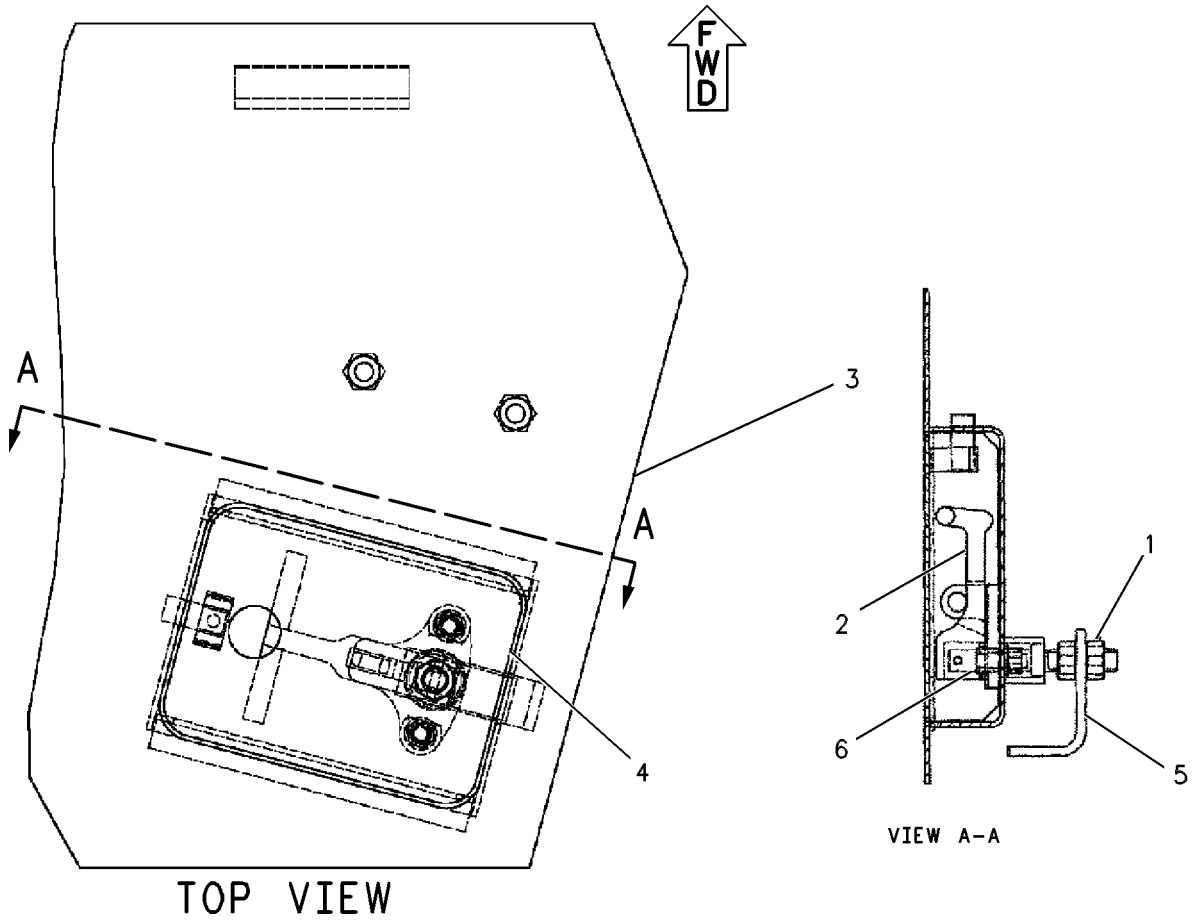

GRAPHIC #1 g00326279

OPERATOR STATION

8E-7802 GUARD GP-VANDALISM

S/N: ABK1-UP

PART OF 162-9501 CHASSIS AR

SMCS-7315 **i01446733**

NOTE	REF NO	GRAPHIC REF	PART NUMBER	QTY	PART NAME 1 2 3 4 5 6 (PRODUCT LEVEL)	SEE PAGE
	1	1	**6I-9434**	1	COVER AS	
	2	1	**8C-4427**	1	PLUNGER-LATCH	
J	3	1	**8T-2895**	1	LOCK AS-CYLINDER	
		1	**7F-9223**	1	LOCKWASHER	
		1	**8T-5004**	1	SCREW-MACHINE (1/4-28X0.375 IN)	
	4	1	**8T-5391**	1	BOLT (5/16-18X0.5 IN)	
		1	**5P-4116**	1	WASHER-HARD (8.8X20.5X2MM THK)	
	5	1	**6I-9441**	1	PLATE AS	
	6	1	**8C-4428**	1	SOCKET-LATCH	
	7	1	**5M-3062**	3	BOLT (3/8-16X0.75 IN)	
		1	**5P-1075**	3	WASHER-HARD (10.2X22.5X3MM THK)	
	8	1	**6V-3884**	2	SCREW-HEX SOCKET (1/4-20X0.5 IN)	
	9	1	**6D-2928**	1	BOLT (1/4-20X1.125 IN)	
		1	**6V-8185**	1	NUT (1/4-20 THD)	
		1	**5P-4115**	1	WASHER-HARD (7.2X19X2MM THK)	

J-REQUIRES 5P8500 KEY

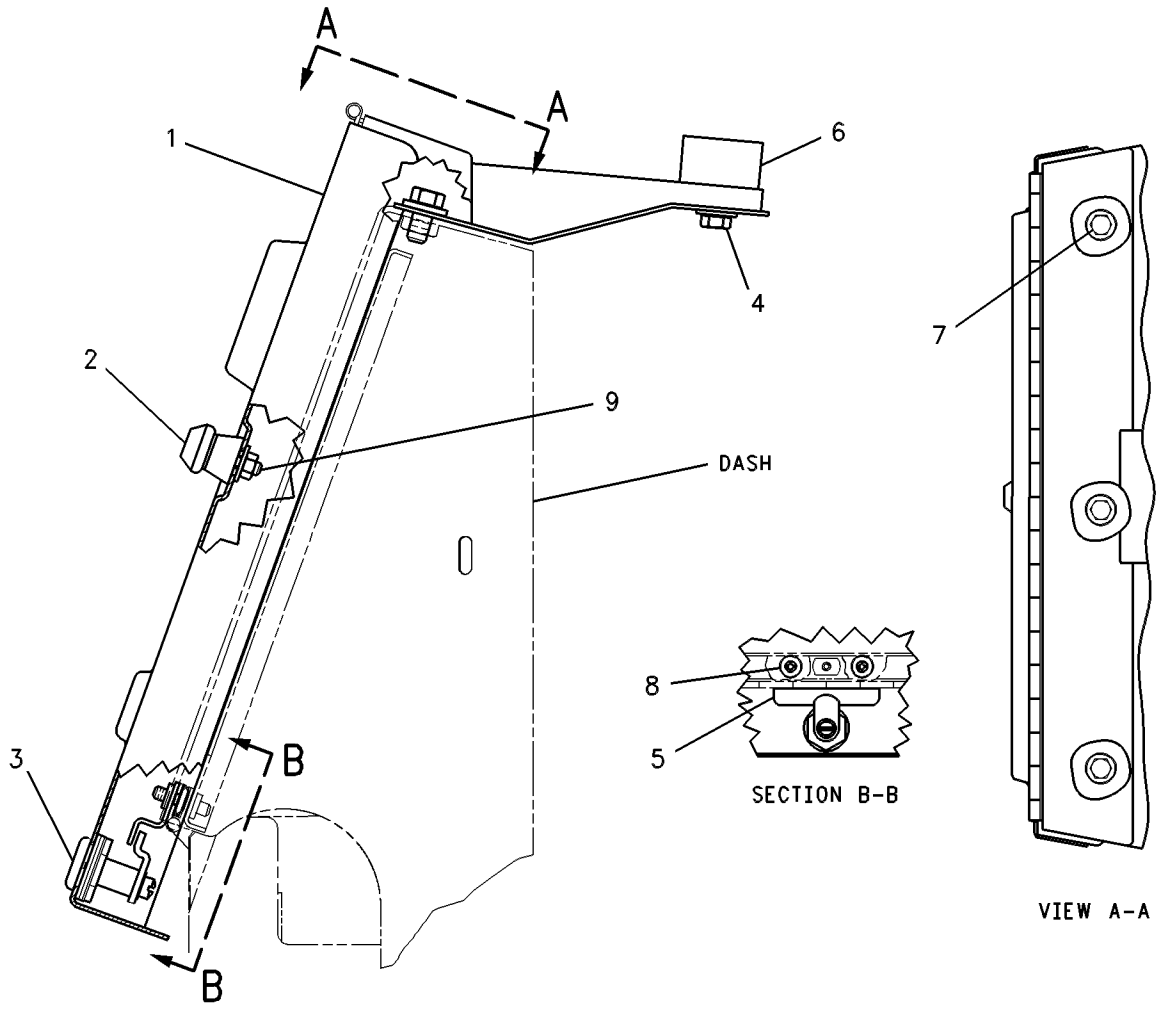

GRAPHIC #1 g00344448

OPERATOR STATION

162-8738 HEATER GP-CAB

S/N: ABK1-UP
PART OF 163-0942, 163-0943 CAB AR
AN ATTACHMENT

SMCS-7304 **i01513006**

NOTE	REF NO	GRAPHIC REF	PART NUMBER	QTY	PART NAME 1 2 3 4 5 6 (PRODUCT LEVEL)	SEE PAGE
	1	1	**6J-0488**	4	SCREW-BUTTON HEAD (3/8-16X0.875 IN)	
	2	1	**5P-1075**	6	WASHER-HARD (10.2X22.5X3MM THK)	
	3	1	**144-3579**	1	DUCT-AIR UPPER	
	4	1	**8E-5975**	1	GASKET	
	5	2	**4P-8134**	3	CLIP	
	6	1	**5P-5824**	1	HOLDER-ASH TRAY	
	7	1	**5P-5454**	1	ASHTRAY	
	8	1,2	**6K-4936**	5	BOLT-LOCKING (3/8-16X0.625 IN)	
	9	1,2	**6B-2882**	5	SPACER (0.41X0.75X0.31 IN THK)	
	10	1	**7T-1890**	1	FILTER-AIR (CAB) (STANDARD)	
					—OR—	
A		1	**175-2832**	1	FILTER-AIR (CAB) (ODOR REDUCTION)	
					—OR—	
A		1	**175-2839**	1	FILTER-AIR (CAB) (HIGH EFFICIENCY)	
	11	1	**134-3992**	1	DOOR AS	
	12	1	**9F-6445**	2	NUT-WELD (1/4-20 THD)	
	13	1	**8E-5959**	1	SEAL	
	14	1	**8E-9253**	1	GASKET	
	15	1	**159-8070**	1	FILM-PANEL (AIR CONDITIONER & BLOWER)	
	16	1	**157-1361**	1	SWITCH AS (BLOWER SPEED)	
		1	**3E-3383**	1	WEDGE-RECEPTACLE LOCK	
		1	**9W-0852**	6	PIN-CONNECTOR	
		1	**102-8805**	1	KIT-RECEPTACLE (6 PIN)	
					(INCLUDES RECEPTACLE AS & WEDGE)	
	17	2	**4L-6454**	8	BOLT (3/8-16X1 IN)	
	18	2	**7X-0772**	8	WASHER-HARD (10.2X25.5X2.5MM THK)	
	19	2	**9P-6571**	2	PLUG	
M	20	2	**8T-4171**	3	BOLT (M6X1X12MM)	
	21	2	**9X-8256**	3	WASHER (6.6X12X2MM THK)	
Y	22	1	**162-8818**	1	HEATER GP-CAB	812
	23	1	**133-8656**	1	DUCT-UPPER	
	24	1	**135-2861**	1	GASKET	
	25	2	**114-5985**	1	PLATE AS	
		2	**2R-2376**	2	WASHER-PANEL FASTENER	
		2	**6P-6926**	2	SCREW-KNURLED	
	26	1	**8T-4943**	1	PLUG	
	27	2	**7K-1181**	3	STRAP-CABLE	
	28	2	**116-2590**	1	SEAL	
	29	2	**2V-0099**	1	KNOB (CAB TEMPERATURE CONTROL)	
	30	2	**8T-1972**	1	FILM-INSTRUCTION (CAB TEMPERATURE CONTROL)	
	31	2	**9W-3429**	1	PLATE-CONTROL	
	32	2	**6D-3031**	4	SCREW-SOCKET HEAD (8-32X0.375 IN)	
	33	1	**2P-4339**	1	NUT-JAM (7/16-20 THD)	
	34	2	**3T-5201**	1	BEARING	
	35	2	**7G-8464**	1	ROD AS	
		2	**3H-1118**	1	PIN-SPRING	
	36	2	**9L-9596**	1	SETSCREW-SOCKET (8-32X0.25 IN)	
	37	1	**030-8535**	2	BOLT-LOCKING (3/8-16X0.875 IN)	
	38	1	**2G-1133**	1	GROMMET	
	39	2	**8T-7566**	2	PIN-SPRING	
	40	2	**7X-0575**	2	WASHER-HARD (10.2X22.5X5MM THK)	
	41	2	**134-3993**	2	PLATE AS	
	42	1,2	**8Y-6388**	8	LOUVER AS	
	43	1,2	**104-2091**	16	SCREW-FLAT HEAD (6-20X0.5 IN)	
BD	44	1	**6V-5163**		SEAL	

162-8738 **HEATER GP-CAB** ***(contd.)*** **i01513006**

NOTE	REF NO	GRAPHIC REF	PART NUMBER	QTY	PART NAME 1 2 3 4 5 6 (PRODUCT LEVEL)	SEE PAGE
BD	45	1,2	**5P-5643**		SEAL	
	46	1	**2H-3920**	1	LOCKWASHER	
	47	1	**110-6109**	1	KNOB-CONTROL (BLOWER SPEED)	
	48	1	**6V-3884**	2	SCREW-HEX SOCKET (1/4-20X0.5 IN)	
	49	1	**116-3119**	1	PLATE	
	50	1	**6T-3990**	1	SWITCH AS-ROCKER (AIR CONDITIONER ON/OFF)	
		1	**3L-8187**	2	LOCKWASHER	
		1	**6V-8374**	2	SCREW-MACHINE (6-32X0.25 IN)	
	51	1	**6V-8927**	1	BOLT-SOCKET HEAD (6-32X0.5 IN)	
	52	1	**6T-6329**	1	BEZEL-ROCKER SWITCH	
	53	1	**130-4846**	1	WIRE AS	
	54	2	**8E-1356**	2	KNOB AS	
					(EACH INCLUDES)	
	55	2	**8T-7566**	1	PIN-SPRING	
	56	2	**107-0266**	1	FILTER-CAB AIR	
BD	57	2	**5P-5755**		SEAL	

A-NOT PART OF THIS GROUP
B-USE AS REQUIRED
D-ORDER BY THE METER
M-METRIC PART
Y-SEPARATE ILLUSTRATION

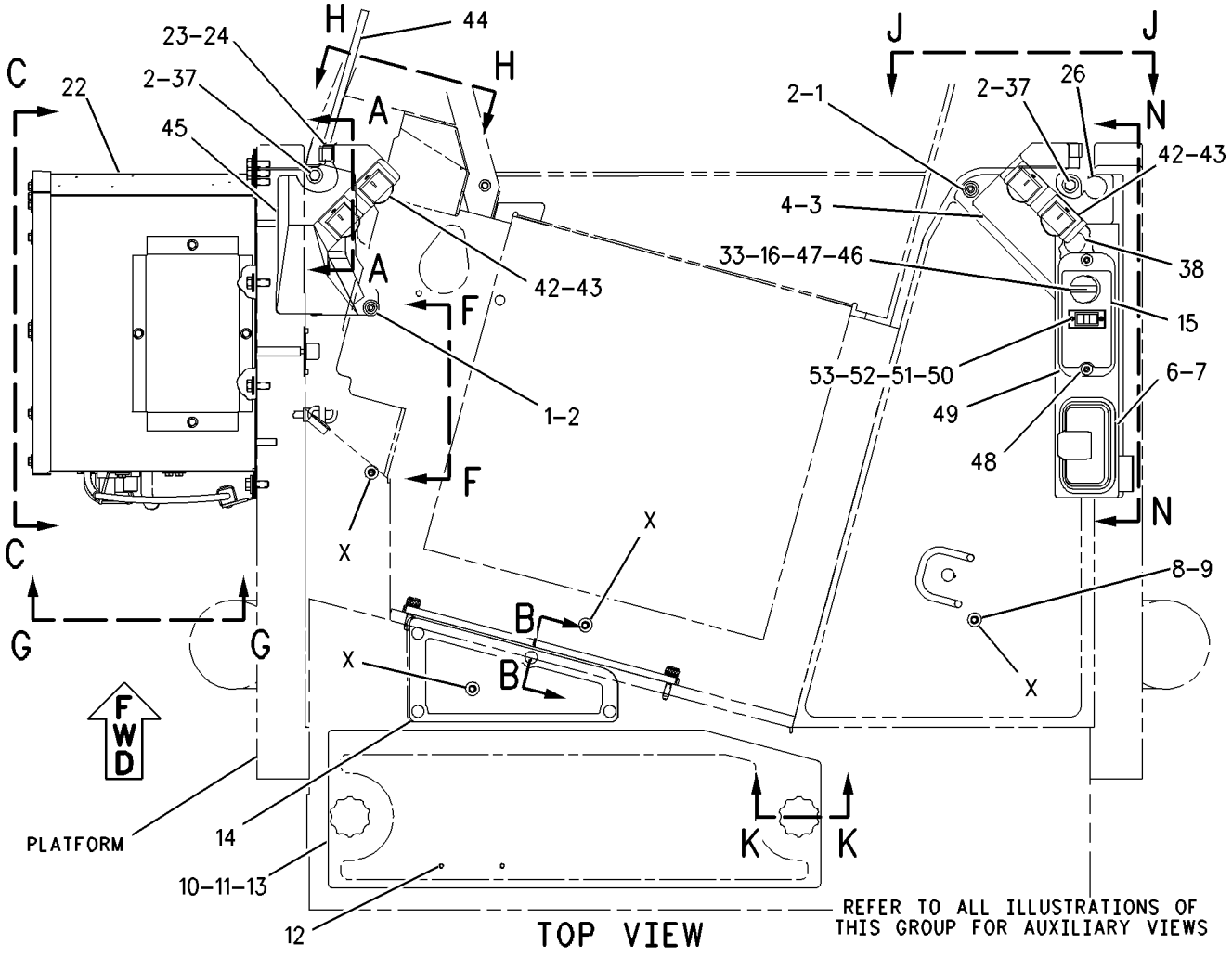

GRAPHIC #1 g00793591

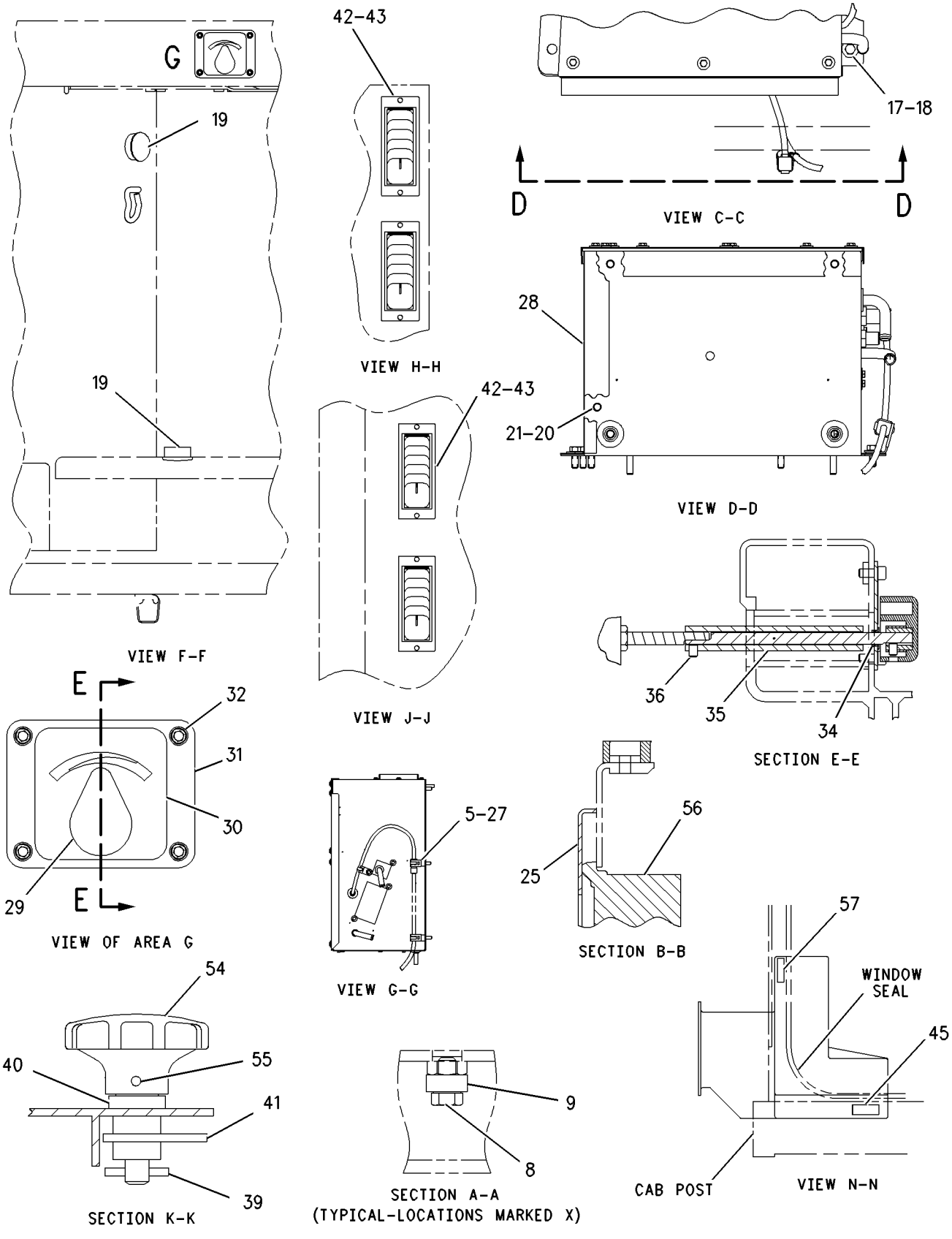

GRAPHIC #2 g00793585

MEMORANDA

OPERATOR STATION

162-8818 HEATER GP-CAB

S/N: ABK1-UP
PART OF 162-8738 HEATER GP-CAB
AN ATTACHMENT

SMCS-7304 **i01440373**

NOTE	REF NO	GRAPHIC REF	PART NUMBER	QTY	PART NAME 1 2 3 4 5 6 (PRODUCT LEVEL)	SEE PAGE
	1	1	**3E-0400**	2	WHEEL-BLOWER	
	2	1	**174-1494**	1	MOTOR GP-ELECTRIC (27 VOLT) (CAB BLOWER)	
		1	**102-8802**	1	KIT-RECEPTACLE (2 PIN)	
					(INCLUDES RECEPTACLE AS AND WEDGE)	
		1	**3E-3365**	1	WEDGE-RECEPTACLE LOCK (2 PIN)	
		1	**8T-8729**	2	PIN-CONNECTOR	
	3	1	**3S-2093**	4	STRAP-CABLE	
M	4	1	**5C-9553**	29	BOLT (M6X1X16MM)	
	5	1	**5P-4115**	15	WASHER-HARD (7.2X19X2MM THK)	
	6	1	**5P-6670**	1	FILM-INSTRUCTION (WATER IN/WATER OUT) (AIR CONDITIONER/HEATER UNIT)	
					(FILM MUST BE CUT IN HALF)	
	7	1	**5V-1474**	4	SCREW-FORMING (10-16X0.625 IN)	
	8	1	**6T-6708**	2	WASHER (7X28.6X4.1MM THK)	
	9	1	**6V-1668**	2	WASHER (6.5X29.1X3MM THK)	
	10	1	**8C-3756**	1	FILM-IDENTIFICATION (GROUP & SEQUENCE NO.) (AIR CONDITIONER/HEATER UNIT)	
	11	1	**8C-4586**	2	CLAMP-MOTOR	
M	12	1	**6V-7728**	1	BOLT (M6X1.0X45MM)	
	13	1	**8P-5141**	2	PLATE-ORIFICE	
	14	1	**8T-4205**	24	WASHER-HARD (7.2X14.5X2MM THK)	
	15	1	**9X-2488**	6	CLAMP-HOSE	
M	16	1	**9X-8498**	1	BOLT (M6X1.0X180MM)	
	17	1	**091-8792**	2	CLIP	
	18	1	**125-9740**	1	RESISTOR	
M	19	1	**129-3178**	11	LOCKNUT	
	20	1	**130-9214**	1	GASKET	
	21	1	**130-9215**	1	GASKET	
	22	1	**130-9216**	1	GASKET	
	23	1	**130-9218**	1	GASKET	
	24	1	**130-9219**	1	GASKET	
	25	1	**130-9220**	1	GASKET	
	26	1	**130-9221**	1	GASKET	
	27	1	**130-9224**	1	COIL AS-HEATER	
	28	1	**130-9227**	1	COVER	
	29	1	**130-9228**	1	CASE AS	
		1	**6T-6686**	2	PIN	
M		1	**6V-9632**	15	NUT-WELD (M6X1 THD)	
		1	**7T-1099**	1	LINK	
	30	1	**160-4885**	1	HOUSING GP-OUTPUT	
		1	**132-5793**	4	SCREW-WASHER HD (4-40X0.25 IN)	
M		1	**6V-9632**	2	NUT-WELD (M6X1 THD)	
	31	1	**130-9234**	1	PAN AS-HEATER	
M		1	**6V-9632**	1	NUT-WELD (M6X1 THD)	
	32	1	**130-9235**	1	DOOR AS	
M		1	**6V-9632**	2	NUT-WELD (M6X1 THD)	
	33	1	**131-2441**	1	COVER	
	34	1	**131-5354**	1	TUBE AS	
	35	1	**132-3871**	1	GASKET	
	36	1	**134-5378**	1	VALVE AS-WATER (CAB HEATER)	
		1	**6V-6717**	1	SCREW-WASHER HEAD	
		1	**3E-1841**	1	LEVER	
		1	**8Y-5737**	1	CLIP (COMPRESSION)	
		1	**037-4426**	1	RETAINER	
		1	**102-0341**	1	CLIP (TAB)	

162-8818 HEATER GP-CAB *(contd.)*

i01440373

NOTE	REF NO	GRAPHIC REF	PART NUMBER	QTY	PART NAME 1 2 3 4 5 6 (PRODUCT LEVEL)	SEE PAGE
	37	1	**172-9291**	1	HARNESS AS	
		1	**155-2270**	1	KIT-CONNECTING PLUG (2 PIN)	
					(INCLUDES PLUG AS, WEDGE & INTERFACE SEAL)	
		1	**3E-5394**	1	RECEPTACLE-CONNECTING (FLANGE)	
		1	**6T-6505**	4	HOUSING-RECEPTACLE (BLADE)(POSITIVE LOCK)	
		1	**6T-6506**	4	TERMINAL (BLADE)(POSITIVE LOCK)	
	38	1	**187-3061**	1	HARNESS AS	
		1	**102-8802**	1	KIT-RECEPTACLE (2 PIN)	
					(INCLUDES RECEPTACLE AS & WEDGE)	
		1	**102-8806**	1	KIT-RECEPTACLE (8 PIN)	
					(INCLUDES RECEPTACLE AS & WEDGE)	
		1	**6T-6505**	2	HOUSING-RECEPTACLE (BLADE)(POSITIVE LOCK)	
		1	**6T-6506**	2	TERMINAL (BLADE)(POSITIVE LOCK)	
		1	**8T-8733**	1	PLUG-CONNECTOR	
		1	**9G-3695**	3	PLUG (GROMMET SEALING)	
		1	**115-3018**	1	GROMMET	
	39	1	**104-6202**	1	CLIP	
	40	1	**132-5793**	4	SCREW-WASHER HD (4-40X0.25 IN)	
E	41	1	**136-1953**		HOSE (30.5 CM)	
E	42	1	**136-1953**		HOSE (47.5 CM)	
E	43	1	**136-1953**		HOSE (8.0 CM)	
	44	1	**6V-6110**	1	CABLE AS	
BD	45	1	**5P-5969**		SEAL	
BE	46	1	**5P-5908**		SEAL	

B-USE AS REQUIRED
D-ORDER BY THE METER
E-ORDER BY THE CENTIMETER
M-METRIC PART

162-8818 HEATER GP-CAB *(contd.)*

i01440373

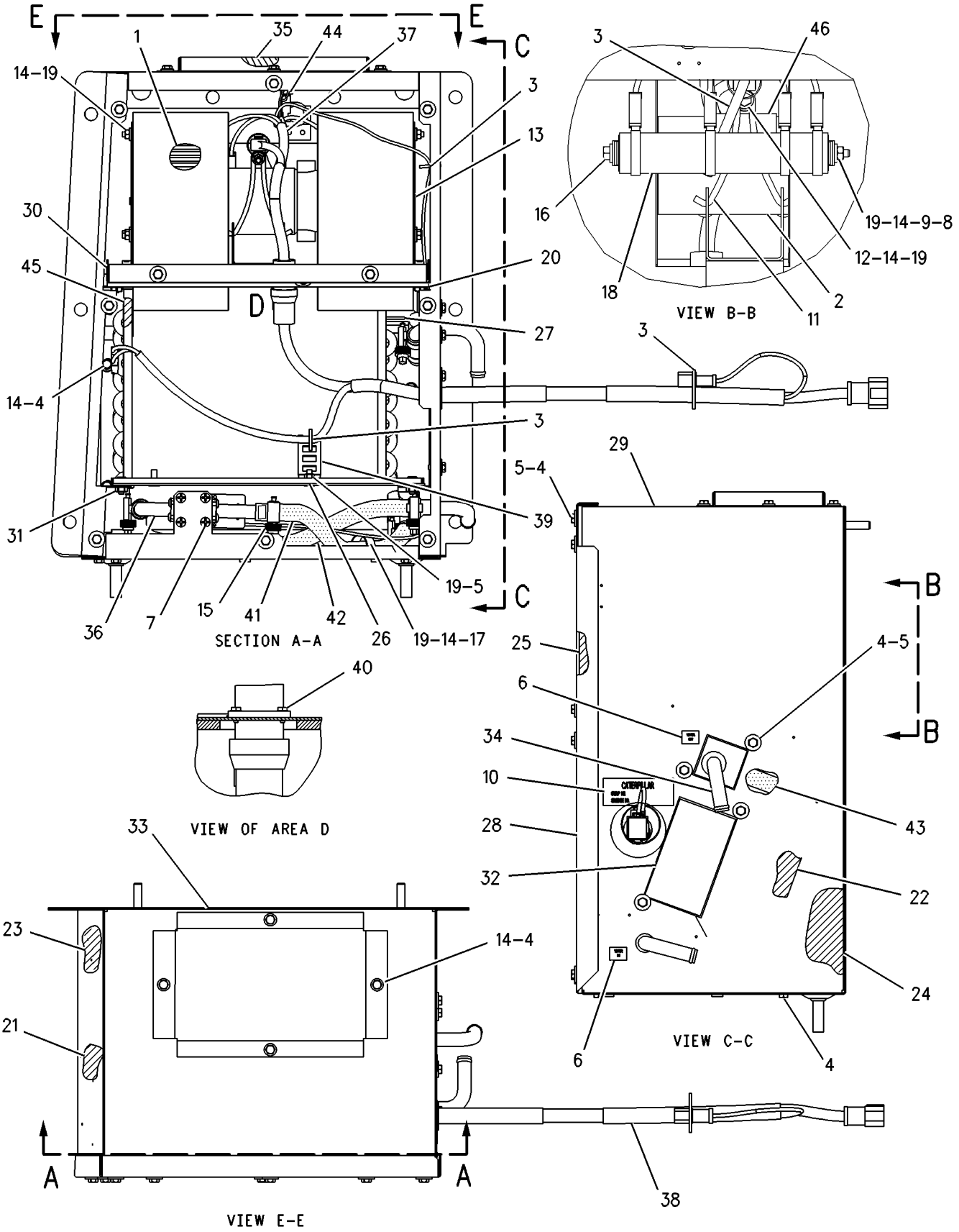

GRAPHIC #1

g00749681

MEMORANDA

OPERATOR STATION

174-2231 HOUSING GP-SEAT SUSPENSION

S/N: ABK1-UP
PART OF 160-7165 SUSPENSION GP-SEAT
ALSO AN ATTACHMENT

SMCS-7321 **i01564914**

NOTE	REF NO	GRAPHIC REF	PART NUMBER	QTY	PART NAME 1 2 3 4 5 6 (PRODUCT LEVEL)	SEE PAGE
	1	1	**1Y-7927**	1	PIN	
	2	1	**2D-6235**	2	LOCKNUT (1/4-20 THD)	
	3	1	**2M-7819**	4	RING-RETAINING	
	4	1	**3D-2975**	2	RING-RETAINING	
	5	1	**4B-5059**	6	WASHER (29.5X15X2.5MM THK)	
	6	1	**4N-2927**	2	RACE-THRUST BEARING	
	7	1	**5D-4822**	2	RING-RETAINING	
	8	1	**5P-8445**	4	RING-RETAINING	
	9	1	**5V-0770**	2	BOLT-CARRIAGE	
	10	1	**7M-7219**	1	BEARING-THRUST	
	11	1	**7V-5191**	2	SPACER (28X10X7.1MM THK)	
	12	1	**8L-8413**	2	STRAP-CABLE	
	13	1	**8S-7803**	4	RING-RETAINING	
	14	1	**8Y-6041**	1	ARM AS	
	15	1	**8Y-6045**	1	CAM	
	16	1	**8Y-6046**	1	PIN	
	17	1	**8Y-6047**	2	PIN	
	18	1	**8Y-6060**	2	ROLLER	
	19	1	**8Y-6062**	1	LINK-ACTUATOR-RH	
	20	1	**8Y-6063**	1	LINK-ACTUATOR-LH	
	21	1	**8Y-6064**	2	ROLLER-SLIDER	
	22	1	**8Y-6066**	1	SPRING	
	23	1	**8Y-6067**	1	SPACER (10.54MM THK)	
	24	1	**8Y-6068**	1	NUT (3/8 X 16 THD)	
	25	1	**8Y-6069**	1	ADJUSTER AS	
	26	1	**9X-8918**	3	SCREW-FLAT HEAD (8-32X0.50 IN)	
	27	1	**095-0878**	1	PIN-SPRING	
	28	1	**131-4242**	1	BOLT (3/8-16X5.18 IN)	
	29	1	**131-5167**	1	KNOB AS-WEIGHT	
	30	1	**161-5967**	1	SHAFT	
	31	1	**174-2237**	1	HOUSING AS-UPPER	
JZ	32	1		1	KNOB-HEIGHT	
JZ	33	1		1	KNOB-HEIGHT	
LZ	34	1		2	SPRING	
LZ	35	1		2	BUSHING	
VZ	36	1		2	SPRING	
VZ	37	1		2	SPACER	
VZ	38	1		2	BUSHING-GUIDE	
VZ	39	1		2	ROD	
PZ	40	1		1	TAPE-INDICATOR	
PZ	41	1		1	GUIDE	
SZ	42	1		1	PIN	
SZ	43	1		1	FOLLOWER-CAM	
TZ	44	1		1	PIN	
TZ	45	1		1	FOLLOWER-CAM	
UZ	46	1		2	ROLLER AS	
UZ	47	1		1	ROLLER AS	
QZ	48	1		3	BUMPER	
					AVAILABLE REPAIR KIT(S):	
J			**8Y-5945**	1	KIT-SUSPENSION KNOB	
L			**8Y-6859**	1	KIT-SPRING	
V			**8Y-6860**	1	KIT-SPRING	
P			**100-3224**	1	KIT-INDICATOR	
Q			**100-5179**	1	KIT-BUMPER	

174-2231 HOUSING GP-SEAT SUSPENSION *(contd.)* i01564914

NOTE	REF NO	GRAPHIC REF	PART NUMBER	QTY	PART NAME 1 2 3 4 5 6 (PRODUCT LEVEL)	SEE PAGE
S			**108-4086**	1	KIT-FOLLOWER	
T			**108-4087**	1	KIT-FOLLOWER	
U			**108-4103**	1	KIT-BEARING	

J-KIT MARKED J INCLUDES PARTS MARKED J
L-KIT MARKED L INCLUDES PARTS MARKED L AND RETAINING RING
P-KIT MARKED P INCLUDES PARTS MARKED P AND CABLE STRAP
Q-KIT MARKED Q INCLUDES PARTS MARKED Q
S-KIT MARKED S INCLUDES PARTS MARKED S
T-KIT MARKED T INCLUDES PARTS MARKED T
U-KIT MARKED U INCLUDES PARTS MARKED U
V-KIT MARKED V INCLUDES PARTS MARKED V
Z-NOT SERVICED SEPARATELY

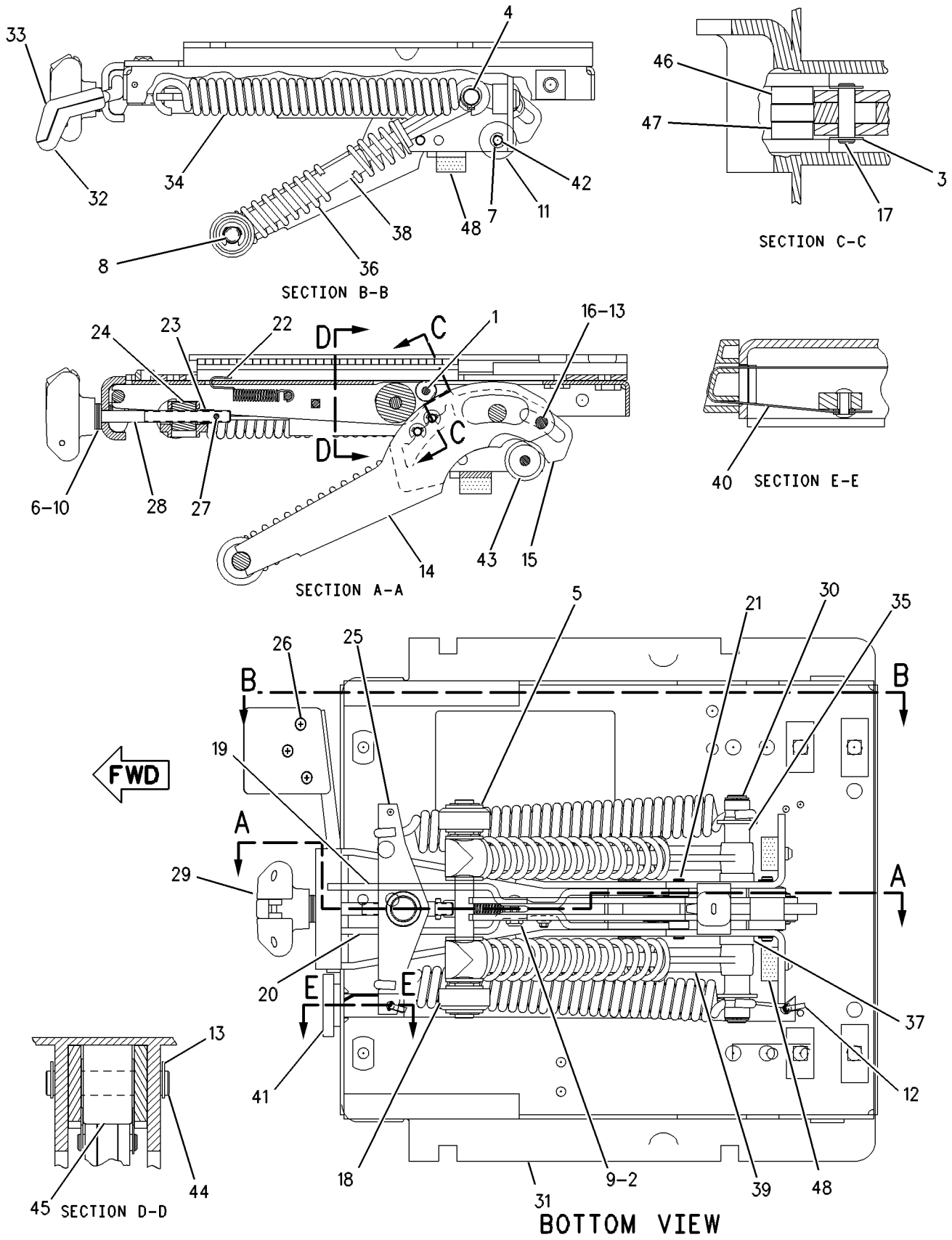

GRAPHIC #1 g00608620

OPERATOR STATION

8E-3284 INSTALLATION GP-RADIO

S/N: ABK1-UP
PART OF 157-4817 CAB AR
AN ATTACHMENT

SMCS-7338 **i01427140**

NOTE	REF NO	GRAPHIC REF	PART NUMBER	QTY	PART NAME 1 2 3 4 5 6 (PRODUCT LEVEL)	SEE PAGE
	1	1	**8E-9654**	1	PLATE AS	
		1	**9V-7451**	1	NUT-WELD (1/4-20 THD)	
	2	1	**4N-9915**	3	GROMMET AS	
	3	1	**6V-7646**	3	WASHER-HARD (7.2X25X2MM THK)	
	4	1	**0S-1616**	3	BOLT (1/4-20X1 IN)	
	5	1	**8E-9656**	1	BRACKET	
	6	1	**6V-8969**	1	SCREW-BUTTON HEAD	
	7	1	**9W-3073**	1	CABLE AS-COAXIAL	
	8	1	**3E-6601**	1	FILM-NOTICE	
	9	1	**8K-1433**	1	GROMMET (12.70MM ID)	
	10	1	**3E-4356**	3	WASHER-HARD (6MM THK)	
	11	1	**168-8772**	2	SPEAKER AS	
	12	1	**4B-2047**	8	NUT (10-24 THD)	
		1	**2N-3480**	8	SCREW-MACHINE (10-24X0.75 IN)	
	13	1	**8E-1118**	1	ANTENNA AS	

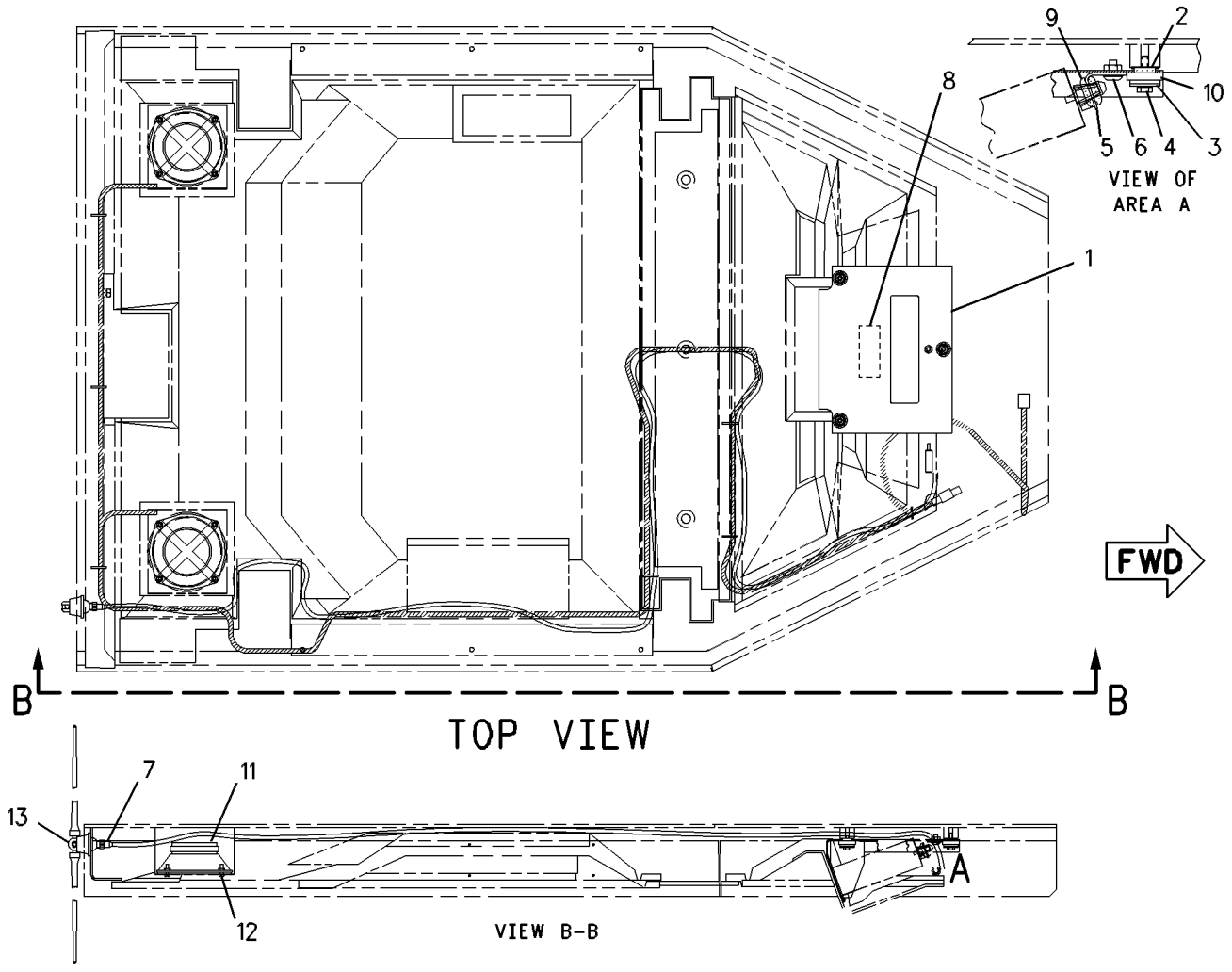

GRAPHIC #1

g00328993

OPERATOR STATION

197-2715 KIT-WINDOW

S/N: ABK1-UP

40 PSI ULTRA STRENGTH GLASS. LARGE REAR WINDOW

FIELD INSTALLATION

SMCS-7310 **i01432098**

NOTE	PART NUMBER	QTY	PART NAME 1 2 3 4 5 6 (PRODUCT LEVEL)	SEE PAGE
			(INCLUDES 2 SHIMS AND REPLACEMENT GLASS FOR CAB FRONT, REAR, SIDE AND DOOR WINDOWS)	
			(INDIVIDUAL PARTS ARE NOT SERVICED SEPARATELY)	

OPERATOR STATION

8Y-6400 LATCH GP

S/N: ABK1-UP
PART OF 124-5517 FLOORPLATE AR
AN ATTACHMENT

SMCS-7308 **i01113114**

NOTE	REF NO	GRAPHIC REF	PART NUMBER	QTY	PART NAME 1 2 3 4 5 6 (PRODUCT LEVEL)	SEE PAGE
	1	1	**7X-0766**	1	SPRING-LATCH	
	2	1	**8Y-5747**	1	BRACKET-MOUNTING	
	3	1	**8Y-3998**	1	HANDLE-LATCH	
	4	1	**8Y-3966**	1	WASHER (1.57MM THK)	
	5	1	**8Y-8306**	1	SHAFT-LATCH	
	6	1	**6H-3956**	1	PIN	

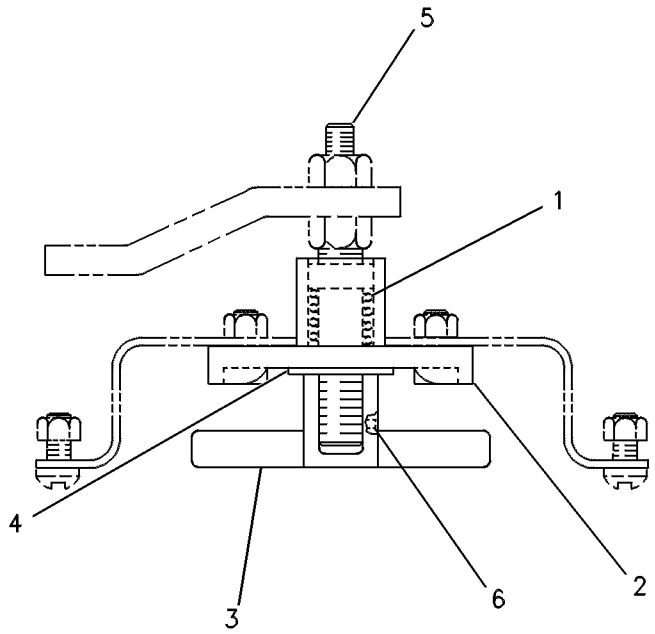

GRAPHIC #1 g00236353

OPERATOR STATION

8E-3270 LINER GP-CAB

S/N: ABK1-UP
PART OF 157-4817 CAB AR
AN ATTACHMENT

SMCS-7329 **i01427171**

NOTE	REF NO	GRAPHIC REF	PART NUMBER	QTY	PART NAME 1 2 3 4 5 6 (PRODUCT LEVEL)	SEE PAGE
	1	1	**8E-3271**	1	LINER-REAR	
	2	1	**8E-3272**	1	LINER-FRONT	
	3	1	**8E-3278**	1	COVER AS	
	4	1	**8E-3280**	1	COVER AS-FRONT	
	5	1	**8E-3273**	2	PLATE	
	6	1	**8E-3274**	1	PLATE AS	
	7	1	**8E-3277**	1	COVER	
	8	1	**5S-7379**	2	BOLT (3/8-16X0.875 IN)	
		1	**5P-1075**	2	WASHER-HARD (10.2X22.5X3MM THK)	
	9	1	**102-0288**	2	PLATE	
		1	**008-9792**	2	SCREW-WASHER HEAD	
		1	**8T-4205**	2	WASHER-HARD (7.2X14.5X2MM THK)	
	10	1	**4V-6981**	5	SCREW-BUTTON HEAD (1/4-20X0.75 IN)	
	11	1	**6V-3884**	18	SCREW-HEX SOCKET (1/4-20X0.5 IN)	
	12	1	**6I-9534**	1	COVER (RH DOOR)	
	13	1	**6I-9535**	1	COVER (LH DOOR)	

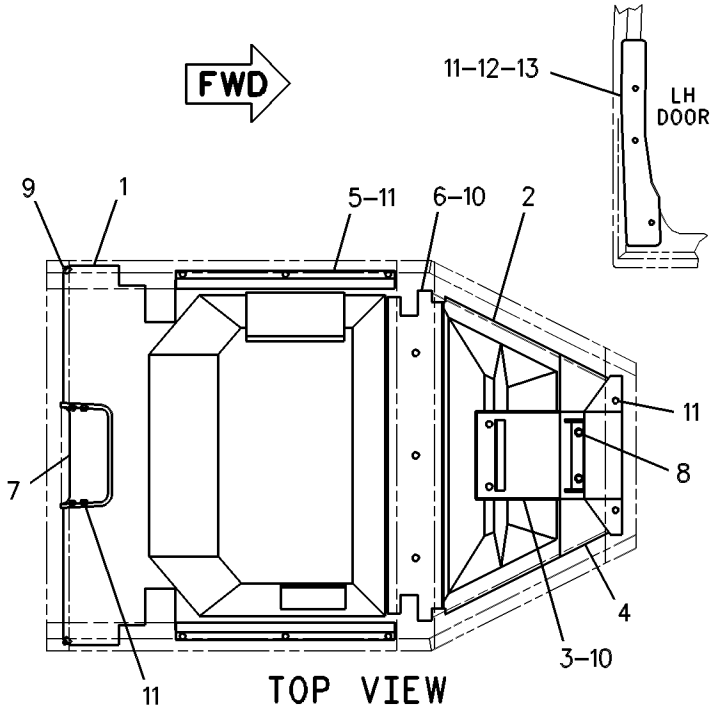

GRAPHIC #1 g00316574

MEMORANDA

OPERATOR STATION

163-8441 LINES GP-AIR CONDITIONER

S/N: ABK1-UP
PART OF 162-8075 AIR CONDITIONER AR
AN ATTACHMENT

SMCS-1808 **i01551110**

NOTE	REF NO	GRAPHIC REF	PART NUMBER	QTY	PART NAME 1 2 3 4 5 6 (PRODUCT LEVEL)	SEE PAGE
	1	2	**1P-6356**	1	PLATE	
	2	3	**3E-3535**	1	RECEIVER-DRYER GP (AIR CONDITIONER)	
	3	3	**5D-1026**	2	CLAMP-HOSE	
	4	3	**6T-3643**	1	CIRCUIT BREAKER AS (15 AMP) (A/C REMOTE CONDENSER)	
		3	**6V-8376**	2	SCREW-MACHINE (8-32X0.25 IN)	
		3	**9B-7233**	2	LOCKWASHER	
	5	3	**7C-1450**	1	BRACKET AS	
	6	2	**7N-1277**	1	BRACKET AS	
	7	2	**9X-6772**	8	STRAP-CABLE	
	8	3	**103-6100**	2	COUPLER AS-QUICK	
					(EACH INCLUDES)	
		3	**9X-7382**	2	SEAL-O-RING	
	9	1	**111-7270**	1	HANDHOLD-RH	
	10	2	**114-5333**	1	SWITCH AS-PRESSURE (AIR CONDITIONER/HIGH)	
		2	**102-8802**	1	KIT-RECEPTACLE (2 PIN)	
					(INCLUDES RECEPTACLE AS & WEDGE)	
		2	**3E-3365**	1	WEDGE-RECEPTACLE LOCK (2 PIN)	
		2	**186-3735**	2	PIN-CONNECTOR	
	11	1	**114-8995**	1	COVER AS	
	12	3	**116-6202**	2	BOOT	
	13	3	**121-3307**	4	MOUNT AS-RUBBER	
I	14	3	**123-3547**	1	HOSE AS	
	15	1	**124-6335**	1	BRACKET AS	
		1	**8F-9836**	1	BOSS-THREADED (3/8-16X.75 IN)	
		1	**8G-4081**	1	PLATE	
		1	**8T-5911**	6	NUT-WELD (1/2-13 THD)	
		1	**8T-5912**	3	NUT-WELD (3/8-16 THD)	
	16	1	**124-6336**	1	BRACKET AS	
		1	**8G-4081**	1	PLATE	
		1	**8T-5911**	6	NUT-WELD (1/2-13 THD)	
		1	**8T-5912**	3	NUT-WELD (3/8-16 THD)	
	17	1	**124-6337**	1	BRACKET	
	18	1	**124-6338**	2	BRACKET	
	19	1	**132-7203**	1	BRACKET AS	
I	20	2	**148-2710**	1	HOSE AS	
	21	2	**149-6371**	1	SWITCH AS-PRESSURE (AIR CONDITIONER/LOW)	
		2	**3E-3365**	1	WEDGE-RECEPTACLE LOCK (2 PIN)	
		2	**186-3735**	2	PIN-CONNECTOR	
		2	**102-8802**	1	KIT-RECEPTACLE (2 PIN)	
					(INCLUDES RECEPTACLE AS & WEDGE)	
	22	1	**153-3946**	1	BRACKET	
	23	1	**153-6781**	2	U-BOLT	
	24	2	**169-7443**	1	TIMER AS-ON DELAY (24 VOLT)	
		2	**8T-8729**	4	PIN-CONNECTOR	
		2	**102-8804**	1	KIT-RECEPTACLE (4 PIN)	
					(INCLUDES RECEPTACLE AS & WEDGE)	
	25	1	**170-0235**	1	ACCUMULATOR-AIR CONDITIONER	
	26	2	**170-5293**	1	HARNESS AS-AIR CONDITIONER	
		2	**8T-8737**	2	PLUG-SEAL	
		2	**102-8805**	1	KIT-RECEPTACLE (6 PIN)	
					(INCLUDES RECEPTACLE AS & WEDGE)	
		2	**155-2270**	3	KIT-CONNECTING PLUG (2 PIN)	

163-8441 LINES GP-AIR CONDITIONER *(contd.)* i01551110

NOTE	REF NO	GRAPHIC REF	PART NUMBER	QTY	PART NAME 1 2 3 4 5 6 (PRODUCT LEVEL)	SEE PAGE
		2	**155-2271**	1	KIT-CONNECTING PLUG (4 PIN)	
					(EACH PLUG KIT INCLUDES PLUG AS, WEDGE & INTERFACE SEAL)	
I	27	1	**171-0802**	1	HOSE AS	
I	28	1	**171-0803**	1	HOSE AS	
I	29	1	**171-3446**	1	HOSE AS	
	30	2	**172-0986**	1	FITTING AS-AIR CONDITIONER	
		2	**3E-4051**	1	CAP-SEAL (AIR CONDITIONER)(LOW SIDE)	
		2	**3E-4057**	1	VALVE AS-AIR CONDITIONER (LOW SIDE)	
		2	**172-4880**	1	CAP-SEAL (AIR CONDITIONER)	
		2	**180-7180**	1	CORE-VALVE	
		2	**180-7181**	1	BODY-VALVE	
	31	3	**192-7932**	1	WIRE AS	
	32	3	**068-4209**	2	SCREW (8-32X0.75 IN)	
	33	3	**109-1633**	1	CLIP (SLOT)	
	34	3	**109-1634**	1	CLIP (TAB)	
	35	2	**3E-4053**	1	FITTING AS-AIR CONDITIONER	
		2	**3E-4052**	1	CAP-SEAL (AIR CONDITIONER)(HIGH SIDE)	
		2	**3E-4058**	1	VALVE AS-AIR CONDITIONER (HIGH SIDE)	
	36	1,2	**3E-4321**	2	CLIP	
	37	2	**4D-7733**	3	CLIP	
	38	3	**4K-8864**	1	CLIP	
	39	1	**4L-6454**	1	BOLT (3/8-16X1 IN)	
	40	3	**4L-6459**	4	BOLT (3/8-16X2.5 IN)	
	41	1,2	**4L-9337**	7	BOLT (3/8-16X1.5 IN)	
	42	2	**4P-7428**	2	CLIP	
	43	2	**4P-7429**	1	CLIP	
	44	2	**4P-7581**	1	CLIP	
	45	2	**4P-8134**	4	CLIP	
	46	1	**5C-6565**	4	BOLT (1/2-13X1.25 IN)	
	47	1,2	**5M-3062**	5	BOLT (3/8-16X0.75 IN)	
	48	1,2,3	**5P-1075**	23	WASHER-HARD (10.2X22.5X3MM THK)	
	49	1,3	**5P-1076**	16	WASHER-HARD (13.5X30X4MM THK)	
	50	3	**5S-7379**	1	BOLT (3/8-16X0.875 IN)	
	51	2,3	**5S-7383**	2	BOLT (3/8-16X1.75 IN)	
	52	1	**6D-4246**	1	CLIP	
	53	1,3	**6D-4247**	5	CLIP	
	54	1	**6V-1889**	1	CLIP	
	55	1,3	**6V-8801**	6	NUT (3/8-16 THD)	
	56	2	**7X-0288**	1	BOLT (3/8-16X1.625 IN)	
	57	1	**8T-2502**	3	BOLT (3/8-16X1.125 IN)	
	58	3	**8T-4226**	8	WASHER-PLATED (10.5X45X3MM THK)	
	59	1	**8T-4895**	4	WASHER (13.5X50X5MM THK)	
	60	1,2,3	**8T-4896**	7	WASHER-HARD (10.2X18.5X2.5MM THK)	
M	61	1	**8T-4956**	4	BOLT (M12X1.75X35MM)	
M	62	2	**8T-6466**	1	BOLT (M10X1.50X60MM)	
	63	3	**8T-8919**	12	BOLT (1/2-13X1.75 IN)	
	64	1	**9B-7237**	2	BOLT (3/8-16X1.25 IN)	
	65	2	**9X-7378**	1	SEAL-O-RING	
	66	2,3	**9X-7380**	3	SEAL-O-RING	
	67	1,3	**9X-7381**	3	SEAL-O-RING	
	68	1	**9X-7382**	2	SEAL-O-RING	
	69	1	**9X-7383**	2	SEAL-O-RING	
	70	2	**9X-7385**	2	SEAL-O-RING	
BD	71	3	**5P-6129**		TUBE	
	72	1	**2K-4973**	4	LOCKNUT (3/8-16 THD)	

B-USE AS REQUIRED
D-ORDER BY THE METER
I-SEE HOSE FABRICATION GUIDE
M-METRIC PART

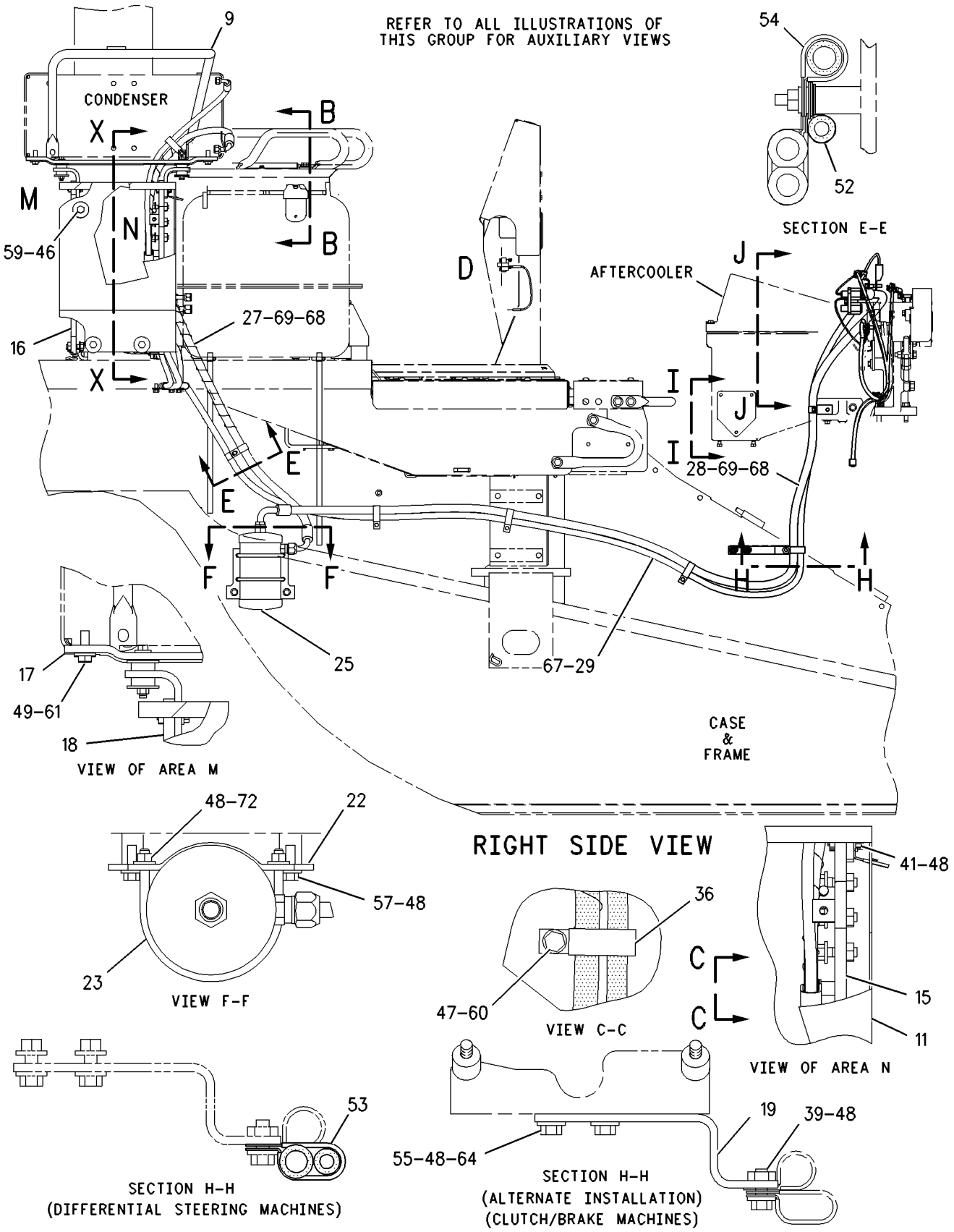

GRAPHIC #1 g00809351

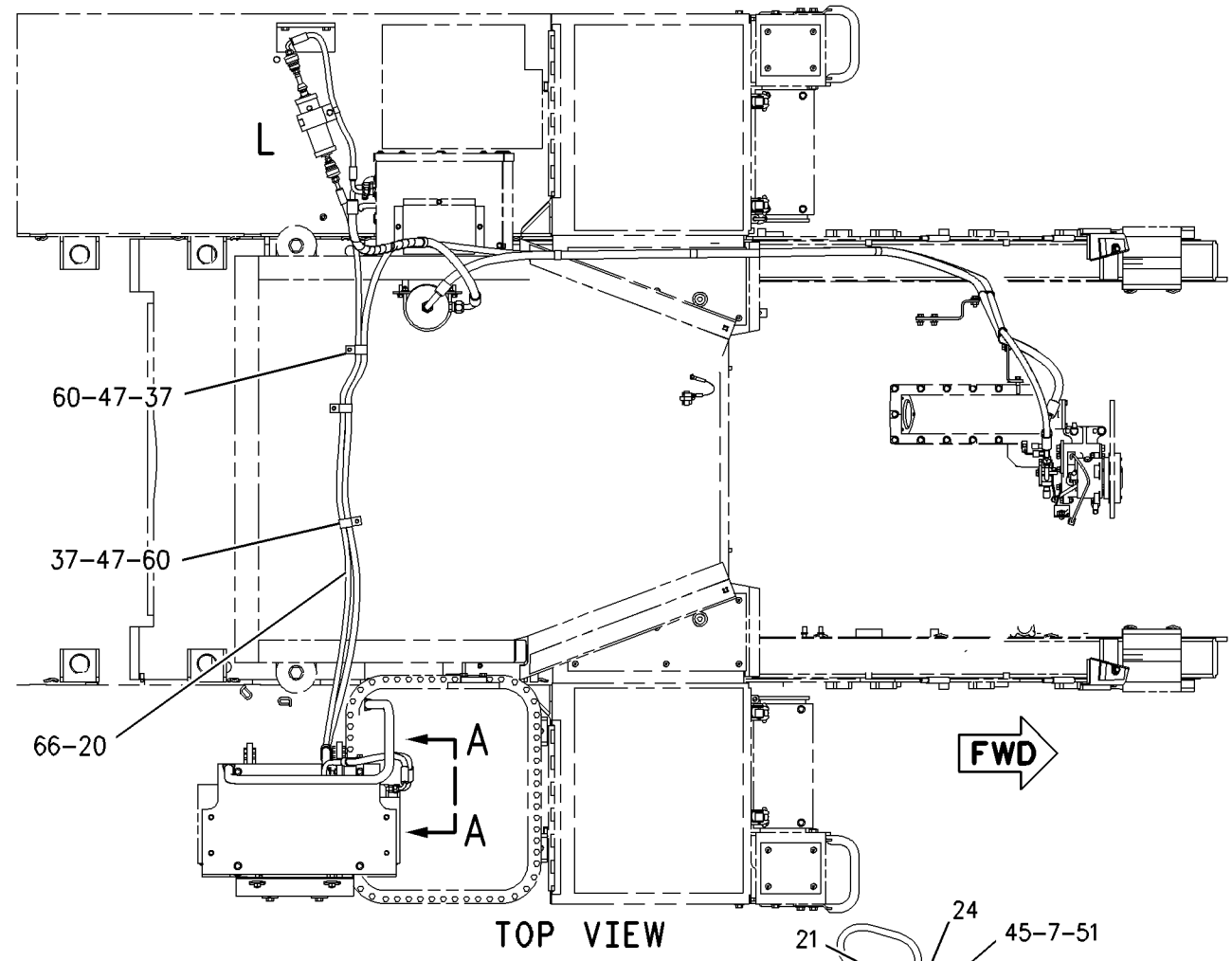

TOP VIEW

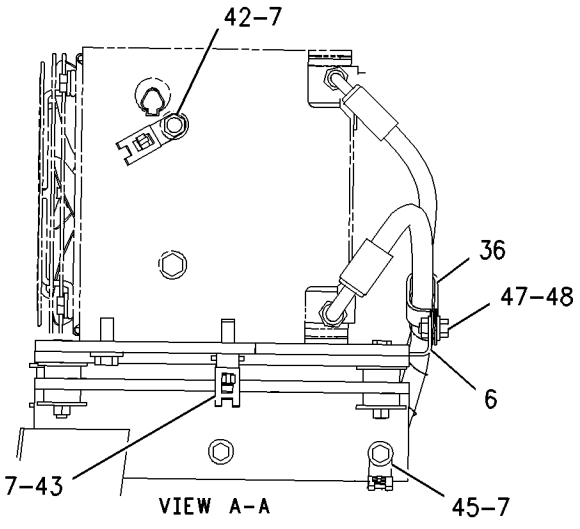

VIEW A-A

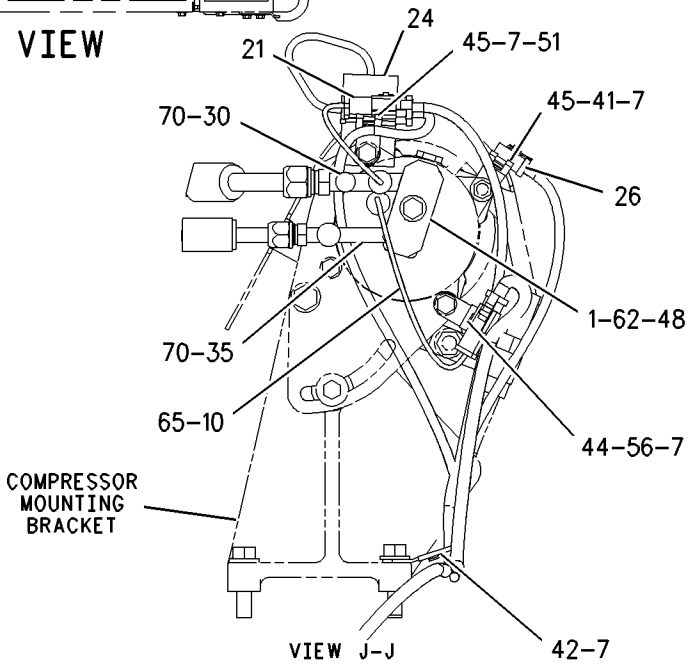

VIEW J-J

REFER TO ALL ILLUSTRATIONS OF THIS GROUP FOR AUXILIARY VIEWS

GRAPHIC #2 g00794197

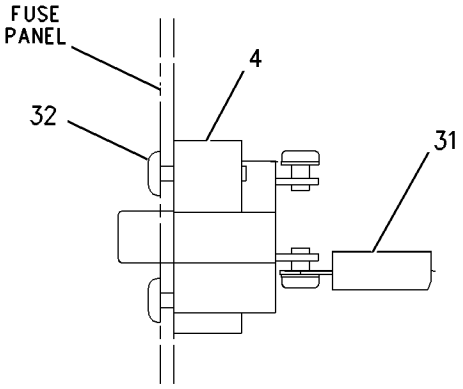

VIEW OF AREA D

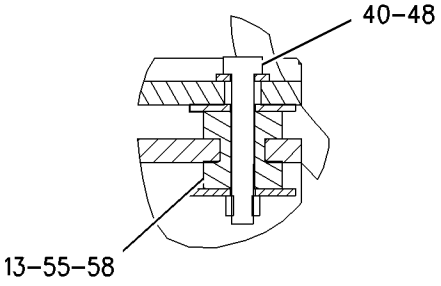

SECTION B-B

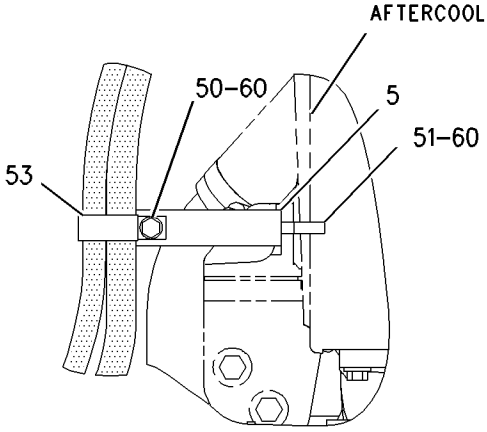

VIEW I-I
(HEUI MODELS ONLY)

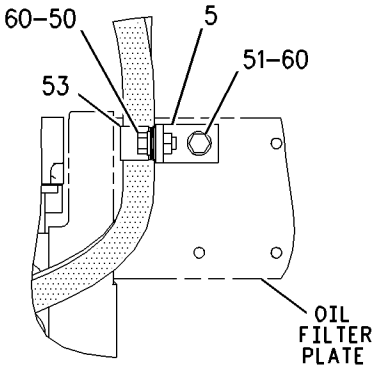

VIEW I-I
(ALTERNATE INSTALLATION)
(NON HEUI MODELS ONLY)

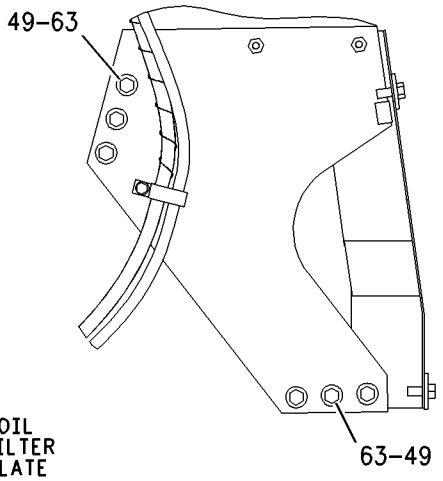

SECTION X-X
(TYPICAL 2 PLACES)

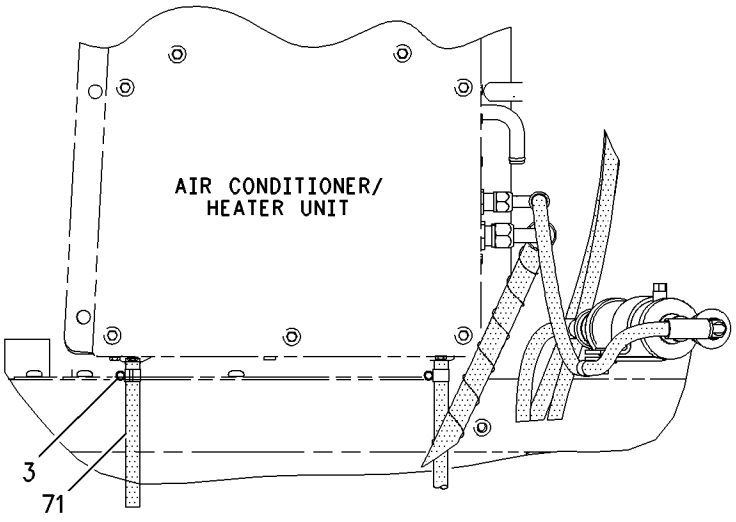

LEFT SIDE VIEW

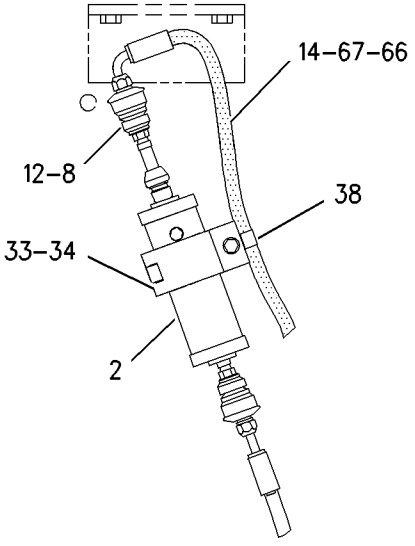

VIEW OF AREA L

GRAPHIC #3

g00794205

MEMORANDA

OPERATOR STATION

163-8442 LINES GP-AIR CONDITIONER

S/N: ABK1-UP
ROPS MOUNTED CONDENSER
PART OF 162-8076 AIR CONDITIONER AR
AN ATTACHMENT

SMCS-1808 **i01551121**

NOTE	REF NO	GRAPHIC REF	PART NUMBER	QTY	PART NAME 1 2 3 4 5 6 (PRODUCT LEVEL)	SEE PAGE
	1	2	**1P-6356**	1	PLATE	
I	2	1	**1Q-1742**	1	HOSE AS	
I	3	1	**1Q-1743**	1	HOSE AS	
	4	3	**3E-3535**	1	RECEIVER-DRYER GP (REFRIGERANT)	
	5	3	**5D-1026**	2	CLAMP-HOSE	
	6	1	**5P-3948**	1	COUPLING AS-REFRIGERANT	
		1	**7F-8607**	1	SEAL-O-RING	
		1	**107-4399**	1	VALVE AS	
	7	3	**6T-3643**	1	CIRCUIT BREAKER AS (15 AMP) (A/C REMOTE CONDENSER)	
		3	**6V-8376**	2	SCREW-MACHINE (8-32X0.25 IN)	
		3	**9B-7233**	2	LOCKWASHER	
	8	3	**7C-1450**	1	BRACKET AS	
		3	**1F-0750**	1	NUT-WELD (3/8-16 THD)	
	9	1	**7K-3176**	1	COUPLING AS	
		1	**107-4393**	1	VALVE AS	
		1	**107-4394**	1	GASKET	
	10	2	**8D-3932**	4	MOUNTING	
	11	1	**9X-0358**	1	FITTING AS	
B	12	1,2	**9X-6772**	12	STRAP-CABLE	
	13	1,3	**103-6100**	3	COUPLER AS-QUICK	
					(EACH INCLUDES)	
		1,3	**9X-7382**	2	SEAL-O-RING	
	14	1	**109-3875**	2	HARNESS AS (ROPS A/C)	
	15	1	**110-4506**	1	PLATE	
	16	2	**114-5333**	1	SWITCH AS-PRESSURE (AIR CONDITIONER/HIGH)	
		2	**102-8802**	1	KIT-RECEPTACLE (2 PIN)	
					(INCLUDES RECEPTACLE AS & WEDGE)	
		2	**3E-3365**	1	WEDGE-RECEPTACLE LOCK (2 PIN)	
		2	**186-3735**	2	PIN-CONNECTOR	
	17	3	**116-6202**	2	BOOT	
I	18	2	**123-3547**	1	HOSE AS	
I	19	1	**130-6183**	1	HOSE AS	
	20	2	**132-7203**	1	BRACKET AS	
		2	**1F-0750**	1	NUT-WELD (3/8-16 THD)	
	21	2	**134-0165**	4	WASHER (13.8X45X3MM THK)	
	22	2	**149-6371**	1	SWITCH AS-PRESSURE (AIR CONDITIONER/LOW)	
		2	**102-8802**	1	KIT-RECEPTACLE (2 PIN)	
					(INCLUDES RECEPTACLE AS & WEDGE)	
		2	**3E-3365**	1	WEDGE-RECEPTACLE LOCK (2 PIN)	
		2	**186-3735**	2	PIN-CONNECTOR	
	23	3	**153-3946**	1	BRACKET	
	24	3	**153-6781**	2	U-BOLT	
	25	2	**169-7443**	1	TIMER AS-ON DELAY (24 VOLT)	
		2	**102-8804**	1	KIT-RECEPTACLE (4 PIN)	
					(INCLUDES RECEPTACLE AS & WEDGE)	
		2	**186-3735**	4	PIN-CONNECTOR	
		2	**3E-3377**	1	WEDGE-RECEPTACLE LOCK	
	26	3	**170-0235**	1	ACCUMULATOR-AIR CONDITIONER	
	27	2	**170-5293**	1	HARNESS AS-AIR CONDITIONER	
I	28	1	**171-0802**	1	HOSE AS	
I	29	1	**171-0803**	1	HOSE AS	
	30	2	**172-0986**	1	FITTING AS-AIR CONDITIONER	
		2	**3E-4051**	1	CAP-SEAL (AIR CONDITIONER)(LOW SIDE)	

163-8442 LINES GP-AIR CONDITIONER *(contd.)* i01551121

NOTE	REF NO	GRAPHIC REF	PART NUMBER	QTY	PART NAME 1 2 3 4 5 6 (PRODUCT LEVEL)	SEE PAGE
		2	**3E-4057**	1	VALVE AS-AIR CONDITIONER (LOW SIDE)	
		2	**172-4880**	1	CAP-SEAL (AIR CONDITIONER)	
		2	**180-7180**	1	CORE-VALVE	
		2	**180-7181**	1	BODY-VALVE	
I	31	1	**188-6209**	1	HOSE AS	
	32	3	**192-7932**	1	WIRE AS	
	33	3	**068-4209**	2	SCREW (8-32X0.75 IN)	
	34	3	**109-1633**	1	CLIP (SLOT)	
	35	3	**109-1634**	1	CLIP (TAB)	
	36	1	**1S-6420**	1	CLIP	
	37	2	**3E-4053**	1	FITTING AS-AIR CONDITIONER	
		2	**3E-4052**	1	CAP-SEAL (AIR CONDITIONER)(HIGH SIDE)	
		2	**3E-4058**	1	VALVE AS-AIR CONDITIONER (HIGH SIDE)	
	38	1,2	**4K-8302**	4	CLIP	
	39	3	**4K-8864**	1	CLIP	
	40	2	**4L-6454**	1	BOLT (3/8-16X1 IN)	
	41	2	**4L-9337**	1	BOLT (3/8-16X1.5 IN)	
	42	1,2	**4P-7428**	6	CLIP	
	43	2	**4P-7581**	1	CLIP	
	44	2	**4P-8134**	2	CLIP	
	45	2,3	**5P-1075**	12	WASHER-HARD (10.2X22.5X3MM THK)	
	46	1,2	**5P-2228**	4	BOLT (1/2-13X1 IN)	
	47	3	**5S-7379**	1	BOLT (3/8-16X0.875 IN)	
	48	2,3	**5S-7383**	2	BOLT (3/8-16X1.75 IN)	
	49	1	**6D-4246**	1	CLIP	
	50	1,2,3	**6D-4247**	5	CLIP	
	51	1	**6V-1889**	1	CLIP	
	52	2	**6V-8801**	2	NUT (3/8-16 THD)	
	53	1,2	**7C-4353**	3	CLIP	
	54	2	**7X-0288**	1	BOLT (3/8-16X1.625 IN)	
	55	3	**8T-2502**	3	BOLT (3/8-16X1.125 IN)	
	56	1,2,3	**8T-4223**	4	WASHER-HARD (13.5X25.5X3MM THK)	
	57	2	**8T-4835**	4	BOLT (1/2-13X2 IN)	
	58	3	**8T-4896**	3	WASHER-HARD (10.2X18.5X2.5MM THK)	
M	59	2	**8T-6466**	1	BOLT (M10X1.50X60MM)	
	60	2	**9B-7237**	2	BOLT (3/8-16X1.25 IN)	
	61	2	**9X-7378**	1	SEAL-O-RING	
	62	1,2,3	**9X-7380**	5	SEAL-O-RING	
	63	2,3	**9X-7381**	3	SEAL-O-RING	
	64	2,3	**9X-7382**	2	SEAL-O-RING	
	65	1,3	**9X-7383**	4	SEAL-O-RING	
	66	2	**9X-7385**	2	SEAL-O-RING	
BD	67	3	**5P-6129**		TUBE	
	68	3	**2K-4973**	4	LOCKNUT (3/8-16 THD)	

B-USE AS REQUIRED
D-ORDER BY THE METER
I-SEE HOSE FABRICATION GUIDE
M-METRIC PART

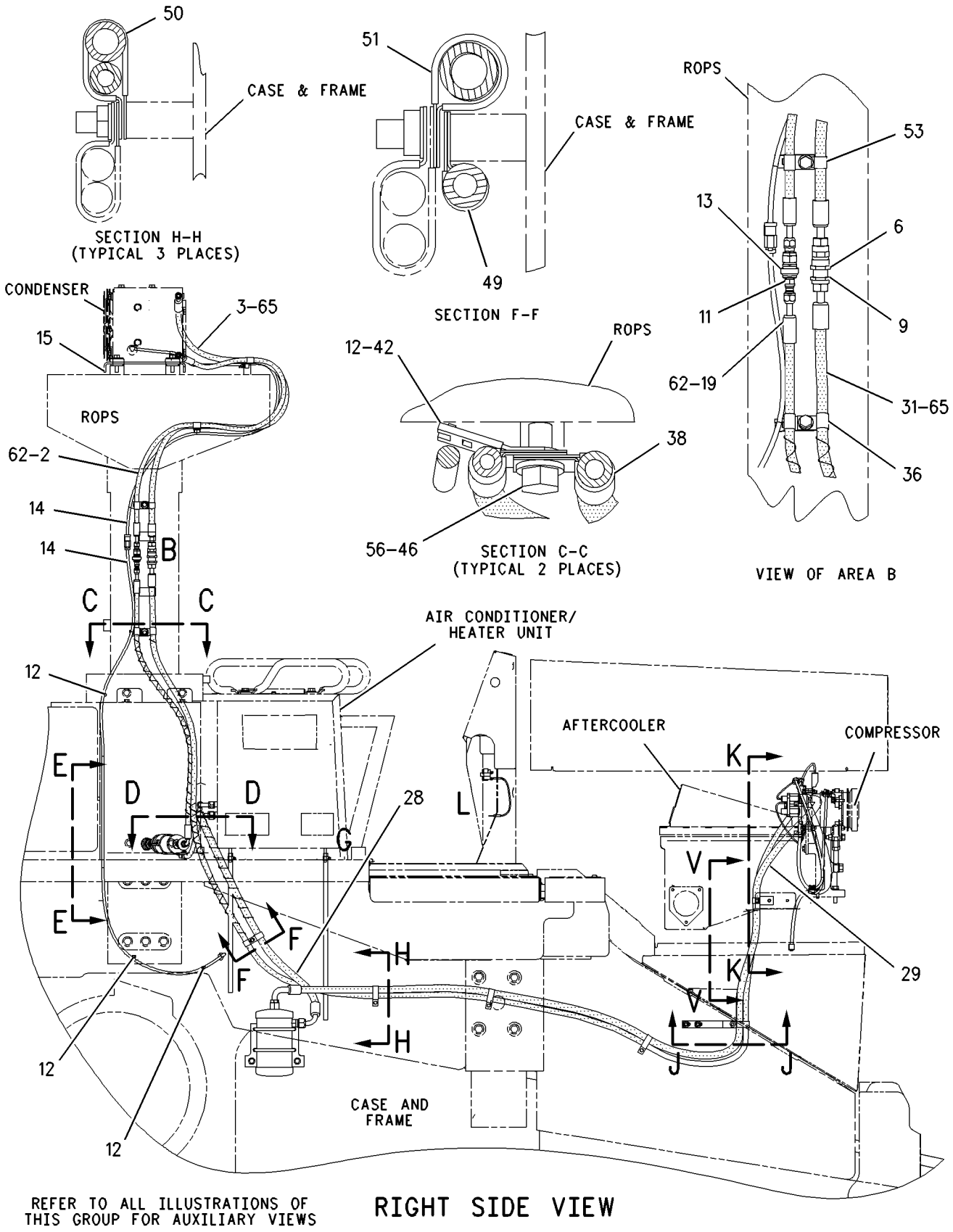

GRAPHIC #1 g00834965

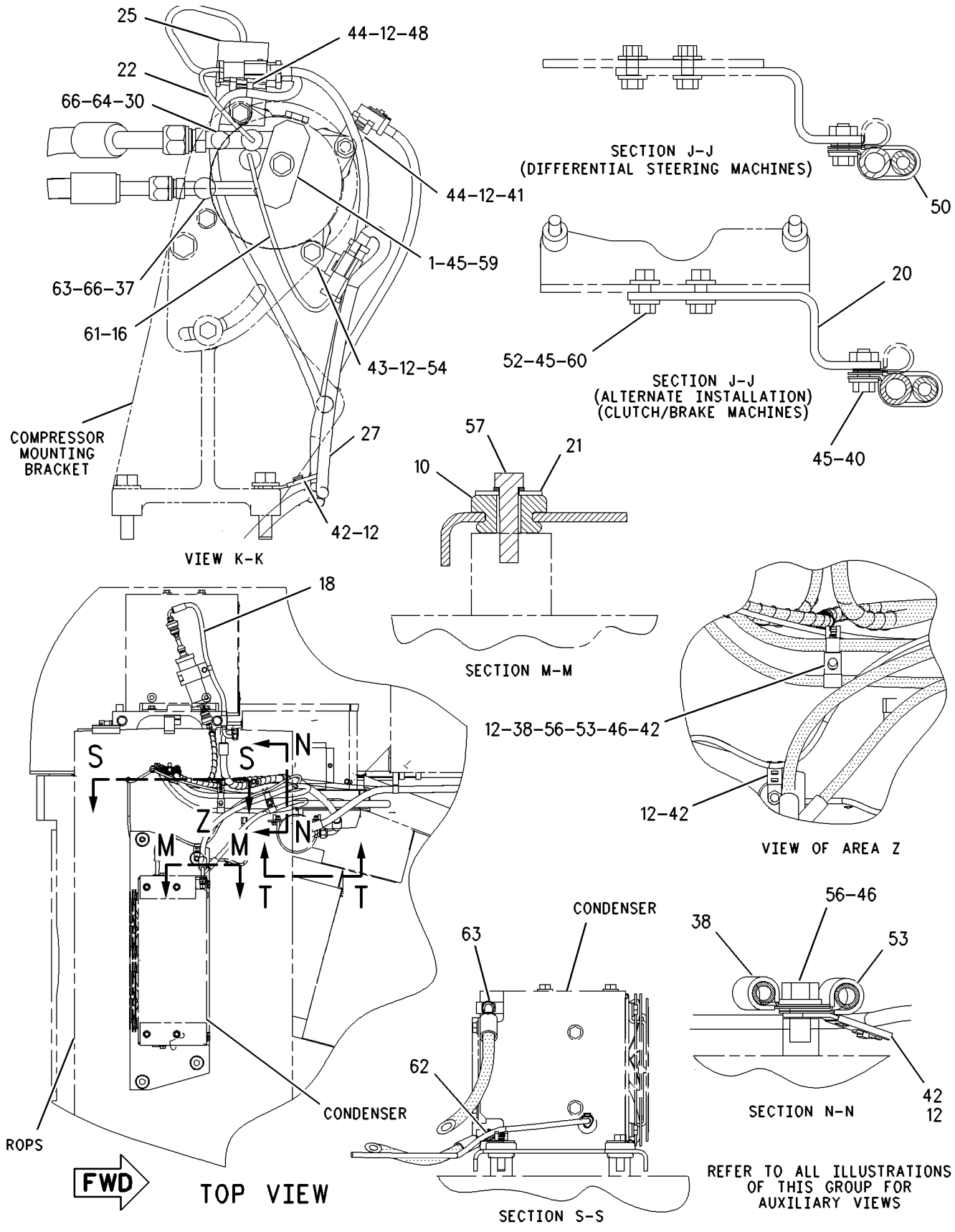

GRAPHIC #2 g00834970

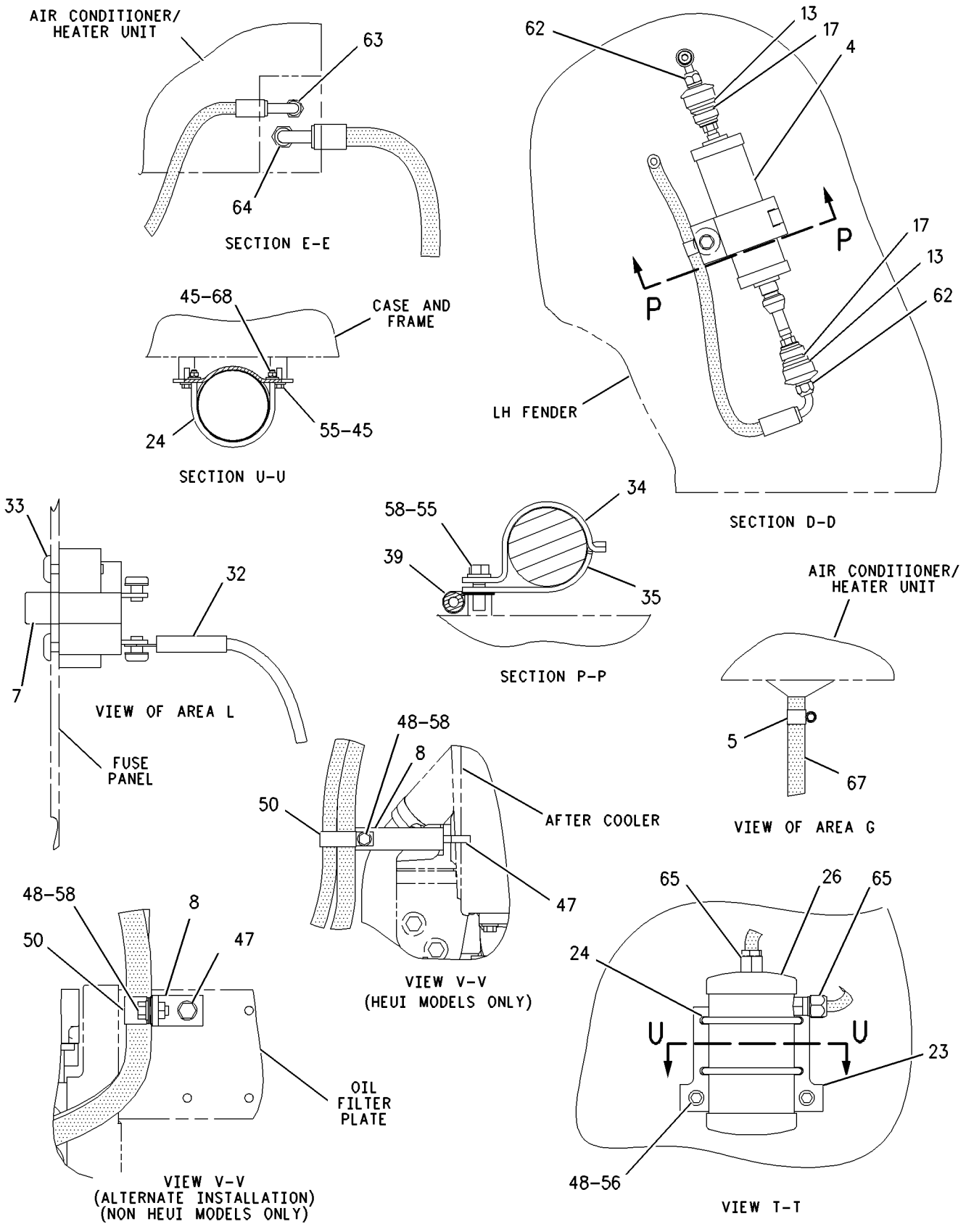

GRAPHIC #3 g00809919

MEMORANDA

OPERATOR STATION

130-6175 LINES GP-HEATER

S/N: ABK1-UP
PART OF 163-0942, 163-0943 CAB AR
AN ATTACHMENT

SMCS-7304 **i01427618**

NOTE	REF NO	GRAPHIC REF	PART NUMBER	QTY	PART NAME 1 2 3 4 5 6 (PRODUCT LEVEL)	SEE PAGE
E	1	1	**5P-0767**	2	HOSE (435CM EACH)	
	2	1	**6D-1641**	8	CLIP	
	3	1	**6V-8801**	5	NUT (3/8-16 THD)	
	4	1	**5P-1075**	8	WASHER-HARD (10.2X22.5X3MM THK)	
	5	1	**3H-5788**	2	SPACER	
	6	1	**8T-9101**	1	BOLT (3/8-16X2.75 IN)	
	7	1	**6B-4661**	1	BUSHING-REDUCER	
	8	1	**005-7889**	2	VALVE AS	
	9	1	**5D-1026**	4	CLAMP-HOSE	
	10	1	**3B-7255**	1	BUSHING-REDUCING	
	11	1	**004-6683**	1	NIPPLE-PIPE	
	12	1	**003-9514**	1	COUPLING-PIPE	
	13	1	**8T-8915**	1	BOLT (3/8-16X3.25 IN)	
	14	1	**1J-8668**	2	STUD-TAPERLOCK	
	15	1	**3M-0496**	1	STUD-TAPERLOCK	
	16	1	**8M-1047**	2	STUD-TAPERLOCK	

E-ORDER BY THE CENTIMETER

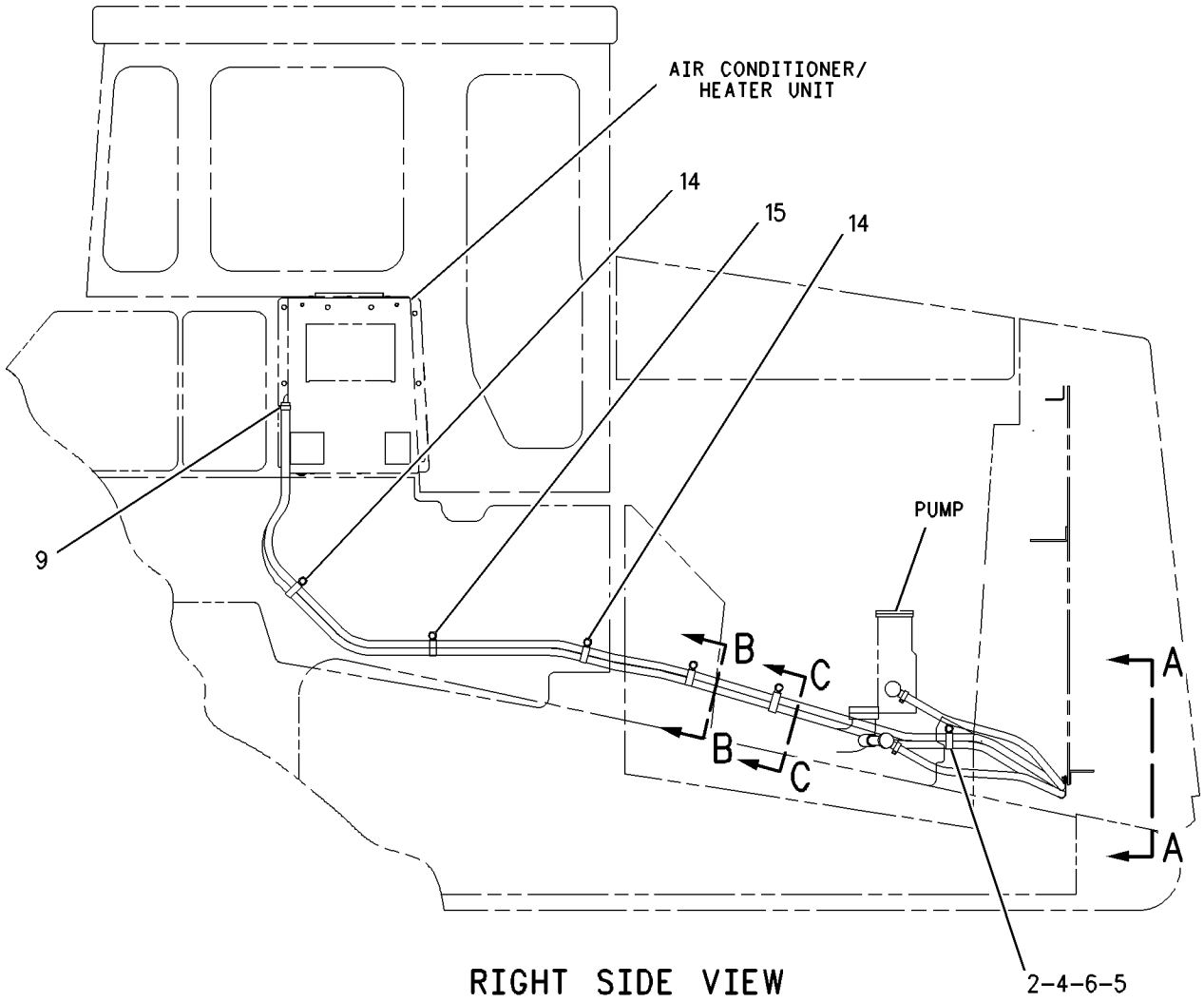

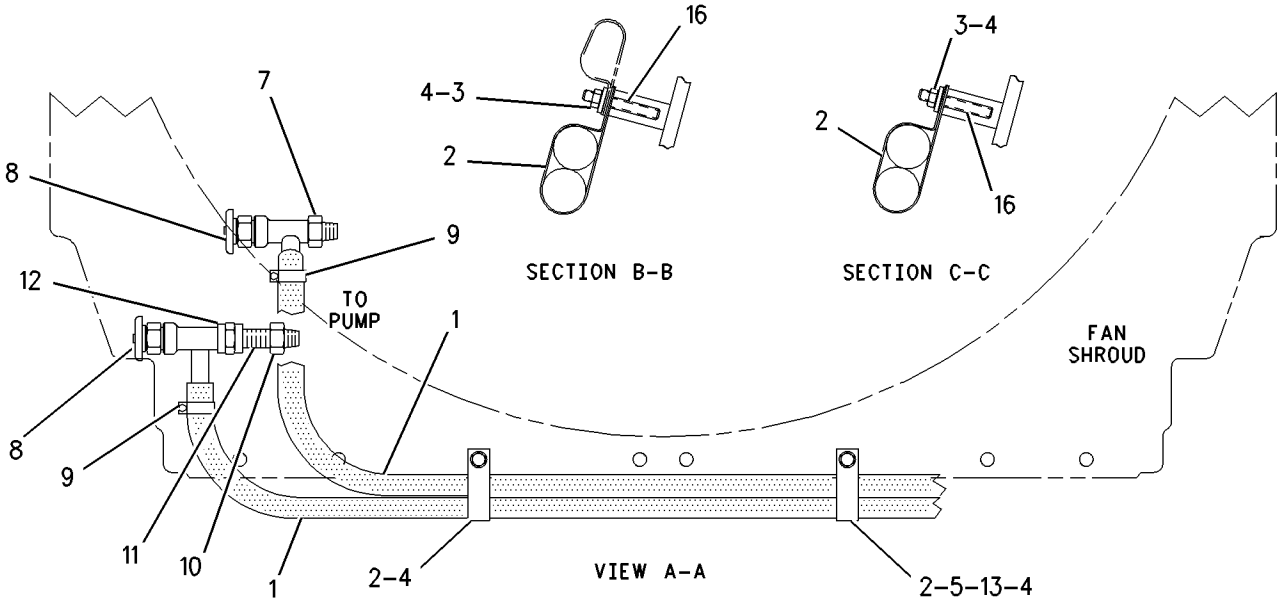

GRAPHIC #1

g00751289

OPERATOR STATION

133-2952 MIRROR GP

S/N: ABK1-UP
PART OF 162-8075 AIR CONDITIONER AR
AN ATTACHMENT

SMCS-7319 **i01446844**

NOTE	REF NO	GRAPHIC REF	PART NUMBER	QTY	PART NAME 1 2 3 4 5 6 (PRODUCT LEVEL)	SEE PAGE
	1	1	**133-2953**	1	PLATE AS	
		1	**1F-0750**	2	NUT-WELD (3/8-16 THD)	
	2	1	**6V-9156**	1	MIRROR	
	3	1	**7X-0592**	2	WASHER-HARD (10.2X32X5MM THK)	
	4	1	**4L-6454**	2	BOLT (3/8-16X1 IN)	
B	5	1	**5P-7648**	2	GROMMET	

B-USE AS REQUIRED

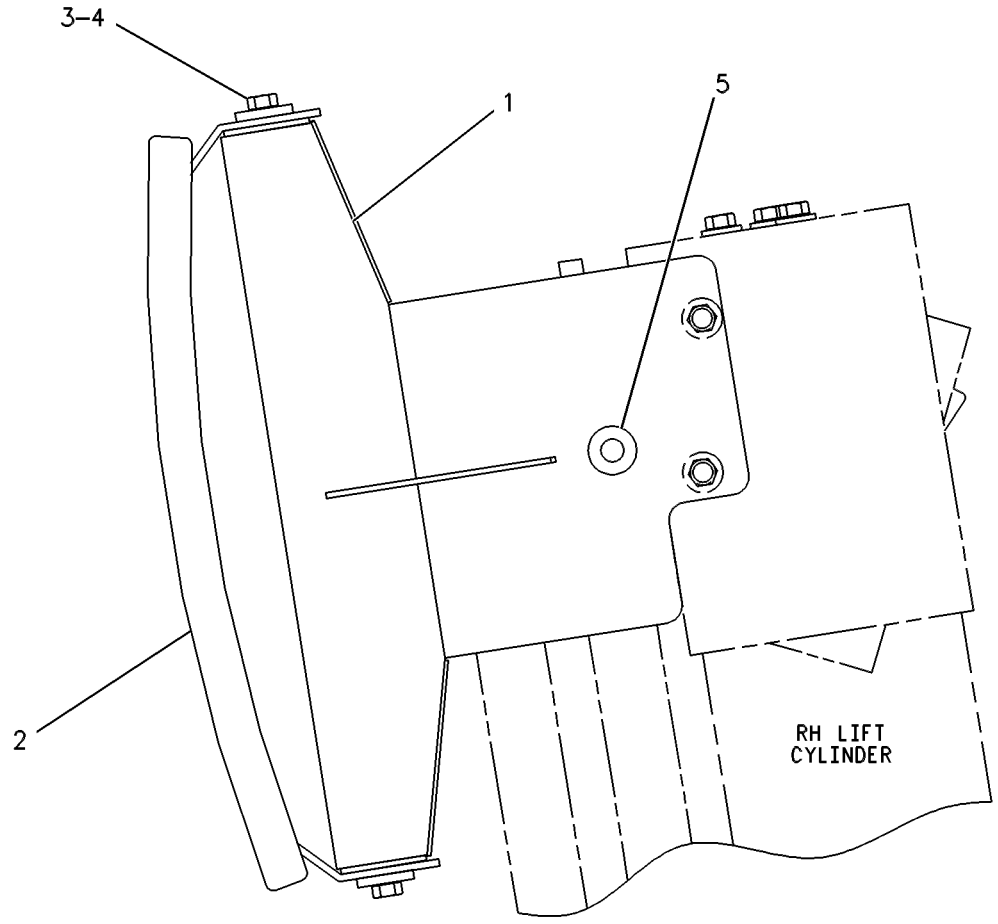

GRAPHIC #1 g00256602

OPERATOR STATION

6Y-3712 MIRROR GP-REAR VIEW

S/N: ABK1-UP
PART OF 157-4817 CAB AR
AN ATTACHMENT

SMCS-7319 **i00591391**

NOTE	REF NO	GRAPHIC REF	PART NUMBER	QTY	PART NAME 1 2 3 4 5 6 (PRODUCT LEVEL)	SEE PAGE
	1	1	**9P-9388**	1	KNOB	
	2	1	**5P-6874**	1	MIRROR	
	3	1	**5K-9179**	1	BOLT-ROUND HEAD	

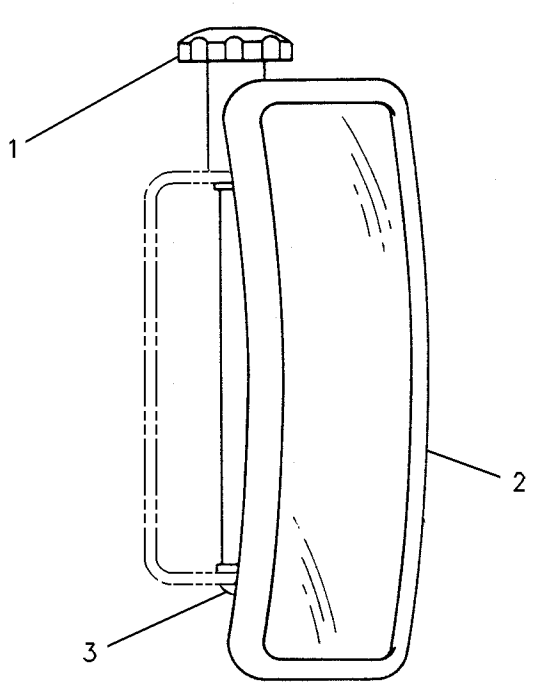

GRAPHIC #1 g00230747

OPERATOR STATION

9P-1896 MIRROR GP-REAR VIEW

S/N: ABK1-UP

PART OF 105-4649 ROPS GP

SMCS-7319 **i01446846**

NOTE	REF NO	GRAPHIC REF	PART NUMBER	QTY	PART NAME 1 2 3 4 5 6 (PRODUCT LEVEL)	SEE PAGE
	1	1	**5M-3062**	6	BOLT (3/8-16X0.75 IN)	
	2	1	**2K-4973**	2	LOCKNUT	
	3	1	**8T-4896**	4	WASHER-HARD (10.2X18.5X2.5MM THK)	
	4	1	**9P-1535**	1	BRACKET	
	5	1	**5P-6871**	1	MIRROR	
	6	1	**9P-1536**	1	BRACKET	

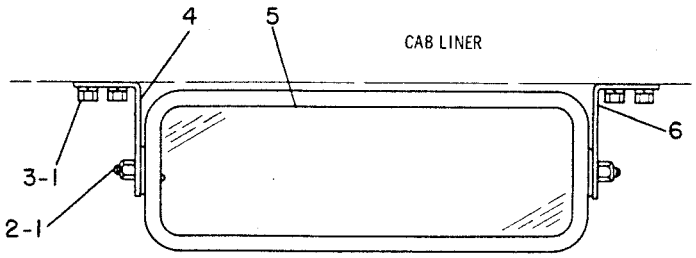

GRAPHIC #1 g00143345

OPERATOR STATION

166-6928 MODULE GP-QUAD GAUGE

S/N: ABK1-UP

PART OF 170-7081 PANEL GP-INSTRUMENT

SMCS-7450, 7451 **i01218984**

NOTE	REF NO	GRAPHIC REF	PART NUMBER	QTY	PART NAME 1 2 3 4 5 6 (PRODUCT LEVEL)	SEE PAGE
	1	1	**102-8805**	1	KIT-RECEPTACLE (6 PIN)	
					(INCLUDES RECEPTACLE AS & WEDGE)	
	2	1	**8T-8729**	6	PIN-CONNECTOR	

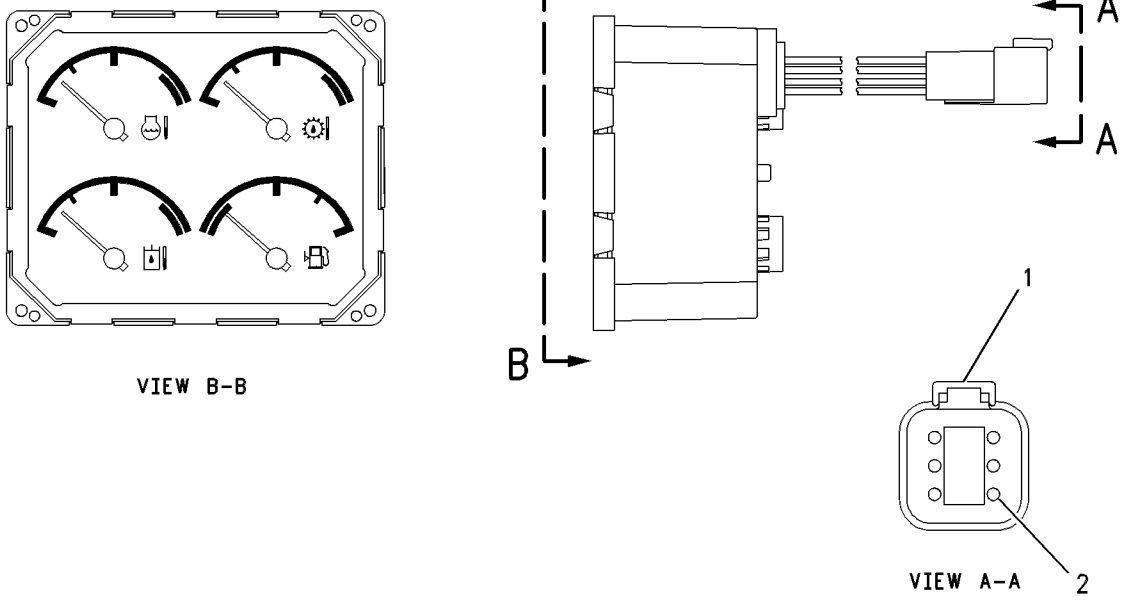

GRAPHIC #1 g00587276

OPERATOR STATION

125-6806 MODULE GP-SPEEDOMETER & TACH

S/N: ABK1-UP

PART OF 170-7081 PANEL GP-INSTRUMENT

SMCS-7462, 7463 **i01590925**

NOTE	REF NO	GRAPHIC REF	PART NUMBER	QTY	PART NAME 1 2 3 4 5 6 (PRODUCT LEVEL)	SEE PAGE
	1	1	**102-8805**	1	KIT-RECEPTACLE (6 PIN)	
					(INCLUDES RECEPTACLE AS & WEDGE)	
	2	1	**3E-3383**	1	WEDGE-RECEPTACLE LOCK	
	3	1	**8T-8729**	6	PIN-CONNECTOR	

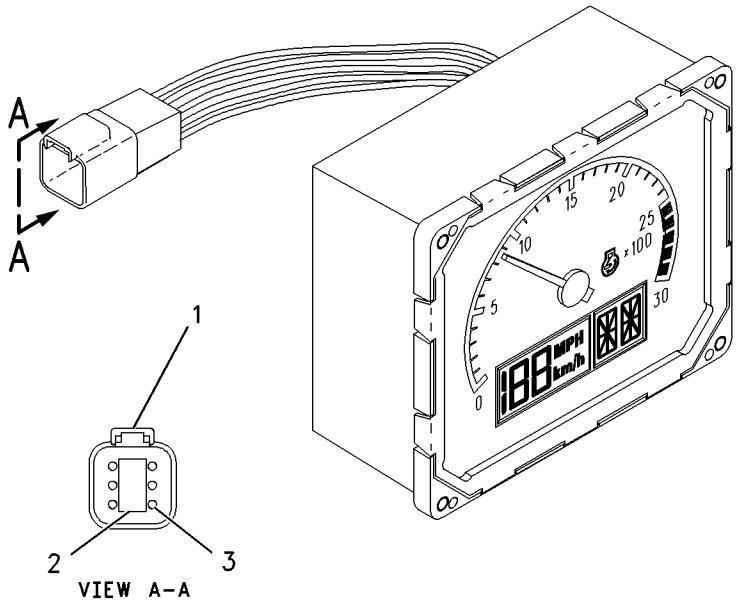

GRAPHIC #1 g00678223

MEMORANDA

OPERATOR STATION

8E-7083 MOUNTING GP-CAB

S/N: ABK1-UP
PART OF 163-0942, 163-0943 CAB AR
AN ATTACHMENT

SMCS-7266, 7301 **i01397405**

NOTE	REF NO	GRAPHIC REF	PART NUMBER	QTY	PART NAME 1 2 3 4 5 6 (PRODUCT LEVEL)	SEE PAGE
	1	1	**8E-7353**	1	FLOOR MAT	
BD	2	1	**5P-7513**		SEAL	
	3	1	**154-3079**	1	STRAP	
	4	1	**5S-7379**	12	BOLT (3/8-16X.875 IN)	
	5	1	**7X-0772**	6	WASHER-HARD (10.2X25.5X2.5MM THK)	
	6	1	**5P-1075**	8	WASHER-HARD (10.2X22.5X3MM THK)	
	7	1	**9P-2261**	2	SEAL	
	8	1	**111-7090**	1	LINER	
	9	1	**9P-2262**	1	SEAL	
	10	1	**7G-1785**	1	PLATE AS	
		1	**9F-2978**	3	NUT-WELD (3/8-16 THD)	
	11	1	**7G-1786**	1	PLATE AS	
		1	**9F-2978**	3	NUT-WELD (3/8-16 THD)	
	12	1	**7G-1744**	1	PLATE	
	13	1	**8E-6834**	1	PLATE AS	
		1	**9F-6445**	2	NUT-WELD (1/4-20 THD)	
	14	1	**8E-6877**	1	COVER	
	15	1	**6V-3884**	10	SCREW-HEX SOCKET (1/4-20X0.5 IN)	
	16	1	**9X-2038**	4	WASHER (7X19X2MM THK)	
	17	1	**3E-6918**	3	BOLT (1/2-13X1 IN)	
	18	1	**7X-0618**	6	WASHER-HARD (13.5X40X5MM THK)	
	19	1	**9X-2508**	3	BOLT-12 POINT HEAD (1/2-13X1.25 IN)	
	20	1	**3E-6919**	11	BOLT (1/2-13X2.25 IN) (12 POINT HEAD)	
	21	1	**7X-3392**	22	WASHER-HARD (13.5X22.5X3MM THK)	
	22	1	**3E-6920**	4	BOLT (1/2-13X3 IN) (12 POINT HEAD)	
	23	1	**105-3380**	1	COVER	
	24	1	**8E-7238**	1	COVER	
	25	1	**8E-7242**	1	COVER	
	26	1	**8E-7235**	1	TRAY	
	27	1	**8E-7236**	1	COVER	
	28	1	**8E-7237**	1	COVER	
	29	1	**6Y-0206**	6	RETAINER	
	30	1	**8T-1572**	17	SCREW-HEX SOCKET (1/4-20X1 IN)	
	31	1	**7G-4824**	2	STRAP	
	32	1	**8E-7791**	2	STRAP	
BD	33	1	**5P-5755**		SEAL	
	34	1	**7G-4823**	1	STRAP	
	35	1	**9B-7237**	5	BOLT (3/8-16X1.25 IN)	
		1	**9P-4898**	5	SPACER	
	36	1	**7K-3222**	9	WASHER (10.3X44.4X2MM THK)	
	37	1	**3K-6060**	4	LOCKNUT (3/8-16 THD)	
	38	1	**8E-9595**	1	LINER	
	39	1	**8E-9592**	1	PLATE AS	
		1	**1F-0748**	4	NUT-WELD (1/2-13 THD)	
		1	**8J-9383**	4	STUD-WELD (3/8-16X1.75IN OAL)	
	40	1	**111-7091**	1	LINER	
	41	1	**8E-7239**	1	COVER	
	42	1	**8T-2502**	2	BOLT (3/8-16X1.125 IN)	
	43	1	**105-3232**	1	FLOOR MAT	
	44	1	**135-1823**	1	HOLDER	

B-USE AS REQUIRED
D-ORDER BY THE METER

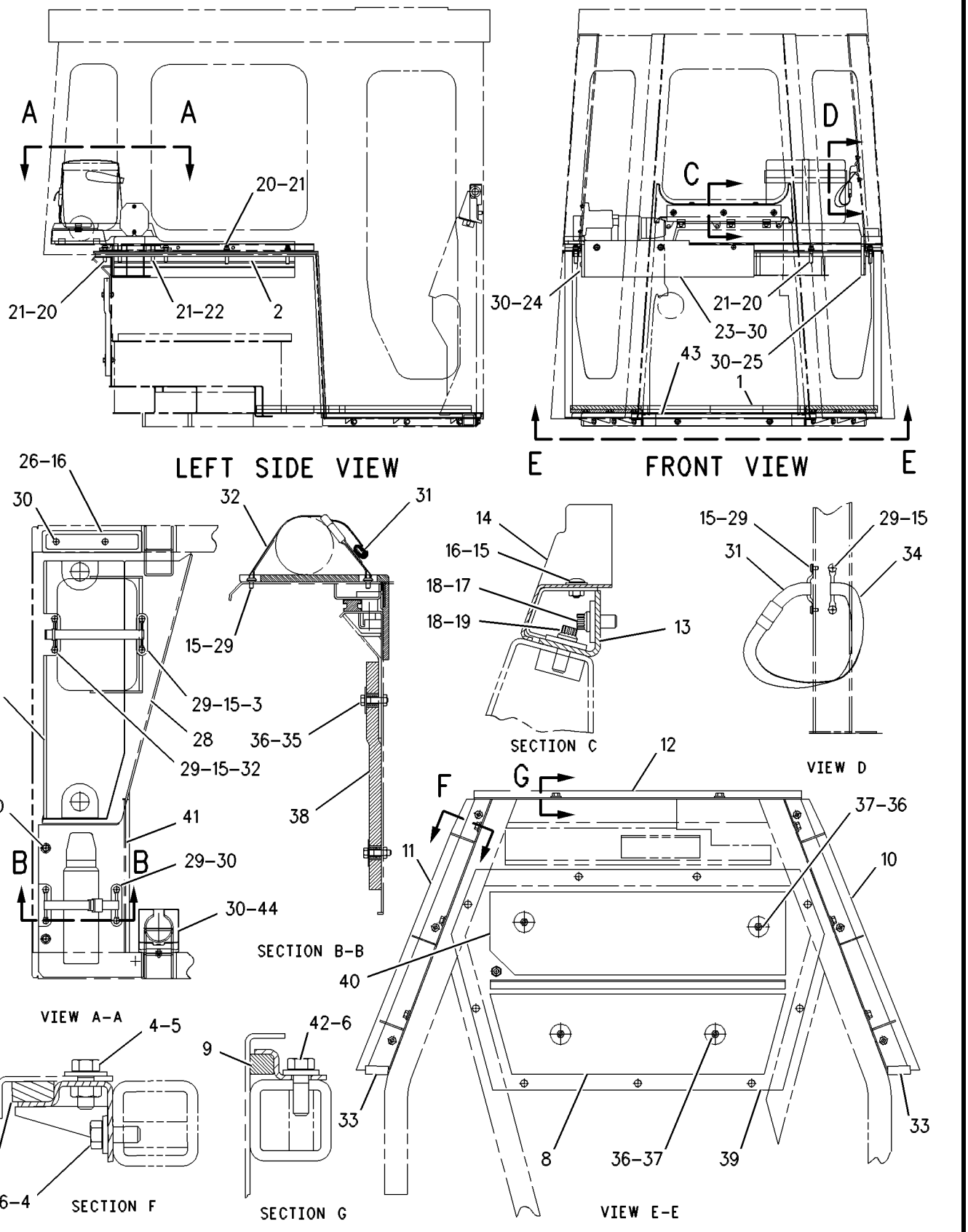

GRAPHIC #1 g00477558

OPERATOR STATION

9U-9552 MOUNTING GP-CB

S/N: ABK1-UP
RADIO
AN ATTACHMENT

SMCS-7338 **i01336073**

NOTE	PART NUMBER	QTY	PART NAME 1 2 3 4 5 6 (PRODUCT LEVEL)	SEE PAGE
	3E-6601	1	FILM-NOTICE	
	3E-8362	1	FILM-NOTICE	
	6V-8185	2	NUT (1/4-20 THD)	
	8E-4836	1	PLATE	
	6V-8969	3	SCREW-BUTTON HEAD	

OPERATOR STATION

110-0781 MOUNTING GP-ROPS

S/N: ABK1-UP

PART OF 162-9501 CHASSIS AR

SMCS-7266 **i01397408**

NOTE	REF NO	GRAPHIC REF	PART NUMBER	QTY	PART NAME 1 2 3 4 5 6 (PRODUCT LEVEL)	SEE PAGE
	1	1	**105-4015**	1	SUPPORT AS-ROPS (LH)	
	2	1	**7T-1099**	5	LINK	
	3	1	**8F-9836**	1	LUG (3/8-16 THD)	
	4	1	**4P-7581**	1	CLIP	
	5	1	**110-0779**	1	SUPPORT AS-ROPS (RH)	
	6	1	**8F-9836**	1	LUG (3/8-16 THD)	
	7	1	**7T-1099**	1	LINK	
	8	1	**6V-8381**	16	BOLT	
	9	1	**7X-0537**	16	WASHER-HARD (40.5X67X6MM THK)	

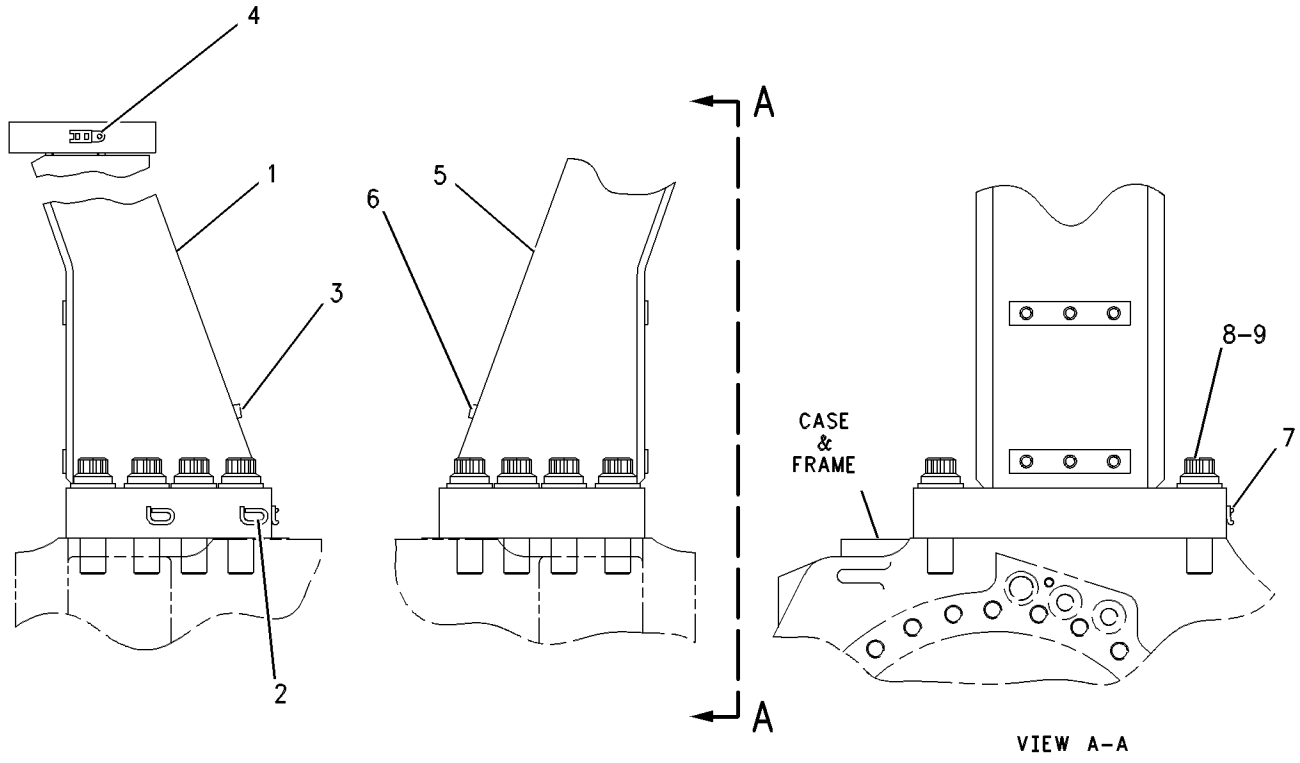

GRAPHIC #1 g00649414

OPERATOR STATION

125-2110 OPERATOR AR

S/N: ABK1-UP

FOR USE WITH DUAL TILT HYDRAULIC CONTROL AND CAB

AN ATTACHMENT

SMCS-7225, 7301, 7335 **i01614106**

NOTE	REF NO	GRAPHIC REF	PART NUMBER	QTY	PART NAME 1 2 3 4 5 6 (PRODUCT LEVEL)	SEE PAGE
C	1	1	**8E-5044**	1	CUSHION AS-RH	
	2	1	**128-5953**	1	LEVER AS	
	3	1	**0L-0829**	1	HANDLE	
	4	1	**110-7357**	1	LEVER AS	
		1	**1D-5118**	1	NUT-JAM (5/8-11 THD)	
	5	1	**7X-3374**	1	NUT-FULL (1/2-20 THD)	
	6	1	**111-3231**	1	BOX AS	
		1	**9F-2978**	2	NUT-WELD (3/8-16 THD)	
		1	**2V-5019**	1	SPRING	
		1	**3W-1547**	1	STRIKER AS	
		1	**5P-8167**	2	BOLT (3/8-16X0.625 IN)	
		1	**8T-4896**	2	WASHER-HARD (10.2X18.5X2.5MM THK)	
	7	1	**5S-7379**	10	BOLT (3/8-16X0.875 IN)	
	8	1	**5P-1075**	5	WASHER-HARD (10.2X22.5X3MM THK)	
	9	1	**1Q-3779**	1	FLOORPLATE AS	
		1	**1F-0748**	2	NUT-WELD (1/2-13 THD)	
		1	**9F-2978**	2	NUT-WELD (3/8-16 THD)	
		1	**8E-9592**	1	PLATE AS	
		1	**1F-0748**	4	NUT-WELD (1/2-13 THD)	
		1	**8J-9383**	4	STUD-WELD (3/8-16X1.75IN OAL)	
	10	1	**4L-6454**	3	BOLT (3/8-16X1 IN)	
	11	1	**1Q-3785**	2	PLATE AS	
					(EACH INCLUDES)	
		1	**9F-2978**	6	NUT-WELD (3/8-16 THD)	
	12	1	**1Q-3783**	2	PLATE AS	
	13	1	**8T-4896**	8	WASHER-HARD (10.2X18.5X2.5MM THK)	
	14	1	**111-3682**	1	FLOOR MAT	
	15	1	**1Q-3811**	1	TREAD-NONSKID	
	16	1	**1Q-3808**	1	FLOOR MAT	
C	17	1	**1Q-3787**	1	PLATE	
	18	1	**126-1753**	1	PLATE AS	
		1	**4B-4463**	1	RIVET	
		1	**109-0628**	1	HINGE	
		1	**122-6133**	2	WASHER (CURVED SPRING)	
	19	1	**120-0114**	1	PEDAL AS	
	20	1	**210-8629**	1	PLATE AS	
					*****STANDARD REMOVALS*****	
L		1	**9P-1444**	2	SUPPORT AS-FOOT	
N		1	**138-1015**	1	CUSHION AS-RH	
N		1	**138-1025**	1	PLATE	
L		1	**189-9810**	1	PLATE AS	
O		1	**119-6140**	1	LEVER	
O		1	**119-6141**	1	LEVER AS	
P		1	**9G-0772**	1	PEDAL	
O		1	**2A-1736**	1	HANDLE	
O		1	**119-7308**	1	PLATE AS	
L		1	**7T-0131**	1	FLOORPLATE AS	
					*****ATTACHMENT REMOVALS*****	
Q		1	**8E-7353**	1	FLOOR MAT	
Q		1	**8E-9592**	1	PLATE AS	
Q		1	**105-3232**	1	FLOOR MAT	

C-CHANGE FROM PREVIOUS TYPE
L-PART OF STANDARD PLATFORM GP
N-PART OF STANDARD SEAT GP
O-PART OF STANDARD LINKAGE GP-IMPLEMENT
P-PART OF STANDARD CONTROL GP-GOVERNOR AND DECELERATOR
Q-PART OF ATTACHMENT MOUNTING GP-CAB

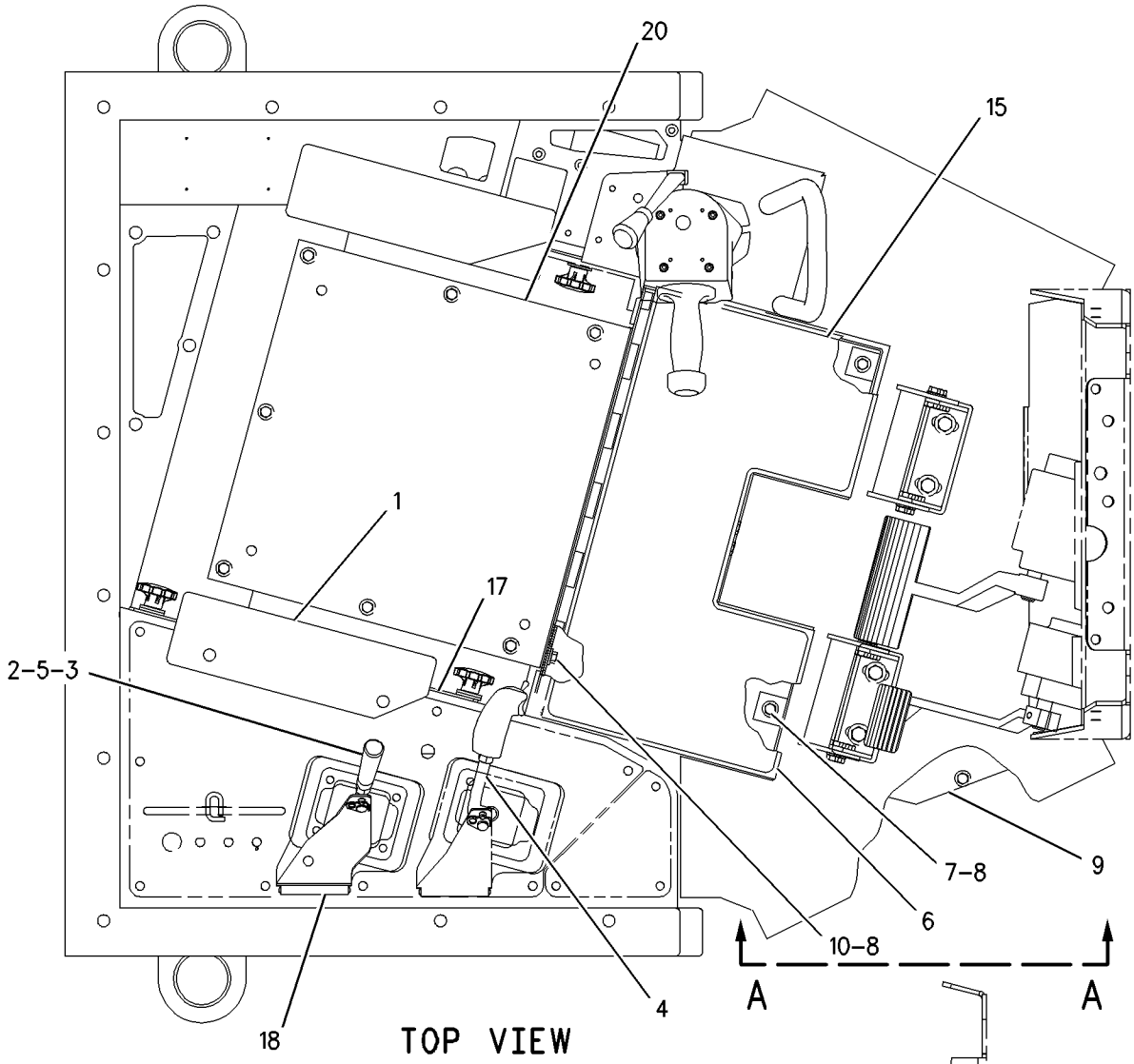

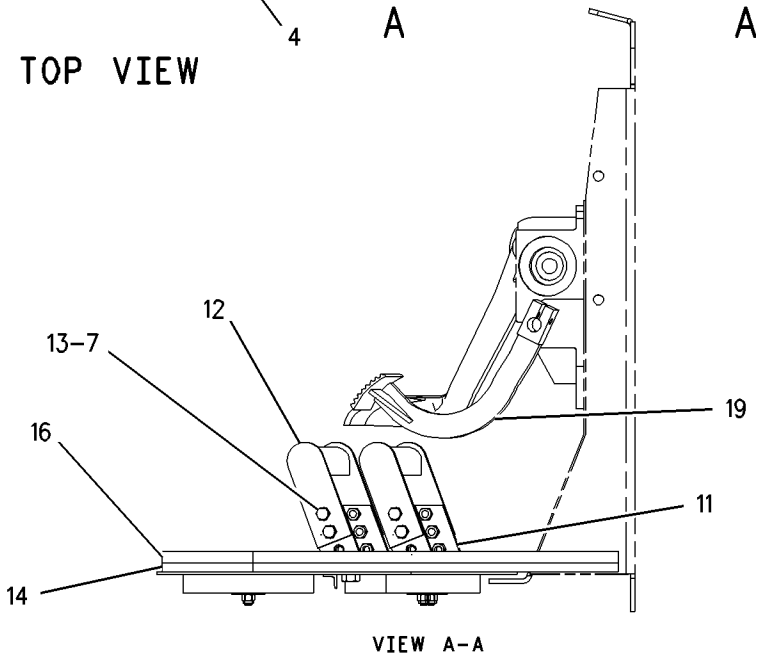

GRAPHIC #1 g00840701

OPERATOR STATION

178-0605 PAN GP-BACKREST

S/N: ABK1-UP

PART OF 180-7305, 180-7307 PAN GP-BACKREST

ALSO AN ATTACHMENT

SMCS-7312 **i01508995**

NOTE	REF NO	GRAPHIC REF	PART NUMBER	QTY	PART NAME 1 2 3 4 5 6 (PRODUCT LEVEL)	SEE PAGE
	1	1	**4K-9429**	8	RIVET-POP	
	2	1	**5P-7957**	1	LANYARD	
	3	1	**136-1543**	1	PLATE AS-LUMBAR	
	4	1	**173-2052**	1	RETAINER	
	5	1	**178-7907**	1	HOLDER	
	6	1	**177-4930**	1	PAN AS-BACK	

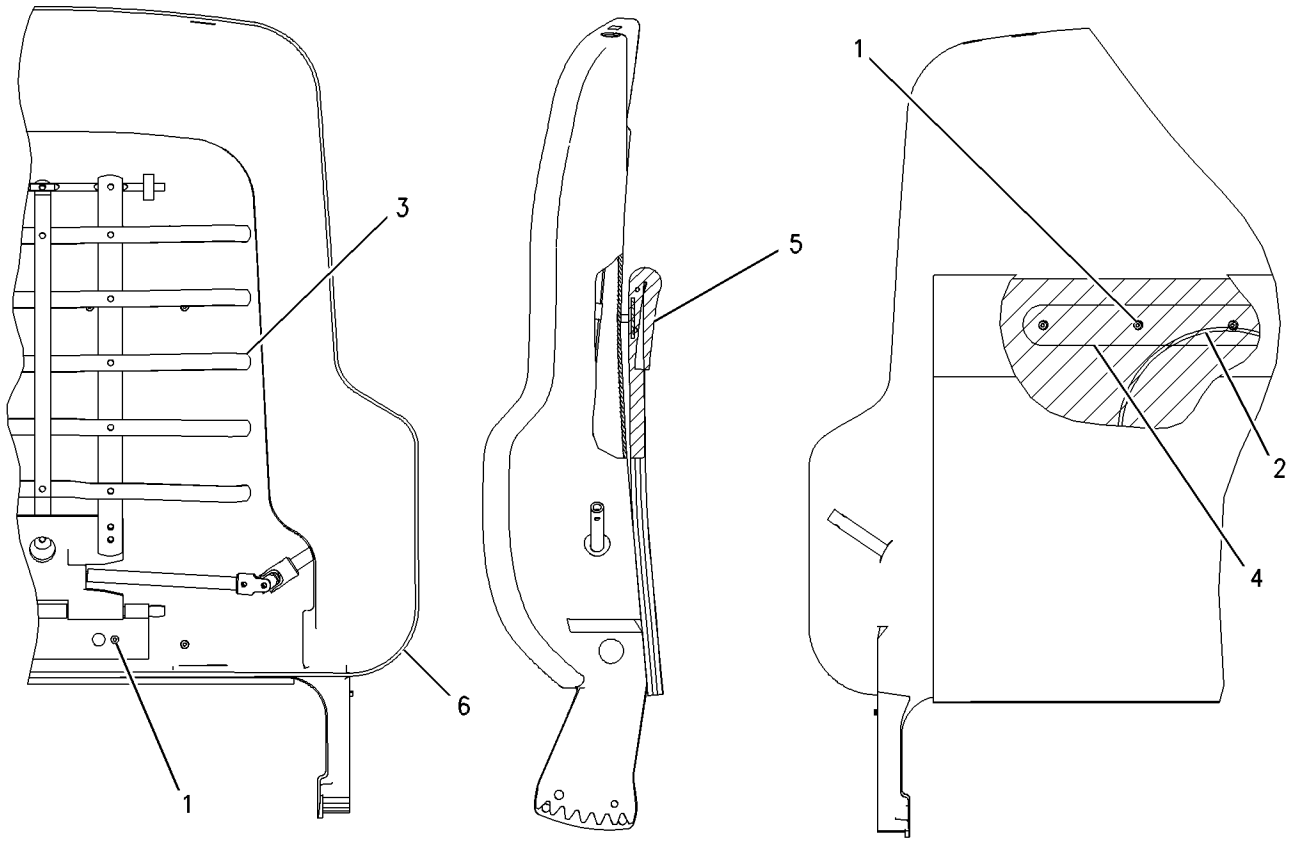

GRAPHIC #1 g00716497

OPERATOR STATION

180-7305 PAN GP-BACKREST

S/N: ABK1-UP
PART OF 180-7304 SEAT GP
ALSO AN ATTACHMENT

SMCS-7312 **i01653940**

NOTE	REF NO	GRAPHIC REF	PART NUMBER	QTY	PART NAME 1 2 3 4 5 6 (PRODUCT LEVEL)	SEE PAGE
	1	1	**164-4883**	1	KNOB-LUMBAR	
	2	1	**169-0697**	1	CUSHION AS	
		1	**184-2300**	1	FILM (SEAT CUSHION IDENTIFICATION)	
Y	3	1	*178-0605*	1	PAN GP-BACKREST	851
	4	1	**8T-7566**	1	PIN-SPRING	

Y-SEPARATE ILLUSTRATION

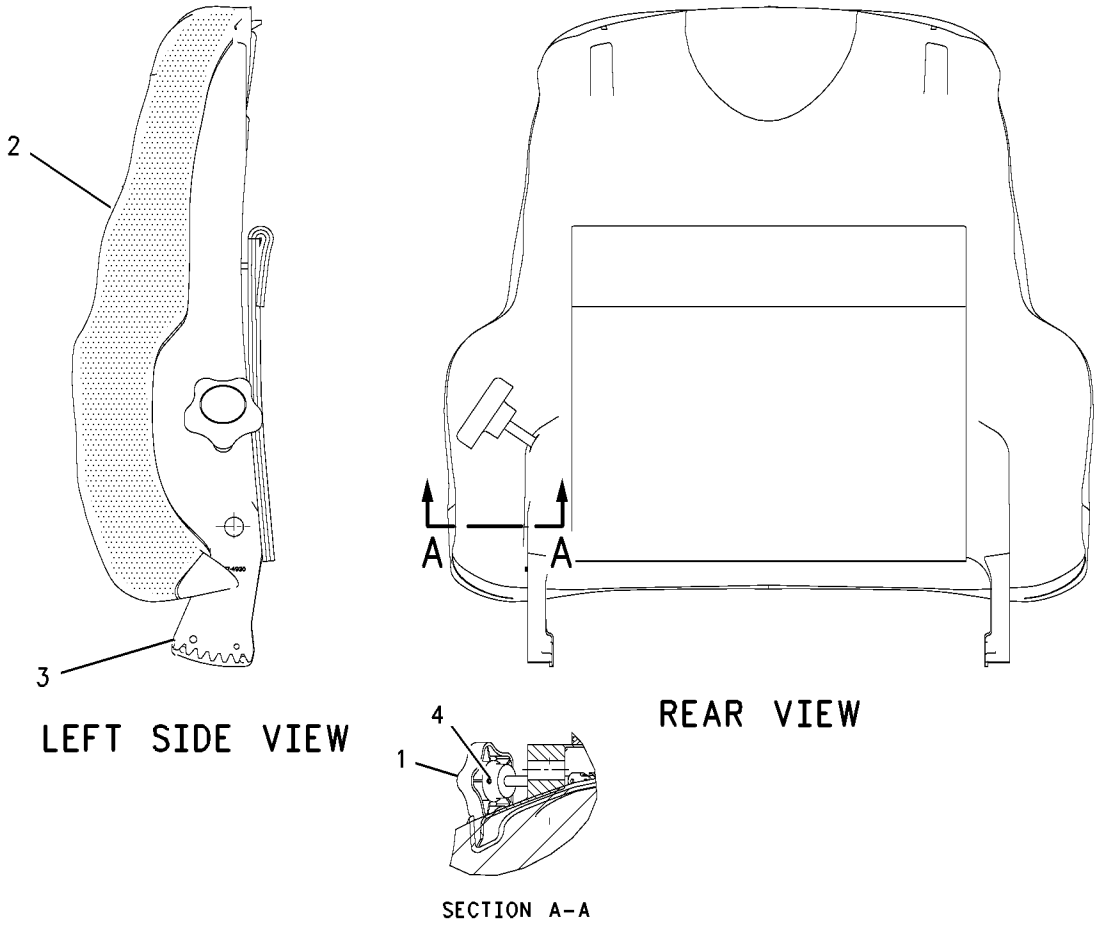

LEFT SIDE VIEW

REAR VIEW

SECTION A-A

GRAPHIC #1 g00678939

OPERATOR STATION

180-7307 PAN GP-BACKREST

S/N: ABK1-UP
BROWN/THIN
PART OF 180-7306 SEAT GP
AN ATTACHMENT

SMCS-7312 **i01445959**

NOTE	REF NO	GRAPHIC REF	PART NUMBER	QTY	PART NAME 1 2 3 4 5 6 (PRODUCT LEVEL)	SEE PAGE
	1	1	**164-4883**	1	KNOB-LUMBAR	
	2	1	**169-1024**	1	CUSHION AS-BACK	
		1	**184-2300**	1	FILM (SEAT CUSHION IDENTIFICATION)	
Y	3	1	*178-0605*	1	PAN GP-BACKREST	851
	4	1	**8T-7566**	1	PIN-SPRING	

Y-SEPARATE ILLUSTRATION

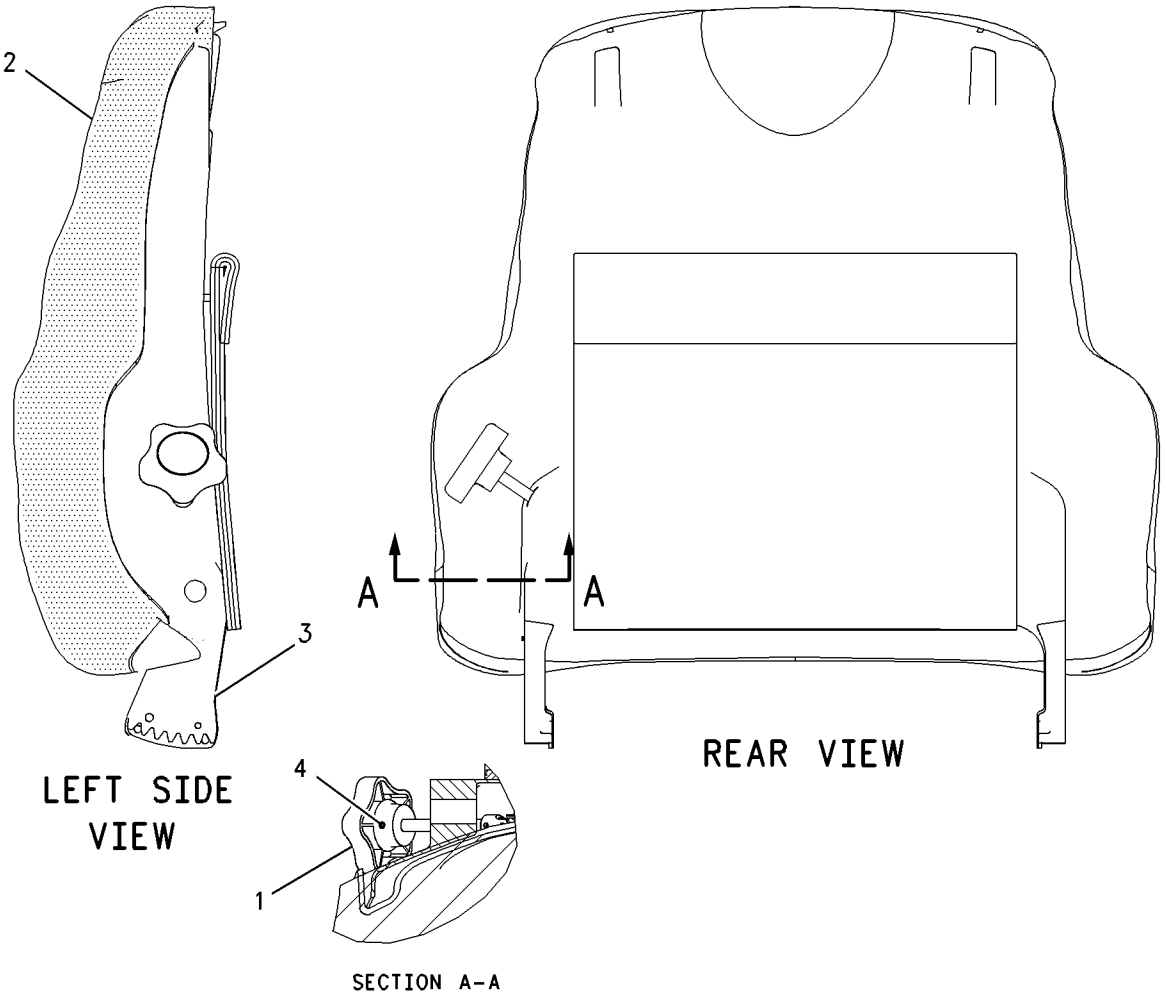

GRAPHIC #1 g00687153

OPERATOR STATION

170-7081 PANEL GP-INSTRUMENT

S/N: ABK1-UP

PART OF 162-9501 CHASSIS AR

SMCS-7450, 7451 **i01540808**

NOTE	REF NO	GRAPHIC REF	PART NUMBER	QTY	PART NAME 1 2 3 4 5 6 (PRODUCT LEVEL)	SEE PAGE
	1	1	**3E-9865**	4	LOCKNUT (1/4-20 THD)	
	2	1	**3T-0304**	1	BASE-INDICATOR LIGHT	
		1	**6V-8374**	2	SCREW-MACHINE (6-32X0.25 IN)	
	3	1	**6I-8921**	1	FRAME AS	
		1	**1V-8442**	6	NUT (1/4-20 THD)	
	4	1	**6T-7058**	1	LENS-RED	
	5	1	**6Y-5094**	1	CABLE	
	6	1	**7N-1996**	1	LAMP (28 VOLT)	
	7	1	**8B-4338**	4	SCREW-TAPPING	
	8	1	**8C-5608**	4	SPACER (6.5X9.5X25.4MM THK)	
	9	1	**8E-2514**	1	HINGE	
	10	1	**9X-0438**	1	CONTROL AS-ELECTRONIC (DASH LIGHT)	
	11	1	**9X-6772**	2	STRAP-CABLE	
	12	1	**9X-9896**	8	MOUNT (ISOLATION)	
	13	1	**100-5568**	1	BEZEL	
M	14	1	**105-3480**	4	BOLT-HEX SOCKET (M5X0.8X16MM)	
	15	1	**106-4454**	1	PLATE	
	16	1	**116-7880**	3	BRACKET	
Y	17	1	**125-6806**	1	MODULE GP-SPEEDOMETER & TACH	842
	18	1	**138-8886**	3	BOLT-SOCKET HEAD	
	19	1	**156-9421**	1	DASH AS	
Y	20	1	**166-6928**	1	MODULE GP-QUAD GAUGE	841
	21	1	**185-1929**	1	CONTROL GP-MONITOR (CATERPILLAR MONITORING SYSTEM)	
	22	1	**197-5110**	1	FILM-PANEL	
	23	1	**197-5111**	1	FILM-PANEL	
	24	1	**197-5112**	1	FILM-PANEL	
	25	1	**197-5113**	1	FILM-PANEL	
	26	1	**107-1964**	8	SCREW-PAN HEAD (6-19X0.5 IN)	
	27	1	**4P-7581**	3	CLIP	
	28	1	**4P-8134**	2	CLIP	
	29	1	**5P-0537**	3	WASHER-HARD (7.2X14.5X2MM THK)	
	30	1	**5P-2675**	4	BOLT (1/4-20X1.75 IN)	
	31	1	**5P-4115**	17	WASHER-HARD (7.2X19X2MM THK)	
	32	1	**5S-7349**	2	BOLT (1/4-20X0.5 IN)	
	33	1	**6V-3884**	7	SCREW-HEX SOCKET (1/4-20X0.5 IN)	
M	34	1	**6V-7357**	3	BOLT (M6X1.0X25MM)	
M	35	1	**8T-4138**	3	BOLT (M6X1X20MM)	
M	36	1	**8T-4171**	5	BOLT (M6X1X12MM)	
	37	1	**8T-4205**	8	WASHER-HARD (7.2X14.5X2MM THK)	

M-METRIC PART
Y-SEPARATE ILLUSTRATION

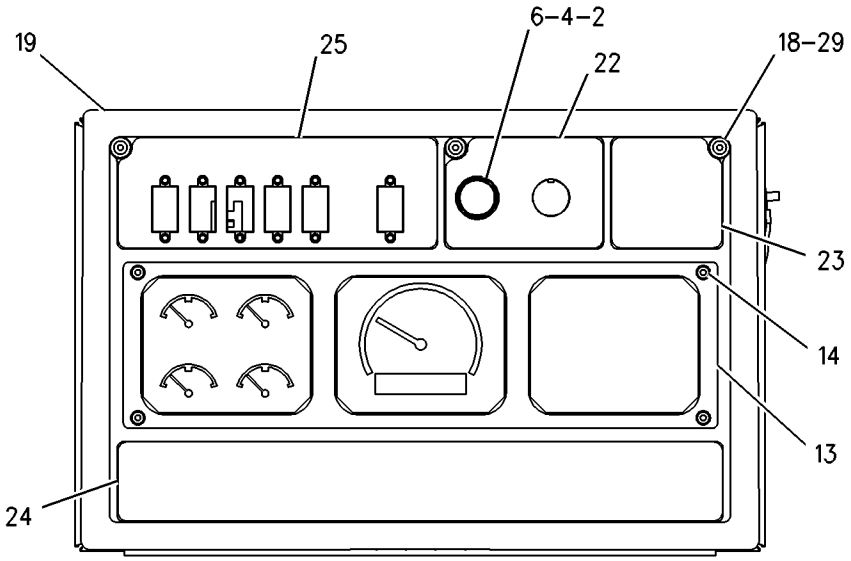

FRONT VIEW
(INSTRUMENT PANEL)

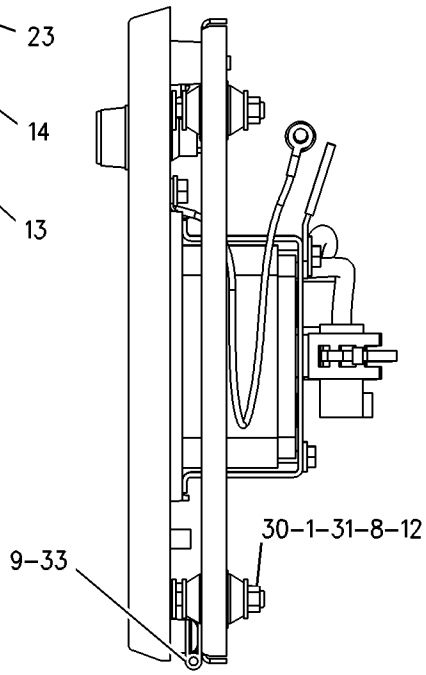

RIGHT SIDE VIEW
(INSTRUMENT PANEL)

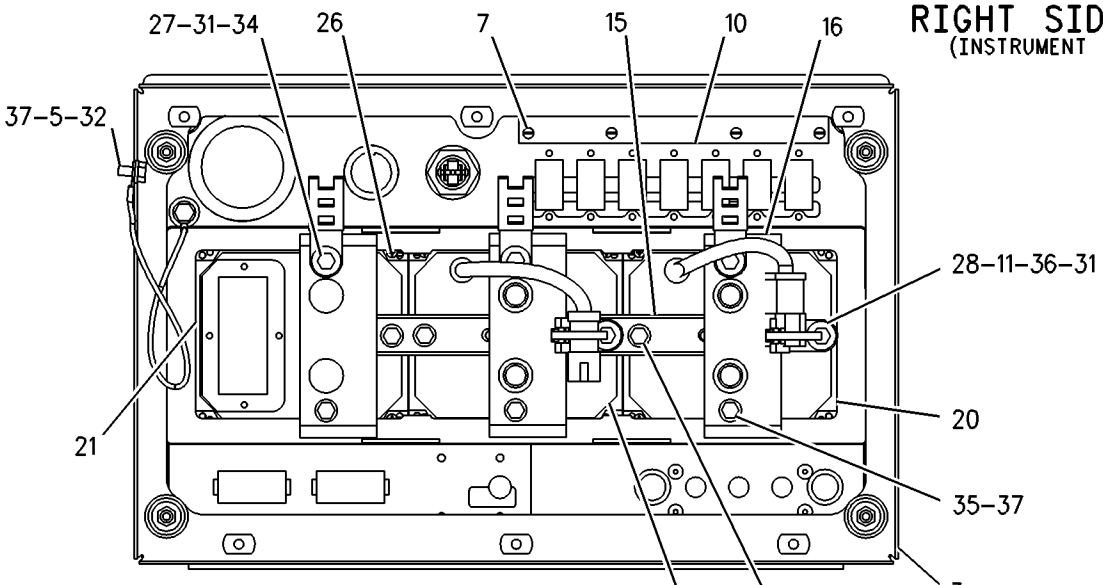

REAR VIEW
(INSTRUMENT PANEL)

GRAPHIC #1 g00800536

OPERATOR STATION

173-1028 PLATE GP-SLIDE

S/N: ABK1-UP
PART OF 180-7304, 180-7306 SEAT GP
ALSO AN ATTACHMENT
TYPE 1

SMCS-7321 **i01635944**

NOTE	REF NO	GRAPHIC REF	PART NUMBER	QTY	PART NAME 1 2 3 4 5 6 (PRODUCT LEVEL)	SEE PAGE
	1	1	**4V-8256**	4	SPRING	
	2	1	**117-4486**	1	ANCHOR	
	3	1	**117-4492**	1	ROD	
	4	1	**132-0338**	2	WASHER-PLASTIC (13X31.7X.8MM THK)	
	5	1	**136-1544**	1	LATCH AS-LH	
	6	1	**143-1288**	1	LOCKNUT-FLANGE (3/8-16 THD)	
	7	1	**156-5545**	1	LATCH AS-RH	
	8	1	**164-4531**	1	ROD	
	9	1	**9M-1974**	1	WASHER-HARD (8.8X16X2MM THK)	
	10	1	**170-1114**	1	HANDLE (SLIDE ADJUSTMENT)	
	11	1	**170-1115**	1	HANDLE (TILT ADJUSTMENT)	
	12	1	**172-4001**	1	BRACKET	
	13	1	**1D-4675**	1	BOLT-CARRIAGE (3/8-16X0.75 IN)	
	14	1	**2K-4973**	2	LOCKNUT (3/8-16 THD)	
	15	1	**7L-8170**	1	NUT-FULL (5/16-18 THD)	
	16	1	**7X-0608**	2	WASHER-HARD (10.2X16X2.0MM THK)	
	17	1	**170-1112**	1	PLATE AS	

173-1028 PLATE GP-SLIDE ***(contd.)*** **i01635944**

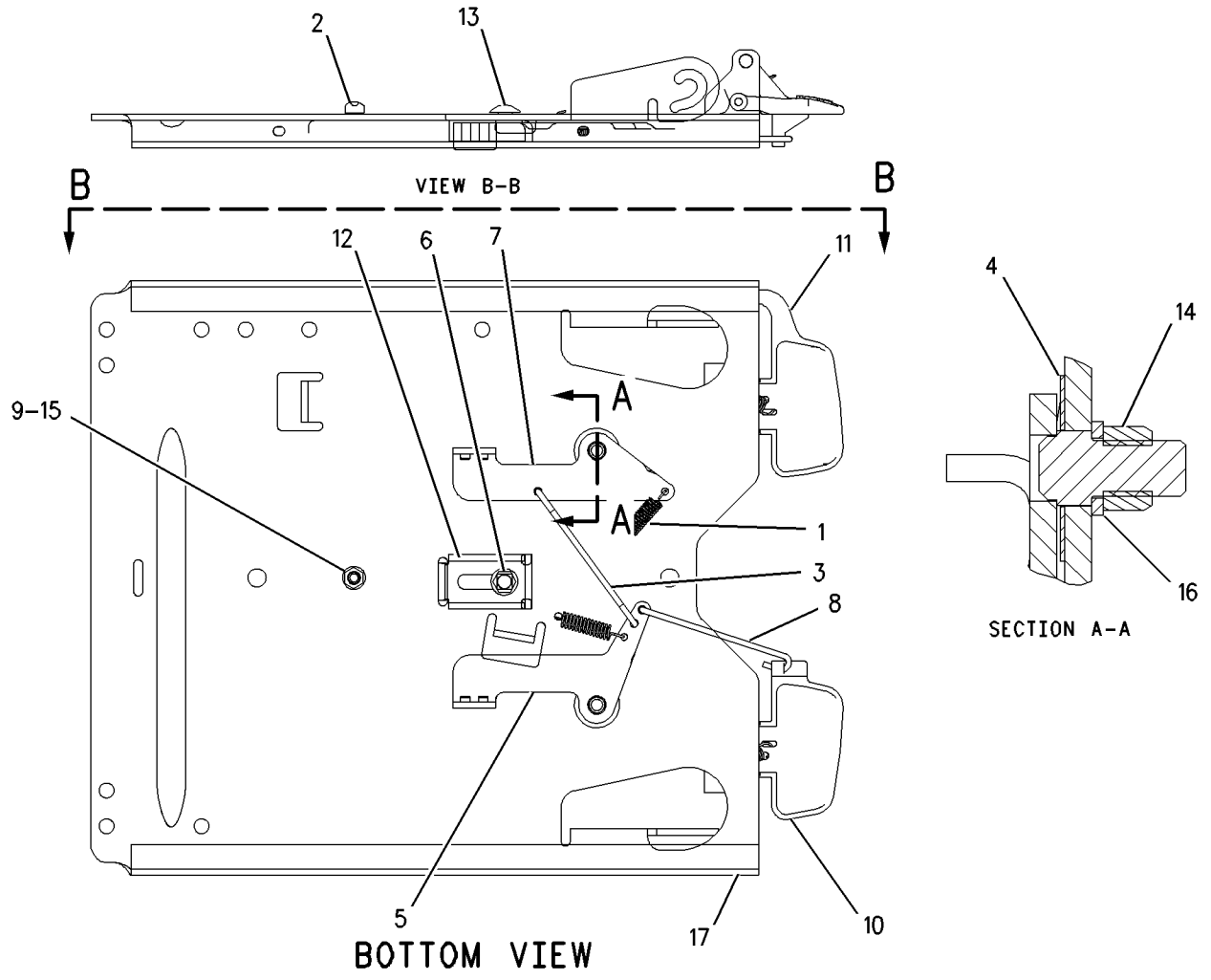

GRAPHIC #1 g00686297

173-1028 PLATE GP-SLIDE

S/N: ABK1-UP
PART OF 180-7304, 180-7306 SEAT GP
ALSO AN ATTACHMENT
TYPE 2

SMCS-7321 **i01561316**

NOTE	REF NO	GRAPHIC REF	PART NUMBER	QTY	PART NAME 1 2 3 4 5 6 (PRODUCT LEVEL)	SEE PAGE
	1	1	**4V-8256**	4	SPRING	
	2	1	**117-4492**	1	ROD	
	3	1	**136-1544**	1	LATCH AS-LH	
	4	1	**156-5545**	1	LATCH AS-RH	
	5	1	**164-4531**	1	ROD	
	6	1	**170-1112**	1	PLATE AS	
	7	1	**170-1114**	1	HANDLE (SLIDE ADJUSTMENT)	
	8	1	**170-1115**	1	HANDLE (TILT ADJUSTMENT)	
	9	1	**132-0338**	2	WASHER-PLASTIC	
	10	1	**2K-4973**	2	LOCKNUT (3/8-16 THD)	
	11	1	**7X-0608**	2	WASHER-HARD (10.2X16X2.0MM THK)	

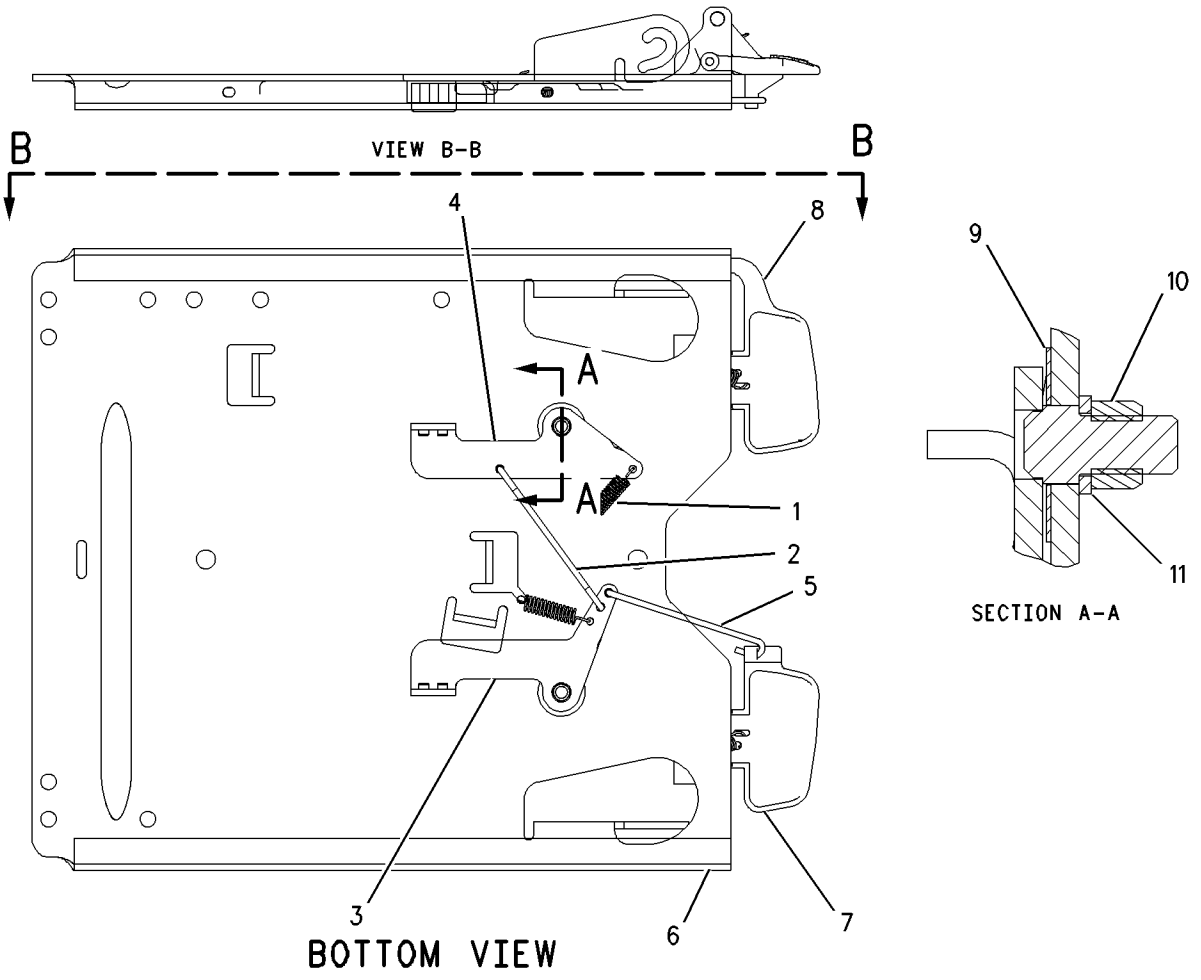

GRAPHIC #1 g00816460

MEMORANDA

OPERATOR STATION

138-3754 PLATFORM GP

S/N: ABK1-UP

PART OF 162-9501 CHASSIS AR

SMCS-7253, 7254 **i01463144**

NOTE	REF NO	GRAPHIC REF	PART NUMBER	QTY	PART NAME 1 2 3 4 5 6 (PRODUCT LEVEL)	SEE PAGE
	1	1	**3E-0109**	1	PLUG-ROCKER SWITCH	
	2	1	**3E-4898**	4	SLEEVE	
	3	1	**8T-4205**	4	WASHER-HARD (7.2X14.5X2MM THK)	
	4	1	**3T-3634**	1	HANDHOLD	
	5	1	**3T-3951**	1	PLATE AS	
	6	1	**3T-3953**	1	PLATE AS	
	7	1	**3T-6280**	1	PLATE AS	
		1	**7G-4928**	6	SPACER	
	8	1	**3T-6281**	1	SEAL	
	9	1	**6D-3031**	8	SCREW-SOCKET HEAD (8-32X0.375 IN)	
	10	1	**9P-6572**	1	PLUG	
	11	1	**6I-9464**	1	FLOOR MAT	
	12	1	**6V-1950**	2	PLUG-BUTTON	
	13	1	**7G-6723**	1	COVER	
	14	1	**7G-6724**	1	GASKET	
	15	1	**7G-6916**	1	COVER AS	
		1	**2R-2376**	2	WASHER-PANEL FASTENER	
		1	**6P-6926**	2	SCREW-KNURLED	
	16	1	**7G-6917**	1	GASKET	
	17	1	**7T-0131**	1	FLOORPLATE AS	
		1	**1F-0748**	4	NUT-WELD (1/2-13 THD)	
	18	1	**189-9809**	1	PLATE	
	19	1	**7T-0135**	1	SEAL	
	20	1	**189-9810**	1	PLATE AS	
		1	**6G-2914**	1	LATCH	
		1	**9N-1995**	2	RIVET-POP	
		1	**189-9816**	1	HINGE	
		1	**1F-0750**	6	NUT-WELD (3/8-16 THD)	
	21	1	**7T-0138**	1	GASKET	
	22	1	**7T-0779**	1	GASKET	
	23	1	**7T-5066**	1	COVER	
	24	1	**7V-8087**	1	PLUG-BUTTON	
	25	1	**8E-5975**	1	GASKET	
	26	1	**8E-5978**	1	GASKET	
	27	1	**8E-9597**	1	COVER	
	28	1	**9P-1444**	2	SUPPORT AS-FOOT	
	29	1	**9P-6571**	2	PLUG	
	30	1	**9W-3428**	1	COVER	
	31	1	**9W-9027**	4	PLATE	
	32	1	**7X-0582**	2	WASHER-HARD (20X44.5X6MM THK)	
	33	1	**104-2091**	8	SCREW-FLAT HEAD (6-20X0.5 IN)	
	34	1	**8T-9312**	2	BOLT (3/4-10X6 IN)	
	35	1	**117-8131**	8	MOUNT	
	36	1	**127-2803**	1	COVER	
	37	1	**127-3018**	1	HANDHOLD	
	38	1	**8T-9364**	4	BOLT (1/4-20X0.625 IN)	
	39	1	**135-2609**	1	COVER	
	40	1	**135-2861**	1	GASKET	
	41	1	**143-4991**	1	COVER AS	
		1	**1F-0750**	10	NUT-WELD (3/8-16 THD)	
	42	1	**144-4283**	1	COVER AS	
M		1	**6V-9632**	2	NUT-WELD (M6X1 THD)	
		1	**9D-4439**	2	STUD-WELD (3/8-16X1.0 IN OAL)	
	43	1	**145-2859**	4	PLATE	
	44	1	**5M-3062**	43	BOLT (3/8-16X0.75 IN)	
	45	1	**5P-1075**	59	WASHER-HARD (10.2X22.5X3MM THK)	

138-3754 **PLATFORM GP** ***(contd.)*** **i01463144**

NOTE	REF NO	GRAPHIC REF	PART NUMBER	QTY	PART NAME 1 2 3 4 5 6 (PRODUCT LEVEL)	SEE PAGE
	46	1	**5P-1076**	19	WASHER-HARD (13.5X30X4MM THK)	
	47	1	**5P-2228**	19	BOLT (1/2-13X1 IN)	
	48	1	**6J-0488**	16	SCREW-BUTTON HEAD (3/8-16X0.875 IN)	
	49	1	**7X-0392**	2	BOLT (7/8-9X6 IN)	
	50	1	**7X-0572**	2	WASHER-HARD (24X44.5X6MM THK)	
	51	1	**133-8128**	1	MODULE AS-OPERATOR	
		1	**1F-0750**	5	NUT-WELD (3/8-16 THD)	
		1	**7T-1099**	1	LINK	
		1	**127-2415**	1	DASH AS-MODULE	
		1	**1F-0750**	11	NUT-WELD (3/8-16 THD)	
		1	**6C-3680**	2	RIVET-POP	
		1	**7T-1099**	5	LINK	
		1	**9F-6445**	2	NUT-WELD (1/4-20 THD)	
		1	**109-1645**	1	CLIP	
		1	**143-5031**	1	CONSOLE AS-RH	
		1	**1F-0750**	11	NUT-WELD (3/8-16 THD)	
M		1	**6V-9632**	2	NUT-WELD (M6X1 THD)	
		1	**7G-4550**	19	GROMMET	
		1	**7T-1099**	9	LINK	
		1	**8F-9836**	1	BOSS-THREADED (3/8-16X.75 IN)	
		1	**9D-6621**	2	NUT-WELD (10-24 THD)	
		1	**143-5449**	1	CONSOLE AS	
		1	**1F-0750**	5	NUT-WELD (3/8-16 THD)	
		1	**6K-2198**	8	BOSS	
		1	**7G-4550**	2	GROMMET	
		1	**7T-1099**	1	LINK	
		1	**144-4283**	1	COVER AS	
M		1	**6V-9632**	2	NUT-WELD (M6X1 THD)	

M-METRIC PART

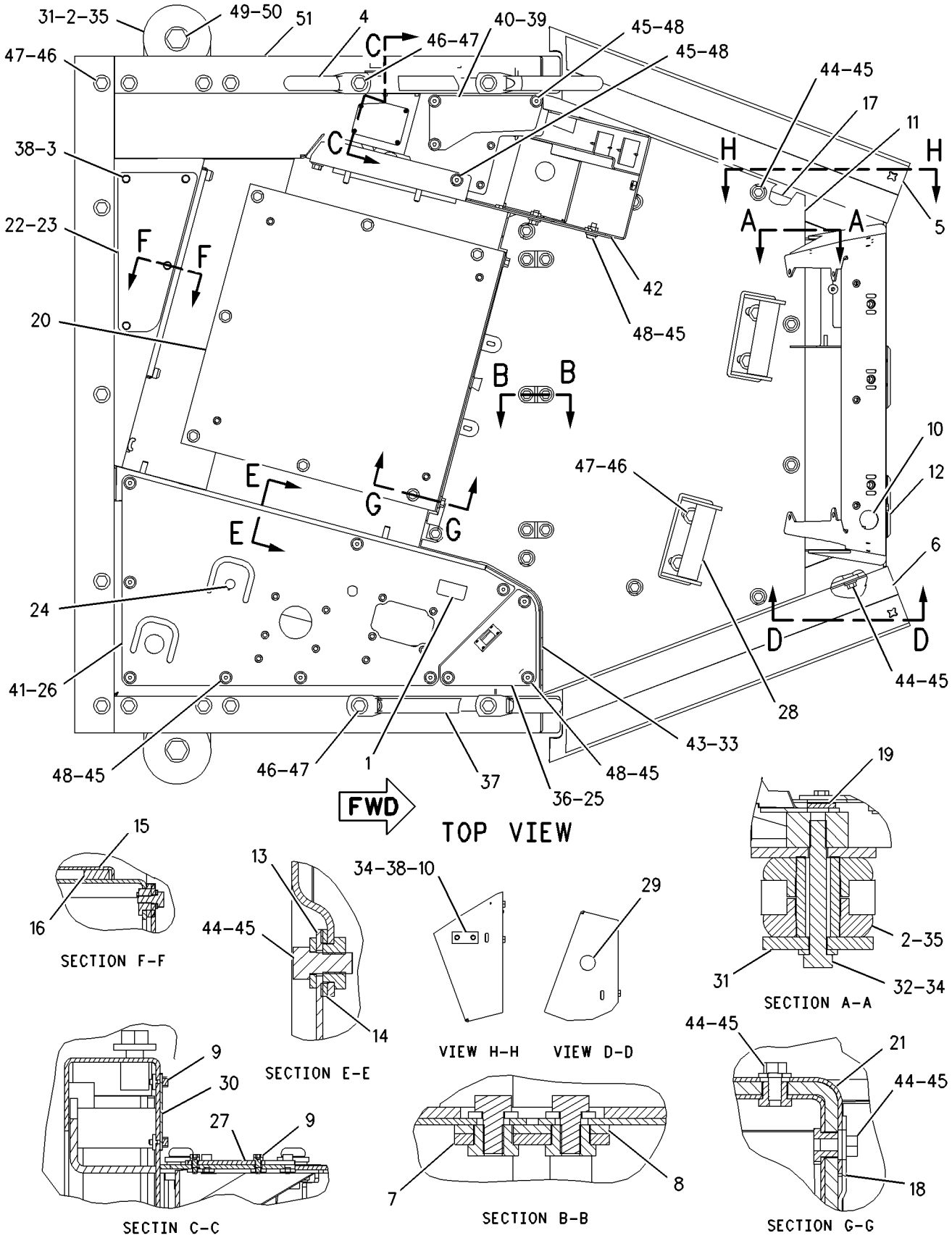

GRAPHIC #1 g00793616

OPERATOR STATION

177-4935 RECLINER GP-SEAT

S/N: ABK1-UP
PART OF 180-7304, 180-7306 SEAT GP
ALSO AN ATTACHMENT

SMCS-7312 **i01657620**

NOTE	REF NO	GRAPHIC REF	PART NUMBER	QTY	PART NAME 1 2 3 4 5 6 (PRODUCT LEVEL)	SEE PAGE
	1	1	**188-2586**	1	LATCH	
	2	1	**164-4146**	1	SPRING	
	3	1	**177-1860**	1	GEAR	
	4	1	**177-1862**	1	BRACKET	
	5	1	**178-0607**	1	SHAFT AS	
	5A	1	**2K-9111**	2	PIN-SPRING	
	5B	1	**9M-6803**	2	DOWEL	
	5C	1	**170-8590**	1	SPRING	
	6	1	**178-0608**	1	BRACKET AS	
	7	1	**178-0609**	1	BRACKET AS	
	8	1	**031-0214**	1	BOLT-LOCKING (1/4-20X0.5 IN)	
	9	1	**101-2867**	1	WASHER-HARD (7.2X25X2MM THK)	
	10	1	**4M-6425**	1	BOLT (5/16-18X1 IN)	
	11	1	**5S-7383**	1	BOLT (3/8-16X1.75 IN)	
	12	1	**8T-4224**	1	WASHER-HARD (8.8X16X2MM THK)	

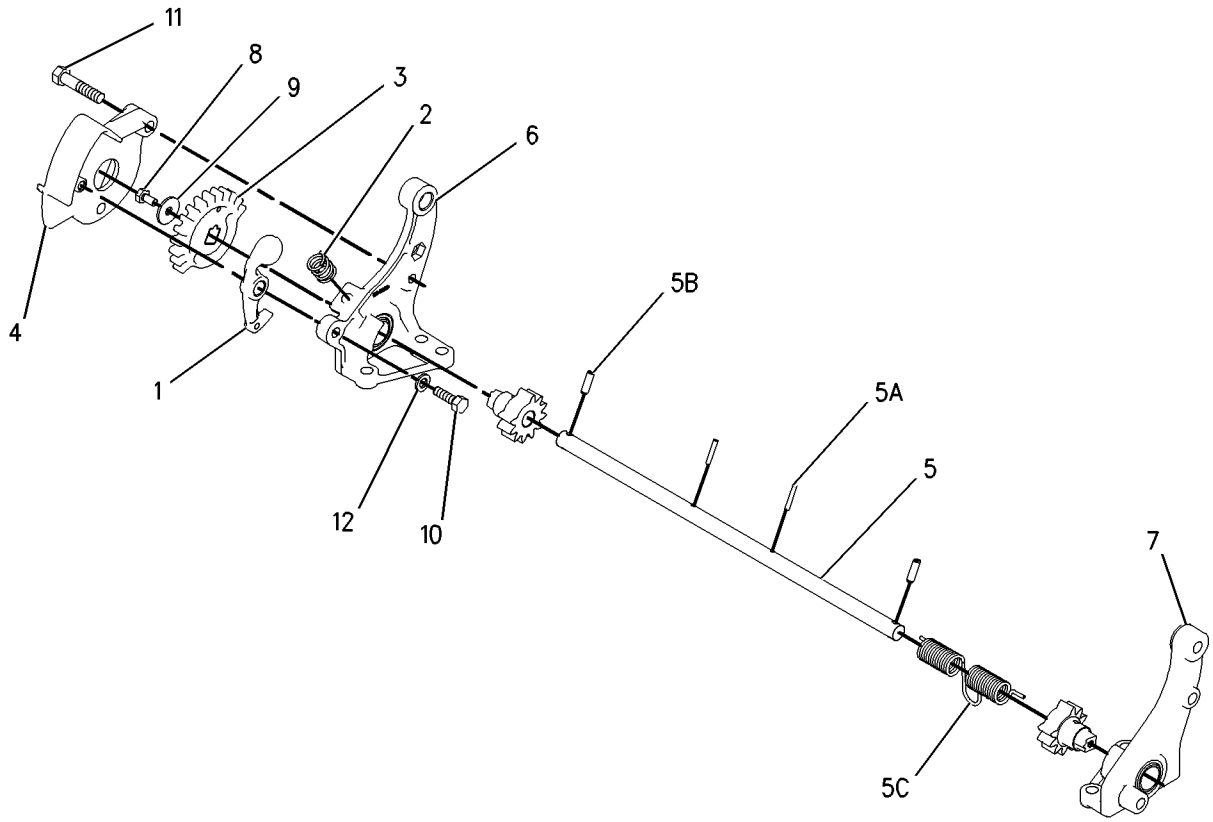

GRAPHIC #1 g00673022

OPERATOR STATION

1Q-1884 ROPS AS

S/N: ABK1-UP
PART OF 162-8076 AIR CONDITIONER AR
AN ATTACHMENT

SMCS-7323 **i01446858**

NOTE	REF NO	GRAPHIC REF	PART NUMBER	QTY	PART NAME 1 2 3 4 5 6 (PRODUCT LEVEL)	SEE PAGE
	1	1	**105-4262**	1	ROPS AS	
	2	1	**9U-9956**	1	HANDHOLD-RH	
	3	1	**9U-9957**	1	HANDHOLD-LH	
	4	1	**5P-1076**	4	WASHER-HARD (13.5X30X4MM THK)	
		1	**5C-6565**	4	BOLT (1/2-13X1.25 IN)	
	5	1	**107-9245**	1	PLATE-ROPS	
	6	1	**7K-6536**	4	RIVET-POP	

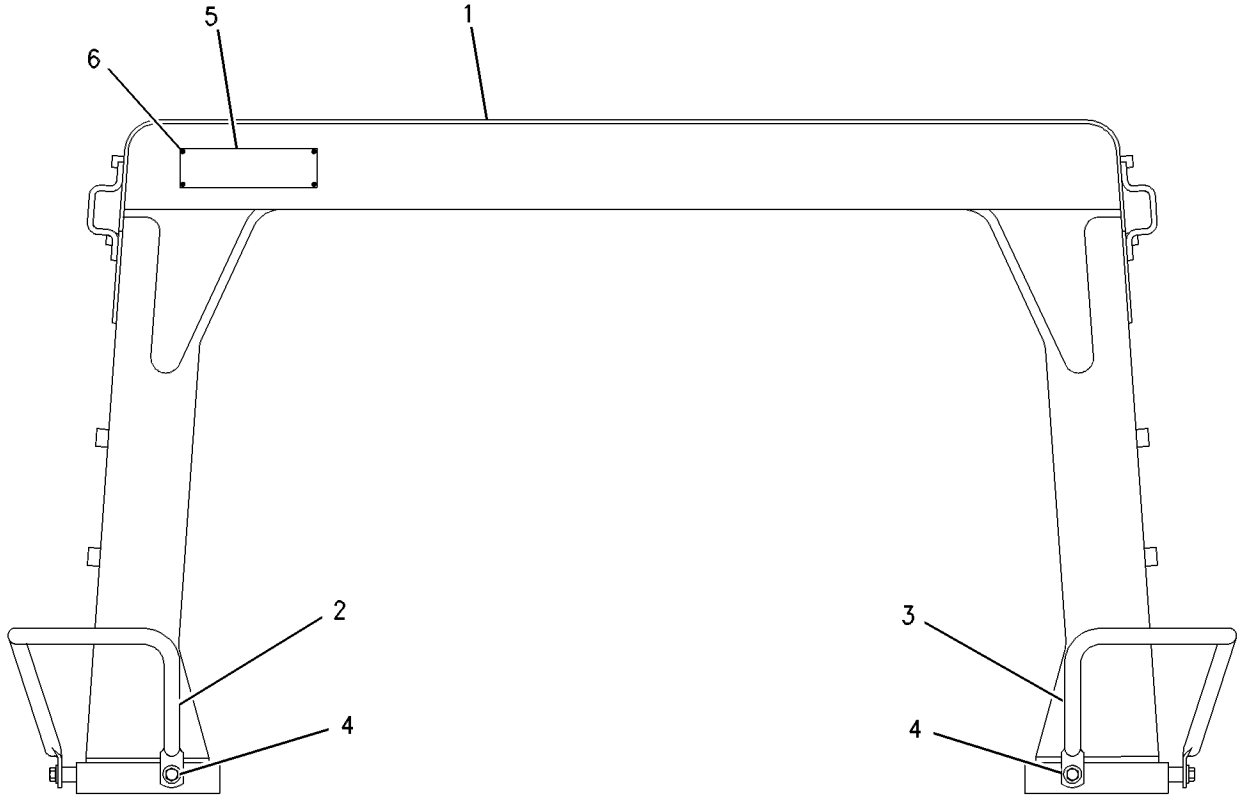

FRONT VIEW

GRAPHIC #1 g00566326

OPERATOR STATION

105-4261 ROPS GP

S/N: ABK1-UP
PART OF 163-0942, 163-0943 CAB AR
AN ATTACHMENT

SMCS-7323, 7325 **i01446859**

NOTE	REF NO	GRAPHIC REF	PART NUMBER	QTY	PART NAME 1 2 3 4 5 6 (PRODUCT LEVEL)	SEE PAGE
	1	1	**5C-6565**	4	BOLT (1/2-13X1.25 IN)	
		1	**5P-1076**	4	WASHER-HARD (13.5X30X4MM THK)	
	2	1	**7X-0429**	12	BOLT (1 1/4-7X4.50 IN)	
		1	**7X-0533**	12	WASHER-HARD (34X55X6MM THK)	
	3	1	**9U-9957**	1	HANDHOLD-LH	
	4	1	**9U-9956**	1	HANDHOLD-RH	
	5	1	**105-4260**	1	ROPS AS	

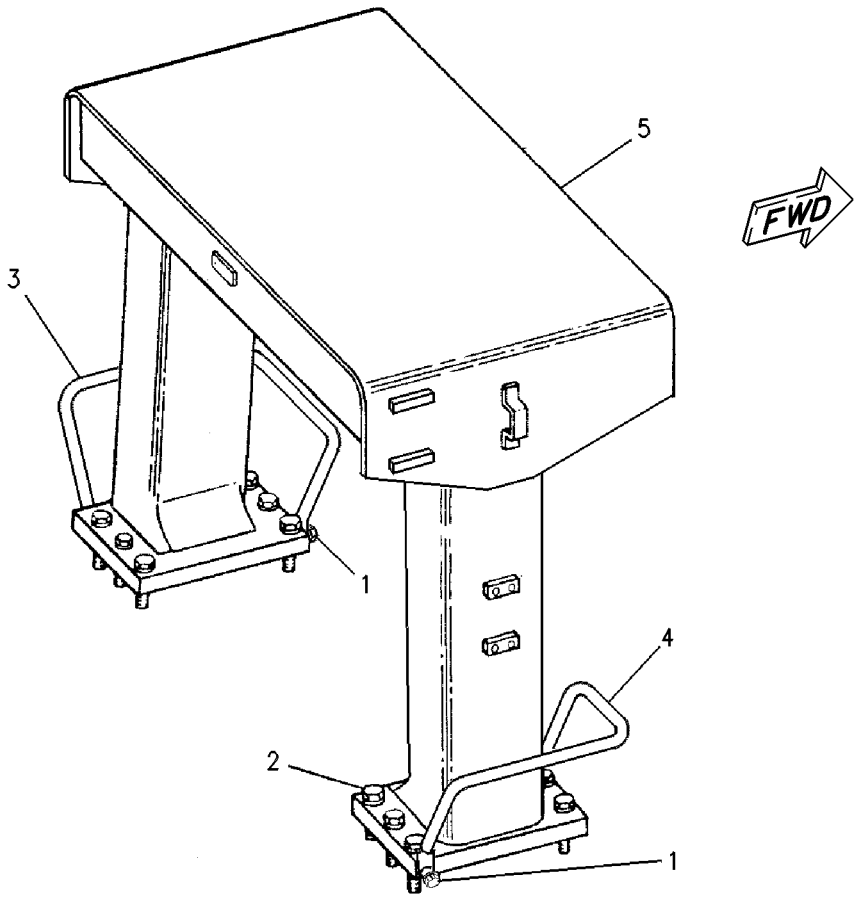

GRAPHIC #1 g00234297

OPERATOR STATION

105-4649 ROPS GP

S/N: ABK1-UP

PART OF 162-9501 CHASSIS AR

SMCS-7323, 7325 **i01624776**

NOTE	REF NO	GRAPHIC REF	PART NUMBER	QTY	PART NAME 1 2 3 4 5 6 (PRODUCT LEVEL)	SEE PAGE
	1	1	**105-4651**	1	ROPS AS	
	2	1	**8P-8542**	2	HANDHOLD	
	3	1	**8E-9739**	1	HEADLINER	
	4	1	**7X-0429**	12	BOLT (1 1/4-7X4.50 IN)	
		1	**7X-0533**	12	WASHER-HARD (34X55X6MM THK)	
Y	5	1	*9P-1896*	1	MIRROR GP-REAR VIEW	840
	6	1	**8E-9737**	1	HEADLINER	
	7	1	**2G-6087**	22	BUTTON	
		1	**3W-6541**	22	WASHER (16X75X3.5MM THK)	
	8	1	**9U-9956**	1	HANDHOLD-RH	
	9	1	**9U-9957**	1	HANDHOLD-LH	
	10	1	**5C-6565**	8	BOLT (1/2-13X1.125 IN)	
	11	1	**5P-1076**	8	WASHER-HARD (13.5X30X4MM THK)	

Y-SEPARATE ILLUSTRATION

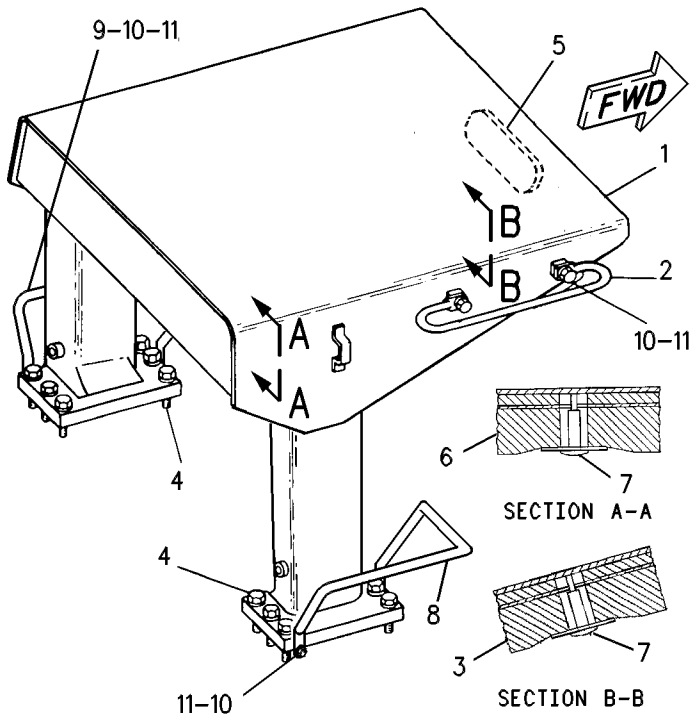

GRAPHIC #1 g00246061

OPERATOR STATION

9U-9634 SCREEN GP-PROTECTION

S/N: ABK1-UP
AN ATTACHMENT

SMCS-7165 **i01423005**

NOTE	REF NO	GRAPHIC REF	PART NUMBER	QTY	PART NAME 1 2 3 4 5 6 (PRODUCT LEVEL)	SEE PAGE
	1	1	**9U-9638**	1	SCREEN AS	
	2	1	**9U-9635**	2	PLATE AS	
					(EACH INCLUDES)	
		1	**8J-7236**	3	NUT-WELD (3/4-10 THD)	
		1	**7T-1099**	4	LINK	
	3	1	**7X-0582**	4	WASHER-HARD (20X44.5X6MM THK)	
	4	1	**7X-0365**	8	BOLT (3/4-10X1.5 IN)	
	5	1	**8T-4994**	6	WASHER-HARD (20X36.5X5MM THK)	
	6	1	**1K-5760**	2	SPACER (.78X1.38X.81 IN THK)	
	7	1	**7X-0366**	2	BOLT (3/4-10X2 IN)	

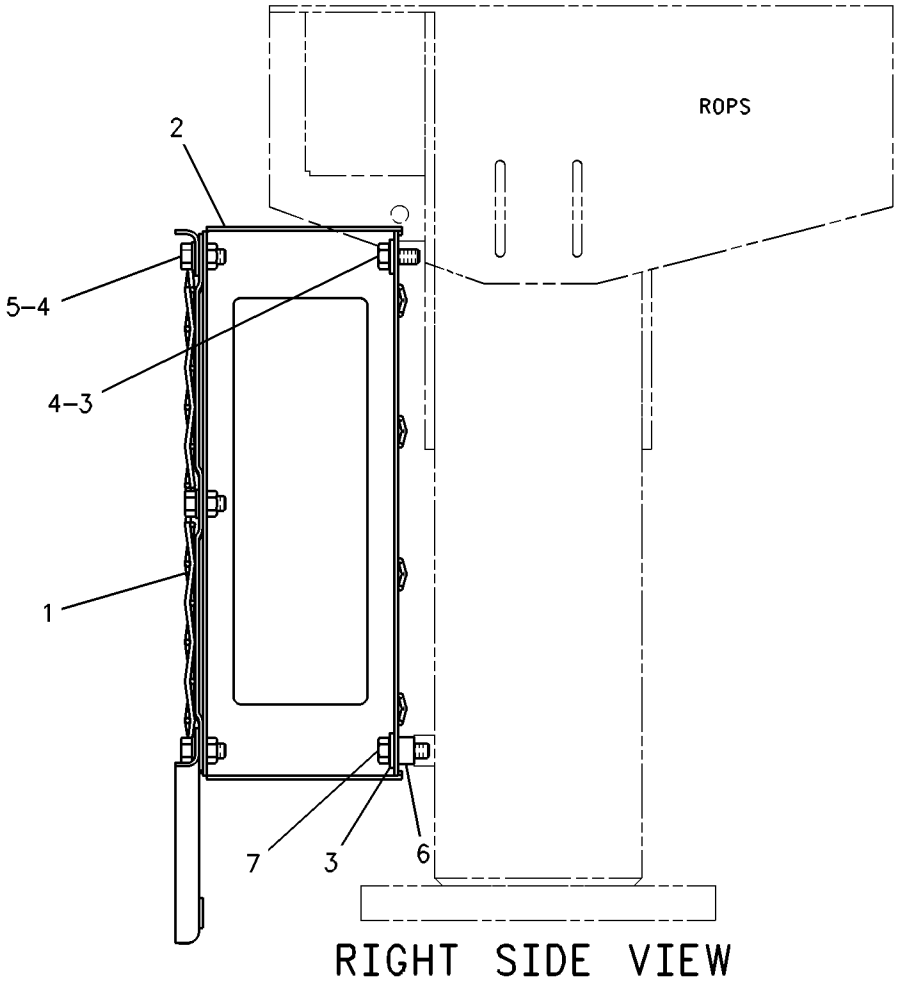

GRAPHIC #1 g00749505

OPERATOR STATION

164-9429 SEAT AR

S/N: ABK1-UP
VINYL
AN ATTACHMENT

SMCS-7312 **i01445950**

NOTE	PART NUMBER	QTY	PART NAME 1 2 3 4 5 6 (PRODUCT LEVEL)	SEE PAGE
Y	*159-2950*	1	SEAT GP-SUSPENSION	879

Y-SEPARATE ILLUSTRATION

MEMORANDA

OPERATOR STATION

163-0879 SEAT GP

S/N: ABK1-UP

PART OF 162-9501 CHASSIS AR

SMCS-7312 **i01445928**

NOTE	REF NO	GRAPHIC REF	PART NUMBER	QTY	PART NAME 1 2 3 4 5 6 (PRODUCT LEVEL)	SEE PAGE
	1	1	**8E-1734**	1	CUSHION AS-LH	
	2	1	**9U-9400**	1	CUSHION AS	
M		1	**5C-2890**	2	NUT (M6X1 THD)	
		1	**9X-2038**	4	WASHER (7X19X2MM THK)	
M		1	**9X-2045**	2	SCREW-TRUSS HEAD (M6X1X20MM)	
	3	1	**137-7369**	1	CUSHION AS	
	4	1	**138-1015**	1	CUSHION AS-RH	
	5	1	**138-1025**	1	PLATE	
	6	1	**147-0852**	1	PLATE	
	7	1	**153-8498**	2	SCREW-FLAT HEAD	
Y	8	1	**159-2950**	1	SEAT GP-SUSPENSION	879
	9	1	**5M-3062**	4	BOLT (3/8-16X0.75 IN)	
	10	1	**5P-1075**	9	WASHER-HARD (10.2X22.5X3MM THK)	
	11	1	**6D-6812**	4	KNOB AS	
	12	1	**7X-0469**	5	BOLT (3/8-24X0.88 IN)	
	13	1	**7X-0603**	8	WASHER-HARD (9.9X35X2.5MM THK)	
	14	1	**9X-2038**	4	WASHER (7X19X2MM THK)	
M	15	1	**9X-2045**	4	SCREW-TRUSS HEAD (M6X1X20MM)	

M-METRIC PART
Y-SEPARATE ILLUSTRATION

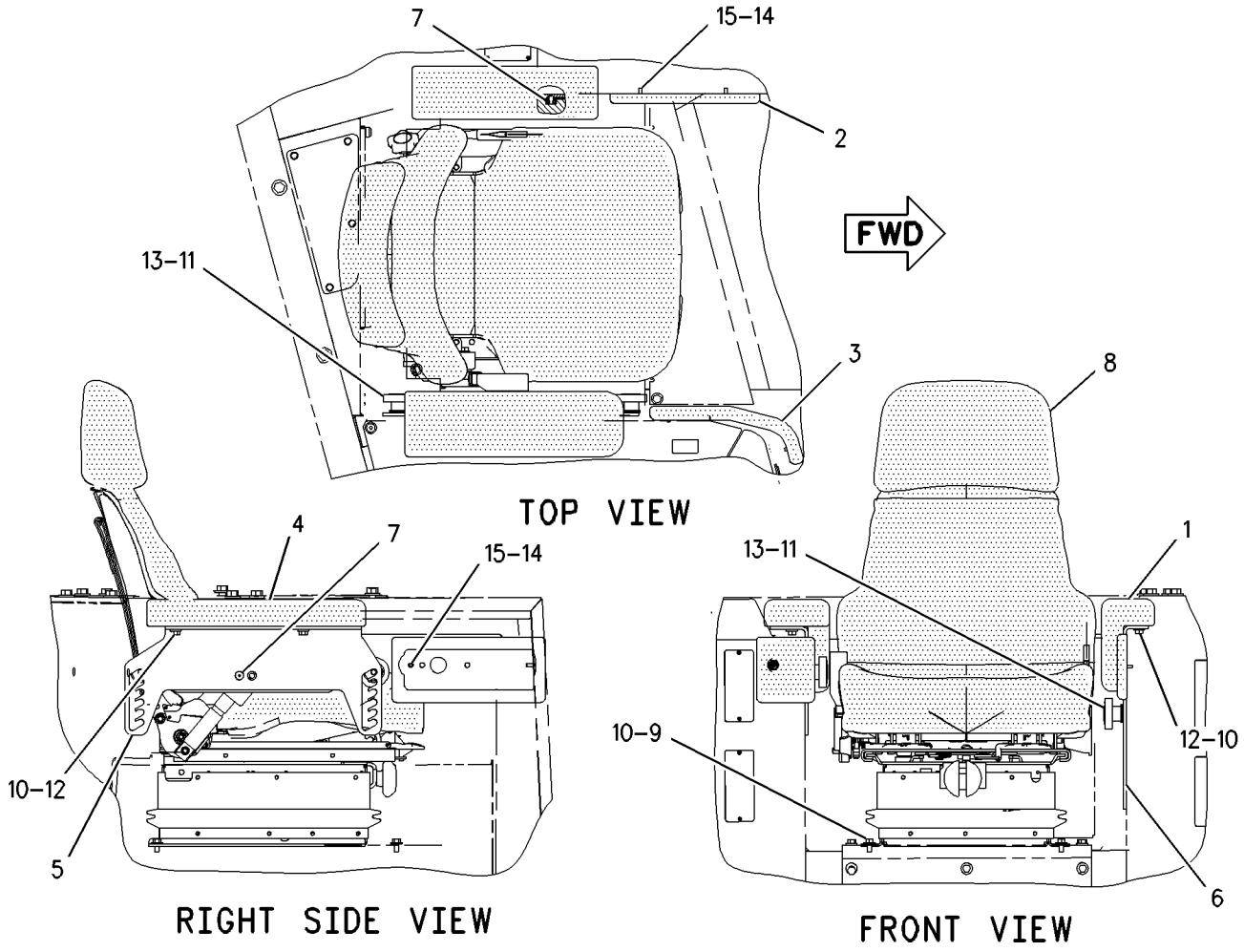

GRAPHIC #1

g00689830

OPERATOR STATION

180-7304 SEAT GP

S/N: ABK1-UP
VINYL
PART OF 184-6011 SEAT GP
ALSO AN ATTACHMENT

SMCS-7312 **i01446863**

NOTE	REF NO	GRAPHIC REF	PART NUMBER	QTY	PART NAME 1 2 3 4 5 6 (PRODUCT LEVEL)	SEE PAGE
	1	1	**6K-3273**	5	RIVET-POP	
		1	**169-1026**	1	CUSHION AS	
	2	1	**143-1288**	8	LOCKNUT-FLANGE	
	3	1	**171-1230**	6	SCREW-BUTTON HEAD (3/8-16X1 IN)	
	4	1	**171-6682**	1	BAR-RECLINER	
	5	1	**172-2416**	2	PIN	
Y	6	1	*173-1028*	1	PLATE GP-SLIDE	856
	7	1	**177-1863**	2	BOLT-PIVOT (3/8-16X2.89 IN)	
Y	8	1	*177-4935*	1	RECLINER GP-SEAT	863
Y	9	1	*180-7305*	1	PAN GP-BACKREST (BACK)	852
	10	1	**184-2298**	1	ROD	
	11	1	**184-2299**	4	WASHER (7X25.4X2.54MM THK)	
	12	1	**095-0843**	2	COTTER	
	13	1	**8Y-6277**	2	SPACER (10.5X28.6X10MM THK)	
	14	1	**5V-1496**	2	RETAINER	
	15	1	**6V-7646**	2	WASHER-HARD (7.2X25X2MM THK)	
	16	1	**8T-0328**	1	WASHER-HARD (5.5X10X1MM THK)	
	17	1	**8T-4205**	1	WASHER-HARD (7.2X14.5X2MM THK)	

Y-SEPARATE ILLUSTRATION

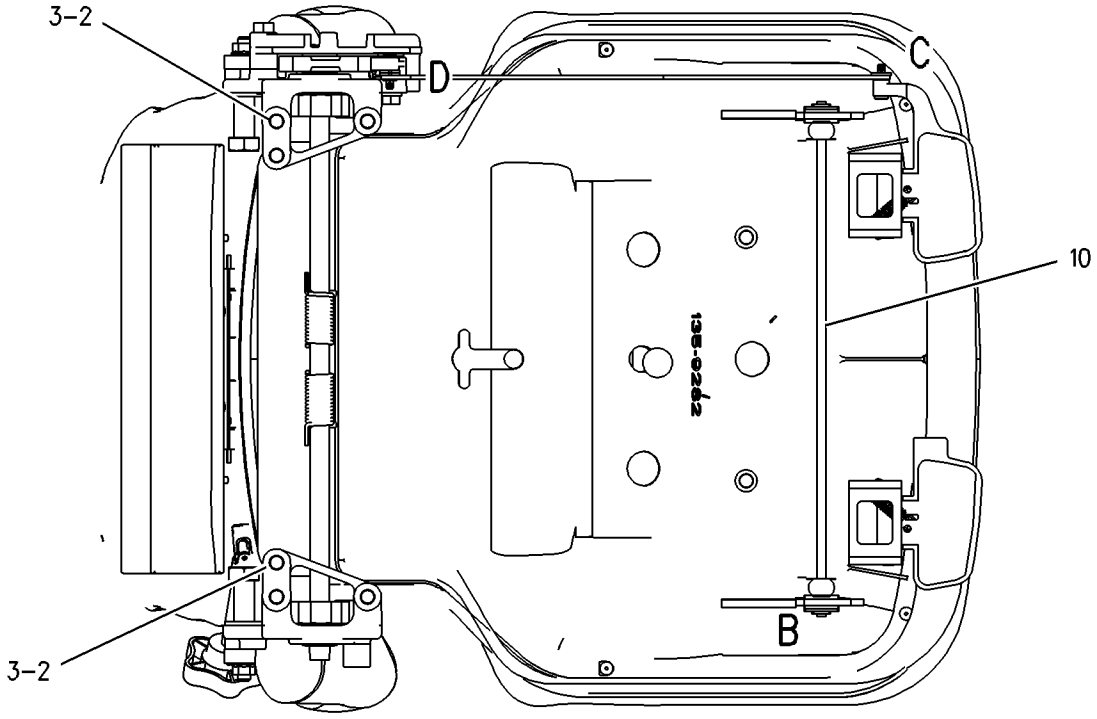

SECTION A-A

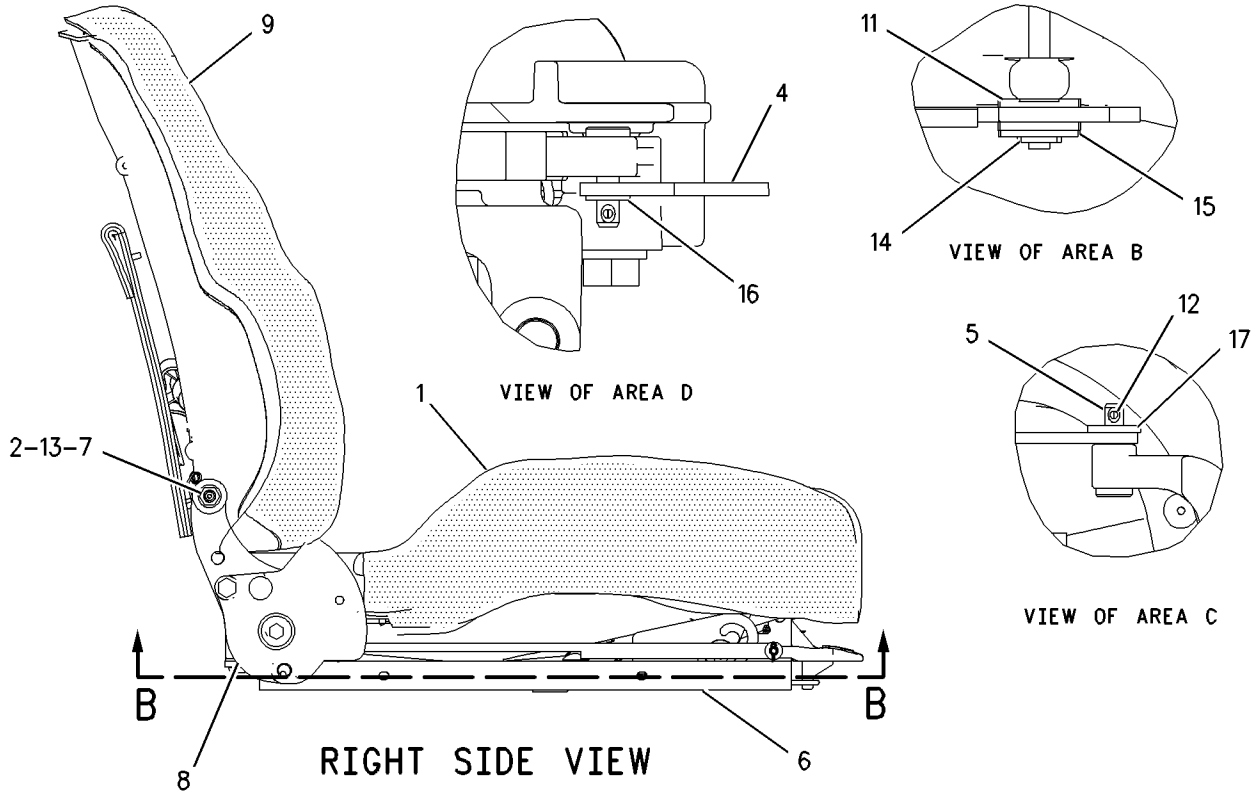

GRAPHIC #1 g00726860

OPERATOR STATION

180-7306 SEAT GP

S/N: ABK1-UP
FABRIC
PART OF 184-6012 SEAT GP
AN ATTACHMENT

SMCS-7312 **i01426497**

NOTE	REF NO	GRAPHIC REF	PART NUMBER	QTY	PART NAME 1 2 3 4 5 6 (PRODUCT LEVEL)	SEE PAGE
	1	1	**172-6581**	1	PAN AS	
		1	**169-1025**	1	CUSHION AS	
	1A	1	**6K-3273**	5	RIVET-POP	
	2	1	**143-1288**	8	LOCKNUT-FLANGE	
	3	1	**171-1230**	6	SCREW-BUTTON HEAD (3/8-16X1 IN)	
	4	1	**171-6682**	1	BAR-RECLINER	
	5	1	**172-2416**	2	PIN	
Y	6	1	*173-1028*	1	PLATE GP-SLIDE	856
	7	1	**177-1863**	2	BOLT-PIVOT (3/8-16X2.89 IN)	
Y	8	1	*177-4935*	1	RECLINER GP-SEAT	863
Y	9	1	**180-7307**	1	PAN GP-BACKREST	853
	10	1	**184-2298**	1	ROD	
	11	1	**184-2299**	4	WASHER (7X25.4X2.54MM THK)	
	12	1	**095-0843**	2	COTTER	
	13	1	**8Y-6277**	2	SPACER (10.5X28.6X10MM THK)	
	14	1	**5V-1496**	2	RETAINER	
	15	1	**6V-7646**	2	WASHER-HARD (7.2X25X2MM THK)	
	16	1	**8T-0328**	1	WASHER-HARD (5.5X10X1MM THK)	
	17	1	**8T-4205**	1	WASHER-HARD (7.2X14.5X2MM THK)	

Y-SEPARATE ILLUSTRATION

180-7306 SEAT GP ***(contd.)*** **i01426497**

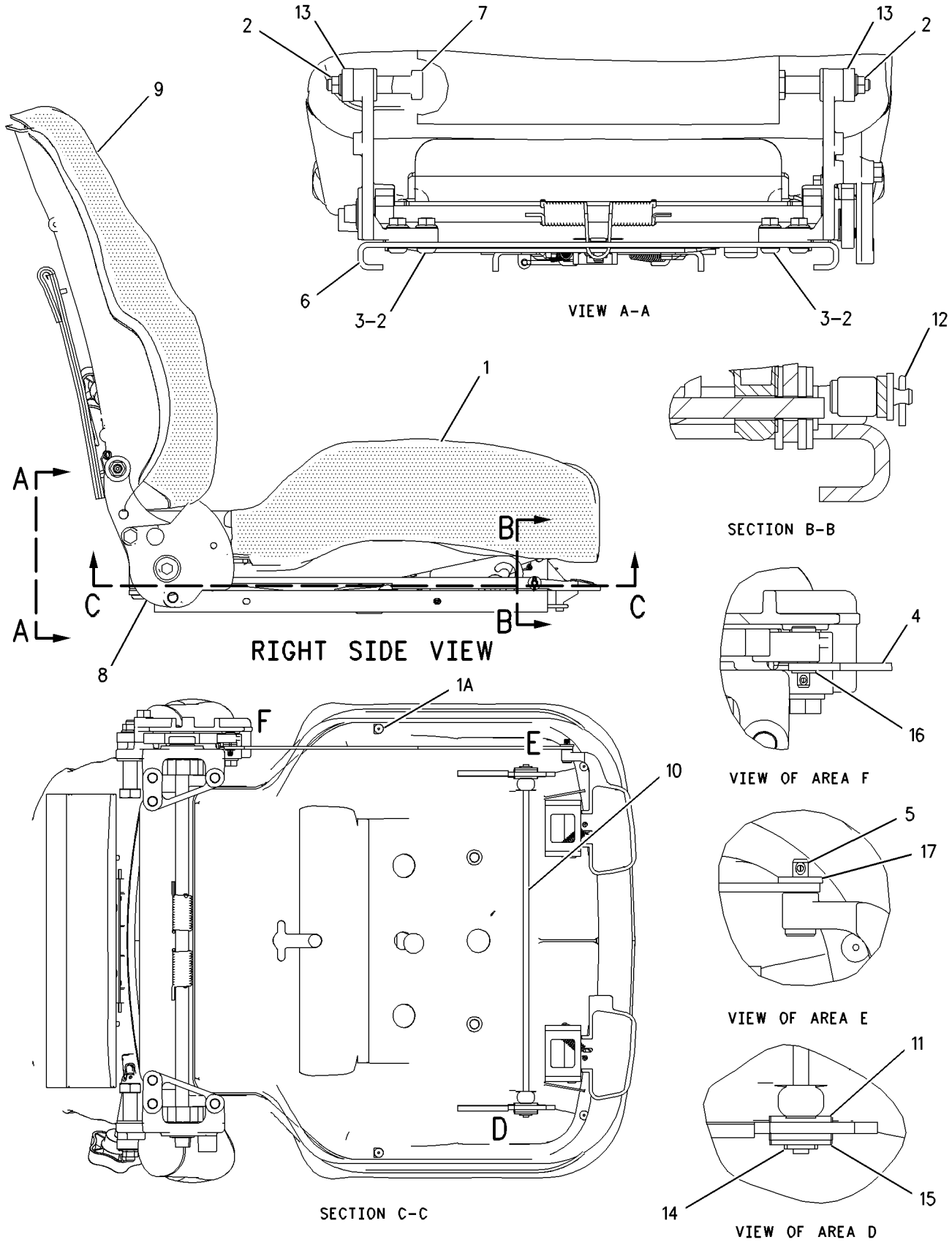

GRAPHIC #1 g00756257

184-6011 SEAT GP

S/N: ABK1-UP
VINYL
PART OF 159-2950 SEAT GP-SUSPENSION
ALSO AN ATTACHMENT

SMCS-7312 **i01654131**

NOTE	REF NO	GRAPHIC REF	PART NUMBER	QTY	PART NAME 1 2 3 4 5 6 (PRODUCT LEVEL)	SEE PAGE
	1	1	**173-3083**	1	EXTENSION GP-BACKREST	
	2	1	**177-4937**	1	SPACER (11.7X19.8X20.3MM THK)	
	3	1	**180-5559**	1	SCREW-PAN HEAD (7/16-20X1.75 IN)	
	4	1	**180-5560**	1	SCREW-PAN HEAD (7/16-20X1.25 IN)	
Y	5	1	**180-7304**	1	SEAT GP (VINYL)	872
	6	1	**183-3648**	1	SEAT BELT GP	

Y-SEPARATE ILLUSTRATION

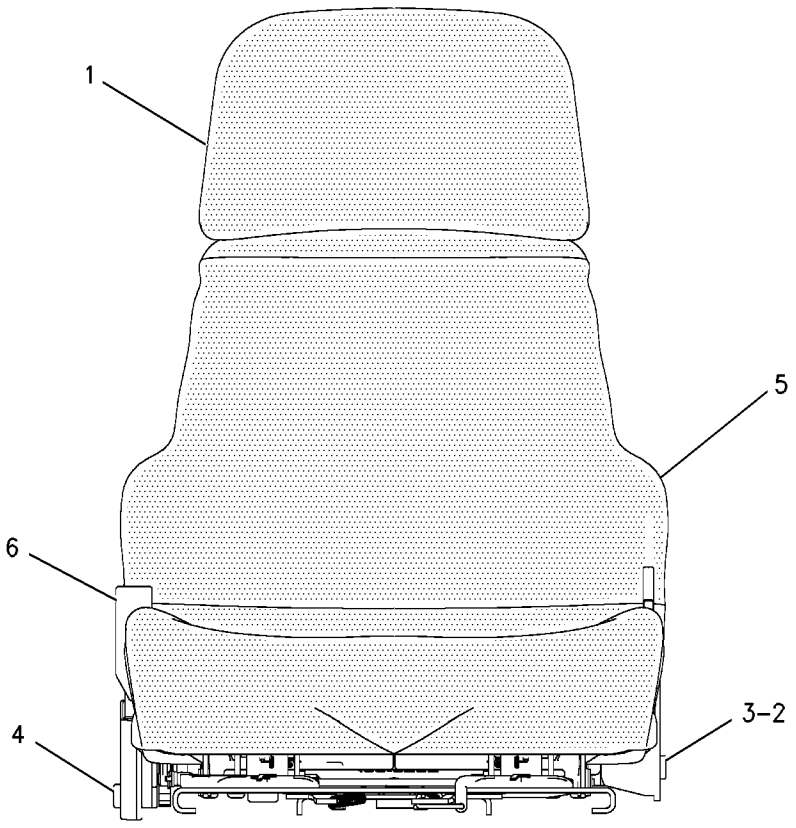

FRONT VIEW

GRAPHIC #1 g00683843

OPERATOR STATION

184-6012 SEAT GP

S/N: ABK1-UP
PART OF 159-2952 SEAT GP-SUSPENSION
AN ATTACHMENT

SMCS-7312 **i01654137**

NOTE	REF NO	GRAPHIC REF	PART NUMBER	QTY	PART NAME 1 2 3 4 5 6 (PRODUCT LEVEL)	SEE PAGE
	1	1	**173-3084**	1	EXTENSION GP-BACKREST	
	2	1	**177-4937**	1	SPACER (11.7X19.8X20.3MM THK)	
	3	1	**180-5559**	1	SCREW-PAN HEAD (7/16-20X1.75 IN)	
	4	1	**180-5560**	1	SCREW-PAN HEAD (7/16-20X1.25 IN)	
Y	5	1	**180-7306**	1	SEAT GP	874
	6	1	**183-3648**	1	SEAT BELT GP	

Y-SEPARATE ILLUSTRATION

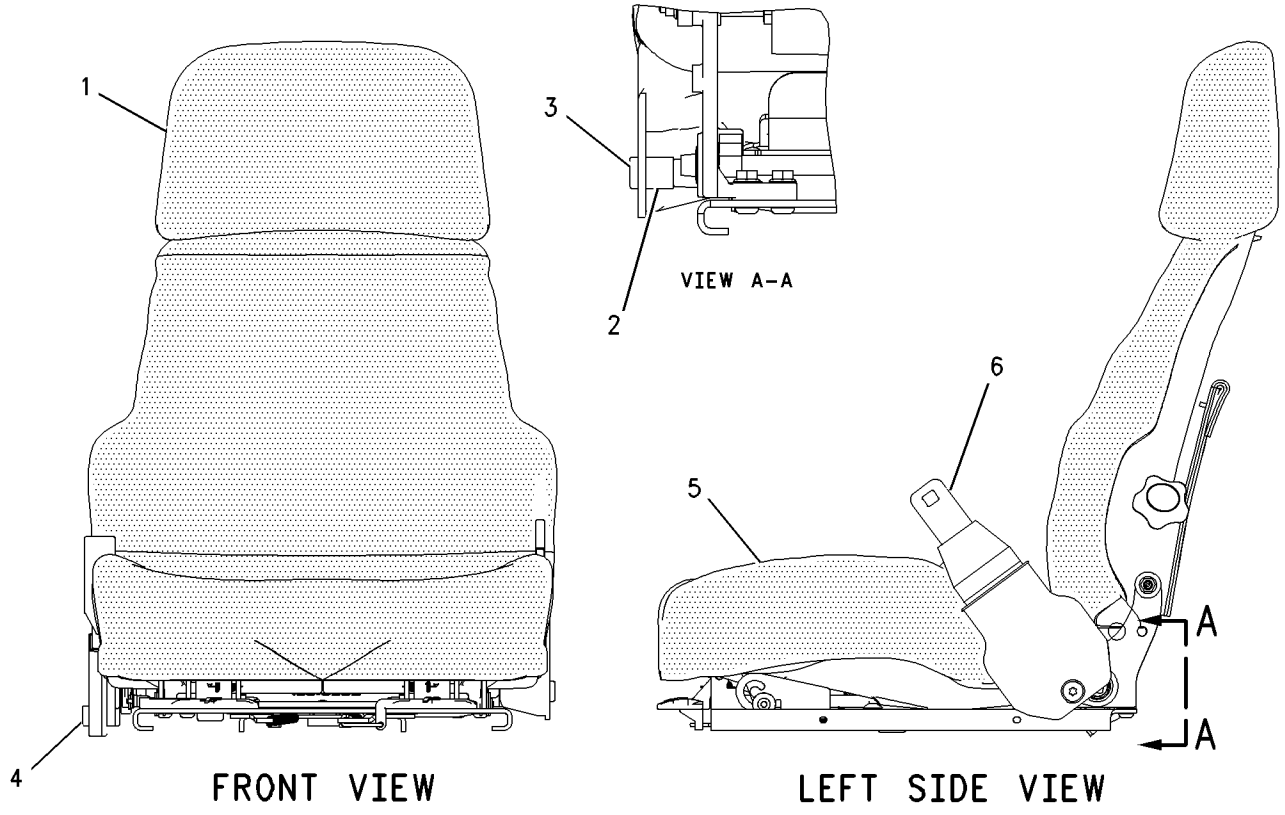

GRAPHIC #1 g00682472

OPERATOR STATION

156-7419 SEAT GP-SUSPENSION

S/N: ABK1-UP
AN ATTACHMENT

SMCS-7321, 7324, 7336 **i00860115**

NOTE	REF NO	GRAPHIC REF	PART NUMBER	QTY	PART NAME 1 2 3 4 5 6 (PRODUCT LEVEL)	SEE PAGE
Y	1	1	**159-2952**	1	SEAT GP-SUSPENSION	881

Y-SEPARATE ILLUSTRATION

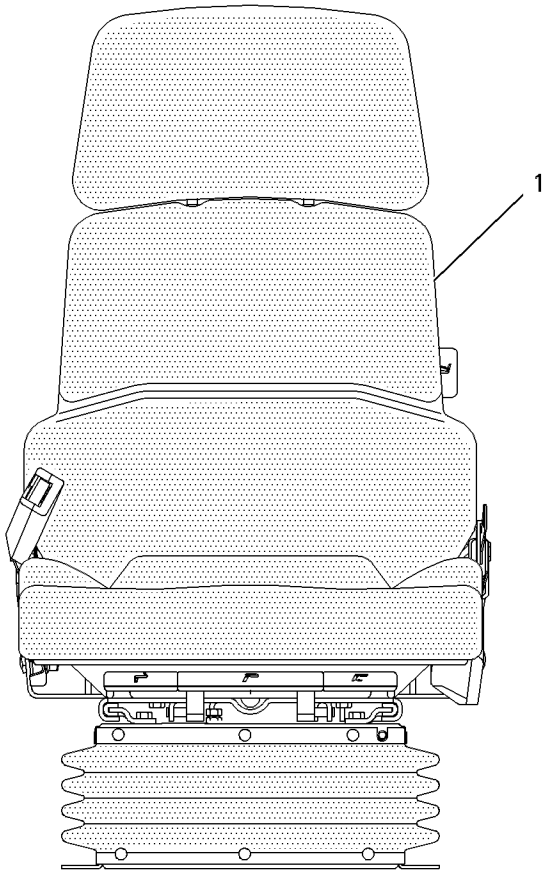

FRONT VIEW

GRAPHIC #1 g00444688

OPERATOR STATION

159-2950 SEAT GP-SUSPENSION–VINYL

S/N: ABK1-UP

PART OF 164-9429 SEAT AR, 163-0879 SEAT GP

ALSO AN ATTACHMENT

SMCS-7321, 7324, 7336 **i01573609**

NOTE	REF NO	GRAPHIC REF	PART NUMBER	QTY	PART NAME 1 2 3 4 5 6 (PRODUCT LEVEL)	SEE PAGE
Y	1	1	**160-7165**	1	SUSPENSION GP-SEAT	882
Y	2	1	*184-6011*	1	SEAT GP	876
JZ	3	1		4	BLOCK-SLIDER	
	4	1	**4F-4879**	1	BOLT (3/8-16X.5 IN)	
	5	1	**203-7703**	2	WASHER-HARD (10.2X22.22X2.38MM THK)	
J	6	1	**173-5787**	4	SETSCREW	
					AVAILABLE REPAIR KIT(S):	
J			**173-7035**	1	KIT-SLIDER BLOCK	

J-KIT MARKED J INCLUDES PART(S) MARKED J
Y-SEPARATE ILLUSTRATION
Z-NOT SERVICED SEPARATELY

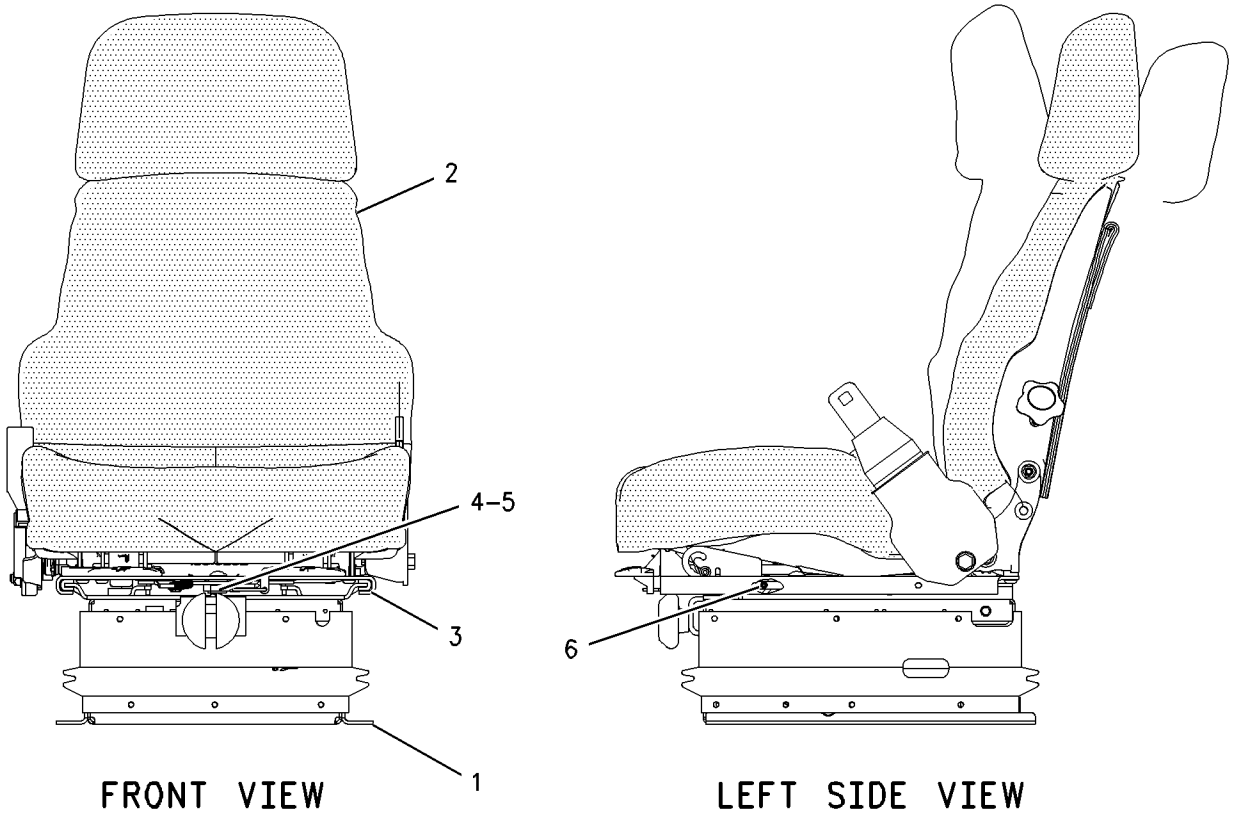

GRAPHIC #1 g00819547

OPERATOR STATION

159-2951 SEAT GP-SUSPENSION

S/N: ABK1-UP
FABRIC
PART OF 163-0942, 163-0943 CAB AR
AN ATTACHMENT

SMCS-7321, 7324, 7336 **i01547959**

NOTE	REF NO	GRAPHIC REF	PART NUMBER	QTY	PART NAME 1 2 3 4 5 6 (PRODUCT LEVEL)	SEE PAGE
Y	1	1	**160-7165**	1	SUSPENSION GP-SEAT	882
Y	2	1	*184-6012*	1	SEAT GP	877
JZ	3	1		4	BLOCK-SLIDER	
J	4	1	**203-7700**	1	BOLT (3/8-16 THD)	
J		1	**203-7703**	1	WASHER-HARD (10.2X22.22X2.38MM THK)	
J	5	1	**173-5787**	4	SETSCREW	
					AVAILABLE REPAIR KIT(S):	
J			**173-7035**	1	KIT-SLIDER BLOCK	

J-KIT MARKED J INCLUDES PARTS MARKED J
Y-SEPARATE ILLUSTRATION
Z-NOT SERVICED SEPARATELY

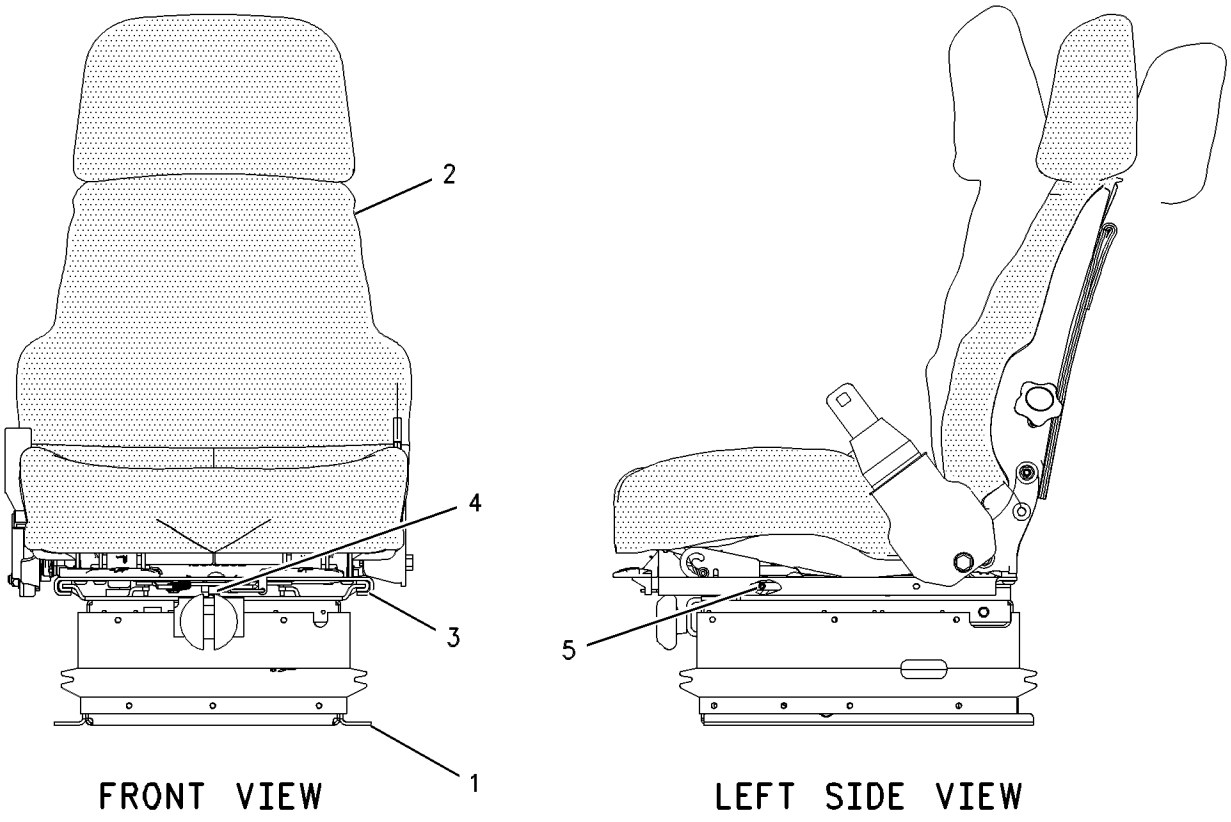

GRAPHIC #1 g00610923

159-2952 SEAT GP-SUSPENSION

S/N: ABK1-UP
FABRIC
PART OF 156-7419 SEAT GP-SUSPENSION
AN ATTACHMENT

SMCS-7321, 7324, 7336 **i01550343**

NOTE	REF NO	GRAPHIC REF	PART NUMBER	QTY	PART NAME 1 2 3 4 5 6 (PRODUCT LEVEL)	SEE PAGE
Y	1	1	**161-7539**	1	SUSPENSION GP-SEAT (AIR)	884
JZ	2	1		4	BLOCK-SLIDER	
J	3	1	**173-5787**	4	SETSCREW	
Y	4	1	**184-6012**	1	SEAT GP	877
J	5	1	**4F-4879**	1	BOLT (3/8-16X.5 IN)	
J	6	1	**203-7703**	2	WASHER-HARD (10.2X22.22X2.38MM THK)	
					AVAILABLE REPAIR KIT(S):	
J			**173-7035**	1	KIT-SLIDER BLOCK	

J-KIT MARKED J INCLUDES PARTS MARKED J
Y-SEPARATE ILLUSTRATION
Z-NOT SERVICED SEPARATELY

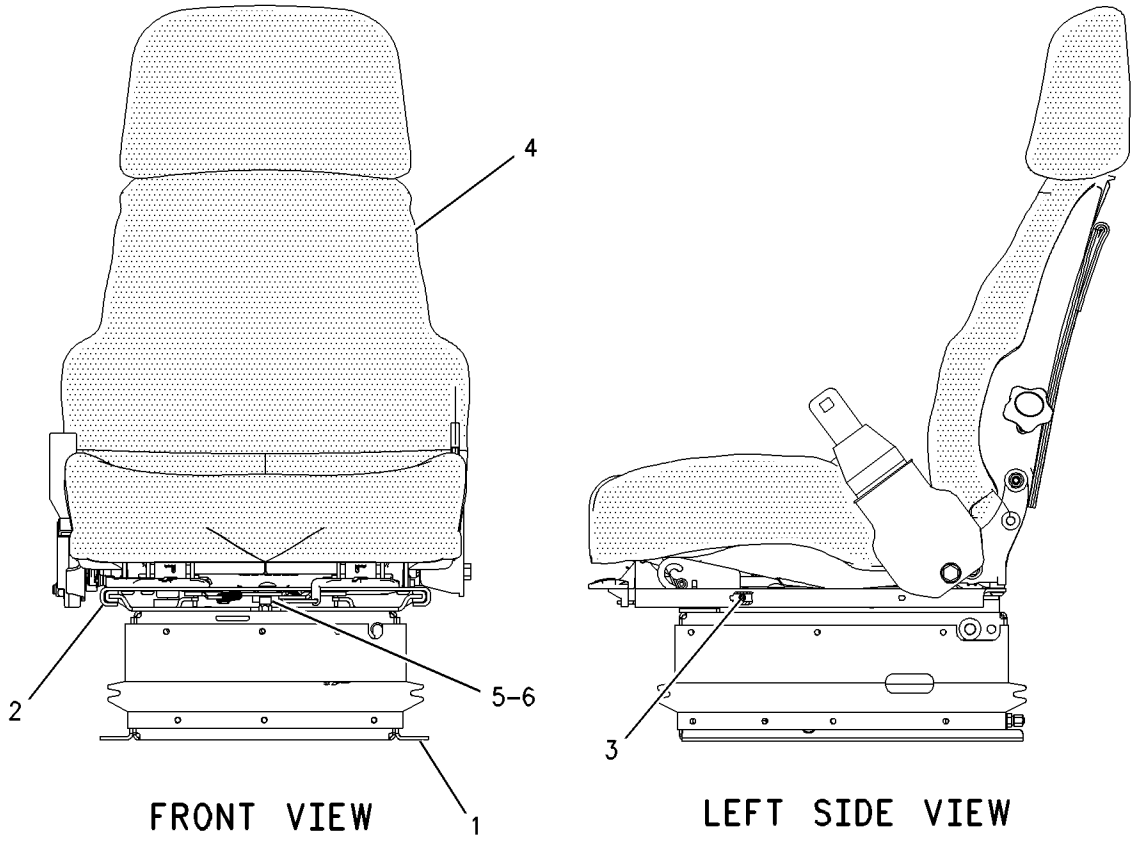

GRAPHIC #1 g00827877

OPERATOR STATION

160-7165 SUSPENSION GP-SEAT

S/N: ABK1-UP
PART OF 159-2950 SEAT GP-SUSPENSION
ALSO AN ATTACHMENT

SMCS-7324 **i01591029**

NOTE	REF NO	GRAPHIC REF	PART NUMBER	QTY	PART NAME 1 2 3 4 5 6 (PRODUCT LEVEL)	SEE PAGE
	1	1	**2K-4973**	2	LOCKNUT (3/8-16 THD)	
	2	1	**4V-7884**	2	BEARING	
	3	1	**4V-8577**	4	BEARING	
	4	1	**5V-1497**	1	RETAINER	
	5	1	**8Y-5965**	1	ABSORBER-SHOCK	
	6	1	**8Y-6012**	1	ARM AS-SUSPENSION	
	7	1	**8Y-6014**	1	HOUSING AS-LOWER	
	8	1	**8Y-6024**	2	SHAFT AS	
J	9	1	**101-0003**	20	FASTENER	
J	10	1	**166-6781**	3	FASTENER (15.9MM OD)	
J		1	**197-7689**	3	FASTENER (5.9MM OD)	
J	11	1	**163-1146**	3	FASTENER	
	12	1	**145-0326**	1	FILM-INSTRUCTION (SEAT ADJUSTMENT)	
	13	1	**169-7380**	1	BOLT-SOCKET HEAD (3/8-16X0.375 IN)	
Y	14	1	**174-2231**	1	HOUSING GP-SEAT SUSPENSION	816
	15	1	**197-7689**	3	FASTENER	
					AVAILABLE REPAIR KIT(S):	
J			**8Y-5944**	1	KIT-SUSPENSION BOOT	
					(INCLUDES BOOT, RETAINER, FASTENERS & PARTS MARKED J)	
			101-4194	1	KIT-BELT TETHER	
			101-4195	1	KIT-SUSPENSION ROLLER	

J-KIT MARKED J SERVICES PART(S) MARKED J
Y-SEPARATE ILLUSTRATION

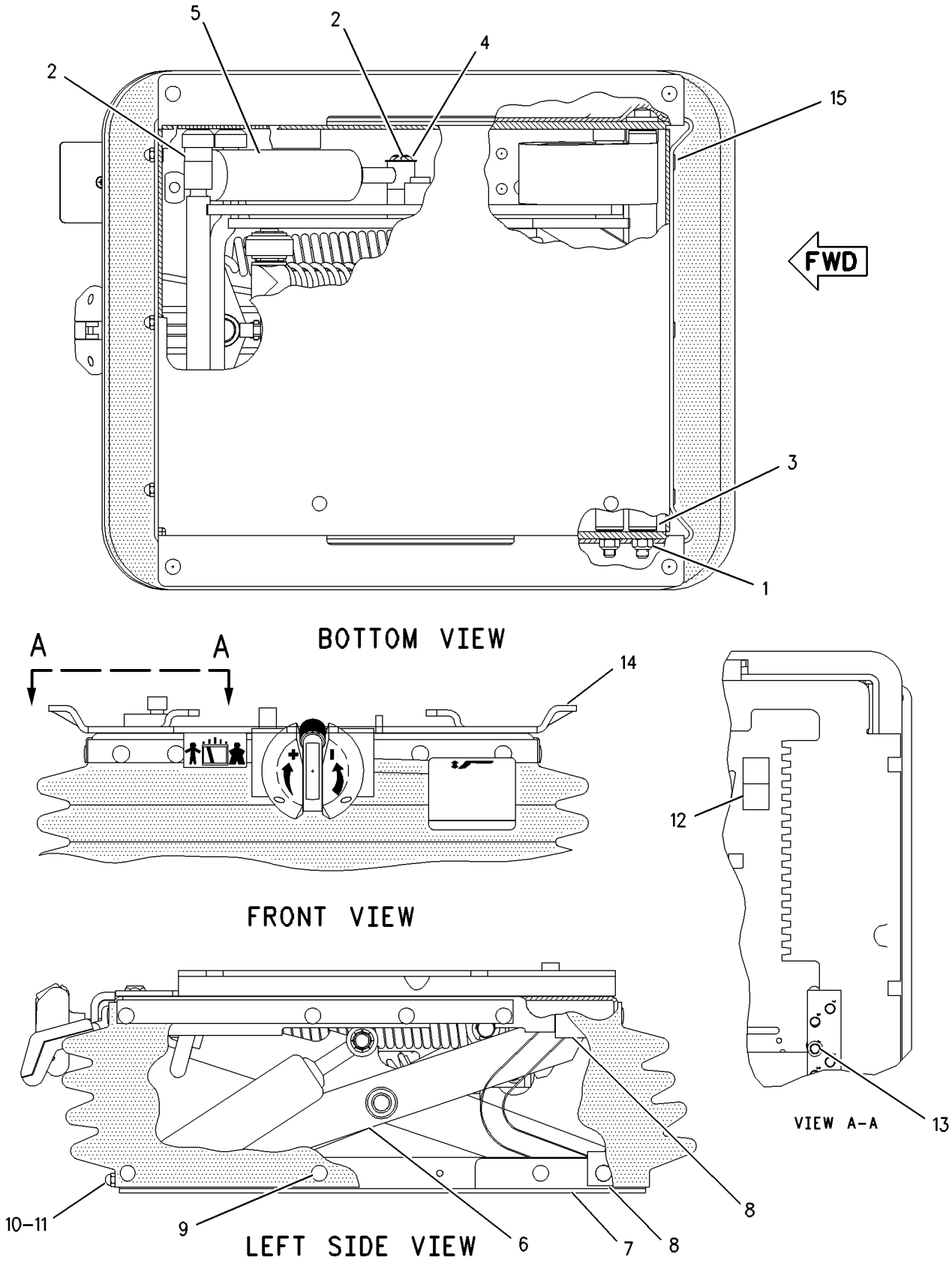

GRAPHIC #1 g00801013

OPERATOR STATION

161-7539 SUSPENSION GP-SEAT

S/N: ABK1-UP
24 VOLT. AIR
PART OF 159-2952 SEAT GP-SUSPENSION
AN ATTACHMENT

SMCS-7324 **i01611735**

NOTE	REF NO	GRAPHIC REF	PART NUMBER	QTY	PART NAME 1 2 3 4 5 6 (PRODUCT LEVEL)	SEE PAGE
	1	1	**1B-4430**	4	NUT-JAM (1/2-20 THD)	
	2	1	**3J-4818**	4	LOCKWASHER	
	3	1	**4V-7884**	2	BEARING	
	4	1	**4V-8556**	1	BOLT (3/8-16X2.34 IN)	
	5	1	**6K-0806**	1	STRAP-CABLE	
	6	1	**8L-8413**	5	STRAP-CABLE	
	7	1	**8Y-6917**	1	BOOT	
	8	1	**166-7401**	1	HOUSING AS	
	9	1	**9M-0164**	1	CLAMP-HOSE	
	10	1	**102-6317**	4	BUMPER	
	11	1	**123-8157**	2	SHAFT	
	12	1	**123-9131**	1	ABSORBER-SHOCK	
	13	1	**124-7128**	1	BUSHING-RELIEF	
	14	1	**128-0686**	2	SPACER (9.78X15.88X27.8MM THK)	
	15	1	**147-4549**	2	FITTING-ELBOW	
	16	1	**147-6522**	1	SPRING	
	17	1	**147-6523**	1	COMPRESSOR	
	18	1	**148-3749**	1	SCISSORS AS	
	19	1	**160-7765**	1	WASHER (16.26X22.23X1.97MM THK)	
B	20	1	**160-7766**	3	WASHER (16.26X22.23X0.51MM THK)	
B	21	1	**160-7767**	8	WASHER (3.68X12.57X0.51MM THK)	
	22	1	**164-5951**	1	HOUSING AS	
		1	**2K-4973**	1	LOCKNUT (3/8-16 THD)	
	23	1	**2K-4973**	3	LOCKNUT (3/8-16 THD)	
	24	1	**5P-8167**	1	BOLT (3/8-16X0.625 IN)	
	25	1	**8M-3267**	1	SCREW-HEX SOCKET (3/8-16X0.75 IN)	
	26	1	**8T-2501**	2	BOLT (3/8-16X2 IN)	
BE	27	1	**147-6541**		TUBE	
	28	1	**128-0613**	1	KIT-TETHER	
					(INCLUDES 2 TETHERS)	
JZ	29	1		27	CLIP	
LZ	30	1		4	ROLLER	
LZ	31	1		4	BEARING	
PZ	32	1		1	HARNESS	
PZ	33	1		1	NUT	
PZ		1		1	WASHER (0.38X0.88X0.02 IN THK)	
PZ		1		1	WASHER	
	34	1	**169-7380**	1	BOLT-SOCKET HEAD (3/8-16X0.375 IN)	
	35	1	**145-0326**	1	FILM-INSTRUCTION (SEAT ADJUSTMENT)	
					AVAILABLE REPAIR KIT(S):	
J			**8Y-6928**	1	KIT-FASTENER	
L			**123-9128**	1	KIT-ROLLER	
					(INCLUDES TIE WRAP)	
P			**123-8266**	1	KIT-WIRING HARNESS (AIR SUSPENSION SEAT)	
					(INCLUDES TIE WRAPS)	

B-USE AS REQUIRED
E-ORDER BY THE CENTIMETER
J-REPAIR KIT MARKED J INCLUDES PART(S) MARKED J
L-REPAIR KIT MARKED L INCLUDES PART(S) MARKED L
P-REPAIR KIT MARKED P INCLUDES PART(S) MARKED P
Z-NOT SERVICED SEPARATELY

161-7539 SUSPENSION GP-SEAT *(contd.)* i01611735

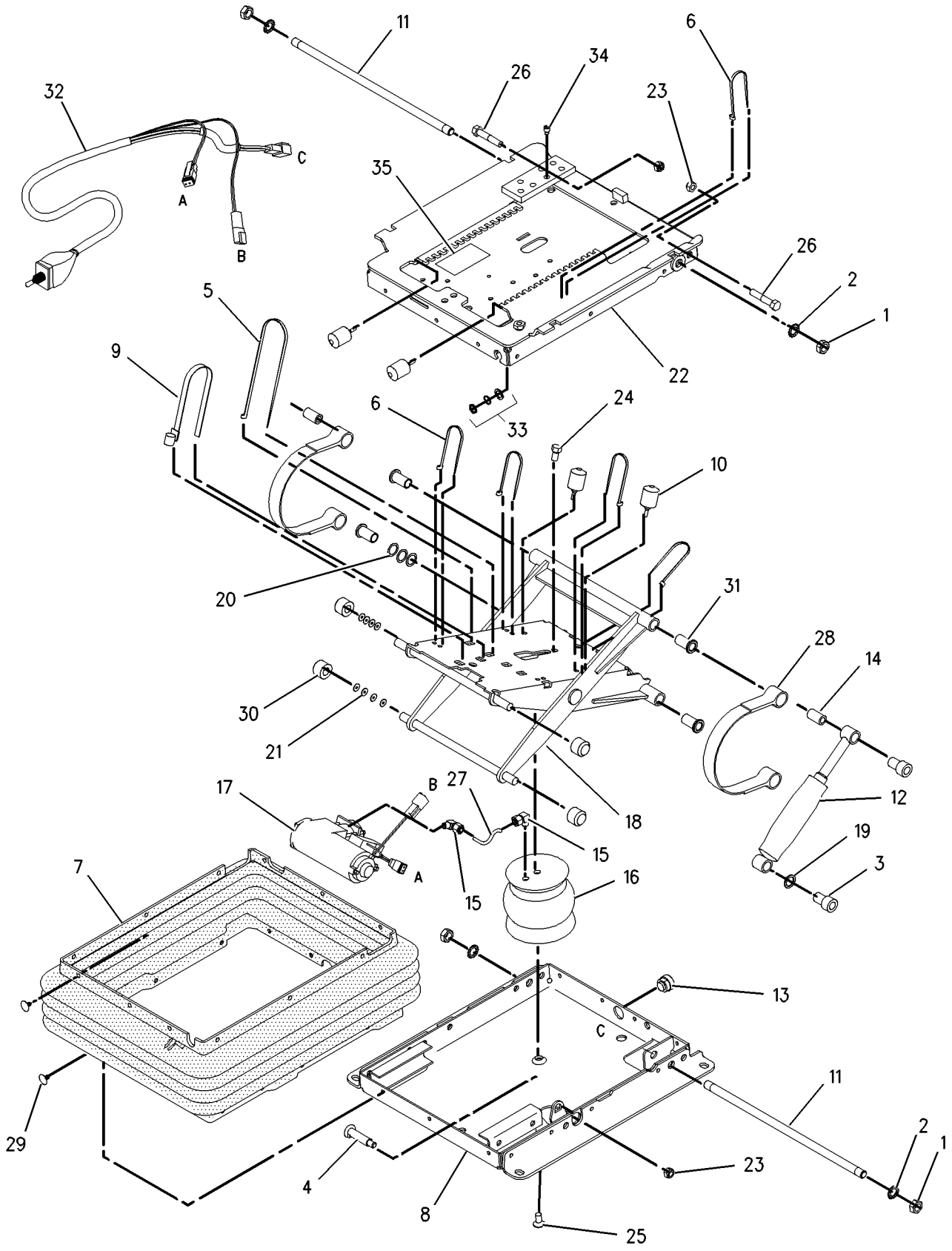

GRAPHIC #1 g00835357

OPERATOR STATION

169-9649 TANK GP-WINDOW WASHER

S/N: ABK1-UP
PART OF 186-5899 TANK GP-WINDOW WASHER
AN ATTACHMENT

SMCS-7306 **i01590916**

NOTE	REF NO	GRAPHIC REF	PART NUMBER	QTY	PART NAME 1 2 3 4 5 6 (PRODUCT LEVEL)	SEE PAGE
	1	1	**169-9650**	1	BOTTLE-WASHER	
	2	1	**8E-8292**	1	CAP-VENTED	
E	3	1	**144-0195**	2	HOSE (61CM EACH)	
	4	1	**186-4857**	1	HARNESS AS (WATER BOTTLE)	
BD	5	1	**6V-5817**		CONDUIT-FLEXIBLE	
	6	1	**7T-8891**	4	PUMP AS-WASHER	
B	7	1	**3S-2093**	7	STRAP-CABLE	
E	8	1	**144-0195**	4	HOSE (15CM EACH)	
E	9	1	**144-0195**	2	HOSE (57CM EACH)	

B-USE AS REQUIRED
D-ORDER BY THE METER
E-ORDER BY THE CENTIMETER

169-9649 TANK GP-WINDOW WASHER *(contd.)* i01590916

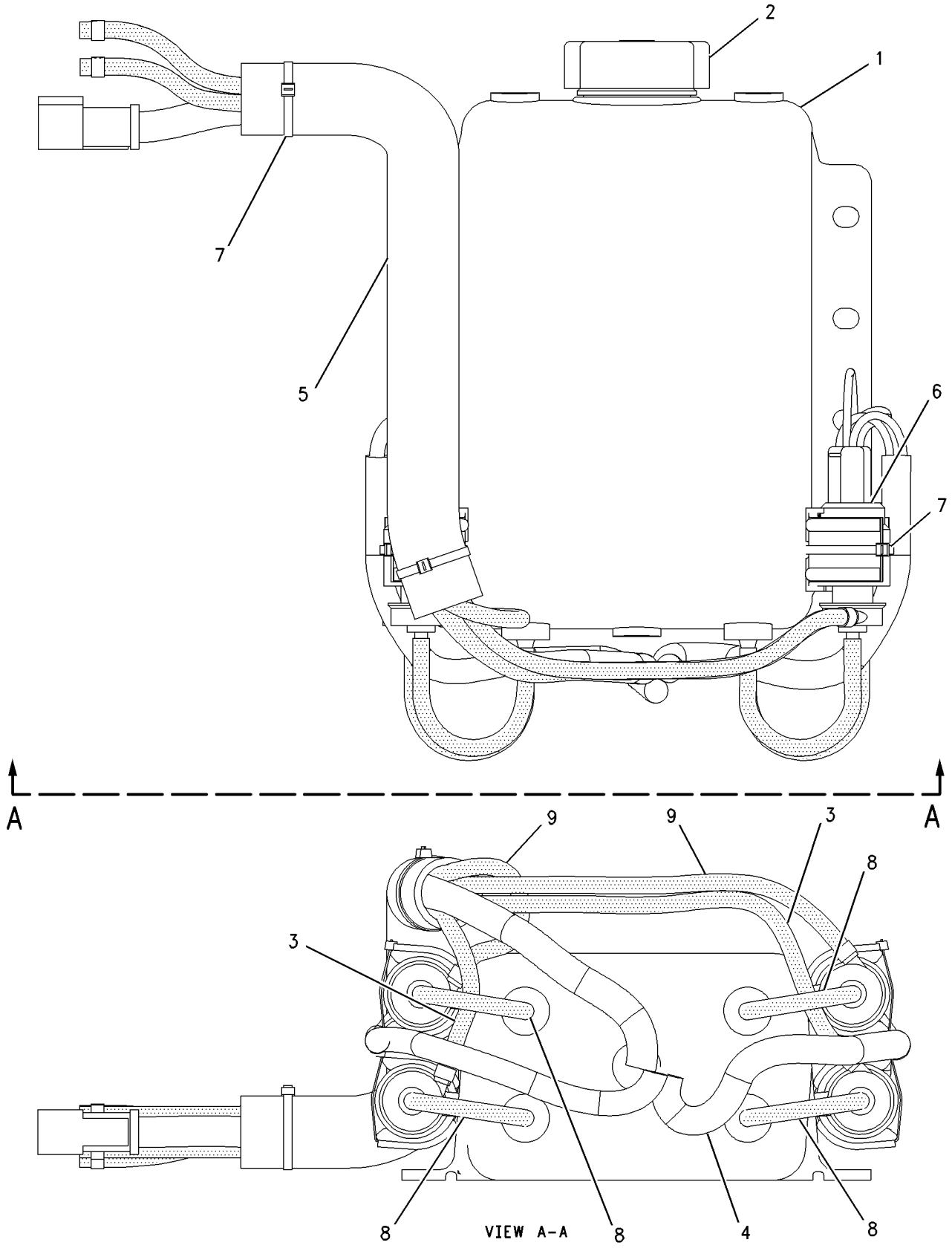

GRAPHIC #1 g00824992

OPERATOR STATION

186-5899 TANK GP-WINDOW WASHER

S/N: ABK1-UP
PART OF 163-0942, 163-0943 CAB AR
AN ATTACHMENT

SMCS-7306 **i01446832**

NOTE	REF NO	GRAPHIC REF	PART NUMBER	QTY	PART NAME 1 2 3 4 5 6 (PRODUCT LEVEL)	SEE PAGE
	1	1	**8T-9364**	1	BOLT (1/4-20X0.625 IN)	
	2	1	**8T-5383**	4	VALVE AS-CHECK (WIPER/WASHER SYSTEM)	
	3	1	**9X-6772**	5	STRAP-CABLE	
Y	4	1	**169-9649**	1	TANK GP-WINDOW WASHER	886
	5	1	**156-6175**	1	CLIP	
	6	1	**3E-9865**	4	LOCKNUT (1/4-20 THD)	
	7	1	**8T-4205**	4	WASHER-HARD (7.2X14.5X2MM THK)	

Y-SEPARATE ILLUSTRATION

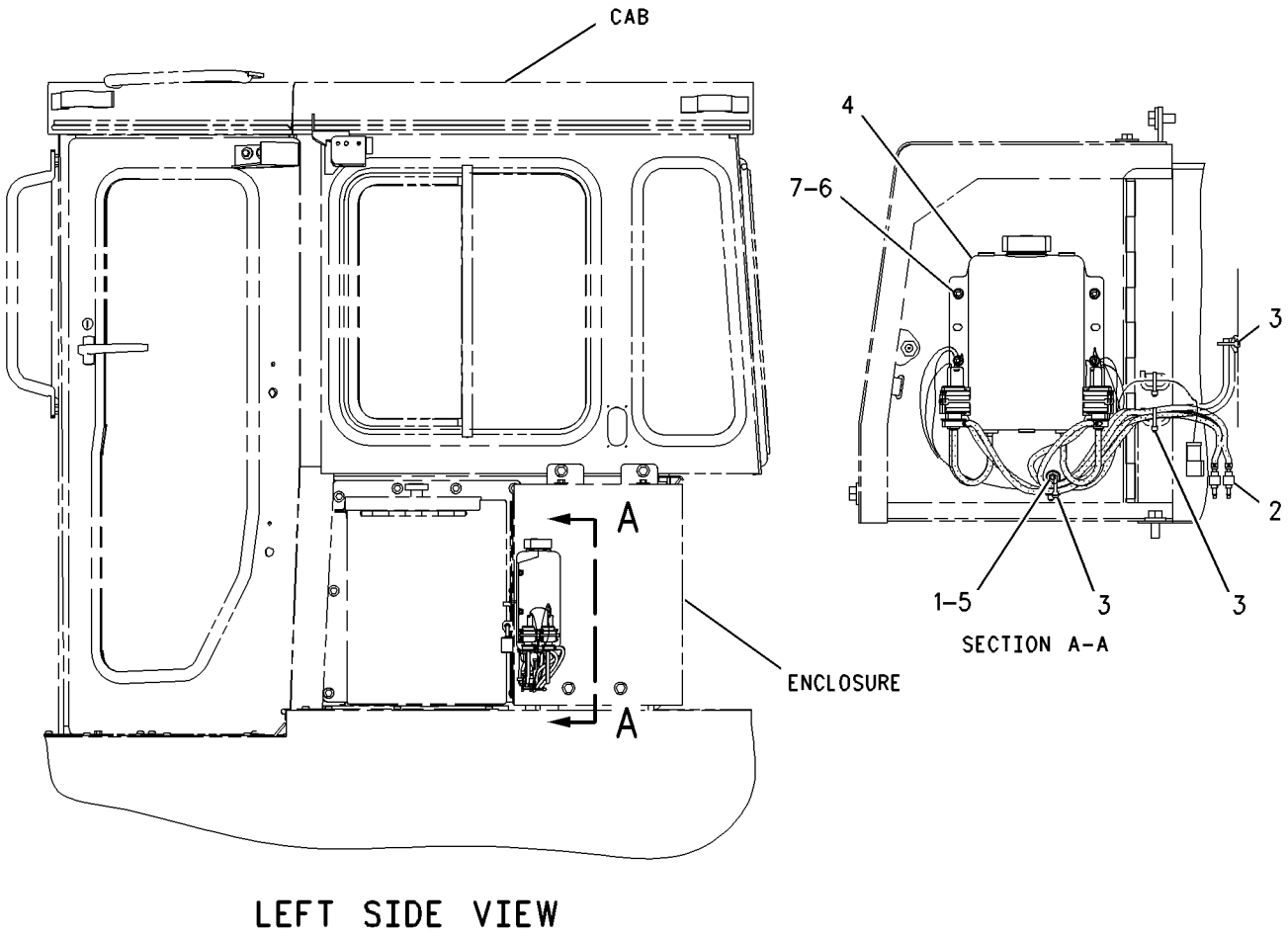

LEFT SIDE VIEW

GRAPHIC #1 g00688043

MEMORANDA

OPERATOR STATION

157-3736 WASHER GP-WINDOW

S/N: ABK1-UP
PART OF 157-4817 CAB AR
AN ATTACHMENT

SMCS-7306 **i01593175**

NOTE	REF NO	GRAPHIC REF	PART NUMBER	QTY	PART NAME 1 2 3 4 5 6 (PRODUCT LEVEL)	SEE PAGE
	1	1	**157-5129**	1	HARNESS AS	
	2	1	**9U-9048**	1	HARNESS AS-RADIO	
E	3	1	**144-0195**		HOSE (405CM)	
	4	1	**9D-3768**	8	GROMMET	
E	5	1	**7X-7702**		CONDUIT-FLEXIBLE (122CM)	
	6	1,2	**8T-5400**	6	CONNECTOR	
M	7	1,2	**6V-6889**	6	NUT (M8X1.25 THD)	
	8	1	**6V-8801**	1	NUT (3/8-16 THD)	
	9	1,2	**2P-4337**	4	SCREW-TAPPING	
	10	1	**5S-7349**	2	BOLT (1/4-20X0.5 IN)	
	11	2	**9N-1995**	4	RIVET-POP	
	12	1,2	**3E-3380**	2	WEDGE-PLUG LOCK	
	13	1	**8E-2589**	2	CLIP	
	14	1,2	**102-8810**	2	KIT-CONNECTING PLUG (6 PINS)	
					(INCLUDES PLUG AS & WEDGE)	
	15	1,2	**6K-9632**	2	TEE	
	16	2	**102-8803**	1	KIT-RECEPTACLE (3 PIN)	
					(INCLUDES RECEPTACLE AS & WEDGE)	
	17	2	**8E-6856**	1	COVER	
	18	1	**8L-8413**	28	STRAP-CABLE	
	19	1,2	**8T-4205**	6	WASHER-HARD (7.2X14.5X2MM THK)	
	20	1	**8T-4896**	1	WASHER-HARD (10.2X18.5X2.5MM THK)	
	21	2	**2D-0388**	2	GROMMET	
E	22	2	**144-0195**		HOSE (422CM)	
	23	2	**102-8804**	1	KIT-RECEPTACLE (4 PIN)	
					(INCLUDES RECEPTACLE AS & WEDGE)	
	24	2	**3E-3377**	1	WEDGE-RECEPTACLE LOCK	
	25	2	**102-8809**	1	KIT-CONNECTING PLUG (4 PIN)	
					(INCLUDES PLUG AS & WEDGE)	
	26	2	**3E-3374**	1	WEDGE-PLUG LOCK (4 PIN)	
	27	1,2	**8T-8737**	3	PLUG-SEAL	
	28	2	**3E-3371**	1	WEDGE-RECEPTACLE LOCK (3 PIN)	
EJ	29	1,2	**144-0195**	2	HOSE (160CM EACH)	
EJ	30	1,2	**144-0195**	2	HOSE (290CM EACH)	
E	31	1	**144-0195**		HOSE (480CM)	
	32	1,2	**4P-8134**	2	CLIP	
	33	2	**4P-7581**	2	CLIP	
BD	34	1	**5P-7086**		TRIM	

B-USE AS REQUIRED
D-ORDER BY THE METER
E-ORDER BY THE CENTIMETER
J-QUANTITIES SHOWN ARE THOSE REQUIRED FOR BOTH LH & RH SIDES
M-METRIC PART

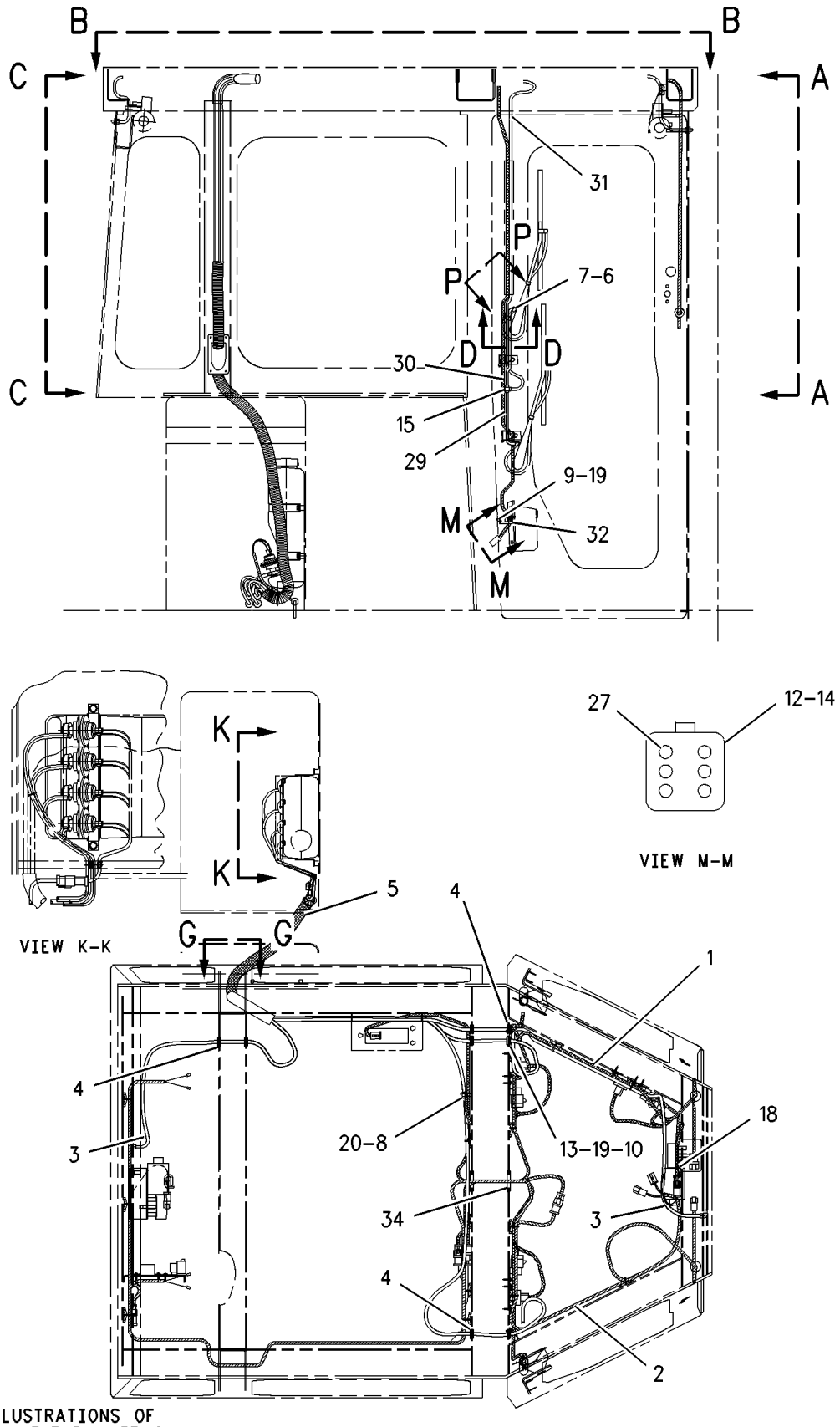

REFER TO ALL ILLUSTRATIONS OF THIS GROUP FOR AUXILIARY VIEWS

GRAPHIC #1 g00826448

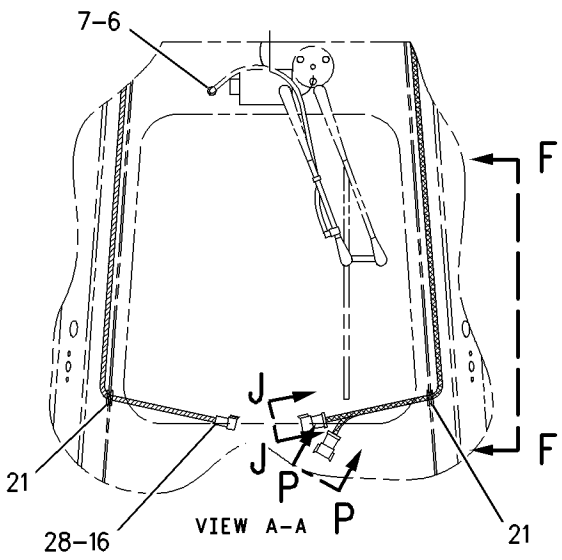

VIEW A-A

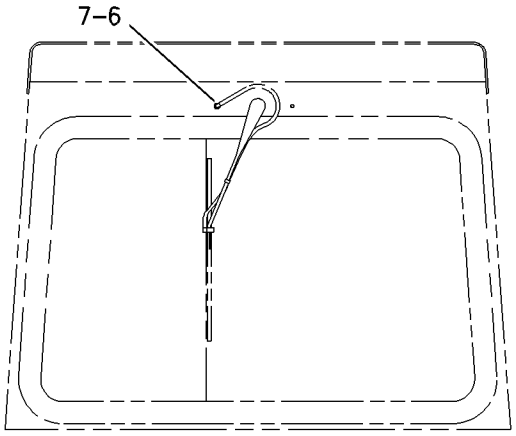

VIEW C-C

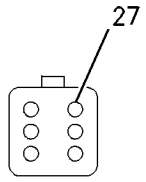

VIEW N-N

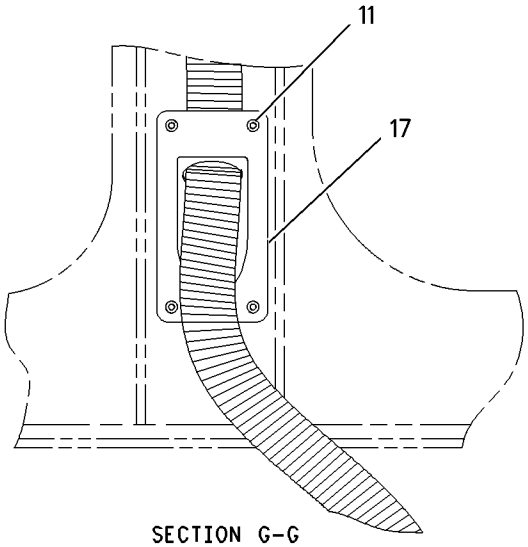

SECTION G-G

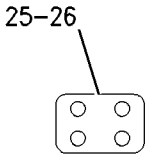

VIEW P-P

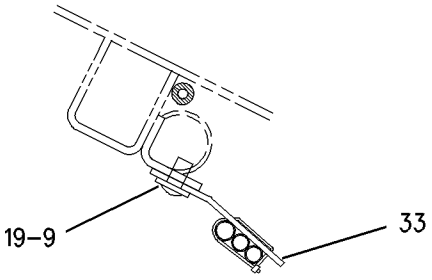

SECTION D-D

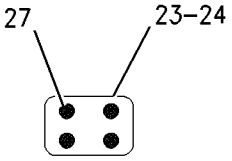

VIEW J-J

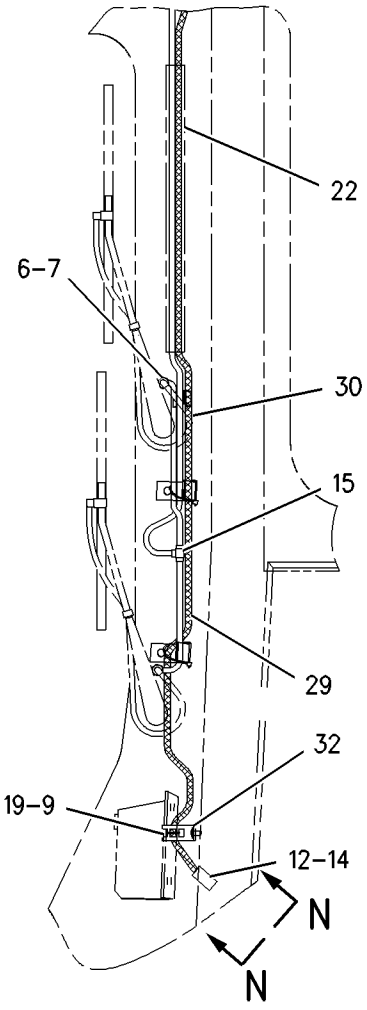

SECTION F-F

GRAPHIC #2

g00826407

OPERATOR STATION

8E-5113 WINDOW AS-SLIDING—RH

S/N: ABK1-UP
PART OF 157-3737 CAB GP
AN ATTACHMENT

SMCS-7310 **i01219822**

NOTE	PART NUMBER	QTY	PART NAME 1 2 3 4 5 6 (PRODUCT LEVEL)	SEE PAGE
Y	*6T-8402*	1	WINDOW GP-CAB (RH)(SLIDING)	895
			—OR—	
Y	*8E-3446*	1	WINDOW GP-CAB (RH)(SLIDING)	901

Y-SEPARATE ILLUSTRATION

OPERATOR STATION

8E-5114 WINDOW AS-SLIDING—LH

S/N: ABK1-UP
PART OF 157-3737 CAB GP
AN ATTACHMENT

SMCS-7310 **i01219825**

NOTE	PART NUMBER	QTY	PART NAME 1 2 3 4 5 6 (PRODUCT LEVEL)	SEE PAGE
Y	*6T-8403*	1	WINDOW GP-CAB (LH)(SLIDING)	896
			—OR—	
Y	*8E-3447*	1	WINDOW GP-CAB (LH)(SLIDING)	902

Y-SEPARATE ILLUSTRATION

6T-8402 WINDOW GP-CAB–RH

S/N: ABK1-UP
SLIDING
PART OF 8E-5113 WINDOW AS-SLIDING
AN ATTACHMENT

SMCS-7310 **i01625874**

NOTE	REF NO	GRAPHIC REF	PART NUMBER	QTY	PART NAME 1 2 3 4 5 6 (PRODUCT LEVEL)	SEE PAGE
Y	1	1	**7T-1068**	1	WINDOW GP-CAB (RH)	897
	2	1	**7T-1330**	1	GLASS (TINTED)	
D	3	1	**5P-5680**		SEAL (1.14M)	
DB	4	1	**8T-0687**		FILLER	
D	5	1	**5P-5680**		SEAL (.66M)	
D	6	1	**6V-5833**		SEAL (.64M)	
E	7	1	**8Y-6839**		SEAL (64 CM)	

B-USE AS REQUIRED
D-ORDER BY THE METER
E-ORDER BY THE CENTIMETER
Y-SEPARATE ILLUSTRATION

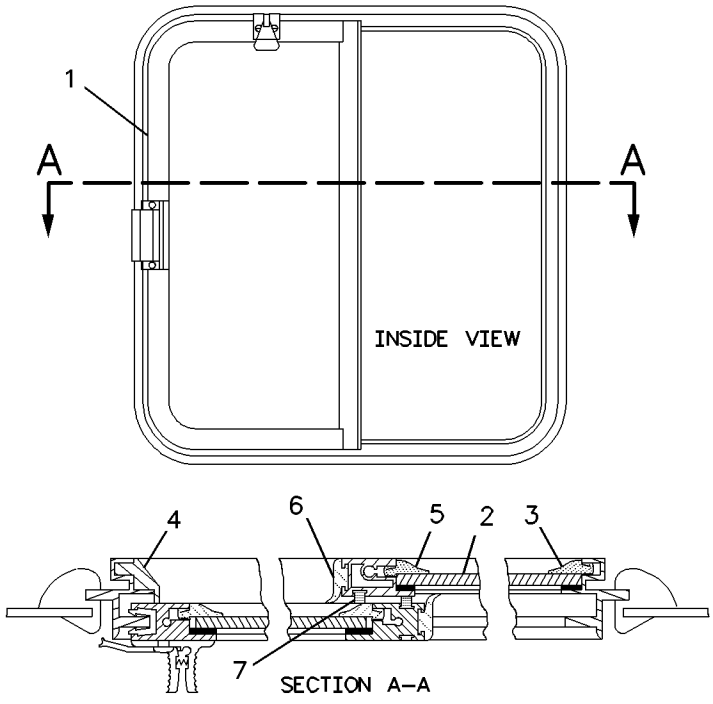

GRAPHIC #1 g00844619

OPERATOR STATION

6T-8403 WINDOW GP-CAB—LH

S/N: ABK1-UP
SLIDING
PART OF 8E-5114 WINDOW AS-SLIDING
AN ATTACHMENT

SMCS-7310 **i01625888**

NOTE	REF NO	GRAPHIC REF	PART NUMBER	QTY	PART NAME 1 2 3 4 5 6 (PRODUCT LEVEL)	SEE PAGE
BD	1	1	**5P-5680**		SEAL	
BD	2	1	**8T-0687**		FILLER	
BD	3	1	**6V-5833**		SEAL	
Y	4	1	**7T-1069**	1	WINDOW GP-CAB (LH)	899
BE	5	1	**8Y-6839**		SEAL	
	6	1	**7T-1330**	1	GLASS (TINTED)	

B-USE AS REQUIRED
D-ORDER BY THE METER
E-ORDER BY THE CENTIMETER
Y-SEPARATE ILLUSTRATION

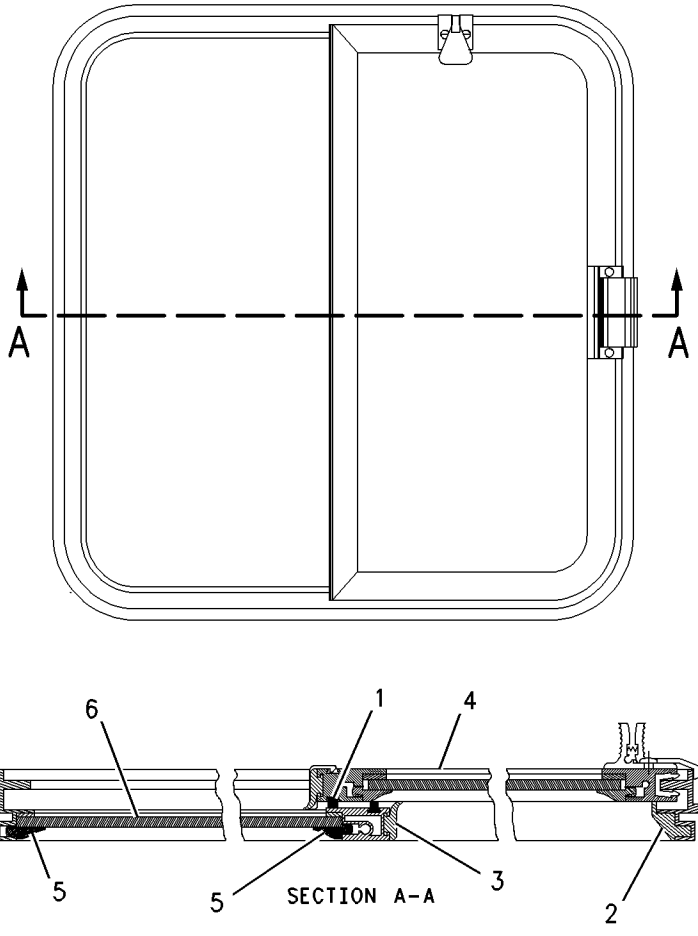

GRAPHIC #1 g00842070

OPERATOR STATION

7T-1068 WINDOW GP-CAB—RH

S/N: ABK1-UP
PART OF 6T-8402 WINDOW GP-CAB
AN ATTACHMENT
TYPE 1

SMCS-7310 **i01080784**

NOTE	REF NO	GRAPHIC REF	PART NUMBER	QTY	PART NAME 1 2 3 4 5 6 (PRODUCT LEVEL)	SEE PAGE
	1	1	**3T-1121**	1	LOCK AS	
	2	1	**2H-6622**	2	SCREW-MACHINE	
	3	1	**9P-7860**	1	LOCK AS	
	4	1	**9P-7859**	2	SCREW	
BD	5	1	**5P-5680**		SEAL (.61M)	
EB	6	1	**9X-6268**		TAPE	
BD	7	1	**6V-5833**		SEAL (.64M)	
BD	8	1	**5P-8918**		SEAL (1.2M)	
BD	9	1	**8Y-6448**	1	GLASS	
BE	10	1	**8Y-6839**		SEAL (64CM)	
BD	11	1	**5P-5680**		SEAL (1.1M)	
	12	1	**124-9774**	1	SLIDE	
	13	1	**117-5677**	1	SLIDE	

B-USE AS REQUIRED
D-ORDER BY THE METER
E-ORDER BY THE CENTIMETER

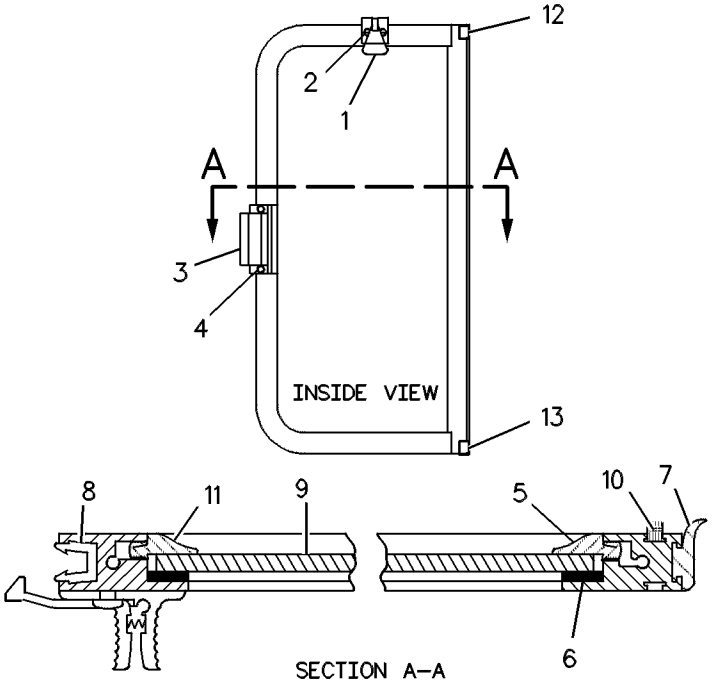

GRAPHIC #1 g00257169

7T-1068 WINDOW GP-CAB—RH

S/N: ABK1-UP
PART OF 6T-8402 WINDOW GP-CAB
AN ATTACHMENT
TYPE 2

SMCS-7310 **i01612444**

NOTE	REF NO	GRAPHIC REF	PART NUMBER	QTY	PART NAME 1 2 3 4 5 6 (PRODUCT LEVEL)	SEE PAGE
	1	1	**3T-1121**	1	LOCK AS	
	2	1	**2H-6622**	2	SCREW-MACHINE	
	3	1	**9P-7860**	1	LOCK AS	
	4	1	**9P-7859**	2	SCREW	
BD	5	1	**5P-5680**		SEAL	
BD	6	1	**6V-5833**		SEAL	
BD	7	1	**5P-8918**		SEAL	
BD	8	1	**8Y-6448**	1	GLASS	
BE	9	1	**8Y-6839**		SEAL	

B-USE AS REQUIRED
D-ORDER BY THE METER
E-ORDER BY THE CENTIMETER

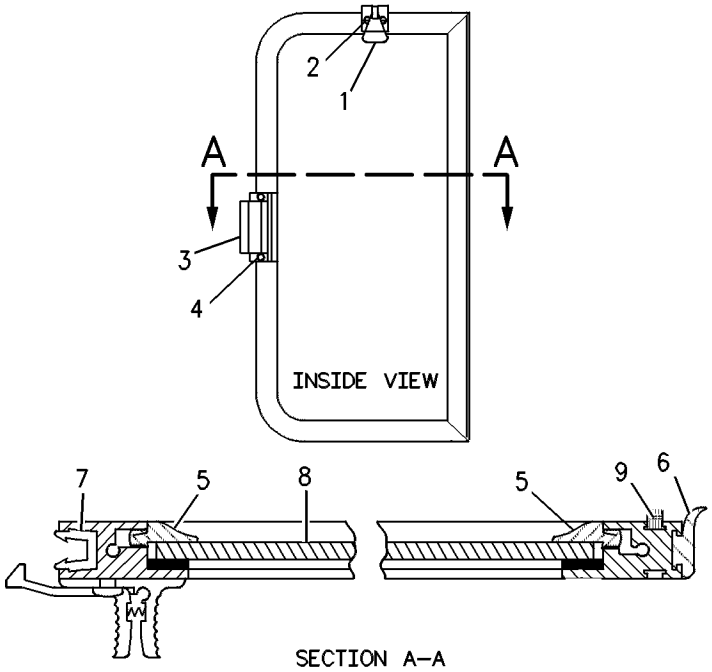

GRAPHIC #1 g00834657

OPERATOR STATION

7T-1069 WINDOW GP-CAB—LH

S/N: ABK1-UP
PART OF 6T-8403 WINDOW GP-CAB
AN ATTACHMENT
TYPE 1

SMCS-7310 **i00731432**

NOTE	REF NO	GRAPHIC REF	PART NUMBER	QTY	PART NAME 1 2 3 4 5 6 (PRODUCT LEVEL)	SEE PAGE
	1	1	**3T-1121**	1	LOCK AS	
	2	1	**2H-6622**	2	SCREW-MACHINE	
	3	1	**9P-7860**	1	LOCK AS	
	4	1	**9P-7859**	2	SCREW	
D	5	1	**5P-5680**		SEAL (.61M)	
EB	6	1	**9X-6268**		TAPE	
D	7	1	**6V-5833**		SEAL (.64M)	
D	8	1	**5P-8918**		SEAL (1.2M)	
	9	1	**8Y-6448**	1	GLASS	
E	10	1	**8Y-6839**		SEAL (64CM)	
D	11	1	**5P-5680**		SEAL (1.1M)	
	12	1	**124-9774**	1	SLIDE	
	13	1	**117-5677**	1	SLIDE	

B-USE AS REQUIRED
D-ORDER BY THE METER
E-ORDER BY THE CENTIMETER

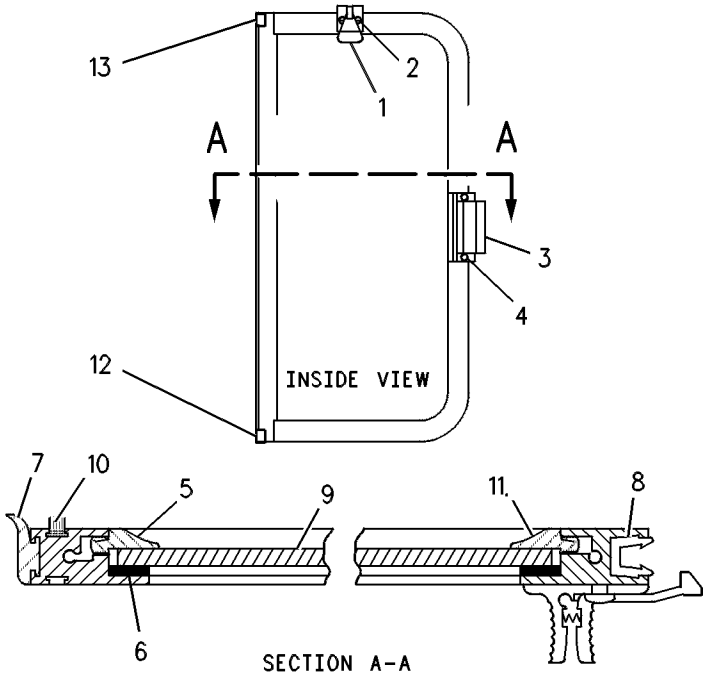

GRAPHIC #1 g00326280

OPERATOR STATION

7T-1069 WINDOW GP-CAB—LH

S/N: ABK1-UP
PART OF 6T-8403 WINDOW GP-CAB
AN ATTACHMENT
TYPE 2

SMCS-7310 **i01612493**

NOTE	REF NO	GRAPHIC REF	PART NUMBER	QTY	PART NAME 1 2 3 4 5 6 (PRODUCT LEVEL)	SEE PAGE
	1	1	**3T-1121**	1	LOCK AS	
	2	1	**2H-6622**	2	SCREW-MACHINE	
	3	1	**9P-7860**	1	LOCK AS	
	4	1	**9P-7859**	2	SCREW	
BD	5	1	**5P-5680**		SEAL	
BD	6	1	**6V-5833**		SEAL	
BD	7	1	**5P-8918**		SEAL	
	8	1	**8Y-6448**	1	GLASS	
BE	9	1	**8Y-6839**		SEAL	

B-USE AS REQUIRED
D-ORDER BY THE METER
E-ORDER BY THE CENTIMETER

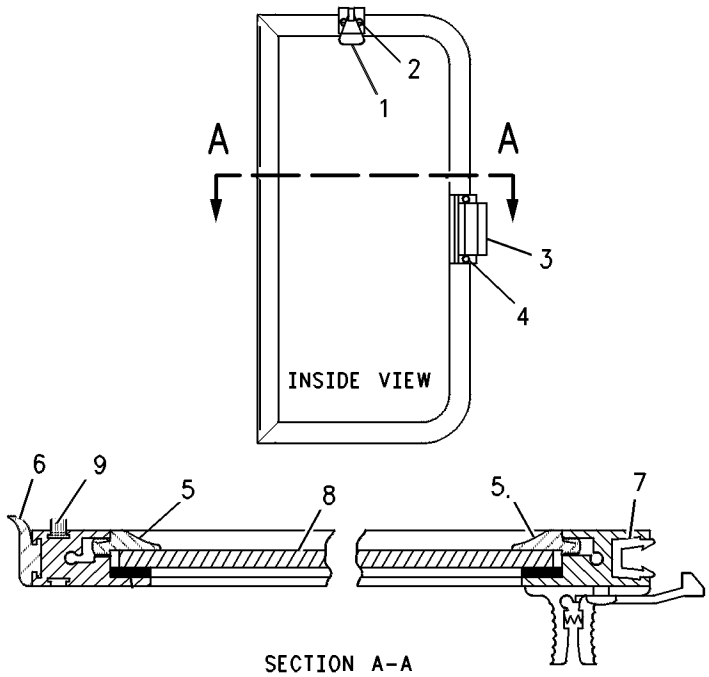

SECTION A-A

GRAPHIC #1 g00834641

OPERATOR STATION

8E-3446 WINDOW GP-CAB–RH

S/N: ABK1-UP
SLIDING
PART OF 8E-5113 WINDOW AS-SLIDING
AN ATTACHMENT

SMCS-7310 **i01233119**

NOTE	REF NO	GRAPHIC REF	PART NUMBER	QTY	PART NAME 1 2 3 4 5 6 (PRODUCT LEVEL)	SEE PAGE
BE	1	1	**8Y-6423**		SEAL	
BE	2	1	**8Y-6459**		TAPE-BUTYL	
	3	1	**8Y-6430**	1	SEAL-WINDOW	
Y	4	1	**8Y-6433**	1	WINDOW GP-CAB (RH)	906
	5	1	**8Y-6462**	1	KIT-LEAF SPRING	
					(INCLUDES SPRING AS & RIVET)	
	6	1	**8Y-6432**	1	GLASS-FIXED-RH (TINTED)	
BE	7	1	**8Y-6424**		SEAL	
BE	8	1	**8Y-6910**		WEATHERSTRIP	

B-USE AS REQUIRED
E-ORDER BY THE CENTIMETER
Y-SEPARATE ILLUSTRATION

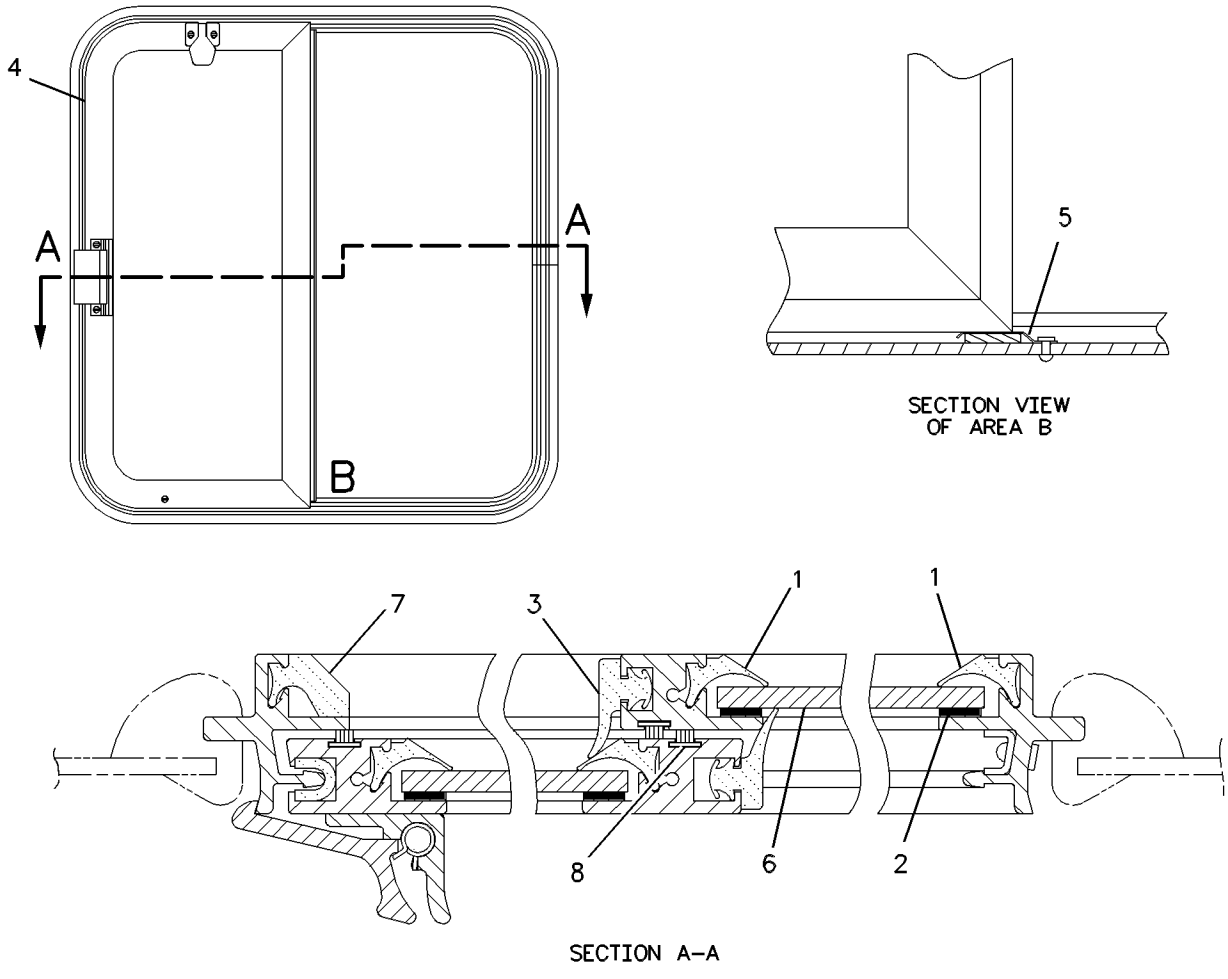

GRAPHIC #1 g00544799

OPERATOR STATION

8E-3447 WINDOW GP-CAB—LH

S/N: ABK1-UP
SLIDING
PART OF 8E-5114 WINDOW AS-SLIDING
AN ATTACHMENT

SMCS-7310 **i01290960**

NOTE	REF NO	GRAPHIC REF	PART NUMBER	QTY	PART NAME 1 2 3 4 5 6 (PRODUCT LEVEL)	SEE PAGE
BE	1	1	**8Y-6423**		SEAL	
BE	2	1	**8Y-6459**		TAPE-BUTYL	
	3	1	**8Y-6430**	1	SEAL-WINDOW	
Y	4	1	**8Y-6420**	1	WINDOW GP-CAB (LH)	904
	5	1	**8Y-6462**	1	KIT-LEAF SPRING	
					(INCLUDES SPRING AS & RIVET)	
	6	1	**8Y-6419**	1	GLASS-FIXED-LH (TINTED)	
BE	7	1	**8Y-6424**		SEAL	
BE	8	1	**8Y-6910**		WEATHERSTRIP	

B-USE AS REQUIRED
E-ORDER BY THE CENTIMETER
Y-SEPARATE ILLUSTRATION

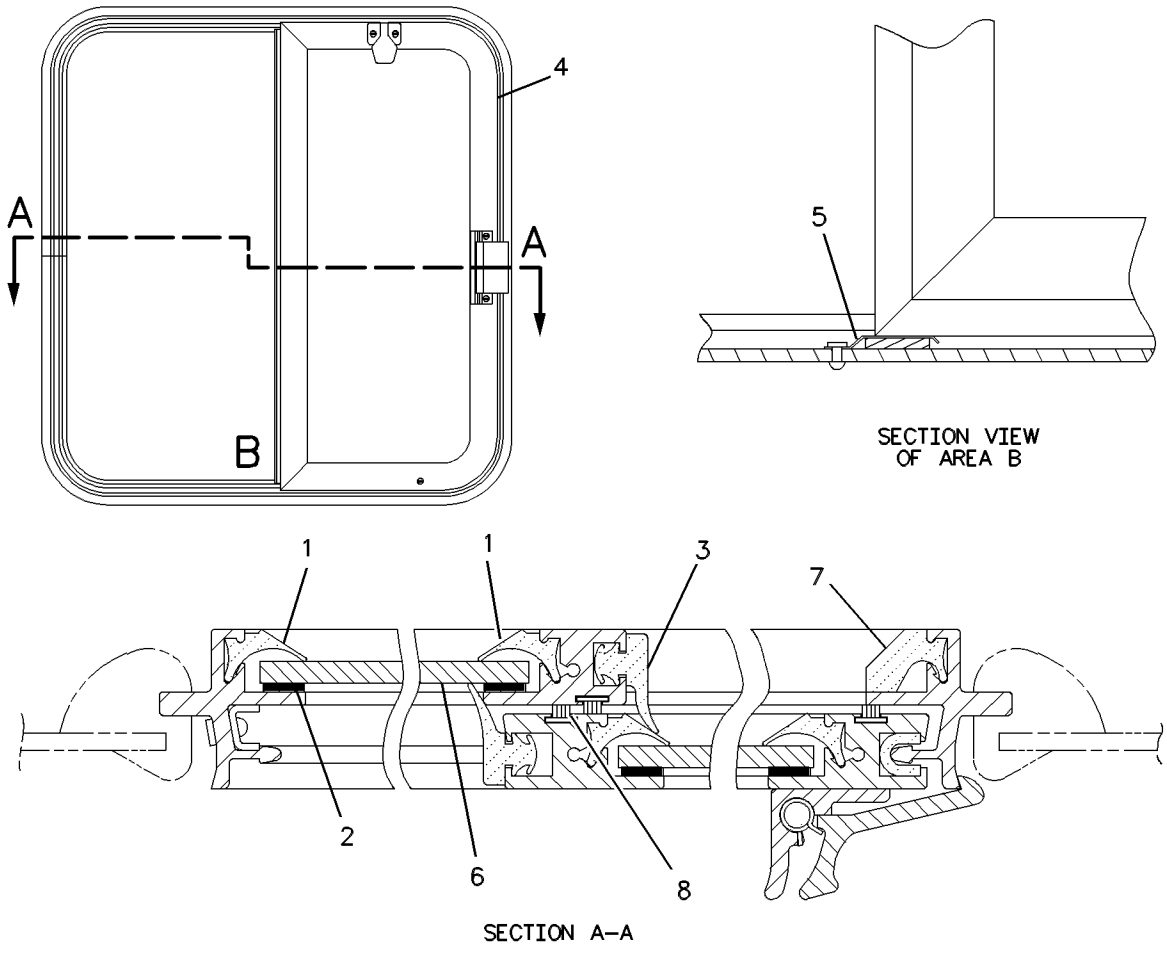

GRAPHIC #1 g00544804

MEMORANDA

OPERATOR STATION

8Y-6420 WINDOW GP-CAB—LH

S/N: ABK1-UP
PART OF 8E-3447 WINDOW GP-CAB
AN ATTACHMENT

SMCS-7310 **i01233120**

NOTE	REF NO	GRAPHIC REF	PART NUMBER	QTY	PART NAME 1 2 3 4 5 6 (PRODUCT LEVEL)	SEE PAGE
	1	1	**8Y-6454**	1	KIT-CATCH	
					(INCLUDES CATCH AS & PARTS MARKED J)	
JM	2	1	**084-4111**	2	SCREW-PAN HEAD	
	3	1	**8Y-6455**	1	KIT-CATCH	
					(INCLUDES CATCH AS & 2 SCREWS)	
M	4	1	**8T-4777**	2	SCREW-MACHINE (M5X0.8X12MM)	
	5	1	**8Y-6460**	1	KIT-RUNNER GUIDE	
					(INCLUDES GUIDE & SCREW)	
	6	1	**3S-9557**	2	SCREW-PAN HEAD	
	7	1	**8Y-6461**	1	KIT-RUNNER GUIDE	
					(INCLUDES A GUIDE & PARTS MARKED L)	
LM	8	1	**6V-2312**	2	SCREW-MACHINE (M6X1X25MM)	
BE	9	1	**8Y-6423**		SEAL	
	10	1	**8Y-6430**	1	SEAL-WINDOW	
BE	11	1	**8Y-6459**		TAPE-BUTYL	
	12	1	**8Y-6422**	1	GLASS-SLIDER (LH) (TINTED)	
BE	13	1	**8Y-6910**		WEATHERSTRIP	

B-USE AS REQUIRED
E-ORDER BY THE CENTIMETER
J-INCLUDED IN 8Y6454 CATCH KIT
L-INCLUDED IN 8Y6461 GUIDE RUNNER KIT
M-METRIC PART

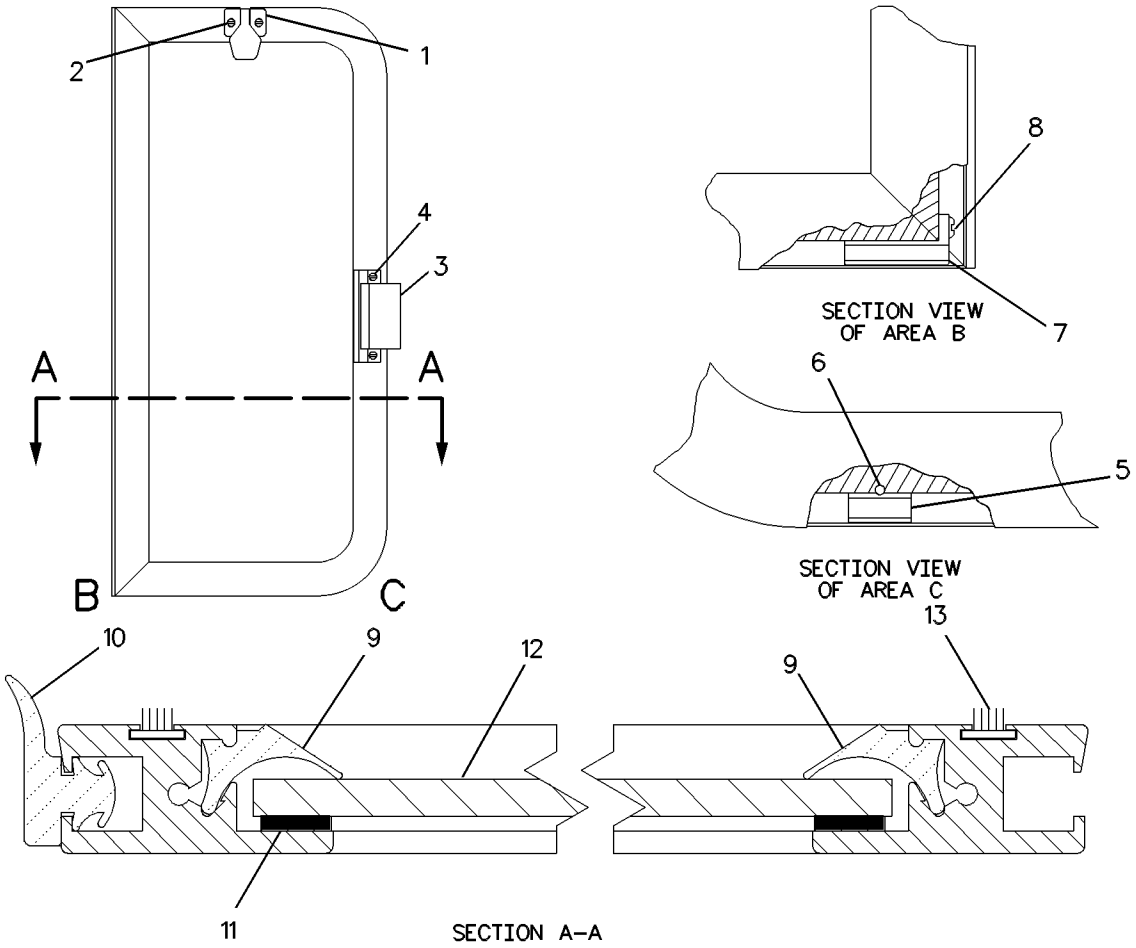

GRAPHIC #1 g00544827

OPERATOR STATION

8Y-6433 WINDOW GP-CAB—RH

S/N: ABK1-UP
PART OF 8E-3446 WINDOW GP-CAB
AN ATTACHMENT

SMCS-7310 **i01233124**

NOTE	REF NO	GRAPHIC REF	PART NUMBER	QTY	PART NAME 1 2 3 4 5 6 (PRODUCT LEVEL)	SEE PAGE
	1	1	**8Y-6454**	1	KIT-CATCH	
					(INCLUDES CATCH AS & 2 SCREWS)	
M	2	1	**084-4111**	2	SCREW-PAN HEAD	
	3	1	**8Y-6455**	1	KIT-CATCH	
					(INCLUDES CATCH AS & 2 SCREWS)	
M	4	1	**8T-4777**	2	SCREW-MACHINE (M5X0.8X12MM)	
	5	1	**8Y-6460**	1	KIT-RUNNER GUIDE	
					(INCLUDES GUIDE & SCREW)	
M	6	1	**6V-2312**	2	SCREW-MACHINE (M6X1X25MM)	
	7	1	**8Y-6461**	1	KIT-RUNNER GUIDE	
					(INCLUDES GUIDE & SCREW)	
E	8	1	**8Y-6423**		SEAL (125CM)	
	9	1	**8Y-6430**	1	SEAL-WINDOW	
BE	10	1	**8Y-6459**		TAPE-BUTYL	
E	11	1	**8Y-6423**		SEAL (59CM)	
	12	1	**8Y-6431**	1	GLASS-SLIDER-RH (TINTED)	
BE	13	1	**8Y-6910**		WEATHERSTRIP	

B-USE AS REQUIRED
E-ORDER BY THE CENTIMETER
M-METRIC PART

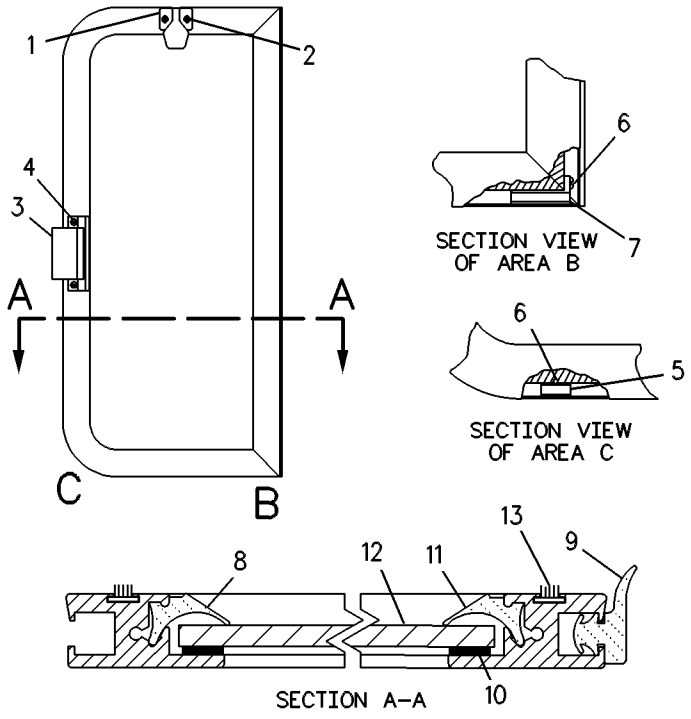

GRAPHIC #1 g00326281

OPERATOR STATION

8Y-6456 WINDOW GP-CAB

S/N: ABK1-UP
REAR, SLIDING
PART OF 157-3737 CAB GP
AN ATTACHMENT
TYPE 1

SMCS-7310 **i01290963**

NOTE	REF NO	GRAPHIC REF	PART NUMBER	QTY	PART NAME 1 2 3 4 5 6 (PRODUCT LEVEL)	SEE PAGE
Y	1	1	**8Y-6826**	1	WINDOW GP-CAB (REAR)	909
	2	1	**8Y-6828**	1	GLASS (TINTED)	
D	3	1	**5P-5680**		SEAL (2.0 M)	
EB	4	1	**9X-6268**		TAPE	
D	5	1	**6V-5833**		SEAL (.66 M)	
DB	6	1	**8T-0687**		FILLER	
E	7	1	**8Y-6839**		SEAL (66 CM)	
D	8	1	**5P-5680**		SEAL (.68 M)	

B-USE AS REQUIRED
D-ORDER BY THE METER
E-ORDER BY THE CENTIMETER
Y-SEPARATE ILLUSTRATION

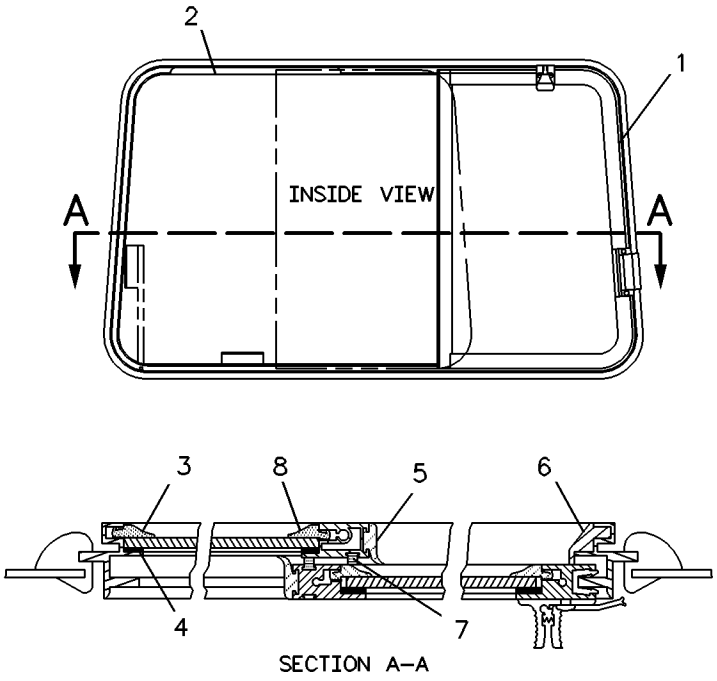

GRAPHIC #1 g00222722

OPERATOR STATION

8Y-6456 WINDOW GP-CAB

S/N: ABK1-UP
REAR, SLIDING
PART OF 157-3737 CAB GP
AN ATTACHMENT
TYPE 2

SMCS-7310 **i01612528**

NOTE	REF NO	GRAPHIC REF	PART NUMBER	QTY	PART NAME 1 2 3 4 5 6 (PRODUCT LEVEL)	SEE PAGE
Y	1	1	**8Y-6826**	1	WINDOW GP-CAB (REAR)	909
BD	2	1	**5P-5680**		SEAL	
	3	1	**8Y-6828**	1	GLASS (TINTED)	
BD	4	1	**6V-5833**		SEAL	
DB	5	1	**8T-0687**		FILLER	
BE	6	1	**8Y-6839**		SEAL	

B-USE AS REQUIRED
D-ORDER BY THE METER
E-ORDER BY THE CENTIMETER
Y-SEPARATE ILLUSTRATION

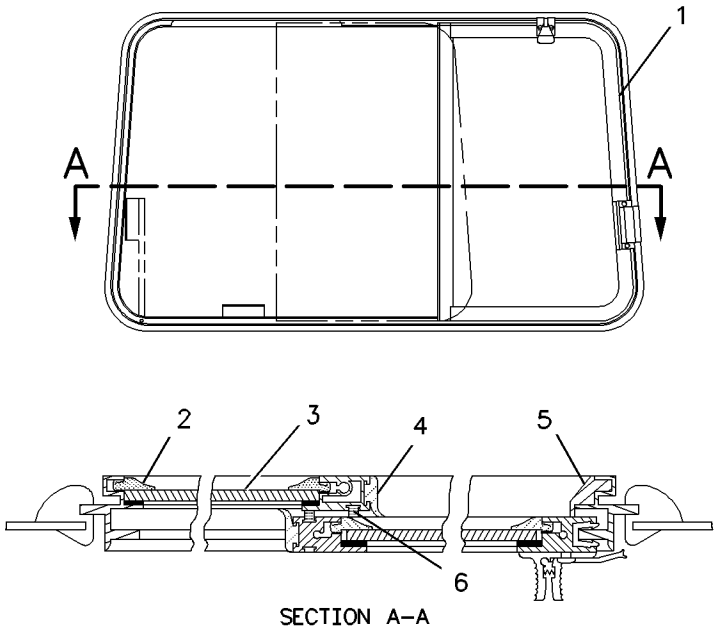

SECTION A–A

GRAPHIC #1 g00834678

OPERATOR STATION

8Y-6826 WINDOW GP-CAB—REAR

S/N: ABK1-UP
PART OF 8Y-6456 WINDOW GP-CAB
AN ATTACHMENT
TYPE 1

SMCS-7310 **i01233127**

NOTE	REF NO	GRAPHIC REF	PART NUMBER	QTY	PART NAME 1 2 3 4 5 6 (PRODUCT LEVEL)	SEE PAGE
	1	1	**3T-1121**	1	LOCK AS	
	2	1	**2H-6622**	2	SCREW-MACHINE	
	3	1	**9P-7860**	1	LOCK AS	
	4	1	**9P-7859**	2	SCREW	
D	5	1	**5P-5680**		SEAL (.65M)	
EB	6	1	**9X-6268**		TAPE	
D	7	1	**6V-5833**		SEAL (.69M)	
D	8	1	**5P-8918**		SEAL (1.43M)	
	9	1	**8Y-6827**	1	GLASS (TINTED)(GREEN)	
E	10	1	**8Y-6839**		SEAL (68.5CM)	
D	11	1	**5P-5680**		SEAL (1.4M)	
	12	1	**117-5676**	1	SLIDE	
	13	1	**124-9775**	1	SLIDE	

B-USE AS REQUIRED
D-ORDER BY THE METER
E-ORDER BY THE CENTIMETER

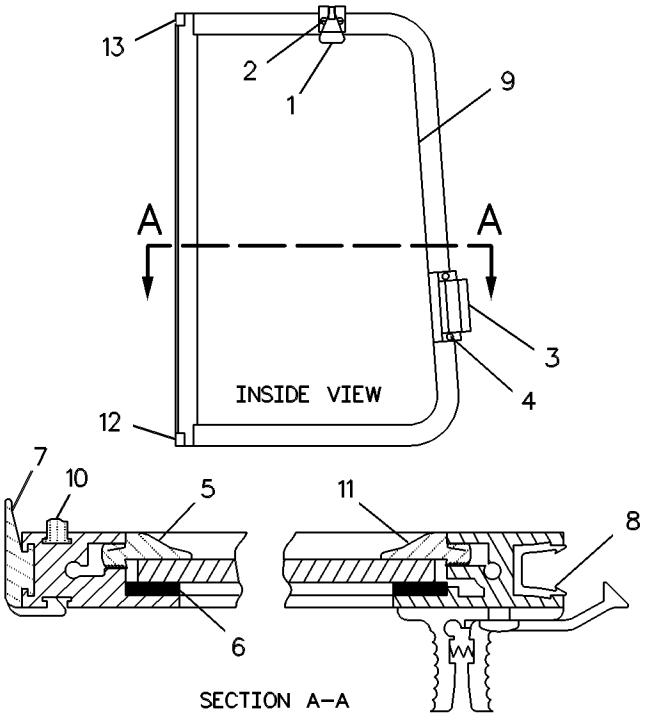

GRAPHIC #1 g00330571

OPERATOR STATION

8Y-6826 WINDOW GP-CAB—REAR

S/N: ABK1-UP
PART OF 8Y-6456 WINDOW GP-CAB
AN ATTACHMENT
TYPE 2

SMCS-7310 **i01612539**

NOTE	REF NO	GRAPHIC REF	PART NUMBER	QTY	PART NAME 1 2 3 4 5 6 (PRODUCT LEVEL)	SEE PAGE
	1	1	**3T-1121**	1	LOCK AS	
	2	1	**2H-6622**	2	SCREW-MACHINE	
	3	1	**9P-7860**	1	LOCK AS	
	4	1	**9P-7859**	2	SCREW	
BD	5	1	**5P-5680**		SEAL	
BD	6	1	**6V-5833**		SEAL	
BD	7	1	**5P-8918**		SEAL	
	8	1	**8Y-6827**	1	GLASS (TINTED)(GREEN)	
BE	9	1	**8Y-6839**		SEAL	

B-USE AS REQUIRED
D-ORDER BY THE METER
E-ORDER BY THE CENTIMETER

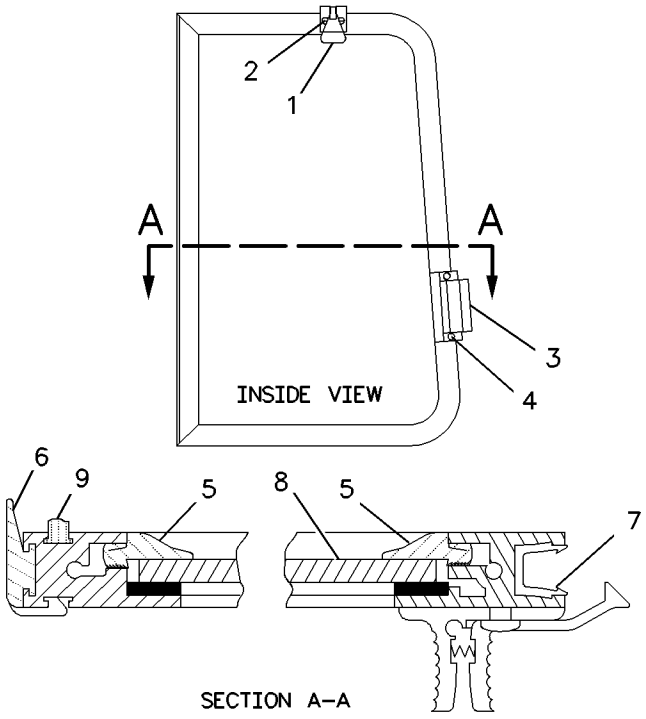

GRAPHIC #1 g00834647

MEMORANDA

OPERATOR STATION

3E-9177 WIPER GP-WINDOW

S/N: ABK1-UP
24 VOLT
PART OF 157-3735 WIPER GP-WINDOW
AN ATTACHMENT

SMCS-7305 **i01446867**

NOTE	REF NO	GRAPHIC REF	PART NUMBER	QTY	PART NAME 1 2 3 4 5 6 (PRODUCT LEVEL)	SEE PAGE
M	1	1	**5C-9553**	3	BOLT (M6X1X16MM)	
	2	1	**5P-0537**	3	WASHER-HARD (7.2X14.5X2MM THK)	
	3	1	**3T-7086**	1	CRANK AS	
M	4	1	**6V-6889**	2	NUT (M8X1.25 THD)	
	5	1	**6V-6888**	1	WASHER-SPRING	
	6	1	**6V-6208**	1	LINK-CONNECTING	
M	7	1	**3C-1884**	4	SCREW-MACHINE (M5X0.8 BG THD)	
	8	1	**6V-6206**	1	SHAFT AS-DRIVE	
M	9	1	**6V-6213**	1	NUT (M20X1 THD)	
	10	1	**6V-6214**	1	WASHER (20.15X29.6X1MM THK)	
	11	1	**6V-6209**	1	CAP	
	12	1	**6A-9718**	1	WASHER (8.1X12.5X1MM THK)	
	13	1	**3T-7059**	1	BRACKET	
	14	1	**3E-6388**	1	MOTOR AS-WINDOW WIPER	
	15	1	**3E-3383**	1	WEDGE-RECEPTACLE LOCK	
	16	1	**8T-8729**	5	PIN-CONNECTOR	
	17	1	**8T-8737**	1	PLUG-SEAL	
	18	1	**102-8805**	1	KIT-RECEPTACLE (6 PIN)	
					(INCLUDES RECEPTACLE AS & WEDGE)	

M-METRIC PART

3E-9177 WIPER GP-WINDOW ***(contd.)*** **i01446867**

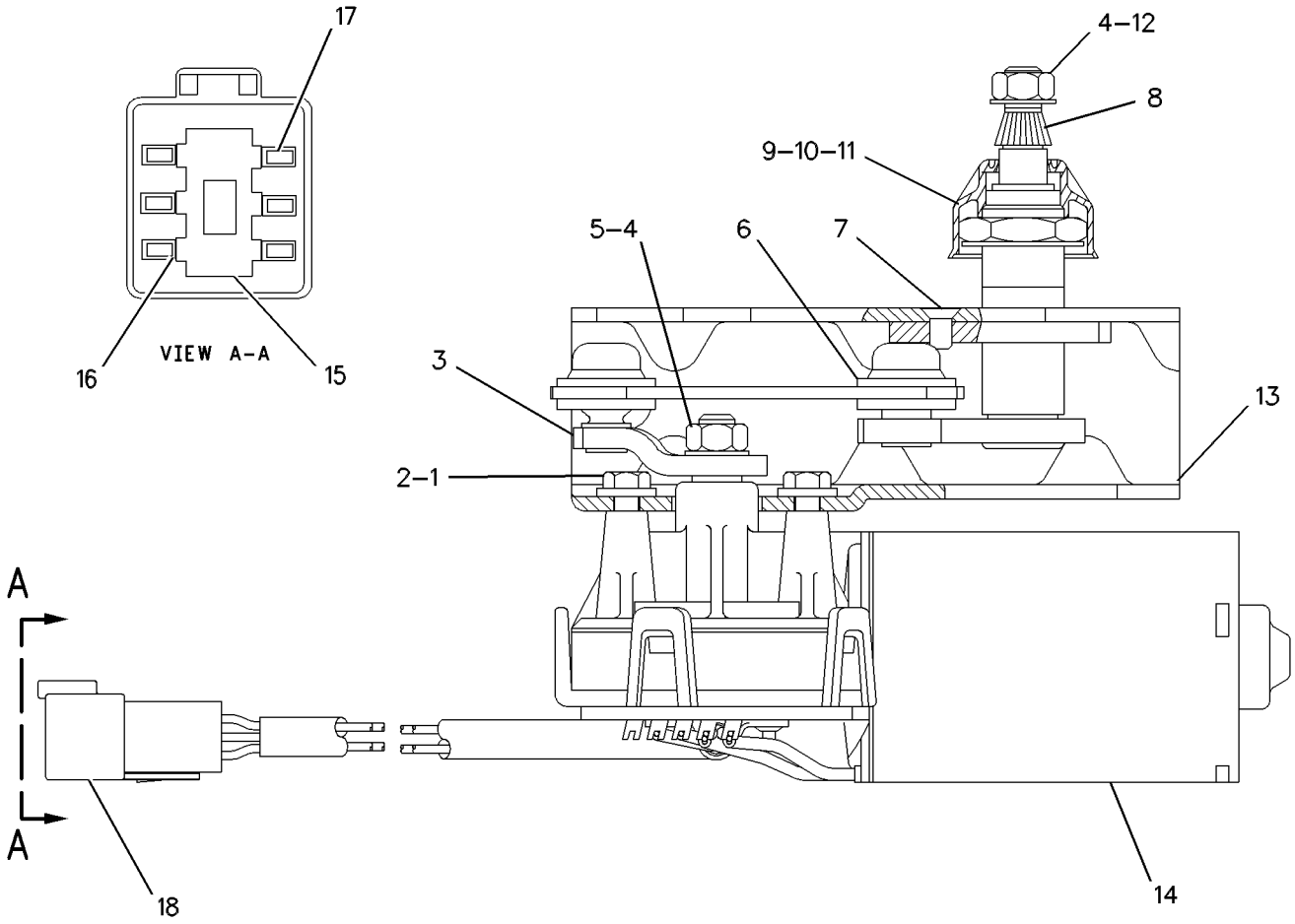

GRAPHIC #1 g00317475

OPERATOR STATION

102-3001 WIPER GP-WINDOW

S/N: ABK1-UP
24 VOLT
PART OF 157-3735 WIPER GP-WINDOW
AN ATTACHMENT

SMCS-7305 **i01446868**

NOTE	REF NO	GRAPHIC REF	PART NUMBER	QTY	PART NAME 1 2 3 4 5 6 (PRODUCT LEVEL)	SEE PAGE
	1	1	**3T-7059**	1	BRACKET	
M	2	1	**5C-9553**	3	BOLT (M6X1X16MM)	
	3	1	**3T-7086**	1	CRANK AS	
M	4	1	**6V-6889**	2	NUT (M8X1.25 THD)	
	5	1	**6V-6888**	1	WASHER-SPRING	
	6	1	**6V-6218**	1	LINK-CONNECTING	
M	7	1	**3C-1884**	4	SCREW-MACHINE (M5X0.8 BG THD)	
	8	1	**6V-6215**	1	SHAFT AS-DRIVE	
	9	1	**6V-6209**	1	CAP	
M	10	1	**6V-6213**	1	NUT (M20X1 THD)	
	11	1	**6V-6214**	1	WASHER (20.15X29.6X1MM THK)	
	12	1	**6A-9718**	1	WASHER (8.1X12.5X1MM THK)	
	13	1	**5P-0537**	3	WASHER-HARD (7.2X14.5X2MM THK)	
	14	1	**3E-6388**	1	MOTOR AS-WINDOW WIPER	
		1	**102-8805**	2	KIT-RECEPTACLE (6 PIN)	
					(EACH INCLUDES RECEPTACLE AS & WEDGE)	
		1	**3E-3383**	1	WEDGE-RECEPTACLE LOCK	
		1	**8T-8729**	5	PIN-CONNECTOR	
		1	**8T-8737**	1	PLUG-SEAL	

M-METRIC PART

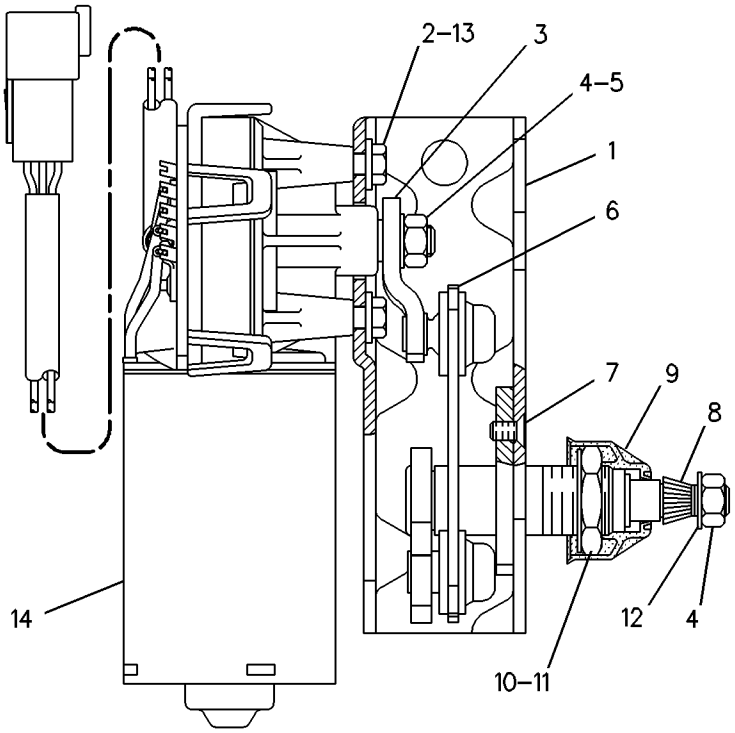

GRAPHIC #1 g00234142

MEMORANDA

OPERATOR STATION

157-3735 WIPER GP-WINDOW

S/N: ABK1-UP
PART OF 157-4817 CAB AR
AN ATTACHMENT

SMCS-7305 **i01613122**

NOTE	REF NO	GRAPHIC REF	PART NUMBER	QTY	PART NAME 1 2 3 4 5 6 (PRODUCT LEVEL)	SEE PAGE
Y	1	1	*102-3001*	1	WIPER GP-WINDOW	914
	2	2	**6V-3960**	1	BOLT (1/4-28X0.875 IN)	
	3	2	**6N-7523**	1	WASHER (6.48X11.9X1.57MM THK)	
	4	2	**8T-1739**	2	WASHER-HARD (21X40X3.5MM THK)	
	5	1	**8T-2174**	4	GASKET-SPACER	
	6	2	**145-8741**	1	ARM AS-WIPER (FRONT)	
	7	2	**6V-5851**	1	BLADE AS-WIPER (FRONT)	
	8	1	**6T-0303**	2	CRANK-DRIVE	
	9	2	**8E-2593**	1	CONSOLE-SWITCH (WIPER)	
	10	2	**6V-8969**	3	SCREW-BUTTON HEAD	
	11	2	**157-5127**	1	HARNESS AS (WIPER SWITCHES)	
	12	1	**6V-6212**	2	SHAFT AS-DRIVE	
	13	1	**6T-0302**	2	LINK AS	
	14	2	**155-2701**	4	SWITCH AS (FRONT,REAR,RH & LH DOOR)	
					(EACH INCLUDES)	
		2	**2H-3920**	1	LOCKWASHER	
		2	**3E-3383**	1	WEDGE-RECEPTACLE LOCK	
		2	**6V-8369**	1	NUT (7/16-28 THD)	
		2	**110-7889**	1	KNOB	
		2	**186-3735**	6	PIN-CONNECTOR	
		2	**014-0816**	1	SETSCREW (8-32X.5 IN)	
		2	**102-8805**	1	KIT-RECEPTACLE (6 PIN)	
					(INCLUDES RECEPTACLE AS & WEDGE)	
	15	2	**7X-7763**	1	FILM-INSTRUCTION	
Y	16	2	*6V-6561*	1	WIPER PIVOT GP	920
Y	17	1	**3E-9177**	1	WIPER GP-WINDOW	912
	18	2	**5P-4115**	1	WASHER-HARD (7.2X19X2MM THK)	
	19	2	**7X-3182**	1	BOLT (1/4-28X0.5 IN)	
	20	2	**5C-8811**	1	BLADE AS-WIPER (REAR)	
	21	2	**8Y-6343**	1	ARM AS-WIPER (REAR)	
	22	1	**6V-6211**	2	SHAFT AS-DRIVE	
J	23	1	**6V-5849**	4	BLADE AS-WIPER (LH DOOR)	
	24	1	**3E-6388**	2	MOTOR AS-WINDOW WIPER	
					(EACH INCLUDES)	
		1	**102-8805**	1	KIT-RECEPTACLE (6 PIN)	
					(INCLUDES RECEPTACLE AS & WEDGE)	
		1	**8T-8729**	5	PIN-CONNECTOR	
		1	**3E-3383**	1	WEDGE-RECEPTACLE LOCK	
		1	**8T-8737**	1	PLUG-SEAL	
	25	1	**6V-6214**	4	WASHER (20.15X29.6X1MM THK)	
	26	1	**7T-1078**	1	LINK AS-LH	
M	27	1	**6V-6213**	4	NUT (M20X1 THD)	
	28	1	**145-8740**	2	ARM AS-WIPER (LH DOOR)	
	29	1	**145-8739**	2	ARM AS-WIPER (RH DOOR)	
	30	1	**6A-9718**	4	WASHER (8.1X12.5X1MM THK)	
M	31	1	**6V-6889**	6	NUT (M8X1.25 THD)	
	32	1	**7T-0942**	2	BRACKET AS	
					(EACH INCLUDES)	
		1	**9F-6445**	1	NUT-WELD (1/4-20 THD)	
M	33	1	**5C-9553**	6	BOLT (M6X1X16MM)	
	34	1	**6V-6888**	2	WASHER-SPRING	
	35	1	**5S-7379**	4	BOLT (3/8-16X0.875 IN)	
	36	1	**5P-1075**	4	WASHER-HARD (10.2X22.5X3MM THK)	
	37	1	**6V-6209**	4	CAP	
	38	2	**157-5128**	1	HARNESS AS (REAR WIPER)	

157-3735 **WIPER GP-WINDOW** ***(contd.)*** **i01613122**

NOTE	REF NO	GRAPHIC REF	PART NUMBER	QTY	PART NAME 1 2 3 4 5 6 (PRODUCT LEVEL)	SEE PAGE
	39	2	**8T-5360**	4	WASHER (12X22.5X2.5MM THK)	
	40	1	**6V-8801**	1	NUT (3/8-16 THD)	
	41	1	**8T-4896**	1	WASHER-HARD (10.2X18.5X2.5MM THK)	
	42	1	**7T-4761**	1	LINK AS-RH	
	43	2	**9X-1138**	1	CONTROL AS-ELECTRONIC	
	44	2	**8B-4338**	5	SCREW-TAPPING	
	45	1	**5P-8394**	12	SCREW-MACHINE (8-32X.75IN)	
	46	1	**163-6088**	4	MODULE AS	
	47	1	**4B-4274**	12	WASHER (5.5X13X1.2MM THK)	
	48	1	**3E-5239**	4	RELAY AS (24 VOLT)	
					AVAILABLE REPAIR KIT(S):	
J			**8C-5060**	1	KIT-WIPER BLADE	
					(INCLUDES 2 REFILL BLADES)	

J-REPAIR KIT(S) MARKED J AVAILABLE FOR PART MARKED J
M-METRIC PART
Y-SEPARATE ILLUSTRATION

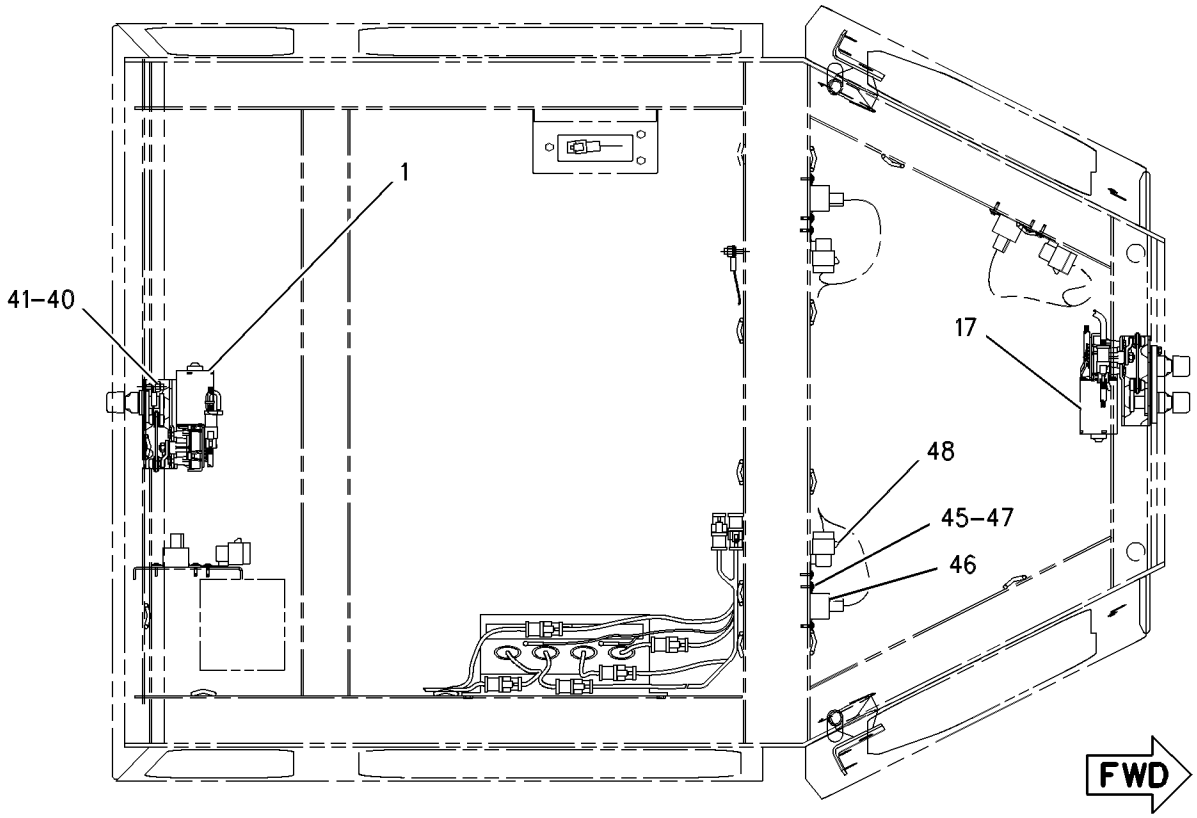

TOP VIEW

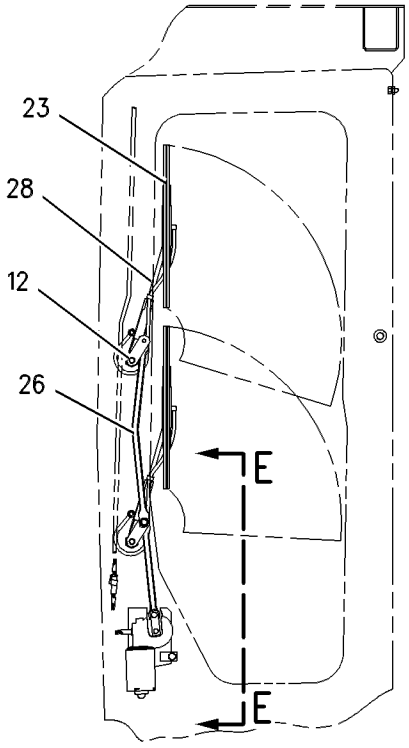

LH DOOR

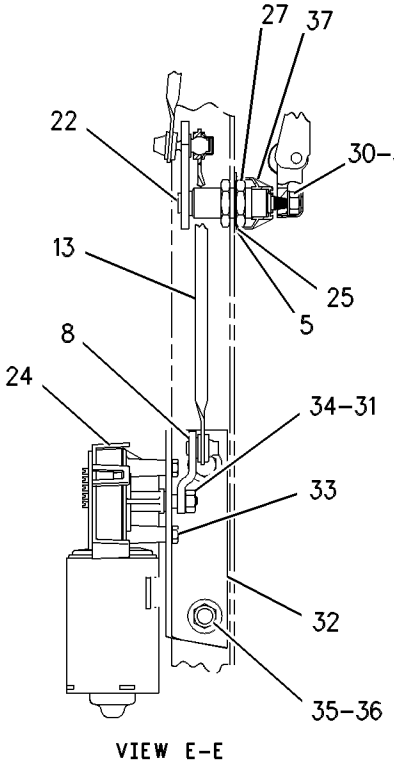

VIEW E-E

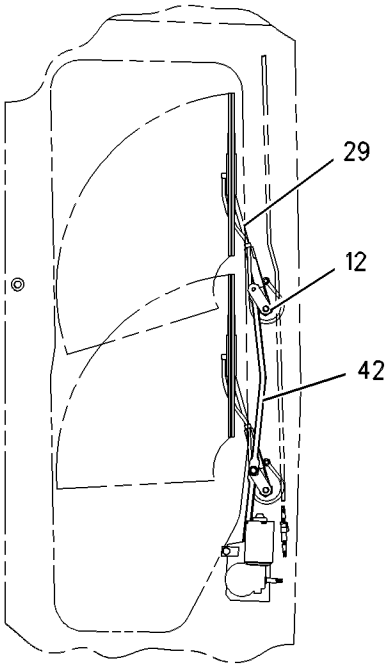

RH DOOR

GRAPHIC #1 g00567392

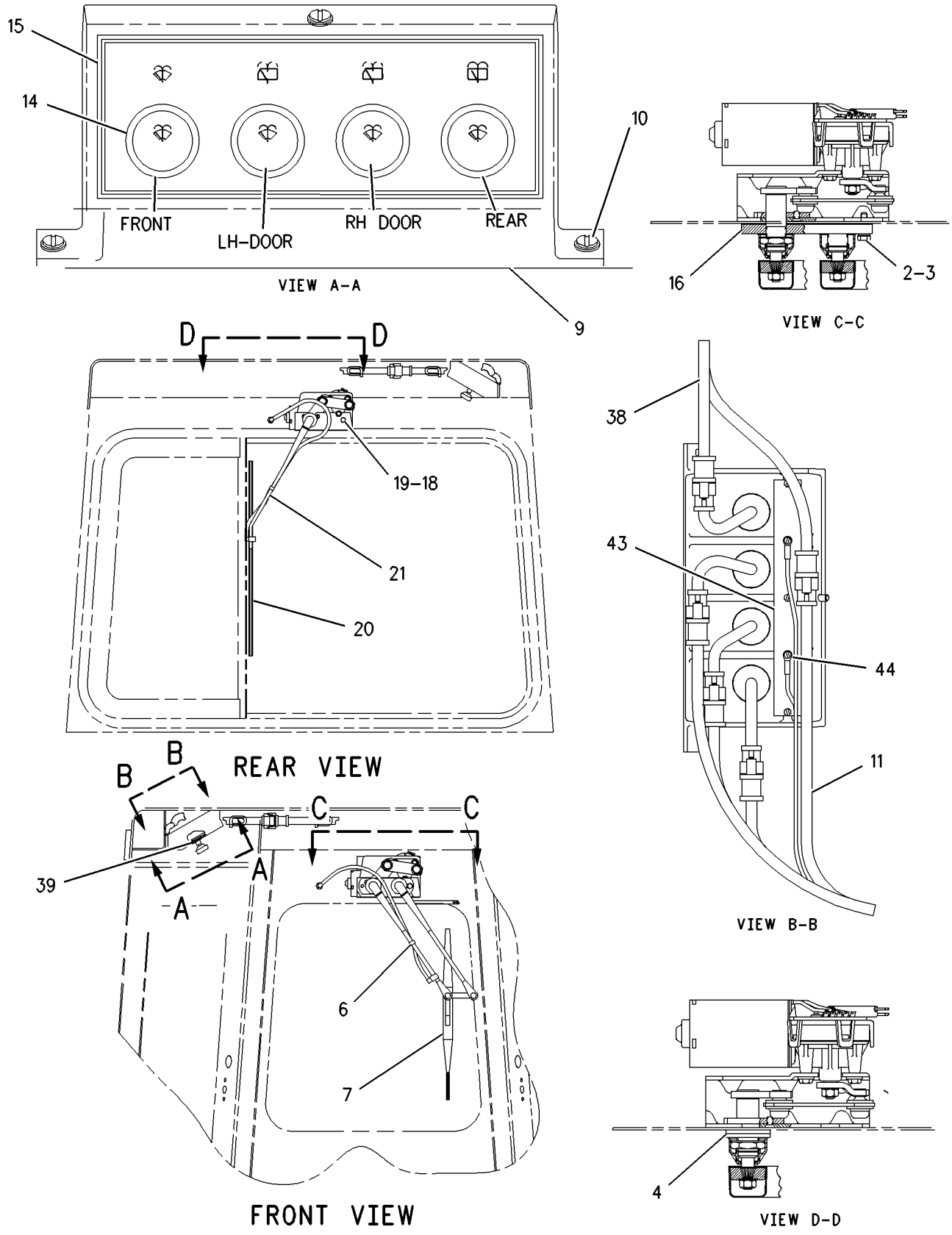

GRAPHIC #2

g00817723

OPERATOR STATION

6V-6561 WIPER PIVOT GP

S/N: ABK1-UP
PART OF 157-3735 WIPER GP-WINDOW
AN ATTACHMENT

SMCS-7305 **i01011513**

NOTE	REF NO	GRAPHIC REF	PART NUMBER	QTY	PART NAME 1 2 3 4 5 6 (PRODUCT LEVEL)	SEE PAGE
	1	1	**6V-6207**	1	SHAFT AS-PIVOT	
	2	1	**6V-6209**	1	CAP	
M	3	1	**6V-6889**	1	NUT (M8X1.25 THD)	
	4	1	**6A-9718**	1	WASHER	
	5	1	**6V-6210**	1	GASKET-SHAFT	

M-METRIC PART

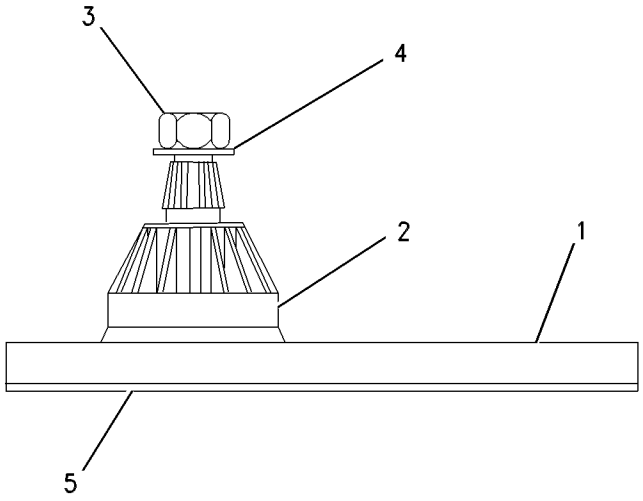

GRAPHIC #1 g00316575

SERVICE EQUIPMENT AND SUPPLIES

169-2859 FILM GP

S/N: ABK1-UP

PART OF 159-8068 PLATE & FILM GP

SMCS-7000 **i01418461**

NOTE	REF NO	GRAPHIC REF	PART NUMBER	QTY	PART NAME 1 2 3 4 5 6 (PRODUCT LEVEL)	SEE PAGE
	1	1	**174-4600**	1	FILM-STRIPE (CAT)	
	2	1	**174-4601**	2	FILM-STRIPE	
	3	1	**3E-8273**	1	FILM-STRIPE (CATERPILLAR)	
	4	1	**174-4603**	1	FILM-STRIPE (D9R)	
	5	1	**114-2497**	1	FILM-STRIPE	
	6	1	**174-4604**	1	FILM-STRIPE (D9R)	
	7	1	**114-2496**	1	FILM-STRIPE	
	8	1	**114-2498**	1	FILM-STRIPE (CATERPILLAR)	
	9	1	**174-4606**	1	FILM-STRIPE	
	10	1	**174-4602**	1	FILM-STRIPE	
	11	1	**174-4605**	1	FILM-STRIPE	
	12	1	**174-4599**	1	FILM-STRIPE (CAT)	
A	13	1	**190-5386**	2	FILM-REFLECTOR (RED)	

A-NOT PART OF THIS GROUP

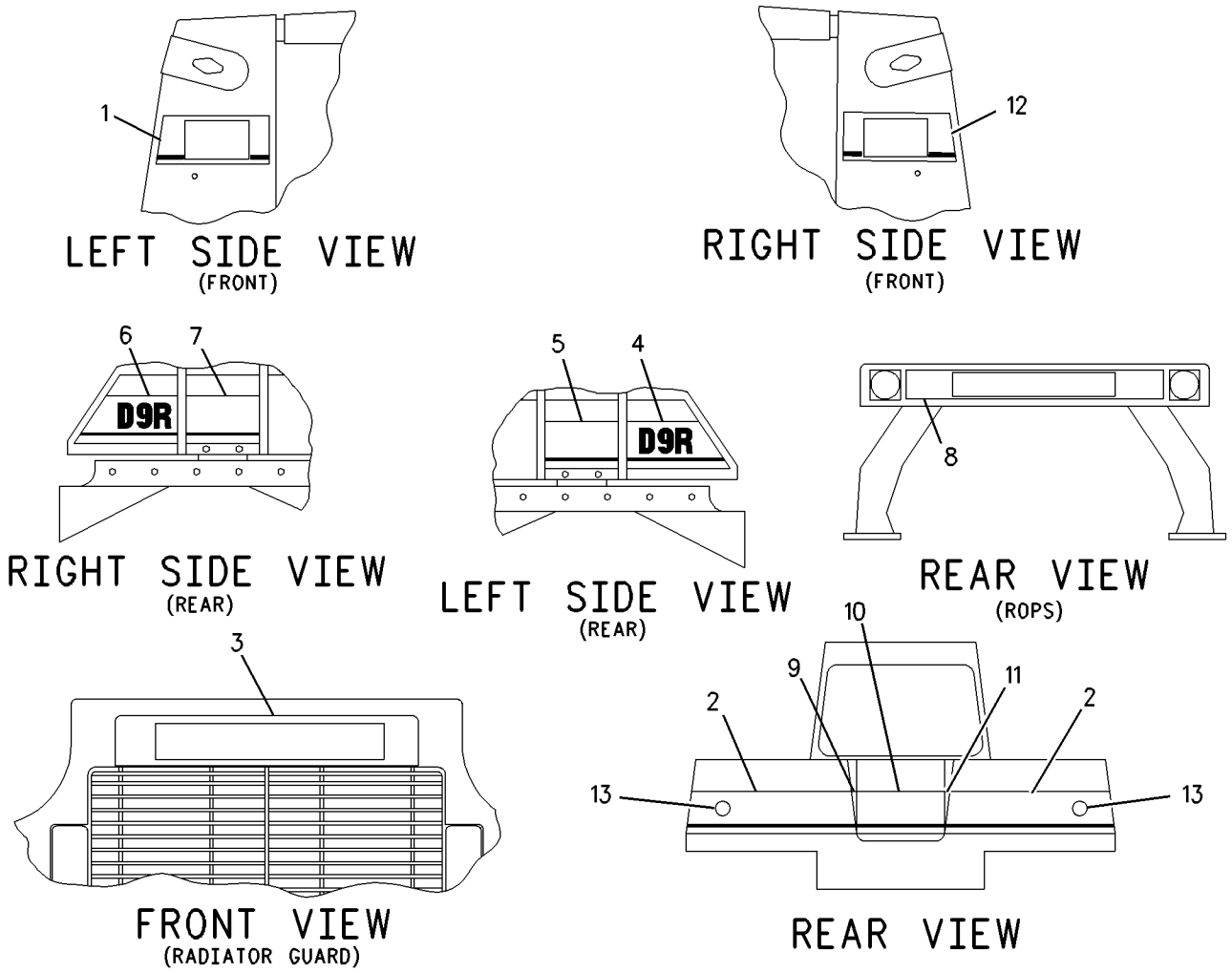

GRAPHIC #1 g00753275

SERVICE EQUIPMENT AND SUPPLIES

159-8068 PLATE & FILM GP

S/N: ABK1-UP

PART OF 162-9501 CHASSIS AR

SMCS-7557, 7563 **i01437893**

NOTE	PART NUMBER	QTY	PART NAME 1 2 3 4 5 6 (PRODUCT LEVEL)	SEE PAGE
Y	*169-2859*	1	FILM GP	921
A	**3N-3790**	1	PLATE-SERIAL NUMBER (ENGINE)	
			ON LH SIDE OF BLOCK NEAR FRONT FACE AT BOTTOM OF WATER JACKET	
	5P-9466	1	PLATE-WARNING (READ OPERATION MANUAL)	
			LH VERTICAL WALL ADJACENT TO TRANSMISSION CONTROL	
	6V-9648	1	PLATE-SERVICE INFORMATION	
			ON LH SIDE OF DASH	
	6Y-4227	1	PLATE-NOTICE (STEERING)	
			ON TOP OF STEERING CONTROL	
	9X-1878	1	PLATE (PRODUCT I.D.)	
			ON UPPER LH REAR OF CASE BELOW FENDER & ROPS	
	039-6360	4	RIVET	
	2K-3219	4	SCREW-DRIVE	
	4B-4158	4	SCREW-DRIVE (3/16X0.25 IN)	
	9F-6656	1	RING-RETAINING	
			ON TOP LINK OF POWER TRAIN OIL FILLER CAP CHAIN	
	9N-1995	8	RIVET-POP	
	1P-2807	4	FILM (LIFT EYE LOCATION)	
			4 - (WITHOUT RIPPER) ON TRACK ROLLER FRAMES BETWEEN FRONT IDLER & FRONT ROLLER AND BETWEEN REAR IDLER & REAR ROLLER	
			4 - (WITH RIPPER) ON TRACK ROLLER FRAMES BETWEEN FRONT IDLER & FRONT ROLLER AND ON BOTH SIDES OF RIPPER FRAME JUST	
			AHEAD OF CARRIAGE OR BEAM MOUNTING PINS	
	3E-2378	1	FILM-INSTRUCTION (PIVOT SHAFT LUBRICATION)	
			ON FRONT OF PIVOT SHAFT LUBRICATION RESERVOIR BOTTLE	
	5P-9884	1	FILM-HYDRAULIC OIL	
			ON TOP OF HYDRAULIC TANK ADJACENT TO FILLER SPOUT	
	190-5386	2	FILM-REFLECTOR (RED)	
			ON REAR LH & RH SIDE OF MACHINE ON FILM STRIPE	
	6V-4611	1	FILM-WARNING (JUMPER CABLE)	
			ON UNDERSIDE OF BATTERY COMPARTMENT COVER	
	7X-7644	10	FILM-TIE DOWN	
			1 - ON FRONT TOWING EYE	
			6 - ON TRACK ROLLER FRAMES AT FRONT & REAR MAJOR BOGIE CARTRIDGE PINS & CENTERED BETWEEN FRONT & REAR IDLERS	
			AT REAR:	
			1 - ON REAR OF DRAWBAR OR COUNTERWEIGHT OR;	
			2 - ON BOTH SIDES OF RIPPER FRAME JUST AHEAD OF CARRIAGE OR BEAM MOUNTING PINS	
			(NOT REQUIRED ON MACHINES WITHOUT DRAWBAR, COUNTERWEIGHT OR RIPPER)	
	8C-3221	1	FILM-OIL LEVEL (TRANSMISSION)	
			ON INSIDE OF POWER TRAIN OIL FILL COVER	
	8C-8902	2	FILM-IDENTIFICATION (ENGINE OIL FILTER)	
			ON ENGINE OIL FILTER	
	8T-4999	1	FILM-INSTRUCTION (BATTERY DISCONNECT)	
			UNDER BATTERY DISCONNECT SWITCH	

159-8068 **PLATE & FILM GP** ***(contd.)*** **i01437893**

NOTE	PART NUMBER	QTY	PART NAME 1 2 3 4 5 6 (PRODUCT LEVEL)	SEE PAGE
	197-5108	1	FILM-INSTRUCTION (RIPPER CONTROL)	
			ON RH CONSOLE TOP COVER PLATE	
	102-2913	1	FILM-INSTRUCTION (DOZER CONTROL)	
			(WITHOUT CAB) ON PLATFORM VERTICAL SURFACE IN FRONT OF LEVER RESTRAINT	
			(WITH CAB) ON RH UPPER AIR DUCT	
	9X-6332	1	FILM-NOTICE (SHIPPING)	
			ON RH FENDER BELOW STEP	
	9Y-4294	4	FILM-WARNING (FUEL INJECTOR)	
			2 - ON LOWER REAR CORNER OF ENGINE FRONT VALVE COVERS	
			2 - ON LOWER FRONT CORNER OF ENGINE REAR VALVE COVERS	
	106-7408	1	FILM-INFORMATION (ENGINE OIL)	
			ON ENGINE OIL FILLER CAP	
	114-5988	1	FILM-IDENTIFICATION (FUEL FILTER)	
			ON SECONDARY FUEL FILTER	
	127-8830	2	FILM-IDENTIFICATION (EQUALIZER BAR LUBRICATION)	
			ON CASE AND FRAME SIDE PLATE ABOVE EQUALIZER BAR (1 EACH SIDE)	
	134-7258	1	FILM-IDENTIFICATION (EXTENDED LIFE COOLANT)	
			ON INSIDE OF DOOR TO RADIATOR FILL	
	137-3937	1	FILM-IDENTIFICATION (EXCLAMATION SYMBOL)	
			REAR CORNER ON RH CONSOLE	
A	**178-0475**	2	FILM-INFORMATION (ENGINE WIRING CONNECTION)	
			ON LH AND RH ENGINE VALVE COVERS (1 EACH SIDE)	
	179-0160	1	FILM-INFORMATION (FUEL FILTER/WATER SEPARATOR)	
			ON WATER/FUEL SEPARATOR ELEMENT	
	188-4478	1	FILM-MONITOR (SMART ELEK MONITORING SYSTEM) (EMISSIONS REGULATED ENGINE)	
			ON INSTRUMENT PANEL	

A-NOT PART OF THIS GROUP
Y-SEPARATE ILLUSTRATION

MEMORANDA

PART NUMBER INDEX

Part	Page
0	
0L-0646	681
0L-0829	848
0L-1022	72
0L-1143	61
	78
	80
	84
	90
	98
	100
	122
	126
	156
	170
	182
	214
	244
0L-1178	548
	581
0L-1351	84
	92
	98
	100
	122
	126
	144
	170
	234
	236
	448
0L-1352	32
	56
	58
	60
	61
	92
	126
0L-2070	84
	92
	248
	250
0S-0484	433
	443
0S-0509	8
	10
	11
	86
	121
	170
	174
	234
	236
	376
0S-1566	16
0S-1571	48
	50
	84
	98
	116
	154
	182
	214
	576
0S-1573	76
0S-1585	84
	410
	440
	564
0S-1587	64
	156
	180
	182
	410
	564
	576
0S-1588	14
	56
	58
	84
	92
	116
	122
	126
	156
	182
	582
0S-1589	386
	654
0S-1590	14
	56
	58
	80
	154
	156
	170
	174
0S-1591	14
	32
	92
	122
	134
	156
	162
	214
	242
0S-1594	12
	13
	14
	18
	64
	84
	92
	116
	117
	120
	122
	126
	132
	170
	174
	182
	214
	226
	236
	390
	449
	676
0S-1595	52
	92
	538
	539
	542
	543
0S-1600	410
0S-1608	32
	92
	100
	236
	422
	568
0S-1614	185
	187
0S-1616	819
0S-1617	209
	248
	250
	262
	264
0S-1618	212
	254
0S-1619	56
	58
	84
	122
	126
	154
0T-0055	122
0T-0065	14
	18
	92
	122
	126
	136
	422
0T-0573	14
	18
	50
	60
	116
	154
	568
0T-0768	92
0V-0375	420
1	
1A-1135	134
	386
1A-1460	410
	540
	541
	544
	545
	576
	578
1A-2029	18
	52
	56
	58
	84
	98
	100
	123
	170
	174
	281
	289
	436
	438
1A-5183	32
	123
	126
1A-5822	436
1A-5964	56
	58
	123
	126
	257
1A-7669	420
1A-8537	518
1A-9252	204
	570
	726
	728
1A-9579	117
1B-0676	204
	570
1B-2578	104
	198
	204
1B-2790	21
	234
1B-3057	236
1B-4034	410
1B-4201	226
1B-4330	226
1B-4367	440
1B-4427	602
1B-4430	728
	884
1B-4971	296
1B-7182	134
	154
	217
	221
	225
1B-8701	568
	570
1B-8704	204
	726
	728
1B-8705	10
	11
	48
	50
	430
1B-8706	198
	204
	205
1B-8714	568
1B-9575	212
	227
	236
1C-0148	673
1C-0569	182
1C-2251	64
	174

► **PRIMARY REFERENCE**

PART NUMBER INDEX

Part	Page	Part	Page	Part	Page	Part	Page
	242		726	1L-5081	548		662
1D-4539	390		794	1L-9551	140		664
1D-4540	226		796		144		686
1D-4541	38		830	1M-0644	108		700
	212		838	1M-1230	804		710
1D-4566	52		860	1M-1341	204	1P-4578	654
1D-4627	74		861	1M-3780	430		680
1D-4631	74	1F-3856	476	1M-6119	278		686
1D-4640	399		480		279	1P-4579	417
	406		503		286	1P-4582	190
1D-4645	461	1F-4166	204		287		194
1D-4675	856	1F-4417	118		348		196
1D-4706	108		130	1M-6120	278		417
	110	1H-1023	242		279	1P-4584	655
	112		352		286	1P-5767	582
1D-5117	293		356		287	1P-6356	824
1D-5118	848		362		348		830
1F-0748	414	1H-1200	726	1M-6718	706	1P-6452	270
	452		728	1M-9968	352	1P-6563	576
	454	1H-2629	352		356	1P-7009	670
	472		356		363	1P-7346	48
	476		362	1M-9971	353		50
	480	1H-3244	373		357		548
	483	1H-3937	679	1N-3300	182	1P-7405	548
	502	1H-4106	470	1N-3789	223	1P-8116	450
	514	1H-5728	417	1N-4656	226	1P-9254	518
	530		430	1N-4734	98	1P-9261	422
	646	1H-7339	156	1N-5998	654	1P-9390	158
	662	1H-8128	190	1N-5999	38		162
	664		192		690	1P-9620	596
	788		194		692	1P-9958	270
	806		196		696	1Q-1376	615
	844		269		700	1Q-1592	314
	848	1J-2674	628	1P-0232	229		324
	860		630	1P-0234	229	1Q-1742	830
1F-0750	96	1J-2860	410	1P-0436	216	1Q-1743	830
	102	1J-4757	410		220	1Q-1884	774
	140	1J-5353	450		225		▶864
	144	1J-5929	489	1P-1120	166	1Q-2112	474
	149		490	1P-2298	258	1Q-2113	474
	174	1J-7468	668	1P-2807	922	1Q-2118	474
	198	1J-8569	624	1P-3702	686	1Q-2120	474
	216		626	1P-3704	582	1Q-3160	196
	220		640		616	1Q-3162	196
	234		642		618	1Q-3626	495
	236	1J-8668	670		646	1Q-3627	495
	274		836	1P-3705	92	1Q-3642	489
	281	1J-9671	190		654	1Q-3644	489
	289		192		700	1Q-3645	489
	319		194	1P-4278	140	1Q-3647	▶489
	320		196		144	1Q-3690	534
	412		258		150		536
	452		589	1P-4576	417	1Q-3691	534
	454	1K-0502	204		628		536
	472	1K-4649	349		630	1Q-3754	474
	476	1K-4703	226		634	1Q-3760	786
	480	1K-5760	867		636	1Q-3762	784
	482	1K-5888	348		662	1Q-3764	784
	483	1K-6872	190		664	1Q-3765	786
	486		500		710	1Q-3779	848
	496		568		722	1Q-3783	848
	502	1K-8850	502	1P-4577	616	1Q-3785	848
	570	1K-9415	458		618	1Q-3787	848
	646	1L-4349	680		646	1Q-3800	784
	654	1L-5072	614		658	1Q-3808	848

▶ **PRIMARY REFERENCE**

PART NUMBER INDEX

Part	Page
1Q-3811	848
1Q-4755	561
1R-0716	84
1R-0719	396
1R-0722	680
1R-0735	681
1R-0749	223
1R-0769	224
1S-0004	102
	104
	242
1S-0996	670
1S-1015	417
	670
1S-1770	166
1S-4295	184
	186
1S-4305	140
	144
	420
1S-4698	794
	796
1S-4915	278
	279
	286
	287
	348
	349
	379
1S-5440	246
1S-6420	646
	655
	670
	831
1S-7251	278
	279
	286
	287
	348
	349
1S-7252	278
	286
	348
1S-7446	352
	356
	362
1S-7984	226
1S-8687	8
1S-8947	602
1S-9110	438
1S-9209	42
	44
1S-9593	707
	708
	709
1T-0068	510
	511
	512
	534
	536
1T-0141	438
1T-0278	436
1T-0284	254
1T-0295	578
1T-0416	576
1T-0550	52
1T-0680	436
1T-0720	52
1T-0738	600
1T-0786	436
1T-0795	436
1T-0806	436
1T-0807	436
1T-1410	436
1T-1423	436
1T-1910	436
1U-1655	587
1U-1738	628
	630
1U-2071	602
1U-2182	638
	640
	642
1U-2472	765
	766
1U-2752	602
1U-2765	602
1U-3147	602
1U-4961	760
1U-4962	760
1U-8846	14
	18
	38
1V-0358	604
1V-6341	326
	327
1V-6652	804
1V-8442	854
1W-0390	116
1W-0481	170
	174
1W-1116	92
1W-2567	200
1W-2835	86
1W-2860	216
	220
	582
1W-3014	76
1W-3136	56
	58
1W-3189	56
	58
1W-3795	174
1W-3862	81
	82
1W-3963	602
1W-4640	246
1W-4795	166
	185
1W-4797	200
1W-5009	►22
	23
1W-5010	4
	6
	►23
1W-5082	6
	►26
1W-5207	32
1W-5283	29
	30
1W-5378	98
	100
1W-5813	64
1W-5814	64
1W-5817	64
1W-5992	92
1W-5994	108
	110
	112
1W-5996	92
1W-6012	92
1W-6177	258
1W-6185	182
1W-6186	170
	174
1W-6694	172
	176
1W-6903	158
1W-6987	252
1W-7999	98
1W-8795	92
1W-9168	240
1W-9169	240
1W-9171	252
1W-9460	66
1W-9860	449
1Y-7927	816
1Z-0749	►495
1Z-9375	732
2	
2A-1162	56
2A-1538	74
2A-1736	204
	728
	848
2A-3746	212
	438
2A-4429	35
	36
2A-4758	588
2B-0858	440
	655
2B-2404	232
2B-2471	14
	18
2B-2694	156
	258
2B-2695	48
	50
	226
	259
	367
	450
2B-9373	430
2D-0388	890
2D-0598	690
	692
	694
	696
2D-2751	281
2D-4202	680
2D-4534	190
	192
	194
	196
2D-5658	423
2D-6235	372
	476
	788
	804
	816
2D-6392	352
	356
	362
2D-6642	72
	386
	422
	694
2D-8009	430
2D-8155	646
	662
	664
2D-9457	436
2F-0808	166
	185
2F-5326	514
	516
2F-6678	352
	356
	363
2G-0493	268
2G-1133	378
	808
2G-4561	150
2G-6087	866
2G-8097	281
	289
2G-9000	►188
	190
	192
	194
	196
2H-1190	212
2H-1537	470
2H-2995	450
2H-3429	353
	357
	362
	390
2H-3517	578
2H-3745	514
2H-3750	32
2H-3755	182
	383
2H-3855	424
2H-3908	655
2H-3920	809
	916
2H-3922	366
	378
	776
2H-3923	776
2H-3928	588
2H-3931	394
	588
2H-3932	518
	588

► **PRIMARY REFERENCE**

PART NUMBER INDEX

Part	Page
	624
	626
	640
	642
2H-5547	202
2H-6124	680
2H-6488	56
	58
2H-6622	897
	898
	899
	900
	909
	910
2J-0157	226
2J-0564	634
	636
2J-3118	386
	424
2J-3507	461
	745
	746
	747
	748
	749
	750
	751
2J-3961	622
2J-4672	390
2J-5245	156
2J-6356	198
	204
	396
	579
2J-7761	614
2J-8163	352
	356
	362
2J-8239	414
2J-8333	434
2K-2794	414
2K-3219	922
2K-4472	518
2K-4973	8
	60
	61
	158
	162
	168
	204
	452
	454
	463
	464
	466
	468
	570
	681
	825
	831
	840
	856
	858
	882
	884
2K-5254	440
2K-6830	632
2K-7979	198
2K-8257	417
2K-9111	863
2L-3650	436
2L-5894	596
2L-6267	573
	726
	728
2L-6679	352
	356
	363
2L-8075	804
2L-8076	804
2L-8077	373
2M-1156	576
2M-1656	64
2M-2742	8
2M-3530	514
2M-3974	428
2M-4208	254
2M-4209	254
2M-4210	254
2M-4211	254
2M-4212	254
2M-5173	172
	176
2M-5407	64
2M-5795	482
	503
2M-6095	502
2M-7041	448
2M-7819	816
2M-9780	104
	216
	217
	220
	221
	289
	302
	304
	564
	580
	581
	586
	596
	604
	654
	655
	704
2N-0828	260
2N-1287	202
2N-2765	184
	186
2N-2766	178
	184
	186
2N-3162	198
2N-3480	819
2N-3680	572
2N-7174	38
2N-7228	72
	73
2N-7229	72
2N-8109	21
	79
	81
	82
2P-0911	182
2P-1286	102
2P-1692	518
2P-1974	84
2P-2772	18
	56
	58
2P-2817	66
2P-2975	278
	286
2P-3203	64
2P-3204	64
2P-3206	257
2P-3538	424
2P-4337	890
2P-4339	808
2P-8225	200
2P-8226	200
2P-8630	246
2P-8643	202
	260
2P-8669	226
2P-8679	226
2P-8697	226
2P-8707	226
2P-8803	200
2P-9556	260
2P-9845	77
	78
2R-1236	588
2R-1694	452
	454
2R-2376	808
	860
2R-4330	449
2S-0613	398
	402
	406
2S-0696	450
2S-2053	92
2S-2110	476
	480
	503
2S-2596	690
	692
	694
	696
2S-2760	108
	110
	112
2S-4078	386
	398
	402
	406
	416
	580
	598
2S-4569	576
2S-4570	576
2S-4872	450
2S-5925	548
2S-5926	548
2S-6091	205
2S-6150	8
2S-6151	8
2S-6160	8
2S-6196	8
2S-6218	369
2S-7316	246
2S-7391	270
2S-8439	396
	579
2S-8926	423
2V-0099	808
2V-2043	102
2V-4868	150
2V-5019	806
	848
2V-8259	281
	289
2W-1010	92
2W-1080	172
	176
2W-1491	226
2W-1733	23
2W-1734	23
2W-2094	6
	▶209
2W-3156	200
2W-3157	▶200
	202
2W-3294	258
2W-3815	26
2W-6000	24
2W-6305	176
2W-6307	176
2W-6687	154
2W-6965	172
	176
2W-6967	172
	176
2W-7264	240
2W-7611	52
2W-7614	52
2W-7615	52
2W-7980	10
2W-8225	84
2W-9054	6
	▶66
2W-9780	227
	3
3B-0623	29
	30
3B-0645	26
	28
	29
	30
3B-1915	32
	50
	64
	116
	123
	156

▶ **PRIMARY REFERENCE**

PART NUMBER INDEX

Part	Page	Part	Page	Part	Page	Part	Page
	214	3D-2871	56		830		220
	234		58		890	3E-7417	674
	376	3D-2975	816	3E-3380	890	3E-7428	174
	410	3D-4072	386	3E-3383	800	3E-7433	581
	548	3D-5279	281		808	3E-7606	570
3B-2968	74		289		842	3E-7753	278
3B-4501	378		582		912		286
	776	3D-8012	470		914	3E-7768	353
3B-4505	202	3D-8241	440		916		357
3B-4605	463	3D-8317	448	3E-3535	824		362
	464		450		830	3E-7771	352
	466	3D-8358	596	3E-3891	587		356
	468	3D-8422	398	3E-4051	825	3E-7835	784
3B-4610	204		402		830		▶804
	414		406	3E-4052	825	3E-7837	804
	472	3D-8748	804		831	3E-7838	804
3B-4615	204	3D-8749	804	3E-4053	825	3E-7839	804
	496	3D-9133	398		831	3E-8273	921
	570		402	3E-4057	825	3E-8362	846
3B-4617	8		406		831	3E-8575	684
3B-5317	489	3E-0109	860	3E-4058	825		▶707
	490	3E-0400	776		831	3E-8581	707
3B-6552	176		812	3E-4302	674		708
3B-7255	289	3E-1841	777	3E-4321	825	3E-8646	300
	836		812	3E-4334	592	3E-8680	▶369
3B-7285	176	3E-2378	922	3E-4352	182		730
3B-7721	104	3E-3365	273	3E-4356	819	3E-8825	378
3B-7732	150		278	3E-4374	204	3E-9044	378
3B-8485	8		279		726	3E-9177	▶912
3B-8489	44		286	3E-4876	393		916
	514		287	3E-4880	393	3E-9205	▶708
	516		326	3E-4898	860		710
	628		327	3E-5239	278	3E-9350	278
	630		340		798		286
	634		344		917	3E-9865	348
	636		346	3E-5394	776		854
	638		348		813		888
	640		365	3E-5464	776	3F-0379	352
	642		372	3E-6328	▶273		356
	716		378		378		362
	718		580	3E-6333	344	3F-3152	386
	722		709		346	3F-6353	802
	733		776	3E-6388	912		803
3C-1884	912		798		914	3F-9556	226
	914		812		916	3G-0911	622
3D-0471	417		824	3E-6389	▶308		720
3D-2824	102		830		788	3G-2292	48
	216	3E-3368	331	3E-6425	286		50
	217		332	3E-6601	819		52
	220		335		846	3G-3475	418
	221		336	3E-6747	257	3G-3747	624
	226		337	3E-6756	716		626
	246		339		718		638
	254	3E-3371	308		722		640
	365		329	3E-6757	716		642
	396		338		718	3G-5596	770
	416		342		722		771
	417		379	3E-6760	200		772
	530		608	3E-6772	32	3G-5999	628
	581		730		38		630
	589		890	3E-6900	299		634
	598	3E-3374	890	3E-6918	844		636
	602	3E-3377	328	3E-6919	844	3G-6402	452
	655		707	3E-6920	844		454
	689		708	3E-7403	216	3G-7000	739

▶ **PRIMARY REFERENCE**

PART NUMBER INDEX

Part	Page
3G-7016	740
3G-7452	666
3G-8054	652
	722
3G-8057	652
	722
3G-8710	417
3G-9401	720
	738
	739
3G-9598	738
	739
	760
	763
3H-1118	808
3H-1461	417
3H-3433	572
3H-4776	452
	454
3H-5366	476
3H-5368	680
3H-5788	836
3H-6660	788
3H-9675	518
3J-1907	140
	216
	220
	234
	254
	259
	281
	289
	386
	390
	396
	416
	449
	579
	580
	581
	582
	589
	596
	598
	604
	608
	646
	652
	654
	655
	670
	672
	680
	686
	688
	698
	700
	706
	710
	722
3J-2903	417
3J-4278	514
3J-4818	884
3J-5169	118
	130
3J-7354	144
	150
	172
	220
	226
	259
	289
	417
	598
	672
	680
	686
	690
	692
	694
	696
	705
	716
	718
	722
3J-7694	694
3K-0360	104
	216
	217
	220
	221
	254
	281
	289
	302
	304
	386
	398
	402
	406
	416
	518
	530
	581
	582
	589
	594
	604
	606
	607
	652
	655
	672
	702
	703
	705
	722
3K-0810	246
3K-2889	458
	470
3K-3256	60
	61
3K-6060	281
	289
	293
	480
	844
3K-6113	521
	522
3K-6223	604
3K-6235	788
3K-8460	258
3K-8692	624
	626
	640
	642
3K-9770	470
3L-3380	352
	356
	362
3L-3825	84
3L-5549	464
	468
3L-5987	227
3L-8187	369
	378
	380
	608
	804
	809
3M-0496	836
3N-2818	602
3N-3763	353
	357
	363
3N-3790	922
3P-0009	226
3P-0653	440
3P-0750	596
3P-0774	449
3P-0812	700
3P-0887	396
	579
3P-1156	598
3P-1210	588
3P-1323	24
3P-1932	417
3P-2685	422
3P-2768	422
3P-2791	422
3P-2792	422
3P-2793	423
3P-2794	423
3P-3059	422
3P-3098	423
3P-3103	423
3P-3321	423
3P-3604	472
3P-3738	422
3P-3839	379
3P-7019	588
3P-7447	423
3P-7489	422
3P-8820	398
	402
	407
3P-8827	398
	402
	406
3P-8845	452
	454
3R-8801	352
	356
	362
3S-0004	568
3S-0036	56
	58
3S-0602	270
3S-1349	470
	510
	511
3S-1356	514
3S-2093	278
	279
	286
	287
	348
	373
	424
	776
	798
	812
	886
3S-2708	423
	438
	576
	578
3S-3439	417
3S-3875	416
3S-6049	279
	287
	348
3S-6050	278
	287
	348
3S-6162	458
	470
3S-6605	26
	28
	212
3S-8652	396
	579
3S-9557	372
	904
3S-9643	122
	126
3T-0304	854
3T-0371	204
3T-1105	416
3T-1121	897
	898
	899
	900
	909
	910
3T-1447	430
3T-2139	422
3T-2662	372
3T-2710	417
3T-2977	482
3T-3418	352
	356
3T-3422	352
	356
	362
3T-3423	352
	356
	363
3T-3424	352
	356

► **PRIMARY REFERENCE**

PART NUMBER INDEX

Part	Page
	363
3T-3434	353
	357
	362
3T-3494	450
3T-3601	564
3T-3602	564
3T-3634	860
3T-3771	448
3T-3772	448
3T-3799	541
	545
3T-3811	436
3T-3951	860
3T-3953	860
3T-4215	450
3T-4704	▶343
	356
3T-4709	352
	356
	363
3T-4710	352
	356
	363
3T-4711	356
3T-4717	564
3T-5201	808
3T-5356	428
3T-5830	420
3T-6191	503
3T-6280	860
3T-6281	860
3T-6457	390
3T-6761	570
3T-6882	398
	402
	406
3T-6963	576
3T-7059	912
	914
3T-7086	912
	914
3T-7566	458
	470
3T-7567	458
	470
3T-7920	518
3T-8269	450
3T-8791	470
3T-8792	470
3T-9345	726
	728
3T-9494	352
	353
	356
	357
	363
3T-9524	352
	356
	362
3T-9525	352
	356
	363
3T-9660	286
3V-4943	44
3V-9399	463
	464
	466
	468
3W-1547	848
3W-3110	482
3W-3828	205
3W-4104	205
3W-6541	866
3Y-7829	452
	454

4

Part	Page
4B-0418	236
	416
4B-1270	572
4B-2047	240
	819
4B-2049	343
	353
	357
	362
4B-3388	200
4B-3609	198
	204
4B-3611	198
4B-4158	518
	562
	589
	711
	712
	713
	714
	741
	742
	922
4B-4161	84
4B-4274	240
	242
	343
	804
	917
4B-4276	804
4B-4278	463
	464
	466
	468
	692
	694
	696
4B-4463	848
4B-4863	258
	730
4B-5059	816
4B-5324	376
4B-6493	204
4B-7739	118
	130
4B-8393	410
4B-8641	60
	61
4B-9365	226
4B-9747	226
4B-9782	386
	573
	576
	578
	589
4B-9784	386
4B-9880	72
	448
	450
	596
4D-1326	104
4D-3704	47
4D-4064	204
4D-4065	568
4D-4508	518
4D-6082	414
4D-6716	279
	287
	348
4D-7388	88
	582
4D-7733	217
	221
	825
4D-7735	376
	582
4D-7794	312
	316
4D-8148	386
4D-9517	150
	236
4F-2041	436
4F-2129	578
4F-2294	370
	689
4F-3508	296
4F-4097	674
4F-4879	879
	881
4F-7389	564
4F-7390	79
	81
4F-7508	205
4F-8503	433
4F-8965	92
4F-9101	472
4H-1394	390
4H-1641	50
	472
	572
4H-2558	463
	464
	466
	468
4H-3283	430
4H-4737	448
4H-6520	568
	578
	582
4H-9541	98
4J-0520	616
	618
	646
	655
	658
	660
	662
	664
	668
	670
	700
	722
	801
4J-0522	606
	655
	686
	710
4J-0524	417
4J-0526	616
	618
4J-0527	190
	192
	194
	196
	417
4J-0528	588
4J-3044	726
	728
4J-3832	692
	696
4J-5267	417
	660
	662
	664
	666
	668
	670
	720
	722
4J-5351	690
	694
	704
4J-5477	716
	718
	722
4J-5977	470
4J-6888	624
	626
	638
	640
	642
4J-7376	624
	626
	638
	640
	642
4J-7533	226
	589
	690
	692
	694
	696
	700
	710
4J-8265	348
4J-8997	686
4J-9058	745
	746
	749
	750

▶ **PRIMARY REFERENCE**

PART NUMBER INDEX

Part	Page	Part	Page	Part	Page	Part	Page
4J-9208	745		726		863	4N-1572	254
	746		734	4M-6921	680	4N-1650	26
	747		788	4M-7470	463		28
	748		806		464	4N-1682	12
	749		808		466		13
	750		825		468	4N-1683	12
	751		831	4M-8239	449		13
4K-0684	458		838	4M-8303	209	4N-1684	12
	470		848	4M-8910	440		13
	802	4L-6459	140	4M-8973	344		96
	803		144		346	4N-1718	▶72
4K-1388	616		573	4N-0342	10		77
	618		825		11	4N-1720	52
	689	4L-6499	104	4N-0513	108	4N-1779	122
	690	4L-7124	362	4N-0683	26	4N-1799	122
	692	4L-7711	694		28		126
	694	4L-8337	170		76	4N-1807	246
	696		174	4N-0684	22	4N-1848	154
	704	4L-9337	2		52		156
4K-6297	234		88	4N-0685	24	4N-1868	260
4K-8302	831		204	4N-0693	26	4N-1870	226
4K-8501	502		349	4N-0775	229	4N-1946	122
4K-8864	825		420	4N-0776	254		126
	831		474	4N-0794	122	4N-1948	134
4K-9097	786		612	4N-0824	254	4N-2109	40
4K-9429	851		722	4N-0848	52		41
4L-2729	353		794	4N-0861	92	4N-2199	122
	357		796	4N-0864	12		126
4L-6454	8		825		13	4N-2481	4
	88		831		122		6
	102	4M-0061	204		126		▶80
	140	4M-1336	134		305	4N-2514	47
	144	4M-1474	229		306	4N-2927	816
	150	4M-1815	343	4N-0865	92	4N-3152	126
	190		363	4N-0898	246	4N-3329	327
	192	4M-1827	353	4N-0899	229	4N-3808	394
	194		357	4N-0900	254	4N-3841	367
	196		362	4N-0901	254	4N-4193	156
	217	4M-1828	352	4N-0905	254	4N-4218	270
	221		356	4N-0913	92	4N-4298	6
	269		362	4N-0914	92		▶77
	274	4M-1829	352	4N-0932	32	4N-4307	116
	302		356		71		122
	304		362	4N-0933	18	4N-4668	21
	305	4M-1831	352		56		79
	306		356		58	4N-5339	108
	314		362		244		110
	324	4M-1853	353	4N-0951	226		112
	349		357	4N-0952	229	4N-5614	72
	412		362	4N-0955	10		73
	413	4M-1854	353		11	4N-5656	260
	463		357		72	4N-5795	154
	464		362	4N-0963	6	4N-5837	4
	466	4M-1896	353		▶10		6
	468		357	4N-1104	260		▶132
	472		363	4N-1105	259	4N-5858	24
	482	4M-2381	448	4N-1106	72	4N-5893	29
	496		450	4N-1114	16		30
	573		596	4N-1119	258	4N-5906	35
	582	4M-5281	104	4N-1151	64		36
	608		379	4N-1156	122	4N-6658	24
	612	4M-5282	788		126	4N-6672	98
	646	4M-5283	204	4N-1230	582		100
	658	4M-5317	530	4N-1235	52	4N-6876	4
	722	4M-6425	8	4N-1294	90		6

▶ **PRIMARY REFERENCE**

PART NUMBER INDEX

Part	Page
	▶16
4N-7183	52
4N-7253	32
4N-7357	258
4N-7437	259
4N-7465	258
4N-8112	202
4N-8410	92
4N-9753	92
4N-9915	819
4P-0246	200
4P-0513	64
4P-0519	64
4P-0520	64
4P-0692	100
	182
4P-0707	90
	248
	250
4P-1639	200
4P-3816	166
4P-3817	166
4P-3818	166
4P-3819	166
4P-3823	166
4P-3864	122
	126
4P-5545	7
	▶74
4P-5546	74
4P-7428	42
	88
	281
	289
	305
	306
	825
	831
4P-7429	281
	289
	424
	825
4P-7581	281
	289
	305
	306
	312
	316
	324
	349
	376
	568
	608
	616
	618
	825
	831
	847
	854
	890
4P-8134	13
	104
	123
	281
	289
	305
	306
	318
	349
	376
	379
	722
	808
	825
	831
	854
	890
4P-8260	240
4P-8487	240
4P-8495	66
4P-8729	6
	▶184
4P-8730	184
	▶185
4P-8731	▶166
	185
4P-8732	185
4P-8733	185
4P-8734	166
4P-8735	166
4P-8736	166
4S-1962	141
	144
	376
4S-4455	102
4S-4456	582
4S-5367	8
4S-5780	274
4S-5898	541
	545
4S-8537	422
	423
4T-0204	718
4T-0208	718
4T-0993	690
	692
	694
	696
4T-0998	645
4T-1005	702
4T-1008	672
	▶702
4T-1009	702
4T-1011	702
4T-1021	690
	692
	696
4T-1022	▶645
	690
	692
	696
4T-1108	690
	694
4T-1649	692
	694
	696
4T-1700	705
4T-1701	692
	694
	696
4T-1843	734
4T-1849	694
4T-1850	690
	692
	696
4T-1851	694
4T-1852	694
4T-1855	694
4T-1860	690
	692
	694
	696
	▶706
4T-1941	589
4T-2069	518
4T-2479	722
	768
	770
4T-2691	644
	645
4T-3131	396
4T-3134	680
4T-3522	716
	718
	723
4T-3981	668
4T-4144	634
	636
4T-4501	772
4T-4509	705
4T-4511	692
	694
	696
4T-4875	733
4T-4942	703
4T-5070	589
	706
4T-5071	688
	706
4T-5072	690
	694
	704
4T-5073	690
	692
	694
	696
	704
4T-5074	692
	694
	696
	705
4T-5075	702
4T-5502	771
4T-5795	644
	645
4T-5896	672
	▶688
4T-5945	644
	645
4T-6907	632
4T-7534	740
	765
	766
4T-7571	703
4T-8588	622
4T-8987	769
	▶770
4T-9439	760
4T-9751	716
4T-9762	718
	734
4V-6366	492
4V-6440	670
4V-6981	788
	822
4V-7884	882
	884
4V-8256	856
	858
4V-8556	884
4V-8577	882
4W-1072	154
4W-1073	174
4W-1737	154
4W-1890	98
	100
4W-1931	6
	▶98
4W-2109	98
	100
4W-2110	98
	100
4W-2169	246
4W-3753	794
4W-4314	170
	174
4W-4588	26
4W-4590	234
	236
4W-4591	234
4W-4592	234
4W-4775	156
4W-4794	122
	126
4W-5390	6
	▶12
	258
4W-5479	▶258
	259
4W-5492	23
4W-5698	23
4W-5699	23
4W-5700	23
4W-5701	23
4W-5702	66
	68
4W-5703	66
	68
4W-5998	77
	78
4W-6013	▶226
	260
4W-6061	26
4W-6538	209
4W-6822	20
4W-6827	6
	▶20
4W-7005	6
	▶32
4W-7062	170

▶ **PRIMARY REFERENCE**

PART NUMBER INDEX

Part	Page
	174
4W-7195	98
4W-7197	98
4W-7374	226
	▶246
4W-7592	138
4W-7653	246
4W-7654	227
4W-8089	40
	41
4Y-5812	606
4Z-6356	615
	▶624
4Z-6357	615
	▶626
4Z-6363	620
	▶628
4Z-6364	620
	▶634
4Z-9189	731
4Z-9221	731
	732
5	
5B-1484	242
5B-2638	32
5B-3254	673
5B-4274	110
	112
5B-5821	386
	588
5B-7040	200
5B-7890	170
5B-9318	229
5B-9603	14
	18
	126
5C-2890	348
	372
	798
	870
5C-6565	281
	289
	302
	304
	349
	412
	417
	472
	496
	503
	514
	662
	664
	802
	803
	825
	864
	865
	866
5C-8811	916
5C-9553	776
	812
	912
	914
	916
5D-0353	398
	402
	406
	568
	680
5D-0718	582
5D-1026	824
	830
	836
5D-1911	614
5D-4822	816
5D-5958	592
5D-6857	204
5D-7449	410
5D-7635	314
	324
5D-7927	680
5D-9514	420
5F-0304	56
5F-1248	410
5F-1678	514
	516
5F-3106	538
	539
	540
	542
	543
	544
	655
5F-3999	44
	588
5F-4899	108
	110
	112
5F-6044	14
	18
	430
5F-7054	398
	402
	406
	681
	702
5F-7403	52
5F-7404	52
5F-8000	416
5F-9144	224
	254
	572
5G-4109	216
	220
5G-6397	580
5G-8288	416
5H-0135	92
5H-0244	118
	130
5H-1351	226
5H-1472	688
5H-1504	32
	77
	78
5H-2068	92
5H-2095	666
	720
5H-4018	662
	664
5H-4019	658
	700
	801
5H-4020	686
5H-4279	428
	434
5H-5339	576
5H-6733	680
5H-6734	190
	192
	194
	196
	269
	518
5H-7152	205
5H-7153	416
5H-7704	170
5H-8803	458
5H-8853	450
5H-8985	134
	438
	450
5I-8307	281
	289
5J-1192	622
5J-1391	690
5J-3488	628
	630
5J-3576	723
	768
	770
5J-5314	258
	353
	357
	362
5J-5315	726
	728
5J-5402	632
5J-5793	208
	386
5J-7386	438
5J-8350	642
5J-9454	624
	626
	638
	640
	642
5K-0906	114
	344
	346
	784
5K-1770	417
5K-5120	386
5K-9065	52
5K-9090	102
	104
	416
	580
	581
	689
5K-9107	386
	422
	680
5K-9179	839
5K-9238	416
5L-1761	296
	445
5L-2029	573
5L-2683	47
5L-4019	383
5L-4041	204
5L-4751	513
	516
5L-5711	573
5L-7200	378
5L-7812	260
5L-8991	227
5L-8992	226
5M-0544	470
5M-0578	576
5M-2057	690
	692
	694
	696
5M-2691	254
5M-2697	254
5M-2894	12
	13
	14
	18
	32
	38
	50
	52
	56
	58
	60
	61
	64
	78
	80
	84
	86
	90
	92
	98
	100
	108
	110
	112
	116
	117
	120
	121
	123
	126
	154
	156
	170
	174
	178
	182
	210
	234
	236
	242
	248

▶ **PRIMARY REFERENCE**

PART NUMBER INDEX

Part	Page	Part	Page	Part	Page	Part	Page
	250	5N-4185	260		417		141
	390	5N-6096	573		452	5P-1262	118
	410	5P-0063	32		454		130
	422		71		474	5P-1265	140
	430	5P-0076	210		476		141
	436		710		480	5P-1268	118
	438	5P-0537	185		482		130
	576		187		486	5P-1293	416
	582		200		496	5P-1327	741
	604		217		503		742
	681		221		530	5P-1370	52
5M-3034	353		225		570	5P-1404	70
	357		226		582		596
	362		386		612	5P-1465	141
5M-3062	104		854		616		145
	141		912		618		150
	144		914		646	5P-1471	168
	158	5P-0597	86		655	5P-1505	217
	162		168		670		221
	217		416		680	5P-1717	118
	221	5P-0695	278		723		130
	281		279		726	5P-1843	680
	289		286		728	5P-1908	217
	315		287		734	5P-2228	42
	318		348		788		88
	319		349		798		349
	320		379		807		417
	344	5P-0747	278		808		476
	349		279		822		480
	379		286		825		503
	412		287		831		546
	417		348		836		646
	503	5P-0761	278		844		670
	570		279		848		788
	646		286		860		831
	662		287		870		861
	664		348		916	5P-2230	150
	722		349	5P-1076	150	5P-2424	349
	807	5P-0764	140		281		392
	825		144		289		416
	840	5P-0767	836		293		582
	860	5P-0796	226		461		794
	870	5P-1075	2		472		796
5M-4987	430		88		474	5P-2546	521
5M-6126	423		102		476		522
5M-6187	422		141		480	5P-2566	114
5M-6214	254		144		482		150
	445		198		496		190
	496		204		503		194
5M-6228	226		274		546		196
5M-7900	423		281		655		293
5M-7925	423		289		666		414
	578		293		668		416
5M-8009	44		294		720		440
5M-8500	788		312		802		458
5M-9498	502		314		803		470
5M-9622	448		315		825		472
	450		316		861		476
5M-9623	448		318		864		480
	450		319		865		492
5M-9624	448		320		866		503
	450		324	5P-1251	150		582
5M-9735	8		349	5P-1255	88		794
5N-0093	26		380	5P-1259	86		796
5N-2840	102		412		121	5P-2618	190

► **PRIMARY REFERENCE**

PART NUMBER INDEX

Part	Page
	192
	194
	196
5P-2675	854
5P-2755	170
	174
5P-2955	315
	318
	319
	320
	722
5P-3119	423
5P-3150	423
5P-3501	417
5P-3629	436
5P-3948	830
5P-4115	104
	476
	776
	784
	807
	812
	854
	916
5P-4116	114
	234
	344
	346
	486
	807
5P-4626	44
5P-4869	158
	162
5P-4939	240
5P-5297	436
5P-5405	438
5P-5454	808
5P-5598	100
5P-5601	246
5P-5639	472
5P-5643	809
5P-5673	776
	798
5P-5677	2
	373
	379
5P-5678	20
5P-5680	895
	896
	897
	898
	899
	900
	907
	908
	909
	910
5P-5755	809
	844
5P-5824	808
5P-5855	50
	248
	250
5P-5874	644
	645
5P-5901	380
5P-5908	777
	813
5P-5924	798
5P-5969	776
	813
5P-5991	221
5P-5992	530
5P-6003	730
5P-6011	232
5P-6129	825
	831
5P-6254	423
	576
5P-6298	352
	363
5P-6300	588
	598
5P-6312	344
	346
5P-6313	344
	346
5P-6314	344
	346
5P-6438	568
	570
5P-6605	788
5P-6652	268
5P-6670	776
	812
5P-6719	598
	700
5P-6721	423
5P-6871	840
5P-6874	839
5P-6944	655
5P-6945	226
5P-6994	302
	304
5P-7036	476
	480
5P-7086	890
5P-7179	518
5P-7204	156
5P-7211	788
5P-7213	443
5P-7464	582
5P-7465	582
5P-7466	662
	670
5P-7467	662
	670
5P-7468	417
5P-7469	417
5P-7483	476
	480
5P-7513	844
5P-7593	628
	630
5P-7604	673
5P-7648	838
5P-7684	38
5P-7705	472
	502
5P-7815	244
5P-7854	236
5P-7907	344
	346
5P-7911	398
	402
	406
5P-7957	851
5P-7970	589
5P-8112	660
	662
	670
	722
5P-8119	242
5P-8167	848
	884
5P-8210	598
5P-8244	92
	673
	680
5P-8245	52
	56
	58
	62
	92
	248
	250
	398
	402
	406
	410
	420
	422
	436
	440
	538
	539
	540
	541
	542
	543
	544
	545
	564
	576
	578
	589
	794
5P-8247	16
	52
	386
	420
	655
5P-8248	74
	582
5P-8249	74
	432
	512
5P-8250	399
	406
	461
	745
	746
	747
	748
	749
	750
	751
5P-8356	26
	28
5P-8394	917
5P-8429	52
5P-8441	798
5P-8445	816
5P-8500	7
	216
	220
	268
	472
	476
	480
	482
	502
	614
5P-8502	7
	216
	220
	268
	472
	476
	480
	482
	502
	614
5P-8522	322
5P-8918	897
	898
	899
	900
	909
	910
5P-9119	680
5P-9132	800
5P-9294	258
5P-9297	234
	236
	582
5P-9299	117
	234
	236
5P-9439	428
5P-9466	922
5P-9519	386
	420
5P-9617	680
5P-9658	394
5P-9687	589
5P-9757	246
5P-9884	922
5P-9890	100
	210
5P-9938	608
5P-9959	170
	174
5R-7755	359
	360
5S-0003	182
5S-0581	134
5S-4246	572
5S-4437	448
5S-7001	702

► **PRIMARY REFERENCE**

PART NUMBER INDEX

Part	Page
5S-7018	602
5S-7189	254
5S-7343	573
5S-7349	281
	380
	417
	530
	786
	854
	890
5S-7379	96
	217
	221
	281
	289
	312
	324
	416
	440
	482
	486
	530
	570
	582
	646
	670
	822
	825
	831
	844
	848
	916
5S-7382	217
	221
	281
	289
	416
	568
	646
	658
	662
	664
	686
	700
	710
	722
5S-7383	102
	104
	172
	176
	658
	722
	726
	728
	825
	831
	863
5T-4896	458
	470
5V-0770	816
5V-1474	776
	812
5V-1496	482
	872
	874
5V-1497	882
5V-7190	655
5V-7574	578
6A-9718	912
	914
	916
	920
6B-0387	604
6B-0533	502
6B-1124	8
6B-1557	390
6B-2882	808
6B-4541	572
6B-4594	140
	144
	476
	480
	496
6B-4661	123
	126
	836
6B-6683	326
6B-6863	422
6C-3680	279
	287
	861
6D-1641	217
	221
	836
6D-1746	472
6D-2928	807
6D-3031	808
	860
6D-3044	450
6D-3886	204
6D-4244	221
	349
	380
6D-4246	798
	825
	831
6D-4247	217
	825
	831
6D-4636	217
6D-5974	205
6D-6812	870
6D-9157	634
	636
6D-9953	227
	564
6E-1127	606
6E-1133	602
6E-1134	602
6E-1135	602
6E-1136	602
6E-1637	690
6E-1835	702
	703
6E-1886	672
6E-1960	604
6E-2007	644
6E-2059	680
6E-2140	704
6E-2193	602
6E-2292	588
6E-2293	588
6E-2295	588
6E-2300	588
6E-2301	588
6E-2302	588
6E-2303	588
6E-2943	673
	674
6E-2960	588
6E-3113	▶632
	736
6E-3332	680
6E-3687	673
6E-3699	588
6E-3972	588
6E-3973	588
6E-3974	▶587
	588
6E-3976	632
6E-3980	632
6E-4049	686
	▶690
6E-4051	686
	▶692
6E-4096	592
6E-4098	592
6E-4100	446
6E-4102	446
6E-4138	▶672
	686
6E-4139	672
	▶703
6E-4213	674
6E-4214	674
6E-4215	674
6E-4216	674
	▶677
6E-4217	677
6E-4218	677
6E-4219	677
6E-4221	674
	▶678
6E-4224	674
6E-4225	674
6E-4227	674
6E-4228	698
6E-4230	698
6E-4233	674
6E-4236	674
6E-4237	674
6E-4239	698
6E-4241	698
6E-4242	698
6E-4245	674
6E-4246	698
6E-4248	674
6E-4293	587
	588
6E-4294	587
6E-4318	698
6E-4343	418
6E-4497	622
6E-4578	588
6E-4579	588
6E-4616	680
6E-4626	592
6E-4641	566
	▶604
6E-4805	610
	▶700
6E-4812	700
6E-4847	566
	▶588
6E-4859	624
	626
	638
	640
	642
6E-4863	610
	▶676
6E-4905	588
6E-4976	632
6E-5049	680
6E-5102	114
6E-5134	▶644
	694
6E-5138	686
	▶694
6E-5176	588
6E-5196	604
6E-5200	705
6E-5296	588
6E-5335	589
6E-5336	589
6E-5341	589
6E-5343	589
6E-5412	589
6E-5413	589
6E-5414	589
6E-5416	589
6E-5420	589
6E-5455	686
6E-5467	702
6E-5502	700
6E-5503	700
6E-5510	606
6E-5613	588
6E-5630	598
6E-5648	573
	▶602
6E-5662	598
6E-5663	598
6E-5674	602
6E-5675	602
6E-5677	598
6E-5848	588
6E-6088	588
6E-6089	588
6E-6090	588
6E-6140	698
6E-6141	698
6E-6142	698
6E-6419	698
6E-6420	698
6E-6461	588

6

▶ **PRIMARY REFERENCE**

PART NUMBER INDEX

Part	Page
6E-6478	589
	▶606
6F-0156	423
6F-0711	417
	452
	454
6F-6405	116
6F-6673	450
	568
6F-7045	366
6F-7316	582
6F-8146	398
	402
	407
6G-0584	417
6G-2914	860
6G-9102	780
6H-1717	436
6H-3609	412
6H-3615	472
6H-3956	436
	463
	464
	466
	468
	502
	821
6H-3977	428
6H-9361	680
6I-0030	▶240
	242
6I-0031	240
6I-0032	240
6I-0033	240
6I-0034	240
6I-0036	240
6I-0038	240
6I-0976	44
6I-0977	44
6I-1684	44
6I-1936	207
6I-2318	240
6I-2319	240
6I-2430	144
6I-2431	140
	144
6I-2433	140
	144
6I-2435	140
	144
6I-2436	140
	144
6I-2507	162
6I-2508	160
	162
6I-2594	162
6I-2922	47
6I-3799	234
6I-3800	234
6I-4613	26
	28
6I-8087	740
6I-8212	802
	803
6I-8361	198
6I-8363	198
6I-8418	496
6I-8514	668
6I-8515	668
6I-8516	668
6I-8654	450
6I-8675	720
	724
	725
6I-8676	724
	725
6I-8724	576
6I-8849	398
	402
	406
6I-8860	398
	402
	406
6I-8921	854
6I-9228	▶302
6I-9255	422
6I-9434	807
6I-9441	807
6I-9464	860
6I-9534	822
6I-9535	822
6J-0450	604
6J-0488	482
	570
	808
	861
6J-2245	386
6J-2419	258
6J-2515	420
6J-2680	655
6J-2797	632
6J-4081	461
6J-5179	720
	740
	765
	766
6J-5653	454
6J-6439	703
6J-6680	770
6J-6703	768
6J-7836	564
6J-9480	718
6J-9482	716
6J-9747	634
	636
6K-0806	884
6K-2198	861
6K-3273	872
	874
6K-3630	722
	737
6K-3631	524
6K-4936	808
6K-5967	570
6K-6307	581
	655
6K-8180	582
6K-9632	890
6L-1651	417
6L-3616	422
6L-3942	122
6L-4364	122
6L-4428	26
	28
6L-4783	428
6L-5897	254
	270
	644
	645
6L-6560	438
6L-8797	674
6L-9284	386
	420
6L-9965	386
6M-7476	98
6N-0008	122
	126
6N-0493	208
6N-0513	200
6N-0515	200
6N-1027	50
6N-1029	110
	112
6N-1069	258
6N-1931	108
6N-2206	81
	82
6N-2331	170
6N-2343	108
	110
	112
6N-2469	64
6N-2508	14
	18
6N-2509	14
	18
6N-2523	208
6N-2533	208
6N-2985	416
6N-3024	116
6N-3025	116
6N-3026	116
6N-3169	202
6N-3175	246
6N-3279	353
	357
	362
6N-3504	226
6N-3826	352
	356
	362
6N-3896	74
6N-3897	74
6N-3927	208
6N-4090	254
6N-4165	254
6N-4414	216
	220
6N-5163	208
6N-5164	208
6N-5165	208
6N-5650	102
	104
6N-5653	208
6N-6223	162
6N-6460	160
	162
6N-6731	32
6N-6732	32
6N-6872	77
	78
6N-6984	612
	804
6N-7145	122
	126
6N-7154	35
	36
6N-7174	36
6N-7175	36
6N-7266	229
6N-7523	338
	916
6N-7672	344
	346
6N-7692	162
6N-7695	254
6N-7818	246
6N-8195	246
6N-8441	229
6N-8780	227
6N-8783	246
6N-8793	227
6N-8942	66
	68
6N-9040	227
6N-9133	26
	28
6N-9655	254
6P-0593	204
6P-3206	449
6P-3458	423
6P-3901	438
6P-4938	450
6P-4940	450
6P-4971	450
6P-5317	564
6P-5751	423
6P-6739	423
6P-6877	445
6P-6926	808
	860
6P-7379	422
6P-7564	422
6P-8269	503
6P-8339	440
6P-8340	440
6P-8369	513
	516
6P-8829	461
	489
	490
6P-8901	462
6P-8931	518
6P-9785	450
6S-1753	422
6S-4039	312
	316
6S-6308	8
6S-6646	390
6S-9470	503

▶ **PRIMARY REFERENCE**

PART NUMBER INDEX

Part	Page
6S-9720	236
6T-0209	548
6T-0302	916
6T-0303	916
6T-0362	343
	353
6T-0363	352
	356
	363
6T-0371	352
	356
	363
6T-0372	352
	356
	363
6T-0463	278
	286
6T-0481	548
6T-0850	564
6T-1119	343
6T-1120	343
	363
6T-1127	417
6T-1140	512
6T-1142	▶512
	563
6T-1698	268
6T-2037	564
6T-2307	448
6T-2313	390
	▶448
6T-2638	550
	551
	552
	553
	554
	555
	556
	557
	558
	559
	560
	561
6T-3382	707
6T-3588	458
	460
6T-3589	458
6T-3590	458
6T-3591	458
6T-3594	458
6T-3631	608
	804
6T-3632	608
	804
6T-3633	608
	804
6T-3642	372
6T-3643	372
	824
	830
6T-3720	423
6T-3726	423
6T-3764	306
6T-3793	517
	518
6T-3990	378
	380
	809
6T-4294	476
	480
	503
6T-4376	534
	536
6T-4504	534
	536
6T-5385	476
6T-5620	728
6T-5814	378
	380
6T-5941	489
	490
6T-6066	378
	380
6T-6329	809
6T-6358	204
6T-6505	776
	777
	813
6T-6506	776
	777
	813
6T-6686	777
	812
6T-6708	776
	812
6T-6805	416
6T-6954	734
6T-6970	608
6T-7058	380
	854
6T-7628	445
6T-7630	445
6T-7863	564
6T-8258	518
6T-8392	568
	570
6T-8402	893
	▶895
6T-8403	894
	▶896
6T-8426	503
6T-8801	518
6T-8943	804
6T-9222	396
	579
6T-9223	396
6T-9244	708
6T-9255	804
6T-9256	804
6T-9352	482
6T-9354	482
6T-9355	482
6T-9559	684
6V-0484	286
	580
	654
6V-0513	▶352
	359
6V-0709	518
6V-0825	604
6V-0836	422
6V-0852	70
	286
	386
	417
	444
	449
	579
	580
	596
	654
6V-0928	▶356
	360
6V-0974	652
	722
6V-1179	299
6V-1193	482
	726
	728
	801
6V-1196	440
6V-1197	248
	250
	586
6V-1249	582
6V-1250	589
6V-1322	352
	356
	362
6V-1355	150
6V-1525	84
6V-1604	596
6V-1653	398
	402
	406
6V-1668	776
	812
6V-1728	550
	551
	552
	553
	554
	555
	556
	557
	558
	559
	560
	561
6V-1748	378
6V-1820	588
6V-1867	416
6V-1868	416
6V-1869	418
6V-1889	217
	221
	312
	316
	530
	825
	831
6V-1950	860
6V-1965	369
6V-1966	369
6V-2226	562
6V-2235	86
6V-2312	904
	906
6V-2331	788
6V-2360	548
6V-2375	788
6V-2455	326
	327
6V-2492	150
6V-2495	580
6V-2686	190
	196
	344
	346
6V-2712	182
6V-2722	307
6V-2830	568
	570
6V-3250	386
6V-3260	788
6V-3298	398
	402
	406
6V-3300	589
6V-3319	52
6V-3340	640
6V-3382	589
6V-3536	73
6V-3545	572
6V-3548	598
6V-3549	210
6V-3675	673
6V-3676	673
6V-3830	64
	84
	92
6V-3831	21
	82
6V-3832	573
6V-3884	784
	788
	807
	809
	822
	844
	854
6V-3918	138
6V-3940	123
6V-3960	916
6V-3965	70
	289
	386
	417
	444
	449
	579
	580
	596
	654
6V-4248	598
	680
6V-4270	789
6V-4314	242

▶ **PRIMARY REFERENCE**

PART NUMBER INDEX

Part	Page	Part	Page	Part	Page	Part	Page
6V-4315	436		910	6V-8183	204		581
6V-4365	390	6V-5839	589		372		604
6V-4432	418		680		570		608
	655	6V-5845	628		572		646
6V-4589	14		630		726		652
	18		634		728		654
	52		636	6V-8185	372		670
	70	6V-5849	916		373		722
	84	6V-5851	916		807	6V-8398	216
	100	6V-6110	777		846		217
	210		813	6V-8186	370		220
	271	6V-6206	912	6V-8187	568		302
6V-4591	598	6V-6207	920		570		304
6V-4611	348	6V-6208	912		573		416
	922	6V-6209	912	6V-8188	281		417
6V-5044	170		914		289		581
	174		916		302	6V-8400	416
	182		920		304		580
6V-5048	38	6V-6210	920		343		581
	84	6V-6211	916		349		616
	96	6V-6212	916		352		618
	217	6V-6213	912		356		654
	225		914		362		655
	248		916		417	6V-8547	784
	250	6V-6214	912		646	6V-8555	96
6V-5049	38		914		662		100
	70		916		664	6V-8562	100
	96	6V-6215	914		686	6V-8625	216
	210	6V-6218	914		794		220
	212	6V-6339	598		796		386
	224	6V-6561	916	6V-8189	315	6V-8626	244
	236		▶920		318	6V-8628	716
6V-5051	281	6V-6716	279		319		718
	289		287		320		722
6V-5100	21		378		722	6V-8632	96
6V-5101	416	6V-6717	777	6V-8190	194		104
6V-5134	244		812		489	6V-8633	216
6V-5142	231	6V-6888	912		490		220
6V-5163	808		914	6V-8214	136		417
6V-5192	588		916	6V-8218	612	6V-8634	236
	677	6V-6889	890	6V-8237	632	6V-8635	102
6V-5266	38		912	6V-8337	674		104
6V-5391	644		914	6V-8358	216		580
	645		916		220	6V-8636	236
6V-5393	702		920	6V-8362	371		580
6V-5553	438	6V-6900	548	6V-8369	916		608
6V-5555	686	6V-6923	271	6V-8370	378		654
6V-5556	692	6V-7190	788	6V-8371	704	6V-8638	581
	694	6V-7357	854	6V-8373	343	6V-8639	216
	696	6V-7423	52		363		302
	705	6V-7607	198	6V-8374	378		304
6V-5586	589	6V-7634	204		380		386
	706	6V-7636	788		608		581
6V-5645	372	6V-7646	819		804	6V-8640	580
6V-5656	417		872		809	6V-8642	96
6V-5817	886		874		854	6V-8676	231
6V-5833	895	6V-7728	776	6V-8376	372		262
	896		812		824		264
	897	6V-7732	680		830	6V-8714	102
	898	6V-7744	680	6V-8378	104		416
	899	6V-8004	589	6V-8381	847	6V-8716	417
	900	6V-8073	788	6V-8397	216		581
	907	6V-8097	680		220	6V-8720	100
	908	6V-8129	788		221	6V-8722	96
	909	6V-8182	413		580	6V-8723	652

▶ **PRIMARY REFERENCE**

PART NUMBER INDEX

Part	Page	Part	Page	Part	Page	Part	Page
	722	6V-8981	217	6Y-0473	521	6Y-3484	422
6V-8724	96	6V-9000	716		522	6Y-3567	662
	216		718		523		664
	220		722		524	6Y-3568	662
	581	6V-9003	100		525		664
	608		244		526	6Y-3682	788
	646	6V-9004	530		527	6Y-3712	779
	652	6V-9005	102		528		►839
	670	6V-9007	581		529	6Y-3732	788
	722	6V-9008	581		538	6Y-4082	450
6V-8781	654	6V-9009	244		539	6Y-4227	922
6V-8801	88		416		540	6Y-4277	745
	114	6V-9156	838		542		746
	158	6V-9168	646		543	6Y-4278	745
	162	6V-9169	217		544		746
	172	6V-9176	438		546	6Y-4941	►393
	176	6V-9182	581	6Y-1130	►524		427
	190	6V-9197	502		554	6Y-4957	427
	196	6V-9313	716	6Y-1202	771		►568
	204		718		772	6Y-5094	854
	217	6V-9632	777	6Y-1204	771	6Y-5500	450
	221		812		772	6Y-5538	746
	281		860	6Y-1255	767	6Y-5539	745
	289		861	6Y-1393	596	6Y-5540	745
	293	6V-9648	922	6Y-2090	74		746
	294	6V-9667	628	6Y-2103	418	6Y-5628	►745
	312		630	6Y-2130	393	6Y-5629	►746
	315	6V-9746	417	6Y-2142	524	6Y-5888	438
	316		530		525	6Y-6584	278
	319		580		526		286
	349		581	6Y-2143	524	6Y-6850	572
	380		582	6Y-2144	525	6Y-7264	596
	474	6V-9829	654		526	6Y-7265	596
	548		655		527	6Y-7266	596
	573	6V-9830	216	6Y-2145	524	6Y-7417	580
	582		220	6Y-2280	450	6Y-7418	580
	608	6V-9833	102	6Y-2446	452	6Y-7429	580
	612		104	6Y-2651	733	6Y-7573	572
	655	6V-9838	96	6Y-2763	572	6Y-7576	573
	658	6V-9840	102	6Y-2764	573	6Y-7577	573
	670		104	6Y-2766	572	6Y-7579	572
	726	6V-9850	646	6Y-2770	573	6Y-7651	44
	728	6V-9852	104	6Y-2773	572	6Y-7652	44
	794		581	6Y-2777	572	6Y-7668	2
	796	6V-9854	581	6Y-2778	572		►204
	806	6V-9855	581	6Y-2779	572	6Y-7669	192
	825		654	6Y-2780	572	6Y-8193	►525
	831	6V-9872	96	6Y-2781	573		550
	836		220	6Y-2782	572	6Y-8194	►550
	890	6V-9873	236	6Y-2783	572	6Y-9047	►410
	917		416	6Y-2841	572		442
6V-8818	572	6V-9875	580	6Y-2846	572	6Y-9052	427
6V-8837	674	6V-9876	652	6Y-2847	572		►578
6V-8927	378		722	6Y-2848	573	6Y-9053	410
	809	6V-9877	530	6Y-2854	572	6Y-9054	410
6V-8928	788	6Y-0091	190	6Y-2855	572	6Y-9055	410
6V-8938	96		196	6Y-3140	572	6Y-9057	410
6V-8939	96	6Y-0145	205	6Y-3141	572	6Y-9058	410
6V-8969	819	6Y-0206	844	6Y-3233	760	6Y-9061	410
	846	6Y-0210	518		763	6Y-9062	410
	916	6Y-0470	525	6Y-3394	770	6Y-9063	410
6V-8970	458		526	6Y-3406	662	6Y-9064	410
	470		527		664	6Y-9065	410
6V-8977	258		528	6Y-3408	662	6Y-9066	410
6V-8980	646		529		664	6Y-9067	576

► **PRIMARY REFERENCE**

PART NUMBER INDEX

Part	Page	Part	Page	Part	Page	Part	Page
6Y-9068	576	7C-3385	154	7F-5711	470	7G-5964	390
6Y-9069	576	7C-3938	274	7F-6112	514	7G-5984	646
6Y-9070	576	7C-4353	831	7F-8607	830		658
6Y-9071	576	7C-4355	102	7F-9223	807	7G-5985	646
6Y-9073	576	7C-5278	252	7G-0339	489		658
6Y-9074	576	7C-5279	226		490	7G-5986	646
6Y-9076	576	7C-6514	20	7G-0343	550		658
6Y-9077	576		21		551	7G-6059	436
6Y-9078	576	7C-6525	240		552	7G-6114	436
6Y-9079	576		242		553	7G-6115	436
6Y-9083	576	7C-6589	240		554	7G-6171	482
6Y-9086	576		242		555	7G-6495	489
6Y-9087	576	7C-6591	240		556		490
6Y-9088	576	7C-7407	26		557	7G-6623	470
6Y-9092	576		28		558	7G-6723	860
6Y-9093	576	7C-7595	794		559	7G-6724	860
6Y-9097	576		796		560	7G-6772	422
6Y-9098	576	7C-7747	240		561	7G-6916	860
6Y-9099	576	7C-9463	98	7G-1060	278	7G-6917	860
6Y-9101	386	7C-9614	26		286	7G-7655	204
6Y-9107	386		28	7G-1239	472	7G-7681	205
6Y-9108	386	7C-9621	20	7G-1744	844	7G-7682	204
6Y-9112	578	7C-9635	20	7G-1785	844	7G-7684	198
6Y-9113	578	7C-9789	6	7G-1786	844		205
6Y-9114	578		▶81	7G-2176	108	7G-7919	378
6Y-9125	576	7D-1195	680		110	7G-8282	548
6Y-9287	718	7D-1649	84		112	7G-8420	568
	723		156	7G-2454	788	7G-8464	808
6Y-9321	410		180	7G-2476	423	7G-8947	452
6Y-9322	410		182	7G-2519	576		454
6Y-9398	416		410	7G-3435	423	7G-9476	450
6Y-9401	416	7D-1677	433	7G-3457	423	7G-9592	414
6Y-9955	422	7D-6922	373	7G-3606	646	7G-9708	518
6Y-9956	422	7D-7233	150		662	7G-9709	518
6Y-9957	422	7D-7705	384		664	7G-9913	476
6Y-9959	423	7E-3205	170	7G-3832	662		480
			174		664		503
		7E-5085	254		668	7H-1447	680
7		7E-5346	225	7G-3833	662	7H-3609	432
		7E-5661	48		664	7H-4543	804
7B-1251	281	7E-5665	66		668	7H-7628	410
	289		68	7G-3834	662	7H-7658	423
7B-2742	217	7E-6084	302		664	7H-9899	209
	221		304		668	7I-1334	8
	225	7E-6479	26	7G-4332	524	7J-0204	259
7B-3107	743	7E-6508	383		525		690
7B-3235	62	7E-7308	32		526		692
	156		38		527		694
	422	7E-8940	226		528		696
7C-0307	116	7E-8941	226		529		700
	123	7E-9262	23	7G-4550	861	7J-1335	496
	126	7F-0192	204	7G-4817	423	7J-1336	496
7C-0754	302	7F-0560	307	7G-4818	423	7J-2036	538
	304	7F-2050	776	7G-4823	844		539
7C-1450	824	7F-2060	776	7G-4824	844		540
	830	7F-3488	352	7G-4842	450		541
7C-1511	110		356	7G-4849	482		542
	112		362	7G-4928	860		543
7C-1512	110	7F-3491	352	7G-4993	417		544
	112		356	7G-5221	546		545
7C-1527	110		362	7G-5606	646	7J-3297	624
	112	7F-3525	352	7G-5622	438		626
7C-2199	100		356	7G-5746	422		638
7C-3039	122		363	7G-5751	386		642
	126	7F-4950	612	7G-5963	390	7J-4169	722

▶ **PRIMARY REFERENCE**

PART NUMBER INDEX

Part	Page	Part	Page	Part	Page	Part	Page
	737	7M-0327	352		110		454
7J-5225	452		356		112	7S-4326	398
	454	7M-0475	420	7N-2213	108		402
7J-6525	424	7M-1419	410		110		407
7J-6580	548	7M-1674	172		112	7S-4433	258
7J-8207	588		176	7N-2351	246	7S-4440	258
7J-8814	482	7M-5130	422	7N-2443	48	7S-5003	▶164
7J-8893	588	7M-6955	205		50		168
7J-8894	588	7M-7193	246	7N-2483	48	7S-5005	22
7J-9108	104	7M-7219	246	7N-2693	254		50
	217		816	7N-2694	254	7S-6745	396
	220	7M-7316	226	7N-2840	6		579
	221	7M-7410	122		▶48	7S-8817	158
	581		126	7N-2851	2		162
	602	7M-8480	386	7N-4012	270	7S-8920	655
7J-9933	690		422	7N-4330	270	7S-8921	655
	692		452	7N-4574	▶229	7T-0020	308
	694		454		254	7T-0095	604
	696	7M-8485	64	7N-5274	278	7T-0131	848
	703		102		287		860
	704		104		348	7T-0135	860
7K-1181	88		150	7N-5352	8	7T-0138	860
	104		396	7N-5876	378	7T-0145	726
	288		416	7N-6128	258	7T-0522	604
	305		417	7N-6251	92	7T-0601	788
	312		580	7N-6252	92	7T-0779	860
	324		581	7N-6253	92	7T-0905	568
	348		589	7N-6255	92	7T-0942	916
	373		596	7N-6494	359	7T-1068	895
	376		598		360		▶897
	378		606	7N-6608	166		▶898
	530		690	7N-6654	122	7T-1069	896
	723		692	7N-6700	4		▶899
	730		694		6		▶900
	784		696		▶92	7T-1078	916
	786		702	7N-6886	2	7T-1099	279
	808	7M-8651	352		88		287
7K-2828	580		356	7N-7049	7		314
7K-3176	830	7M-9107	771		▶359		315
7K-3222	844		772	7N-7078	66		319
7K-4363	461	7M-9831	242	7N-7325	226		324
7K-6536	864	7M-9910	240	7N-7559	98		379
7K-8876	588	7N-0060	281		100		452
	674		289	7N-7584	50		454
7K-8877	588		349	7N-7586	48		472
	674	7N-0209	200	7N-7591	22		482
7L-2894	352	7N-0210	305	7N-7628	117		483
	356		306		120		502
	362	7N-0242	229	7N-7688	118		726
7L-7262	117	7N-0296	344		130		777
	120		346	7N-7779	369		798
7L-8170	856	7N-0579	246	7N-7780	369		812
7L-8316	804	7N-0719	278	7N-7782	369		847
7L-8696	254		286	7N-7878	117		861
7L-9061	438		▶366		120		867
	674	7N-1066	252	7N-8243	6	7T-1248	432
7M-0324	352	7N-1210	76		▶232	7T-1330	895
	356	7N-1277	646	7N-9801	344		896
	362		824		346	7T-1775	502
7M-0325	352	7N-1996	380	7N-9943	308	7T-1885	564
	356		854	7P-4190	205	7T-1890	808
	362	7N-2059	344	7S-2042	472	7T-2275	525
7M-0326	352		346	7S-3916	452		526
	356	7N-2155	112		454		527
	362	7N-2156	108	7S-3919	452		528

▶ **PRIMARY REFERENCE**

PART NUMBER INDEX

Part	Page	Part	Page	Part	Page	Part	Page
	529	7T-4761	917	7V-9799	204	7X-0291	281
7T-2276	525	7T-4865	514	7W-0182	252		289
	526	7T-5066	860	7W-0534	204		417
	527	7T-5140	738	7W-0561	▶252	7X-0297	572
	528		739		254	7X-0325	416
	529	7T-5351	548	7W-1208	168		655
7T-2277	525	7T-5352	548	7W-1367	174	7X-0326	42
	526	7T-5391	▶747	7W-1927	252		44
	527		754	7W-1944	170		416
	528		757		174	7X-0328	42
	529		758	7W-1983	▶254		392
7T-2278	525	7T-5394	▶748		260		500
	526		755	7W-2315	242		794
	527		756	7W-2338	40	7X-0331	42
	528	7T-5417	546		41		655
	529	7T-5419	546	7W-2478	168	7X-0332	582
7T-2279	524	7T-5422	546	7W-3145	170	7X-0333	392
	525	7T-5430	518	7W-3447	38	7X-0339	190
	526	7T-5617	423		84	7X-0340	196
	527	7T-5701	748		386	7X-0342	517
	528	7T-5702	747		668		518
	529	7T-5803	759	7W-3659	180	7X-0343	503
7T-2280	524	7T-5856	798	7W-3956	254	7X-0345	75
	525	7T-5869	760	7W-4487	242		118
	526		763	7W-4990	26		130
	527	7T-6040	▶462	7W-5524	168		482
	528	7T-6228	490	7W-6381	4		494
	529	7T-6242	490		6		518
7T-2283	550	7T-6246	490		▶64	7X-0346	274
	551	7T-6799	371	7W-6492	24		482
	552	7T-6994	564		154		496
	553	7T-7305	716	7W-6528	108		655
	554		718		110	7X-0347	458
	555		722		112		794
	556		734	7W-6534	26		796
	557	7T-7388	607		70	7X-0349	470
	558	7T-7678	436	7W-6752	126		482
	559	7T-7777	278	7W-6978	86	7X-0353	616
	560		286	7W-6988	2		618
	561		348		▶86	7X-0365	722
7T-2288	551	7T-7778	278	7W-7000	126		867
7T-2289	▶551		286	7W-7026	242	7X-0366	867
7T-2294	552	7T-7921	726	7W-7078	86	7X-0369	268
	558	7T-8004	518	7W-7129	246	7X-0370	503
7T-2295	▶552	7T-8136	576	7W-7141	108	7X-0392	861
	563	7T-8331	654		110	7X-0393	534
7T-2770	521	7T-8733	470		112		536
	522	7T-8745	456	7W-7381	582	7X-0401	489
	523		▶490		655		490
7T-3810	369	7T-8891	886	7W-8071	32	7X-0403	462
7T-3877	517	7T-9105	654	7W-9545	6	7X-0404	720
	518	7T-9123	343		▶234		744
	532		353	7W-9546	234	7X-0405	489
	534		357	7X-0264	804		490
	536		363	7X-0277	690	7X-0406	534
7T-3896	▶470	7T-9125	747		692		536
7T-3935	▶553		748		694	7X-0408	194
7T-4132	518	7T-9307	546		696	7X-0418	461
7T-4155	422	7T-9515	378	7X-0280	694	7X-0420	507
7T-4385	472	7T-9538	654	7X-0288	568	7X-0421	507
7T-4501	722	7T-9982	348		658	7X-0429	865
	737	7V-0008	573		825		866
7T-4502	722	7V-5191	816		831	7X-0443	743
	737	7V-8087	860	7X-0290	168	7X-0448	274
7T-4532	792	7V-8791	502		417		726

▶ **PRIMARY REFERENCE**

PART NUMBER INDEX

Part	Page
	794
	796
7X-0469	870
7X-0515	141
	144
	482
	668
7X-0531	507
	514
7X-0533	514
	865
	866
7X-0537	723
	734
	737
	847
7X-0549	489
	490
7X-0550	414
	492
	646
7X-0562	343
	352
	356
	362
7X-0572	861
7X-0575	808
7X-0578	472
	480
	482
	608
	658
	798
7X-0582	314
	324
	723
	734
	860
	867
7X-0590	414
	492
	514
7X-0591	274
7X-0592	838
7X-0603	870
7X-0608	372
	856
	858
7X-0618	844
7X-0620	104
7X-0766	463
	464
	466
	468
	821
7X-0772	472
	808
	844
7X-0851	622
	720
7X-0860	204
	570
7X-0909	589
7X-1552	573
7X-2031	338
7X-2459	581
7X-2501	204
7X-2553	668
7X-2573	666
	668
	720
7X-2574	720
	740
	765
	766
7X-2578	720
	724
	725
7X-2579	720
	738
	739
7X-2623	440
7X-3178	198
7X-3182	916
7X-3317	572
7X-3373	353
	357
	362
7X-3374	568
	848
7X-3391	723
	737
7X-3392	417
	844
7X-6315	299
7X-7644	922
7X-7700	269
7X-7702	890
7X-7729	788
7X-7731	32
	71
	123
	126
7X-7763	916

8

Part	Page
8B-1312	422
8B-1910	489
	743
8B-2327	8
8B-4338	854
	917
8B-6561	236
8C-3075	410
	440
8C-3085	688
	706
8C-3089	353
	357
	362
	676
8C-3121	690
	692
	696
8C-3205	666
	668
	720
8C-3206	658
	668
8C-3221	922
8C-3442	789
8C-3445	84
8C-3446	84
	417
	681
8C-3447	417
8C-3451	681
8C-3681	150
8C-3756	776
	798
	812
8C-4000	104
8C-4427	807
8C-4428	807
8C-4436	2
	414
	417
	461
	496
	568
8C-4586	776
	812
8C-5060	917
8C-5196	20
8C-5219	642
8C-5222	44
8C-5230	84
	680
8C-5608	198
	854
8C-5917	278
	286
	348
8C-6354	373
8C-6358	307
8C-6561	407
8C-6711	272
8C-6758	96
8C-6761	423
8C-6857	413
	546
8C-6877	523
8C-6913	534
	536
8C-7514	216
	220
8C-7563	217
	220
8C-8514	730
8C-8584	463
	464
	466
	468
8C-8902	922
8C-8988	216
	220
8C-8989	216
	220
8C-8992	722
	737
8C-9127	642
8C-9161	622
8C-9660	353
8C-9987	709
8D-3508	482
8D-3932	830
8D-4771	398
	402
	406
8D-5294	596
8D-5295	596
8D-6542	476
	480
8E-0618	384
8E-0852	572
8E-0853	572
8E-1050	496
8E-1118	819
8E-1203	573
8E-1243	616
	618
8E-1244	616
	618
8E-1247	646
8E-1356	809
8E-1358	572
8E-1476	312
	316
8E-1477	312
	316
8E-1676	564
8E-1682	576
8E-1734	870
8E-1848	770
8E-2075	578
8E-2126	578
8E-2231	427
	▶564
8E-2232	564
8E-2233	564
8E-2234	564
8E-2514	854
8E-2589	890
8E-2593	916
8E-2685	788
8E-2711	596
8E-2713	596
8E-2715	596
8E-2729	423
8E-2819	518
8E-2935	572
8E-2936	573
8E-2938	572
8E-2939	572
8E-2940	572
8E-3124	398
	402
	407
8E-3131	573
8E-3241	320
8E-3270	779
	▶822
8E-3271	822
8E-3272	822
8E-3273	822
8E-3274	822

▶ **PRIMARY REFERENCE**

PART NUMBER INDEX

Part	Page	Part	Page	Part	Page	Part	Page
8E-3277	822	8E-6856	890	8E-8161	436		713
8E-3278	822	8E-6877	844	8E-8162	436		714
8E-3280	822	8E-6927	449	8E-8215	410		▶740
8E-3284	779	8E-7010	654	8E-8242	573	8E-9890	▶666
	▶819	8E-7033	726	8E-8292	886		711
8E-3446	893	8E-7034	726	8E-8304	423		712
	▶901	8E-7035	728	8E-8307	576		713
8E-3447	894	8E-7036	728	8E-8310	423		714
	▶902	8E-7083	781		576	8E-9891	621
8E-3523	384		782		578		▶668
8E-3600	668		▶844	8E-8316	438	8E-9963	496
8E-3664	782	8E-7108	670	8E-8393	450	8F-1434	104
8E-3720	472	8E-7111	670	8E-8545	427		343
8E-4112	496	8E-7112	670		▶433		353
8E-4196	747	8E-7117	▶102	8E-8546	393		357
	748	8E-7128	580		▶434		362
8E-4197	747	8E-7131	580	8E-8547	434	8F-3469	596
	748	8E-7134	580	8E-8548	434	8F-4994	680
8E-4258	580	8E-7212	456	8E-8549	428	8F-6058	258
8E-4259	580		▶472	8E-8562	433	8F-6350	14
8E-4331	582	8E-7235	844		▶443		18
8E-4471	430	8E-7236	844	8E-8616	600	8F-7219	678
8E-4539	749	8E-7237	844	8E-8630	458	8F-7242	202
	750	8E-7238	844	8E-8994	440	8F-7702	572
8E-4540	749	8E-7239	844	8E-9051	▶458	8F-8544	422
	750	8E-7242	844	8E-9052	▶460	8F-9516	521
8E-4743	770	8E-7353	844	8E-9228	763		522
8E-4830	430		848	8E-9253	808		523
8E-4836	846	8E-7364	726	8E-9289	458	8F-9836	474
8E-5044	848		728		470		482
8E-5113	788	8E-7510	538	8E-9299	801		502
	▶893		539	8E-9401	738		824
8E-5114	788		540	8E-9427	668		847
	▶894		541	8E-9428	668		861
8E-5346	770		542	8E-9433	668	8G-4081	824
8E-5437	454		543	8E-9436	668	8H-0333	208
8E-5445	518		544	8E-9438	668	8H-3127	338
8E-5553	578		545	8E-9445	666	8H-3532	606
8E-5590	760	8E-7561	472		668	8H-5303	366
8E-5922	788	8E-7695	▶420	8E-9446	668	8H-5306	366
8E-5926	788		427	8E-9483	572	8H-8175	390
8E-5931	788	8E-7706	410	8E-9487	433	8H-8769	296
8E-5932	788	8E-7707	410	8E-9572	616	8H-8819	410
8E-5933	788	8E-7791	844		618	8H-9180	205
8E-5959	808	8E-7802	456	8E-9592	844	8H-9181	227
8E-5962	726		▶807		848	8H-9182	205
8E-5974	2	8E-7838	440	8E-9595	844	8H-9186	205
8E-5975	2	8E-7881	658	8E-9597	860	8H-9189	42
	808	8E-7882	658	8E-9654	819		44
	860	8E-7883	658	8E-9656	819	8H-9204	226
8E-5978	860	8E-7886	▶318	8E-9737	866		254
8E-6083	416		741	8E-9739	866	8H-9819	118
8E-6332	660		742	8E-9853	▶412		130
	722	8E-7962	▶526		456	8J-0101	589
8E-6334	660		551	8E-9861	610	8J-0322	606
	722		552		▶726	8J-0331	606
8E-6449	600		553	8E-9862	610	8J-0412	588
8E-6619	521		556		▶728	8J-0503	588
	522	8E-8152	436	8E-9865	610	8J-0504	588
	523	8E-8153	436		▶658	8J-1196	482
8E-6752	765	8E-8155	436	8E-9868	450	8J-1622	602
	766	8E-8157	436	8E-9869	715	8J-1717	634
8E-6758	765	8E-8158	440		▶730		636
	766	8E-8159	436	8E-9889	711	8J-4351	92
8E-6834	844	8E-8160	436		712	8J-4386	624

▶ **PRIMARY REFERENCE**

PART NUMBER INDEX

Part	Page
	626
	638
	640
	642
8J-5326	738
	739
8J-5914	386
8J-6709	449
8J-6815	672
8J-7236	476
	480
	502
	867
8J-8322	438
8J-8621	710
8J-8879	600
8J-9383	844
	848
8J-9990	686
8K-0273	482
8K-1433	819
8K-2692	423
8K-5818	498
	499
8L-2746	100
8L-2779	96
	236
8L-2786	96
	170
	172
	236
	248
	250
	339
8L-3441	66
	68
8L-3873	226
8L-4154	226
8L-4155	226
8L-4175	226
8L-4308	226
8L-5771	666
	668
8L-6565	229
	688
8L-8413	816
	884
	890
8L-8501	450
8M-0506	234
8M-0755	117
	120
	150
8M-1013	448
	450
8M-1019	204
8M-1047	836
8M-1871	14
	18
8M-2530	386
	576
8M-2770	150
8M-2773	2
	96
	236
	302
	304
8M-3267	884
8M-4389	564
8M-4390	423
8M-4432	386
	390
8M-4443	417
8M-4969	348
8M-4986	390
	449
8M-4992	449
8M-5248	430
8M-5249	32
8M-5266	422
8M-5661	423
	568
	570
8M-6393	246
8M-6802	212
8M-8157	416
8M-8382	482
8M-8403	226
8M-8489	108
	110
	112
	430
	600
8M-8739	246
8M-9062	270
8M-9124	56
	58
8N-0301	118
	130
8N-0560	254
8N-0561	254
8N-0605	52
8N-0788	117
	120
8N-0869	278
	279
	286
	287
	348
	349
	379
8N-0878	170
	174
8N-0879	170
	174
8N-1189	259
8N-1415	252
8N-1594	182
8N-1608	66
8N-1619	182
8N-1626	259
8N-1628	258
8N-1630	▶259
	260
8N-1725	279
	287
	348
8N-2104	92
8N-2113	116
8N-2258	170
	174
8N-2282	116
8N-2291	116
8N-2299	154
8N-2304	6
	▶116
8N-2306	116
8N-2368	182
8N-2574	174
8N-2694	176
8N-2729	172
	176
8N-2730	172
	176
8N-2745	172
	176
8N-5021	6
	▶202
8N-6739	84
	92
8N-6740	92
8N-6981	254
8N-6983	246
8N-7806	52
8N-7953	182
8N-7954	182
8N-8753	348
	▶360
8N-8997	208
8N-9103	185
	187
8N-9104	185
	187
8P-0056	422
8P-0058	386
8P-0311	448
8P-0420	452
	454
	496
8P-4047	423
8P-4617	422
8P-5056	438
8P-5141	776
	812
8P-5189	438
8P-5210	236
8P-5698	398
	402
	406
8P-6083	440
8P-6321	450
8P-6334	452
	454
8P-6363	798
8P-6986	423
8P-6997	423
8P-8542	866
8P-9265	436
8P-9770	716
	718
	738
	739
	760
	763
	768
	769
8S-0023	244
	289
	582
8S-0024	244
	289
	582
8S-0948	582
8S-2195	572
8S-2332	359
	360
8S-2634	278
	286
8S-4211	278
	286
8S-4212	81
	82
8S-4755	546
8S-5383	274
8S-6212	422
8S-7048	573
8S-7803	207
	816
8S-9089	576
8S-9104	423
8S-9130	386
	440
8S-9191	32
	64
	98
8T-0075	654
8T-0122	176
8T-0193	176
8T-0208	518
8T-0283	624
	626
	638
	640
	642
8T-0318	788
8T-0328	343
	353
	357
	362
	872
	874
8T-0334	644
	645
8T-0341	589
8T-0343	674
8T-0372	589
8T-0379	670
8T-0644	588
8T-0672	622
	720
8T-0687	895
	896
	907
	908
8T-0741	726
	728
8T-1141	422
8T-1266	140
8T-1443	422
8T-1444	422

▶ **PRIMARY REFERENCE**

PART NUMBER INDEX

Part	Page
8T-1572	844
8T-1674	416
8T-1686	248
	250
	386
8T-1739	916
8T-1757	589
8T-1779	236
	654
8T-1786	530
8T-1790	628
	630
8T-1793	624
	626
	638
	640
	642
8T-1905	646
	652
	670
	722
8T-1972	808
8T-1979	788
8T-1980	788
8T-2174	916
8T-2223	588
8T-2225	278
	279
	286
	287
	348
	349
	379
8T-2275	680
8T-2501	114
	281
	289
	386
	393
	440
	582
	616
	618
	646
	692
	694
	696
	788
	884
8T-2502	118
	130
	198
	204
	205
	312
	316
	320
	398
	402
	407
	452
	454
	486
	489
	490
	568
	570
	655
	726
	728
	825
	831
	844
8T-2540	572
8T-2561	141
	145
	472
	612
	646
	788
	794
	796
8T-2895	807
8T-3282	628
	630
	634
	636
8T-3329	624
	626
	638
	640
	642
8T-3490	798
8T-3491	216
	220
8T-3518	307
8T-3519	307
8T-3597	798
8T-3611	580
8T-3848	789
8T-3957	586
8T-4001	720
	724
	725
	738
	739
8T-4121	628
	630
	634
	636
	652
	658
	662
	664
	666
	668
	720
	723
	798
8T-4122	75
	118
	130
	274
	494
	496
	503
	517
	518
	582
	616
	618
	655
	794
	796
8T-4133	798
8T-4136	666
	668
	720
8T-4137	798
8T-4138	854
8T-4139	666
	668
	720
8T-4167	568
	666
	668
	720
	723
	737
8T-4171	808
	854
8T-4182	660
	668
	722
8T-4185	666
	668
	720
8T-4186	660
	722
8T-4192	798
8T-4193	744
8T-4195	652
	668
	722
8T-4196	628
	630
	634
	636
	658
	666
	668
	720
	722
8T-4205	104
	198
	281
	349
	352
	356
	362
	373
	380
	417
	530
	573
	776
	786
	798
	812
	822
	854
	860
	872
	874
	888
	890
8T-4222	804
8T-4223	2
	8
	42
	44
	88
	114
	190
	194
	196
	274
	281
	289
	302
	304
	349
	392
	398
	402
	407
	412
	414
	416
	440
	458
	470
	472
	476
	480
	495
	496
	500
	503
	514
	519
	568
	582
	646
	655
	662
	664
	668
	670
	686
	780
	788
	794
	796
	798
	831
8T-4224	200
	315
	318
	319
	320
	407
	690
	692
	694
	696
	723
	784
	863
8T-4226	482

► **PRIMARY REFERENCE**

PART NUMBER INDEX

Part	Page	Part	Page	Part	Page	Part	Page
	825		568	8T-5361	194		118
8T-4231	586		570		462		123
8T-4244	668		572		489		126
8T-4777	904		582		490		130
	906		608		514		134
8T-4835	190		612		534		140
	274		616		536		156
	417		618	8T-5383	888	8T-6765	56
	500		646	8T-5391	486		58
	582		655		807		170
	796		658	8T-5400	890		174
	831		662	8T-5410	572		176
8T-4895	122		664	8T-5460	716	8T-6767	116
	825		670		718	8T-6869	600
8T-4896	2		686		722	8T-6870	600
	8		690		734	8T-6871	482
	88		700	8T-5911	196		494
	96		710		482	8T-6876	96
	102		723		483		216
	104		726		492		236
	118		728		824	8T-7008	305
	130		794	8T-5912	126		306
	141		796		170		608
	145		806		312		655
	150		825		316	8T-7338	722
	158		831		483		737
	162		840		654	8T-7371	711
	168		848		824		712
	190		890	8T-6342	369		713
	192		917	8T-6466	825		714
	194	8T-4943	808		831	8T-7529	582
	196	8T-4956	825	8T-6539	781	8T-7566	472
	217	8T-4983	121		782		808
	221	8T-4984	121	8T-6631	776		809
	269		122	8T-6639	216		852
	281		126		220		853
	289	8T-4985	140	8T-6663	581	8T-7876	674
	294		144	8T-6675	118	8T-7971	482
	302	8T-4994	398		130	8T-8382	624
	304		402		144		626
	312		406	8T-6685	798		638
	315		413	8T-6703	140		640
	324		414	8T-6745	628		642
	344		474		630	8T-8729	104
	346		476	8T-6757	22		122
	376		480		26		170
	380		489		28		236
	393		490		70		308
	396		503	8T-6761	56		326
	398		546		58		327
	402		646		64		328
	407		723		123		329
	412		733		126		338
	413		734	8T-6762	32		340
	417		867		71		342
	420	8T-4999	922		123		344
	440	8T-5004	807		126		346
	452	8T-5039	674		386		348
	454	8T-5093	588	8T-6763	26		580
	463	8T-5353	205		28		608
	464	8T-5360	523	8T-6764	26		709
	466		655		32		812
	468		670		38		824
	496		686		56		841
	503		917		58		842

► **PRIMARY REFERENCE**

PART NUMBER INDEX

Part	Page
	912
	914
	916
8T-8730	330
	333
	339
8T-8731	330
	333
8T-8733	777
	813
8T-8737	104
	279
	280
	288
	349
	378
	824
	890
	912
	914
	916
8T-8887	654
8T-8908	476
8T-8914	788
8T-8915	168
	396
	662
	664
	836
8T-8916	655
	686
8T-8917	392
	398
	402
	406
	417
	482
	496
	519
	582
	646
	655
	662
	664
	700
	794
	796
8T-8919	42
	190
	192
	194
	196
	274
	414
	440
	474
	482
	492
	568
	647
	655
	825
8T-8920	416
	670
	794
8T-8924	398
	402
	406
8T-8932	568
	570
8T-9048	789
8T-9049	789
8T-9056	141
	145
	612
8T-9101	568
	570
	646
	655
	836
8T-9312	733
	860
8T-9364	860
	888
8T-9367	104
	380
8T-9368	804
8T-9375	204
8T-9377	96
	476
	480
	690
8T-9379	670
8T-9380	670
8T-9383	476
	480
	780
8T-9389	495
	519
8T-9391	492
8T-9393	141
	145
	496
8T-9397	314
	324
8T-9398	414
	489
	490
8T-9399	413
	474
	722
	734
8T-9407	348
8T-9412	399
	406
8T-9472	140
8T-9496	463
	464
	466
	468
	806
8T-9515	589
8T-9636	300
8T-9655	296
8T-9757	278
	286
	348
8V-0622	278
	286
	348
8Y-3966	463
	464
	466
	468
	821
8Y-3998	463
	464
	466
	468
	821
8Y-3999	463
	464
	466
	468
8Y-4000	463
	464
	466
	468
8Y-4502	580
8Y-4505	580
8Y-5737	777
	812
8Y-5747	821
8Y-5944	882
8Y-5945	816
8Y-5965	882
8Y-6012	882
8Y-6014	882
8Y-6024	882
8Y-6041	816
8Y-6045	816
8Y-6046	816
8Y-6047	816
8Y-6060	816
8Y-6062	816
8Y-6063	816
8Y-6064	816
8Y-6066	816
8Y-6067	816
8Y-6068	816
8Y-6069	816
8Y-6277	872
	874
8Y-6343	916
8Y-6364	7
	216
	220
	268
	472
	476
	480
	482
	502
	614
8Y-6388	808
8Y-6400	806
	▶821
8Y-6419	902
8Y-6420	902
	▶904
8Y-6422	904
8Y-6423	901
	902
	904
	906
8Y-6424	901
	902
8Y-6430	901
	902
	904
	906
8Y-6431	906
8Y-6432	901
8Y-6433	901
	▶906
8Y-6448	897
	898
	899
	900
8Y-6454	904
	906
8Y-6455	904
	906
8Y-6456	788
	▶907
	▶908
8Y-6459	901
	902
	904
	906
8Y-6460	904
	906
8Y-6461	904
	906
8Y-6462	901
	902
8Y-6826	907
	908
	▶909
	▶910
8Y-6827	909
	910
8Y-6828	907
	908
8Y-6839	895
	896
	897
	898
	899
	900
	907
	908
	909
	910
8Y-6859	816
8Y-6860	816
8Y-6910	901
	902
	904
	906
8Y-6917	884
8Y-6928	884
8Y-8306	463
	464
	466
	468
	821

▶ **PRIMARY REFERENCE**

PART NUMBER INDEX

Part	Page
9	
9B-2052	476
	480
	503
9B-2232	209
9B-7233	371
	372
	824
	830
9B-7237	42
	44
	88
	96
	118
	130
	168
	172
	198
	204
	217
	221
	293
	312
	412
	416
	482
	496
	503
	568
	570
	582
	612
	616
	618
	658
	670
	794
	796
	804
	825
	831
	844
9C-6984	496
9D-0630	190
	192
	194
	196
9D-3768	316
	322
	784
	786
	890
9D-4439	279
	287
	860
9D-6621	861
9F-2978	92
	102
	530
	608
	804
	844
	848
9F-3691	476
9F-3788	423
9F-5599	352
	356
	363
9F-5644	366
	372
9F-6304	92
9F-6445	530
	784
	786
	788
	808
	844
	861
	916
9F-6656	922
9G-0003	278
	286
	348
9G-0004	278
	286
	348
9G-0278	688
9G-0296	518
9G-0611	548
9G-0715	568
	570
9G-0742	570
9G-0772	198
	204
	848
9G-1496	430
9G-1499	430
9G-1696	514
9G-1697	514
9G-1913	204
9G-1918	423
9G-1919	423
9G-1935	458
9G-2790	514
9G-3464	410
9G-3695	2
	279
	280
	288
	379
	777
	813
9G-3737	204
9G-4101	352
	356
9G-4512	204
9G-4872	521
	522
	523
	538
	539
	540
	542
	543
	544
	546
9G-5127	417
9G-5209	568
9G-5211	568
9G-5212	568
9G-5214	568
9G-5215	568
9G-5291	568
9G-6655	305
9G-6770	343
	363
9G-7127	513
	516
9G-7498	386
9G-7516	518
9G-7641	▶371
	378
9G-8040	502
9G-8615	386
9G-8661	296
9G-8909	278
	287
9G-9151	798
9G-9239	496
9G-9288	610
	▶614
9H-1024	274
9H-1031	24
9H-3360	564
9H-3757	352
	356
	362
9H-5322	576
9H-5537	423
9H-6454	680
9H-6761	644
	645
9J-0123	760
	763
9J-1716	710
9J-1722	710
9J-1979	680
9J-1985	680
9J-1986	680
9J-1988	680
9J-5284	733
9J-5717	496
9J-5718	496
9J-5860	634
	636
9J-7625	733
9J-8126	598
	690
	692
	694
	696
9J-9055	716
9K-3050	452
	454
9K-4430	92
9K-6034	726
9K-7290	794
9K-8590	474
9L-3625	270
9L-4989	246
9L-5854	24
9L-6130	2
9L-6447	260
9L-6509	246
9L-7712	72
	73
9L-8388	579
9L-8781	114
	612
9L-8925	20
9L-9098	242
9L-9132	92
	244
9L-9347	270
9L-9596	808
9L-9766	229
9M-0164	884
9M-0853	92
9M-1503	422
9M-1869	172
9M-1974	21
	117
	123
	138
	154
	170
	174
	182
	217
	221
	225
	236
	248
	250
	367
	383
	390
	445
	588
	856
9M-2074	438
9M-2076	438
9M-2089	246
9M-2151	158
	162
9M-2904	86
	88
	660
	722
9M-3835	482
	502
9M-4007	386
	436
	578
9M-4136	170
	174
9M-4225	56
	58
9M-4355	422
9M-4388	430
9M-4594	244
9M-4704	226
9M-4972	582
9M-5024	582
9M-5590	118
	130
9M-5884	788
9M-5894	398
	402

▶ **PRIMARY REFERENCE**

PART NUMBER INDEX

Part	Page
	406
	519
9M-6302	246
9M-6522	141
	145
9M-6527	134
9M-6803	863
9M-7394	614
9M-7606	352
	356
	362
9M-7609	352
	356
	362
9M-7961	150
9M-8915	166
9M-8919	166
9M-9647	386
	416
	420
9M-9730	539
	541
	543
	545
9M-9788	226
9N-0869	212
	296
9N-1750	572
9N-1754	200
9N-1822	204
	▶207
9N-1916	226
9N-1917	226
9N-1995	518
	781
	782
	860
	890
	922
9N-2038	185
	187
9N-2039	185
9N-2041	166
9N-2165	226
9N-2428	227
9N-3323	246
9N-3324	226
9N-3363	226
9N-3666	150
9N-3735	207
9N-3736	207
9N-4541	564
9N-5071	260
	▶270
9N-6495	254
9N-6496	254
9N-6613	6
	▶154
9P-0575	788
9P-1444	848
	860
9P-1503	278
	286
9P-1535	840
9P-1536	840
9P-1896	▶840
	866
9P-2261	844
9P-2262	844
9P-3041	450
9P-3066	502
9P-3320	398
	402
	406
9P-3366	398
	402
	406
9P-3429	398
	402
	406
9P-3467	398
	402
	406
9P-3468	398
	402
	406
9P-3471	398
	402
	406
9P-3474	398
	402
	406
9P-3657	398
	402
	406
9P-4057	438
9P-4809	443
9P-4898	844
9P-4959	398
	402
	406
9P-5531	422
9P-5708	517
	518
	534
	536
9P-5977	390
9P-6217	390
9P-6477	436
9P-6544	452
	454
9P-6571	808
	860
9P-6572	860
9P-6911	514
9P-6912	514
9P-7053	518
9P-7121	268
9P-7255	548
9P-7256	548
9P-7380	548
9P-7823	546
9P-7859	897
	898
	899
	900
	909
	910
9P-7860	897
	898
9P-7990	518
9P-9150	600
9P-9388	839
9P-9548	474
	502
9P-9549	474
	502
9P-9550	476
	502
9P-9826	416
9R-1685	14
	18
9R-6776	716
	718
9S-1018	568
9S-1343	422
9S-1354	568
	570
	572
9S-1366	564
9S-2075	502
9S-2437	788
9S-2544	352
	356
	362
9S-2792	448
9S-3032	209
9S-4160	229
9S-4167	223
	225
9S-4180	262
	266
	589
	700
9S-4181	64
	418
9S-4182	145
	226
	259
	598
	672
	680
	686
	690
	692
	694
	696
9S-4183	589
	598
9S-4185	172
	398
	402
	406
	519
	582
9S-4190	14
	18
	26
	70
	84
	596
9S-4191	674
	140
	236
	254
	259
	289
	386
	390
	396
	436
	440
	579
	589
	672
	698
	710
9S-4368	436
9S-4372	440
9S-5279	576
9S-6130	386
9S-6465	568
9S-8001	226
	262
	564
	690
	692
	694
	696
	700
	710
9S-8002	217
	225
	262
	266
9S-8004	38
	212
	236
	262
	266
	598
	604
	710
9S-8005	589
	594
	672
9S-8006	38
	564
	586
	604
9S-8007	262
	266
	700
9S-8008	226
	246
	254
	396
9S-8230	472
9S-8748	200
9S-8752	14
	18
	38
	52
	64
	84
	90

▶ **PRIMARY REFERENCE**

PART NUMBER INDEX

Part	Page
	92
	98
	132
	182
	236
	376
	680
9S-9332	259
9S-9334	396
	589
9T-0094	634
	636
9T-0098	634
	636
9T-0249	767
9T-0250	767
9T-1576	592
9T-1579	592
9T-1636	674
9T-1637	592
9T-1641	586
9T-1642	592
9T-1652	674
9T-1699	674
9T-1710	674
9T-1878	624
	626
	640
	642
9T-1887	694
9T-2186	698
9T-2378	602
9T-2856	686
9T-3493	632
9T-4512	689
9T-4513	689
9T-4514	689
9T-4517	689
9T-4518	689
9T-4683	644
	645
9T-4684	644
	645
9T-4685	644
	645
9T-4697	644
	645
9T-4906	677
9T-5805	634
	636
9T-5809	628
	630
9T-6043	607
	704
9T-6960	704
9T-6963	704
9T-7202	607
9T-7567	681
9T-7568	680
9T-7570	681
9T-7571	680
9T-7572	681
9T-7578	680
9T-7692	589
9T-8326	579
9T-8445	677
9T-8446	677
9T-8448	677
9T-8450	677
9T-8452	677
9T-8700	579
9U-8032	654
9U-8033	654
9U-8036	654
9U-8039	654
9U-8041	654
9U-8042	654
9U-8045	646
9U-8047	646
9U-8241	436
9U-8376	450
9U-8388	450
9U-8419	416
9U-8420	580
9U-8421	580
9U-8422	580
9U-8536	524
	525
	526
	527
	528
	529
9U-8666	572
9U-8667	572
9U-8689	412
9U-8690	412
9U-8867	580
9U-9031	570
9U-9033	570
9U-9048	890
9U-9100	436
9U-9285	396
9U-9286	▶396
	416
9U-9329	430
9U-9330	430
9U-9337	728
9U-9400	870
9U-9409	530
9U-9480	596
9U-9501	410
9U-9552	▶846
9U-9557	102
9U-9634	▶867
9U-9635	867
9U-9638	867
9U-9709	413
	734
9U-9712	734
9U-9821	564
9U-9956	802
	803
	864
	865
	866
9U-9957	802
	803
	864
	865
	866
9V-7451	819
9W-0329	452
	454
9W-0330	452
	454
	496
9W-0332	452
	454
9W-0333	452
	454
9W-0352	482
9W-0648	482
	483
9W-0725	496
9W-0742	278
	287
	▶307
	348
9W-0852	776
	798
	808
9W-1441	373
9W-1442	373
9W-1446	373
9W-1599	216
	220
9W-1694	530
9W-1706	216
	220
9W-1707	216
	220
9W-1709	302
	304
9W-1710	216
	220
9W-2345	452
	454
9W-2350	762
	▶767
9W-2380	518
9W-2381	730
9W-2452	770
9W-2611	204
9W-2738	550
	553
	554
	555
	559
9W-2743	524
9W-2744	524
9W-2745	524
9W-2746	524
9W-2754	▶554
9W-2755	524
	525
	526
	527
	528
	529
9W-2822	496
9W-2877	668
9W-2938	278
	287
	348
9W-2971	461
9W-2972	▶461
9W-2977	422
9W-2979	422
9W-3073	819
9W-3428	860
9W-3429	808
9W-3551	205
9W-3705	416
9W-3927	749
	750
9W-3990	▶508
9W-4220	502
9W-4222	502
9W-4229	502
9W-4361	315
	319
9W-4480	510
	511
9W-4481	546
9W-4649	▶413
9W-4657	205
9W-4681	760
	763
9W-4829	476
	480
9W-5567	450
9W-5568	450
9W-5575	518
9W-5768	423
9W-5830	174
9W-6098	423
9W-6099	422
9W-6118	760
	763
9W-6259	456
	▶530
9W-6260	530
9W-6261	530
9W-6262	530
9W-6263	530
9W-6402	530
9W-6403	530
9W-6612	420
9W-6958	482
9W-6991	423
	436
9W-7006	496
9W-7041	▶749
9W-7042	▶750
9W-7043	749
9W-7044	750
9W-7919	▶509
9W-8151	502
9W-8152	502
9W-8277	530
9W-8297	423
9W-8298	423
9W-8365	771
	772
9W-8394	302
	304
9W-8546	760
	763
9W-8625	390
	▶445

▶ **PRIMARY REFERENCE**

PART NUMBER INDEX

Part	Page
9W-8626	▶390
	442
9W-8687	96
9W-8878	521
9W-9027	860
9W-9154	▶384
	427
9W-9173	482
9W-9243	734
9W-9320	88
9W-9472	279
	287
9W-9499	521
	522
	523
9W-9830	450
9W-9844	538
	539
	540
	541
	542
	543
	544
	545
9W-9856	423
9W-9970	666
9X-0199	378
9X-0261	287
9X-0262	248
	250
9X-0263	38
	172
9X-0352	386
9X-0358	830
9X-0438	854
9X-0941	293
9X-1138	917
9X-1386	326
	327
	342
	348
	372
9X-1484	272
9X-1813	122
	236
	328
	330
	331
	332
	333
	334
	335
	337
	338
	339
	340
	341
	365
9X-1878	922
9X-2027	666
	668
	720
9X-2038	844
	870
9X-2045	870
9X-2205	269
9X-2327	588
9X-2488	302
	304
	776
	812
9X-2498	300
	380
9X-2508	844
9X-2836	242
9X-3271	287
9X-3401	378
9X-3402	2
	334
9X-3452	798
9X-3463	309
	310
9X-3994	788
9X-4586	518
9X-4609	418
9X-5535	272
9X-6016	573
9X-6258	373
	376
9X-6268	897
	899
	907
	909
9X-6281	572
9X-6332	923
9X-6395	606
	702
	703
	705
9X-6458	14
	84
	100
	123
	127
	145
	156
	182
	236
	376
9X-6653	654
9X-6772	279
	287
	300
	306
	314
	316
	318
	322
	568
	570
	580
	608
	723
	824
	830
	854
	888
9X-7286	588
9X-7371	52
	132
9X-7373	798
9X-7378	825
	831
9X-7380	825
	831
9X-7381	825
	831
9X-7382	824
	825
	830
	831
9X-7383	825
	831
9X-7385	792
	825
	831
9X-7404	628
9X-7405	624
	626
9X-7412	622
	634
9X-7505	513
	516
9X-7547	674
9X-7680	231
	262
	266
	698
9X-7681	257
9X-7734	244
9X-8256	808
9X-8257	723
	737
9X-8260	616
	618
9X-8267	136
9X-8399	624
	626
	638
	640
	642
9X-8498	776
	812
9X-8600	269
9X-8874	410
9X-8918	816
9X-9730	281
	289
	349
9X-9896	854
9Y-1792	108
9Y-1800	110
	112
9Y-2989	6
	▶79
9Y-3336	▶214
	260
9Y-3358	242
9Y-3368	26
9Y-3969	242
9Y-4056	277
9Y-4294	923
9Y-4384	72
9Y-4385	72
9Y-4577	242
9Y-4578	240
9Y-6089	16
9Y-6188	68
9Y-6189	68
9Y-6190	68
9Y-7212	66
9Y-9194	88
9Y-9236	150
9Y-9497	66
	68
9Z-9377	474
0	
001-3232	182
001-5600	568
003-9514	836
004-6683	836
005-0469	674
005-0471	674
005-7889	836
006-7403	72
008-9792	822
009-3138	573
014-0816	916
030-7335	503
030-7947	234
030-7949	140
	144
030-7963	150
030-8194	52
030-8535	386
	808
030-8537	140
	144
	612
030-8538	398
	402
	406
030-9620	140
	144
031-0214	863
031-0216	386
031-1119	149
031-2701	212
031-4155	204
032-1267	52
033-0512	460
033-5359	226
033-5853	231
033-6027	38
	231
	674
	698
033-6028	272
033-6033	96
	236
	248
	250
	271
	338
033-6034	383
033-6036	674
	698

▶ **PRIMARY REFERENCE**

PART NUMBER INDEX

Part	Page
033-6039	231
	272
033-6042	231
	436
	440
033-6044	602
033-8755	372
033-9412	503
034-3679	216
	220
034-4160	246
036-9821	352
	356
	362
036-9823	352
	356
	362
037-4426	777
	812
037-7388	572
039-6360	922
045-4065	343
	353
	357
	363
053-2294	214
053-6845	476
	480
	503
053-6846	476
	480
	503
061-7540	84
	598
061-7661	279
	287
	348
061-8248	98
061-8561	38
067-3161	546
068-4209	372
	825
	831
068-8438	242
084-4111	904
	906
091-0081	376
091-1745	204
091-8792	776
	812
091-9035	102
091-9915	205
095-0705	674
095-0843	872
	874
095-0878	816
095-0888	674
096-6166	705
098-5687	236
099-3649	600
100-3135	753
100-3136	753
100-3137	752
100-3138	752
100-3224	816
100-4417	4
	6
	▶367
100-4708	598
100-5179	816
100-5518	482
100-5568	854
100-5725	294
100-6153	589
100-6154	589
100-6239	▶674
	676
100-6240	▶673
	676
100-6241	676
100-6335	674
	▶698
100-6337	674
100-6889	77
	78
100-6920	32
100-7000	589
100-7401	178
100-8010	690
	692
	694
100-8011	690
	692
	694
	696
100-8012	692
	694
	696
100-8180	50
100-8181	50
101-0003	882
101-0523	26
101-1741	392
101-2749	132
101-2867	863
101-2868	572
101-3374	10
	11
101-4194	882
101-4195	882
101-4845	220
101-6713	50
101-7771	▶608
101-7788	77
	78
101-8240	302
	304
101-8917	28
101-9397	788
101-9398	788
101-9575	604
102-0288	822
102-0341	777
	812
102-1904	757
	759
	▶760
	762
102-1937	▶498
	762
102-1938	758
	▶762
102-2240	122
	236
102-2913	923
102-3001	▶914
	916
102-3679	608
102-3680	608
102-4394	▶314
102-4395	▶322
102-6317	884
102-6345	711
	712
	▶765
102-6346	▶757
	765
102-6347	▶758
102-6348	498
	499
102-6351	498
102-6357	498
102-7494	35
102-7535	236
	▶271
102-8801	279
	280
	288
	379
102-8802	104
	273
	278
	279
	280
	286
	287
	288
	289
	326
	327
	340
	344
	346
	348
	349
	365
	372
	373
	376
	378
	379
	580
	709
	776
	777
	798
	812
	813
	824
	830
102-8803	104
	122
	170
	236
	279
	280
	287
	308
	329
	338
	341
	342
	373
	376
	378
	379
	608
	730
	890
102-8804	279
	280
	288
	328
	373
	376
	379
	707
	708
	824
	830
	890
102-8805	279
	288
	379
	800
	808
	824
	841
	842
	912
	914
	916
102-8806	279
	280
	288
	378
	777
	813
102-8807	287
	349
	373
102-8809	890
102-8810	890
102-8812	376
102-8813	339
102-8814	376
102-9445	279
	287
103-1179	588
	▶598
103-1180	▶594
	598
103-1186	594
103-1187	598
103-1188	598
103-1190	598

1

▶ **PRIMARY REFERENCE**

PART NUMBER INDEX

Part	Page
103-1191	598
103-1200	598
103-1201	589
103-1202	598
103-1996	412
103-5526	378
	▶800
103-6100	824
	830
103-6282	674
103-6293	496
103-7574	2
	▶344
103-8120	730
103-9527	773
	774
	▶798
104-1942	594
104-2091	808
	860
104-3038	240
104-3039	240
104-3110	654
104-3132	384
104-3133	398
	402
	406
104-3136	398
	402
	406
104-3137	398
	402
	406
104-3139	398
	402
104-3140	398
	402
104-3153	398
	402
	406
104-3154	▶316
	711
	713
104-3494	538
	539
	540
	541
	542
	543
	544
	545
104-3495	534
	▶542
	563
104-3496	▶538
	563
104-3817	681
104-4195	589
104-4485	438
104-5771	472
104-5773	472
104-5784	483
104-6202	289
	777
	813
104-6931	681
104-7032	6
	▶260
104-8576	542
	543
104-8577	538
	539
105-1513	6
	▶208
105-1515	198
105-2508	225
105-3232	844
	848
105-3380	844
105-3480	854
105-4015	847
105-4260	865
105-4261	781
	782
	▶865
105-4262	864
105-4649	456
	▶866
105-4651	866
105-6122	296
	▶298
105-6140	58
105-8627	118
	130
105-8655	126
105-8901	392
105-9149	378
105-9152	104
105-9678	122
	126
106-0735	248
	250
	▶341
106-1017	622
106-1791	694
106-1792	32
	38
106-3958	576
106-3959	576
106-4150	386
	▶394
	440
106-4155	280
	288
	379
106-4454	854
106-4572	140
	144
106-5008	472
106-5122	▶792
	794
	796
106-5135	580
106-5823	302
	304
106-7099	438
106-7362	▶621
106-7363	621
	▶724
106-7364	711
	712
	713
	714
	▶744
106-7365	713
	714
	▶766
106-7408	923
106-7483	608
	▶684
106-7798	423
106-8186	452
	454
106-8187	452
	454
106-9408	170
	174
106-9488	21
106-9648	▶710
	715
107-0266	809
107-0677	262
	266
	▶272
107-1026	598
107-1027	598
107-1954	▶73
	78
107-1964	854
107-2688	533
	▶543
107-2689	533
	▶539
107-2690	▶521
	533
107-3202	244
107-3752	4
	6
	▶47
107-3944	538
	539
	540
	541
	542
	543
	544
	545
107-3945	538
	539
	540
	541
	542
	543
	544
	545
107-3946	521
	522
107-3947	521
	522
107-3952	287
	▶330
107-4057	521
	522
	523
107-4393	830
107-4394	830
107-4399	830
107-4888	521
107-4889	539
	541
	543
	545
107-4913	607
107-6761	383
107-7088	398
	402
	406
107-7089	398
	402
	406
107-7320	▶35
	38
107-7322	38
107-7509	221
107-8618	170
107-9245	781
	782
	864
107-9326	257
107-9570	38
108-0219	38
108-0685	738
108-0936	588
108-1028	▶738
	740
108-1225	668
108-1226	668
108-1299	598
108-1434	100
108-1462	122
	126
108-1496	▶596
	600
108-1551	4
	▶78
108-1806	738
108-2224	445
	▶450
108-2735	422
108-2736	422
108-3612	178
108-3895	568
	▶600
108-3956	21
108-4086	817
108-4087	817
108-4103	817
108-4814	698
108-4822	588
108-5157	705
108-5603	72
	73
108-5803	38
	231
108-5806	38
108-7930	134
108-8105	122
	126
108-8174	572
108-8283	744

▶ **PRIMARY REFERENCE**

PART NUMBER INDEX

Part	Page
108-8290	▶754
108-8291	▶755
	766
108-8292	760
	763
108-8318	755
	▶763
	764
108-9402	694
108-9432	100
109-0072	122
	126
109-0073	116
	122
	126
	154
109-0074	122
	126
109-0076	92
	123
	126
109-0077	123
	126
109-0078	92
	156
109-0079	154
109-0401	4
	▶383
109-0628	726
	728
	848
109-1633	825
	831
109-1634	825
	831
109-1645	279
	287
	378
	861
109-2811	122
	126
109-3036	709
109-3206	231
109-3875	830
109-4670	624
	626
	640
	642
109-5674	739
109-5675	738
109-5676	739
109-5760	140
	144
109-6347	760
109-6778	▶638
	740
109-6779	624
	626
	638
	640
	642
109-6781	638
109-6783	638
109-6784	624
	626
109-7163	607
109-7171	604
	▶607
109-8314	654
109-8832	621
	▶640
109-8833	621
	▶642
109-8836	624
	640
109-8837	626
	642
109-9009	4
	▶28
109-9036	▶752
109-9037	▶753
109-9113	▶771
109-9114	771
109-9685	231
110-0779	847
110-0781	456
	▶847
110-2220	24
110-2468	200
110-2469	200
110-2631	564
110-2665	398
	402
	406
110-2966	452
	454
	763
110-4378	654
110-4506	830
110-5203	725
110-5204	▶725
	740
110-5205	666
	668
110-5207	666
110-5358	476
110-5744	▶739
	740
110-5889	724
110-5890	666
	668
110-5918	654
110-5980	102
110-5981	102
110-6109	809
110-6393	773
	774
110-7357	848
110-7421	760
	763
110-7889	916
110-8318	102
110-8319	102
110-8827	102
110-9526	204
110-9672	96
111-0343	709
111-1588	668
111-2104	716
	718
111-2622	492
111-2721	134
111-3203	447
111-3231	848
111-3261	7
	▶392
111-3682	848
111-4402	279
	287
111-4639	122
	126
111-4640	122
	126
111-4919	428
111-7090	844
111-7091	844
111-7270	824
111-7421	140
	144
111-7739	689
111-7740	689
111-7745	666
111-7746	666
111-8268	482
111-8269	482
111-8314	315
	319
	320
111-8411	299
111-9289	302
	304
111-9827	302
	304
111-9862	362
111-9864	362
111-9866	363
112-1574	123
112-1579	132
112-1580	132
112-2671	668
112-3258	116
112-3440	4
	6
	▶52
112-3444	52
112-3445	52
112-4511	423
112-4550	170
112-5282	123
112-7308	422
112-7309	423
112-7750	178
112-7751	178
112-8004	204
112-9217	48
	50
112-9736	482
113-0320	▶751
113-0321	751
113-0322	751
113-0332	751
113-0333	751
113-0580	280
	288
113-0582	280
	288
113-0715	190
113-0716	190
113-1636	598
113-1921	244
113-2518	598
113-2648	602
113-3239	754
	▶759
113-3240	▶756
113-3241	756
	▶764
113-3394	414
113-4420	592
113-5276	6
	▶326
113-5421	182
113-6041	▶499
	764
113-6317	499
113-6318	499
113-7442	570
113-7449	588
113-9122	40
	41
113-9326	652
114-0915	182
114-0917	182
114-0978	▶801
114-2194	413
	734
114-2195	413
114-2197	413
114-2368	319
114-2492	492
114-2496	921
114-2497	921
114-2498	921
114-2687	92
	98
114-2858	▶312
114-3107	▶324
114-3364	242
114-3438	589
114-3824	84
114-3825	84
114-4246	8
114-4283	568
	570
114-4294	8
114-4427	26
	98
	140
	144
114-4502	768
	▶772
114-4503	772
114-4811	246
114-4812	246
114-5157	602
114-5333	824
	830
114-5356	589
114-5540	7
	▶8

▶ **PRIMARY REFERENCE**

PART NUMBER INDEX

Part	Page
114-5985	808
114-5988	923
114-6305	246
114-6306	246
114-8684	21
114-8718	254
114-8995	824
114-9363	315
114-9365	314
	324
115-0448	44
115-0482	449
115-0614	580
115-0617	318
	722
115-0775	44
115-0776	44
115-1032	312
115-1146	416
	▶449
115-1888	324
115-1889	314
115-1955	449
115-2249	84
115-2460	44
115-2947	666
115-3018	777
	813
115-3050	568
	570
115-3514	449
115-3598	230
115-4322	236
115-4336	596
115-5026	312
	316
115-6469	296
115-8057	568
115-8384	84
115-8436	646
115-9650	794
	796
116-1895	696
	▶704
116-2236	390
116-2590	808
116-3119	809
116-3291	476
	480
116-3292	476
	480
116-4912	588
116-5819	236
116-6202	824
	830
116-7220	78
116-7221	257
116-7222	230
116-7880	854
116-8038	738
	739
116-8046	738
	739
116-8050	744
116-8052	744
116-9821	596
117-0015	6
	▶242
117-0610	362
117-1620	262
	264
117-3328	568
117-4013	513
	516
117-4015	513
	516
117-4486	856
117-4492	856
	858
117-5676	909
117-5677	897
	899
117-8131	860
117-8301	84
117-8727	658
117-8806	436
117-9509	▶24
	26
	28
117-9650	244
117-9712	48
	50
118-0628	412
118-1293	6
	▶117
118-2112	482
118-3287	507
118-3288	507
118-3289	507
118-3290	507
118-3291	507
118-3292	507
118-5068	90
118-6335	210
118-6365	279
	287
	378
118-7214	92
118-8138	668
118-8157	248
	250
118-8475	62
118-9115	62
118-9644	118
	130
119-1708	257
119-2285	794
119-3025	137
119-3662	2
	379
119-4166	46
	▶338
119-4739	126
119-4774	140
	144
119-6109	446
119-6110	446
119-6112	446
119-6113	446
119-6114	▶446
	592
119-6121	586
119-6140	728
	848
119-6141	726
	848
119-6637	118
	130
119-7307	726
119-7308	728
	848
119-7543	606
119-8455	628
	630
119-9015	21
120-0114	848
120-0156	654
120-1763	580
120-5820	608
120-5821	608
121-0596	376
121-2844	279
121-3307	824
121-3813	654
121-4731	680
121-5455	170
	174
121-5457	170
	174
121-5459	170
	174
121-5461	170
	174
121-5907	556
	557
121-6160	726
121-6649	690
	▶705
121-8886	194
121-9842	726
	728
122-0163	73
122-0321	35
	36
122-0322	35
	36
122-6043	246
122-6133	848
122-9350	624
	626
	640
	642
122-9351	624
	626
	640
	642
123-0555	236
123-3132	272
123-3547	824
	830
123-4079	104
123-4080	104
123-5150	104
123-5739	2
	▶118
123-5748	592
123-5895	96
123-6449	279
	287
123-8157	884
123-8176	236
123-8179	100
123-8266	884
123-8686	104
	▶362
123-9052	96
123-9128	884
123-9131	884
123-9624	690
123-9773	363
123-9776	363
124-0174	202
	234
124-0186	568
124-0187	568
124-0188	568
124-1444	589
124-1493	568
124-2967	417
124-4177	84
124-4456	4
	▶71
124-4461	4
	6
	▶62
124-4668	200
124-5517	▶806
124-5518	806
124-5519	806
124-5524	806
124-5945	240
124-5947	240
124-6335	824
124-6336	824
124-6337	824
124-6338	824
124-6625	38
124-6626	38
124-6640	212
124-7128	884
124-7326	689
124-7359	689
124-7360	689
124-7609	50
124-7629	490
124-8274	580
124-8331	489
124-8490	798
124-8966	564
124-9317	416
124-9318	416
124-9319	416
124-9325	279
	287
	▶328
124-9774	897
	899
124-9775	909
125-0473	104
125-1302	348

▶ **PRIMARY REFERENCE**

PART NUMBER INDEX

Part	Page
	372
125-2001	316
	▶319
	322
	324
125-2110	▶848
125-2139	▶507
125-2140	▶533
125-3428	4
	▶210
125-4490	378
125-4653	▶104
125-4655	▶522
	563
125-5835	212
125-6533	352
	362
125-6535	353
	357
	363
125-6536	353
	357
	362
125-6537	357
	362
125-6743	144
125-6796	236
125-6797	236
125-6806	▶842
	854
125-6990	689
125-7875	373
125-8828	200
125-9610	502
125-9740	776
	812
125-9794	84
126-0189	122
	126
126-0588	398
	402
	406
126-1103	732
126-1104	732
126-1753	848
126-1766	379
126-5056	182
126-5057	182
126-5396	7
	▶182
126-5948	707
	708
126-7292	4
	▶248
	▶250
126-7538	102
126-7539	102
126-7574	299
127-0116	398
	402
	406
127-0561	88
127-1969	248
	250
127-2415	861
127-2419	372
127-2803	860
127-3018	860
127-3514	4
	▶60
127-3605	56
127-5087	743
127-5485	349
	372
	378
127-5486	280
	288
	372
127-5561	6
	▶61
127-6256	84
127-8749	▶720
127-8830	923
127-9374	4
	6
	▶82
128-0317	134
128-0598	81
	82
128-0613	884
128-0686	884
128-3227	580
128-5109	4
	▶327
128-5953	848
128-6157	372
128-6191	541
	545
128-8405	349
128-8557	225
129-0898	502
129-0901	502
129-0903	502
129-0905	502
129-0906	502
129-0908	502
129-0910	502
129-0912	502
129-0913	502
129-1170	137
129-1192	794
	796
129-3178	776
	812
129-5082	668
129-6628	60
	▶339
129-7632	698
129-9416	170
	174
129-9452	178
130-1241	502
130-1244	502
130-1831	216
130-1977	660
	722
130-2570	216
130-3374	121
130-4625	454
130-4846	809
130-5097	506
130-5159	506
130-6175	781
	782
	▶836
130-6183	830
130-6366	737
130-7301	4
	▶13
130-7302	4
	▶21
130-7306	4
	6
	▶90
130-7310	4
	▶120
130-8579	204
130-9191	660
	722
130-9195	▶463
	476
130-9214	776
	812
130-9215	776
	812
130-9216	776
	812
130-9218	776
	812
130-9219	776
	812
130-9220	776
	812
130-9221	776
	812
130-9224	776
	812
130-9225	776
130-9226	776
130-9227	777
	812
130-9228	777
	812
130-9233	777
130-9234	777
	812
130-9235	812
131-0167	430
131-1625	▶510
	563
131-1626	▶511
	563
131-1642	510
131-1643	511
131-1651	512
131-1721	102
131-2441	777
	812
131-3313	204
131-4242	816
131-4427	216
131-5167	816
131-5354	777
	812
131-7184	622
131-7823	622
131-8037	476
	480
131-8039	476
	480
131-8041	476
	480
131-8043	476
	480
131-8045	463
131-8051	464
131-8061	480
131-8062	480
131-8428	126
131-8556	▶464
	480
131-9306	576
131-9307	576
132-0338	856
	858
132-3871	777
	812
132-4933	486
132-5121	628
	630
132-5122	628
	630
132-5123	▶630
	741
	742
132-5125	126
132-5146	634
	636
132-5147	634
	636
132-5149	▶636
	741
	742
132-5789	376
132-5793	776
	812
	813
132-7166	162
132-7203	580
	824
	830
132-7370	126
132-7536	90
132-7994	716
132-8875	396
	579
132-8928	731
132-8930	731
132-8931	731
132-9271	▶731
133-0819	140
	144
133-0822	140
	144
133-1705	231
133-2952	773
	▶838
133-2953	838
133-3225	216
	220

▶ **PRIMARY REFERENCE**

PART NUMBER INDEX

Part	Page
	▶223
133-3316	42
133-3598	344
133-3801	349
133-3868	14
133-5631	514
	516
133-6529	216
	220
133-6934	580
133-8128	861
133-8269	658
133-8656	808
133-8702	▶474
133-8703	474
133-8704	474
133-9016	42
133-9522	349
134-0165	830
134-0825	768
134-0978	▶320
	456
134-1038	216
	220
134-2252	279
	281
	287
	289
	▶342
134-2263	73
134-2596	4
	▶70
134-2679	546
134-2680	546
134-3992	808
134-3993	808
134-5378	777
	812
134-6000	▶741
134-6446	14
	18
134-7258	923
134-7321	144
134-7431	144
134-8107	741
	▶768
134-8213	430
134-8250	90
134-8348	344
134-9918	187
135-1823	844
135-2609	860
135-2652	231
	262
	266
135-2655	231
135-2803	▶716
	741
135-2804	716
135-2861	808
	860
135-3225	73
135-3678	305
135-3679	306
135-4928	134
135-5102	737
135-5105	737
135-5109	737
135-5110	▶736
135-5111	736
	▶737
135-5112	▶652
	736
135-5113	722
	737
135-5114	722
	737
135-6137	532
135-6140	▶532
135-6242	▶305
135-6244	▶306
135-6410	▶660
	741
	742
135-6411	660
135-6412	660
135-6413	660
135-6414	660
135-6415	660
135-8287	117
	120
136-0866	8
136-1107	134
136-1543	851
136-1544	856
	858
136-1869	230
136-1953	776
	777
	813
136-7226	96
136-7227	96
136-7921	716
	718
	723
137-1339	132
	▶134
137-1344	134
137-1970	134
137-3936	608
137-3937	923
137-3944	2
137-4550	187
137-4835	398
	402
	406
137-4836	399
	402
	407
137-6500	35
137-6501	35
137-7081	650
137-7090	▶615
137-7157	▶734
	741
	742
137-7158	734
137-7159	734
137-7161	615
137-7369	870
137-7371	▶620
137-7374	▶650
137-9441	279
	287
138-0430	742
	▶769
138-0431	769
138-1015	848
	870
138-1025	848
	870
138-3094	336
138-3754	456
	▶860
138-4309	262
	266
138-4311	262
	266
138-4313	262
	266
138-6256	▶231
	262
	266
138-6744	134
138-6793	96
138-7772	548
138-8455	722
	734
138-8745	236
138-8886	854
138-9507	226
139-0532	678
139-0617	560
139-1536	680
139-1537	681
139-2455	660
	723
139-2456	660
	722
139-2903	279
139-3564	349
139-7700	548
139-7701	548
139-7704	▶534
	▶536
139-7711	▶494
139-7718	532
139-9281	680
139-9282	680
139-9283	680
140-3108	104
140-7477	482
141-1207	32
	▶36
141-6605	38
141-6787	709
141-9497	417
142-6217	24
142-7072	24
142-8620	798
143-0040	▶29
	36
143-1288	856
	872
	874
143-1349	▶722
143-3613	▶30
	35
143-4991	860
143-5031	861
143-5449	861
144-0195	886
	890
144-0367	140
144-0835	248
	▶262
144-0837	262
144-3579	808
144-4283	860
	861
145-0326	882
	884
145-2269	287
145-2370	615
145-2371	615
145-2372	615
145-2373	615
145-2375	615
145-2859	860
145-8274	620
145-8275	620
145-8276	620
145-8277	620
145-8278	620
145-8502	110
145-8503	108
	110
	112
145-8739	916
145-8740	916
145-8741	916
146-0240	608
146-3672	668
146-3730	650
146-7812	287
147-0319	▶309
	315
	319
147-0633	363
147-0852	870
147-4549	884
147-5088	137
147-6116	628
	630
147-6522	884
147-6523	884
147-6541	884
148-2710	824
148-3749	884
148-5381	▶348
148-8317	102
	416
148-8322	580
148-8323	580
148-8326	220
148-8328	216
	220
	417
148-8334	580
148-8335	102

▶ **PRIMARY REFERENCE**

PART NUMBER INDEX

Part	Page
	580
148-8336	580
	608
	654
148-8338	654
148-8339	417
	581
148-8340	216
	581
148-8345	581
148-8347	581
148-8352	581
148-8355	102
148-8356	416
148-8357	581
148-8360	581
148-8364	216
	220
148-8365	216
148-8367	646
148-8371	216
	220
148-8377	646
148-8378	216
	220
	581
	608
	646
	670
148-8387	581
	654
148-8392	581
148-8429	102
148-8435	654
148-8443	581
148-9849	220
149-1950	262
	264
149-2969	44
149-6371	824
	830
149-7756	44
150-1156	68
150-2392	212
150-3036	646
	670
150-3059	416
150-4034	670
150-4043	416
150-4044	654
151-1396	373
151-1397	373
151-1398	373
152-2938	244
152-2939	244
152-3952	137
152-5231	2
152-8346	700
	▶709
152-8427	312
	314
	▶315
153-0976	314
	324
153-1157	417
153-1256	134
153-1302	318
153-2073	▶310
	318
	320
153-2681	788
153-3050	4
	▶56
153-3946	824
	830
153-6235	581
153-6240	216
	220
153-6241	216
	220
153-6248	581
153-6249	654
153-6251	616
153-6256	216
	220
153-6264	654
153-6281	278
	286
	349
153-6620	654
153-6781	824
	830
153-8498	870
154-3079	844
154-3309	521
	522
	523
154-4492	716
	718
	722
154-6165	654
154-6732	262
154-6734	262
	266
154-6735	262
	266
154-7016	652
154-9024	122
	126
155-1556	372
155-1996	372
155-1998	372
155-2001	372
155-2255	379
155-2259	2
	379
155-2260	104
	279
	280
	288
	331
	332
	334
	335
	336
	337
	339
	376
	378
	379
155-2261	370
155-2265	2
	280
	288
	379
155-2270	2
	104
	279
	280
	288
	289
	370
	376
	379
	424
	776
	813
	824
155-2271	280
	288
	289
	373
	376
	379
	825
155-2274	104
	280
	288
	378
	379
155-2276	378
155-2701	916
155-3502	220
155-3505	221
155-4426	447
155-6636	212
155-6637	212
155-8096	▶546
	563
155-8097	518
155-8098	518
155-8099	534
	536
155-8100	534
	536
156-5545	856
	858
156-6175	888
156-7419	▶878
156-9421	854
157-0670	122
	126
157-1361	808
157-2284	707
	708
157-3106	546
157-3107	546
157-3561	6
	▶58
157-3735	779
	▶916
157-3736	779
	▶890
157-3737	779
	▶788
157-3739	788
157-4817	▶779
	780
	781
	782
	786
157-5127	916
157-5128	916
157-5129	890
158-0248	309
	310
158-0250	309
	310
158-0252	309
	310
158-6632	378
159-0226	156
159-1549	378
159-2943	372
159-2950	868
	870
	▶879
159-2951	781
	782
	▶880
159-2952	878
	▶881
159-3449	378
159-4689	372
159-4696	372
159-4697	372
159-5200	▶300
159-7161	566
	▶586
159-7226	774
	▶780
159-7623	8
159-8047	379
159-8068	456
	▶922
159-8070	808
159-9796	▶718
	742
160-0633	300
160-2443	198
	▶329
160-2539	▶514
	563
160-4765	527
160-4766	▶527
	555
160-4769	▶555
160-4885	812
160-4926	432
160-4927	399
	406
	▶432
160-5843	707
	708
160-5844	707
	708
160-6307	724
	725
160-6310	622
160-6349	▶513

▶ **PRIMARY REFERENCE**

PART NUMBER INDEX

Part	Page
	514
160-6416	416
	▶428
160-6417	428
	▶430
160-6609	430
160-6611	430
160-7165	879
	880
	▶882
160-7765	884
160-7766	884
160-7767	884
160-8152	50
160-8178	66
	68
161-0018	144
161-4110	6
	▶108
161-5967	816
161-6291	156
161-6601	312
	316
161-7128	8
161-7293	56
	58
161-7539	881
	▶884
161-8627	262
	266
161-9926	172
	▶331
161-9931	248
	▶332
162-0150	212
162-0151	212
162-0152	212
162-0161	212
162-2166	538
	540
	542
	544
162-2167	522
	523
162-2501	244
162-7862	538
	540
	542
	544
162-7863	522
	523
162-8075	▶773
162-8076	▶774
162-8727	476
	480
162-8728	476
	480
162-8738	781
	782
	▶808
162-8818	808
	▶812
162-8819	773
	774
	▶776
162-9329	452
162-9330	▶452
	456
162-9331	454
162-9500	▶1
162-9501	1
	▶456
162-9502	▶2
162-9503	1
	▶427
162-9504	1
	▶610
162-9505	1
	▶7
162-9507	427
	▶566
163-0879	456
	▶870
163-0942	▶781
163-0943	▶782
163-1146	882
163-1201	281
	289
163-1268	▶616
	711
	713
163-1269	▶618
	711
	713
163-1580	610
	▶662
	▶664
163-1581	▶670
	715
163-1582	610
	▶646
163-1583	610
	▶654
163-1584	566
	▶580
163-1588	▶715
163-1618	616
	618
163-1619	616
	618
163-1622	616
163-1623	618
163-1790	646
163-1791	646
163-1792	646
163-1823	581
163-1824	581
163-1834	662
	664
163-1835	670
163-1965	40
163-2790	646
163-3103	178
163-4153	610
	▶680
163-4550	▶711
163-4551	▶713
163-4552	▶712
163-4553	▶714
163-5294	427
	▶442
163-5297	▶422
	442
163-5298	▶386
	442
163-5393	▶278
	456
163-5395	2
	▶286
163-5399	▶378
	456
163-5403	378
163-5404	378
163-5405	379
163-5407	379
163-5426	279
	287
163-5427	280
	288
163-5428	280
163-5429	280
	288
163-5450	288
163-5455	190
	192
	194
	196
163-5456	190
	192
	194
	196
163-5459	▶190
163-5472	280
	289
163-5784	1
	▶4
163-5798	4
	▶40
163-5799	4
	▶14
163-5800	4
	6
	▶84
163-5801	4
	▶121
163-5802	4
	▶186
163-5803	4
	▶170
163-5804	4
	▶156
163-5805	4
	▶257
163-5806	4
	▶236
163-5809	4
	▶376
163-5811	7
	▶114
163-5812	7
	▶158
163-5813	7
	▶140
163-5814	7
	▶150
163-5815	7
	▶168
163-5817	7
	▶172
163-5820	7
	▶274
163-6088	917
163-7462	▶346
	456
163-8391	140
	144
163-8393	84
163-8395	121
163-8397	121
163-8398	4
	▶136
163-8405	140
163-8406	4
	▶244
163-8407	156
163-8408	156
163-8411	14
163-8413	236
163-8415	376
163-8416	7
	▶180
163-8419	172
163-8422	140
	144
163-8439	▶304
163-8441	773
	▶824
163-8442	774
	▶830
163-8826	456
	▶502
163-9106	456
	▶496
163-9277	▶268
	456
163-9280	427
	▶570
163-9362	▶436
	438
163-9363	▶438
	440
163-9364	427
	▶440
164-0759	262
	266
164-1949	456
	▶482
164-1950	482
164-1951	483
164-1962	496
164-1975	496
164-1976	496
164-1981	496
164-1982	496
164-2108	447
164-2134	486
164-2208	4
	▶38
164-2877	2
	▶144

▶ **PRIMARY REFERENCE**

PART NUMBER INDEX

Part	Page
164-3417	269
164-3422	269
164-3692	▶333
164-4146	863
164-4210	▶398
	427
164-4531	856
	858
164-4883	852
	853
164-5055	▶743
164-5502	502
164-5796	2
164-5808	398
	402
	406
164-5840	▶476
164-5841	476
	480
164-5843	▶480
	506
164-5951	884
164-6403	622
164-7577	281
	289
	▶365
	579
164-7956	▶454
	743
164-9429	▶868
164-9436	281
	289
	▶293
164-9919	▶416
	427
164-9980	372
165-0652	▶742
165-1684	158
	▶160
165-1687	160
165-1689	160
165-3726	668
165-4217	158
	162
165-4852	440
165-4854	440
165-5030	160
165-5067	140
165-5068	4
	6
	▶294
165-5069	122
165-5070	122
165-5137	4
	▶122
165-5140	▶276
	277
165-5629	423
165-5631	424
165-5632	423
165-5676	156
165-5677	170
165-5678	170
165-5679	170
165-5680	156
165-6881	262
165-6970	592
165-7783	436
165-7855	494
165-7860	494
165-7861	494
165-7862	494
165-7870	121
165-8633	616
	618
	▶622
165-9055	7
	▶42
165-9142	576
165-9143	576
165-9905	140
	144
166-0663	576
166-0666	442
	▶576
166-1206	492
166-1207	492
166-1209	▶492
166-1855	622
166-2088	140
166-3320	523
166-3321	523
166-3322	523
166-3324	523
166-3544	422
166-3785	▶506
166-4452	122
166-5985	262
	266
166-6781	882
166-6928	▶841
	854
166-6930	398
	402
	406
166-6931	398
	402
	406
166-7164	372
166-7262	424
166-7265	424
166-7267	386
166-7401	884
166-8524	680
166-8624	572
166-8625	570
	▶572
166-9145	60
	61
167-0138	▶370
	372
167-1066	140
167-1327	187
167-1709	38
	▶334
167-1801	679
167-1947	488
	▶523
167-2190	632
167-2208	622
	634
	636
167-2209	628
	630
167-2211	624
	626
	638
	640
167-2300	632
167-2319	636
167-2320	630
167-2324	638
	640
167-2452	632
167-2469	622
	634
	636
167-2471	628
	630
167-2474	624
	626
	638
	640
167-3830	372
167-3851	122
167-3852	122
167-3945	2
	▶162
167-3949	162
167-6835	156
167-6837	14
167-6940	14
167-7494	▶372
	379
167-7499	372
167-7812	274
167-9258	581
167-9270	187
167-9524	447
168-0264	372
168-0265	372
168-0267	372
168-0269	373
168-0270	372
168-0275	373
168-0365	4
	▶110
168-3410	140
168-4591	486
168-4592	4
	▶50
168-4593	▶486
168-6448	733
168-6575	711
	713
	▶733
168-6861	694
168-7488	122
168-8768	236
168-8772	819
168-9241	156
168-9243	7
	▶96
169-0147	42
169-0152	149
169-0156	▶149
	150
169-0697	852
169-0908	114
	612
169-1024	853
169-1025	874
169-1026	872
169-1644	726
	728
169-1821	41
169-1822	6
	▶41
169-2859	▶921
	922
169-3615	122
169-3616	122
169-3691	6
	▶18
169-3698	6
	▶174
169-3701	2
	▶44
169-3704	2
	▶176
169-5446	121
169-6547	4
	▶100
169-6548	100
169-7055	423
169-7163	7
	▶612
169-7380	882
	884
169-7443	824
	830
169-8367	▶277
169-9073	156
169-9074	156
169-9649	▶886
	888
169-9650	886
170-0235	824
	830
170-0262	503
170-0263	503
170-0781	476
	480
170-0783	476
	480
170-1112	856
	858
170-1114	856
	858
170-1115	856
	858
170-1761	461
170-1769	612
170-1770	612
170-1845	▶466
	476
170-1847	466
170-1852	▶468
	480
170-1854	468

▶ **PRIMARY REFERENCE**

PART NUMBER INDEX

Part	Page	Part	Page	Part	Page	Part	Page
170-1882	126		144		728		▶796
170-2422	612	172-5769	140	174-7875	281	179-6020	230
170-2424	612		144		289	179-7023	4
170-3461	379	172-6581	874	174-8830	168		6
170-3793	379	172-7938	▶198	174-8943	262		▶178
170-3795	379		456		266	179-7086	4
170-4017	680	172-8595	14	174-9169	346		6
170-5293	824		18	174-9485	140		▶76
	830	172-8833	731	175-0453	696	179-7087	383
170-5673	236	172-9291	776	175-1447	769	180-0095	532
170-5675	236		813	175-1448	769	180-5559	876
170-6677	114	172-9313	60	175-2832	808		877
170-6679	114	172-9314	61	175-2839	808	180-5560	876
170-7081	456	173-0147	68	175-2962	▶562		877
	▶854	173-0148	68	175-3616	444	180-5738	64
170-7485	709	173-1028	▶856	175-4018	138	180-6645	212
170-8590	863		▶858	175-4019	137	180-6646	212
170-9096	476		872	175-4020	136	180-6647	212
	480		874	175-4021	137	180-6649	210
	503	173-1518	689	175-4022	▶137		▶212
171-0802	825	173-1519	589		138	180-7180	825
	830		▶689	175-4023	136		831
171-0803	825	173-1566	373		▶138	180-7181	825
	830	173-2052	851	175-4828	▶192		831
171-1184	114	173-3071	398	175-7574	580	180-7304	▶872
171-1185	114		402	175-7900	632		876
171-1230	872		406	175-7903	622	180-7305	▶852
	874	173-3083	876	176-5321	444		872
171-3054	592	173-3084	877		▶447	180-7306	▶874
171-3055	592	173-5562	6	176-5322	447		877
171-3057	592		▶126	176-5618	▶224	180-7307	▶853
171-3058	592	173-5787	879		225		874
171-3059	592		880	176-7662	612	180-9340	335
171-3060	592		881	177-1860	863		336
171-3061	592	173-7035	879	177-1862	863		337
171-3065	586		880	177-1863	872	183-2120	▶556
	▶592		881		874	183-3398	96
171-3066	592	173-7126	224	177-3243	646	183-3648	876
171-3446	825	173-7188	35	177-3908	274		877
171-5349	340		36	177-4308	104	183-5116	42
171-5989	592	173-9431	190	177-4651	▶516		▶46
171-6464	▶216	173-9682	622	177-4930	851	183-6651	589
	456	173-9779	632	177-4935	▶863	183-7426	794
171-6465	2	174-1472	186		872		796
	▶220		▶187		874	183-8610	▶579
171-6682	872	174-1494	776	177-4937	876		580
	874		812		877	184-1527	▶679
171-6768	170	174-1495	798	177-7496	68	184-2298	872
171-6769	376	174-1503	804	177-9383	▶194		874
171-8693	379	174-2231	▶816	177-9871	589	184-2299	872
171-8696	379		882	178-0475	923		874
171-8708	367	174-2237	816	178-0605	▶851	184-2300	852
	▶368	174-2272	612		852		853
172-0802	298	174-3999	170		853	184-3647	122
	▶299	174-4599	921	178-0607	863	184-3648	7
172-0859	612	174-4600	921	178-0608	863		▶130
172-0986	825	174-4601	921	178-0609	863	184-4395	546
	830	174-4602	921	178-1781	281	184-6011	▶876
172-2416	872	174-4603	921		289		879
	874	174-4604	921	178-7907	851	184-6012	▶877
172-3919	346	174-4605	921	179-0006	104		880
172-4001	856	174-4606	921	179-0160	923		881
172-4880	825	174-5732	726	179-2941	773	184-6191	788
	831		728		774	184-7687	▶230
172-5768	140	174-5733	726		▶794		257

▶ **PRIMARY REFERENCE**

PART NUMBER INDEX

Part	Page
185-1929	854
185-7593	▶402
185-9977	217
	221
	▶225
186-0272	281
	289
186-0780	528
	529
186-0781	528
	529
186-2396	11
186-2397	4
	▶11
186-2847	104
186-3161	386
	570
186-3735	273
	278
	279
	286
	287
	341
	365
	372
	707
	708
	800
	824
	830
	916
186-3736	332
	370
186-4857	886
186-4919	4
186-5899	781
	782
	▶888
187-1507	68
187-1679	269
187-1985	104
187-2015	1
	▶563
187-3061	777
	813
187-4928	572
187-5275	194
187-5279	▶196
187-5341	718
187-8636	610
	▶686
187-8637	686
	▶696
187-8677	379
187-9209	492
187-9210	492
188-0532	▶487
188-1599	646
188-1601	646
188-2034	274
188-2557	518
188-2586	863
188-2901	786
188-2903	786
188-2904	786
188-3384	670
188-3548	46
188-3549	46
188-4478	923
188-5095	190
	192
	194
	196
188-5141	452
	454
188-6209	831
188-7197	118
	130
188-8849	309
	310
188-9314	472
189-0981	84
189-2319	378
189-2514	118
189-3063	407
189-3064	406
189-3065	406
189-6244	407
189-8709	580
189-8867	406
189-8868	406
189-9809	860
189-9810	848
	860
189-9816	860
190-3127	75
190-3472	7
	▶88
190-3474	88
190-4184	4
	6
	▶75
190-5386	921
	922
191-2359	573
191-9292	786
192-0729	96
	▶444
192-2209	68
192-3834	50
192-5112	548
192-5425	140
	144
192-7932	825
	831
192-8807	68
192-8809	4
	▶68
192-9147	▶406
	487
193-2550	▶340
	423
193-3973	380
193-7004	668
193-8944	532
193-8945	532
193-8946	532
193-8947	532
194-2483	130
194-2885	376
194-3217	236
194-5226	331
194-5227	331
194-6590	236
194-6591	376
194-6722	210
	▶335
194-6724	38
	▶336
194-6725	250
	▶337
194-7034	198
195-1174	▶732
195-7619	102
195-8744	517
195-8745	517
195-8746	▶517
196-1353	▶488
196-3736	4
	▶296
196-8560	▶518
	563
196-8561	▶548
	563
196-9954	▶540
	563
196-9955	536
	▶544
	563
196-9956	540
	541
196-9957	544
	545
197-2715	▶820
197-4096	▶802
197-4097	▶803
197-5108	923
197-5109	730
197-5110	854
197-5111	854
197-5112	854
197-5113	854
197-6335	114
197-6336	2
197-7504	▶784
197-7689	882
197-8228	533
	▶541
197-8229	533
	▶545
198-1862	140
	144
198-1863	140
	144
198-1864	140
	144
198-1865	140
	144
198-7247	96
198-9172	496
198-9948	2
	▶6
199-5525	▶528
	551
	557
	558
	559
	560
	561
199-5528	▶529
	550
199-5536	▶557
199-5537	▶558
	563
199-5538	▶559
199-6601	274
199-6602	794
	796
199-9024	796
2	
200-0856	▶414
200-2354	668
200-7958	414
200-7959	414
200-7961	414
200-7963	414
201-0704	784
	▶786
201-4155	266
201-4201	250
	▶264
201-4202	264
	▶266
201-4203	266
202-3572	108
	112
202-3575	4
	▶112
203-2070	798
203-2199	▶560
203-2200	▶561
203-7700	880
203-7703	879
	880
	881
203-9380	▶500
203-9381	500
203-9382	500
203-9383	500
204-9530	798
204-9531	798
204-9532	798
205-4275	268
	▶269
208-1686	786
208-1687	786
208-1691	786
210-8629	848
210-9479	130

▶ **PRIMARY REFERENCE**

MEMORANDA



© 2001 Caterpillar
All Rights Reserved

Printed in U.S.A.