CATERPILLAR®

SEBP3653-01
January 2005

RUTHZIL TRATOR COMERCIAL DE PEÇAS LTDA 11 97083-6812 ROLANDO CITRANGULO

Parts Manual

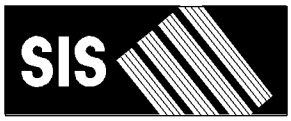

See "General Information" for New Parts Manual Features.

D9T Track-Type Tractor

RJS1-Up (Machine)
RHX1-Up (Engine)
DXK1-Up (Transmission)
T9H1-Up (Bulldozer)
T9J1-Up (Bulldozer)
CRM1-Up (Ripper)
GNM1-Up (Ripper)
MAM1-Up (Ripper)
SEM1-Up (Ripper)
TCW1-Up (Torque Converter)

Powered By C-18 Engine
This Parts Manual is also available in .PDF Format on Compact Disc (CD-ROM)-Caterpillar Form No. SERP3653-01

Product and Dealer Information

Note: For product identification plate locations, see the section “Product Identification Information” in the Operation and Maintenance Manual.

Delivery Date: _____

Product Information

Model: _____

Product Identification Number: _____

Engine Serial Number: _____

Transmission Serial Number: _____

Generator Serial Number: _____

Attachment Serial Numbers: _____

Attachment Information: _____

Customer Equipment Number: _____

Dealer Equipment Number: _____

Dealer Information

Name: _____ Branch: _____

Address: _____

_____

_____

	Dealer Contact	Phone Number	Hours
Sales:	_____	_____	_____
Parts:	_____	_____	_____
Service:	_____	_____	_____

Informations produit et concessionnaire

Nota: Voir l'emplacement de la plaque signalétique du produit au chapitre "Informations produit" du guide d'utilisation et d'entretien.

Date de livraison: _____

Informations produit

Modèle: _____

Numéro d'identification produit: _____

Numéro de série du moteur: _____

Numéro de série de la boîte de vitesses: _____

Numéro de série de l'alternateur: _____

Numéros de série d'équipement: _____

Informations sur l'équipement: _____

Numéro matériel client: _____

Numéro matériel concessionnaire: _____

Informations concessionnaire

Nom: _____ Agence: _____

Adresse: _____

_____

_____

	Contact concessionnaire	Numéro de téléphone	Heures
Ventes:			
Pièces:			
Service:			

Información del Producto/Distribuidor

Nota: Para saber la ubicación de las placas de identificación del producto, ver la sección “Información sobre identificación del producto” en el Manual de Operación y Mantenimiento.

Fecha de entrega: _____

Información del producto

Modelo: _____

Número de identificación del producto: _____

Número de serie del motor: _____

Número de serie de la transmisión: _____

Número de serie del generador: _____

Números de serie de los accesorios: _____

Información sobre los accesorios: _____

Número del equipo del cliente: _____

Número del equipo del distribuidor: _____

Información del distribuidor

Nombre: _____ Sucursal: _____

Dirección: _____

_____

_____

Comunicación con el distribuidor	Número de teléfono	Horas
Ventas: _____	_____	_____
Piezas: _____	_____	_____
Servicio: _____	_____	_____

Informações Sobre Produto e Revendedor

Nota: Para localizações da placa de identificação do produto, consulte a seção, “Informações Sobre Identificação do Produto” no Manual de Operação e Manutenção.

Data de Entrega: _____

Informações Sobre o Produto

Modelo: _____

Número de Identificação do Produto: _____

Número de Série do Motor: _____

Número de Série da Transmissão: _____

Número de Série do Gerador: _____

Números de Série de Acessórios: _____

Informações Sobre Acessórios: _____

Número do Equipamento do Cliente: _____

Número do Equipamento do Revendedor: _____

Informações Sobre o Revendedor

Nome: _____ Filial: _____

Endereço: _____

_____

_____

	Contato do Revendedor	Telefone	Horas
Vendas:	_____	_____	_____
Peças:	_____	_____	_____
Serviço:	_____	_____	_____

Produkt- und Händlerinformation

Anmerkung: Für die Lage der Produkt-Identnummer und Seriennummern siehe Abschnitt “Produkt-Identinformation” im Betriebs- und Wartungshandbuch.

Lieferdatum: _____

Produkt-Identinformation

Modell: _____

Produkt-Identnummer: _____

Seriennummer des Motors: _____

Seriennummer des Getriebes: _____

Seriennummer des Generators: _____

Seriennummern der Arbeitsgeräte: _____

Arbeitsgeräteinformation: _____

Kundennummer: _____

Händlernummer: _____

Händlerinformation

Name: _____ Niederlassung: _____

Adresse: _____

_____

_____

	Kontaktperson beim Händler	Telefon	Dienststunden
Verkauf:	_____	_____	_____
Ersatzteile:	_____	_____	_____
Service:	_____	_____	_____

MEMORANDA

TABLE OF CONTENTS

Name	Page
GENERAL INFORMATION	A26
REPAIR ALTERNATIVES	A45
SUPPLEMENTAL COOLANT ADDITIVES	A50
MAINTENANCE PARTS	A55
INDEX	A81
MACHINE ARRANGEMENT	1
CHASSIS AR	1
COLD WEATHER AR	1
GENERAL AR-TRACTOR	2
MINING AR	2
MODIFICATION AR-WOODCHIP	2
STOCKPILE AR	3
WASTE HANDLING AR	3
ENGINE ARRANGEMENT	6
ENGINE AR-COMPLETE	6
ENGINE AR-CORE	8
INSTALLATION AR-ENGINE	9
BASIC ENGINE	10
BASE GP-VALVE COVER & INJ HARN	10
CAMSHAFT GP	12
COVER GP-CYLINDER BLOCK	13
COVER GP-FLYWHEEL HOUSING	14
COVER GP-FRONT HOUSING	16
COVER GP-SOUND SUPPRESSION	17
COVER GP-VALVE MECHANISM	18
CRANKSHAFT GP	29
CYLINDER BLOCK AS	30
CYLINDER BLOCK GP	32
CYLINDER HEAD AS	34
CYLINDER HEAD GP	39
DAMPER & PULLEY GP	41
FASTENER GP-FRONT HOUSING	42
FASTENER GP-OIL PAN	45
FASTENER GP-VALVE MECHANISM	46
FLYWHEEL GP	47
GEAR GP-CAMSHAFT	48
GEAR GP-FRONT	49
GEAR GP-REAR	52
HOUSING GP-FLYWHEEL	54
HOUSING GP-FRONT	56
LIFTING GP-ENGINE	60
MOUNTING GP-ENGINE	62
PAN GP-OIL	64
PISTON & ROD GP	68
PLUG GP-CYLINDER BLOCK	71
PLUG GP-CYLINDER HEAD	73
ROCKER ARM GP	74
SUPPORT GP-ENGINE	76
SUPPRESSION AR-SOUND	77
TRUNNION GP-ENGINE	78
VALVE MECHANISM GP	79
LUBRICATION SYSTEM	80
BREATHER GP	80
FASTENER GP-OIL PUMP MOUNTING	81
FILLER GP-ENGINE OIL	82
FILTER GP-ENGINE OIL	83
FUMES DISPOSAL GP	86
GAUGE GP-OIL LEVEL (DIPSTICK)	87
LINES GP-ENGINE OIL	88
LINES GP-TURBOCHARGER OIL	89
MOUNTING GP-FUMES DISPOSAL	91
OIL CHANGE GP-HIGH SPEED	92
PRELUBRICATION AR-ENGINE	94
PUMP GP-ENGINE OIL	97
COOLING SYSTEM	100
FAN GP-SUCTION	100
LINES GP-WATER	103
PUMP GP-WATER	111
RADIATOR AR	113
RADIATOR GP	114
SWITCH GP-FLOW	116
TANK GP-COOLANT	117
TANK GP-WATER	118
AIR INLET AND EXHAUST SYSTEM	120
AFTERCOOLER GP-AIR	120
AIR CLEANER GP	121
DUST EJECTOR GP	123
LINES GP-AIR	124
MANIFOLD GP-EXHAUST	127
MOUNTING GP-AIR CLEANER	128
MUFFLER GP	129
PRECLEANER AR	130
PRECLEANER GP	132
SHIELD GP-MANIFOLD	134
TURBOCHARGER GP	135
FUEL SYSTEM	136
ADAPTER GP-FAST FILL FUEL	136
ADAPTER GP-PUMP DRIVE	143
FILTER & LINES GP-FUEL	144
FILTER GP-FUEL	148
FILTER GP-WATER SEP & FUEL	149
KIT-SEAL	150
LINES GP-FUEL	151
MOUNTING GP-FUEL LINE	154
PUMP & MTG GP-FUEL TRANSFER	155
PUMP GP-FUEL INJECTION	156
SEAL GP	159

TABLE OF CONTENTS

Name	Page
TANK GP-FUEL	162
VALVE GP-CHECK	167
WATER SEP & FUEL PRM PUMP GP	169
ELECTRICAL AND STARTING SYSTEM	170
ALARM GP	170
ALTERNATOR GP-CHARGING	171
BATTERY & WIRING GP	177
BLOCK GP-JUNCTION	184
BLOCK GP-POWER	185
CONNECTION GP-ELECTRICAL	186
CONTROL & MTG GP-ELECTRONIC	187
CONTROL & MTG GP-ENGINE ELEK	188
CONVERTER GP-ELECTRICAL	189
ELECTRONICS AR-MACHINE	190
ELECTRONICS GP-COMMUNICATION	190
ELECTRONICS GP-IMPLEMENT	190
ELECTRONICS GP-MONITOR	191
ELECTRONICS GP-POWER TRAIN	191
HEATER GP-JACKET WATER	192
HEATER GP-MACHINE	194
INSTALLATION AR-GRADE CONTROL	196
INSTALLATION GP-COMMUNICATION	197
INSTALLATION GP-GRADE CONTROL	199
LAMP GP-FLOOD	200
LIGHTING GP-FLOOD	205
LIGHTING GP-WARNING BEACON	222
MOUNTING GP-CONNECTOR	224
MOUNTING GP-SENSOR	225
PANEL GP-FUSE	226
PLUG GP-CONNECTOR	230
SENSOR & MOUNTING GP	231
SENSOR GP-ENGINE	233
SENSOR GP-FUEL LEVEL	235
SENSOR GP-POSITION	236
SENSOR GP-PRESSURE	238
SENSOR GP-SPEED	247
SENSOR GP-TEMPERATURE	252
STARTING AID GP-ETHER	255
STARTING AR-COLD WEATHER	256
STARTING MOTOR GP-ELECTRIC	259
SWITCH GP-BYPASS	267
SWITCH GP-DISCONNECT	268
SWITCH GP-LIMIT	272
SWITCH GP-MAGNETIC	273
SWITCH GP-PRESSURE	275
SWITCH GP-PUSH BUTTON	276
SWITCH GP-TOGGLE	277
VALVE GP-ETHER STARTING	278
WIRING GP-CAB	279
WIRING GP-ELECTRONIC CONTROL	281
WIRING GP-ENGINE	283
WIRING GP-GRADE CONTROL	287
WIRING GP-PLATFORM	290
WIRING GP-UNIT INJECTOR	294
POWER TRAIN	295
AXLE GP	295
CASE & PARTS GP-PLANETARY	296
CONTROL GP-TRANSMISSION HYD	299
COOLER GP-TRANSMISSION OIL	301
COUPLING GP-PUMP	302
DRAIN GP-ECOLOGY	303
DRIVE GP-PUMP	304
FILTER GP-OIL	305
FINAL DRIVE GP	307
GEAR GP-BEVEL & PINION	319
GUARD GP-DRIVE SHAFT	321
GUARD GP-POWER TRAIN	322
LINES GP-POWER TRAIN OIL	326
MOUNTING GP-TRANSMISSION	330
PLANETARY GP-TRANSMISSION	331
POWER TRAIN AR	335
PUMP GP-GEAR	336
SCREEN GP-MAGNETIC	340
SEGMENT GP-SPROCKET	341
SHAFT GP-DRIVE	342
SLIP JOINT GP	343
TORQUE CONVERTER GP	344
TRANSMISSION AR	348
UNIVERSAL JOINT GP	349
VALVE GP-CONTROL	350
VALVE GP-MODULATING	352
VALVE GP-PRIORITY	354
VALVE GP-RELIEF	356
VALVE GP-SOLENOID	358
VALVE GP-TRANSMISSION CONTROL	359
FRAME AND BODY	363
CASE & FRAME GP	363
COUNTERWEIGHT GP	365
COVER GP-TRUNNION	370
DOOR GP-ACCESS	371
DRAWBAR GP	375
ENCLOSURE GP-ENGINE	377
ENCLOSURE GP-LH	384
ENCLOSURE GP-REAR	387
ENCLOSURE GP-RH	388
FENDER GP	391
FRAME & BEARING AS	395
GUARD AR-FINAL DRIVE	397
GUARD AR-IDLER	397
GUARD GP-BOTTOM	398
GUARD GP-FINAL DRIVE	403
GUARD GP-FUEL TANK	404

TABLE OF CONTENTS

Name	Page
GUARD GP-IDLER	405
GUARD GP-PIVOT SHAFT	406
GUARD GP-RADIATOR	407
GUARD GP-ROCK	409
GUARD GP-SEAL	411
PANEL GP-SOUND SUPPRESSION	412
UNDERCARRIAGE	413
BAR AR-STRIKER	413
BAR AS-EQUALIZER	416
BAR AS-STRIKER	417
BAR GP-EQUALIZER	420
BAR GP-STRIKER	424
BEARING-SLEEVE	425
CAP GP-TRACK IDLER	427
CAP GP-TRACK ROLLER	429
FRAME GP-TELESCOPING RECOIL	430
IDLER GP-TRACK	434
LINK AS-TRACK	437
LUBRICATION GP-PIVOT SHAFT	439
ROLLER & IDLER AR	441
ROLLER AR-TRACK	442
ROLLER AR-TRACK CARRIER	443
ROLLER GP-TRACK-DOUBLE FLANGE	444
ROLLER GP-TRACK-SINGLE FLANGE	446
SHOE-TRACK	449
SUSPENSION GP-BOGIE	455
TRACK ADJUSTER & RECOIL GP	457
TRACK GP	459
TUBE AS-ROLLER FRAME	467
UNDERCARRIAGE AR	468
STEERING AND BRAKING SYSTEM	469
BRAKE GP-SERVICE	469
CONTROL GP-HANDLE	471
CONTROL GP-PARKING BRAKE	472
CONTROL GP-STEERING	474
CONTROL GP-STEERING & TMSN	476
DRIVE GP-DIFFERENTIAL STEERING	480
DRIVE GP-STEERING	482
FILTER GP-OIL	483
LINES GP-STEERING	485
MANIFOLD & VALVE GP	488
PEDAL GP-GOVERNOR & BRAKE	490
VALVE & MTG GP-STEER & BRAKE	493
VALVE GP-RELIEF	494
VALVE GP-SOLENOID	497
HYDRAULIC SYSTEM	499
ACCUMULATOR GP-HYDRAULIC	499
ACTUATOR GP-PUMP	501
CONTROL & MOUNTING GP	502
CONTROL AR-DUAL TILT	503
CONTROL AR-HYD PIN PULLER	504
CONTROL AR-HYDRAULIC	506
CONTROL GP-HANDLE	507
CONTROL GP-IMPLEMENT	511
CONTROL GP-JOYSTICK	513
COOLER & MTG GP-HYDRAULIC OIL	521
COVER GP-HYDRAULIC TANK CAP	522
CYLINDER & LINES GP-LIFT	523
CYLINDER & LINES GP-RIPPER	529
CYLINDER AR-TILT	530
CYLINDER GP-LIFT	531
CYLINDER GP-RIPPER	535
CYLINDER GP-RIPPER PIN PULLER	539
CYLINDER GP-RIPPER TIP	540
CYLINDER GP-TILT	544
HEAD GP-PUMP	550
HYDRAULIC AR	552
LINES GP-HYDRAULIC FAN	553
LINES GP-LIFT CYLINDER	559
LINES GP-PIN PULLER	561
LINES GP-PIN PULLER CYLINDER	562
LINES GP-PUMP	564
LINES GP-RIPPER	568
LINES GP-TILT CYLINDER	572
MANIFOLD GP-CONTROL	580
MANIFOLD GP-HYDRAULIC	583
MOTOR GP-PISTON	584
MOUNTING GP-CYLINDER	587
PLUG GP-CONTROL VALVE	588
PUMP GP-GEAR	589
PUMP GP-PISTON	590
ROTATING GP-MOTOR	597
ROTATING GP-PUMP	601
TANK & FILTER GP-HYDRAULIC	605
VALVE & MTG GP-CONTROL	609
VALVE & MTG GP-MAIN CONTROL	611
VALVE GP-BANK 4	612
VALVE GP-BREAKER RELIEF	618
VALVE GP-CHECK	619
VALVE GP-CONTROL	623
VALVE GP-FLUSHING	634
VALVE GP-PRESSURE REDUCING	635
VALVE GP-PRESSURE COMPENSATOR	636
VALVE GP-PUMP CONTROL	637
VALVE GP-QUICK-DROP	642
VALVE GP-RELIEF	644
VALVE GP-SHUTTLE	649
VALVE GP-SOLENOID	650
IMPLEMENTS	657
BEAM AS	657
BULLDOZER AR	659
BULLDOZER AR-SEMI-UNIVERSAL	660
BULLDOZER AR-UNIVERSAL	663

TABLE OF CONTENTS

Name	Page
LINK GP-STABILIZER	666
MODIFICATION AR-BULLDOZER	668
PUSH ARM GP	669
PUSH ARM GP-STABILIZER	671
TRUNNION GP-BULLDOZER	672
WORK TOOLS	675
BLADE & EDGE GP-SEMI-UNIVERSAL	675
BLADE & EDGE GP-UNIVERSAL	677
BLADE AS-SEMI-UNIVERSAL	680
BLADE AS-UNIVERSAL	685
BLADE GP-SEMI-UNIVERSAL	690
BLADE GP-UNIVERSAL	691
EDGE GP-BIT & CUTTING	692
FRAME GP-RIPPER	696
LINES GP-WINCH	700
MOUNTING GP-RIPPER	703
PLATE GP-WEAR	705
PULLER AR-PIN	707
PULLER GP-PIN	708
RIPPER AR	711
RIPPER GP	714
TOOTH GP-RIPPER	718
VALVE GP-WINCH CONTROL	723
OPERATOR STATION	725
ADJUSTER GP-SEAT	725
AIR COMPRESSOR GP-SEAT	726
AIR CONDITIONER AR	728
BLOWER GP-CAB	729
BOX GP-STORAGE	731
BRACKET GP-MOUNTING	732
CAB AR	736
CAB AR-COLD WEATHER	738
CAB GP	739
COMPRESSOR GP-REFRIGERANT	742
CONDENSER GP-REFRIGERANT	744
CONSOLE GP-FRONT	746
CONSOLE GP-OPERATOR	747
CONTROL & MTG GP-PEDAL	749
COVER GP-CAB	751
DOOR GP-CAB	753
FILTER GP-CAB AIR	757
HEATER GP-CAB	759
HOUSING GP-SEAT SUSPENSION	765
INSTALLATION GP-RADIO	768
LINER GP-CAB	770
LINES GP-AIR CONDITIONER	772
LINES GP-HEATER	778
MIRROR GP-REAR VIEW	780
MOUNTING GP-CAB	782
MOUNTING GP-CONTROL	783
MOUNTING GP-MONITOR	784
MOUNTING GP-RADIO	785
MOUNTING GP-ROPS	787
OPERATOR AR	788
PAN GP-BACKREST	790
PANEL GP-CONTROL	793
PLATFORM AR	795
PLATFORM GP	796
RECLINER GP-SEAT	799
ROPS GP	800
ROPS AS	801
SCREEN GP-PROTECTION	802
SEAT & MOUNTING GP	803
SEAT GP	804
SEAT GP-SUSPENSION	812
STEP AR	815
SUSPENSION GP-SEAT	817
TANK GP-WINDOW WASHER	821
WASHER GP-WINDOW	824
WINDOW GP-CAB	824
WIPER GP-WINDOW	826
WIPER PIVOT GP	831
SERVICE EQUIPMENT AND SUPPLIES	833
FILM GP	833
PAINT GP	834
PLATE & FILM GP	834
PART NUMBER INDEX	B1

TABLE DES MATIÈRES

Désignation	Page
GÉNÉRALITÉS	A29
OPTIONS DE RÉPARATION	A46
ADDITIFS POUR LIQUIDE DE REFROIDISSEMENT	A51
PIÈCES DE RECHANGE	A60
INDEX	A93
VERSION DE MACHINE	1
VERSION DE CHASSIS	1
TEMPS FROID (VERSION)	1
TRACTEUR - VERSION STANDARD	2
VERSION POUR APPLICATION MINIÈRE	2
VERSION DE MODIFICATION POUR COPEAUX	2
VERSION DE REPRISE AU TAS	3
ÉLIMINATION DES DÉCHETS (VERSION)	3
VERSION DE MOTEUR	6
VERSION DE MOTEUR COMPLET	6
MOTEUR - PARTIE CENTRALE (VERSION)	8
MONTAGE DE MOTEUR (VERSION)	9
MOTEUR STANDARD	10
SUPPORT DE CACHE-SOUPAPE ET FAISC. DE CABL. D'IN.	10
ARBRE A CAMES (ASS)	12
BLOC-CYLINDRES - COUVERCLE (ASS)	13
COUVERCLE DE CARTER DE VOLANT (ASS)	14
COUVERCLE DE CARTER AV (ASS)	16
INSONORISATION - COUVERCLE (ASS)	17
CACHE-SOUPAPES (ASS)	18
VILEBREQUIN (ASS)	29
BLOC-CYLINDRES (ENS)	30
BLOC-CYLINDRES (ASS)	32
CULASSE (ENS)	34
CULASSE (ASS)	39
AMORTISSEUR DE VIBRATIONS ET POULIE (ASS)	41
BOULONNERIE DE CARTER AV (ASS)	42
BOULONNERIE DU CARTER D'HUILE (ASS)	45
CULBUTERIE - BOULONNERIE (ASS)	46
VOLANT MOTEUR (ASS)	47
PIGNONNERIE D'ARBRE À CAME	48
PIGNONNERIE AV (ASS)	49
PIGNON AR (ASS)	52
CARTER DE VOLANT (ASS)	54
CARTER AV (ASS)	56
OEILLETONS DE LEVAGE MOTEUR (ASS)	60
MONTAGE DE MOTEUR (ASS)	62
HUILE MOTEUR - CARTER (ASS)	64
PISTON ET BIELLE (ASS)	68
BOUCHON DE BLOC-CYLINDRES (ASS)	71
BOUCHON - CULASSE (ASS)	73
AXE DE CULBUTEUR (ASS)	74
SUPPORT DE MOTEUR (ASS)	76
INSONORISATION (VERSION)	77
TOURILLON DE MOTEUR (ASS)	78
CULBUTERIE (ASS)	79
CIRCUIT DE GRAISSAGE	80
RENIFLARD (ASS)	80
BOULONNERIE DE MONTAGE DE LA POMPE A HUILE (ASS)	81
BOUCHON DE REMPLISSAGE D'HUILE MOTEUR (ASS)	82
FILTRE À HUILE MOTEUR (ASS)	83
DISPOSITIF D'EVACUATION DES VAPEURS DE CARTER	86
JAUGE D'HUILE MOTEUR (BAIONNETTE) (ASS)	87
CANALISATIONS D'HUILE MOTEUR (ASS)	88
CANALISATIONS D'HUILE DE TURBOCOMPRESSEUR (ASS)	89
MONTAGE - ÉVACUATION DES VAPEURS DE CARTER	91
DISPOSITIF DE VIDANGE RAPIDE D'HUILE (ASS)	92
VERSION DE PRÉGRAISSAGE DE MOTEUR	94
POMPE A HUILE MOTEUR (ASS)	97
CIRCUIT DE REFROIDISSEMENT	100
VENTILATEUR ASPIRANT (ASS)	100
CANALISATIONS D'EAU (ASS)	103
POMPE A EAU (ASS)	111
RADIATEUR (VERSION)	113
RADIATEUR (ASS)	114
CONTACTEUR DE DEBIT (ASS)	116
RÉSERVOIR DU LIQUIDE DE REFROIDISSEMENT (ASS)	117
RÉSERVOIR D'EAU (ASS)	118

* TRADUCTION NON DISPONIBLE AU MOMENT DE LA PUBLICATION

TABLE DES MATIÈRES

Désignation	Page
CIRCUIT D'ADMISSION D'AIR ET D'ECHAPPEMENT	120
REFROIDISSEUR D'ADMISSION D'AIR (ASS)	120
FILTRE A AIR (ASS)	121
ÉJECTEUR AUTOMATIQUE DE POUSSIÈRE (ASS)	123
CANALISATIONS D'AIR (ASS)	124
COLLECTEUR D'ÉCHAPPEMENT (ASS)	127
MONTAGE DE FILTRE À AIR (ASS)	128
SILENCIEUX (ASS)	129
PREFILTRE (VERSION)	130
PREFILTRE (ASS)	132
ÉCRAN DE COLLECTEUR (ASS)	134
TURBOCOMPRESSEUR (ASS)	135
CIRCUIT DE CARBURANT	136
ADAPTATEUR DE REMPLIS. RAPIDE DE CARBURANT (ASS)	136
ADAPTATEUR - ENTRAÎNEMENT DE POMPE (ASS)	143
FILTRE ET CANALISATIONS DE CARBURANT (ASS)	144
FILTRE A CARBURANT (ASS)	148
FILTRE DE SÉPARATEUR D'EAU ET DE CARBURANT (ASS)	149
KIT DE JOINTS	150
CANALISATIONS DE CARBURANT (ASS)	151
MONTAGE DE CANALISATION DE CARBURANT (ASS)	154
POMPE D'ALIMENTATION ET MONTAGE (ASS)	155
POMPE D'INJECTION DE CARBURANT (ASS)	156
JOINT (ASS)	159
RÉSERVOIR DE CARBURANT (ASS)	162
CLAPET DE RETENUE (ENS)	167
POMPE DE SÉPARATEUR D'EAU ET D'AMORÇAGE DE CARBURANT (ASS)	169
CIRCUIT DE DÉMARRAGE ET ÉLECTRIQUE	170
AVERTISSEUR (ASS)	170
ALTERNATEUR DE CHARGE (ASS)	171
BATTERIE ET CÂBLAGE	177
BLOC DE BRANCHEMENT (ASS)	184
BLOC-PUISSANCE (ASS)	185
BRANCHEMENT ÉLECTRIQUE (ASS)	186
COMMANDE ELECTRONIQUE ET MONTAGE (ASS)	187
COMMANDE ET MONTAGE - MOTEUR	188
TRANSFORMATION ELECTRIQUE (ASS)	189
COMPOSANTS ÉLECTRONIQUES DE LA MACHINE (VERSION)	190
ÉLECTRONIQUE - COMMUNICATION (ASS)	190
COMMANDE ÉLECTRONIQUE D'ÉQUIPEMENT (ASS)	190
ÉLECTRONIQUE-MONITEUR (ASS)	191
ÉLECTRONIQUE DE TRANSMISSION (ASS)	191
EAU DES CHEMISES - RECHAUFFEUR (ASS)	192
CHAUFFAGE-MACHINE (ASS)	194
VERSION DE MONTAGE DE COMMANDE DE PROFIL LONGITUDINAL	196
MONTAGE-COMMUNICATION (ASS)	197
MONTAGE DE COMMANDE DE PROFIL LONGITUDINAL (ASS)	199
LAMPE - PHARE (ASS)	200
ÉCLAIRAGE - PROJECTEURS (ASS)	205
ÉCLAIRAGE - GYROPHARE (ASS)	222
MONTAGE DE CONNECTEUR (ASS)	224
MONTAGE - CAPTEUR (ASS)	225
PANNEAU - FUSIBLES (ASS)	226
PRISE (ASS)	230
CAPTEURS ET MONTAGE (ASS)	231
CAPTEUR - MOTEUR (ASS)	233
CAPTEUR DE NIVEAU DE CARBURANT (ASS)	235
SONDE - CIRCUIT DE CARBURANT	236
CAPTEUR DE PRESSION (ASS)	238
CAPTEUR DE VITESSE (ASS)	247
CAPTEUR DE TEMPERATURE (ASS)	252
AUXILIAIRE DE DÉMARRAGE À L'ÉTHER	255
DÉMARRAGE PAR TEMPS FROID (VERSION)	256
DÉMARREUR ÉLECTRIQUE (ASS)	259
INTERRUPTEUR - DÉRIVATION (ASS)	267
ROBINET DE BATTERIE (ASS)	268
CONTACTEUR DE LIMITE (ASS)	272
CONTACTEUR MAGNETIQUE (ASS)	273
MANOCONTACT	275
CONTACTEUR DE BOUTON-POUSSOIR (ASS)	276
INTERRUPTEUR À BASCULE (ASS)	277
SOUPAPE DE DÉMARRAGE À L'ÉTHER (ASS)	278
CABLAGE DE CABINE (ASS)	279

* TRADUCTION NON DISPONIBLE AU MOMENT DE LA PUBLICATION

TABLE DES MATIÈRES

Désignation	Page
COMMANDE ÉLECTRONIQUE - CABLAGE	281
CABLAGE DE MOTEUR (ASS)	283
AVERTISSEMENT DE PROFIL LONGITUDINAL (ASS)	287
CABLAGE - PLATE-FORME (ASS)	290
CABLAGE D'INJECTEUR	294
TRANSMISSION	295
ESSIEU (ASS)	295
TRAINS PLANÉTAIRES - CARTER ET PIÈCES	296
COMMANDE HYDRAULIQUE DE BOÎTE (ASS)	299
REFROIDISSEUR D'HUILE DE BOÎTE (ASS)	301
ACCOUPLEMENT DE POMPE (ASS)	302
VIDANGE-ÉCOLOGIE (ASS)	303
ENTRAÎNEMENT DE POMPE (ASS)	304
FILTRE A HUILE (ASS)	305
RÉDUCTEURS (ASS)	307
COURONNE CONIQUE ET PIGNON	319
BLINDAGE D'ARBRE DE TRANSMISSION (ASS)	321
BLINDAGE DE TRANSMISSION (ASS)	322
CANALISATIONS D'HUILE DE TRANSMISSION (ASS)	326
REDUCTEUR MARIN - MONTAGE (ASS)	330
BOÎTE PLANÉTAIRE (ASS)	331
TRANSMISSION (VERSION)	335
POMPE A ENGRENAGES (ASS)	336
ÉCRAN MAGNÉTIQUE (ASS)	340
SEGMENT DE BARBOTIN (ASS)	341
ARBRE D'ENTRAÎNEMENT (ASS)	342
CARDAN COULISSANT (ASS)	343
CONVERTISSEUR DE COUPLE (ASS)	344
BOÎTE DE VITESSES (VERSION)	348
JOINT UNIVERSEL (ASS)	349
DISTRIBUTEUR (ASS)	350
SOUPAPE DE MODULATION (ASS)	352
SOUPAPE DE PRIORITE (ASS)	354
CLAPET DE DECHARGE (ASS)	356
SOUPAPE - SOLÉNOÏDE (ASS)	358
DISTRIBUTEUR DE BOITE (ASS)	359
CHÂSSIS ET BENNE	363
CHÂSSIS ET CARTER (ASS)	363
CONTREPOIDS (ASS)	365
COUVERCLE DE TOURILLON (ASS)	370
PORTE DE VISITE (ASS)	371
BARRE D'ATTELAGE (ASS)	375
CARENAGE DE MOTEUR (ASS)	377
CAPOTAGE CÔTÉ GAUCHE	384
REVETEMENT AR (ASS)	387
CAPOTAGE CÔTÉ DROIT	388
GARDE-BOUE (ASS)	391
CHÂSSIS ET ROULEMENT (ENS)	395
PROTECTEUR DE RÉDUCTEURS (VERSION)	397
PROTECTION DE ROUE LIBRE (VERSION)	397
BLINDAGE INFÉRIEUR (ASS)	398
PROTECTEUR DE RÉDUCTEURS (ASS)	403
PROTECTION DU RÉSERVOIR DE CARBURANT (ASS)	404
BLINDAGE DE ROUE AV (ASS)	405
PROTECTION D'ARBRE PIVOT (ASS)	406
PROTÈGE-RADIATEUR (ASS)	407
PARE-PIERRES (ASS)	409
PROTECTION DE JOINT (ASS)	411
PANNEAU D'INSONORISATION (ASS)	412
TRAIN DE ROULEMENT	413
BARRE DÉFLECTRICE (VERSION)	413
BALANCIER DE SUSPENSION (ENS)	416
BARRE DÉFLECTRICE (ENS)	417
BALANCIER DE SUSPENSION (ASS)	420
BARRE DÉFLECTRICE (ASS)	424
BAGUE	425
CHAPEAU DE ROUE AV (CHAINE) (ASS)	427
CHAPEAU DE GALET INFERIEUR (ASS)	429
CARTER TELESCOPIQUE DE MECANISME AMORTISSEUR	430
ROUE AV - CHAINES (ASS)	434
MAILLON DE CHAINE (ENS)	437
GRAISSAGE DE LA TRAVERSE-PIVOT	439
VERSION DE GALET ET ROUE AVANT	441
GALET INFÉRIEUR (VERSION)	442
GALET SUPERIEUR (VERSION)	443
GALET A BOUDIN DOUBLE (ASS)	444
GALET A BOUDIN SIMPLE (ASS)	446
PATIN DE CHAÎNE	449
SUSPENSION A BOGIES (ASS)	455
MECANISME AMORTISSEUR ET REGLAGE DE CHAINES (ASS)	457
CHAINES (ASS)	459
TUYAU-CHÂSSIS PORTEUR (ENS)	467
TRAIN DE ROULEMENT	468

* TRADUCTION NON DISPONIBLE AU MOMENT DE LA PUBLICATION

TABLE DES MATIÈRES

Désignation	Page
CIRCUIT DE DIRECTION ET DE FREIN	469
FREIN DE MANOEUVRE (ASS)	469
COMMANDE DE POIGNÉE (ASS)	471
COMMANDE DE FREIN DE STATIONNEMENT (ASS)	472
COMMANDE DE DIRECTION (ASS)	474
COMMANDE DE DIRECTION ET BOITE DE VITESSES	476
ENTRAÎNEMENT DE DIRECTION DIFFÉRENTIELLE (ASS)	480
ENTRAÎNEMENT DE DIRECTION (ASS)	482
FILTRE A HUILE (ASS)	483
CANALISATIONS DE DIRECTION (ASS)	485
COLLECTEUR ET SOUPAPE (ASS)	488
PÉDALE DE RÉGULATEUR ET DE FREIN (ASS)	490
SOUPAPE DE DIRECTION ET FREIN ET MONTAGE (ASS)	493
CLAPET DE DECHARGE (ASS)	494
SOUPAPE - SOLÉNOÏDE (ASS)	497
CIRCUIT HYDRAULIQUE	499
ACCUMULATEUR HYDRAULIQUE (ASS)	499
MECANISME DE COMMANDE DE POMPE (ASS)	501
COMMANDE ET MONTAGE (ASS)	502
COMMANDE DE DOUBLE DEVERS (VERSION)	503
VERSION DE COMMANDE HYDRAULIQUE D'EXTRACTEUR DE BROCHE	504
COMMANDE HYDRAULIQUE (VERSION)	506
COMMANDE DE POIGNÉE (ASS)	507
COMMANDE D'EQUIPEMENT (ASS)	511
PALONNIER - GROUPE DE COMMANDE (ASS)	513
REFROIDISSEUR D'HUILE HYDRAULIQUE ET MONTAGE (ASS)	521
COUVERCLE DE RÉSERVOIR HYDRAULIQUE	522
VÉRIN DE LEVAGE ET CANALISATIONS (ASS)	523
VÉRIN DE RIPPER ET CANALISATIONS (ASS)	529
VÉRIN D'INCLINAISON (VERSION)	530
VÉRIN DE LEVAGE (ASS)	531
VERIN DE RIPPER (ASS)	535
VERIN D'EXTRACTEUR DE BROCHE DE RIPPER (ASS)	539
VERIN D'INCLINAISON DE RIPPER (ASS)	540
VÉRIN D'INCLINAISON (ASS)	544
TÊTE DE POMPE (ASS)	550
VERSION HYDRAULIQUE	552
CANALISATIONS HYDRAULIQUES DE VENTILATEUR (ASS)	553
CANALISATIONS DE VÉRIN DE LEVAGE (ASS)	559
CANALISATIONS D'EXTRACTEUR DE BROCHE (ASS)	561
CANALISATIONS DE POMPE (ASS)	564
CANALISATIONS DU RIPPER (ASS)	568
CANALISATIONS DU VÉRIN D'INCLINAISON (ASS)	572
COLLECTEUR - COMMANDE (ASS)	580
COLLECTEUR HYDRAULIQUE (ASS)	583
GROUPE DE MOTEUR A PISTONS	584
MONTAGE DE VÉRIN (ASS)	587
BOUCHON-DISTRIBUTEUR (ASS)	588
POMPE A ENGRENAGES (ASS)	589
POMPE A PISTONS (ASS)	590
GROUPE DE ROTATION DE MOTEUR	597
GROUPE DE ROTATION DE POMPE	601
RÉSERVOIR HYDRAULIQUE ET FILTRE (ASS)	605
DISTRIBUTEUR ET MONTAGE (ASS)	609
COMMANDE PRINCIPALE DE SOUPAPE ET MONTAGE (ASS)	611
DISTRIBUTEUR 4 ÉLÉMENTS (ASS)	612
CLAPET DE DÉCHARGE HYDRAULIQUE (ASS)	618
CLAPET DE RETENUE (ENS)	619
DISTRIBUTEUR (ASS)	623
VANNE DE RINÇAGE (ASS)	634
SOUPAPE RÉDUCTRICE DE PRESSION (ASS)	635
SOUPAPE DE COMPENSATION DE PRESSION (ASS)	636
DISTRIBUTEUR DE POMPE (ASS)	637
SOUPAPE D'ABAISSEMENT RAPIDE (ASS)	642
CLAPET DE DECHARGE (ASS)	644
VANNE PILOTE (ASS)	649
SOUPAPE - SOLÉNOÏDE (ASS)	650
ÉQUIPEMENTS	657
ENS. POUTRE	657
VERSION DE BULLDOZER	659
LAME DE BULLDOZER SEMI-UNIVERSELLE (VERSION)	660
LAME DE BULLDOZER UNIVERSELLE (VERSION)	663

* TRADUCTION NON DISPONIBLE AU MOMENT DE LA PUBLICATION

TABLE DES MATIÈRES

Désignation	Page
STABILISATEUR - BRAS DE POUSSEE (ASS)	666
MODIFICATION -BULLDOZER	668
BRAS DE POUSSÉE (ASS)	669
STABILISATEUR DU BRAS DE POUSSEE (ASS)	671
TOURILLON DE BULLDOZER (ASS)	672
OUTILS DE TRAVAIL	675
LAME DE COUPE SEMI-UNIVERSELLE (ASS)	675
LAME ET BORD UNIVERSELS (ASS)	677
LAME SEMI-UNIVERSELLE (ENS)	680
LAME UNIVERSELLE (ENS)	685
LAME SEMI-UNIVERSELLE (ASS)	690
LAME UNIVERSELLE (ASS)	691
EMBOUT ET LAME DE COUPE (ASS)	692
BATI DE RIPPER (ASS)	696
CANALISATIONS DE TREUIL (ASS)	700
MONTAGE DE RIPPER (ASS)	703
PLAQUE D'USURE (ASS)	705
EXTRACTEUR DE BROCHE (VERSION)	707
EXTRACTEUR DE BROCHE (ASS)	708
RIPPER (VERSION)	711
RIPPER (ASS)	714
DENT DE RIPPER (ASS)	718
DISTRIBUTEUR DE TREUIL (ASS)	723
POSTE DE CONDUITE	725
REGLAGE DE SIEGE (ASS)	725
*AIR COMPRESSOR GP-SEAT	726
SIÈGE - COMPRESSEUR D'AIR (ASS)	727
CLIMATISEUR (VERSION)	728
VENTILATEUR SOUFFLANT DE CABINE (ASS)	729
COFFRE DE RANGEMENT (ASS)	731
SUPPORT - MONTAGE (ASS)	732
CABINE (VERSION)	736
CABINE (VERSION POUR TEMPS FROID)	738
CABINE (ASS)	739
COMPRESSEUR DE REFRIGERANT (ASS)	742
CONDENSEUR DE RÉFRIGÉRANT	744
CONSOLE AV (ASS)	746
CONSOLE DE CONDUITE (ASS)	747
COMMANDE ET MONTAGE DE PÉDALE (ASS)	749
COUVERCLE - CABINE (ASS)	751
PORTIÈRE DE CABINE (ASS)	753
FILTRE À AIR DE CABINE (ASS)	757
CHAUFFAGE DE CABINE (ASS)	759
SUSPENSION DE SIEGE - CARTER (ASS)	765
MONTAGE DE RADIO (ASS)	768
CABINE - REVÊTEMENT (ASS)	770
CANALISATIONS DE CLIMATISEUR (ASS)	772
CANALISATIONS DE CHAUFFAGE (ASS)	778
RÉTROVISEUR (ASS)	780
MONTAGE DE CABINE (ASS)	782
MONTAGE DE GROUPE DE COMMANDE	783
MONTAGE DE MONITEUR (ASS)	784
MONTAGE DE RADIO (ASS)	785
MONTAGE DU TOIT ROPS (ASS)	787
POSTE DE CONDUITE (VERSION)	788
COUVERCLE INFÉRIEUR-DOSSIER (ASS)	790
PANNEAU DE COMMANDE (ASS)	793
PLATE-FORME (VERSION)	795
PLATE-FORME (ASS)	796
SIÈGE INCLINABLE (ASS)	799
TOIT ROPS (ASS)	800
TOIT ROPS (ENS)	801
GRILLE DE PROTECTION (ASS)	802
SIÈGE ET MONTAGE (ASS)	803
SIÈGE (ASS)	804
SIÈGE AVEC SUSPENSION (ASS)	812
MARCHEPIED ARRIÈRE	815
SIÈGE AVEC SUSPENSION (ASS)	817
RÉSERVOIR - LAVE-GLACE (ASS)	821
LAVE-GLACE - VITRE (ASS)	824
*WINDOW GP-CAB	824
VITRE DE CABINE (ASS)	825
ESSUIE-GLACE (ASS)	826
PIVOT D'ESSUIE-GLACE (ASS)	831
MATÉRIEL ET FOURNITURES D'ENTRETIEN	833
PLAQUE SIGNALÉTIQUE (ASS)	833
PEINTURE (ASS)	834
PLAQUES SIGNALETIQUES ET AUTOCOLLANTS (ASS)	834
INDEX DE NUMÉROS DE PIÈCES	B1

* TRADUCTION NON DISPONIBLE AU MOMENT DE LA PUBLICATION

CONTENIDO

Nombre	Página
INFORMACIÓN GENERAL	A33
ALTERNATIVAS DE REPARACIÓN	A47
ADITIVOS DE REFRIGERANTE SUPLEMENTARIOS	A52
PIEZAS DE MANTENIMIENTO	A65
INDICE	A107
CONFIGURACIÓN DE MÁQUINA	1
CHASIS (CONFIG)	1
CONFIGURACIÓN PARA CLIMA FRÍO	1
CONFIGURACIÓN GENERAL DEL TRACTOR	2
CONFIGURACION PARA MINERIA	2
MODIFICACIÓN DE LA CONFIGURACIÓN PARA VIRUTAS DE MADERA	2
CONFIGURACION DE APILAMIENTO	3
CONFIGURACIÓN DE ELIMINACIÓN DE BASURAS	3
CONFIGURACIÓN DE MOTOR	6
MOTOR COMPLETO (CONFIG)	6
MOTOR - NÚCLEO (CONFIG)	8
CONFIGURACIÓN DE INSTALACIÓN DEL MOTOR	9
MOTOR BÁSICO	10
BASE DE LA TAPA DE VÁLVULAS Y MAZO DE CABLES DE INYECTOR (GR)	10
ÁRBOL DE LEVAS (GR)	12
TAPA DEL BLOQUE MOTOR (GR)	13
TAPA DE LA CAJA DE VOLANTE (GR)	14
TAPA DE LA CAJA DELANTERA (GR)	16
TAPA DEL INSONORIZADOR (GR)	17
TAPA DEL MECANISMO DE VÁLVULAS (GR)	18
CIGÜEÑAL (GR)	29
BLOQUE MOTOR (CONJ)	30
BLOQUE MOTOR (GR)	32
CULATA DE CILINDROS (CONJ)	34
CULATA DE CILINDROS (GR)	39
AMORTIGUADOR Y POLEA (GR)	41
CAJA DELANTERA - TORNILLERÍA DE LA (GR)	42
TORNILLERÍA DEL COLECTOR DEL CÁRTER (GR)	45
TORNILLERÍA DEL MECANISMO DE VÁLVULAS (GR)	46
VOLANTE (GR)	47
ENGRANAJE DE ARBOL DE LEVAS (GR)	48
ENGRANAJE DELANTERO (GR)	49
ENGRANAJE TRASERO (GR)	52
VOLANTE - CAJA DE (GR)	54
CAJA DELANTERA (GR)	56
CÁNCAMOS DE LEVANTAMIENTO DEL MOTOR (GR)	60
MONTAJE DEL MOTOR (GR)	62
CÁRTER - COLECTOR DEL (GR)	64
PISTÓN Y BIELA (GR)	68
TAPÓN DEL BLOQUE MOTOR (GR)	71
TAPÓN DE CULATA (GR)	73
BALANCÍN (GR)	74
MOTOR - SOPORTE DEL (GR)	76
INSONORIZADOR (CONFIG)	77
MUÑÓN DEL MOTOR (GR)	78
MECANISMO DE VÁLVULAS (GR)	79
SISTEMA DE LUBRICACIÓN	80
RESPIRADERO (GR)	80
TORNILLERÍA DE MONT. DE LA BOMBA DE ACEITE (GR)	81
TUBO DE LLENADO DE ACEITE (GR)	82
FILTRO DE ACEITE DEL MOTOR (GR)	83
ESCAPE DE GASES (GR)	86
INDICADOR DEL NIVEL DE ACEITE (VARILLA) (GR)	87
TUBERÍAS DE ACEITE DEL MOTOR (GR)	88
TURBOCOMPRESOR - TUBERÍAS DE ACEITE DEL (GR)	89
MONTAJE DEL GRUPO DE ELIMINACIÓN DE EMANACIONES	91
CAMBIO RÁPIDO DE ACEITE (GR)	92
PRELUBRICACION DEL MOTOR (CONFIG)	94
BOMBA DE ACEITE DEL MOTOR (GR)	97
SISTEMA DE ENFRIAMIENTO	100
SUCCIÓN - VENTILADOR DE (GR)	100
TUBERÍAS DEL AGUA (GR)	103
BOMBA DE AGUA (GR)	111
RADIADOR (CONFIG)	113
RADIADOR (GR)	114
INTERRUPTOR DE FLUJO (GR)	116
TANQUE DE REFRIGERANTE (GR)	117
TANQUE DEL AGUA (GR)	118
SISTEMA DE ADMISIÓN Y ESCAPE DE AIRE	120
POSENFRIADOR DE AIRE (GR)	120

* NO HAY TRADUCCION DISPONIBLE EN EL MOMENTO DE LA IMPRESION

CONTENIDO

Nombre	Página
FILTRO DE AIRE (GR)	121
EXPULSOR DE POLVO (GR)	123
AIRE - TUBERÍAS DE (GR)	124
MÚLTIPLE DE ESCAPE (GR)	127
MONTAJE DEL FILTRO DE AIRE (GR)	128
SILENCIADOR (GR)	129
ANTEFILTRO (CONFIG)	130
ANTEFILTRO (GR)	132
MULTIPLE - PROTECTOR DEL	134
TURBOCOMPRESOR (GR)	135
SISTEMA DE COMBUSTIBLE	136
ADAPTADOR DE LLENADO RÁPIDO DE COMBUSTIBLE (GR)	136
ADAPTADOR DEL MANDO DE LA BOMBA	143
FILTRO Y TUBERÍAS DE COMBUSTIBLE (GR)	144
FILTRO DE COMBUSTIBLE (GR)	148
FILTRO DE COMBUSTIBLE Y SEPARADOR DE AGUA (GR)	149
JUEGO DE SELLOS	150
TUBERÍAS DE COMBUSTIBLE (GR)	151
GRUPO Y MONTAJE DE LINEA DE COMBUSTIBLE	154
BOMBA DE TRANSFERENCIA DE COMBUSTIBLE Y MONTAJE (GR)	155
BOMBA DE INYECCIÓN DE COMBUSTIBLE (GR)	156
GRUPO DE SELLO	159
COMBUSTIBLE - TANQUE DE (GR)	162
VÁLVULA DE RETENCIÓN (GR)	167
SEPARADOR DE AGUA Y BOMBA DE CEBADO DE COMBUSTIBLE (GR)	169
SISTEMA ELÉCTRICO Y DE ARRANQUE	170
ALARMA (GR)	170
CARGA - ALTERNADOR DE (GR)	171
BATERÍA Y CABLES (GR)	177
BLOQUE DE EMPALME (GR)	184
BLOQUE DE POTENCIA (GR)	185
CONEXIÓN ELÉCTRICA (GR)	186
CONTROL ELECTRÓNICO Y MONTAJE (GR)	187
CONTROL ELECTRÓNICO DEL MOTOR Y MONTAJE	188
CONVERTIDOR ELÉCTRICO (GR)	189
CONFIGURACIÓN ELECTRÓNICA DE LA MÁQUINA	190
GRUPO ELECTRONICO-COMUNICACION	190
IMPLEMENTOS (GR ELECTRÓNICO)	190
ELECTRONICA DE MONITOR (GR)	191
TREN DE FUERZA-GRUPO ELECTRÓNICO	191
AGUA DE LAS CAMISAS - CALENTADOR DEL (GR)	192
CALENTADOR DE LA MÁQUINA (GR)	194
INSTALALCIÓN (CONFIG) -CONTROL DE GRADO	196
INSTALACION DE COMUNICACION (GR)	197
GRUPO DE INSTALACION, CONTROL DE GRADO	199
REFLECTOR (GR)	200
LUCES DE REFLECTOR (GR)	205
LUZ DE BALIZA (GR)	222
GRUPO DE MONTAJE-CONECTOR	224
MONTAJE DEL SENSOR (GR)	225
PANEL DE FUSIBLES (GR)	226
*PLUG GP-CONNECTOR	230
SENSOR Y MONTAJE (GR)	231
SENSOR DEL MOTOR (GR)	233
SENSOR DE NIVEL DE COMBUSTIBLE (GR)	235
DETECTOR DE POSICIÓN (SISTEMA DE COMBUST.) (GR)	236
SENSOR DE PRESIÓN (GR)	238
SENSOR DE VELOCIDAD (GR)	247
SENSOR DE TEMPERATURA (GR)	252
AUXILIAR DE ARRANQUE CON ÉTER (GR)	255
ARRANQUE EN TIEMPO FRIO (CONFIG)	256
MOTOR DE ARRANQUE ELÉCTRICO (GR)	259
INTERRUPTOR DE DERIVACIÓN	267
DISYUNTOR (GR)	268
INTERRUPTOR LÍMITE (GR)	272
INTERRUPTOR MAGNÉTICO (GR)	273
INTERRUPTOR DE PRESIÓN (GR)	275
GRUPO DE INTERRUPTOR-BOTON PULSADOR	276
INTERRUPTOR DE VOLQUETE (GR)	277
GRUPO DE VÁLVULA-ARRANQUE CON ÉTER	278
CABLES DE LA CABINA (GR)	279
CABLES DEL CONTROL ELECTRÓNICO (GR)	281
CABLES DEL MOTOR (GR)	283
CABLE GR-GRADO DE CONTROL	287
CABLES DE LA PLATAFORMA (GR)	290
CABLES DE INYECTOR (GR)	294

* NO HAY TRADUCCION DISPONIBLE EN EL MOMENTO DE LA IMPRESION

CONTENIDO

Nombre	Página
TREN DE FUERZA	295
EJE (GR)	295
CAJA Y PIEZAS DE LOS PLANETARIOS	296
CONTROL HIDRÁULICO DE LA TRANSMISIÓN (GR)	299
ENFRIADOR DE ACEITE DE LA TRANSMISIÓN (GR)	301
ACOPLAMIENTO DE BOMBA (GR)	302
DRENAJE DE SEGURIDAD ECOLÓGICA (GR)	303
MANDO DE BOMBA (GR)	304
FILTRO DE ACEITE (GR)	305
MANDO FINAL (GR)	307
ENGRANAJE DE CORONA Y PIÑÓN (GR)	319
PROTECTOR DEL EJE IMPULSOR (GR)	321
PROTECTOR DEL TREN DE FUERZA (GR)	322
TUBERÍAS DE ACEITE DEL TREN DE FUERZA (GR)	326
MONTAJE DE LA TRANSMISIÓN (GR)	330
TRANSMISIÓN PLANETARIA (GR)	331
TREN DE FUERZA (CONFIG)	335
BOMBA DE ENGRANAJES (GR)	336
REJILLA MAGNÉTICA (GR)	340
SEGMENTO DE RUEDA MOTRIZ (GR)	341
EJE DE MANDO (GR)	342
JUNTA DESLIZANTE (GR)	343
CONVERTIDOR DE PAR (GR)	344
TRANSMISION (CONFIG)	348
JUNTA UNIVERSAL (GR)	349
VÁLVULA DE CONTROL (GR)	350
VÁLVULA DE MODULACIÓN (GR)	352
PRIORIDAD - VÁLVULA DE (GR)	354
VÁLVULA DE ALIVIO (GR)	356
VÁLVULA DE SOLENOIDE (GR)	358
VÁLVULA DE CONTROL DE LA TRANSMISIÓN (GR)	359
BASTIDOR Y CAJA	363
CAJA Y BASTIDOR (GR)	363
CONTRAPESO (GR)	365
TAPA DEL MUÑÓN (GR)	370
PUERTA DE ACCESO (GR)	371
BARRA DE TIRO (GR)	375
COMPARTIMIENTO DEL MOTOR (GR)	377
COMPARTIMIENTO DEL LADO IZQUIERDO (GR)	384
COMPARTIMIENTO POSTERIOR (GR)	387
COMPARTIMIENTO DEL LADO DERECHO (GR)	388
GUARDABARROS (GR)	391
BASTIDOR Y COJINETE (CONJ)	395
PROTECTOR DE MANDO FINAL (GR)	397
PROTECTOR DE LA RUEDA GUÍA (CONFIG)	397
PROTECTOR INFERIOR (GR)	398
PROTECTOR DE LOS MANDOS FINALES (GR)	403
PROTECTOR DEL TANQUE DE COMBUSTIBLE (GR)	404
PROTECTOR DE RUEDA GUÍA	405
PROTECTOR DEL EJE PIVOTE (GR)	406
PROTECTOR DEL RADIADOR (GR)	407
PROTECTOR CONTRA ROCAS (GR)	409
PROTECTOR DE SELLO (GR)	411
PANEL DE INSONORIZACIÓN (GR)	412
TREN DE RODAJE	413
BARRA LIMPIADORA(CONFIG)	413
BARRA COMPENSADORA (CONJ)	416
BARRA DEFLECTORA (CONJ)	417
BARRA COMPENSADORA (GR)	420
BARRA LIMPIADORA (GR)	424
COJINETE	425
TAPA DE RUEDA GUÍA (GR)	427
TAPA DE RODILLO INFERIOR	429
BASTIDOR TELESCÓPICO DEL RESORTE TENSOR (GR)	430
RUEDA GUÍA DE CADENA (GR)	434
ESLABÓN DE CADENA (CONJ)	437
LUBRICACIÓN DE EJE PIVOTE (GR)	439
RODILLO Y RUEDA GUIA (CONFIG)	441
RODILLO DE CADENA (CONFIG)	442
RODILLO SUPERIOR DE CADENAS (CONFIG)	443
RODILLOS DE PESTAÑA DOBLE (GR)	444
RODILLOS DE PESTAÑA SIMPLE (GR)	446
ZAPATA DE CADENA	449
SOPORTE BASCULANTE (GR)	455
RESORTE TENSOR Y AJUSTADOR DE LA CADENA (GR)	457
CADENAS (GR)	459
TUBERIA DEL BASTIDOR DE RODILLO (CONJ)	467
TREN DE RODAJE (CONFIG)	468
SISTEMA DE FRENOS Y DIRECCIÓN	469
FRENO DE SERVICIO (GR)	469
CONTROL DE MANIJA (GR)	471

* NO HAY TRADUCCION DISPONIBLE EN EL MOMENTO DE LA IMPRESION

CONTENIDO

Nombre	Página
CONTROL DEL FRENO DE ESTACIONAMIENTO	472
CONTROL DE DIRECCIÓN (GR)	474
CONTROL DE DIRECCIÓN Y TRANSMISIÓN (GR)	476
MANDO DE DIRECCION DE DIFERENCIAL (GR)	480
MANDO DE DIRECCION (GR)	482
FILTRO DE ACEITE (GR)	483
TUBERÍAS DE DIRECCIÓN (GR)	485
MÚLTIPLE Y VÁLVULA (GR)	488
REGULADOR Y PEDAL DEL FRENO (GR)	490
VÁLVULA Y MONTAJE DE DIRECCIÓN Y FRENO (GR)	493
VÁLVULA DE ALIVIO (GR)	494
VÁLVULA DE SOLENOIDE (GR)	497
SISTEMA HIDRÁULICO	499
ACUMULADOR HIDRAULICO (GR)	499
ACTIVADOR DE LA BOMBA (GR)	501
CONTROL Y MONTAJE (GR)	502
CONTROL DE INCLINACIÓN DUAL (CONFIG)	503
CONTROL HIDRÁULICO DEL EXTRACTOR DE PASADORES	504
CONTROL HIDRÁULICO (CONFIG)	506
CONTROL DE MANIJA (GR)	507
CONTROL DE IMPLEMENTOS (GR)	511
PALANCA UNIVERSAL DE CONTROL (GR)	513
ENFRIADOR DE ACEITE HIDRÁULICO Y MONTAJE (GR)	521
TAPA DEL TAPÓN DEL TANQUE HIDRÁULICO (GR)	522
CILINDRO DE LEVANTAMIENTO Y TUBERÍAS (GR)	523
CILINDRO DE DESGARRADOR Y TUBERÍAS (GR)	529
CILINDRO DE INCLINACIÓN (GR)	530
CILINDRO DE LEVANTAMIENTO (GR)	531
CILINDRO DE DESGARRADOR (GR)	535
CILINDRO DEL EXTRACTOR DE PASADOR DEL DESGARRADOR (GR)	539
CILINDRO DE INCLINACION DEL DESGARRADOR (GR)	540
INCLINACIÓN HORIZONTAL - CILINDRO DE (GR)	544
CABEZA DE BOMBA (GR)	550
HIDRÁULICA (CONFIG)	552
TUBERÍAS HIDRÁULICAS DEL VENTILADOR (GR)	553
CILINDRO DE LEVANTAMIENTO - TUBERÍAS DEL (GR)	559
TUBERIAS DE EXTRACTOR DE PASADORES (GR)	561
TUBERÍAS DE CILINDRO DE EXTRACTOR DE PASADORES	562
BOMBA - TUBERÍAS DE (GR)	564
TUBERÍAS DEL DESGARRADOR (GR)	568
TUBERÍAS DEL CILINDRO DE INCLINACIÓN (GR)	572
CONTROL DEL MULTIPLE (GR)	580
MULTIPLE HIDRAULICO (GR)	583
PISTONES DEL MOTOR (GR)	584
MONTAJE DE CILINDRO (GR)	587
TAPON DE VALVULA DE CONTROL (GR)	588
BOMBA DE ENGRANAJES (GR)	589
BOMBA DE PISTONES (GR)	590
GRUPO DE ROTACIÓN DEL MOTOR (GR)	597
GRUPO GIRATORIO DE BOMBA	601
TANQUE Y FILTRO HIDRÁULICOS (GR)	605
VÁLVULA DE CONTROL Y MONTAJE (GR)	609
MONTAJE Y VALVULA DEL CONTROL PRINCIPAL (GR)	611
GRUPO DE 4 VÁLVULAS HIDRÁULICAS	612
VÁLVULA DE ALIVIO - DESCONEXIÓN (GR)	618
VÁLVULA DE RETENCIÓN (GR)	619
VÁLVULA DE CONTROL (GR)	623
VÁLVULA DE DESCARGA (GR)	634
VÁLVULA REDUCTORA DE PRESIÓN (GR)	635
VÁLVULA COMPENSADORA DE PRESIÓN (GR)	636
VALVULA DE CONTROL DE LA BOMBA (GR)	637
VÁLVULA DE CAÍDA RÁPIDA (GR)	642
VÁLVULA DE ALIVIO (GR)	644
VÁLVULA DE LANZADERA (GR)	649
VÁLVULA DE SOLENOIDE (GR)	650
IMPLEMENTOS	657
VIGA (CONJ)	657
HOJA TOPADORA (CONFIG)	659
HOJA TOPADORA SEMIUNIVERSAL	660
HOJA TOPADORA UNIVERSAL (CONFIG)	663

* NO HAY TRADUCCION DISPONIBLE EN EL MOMENTO DE LA IMPRESION

CONTENIDO

Nombre	Página
ESTABILIZADOR DEL BRAZO DE EMPUJE (GR)	666
MODIFICACIÓN DEL TRACTOR TOPADOR (CONFIG)	668
BRAZO DE EMPUJE (GR)	669
ESTABILIZADOR DEL BRAZO DE EMPUJE (GR)	671
MUÑÓN DE LA HOJA TOPADORA (GR)	672
HERRAMIENTAS	675
HOJA Y CUCHILLA SEMIUNIVERSAL (GR)	675
GRUPO DE HOJA Y CUCHILLA UNIVERSAL	677
HOJA SEMIUNIVERSAL (CONJ)	680
HOJA UNIVERSAL (CONJ)	685
HOJA SEMIUNIVERSAL (GR)	690
HOJA UNIVERSAL (GR)	691
GRUPO DE CANTONERA Y CUCHILLA	692
BASTIDOR DEL DESGARRADOR (GR)	696
TUBERÍAS DEL MALACATE (GR)	700
MONTAJE DEL DESGARRADOR (GR)	703
PLANCHA DE DESGASTE (GR)	705
EXTRACTOR DE PASADOR (CONFIG)	707
EXTRACTOR DE PASADOR (GR)	708
DESGARRADOR (CONFIG)	711
DESGARRADOR (GR)	714
DIENTE DE DESGARRADOR (GR)	718
VÁLVULA DE CONTROL DEL MALACATE (GR)	723
CABINA DEL OPERADOR	725
AJUSTADOR DEL ASIENTO (GR)	725
*AIR COMPRESSOR GP-SEAT	726
COMPRESOR DE AIRE DEL ASIENTO (GR)	727
ACONDICIONADOR DE AIRE (CONFIG)	728
VENTILADOR SOPLADOR DE LA CABINA (GR)	729
CAJA DE ALMACENAMIENTO	731
SOPORTE DE MONTAJE (GR)	732
CABINA (CONFIG)	736
CABINA PARA TIEMPO FRÍO (CONFIG)	738
CABINA (GR)	739
COMPRESOR DE REFRIGERANTE (GR)	742
CONDENSADOR DE REFRIGERANTE (GR)	744
CONSOLA DELANTERA (GR)	746
CONSOLA DEL OPERADOR (GR)	747
PEDAL-GRUPO DE CONTROL Y MONTAJE	749
TAPA DE LA CABINA (GR)	751
PUERTA DE CABINA	753
FILTRO DE AIRE DE LA CABINA (GR)	757
CALEFACCIÓN DE LA CABINA (GR)	759
CAJA DE LA SUSPENSIÓN DEL ASIENTO (GR)	765
INSTALACIÓN DE RADIO (GR)	768
REVESTIMIENTO DE LA CABINA (GR)	770
TUBERÍAS DE ACONDICIONADOR DE AIRE (GR)	772
TUBERÍAS DE LA CALEFACCIÓN (GR)	778
RETROVISOR (GR)	780
GRUPO DE MONTAJE DE LA CABINA	782
MONTAJE DE CONTROL (GR)	783
MONTAJE GR-MONITOR	784
MONTAJE DE LA RADIO (GR)	785
MONTAJE DE LA ESTRUCTURA ROPS (GR)	787
COMPARTIMIENTO DEL OPERADOR (CONFIG)	788
SOPORTE DEL RESPALDO (GR)	790
TABLERO DE CONTROL (GR)	793
PLATAFORMA (CONFIG)	795
PLATAFORMA (GR)	796
RECLINACION DE ASIENTO (GR)	799
ESTRUCTURA ROPS (GR)	800
SISTEMA ROPS (CONJ)	801
REJILLA PROTECTORA (GR)	802
ASIENTO Y MONTAJE (GR)	803
ASIENTO (GR)	804
SUSPENSIÓN - ASIENTO CON (GR)	812
PASO (CONJ)	815
ASIENTO CON SUSPENSIÓN (GR)	817
TANQUE DEL LAVAPARABRISAS (GR)	821
LAVAPARABRISAS DE LA VENTANA (GR)	824
*WINDOW GP-CAB	824
VENTANA DE LA CABINA (GR)	825
LIMPIAPARABRISAS DE LA VENTANA (GR)	826
PIVOTE DEL LIMPIADOR (GR)	831

* NO HAY TRADUCCION DISPONIBLE EN EL MOMENTO DE LA IMPRESION

CONTENIDO

Nombre	Página	Nombre	Página
EQUIPOS Y SUMINISTRO DE SERVICIOS	833		
ETIQUETA DE ADVERTENCIA (GR)	833		
PINTURA (GR)	834		
CALCOMANÍAS Y PLACAS DE IDENTIFICACIÓN (GR)	834		
INDICE DE NUMEROS DE PIEZA	B1		

* NO HAY TRADUCCION DISPONIBLE EN EL MOMENTO DE LA IMPRESION

ÍNDICE

Designação	Página
INFORMAÇÃO GERAL	A37
ALTERNATIVAS DE REPARO	A48
ADITIVOS SUPLEMENTARES DO LÍQUIDO ARREFECEDOR	A53
PEÇAS DE MANUTENÇÃO	A71
ÍNDICE	A121
MÁQUINA - ARRANJO	1
CHASSI	1
CLIMA FRIO - ARRANJO	1
AR. GERAL - TRATOR	2
MINERAÇÃO	2
MODIFICAÇÃO - LASCA DE MADEIRA	2
PILHA DE MATERIAL	3
ATERRO SANITÁRIO	3
MOTOR - ARRANJO	6
MOTOR COMPLETO	6
MOTOR - NÚCLEO	8
GRUPO DE INSTALAÇÃO - MOTOR	9
MOTOR BÁSICO	10
GR. BÁSICO - TAMPA DAS VÁLVULAS E CHICOTE DE INJEÇÃO	10
EIXO-COMANDO DE VÁLVULA	12
TAMPA - BLOCO DO MOTOR	13
TAMPA - CAIXA DO VOLANTE	14
TAMPA - CAIXA DIANTEIRA	16
TAMPA - REDUÇÃO DE RUÍDOS	17
TAMPA - MECANISMO DAS VÁLVULAS	18
VIRABREQUIM	29
BLOCO DO MOTOR	30
CABEÇOTE DO MOTOR	34
AMORTECEDOR DE VIBRAÇÕES E POLIA	41
FIXADORES - CAIXA DIANTEIRA	42
FIXADORES - CÁRTER DO ÓLEO	45
FIXADORES - MECANISMO DAS VÁLVULAS	46
VOLANTE DO MOTOR	47
ENGRENAGEM - EIXO-COMANDO DE VÁLVULAS	48
ENGRENAGENS DE DISTRIBUIÇÃO	49
ENGRENAGENS DE COMANDO TRASEIRO	52
CAIXA DO VOLANTE DO MOTOR	54
CAIXA DIANTEIRA	56
LEVANTAMENTO DO MOTOR	60
MONTAGEM - MOTOR	62
CÁRTER DO ÓLEO DO MOTOR	64
PISTÃO E BIELA	68
BUJÃO DO BLOCO DO CILINDRO	71
BUJÃO - CABEÇA DO CILINDRO	73
BALANCIM	74
SUPORTE DO MOTOR	76
RUÍDO - ARRANJO PARA SUPRESSÃO	77
MUNHÃO DO MOTOR	78
MECANISMO DAS VÁLVULAS	79
SISTEMA DE LUBRIFICAÇÃO	80
RESPIRO	80
FIXADORES - BOMBA DE ÓLEO DO MOTOR	81
BOCAL DE ENCHIMENTO DE ÓLEO DO MOTOR	82
FILTRO - ÓLEO DO MOTOR	83
ELIMINAÇÃO DE VAPORES DO CÁRTER	86
INDICADOR - NÍVEL DO ÓLEO (VARETA)	87
TUBOS - ÓLEO DO MOTOR	88
TUBOS - ÓLEO DO TURBOALIMENTADOR	89
MONTAGEM - ELIMINAÇÃO DE VAPORES	91
ÓLEO - ARRANJO PARA TROCA RÁPIDA	92
PRÊ-LUBRIFICAÇÃO	94
BOMBA DE ÓLEO - MOTOR	97
SISTEMA DE ARREFECIMENTO	100
VENTILADOR DE SUCÇÃO	100
TUBOS - ÁGUA	103
BOMBA DE ÁGUA	111
RADIADOR	113
INTERRUPTOR - FLUXO	116
TANQUE - LÍQUIDO ARREFECEDOR	117
TANQUE DE ÁGUA	118
SISTEMA DA ADMISSÃO DE AR E DE ESCAPE	120
PÓS-ARREFECEDOR DA ADMISSÃO DE AR	120
PURIFICADOR DE AR	121
EJETOR DE POEIRA	123
TUBOS - AR	124
COLETOR DE ESCAPE	127
MONTAGEM - PURIFICADOR DE AR	128
SILENCIADOR	129
PRÉ-PURIFICADOR	130

* TRADUÇÃO NÃO DISPONÍVEL NO MOMENTO DA IMPRESSÃO

ÍNDICE

Designação	Página
BLINDAGEM DO COLETOR	134
TURBOALIMENTADOR	135
SISTEMA DE COMBUSTÍVEL	136
ADAPTADOR - ABASTECIMENTO RÁPIDO DE COMBUSTÍVEL	136
ADAPTADOR DO COMANDO DA BOMBA	143
FILTRO E TUBOS - COMBUSTÍVEL	144
FILTRO - COMBUSTÍVEL	148
FILTRO DE COMBUSTÍVEL E SEPARADOR DE ÁGUA	149
JOGO DE RETENTOR	150
TUBOS - COMBUSTÍVEL	151
MONTAGEM DO TUBO DE COMBUSTÍVEL	154
BOMBA E MONTAGEM - TRANSFERÊNCIA DE COMBUSTÍVEL	155
BOMBA DE INJEÇÃO DO COMBUSTÍVEL	156
VEDADOR	159
TANQUE DE COMBUSTÍVEL	162
VÁLVULA DE RETENÇÃO	167
SEPARADOR DE ÁGUA E BOMBA DE ESCORVA DE COMBUSTÍVEL	169
SISTEMA ELÉTRICO E DE PARTIDA	170
ALARME	170
ALTERNADOR DE CORRENTE	171
BATERIA E CABOS / FIOS ELÉTRICOS	177
BLOCO DE JUNÇÃO	184
BLOCO - FORÇA	185
CONEXÃO - ELÉTRICA	186
CONTROLE ELETRÔNICO E MONTAGEM	187
CONTROLE ELETRÔNICO E MONTAGEM - MOTOR	188
CONVERSOR ELÉTRICO	189
SISTEMA ELETRÔNICO - MÁQUINA	190
SISTEMA ELETRÔNICO-COMUNICAÇÃO	190
SIST. ELETRÔNICO - ACESSÓRIO	190
SISTEMA ELETRÔNICO - MONITOR	191
SISTEMA ELETRÔNICO - TREM DE FORÇA	191
AQUECEDOR DA ÁGUA DO MOTOR	192
AQUECEDOR - MÁQUINA	194
INSTALACAO - CONTROLE DA GRELHA	196
INSTALAÇÃO-COMUNICAÇÃO	197
INSTALAÇÃO-CONTROLE DA INCLINAÇÃO	199
LÂMPADA - FAROL	200
SISTEMA DE ILUMINAÇÃO - FARÓIS	205
SIST. DE ILUMINAÇÃO - PISCA-PISCA GIRATÓRIO DE ADVERTÊNCIA	222
MONTAGEM-CONECTOR	224
MONTAGEM - SENSOR	225
PAINEL DE FUSÍVEIS	226
BUJÃO - CONECTOR	230
SENSOR E MONTAGEM	231
SENSOR DO MOTOR	233
SENSOR - NÍVEL DE COMBUSTÍVEL	235
EMISSOR - POSIÇÃO	236
SENSOR - PRESSÃO	238
SENSOR DE VELOCIDADE	247
SENSOR - TEMPERATURA	252
AUXILIAR DE PARTIDA A ÉTER	255
PARTIDA EM TEMPO FRIO - ARRANJO	256
MOTOR ELÉTRICO DE PARTIDA	259
INTERRUPTOR DE DERIVAÇÃO	267
CHAVE GERAL	268
INTERRUPTOR - LIMITE	272
INTERRUPTOR - MAGNÉTICO	273
INTERRUPTOR - PRESSÃO	275
INTERRUPTOR-BOTÃO	276
INTERRUPTOR - BALANCIM	277
VALVULA - PARTIDA A ETER	278
CABOS/FIOS ELÉTRICOS - CABINE	279
CABOS/FIOS ELÉTRICOS - CONTROLE ELETRÔNICO	281
CABOS/FIOS ELÉTRICOS - MOTOR	283
FIACAO - CONTROLE DO NIVEL	287
CABOS/FIOS ELÉTRICOS - PLATAFORMA	290
CABOS/FIOS ELÉTRICOS - INJETOR	294
TREM DE FORÇA	295
EIXO	295
CARCAÇA DAS ENGRENAGENS PLANETÁRIAS E COMPONENTES	296
CONTROLE HIDRÁULICO DA TRANSMISSÃO	299
ARREFECEDOR DE ÓLEO DA TRANSMISSÃO	301
ACOPLAMENTO DA BOMBA	302
DRENO - ECOLOGIA	303
COMANDO DA BOMBA	304
FILTRO - ÓLEO	305
COMANDO FINAL	307
ENGRENAGEM-COROA E PINHÃO	319
PROTETOR - EIXO DE TRANSMISSÃO	321
PROTETOR - TREM DE FORÇA	322

* TRADUÇÃO NÃO DISPONÍVEL NO MOMENTO DA IMPRESSÃO

ÍNDICE

Designação	Página
TUBOS - ÓLEO DA TRANSMISSÃO	326
MONTAGEM - TRANSMISSÃO	330
ENGRENAGENS PLANETÁRIAS - TRANSMISSÃO	331
TREM DE FORÇA	335
BOMBA DE ENGRENAGENS	336
FILTRO - MAGNÉTICO	340
SEGMENTO DA RODA MOTRIZ	341
EIXO DE TRANSMISSÃO	342
JUNTA CORREDIÇA	343
CONVERSOR DE TORQUE	344
TRANSMISSÃO	348
JUNTA UNIVERSAL	349
VÁLVULA DE CONTROLE	350
VÁLVULA DE MODULAÇÃO	352
VÁLVULA DE PRIORIDADE	354
VÁLVULA DE ALÍVIO	356
VÁLVULA SOLENÓIDE	358
VÁLVULA DE CONTROLE - TRANSMISSÃO	359
CHASSI E CARROCERIA	363
CAIXA E CHASSI	363
CONTRAPESO	365
TAMPA - MUNHÃO	370
PORTA DE ACESSO	371
BARRA DE TRAÇÃO	375
COBERTURA DO MOTOR	377
COBERTURA - LADO ESQUERDO	384
COBERTURA TRASEIRA	387
COBERTURA - LADO DIREITO	388
PÁRA-LAMA	391
CHASSI E MANCAL	395
PROTETOR - COMANDO FINAL	397
PROTETOR - RODA-GUIA	397
PROTETOR INFERIOR	398
PROTETOR DO COMANDO FINAL	403
PROTETOR - TANQUE DE COMBUSTÍVEL	404
PROTETOR - RODA-GUIA	405
PROTETOR - EIXO PIVÔ	406
PROTETOR - RADIADOR	407
PROTETOR - ROCHA	409
GUIA - VEDADOR	411
PAINEL- REDUÇÃO DE RUÍDO	412
MATERIAL RODANTE	413
BARRA LIMPADORA DOS ROLOS	413
BARRA EQUALIZADORA	416
BARRA LIMPADORA DOS ROLOS	417
BARRA DE SUSPENSÃO	420
BARRA LIMPADORA DOS ROLOS	424
BRONZINA TIPO LUVA	425
TAMPA DA RODA-GUIA	427
TAMPA - ROLETE DAS ESTEIRAS	429
ARMAÇÃO TELESCÓPICA DA MOLA TENSORA	430
RODA-GUIA DAS ESTEIRAS	434
ELO DA ESTEIRA	437
EIXO PIVÔ - LUBRIFICAÇÃO	439
ROLETE E RODA-GUIA	441
ROLETE DAS ESTEIRAS	442
ROLETE SUPERIOR DA ESTEIRA	443
ROLETE DE ESTEIRA DE FLANGE DUPLO	444
ROLETE DE ESTEIRA DE FLANGE SIMPLES	446
SAPATA DA ESTEIRA DO TRATOR	449
SUSPENSÃO - TRUQUE	455
AJUSTADOR DE ESTEIRAS E MOLA TENSORA	457
ESTEIRA	459
TUBO - ARMAÇÃO DOS ROLETES	467
MATERIAL RODANTE	468
SISTEMA DE DIREÇÃO E DE FREIO	469
FREIO DE SERVIÇO	469
CONTROLE-CABO	471
CONTROLE DO FREIO DE ESTACIONAMENTO	472
CONTROLE DE DIREÇÃO	474
CONTROLE DE DIREÇÃO E TRANSMISSÃO	476
COMANDO DA DIREÇÃO - DIFERENCIAL	480
COMANDO DA DIREÇÃO	482
FILTRO - ÓLEO	483
TUBOS - DIREÇÃO	485
COLETOR E VÁLVULA	488
PEDAL - GOVERNADOR E FREIO	490
VÁLVULA E MONTAGEM-DIREÇÃO E FREIO	493
VÁLVULA DE ALÍVIO	494
VÁLVULA SOLENÓIDE	497
SISTEMA HIDRÁULICO	499
ACUMULADOR HIDRÁULICO	499
ACIONADOR DA BOMBA	501
CONTROLE E GRUPO DE MONTAGEM	502
CONTROLE DE INCLINAÇÃO DUPLA	503
CONTROLE - EXTRATOR DO PINO HIDRÁULICO	504
CONTROLE HIDRÁULICO	506
CONTROLE-CABO	507
CONTROLE DO ACESSÓRIO	511

* TRADUÇÃO NÃO DISPONÍVEL NO MOMENTO DA IMPRESSÃO

ÍNDICE

Designação	Página
CONTROLE - ALAVANCA	513
ARREFECEDOR DE ÓLEO HIDRÁULICO E MONTAGEM	521
TAMPA - TANQUE HIDRÁULICO	522
CILINDRO DE LEVANTAMENTO E TUBOS	523
CILINDROS E TUBOS - RÍPER	529
CILINDRO DE INCLINAÇÃO	530
CILINDRO DE LEVANTAMENTO	531
CILINDRO DO RÍPER	535
CILINDRO DO SACADOR DE PINO DO RIPER	539
CILINDRO DE TOMBAMENTO DO RIPER	540
CILINDRO DE INCLINAÇÃO	544
CABEÇA DA BOMBA	550
COMANDO HIDRÁULICO	552
TUBOS - VENTILADOR HIDRÁULICOS	553
TUBOS - CILINDRO DE LEVANTAMENTO	559
TUBOS - SACA-PINO	561
TUBOS - CILINDRO DO SACA-PINO	562
TUBOS - BOMBA	564
TUBOS - RIPER	568
TUBOS - CILINDRO DE INCLINAÇÃO	572
COLETOR - CONTROLE	580
COLETOR HIDRÁULICO	583
MOTOR - PISTÃO	584
MONTAGEM - CILINDRO	587
BUJÃO - VÁLVULA DE CONTROLE	588
BOMBA DE ENGRENAGENS	589
BOMBA DE PISTÃO	590
MOTOR DO GRUPO ROTATIVO	597
GRUPO ROTATIVO DA BOMBA	601
TANQUE HIDRÁULICO E FILTRO	605
VÁLVULA DE CONTROLE E MONTAGEM	609
VÁLVULA DO CONTROLE PRINCIPAL E MONTAGEM	611
GRUPO DE VÁLVULAS DE CONTROLE - QUÁDRUPLO	612
VÁLVULA DISJUNTORA	618
VÁLVULA DE RETENÇÃO	619
VÁLVULA DE CONTROLE	623
VÁLVULA DE ENXAGUAR	634
VÁLVULA DE REDUÇÃO DE PRESSÃO	635
VÁLVULA DE COMPENSAÇÃO DE PRESSÃO	636
VÁLVULA DE CONTROLE DA BOMBA	637
VÁLVULA DE QUEDA RÁPIDA	642
VÁLVULA DE ALÍVIO	644
VÁLVULA DE SEPARAÇÃO	649
VÁLVULA SOLENÓIDE	650
ACESSÓRIOS	657
BARRA, VIGA, TRAVE	657
LÂMINA	659
LÂMINA SEMI-UNIVERSAL	660
LÂMINA UNIVERSAL	663
ELO ESTABILIZADOR	666
GRUPO DE CONVERSÃO - LÂMINA	668
BRAÇO DE EMPUXO	669
BRAÇO DE EMPUXO - ESTABILIZADOR	671
MUNHÃO DA LÂMINA	672
FERRAMENTAS DE TRABALHO	675
LÂMINA E BORDA CORTANTE SEMI-UNIVERSAL	675
LÂMINA E BORDA - UNIVERSAL	677
LÂMINA SEMI-UNIVERSAL	680
LÂMINA UNIVERSAL	685
LÂMINA SEMI-UNIVERSAL	690
LÂMINA UNIVERSAL	691
BEIRA - PONTA CORTANTE	692
ARMAÇÃO DO RIPER	696
TUBOS - GUINCHO	700
MONTAGEM - RIPER	703
PLACA DE DESGASTE	705
SACA-PINO	707
RIPER	711
DENTE DO RÍPER	718
VÁLVULA DE CONTROLE DO GUINCHO	723
POSTO DO OPERADOR	725
AJUSTADOR DO ASSENTO	725
*AIR COMPRESSOR GP-SEAT	726
COMPRESSOR DE AR - ASSENTO	727
CONDICIONADOR DE AR	728
VENTILADOR DA CABINE	729
CAIXA DE ARMAZENAMENTO	731
SUPORTE - MONTAGEM	732
CABINE	736
CABINE PARA USO EM TEMPO FRIO	738
CABINE	739
COMPRESSOR DE REFRIGERANTE	742
CONDENSADOR DE REFRIGERANTE	744
POSTO DE CONTROLE/CONSOLE DIANTEIRO	746
CONSOLE DO OPERADOR	747
CONTROLE DO PEDAL E MONTAGEM	749

* TRADUÇÃO NÃO DISPONÍVEL NO MOMENTO DA IMPRESSÃO

ÍNDICE

Designação	Página
TAMPA - CABINE	751
PORTA DA CABINE	753
FILTRO - AR DA CABINE	757
AQUECEDOR DA CABINE	759
CAIXA - SUSPENSÃO DO ASSENTO	765
INSTALAÇÃO DO RÁDIO	768
REVESTIMENTO DA CABINE	770
TUBOS - AR CONDICIONADO	772
TUBOS - AQUECEDOR	778
ESPELHO RETROVISOR	780
MONTAGEM - CABINE	782
MONTAGEM - CONTROLE	783
MONTAGEM - MONITOR	784
MONTAGEM - RÁDIO	785
MONTAGEM - ESTRUTURA ROPS	787
CABINE	788
FUNDO - ENCOSTO	790
PAINEL DE CONTROLE	793
PISO	795
PLATAFORMA	796
RECLINAÇÃO - ASSENTO	799
ESTRUTURA ROPS	800
TELA DE PROTEÇÃO	802
ASSENTO E MONTAGEM	803
ASSENTO	804
ASSENTO COM SUSPENSÃO	812
DEGRAU	815
SUSPENSÃO - ASSENTO	817
TANQUE - LAVADOR DE JANELA	821
LAVADOR DO VIDRO	824
*WINDOW GP-CAB	824
JANELA DA CABINE	825
LIMPADOR DO VIDRO	826
PIVÔ DO LIMPADOR	831
EQUIPAMENTO DE SERVIÇO E SUPRIMENTOS	833
DECALQUE	833
PINTURA	834
PLACA E DECALQUE	834
ÍNDICE DE NÚMERO DE PEÇA	B1

* TRADUÇÃO NÃO DISPONÍVEL NO MOMENTO DA IMPRESSÃO

INHALTSVERZEICHNIS

Bezeichnung	Seite
ALLGEMEINE HINWEISE	A41
REPARATURALTERNATIVEN	A49
KÜHLMITTELZUSATZ	A54
WARTUNGSTEILE	A76
STICHWORTVERZEICHNIS	A134
MASCHINE	1
FAHRWERK	1
KALTWETTERAUSRÜSTUNG	1
ZUGMASCHINENAUSFÜHRUNG (ALLGEMEIN)	2
BERGBAUAUSFÜHRUNG	2
UMRÜSTSATZ - HOLZSPANAUSFÜHRUNG	2
HALDENAUFÜHRUNG	3
ABFALLBESEITIGUNGSMONTAGE	3
MOTORAUSFÜHRUNG	6
MOTOR, KOMPLETT	6
MOTORKÜHLERBLOCK	8
MOTOR-EINBAUSATZ	9
MOTOR (GRUNDAUSFÜHRUNG)	10
SOCKEL FÜR VENTILDECKEL U. EINSPRITZKABELBAUM	10
NOCKENWELLE	12
MOTORBLOCKDECKEL	13
SCHWUNGRADGEHÄUSEDECKEL	14
STIRNRADGEHÄUSEDECKEL	16
SCHALLDÄMPFENDE VERKLEIDUNG	17
VENTILDECKEL	18
KURBELWELLE	29
MOTORBLOCK	30
ZYLINDERKOPF	34
DÄMPFER UND RIEMENSCHEIBE	41
STIRNRADGEHÄUSE-HALTETEILE	42
ÖLWANNEN-HALTETEILE	45
VENTILMECHANISMUS-HALTETEILE	46
SCHWUNGRAD	47
NOCKENWELLENZAHNRAD	48
STIRNRAD	49
ZAHNRADVORGELEGE	52
SCHWUNGRADGEHÄUSE	54
STIRNRADGEHÄUSE	56
MOTORHUBÖSE	60
MOTORAUFLAGER	62
ÖLWANNE	64
PLEUELSTANGE UND KOLBEN	68
ZYLINDERBLOCKSCHRAUBE	71
ZYLINDERKOPFSTOPFEN	73
VENTILKIPPHEBEL	74
MOTORAUFHÄNGUNG	76
SCHALLDÄMPFUNG	77
MONTAGEZAPFEN	78
VENTILSTEUERUNG	79
SCHMIERSYSTEM	80
ENTLÜFTER	80
ÖLPUMPEN-BEFESTIGUNGSTEILE	81
MOTORÖLEINFÜLLSTUTZEN	82
ÖLFILTER	83
ENTDUNSTER	86
ÖLMESSSTAB	87
MOTORÖLLEITUNGEN	88
TURBOLADERÖLLEITUNGEN	89
ENTDUNSTERBEFESTIGUNG	91
ÖLSCHNELLWECHSELANSCHLUSS	92
MOTORVORSCHMIERUNG	94
SCHMIERPUMPE	97
KÜHLSYSTEM	100
SAUGLÜFTER	100
KÜHLWASSERLEITUNGEN	103
KÜHLWASSERPUMPE	111
KÜHLER	113
STRÖMUNGSSCHALTER	116
KÜHLMITTELBEHÄLTER	117
WASSERTANK	118
LUFTEINLASS- UND ABGASSYSTEM	120
LADELUFTKÜHLER	120
LUFTREINIGER	121
STAUBAUSWERFER	123
DRUCKLUFTLEITUNGEN	124
AUSPUFFKRÜMMER	127
LUFTREINIGER-ANBAUSATZ	128
SCHALLDÄMPFER	129
VORREINIGER	130
KRÜMMERSCHILD	134
TURBOLADER	135
KRAFTSTOFFSYSTEM	136
SCHNELLBETANKUNGSANSCHLUSS	136
PUMPENANTRIEBSADAPTER	143
KRAFTSTOFFILTER UND LEITUNGEN	144
KRAFTSTOFFILTER	148
WASSERABSCHEIDER- U. KRAFTSTOFFILTER	149
DICHTUNGSSATZ	150

* ÜBERSETZUNG ZUM ZEITPUNKT DER DRUCKLEGUNG NICHT VORHANDEN

INHALTSVERZEICHNIS

Bezeichnung	Seite
KRAFTSTOFFLEITUNGEN	151
KRAFTSTOFFLEITUNGSBEFESTIGUNGS-TEILE	154
KRAFTSTOFFÖRDERPUMPE UND BEFESTIGUNGSTEILE	155
KRAFTSTOFFEINSPRITZPUMPE	156
DICHTUNG	159
KRAFTSTOFFTANK	162
SPERRVENTIL	167
WASSERABSCHEIDER U. KRAFTSTOF-FENTLÜFTUNGSPUMPE	169
ELEKTRISCHE ANLAGE UND STARTSYSTEM	170
WARNVORRICHTUNG	170
DREHSTROMGENERATOR	171
BATTERIE UND VERDRAHTUNG	177
KLEMMLEISTE	184
STROMBLOCK	185
ANSCHLUSS, ELEKTR.	186
ELEKTRON. STEUERUNG UND ANBAUSATZ	187
STEUERUNGSEINHEIT, ELEKTRON. FÜR MOTOR UND BEFEST.	188
ELEKTR. UMFORMER	189
ELEKTRONIK - MASCHINE	190
ELEKTRONIK, KOMMUNIKATION	190
ARBEITSGERÄTEELEKTRONIK	190
ELEKTRONIK - MONITOR	191
KRAFTÜBERTRAGUNGSELEKTRO-NIK	191
UMLAUFKÜHLWASSERHEIZUNG	192
HEIZUNG - MASCHINE	194
NEIGUNGSSTEUREINBAUSATZ	196
KOMMUNIKATIONSEINBAUSATZ	197
EINBAUSATZ - PLANIERSTEUE-RUNG	199
ARBEITSLEUCHTEN	200
RUNDUM-KENNLEUCHTE	222
BEFESTIGUNG - VERBINDER	224
SENSORBEFESTIGUNG	225
INSTRUMENTENTAFEL-SICHERUNG	226
VERBINDUNGSSTECKER	230
SENSOR U. BEFESTIGUNGSTEILE	231
MOTORSENSOR	233
KRAFTSTOFFSTANDSENSOR	235
STELLUNGSSENSOR	236
DRUCKSENSOR	238
DREHZAHLSENSOR	247
TEMPERATURSENSOR	252
ÄTHERSTARTHILFE	255
KALTWETTERSTARTANLAGE	256
STARTERMOTOR	259
UMGEHUNGSSCHALTER	267
TRENNSCHALTER	268
BEGRENZUNGSSCHALTER	272
MAGNETSCHALTER	273
DRUCKSCHALTER	275
DRUCKKOPFSCHALTER	276
KIPPSCHALTER	277
ÄTHERSTARTVENTIL	278
FAHRERHAUSVERDRAHTUNG	279
VERDRAHTUNG (ELEKTRON. STEUERUNG)	281
MOTORVERDRAHTUNG	283
NIEGUNGSSTEUER VERDRAHTUNG	287
FAHRERPLATTFORMVERDRAH-TUNG	290
VERDRAHTUNG (EINSPRITZEIN-HEIT)	294
KRAFTÜBERTRAGUNG	295
ACHSE	295
PLANETENANTRIEBSGEHÄUSE U. TEILE	296
GETRIEBEHYDRAULIK	299
GETRIEBEÖLKÜHLER	301
PUMPENANSCHLUSS	302
ABLASS (UMWELTFREUNDLICH)	303
PUMPENANTRIEB	304
ÖLFILTER	305
SEITENANTRIEB	307
TELLER- UND KEGELRAD	319
ANTRIEBSWELLENVERKLEIDUNG	321
ANTRIEBSSCHUTZ	322
ÖLLEITUNGEN - KRAFTÜBERTRA-GUNG	326
GETRIEBEAUFLAGER	330
PLANETENGETRIEBE	331
KRAFTÜBERTRAGUNG	335
ZAHNRADPUMPE	336
MAGNETSIEB	340
KETTENRADSEGMENT	341
ANTRIEBSWELLE	342
ANTRIEBSWELLEN-KEILVERZAH-NUNG	343
DREHMOMENTWANDLER	344
GETRIEBE	348
KREUZGELENK	349
STEUERVENTIL	350
MODULATORVENTIL	352
VORRANGVENTIL	354
ÜBERDRUCKVENTIL	356
MAGNETVENTIL	358
GETRIEBESTEUERVENTIL	359

* ÜBERSETZUNG ZUM ZEITPUNKT DER DRUCKLEGUNG NICHT VORHANDEN

INHALTSVERZEICHNIS

Bezeichnung	Seite
RAHMEN UND AUFBAU	363
RAHMEN UND GEHÄUSE	363
GEGENGEWICHT	365
MONTAGEZAPFENVERKLEIDUNG	370
ZUGANGSKLAPPE	371
ZUGHAKEN	375
MOTORVERKLEIDUNG	377
VERKLEIDUNG, LINKS	384
VERKLEIDUNG, HINTEN	387
VERKLEIDUNG, RECHTS	388
SCHUTZBLECHE	391
RAHMEN U. LAGER	395
SEITENANTRIEBSVERKLEIDUNG	397
LEITRADSCHUTZ	397
PANZERWANNE	398
SEITENANTRIEBSVERKLEIDUNG	403
KRAFTSTOFFTANKVERKLEIDUNG	404
LEITRADSCHUTZ	405
DREHZAPFENVERKLEIDUNG	406
KÜHLERSCHUTZ	407
STEINSCHUTZ	409
SCHUTZDICHTUNG	411
SCHALLDÄMPFUNG	412
LAUFWERK	413
ABSTREIFBALKEN	413
QUERTRAVERSE	416
ABSTREIFBALKEN	417
QUERTRAVERSE	420
ABSTREIFBALKEN	424
GLEITLAGER	425
LEITRADAUFSATZ	427
LAUFROLLENAUFSATZ	429
LAUFROLLENRAHMEN (TELESKOPRÜCKLAUF)	430
LEITRAD	434
KETTENGLIEDER	437
ACHSWELLENSCHMIERUNG	439
LAUFROLLEN U. LEITRAD	441
LAUFROLLE	442
TRAGROLLEN	443
DOPPELFLANSCHROLLEN	444
EINZELFLANSCHROLLEN	446
BODENPLATTE	449
LAUFROLLENRAHMEN-KNICKFEDERUNG	455
KETTENSPANNER UND -FEDERRÜCKLAUF	457
LAUFWERKSKETTE	459
LAUFROLLENRAHMENROHR	467
LAUFWERKSRAHMEN	468

Bezeichnung	Seite
LENK- UND BREMSSYSTEM	469
BETRIEBSBREMSE	469
STEUERHEBEL	471
FESTSTELLBREMSGESTÄNGE	472
LENKBETÄTIGUNG	474
LENK- UND GETRIEBESTEUERUNG	476
DIFFERENTIALLENKANTRIEB	480
LENKANTRIEB	482
ÖLFILTER	483
LENKÖLLEITUNGEN	485
KRÜMMER UND VENTIL	488
GAS- U. BREMSPEDAL	490
LENKUNGS- U. BREMSVENTIL	493
ÜBERDRUCKVENTIL	494
MAGNETVENTIL	497
HYDRAULIKSYSTEM	499
HYDRAULIKDRUCKSPEICHER	499
PUMPENSTELLGLIED	501
STEUERHEBEL U. BEFESTIGUNGSTEILE	502
DOPPELKIPPZYLINDERSTEUERUNG	503
HYDR. BOLZENZIEHER STEUERUNG	504
HYDRAULIKSTEUERUNG	506
STEUERHEBEL	507
ARBEITSGERÄTESTEUERUNG	511
JOYSTICK -STEUERUNG	513
HYDRAULIKÖLKÜHLERBEFESTIGUNG	521
ZUGANGSKLAPPE - HYDRAULIKTANKKAPPE	522
HUBZYLINDER U. LEITUNGEN	523
AUFREISSERZYLINDER UND -LEITUNGEN	529
KIPPZYLINDER	530
HUBZYLINDER	531
AUFREISSERZYLINDER	535
AUFREISSER-BOLZENZIEHERZYLINDER	539
AUFREISSERZAHNSPITZE - ZYLINDER	540
KIPPZYLINDER	544
PUMPENKOPF	550
HYDRAULIKSYSTEM	552
HYDRAULIKLÜFTERLEITUNGEN	553
HUBZYLINDERLEITUNGEN	559
LEITUNGSBOLZENZIEHER	561
BOLZENZIEHERZYLINDERLEITUNGEN	562
HYDRAULIKPUMPE UND LEITUNGEN	564
AUFREISSERLEITUNGEN	568

* ÜBERSETZUNG ZUM ZEITPUNKT DER DRUCKLEGUNG NICHT VORHANDEN

INHALTSVERZEICHNIS

Bezeichnung	Seite
NEIGEZYLINDERLEITUNGEN	572
STEUERKRÜMMER	580
HYDRAULIKVERTEILER	583
KOLBENMOTOR	584
ZYLINDERAUFHÄNGUNG	587
STEUERVENTILSTOPFEN	588
ZAHNRADPUMPE	589
KOLBENPUMPE	590
MOTORDREHVORRICHTUNG	597
KOLBENPUMPENUMLAUFSATZ	601
HYDRAULIKTANK UND SCHMIERFILTER	605
STEUERVENTIL UND BEFESTIGUNGSTEILE	609
VENTIL UND BEFESTIGUNGSTEILE - HAUPTSTEUERUNG	611
VENTILSATZ (4-VENTIL)	612
RÜCKSCHLAGVENTIL (GEGEN VAKUUM)	618
SPERRVENTIL	619
STEUERVENTIL	623
SPÜLVENTIL	634
DRUCKREDUZIERVENTIL	635
DRUCKAUSGLEICHSVENTIL	636
PUMPENSTEUERVENTIL	637
SCHNELLSENKVENTIL	642
ÜBERDRUCKVENTIL	644
PENDELVENTIL	649
MAGNETVENTIL	650
ARBEITSGERÄTE	657
TRÄGER	657
PLANIEREINRICHTUNG	659
SU-SCHILD	660
U-PLANIERSCHILDEINRICHTUNG	663
STABILISATORGELENK	666
PLANIERSCHILD-UMRÜSTSATZ	668
SCHUBARM	669
SCHUBARM - STABILISATOR	671
MONTAGEZAPFEN (PLANIERSCHILDEINRICHTUNG)	672
ARBEITSGERÄTE	675
SU-PLANIERSCHILD U. ECKMESSER	675
UNIVERSALSCHILD U. KANTE	677
SU-SCHILD	680
U-SCHILD	685
SU-SCHILD	690
U-SCHILD	691
SCHNEIDMESSER UND EINSATZSTÜCK	692
AUFREISSERRAHMEN	696
WINDEN-ÖLLEITUNGEN	700
AUFREISSERBEFESTIGUNG	703
VERSCHLEISSPLATTEN	705
BOLZENZIEHER	707
AUFREISSER	711
AUFREISSERZAHN	718
WINDENSTEUERVENTIL	723
FAHRERHAUS	725
FAHRERSITZVERSTELLER	725
*AIR COMPRESSOR GP-SEAT	726
LUFTKOMPRESSORSITZ	727
KLIMAANLAGE	728
FAHRERHAUS-DRUCKLÜFTER	729
VERSTAUKASTEN	731
BEFESTIGUNGSHALTERUNG	732
FAHRERHAUS	736
FAHRERHAUS (FÜR TIEFE UMGEBUNGSTEMPERATUREN)	738
FAHRERHAUS	739
KÄLTEMITTELKOMPRESSOR	742
KÄLTEMITTELKONDENSATOR	744
FRONTSTEUERPULT	746
STEUERKONSOLE	747
STEUERPEDAL U. BEFESTIGUNG	749
FAHRERHAUSABDECKUNG	751
FAHRERHAUSTÜR	753
FAHRERHAUSLUFTFILTER	757
FAHRERHAUSHEIZUNG	759
FAHRERSITZFEDERUNGSGEHÄUSE	765
RADIOEINBAUSATZ	768
FAHRERHAUSAUSKLEIDUNG	770
KLIMAANLAGENLEITUNGEN	772
HEIZUNGSLEITUNGEN	778
RÜCKSPIEGEL	780
FAHRERHAUSANBAUSATZ	782
GESTÄNGE UND ANBAUSATZ	783
MONITORBEFESTIGUNG	784
RADIOANBAUSATZ	785
ÜBERROLLSCHUTZAUFLAGER	787
FAHRERHAUSAUSRÜSTUNG	788
SCHALE - RÜCKENLEHNE	790
SCHALTTAFEL	793
PLATTFORM	795
VERSTELLBARER SITZ	799
ÜBERROLLSCHUTZ	800
SCHUTZGITTER	802
FAHRERSITZ UND UNTERBAU	803
FAHRERSITZ	804
SCHWINGSITZ	812
STUFEN	815
FAHRERSITZFEDERUNG	817
SCHEIBENWASCHMITTELBEHÄLTER	821

* ÜBERSETZUNG ZUM ZEITPUNKT DER DRUCKLEGUNG NICHT VORHANDEN

INHALTSVERZEICHNIS

Bezeichnung	Seite	Bezeichnung	Seite
SCHEIBENWASCHANLAGE	824		
*WINDOW GP-CAB	824		
FAHRERHAUSFENSTER	825		
SCHEIBENWISCHER	826		
WISCHERARM	831		
WARTUNGSAUSRÜSTUNG UND -ZUBEHÖR	833		
AUFKLEBER	833		
ANSTRICH	834		
SCHILD UND AUFKLEBER	834		
ERSATZTEILNUMMERNINDEX	B1		

* ÜBERSETZUNG ZUM ZEITPUNKT DER DRUCKLEGUNG NICHT VORHANDEN

GENERAL INFORMATION

1. MACHINE IDENTIFICATION

Caterpillar machines are identified by Product Identification Numbers (PIN). Some components included in a machine may be identified by Serial Numbers (S/N). Typical components that will be serialized include engines, transmissions, bulldozers, and rippers. The machine and engine are further identified by arrangement numbers and in some cases modification numbers. These numbers are shown on the product identification plate(s) and on the master plate in the operator's compartment.

Caterpillar dealers need all of these numbers to determine accurate parts identification.

SIS *New Feature*

Effective First Quarter 2001 the Caterpillar Product Identification Number (PIN) changed from 8 to 17 characters. In an effort to provide uniform equipment identification, Caterpillar and other construction equipment manufacturers are moving to comply with the latest version of the product identification numbering standard. Non-road machine PINs are defined by ISO 10261. The new PIN format will apply to all Caterpillar machines and generator sets. The PIN plates and frame marking will display the 17 character PIN. The new format will look like the following:

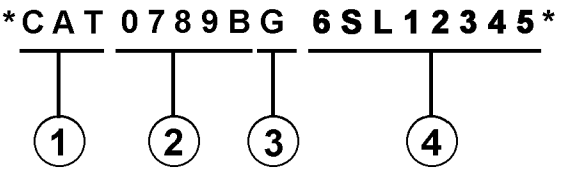

Where:

1. Caterpillar's World Manufacturing Code (characters 1-3)

2. Machine Descriptor (characters 4-8)

3. Check Character (character 9)

4. Machine Indicator Section (MIS) or Product Sequence Number (characters 10-17). These were previously referred to as the Serial Number.

Machines and generator sets produced before First Quarter 2001 will maintain their 8 character PIN format.

Components such as engines, transmissions, axles, etc. and work tools will continue to use an 8 character Serial Number (S/N).

2. ORDERING PARTS

⚠ WARNING

When replacement parts are required for this product Caterpillar recommends using Caterpillar replacement parts or parts with equivalent specifications including, but not limited to, physical dimensions, type, strength and material.

Failure to heed this warning can lead to premature failures, product damage, personal injury or death.

Quality Caterpillar replacement parts are available from Caterpillar dealers throughout the world. Their parts inventories are up to date and include all parts normally required to protect your investment in Caterpillar machines. Dealers may offer repair kits or remanufactured parts to allow selection of the most effective repair alternative for a particular situation. When ordering parts, your order should specify the quantity, part number, part name, and the serial number/product identification number of the machine for which the parts are needed.

3. PARTS MANUAL ORGANIZATION

Product information in this manual is presented as "information elements" that represent all of the components for the specific model. Engine Arrangement and Seat Group are examples of information elements. The information elements are organized alphabetically by part name and secondarily by part number within each major section of the manual.

4. TABLE OF CONTENTS

A table of contents (TOC) is found at the beginning of the manual. The TOC lists each section of the manual with a complete list of all information elements organized as they appear in the manual. Page numbers are provided for quick reference to detailed parts identification illustrations and serviceable consist lists.

5. MAINTENANCE PARTS INDEX

The Maintenance Parts Index, located near the beginning of the manual, references most frequently used maintenance part numbers, providing description, quantity, usage and page number. This information is organized alphabetically by part description.

6. INDEX

The index located near the front of the manual is an alphabetical listing of all information elements included in the manual. Page numbers are provided for quick reference to detailed parts identification illustrations and serviceable consist lists.

7. PART NUMBER INDEX

A numerical index listing all part numbers and the corresponding page number(s) appears at the back of the manual.

8. CAPTIONS

Captions located at the beginning of each information element identify the part number and part name along with additional descriptive information. PIN and S/N information found in each caption should be used to select correct information for a specific machine. Field replacement options, identification of optional attachment components, and where used ("part of") information is also provided.

The first line of a caption is shown in larger type font to indicate the beginning of an information element. Captions for additional pages that may be required to illustrate an information element will be shown in standard type font and will include the term *(contd.)* .

9. NON-SERVICED PARTS

In some instances it is necessary to display non-serviced parts that are a link to a lower level serviceable consist lists. These non-serviced part numbers are shown in *italic* type indicating that they are not available.

10. PARTS LIST REFERENCE NUMBERS

Numbers shown in the Ref No column correspond to numbers used in the associated graphic(s). An alphabetic suffix may be added to a reference number to identify lower level consist items. Numbers shown in the Graphic Ref column refer to the graphic number identifier displayed in the lower left corner of each illustration. The Graphic Ref number may be used in combination with the item Ref No to determine the correct part number. There may be intentional omission of a Ref No in a consist list as information is updated to reflect the latest serviceable part numbers.

11. INDENTED PART NAMES

When a part name is indented in a parts list, it is part of (included in) the group or assembly under which it is indented.

12. ILLUSTRATION REFERENCE LETTERS

When necessary, illustrations contain reference letters (A, B, C etc.) that are intended to track lines and harnesses from one point to another. They are also used to show where to reconnect illustrations that have been separated.

13. ABBREVIATIONS AND SYMBOLS

O.D. – Outside Diameter
I.D. – Inside Diameter
A – Not Part Of This Group
B – Use As Required
C – Change From Previous Type
D – Order By The Meter
E – Order By The Centimeter
F – Not Shown
G – Order By The Inch
I – Refer To Hydraulic Information System
M – Metric Part
R – Remfg Part May Be Available
Y – Separate Illustration
Z – Not Serviced Separately

SIS *New Feature*

14.<END>

This symbol indicates the end of an information element.

NOTE:

Continuing improvement and advancement of product design may cause changes to your machine which may not be included in this publication. Whenever a question arises regarding your caterpillar product or this publication, please consult your caterpillar dealer for the latest available information.

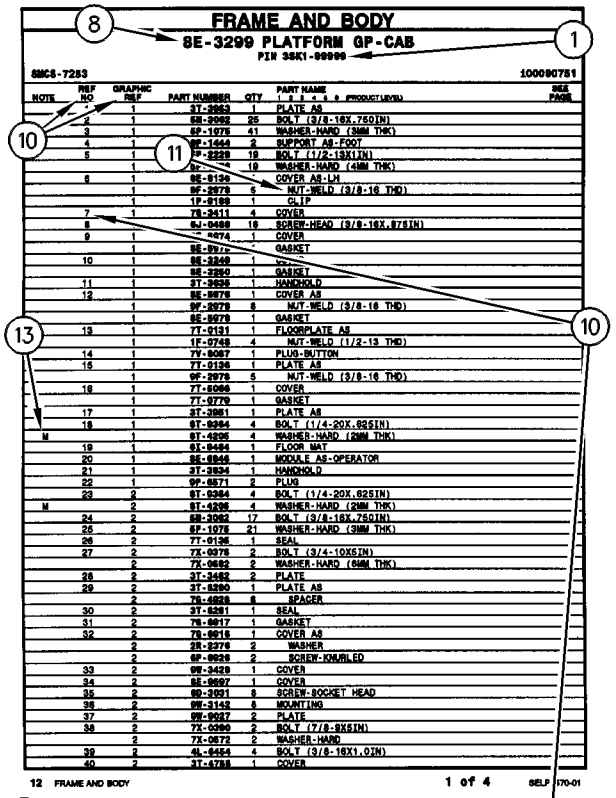

FRAME AND BODY

8E-3299 PLATFORM GP-CAB

PIN 3SK1-99999

SMCS-7283 100090751

NOTE	REF NO	GRAPHIC REF	PART NUMBER	QTY	PART NAME 1 2 3 4 5 6 (PRODUCT LEVEL)	SEE PAGE
	*	1	3T-3963	1	PLATE AS	
	2	1	5M-3062	25	BOLT (3/8-16X.750IN)	
	3	1	6P-1075	41	WASHER-HARD (3MM THK)	
	4	1	8E-1443	2	SUPPORT AS-FOOT	
	5	1	9P-2229	19	BOLT (1/2-13X1IN)	
		1	9P-[illegible]	19	WASHER-HARD (4MM THK)	
	6	1	8E-9136	*	COVER AS-LH	
		1	9F-2979	6	NUT-WELD (3/8-16 THD)	
		1	1F-0189	1	CLIP	
	7	1	7X-3411	4	COVER	
	8	1	9J-0468	18	SCREW-HEAD (3/8-16X.87SIN)	
	9	1	[illegible]074	1	COVER	
		1	8E-9[illegible]	*	GASKET	
	10	1	8E-3248	1	[illegible]	
		1	8E-3250	1	GASKET	
	11	1	3T-3636	1	HANDHOLD	
	12	1	8E-9078	1	COVER AS	
		1	9F-2979	8	NUT-WELD (3/8-16 THD)	
		1	8E-9079	1	GASKET	
	13	1	7T-9131	1	FLOORPLATE AS	
		1	1F-0748	4	NUT-WELD (1/2-13 THD)	
	14	1	7V-8067	1	PLUG-BUTTON	
	15	1	7T-9136	1	PLATE AS	
		1	9F-2979	5	NUT-WELD (3/8-16 THD)	
	16	1	7T-5066	1	COVER	
		1	7T-9779	1	GASKET	
	17	1	3T-3951	1	PLATE AS	
	18	1	9T-0264	4	BOLT (1/4-20X.62SIN)	
M		1	9T-4295	4	WASHER-HARD (2MM THK)	
	19	1	9I-9464	1	FLOOR MAT	
	20	1	8E-6848	1	MODULE AS-OPERATOR	
	21	1	3T-3934	1	HANDHOLD	
	22	1	9P-0671	2	PLUG	
	23	2	9T-0264	4	BOLT (1/4-20X.62SIN)	
M		2	9T-4295	4	WASHER-HARD (2MM THK)	
	24	2	5M-3062	17	BOLT (3/8-16X.750IN)	
	25	2	6P-1075	21	WASHER-HARD (3MM THK)	
	26	2	7T-9136	1	SEAL	
	27	2	7X-0078	2	BOLT (3/4-10X5IN)	
		2	7X-0682	2	WASHER-HARD (6MM THK)	
	28	2	3T-3482	2	PLATE	
	29	2	3T-5290	1	PLATE AS	
		2	7S-4828	6	SPACER	
	30	2	3T-5291	1	SEAL	
	31	2	7S-8817	1	GASKET	
	32	2	7S-8816	1	COVER AS	
		2	5R-2276	2	WASHER	
		2	9F-9026	2	SCREW-KNURLED	
	33	2	9W-3429	1	COVER	
	34	2	8E-9697	1	COVER	
	35	2	9D-3031	8	SCREW-SOCKET HEAD	
	36	2	9W-3143	8	MOUNTING	
	37	2	9W-9037	2	PLATE	
	38	2	7X-0360	2	BOLT (7/8-9X5IN)	
		2	7X-0672	2	WASHER-HARD	
	39	2	4L-6454	4	BOLT (3/8-16X1.0IN)	
	40	2	3T-4788	1	COVER	

12 FRAME AND BODY 1 of 4 SELP4570-01

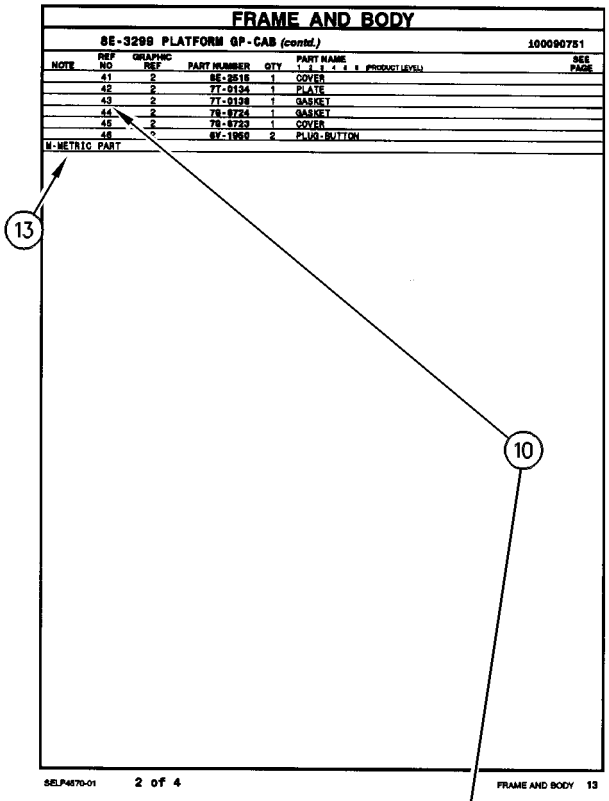

FRAME AND BODY

8E-3299 PLATFORM GP-CAB (contd.) 100090751

NOTE	REF NO	GRAPHIC REF	PART NUMBER	QTY	PART NAME 1 2 3 4 5 6 (PRODUCT LEVEL)	SEE PAGE
	41	2	8E-2515	1	COVER	
	42	2	7T-9134	1	PLATE	
	43	2	7T-9138	1	GASKET	
	44	2	7S-8724	1	GASKET	
	45	2	7S-8723	1	COVER	
	46	*	8Y-1950	2	PLUG-BUTTON	

M-METRIC PART

SELP4570-01 2 of 4 FRAME AND BODY 13

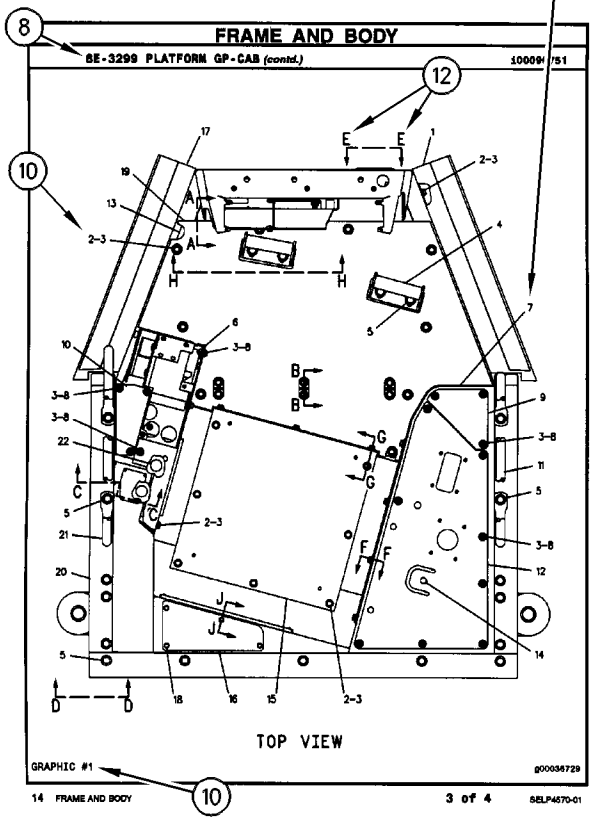

FRAME AND BODY

8E-3299 PLATFORM GP-CAB (contd.) 100090751

TOP VIEW

GRAPHIC #1 g00036729

14 FRAME AND BODY 3 of 4 SELP4570-01

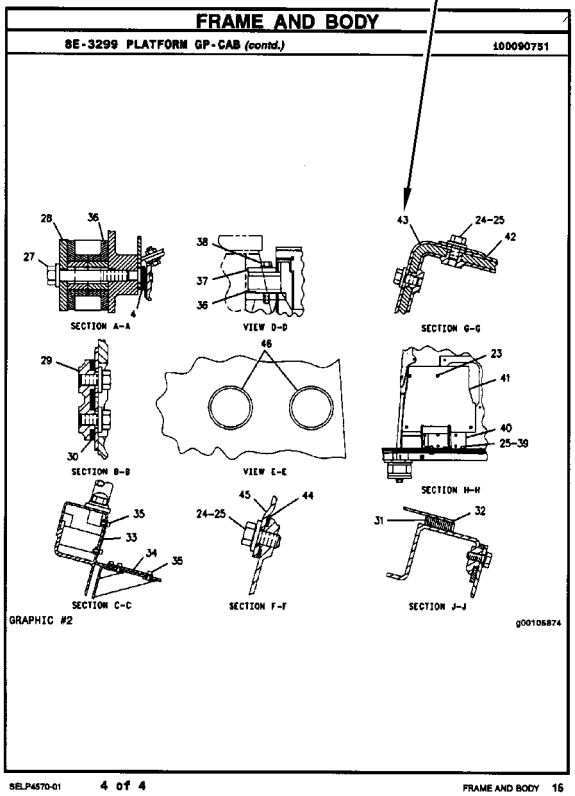

FRAME AND BODY

8E-3299 PLATFORM GP-CAB (contd.) 100090751

SECTION A-A VIEW D-D SECTION G-G

SECTION B-B VIEW E-E SECTION H-H

SECTION C-C SECTION F-F SECTION J-J

GRAPHIC #2 g00105874

SELP4570-01 4 of 4 FRAME AND BODY 15

GÉNÉRALITÉS

1. IDENTIFICATION DE LA MACHINE

Toutes les machines Caterpillar portent un numéro d'identification (PIN). Certains composants des machines peuvent porter des numéros de série (S/N). En général, parmi les composants qui portent des numéros de série il y a les moteurs, les transmissions, les bulldozers et les rippers. En plus, la machine et le moteur peuvent recevoir des numéros de version, et dans certains cas, de modification. Ces numéros figurent sur les plaques de numéro de série et sur la plaque signalétique principale qui se trouve dans le poste de conduite.

Les concessionnaires Caterpillar doivent connaître tous ces numéros pour identifier correctement les pièces.

SIS *Nouvelle Caractéristique*

À partir du premier trimestre 2001, le numéro d'identification produit (PIN) Caterpillar passe de 8 à 17 caractères. Afin de permettre une identification uniforme des matériels, Caterpillar et d'autres constructeurs de machines de travaux publics s'efforcent de se conformer à la norme la plus récente portant sur les numéros d'identification des produits. Les numéros d'identification (PIN) de machines de chantier sont définis par la norme ISO 10261. Le nouveau format du numéro d'identification est valable pour toutes les machines et tous les groupes électrogènes Caterpillar. Le numéro d'identification produit (PIN) figurant sur la plaque et sur le châssis se composera de 17 caractères. Le nouveau format ressemblera à ceci:

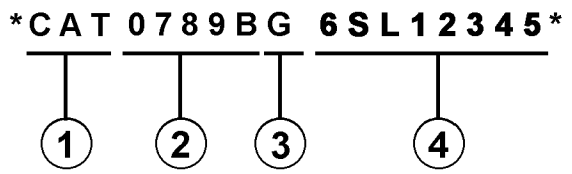

Il se décomposera de la façon suivante:

1. Code international de fabrication de Caterpillar (caractères 1 à 3)

2. Descriptif de la machine (caractères 4 à 8)

3. Contrôle (caractère 9)

4. Indicateur machine (MIS) ou numéro de séquence produit (caractères 10 à 17). Ceux-ci étaient auparavant désignés sous le terme de numéro de série.

Les machines et les groupes électrogènes construits avant le premier trimestre 2001 garderont le format à 8 caractères du numéro d'identification produit (PIN).

Les organes tels que les moteurs, les boîtes de vitesses, les essieux, etc., continueront d'être désignés par un numéro de série (S/N) à 8 caractères.

2. COMMANDE DE PIÈCES

⚠ DANGER

Lorsqu'il faut remplacer des pièces de rechange pour ce produit Caterpillar recommande d'utiliser les pièces de rechange Caterpillar ou les pièces qui ont des spécifications équivalentes dont les dimensions physiques, le type, la force et le matériau. Ces équivalences ne se limitent pas à l'énoncé précédent.

L'inobservation de cette mise en garde peut entraîner des défaillances prématurées, des dommages au produit, des blessures ou même la mort.

Les concessionnaires Caterpillar fournissent dans le monde entier des pièces de rechange de qualité Caterpillar. Leurs stocks de pièces sont constamment réapprovisionnés et comptent toutes les pièces nécessaires pour assurer la bonne marche de vos machines Caterpillar. Certains concessionnaires proposent également des kits de réparation ou des pièces rénovées, ce qui permet de choisir la solution la plus économique dans une situation donnée. Lors des commandes de pièces, mentionner la quantité, le numéro et la désignation des pièces ainsi que le numéro de série ou le numéro d'identification (PIN) de la machine pour laquelle ces pièces sont requises.

3. ORGANISATION DU CATALOGUE DE PIÈCES

Les renseignements sur les produits sont présentés sous forme de "Information element" (élément d'information) représentant tous les composants d'un modèle donné. "Engine Arrangement" (version de moteur) et "Seat Group" (assemblage de siège)" sont des exemples d'éléments d'information. Les éléments d'information sont classés par ordre alphabétique par la désignation standard des pièces et par numéros de pièces dans chaque partie importante du manuel.

4. TABLE DES MATIÈRES

SIS *Nouvelle Caractéristique*

La table des matières se trouve au début du manuel. La table des matières fournit la liste de tous les chapitres du manuel avec une liste complète de tous les éléments d'information classés par ordre d'apparition dans le manuel. Les numéros de page sont fournis afin que l'utilisateur puisse trouver rapidement les illustrations détaillées concernant l'identification des pièces et les listes des pièces d'entretien.

5. INDEX DES PIÈCES D'ENTRETIEN

La rubrique "Index des pièces d'entretien" qui se trouve au début du manuel renvoie aux pièces d'entretien les plus fréquemment utilisées en précisant la désignation, la quantité, là où la pièce est utilisée et le numéro de page. Ces pièces sont classés par ordre alphabétique.

6. INDEX

L'index qui se trouve vers le début du manuel est une liste alphabétique de tous les éléments d'information du manuel. Les numéros de page sont fournis afin que l'utilisateur puisse trouver rapidement les illustrations détaillées concernant l'identification des pièces et les listes des pièces d'entretien.

7. INDEX DES NUMÉROS DE PIÈCES

Une liste numérique de tous les numéros de pièces et des pages correspondantes se trouve à la fin du manuel.

8. LÉGENDES

Les légendes qui se trouvent en haut de chaque page de chaque élément d'information fournissent le numéro de pièce, la désignation ainsi que des renseignements supplémentaires sur les pièces. Les renseignements concernant les numéros de série (S/N) qui se trouvent dans chaque légende doivent être utilisés pour sélectionner les informations correctes pour un moteur donné. Les informations concernant les options de remplacement sur le chantier, l'identification des composants des équipements offerts en option et les lieux d'application sont aussi fournies.

SIS *Nouvelle Caractéristique*

Les lettres de la première ligne d'une légende sont présentées en police plus grande afin d'indiquer le début d'une unité d'information. Les légendes qui pourraient être requises pour des pages supplémentaires afin d'illustrer une unité d'information seront présentées en police standard et comprendront le terme (à suivre).

9. PIÈCES NON FOURNIES

SIS *Nouvelle Caractéristique*

Dans certains cas, il est nécessaire d'indiquer les pièces non fournies qui sont en aval de la liste des pièces d'entretien. Les numéros des pièces non fournies dans la liste des pièces et les légendes seront en italique pour signaler qu'ils ne sont pas disponibles.

10. NUMÉROS DE RÉFÉRENCE DE LA LISTE DES PIÈCES

SIS *Nouvelle Caractéristique*

Les numéros indiqués dans la colonne des numéros de références correspondent aux numéros utilisés dans les illustrations auxquelles ils sont associés. Un suffixe alphabétique peut être ajouté à un numéro de référence pour identifier la liste des articles en aval. Les numéros indiqués dans la colonne de référence de l'illustration renvoient à l'identification du numéro affiché dans le coin inférieur gauche de chaque illustration. Le numéro de référence de l'illustration pourrait être utilisé avec le numéro de référence de l'article pour déterminer le numéro de pièce correct. Il peut y avoir une omission intentionnelle d'un numéro de référence dans une liste de pièces suite à la mise à jour des informations en vue de refléter les numéros de pièces les plus récentes.

11. DÉSIGNATIONS DE PIÈCES EN RETRAIT

Lorsqu'une désignation de pièce est en retrait, cela veut dire que l'article en regard fait partie de l'ensemble sous lequel il figure.

12. LETTRES DE RÉFÉRENCE DES ILLUSTRATIONS

Quand cela est nécessaire, les illustrations comportent des lettres de référence (A, B, C, etc.) pour montrer le trajet des canalisations et faisceaux de câbles d'un point à l'autre. Elles sont utilisées également pour indiquer où relier les illustrations séparées auparavant.

13. ABRÉVIATIONS ET SYMBOLES

O.D. – Diamètre extérieur
I.D. – Diamètre intérieur
A – Ne fait pas partie de ce groupe
B – Utiliser selon besoin
C – Modification
D – Commander par mètre
E – Commander par centimètre
F – Non représenté
G – Commander par pouce
I – Voir "Hydraulic Information System"
M – Pièce métrique
R – Pièce rénovée éventuellement disponible
Y – Illustration séparée
Z – Non fourni séparément

NOTA:

En raison du progrès technique et des améliorations continuelles apportées au matériel, votre machine comporte peut-être des modifications qui n'apparaissent pas dans la présente publication. En cas de doute sur un détail de votre machine Caterpillar ou sur le texte de la présente publication, adressez-vous à votre concessionnaire Caterpillar.

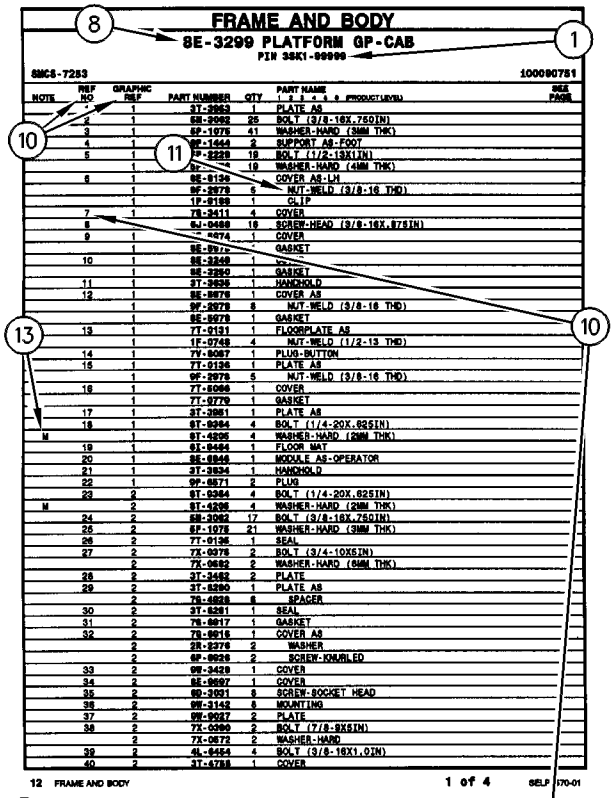

FRAME AND BODY

8E-3299 PLATFORM GP-CAB

PIN 3SK1-99999

SMCS-7283 100090751

NOTE	REF NO	GRAPHIC REF	PART NUMBER	QTY	PART NAME 1 2 3 4 5 6 (PRODUCT LEVEL)	SEE PAGE
	*	1	3T-3963	1	PLATE AS	
	2	1	5M-2062	25	BOLT (3/8-16X.750IN)	
	3	1	6P-1075	41	WASHER-HARD (3MM THK)	
	4	1	9E-1444	2	SUPPORT AS-FOOT	
	5	1	9P-2229	19	BOLT (1/2-13X1IN)	
		1	9P-[illegible]	19	WASHER-HARD (4MM THK)	
	6	1	9E-9136	*	COVER AS-LH	
		1	9F-2979	6	NUT-WELD (3/8-16 THD)	
		1	1P-0189	1	CLIP	
	7	1	7X-3411	4	COVER	
	8	1	6J-0468	18	SCREW-HEAD (3/8-16X.87SIN)	
	9	1	[illegible]074	1	COVER	
		1	9E-9[illegible]	*	GASKET	
	10	1	9E-3248	1	[illegible]	
		1	9E-2950	1	GASKET	
	11	1	3T-3936	1	HANDHOLD	
	12	1	9E-9076	1	COVER AS	
		1	9F-2979	8	NUT-WELD (3/8-16 THD)	
		1	9E-9078	1	GASKET	
	13	1	7T-9131	1	FLOORPLATE AS	
		1	1F-0748	4	NUT-WELD (1/2-13 THD)	
	14	1	7V-8067	1	PLUG-BUTTON	
	15	1	7T-9126	1	PLATE AS	
		1	9F-2979	5	NUT-WELD (3/8-16 THD)	
	16	1	7T-5066	1	COVER	
		1	7T-9779	1	GASKET	
	17	1	3T-3951	1	PLATE AS	
	18	1	9T-0264	4	BOLT (1/4-20X.62SIN)	
M		1	9T-4296	4	WASHER-HARD (2MM THK)	
	19	1	9I-9464	1	FLOOR MAT	
	20	1	9E-6946	1	MODULE AS-OPERATOR	
	21	1	3T-3934	1	HANDHOLD	
	22	1	9P-0671	2	PLUG	
	23	2	9T-0264	4	BOLT (1/4-20X.62SIN)	
M		2	9T-4296	4	WASHER-HARD (2MM THK)	
	24	2	5M-2062	17	BOLT (3/8-16X.750IN)	
	25	2	6P-1075	21	WASHER-HARD (3MM THK)	
	26	2	7T-9136	1	SEAL	
	27	2	7X-0078	2	BOLT (3/4-10X5IN)	
		2	7X-0682	2	WASHER-HARD (6MM THK)	
	28	2	3T-3482	2	PLATE	
	29	2	3T-5290	1	PLATE AS	
		2	7S-4828	6	SPACER	
	30	2	3T-5291	1	SEAL	
	31	2	7S-8817	1	GASKET	
	32	2	7S-8816	1	COVER AS	
		2	5R-2276	2	WASHER	
		2	9F-9026	2	SCREW-KNURLED	
	33	2	9W-3429	1	COVER	
	34	2	8E-9697	1	COVER	
	35	2	9D-3031	8	SCREW-SOCKET HEAD	
	36	2	9W-3143	8	MOUNTING	
	37	2	9W-9037	2	PLATE	
	38	2	7X-0360	2	BOLT (7/8-9X5IN)	
		2	7X-0672	2	WASHER-HARD	
	39	2	4L-6454	4	BOLT (3/8-16X1.0IN)	
	40	2	3T-4788	1	COVER	

12 FRAME AND BODY 1 of 4 SELP4570-01

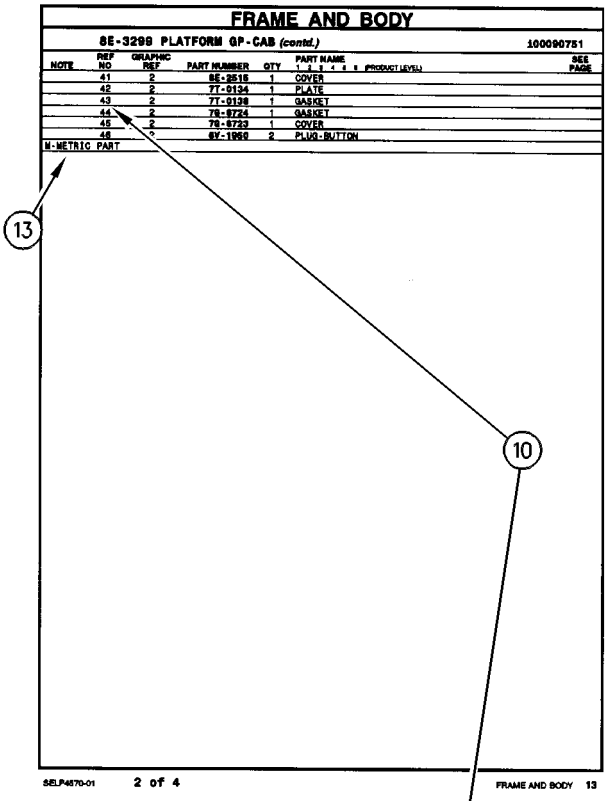

FRAME AND BODY

8E-3299 PLATFORM GP-CAB (contd.) 100090751

NOTE	REF NO	GRAPHIC REF	PART NUMBER	QTY	PART NAME 1 2 3 4 5 6 (PRODUCT LEVEL)	SEE PAGE
	41	2	8E-2516	1	COVER	
	42	2	7T-9134	1	PLATE	
	43	2	7T-9138	1	GASKET	
	44	2	7S-8724	1	GASKET	
	45	2	7S-8723	1	COVER	
	46	*	8Y-1950	2	PLUG-BUTTON	

M-METRIC PART

SELP4570-01 2 of 4 FRAME AND BODY 13

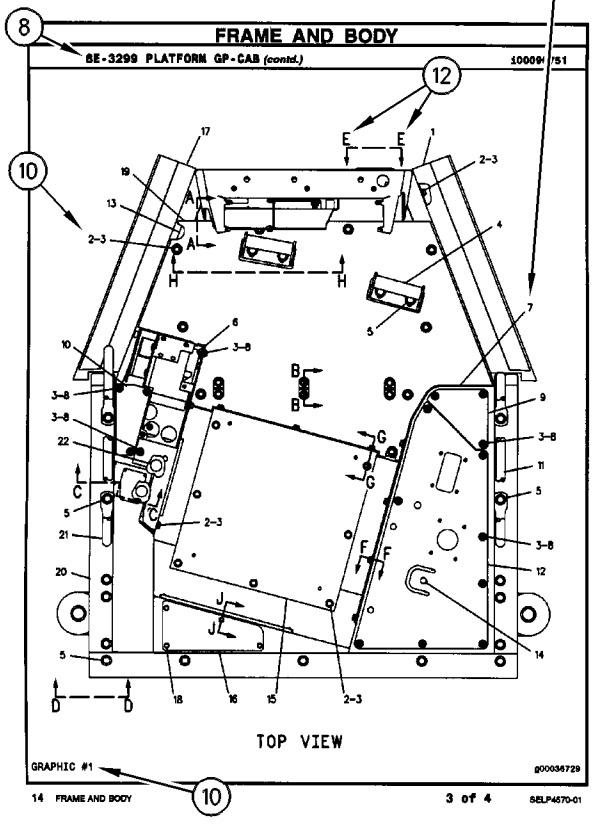

FRAME AND BODY

8E-3299 PLATFORM GP-CAB (contd.) 100090751

TOP VIEW

GRAPHIC #1 g00036729

14 FRAME AND BODY 3 of 4 SELP4570-01

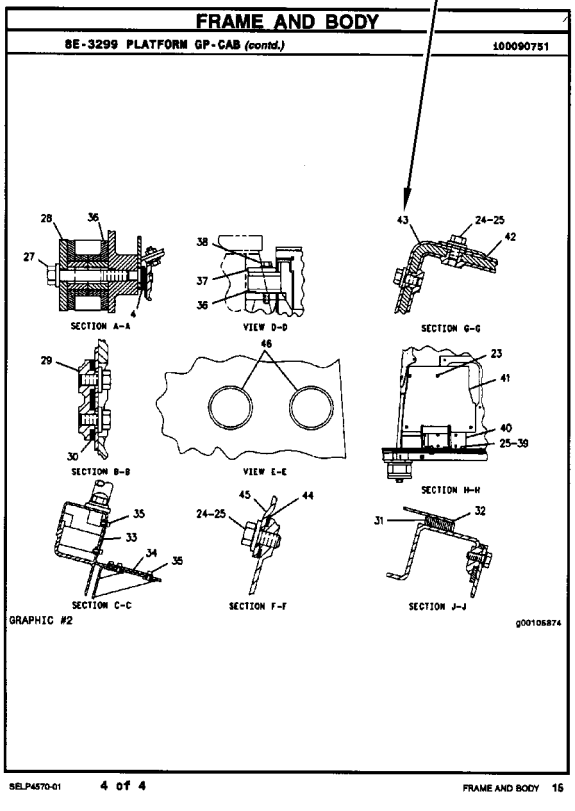

FRAME AND BODY

8E-3299 PLATFORM GP-CAB (contd.) 100090751

SECTION A-A VIEW D-D SECTION G-G

SECTION B-B VIEW E-E SECTION H-H

SECTION C-C SECTION F-F SECTION J-J

GRAPHIC #2 g00105874

SELP4570-01 4 of 4 FRAME AND BODY 15

INFORMACIÓN GENERAL

1. MÁQUINAS

Las máquinas Caterpillar se identifican con Números de Identificación del Producto (PIN). Algunos componentes incluídos en la máquina pueden estar identificados con Números de Serie (N/S). Los componentes que tienen típicamente esta identificación incluyen motores, transmisiones, hojas topadoras y desgarradores. La máquina y el motor se identifican además con Números de Configuración y en algunos casos, Números de Modificación. Estos números están en las placas de identificación del producto o en la placa principal en la cabina del operador.

Los distribuidores Caterpillar necesitan estos números para identificar con exactitud los números de piezas de repuesto.

SIS *Nueva Característica*

A partir del primer trimestre del 2001, el Número de Identificación de Producto (PIN) de Caterpillar cambió de 8 a 17 caracteres. Para hacer más uniforme el método de identificación de equipos, Caterpillar y otros fabricantes de equipo de construcción han tomado medidas para cumplir con la versión más reciente de la norma de numeración de identificación de productos. Los Números de Identificación de Producto para máquinas que no se operan en carreteras son definidos por la norma ISO 10261. El nuevo formato PIN corresponderá a todas las máquinas y grupos electrógenos Caterpillar. Las placas y los caracteres PIN estampados en el bastidor mostrarán el PIN de 17 caracteres. El nuevo formato tendrá la apariencia siguiente:

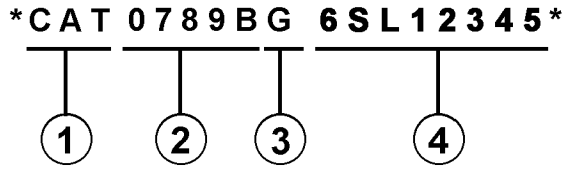

Significado de los caracteres:

1. Código de Fabricación Mundial de Caterpillar (caracteres 1-3)

2. Sección Descriptor de la Máquina (caracteres 4-8)

3. Carácter de Verificación (carácter 9)

4. Sección Indicador de la Máquina (MIS) o Número de Secuencia de Producto (caracteres 10-17). Anteriormente, estos caracteres constituían el Número de Serie.

Las máquinas y grupos electrógenos producidos antes del primer semestre del 2001 mantendrán su formato PIN de 8 caracteres.

Los componentes como motores, transmisiones, ejes, herramientas de trabajo, etc., continuarán usando un Número de Serie (S/N) de 8 caracteres.

2. COMO PEDIR REPUESTOS

⚠ ADVERTENCIA

Cuando se necesiten piezas de repuesto para este producto, Caterpillar recomienda usar piezas de repuesto Caterpillar o piezas que tengan especificaciones equivalentes incluyendo, pero sin estar limitadas a, dimensiones físicas, tipo, fortaleza y material.

El no hacer caso de esta advertencia puede llevar a fallas prematuras, daños al producto y lesiones graves o mortales.

Las piezas de repuesto Caterpillar de calidad están a la disposición de los distribuidores Caterpillar en todo el mundo. Sus existencias actualizadas incluyen todas las piezas normalmente requeridas para proteger su inversión en máquinas Caterpillar. Los distribuidores pueden tener juegos de reparación o piezas remanufacturadas para permitir la selección de la mejor alternativa de reparación en un caso en particular. Al pedir piezas de repuesto, especifique en su pedido la cantidad, el número de pieza, el nombre de la pieza y el número de serie/número de identificación del producto, de la máquina para la cual se necesitan estas piezas.

3. ORGANIZACION DEL MANUAL DE PIEZAS

La información sobre el producto, se presenta en este manual, como "elementos de información" que representan todos los componentes de un modelo específico. Las configuraciones de motores y los grupos de asientos son ejemplos de elementos de información. Los elementos de información están organizados primeramente por nombres de piezas en orden alfabético y en segundo lugar, por el número de pieza dentro de cada sección principal del manual.

4. CONTENIDO

La página de Contenido se encuentra al principio del manual. El Contenido indica cada sección del manual con una lista completa de todos los elementos de información organizados en el orden que aparecen en el manual. Los números de página proporcionan una referencia rápida a las ilustraciones detalladas de identificación de piezas y a las listas de componentes de repuesto de dichas piezas.

5. ÍNDICE DE PIEZAS DE MANTENIMIENTO

Al principio de este catálogo se encuentra un índice de los números de piezas utilizadas más frecuentemente para el mantenimiento, que incluye descripción, cantidad necesaria, lugar de utilización y número de página. Esta información está organizada alfabéticamente, por descripción de la pieza.

6. ÍNDICE

El Índice, ubicado cerca del principio del manual, es una lista en orden alfabético de todos los elementos de información incluídos en el manual. Los números de página proporcionan una referencia rápida a las ilustraciones detalladas de identificación de piezas y a las listas de componentes de repuesto de dichas piezas.

7. INDICE NUMÉRICO DE PIEZAS

Un índice numérico de piezas con el correspondiente número de página aparece al final de este catálogo.

8. TÍTULOS

Los títulos ubicados al principio de cada elemento de información identifican el número y el nombre de la pieza junto con información descriptiva. Se debe usar información sobre los Números de Identificación de Pieza (PIN) y los números de serie (S/N) para seleccionar la información que corresponda a una máquina en particular. También se suministra información sobre las opciones de reparación en el campo, la identificación de componentes de accesorios optativos y el lugar de ubicación de la pieza ("es parte de").

La primera línea del título se muestra con un tipo de letra más grande para indicar el comienzo de un elemento de información. Si se requieren páginas adicionales para ilustrar un elemento de información, los títulos se muestran con un tipo de letra normal y la continuación se indica entre paréntesis.

9. PIEZAS QUE NO SE SUMINISTRAN COMO REPUESTO

En algunos casos es necesario indicar piezas que no se suministran como repuesto pero que pueden estar conectadas a listas de componentes de otras piezas de repuesto. En tal caso, dichas piezas se muestran en cursiva para indicar que no son piezas disponibles.

10. NÚMEROS DE REFERENCIA

Los números en la columna de No. de Referencia corresponden a los números indicados en la ilustración que pertenece a ese número de pieza. Los números que tienen un sufijo alfabético identifican artículos de las listas de componentes de piezas. Los números en la columna de Referencia de la ilustración se identifican en la esquina inferior izquierda de cada ilustración. Para determinar el número de pieza correcto se puede utilizar tanto el No. de Referencia de la ilustración como el No. de Referencia del artículo. A medida que se actualiza la información para indicar los más recientes números de piezas de repuesto, puede omitirse intencionalmente un No. de Referencia en una lista de componentes de piezas.

11. NOMBRES DE PIEZA SANGRADOS

Cuando el nombre de una pieza está sangrado en una lista, significa que esta pieza forma parte del grupo o conjunto del renglón inmediatamente superior.

12. LETRAS DE REFERENCIA DE ILUSTRACIONES

Las ilustraciones contienen algunas veces letras de referencia (A, B, C etc.) cuyo propósito es seguir el trayecto de líneas y mazos de cables de un punto a otro. También se utilizan para mostrar dónde volver a unir ilustraciones que se habían separado.

13. ABREVIATURAS Y SIMBOLOS

O.D. – Diámetro exterior
I.D. – Diámetro interior
A – No es pieza de este grupo
B – Utilizado según la demanda
C – Indica cambio
D – Se pide por metro
E – Se pide por centímetro
F – No se muestra
G – Se pide por pulgada
I – Consulte el sistema de información hidráulica
M – Pieza métrica
R – Puede estar disponible como pieza remanufacturada
Y – Ilustración separada
Z – No se suministra por separado

SIS *Nueva Característica*

14.<END>

Este símbolo indica el final de un elemento de información.

NOTA:

Las contínuas mejoras y adelantos en diseño podrían originar cambios a su máquina que no se incluyen en esta publicación. Cuando tenga alguna pregunta acerca de su producto Caterpillar o de esta publicación, consulte al distribuidor Caterpillar para obtener la información más reciente.

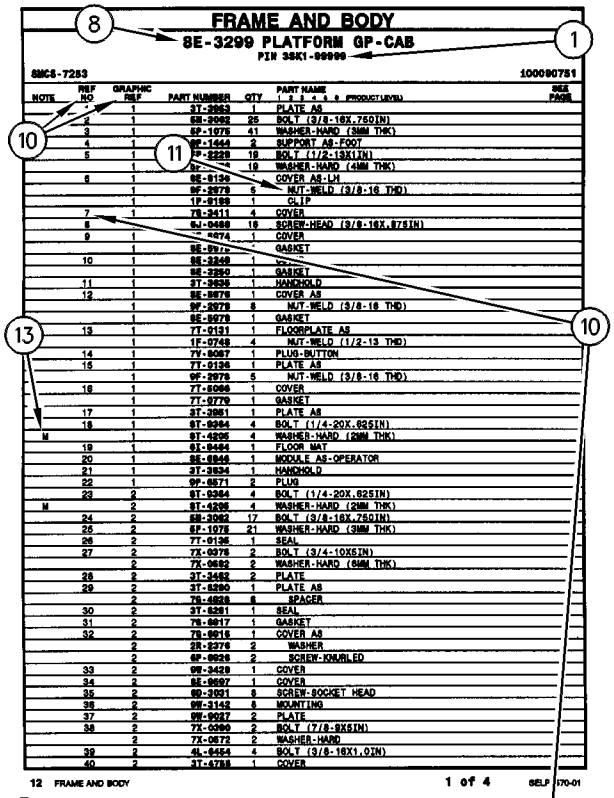

FRAME AND BODY

8E-3299 PLATFORM GP-CAB

PIN 3SK1-99999

SMCS-7283 100090751

NOTE	REF NO	GRAPHIC REF	PART NUMBER	QTY	PART NAME 1 2 3 4 5 6 (PRODUCT LEVEL)	SEE PAGE
	*	1	3T-3963	1	PLATE AS	
	2	1	5M-2062	25	BOLT (3/8-16X.750IN)	
	3	1	6P-1075	41	WASHER-HARD (3MM THK)	
	4	1	9E-1443	2	SUPPORT AS-FOOT	
	5	1	9P-2229	19	BOLT (1/2-13X1IN)	
		1	9P-[illegible]	19	WASHER-HARD (4MM THK)	
	6	1	9E-9136	*	COVER AS-LH	
		1	9F-2979	6	NUT-WELD (3/8-16 THD)	
		1	1P-0189	1	CLIP	
	7	1	7S-2411	4	COVER	
	8	1	6J-0468	18	SCREW-HEAD (3/8-16X.87SIN)	
	9	1	[illegible]-0274	1	COVER	
		1	9E-9976	*	GASKET	
	10	1	9E-3248	1	[illegible]	
		1	9E-2950	1	GASKET	
	11	1	3T-3936	1	HANDHOLD	
	12	1	9E-9976	1	COVER AS	
		1	9F-2979	8	NUT-WELD (3/8-16 THD)	
		1	9E-9978	1	GASKET	
	13	1	7T-9131	1	FLOORPLATE AS	
		1	1F-0748	4	NUT-WELD (1/2-13 THD)	
	14	1	7V-9067	1	PLUG-BUTTON	
	15	1	7T-9136	1	PLATE AS	
		1	9F-2979	5	NUT-WELD (3/8-16 THD)	
	16	1	7T-5066	1	COVER	
		1	7T-9779	1	GASKET	
	17	1	3T-3951	1	PLATE AS	
	18	1	9T-0264	4	BOLT (1/4-20X.62SIN)	
M		1	9T-4295	4	WASHER-HARD (2MM THK)	
	19	1	9I-9464	1	FLOOR MAT	
	20	1	9E-6946	1	MODULE AS-OPERATOR	
	21	1	3T-3934	1	HANDHOLD	
	22	1	9P-0571	2	PLUG	
	23	2	9T-0264	4	BOLT (1/4-20X.62SIN)	
M		2	9T-4295	4	WASHER-HARD (2MM THK)	
	24	2	5M-2062	17	BOLT (3/8-16X.750IN)	
	25	2	6P-1075	21	WASHER-HARD (3MM THK)	
	26	2	7T-9136	1	SEAL	
	27	2	7X-0075	2	BOLT (3/4-10X5IN)	
		2	7X-0682	2	WASHER-HARD (6MM THK)	
	28	2	3T-3482	2	PLATE	
	29	2	3T-5290	1	PLATE AS	
		2	7S-4828	6	SPACER	
	30	2	3T-5291	1	SEAL	
	31	2	7S-9817	1	GASKET	
	32	2	7S-9816	1	COVER AS	
		2	5R-2276	2	WASHER	
		2	9F-9926	2	SCREW-KNURLED	
	33	2	9W-3429	1	COVER	
	34	2	8E-9697	1	COVER	
	35	2	9D-3931	8	SCREW-SOCKET HEAD	
	36	2	9W-3143	8	MOUNTING	
	37	2	9W-9937	2	PLATE	
	38	2	7X-0360	2	BOLT (7/8-9X5IN)	
		2	7X-0672	2	WASHER-HARD	
	39	2	4L-6454	4	BOLT (3/8-16X1.0IN)	
	40	2	3T-4788	1	COVER	

12 FRAME AND BODY 1 of 4 SELP4570-01

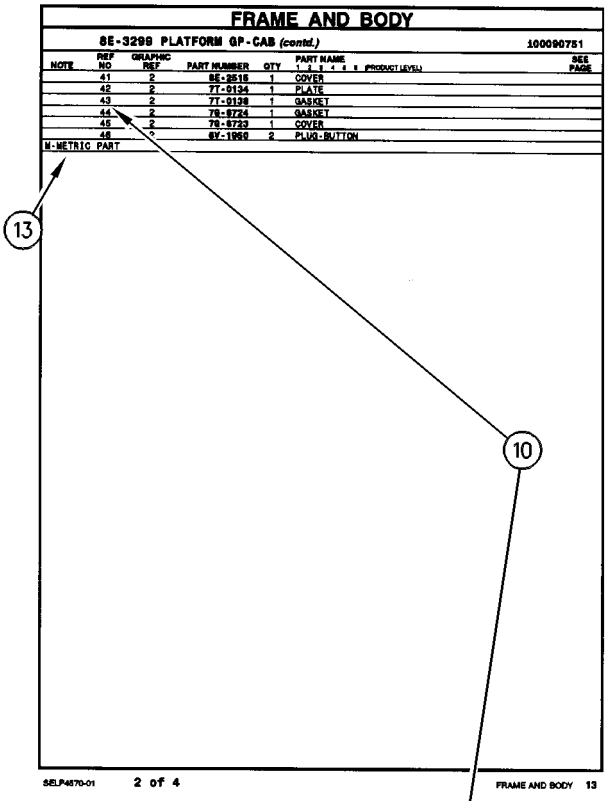

FRAME AND BODY

8E-3299 PLATFORM GP-CAB (contd.) 100090751

NOTE	REF NO	GRAPHIC REF	PART NUMBER	QTY	PART NAME 1 2 3 4 5 6 (PRODUCT LEVEL)	SEE PAGE
	41	2	8E-2515	1	COVER	
	42	2	7T-9134	1	PLATE	
	43	2	7T-9138	1	GASKET	
	44	2	7S-9724	1	GASKET	
	45	2	7S-9723	1	COVER	
	46	*	8Y-1950	2	PLUG-BUTTON	

M-METRIC PART

SELP4570-01 2 of 4 FRAME AND BODY 13

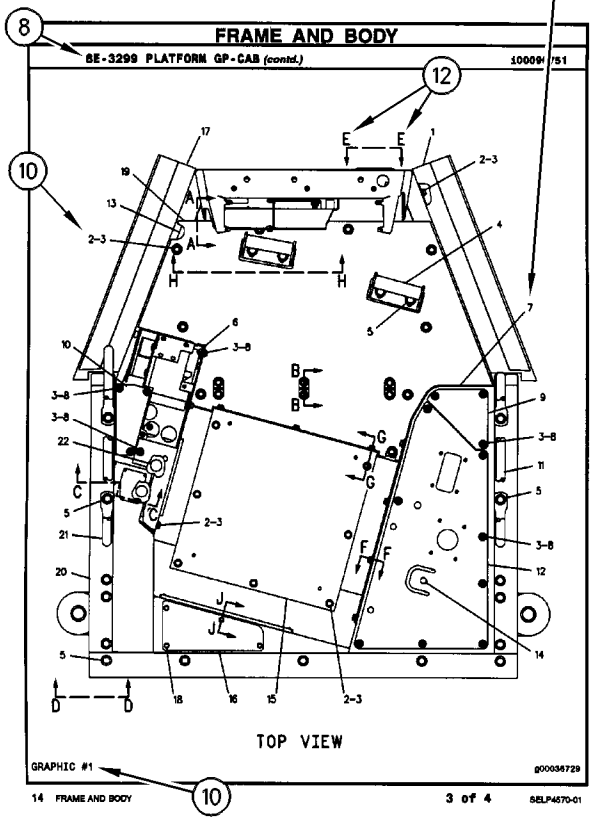

FRAME AND BODY

8E-3299 PLATFORM GP-CAB (contd.) 100090751

TOP VIEW

GRAPHIC #1 g00036729

14 FRAME AND BODY 3 of 4 SELP4570-01

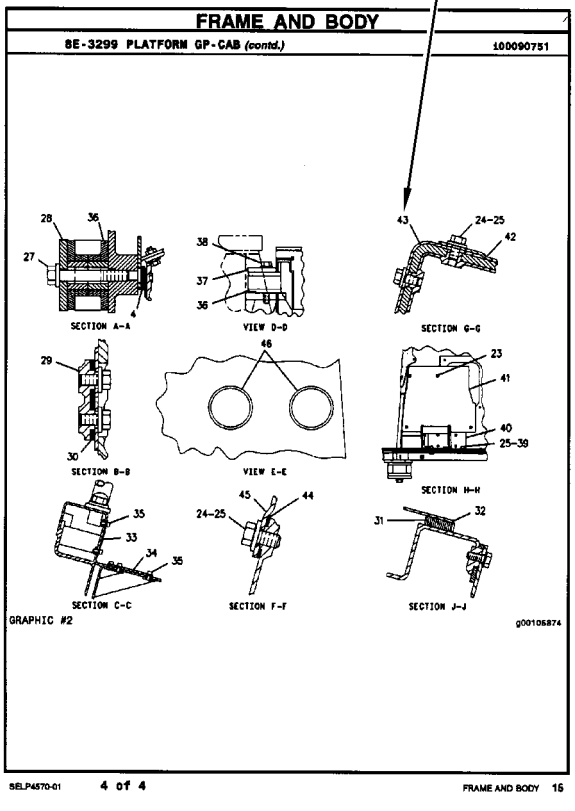

FRAME AND BODY

8E-3299 PLATFORM GP-CAB (contd.) 100090751

SECTION A-A VIEW D-D SECTION G-G

SECTION B-B VIEW E-E SECTION H-H

SECTION C-C SECTION F-F SECTION J-J

GRAPHIC #2 g00105874

SELP4570-01 4 of 4 FRAME AND BODY 15

INFORMAÇÃO GERAL

1. IDENTIFICAÇÃO DA MÁQUINA

As máquinas Caterpillar são identificadas pelos Números de Informação do Produto (PIN). Alguns componentes incluídos numa máquina podem ser identificados por Números de Série (S/N). Componentes típicos que serão enumerados com números de série incluem motores, transmissões, lâminas e ríperes. Além do número de série, a máquina e o motor são ainda identificados por números de arranjo e, em alguns casos, números de modificações. Tais números encontram-se na(s) placa(s) de identificação do produto e na placa mestre no compartimento do operador.

SIS *Novidades*

A partir do primeiro trimestre de 2001 o Número de Identificação de Produto da Caterpillar (PIN) precisa ser mudado de 8 para 17 caracteres. Esforçando-se para fornecer uma identificação uniforme de equipamentos, a Caterpillar e outros fabricantes de equipamento de construção estão mudando para atender a versão mais atualizada do padrão de identificação de produtos. Os números de PIN para produtos de aplicações não rodoviárias são definidos pela ISO 10261. O novo formato de número PIN será adotado em todas as máquinas e grupos geradores Caterpillar. As placas e as marcações do chassi mostrarão os 17 dígitos de PIN. O novo formato terá a seguinte disposição:

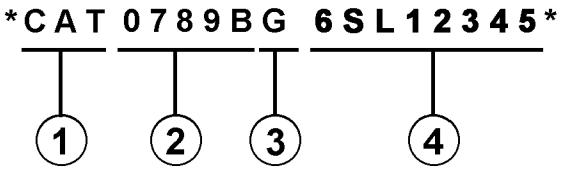

Onde:

1. Código de Fabricação Mundial da Caterpillar (dígitos 1-3)

2. Descrição da Máquina (dígitos 4-8)

3. Dígito de Verificação (dígito 9)

4. Seção de Indicador da Máquina (MIS) ou Número de Seqüência de Produto (dígitos 10-17). Estes eram anteriormente chamados de Número de Série.

Máquinas e grupos geradores produzidos antes do primeiro trimestre de 2001 manterão o formato de 8 caracteres de PIN.

Componentes como motores, transmissões, eixos, ferramentas de trabalho, etc. continuarão a usar Número de Série (S/N) com oito caracteres.

2. COMO OBTER PEÇAS

⚠ CUIDADO

Quando peças de substituição são exigidas para este produto, a Caterpillar recomenda a utilização de peças de substituição Caterpillar ou peças com as especificações equivalentes incluindo, mas não limitadas, à dimensões físicas, tipos, resistência e materiais.

A inobservância desta advertência poderá resultar em falhas prematuras, danos ao produto, ferimentos ou morte.

As Peças de Reposição de Qualidade Caterpillar encontram-se disponíveis nos revendedores Caterpillar no mundo inteiro. Seus estoques de peças são atualizados e incluem todas as peças normalmente necessárias para proteger seu investimento em máquinas Caterpillar. Alguns revendedores podem oferecer jogos de reparo ou peças de troca/remanufaturadas disponíveis como uma opção da alternativa de reparo mais eficaz para uma situação específica. Ao encomendar peças, seu pedido deve especificar a quantidade, o número e o nome da peça e o número de série/número de identificação do produto referentes à máquina para a qual as peças se destinam.

3. ORGANIZAÇÃO DO MANUAL DE PEÇAS

A informação do produto neste manual é apresentada em forma de "elementos de informação" que representam todos os componentes para o modelo específico. Arranjo de Motor e Grupo de Assento são exemplos de elementos de informação. Os elementos de informação são organizados em ordem alfabética por nome de peça ou secundariamente, por número de peça incluído em cada seção principal do manual.

4. LISTA DE CONTEÚDOS

A Lista de Conteúdos (TOC) se encontra no princípio do manual. A Lista de Conteúdos (TOC) relaciona em cada seção do manual uma lista completa com todos os elementos de informação organizados conforme aparecem no manual. Números de página são fornecidos para que se tenha referência rápida de ilustrações de peças detalhadas e listas de conteúdos que podem receber serviço de manutenção.

INFORMAÇÃO GERAL

5. ÍNDICE DE PEÇAS DE MANUTENÇÃO

O Índice de Peças de Manutenção, localizado perto do princípio do manual, faz referência aos números de peça de manutenção usados com maior frequência, fornecendo uma descrição, a quantidade, o uso e o número de página. Esta informação é organizada com a descrição da peça em ordem alfabética.

6. ÍNDICE

O Índice localizado perto do princípio do manual, consiste de uma lista em ordem alfabética de todos os elementos de informação incluídos no manual. Números de página são fornecidos para que se tenha referência rápida de ilustrações de peças detalhadas e listas de conteúdos que podem receber serviço de manutenção.

7. ÍNDICE DE NÚMERO DE PEÇA

Um índice numérico relacionando todos os números de peça e a(s) página(s) correspondentes, aparece no final do manual.

8. LEGENDAS

As legendas localizadas no início de cada elemento de informação identificam o número e o nome de peça, juntamente com informação descritiva adicional. Informações sobre o Número de Informação do Produto (PIN) e o Número de Série (S/N) encontradas em cada legenda devem ser usadas para selecionar a informação correta sobre uma máquina específica. Opções de substituição no campo, identificação de componentes de acessórios opcionais e informações sobre onde são utilizados ("parte de") são também fornecidas.

A primeira linha de uma legenda é indicada em tipo maior para indicar o princípio de um elemento de informação. Legendas para páginas adicionais que podem ser necessárias para ilustrar um elemento de informação serão apresentadas em tipo padrão e incluirão o termo *(continua)* .

9. NÃO DISPONÍVEL SEPARADAMENTE

Em alguns casos, é necessário mostrar peças não disponíveis separadamente que têm uma ligação com listas de conteúdos de nível inferior que podem receber serviço de manutenção. Os números de peça destes componentes não disponíveis aparecerão em *itálico* , a fim de indicar que não estão disponíveis.

10. NÙMEROS DE REFERÊNCIA À LISTA DE PEÇAS

Os números indicados na coluna Ref No (No. de Referência) correspondem-se aos números usados no(s) gráfico(s) correspondente(s). Um sufixo com letras pode ser acrescentado a um número de referência para identificar itens de conteúdo de nível inferior. Os números indicados na coluna Graphic Ref (Referência de Gráfico) referem-se ao identificador de número de gráfico presente no canto esquerdo inferior de cada ilustração. O número de Referência de Gráfico pode ser usado em combinação com o item Ref No para determinar-se o número de peça correto. Poderá haver omissão intencional de um número de referência (Ref No) de uma lista de conteúdos uma vez que as informações são atualizadas para refletir os números de peça mais recentes que podem receber serviço de manutenção.

11. NOMES DE PEÇAS DESALINHADOS

Quando um nome de peça encontra-se desalinhado numa lista de peças, significa que tal item faz parte do (está incluído no) grupo ou conjunto sob o qual está relacionado.

12. LETRAS DE REFERÊNCIA NAS ILUSTRAÇÕES

Quando necessário, as ilustrações contêm letras de referência (A, B, C, etc.) que são utilizadas para seguir tubulações e cabos elétricos de um ponto a outro. Também foram utilizadas para indicar onde se pode reconectar as ilustrações que foram separadas.

13. ABREVIAÇÕES E SÍMBOLOS

O.D. – "Outside Diameter" (Diâmetro Externo)
I.D. – "Inside Diameter" (Diâmetro Interno)
A – Não faz parte deste grupo
B – Use conforme necessário
C – Indica modificação
D – Vendido por metro
E – Vendido por centímetro
F – Não ilustrado
G – Vendido por polegada
I – Consultar o Sistema de Informações Hidráulicas
M – Peça métrica
R – Peça remanufaturada pode estar disponível; consulte o seu revendedor Cat
Y – Ilustração separada
Z – Não disponível separadamente

SIS *Novidades*

14. <END>

Este símbolo indica o final de um elemento de informação.

NOTA:

Os contínuos aperfeiçoamentos e avanços no projeto do produto podem ocasionar modificações em sua máquina que talvez ainda não estejam incluídas nesta publicação. Sempre que surgirem dúvidas quanto a um produto Caterpillar ou quanto à presente publicação, consulte o seu revendedor Caterpillar para obter as informações mais recentes disponíveis.

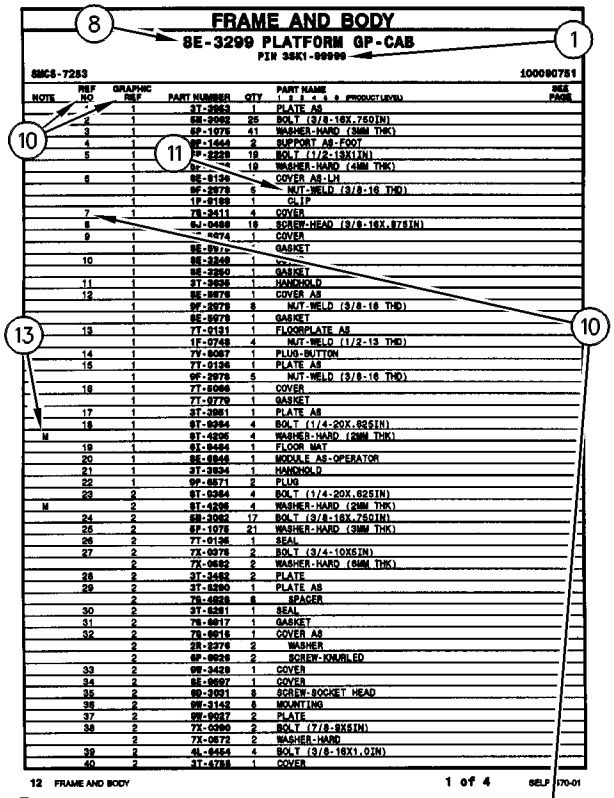

FRAME AND BODY

8E-3299 PLATFORM GP-CAB

PIN 3SK1-99999

SMCS-7283 100090751

NOTE	REF NO	GRAPHIC REF	PART NUMBER	QTY	PART NAME 1 2 3 4 5 6 (PRODUCT LEVEL)	SEE PAGE
	*	1	3T-3963	1	PLATE AS	
	2	1	5B-3062	25	BOLT (3/8-16X.750IN)	
	3	1	6P-1075	41	WASHER-HARD (3MM THK)	
	4	1	9E-1443	2	SUPPORT AS-FOOT	
	5	1	9P-2229	19	BOLT (1/2-13X1IN)	
		1	9P-[illegible]	19	WASHER-HARD (4MM THK)	
	6	1	9E-9136	*	COVER AS-LH	
		1	9F-2979	6	NUT-WELD (3/8-16 THD)	
		1	1P-0189	1	CLIP	
	7	1	7X-3411	4	COVER	
	8	1	6J-0468	18	SCREW-HEAD (3/8-16X.87SIN)	
	9	1	[illegible]-0274	1	COVER	
		1	9E-9976	*	GASKET	
	10	1	9E-3248	1	[illegible]	
		1	9E-3250	1	GASKET	
	11	1	3T-3636	1	HANDHOLD	
	12	1	9E-9978	1	COVER AS	
		1	9F-2979	8	NUT-WELD (3/8-16 THD)	
		1	9E-9979	1	GASKET	
	13	1	7T-9131	1	FLOORPLATE AS	
		1	1F-0748	4	NUT-WELD (1/2-13 THD)	
	14	1	7V-8067	1	PLUG-BUTTON	
	15	1	7T-9136	1	PLATE AS	
		1	9F-2979	5	NUT-WELD (3/8-16 THD)	
	16	1	7T-8066	1	COVER	
		1	7T-9779	1	GASKET	
	17	1	3T-3951	1	PLATE AS	
	18	1	9T-0264	4	BOLT (1/4-20X.62SIN)	
M		1	9T-4296	4	WASHER-HARD (2MM THK)	
	19	1	9X-9454	1	FLOOR MAT	
	20	1	9E-6946	1	MODULE AS-OPERATOR	
	21	1	3T-3934	1	HANDHOLD	
	22	1	9P-0671	2	PLUG	
	23	2	9T-0264	4	BOLT (1/4-20X.62SIN)	
M		2	9T-4296	4	WASHER-HARD (2MM THK)	
	24	2	5B-3062	17	BOLT (3/8-16X.750IN)	
	25	2	6P-1075	21	WASHER-HARD (3MM THK)	
	26	2	7T-9136	1	SEAL	
	27	2	7X-0078	2	BOLT (3/4-10X5IN)	
		2	7X-0682	2	WASHER-HARD (6MM THK)	
	28	2	3T-3482	2	PLATE	
	29	2	3T-5290	1	PLATE AS	
		2	7S-4828	6	SPACER	
	30	2	3T-5291	1	SEAL	
	31	2	7S-8817	1	GASKET	
	32	2	7S-8816	1	COVER AS	
		2	5R-2276	2	WASHER	
		2	9F-9928	2	SCREW-KNURLED	
	33	2	9W-3429	1	COVER	
	34	2	8E-9697	1	COVER	
	35	2	9D-3931	8	SCREW-SOCKET HEAD	
	36	2	9W-3143	8	MOUNTING	
	37	2	9W-9937	2	PLATE	
	38	2	7X-0360	2	BOLT (7/8-9X5IN)	
		2	7X-0672	2	WASHER-HARD	
	39	2	4L-6454	4	BOLT (3/8-16X1.0IN)	
	40	2	3T-4788	1	COVER	

12 FRAME AND BODY 1 of 4 SELP4570-01

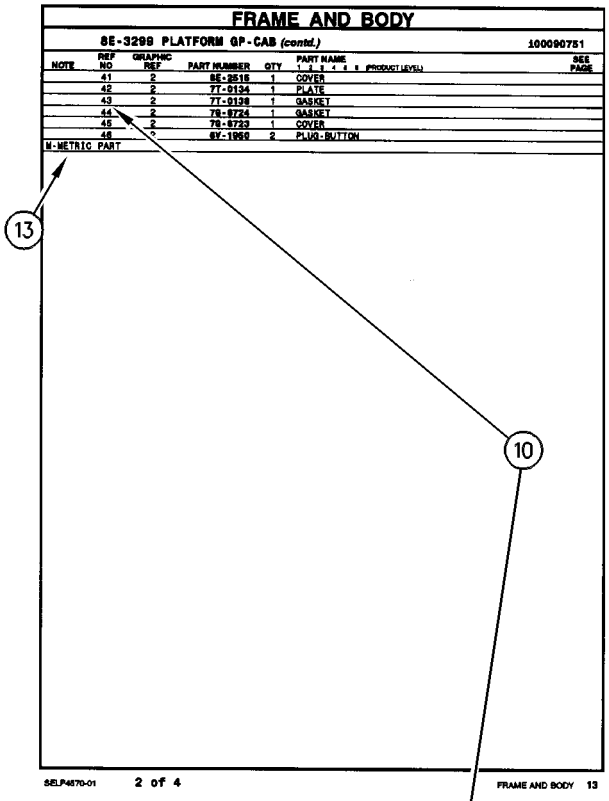

FRAME AND BODY

8E-3299 PLATFORM GP-CAB (contd.) 100090751

NOTE	REF NO	GRAPHIC REF	PART NUMBER	QTY	PART NAME 1 2 3 4 5 6 (PRODUCT LEVEL)	SEE PAGE
	41	2	8E-2515	1	COVER	
	42	2	7T-9134	1	PLATE	
	43	2	7T-9138	1	GASKET	
	44	2	7S-8724	1	GASKET	
	45	2	7S-8723	1	COVER	
	46	*	8Y-1950	2	PLUG-BUTTON	

M-METRIC PART

SELP4570-01 2 of 4 FRAME AND BODY 13

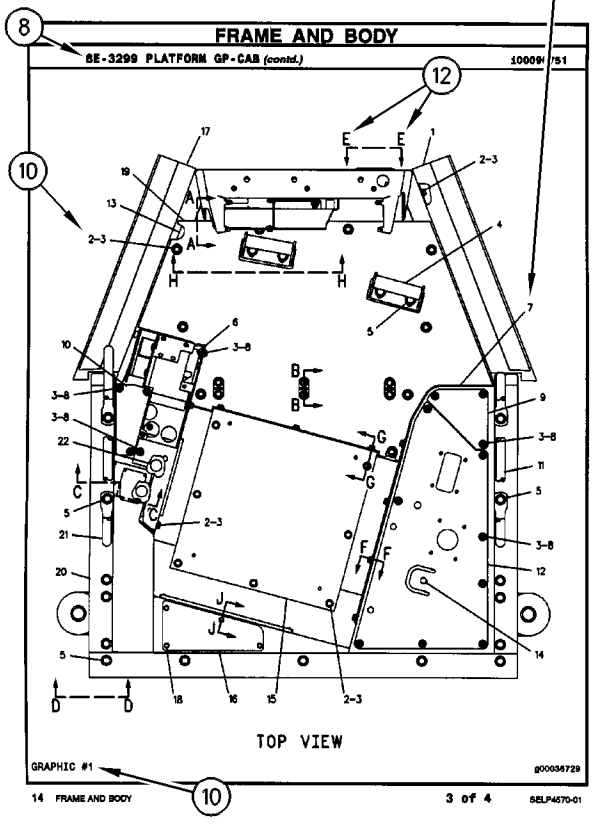

FRAME AND BODY

8E-3299 PLATFORM GP-CAB (contd.) 100090751

TOP VIEW

GRAPHIC #1 g00036729

14 FRAME AND BODY 3 of 4 SELP4570-01

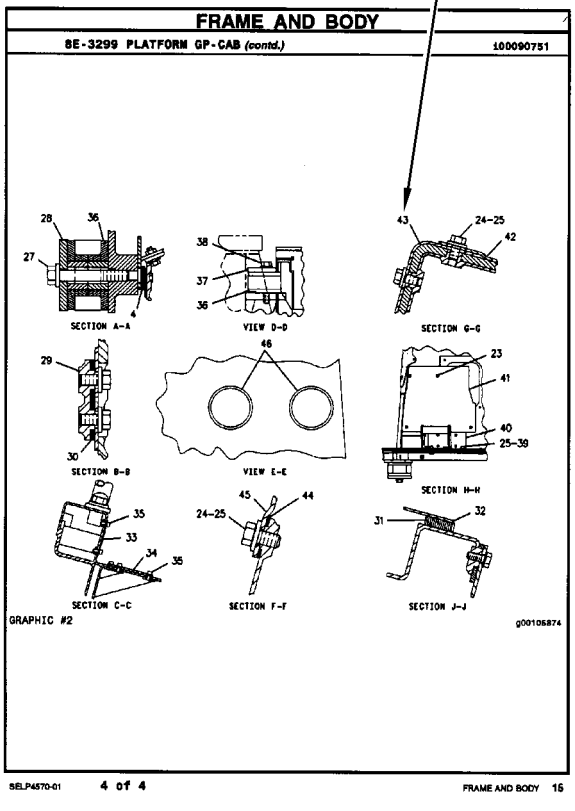

FRAME AND BODY

8E-3299 PLATFORM GP-CAB (contd.) 100090751

SECTION A-A VIEW D-D SECTION G-G

SECTION B-B VIEW E-E SECTION H-H

SECTION C-C SECTION F-F SECTION J-J

GRAPHIC #2 g00105874

SELP4570-01 4 of 4 FRAME AND BODY 15

ALLGEMEINE HINWEISE

1. MASCHINENKENNZEICHNUNG

Caterpillar-Maschinen sind mit PRODUCT IDENTIFICATION NUMBERS (PIN) (Produkt-Identnummern) gekennzeichnet. Einige Baugruppen, z.B. Motoren, Getriebe, Planierschilde und Aufreißer, sind mit SERIAL NUMBERS (S/N) (Seriennummern) gekennzeichnet. An der Maschine und am Motor befinden sich außerdem ARRANGEMENT NUMBERS (Ausrüstungsnummern) sowie in einigen Fällen MODIFICATION NUMBERS (Änderungsnummern). Sie befinden sich auf den PIN-Schildern und auf dem Typenschild im Fahrerhaus.

Bei Ersatzteilbestellungen müssen dem Händler alle diese Nummern zur Verfügung gestellt werden.

SIS *Neu im Parts Manual*

Vom ersten Quartal 2001 ab wurde die Caterpillar Produkt-Identnummer (PIN) von 8 auf 17 Zeichen geändert. Um zur Standardisierung der Produkt-Identnummer beizutragen, sind Caterpillar und andere Baumaschinenhersteller bestrebt, die aktuellste Norm zur Produkt-Identnummerierung einzuführen. Produkt-Identnummern für Baumaschinen sind durch ISO 10261 definiert. Das neue Format der Produkt-Identnummern gilt für alle Caterpillar-Maschinen und -Stromaggregate. Die Produkt-Identschilder und -Identrahmenmarkierung enthalten die aus 17 Zeichen bestehende Identnummer. Das neue Format hat folgende Abschnitte:

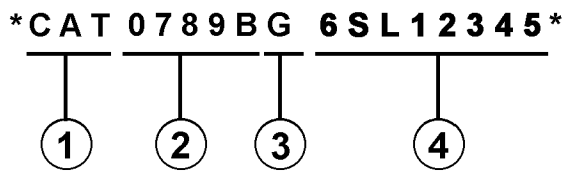

Abschnitte:

1. Caterpillars weltweiter Herstellungscode (Zeichen 1-3)

2. Modell (Zeichen 4-8)

3. Kontrollzeichen (Zeichen 9)

4. Maschinenspezifische Kennung (MIS) oder Produktsequenznummer (Zeichen 10-17). Diese wurde früher als Seriennummer bezeichnet.

Für vor dem ersten Quartal 2001 hergestellte Maschinen und Stromaggregate wird das aus 8 Zeichen bestehende PIN-Format beibehalten.

Bauteile wie z.B. Motoren, Getriebe, Achsen sowie Arbeitsgeräte werden weiterhin eine aus 8 Zeichen bestehende Seriennummer (S/N) aufweisen.

2. BESTELLEN VON ERSATZTEILEN

⚠ WARNUNG

Wenn für diese Maschine Ersatzteile benötigt werden, empfiehlt Caterpillar, ausschließlich Caterpillar-Ersatzteile oder solche zu verwenden, die die gleichen technischen Merkmale hinsichtlich Typ, Festigkeit, Werkzeugeigenschaften und die gleichen Maße aufweisen.

Bei Nichtbeachtung dieser Warnung besteht Verletzungs- oder sogar Lebensgefahr! Ferner kann Nichtbeachtung vorzeitige Ausfälle der Teile und Beschädigung der Maschine zur Folge haben.

Original Caterpillar-Ersatzteile können weltweit bei jedem Caterpillar-Händlern bestellt werden. Die umfangreichen Händlerlager enthalten normalerweise alle Teile, die Sie für Ihre Caterpillar-Maschine benötigen. Einige Händler bieten Reparatursätze, Austausch- oder werküberholte Teile an, so daß Sie eine Auswahl unter verschiedenen Reparaturmöglichkeiten treffen können. Ihre Bestellung muß folgende Angaben enthalten: Anzahl der benötigten Teile, Bestellnummer, Bezeichnung des Teils, Serien-Nr./Produkt-Ident-Nr., Ausrüstungs-Nr. und Änderungs-Nr. der Maschine, für die diese Teile benötigt werden.

3. AUFBAU DES PARTS MANUAL

Die Produktinformationen für alle Komponenten eines bestimmten Modells sind in INFORMATION ELEMENTS (Informationseinheiten) gegliedert. ENGINE ARRANGEMENT (Motorausführung) und SEAT GROUP (Fahrersitz) sind Beispiele für solche Informationseinheiten. Sie sind innerhalb jeder Gruppe alphabetisch, entsprechend der Ersatzteilbezeichnung, und zusätzlich numerisch, entsprechend der Ersatzteilnummer, geordnet.

4. INHALTSVERZEICHNIS

Das Inhaltsverzeichnis befindet sich am Anfang des Buches. Im Inhaltsverzeichnis werden die einzelnen Abschnitte des Buches aufgeführt. Die Abschnitte enthalten eine vollständige Aufstellung aller Informationseinheiten. Diese sind entsprechend ihrem Erscheinen im Buch geordnet. Das Inhaltsverzeichnis enthält Seitenangaben für Schnellverweise auf detaillierte Abbildungen und Teillisten.

ALLGEMEINE HINWEISE

5. INDEX FÜR WARTUNGSTEILE

Der Index für Wartungsteile vorn im Buch enthält die Bestellnummern, Seitenangaben, Mengenangaben und Informationen über den Einsatzbereich für die am häufigsten benötigten Ersatzteile. Die Angaben sind alphabetisch entsprechend der Teilebezeichnung geordnet.

6. INDEX

Der Index vorn im Buch enthält eine alphabetische Liste aller Informationseinheiten. Er enthält Seitenangaben für Schnellverweise auf detaillierte Abbildungen und Teillisten.

7. INDEX FÜR BESTELLNUMMERN

Hinten im Buch befindet sich ein numerischer Index, mit allen Bestellnummern und dem Hinweis auf die Seite, auf der sich die betreffende Abbildung befindet.

8. ÜBERSCHRIFTEN

Die Überschriften, die sich am Anfang jeder der Informationseinheiten befinden, enthalten Bestellnummern, Ersatzteilbezeichnungen und zusätzliche beschreibende Informationen. Produkt-Ident- und Seriennummern in den Überschriften sollten zur Auswahl der richtigen Informationen für die betreffende Maschine verwendet werden. Die Überschriften enthalten außerdem Informationen über möglichen Außendienstersatz, mögliche Baugerätekomponenten und die Baugruppe, zu der das Teil gehört.

Die erste Zeile einer Überschrift erscheint in einer größeren Schriftart, um den Anfang einer Informationseinheit zu kennzeichnen. Überschriften für zusätzliche Seiten, die zur Erläuterung einer Informationseinheit notwendig sind, erscheinen in normaler Schriftart und enthalten den Begriff "(contd.)".

9. NICHT EINZELN LIEFERBARE TEILE

In einigen Fällen ist es notwendig nicht lieferbare Teile, die selbst mit einer eigenen Teilliste im Buch vertreten sind, aufzuführen. Die Bestellnummern dieser nicht einzeln lieferbaren Teile erscheinen kursiv, wodurch angezeigt wird, daß sie nur in Verbindung mit anderen Teilen lieferbar sind.

10. REFERENZNUMMER FÜR ERSATZTEILE

Die Zahlen, die in der Spalte "Ref No" aufgeführt sind, stimmen mit den Zahlen in den beigefügten Abbildungen überein. Ein Buchstaben-Suffix kann zu einer Referenznummer hinzugefügt werden, um zu kennzeichnen, daß das Teil mit einer eigenen Teilliste im Buch aufgeführt ist. Die in der Spalte "Graphic Ref" angeführten Zahlen verweisen auf die Identifikationsnummer der Abbildung, die sich in der linken unteren Ecke der Abbildung befindet. Diese Nummer kann zusammen mit der Referenznummer des Teils angegeben werden, um die richtige Ersatzteilnummer zu ermitteln. Referenznummern können absichtlich weggelassen werden, da die Nummern der lieferbaren Ersatzteile ständig aktualisiert werden.

11. EINGERÜCKTE BEZEICHNUNGEN

Wenn eine Bezeichnung eingerückt ist, wird dadurch angezeigt, daß das Teil zu einer Baugruppe gehört, unter deren Bezeichnung es eingerückt ist.

12. REFERENZBUCHSTABEN

Falls erforderlich sind in den Abbildungen Referenzbuchstaben enthalten (z.B. A, B, C, usw.), die Leitungen und Kabelbäume von einem Punkt zum anderen verfolgen. Außerdem geben sie die Stelle an, an der getrennte Abbildungen fortgesetzt werden.

13. ABKÜRZUNGEN UND SYMBOLE

O.D. – Außendurchmesser
I.D. – Innendurchmesser
A – kein Teil dieser Gruppe
B – nach Bedarf verwenden
C – Hinweis auf eine Änderung
D – in Meter-Länge bestellen
E – in Zentimeter-Länge bestellen
F – nicht gezeigt
G – in Zoll-Länge bestellen
I – siehe Hydraulikinformationssystem
M – metrisches Teil
R – werküberholtes Teil unter Umständen lieferbar
Y – separate Abbildung
Z – nicht einzeln lieferbar

SIS *Neu im Parts Manual*

14. <END>

Dieses Symbol zeigt das Ende eines Informationselements an.

ANMERKUNG:

Ständig vorgenommene Verbesserungen und Weiterentwicklungen an Ihrer Maschine können Änderungen verursachen, die in der vorliegenden Ausgabe noch nicht berücksichtigt sind. Fragen zu Ihrer Caterpillar-Maschine oder diesem Ersatzteilbuch beantwortet Ihr Caterpillar-Händler.

ALLGEMEINE HINWEISE

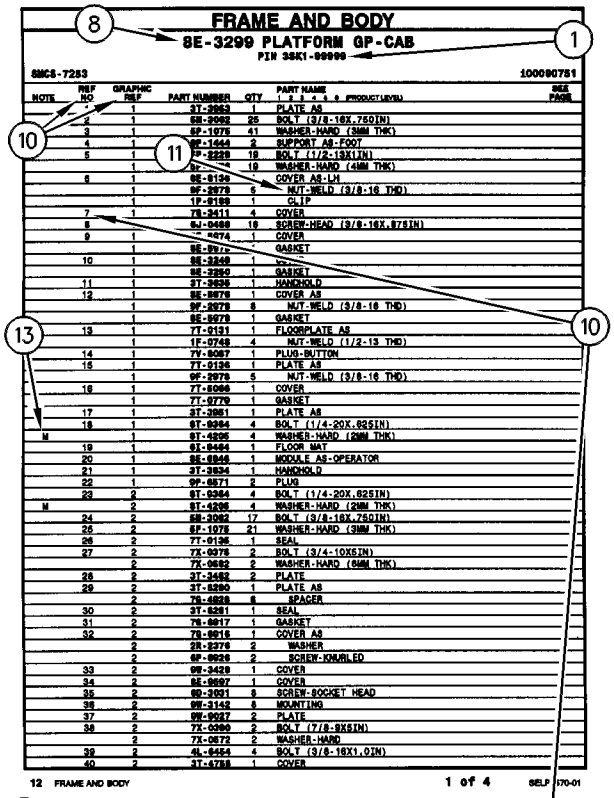

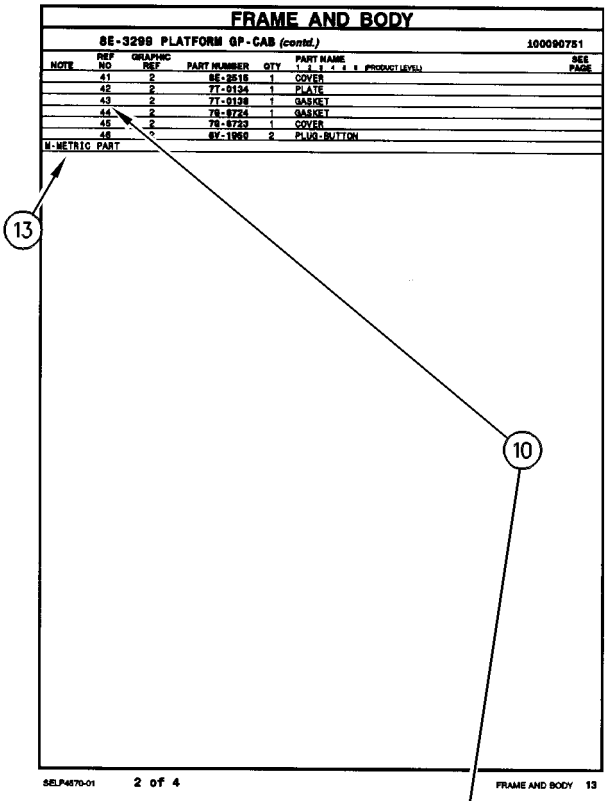

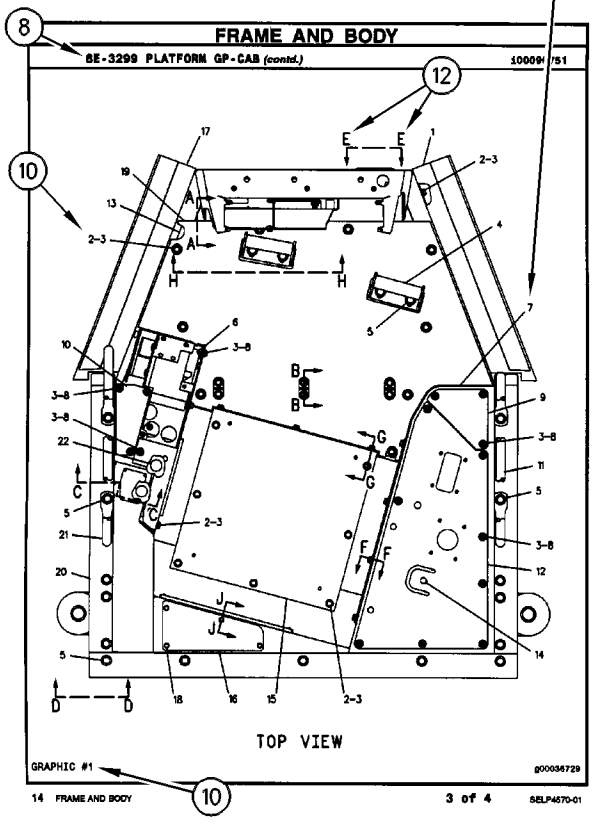

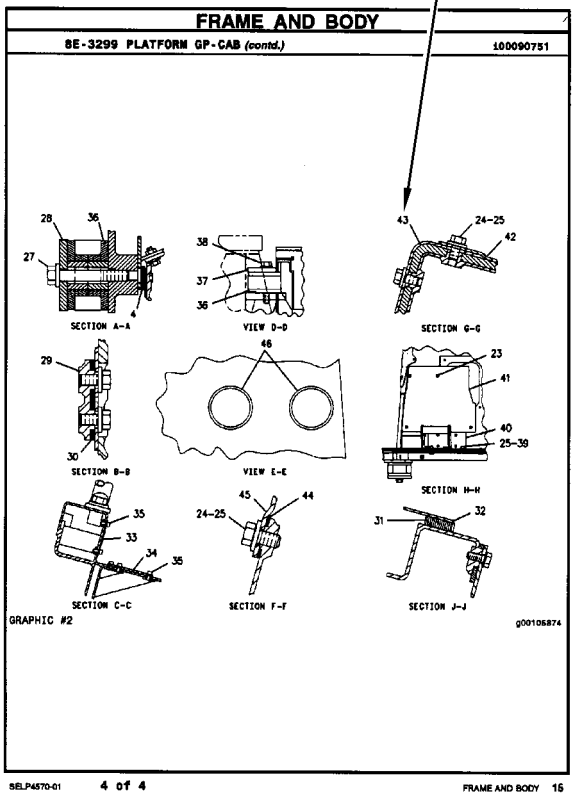

REMANUFACTURED COMPONENTS

As an option when making repairs consider Caterpillar Remanufactured Components. Components that are available through the Caterpillar Remanufactured Program are identified three ways in the parts book:

- with the letter R in the note field of the parts list
- with an R* at the beginning of the first line of the caption
- with an *R at the end of the first line of the caption

Typical components included in the Remanufacturing Program include:

ALTERNATORS
CONNECTING RODS
CRANKSHAFTS - UNDERSIZE
CRANKSHAFTS - UPGRADE TO NEW
CYLINDER HEADS
ELECTRONIC CONTROL MODULES (ECM)
ELECTRONIC SENSORS
FUEL INJECTORS
FUEL NOZZLES
FUEL PUMPS
GOVERNORS
OIL PUMPS
PISTONS
SHORT BLOCKS
STARTERS
TURBOCHARGERS - COMPLETE
TURBOCHARGER CARTRIDGES
WATER PUMPS

Caterpillar Remanufactured engines for many engine arrangements are also available.

OPTIONS DE RÉPARATION

COMPOSANTS RÉNOVÉS

Comme option de réparation, considérer les composants rénovés Caterpillar. Les composants disponibles dans le cadre du programme Caterpillar de composants rénovés sont identifiés de trois façons dans le catalogue de pièces:

- avec la lettre "R" dans l'espace note de la liste des pièces
- avec R* au début de la première ligne des légendes
- avec *R à la fin de la première ligne des légendes

Les composants suivants figurent parmi les composants typiques du programme de rénovation:

ALTERNATEURS
BIELLES
VILEBREQUINS - SOUS-DIMENSIONNÉS
VILEBREQUINS - REMIS À NEUF
CULASSES
MODULES DE COMMANDE ÉLECTRONIQUE (ECM)
CAPTEURS ÉLECTRONIQUES
INJECTEURS
TÊTES D'INJECTEURS
POMPES À CARBURANT
RÉGULATEURS
POMPES À HUILE
PISTONS
BLOCS EMBIELLÉS
DÉMARREURS
TURBOCOMPRESSEURS - COMPLETS
CARTOUCHES DE TURBOCOMPRESSEUR
POMPES À EAU

Des moteurs rénovés sont aussi disponibles pour plusieurs versions de moteur.

ALTERNATIVAS DE REPARACIÓN

COMPONENTES REMANUFACTURADOS

Al hacer reparaciones, tenga en cuenta la opción de Componentes Remanufacturados Caterpillar. Los componentes que están disponibles por medio del programa de Productos Remanufacturados Caterpillar se identifican de tres maneras en el manual de piezas:

- con la letra R en el espacio de Nota de la lista de piezas
- con una R* al comienzo de la primera línea de la leyenda
- con una *R al final de la primera línea de la leyenda

Los componentes que se incluyen típicamente en el Programa de Productos Remanufacturados son:

ALTERNADORES
BIELAS
CIGÜEÑALES - BAJOMEDIDA
CIGÜEÑALES - REMANUFACTURADOS A NUEVO
CULATAS
MÓDULOS DE CONTROL ELECTRÓNICO (ECM)
SENSORES ELECTRONICOS
INYECTORES
BOQUILLAS
BOMBAS DE COMBUSTIBLE
REGULADORES
BOMBAS DE ACEITE
PISTONES
MONOBLOQUES
MOTORES DE ARRANQUE
TURBOCOMPRESORES - COMPLETOS
NÚCLEOS DE TURBOCOMPRESOR
BOMBAS DE AGUA

También hay disponibles motores Remanufacturados Caterpillar para muchas de las configuraciones de motores.

ALTERNATIVAS DE REPARO

COMPONENTES REMANUFATURADOS

Considere o uso de Componentes Remanufaturados Caterpillar ao efetuar reparos. Os componentes disponíveis através do Programa de Remanufatura Caterpillar são identificados de três formas no manual de peças:

- com um R na área da nota da lista de peças
- com um R* no princípio da primeira linha da legenda
- com um *R no final da primeira linha da legenda

Os componentes típicos que constam no Programa de Remanufatura incluem:

ALTERNADORES
BIELAS
VIRABREQUINS - SUBMEDIDAS
VIRABREQUINS - ATUALIZAÇÃO
CABEÇOTES
MÓDULOS DE CONTROLE ELETRÔNICO (ECM)
SENSORES ELETRÔNICOS
INJETORES DE COMBUSTÍVEL
BICOS DE ABASTECIMENTO DE COMBUSTÍVEL
BOMBAS DE COMBUSTÍVEL
GOVERNADORES
BOMBAS DE ÓLEO
PISTÕES
BLOCOS BÁSICOS DO MOTOR
MOTORES DE PARTIDA
TURBOALIMENTADORES - COMPLETOS
CARTUCHOS DE TURBOALIMENTADORES
BOMBAS D'ÁGUA

Motores Remanufaturados Caterpillar também encontram-se disponíveis para diversos arranjos de motor.

REPARATURALTERNATIVEN

WERKÜBERHOLTE AT-PRODUKTE

Bei Reparaturen sollten werküberholte AT-Produkte von Caterpillar in Betracht gezogen werden. Die durch das AT-Programm von Caterpillar erhältlichen Teile sind im Parts Book auf drei verschiedene Arten gekennzeichnet:

- mit dem Buchstaben R in der Spalte NOTE der Ersatzteilliste
- mit einem R* am Anfang der ersten Zeile der Überschrift
- mit einem *R am Ende der ersten Zeile der Überschrift

Das AT-Programm umfaßt u.a. folgende Produkte:

DREHSTROMGENERATOREN
PLEUELSTANGEN
KURBELWELLEN - MIT UNTERMASS
KURBELWELLEN - MIT ORIGINALMASS
ZYLINDERKÖPFE
ELEKTRONISCHE STEUEREINHEITEN (EMC)
ELEKTRONISCHE SENSOREN
PUMPENDÜSEN
EINSPRITZDÜSEN
KRAFTSTOFFPUMPEN
DREHZAHLREGLER
ÖLPUMPEN
KOLBEN
TEILMOTOREN
ANLASSER
TURBOLADER - KOMPLETT
TURBOLADERLAUFZEUGE
KÜHLWASSERPUMPEN

Viele Motoren können durch werküberholte AT-Motoren von Caterpillar ersetzt werden.

SUPPLEMENTAL COOLANT ADDITIVES

CUSTOMER BENEFITS:

Protects against cavitation, foam, erosion, corrosion, and scale buildup in cooling systems.

- Provides measured coolant conditioner.

DESCRIPTION:

Additives deplete from the coolant with normal operation. For this reason, Supplemental Coolant Additives (SCA) must be added to all heavy duty coolants at regular intervals. In addition, when not using a fully formulated, pre-charged antifreeze, like Caterpillar's DEAC, an initial charge of SCA must be added to the cooling system. The amount of SCA added to the system is dependent on the capacity of the system.

The SCA for initial fill is provided as a liquid. SCA's for maintenance intervals are available in liquid form and as a spin-on element. (No Spin-on available for 3600 Family of Engines)

NOTE:

The amount of SCA added at initial fill is not the same as the amount added at maintenance intervals.

The coolant additive elements can be used with any ethylene or propylene glycol type antifreeze which meets ASTM D4985 or ASTM D5345 Specifications.

NOTE:

For use with standard heavy duty coolant only, not for use with Extended Life Coolant.

PARTS NEEDED:

Cooling System Capacity		Liquid SCA at Initial Fill	Liquid SCA at Maintenance*	Spin-on SCA Maintenance Element*
Liters	Gallons			
22-30	(6-8)	3P-2044 (1)	6V-3542 (1)	111-2370 (1)
30-38	(8-10)	3P-2044 (1) 6V-3542 (1)	111-2372 (1)	111-2369 (1)
38-49	(10-13)	3P-2044 (1) 8T-1589 (1)	111-2372 (1)	111-2369 (1)
49-64	(13-17)	3P-2044 (2)	8T-1589 (1)	9N-3368 (1)
64-83	(17-22)	3P-2044 (2) 8T-1589 (1)	111-2372 (1) 6V-3542 (1)	111-2371 (1)
83-114	(22-30)	3P-2044 (3) 8T-1589 (1)	3P-2044 (1)	9N-3718 (1)
114-163	(30-43)	3P-2044 (5)	3P-2044 (1) 6V-3542 (1)	111-2371 (2)
163-242	(43-64)	3P-2044 (8)	3P-2044 (2)	9N-3718 (2)

** Normal maintenance period is 250 hrs. See your Operation and Maintenance Manual for complete coolant maintenance instructions.*

( ) Indicates quantity required.

ADDITIFS POUR LIQUIDE DE REFROIDISSEMENT

AVANTAGES POUR LE CLIENT

L'additif protège contre la cavitation, la mousse, l'érosion, la corrosion et l'accumulation de dépôts dans le circuit de refroidissement.

- L'additif complémentaire fournit une quantité mesurée d'additif.

DESCRIPTION:

Les additifs s'épuisent pendant l'utilisation du moteur. C'est pourquoi l'on doit ajouter de l'additif au liquide de refroidissement/antigel pour moteurs diesel à intervalles réguliers. En plus, si l'on n'utilise pas de l'antigel entièrement formulé et pré-chargé comme le liquide de refroidissement/antigel Caterpillar pour moteurs diesel, une quantité initiale d'additif doit être ajoutée au circuit de refroidissement. La quantité d'additif à ajouter au circuit dépend de la contenance du circuit.

L'additif pour le remplissage initial est fourni sous forme liquide. L'additif pour l'entretien ultérieur est disponible sous forme liquide et sous forme d'élément à visser. (Il n'y a pas d'élément à visser pour les moteurs de la famille 3600).

NOTA:

La quantité d'additif à ajouter au remplissage initial diffère de la quantité à ajouter aux intervalles d'entretien.

Les éléments d'additif peuvent être utilisés avec tout antigel de type éthylène ou propylène-glycol conforme à la norme ASTM D4985 ou ASTM D5345.

NOTA:

A utiliser uniquement avec du liquide de refroidissement pour moteurs diesel et non avec le liquide de refroidissement longue durée.

PIÈCES NÉCESSAIRES:

Contenance du circuit de refroidissement		Additif liquide au remplissage initial	Additif liquide aux intervalles d'entretien*	Elément d'additif à visser aux intervalles d'entretien*
Litres	Gallons U.S.			
22-30	(6-8)	3P-2044 (1)	6V-3542 (1)	111-2370 (1)
30-38	(8-10)	3P-2044 (1) 6V-3542 (1)	111-2372 (1)	111-2369 (1)
38-49	(10-13)	3P-2044 (1) 8T-1589 (1)	111-2372 (1)	111-2369 (1)
49-64	(13-17)	3P-2044 (2)	8T-1589 (1)	9N-3368 (1)
64-83	(17-22)	3P-2044 (2) 8T-1589 (1)	111-2372 (1) 6V-3542 (1)	111-2371 (1)
83-114	(22-30)	3P-2044 (3) 8T-1589 (1)	3P-2044 (1)	9N-3718 (1)
114-163	(30-43)	3P-2044 (5)	3P-2044 (1) 6V-3542 (1)	111-2371 (2)
163-242	(43-64)	3P-2044 (8)	3P-2044 (2)	9N-3718 (2)

** L'intervalle d'entretien normal est de 250 heures-service. Voir le Guide d'utilisation et d'entretien pour de plus amples renseignements concernant l'entretien du circuit de refroidissement.*

( ) Indique la quantité exigée.

ADITIVOS DE REFRIGERANTE SUPLEMENTARIOS

VENTAJAS PARA EL USUARIO:

Protegen contra la cavitación, la formación de espuma, la corrosión y la acumulación de escamas en los sistemas de enfriamiento.

- Suministra un acondicionador dosificado de refrigerante.

DESCRIPCIÓN:

Los aditivos en el refrigerante se agotan con la operación normal. Por esta razón, se debe agregar Aditivo de refrigerante suplementario (SCA) a todos los refrigerantes para servicio pesado, a intervalos regulares. Además, cuando no se usa un anticongelante de precarga completo, tal como el DEAC de Caterpillar, es necesario agregar una cantidad de aditivo de refrigerante suplementario inicial al sistema de enfriamiento. La cantidad de aditivo que se debe agregar depende de la capacidad del sistema.

El SCA de llenado inicial es líquido. El que se usa para el mantenimiento está disponible tanto en líquido como en un elemento enroscable. (No hay elemento enroscable disponible para la Familia de Motores 3600).

NOTA:

La cantidad de aditivo de llenado inicial no es la misma que se agrega en los intervalos de mantenimiento.

Los elementos de aditivo de refrigerante se pueden usar con cualquier anticongelante de tipo glicol etilénico o propílico que esté de acuerdo con las especificaciones de las normas ASTM D4985 o ASTM D5345.

NOTA:

Se debe utilizar únicamente con refrigerante estándar para servicio pesado; no se debe usar con Refrigerante de Larga Duración.

PIEZAS NECESARIAS:

Capacidad del Sistema de Enfriamiento		SCA líquido de llenado inicial	SCA líquido de mantenimiento*	Elemento de mantenimiento enroscable*
litros	gal EE.UU.			
22-30	6-8	3P-2044 (1)	6V-3542 (1)	111-2370 (1)
30-38	8-10	3P-2044 (1) 6V-3542 (1)	111-2372 (1)	111-2369 (1)
38-49	10-13	3P-2044 (1) 8T-1589 (1)	111-2372 (1)	111-2369 (1)
49-64	13-17	3P-2044 (2)	8T-1589 (1)	9N-3368 (1)
64-83	17-22	3P-2044 (2) 8T-1589 (1)	111-2372 (1) 6V-3542 (1)	111-2371 (1)
83-114	22-30	3P-2044 (3) 8T-1589 (1)	3P-2044 (1)	9N-3718 (1)
114-163	30-43	3P-2044 (5)	3P-2044 (1) 6V-3542 (1)	111-2371 (2)
163-242	43-64	3P-2044 (8)	3P-2044 (2)	9N-3718 (2)

** El período normal de mantenimiento es de 250 horas. Para ver las instrucciones completas sobre el mantenimiento del refrigerante, consulte el Manual de Operación y Mantenimiento.*

( ) Indica la cantidad necesaria.

ADITIVOS SUPLEMENTARES DO LÍQUIDO ARREFECEDOR

BENEFÍCIOS PARA O CLIENTE:

Protege contra cavitação, espuma, erosão, corrosão e acúmulo de crostas nos sistemas de arrefecimento.

- Fornece uma quantidade pré-determinada de condicionador de arrefecimento.

DESCRIÇÃO:

Com a operação normal, os aditivos se esgotam do líquido arrefecedor. Por isso, Aditivos Suplementares do Líquido Arrefecedor (SCA) devem ser acrescentados a todos os líquidos arrefecedores para serviço pesado em intervalos regulares. Além disso, quando um anticongelante pré-carregado, totalmente formulado não for usado, como o DEAC Caterpillar, uma carga inicial de SCA deve ser acrescentada ao sistema de arrefecimento. A quantidade de SCA acrescentada ao sistema depende da capacidade do sistema.

O SCA para abastecimento inicial é fornecido em forma de líquido. Os aditivos suplementares (SCA) para intervalos de manutenção estão à disposição em forma líquida e como um elemento com roscas. (Exceto os Motores da Família 3600)

NOTA:

A quantidade de SCA adicionada no abastecimento inicial não é a mesma que a acrescentada nos intervalos de manutenção.

Os elementos do aditivo do líquido arrefecedor podem ser usados com qualquer tipo de anticongelante etileno ou propileno que satisfaz as Especificações ASTM D4985 ou ASTM D5345.

NOTA:

Para uso apenas com líquido arrefecedor para serviço pesado padrão, não deve ser usado com Líquido Arrefecedor de Vida Longa.

PEÇAS NECESSÁRIAS:

Capacidade do Sistema de Arrefecimento		Líquido SCA Durante Abastecimento Inicial	Líquido SCA Durante Manutenção*	Elemento de Manutenção de SCA com Roscas*
Litros	Galões			
22-30	6-8	3P-2044 (1)	6V-3542 (1)	111-2370 (1)
30-38	8-10	3P-2044 (1) 6V-3542 (1)	111-2372 (1)	111-2369 (1)
38-49	10-13	3P-2044 (1) 8T-1589 (1)	111-2372 (1)	111-2369 (1)
49-64	13-17	3P-2044 (2)	8T-1589 (1)	9N-3368 (1)
64-83	17-22	3P-2044 (2) 8T-1589 (1)	111-2372 (1) 6V-3542 (1)	111-2371 (1)
83-114	22-30	3P-2044 (3) 8T-1589 (1)	3P-2044 (1)	9N-3718 (1)
114-163	30-43	3P-2044 (5)	3P-2044 (1) 6V-3542 (1)	111-2371 (2)
163-242	43-64	3P-2044 (8)	3P-2044 (2)	9N-3718 (2)

** O período normal de manutenção é de 250 horas. Consulte o Manual de Operação e Manutenção para obter instruções completas quanto à manutenção do líquido arrefecedor.*

( ) Indica a quantidade exigida.

KÜHLMITTELZUSATZ

VORTEILE FÜR DEN KUNDEN:

Schutz gegen Kavitation, Schaumbildung, Erosion, Korrosion und Kesselsteinbildung in Kühlsystemen.

- Richtig dosierter Kühlmittelzusatz

BESCHREIBUNG:

Additive erschöpfen sich während des Motorbetriebs. Deshalb muß allen HD-Kühlmitteln regelmäßig Kühlmittelzusatz beigefügt werden. Wenn bei Erstfüllung kein vollwertiges Fertigkühlmittel, wie das Frostschutz- und Kühlmittel für Dieselmotoren von Caterpiller (DEAC), verwendet wird, muß bei Erstfüllung Kühlmittelzusatz beigefügt werden. Wieviel Kühlmittelzusatz beigefügt werden muß, hängt vom Inhalt des Kühlsystems ab.

Für Erstfüllung ist Kühlmittelzusatz nur in flüssiger Form erhältlich. Für Wartungsintervalle ist Kühlmittelzusatz in flüssiger Form und als Zusatzelement erhältlich. (Für die Motorbaureihe 3600 sind keine Zusatzelemente erhältlich.)

ANMERKUNG:

Die Kühlmittelmenge bei Erstfüllung ist nicht die gleiche Menge, die bei Wartungsintervallen beigefügt werden muß.

Die Kühlmittelzusatzelemente können mit allen Frostschutzmitteln auf Ethylen- oder Propylenglykolbasis verwendet werden, die den Standards nach ASTM D4985 oder ASTM D5345 entsprechen.

ANMERKUNG:

Den Kühlmittelzusatz nicht mit Langzeitkühlmittel (ELC) von Caterpillar verwenden. Der Kühlmittelzusatz ist nur für HD-Kühlmittel bestimmt.

TEILEBEZEICHNUNG:

Kühlsysteminhalt		Kühlmittelzusatz bei Erstfüllung	Flüssiger Kühlmittelzusatz bei Wartung*	Kühlmittelzusatzelement bei Wartung*
Liter	US-Gall.			
22-30	(6-8)	3P-2044 (1)	6V-3542 (1)	111-2370 (1)
30-38	(8-10)	3P-2044 (1) 6V-3542 (1)	111-2372 (1)	111-2369 (1)
38-49	(10-13)	3P-2044 (1) 8T-1589 (1)	111-2372 (1)	111-2369 (1)
49-64	(13-17)	3P-2044 (2)	8T-1589 (1)	9N-3368 (1)
64-83	(17-22)	3P-2044 (2) 8T-1589 (1)	111-2372 (1) 6V-3542 (1)	111-2371 (1)
83-114	(22-30)	3P-2044 (3) 8T-1589 (1)	3P-2044 (1)	9N-3718 (1)
114-163	(30-43)	3P-2044 (5)	3P-2044 (1) 6V-3542 (1)	111-2371 (2)
163-242	(43-64)	3P-2044 (8)	3P-2044 (2)	9N-3718 (2)

** Der normale Wartungsintervall beträgt 250 Betriebsstunden. Für vollständige Anweisungen zur Wartung des Kühlsystems, siehe Betriebs- und Wartungshandbuch.*

( ) Erforderliche Anzahl

MAINTENANCE PARTS

DESCRIPTION	PART NUMBER	QTY	WHERE USED	PAGE
AIR INLET AND EXHAUST SYSTEM				
ELEMENT AS-PRIMARY (AIR CLEANER)	123-6855	1	AIR CLEANER GP	122
ELEMENT AS-SECONDARY (AIR CLEANER)	123-6856	1	AIR CLEANER GP	122
BASIC ENGINE				
PLUG-OIL DRAIN (PAN)	4P-0513	1	PAN GP-OIL	64
	109-5839	1	PAN GP-OIL	66
SEAL (COVER, VALVE MECHANISM)	242-9537	1	COVER GP-VALVE MECHANISM	19
		1	COVER GP-VALVE MECHANISM	24
		1	COVER GP-VALVE MECHANISM	25
		1	COVER GP-VALVE MECHANISM	27
COOLING SYSTEM				
CAP AS-RADIATOR	031-1119	1	TANK GP-COOLANT	117
FILTER (WATER PUMP)	111-2721	1	PUMP GP-WATER	111
HOSE	106-4572	6	RADIATOR GP	114
PLUG-DRAIN (RADIATOR)	8M-1869	1	LINES GP-WATER	107
REGULATOR-WATER TEMPERATURE (92-DEG C) (COOLANT)	248-5513	2	LINES GP-WATER	105
SEAL-LIP TYPE (WATER TEMPERATURE REGULATOR)	3S-9643	2	LINES GP-WATER	105
SEAL (TEMPERATURE REGULATOR HOUSING)	166-2340	1	LINES GP-WATER	105

MAINTENANCE PARTS

DESCRIPTION	PART NUMBER	QTY	WHERE USED	PAGE
ELECTRICAL AND STARTING SYSTEM				
BATTERY (12-VOLT) (MAINTENANCE FREE)	153-5710	2	STARTING AR-COLD WEATHER	256
		2	BATTERY & WIRING GP	177
BELT-SERPENTINE (ALTERNATOR)	243-1324	1	ALTERNATOR GP-CHARGING	173
CIRCUIT BREAKER AS (15-AMPERE) (MAIN POWER)	6T-3643	1	PANEL GP-FUSE	226
ELEMENT AS-JACKET WATER HEATER	239-8051	1	HEATER GP-JACKET WATER	193
ELEMENT AS-JACKET WATER HEATER (120-VOLT, 1500-WATT)	230-3525	1	HEATER GP-JACKET WATER	192
FILTER (ATMOSPHERIC PRESSURE SENSOR)	125-5835	1	MOUNTING GP-SENSOR	225
FILTER-FOAM (FUEL LEVEL SENSOR)	111-4402	1	BATTERY & WIRING GP	177
FUSE (10-AMPERE)	9W-1442	6	PANEL GP-FUSE	226
FUSE (15-AMPERE)	9W-1441	18	PANEL GP-FUSE	226
FUSE (175-AMPERE)	239-8107	2	PANEL GP-FUSE	226
FUSE (20-AMPERE)	9W-1446	4	PANEL GP-FUSE	226
KEY (BATTERY DISCONNECT)	8H-5306	1	SWITCH GP-DISCONNECT	268
KIT-RECEPTACLE (12-PIN)	190-7615	1	WIRING GP-ENGINE	283
		1	WIRING GP-GRADE CONTROL	287
LAMP	249-5592	1	LIGHTING GP-WARNING BEACON	222
LAMP AS-DOME (24-VOLT)	226-2811	1	WIRING GP-CAB	279
LAMP AS-FLOOD (24-VOLT, 70-WATT)	213-4998	1	LAMP GP-FLOOD	203
		1	LAMP GP-FLOOD	204
LAMP AS-INDICATOR (ACTION LIGHT)	170-3461	1	WIRING GP-PLATFORM	290
LAMP-HALOGEN (24-VOLT, 65-WATT)	9X-3463	1	LAMP GP-FLOOD	200
		1	LAMP GP-FLOOD	201
		1	LAMP GP-FLOOD	202
LAMP (24-VOLT) (ACTION LIGHT)	7N-1996	1	WIRING GP-PLATFORM	290
LAMP (24-VOLT, 21-WATT)	9X-4493	1	WIRING GP-CAB	279
SCREEN	226-4909	1	ALTERNATOR GP-CHARGING	175
ENGINE ARRANGEMENT				
PADLOCK GP (OIL FILLER)	246-2641	1	INSTALLATION AR-ENGINE	9
PADLOCK GP (OIL LEVEL GAGE)	246-2641	1	INSTALLATION AR-ENGINE	9
FRAME AND BODY				
PADLOCK GP (BATTERY BOX)	246-2641	2	FENDER GP	391
PADLOCK GP (ENGINE ENCLOSURE)	246-2641	4	ENCLOSURE GP-ENGINE	377
		4	ENCLOSURE GP-ENGINE	380
PADLOCK GP (REAR ENCLOSURE)	246-2641	1	ENCLOSURE GP-REAR	387
PLUG (DRAIN) (TRANSMISSION)	106-8187	1	CASE & FRAME GP	363
		1	CASE & FRAME GP	364
VALVE-DRAIN (TRANSMISSION)	106-8186	1	CASE & FRAME GP	363
		1	CASE & FRAME GP	364

MAINTENANCE PARTS

DESCRIPTION	PART NUMBER	QTY	WHERE USED	PAGE
FUEL SYSTEM				
CAP AS-FILLER (FUEL, LOCKING, VENTED)	7X-7700	1	TANK GP-FUEL	163
		1	TANK GP-FUEL	166
FILTER AS-FUEL	1R-0749	1	FILTER GP-FUEL	148
FILTER AS-WATER SEP & FUEL (PRIMARY)	1R-0770	1	FILTER GP-WATER SEP & FUEL	149
GASKET (FUEL PRIMING PUMP)	1P-0436	1	FILTER & LINES GP-FUEL	144
KEY	5P-8500	2	FILTER & LINES GP-FUEL	144
PADLOCK GP (FUEL LINE)	246-2641	1	FILTER & LINES GP-FUEL	144
PADLOCK GP (FUEL TANK)	246-2641	1	TANK GP-FUEL	162
		1	TANK GP-FUEL	165
SCREEN-SUMP (FUEL TANK)	5G-4109	1	FILTER & LINES GP-FUEL	144
SEAL (WATER SEPARATOR, FUEL)	220-8678	1	FILTER GP-WATER SEP & FUEL	149
STRAINER-FUEL	9P-7121	1	TANK GP-FUEL	163
STRAINER-FUEL (TANK FILLER)	9P-7121	1	TANK GP-FUEL	166
HYDRAULIC SYSTEM				
CAP-FILLER (HYDRAULIC TANK)	7H-1447	1	TANK & FILTER GP-HYDRAULIC	605
FILTER ELEMENT AS-OIL (HYDRAULIC) (FIRE RESISTANT FLUID)	4T-3134	1	TANK & FILTER GP-HYDRAULIC	605
FILTER ELEMENT AS-OIL (HYDRAULIC) (HIGH EFFICIENCY)	139-1536	1	TANK & FILTER GP-HYDRAULIC	605
FILTER ELEMENT AS-OIL (HYDRAULIC) (STANDARD EFFICIENCY)	1R-0774	1	TANK & FILTER GP-HYDRAULIC	605
FILTER-OIL (HIGH EFFICIENCY)	126-1813	1	LINES GP-PUMP	564
GASKET	9H-6454	1	TANK & FILTER GP-HYDRAULIC	606
PADLOCK GP (HYDRAULIC TANK FILL)	246-2641	1	COVER GP-HYDRAULIC TANK CAP	522
SCREEN AS (HYDRAULIC OIL FILTER BYPASS)	9T-7571	1	TANK & FILTER GP-HYDRAULIC	605
SCREEN (CONTROL, RELIEF MANIFOLD)	6E-5066	1	MANIFOLD GP-CONTROL	580
SCREEN (HYDRAULIC TANK)	6E-1752	1	TANK & FILTER GP-HYDRAULIC	605
STRAINER AS (HYDRAULIC TANK FILL)	5D-7927	1	TANK & FILTER GP-HYDRAULIC	605
LUBRICATION SYSTEM				
BREATHER AS (CRANKCASE)	162-2266	1	BREATHER GP	80
CAP AS-FILLER (ENGINE OIL)	6N-2985	1	FILLER GP-ENGINE OIL	82
FILTER AS-ENGINE OIL	1R-0716	1	FILTER GP-ENGINE OIL	83
HOSE (FUMES DISPOSAL)	9Y-5281	1	FUMES DISPOSAL GP	86
SCREEN AS-BELL	4N-0913	1	LINES GP-ENGINE OIL	88
MACHINE ARRANGEMENT				
KEY	5P-8500	1	CHASSIS AR	1
PADLOCK GP (LITERATURE COMPARTMENT)	246-2641		CHASSIS AR	1

MAINTENANCE PARTS

DESCRIPTION	PART NUMBER	QTY	WHERE USED	PAGE
OPERATOR STATION				
ACCUMULATOR-REFRIGERANT	170-0235	1	LINES GP-AIR CONDITIONER	772
		1	LINES GP-AIR CONDITIONER	775
BELT-SERPENTINE (A/C COMPRESSOR PULLEY)	243-1325	1	COMPRESSOR GP-REFRIGERANT	743
BLADE AS-WIPER	6V-6864	1	WIPER GP-WINDOW	829
BLADE AS-WIPER (FRONT)	6V-5851	1	WIPER GP-WINDOW	826
BLADE AS-WIPER (REAR)	5C-8811	1	WIPER GP-WINDOW	826
BLADE AS-WIPER (SIDE)	128-5040	4	WIPER GP-WINDOW	826
BLADE-WIPER	134-1935	1	WIPER GP-WINDOW	829
CAP-VENTED (WINDOW WASHER TANK)	8E-8292	1	TANK GP-WINDOW WASHER	821
CIRCUIT BREAKER AS (15-AMPERE) (AIR CONDITIONER)	6T-3643	1	LINES GP-AIR CONDITIONER	775
CIRCUIT BREAKER AS (15-AMPERE) (CONDENSOR FAN MOTOR)	6T-3643	1	LINES GP-AIR CONDITIONER	772
FILTER-AIR (STANDARD) (CAB)	238-0479	1	HEATER GP-CAB	763
FILTER ELEMENT AS-AIR (CAB)	209-8217	1	HEATER GP-CAB	763
FUSE (15-AMPERE) (HEATER)	133-9012	1	HEATER GP-CAB	759
GASKET	248-2929	1	HEATER GP-CAB	759
	248-2930	1	HEATER GP-CAB	759
PADLOCK GP (HEATER)	246-2641	1	HEATER GP-CAB	763
RECEIVER-DRYER GP (AIR CONDITIONER)	175-7162	1	LINES GP-AIR CONDITIONER	772
		1	LINES GP-AIR CONDITIONER	775
SEAT BELT GP	222-0345	1	SEAT GP	806
SEAT BELT GP (RETRACTABLE)	222-0345	1	SEAT GP	809
POWER TRAIN				
BREATHER AS (POWER TRAIN)	9G-5127	1	LINES GP-POWER TRAIN OIL	326
CAP AS-FILLER (POWER TRAIN OIL)	6N-2985	1	LINES GP-POWER TRAIN OIL	326
DRAIN GP-ECOLOGY (TORQUE CONVERTER)	106-4150	1	TORQUE CONVERTER GP	346
DRAIN GP-ECOLOGY (TRANSMISSION CASE)	106-4150	1	CASE & PARTS GP-PLANETARY	296
FILTER ELEMENT AS-OIL (HIGH EFFICIENCY, HYDRAULIC) (POWER TRAIN)	1R-1809	2	LINES GP-POWER TRAIN OIL	326
FILTER ELEMENT AS-OIL (HIGH EFFICIENCY, HYDRAULIC) (TRANSMISSION)	1R-1809	1	FILTER GP-OIL	305
PLUG-MAGNETIC (FINAL DRIVE, OIL FILL)	6V-3298	1	FINAL DRIVE GP	307
		1	FINAL DRIVE GP	310
		1	FINAL DRIVE GP	313
		1	FINAL DRIVE GP	316
SCREEN GP-MAGNETIC (POWER TRAIN OIL SUMP)	213-8793	1	LINES GP-POWER TRAIN OIL	326
SCREEN-SUCTION	8S-9130	1	CASE & PARTS GP-PLANETARY	296
SCREEN-SUCTION (POWER TRAIN OIL SUMP)	3S-3875	1	SCREEN GP-MAGNETIC	340
SCREEN-SUCTION (TORQUE CONVERTER)	8S-9130	1	TORQUE CONVERTER GP	346

MAINTENANCE PARTS

DESCRIPTION	PART NUMBER	QTY	WHERE USED	PAGE
STEERING AND BRAKING SYSTEM				
FILTER ELEMENT AS-OIL (HYDRAULIC) (HIGH EFFICIENCY)	132-8875	1	FILTER GP-OIL	483
UNDERCARRIAGE				
CAP AS-OIL FILLER (PIVOT SHAFT)	9W-8277	1	LUBRICATION GP-PIVOT SHAFT	439
PLUG-DRAIN (PIVOT SHAFT OIL)	4T-2069	4	FRAME GP-TELESCOPING RECOIL	430
PLUG-DRAIN (PIVOT SHAFT OIL FILL)	4T-2069	2	FRAME GP-TELESCOPING RECOIL	430

PIÈCES DE RECHANGE

DESCRIPTION	NUMÉRO DE PIECÈS	QTÉ	DOMAINE D'APPLICATION	PAGE
CHÂSSIS ET BENNE				
BOUCHON FILETÉ (VIDANGE) (BOîTE DE VITESSES)	106-8187	1	CHÂSSIS ET CARTER (ASS)	363
		1	CHÂSSIS ET CARTER (ASS)	364
CADENAS (ASS) (CARÉNAGE ARRIÈRE)	246-2641	1	REVETEMENT AR (ASS)	387
CADENAS (ASS) (CARENAGE DE MOTEUR)	246-2641	4	CARENAGE DE MOTEUR (ASS)	377
		4	CARENAGE DE MOTEUR (ASS)	380
CADENAS (ASS) (COMPARTIMENT DE BATTERIE)	246-2641	2	GARDE-BOUE (ASS)	391
SOUPAPE DE VIDANGE (BOîTE DE VITESSES)	106-8186	1	CHÂSSIS ET CARTER (ASS)	363
		1	CHÂSSIS ET CARTER (ASS)	364
CIRCUIT D'ADMISSION D'AIR ET D'ECHAPPEMENT				
ÉLÉMENT PRINCIPAL (ENS) (FILTRE À AIR)	123-6855	1	FILTRE A AIR (ASS)	122
ÉLÉMENT SECONDAIRE (ENS) (FILTRE À AIR)	123-6856	1	FILTRE A AIR (ASS)	122
CIRCUIT DE CARBURANT				
BOUCHON DE GOULOTTE DE REMPLISSAGE (ENS) (CARBURANT, VERROUILLAGE, AÉRÉ)	7X-7700	1	RÉSERVOIR DE CARBURANT (ASS)	163
		1	RÉSERVOIR DE CARBURANT (ASS)	166
BOURRELET D'ÉTANCHÉITÉ (SÉPARATEUR D'EAU)	220-8678	1	FILTRE DE SÉPARATEUR D'EAU ET DE CARBURANT (ASS)	149
CADENAS (ASS) (CANALISATION DE CARBURANT)	246-2641	1	FILTRE ET CANALISATIONS DE CARBURANT (ASS)	144
CADENAS (ASS) (RESERVOIR DE CARBURANT)	246-2641	1	RÉSERVOIR DE CARBURANT (ASS)	162
		1	RÉSERVOIR DE CARBURANT (ASS)	165
CLÉ	5P-8500	2	FILTRE ET CANALISATIONS DE CARBURANT (ASS)	144
FILTRE - SÉPARATEUR D'EAU ET DE CARBURANT (ENS) (PRINCIPAL)	1R-0770	1	FILTRE DE SÉPARATEUR D'EAU ET DE CARBURANT (ASS)	149
FILTRE À CARBURANT	9P-7121	1	RÉSERVOIR DE CARBURANT (ASS)	163
FILTRE A CARBURANT (ENS)	1R-0749	1	FILTRE A CARBURANT (ASS)	148
FILTRE À CARBURANT (REMPLISSAGE DU RÉSERVOIR)	9P-7121	1	RÉSERVOIR DE CARBURANT (ASS)	166
JOINT PLAT (POMPE D'AMORÇAGE DE CARBURANT)	1P-0436	1	FILTRE ET CANALISATIONS DE CARBURANT (ASS)	144
TAMIS DE CARTER (RÉSERVOIR DE CARBURANT)	5G-4109	1	FILTRE ET CANALISATIONS DE CARBURANT (ASS)	144

PIÈCES DE RECHANGE

DESCRIPTION	NUMÉRO DE PIECÈS	QTÉ	DOMAINE D'APPLICATION	PAGE
CIRCUIT DE DÉMARRAGE ET ÉLECTRIQUE				
AMPOULE	249-5592	1	ÉCLAIRAGE - GYROPHARE (ASS)	222
AMPOULE (24 VOLTS) (TÉMOIN D'ACTIONNEMENT)	7N-1996	1	CABLAGE - PLATE-FORME (ASS)	290
AMPOULE (24V, 21W)	9X-4493	1	CABLAGE DE CABINE (ASS)	279
BATTERIE (12 VOLTS) (SANS ENTRETIEN)	153-5710	2	BATTERIE ET CÂBLAGE	177
		2	DÉMARRAGE PAR TEMPS FROID (VERSION)	256
CLÉ (COUPE-BATTERIE)	8H-5306	1	ROBINET DE BATTERIE (ASS)	268
COURROIE MULTIPLE (ALTERNATEUR)	243-1324	1	ALTERNATEUR DE CHARGE (ASS)	173
DISJONCTEUR (ENS) (15A) (PUISSANCE PRINCIPALE)	6T-3643	1	PANNEAU - FUSIBLES (ASS)	226
ÉCRAN	226-4909	1	ALTERNATEUR DE CHARGE (ASS)	175
ÉLÉMENT DU RÉCHAUFFEUR D'EAU DES CHEMISES (ENS)	239-8051	1	EAU DES CHEMISES - RECHAUFFEUR (ASS)	193
ÉLÉMENT DU RÉCHAUFFEUR D'EAU DES CHEMISES (ENS) (120V, 1500W)	230-3525	1	EAU DES CHEMISES - RECHAUFFEUR (ASS)	192
FILTRE A MOUSSE (CAPTEUR DE NIVEAU DE CARBURANT)	111-4402	1	BATTERIE ET CÂBLAGE	177
FILTRE (CAPTEUR DE PRESSION ATMOSPHÉRIQUE)	125-5835	1	MONTAGE - CAPTEUR (ASS)	225
FUSIBLE (10A)	9W-1442	6	PANNEAU - FUSIBLES (ASS)	226
FUSIBLE (15A)	9W-1441	18	PANNEAU - FUSIBLES (ASS)	226
FUSIBLE (175A)	239-8107	2	PANNEAU - FUSIBLES (ASS)	226
FUSIBLE (20A)	9W-1446	4	PANNEAU - FUSIBLES (ASS)	226
KIT DE PRISE FEMELLE (12 BROCHES)	190-7615	1	AVERTISSEMENT DE PROFIL LONGITUDINAL (ASS)	287
		1	CABLAGE DE MOTEUR (ASS)	283
LAMPE - PHARE (ENS) (24V, 70W)	213-4998	1	LAMPE - PHARE (ASS)	203
		1	LAMPE - PHARE (ASS)	204
LAMPE DE TÉMOIN (ENS) (TÉMOIN D'ACTIONNEMENT)	170-3461	1	CABLAGE - PLATE-FORME (ASS)	290
LAMPE HALOGÈNE (24V, 65W)	9X-3463	1	LAMPE - PHARE (ASS)	200
		1	LAMPE - PHARE (ASS)	201
		1	LAMPE - PHARE (ASS)	202
PLAFONNIER (ENS) (24 VOLTS)	226-2811	1	CABLAGE DE CABINE (ASS)	279
CIRCUIT DE DIRECTION ET DE FREIN				
ÉLÉMENT DE FILTRE À HUILE (ENS) (HYDRAULIQUE) (GRANDE EFFICACITÉ)	132-8875	1	FILTRE A HUILE (ASS)	483
CIRCUIT DE GRAISSAGE				
BOUCHON DE GOULOTTE DE REMPLISSAGE (ENS) (HUILE MOTEUR)	6N-2985	1	BOUCHON DE REMPLISSAGE D'HUILE MOTEUR (ASS)	82
FILTRE A HUILE MOTEUR (ENS)	1R-0716	1	FILTRE À HUILE MOTEUR (ASS)	83
FLEXIBLE (ÉVACUATION DES GAZ DE CARTER)	9Y-5281	1	DISPOSITIF D'EVACUATION DES VAPEURS DE CARTER	86
RENIFLARD (ENS) (CARTER)	162-2266	1	RENIFLARD (ASS)	80
TAMIS DE CLOCHE (ENS)	4N-0913	1	CANALISATIONS D'HUILE MOTEUR (ASS)	88

PIÈCES DE RECHANGE

DESCRIPTION	NUMÉRO DE PIECÈS	QTÉ	DOMAINE D'APPLICATION	PAGE
CIRCUIT DE REFROIDISSEMENT				
BOUCHON DE RADIATEUR (ENS)	031-1119	1	RÉSERVOIR DU LIQUIDE DE REFROIDISSEMENT (ASS)	117
BOUCHON DE VIDANGE (RADIATEUR)	8M-1869	1	CANALISATIONS D'EAU (ASS)	107
BOURRELET D'ÉTANCHÉITÉ (BOÎTIER DE RÉGULATEUR DE TEMPÉRATURE)	166-2340	1	CANALISATIONS D'EAU (ASS)	105
FILTRE (POMPE À EAU)	111-2721	1	POMPE A EAU (ASS)	111
FLEXIBLE	106-4572	6	RADIATEUR (ASS)	114
THERMOSTAT-TEMPÉRATURE D'EAU (92-DEG C) (LIQUIDE DE REFROIDISSEMENT)	248-5513	2	CANALISATIONS D'EAU (ASS)	105
TYPE LÈVRE À JOINT (RÉGULATEUR DE TEMPÉRATURE D'EAU)	3S-9643	2	CANALISATIONS D'EAU (ASS)	105
CIRCUIT HYDRAULIQUE				
BOUCHON DE GOULOTTE DE REMPLISSAGE (RÉSERVOIR HYDRAULIQUE)	7H-1447	1	RÉSERVOIR HYDRAULIQUE ET FILTRE (ASS)	605
CADENAS (ASS) (REMPLISSAGE DE RÉSERVOIR HYDRAULIQUE)	246-2641	1	COUVERCLE DE RÉSERVOIR HYDRAULIQUE	522
CREPINE (ENS) (REMPLISSAGE DE RÉSERVOIR HYDRAULIQUE)	5D-7927	1	RÉSERVOIR HYDRAULIQUE ET FILTRE (ASS)	605
ÉCRAN (COMMANDE, COLLECTEUR DE DÉTENTE)	6E-5066	1	COLLECTEUR - COMMANDE (ASS)	580
ÉCRAN (ENS) (DÉRIVATION DE FILTRE À HUILE HYDRAULIQUE)	9T-7571	1	RÉSERVOIR HYDRAULIQUE ET FILTRE (ASS)	605
ÉCRAN (RÉSERVOIR HYDRAULIQUE)	6E-1752	1	RÉSERVOIR HYDRAULIQUE ET FILTRE (ASS)	605
ÉLÉMENT DE FILTRE À HUILE (ENS) (HYDRAULIQUE) (EFFICACITÉ NORMALE)	1R-0774	1	RÉSERVOIR HYDRAULIQUE ET FILTRE (ASS)	605
ÉLÉMENT DE FILTRE À HUILE (ENS) (HYDRAULIQUE) (GRANDE EFFICACITÉ)	139-1536	1	RÉSERVOIR HYDRAULIQUE ET FILTRE (ASS)	605
ÉLÉMENT DE FILTRE À HUILE (ENS) (HYDRAULIQUE) (LIQUIDE RÉSISTANT AU FEU)	4T-3134	1	RÉSERVOIR HYDRAULIQUE ET FILTRE (ASS)	605
FILTRE À HUILE (GRANDE EFFICACITÉ)	126-1813	1	CANALISATIONS DE POMPE (ASS)	564
JOINT PLAT	9H-6454	1	RÉSERVOIR HYDRAULIQUE ET FILTRE (ASS)	606
MOTEUR STANDARD				
BOUCHON DE VIDANGE D'HUILE (CARTER)	4P-0513	1	HUILE MOTEUR - CARTER (ASS)	64
	109-5839	1	HUILE MOTEUR - CARTER (ASS)	66
BOURRELET D'ÉTANCHÉITÉ (COUVERCLE DE CULBUTERIE)	242-9537	1	CACHE-SOUPAPES (ASS)	19
		1	CACHE-SOUPAPES (ASS)	24
		1	CACHE-SOUPAPES (ASS)	25
		1	CACHE-SOUPAPES (ASS)	27

PIÈCES DE RECHANGE

DESCRIPTION	NUMÉRO DE PIECÈS	QTÉ	DOMAINE D'APPLICATION	PAGE
POSTE DE CONDUITE				
ACCUMULATEUR - RÉFRIGÉRANT	170-0235	1	CANALISATIONS DE CLIMATISEUR (ASS)	772
		1	CANALISATIONS DE CLIMATISEUR (ASS)	775
BALAI D'ESSUIE-GLACE	134-1935	1	ESSUIE-GLACE (ASS)	829
BALAI D'ESSUIE-GLACE (ENS)	6V-6864	1	ESSUIE-GLACE (ASS)	829
BALAI D'ESSUIE-GLACE (ENS) (ARRIÈRE)	5C-8811	1	ESSUIE-GLACE (ASS)	826
BALAI D'ESSUIE-GLACE (ENS) (AVANT)	6V-5851	1	ESSUIE-GLACE (ASS)	826
BALAI D'ESSUIE-GLACE (ENS) (LATÉRAL)	128-5040	4	ESSUIE-GLACE (ASS)	826
BOUCHON À ÉVENT (RÉSERVOIR DE LAVE-GLACE DE VITRE)	8E-8292	1	RÉSERVOIR - LAVE-GLACE (ASS)	821
CADENAS (ASS) (RÉCHAUFFEUR)	246-2641	1	CHAUFFAGE DE CABINE (ASS)	763
CEINTURE DE SECURITE (ASS)	222-0345	1	SIÈGE (ASS)	806
CEINTURE DE SECURITE (ASS) (RÉTRACTABLE)	222-0345	1	SIÈGE (ASS)	809
COURROIE MULTIPLE (POULIE DE COMPRESSEUR DE CLIMATISEUR)	243-1325	1	COMPRESSEUR DE REFRIGERANT (ASS)	743
DISJONCTEUR (ENS) (15A) (CLIMATISEUR)	6T-3643	1	CANALISATIONS DE CLIMATISEUR (ASS)	775
DISJONCTEUR (ENS) (15A) (MOTEUR DE VENTILATEUR DE CONDENSEUR)	6T-3643	1	CANALISATIONS DE CLIMATISEUR (ASS)	772
ÉLÉMENT DE FILTRE À AIR (ENS) (CABINE)	209-8217	1	CHAUFFAGE DE CABINE (ASS)	763
FILTRE À AIR (STANDARD) (CABINE)	238-0479	1	CHAUFFAGE DE CABINE (ASS)	763
FUSIBLE (15A) (RÉCHAUFFEUR)	133-9012	1	CHAUFFAGE DE CABINE (ASS)	759
JOINT PLAT	248-2929	1	CHAUFFAGE DE CABINE (ASS)	759
	248-2930	1	CHAUFFAGE DE CABINE (ASS)	759
RÉCEPTEUR-DÉSHYDRATEUR (ASS) (CLIMATISEUR)	175-7162	1	CANALISATIONS DE CLIMATISEUR (ASS)	775
		1	CANALISATIONS DE CLIMATISEUR (ASS)	772
TRAIN DE ROULEMENT				
BOUCHON DE GOULOTTE DE REMPLISSAGE D'HUILE MOTEUR (ARBRE-PIVOT)	9W-8277	1	GRAISSAGE DE LA TRAVERSE-PIVOT	439
BOUCHON DE VIDANGE (HUILE D'ARBRE D'ARTICULATION)	4T-2069	4	CARTER TELESCOPIQUE DE MECANISME AMORTISSEUR	430
BOUCHON DE VIDANGE (REMPLISSAGE D'HUILE D'ARBRE D'ARTICULATION)	4T-2069	2	CARTER TELESCOPIQUE DE MECANISME AMORTISSEUR	430

PIÈCES DE RECHANGE

DESCRIPTION	NUMÉRO DE PIECÈS	QTÉ	DOMAINE D'APPLICATION	PAGE
TRANSMISSION				
BOUCHON AIMANTÉ (RÉDUCTEUR, REMPLISSAGE D'HUILE)	6V-3298	1	RÉDUCTEURS (ASS)	307
		1	RÉDUCTEURS (ASS)	310
		1	RÉDUCTEURS (ASS)	313
		1	RÉDUCTEURS (ASS)	316
BOUCHON DE GOULOTTE DE REMPLISSAGE (ENS) (HUILE DE TRANSMISSION)	6N-2985	1	CANALISATIONS D'HUILE DE TRANSMISSION (ASS)	326
ÉCRAN MAGNÉTIQUE (ASS) (CARTER D'HUILE DE TRANSMISSION)	213-8793	1	CANALISATIONS D'HUILE DE TRANSMISSION (ASS)	326
ÉLÉMENT DE FILTRE À HUILE (ENS) (GRANDE EFFICACITÉ, HYDRAULIQUE) (BOîTE DE VITESSES)	1R-1809	1	FILTRE A HUILE (ASS)	305
ÉLÉMENT DE FILTRE À HUILE (ENS) (GRANDE EFFICACITÉ, HYDRAULIQUE) (TRANSMISSION)	1R-1809	2	CANALISATIONS D'HUILE DE TRANSMISSION (ASS)	326
RENIFLARD (ENS) (TRANSMISSION)	9G-5127	1	CANALISATIONS D'HUILE DE TRANSMISSION (ASS)	326
TAMIS D'ASPIRATION	8S-9130	1	TRAINS PLANÉTAIRES - CARTER ET PIÈCES	296
TAMIS D'ASPIRATION (CARTER D'HUILE DE TRANSMISSION)	3S-3875	1	ÉCRAN MAGNÉTIQUE (ASS)	340
TAMIS D'ASPIRATION (CONVERTISSEUR DE COUPLE)	8S-9130	1	CONVERTISSEUR DE COUPLE (ASS)	346
VIDANGE-ÉCOLOGIE (ASS) (CARTER DE BOITE DE VITESSES)	106-4150	1	TRAINS PLANÉTAIRES - CARTER ET PIÈCES	296
VIDANGE-ÉCOLOGIE (ASS) (CONVERTISSEUR DE COUPLE)	106-4150	1	CONVERTISSEUR DE COUPLE (ASS)	346
VERSION DE MACHINE				
CADENAS (ASS) (COMPARTIMENT POUR LA DOCUMENTATION)	246-2641		VERSION DE CHASSIS	1
CLÉ	5P-8500	1	VERSION DE CHASSIS	1
VERSION DE MOTEUR				
CADENAS (ASS) (GOULOTTE DE REMPLISSAGE D'HUILE)	246-2641	1	MONTAGE DE MOTEUR (VERSION)	9
CADENAS (ASS) (JAUGE DE NIVEAU D'HUILE)	246-2641	1	MONTAGE DE MOTEUR (VERSION)	9

PIEZAS DE MANTENIMIENTO

DESCRIPCION	NUMERO DE PIEZA	CANT	SE UTILIZA EN	PAGINA
BASTIDOR Y CAJA				
CANDADO (GR) (COMPARTIMENTO DE BATERIA)	246-2641	2	GUARDABARROS (GR)	391
CANDADO (GR) (RECINTO DE MOTOR)	246-2641	4	COMPARTIMIENTO DEL MOTOR (GR)	377
		4	COMPARTIMIENTO DEL MOTOR (GR)	380
CANDADO (GR) (RECINTO TRASERO)	246-2641	1	COMPARTIMIENTO POSTERIOR (GR)	387
TAPÓN (DRENAJE) (TRANSMISION)	106-8187	1	CAJA Y BASTIDOR (GR)	363
		1	CAJA Y BASTIDOR (GR)	364
VÁLVULA DE DRENAJE (TRANSMISION)	106-8186	1	CAJA Y BASTIDOR (GR)	363
		1	CAJA Y BASTIDOR (GR)	364
CABINA DEL OPERADOR				
ACUMULADOR DE REFRIGERANTE	170-0235	1	TUBERÍAS DE ACONDICIONADOR DE AIRE (GR)	772
		1	TUBERÍAS DE ACONDICIONADOR DE AIRE (GR)	775
CANDADO (GR) (CALEFACTOR)	246-2641	1	CALEFACCIÓN DE LA CABINA (GR)	763
CINTURÓN DE SEGURIDAD (GR)	222-0345	1	ASIENTO (GR)	806
CINTURÓN DE SEGURIDAD (GR) (RETRACTIL)	222-0345	1	ASIENTO (GR)	809
CORREA-SERPENTIN (POLEA DE COMPRESOR DE AIRE ACONDICIOANDO)	243-1325	1	COMPRESOR DE REFRIGERANTE (GR)	743
DISYUNTOR (CONJ) (15 AMPERIOS) (AIRE ACONDICIONADO)	6T-3643	1	TUBERÍAS DE ACONDICIONADOR DE AIRE (GR)	775
DISYUNTOR (CONJ) (15 AMPERIOS) (MOTOR DEL VENTILADOR DEL CONDENSADOR)	6T-3643	1	TUBERÍAS DE ACONDICIONADOR DE AIRE (GR)	772
ELEMENTO DEL FILTRO DE AIRE (CONJ) (CABINA)	209-8217	1	CALEFACCIÓN DE LA CABINA (GR)	763
EMPAQUETADURA	248-2929	1	CALEFACCIÓN DE LA CABINA (GR)	759
	248-2930	1	CALEFACCIÓN DE LA CABINA (GR)	759
FILTRO DE AIRE (ESTANDAR) (CABINA)	238-0479	1	CALEFACCIÓN DE LA CABINA (GR)	763
FUSIBLE (15 AMPERIOS) (CALEFACTOR)	133-9012	1	CALEFACCIÓN DE LA CABINA (GR)	759
HOJA DE LIMPIAPARABRISAS	134-1935	1	LIMPIAPARABRISAS DE LA VENTANA (GR)	829
HOJA DE LIMPIAPARABRISAS (CONJ)	6V-6864	1	LIMPIAPARABRISAS DE LA VENTANA (GR)	829
HOJA DE LIMPIAPARABRISAS (CONJ) (DELANTERO)	6V-5851	1	LIMPIAPARABRISAS DE LA VENTANA (GR)	826
HOJA DE LIMPIAPARABRISAS (CONJ) (LADO)	128-5040	4	LIMPIAPARABRISAS DE LA VENTANA (GR)	826
HOJA DE LIMPIAPARABRISAS (CONJ) (PARTE TRASERA)	5C-8811	1	LIMPIAPARABRISAS DE LA VENTANA (GR)	826
RECEPTOR-SECADOR (GR) (ACONDICIONADOR DE AIRE)	175-7162	1	TUBERÍAS DE ACONDICIONADOR DE AIRE (GR)	775
		1	TUBERÍAS DE ACONDICIONADOR DE AIRE (GR)	772
TAPA CON RESPIRADERO (TANQUE DE LIMPIPARABRISA)	8E-8292	1	TANQUE DEL LAVAPARABRISAS (GR)	821

PIEZAS DE MANTENIMIENTO

DESCRIPCION	NUMERO DE PIEZA	CANT	SE UTILIZA EN	PAGINA
CONFIGURACIÓN DE MÁQUINA				
CANDADO (GR) (COMPARTIMENTO PARA LA LITERATURA)	246-2641		CHASIS (CONFIG)	1
LLAVE	5P-8500	1	CHASIS (CONFIG)	1
CONFIGURACIÓN DE MOTOR				
CANDADO (GR) (MEDIDOR DE NIVEL DE ACEITE)	246-2641	1	CONFIGURACIÓN DE INSTALACIÓN DEL MOTOR	9
CANDADO (GR) (RELLENADOR DE ACEITE)	246-2641	1	CONFIGURACIÓN DE INSTALACIÓN DEL MOTOR	9
MOTOR BÁSICO				
SELLO (TAPA DEL MECANISMO DE LA VÁLVULA)	242-9537	1	TAPA DEL MECANISMO DE VÁLVULAS (GR)	19
		1	TAPA DEL MECANISMO DE VÁLVULAS (GR)	24
		1	TAPA DEL MECANISMO DE VÁLVULAS (GR)	25
		1	TAPA DEL MECANISMO DE VÁLVULAS (GR)	27
TAPON DE DRENAJE DE ACEITE (COLECTOR)	4P-0513	1	CÁRTER - COLECTOR DEL (GR)	64
	109-5839	1	CÁRTER - COLECTOR DEL (GR)	66
SISTEMA DE ADMISIÓN Y ESCAPE DE AIRE				
ELEMENTO PRIMARIO (CONJ) (FILTRO DE AIRE)	123-6855	1	FILTRO DE AIRE (GR)	122
ELEMENTO SECUNDARIO (CONJ) (FILTRO DE AIRE)	123-6856	1	FILTRO DE AIRE (GR)	122

PIEZAS DE MANTENIMIENTO

DESCRIPCION	NUMERO DE PIEZA	CANT	SE UTILIZA EN	PAGINA
SISTEMA DE COMBUSTIBLE				
CANDADO (GR) (TANQUE DE COMBUSTIBLE)	246-2641	1	COMBUSTIBLE - TANQUE DE (GR)	162
		1	COMBUSTIBLE - TANQUE DE (GR)	165
CANDADO (GR) (TUBERIA DE COMBUSTIBLE)	246-2641	1	FILTRO Y TUBERÍAS DE COMBUSTIBLE (GR)	144
COLADOR DE COMBUSTIBLE	9P-7121	1	COMBUSTIBLE - TANQUE DE (GR)	163
COLADOR DE COMBUSTIBLE (LLENADO DEL TANQUE)	9P-7121	1	COMBUSTIBLE - TANQUE DE (GR)	166
EMPAQUETADURA (BOMBA DE CEBADO DE COMBUSTIBLE)	1P-0436	1	FILTRO Y TUBERÍAS DE COMBUSTIBLE (GR)	144
FILTRO DE COMBUSTIBLE (CONJ)	1R-0749	1	FILTRO DE COMBUSTIBLE (GR)	148
FILTRO DE COMBUSTIBLE Y SEPARADOR DE AGUA (CONJ) (PRIMARIO)	1R-0770	1	FILTRO DE COMBUSTIBLE Y SEPARADOR DE AGUA (GR)	149
LLAVE	5P-8500	2	FILTRO Y TUBERÍAS DE COMBUSTIBLE (GR)	144
REJILLA DE SUMIDERO (TANQUE DE COMBUSTIBLE)	5G-4109	1	FILTRO Y TUBERÍAS DE COMBUSTIBLE (GR)	144
SELLO (SEPARADOR DE AGUA, COMBUSTIBLE)	220-8678	1	FILTRO DE COMBUSTIBLE Y SEPARADOR DE AGUA (GR)	149
TAPA DE LLENADO (CONJ) (COMBUSTIBLE, TRABA, VENTILACIÓN)	7X-7700	1	COMBUSTIBLE - TANQUE DE (GR)	163
		1	COMBUSTIBLE - TANQUE DE (GR)	166
SISTEMA DE ENFRIAMIENTO				
FILTRO (BOMBA DE AGUA)	111-2721	1	BOMBA DE AGUA (GR)	111
MANGUERA	106-4572	6	RADIADOR (GR)	114
REGULADOR DE TEMPERATURA DEL AGUA (92 GRADOS CENTÍGRADOS) (REFRIGERANTE)	248-5513	2	TUBERÍAS DEL AGUA (GR)	105
SELLO (CAJA DEL REGULADOR DE TEMPERATURA)	166-2340	1	TUBERÍAS DEL AGUA (GR)	105
SELLO DE LABIO (REGULADOR DE TEMPERATURA DEL AGUA)	3S-9643	2	TUBERÍAS DEL AGUA (GR)	105
TAPA DE RADIADOR (CONJ)	031-1119	1	TANQUE DE REFRIGERANTE (GR)	117
TAPÓN DE DRENAJE (RADIADOR)	8M-1869	1	TUBERÍAS DEL AGUA (GR)	107
SISTEMA DE FRENOS Y DIRECCIÓN				
ELEMENTO DE FILTRO DE ACEITE (CONJ) (HIDRAULICO) (ALTA EFICIENCIA)	132-8875	1	FILTRO DE ACEITE (GR)	483
SISTEMA DE LUBRICACIÓN				
FILTRO DE ACEITE DEL MOTOR (CONJ)	1R-0716	1	FILTRO DE ACEITE DEL MOTOR (GR)	83
MANGUERA (ELIMINACION DE GASES)	9Y-5281	1	ESCAPE DE GASES (GR)	86
REJILLA ACAMPANADA (CONJ)	4N-0913	1	TUBERÍAS DE ACEITE DEL MOTOR (GR)	88
RESPIRADERO (CONJ) (CÁRTER DEL MOTOR)	162-2266	1	RESPIRADERO (GR)	80
TAPA DE LLENADO (CONJ) (ACEITE DEL MOTOR)	6N-2985	1	TUBO DE LLENADO DE ACEITE (GR)	82

PIEZAS DE MANTENIMIENTO

DESCRIPCION	NUMERO DE PIEZA	CANT	SE UTILIZA EN	PAGINA
SISTEMA ELÉCTRICO Y DE ARRANQUE				
BATERÍA (12 VOLTIOS) (LIBRE DE MANTENIMIENTO)	153-5710	2	ARRANQUE EN TIEMPO FRIO (CONFIG)	256
		2	BATERÍA Y CABLES (GR)	177
CONFIGURACION DE LAMPARA DE REFLECTOR (24-VOLTIOS, 70-VATIOS)	213-4998	1	REFLECTOR (GR)	203
		1	REFLECTOR (GR)	204
CORREA-SERPENTIN (ALTERNADOR)	243-1324	1	CARGA - ALTERNADOR DE (GR)	173
DISYUNTOR (CONJ) (15 AMPERIOS) (CORRIENTE PRINCIPAL)	6T-3643	1	PANEL DE FUSIBLES (GR)	226
ELEMENTO DEL CALENTADOR DEL AGUA DE LAS CAMISAS	239-8051	1	AGUA DE LAS CAMISAS - CALENTADOR DEL (GR)	193
ELEMENTO DEL CALENTADOR DEL AGUA DE LAS CAMISAS (120 VOLTIOS, 1500 VATIOS)	230-3525	1	AGUA DE LAS CAMISAS - CALENTADOR DEL (GR)	192
FILTRO ESPONJOSO (SENSOR DE NIVEL DE COMBUSTIBLE)	111-4402	1	BATERÍA Y CABLES (GR)	177
FILTRO (SENSOR DE PRESION ATMOSFERICA)	125-5835	1	MONTAJE DEL SENSOR (GR)	225
FUSIBLE (10-AMPERIOS)	9W-1442	6	PANEL DE FUSIBLES (GR)	226
FUSIBLE (15 AMPERIOS)	9W-1441	18	PANEL DE FUSIBLES (GR)	226
FUSIBLE (175-AMPERIOS)	239-8107	2	PANEL DE FUSIBLES (GR)	226
FUSIBLE (20-AMPERIOS)	9W-1446	4	PANEL DE FUSIBLES (GR)	226
JUEGO DE RECEPTÁCULO (12-CLAVIJAS)	190-7615	1	CABLE GR-GRADO DE CONTROL	287
		1	CABLES DEL MOTOR (GR)	283
LÁMPARA	249-5592	1	LUZ DE BALIZA (GR)	222
LAMPARA DEL TECHO (CONJ) (24 VOLTIOS)	226-2811	1	CABLES DE LA CABINA (GR)	279
LAMPARA INDICADORA (CONJ) (LUZ DE ACCIÓN)	170-3461	1	CABLES DE LA PLATAFORMA (GR)	290
LÁMPARA (24 VOLTIOS) (LUZ DE ACCIÓN)	7N-1996	1	CABLES DE LA PLATAFORMA (GR)	290
LÁMPARA (24-VOLTIOS, 21 VATIOS)	9X-4493	1	CABLES DE LA CABINA (GR)	279
LLAVE (DESCONECTAR BATERIA)	8H-5306	1	DISYUNTOR (GR)	268
LUCES DE ALÓGENO (24 VOLTIOS, 65 VATIOS)	9X-3463	1	REFLECTOR (GR)	200
		1	REFLECTOR (GR)	201
		1	REFLECTOR (GR)	202
REJILLA	226-4909	1	CARGA - ALTERNADOR DE (GR)	175

PIEZAS DE MANTENIMIENTO

DESCRIPCION	NUMERO DE PIEZA	CANT	SE UTILIZA EN	PAGINA
SISTEMA HIDRÁULICO				
CANDADO (GR) (LLENADO DEL TANQUE HIDRÁULICO)	246-2641	1	TAPA DEL TAPÓN DEL TANQUE HIDRÁULICO (GR)	522
COLADOR (CONJ) (LLENADO DEL TANQUE HIDRÁULICO)	5D-7927	1	TANQUE Y FILTRO HIDRÁULICOS (GR)	605
ELEMENTO DE FILTRO DE ACEITE (CONJ) (HIDRAULICO) (ALTA EFICIENCIA)	139-1536	1	TANQUE Y FILTRO HIDRÁULICOS (GR)	605
ELEMENTO DE FILTRO DE ACEITE (CONJ) (HIDRAULICO) (EFICIENCIA ESTANDAR)	1R-0774	1	TANQUE Y FILTRO HIDRÁULICOS (GR)	605
ELEMENTO DE FILTRO DE ACEITE (CONJ) (HIDRAULICO) (FLUÍDO RESISTENTE AL FUEGO)	4T-3134	1	TANQUE Y FILTRO HIDRÁULICOS (GR)	605
EMPAQUETADURA	9H-6454	1	TANQUE Y FILTRO HIDRÁULICOS (GR)	606
FILTRO DE ACEITE (ALTA EFICIENCIA)	126-1813	1	BOMBA - TUBERÍAS DE (GR)	564
PANTALLA (CONJ) (DERIVACION DEL FILTRO DEL ACEITE HIDRAULICO)	9T-7571	1	TANQUE Y FILTRO HIDRÁULICOS (GR)	605
REJILLA (MÚLTIPLE DE ALIVIO Y CONTROL)	6E-5066	1	CONTROL DEL MULTIPLE (GR)	580
REJILLA (TANQUE HIDRÁULICO)	6E-1752	1	TANQUE Y FILTRO HIDRÁULICOS (GR)	605
TAPA DEL TUBO DE LLENADO (TANQUE HIDRÁULICO)	7H-1447	1	TANQUE Y FILTRO HIDRÁULICOS (GR)	605

PIEZAS DE MANTENIMIENTO

DESCRIPCION	NUMERO DE PIEZA	CANT	SE UTILIZA EN	PAGINA
TREN DE FUERZA				
DRENAJE DE SEGURIDAD ECOLÓGICA (GR) (CAJA DE TRANSMISION)	106-4150	1	CAJA Y PIEZAS DE LOS PLANETARIOS	296
DRENAJE DE SEGURIDAD ECOLÓGICA (GR) (CONVERTIDOR DE PAR)	106-4150	1	CONVERTIDOR DE PAR (GR)	346
ELEMENTO DE FILTRO DE ACEITE (CONJ) (ALTA EFICIENCIA HIDRÁULICA) (TRANSMISION)	1R-1809	1	FILTRO DE ACEITE (GR)	305
ELEMENTO DE FILTRO DE ACEITE (CONJ) (ALTA EFICIENCIA HIDRÁULICA) (TREN DE FUERZA)	1R-1809	2	TUBERÍAS DE ACEITE DEL TREN DE FUERZA (GR)	326
REJILLA DE SUCCIÓN	8S-9130	1	CAJA Y PIEZAS DE LOS PLANETARIOS	296
REJILLA DE SUCCIÓN (CONVERTIDOR DE PAR)	8S-9130	1	CONVERTIDOR DE PAR (GR)	346
REJILLA DE SUCCIÓN (SUMIDERO DE ACEITE DE TREN DE FUERZA)	3S-3875	1	REJILLA MAGNÉTICA (GR)	340
REJILLA MAGNÉTICA (GR) (SUMIDERO DE ACEITE DE TREN DE FUERZA)	213-8793	1	TUBERÍAS DE ACEITE DEL TREN DE FUERZA (GR)	326
RESPIRADERO (CONJ) (TREN DE FUERZA)	9G-5127	1	TUBERÍAS DE ACEITE DEL TREN DE FUERZA (GR)	326
TAPA DE LLENADO (CONJ) (ACEITE DEL TREN DE FUERZA)	6N-2985	1	TUBERÍAS DE ACEITE DEL TREN DE FUERZA (GR)	326
TAPÓN MAGNÉTICO (MANDO FINAL, LLENADO DE ACEITE)	6V-3298	1	MANDO FINAL (GR)	307
		1	MANDO FINAL (GR)	310
		1	MANDO FINAL (GR)	313
		1	MANDO FINAL (GR)	316
TREN DE RODAJE				
TAPA DEL TUBO DE LLENADO DE ACEITE (CONJ) (EJE PIVOTE)	9W-8277	1	LUBRICACIÓN DE EJE PIVOTE (GR)	439
TAPÓN DE DRENAJE (ACEITE DEL EJE PIVOTE)	4T-2069	4	BASTIDOR TELESCÓPICO DEL RESORTE TENSOR (GR)	430
TAPÓN DE DRENAJE (LLENADO DEL ACEITE DEL EJE PIVOTE)	4T-2069	2	BASTIDOR TELESCÓPICO DEL RESORTE TENSOR (GR)	430

PEÇAS DE MANUTENÇÃO

DESCRIÇÃO	NÚMERO DE PEÇA	QUANT	UTILIZADA EM	PÁGINA
CHASSI E CARROCERIA				
CADEADO (CAIXA DA BATERIA)	246-2641	2	PÁRA-LAMA	391
CADEADO (COBERTURA DO MOTOR)	246-2641	4	COBERTURA DO MOTOR	377
		4	COBERTURA DO MOTOR	380
CADEADO (COBERTURA TRASEIRA)	246-2641	1	COBERTURA TRASEIRA	387
TAMPÃO (DRENAGEM) (TRANSMISSÃO)	106-8187	1	CAIXA E CHASSI	363
		1	CAIXA E CHASSI	364
VÁLVULA DE DRENAGEM (TRANSMISSÃO)	106-8186	1	CAIXA E CHASSI	363
		1	CAIXA E CHASSI	364
MÁQUINA - ARRANJO				
CADEADO (COMPARTIMENTO PARA PUBLICAÇÕES)	246-2641		CHASSI	1
CHAVE	5P-8500	1	CHASSI	1
MATERIAL RODANTE				
BUJÃO DO DRENO (ENCHIMENTO DO ÓLEO DO EIXO PIVÔ)	4T-2069	2	ARMAÇÃO TELESCÓPICA DA MOLA TENSORA	430
BUJÃO DO DRENO (ÓLEO DO EIXO PIVÔ)	4T-2069	4	ARMAÇÃO TELESCÓPICA DA MOLA TENSORA	430
TAMPA - BOCAL DE ENCHIMENTO DE ÓLEO (EIXO PILOTO)	9W-8277	1	EIXO PIVÔ - LUBRIFICAÇÃO	439
MOTOR - ARRANJO				
CADEADO (BITOLA DO NÍVEL DE ÓLEO)	246-2641	1	GRUPO DE INSTALAÇÃO - MOTOR	9
CADEADO (BOCAL DE ENCHIMENTO DE ÓLEO)	246-2641	1	GRUPO DE INSTALAÇÃO - MOTOR	9
MOTOR BÁSICO				
BUJÃO - DRENAGEM DO ÓLEO (CÁRTER)	4P-0513	1	CÁRTER DO ÓLEO DO MOTOR	64
	109-5839	1	CÁRTER DO ÓLEO DO MOTOR	66
RETENTOR (TAMPA, MECANISMO DA VÁLVULA)	242-9537	1	TAMPA - MECANISMO DAS VÁLVULAS	19
		1	TAMPA - MECANISMO DAS VÁLVULAS	24
		1	TAMPA - MECANISMO DAS VÁLVULAS	25
		1	TAMPA - MECANISMO DAS VÁLVULAS	27

PEÇAS DE MANUTENÇÃO

DESCRIÇÃO	NÚMERO DE PEÇA	QUANT	UTILIZADA EM	PÁGINA
POSTO DO OPERADOR				
ACUMULADOR - REFRIGERANTE	170-0235	1	TUBOS - AR CONDICIONADO	772
		1	TUBOS - AR CONDICIONADO	775
CADEADO (AQUECEDOR)	246-2641	1	AQUECEDOR DA CABINE	763
CINTO DE SEGURANÇA	222-0345	1	ASSENTO	806
CINTO DE SEGURANÇA (RETRÁTIL)	222-0345	1	ASSENTO	809
CORREIA- SERPENTINA (POLIA DO COMPRESSOR DO AR CONDICIONADO)	243-1325	1	COMPRESSOR DE REFRIGERANTE	743
DISJUNTOR AUTOMÁTICO DE CIRCUITO (15 AMPERES) (AR CONDICIONADO)	6T-3643	1	TUBOS - AR CONDICIONADO	775
DISJUNTOR AUTOMÁTICO DE CIRCUITO (15 AMPERES) (MOTOR DO VENTILADOR DO CONDENSADOR)	6T-3643	1	TUBOS - AR CONDICIONADO	772
ELEMENTO DO FILTRO DE AR (CABINE)	209-8217	1	AQUECEDOR DA CABINE	763
FILTRO - AR (PADRÃO) (CABINE)	238-0479	1	AQUECEDOR DA CABINE	763
FUSÍVEL (15 AMPERES) (AQUECEDOR)	133-9012	1	AQUECEDOR DA CABINE	759
JUNTA	248-2929	1	AQUECEDOR DA CABINE	759
	248-2930	1	AQUECEDOR DA CABINE	759
LÂMINA DO LIMPADOR DE PÁRA-BRISA	6V-6864	1	LIMPADOR DO VIDRO	829
	134-1935	1	LIMPADOR DO VIDRO	829
LÂMINA DO LIMPADOR DE PÁRA-BRISA (DIANTEIRO)	6V-5851	1	LIMPADOR DO VIDRO	826
LÂMINA DO LIMPADOR DE PÁRA-BRISA (LATERAL)	128-5040	4	LIMPADOR DO VIDRO	826
LÂMINA DO LIMPADOR DE PÁRA-BRISA (TRASEIRO)	5C-8811	1	LIMPADOR DO VIDRO	826
RECEPTOR - SECADOR (CONDICIONADOR DE AR)	175-7162	1	TUBOS - AR CONDICIONADO	775
		1	TUBOS - AR CONDICIONADO	772
TAMPA COM RESPIRO (TANQUE DO LAVADOR DE VIDROS)	8E-8292	1	TANQUE - LAVADOR DE JANELA	821
SISTEMA DA ADMISSÃO DE AR E DE ESCAPE				
ELEMENTO - PRIMÁRIO (PURIFICADOR DE AR)	123-6855	1	PURIFICADOR DE AR	122
ELEMENTO - SECUNDÁRIO (PURIFICADOR DE AR)	123-6856	1	PURIFICADOR DE AR	122
SISTEMA DE ARREFECIMENTO				
BUJÃO DO DRENO (RADIADOR)	8M-1869	1	TUBOS - ÁGUA	107
FILTRO (BOMBA D'ÁGUA)	111-2721	1	BOMBA DE ÁGUA	111
MANGUEIRA	106-4572	6	RADIADOR	114
REGULADOR DE TEMPERATURA DA ÁGUA (92 GRAUS C) (LÍQUIDO ARREFECEDOR)	248-5513	2	TUBOS - ÁGUA	105
RETENTOR (ALOJAMENTO DO REGULADOR DE TEMPERATURA)	166-2340	1	TUBOS - ÁGUA	105
TAMPA - RADIADOR	031-1119	1	TANQUE - LÍQUIDO ARREFECEDOR	117
VEDADOR TIPO LABIO (REGULADOR DA TEMPERATURA DA ÁGUA)	3S-9643	2	TUBOS - ÁGUA	105

PEÇAS DE MANUTENÇÃO

DESCRIÇÃO	NÚMERO DE PEÇA	QUANT	UTILIZADA EM	PÁGINA
SISTEMA DE COMBUSTÍVEL				
CADEADO (TANQUE DE COMBUSTÍVEL)	246-2641	1	TANQUE DE COMBUSTÍVEL	165
		1	TANQUE DE COMBUSTÍVEL	162
CADEADO (TUBULAÇÃO DE COMBUSTÍVEL)	246-2641	1	FILTRO E TUBOS - COMBUSTÍVEL	144
CHAVE	5P-8500	2	FILTRO E TUBOS - COMBUSTÍVEL	144
FILTRO - COMBUSTÍVEL	1R-0749	1	FILTRO - COMBUSTÍVEL	148
	9P-7121	1	TANQUE DE COMBUSTÍVEL	163
FILTRO - COMBUSTÍVEL (BOCAL DE ENCHIMENTO DO TANQUE)	9P-7121	1	TANQUE DE COMBUSTÍVEL	166
FILTRO - SEPARADOR DE ÁGUA E COMBUSTÍVEL (PRIMÁRIO)	1R-0770	1	FILTRO DE COMBUSTÍVEL E SEPARADOR DE ÁGUA	149
JUNTA (BOMBA DE ESCORVA DE COMBUSTÍVEL)	1P-0436	1	FILTRO E TUBOS - COMBUSTÍVEL	144
RETENTOR (SEPARADOR DE ÁGUA, COMBUSTÍVEL)	220-8678	1	FILTRO DE COMBUSTÍVEL E SEPARADOR DE ÁGUA	149
TAMPA - BOCAL DE ENCHIMENTO (COMBUSTÍVEL, TRAVA, COM RESPIRO)	7X-7700	1	TANQUE DE COMBUSTÍVEL	163
		1	TANQUE DE COMBUSTÍVEL	166
TELA - RESERVATÓRIO (TANQUE DE COMBUSTÍVEL)	5G-4109	1	FILTRO E TUBOS - COMBUSTÍVEL	144
SISTEMA DE DIREÇÃO E DE FREIO				
ELEMENTO FILTRANTE - ÓLEO (HIDRÁULICO) (ALTA EFICIÊNCIA)	132-8875	1	FILTRO - ÓLEO	483
SISTEMA DE LUBRIFICAÇÃO				
FILTRO - ÓLEO DO MOTOR	1R-0716	1	FILTRO - ÓLEO DO MOTOR	83
MANGUEIRA (ELIMINAÇÃO DE VAPORES)	9Y-5281	1	ELIMINAÇÃO DE VAPORES DO CÁRTER	86
RESPIRO (CÁRTER DO MOTOR)	162-2266	1	RESPIRO	80
TAMPA - BOCAL DE ENCHIMENTO (ÓLEO DO MOTOR)	6N-2985	1	BOCAL DE ENCHIMENTO DE ÓLEO DO MOTOR	82
TELA	4N-0913	1	TUBOS - ÓLEO DO MOTOR	88

PEÇAS DE MANUTENÇÃO

DESCRIÇÃO	NÚMERO DE PEÇA	QUANT	UTILIZADA EM	PÁGINA
SISTEMA ELÉTRICO E DE PARTIDA				
BATERIA (12-VOLTS) (LIVRE DE MANUTENÇÃO)	153-5710	2	BATERIA E CABOS / FIOS ELÉTRICOS	177
		2	PARTIDA EM TEMPO FRIO - ARRANJO	256
CHAVE (DESCONECTAR A BATERIA)	8H-5306	1	CHAVE GERAL	268
CORREIA- SERPENTINA (ALTERNADOR)	243-1324	1	ALTERNADOR DE CORRENTE	173
DISJUNTOR AUTOMÁTICO DE CIRCUITO (15 AMPERES) (POTÊNCIA PRINCIPAL)	6T-3643	1	PAINEL DE FUSÍVEIS	226
ELEMENTO - AQUECEDOR DE ÁGUA DA CAMISA	239-8051	1	AQUECEDOR DA ÁGUA DO MOTOR	193
ELEMENTO - AQUECEDOR DE ÁGUA DA CAMISA (120 VOLTS, 1500 WATTS)	230-3525	1	AQUECEDOR DA ÁGUA DO MOTOR	192
FILTRO - ESPUMA (SENSOR DO NÍVEL DO COMBUSTÍVEL)	111-4402	1	BATERIA E CABOS / FIOS ELÉTRICOS	177
FILTRO (SENSOR DE PRESSÃO ATMOSFÉRICA)	125-5835	1	MONTAGEM - SENSOR	225
FUSÍVEL (10 AMPERES)	9W-1442	6	PAINEL DE FUSÍVEIS	226
FUSÍVEL (15 AMPERES)	9W-1441	18	PAINEL DE FUSÍVEIS	226
FUSÍVEL (175 AMPÈRES)	239-8107	2	PAINEL DE FUSÍVEIS	226
FUSÍVEL (20-AMPERES)	9W-1446	4	PAINEL DE FUSÍVEIS	226
JOGO DE RECEPTÁCULO (12 PINOS)	190-7615	1	CABOS/FIOS ELÉTRICOS - MOTOR	283
		1	FIACAO - CONTROLE DO NIVEL	287
LÂMPADA	249-5592	1	SIST. DE ILUMINAÇÃO - PISCA-PISCA GIRATÓRIO DE ADVERTÊNCIA	222
LÂMPADA - FAROL (24 VOLTS, 70 WATTS)	213-4998	1	LÂMPADA - FAROL	203
		1	LÂMPADA - FAROL	204
LÂMPADA - HALOGÊNEO (24 VOLTS, 65 WATTS)	9X-3463	1	LÂMPADA - FAROL	200
		1	LÂMPADA - FAROL	201
		1	LÂMPADA - FAROL	202
LÂMPADA DO TETO (24 VOLTS)	226-2811	1	CABOS/FIOS ELÉTRICOS - CABINE	279
LÂMPADA INDICADORA (LUZ DE AÇÃO)	170-3461	1	CABOS/FIOS ELÉTRICOS - PLATAFORMA	290
LÂMPADA (24 VOLTS) (LUZ DE AÇÃO)	7N-1996	1	CABOS/FIOS ELÉTRICOS - PLATAFORMA	290
LÂMPADA (24 VOLTS, 21 WATTS)	9X-4493	1	CABOS/FIOS ELÉTRICOS - CABINE	279
TELA FILTRANTE	226-4909	1	ALTERNADOR DE CORRENTE	175

PEÇAS DE MANUTENÇÃO

DESCRIÇÃO	NÚMERO DE PEÇA	QUANT	UTILIZADA EM	PÁGINA
SISTEMA HIDRÁULICO				
CADEADO (ENCHIMENTO DO TANUQE HIDRÁULICO)	246-2641	1	TAMPA - TANQUE HIDRÁULICO	522
ELEMENTO FILTRANTE - ÓLEO (HIDRÁULICO) (ALTA EFICIÊNCIA)	139-1536	1	TANQUE HIDRÁULICO E FILTRO	605
ELEMENTO FILTRANTE - ÓLEO (HIDRÁULICO) (EFICIÊNCIA PADRÃO)	1R-0774	1	TANQUE HIDRÁULICO E FILTRO	605
ELEMENTO FILTRANTE - ÓLEO (HIDRÁULICO) (FLUIDO RESISTENTE A FOGO)	4T-3134	1	TANQUE HIDRÁULICO E FILTRO	605
FILTRO - ÓLEO (ALTA EFICIÊNCIA)	126-1813	1	TUBOS - BOMBA	564
JUNTA	9H-6454	1	TANQUE HIDRÁULICO E FILTRO	606
TAMPA - BOCAL DE ENCHIMENTO (TANQUE HIDRÁULICO)	7H-1447	1	TANQUE HIDRÁULICO E FILTRO	605
TELA FILTRANTE (CONTROLE, COLETOR DE ALÍVIO)	6E-5066	1	COLETOR - CONTROLE	580
TELA FILTRANTE (ENCHIMENTO DO TANUQE HIDRÁULICO)	5D-7927	1	TANQUE HIDRÁULICO E FILTRO	605
TELA FILTRANTE (FILTRO DE DERIVAÇÃO DO ÓLEO HIDRÁULICO)	9T-7571	1	TANQUE HIDRÁULICO E FILTRO	605
TELA FILTRANTE (TANQUE HIDRÁULICO)	6E-1752	1	TANQUE HIDRÁULICO E FILTRO	605
TREM DE FORÇA				
BUJÃO MAGNÉTICO (COMANDO FINAL, ENCHIMENTO DE ÓLEO)	6V-3298	1	COMANDO FINAL	307
		1	COMANDO FINAL	310
		1	COMANDO FINAL	313
		1	COMANDO FINAL	316
DRENO - ECOLOGIA (CAIXA DE TRANSMISSÃO)	106-4150	1	CARCAÇA DAS ENGRENAGENS PLANETÁRIAS E COMPONENTES	296
DRENO - ECOLOGIA (CONVERSOR DE TORQUE)	106-4150	1	CONVERSOR DE TORQUE	346
ELEMENTO FILTRANTE - ÓLEO (ALTA EFICIENCIA, SISTEMA HIDRAULICO) (TRANSMISSÃO)	1R-1809	1	FILTRO - ÓLEO	305
ELEMENTO FILTRANTE - ÓLEO (ALTA EFICIENCIA, SISTEMA HIDRAULICO) (TREM DE FORÇA)	1R-1809	2	TUBOS - ÓLEO DA TRANSMISSÃO	326
FILTRO - MAGNÉTICO (CÁRTER DO TREM DE FORÇA)	213-8793	1	TUBOS - ÓLEO DA TRANSMISSÃO	326
RESPIRO (TREM DE FORÇA)	9G-5127	1	TUBOS - ÓLEO DA TRANSMISSÃO	326
TAMPA - BOCAL DE ENCHIMENTO (ÓLEO DO TREM DE FORÇA)	6N-2985	1	TUBOS - ÓLEO DA TRANSMISSÃO	326
TELA DE SUCÇÃO	8S-9130	1	CARCAÇA DAS ENGRENAGENS PLANETÁRIAS E COMPONENTES	296
TELA DE SUCÇÃO (CÁRTER DO TREM DE FORÇA)	3S-3875	1	FILTRO - MAGNÉTICO	340
TELA DE SUCÇÃO (CONVERSOR DE TORQUE)	8S-9130	1	CONVERSOR DE TORQUE	346

WARTUNGSTEILE

BESCHREIBUNG	ERSATZTEIL-NUMMER	MENGE	VERWENDET IN	SEITE
ELEKTRISCHE ANLAGE UND STARTSYSTEM				
ARBEITSLEUCHTEN (24 V, 70 W)	213-4998	1	ARBEITSLEUCHTEN	203
		1	ARBEITSLEUCHTEN	204
BATTERIE (12 V) (WARTUNGSFREI)	153-5710	2	BATTERIE UND VERDRAHTUNG	177
		2	KALTWETTERSTARTANLAGE	256
FAHRERHAUS-INNENLEUCHTE (24 V)	226-2811	1	FAHRERHAUSVERDRAHTUNG	279
FILTER (LUFTDRUCKSENSOR)	125-5835	1	SENSORBEFESTIGUNG	225
HALOGENSCHINWERFER (24V)(65W)	9X-3463	1	ARBEITSLEUCHTEN	200
		1	ARBEITSLEUCHTEN	201
		1	ARBEITSLEUCHTEN	202
KONTROLLEUCHTE (WARNLEUCHTE)	170-3461	1	FAHRERPLATTFORMVERDRAHTUNG	290
LEUCHTE	249-5592	1	RUNDUM-KENNLEUCHTE	222
LEUCHTE (24 V) (WARNLEUCHTE)	7N-1996	1	FAHRERPLATTFORMVERDRAHTUNG	290
LEUCHTE (24V, 21W)	9X-4493	1	FAHRERHAUSVERDRAHTUNG	279
SCHAUMFILTER (KRAFTSTOFFS-TANDSENOR)	111-4402	1	BATTERIE UND VERDRAHTUNG	177
SCHLÜSSEL (HAUPTSCHALTER)	8H-5306	1	TRENNSCHALTER	268
SCREEN	226-4909	1	DREHSTROMGENERATOR	175
SERPENTINENFÖRMIGER RIEMEN (DREHSTROMGENERATOR)	243-1324	1	DREHSTROMGENERATOR	173
SICHERUNG (10 A)	9W-1442	6	INSTRUMENTENTAFEL-SICHERUNG	226
SICHERUNG (15 A)	9W-1441	18	INSTRUMENTENTAFEL-SICHERUNG	226
SICHERUNG (175 A)	239-8107	2	INSTRUMENTENTAFEL-SICHERUNG	226
SICHERUNG (20 A)	9W-1446	4	INSTRUMENTENTAFEL-SICHERUNG	226
STECKDOSEN - EINBAUSATZ (12 STIFTE)	190-7615	1	MOTORVERDRAHTUNG	283
		1	NIEGUNGSSTEUER VERDRAHTUNG	287
UMLAUFKÜHLWASSERHEIZUNGS-ELEMENT	239-8051	1	UMLAUFKÜHLWASSERHEIZUNG	193
UMLAUFKÜHLWASSERHEIZUNGS-ELEMENT (120 V, 1500 W)	230-3525	1	UMLAUFKÜHLWASSERHEIZUNG	192
UNTERBRECHER (15 A) (HAUPTSTROM)	6T-3643	1	INSTRUMENTENTAFEL-SICHERUNG	226

WARTUNGSTEILE

BESCHREIBUNG	ERSATZTEIL-NUMMER	MENGE	VERWENDET IN	SEITE
FAHRERHAUS				
DICHTUNG	248-2929	1	FAHRERHAUSHEIZUNG	759
	248-2930	1	FAHRERHAUSHEIZUNG	759
KÄLTEMITTEL-DRUCKSPEICHER	170-0235	1	KLIMAANLAGENLEITUNGEN	772
		1	KLIMAANLAGENLEITUNGEN	775
KÄLTEMITTELTROCKNER (KLIMAANLAGE)	175-7162	1	KLIMAANLAGENLEITUNGEN	775
		1	KLIMAANLAGENLEITUNGEN	772
KAPPE MIT ENTLÜFTER (SCHEIBEN-WASCHMITTELBEHÄLTER)	8E-8292	1	SCHEIBENWASCHMITTELBEHÄLTER	821
LUFTFILTER (FAHRERHAUS)	209-8217	1	FAHRERHAUSHEIZUNG	763
LUFTFILTER (STANDARD) (FAHRERHAUS)	238-0479	1	FAHRERHAUSHEIZUNG	763
SCHEIBENWISCHERBLATT	6V-6864	1	SCHEIBENWISCHER	829
SCHEIBENWISCHERBLATT (HINTEN)	5C-8811	1	SCHEIBENWISCHER	826
SCHEIBENWISCHERBLATT (SEITE)	128-5040	4	SCHEIBENWISCHER	826
SCHEIBENWISCHERBLATT (VORNE)	6V-5851	1	SCHEIBENWISCHER	826
SERPENTINENFÖRMIGER RIEMEN (KLIMAANLAGEN-RIEMENSCHEIBE)	243-1325	1	KÄLTEMITTELKOMPRESSOR	743
SICHERHEITSGURT	222-0345	1	FAHRERSITZ	806
SICHERHEITSGURT (AUSZIEHBAR)	222-0345	1	FAHRERSITZ	809
SICHERUNG (15 A) (HEIZUNG)	133-9012	1	FAHRERHAUSHEIZUNG	759
UNTERBRECHER (15 A) (KLIMAANLAGE)	6T-3643	1	KLIMAANLAGENLEITUNGEN	775
UNTERBRECHER (15 A) (KONDESATOR GEBLÄSEMOTOR)	6T-3643	1	KLIMAANLAGENLEITUNGEN	772
VORHÄNGESCHLOSS (HEIZUNG)	246-2641	1	FAHRERHAUSHEIZUNG	763
WISCHERBLATT	134-1935	1	SCHEIBENWISCHER	829
HYDRAULIKSYSTEM				
DICHTUNG	9H-6454	1	HYDRAULIKTANK UND SCHMIERFILTER	606
EINFÜLLSTUTZENKAPPE (HYDRAULIKTANK)	7H-1447	1	HYDRAULIKTANK UND SCHMIERFILTER	605
FILTERSIEB (HYDRAULIKTANKEIN-FÜLLSIEB)	5D-7927	1	HYDRAULIKTANK UND SCHMIERFILTER	605
ÖLFILTER (HOCHLEISTUNG)	126-1813	1	HYDRAULIKPUMPE UND LEITUNGEN	564
ÖLFILTERELEMENT (HYDRAULISCH) (HOCHLEISTUNG)	139-1536	1	HYDRAULIKTANK UND SCHMIERFILTER	605
ÖLFILTERELEMENT (HYDRAULISCH) (SCHWER ENTFLAMMBARE FLÜSSIGKEIT)	4T-3134	1	HYDRAULIKTANK UND SCHMIERFILTER	605
ÖLFILTERELEMENT (HYDRAULISCH) (STANDARD EFFIZIENZ)	1R-0774	1	HYDRAULIKTANK UND SCHMIERFILTER	605
SCREEN (HYDRAULIKTANK)	6E-1752	1	HYDRAULIKTANK UND SCHMIERFILTER	605
SCREEN (STEUERUNG - ÜBERDRUCKKRÜMMER)	6E-5066	1	STEUERKRÜMMER	580
SIEB (HYDRAULIKÖLFILTER - UMGEHUNG)	9T-7571	1	HYDRAULIKTANK UND SCHMIERFILTER	605
VORHÄNGESCHLOSS (HYDRAULIKTANKEINFÜLLSIEB)	246-2641	1	ZUGANGSKLAPPE - HYDRAULIKTANKKAPPE	522

WARTUNGSTEILE

BESCHREIBUNG	ERSATZTEIL-NUMMER	MENGE	VERWENDET IN	SEITE
KRAFTSTOFFSYSTEM				
DICHTUNG (KRAFTSTOFFENTLÜFTUNGSPUMPE)	1P-0436	1	KRAFTSTOFFILTER UND LEITUNGEN	144
DICHTUNG (WASSERABSCHEIDER, KRAFTSTOFF)	220-8678	1	WASSERABSCHEIDER- U. KRAFTSTOFFILTER	149
EINFÜLLKAPPE (KRAFTSTOFF, SPERRUNG, LÜFTUNG)	7X-7700	1	KRAFTSTOFFTANK	163
		1	KRAFTSTOFFTANK	166
KRAFTSTOFFILTER	1R-0749	1	KRAFTSTOFFILTER	148
KRAFTSTOFFSIEB	9P-7121	1	KRAFTSTOFFTANK	163
KRAFTSTOFFSIEB (TANKFÜLLER)	9P-7121	1	KRAFTSTOFFTANK	166
SCHLÜSSEL	5P-8500	2	KRAFTSTOFFILTER UND LEITUNGEN	144
SUMPFSIEB (KRAFTSTOFFTANK)	5G-4109	1	KRAFTSTOFFILTER UND LEITUNGEN	144
VORHÄNGESCHLOSS (KRAFTSTOFFLEITUNG)	246-2641	1	KRAFTSTOFFILTER UND LEITUNGEN	144
VORHÄNGESCHLOSS (KRAFTSTOFFTANK)	246-2641	1	KRAFTSTOFFTANK	162
		1	KRAFTSTOFFTANK	165
WASSERABSCHEIDER UND KRAFTSTOFFILTER (HAUPTELEMENT)	1R-0770	1	WASSERABSCHEIDER- U. KRAFTSTOFFILTER	149
KRAFTÜBERTRAGUNG				
ABLASS (UMWELTFREUNDLICH) (DREHMOMENTWANDLER)	106-4150	1	DREHMOMENTWANDLER	346
ABLASS (UMWELTFREUNDLICH) (GETRIEBEGEHÄUSE)	106-4150	1	PLANETENANTRIEBSGEHÄUSE U. TEILE	296
ANSAUGSIEB	8S-9130	1	PLANETENANTRIEBSGEHÄUSE U. TEILE	296
ANSAUGSIEB (DREHMOMENTWANDLER)	8S-9130	1	DREHMOMENTWANDLER	346
ANSAUGSIEB (KRAFTÜBERTRAGUNG - ÖLSUMPF)	3S-3875	1	MAGNETSIEB	340
EINFÜLLKAPPE (KRAFTÜBERTRAGUNGSÖL)	6N-2985	1	ÖLLEITUNGEN - KRAFTÜBERTRAGUNG	326
ENTLÜFTER (KRAFTÜBERTRAGUNG)	9G-5127	1	ÖLLEITUNGEN - KRAFTÜBERTRAGUNG	326
MAGNETSIEB (KRAFTÜBERTRAGUNG - ÖLSUMPF)	213-8793	1	ÖLLEITUNGEN - KRAFTÜBERTRAGUNG	326
MAGNETSTOPFEN (SEITENANTRIEB, ÖLEINFÜLLUNG)	6V-3298	1	SEITENANTRIEB	307
		1	SEITENANTRIEB	310
		1	SEITENANTRIEB	313
		1	SEITENANTRIEB	316
ÖLFILTERELEMENT (HOCHLEISTUNG, HYDR.) (GETRIEBE)	1R-1809	1	ÖLFILTER	305
ÖLFILTERELEMENT (HOCHLEISTUNG, HYDR.) (KRAFTÜBERTRAGUNG)	1R-1809	2	ÖLLEITUNGEN - KRAFTÜBERTRAGUNG	326

WARTUNGSTEILE

BESCHREIBUNG	ERSATZTEIL-NUMMER	MENGE	VERWENDET IN	SEITE
KÜHLSYSTEM				
ABLASSSTOPFEN (KÜHLER)	8M-1869	1	KÜHLWASSERLEITUNGEN	107
DICHTUNG (TEMPERATURREGELGE-HÄUSE)	166-2340	1	KÜHLWASSERLEITUNGEN	105
FILTER (WASSERPUMPE)	111-2721	1	KÜHLWASSERPUMPE	111
KÜHLERKAPPE	031-1119	1	KÜHLMITTELBEHÄLTER	117
LIPPENDICHTUNG (KÜHLWASSERTHERMOSTAT)	3S-9643	2	KÜHLWASSERLEITUNGEN	105
SCHLAUCHLEITUNG	106-4572	6	KÜHLER	114
WASSERTEMPERATURREGLER (92 GRAD) (KÜHLMITTEL)	248-5513	2	KÜHLWASSERLEITUNGEN	105
LAUFWERK				
ABLASSSTOPFEN (ÖLDREHWELLE)	4T-2069	4	LAUFROLLENRAHMEN (TELESKOPRÜCKLAUF)	430
ABLASSSTOPFEN (ÖLFÜLLDREHWELLE)	4T-2069	2	LAUFROLLENRAHMEN (TELESKOPRÜCKLAUF)	430
ÖLEINFÜLLSTUTZEN (DREHZAPFEN)	9W-8277	1	ACHSWELLENSCHMIERUNG	439
LENK- UND BREMSSYSTEM				
ÖLFILTERELEMENT (HYDRAULISCH) (HOCHLEISTUNG)	132-8875	1	ÖLFILTER	483
LUFTEINLASS- UND ABGASSYSTEM				
HAUPTFILTER (LUFTREINIGER)	123-6855	1	LUFTREINIGER	122
SICHERHEITSFILTER (LUFTREINIGER)	123-6856	1	LUFTREINIGER	122
MASCHINE				
SCHLÜSSEL	5P-8500	1	FAHRWERK	1
VORHÄNGESCHLOSS (LTERATURFACH)	246-2641		FAHRWERK	1
MOTOR (GRUNDAUSFÜHRUNG)				
DICHTUNG (VENTILMECHANISMUS-DECKEL)	242-9537	1	VENTILDECKEL	19
		1	VENTILDECKEL	24
		1	VENTILDECKEL	25
		1	VENTILDECKEL	27
ÖLABLASSSCHRAUBE (WANNE)	4P-0513	1	ÖLWANNE	64
	109-5839	1	ÖLWANNE	66
MOTORAUSFÜHRUNG				
VORHÄNGESCHLOSS (ÖLEINFÜLLSTUTZEN)	246-2641	1	MOTOR-EINBAUSATZ	9
VORHÄNGESCHLOSS (ÖLMESSSTAB)	246-2641	1	MOTOR-EINBAUSATZ	9

WARTUNGSTEILE

BESCHREIBUNG	ERSATZTEIL-NUMMER	MENGE	VERWENDET IN	SEITE
RAHMEN UND AUFBAU				
ABLASSVENTIL (GETRIEBE)	106-8186	1	RAHMEN UND GEHÄUSE	363
		1	RAHMEN UND GEHÄUSE	364
SCHRAUBE (ABLASS) (GETRIEBE)	106-8187	1	RAHMEN UND GEHÄUSE	363
		1	RAHMEN UND GEHÄUSE	364
VORHÄNGESCHLOSS (BATTERIEKASTEN)	246-2641	2	SCHUTZBLECHE	391
VORHÄNGESCHLOSS (HINTERES ABTEIL)	246-2641	1	VERKLEIDUNG, HINTEN	387
VORHÄNGESCHLOSS (MOTORVERKLEIDUNG)	246-2641	4	MOTORVERKLEIDUNG	377
		4	MOTORVERKLEIDUNG	380
SCHMIERSYSTEM				
EINFÜLLKAPPE (MOTORÖL)	6N-2985	1	MOTORÖLEINFÜLLSTUTZEN	82
ENTLÜFTER (KURBELGEHÄUSE)	162-2266	1	ENTLÜFTER	80
ÖLFILTER	1R-0716	1	ÖLFILTER	83
SAUGGLOCKENSIEB	4N-0913	1	MOTORÖLLEITUNGEN	88
SCHLAUCHLEITUNG (ENTDUNSTER)	9Y-5281	1	ENTDUNSTER	86

INDEX

Name	Page
A	
ACCUMULATOR GP-HYDRAULIC–CHARGED	500
ACCUMULATOR GP-HYDRAULIC–UNCHARGED	499
ACCUMULATOR-REFRIGERANT	772 775
ACTUATOR GP-PUMP–STEERING	501
ADAPTER-FAST FILL FUEL	136 138 139 141
ADAPTER GP-FAST FILL FUEL	136 138 139 141
ADAPTER GP-PUMP DRIVE	143
ADJUSTER GP-SEAT	725
AFTERCOOLER GP-AIR	120
AIR CLEANER GP	121 122
AIR COMPRESSOR GP-SEAT	726 727
AIR CONDITIONER AR	728
ALARM GP–ACTION	170
ALTERNATOR GP-CHARGING	171 173 175
ARM AS (WIPER) (FRONT)	826
ARM GP-WINDOW WIPER (LH)	826
ARM GP-WINDOW WIPER (REAR, LH)	829
ARM GP-WINDOW WIPER (REAR, RH)	829
ARM GP-WINDOW WIPER (RH)	826
ASHTRAY (CAB)	751
AXLE GP	295
B	
BAR AR-STRIKER	413 414
BAR AS-EQUALIZER–COLD WEATHER	416
BAR AS-STRIKER–TRASH	417 418 419
BAR GP-EQUALIZER	421 423
BAR GP-EQUALIZER–ROLLER FRAME, STRAIGHT	420
BAR GP-STRIKER–FRONT	424
BASE GP-VALVE COVER & INJ HARN	10
BATTERY & WIRING GP	177
BATTERY (12-VOLT) (MAINTENANCE FREE)	177 256
BEAM AS–MULTI-SHANK, HEAVY DUTY	658
BEAM AS–MULTI-SHANK RIPPER	657
BEARING-SLEEVE	425 426
BELT-SERPENTINE (A/C COMPRESSOR PULLEY)	743
BELT-SERPENTINE (ALTERNATOR)	173
BLADE & EDGE GP-SEMI-UNIVERSAL	675 676
BLADE & EDGE GP-UNIVERSAL	677 678 679
BLADE AS-SEMI-UNIVERSAL	680 681 682 683 684 685
BLADE AS-UNIVERSAL	685 686 687 688 689
BLADE AS-WIPER	829
BLADE AS-WIPER (FRONT)	826
BLADE AS-WIPER (REAR)	826
BLADE AS-WIPER (SIDE)	826
BLADE GP-SEMI-UNIVERSAL	690
BLADE GP-UNIVERSAL	691
BLADE-WIPER	829
BLOCK GP-JUNCTION	184
BLOCK GP-POWER	185
BLOWER GP-CAB–HEATER	729
BODY-COOLER BYPASS (ENGINE OIL)	83
BOX GP-STORAGE	731
BRACKET GP-MOUNTING–ACCUGRADE	732
BRACKET GP-MOUNTING–DOOR	733
BRACKET GP-MOUNTING–FIRST AID KIT	734
BRAKE GP-SERVICE	469
BREATHER AS (CRANKCASE)	80
BREATHER AS (POWER TRAIN)	326
BREATHER GP	80
BULLDOZER AR–SEMI-UNIVERSAL	659
BULLDOZER AR–UNIVERSAL	659 660
BULLDOZER AR-SEMI-UNIVERSAL	660 661 662
BULLDOZER AR-UNIVERSAL	663 664 665
C	
CAB AR	736 737

INDEX

Name	Page
	738
CAB AR–ROPS MOUNTED CONDENSER	736
CAB AR-COLD WEATHER	738
CAB GP	739
CAB GP–ROPS MOUNTED CONDENSER	741
CAMSHAFT GP	12
CAP AS-FILLER (ENGINE OIL)	82
CAP AS-FILLER (FUEL, LOCKING, VENTED)	163
	166
CAP AS-FILLER (POWER TRAIN OIL)	326
CAP AS-OIL FILLER (PIVOT SHAFT)	439
CAP AS-RADIATOR	117
CAP-FILLER (HYDRAULIC TANK)	605
CAP GP-TRACK IDLER	427
	428
CAP GP-TRACK ROLLER	429
CAP-VENTED (WINDOW WASHER TANK)	821
CASE & FRAME GP	363
CASE & FRAME GP–CUSHION DOZER	364
CASE & PARTS GP-PLANETARY	296
CHASSIS AR	1
CIRCUIT BREAKER AS (15-AMPERE) (AIR CONDITIONER)	775
CIRCUIT BREAKER AS (15-AMPERE) (CONDENSOR FAN MOTOR)	772
CIRCUIT BREAKER AS (15-AMPERE) (MAIN POWER)	226
COLD WEATHER AR	1
COMPRESSOR GP-REFRIGERANT	742
	743
CONDENSER GP-REFRIGERANT–A/C	744
CONNECTION GP-ELECTRICAL	186
CONSOLE GP-FRONT	746
CONSOLE GP-OPERATOR	747
CONTROL & MOUNTING GP–RIPPER	502
CONTROL & MTG GP-ELECTRONIC–WINCH	187
CONTROL & MTG GP-ENGINE ELEK	188
CONTROL & MTG GP-PEDAL–GOVERNOR, BRAKE	749
	750
CONTROL AR-DUAL TILT	503
CONTROL AR-HYD PIN PULLER	504
CONTROL AR-HYDRAULIC–RIPPER	506
CONTROL AR-HYDRAULIC–WINCH	506
CONTROL AS-ELECTRONIC (WIPER)	793
CONTROL GP-HANDLE–BRAKE, STEERING, TRANSMISSION	471
CONTROL GP-HANDLE–BULLDOZER	507
CONTROL GP-HANDLE–GRADE CONTROL	510
CONTROL GP-HANDLE–WITH TRIGGER–DUAL TILT	508
CONTROL GP-HANDLE (BULLDOZER CONTROL)	515
CONTROL GP-HEAT & AIR COND	793
CONTROL GP-IMPLEMENT–RIPPER	511
CONTROL GP-JOYSTICK–BULLDOZER	515
CONTROL GP-JOYSTICK–DUAL TILT	513
CONTROL GP-JOYSTICK–GRADE CONTROL	519
CONTROL GP-JOYSTICK–WINCH	517
CONTROL GP-MACHINE	188
CONTROL GP-PARKING BRAKE	472
CONTROL GP-STEERING	474
	475
CONTROL GP-STEERING & TMSN	476
	478
CONTROL GP-TRANSMISSION HYD	299
CONTROL GP-UNPROGRAMMED (DRIVE TRAIN)	291
CONTROL GP-UNPROGRAMMED (PRODUCT LINK 300)	197
CONVERTER GP-ELECTRICAL	189
CONVERTER-POWER (24-VOLT TO 12-VOLT)	290
COOLANT HEATER LINES	778
COOLER & MTG GP-HYDRAULIC OIL	521
COOLER GP-TRANSMISSION OIL	301
CORE AS (AFTERCOOLER)	120
CORE AS-OIL COOLER (ENGINE)	105
CORE AS-OIL COOLER (HYDRAULIC)	521
CORE AS (TRANSMISSION)	301
CORE-VALVE	773
	775
COUNTERWEIGHT GP	365
	367
	368
	369
COUPLING GP-PUMP	302
COVER GP-CAB	751
COVER GP-CYLINDER BLOCK	13
COVER GP-FLYWHEEL HOUSING	14
	15
COVER GP-FRONT HOUSING	16
COVER GP-HYDRAULIC TANK CAP	522
COVER GP-SOUND SUPPRESSION	17
COVER GP-TRUNNION	370
COVER GP-VALVE MECHANISM	18
	19
	20
	24
	25
	26
	27
	28
COVER GP-VALVE MECHANISM–NO OIL FILL	21
	22
	23
CRANKSHAFT GP	29

INDEX

Name	Page
CYLINDER & LINES GP-LIFT–LH–BULLDOZER	525
CYLINDER & LINES GP-LIFT–RH–BULLDOZER	523, 527
CYLINDER & LINES GP-RIPPER–COLD WEATHER OPERATION	529
CYLINDER AR-TILT	530
CYLINDER BLOCK AS	30, 31
CYLINDER BLOCK GP	32
CYLINDER GP-LIFT–BULLDOZER	531, 533
CYLINDER GP-RIPPER	535
CYLINDER GP-RIPPER–RAISE, LOWER	537
CYLINDER GP-RIPPER PIN PULLER	539
CYLINDER GP-RIPPER TIP	540, 542
CYLINDER GP-TILT–LH	548
CYLINDER GP-TILT–RH	546
CYLINDER GP-TILT–STABILIZER	544
CYLINDER GP-TILT (LH)	530
CYLINDER GP-TILT (RH)	530
CYLINDER HEAD AS	34, 35, 36
CYLINDER HEAD GP	39, 40

D

Name	Page
DAMPER & PULLEY GP	41
DETENT GP-CONTROL (BLADE LIFT, LOWER)	513, 519
DETENT GP-CONTROL (BLADE LIFT, LOWER)	515
DETENT GP-CONTROL (BLADE TILT)	513, 515, 519
DETENT GP-CONTROL (DRUM CLUTCH RELEASE)	517
DETENT GP-CONTROL (REEL IN, REEL OUT)	517
DOOR GP-ACCESS–LH	371
DOOR GP-ACCESS–LH–SOUND SUPPRESSION	373
DOOR GP-ACCESS–RH	372
DOOR GP-ACCESS–RH–SOUND SUPPRESSION	374
DOOR GP-CAB–LH	755
DOOR GP-CAB–RH	753
DRAIN GP-ECOLOGY–TORQUE CONVERTER–TRANSMISSION CASE	303
DRAIN GP-ECOLOGY (TORQUE CONVERTER)	346
DRAIN GP-ECOLOGY (TRANSMISSION CASE)	296
DRAWBAR GP	375
DRIVE GP-DIFFERENTIAL STEERING	480
DRIVE GP-PUMP	304
DRIVE GP-STEERING	482
DUST EJECTOR GP	123

E

Name	Page
EDGE GP-BIT & CUTTING–SEMI-UNIVERSAL	692, 694, 695
EDGE GP-BIT & CUTTING–UNIVERSAL	693
ELECTRONICS AR-MACHINE	190
ELECTRONICS GP-COMMUNICATION–PRODUCT LINK 300	190
ELECTRONICS GP-IMPLEMENT	190
ELECTRONICS GP-MONITOR	191
ELECTRONICS GP-POWER TRAIN	191
ELEMENT AS-JACKET WATER HEATER	193
ELEMENT AS-JACKET WATER HEATER (120-VOLT, 1500-WATT)	192
ELEMENT AS-PRIMARY (AIR CLEANER)	122
ELEMENT AS-SECONDARY (AIR CLEANER)	122
ENCLOSURE GP-ENGINE	380
ENCLOSURE GP-ENGINE–SOUND SUPPRESSION	377
ENCLOSURE GP-ENGINE–WASTE HANDLING	383
ENCLOSURE GP-LH	384
ENCLOSURE GP-LH–SOUND SUPPRESSION	385
ENCLOSURE GP-LH–WASTE HANDLING	386
ENCLOSURE GP-REAR	387
ENCLOSURE GP-RH	388
ENCLOSURE GP-RH–SOUND SUPPRESSION	389
ENCLOSURE GP-RH–WASTE HANDLING	390
ENGINE AR-COMPLETE	6, 7
ENGINE AR-CORE	8
EXTENSION GP-BACKREST (CLOTH)	806
EXTENSION GP-BACKREST (VINYL)	809

F

Name	Page
FAN GP-SUCTION	100
FASTENER GP-CYLINDER HEAD	40
FASTENER GP-FRONT HOUSING	42, 43, 44

INDEX

Name	Page
FASTENER GP-OIL PAN	45
FASTENER GP-OIL PUMP MOUNTING–ENGINE	81
FASTENER GP-VALVE MECHANISM	46
FENDER GP	391
FENDER GP–LH	393
FENDER GP–RH	394
FILLER GP-ENGINE OIL	82
FILM (AUTOMATIC BLADE)	503
FILM (DUAL TILT)	503
FILM (D9T, LH)	404
FILM (D9T, RH)	404
FILM GP	833
FILM-IDENTIFICATION (GROUP NUMBER) (CAB HEATER)	759
FILM-IDENTIFICATION (GROUP NUMBER) (REFRIGERANT CONDENSER)	744
FILM-IDENTIFICATION (JACKET WATER HEATER)	192 193
FILM-IDENTIFICATION (JOYSTICK) (ACCUGRADE)	196
FILM-IDENTIFICATION (PRELUBRICATION PUMP)	94
FILM-IDENTIFICATION (ROUND RED REFLECTIVE)	834
FILM-IDENTIFICATION (12-VOLT)	835
FILM-INFORMATION (AUTOMATIC RIPPER)	511
FILM-INSTRUCTION (BATTERY DISCONNECT)	269 835
FILM-INSTRUCTION (READ OMM, STEERING)	836
FILM-INSTRUCTION (RIPPER CONTROL)	502
FILM-INSTRUCTION (SEAT ADJUSTMENT)	817 819
FILM-NOTICE (RADIO)	768
FILM-PANEL (WIPER CONTROL)	793
FILM-STRIPE (REAR)	404
FILM-WARNING (ACCUMULATOR)	499 500
FILM-WARNING (BLADE, DO NOT CLIMB, READ OMM)	199
FILM-WARNING (NO WELD, NO DRILL)	836
FILM-WARNING (PRODUCT LINK)	197
FILM-WARNING (RECOIL SPRING)	430
FILM-WARNING (SHOCK HAZARD)	836
FILM-WASTE HANDLER	4
FILM (WINCH)	506
FILTER & LINES GP-FUEL	144
FILTER-AIR (STANDARD) (CAB)	763
FILTER AS-ENGINE OIL	83
FILTER AS-FUEL	148
FILTER AS-WATER SEP & FUEL (PRIMARY)	149
FILTER (ATMOSPHERIC PRESSURE SENSOR)	225
FILTER ELEMENT AS-AIR (CAB)	763
FILTER ELEMENT AS-OIL (HIGH EFFICIENCY, HYDRAULIC) (POWER TRAIN)	326
FILTER ELEMENT AS-OIL (HIGH EFFICIENCY, HYDRAULIC) (TRANSMISSION)	305
FILTER ELEMENT AS-OIL (HYDRAULIC) (FIRE RESISTANT FLUID)	605
FILTER ELEMENT AS-OIL (HYDRAULIC) (HIGH EFFICIENCY)	483
FILTER ELEMENT AS-OIL (HYDRAULIC) (HIGH EFFICIENCY)	605
FILTER ELEMENT AS-OIL (HYDRAULIC) (STANDARD EFFICIENCY)	605
FILTER-FOAM (FUEL LEVEL SENSOR)	177
FILTER GP-CAB AIR	757
FILTER GP-ENGINE OIL	83
FILTER GP-FUEL	148
FILTER GP-OIL–STEERING	483
FILTER GP-OIL–TRANSMISSION	305
FILTER GP-OIL (HYDRAULIC) (STEERING)	485
FILTER GP-OIL (TRANSMISSION)	326
FILTER GP-WATER SEP & FUEL	149
FILTER-OIL (HIGH EFFICIENCY)	564
FILTER (WATER PUMP)	111
FINAL DRIVE GP	307 310
FINAL DRIVE GP–ARCTIC	313
FINAL DRIVE GP–WASTE HANDLING	316
FLOOR MAT-LOWER	788
FLOOR MAT-LOWER (CAB)	751
FLOOR MAT-UPPER	788
FLOOR MAT-UPPER (CAB)	751
FLYWHEEL GP	47
FRAME & BEARING AS–TRASH–MULTI-SHANK RIPPER	396
FRAME & BEARING AS–TRASH–SINGLE SHANK RIPPER	395
FRAME GP-RIPPER	696 698
FRAME GP-TELESCOPING RECOIL	430
FUMES DISPOSAL GP	86
FUSE (10-AMPERE)	226
FUSE (15-AMPERE)	226
FUSE (15-AMPERE) (HEATER)	759
FUSE (175-AMPERE)	226
FUSE (20-AMPERE)	226

G

GASKET	606 759

INDEX

Name	Page
GASKET (FUEL PRIMING PUMP)	144
GAUGE AS-OIL LEVEL (DIPSTICK) (POWER TRAIN)	326
GAUGE GP-OIL LEVEL (DIPSTICK)	87
GAUGE-LIQUID LEVEL (HYDRAULIC OIL)	605
GEAR GP-BEVEL & PINION	319
GEAR GP-CAMSHAFT	48
GEAR GP-FRONT	49
GEAR GP-REAR	52
GENERAL AR-TRACTOR	2
GUARD AR-FINAL DRIVE–WASTE HANDLING	397
GUARD AR-IDLER–WASTE HANDLING	397
GUARD GP-BOTTOM	398 400
GUARD GP-BOTTOM–WASTE HANDLING	401
GUARD GP-DRIVE SHAFT	321
GUARD GP-FINAL DRIVE	403
GUARD GP-FUEL TANK	404
GUARD GP-IDLER–WITH RUBBER GUARDS	405
GUARD GP-PIVOT SHAFT	406
GUARD GP-POWER TRAIN	324
GUARD GP-POWER TRAIN–REAR	322
GUARD GP-RADIATOR	407
GUARD GP-ROCK–SEMI-UNIVERSAL	409
GUARD GP-ROCK–UNIVERSAL	410
GUARD GP-SEAL–PIVOT SHAFT	411

H

HANDLE GP-MODULAR (WINCH)	517
HARNESS AS-CAB	279
HARNESS AS-CHASSIS (LH)	178
HARNESS AS-CHASSIS (RH)	177
HARNESS AS-CONSOLE	291 478
HARNESS AS-CONTROL (PRODUCT LINK)	197
HARNESS AS-DASH	290
HARNESS AS-ENGINE	283
HARNESS AS-ENGINE (ENGINE WIRING)	281
HARNESS AS-ENGINE (INJECTOR, VARIABLE VALVE)	10
HARNESS AS-FRONT	178
HARNESS AS-HEATER & AIR COND	759 772 775
HARNESS AS-HEATER & AIR COND (CONDENSER BLOWER MOTORS)	744
HARNESS AS-HEATER & AIR COND (CONDENSER FAN)	772
HARNESS AS-LIGHTING (BEACON)	222
HARNESS AS-LIGHTING (FRONT)	209 211 219
HARNESS AS-LIGHTING (FRONT) (LH,RH)	214
HARNESS AS-LIGHTING (FRONT) (RH,LH)	216
HARNESS AS-MONITOR (ACCUGRADE)	287
HARNESS AS-MONITOR (ADVISOR)	290
HARNESS AS-PANEL (FUSE)	226
HARNESS AS-PLATFORM	290
HARNESS AS-RADIO (RECEIVER)	287
HARNESS AS-SENSOR (CYLINDER POSITION, RH)	287
HARNESS AS-SENSOR (INCLINATION, RECEIVER, LH)	287
HARNESS AS-SENSOR (STEER MOTOR SPEED, TMSN LUBE)	179
HARNESS AS-SOLENOID	700
HARNESS AS-STEERING	471
HARNESS AS-SWITCH (SERVICE BRAKE)	490
HARNESS AS-TRANSMISSION	178 299
HARNESS AS-VALVE	615
HARNESS AS-VALVE (IMPLEMENT)	612
HARNESS AS-VALVE (SEAT AIR COMPRESSOR)	819
HARNESS AS-WIRING (JOYSTICK) (WINCH)	187
HARNESS AS-WIRING (PRODUCT LINK RADIO)	197
HARNESS AS-WIRING (WINDOW WASHER)	821
HEAD GP-PUMP–STEERING PUMP	550
HEATER GP-CAB	759 763
HEATER GP-JACKET WATER	192 193
HEATER GP-MACHINE–CAB, FUEL	194
HOSE	114
HOSE (FUMES DISPOSAL)	86
HOUSING GP-FLYWHEEL	54
HOUSING GP-FRONT	56
HOUSING GP-FRONT–SOUND SUPPRESSION	58
HOUSING GP-SEAT SUSPENSION	765
HYDRAULIC AR	552

I

IDLER GP-TRACK	434
IDLER GP-TRACK–COLD WEATHER	436
IDLER GP-TRACK–WASTE HANDLING	435
INJECTOR GP-FUEL	156 157
INSTALLATION AR-ENGINE	9
INSTALLATION AR-GRADE CONTROL	196
INSTALLATION GP-COMMUNICATION–PRODUCT LINK	197
INSTALLATION GP-GRADE CONTROL–ACCUGRADE GPS	199
INSTALLATION GP-RADIO	768

INDEX

Name	Page

K

KEY 1
144
KEY (BATTERY DISCONNECT) 268
KIT-AIR CLEANER CLAMP 122
KIT-AIR VALVE (SUSPENSION SEAT) 819
KIT-BEARING 599
KIT-BEARING (ALTERNATOR) 171
KIT-BEARING (MOTOR ROTATING GROUP) . . . 597
KIT-BEARING (SUSPENSION SEAT) 766
KIT-BUMPER (WEIGHT ADJUSTMENT) (SUSPENSION SEAT) 766
KIT-CAP FILTER (FUEL TANK) 166
KIT-CAP FILTER (FUEL TANK) (VENT) 163
KIT-FOLLOWER (SUSPENSION SEAT) 766
KIT-HARDWARE (ALTERNATOR) 171
KIT-INDICATOR (WEIGHT ADJUSTMENT) (SUSPENSION SEAT) 766
KIT-RECEPTACLE (12-PIN) 287
513
519
KIT-RECEPTACLE (12-PIN) 283
KIT-SEAL–LINK 150
KIT-SEAL (CHECK VALVE) (HYDRAULIC FAN, REVERSING) 620
KIT-SEAL (DIVERTER VALVE) (HYDRAULIC FAN, REVERSING) 581
KIT-SEAL (PISTON MOTOR) (HYDRAULIC FAN) 585
KIT-SEAL (RELIEF VALVE) 648
KIT-SEAL (RELIEF VALVE) (HYDRAULIC FAN, REVERSING) 581
KIT-SEAL (RELIEF VALVE) (STEERING PISTON PUMP) 550
KIT-SEAL (SHUTTLE VALVE) 649
KIT-SEAL (SOLENOID VALVE) 358
497
650
651
652
653
655
KIT-SHOCK ABSORBER (SUSPENSION SEAT) 819
KIT-SLIDER BLOCK (SUSPENSION SEAT) 812
813
814
KIT-SPRING (HEIGHT ADJUSTMENT) (SUSPENSION SEAT) 765
KIT-SPRING (SUSPENSION SEAT) 765
KIT-SUSPENSION KNOB (HEIGHT ADJUSTMENT) (SUSPENSION SEAT) 765
KIT-TERMINAL (ALTERNATOR) 171
KIT-TERMINAL (LOCK) 226
KIT-TERMINAL (STARTING MOTOR) 260
264
KIT-TETHER (SUSPENSION SEAT) 819
KIT-VALVE REPAIR (FLOW COMPENSATOR) (IMPLEMENT PUMP) 638
KIT-VALVE REPAIR (PRESSURE COMPENSATOR VALVE) 637

L

LAMP 222
LAMP AS-DOME (24-VOLT) 279
LAMP AS-FLOOD (24-VOLT, 70-WATT) 203
204
LAMP AS-INDICATOR (ACTION LIGHT) 290
LAMP GP-FLOOD–SUSPENDED MOUNT 200
203
LAMP GP-FLOOD–VERTICAL MOUNT 201
204
LAMP GP-FLOOD–VERTICAL MOUNT–ENGINE SERVICE 202
LAMP GP-WARNING BEACON 222
LAMP-HALOGEN (24-VOLT, 65-WATT) 200
201
202
LAMP (24-VOLT) (ACTION LIGHT) 290
LAMP (24-VOLT, 21-WATT) 279
LIFTING GP-ENGINE 60
61
LIGHTING GP-FLOOD–1-LAMP 205
LIGHTING GP-FLOOD–1-LAMP–RIPPER 208
LIGHTING GP-FLOOD–10-LAMP 211
LIGHTING GP-FLOOD–10-LAMP–ROPS, CYLINDER MOUNTED 214
LIGHTING GP-FLOOD–11-LAMP–FRONT, REAR FLOODLIGHTS 216
LIGHTING GP-FLOOD–4-LAMP 206
LIGHTING GP-FLOOD–6-LAMP 209
LIGHTING GP-FLOOD–9-LAMP–ROPS, CYLINDER MOUNTED 219
LIGHTING GP-WARNING BEACON 222
LINER GP-CAB 770
LINES GP-AIR 124
125
126
LINES GP-AIR CONDITIONER–CONDENSER, FENDER MOUNTED 775
LINES GP-AIR CONDITIONER–ROPS MOUNTED CONDENSER 772
LINES GP-ENGINE OIL 88
LINES GP-FUEL 151
LINES GP-HEATER 778
LINES GP-HYDRAULIC FAN 553

INDEX

Name	Page
LINES GP-HYDRAULIC FAN–REVERSING FAN	557
LINES GP-LIFT CYLINDER	559
LINES GP-LIFT CYLINDER–COLD WEATHER OPERATION	561
LINES GP-PIN PULLER–COLD WEATHER OPERATION	561
LINES GP-PIN PULLER CYLINDER–MULTI-SHANK RIPPER	562
LINES GP-PIN PULLER CYLINDER–SINGLE SHANK RIPPER	563
LINES GP-POWER TRAIN OIL	326
LINES GP-PUMP	564
LINES GP-RIPPER	568 570
LINES GP-STEERING	485
LINES GP-TILT CYLINDER	572 578
LINES GP-TILT CYLINDER–DUAL	574 576
LINES GP-TURBOCHARGER OIL	89
LINES GP-WATER	103 105 107 109
LINES GP-WINCH	700
LINK AS-TRACK	437 438
LINK GP-STABILIZER	666 667
LUBRICATION GP-PIVOT SHAFT	439
MOTOR GP-PISTON–HYDRAULIC FAN	585
MOTOR GP-PISTON–STEERING	584
MOTOR GP-WINDOW WIPER (24-VOLT) (CENTER, FRONT)	826
MOTOR GP-WINDOW WIPER (24-VOLT) (LH, FRONT)	826
MOTOR GP-WINDOW WIPER (24-VOLT) (REAR)	829
MOTOR GP-WINDOW WIPER (24-VOLT) (RH, FRONT)	826
MOTOR GP-WINDOW WIPER (24-VOLT, 2-SPEED) (REAR)	826
MOUNTING GP-AIR CLEANER	128
MOUNTING GP-CAB	782
MOUNTING GP-CONNECTOR–ACCUGRADE	224
MOUNTING GP-CONTROL–MAST	783
MOUNTING GP-CYLINDER	587
MOUNTING GP-ENGINE	62
MOUNTING GP-FUEL LINE	154
MOUNTING GP-FUMES DISPOSAL	91
MOUNTING GP-MONITOR–GRADE CONTROL	784
MOUNTING GP-RADIO–GRADE CONTROL	785 786
MOUNTING GP-RIPPER	703
MOUNTING GP-ROPS	787
MOUNTING GP-SENSOR–ATMOSPHERIC, ENGINE OIL	225
MOUNTING GP-TRANSMISSION	330
MUFFLER GP	129

M

Name	Page
MANIFOLD & VALVE GP–PARKING, SECONDARY BRAKE	489
MANIFOLD & VALVE GP–RH, LH STEERING CLUTCH, BRAKE	488
MANIFOLD GP-CONTROL–HYDRAULIC FAN, REVERSING	581
MANIFOLD GP-CONTROL–IMPLEMENT PUMP	580
MANIFOLD GP-EXHAUST	127
MANIFOLD GP-HYDRAULIC–WINCH	583
MINING AR	2
MIRROR GP-REAR VIEW	780
MIRROR GP-REAR VIEW–LIFT CYLINDER	781
MODIFICATION AR-BULLDOZER–LANDFILL	668
MODIFICATION AR-WOODCHIP	2
MODULE GP-DISPLAY (ADVISOR)	291
MOTOR AS-BLOWER (24-VOLT, A/C, HEATER)	729
MOTOR GP-ELECTRIC (CONDENSER BLOWER)	744

O

Name	Page
OIL CHANGE GP-HIGH SPEED	92
OPERATOR AR	788

P

Name	Page
PADLOCK GP (BATTERY BOX)	391
PADLOCK GP (ENGINE ENCLOSURE)	377 380
PADLOCK GP (FUEL LINE)	144
PADLOCK GP (FUEL TANK)	162 165
PADLOCK GP (HEATER)	763
PADLOCK GP (HYDRAULIC TANK FILL)	522
PADLOCK GP (LITERATURE COMPARTMENT)	1
PADLOCK GP (OIL FILLER)	9
PADLOCK GP (OIL LEVEL GAGE)	9
PADLOCK GP (REAR ENCLOSURE)	387
PAINT GP–BLACK	834
PAN GP-BACKREST	791
PAN GP-BACKREST–CLOTH	790

INDEX

Name	Page
PAN GP-BACKREST–VINYL	792
PAN GP-OIL	64
	66
PANEL GP-CONTROL	793
PANEL GP-FUSE	226
PANEL GP-SOUND SUPPRESSION	412
PEDAL GP-GOVERNOR & BRAKE	490
PISTON & ROD GP	68
	69
PLANETARY GP-TRANSMISSION	331
PLATE	395
	657
	658
	669
	670
	683
	688
	696
	698
	715
	716
PLATE & FILM GP	834
	837
PLATE GP-WEAR–SEMI-UNIVERSAL	706
PLATE GP-WEAR–UNIVERSAL	705
PLATE-INSTRUCTION (AIR CONDITIONER)	728
	736
PLATE-SERIAL NUMBER	664
PLATE-SERIAL NUMBER (BULLDOZER)	661
	662
	665
PLATE-SERIAL NUMBER (RIPPER)	712
	713
PLATE-SERIAL NUMBER (TRANSMISSION)	332
PLATE-WARNING (HIGH PRESSURE CYLINDER)	430
PLATE-WARNING (RECOIL SPRING)	3
	430
	467
PLATFORM AR	795
PLATFORM GP	796
PLUG AS-CODE (IMPLEMENT)	291
PLUG AS-CODE (POWER TRAIN)	292
PLUG-DRAIN (PIVOT SHAFT OIL)	430
PLUG-DRAIN (PIVOT SHAFT OIL FILL)	430
PLUG-DRAIN (RADIATOR)	107
PLUG (DRAIN) (TRANSMISSION)	363
	364
PLUG GP-CONNECTOR	230
PLUG GP-CONTROL VALVE	588
PLUG GP-CYLINDER BLOCK	71
	72
PLUG GP-CYLINDER HEAD	73
PLUG-MAGNETIC (FINAL DRIVE, OIL FILL)	307
	310
	313
	316
PLUG-OIL DRAIN (PAN)	64
	66
POWER TRAIN AR	335
PRECLEANER AR–WITH SCREEN	130
PRECLEANER AR–WITHOUT SCREEN	131
PRECLEANER GP	757
PRECLEANER GP–WITH SCREEN	132
PRECLEANER GP–WITHOUT SCREEN	133
PRELUBRICATION AR-ENGINE	94
PULLER AR-PIN	707
PULLER GP-PIN	708
	710
PULLER GP-PIN–SINGLE SHANK RIPPER	709
PUMP & MOTOR GP-PRELUBRICATION (ELECTRIC DRIVE)	94
PUMP & MTG GP-FUEL TRANSFER	155
PUMP GP-ENGINE OIL	97
	99
PUMP GP-FUEL INJECTION	156
	157
	158
PUMP GP-FUEL PRM & WATER SEP	169
PUMP GP-FUEL TRANSFER	155
PUMP GP-GEAR–POWER TRAIN OIL	336
	338
PUMP GP-GEAR–STEERING	589
PUMP GP-PISTON–FRONT–IMPLEMENT	595
PUMP GP-PISTON–IMPLEMENT, HYDRAULIC FAN	592
PUMP GP-PISTON–REAR–HYDRAULIC FAN	593
PUMP GP-PISTON–STEERING	590
PUMP GP-WATER	111
	112
PUSH ARM GP–LH	669
PUSH ARM GP–RH	670
PUSH ARM GP-STABILIZER	671

R

RADIATOR AR–TRASH RESISTANT	113
RADIATOR GP	114
RADIO GP-COMMUNICATION (PRODUCT LINK)	197
RECEIVER-DRYER GP (AIR CONDITIONER)	772
RECEIVER-DRYER GP (AIR CONDITIONER)	775
RECLINER GP-SEAT	799
REGULATOR AS-VOLTAGE (24-VOLT) (ALTERNATOR)	171
REGULATOR-WATER TEMPERATURE (92-DEG C) (COOLANT)	105
RELAY AS (24-VOLT) (CAB CONNECTION)	290
RELAY AS (24-VOLT) (CONDENSER BLOWER MOTOR)	744

INDEX

Name	Page
RELAY AS (24-VOLT) (HEATER, AIR CONDITIONER)	759
RIPPER AR–MULTI-SHANK	711, 712
RIPPER AR–MULTI-SHANK, HEAVY DUTY	711
RIPPER AR–SINGLE SHANK	713
RIPPER GP–MULTI-SHANK	714, 716
RIPPER GP–MULTI-SHANK, HEAVY DUTY	717
RIPPER GP–SINGLE SHANK	715
ROCKER ARM GP	74
ROLLER & IDLER AR–COLD WEATHER	441
ROLLER AR-TRACK	442
ROLLER AR-TRACK CARRIER–HORIZONTAL MOUNTED	443
ROLLER GP-TRACK-DOUBLE FLANGE	444
ROLLER GP-TRACK-DOUBLE FLANGE–COLD WEATHER	445
ROLLER GP-TRACK-SINGLE FLANGE	446
ROLLER GP-TRACK-SINGLE FLANGE–COLD WEATHER	448
ROPS AS–ROPS MOUNTED CONDENSOR	801
ROPS GP	800
ROTATING GP-MOTOR–HYDRAULIC FAN	599
ROTATING GP-MOTOR–STEERING	597
ROTATING GP-PUMP–HYDRAULIC FAN	601
ROTATING GP-PUMP–IMPLEMENT	604
ROTATING GP-PUMP–STEERING	602

S

Name	Page
SCREEN	175
SCREEN AS-BELL	88
SCREEN AS (HYDRAULIC OIL FILTER BYPASS)	605
SCREEN (CONTROL, RELIEF MANIFOLD)	580
SCREEN GP-MAGNETIC–POWER TRAIN OIL SUMP	340
SCREEN GP-MAGNETIC (POWER TRAIN OIL SUMP)	326
SCREEN GP-PROTECTION–REAR	802
SCREEN (HYDRAULIC TANK)	605
SCREEN-SUCTION	296
SCREEN-SUCTION (POWER TRAIN OIL SUMP)	340
SCREEN-SUCTION (TORQUE CONVERTER)	346
SCREEN-SUMP (FUEL TANK)	144
SEAL (COVER, VALVE MECHANISM)	19, 24, 25, 27
SEAL GP–TRASH	159
SEAL GP-CRANKSHAFT	29, 54
SEAL GP (WATER PUMP)	111
SEAL-LIP TYPE (WATER TEMPERATURE REGULATOR)	105
SEAL (TEMPERATURE REGULATOR HOUSING)	105
SEAL (WATER SEPARATOR, FUEL)	149
SEAT & MOUNTING GP–CLOTH	803
SEAT BELT GP	806
SEAT BELT GP (RETRACTABLE)	809
SEAT GP–AIR SUSPENSION, CLOTH	810
SEAT GP–AIR SUSPENSION, VINYL	811
SEAT GP–CLOTH	804, 806
SEAT GP–VINYL	807, 809
SEAT GP-SUSPENSION–CLOTH	813
SEAT GP-SUSPENSION–CLOTH, AIR	814
SEAT GP-SUSPENSION–VINYL	812
SEGMENT GP-SPROCKET	341
SENSOR & MOUNTING GP–CYLINDER POSITION	231
SENSOR AS-POSITION (STEERING, TMSN CONTROL HANDLE)	478
SENSOR GP-ENGINE	233
SENSOR GP-FUEL LEVEL–ULTRASONIC	235
SENSOR GP-POSITION–DECELERATOR PEDAL	237
SENSOR GP-POSITION–SERVICE BRAKE PEDAL	236
SENSOR GP-POSITION (BLADE LIFT, LOWER)	513, 515
SENSOR GP-POSITION (BLADE LIFT, LOWER)	519
SENSOR GP-POSITION (BLADE TILT)	513, 515, 519
SENSOR GP-POSITION (DECELERATOR PEDAL)	490
SENSOR GP-POSITION (DRUM CLUTCH RELEASE)	517
SENSOR GP-POSITION (REEL IN, REEL OUT)	517
SENSOR GP-POSITION (RIPPER RAISE, LOWER)	511
SENSOR GP-POSITION (RIPPER SHANK IN, OUT)	511
SENSOR GP-POSITION (ROTARY) (SERVICE BRAKE PEDAL)	490
SENSOR GP-POSITION (STEERING, TMSN CONTROL)	476
SENSOR GP-PRESSURE–AIR INLET MANIFOLD	245, 246
SENSOR GP-PRESSURE–ATMOSPHERIC AIR	238

INDEX

Name	Page
	239
	243
SENSOR GP-PRESSURE–ENGINE OIL	244
SENSOR GP-PRESSURE–ENGINE OIL–FUEL	240
SENSOR GP-PRESSURE–HYDRAULIC OIL–HYDRAULIC PUMP	242
SENSOR GP-PRESSURE–STEERING	241
SENSOR GP-PRESSURE (ATMOSPHERIC AIR)	283
SENSOR GP-PRESSURE (FUEL)	144
SENSOR GP-PRESSURE (STEERING)	179
SENSOR GP-SPEED–ENGINE	248
SENSOR GP-SPEED–STEERING MOTOR	247
SENSOR GP-SPEED–TIMING, CAMSHAFT	249
	251
SENSOR GP-SPEED–TIMING, CRANKSHAFT	250
SENSOR GP-SPEED (ENGINE)	250
	283
SENSOR GP-SPEED (TRANSMISSION OUTPUT 1)	333
SENSOR GP-SPEED (TRANSMISSION OUTPUT 2)	333
SENSOR GP-TEMPERATURE–AIR INLET MANIFOLD–FUEL	253
SENSOR GP-TEMPERATURE–HYDRAULIC OIL–TRANSMISSION SUMP	252
SENSOR GP-TEMPERATURE–WATER, COOLANT	254
SHAFT GP-DRIVE	342
SHIELD GP-MANIFOLD	134
SHOE-TRACK–ABRASIVE RESISTANT MATERIAL	449
	450
	451
	452
	453
	454
SLIP JOINT GP	343
SOLENOID AS (24-VOLT, STARTING MOTOR)	260
	264
SOLENOID GP-PROPORTIONAL (12-VDC) (HYDRAULIC FAN)	639
SOLENOID GP-PROPORTIONAL (12-VDC) (STEERING)	640
STARTING AID GP-ETHER	255
STARTING AR-COLD WEATHER	256
STARTING MOTOR GP-ELECTRIC	262
	263
STARTING MOTOR GP-ELECTRIC–COLD WEATHER	259
STEP AR–HEAVY DUTY	815
STOCKPILE AR	3
STRAINER AS (HYDRAULIC TANK FILL)	605
STRAINER-FUEL	163
STRAINER-FUEL (TANK FILLER)	166
SUPPORT GP-ENGINE	76
SUPPRESSION AR-SOUND–EUROPEAN MARKET	77
SUSPENSION GP-BOGIE	455
SUSPENSION GP-SEAT	817
SUSPENSION GP-SEAT–CLOTH, AIR	819
SWITCH AS-DISCONNECT	269
SWITCH AS (DOME LIGHT)	279
SWITCH AS-LIMIT (DOME LIGHT)	279
SWITCH AS-LIMIT (SERVICE BRAKE PEDAL)	490
SWITCH AS-PRESSURE (AIR CONDITIONER, LOW)	775
SWITCH AS-PRESSURE (COMPRESSOR-LOW SIDE)	772
SWITCH AS-PRESSURE (REFRIGERANT) (AIR CONDITIONER, HIGH)	775
SWITCH AS-PRESSURE (REFRIGERANT) (COMPRESSOR-HIGH SIDE)	772
SWITCH AS-PUSH BUTTON (BULLDOZER TILT)	508
SWITCH AS-PUSH BUTTON (ELECTRONIC DOWNSHIFT)	476
SWITCH AS-PUSH BUTTON (ELECTRONIC UPSHIFT)	476
SWITCH AS-PUSH BUTTON (RIPPER AUTOMATIC STOW)	511
SWITCH AS-ROCKER (AIR CONDITIONER ON, OFF)	793
SWITCH AS-ROCKER (AUTO DOWN SHIFT)	291
SWITCH AS-ROCKER (BI-DIRECTIONAL SHIFT)	291
SWITCH AS-ROCKER (CYLINDER FLOODLAMP)	216
SWITCH AS-ROCKER (CYLINDER FLOODLAMP)	214
SWITCH AS-ROCKER (CYLINDER LIGHT)	291
SWITCH AS-ROCKER (FENDER LIGHT)	291
SWITCH AS-ROCKER (FLOODLAMPS-CYLINDER)	219
SWITCH AS-ROCKER (FLOODLAMPS-ROPS)	211
	219
SWITCH AS-ROCKER (HYDRAULIC LOCKOUT)	291
SWITCH AS-ROCKER (HYDRAULIC PIN PULLER)	504
SWITCH AS-ROCKER (PARKING BRAKE ON, OFF)	471
SWITCH AS-ROCKER (REVERSING FAN)	557
SWITCH AS-ROCKER (ROPS FLOODLAMP)	214
	216

INDEX

Name	Page
SWITCH AS-ROCKER (THROTTLE)	291
SWITCH AS-ROCKER (24-VOLT, SEALED, ILLUMINATED) (WINCH)	506
SWITCH AS-ROCKER (24-VOLT)(AUTO BLADE ASSIST)	576
SWITCH AS-ROTARY (A/C CONTROL)	793
SWITCH AS-TEMPERATURE (THERMOSTAT) (HEATER, AIR CONDITIONER)	759
SWITCH AS-TOGGLE (ENGINE COMPARTMENT WORK LAMP)	177
SWITCH AS-WIPER (24-VOLT) (FRONT INTERMITTENT)	793
SWITCH AS-WIPER (24-VOLT) (LH DOOR)	793
SWITCH AS-WIPER (24-VOLT) (REAR INTERMITTENT)	793
SWITCH AS-WIPER (24-VOLT) (RH DOOR)	793
SWITCH GP-BYPASS–PTO FILTER–STEERING FILTER	267
SWITCH GP-DISCONNECT–BATTERY	268
SWITCH GP-DISCONNECT–BATTERY, AUXILIARY	269
SWITCH GP-FLOW–COOLANT	116
SWITCH GP-LIMIT–STEERING CONTROL	272
SWITCH GP-MAGNETIC–MAIN RELAY	274
SWITCH GP-MAGNETIC–START RELAY	273
SWITCH GP-MAGNETIC (24-VOLT) (MAIN RELAY)	226
SWITCH GP-MAGNETIC (24-VOLT) (START RELAY)	226
SWITCH GP-PRESSURE–FUEL	275
SWITCH GP-PUSH BUTTON–HORN	276
SWITCH GP-PUSH BUTTON (HORN)	290
SWITCH GP-START (KEY)	291
SWITCH GP-TOGGLE–FUEL PRIMING PUMP	277
SWITCH GP-TOGGLE (FUEL PRIMING PUMP)	177

T

Name	Page
TANK & FILTER GP-HYDRAULIC	605
TANK GP-COOLANT	117
TANK GP-FUEL	162 163 165 166
TANK GP-WATER	118
TANK GP-WINDOW WASHER	821 823
TIMER AS-ON DELAY (24-VOLT) (AIR CONDITIONER)	775
TIMER AS-ON DELAY (24-VOLT) (COMPRESSOR CYCLE LIMITER)	772
TOOTH GP-RIPPER	718
TOOTH GP-RIPPER–MULTI-SHANK	719 722
TOOTH GP-RIPPER–SINGLE SHANK	720 721
TORQUE CONVERTER GP	344 346
TRACK ADJUSTER & RECOIL GP	457
TRACK GP–2-REQUIRED	459 460 461 462 463 464 465 466
TRANSMISSION AR	348
TRUNNION GP-BULLDOZER	672 673
TRUNNION GP-BULLDOZER–CUSHION DOZER	674
TRUNNION GP-ENGINE	78
TUBE AS-ROLLER FRAME	467
TURBOCHARGER GP	135

U

Name	Page
UNDERCARRIAGE AR	468
UNDERCARRIAGE AR–ROLLER FRAME, STRAIGHT	468
UNIVERSAL JOINT GP–DRIVE SHAFT	349

V

Name	Page
VALVE & MTG GP-CONTROL–HYDRAULIC PIN PULLER	609
VALVE & MTG GP-CONTROL–IMPLEMENT	610
VALVE & MTG GP-MAIN CONTROL–BULLDOZER, RIPPER	611
VALVE & MTG GP-STEER & BRAKE	493
VALVE-BALL (FUEL DRAIN)	144
VALVE-CHECK (FUEL FILTER, WATER SEPARATOR)	144
VALVE-DRAIN (TRANSMISSION)	363 364
VALVE GP-BANK 4–AUXILIARY, BULLDOZER, WINCH	612
VALVE GP-BANK 4–BULLDOZER, RIPPER	615
VALVE GP-BREAKER RELIEF	618
VALVE GP-CHECK–FUEL FILTER	167 168
VALVE GP-CHECK–HYDRAULIC FAN–IMPLEMENT PUMP OIL	621
VALVE GP-CHECK–HYDRAULIC FAN, REVERSING	620
VALVE GP-CHECK–IMPLEMENT PUMP OIL	622

INDEX

Name	Page
VALVE GP-CHECK–INLET MANIFOLD	619
VALVE GP-CONTROL–BULLDOZER LIFT	623
VALVE GP-CONTROL–BULLDOZER TILT	625
VALVE GP-CONTROL–DUAL TILT	631
VALVE GP-CONTROL–IMPLEMENT INLET MANIFOLD	633
VALVE GP-CONTROL–RIPPER RAISE	627
VALVE GP-CONTROL–RIPPER TIP	629
VALVE GP-CONTROL–TRANSMISSION	350
VALVE GP-DIVERTER (HYDRAULIC FAN)	581
VALVE GP-ETHER STARTING	278
VALVE GP-FLUSHING–STEERING MOTOR	634
VALVE GP (MANIFOLD INLET)	644
VALVE GP-MODULATING	353
VALVE GP-MODULATING–TRANSMISSION CONTROL	352
VALVE GP-PRESSURE COMPENSATOR–STEERING PISTON PUMP	636
VALVE GP-PRESSURE REDUCING–IMPLEMENT PUMP OIL	635
VALVE GP-PRIORITY–POWER TRAIN OIL	354
VALVE GP-PUMP CONTROL–FLOW COMPENSATOR–IMPLEMENT	638
VALVE GP-PUMP CONTROL–HYDRAULIC FAN	639
VALVE GP-PUMP CONTROL–PRESSURE COMPENSATOR–IMPLEMENT	637
VALVE GP-PUMP CONTROL–STEERING	640 641
VALVE GP-QUICK-DROP	642
VALVE GP-RELIEF–BULLDOZER TILT	647
VALVE GP-RELIEF–IMPLEMENT PUMP OIL	648
VALVE GP-RELIEF–INLET MANIFOLD	644 645
VALVE GP-RELIEF–POWER TRAIN OIL	356
VALVE GP-RELIEF–RIPPER TIP	646
VALVE GP-RELIEF–STEERING PISTON PUMP	495
VALVE GP-RELIEF–STEERING PUMP OIL	494 496
VALVE GP-RELIEF (CHARGING)	633
VALVE GP-RELIEF (HYDRAULIC FAN, REVERSING)	581
VALVE GP-RELIEF (MAIN)	633
VALVE GP-RELIEF (REFRIGERANT COMPRESSOR)	742
VALVE GP-RELIEF (STEERING PISTON PUMP)	550
VALVE GP-SHUTTLE–BULLDOZER LIFT–BULLDOZER TILT–RIPPER RAISE–RIPPER TIP–WINCH	649
VALVE GP-SOLENOID	354
VALVE GP-SOLENOID–BULLDOZER LIFT–BULLDOZER TILT–RIPPER RAISE–RIPPER TIP–WINCH	656
VALVE GP-SOLENOID–DUAL TILT	651
VALVE GP-SOLENOID–HYDRAULIC FAN SPEED CONTROL	652
VALVE GP-SOLENOID–HYDRAULIC LOCKOUT	655
VALVE GP-SOLENOID–HYDRAULIC PIN PULLER	650
VALVE GP-SOLENOID–IMPLEMENT, STEERING–IMPLEMENT MAKEUP	654
VALVE GP-SOLENOID–PARKING, SECONDARY BRAKE	497
VALVE GP-SOLENOID–POWER TRAIN OIL	358
VALVE GP-SOLENOID–QUICK-DROP	653
VALVE GP-SOLENOID–SECONDARY BRAKE	498
VALVE GP-TRANSMISSION CONTROL	359 361
VALVE GP-WINCH CONTROL	723
VALVE MECHANISM GP	79
VALVE-SAMPLING (ENGINE COOLANT)	107

W

Name	Page
WASHER GP-WINDOW	824
WASTE HANDLING AR	3 4
WATER SEP & FUEL PRM PUMP GP	169
WINDOW GP-CAB	824
WINDOW GP-CAB–ARCTIC	825
WIPER GP-WINDOW	826
WIPER GP-WINDOW–REAR CAB	829
WIPER PIVOT GP–REAR, LH	831
WIPER PIVOT GP–REAR, RH	832
WIRING GP-CAB	279
WIRING GP-ELECTRONIC CONTROL	281
WIRING GP-ENGINE	283
WIRING GP-GRADE CONTROL	287
WIRING GP-PANEL (FUSE)	226
WIRING GP-PLATFORM	290
WIRING GP-UNIT INJECTOR	294

INDEX

Désignation	Page
A	
ACCOUPLEMENT DE POMPE (ASS)	302
ACCUMULATEUR - RÉFRIGÉRANT	772, 775
ACCUMULATEUR HYDRAULIQUE (ASS)	499, 500
ADAPTATEUR - ENTRAÎNEMENT DE POMPE (ASS)	143
ADAPTATEUR DE REMPLIS. RAPIDE DE CARBURANT (ASS)	138, 139, 141
ADAPTATEUR DE REMPLIS. RAPIDE DE CARBURANT (ASS)	136
*AIR COMPRESSOR GP-SEAT	726
ALTERNATEUR DE CHARGE (ASS)	171, 173, 175
AMORTISSEUR DE VIBRATIONS ET POULIE (ASS)	41
AMPOULE	222
AMPOULE (24 VOLTS) (TÉMOIN D'ACTIONNEMENT)	290
AMPOULE (24V, 21W)	279
ARBRE A CAMES (ASS)	12
ARBRE D'ENTRAÎNEMENT (ASS)	342
AUTOCOLLANT - ÉQUIPEMENT DE MANUTENTION DE DÉCHET	4
AUTOCOLLANT DE MISE EN GARDE (ACCUMULATEUR)	499, 500
AUTOCOLLANT DE MISE EN GARDE (LAME, NE PAS MONTER, LIRE LE MANUEL)	199
AUTOCOLLANT DE MISE EN GARDE (LIAISON DE PRODUIT)	197
AUTOCOLLANT DE MISE EN GARDE (PAS DE SOUDAGE, PAS DE PERÇAGE)	836
AUTOCOLLANT DE MISE EN GARDE (RESSORT AMORTISSEUR)	430
AUTOCOLLANT DE MISE EN GARDE (RISQUE D'ÉLECTROCUTION)	836
AUTOCOLLANT D'IDENTIFICATION (LEVIER) (ACCUGRADE)	196
AUTOCOLLANT D'IDENTIFICATION (NUMÉRO D'ASSEMBLAGE) (CONDENSEUR DE RÉFRIGÉRANT)	744
AUTOCOLLANT D'IDENTIFICATION (NUMÉRO D'ASSEMBLAGE) (RÉCHAUFFEUR DE CABINE)	759
AUTOCOLLANT D'IDENTIFICATION (POMPE DE PRÉGRAISSAGE)	94
AUTOCOLLANT D'IDENTIFICATION (RÉCHAUFFEUR D'EAU)	192
AUTOCOLLANT D'IDENTIFICATION (RÉCHAUFFEUR D'EAU)	193
AUTOCOLLANT D'IDENTIFICATION (RÉFLECTEUR ROND ROUGE)	834
AUTOCOLLANT D'IDENTIFICATION (12 VOLTS)	835
AUTOCOLLANT (DOUBLE DÉVERS)	503
AUTOCOLLANT DU PANNEAU (COMMANDE D'ESSUIE-GLACE)	793
AUTOCOLLANT (*D9T, LH)	404
AUTOCOLLANT (*D9T, RH)	404
AUTOCOLLANT-INFORMATION (RIPPER AUTOMATIQUE)	511
AUTOCOLLANT (LAME AUTOMATIQUE)	503
AUTOCOLLANT (TREUIL)	506
AUXILIAIRE DE DÉMARRAGE À L'ÉTHER	255
AVERTISSEMENT DE PROFIL LONGITUDINAL (ASS)	287
AVERTISSEUR (ASS)	170
AXE DE CULBUTEUR (ASS)	74
B	
BAGUE	425, 426
BALAI D'ESSUIE-GLACE	829
BALAI D'ESSUIE-GLACE (ENS)	829
BALAI D'ESSUIE-GLACE (ENS) (ARRIÈRE)	826
BALAI D'ESSUIE-GLACE (ENS) (AVANT)	826
BALAI D'ESSUIE-GLACE (ENS) (LATÉRAL)	826
BALANCIER DE SUSPENSION (ASS)	420, 421, 423
BALANCIER DE SUSPENSION (ENS)	416
BANDE AUTOCOLLANTE (ARRIÈRE)	404
BARRE D'ATTELAGE (ASS)	375
BARRE DÉFLECTRICE (ASS)	424
BARRE DÉFLECTRICE (ENS)	417, 418, 419
BARRE DÉFLECTRICE (VERSION)	413, 414
BATI DE RIPPER (ASS)	696, 698
BATTERIE ET CÂBLAGE	177
BATTERIE (12 VOLTS) (SANS ENTRETIEN)	256
BATTERIE (12 VOLTS) (SANS ENTRETIEN)	177
BLINDAGE D'ARBRE DE TRANSMISSION (ASS)	321
BLINDAGE DE ROUE AV (ASS)	405
BLINDAGE DE TRANSMISSION (ASS)	322, 324
BLINDAGE INFÉRIEUR (ASS)	398

* TRADUCTION NON DISPONIBLE AU MOMENT DE LA PUBLICATION

INDEX

Désignation	Page
	400
	401
BLOC-CYLINDRES - COUVERCLE (ASS)	13
BLOC-CYLINDRES (ASS)	32
BLOC-CYLINDRES (ENS)	30
	31
BLOC DE BRANCHEMENT (ASS)	184
BLOC-PUISSANCE (ASS)	185
BOÎTE DE VITESSES (VERSION)	348
BOÎTE PLANÉTAIRE (ASS)	331
BOUCHON - CULASSE (ASS)	73
BOUCHON À ÉVENT (RÉSERVOIR DE LAVE-GLACE DE VITRE)	821
BOUCHON AIMANTÉ (RÉDUCTEUR, REMPLISSAGE D'HUILE)	307
	310
	313
	316
BOUCHON DE BLOC-CYLINDRES (ASS)	71
	72
BOUCHON DE GOULOTTE DE REMPLISSAGE D'HUILE MOTEUR (ARBRE-PIVOT)	439
BOUCHON DE GOULOTTE DE REMPLISSAGE (ENS) (CARBURANT, VERROUILLAGE, AÉRÉ)	166
BOUCHON DE GOULOTTE DE REMPLISSAGE (ENS) (CARBURANT, VERROUILLAGE, AÉRÉ)	163
BOUCHON DE GOULOTTE DE REMPLISSAGE (ENS) (HUILE DE TRANSMISSION)	326
BOUCHON DE GOULOTTE DE REMPLISSAGE (ENS) (HUILE MOTEUR)	82
BOUCHON DE GOULOTTE DE REMPLISSAGE (RÉSERVOIR HYDRAULIQUE)	605
BOUCHON DE RADIATEUR (ENS)	117
BOUCHON DE REMPLISSAGE D'HUILE MOTEUR (ASS)	82
BOUCHON DE VIDANGE D'HUILE (CARTER)	64
	66
BOUCHON DE VIDANGE (HUILE D'ARBRE D'ARTICULATION)	430
BOUCHON DE VIDANGE (RADIATEUR)	107
BOUCHON DE VIDANGE (REMPLISSAGE D'HUILE D'ARBRE D'ARTICULATION)	430
BOUCHON-DISTRIBUTEUR (ASS)	588
BOUCHON FILETÉ (VIDANGE) (BOÎTE DE VITESSES)	363
	364
BOULONNERIE DE CARTER AV (ASS)	42
	43
	44
BOULONNERIE DE LA CULASSE (ASS)	40
BOULONNERIE DE MONTAGE DE LA POMPE A HUILE (ASS)	81
BOULONNERIE DU CARTER D'HUILE (ASS)	45
BOURRELET D'ÉTANCHÉITÉ (BOÎTIER DE RÉGULATEUR DE TEMPÉRATURE)	105
BOURRELET D'ÉTANCHÉITÉ (COUVERCLE DE CULBUTERIE)	19
	24
	25
	27
BOURRELET D'ÉTANCHÉITÉ (SÉPARATEUR D'EAU)	149
BRANCHEMENT ÉLECTRIQUE (ASS)	186
BRAS DE POUSSÉE (ASS)	669
	670
BRAS D'ESSUIE-GLACE (ASS) (ARRIÈRE, CÔTÉ DROIT)	829
BRAS D'ESSUIE-GLACE (ASS) (ARRIÈRE GAUCHE)	829
BRAS D'ESSUIE-GLACE (ASS) (DROITE)	826
BRAS D'ESSUIE-GLACE (ASS) (GAUCHE)	826
BRAS (ENS) (ESSUIE-GLACE) (AVANT)	826

C

CABINE - REVÊTEMENT (ASS)	770
CABINE (ASS)	739
	741
CABINE-FAISCEAU DE CÂBLES (ENS)	279
CABINE (VERSION)	736
CABINE (VERSION)	736
	737
	738
CABINE (VERSION POUR TEMPS FROID)	738
CABLAGE - PLATE-FORME (ASS)	290
CABLAGE DE CABINE (ASS)	279
CABLAGE DE MOTEUR (ASS)	283
CÂBLAGE DE PANNEAU (ASS) (FUSIBLE)	226
CABLAGE D'INJECTEUR	294
CÂBLAGE-MONITEUR (ACCUGRADE)	287
CÂBLAGE-MONITEUR (ADVISOR)	290
CABLAGE MOTEUR (ENS)	283
CABLAGE MOTEUR (ENS) (CÂBLAGE MOTEUR)	281
CABLAGE MOTEUR (ENS) (SOUPAPE D'INJECTION VARIABLE)	10
CACHE-SOUPAPES (ASS)	18
	19
	20
	21
	22
	23
	24

* TRADUCTION NON DISPONIBLE AU MOMENT DE LA PUBLICATION

INDEX

Désignation	Page
	25
	26
	27
	28
CADENAS (ASS) (CANALISATION DE CARBURANT)	144
CADENAS (ASS) (CARÉNAGE ARRIÈRE)	387
CADENAS (ASS) (CARENAGE DE MOTEUR)	377
	380
CADENAS (ASS) (COMPARTIMENT DE BATTERIE)	391
CADENAS (ASS) (COMPARTIMENT POUR LA DOCUMENTATION)	1
CADENAS (ASS) (GOULOTTE DE REMPLISSAGE D'HUILE)	9
CADENAS (ASS) (JAUGE DE NIVEAU D'HUILE)	9
CADENAS (ASS) (RÉCHAUFFEUR)	763
CADENAS (ASS) (REMPLISSAGE DE RÉSERVOIR HYDRAULIQUE)	522
CADENAS (ASS) (RESERVOIR DE CARBURANT)	162
	165
CANALISATIONS D'AIR (ASS)	124
	125
	126
CANALISATIONS DE CARBURANT (ASS)	151
CANALISATIONS DE CHAUFFAGE (ASS)	778
CANALISATIONS DE CLIMATISEUR (ASS)	775
CANALISATIONS DE CLIMATISEUR (ASS)	772
CANALISATIONS DE DIRECTION (ASS)	485
CANALISATIONS DE POMPE (ASS)	564
CANALISATIONS DE RÉCHAUFFEUR DE LIQUIDE DE REFROIDISSEMENT	778
CANALISATIONS DE TREUIL (ASS)	700
CANALISATIONS DE VÉRIN DE LEVAGE (ASS)	559
	561
CANALISATIONS D'EAU (ASS)	103
	105
	107
	109
CANALISATIONS D'EXTRACTEUR DE BROCHE (ASS)	561
	562
	563
CANALISATIONS D'HUILE DE TRANSMISSION (ASS)	326
CANALISATIONS D'HUILE DE TURBOCOMPRESSEUR (ASS)	89
CANALISATIONS D'HUILE MOTEUR (ASS)	88
CANALISATIONS DU RIPPER (ASS)	568
	570
CANALISATIONS DU VÉRIN D'INCLINAISON (ASS)	572
	574
	576
	578
CANALISATIONS HYDRAULIQUES DE VENTILATEUR (ASS)	553
	557
CAPOTAGE CÔTÉ DROIT	388
	389
	390
CAPOTAGE CÔTÉ GAUCHE	384
	385
	386
CAPTEUR - MOTEUR (ASS)	233
CAPTEUR DE NIVEAU DE CARBURANT (ASS)	235
CAPTEUR DE POSITION (ENS) (POIGNÉE DE COMMANDE DE TRANSMISSION, DIRECTION)	478
CAPTEUR DE PRESSION (ASS)	238
	239
	240
	241
	242
	243
	244
	245
	246
CAPTEUR DE PRESSION (ASS) (AIR ATMOSPHÉRIQUE)	283
CAPTEUR DE PRESSION (ASS) (CARBURANT)	144
CAPTEUR DE PRESSION (ASS) (DIRECTION)	179
CAPTEUR DE TEMPERATURE (ASS)	252
	253
	254
CAPTEUR DE VITESSE (ASS)	247
	248
	249
	250
	251
CAPTEUR DE VITESSE (ASS) (MOTEUR)	250
CAPTEUR DE VITESSE (ASS) (MOTEUR)	283
CAPTEUR DE VITESSE (ASS) (SORTIE 1 DE BOÎTE)	333
CAPTEUR DE VITESSE (ASS) (SORTIE 2 DE BOÎTE)	333
CAPTEURS ET MONTAGE (ASS)	231
CARDAN COULISSANT (ASS)	343
CARENAGE DE MOTEUR (ASS)	377
	380

* TRADUCTION NON DISPONIBLE AU MOMENT DE LA PUBLICATION

INDEX

Désignation	Page
	383
CARTER AV (ASS)	56
	58
CARTER DE VOLANT (ASS)	54
CARTER TELESCOPIQUE DE MECANISME AMORTISSEUR	430
CEINTURE DE SECURITE (ASS)	806
CEINTURE DE SECURITE (ASS) (RÉTRACTABLE)	809
CENDRIER (CABINE)	751
CHAINES (ASS)	459
	460
	461
	462
	463
	464
	465
	466
CHAPEAU DE GALET INFERIEUR (ASS)	429
CHAPEAU DE ROUE AV (CHAINE) (ASS)	427
	428
CHÂSSIS ET CARTER (ASS)	363
CHÂSSIS ET CARTER (ASS)	364
CHÂSSIS ET ROULEMENT (ENS)	395
	396
CHAUFFAGE DE CABINE (ASS)	759
	763
CHAUFFAGE-MACHINE (ASS)	194
CLAPET A BILLE (VIDANGE DE CARBURANT)	144
CLAPET ANTI-RETOUR (FILTRE À CARBURANT, SÉPARATEUR D'EAU)	144
CLAPET (ASS) (ADMISSION DE COLLECTEUR)	644
CLAPET DE DECHARGE (ASS)	494
	495
	496
	644
	645
	646
	647
	648
CLAPET DE DECHARGE (ASS)	356
CLAPET DE DECHARGE (ASS) (CHARGE)	633
CLAPET DE DECHARGE (ASS) (COMPRESSEUR DE RÉFRIGÉRANT)	742
CLAPET DE DECHARGE (ASS) (INVERSION DE ROTATION DU VENTILATEUR HYDRAULIQUE)	581
CLAPET DE DECHARGE (ASS) (PRINCIPAL)	633
CLAPET DE DECHARGE (ASS) (*STEERING PISTON PUMP)	550
CLAPET DE DÉCHARGE HYDRAULIQUE (ASS)	618
CLAPET DE RETENUE (ENS)	167
	168
	619
	620
	621
	622
CLÉ	1
	144
CLÉ (COUPE-BATTERIE)	268
CLIMATISEUR (VERSION)	728
COFFRE DE RANGEMENT (ASS)	731
COLLECTEUR - COMMANDE (ASS)	580
	581
COLLECTEUR D'ÉCHAPPEMENT (ASS)	127
COLLECTEUR ET SOUPAPE (ASS)	488
	489
COLLECTEUR HYDRAULIQUE (ASS)	583
COMMANDE DE CHALEUR ET DE CLIMATISATION (ASS)	793
COMMANDE DE DIRECTION (ASS)	474
	475
COMMANDE DE DIRECTION ET BOITE DE VITESSES	476
	478
COMMANDE DE DOUBLE DEVERS (VERSION)	503
COMMANDE DE FAISCEAU (ENS) (LIAISON DE PRODUIT)	197
COMMANDE DE FREIN DE STATIONNEMENT (ASS)	472
COMMANDE DE MACHINE (ASS)	188
COMMANDE DE POIGNÉE (ASS)	471
	507
	508
	510
COMMANDE DE POIGNÉE (ASS) (COMMANDE DE BULLDOZER)	515
COMMANDE D'EQUIPEMENT (ASS)	511
COMMANDE ÉLECTRONIQUE - CABLAGE	281
COMMANDE ÉLECTRONIQUE D'ÉQUIPEMENT (ASS)	190
COMMANDE ELECTRONIQUE (ENS) (ESSUIE-GLACE)	793
COMMANDE ELECTRONIQUE ET MONTAGE (ASS)	187
COMMANDE ET MONTAGE - MOTEUR	188
COMMANDE ET MONTAGE (ASS)	502
COMMANDE ET MONTAGE DE PÉDALE (ASS)	749
	750

* TRADUCTION NON DISPONIBLE AU MOMENT DE LA PUBLICATION

INDEX

Désignation	Page
COMMANDE HYDRAULIQUE DE BOÎTE (ASS)	299
COMMANDE HYDRAULIQUE (VERSION)	506
COMMANDE NON PROGRAMMEE (ASS) (CHAÎNE CINÉMATIQUE)	291
COMMANDE NON PROGRAMMEE (ASS) (PRODUCT LINK 300)	197
COMMANDE PRINCIPALE DE SOUPAPE ET MONTAGE (ASS)	611
COMPOSANTS ÉLECTRONIQUES DE LA MACHINE (VERSION)	190
COMPRESSEUR DE REFRIGERANT (ASS)	743
COMPRESSEUR DE REFRIGERANT (ASS)	742
CONDENSEUR DE RÉFRIGÉRANT	744
CONSOLE AV (ASS)	746
CONSOLE DE CONDUITE (ASS)	747
CONSOLE DE FAISCEAU (ENS)	291
	478
CONTACTEUR DE BOUTON-POUSSOIR (ASS)	276
CONTACTEUR DE BOUTON-POUSSOIR (ASS) (KLAXON)	290
CONTACTEUR DE DEBIT (ASS)	116
CONTACTEUR DE LIMITE (ASS)	272
CONTACTEUR (ENS) (PLAFONNIER)	279
CONTACTEUR MAGNETIQUE (ASS)	273
	274
CONTACTEUR MAGNETIQUE (ASS) (24 VOLTS) (RELAIS DE DÉMARRAGE)	226
CONTACTEUR MAGNETIQUE (ASS) (24 VOLTS) (RELAIS PRINCIPAL)	226
CONTREPOIDS (ASS)	365
	367
	368
	369
CONVERTISSEUR DE COUPLE (ASS)	344
	346
CORPS DE DÉRIVATION DE REFROIDISSEUR (HUILE MOTEUR)	83
COURONNE CONIQUE ET PIGNON	319
COURROIE MULTIPLE (ALTERNATEUR)	173
COURROIE MULTIPLE (POULIE DE COMPRESSEUR DE CLIMATISEUR)	743
COUVERCLE - CABINE (ASS)	751
COUVERCLE DE CARTER AV (ASS)	16
COUVERCLE DE CARTER DE VOLANT (ASS)	14
	15
COUVERCLE DE RÉSERVOIR HYDRAULIQUE	522
COUVERCLE DE TOURILLON (ASS)	370
COUVERCLE INFÉRIEUR-DOSSIER (ASS)	790
	791
	792
CRAN DE COMMANDE (ASS) (*DRUM CLUTCH RELEASE)	517
CRAN DE COMMANDE (ASS) (ENROULAGE, DÉVIDAGE)	517
CRAN DE COMMANDE (ASS) (INCLINAISON DE LAME)	513
	515
	519
CRAN DE COMMANDE (ASS) (LEVAGE, ABAISSEMENT DE LAME)	513
	515
	519
CREPINE (ENS) (REMPLISSAGE DE RÉSERVOIR HYDRAULIQUE)	605
CULASSE (ASS)	39
	40
CULASSE (ENS)	34
	35
	36
CULBUTERIE - BOULONNERIE (ASS)	46
CULBUTERIE (ASS)	79

D

DÉMARRAGE PAR TEMPS FROID (VERSION)	256
DÉMARREUR ÉLECTRIQUE (ASS)	262
	263
DÉMARREUR ÉLECTRIQUE (ASS)	259
DENT DE RIPPER (ASS)	718
	719
	720
	721
	722
DISJONCTEUR DE SECURITE (ENS) (PÉDALE DE FREIN DE MANOEUVRE)	490
DISJONCTEUR DE SECURITE (ENS) (PLAFONNIER)	279
DISJONCTEUR (ENS) (15A) (CLIMATISEUR)	775
DISJONCTEUR (ENS) (15A) (MOTEUR DE VENTILATEUR DE CONDENSEUR)	772
DISJONCTEUR (ENS) (15A) (PUISSANCE PRINCIPALE)	226
DISPOSITIF DE VIDANGE RAPIDE D'HUILE (ASS)	92
DISPOSITIF D'EVACUATION DES VAPEURS DE CARTER	86
DISTRIBUTEUR (ASS)	350
	623
	625
	627
	629

* TRADUCTION NON DISPONIBLE AU MOMENT DE LA PUBLICATION

INDEX

Désignation	Page
	631
	633
DISTRIBUTEUR DE BOITE (ASS)	359
	361
DISTRIBUTEUR DE POMPE (ASS)	637
	638
	639
	640
	641
DISTRIBUTEUR DE TREUIL (ASS)	723
DISTRIBUTEUR ET MONTAGE (ASS)	609
	610
DISTRIBUTEUR 4 ÉLÉMENTS (ASS)	612
DISTRIBUTEUR 4 ÉLÉMENTS (ASS)	615

E

Désignation	Page
EAU DES CHEMISES - RECHAUFFEUR (ASS)	192
	193
ÉCLAIRAGE - GYROPHARE (ASS)	222
ÉCLAIRAGE - PROJECTEURS (ASS)	205
	206
	208
	209
	214
	216
ÉCLAIRAGE - PROJECTEURS (ASS)	211
	219
ÉCRAN	175
ÉCRAN (COMMANDE, COLLECTEUR DE DÉTENTE)	580
ÉCRAN DE COLLECTEUR (ASS)	134
ÉCRAN (ENS) (DÉRIVATION DE FILTRE À HUILE HYDRAULIQUE)	605
ÉCRAN MAGNÉTIQUE (ASS)	340
ÉCRAN MAGNÉTIQUE (ASS) (CARTER D'HUILE DE TRANSMISSION)	326
ÉCRAN (RÉSERVOIR HYDRAULIQUE)	605
ÉJECTEUR AUTOMATIQUE DE POUSSIÈRE (ASS)	123
ÉLECTRONIQUE - COMMUNICATION (ASS)	190
ÉLECTRONIQUE DE TRANSMISSION (ASS)	191
ÉLECTRONIQUE-MONITEUR (ASS)	191
ÉLÉMENT DE FILTRE À AIR (ENS) (CABINE)	763
ÉLÉMENT DE FILTRE À HUILE (ENS) (GRANDE EFFICACITÉ, HYDRAULIQUE) (BOÎTE DE VITESSES)	305
ÉLÉMENT DE FILTRE À HUILE (ENS) (GRANDE EFFICACITÉ, HYDRAULIQUE) (TRANSMISSION)	326
ÉLÉMENT DE FILTRE À HUILE (ENS) (HYDRAULIQUE) (EFFICACITÉ NORMALE)	605
ÉLÉMENT DE FILTRE À HUILE (ENS) (HYDRAULIQUE) (GRANDE EFFICACITÉ)	483
ÉLÉMENT DE FILTRE À HUILE (ENS) (HYDRAULIQUE) (GRANDE EFFICACITÉ)	605
ÉLÉMENT DE FILTRE À HUILE (ENS) (HYDRAULIQUE) (LIQUIDE RÉSISTANT AU FEU)	605
ÉLÉMENT DU RÉCHAUFFEUR D'EAU DES CHEMISES (ENS)	193
ÉLÉMENT DU RÉCHAUFFEUR D'EAU DES CHEMISES (ENS) (120V, 1500W)	192
ÉLÉMENT PRINCIPAL (ENS) (FILTRE À AIR)	122
ÉLÉMENT SECONDAIRE (ENS) (FILTRE À AIR)	122
ÉLIMINATION DES DÉCHETS (VERSION)	3
	4
EMBOUT ET LAME DE COUPE (ASS)	692
	693
	694
	695
ENS. POUTRE	657
	658
ENTRAÎNEMENT DE DIRECTION (ASS)	482
ENTRAÎNEMENT DE DIRECTION DIFFÉRENTIELLE (ASS)	480
ENTRAÎNEMENT DE POMPE (ASS)	304
ESSIEU (ASS)	295
ESSUIE-GLACE (ASS)	826
	829
EXTRACTEUR DE BROCHE (ASS)	708
	709
	710
EXTRACTEUR DE BROCHE (VERSION)	707

F

Désignation	Page
FAISCEAU-BOÎTE DE TRANSMISSION	178
	299
FAISCEAU DE CABLES - CAPTEUR (ENS) (INCLINAISON, RÉCEPTEUR, GAUCHE)	287
FAISCEAU DE CABLES - CAPTEUR (ENS) (POSITION DE VÉRIN, DROITE)	287
FAISCEAU DE CABLES - CAPTEUR (ENS) (VITESSE DE MOTEUR DE DIRECTION, GRAISSAGE DE TRANSMISSION)	179
FAISCEAU DE CÂBLES AVANT (ENS)	178
FAISCEAU DE CABLES DE LA PLATE-FORME	290
FAISCEAU DE CABLES DU TABLEAU DE BORD (ENS)	290

* TRADUCTION NON DISPONIBLE AU MOMENT DE LA PUBLICATION

INDEX

Désignation	Page
FAISCEAU DE CABLES (ENS) (LAVE-VITRE)	821
FAISCEAU DE CABLES (ENS) (LEVIER) (TREUIL)	187
FAISCEAU DE CABLES (ENS) (RADIO PRODUCT LINK)	197
FAISCEAU DE CHÂSSIS (ENS) (DROITE)	177
FAISCEAU DE CHÂSSIS (ENS) (GAUCHE)	178
FAISCEAU DE CHAUFFAGE ET CLIMATISATION	759 772 775
FAISCEAU DE CHAUFFAGE ET CLIMATISATION (MOTEURS DE VENTILATEUR DE CONDENSEUR)	744
FAISCEAU DE CHAUFFAGE ET CLIMATISATION (VENTILATEUR DE CONDENSEUR)	772
FAISCEAU DE CONTACTEUR (ENS) (FREIN DE MANOEUVRE)	490
FAISCEAU DE DIRECTION (ENS)	471
FAISCEAU DE RADIO (ENS) (RÉCEPTEUR)	287
FAISCEAU DE SOLÉNOÏDE (ENS)	700
FAISCEAU DE SOUPAPE (ENS)	615
FAISCEAU DE SOUPAPE (ENS) (COMPRESSEUR PNEUMATIQUE DE SIÈGE)	819
FAISCEAU DE SOUPAPE (ENS) (ÉQUIPEMENT)	612
FAISCEAU D'ÉCLAIRAGE (ENS) (AVANT)	209 211
FAISCEAU D'ÉCLAIRAGE (ENS) (AVANT)	219
FAISCEAU D'ÉCLAIRAGE (ENS) (AVANT) (DROITE, GAUCHE)	216
FAISCEAU D'ÉCLAIRAGE (ENS) (AVANT) (GAUCHE, DROITE)	214
FAISCEAU D'ÉCLAIRAGE (ENS) (PHARE)	222
FAISCEAU DU REFROIDISSEUR D'HUILE (ENS) (HYDRAULIQUE)	521
FAISCEAU DU REFROIDISSEUR D'HUILE (ENS) (MOTEUR)	105
FAISCEAU (ENS) (BOÎTE DE VITESSES)	301
FAISCEAU (ENS) (REFROIDISSEUR D'ADMISSION)	120
FILTRE - SÉPARATEUR D'EAU ET DE CARBURANT (ENS) (PRINCIPAL)	149
FILTRE A AIR (ASS)	121 122
FILTRE À AIR DE CABINE (ASS)	757
FILTRE À AIR (STANDARD) (CABINE)	763
FILTRE À CARBURANT	163
FILTRE A CARBURANT (ASS)	148
FILTRE A CARBURANT (ENS)	148
FILTRE À CARBURANT (REMPLISSAGE DU RÉSERVOIR)	166
FILTRE A HUILE (ASS)	305 483
FILTRE A HUILE (ASS) (BOITE DE VITESSE)	326
FILTRE A HUILE (ASS) (HYDRAULIQUE) (DIRECTION)	485
FILTRE À HUILE (GRANDE EFFICACITÉ)	564
FILTRE À HUILE MOTEUR (ASS)	83
FILTRE A HUILE MOTEUR (ENS)	83
FILTRE A MOUSSE (CAPTEUR DE NIVEAU DE CARBURANT)	177
FILTRE (CAPTEUR DE PRESSION ATMOSPHÉRIQUE)	225
FILTRE DE SÉPARATEUR D'EAU ET DE CARBURANT (ASS)	149
FILTRE ET CANALISATIONS DE CARBURANT (ASS)	144
FILTRE (POMPE À EAU)	111
FLEXIBLE	114
FLEXIBLE (ÉVACUATION DES GAZ DE CARTER)	86
FREIN DE MANOEUVRE (ASS)	469
FUSIBLE (10A)	226
FUSIBLE (15A)	226
FUSIBLE (15A) (RÉCHAUFFEUR)	759
FUSIBLE (175A)	226
FUSIBLE (20A)	226

G

GALET A BOUDIN DOUBLE (ASS)	444 445
GALET A BOUDIN SIMPLE (ASS)	446 448
GALET INFÉRIEUR (VERSION)	442
GALET SUPERIEUR (VERSION)	443
GARDE-BOUE (ASS)	391 393 394
GRAISSAGE DE LA TRAVERSE-PIVOT	439
GRILLE DE PROTECTION (ASS)	802
GROUPE DE MOTEUR A PISTONS	584 585 586
GROUPE DE ROTATION DE MOTEUR	597 599
GROUPE DE ROTATION DE POMPE	601 602 604

H

HUILE MOTEUR - CARTER (ASS)	66
HUILE MOTEUR - CARTER (ASS)	64

* TRADUCTION NON DISPONIBLE AU MOMENT DE LA PUBLICATION

INDEX

Désignation	Page

I

INJECTEUR DE CARBURANT (ASS)	156 157
INSONORISATION - COUVERCLE (ASS)	17
INSONORISATION (VERSION)	77
INTERRUPTEUR - BOUTON-POUSSOIR (ENS) (ARRIMAGE AUTOMATIQUE DE RIPPER)	511
INTERRUPTEUR - BOUTON-POUSSOIR (ENS) (INCLINAISON DE LAME)	508
INTERRUPTEUR - BOUTON-POUSSOIR (ENS) (MONTÉE EN VITESSE ÉLECTRONIQUE)	476
INTERRUPTEUR - BOUTON-POUSSOIR (ENS) (RÉTROGRADATION ÉLECTRONIQUE)	476
INTERRUPTEUR - DÉRIVATION (ASS)	267
INTERRUPTEUR À BASCULE (ASS)	277
INTERRUPTEUR À BASCULE (ASS) (POMPE D'AMORÇAGE DE CARBURANT)	177
INTERRUPTEUR À BASCULE (ENS) (PROJECTEUR SUR COMPARTIMENT MOTEUR)	177
INTERRUPTEUR BALANCIER (ENS) (ACCÉLÉRATEUR)	291
INTERRUPTEUR BALANCIER (ENS) (BLOCAGE HYDRAULIQUE)	291
INTERRUPTEUR BALANCIER (ENS) (CHANGEMENT BI-DIRECTIONNEL)	291
INTERRUPTEUR BALANCIER (ENS) (EXTRACTEUR DE BROCHE HYDRAULIQUE)	504
INTERRUPTEUR BALANCIER (ENS) (MARCHE, ARRÊT DE CLIMATISEUR)	793
INTERRUPTEUR BALANCIER (ENS) (PHARE DE VÉRIN)	291
INTERRUPTEUR BALANCIER (ENS) (PHARE SUR GARDE-BOUE)	291
INTERRUPTEUR BALANCIER (ENS) (PROJECTEUR ROPS)	214
INTERRUPTEUR BALANCIER (ENS) (PROJECTEUR ROPS)	216
INTERRUPTEUR BALANCIER (ENS) (PROJECTEUR SUR VÉRIN)	214
INTERRUPTEUR BALANCIER (ENS) (PROJECTEUR SUR VÉRIN)	216
INTERRUPTEUR BALANCIER (ENS) (PROJECTEURS SUR CADRE ROPS)	211
INTERRUPTEUR BALANCIER (ENS) (PROJECTEURS SUR CADRE ROPS)	219
INTERRUPTEUR BALANCIER (ENS) (PROJECTEURS SUR VÉRIN)	219
INTERRUPTEUR BALANCIER (ENS) (RÉTROGRADAGE AUTOMATIQUE)	291
INTERRUPTEUR BALANCIER (ENS) (SERRAGE, DESSERRAGE DES FREINS DE STATIONNEMENT)	471
INTERRUPTEUR BALANCIER (ENS) (VENTILATEUR EN MARCHE ARRIÈRE)	557
INTERRUPTEUR BALANCIER (ENS) (24V, ÉTANCHE, ALLUMÉ) (TREUIL)	506
INTERRUPTEUR BALANCIER (ENS) (24V)(LAME ASSISTÉE AUTOMATIQUE)	576
INTERRUPTEUR DE DÉMARRAGE (ASS) (CLAVETTE)	291
INTERRUPTEUR D'ESSUIE-GLACE (24 VOLTS) (AV, INTERMITTENT)	793
INTERRUPTEUR D'ESSUIE-GLACE (24 VOLTS) (INTERMITTENT ARRIÈRE)	793
INTERRUPTEUR D'ESSUIE-GLACE (24 VOLTS) (PORTE GAUCHE)	793
INTERRUPTEUR D'ESSUIE-GLACE (24 VOLTS) (PORTIERE DROITE)	793
INTERRUPTEUR ROTATIF (ENS) (COMMANDE DE CLIMATISATION)	793

J

JAUGE DE NIVEAU D'HUILE (HUILE HYDRAULIQUE)	605
JAUGE D'HUILE MOTEUR (BAIONNETTE) (ASS)	87
JAUGE D'HUILE MOTEUR (BAÏONNETTE) (ENS) (TRANSMISSION)	326
JOINT (ASS)	159
JOINT (ASS) (POMPE À EAU)	111
JOINT DE VILEBREQUIN (ASS)	29
JOINT DE VILEBREQUIN (ASS)	54
JOINT PLAT	606 759
JOINT PLAT (POMPE D'AMORÇAGE DE CARBURANT)	144
JOINT UNIVERSEL (ASS)	349

K

KIT D'AMORTISSEUR (SIEGE A SUSPENSION)	819
KIT D'ATTACHE (SIEGE A SUSPENSION)	819
KIT DE BLOC COULISSANT (SIEGE A SUSPENSION)	812 813 814
KIT DE BORNE (ALTERNATEUR)	171
KIT DE BORNE (DÉMARREUR)	260 264
KIT DE BORNE (VERROUILLAGE)	226

* TRADUCTION NON DISPONIBLE AU MOMENT DE LA PUBLICATION

INDEX

Désignation	Page
KIT DE BOULONNERIE (ALTERNATEUR)	171
KIT DE BOUTON (REGLAGE DE HAUTEUR) (SIEGE A SUSPENSION)	765
KIT DE BRIDE DE FIXATION DE FILTRE A AIR	122
KIT DE CHAPEAU DE FILTRE (RÉSERVOIR DE CARBURANT)	166
KIT DE CHAPEAU DE FILTRE (RÉSERVOIR DE CARBURANT) (ÉVENT)	163
KIT DE COUSSINET	599
KIT DE COUSSINET (ALTERNATEUR)	171
KIT DE COUSSINET (ASSEMBLAGE DE ROTATION DE MOTEUR)	597
KIT DE COUSSINET (SIEGE A SUSPENSION)	766
KIT DE JOINTS	150
KIT DE JOINTS (CLAPET DE DÉCHARGE)	648
KIT DE JOINTS (CLAPET DE DÉCHARGE) (INVERSION DE ROTATION DU VENTILATEUR HYDRAULIQUE)	581
KIT DE JOINTS (CLAPET DE DÉCHARGE) (*STEERING PISTON PUMP)	550
KIT DE JOINTS (CLAPET DE RETENUE) (INVERSION DE ROTATION DU VENTILATEUR HYDRAULIQUE)	620
KIT DE JOINTS (ÉLECTROVANNE)	358 497 650 651 652 653 655
KIT DE JOINTS (*PISTON MOTOR) (VENTILATEUR HYDRAULIQUE)	585
KIT DE JOINTS (SOUPAPE DE DÉRIVATION) (INVERSION DE ROTATION DU VENTILATEUR HYDRAULIQUE)	581
KIT DE JOINTS (VANNE-PILOTE)	649
KIT DE PARE-CHOCS (RÉGLAGE DU POIDS) (SIEGE A SUSPENSION)	766
KIT DE POUSSOIR (SIEGE A SUSPENSION)	766
KIT DE PRISE FEMELLE (12 BROCHES)	283 287 513 519
KIT DE PRISE FEMELLE (12 BROCHES)	287
KIT DE RÉPARATION DE SOUPAPE (*FLOW COMPENSATOR) (POMPE D'ÉQUIPEMENT)	638
KIT DE RÉPARATION DE SOUPAPE (SOUPAPE COMPENSATRICE DE PRESSION)	637
KIT DE RESSORTS (REGLAGE DE HAUTEUR) (SIEGE A SUSPENSION)	765
KIT DE RESSORTS (SIEGE A SUSPENSION)	765
KIT DE SOUPAPE PNEUMATIQUE (SIEGE A SUSPENSION)	819
KIT D'INDICATEUR (RÉGLAGE DU POIDS) (SIEGE A SUSPENSION)	766

L

Désignation	Page
LAME DE BULLDOZER SEMI-UNIVERSELLE (VERSION)	660 661 662
LAME DE BULLDOZER UNIVERSELLE (VERSION)	663 664 665
LAME DE COUPE SEMI-UNIVERSELLE (ASS)	675 676
LAME ET BORD UNIVERSELS (ASS)	677 678 679
LAME SEMI-UNIVERSELLE (ASS)	690
LAME SEMI-UNIVERSELLE (ENS)	680 681 682 683 684 685
LAME UNIVERSELLE (ASS)	691
LAME UNIVERSELLE (ENS)	685 686 687 688 689
LAMPE - GYROPHARE (ASS)	222
LAMPE - PHARE (ASS)	200
LAMPE - PHARE (ASS)	201 202 203 204
LAMPE - PHARE (ENS) (24V, 70W)	203 204
LAMPE DE TÉMOIN (ENS) (TÉMOIN D'ACTIONNEMENT)	290
LAMPE HALOGÈNE (24V, 65W)	200 201 202
LAVE-GLACE - VITRE (ASS)	824

M

Désignation	Page
MAILLON DE CHAINE (ENS)	437

* TRADUCTION NON DISPONIBLE AU MOMENT DE LA PUBLICATION

INDEX

Désignation	Page
	438
MANOCONTACT	275
MANOCONTACT (ENS) (CLIMATISEUR, PETITE VITESSE)	775
MANOCONTACT (ENS) (COMPRESSEUR-CÔTÉ BAS)	772
MANOCONTACT (ENS) (RÉFRIGÉRANT) (CLIMATISEUR, GRANDE VITESSE)	775
MANOCONTACT (ENS) (RÉFRIGÉRANT) (COMPRESSEUR-CÔTÉ HAUT)	772
MARCHEPIED ARRIÈRE	815
MECANISME AMORTISSEUR ET REGLAGE DE CHAINES (ASS)	457
MECANISME DE COMMANDE DE POMPE (ASS)	501
MINUTERIE (ENS) À TEMPORISATION (24 VOLTS) (CLIMATISEUR)	775
MINUTERIE (ENS) À TEMPORISATION (24 VOLTS) (LIMITEUR DE CYCLE DE COMPRESSEUR)	772
MODIFICATION -BULLDOZER	668
MODULE D'AFFICHAGE (ASS) (ADVISOR)	291
MONTAGE - CAPTEUR (ASS)	225
MONTAGE - ÉVACUATION DES VAPEURS DE CARTER	91
MONTAGE-COMMUNICATION (ASS)	197
MONTAGE DE CABINE (ASS)	782
MONTAGE DE CANALISATION DE CARBURANT (ASS)	154
MONTAGE DE COMMANDE DE PROFIL LONGITUDINAL (ASS)	199
MONTAGE DE CONNECTEUR (ASS)	224
MONTAGE DE FILTRE À AIR (ASS)	128
MONTAGE DE GROUPE DE COMMANDE	783
MONTAGE DE MONITEUR (ASS)	784
MONTAGE DE MOTEUR (ASS)	62
MONTAGE DE MOTEUR (VERSION)	9
MONTAGE DE RADIO (ASS)	768 785 786
MONTAGE DE RIPPER (ASS)	703
MONTAGE DE VÉRIN (ASS)	587
MONTAGE DU TOIT ROPS (ASS)	787
MOTEUR - PARTIE CENTRALE (VERSION)	8
MOTEUR DE VENTILATEUR (ENS) (CLIMATISATION, CHAUFFAGE, 24V)	729
MOTEUR D'ESSUIE-GLACE (ASS) (24 VOLTS) (ARRIÈRE)	829
MOTEUR D'ESSUIE-GLACE (ASS) (24 VOLTS) (AVANT DROIT)	826
MOTEUR D'ESSUIE-GLACE (ASS) (24 VOLTS) (AVANT GAUCHE)	826
MOTEUR D'ESSUIE-GLACE (ASS) (24 VOLTS) (CENTRE, AVANT)	826
MOTEUR D'ESSUIE-GLACE (ASS) (24V, 2 VITESSES) (ARRIÈRE)	826
MOTEUR ELECTRIQUE (ASS) (SOUFFLANTE DE CONDENSEUR)	744

O

OBUS DE VALVE	773 775
OEILLETONS DE LEVAGE MOTEUR (ASS)	60 61

P

PALONNIER - GROUPE DE COMMANDE (ASS)	513 515 517 519
PANNEAU - FUSIBLES (ASS)	226
PANNEAU DE COMMANDE (ASS)	793
PANNEAU DE FAISCEAU (ENS) (FUSIBLE)	226
PANNEAU D'INSONORISATION (ASS)	412
PARE-PIERRES (ASS)	409 410
PATIN DE CHAÎNE	449 450 451 452 453 454
PÉDALE DE RÉGULATEUR ET DE FREIN (ASS)	490
PEINTURE (ASS)	834
PIGNON AR (ASS)	52
PIGNONNERIE AV (ASS)	49
PIGNONNERIE D'ARBRE À CAME	48
PISTON ET BIELLE (ASS)	68 69
PIVOT D'ESSUIE-GLACE (ASS)	831 832
PLAFONNIER (ENS) (24 VOLTS)	279
PLAQUE	395 657 658 669 670 683 688 696 698

* TRADUCTION NON DISPONIBLE AU MOMENT DE LA PUBLICATION

INDEX

Désignation	Page
	715
	716
PLAQUE - AVERTISSEMENT (RESSORT AMORTISSEUR)	430
	467
PLAQUE - AVERTISSEMENT (RESSORT AMORTISSEUR)	3
PLAQUE - AVERTISSEMENT (VÉRIN HAUTE PRESSION)	430
PLAQUE DE NUMÉRO DE SÉRIE	664
PLAQUE DE NUMÉRO DE SÉRIE (BOITE DE VITESSE)	332
PLAQUE DE NUMÉRO DE SÉRIE (BULLDOZER)	661
	662
	665
PLAQUE DE NUMÉRO DE SÉRIE (RIPPER)	712
	713
PLAQUE D'INSTRUCTIONS (CLIMATISEUR)	728
	736
PLAQUE D'USURE (ASS)	705
	706
PLAQUE SIGNALÉTIQUE (ASS)	833
PLAQUE SIGNALÉTIQUE (REMARQUE) (RADIO)	768
PLAQUES SIGNALETIQUES ET AUTOCOLLANTS (ASS)	834
	837
PLATE-FORME (ASS)	796
PLATE-FORME (VERSION)	795
POIGNÉE MODULAIRE (ASS) (TREUIL)	517
POMPE A EAU (ASS)	111
	112
POMPE A ENGRENAGES (ASS)	336
	338
	589
POMPE A HUILE MOTEUR (ASS)	97
	99
POMPE A PISTONS (ASS)	590
	592
	593
	595
POMPE D'ALIMENTATION EN CARBURANT (ASS)	155
POMPE D'ALIMENTATION ET MONTAGE (ASS)	155
POMPE D'AMORÇAGE DE CARBURANT ET SÉPARATEUR D'EAU (ASS)	169
POMPE DE SÉPARATEUR D'EAU ET D'AMORÇAGE DE CARBURANT (ASS)	169
POMPE D'INJECTION DE CARBURANT (ASS)	156
	157
	158
POMPE ET MOTEUR DE PRÉ-GRAISSAGE (ASS) (TRANSLATION ÉLECTRIQUE)	94
PORTE DE VISITE (ASS)	371
	372
	373
	374
PORTIÈRE DE CABINE (ASS)	753
	755
POSTE DE CONDUITE (VERSION)	788
PREFILTRE (ASS)	757
PREFILTRE (ASS)	132
	133
PREFILTRE (VERSION)	130
	131
PRISE (ASS)	230
PRISE CODE (ENS) (ÉQUIPEMENT)	291
PRISE CODE (ENS) (TRANSMISSION)	292
PROTECTEUR DE RÉDUCTEURS (ASS)	403
PROTECTEUR DE RÉDUCTEURS (VERSION)	397
PROTECTION D'ARBRE PIVOT (ASS)	406
PROTECTION DE JOINT (ASS)	411
PROTECTION DE ROUE LIBRE (VERSION)	397
PROTECTION DU RÉSERVOIR DE CARBURANT (ASS)	404
PROTÈGE-RADIATEUR (ASS)	407

R

RACCORD DE REMPLISSAGE DE CARBURANT RAPIDE	136
	138
	139
	141
RADIATEUR (ASS)	114
RADIATEUR (VERSION)	113
RADIO -COMMUNICATION (ASS) (LIAISON DE PRODUIT)	197
RALLONGE DU DOSSIER DE SIEGE (TOILE)	806
RALLONGE DU DOSSIER DE SIEGE (VINYLE)	809
RÉCEPTEUR-DÉSHYDRATEUR (ASS) (CLIMATISEUR)	772
	775
REDUCTEUR MARIN - MONTAGE (ASS)	330
RÉDUCTEURS (ASS)	307
	310
	313
	316
REFROIDISSEUR D'ADMISSION D'AIR (ASS)	120
REFROIDISSEUR D'HUILE DE BOÎTE (ASS)	301

* TRADUCTION NON DISPONIBLE AU MOMENT DE LA PUBLICATION

INDEX

Désignation	Page
REFROIDISSEUR D'HUILE HYDRAULIQUE ET MONTAGE (ASS)	521
REGLAGE DE SIEGE (ASS)	725
REGULATEUR DE LA TENSION (ENS) (24 VOLTS) (ALTERNATEUR)	171
RELAIS (ENS) (24 VOLTS) (CONNEXION DE CABINE)	290
RELAIS (ENS) (24 VOLTS) (MOTEUR SOUFFLANT DE CONDENSATEUR)	744
RELAIS (ENS) (24 VOLTS) (RÉCHAUFFEUR, CLIMATISEUR)	759
RENIFLARD (ASS)	80
RENIFLARD (ENS) (CARTER)	80
RENIFLARD (ENS) (TRANSMISSION)	326
RÉSERVOIR - LAVE-GLACE (ASS)	821
RÉSERVOIR - LAVE-GLACE (ASS)	823
RÉSERVOIR DE CARBURANT (ASS)	162 163 165 166
RÉSERVOIR D'EAU (ASS)	118
RÉSERVOIR DU LIQUIDE DE REFROIDISSEMENT (ASS)	117
RÉSERVOIR HYDRAULIQUE ET FILTRE (ASS)	605
RÉTROVISEUR (ASS)	780 781
REVETEMENT AR (ASS)	387
RIPPER (ASS)	714 715 716 717
RIPPER (VERSION)	711 712 713
ROBINET DE BATTERIE (ASS)	268 269
ROBINET DE BATTERIE (ENS)	269
ROTATION DE LA ROUE DU VENTILATEUR SOUFFLANT (COMMANDE DE RIPPER)	502
ROTATION DE LA ROUE DU VENTILATEUR SOUFFLANT (COUPE-BATTERIE)	269
ROTATION DE LA ROUE DU VENTILATEUR SOUFFLANT (COUPE-BATTERIE)	835
ROTATION DE LA ROUE DU VENTILATEUR SOUFFLANT (LIRE LE GUIDE D'UTILISATION ET D'ENTRETIEN, DIRECTION)	836
ROTATION DE LA ROUE DU VENTILATEUR SOUFFLANT (RÉGLAGE DU SIÈGE)	817 819
ROUE AV - CHAINES (ASS)	434 435 436

S

Désignation	Page
SEGMENT DE BARBOTIN (ASS)	341
SIÈGE - COMPRESSEUR D'AIR (ASS)	727
SIÈGE (ASS)	804 806 807 809 810 811
SIÈGE AVEC SUSPENSION (ASS)	812 819
SIÈGE AVEC SUSPENSION (ASS)	813 814 817
SIÈGE ET MONTAGE (ASS)	803
SIÈGE INCLINABLE (ASS)	799
SILENCIEUX (ASS)	129
SOLÉNOÏDE (ENS) (24V, DÉMARREUR)	260 264
SOLÉNOÏDE PROPORTIONNEL (ASS) (12V CC) (DIRECTION)	640
SOLÉNOÏDE PROPORTIONNEL (ASS) (12V CC) (VENTILATEUR HYDRAULIQUE)	639
SONDE - CIRCUIT DE CARBURANT	236 237
SONDE - CIRCUIT DE CARBURANT (COMMANDE DE DIRECTION, TRANSMISSION)	476
SONDE - CIRCUIT DE CARBURANT (*DRUM CLUTCH RELEASE)	517
SONDE - CIRCUIT DE CARBURANT (ENROULAGE, DÉVIDAGE)	517
SONDE - CIRCUIT DE CARBURANT (ENTRÉE, SORTIE DE DENT DE RIPPER)	511
SONDE - CIRCUIT DE CARBURANT (INCLINAISON DE LAME)	513 515 519
SONDE - CIRCUIT DE CARBURANT (LEVAGE, ABAISSEMENT DE LAME)	513 515 519
SONDE - CIRCUIT DE CARBURANT (PÉDALE DE DÉCÉLÉRATEUR)	490
SONDE - CIRCUIT DE CARBURANT (RELEVAGE, ABAISSEMENT DE RIPPER)	511
SONDE - CIRCUIT DE CARBURANT (ROTATIF) (PÉDALE DE FREIN DE MANOEUVRE)	490
SOUPAPE - SOLÉNOÏDE (ASS)	354 358 497 498 650

* TRADUCTION NON DISPONIBLE AU MOMENT DE LA PUBLICATION

INDEX

Désignation	Page
	651
	652
	653
	654
	655
	656
SOUPAPE D'ABAISSEMENT RAPIDE (ASS)	642
SOUPAPE DE COMPENSATION DE PRESSION (ASS)	636
SOUPAPE DE DÉMARRAGE À L'ÉTHER (ASS)	278
SOUPAPE DE DERIVATION (ASS) (VENTILATEUR HYDRAULIQUE)	581
SOUPAPE DE DIRECTION ET FREIN ET MONTAGE (ASS)	493
SOUPAPE DE MODULATION (ASS)	352
	353
SOUPAPE DE PRIORITE (ASS)	354
SOUPAPE DE VIDANGE (BOÎTE DE VITESSES)	363
	364
SOUPAPE-ÉCHANTILLON (LIQUIDE DE REFROIDISSEMENT DU MOTEUR)	107
SOUPAPE RÉDUCTRICE DE PRESSION (ASS)	635
STABILISATEUR - BRAS DE POUSSEE (ASS)	666
	667
STABILISATEUR DU BRAS DE POUSSEE (ASS)	671
SUPPORT - MONTAGE (ASS)	732
	733
	734
SUPPORT DE CACHE-SOUPAPE ET FAISC. DE CABL. D'IN.	10
SUPPORT DE MOTEUR (ASS)	76
SUSPENSION A BOGIES (ASS)	455
SUSPENSION DE SIEGE - CARTER (ASS)	765

T

TAMIS D'ASPIRATION	296
TAMIS D'ASPIRATION (CARTER D'HUILE DE TRANSMISSION)	340
TAMIS D'ASPIRATION (CONVERTISSEUR DE COUPLE)	346
TAMIS DE CARTER (RÉSERVOIR DE CARBURANT)	144
TAMIS DE CLOCHE (ENS)	88
TAPIS DE SOL (INFERIEUR)	788
TAPIS DE SOL (INFERIEUR) (CABINE)	751
TAPIS DE SOL (SUPERIEUR)	788
TAPIS DE SOL (SUPERIEUR) (CABINE)	751
TEMPS FROID (VERSION)	1
TÊTE DE POMPE (ASS)	550
THERMOCONTACT (ENS) (THERMOSTAT) (RÉCHAUFFEUR, CLIMATISEUR)	759
THERMOSTAT-TEMPÉRATURE D'EAU (92-DEG C) (LIQUIDE DE REFROIDISSEMENT)	105
TOIT ROPS (ASS)	800
TOIT ROPS (ENS)	801
TOURILLON DE BULLDOZER (ASS)	672
	673
	674
TOURILLON DE MOTEUR (ASS)	78
TRACTEUR - VERSION STANDARD	2
TRAIN DE ROULEMENT	468
TRAINS PLANÉTAIRES - CARTER ET PIÈCES	296
TRANSFORMATEUR DE PUISSANCE (24-VOLTS À 12-VOLTS)	290
TRANSFORMATION ELECTRIQUE (ASS)	189
TRANSMISSION (VERSION)	335
TURBOCOMPRESSEUR (ASS)	135
TUYAU-CHÂSSIS PORTEUR (ENS)	467
TYPE LÈVRE À JOINT (RÉGULATEUR DE TEMPÉRATURE D'EAU)	105

V

VANNE DE RINÇAGE (ASS)	634
VANNE PILOTE (ASS)	649
VENTILATEUR ASPIRANT (ASS)	100
VENTILATEUR SOUFFLANT DE CABINE (ASS)	729
VÉRIN DE LEVAGE (ASS)	531
	533
VÉRIN DE LEVAGE ET CANALISATIONS (ASS)	523
	525
	527
VERIN DE RIPPER (ASS)	535
	537
VÉRIN DE RIPPER ET CANALISATIONS (ASS)	529
VERIN D'EXTRACTEUR DE BROCHE DE RIPPER (ASS)	539
VÉRIN D'INCLINAISON (ASS)	544
	546
	548
VÉRIN D'INCLINAISON (ASS) (DROITE)	530
VÉRIN D'INCLINAISON (ASS) (GAUCHE)	530
VERIN D'INCLINAISON DE RIPPER (ASS)	540
	542
VÉRIN D'INCLINAISON (VERSION)	530

* TRADUCTION NON DISPONIBLE AU MOMENT DE LA PUBLICATION

INDEX

Désignation	Page
VERSION DE BULLDOZER	659, 660
VERSION DE CHASSIS	1
VERSION DE COMMANDE HYDRAULIQUE D'EXTRACTEUR DE BROCHE	504
VERSION DE GALET ET ROUE AVANT	441
VERSION DE MODIFICATION POUR COPEAUX	2
VERSION DE MONTAGE DE COMMANDE DE PROFIL LONGITUDINAL	196
VERSION DE MOTEUR COMPLET	6, 7
VERSION DE PRÉGRAISSAGE DE MOTEUR	94
VERSION DE REPRISE AU TAS	3
VERSION HYDRAULIQUE	552
VERSION POUR APPLICATION MINIÈRE	2
VIDANGE-ÉCOLOGIE (ASS)	303
VIDANGE-ÉCOLOGIE (ASS) (CARTER DE BOITE DE VITESSES)	296
VIDANGE-ÉCOLOGIE (ASS) (CONVERTISSEUR DE COUPLE)	346
VILEBREQUIN (ASS)	29
VITRE DE CABINE (ASS)	825
VOLANT MOTEUR (ASS)	47

W

Désignation	Page
*WINDOW GP-CAB	824

* TRADUCTION NON DISPONIBLE AU MOMENT DE LA PUBLICATION

INDICE

Nombre	Página
A	
ACONDICIONADOR DE AIRE (CONFIG)	728
ACOPLAMIENTO DE BOMBA (GR)	302
ACTIVADOR DE LA BOMBA (GR)	501
ACUMULADOR DE REFRIGERANTE	772
	775
ACUMULADOR HIDRAULICO (GR)	499
	500
ADAPTADOR DE LLENADO RÁPIDO DE COMBUSTIBLE (GR)	136
	138
	139
	141
ADAPTADOR DEL MANDO DE LA BOMBA	143
ADAPTADOR-LLENADO DE COMBUSTIBLE RAPIDO	136
	138
	139
	141
AGUA DE LAS CAMISAS - CALENTADOR DEL (GR)	192
	193
*AIR COMPRESSOR GP-SEAT	726
AIRE - TUBERÍAS DE (GR)	124
	125
	126
AJUSTADOR DEL ASIENTO (GR)	725
ALARMA (GR)	170
ALFOMBRILLA INFERIOR	788
ALFOMBRILLA INFERIOR (CABINA)	751
ALFOMBRILLA SUPERIOR	788
ALFOMBRILLA SUPERIOR (CABINA)	751
AMORTIGUADOR Y POLEA (GR)	41
ANTEFILTRO (CONFIG)	130
	131
ANTEFILTRO (GR)	757
ANTEFILTRO (GR)	132
	133
ÁRBOL DE LEVAS (GR)	12
ARRANQUE - INTERRUPTOR DE (GR) (LLAVE)	291
ARRANQUE EN TIEMPO FRIO (CONFIG)	256
ASIENTO CON SUSPENSIÓN (GR)	819
ASIENTO CON SUSPENSIÓN (GR)	817
ASIENTO (GR)	804
	806
	807
	809
	810
	811
ASIENTO Y MONTAJE (GR)	803
AUXILIAR DE ARRANQUE CON ÉTER (GR)	255

Nombre	Página
B	
BALANCÍN (GR)	74
BARRA COMPENSADORA (CONJ)	416
BARRA COMPENSADORA (GR)	420
	421
	423
BARRA DE TIRO (GR)	375
BARRA DEFLECTORA (CONJ)	417
	418
	419
BARRA LIMPIADORA (GR)	424
BARRA LIMPIADORA(CONFIG)	413
	414
BASE DE LA TAPA DE VÁLVULAS Y MAZO DE CABLES DE INYECTOR (GR)	10
BASTIDOR DEL DESGARRADOR (GR)	696
	698
BASTIDOR TELESCÓPICO DEL RESORTE TENSOR (GR)	430
BASTIDOR Y COJINETE (CONJ)	395
	396
BATERÍA Y CABLES (GR)	177
BATERÍA (12 VOLTIOS) (LIBRE DE MANTENIMIENTO)	177
	256
BLOQUE DE EMPALME (GR)	184
BLOQUE DE POTENCIA (GR)	185
BLOQUE DESLIZANTE-JUEGO (ASIENTO DE SUSPENSION)	812
	813
	814
BLOQUE MOTOR (CONJ)	30
	31
BLOQUE MOTOR (GR)	32
BOMBA - TUBERÍAS DE (GR)	564
BOMBA DE ACEITE DEL MOTOR (GR)	97
	99
BOMBA DE AGUA (GR)	111
	112
BOMBA DE ENGRANAJES (GR)	336
	338
	589
BOMBA DE INYECCIÓN DE COMBUSTIBLE (GR)	156
	157
	158
BOMBA DE PISTONES (GR)	590
	592
	593
	595
BOMBA DE SEPARADOR DE AGUA Y CEBADO DE COMBUSTIBLE (GR)	169

* NO HAY TRADUCCION DISPONIBLE EN EL MOMENTO DE LA IMPRESION

INDICE

Nombre	Página
BOMBA DE TRANSFERENCIA DE COMBUSTIBLE (GR)	155
BOMBA DE TRANSFERENCIA DE COMBUSTIBLE Y MONTAJE (GR)	155
BOMBA Y MOTOR DE PRELUBRICACIÓN (CONJ) (MANDO ELECTRICO)	94
BRAZO DE EMPUJE (GR)	669, 670
BRAZO DE LIMPIAPARABRISAS (GR) (LADO DERECHO)	826
BRAZO DE LIMPIAPARABRISAS (GR) (LADO IZQUIERDO)	826
BRAZO DE LIMPIAPARABRISAS (GR) (*REAR, LH)	829
BRAZO DE LIMPIAPARABRISAS (GR) (*REAR, RH)	829
BRAZO (LIMPIAPARABRISA) (DELANTERO)	826

C

Nombre	Página
CABEZA DE BOMBA (GR)	550
CABINA - MAZO DE CABLES DE LA	279
CABINA (CONFIG)	736, 737, 738
CABINA (GR)	739, 741
CABINA PARA TIEMPO FRÍO (CONFIG)	738
CABLE GR-GRADO DE CONTROL	287
CABLES DE INYECTOR (GR)	294
CABLES DE LA CABINA (GR)	279
CABLES DE LA PLATAFORMA (GR)	290
CABLES DEL CONTROL ELECTRÓNICO (GR)	281
CABLES DEL MOTOR (GR)	283
CABLES DEL TABLERO (GR) (FUSIBLE)	226
CADENAS (GR)	459, 460, 461, 462, 463, 464, 465, 466
CAJA DE ALMACENAMIENTO	731
CAJA DE LA SUSPENSIÓN DEL ASIENTO (GR)	765
CAJA DELANTERA - TORNILLERÍA DE LA (GR)	42, 43, 44
CAJA DELANTERA (GR)	56, 58
CAJA Y BASTIDOR (GR)	363, 364
CAJA Y PIEZAS DE LOS PLANETARIOS	296
CALCOMANÍA (CABRESTANTE)	506
CALCOMANÍA DE ADVERTENCIA (ACUMULADOR)	499, 500
CALCOMANÍA DE ADVERTENCIA (ASIENTO AJUSTABLE)	817, 819
CALCOMANÍA DE ADVERTENCIA (CONTROL DE DESGARRADOR)	502
CALCOMANÍA DE ADVERTENCIA (ESLABON DE PRODUCTO)	197
CALCOMANÍA DE ADVERTENCIA (HOJA, NO ESCALAR, LEER OMM)	199
CALCOMANÍA DE ADVERTENCIA (INTERRUPTOR GENERAL)	835
CALCOMANÍA DE ADVERTENCIA (INTERRUPTOR GENERAL)	269
CALCOMANÍA DE ADVERTENCIA (LEER OMM, DIRECCION)	836
CALCOMANÍA DE ADVERTENCIA (NO SOLDAR, NO BARRENAR)	836
CALCOMANÍA DE ADVERTENCIA (PELIGRO)	836
CALCOMANÍA DE ADVERTENCIA (RADIO)	768
CALCOMANÍA DE ADVERTENCIA (RESORTE DE AMORTIGUACION)	430
CALCOMANÍA DE IDENTIFICACIÓN (BOMBA DE PRELUBRICACION)	94
CALCOMANÍA DE IDENTIFICACIÓN (CALENTADOR DE AGUA DE LAS CAMISAS)	192, 193
CALCOMANÍA DE IDENTIFICACIÓN (NOMBRE DE GRUPO) (CALENTADOR DE CABINA)	759
CALCOMANÍA DE IDENTIFICACIÓN (NOMBRE DE GRUPO) (CONDENSADOR DE REFRIGERANTE)	744
CALCOMANÍA DE IDENTIFICACIÓN (PALANCA UNIVERSAL) (ACCUGRADE)	196
CALCOMANÍA DE IDENTIFICACIÓN (RODEADO DE ROJO REFLECTIVO)	834
CALCOMANÍA DE IDENTIFICACIÓN (12 VOLTIOS)	835
CALCOMANÍA DE MANIPULADOR DE BASURAS	4
CALCOMANÍA DE RAYAS (SELECTOR DE MARCHAS AUTOMÁTICO/MANUAL)	404
CALCOMANÍA (*D9T, LH)	404
CALCOMANÍA (*D9T, RH)	404

* NO HAY TRADUCCION DISPONIBLE EN EL MOMENTO DE LA IMPRESION

INDICE

Nombre	Página
CALCOMANÍA (HOJA AUTOMÁTICA)	503
CALCOMANÍA (INCLINACIÓN DOBLE)	503
CALCOMANÍAS Y PLACAS DE IDENTIFICACIÓN (GR)	837
CALCOMANÍAS Y PLACAS DE IDENTIFICACIÓN (GR)	834
CALEFACCIÓN DE LA CABINA (GR)	759, 763
CALENTADOR DE LA MÁQUINA (GR)	194
CAMBIO RÁPIDO DE ACEITE (GR)	92
CÁNCAMOS DE LEVANTAMIENTO DEL MOTOR (GR)	60, 61
CANDADO (GR) (CALEFACTOR)	763
CANDADO (GR) (COMPARTIMENTO DE BATERIA)	391
CANDADO (GR) (COMPARTIMENTO PARA LA LITERATURA)	1
CANDADO (GR) (LLENADO DEL TANQUE HIDRÁULICO)	522
CANDADO (GR) (MEDIDOR DE NIVEL DE ACEITE)	9
CANDADO (GR) (RECINTO DE MOTOR)	377, 380
CANDADO (GR) (RECINTO TRASERO)	387
CANDADO (GR) (RELLENADOR DE ACEITE)	9
CANDADO (GR) (TANQUE DE COMBUSTIBLE)	162, 165
CANDADO (GR) (TUBERIA DE COMBUSTIBLE)	144
CARGA - ALTERNADOR DE (GR)	171, 173, 175
CÁRTER - COLECTOR DEL (GR)	64
CÁRTER - COLECTOR DEL (GR)	66
CENICERO (CABINA)	751
CHASIS (CONFIG)	1
CIGÜEÑAL (GR)	29
CILINDRO DE DESGARRADOR (GR)	535, 537
CILINDRO DE DESGARRADOR Y TUBERÍAS (GR)	529
CILINDRO DE INCLINACION DEL DESGARRADOR (GR)	540, 542
CILINDRO DE INCLINACIÓN (GR)	530
CILINDRO DE LEVANTAMIENTO - TUBERÍAS DEL (GR)	559, 561
CILINDRO DE LEVANTAMIENTO (GR)	531, 533
CILINDRO DE LEVANTAMIENTO Y TUBERÍAS (GR)	523, 525, 527
CILINDRO DEL EXTRACTOR DE PASADOR DEL DESGARRADOR (GR)	539
CINTURÓN DE SEGURIDAD (GR)	806
CINTURÓN DE SEGURIDAD (GR) (RETRACTIL)	809
COJINETE	425, 426
COLADOR (CONJ) (LLENADO DEL TANQUE HIDRÁULICO)	605
COLADOR DE COMBUSTIBLE	163
COLADOR DE COMBUSTIBLE (LLENADO DEL TANQUE)	166
COMBUSTIBLE - TANQUE DE (GR)	162, 163, 166
COMBUSTIBLE - TANQUE DE (GR)	165
COMPARTIMIENTO DEL LADO DERECHO (GR)	388, 389, 390
COMPARTIMIENTO DEL LADO IZQUIERDO (GR)	384, 385, 386
COMPARTIMIENTO DEL MOTOR (GR)	377, 380, 383
COMPARTIMIENTO DEL OPERADOR (CONFIG)	788
COMPARTIMIENTO POSTERIOR (GR)	387
COMPRESOR DE AIRE DEL ASIENTO (GR)	727
COMPRESOR DE REFRIGERANTE (GR)	742, 743
CONDENSADOR DE REFRIGERANTE (GR)	744
CONEXIÓN ELÉCTRICA (GR)	186
CONFIGURACION DE APILAMIENTO	3
CONFIGURACIÓN DE CABLERIA, CALENTADOR Y ACONDICIONADOR DE AIRE	759, 772, 775
CONFIGURACIÓN DE CABLERIA, CALENTADOR Y ACONDICIONADOR DE AIRE (*CONDENSER BLOWER MOTORS)	744
CONFIGURACIÓN DE CABLERIA, CALENTADOR Y ACONDICIONADOR DE AIRE (VENTILADOR DE CONDENSADOR)	772

* NO HAY TRADUCCION DISPONIBLE EN EL MOMENTO DE LA IMPRESION

INDICE

Nombre	Página
CONFIGURACIÓN DE ELIMINACIÓN DE BASURAS	3 4
CONFIGURACIÓN DE INSTALACIÓN DEL MOTOR	9
CONFIGURACION DE LAMPARA DE REFLECTOR (24-VOLTIOS, 70-VATIOS)	203 204
CONFIGURACIÓN ELECTRÓNICA DE LA MÁQUINA	190
CONFIGURACIÓN GENERAL DEL TRACTOR	2
CONFIGURACIÓN PARA CLIMA FRÍO	1
CONFIGURACION PARA MINERIA	2
CONJUNTO DE CABLERIA, RADIO (RECEPTOR)	287
CONJUNTO DE CABLES, VÁLVULA	615
CONJUNTO DE CABLES, VÁLVULA (COMPRESOR DE AIRE DEL ASIENTO)	819
CONJUNTO DE CABLES, VÁLVULA (IMPLEMENTO)	612
CONJUNTO DE ENCHUFE DE CODIGO (IMPLEMENTO)	291
CONJUNTO DE ENCHUFE DE CODIGO (TREN DE FUERZA)	292
CONJUNTO DE MAZO DE CABLES DE LA CONSOLA	291 478
CONJUNTO DE MAZO DE CABLES DE SOLENOIDE	700
CONJUNTO DE NÚCLEO (POSENFRIADOR)	120
CONJUNTO DE NÚCLEO (TRANSMISION)	301
CONSOLA DEL OPERADOR (GR)	747
CONSOLA DELANTERA (GR)	746
CONTRAPESO (GR)	365 367 368 369
CONTROL DE DIRECCIÓN (GR)	474 475
CONTROL DE DIRECCIÓN Y TRANSMISIÓN (GR)	476 478
CONTROL DE IMPLEMENTOS (GR)	511
CONTROL DE INCLINACIÓN DUAL (CONFIG)	503
CONTROL DE MANIJA (GR)	507 508 510
CONTROL DE MANIJA (GR)	471
CONTROL DE MANIJA (GR) (CONTROL DE HOJA TOPADORA)	515
CONTROL DE MAQUINA (GR)	188
CONTROL DEL FRENO DE ESTACIONAMIENTO	472
CONTROL DEL MULTIPLE (GR)	580 581
CONTROL ELECTRÓNICO (CONJ) (LIMPIADOR)	793
CONTROL ELECTRÓNICO DEL MOTOR Y MONTAJE	188
CONTROL ELECTRÓNICO Y MONTAJE (GR)	187
CONTROL HIDRÁULICO (CONFIG)	506
CONTROL HIDRÁULICO DE LA TRANSMISIÓN (GR)	299
CONTROL HIDRÁULICO DEL EXTRACTOR DE PASADORES	504
CONTROL NO PROGRAMADO (GR) (PRODUCTO DE ENLACE 300)	197
CONTROL NO PROGRAMADO (GR) (TREN DE IMPULSION)	291
CONTROL Y MONTAJE (GR)	502
CONVERTIDOR DE PAR (GR)	344 346
CONVERTIDOR DE VOLTAJE (24 VOLTIOS A 12 VOLTIOS)	290
CONVERTIDOR ELÉCTRICO (GR)	189
CORREA-SERPENTIN (ALTERNADOR)	173
CORREA-SERPENTIN (POLEA DE COMPRESOR DE AIRE ACONDICIOANDO)	743
CRONOMETRO DE DEMORA DE ACTIVACION (CONJ) (24 VOLTIOS) (AIRE ACONDICIONADO)	775
CRONOMETRO DE DEMORA DE ACTIVACION (CONJ) (24 VOLTIOS) (LIMITADOR DE CICLO DE COMPRESOR)	772
CULATA DE CILINDROS - TORNILLERÍA DE LA (GR)	40
CULATA DE CILINDROS (CONJ)	34 35 36
CULATA DE CILINDROS (GR)	39 40

D

DERIVADOR DE ENFRIADOR (ACEITE DE MOTOR)	83
DESGARRADOR (CONFIG)	713
DESGARRADOR (CONFIG)	711 712
DESGARRADOR (GR)	714 715 716 717

* NO HAY TRADUCCION DISPONIBLE EN EL MOMENTO DE LA IMPRESION

INDICE

Nombre	Página
DETECTOR DE POSICIÓN (SISTEMA DE COMBUST.) (GR)	236, 237
DETECTOR DE POSICIÓN (SISTEMA DE COMBUST.) (GR) (DESGARRADOR LEVANTAR, BAJAR)	511
DETECTOR DE POSICIÓN (SISTEMA DE COMBUST.) (GR) (DIRECCION, CONTROL DE TRANSMISION)	476
DETECTOR DE POSICIÓN (SISTEMA DE COMBUST.) (GR) (*DRUM CLUTCH RELEASE)	517
DETECTOR DE POSICIÓN (SISTEMA DE COMBUST.) (GR) (INCLINACION DE HOJA)	513
DETECTOR DE POSICIÓN (SISTEMA DE COMBUST.) (GR) (INCLINACION DE HOJA)	515, 519
DETECTOR DE POSICIÓN (SISTEMA DE COMBUST.) (GR) (LEVANTAMIENTO DE LA HOJA, BAJAR)	513
DETECTOR DE POSICIÓN (SISTEMA DE COMBUST.) (GR) (LEVANTAMIENTO DE LA HOJA, BAJAR)	515, 519
DETECTOR DE POSICIÓN (SISTEMA DE COMBUST.) (GR) (PEDAL DECELERADOR)	490
DETECTOR DE POSICIÓN (SISTEMA DE COMBUST.) (GR) (*REEL IN, REEL OUT)	517
DETECTOR DE POSICIÓN (SISTEMA DE COMBUST.) (GR) (ROTATORIO) (PEDAL DE FRENO DE SEVICIO)	490
DETECTOR DE POSICIÓN (SISTEMA DE COMBUST.) (GR) (VASTAGO DEL DESGARRADOR DENTRO, FUERA)	511
DIENTE DE DESGARRADOR (GR)	718, 719, 720, 721, 722
DISYUNTOR (CONJ) (15 AMPERIOS) (AIRE ACONDICIONADO)	775
DISYUNTOR (CONJ) (15 AMPERIOS) (CORRIENTE PRINCIPAL)	226
DISYUNTOR (CONJ) (15 AMPERIOS) (MOTOR DEL VENTILADOR DEL CONDENSADOR)	772
DISYUNTOR (GR)	268, 269
DRENAJE DE SEGURIDAD ECOLÓGICA (GR)	303
DRENAJE DE SEGURIDAD ECOLÓGICA (GR) (CAJA DE TRANSMISION)	296
DRENAJE DE SEGURIDAD ECOLÓGICA (GR) (CONVERTIDOR DE PAR)	346

E

EJE DE MANDO (GR)	342
EJE (GR)	295
ELECTRONICA DE MONITOR (GR)	191
ELEMENTO DE FILTRO DE ACEITE (CONJ) (ALTA EFICIENCIA HIDRÁULICA) (TRANSMISION)	305
ELEMENTO DE FILTRO DE ACEITE (CONJ) (ALTA EFICIENCIA HIDRÁULICA) (TREN DE FUERZA)	326
ELEMENTO DE FILTRO DE ACEITE (CONJ) (HIDRAULICO) (ALTA EFICIENCIA)	483, 605
ELEMENTO DE FILTRO DE ACEITE (CONJ) (HIDRAULICO) (EFICIENCIA ESTANDAR)	605
ELEMENTO DE FILTRO DE ACEITE (CONJ) (HIDRAULICO) (FLUÍDO RESISTENTE AL FUEGO)	605
ELEMENTO DEL CALENTADOR DEL AGUA DE LAS CAMISAS	193
ELEMENTO DEL CALENTADOR DEL AGUA DE LAS CAMISAS (120 VOLTIOS, 1500 VATIOS)	192
ELEMENTO DEL FILTRO DE AIRE (CONJ) (CABINA)	763
ELEMENTO PRIMARIO (CONJ) (FILTRO DE AIRE)	122
ELEMENTO SECUNDARIO (CONJ) (FILTRO DE AIRE)	122
EMPAQUETADURA	606, 759
EMPAQUETADURA (BOMBA DE CEBADO DE COMBUSTIBLE)	144
ENFRIADOR DE ACEITE DE LA TRANSMISIÓN (GR)	301
ENFRIADOR DE ACEITE HIDRÁULICO Y MONTAJE (GR)	521
ENGRANAJE DE ARBOL DE LEVAS (GR)	48
ENGRANAJE DE CORONA Y PIÑÓN (GR)	319
ENGRANAJE DELANTERO (GR)	49
ENGRANAJE TRASERO (GR)	52
ESCAPE DE GASES (GR)	86
ESLABÓN DE CADENA (CONJ)	437, 438
ESTABILIZADOR DEL BRAZO DE EMPUJE (GR)	666, 667

* NO HAY TRADUCCION DISPONIBLE EN EL MOMENTO DE LA IMPRESION

INDICE

Nombre	Página
	671
ESTRUCTURA ROPS (GR)	800
ETIQUETA DE ADVERTENCIA (GR)	833
EXPULSOR DE POLVO (GR)	123
EXTENSIÓN DEL RESPALDO (GR) (DE TELA)	806
EXTENSIÓN DEL RESPALDO (GR) (VINIL)	809
EXTRACTOR DE PASADOR (CONFIG)	707
EXTRACTOR DE PASADOR (GR)	708
	709
	710

F

FILTRO (BOMBA DE AGUA)	111
FILTRO DE ACEITE (ALTA EFICIENCIA)	564
FILTRO DE ACEITE DEL MOTOR (CONJ)	83
FILTRO DE ACEITE DEL MOTOR (GR)	83
FILTRO DE ACEITE (GR)	305
	483
FILTRO DE ACEITE (GR) (HIDRAULICO) (DIRECCIÓN)	485
FILTRO DE ACEITE (GR) (TRANSMISION)	326
FILTRO DE AIRE DE LA CABINA (GR)	757
FILTRO DE AIRE (ESTANDAR) (CABINA)	763
FILTRO DE AIRE (GR)	121
	122
FILTRO DE COMBUSTIBLE (CONJ)	148
FILTRO DE COMBUSTIBLE (GR)	148
FILTRO DE COMBUSTIBLE Y SEPARADOR DE AGUA (CONJ) (PRIMARIO)	149
FILTRO DE COMBUSTIBLE Y SEPARADOR DE AGUA (GR)	149
FILTRO ESPONJOSO (SENSOR DE NIVEL DE COMBUSTIBLE)	177
FILTRO (SENSOR DE PRESION ATMOSFERICA)	225
FILTRO Y TUBERÍAS DE COMBUSTIBLE (GR)	144
FRENO DE SERVICIO (GR)	469
FUSIBLE (10-AMPERIOS)	226
FUSIBLE (15 AMPERIOS)	226
FUSIBLE (15 AMPERIOS) (CALEFACTOR)	759
FUSIBLE (175-AMPERIOS)	226
FUSIBLE (20-AMPERIOS)	226

G

GRUPO DE CANTONERA Y CUCHILLA	692
	693
	694
	695
GRUPO DE CONTROL, CALEFACIÓN Y ACONDICIONADOR DE AIRE	793
GRUPO DE HOJA Y CUCHILLA UNIVERSAL	677
	678
	679
GRUPO DE INSTALACION, CONTROL DE GRADO	199
GRUPO DE INTERRUPTOR-BOTON PULSADOR	276
GRUPO DE INTERRUPTOR-BOTON PULSADOR (BOCINA)	290
GRUPO DE MONTAJE-CONECTOR	224
GRUPO DE MONTAJE DE LA CABINA	782
GRUPO DE ROTACIÓN DEL MOTOR (GR)	599
GRUPO DE ROTACIÓN DEL MOTOR (GR)	597
GRUPO DE SELLO	159
GRUPO DE SELLO (BOMBA DE AGUA)	111
GRUPO DE TOPE, CONTROL (*DRUM CLUTCH RELEASE)	517
GRUPO DE TOPE, CONTROL (INCLINACION DE HOJA)	513
	519
GRUPO DE TOPE, CONTROL (INCLINACION DE HOJA)	515
GRUPO DE TOPE, CONTROL (LEVANTAMIENTO DE LA HOJA, BAJAR)	513
GRUPO DE TOPE, CONTROL (LEVANTAMIENTO DE LA HOJA, BAJAR)	519
GRUPO DE TOPE, CONTROL (LEVANTAMIENTO DE LA HOJA, BAJAR)	515
GRUPO DE TOPE, CONTROL (*REEL IN, REEL OUT)	517
GRUPO DE VÁLVULA-ARRANQUE CON ÉTER	278
GRUPO DE VÁLVULAS (MULTIPLE DE ADMISION)	644
GRUPO DE 4 VÁLVULAS HIDRÁULICAS	612
	615
GRUPO ELECTRONICO-COMUNICACION	190
GRUPO GIRATORIO DE BOMBA	601
	602
	604
GRUPO Y MONTAJE DE LINEA DE COMBUSTIBLE	154
GUARDABARROS (GR)	391
	393
	394

H

HIDRÁULICA (CONFIG)	552
HOJA DE LIMPIAPARABRISAS	829
HOJA DE LIMPIAPARABRISAS (CONJ)	829

* NO HAY TRADUCCION DISPONIBLE EN EL MOMENTO DE LA IMPRESION

INDICE

Nombre	Página
HOJA DE LIMPIAPARABRISAS (CONJ) (DELANTERO)	826
HOJA DE LIMPIAPARABRISAS (CONJ) (LADO)	826
HOJA DE LIMPIAPARABRISAS (CONJ) (PARTE TRASERA)	826
HOJA SEMIUNIVERSAL (CONJ)	680 681 682 683 684 685
HOJA SEMIUNIVERSAL (GR)	690
HOJA TOPADORA (CONFIG)	659 660
HOJA TOPADORA SEMIUNIVERSAL	660 661 662
HOJA TOPADORA UNIVERSAL (CONFIG)	663 664 665
HOJA UNIVERSAL (CONJ)	685 686 687 688 689
HOJA UNIVERSAL (GR)	691
HOJA Y CUCHILLA SEMIUNIVERSAL (GR)	675 676

I

IMPLEMENTOS (GR ELECTRÓNICO)	190
INCLINACIÓN HORIZONTAL - CILINDRO DE (GR)	544 546 548
INCLINACIÓN HORIZONTAL - CILINDRO DE (GR) (IZQUIERDO)	530
INCLINACIÓN HORIZONTAL - CILINDRO DE (GR) (LADO DERECHO)	530
INDICADOR DEL NIVEL DE ACEITE (VARILLA) (GR)	87
INDICADOR DEL NIVEL DEL ACEITE (VARILLA) (CONJ) (TREN DE FUERZA)	326
INSONORIZADOR (CONFIG)	77
INSTALACION DE COMUNICACION (GR)	197
INSTALACIÓN DE RADIO (GR)	768
INSTALALCIÓN (CONFIG) -CONTROL DE GRADO	196
INTERRUPTOR (CONJ) (LUZ DEL TECHO)	279
INTERRUPTOR DE DERIVACIÓN	267
INTERRUPTOR DE FLUJO (GR)	116
INTERRUPTOR DE LÍMITE (CONJ) (LUZ DEL TECHO)	279
INTERRUPTOR DE LÍMITE (CONJ) (PEDAL DE FRENO DE SEVICIO)	490
INTERRUPTOR DE PRESIÓN (CONJ) (ACONDICIONADOR DE AIRE BAJO)	775
INTERRUPTOR DE PRESIÓN (CONJ) (COMPRESOR - LADO BAJO)	772
INTERRUPTOR DE PRESIÓN (CONJ) (REFRIGERANTE) (ACONDICIONADOR DE AIRE, ALTO)	775
INTERRUPTOR DE PRESIÓN (CONJ) (REFRIGERANTE) (COMPRESOR - LADO ALTO)	772
INTERRUPTOR DE PRESIÓN (GR)	275
INTERRUPTOR DE TEMPERATURA (CONJ) (*THERMOSTAT) (CALENTADOR, ACONDICIONADOR DE AIRE)	759
INTERRUPTOR DE VOLQUETE (CONJ) (ACELERACIÓN)	291
INTERRUPTOR DE VOLQUETE (CONJ) (ACONDICIONADOR DE AIRE ACTIVO, INACTIVO)	793
INTERRUPTOR DE VOLQUETE (CONJ) (DESCONEXIÓN HIDRÁULICA)	291
INTERRUPTOR DE VOLQUETE (CONJ) (DESPLAZAMIENTO BIDIRECCIONAL)	291
INTERRUPTOR DE VOLQUETE (CONJ) (EXTRACTOR DE PASADOR HIDRÁULICO)	504
INTERRUPTOR DE VOLQUETE (CONJ) (FRENOS DE ESTACIONAMIENTO ACTIVO, INACTIVO)	471
INTERRUPTOR DE VOLQUETE (CONJ) (LÁMPARA DE TRABAJO DEL COMPARTIMIENTO DEL MOTOR)	177
INTERRUPTOR DE VOLQUETE (CONJ) (LUZ DEL CILINDRO)	291
INTERRUPTOR DE VOLQUETE (CONJ) (LUZ DEL GUARDABARROS)	291
INTERRUPTOR DE VOLQUETE (CONJ) (PALANCA DE AUTO DESCONEXIÓN)	291
INTERRUPTOR DE VOLQUETE (CONJ) (REFLECTOR CILINDRICO)	214 216
INTERRUPTOR DE VOLQUETE (CONJ) (REFLECTORES-CILINDRICOS)	219
INTERRUPTOR DE VOLQUETE (CONJ) (REFLECTORES ROPS)	214 216
INTERRUPTOR DE VOLQUETE (CONJ) (REFLECTORES-ROPS)	211

* NO HAY TRADUCCION DISPONIBLE EN EL MOMENTO DE LA IMPRESION

INDICE

Nombre	Página
INTERRUPTOR DE VOLQUETE (CONJ) (REFLECTORES-ROPS)	219
INTERRUPTOR DE VOLQUETE (CONJ) (REVERSA, VENTILADOR)	557
INTERRUPTOR DE VOLQUETE (CONJ) (24-VOLTIOS, SELLADO, ILUMINADO) (MALACATE)	506
INTERRUPTOR DE VOLQUETE (CONJ) (24 VOLTIOS)(AYUDA AUTOMÁTICA DE LA HOJA)	576
INTERRUPTOR DE VOLQUETE (GR)	277
INTERRUPTOR DE VOLQUETE (GR) (BOMBA DE CEBADO DE COMBUSTIBLE)	177
INTERRUPTOR DEL LIMPIAPARABRISAS (CONJ) (24 VOLTIOS) (INTERMITENTE DELANTERO)	793
INTERRUPTOR DEL LIMPIAPARABRISAS (CONJ) (24 VOLTIOS) (INTERMITENTE TRASERO)	793
INTERRUPTOR DEL LIMPIAPARABRISAS (CONJ) (24 VOLTIOS) (PUERTA DE LADO DERECHO)	793
INTERRUPTOR DEL LIMPIAPARABRISAS (CONJ) (24 VOLTIOS) (PUERTA IZQUIERDA)	793
INTERRUPTOR GENERAL (CONJ)	269
INTERRUPTOR LÍMITE (GR)	272
INTERRUPTOR MAGNÉTICO (GR)	273 274
INTERRUPTOR MAGNÉTICO (GR) (24 VOLTIOS) (RELÉ DE ARRANQUE)	226
INTERRUPTOR MAGNÉTICO (GR) (24 VOLTIOS) (RELE PRINCIPAL)	226
INTERRUPTOR PULSADOR (CONJ) (CAMBIO ASCENDENTE ELECTRONICO)	476
INTERRUPTOR PULSADOR (CONJ) (CAMBIO DESCENDENTE ELECTRONICO)	476
INTERRUPTOR PULSADOR (CONJ) (DESGARRADOR APILADOR AUTOMÁTICO)	511
INTERRUPTOR PULSADOR (CONJ) (INCLINACIÓN DE LA HOJA TOPADORA)	508
INTERRUPTOR ROTATIVO (CONJ) (CONTROL DE ACONDICIONADOR DE AIRE)	793
INYECTOR DE COMBUSTIBLE (GR)	156 157

J

Nombre	Página
JUEGO DE ABRAZADERA DEL FILTRO DE AIRE	122
JUEGO DE AMORTIGUADOR (ASIENTO DE SUSPENSION)	819
JUEGO DE ATADURA (ASIENTO DE SUSPENSION)	819
JUEGO DE BOTÓN (AJUSTE DE ALTURA) (ASIENTO DE SUSPENSION)	765
JUEGO DE COJINETES	599
JUEGO DE COJINETES (ALTERNADOR)	171
JUEGO DE COJINETES (ASIENTO DE SUSPENSION)	766
JUEGO DE COJINETES (GRUPO GIRATORIO DEL MOTOR)	597
JUEGO DE FILTRO DE TAPA (TANQUE DE COMBUSTIBLE)	166
JUEGO DE FILTRO DE TAPA (TANQUE DE COMBUSTIBLE) (RESPIRADERO)	163
JUEGO DE INDICADOR (AJUSTE DE PESO) (ASIENTO DE SUSPENSION)	766
JUEGO DE PARAGOLPES (AJUSTE DE PESO) (ASIENTO DE SUSPENSION)	766
JUEGO DE RECEPTÁCULO (12-CLAVIJAS)	283 287 513 519
JUEGO DE REPARACIÓN DE VÁLVULAS (*FLOW COMPENSATOR) (BOMBA DEL IMPLEMENTO)	638
JUEGO DE REPARACIÓN DE VÁLVULAS (*PRESSURE COMPENSATOR VALVE)	637
JUEGO DE RESORTES (AJUSTE DE ALTURA) (ASIENTO DE SUSPENSION)	765
JUEGO DE RESORTES (ASIENTO DE SUSPENSION)	765
JUEGO DE SEGUIDOR (ASIENTO DE SUSPENSION)	766
JUEGO DE SELLOS	150
JUEGO DE SELLOS (*PISTON MOTOR) (VENTILADOR HIDRAULICO)	585
JUEGO DE SELLOS (VALVULA DE ALIVIO)	648
JUEGO DE SELLOS (VALVULA DE ALIVIO) (*STEERING PISTON PUMP)	550
JUEGO DE SELLOS (VALVULA DE ALIVIO) (VENTILADOR HIDRAULICO, REVERSA)	581
JUEGO DE SELLOS (VÁLVULA DE DERIVADOR) (VENTILADOR HIDRAULICO, REVERSA)	581
JUEGO DE SELLOS (VÁLVULA DE LANZADERA)	649
JUEGO DE SELLOS (VÁLVULA DE RETENCIÓN) (VENTILADOR HIDRAULICO, REVERSA)	620
JUEGO DE SELLOS (VALVULA DE SOLENOIDE)	650 651 652 653

* NO HAY TRADUCCION DISPONIBLE EN EL MOMENTO DE LA IMPRESION

INDICE

Nombre	Página
	655
JUEGO DE SELLOS (VALVULA DE SOLENOIDE)	497
JUEGO DE SELLOS (VALVULA DE SOLENOIDE)	358
JUEGO DE TERMINAL (ALTERNADOR)	171
JUEGO DE TERMINAL (MOTOR DE ARRANQUE)	260
	264
JUEGO DE TERMINAL (TRABA)	226
JUEGO DE TORNILLERÍA (ALTERNADOR)	171
JUEGO DE VALVULA DE AIRE (ASIENTO DE SUSPENSION)	819
JUNTA DESLIZANTE (GR)	343
JUNTA UNIVERSAL (GR)	349

L

LÁMPARA	222
LÁMPARA DE BALIZA DE ADVERTENCIA (GR)	222
LAMPARA DEL TECHO (CONJ) (24 VOLTIOS)	279
LAMPARA INDICADORA (CONJ) (LUZ DE ACCIÓN)	290
LÁMPARA (24 VOLTIOS) (LUZ DE ACCIÓN)	290
LÁMPARA (24-VOLTIOS, 21 VATIOS)	279
LAVAPARABRISAS DE LA VENTANA (GR)	824
LIMPIAPARABRISAS DE LA VENTANA (GR)	826
	829
LLAVE	1
	144
LLAVE (DESCONECTAR BATERIA)	268
LUBRICACIÓN DE EJE PIVOTE (GR)	439
LUCES DE ALÓGENO (24 VOLTIOS, 65 VATIOS)	200
	201
	202
LUCES DE REFLECTOR (GR)	205
	206
	208
	209
	211
LUCES DE REFLECTOR (GR)	214
	216
	219
LUZ DE BALIZA (GR)	222

M

MANDO DE BOMBA (GR)	304
MANDO DE DIRECCION DE DIFERENCIAL (GR)	480
MANDO DE DIRECCION (GR)	482
MANDO FINAL (GR)	307
	310
	313
	316
MANGUERA	114
MANGUERA (ELIMINACION DE GASES)	86
MANIJA MODULAR (GR) (MALACATE)	517
MAZO DE CABLES (CONJ) (LAVAPARABRISAS)	821
MAZO DE CABLES (CONJ) (PALANCA UNIVERSAL) (MALACATE)	187
MAZO DE CABLES (CONJ) (RADIO PRODUCT LINK)	197
MAZO DE CABLES DE CONTROL (CONJ) (ESLABON DE PRODUCTO)	197
MAZO DE CABLES DE DIRECCION (CONJ)	471
MAZO DE CABLES DE LA PLATAFORMA (CONJ)	290
MAZO DE CABLES DE LA TRANSMISION	178
	299
MAZO DE CABLES DE SENSOR (CONJ) (INCLINACIÓN, RECEPTOR, LADO IZQUIERDO)	287
MAZO DE CABLES DE SENSOR (CONJ) (POSICIÓN DE CILINDRO, MANO DERECHA)	287
MAZO DE CABLES DE SENSOR (CONJ) (VELOCIDAD DE MOTOR DE DIRECCION, TRANSMISION LUBE)	179
MAZO DE CABLES DEL CHASIS (CONJ) (IZQUIERDO)	178
MAZO DE CABLES DEL CHASIS (CONJ) (LADO DERECHO)	177
MAZO DE CABLES DEL INTERRUPTOR (CONFIG) (FRENO DE SERVICIO)	490
MAZO DE CABLES DEL MONITOR (CONJ) (*ACCUGRADE)	287
MAZO DE CABLES DEL MONITOR (CONJ) (SEÑALIZADOR)	290
MAZO DE CABLES DEL MOTOR (CONJ)	283
MAZO DE CABLES DEL MOTOR (CONJ) (ALAMBRADO DEL MOTOR)	281
MAZO DE CABLES DEL MOTOR (CONJ) (INYECTOR, VÁLVULA VARIABLE)	10
MAZO DE CABLES DEL TABLERO (CONJ)	290
MAZO DE CABLES DEL TABLERO (CONJ) (FUSIBLE)	226
MAZO DE CABLES DELANTERO (CONJ)	178
MAZO DE CABLES, LUCES (*BEACON)	222
MAZO DE CABLES, LUCES (FRENTE)	209
	211
MAZO DE CABLES, LUCES (FRENTE)	219

* NO HAY TRADUCCION DISPONIBLE EN EL MOMENTO DE LA IMPRESION

INDICE

Nombre	Página
MAZO DE CABLES, LUCES (FRENTE) (IZQ,DER)	214
MAZO DE CABLES, LUCES (FRENTE) (LADO DERECHO, LADO IZQUIERDO)	216
MECANISMO DE VÁLVULAS (GR)	79
MEDIDOR DEL NIVEL DE LÍQUIDO (ACEITE HIDRÁULICO)	605
MODIFICACIÓN DE LA CONFIGURACIÓN PARA VIRUTAS DE MADERA	2
MODIFICACIÓN DEL TRACTOR TOPADOR (CONFIG)	668
MODULO DE LA PANTALLA (GR) (SEÑALIZADOR)	291
MONTAJE DE CILINDRO (GR)	587
MONTAJE DE CONTROL (GR)	783
MONTAJE DE LA ESTRUCTURA ROPS (GR)	787
MONTAJE DE LA RADIO (GR)	785 786
MONTAJE DE LA TRANSMISIÓN (GR)	330
MONTAJE DEL DESGARRADOR (GR)	703
MONTAJE DEL FILTRO DE AIRE (GR)	128
MONTAJE DEL GRUPO DE ELIMINACIÓN DE EMANACIONES	91
MONTAJE DEL MOTOR (GR)	62
MONTAJE DEL SENSOR (GR)	225
MONTAJE GR-MONITOR	784
MONTAJE Y VALVULA DEL CONTROL PRINCIPAL (GR)	611
MOTOR - NÚCLEO (CONFIG)	8
MOTOR - SOPORTE DEL (GR)	76
MOTOR COMPLETO (CONFIG)	6 7
MOTOR CONJ-SOPLADOR (*24-VOLT, A/C, HEATER)	729
MOTOR DE ARRANQUE ELÉCTRICO (GR)	259 262 263
MOTOR ELÉCTRICO (GR) (SOPLADOR DEL CONDENSADOR)	744
MOTOR-LIMPIAPARABRISAS (GR) (24 VOLTIOS) (CENTRO, DELANTERO)	826
MOTOR-LIMPIAPARABRISAS (GR) (24 VOLTIOS) (LADO DERECHO, DELANTERO)	826
MOTOR-LIMPIAPARABRISAS (GR) (24 VOLTIOS) (LADO IZQUIERDO, DELANTERO)	826
MOTOR-LIMPIAPARABRISAS (GR) (24 VOLTIOS) (PARTE TRASERA)	829
MOTOR-LIMPIAPARABRISAS (GR) (24 VOLTIOS, 2 VELOCIDADES) (PARTE TRASERA)	826
MULTIPLE - PROTECTOR DEL	134
MÚLTIPLE DE ESCAPE (GR)	127
MULTIPLE HIDRAULICO (GR)	583
MÚLTIPLE Y VÁLVULA (GR)	488 489
MUÑÓN DE LA HOJA TOPADORA (GR)	672 673 674
MUÑÓN DEL MOTOR (GR)	78

N

Nombre	Página
NUCLEO DE VALVULA	773 775
NÚCLEO DEL ENFRIADOR DE ACEITE (CONJ) (HIDRÁULICO)	521
NÚCLEO DEL ENFRIADOR DE ACEITE (CONJ) (MOTOR)	105

P

Nombre	Página
PALANCA UNIVERSAL DE CONTROL (GR)	513 517 519
PALANCA UNIVERSAL DE CONTROL (GR)	515
PANEL DE FUSIBLES (GR)	226
PANEL DE INSONORIZACIÓN (GR)	412
PANTALLA (CONJ) (DERIVACION DEL FILTRO DEL ACEITE HIDRAULICO)	605
PASO (CONJ)	815
PEDAL-GRUPO DE CONTROL Y MONTAJE	749 750
PINTURA (GR)	834
PISTÓN Y BIELA (GR)	68 69
PISTONES DEL MOTOR (GR)	586
PISTONES DEL MOTOR (GR)	584 585
PIVOTE DEL LIMPIADOR (GR)	831 832
PLACA	395 657 658 669 670 683 688 696 698 715 716
PLACA DE ADVERTENCIA (CILINDRO PARA ALTA PRESION)	430

* NO HAY TRADUCCION DISPONIBLE EN EL MOMENTO DE LA IMPRESION

INDICE

Nombre	Página
PLACA DE ADVERTENCIA (RESORTE DE AMORTIGUACION)	3, 430, 467
PLACA DE INFORMACION (DESGARRADOR AUTOMÁTICO)	511
PLACA DE INSTRUCCIONES (ACONDICIONADOR DE AIRE)	728, 736
PLACA DEL NÚMERO DE SERIE	664
PLACA DEL NÚMERO DE SERIE (DESGARRADOR)	712, 713
PLACA DEL NÚMERO DE SERIE (HOJA TOPADORA)	661, 662, 665
PLACA DEL NÚMERO DE SERIE (TRANSMISION)	332
PLACA DEL TABLERO (CONTROL DEL LIMPIAPARABRISAS)	793
PLANCHA DE DESGASTE (GR)	705, 706
PLATAFORMA (CONFIG)	795
PLATAFORMA (GR)	796
*PLUG GP-CONNECTOR	230
POSENFRIADOR DE AIRE (GR)	120
POSICIÓN DEL SENSOR (CONJ) (DIRECCION, MANIPULADOR DE CONTROL DE TRANSMISION)	478
PRELUBRICACION DEL MOTOR (CONFIG)	94
PRIORIDAD - VÁLVULA DE (GR)	354
PROTECTOR CONTRA ROCAS (GR)	409, 410
PROTECTOR DE LA RUEDA GUÍA (CONFIG)	397
PROTECTOR DE LOS MANDOS FINALES (GR)	403
PROTECTOR DE MANDO FINAL (GR)	397
PROTECTOR DE RUEDA GUÍA	405
PROTECTOR DE SELLO (GR)	411
PROTECTOR DEL EJE IMPULSOR (GR)	321
PROTECTOR DEL EJE PIVOTE (GR)	406
PROTECTOR DEL RADIADOR (GR)	407
PROTECTOR DEL TANQUE DE COMBUSTIBLE (GR)	404
PROTECTOR DEL TREN DE FUERZA (GR)	322, 324
PROTECTOR INFERIOR (GR)	398, 400, 401
PUERTA DE ACCESO (GR)	371, 372, 373, 374
PUERTA DE CABINA	753, 755

R

Nombre	Página
RADIADOR (CONFIG)	113
RADIADOR (GR)	114
RADIO (GR)-COMUNICACION (ESLABON DE PRODUCTO)	197
RECEPTOR-SECADOR (GR) (ACONDICIONADOR DE AIRE)	772, 775
RECLINACION DE ASIENTO (GR)	799
REFLECTOR (GR)	200, 201, 202, 203, 204
REGULADOR DE TEMPERATURA DEL AGUA (92 GRADOS CENTÍGRADOS) (REFRIGERANTE)	105
REGULADOR DE VOLTAJE (24 VOLTIOS) (ALTERNADOR)	171
REGULADOR Y PEDAL DEL FRENO (GR)	490
REJILLA	175
REJILLA ACAMPANADA (CONJ)	88
REJILLA DE SUCCIÓN	296
REJILLA DE SUCCIÓN (CONVERTIDOR DE PAR)	346
REJILLA DE SUCCIÓN (SUMIDERO DE ACEITE DE TREN DE FUERZA)	340
REJILLA DE SUMIDERO (TANQUE DE COMBUSTIBLE)	144
REJILLA MAGNÉTICA (GR)	340
REJILLA MAGNÉTICA (GR) (SUMIDERO DE ACEITE DE TREN DE FUERZA)	326
REJILLA (MÚLTIPLE DE ALIVIO Y CONTROL)	580
REJILLA PROTECTORA (GR)	802
REJILLA (TANQUE HIDRÁULICO)	605
RELÉ (CONJ) (24 VOLTIOS) (CALENTADOR, ACONDICIONADOR DE AIRE)	759
RELÉ (CONJ) (24 VOLTIOS) (CONEXION DE CABINA)	290
RELÉ (CONJ) (24 VOLTIOS) (MOTOR DE SOPLADOR DE CONDENSADOR)	744
RESORTE TENSOR Y AJUSTADOR DE LA CADENA (GR)	457
RESPIRADERO (CONJ) (CÁRTER DEL MOTOR)	80
RESPIRADERO (CONJ) (TREN DE FUERZA)	326
RESPIRADERO (GR)	80
RETROVISOR (GR)	780

* NO HAY TRADUCCION DISPONIBLE EN EL MOMENTO DE LA IMPRESION

INDICE

Nombre	Página
	781
REVESTIMIENTO DE LA CABINA (GR)	770
RODILLO DE CADENA (CONFIG)	442
RODILLO SUPERIOR DE CADENAS (CONFIG)	443
RODILLO Y RUEDA GUIA (CONFIG)	441
RODILLOS DE PESTAÑA DOBLE (GR)	444
	445
RODILLOS DE PESTAÑA SIMPLE (GR)	446
	448
RUEDA GUÍA DE CADENA (GR)	434
	435
	436
S	
SEGMENTO DE RUEDA MOTRIZ (GR)	341
SELLO (CAJA DEL REGULADOR DE TEMPERATURA)	105
SELLO DE CIGÜEÑAL (GR)	29
	54
SELLO DE LABIO (REGULADOR DE TEMPERATURA DEL AGUA)	105
SELLO (SEPARADOR DE AGUA, COMBUSTIBLE)	149
SELLO (TAPA DEL MECANISMO DE LA VÁLVULA)	19
	24
	25
	27
SENSOR DE NIVEL DE COMBUSTIBLE (GR)	235
SENSOR DE PRESIÓN (GR)	238
	239
	240
	241
	242
	243
	244
	245
	246
SENSOR DE PRESIÓN (GR) (AIRE ATMOSFERICO)	283
SENSOR DE PRESIÓN (GR) (COMBUSTIBLE)	144
SENSOR DE PRESIÓN (GR) (DIRECCIÓN)	179
SENSOR DE TEMPERATURA (GR)	252
	253
	254
SENSOR DE VELOCIDAD (GR)	247
	248
	249
	250
	251
SENSOR DE VELOCIDAD (GR) (MOTOR)	250
SENSOR DE VELOCIDAD (GR) (MOTOR)	283
SENSOR DE VELOCIDAD (GR) (SALIDA DE TRANSMISIÓN 1)	333
SENSOR DE VELOCIDAD (GR) (SALIDA DE TRANSMISIÓN 2)	333
SENSOR DEL MOTOR (GR)	233
SENSOR Y MONTAJE (GR)	231
SEPARADOR DE AGUA Y BOMBA DE CEBADO DE COMBUSTIBLE (GR)	169
SILENCIADOR (GR)	129
SISTEMA ROPS (CONJ)	801
SOLENOIDE (CONJ) (24 VOLTIOS, MOTOR DE ARRANQUE)	260
	264
SOLENOIDE PROPORCIONAL (GR) (12-V CD) (DIRECCIÓN)	640
SOLENOIDE PROPORCIONAL (GR) (12-V CD) (VENTILADOR HIDRAULICO)	639
SOPORTE BASCULANTE (GR)	455
SOPORTE DE MONTAJE (GR)	732
	733
	734
SOPORTE DEL RESPALDO (GR)	790
	791
	792
SUCCIÓN - VENTILADOR DE (GR)	100
SUSPENSIÓN - ASIENTO CON (GR)	813
	814
SUSPENSIÓN - ASIENTO CON (GR)	812
T	
TABLERO DE CONTROL (GR)	793
TANQUE DE REFRIGERANTE (GR)	117
TANQUE DEL AGUA (GR)	118
TANQUE DEL LAVAPARABRISAS (GR)	821
	823
TANQUE Y FILTRO HIDRÁULICOS (GR)	605
TAPA CON RESPIRADERO (TANQUE DE LIMPIPARABRISA)	821
TAPA DE LA CABINA (GR)	751
TAPA DE LA CAJA DE VOLANTE (GR)	14
	15
TAPA DE LA CAJA DELANTERA (GR)	16
TAPA DE LLENADO (CONJ) (ACEITE DEL MOTOR)	82
TAPA DE LLENADO (CONJ) (ACEITE DEL TREN DE FUERZA)	326
TAPA DE LLENADO (CONJ) (COMBUSTIBLE, TRABA, VENTILACIÓN)	163
TAPA DE LLENADO (CONJ) (COMBUSTIBLE, TRABA, VENTILACIÓN)	166

* NO HAY TRADUCCION DISPONIBLE EN EL MOMENTO DE LA IMPRESION

INDICE

Nombre	Página
TAPA DE RADIADOR (CONJ)	117
TAPA DE RODILLO INFERIOR	429
TAPA DE RUEDA GUÍA (GR)	427
	428
TAPA DEL BLOQUE MOTOR (GR)	13
TAPA DEL INSONORIZADOR (GR)	17
TAPA DEL MECANISMO DE VÁLVULAS (GR)	18
	19
	20
	21
	22
	23
	24
	25
	26
	27
	28
TAPA DEL MUÑÓN (GR)	370
TAPA DEL TAPÓN DEL TANQUE HIDRÁULICO (GR)	522
TAPA DEL TUBO DE LLENADO DE ACEITE (CONJ) (EJE PIVOTE)	439
TAPA DEL TUBO DE LLENADO (TANQUE HIDRÁULICO)	605
TAPÓN DE CULATA (GR)	73
TAPÓN DE DRENAJE (ACEITE DEL EJE PIVOTE)	430
TAPON DE DRENAJE DE ACEITE (COLECTOR)	64
	66
TAPÓN DE DRENAJE (LLENADO DEL ACEITE DEL EJE PIVOTE)	430
TAPÓN DE DRENAJE (RADIADOR)	107
TAPON DE VALVULA DE CONTROL (GR)	588
TAPÓN DEL BLOQUE MOTOR (GR)	71
	72
TAPÓN (DRENAJE) (TRANSMISION)	363
	364
TAPÓN MAGNÉTICO (MANDO FINAL, LLENADO DE ACEITE)	307
	310
	313
	316
TORNILLERÍA DE MONT. DE LA BOMBA DE ACEITE (GR)	81
TORNILLERÍA DEL COLECTOR DEL CÁRTER (GR)	45
TORNILLERÍA DEL MECANISMO DE VÁLVULAS (GR)	46
TRANSMISION (CONFIG)	348
TRANSMISIÓN PLANETARIA (GR)	331
TREN DE FUERZA (CONFIG)	335
TREN DE FUERZA-GRUPO ELECTRÓNICO	191
TREN DE RODAJE (CONFIG)	468
TUBERIA DEL BASTIDOR DE RODILLO (CONJ)	467
TUBERÍAS DE ACEITE DEL MOTOR (GR)	88
TUBERÍAS DE ACEITE DEL TREN DE FUERZA (GR)	326
TUBERÍAS DE ACONDICIONADOR DE AIRE (GR)	772
	775
TUBERIAS DE CALEFACCION	778
TUBERÍAS DE CILINDRO DE EXTRACTOR DE PASADORES	562
	563
TUBERÍAS DE COMBUSTIBLE (GR)	151
TUBERÍAS DE DIRECCIÓN (GR)	485
TUBERIAS DE EXTRACTOR DE PASADORES (GR)	561
TUBERÍAS DE LA CALEFACCIÓN (GR)	778
TUBERÍAS DEL AGUA (GR)	103
	105
	107
	109
TUBERÍAS DEL CILINDRO DE INCLINACIÓN (GR)	572
	574
	576
	578
TUBERÍAS DEL DESGARRADOR (GR)	568
	570
TUBERÍAS DEL MALACATE (GR)	700
TUBERÍAS HIDRÁULICAS DEL VENTILADOR (GR)	553
	557
TUBO DE LLENADO DE ACEITE (GR)	82
TURBOCOMPRESOR - TUBERÍAS DE ACEITE DEL (GR)	89
TURBOCOMPRESOR (GR)	135

V

VÁLVULA - ESFERA (DRENAJE DE COMBUSTIBLE)	144
VÁLVULA COMPENSADORA DE PRESIÓN (GR)	636
VÁLVULA DE ALIVIO - DESCONEXIÓN (GR)	618
VÁLVULA DE ALIVIO (GR)	356
	494
	495
	496
	644
	645
	646
	647

* NO HAY TRADUCCION DISPONIBLE EN EL MOMENTO DE LA IMPRESION

INDICE

Nombre	Página
	648
VÁLVULA DE ALIVIO (GR) (CARGANDO)	633
VÁLVULA DE ALIVIO (GR) (COMPRESOR DEL REFRIGERANTE)	742
VÁLVULA DE ALIVIO (GR) (PRINCIPAL)	633
VÁLVULA DE ALIVIO (GR) (*STEERING PISTON PUMP)	550
VÁLVULA DE ALIVIO (GR) (VENTILADOR HIDRAULICO, REVERSA)	581
VÁLVULA DE CAÍDA RÁPIDA (GR)	642
VALVULA DE CONTROL DE LA BOMBA (GR)	640
	641
VALVULA DE CONTROL DE LA BOMBA (GR)	638
	639
VALVULA DE CONTROL DE LA BOMBA (GR)	637
VÁLVULA DE CONTROL DE LA TRANSMISIÓN (GR)	359
	361
VÁLVULA DE CONTROL DEL MALACATE (GR)	723
VÁLVULA DE CONTROL (GR)	623
	625
	627
	629
	631
	633
VÁLVULA DE CONTROL (GR)	350
VÁLVULA DE CONTROL Y MONTAJE (GR)	609
	610
VÁLVULA DE DERIVACIÓN (GR) (VENTILADOR HIDRAULICO)	581
VÁLVULA DE DESCARGA (GR)	634
VÁLVULA DE DRENAJE (TRANSMISION)	363
	364
VÁLVULA DE LANZADERA (GR)	649
VÁLVULA DE MODULACIÓN (GR)	352
	353
VALVULA DE MUESTREAR (REFRIGERANTE DEL MOTOR)	107
VÁLVULA DE RETENCIÓN (GR)	167
	168
	619
	620
	621
	622
VÁLVULA DE SOLENOIDE (GR)	354
	498
	650
	651
	652
	653
	654
	655
	656
VÁLVULA DE SOLENOIDE (GR)	358
	497
VALVULA (FILTRO SEPARDOR COMBUSTIBLE/AGUA)	144
VÁLVULA REDUCTORA DE PRESIÓN (GR)	635
VÁLVULA Y MONTAJE DE DIRECCIÓN Y FRENO (GR)	493
VENTANA DE LA CABINA (GR)	825
VENTILADOR SOPLADOR DE LA CABINA (GR)	729
VIGA (CONJ)	657
	658
VOLANTE - CAJA DE (GR)	54
VOLANTE (GR)	47

W

*WINDOW GP-CAB	824

Z

ZAPATA DE CADENA	449
	450
	451
	452
	453
	454

* NO HAY TRADUCCION DISPONIBLE EN EL MOMENTO DE LA IMPRESION

ÍNDICE

Designação	Página
A	
ACIONADOR DA BOMBA	501
ACOPLAMENTO DA BOMBA	302
ACUMULADOR - REFRIGERANTE	772
	775
ACUMULADOR HIDRÁULICO	499
	500
ADAPTADOR - ABASTECIMENTO RÁPIDO DE COMBUSTÍVEL	136
	138
	139
	141
ADAPTADOR DO COMANDO DA BOMBA	143
ADAPTADOR-ENCHIMENTO RÁPIDO DE COMBUSTÍVEL	136
	138
	139
	141
*AIR COMPRESSOR GP-SEAT	726
AJUSTADOR DE ESTEIRAS E MOLA TENSORA	457
AJUSTADOR DO ASSENTO	725
ALARME	170
ALAVANCA DE CONTROLE - MODULAR (GUINCHO)	517
ALTERNADOR DE CORRENTE	171
	173
	175
AMORTECEDOR DE VIBRAÇÕES E POLIA	41
AQUECEDOR - MÁQUINA	194
AQUECEDOR DA ÁGUA DO MOTOR	192
	193
AQUECEDOR DA CABINE	759
	763
AR. GERAL - TRATOR	2
ARMAÇÃO DO RIPER	696
	698
ARMAÇÃO TELESCÓPICA DA MOLA TENSORA	430
ARREFECEDOR DE ÓLEO DA TRANSMISSÃO	301
ARREFECEDOR DE ÓLEO HIDRÁULICO E MONTAGEM	521
ASSENTO	804
	806
	807
	809
	810
	811
ASSENTO COM SUSPENSÃO	812
	813
	814
ASSENTO E MONTAGEM	803
ATERRO SANITÁRIO	3
	4
AUXILIAR DE PARTIDA A ÉTER	255
B	
BALANCIM	74
BARRA DE SUSPENSÃO	420
	421
	423
BARRA DE TRAÇÃO	375
BARRA EQUALIZADORA	416
BARRA LIMPADORA DOS ROLOS	413
	414
	417
	418
	419
	424
BARRA, VIGA, TRAVE	657
	658
BATERIA E CABOS / FIOS ELÉTRICOS	177
BATERIA (12-VOLTS) (LIVRE DE MANUTENÇÃO)	177
	256
BEIRA - PONTA CORTANTE	692
	693
	694
	695
BLINDAGEM DO COLETOR	134
BLOCO - FORÇA	185
BLOCO DE JUNÇÃO	184
BLOCO DO MOTOR	30
	31
	32
BOCAL DE ENCHIMENTO DE ÓLEO DO MOTOR	82
BOMBA - ESCORVA DE COMBUSTÍVEL E SEPARADOR DE ÁGUA	169
BOMBA DE ÁGUA	111
	112
BOMBA DE ENGRENAGENS	336
	338
	589
BOMBA DE INJEÇÃO DO COMBUSTÍVEL	156
	157
	158
BOMBA DE ÓLEO - MOTOR	97
	99
BOMBA DE PISTÃO	590
	592
	593
	595

* TRADUÇÃO NÃO DISPONÍVEL NO MOMENTO DA IMPRESSÃO

ÍNDICE

Designação	Página
BOMBA DE TRANSFERÊNCIA DO COMBUSTÍVEL	155
BOMBA E MONTAGEM - TRANSFERÊNCIA DE COMBUSTÍVEL	155
BOMBA E MOTOR - PRÉ-LUBRIFICAÇÃO (COMANDO ELÉTRICO)	94
BRAÇO DE EMPUXO	669 670
BRAÇO DE EMPUXO - ESTABILIZADOR	671
BRAÇO DO LIMPADOR (DIREITO)	826
BRAÇO DO LIMPADOR (ESQUERDO)	826
BRAÇO DO LIMPADOR (TRASEIRA, DIREITA)	829
BRAÇO DO LIMPADOR (TRASEIRO, ESQUERDO)	829
BRAÇO (LIMPADOR) (DIANTEIRO)	826
BRONZINA TIPO LUVA	425 426
BUJÃO - CABEÇA DO CILINDRO	73
BUJÃO - CÓDIGO (IMPLEMENTO)	291
BUJÃO - CÓDIGO (TREM DE FORÇA)	292
BUJÃO - CONECTOR	230
BUJÃO - DRENAGEM DO ÓLEO (CÁRTER)	64 66
BUJÃO - VÁLVULA DE CONTROLE	588
BUJÃO DO BLOCO DO CILINDRO	71 72
BUJÃO DO DRENO (ENCHIMENTO DO ÓLEO DO EIXO PIVÔ)	430
BUJÃO DO DRENO (ÓLEO DO EIXO PIVÔ)	430
BUJÃO DO DRENO (RADIADOR)	107
BUJÃO MAGNÉTICO (COMANDO FINAL, ENCHIMENTO DE ÓLEO)	307 310 313 316

C

CABEÇA DA BOMBA	550
CABEÇOTE DO MOTOR	34 35 36 39 40
CABINE	736 737 738 739 741 788
CABINE PARA USO EM TEMPO FRIO	738
CABOS/FIOS ELÉTRICOS - CABINE	279
CABOS/FIOS ELÉTRICOS - CONTROLE ELETRÔNICO	281
CABOS/FIOS ELÉTRICOS - INJETOR	294
CABOS/FIOS ELÉTRICOS - MOTOR	283
CABOS/FIOS ELÉTRICOS - PAINEL (FUSÍVEL)	226
CABOS/FIOS ELÉTRICOS - PLATAFORMA	290
CADEADO (AQUECEDOR)	763
CADEADO (BITOLA DO NÍVEL DE ÓLEO)	9
CADEADO (BOCAL DE ENCHIMENTO DE ÓLEO)	9
CADEADO (CAIXA DA BATERIA)	391
CADEADO (COBERTURA DO MOTOR)	377 380
CADEADO (COBERTURA TRASEIRA)	387
CADEADO (COMPARTIMENTO PARA PUBLICAÇÕES)	1
CADEADO (ENCHIMENTO DO TANUQE HIDRÁULICO)	522
CADEADO (TANQUE DE COMBUSTÍVEL)	162 165
CADEADO (TUBULAÇÃO DE COMBUSTÍVEL)	144
CAIXA - SUSPENSÃO DO ASSENTO	765
CAIXA DE ARMAZENAMENTO	731
CAIXA DIANTEIRA	56 58
CAIXA DO VOLANTE DO MOTOR	54
CAIXA E CHASSI	363 364
CARCAÇA - DERIVAÇÃO DO ARREFECEDOR (ÓLEO DO MOTOR)	83
CARCAÇA DAS ENGRENAGENS PLANETÁRIAS E COMPONENTES	296
CÁRTER DO ÓLEO DO MOTOR	64 66
CHASSI	1
CHASSI E MANCAL	395 396
CHAVE	1 144
CHAVE (DESCONECTAR A BATERIA)	268
CHAVE GERAL	268 269
CHICOTE - CABINE	279
CHICOTE - CABOS ELÉTRICOS (ALAVANCA DE CONTROLE) (GUINCHO)	187
CHICOTE - CABOS ELÉTRICOS (LAVADOR DE VIDROS)	821
CHICOTE - CABOS ELÉTRICOS (RAIO DE ARTICULAÇÃO DO PRODUTO)	197
CHICOTE - CHASSI (LADO DIREITO)	177
CHICOTE - CHASSI (LADO ESQUERDO)	178

* TRADUÇÃO NÃO DISPONÍVEL NO MOMENTO DA IMPRESSÃO

ÍNDICE

Designação	Página
CHICOTE - CONSOLO	291
	478
CHICOTE - DIANTEIRO	178
CHICOTE - ILUMINAÇÃO (DIANTEIRO)	209
	211
	219
CHICOTE - ILUMINAÇÃO (DIANTEIRO) (DIREITO, ESQUERDO)	216
CHICOTE - ILUMINAÇÃO (DIANTEIRO) (ESQUERDO, DIREITO)	214
CHICOTE - ILUMINAÇÃO (PISCA-PISCA)	222
CHICOTE - MONITOR (ACCUGRADE)	287
CHICOTE - MONITOR (CONSULTOR)	290
CHICOTE - MOTOR	283
CHICOTE - MOTOR (FIAÇÃO DO MOTOR)	281
CHICOTE - MOTOR (INJETOR, VÁLVULA VARIÁVEL)	10
CHICOTE - PAINEL DE INSTRUMENTOS	290
CHICOTE - PLATAFORMA	290
CHICOTE - SENSOR (INCLINAÇÃO, RECEPTOR, LADO ESQUERDO)	287
CHICOTE - SENSOR (POSIÇÃO DO CILINDRO, LADO DIREITO)	287
CHICOTE - SENSOR (ROTAÇÃO DO MOTOR DA DIREÇÃO, LUBRIFICAÇÃO DA TRANSMISSÃO)	179
CHICOTE - SOLENÓIDE	700
CHICOTE - TRANSMISSÃO	178
	299
CHICOTE - VÁLVULA	615
CHICOTE - VÁLVULA (COMPRESSOR DE AR DO ASSENTO)	819
CHICOTE - VÁLVULA (IMPLEMENTO)	612
CHICOTE-DIREÇÃO	471
CILINDRO DE INCLINAÇÃO	530
	544
	546
	548
CILINDRO DE INCLINAÇÃO (LADO DIREITO)	530
CILINDRO DE INCLINAÇÃO (LADO ESQUERDO)	530
CILINDRO DE LEVANTAMENTO	531
	533
CILINDRO DE LEVANTAMENTO E TUBOS	523
	525
	527
CILINDRO DE TOMBAMENTO DO RIPER	540
	542
CILINDRO DO RÍPER	535
	537
CILINDRO DO SACADOR DE PINO DO RIPER	539
CILINDROS E TUBOS - RÍPER	529
CINTO DE SEGURANÇA	806
CINTO DE SEGURANÇA (RETRÁTIL)	809
CINZEIRO (CABINE)	751
CLIMA FRIO - ARRANJO	1
COBERTURA - LADO DIREITO	388
	389
	390
COBERTURA - LADO ESQUERDO	384
	385
	386
COBERTURA DO MOTOR	377
	380
	383
COBERTURA TRASEIRA	387
COLETOR - CONTROLE	580
	581
COLETOR DE ESCAPE	127
COLETOR E VÁLVULA	488
	489
COLETOR HIDRÁULICO	583
COLMÉIA - ARREFECEDOR DE ÓLEO (HIDRÁULICO)	521
COLMÉIA - ARREFECEDOR DE ÓLEO (MOTOR)	105
COLMÉIA (PÓS-ARREFECEDOR)	120
COLMÉIA (TRANSMISSÃO)	301
COMANDO DA BOMBA	304
COMANDO DA DIREÇÃO	482
COMANDO DA DIREÇÃO - DIFERENCIAL	480
COMANDO FINAL	307
	310
	313
	316
COMANDO HIDRÁULICO	552
COMPRESSOR DE AR - ASSENTO	727
COMPRESSOR DE REFRIGERANTE	742
	743
CONDENSADOR DE REFRIGERANTE	744
CONDICIONADOR DE AR	728
CONEXÃO - ELÉTRICA	186
CONSOLE DO OPERADOR	747
CONTRAPESO	365
	367
	368
	369
CONTROLE - ALAVANCA	513
	515
	517
	519
CONTROLE - AQUECIMENTO E AR CONDICIONADO	793
CONTROLE - EXTRATOR DO PINO HIDRÁULICO	504

* TRADUÇÃO NÃO DISPONÍVEL NO MOMENTO DA IMPRESSÃO

ÍNDICE

Designação	Página
CONTROLE - NÃO PROGRAMADO (PRODUCT LINK 300)	197
CONTROLE - NÃO PROGRAMADO (TREM DE ACIONAMENTO)	291
CONTROLE-CABO	471
	507
	508
	510
CONTROLE-CABO (CONTROLE DA LÂMINA)	515
CONTROLE DA MÁQUINA	188
CONTROLE DE DIREÇÃO	474
	475
CONTROLE DE DIREÇÃO E TRANSMISSÃO	476
	478
CONTROLE DE INCLINAÇÃO DUPLA	503
CONTROLE DO ACESSÓRIO	511
CONTROLE DO FREIO DE ESTACIONAMENTO	472
CONTROLE DO PEDAL E MONTAGEM	749
	750
CONTROLE E GRUPO DE MONTAGEM	502
CONTROLE ELETRÔNICO E MONTAGEM	187
CONTROLE ELETRÔNICO E MONTAGEM - MOTOR	188
CONTROLE ELETRÔNICO (LIMPADOR)	793
CONTROLE HIDRÁULICO	506
CONTROLE HIDRÁULICO DA TRANSMISSÃO	299
CONVERSOR DE POTÊNCIA (24-VOLTS A 12-VOLTS)	290
CONVERSOR DE TORQUE	344
	346
CONVERSOR ELÉTRICO	189
CORREIA- SERPENTINA (ALTERNADOR)	173
CORREIA- SERPENTINA (POLIA DO COMPRESSOR DO AR CONDICIONADO)	743
CRONÔMETRO-ESPERA DE LIGAÇÃÕ (24 VOLTS) (AR CONDICIONADO)	775
CRONÔMETRO-ESPERA DE LIGAÇÃÕ (24 VOLTS) (LIMITADOR DE CICLO DO COMPRESSORN)	772

D

Designação	Página
DECALQUE	833
DECALQUE - ADVERTÊNCIA (ACUMULADOR)	499
	500
DECALQUE - ADVERTÊNCIA (LÂMINA, NÃO SUBA, LEIA O OMM)	199
DECALQUE - ADVERTÊNCIA (MOLA TENSORA)	430
DECALQUE - ADVERTÊNCIA (NÃO SOLDAR. NÃO PERFURAR)	836
DECALQUE - ADVERTÊNCIA (PERIGO DE CHOQUE)	836
DECALQUE - ADVERTÊNCIA (PRODUCT LINK)	197
DECALQUE - AVISO (RÁDIO)	768
DECALQUE - IDENTIFICAÇÃO (ALAVANCA DE CONTROLE) (ACCUGRADE)	196
DECALQUE - IDENTIFICAÇÃO (AQUECEDOR DE ÁGUA DA CAMISA)	192
	193
DECALQUE - IDENTIFICAÇÃO (BOMBA DE PRÉ-LUBRIFICAÇÃO)	94
DECALQUE - IDENTIFICAÇÃO (NÚMERO DE GRUPO) (AQUECEDOR DA CABINE)	759
DECALQUE - IDENTIFICAÇÃO (NÚMERO DE GRUPO) (CONDENSADOR DO REFRIGERANTE)	744
DECALQUE - IDENTIFICAÇÃO (REFLETOR VERMELHO REDONDO)	834
DECALQUE - IDENTIFICAÇÃO (12-VOLTS)	835
DECALQUE - INFORMAÇÕES (RÍPER AUTOMÁTICO)	511
DECALQUE - INSTRUÇÃO (AJUSTE DO ASSENTO)	817
	819
DECALQUE - INSTRUÇÃO (CONTROLE DO RÍPER)	502
DECALQUE - INSTRUÇÃO (DESCONEXÃO DA BATERIA)	269
	835
DECALQUE - INSTRUÇÃO (LEIA O OMM, DIREÇÃO)	836
DECALQUE - MANUSEADOR DE DETRITOS	4
DECALQUE - PAINEL (CONTROLE DO LIMPADOR DE VIDROS)	793
DECALQUE - TIRA (PARTE TRASEIRA)	404
DECALQUE (*D9T, LH)	404
DECALQUE (*D9T, RH)	404
DECALQUE (GUINCHO)	506
DECALQUE (INCLINAÇÃO DUPLA)	503
DECALQUE (LÂMINA AUTOMÁTICA)	503
DEGRAU	815
DENTE DO RÍPER	718
	719
	720
	721
	722
DISJUNTOR AUTOMÁTICO DE CIRCUITO (15 AMPERES) (AR CONDICIONADO)	775

* TRADUÇÃO NÃO DISPONÍVEL NO MOMENTO DA IMPRESSÃO

ÍNDICE

Designação	Página
DISJUNTOR AUTOMÁTICO DE CIRCUITO (15 AMPERES) (MOTOR DO VENTILADOR DO CONDENSADOR)	772
DISJUNTOR AUTOMÁTICO DE CIRCUITO (15 AMPERES) (POTÊNCIA PRINCIPAL)	226
DRENO - ECOLOGIA	303
DRENO - ECOLOGIA (CAIXA DE TRANSMISSÃO)	296
DRENO - ECOLOGIA (CONVERSOR DE TORQUE)	346

E

EIXO	295
EIXO-COMANDO DE VÁLVULA	12
EIXO DE TRANSMISSÃO	342
EIXO PIVÔ - LUBRIFICAÇÃO	439
EJETOR DE POEIRA	123
ELEMENTO - AQUECEDOR DE ÁGUA DA CAMISA	193
ELEMENTO - AQUECEDOR DE ÁGUA DA CAMISA (120 VOLTS, 1500 WATTS)	192
ELEMENTO - PRIMÁRIO (PURIFICADOR DE AR)	122
ELEMENTO - SECUNDÁRIO (PURIFICADOR DE AR)	122
ELEMENTO DO FILTRO DE AR (CABINE)	763
ELEMENTO FILTRANTE - ÓLEO (ALTA EFICIENCIA, SISTEMA HIDRAULICO) (TRANSMISSÃO)	305
ELEMENTO FILTRANTE - ÓLEO (ALTA EFICIENCIA, SISTEMA HIDRAULICO) (TREM DE FORÇA)	326
ELEMENTO FILTRANTE - ÓLEO (HIDRÁULICO) (ALTA EFICIÊNCIA)	483 605
ELEMENTO FILTRANTE - ÓLEO (HIDRÁULICO) (EFICIÊNCIA PADRÃO)	605
ELEMENTO FILTRANTE - ÓLEO (HIDRÁULICO) (FLUIDO RESISTENTE A FOGO)	605
ELIMINAÇÃO DE VAPORES DO CÁRTER	86
ELO DA ESTEIRA	437 438
ELO ESTABILIZADOR	666 667
EMISSOR - POSIÇÃO	236 237
EMISSOR - POSIÇÃO (DENTRO DO CARRETEL, FORA DO CARRETEL)	517
EMISSOR - POSIÇÃO (DIREÇÃO, CONTROLE TMSN)	476
EMISSOR - POSIÇÃO (*DRUM CLUTCH RELEASE)	517
EMISSOR - POSIÇÃO (GIRATÓRIO) (PEDALDO FREIO DE SERVIÇO)	490
EMISSOR - POSIÇÃO (INCLINAÇÃO DA LÂMINA)	513 515 519
EMISSOR - POSIÇÃO (LEVANTAMENTO DA LÂMINA, INFERIOR)	513 515 519
EMISSOR - POSIÇÃO (LEVANTAR, ABAIXAR RÍPER)	511
EMISSOR - POSIÇÃO (PEDAL DESACELERADOR)	490
EMISSOR - POSIÇÃO (PORTA-DENTE DO RÍPER - RETRAIR, ESTENDER)	511
ENGRENAGEM - EIXO-COMANDO DE VÁLVULAS	48
ENGRENAGEM-COROA E PINHÃO	319
ENGRENAGENS DE COMANDO TRASEIRO	52
ENGRENAGENS DE DISTRIBUIÇÃO	49
ENGRENAGENS PLANETÁRIAS - TRANSMISSÃO	331
ESPELHO RETROVISOR	780 781
ESTEIRA	459 460 461 462 463 464 465 466
ESTRUTURA ROPS	800 801
EXTENSÃO - ENCOSTO (TECIDO)	806
EXTENSÃO - ENCOSTO (VINIL)	809

F

FIAÇÃO - AQUECEDOR E AR CONDICIONADO	759 772 775
FIAÇÃO - AQUECEDOR E AR CONDICIONADO (MOTORES DO SOPRADOR DO CONDENSADOR)	744
FIAÇÃO - AQUECEDOR E AR CONDICIONADO (VENTILADOR DO CONDENSADOR)	772
FIACAO - CONTROLE DO NIVEL	287
FIAÇÃO - CONTROLE (PRODUCT LINK)	197
FIAÇÃO - INTERRUPTOR (FREIO DE SERVIÇO)	490

* TRADUÇÃO NÃO DISPONÍVEL NO MOMENTO DA IMPRESSÃO

ÍNDICE

Designação	Página
FIAÇÃO - PAINEL (FUSÍVEL)	226
FIAÇÃO-RÁDIO (RECEPTOR)	287
FILTRO - AR DA CABINE	757
FILTRO - AR (PADRÃO) (CABINE)	763
FILTRO - COMBUSTÍVEL	148
	163
FILTRO - COMBUSTÍVEL (BOCAL DE ENCHIMENTO DO TANQUE)	166
FILTRO - ESPUMA (SENSOR DO NÍVEL DO COMBUSTÍVEL)	177
FILTRO - MAGNÉTICO	340
FILTRO - MAGNÉTICO (CÁRTER DO TREM DE FORÇA)	326
FILTRO - ÓLEO	305
	483
FILTRO - ÓLEO (ALTA EFICIÊNCIA)	564
FILTRO - ÓLEO DO MOTOR	83
FILTRO - ÓLEO (HIDRÁULICO) (DIREÇÃO)	485
FILTRO - ÓLEO (TRANSMISSÃO)	326
FILTRO - SEPARADOR DE ÁGUA E COMBUSTÍVEL (PRIMÁRIO)	149
FILTRO (BOMBA D'ÁGUA)	111
FILTRO DE COMBUSTÍVEL E SEPARADOR DE ÁGUA	149
FILTRO E TUBOS - COMBUSTÍVEL	144
FILTRO (SENSOR DE PRESSÃO ATMOSFÉRICA)	225
FIXADORES - BOMBA DE ÓLEO DO MOTOR	81
FIXADORES - CABEÇOTE DO MOTOR	40
FIXADORES - CAIXA DIANTEIRA	42
	43
	44
FIXADORES - CÁRTER DO ÓLEO	45
FIXADORES - MECANISMO DAS VÁLVULAS	46
FREIO DE SERVIÇO	469
FUNDO - ENCOSTO	790
	791
	792
FUSÍVEL (10 AMPERES)	226
FUSÍVEL (15 AMPERES)	226
FUSÍVEL (15 AMPERES) (AQUECEDOR)	759
FUSÍVEL (175 AMPÈRES)	226
FUSÍVEL (20-AMPERES)	226

G

Designação	Página
GR. BÁSICO - TAMPA DAS VÁLVULAS E CHICOTE DE INJEÇÃO	10
GRUPO DE CONVERSÃO - LÂMINA	668
GRUPO DE INSTALAÇÃO - MOTOR	9
GRUPO DE VÁLVULAS DE CONTROLE - QUÁDRUPLO	612
	615
GRUPO ROTATIVO DA BOMBA	601
	602
	604
GUIA - VEDADOR	411

I

Designação	Página
INDICADOR - NÍVEL DE LÍQUIDO (ÓLEO HIDRÁULICO)	605
INDICADOR - NÍVEL DO ÓLEO (VARETA)	87
INDICADOR - VARETA DO NÍVEL DE ÓLEO (TREM DE FORÇA)	326
INJETOR DE COMBUSTÍVEL	156
	157
INSTALACAO - CONTROLE DA GRELHA	196
INSTALAÇÃO-COMUNICAÇÃO	197
INSTALAÇÃO-CONTROLE DA INCLINAÇÃO	199
INSTALAÇÃO DO RÁDIO	768
INTERRUPTOR - BALANCIM	277
INTERRUPTOR - BALANCIM (ACELERADOR)	291
INTERRUPTOR - BALANCIM (BOMBA DE ESCORVA DO COMBUSTÍVEL)	177
INTERRUPTOR - BALANCIM (CONDICIONADOR DE AR, LIGAR-DESLIGAR)	793
INTERRUPTOR - BALANCIM (EXTRATOR DO PINO HIDRÁULICO)	504
INTERRUPTOR - BALANCIM (FARÓIS-CILINDRO)	219
INTERRUPTOR - BALANCIM (FARÓIS-ROPS)	219
INTERRUPTOR - BALANCIM (FARÓIS-ROPS)	211
INTERRUPTOR - BALANCIM (FAROL DA ROPS)	214
	216
INTERRUPTOR - BALANCIM (FAROL DO CILINDRO)	214
	216
INTERRUPTOR - BALANCIM (FREIO DE ESTACIONAMENTO - LIGAR-DESLIGAR)	471
INTERRUPTOR - BALANCIM (LÂMPADA DE TRABALHO DO COMPARTIMENTO DO MOTOR)	177
INTERRUPTOR - BALANCIM (LUZ DO CILINDRO)	291
INTERRUPTOR - BALANCIM (LUZ DO PARA-CHOQUE)	291
INTERRUPTOR - BALANCIM (MUDANÇA AUTOMÁTICA PARA MARCHA MAIS BAIXA)	291
INTERRUPTOR - BALANCIM (MUDANÇA BIDIRECIONAL)	291

* TRADUÇÃO NÃO DISPONÍVEL NO MOMENTO DA IMPRESSÃO

ÍNDICE

Designação	Página
INTERRUPTOR - BALANCIM (TRAVA HIDRÁULICA)	291
INTERRUPTOR - BALANCIM (VENTILDOR INVERTIDO)	557
INTERRUPTOR - BALANCIM (24 VOLTS, VEDADO, ILUMINADO) (GUINCHO)	506
INTERRUPTOR - BALANCIM (24 VOLTS)(AUXILIAR AUTOMÁTICA DE LÂMINA)	576
INTERRUPTOR - BATERIA	269
INTERRUPTOR - BOTÃO (EMPILHAMENTO AUTOMÁTICO DO RÍPER)	511
INTERRUPTOR - BOTÃO (INCLINAÇÃO DA LÂMINA)	508
INTERRUPTOR - BOTÃO (MUDANÇA ACIMA ELETRÔNICA)	476
INTERRUPTOR - BOTÃO (REDUÇÃO DE MARCHA ELETRÔNICA)	476
INTERRUPTOR - FLUXO	116
INTERRUPTOR - LIMITADOR (LUZ DO TETO)	279
INTERRUPTOR - LIMITADOR (PEDALDO FREIO DE SERVIÇO)	490
INTERRUPTOR - LIMITE	272
INTERRUPTOR - LIMPADOR (24 VOLTS) (INTERMITENTE TRASEIRA)	793
INTERRUPTOR - LIMPADOR (24 VOLTS) (PISCA-PISCA DIANTEIRA)	793
INTERRUPTOR - LIMPADOR (24 VOLTS) (PORTA - LADO ESQUERDO)	793
INTERRUPTOR - LIMPADOR (24 VOLTS) (PORTA-LADO DIREITO)	793
INTERRUPTOR - MAGNÉTICO	273, 274
INTERRUPTOR - MAGNÉTICO (24 VOLTS) (RELÉ DE PARTIDA)	226
INTERRUPTOR - MAGNÉTICO (24 VOLTS) (RELÉ PRINCIPAL)	226
INTERRUPTOR - PARTIDA (CHAVE)	291
INTERRUPTOR - PRESSÃO	275
INTERRUPTOR - PRESSÃO (COMPRESSOR - LADO BAIXO)	772
INTERRUPTOR - PRESSÃO (CONDICIONADOR DE AR, BAIXA)	775
INTERRUPTOR - PRESSÃO (REFRIGERANTE) (COMPRESSOR - LADO ALTO)	772
INTERRUPTOR - PRESSÃO (REFRIGERANTE) (CONDICIONADOR DE AR, ALTA)	775
INTERRUPTOR - ROTATIVO (CONTROLE DO AR CONDICIONADO)	793
INTERRUPTOR - TEMPERATURA (TERMOSTATO) (AQUECEDOR, AR CONDICIONADO)	759
INTERRUPTOR-BOTÃO	276
INTERRUPTOR-BOTÃO (BUZINA)	290
INTERRUPTOR DE DERIVAÇÃO	267
INTERRUPTOR (LUZ DO TETO)	279

J

Designação	Página
JANELA DA CABINE	825
JOGO DE ABRAÇADEIRA DO PURIFICADOR DE AR	122
JOGO DE AMORTECEDOR DE CHOQUES (ASSENTO DA SUSPENSÃO)	819
JOGO DE BLOCO DESLIZADOR (ASSENTO DA SUSPENSÃO)	812, 813, 814
JOGO DE BOTÃO DE SUSPENSÃO (AJUSTE DE ALTURA) (ASSENTO DA SUSPENSÃO)	765
JOGO DE CORDÃO (ASSENTO DA SUSPENSÃO)	819
JOGO DE FILTRO DA TAMPA (TANQUE DE COMBUSTÍVEL)	166
JOGO DE FILTRO DA TAMPA (TANQUE DE COMBUSTÍVEL) (RESPIRO)	163
JOGO DE FIXADORES (ALTERNADOR)	171
JOGO DE INDICADOR (AJUSTAGEM DO PESO) (ASSENTO DA SUSPENSÃO)	766
JOGO DE MANCAL	599
JOGO DE MANCAL (ALTERNADOR)	171
JOGO DE MANCAL (ASSENTO DA SUSPENSÃO)	766
JOGO DE MANCAL (GRUPO ROTAÇÃO MOTOR)	597
JOGO DE MOLA (AJUSTE DE ALTURA) (ASSENTO DA SUSPENSÃO)	765
JOGO DE MOLA (ASSENTO DA SUSPENSÃO)	765
JOGO DE PÁRA-CHOQUE (AJUSTAGEM DO PESO) (ASSENTO DA SUSPENSÃO)	766
JOGO DE RECEPTÁCULO (12 PINOS)	287, 513, 519
JOGO DE RECEPTÁCULO (12 PINOS)	283
JOGO DE REPARO - VÁLVULA (*FLOW COMPENSATOR) (*IMPLEMENT PUMP)	638
JOGO DE REPARO - VÁLVULA (VÁLVULA DE COMPENSAÇÃO DE PRESSÃO)	637
JOGO DE RETENTOR	150
JOGO DE RETENTOR (*PISTON MOTOR) (VENTILADOR HIDRÁULICO)	585
JOGO DE RETENTOR (VALVULA DE ALIVIO)	648

* TRADUÇÃO NÃO DISPONÍVEL NO MOMENTO DA IMPRESSÃO

ÍNDICE

Designação	Página
JOGO DE RETENTOR (VALVULA DE ALIVIO) (*STEERING PISTON PUMP)	550
JOGO DE RETENTOR (VALVULA DE ALIVIO) (VENTILADOR HIDRÁULICO, INVERSÃO)	581
JOGO DE RETENTOR (VÁLVULA DE DESVIO) (VENTILADOR HIDRÁULICO, INVERSÃO)	581
JOGO DE RETENTOR (VÁLVULA DE RETENÇÃO) (VENTILADOR HIDRÁULICO, INVERSÃO)	620
JOGO DE RETENTOR (VÁLVULA DE VAIVÉM)	649
JOGO DE RETENTOR (VÁLVULA SOLENÓIDE)	358
	497
	650
	651
	652
	653
	655
JOGO DE SEGUIDOR (ASSENTO DA SUSPENSÃO)	766
JOGO DE TERMINAL (ALTERNADOR)	171
JOGO DE TERMINAL (MOTOR DE PARTIDA)	260
	264
JOGO DE TERMINAL (TRAVA)	226
JOGO DE VÁLVULA DE AR (ASSENTO DA SUSPENSÃO)	819
JUNTA	606
	759
JUNTA (BOMBA DE ESCORVA DE COMBUSTÍVEL)	144
JUNTA CORREDIÇA	343
JUNTA UNIVERSAL	349

L

Designação	Página
LÂMINA	659
	660
LÂMINA DO LIMPADOR DE PÁRA-BRISA	829
LÂMINA DO LIMPADOR DE PÁRA-BRISA (DIANTEIRO)	826
LÂMINA DO LIMPADOR DE PÁRA-BRISA (LATERAL)	826
LÂMINA DO LIMPADOR DE PÁRA-BRISA (TRASEIRO)	826
LÂMINA E BORDA - UNIVERSAL	677
	678
	679
LÂMINA E BORDA CORTANTE SEMI-UNIVERSAL	675
	676
LÂMINA SEMI-UNIVERSAL	660
	661
	662
	680
	681
	682
	683
	684
	685
	690
LÂMINA UNIVERSAL	663
	664
	665
	685
	686
	687
	688
	689
	691
LÂMPADA	222
LÂMPADA - FAROL	200
	201
	202
	203
	204
LÂMPADA - FAROL (24 VOLTS, 70 WATTS)	203
	204
LÂMPADA - HALOGÊNEO (24 VOLTS, 65 WATTS)	200
	201
	202
LÂMPADA DO TETO (24 VOLTS)	279
LÂMPADA INDICADORA (LUZ DE AÇÃO)	290
LÂMPADA (24 VOLTS) (LUZ DE AÇÃO)	290
LÂMPADA (24 VOLTS, 21 WATTS)	279
LAVADOR DO VIDRO	824
LEVANTAMENTO DO MOTOR	60
	61
LIMPADOR DO VIDRO	826
	829
LUZ GIRATÓRIA DE ALARME	222

M

Designação	Página
MANGUEIRA	114
MANGUEIRA (ELIMINAÇÃO DE VAPORES)	86
MATERIAL RODANTE	468
MECANISMO DAS VÁLVULAS	79
MINERAÇÃO	2
MODIFICAÇÃO - LASCA DE MADEIRA	2
MÓDULO DO VISOR (CONSULTOR)	291
MONTAGEM - CABINE	782
MONTAGEM - CILINDRO	587
MONTAGEM - CONTROLE	783
MONTAGEM - ELIMINAÇÃO DE VAPORES	91

* TRADUÇÃO NÃO DISPONÍVEL NO MOMENTO DA IMPRESSÃO

ÍNDICE

Designação	Página
MONTAGEM - ESTRUTURA ROPS	787
MONTAGEM - MONITOR	784
MONTAGEM - MOTOR	62
MONTAGEM - PURIFICADOR DE AR	128
MONTAGEM - RÁDIO	785 786
MONTAGEM - RIPER	703
MONTAGEM - SENSOR	225
MONTAGEM - TRANSMISSÃO	330
MONTAGEM-CONECTOR	224
MONTAGEM DO TUBO DE COMBUSTÍVEL	154
MOTOR - LIMPADOR DO VIDRO (24 VOLTS) (CENTRO, DIANTEIRO)	826
MOTOR - LIMPADOR DO VIDRO (24 VOLTS) (DIREITO, DIANTEIRO)	826
MOTOR - LIMPADOR DO VIDRO (24 VOLTS) (ESQUERDO, DIANTEIRO)	826
MOTOR - LIMPADOR DO VIDRO (24 VOLTS) (TRASEIRO)	829
MOTOR - LIMPADOR DO VIDRO (24 VOLTS, 2 VELOCIDADES) (TRASEIRO)	826
MOTOR - NÚCLEO	8
MOTOR - PISTÃO	584 585 586
MOTOR COMPLETO	6 7
MOTOR DO GRUPO ROTATIVO	597 599
MOTOR ELÉTRICO (COMPRESSOR DO CONDENSADOR)	744
MOTOR ELÉTRICO DE PARTIDA	259 262 263
MOTOR-SOPRADOR (24 VOLTS, A/C, AQUECEDOR)	729
MUNHÃO DA LÂMINA	672 673 674
MUNHÃO DO MOTOR	78

N

Designação	Página
NÚCLEO-VÁLVULA	773 775

O

Designação	Página
ÓLEO - ARRANJO PARA TROCA RÁPIDA	92

P

Designação	Página
PAINEL- REDUÇÃO DE RUÍDO	412
PAINEL DE CONTROLE	793
PAINEL DE FUSÍVEIS	226
PÁRA-LAMA	391 393 394
PARTIDA EM TEMPO FRIO - ARRANJO	256
PEDAL - GOVERNADOR E FREIO	490
PILHA DE MATERIAL	3
PINTURA	834
PISO	795
PISTÃO E BIELA	68 69
PIVÔ DO LIMPADOR	831 832
PLACA - NÚMERO DE SÉRIE	664
PLACA - NÚMERO DE SÉRIE (LÂMINA)	661 662 665
PLACA - NÚMERO DE SÉRIE (RÍPER)	712 713
PLACA - NÚMERO DE SÉRIE (TRANSMISSÃO)	332
PLACA DE ADVERTÊNCIA (CILINDRO DE ALTA PRESSÃO)	430
PLACA DE ADVERTÊNCIA (MOLA TENSORA)	3 430
PLACA DE ADVERTÊNCIA (MOLA TENSORA)	467
PLACA DE DESGASTE	705 706
PLACA DE INSTRUÇÃO (CONDICIONADOR DE AR)	728 736
PLACA E DECALQUE	834 837
PLACA/CHAPA	395 657 658 669 670 683 688 696 698 715 716
PLATAFORMA	796
PORTA DA CABINE	753 755
PORTA DE ACESSO	371

* TRADUÇÃO NÃO DISPONÍVEL NO MOMENTO DA IMPRESSÃO

ÍNDICE

Designação	Página
	372
	373
	374
PÓS-ARREFECEDOR DA ADMISSÃO DE AR	120
POSIÇÃO DO SENSOR (DIREÇÃO, CABO DE CONTROLE DA TRANSMISSÃO)	478
POSTO DE CONTROLE/CONSOLE DIANTEIRO	746
PRÊ-LUBRIFICAÇÃO	94
PRÉ-PURIFICADOR	130
	131
	132
	133
	757
PROTETOR - COMANDO FINAL	397
PROTETOR - EIXO DE TRANSMISSÃO	321
PROTETOR - EIXO PIVÔ	406
PROTETOR - RADIADOR	407
PROTETOR - ROCHA	409
	410
PROTETOR - RODA-GUIA	397
	405
PROTETOR - TANQUE DE COMBUSTÍVEL	404
PROTETOR - TREM DE FORÇA	322
	324
PROTETOR DO COMANDO FINAL	403
PROTETOR INFERIOR	398
	400
	401
PURIFICADOR DE AR	121
	122

R

Designação	Página
RADIADOR	113
	114
RÁDIO - COMUNICAÇÃO (PRODUCT LINK)	197
RECEPTOR - SECADOR (CONDICIONADOR DE AR)	772
	775
RECLINAÇÃO - ASSENTO	799
REGULADOR DE TEMPERATURA DA ÁGUA (92 GRAUS C) (LÍQUIDO ARREFECEDOR)	105
REGULADOR DE VOLTAGEM (24 VOLTS) (ALTERNADOR)	171
RELÉ (CONJ) (24 VOLTS) (AQUECEDOR, AR CONDICIONADO)	759
RELÉ (CONJ) (24 VOLTS) (CONEXÃO DA CABINE)	290
RELÉ (CONJ) (24 VOLTS) (MOTOR DO VENTILADOR DO CONDENSADOR)	744
RESPIRO	80
RESPIRO (CÁRTER DO MOTOR)	80
RESPIRO (TREM DE FORÇA)	326
RETÉM - CONTROLE (DENTRO DO CARRETEL, FORA DO CARRETEL)	517
RETÉM - CONTROLE (*DRUM CLUTCH RELEASE)	517
RETÉM - CONTROLE (INCLINAÇÃO DA LÂMINA)	513
	515
	519
RETÉM - CONTROLE (LEVANTAMENTO DA LÂMINA, INFERIOR)	513
	519
RETÉM - CONTROLE (LEVANTAMENTO DA LÂMINA, INFERIOR)	515
RETENTOR (ALOJAMENTO DO REGULADOR DE TEMPERATURA)	105
RETENTOR DO VIRABREQUIM	29
	54
RETENTOR (SEPARADOR DE ÁGUA, COMBUSTÍVEL)	149
RETENTOR (TAMPA, MECANISMO DA VÁLVULA)	19
	24
	25
	27
REVESTIMENTO DA CABINE	770
RIPER	711
	712
	713
	714
	715
	716
	717
RODA-GUIA DAS ESTEIRAS	434
	435
	436
ROLETE DAS ESTEIRAS	442
ROLETE DE ESTEIRA DE FLANGE DUPLO	444
	445
ROLETE DE ESTEIRA DE FLANGE SIMPLES	446
	448
ROLETE E RODA-GUIA	441
ROLETE SUPERIOR DA ESTEIRA	443
RUÍDO - ARRANJO PARA SUPRESSÃO	77

S

Designação	Página
SACA-PINO	707
	708
	709
	710
SAPATA DA ESTEIRA DO TRATOR	449
	450

* TRADUÇÃO NÃO DISPONÍVEL NO MOMENTO DA IMPRESSÃO

ÍNDICE

Designação	Página
	451
	452
	453
	454
SEGMENTO DA RODA MOTRIZ	341
SENSOR - NÍVEL DE COMBUSTÍVEL	235
SENSOR - PRESSÃO	238
	239
	240
	241
	242
	243
	244
	245
	246
SENSOR - PRESSÃO (AR ATMOSFÉRICO)	283
SENSOR - PRESSÃO (COMBUSTÍVEL)	144
SENSOR - PRESSÃO (DIREÇÃO)	179
SENSOR - TEMPERATURA	252
	253
	254
SENSOR DE VELOCIDADE	247
	248
	249
	250
	251
SENSOR DE VELOCIDADE (MOTOR)	250
	283
SENSOR DE VELOCIDADE (SAÍDA DA TRANSMISSÃO 1)	333
SENSOR DE VELOCIDADE (SAÍDA DA TRANSMISSÃO 2)	333
SENSOR DO MOTOR	233
SENSOR E MONTAGEM	231
SEPARADOR DE ÁGUA E BOMBA DE ESCORVA DE COMBUSTÍVEL	169
SILENCIADOR	129
SIST. DE ILUMINAÇÃO - PISCA-PISCA GIRATÓRIO DE ADVERTÊNCIA	222
SIST. ELETRÔNICO - ACESSÓRIO	190
SISTEMA DE ILUMINAÇÃO - FARÓIS	205
	206
	208
	209
	211
	214
	216
	219
SISTEMA ELETRÔNICO - MÁQUINA	190
SISTEMA ELETRÔNICO - MONITOR	191
SISTEMA ELETRÔNICO - TREM DE FORÇA	191
SISTEMA ELETRÔNICO-COMUNICAÇÃO	190
SOLENÓIDE PROPORCIONAL (12 VDC) (DIREÇÃO)	640
SOLENÓIDE PROPORCIONAL (12 VDC) (VENTILADOR HIDRÁULICO)	639
SOLENÓIDE (24 VOLTS, MOTOR DE PARTIDA)	260
	264
SUPORTE - MONTAGEM	732
	733
	734
SUPORTE DO MOTOR	76
SUSPENSÃO - ASSENTO	817
	819
SUSPENSÃO - TRUQUE	455

T

TAMPA - BLOCO DO MOTOR	13
TAMPA - BOCAL DE ENCHIMENTO (COMBUSTÍVEL, TRAVA, COM RESPIRO)	163
TAMPA - BOCAL DE ENCHIMENTO (COMBUSTÍVEL, TRAVA, COM RESPIRO)	166
TAMPA - BOCAL DE ENCHIMENTO DE ÓLEO (EIXO PILOTO)	439
TAMPA - BOCAL DE ENCHIMENTO (ÓLEO DO MOTOR)	82
TAMPA - BOCAL DE ENCHIMENTO (ÓLEO DO TREM DE FORÇA)	326
TAMPA - BOCAL DE ENCHIMENTO (TANQUE HIDRÁULICO)	605
TAMPA - CABINE	751
TAMPA - CAIXA DIANTEIRA	16
TAMPA - CAIXA DO VOLANTE	14
	15
TAMPA - MECANISMO DAS VÁLVULAS	18
	19
	20
	21
	22
	23
	24
	25
	26
	27
	28
TAMPA - MUNHÃO	370
TAMPA - RADIADOR	117
TAMPA - REDUÇÃO DE RUÍDOS	17
TAMPA - ROLETE DAS ESTEIRAS	429
TAMPA - TANQUE HIDRÁULICO	522
TAMPA COM RESPIRO (TANQUE DO LAVADOR DE VIDROS)	821
TAMPA DA RODA-GUIA	427

* TRADUÇÃO NÃO DISPONÍVEL NO MOMENTO DA IMPRESSÃO

ÍNDICE

Designação	Página
	428
TAMPÃO (DRENAGEM) (TRANSMISSÃO)	363
	364
TANQUE - LAVADOR DE JANELA	821
	823
TANQUE - LÍQUIDO ARREFECEDOR	117
TANQUE DE ÁGUA	118
TANQUE DE COMBUSTÍVEL	162
	163
	165
	166
TANQUE HIDRÁULICO E FILTRO	605
TAPETE INFERIOR	788
TAPETE INFERIOR (CABINE)	751
TAPETE SUPERIOR	788
TAPETE SUPERIOR (CABINE)	751
TELA	88
TELA - RESERVATÓRIO (TANQUE DE COMBUSTÍVEL)	144
TELA DE PROTEÇÃO	802
TELA DE SUCÇÃO	296
TELA DE SUCÇÃO (CÁRTER DO TREM DE FORÇA)	340
TELA DE SUCÇÃO (CONVERSOR DE TORQUE)	346
TELA FILTRANTE	175
TELA FILTRANTE (CONTROLE, COLETOR DE ALÍVIO)	580
TELA FILTRANTE (ENCHIMENTO DO TANUQE HIDRÁULICO)	605
TELA FILTRANTE (FILTRO DE DERIVAÇÃO DO ÓLEO HIDRÁULICO)	605
TELA FILTRANTE (TANQUE HIDRÁULICO)	605
TRANSMISSÃO	348
TREM DE FORÇA	335
TUBO - ARMAÇÃO DOS ROLETES	467
TUBOS - ÁGUA	103
	105
	107
	109
TUBOS - AQUECEDOR	778
TUBOS - AR	124
	125
	126
TUBOS - AR CONDICIONADO	772
	775
TUBOS - BOMBA	564
TUBOS - CILINDRO DE INCLINAÇÃO	572
	574
	576
	578
TUBOS - CILINDRO DE LEVANTAMENTO	559
	561
TUBOS - CILINDRO DO SACA-PINO	562
	563
TUBOS - COMBUSTÍVEL	151
TUBOS - DIREÇÃO	485
TUBOS - GUINCHO	700
TUBOS - ÓLEO DA TRANSMISSÃO	326
TUBOS - ÓLEO DO MOTOR	88
TUBOS - ÓLEO DO TURBOALIMENTADOR	89
TUBOS - RIPER	568
	570
TUBOS - SACA-PINO	561
TUBOS - VENTILADOR HIDRÁULICOS	553
	557
TUBOS DO AQUECEDOR	778
TURBOALIMENTADOR	135

V

Designação	Página
VÁLVULA - ESFERA (DRENAGEM DO COMBUSTÍVEL)	144
VALVULA - PARTIDA A ETER	278
VÁLVULA (ADMISSÃO DO COLETOR)	644
VÁLVULA DE ALÍVIO	356
	494
	495
	496
	644
	645
	646
	647
	648
VÁLVULA DE ALÍVIO (CARGA)	633
VÁLVULA DE ALÍVIO (COMPRESSOR DO REFRIGERANTE)	742
VÁLVULA DE ALÍVIO (PRINCIPAL)	633
VÁLVULA DE ALÍVIO (*STEERING PISTON PUMP)	550
VÁLVULA DE ALÍVIO (VENTILADOR HIDRÁULICO, INVERSÃO)	581
VÁLVULA DE AMOSTRAGEM (LÍQUIDO ARREFECEDOR DO MOTOR)	107
VÁLVULA DE COMPENSAÇÃO DE PRESSÃO	636
VÁLVULA DE CONTROLE	350
	623
	625
	627
	629
	631
	633
VÁLVULA DE CONTROLE - TRANSMISSÃO	359
	361
VÁLVULA DE CONTROLE DA BOMBA	637

* TRADUÇÃO NÃO DISPONÍVEL NO MOMENTO DA IMPRESSÃO

ÍNDICE

Designação	Página
	638
	639
	640
	641
VÁLVULA DE CONTROLE DO GUINCHO	723
VÁLVULA DE CONTROLE E MONTAGEM	609
	610
VÁLVULA DE DRENAGEM (TRANSMISSÃO)	363
	364
VÁLVULA DE ENXAGUAR	634
VÁLVULA DE MODULAÇÃO	352
	353
VÁLVULA DE PRIORIDADE	354
VÁLVULA DE QUEDA RÁPIDA	642
VÁLVULA DE REDUÇÃO DE PRESSÃO	635
VÁLVULA DE RETENÇÃO	167
	168
	619
	620
	621
	622
VÁLVULA DE RETENÇÃO (FILTRO DE COMBUSTÍVEL, SEPARADOR DE ÁGUA)	144
VÁLVULA DE SEPARAÇÃO	649
VÁLVULA DESVIADORA (VENTILADOR HIDRÁULICO)	581
VÁLVULA DISJUNTORA	618
VÁLVULA DO CONTROLE PRINCIPAL E MONTAGEM	611
VÁLVULA E MONTAGEM-DIREÇÃO E FREIO	493
VÁLVULA SOLENÓIDE	354
	358
	497
	498
	650
	651
	652
	653
	654
	655
	656
VEDADOR	159
VEDADOR (BOMBA D'ÁGUA)	111
VEDADOR TIPO LABIO (REGULADOR DA TEMPERATURA DA ÁGUA)	105
VENTILADOR DA CABINE	729
VENTILADOR DE SUCÇÃO	100
VIRABREQUIM	29
VOLANTE DO MOTOR	47

W

*WINDOW GP-CAB	824

* TRADUÇÃO NÃO DISPONÍVEL NO MOMENTO DA IMPRESSÃO

STICHWORTVERZEICHNIS

Bezeichnung	Seite
A	
ABFALLBESEITIGUNGSMONTAGE	3
	4
ABLASS (UMWELTFREUNDLICH)	303
ABLASS (UMWELTFREUNDLICH) (DREHMOMENTWANDLER)	346
ABLASS (UMWELTFREUNDLICH) (GETRIEBEGEHÄUSE)	296
ABLASSSTOPFEN (KÜHLER)	107
ABLASSSTOPFEN (ÖLDREHWELLE)	430
ABLASSSTOPFEN (ÖLFÜLLDREHWELLE)	430
ABLASSVENTIL (GETRIEBE)	363
	364
ABSTREIFBALKEN	413
	414
	417
	418
	419
	424
ACHSE	295
ACHSWELLENSCHMIERUNG	439
*AIR COMPRESSOR GP-SEAT	726
ANSAUGSIEB	296
ANSAUGSIEB (DREHMOMENTWANDLER)	346
ANSAUGSIEB (KRAFTÜBERTRAGUNG - ÖLSUMPF)	340
ANSCHLUSS, ELEKTR.	186
ANSCHLUSSKLEMMENSATZ (DREHSTROM-GENERATOR)	171
ANSCHLUSSKLEMMENSATZ (SPERRE)	226
ANSCHLUSSKLEMMENSATZ (STARTERMO-TOR)	260
	264
ANSTRICH	834
ANTRIEBSSCHUTZ	322
	324
ANTRIEBSWELLE	342
ANTRIEBSWELLEN-KEILVERZAHNUNG	343
ANTRIEBSWELLENVERKLEIDUNG	321
ANZEIGEMODUL (RATGEBER)	291
ANZEIGEN-EINBAUSATZ (GEWICHTSEINSTEL-LUNG) (SCHWINGSITZ)	766
ANZUGSLEINE (SCHWINGSITZ)	819
ARBEITSGERÄTEELEKTRONIK	190
ARBEITSGERÄTESTEUERUNG	511
ARBEITSLEUCHTEN	200
	201
	202
	203
	204
	205
	206
	208
	209
	211
	214
	216
	219
ARBEITSLEUCHTEN (24 V, 70 W)	203
	204
ARM (SCHEIBENWISCHER) (VORNE)	826
ASCHENBECHER (FAHRERHAUS)	751
ÄTHERSTARTHILFE	255
ÄTHERSTARTVENTIL	278
AUFKLEBER	833
AUFKLEBER - INFORMATION (AUTOM. AUFREISSER)	511
AUFKLEBER - MÜLLVERTEILSCHILD	4
AUFKLEBER (AUTOM. SCHILD)	503
AUFKLEBER (DOPPELNEIGUNG)	503
AUFKLEBER (*D9T, LH)	404
AUFKLEBER (*D9T, RH)	404
AUFKLEBER (HINTEN)	404
AUFKLEBER (RADIO)	768
AUFKLEBER (WINDE)	506
AUFREISSER	711
	712
	713
	714
	715
	716
	717
AUFREISSER-BOLZENZIEHERZYLINDER	539
AUFREISSERBEFESTIGUNG	703
AUFREISSERLEITUNGEN	568
	570
AUFREISSERRAHMEN	696
	698
AUFREISSERZAHN	718
	719
	720
	721
	722
AUFREISSERZAHNSPITZE - ZYLINDER	540
	542
AUFREISSERZYLINDER	535
	537
AUFREISSERZYLINDER UND -LEITUNGEN	529
AUSPUFFKRÜMMER	127
B	
BATTERIE UND VERDRAHTUNG	177
BATTERIE (12 V) (WARTUNGSFREI)	177
	256
BEFESTIGUNG - VERBINDER	224

* ÜBERSETZUNG ZUM ZEITPUNKT DER DRUCKLEGUNG NICHT VORHANDEN

STICHWORTVERZEICHNIS

Bezeichnung	Seite
BEFESTIGUNGSHALTERUNG	732, 733, 734
BEFESTIGUNGSTEILE (DREHSTROMGENERATOR)	171
BEGRENZUNGSSCHALTER	272
BELEUCHTUNGSKABELSTRANG (VORN)	219
BELEUCHTUNGSKABELSTRANG (VORN)	209, 211
BELEUCHTUNGSKABELSTRANG (VORN) (LINKS, RECHTS)	214
BELEUCHTUNGSKABELSTRANG (VORN) (RECHTS, LINKS)	216
BELEUCHTUNGSKABELSTRANG (WARNDREHLEUCHTE)	222
BERGBAUAUSFÜHRUNG	2
BETRIEBSBREMSE	469
BLOCK (GETRIEBE)	301
BLOCK (LADELUFTKÜHLER)	120
BODENPLATTE	449, 450, 451, 452, 453, 454
BOLZENZIEHER	707, 708, 709, 710
BOLZENZIEHERZYLINDERLEITUNGEN	562, 563

C

Bezeichnung	Seite
CODESTECKER (ARBEITSGERÄT)	291
CODESTECKER (KRAFTÜBERTRAGUNG)	292

D

Bezeichnung	Seite
DÄMPFER UND RIEMENSCHEIBE	41
DICHTUNG	159, 606, 759
DICHTUNG (KRAFTSTOFFENTLÜFTUNGSPUMPE)	144
DICHTUNG (TEMPERATURREGELGEHÄUSE)	105
DICHTUNG (VENTILMECHANISMUSDECKEL)	19, 24, 25, 27
DICHTUNG (WASSERABSCHEIDER, KRAFTSTOFF)	149
DICHTUNG (WASSERPUMPE)	111
DICHTUNGSSATZ	150
DICHTUNGSSATZ (AUSGELEICHSVENTIL)	648
DICHTUNGSSATZ (AUSGELEICHSVENTIL) (HYDRAULIKFILTER, UMKEHRUNG)	581
DICHTUNGSSATZ (AUSGELEICHSVENTIL) (*STEERING PISTON PUMP)	550
DICHTUNGSSATZ (*PISTON MOTOR) (HYDRAULIKLÜFTER)	585
DICHTUNGSSATZ (RÜCKSCHLAGVENTIL) (HYDRAULIKFILTER, UMKEHRUNG)	620
DICHTUNGSSATZ (SOLENOIDVENTIL)	358, 497, 650, 651, 652, 653, 655
DICHTUNGSSATZ (VERTEILERVENTIL) (HYDRAULIKFILTER, UMKEHRUNG)	581
DICHTUNGSSATZ (WECHSELVENTIL)	649
DIFFERENTIALLENKANTRIEB	480
DOPPELFLANSCHROLLEN	444, 445
DOPPELKIPPZYLINDERSTEUERUNG	503
DREHKNOPFSCHALTER (KLIMAANLAGENSTEUERUNG)	793
DREHMOMENTWANDLER	344, 346
DREHSTROMGENERATOR	171, 173, 175
DREHZAHLSENSOR	247, 248, 249, 250, 251
DREHZAHLSENSOR (GETRIEBEAUSGANG 1)	333
DREHZAHLSENSOR (GETRIEBEAUSGANG 2)	333
DREHZAHLSENSOR (MOTOR)	250, 283
DREHZAPFENVERKLEIDUNG	406
DRUCKAUSGLEICHSVENTIL	636
DRUCKKNOPFSCHALTER (AUFREISEER, AUTOM. AUFBEWAHRUNG)	511
DRUCKKNOPFSCHALTER (DOZER NEIGEN)	508
DRUCKKNOPFSCHALTER (ELEKTRON. HERUNTERSCHALTUNG)	476

* ÜBERSETZUNG ZUM ZEITPUNKT DER DRUCKLEGUNG NICHT VORHANDEN

STICHWORTVERZEICHNIS

Bezeichnung	Seite
DRUCKKNOPFSCHALTER (ELEKTRON. HOCHSCHALTUNG)	476
DRUCKKOPFSCHALTER	276
DRUCKKOPFSCHALTER (WARNHORN)	290
DRUCKLUFTLEITUNGEN	124 125 126
DRUCKLUFTVENTILSATZ (SCHWINGSITZ)	819
DRUCKREDUZIERVENTIL	635
DRUCKSCHALTER	275
DRUCKSCHALTER (KLIMAANALGE, NIEDRIG)	775
DRUCKSCHALTER (KOMPRESSOR - UNTERE SEITE)	772
DRUCKSCHALTER (KÜHLMITTEL) (KLIMAANLAGE, HOCH)	775
DRUCKSCHALTER (KÜHLMITTEL) (KOMPRESSOR - HOHE SEITE)	772
DRUCKSENSOR	238 239 240 241 242 243 244 245 246
DRUCKSENSOR (AUSSENLUFT)	283
DRUCKSENSOR (KRAFTSTOFF)	144
DRUCKSENSOR (LENKUNG)	179
ELEKTRONIK, KOMMUNIKATION	190
ENDSCHALTER (BETRIEBSBREMSPEDAL)	490
ENDSCHALTER (FAHRERHAUSBELEUCHTUNG)	279
ENTDUNSTER	86
ENTDUNSTERBEFESTIGUNG	91
ENTLÜFTER	80
ENTLÜFTER (KRAFTÜBERTRAGUNG)	326
ENTLÜFTER (KURBELGEHÄUSE)	80

E

EINBAUSATZ - PLANIERSTEUERUNG	199
EINFÜLLKAPPE (KRAFTSTOFF, SPERRUNG, LÜFTUNG)	163
EINFÜLLKAPPE (KRAFTSTOFF, SPERRUNG, LÜFTUNG)	166
EINFÜLLKAPPE (KRAFTÜBERTRAGUNGS-ÖL)	326
EINFÜLLKAPPE (MOTORÖL)	82
EINFÜLLSTUTZENKAPPE (HYDRAULIK-TANK)	605
EINZELFLANSCHROLLEN	446 448
ELEKTR. UMFORMER	189
ELEKTR. UMFORMER (24V - 24V)	290
ELEKTRON. STEUERUNG (SCHEIBENWISCHER)	793
ELEKTRON. STEUERUNG UND ANBAUSATZ	187
ELEKTRONIK - MASCHINE	190
ELEKTRONIK - MONITOR	191

F

FAHRERHAUS	736 737 738 739 741
FAHRERHAUS-DRUCKLÜFTER	729
FAHRERHAUS (FÜR TIEFE UMGEBUNGSTEMPERATUREN)	738
FAHRERHAUS-INNENLEUCHTE (24 V)	279
FAHRERHAUS-KABELBAUM	279
FAHRERHAUSABDECKUNG	751
FAHRERHAUSANBAUSATZ	782
FAHRERHAUSAUSKLEIDUNG	770
FAHRERHAUSAUSRÜSTUNG	788
FAHRERHAUSFENSTER	825
FAHRERHAUSHEIZUNG	759 763
FAHRERHAUSLUFTFILTER	757
FAHRERHAUSTÜR	753 755
FAHRERHAUSVERDRAHTUNG	279
FAHRERPLATTFORM-KABELSTRANG	290
FAHRERPLATTFORMVERDRAHTUNG	290
FAHRERSITZ	804 806 807 809 810 811
FAHRERSITZ UND UNTERBAU	803
FAHRERSITZFEDERUNG	817 819
FAHRERSITZFEDERUNGSGEHÄUSE	765
FAHRERSITZVERSTELLER	725
FAHRWERK	1
FAHRWERK-KABELBAUM (LINKS)	178
FAHRWERK-KABELBAUM (RECHTS)	177
FEDER-EINBAUSATZ (HÖHENEINSTELLUNG) (SCHWINGSITZ)	765
FEDER-EINBAUSATZ (SCHWINGSITZ)	765

* ÜBERSETZUNG ZUM ZEITPUNKT DER DRUCKLEGUNG NICHT VORHANDEN

STICHWORTVERZEICHNIS

Bezeichnung	Seite
FEDERUNGS-EINBAUSATZ (EINSTELLKNOPF) (HÖHENEINSTELLUNG) (SCHWINGSITZ)	765
FESTSTELLBREMSGESTÄNGE	472
FILTER (LUFTDRUCKSENSOR)	225
FILTER (WASSERPUMPE)	111
FILTERSIEB (HYDRAULIKTANKEINFÜLL-SIEB)	605
FRONTSTEUERPULT	746
FUSSMATTE (OBERE)	788
FUSSMATTE (OBERE) (FAHRERHAUS)	751
FUSSMATTE (UNTERE)	788
FUSSMATTE (UNTERE) (FAHRERHAUS)	751

G

GAS- U. BREMSPEDAL	490
GEBLÄSEMOTOR (*24-VOLT, A/C, HEATER)	729
GEGENGEWICHT	365
	367
	368
	369
GESTÄNGE UND ANBAUSATZ	783
GETRIEBE	348
GETRIEBE-KABELBAUM	178
	299
GETRIEBEAUFLAGER	330
GETRIEBEHYDRAULIK	299
GETRIEBEÖLKÜHLER	301
GETRIEBESTEUERVENTIL	359
	361
GLEITLAGER	425
	426
GLEITSCHIENENBLOCK-EINBAUSATZ (SCHWINGSITZ)	812
	813
	814

H

HALDENAUFÜHRUNG	3
HALOGENSCHINWERFER (24V)(65W)	200
	201
	202
HAUPTFILTER (LUFTREINIGER)	122
HAUPTSCHALTER	269
HEIZUNG - MASCHINE	194
HEIZUNGS- U. KLIMAANLAGENSTEUE-RUNG	793
HEIZUNGSLEITUNGEN	778
HUBZYLINDER	531
	533
HUBZYLINDER U. LEITUNGEN	523
	525
	527
HUBZYLINDERLEITUNGEN	559
	561
HYDR. BOLZENZIEHER STEUERUNG	504
HYDRAULIKDRUCKSPEICHER	499
	500
HYDRAULIKLÜFTERLEITUNGEN	553
	557
HYDRAULIKÖLKÜHLERBEFESTIGUNG	521
HYDRAULIKPUMPE UND LEITUNGEN	564
HYDRAULIKSTEUERUNG	506
HYDRAULIKSYSTEM	552
HYDRAULIKTANK UND SCHMIERFILTER	605
HYDRAULIKVERTEILER	583

I

IDENTIFIZIERUNGS-AUFKLEBER (GRUPPEN-NUMMER) (FAHRERHAUSHEIZUNG)	759
IDENTIFIZIERUNGS-AUFKLEBER (GRUP-PENNUMMER) (KÄLTEMITTELKONDENSA-TOR)	744
IDENTIFIZIERUNGS-AUFKLEBER (JOYSTICK) (ACCUGRADE)	196
IDENTIFIZIERUNGS-AUFKLEBER (RUND, ROT REFEKTIEREND)	834
IDENTIFIZIERUNGS-AUFKLEBER (UMLAUFKÜHLWASSERHEIZUNG)	193
IDENTIFIZIERUNGS-AUFKLEBER (UMLAUFKÜHLWASSERHEIZUNG)	192
IDENTIFIZIERUNGS-AUFKLEBER (VORSCHMIERPUMPE)	94
IDENTIFIZIERUNGS-AUFKLEBER (12 V)	835
INSTRUKTIONS-AUFKLEBER (AUFREISSER-STEUERUNG)	502
INSTRUKTIONS-AUFKLEBER (ELEKTRISCHER HAUPTSCHALTER)	269
INSTRUKTIONS-AUFKLEBER (ELEKTRISCHER HAUPTSCHALTER)	835
INSTRUKTIONS-AUFKLEBER (FÜR SITZVERSTELLUNG)	817
	819
INSTRUKTIONS-AUFKLEBER (HANDBUCH LESEN, LENKUNG)	836
INSTRUKTONSSCHILD (KLIMAANLAGE)	736
INSTRUKTONSSCHILD (KLIMAANLAGE)	728
INSTRUMENTENBRETT-AUFKLEBER (WISCHERSTEUERUNG)	793
INSTRUMENTENTAFEL-KABELSTRANG (SICHERUNG)	226
INSTRUMENTENTAFEL-SICHERUNG	226
INTRUMENTENBRETTVERKABELSTRANG	290

* ÜBERSETZUNG ZUM ZEITPUNKT DER DRUCKLEGUNG NICHT VORHANDEN

STICHWORTVERZEICHNIS

Bezeichnung	Seite
J	
JOYSTICK -STEUERUNG	513, 515, 517, 519
K	
KABELBAUM, VORNE	178
KABELSTRANG - HEIZUNG U. KLIMAANLAGE	759, 772, 775
KABELSTRANG - HEIZUNG U. KLIMAANLAGE (KONDENSATORGEBLÄSEMOTOREN)	744
KABELSTRANG - HEIZUNG U. KLIMAANLAGE (KONDENSATORLÜFTER)	772
KABELSTRANG - LENKUNG	471
KÄLTEMITTEL-DRUCKSPEICHER	772, 775
KÄLTEMITTELKOMPRESSOR	742, 743
KÄLTEMITTELKONDENSATOR	744
KÄLTEMITTELTROCKNER (KLIMAANLAGE)	772, 775
KALTWETTERAUSRÜSTUNG	1
KALTWETTERSTARTANLAGE	256
KAPPE MIT ENTLÜFTER (SCHEIBENWASCH-MITTELBEHÄLTER)	821
KAPPENFILTERSATZ (KRAFTSTOFFTANK)	166
KAPPENFILTERSATZ (KRAFTSTOFFTANK) (ENTLÜFTER)	163
KETTENGLIEDER	437, 438
KETTENRADSEGMENT	341
KETTENSPANNER UND -FEDERRÜCKLAUF	457
KIPPSCHALTER	277
KIPPSCHALTER (ARBEITSSCHEINWERFER - ROPS)	211, 219
KIPPSCHALTER (ARBEITSSCHEINWERFER - ZYLINDER)	219
KIPPSCHALTER (AUTOM. HERUNTERSCHAL-TEN)	291
KIPPSCHALTER (BIDIREKTIONALE SCHALTUNG)	291
KIPPSCHALTER (FESTSTELLBREMSE EIN/AUS)	471
KIPPSCHALTER (GASSTEUERUNG)	291
KIPPSCHALTER (HYDRAULIKSPERRE)	291
KIPPSCHALTER (HYDRAULISCHER BOLZENZIEHER)	504
KIPPSCHALTER (KLIMAANLAGE EIN/AUS)	793
KIPPSCHALTER (KRAFTSTOFFENTLÜF-TUNGSPUMPE)	177
KIPPSCHALTER (LÜFTER MIT DREHRICH-TUNGSUMKEHRUNG)	557
KIPPSCHALTER (MOTORRAUM - ARBEITSLEUCHTE)	177
KIPPSCHALTER (ROPS ARBEITSSCHEINWER-FER)	214, 216
KIPPSCHALTER (SCHUTZBLECHBELEUCH-TUNG)	291
KIPPSCHALTER (ZYLINDER ARBEITSSCHEIN-WERFER)	214, 216
KIPPSCHALTER (ZYLINDERBELEUCH-TUNG)	291
KIPPSCHALTER (24 V, GEKAPSELT, ERLEUCHTET) (SEILWINDE)	506
KIPPSCHALTER (24 V)(AUTOM. SCHILDUNTERSTÜTZUNG)	576
KIPPZYLINDER	530, 544, 546, 548
KIPPZYLINDER (LINKS)	530
KIPPZYLINDER (RECHTS)	530
KLEMMLEISTE	184
KLIMAANLAGE	728
KLIMAANLAGENLEITUNGEN	772, 775
KOLBENMOTOR	584, 585, 586
KOLBENPUMPE	590, 592, 593, 595
KOLBENPUMPENUMLAUFSATZ	601, 602, 604
KOMMUNIKATIONSEINBAUSATZ	197
KONSOLEN-VERDRAHTUNG	291, 478
KONTROLLEUCHTE (WARNLEUCHTE)	290
KRAFTSTOFFEINSPRITZDÜSE	156, 157
KRAFTSTOFFEINSPRITZPUMPE	156, 157, 158
KRAFTSTOFFILTER	148
KRAFTSTOFFILTER UND LEITUNGEN	144
KRAFTSTOFFLEITUNGEN	151

* ÜBERSETZUNG ZUM ZEITPUNKT DER DRUCKLEGUNG NICHT VORHANDEN

STICHWORTVERZEICHNIS

Bezeichnung	Seite
KRAFTSTOFFLEITUNGSBEFESTIGUNGSTEILE	154
KRAFTSTOFFÖRDERPUMPE	155
KRAFTSTOFFÖRDERPUMPE UND BEFESTIGUNGSTEILE	155
KRAFTSTOFFSIEB	163
KRAFTSTOFFSIEB (TANKFÜLLER)	166
KRAFTSTOFFSTANDSENSOR	235
KRAFTSTOFFTANK	162
	163
	165
	166
KRAFTSTOFFTANKVERKLEIDUNG	404
KRAFTÜBERTRAGUNG	335
KRAFTÜBERTRAGUNGSELEKTRONIK	191
KREUZGELENK	349
KRÜMMER UND VENTIL	488
	489
KRÜMMERSCHILD	134
KUGELVENTIL (KRAFTSTOFFABLASS)	144
KÜHLER	113
	114
KÜHLERKAPPE	117
KÜHLERSCHUTZ	407
KÜHLMITTELBEHÄLTER	117
KÜHLWASSERLEITUNGEN	103
	105
	107
	109
KÜHLWASSERPUMPE	111
	112
KURBELWELLE	29
KURBELWELLENDICHTUNG	29
	54
LADELUFTKÜHLER	120
LAGERSATZ	599
LAGERSATZ (DREHSTROMGENERATOR)	171
LAGERSATZ (MOTORROTATIONSGRUPPE)	597
LAGERSATZ (SCHWINGSITZ)	766
LAUFROLLE	442
LAUFROLLEN U. LEITRAD	441
LAUFROLLENAUFSATZ	429
LAUFROLLENRAHMEN-KNICKFEDERUNG	455
LAUFROLLENRAHMEN (TELESKOPRÜCKLAUF)	430
LAUFROLLENRAHMENROHR	467
LAUFWERKSKETTE	459
	460
	461
	462
	463
	464
	465
	466
LAUFWERKSRAHMEN	468
LEITRAD	434
	435
	436
LEITRADAUFSATZ	427
	428
LEITRADSCHUTZ	397
	405
LEITUNGSBOLZENZIEHER	561
LENK- UND GETRIEBESTEUERUNG	476
	478
LENKANTRIEB	482
LENKBETÄTIGUNG	474
	475
LENKÖLLEITUNGEN	485
LENKUNGS- U. BREMSVENTIL	493
LEUCHTE	222
LEUCHTE (24 V) (WARNLEUCHTE)	290
LEUCHTE (24V, 21W)	279
LIPPENDICHTUNG (KÜHLWASSERTHERMOSTAT)	105
LUFTFILTER (FAHRERHAUS)	763
LUFTFILTER (STANDARD) (FAHRERHAUS)	763
LUFTKOMPRESSORSITZ	727
LUFTREINIGER	121
	122
LUFTREINIGER-ANBAUSATZ	128
LUFTREINIGERKLEMMEN-EINBAUSATZ	122
MAGNETSCHALTER	273
	274
MAGNETSCHALTER (24 V) (HAUPTRELAIS)	226
MAGNETSCHALTER (24 V) (STARTRELAIS)	226
MAGNETSIEB	340
MAGNETSIEB (KRAFTÜBERTRAGUNG - ÖLSUMPF)	326
MAGNETSPULE (24 V, STARTERMOTOR)	260
	264
MAGNETSTOPFEN (SEITENANTRIEB, ÖLEINFÜLLUNG)	307
	310
	313
	316
MAGNETVENTIL	354
	358
	497
	498

L

M

* ÜBERSETZUNG ZUM ZEITPUNKT DER DRUCKLEGUNG NICHT VORHANDEN

STICHWORTVERZEICHNIS

Bezeichnung	Seite
	650
	651
	652
	653
	654
	655
	656
MASCHINENSTEUERUNG	188
MODULARHEBEL (SEILWINDE)	517
MODULATORVENTIL	352
	353
MONITOR - KABELBAUM (ACCUGRADE)	287
MONITOR - KABELBAUM (RATGEBER)	290
MONITORBEFESTIGUNG	784
MONTAGEZAPFEN	78
MONTAGEZAPFEN (PLANIERSCHILDEINRICHTUNG)	672
	673
	674
MONTAGEZAPFENVERKLEIDUNG	370
MOTOR-EINBAUSATZ	9
MOTOR, ELEKTR. (KONDENSATORGEBLÄSE)	744
MOTOR, KOMPLETT	6
	7
MOTORAUFHÄNGUNG	76
MOTORAUFLAGER	62
MOTORBLOCK	30
	31
	32
MOTORBLOCKDECKEL	13
MOTORDREHVORRICHTUNG	597
	599
MOTORHUBÖSE	60
	61
MOTORKABELSTRANG	283
MOTORKABELSTRANG (EINSPRITZDÜSE, VARIABLES VENTIL)	10
MOTORKABELSTRANG (MOTORVERDRAHTUNG)	281
MOTORKÜHLERBLOCK	8
MOTORÖLEINFÜLLSTUTZEN	82
MOTORÖLLEITUNGEN	88
MOTORSENSOR	233
MOTORVERDRAHTUNG	283
MOTORVERKLEIDUNG	377
	380
	383
MOTORVORSCHMIERUNG	94
MULDE - KÜHLERUMGEHUNG (MOTORÖL)	83

N

NEIGEZYLINDERLEITUNGEN	572
	574
	576
	578
NEIGUNGSSTEUREINBAUSATZ	196
NIEGUNGSSTEUER VERDRAHTUNG	287
NOCKENWELLE	12
NOCKENWELLENZAHNRAD	48

O

ÖLABLASSSCHRAUBE (WANNE)	64
	66
ÖLEINFÜLLSTUTZEN (DREHZAPFEN)	439
ÖLFILTER	83
	305
	483
ÖLFILTER (GETRIEBE)	326
ÖLFILTER (HOCHLEISTUNG)	564
ÖLFILTER (HYDRAULISCH) (LENKUNG)	485
ÖLFILTERELEMENT (HOCHLEISTUNG, HYDR.) (GETRIEBE)	305
ÖLFILTERELEMENT (HOCHLEISTUNG, HYDR.) (KRAFTÜBERTRAGUNG)	326
ÖLFILTERELEMENT (HYDRAULISCH) (HOCHLEISTUNG)	605
ÖLFILTERELEMENT (HYDRAULISCH) (HOCHLEISTUNG)	483
ÖLFILTERELEMENT (HYDRAULISCH) (SCHWER ENTFLAMMBARE FLÜSSIGKEIT)	605
ÖLFILTERELEMENT (HYDRAULISCH) (STANDARD EFFIZIENZ)	605
ÖLKÜHLERBLOCK (HYDRAULIK)	521
ÖLKÜHLERBLOCK (MOTOR)	105
ÖLLEITUNGEN - KRAFTÜBERTRAGUNG	326
ÖLMESSSTAB	87
ÖLMESSSTAB (KRAFTÜBERTRAGUNG)	326
ÖLPUMPEN-BEFESTIGUNGSTEILE	81
ÖLSCHNELLWECHSELANSCHLUSS	92
ÖLWANNE	64
	66
ÖLWANNEN-HALTETEILE	45

P

PANZERWANNE	398
	400
	401
PENDELVENTIL	649
PLANETENANTRIEBSGEHÄUSE U. TEILE	296
PLANETENGETRIEBE	331

* ÜBERSETZUNG ZUM ZEITPUNKT DER DRUCKLEGUNG NICHT VORHANDEN

STICHWORTVERZEICHNIS

Bezeichnung	Seite
PLANIEREINRICHTUNG	659, 660
PLANIERSCHILD-UMRÜSTSATZ	668
PLATTE	395, 657, 658, 669, 670, 683, 688, 696, 698, 715, 716
PLATTFORM	795, 796
PLEUELSTANGE UND KOLBEN	68, 69
PROBEENTNAHMEVENTIL (MOTORKÜHLMITTEL)	107
PROPORTIONALSOLENOID (12 VDC) (HYDRAULIKLÜFTER)	639
PROPORTIONALSOLENOID (12 VDC) (LENKUNG)	640
PUMPE FÜR KRAFTSTOFFENTLÜFTUNG U. WASSERABSCHEIDER	169
PUMPENANSCHLUSS	302
PUMPENANTRIEB	304
PUMPENANTRIEBSADAPTER	143
PUMPENKOPF	550
PUMPENSTELLGLIED	501
PUMPENSTEUERVENTIL	637, 638, 639, 640, 641

Q

QUERTRAVERSE	416, 420, 421, 423

R

RADIO - KABELSTRANG (EMPFÄNGER)	287
RADIO - KOMMUNIKATION (PRODUCT LINK RADIO)	197
RADIOANBAUSATZ	785, 786
RADIOEINBAUSATZ	768
RAHMEN U. LAGER	395, 396
RAHMEN UND GEHÄUSE	363, 364
RASTE - STEUERUNG (*DRUM CLUTCH RELEASE)	517
RASTE - STEUERUNG (*REEL IN, REEL OUT)	517
RASTE - STEUERUNG (SCHILDHUB, ABSENKEN)	513, 515, 519
RASTE - STEUERUNG (SCHILDNEIGUNG)	513, 515, 519
RELAIS (24 V) (FAHRERHAUSVERBINDUNG)	290
RELAIS (24 V) (HEIZUNG, KLIMAANLAGE)	759
RELAIS (24 V) (KONDENSATORGEBLÄSEMOTOR)	744
RÜCKLEHNENVERLÄNGERUNG (STOFF)	806
RÜCKLEHNENVERLÄNGERUNG (VINYL)	809
RÜCKSCHLAGVENTIL (GEGEN VAKUUM)	618
RÜCKSPIEGEL	780, 781
RUNDUM-KENNLEUCHTE	222

S

SAUGGLOCKENSIEB	88
SAUGLÜFTER	100
SCHALE - RÜCKENLEHNE	790, 791, 792
SCHALLDÄMPFENDE VERKLEIDUNG	17
SCHALLDÄMPFER	129
SCHALLDÄMPFUNG	77, 412
SCHALTER (FAHRERHAUSBELEUCHTUNG)	279
SCHALTERKABELSTRANG (BETRIEBSBREMSE)	490
SCHALTTAFEL	793
SCHAUGLAS - FLÜSSIGKEITSSTAND (HYDRAULIKÖL)	605
SCHAUMFILTER (KRAFTSTOFFSTANDSENOR)	177
SCHEIBENWASCHANLAGE	824
SCHEIBENWASCHMITTELBEHÄLTER	821, 823
SCHEIBENWISCHER	826, 829
SCHEIBENWISCHERARM (HINTEN, LINKS)	829
SCHEIBENWISCHERARM (HINTEN, RECHTS)	829

* ÜBERSETZUNG ZUM ZEITPUNKT DER DRUCKLEGUNG NICHT VORHANDEN

STICHWORTVERZEICHNIS

Bezeichnung	Seite
SCHEIBENWISCHERARM (LINKS)	826
SCHEIBENWISCHERARM (RECHTS)	826
SCHEIBENWISCHERBLATT	829
SCHEIBENWISCHERBLATT (HINTEN)	826
SCHEIBENWISCHERBLATT (SEITE)	826
SCHEIBENWISCHERBLATT (VORNE)	826
SCHEIBENWISCHERMOTOR (24 V) (HINTEN)	829
SCHEIBENWISCHERMOTOR (24 V) (LINKS, VORN)	826
SCHEIBENWISCHERMOTOR (24 V) (MITTE, VORN)	826
SCHEIBENWISCHERMOTOR (24 V) (RECHTS, VORN)	826
SCHEIBENWISCHERMOTOR (24V, 2 GESCHWINDIGKEITEN) (HINTEN)	826
SCHEIBENWISCHERSCHALTER (24 V) (HINTEN, INTERVAL)	793
SCHEIBENWISCHERSCHALTER (24 V) (LINKE TÜR)	793
SCHEIBENWISCHERSCHALTER (24 V) (RECHTE TÜRY)	793
SCHEIBENWISCHERSCHALTER (24 V) (VORN, INTERVALLSCHALTUNG)	793
SCHILD UND AUFKLEBER	834
	837
SCHLAUCHLEITUNG	114
SCHLAUCHLEITUNG (ENTDUNSTER)	86
SCHLÜSSEL	1
	144
SCHLÜSSEL (HAUPTSCHALTER)	268
SCHMIERPUMPE	97
	99
SCHNEIDMESSER UND EINSATZSTÜCK	692
	693
	694
	695
SCHNELLBETANKUNGSADAPTER	136
	138
	139
	141
SCHNELLBETANKUNGSANSCHLUSS	136
	138
	139
	141
SCHNELLSENKVENTIL	642
SCHRAUBE (ABLASS) (GETRIEBE)	363
	364
SCHUBARM	669
	670
SCHUBARM - STABILISATOR	671
SCHUTZBLECHE	391
	393
	394
SCHUTZDICHTUNG	411
SCHUTZGITTER	802
SCHWINGSITZ	812
	813
	814
SCHWUNGRAD	47
SCHWUNGRADGEHÄUSE	54
SCHWUNGRADGEHÄUSEDECKEL	14
	15
SCREEN	175
SCREEN (HYDRAULIKTANK)	605
SCREEN (STEUERUNG - ÜBERDRUCKKRÜMMER)	580
SEITENANTRIEB	307
	310
	313
	316
SEITENANTRIEBSVERKLEIDUNG	397
	403
SENSOR, KABELSTRANG (LENKMOTORDREHZAHL, GETRIEBESCHMIERUNG)	179
SENSOR, KABELSTRANG (NEIGUNG, EMPFÄNGER, LINKS)	287
SENSOR, KABELSTRANG (ZYLINDERSTELLUNG, RECHTS)	287
SENSOR U. BEFESTIGUNGSTEILE	231
SENSORBEFESTIGUNG	225
SERIENNUMMERNSCHILD	664
SERIENNUMMERNSCHILD (AUFREISSER)	712
	713
SERIENNUMMERNSCHILD (GETRIEBE)	332
SERIENNUMMERNSCHILD (PLANIERSCHILD)	661
	662
	665
SERPENTINENFÖRMIGER RIEMEN (DREHSTROMGENERATOR)	173
SERPENTINENFÖRMIGER RIEMEN (KLIMAANLAGEN-RIEMENSCHEIBE)	743
SICHERHEITSFILTER (LUFTREINIGER)	122
SICHERHEITSGURT	806
SICHERHEITSGURT (AUSZIEHBAR)	809
SICHERUNG (10 A)	226
SICHERUNG (15 A)	226
SICHERUNG (15 A) (HEIZUNG)	759
SICHERUNG (175 A)	226
SICHERUNG (20 A)	226
SIEB (HYDRAULIKÖLFILTER - UMGEHUNG)	605
SOCKEL FÜR VENTILDECKEL U. EINSPRITZKABELBAUM	10
SPANNUNGSREGLER (24 V) (DREHSTROMGENERATOR)	171

* ÜBERSETZUNG ZUM ZEITPUNKT DER DRUCKLEGUNG NICHT VORHANDEN

STICHWORTVERZEICHNIS

Bezeichnung	Seite
SPERRVENTIL	167, 168, 619, 620, 621, 622
SPERRVENTIL (KRAFTSTOFFFILTER, WASSERABSCHEIDER)	144
SPÜLVENTIL	634
STABILISATORGELENK	666, 667
STARTERMOTOR	259, 262, 263
STARTSCHALTER (TASTE)	291
STAUBAUSWERFER	123
STECKDOSEN - EINBAUSATZ (12 STIFTE)	283, 287, 513, 519
STEINSCHUTZ	409, 410
STELLUNGSSENSOR	236, 237
STELLUNGSSENSOR (*DRUM CLUTCH RELEASE)	517
STELLUNGSSENSOR (GASREDUZIERPEDAL)	490
STELLUNGSSENSOR (LENKUNG, GETRIEBESTEUERGRIFF)	478
STELLUNGSSENSOR (LENKUNG, GETRIEBESTEUERUNG)	476
STELLUNGSSENSOR (*REEL IN, REEL OUT)	517
STELLUNGSSENSOR (REISSSCHENKEL ANHEBEN, ABSENKEN)	511
STELLUNGSSENSOR (REISSSCHENKEL EIN/AUS)	511
STELLUNGSSENSOR (ROTIEREND) (BETRIEBSBREMSPEDAL)	490
STELLUNGSSENSOR (SCHILDHUB, ABSENKEN)	513, 515, 519
STELLUNGSSENSOR (SCHILDNEIGUNG)	513, 515, 519
STEUERHEBEL	471, 507, 508, 510
STEUERHEBEL (SCHILDSTEUERUNG)	515
STEUERHEBEL U. BEFESTIGUNGSTEILE	502
STEUERKONSOLE	747
STEUERKRÜMMER	580, 581
STEUERPEDAL U. BEFESTIGUNG	749, 750
STEUERUNG - NICHT PROGRAMMIERT (ANTRIEBSSTRANG)	291
STEUERUNG - NICHT PROGRAMMIERT (PRODUCT LINK 300)	197
STEUERUNGS-KABELSTRANG (PRODUCT LINK RADIO)	197
STEUERUNGSEINHEIT, ELEKTRON. FÜR MOTOR UND BEFEST.	188
STEUERVENTIL	350, 623, 625, 627, 629, 631, 633
STEUERVENTIL UND BEFESTIGUNGSTEILE	609, 610
STEUERVENTILSTOPFEN	588
STIRNRAD	49
STIRNRADGEHÄUSE	56, 58
STIRNRADGEHÄUSE-HALTETEILE	42, 43, 44
STIRNRADGEHÄUSEDECKEL	16
STOSSDÄMPFER-REPARATURSATZ (SCHWINGSITZ)	819
STOSSSTANGEN-EINBAUSATZ (GEWICHTSEINSTELLUNG) (SCHWINGSITZ)	766
STROMBLOCK	185
STRÖMUNGSSCHALTER	116
STUFEN	815
SU-PLANIERSCHILD U. ECKMESSER	675, 676
SU-SCHILD	660, 661, 662, 680, 681, 682, 683, 684, 685, 690
SUMPFSIEB (KRAFTSTOFFTANK)	144

* ÜBERSETZUNG ZUM ZEITPUNKT DER DRUCKLEGUNG NICHT VORHANDEN

STICHWORTVERZEICHNIS

Bezeichnung	Seite
T	
TAFELVERDRAHTUNG (SICHERUNG)	226
TELLER- UND KEGELRAD	319
TEMPERATURSCHALTER (THEMRMOSTAT) (HEIZUNG, KLIMAANLAGE)	759
TEMPERATURSENSOR	252
	253
	254
TRÄGER	657
	658
TRAGROLLEN	443
TRENNSCHALTER	268
	269
TURBOLADER	135
TURBOLADERÖLLEITUNGEN	89
U	
U-PLANIERSCHILDEINRICHTUNG	663
	664
	665
U-SCHILD	685
	686
	687
	688
	689
	691
ÜBERDRUCKVENTIL	356
	494
	495
	496
	644
	645
	646
	647
	648
ÜBERDRUCKVENTIL (HAUPTUNTERBRECHER)	633
ÜBERDRUCKVENTIL (HYDRAULIKFILTER, UMKEHRUNG)	581
ÜBERDRUCKVENTIL (KÄLTEMITTELKOMPRESSOR)	742
ÜBERDRUCKVENTIL (LADUNG)	633
ÜBERDRUCKVENTIL (*STEERING PISTON PUMP)	550
ÜBERROLLSCHUTZ	800
	801
ÜBERROLLSCHUTZAUFLAGER	787
UMGEHUNGSSCHALTER	267
UMLAUFKÜHLWASSERHEIZUNG	192
	193
UMLAUFKÜHLWASSERHEIZUNGS-ELEMENT	193
UMLAUFKÜHLWASSERHEIZUNGS-ELEMENT (120 V, 1500 W)	192
UMLEITVENTIL (HYDRAULIKLÜFTER)	581
UMRÜSTSATZ - HOLZSPANAUSFÜHRUNG	2
UNIVERSALSCHILD U. KANTE	677
	678
	679
UNTERBRECHER (15 A) (HAUPTSTROM)	226
UNTERBRECHER (15 A) (KLIMAANLAGE)	775
UNTERBRECHER (15 A) (KONDESATOR GEBLÄSEMOTOR)	772
V	
VEDRAHTUNG - SOLENOID	700
VENTIL (KRÜMMEREINLASS)	644
VENTIL UND BEFESTIGUNGSTEILE - HAUPTSTEUERUNG	611
VENTILBLOCK	773
	775
VENTILDECKEL	18
	19
	20
	21
	22
	23
	24
	25
	26
	27
	28
VENTILKABELSTRANG	615
VENTILKABELSTRANG (ARBEITSGERÄT)	612
VENTILKABELSTRANG (SITZ LUFTKOMPRESSOR)	819
VENTILKIPPHEBEL	74
VENTILMECHANISMUS-HALTETEILE	46
VENTILREPARATURSATZ (*FLOW COMPENSATOR) (ARBEITSGERÄTE-HYDRAULIKPUMPE)	638
VENTILREPARATURSATZ (*PRESSURE COMPENSATOR VALVE)	637
VENTILSATZ (4-VENTIL)	612
	615
VENTILSTEUERUNG	79
VENTILSTÖSSELSATZ (SCHWINGSITZ)	766
VERBINDUNGSSTECKER	230
VERDRAHTUNG (EINSPRITZEINHEIT)	294
VERDRAHTUNG (ELEKTRON. STEUERUNG)	281
VERDRAHTUNGSKABELBAUM (JOYSTICK) (SEILWINDE)	187

* ÜBERSETZUNG ZUM ZEITPUNKT DER DRUCKLEGUNG NICHT VORHANDEN

STICHWORTVERZEICHNIS

Bezeichnung	Seite
VERDRAHTUNGSKABELBAUM (PRODUCT LINK RADIO)	197
VERDRAHTUNGSKABELBAUM (SCHEIBENWASCHER)	821
VERKLEIDUNG, HINTEN	387
VERKLEIDUNG, LINKS	384
	385
	386
VERKLEIDUNG, RECHTS	388
	389
	390
VERSCHLEISSPLATTEN	705
	706
VERSTAUKASTEN	731
VERSTELLBARER SITZ	799
VERZÖGERUNGSZEITGEBER (24 V) (KLIMAANLAGE)	775
VERZÖGERUNGSZEITGEBER (24 V) (KOMPRESSORZYKLUSBEGRENZER)	772
VORHÄNGESCHLOSS (BATTERIEKASTEN)	391
VORHÄNGESCHLOSS (HEIZUNG)	763
VORHÄNGESCHLOSS (HINTERES ABTEIL)	387
VORHÄNGESCHLOSS (HYDRAULIKTANKEINFÜLLSIEB)	522
VORHÄNGESCHLOSS (KRAFTSTOFFLEITUNG)	144
VORHÄNGESCHLOSS (KRAFTSTOFFTANK)	162
VORHÄNGESCHLOSS (KRAFTSTOFFTANK)	165
VORHÄNGESCHLOSS (LTERATURFACH)	1
VORHÄNGESCHLOSS (MOTORVERKLEIDUNG)	377
	380
VORHÄNGESCHLOSS (ÖLEINFÜLLSTUTZEN)	9
VORHÄNGESCHLOSS (ÖLMESSSTAB)	9
VORRANGVENTIL	354
VORREINIGER	130
	131
	132
	133
	757
VORSCHMIERPUMPE UND MOTOR (ELEKTROANTRIEB)	94

W

Bezeichnung	Seite
WARNAUFKLEBER (DRUCKSPEICHER)	499
	500
WARNAUFKLEBER (KETTENSPANNFEDER)	430
WARNAUFKLEBER (NICHT SCHWEISSEN, NICHT BOHREN)	836
WARNAUFKLEBER (PRODUCT LINK RADIO)	197
WARNAUFKLEBER (SCHILD, NICHT BESTEIGEN, BETRIEBS- UND WARTUNGSHANDBUCH LESEN)	199
WARNAUFKLEBER (STROMSCHLAGGEFAHR)	836
WARNSCHILD (HOCHDRUCKZYLINDER)	430
WARNSCHILD (KETTENSPANNFEDER)	3
	430
	467
WARNVORRICHTUNG	170
WASSERABSCHEIDER- U. KRAFTSTOFFILTER	149
WASSERABSCHEIDER U. KRAFTSTOFFENTLÜFTUNGSPUMPE	169
WASSERABSCHEIDER UND KRAFTSTOFFILTER (HAUPTELEMENT)	149
WASSERTANK	118
WASSERTEMPERATURREGLER (92 GRAD) (KÜHLMITTEL)	105
WINDEN-ÖLLEITUNGEN	700
WINDENSTEUERVENTIL	723
*WINDOW GP-CAB	824
WISCHERARM	831
	832
WISCHERBLATT	829

Z

Bezeichnung	Seite
ZAHNRADPUMPE	336
	338
	589
ZAHNRADVORGELEGE	52
ZUGANGSKLAPPE	371
	372
	373
	374
ZUGANGSKLAPPE - HYDRAULIKTANKKAPPE	522
ZUGHAKEN	375
ZUGMASCHINENAUSFÜHRUNG (ALLGEMEIN)	2
ZYLINDERAUFHÄNGUNG	587
ZYLINDERBLOCKSCHRAUBE	71
	72
ZYLINDERKOPF	34
	35
	36
	39
	40
ZYLINDERKOPF-HALTETEILE	40
ZYLINDERKOPFSTOPFEN	73

* ÜBERSETZUNG ZUM ZEITPUNKT DER DRUCKLEGUNG NICHT VORHANDEN

MEMORANDA

MACHINE ARRANGEMENT

205-8601 CHASSIS AR

S/N: RJS1-UP

PART OF 205-8600 GENERAL AR-TRACTOR

SMCS-7000 **i02217882**

NOTE	PART NUMBER	QTY	PART NAME 1 2 3 4 5 6 (PRODUCT LEVEL)	SEE PAGE
Y	*205-8578*	1	BATTERY & WIRING GP	177
Y	*205-8640*	1	CAB AR	736
Y	*205-8632*	1	CASE & FRAME GP	363
Y	*215-5599*	1	ENCLOSURE GP-ENGINE	380
Y	*210-1689*	1	ENCLOSURE GP-REAR	387
Y	*205-8570*	1	FENDER GP	391
Y	*207-4802*	1	FILTER & LINES GP-FUEL	144
Y	*210-8373*	1	GUARD GP-BOTTOM	398
Y	*205-8571*	1	GUARD GP-DRIVE SHAFT	321
Y	*204-9876*	1	GUARD GP-RADIATOR	407
Y	*134-0978*	1	LIGHTING GP-FLOOD	206
Y	*205-8634*	1	LINES GP-HEATER	778
Y	*213-9253*	1	LUBRICATION GP-PIVOT SHAFT	439
Y	*207-4801*	1	MOUNTING GP-ROPS	787
Y	*205-8574*	1	PLATE & FILM GP	834
Y	*214-4193*	1	PLATFORM AR	795
Y	*207-4800*	1	ROPS GP	800
Y	*214-1096*	1	SEAT & MOUNTING GP	803
Y	*205-8577*	1	TANK GP-FUEL	162
	6V-1971	1	LITERATURE GP (MACHINE)	
	246-2641		PADLOCK GP (LITERATURE COMPARTMENT)	
	5P-8500	1	KEY	

Y-SEPARATE ILLUSTRATION

<END>

211-5087 COLD WEATHER AR

S/N: RJS1-UP

AN ATTACHMENT

SMCS-7000 **i02223264**

NOTE	PART NUMBER	QTY	PART NAME 1 2 3 4 5 6 (PRODUCT LEVEL)	SEE PAGE
Y	**179-6823**	1	BAR AS-EQUALIZER	416
Y	**186-2949**	2	FINAL DRIVE GP	313
Y	*125-2140*	1	ROLLER & IDLER AR (COLD WEATHER)	441
	7T-9308	32	PIN AS-CARTRIDGE	
			(EACH INCLUDES)	
	6Y-0473	2	PLUG-CLEAR	
	9G-4872	2	STOPPER-RUBBER	
	9X-7487	2	SEAL AS-SHAFT	

Y-SEPARATE ILLUSTRATION

<END>

MACHINE ARRANGEMENT

205-8600 GENERAL AR-TRACTOR

S/N: RJS1-UP

SMCS-7000 **i01989122**

NOTE	PART NUMBER	QTY	PART NAME 1 2 3 4 5 6 (PRODUCT LEVEL)	SEE PAGE
Y	*205-8601*	1	CHASSIS AR	1
Y	*205-8624*	1	ELECTRONICS AR-MACHINE	190
Y	*205-8603*	1	ENGINE AR-COMPLETE	6
Y	*205-8602*	1	HYDRAULIC AR	552
Y	*205-8604*	1	INSTALLATION AR-ENGINE	9
Y	*205-8605*	1	POWER TRAIN AR	335
Y	*205-8606*	1	UNDERCARRIAGE AR	468

Y-SEPARATE ILLUSTRATION

<END>

211-5077 MINING AR

S/N: RJS1-UP
AN ATTACHMENT

SMCS-7000 **i02223328**

NOTE	PART NUMBER	QTY	PART NAME 1 2 3 4 5 6 (PRODUCT LEVEL)	SEE PAGE
Y	**1Z-0886**	1	PAINT GP (BLACK)	834
Y	*211-5079*	1	ROLLER AR-TRACK	442
Y	*211-5068*	1	STEP AR	815

Y-SEPARATE ILLUSTRATION

<END>

211-5069 MODIFICATION AR-WOODCHIP

S/N: RJS1-UP
WITH TRASH RESISTANT RADIATOR, REVERSING FAN, TURBINE PRECLEANER, BLACK HOOD AND LIFT CYLINDERS, CARRIER ROLLERS, AND REMOVED BOTTOM GUARDS
AN ATTACHMENT

SMCS-7000 **i02219891**

NOTE	PART NUMBER	QTY	PART NAME 1 2 3 4 5 6 (PRODUCT LEVEL)	SEE PAGE
Y	*242-9279*	1	ALTERNATOR GP-CHARGING	175
Y	*211-5080*	1	GUARD GP-BOTTOM	400
Y	*208-1597*	1	LINES GP-HYDRAULIC FAN	557
Y	**1Z-0886**	1	PAINT GP (BLACK)	834
Y	*211-5053*	1	PRECLEANER AR (TURBINE)	130
Y	*211-5078*	1	RADIATOR AR (TRASH RESISTANT)	113
Y	*211-9297*	1	ROLLER AR-TRACK CARRIER	443
Y	*243-4311*	1	SEAL GP (TRASH)	159

Y-SEPARATE ILLUSTRATION

<END>

MACHINE ARRANGEMENT

211-5072 STOCKPILE AR

S/N: RJS1-UP

WITH DUCTED HIGH OUTPUT ALTERNATOR, CARRIER ROLLERS, TURBINE PRECLEANER, BLACK HOOD AND LIFT CYLINDERS, AND PARTIAL BOTTOM GUARDS

AN ATTACHMENT

SMCS-7000 **i02219633**

NOTE	PART NUMBER	QTY	PART NAME 1 2 3 4 5 6 (PRODUCT LEVEL)	SEE PAGE
Y	*242-9279*	1	ALTERNATOR GP-CHARGING	175
Y	*211-5080*	1	GUARD GP-BOTTOM	400
Y	**1Z-0886**	1	PAINT GP (BLACK)	834
Y	*211-5053*	1	PRECLEANER AR (TURBINE)	130
Y	*211-9297*	1	ROLLER AR-TRACK CARRIER	443
Y	*243-4311*	1	SEAL GP (TRASH)	159
Y-SEPARATE ILLUSTRATION				

<END>

211-5065 WASTE HANDLING AR

S/N: RJS1-UP

CANNOT BE USED WITH CAB AR-ARTIC, CAB AR-DEFROST

AN ATTACHMENT

SMCS-7000 **i02252180**

NOTE	PART NUMBER	QTY	PART NAME 1 2 3 4 5 6 (PRODUCT LEVEL)	SEE PAGE
Y	*242-9279*	1	ALTERNATOR GP-CHARGING	175
Y	*188-0532*	1	GUARD AR-FINAL DRIVE	397
Y	*196-1353*	1	GUARD AR-IDLER	397
Y	*195-1174*	1	MODIFICATION AR-BULLDOZER	668
Y	*243-4311*	1	SEAL GP (TRASH)	159
Y	*211-5088*	1	WASTE HANDLING AR	4
	188-2559	2	FRAME AS-FRONT	
			(EACH INCLUDES)	
	4B-4158	4	SCREW-DRIVE (3/16XO.25-IN)	
	253-1347	2	PLATE-WARNING (RECOIL SPRING)	
	9P-7990	1	SLEEVE-WEAR	
Y-SEPARATE ILLUSTRATION				

<END>

MACHINE ARRANGEMENT

211-5088 WASTE HANDLING AR

S/N: RJS1-UP

PART OF 211-5065 WASTE HANDLING AR

AN ATTACHMENT

SMCS-7000 **i02219923**

NOTE	REF NO	GRAPHIC REF	PART NUMBER	QTY	PART NAME 1 2 3 4 5 6 (PRODUCT LEVEL)	SEE PAGE
Y	1	1	*1Z-0749*	1	GUARD GP-PIVOT SHAFT	406
	2	1	*109-5196*	2	FILM-WASTE HANDLER	
Y	3	1	*211-5068*	1	STEP AR	815
	4	1	**240-8605**	2	BAR	
Y	5	1	*242-9355*	1	ENCLOSURE GP-ENGINE	383
Y	6	1	*243-2742*	1	GUARD GP-BOTTOM	401
	7	1	**245-6777**	2	BAR	
	8	1	**5J-4982**	2	REINFORCEMENT	

Y-SEPARATE ILLUSTRATION

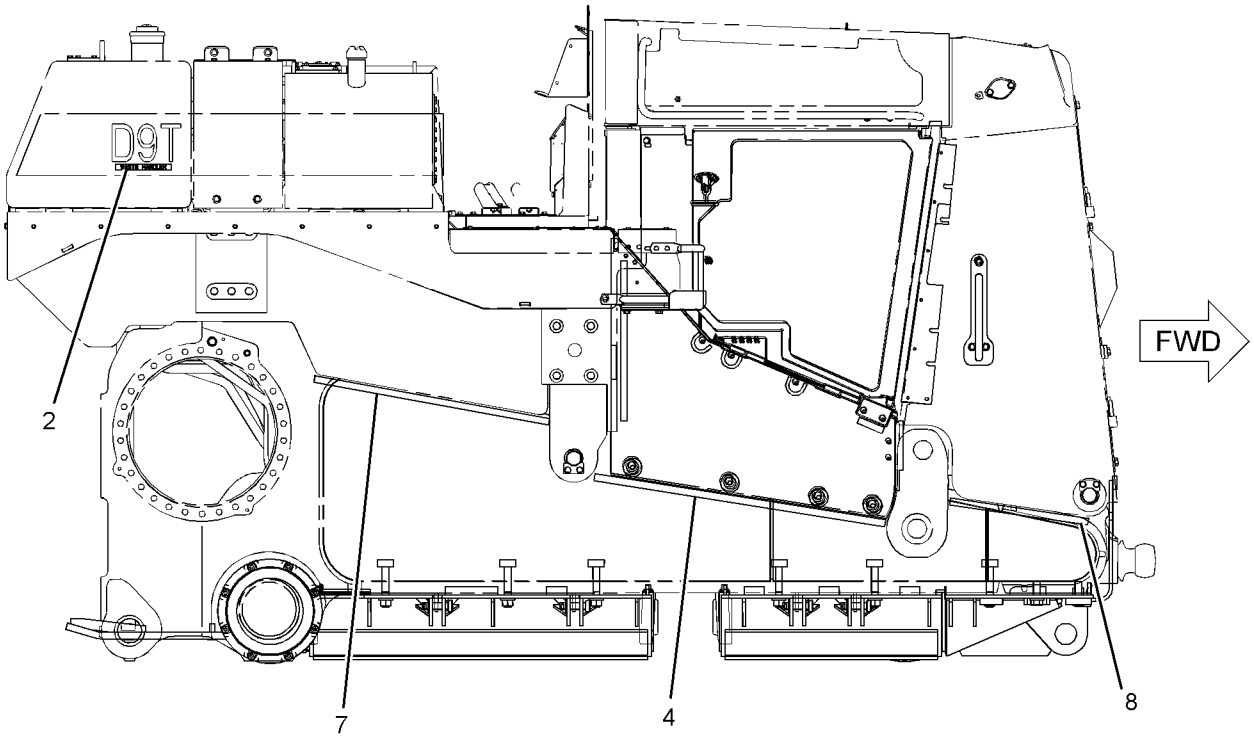

RIGHT SIDE VIEW

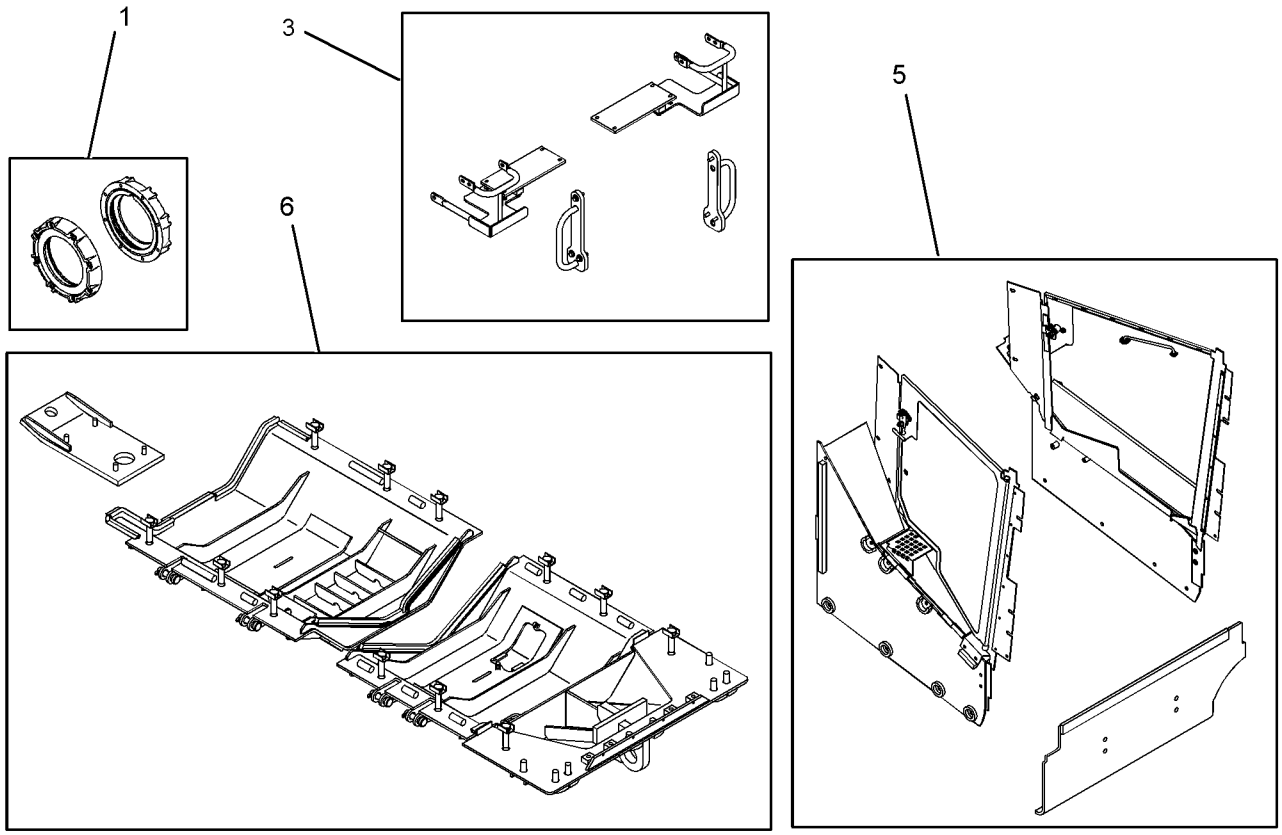

GRAPHIC #1 **<END>** g01126030

ENGINE ARRANGEMENT

205-8603 ENGINE AR-COMPLETE

S/N: RHX1-UP
EXHAUSTS REAR
PART OF 205-8600 GENERAL AR-TRACTOR

SMCS-1000 **i02183576**

NOTE	PART NUMBER	QTY	PART NAME 1 2 3 4 5 6 (PRODUCT LEVEL)	SEE PAGE
Y	*126-7631*	1	CONNECTION GP-ELECTRICAL	186
Y	*235-8200*	1	PLUG GP-CONNECTOR (ENGINE HARNESS, PROT COVER)	230
Y	*243-1560*	1	CONTROL & MTG GP-ENGINE ELEK	188
Y	*8N-3148*	1	COVER GP-CYLINDER BLOCK	13
Y	*216-5540*	1	COVER GP-FLYWHEEL HOUSING	14
Y	*220-6390*	1	COVER GP-FLYWHEEL HOUSING	15
Y	*159-6159*	1	COVER GP-FRONT HOUSING (CAM, IDLER GEAR)	16
Y	*230-3818*	1	COVER GP-VALVE MECHANISM	21
Y	*212-2113*	1	DAMPER & PULLEY GP	41
Y	*6I-3638*	1	DRIVE GP-PUMP	304
	221-1002	1	ELECTRONICS GP-ENGINE RATINGS	
Y	*241-5933*	1	ENGINE AR-CORE	8
Y	*4P-6846*	1	FASTENER GP-FRONT HOUSING	42
Y	*108-9382*	1	FASTENER GP-FRONT HOUSING (STUD, WASHER, NUT)	43
Y	*227-3033*	1	FASTENER GP-FRONT HOUSING	44
Y	*243-5194*	1	FASTENER GP-OIL PAN	45
Y	*4N-2481*	1	FASTENER GP-OIL PUMP MOUNTING	81
Y	*220-6374*	1	FILLER GP-ENGINE OIL	82
Y	*220-6371*	1	FILTER GP-ENGINE OIL	83
Y	*209-7307*	1	FLYWHEEL GP	47
Y	*220-6367*	1	GAUGE GP-OIL LEVEL (DIPSTICK)	87
Y	*220-6365*	1	GEAR GP-REAR	52
Y	*220-6368*	1	HOUSING GP-FLYWHEEL	54
Y	*225-8363*	1	HOUSING GP-FRONT	56
Y	*111-2355*	1	LIFTING GP-ENGINE (FRONT)	60
Y	*220-6370*	1	LIFTING GP-ENGINE	61
Y	*4N-4771*	1	LINES GP-ENGINE OIL	88
Y	*229-1497*	1	LINES GP-FUEL	151
Y	*225-4126*	1	LINES GP-TURBOCHARGER OIL	89
Y	*211-9295*	1	LINES GP-WATER	105
Y	*225-4127*	1	LINES GP-WATER (TURBOCHARGER)	109
Y	*220-6372*	1	MANIFOLD GP-EXHAUST	127
Y	*222-5314*	1	MOUNTING GP-AIR CLEANER	128
Y	*174-7464*	1	MOUNTING GP-FUEL LINE	154
Y	*220-6377*	1	MOUNTING GP-FUMES DISPOSAL	91
Y	*259-4756*	1	MOUNTING GP-SENSOR (ATMOSPHERIC, ENGINE OIL)	225
Y	*7W-0158*	1	PAN GP-OIL	64
Y	*225-6329*	1	PLUG GP-CYLINDER BLOCK	71
Y	*229-9477*	1	PLUG GP-CYLINDER BLOCK (OIL GALLERY)	72
Y	*229-6711*	1	PLUG GP-CYLINDER HEAD	73
Y	*150-4279*	1	PUMP & MTG GP-FUEL TRANSFER	155
YR	**198-1508**	1	PUMP GP-ENGINE OIL	97
Y	*224-3239*	1	PUMP GP-WATER	112
Y	*231-1973*	1	SENSOR GP-ENGINE	233
Y	*229-3693*	1	SUPPORT GP-ENGINE	76
Y	*192-0542*	1	TRUNNION GP-ENGINE	78
Y	*239-9667*	1	TURBOCHARGER GP	135
Y	*243-1546*	1	WIRING GP-ELECTRONIC CONTROL	281
			GASKET KITS WILL BE PROVIDED WHEN AVAILABLE	

R-REMFG PART MAY BE AVAILABLE
Y-SEPARATE ILLUSTRATION

ENGINE ARRANGEMENT

231-3468 ENGINE AR-COMPLETE

S/N: RHX1-UP
EXHAUSTS REAR, SOUND SUPPRESSED
PART OF 205-8609 SUPPRESSION AR-SOUND
AN ATTACHMENT

SMCS-1000 **i02183577**

NOTE	PART NUMBER	QTY	PART NAME 1 2 3 4 5 6 (PRODUCT LEVEL)	SEE PAGE
Y	*126-7631*	1	CONNECTION GP-ELECTRICAL	186
Y	*243-1560*	1	CONTROL & MTG GP-ENGINE ELEK	188
Y	*8N-3148*	1	COVER GP-CYLINDER BLOCK	13
Y	*216-5540*	1	COVER GP-FLYWHEEL HOUSING	14
Y	*220-6390*	1	COVER GP-FLYWHEEL HOUSING	15
Y	*159-6159*	1	COVER GP-FRONT HOUSING (CAM, IDLER GEAR)	16
Y	*238-1262*	1	COVER GP-SOUND SUPPRESSION	17
Y	*230-3818*	1	COVER GP-VALVE MECHANISM	21
Y	*212-2113*	1	DAMPER & PULLEY GP	41
Y	*6I-3638*	1	DRIVE GP-PUMP	304
Y	*241-5933*	1	ENGINE AR-CORE	8
Y	*4P-6846*	1	FASTENER GP-FRONT HOUSING	42
Y	*108-9382*	1	FASTENER GP-FRONT HOUSING (STUD, WASHER, NUT)	43
Y	*243-5194*	1	FASTENER GP-OIL PAN	45
Y	*4N-2481*	1	FASTENER GP-OIL PUMP MOUNTING	81
Y	*220-6374*	1	FILLER GP-ENGINE OIL	82
Y	*220-6371*	1	FILTER GP-ENGINE OIL	83
Y	*209-7307*	1	FLYWHEEL GP	47
Y	*220-6367*	1	GAUGE GP-OIL LEVEL (DIPSTICK)	87
Y	*220-6365*	1	GEAR GP-REAR	52
Y	*220-6368*	1	HOUSING GP-FLYWHEEL	54
Y	*243-5644*	1	HOUSING GP-FRONT	58
Y	*111-2355*	1	LIFTING GP-ENGINE (FRONT)	60
Y	*220-6370*	1	LIFTING GP-ENGINE	61
Y	*4N-4771*	1	LINES GP-ENGINE OIL	88
Y	*229-1497*	1	LINES GP-FUEL	151
Y	*225-4126*	1	LINES GP-TURBOCHARGER OIL	89
Y	*211-9295*	1	LINES GP-WATER	105
Y	*225-4127*	1	LINES GP-WATER (TURBOCHARGER)	109
Y	*220-6372*	1	MANIFOLD GP-EXHAUST	127
Y	*222-5314*	1	MOUNTING GP-AIR CLEANER	128
Y	*220-6377*	1	MOUNTING GP-FUMES DISPOSAL	91
Y	*259-4756*	1	MOUNTING GP-SENSOR (ATMOSPHERIC, ENGINE OIL)	225
Y	*107-7378*	1	PAN GP-OIL	66
Y	*174-3874*	1	PANEL GP-SOUND SUPPRESSION (ENGINE, LH)	412
Y	*225-6329*	1	PLUG GP-CYLINDER BLOCK	71
Y	*229-9477*	1	PLUG GP-CYLINDER BLOCK (OIL GALLERY)	72
Y	*229-6711*	1	PLUG GP-CYLINDER HEAD	73
Y	*150-4279*	1	PUMP & MTG GP-FUEL TRANSFER	155
YR	**198-1508**	1	PUMP GP-ENGINE OIL	97
Y	*224-3239*	1	PUMP GP-WATER	112
Y	*231-1973*	1	SENSOR GP-ENGINE	233
Y	*229-3693*	1	SUPPORT GP-ENGINE	76
Y	*192-0542*	1	TRUNNION GP-ENGINE	78
Y	*239-9667*	1	TURBOCHARGER GP	135
Y	*243-1546*	1	WIRING GP-ELECTRONIC CONTROL	281
	244-8689	1	ELECTRONICS GP-ENGINE RATINGS	
			GASKET KITS WILL BE PROVIDED WHEN AVAILABLE	

R-REMFG PART MAY BE AVAILABLE
Y-SEPARATE ILLUSTRATION

ENGINE ARRANGEMENT

241-5933 ENGINE AR-CORE

S/N: RHX1-UP
ADEM 4, WITHOUT BRAKE, TIER 3
PART OF 205-8603, 231-3468 ENGINE AR-COMPLETE
ALSO AN ATTACHMENT

SMCS-1000 **i02219812**

NOTE	PART NUMBER	QTY	PART NAME 1 2 3 4 5 6 (PRODUCT LEVEL)	SEE PAGE
Y	*234-5005*	1	BASE GP-VALVE COVER & INJ HARN	10
Y	*234-7935*	1	CAMSHAFT GP	12
Y	*223-9732*	1	CRANKSHAFT GP	29
Y	*261-0191*	1	CYLINDER BLOCK GP	32
Y	*235-2974*	1	CYLINDER HEAD GP	40
Y	*109-1657*	1	FASTENER GP-VALVE MECHANISM	46
Y	*207-0449*	1	GEAR GP-FRONT	49
Y	*220-1441*	6	PISTON & ROD GP	68
Y	*235-1402*	6	PUMP GP-FUEL INJECTION	156
Y	*148-7482*	1	VALVE MECHANISM GP	79

Y-SEPARATE ILLUSTRATION

ENGINE ARRANGEMENT

205-8604 INSTALLATION AR-ENGINE

S/N: RJS1-UP

PART OF 205-8600 GENERAL AR-TRACTOR

SMCS-1000 **i02246693**

NOTE	PART NUMBER	QTY	PART NAME 1 2 3 4 5 6 (PRODUCT LEVEL)	SEE PAGE
Y	*206-7335*	1	AFTERCOOLER GP-AIR	120
Y	*205-8588*	1	AIR CLEANER GP	121
Y	*205-8587*	1	ALTERNATOR GP-CHARGING	173
Y	*205-8590*	1	COOLER & MTG GP-HYDRAULIC OIL	521
Y	*205-8589*	1	COOLER GP-TRANSMISSION OIL (TRANSMISSION)	301
Y	*205-8593*	1	DUST EJECTOR GP	123
Y	*205-8594*	1	FAN GP-SUCTION	100
Y	*206-7371*	1	FUMES DISPOSAL GP	86
Y	*205-8595*	1	LINES GP-AIR	124
Y	*206-7339*	1	LINES GP-AIR	125
Y	*206-7346*	1	LINES GP-AIR	126
Y	*205-8597*	1	LINES GP-WATER	103
Y	*212-7557*	1	LINES GP-WATER	107
Y	*205-4709*	1	MOUNTING GP-ENGINE	62
Y	*205-8610*	1	MUFFLER GP	129
Y	*205-8611*	1	RADIATOR GP	114
Y	*231-7913*	1	SHIELD GP-MANIFOLD	134
Y	*209-8389*	1	STARTING AID GP-ETHER	255
Y	*209-8423*	1	STARTING MOTOR GP-ELECTRIC	262
Y	*206-7364*	1	TANK GP-WATER	118
Y	*222-7860*	1	WIRING GP-ENGINE	283
	246-2641	1	PADLOCK GP (OIL FILLER)	
	246-2641	1	PADLOCK GP (OIL LEVEL GAGE)	
			(EACH INCLUDES)	
	5P-8500	2	KEY	

Y-SEPARATE ILLUSTRATION

234-5005 BASE GP-VALVE COVER & INJ HARN

S/N: RHX1-UP
PART OF 241-5933 ENGINE AR-CORE
ALSO AN ATTACHMENT

SMCS-1120, 1408 **i02230630**

NOTE	REF NO	GRAPHIC REF	PART NUMBER	QTY	PART NAME 1 2 3 4 5 6 (PRODUCT LEVEL)	SEE PAGE
	1	1	**123-3202**	3	STRAP-CABLE	
	2	1	**6V-0128**	1	SEAL-CONNECTOR	
	3	1	**7E-6508**	6	CAP AS	
	4	1	**9L-8925**	14	BOLT (5/16-18X1.25-IN)	
	5	1	**122-1472**	1	BOLT (5/16-18X2.36-IN)	
	6	1	**177-4152**	1	BASE-VALVE COVER	
	7	1	**234-5002**	1	HARNESS AS-ENGINE (INJECTOR, VARIABLE VALVE)	
		1	**103-8134**	1	KIT-RECEPTACLE (12-PIN)	
					(INCLUDES RECEPTACLE AS & WEDGE)	
	8	1	**100-5218**	3	CLIP	
	9	1	**100-5219**	3	CLIP	
	10	1	**4F-7957**	2	BOLT (1/4-20X0.875-IN)	
	11	1	**5P-0537**	8	WASHER-HARD (7.2X14.5X2-MM THK)	
	12	1	**8H-3127**	6	BOLT (1/4-20X3/4-IN)	
BD	13	1	**5P-5678**		SEAL	
J	14	1	**123-3202**	3	STRAP-CABLE	

B-USE AS REQUIRED
D-ORDER BY THE METER
J-ONLY FOR USE WITH ACTUATOR GROUP-EVA

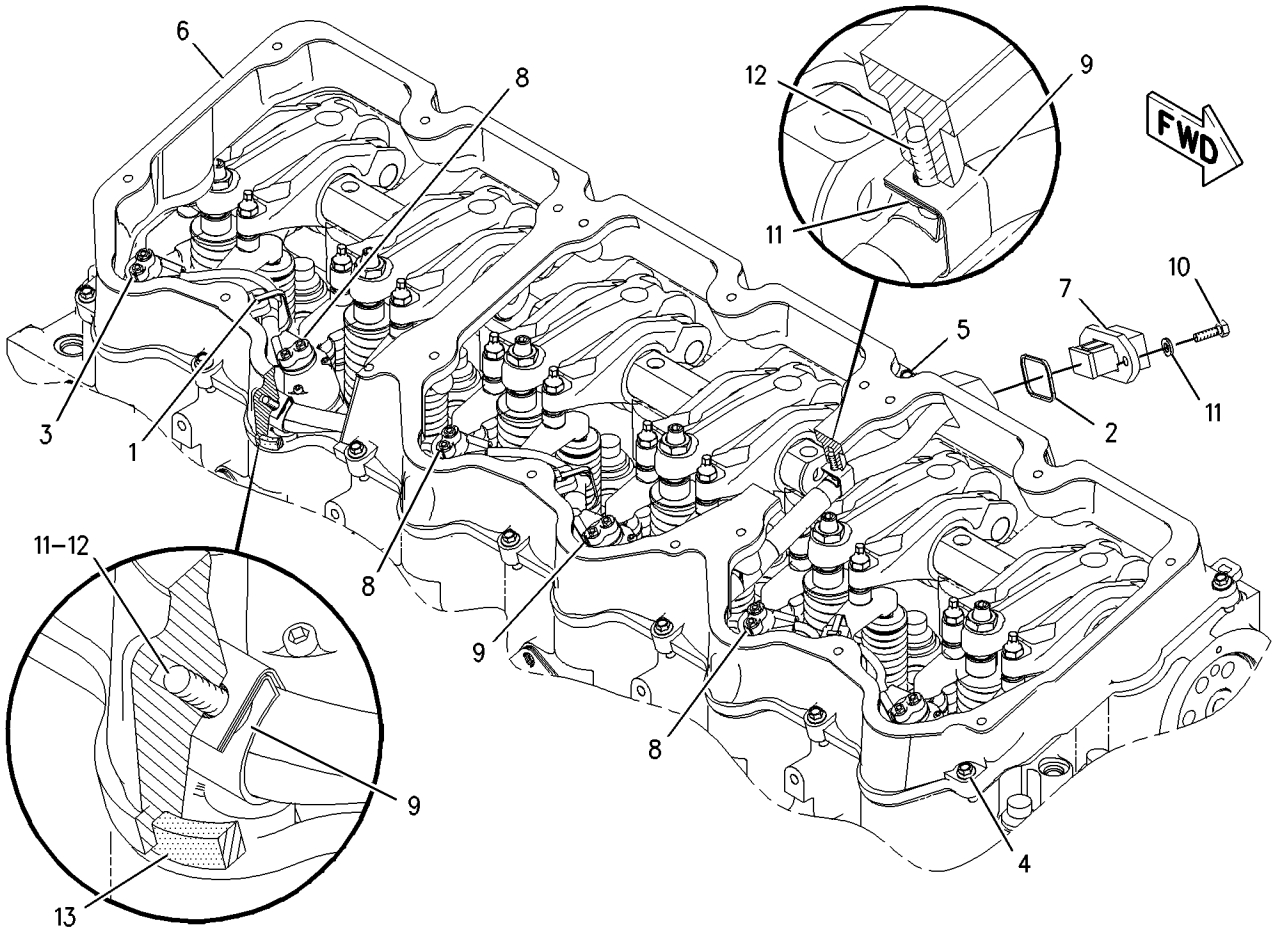

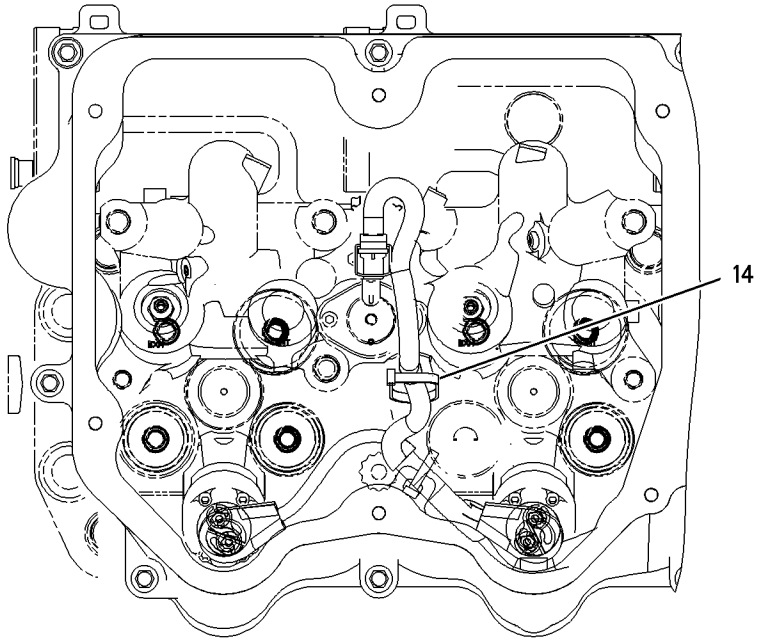

WIRING FOR
ACTUATOR GROUP-EVA

GRAPHIC #1 **<END>** g01003162

BASIC ENGINE

234-7935 CAMSHAFT GP

S/N: RHX1-UP
PART OF 241-5933 ENGINE AR-CORE
ALSO AN ATTACHMENT

SMCS-1210, 1211, 1212 **i01924802**

NOTE	REF NO	GRAPHIC REF	PART NUMBER	QTY	PART NAME 1 2 3 4 5 6 (PRODUCT LEVEL)	SEE PAGE
	1	1	**6V-1197**	1	SEAL-O-RING	
	2	1	**102-9089**	1	COVER	
	3	1	**119-0036**	3	SCREW-FLAT HEAD	
	4	1	**234-7900**	1	CAMSHAFT	

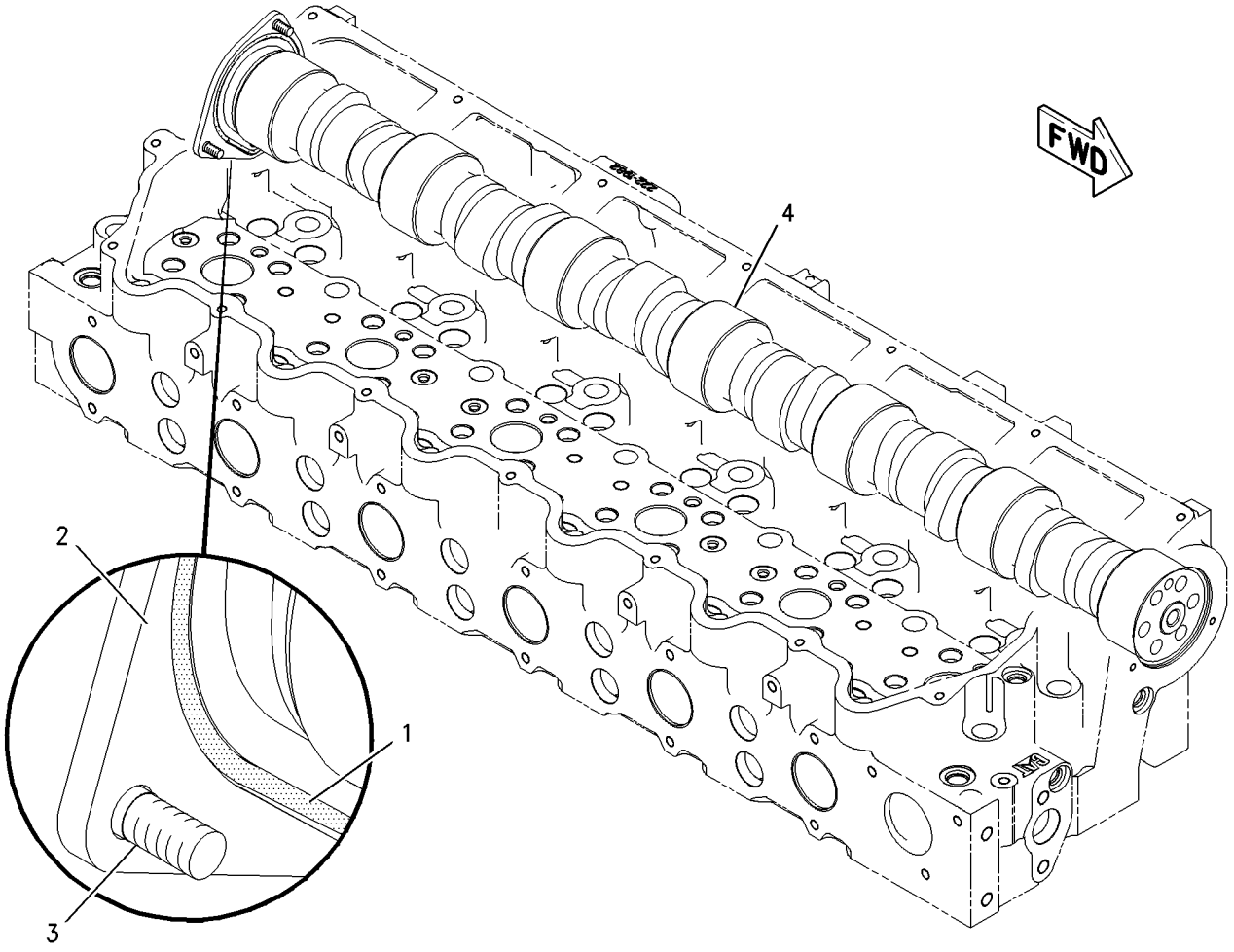

GRAPHIC #1 **<END>** g01002422

8N-3148 COVER GP-CYLINDER BLOCK

S/N: RHX1-UP
PART OF 205-8603, 231-3468 ENGINE AR-COMPLETE
ALSO AN ATTACHMENT

SMCS-1201 **i01807402**

NOTE	REF NO	GRAPHIC REF	PART NUMBER	QTY	PART NAME 1 2 3 4 5 6 (PRODUCT LEVEL)	SEE PAGE
	1	1	**0S-1594**	4	BOLT (3/8-16X1 IN)	
	2	1	**5M-2894**	4	WASHER-HARD (10.2X18.5X2.5MM THK)	
	3	1	**4W-9890**	2	COVER	
	4	1	**4N-0699**	2	GASKET	

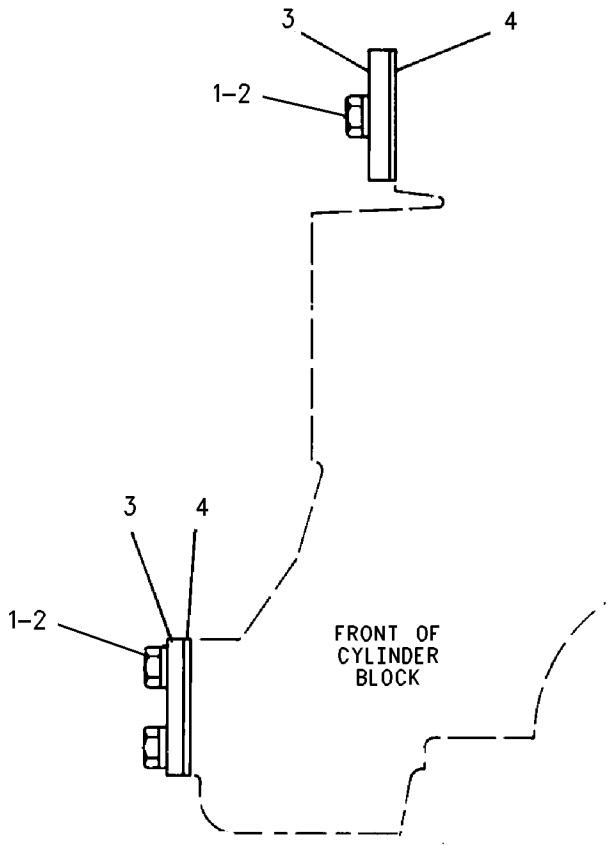

GRAPHIC #1 **<END>** g00921311

216-5540 COVER GP-FLYWHEEL HOUSING

S/N: RHX1-UP
PART OF 205-8603, 231-3468 ENGINE AR-COMPLETE
ALSO AN ATTACHMENT

SMCS-1157 **i01963594**

NOTE	REF NO	GRAPHIC REF	PART NUMBER	QTY	PART NAME 1 2 3 4 5 6 (PRODUCT LEVEL)	SEE PAGE
	1	1	**217-5900**	1	COVER	
	2	1	**4M-6480**	1	GASKET	
M	3	1	**6V-4248**	2	BOLT (M10X1.50X25MM)	
	4	1	**6V-5839**	2	WASHER (11X21X2.5MM THK)	

M-METRIC PART

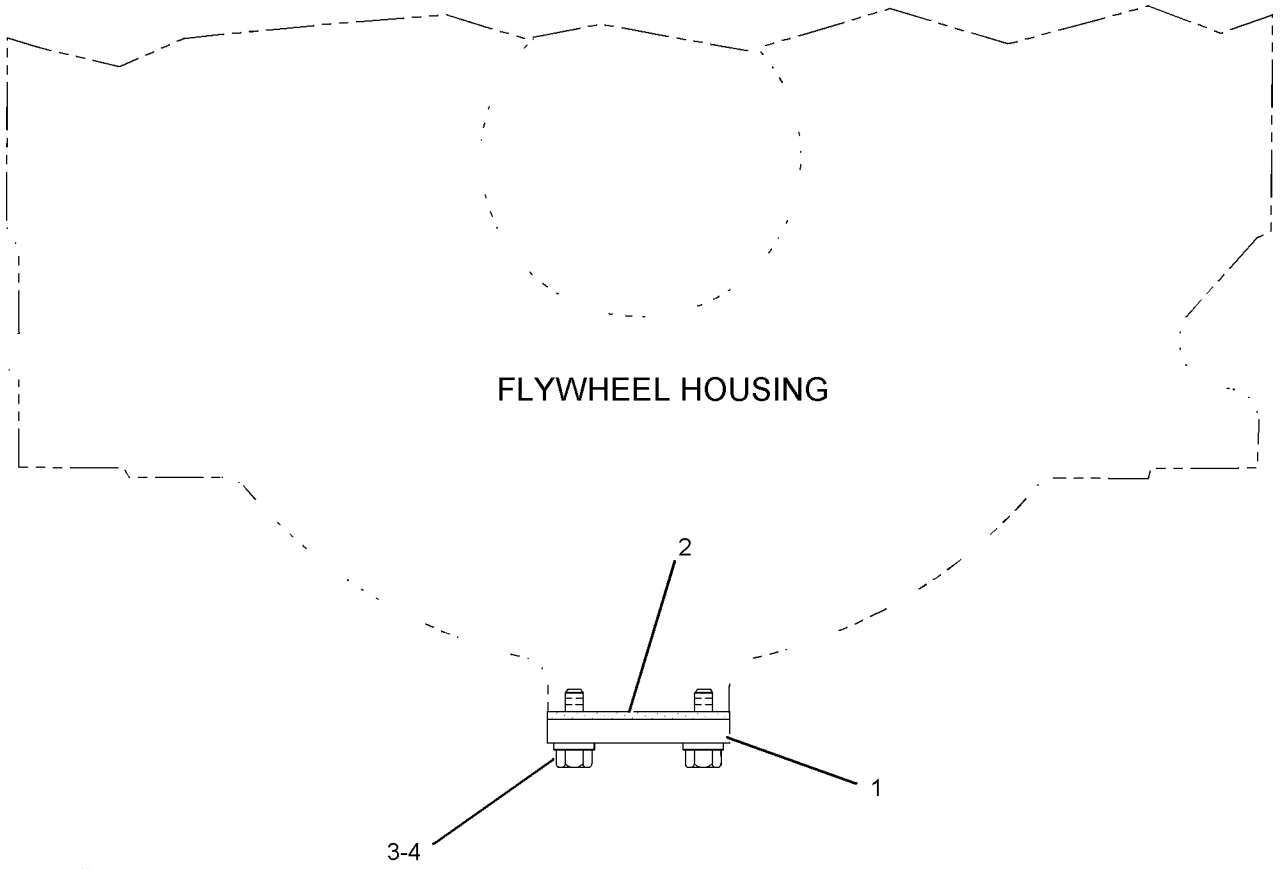

GRAPHIC #1 **<END>** g01020213

220-6390 COVER GP-FLYWHEEL HOUSING

S/N: RHX1-UP
PART OF 205-8603, 231-3468 ENGINE AR-COMPLETE
ALSO AN ATTACHMENT

SMCS-1157 **i01964481**

NOTE	REF NO	GRAPHIC REF	PART NUMBER	QTY	PART NAME 1 2 3 4 5 6 (PRODUCT LEVEL)	SEE PAGE
	1	1	**9Y-6089**	1	GASKET	
M	2	1	**6V-4429**	3	BOLT (M16X2X40MM)	
	3	1	**9X-8268**	3	WASHER (17.5X30X3.5MM THK)	
	4	1	**4N-1114**	1	COVER	

M-METRIC PART

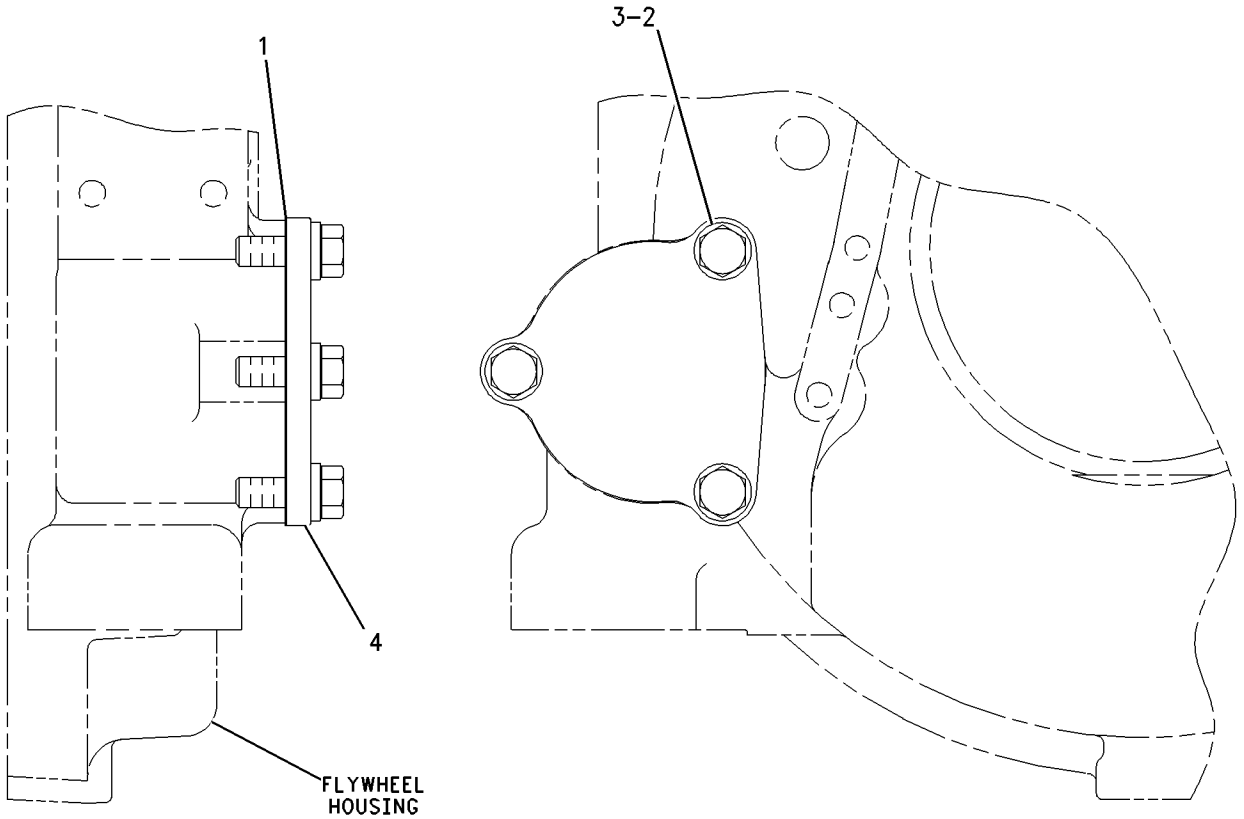

RIGHT SIDE VIEW FRONT VIEW

GRAPHIC #1 **<END>** g00783561

159-6159 COVER GP-FRONT HOUSING

S/N: RHX1-UP
CAM AND IDLER GEAR ACCESS
PART OF 205-8603, 231-3468 ENGINE AR-COMPLETE
ALSO AN ATTACHMENT

SMCS-1151, 1162, 1166 **i01565580**

NOTE	REF NO	GRAPHIC REF	PART NUMBER	QTY	PART NAME 1 2 3 4 5 6 (PRODUCT LEVEL)	SEE PAGE
	1	1	**174-7462**	12	SCREW-BUTTON HEAD	
	2	1	**175-1367**	2	SPACER (8.8X16X10MM THK) (MARKED X)	
	3	1	**209-3569**	1	COVER AS	
		1	**160-7271**	1	SEAL	
	4	1	**5S-0003**	2	NUT (5/16-18 THD) (MARKED X)	
	5	1	**175-1366**	2	STUD (MARKED X)	
	6	1	**163-4565**	2	SEAL-O-RING (MARKED X)	

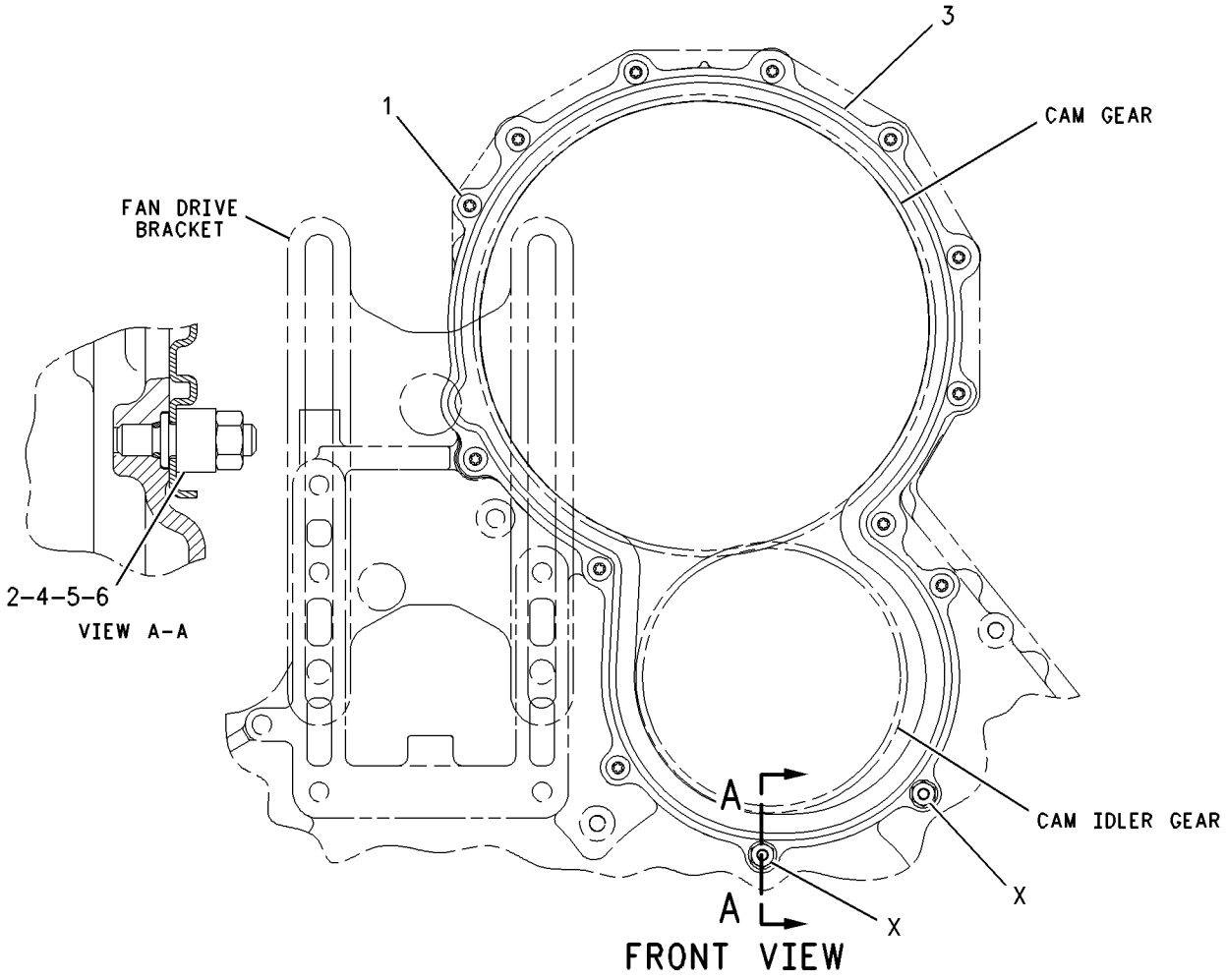

GRAPHIC #1 **<END>** g00631258

238-1262 COVER GP-SOUND SUPPRESSION

S/N: RHX1-UP
PART OF 231-3468 ENGINE AR-COMPLETE
AN ATTACHMENT

SMCS-1801 **i01964741**

NOTE	REF NO	GRAPHIC REF	PART NUMBER	QTY	PART NAME 1 2 3 4 5 6 (PRODUCT LEVEL)	SEE PAGE
	1	1	**104-4820**	1	PANEL AS-SOUND SUPPRESSION	
		1	**9N-6108**	8	SPACER (30.0MM LG X 14.0MM DIA)	
	2	1	**0L-1143**	8	BOLT (3/8-16X2.50 IN)	
	3	1	**5M-2894**	8	WASHER-HARD (10.2X18.5X2.5MM THK)	

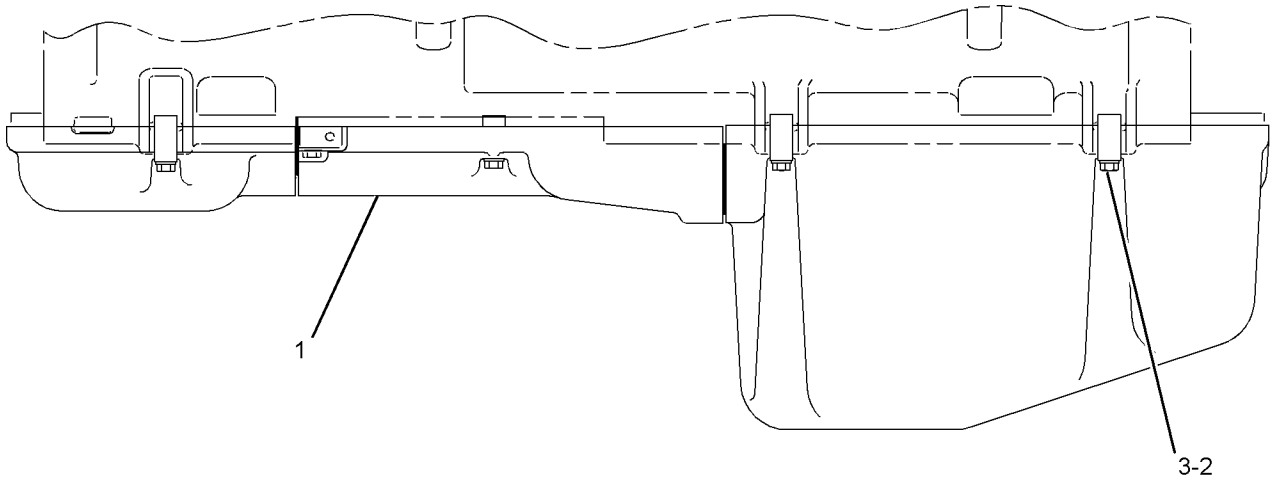

LEFT SIDE VIEW

GRAPHIC #1 **<END>** g01021347

225-1147 COVER GP-VALVE MECHANISM

S/N: RHX1-UP
PART OF 236-2230 COVER GP-VALVE MECHANISM
ALSO AN ATTACHMENT

SMCS-1107, 1120 **i01900540**

NOTE	REF NO	GRAPHIC REF	PART NUMBER	QTY	PART NAME 1 2 3 4 5 6 (PRODUCT LEVEL)	SEE PAGE
	1	1	**7C-6514**	1	ADAPTER	
	2	1	**225-1145**	1	COVER-VALVE	
	3	1	**6V-5100**	1	SEAL-O-RING	

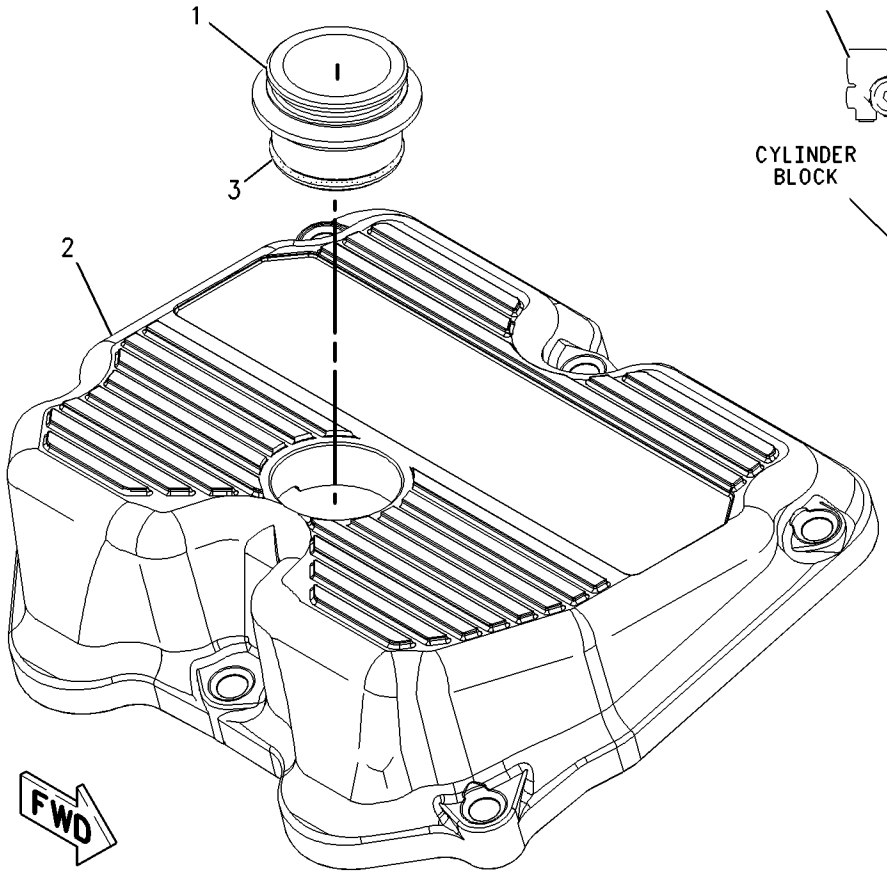

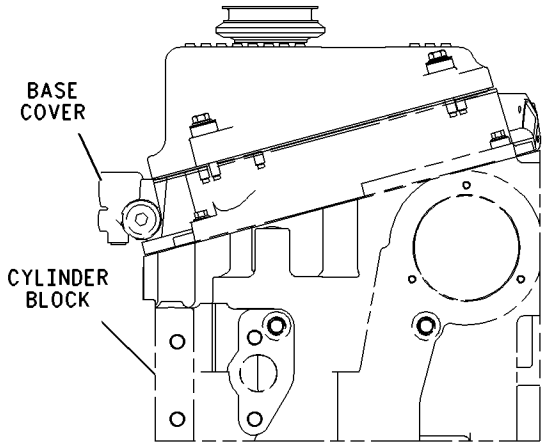

FRONT VIEW
(TYPICAL INSTALLATION)

GRAPHIC #1 **<END>** g00991129

225-1148 COVER GP-VALVE MECHANISM

S/N: RHX1-UP

PART OF 230-3818 COVER GP-VALVE MECHANISM

ALSO AN ATTACHMENT

SMCS-1107, 1120 **i02085796**

NOTE	REF NO	GRAPHIC REF	PART NUMBER	QTY	PART NAME 1 2 3 4 5 6 (PRODUCT LEVEL)	SEE PAGE
	1	1	**242-9537**	1	SEAL (COVER, VALVE MECHANISM)	
	2	1	**243-1159**	6	FASTENER AS	
	3	1	**225-1144**	1	COVER-VALVE	

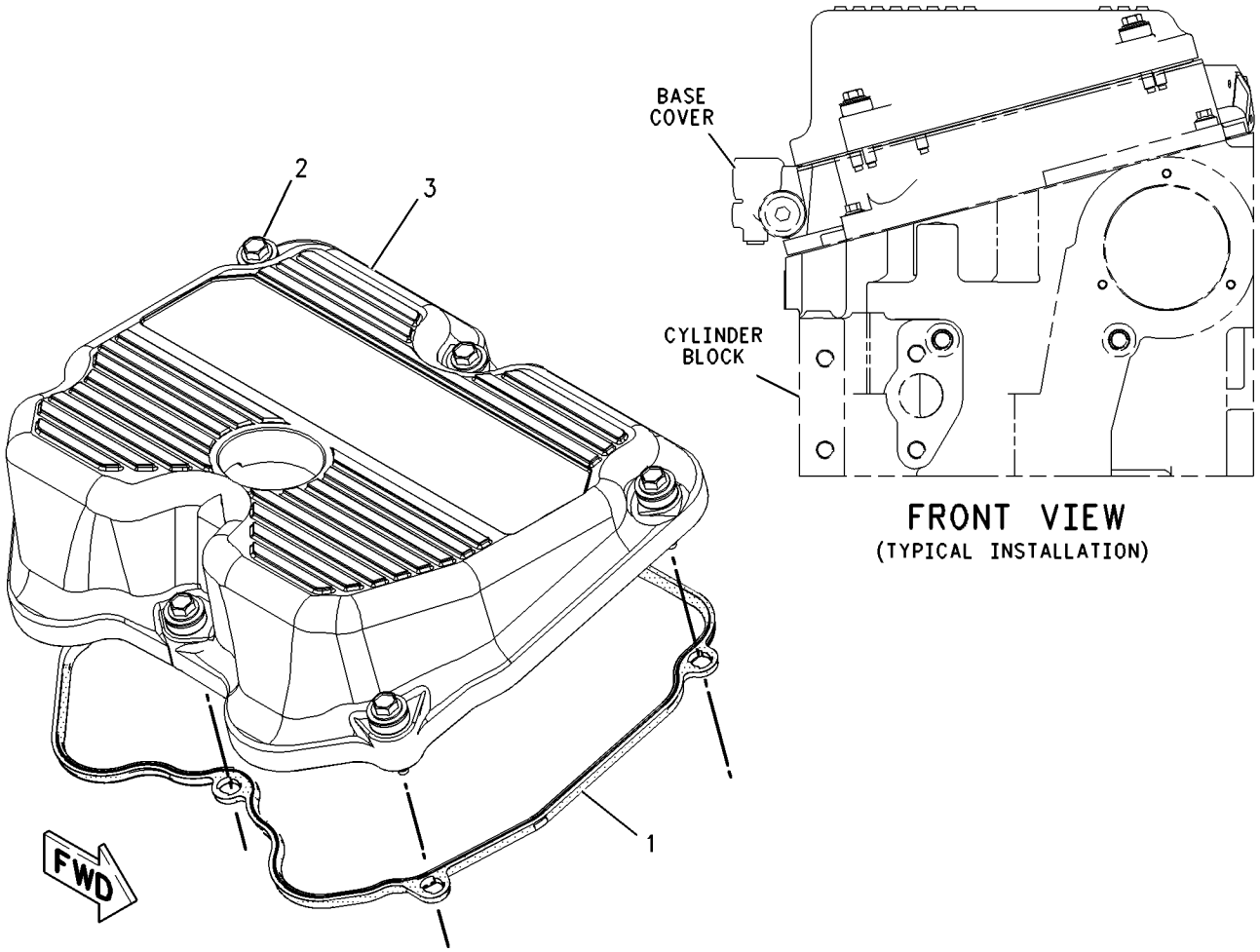

GRAPHIC #1 **<END>** g00991113

225-1150 COVER GP-VALVE MECHANISM

S/N: RHX1-UP

PART OF 230-3818 COVER GP-VALVE MECHANISM

ALSO AN ATTACHMENT

SMCS-1107, 1120 **i02011568**

NOTE	REF NO	GRAPHIC REF	PART NUMBER	QTY	PART NAME 1 2 3 4 5 6 (PRODUCT LEVEL)	SEE PAGE
Y	1	1	**234-2916**	1	BREATHER GP (VALVE MECHANISM)	80
Y	2	1	**236-2230**	1	COVER GP-VALVE MECHANISM	24

Y-SEPARATE ILLUSTRATION

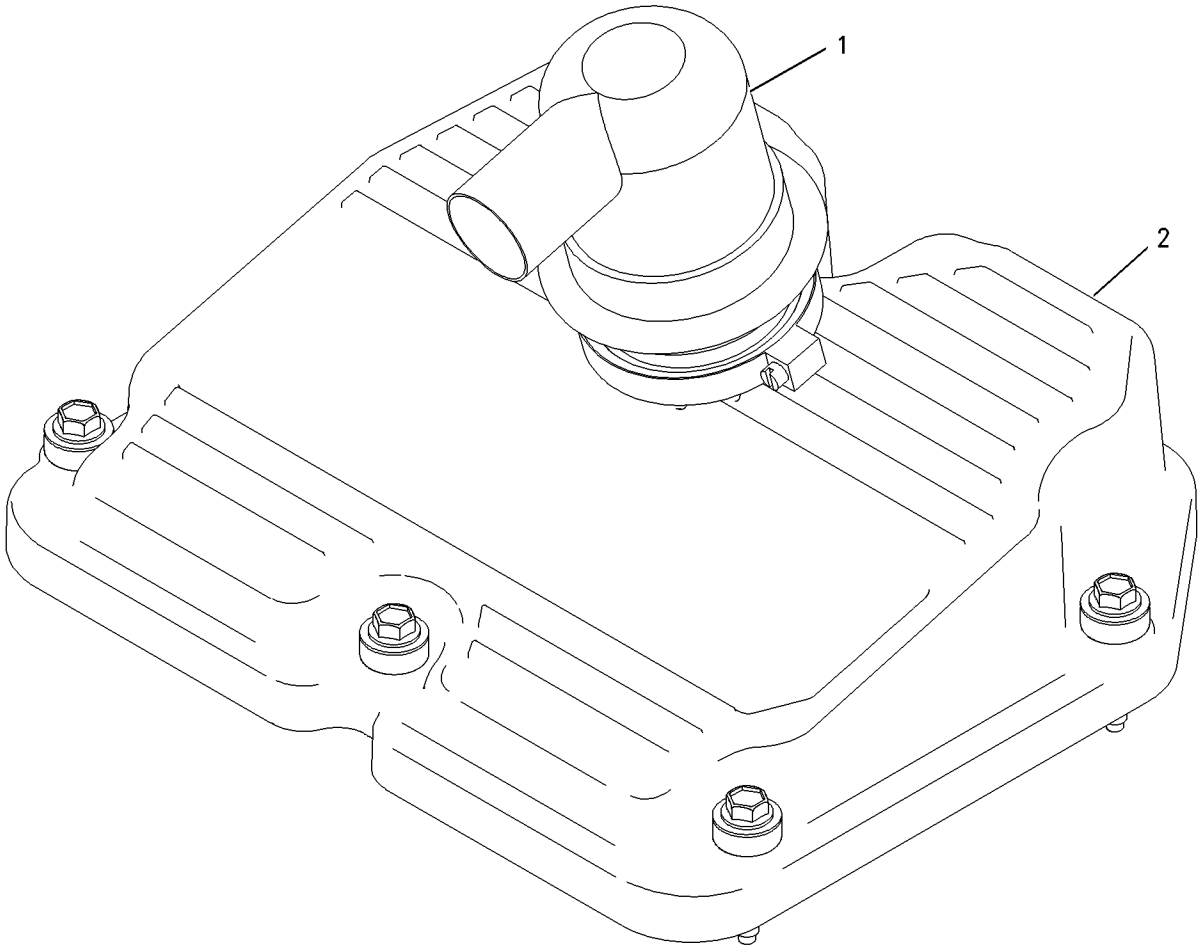

GRAPHIC #1 **<END>** g00989702

230-3818 COVER GP-VALVE MECHANISM—NO OIL FILL

S/N: RHX1-UP
BLACK ISOLATED VALVE COVERS AND FRONT MOUNTED COVER BREATHER
PART OF 205-8603, 231-3468 ENGINE AR-COMPLETE
FOR USE WITH FRONT FUMES DISPOSAL GROUP
ALSO AN ATTACHMENT
TYPE 1

SMCS-1107, 1120 **i01901068**

NOTE	REF NO	GRAPHIC REF	PART NUMBER	QTY	PART NAME 1 2 3 4 5 6 (PRODUCT LEVEL)	SEE PAGE
Y	1	1	*225-1148*	2	COVER GP-VALVE MECHANISM	19
Y	2	1	*225-1150*	1	COVER GP-VALVE MECHANISM	20

Y-SEPARATE ILLUSTRATION

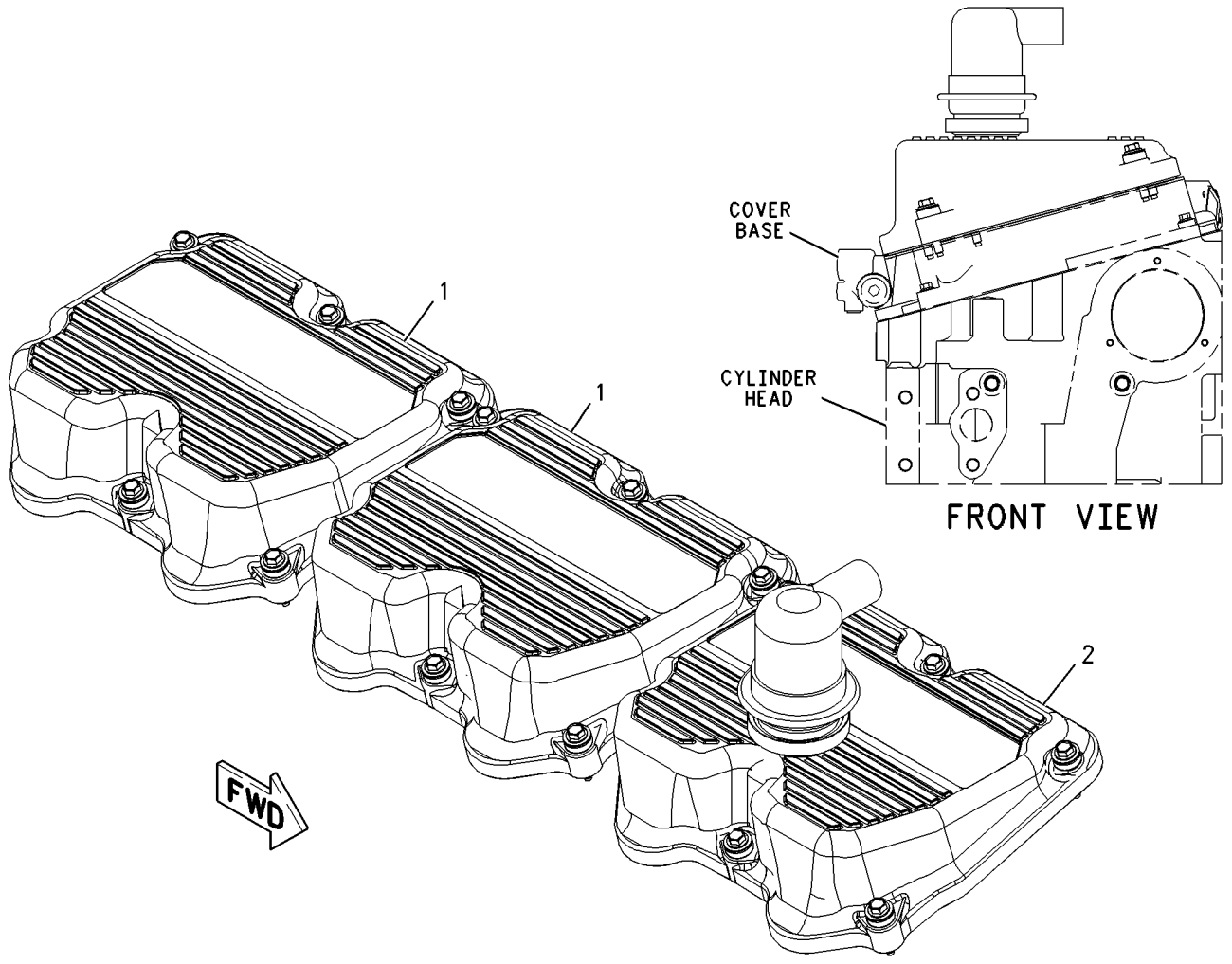

GRAPHIC #1 **<END>** g00990093

230-3818 COVER GP-VALVE MECHANISM–NO OIL FILL

S/N: RHX1-UP
BLACK ISOLATED VALVE COVERS AND FRONT MOUNTED COVER BREATHER
PART OF 205-8603, 231-3468 ENGINE AR-COMPLETE
FOR USE WITH FRONT FUMES DISPOSAL GROUP
ALSO AN ATTACHMENT
TYPE 2

SMCS-1107, 1120 **i02193512**

NOTE	REF NO	GRAPHIC REF	PART NUMBER	QTY	PART NAME 1 2 3 4 5 6 (PRODUCT LEVEL)	SEE PAGE
CY	1	1	*256-3818*	2	COVER GP-VALVE MECHANISM	25
CY	2	1	*256-3820*	1	COVER GP-VALVE MECHANISM	26

C-CHANGE FROM PREVIOUS TYPE
Y-SEPARATE ILLUSTRATION

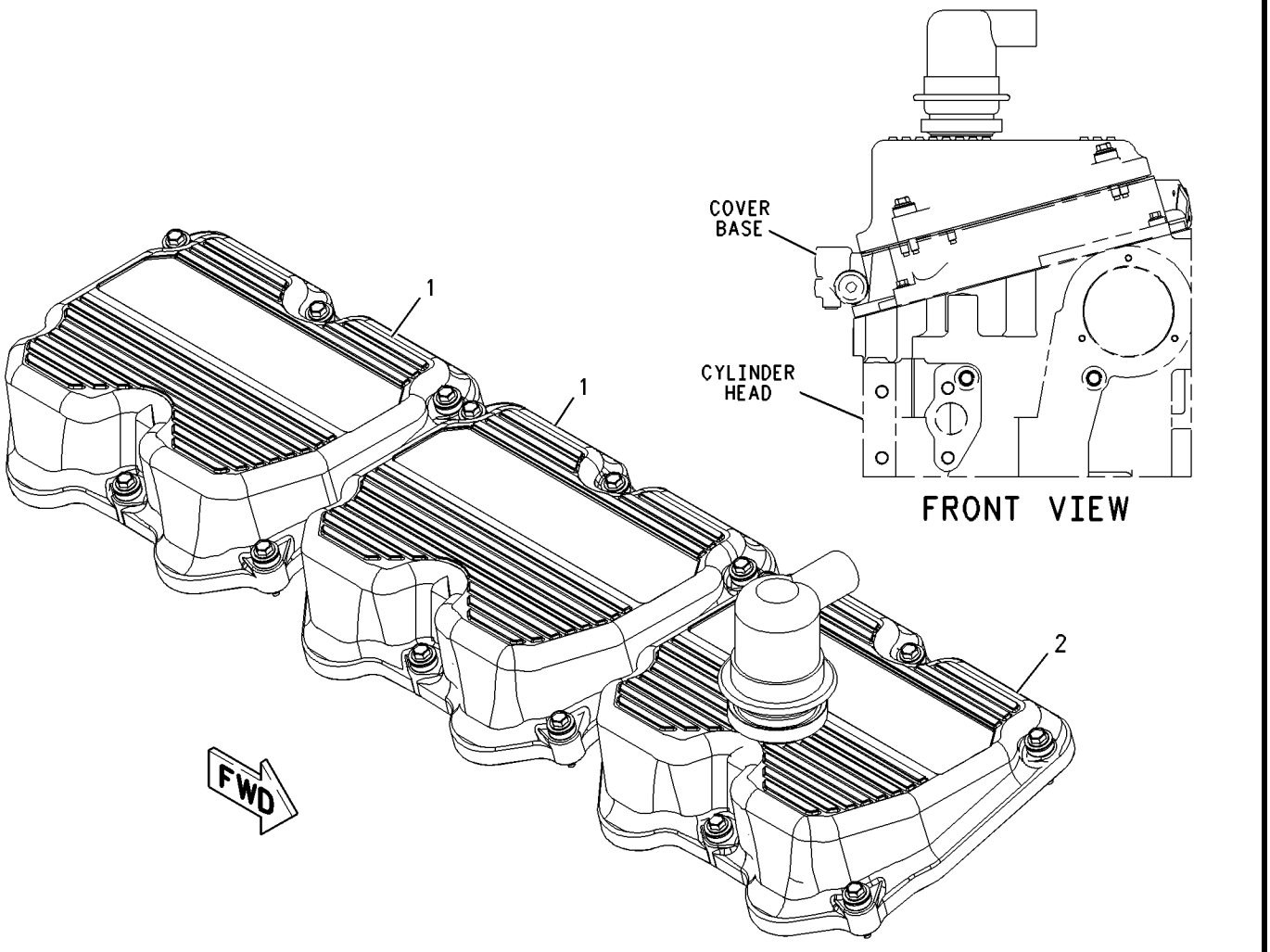

GRAPHIC #1 **<END>** g00990093

230-3818 COVER GP-VALVE MECHANISM—NO OIL FILL

S/N: RHX1-UP
BLACK ISOLATED VALVE COVERS AND FRONT MOUNTED COVER BREATHER
PART OF 205-8603, 231-3468 ENGINE AR-COMPLETE
FOR USE WITH FRONT FUMES DISPOSAL GROUP
ALSO AN ATTACHMENT
TYPE 3

SMCS-1107, 1120 **i02196053**

NOTE	REF NO	GRAPHIC REF	PART NUMBER	QTY	PART NAME 1 2 3 4 5 6 (PRODUCT LEVEL)	SEE PAGE
CY	1	1	*225-1148*	2	COVER GP-VALVE MECHANISM	19
CY	2	1	*225-1150*	1	COVER GP-VALVE MECHANISM	20

C-CHANGE FROM PREVIOUS TYPE
Y-SEPARATE ILLUSTRATION

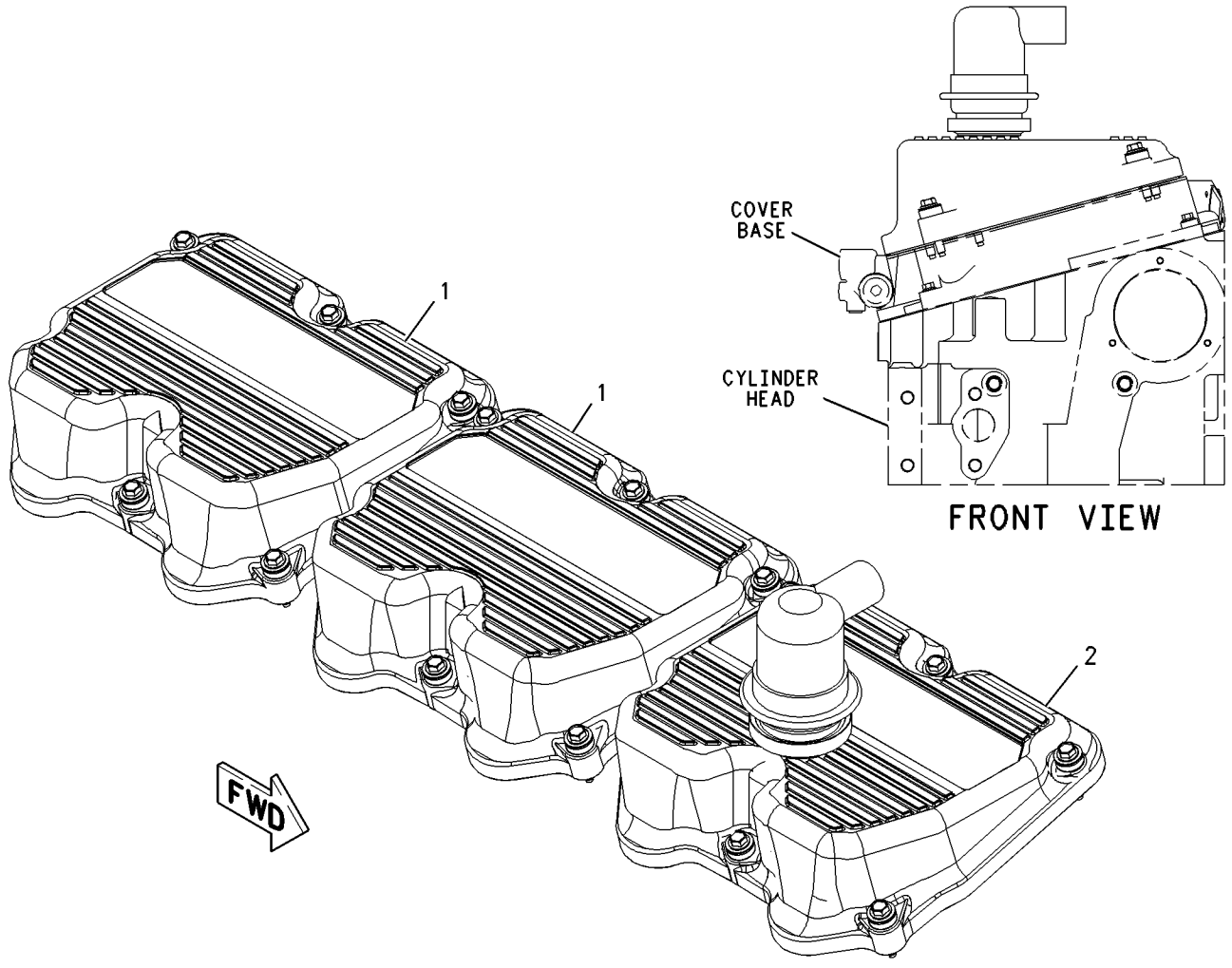

GRAPHIC #1 **<END>** g00990093

BASIC ENGINE

236-2230 COVER GP-VALVE MECHANISM

S/N: RHX1-UP
PART OF 225-1150 COVER GP-VALVE MECHANISM
ALSO AN ATTACHMENT

SMCS-1107, 1120 **i02085803**

NOTE	REF NO	GRAPHIC REF	PART NUMBER	QTY	PART NAME 1 2 3 4 5 6 (PRODUCT LEVEL)	SEE PAGE
	1	1	**242-9537**	1	SEAL (COVER, VALVE MECHANISM)	
	2	1	**243-1159**	6	FASTENER AS	
Y	3	1	**225-1147**	1	COVER GP-VALVE MECHANISM	18

Y-SEPARATE ILLUSTRATION

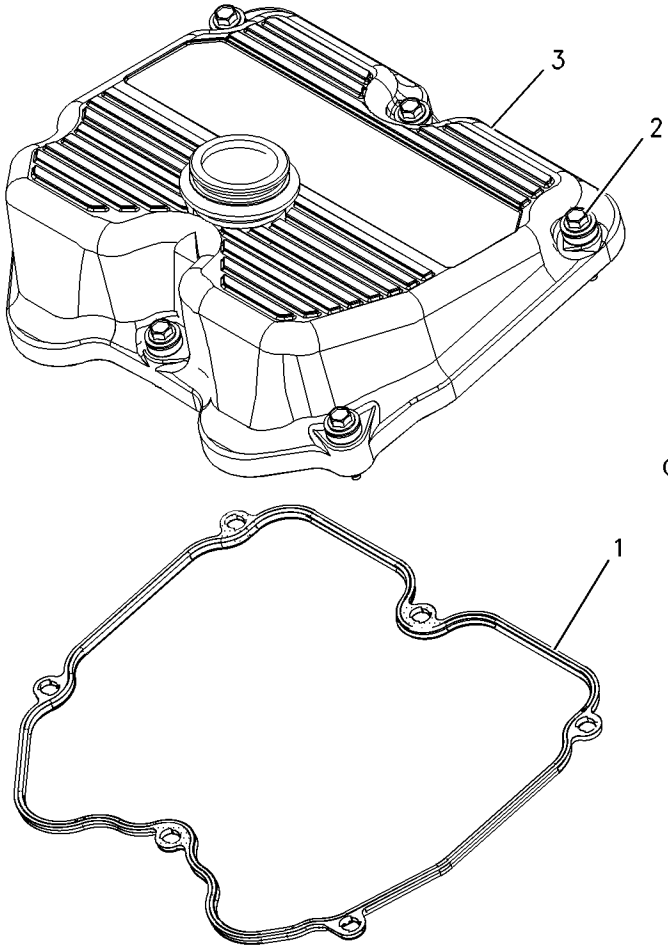

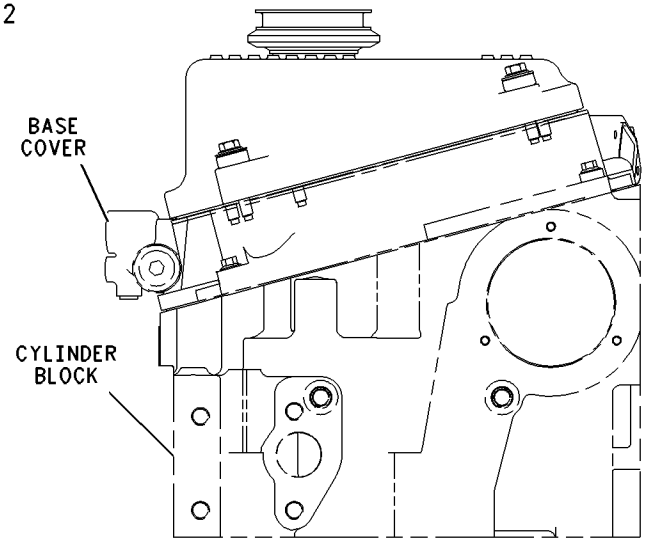

FRONT VIEW

GRAPHIC #1 **<END>** g00990932

256-3818 COVER GP-VALVE MECHANISM

S/N: RHX1-UP
PART OF 230-3818 COVER GP-VALVE MECHANISM
ALSO AN ATTACHMENT

SMCS-1107, 1120 **i02171607**

NOTE	REF NO	GRAPHIC REF	PART NUMBER	QTY	PART NAME 1 2 3 4 5 6 (PRODUCT LEVEL)	SEE PAGE
	1	1	**242-9537**	1	SEAL (COVER, VALVE MECHANISM)	
	2	1	**243-1159**	6	FASTENER AS	
					(EACH INCLUDES)	
		1	**149-7378**		GROMMET	
	3	1	**256-3828**	1	COVER-VALVE	

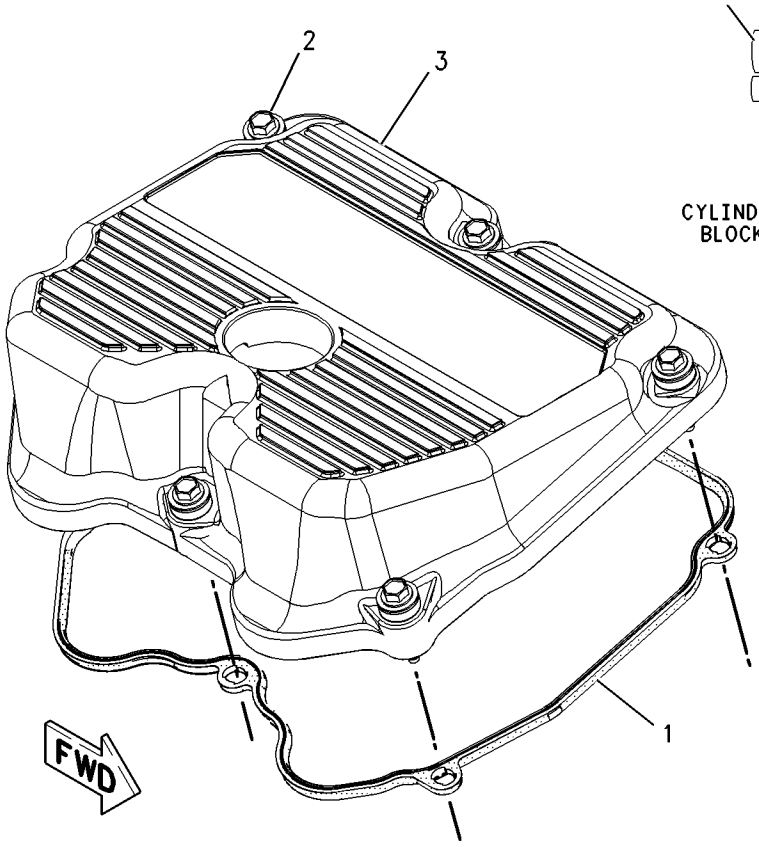

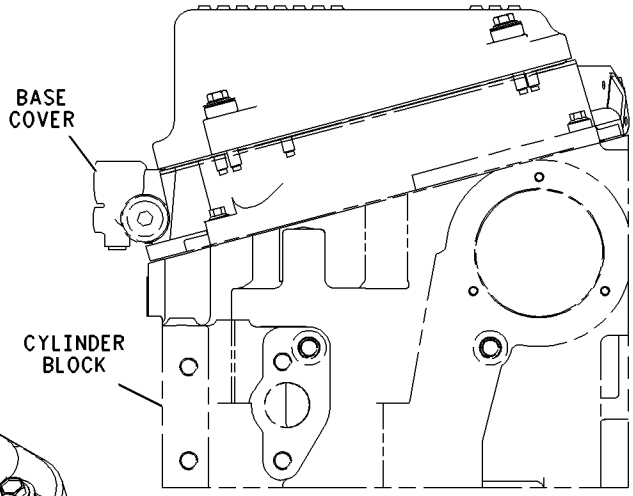

FRONT VIEW
(TYPICAL INSTALLATION)

GRAPHIC #1 **<END>** g00991113

256-3820 COVER GP-VALVE MECHANISM

S/N: RHX1-UP
PART OF 230-3818 COVER GP-VALVE MECHANISM
ALSO AN ATTACHMENT

SMCS-1107, 1120 **i02171611**

NOTE	REF NO	GRAPHIC REF	PART NUMBER	QTY	PART NAME 1 2 3 4 5 6 (PRODUCT LEVEL)	SEE PAGE
Y	1	1	*234-2916*	1	BREATHER GP	80
Y	2	1	*256-3824*	1	COVER GP-VALVE MECHANISM	27

Y-SEPARATE ILLUSTRATION

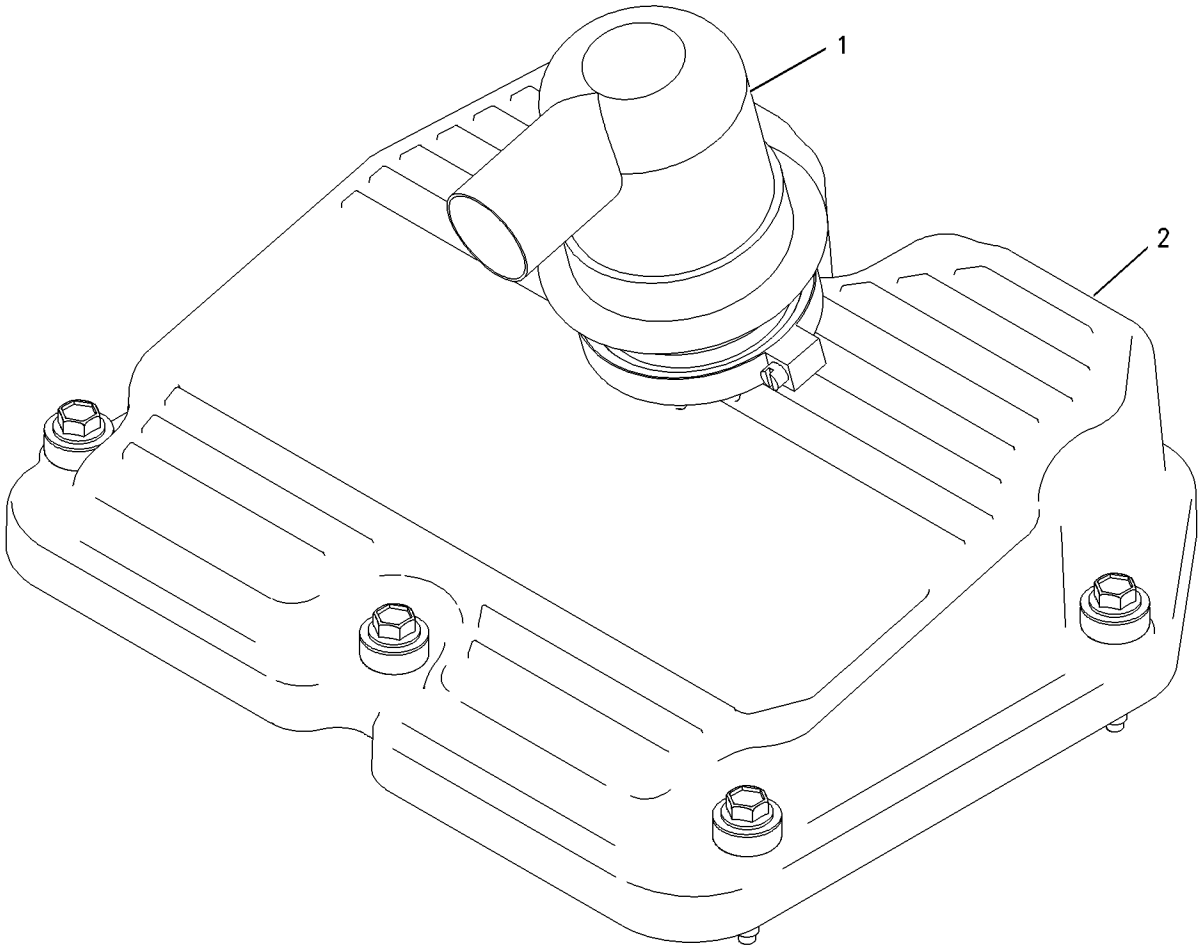

GRAPHIC #1 **<END>** g00989702

BASIC ENGINE

256-3824 COVER GP-VALVE MECHANISM

S/N: RHX1-UP

PART OF 256-3820 COVER GP-VALVE MECHANISM

ALSO AN ATTACHMENT

SMCS-1107, 1120 **i02171615**

NOTE	REF NO	GRAPHIC REF	PART NUMBER	QTY	PART NAME 1 2 3 4 5 6 (PRODUCT LEVEL)	SEE PAGE
	1	1	**242-9537**	1	SEAL (COVER, VALVE MECHANISM)	
	2	1	**243-1159**	6	FASTENER AS	
Y	3	1	**256-3826**	1	COVER GP-VALVE MECHANISM	28

Y-SEPARATE ILLUSTRATION

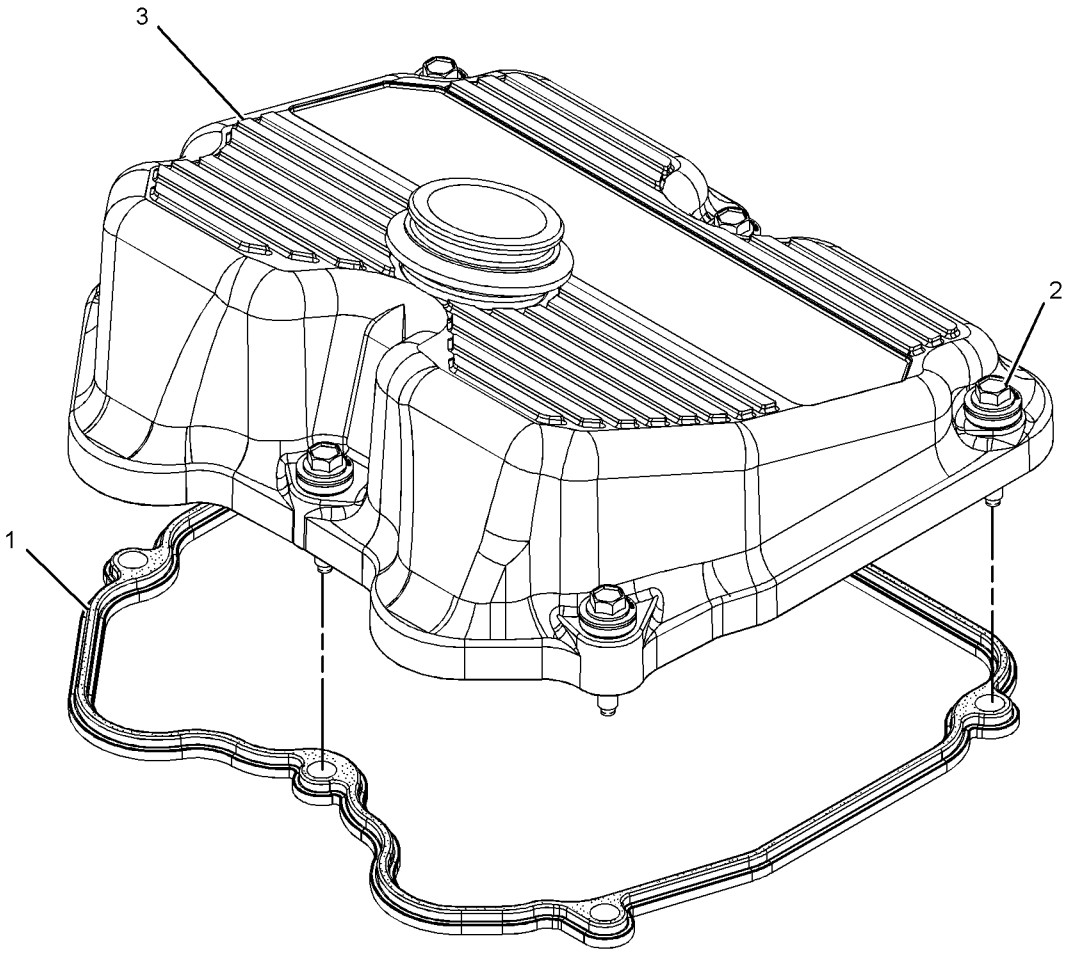

GRAPHIC #1 **<END>** g01102011

256-3826 COVER GP-VALVE MECHANISM

S/N: RHX1-UP
PART OF 256-3824 COVER GP-VALVE MECHANISM
ALSO AN ATTACHMENT

SMCS-1107, 1120 **i02171616**

NOTE	REF NO	GRAPHIC REF	PART NUMBER	QTY	PART NAME 1 2 3 4 5 6 (PRODUCT LEVEL)	SEE PAGE
	1	1	**7C-6514**	1	ADAPTER	
	2	1	*256-3829*	1	COVER-VALVE	
	3	1	**6V-5100**	1	SEAL-O-RING	

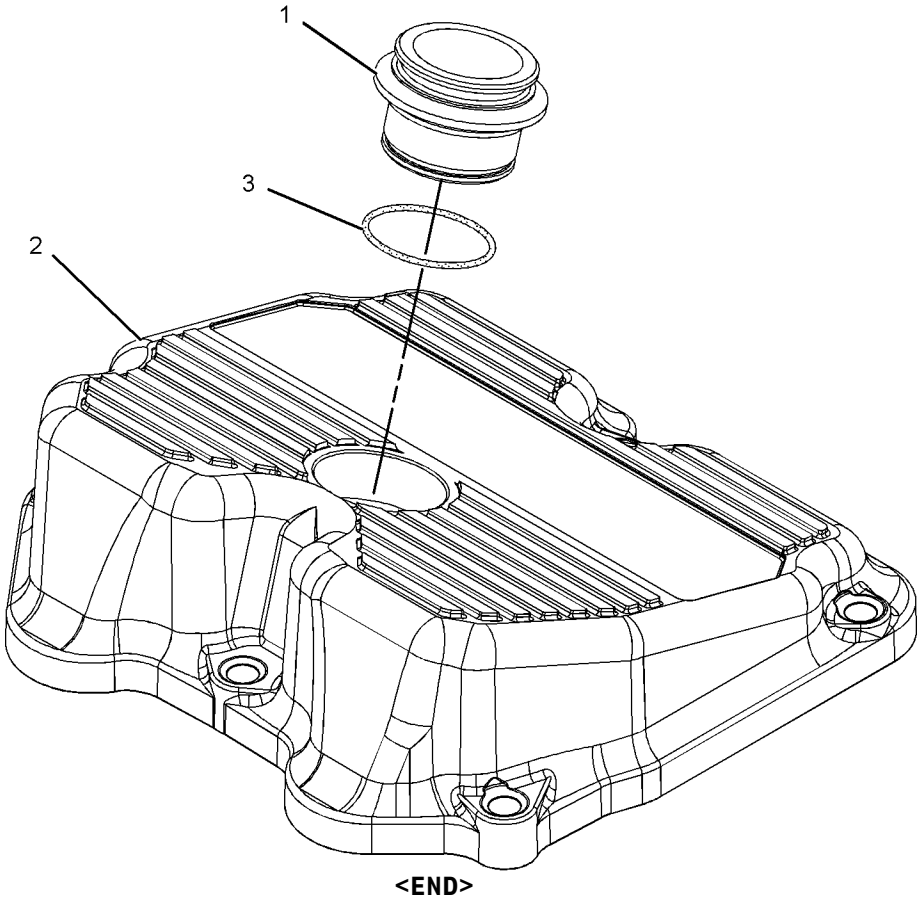

GRAPHIC #1 **<END>** g01101483

223-9732 CRANKSHAFT GP

S/N: RHX1-UP
PART OF 241-5933 ENGINE AR-CORE
ALSO AN ATTACHMENT

SMCS-1202, 1203, 1204, 1230, 1231, 1232 **i01924807**

NOTE	REF NO	GRAPHIC REF	PART NUMBER	QTY	PART NAME 1 2 3 4 5 6 (PRODUCT LEVEL)	SEE PAGE
	1	1	**7E-9262**	2	PLATE-THRUST	
	2	1	**142-5867**	1	SEAL GP-CRANKSHAFT	
	3	1	**189-4918**	1	CRANKSHAFT AS	
		1	**4N-0684**	1	DOWEL	
		1	**7S-5005**	1	DOWEL	
		1	**187-8981**	1	GEAR-CRANKSHAFT (80-TEETH)	
	4	1	**211-0592**	7	BEARING-MAIN (STANDARD)	

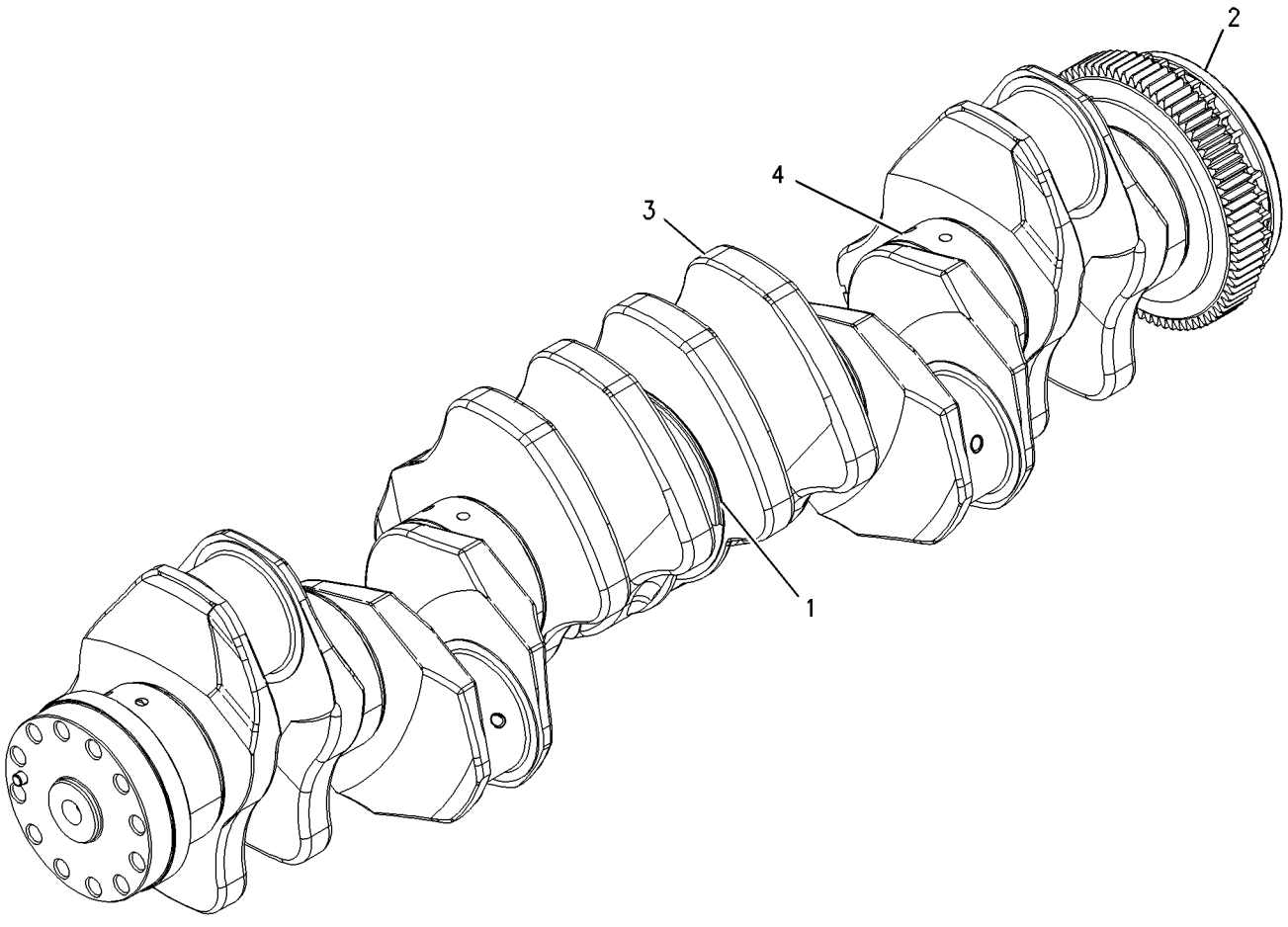

GRAPHIC #1 **<END>** g01002280

BASIC ENGINE

229-8568 CYLINDER BLOCK AS

S/N: RHX1-UP
PART OF 261-0052 CYLINDER BLOCK AS
ALSO AN ATTACHMENT

SMCS-1117, 1201, 1211, 1216, 1217, 1221, 1222, 1223, 1224, 1238, 1239, 1240, 1331 **i02228404**

NOTE	REF NO	GRAPHIC REF	PART NUMBER	QTY	PART NAME 1 2 3 4 5 6 (PRODUCT LEVEL)	SEE PAGE
	1	1	**167-8081**	7	CAP-CRANKSHAFT BEARING	
	2	1	**167-8083**	14	BOLT (7/8-14X7.5-IN)	
	3	1	**9H-1031**	14	WASHER-HARD (24X41.5X6-MM THK)	

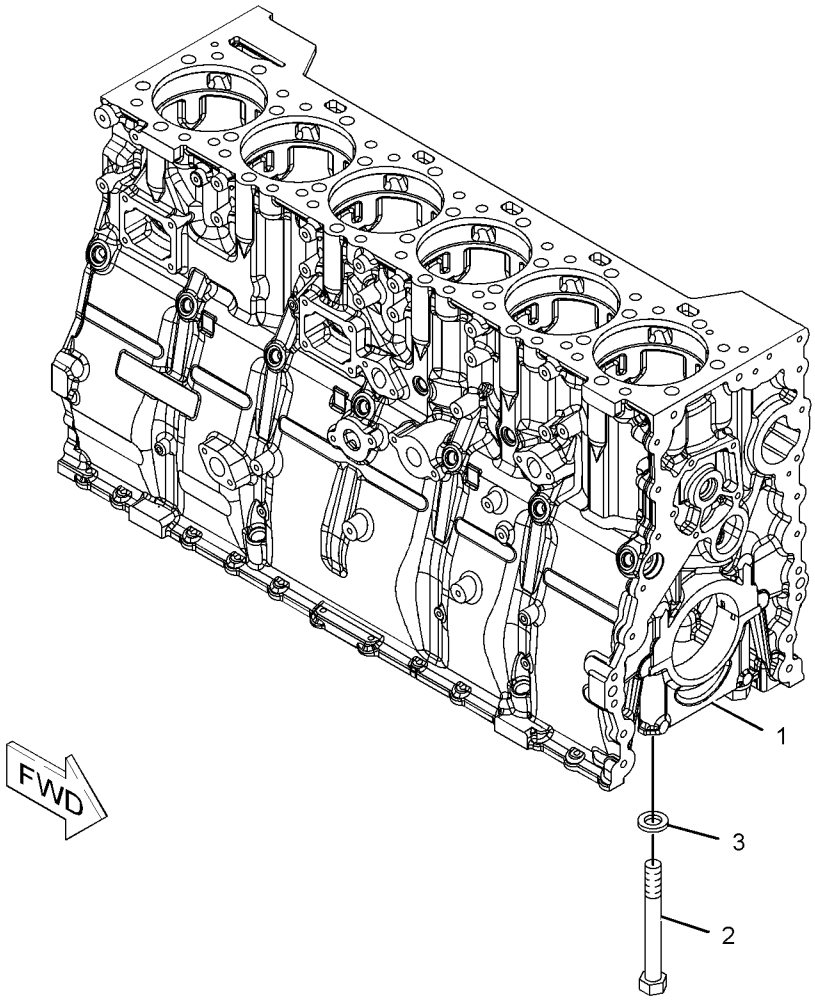

GRAPHIC #1 **<END>** g01122669

261-0052 CYLINDER BLOCK AS

S/N: RHX1-UP
PART OF 261-0191 CYLINDER BLOCK GP
ALSO AN ATTACHMENT

SMCS-1117, 1201, 1211, 1216, 1217, 1221, 1222, 1223, 1224, 1238, 1239, 1240, 1331 **i02228386**

NOTE	REF NO	GRAPHIC REF	PART NUMBER	QTY	PART NAME 1 2 3 4 5 6 (PRODUCT LEVEL)	SEE PAGE
	1	1	**155-0809**	6	SEAL-LINER	
	2	1	**155-0810**	6	SEAL-LINER	
	3	1	**155-2793**	6	SEAL-LINER	
	4	1	**253-8766**	6	LINER-CYLINDER	
Y	5	1	**229-8568**	1	CYLINDER BLOCK AS	30
	6	1	**9L-5854**	6	BAND-FILLER (130.2-MM ID)	

Y-SEPARATE ILLUSTRATION

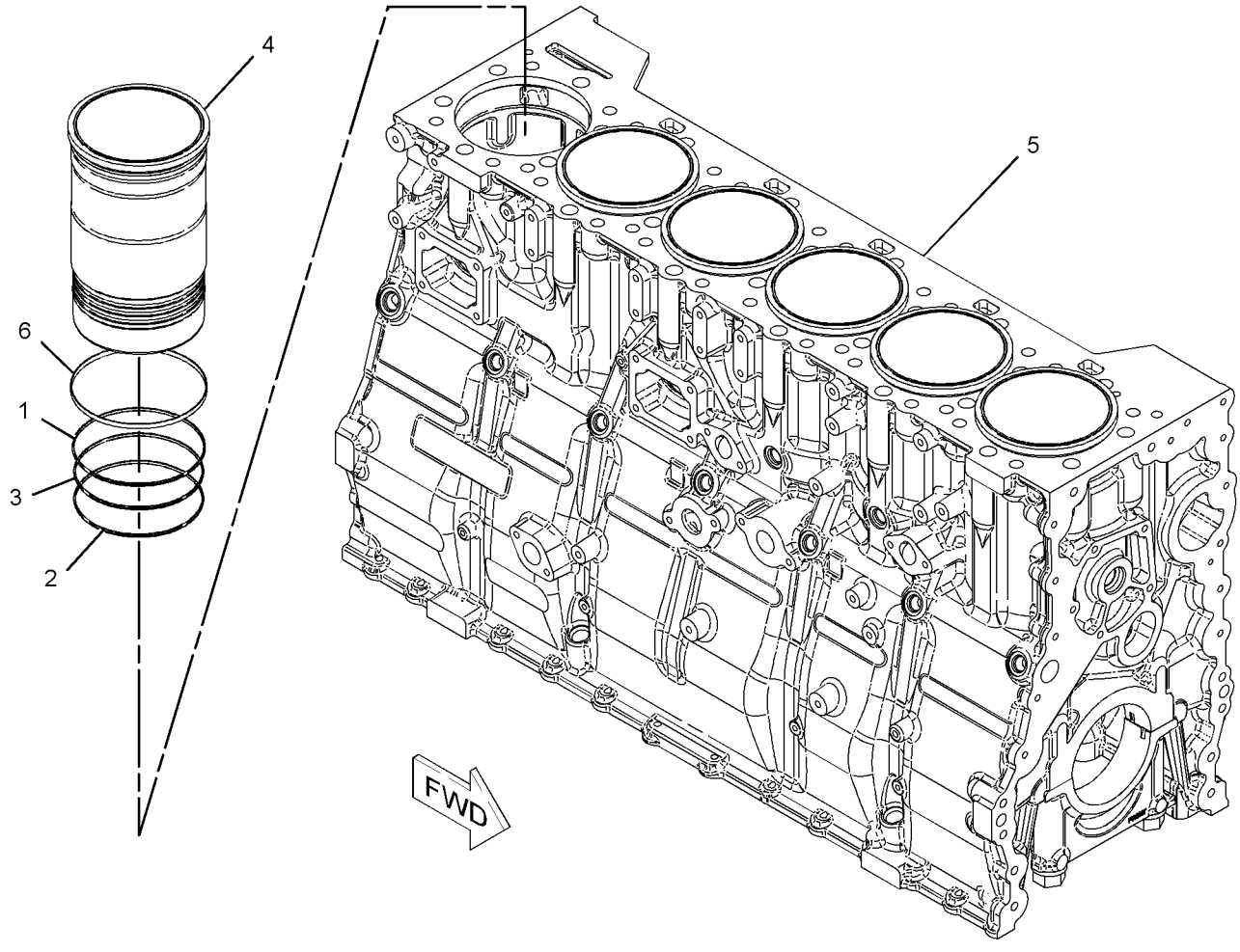

GRAPHIC #1 **<END>** g01122528

BASIC ENGINE

261-0191 CYLINDER BLOCK GP

S/N: RHX1-UP
PART OF 241-5933 ENGINE AR-CORE
ALSO AN ATTACHMENT

SMCS-1201 **i02219815**

NOTE	REF NO	GRAPHIC REF	PART NUMBER	QTY	PART NAME 1 2 3 4 5 6 (PRODUCT LEVEL)	SEE PAGE
	1	1	**1S-9540**	1	DOWEL	
	2	1	**4N-1650**	1	DOWEL	
	3	1	**6I-1055**	1	DOWEL	
	4	1	**6I-4421**	1	PLATE-SPACER	
	5	1	**8S-9094**	1	PLUG-ORIFICE	
	6	1	**142-2329**	1	SEAL	
	7	1	**227-1204**	1	GASKET	
	8	1	**250-0466**	2	SEAL-O-RING	
Y	9	1	**261-0052**	1	CYLINDER BLOCK AS	31
	10	1	**100-7399**	2	PLUG	
	11	1	**4N-0683**	4	DOWEL	
	12	1	**5P-0840**	1	SEAL-O-RING	

Y-SEPARATE ILLUSTRATION

261-0191 **CYLINDER BLOCK GP** *(contd.)* **i02219815**

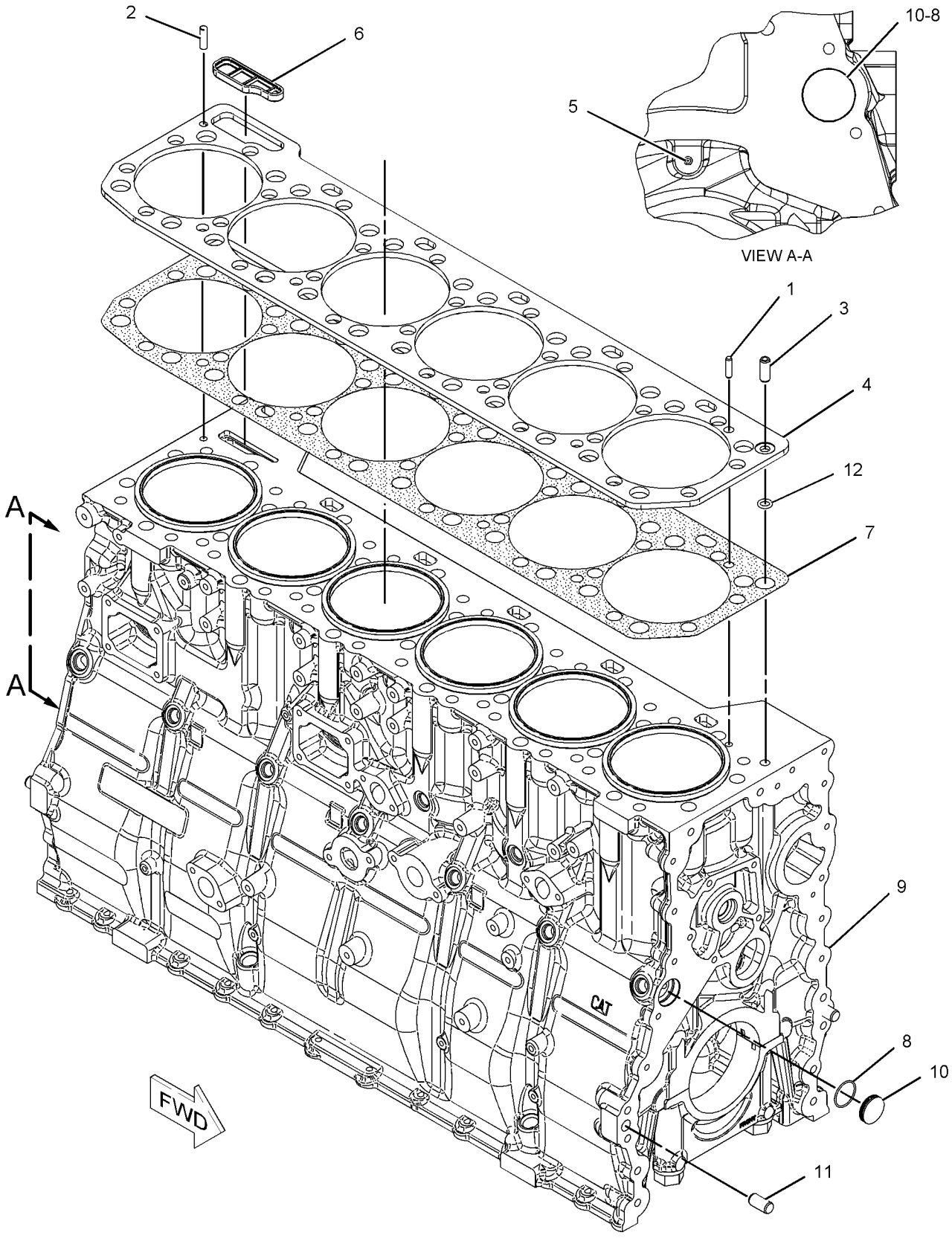

GRAPHIC #1 **<END>** g01121389

BASIC ENGINE

223-7263 CYLINDER HEAD AS

S/N: RHX1-UP
WITH PRE-FINISHED VALVE SEAT INSERTS
PART OF 243-6741 CYLINDER HEAD AS
ALSO AN ATTACHMENT

SMCS-1100, 1101, 1103, 1104, 1105, 1106, 1108, 1109, 1115, 1117, 1121, 1124, 1125

i02118405

NOTE	REF NO	GRAPHIC REF	PART NUMBER	QTY	PART NAME 1 2 3 4 5 6 (PRODUCT LEVEL)	SEE PAGE
	1	1	**122-7375**	24	GUIDE-VALVE	
B	2	1	**216-5582**	7	BEARING-SLEEVE	
AB		1	**217-0751**		BEARING-SLEEVE (0.254-MM OS)	
AB		1	**217-0752**		BEARING-SLEEVE (0.762-MM OS)	
	3	1	**222-1982**	1	CYLINDER HEAD	
		1	**224-3983**	12	INSERT-SEAT (INLET)	
		1	**226-5561**	12	INSERT-VALVE (EXHAUST)	
	4	1	**227-4239**	1	SLEEVE-INJECTOR	
	5	1	**166-2903**	6	SEAL-O-RING	
	6	1	**166-2904**	6	SEAL-O-RING	
	7	1	**3B-0623**	17	PLUG-CUP	
	8	1	**3B-0645**	20	PLUG-CUP	
	9	1	**8T-6757**	3	PLUG-PIPE	
	10	1	**9X-7430**	6	SEAL-O-RING	

A-NOT PART OF THIS GROUP
B-USE AS REQUIRED

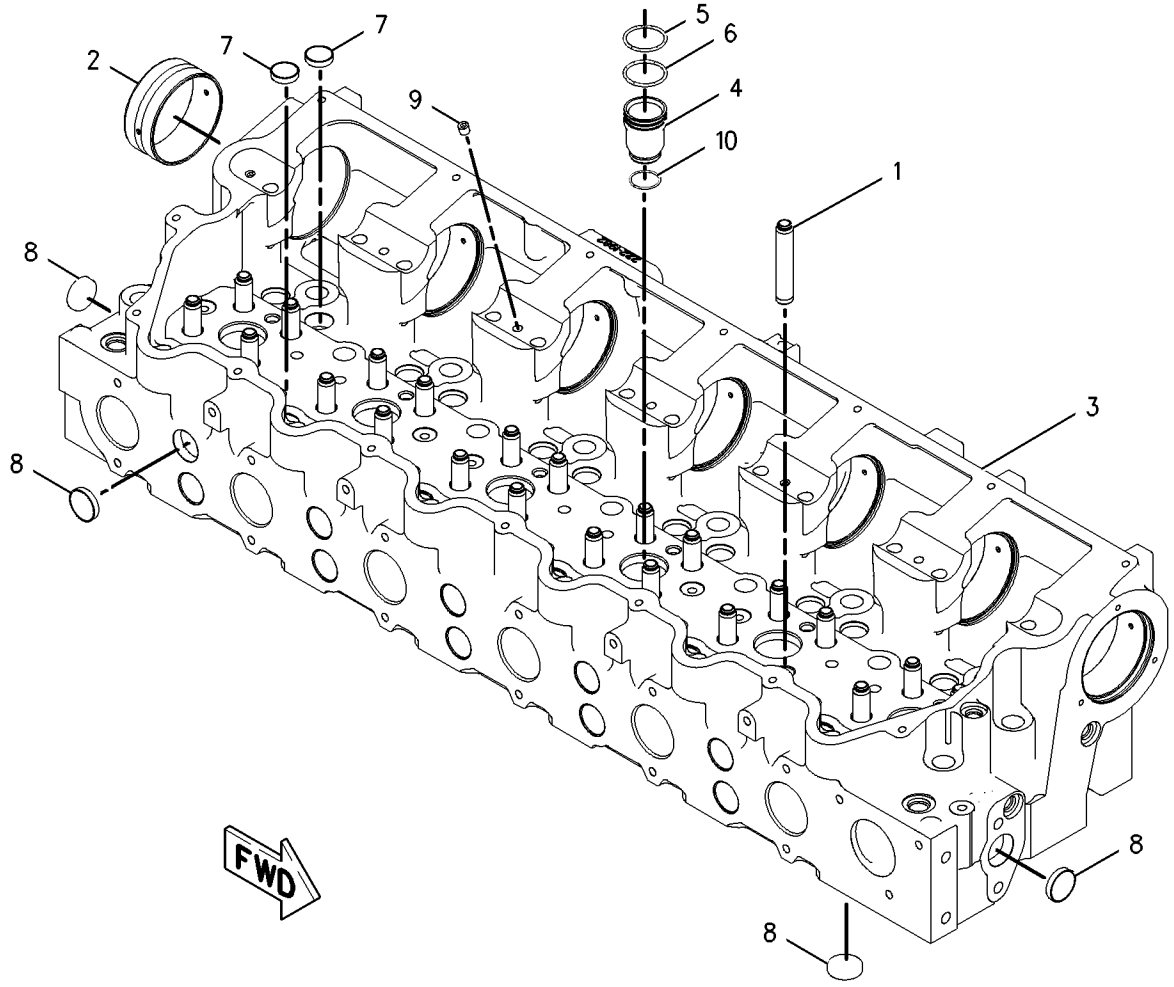

GRAPHIC #1 **<END>** g00956436

243-0943 CYLINDER HEAD AS

S/N: RHX1-UP

PART OF 243-6741 CYLINDER HEAD AS

ALSO AN ATTACHMENT

SMCS-1100, 1101, 1103, 1104, 1105, 1106, 1108, 1109, 1115, 1117, 1121, 1124, 1125

i01983776

NOTE	REF NO	GRAPHIC REF	PART NUMBER	QTY	PART NAME 1 2 3 4 5 6 (PRODUCT LEVEL)	SEE PAGE
	1	1	**152-7582**	12	INSERT-VALVE SEAT (EXHAUST) (STANDARD)	
AB		1	**167-0642**		INSERT-VALVE SEAT (0.76 MM O.S.)	
AB		1	**170-4737**		INSERT-VALVE SEAT (0.51 MM O.S.)	
	2	1	**175-3617**	12	INSERT-VALVE SEAT (INLET) (STANDARD)	
AB		1	**167-0643**		INSERT-VALVE SEAT (0.76 MM O.S.)	
AB		1	**170-4738**		INSERT-VALVE SEAT (0.51 MM O.S.)	

A-NOT PART OF THIS GROUP
B-USE AS REQUIRED

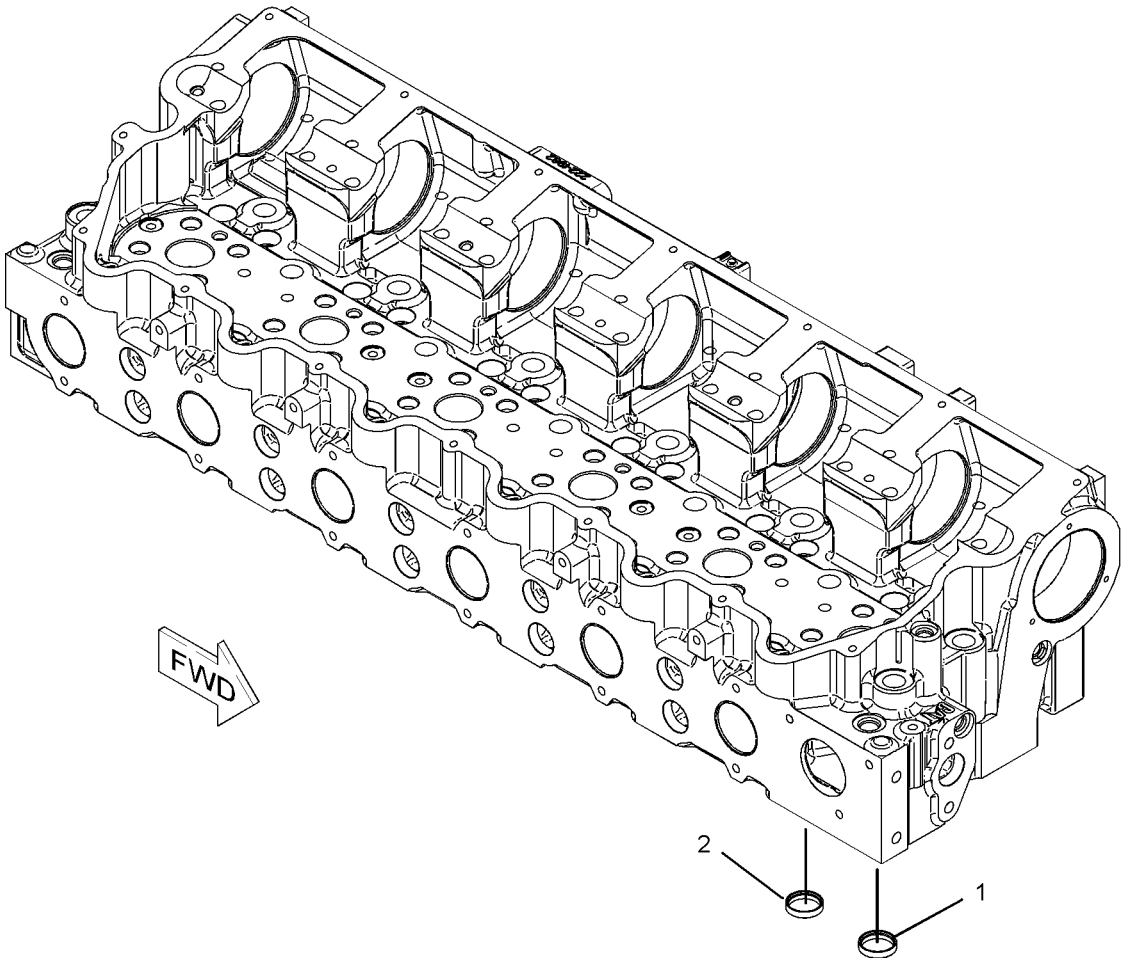

GRAPHIC #1 **<END>** g01028691

BASIC ENGINE

243-6741 CYLINDER HEAD AS

S/N: RHX1-UP
WITH MACHINE IN PLACE VALVE SEAT INSERTS
PART OF 223-9250 CYLINDER HEAD GP
ALSO AN ATTACHMENT

SMCS-1100, 1101, 1103, 1104, 1105, 1106, 1108, 1109, 1115, 1117, 1121, 1124, 1125

i01983686

NOTE	REF NO	GRAPHIC REF	PART NUMBER	QTY	PART NAME 1 2 3 4 5 6 (PRODUCT LEVEL)	SEE PAGE
	1	2	**122-7375**	24	GUIDE-VALVE (STANDARD)	
AB		2	**122-0447**		GUIDE-VALVE (0.51-MM OS)	
AB		2	**122-8612**		GUIDE-VALVE (0.13-MM OS)	
	2	1	**216-5582**	7	BEARING-SLEEVE (STANDARD)	
AB		1	**217-0751**		BEARING-SLEEVE (0.254-MM OS)	
AB		1	**217-0752**		BEARING-SLEEVE (0.762-MM OS)	
	3	2	**227-4239**	6	SLEEVE-INJECTOR	
Y	4	1	**243-0943**	1	CYLINDER HEAD AS	35
					—OR—	
Y		1	**223-7263**	1	CYLINDER HEAD AS	34
	5	2	**166-2903**	6	SEAL-O-RING	
	6	2	**166-2904**	6	SEAL-O-RING	
	7	1	**3B-0623**	17	PLUG-CUP	
	8	1,2	**3B-0645**	20	PLUG-CUP	
	9	2	**8T-6757**	3	PLUG-PIPE	
	10	2	**9X-7430**	6	SEAL-O-RING	

A-NOT PART OF THIS GROUP
B-USE AS REQUIRED
Y-SEPARATE ILLUSTRATION

243-6741 **CYLINDER HEAD AS** *(contd.)* **i01983686**

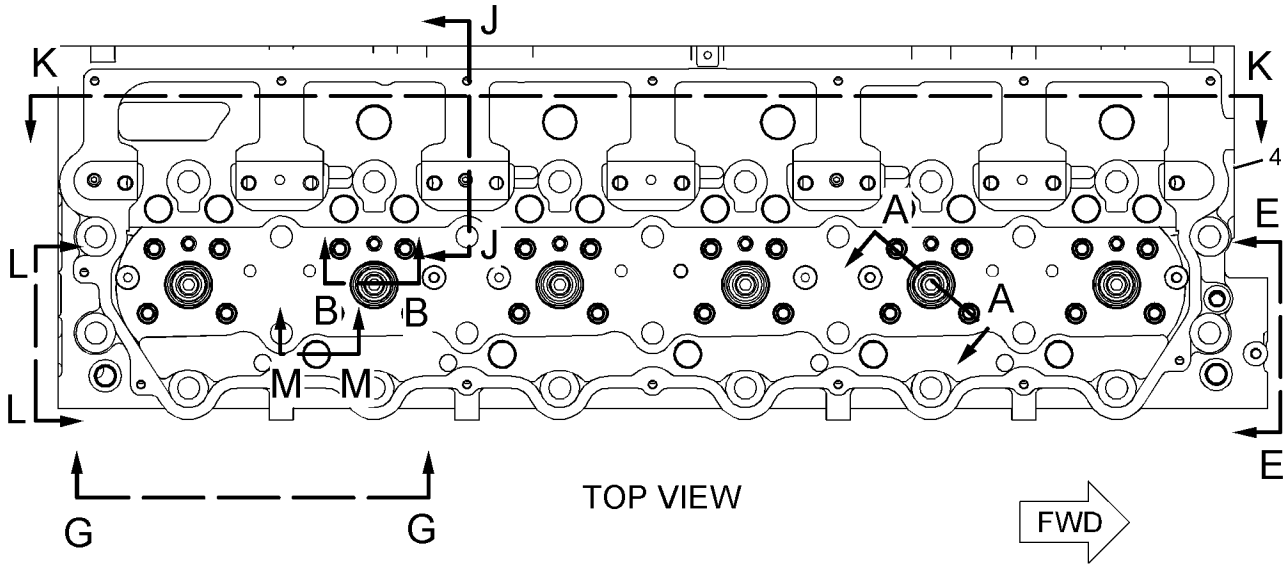

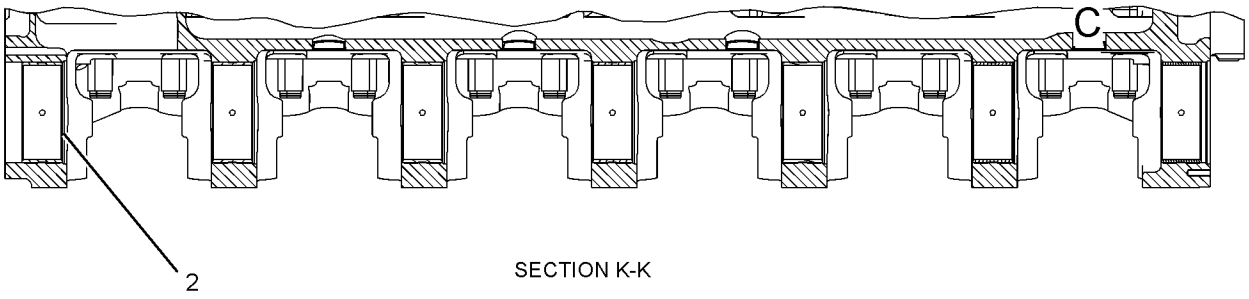

SECTION K-K

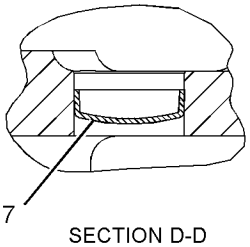

SECTION D-D

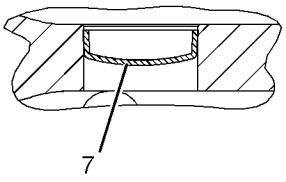

SECTION M-M

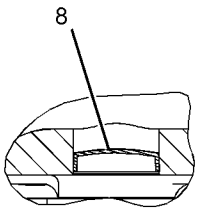

VIEW OF AREA C

REFER TO ALL ILLUSTRATIONS OF
THIS GROUP FOR AUXILIARY VIEWS

GRAPHIC #1

g01029133

243-6741 **CYLINDER HEAD AS** *(contd.)* **i01983686**

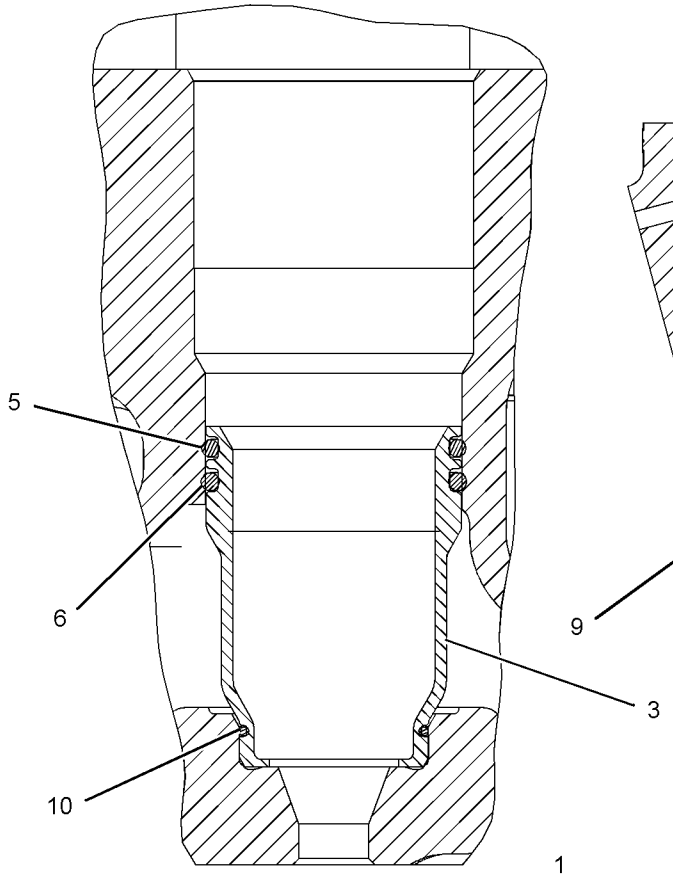

SECTION B-B

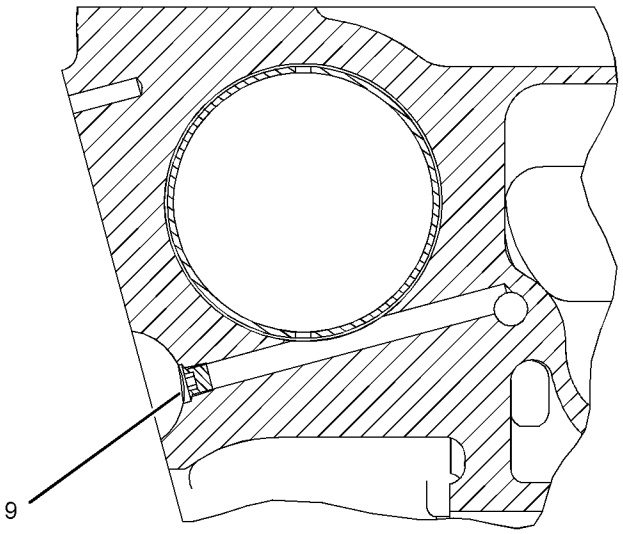

SECTION J-J

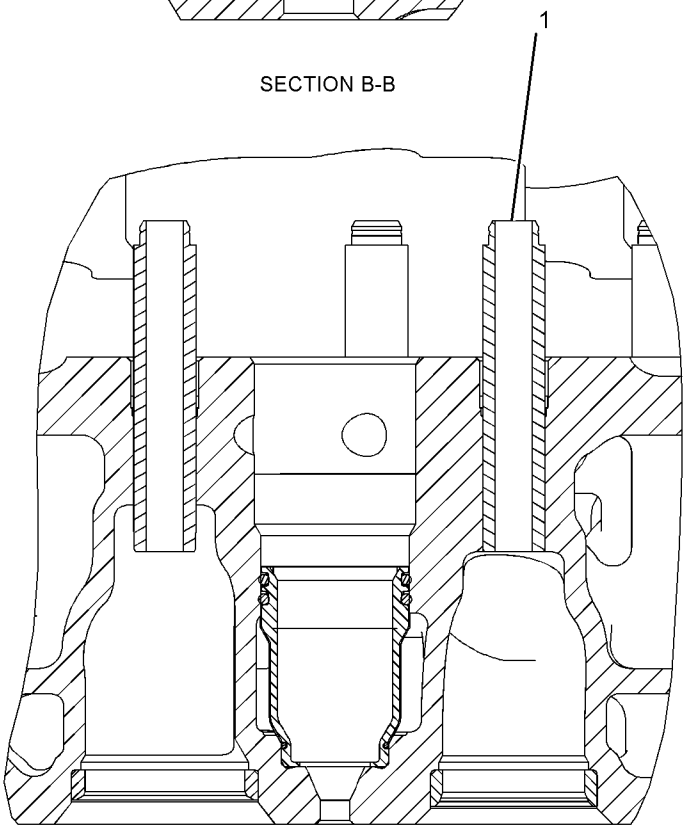

SECTION A-A

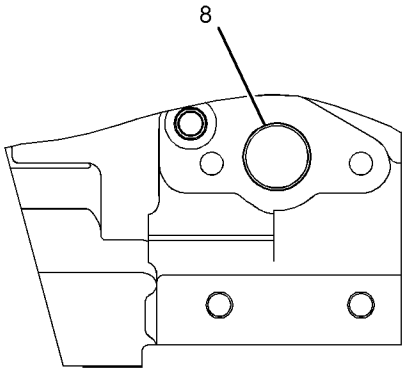

VIEW E-E

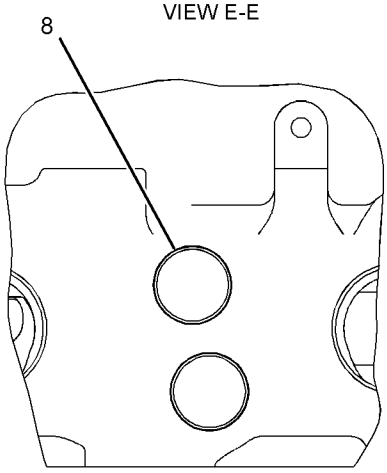

VIEW G-G

GRAPHIC #2 **<END>** g01029134

223-9250 CYLINDER HEAD GP

S/N: RHX1-UP
PART OF 235-2974 CYLINDER HEAD GP
ALSO AN ATTACHMENT

SMCS-1100, 1103, 1104, 1105, 1106, 1108, 1109, 1115, 1117, 1121, 1124, 1125

i02011745

NOTE	REF NO	GRAPHIC REF	PART NUMBER	QTY	PART NAME 1 2 3 4 5 6 (PRODUCT LEVEL)	SEE PAGE
	1	1	**2A-4429**	48	LOCK-RETAINER	
	2	1	**6I-0928**	24	WASHER	
	3	1	**153-7023**	12	VALVE-INLET	
	4	1	**153-7024**	12	VALVE-EXHAUST	
	5	1	**163-2478**	24	SEAL-VALVE STEM	
	6	1	**211-3123**	24	SPRING-VALVE	
CY	7	1	**243-6741**	1	CYLINDER HEAD AS	36
	8	1	**186-2001**	24	ROTOCOIL AS	
	9	1	**211-3122**	24	SPRING-VALVE	

C-CHANGE FROM PREVIOUS TYPE
Y-SEPARATE ILLUSTRATION

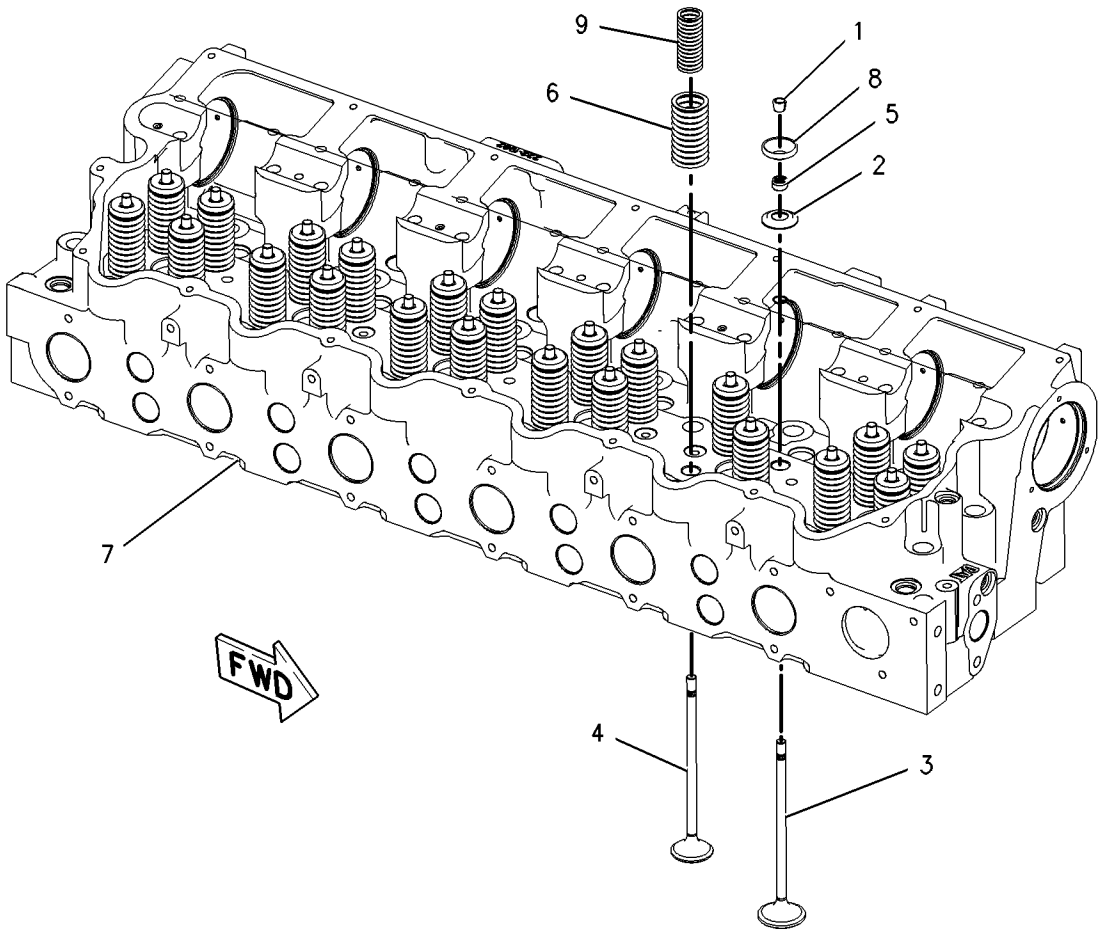

GRAPHIC #1

<END>

g00955632

BASIC ENGINE

235-2974 CYLINDER HEAD GP

S/N: RHX1-UP
PART OF 241-5933 ENGINE AR-CORE
ALSO AN ATTACHMENT

SMCS-1100, 1103, 1104, 1105, 1106, 1108, 1109, 1115, 1117, 1121, 1124, 1125 **i02021458**

NOTE	REF NO	GRAPHIC REF	PART NUMBER	QTY	PART NAME 1 2 3 4 5 6 (PRODUCT LEVEL)	SEE PAGE
	1	1	**3E-6772**	24	SEAL	
	2	1	*6I-4025*	16	FASTENER GP-CYLINDER HEAD	
		1	**5H-1504**	1	WASHER-HARD (20X33.5X5-MM THK)	
		1	**124-1855**	1	BOLT-12 POINT HEAD (3/4-16X194-MM)	
	3	1	*106-5673*	10	FASTENER GP-CYLINDER HEAD	
		1	**5H-1504**	1	WASHER-HARD (20X33.5X5-MM THK)	
		1	**124-1854**	1	BOLT-12 POINT HEAD (3/4-16X216-MM)	
	4	1	**195-3187**	6	SLEEVE AS (EXHAUST)	
YR	5	1	**223-9250**	1	CYLINDER HEAD GP	39
	6	1	**224-5122**	1	GASKET	
	7	1	**5P-0840**	1	SEAL-O-RING	
	8	1	**6V-5049**	3	SEAL-O-RING	
	9	1	**9S-8004**	3	PLUG	

R-REMFG PART MAY BE AVAILABLE
Y-SEPARATE ILLUSTRATION

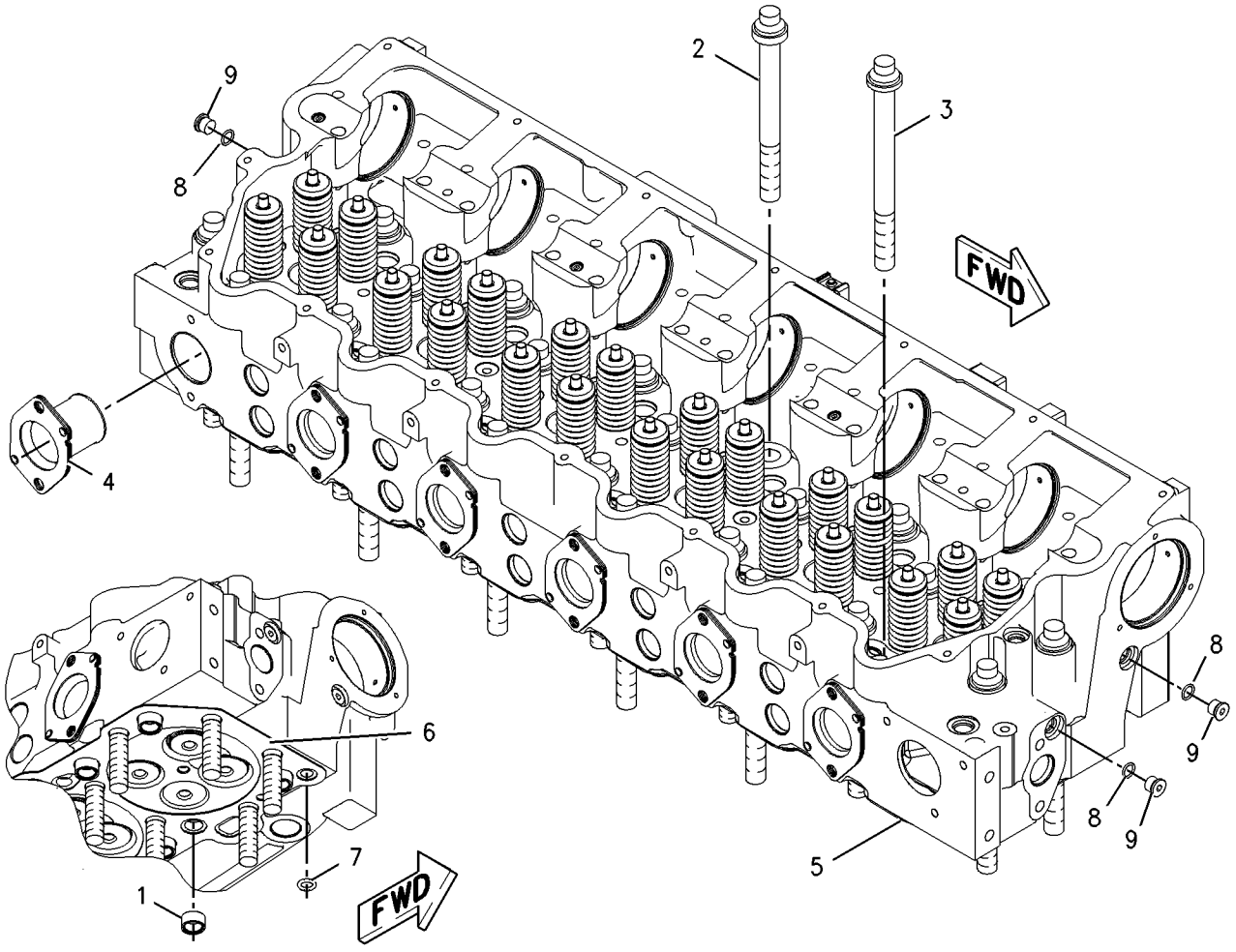

GRAPHIC #1 **<END>** g01002373

212-2113 DAMPER & PULLEY GP

S/N: RHX1-UP
8 GROOVE, 241.3MM DIAMETER PULLEY
PART OF 205-8603, 231-3468 ENGINE AR-COMPLETE
ALSO AN ATTACHMENT

SMCS-1205 **i01994926**

NOTE	REF NO	GRAPHIC REF	PART NUMBER	QTY	PART NAME 1 2 3 4 5 6 (PRODUCT LEVEL)	SEE PAGE
	1	1	**6N-7654**	1	SPACER	
R	2	1	**167-8130**	1	DAMPER AS	
	3	1	**212-2086**	1	PULLEY-CRANKSHAFT (8 GROOVES)	
	4	1	**0S-1585**	12	BOLT (1/2-13X1.50 IN)	
	5	1	**1B-3623**	6	BOLT (5/8-18X7IN)	

R-REMFG PART MAY BE AVAILABLE

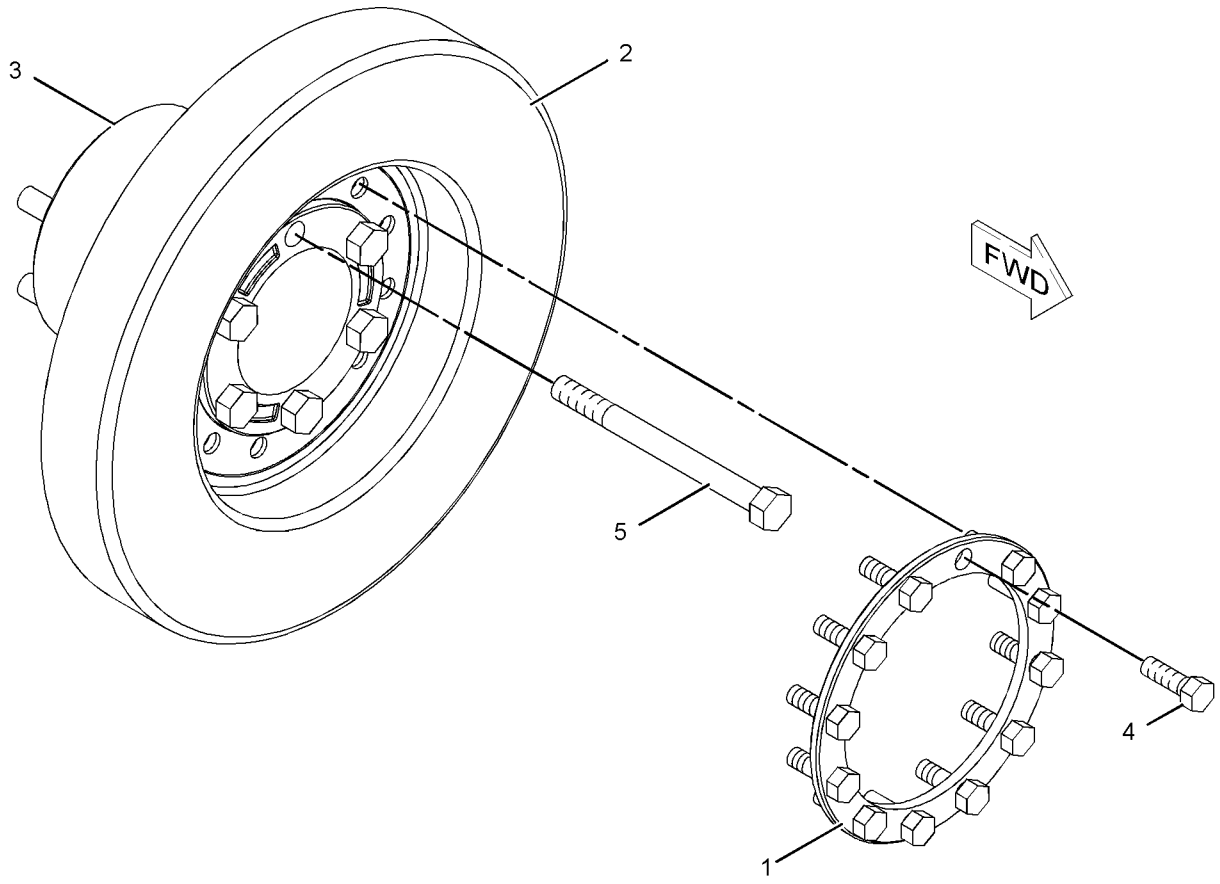

GRAPHIC #1 **<END>** g01033610

4P-6846 FASTENER GP-FRONT HOUSING

S/N: RHX1-UP
PART OF 205-8603, 231-3468 ENGINE AR-COMPLETE
ALSO AN ATTACHMENT

SMCS-1151 **i00670557**

NOTE	REF NO	GRAPHIC REF	PART NUMBER	QTY	PART NAME 1 2 3 4 5 6 (PRODUCT LEVEL)	SEE PAGE
	1	1	**7N-0452**	1	PLATE	
	2	1	**0S-1594**	2	BOLT (3/8-16X1IN)	
	3	1	**5M-2894**	2	WASHER (2.5MM THK)	

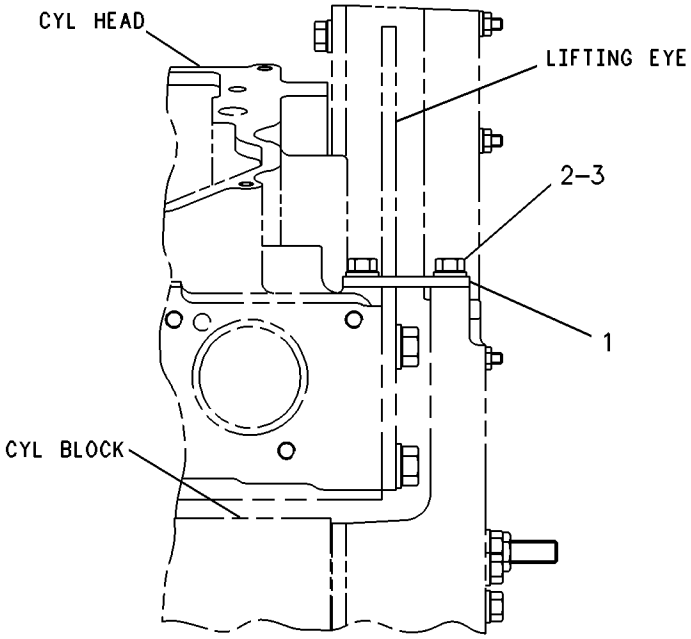

RIGHT SIDE VIEW

GRAPHIC #1 **<END>** g00231021

108-9382 FASTENER GP-FRONT HOUSING

S/N: RHX1-UP
PART OF 205-8603, 231-3468 ENGINE AR-COMPLETE
FOR USE WITH FRONT HOUSING WHEN FAN DRIVE IS NOT INSTALLED
ALSO AN ATTACHMENT

SMCS-1151 **i00670762**

NOTE	REF NO	GRAPHIC REF	PART NUMBER	QTY	PART NAME 1 2 3 4 5 6 (PRODUCT LEVEL)	SEE PAGE
	1	1	**1F-7958**	2	NUT-FULL (1/2-13 THD)	
	2	1	**5P-8245**	2	WASHER (3MM THK)	
	3	1	**149-5268**	2	STUD-TAPERLOCK	

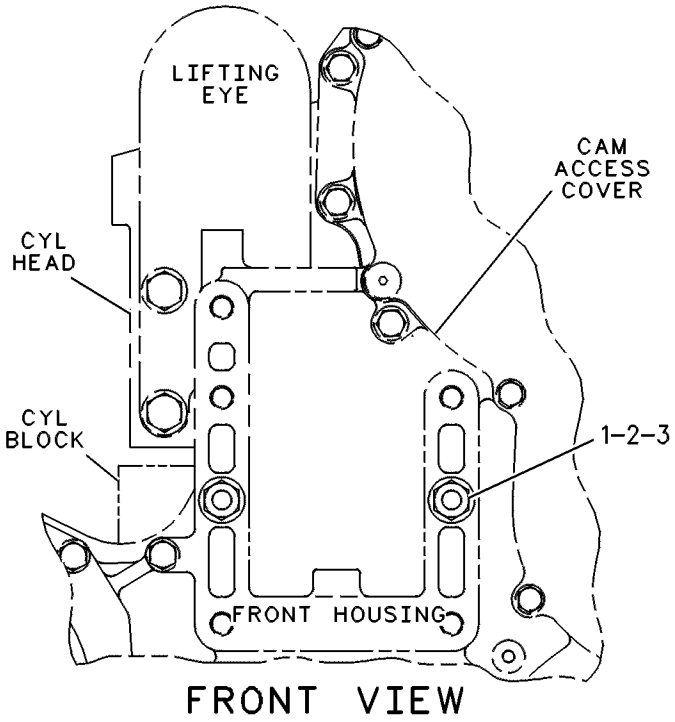

FRONT VIEW

GRAPHIC #1 **<END>** g00237936

BASIC ENGINE

227-3033 FASTENER GP-FRONT HOUSING

S/N: RHX1-UP

PART OF 205-8603 ENGINE AR-COMPLETE

SMCS-1151 **i02150929**

NOTE	REF NO	GRAPHIC REF	PART NUMBER	QTY	PART NAME 1 2 3 4 5 6 (PRODUCT LEVEL)	SEE PAGE
	1	1	**5M-2894**	2	WASHER-HARD (10.2X18.5X2.5-MM THK)	
	2	1	**0T-0055**	2	BOLT (3/8-16X4.25-IN)	

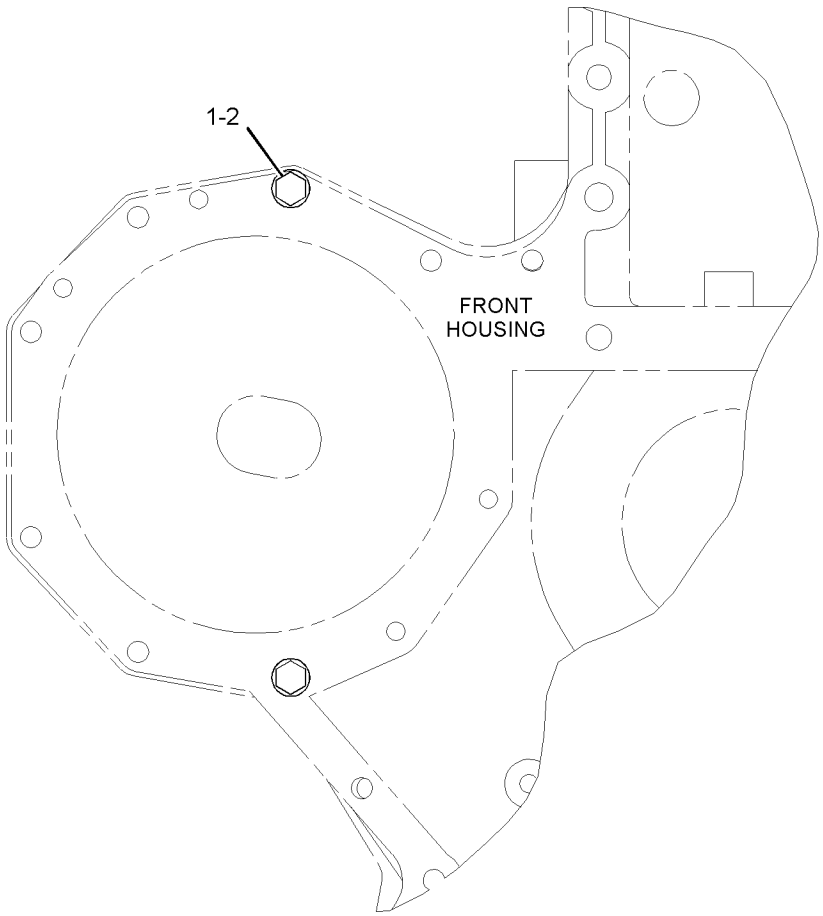

FRONT VIEW

GRAPHIC #1

<END>

g01033890

243-5194 FASTENER GP-OIL PAN

S/N: RHX1-UP
PART OF 205-8603, 231-3468 ENGINE AR-COMPLETE
ALSO AN ATTACHMENT

SMCS-1302 **i01994856**

NOTE	REF NO	GRAPHIC REF	PART NUMBER	QTY	PART NAME 1 2 3 4 5 6 (PRODUCT LEVEL)	SEE PAGE
	1	1	**2P-3203**	1	BOLT-WASHER HEAD (3/8-16X1.25 IN)	

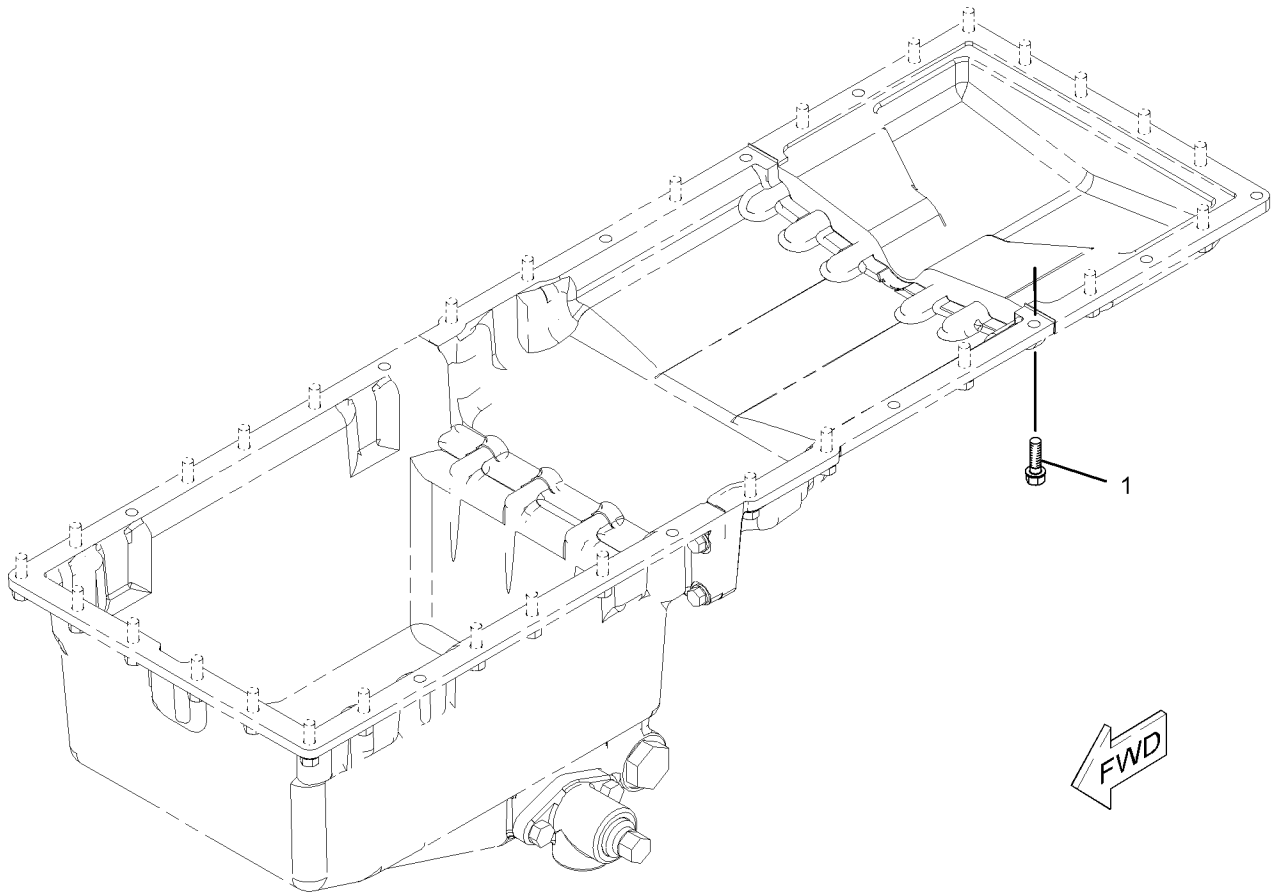

GRAPHIC #1 **<END>** g01034430

109-1657 FASTENER GP-VALVE MECHANISM

S/N: RHX1-UP
PART OF 241-5933 ENGINE AR-CORE
ALSO AN ATTACHMENT

SMCS-1102, 1121, 1123, 1208, 1209 **i01090405**

NOTE	REF NO	GRAPHIC REF	PART NUMBER	QTY	PART NAME 1 2 3 4 5 6 (PRODUCT LEVEL)	SEE PAGE
	1	1	**5J-5794**	12	BOLT (1/2-13X3.5-IN)	
	2	1	**8L-8413**	6	STRAP-CABLE	

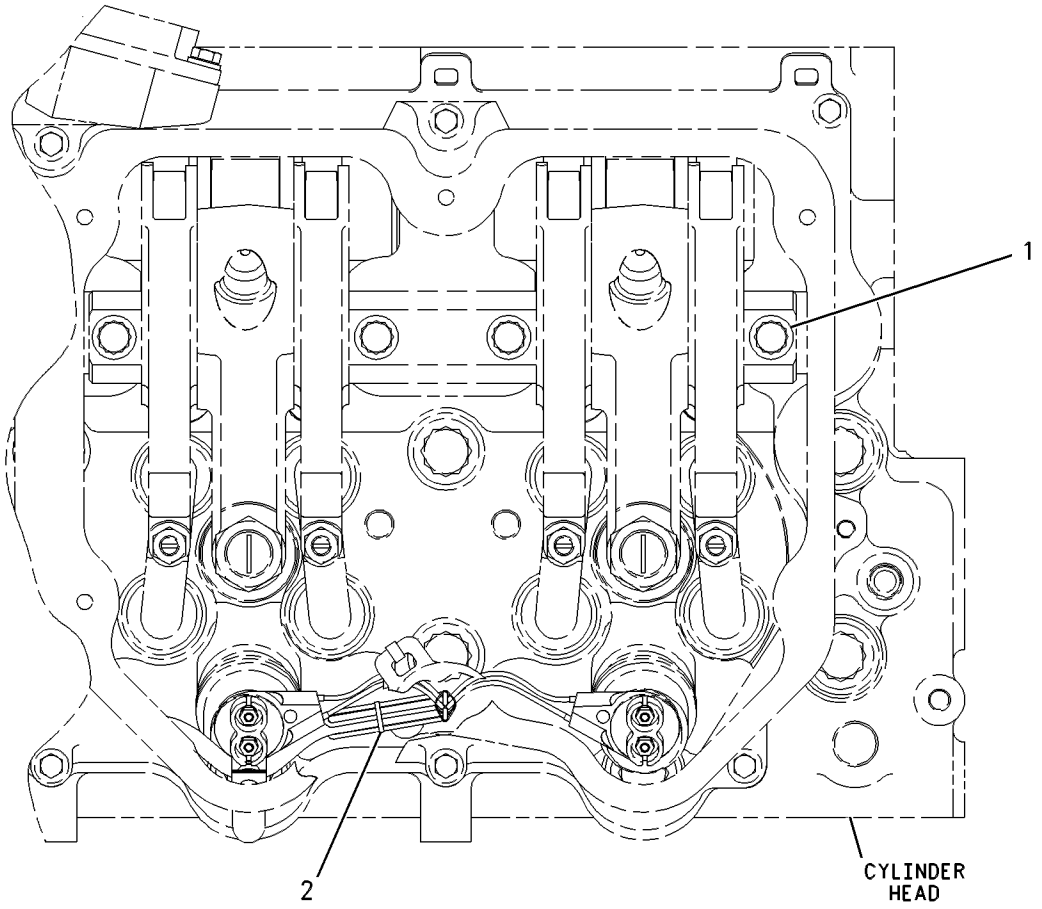

TOP VIEW

GRAPHIC #1 **<END>** g00571205

BASIC ENGINE

209-7307 FLYWHEEL GP

S/N: RHX1-UP

PART OF 205-8603, 231-3468 ENGINE AR-COMPLETE

ALSO AN ATTACHMENT

SMCS-1156, 1158 **i01994883**

NOTE	REF NO	GRAPHIC REF	PART NUMBER	QTY	PART NAME 1 2 3 4 5 6 (PRODUCT LEVEL)	SEE PAGE
	1	1	**209-7306**	1	FLYWHEEL AS	
		1	**4N-2514**	1	GEAR (113 TEETH)	
	2	1	**0V-0523**	12	BOLT (5/8-18X4.25IN)	
	3	1	**4D-3704**	12	WASHER-HARD (17X30X5MM THK)	

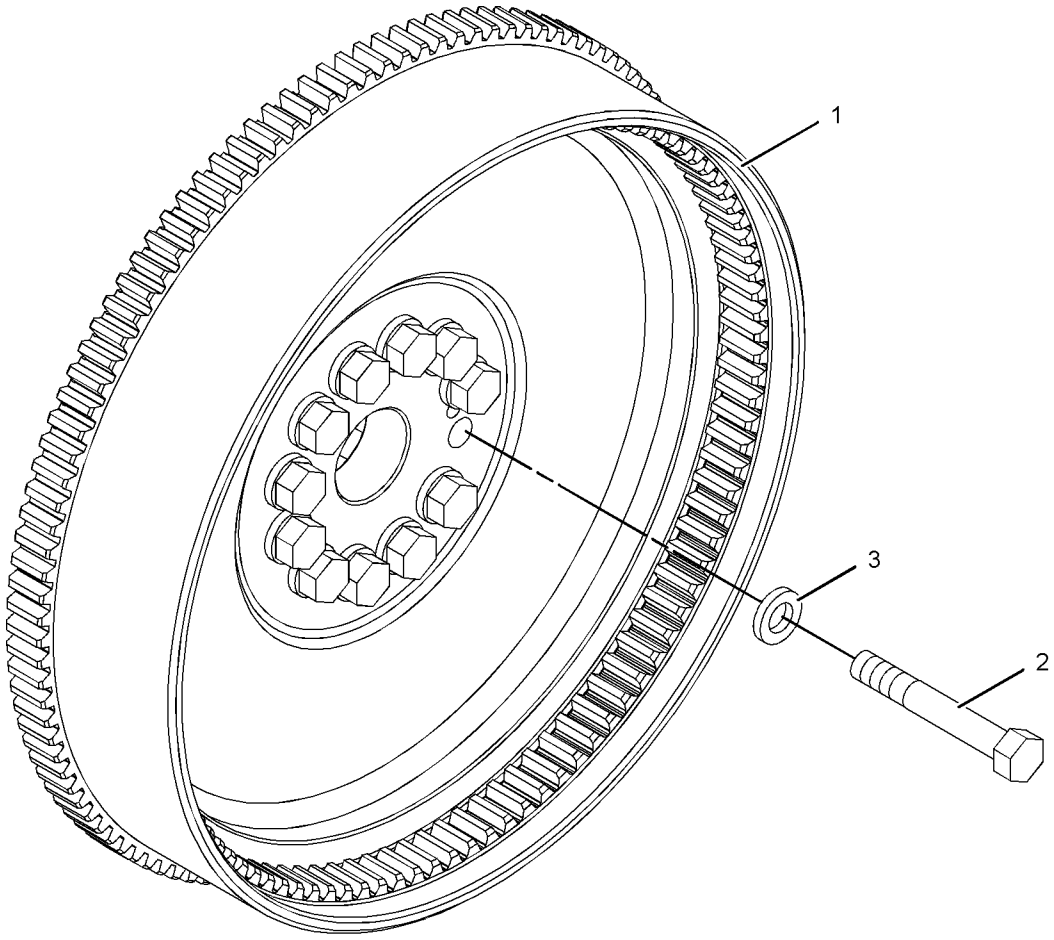

GRAPHIC #1 **<END>** g01033453

BASIC ENGINE

204-9316 GEAR GP-CAMSHAFT

S/N: RHX1-UP
PART OF 207-0449 GEAR GP-FRONT
ALSO AN ATTACHMENT

SMCS-1206 **i01549424**

NOTE	REF NO	GRAPHIC REF	PART NUMBER	QTY	PART NAME 1 2 3 4 5 6 (PRODUCT LEVEL)	SEE PAGE
	1	1	**9X-8872**	16	BOLT-LOCKING (3/8-16X0.875 IN)	

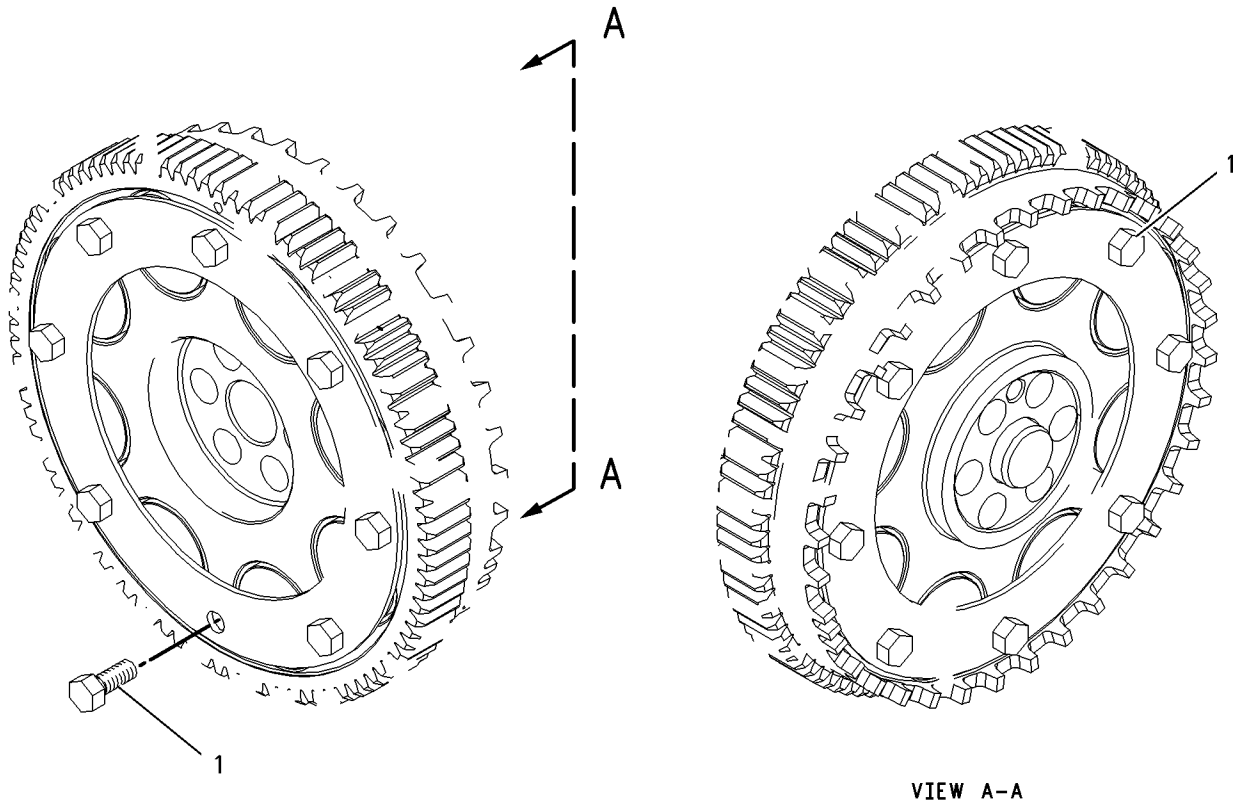

VIEW A-A

GRAPHIC #1 **<END>** g00809033

207-0449 GEAR GP-FRONT

S/N: RHX1-UP
SHOT-PEENED CLUSTER IDLER AND AN 8 BOLT CAM GEAR RETAINER
PART OF 241-5933 ENGINE AR-CORE
ALSO AN ATTACHMENT

SMCS-1206 **i02005116**

NOTE	REF NO	GRAPHIC REF	PART NUMBER	QTY	PART NAME 1 2 3 4 5 6 (PRODUCT LEVEL)	SEE PAGE
	1	2	**0S-1571**	1	BOLT (3/8-16X1.75-IN)	
	2	2	**2J-3118**	5	BOLT-LOCKING (3/8-16X1.25-IN)	
	3	1	**5P-4142**	2	BOLT-LOCKING (3/8-16X1.5-IN)	
	4	2	**1B-8705**	1	KEY-WOODRUFF	
	5	2	**1P-7346**	1	WASHER-HARD (10.2X35X6-MM THK)	
	6	1	**126-1756**	10	BOLT-LOCKING (5/16-18X22.22-MM)	
	7	2	**112-9217**	1	PLATE-THRUST	
	8	2	**130-4701**	1	GEAR AS (56-TEETH)	
		2	**130-4698**	1	BEARING-SLEEVE	
	9	2	**151-5966**	1	SHAFT AS-STUB	
		2	**6I-3623**	1	DOWEL	
	10	1	**6I-3624**	2	PLATE-THRUST	
	11	2	**6I-3625**	1	GEAR AS (71-TEETH)	
		2	**101-8468**	1	BEARING-SLEEVE	
Y	12	2	**204-9316**	1	GEAR GP-CAMSHAFT (96 TEETH)	48
	13	2	**197-4971**	1	SHAFT-STUB	
	14	2	**158-3416**	1	SHAFT-STUB	
	15	1	**031-3185**	6	BOLT-12 POINT HEAD (5/8-11X76.2-MM)	
	16	2	**149-9110**	1	GEAR-OIL PUMP DRIVE (69-TEETH)	
	17	1,2	**9S-8752**	10	NUT-FULL (3/8-16-THD)	
	18	1,2	**9X-6458**	12	WASHER-HARD (10.2X22.5X3-MM THK)	
	19	1	**117-8801**	1	SEAL-O-RING	
	20	1	**5E-8771**	1	SEAL-O-RING	
	21	2	**159-1533**	1	PLATE-SEALING	
	22	2	**159-8524**	1	ADAPTER AS	
		2	**6V-3677**	1	DOWEL	
	23	2	**102-5861**	1	PLATE-THRUST	
	24	1	**107-0583**	3	BOLT-LOCKING (1/4-20X0.87-IN)	
	25	2	**187-8979**	1	GEAR AS (105, 63-TEETH)	
		2	**1B-8705**	1	KEY-WOODRUFF	
		2	**6I-4582**	1	GEAR (63-TEETH) (SMALL CLUSTER)	
		2	**128-2661**	1	BEARING-SLEEVE	
		2	**187-8980**	1	GEAR (105-TEETH) (LARGE CLUSTER)	

Y-SEPARATE ILLUSTRATION

207-0449 **GEAR GP-FRONT** *(contd.)* **i02005116**

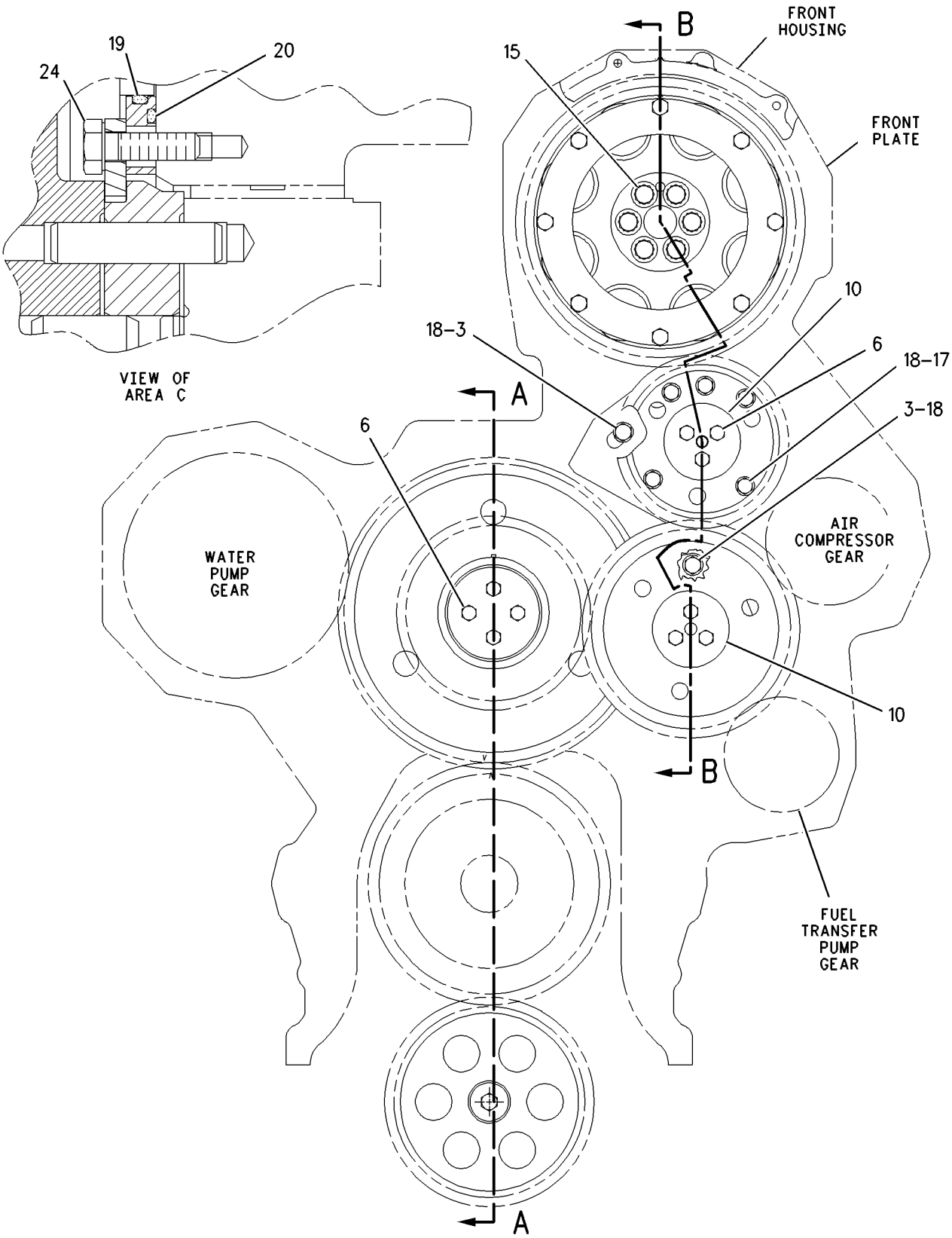

GRAPHIC #1 g00809001

207-0449 **GEAR GP-FRONT** *(contd.)* **i02005116**

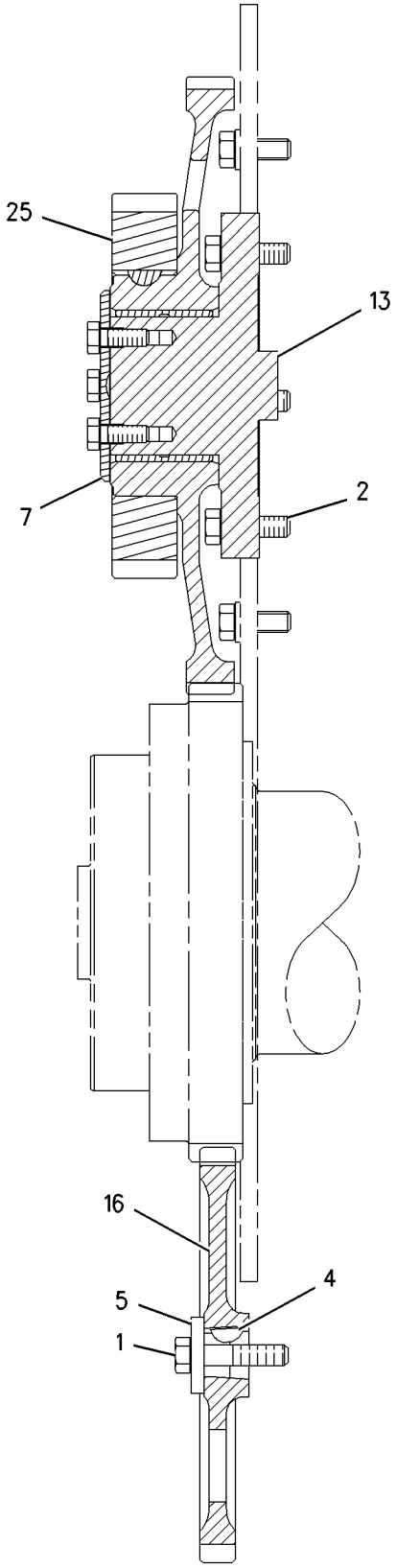

SECTION A-A

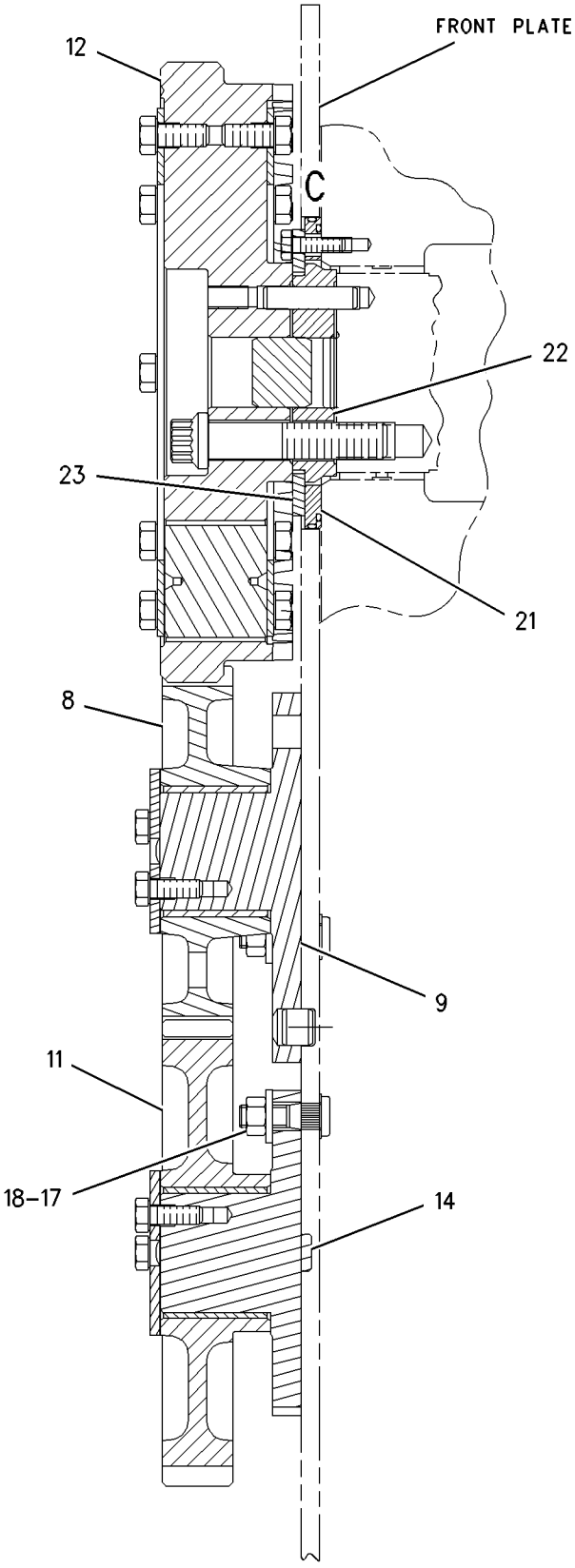

SECTION B-B

GRAPHIC #2 **<END>** g00809003

BASIC ENGINE

220-6365 GEAR GP-REAR

S/N: RHX1-UP
PART OF 205-8603, 231-3468 ENGINE AR-COMPLETE
ALSO AN ATTACHMENT

SMCS-1204 **i01994888**

NOTE	REF NO	GRAPHIC REF	PART NUMBER	QTY	PART NAME 1 2 3 4 5 6 (PRODUCT LEVEL)	SEE PAGE
	1	1	**206-4198**	1	GEAR AS (51 TEETH) (CRANKSHAFT)	
		1	**4N-0684**	1	DOWEL	
	2	1	**206-4225**	1	GEAR AS (59 TEETH) (IDLER)	
		1	**209-8621**	1	BEARING	
	3	1	**206-4231**	1	GEAR AS (41 TEETH) (PUMP DRIVE)	
		1	**4F-6024**	1	PIN	
	4	1	**206-4236**	1	ADAPTER AS (HYDRAULIC PUMP)	
		1	**209-8624**	1	BEARING-SLEEVE	
	5	1	**207-8211**	1	GEAR AS-IDLER (53 TEETH)	
		1	**209-8621**	1	BEARING	
	6	1	**207-8213**	1	GEAR AS (51 TEETH) (PUMP DRIVE)	
		1	**4F-6024**	1	PIN	
	7	1	**209-9770**	1	RETAINER AS (IDLER)	
		1	**5B-5821**	1	DOWEL	
	8	1	**209-9771**	1	RETAINER AS (IDLER)	
		1	**5B-5821**	1	DOWEL	
	9	1	**220-8225**	1	ADAPTER AS (HYDRAULIC PUMP)	
		1	**209-8624**	1	BEARING-SLEEVE	
M	10	1	**136-4183**	12	BOLT-12 POINT HEAD (M10X1.5X30MM)	
	11	1	**189-6123**	8	BOLT-12 POINT HEAD (M12X1.75X60MM)	
	12	1	**2W-2072**	2	SEAL-O-RING	

M-METRIC PART

220-6365 **GEAR GP-REAR** *(contd.)* **i01994888**

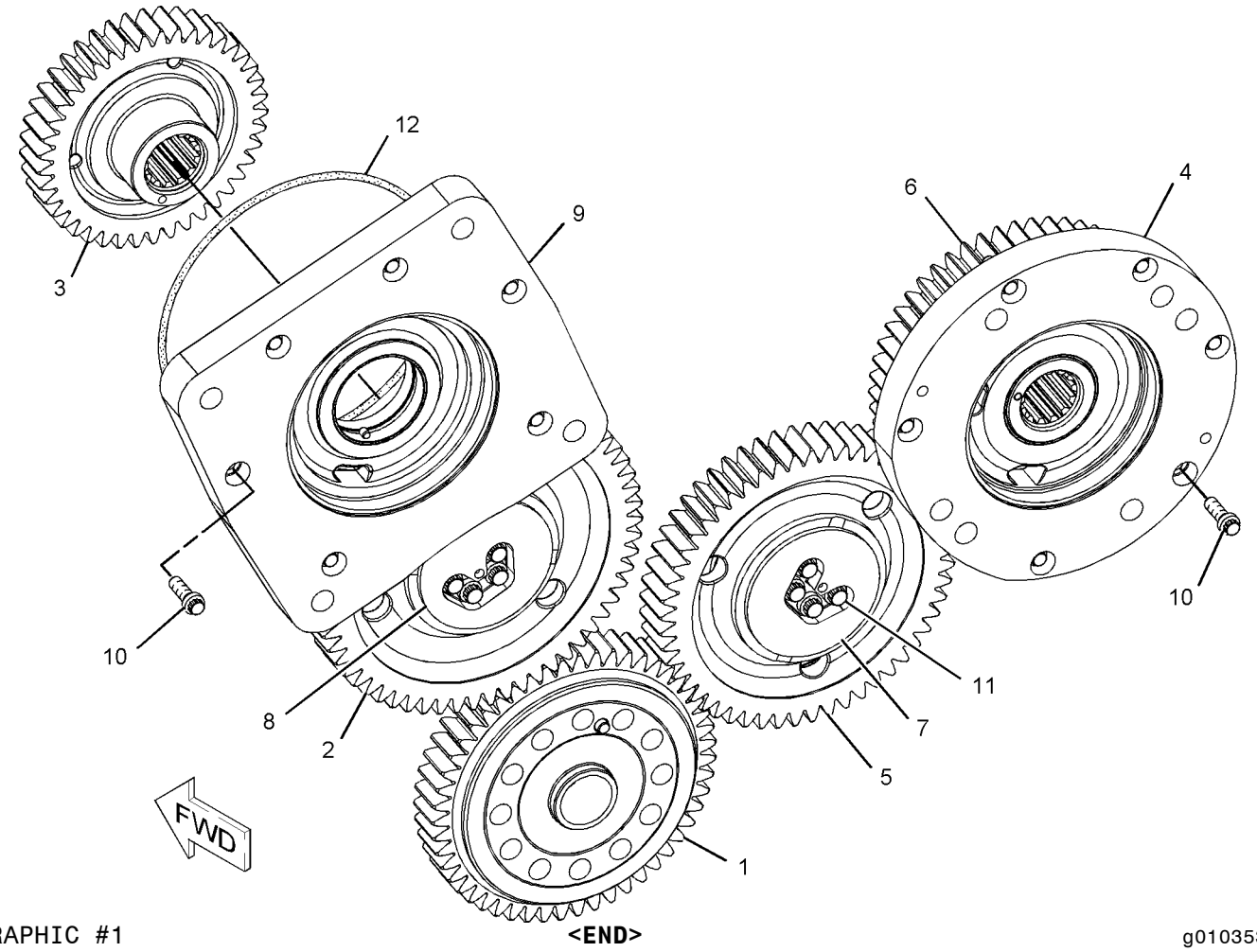

GRAPHIC #1 **<END>** g01035334

BASIC ENGINE

220-6368 HOUSING GP-FLYWHEEL

S/N: RHX1-UP

PART OF 205-8603, 231-3468 ENGINE AR-COMPLETE

ALSO AN ATTACHMENT

SMCS-1157 **i02079449**

NOTE	REF NO	GRAPHIC REF	PART NUMBER	QTY	PART NAME 1 2 3 4 5 6 (PRODUCT LEVEL)	SEE PAGE
	1	1	**142-5868**	1	SEAL GP-CRANKSHAFT	
	2	1	*148-8411*	2	PLUG AS	
					(EACH INCLUDES)	
		1	**9S-4185**	1	PLUG (3/4-16 THD)	
		1	**3K-0360**	1	SEAL-O-RING (16.36MM ID)	
	3	1	**155-5619**	1	GASKET	
	4	1	**175-3721**	2	COVER	
	5	1	**220-8217**	1	HOUSING AS-FLYWHEEL	
		1	**1W-3136**	1	BAFFLE	
		1	**209-8622**	2	BEARING-SLEEVE	
	6	1	*148-8395*	2	PLUG AS	
					(EACH INCLUDES)	
		1	**9S-8005**	1	PLUG (3/4-16 THD)	
		1	**3K-0360**	1	SEAL-O-RING (16.36MM ID)	
	7	1	*155-3624*	4	PLUG AS	
					(EACH INCLUDES)	
		1	**3J-7354**	1	SEAL-O-RING (8.92MM ID)	
		1	**9S-4182**	1	PLUG (7/16-20 THD)	
	8	1	**165-3930**	7	BOLT (3/8-16X1.625-IN)	
	9	1	**1J-9671**	1	SEAL-O-RING (10.52MM ID)	
	10	1	**223-4903**	6	BOLT	
	11	1	**2P-2772**	1	COVER	
	12	1	**4M-0189**	2	SEAL-O-RING (104.37MM ID)	
	13	1	**4N-0933**	1	GASKET	
	14	1	**5J-5793**	1	BOLT-12 POINT HEAD (1/2-13X1.75-IN)	
	15	1	**5J-5794**	8	BOLT (1/2-13X3.5-IN)	
M	16	1	**5P-8245**	13	WASHER-HARD (13.5X25.5X3-MM THK)	
M	17	1	**6A-5591**	4	BOLT (M12X1.75X25-MM)	
M	18	1	**6V-4248**	1	BOLT (M10X1.5X25-MM)	
	19	1	**6V-5839**	2	WASHER (11X21X2.5-MM THK)	
M	20	1	**8T-0643**	1	BOLT (M10X1.5X80-MM)	
	21	1	**9S-8003**	1	PLUG (1/2-20 THD)	
	22	1	**165-3932**	1	BOLT	

M-METRIC PART

220-6368 **HOUSING GP-FLYWHEEL** *(contd.)* **i02079449**

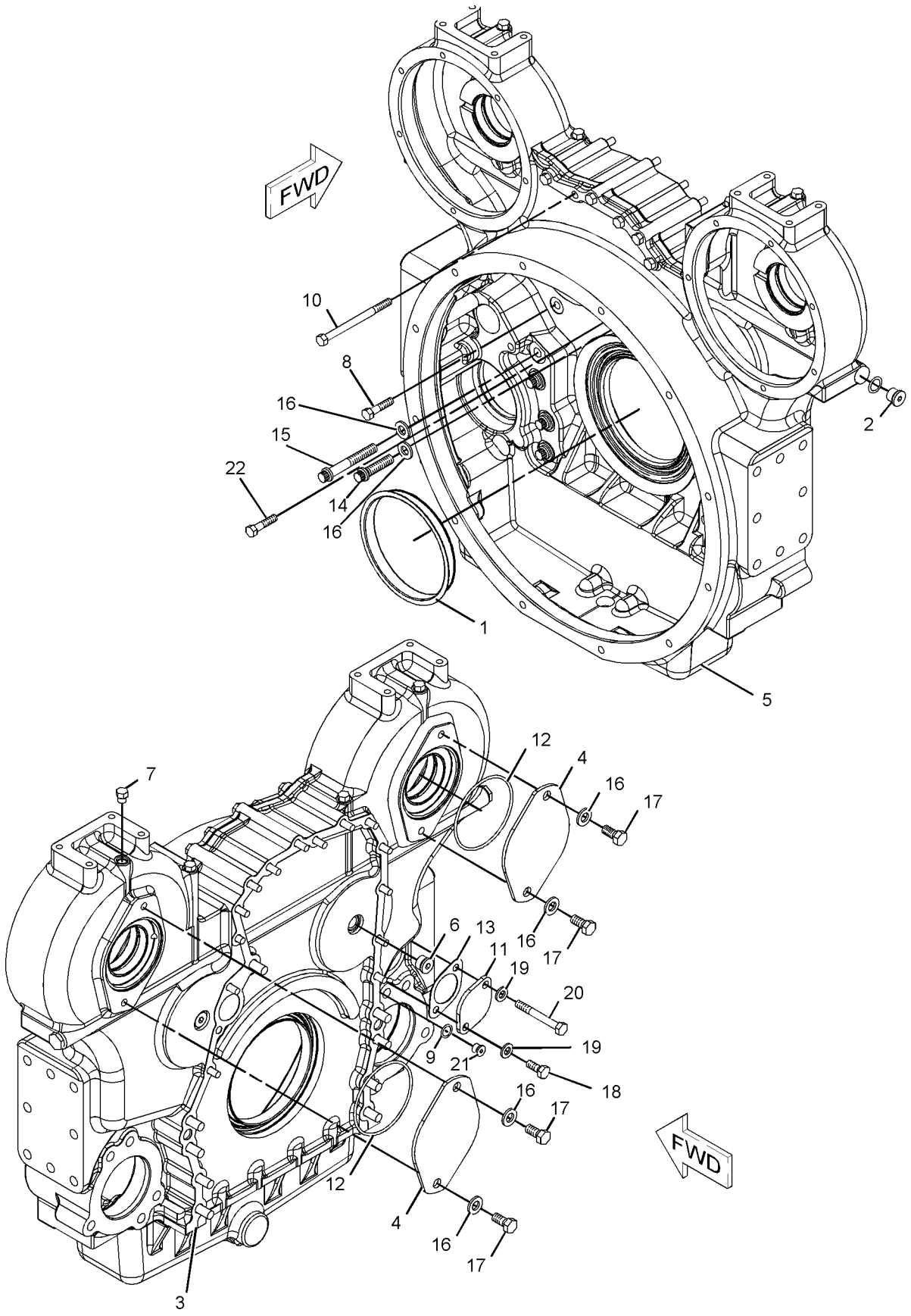

GRAPHIC #1 **<END>** g01071147

BASIC ENGINE

225-8363 HOUSING GP-FRONT

S/N: RHX1-UP

PART OF 205-8603 ENGINE AR-COMPLETE

SMCS-1151, 1162, 1166 **i01995014**

NOTE	REF NO	GRAPHIC REF	PART NUMBER	QTY	PART NAME 1 2 3 4 5 6 (PRODUCT LEVEL)	SEE PAGE
	1	1	**7C-1445**	1	COVER	
	2	1	**120-9243**	2	STUD	
	3	1	**126-1757**	9	WASHER (10.85X19.3X1.27-MM THK)	
	4	1	**129-5427**	2	WASHER (14X27X1.27-MM THK)	
	5	1	**129-5428**	12	STUD	
	6	1	**155-9524**	1	SEAL-INTEGRAL	
	7	1	**166-9144**	1	GASKET	
	8	1	**187-5420**	1	HOUSING-FRONT	
	9	1	**223-0533**	1	PLATE	
	10	1	**061-9455**	1	SEAL-O-RING	
	11	1	**0L-2070**	1	BOLT (3/8-16X2.25-IN)	
	12	1	**0S-1588**	7	BOLT (3/8-16X1.25-IN)	
	13	1	**0T-0055**	5	BOLT (3/8-16X4.25-IN)	
	14	1	**2B-2695**	2	BOLT (5/16-18X0.875-IN)	
	15	1	**5M-2894**	24	WASHER-HARD (10.2X18.5X2.5-MM THK)	
	16	1	**5P-4255**	8	BOLT-LOCKING (3/8-16X1-IN)	
	17	1	**8S-9191**	1	BOLT (3/8-16X4-IN)	
	18	1	**9K-0416**	1	STUD	
	19	1	**9M-1974**	2	WASHER-HARD (8.8X16X2-MM THK)	
	20	1	**9S-8752**	2	NUT-FULL (3/8-16-THD)	

225-8363 **HOUSING GP-FRONT** *(contd.)* **i01995014**

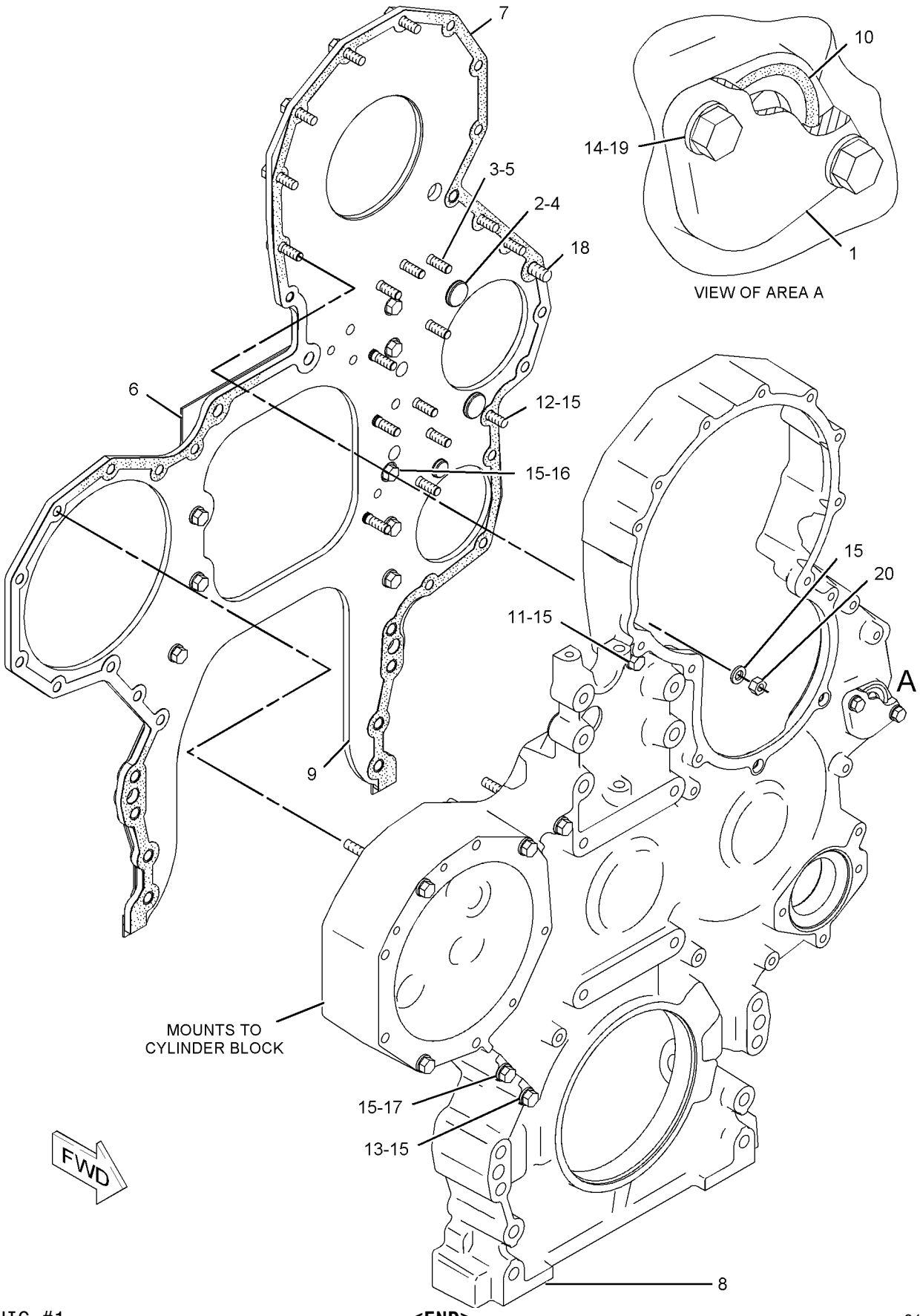

GRAPHIC #1 **<END>** g01033200

BASIC ENGINE

243-5644 HOUSING GP-FRONT—SOUND SUPPRESSION

S/N: RHX1-UP

PART OF 231-3468 ENGINE AR-COMPLETE

AN ATTACHMENT

SMCS-1151, 1162, 1166 **i01995157**

NOTE	REF NO	GRAPHIC REF	PART NUMBER	QTY	PART NAME 1 2 3 4 5 6 (PRODUCT LEVEL)	SEE PAGE
	1	1	**7C-1445**	1	COVER	
	2	1	**120-9243**	2	STUD	
	3	1	**126-1757**	9	WASHER (10.85X19.3X1.27-MM THK)	
	4	1	**129-5427**	2	WASHER (14X27X1.27-MM THK)	
	5	1	**129-5428**	12	STUD	
	6	1	**155-9524**	1	SEAL-INTEGRAL	
	7	1	**166-9144**	1	GASKET	
	8	1	**187-5420**	1	HOUSING-FRONT	
	9	1	**223-0533**	1	PLATE	
	10	1	**243-5449**	1	COVER AS (SOUND PANEL)	
	11	1	**243-5455**	1	COVER AS (SOUND PANEL)	
	12	1	**061-9455**	1	SEAL-O-RING	
	13	1	**0L-1351**	1	BOLT (3/8-16X0.875-IN)	
	14	1	**0L-2070**	1	BOLT (3/8-16X2.25-IN)	
	15	1	**0S-1588**	8	BOLT (3/8-16X1.25-IN)	
	16	1	**0T-0055**	5	BOLT (3/8-16X4.25-IN)	
	17	1	**1A-2029**	2	BOLT (3/8-16X1.125-IN)	
	18	1	**1A-5964**	3	BOLT (3/8-16X4.5-IN)	
	19	1	**2B-2695**	2	BOLT (5/16-18X0.875-IN)	
	20	1	**5M-2894**	30	WASHER-HARD (10.2X18.5X2.5-MM THK)	
	21	1	**5P-4255**	8	BOLT-LOCKING (3/8-16X1-IN)	
	22	1	**9K-0416**	1	STUD	
	23	1	**9M-1974**	2	WASHER-HARD (8.8X16X2-MM THK)	
	24	1	**9S-8752**	2	NUT-FULL (3/8-16-THD)	

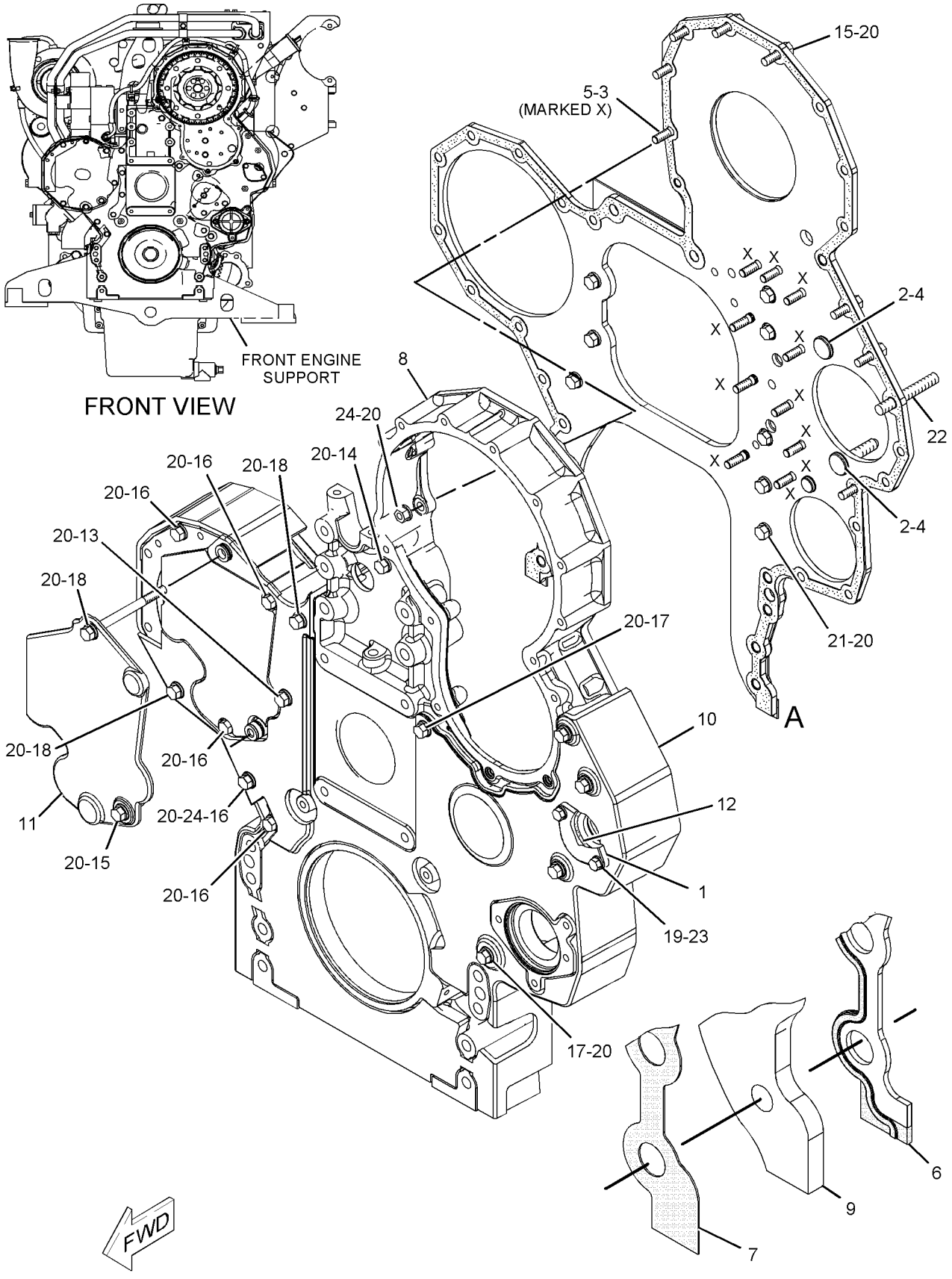

GRAPHIC #1 **<END>** g01035139

111-2355 LIFTING GP-ENGINE

S/N: RHX1-UP
FRONT- OFFSET LIFTING EYE
PART OF 205-8603, 231-3468 ENGINE AR-COMPLETE
CANNOT BE USED WITH ALTERNATOR MOUNTING
ALSO AN ATTACHMENT

SMCS-1122 **i00833389**

NOTE	REF NO	GRAPHIC REF	PART NUMBER	QTY	PART NAME 1 2 3 4 5 6 (PRODUCT LEVEL)	SEE PAGE
	1	1	**110-4344**	1	EYE-LIFTING	
	2	1	**0S-1595**	4	BOLT (1/2-13X1.25IN)	
	3	1	**5P-8245**	4	WASHER (3MM THK)	

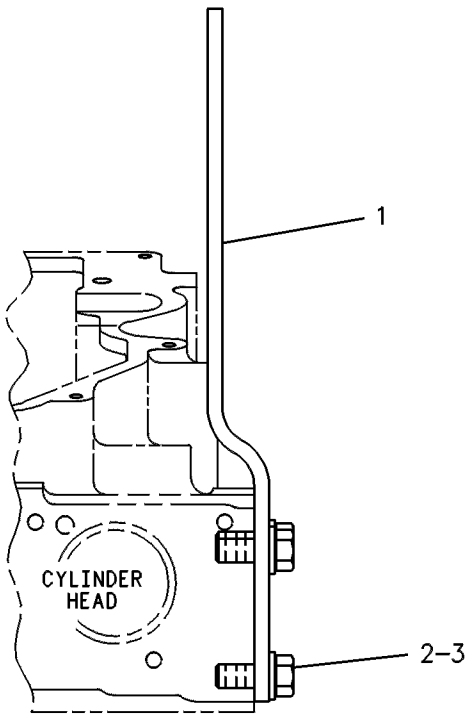

GRAPHIC #1 **<END>** g00238181

220-6370 LIFTING GP-ENGINE

S/N: RHX1-UP
PART OF 205-8603, 231-3468 ENGINE AR-COMPLETE
ALSO AN ATTACHMENT

SMCS-1122 **i01994922**

NOTE	REF NO	GRAPHIC REF	PART NUMBER	QTY	PART NAME 1 2 3 4 5 6 (PRODUCT LEVEL)	SEE PAGE
	1	1	**221-1424**	1	EYE-LIFTING	
	2	1	**0S-1591**	8	BOLT (3/8-16X1.5 IN)	
	3	1	**5M-2894**	8	WASHER-HARD (10.2X18.5X2.5MM THK)	

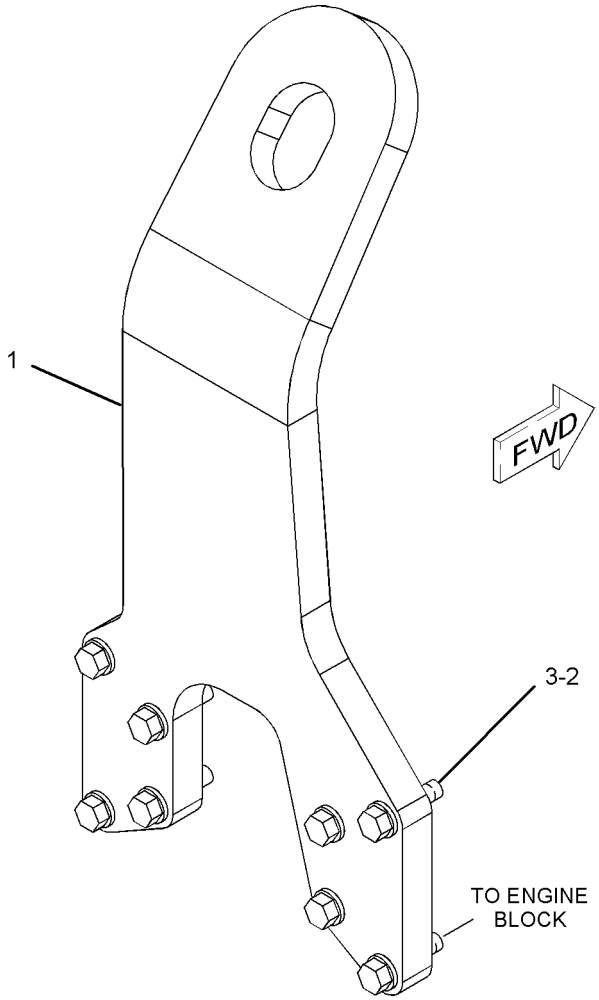

GRAPHIC #1 **<END>** g01033837

205-4709 MOUNTING GP-ENGINE

S/N: RJS1-UP

PART OF 205-8604 INSTALLATION AR-ENGINE

SMCS-1152, 1153, 1154 **i01995213**

NOTE	REF NO	GRAPHIC REF	PART NUMBER	QTY	PART NAME 1 2 3 4 5 6 (PRODUCT LEVEL)	SEE PAGE
	1	1	**2W-1160**	2	SUPPORT-ENGINE	
	2	1	**4P-5546**	2	SUPPORT	
	3	1	**6N-3896**	2	CAP	
	4	1	**6Y-2090**	2	MOUNT AS (900 CUP)	
	5	1	**220-0771**	14	BOLT-12 POINT HEAD	
	6	1	**1D-4627**	6	BOLT (7/8-9X3 IN)	
	7	1	**3B-2968**	4	BOLT (3/4-10X3.5 IN)	
	8	1	**5P-8247**	14	WASHER-HARD (17X32X3.5MM THK)	
	9	1	**5P-8248**	4	WASHER-HARD (20X36.5X3.5MM THK)	
	10	1	**5P-8249**	8	WASHER-HARD (24X41.5X4MM THK)	
	11	1	**9X-8895**	2	BOLT (7/8-9X4.0 IN)	

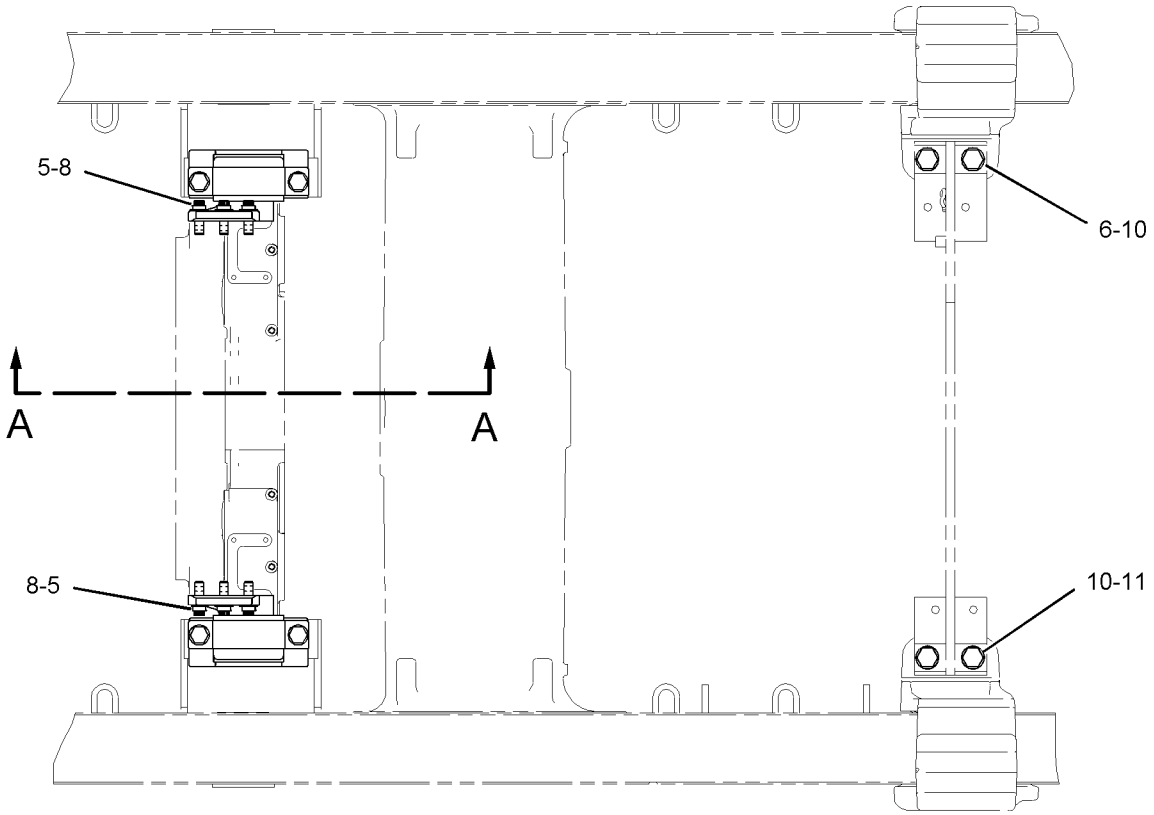

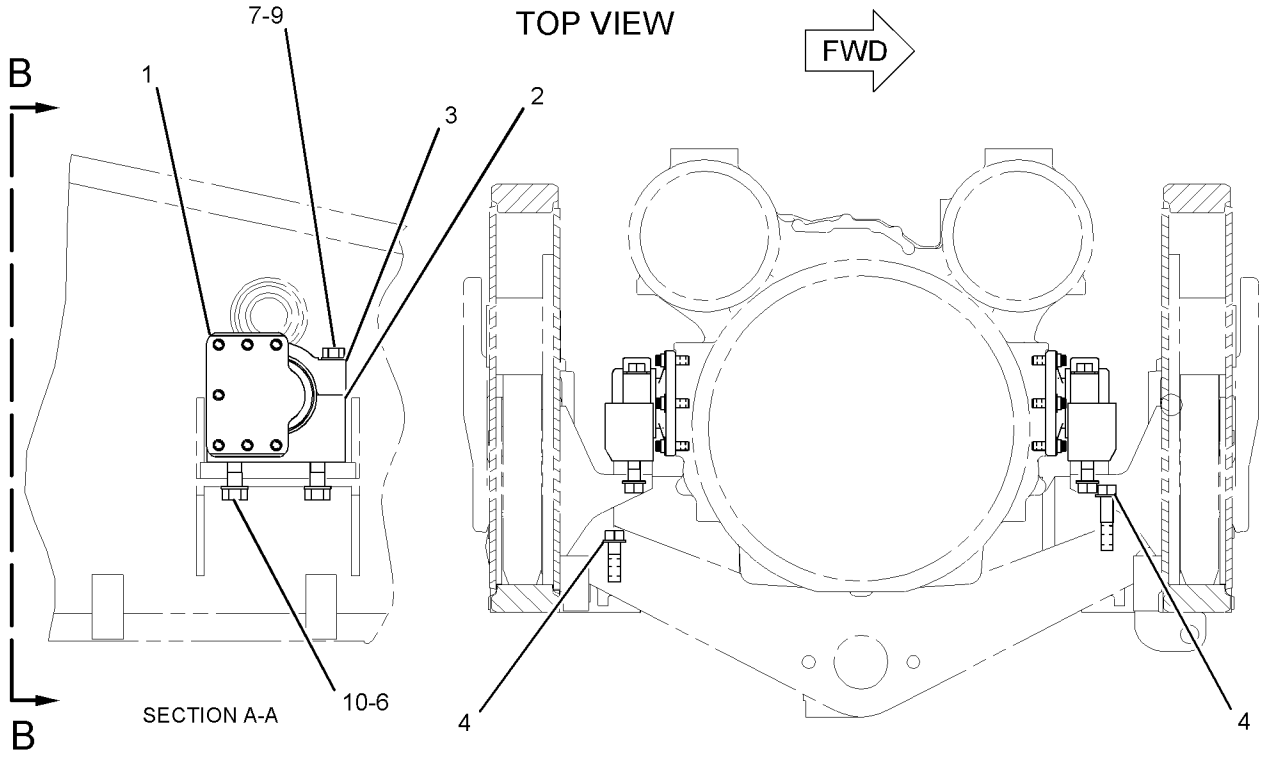

GRAPHIC #1 **<END>** g01033566

BASIC ENGINE

7W-0158 PAN GP-OIL

S/N: RHX1-UP

PART OF 205-8603 ENGINE AR-COMPLETE

SMCS-1302 **i01876606**

NOTE	REF NO	GRAPHIC REF	PART NUMBER	QTY	PART NAME 1 2 3 4 5 6 (PRODUCT LEVEL)	SEE PAGE
	1	1	**4N-3661**	2	GASKET-OIL PAN	
	2	1	**6V-3830**	1	SEAL-O-RING	
	3	1	**116-7885**	1	PAN-FRONT OIL	
	4	1	**4N-7266**	1	GASKET-OIL PAN	
	5	1	**7W-0844**	1	PAN-CENTER OIL	
	6	1	**0S-1591**	8	BOLT (3/8-16X1.5-IN)	
	7	1	**5M-2894**	14	WASHER-HARD (10.2X18.5X2.5-MM THK)	
	8	1	**7W-0845**	1	GASKET	
	9	1	**7W-0843**	1	PAN-REAR OIL	
	10	1	**0S-1588**	6	BOLT (3/8-16X1.25-IN)	
	11	1	**2P-3203**	39	BOLT-WASHER HEAD (3/8-16X1.25-IN)	
	12	1	**4P-0519**	1	ADAPTER AS-DRAIN	
	13	1	**4P-0513**	1	PLUG-OIL DRAIN (PAN)	
	14	1	**0S-1587**	2	BOLT (1/2-13X1.75-IN)	
	15	1	**1W-6632**	1	PLATE AS-OIL PAN	
	16	1	**9F-2978**	5	NUT-WELD (3/8-16-THD)	
	17	1	**7M-8485**	1	SEAL-O-RING	
	18	1	**9S-4181**	1	PLUG	
	19	1	**3B-0551**	1	PLUG-PIPE	

7W-0158 **PAN GP-OIL** *(contd.)* **i01876606**

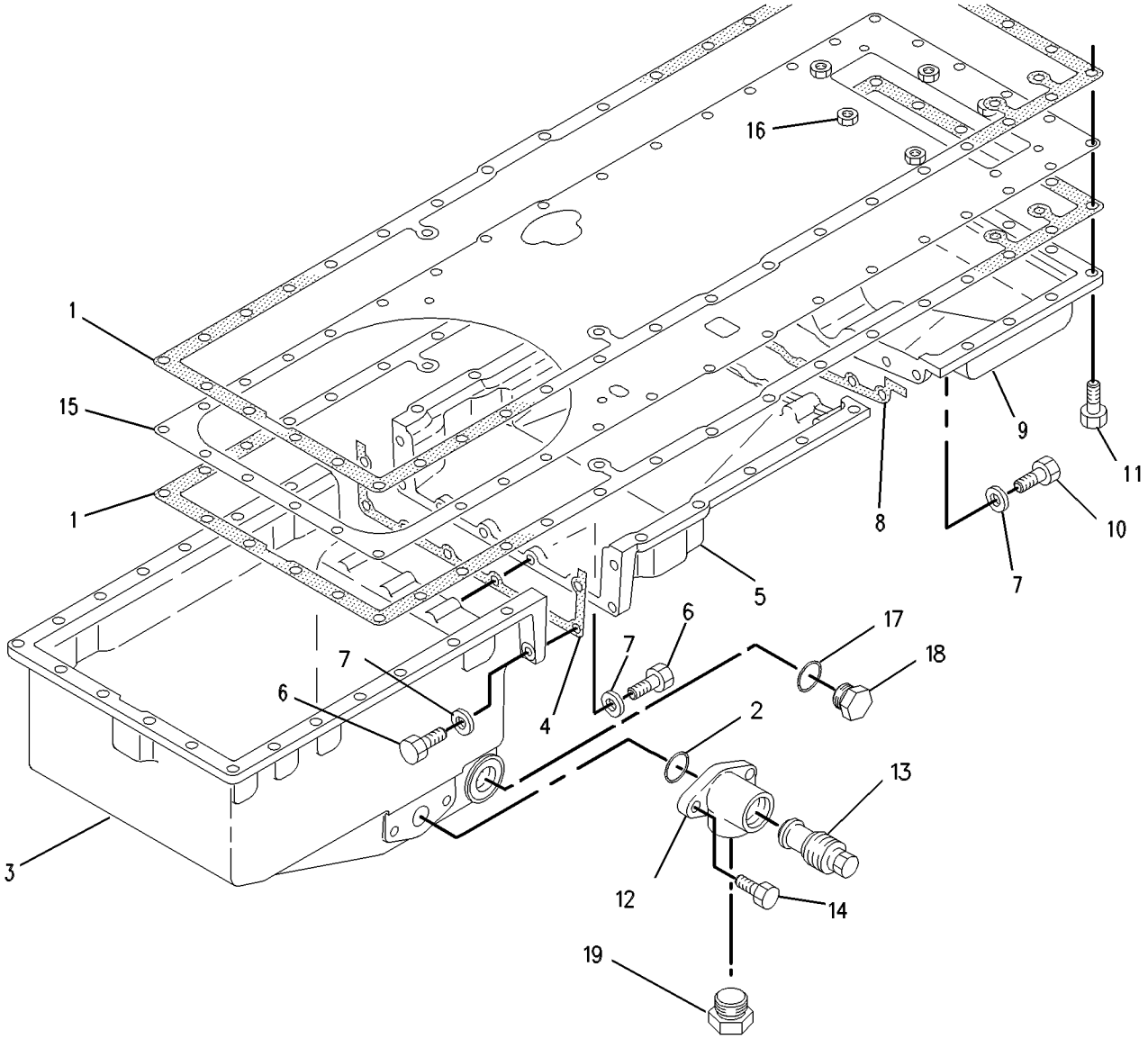

GRAPHIC #1 **<END>** g00590371

BASIC ENGINE

107-7378 PAN GP-OIL

S/N: RHX1-UP
PART OF 231-3468 ENGINE AR-COMPLETE
AN ATTACHMENT

SMCS-1302 **i01876608**

NOTE	REF NO	GRAPHIC REF	PART NUMBER	QTY	PART NAME 1 2 3 4 5 6 (PRODUCT LEVEL)	SEE PAGE
	1	1	**4N-3661**	2	GASKET-OIL PAN	
	2	1	**6V-3830**	1	SEAL-O-RING (34.29MM ID)	
	3	1	**116-7885**	1	PAN-FRONT OIL	
	4	1	**4N-7266**	1	GASKET-OIL PAN	
	5	1	**7W-0844**	1	PAN-CENTER OIL	
	6	1	**0S-1591**	8	BOLT (3/8-16X1.5-IN)	
	7	1	**5M-2894**	14	WASHER-HARD (10.2X18.5X2.5-MM THK)	
	8	1	**7W-0845**	1	GASKET	
	9	1	**7W-0843**	1	PAN-REAR OIL	
	10	1	**0S-1588**	6	BOLT (3/8-16X1.25-IN)	
	11	1	**2P-3203**	31	BOLT-WASHER HEAD (3/8-16X1.25-IN)	
	12	1	**4P-0519**	1	ADAPTER AS-DRAIN	
	13	1	**109-5839**	1	PLUG-OIL DRAIN (PAN)	
	14	1	**0S-1587**	2	BOLT (1/2-13X1.75-IN)	
	15	1	**1W-6632**	1	PLATE AS-OIL PAN	
	16	1	**1F-0750**	5	NUT-WELD (3/8-16-THD)	
	17	1	**7M-8485**	1	SEAL-O-RING (29.74MM ID)	
	18	1	**9S-4181**	1	PLUG	
	19	1	**3B-0551**	1	PLUG-PIPE	

107-7378 **PAN GP-OIL** *(contd.)* **i01876608**

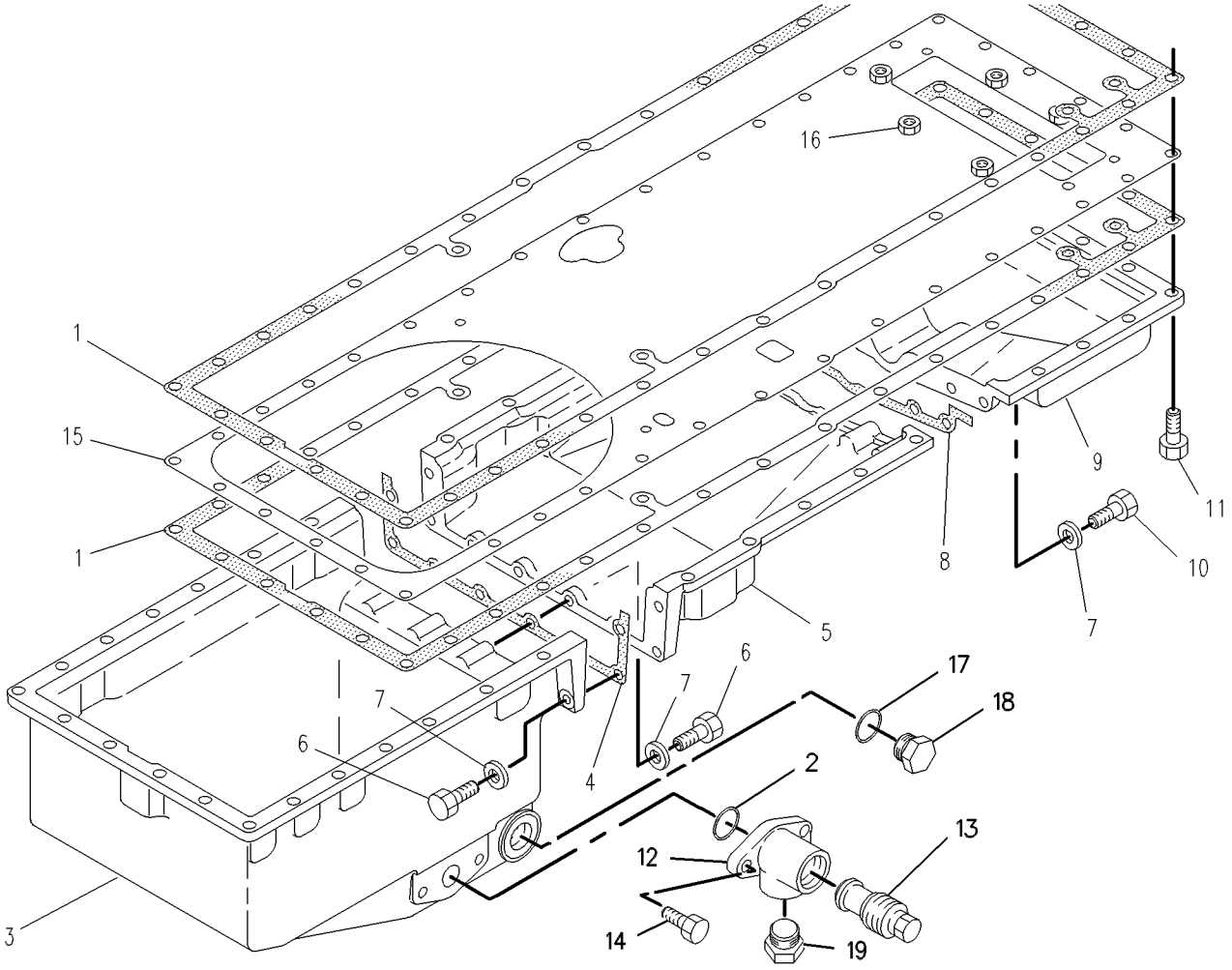

GRAPHIC #1 **<END>** g00591630

BASIC ENGINE

220-1441 PISTON & ROD GP

S/N: RHX1-UP
PART OF 241-5933 ENGINE AR-CORE
ALSO AN ATTACHMENT
TYPE 1

SMCS-1213, 1214, 1215, 1218, 1219, 1225, 1239 **i02071085**

NOTE	REF NO	GRAPHIC REF	PART NUMBER	QTY	PART NAME 1 2 3 4 5 6 (PRODUCT LEVEL)	SEE PAGE
	1	1	**151-5925**	1	BOLT (7/16-14-2A THD)	
	2	1	**180-7350**	1	PIN-PISTON	
	3	1	**187-1503**	1	RING-PISTON (INTERMEDIATE)	
	4	1	**197-9296**	1	RING-PISTON (OIL CONTROL)	
	5	1	**197-9360**	1	TUBE AS (OIL JET)	
	6	1	**223-9158**	1	BODY AS-PISTON	
	7	1	**223-9159**	1	RING-PISTON-TOP	
	8	1	**224-3245**	1	ROD AS	
	8A	1	**7N-2043**	2	DOWEL	
	8B	1	**213-3217**	4	BOLT	
	8C	1	**229-6259**	1	BEARING	
	9	1	**224-3246**	1	BEARING-CONNECTING ROD	
AB		1	**232-3235**		BEARING-CONNECTING ROD (0.64-MM US)	
AB		1	**232-3236**		BEARING-CONNECTING ROD (1.27-MM US)	
	10	1	**230-2569**	2	RETAINER-PIN	

A-NOT PART OF THIS GROUP
B-USE AS REQUIRED

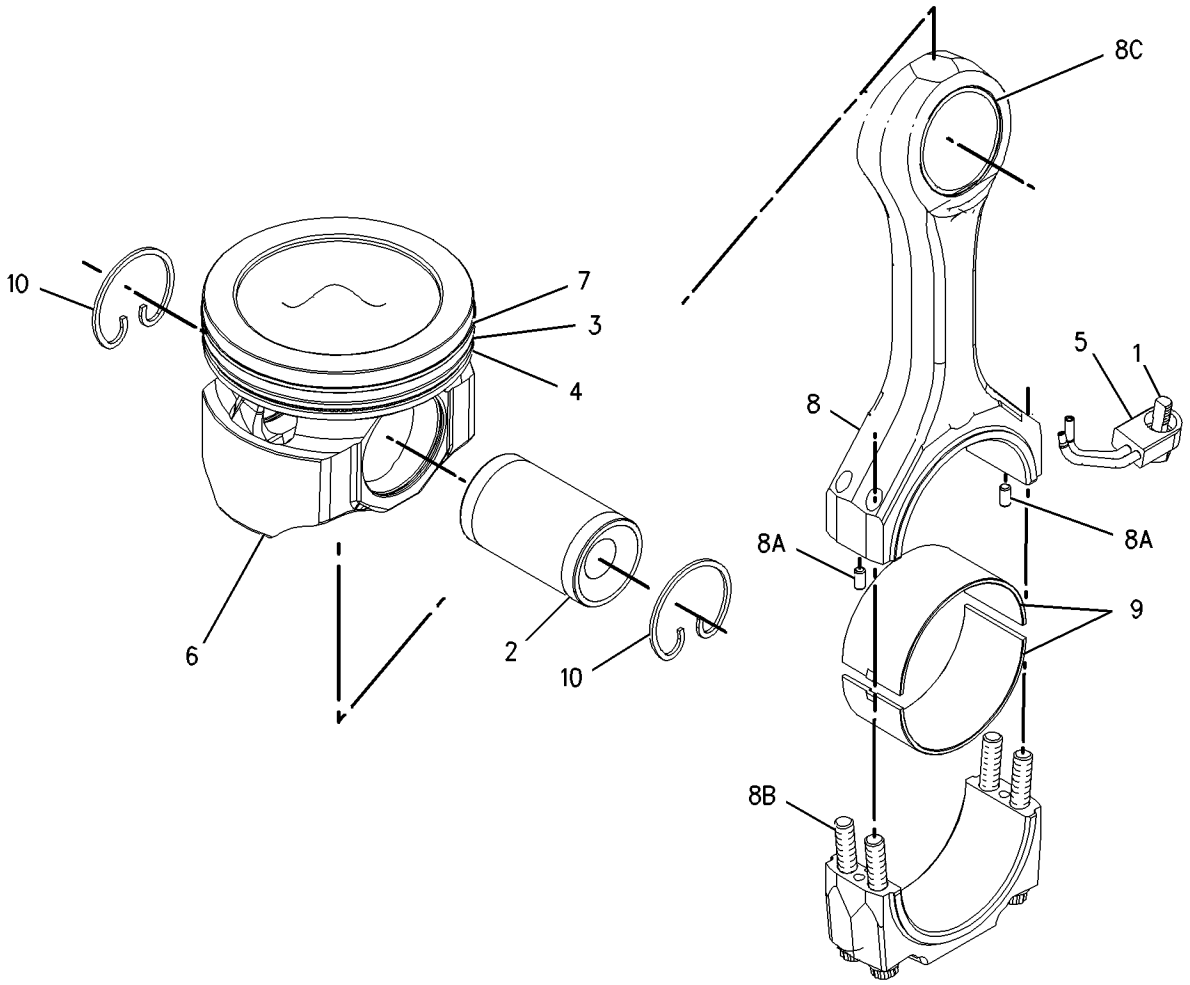

GRAPHIC #1 **<END>** g01002106

220-1441 PISTON & ROD GP

S/N: RHX1-UP
PART OF 241-5933 ENGINE AR-CORE
ALSO AN ATTACHMENT
TYPE 2

SMCS-1213, 1214, 1215, 1218, 1219, 1225, 1239 **i02208906**

NOTE	REF NO	GRAPHIC REF	PART NUMBER	QTY	PART NAME 1 2 3 4 5 6 (PRODUCT LEVEL)	SEE PAGE
	1	1	**151-5925**	1	BOLT (7/16-14-2A THD)	
	2	1	**180-7350**	1	PIN-PISTON	
C	3	1	**238-2707**	1	RING-PISTON (INTERMEDIATE)	
C	4	1	**246-5659**	1	RING-PISTON-OIL	
	5	1	**197-9360**	1	TUBE AS (OIL JET)	
C	6	1	**247-6120**	1	BODY AS	
	7	1	**223-9159**	1	RING-PISTON-TOP	
R	8	1	**224-3245**	1	ROD AS	
	8A	1	**219-4458**	2	PIN-DOWEL	
	8B	1	**213-3217**	4	BOLT	
	8C	1	**229-6259**	1	BEARING	
	9	1	**224-3246**	1	BEARING-CONNECTING ROD (STANDARD)	
AB		1	**232-3235**		BEARING-CONNECTING ROD (0.64-MM US)	
AB		1	**232-3236**		BEARING-CONNECTING ROD (1.27-MM US)	
	10	1	**230-2569**	2	RETAINER-PIN	

A-NOT PART OF THIS GROUP
B-USE AS REQUIRED
C-CHANGE FROM PREVIOUS TYPE
R-REMFG PART MAY BE AVAILABLE

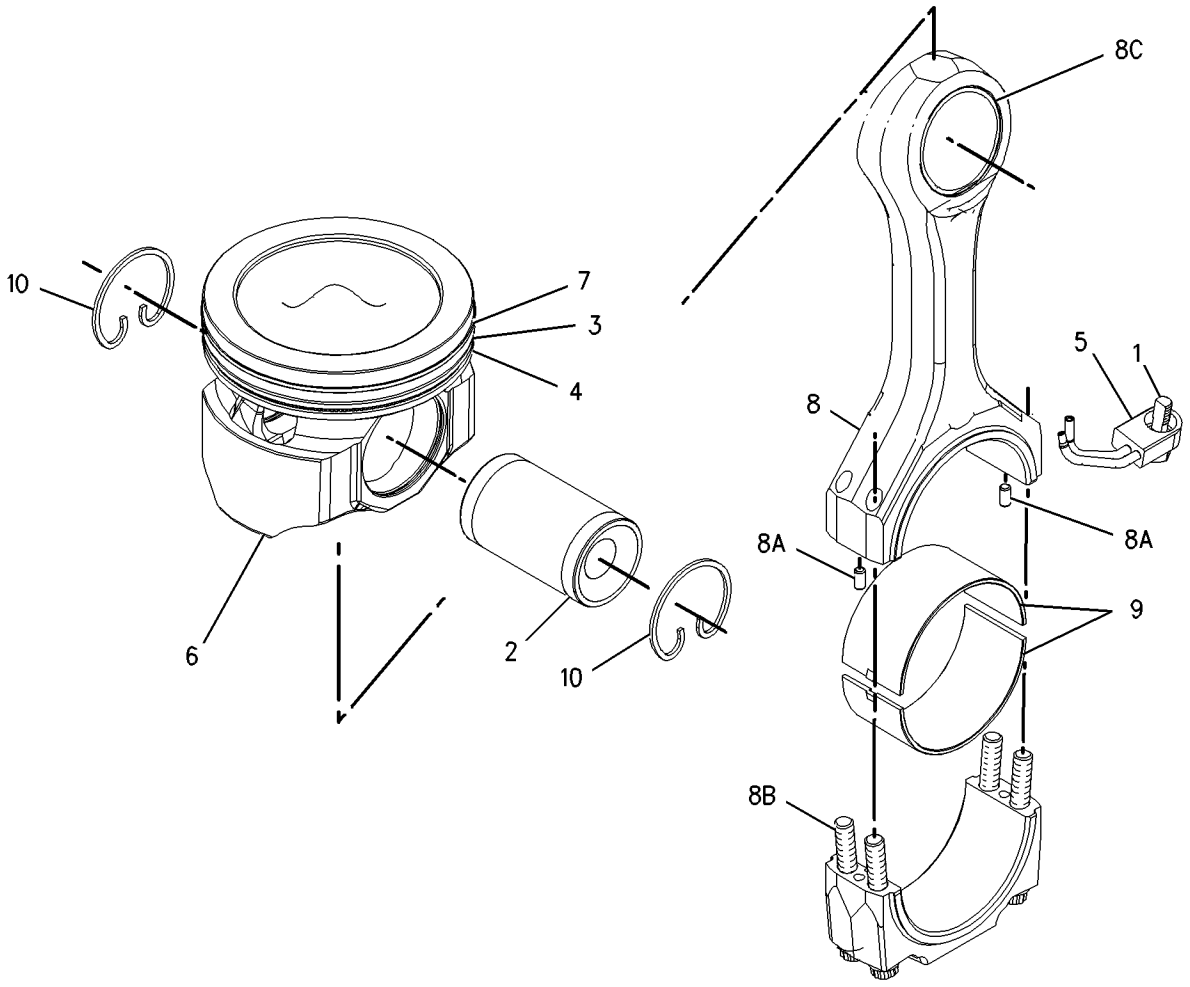

GRAPHIC #1 **<END>** g01002106

225-6329 PLUG GP-CYLINDER BLOCK

S/N: RHX1-UP
PART OF 205-8603, 231-3468 ENGINE AR-COMPLETE
ALSO AN ATTACHMENT

SMCS-1201 **i02189613**

NOTE	REF NO	GRAPHIC REF	PART NUMBER	QTY	PART NAME 1 2 3 4 5 6 (PRODUCT LEVEL)	SEE PAGE
	1	1	*183-3409*	1	PLUG AS	
		1	**9S-8002**		PLUG	
		1	**033-5853**		SEAL-O-RING	
	2	1	**6V-6609**	2	SEAL-O-RING	
	3	1	**8L-2786**	1	SEAL-O-RING	
	4	1	**9S-8005**	3	PLUG	

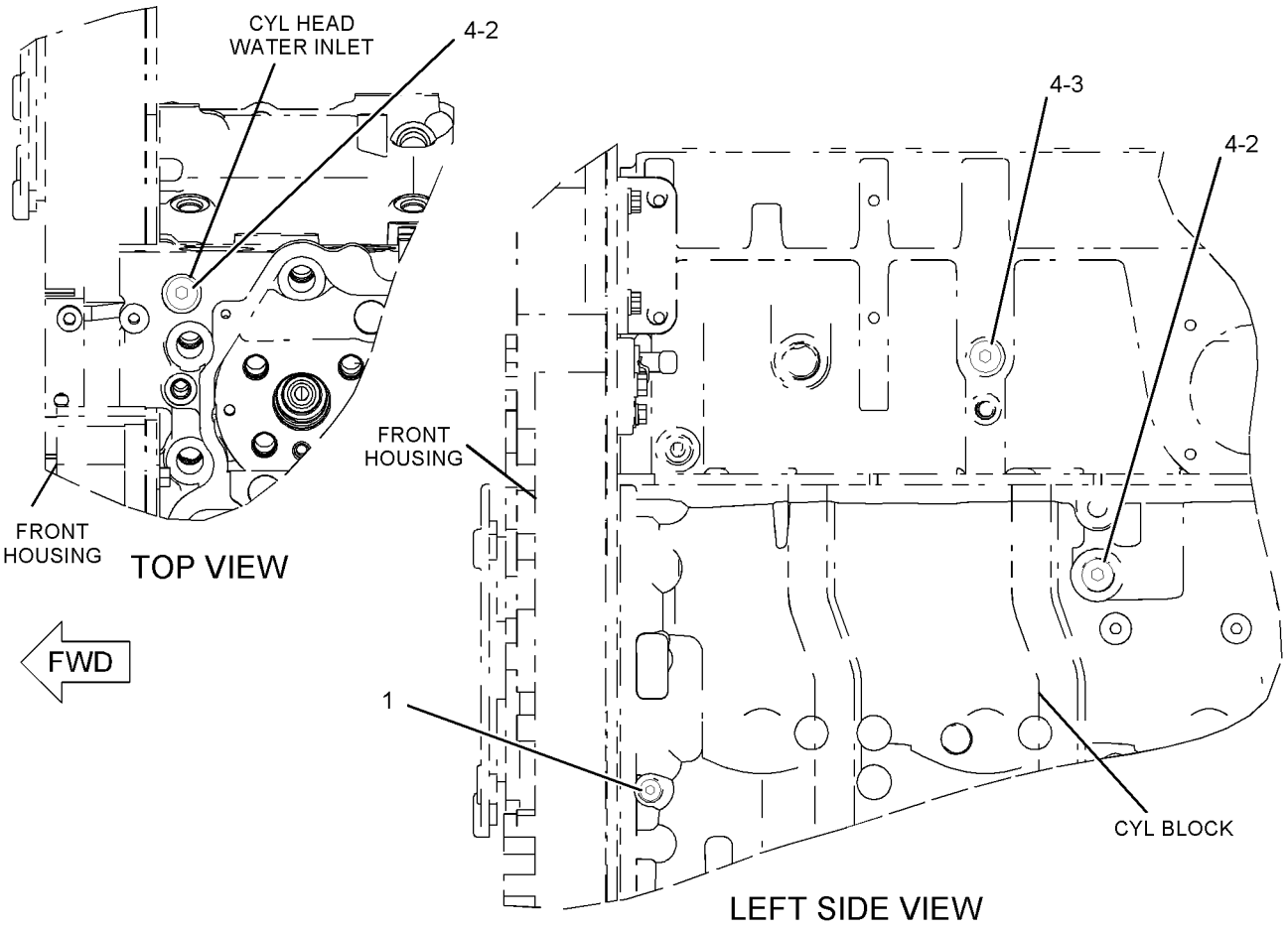

GRAPHIC #1 **<END>** g01107569

229-9477 PLUG GP-CYLINDER BLOCK

S/N: RHX1-UP
PART OF 205-8603, 231-3468 ENGINE AR-COMPLETE
ALSO AN ATTACHMENT

SMCS-1201 **i02014460**

NOTE	REF NO	GRAPHIC REF	PART NUMBER	QTY	PART NAME 1 2 3 4 5 6 (PRODUCT LEVEL)	SEE PAGE
	1	1	**136-7227**	1	SEAL-O-RING	
	2	1	*183-3409*	1	PLUG AS	
		1	**9S-8002**	1	PLUG	
		1	**033-5853**	1	SEAL-O-RING	
	3	1	**6V-6609**	2	SEAL-O-RING	
	4	1	**8L-2786**	6	SEAL-O-RING	
	5	1	**9S-8005**	8	PLUG	
	6	1	**9S-8006**	1	PLUG	

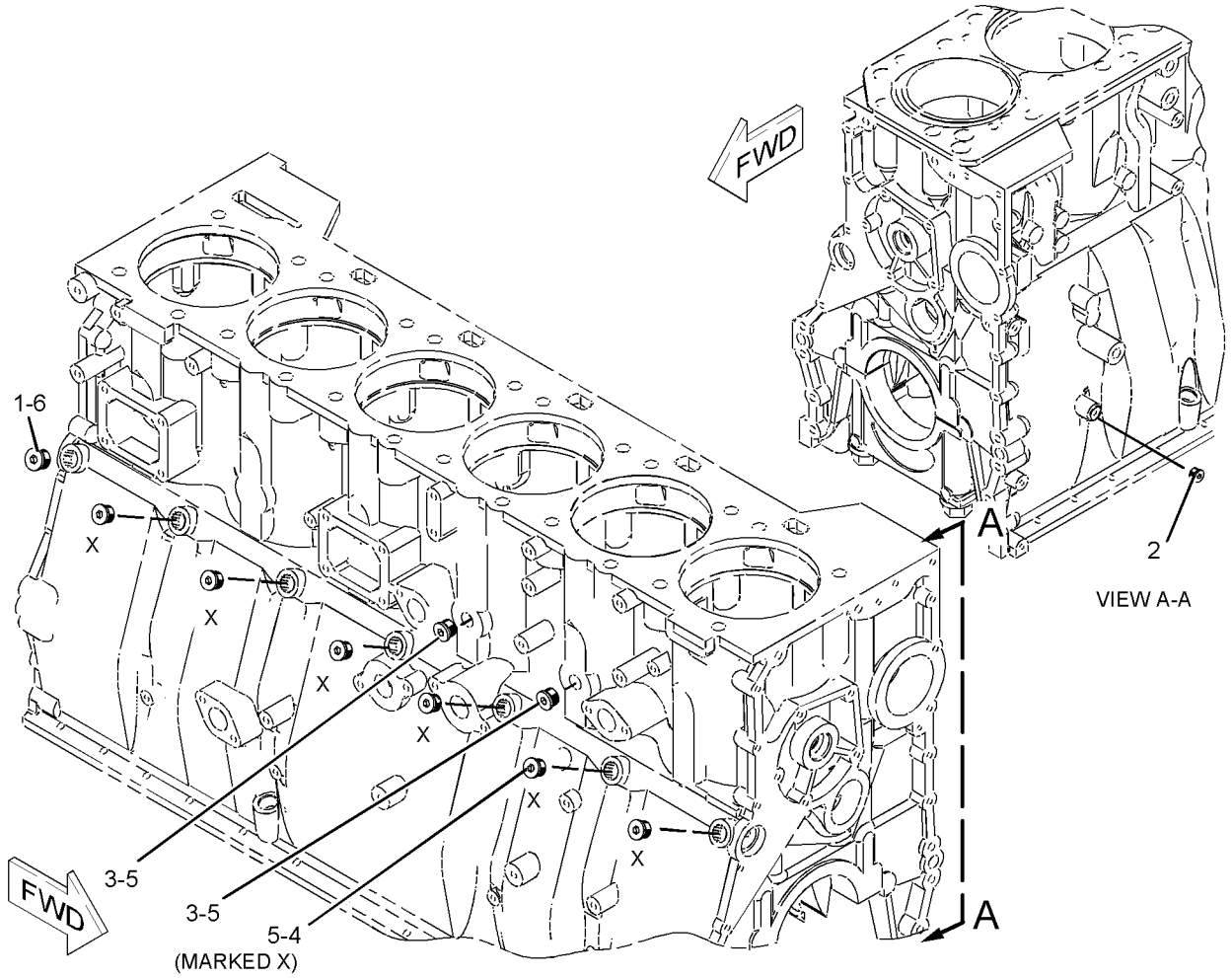

GRAPHIC #1 **<END>** g01044221

229-6711 PLUG GP-CYLINDER HEAD

S/N: RHX1-UP
PART OF 205-8603, 231-3468 ENGINE AR-COMPLETE
FOR USE WITH AIR COMPRESSOR COVER GROUP IF NO AIR COMPRESSOR
ALSO AN ATTACHMENT

SMCS-1100 **i02001323**

NOTE	REF NO	GRAPHIC REF	PART NUMBER	QTY	PART NAME 1 2 3 4 5 6 (PRODUCT LEVEL)	SEE PAGE
	1	1	**6V-6609**	1	SEAL-O-RING	
	2	1	*183-3408*	4	PLUG AS	
					(EACH INCLUDES)	
	2A	1	**9S-8004**	1	PLUG	
	2B	1	**153-4906**	1	SEAL-O-RING	
	3	1	**6V-3251**	1	SEAL-O-RING	
	4	1	**9S-8006**	1	PLUG	
	5	1	**9S-8005**	1	PLUG	

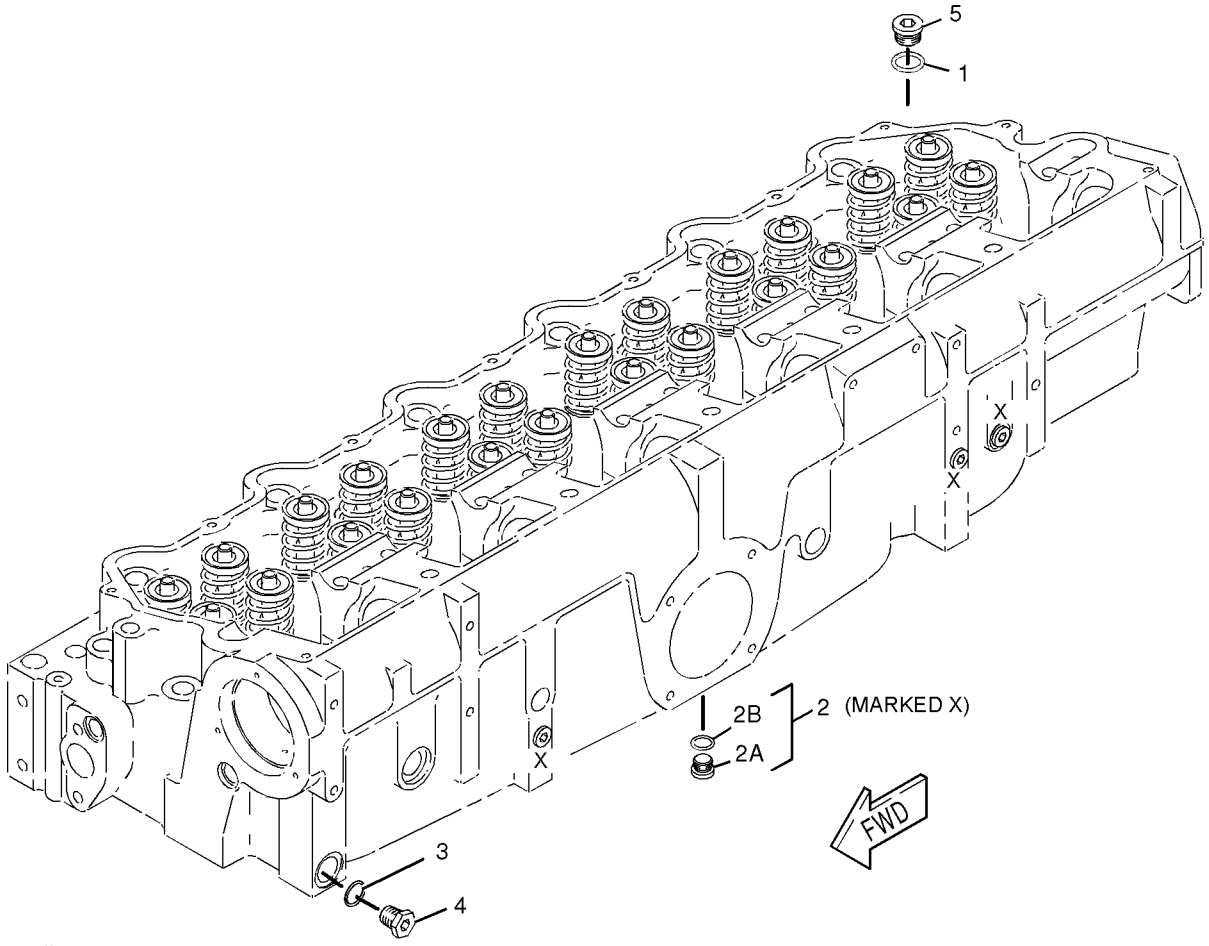

GRAPHIC #1 **<END>** g01037658

198-9898 ROCKER ARM GP

S/N: RHX1-UP
PART OF 148-7482 VALVE MECHANISM GP
ALSO AN ATTACHMENT

SMCS-1102, 1123 **i02034566**

NOTE	REF NO	GRAPHIC REF	PART NUMBER	QTY	PART NAME 1 2 3 4 5 6 (PRODUCT LEVEL)	SEE PAGE
	1	1	**6I-0901**	1	SHAFT AS-ROCKER ARM	
		1	**4B-9782**	2	BALL	
	2	1	**9L-7712**	4	NUT (3/8-24-THD)	
	3	1	**104-9270**	4	BUTTON	
W	4	1	**192-4151**	2	BUTTON (24MM ID)	
					—OR—	
J		1	**4P-7371**	2	INSERT (14.75MM ID)	
W	5	1	**196-5069**	2	SCREW (9/16-18 THD)	
					—OR—	
J		1	**4P-4278**	2	SCREW-UNIT INJ ADJUSTMENT (7/8-18 THD)	
W	6	1	**196-5070**	2	NUT-JAM (9/16-18-THD)	
					—OR—	
J		1	**4P-4279**	2	NUT-JAM (7/8-18 THD)	
	7	1	**232-0253**	4	SCREW	
R	8	1	**203-8822**	2	ROCKER ARM AS (EXHAUST VALVE ROCKER)	
R	9	1	**203-8824**	2	ROCKER ARM AS (INLET VALVE ROCKER)	
R	10	1	**207-5248**	2	ROCKER ARM AS (UNIT INJECTOR ROCKER)	
W	11	1	**061-8639**	2	SEAL-O-RING (15.54MM ID)	
					—OR—	
J		1	**032-9313**	2	SEAL-O-RING (12.37MM ID)	
	12	1	**8L-2777**	4	SEAL-O-RING (10.77MM ID)	

J-PARTS MARKED J MUST BE USED TOGETHER ON OLDER ROCKER ARM ASSEMBLIES
R-REMFG PART MAY BE AVAILABLE
W-PARTS MARKED W MUST BE USED TOGETHER ON NEWER ROCKER ARM ASSEMBLIES

198-9898 **ROCKER ARM GP** *(contd.)* **i02034566**

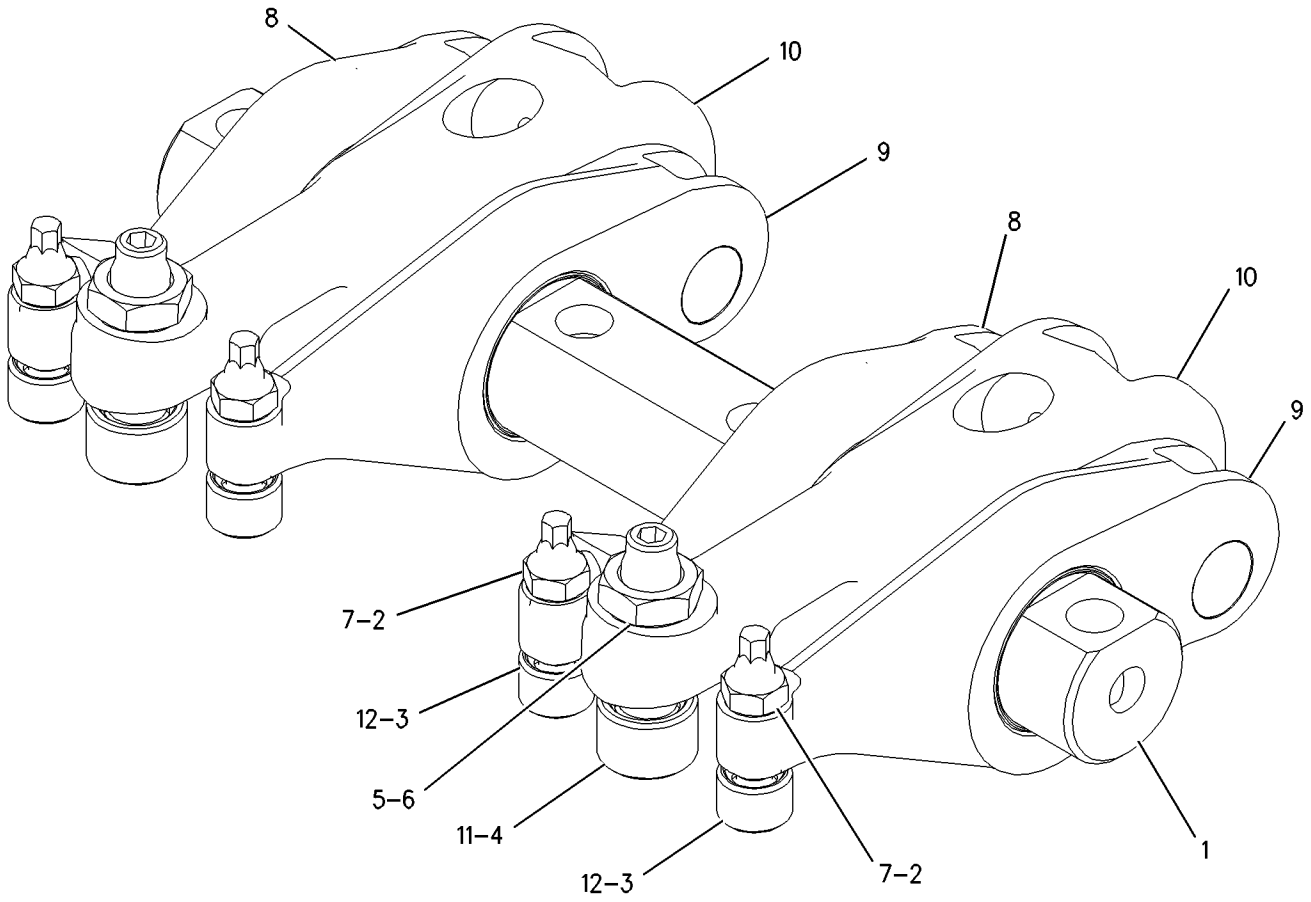

GRAPHIC #1 **<END>** g00905507

BASIC ENGINE

229-3693 SUPPORT GP-ENGINE

S/N: RHX1-UP
FRONT
PART OF 205-8603, 231-3468 ENGINE AR-COMPLETE
ALSO AN ATTACHMENT

SMCS-1152, 1153, 1154 **i02182844**

NOTE	REF NO	GRAPHIC REF	PART NUMBER	QTY	PART NAME 1 2 3 4 5 6 (PRODUCT LEVEL)	SEE PAGE
	1	1	**247-8333**	1	SUPPORT AS-ENGINE	
	2	1	**0S-1589**	4	BOLT (5/8-11X1.75-IN)	
	3	1	**5P-8247**	4	WASHER-HARD (17X32X3.5-MM THK)	

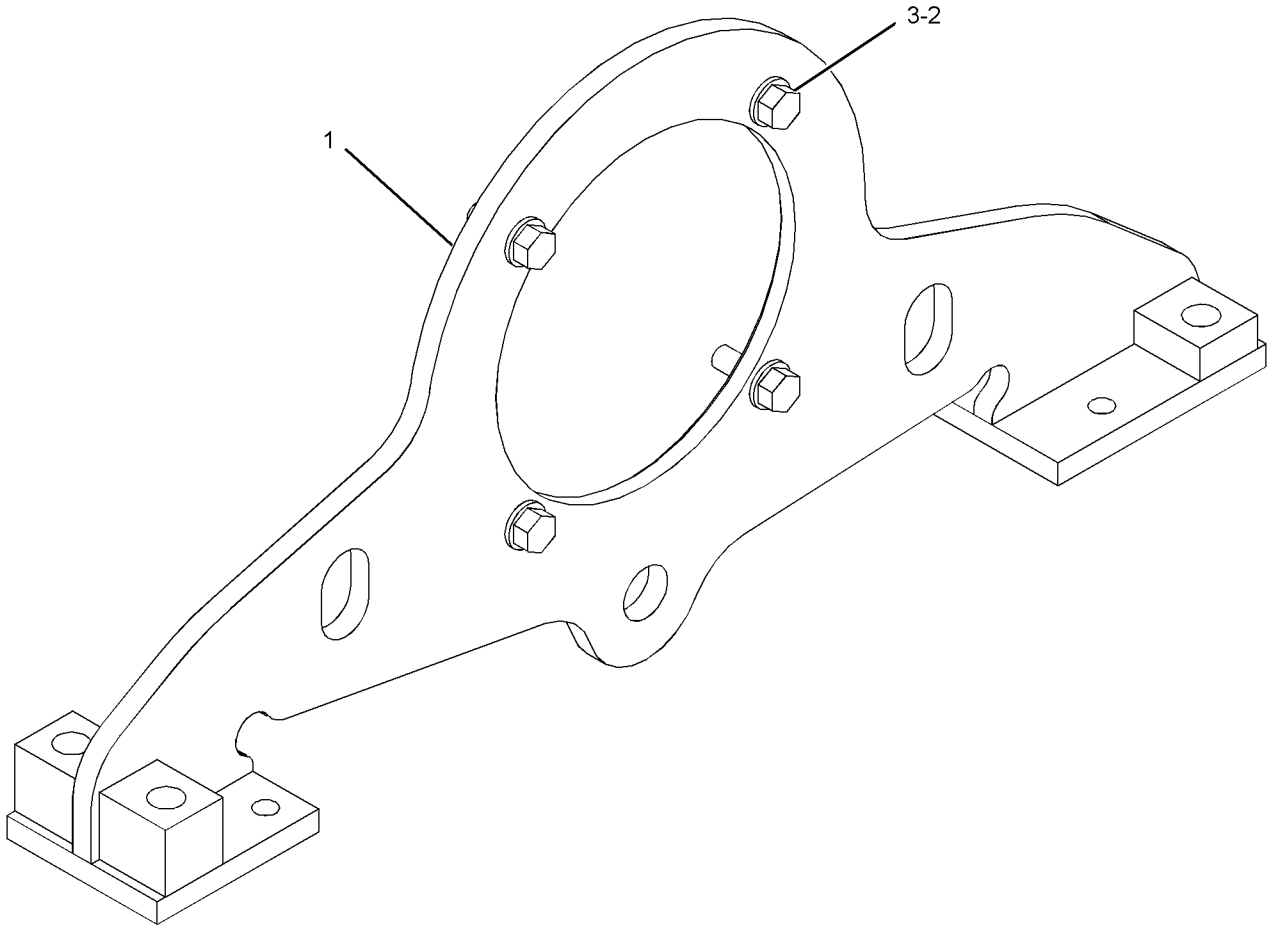

GRAPHIC #1 **<END>** g01115129

205-8609 SUPPRESSION AR-SOUND—EUROPEAN MARKET

S/N: RJS1-UP
114 DECIBEL
AN ATTACHMENT

SMCS-1801 **i01991447**

NOTE	PART NUMBER	QTY	PART NAME 1 2 3 4 5 6 (PRODUCT LEVEL)	SEE PAGE
Y	*210-1681*	1	ENCLOSURE GP-ENGINE	377
Y	*231-3468*	1	ENGINE AR-COMPLETE	7
	220-0813	1	VALVE AS-RELIEF	

Y-SEPARATE ILLUSTRATION

<END>

BASIC ENGINE

192-0542 TRUNNION GP-ENGINE

S/N: RHX1-UP

PART OF 205-8603, 231-3468 ENGINE AR-COMPLETE

ALSO AN ATTACHMENT

SMCS-1152, 1153, 1154 **i01341009**

NOTE	REF NO	GRAPHIC REF	PART NUMBER	QTY	PART NAME 1 2 3 4 5 6 (PRODUCT LEVEL)	SEE PAGE
	1	1	**1W-3014**	1	ADAPTER AS	
	1A	1	**4N-0683**	2	DOWEL (15.88 X 31.88MM)	
	2	1	**7N-1210**	1	MOUNT AS	
	3	1	**9X-8876**	8	BOLT (1/2-13X4.75 IN)	

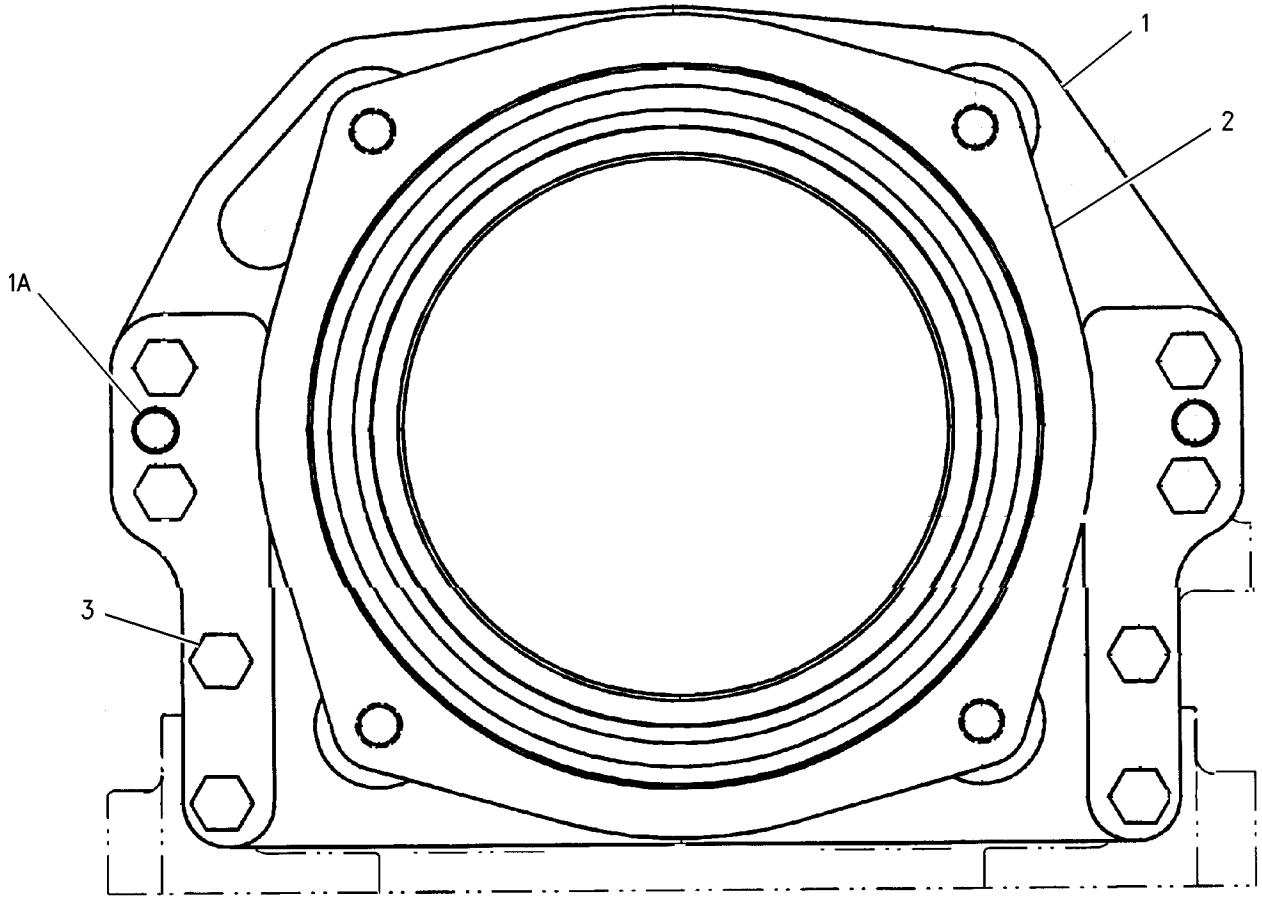

GRAPHIC #1 **<END>** g00712631

148-7482 VALVE MECHANISM GP

S/N: RHX1-UP
PART OF 241-5933 ENGINE AR-CORE
ALSO AN ATTACHMENT

SMCS-1102, 1112, 1121, 1123, 1208, 1209 **i01768605**

NOTE	REF NO	GRAPHIC REF	PART NUMBER	QTY	PART NAME 1 2 3 4 5 6 (PRODUCT LEVEL)	SEE PAGE
CY	1	1	*198-9898*	3	ROCKER ARM GP	74
	2	1	**6I-1458**	12	BRIDGE-VALVE	

C-CHANGE FROM PREVIOUS TYPE
Y-SEPARATE ILLUSTRATION

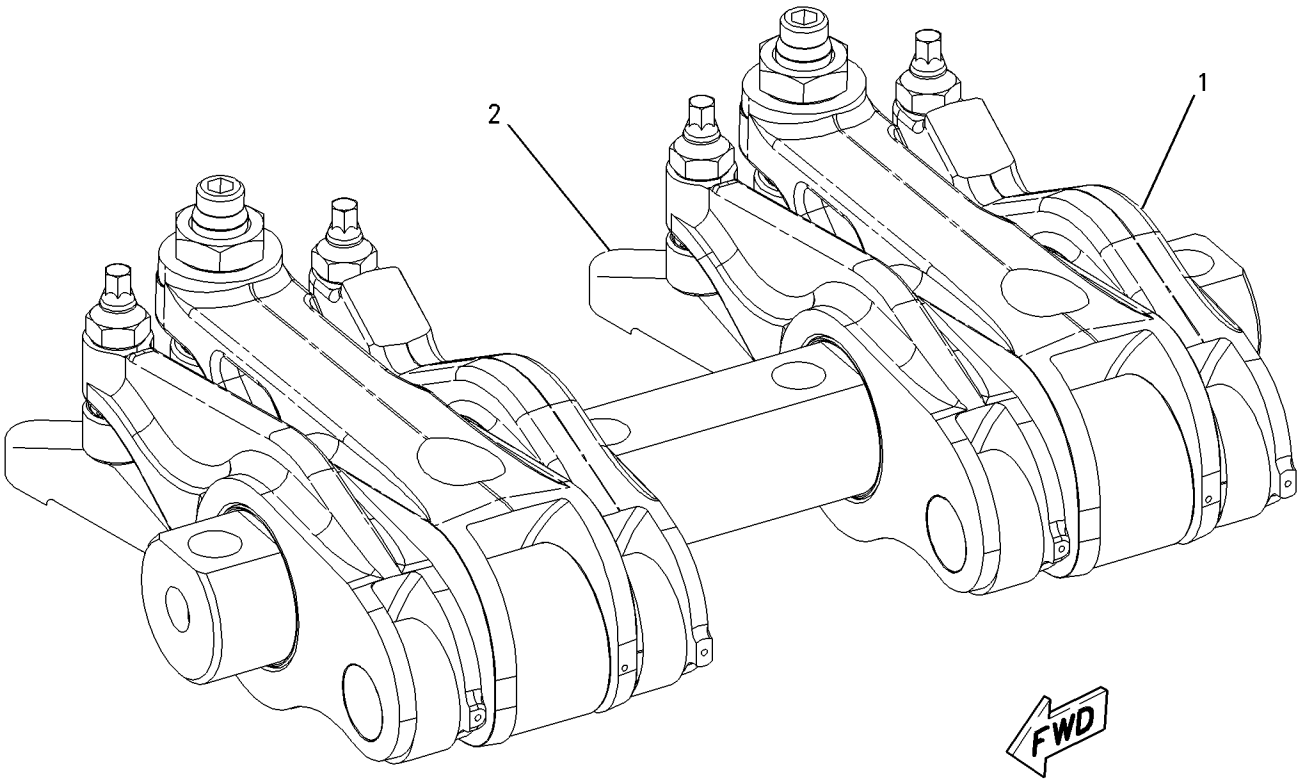

GRAPHIC #1 **<END>** g00905240

234-2916 BREATHER GP

S/N: RHX1-UP
PART OF 225-1150, 256-3820 COVER GP-VALVE MECHANISM
ALSO AN ATTACHMENT

SMCS-1317 **i01900478**

NOTE	REF NO	GRAPHIC REF	PART NUMBER	QTY	PART NAME 1 2 3 4 5 6 (PRODUCT LEVEL)	SEE PAGE
	1	1	**2N-8109**	1	CLAMP	
	2	1	**162-2266**	1	BREATHER AS (CRANKCASE)	
	3	1	**4F-7390**	1	SEAL-O-RING	

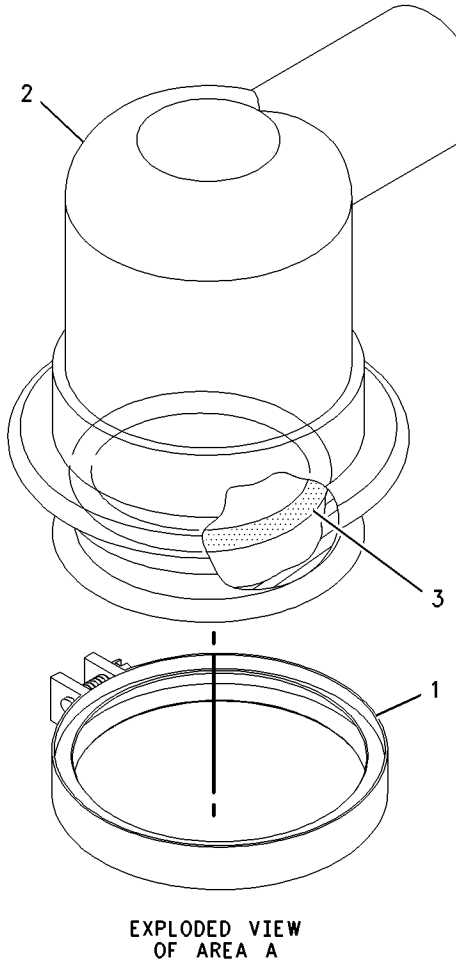

EXPLODED VIEW
OF AREA A

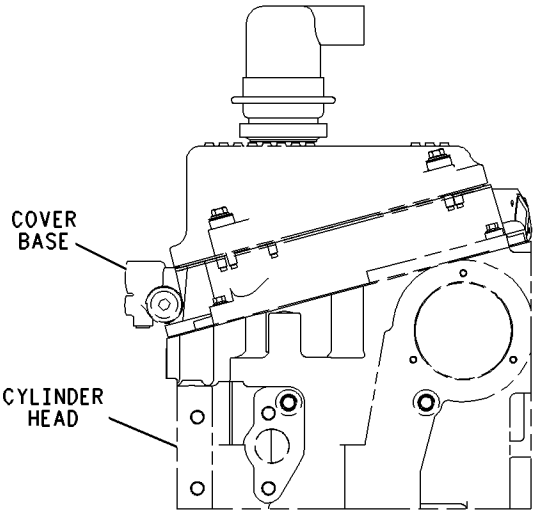

FRONT VIEW
(TYPICAL INSTALLATION)

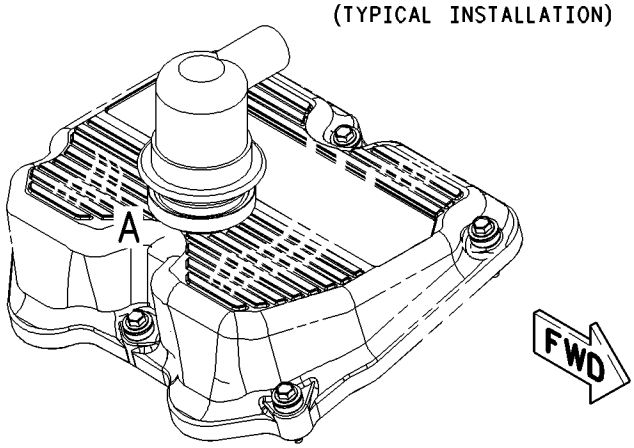

GRAPHIC #1 **<END>** g00990942

4N-2481 FASTENER GP-OIL PUMP MOUNTING–ENGINE

S/N: RHX1-UP
PART OF 205-8603, 231-3468 ENGINE AR-COMPLETE
ALSO AN ATTACHMENT

SMCS-1304 **i01446823**

NOTE	REF NO	GRAPHIC REF	PART NUMBER	QTY	PART NAME 1 2 3 4 5 6 (PRODUCT LEVEL)	SEE PAGE
	1	1	**0L-1143**	2	BOLT (3/8-16X2.50 IN)	
	2	1	**0S-1590**	1	BOLT (3/8-16X2 IN)	
	3	1	**5M-2894**	3	WASHER-HARD (10.2X18.5X2.5MM THK)	

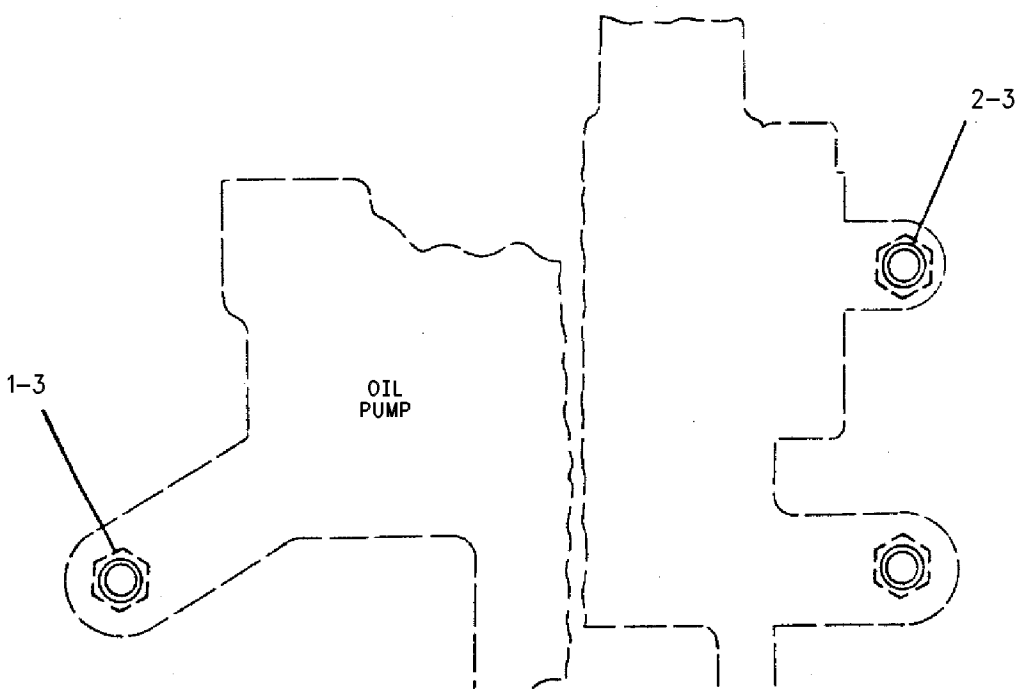

GRAPHIC #1 **<END>** g00604525

220-6374 FILLER GP-ENGINE OIL

S/N: RHX1-UP
PART OF 205-8603, 231-3468 ENGINE AR-COMPLETE
ALSO AN ATTACHMENT

SMCS-1316 **i02207332**

NOTE	REF NO	GRAPHIC REF	PART NUMBER	QTY	PART NAME 1 2 3 4 5 6 (PRODUCT LEVEL)	SEE PAGE
	1	1	**221-1737**	1	TUBE AS	
	1A	1	**4B-4311**	1	RIVET (BUTTON HEAD)	
	1B	1	**6N-2985**	1	CAP AS-FILLER (ENGINE OIL)	
	2	1	**0S-1594**	1	BOLT (3/8-16X1-IN)	
	3	1	**0S-1591**	2	BOLT (3/8-16X1.5-IN)	
	4	1	**1F-7958**	3	NUT-FULL (1/2-13-THD)	
	5	1	**5M-2894**	1	WASHER-HARD (10.2X18.5X2.5-MM THK)	
	6	1	**6V-8260**	1	SEAL-O-RING	

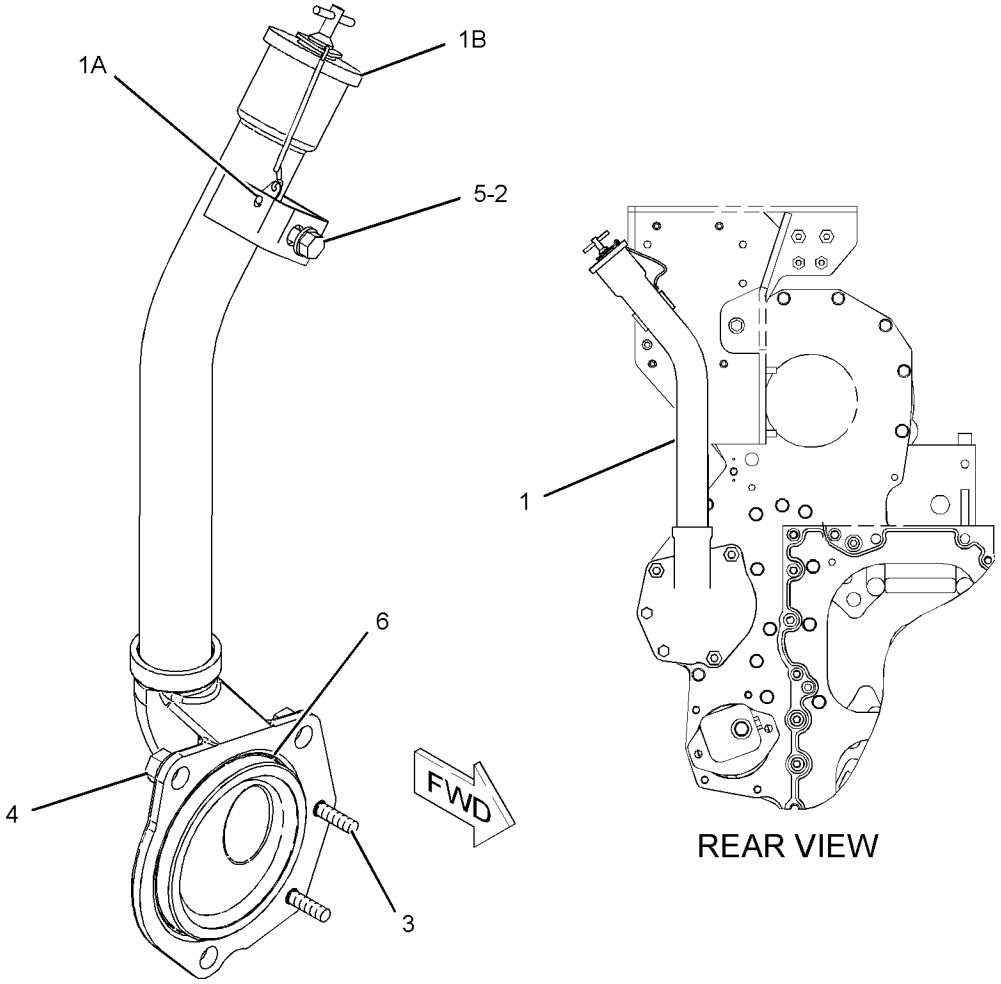

GRAPHIC #1 **<END>** g01100743

LUBRICATION SYSTEM

220-6371 FILTER GP-ENGINE OIL

S/N: RHX1-UP

PART OF 205-8603, 231-3468 ENGINE AR-COMPLETE

ALSO AN ATTACHMENT

SMCS-1306, 1308, 1318 **i02196514**

NOTE	REF NO	GRAPHIC REF	PART NUMBER	QTY	PART NAME 1 2 3 4 5 6 (PRODUCT LEVEL)	SEE PAGE
	1	1,2	**2P-3760**	2	GASKET	
	2	1,2	**2P-4301**	1	BASE AS	
		1,2	**2P-4304**	1	STUD-TAPERLOCK	
	3	1	**2P-4305**	2	GASKET	
	4	1	**4N-1216**	1	TUBE-COOLER BYPASS	
	5	1	**4N-7082**	1	SHIELD-OIL FILTER	
	6	2	**4N-8150**	2	SPRING	
	7	2	**6V-0852**	1	CAP-DUST	
	8	2	**8C-3445**	1	CAP-DUST	
	9	2	**9M-0853**	2	PLUNGER-VALVE	
	10	2	**117-4897**	4	RETAINER	
	11	1	**221-2991**	1	TUBE AS	
	12	1	**254-7334**	1	TUBE AS	
	13	2	**221-2995**	1	BRACKET AS	
		2	**1F-0750**	2	NUT-WELD (3/8-16-THD)	
	14	2	**223-5814**	1	BODY-COOLER BYPASS (ENGINE OIL)	
	15	1	**231-3916**	1	ELBOW	
	16	2	**253-0000**	1	ELBOW	
	17	2	**236-1665**	1	ADAPTER	
	18	2	**236-1666**	1	COVER	
	19	2	**237-2305**	1	BRACKET AS	
		2	**1F-0750**	2	NUT-WELD (3/8-16-THD)	
	20	2	**0L-1351**	8	BOLT (3/8-16X0.875-IN)	
	21	2	**0L-2070**	4	BOLT (3/8-16X2.25-IN)	
	22	1	**0S-1588**	6	BOLT (3/8-16X1.25-IN)	
	23	2	**0S-1591**	4	BOLT (3/8-16X1.5-IN)	
	24	1,2	**0S-1594**	15	BOLT (3/8-16X1-IN)	
	25	1	**113-5304**	2	SEAL-O-RING	
	26	1	**9S-8006**	1	PLUG	
	27	1,2	**1A-2029**	3	BOLT (3/8-16X1.125-IN)	
	28	1	**1R-0716**	1	FILTER AS-ENGINE OIL	
	29	1	**8T-1889**	4	CLIP (SLOT)	
	30	1	**8T-1890**	4	CLIP (TAB)	
	31	2	**2N-3350**	2	SEAL-O-RING	
	32	1,2	**2P-3761**	2	COVER	
	33	1	**3K-8460**	2	PLUG	
	34	1,2	**5M-2894**	26	WASHER-HARD (10.2X18.5X2.5-MM THK)	
	35	2	**5P-7701**	2	SEAL-O-RING	
	36	1	**5P-7814**	2	SEAL-O-RING	
	37	2	**5P-8068**	2	SEAL-O-RING	
	38	2	**6V-3965**	1	FITTING AS	
	39	2	**6V-5048**	1	SEAL-O-RING	
	40	2	**6V-5049**	1	SEAL-O-RING	
	41	2	**6V-8635**	2	CONNECTOR	
	42	1	**7F-9090**	2	SCREW-DRIVE (NO 8X3/8-IN)	
	43	2	**8C-3093**	2	SEAL-O-RING	
	44	2	**8C-3446**	1	VALVE AS-FLUID SAMPLING (ENGINE OIL)	
	45	1	**8C-5230**	2	SEAL-O-RING	
	46	1	**8L-2786**	1	SEAL-O-RING	
	47	1	**9S-8005**	1	PLUG	
	48	1	**9S-8752**	4	NUT-FULL (3/8-16-THD)	
	49	2	**9X-6458**	4	WASHER-HARD (10.2X22.5X3-MM THK)	
	50	1	**6V-4589**	1	SEAL-O-RING	

220-6371 **FILTER GP-ENGINE OIL** *(contd.)* **i02196514**

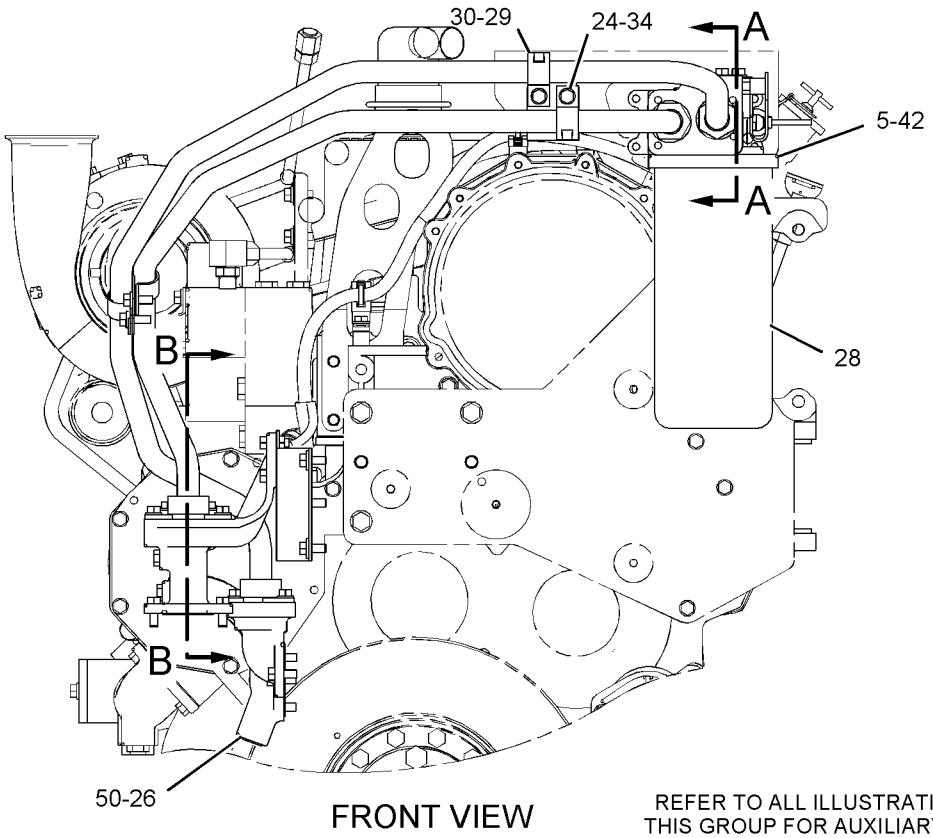

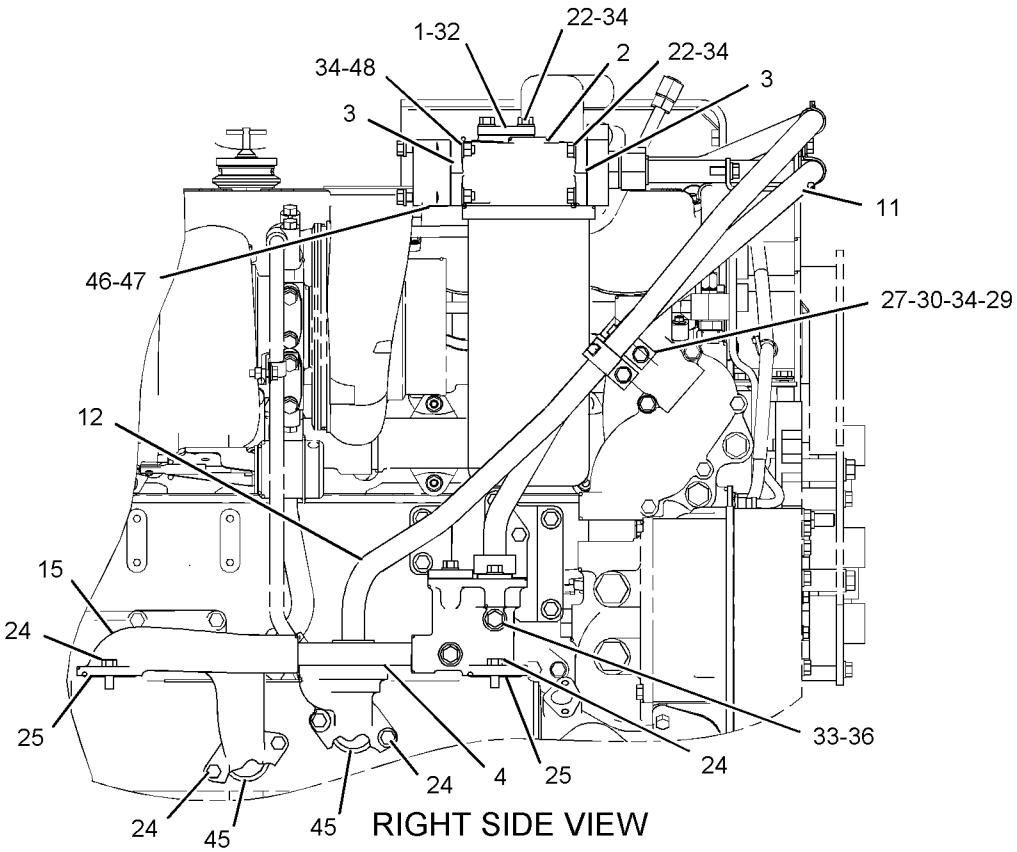

GRAPHIC #1

g01115097

220-6371 **FILTER GP-ENGINE OIL** *(contd.)* **i02196514**

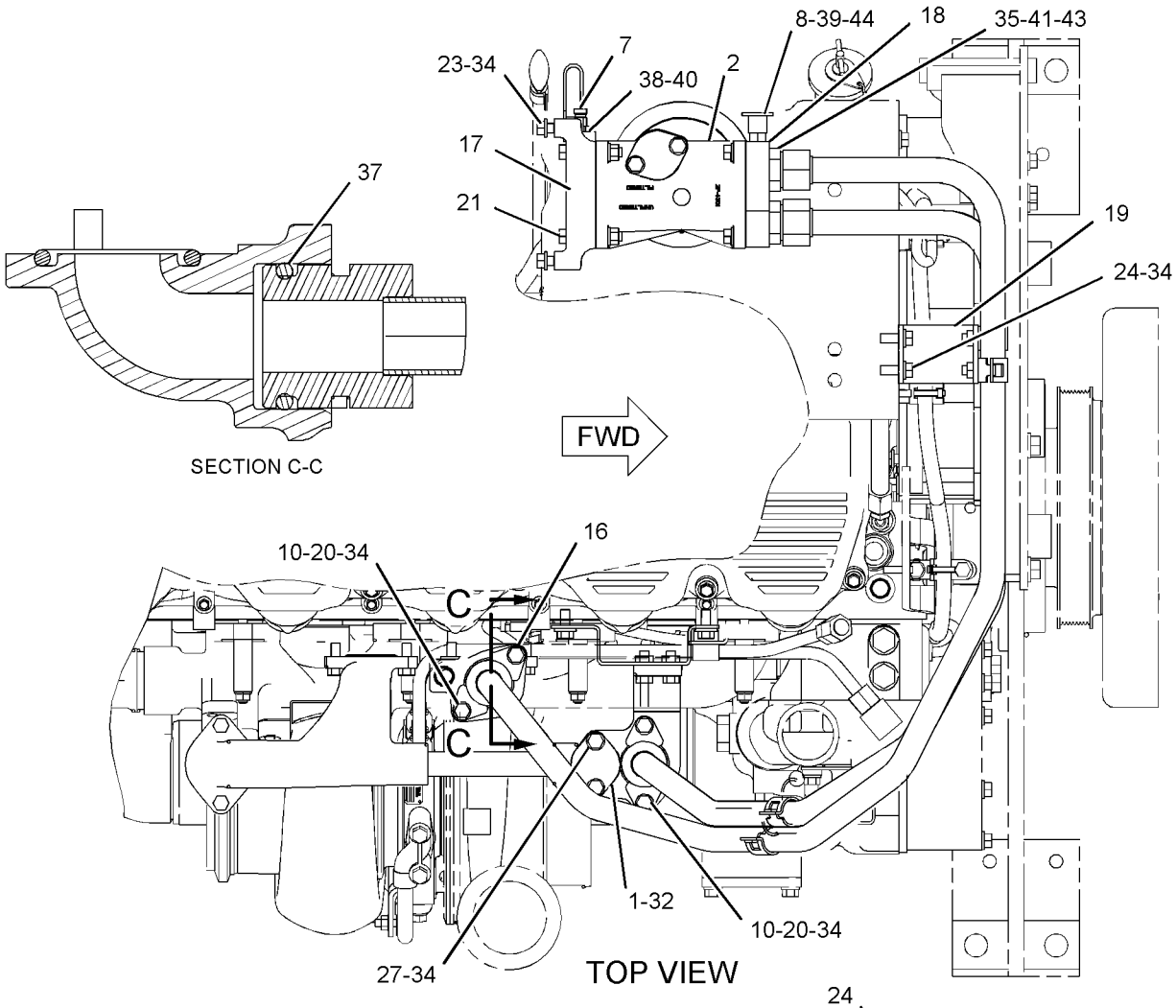

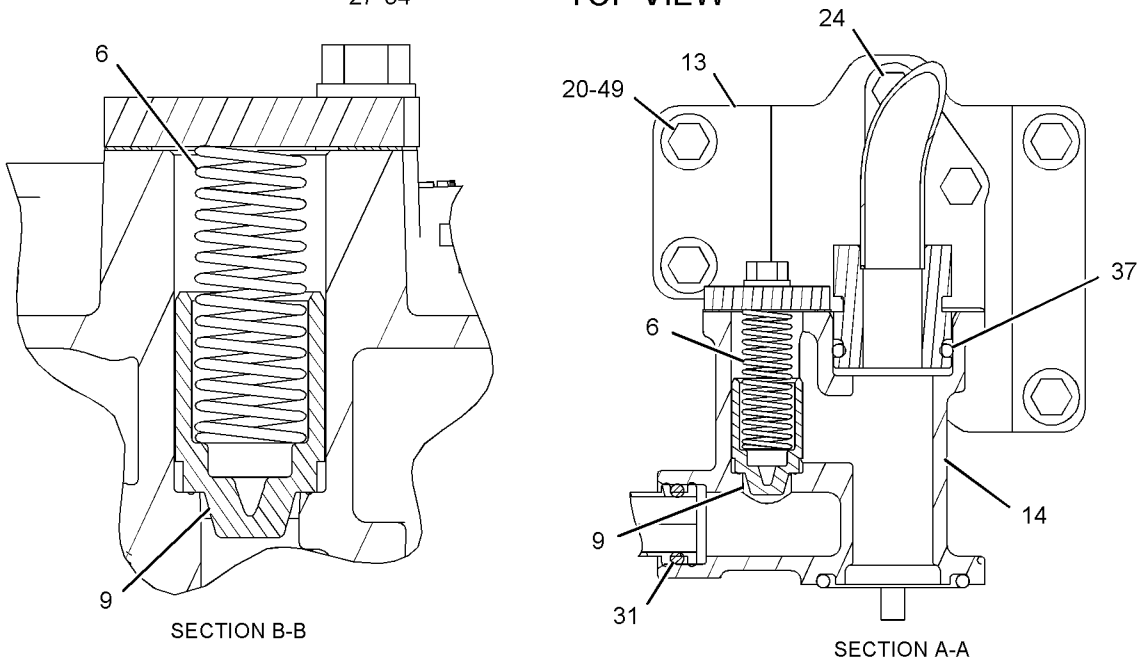

GRAPHIC #2 **<END>** g01115098

LUBRICATION SYSTEM

206-7371 FUMES DISPOSAL GP

S/N: RJS1-UP

PART OF 205-8604 INSTALLATION AR-ENGINE

SMCS-1317 **i01995249**

NOTE	REF NO	GRAPHIC REF	PART NUMBER	QTY	PART NAME 1 2 3 4 5 6 (PRODUCT LEVEL)	SEE PAGE
	1	1	**9M-2904**	4	CLAMP-HOSE	
	2	1	**9X-7449**	1	GROMMET	
	3	1	**9Y-5281**	1	HOSE (FUMES DISPOSAL)	
	4	1	**227-1362**	1	TUBE	
	5	1	**227-1363**	1	TUBE	
	6	1	**4D-7388**	2	CLIP	
	7	1	**8T-4121**	1	WASHER-HARD (11X21X2.5-MM THK)	
M	8	1	**8T-4195**	1	BOLT (M10X1.5X30-MM)	
E	9	1	**5P-1255**		HOSE (11CM)	

E-ORDER BY THE CENTIMETER
M-METRIC PART

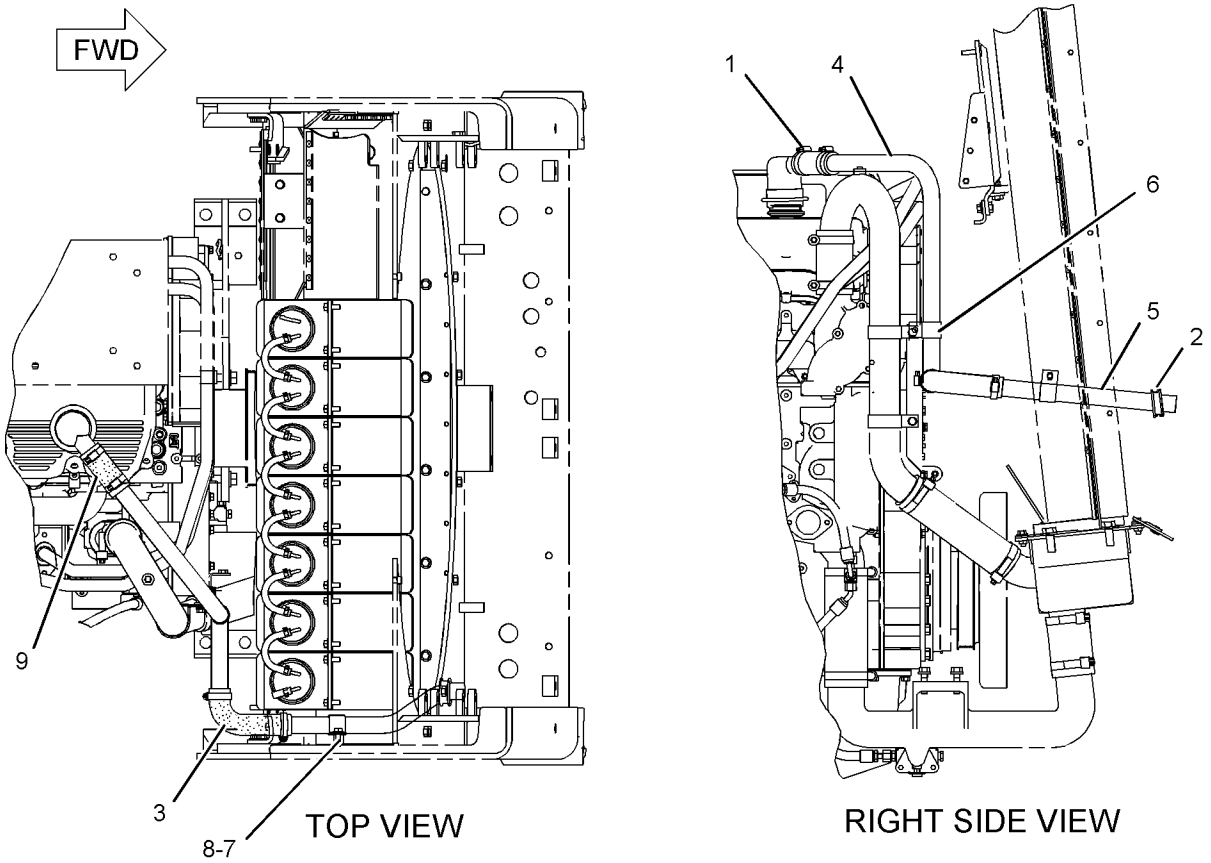

GRAPHIC #1 **<END>** g01033486

220-6367 GAUGE GP-OIL LEVEL (DIPSTICK)

S/N: RHX1-UP
LEFT HAND
PART OF 205-8603, 231-3468 ENGINE AR-COMPLETE
ALSO AN ATTACHMENT

SMCS-1326 **i02111085**

NOTE	REF NO	GRAPHIC REF	PART NUMBER	QTY	PART NAME 1 2 3 4 5 6 (PRODUCT LEVEL)	SEE PAGE
J	1	1	**165-6170**	3	PLUG	
	2	1	**220-7243**	1	GAUGE AS-OIL LEVEL (DIPSTICK) (ENGINE)	
	3	1	**220-7244**	1	GUIDE AS	
	3A	1	**4N-1294**	1	ADAPTER	
	4	1	**061-8639**	1	SEAL-O-RING	
	5	1	**0S-0509**	1	BOLT (3/8-16X0.75-IN)	
	6	1	**0S-1594**	1	BOLT (3/8-16X1-IN)	
	7	1	**4D-9517**	1	CLIP	
	8	1	**5M-2894**	2	WASHER-HARD (10.2X18.5X2.5-MM THK)	
J-USE TO PLUG OPTIONAL DIPSTICK LOCATIONS						

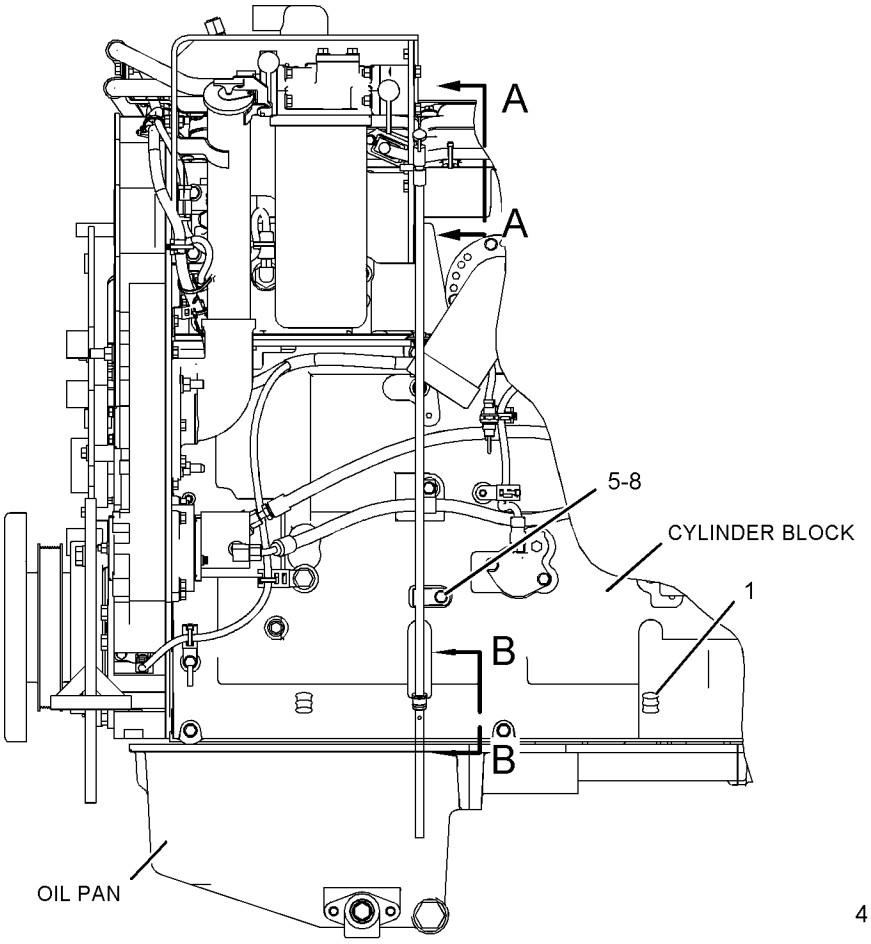

LEFT SIDE VIEW

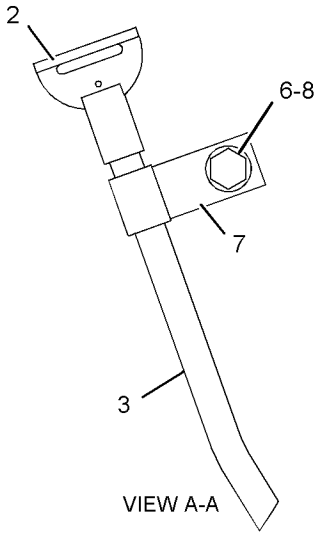

VIEW A-A

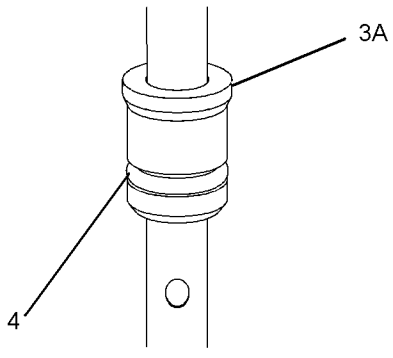

VIEW B-B

GRAPHIC #1 **<END>** g01075616

4N-4771 LINES GP-ENGINE OIL

S/N: RHX1-UP
PART OF 205-8603, 231-3468 ENGINE AR-COMPLETE
ALSO AN ATTACHMENT

SMCS-1307 **i01976479**

NOTE	REF NO	GRAPHIC REF	PART NUMBER	QTY	PART NAME 1 2 3 4 5 6 (PRODUCT LEVEL)	SEE PAGE
	1	1	**109-0078**	2	SEAL-O-RING	
	2	1	**4N-0995**	1	TUBE AS	
	3	1	**0L-1351**	2	BOLT (3/8-16X0.875 IN)	
		1	**9X-6458**	2	WASHER-HARD (10.2X22.5X3MM THK)	
C	4	1	**0S-1591**	8	BOLT (3/8-16X1.5 IN)	
	5	1	**4N-7489**	1	SCREEN-INLET	
C	6	1	**0S-1590**	2	BOLT (3/8-16X2 IN)	
	7	1	**4N-7497**	1	TUBE AS	
	8	1	**4N-6229**	1	SUPPORT-BELL	
	9	1	**8N-2104**	1	BELL AS-SUCTION	
		1	**9F-2978**	2	NUT-WELD (3/8-16 THD)	
	10	1	**4N-0914**	1	CLIP	
	11	1	**4N-0913**	1	SCREEN AS-BELL	
	12	1	**1A-2029**	2	BOLT (3/8-16X1.125 IN)	
	13	1	**4N-6228**	1	PIPE AS-PUMP SUCTION	
	14	1	**109-0072**	1	SEAL-O-RING	

C-CHANGE FROM PREVIOUS TYPE

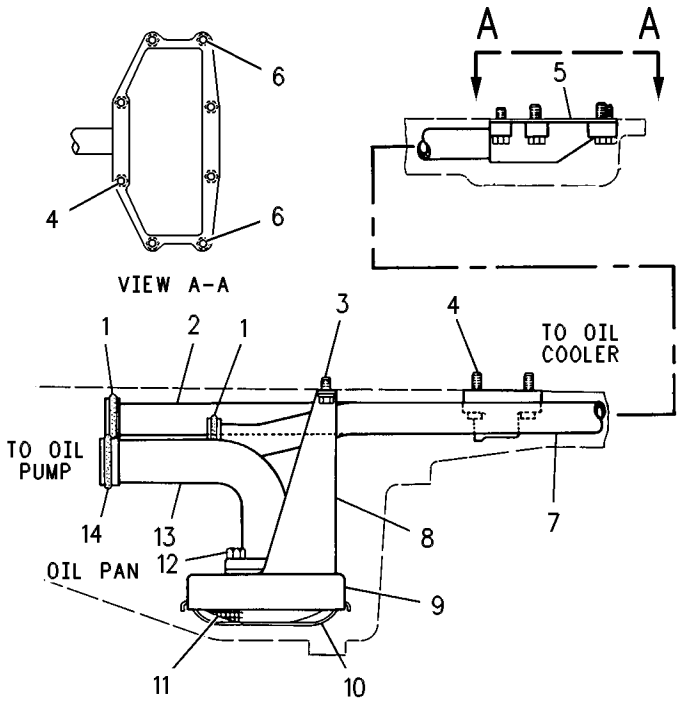

GRAPHIC #1 **<END>** g00257856

225-4126 LINES GP-TURBOCHARGER OIL

S/N: RHX1-UP
PART OF 205-8603, 231-3468 ENGINE AR-COMPLETE
ALSO AN ATTACHMENT

SMCS-1052, 1307 **i02254124**

NOTE	REF NO	GRAPHIC REF	PART NUMBER	QTY	PART NAME 1 2 3 4 5 6 (PRODUCT LEVEL)	SEE PAGE
	1	1	**4H-9541**	1	GASKET	
	2	1	**7N-7559**	1	GASKET	
	3	1	**242-8511**	2	CLAMP	
	4	1	**246-6036**	1	HOSE (SUPPLY)	
	5	1	**253-2626**	1	TUBE AS	
	6	1	**254-5570**	1	TUBE AS (DRAIN)	
	7	1	**254-5571**	1	TUBE AS-DRAIN (ENGINE OIL)	
	8	1	**0L-1143**	2	BOLT (3/8-16X2.5-IN)	
	9	1	**0S-1571**	2	BOLT (3/8-16X1.75-IN)	
	10	1	**0S-1618**	1	BOLT (5/16-18X1-IN)	
	11	1	**136-7226**	1	SEAL-O-RING	
	12	1	**3B-1915**	2	BOLT (3/8-16X1.75-IN)	
	13	1	**5M-2894**	6	WASHER-HARD (10.2X18.5X2.5-MM THK)	
	14	1	**5S-0003**	1	NUT (5/16-18-THD)	
	15	1	**210-9246**	1	SEAL-O-RING	
	16	1	**6V-8632**	1	CONNECTOR (SEAL)	
	17	1	**8L-2786**	1	SEAL-O-RING	
	18	1	**9M-8406**	1	CLIP	

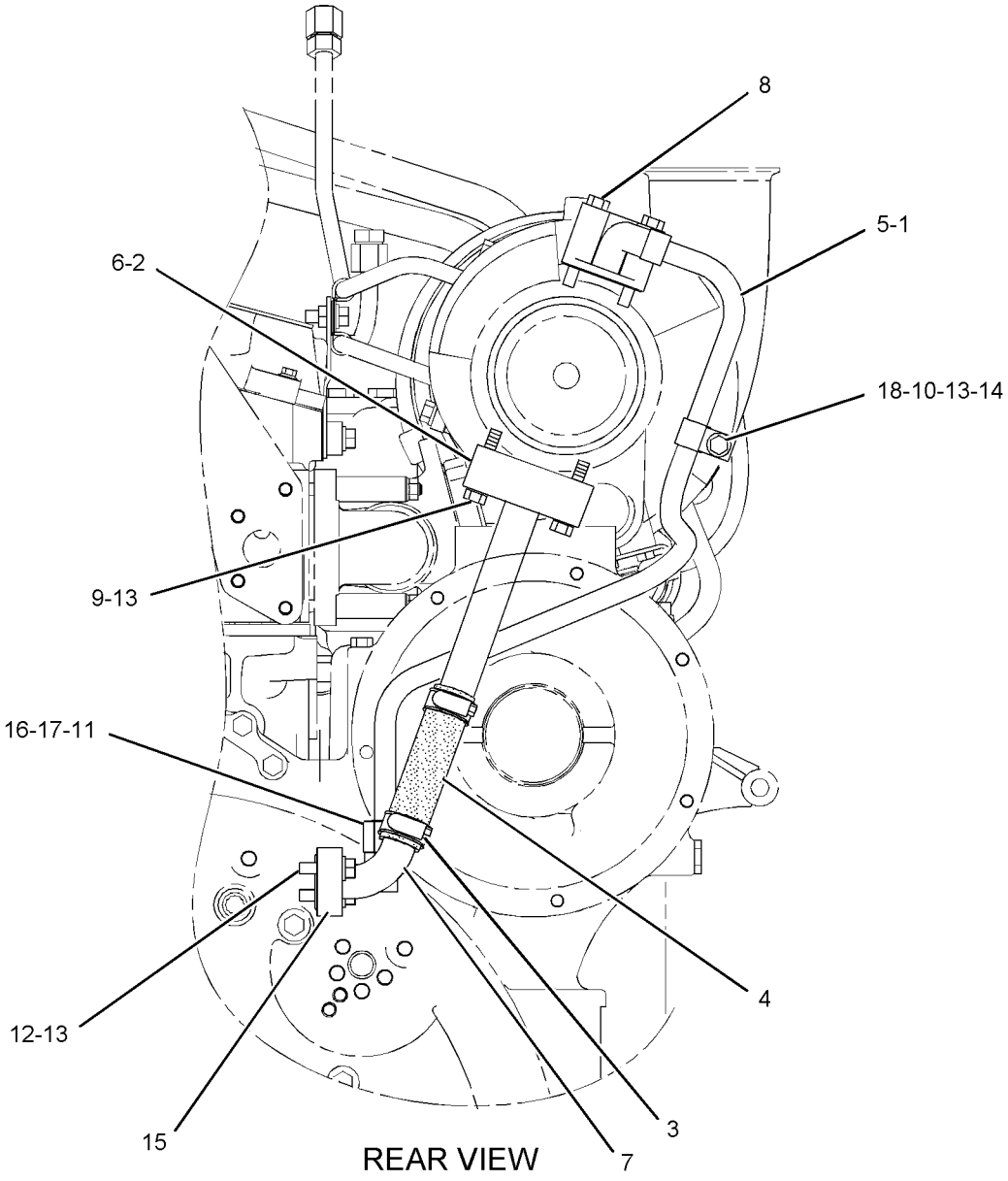

GRAPHIC #1 **<END>** g01106012

220-6377 MOUNTING GP-FUMES DISPOSAL

S/N: RHX1-UP
PART OF 205-8603, 231-3468 ENGINE AR-COMPLETE
ALSO AN ATTACHMENT

SMCS-1317 **i02206629**

NOTE	REF NO	GRAPHIC REF	PART NUMBER	QTY	PART NAME 1 2 3 4 5 6 (PRODUCT LEVEL)	SEE PAGE
	1	1	**212-7561**	1	BRACKET AS	
	2	1	**0T-0055**	2	BOLT (3/8-16X4.25-IN)	
	3	1	**5M-2894**	2	WASHER-HARD (10.2X18.5X2.5-MM THK)	

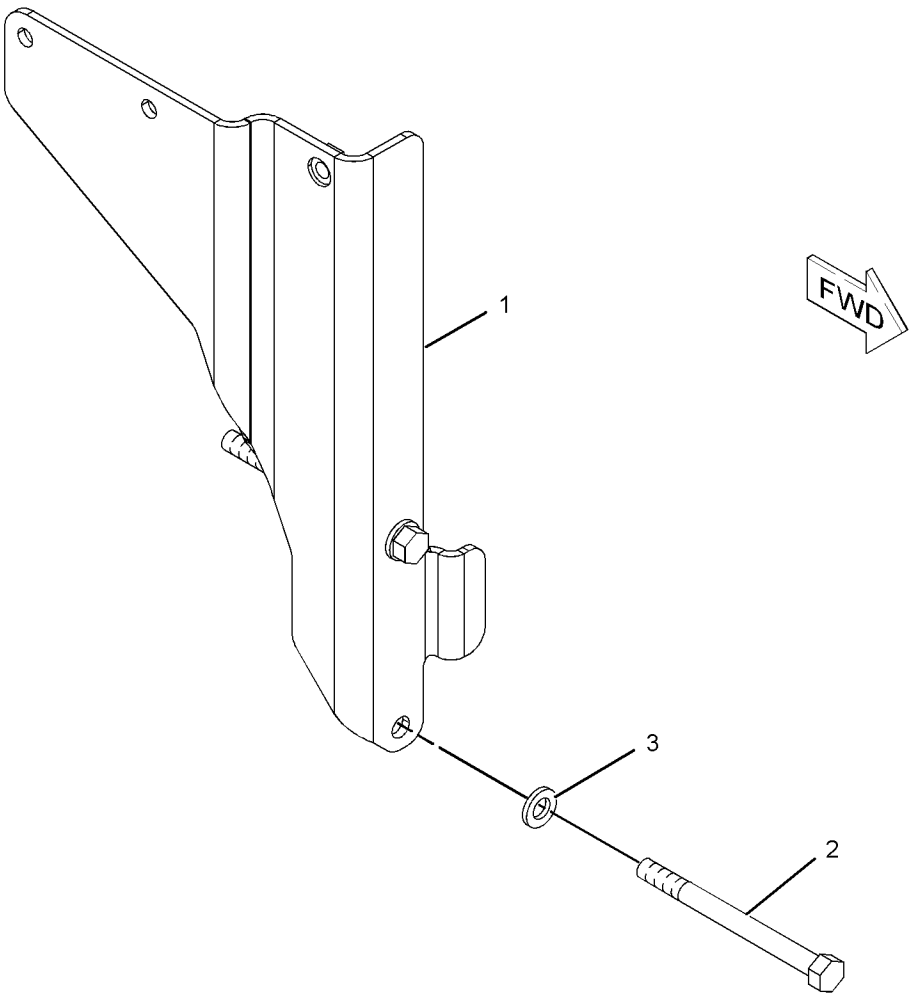

GRAPHIC #1 **<END>** g01119428

LUBRICATION SYSTEM

220-7185 OIL CHANGE GP-HIGH SPEED

S/N: RJS1-UP

AN ATTACHMENT

SMCS-1325 **i02206981**

NOTE	REF NO	GRAPHIC REF	PART NUMBER	QTY	PART NAME 1 2 3 4 5 6 (PRODUCT LEVEL)	SEE PAGE
	1	1	**2P-1286**	1	LOCKNUT-BULKHEAD (1-5/16-12-THD)	
	2	1	**2V-2043**	1	LOCKNUT-FLARED (1-5/8-12-THD)	
I	3	1	**110-5979**	1	HOSE AS	
	4	1	**110-8319**	1	FITTING AS (QUICK DISCONNECT) (TRANSMISSION OIL)	
		1	**110-8318**	1	CAP-DUST (TRANSMISSION OIL)	
	5	1	**110-8827**	1	FITTING AS (QUICK DISCONNECT) (ENGINE OIL)	
		1	**110-8826**	1	CAP-DUST (ENGINE OIL)	
	6	1	**193-3973**	4	TIE (WRAP)	
	7	1	**200-6345**	2	MOUNT (DUAL SWIVEL)	
	8	1	**222-0446**	1	BRACKET AS	
I	9	1	**232-4719**	1	HOSE AS	
	10	1	*148-8317*	1	CONNECTOR GP	
		1	**6V-8714**	1	CONNECTOR	
		1	**3D-2824**	1	SEAL-O-RING	
		1	**5K-9090**	1	SEAL-O-RING	
	11	1	*148-8335*	1	CONNECTOR AS	
		1	**6V-8635**	1	CONNECTOR	
		1	**5K-9090**	1	SEAL-O-RING	
		1	**7M-8485**	1	SEAL-O-RING	
	12	1	*148-8355*	1	ELBOW AS	
		1	**6V-9005**	1	ELBOW	
		1	**5K-9090**	1	SEAL-O-RING	
		1	**7M-8485**	1	SEAL-O-RING	
	13	1	*148-8431*	1	TEE GP	
		1	**6V-8785**	1	TEE	
		1	**5K-9090**	2	SEAL-O-RING	
		1	**7M-8485**	1	SEAL-O-RING	
	14	1	**5P-1075**	3	WASHER-HARD (10.2X22.5X3-MM THK)	
	15	1	**5S-7379**	3	BOLT (3/8-16X0.875-IN)	
	16	1	**6V-9833**	1	CAP AS	
	17	1	**8T-1897**	3	CLIP (SLOT)	
	18	1	**8T-1898**	3	CLIP (TAB)	
	19	1	**8T-4896**	1	WASHER-HARD (10.2X18.5X2.5-MM THK)	
	20	1	**9B-7237**	2	BOLT (3/8-16X1.25-IN)	

I-REFER TO HYDRAULIC INFORMATION SYSTEM

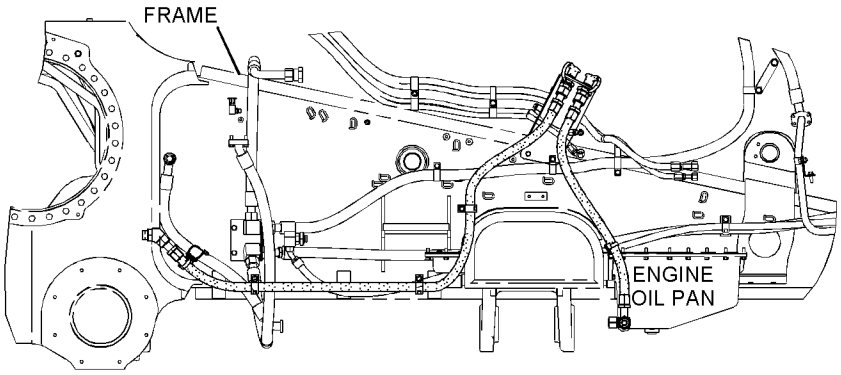

RIGHT SIDE VIEW

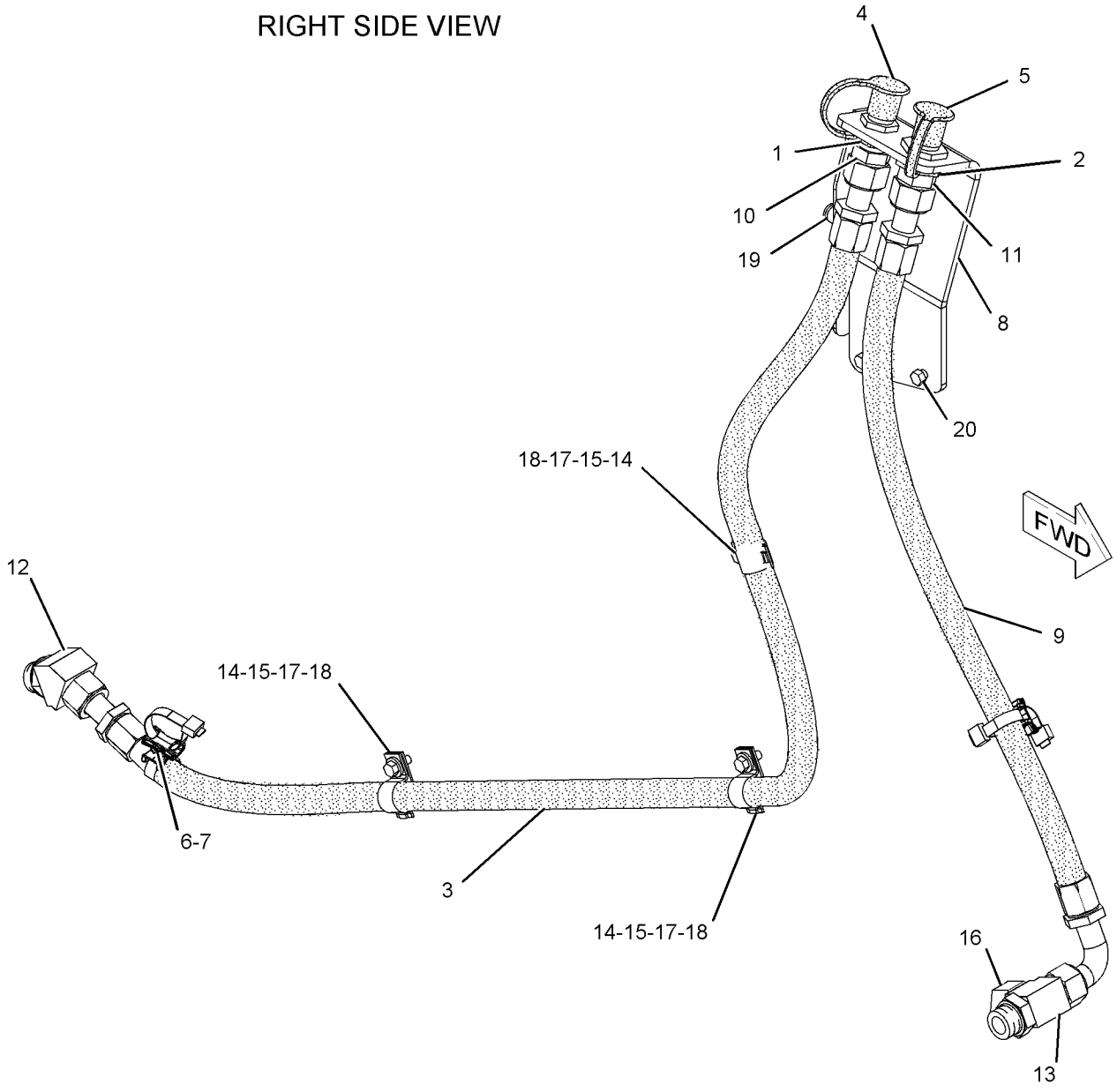

GRAPHIC #1 **<END>** g01120119

LUBRICATION SYSTEM

230-4090 PRELUBRICATION AR-ENGINE

S/N: RJS1-UP

AN ATTACHMENT

SMCS-1319 **i02194453**

NOTE	REF NO	GRAPHIC REF	PART NUMBER	QTY	PART NAME 1 2 3 4 5 6 (PRODUCT LEVEL)	SEE PAGE
	1	1	**7G-1060**	1	STRAP AS-GROUND	
	2	1	**7K-1181**	8	STRAP-CABLE	
Y	3	1	*9W-0742*	1	BLOCK GP-JUNCTION	184
	4	1	**123-5150**	1	VALVE-CHECK	
	5	1	**124-7000**	1	PLATE AS	
	6	1	**187-8677**	1	PLATE AS	
	7	1	**226-0759**	1	PLATE AS	
	8	1	**228-8553**	1	PUMP & MOTOR GP-PRELUBRICATION (ELECTRIC DRIVE)	
I	9	1	**230-4087**	1	HOSE AS	
I	10	1	**230-4088**	1	HOSE AS	
	11	1	**230-4089**	1	PLATE AS	
	12	1	**230-4091**	1	HARNESS AS-WIRING (PRELUBRICATION)	
		1	**102-8802**	1	KIT-RECEPTACLE (2-PIN)	
					(INCLUDES RECEPTACLE AS & WEDGE)	
	13	1	**230-4092**	1	PLATE AS	
	14	1	**230-4093**	1	WIRE AS	
	15	1	**230-4094**	1	CABLE AS	
		1	**1S-4915**	2	LINER (CONDUIT)	
		1	**1S-7251**	2	TERMINAL-RING (FOR 1/2-IN BOLT)	
E		1	**5P-0695**		CONDUIT (269CM)	
E		1	**5P-0761**		CABLE (00-GA, RED) (300CM)	
		1	**8N-0869**	2	COVER-TERMINAL (RED)	
BE		1	**8T-2225**		TUBE-HEAT SHRINK	
	16	1	**230-7732**	1	MOUNT	
	17	1	*148-8352*	1	ELBOW GP	
		1	**6V-9854**	1	ELBOW (SWIVEL)	
		1	**5K-9090**	1	SEAL-O-RING	
	18	1	*148-8431*	1	TEE GP	
		1	**6V-8785**	1	TEE	
		1	**5K-9090**	2	SEAL-O-RING	
		1	**7M-8485**	1	SEAL-O-RING	
	19	1	*150-4048*	1	ELBOW AS	
		1	**6V-8722**	1	ELBOW	
		1	**3K-0360**	1	SEAL-O-RING	
		1	**7J-9108**	1	SEAL-O-RING	
	20	1	*153-6230*	1	CONNECTOR GP	
		1	**8T-9386**	1	CONNECTOR	
		1	**2M-9780**	1	SEAL-O-RING	
		1	**5K-9090**	1	SEAL-O-RING	
	21	1	**204-2281**	5	TIE	
	22	1	**233-5070**	1	FILM-IDENTIFICATION (PRELUBRICATION PUMP)	
	23	1	**2M-9780**	1	SEAL-O-RING	
	24	1	**4L-6454**	4	BOLT (3/8-16X1-IN)	
	25	1	**4P-7428**	3	CLIP	
	26	1	**4P-7429**	3	CLIP	
	27	1	**4P-7581**	1	CLIP	
	28	1	**4P-8134**	1	CLIP	
	29	1	**5M-3062**	6	BOLT (3/8-16X0.75-IN)	
	30	1	**5P-1075**	11	WASHER-HARD (10.2X22.5X3-MM THK)	
	31	1	**5P-4295**	5	CLIP	
	32	1	**5S-7379**	2	BOLT (3/8-16X0.875-IN)	
	33	1	**6V-9833**	1	CAP AS	
	34	1	**7J-9108**	1	SEAL-O-RING	
M	35	1	**8T-4133**	4	NUT (M10X1.5-THD)	
M	36	1	**8T-4139**	3	BOLT (M12X1.75X30-MM)	

230-4090 **PRELUBRICATION AR-ENGINE** *(contd.)* **i02194453**

NOTE	REF NO	GRAPHIC REF	PART NUMBER	QTY	PART NAME 1 2 3 4 5 6 (PRODUCT LEVEL)	SEE PAGE
M	37	1	**8T-4191**	1	BOLT (M10X1.5X16-MM)	
	38	1	**8T-4223**	4	WASHER-HARD (13.5X25.5X3-MM THK)	
M	39	1	**8T-4244**	1	NUT (M12X1.75-THD)	
	40	1	**8T-4896**	6	WASHER-HARD (10.2X18.5X2.5-MM THK)	
	41	1	**9D-6196**	1	CLIP (SLOT)	
	42	1	**9D-6197**	1	CLIP (TAB)	
	43	1	**8T-8919**	1	BOLT (1/2-13X1.75-IN)	
F			**261-5734**	1	SOFTWARE GP-ENGINE (PRELUBRICATION)	

B-USE AS REQUIRED
E-ORDER BY THE CENTIMETER
F-NOT SHOWN
I-REFER TO HYDRAULIC INFORMATION SYSTEM
M-METRIC PART
Y-SEPARATE ILLUSTRATION

230-4090 **PRELUBRICATION AR-ENGINE** *(contd.)* **i02194453**

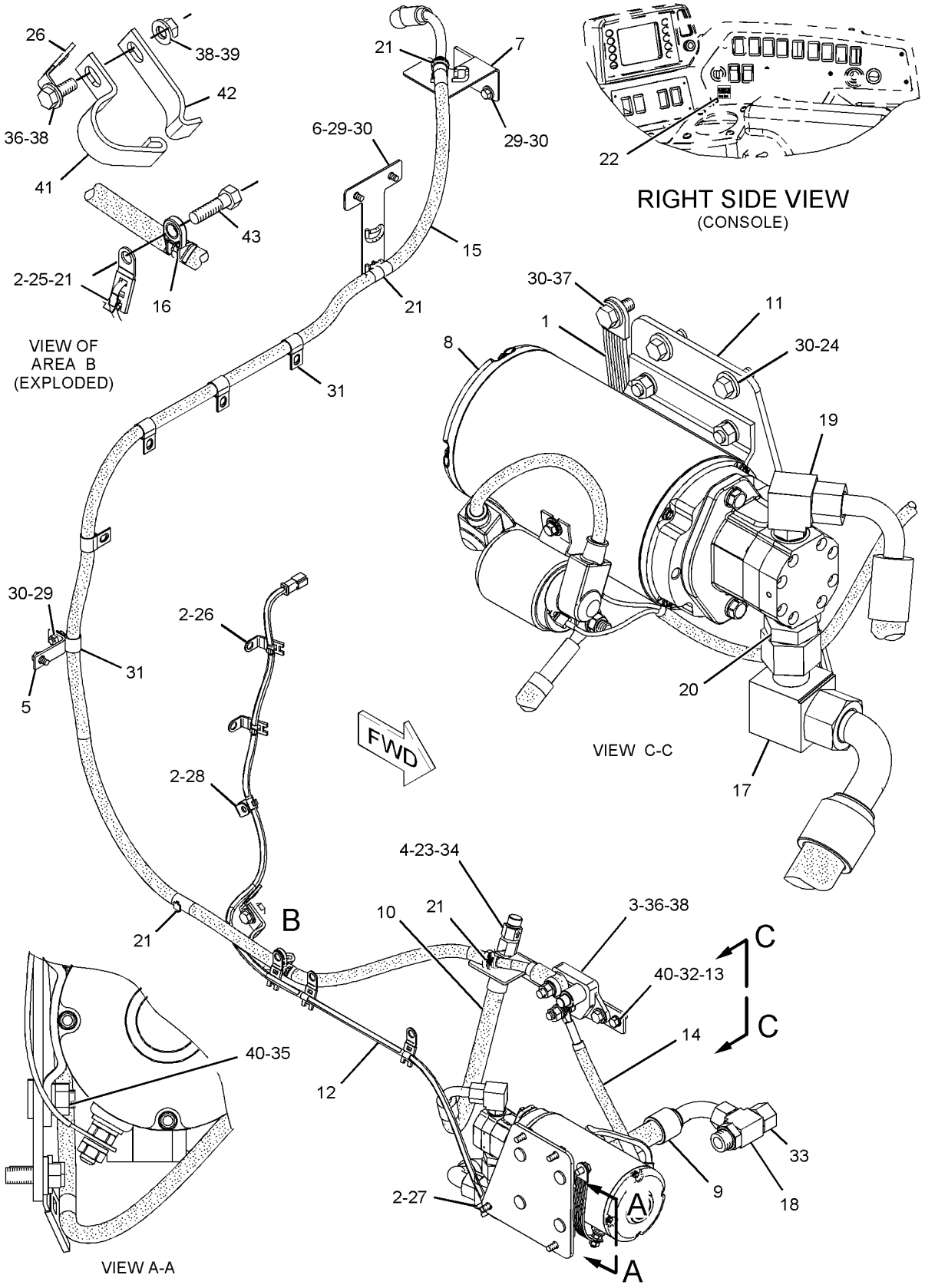

GRAPHIC #1 **<END>** g01108258

198-1508 PUMP GP-ENGINE OIL

S/N: RHX1-UP
PART OF 205-8603, 231-3468 ENGINE AR-COMPLETE
ALSO AN ATTACHMENT
TYPE 1

SMCS-1304, 1315 **i01515586**

NOTE	REF NO	GRAPHIC REF	PART NUMBER	QTY	PART NAME 1 2 3 4 5 6 (PRODUCT LEVEL)	SEE PAGE
	1	1	**4N-0513**	1	BODY AS-OIL PUMP	
		1	**7N-2156**	2	BEARING-SLEEVE	
		1	**8M-8489**	2	DOWEL	
	2	1	**1M-0644**	2	BOLT (3/8-16X2-1/4 IN)	
	3	1	**5M-2894**	2	WASHER-HARD (10.2X18.5X2.5MM THK)	
	4	1	**5F-4899**	4	BOLT (3/8-16X5.5 IN)	
	5	1	**9Y-1792**	1	RETAINER	
	6	1	**2S-2760**	1	SPRING	
	7	1	**6N-1931**	1	PLUNGER-RELIEF	
	8	1	**162-2679**	1	SHAFT AS-PUMP	
	9	1	**162-2682**	1	SHAFT AS-PUMP	
	10	1	**4N-5339**	1	SPACER AS-OIL PUMP	
		1	**7N-2155**	2	BEARING-SLEEVE	
	11	1	**4N-0587**	1	BODY AS-PUMP	
		1	**7N-2213**	2	BEARING-SLEEVE	
	12	1	**7W-6529**	1	GEAR (8 TEETH)	
	13	1	**7W-7142**	1	GEAR (8 TEETH)	

198-1508 PUMP GP-ENGINE OIL *(contd.)* **i01515586**

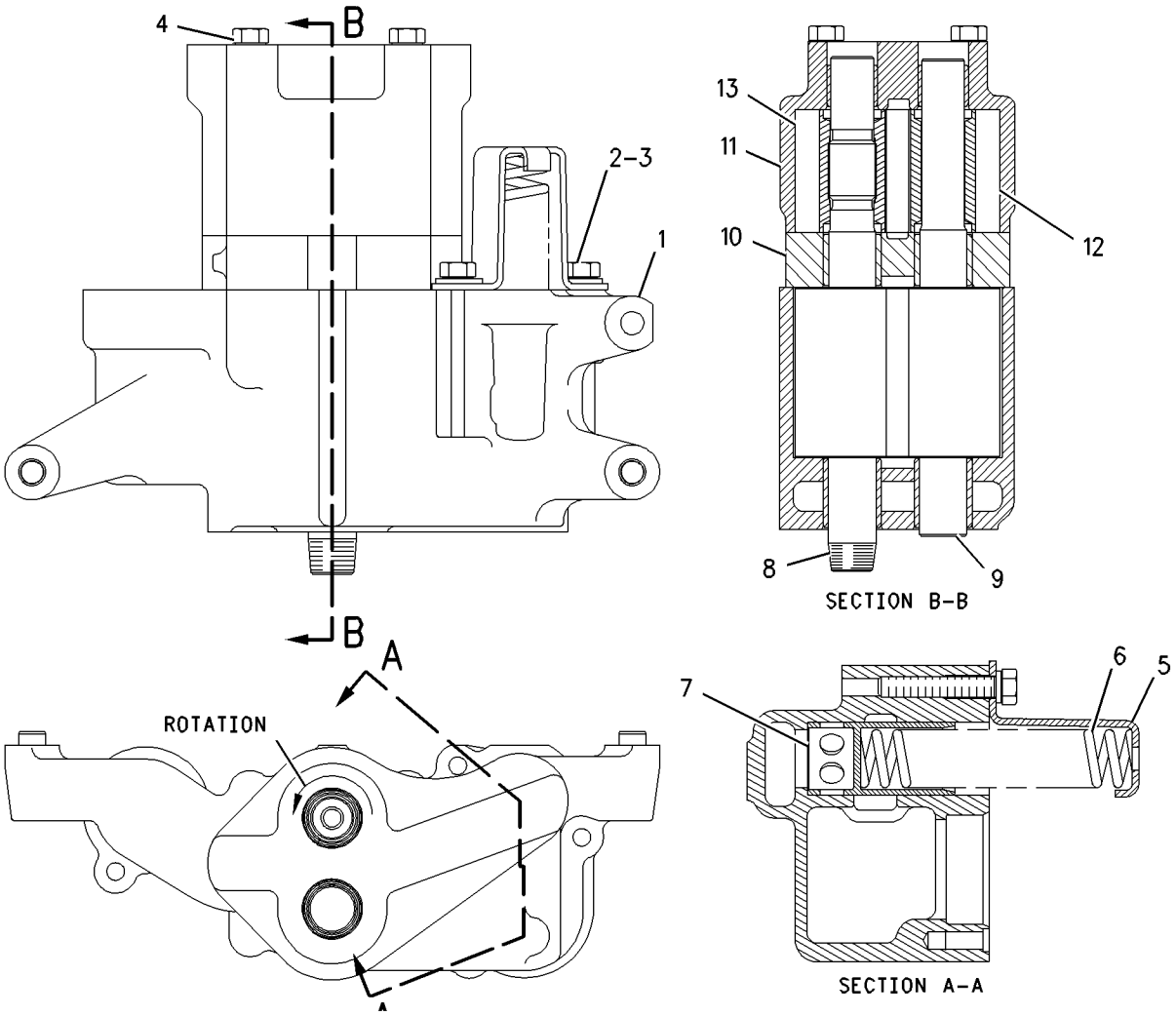

GRAPHIC #1 **<END>** g00786556

198-1508 PUMP GP-ENGINE OIL*R

S/N: RHX1-UP
PART OF 205-8603, 231-3468 ENGINE AR-COMPLETE
ALSO AN ATTACHMENT
TYPE 2

SMCS-1304, 1315 **i02085849**

NOTE	REF NO	GRAPHIC REF	PART NUMBER	QTY	PART NAME 1 2 3 4 5 6 (PRODUCT LEVEL)	SEE PAGE
	1	1	**2S-2760**	1	SPRING	
	2	1	**4N-5339**	1	SPACER AS-OIL PUMP	
	3	1	**6N-1931**	1	PLUNGER-RELIEF	
	4	1	**6N-2343**	1	BODY AS-PUMP	
	5	1	**7W-6528**	1	GEAR-PUMP (8-TEETH)	
	6	1	**7W-7141**	1	GEAR-PUMP (8-TEETH)	
	7	1	**9Y-1792**	1	RETAINER	
	8	1	**145-8503**	1	SHAFT AS-IDLER	
	9	1	**202-3572**	1	SHAFT AS-DRIVE	
	10	1	**235-1587**	1	BODY AS	
	10A	1	**8M-8489**	2	DOWEL	
	10B	1	**2S-7905**	1	PLUG-PIPE	
	10C	1	**7N-2156**	2	BEARING-SLEEVE	
	11	1	**1M-0644**	2	BOLT (3/8-16X2-1/4-IN)	
	13	1	**5F-4899**	4	BOLT (3/8-16X5.5-IN)	
	14	1	**5M-2894**	2	WASHER-HARD (10.2X18.5X2.5-MM THK)	

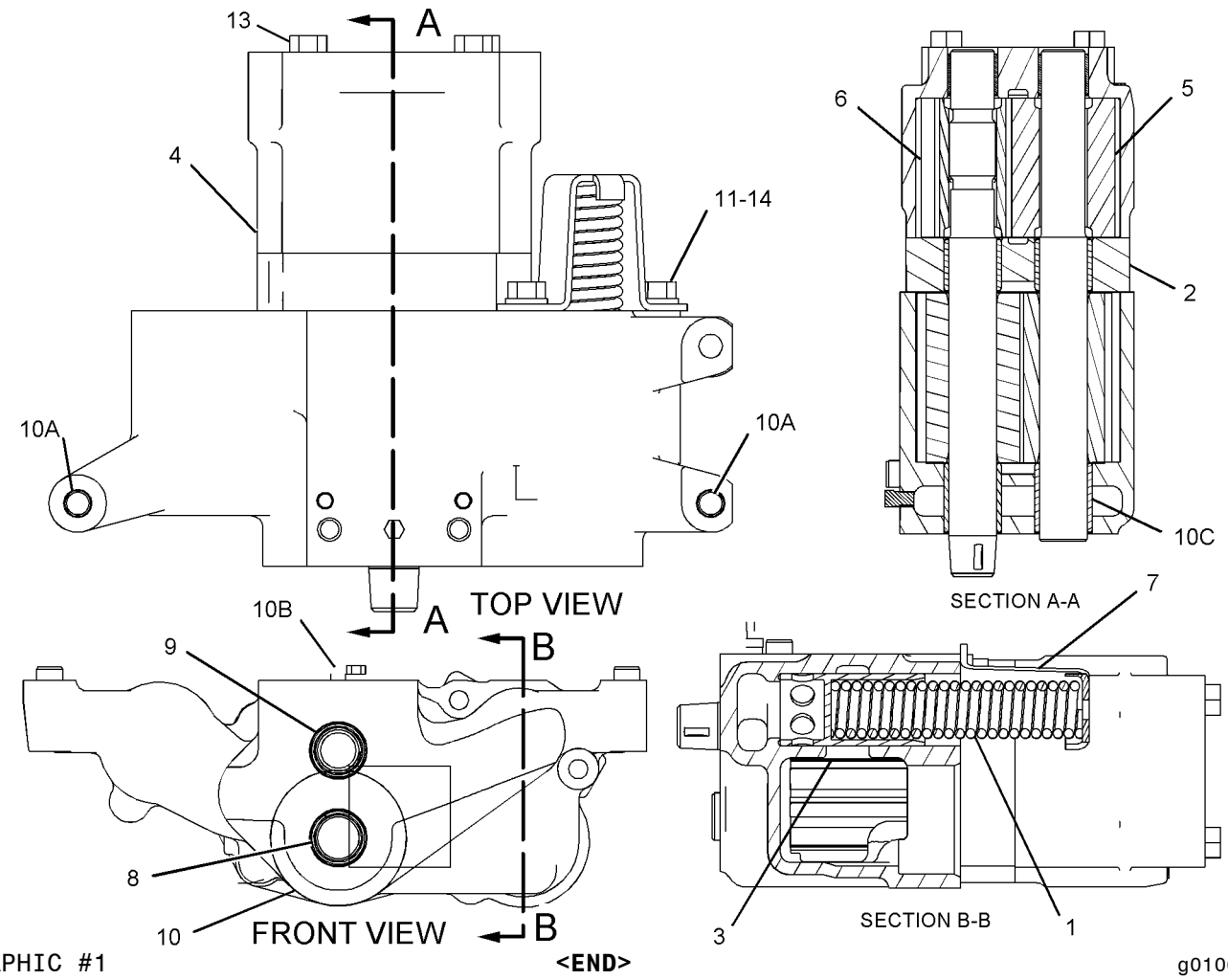

GRAPHIC #1 **<END>** g01066706

COOLING SYSTEM

205-8594 FAN GP-SUCTION

S/N: RJS1-UP

PART OF 205-8604 INSTALLATION AR-ENGINE

SMCS-1356, 1360 **i01995240**

NOTE	REF NO	GRAPHIC REF	PART NUMBER	QTY	PART NAME 1 2 3 4 5 6 (PRODUCT LEVEL)	SEE PAGE
	1	2	**6I-9471**	1	RETAINER	
	2	1	**205-0311**	1	SUPPORT AS	
	3	2	**208-8632**	1	ADAPTER	
	4	2	**216-3425**	1	SPIDER AS-FAN (8 BLADES)	
	5	2	**216-8401**	4	BAFFLE AS	
		2	**7G-5186**	4	SPACER (13X19X4.5-MM THK)	
	6	2	**216-8402**	4	STRIP	
	7	2	**7X-0515**	1	WASHER-HARD (17X35X5-MM THK)	
M	8	2	**7X-2554**	1	BOLT (M16X2X70-MM)	
M	9	1	**7X-2563**	4	BOLT (M20X2.5X60-MM)	
	10	2	**8T-4121**	24	WASHER-HARD (11X21X2.5-MM THK)	
	11	1	**8T-4123**	4	WASHER-PLATED (22X35X3.5-MM THK)	
M	12	2	**8T-4186**	8	BOLT (M10X1.5X40-MM)	
M	13	2	**8T-4195**	16	BOLT (M10X1.5X30-MM)	

M-METRIC PART

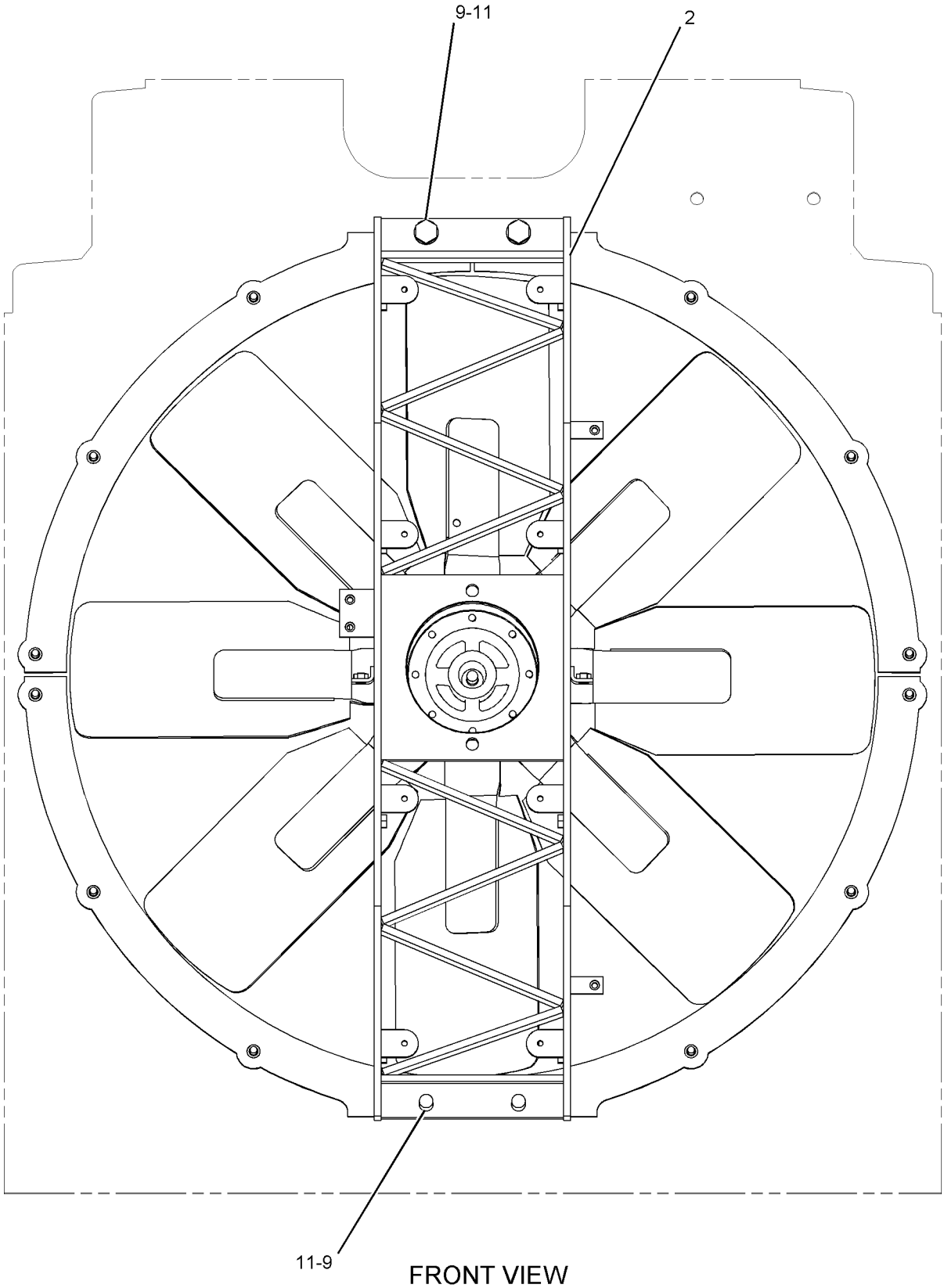

FRONT VIEW

GRAPHIC #1 g01033412

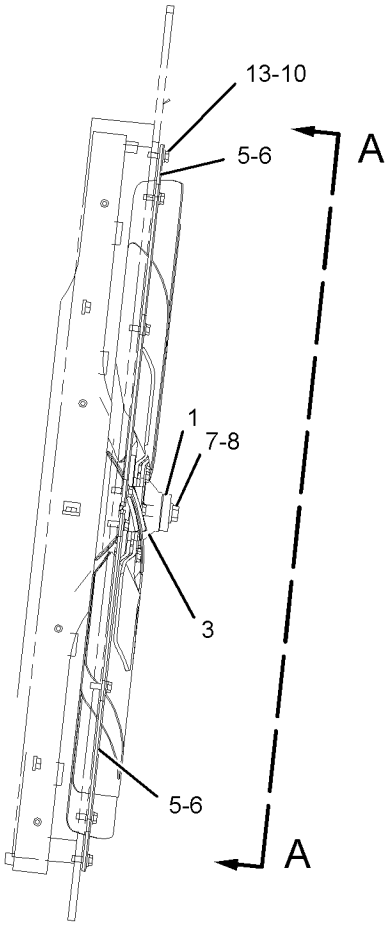

RIGHT SIDE VIEW

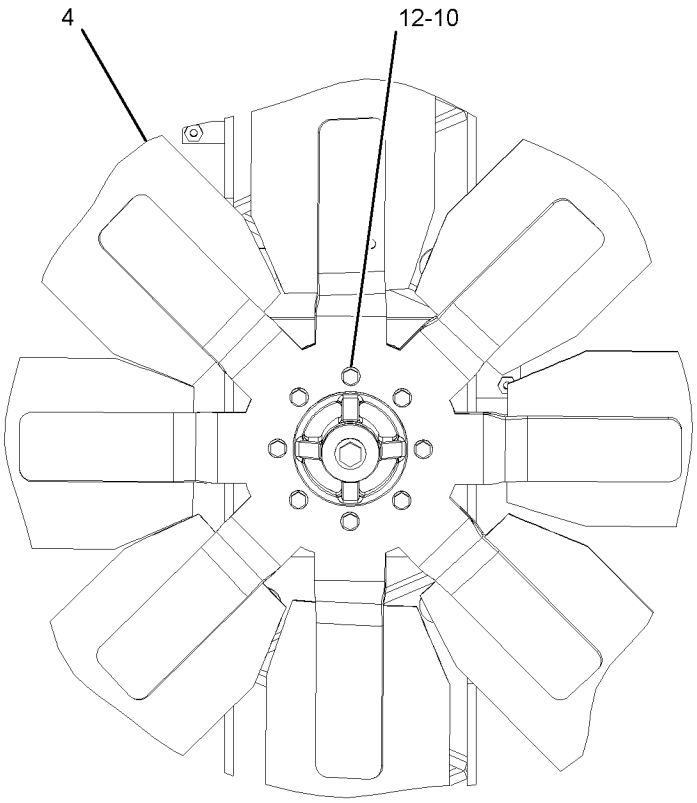

VIEW A-A

GRAPHIC #2

<END>

g01033413

205-8597 LINES GP-WATER

S/N: RJS1-UP

PART OF 205-8604 INSTALLATION AR-ENGINE

SMCS-1355, 1380, 1393 **i02202233**

NOTE	REF NO	GRAPHIC REF	PART NUMBER	QTY	PART NAME 1 2 3 4 5 6 (PRODUCT LEVEL)	SEE PAGE
E	1	1	**5P-1262**		HOSE (114.3-CM)	
	2	1	**7C-0307**	2	GASKET	
	3	1	**7W-7000**	2	ELBOW	
E	4	1	**5P-1262**		HOSE (152.4-CM)	
	5	1	**9Y-7595**	1	SPACER (30-MM ODX14-MM OAL)	
	6	1	**144-0367**	4	CLAMP-HOSE	
	7	1	**206-7355**	1	BONNET (TRANSMISSION)	
	8	1	**212-7563**	1	BRACKET AS	
M	8A	1	**8T-3490**	5	NUT-WELD (M10X1.5-THD)	
	9	1	**212-7564**	1	BRACKET AS	
M	9A	1	**8T-3490**	5	NUT-WELD (M10X1.5-THD)	
	10	1	**242-5124**	1	TUBE AS	
	11	1	**248-0346**	1	BONNET AS	
	11A	1	**212-7537**	1	BONNET	
	12	1	**105-8901**	2	GASKET	
	13	1	**109-1633**	1	CLIP (SLOT)	
	14	1	**109-1634**	1	CLIP (TAB)	
	15	1	**2H-2665**	1	SEAL-O-RING	
	16	1	**5C-6565**	1	BOLT (1/2-13X1.125-IN)	
	17	1	**6V-8801**	1	NUT (3/8-16-THD)	
	18	1	**7X-0331**	1	BOLT (1/2-13X4.25-IN)	
	19	1	**7X-0332**	3	BOLT (1/2-13X4.5-IN)	
	20	1	**7X-0337**	1	BOLT (1/2-13X5.75-IN)	
	21	1	**8T-4223**	6	WASHER-HARD (13.5X25.5X3-MM THK)	
	22	1	**8T-4835**	3	BOLT (1/2-13X2-IN)	
	23	1	**8T-4896**	2	WASHER-HARD (10.2X18.5X2.5-MM THK)	
	24	1	**8T-8915**	4	BOLT (3/8-16X3.25-IN)	
	25	1	**8T-8917**	3	BOLT (1/2-13X1.25-IN)	
	26	1	**9B-7237**	1	BOLT (3/8-16X1.25-IN)	

E-ORDER BY THE CENTIMETER
M-METRIC PART

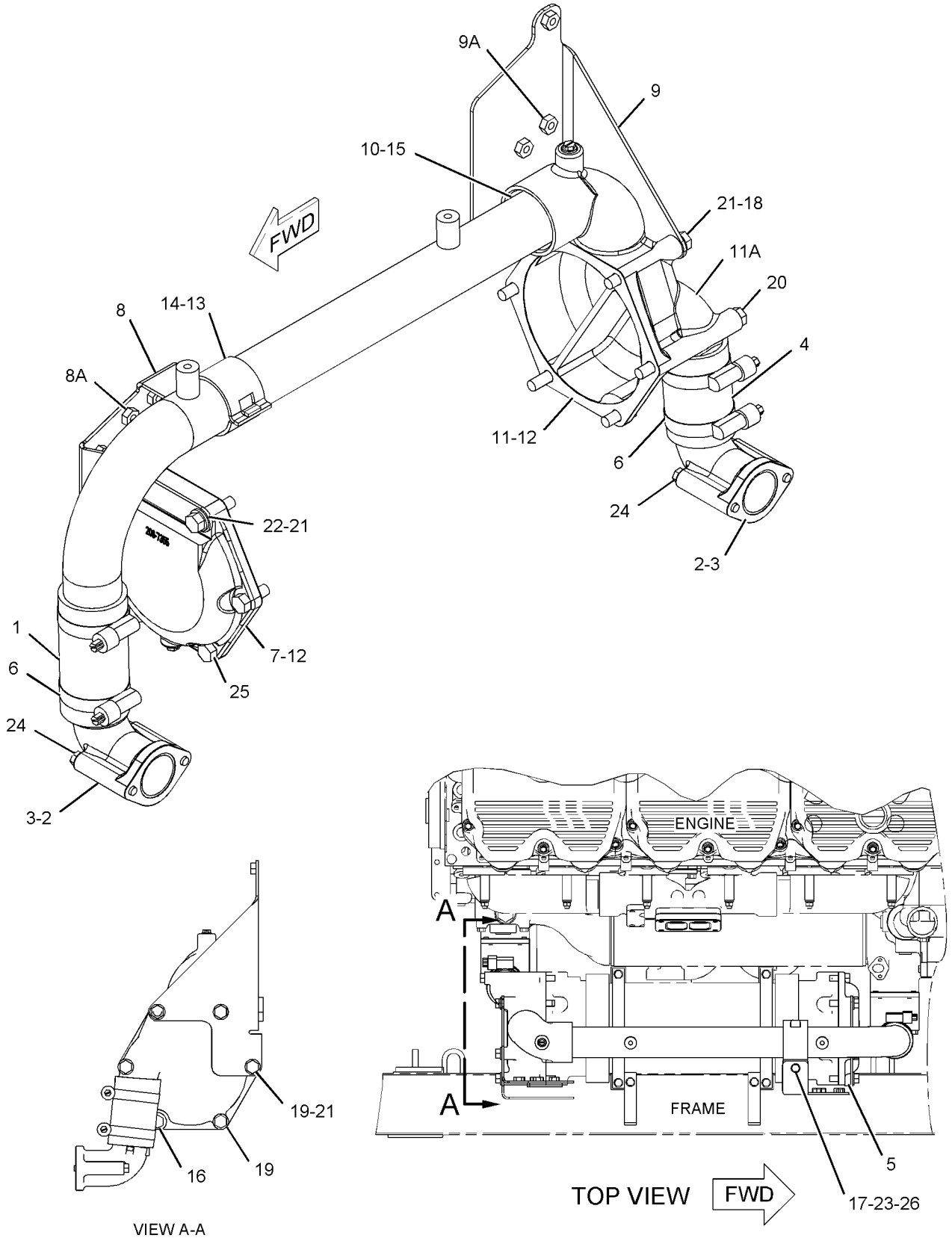

GRAPHIC #1 **<END>** g01120714

COOLING SYSTEM

211-9295 LINES GP-WATER

S/N: RHX1-UP
PART OF 205-8603, 231-3468 ENGINE AR-COMPLETE
ALSO AN ATTACHMENT

SMCS-1355, 1380, 1393 **i02186915**

NOTE	REF NO	GRAPHIC REF	PART NUMBER	QTY	PART NAME 1 2 3 4 5 6 (PRODUCT LEVEL)	SEE PAGE
	1	1	**3S-2093**	1	STRAP-CABLE	
	2	1	**3S-9643**	2	SEAL-LIP TYPE (WATER TEMPERATURE REGULATOR)	
	3	1	**4N-3840**	1	COVER	
	4	1	**4N-3841**	2	GASKET	
R	5	1	**7C-0145**	1	CORE AS-OIL COOLER (ENGINE)	
	6	1	**125-0434**	1	SEAL-INTEGRAL	
	7	1	**126-4935**	2	SEAL-INTEGRAL	
Y	8	1	**134-6054**	1	SWITCH GP-FLOW (COOLANT)	116
	9	1	**136-4303**	1	PLUG AS (2-PIN)	
	10	1	**166-2340**	1	SEAL (TEMPERATURE REGULATOR HOUSING)	
	11	1	**166-3501**	1	PIPE	
	12	1	**172-0197**	1	SPACER (10X20X5.29-MM THK)	
	13	1	**196-4813**	1	COVER-WATER PUMP	
	14	1	**197-8006**	1	SEAL-O-RING	
	15	1	**211-5959**	1	BONNET-OIL COOLER	
	16	1	**223-5813**	1	BRACKET AS	
		1	**1F-0750**	2	NUT-WELD (3/8-16-THD)	
		1	**090-8635**	1	SPACER (5-MM THK)	
	17	1	**227-8851**	1	MANIFOLD-HOUSING	
	18	1	**231-3889**	1	BONNET (OIL COOLER)	
	19	1	**231-3896**	1	ELBOW-WATER	
	20	1	**236-1687**	1	HOUSING-REGULATOR	
	21	1	**248-5513**	2	REGULATOR-WATER TEMPERATURE (92-DEG C) (COOLANT)	
	22	1	**0L-1352**	1	BOLT (3/8-16X3.25-IN)	
	23	1	**0S-1594**	6	BOLT (3/8-16X1-IN)	
	24	1	**0T-0065**	1	BOLT (3/8-16X3.5-IN)	
	25	1	**109-0077**	2	SEAL-O-RING	
	26	1	**112-8186**	1	SEAL-O-RING	
	27	1	**167-4407**	1	SEAL-O-RING	
	28	1	**171-4358**	2	SEAL-O-RING	
	29	1	**1A-2029**	4	BOLT (3/8-16X1.125-IN)	
	30	1	**2A-4639**	2	BOLT (3/8-16X1.625-IN)	
	31	1	**2B-2695**	4	BOLT (5/16-18X0.875-IN)	
	32	1	**4F-0411**	2	BOLT (3/8-16X6.5-IN)	
	33	1	**4N-0794**	2	COVER	
	34	1	**4P-7581**	1	CLIP	
	35	1	**5F-4899**	4	BOLT (3/8-16X5.5-IN)	
	36	1	**5M-2894**	10	WASHER-HARD (10.2X18.5X2.5-MM THK)	
	37	1	**6V-5063**	6	SEAL-O-RING	
	38	1	**6V-5064**	1	SEAL-O-RING	
	39	1	**6V-6609**	5	SEAL-O-RING	
	40	1	**7C-0307**	2	GASKET	
	41	1	**8S-9191**	2	BOLT (3/8-16X4-IN)	
	42	1	**9F-8999**	1	BOLT (3/8-16X7-IN)	
	43	1	**9M-1974**	4	WASHER-HARD (8.8X16X2-MM THK)	
	44	1	**9S-4181**	1	PLUG	
	45	1	**9S-4183**	6	PLUG	
	46	1	**9S-4185**	5	PLUG	

R-REMFG PART MAY BE AVAILABLE
Y-SEPARATE ILLUSTRATION

211-9295 **LINES GP-WATER** *(contd.)* **i02186915**

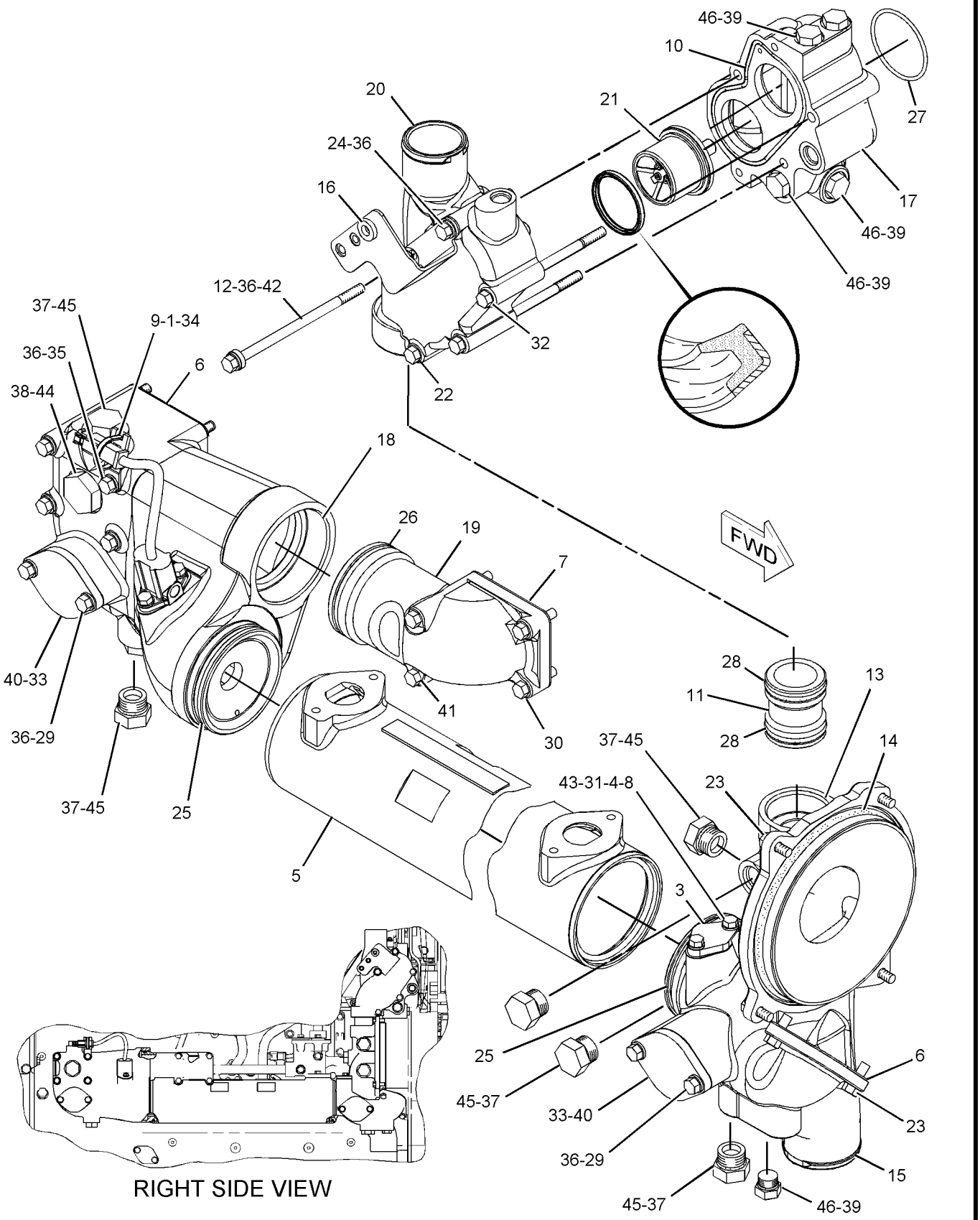

GRAPHIC #1 **<END>** g01115106

COOLING SYSTEM

212-7557 LINES GP-WATER

S/N: RJS1-UP

PART OF 205-8604 INSTALLATION AR-ENGINE

SMCS-1355, 1380, 1393 **i02202231**

NOTE	REF NO	GRAPHIC REF	PART NUMBER	QTY	PART NAME 1 2 3 4 5 6 (PRODUCT LEVEL)	SEE PAGE
E	1	1	**5P-1265**		HOSE (28.5-CM)	
	2	1	**8M-1869**	1	PLUG-DRAIN (RADIATOR)	
	3	1	**8M-7057**	1	ADAPTER-PLUG	
	4	1	**8T-4984**	4	CLAMP-HOSE	
	5	1	**061-7208**	1	CLAMP-TUBE	
	6	1	**136-8424**	1	HOSE	
	7	1	**144-0367**	4	CLAMP-HOSE	
	8	1	*148-8318*	1	CONNECTOR AS	
		1	**3K-0360**	1	SEAL-O-RING	
		1	**6V-8397**	1	SEAL-O-RING	
		1	**6V-8634**	1	CONNECTOR	
	9	1	*148-8378*	1	ELBOW AS	
		1	**3J-1907**	1	SEAL-O-RING	
		1	**6V-8397**	1	SEAL-O-RING	
		1	**6V-8724**	1	ELBOW	
	10	1	*148-8433*	1	TEE AS	
		1	**6V-8397**	2	SEAL-O-RING	
		1	**6V-9836**	1	TEE-SWIVEL	
	11	1	**157-0670**	1	CAP-DUST	
	12	1	**212-7559**	1	ELBOW	
I	13	1	**212-7568**	1	HOSE AS	
I	14	1	**212-7569**	1	HOSE AS	
	15	1	**227-7545**	1	TUBE AS	
	16	1	**154-9023**	1	VALVE-SAMPLING (ENGINE COOLANT)	
	17	1	**3J-7354**	1	SEAL-O-RING	
	18	1	**4J-7533**	1	SEAL-O-RING	
	19	1	**4L-6459**	2	BOLT (3/8-16X2.5-IN)	
	20	1	**6V-8397**	1	SEAL-O-RING	
	21	1	**8C-6869**	1	CONNECTOR	
	22	1	**8M-7066**	1	GASKET	
	23	1	**8T-2502**	1	BOLT (3/8-16X1.125-IN)	
	24	1	**8T-4223**	2	WASHER-HARD (13.5X25.5X3-MM THK)	
	25	1	**8T-4896**	3	WASHER-HARD (10.2X18.5X2.5-MM THK)	
	26	1	**8T-6762**	1	PLUG-PIPE	
	27	1	**8T-6767**	1	PLUG-PIPE	
	28	1	**8T-8919**	2	BOLT (1/2-13X1.75-IN)	
	29	1	**9S-4180**	1	PLUG	
E	30	1	**5P-1262**		HOSE (10-CM)	
E	30A	1	**5P-1262**		HOSE (28-CM)	

E-ORDER BY THE CENTIMETER
I-REFER TO HYDRAULIC INFORMATION SYSTEM

212-7557 **LINES GP-WATER** *(contd.)* **i02202231**

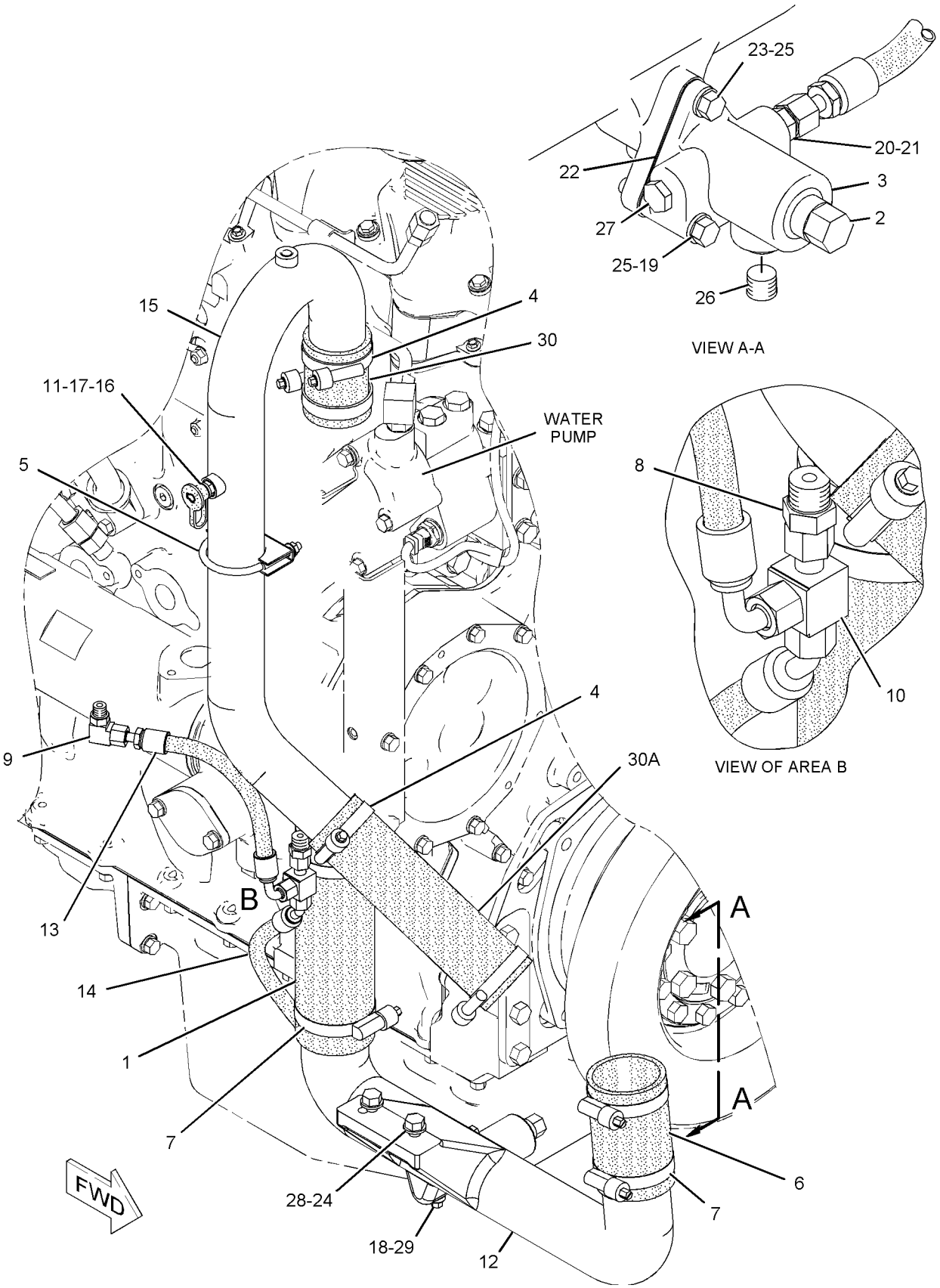

GRAPHIC #1 **<END>** g01117901

COOLING SYSTEM

225-4127 LINES GP-WATER

S/N: RHX1-UP
PART OF 205-8603, 231-3468 ENGINE AR-COMPLETE
FOR USE WITH TURBOCHARGER
ALSO AN ATTACHMENT

SMCS-1355, 1380, 1393 **i01963822**

NOTE	REF NO	GRAPHIC REF	PART NUMBER	QTY	PART NAME 1 2 3 4 5 6 (PRODUCT LEVEL)	SEE PAGE
	1	1	**7N-7628**	4	GASKET	
	2	1	**7N-7878**	2	PLATE-COVER	
	3	1	**8M-4553**	1	BRACKET	
	4	1	**217-1546**	1	TUBE AS	
	5	1	**217-1547**	1	TUBE AS	
	6	1	**237-2789**	1	BRACKET AS	
		1	**1F-0750**	2	NUT-WELD (3/8-16THD)	
	7	1	**033-6033**	2	SEAL-O-RING	
	8	1	**0S-1588**	2	BOLT (3/8-16X1.25 IN)	
	9	1	**0S-1594**	2	BOLT (3/8-16X1 IN)	
	10	1	**1A-2029**	7	BOLT (3/8-16X1.125 IN)	
	11	1	**2Y-6448**	1	SPACER (10.5X25.4X11.80MM THK)	
	12	1	**5M-2894**	11	WASHER-HARD (10.2X18.5X2.5MM THK)	
	13	1	**5P-9299**	2	CLIP	
	14	1	**6V-8625**	1	ELBOW (FACE SEAL)	
	16	1	**8L-2786**	1	SEAL-O-RING	

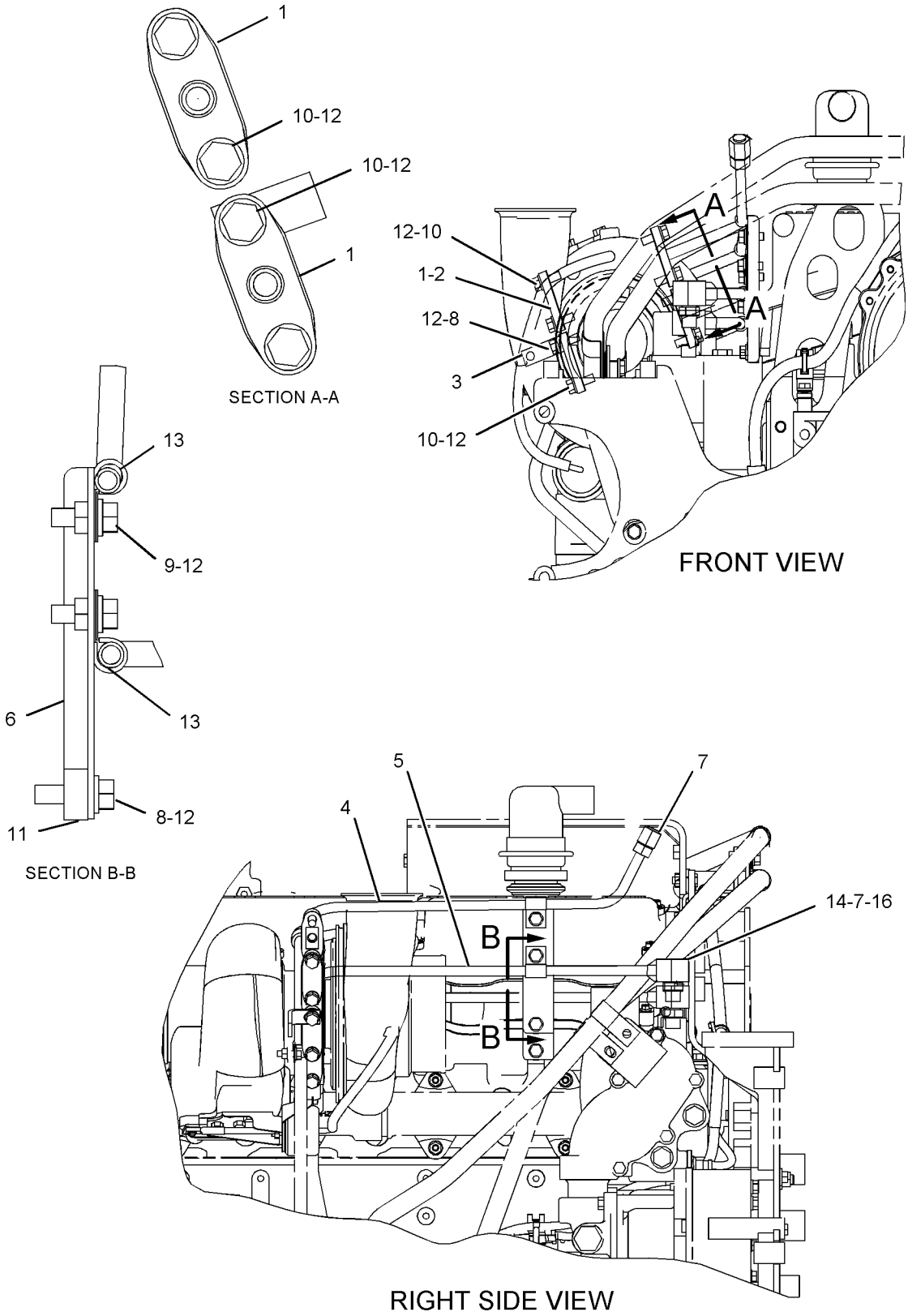

GRAPHIC #1

<END>

g01020966

224-3238 PUMP GP-WATER

S/N: RHX1-UP
PART OF 224-3239 PUMP GP-WATER
ALSO AN ATTACHMENT

SMCS-1361 **i02011744**

NOTE	REF NO	GRAPHIC REF	PART NUMBER	QTY	PART NAME 1 2 3 4 5 6 (PRODUCT LEVEL)	SEE PAGE
	1	1	**108-7930**	1	BEARING AS-ROLLER	
	2	1	**128-0317**	1	SEAL GP (WATER PUMP)	
	3	1	**136-1107**	1	RETAINER	
	4	1	**153-1256**	1	SEAL-LIP TYPE	
	5	1	**195-0319**	1	GEAR (74 TEETH)	
	7	1	**224-3235**	1	SHAFT-WATER PUMP	
	8	1	**224-3236**	1	IMPELLER-PUMP	
	9	1	**224-3237**	1	HOUSING	
	10	1	**1B-7182**	4	BOLT (5/16-18X1.25 IN)	
	11	1	**111-2721**	1	FILTER (WATER PUMP)	

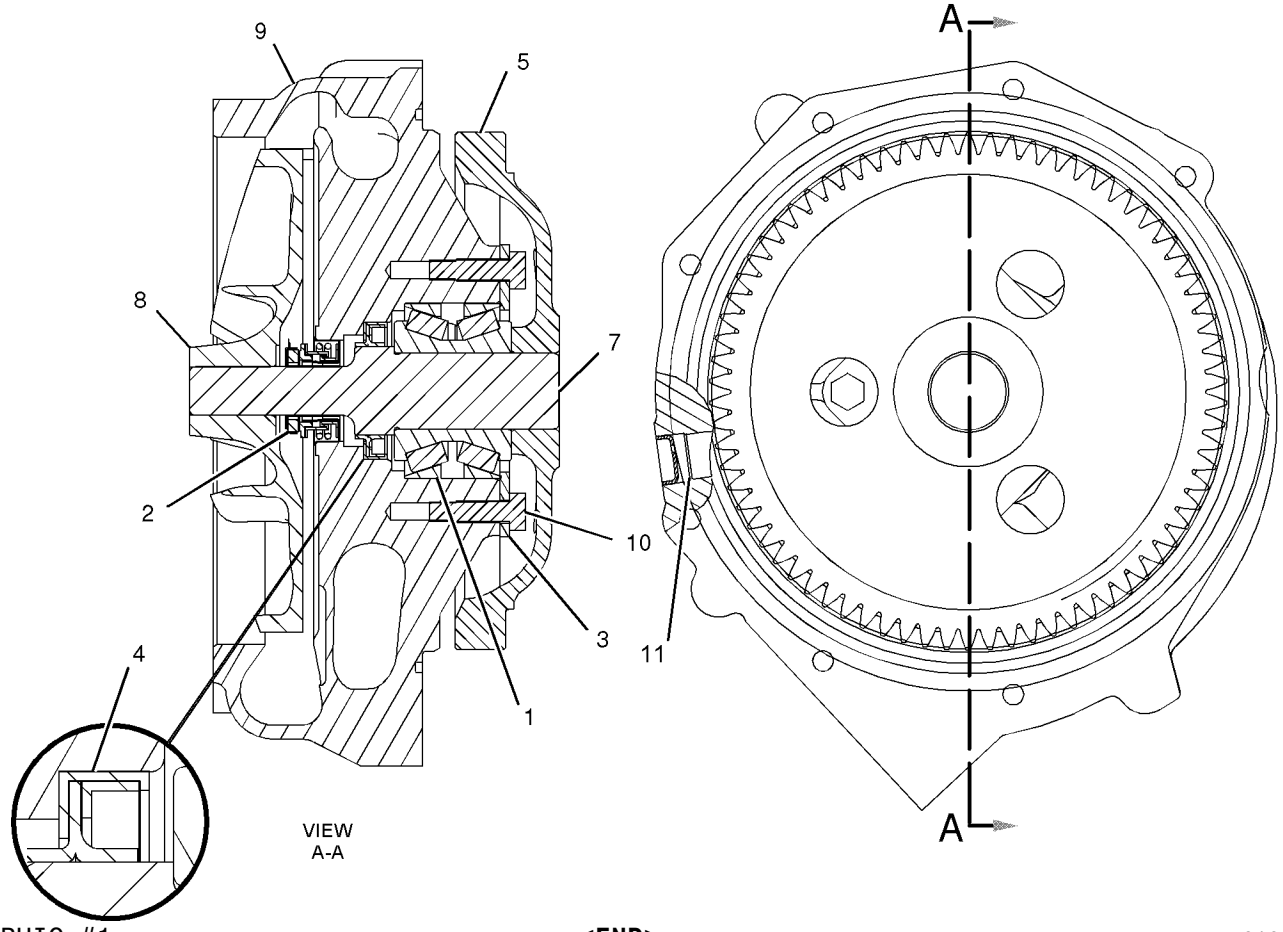

GRAPHIC #1 **<END>** g01035316

COOLING SYSTEM

224-3239 PUMP GP-WATER

S/N: RHX1-UP
HIGH FLOW
PART OF 205-8603, 231-3468 ENGINE AR-COMPLETE
ALSO AN ATTACHMENT

SMCS-1361 **i01872254**

NOTE	REF NO	GRAPHIC REF	PART NUMBER	QTY	PART NAME 1 2 3 4 5 6 (PRODUCT LEVEL)	SEE PAGE
Y	1	1	*224-3238*	1	PUMP GP-WATER	111
	2	1	**156-5198**	1	SEAL-O-RING	

Y-SEPARATE ILLUSTRATION

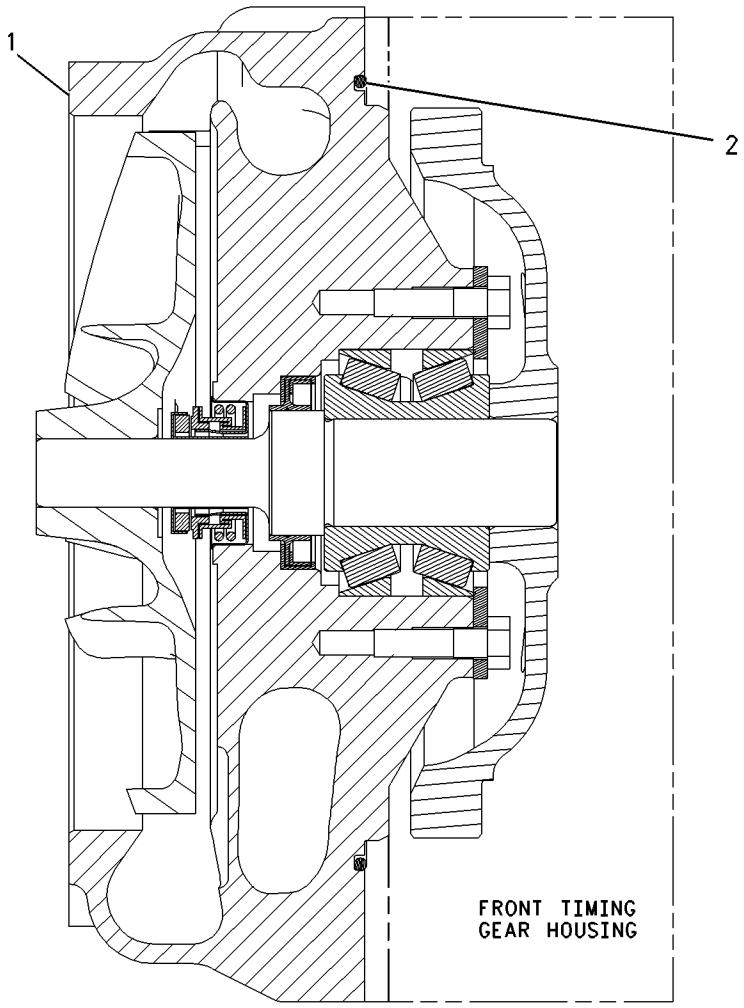

GRAPHIC #1 **<END>** g00953977

COOLING SYSTEM

211-5078 RADIATOR AR–TRASH RESISTANT

S/N: RJS1-UP

PART OF 211-5069 MODIFICATION AR-WOODCHIP

AN ATTACHMENT

SMCS-1353 **i02236660**

NOTE	PART NUMBER	QTY	PART NAME 1 2 3 4 5 6 (PRODUCT LEVEL)	SEE PAGE
	256-2090	7	CORE AS-RADIATOR	

<END>

COOLING SYSTEM

205-8611 RADIATOR GP

S/N: RJS1-UP

PART OF 205-8604 INSTALLATION AR-ENGINE

SMCS-1353 **i02252161**

NOTE	REF NO	GRAPHIC REF	PART NUMBER	QTY	PART NAME 1 2 3 4 5 6 (PRODUCT LEVEL)	SEE PAGE
	1	1	**1P-4278**	13	CLAMP-HOSE	
	2	1	**6I-2431**	7	SEAL	
	3	1	**6I-2435**	7	SPACER (80X108X25-MM THK)	
	4	1	**6I-2436**	7	RETAINER	
	5	1	**106-4572**	6	HOSE	
	6	1	**111-7421**	1	CAP	
	7	1	**206-7363**	1	TANK AS-COOLANT	
		1	**1F-0750**	10	NUT-WELD (3/8-16-THD)	
	8	1	**206-7383**	1	BAFFLE AS (FRONT)	
		1	**6B-4594**	11	RIVET	
	9	1	**211-2853**	1	SUPPORT AS	
		1	**8T-5912**	2	NUT-WELD (3/8-16-THD)	
	10	1	**211-2854**	1	SUPPORT AS	
		1	**8T-5912**	4	NUT-WELD (3/8-16-THD)	
	11	1	**212-7543**	1	BAFFLE AS (LH)	
		1	**6B-4594**	12	RIVET	
	12	1	**212-7547**	1	BAFFLE AS (RH)	
		1	**6B-4594**	11	RIVET	
	13	1	**212-7551**	1	BAFFLE AS (BOTTOM)	
		1	**6B-4594**	5	RIVET	
	14	1	**212-7566**	7	BRACKET	
		1	**8T-5912**	4	NUT-WELD (3/8-16-THD)	
	15	1	**212-7573**	1	BRACKET	
	16	1	**213-9906**	7	CORE AS-RADIATOR	
	17	1	**228-1847**	1	PLATE AS	
	18	1	**5P-1075**	28	WASHER-HARD (10.2X22.5X3-MM THK)	
M	19	1	**7X-2553**	4	BOLT (M16X2X40-MM)	
	20	1	**7X-7729**	32	WASHER (11X25X3-MM THK)	
M	21	1	**8T-4136**	18	BOLT (M10X1.5X25-MM)	
M	22	1	**8T-4196**	14	BOLT (M10X1.5X35-MM)	
	23	1	**8T-4896**	14	WASHER-HARD (10.2X18.5X2.5-MM THK)	
	24	1	**9B-7237**	42	BOLT (3/8-16X1.25-IN)	
	25	1	**9X-8257**	4	WASHER (17.5X30X3.5-MM THK)	

M-METRIC PART

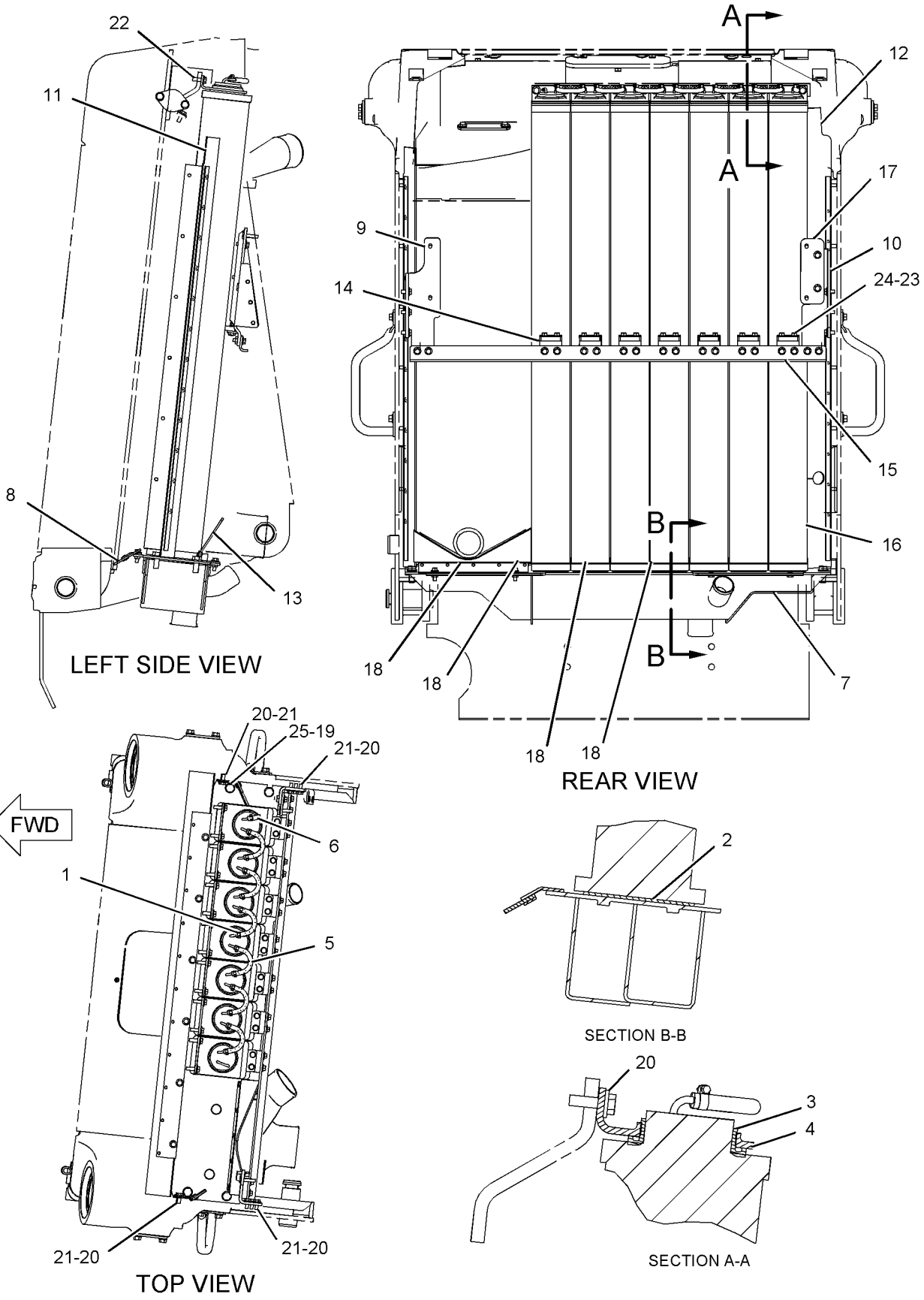

GRAPHIC #1 **<END>** g01036554

134-6054 SWITCH GP-FLOW–COOLANT

S/N: RHX1-UP
PART OF 211-9295 LINES GP-WATER
ALSO AN ATTACHMENT

SMCS-1435 **i02142928**

NOTE	REF NO	GRAPHIC REF	PART NUMBER	QTY	PART NAME 1 2 3 4 5 6 (PRODUCT LEVEL)	SEE PAGE
	1	1	**186-3735**	2	PIN-CONNECTOR	
	2	1	**3E-3365**	1	WEDGE-RECEPTACLE LOCK (2-PIN)	
	3	1	**102-8802**	1	KIT-RECEPTACLE (2-PIN)	
					(INCLUDES RECEPTACLE AS AND WEDGE)	
BE	4	1	**9X-1813**		SLEEVE	

B-USE AS REQUIRED
E-ORDER BY THE CENTIMETER

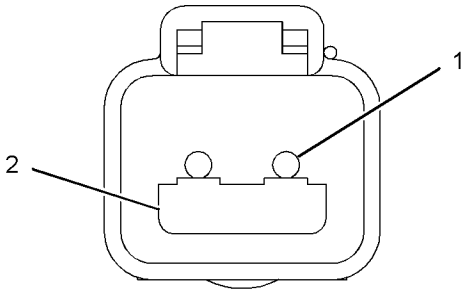

VIEW A-A

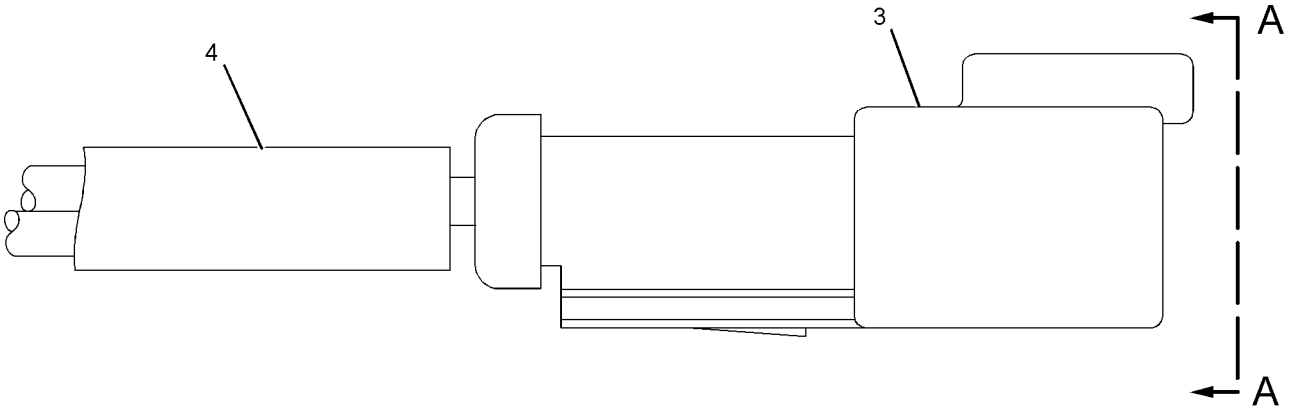

GRAPHIC #1 **<END>** g01088453

206-7365 TANK GP-COOLANT

S/N: RJS1-UP

PART OF 206-7364 TANK GP-WATER

SMCS-1354, 1377 **i02202237**

NOTE	REF NO	GRAPHIC REF	PART NUMBER	QTY	PART NAME 1 2 3 4 5 6 (PRODUCT LEVEL)	SEE PAGE
	1	1	**031-1119**	1	CAP AS-RADIATOR	
	2	1	**227-1395**	1	TANK AS-COOLANT	

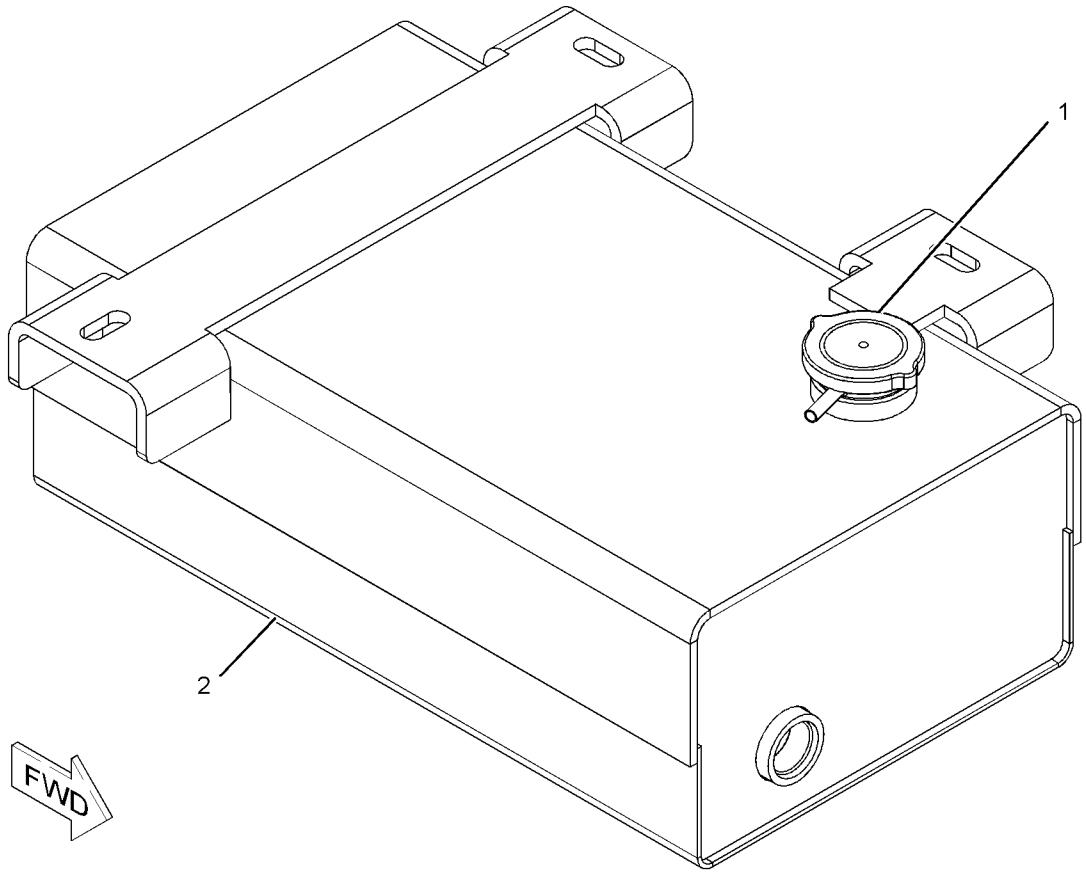

GRAPHIC #1 **<END>** g01037169

COOLING SYSTEM

206-7364 TANK GP-WATER

S/N: RJS1-UP

PART OF 205-8604 INSTALLATION AR-ENGINE

SMCS-1377 **i02202229**

NOTE	REF NO	GRAPHIC REF	PART NUMBER	QTY	PART NAME 1 2 3 4 5 6 (PRODUCT LEVEL)	SEE PAGE
	1	1	**1P-4278**	4	CLAMP-HOSE	
	2	1	**1P-9328**	2	FITTING	
	3	1	**1W-8793**	3	SPACER (13.8X30X20-MM THK)	
	4	1	**2D-7325**	1	TEE-PIPE	
	5	1	**5P-1230**	1	CONNECTOR	
	6	1	**5P-2230**	2	CLAMP-HOSE	
	7	1	**6V-1355**	3	ELBOW	
	8	1	**6V-6782**	2	CLIP (SLOT)	
	9	1	**6V-6783**	2	CLIP (TAB)	
	10	1	**8C-7311**	1	ADAPTER	
	11	1	**9M-7961**	1	FITTING	
	12	1	**9N-3666**	1	VALVE AS (WATER TANK DRAIN)	
	13	1	*148-8312*	1	ADAPTER AS	
		1	**3D-2824**	1	SEAL-O-RING	
		1	**3T-4965**	1	ADAPTER-O-RING	
I	14	1	**152-1035**	1	HOSE AS	
Y	15	1	*206-7365*	1	TANK GP-COOLANT	117
	16	1	*155-7319*	1	ELBOW AS	
		1	**118-4728**	1	ELBOW	
		1	**3K-0360**	1	SEAL-O-RING	
	17	1	**3D-2824**	1	SEAL-O-RING	
	18	1	**3J-7354**	3	SEAL-O-RING	
	19	1	**4D-9517**	1	CLIP	
	20	1	**5M-3062**	2	BOLT (3/8-16X0.75-IN)	
	21	1	**5P-1076**	3	WASHER-HARD (13.5X30X4-MM THK)	
	22	1	**5P-9299**	2	CLIP	
	23	1	**6V-8398**	1	SEAL-O-RING	
	24	1	**7D-7233**	2	CLIP	
	25	1	**7M-8485**	1	SEAL-O-RING	
	26	1	**8T-4121**	4	WASHER-HARD (11X21X2.5-MM THK)	
M	27	1	**8T-4133**	2	NUT (M10X1.5-THD)	
M	28	1	**8T-4182**	2	BOLT (M10X1.5X45-MM)	
	29	1	**8T-4896**	2	WASHER-HARD (10.2X18.5X2.5-MM THK)	
M	30	1	**8T-4910**	3	BOLT (M12X1.75X60-MM)	
	31	1	**9Y-9236**	1	BODY AS-GAUGE	
E	32	1	**5P-1251**		HOSE (156-CM)	
E	33	1	**8C-3681**		HOSE (190-CM)	
E	34	1	**5P-1465**		HOSE (108-CM)	
E	34A	1	**5P-1465**		HOSE (85-CM)	
E	34B	1	**5P-1465**		HOSE (28-CM)	

E-ORDER BY THE CENTIMETER
I-REFER TO HYDRAULIC INFORMATION SYSTEM
M-METRIC PART
Y-SEPARATE ILLUSTRATION

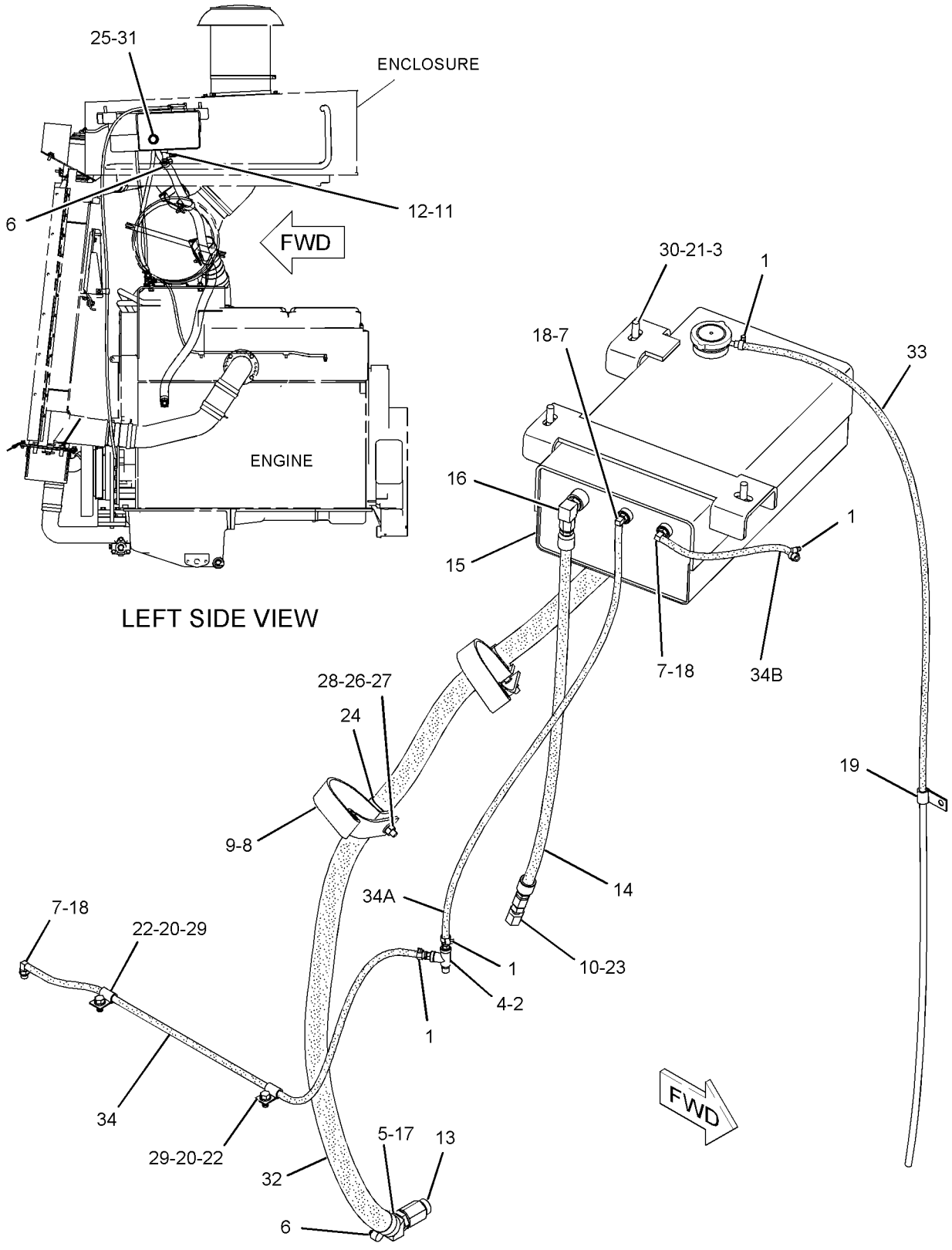

GRAPHIC #1 **<END>** g01113646

AIR INLET AND EXHAUST SYSTEM

206-7335 AFTERCOOLER GP-AIR

S/N: RJS1-UP

PART OF 205-8604 INSTALLATION AR-ENGINE

SMCS-1063 **i01995307**

NOTE	REF NO	GRAPHIC REF	PART NUMBER	QTY	PART NAME 1 2 3 4 5 6 (PRODUCT LEVEL)	SEE PAGE
	2	1	**6I-2435**	2	SPACER (80X108X25MM THK)	
	3	1	**6I-2436**	2	RETAINER	
	4	1	**6S-6251**	2	MOUNT	
	5	1	**231-7914**	1	BAFFLE	
	6	1	**231-8103**	1	CORE AS (AFTERCOOLER)	
	7	1	**7G-8839**	4	SPACER (13.5X57X6MM THK)	
	8	1	**7X-7729**	6	WASHER (11X25X3MM THK)	
M	9	1	**8T-4196**	6	BOLT (M10X1.5X35MM)	
M	10	1	**8T-4910**	2	BOLT (M12X1.75X60MM)	

M-METRIC PART

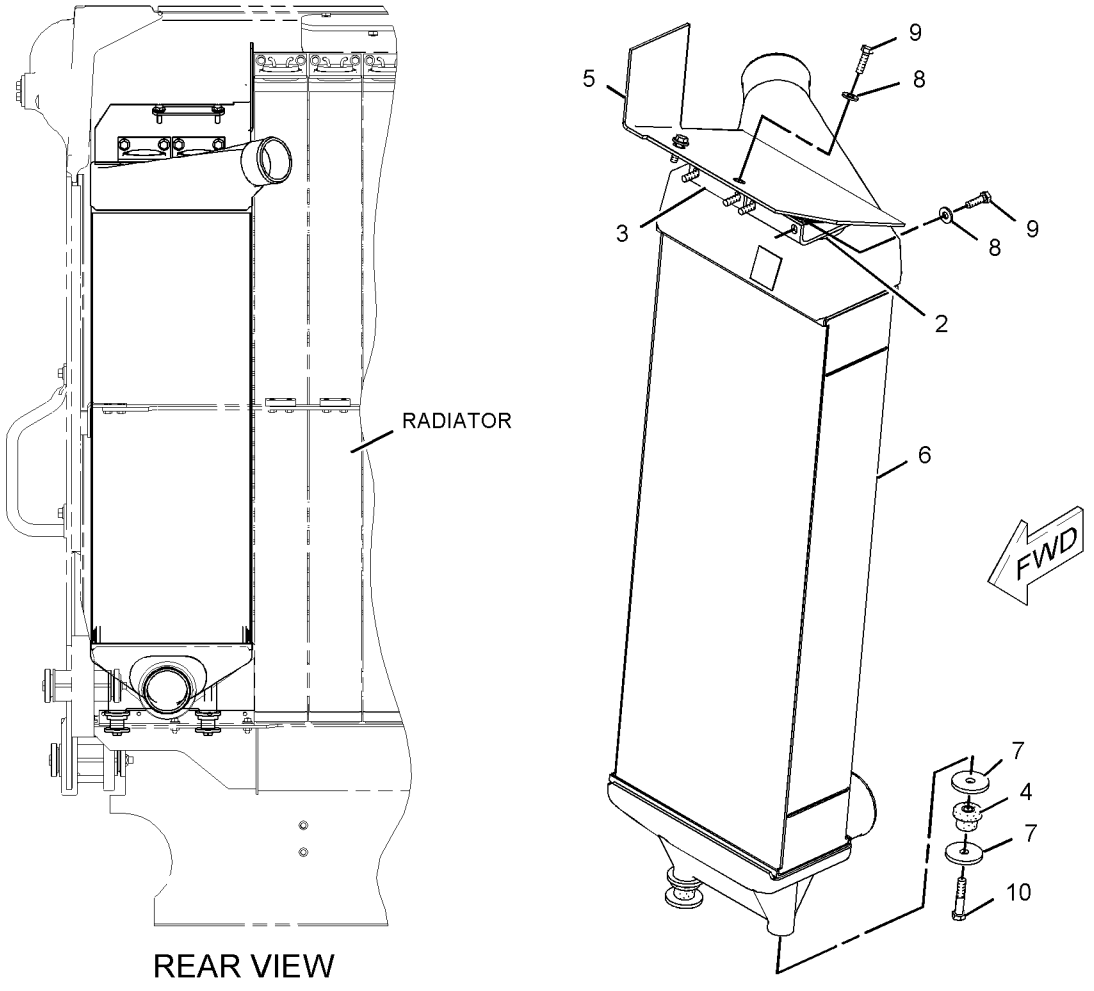

GRAPHIC #1 **<END>** g01034080

AIR INLET AND EXHAUST SYSTEM

205-8588 AIR CLEANER GP

S/N: RJS1-UP

PART OF 205-8604 INSTALLATION AR-ENGINE

SMCS-1051, 1054 **i02202235**

NOTE	REF NO	GRAPHIC REF	PART NUMBER	QTY	PART NAME 1 2 3 4 5 6 (PRODUCT LEVEL)	SEE PAGE
	1	1	**5P-4869**	2	CLAMP-HOSE	
	2	1	**7S-8817**	1	PRECLEANER AS	
	2A	1	**0S-1591**	1	BOLT (3/8-16X1.5-IN)	
	2B	1	**6V-8801**	1	NUT (3/8-16-THD)	
	3	1	**206-7341**	1	BODY AS	
Y	4	1	**206-7342**	1	AIR CLEANER GP	122
	5	1	**212-7548**	1	ELBOW	
	6	1	**8T-4121**	4	WASHER-HARD (11X21X2.5-MM THK)	
M	7	1	**8T-4137**	4	BOLT (M10X1.5X20-MM)	
M	8	1	**8T-4139**	4	BOLT (M12X1.75X30-MM)	
	9	1	**8T-4223**	4	WASHER-HARD (13.5X25.5X3-MM THK)	

M-METRIC PART
Y-SEPARATE ILLUSTRATION

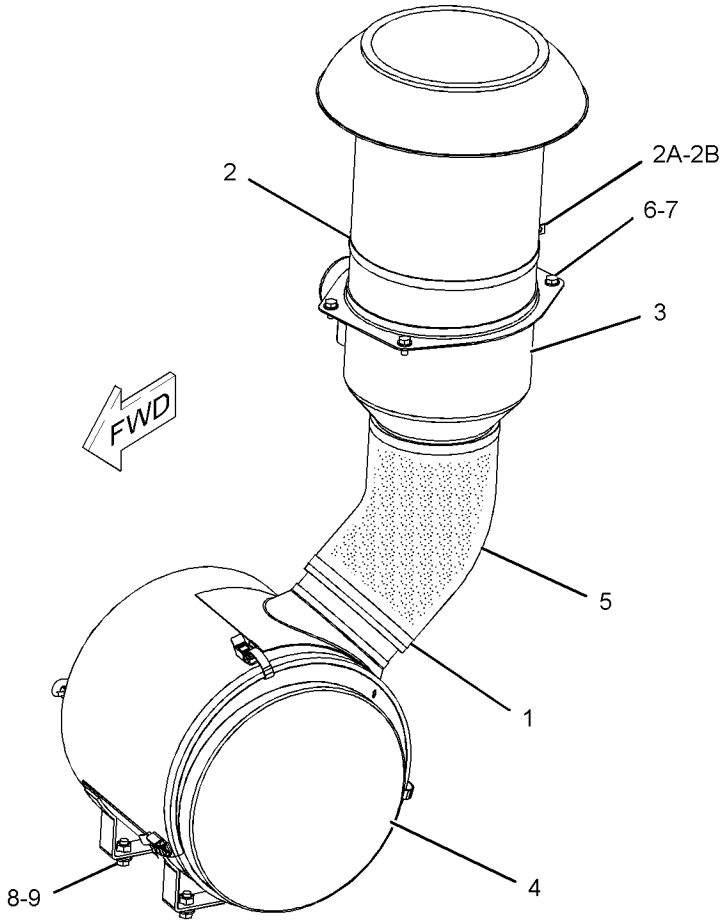

GRAPHIC #1 **<END>** g01119763

AIR INLET AND EXHAUST SYSTEM

206-7342 AIR CLEANER GP

S/N: RJS1-UP

PART OF 205-8588 AIR CLEANER GP

SMCS-1051, 1054 **i01995324**

NOTE	REF NO	GRAPHIC REF	PART NUMBER	QTY	PART NAME 1 2 3 4 5 6 (PRODUCT LEVEL)	SEE PAGE
	1	1	**8N-4617**	3	KIT-AIR CLEANER CLAMP	
					(EACH INCLUDES A CLIP AS AND RIVET)	
	2	1	**123-6855**	1	ELEMENT AS-PRIMARY (AIR CLEANER)	
	3	1	**123-6856**	1	ELEMENT AS-SECONDARY (AIR CLEANER)	
	4	1	**232-0363**	1	COVER AS	

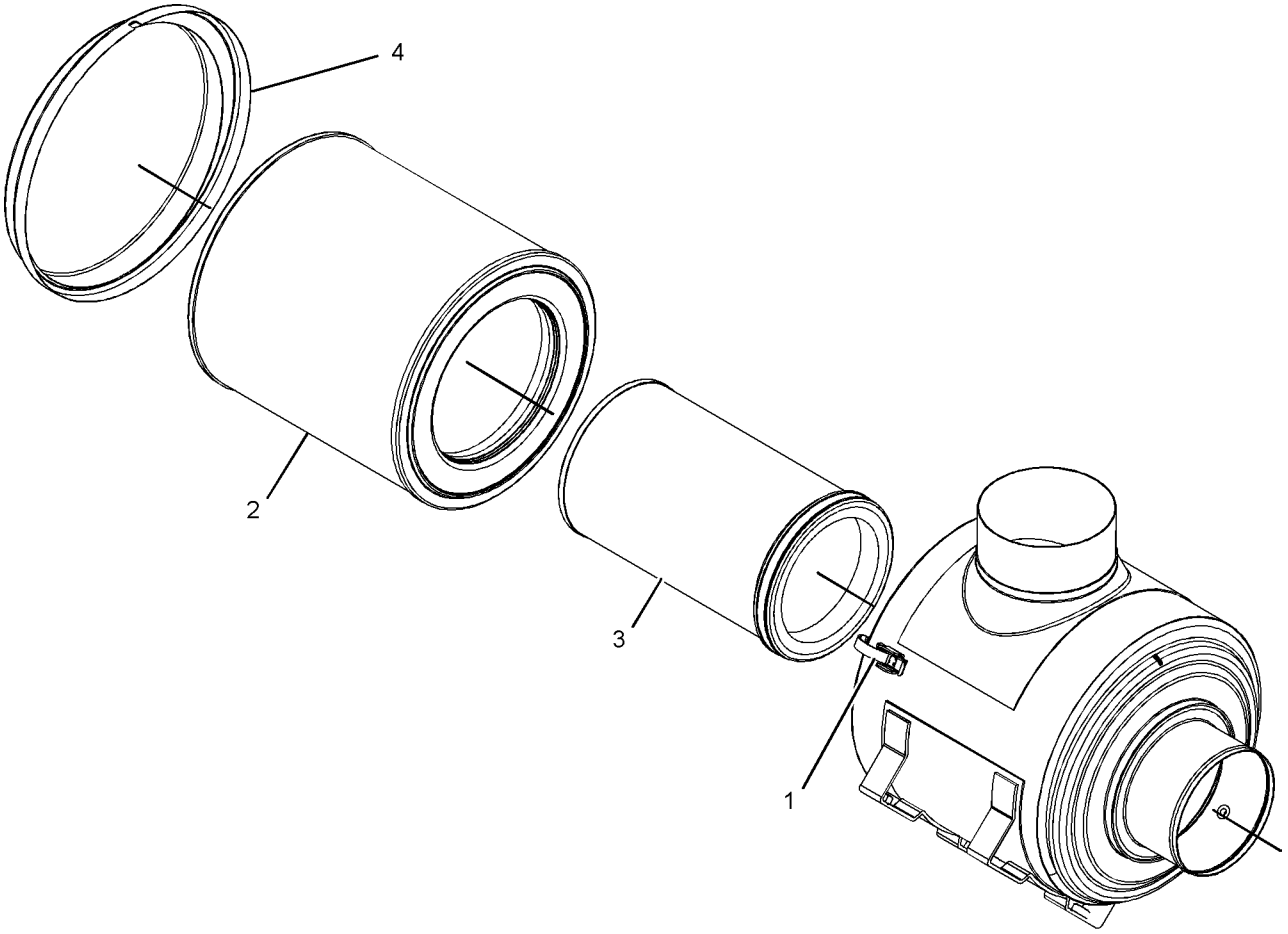

GRAPHIC #1 **<END>** g01033644

AIR INLET AND EXHAUST SYSTEM

205-8593 DUST EJECTOR GP

S/N: RJS1-UP

PART OF 205-8604 INSTALLATION AR-ENGINE

SMCS-1068 **i01995215**

NOTE	REF NO	GRAPHIC REF	PART NUMBER	QTY	PART NAME 1 2 3 4 5 6 (PRODUCT LEVEL)	SEE PAGE
	1	1	**5P-0597**	2	CLAMP-HOSE	
	2	1	**7S-5003**	1	CAP AS-RAIN (DUST EJECTOR)	
	3	1	**7W-1208**	1	CLAMP	
	4	1	**7W-5524**	1	EJECTOR AS-EXHAUST	
	5	1	**2K-4973**	1	LOCKNUT (3/8-16-THD)	
	6	1	**7X-0290**	1	BOLT (3/8-16X3.5-IN)	
	7	1	**8T-4896**	2	WASHER-HARD (10.2X18.5X2.5-MM THK)	
E	8	1	**5P-1471**		HOSE (88CM)	

E-ORDER BY THE CENTIMETER

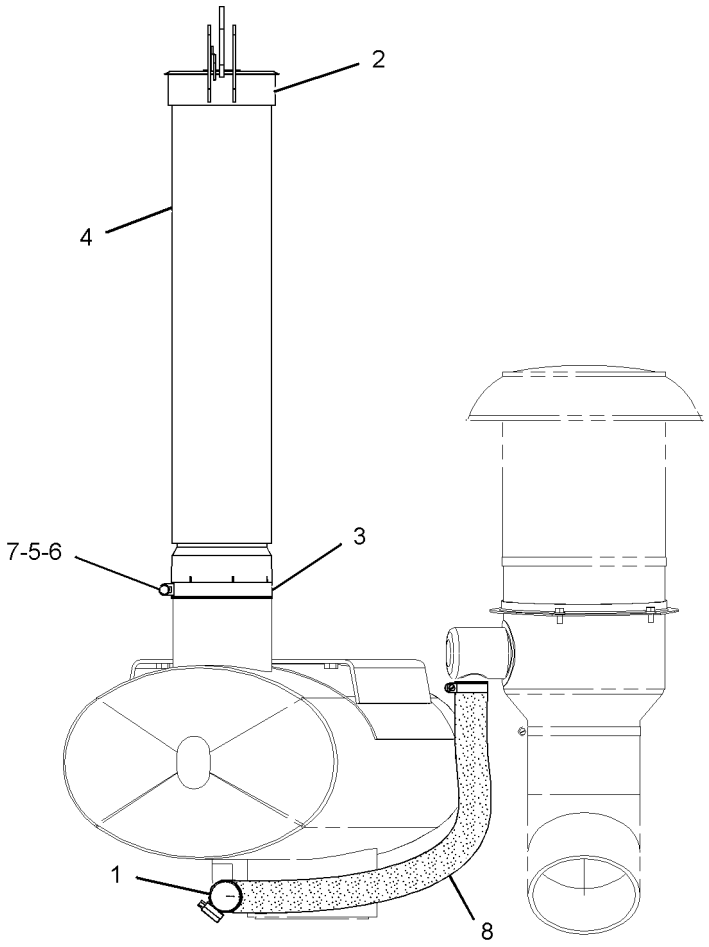

RIGHT SIDE VIEW

GRAPHIC #1

<END>

g01033621

AIR INLET AND EXHAUST SYSTEM

205-8595 LINES GP-AIR

S/N: RJS1-UP

PART OF 205-8604 INSTALLATION AR-ENGINE

SMCS-1071 **i01995253**

NOTE	REF NO	GRAPHIC REF	PART NUMBER	QTY	PART NAME 1 2 3 4 5 6 (PRODUCT LEVEL)	SEE PAGE
	1	1	**9N-0720**	1	ELBOW AS-AIR INLET	
	2	1	**211-6636**	1	TUBE	
	3	1	**231-2762**	1	ELBOW	
	4	1	**231-5210**	1	CLAMP	
	5	1	**216-2212**	3	CLAMP	

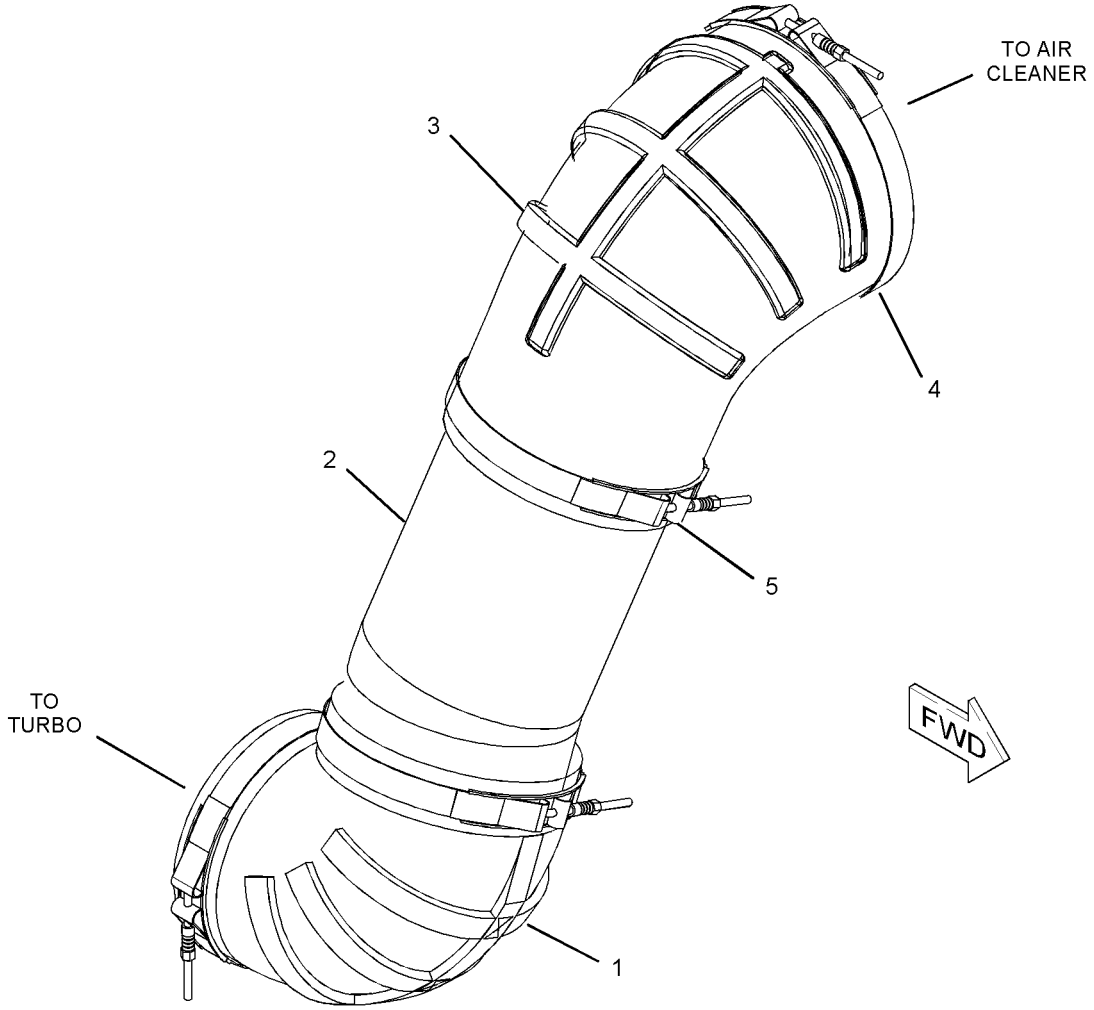

GRAPHIC #1 **<END>** g01033628

AIR INLET AND EXHAUST SYSTEM

206-7339 LINES GP-AIR

S/N: RJS1-UP

PART OF 205-8604 INSTALLATION AR-ENGINE

SMCS-1071 **i02202232**

NOTE	REF NO	GRAPHIC REF	PART NUMBER	QTY	PART NAME 1 2 3 4 5 6 (PRODUCT LEVEL)	SEE PAGE
	1	1	**109-4203**	1	ELBOW (AFTERCOOLER, INLET)	
	2	1	**217-8947**	1	ELBOW (AFTERCOOLER, OUTLET)	
	3	1	**127-0929**	1	CLAMP	
	4	1	**147-7109**	2	HOSE	
	5	1	**186-2002**	2	HOSE	
	6	1	**206-7340**	1	TUBE	
	7	1	**206-9254**	1	TUBE	
	8	1	**101-3125**	1	GASKET (AIR INLET MANIFOLD)	
	9	1	**208-7448**	8	CLAMP (M5X0.8-THD)	
	10	1	**8C-3089**	1	SEAL-O-RING	
	11	1	**8T-2502**	4	BOLT (3/8-16X1.125-IN)	
	12	1	**8T-4896**	4	WASHER-HARD (10.2X18.5X2.5-MM THK)	
	13	1	**9S-8002**	1	PLUG (STRAIGHT THREAD O-RING)	
	14	1	**6V-5048**	1	SEAL-O-RING	

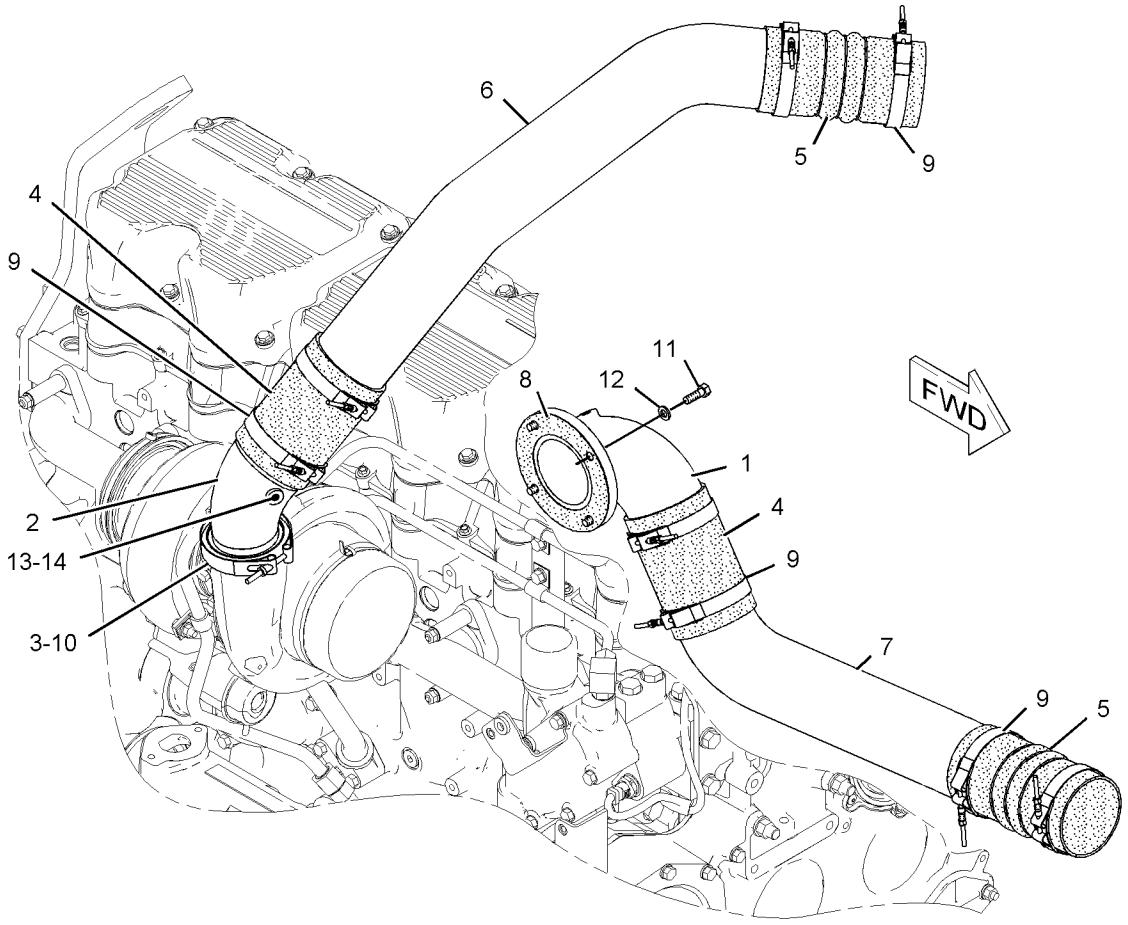

GRAPHIC #1 **<END>** g01113422

AIR INLET AND EXHAUST SYSTEM

206-7346 LINES GP-AIR

S/N: RJS1-UP

PART OF 205-8604 INSTALLATION AR-ENGINE

SMCS-1071 **i01995262**

NOTE	REF NO	GRAPHIC REF	PART NUMBER	QTY	PART NAME 1 2 3 4 5 6 (PRODUCT LEVEL)	SEE PAGE
	1	1	**2W-6965**	1	COUPLING	
	2	1	**8N-2729**	1	RING-METAL SEAL	
	3	1	**8N-2730**	1	RING-METAL SEAL	
	4	1	**9N-1941**	1	CLAMP-V-BAND	
	5	1	**227-4119**	1	TUBE AS	

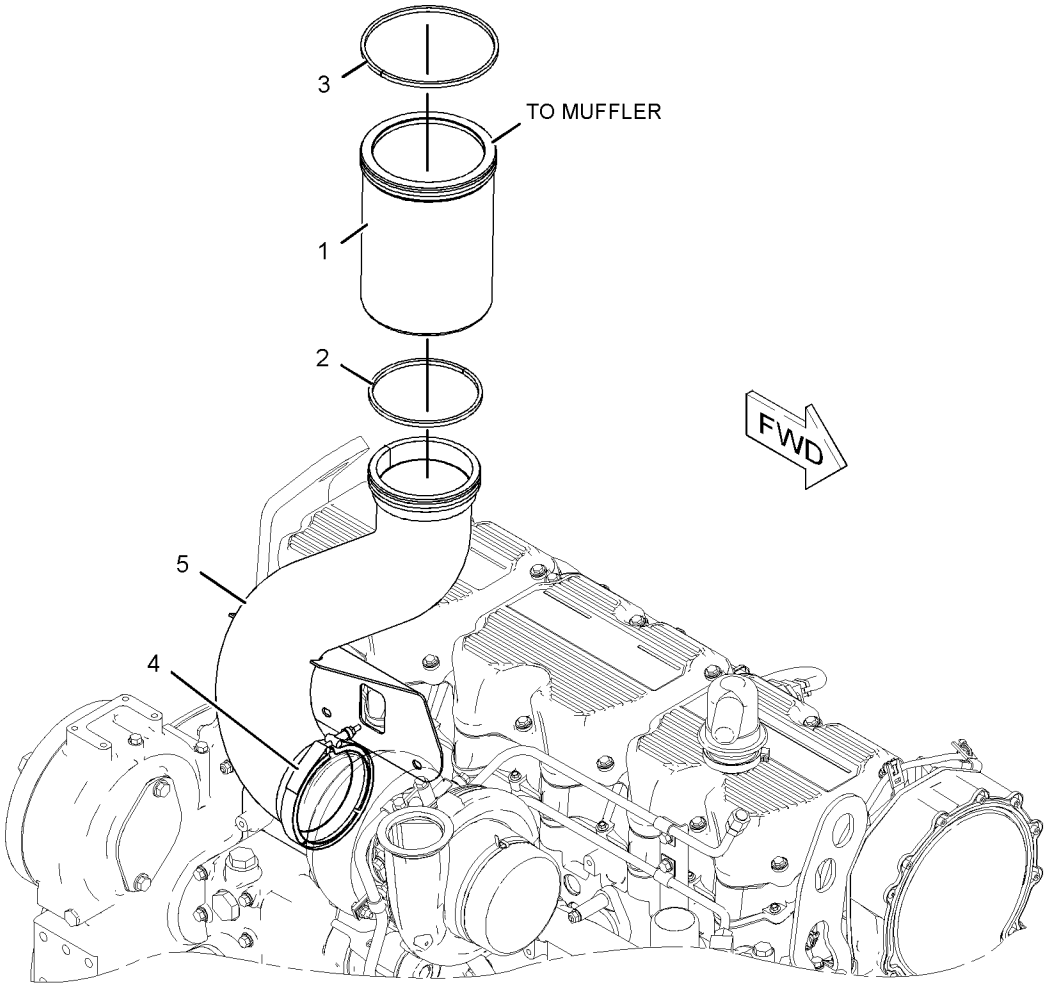

GRAPHIC #1 **<END>** g01033914

220-6372 MANIFOLD GP-EXHAUST

S/N: RHX1-UP
PART OF 205-8603, 231-3468 ENGINE AR-COMPLETE
ALSO AN ATTACHMENT

SMCS-1059 **i02230675**

NOTE	REF NO	GRAPHIC REF	PART NUMBER	QTY	PART NAME 1 2 3 4 5 6 (PRODUCT LEVEL)	SEE PAGE
	1	1	**6V-1525**	4	STUD-TAPERLOCK (3/8-16X2.16-IN) (HIGH TEMPERATURE)	
	2	1	**106-1792**	12	STUD-TAPERLOCK (3/8-16X4-IN) (HIGH TEMPERATURE)	
	3	1	**108-3612**	12	SPACER (11.13X19.05X53-MM THK)	
	4	1	**133-3359**	2	MANIFOLD-EXHAUST (END)	
	5	1	**221-1426**	1	MANIFOLD-EXHAUST (CENTER)	
	6	1	**168-7800**	12	LOCKNUT (3/8-16-THD)	

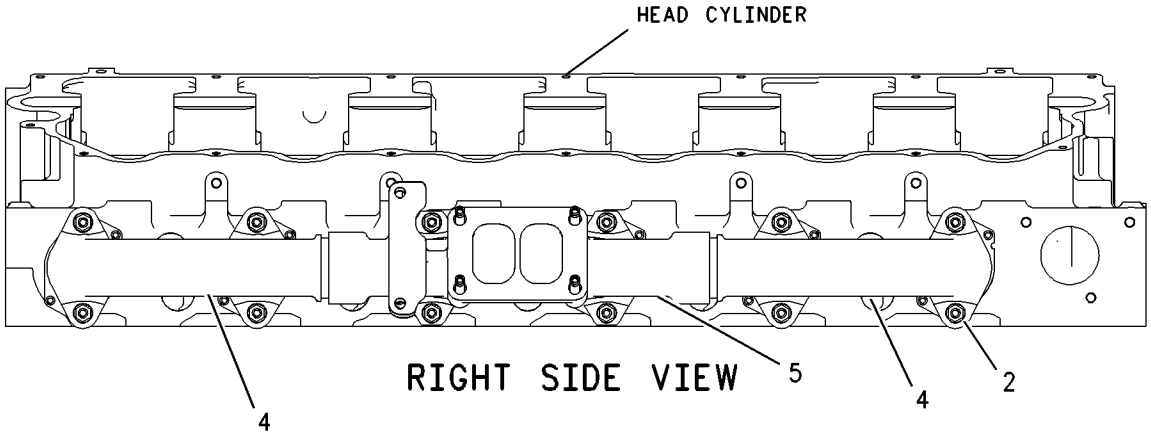

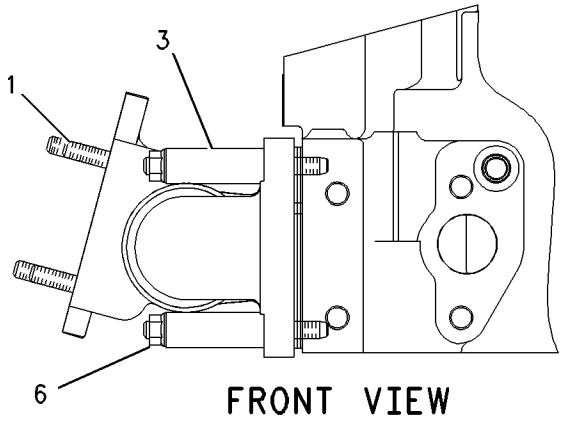

GRAPHIC #1 **<END>** g01002978

AIR INLET AND EXHAUST SYSTEM

222-5314 MOUNTING GP-AIR CLEANER

S/N: RHX1-UP
PART OF 205-8603, 231-3468 ENGINE AR-COMPLETE
ALSO AN ATTACHMENT

SMCS-1051 **i02219783**

NOTE	REF NO	GRAPHIC REF	PART NUMBER	QTY	PART NAME 1 2 3 4 5 6 (PRODUCT LEVEL)	SEE PAGE
	1	1	**101-3120**	4	SPACER (10.5X25X20-MM THK)	
	2	1	**263-9973**	1	SUPPORT AS	
		1	**1F-0750**	3	NUT-WELD (3/8-16-THD)	
M		1	**8T-3490**	2	NUT-WELD (M10X1.5-THD)	
M		1	**8T-3612**	4	NUT-WELD (M8X1.25-THD)	
M		1	**8T-3597**	4	NUT-WELD (M12X1.75-THD)	
	3	1	**1C-2251**	4	BOLT (3/8-16X1.87-IN)	
	4	1	**2A-4639**	3	BOLT (3/8-16X1.625-IN)	
	5	1	**9X-6458**	7	WASHER-HARD (10.2X22.5X3-MM THK)	

M-METRIC PART

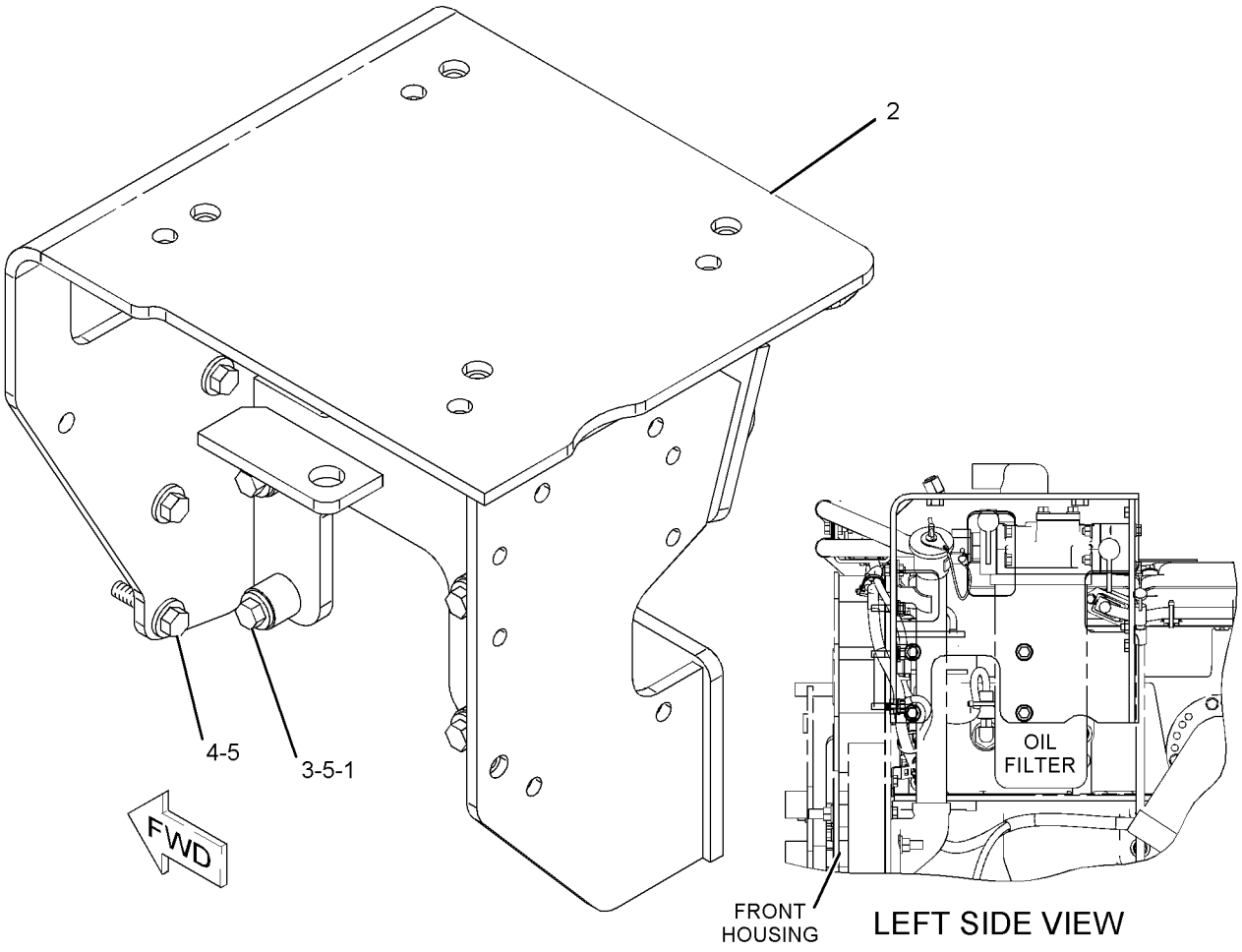

GRAPHIC #1 **<END>** g01121326

AIR INLET AND EXHAUST SYSTEM

205-8610 MUFFLER GP

S/N: RJS1-UP

PART OF 205-8604 INSTALLATION AR-ENGINE

SMCS-1062 **i02202230**

NOTE	REF NO	GRAPHIC REF	PART NUMBER	QTY	PART NAME 1 2 3 4 5 6 (PRODUCT LEVEL)	SEE PAGE
	1	1	**247-4822**	1	MUFFLER AS	
	2	1	**7D-1649**	4	WASHER-HARD (13.5X32X5-MM THK)	
M	3	1	**7X-2549**	2	BOLT (M12X1.75X100-MM)	
M	4	1	**8T-5041**	2	BOLT (M12X1.75X120-MM)	

M-METRIC PART

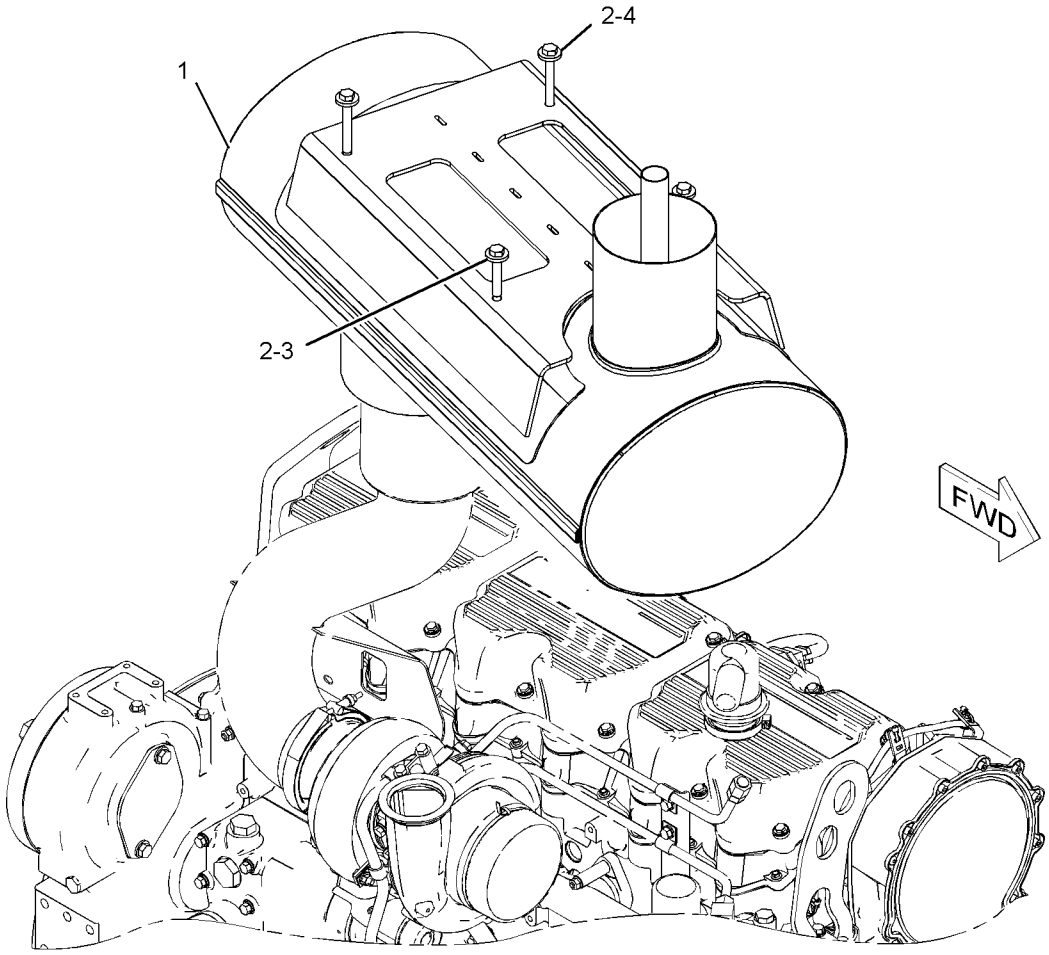

GRAPHIC #1 **<END>** g01119458

AIR INLET AND EXHAUST SYSTEM

211-5053 PRECLEANER AR—WITH SCREEN

S/N: RJS1-UP

PART OF 211-5069 MODIFICATION AR-WOODCHIP, 211-5072 STOCKPILE AR AN ATTACHMENT

SMCS-1055 **i02206650**

NOTE	REF NO	GRAPHIC REF	PART NUMBER	QTY	PART NAME 1 2 3 4 5 6 (PRODUCT LEVEL)	SEE PAGE
	1	1	**1W-8620**	1	VALVE AS-CHECK (EXHAUST)	
	2	1	**5P-0597**	4	CLAMP-HOSE	
	3	1	**6V-6782**	1	CLIP (SLOT)	
	4	1	**6V-6783**	1	CLIP (TAB)	
	5	1	**110-8330**	1	SPACER (11.13X10.05X90-MM THK)	
Y	6	1	*244-3457*	1	PRECLEANER GP	132
	8	1	**5P-4325**	1	CLIP	
	9	1	**8T-4121**	3	WASHER-HARD (11X21X2.5-MM THK)	
M	10	1	**8T-4133**	1	NUT (M10X1.5-THD)	
M	11	1	**8T-4182**	1	BOLT (M10X1.5X45-MM)	
M	12	1	**8T-6685**	1	BOLT (M10X1.5X110-MM)	
E	13	1	**5P-1471**		HOSE (64.3-CM)	
	13A	1	**5P-1471**		HOSE (73.5-CM)	

E-ORDER BY THE CENTIMETER
M-METRIC PART
Y-SEPARATE ILLUSTRATION

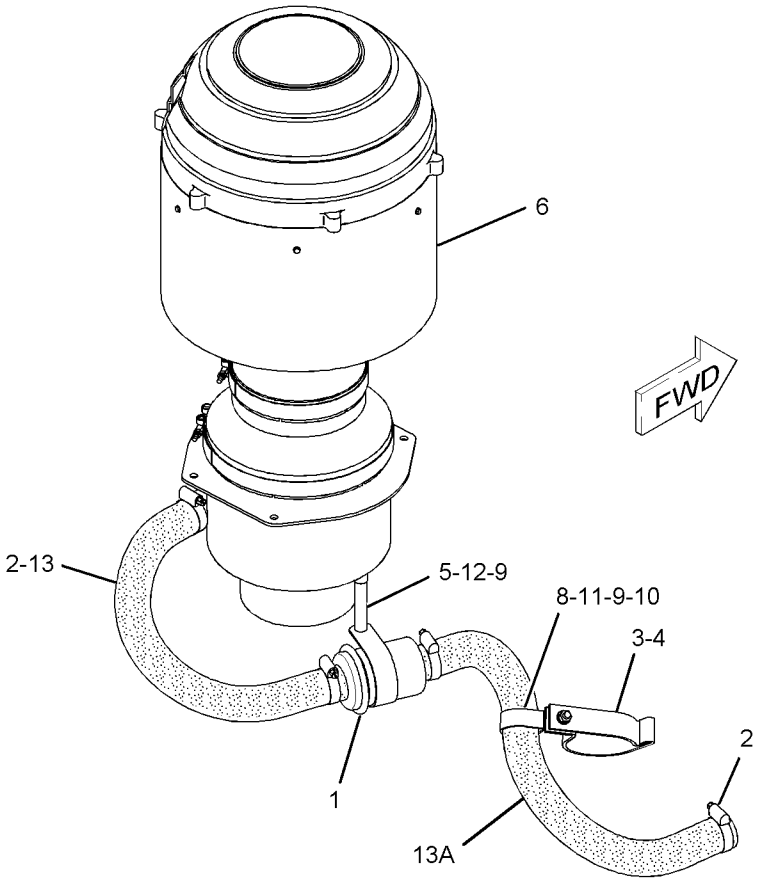

GRAPHIC #1 **<END>** g01118792

AIR INLET AND EXHAUST SYSTEM

211-7589 PRECLEANER AR—WITHOUT SCREEN

S/N: RJS1-UP

AN ATTACHMENT

SMCS-1055 **i02206685**

NOTE	REF NO	GRAPHIC REF	PART NUMBER	QTY	PART NAME 1 2 3 4 5 6 (PRODUCT LEVEL)	SEE PAGE
	1	1	**1W-8620**	1	VALVE AS-CHECK (EXHAUST)	
	2	1	**5P-0597**	4	CLAMP-HOSE	
	3	1	**6V-6782**	1	CLIP (SLOT)	
	4	1	**6V-6783**	1	CLIP (TAB)	
	5	1	**110-8330**	1	SPACER (11.13X10.05X90-MM THK)	
Y	6	1	*244-3459*	1	PRECLEANER GP	133
	8	1	**5P-4325**	1	CLIP	
	9	1	**8T-4121**	3	WASHER-HARD (11X21X2.5-MM THK)	
M	10	1	**8T-4133**	1	NUT (M10X1.5-THD)	
M	11	1	**8T-4182**	1	BOLT (M10X1.5X45-MM)	
M	12	1	**8T-6685**	1	BOLT (M10X1.5X110-MM)	
E	13	1	**5P-1471**		HOSE (64.3-CM)	
E	13A	1	**5P-1471**		HOSE (73.5-CM)	

E-ORDER BY THE CENTIMETER
M-METRIC PART
Y-SEPARATE ILLUSTRATION

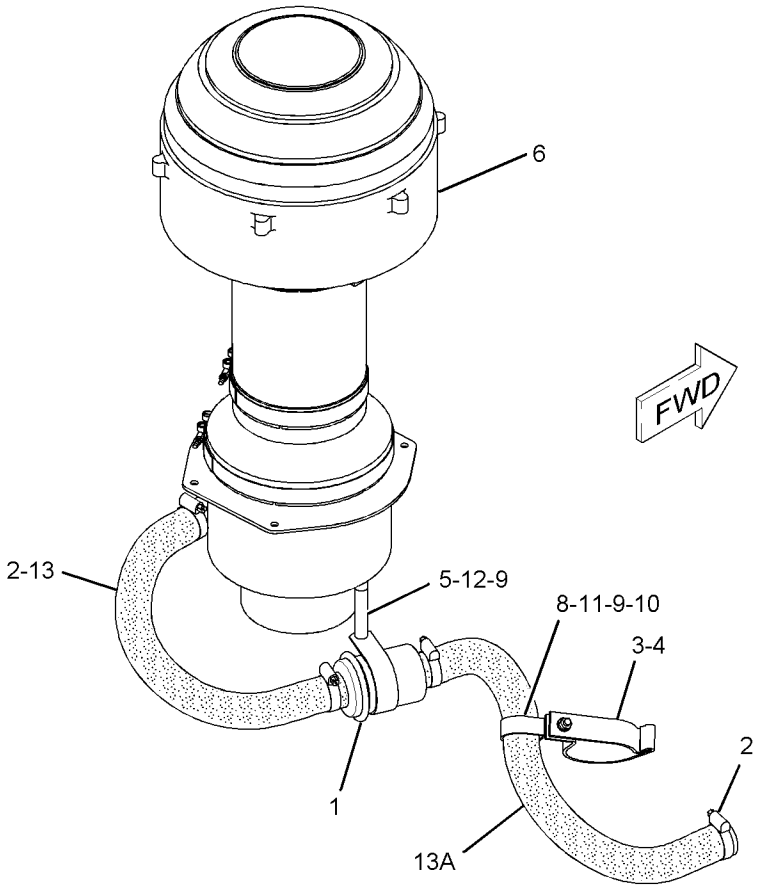

GRAPHIC #1 **<END>** g01118795

AIR INLET AND EXHAUST SYSTEM

244-3457 PRECLEANER GP—WITH SCREEN

S/N: RJS1-UP
PART OF 211-5053 PRECLEANER AR
AN ATTACHMENT

SMCS-1055 **i02204146**

NOTE	REF NO	GRAPHIC REF	PART NUMBER	QTY	PART NAME 1 2 3 4 5 6 (PRODUCT LEVEL)	SEE PAGE
	1	1	**130-3281**	1	PRECLEANER AS (AIR TURBINE)	
		1	**174-4895**	2	CLAMP	
	2	1	**145-6669**	6	SCREW-SELF-TAPPING	
	3	1	**145-9987**	1	ADAPTER AS	
	4	1	**208-5837**	1	PRESCREEN	
	5	1	**244-3462**	1	TUBE AS	

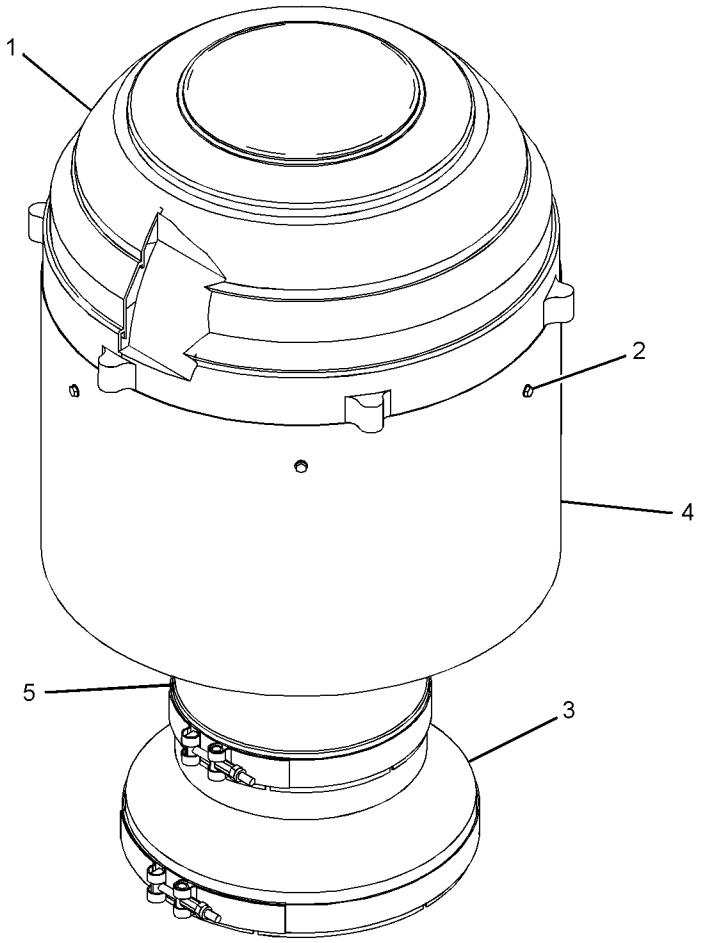

GRAPHIC #1 **<END>** g01112147

AIR INLET AND EXHAUST SYSTEM

244-3459 PRECLEANER GP—WITHOUT SCREEN

S/N: RJS1-UP

PART OF 211-7589 PRECLEANER AR

AN ATTACHMENT

SMCS-1055 **i02204142**

NOTE	REF NO	GRAPHIC REF	PART NUMBER	QTY	PART NAME 1 2 3 4 5 6 (PRODUCT LEVEL)	SEE PAGE
	1	1	**130-3281**	1	PRECLEANER AS (AIR TURBINE)	
		1	**174-4895**	2	CLAMP	
	2	1	**145-9987**	1	ADAPTER AS	
	3	1	**244-3462**	1	TUBE AS	

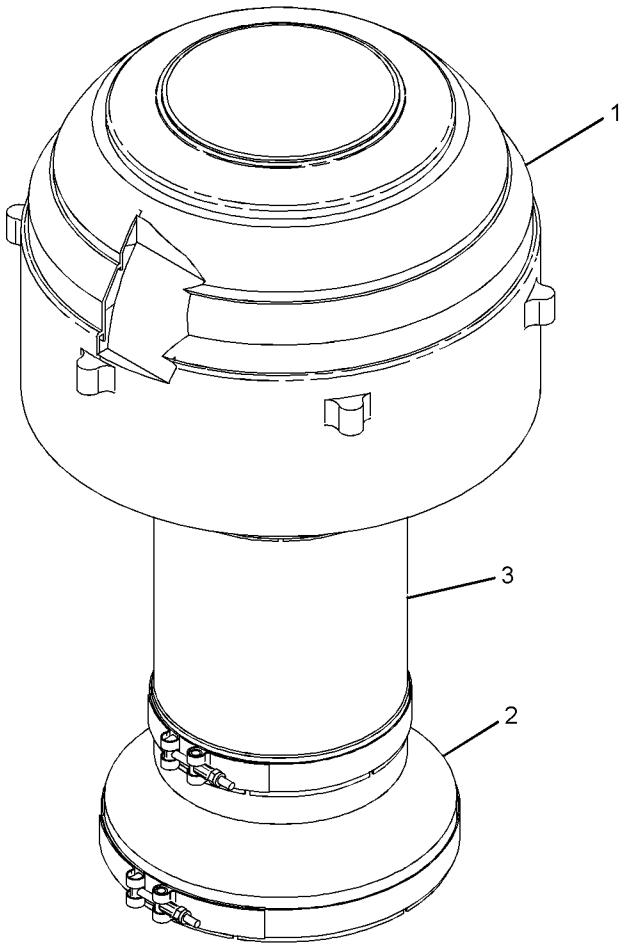

GRAPHIC #1 **<END>** g01112181

AIR INLET AND EXHAUST SYSTEM

231-7913 SHIELD GP-MANIFOLD

S/N: RJS1-UP

PART OF 205-8604 INSTALLATION AR-ENGINE

SMCS-1067 **i01995474**

NOTE	REF NO	GRAPHIC REF	PART NUMBER	QTY	PART NAME 1 2 3 4 5 6 (PRODUCT LEVEL)	SEE PAGE
	1	1	**9G-8140**	2	SPACER (10.5X25X15MM THK)	
	2	1	**233-7920**	1	SHIELD AS	
	3	1	**233-7921**	1	SHIELD AS	
	4	1	**233-7922**	1	SHIELD AS	
	5	1	**233-7923**	1	SHIELD AS	
	6	1	**0S-0509**	4	BOLT (3/8-16X0.75 IN)	
	7	1	**7N-1637**	2	STUDBOLT	
	8	1	**9S-8752**	2	NUT-FULL (3/8-16 THD)	
	9	1	**9X-6458**	8	WASHER-HARD (10.2X22.5X3MM THK)	

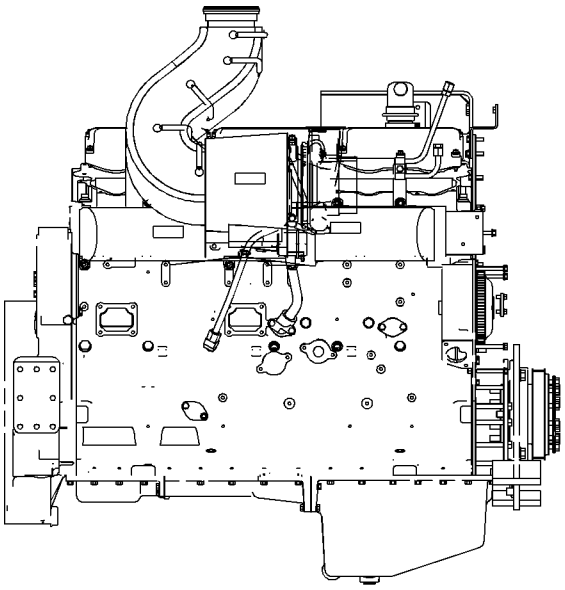

RIGHT SIDE VIEW

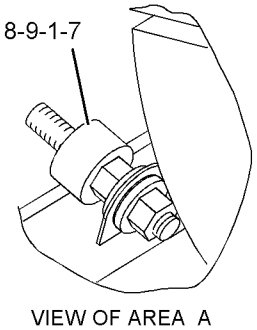

VIEW OF AREA A

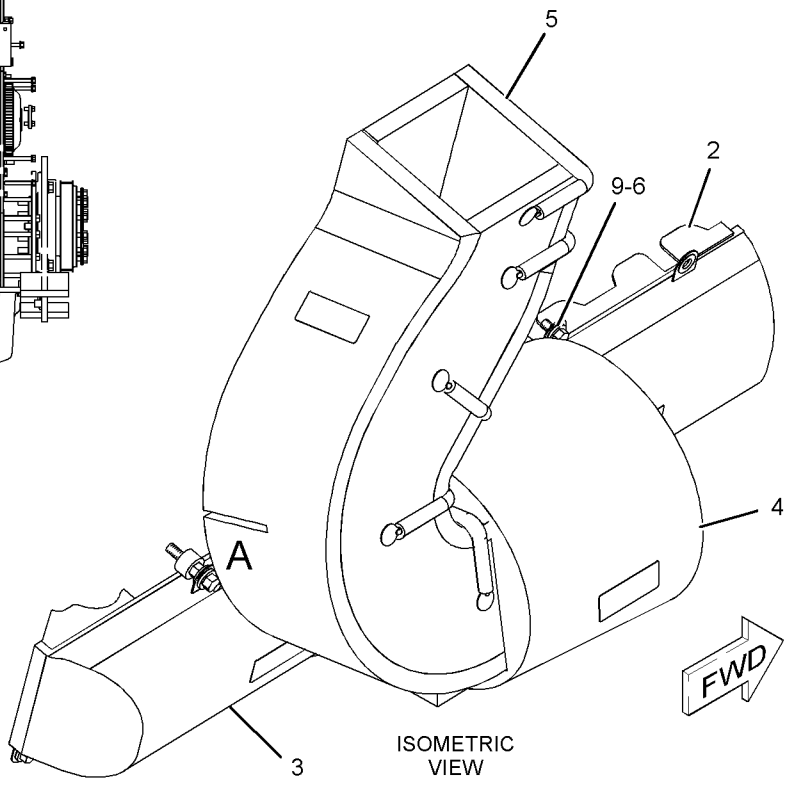

ISOMETRIC VIEW

GRAPHIC #1

<END>

g01034675

239-9667 TURBOCHARGER GP

S/N: RHX1-UP
WATER COOLED CENTER SECTION
PART OF 205-8603, 231-3468 ENGINE AR-COMPLETE
FOR USE WITH EXHAUST MANIFOLD STUDS
ALSO AN ATTACHMENT

SMCS-1052, 1053 **i01995135**

NOTE	REF NO	GRAPHIC REF	PART NUMBER	QTY	PART NAME 1 2 3 4 5 6 (PRODUCT LEVEL)	SEE PAGE
	1	1	**1S-4295**	1	GASKET	
	2	1	**168-7800**	4	LOCKNUT (HIGH TEMPERATURE)	
	3	1	**238-5105**	1	TURBOCHARGER GP	

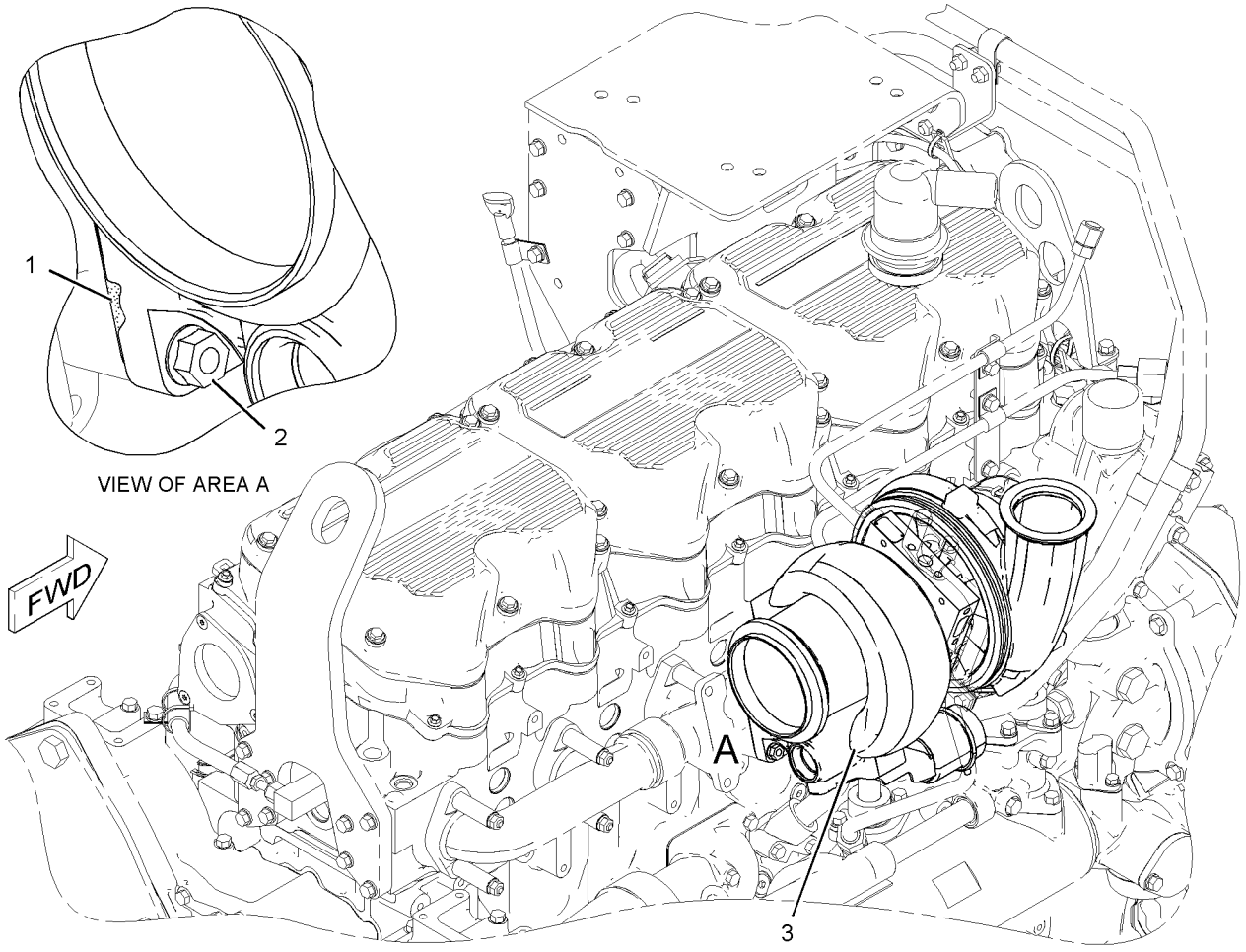

GRAPHIC #1 **<END>** g01034127

236-5177 ADAPTER GP-FAST FILL FUEL

S/N: RJS1-UP
FOR USE WITH RIPPER
AN ATTACHMENT

SMCS-1710 **i02001274**

NOTE	REF NO	GRAPHIC REF	PART NUMBER	QTY	PART NAME 1 2 3 4 5 6 (PRODUCT LEVEL)	SEE PAGE
	1	1	**6Y-0091**	1	BLOCK AS	
	2	1	**9D-0630**	1	CAP-DUST (FUEL RECEIVER PORT)	
	3	1	**113-0715**	1	CLAMP	
	4	1	**113-0716**	1	CLAMP AS	
	5	1	**124-2463**	1	ADAPTER-FAST FILL FUEL	
	6	1	**163-5455**	1	VALVE AS	
I	7	1	**163-5456**	1	HOSE AS	
I	8	1	**173-9431**	1	HOSE AS	
	9	1	**188-5095**	1	VENT AS	
	10	1	**1H-8128**	1	SEAL-O-RING	
	11	1	**1J-9671**	2	SEAL-O-RING	
	12	1	**1K-6872**	6	LOCKNUT (1/2-13-THD)	
	13	1	**1P-4582**	4	FLANGE-HALF	
	14	1	**4J-0527**	2	SEAL-O-RING	
	15	1	**4L-6454**	1	BOLT (3/8-16X1-IN)	
	16	1	**5H-6734**	1	SEAL-O-RING	
	17	1	**5P-2566**	4	BOLT (1/2-13X1.5-IN)	
	18	1	**5P-2618**	2	CONNECTOR	
	19	1	**6V-2686**	1	CLIP	
	20	1	**6V-8801**	1	NUT (3/8-16-THD)	
	21	1	**7X-0339**	2	BOLT (1/2-13X6.25-IN)	
M	22	1	**8T-1159**	6	BOLT-SOCKET HEAD (M10X1.5X25-MM)	
	23	1	**8T-4121**	12	WASHER-HARD (11X21X2.5-MM THK)	
M	24	1	**8T-4136**	6	BOLT (M10X1.5X25-MM)	
	25	1	**8T-4223**	16	WASHER-HARD (13.5X25.5X3-MM THK)	
	26	1	**8T-4835**	6	BOLT (1/2-13X2-IN)	
	27	1	**8T-4896**	2	WASHER-HARD (10.2X18.5X2.5-MM THK)	
	28	1	**8T-8919**	4	BOLT (1/2-13X1.75-IN)	

I-REFER TO HYDRAULIC INFORMATION SYSTEM
M-METRIC PART

236-5177 **ADAPTER GP-FAST FILL FUEL** *(contd.)* **i02001274**

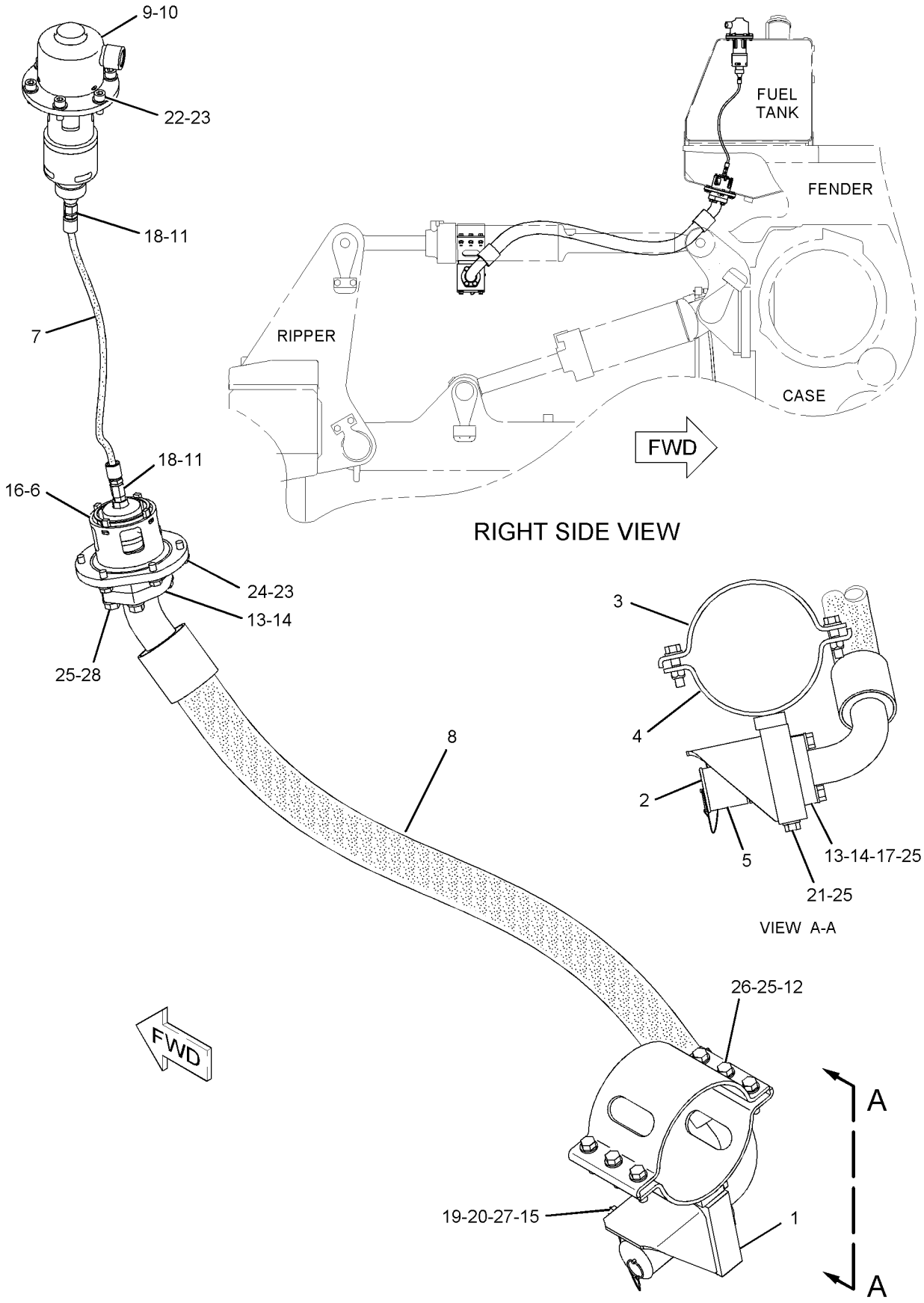

GRAPHIC #1 **<END>** g01039020

236-5178 ADAPTER GP-FAST FILL FUEL

S/N: RJS1-UP
CANNOT BE USED WITH RIPPER
AN ATTACHMENT

SMCS-1710 **i02001284**

NOTE	REF NO	GRAPHIC REF	PART NUMBER	QTY	PART NAME 1 2 3 4 5 6 (PRODUCT LEVEL)	SEE PAGE
	1	1	**6Y-7669**	1	TUBE AS	
	2	1	**9D-0630**	1	CAP-DUST (FUEL RECEIVER PORT)	
	3	1	**124-2463**	1	ADAPTER-FAST FILL FUEL	
	4	1	**163-5455**	1	VALVE AS	
I	5	1	**163-5456**	1	HOSE AS	
	6	1	**188-5095**	1	VENT AS	
	7	1	**1H-8128**	1	SEAL-O-RING	
	8	1	**1J-9671**	2	SEAL-O-RING	
	9	1	**4J-0527**	1	SEAL-O-RING	
	10	1	**5H-6734**	1	SEAL-O-RING	
	11	1	**5P-2618**	2	CONNECTOR	
M	12	1	**8T-1159**	6	BOLT-SOCKET HEAD (M10X1.5X25-MM)	
	13	1	**8T-4121**	12	WASHER-HARD (11X21X2.5-MM THK)	
M	14	1	**8T-4136**	6	BOLT (M10X1.5X25-MM)	
	15	1	**8T-8919**	4	BOLT (1/2-13X1.75-IN)	

I-REFER TO HYDRAULIC INFORMATION SYSTEM
M-METRIC PART

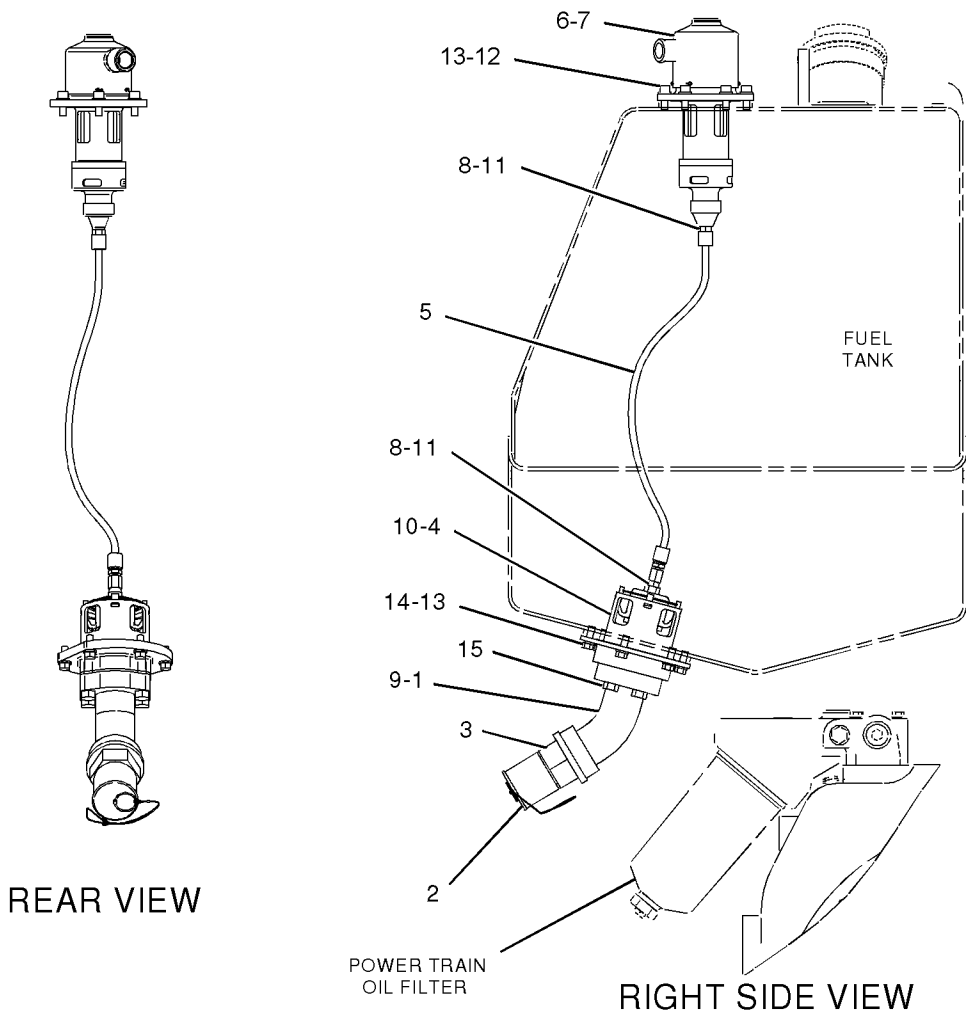

GRAPHIC #1 **<END>** g01037382

236-5179 ADAPTER GP-FAST FILL FUEL

S/N: RJS1-UP
FOR USE WITH WINCH
AN ATTACHMENT

SMCS-1710 **i02001303**

NOTE	REF NO	GRAPHIC REF	PART NUMBER	QTY	PART NAME 1 2 3 4 5 6 (PRODUCT LEVEL)	SEE PAGE
	1	1	**9D-0630**	1	CAP-DUST (FUEL RECEIVER PORT)	
	2	1	**121-8886**	1	PLATE AS	
	3	1	**124-2463**	1	ADAPTER-FAST FILL FUEL	
	4	1	**163-5455**	1	VALVE AS	
I	5	1	**163-5456**	1	HOSE AS	
I	6	1	**187-5275**	1	HOSE AS	
	7	1	**188-5095**	1	VENT AS	
	8	1	**1H-8128**	1	SEAL-O-RING	
	9	1	**1J-9671**	2	SEAL-O-RING	
	10	1	**1P-4582**	4	FLANGE-HALF	
	11	1	**4J-0527**	2	SEAL-O-RING	
	12	1	**5H-6734**	1	SEAL-O-RING	
	13	1	**5P-2566**	4	BOLT (1/2-13X1.5-IN)	
	14	1	**5P-2618**	2	CONNECTOR	
	15	1	**6V-8190**	2	NUT (1-8-THD)	
	16	1	**7X-0408**	2	BOLT (1-8X3.5-IN)	
M	17	1	**8T-1159**	6	BOLT-SOCKET HEAD (M10X1.5X25-MM)	
	18	1	**8T-4121**	12	WASHER-HARD (11X21X2.5-MM THK)	
M	19	1	**8T-4136**	6	BOLT (M10X1.5X25-MM)	
	20	1	**8T-4223**	8	WASHER-HARD (13.5X25.5X3-MM THK)	
	21	1	**8T-5361**	4	WASHER-HARD (28X49X5-MM THK)	
	22	1	**8T-8919**	4	BOLT (1/2-13X1.75-IN)	

I-REFER TO HYDRAULIC INFORMATION SYSTEM
M-METRIC PART

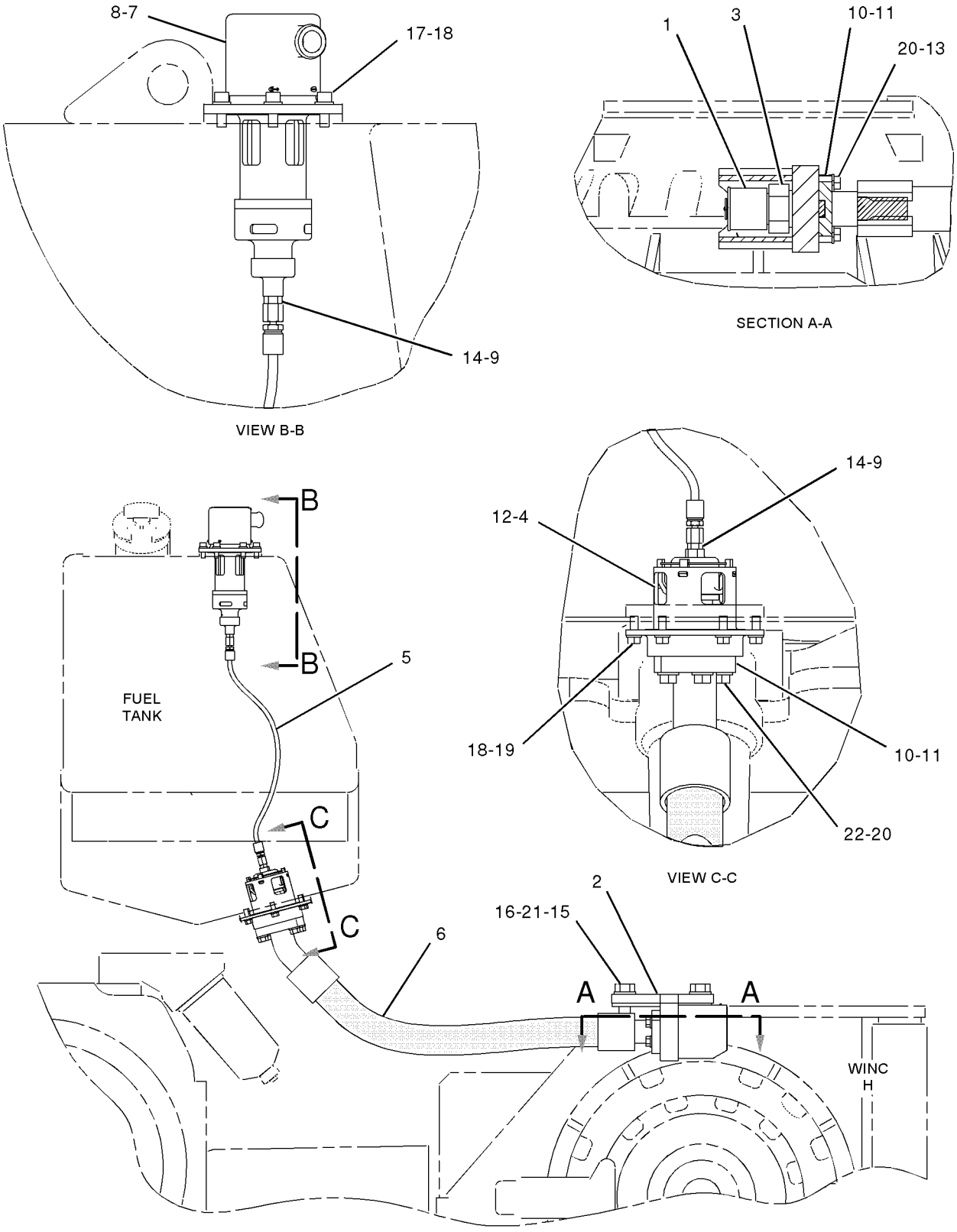

LEFT SIDE VIEW

GRAPHIC #1

<END>

g01037449

236-5180 ADAPTER GP-FAST FILL FUEL

S/N: RJS1-UP
FOR USE WITH STRIKER BAR
AN ATTACHMENT

SMCS-1710 **i02208381**

NOTE	REF NO	GRAPHIC REF	PART NUMBER	QTY	PART NAME 1 2 3 4 5 6 (PRODUCT LEVEL)	SEE PAGE
I	1	1	**1Q-3160**	1	HOSE AS	
	3	1	**6Y-0091**	1	BLOCK AS	
	4	1	**9D-0630**	1	CAP-DUST (FUEL RECEIVER PORT)	
	5	1	**124-2463**	1	ADAPTER-FAST FILL FUEL	
	6	1	**163-5455**	1	VALVE AS (FAST FILL FUEL)	
I	7	1	**163-5456**	1	HOSE AS	
	8	1	**188-5095**	1	VENT AS (FAST FILL FUEL)	
	9	1	**1H-8128**	1	SEAL-O-RING	
	10	1	**1J-9671**	2	SEAL-O-RING	
	11	1	**1P-4582**	4	FLANGE-HALF	
	12	1	**4J-0527**	2	SEAL-O-RING	
	13	1	**4L-6454**	1	BOLT (3/8-16X1-IN)	
	14	1	**5H-6734**	1	SEAL-O-RING	
	15	1	**5P-2566**	4	BOLT (1/2-13X1.5-IN)	
	16	1	**5P-2618**	2	CONNECTOR	
	17	1	**6V-2686**	1	CLIP	
	18	1	**6V-8801**	1	NUT (3/8-16-THD)	
	19	1	**7X-0340**	2	BOLT (1/2-13X6.5-IN)	
M	20	1	**8T-1159**	6	BOLT-SOCKET HEAD (M10X1.5X25-MM)	
	21	1	**8T-4121**	12	WASHER-HARD (11X21X2.5-MM THK)	
M	22	1	**8T-4136**	6	BOLT (M10X1.5X25-MM)	
	23	1	**8T-4223**	10	WASHER-HARD (13.5X25.5X3-MM THK)	
	24	1	**8T-4896**	2	WASHER-HARD (10.2X18.5X2.5-MM THK)	
	25	1	**8T-8919**	4	BOLT (1/2-13X1.75-IN)	

I-REFER TO HYDRAULIC INFORMATION SYSTEM
M-METRIC PART

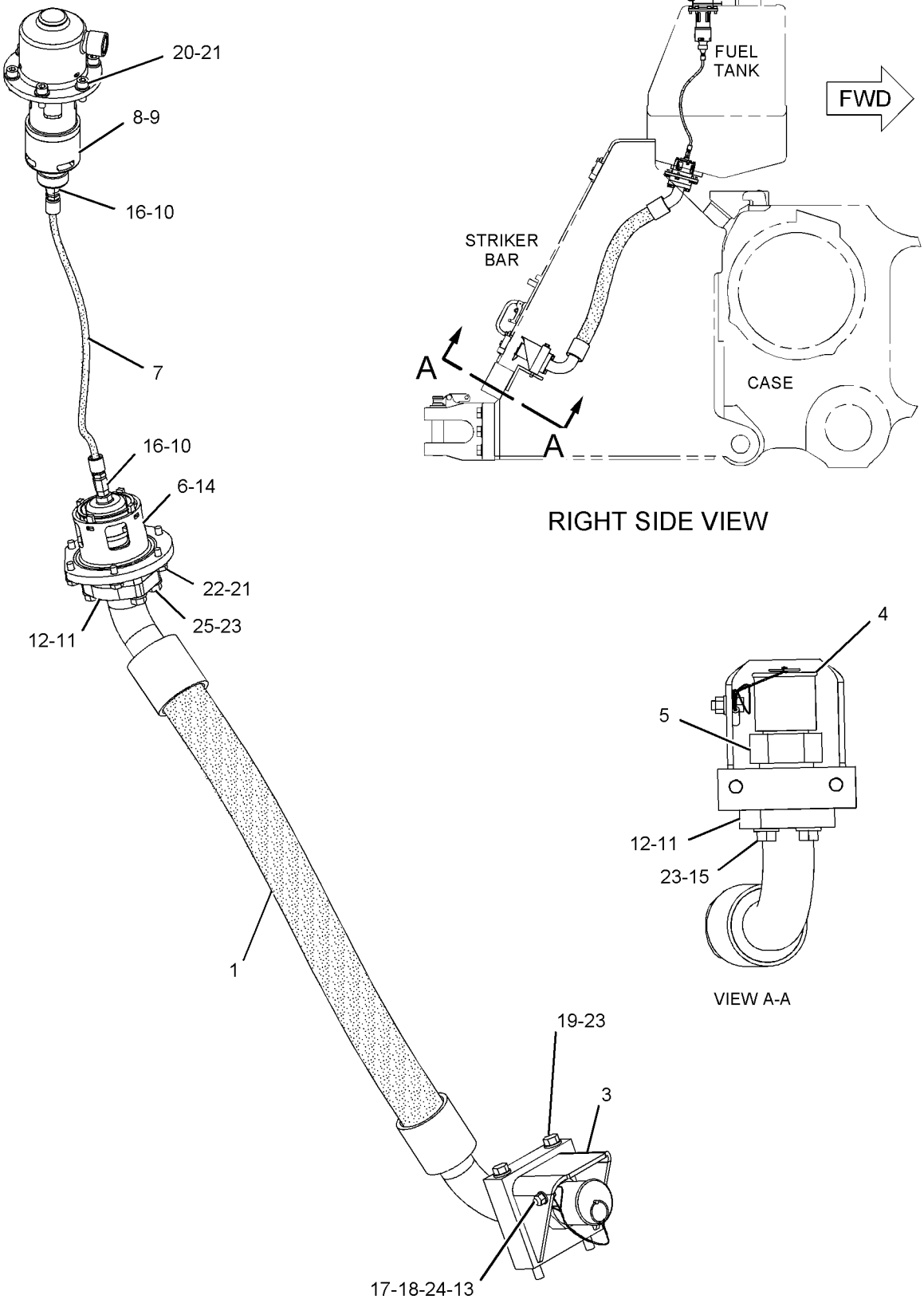

GRAPHIC #1 **<END>** g01120321

133-9907 ADAPTER GP-PUMP DRIVE

S/N: RHX1-UP
PART OF 6I-3638 DRIVE GP-PUMP
ALSO AN ATTACHMENT

SMCS-1251 **i01152889**

NOTE	REF NO	GRAPHIC REF	PART NUMBER	QTY	PART NAME 1 2 3 4 5 6 (PRODUCT LEVEL)	SEE PAGE
	1	1	**1B-3867**	2	BALL BEARING	
	2	1	**4F-7957**	3	BOLT (1/4-20X.875IN)	
	3	1	**6I-4575**	1	GEAR (34 TEETH)	
	4	1	**9X-2038**	3	WASHER (2MM THK)	
	5	1	**133-9906**	1	ADAPTER	
	6	1	**1H-8647**	1	RING-SNAP	

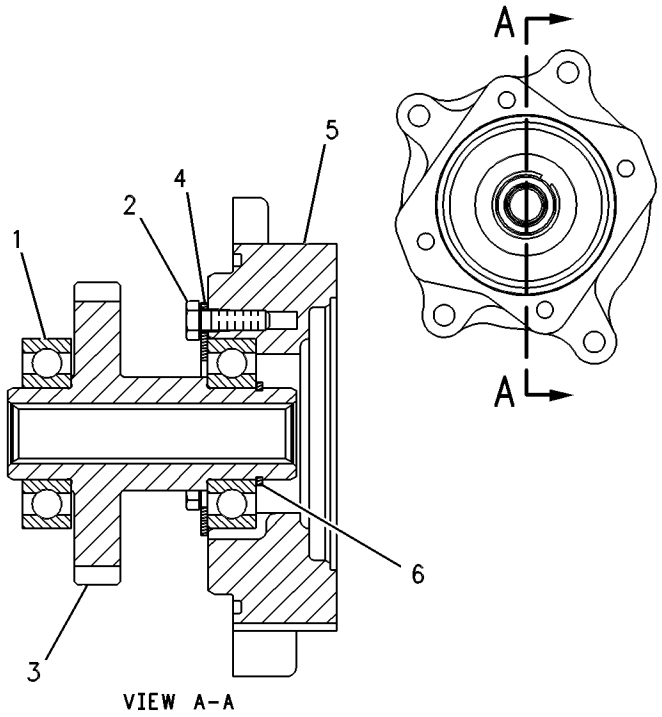

GRAPHIC #1 **<END>** g00263602

FUEL SYSTEM

207-4802 FILTER & LINES GP-FUEL

S/N: RJS1-UP

PART OF 205-8601 CHASSIS AR

SMCS-1261, 1274 **i02235427**

NOTE	REF NO	GRAPHIC REF	PART NUMBER	QTY	PART NAME 1 2 3 4 5 6 (PRODUCT LEVEL)	SEE PAGE
	1	2	**1P-0436**	1	GASKET (FUEL PRIMING PUMP)	
	2	2	**1W-2860**	2	BRACKET	
M	3	1	**4E-0550**	1	ADAPTER	
	4	1	**5G-4109**	1	SCREEN-SUMP (FUEL TANK)	
	5	1	**246-2641**	1	PADLOCK GP (FUEL LINE)	
		1	**5P-8500**	2	KEY	
	6	2	**6N-4414**	1	COVER-FILTER BASE	
	7	2	**6V-8358**	1	VALVE-BALL (FUEL SHUTOFF)	
	8	2	**6V-9830**	1	CAP AS	
	9	1	**8T-6639**	1	VALVE-BALL (FUEL DRAIN)	
	10	2	**8T-9655**	6	MOUNT-ISOLATION	
	11	2	**9W-1599**	1	VALVE-CHECK (FUEL FILTER, WATER SEPARATOR)	
	12	2	**9X-0262**	1	ADAPTER	
	13	1	**034-3679**	1	FITTING	
M	14	1	**101-3129**	2	STUD (M10X1.5-THD)	
	15	2	**153-6240**	1	TEE AS	
		2	**8C-7514**	1	TEE	
		2	**2M-9780**	1	SEAL-O-RING	
		2	**6V-8398**	1	SEAL-O-RING	
	16	2	*167-1795*	1	ELBOW AS	
		2	**3D-2824**	1	SEAL-O-RING	
		2	**8T-3491**	1	ELBOW	
Y	17	2	*173-9749*	1	FILTER GP-FUEL	148
	18	2	**191-1782**	1	SPACER (8.5X12.7X38.2-MM THK)	
	19	2	**191-1783**	2	SPACER (8.5X12.7X87.3-MM THK)	
Y	20	2	**194-6725**	1	SENSOR GP-PRESSURE (FUEL)	240
	21	1	**206-5575**	2	BRACKET AS	
I	22	1	**215-1368**	1	HOSE AS	
I	23	1	**215-1369**	1	HOSE AS	
I	24	1	**215-1370**	1	HOSE AS	
I	25	2	**215-1371**	1	HOSE AS	
	26	2	**228-1761**	1	BRACKET AS	
I	27	2	**228-4176**	1	HOSE AS	
Y	28	2	**252-1363**	1	WATER SEP & FUEL PRM PUMP GP	169
Y	29	2	**258-0883**	1	SWITCH GP-PRESSURE (FUEL)	275
	30	2	*148-8312*	1	ADAPTER AS	
		2	**3T-4965**	1	ADAPTER-O-RING	
		2	**3D-2824**	1	SEAL-O-RING	
	31	2	*148-8340*	1	CONNECTOR AS	
		2	**6V-8639**	1	CONNECTOR	
		2	**3K-0360**	1	SEAL-O-RING	
		2	**6V-8398**	1	SEAL-O-RING	
	32	2	*148-8353*	1	ELBOW AS	
		2	**6V-9001**	1	ELBOW	
		2	**3J-1907**	1	SEAL-O-RING	
		2	**6V-8397**	1	SEAL-O-RING	
	33	2	*148-8365*	1	ELBOW AS	
		2	**8T-6876**	1	ELBOW	
		2	**3J-1907**	1	SEAL-O-RING	
		2	**6V-8398**	1	SEAL-O-RING	
	34	2	*148-8372*	1	ELBOW AS	
		2	**6V-8721**	1	ELBOW	
		2	**2M-9780**	1	SEAL-O-RING	
		2	**6V-8398**	1	SEAL-O-RING	
	35	2	*148-8381*	1	ELBOW AS	
		2	**8T-5429**	1	ELBOW	

207-4802 FILTER & LINES GP-FUEL *(contd.)* i02235427

NOTE	REF NO	GRAPHIC REF	PART NUMBER	QTY	PART NAME 1 2 3 4 5 6 (PRODUCT LEVEL)	SEE PAGE
		2	**3D-2824**	1	SEAL-O-RING	
		2	**6V-8398**	1	SEAL-O-RING	
	36	2	*153-6256*	1	ELBOW AS	
		2	**8C-7563**	1	ELBOW	
		2	**7J-9108**	1	SEAL-O-RING	
	37	2	**1B-7182**	1	BOLT (5/16-18X1.25-IN)	
	38	2	**1D-4539**	1	BOLT (5/16-18X2.5-IN)	
	39	2	**2M-9780**	4	SEAL-O-RING	
	40	2	**3D-2824**	1	SEAL-O-RING	
	41	2	**3H-5932**	2	BOLT (5/16-18X4.5-IN)	
	42	2	**3J-7354**	2	SEAL-O-RING	
	43	1	**3K-0360**	2	SEAL-O-RING	
	44	2	**3P-2404**	1	CLIP	
	45	1,2	**4D-7733**	6	CLIP	
	46	2	**4L-6454**	2	BOLT (3/8-16X1-IN)	
	47	1,2	**5M-3062**	2	BOLT (3/8-16X0.75-IN)	
	48	2	**5P-0537**	1	WASHER-HARD (7.2X14.5X2-MM THK)	
	49	1,2	**6D-4247**	6	CLIP	
	50	1	**6D-7573**	1	CLIP	
	51	2	**6V-8801**	2	NUT (3/8-16-THD)	
	52	2	**7B-2742**	1	BOLT (1/4-20X1.25-IN)	
	53	2	**7J-9108**	1	SEAL-O-RING	
	54	1	**7S-1912**	1	CLIP	
	55	2	**7W-5157**	1	BRACKET AS	
	56	2	**8T-2561**	3	WASHER-HARD (10.5X28.5X5-MM THK)	
	57	1,2	**8T-4121**	8	WASHER-HARD (11X21X2.5-MM THK)	
M	58	1	**8T-4133**	4	NUT (M10X1.5-THD)	
M	59	1,2	**8T-4136**	3	BOLT (M10X1.5X25-MM)	
M	60	1	**8T-4137**	1	BOLT (M10X1.5X20-MM)	
M	61	2	**8T-4139**	5	BOLT (M12X1.75X30-MM)	
	62	2	**8T-4223**	5	WASHER-HARD (13.5X25.5X3-MM THK)	
M	63	1	**8T-4244**	1	NUT (M12X1.75-THD)	
	64	1,2	**8T-4896**	9	WASHER-HARD (10.2X18.5X2.5-MM THK)	
	65	1	**8T-5360**	1	WASHER (12X22.5X2.5-MM THK)	
	66	2	**9B-7237**	3	BOLT (3/8-16X1.25-IN)	
	67	2	**9M-1974**	1	WASHER-HARD (8.8X16X2-MM THK)	
	68	2	**9N-0869**	3	WASHER-HARD (8.8X25.5X2-MM THK)	
	69	2	**9S-4190**	1	PLUG	
	70	2	**9S-8006**	1	PLUG	
M	71	1	**9X-8281**	2	STUD-TAPERLOCK (M10X1.5X45-MM)	
D	72	2	**5P-5991**		HOSE (0.6-M)	
E	73	1	**5P-1505**		HOSE (64-CM)	
	74	2	**1P-4278**	1	CLAMP-HOSE	

D-ORDER BY THE METER
E-ORDER BY THE CENTIMETER
I-REFER TO HYDRAULIC INFORMATION SYSTEM
M-METRIC PART
Y-SEPARATE ILLUSTRATION

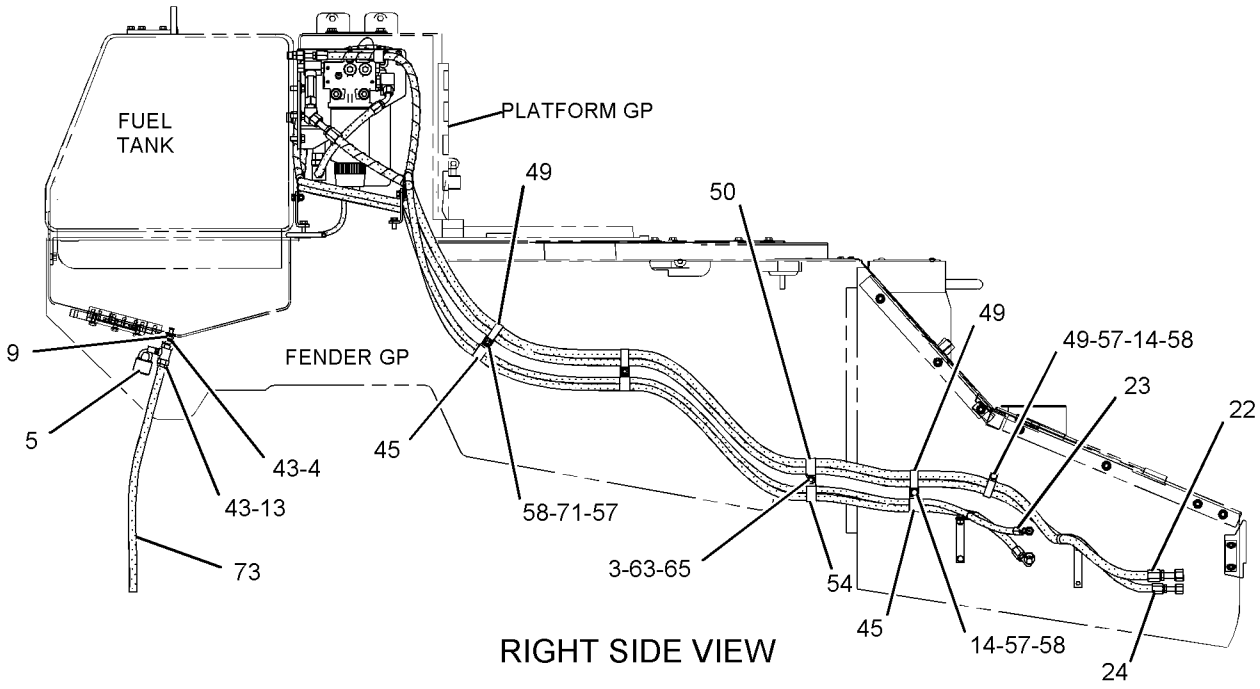

RIGHT SIDE VIEW

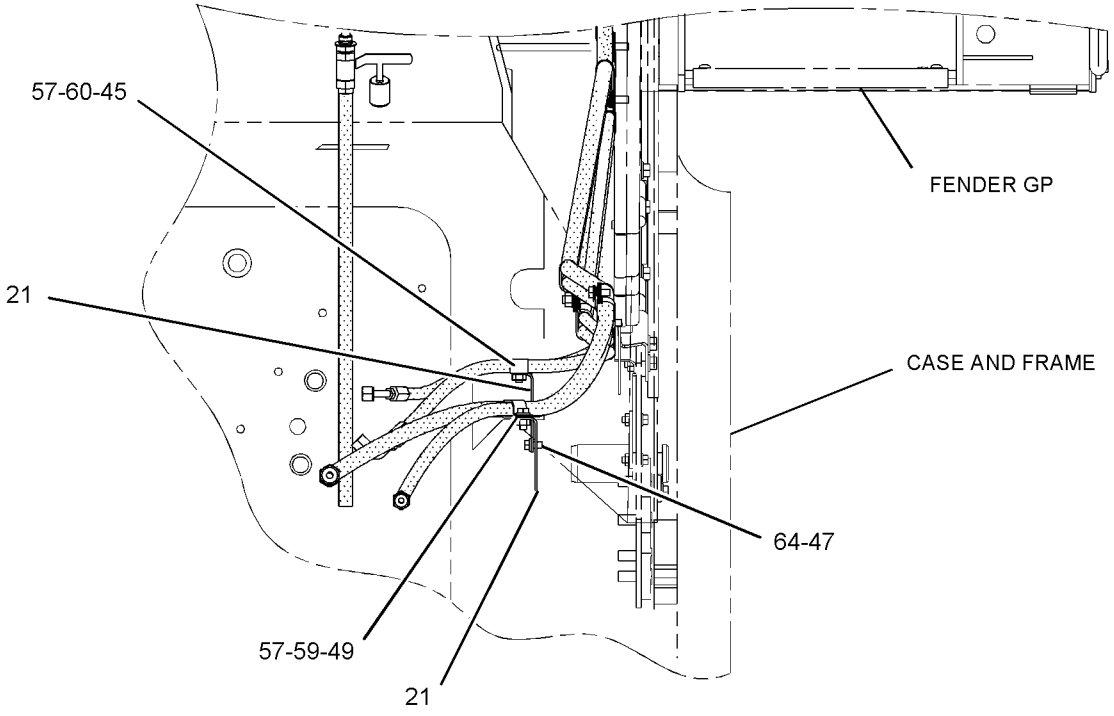

FRONT VIEW

GRAPHIC #1 g01121059

207-4802 **FILTER & LINES GP-FUEL** *(contd.)* **i02235427**

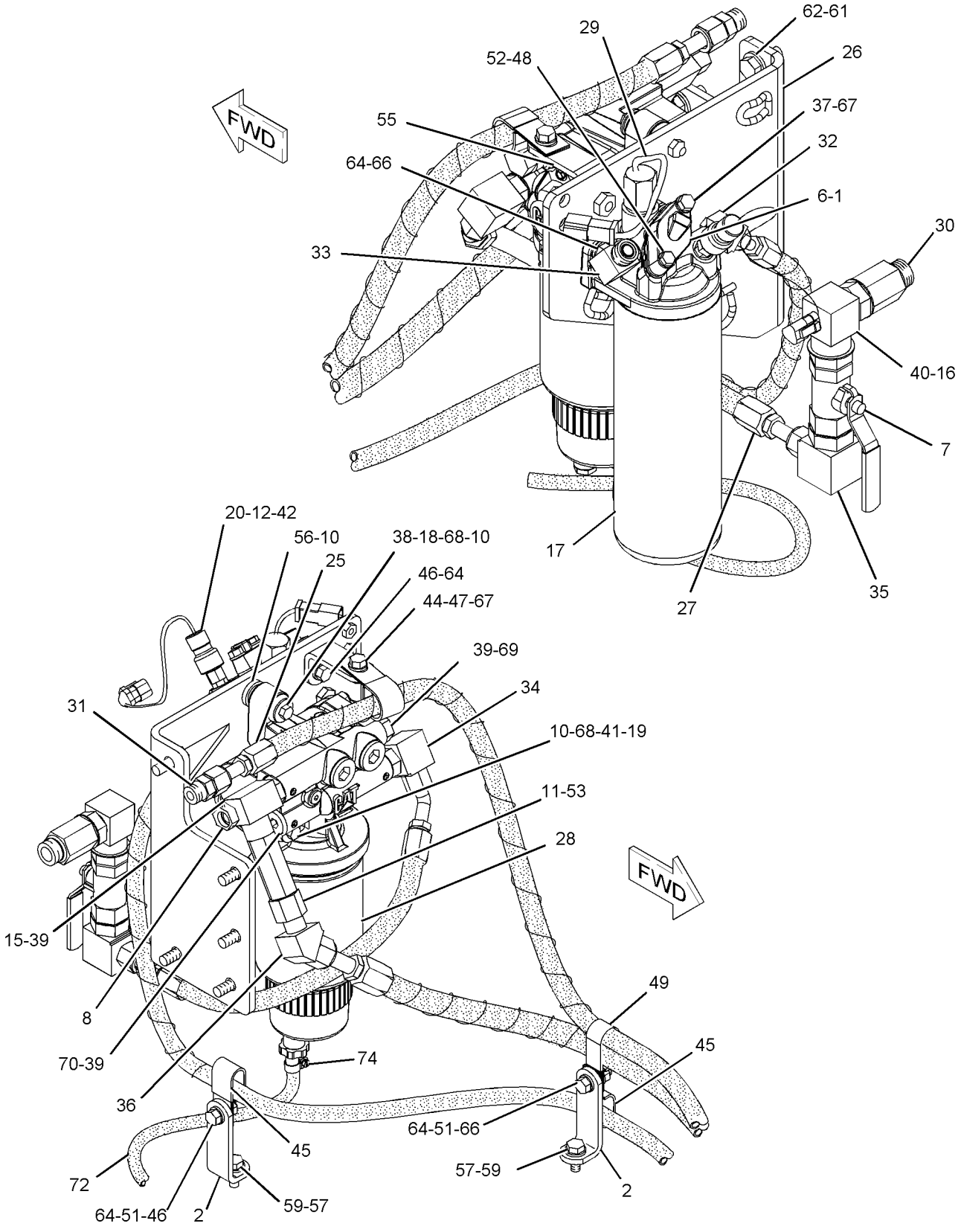

GRAPHIC #2 **<END>** g01127751

173-9749 FILTER GP-FUEL

S/N: RJS1-UP

PART OF 207-4802 FILTER & LINES GP-FUEL

SMCS-1261 **i01251621**

NOTE	REF NO	GRAPHIC REF	PART NUMBER	QTY	PART NAME 1 2 3 4 5 6 (PRODUCT LEVEL)	SEE PAGE
	1	1	**162-7838**	1	BASE AS-FUEL FILTER	
	1A	1	**9S-4167**	1	STUD-HOLLOW	
	2	1	**1R-0749**	1	FILTER AS-FUEL	

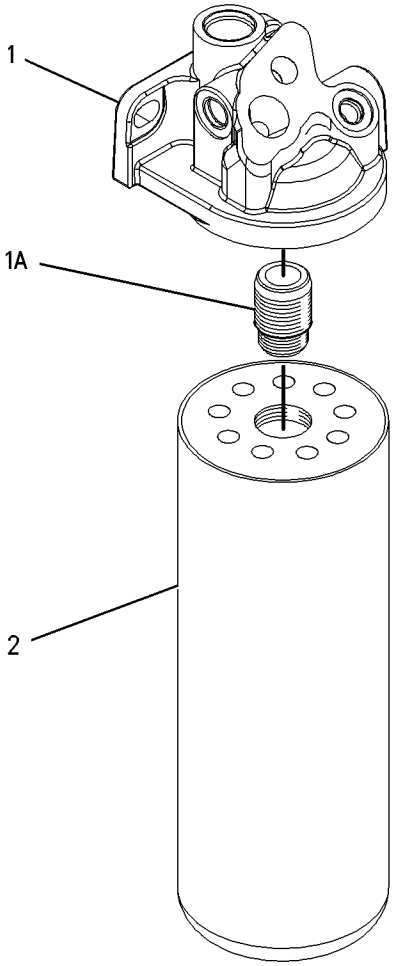

GRAPHIC #1 **<END>** g00668610

FUEL SYSTEM

174-9570 FILTER GP-WATER SEP & FUEL

S/N: RJS1-UP

PART OF 252-1363 WATER SEP & FUEL PRM PUMP GP

SMCS-1261, 1263 **i02195362**

NOTE	REF NO	GRAPHIC REF	PART NUMBER	QTY	PART NAME 1 2 3 4 5 6 (PRODUCT LEVEL)	SEE PAGE
	1	1	**173-7126**	1	BOWL AS	
	2	1	**1R-0770**	1	FILTER AS-WATER SEP & FUEL (PRIMARY)	
		1	**220-8678**	1	SEAL (WATER SEPARATOR, FUEL)	

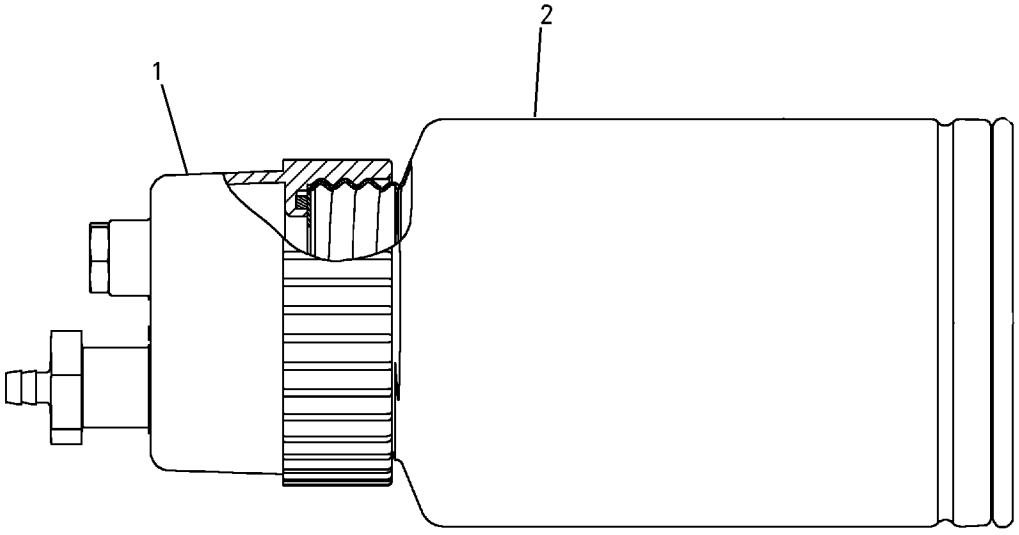

GRAPHIC #1 **<END>** g00787237

249-7174 KIT-SEAL–LINK

S/N: RJS1-UP

PROVIDES A SET OF SEALS FOR REPLACEMENT OF TRACK LINKS ON ONE SIDE OF THE MACHINE

FIELD INSTALLATION

SMCS-1714 **i02214961**

NOTE	PART NUMBER	QTY	PART NAME 1 2 3 4 5 6 (PRODUCT LEVEL)	SEE PAGE
	207-0545	94	SEAL AS (LINK)	

<END>

FUEL SYSTEM

229-1497 LINES GP-FUEL

S/N: RHX1-UP
PART OF 205-8603, 231-3468 ENGINE AR-COMPLETE
ALSO AN ATTACHMENT

SMCS-1274 **i02219784**

NOTE	REF NO	GRAPHIC REF	PART NUMBER	QTY	PART NAME 1 2 3 4 5 6 (PRODUCT LEVEL)	SEE PAGE
	1	1	**3S-2093**	4	STRAP-CABLE	
I	2	1	**8W-6153**	1	HOSE AS	
	3	1	**9G-8140**	2	SPACER (10.5X25X15-MM THK)	
	4	1	**101-3120**	2	SPACER (10.5X25X20-MM THK)	
	5	1	**103-4656**	1	MANIFOLD-FUEL	
I	6	1	**120-9317**	1	HOSE AS	
	7	1	**141-9308**	1	BRACKET AS	
I	8	1	**162-5369**	1	HOSE AS	
	9	1	**185-2058**	1	BRACKET AS	
	10	1	**188-2128**	1	PLUG AS	
		1	**8T-8737**	2	PLUG-SEAL	
		1	**155-2270**	1	KIT-CONNECTING PLUG (2-PIN)	
Y	11	1	*197-8391*	1	SENSOR GP-TEMPERATURE (FUEL)	253
Y	12	1	*233-6742*	1	VALVE GP-CHECK (FUEL)	167
	13	1	**261-7471**	1	BRACKET AS	
	14	1	**263-2224**	1	TUBE AS	
	15	1	**067-2551**	2	CLIP	
	16	1	**0L-1143**	2	BOLT (3/8-16X2.5-IN)	
	17	1	**0L-1351**	1	BOLT (3/8-16X0.875-IN)	
	18	1	**0L-1352**	1	BOLT (3/8-16X3.25-IN)	
	19	1	**0S-1571**	2	BOLT (3/8-16X1.75-IN)	
	20	1	**0S-1576**	1	BOLT (5/8-18X2-IN)	
	21	1	**0S-1591**	1	BOLT (3/8-16X1.5-IN)	
	22	1	*148-8336*	3	CONNECTOR AS	
					(EACH INCLUDES)	
		1	**3J-1907**	1	SEAL-O-RING (11.89-MM-ID)	
		1	**6V-8397**	1	SEAL-O-RING (12.83-MM-OD)	
		1	**6V-8636**	1	CONNECTOR	
	23	1	*148-8365*	1	ELBOW AS	
		1	**3J-1907**	1	SEAL-O-RING (11.89-MM-ID)	
		1	**6V-8398**	1	SEAL-O-RING (16.03-MM-OD)	
		1	**8T-6876**	1	ELBOW	
	24	1	*148-8407*	2	PLUG AS	
					(EACH INCLUDES)	
		1	**9S-4191**	1	PLUG	
		1	**3J-1907**	1	SEAL-O-RING	
	25	1	*150-3036*	1	ELBOW AS	
		1	**3J-1907**	1	SEAL-O-RING	
		1	**6V-8397**	1	SEAL-O-RING	
		1	**8T-1905**	1	ELBOW (90-DEG)	
	26	1	*150-4048*	1	ELBOW AS	
		1	**3K-0360**	1	SEAL-O-RING (16.36-MM-ID)	
		1	**6V-8722**	1	ELBOW	
		1	**7J-9108**	1	SEAL-O-RING (19.28-MM-OD)	
	27	1	*155-3624*	2	PLUG AS	
					(EACH INCLUDES)	
		1	**3J-7354**	1	SEAL-O-RING	
		1	**9S-4182**	1	PLUG	
	28	1	*164-5624*	1	ELBOW GP	
		1	**3J-1907**	1	SEAL-O-RING (11.89-MM-ID)	
		1	**6V-8398**	1	SEAL-O-RING (16.03-MM-OD)	
		1	**9X-2085**	1	ELBOW	
	29	1	**5M-2894**	7	WASHER-HARD (10.2X18.5X2.5-MM THK)	
	30	1	**5P-8247**	1	WASHER-HARD (17X32X3.5-MM THK)	
	31	1	**6K-8178**	1	CLIP	

229-1497 **LINES GP-FUEL** *(contd.)* **i02219784**

NOTE	REF NO	GRAPHIC REF	PART NUMBER	QTY	PART NAME 1 2 3 4 5 6 (PRODUCT LEVEL)	SEE PAGE
	32	1	**6V-5839**	1	WASHER (11X21X2.5-MM THK)	
M	33	1	**6V-6317**	1	BOLT (M10X1.5X20-MM)	
	34	1	**6V-8397**	3	SEAL-O-RING	
	35	1	**6V-8398**	1	SEAL-O-RING	
	36	1	**6V-8980**	1	ELBOW	
	37	1	**6V-9168**	1	NUT (11/16-16-THD)	
	38	1	**8T-9041**	1	CONNECTOR	
	39	1	**9X-8257**	1	WASHER (17.5X30X3.5-MM THK)	
E	40	1	**8C-5064**		CONDUIT-FLEXIBLE (64-CM)	

E-ORDER BY THE CENTIMETER
I-REFER TO HYDRAULIC INFORMATION SYSTEM
M-METRIC PART
Y-SEPARATE ILLUSTRATION

229-1497 **LINES GP-FUEL** *(contd.)* **i02219784**

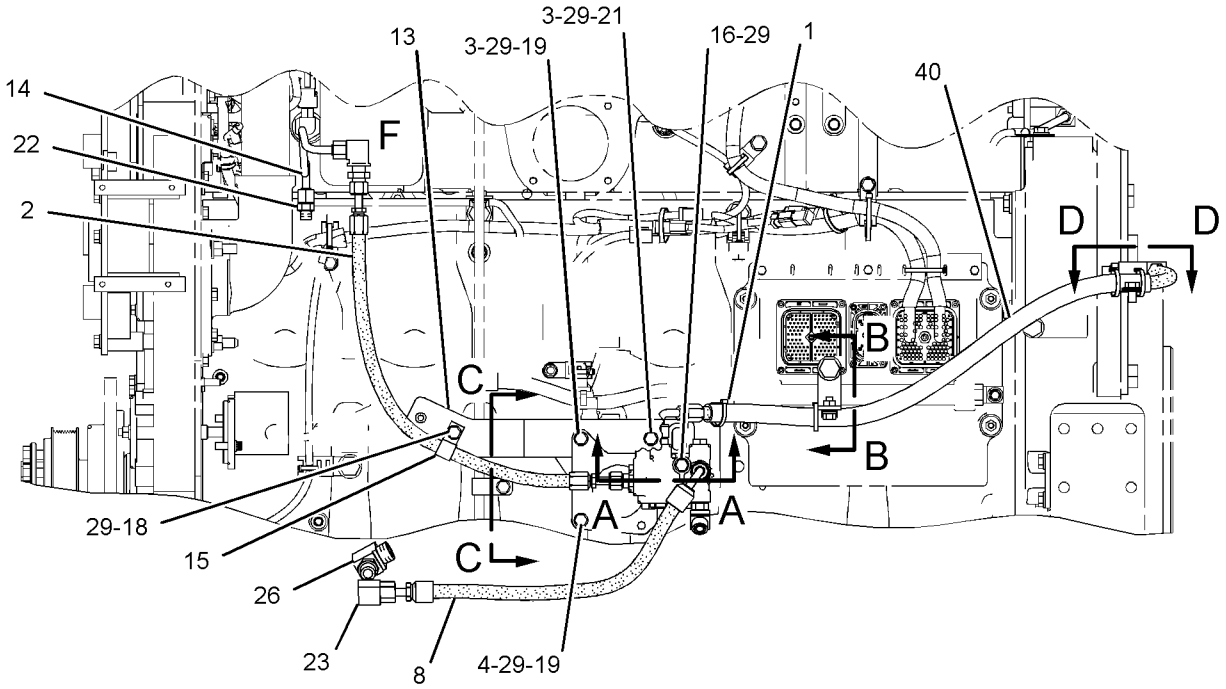

LEFT SIDE VIEW

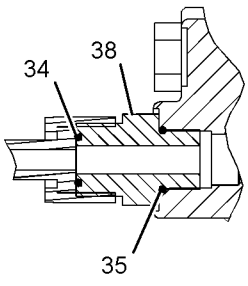

SECTION A-A

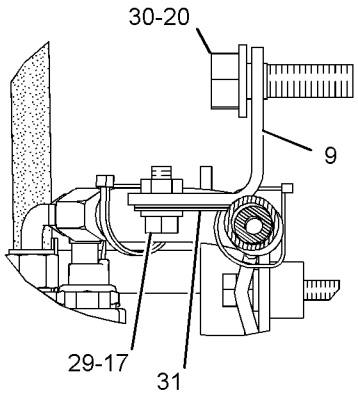

SECTION B-B

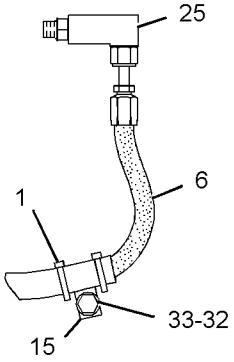

VIEW D-D

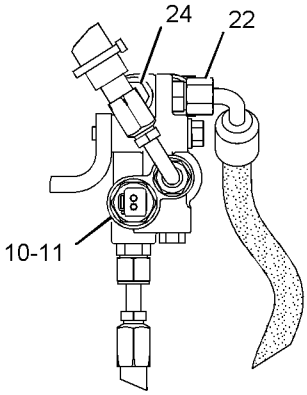

VIEW E-E

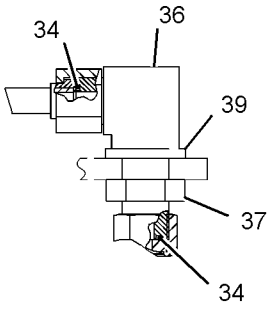

VIEW OF AREA F

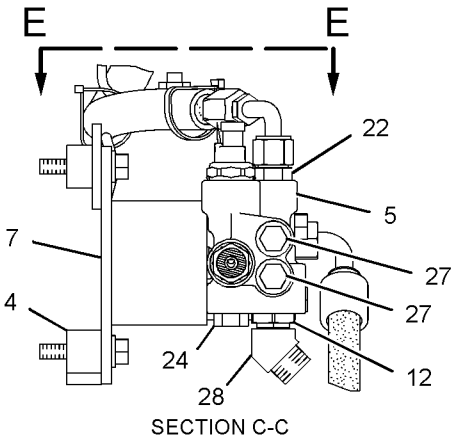

SECTION C-C

GRAPHIC #1 **<END>** g01121398

174-7464 MOUNTING GP-FUEL LINE

S/N: RHX1-UP
PART OF 205-8603 ENGINE AR-COMPLETE
CANNOT BE USED WITH LH SOUND PANEL

SMCS-1274 **i01137448**

NOTE	REF NO	GRAPHIC REF	PART NUMBER	QTY	PART NAME 1 2 3 4 5 6 (PRODUCT LEVEL)	SEE PAGE
	1	1	**9G-8140**	1	SPACER (10.5X25X15-MM THK)	
	2	1	*9R-9733*	2	BOSS	

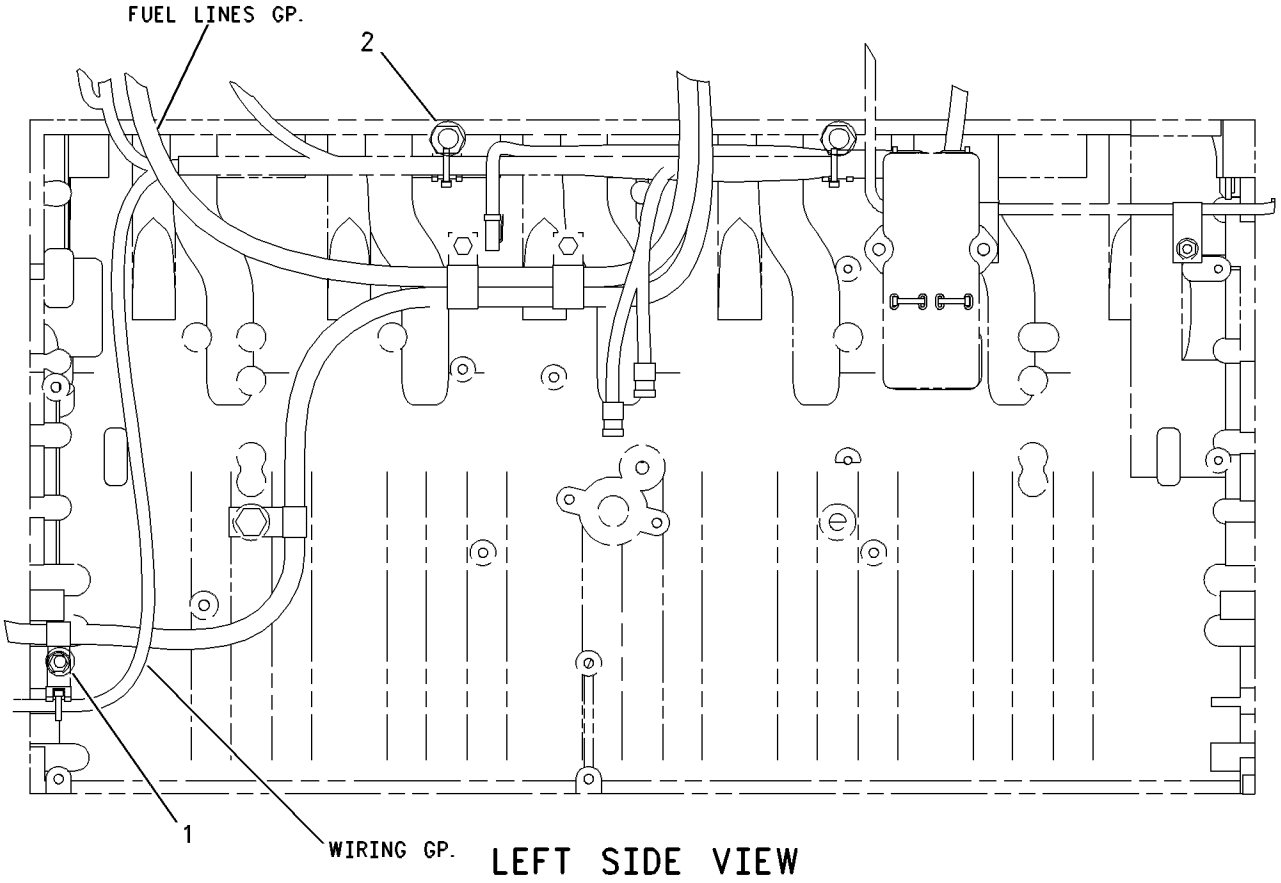

LEFT SIDE VIEW

GRAPHIC #1 **<END>** g00607144

150-4279 PUMP & MTG GP-FUEL TRANSFER

S/N: RHX1-UP
ALLOWS USE OF FRONT MOUNTED PUMP EXCEPT WHEN LH MOUNTING GP-ALTERNATOR IS PROVIDED
PART OF 205-8603, 231-3468 ENGINE AR-COMPLETE
ALSO AN ATTACHMENT

SMCS-1256 **i01932174**

NOTE	REF NO	GRAPHIC REF	PART NUMBER	QTY	PART NAME 1 2 3 4 5 6 (PRODUCT LEVEL)	SEE PAGE
C	1	1	**190-3443**	1	PUMP GP-FUEL TRANSFER	
	2	1	**1T-0765**	2	BOLT (3/8-16X1 IN)	
	3	1	**5M-2894**	2	WASHER-HARD (10.2X18.5X2.5MM THK)	
	4	1	**107-5769**	2	SEAL-O-RING	
	5	1	**0S-0699**	2	STUD	
	6	1	**9S-8752**	2	NUT-FULL (3/8-16 THD)	
	7	1	**133-9116**	1	COVER	

C-CHANGE FROM PREVIOUS TYPE

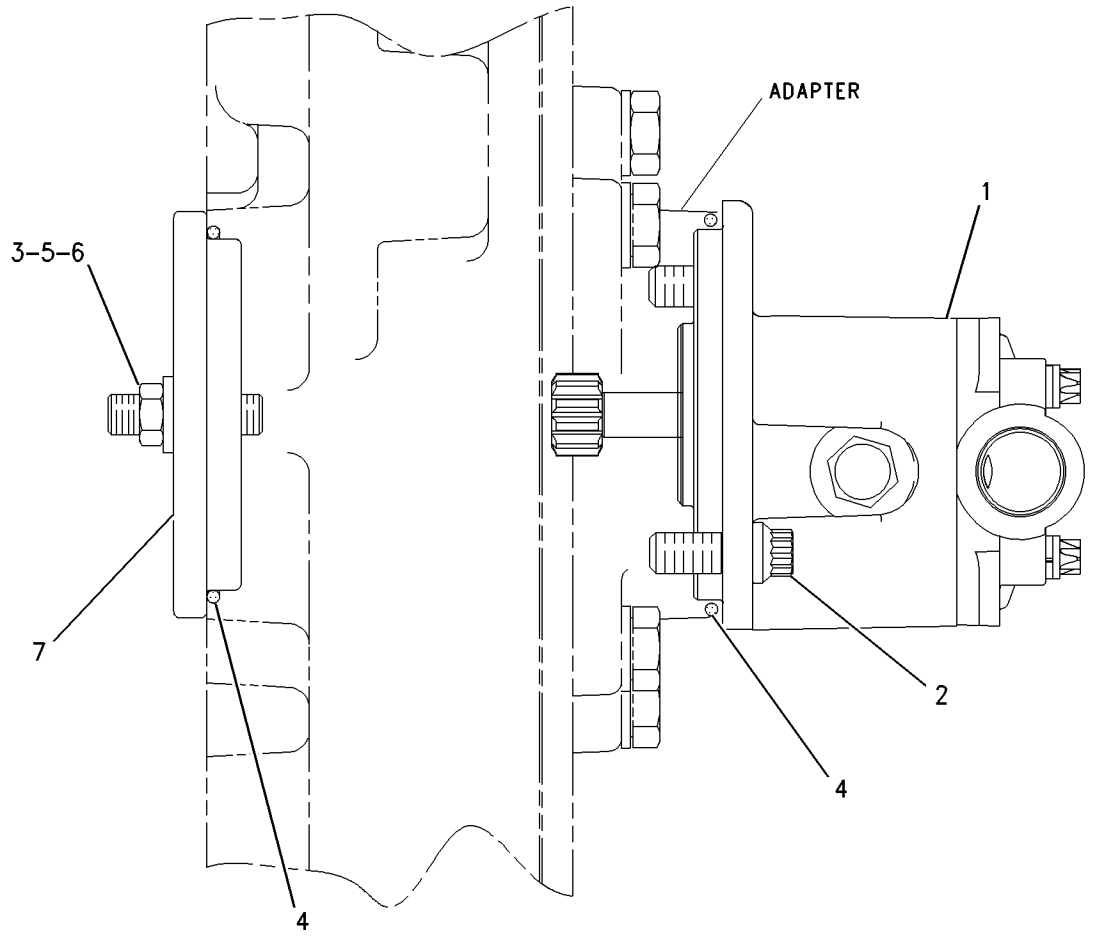

LEFT SIDE VIEW

GRAPHIC #1 **<END>** g00762253

235-1402 PUMP GP-FUEL INJECTION

S/N: RHX515-625
PART OF 241-5933 ENGINE AR-CORE
ALSO AN ATTACHMENT

SMCS-1251, 1290 **i02151038**

NOTE	REF NO	GRAPHIC REF	PART NUMBER	QTY	PART NAME 1 2 3 4 5 6 (PRODUCT LEVEL)	SEE PAGE
	1	1	**6I-0213**	1	CLAMP	
	2	1	**100-5072**	1	SPACER (9.8X15.85X37.6-MM THK)	
	3	1	**244-7716**	1	INJECTOR GP-FUEL	
	3A	1	**230-3728**	1	SEAL-O-RING (32.99MM ID)	
	3B	1	**230-3775**	1	SEAL-O-RING (36.09MM ID)	
	3C	1	**9X-7317**	1	SEAL-O-RING (9.6MM ID)	
	4	1	**8S-9191**	1	BOLT (3/8-16X4-IN)	

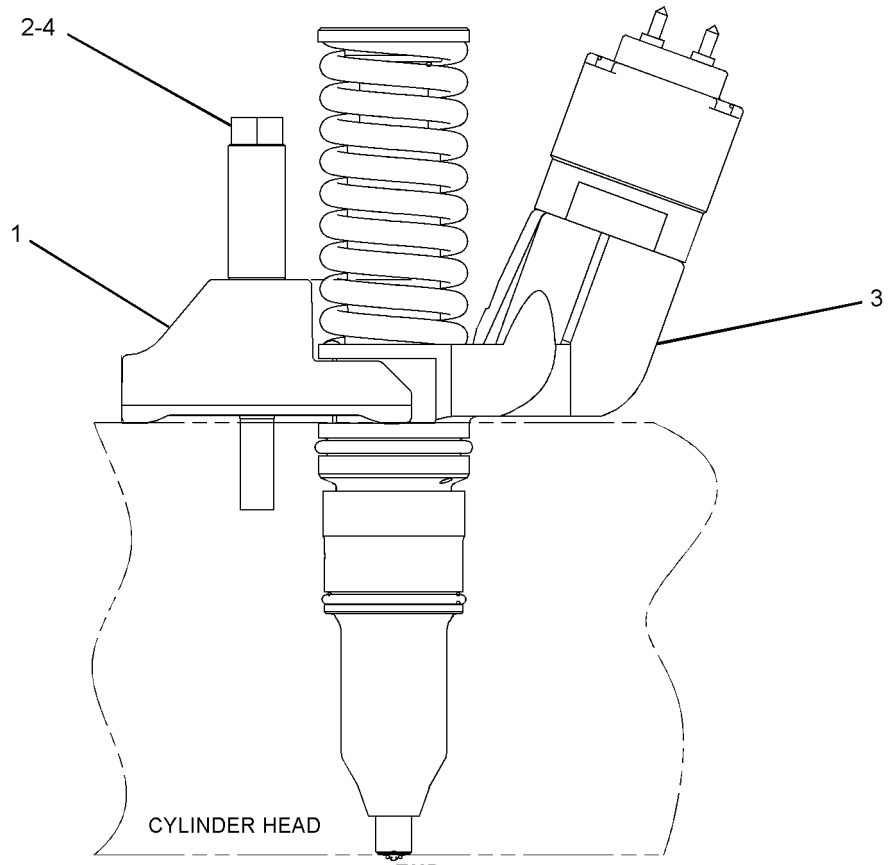

GRAPHIC #1 **<END>** g01058299

235-1402 PUMP GP-FUEL INJECTION

S/N: RHX1-514
PART OF 241-5933 ENGINE AR-CORE
ALSO AN ATTACHMENT

SMCS-1251, 1290 **i01924800**

NOTE	REF NO	GRAPHIC REF	PART NUMBER	QTY	PART NAME 1 2 3 4 5 6 (PRODUCT LEVEL)	SEE PAGE
	1	1	**6I-0213**	1	CLAMP	
	2	1	**8S-9191**	1	BOLT (3/8-16X4 IN)	
	3	1	**100-5072**	1	SPACER (9.8X15.85X37.6MM THK)	
	4	1	**232-1206**	1	INJECTOR GP-FUEL	
	4A	1	**9X-7419**	1	SEAL-O-RING (36.09MM ID)	
	4B	1	**9X-7418**	1	SEAL-O-RING (32.99MM ID)	
	4C	1	**9X-7317**	1	SEAL-O-RING (9.6MM ID)	

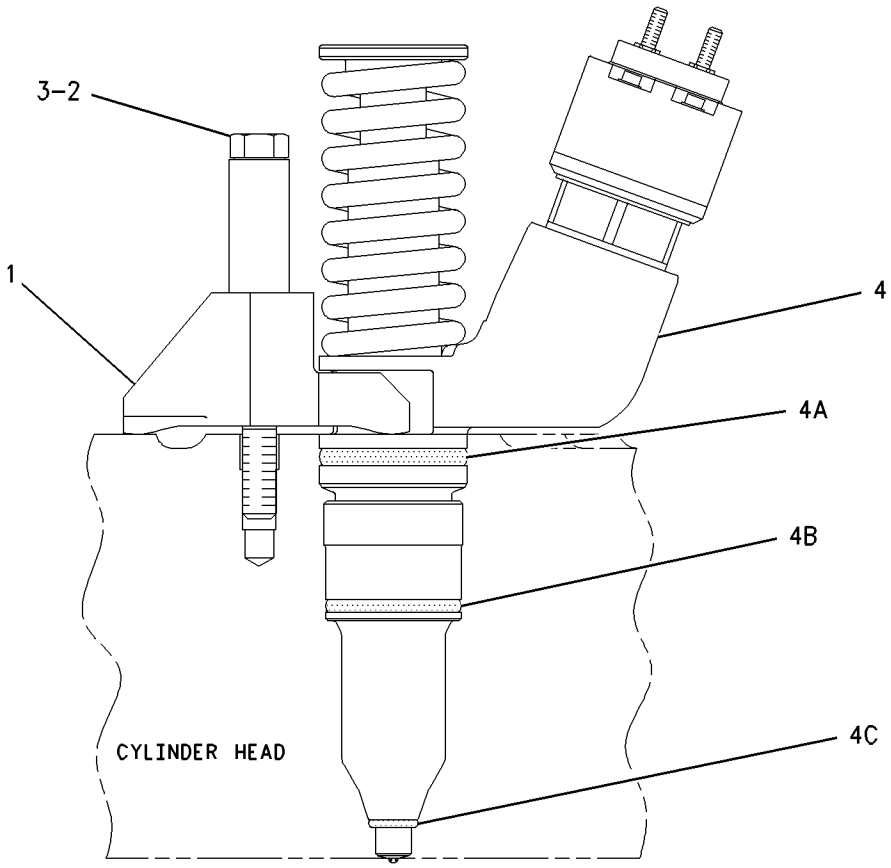

GRAPHIC #1 **<END>** g00900391

235-1402 PUMP GP-FUEL INJECTION

S/N: RHX626-UP
PART OF 241-5933 ENGINE AR-CORE
ALSO AN ATTACHMENT

SMCS-1251, 1290 **i02199977**

NOTE	REF NO	GRAPHIC REF	PART NUMBER	QTY	PART NAME 1 2 3 4 5 6 (PRODUCT LEVEL)	SEE PAGE
	1	1	**6I-0213**	1	CLAMP	
	2	1	**100-5072**	1	SPACER (9.8X15.85X37.6-MM THK)	
C	3	1	**253-0616**	1	INJECTOR GP-FUEL	
	3A	1	**230-3728**	1	SEAL-O-RING (32.99MM ID)	
	3B	1	**230-3775**	1	SEAL-O-RING (36.09MM ID)	
	3C	1	**9X-7317**	1	SEAL-O-RING (9.6MM ID)	
	4	1	**8S-9191**	1	BOLT (3/8-16X4-IN)	

C-CHANGE FROM PREVIOUS TYPE

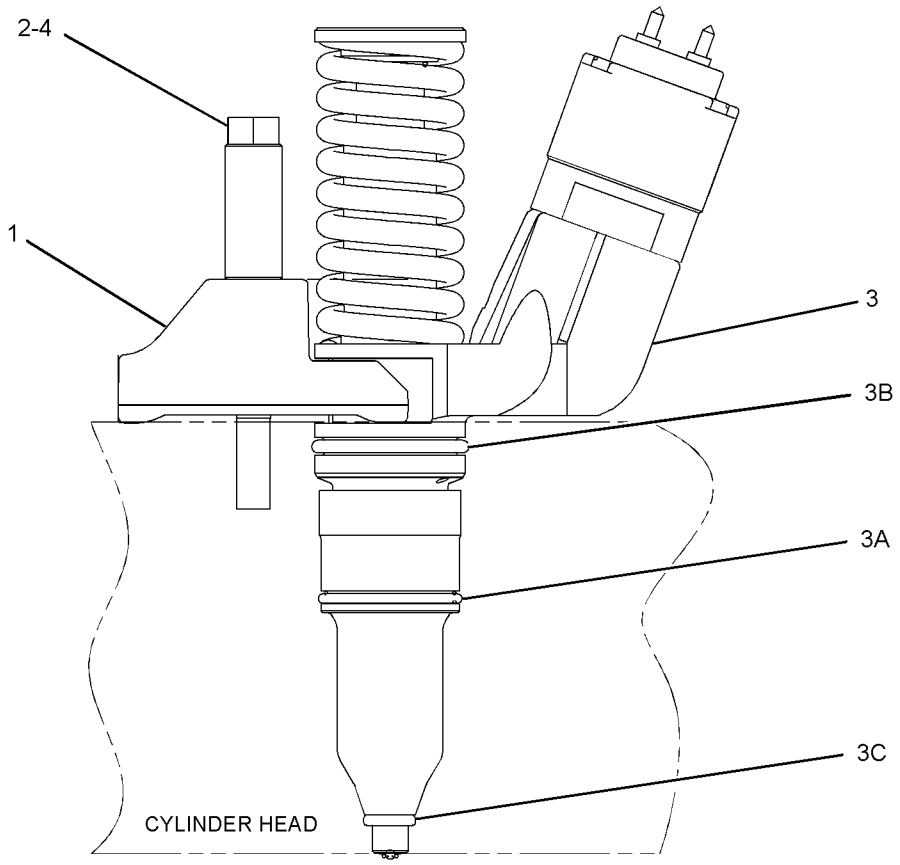

GRAPHIC #1 **<END>** g01111489

243-4311 SEAL GP–TRASH

S/N: RJS1-UP
PART OF 211-5069 MODIFICATION AR-WOODCHIP, 211-5072 STOCKPILE AR, 211-5065 WASTE HANDLING AR
AN ATTACHMENT

SMCS-1250 **i02246850**

NOTE	REF NO	GRAPHIC REF	PART NUMBER	QTY	PART NAME 1 2 3 4 5 6 (PRODUCT LEVEL)	SEE PAGE
	1	2	**6T-5385**	1	PLATE	
	2	2	**110-5358**	1	PLATE AS	
	3	2	*242-9911*	1	EXTENSION GP-FENDER	
BD		2	**5P-7211**		SEAL	
		2	**242-9939**	1	PLATE	
		2	**242-9941**	1	PLATE	
	4	1	**243-4312**	1	BAFFLE AS	
	5	1	**243-4313**	1	PLATE AS	
	6	1	**243-4314**	1	PLATE AS	
	7	2	**243-4318**	1	PLATE	
	8	1	**243-4321**	1	PLATE	
	9	1	**264-3167**	1	COVER AS	
	10	1	**150-5931**	4	GROMMET	
	11	1	**4L-6454**	4	BOLT (3/8-16X1-IN)	
	12	1	**7X-0578**	10	WASHER-HARD (10.2X32X2.5-MM THK)	
	13	2	**8T-4121**	1	WASHER-HARD (11X21X2.5-MM THK)	
M	14	1	**8T-4133**	6	NUT (M10X1.5-THD)	
M	15	2	**8T-4136**	1	BOLT (M10X1.5X25-MM)	
	16	2	**9F-3691**	1	SPACER (0.28X0.44X0.26-IN THK)	
	17	2	**2D-6235**	2	LOCKNUT (1/4-20-THD)	
	18	2	**5P-4115**	2	WASHER-HARD (7.2X19X2-MM THK)	
	19	2	**8T-8908**	1	BOLT (1/4-20X1-IN)	
BD	20	1	**5P-7483**		SEAL	
BD	21	1,2	**5P-7211**		SEAL	
BE	22	1	**145-0060**		SEAL	
BE	23	2	**9X-8699**		SEAL	
BE	24	1,2	**128-8423**		SEAL	
BE	25	2	**132-8502**		SEAL	
BE	26	1,2	**238-9166**		SEAL	
BE	27	1,2	**149-5933**		SEAL	

B-USE AS REQUIRED
D-ORDER BY THE METER
E-ORDER BY THE CENTIMETER
M-METRIC PART

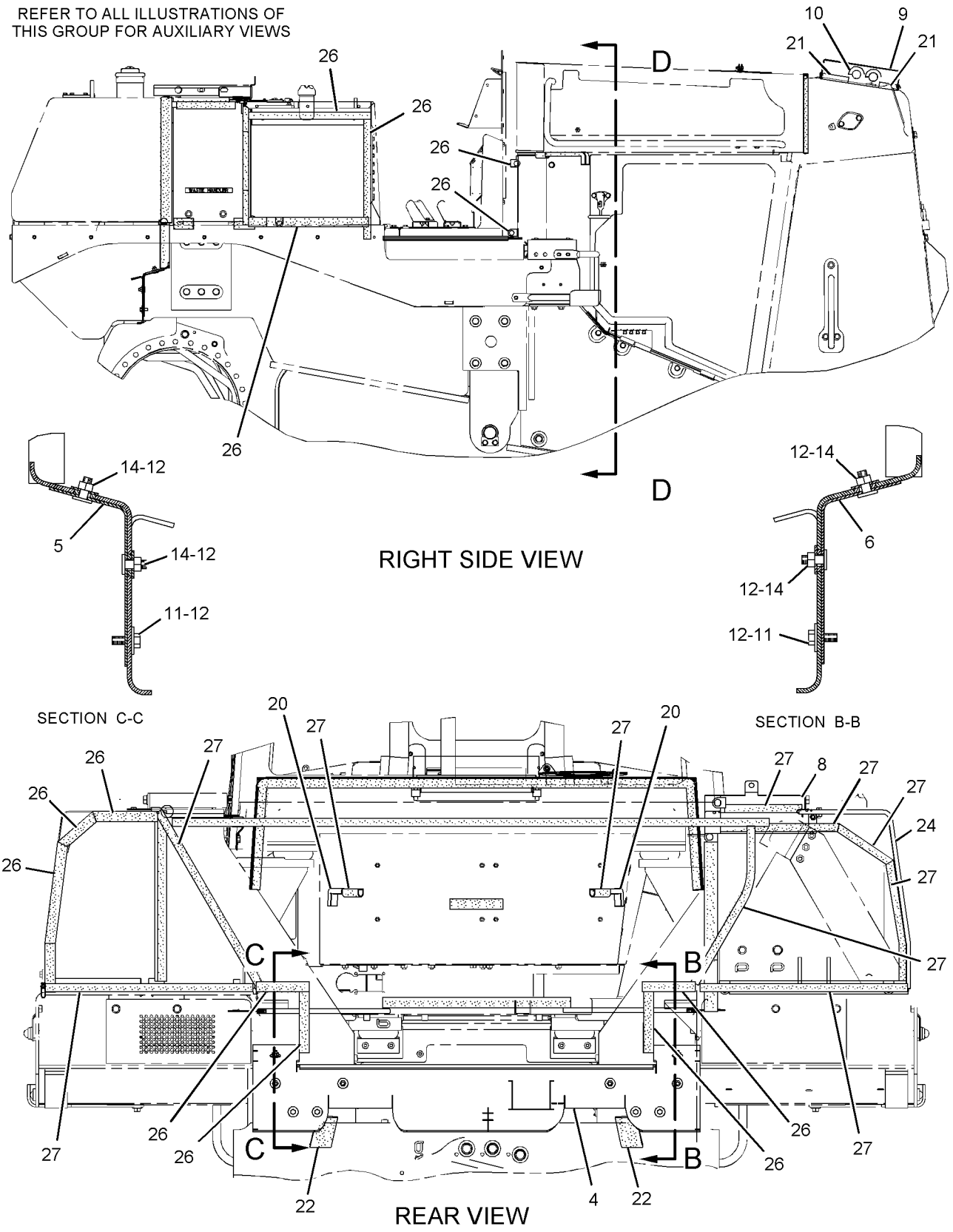

GRAPHIC #1 g01126341

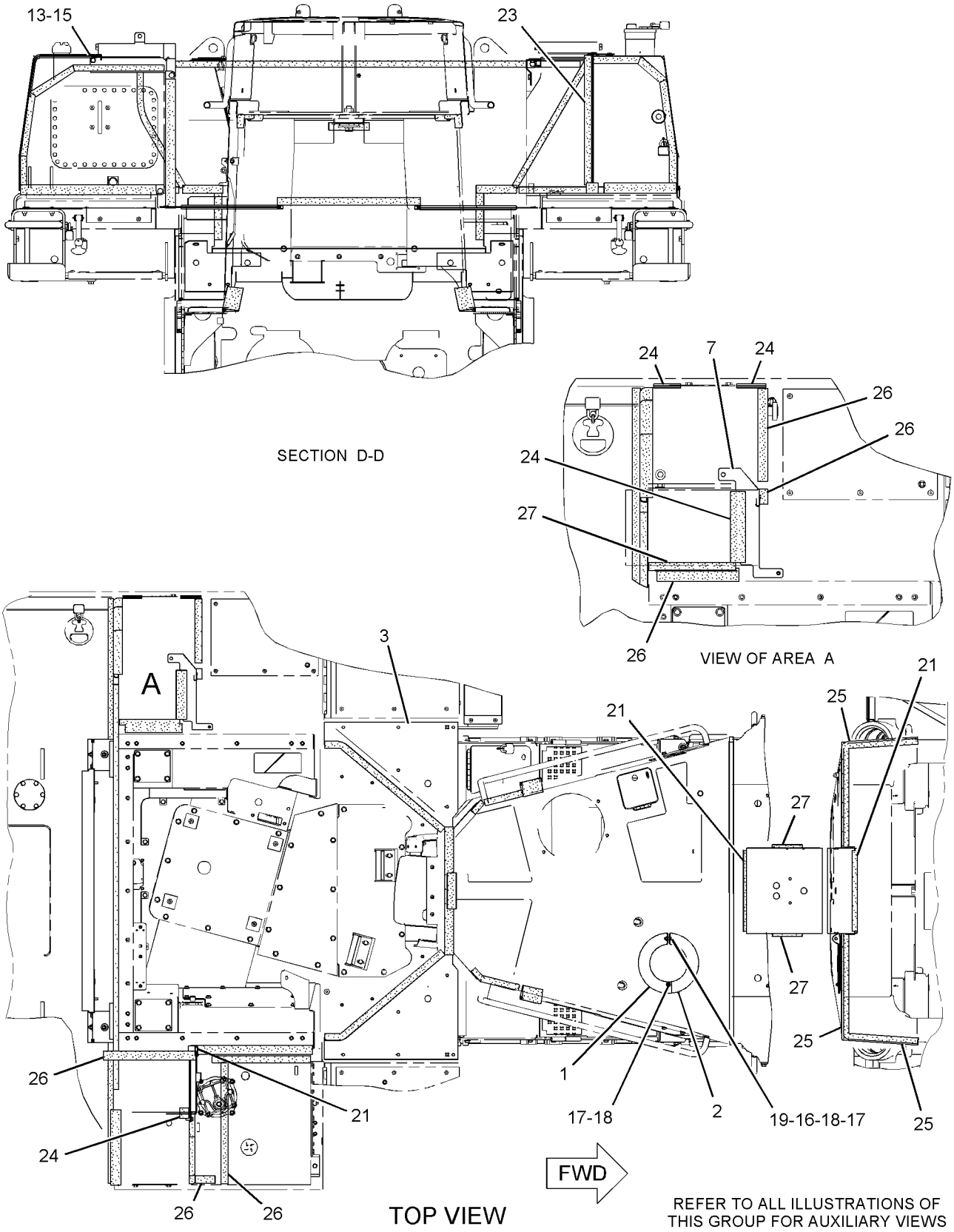

GRAPHIC #2

<END>

g01126342

205-8577 TANK GP-FUEL

S/N: RJS1-UP
889-LITERS (235-GALLONS)
PART OF 205-8601 CHASSIS AR

SMCS-1273 **i02246864**

NOTE	REF NO	GRAPHIC REF	PART NUMBER	QTY	PART NAME 1 2 3 4 5 6 (PRODUCT LEVEL)	SEE PAGE
	1	1	**246-2641**	1	PADLOCK GP (FUEL TANK)	
		1	**5P-8500**	2	KEY	
	2	1	**6T-1698**	8	MOUNTING	
Y	3	1	**211-0681**	1	TANK GP-FUEL	163
	4	1	**241-2501**	4	WASHER (22X82.55X11-MM THK)	
M	5	1	**7X-2564**	4	BOLT (M20X2.5X90-MM)	
	6	1	**8T-5439**	4	WASHER (21.5X45X6-MM THK)	

M-METRIC PART
Y-SEPARATE ILLUSTRATION

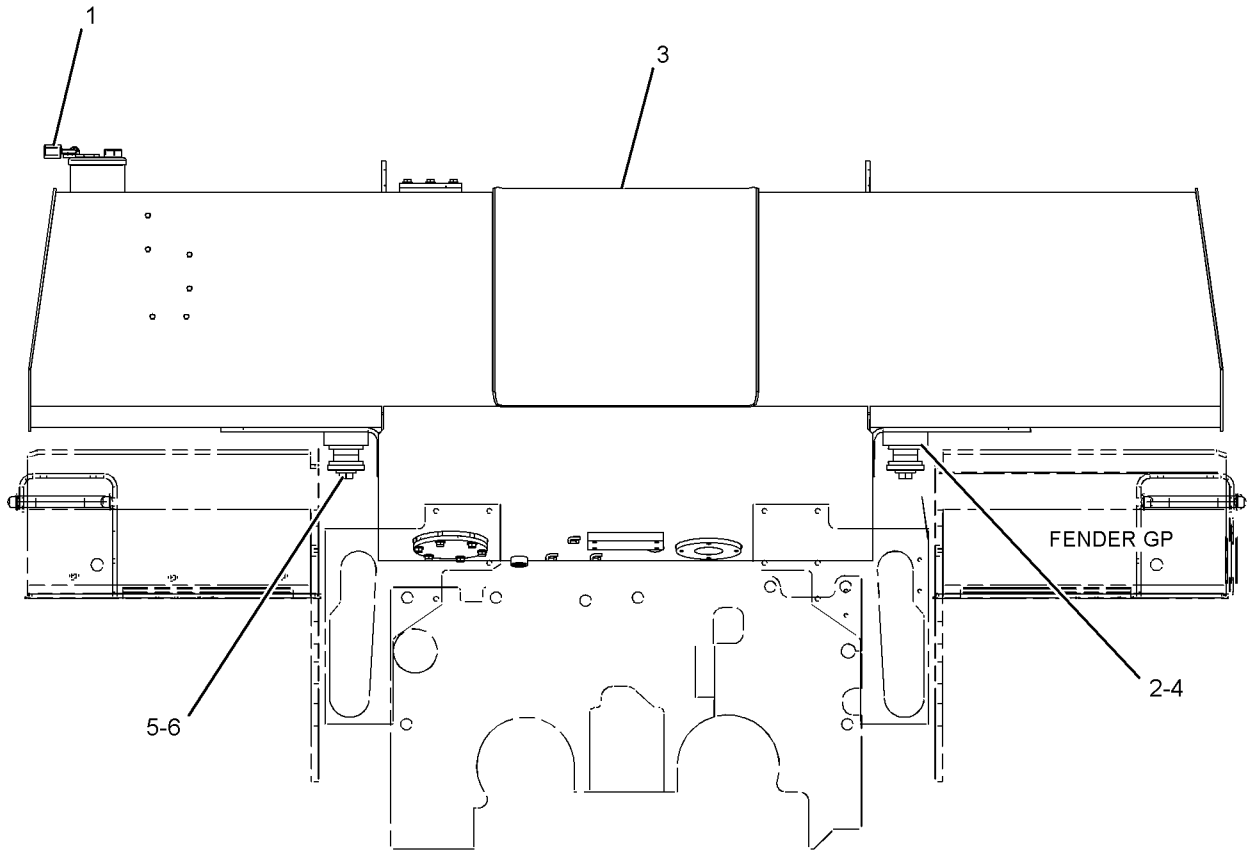

REAR VIEW

GRAPHIC #1

<END>

g01036549

FUEL SYSTEM

211-0681 TANK GP-FUEL

S/N: RJS1-UP

PART OF 205-8577 TANK GP-FUEL

SMCS-1273 **i01990491**

NOTE	REF NO	GRAPHIC REF	PART NUMBER	QTY	PART NAME 1 2 3 4 5 6 (PRODUCT LEVEL)	SEE PAGE
J	1	1	**7X-7700**	1	CAP AS-FILLER (FUEL, LOCKING, VENTED)	
	1A	1	**9X-8600**	1	SEAL-O-RING	
	2	1	**9P-7121**	1	STRAINER-FUEL	
	3	1	**164-3417**	1	COVER	
	4	1	**187-1679**	1	COVER	
	5	1	**211-0679**	1	TANK AS-FUEL	
	6	1	**1H-8128**	1	SEAL-O-RING	
	7	1	**5H-6734**	1	SEAL-O-RING	
	8	1	**8T-4121**	12	WASHER-HARD (11X21X2.5-MM THK)	
M	9	1	**8T-4136**	12	BOLT (M10X1.5X25-MM)	
					AVAILABLE REPAIR KIT(S):	
J			**9X-2205**	1	KIT-CAP FILTER (FUEL TANK) (VENT)	
					(INCLUDES FILTER AS, SCREEN,GASKETS,VALVE)	

J-KIT MARKED J SERVICES PART MARKED J
M-METRIC PART

211-0681 **TANK GP-FUEL** *(contd.)* **i01990491**

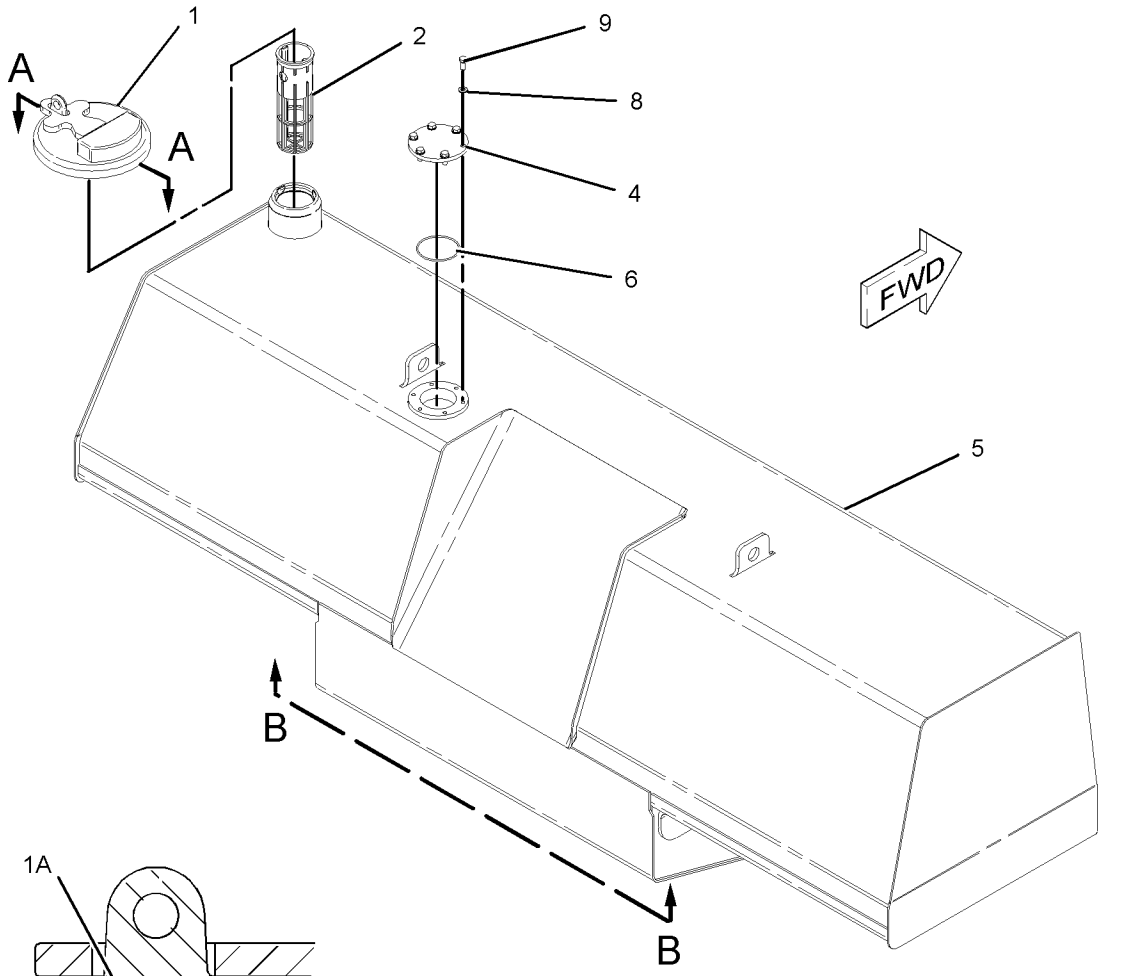

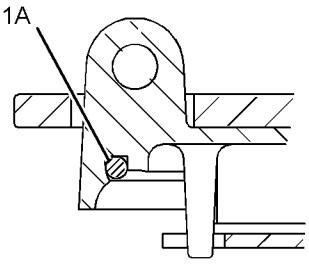

SECTION A-A

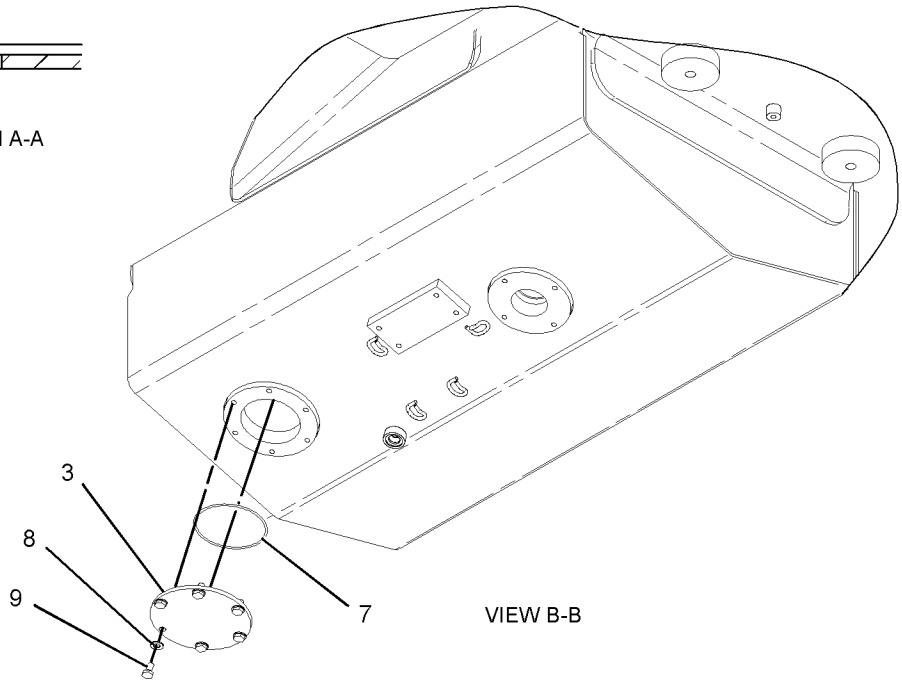

VIEW B-B

GRAPHIC #1 **<END>** g01035710

242-3370 TANK GP-FUEL

S/N: RJS1-UP
889-LITERS (235-GALLONS)
PART OF 224-5139, 224-5144 LIGHTING GP-FLOOD
AN ATTACHMENT

SMCS-1273 **i02207569**

NOTE	REF NO	GRAPHIC REF	PART NUMBER	QTY	PART NAME 1 2 3 4 5 6 (PRODUCT LEVEL)	SEE PAGE
	1	1	**246-2641**	1	PADLOCK GP (FUEL TANK)	
		1	**5P-8500**	1	KEY	
	2	1	**6T-1698**	8	MOUNTING	
	3	1	**241-2501**	4	WASHER (22X82.55X11-MM THK)	
Y	4	1	**242-3383**	1	TANK GP-FUEL	166
M	5	1	**7X-2564**	4	BOLT (M20X2.5X90-MM)	
	6	1	**8T-5439**	4	WASHER (21.5X45X6-MM THK)	

M-METRIC PART
Y-SEPARATE ILLUSTRATION

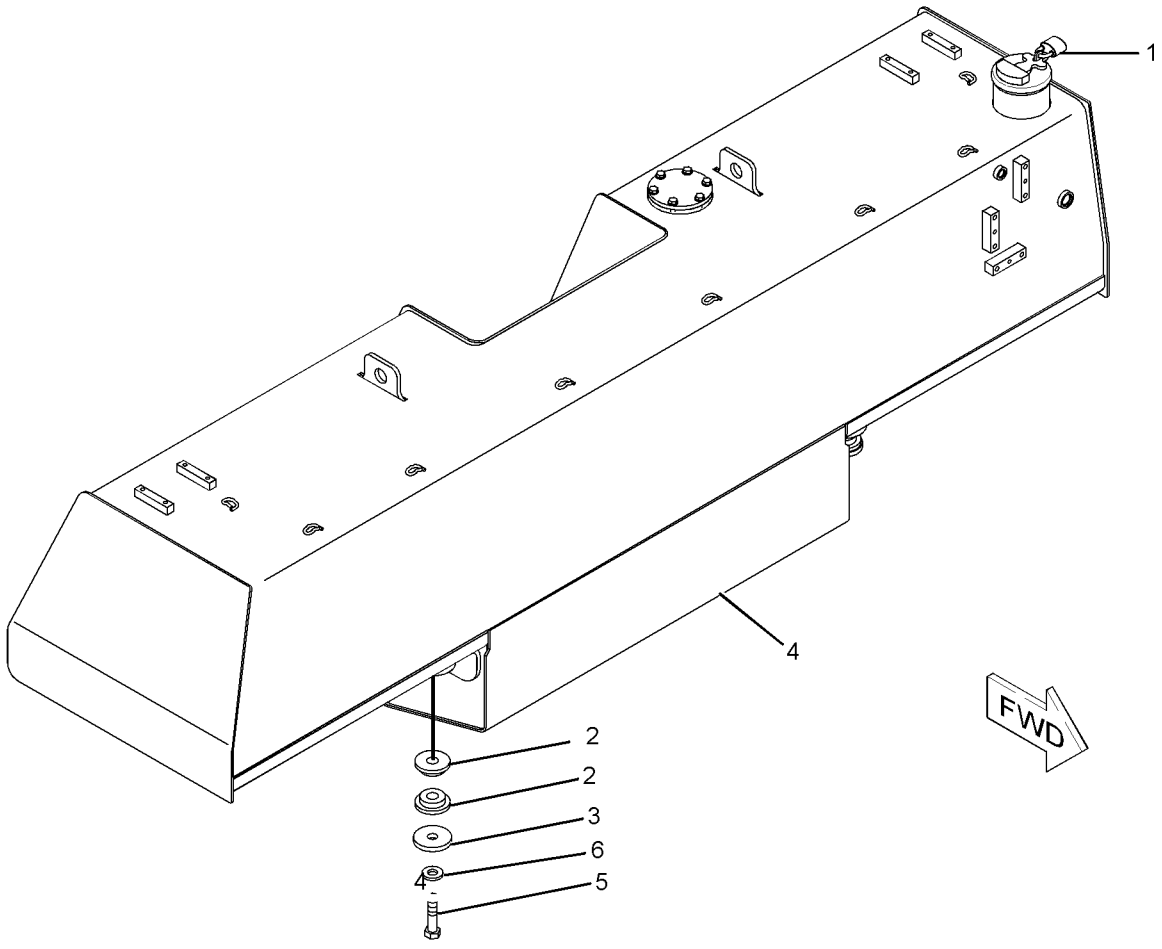

GRAPHIC #1 **<END>** g01121270

FUEL SYSTEM

242-3383 TANK GP-FUEL

S/N: RJS1-UP
PART OF 242-3370 TANK GP-FUEL
AN ATTACHMENT

SMCS-1273 **i02205073**

NOTE	REF NO	GRAPHIC REF	PART NUMBER	QTY	PART NAME 1 2 3 4 5 6 (PRODUCT LEVEL)	SEE PAGE
J	1	1	**7X-7700**	1	CAP AS-FILLER (FUEL, LOCKING, VENTED)	
		1	**9X-8600**	1	SEAL-O-RING	
	2	1	**9P-7121**	1	STRAINER-FUEL (TANK FILLER)	
	3	1	**164-3417**	1	COVER	
	4	1	**187-1679**	1	COVER	
	6	1	**1H-8128**	1	SEAL-O-RING	
	7	1	**5H-6734**	1	SEAL-O-RING	
	8	1	**8T-4121**	12	WASHER-HARD (11X21X2.5-MM THK)	
M	9	1	**8T-4136**	12	BOLT (M10X1.5X25-MM)	
					AVAILABLE REPAIR KIT(S):	
J			**9X-2205**	1	KIT-CAP FILTER (FUEL TANK)	
					(INCLUDES FILTER AS, SCREWS, GASKETS, VALVE)	

J-KIT MARKED J SERVICES PART MARKED J
M-METRIC PART

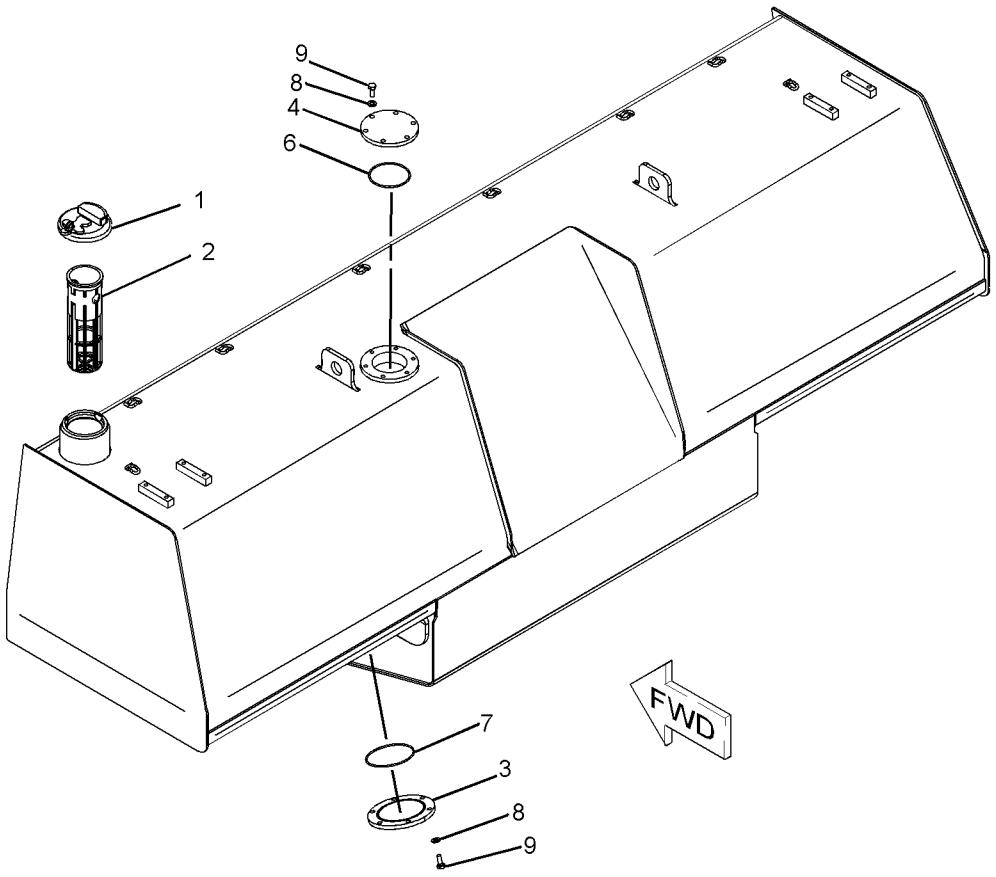

GRAPHIC #1 **<END>** g01121432

233-6742 VALVE GP-CHECK–FUEL FILTER

S/N: RHX1-UP

PART OF 229-1497 LINES GP-FUEL

ALSO AN ATTACHMENT

SMCS-1250, 1251, 1261, 1262, 1274 **i02140022**

NOTE	REF NO	GRAPHIC REF	PART NUMBER	QTY	PART NAME 1 2 3 4 5 6 (PRODUCT LEVEL)	SEE PAGE
Y	1	1	**238-0296**	1	VALVE GP-CHECK (FUEL) (FILTER)	168
	2	1	**6V-4589**	1	SEAL-O-RING	

Y-SEPARATE ILLUSTRATION

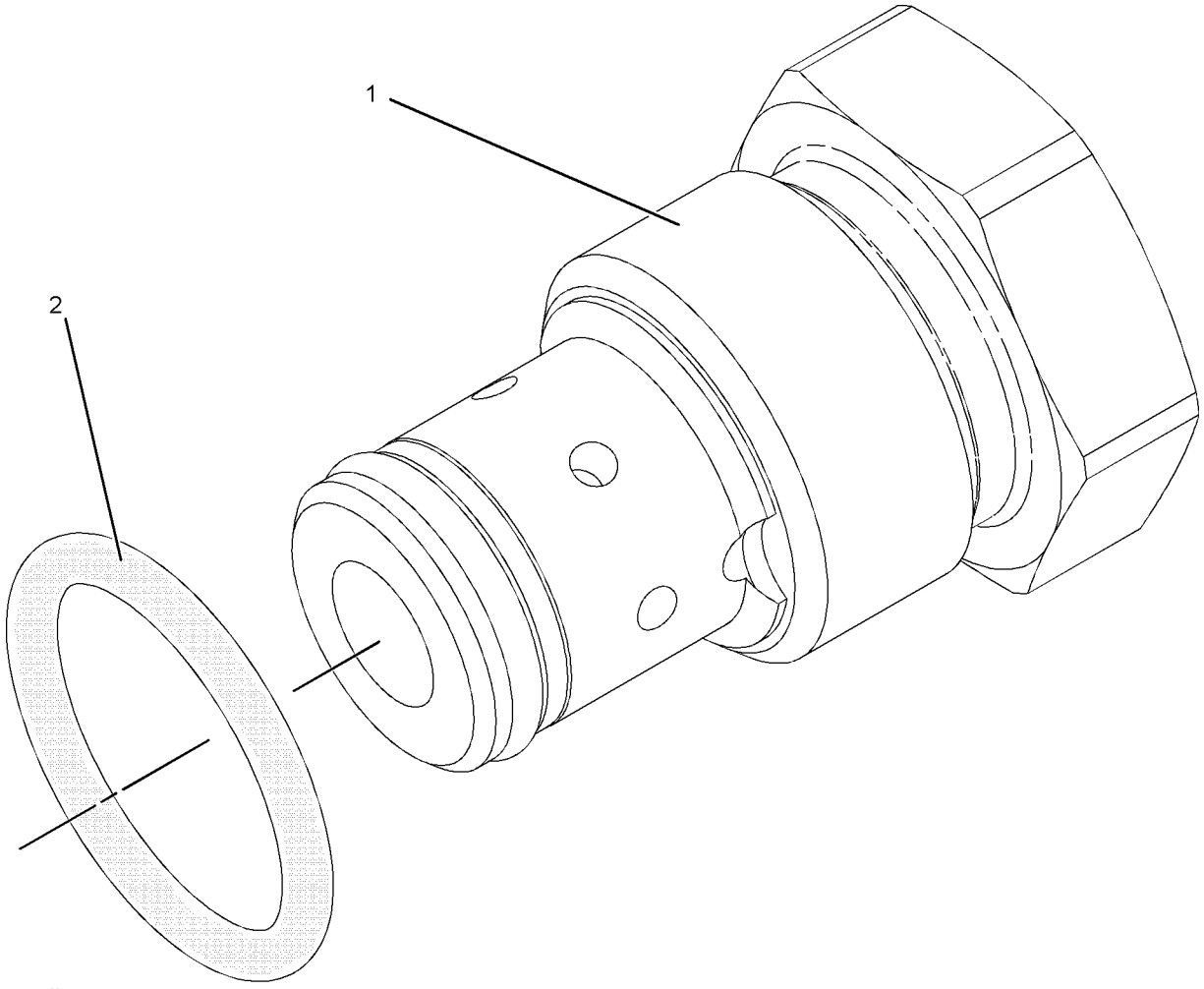

GRAPHIC #1 **<END>** g01031823

238-0296 VALVE GP-CHECK–FUEL FILTER

S/N: RHX1-UP
PART OF 233-6742 VALVE GP-CHECK
ALSO AN ATTACHMENT

SMCS-1250, 1251, 1261, 1262, 1274 **i02140024**

NOTE	REF NO	GRAPHIC REF	PART NUMBER	QTY	PART NAME 1 2 3 4 5 6 (PRODUCT LEVEL)	SEE PAGE
	1	1	**6V-6923**	1	RING-BACKUP	
	2	1	**033-6033**	1	SEAL-O-RING	

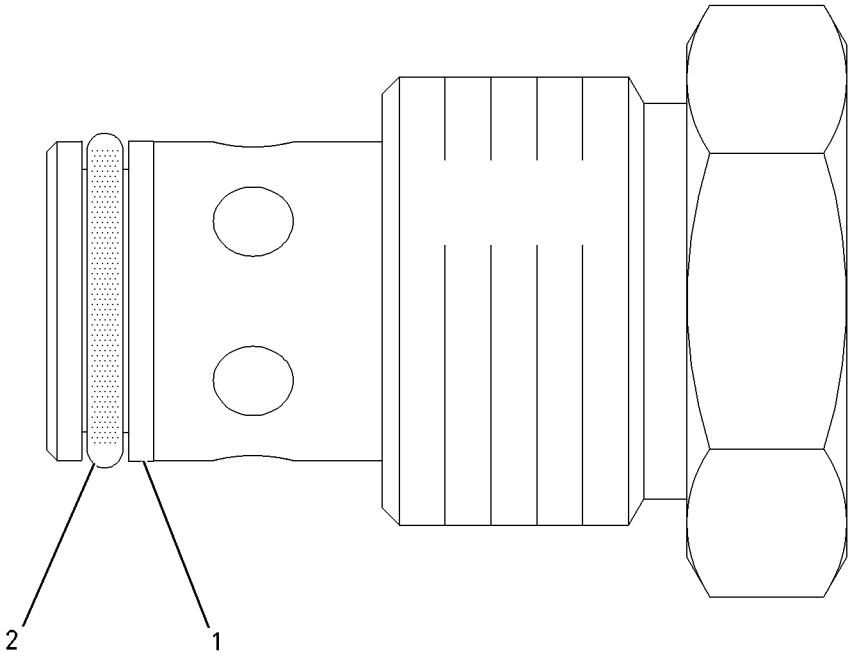

GRAPHIC #1 **<END>** g00864141

252-1363 WATER SEP & FUEL PRM PUMP GP

S/N: RJS1-UP

PART OF 207-4802 FILTER & LINES GP-FUEL

SMCS-1258, 1263 **i02199397**

NOTE	REF NO	GRAPHIC REF	PART NUMBER	QTY	PART NAME 1 2 3 4 5 6 (PRODUCT LEVEL)	SEE PAGE
Y	1	1	*174-9570*	1	FILTER GP-WATER SEP & FUEL	149
	2	1	**247-6050**	1	BASE GP-FUEL FILTER	

Y-SEPARATE ILLUSTRATION

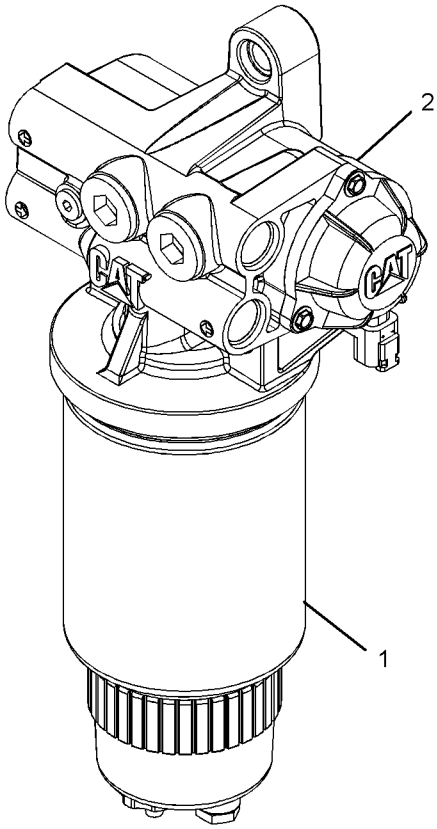

GRAPHIC #1 **<END>** g01119485

3E-6328 ALARM GP–ACTION

S/N: RJS1-UP
24-VOLT
PART OF 205-8579 WIRING GP-PLATFORM

SMCS-7400, 7402, 7407 **i02160203**

NOTE	REF NO	GRAPHIC REF	PART NUMBER	QTY	PART NAME 1 2 3 4 5 6 (PRODUCT LEVEL)	SEE PAGE
	1	1	**102-8802**	1	KIT-RECEPTACLE (2-PIN)	
					(INCLUDES RECEPTACLE AS & WEDGE)	
	2	1	**186-3735**	2	PIN-CONNECTOR	
	3	1	**3E-3365**	1	WEDGE-RECEPTACLE LOCK (2-PIN)	

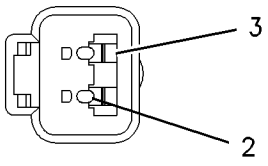

VIEW A–A

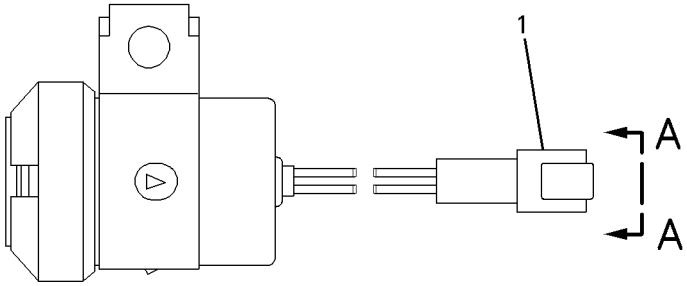

GRAPHIC #1 **<END>** g00826023

197-8820 ALTERNATOR GP-CHARGING*R

S/N: RJS1-UP
24-VOLT, 95-AMPERE
PART OF 205-8587 ALTERNATOR GP-CHARGING

SMCS-1405 **i02197631**

NOTE	REF NO	GRAPHIC REF	PART NUMBER	QTY	PART NAME 1 2 3 4 5 6 (PRODUCT LEVEL)	SEE PAGE
	1	1	**185-2653**	1	FRAME	
	2	1	**5S-7349**	1	BOLT (1/4-20X0.5-IN)	
	3	1	**185-2639**	1	FAN AS	
	4	1	**1H-3244**	1	LOCKWASHER	
	5	1	**185-2645**	1	FRAME	
	6	1	**2K-4821**	1	LOCKNUT (5/8-18-THD)	
	7	1	**5P-8247**	1	WASHER-HARD (17X32X3.5-MM THK)	
	8	1	**185-2651**	1	COVER	
	9	1	**8T-4205**	1	WASHER-HARD (7.2X14.5X2-MM THK)	
	10	1	**185-2647**	1	GROMMET	
	11	1	**9L-6770**	1	CAP	
	12	1	**205-0626**	1	STATOR AS-ALTERNATOR	
	13	1	**185-2638**	2	COLLAR	
	14	1	**185-2654**	1	PLATE	
	15	1	**185-2650**	1	ROTOR AS	
	16	1	**185-2644**	1	COIL AS	
	17	1	**185-2648**	1	REGULATOR AS-VOLTAGE (24-VOLT) (ALTERNATOR)	
	18	1	**6V-8189**	1	NUT (5/16-18-THD)	
	19	1	**8T-4224**	1	WASHER-HARD (8.8X16X2-MM THK)	
	20	1	**3F-9556**	1	LOCKWASHER	
					AVAILABLE REPAIR KIT(S):	
			185-2655	1	KIT-BEARING (ALTERNATOR)	
					(INCLUDES 2 BEARINGS)	
			199-8436	1	KIT-TERMINAL (ALTERNATOR)	
					(INCLUDES HOLDER AS, PLATE, INSULATOR, PIN, BOLTS, GROMMET, AND NUT)	
			199-7891	1	KIT-TERMINAL (ALTERNATOR)	
					(INCLUDES INSULATORS, WASHERS, AND NUTS)	
			185-2658	1	KIT-HARDWARE (ALTERNATOR)	
					(INCLUDES BOLTS)	

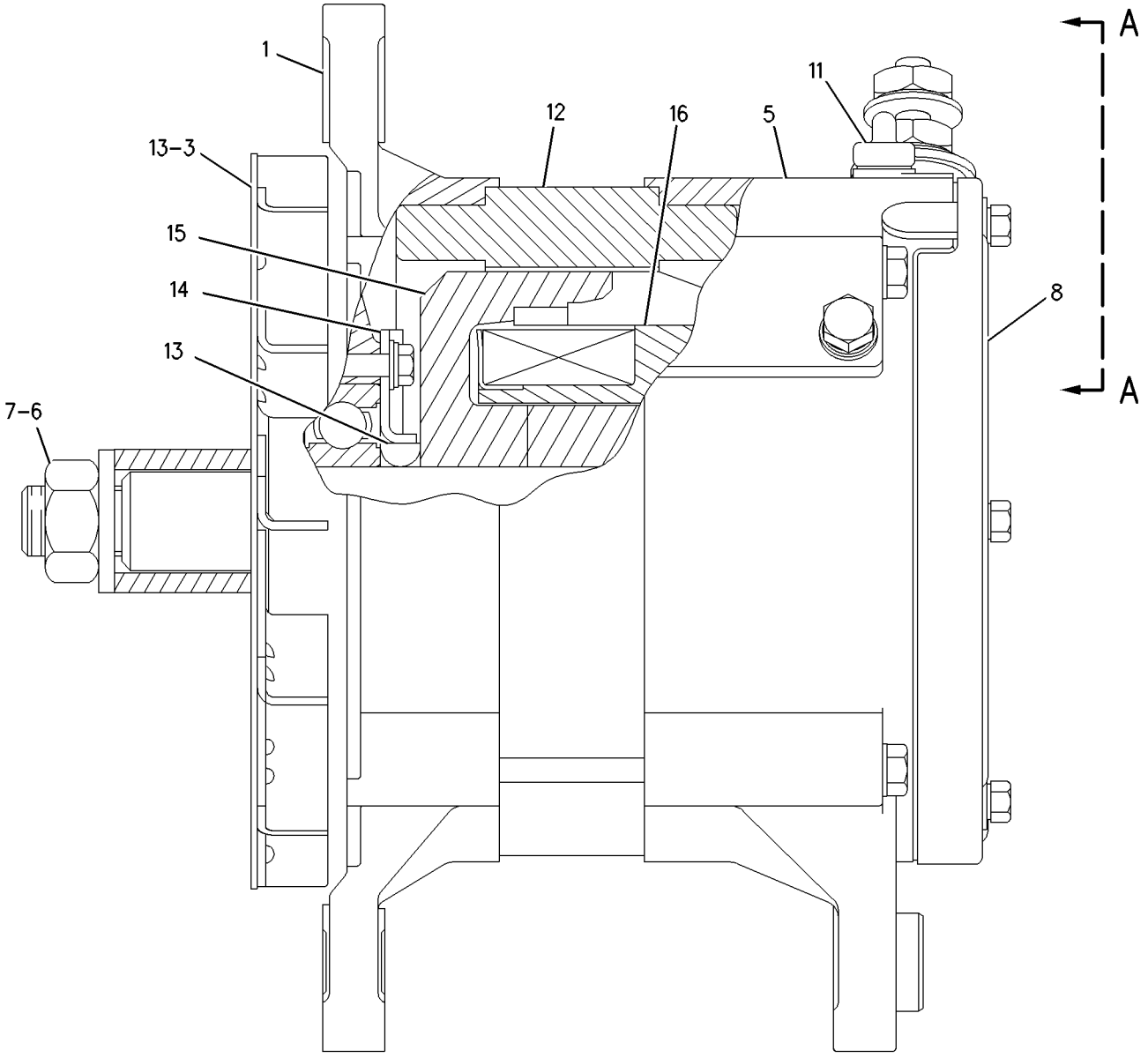

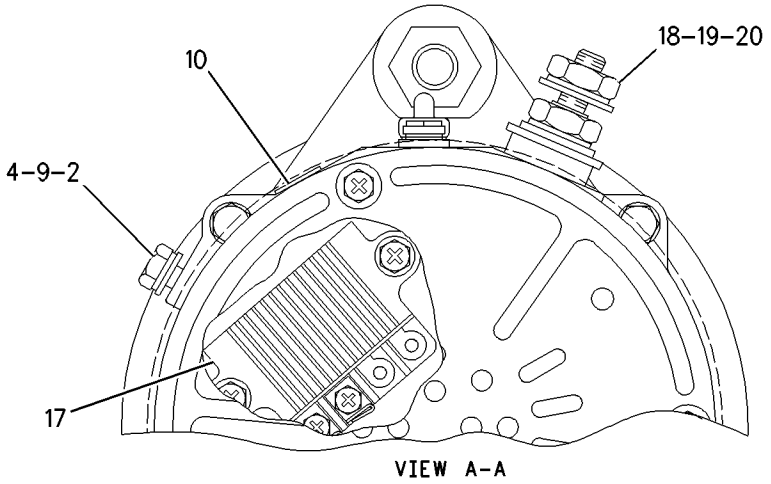

VIEW A-A

GRAPHIC #1 **<END>** g00873198

205-8587 ALTERNATOR GP-CHARGING

S/N: RJS1-UP
95 AMPERE, 24 VOLT
PART OF 205-8604 INSTALLATION AR-ENGINE

SMCS-1405 **i02219855**

NOTE	REF NO	GRAPHIC REF	PART NUMBER	QTY	PART NAME 1 2 3 4 5 6 (PRODUCT LEVEL)	SEE PAGE
	1	1	**133-7023**	2	PULLEY AS-IDLER	
					(EACH INCLUDES)	
		1	**151-2898**	1	SPACER (10.4X38.1X20-MM THK)	
		1	**151-2900**	1	BOLT (M10X1.5X54.25-MM)	
		1	**166-6358**	1	COVER-DUST	
	2	1	**173-1498**	1	PULLEY AS-IDLER (8-GROOVE)	
		1	**151-2900**	1	BOLT (M10X1.5X54.25-MM)	
		1	**166-6358**	1	COVER-DUST	
	3	1	**190-0643**	1	BELT TIGHTENER	
YR	4	1	**197-8820**	1	ALTERNATOR GP-CHARGING (24-VOLT, 95-AMPERE)	171
	5	1	**239-7037**	1	SUPPORT	
	6	1	**243-1324**	1	BELT-SERPENTINE (ALTERNATOR)	
	7	1	**123-0791**	1	PULLEY (8-GROOVE)	
	8	1	**5P-2424**	1	BOLT (1/2-13X2.25-IN)	
	9	1	**6V-8188**	1	NUT (1/2-13-THD)	
	10	1	**7X-0326**	3	BOLT (1/2-13X3-IN)	
	11	1	**7X-0339**	1	BOLT (1/2-13X6.25-IN)	
	12	1	**8T-4121**	1	WASHER-HARD (11X21X2.5-MM THK)	
M	13	1	**8T-4172**	1	BOLT (M10X1.5X80-MM)	
	14	1	**8T-4223**	6	WASHER-HARD (13.5X25.5X3-MM THK)	
	15	1	**8T-4896**	3	WASHER-HARD (10.2X18.5X2.5-MM THK)	
	16	1	**8T-7008**	3	BOLT (3/8-16X3-IN)	

M-METRIC PART
R-REMFG PART MAY BE AVAILABLE
Y-SEPARATE ILLUSTRATION

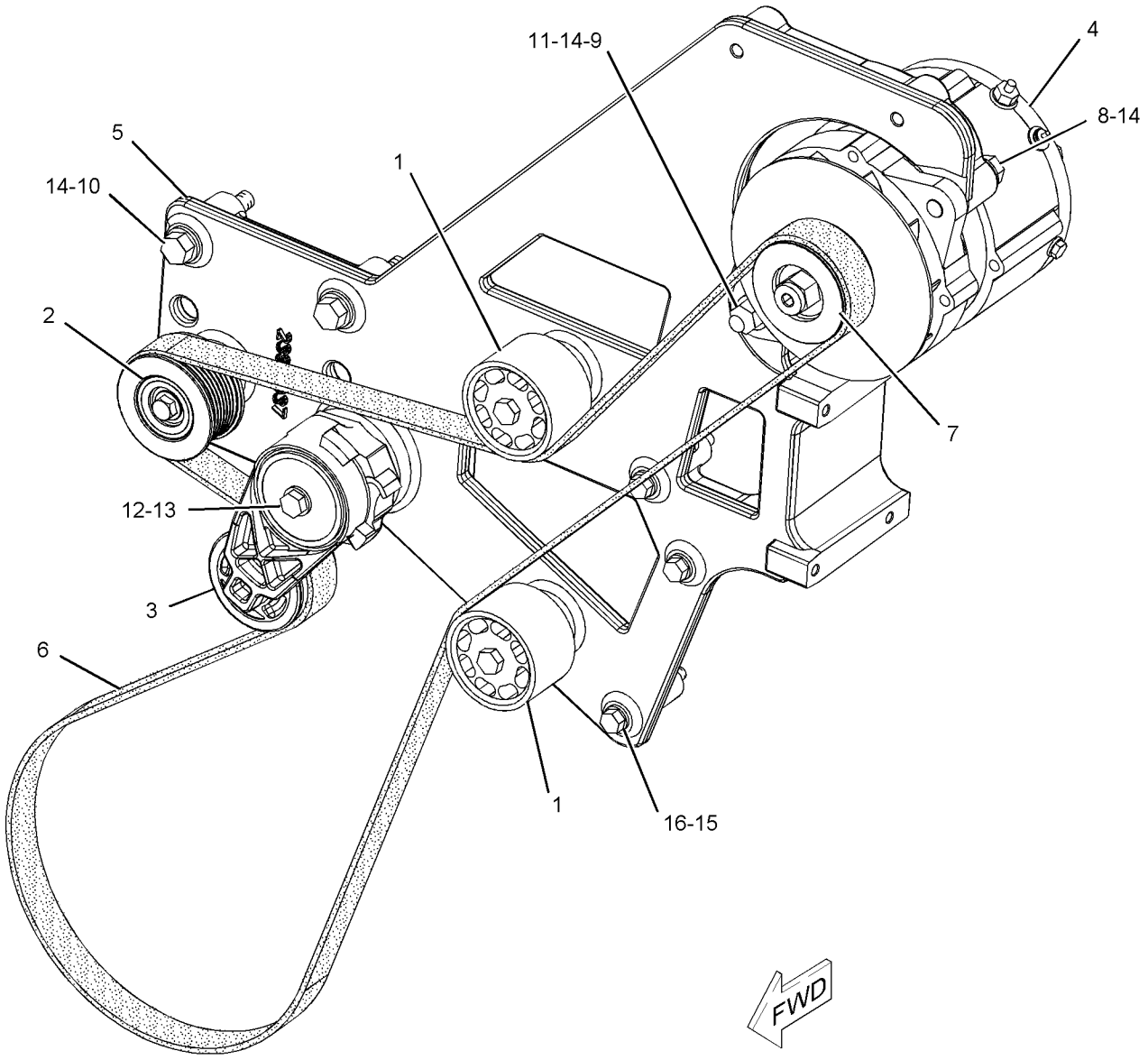

GRAPHIC #1 **<END>** g01119760

242-9279 ALTERNATOR GP-CHARGING

S/N: RJS1-UP
PART OF 211-5069 MODIFICATION AR-WOODCHIP, 211-5072 STOCKPILE AR, 211-5065 WASTE HANDLING AR
AN ATTACHMENT

SMCS-1405 **i02219756**

NOTE	REF NO	GRAPHIC REF	PART NUMBER	QTY	PART NAME 1 2 3 4 5 6 (PRODUCT LEVEL)	SEE PAGE
	1	1	**1W-4724**	2	CLAMP-HOSE	
	2	1	**5P-0597**	1	CLAMP-HOSE	
	3	1	**8P-5411**	1	BUTTON-PLUG	
	4	1	**9S-1803**	1	BOSS	
	5	1	**162-9728**	1	BRACKET AS	
	6	1	**164-5798**	1	CAP-RAIN	
	7	1	**226-4909**	1	SCREEN	
	8	1	**245-4849**	1	HOOD AS	
	9	1	**245-7303**	1	COVER AS	
	10	1	**4L-6459**	1	BOLT (3/8-16X2.5-IN)	
	11	1	**5P-4325**	2	CLIP	
	12	1	**8T-4121**	1	WASHER-HARD (11X21X2.5-MM THK)	
M	13	1	**8T-4137**	1	BOLT (M10X1.5X20-MM)	
E	14	1	**5P-1471**		HOSE (204-CM)	
BE	15	1	**231-0858**		SEAL	

B-USE AS REQUIRED
E-ORDER BY THE CENTIMETER
M-METRIC PART

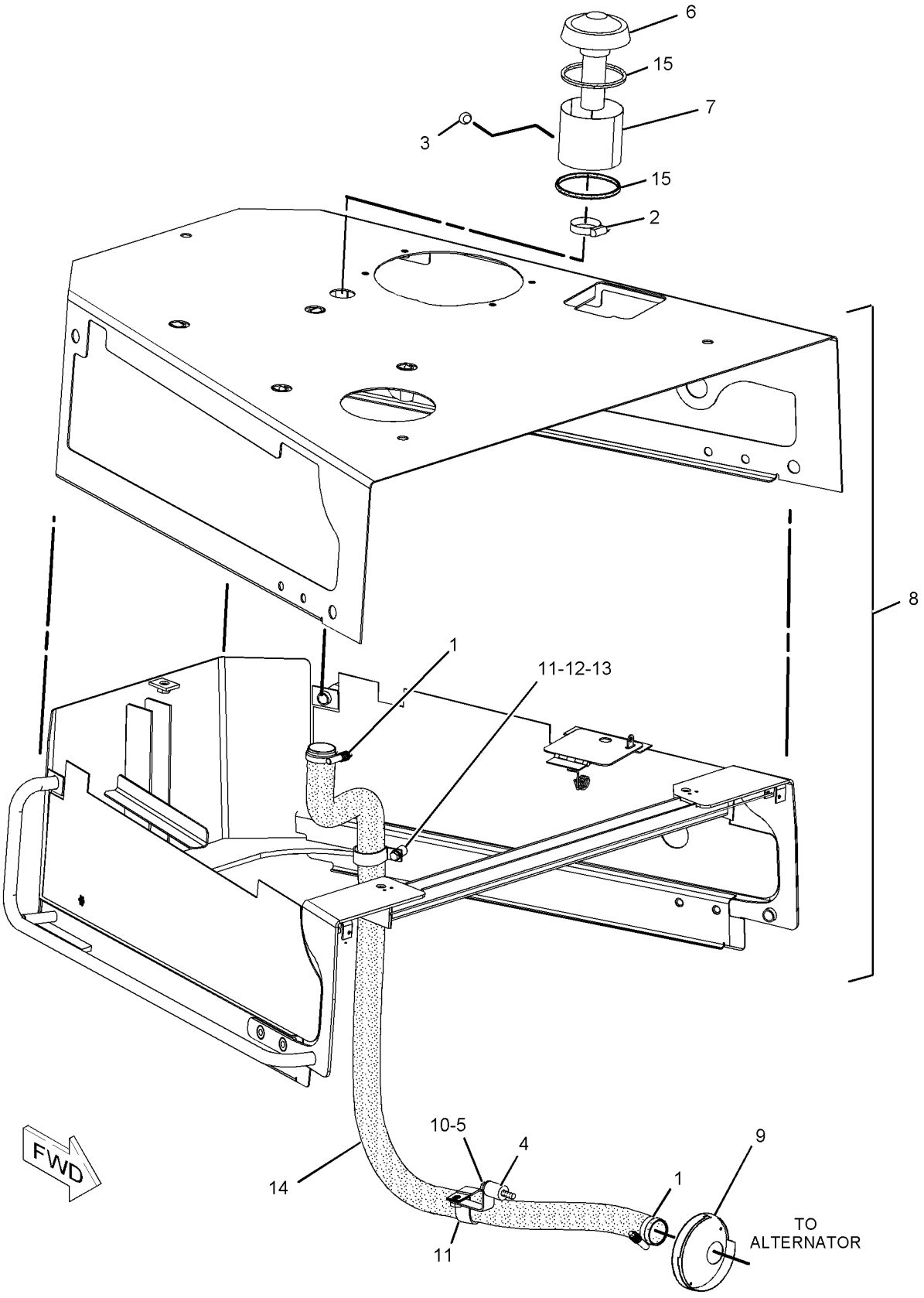

GRAPHIC #1 **<END>** g01126106

205-8578 BATTERY & WIRING GP

S/N: RJS1-UP

PART OF 205-8601 CHASSIS AR

SMCS-1401, 1402, 1408 **i02253981**

NOTE	REF NO	GRAPHIC REF	PART NUMBER	QTY	PART NAME 1 2 3 4 5 6 (PRODUCT LEVEL)	SEE PAGE
	1	3	**3E-7753**	1	FLOAT AS	
	2	3	**3T-9549**	1	ADAPTER	
	3	3	**6V-5051**	1	SEAL-O-RING	
	4	1	**7G-1060**	4	STRAP AS-GROUND	
B	5	1,2,3	**7K-1181**	112	STRAP-CABLE (PLASTIC)	
Y	6	2	**7N-0718**	1	SWITCH GP-DISCONNECT (BATTERY)	268
	7	2	**8S-2634**	1	COVER AS	
		2	**2P-2975**	2	SEAL-O-RING	
	8	2	**8S-4211**	2	PLATE	
	9	2	**8V-0622**	1	CABLE AS	
		2	**8C-5917**	1	TERMINAL AS-BATTERY (POSITIVE)	
		2	**1M-6119**	2	BOLT (5/16-18X1.375-IN)	
		2	**1M-6120**	2	NUT (5/16-18-THD)	
E		2	**5P-0761**		CABLE (OO-GA, RED) (14-CM)	
		2	**8T-9757**	1	TERMINAL AS-BATTERY (NEGATIVE)	
		2	**9G-0003**	1	COVER-TERMINAL (BLACK)	
		2	**9G-0004**	1	COVER-TERMINAL (RED)	
	10	2	**102-9445**	1	PLATE AS	
		2	**7T-1099**	1	LINK	
		2	**9D-4439**	2	STUD-WELD (3/8-16X1-IN)	
	11	3	**111-4402**	1	FILTER-FOAM (FUEL LEVEL SENSOR)	
Y	12	3	**124-9325**	1	SENSOR GP-FUEL LEVEL (ULTRASONIC)	235
	13	2	**139-2118**	1	SWITCH AS-TOGGLE (ENGINE COMPARTMENT WORK LAMP)	
		2	**3E-3365**	1	WEDGE-RECEPTACLE LOCK (2-PIN)	
		2	**6T-3631**	2	NUT-HEX (15/32-32-THD)	
		2	**6T-3632**	1	LOCKWASHER	
		2	**6T-3633**	1	RING-LOCKING	
		2	**186-3735**	2	PIN-CONNECTOR	
		2	**102-8802**	1	KIT-RECEPTACLE (2-PIN) (INCLUDES RECEPTACLE AS & WEDGE)	
	14	2	**140-0860**	1	STRAP AS-GROUND	
Y	15	3	**145-7028**	1	SENSOR GP-TEMPERATURE (HYDRAULIC OIL)	252
Y	15A	2	**145-7028**	1	SENSOR GP-TEMPERATURE (TRANSMISSION SUMP)	252
	16	2	**153-5710**	2	BATTERY (12-VOLT) (MAINTENANCE FREE)	
	17	1,2	**153-6281**	1	HOLD-DOWN-BATTERY	
	18	3	**164-3651**	1	ADAPTER	
Y	19	3	**164-7577**	1	SWITCH GP-BYPASS (PTO FILTER LIMIT)	267
Y	19A	2	**164-7577**	1	SWITCH GP-BYPASS (STEERING CHARGE FILTER)	267
Y	20	2	**165-5970**	1	SWITCH GP-TOGGLE (FUEL PRIMING PUMP)	277
	21	2	**174-7875**	1	HORN AS (24-VOLT, HIGH TONE)	
Y	22	3	**183-4584**	1	SENSOR GP-SPEED (STEERING MOTOR)	247
	23	2	**191-8726**	1	CABLE AS	
		2	**1S-4915**	2	LINER (CONDUIT)	
		2	**1S-7251**	1	TERMINAL-RING (FOR 1/2-IN BOLT)	
E		2	**5P-0695**		CONDUIT (52-CM)	
E		2	**5P-0761**		CABLE (OO-GA, RED) (69-CM)	
		2	**8N-0869**	1	COVER-TERMINAL (RED)	
BE		2	**8T-2225**		TUBE-HEAT SHRINK	
		2	**9G-0002**	1	COVER-TERMINAL (RED)	
		2	**8T-9756**	1	TERMINAL AS (POSITIVE) (LH)	
BE		2	**114-8843**		SLEEVE-PLASTIC	
	24	2	**199-9800**	1	JUNCTION BLOCK	
	25	3	**204-8000**	3	ANCHOR-TIE	
	26	3	**205-3079**	1	ADAPTER	
	27	1	**209-7803**	1	HARNESS AS-CHASSIS (RH)	

205-8578 **BATTERY & WIRING GP** *(contd.)* **i02253981**

NOTE	REF NO	GRAPHIC REF	PART NUMBER	QTY	PART NAME 1 2 3 4 5 6 (PRODUCT LEVEL)	SEE PAGE
		1	**102-8802**	2	KIT-RECEPTACLE (2-PIN)	
		1	**102-8803**	3	KIT-RECEPTACLE (3-PIN)	
		1	**102-8801**	1	KIT-RECEPTACLE (12-PIN)	
					(EACH INCLUDES RECEPTACLE AS & WEDGE)	
		1	**155-2255**	1	KIT-CONNECTING PLUG (12-PIN)	
		1	**155-2265**	1	KIT-CONNECTING PLUG (8-PIN)	
		1	**155-2260**	3	KIT-CONNECTING PLUG (3-PIN)	
		1	**155-2270**	9	KIT-CONNECTING PLUG (2-PIN)	
					(EACH INCLUDES PLUG AS & WEDGE)	
		1	**155-2272**	1	PLUG AS-CONNECTOR (4-PIN)	
		1	**160-7689**	1	PLUG AS-CONNECTOR (70-PIN)	
	28	1	**209-7804**	1	HARNESS AS-CHASSIS (LH)	
		1	**102-8802**	2	KIT-RECEPTACLE (2-PIN)	
		1	**102-8803**	2	KIT-RECEPTACLE (3-PIN)	
		1	**102-8804**	1	KIT-RECEPTACLE (4-PIN)	
		1	**102-8805**	1	KIT-RECEPTACLE (6-PIN)	
		1	**102-8801**	3	KIT-RECEPTACLE (12-PIN)	
					(EACH INCLUDES RECEPTACLE AS & WEDGE)	
		1	**155-2255**	3	KIT-CONNECTING PLUG (12-PIN)	
		1	**155-2260**	1	KIT-CONNECTING PLUG (3-PIN)	
		1	**155-2270**	10	KIT-CONNECTING PLUG (2-PIN)	
		1	**155-2274**	1	KIT-CONNECTING PLUG (6-PIN)	
					(EACH INCLUDES PLUG AS & WEDGE)	
		1	**155-2272**	4	PLUG AS-CONNECTOR (4-PIN)	
		1	**160-7689**	1	PLUG AS-CONNECTOR (70-PIN)	
	29	1	**209-7805**	1	HARNESS AS-FRONT	
		1	**102-8802**	1	KIT-RECEPTACLE (2-PIN)	
		1	**102-8803**	2	KIT-RECEPTACLE (3-PIN)	
		1	**102-8804**	1	KIT-RECEPTACLE (4-PIN)	
		1	**102-8801**	1	KIT-RECEPTACLE (12-PIN)	
					(EACH INCLUDES RECEPTACLE AS & WEDGE)	
		1	**155-2260**	2	KIT-CONNECTING PLUG (3-PIN)	
		1	**155-2270**	7	KIT-CONNECTING PLUG (2-PIN)	
					(EACH INCLUDES PLUG AS & WEDGE)	
		1	**155-2272**	1	PLUG AS-CONNECTOR (4-PIN)	
	30	2	**209-7808**	1	CABLE AS	
		2	**1S-4915**	2	LINER (CONDUIT)	
		2	**1S-7251**	2	TERMINAL-RING (FOR 1/2-IN BOLT)	
E		2	**5P-0695**		CONDUIT (151-CM)	
E		2	**5P-0761**		CABLE (00-GA, RED) (169-CM)	
		2	**8N-0869**	2	COVER-TERMINAL (RED)	
BE		2	**8T-2225**		TUBE-HEAT SHRINK	
BE		2	**114-8843**		SLEEVE-PLASTIC	
	31	1	**209-7809**	1	CABLE AS	
		1	**1S-4915**	2	LINER (CONDUIT)	
		1	**1S-7251**	2	TERMINAL-RING (FOR 1/2-IN BOLT)	
E		1	**5P-0695**		CONDUIT (63-CM)	
E		1	**5P-0761**		CABLE (00-GA, RED) (80-CM)	
		1	**8N-0869**	2	COVER-TERMINAL (RED)	
BE		1	**8T-2225**		TUBE-HEAT SHRINK	
BE		1	**114-8843**		SLEEVE-PLASTIC	
	32	1	**213-6661**	1	HARNESS AS-TRANSMISSION	
		1	**102-8801**	1	KIT-RECEPTACLE (12-PIN)	
					(INCLUDES RECEPTACLE AS & WEDGE)	
		1	**155-2255**	1	KIT-CONNECTING PLUG (12-PIN)	
					(INCLUDES PLUG AS & WEDGE)	
		1	**108-6259**	1	PLUG AS-CONNECTOR (17-PIN)	
	33	2	**213-6664**	1	CABLE AS	
		2	**1S-7252**	1	TERMINAL-RING (FOR 3/8-IN BOLT)	

205-8578 **BATTERY & WIRING GP** *(contd.)* **i02253981**

NOTE	REF NO	GRAPHIC REF	PART NUMBER	QTY	PART NAME 1 2 3 4 5 6 (PRODUCT LEVEL)	SEE PAGE
		2	**9G-0003**	1	COVER-TERMINAL (BLACK)	
		2	**9G-8909**	1	COVER-TERMINAL (BLACK)	
		2	**8T-9757**	1	TERMINAL AS-BATTERY (NEGATIVE)	
E		2	**159-8050**		CABLE (00-GA, BLACK) (25-CM)	
	34	1	**213-6665**	1	CABLE AS	
		1	**1S-4915**	2	LINER (CONDUIT)	
		1	**1S-7252**	2	TERMINAL-RING (FOR 3/8-IN BOLT)	
E		1	**5P-0695**		CONDUIT (95-CM)	
E		1	**5P-0747**		CABLE (00-GA, BLACK) (112-CM)	
BE		1	**8T-2225**		TUBE-HEAT SHRINK	
		1	**9G-8909**	2	COVER-TERMINAL (BLACK)	
BE		1	**114-8843**		SLEEVE-PLASTIC	
	35	2	**213-6666**	1	CABLE AS	
		2	**1S-7252**	2	TERMINAL-RING (FOR 3/8-IN BOLT)	
E		2	**5P-0747**		CABLE (00-GA, BLACK) (57-CM)	
		2	**9G-8909**	1	COVER-TERMINAL (BLACK)	
BE		2	**114-8843**		SLEEVE-PLASTIC	
	36	2	**213-6672**	1	RECEPTACLE AS (AUX START)	
		2	**1S-4915**	2	LINER (CONDUIT)	
		2	**1S-7251**	1	TERMINAL-RING (FOR 1/2-IN BOLT)	
		2	**1S-7252**	1	TERMINAL-RING (FOR 3/8-IN BOLT)	
E		2	**5P-0695**		CONDUIT (100-CM)	
E		2	**5P-0747**		CABLE (00-GA, BLACK) (70-CM)	
E		2	**5P-0761**		CABLE (00-GA, RED) (122-CM)	
		2	**8N-0869**	1	COVER-TERMINAL (RED)	
BE		2	**8T-2225**		TUBE-HEAT SHRINK	
BE		2	**114-8843**		SLEEVE-PLASTIC	
	37	2	**213-9100**	1	ALARM AS	
BD		2	**5P-5623**		WIRE-ELECTRICAL (16-GA, BLACK)	
		2	**102-8802**	1	KIT-RECEPTACLE (2-PIN)	
					(INCLUDES RECEPTACLE AS & WEDGE)	
		2	**3E-3365**	1	WEDGE-RECEPTACLE LOCK (2-PIN)	
		2	**186-3735**	2	PIN-CONNECTOR	
E		2	**9X-1813**		SLEEVE (31-CM)	
	38	2	**220-8397**	1	WIRE AS	
Y	39	2	**224-4535**	1	SENSOR GP-PRESSURE (STEERING)	241
	40	2	**224-6316**	1	ADAPTER	
	41	3	**224-9044**	1	HARNESS AS-SENSOR (STEER MOTOR SPEED, TMSN LUBE)	
		3	**102-8806**	1	KIT-RECEPTACLE (8-PIN)	
					(INCLUDES RECEPTACLE AS & WEDGE)	
		3	**155-2270**	2	KIT-CONNECTING PLUG (2-PIN)	
					(EACH INCLUDES PLUG AS & WEDGE)	
		3	**155-2272**	1	PLUG AS-CONNECTOR (4-PIN)	
	42	2	**233-9843**	1	BRACKET	
Y	43	2	**234-4323**	1	LAMP GP-FLOOD (24-VOLT, VERTICAL MOUNT) (ENGINE SERVICE)	202
Y	44	3	**237-0957**	1	SENSOR GP-PRESSURE (ELECTROHYDRAULIC PUMP)	242
	45	2	**248-2917**	1	BRACKET	
	46	3	**0L-1407**	2	GROMMET	
	47	3	**115-3072**	1	CLIP AS-CONNECTOR (8-PIN)	
	48	2	**132-5789**	4	CLIP	
	49	2	**148-9263**	2	GROMMET-SPLIT	
	50	2	**163-1201**	1	HORN AS (24-VOLT, LOW TONE)	
	51	2,3	**1J-9671**	2	SEAL-O-RING	
	52	2	**2J-5245**	3	BOLT (3/8-16X1.25-IN)	
	53	3	**2S-4078**	1	SEAL-O-RING	
	54	2	**3D-2824**	1	SEAL-O-RING	
	55	3	**3J-1907**	2	SEAL-O-RING	
	56	2	**3J-7354**	1	SEAL-O-RING	

205-8578 **BATTERY & WIRING GP** *(contd.)* **i02253981**

NOTE	REF NO	GRAPHIC REF	PART NUMBER	QTY	PART NAME 1 2 3 4 5 6 (PRODUCT LEVEL)	SEE PAGE
	57	2	**3K-0360**	1	SEAL-O-RING	
	58	2	**3K-6060**	2	LOCKNUT (3/8-16-THD)	
	59	2	**4M-6425**	2	BOLT (5/16-18X1-IN)	
	60	2,3	**4P-7428**	2	CLIP	
	61	2	**4P-7429**	1	CLIP	
	62	2,3	**4P-7581**	6	CLIP	
	63	2,3	**4P-8134**	4	CLIP	
	64	3	**5M-3062**	1	BOLT (3/8-16X0.75-IN)	
	65	2	**5P-1075**	6	WASHER-HARD (10.2X22.5X3-MM THK)	
	66	2	**5P-4674**	1	ADAPTER-O-RING	
	67	2	**5S-7379**	4	BOLT (3/8-16X0.875-IN)	
	68	2	**5S-7382**	1	BOLT (3/8-16X1.375-IN)	
	69	2	**6V-8801**	3	NUT (3/8-16-THD)	
	70	2,3	**7B-1251**	4	GROMMET	
	71	2,3	**7J-0204**	2	SEAL-O-RING	
	72	2	**7X-7729**	2	WASHER (11X25X3-MM THK)	
	73	2	**8C-7325**	1	ADAPTER	
	74	1,2,3	**8T-4121**	25	WASHER-HARD (11X21X2.5-MM THK)	
M	75	2	**8T-4133**	2	NUT (M10X1.5-THD)	
M	76	1,2,3	**8T-4137**	23	BOLT (M10X1.5X20-MM)	
M	77	2	**8T-4179**	3	BOLT (M12X1.75X20-MM)	
M	78	3	**8T-4185**	4	BOLT (M10X1.5X50-MM)	
	79	2	**8T-4223**	3	WASHER-HARD (13.5X25.5X3-MM THK)	
	80	2	**8T-4224**	2	WASHER-HARD (8.8X16X2-MM THK)	
	81	2,3	**8T-4896**	5	WASHER-HARD (10.2X18.5X2.5-MM THK)	
M	82	3	**9X-6153**	2	BOLT (M6X1X10-MM)	

B-USE AS REQUIRED
D-ORDER BY THE METER
E-ORDER BY THE CENTIMETER
M-METRIC PART
Y-SEPARATE ILLUSTRATION

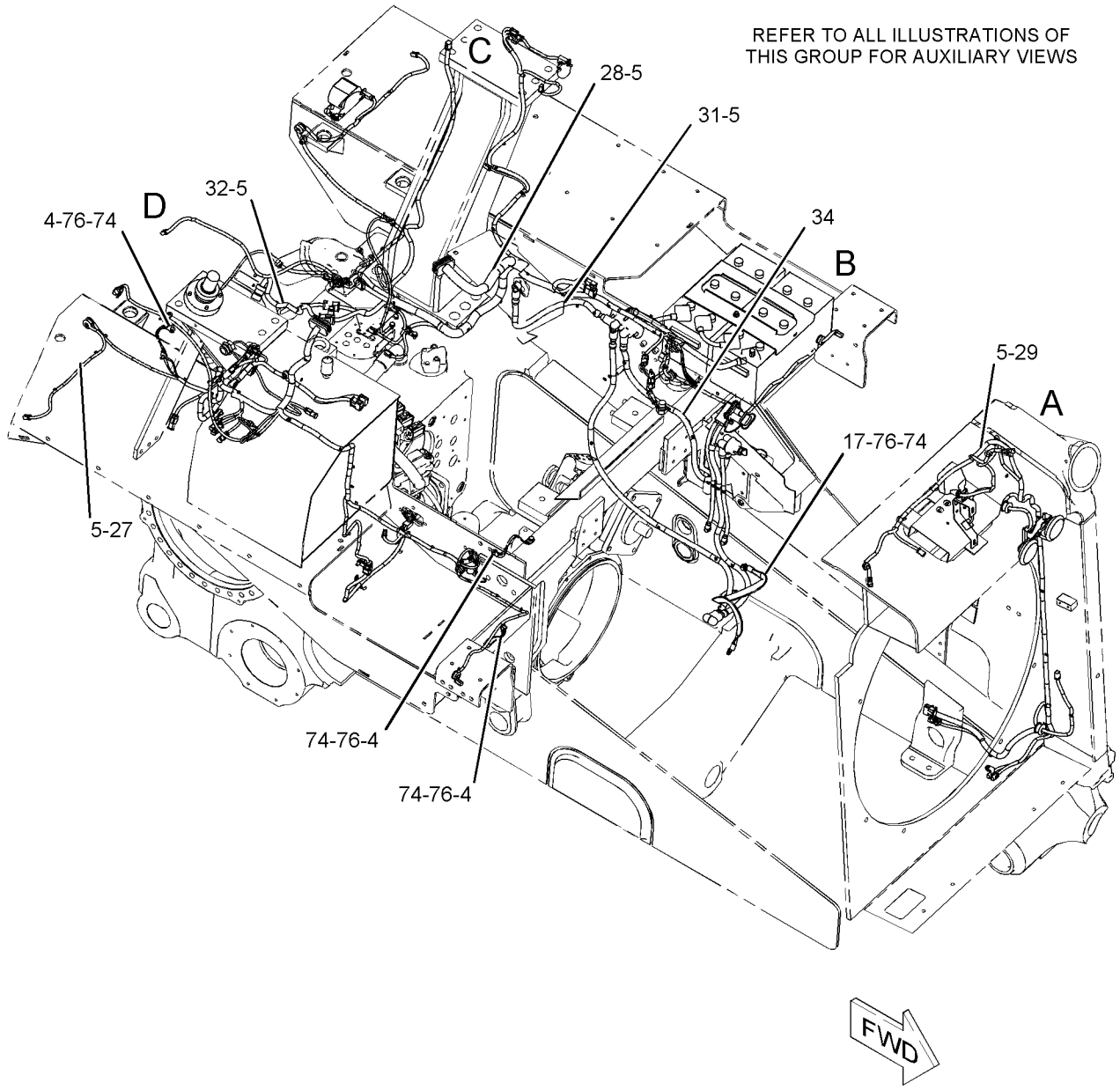

GRAPHIC #1 g01122604

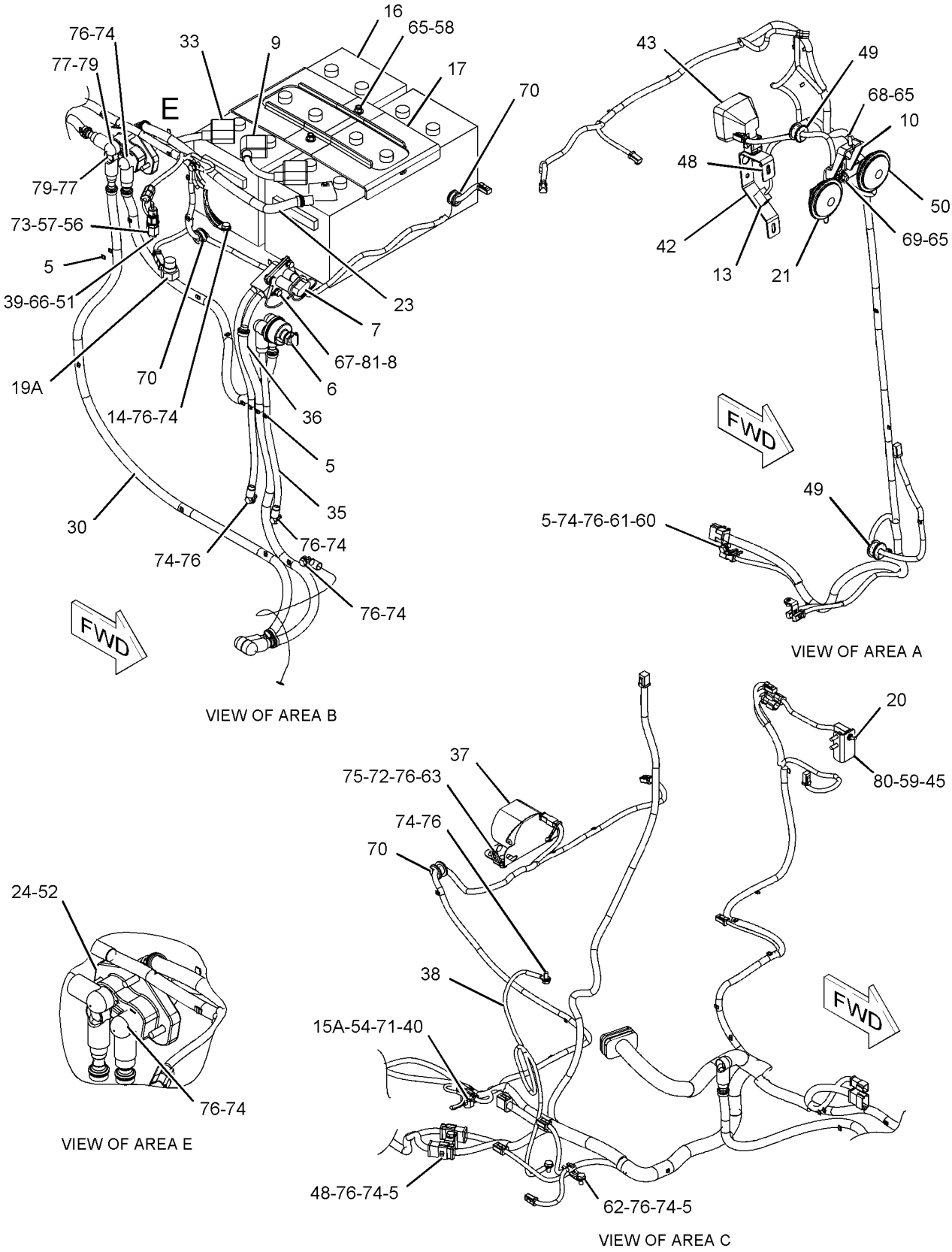

GRAPHIC #2 g01122605

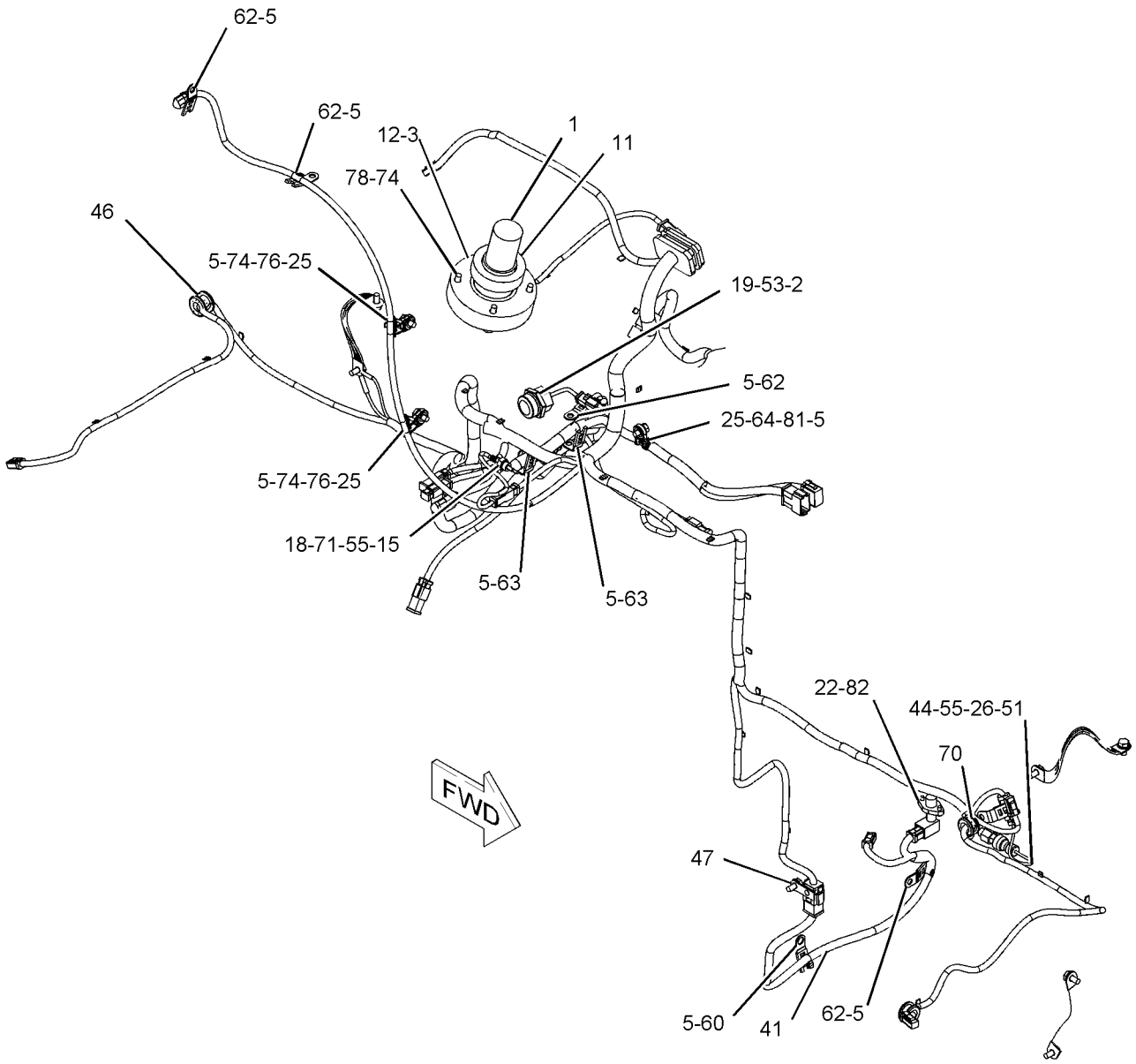

VIEW OF AREA D

GRAPHIC #3 **<END>** g01122607

9W-0742 BLOCK GP-JUNCTION

S/N: RJS1-UP

PART OF 230-4090 PRELUBRICATION AR-ENGINE, 213-6675 STARTING AR-COLD WEATHER AN ATTACHMENT

SMCS-1408 **i02162969**

NOTE	REF NO	GRAPHIC REF	PART NUMBER	QTY	PART NAME 1 2 3 4 5 6 (PRODUCT LEVEL)	SEE PAGE
	1	1	**8C-6358**	1	BLOCK GP-JUNCTION	
	1A	1	**8T-3519**	3	BOLT-BRONZE (1/2-13X2-IN)	
BD	2	1	**6V-2722**		TUBE-HEAT SHRINK	
	3	1	**7F-0560**	6	WASHER (0.516X0.938X0.101-IN THK)	
	4	1	**8T-3518**	6	NUT-FULL (1/2-13-THD)	

B-USE AS REQUIRED
D-ORDER BY THE METER

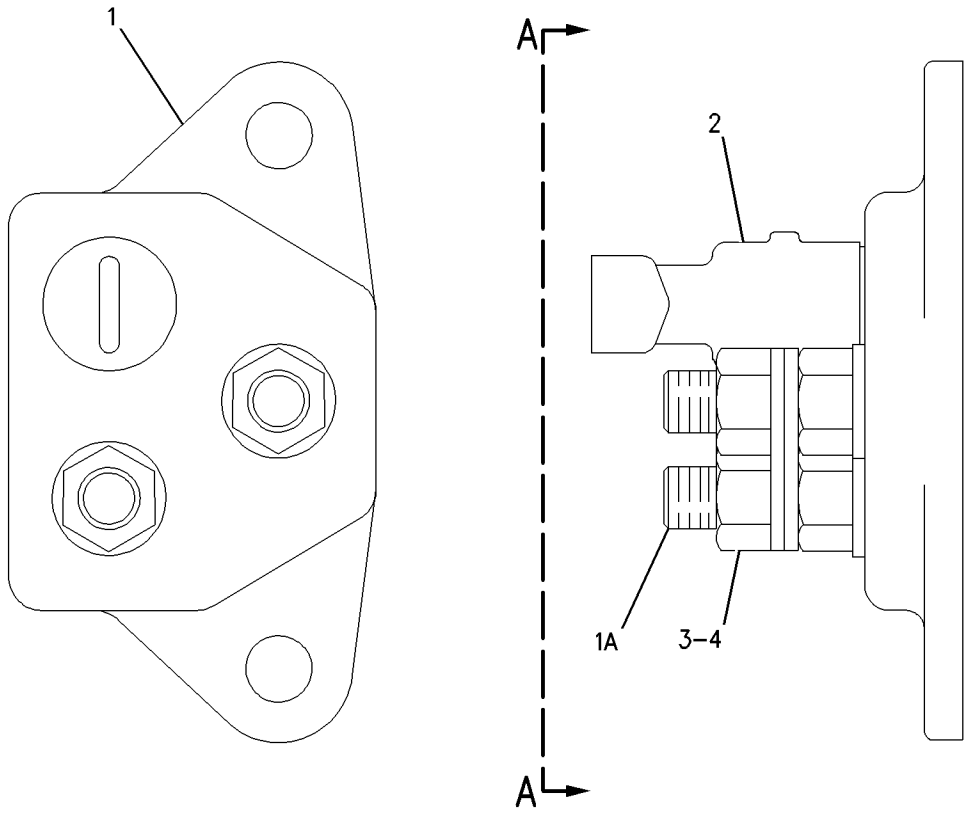

VIEW A–A

GRAPHIC #1 **<END>** g00650721

164-9436 BLOCK GP-POWER

S/N: RJS1-UP
PART OF 259-1869 SWITCH GP-DISCONNECT
AN ATTACHMENT

SMCS-1408 **i01988523**

NOTE	REF NO	GRAPHIC REF	PART NUMBER	QTY	PART NAME 1 2 3 4 5 6 (PRODUCT LEVEL)	SEE PAGE
	1	1	**1D-5117**	1	NUT-JAM (1/2-13 THD)	
	2	1	**3K-6060**	1	LOCKNUT (3/8-16 THD)	
	3	1	**5P-1075**	2	WASHER-HARD (10.2X22.5X3MM THK)	
	4	1	**5P-1076**	2	WASHER-HARD (13.5X30X4MM THK)	
	5	1	**6V-8801**	1	NUT (3/8-16 THD)	
	6	1	**9B-7237**	1	BOLT (3/8-16X1.25 IN)	
	7	1	**5P-2566**	1	BOLT (1/2-13X1.5 IN)	
	8	1	**9X-0941**	1	LOCKNUT (1/2-13 THD)	

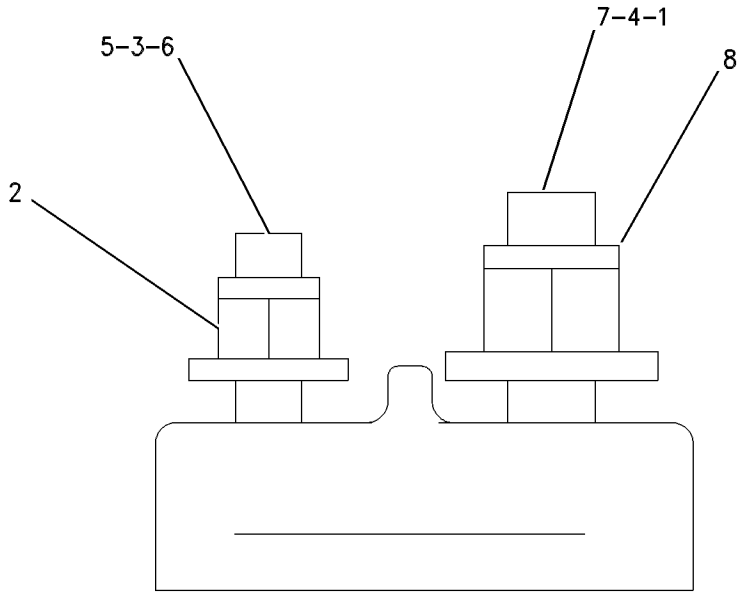

GRAPHIC #1 **<END>** g00520404

126-7631 CONNECTION GP-ELECTRICAL

S/N: RHX1-UP
PART OF 205-8603, 231-3468 ENGINE AR-COMPLETE
FOR USE WITH BLOCK SOUND PANEL
ALSO AN ATTACHMENT

SMCS-4459 **i00834312**

NOTE	REF NO	GRAPHIC REF	PART NUMBER	QTY	PART NAME 1 2 3 4 5 6 (PRODUCT LEVEL)	SEE PAGE
	1	1	**126-8449**	1	STUD-BOLT	
	2	1	**8T-4896**	2	WASHER-HARD (2.5MM THK)	
	3	1	**6V-8801**	1	NUT (3/8-16 THD)	
	4	1	**9M-7783**	1	SPACER	
	5	1	**5P-8247**	1	WASHER-HARD (3.5MM THK)	
	6	1	**101-6603**	1	CAP	

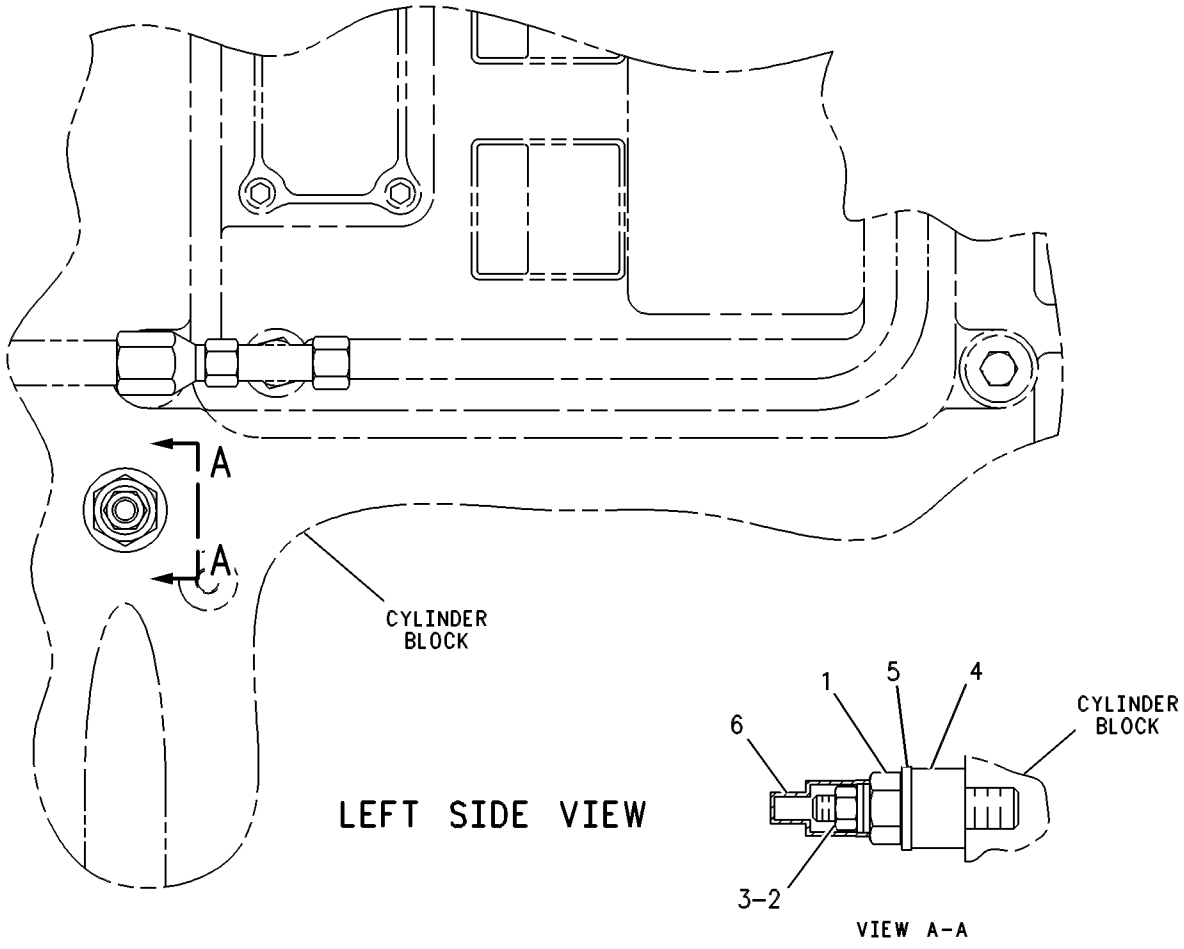

GRAPHIC #1 **<END>** g00263455

209-2608 CONTROL & MTG GP-ELECTRONIC—WINCH

S/N: RJS1-UP

PART OF 205-8636 CONTROL AR-HYDRAULIC

AN ATTACHMENT

SMCS-1901 **i02254040**

NOTE	REF NO	GRAPHIC REF	PART NUMBER	QTY	PART NAME 1 2 3 4 5 6 (PRODUCT LEVEL)	SEE PAGE
Y	1	1	**208-6075**	1	CONTROL GP-JOYSTICK (WINCH)	517
	2	1	**235-5801**	1	PLATE	
	3	1	**260-1982**	1	HARNESS AS-WIRING (JOYSTICK) (WINCH)	
		1	**102-8805**	1	KIT-RECEPTACLE (6-PIN)	
					(INCLUDES RECEPTACLE AS & WEDGE)	
		1	**180-0050**	2	KIT-CONNECTING PLUG (4-PIN)	
					(EACH INCLUDES PLUG AS & WEDGE)	
		1	**155-2272**	1	PLUG AS-CONNECTOR (4-PIN)	
M	4	1	**127-2170**	4	SCREW-TRUSS HEAD (M8X1.25X20-MM)	

M-METRIC PART
Y-SEPARATE ILLUSTRATION

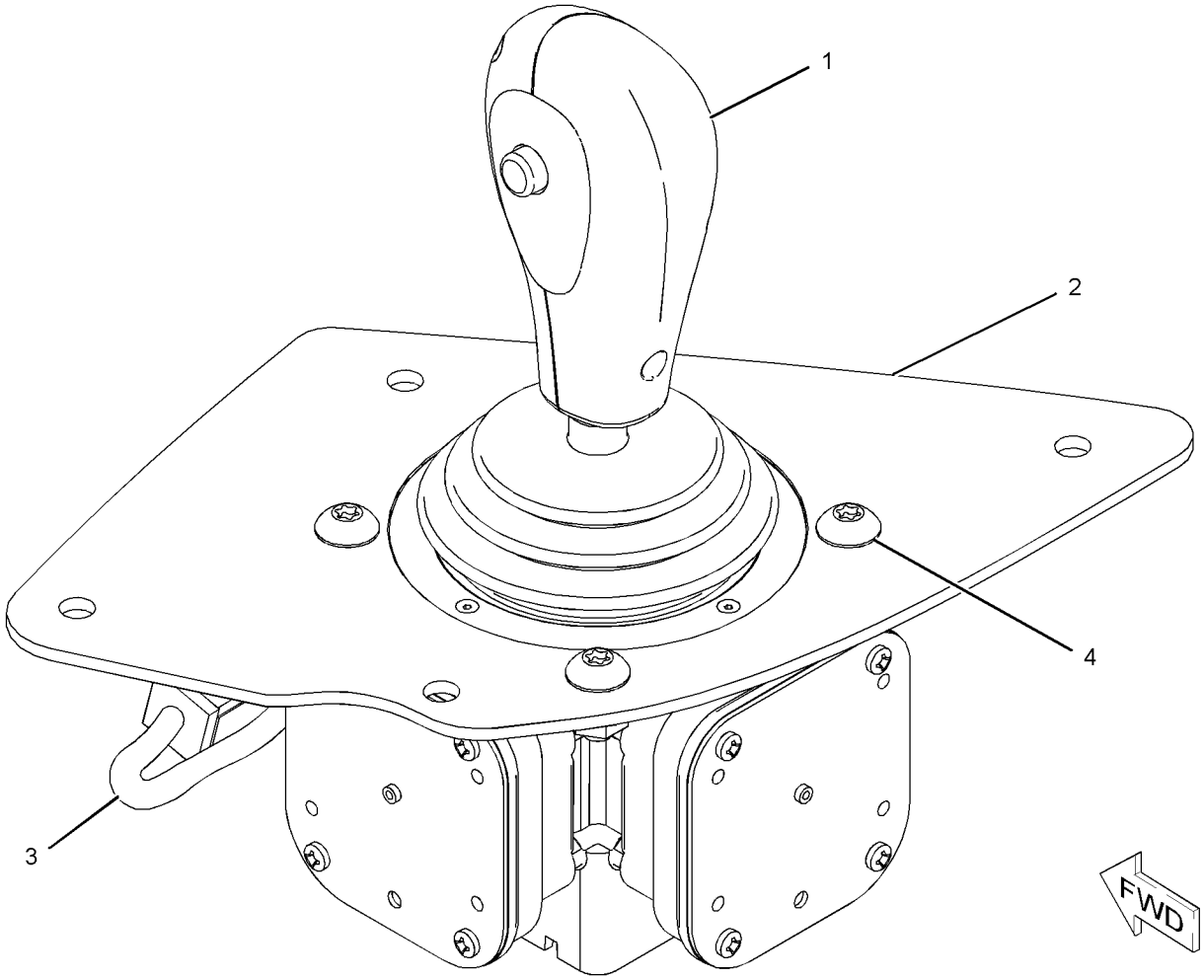

GRAPHIC #1 **<END>** g01110827

243-1560 CONTROL & MTG GP-ENGINE ELEK

S/N: RHX1-UP
ADEM-IV, AIR COOLED
PART OF 205-8603, 231-3468 ENGINE AR-COMPLETE
ALSO AN ATTACHMENT

SMCS-1901 **i02189526**

NOTE	REF NO	GRAPHIC REF	PART NUMBER	QTY	PART NAME 1 2 3 4 5 6 (PRODUCT LEVEL)	SEE PAGE
	1	1	**6I-1418**	4	SPACER (8.2X12.7X28.7-MM THK)	
	3	1	**155-0696**	1	SUPPORT AS	
	3A	1	**5L-3708**	1	STUD-TAPERLOCK	
	4	1	**155-0698**	1	SUPPORT AS	
	4A	1	**5L-3708**	1	STUD-TAPERLOCK	
	5	1	**161-7419**	2	STUD	
	6	1	**248-4068**	2	CONTROL GP-MACHINE	
	7	1	**1B-9575**	2	BOLT (5/16-18X1.75-IN)	
	8	1	**233-0891**	2	BRACKET AS	
	9	1	**6V-3964**	2	WASHER-HARD (8.8X25.5X5-MM THK)	
	10	1	**8T-9655**	8	MOUNT-ISOLATION	
	11	1	**9M-1974**	2	WASHER-HARD (8.8X16X2-MM THK)	
	12	1	**9N-0869**	6	WASHER-HARD (8.8X25.5X2-MM THK)	

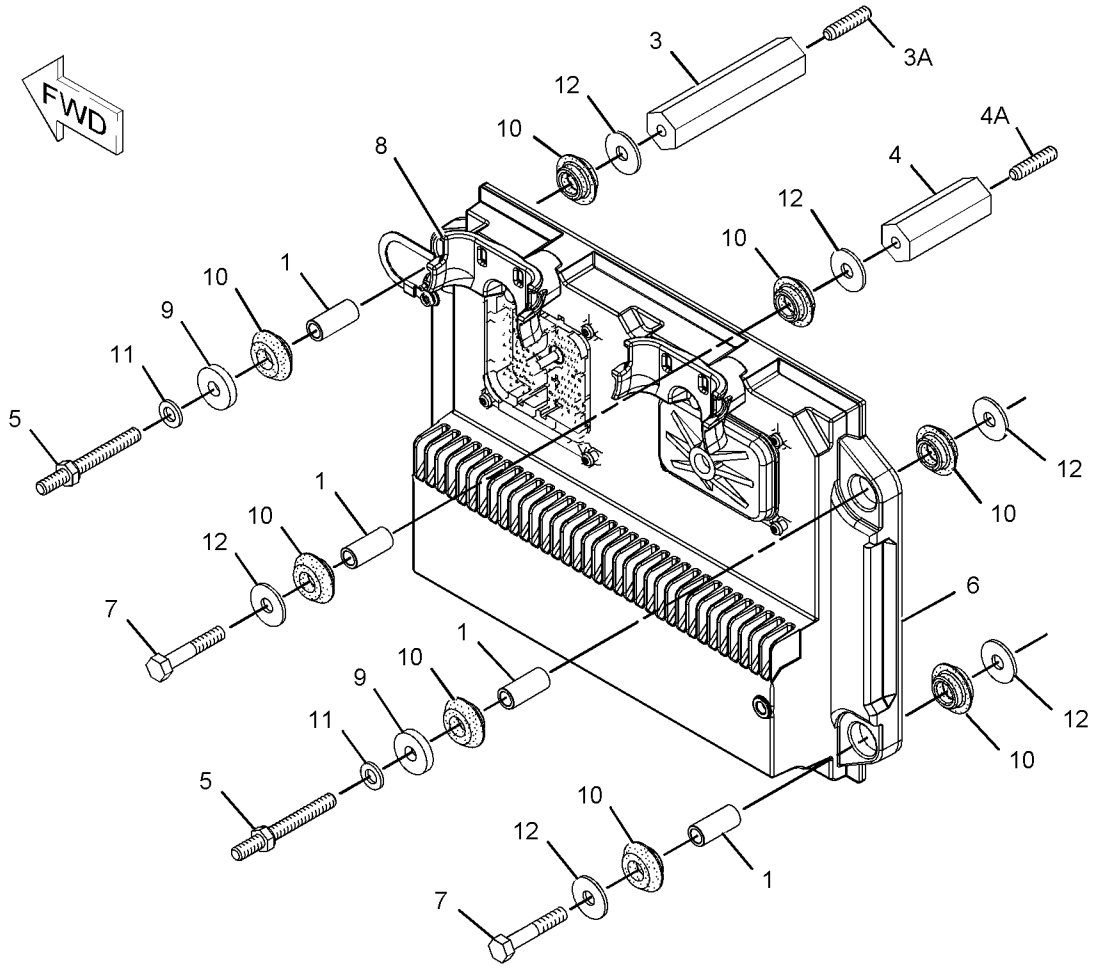

GRAPHIC #1 **<END>** g01107688

214-2540 CONVERTER GP-ELECTRICAL

S/N: RJS1-UP
24-VOLT TO 12-VOLT, 20-AMPERE
AN ATTACHMENT

SMCS-1421 **i01998293**

NOTE	REF NO	GRAPHIC REF	PART NUMBER	QTY	PART NAME 1 2 3 4 5 6 (PRODUCT LEVEL)	SEE PAGE
	1	1	**239-3902**	1	CONVERTER-ELECTRICAL (24-VOLT TO 12-VOLT)	
M	2	1	**9X-2042**	4	SCREW-TRUSS HEAD	

M-METRIC PART

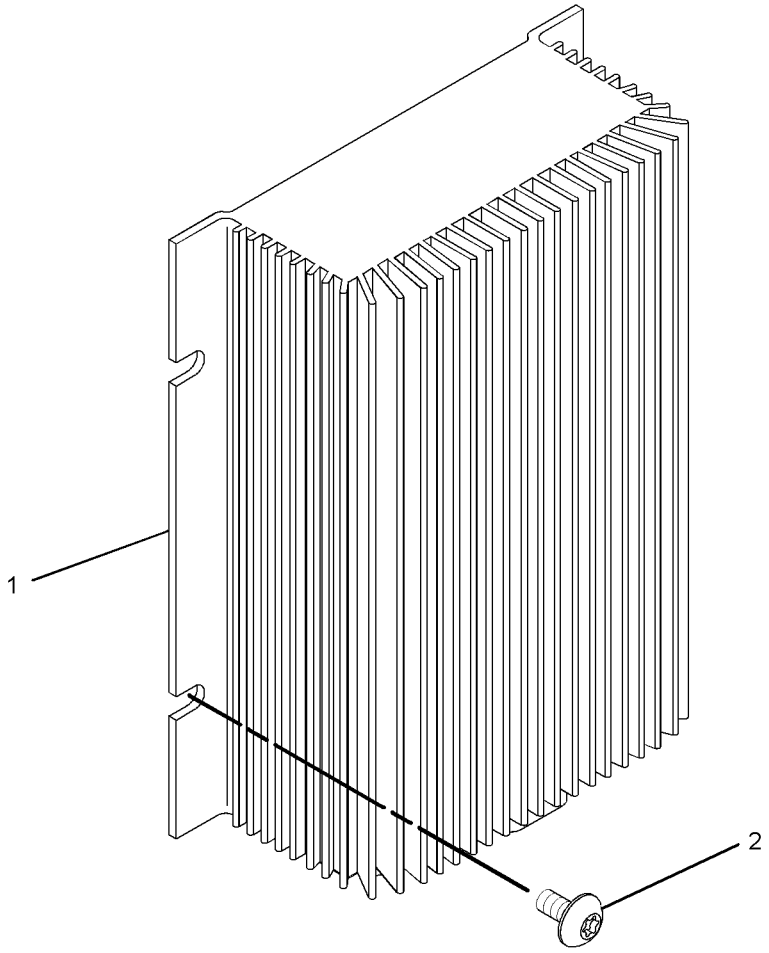

GRAPHIC #1 **<END>** g01037155

205-8624 ELECTRONICS AR-MACHINE

S/N: RJS1-UP

PART OF 205-8600 GENERAL AR-TRACTOR

SMCS-7000 **i02205052**

NOTE	PART NUMBER	QTY	PART NAME 1 2 3 4 5 6 (PRODUCT LEVEL)	SEE PAGE
Y	*207-4458*	1	ELECTRONICS GP-IMPLEMENT	190
Y	*207-4457*	1	ELECTRONICS GP-MONITOR	191
Y	*207-4456*	1	ELECTRONICS GP-POWER TRAIN	191

Y-SEPARATE ILLUSTRATION

<END>

262-2043 ELECTRONICS GP-COMMUNICATION–

PRODUCT LINK 300

S/N: RJS1-UP

PART OF 255-4206 INSTALLATION GP-COMMUNICATION

AN ATTACHMENT

SMCS-7602, 7610, 7620 **i02252028**

NOTE	PART NUMBER	QTY	PART NAME 1 2 3 4 5 6 (PRODUCT LEVEL)	SEE PAGE
	258-8985	1	SOFTWARE GP-COMMUNICATION (PRODUCT LINK 300)	
			-OR-	
			(OPTIONAL SERVICE REPLACEMENT)	
	258-8986	1	SERVICE GP-COMMUNICATION (PRODUCT LINK 300)	
			(INCLUDES CONTROL GP & SOFTWARE)	

<END>

207-4458 ELECTRONICS GP-IMPLEMENT

S/N: RJS1-UP

PART OF 205-8624 ELECTRONICS AR-MACHINE

SMCS-5701, 7610, 7620 **i02254078**

NOTE	PART NUMBER	QTY	PART NAME 1 2 3 4 5 6 (PRODUCT LEVEL)	SEE PAGE
	258-5460	1	SOFTWARE GP-IMPLEMENT (SOFTWARE ONLY)	
			-OR-	
			(OPTIONAL SERVICE REPLACEMENT)	
	258-5461	1	SERVICE GP-IMPLEMENT	
			(INCLUDES CONTROL GP & SOFTWARE)	

<END>

ELECTRICAL AND STARTING SYSTEM

207-4457 ELECTRONICS GP-MONITOR

S/N: RJS1-UP

PART OF 205-8624 ELECTRONICS AR-MACHINE

SMCS-7490, 7601, 7603, 7610, 7620 **i02254081**

NOTE	PART NUMBER	QTY	PART NAME 1 2 3 4 5 6 (PRODUCT LEVEL)	SEE PAGE
	260-3639	1	SOFTWARE GP-MONITOR (ADVISOR) (SOFTWARE ONLY)	
			-OR-	
			(OPTIONAL SERVICE REPLACEMENT)	
	260-3640	1	SERVICE GP-MONITOR (ADVISOR)	
			(INCLUDES CONTROL GP & SOFTWARE)	

<END>

207-4456 ELECTRONICS GP-POWER TRAIN

S/N: RJS1-UP

PART OF 205-8624 ELECTRONICS AR-MACHINE

SMCS-4800, 4808, 7610, 7620 **i02254083**

NOTE	PART NUMBER	QTY	PART NAME 1 2 3 4 5 6 (PRODUCT LEVEL)	SEE PAGE
	258-5440	1	SOFTWARE GP-POWER TRAIN (SOFTWARE ONLY)	
			-OR-	
			(OPTIONAL SERVICE REPLACEMENT)	
	258-5441	1	SERVICE GP-POWER TRAIN	
			(INCLUDES CONTROL GP & SOFTWARE)	

<END>

213-6673 HEATER GP-JACKET WATER

S/N: RJS1-UP
120-VOLT, 1500-WATT
AN ATTACHMENT

SMCS-1383 **i02236786**

NOTE	REF NO	GRAPHIC REF	PART NUMBER	QTY	PART NAME 1 2 3 4 5 6 (PRODUCT LEVEL)	SEE PAGE
	1	1	**6T-2724**	1	BRACKET AS	
		1	**1F-0750**	1	NUT-WELD (3/8-16-THD)	
		1	**6T-2723**	1	BRACKET	
	2	1	**197-6281**	1	CORD AS	
	3	1	**199-5128**	1	RECEPTACLE AS	
	4	1	**261-0634**	1	FILM-IDENTIFICATION (JACKET WATER HEATER)	
	5	1	**230-3525**	1	ELEMENT AS-JACKET WATER HEATER (120-VOLT, 1500-WATT)	
	6	1	**096-6166**	2	WASHER-HARD (4.5X9X1-MM THK)	
M	7	1	**170-5632**	2	BOLT (M4X0.7X16-MM)	
	8	1	**4P-7581**	3	CLIP	
	9	1	**4P-8134**	2	CLIP	
	10	1	**5M-3062**	1	BOLT (3/8-16X0.75-IN)	
	11	1	**5P-1075**	1	WASHER-HARD (10.2X22.5X3-MM THK)	
	12	1	**8T-7525**	1	SEAL-O-RING	
	13	1	**9X-6772**	8	STRAP-CABLE	

M-METRIC PART

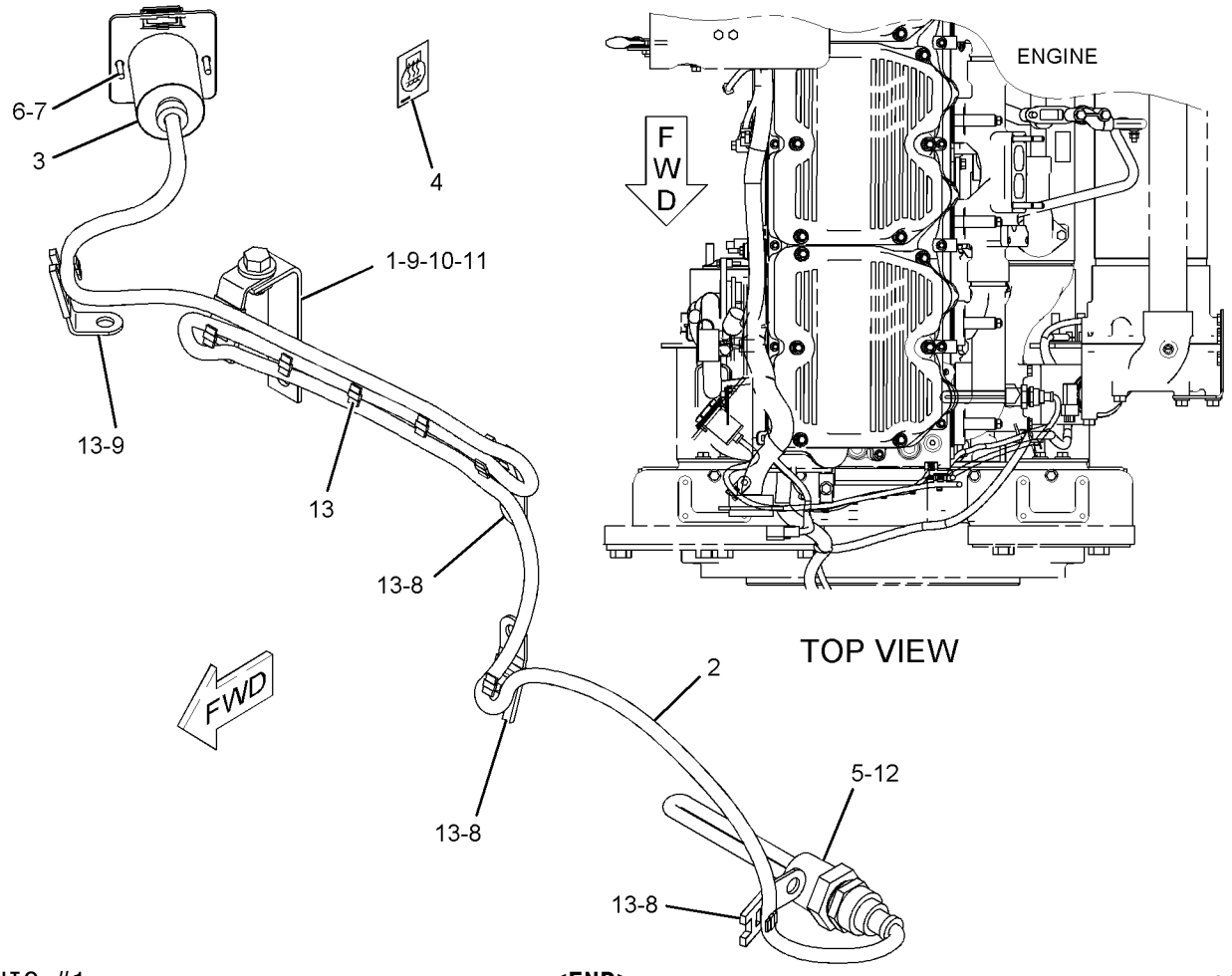

GRAPHIC #1 **<END>** g01036019

214-2539 HEATER GP-JACKET WATER

S/N: RJS1-UP
240-VOLT, 1500-WATT
AN ATTACHMENT

SMCS-1383 **i02235423**

NOTE	REF NO	GRAPHIC REF	PART NUMBER	QTY	PART NAME 1 2 3 4 5 6 (PRODUCT LEVEL)	SEE PAGE
	1	1	**6T-2724**	1	BRACKET AS	
		1	**1F-0750**	1	NUT-WELD (3/8-16-THD)	
		1	**6T-2723**	1	BRACKET	
	2	1	**199-5128**	1	RECEPTACLE AS	
	3	1	**199-5142**	1	CORD AS-JACKET WATER HEATER	
	4	1	**261-0634**	1	FILM-IDENTIFICATION (JACKET WATER HEATER)	
	5	1	**239-8051**	1	ELEMENT AS-JACKET WATER HEATER	
	6	1	**096-6166**	2	WASHER-HARD (4.5X9X1-MM THK)	
M	7	1	**170-5632**	2	BOLT (M4X0.7X16-MM)	
	8	1	**4P-7581**	3	CLIP	
	9	1	**4P-8134**	2	CLIP	
	10	1	**5M-3062**	1	BOLT (3/8-16X0.75-IN)	
	11	1	**5P-1075**	1	WASHER-HARD (10.2X22.5X3-MM THK)	
	12	1	**8T-7525**	1	SEAL-O-RING	
	13	1	**9X-6772**	8	STRAP-CABLE	

M-METRIC PART

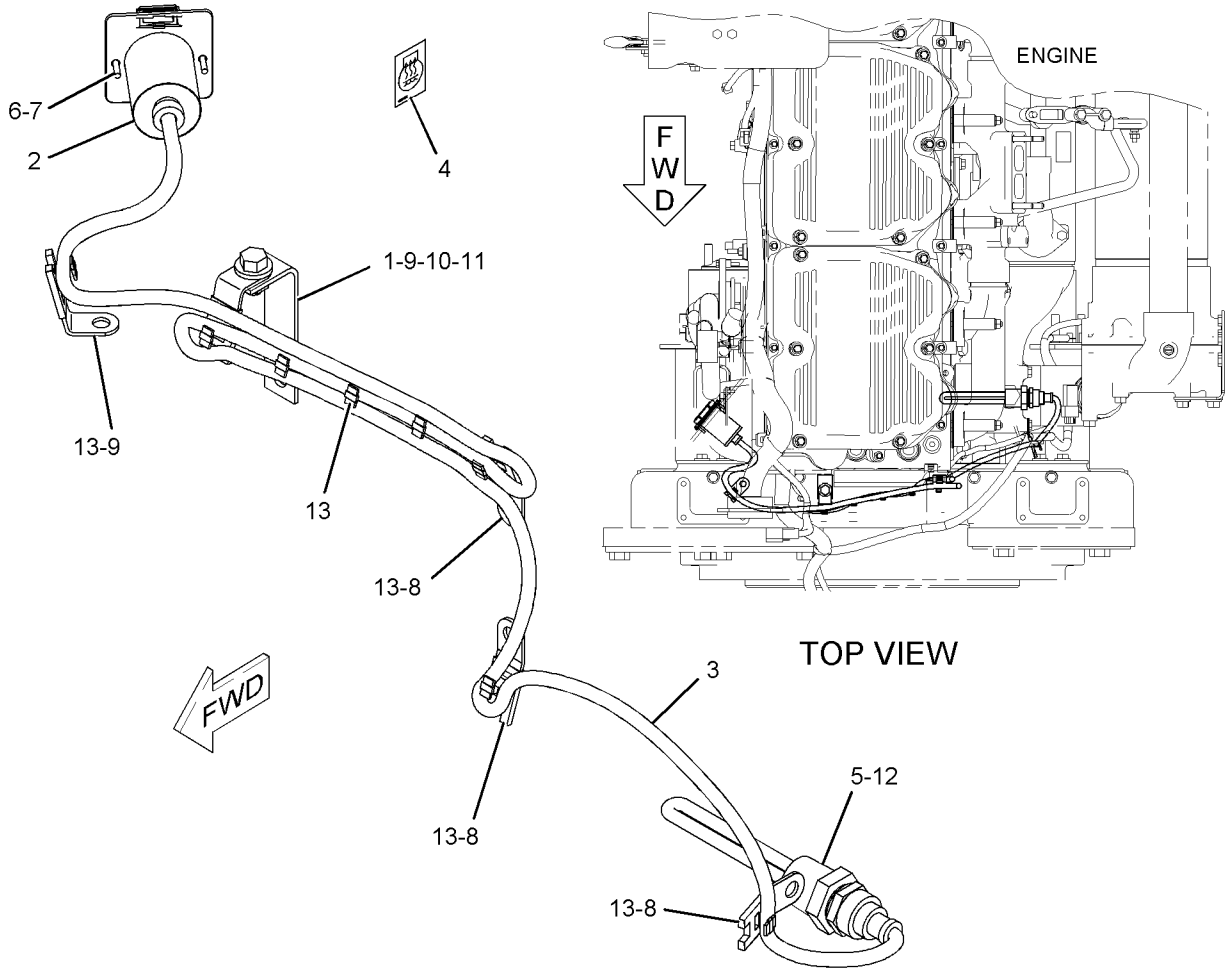

GRAPHIC #1 **<END>** g01036026

205-8586 HEATER GP-MACHINE–CAB, FUEL

S/N: RJS1-UP

AN ATTACHMENT

SMCS-1296, 1383, 5096, 7304 **i02254280**

NOTE	REF NO	GRAPHIC REF	PART NUMBER	QTY	PART NAME 1 2 3 4 5 6 (PRODUCT LEVEL)	SEE PAGE
	1	1	**7C-0754**	2	TEE	
	2	1	**9W-8394**	1	ORIFICE	
	3	1	**9X-2488**	9	CLAMP-HOSE	
	4	1	**101-8240**	1	BRACKET	
	5	1	**106-5823**	2	HOSE	
	6	1	**111-9289**	1	HEATER AS (FUEL, COOLANT)	
		1	**2M-9780**	2	SEAL-O-RING	
		1	**111-9827**	2	ADAPTER	
	7	1	*150-4048*	1	ELBOW AS	
		1	**6V-8722**	1	ELBOW	
		1	**3K-0360**	1	SEAL-O-RING	
		1	**7J-9108**	1	SEAL-O-RING	
I	8	1	**243-1955**	1	HOSE AS	
I	9	1	**243-1956**	1	HOSE AS	
	10	1	*150-3037*	1	ELBOW GP	
		1	**8T-2530**	1	ELBOW	
		1	**3K-0360**	1	SEAL-O-RING	
		1	**7J-9108**	1	SEAL-O-RING	
	11	1	**4L-6454**	6	BOLT (3/8-16X1-IN)	
	12	1	**6D-4246**	1	CLIP	
	13	1	**8T-4896**	6	WASHER-HARD (10.2X18.5X2.5-MM THK)	

I-REFER TO HYDRAULIC INFORMATION SYSTEM

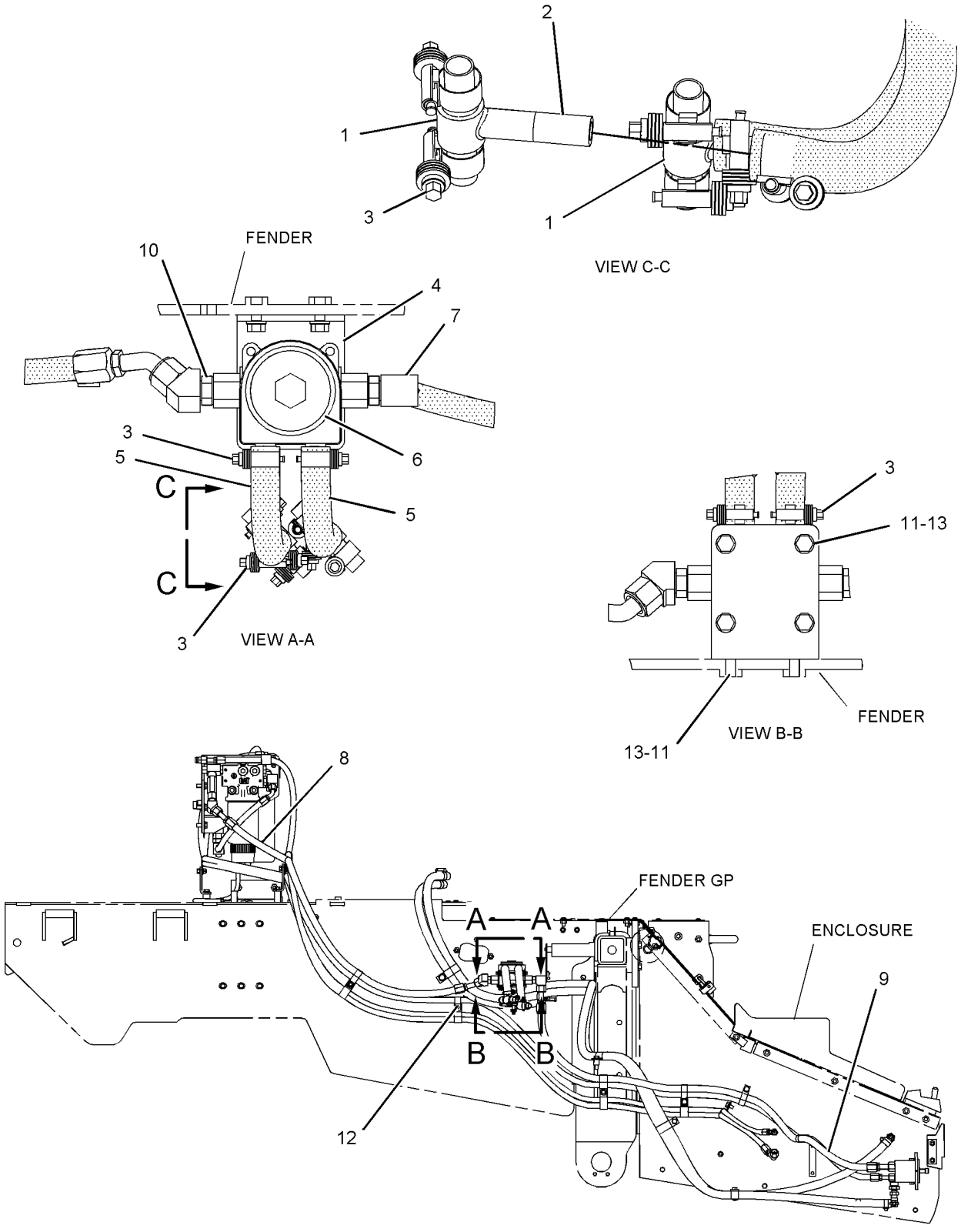

RIGHT SIDE VIEW

GRAPHIC #1

<END>

g01037117

ELECTRICAL AND STARTING SYSTEM

245-4623 INSTALLATION AR-GRADE CONTROL

S/N: RJS1-UP

AN ATTACHMENT

SMCS-7220 **i02236826**

NOTE	PART NUMBER	QTY	PART NAME 1 2 3 4 5 6 (PRODUCT LEVEL)	SEE PAGE
Y	*247-0747*	1	CONTROL GP-JOYSTICK (GRADE CONTROL)	519
Y	*255-3632*	1	MOUNTING GP-CONNECTOR (ACCUGRADE)	224
Y	*241-7920*	1	MOUNTING GP-MONITOR (KIT)	784
Y	*243-5158*	1	MOUNTING GP-RADIO	785
Y	*250-0875*	1	WIRING GP-GRADE CONTROL (ACCUGRADE)	287
	261-4284	1	SOFTWARE GP-IMPLEMENT (ACCUGRADE)	
			(DLR INSTALL CONFIG: SEE IRM: EES03-01)	
	252-5109	1	CONSOLE-FRONT	
	245-7725	1	FILM-IDENTIFICATION (JOYSTICK) (ACCUGRADE)	
			(ON LOWER RH CONSOLE)	

Y-SEPARATE ILLUSTRATION

<END>

255-4206 INSTALLATION GP-COMMUNICATION–PRODUCT LINK

S/N: RJS1-UP
AN ATTACHMENT

SMCS-7602 **i02251168**

NOTE	REF NO	GRAPHIC REF	PART NUMBER	QTY	PART NAME 1 2 3 4 5 6 (PRODUCT LEVEL)	SEE PAGE
B	1	1	**7K-1181**	15	STRAP-CABLE	
	2	1	**8C-5607**	8	MOUNT-ISOLATION	
	3	1	**8C-5608**	4	SPACER (6.5X9.5X25.4-MM THK)	
	4	1	**239-9954**	1	CONTROL GP-UNPROGRAMMED (PRODUCT LINK 300)	
		1	**7X-6315**	1	STRAP AS-GROUND	
		1	**126-7574**	1	SCREW-PAN HEAD (8-32X9.52-MM)	
		1	**134-4126**	1	WASHER (4.52X8.28X0.76-MM THK)	
	5	1	**242-9230**	1	RADIO GP-COMMUNICATION (PRODUCT LINK)	
	6	1	**255-4517**	1	HARNESS AS-CONTROL (PRODUCT LINK)	
		1	**102-8806**	1	KIT-RECEPTACLE (8-PIN)	
					(INCLUDES RECEPTACLE AS & WEDGE)	
		1	**155-2255**	1	KIT-CONNECTING PLUG (12-PIN)	
					(INCLUDES PLUG AS & WEDGE)	
		1	**160-7690**	1	PLUG AS-CONNECTOR (70-PIN)	
	7	1	**255-4518**	1	HARNESS AS-WIRING (PRODUCT LINK RADIO)	
		1	**155-2255**	2	KIT-CONNECTING PLUG (12-PIN)	
					(INCLUDES PLUG AS & WEDGE)	
	8	1	**256-0270**	1	BRACKET AS	
	9	1	**258-8886**	1	HARNESS AS-WIRING (PRODUCT LINK RADIO)	
		1	**102-8801**	1	KIT-RECEPTACLE (12-PIN)	
					(INCLUDES RECEPTACLE AS & WEDGE)	
		1	**3E-7990**	1	RECEPTACLE AS (12-PIN)	
	10	1	**260-7652**	1	FILM-WARNING (PRODUCT LINK)	
M	11	1	**6V-7357**	2	BOLT (M6X1X25-MM)	
M	12	1	**8C-8451**	4	BOLT (M6X1X40-MM)	
M	13	1	**9X-2480**	4	BOLT (M6X1X45-MM)	
	14	1	**9X-6165**	4	WASHER (6.5X22X2.5-MM THK)	
	15	1	**9X-8256**	6	WASHER (6.6X12X2-MM THK)	
Y	16	1	*262-2043*	1	ELECTRONICS GP-COMMUNICATION (PRODUCT LINK 300)	190

B-USE AS REQUIRED
M-METRIC PART
Y-SEPARATE ILLUSTRATION

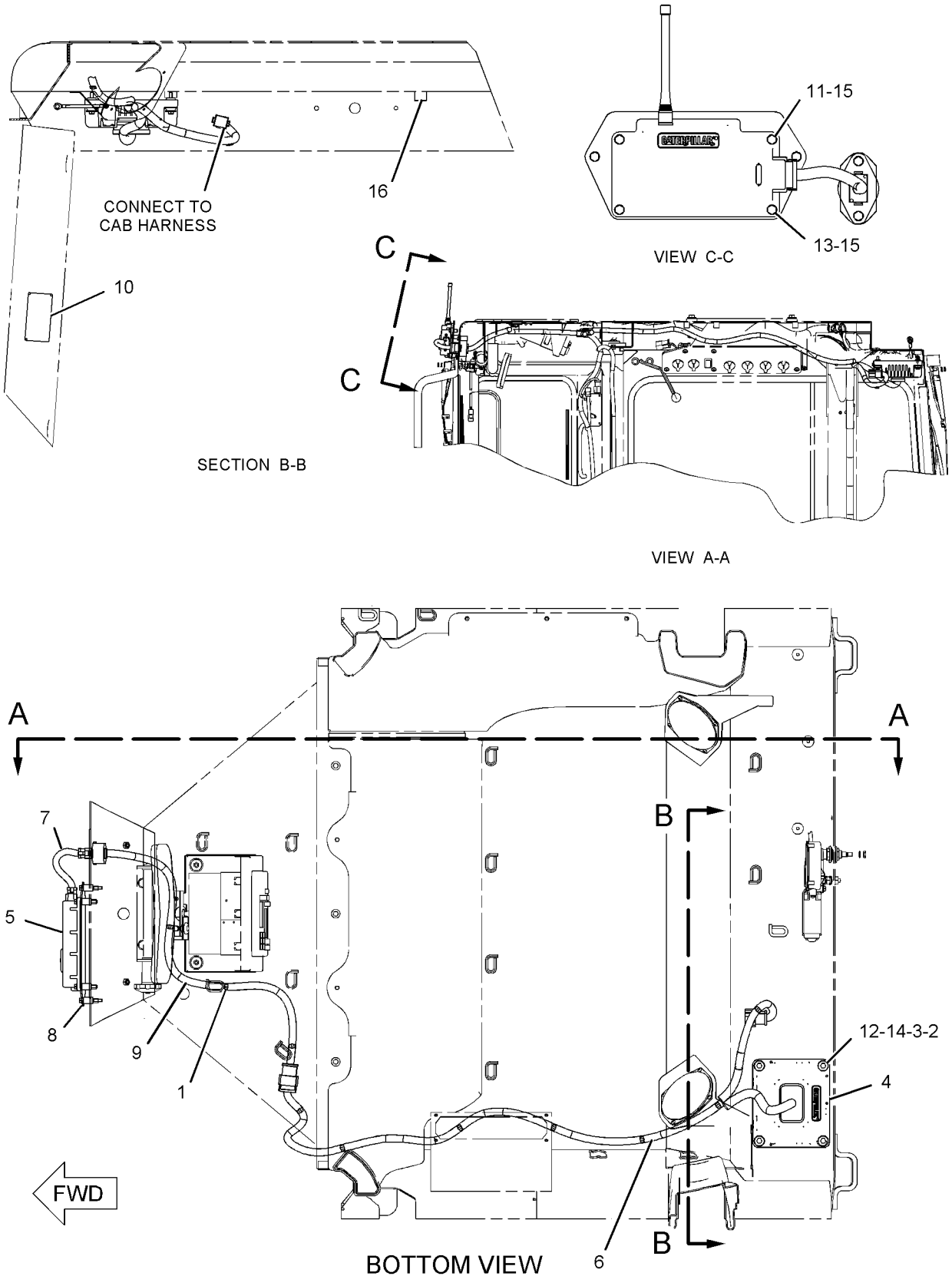

GRAPHIC #1 **<END>** g01133035

255-2430 INSTALLATION GP-GRADE CONTROL–

ACCUGRADE GPS

S/N: RJS1-UP

AN ATTACHMENT

SMCS-7220 **i02230699**

NOTE	PART NUMBER	QTY	PART NAME 1 2 3 4 5 6 (PRODUCT LEVEL)	SEE PAGE
Y	*259-4746*	1	MOUNTING GP-RADIO	786
	194-8031	1	ADAPTER	
M	**8T-4648**	8	BOLT (M12X1.75X70-MM)	
M	**151-6283**	2	BOLT-SOCKET HEAD (M6X1-THD)	
	254-9136	2	CABLE-COILED	
	254-9951	1	CABLE-COILED	
	255-0939	1	CASE-PLASTIC	
	255-0940	1	CASE-PLASTIC	
	226-6115	1	DISKETTE-COMPACT	
	252-8744	2	FILM-WARNING (BLADE, DO NOT CLIMB, READ OMM)	
	252-9628	2	KIT-BRACKET	
			(EACH INCLUDES LOCKWASHERS, BOLTS, WASHERS, & BRACKET AS)	
M	**8T-2659**	4	LOCKNUT (M4X0.7-THD)	
	248-1500	2	MAST AS (GLOBAL POSITIONING SYSTEM)	
	250-2168	1	MODULE GP-DISPLAY (CD550)	
	255-9215	1	SOFTWARE GP-ELECTRONIC	
	244-1720	3	MONITOR AS (GRADE)	
	244-1717	2	RECEIVER GP (GLOBAL POSITIONING SYSTEM)	
M	**9X-1046**	6	SCREW (M4X0.7X18-MM)	
	226-9170	1	SENSOR AS-POSITION (ANGLE)	
	204-6606	1	TOOL GP-CAES (DISPLAY MOUNTING)	
	4B-4863	4	WASHER (4.7X11X1.2-MM THK)	
	8T-4223	8	WASHER-HARD (13.5X25.5X3-MM THK)	

M-METRIC PART
Y-SEPARATE ILLUSTRATION

<END>

147-0319 LAMP GP-FLOOD–SUSPENDED MOUNT

S/N: RJS1-UP
24-VOLT
PART OF 125-2001, 224-5139, 224-5144 LIGHTING GP-FLOOD
AN ATTACHMENT

SMCS-1434 **i02246904**

NOTE	REF NO	GRAPHIC REF	PART NUMBER	QTY	PART NAME 1 2 3 4 5 6 (PRODUCT LEVEL)	SEE PAGE
	1	1	**9X-3463**	1	LAMP-HALOGEN (24-VOLT, 65-WATT)	
	2	1	**158-0250**	1	BODY AS-LAMP	
	3	1	**158-0248**	1	LENS AS	
	4	1	**158-0252**	1	BEZEL	
	5	1	**188-8849**	2	CLAMP	

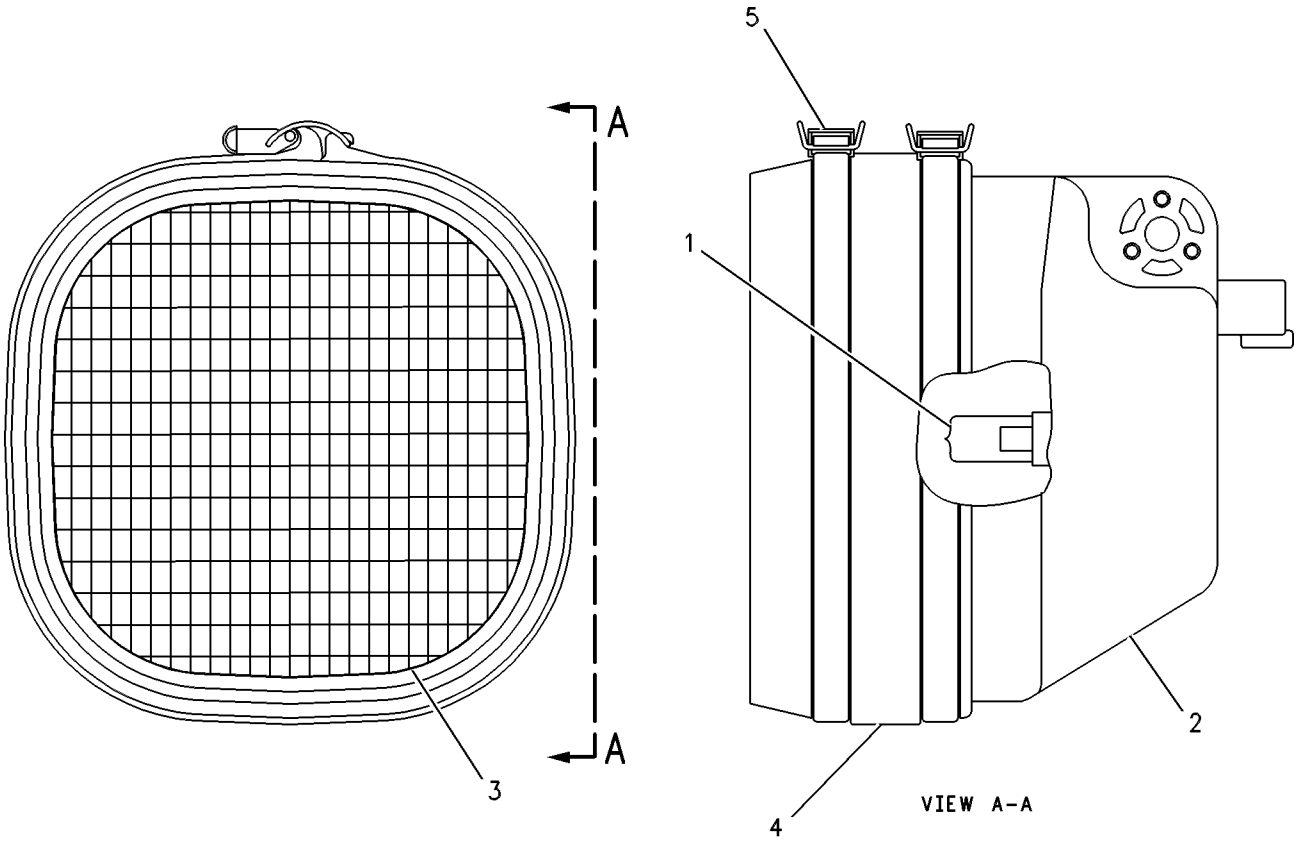

GRAPHIC #1 **<END>** g00458549

153-2073 LAMP GP-FLOOD–VERTICAL MOUNT

S/N: CRM1-UP; MAM1-UP; RJS1-UP
24-VOLT
PART OF 134-0978, 222-1209, 224-5137, 224-5138, 224-5142 LIGHTING GP-FLOOD
ALSO AN ATTACHMENT

SMCS-1434 **i02247184**

NOTE	REF NO	GRAPHIC REF	PART NUMBER	QTY	PART NAME 1 2 3 4 5 6 (PRODUCT LEVEL)	SEE PAGE
	1	1	**9X-3463**	1	LAMP-HALOGEN (24-VOLT, 65-WATT)	
	2	1	**158-0250**	1	BODY AS-LAMP	
	3	1	**158-0248**	1	LENS AS	
	4	1	**158-0252**	1	BEZEL	
	5	1	**188-8849**	2	CLAMP	

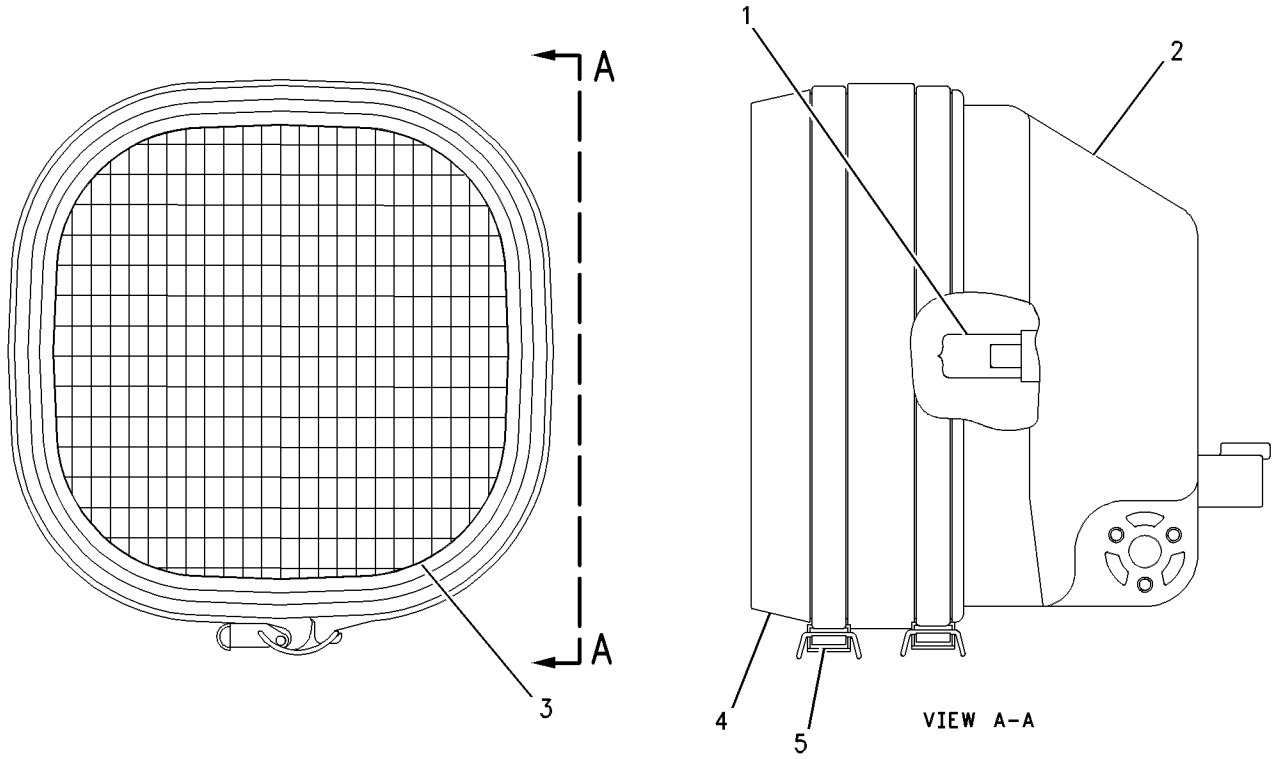

GRAPHIC #1 **<END>** g00449633

234-4323 LAMP GP-FLOOD—VERTICAL MOUNT—ENGINE SERVICE

S/N: RJS1-UP
24-VOLT
PART OF 205-8578 BATTERY & WIRING GP

SMCS-1434 **i02247190**

NOTE	REF NO	GRAPHIC REF	PART NUMBER	QTY	PART NAME 1 2 3 4 5 6 (PRODUCT LEVEL)	SEE PAGE
	1	1	**9X-3463**	1	LAMP-HALOGEN (24-VOLT, 65-WATT)	
	2	1	**9X-4244**	2	SCREW	
	3	1	**202-6614**	1	LENS AS	
	4	1	**234-7730**	1	BODY AS	
	5	1	**164-7556**	1	CLIP	
M	6	1	**8T-4133**	1	NUT (M10X1.5-THD)	
	7	1	**234-7731**	1	BRACKET AS	

M-METRIC PART

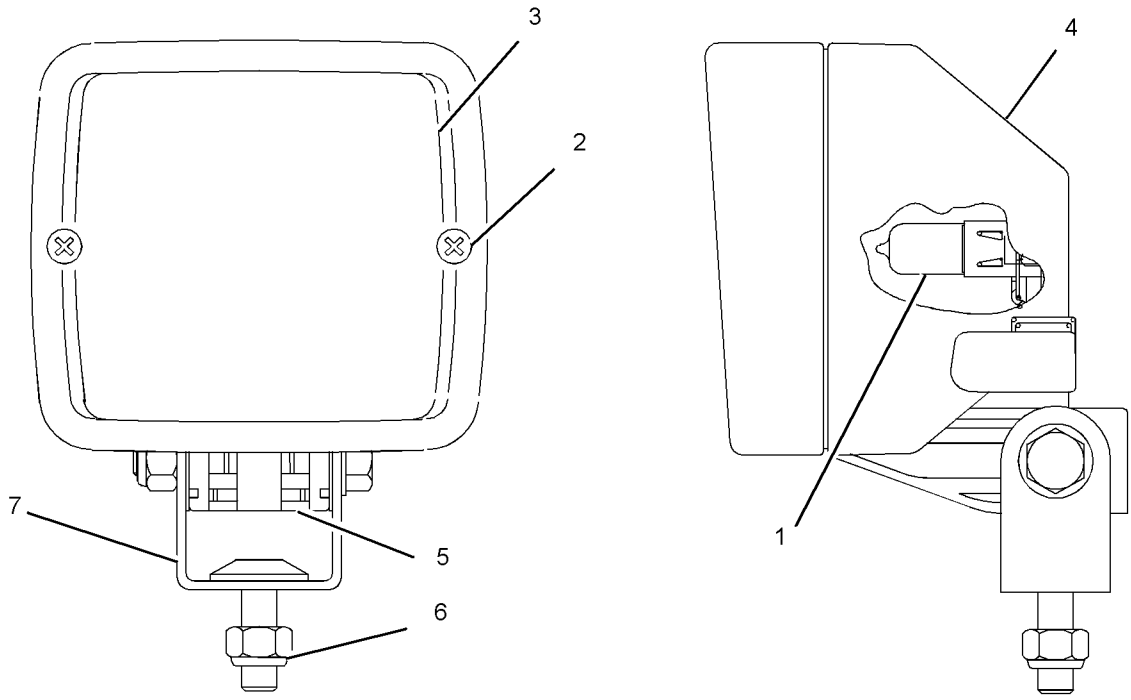

GRAPHIC #1 **<END>** g01088195

247-0293 LAMP GP-FLOOD–SUSPENDED MOUNT

S/N: RJS1-UP
24-VOLT
PART OF 224-5142, 224-5144 LIGHTING GP-FLOOD
AN ATTACHMENT

SMCS-1434 **i02047240**

NOTE	REF NO	GRAPHIC REF	PART NUMBER	QTY	PART NAME 1 2 3 4 5 6 (PRODUCT LEVEL)	SEE PAGE
	1	1	**213-4998**	1	LAMP AS-FLOOD (24-VOLT, 70-WATT)	
	2	1	**9X-9896**	8	MOUNT (ISOLATION)	
	3	1	**8C-5608**	4	SPACER (6.5X9.5X25.4-MM THK)	
	4	1	**9X-6165**	4	WASHER (6.5X22X2.5-MM THK)	
M	5	1	**120-9027**	4	SCREW-PAN HEAD (M3X0.5X16-MM)	
M	6	1	**7X-2533**	4	BOLT (M6X1X35-MM)	
M	7	1	**8T-6868**	1	BOLT (M12X1.75X80-MM)	
M	8	1	**129-3180**	1	LOCKNUT (M12X1.75-THD)	
	9	1	**215-1933**	1	BRACKET	
	10	1	**246-6720**	1	BEZEL	

M-METRIC PART

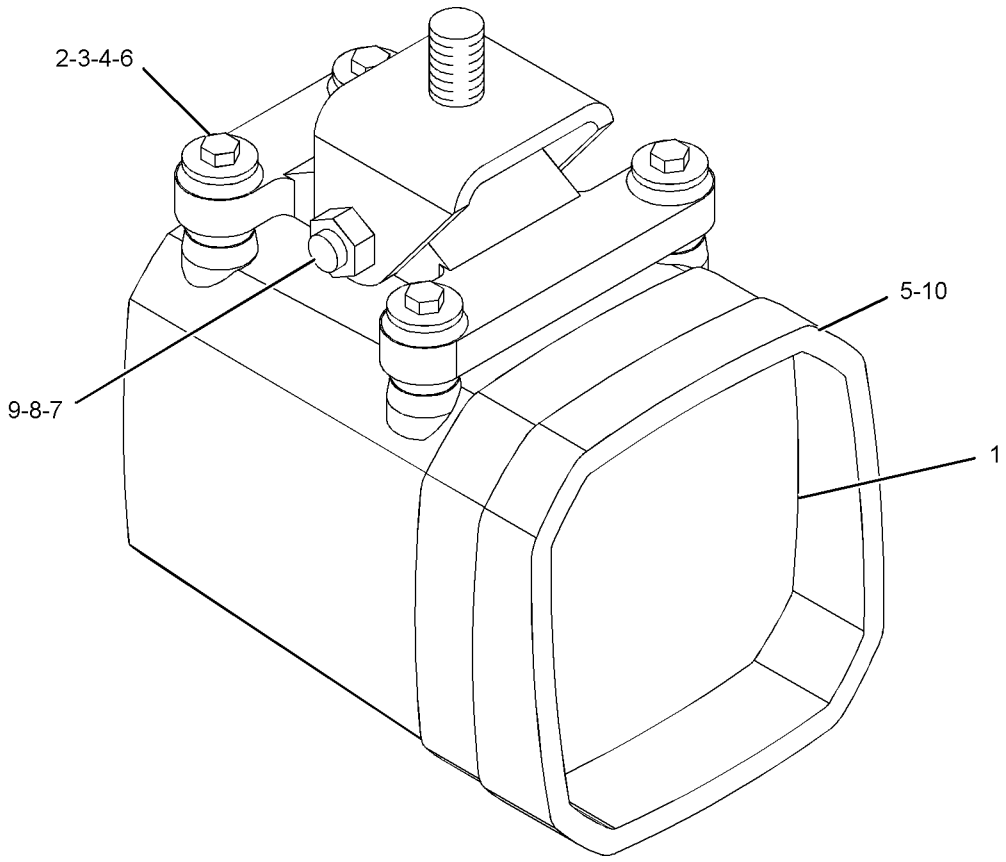

GRAPHIC #1 **<END>** g01052218

247-0294 LAMP GP-FLOOD–VERTICAL MOUNT

S/N: RJS1-UP
24-VOLT
PART OF 224-5142, 224-5144 LIGHTING GP-FLOOD
AN ATTACHMENT

SMCS-1434 **i02047506**

NOTE	REF NO	GRAPHIC REF	PART NUMBER	QTY	PART NAME 1 2 3 4 5 6 (PRODUCT LEVEL)	SEE PAGE
	1	1	**213-4998**	1	LAMP AS-FLOOD (24-VOLT, 70-WATT)	
	2	1	**9X-9896**	8	MOUNT (ISOLATION)	
	3	1	**8C-5608**	4	SPACER (6.5X9.5X25.4-MM THK)	
	4	1	**9X-6165**	4	WASHER (6.5X22X2.5-MM THK)	
M	5	1	**120-9027**	4	SCREW-PAN HEAD (M3X0.5X16-MM)	
M	6	1	**7X-2533**	4	BOLT (M6X1X35-MM)	
M	7	1	**8T-6868**	1	BOLT (M12X1.75X80-MM)	
M	8	1	**129-3180**	1	LOCKNUT (M12X1.75-THD)	
	9	1	**215-1933**	1	BRACKET	
	10	1	**246-6720**	1	BEZEL	

M-METRIC PART

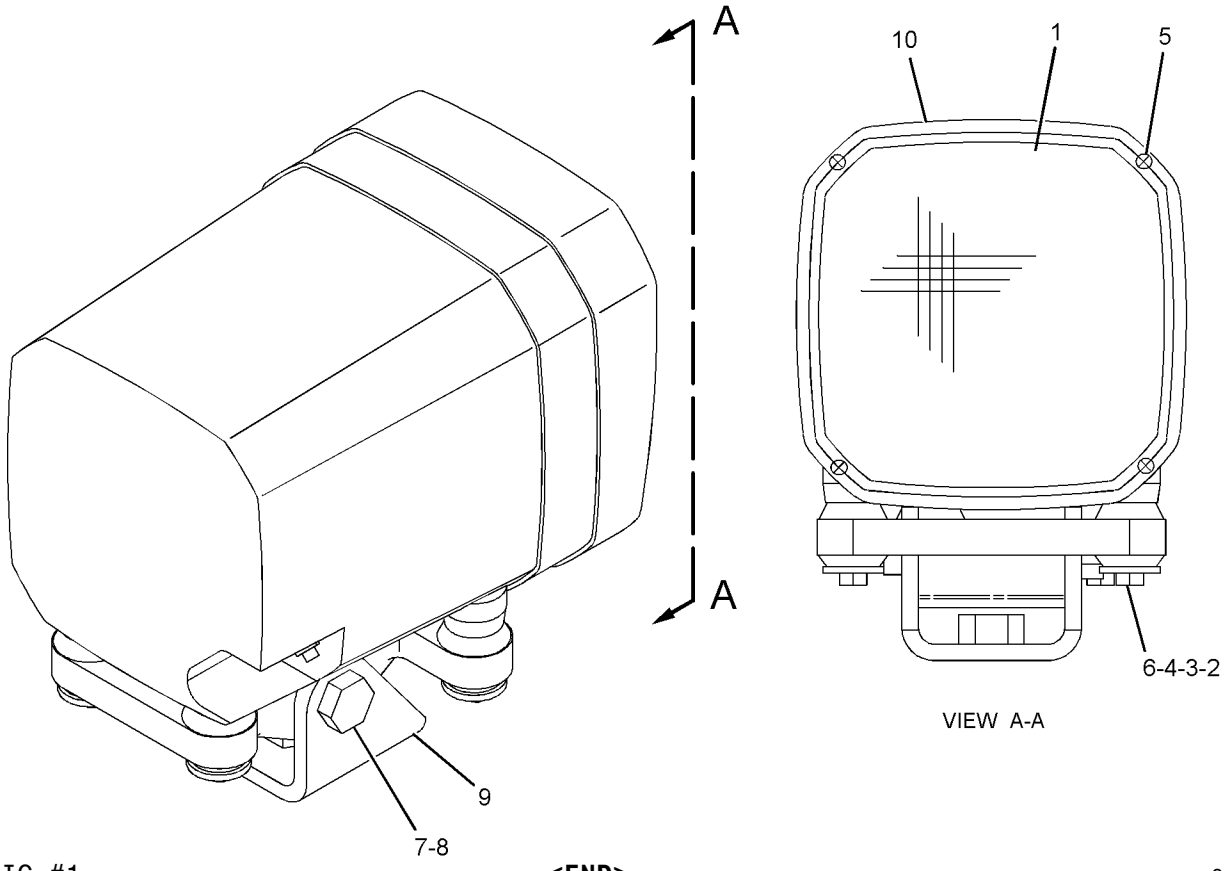

GRAPHIC #1 **<END>** g01052442

125-2001 LIGHTING GP-FLOOD–1-LAMP

S/N: RJS1-UP

PART OF 224-5137, 224-5138, 224-5142 LIGHTING GP-FLOOD

AN ATTACHMENT

SMCS-1434 **i01714235**

NOTE	REF NO	GRAPHIC REF	PART NUMBER	QTY	PART NAME 1 2 3 4 5 6 (PRODUCT LEVEL)	SEE PAGE
	1	1	**9W-4361**	4	MOUNT-FLEXIBLE	
	2	1	**111-8314**	1	BRACKET AS	
		1	**1F-0750**	1	NUT-WELD (3/8-16-THD)	
Y	3	1	**147-0319**	1	LAMP GP-FLOOD (24-VOLT, SUSPENDED MOUNT)	200
	4	1	**167-1884**	1	GUARD	
	5	1	**5M-3062**	1	BOLT (3/8-16X0.75-IN)	
	6	1	**5P-1075**	9	WASHER-HARD (10.2X22.5X3-MM THK)	
	7	1	**5P-2955**	1	BOLT (5/16-18X2.5-IN)	
	8	1	**6V-8189**	1	NUT (5/16-18-THD)	
	9	1	**6V-8801**	8	NUT (3/8-16-THD)	
	10	1	**8T-4224**	2	WASHER-HARD (8.8X16X2-MM THK)	

Y-SEPARATE ILLUSTRATION

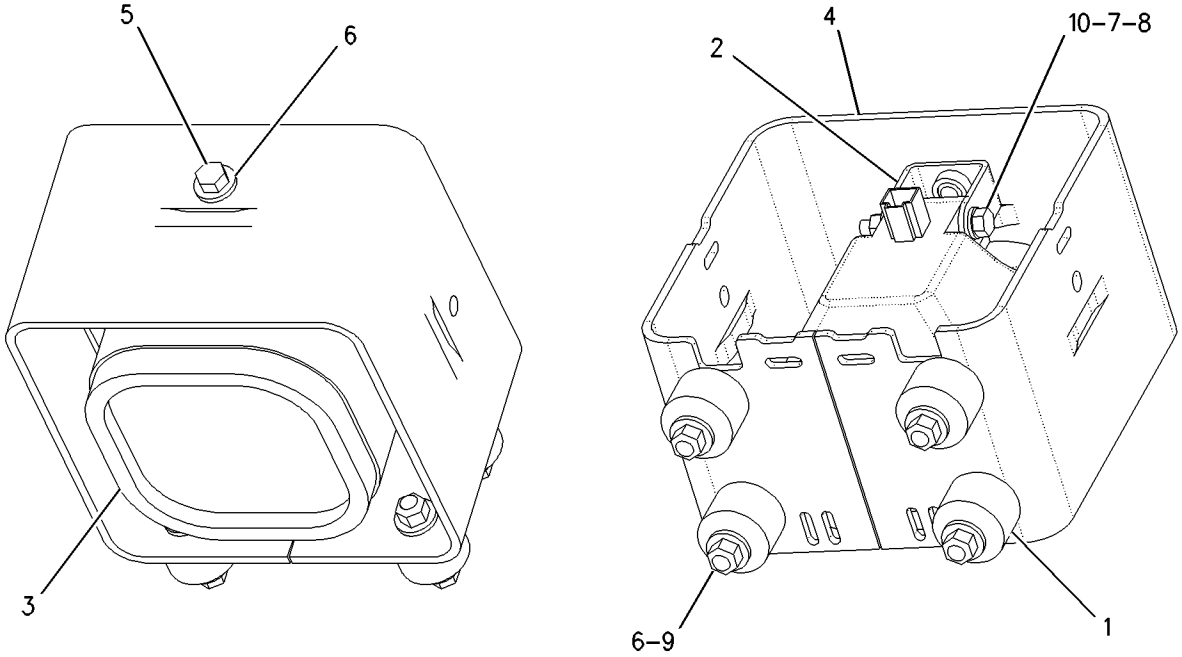

GRAPHIC #1 **<END>** g00887298

134-0978 LIGHTING GP-FLOOD–4-LAMP

S/N: RJS1-UP

FENDER, FRONT, REAR

PART OF 205-8601 CHASSIS AR

SMCS-1434 **i01988558**

NOTE	REF NO	GRAPHIC REF	PART NUMBER	QTY	PART NAME 1 2 3 4 5 6 (PRODUCT LEVEL)	SEE PAGE
CY	1	1	**153-2073**	4	LAMP GP-FLOOD (24-VOLT, VERTICAL MOUNT)	201
	2	1	**8T-4224**	8	WASHER-HARD (8.8X16X2-MM THK)	
	3	1	**5P-2955**	4	BOLT (5/16-18X2.5-IN)	
	4	1	**6V-8189**	4	NUT (5/16-18-THD)	
	5	1	**5P-1075**	8	WASHER-HARD (10.2X22.5X3-MM THK)	
	6	1	**5M-3062**	4	BOLT (3/8-16X0.75-IN)	
	7	1	**111-8314**	4	BRACKET AS	
	8	1	**8E-3241**	4	BRACKET AS	
					(EACH BRACKET AS INCLUDES)	
		1	**1F-0750**	1	NUT-WELD (3/8-16-THD)	
	9	1	**8T-2502**	4	BOLT (3/8-16X1.125-IN)	

C-CHANGE FROM PREVIOUS TYPE
Y-SEPARATE ILLUSTRATION

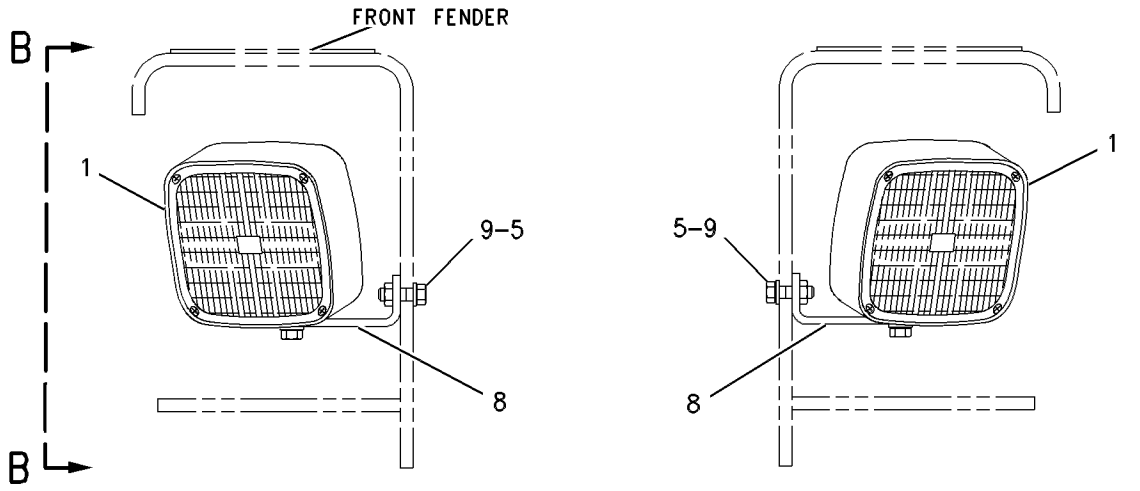

SIDE FLOOD LIGHTS

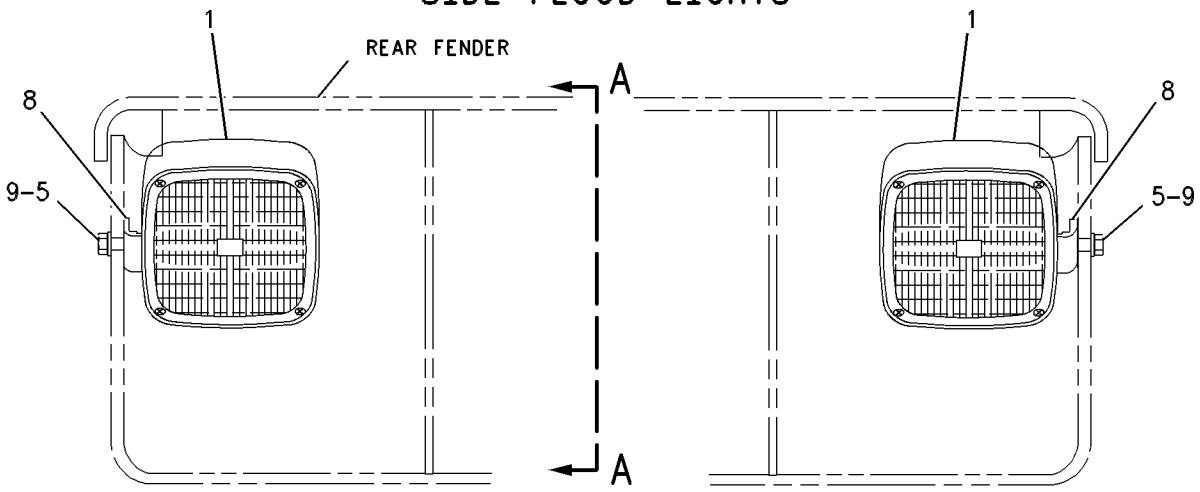

REAR LIGHTS

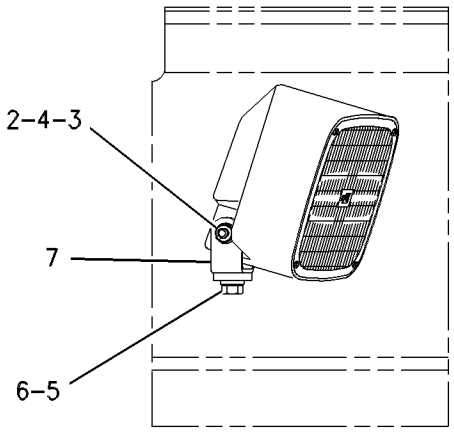

VIEW B-B

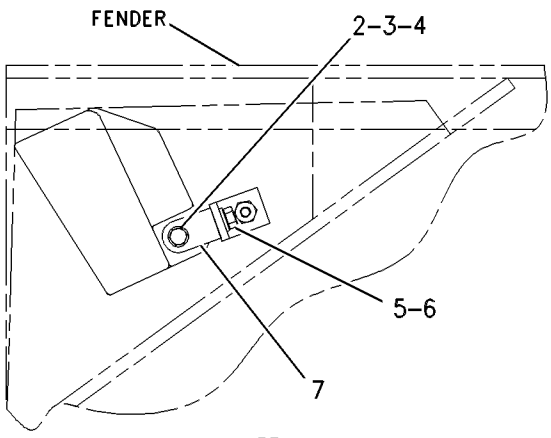

VIEW A-A

GRAPHIC #1 **<END>** g00451083

222-1209 LIGHTING GP-FLOOD–1-LAMP–RIPPER

S/N: CRM1-UP; MAM1-UP
PART OF 217-3562, 217-3563 RIPPER AR
AN ATTACHMENT

SMCS-1434 **i02246908**

NOTE	REF NO	GRAPHIC REF	PART NUMBER	QTY	PART NAME 1 2 3 4 5 6 (PRODUCT LEVEL)	SEE PAGE
	1	1	**7K-1181**	2	STRAP-CABLE	
	2	1	**164-8101**	1	BRACKET	
Y	3	1	**153-2073**	1	LAMP GP-FLOOD (24-VOLT, VERTICAL MOUNT) (RIPPER)	201
	4	1	**4P-8134**	2	CLIP	
M	5	1	**5C-7261**	1	NUT (M8X1.25-THD)	
	6	1	**5P-4116**	2	WASHER-HARD (8.8X20.5X2-MM THK)	
	7	1	**7X-7729**	1	WASHER (11X25X3-MM THK)	
M	8	1	**8T-4137**	1	BOLT (M10X1.5X20-MM)	
M	9	1	**8T-6869**	1	BOLT (M8X1.25X60-MM)	

M-METRIC PART
Y-SEPARATE ILLUSTRATION

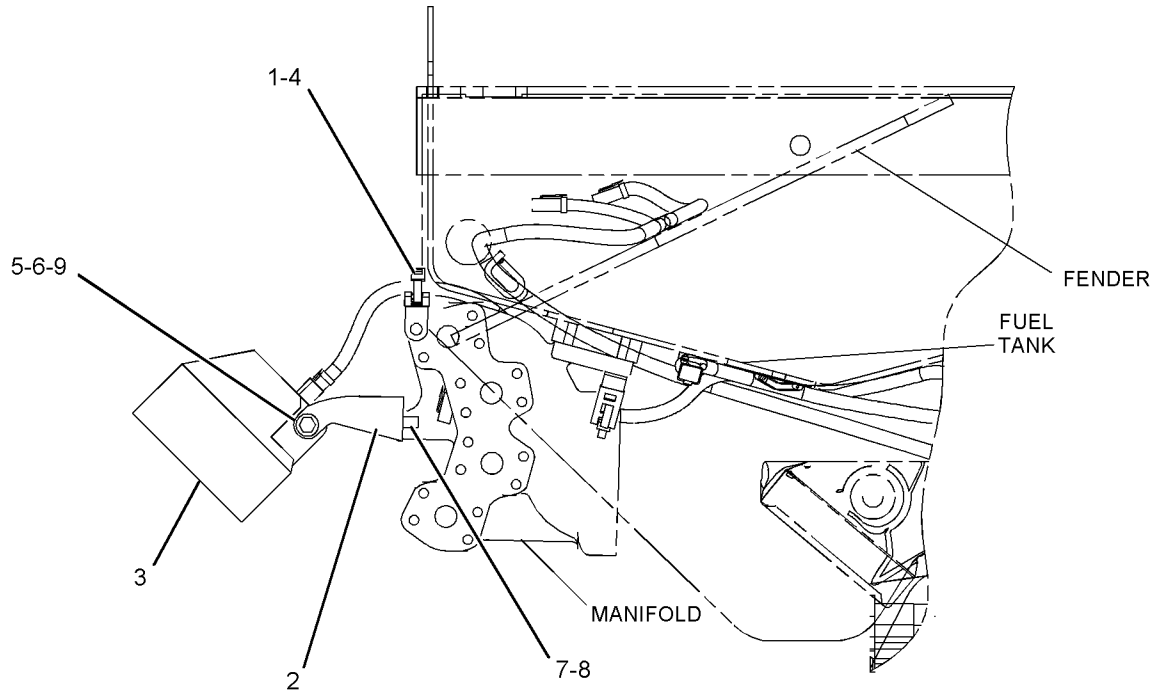

RIGHT SIDE VIEW

GRAPHIC #1 **<END>** g01037904

224-5137 LIGHTING GP-FLOOD–6-LAMP

S/N: RJS1-UP
CYLINDER, FENDER MOUNTED
AN ATTACHMENT

SMCS-1434 **i02254516**

NOTE	REF NO	GRAPHIC REF	PART NUMBER	QTY	PART NAME 1 2 3 4 5 6 (PRODUCT LEVEL)	SEE PAGE
	1	1	**6S-4039**	2	GROMMET	
	2	1	**7K-1181**	6	STRAP-CABLE	
	3	1	**8E-3241**	4	BRACKET AS	
					(EACH INCLUDES)	
		1	**1F-0750**	1	NUT-WELD (3/8-16-THD)	
	4	1	**111-8314**	4	BRACKET AS	
Y	5	1	*125-2001*	2	LIGHTING GP-FLOOD (24-VOLT, SUSPENDED MOUNT) (CYLINDER MOUNTED)	205
Y	6	1	**153-2073**	4	LAMP GP-FLOOD (24-VOLT, VERTICAL MOUNT) (FENDER, FRONT, REAR MOUNTED)	201
	7	1	**229-8907**	2	HARNESS AS-LIGHTING (FRONT)	
					(EACH INCLUDES)	
		1	**102-8802**	2	KIT-RECEPTACLE (2-PIN)	
		1	**102-8803**	1	KIT-RECEPTACLE (3-PIN)	
					(EACH INCLUDES RECEPTACLE AS & WEDGE)	
		1	**155-2270**	3	KIT-CONNECTING PLUG (2-PIN)	
					(EACH INCLUDES PLUG AS & WEDGE)	
	8	1	**4L-6454**	4	BOLT (3/8-16X1-IN)	
	9	1	**4P-7581**	2	CLIP	
	10	1	**4S-1936**	4	CLIP	
	11	1	**5M-3062**	4	BOLT (3/8-16X0.75-IN)	
	12	1	**5P-1075**	16	WASHER-HARD (10.2X22.5X3-MM THK)	
	13	1	**5P-2955**	4	BOLT (5/16-18X2.5-IN)	
	14	1	**6K-4934**	4	CLIP (SLOT)	
	15	1	**6K-4935**	4	CLIP (TAB)	
	16	1	**6V-8189**	4	NUT (5/16-18-THD)	
	17	1	**6V-8801**	4	NUT (3/8-16-THD)	
	18	1	**8T-2502**	4	BOLT (3/8-16X1.125-IN)	
	19	1	**8T-4224**	8	WASHER-HARD (8.8X16X2-MM THK)	
	20	1	**9D-3768**	2	GROMMET	

Y-SEPARATE ILLUSTRATION

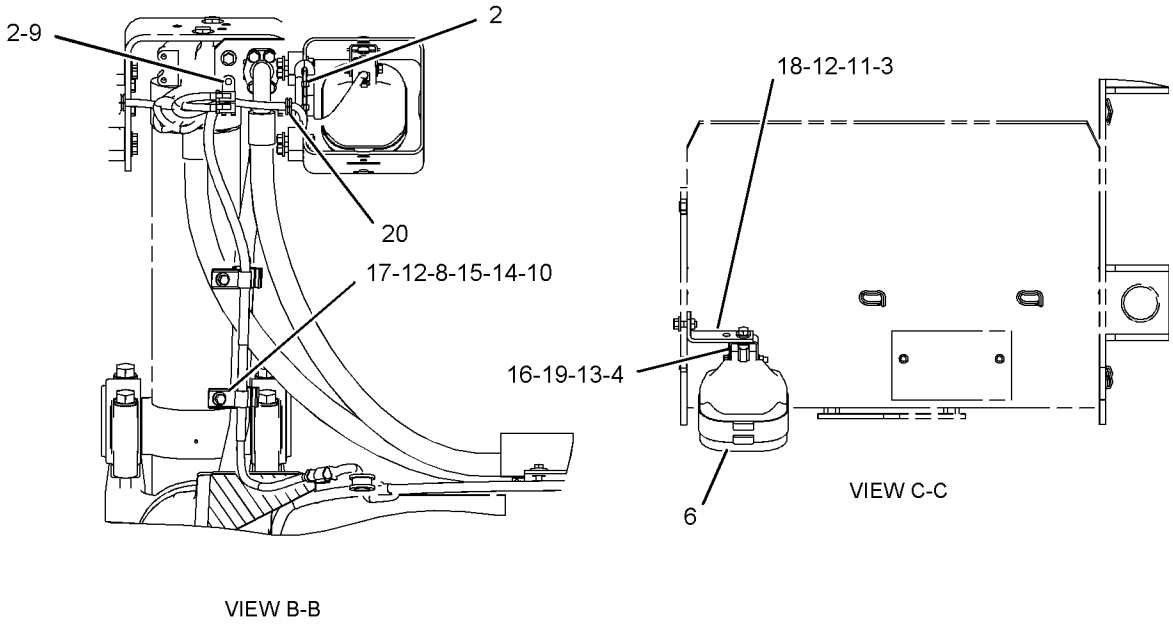

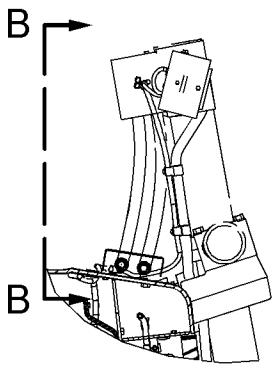

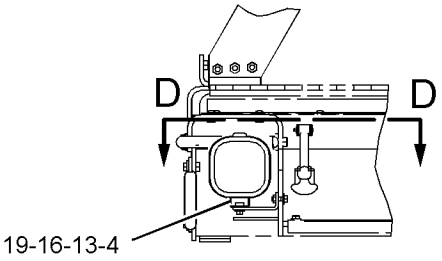

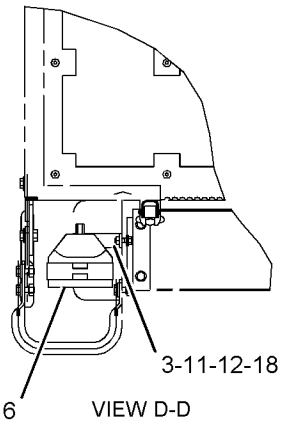

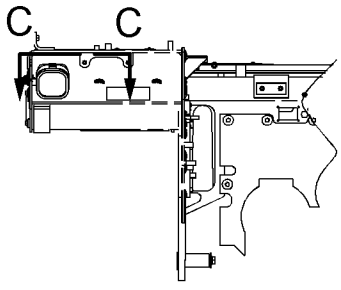

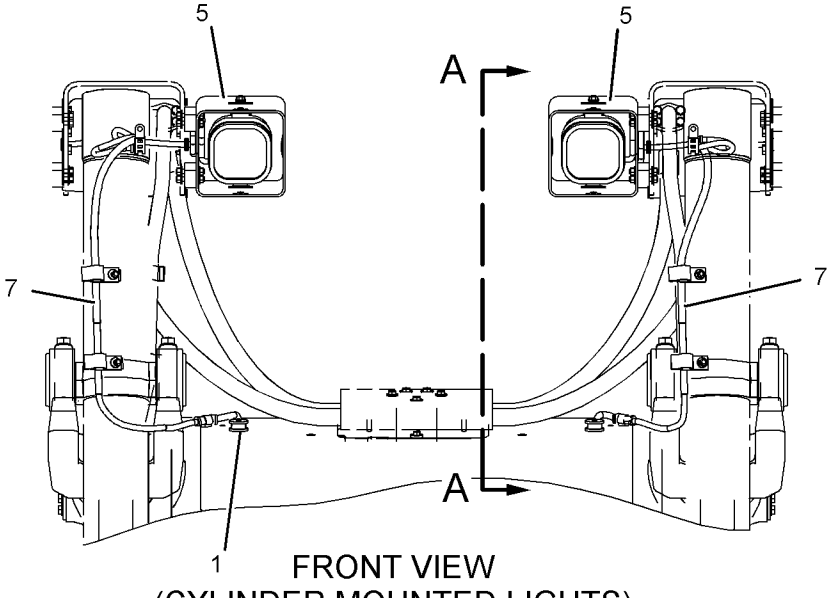

GRAPHIC #1

<END>

g01037631

224-5138 LIGHTING GP-FLOOD–10-LAMP

S/N: RJS1-UP
CYLINDER, FENDER, ROPS MOUNTED
AN ATTACHMENT

SMCS-1434 **i01999730**

NOTE	REF NO	GRAPHIC REF	PART NUMBER	QTY	PART NAME 1 2 3 4 5 6 (PRODUCT LEVEL)	SEE PAGE
	1	1	**1Q-1592**	1	PLATE AS	
		1	**1Q-1591**	1	PLATE	
		1	**7T-1099**	4	LINK	
	2	1	**6S-4039**	2	GROMMET	
	3	1	**7K-1181**	23	STRAP-CABLE	
	4	2	**8E-3241**	4	BRACKET AS	
					(EACH INCLUDES)	
		2	**1F-0750**	1	NUT-WELD (3/8-16-THD)	
	5	1,2	**111-8314**	4	BRACKET AS	
	6	1	**114-9365**	2	PLATE	
Y	7	1	*125-2001*	6	LIGHTING GP-FLOOD (24-VOLT, SUSPENDED MOUNT) (ROPS & CYLINDER MOUNTED)	205
Y	8	2	**153-2073**	4	LAMP GP-FLOOD (24-VOLT, VERTICAL MOUNT) (FRONT & REAR FENDER MOUNTED)	201
	9	1	**245-0175**	1	HARNESS AS-LIGHTING (CAB FLOODLIGHT)	
		1	**102-8802**	6	KIT-RECEPTACLE (2-PIN)	
		1	**102-8805**	1	KIT-RECEPTACLE (6-PIN)	
					(EACH INCLUDES RECEPTACLE AS & WEDGE)	
		1	**155-2270**	6	KIT-CONNECTING PLUG (2-PIN)	
					(EACH INCLUDES PLUG AS & WEDGE)	
	10	1	**229-8907**	2	HARNESS AS-LIGHTING (FRONT)	
					(EACH INCLUDES)	
		1	**102-8802**	2	KIT-RECEPTACLE (2-PIN)	
		1	**102-8803**	1	KIT-RECEPTACLE (3-PIN)	
					(EACH INCLUDES RECEPTACLE AS & WEDGE)	
		1	**155-2270**	3	KIT-CONNECTING PLUG (2-PIN)	
					(EACH INCLUDES PLUG AS & WEDGE)	
	11	1	**246-5626**	1	SWITCH AS-ROCKER (FLOODLAMPS-ROPS)	
	12	1	**4L-6454**	12	BOLT (3/8-16X1-IN)	
	13	1	**4P-7581**	2	CLIP	
	14	1	**4S-1936**	4	CLIP	
	15	2	**5M-3062**	4	BOLT (3/8-16X0.75-IN)	
	16	1,2	**5P-1075**	24	WASHER-HARD (10.2X22.5X3-MM THK)	
	17	2	**5P-2955**	4	BOLT (5/16-18X2.5-IN)	
	18	1	**6K-4934**	4	CLIP (SLOT)	
	19	1	**6K-4935**	4	CLIP (TAB)	
	20	2	**6V-8189**	4	NUT (5/16-18-THD)	
	21	1	**6V-8801**	4	NUT (3/8-16-THD)	
	22	1	**7G-7053**	2	GROMMET	
	23	1	**7X-0582**	2	WASHER-HARD (20X44.5X6-MM THK)	
	24	2	**8T-2502**	4	BOLT (3/8-16X1.125-IN)	
	25	2	**8T-4224**	8	WASHER-HARD (8.8X16X2-MM THK)	
	26	1	**8T-9397**	2	BOLT (3/4-10X1.25-IN)	
	27	1	**9D-3768**	4	GROMMET	

Y-SEPARATE ILLUSTRATION

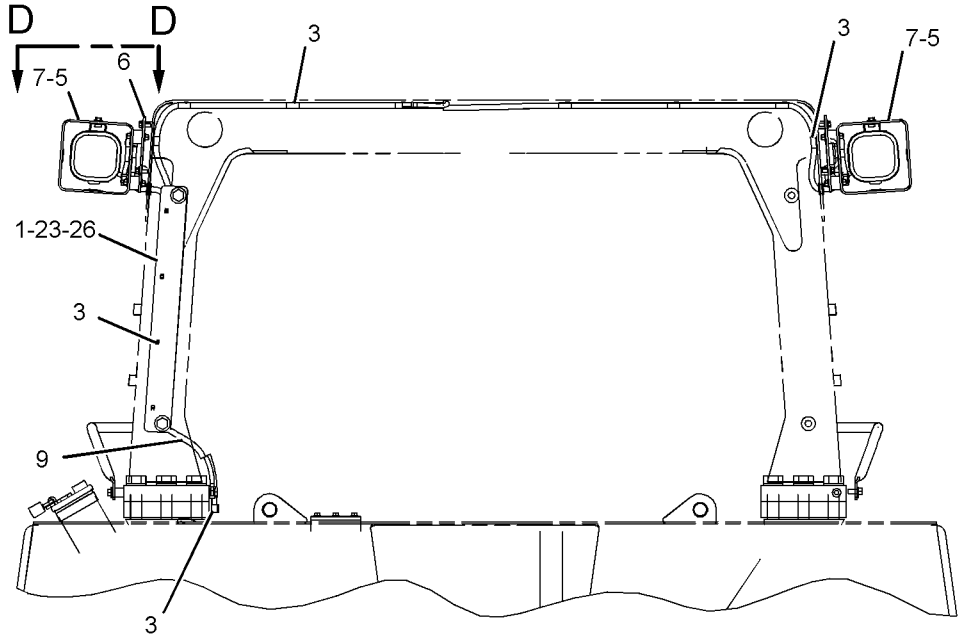

REAR VIEW
(ROPS MOUNTED LIGHTS)

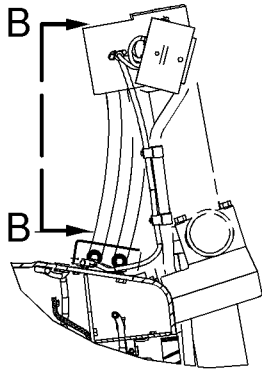

VIEW A-A

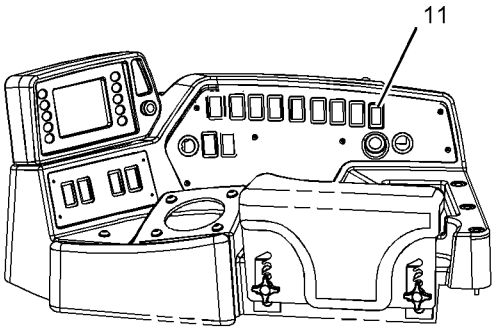

RIGHT HAND VIEW
(CONSOLE)

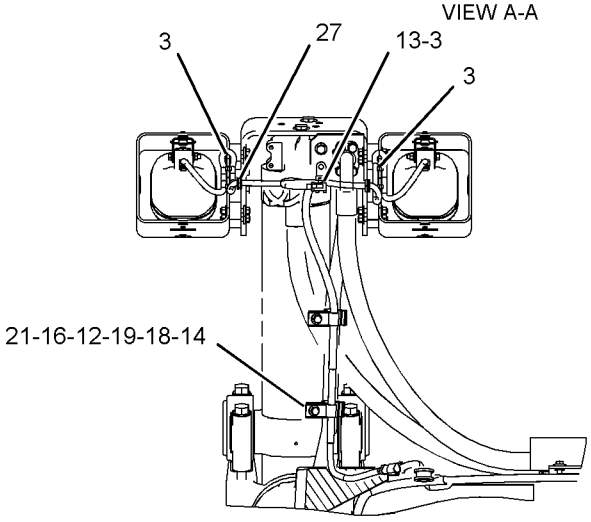

VIEW B-B

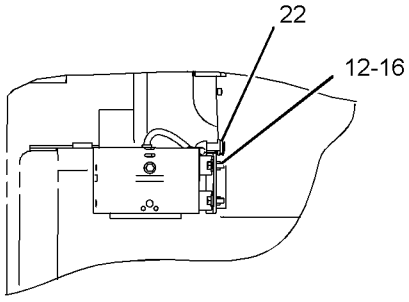

VIEW D-D

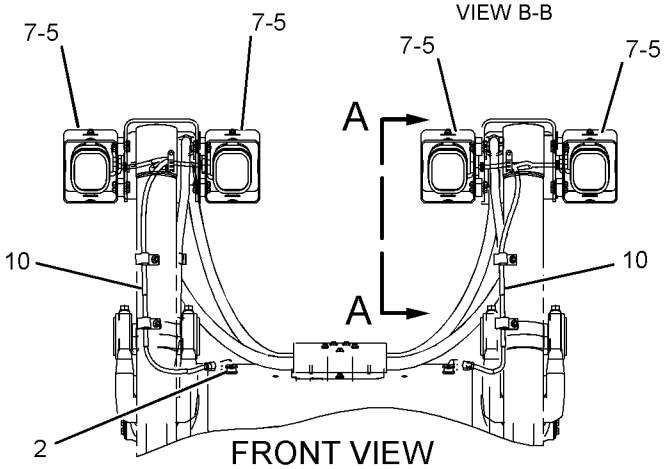

FRONT VIEW
(CYLINDER MOUNTED LIGHTS)

GRAPHIC #1 g01037546

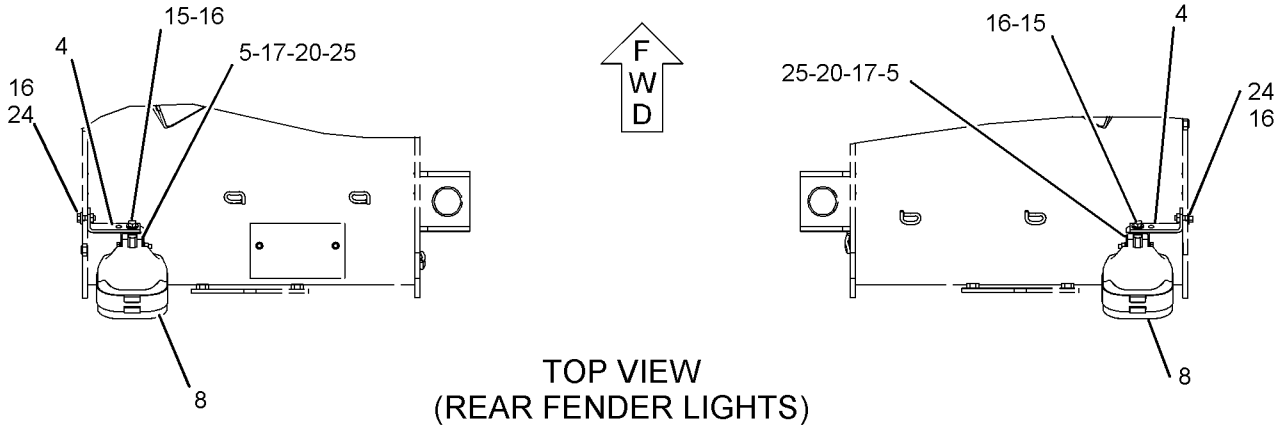

TOP VIEW
(REAR FENDER LIGHTS)

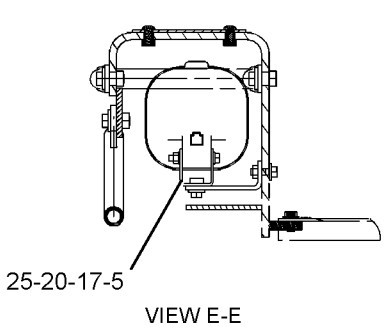

VIEW E-E

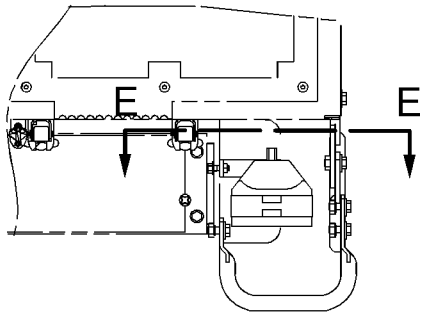

VIEW C-C

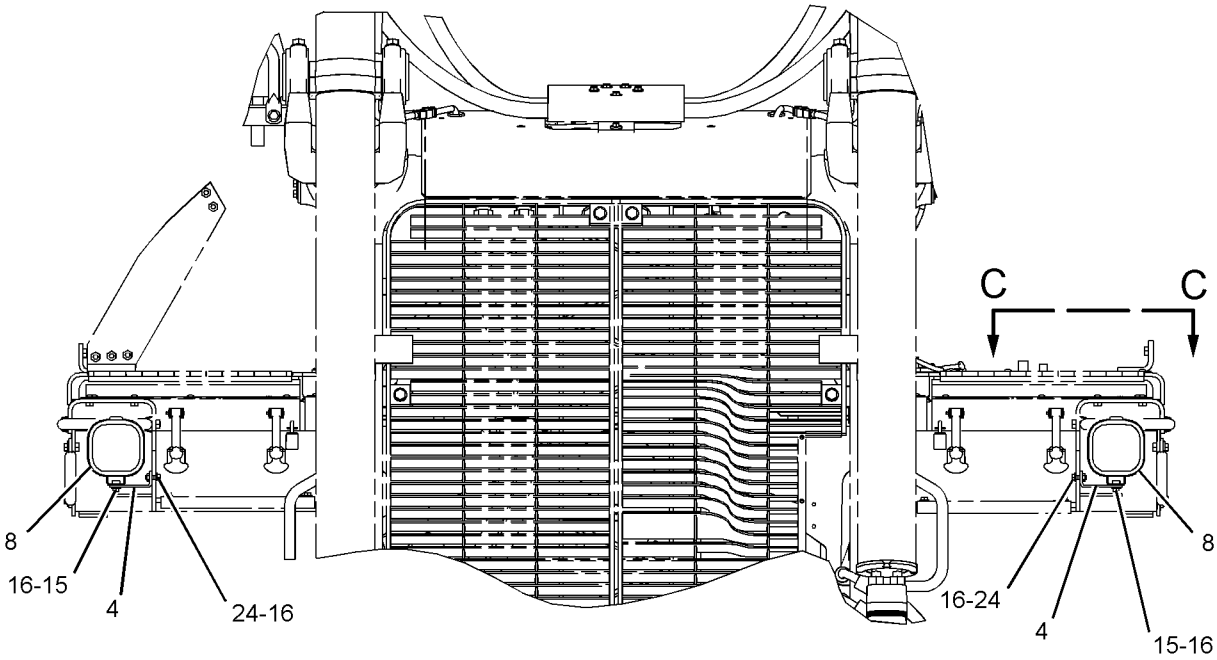

FRONT VIEW
(FRONT FENDER LIGHTS)

GRAPHIC #2

<END>

g01037547

224-5139 LIGHTING GP-FLOOD–10-LAMP–
ROPS, CYLINDER MOUNTED

S/N: RJS1-UP

MUST BE EQUIPPED WITH CYLINDERS, WASTE HANDLING

CANNOT BE USED WITH 224-5137–PAGE 209, 224-5138–PAGE 211, 224-5142–PAGE 216

AN ATTACHMENT

SMCS-1434 **i02205063**

NOTE	REF NO	GRAPHIC REF	PART NUMBER	QTY	PART NAME 1 2 3 4 5 6 (PRODUCT LEVEL)	SEE PAGE
	1	1	**1Q-1592**	1	PLATE AS	
		1	**7T-1099**	4	LINK	
	2	1	**7K-1181**	38	STRAP-CABLE	
	3	1	**9W-4361**	16	MOUNT-FLEXIBLE	
	4	1	**111-8314**	10	BRACKET AS	
	5	1	**114-9363**	4	GUARD AS	
	6	1	**114-9365**	2	PLATE	
	7	1	**115-1032**	2	BRACKET	
Y	8	1	**147-0319**	10	LAMP GP-FLOOD (24-VOLT, SUSPENDED MOUNT) (CYLINDER,ROPS MOUNTED)	200
	9	1	**167-1884**	2	GUARD	
	10	1	**183-1961**	2	BRACKET	
Y	11	1	*242-3370*	1	TANK GP-FUEL	165
	12	1	**244-7357**	1	HARNESS AS-LIGHTING (FENDER FLOOD)	
		1	**102-8802**	1	KIT-RECEPTACLE (2-PIN)	
					(INCLUDES RECEPTACLE AS & WEDGE)	
		1	**155-2270**	2	KIT-CONNECTING PLUG (2-PIN)	
					(EACH INCLUDES PLUG AS & WEDGE)	
	13	1	**245-0175**	1	HARNESS AS-LIGHTING (CAB FLOODLIGHT)	
		1	**102-8802**	6	KIT-RECEPTACLE (2-PIN)	
		1	**102-8805**	1	KIT-RECEPTACLE (6-PIN)	
					(EACH KIT INCLUDES RECEPTACLE AS & WEDGE)	
		1	**155-2270**	6	KIT-CONNECTING PLUG (2-PIN)	
					(EACH INCLUDES PLUG AS & WEDGE)	
	14	1	**229-8907**	2	HARNESS AS-LIGHTING (FRONT) (LH,RH)	
					(EACH INCLUDES)	
		1	**102-8802**	2	KIT-RECEPTACLE (2-PIN)	
		1	**102-8803**	1	KIT-RECEPTACLE (3-PIN)	
					(EACH KIT INCLUDES RECEPTACLE AS & WEDGE)	
		1	**155-2270**	3	KIT-CONNECTING PLUG (2-PIN)	
					(EACH INCLUDES PLUG AS & WEDGE)	
	15	1	**246-5625**	1	SWITCH AS-ROCKER (CYLINDER FLOODLAMP)	
	16	1	**246-5626**	1	SWITCH AS-ROCKER (ROPS FLOODLAMP)	
	17	1	**4L-6454**	28	BOLT (3/8-16X1-IN)	
	18	1	**4P-7581**	2	CLIP	
	19	1	**4S-1936**	4	CLIP	
	20	1	**5M-3062**	10	BOLT (3/8-16X0.75-IN)	
	21	1	**5P-1075**	98	WASHER-HARD (10.2X22.5X3-MM THK)	
	22	1	**5P-2955**	10	BOLT (5/16-18X2.5-IN)	
	23	1	**6K-4934**	4	CLIP (SLOT)	
	24	1	**6K-4935**	4	CLIP (TAB)	
	25	1	**6V-8189**	10	NUT (5/16-18-THD)	
	26	1	**6V-8801**	52	NUT (3/8-16-THD)	
	27	1	**7G-7053**	2	GROMMET	
	28	1	**7X-0582**	2	WASHER-HARD (20X44.5X6-MM THK)	
M	29	1	**8T-4136**	8	BOLT (M10X1.5X25-MM)	
	30	1	**8T-4224**	20	WASHER-HARD (8.8X16X2-MM THK)	
	31	1	**8T-9397**	2	BOLT (3/4-10X1.25-IN)	

M-METRIC PART
Y-SEPARATE ILLUSTRATION

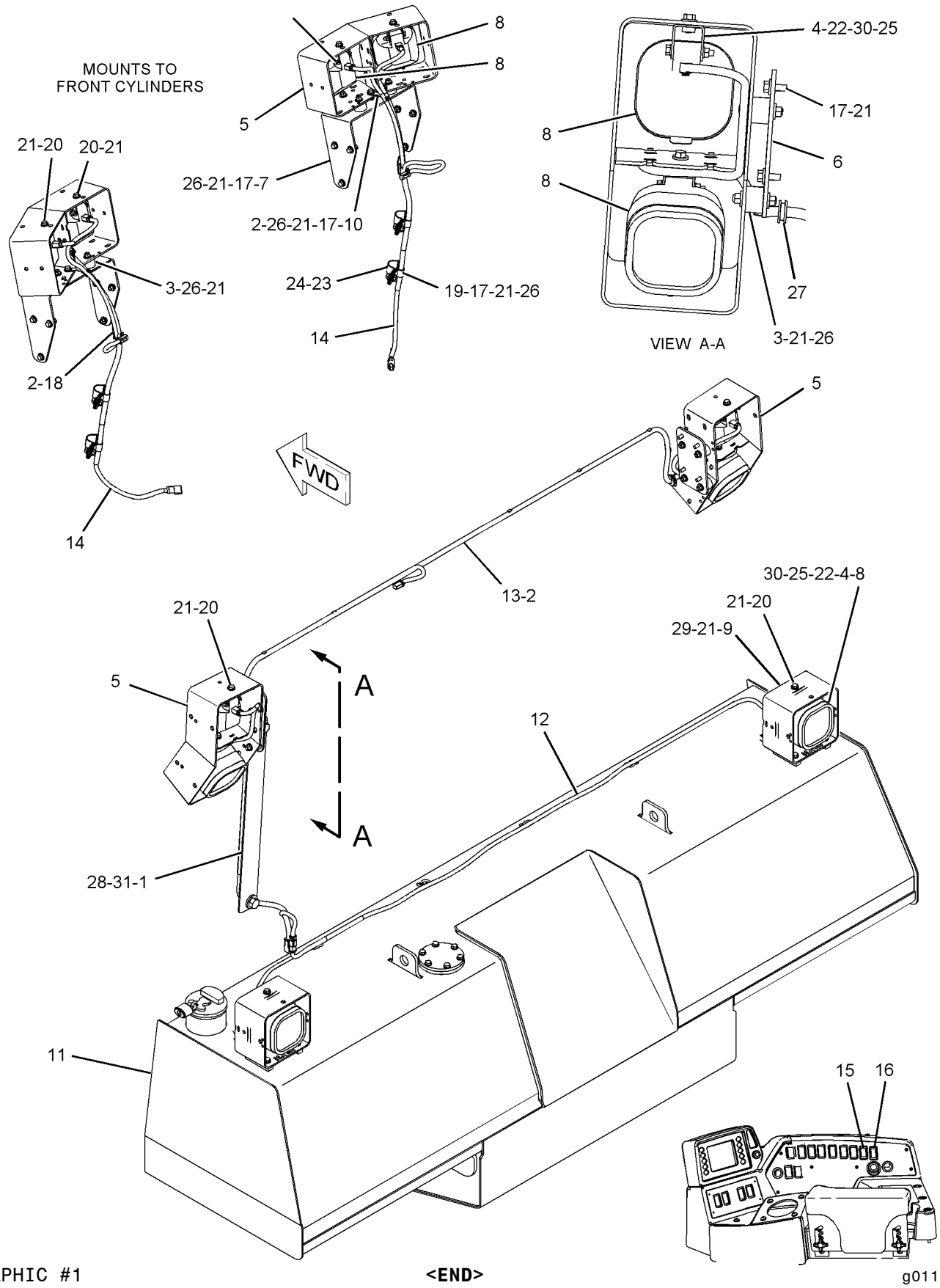

GRAPHIC #1 **<END>** g01114591

224-5142 LIGHTING GP-FLOOD–11-LAMP–
FRONT, REAR FLOODLIGHTS
S/N: RJS1-UP
HIGH INTENSITY DISCHARGE
AN ATTACHMENT

SMCS-1434 **i02247241**

NOTE	REF NO	GRAPHIC REF	PART NUMBER	QTY	PART NAME 1 2 3 4 5 6 (PRODUCT LEVEL)	SEE PAGE
	1	1	**1Q-1592**	1	PLATE AS	
	2	1	**6S-4039**	2	GROMMET	
	3	1	**7K-1181**	33	STRAP-CABLE	
	4	1	**8E-3241**	4	BRACKET AS	
					(EACH INCLUDES)	
		1	**1F-0750**	1	NUT-WELD (3/8-16-THD)	
	5	1	**9W-4361**	20	MOUNT-FLEXIBLE	
	6	1	**111-8314**	4	BRACKET AS	
Y	7	1	*125-2001*	2	LIGHTING GP-FLOOD (24-VOLT, SUSPENDED MOUNT) (CYLINDER MOUNT)	205
	8	1	**143-2466**	5	GUARD-LIGHT	
Y	9	1	**153-2073**	4	LAMP GP-FLOOD (24-VOLT, VERTICAL MOUNT) (FRONT,REAR FENDER MOUNT)	201
	10	1	**229-8779**	1	BRACKET	
	11	1	**231-1946**	1	BRACKET	
	12	1	**231-1947**	1	BRACKET	
	13	1	**231-9306**	1	SWITCH AS-ROCKER (CYLINDER FLOODLAMP)	
	14	1	**233-6020**	2	BRACKET AS	
	15	1	**242-9228**	2	BRACKET	
	16	1	**246-5626**	1	SWITCH AS-ROCKER (ROPS FLOODLAMP)	
	17	1	**229-8907**	2	HARNESS AS-LIGHTING (FRONT) (RH,LH)	
					(EACH HARNESS AS INCLUDES)	
		1	**102-8802**	2	KIT-RECEPTACLE (2-PIN)	
		1	**102-8803**	1	KIT-RECEPTACLE (3-PIN)	
					(EACH INCLUDES RECEPTACLE AS & WEDGE)	
		1	**155-2270**	3	KIT-CONNECTING PLUG (2-PIN)	
					(EACH INCLUDES PLUG AS & WEDGE)	
	18	1	**245-0175**	1	HARNESS AS-LIGHTING (CAB FLOODLIGHT)	
		1	**102-8802**	6	KIT-RECEPTACLE (2-PIN)	
		1	**102-8805**	1	KIT-RECEPTACLE (6-PIN)	
					(EACH INCLUDES RECEPTACLE AS & WEDGE)	
		1	**155-2270**	6	KIT-CONNECTING PLUG (2-PIN)	
					(EACH INCLUDES PLUG AS & WEDGE)	
Y	19	1	**247-0293**	4	LAMP GP-FLOOD (24-VOLT, SUSPENDED MOUNT) (CYLINDER, ROPS)	203
Y	20	1	**247-0294**	1	LAMP GP-FLOOD (24-VOLT, VERTICAL MOUNT) (ROPS MOUNT)	204
	21	1	**4L-6454**	24	BOLT (3/8-16X1-IN)	
	22	1	**4P-7581**	3	CLIP	
	23	1	**4S-1936**	4	CLIP	
	24	1	**5M-3062**	5	BOLT (3/8-16X0.75-IN)	
	25	1	**5P-1075**	85	WASHER-HARD (10.2X22.5X3-MM THK)	
	26	1	**5P-1076**	5	WASHER-HARD (13.5X30X4-MM THK)	
	27	1	**5P-2955**	4	BOLT (5/16-18X2.5-IN)	
	28	1	**5S-7382**	4	BOLT (3/8-16X1.375-IN)	
	29	1	**6K-4934**	4	CLIP (SLOT)	
	30	1	**6K-4935**	4	CLIP (TAB)	
	31	1	**6V-8189**	4	NUT (5/16-18-THD)	
	32	1	**6V-8801**	48	NUT (3/8-16-THD)	
	33	1	**7G-7053**	2	GROMMET	
	34	1	**7X-0582**	2	WASHER-HARD (20X44.5X6-MM THK)	
	35	1	**8T-2502**	4	BOLT (3/8-16X1.125-IN)	
M	36	1	**8T-4139**	5	BOLT (M12X1.75X30-MM)	
	37	1	**8T-4224**	8	WASHER-HARD (8.8X16X2-MM THK)	

224-5142 **LIGHTING GP-FLOOD** *(contd.)* **i02247241**

NOTE	REF NO	GRAPHIC REF	PART NUMBER	QTY	PART NAME 1 2 3 4 5 6 (PRODUCT LEVEL)	SEE PAGE
	38	1	**8T-9397**	2	BOLT (3/4-10X1.25-IN)	
	39	1	**9D-3768**	4	GROMMET	

M-METRIC PART
Y-SEPARATE ILLUSTRATION

224-5142 **LIGHTING GP-FLOOD** *(contd.)* **i02247241**

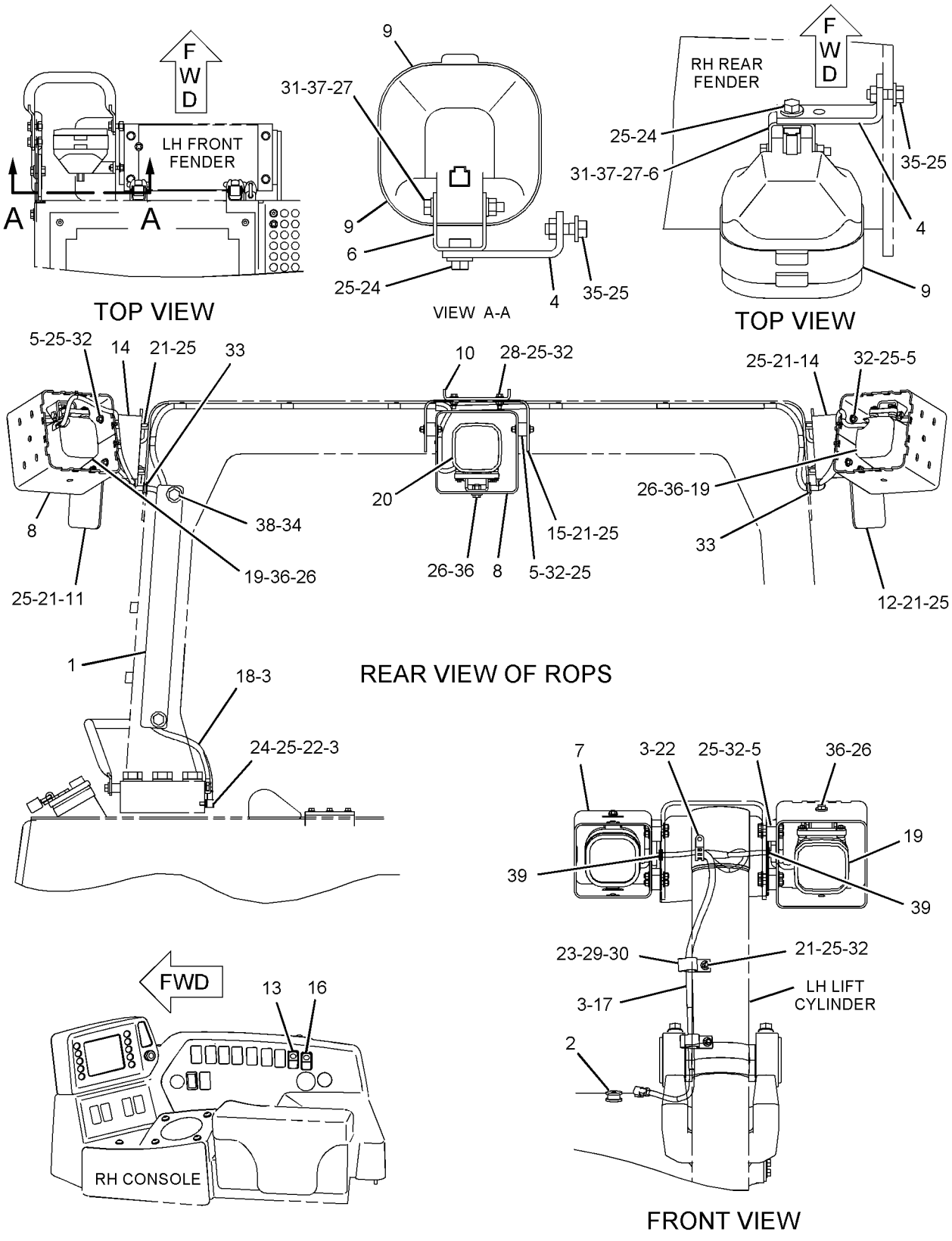

GRAPHIC #1 **<END>** g01117665

224-5144 LIGHTING GP-FLOOD–9-LAMP–
ROPS, CYLINDER MOUNTED
S/N: RJS1-UP
HIGH INTENSITY DISCHARGE, WASTE HANDLING
AN ATTACHMENT

SMCS-1434 **i02247258**

NOTE	REF NO	GRAPHIC REF	PART NUMBER	QTY	PART NAME 1 2 3 4 5 6 (PRODUCT LEVEL)	SEE PAGE
	1	1	**1Q-1592**	1	PLATE AS	
		1	**1Q-1591**	1	PLATE	
		1	**7T-1099**	4	LINK	
	2	1	**7K-1181**	44	STRAP-CABLE	
	3	1	**9W-4361**	20	MOUNT-FLEXIBLE	
	4	1	**111-8314**	4	BRACKET AS	
	5	1	**115-1032**	2	BRACKET	
	6	1	**143-2466**	3	GUARD-LIGHT	
Y	7	1	**147-0319**	4	LAMP GP-FLOOD (24-VOLT, SUSPENDED MOUNT) (ROPS & CYLINDER MOUNTED)	200
	8	1	**167-1884**	2	GUARD	
	9	1	**183-1961**	2	BRACKET	
	10	1	**229-8779**	1	BRACKET	
	11	1	**231-1946**	1	BRACKET	
	12	1	**231-1947**	1	BRACKET	
	13	1	**231-9306**	1	SWITCH AS-ROCKER (FLOODLAMPS-CYLINDER)	
	14	1	**233-6020**	2	BRACKET AS	
Y	15	1	*242-3370*	1	TANK GP-FUEL	165
	16	1	**242-9228**	2	BRACKET	
	17	1	**242-9960**	2	GUARD AS	
	18	1	**244-7357**	1	HARNESS AS-LIGHTING (FENDER FLOOD)	
		1	**102-8802**	1	KIT-RECEPTACLE (2-PIN)	
					(INCLUDES RECEPTACLE AS & WEDGE)	
		1	**155-2270**	2	KIT-CONNECTING PLUG (2-PIN)	
					(EACH INCLUDES PLUG AS & WEDGE)	
	19	1	**246-5626**	1	SWITCH AS-ROCKER (FLOODLAMPS-ROPS)	
	20	1	**229-8907**	2	HARNESS AS-LIGHTING (FRONT)	
					(EACH INCLUDES)	
		1	**102-8802**	2	KIT-RECEPTACLE (2-PIN)	
		1	**102-8803**	1	KIT-RECEPTACLE (3-PIN)	
					(EACH INCLUDES RECEPTACLE AS & WEDGE)	
		1	**155-2270**	3	KIT-CONNECTING PLUG (2-PIN)	
					(EACH INCLUDES PLUG AS & WEDGE)	
	21	1	**245-0175**	1	HARNESS AS-LIGHTING (CAB FLOODLIGHT)	
		1	**102-8802**	6	KIT-RECEPTACLE (2-PIN)	
		1	**102-8805**	1	KIT-RECEPTACLE (6-PIN)	
					(EACH INCLUDES RECEPTACLE AS & WEDGE)	
		1	**155-2270**	6	KIT-CONNECTING PLUG (2-PIN)	
					(EACH INCLUDES PLUG AS & WEDGE)	
Y	22	1	**247-0293**	4	LAMP GP-FLOOD (24-VOLT, SUSPENDED MOUNT) (ROPS & CYLINDER)	203
Y	23	1	**247-0294**	1	LAMP GP-FLOOD (24-VOLT, VERTICAL MOUNT) (ROPS MOUNTED)	204
	24	1	**4L-6454**	28	BOLT (3/8-16X1-IN)	
	25	1	**4P-7581**	2	CLIP	
	26	1	**4S-1936**	4	CLIP	
	27	1	**5M-3062**	4	BOLT (3/8-16X0.75-IN)	
	28	1	**5P-1075**	120	WASHER-HARD (10.2X22.5X3-MM THK)	
	29	1	**5P-1076**	5	WASHER-HARD (13.5X30X4-MM THK)	
	30	1	**5P-2955**	4	BOLT (5/16-18X2.5-IN)	
	31	1	**5S-7382**	4	BOLT (3/8-16X1.375-IN)	
	32	1	**6K-4934**	4	CLIP (SLOT)	
	33	1	**6K-4935**	4	CLIP (TAB)	
	34	1	**6V-8189**	4	NUT (5/16-18-THD)	

224-5144 **LIGHTING GP-FLOOD** *(contd.)* **i02247258**

NOTE	REF NO	GRAPHIC REF	PART NUMBER	QTY	PART NAME 1 2 3 4 5 6 (PRODUCT LEVEL)	SEE PAGE
	35	1	**6V-8801**	64	NUT (3/8-16-THD)	
	36	1	**7G-7053**	2	GROMMET	
	37	1	**7X-0582**	2	WASHER-HARD (20X44.5X6-MM THK)	
M	38	1	**8T-4136**	8	BOLT (M10X1.5X25-MM)	
M	39	1	**8T-4139**	5	BOLT (M12X1.75X30-MM)	
	40	1	**8T-4224**	8	WASHER-HARD (8.8X16X2-MM THK)	
	41	1	**8T-9397**	2	BOLT (3/4-10X1.25-IN)	
	42	1	**9B-7237**	12	BOLT (3/8-16X1.25-IN)	

M-METRIC PART
Y-SEPARATE ILLUSTRATION

224-5144 **LIGHTING GP-FLOOD** *(contd.)* **i02247258**

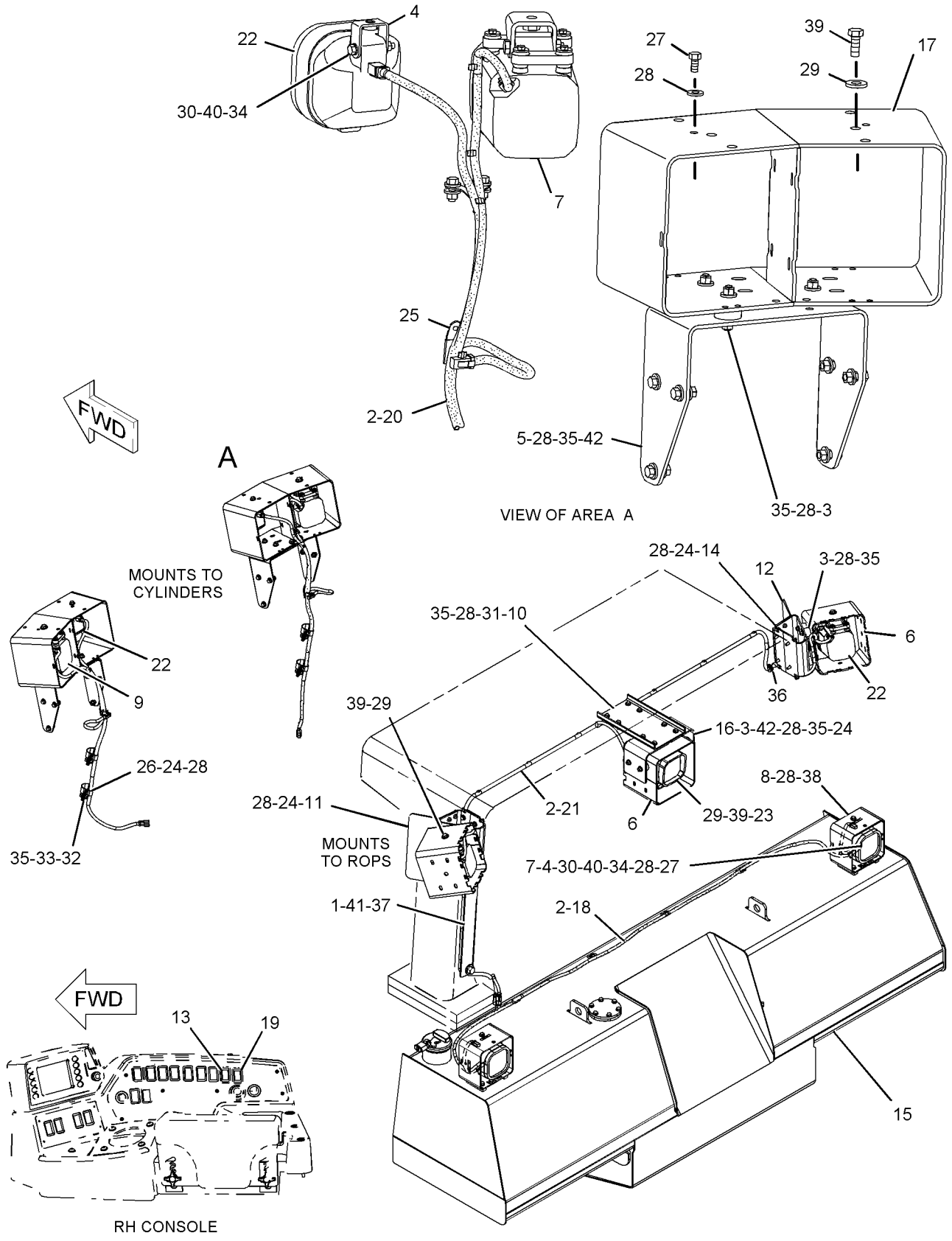

GRAPHIC #1 **<END>** g01116996

ELECTRICAL AND STARTING SYSTEM

259-1868 LIGHTING GP-WARNING BEACON

S/N: RJS1-UP
FOR USE WITH 205-8630—PAGE 736
AN ATTACHMENT

SMCS-1431 **i02223254**

NOTE	REF NO	GRAPHIC REF	PART NUMBER	QTY	PART NAME 1 2 3 4 5 6 (PRODUCT LEVEL)	SEE PAGE
	1	1	**7K-1181**	9	STRAP-CABLE	
	2	1	**8B-9294**	2	SPACER (13.5X38X30-MM THK)	
M	3	1	**179-4324**	3	LOCKNUT (M5X0.8-THD)	
	4	1	**248-2985**	1	LAMP GP-WARNING BEACON	
		1	**5F-3144**	1	SEAL-O-RING	
		1	**6V-6789**	1	SCREW-WASHER HEAD (NO 6X3/4-IN)	
		1	**248-2986**	1	LENS (AMBER, WARNING BEACON)	
		1	**249-5592**	1	LAMP	
	5	1	**250-3076**	1	PLATE	
	6	1	**250-3077**	1	CHANNEL AS	
	7	1	**263-0009**	1	HARNESS AS-LIGHTING (BEACON)	
		1	**102-8802**	1	KIT-RECEPTACLE (2-PIN)	
					(INCLUDES RECEPTACLE AS & WEDGE)	
	8	1	**263-5425**	1	HARNESS AS-LIGHTING (BEACON)	
		1	**155-2270**	2	KIT-CONNECTING PLUG (2-PIN)	
					(EACH INCLUDES PLUG AS & WEDGE)	
	9	1	**263-5426**	1	HARNESS AS-LIGHTING (BEACON)	
		1	**102-8802**	1	KIT-RECEPTACLE (2-PIN)	
					(INCLUDES RECEPTACLE AS & WEDGE)	
		1	**155-2270**	1	KIT-CONNECTING PLUG (2-PIN)	
					(INCLUDES PLUG AS & WEDGE)	
	10	1	**130-5301**	1	CLIP	
	11	1	**156-6175**	1	CLIP	
	12	1	**4P-7581**	4	CLIP	
	13	1	**5P-2228**	5	BOLT (1/2-13X1-IN)	
M	14	1	**6V-4298**	3	BOLT (M5X0.8X16-MM)	
	15	1	**8T-0328**	6	WASHER-HARD (5.5X10X1-MM THK)	
M	16	1	**8T-4138**	2	BOLT (M6X1X20-MM)	
	17	1	**8T-4205**	2	WASHER-HARD (7.2X14.5X2-MM THK)	
	18	1	**8T-4223**	7	WASHER-HARD (13.5X25.5X3-MM THK)	
M	19	1	**8T-4910**	2	BOLT (M12X1.75X60-MM)	
	20	1	**8T-5360**	1	WASHER (12X22.5X2.5-MM THK)	
	21	1	**8T-9380**	1	BOLT (7/16-14X1-IN)	

M-METRIC PART

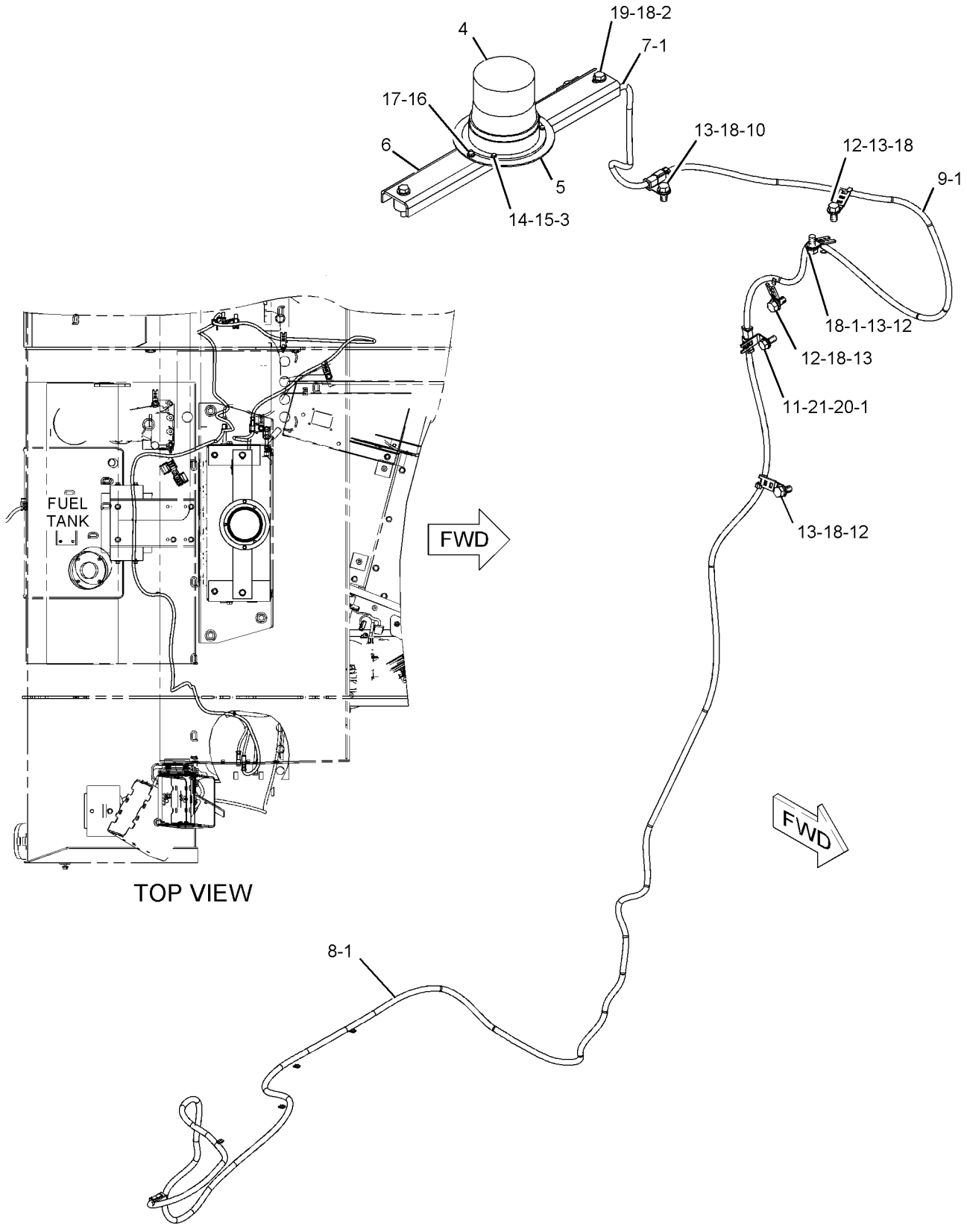

GRAPHIC #1 **<END>** g01123398

255-3632 MOUNTING GP-CONNECTOR–ACCUGRADE

S/N: RJS1-UP
PART OF 245-4623 INSTALLATION AR-GRADE CONTROL
AN ATTACHMENT

SMCS-1408 **i02204747**

NOTE	REF NO	GRAPHIC REF	PART NUMBER	QTY	PART NAME 1 2 3 4 5 6 (PRODUCT LEVEL)	SEE PAGE
	1	1	**236-8826**	3	BOSS	
	2	1	**246-5960**	1	BOX AS-LH	
	3	1	**246-5961**	1	BOX AS-RH	
	4	1	**255-3634**	2	PLATE AS	
					(EACH INCLUDES)	
M	4A	1	**8T-3490**	6	NUT-WELD (M10X1.5-THD)	
M	5	1	**188-9644**	3	SCREW-FLAT HEAD (M8X1.25X25-MM)	
	6	1	**7X-7729**	4	WASHER (11X25X3-MM THK)	
M	7	1	**8T-4136**	4	BOLT (M10X1.5X25-MM)	

M-METRIC PART

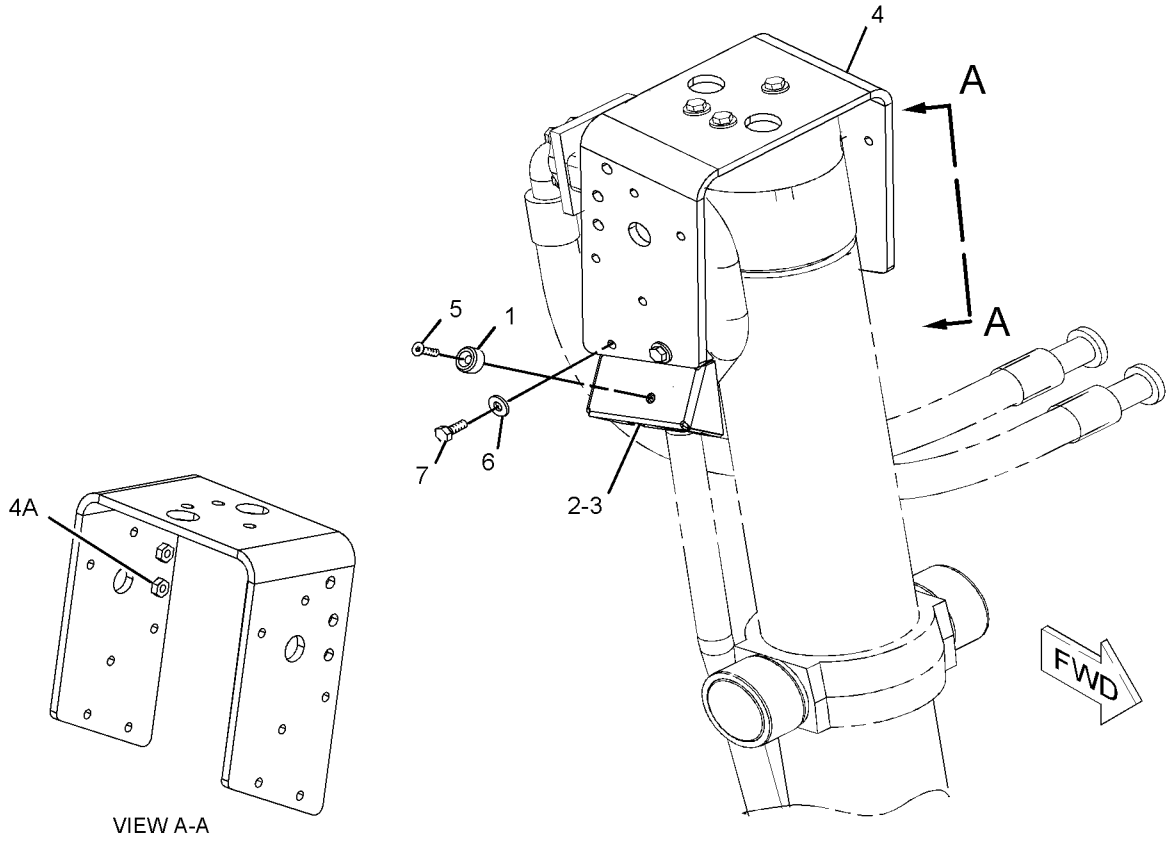

GRAPHIC #1 **<END>** g01119448

259-4756 MOUNTING GP-SENSOR–ATMOSPHERIC, ENGINE OIL

S/N: RHX1-UP

PART OF 205-8603, 231-3468 ENGINE AR-COMPLETE

FOR USE WITH OIL AND ATMOSPHERIC PRESSURE SENSORS

ALSO AN ATTACHMENT

SMCS-5574 **i02183525**

NOTE	REF NO	GRAPHIC REF	PART NUMBER	QTY	PART NAME 1 2 3 4 5 6 (PRODUCT LEVEL)	SEE PAGE
	1	1	**125-5835**	1	FILTER (ATMOSPHERIC PRESSURE SENSOR)	
	2	1	**254-4957**	1	ADAPTER	
	3	1	**0S-1588**	2	BOLT (3/8-16X1.25-IN)	
	4	1	**5M-2894**	2	WASHER-HARD (10.2X18.5X2.5-MM THK)	
	5	1	**6V-3683**	1	SEAL-O-RING	
	6	1	**6V-5048**	1	SEAL-O-RING	
	7	1	**8J-4351**	1	SEAL-O-RING	
	8	1	**9S-4182**	1	PLUG	

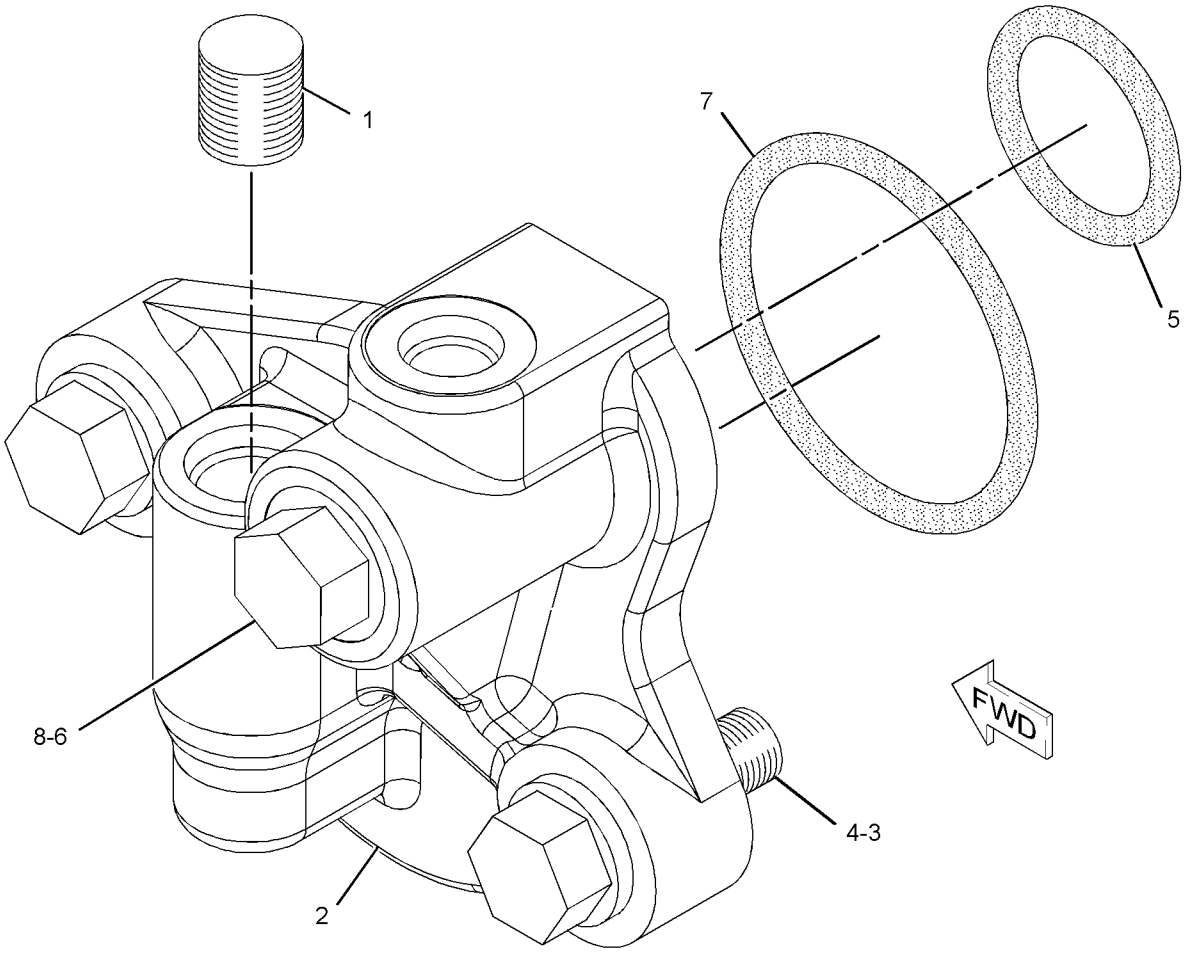

GRAPHIC #1 **<END>** g01110934

ELECTRICAL AND STARTING SYSTEM

223-8176 PANEL GP-FUSE

S/N: RJS1-UP

PART OF 205-8579 WIRING GP-PLATFORM

SMCS-1417 **i02238648**

NOTE	REF NO	GRAPHIC REF	PART NUMBER	QTY	PART NAME 1 2 3 4 5 6 (PRODUCT LEVEL)	SEE PAGE
	1	1	**6T-3643**	1	CIRCUIT BREAKER AS (15-AMPERE) (MAIN POWER)	
		1	**6V-8376**	2	SCREW-MACHINE (8-32X0.25-IN)	
		1	**9B-7233**	2	LOCKWASHER	
	2	1	**9W-1441**	18	FUSE (15-AMPERE)	
	3	1	**9W-1442**	6	FUSE (10-AMPERE)	
	4	1	**9W-1446**	4	FUSE (20-AMPERE)	
	5	2	**117-2311**	1	RECEPTACLE AS-POWER (12-VOLT)	
Y	6	1	**125-1302**	1	SWITCH GP-MAGNETIC (24-VOLT) (START RELAY)	273
	7	1	**128-6157**	1	PLATE	
	8	1	**172-4863**	1	JUNCTION BLOCK	
	9	1	**189-3158**	1	SUPPRESSOR-ARC	
	10	1	**202-4327**	1	PULLER-FUSE	
	11	2	**204-8000**	1	ANCHOR-TIE	
	12	1	**211-3686**	1	WIRING GP-PANEL (FUSE)	
		1	**225-8553**	1	BLOCK AS-FUSE	
		1	**1H-3244**	2	LOCKWASHER	
		1	**6V-8185**	2	NUT (1/4-20-THD)	
		1	**8T-4205**	2	WASHER-HARD (7.2X14.5X2-MM THK)	
		1	**151-1398**	2	KIT-TERMINAL (LOCK)	
					(INCLUDES LOCK)	
		1	**227-0912**	1	BLOCK AS	
		1	**213-2304**	1	HARNESS AS-PANEL (FUSE)	
		1	**214-4208**	1	RECEPTACLE AS (70-PIN)	
		1	**102-8802**	2	KIT-RECEPTACLE (2-PIN)	
					(INCLUDES RECEPTACLE AS & WEDGE)	
		1	**155-2270**	3	KIT-CONNECTING PLUG (2-PIN)	
					(INCLUDES PLUG AS & WEDGE)	
	13	2	**212-6167**	1	STRAP	
	14	2	**212-6168**	1	STRAP	
	15	1	**212-6169**	1	STRAP	
	16	2	**213-3064**	1	GASKET	
	17	1	**214-1703**	1	WIRE AS	
	18	1	**215-3712**	1	COVER AS	
		1	**6V-2491**	2	RIVET-POP	
		1	**185-9464**	1	LATCH AS	
		1	**211-3703**	1	COVER	
		1	**212-6157**	1	HINGE AS	
	19	2	**223-8173**	1	HOLDER AS-FUSE	
	20	1	**223-8175**	1	CAP AS	
	21	2	**225-3797**	1	BOX AS-FUSE	
	22	1	**225-5928**	1	COVER PLATE	
	23	2	**231-6270**	1	GASKET	
	24	1	**234-5880**	1	BRACKET	
	25	1	**234-6845**	1	COVER	
	26	1,2	**239-8107**	2	FUSE (175-AMPERE)	
Y	27	2	**241-8368**	1	SWITCH GP-MAGNETIC (24-VOLT) (MAIN RELAY)	274
	28	1	**249-0951**	1	GASKET	
	29	1	**068-4209**	2	SCREW (8-32X0.75-IN)	
	30	1	**3S-9557**	4	SCREW-PAN HEAD (4-40X0.5-IN)	
	31	2	**4F-8711**	2	BUTTON-PLUG	
M	32	2	**5C-2890**	4	NUT (M6X1-THD)	
	33	1	**6D-5801**	2	NUT (8-32-THD)	
	34	1	**6V-5645**	4	SCREW-MACHINE (10-32X0.87-IN)	
M	35	1	**6V-5683**	4	BOLT (M6X1X16-MM)	
	36	1	**7K-1181**	4	STRAP-CABLE	
	37	1	**7U-4892**	2	SCREW (8-32X0.75-IN)	

223-8176 PANEL GP-FUSE *(contd.)* i02238648

NOTE	REF NO	GRAPHIC REF	PART NUMBER	QTY	PART NAME 1 2 3 4 5 6 (PRODUCT LEVEL)	SEE PAGE
M	38	2	**7X-2548**	2	BOLT (M12X1.75X16-MM)	
M	39	1	**8T-0267**	3	BOLT-SOCKET HEAD (M6X1X12-MM)	
	40	1,2	**8T-4121**	3	WASHER-HARD (11X21X2.5-MM THK)	
M	41	1	**8T-4136**	1	BOLT (M10X1.5X25-MM)	
M	42	2	**8T-4191**	2	BOLT (M10X1.5X16-MM)	
M	43	2	**8T-4199**	2	BOLT (M8X1.25X12-MM)	
M	44	2	**8T-4200**	2	BOLT (M8X1.25X16-MM)	
	45	2	**8T-4223**	2	WASHER-HARD (13.5X25.5X3-MM THK)	
	46	2	**8T-4224**	4	WASHER-HARD (8.8X16X2-MM THK)	
M	47	1,2	**9X-2042**	15	SCREW-TRUSS HEAD (M6X1X12-MM)	
	48	2	**9X-8256**	4	WASHER (6.6X12X2-MM THK)	

M-METRIC PART
Y-SEPARATE ILLUSTRATION

223-8176 PANEL GP-FUSE *(contd.)* i02238648

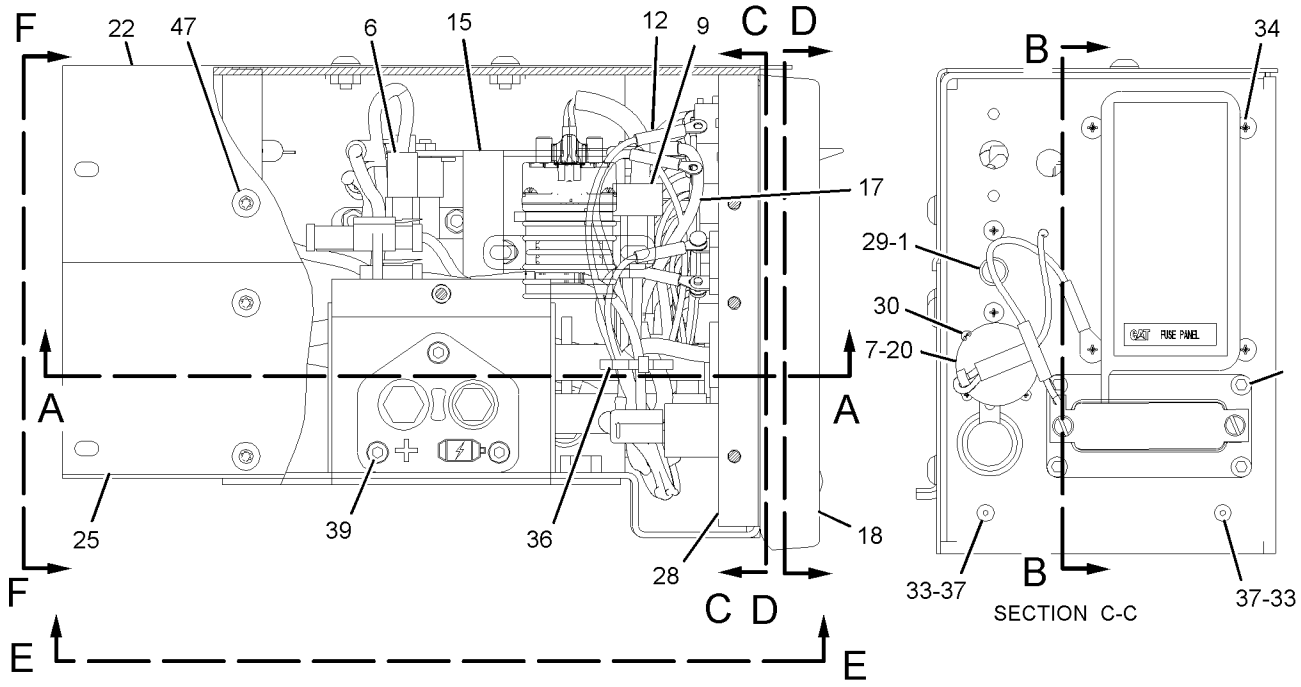

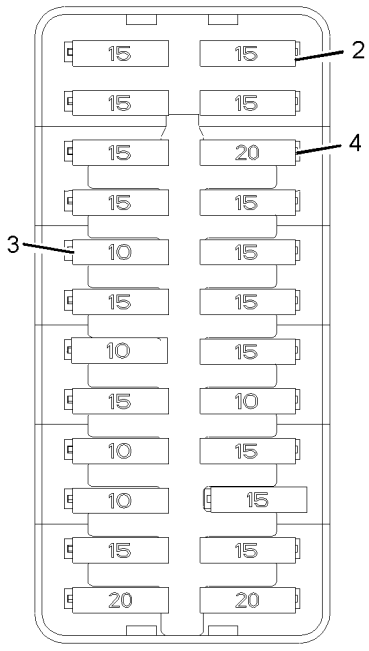

VIEW OF FUSE LOCATIONS

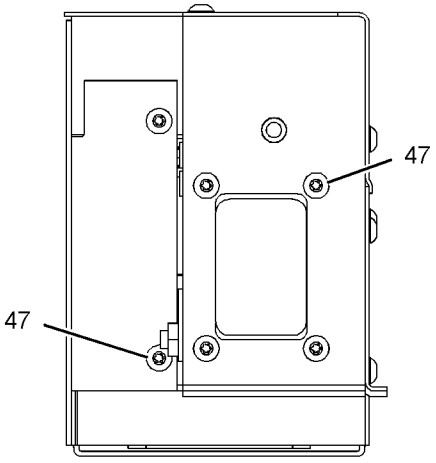

VIEW F-F

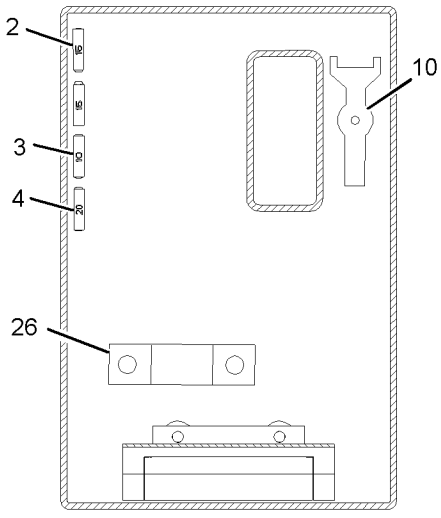

SECTION D-D

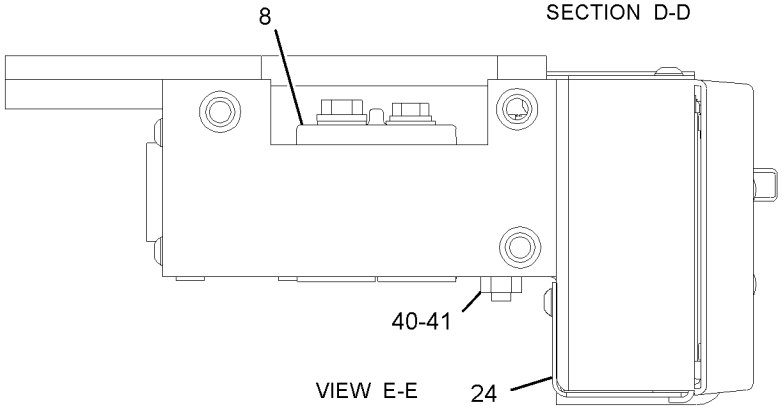

VIEW E-E

REFER TO ALL ILLUSTRATIONS OF THIS GROUP FOR AUXILIARY VIEWS

GRAPHIC #1 g01111807

223-8176 PANEL GP-FUSE *(contd.)* **i02238648**

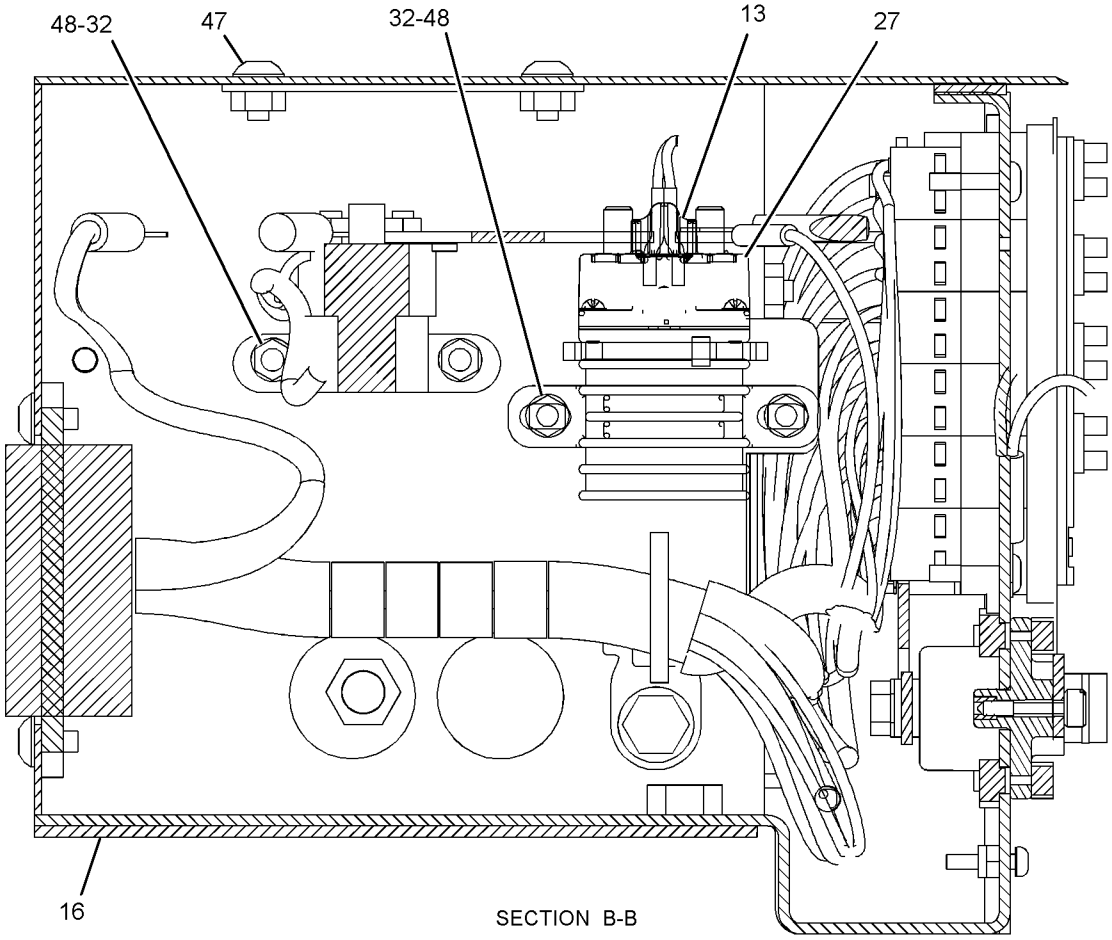

SECTION B-B

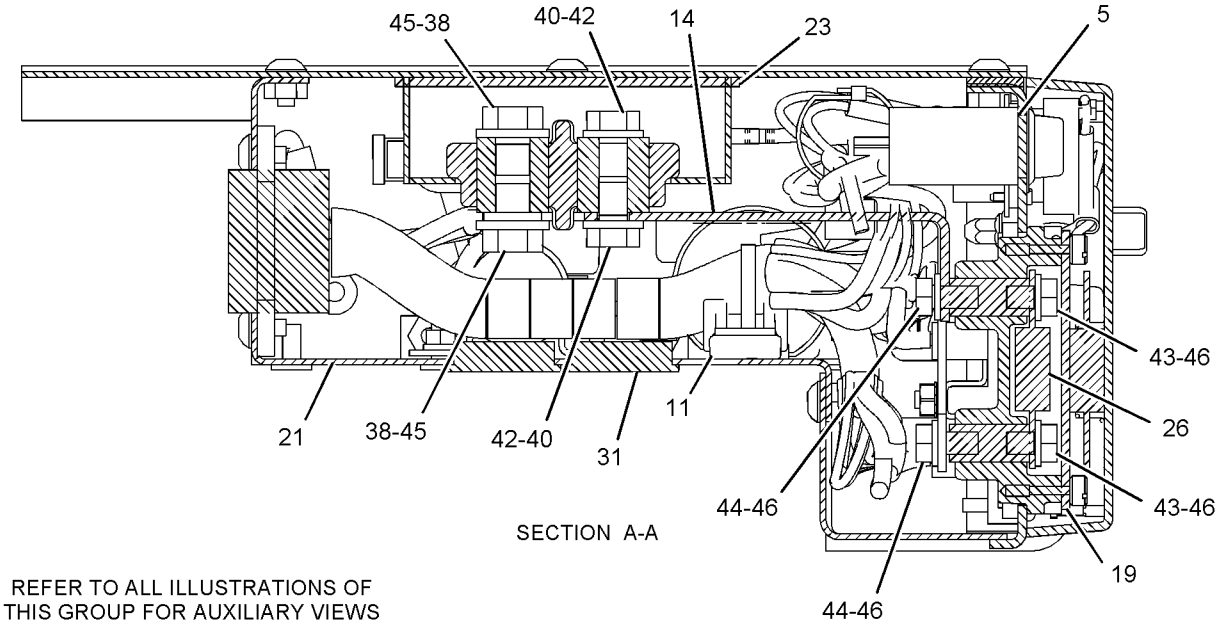

SECTION A-A

REFER TO ALL ILLUSTRATIONS OF
THIS GROUP FOR AUXILIARY VIEWS

GRAPHIC #2 **<END>** g01111808

235-8200 PLUG GP-CONNECTOR

S/N: RHX1-UP

PART OF 205-8603 ENGINE AR-COMPLETE

SMCS-1408 **i02185604**

NOTE	REF NO	GRAPHIC REF	PART NUMBER	QTY	PART NAME 1 2 3 4 5 6 (PRODUCT LEVEL)	SEE PAGE
	1	1	**246-9353**	1	PLUG AS	
	1A	1	**8T-8737**	8	PLUG-SEAL	
	1B	1	**102-8806**	1	KIT-RECEPTACLE (8-PIN)	
					(INCLUDES RECEPTACLE AS AND WEDGE)	
	2	1	**3S-2093**	1	STRAP-CABLE	

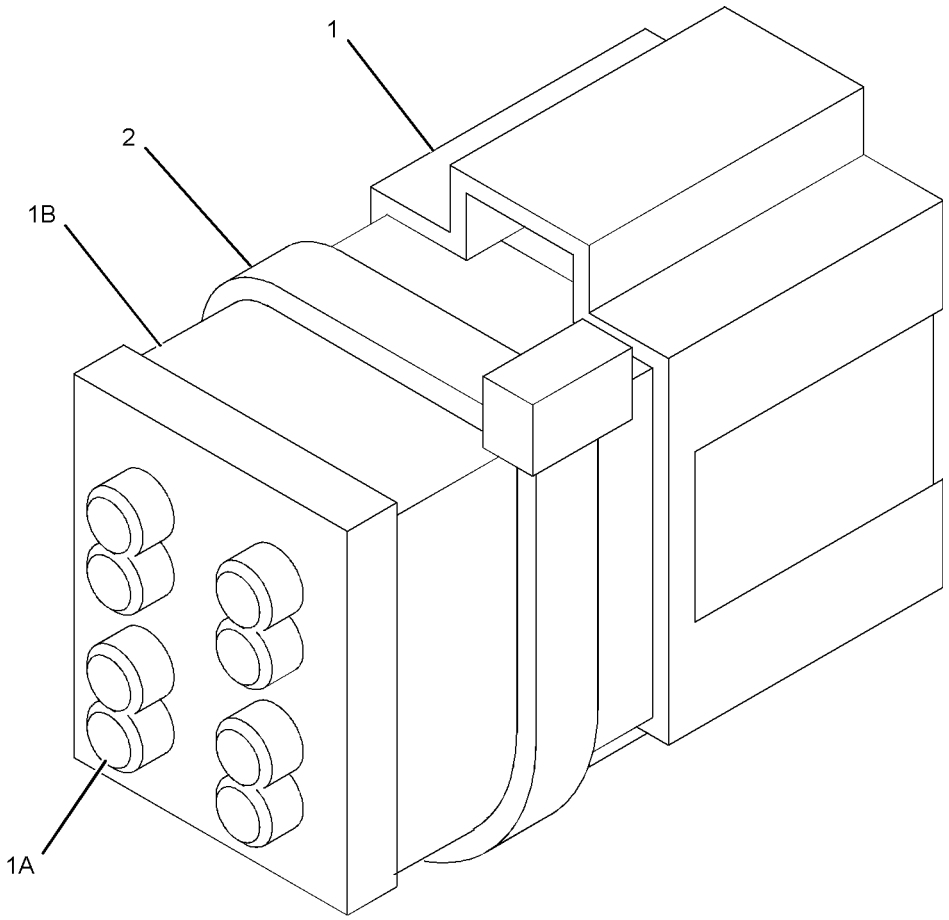

GRAPHIC #1 **<END>** g01105455

225-6733 SENSOR & MOUNTING GP—CYLINDER POSITION

S/N: RJS1-UP

PART OF 225-6727 CYLINDER GP-LIFT

AN ATTACHMENT

SMCS-1408 **i02247317**

NOTE	REF NO	GRAPHIC REF	PART NUMBER	QTY	PART NAME 1 2 3 4 5 6 (PRODUCT LEVEL)	SEE PAGE
	1	1	**102-2244**	1	GROMMET	
	2	1	**212-0907**	1	PLATE-CONNECTOR	
	3	1	**217-8763**	1	COVER-PROTECTION	
	4	1	**227-0920**	1	HOUSING-SENSOR	
	5	1	**228-0805**	1	SENSOR GP-POSITION (CYLINDER)	
	6	1	**095-0879**	1	PIN-SPRING	
	7	1	**102-8804**	1	KIT-RECEPTACLE (4-PIN)	
					(INCLUDES RECEPTACLE AS & WEDGE)	
	8	1	**188-2199**	1	SEAL-O-RING	
	9	1	**215-1942**	1	RING-BACKUP	
	10	1	**3J-7354**	1	SEAL-O-RING	
	11	1	**3V-2431**	2	WASHER (10.2X16X2-MM THK)	
	12	1	**4S-5565**	2	BOLT	
	13	1	**8T-5070**	1	SETSCREW-SOCKET (3/8-16XO.5-IN)	
	14	1	**8T-8737**	1	PLUG-SEAL	
	15	1	**9S-8002**	1	PLUG	
E	16	1	**9X-1386**		SLEEVE (7-CM)	
E	16A	1	**9X-1386**		SLEEVE (6-CM)	

E-ORDER BY THE CENTIMETER

225-6733 SENSOR & MOUNTING GP *(contd.)* **i02247317**

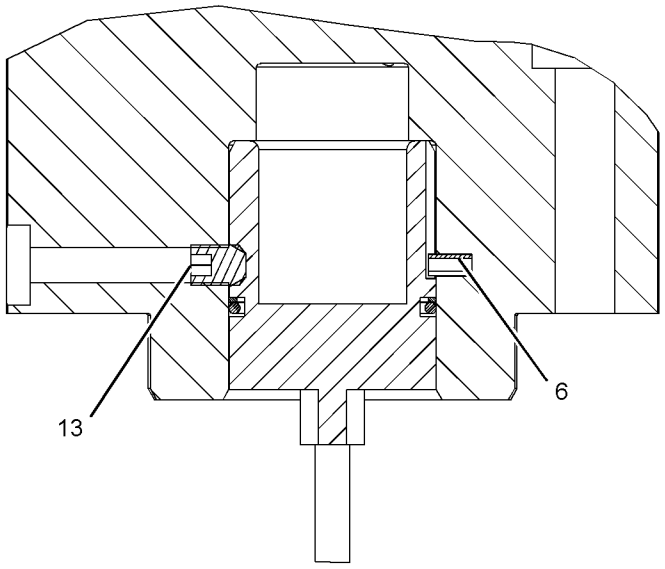

SECTION A-A

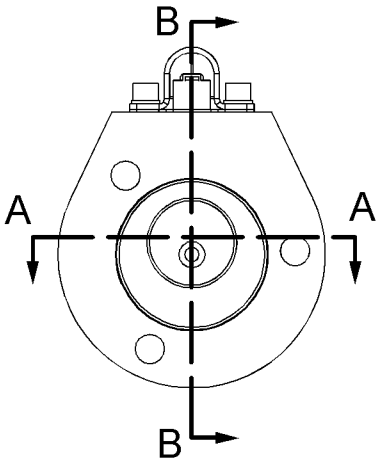

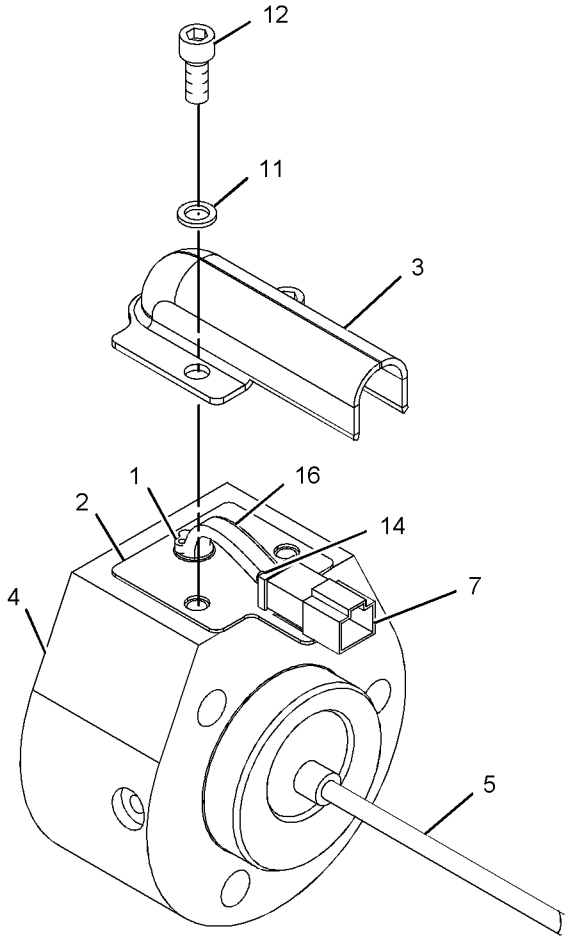

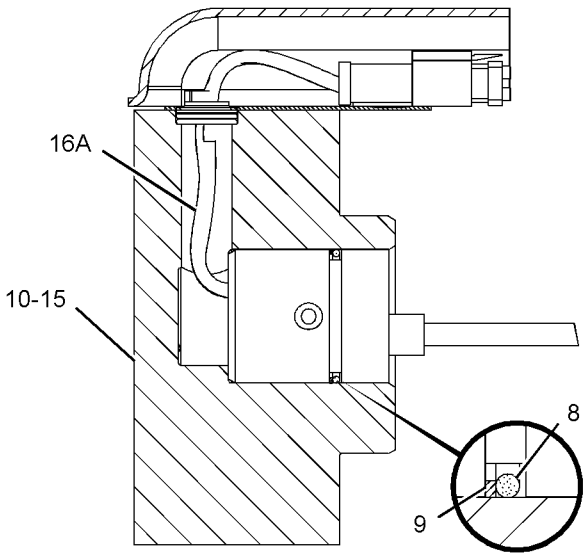

SECTION B-B

GRAPHIC #1 **<END>** g01120634

231-1973 SENSOR GP-ENGINE

S/N: RHX1-UP

PART OF 205-8603, 231-3468 ENGINE AR-COMPLETE

ALSO AN ATTACHMENT

SMCS-1718, 1906, 1912, 1924, 1929 **i02050708**

NOTE	REF NO	GRAPHIC REF	PART NUMBER	QTY	PART NAME 1 2 3 4 5 6 (PRODUCT LEVEL)	SEE PAGE
	1	1	**9X-0262**	1	ADAPTER	
	2	1	**132-9770**	1	SPACER AS	
		1	**1W-6448**	2	DOWEL	
Y	3	1	*197-8391*	1	SENSOR GP-TEMPERATURE (INTAKE AIR MANIFOLD)	253
Y	4	1	*197-8392*	1	SENSOR GP-TEMPERATURE (WATER/COOLANT)	254
Y	5	1	*214-2484*	1	SENSOR GP-SPEED (TIMING) (CRANKSHAFT)	250
Y	6	1	*239-2395*	1	SENSOR GP-PRESSURE (ATMOSPHERIC)	243
Y	7	1	*239-2396*	1	SENSOR GP-PRESSURE (ENGINE OIL)	244
Y	8	1	*239-5928*	1	SENSOR GP-SPEED (TIMING) (CAMSHAFT)	251
	9	1	**241-6186**	1	ELBOW	
	10	1	**0S-1591**	1	BOLT (3/8-16X1.5-IN)	
Y	11	1	*239-5674*	1	SENSOR GP-PRESSURE (INTAKE AIR MANIFOLD)	246
	12	1	**2H-3755**	2	BOLT (5/16-18X0.62-IN)	
	13	1	**3P-1155**	1	SEAL-O-RING	
	14	1	**5M-2894**	1	WASHER-HARD (10.2X18.5X2.5-MM THK)	
	15	1	**6V-5048**	1	SEAL-O-RING	
	16	1	**6V-5049**	1	SEAL-O-RING	
	17	1	**9M-1974**	2	WASHER-HARD (8.8X16X2-MM THK)	

Y-SEPARATE ILLUSTRATION

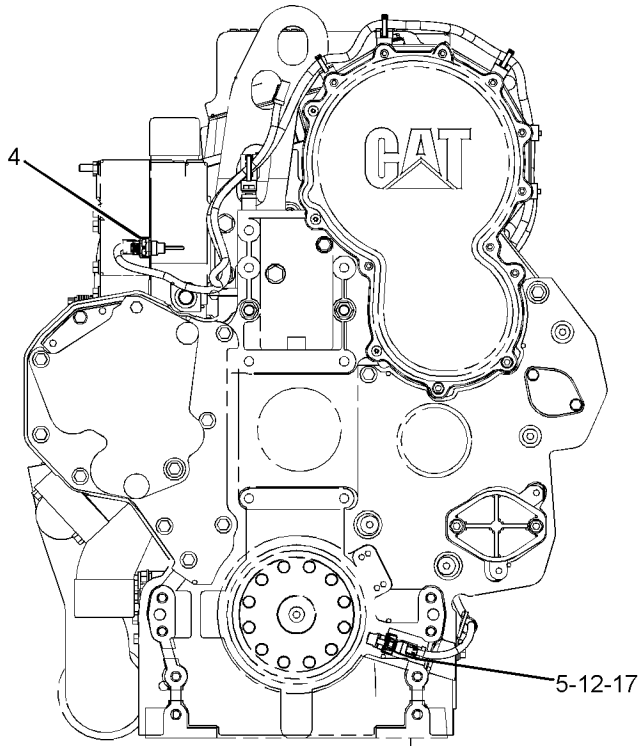

FRONT VIEW

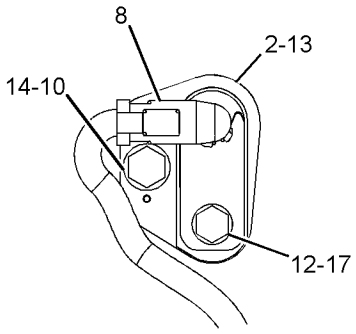

SECTION A-A

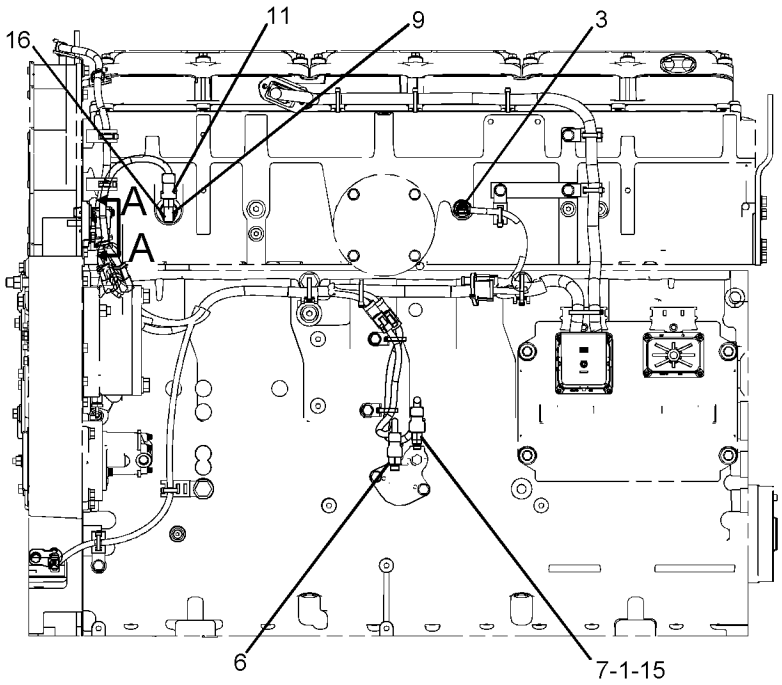

LEFT SIDE VIEW

GRAPHIC #1 **<END>** g01055021

124-9325 SENSOR GP-FUEL LEVEL–ULTRASONIC

S/N: RJS1-UP

PART OF 205-8578 BATTERY & WIRING GP

SMCS-1273 **i02247340**

NOTE	REF NO	GRAPHIC REF	PART NUMBER	QTY	PART NAME 1 2 3 4 5 6 (PRODUCT LEVEL)	SEE PAGE
	1	1	**102-8804**	1	KIT-RECEPTACLE (4-PIN)	
					(INCLUDES RECEPTACLE AS & WEDGE)	
	2	1	**3E-3377**	1	WEDGE-RECEPTACLE LOCK (4-PIN)	
	3	1	**186-3735**	4	PIN-CONNECTOR	
E	4	1	**9X-1813**		SLEEVE (34-CM)	

E-ORDER BY THE CENTIMETER

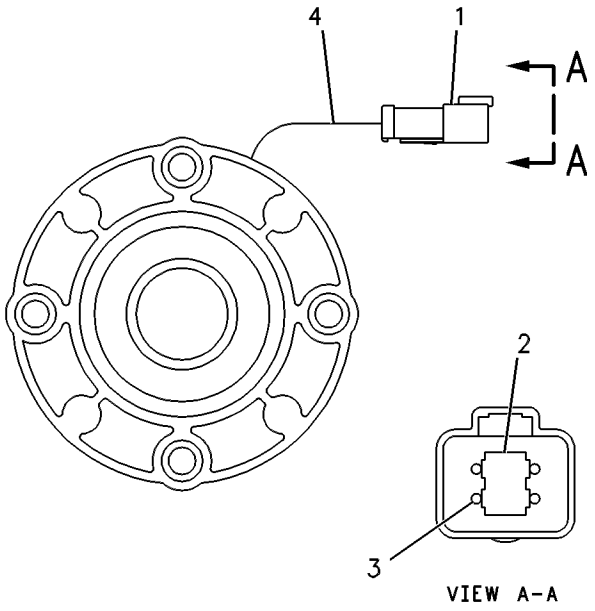

GRAPHIC #1 **<END>** g00085712

160-2443 SENSOR GP-POSITION–SERVICE BRAKE PEDAL

S/N: RJS1-UP
PART OF 231-7314 PEDAL GP-GOVERNOR & BRAKE
ALSO AN ATTACHMENT

SMCS-1408 **i02249656**

NOTE	REF NO	GRAPHIC REF	PART NUMBER	QTY	PART NAME 1 2 3 4 5 6 (PRODUCT LEVEL)	SEE PAGE
	1	1	**102-8803**	1	KIT-RECEPTACLE (3-PIN)	
					(INCLUDES RECEPTACLE AS & WEDGE)	
	2	1	**8T-8729**	3	PIN-CONNECTOR	
	3	1	**3E-3371**	1	WEDGE-RECEPTACLE LOCK (3-PIN)	

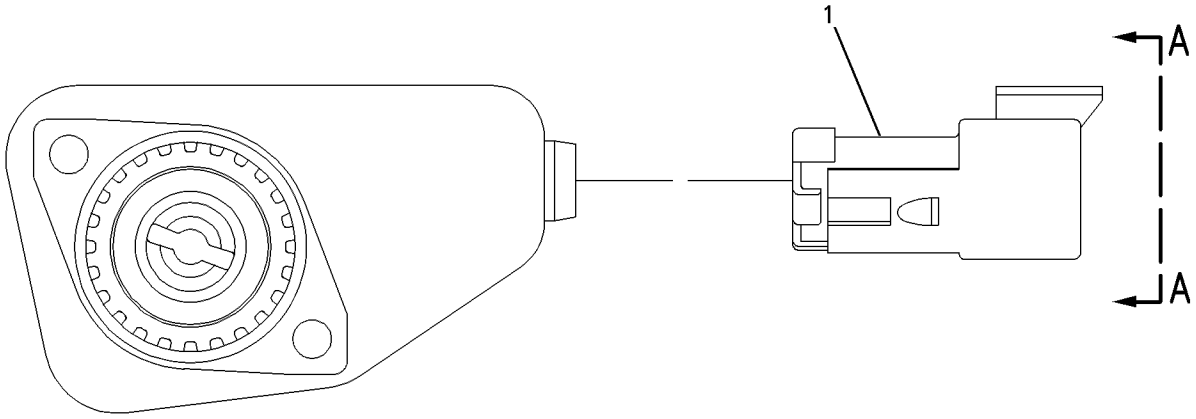

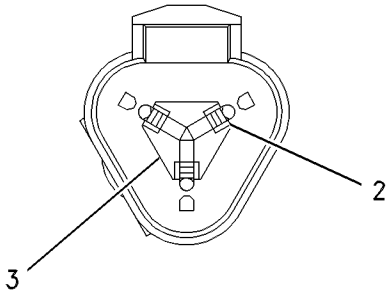

VIEW A–A

GRAPHIC #1 **<END>** g00637818

224-5530 SENSOR GP-POSITION–DECELERATOR PEDAL

S/N: RJS1-UP

PART OF 231-7314 PEDAL GP-GOVERNOR & BRAKE

ALSO AN ATTACHMENT

SMCS-1408 **i02241488**

NOTE	REF NO	GRAPHIC REF	PART NUMBER	QTY	PART NAME 1 2 3 4 5 6 (PRODUCT LEVEL)	SEE PAGE
	2	1	**102-8803**	1	KIT-RECEPTACLE (3-PIN)	
					(INCLUDES RECEPTACLE AS & WEDGE)	
	3	1	**8T-8729**	3	PIN-CONNECTOR	
	4	1	**3E-3371**	1	WEDGE-RECEPTACLE LOCK (3-PIN)	
E	5	1	**9X-1813**		SLEEVE (13-CM)	

E-ORDER BY THE CENTIMETER

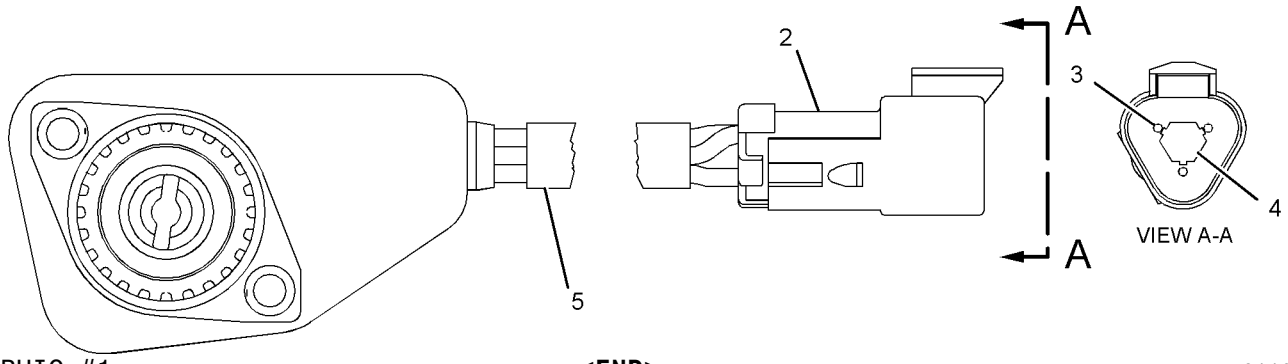

GRAPHIC #1 **<END>** g01107385

161-9926 SENSOR GP-PRESSURE–ATMOSPHERIC AIR

S/N: RJS1-UP

PART OF 222-7860 WIRING GP-ENGINE

SMCS-1408 **i02231080**

NOTE	REF NO	GRAPHIC REF	PART NUMBER	QTY	PART NAME 1 2 3 4 5 6 (PRODUCT LEVEL)	SEE PAGE
BE	1	1	**9X-1813**		SLEEVE	
	2	1	**155-2260**	1	KIT-CONNECTING PLUG (3-PIN)	
					(INCLUDES PLUG AS & WEDGE)	
	3	1	**180-9340**	3	SOCKET-CONNECTOR	
	4	1	**3E-3368**	1	WEDGE-PLUG LOCK (3-PIN)	

B-USE AS REQUIRED
E-ORDER BY THE CENTIMETER

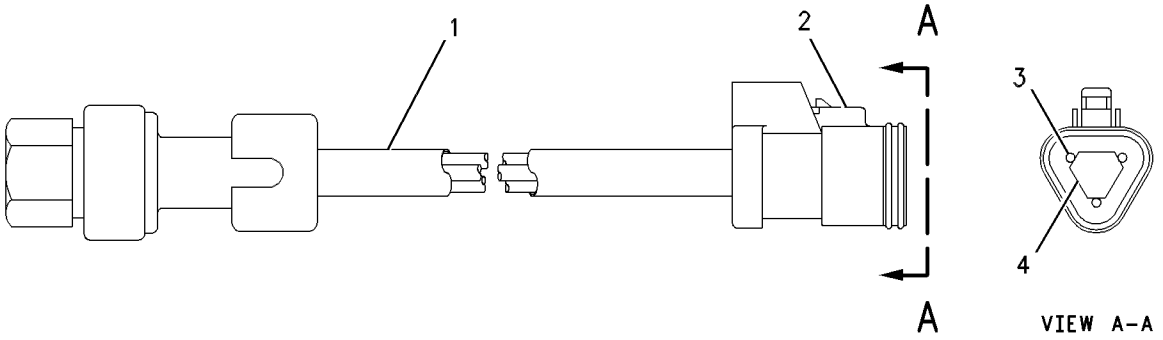

GRAPHIC #1 **<END>** g00513129

194-6722 SENSOR GP-PRESSURE–ATMOSPHERIC AIR

S/N: RHX1-UP
PART OF 239-2395 SENSOR GP-PRESSURE
ALSO AN ATTACHMENT

SMCS-1408 **i02230727**

NOTE	REF NO	GRAPHIC REF	PART NUMBER	QTY	PART NAME 1 2 3 4 5 6 (PRODUCT LEVEL)	SEE PAGE
BE	1	1	**9X-1813**		SLEEVE	
	2	1	**155-2260**	1	KIT-CONNECTING PLUG (3-PIN)	
					(INCLUDES PLUG AS & WEDGE)	
	3	1	**180-9340**	3	SOCKET-CONNECTOR	
	4	1	**3E-3368**	1	WEDGE-PLUG LOCK (3-PIN)	

B-USE AS REQUIRED
E-ORDER BY THE CENTIMETER

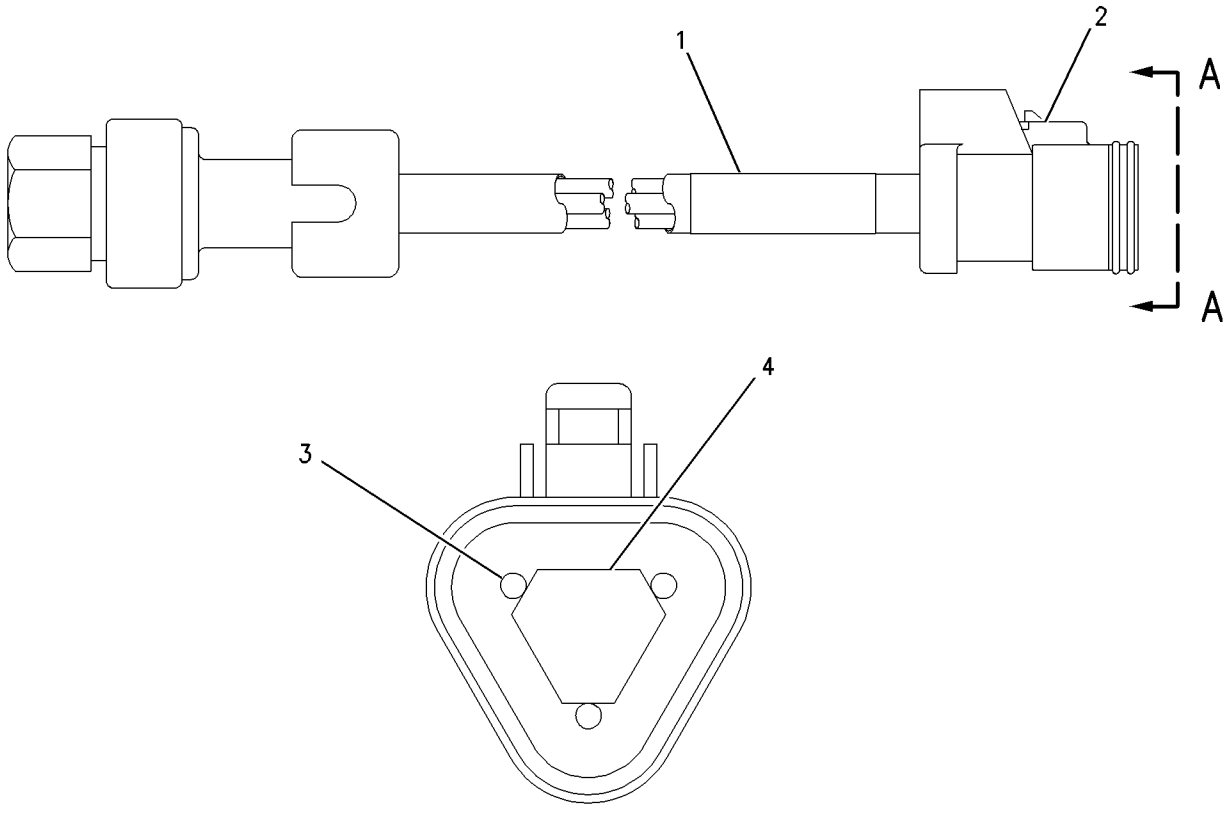

VIEW A-A

GRAPHIC #1 **<END>** g00934579

194-6725 SENSOR GP-PRESSURE–ENGINE OIL–FUEL

S/N: RJS1-UP; RHX1-UP
PART OF 207-4802 FILTER & LINES GP-FUEL, 239-2396 SENSOR GP-PRESSURE
ALSO AN ATTACHMENT

SMCS-1408 **i02267093**

NOTE	REF NO	GRAPHIC REF	PART NUMBER	QTY	PART NAME 1 2 3 4 5 6 (PRODUCT LEVEL)	SEE PAGE
E	1	1	**9X-1813**		SLEEVE (34-CM)	
	2	1	**155-2260**	1	KIT-CONNECTING PLUG (3-PIN)	
					(INCLUDES PLUG AS AND WEDGE)	
	3	1	**194-5226**	3	WIRE AS-HARNESS (16-GA TO 18-GA)	
	4	1	**3E-3368**	1	WEDGE-PLUG LOCK (3-PIN)	

E-ORDER BY THE CENTIMETER

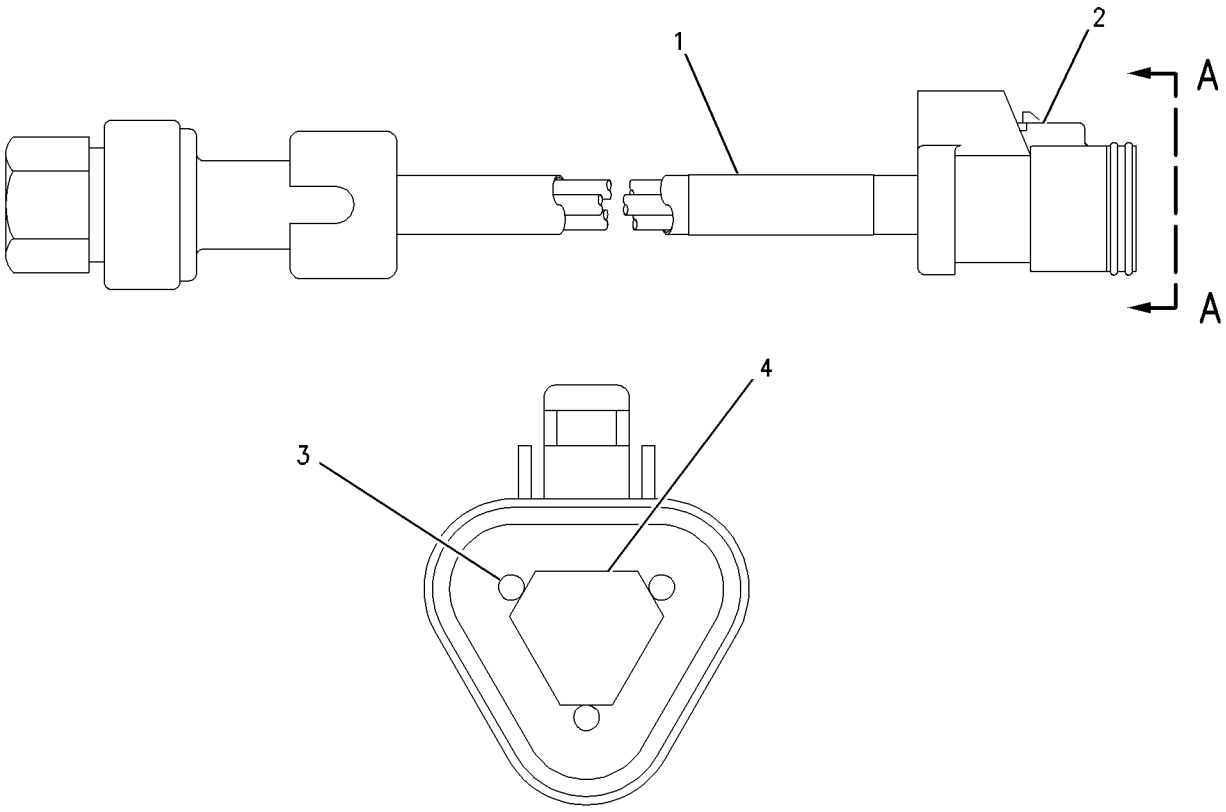

VIEW A–A

GRAPHIC #1 **<END>** g00851220

224-4535 SENSOR GP-PRESSURE–STEERING

S/N: RJS1-UP

PART OF 205-8578 BATTERY & WIRING GP

SMCS-1408 **i02232510**

NOTE	REF NO	GRAPHIC REF	PART NUMBER	QTY	PART NAME 1 2 3 4 5 6 (PRODUCT LEVEL)	SEE PAGE
E	1	1	**9X-1813**		SLEEVE (35-CM)	
	2	1	**155-2260**	1	KIT-CONNECTING PLUG (3-PIN)	
					(INCLUDES PLUG AS AND WEDGE)	
	3	1	**194-5226**	3	WIRE AS-HARNESS (16-GA TO 18-GA)	
	4	1	**155-2276**	1	WEDGE-PLUG LOCK (3-PIN)	

E-ORDER BY THE CENTIMETER

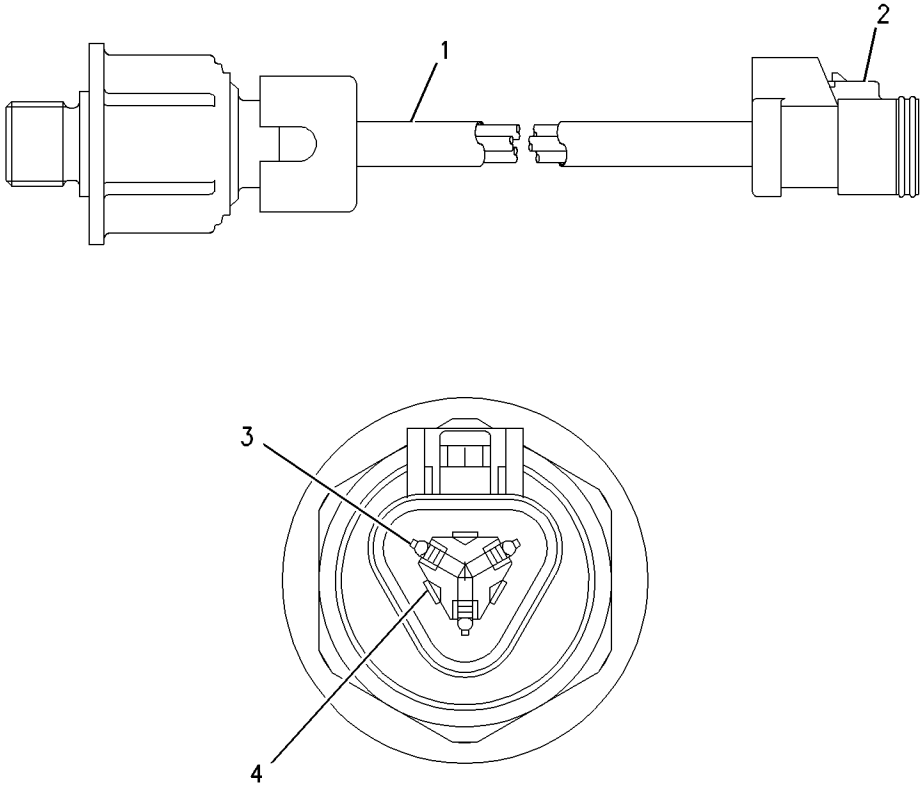

GRAPHIC #1 **<END>** g00949420

237-0957 SENSOR GP-PRESSURE–HYDRAULIC OIL–HYDRAULIC PUMP

S/N: RJS1-UP

PART OF 205-8578 BATTERY & WIRING GP, 222-7860 WIRING GP-ENGINE

SMCS-1408 **i02254217**

NOTE	REF NO	GRAPHIC REF	PART NUMBER	QTY	PART NAME 1 2 3 4 5 6 (PRODUCT LEVEL)	SEE PAGE
BE	1	1	**9X-1813**		SLEEVE	
	2	1	**155-2260**	1	KIT-CONNECTING PLUG (3-PIN)	
					(INCLUDES PLUG AS & WEDGE)	

B-USE AS REQUIRED
E-ORDER BY THE CENTIMETER

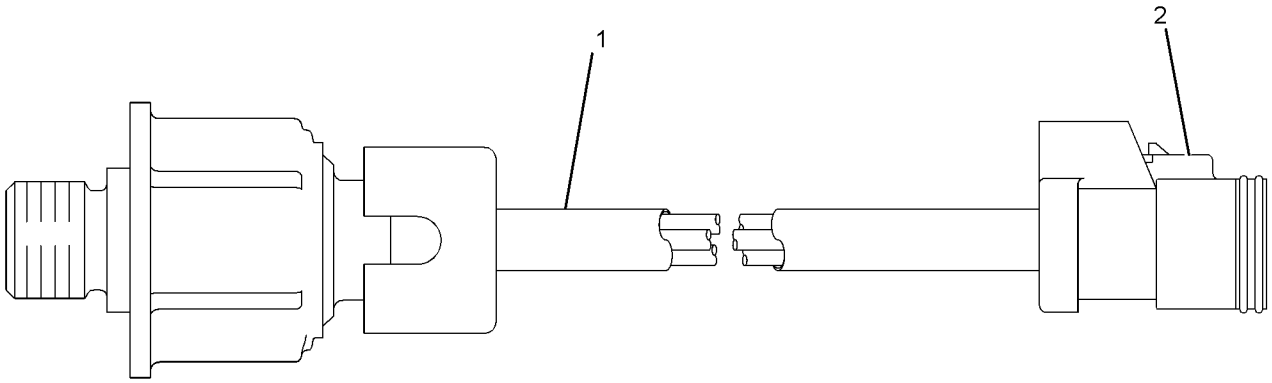

GRAPHIC #1 **<END>** g01131622

239-2395 SENSOR GP-PRESSURE–ATMOSPHERIC AIR

S/N: RHX1-UP

PART OF 231-1973 SENSOR GP-ENGINE

ALSO AN ATTACHMENT

SMCS-1408 **i02230746**

NOTE	REF NO	GRAPHIC REF	PART NUMBER	QTY	PART NAME 1 2 3 4 5 6 (PRODUCT LEVEL)	SEE PAGE
Y	1	1	**194-6722**	1	SENSOR GP-PRESSURE	239
	2	1	**6V-5049**	1	SEAL-O-RING	

Y-SEPARATE ILLUSTRATION

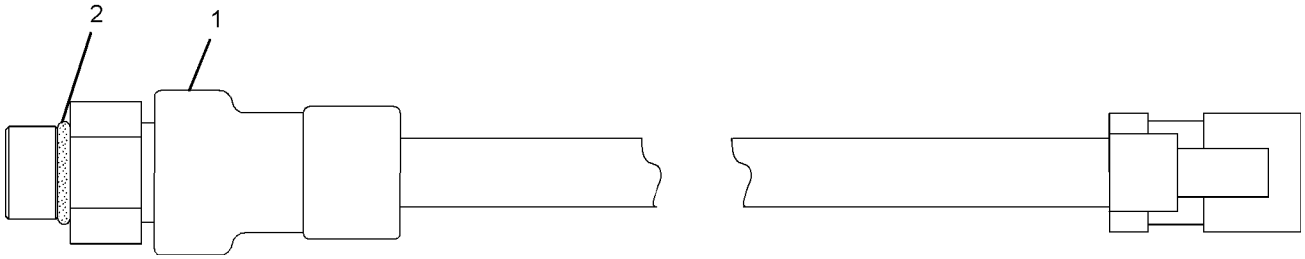

GRAPHIC #1 **<END>** g01019702

239-2396 SENSOR GP-PRESSURE—ENGINE OIL

S/N: RHX1-UP

PART OF 231-1973 SENSOR GP-ENGINE

ALSO AN ATTACHMENT

SMCS-1408 **i02250759**

NOTE	REF NO	GRAPHIC REF	PART NUMBER	QTY	PART NAME 1 2 3 4 5 6 (PRODUCT LEVEL)	SEE PAGE
Y	1	1	**194-6725**	1	SENSOR GP-PRESSURE	240
	2	1	**6V-5048**	1	SEAL-O-RING	

Y-SEPARATE ILLUSTRATION

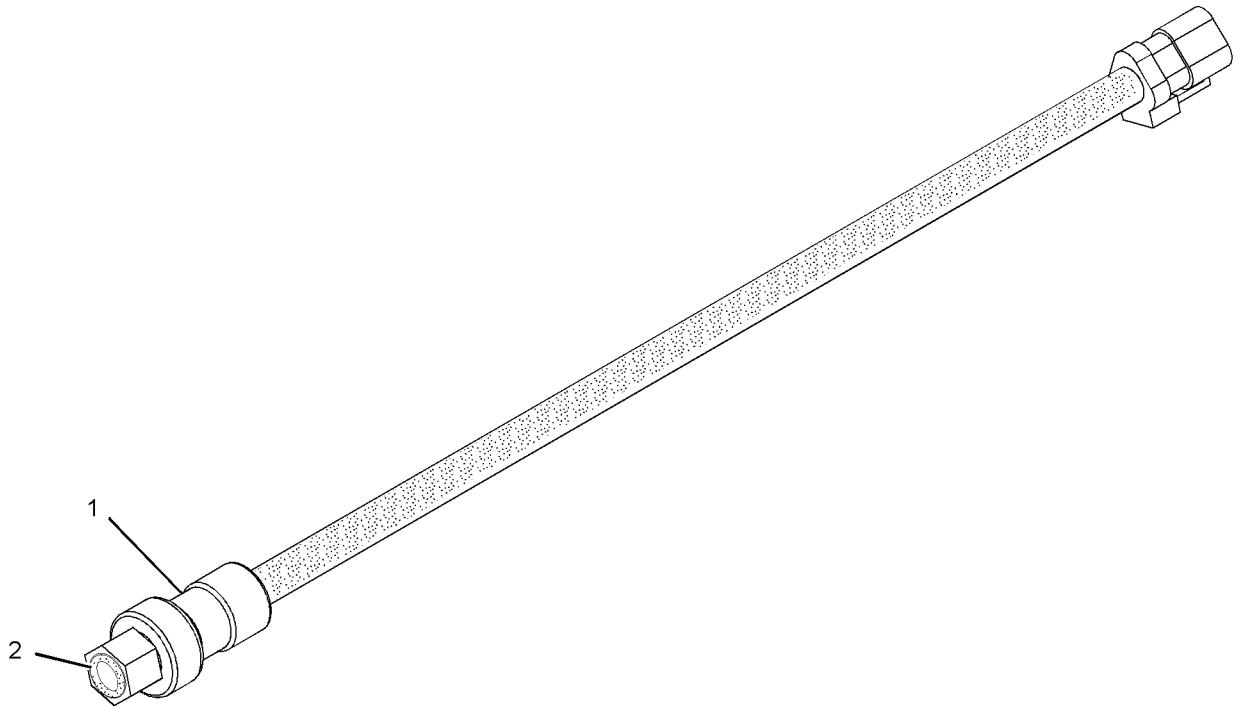

GRAPHIC #1 **<END>** g01019323

239-3478 SENSOR GP-PRESSURE–AIR INLET MANIFOLD

S/N: RHX1-UP
PART OF 239-5674 SENSOR GP-PRESSURE
ALSO AN ATTACHMENT

SMCS-1408 **i02178818**

NOTE	REF NO	GRAPHIC REF	PART NUMBER	QTY	PART NAME 1 2 3 4 5 6 (PRODUCT LEVEL)	SEE PAGE
BE	1	1	**9X-1813**		SLEEVE	
	2	1	**102-8803**	1	KIT-RECEPTACLE (3-PIN)	
					(INCLUDES RECEPTACLE AS AND WEDGE)	
	3	1	**9X-3401**	3	PIN-CONNECTOR	
	4	1	**3E-3371**	1	WEDGE-RECEPTACLE LOCK (3-PIN)	

B-USE AS REQUIRED
E-ORDER BY THE CENTIMETER

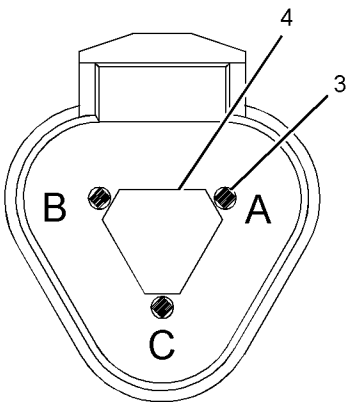

VIEW A-A

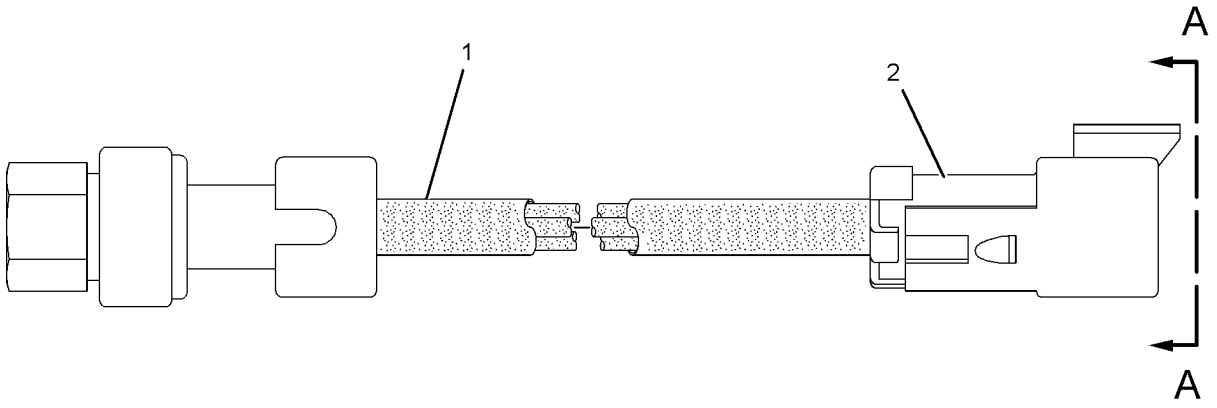

GRAPHIC #1 **<END>** g01019421

239-5674 SENSOR GP-PRESSURE–AIR INLET MANIFOLD

S/N: RHX1-UP

PART OF 231-1973 SENSOR GP-ENGINE

ALSO AN ATTACHMENT

SMCS-1408 **i02140159**

NOTE	REF NO	GRAPHIC REF	PART NUMBER	QTY	PART NAME 1 2 3 4 5 6 (PRODUCT LEVEL)	SEE PAGE
Y	1	1	**239-3478**	1	SENSOR GP-PRESSURE (AIR INLET MANIFOLD)	245
	2	1	**6V-5048**	1	SEAL-O-RING	

Y-SEPARATE ILLUSTRATION

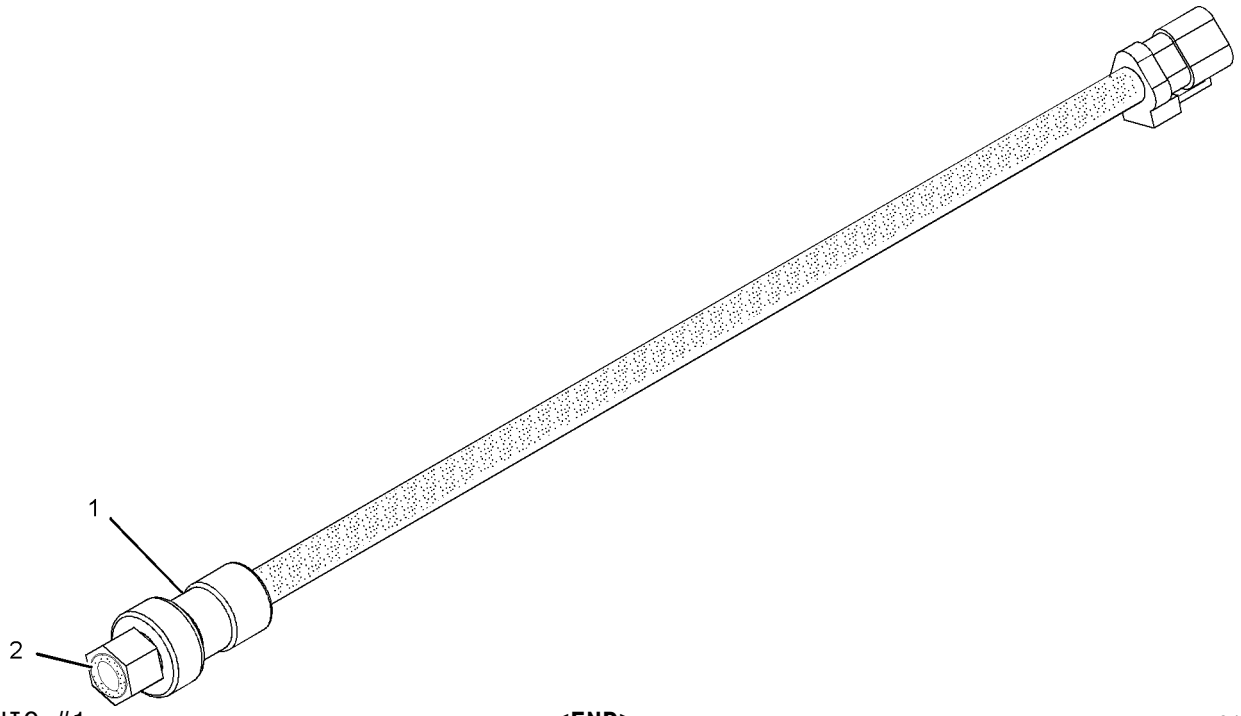

GRAPHIC #1 **<END>** g01019323

183-4584 SENSOR GP-SPEED–STEERING MOTOR

S/N: RJS1-UP

PART OF 205-8578 BATTERY & WIRING GP

SMCS-1408 **i01990496**

NOTE	REF NO	GRAPHIC REF	PART NUMBER	QTY	PART NAME 1 2 3 4 5 6 (PRODUCT LEVEL)	SEE PAGE
	1	1	**6J-2245**	1	SEAL-O-RING	

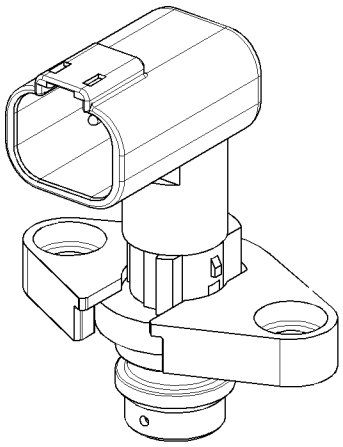

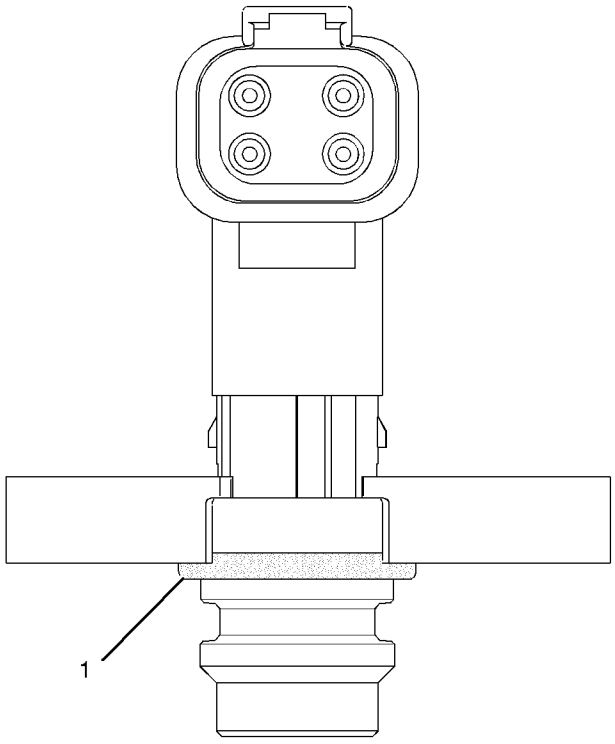

GRAPHIC #1 **<END>** g01031645

189-5746 SENSOR GP-SPEED–ENGINE

S/N: RJS1-UP

PART OF 222-7860 WIRING GP-ENGINE

SMCS-1408 **i02251252**

NOTE	REF NO	GRAPHIC REF	PART NUMBER	QTY	PART NAME 1 2 3 4 5 6 (PRODUCT LEVEL)	SEE PAGE
	1	1	**171-5349**	1	MARKER	
	2	1	**102-8802**	1	KIT-RECEPTACLE (2-PIN)	
					(INCLUDES RECEPTACLE ASSEMBLY AND WEDGE)	
	3	1	**186-3735**	2	PIN-CONNECTOR	
	4	1	**3E-3365**	1	WEDGE-RECEPTACLE LOCK (2-PIN)	
BE	5	1	**9X-1386**		SLEEVE (14-CM)	

B-USE AS REQUIRED
E-ORDER BY THE CENTIMETER

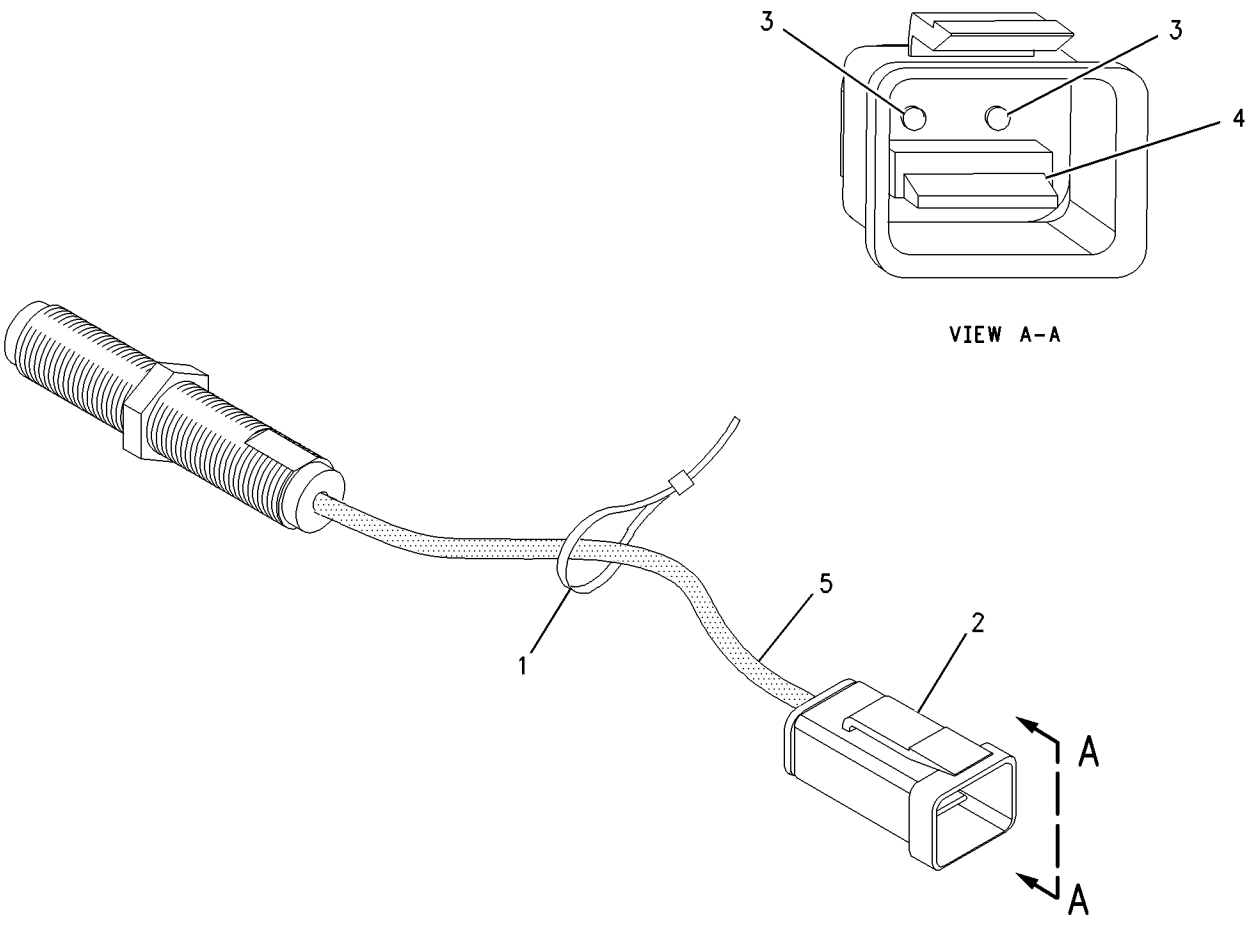

GRAPHIC #1 **<END>** g00837278

201-6617 SENSOR GP-SPEED–TIMING, CAMSHAFT

S/N: RHX1-UP
PART OF 239-5928 SENSOR GP-SPEED
ALSO AN ATTACHMENT

SMCS-1408 **i02230734**

NOTE	REF NO	GRAPHIC REF	PART NUMBER	QTY	PART NAME 1 2 3 4 5 6 (PRODUCT LEVEL)	SEE PAGE
	1	1	**133-0261**	1	BRACKET	
	2	1	**189-0852**	1	HARNESS AS-WIRING (CAM TIMING)	
		1	**102-8802**	1	KIT-RECEPTACLE (2-PIN)	
					(INCLUDES RECEPTACLE AS & WEDGE)	
		1	**155-2270**	1	KIT-CONNECTING PLUG (2-PIN)	
					(INCLUDES PLUG AS & WEDGE)	

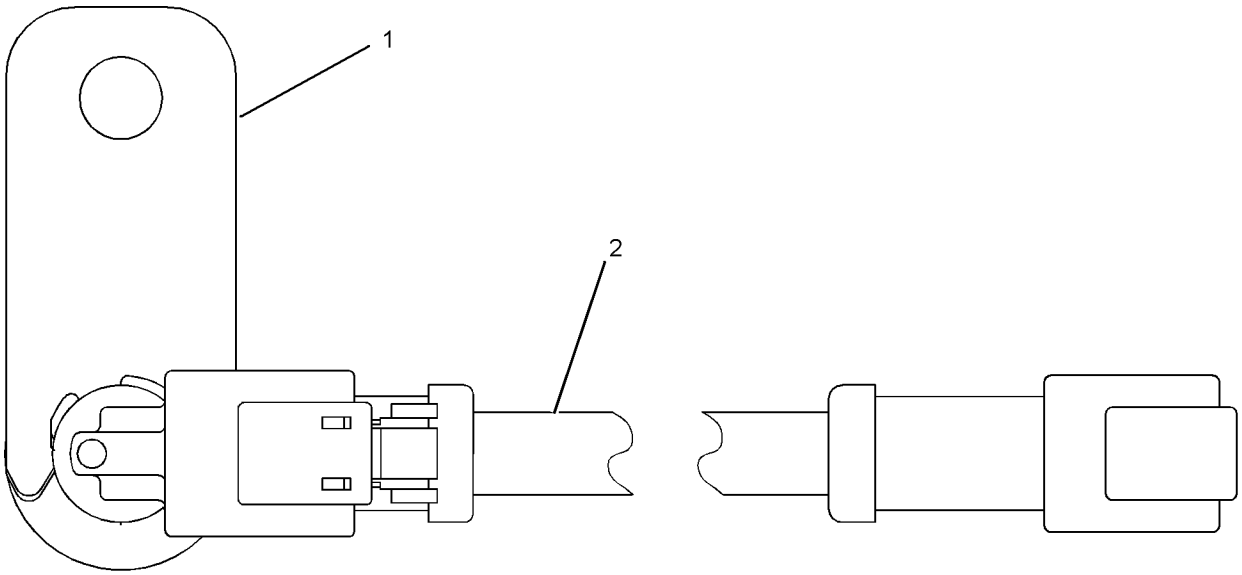

GRAPHIC #1 **<END>** g01071396

214-2484 SENSOR GP-SPEED–TIMING, CRANKSHAFT

S/N: RHX1-UP

PART OF 231-1973 SENSOR GP-ENGINE

ALSO AN ATTACHMENT

SMCS-1408 **i01967186**

NOTE	REF NO	GRAPHIC REF	PART NUMBER	QTY	PART NAME 1 2 3 4 5 6 (PRODUCT LEVEL)	SEE PAGE
	1	1	**191-8303**	1	SENSOR GP-SPEED (ENGINE)	
	2	1	**203-3940**	1	SEAL-O-RING	

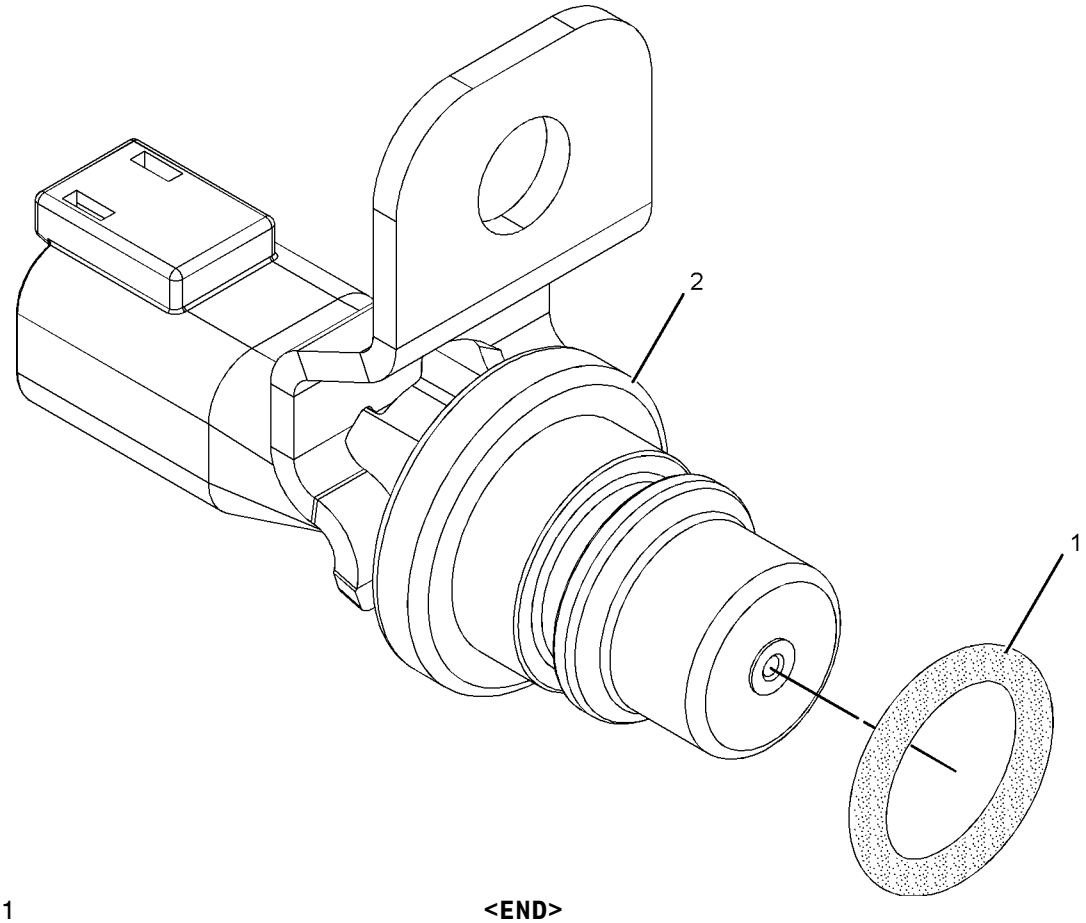

GRAPHIC #1 **<END>** g01021497

239-5928 SENSOR GP-SPEED–TIMING, CAMSHAFT

S/N: RHX1-UP

PART OF 231-1973 SENSOR GP-ENGINE

ALSO AN ATTACHMENT

SMCS-1408 **i02160187**

NOTE	REF NO	GRAPHIC REF	PART NUMBER	QTY	PART NAME 1 2 3 4 5 6 (PRODUCT LEVEL)	SEE PAGE
	1	1	**228-4947**	1	SEAL-O-RING	
Y	2	1	**201-6617**	1	SENSOR GP-SPEED (TIMING, CAMSHAFT)	249

Y-SEPARATE ILLUSTRATION

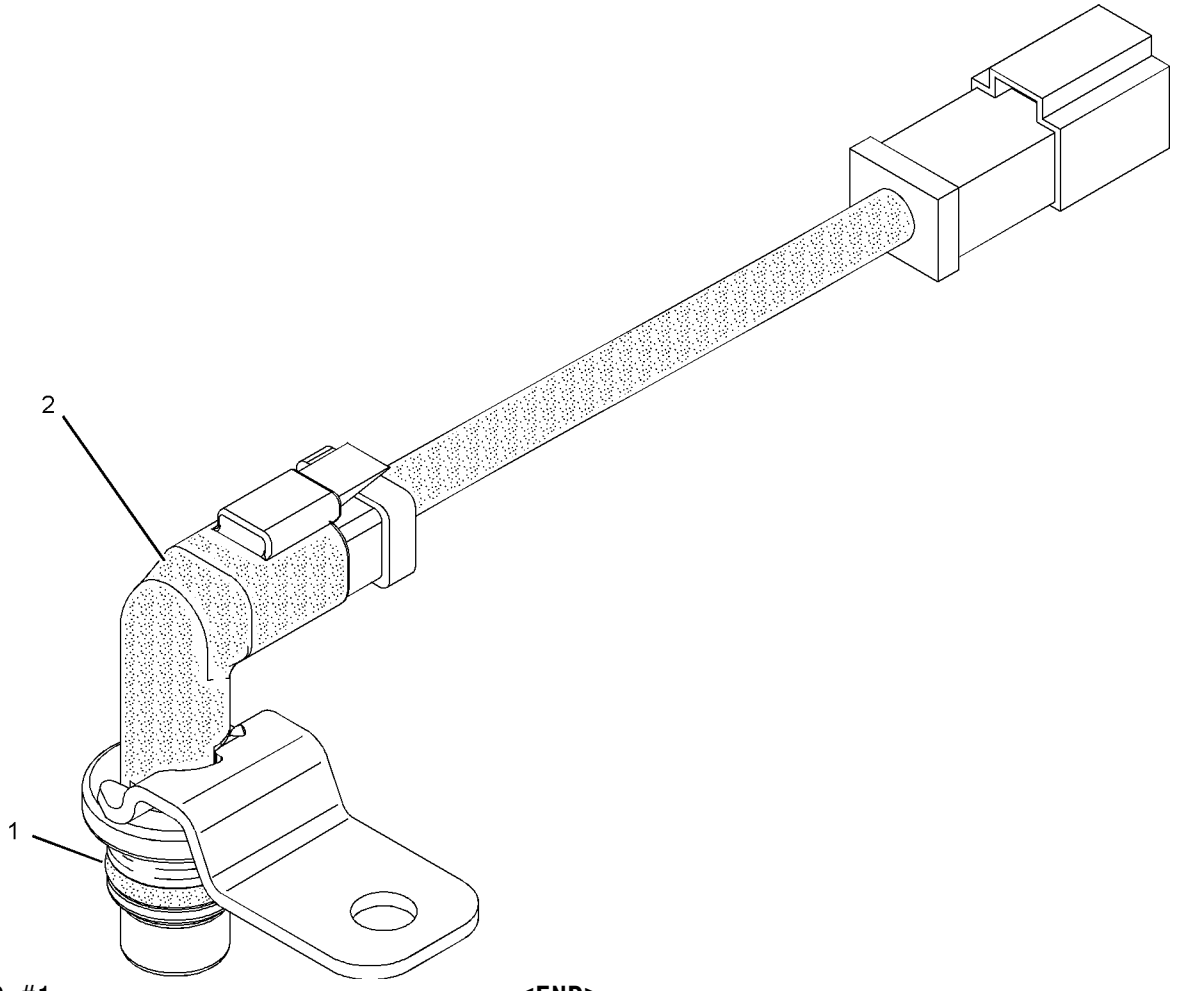

GRAPHIC #1 **<END>** g01019337

145-7028 SENSOR GP-TEMPERATURE–HYDRAULIC OIL–TRANSMISSION SUMP

S/N: RJS1-UP

2 WIRE-PASSIVE

PART OF 205-8578 BATTERY & WIRING GP, 222-7860 WIRING GP-ENGINE

SMCS-1408, 1906, 1921, 1922, 7400 **i02267103**

NOTE	REF NO	GRAPHIC REF	PART NUMBER	QTY	PART NAME 1 2 3 4 5 6 (PRODUCT LEVEL)	SEE PAGE
	1	1	**102-8802**	1	KIT-RECEPTACLE (2-PIN)	
					(INCLUDES RECEPTACLE AS AND WEDGE)	
J	2	1	**153-5043**		SLEEVE (3-DM)	
	3	1	**8T-8729**	2	PIN-CONNECTOR	
	4	1	**3E-3365**	1	WEDGE-RECEPTACLE LOCK (2-PIN)	

J-ORDER BY THE DECIMETER

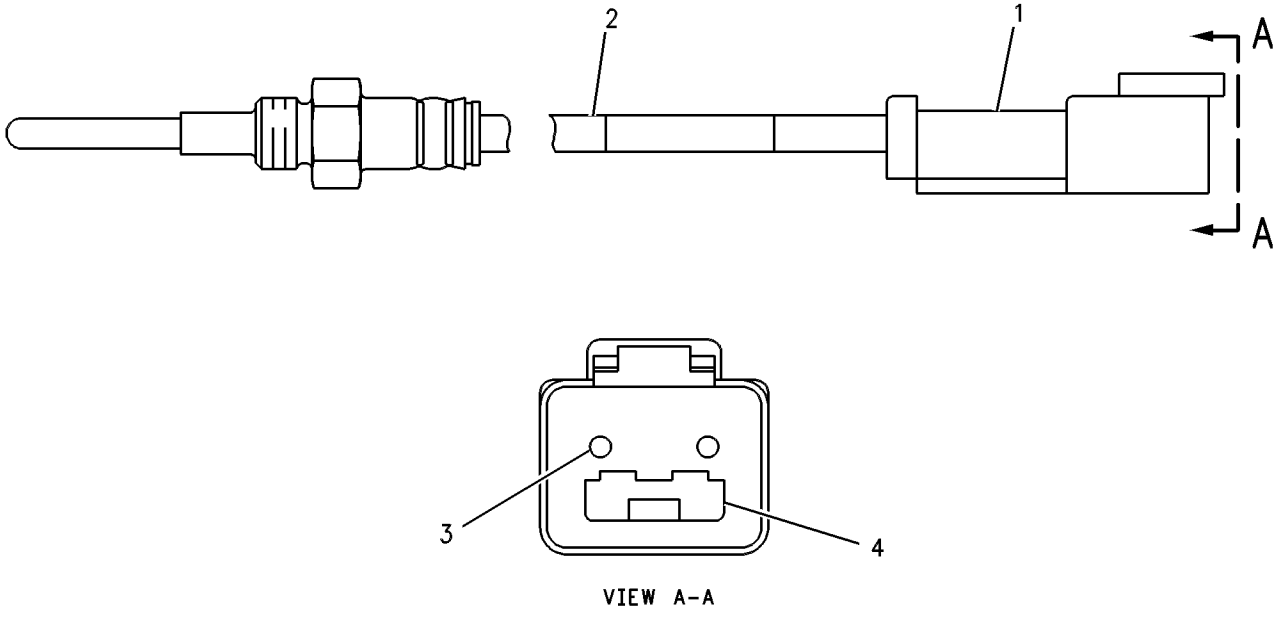

VIEW A-A

GRAPHIC #1 **<END>** g00334570

197-8391 SENSOR GP-TEMPERATURE–AIR INLET MANIFOLD–FUEL

S/N: RHX1-UP

PART OF 229-1497 LINES GP-FUEL, 231-1973 SENSOR GP-ENGINE

ALSO AN ATTACHMENT

SMCS-1408, 1906, 1921, 1922, 7400 **i02249877**

NOTE	REF NO	GRAPHIC REF	PART NUMBER	QTY	PART NAME 1 2 3 4 5 6 (PRODUCT LEVEL)	SEE PAGE
	1	1	**130-9811**	1	SENSOR GP-TEMPERATURE	
	2	1	**8L-2786**	1	SEAL-O-RING	

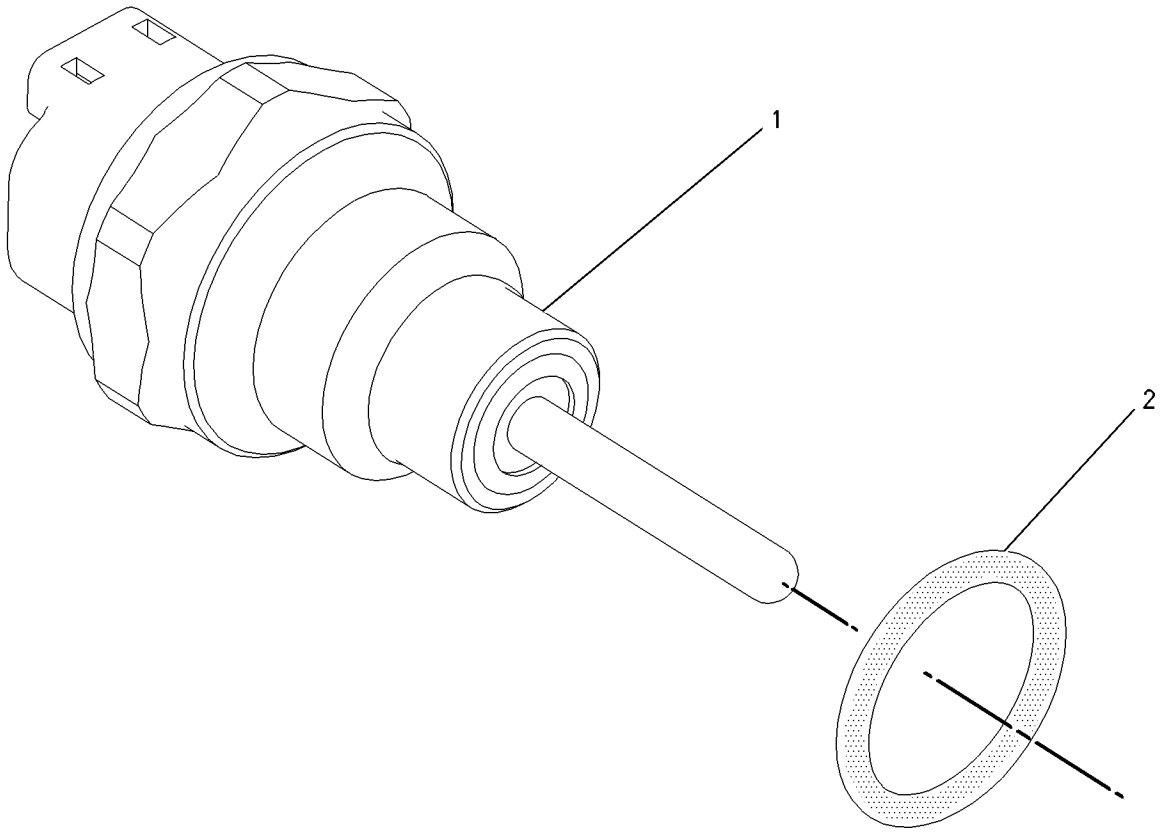

GRAPHIC #1 **<END>** g00856011

197-8392 SENSOR GP-TEMPERATURE–WATER, COOLANT

S/N: RHX1-UP

PART OF 231-1973 SENSOR GP-ENGINE

ALSO AN ATTACHMENT

SMCS-1408, 1906, 1921, 1922, 7400 **i02249884**

NOTE	REF NO	GRAPHIC REF	PART NUMBER	QTY	PART NAME 1 2 3 4 5 6 (PRODUCT LEVEL)	SEE PAGE
	1	1	**130-9811**	1	SENSOR GP-TEMPERATURE	
	2	1	**6V-6609**	1	SEAL-O-RING	

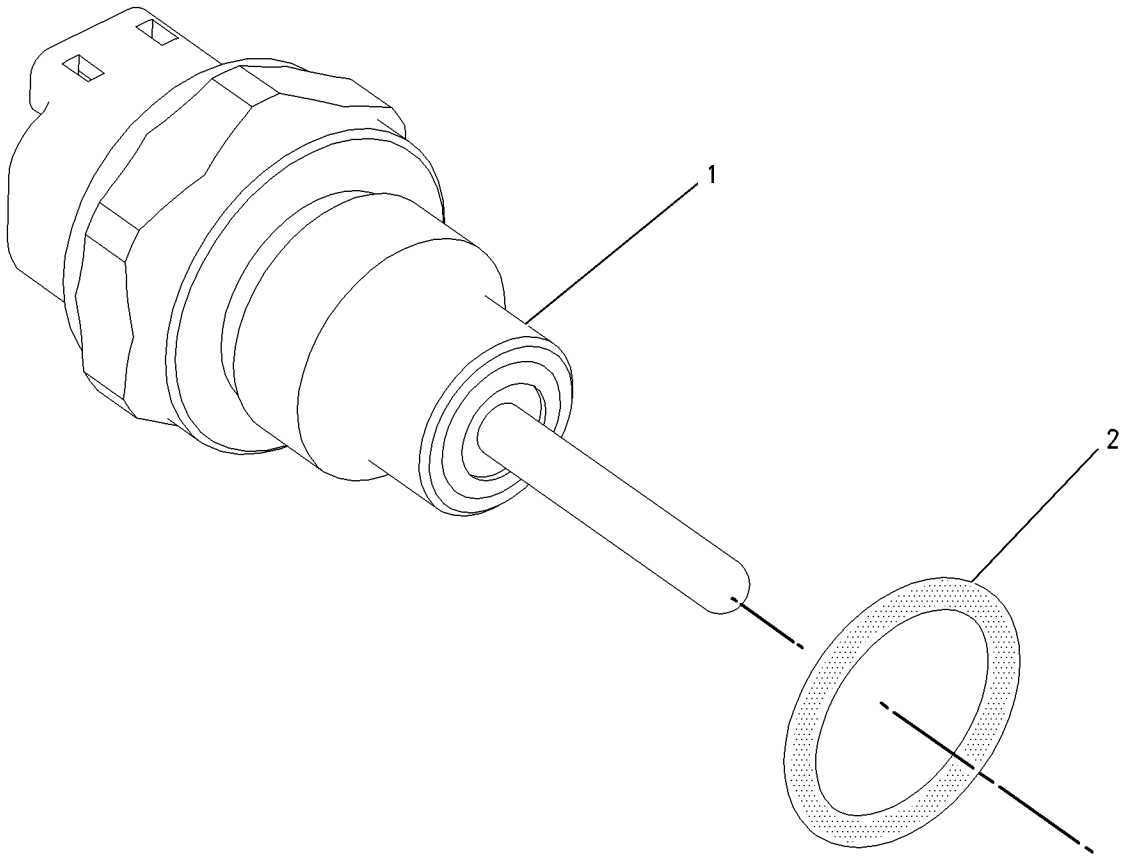

GRAPHIC #1 **<END>** g00856005

209-8389 STARTING AID GP-ETHER

S/N: RJS1-UP

PART OF 205-8604 INSTALLATION AR-ENGINE

SMCS-1456 **i02188954**

NOTE	REF NO	GRAPHIC REF	PART NUMBER	QTY	PART NAME 1 2 3 4 5 6 (PRODUCT LEVEL)	SEE PAGE
	1	1	**5P-6313**	1	NUT-FLARELESS (5/16-24-THD)	
	2	1	**5P-6314**	1	SLEEVE	
	3	1	**7N-2059**	1	CLAMP AS	
	4	1	**127-7443**	1	ATOMIZER AS (ETHER)	
	5	1	**230-1434**	1	FITTING	
Y	6	1	**239-1134**	1	VALVE GP-ETHER STARTING (24-VOLT)	278
	7	1	**4M-5317**	1	BUSHING-REDUCING	
	8	1	**8T-4224**	4	WASHER-HARD (8.8X16X2-MM THK)	
M	9	1	**8T-4908**	4	BOLT (M8X1.25X25-MM)	
BE	10	1	**174-9169**		TUBE	

B-USE AS REQUIRED
E-ORDER BY THE CENTIMETER
M-METRIC PART
Y-SEPARATE ILLUSTRATION

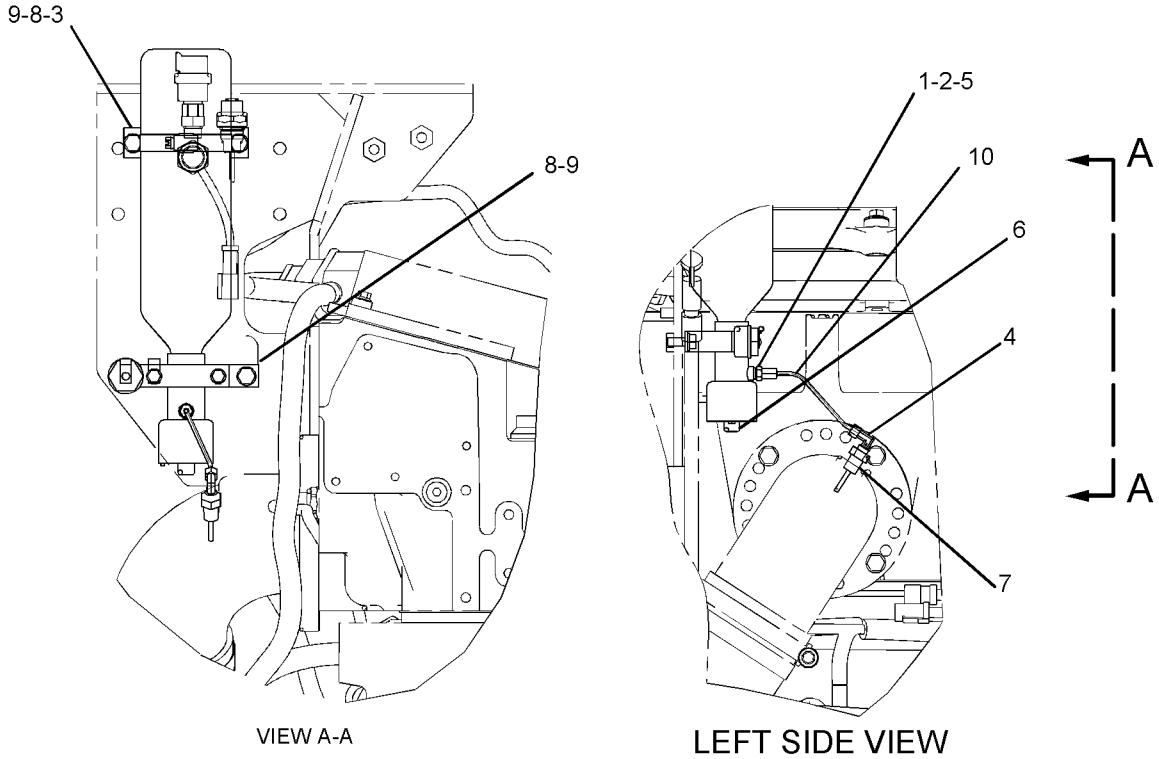

GRAPHIC #1 **<END>** g01060666

ELECTRICAL AND STARTING SYSTEM

213-6675 STARTING AR-COLD WEATHER

S/N: RJS1-UP
LOW TEMPERATURE STARTING
AN ATTACHMENT

SMCS-1450 **i02258071**

NOTE	REF NO	GRAPHIC REF	PART NUMBER	QTY	PART NAME 1 2 3 4 5 6 (PRODUCT LEVEL)	SEE PAGE
	1	1	**226-0759**	1	PLATE AS	
	2	1	**4N-1059**	1	GASKET	
Y	3	1	*6V-0885*	1	STARTING MOTOR GP-ELECTRIC (24-VOLT)	259
	4	1	**7K-1181**	4	STRAP-CABLE	
	5	1	**8V-0622**	1	CABLE AS	
		1	**8C-5917**	1	TERMINAL AS-BATTERY (POSITIVE)	
		1	**1M-6119**	2	BOLT (5/16-18X1.375-IN)	
		1	**1M-6120**	2	NUT (5/16-18-THD)	
E		1	**5P-0761**		CABLE (00-GA, RED) (14-CM)	
		1	**8T-9757**	1	TERMINAL AS-BATTERY (NEGATIVE)	
		1	**9G-0003**	1	COVER-TERMINAL (BLACK)	
		1	**9G-0004**	1	COVER-TERMINAL (RED)	
Y	6	1	*9W-0742*	1	BLOCK GP-JUNCTION	184
	7	1	**061-7661**	1	CABLE AS	
E		1	**5P-0747**		CABLE (00-GA, BLACK) (42-CM)	
		1	**1S-7251**	2	TERMINAL-RING (FOR 1/2-IN BOLT)	
	8	1	**124-7000**	1	PLATE AS	
Y	9	1	**125-1302**	1	SWITCH GP-MAGNETIC (24-VOLT) (START RELAY)	273
	10	1	**146-6747**	1	FILM-INFORMATION (24-VOLT) (BATTERY COMPARTMENT)	
	11	1	**153-5710**	2	BATTERY (12-VOLT) (MAINTENANCE FREE)	
	12	1	**153-6281**	1	HOLD-DOWN-BATTERY	
	13	1	**185-6393**	1	CABLE AS	
	14	1	**187-8677**	1	PLATE AS	
		1	**7T-1099**	2	LINK	
	15	1	**191-8729**	1	CABLE AS	
		1	**1S-4915**	2	LINER (CONDUIT)	
		1	**1S-7252**	1	TERMINAL-RING (FOR 3/8-IN BOLT)	
E		1	**5P-0695**		CONDUIT (52-CM)	
E		1	**5P-0747**		CABLE (00-GA, BLACK) (70-CM)	
BE		1	**8T-2225**		TUBE-HEAT SHRINK	
		1	**9G-0005**	1	COVER-TERMINAL (BLACK)	
		1	**9G-8909**	1	COVER-TERMINAL (BLACK)	
		1	**8C-5918**	1	TERMINAL AS (NEGATIVE)	
BE		1	**114-8843**		SLEEVE-PLASTIC	
	16	1	**199-9800**	1	JUNCTION BLOCK	
	17	1	**204-2281**	9	TIE	
	18	1	**213-1046**	1	STRAP	
	19	1	**213-6667**	1	CABLE AS	
		1	**1S-4915**	2	LINER (CONDUIT)	
		1	**1S-7251**	2	TERMINAL-RING (FOR 1/2-IN BOLT)	
E		1	**5P-0695**		CONDUIT (186-CM)	
E		1	**5P-0761**		CABLE (00-GA, RED) (207-CM)	
		1	**8N-0869**	2	COVER-TERMINAL (RED)	
BE		1	**8T-2225**		TUBE-HEAT SHRINK	
BE		1	**114-8843**		SLEEVE-PLASTIC	
	20	1	**213-6668**	1	CABLE AS	
		1	**1S-4915**	2	LINER (CONDUIT)	
		1	**1S-7251**	1	TERMINAL-RING (FOR 1/2-IN BOLT)	
E		1	**5P-0695**		CONDUIT (8-CM)	
E		1	**5P-0761**		CABLE (00-GA, RED) (21-CM)	
		1	**8N-0869**	1	COVER-TERMINAL (RED)	
BE		1	**8T-2225**		TUBE-HEAT SHRINK	
		1	**9G-0004**	1	COVER-TERMINAL (RED)	
		1	**8C-5917**	1	TERMINAL AS-BATTERY (POSITIVE)	

213-6675 **STARTING AR-COLD WEATHER** *(contd.)* **i02258071**

NOTE	REF NO	GRAPHIC REF	PART NUMBER	QTY	PART NAME 1 2 3 4 5 6 (PRODUCT LEVEL)	SEE PAGE
	21	1	**213-6669**	1	CABLE AS	
		1	**1S-4915**	2	LINER (CONDUIT)	
		1	**1S-7251**	2	TERMINAL-RING (FOR 1/2-IN BOLT)	
E		1	**5P-0695**		CONDUIT (177-CM)	
E		1	**5P-0761**		CABLE (00-GA, RED) (202-CM)	
		1	**8N-0869**	2	COVER-TERMINAL (RED)	
BE		1	**8T-2225**		TUBE-HEAT SHRINK	
BE		1	**114-8843**		SLEEVE-PLASTIC	
	22	1	**213-6671**	1	CABLE AS	
		1	**1S-4915**	2	LINER (CONDUIT)	
		1	**1S-7252**	2	TERMINAL-RING (FOR 3/8-IN BOLT)	
E		1	**5P-0695**		CONDUIT (168-CM)	
E		1	**5P-0747**		CABLE (00-GA, BLACK) (201-CM)	
		1	**8N-0869**	2	COVER-TERMINAL (RED)	
BE		1	**8T-2225**		TUBE-HEAT SHRINK	
BE		1	**114-8843**		SLEEVE-PLASTIC	
	23	1	**220-0771**	3	BOLT-12 POINT HEAD	
	24	1	**225-0313**	1	FILM-WARNING (JUMP START, READ OMM)	
	25	1	**226-0857**	1	PLATE AS	
	26	1	**230-4092**	1	PLATE AS	
	27	1	**230-7732**	1	MOUNT	
	28	1	**231-2940**	1	CABLE AS	
		1	**1S-4915**	2	LINER (CONDUIT)	
		1	**1S-7251**	1	TERMINAL-RING (FOR 1/2-IN BOLT)	
E		1	**5P-0695**		CONDUIT (30-CM)	
E		1	**5P-0761**		CABLE (00-GA, RED) (51-CM)	
		1	**8N-0869**	1	COVER-TERMINAL (RED)	
BE		1	**8T-2225**		TUBE-HEAT SHRINK	
		1	**9X-9120**	1	BOOT (RED)	
		1	**9X-9825**	1	TERMINAL-CABLE (FOR 1/2-IN BOLT)	
BE		1	**114-8843**		SLEEVE-PLASTIC	
	29	1	**2J-5245**	3	BOLT (3/8-16X1.25-IN)	
	30	1	**3K-6060**	2	LOCKNUT (3/8-16-THD)	
M	31	1	**5C-2890**	2	NUT (M6X1-THD)	
	32	1	**5M-3062**	6	BOLT (3/8-16X0.75-IN)	
	33	1	**5P-1075**	10	WASHER-HARD (10.2X22.5X3-MM THK)	
	34	1	**5P-4295**	2	CLIP	
	35	1	**6D-4247**	3	CLIP	
	36	1	**7X-7729**	3	WASHER (11X25X3-MM THK)	
	37	1	**8T-4121**	2	WASHER-HARD (11X21X2.5-MM THK)	
M	38	1	**8T-4133**	3	NUT (M10X1.5-THD)	
M	39	1	**8T-4137**	2	BOLT (M10X1.5X20-MM)	
M	40	1	**8T-4139**	2	BOLT (M12X1.75X30-MM)	
M	41	1	**8T-4192**	3	BOLT (M12X1.75X25-MM)	
	42	1	**8T-4223**	5	WASHER-HARD (13.5X25.5X3-MM THK)	
	43	1	**8T-8919**	1	BOLT (1/2-13X1.75-IN)	
	44	1	**8T-9371**	2	BOLT (3/8-16X0.5-IN)	
M	45	1	**9X-2060**	3	BOLT (M10X1.5X30-MM)	
	46	1	**9X-8256**	4	WASHER (6.6X12X2-MM THK)	

B-USE AS REQUIRED
E-ORDER BY THE CENTIMETER
M-METRIC PART
Y-SEPARATE ILLUSTRATION

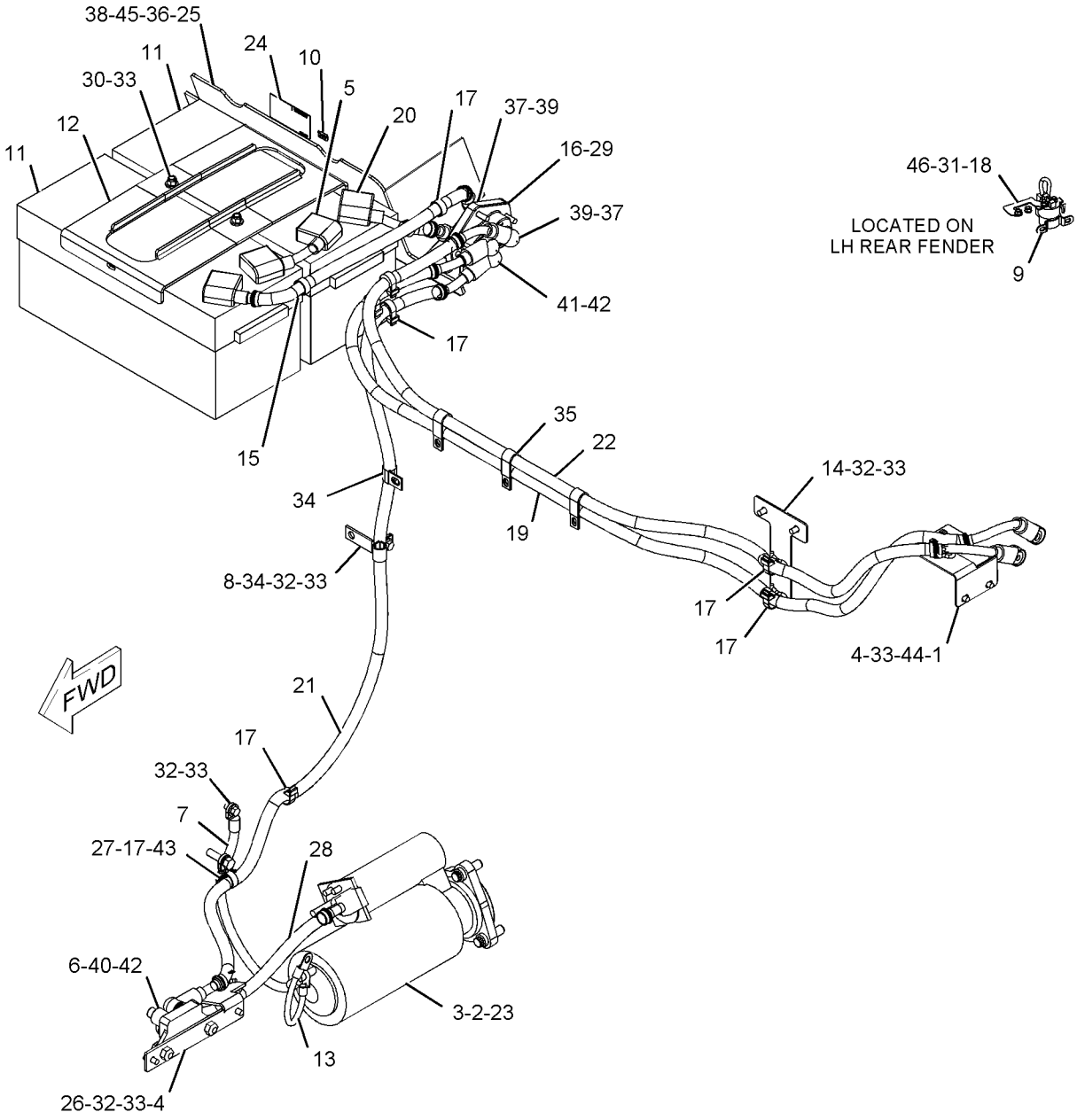

GRAPHIC #1 **<END>** g01121825

ELECTRICAL AND STARTING SYSTEM

6V-0885 STARTING MOTOR GP-ELECTRIC—COLD WEATHER

S/N: RJS1-UP
24 VOLT
PART OF 213-6675 STARTING AR-COLD WEATHER
FIELD REPLACEMENT ORDER 237-1962—PAGE 263
AN ATTACHMENT

SMCS-1453 **i02092947**

NOTE	REF NO	GRAPHIC REF	PART NUMBER	QTY	PART NAME 1 2 3 4 5 6 (PRODUCT LEVEL)	SEE PAGE
	1	1	**7M-0326**	1	CONNECTOR	
	2	1	**9H-3757**	2	WASHER (0.516X1X0.094-IN THK)	
	3	1	**1S-7446**	3	SCREW-MACHINE (8-32X0.437-IN)	
	4	1	**8C-9660**	3	WASHER (4.6X7.9X0.8-MM THK)	
	5	1	**9S-2544**	9	SCREW-HEX HEAD (8-32X11.13-MM)	
	6	1	**7M-0327**	1	WASHER-THRUST (17.4X25.4X1.6-MM THK)	
	7	1	**3T-3418**	1	FRAME AS-END	
	7A	1	**3T-3424**	1	PLUG-FELT	
	7B	1	**3T-3423**	1	CUP	
	7C	1	**9G-4101**	1	BUSHING-END	
	8	1	**3T-9525**	1	PLATE AS-BRUSH	
	8A	1	**9F-5599**	12	LOCKWASHER	
	8B	1	**6T-0371**	1	INSULATOR	
	8C	1	**6T-0363**	6	HOLDER AS-BRUSH (STARTING MOTOR)	
					(EACH INCLUDES)	
	8D	1	**3T-9494**	1	SPRING (STARTING MOTOR BRUSH)	
	8E	1	**3T-4709**	3	PLATE	
	8F	1	**3T-4710**	3	PLATE	
	8G	1	**2L-6679**	3	PLATE-INSULATOR	
	8H	1	**7F-3525**	6	WASHER-BUSHING (0.209X0.39X0.09-MM THK)	
	8J	1	**6T-0372**	1	PLATE	
	8K	1	**5P-6298**	12	SCREW-MACHINE (10-32X0.5-IN)	
	9	1	**7F-3491**	2	WASHER (0.516X1X0.094-IN THK)	
	10	1	**3T-3422**	1	WIRE AS	
	11	1	**2J-8163**	2	SEAL-O-RING	
	12	1	**7X-3373**	1	BOLT (5/16-18X0.88-IN)	
B	13	1	**3T-3434**	6	PLUG	
	14	1	**5J-5314**	5	BOLT (5/16-18X1.5-IN)	
	15	1	**3L-3380**	1	BUSHING-TERMINAL	
	16	1	**036-9821**	1	WASHER	
	17	1	**4M-1828**	1	RETAINER-SPRING	
	18	1	**4M-1829**	1	BOOT-RUBBER	
	19	1	**4M-1827**	1	RETAINER-SPRING	
	20	1	**9M-7609**	1	SPRING (SHIFT LEVER)	
	21	1	**8C-3089**	1	SEAL-O-RING	
	22	1	**4M-1853**	1	LEVER AS-SHIFT	
	23	1	**5M-3034**	1	LOCKNUT (5/16-24-IN THD)	
	24	1	**7L-2894**	4	GASKET	
	25	1	**4M-1831**	4	PLUG-LEVER HOUSING	
	26	1	**4M-1854**	1	SHAFT-LEVER	
	27	1	**1H-1023**	1	SEAL-O-RING	
	28	1	**2D-6392**	1	SEAL-O-RING	
	29	1	**7T-3974**	1	HOUSING AS-DRIVE	
	30	1	**6N-3826**	1	DRIVE AS-MOTOR	
	31	1	**2H-3429**	2	RING-RETAINING	
	32	1	**6V-1322**	4	BOLT (1/4-20X0.375-IN)	
	33	1	**8T-4205**	4	WASHER-HARD (7.2X14.5X2-MM THK)	
	34	1	**6N-3279**	1	INSULATOR	
	35	1	**036-9823**	13	BOLT (1/4-28X1-IN)	
	36	1	**1M-9971**	1	SPACER (0.84X1.72X1.88-IN THK)	
	37	1	**1H-2629**	3	STRIP-INSULATION	
	38	1	**7M-0324**	1	COIL AS-FIELD	
	39	1	**3F-0379**	12	SCREW-POLE SHOE (3/8-24-THD)	

6V-0885 **STARTING MOTOR GP-ELECTRIC** *(contd.)* **i02092947**

NOTE	REF NO	GRAPHIC REF	PART NUMBER	QTY	PART NAME 1 2 3 4 5 6 (PRODUCT LEVEL)	SEE PAGE
	40	1	**7F-3488**	6	SHOE-POLE	
	41	1	**7M-8651**	1	ARMATURE AS	
	42	1	**7M-0325**	1	INSULATOR	
	43	1	**3T-9524**	6	BRUSH AS (STARTING MOTOR)	
J	44	1	**3N-3763**	1	KIT-TERMINAL (STARTING MOTOR)	
JZ	44A	1		1	BUSHING	
JZ	44B	1		1	BUSHING	
JZ	44C	1		1	WASHER	
	45	1	**125-6535**	1	COVER-STARTING MOTOR	
	46	1	**3R-8801**	1	CLAMP	
	47	1	**8F-1434**	2	LOCKWASHER	
	48	1	**6V-8188**	6	NUT (1/2-13-THD)	
	49	1	**7X-0562**	6	WASHER-HARD (13.5X19X0.8-MM THK)	
	50	1	**4B-2049**	6	NUT (10-32-THD)	
	51	1	**8T-0328**	10	WASHER-HARD (5.5X10X1-MM THK)	
	52	1	**3T-9494**	6	SPRING (STARTING MOTOR BRUSH)	
	53	1	**3E-7771**	1	HOUSING AS	
	55	1	**3T-3424**	2	PLUG-FELT	
	56	1	**3T-3423**	2	CUP	
	57	1	**1M-9968**	1	BUSHING	
	58	1	**2F-6678**	1	SEAL-LIP TYPE	
	59	1	**4L-2729**	1	WASHER (0.844X1.9X0.188-IN THK)	
	60	1	**4M-1896**	1	BUSHING-TERMINAL	
	61	1	**045-4065**	4	SCREW-MACHINE (10-32X0.75-IN)	
	62	1	**125-6537**	1	INSULATOR	
	63	1	**7T-9123**	1	GASKET-PLATE	
	64	1	**125-6536**	1	TERMINAL AS	
C	65	1	**238-1851**	1	SOLENOID AS (24-VOLT, STARTING MOTOR)	

B-USE AS REQUIRED
C-CHANGE FROM PREVIOUS TYPE
J-KIT MARKED J INCLUDES PARTS MARKED J
Z-NOT SERVICED SEPARATELY

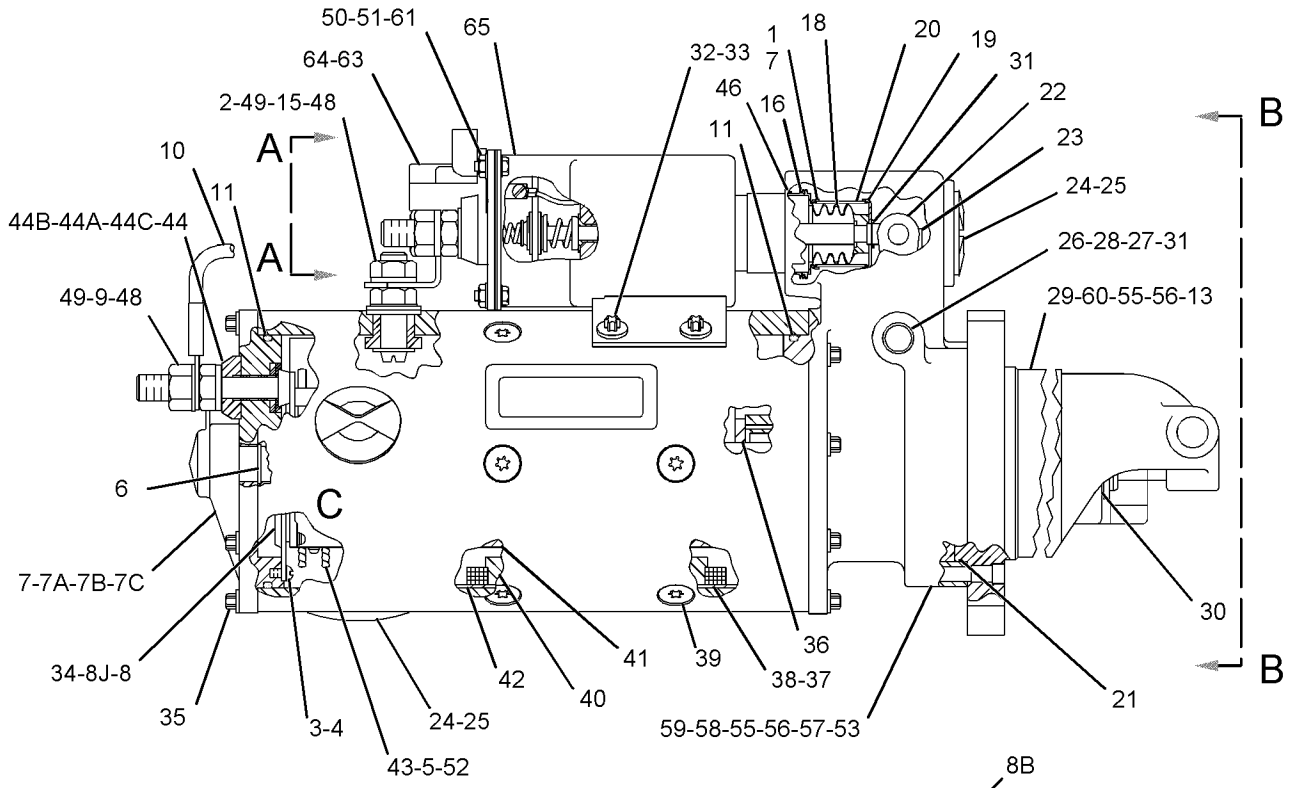

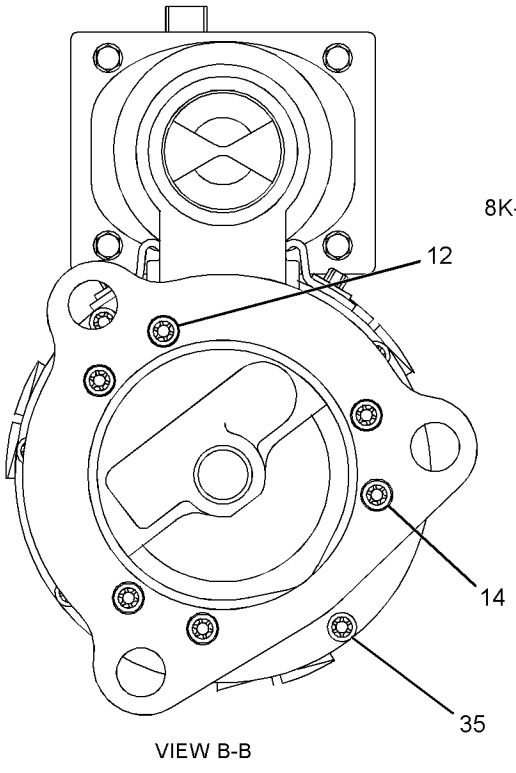

VIEW B-B

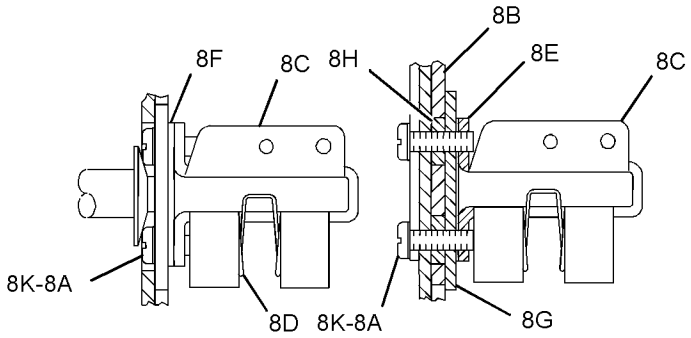

VIEW OF AREA C

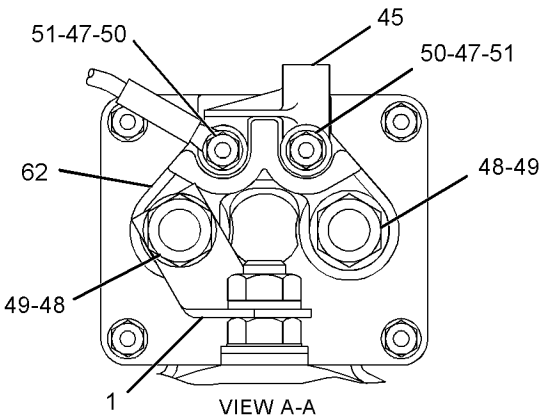

VIEW A-A

GRAPHIC #1 **<END>** g01073134

209-8423 STARTING MOTOR GP-ELECTRIC

S/N: RJS1-UP

PART OF 205-8604 INSTALLATION AR-ENGINE

SMCS-1453 **i02188986**

NOTE	REF NO	GRAPHIC REF	PART NUMBER	QTY	PART NAME 1 2 3 4 5 6 (PRODUCT LEVEL)	SEE PAGE
	1	1	**4N-1059**	1	GASKET	
	2	1	**185-6393**	1	CABLE AS	
E		1	**5P-0746**		CABLE (0-GA, BLACK) (30-CM)	
		1	**1M-4986**	1	TERMINAL-RING (FOR 1/2-IN BOLT)	
		1	**030-1707**	1	TERMINAL-RING	
YR	3	1	**237-1962**	1	STARTING MOTOR GP-ELECTRIC	263
	4	1	**220-0771**	3	BOLT-12 POINT HEAD (MJ16X2 THD)	

E-ORDER BY THE CENTIMETER
R-REMFG PART MAY BE AVAILABLE
Y-SEPARATE ILLUSTRATION

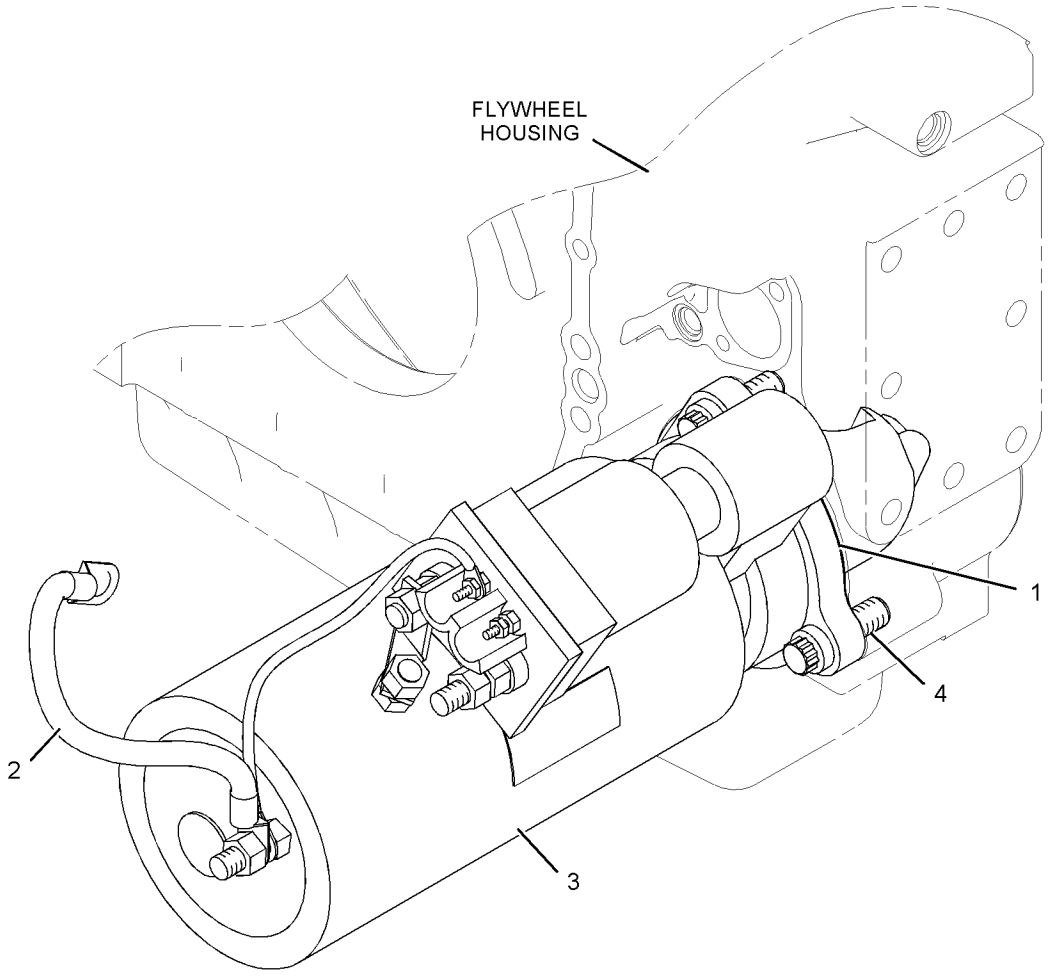

GRAPHIC #1 **<END>** g01023567

ELECTRICAL AND STARTING SYSTEM

237-1962 STARTING MOTOR GP-ELECTRIC*R

S/N: RJS1-UP
24-VOLT
PART OF 209-8423 STARTING MOTOR GP-ELECTRIC
FIELD REPLACEMENT FOR 6V-0885—PAGE 259
ALSO FIELD INSTALLATION

SMCS-1453 **i02249643**

NOTE	REF NO	GRAPHIC REF	PART NUMBER	QTY	PART NAME 1 2 3 4 5 6 (PRODUCT LEVEL)	SEE PAGE
	1	1	**7M-0326**	1	CONNECTOR	
	2	1	**9H-3757**	2	WASHER (0.516X1X0.094-IN THK)	
	3	1	**1S-7446**	3	SCREW-MACHINE (8-32X0.437-IN)	
	4	1	**8C-9660**	3	WASHER (4.6X7.9X0.8-MM THK)	
	5	1	**9S-2544**	9	SCREW-HEX HEAD (8-32X11.13-MM)	
	6	1	**7M-0327**	1	WASHER-THRUST (17.4X25.4X1.6-MM THK)	
	7	1	**3T-3418**	1	FRAME AS-END	
		1	**3T-3423**	1	CUP	
		1	**3T-3424**	1	PLUG-FELT	
		1	**9G-4101**	1	BUSHING-END	
	8	1	**3T-9525**	1	PLATE AS-BRUSH	
	8A	2	**6T-0371**	1	INSULATOR	
	8B	2	**5P-6298**	12	SCREW-MACHINE (10-32X0.5-IN)	
		1	**9F-5599**	12	LOCKWASHER	
	8C	2	**7F-3525**	6	WASHER-BUSHING (0.209X0.39X0.09-MM THK)	
	8D	2	**6T-0372**	1	PLATE	
	8E	2	**3T-4709**	3	PLATE	
	8F	2	**2L-6679**	3	PLATE-INSULATOR	
	8G	2	**3T-4710**	3	PLATE	
	8H	2	**6T-0363**	6	HOLDER AS-BRUSH	
					(EACH INCLUDES)	
	8J	2	**3T-9494**	1	SPRING	
	9	1	**7F-3491**	2	WASHER (0.516X1X0.094-IN THK)	
	10	1	**3T-3422**	1	WIRE AS (STARTER)	
	11	1	**2J-8163**	2	SEAL-O-RING	
	12	1	**7X-3373**	1	BOLT (5/16-18X0.88-IN)	
	13	1	**3T-3434**	6	PLUG	
	14	1	**5J-5314**	5	BOLT (5/16-18X1.5-IN)	
	15	1	**3L-3380**	1	BUSHING-TERMINAL	
	16	2	**036-9821**	1	WASHER	
	17	2	**4M-1828**	1	RETAINER-SPRING	
	18	2	**4M-1829**	1	BOOT-RUBBER	
	19	2	**9M-7609**	1	SPRING (SHIFT LEVER)	
	20	2	**4M-1827**	1	RETAINER-SPRING	
	21	1	**8C-3089**	1	SEAL-O-RING	
	22	2	**4M-1853**	1	LEVER AS-SHIFT	
	23	2	**5M-3034**	1	LOCKNUT (5/16-24-IN THD)	
	24	1	**7L-2894**	4	GASKET	
	25	1	**4M-1831**	4	PLUG-LEVER HOUSING	
	26	1	**4M-1854**	1	SHAFT-LEVER	
	27	1	**1H-1023**	1	SEAL-O-RING	
	28	1	**2D-6392**	1	SEAL-O-RING	
	29	1	**7T-3974**	1	HOUSING AS-DRIVE	
	30	1	**6N-3826**	1	DRIVE AS-MOTOR	
	31	1,2	**2H-3429**	2	RING-RETAINING	
	32	1	**6V-1322**	4	BOLT (1/4-20X0.375-IN)	
	33	1	**8T-4205**	4	WASHER-HARD (7.2X14.5X2-MM THK)	
	34	1	**6N-3279**	1	INSULATOR	
	35	1	**036-9823**	13	BOLT (1/4-28X1-IN)	
	36	1	**1M-9971**	1	SPACER (0.84X1.72X1.88-IN THK)	
	37	1	**1H-2629**	3	STRIP-INSULATION	
	38	1	**7M-0324**	1	COIL AS-FIELD	
	39	1	**3F-0379**	12	SCREW-POLE SHOE (3/8-24-THD)	

237-1962 **STARTING MOTOR GP-ELECTRIC** *(contd.)* **i02249643**

NOTE	REF NO	GRAPHIC REF	PART NUMBER	QTY	PART NAME 1 2 3 4 5 6 (PRODUCT LEVEL)	SEE PAGE
	40	1	**7F-3488**	6	SHOE-POLE	
	41	1	**7M-8651**	1	ARMATURE AS	
	42	1	**7M-0325**	1	INSULATOR (COIL)	
	43	1	**3T-9524**	6	BRUSH AS	
	44	1	**3N-3763**	1	KIT-TERMINAL (STARTING MOTOR)	
					(INCLUDES BUSHINGS AND WASHERS)	
	45	1	**125-6537**	1	INSULATOR (STARTER)	
	46	2	**3R-8801**	1	CLAMP	
	47	1	**8F-1434**	2	LOCKWASHER	
	48	1	**6V-8188**	6	NUT (1/2-13-THD)	
	49	1	**7X-0562**	6	WASHER-HARD (13.5X19X0.8-MM THK)	
	50	1	**4B-2049**	6	NUT (10-32-THD)	
	51	1	**8T-0328**	10	WASHER-HARD (5.5X10X1-MM THK)	
	52	1	**3T-9494**	6	SPRING	
	53	1	**3E-7771**	1	HOUSING AS	
	54	1	**9G-4101**	1	BUSHING-END	
	55	1	**3T-3424**	3	PLUG-FELT	
	56	1	**3T-3423**	3	CUP	
	57	1	**1M-9968**	1	BUSHING	
	58	1	**2F-6678**	1	SEAL-LIP TYPE	
	59	1	**4L-2729**	1	WASHER (0.844X1.9X0.188-IN THK)	
	60	1	**4M-1896**	1	BUSHING-TERMINAL	
	61	1	**045-4065**	4	SCREW-MACHINE (10-32X0.75-IN)	
	62	1	**125-6535**	1	COVER-STARTING MOTOR	
	63	1	**7T-9123**	1	GASKET-PLATE	
	64	1	**238-1851**	1	SOLENOID AS (24-VOLT, STARTING MOTOR)	
	65	1	**125-6536**	1	TERMINAL AS	

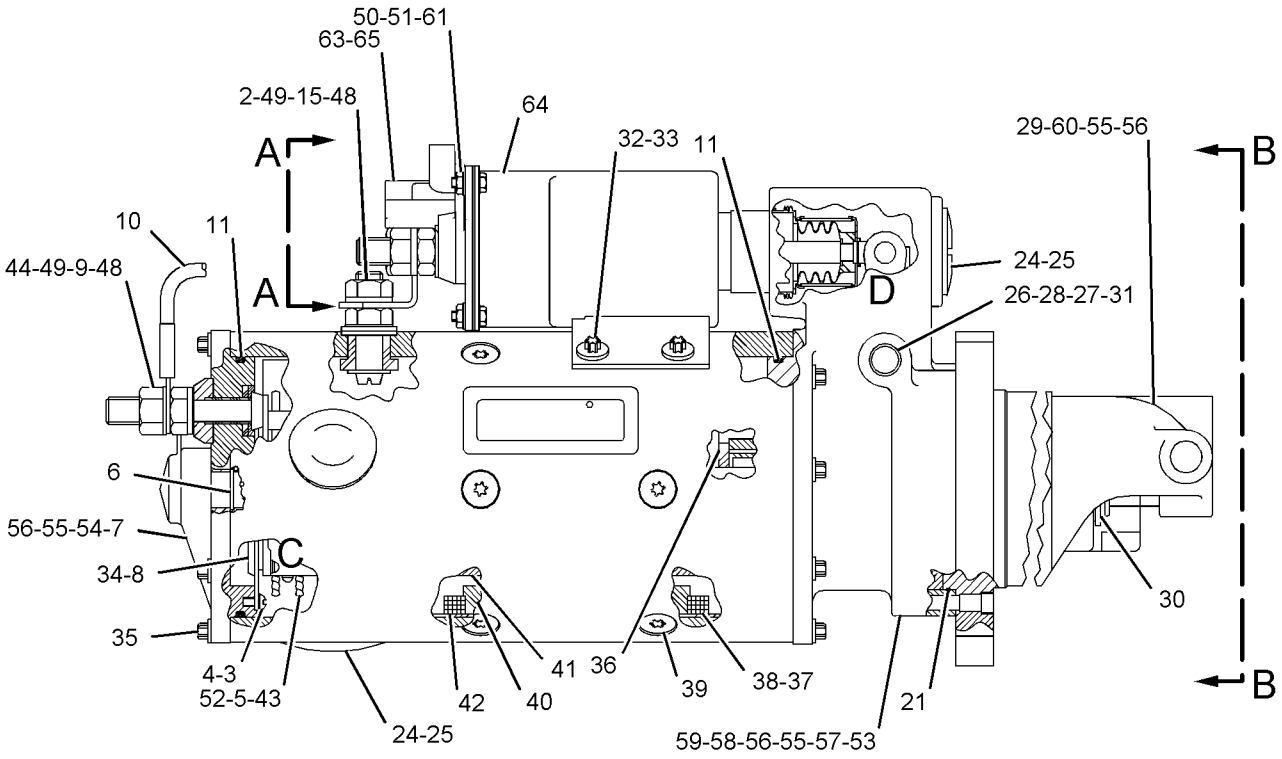

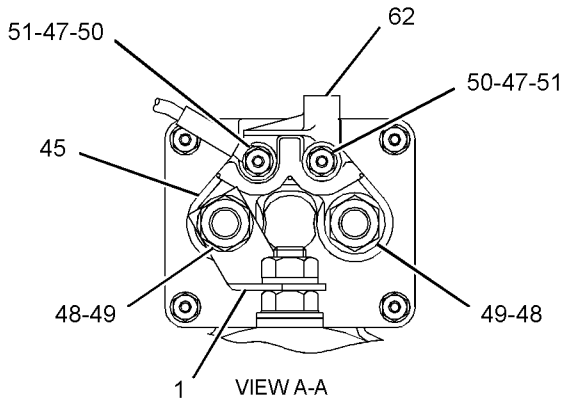

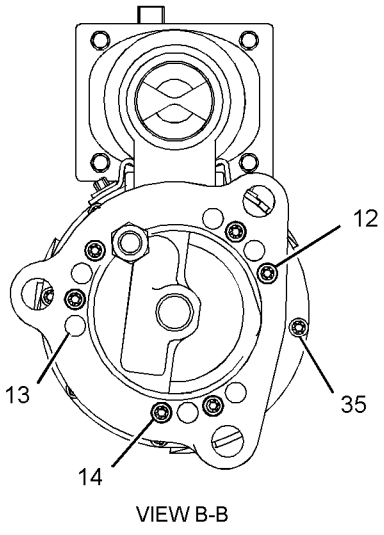

REFER TO ALL ILLUSTRATIONS OF THIS GROUP FOR AUXILIARY VIEWS

GRAPHIC #1

g01087643

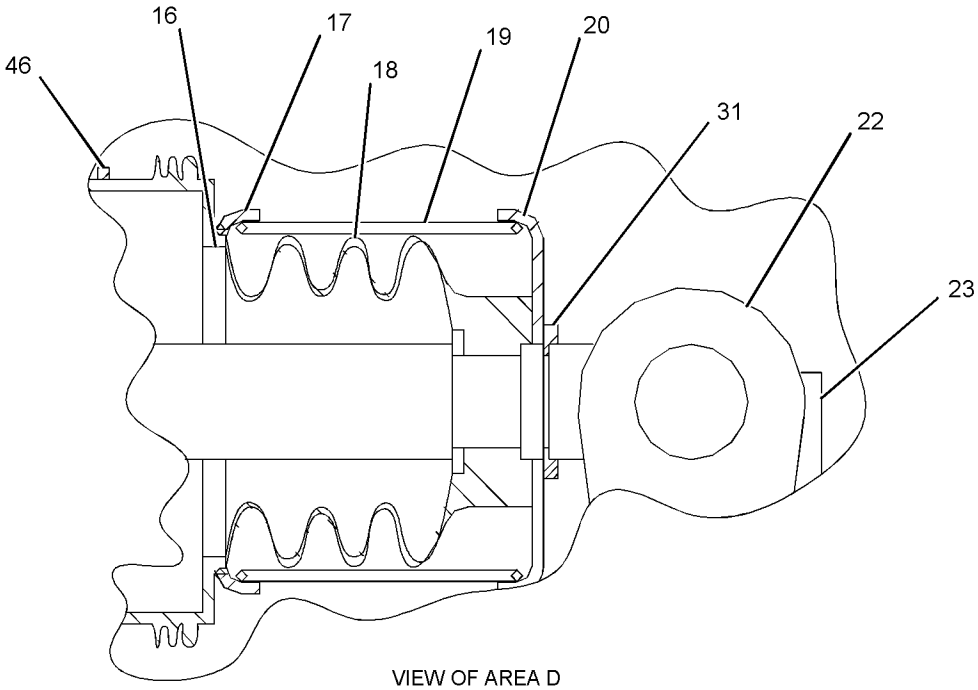

VIEW OF AREA D

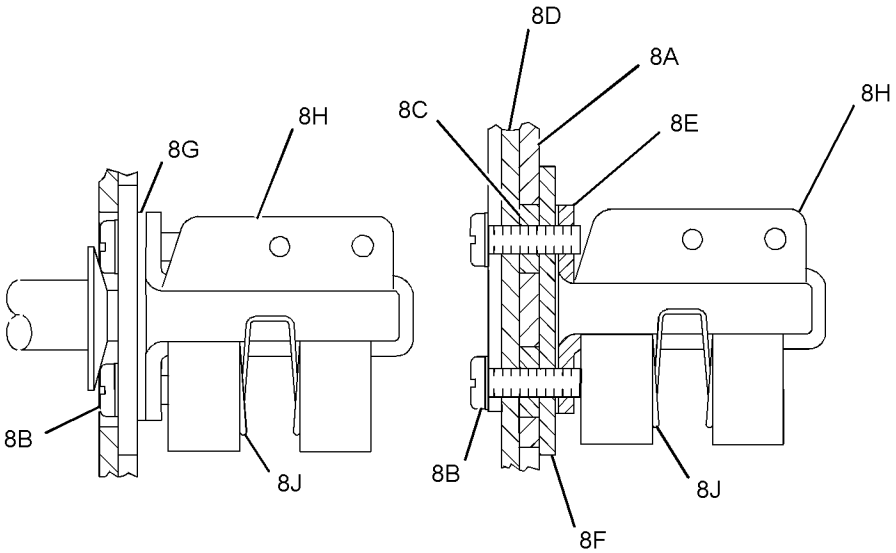

VIEW OF AREA C

GRAPHIC #2

<END>

g01087783

164-7577 SWITCH GP-BYPASS–PTO FILTER–STEERING FILTER

S/N: RJS1-UP

PART OF 205-8578 BATTERY & WIRING GP, 212-2297 FILTER GP-OIL

SMCS-1408 **i02267105**

NOTE	REF NO	GRAPHIC REF	PART NUMBER	QTY	PART NAME 1 2 3 4 5 6 (PRODUCT LEVEL)	SEE PAGE
E	1	1	**9X-1813**		SLEEVE (19-CM)	
	2	1	**102-8802**	1	KIT-RECEPTACLE (2-PIN)	
					(INCLUDES RECEPTACLE AS AND WEDGE)	
	3	1	**186-3735**	2	PIN-CONNECTOR	
	4	1	**3E-3365**	1	WEDGE-RECEPTACLE LOCK (2-PIN)	
	5	1	**3D-2824**	1	SEAL-O-RING	
Z	6	1		1	SWITCH AS (FILTER BYPASS)	

E-ORDER BY THE CENTIMETER
Z-NOT SERVICED SEPARATELY

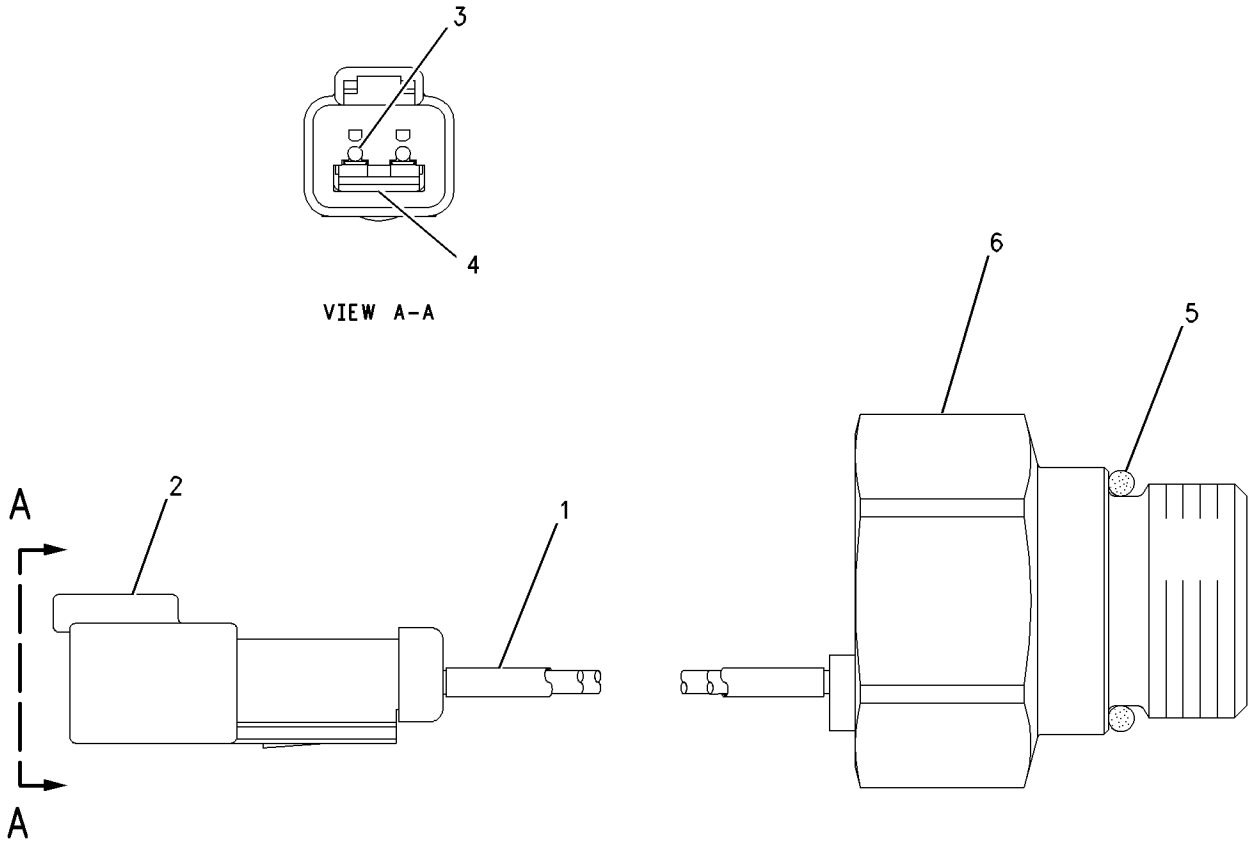

GRAPHIC #1 **<END>** g00750019

7N-0718 SWITCH GP-DISCONNECT–BATTERY

S/N: RJS1-UP

PART OF 205-8578 BATTERY & WIRING GP

SMCS-1411 **i02163014**

NOTE	REF NO	GRAPHIC REF	PART NUMBER	QTY	PART NAME 1 2 3 4 5 6 (PRODUCT LEVEL)	SEE PAGE
	1	1	**8H-5306**	1	KEY (BATTERY DISCONNECT)	
	2	1	**8H-5303**	1	NUT (3/4-16-THD)	
	3	1	**2H-3922**	2	LOCKWASHER	
	4	1	**9F-5644**	2	LOCKWASHER	
	5	1	**6F-7045**	2	NUT-FULL (3/8X24-THD)	

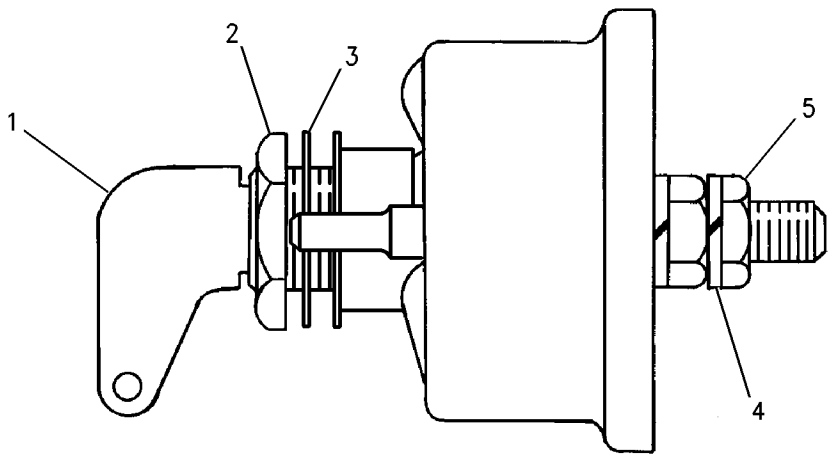

GRAPHIC #1 **<END>** g00715584

259-1869 SWITCH GP-DISCONNECT–BATTERY, AUXILIARY

S/N: RJS1-UP

AN ATTACHMENT

SMCS-1411 **i02223118**

NOTE	REF NO	GRAPHIC REF	PART NUMBER	QTY	PART NAME 1 2 3 4 5 6 (PRODUCT LEVEL)	SEE PAGE
	1	1,2	**7K-1181**	7	STRAP-CABLE	
	2	1	**8T-4999**	1	FILM-INSTRUCTION (BATTERY DISCONNECT)	
Y	3	1	**164-9436**	1	BLOCK GP-POWER	185
	4	2	**224-9222**	1	BRACKET	
	5	1	*263-8583*	1	PLATFORM AS	
	5A	1	**9R-2613**	1	BOSS (M10X1.5X25-MM OAL)	
	5B	2	**128-3231**	1	BLOCK	
M	5C	2	**5C-7261**	8	NUT (M8X1.25-THD)	
M	5D	2	**6V-9632**	8	NUT-WELD (M6X1 THD)	
	5E	2	**7T-1099**	4	LINK	
M	5F	2	**8T-3490**	20	NUT-WELD (M10X1.5-THD)	
	5G	1	**209-9336**	1	PANEL AS-DASH	
	5H	1	**209-9342**	1	CONSOLE AS-RH	
	5J	1	**209-9343**	1	CONSOLE AS-LH	
	5K	2	**7T-1099**	11	LINK	
	5L	2	**8F-9836**	3	BOSS-THREADED	
M	5M	2	**8T-3490**	15	NUT-WELD (M10X1.5-THD)	
M	5N	2	**9R-2640**	1	BOSS (M12X1.75X25-MM)	
	6	1	**263-8584**	1	PANEL AS	
		1	**209-5196**	1	PANEL-ACOUSTICAL	
	7	1	**263-8585**	1	PLATE AS	
		1	**252-6953**	1	PLATE AS	
	8	2	**263-8586**	1	CABLE AS	
		2	**1S-7252**	2	TERMINAL-RING (FOR 3/8-IN BOLT)	
E		2	**5P-0747**		CABLE (00-GA, BLACK) (220-CM)	
		2	**6T-0465**	1	COVER-TERMINAL (BLACK)	
	9	1	**263-8587**	1	CABLE AS	
		1	**1S-7252**	2	TERMINAL-RING (FOR 3/8-IN BOLT)	
E		1	**5P-0747**		CABLE (00-GA, BLACK) (52-CM)	
		1	**6T-0465**	2	COVER-TERMINAL (BLACK)	
	10	1	**263-8588**	1	CABLE AS	
		1	**1S-7251**	1	TERMINAL-RING (FOR 1/2-IN BOLT)	
		1	**1S-7252**	1	TERMINAL-RING (FOR 3/8-IN BOLT)	
E		1	**5P-0747**		CABLE (00-GA, BLACK) (52-CM)	
		1	**6T-0465**	2	COVER-TERMINAL (BLACK)	
	11	2	**263-8589**	1	CABLE AS	
		2	**1S-7251**	1	TERMINAL-RING (FOR 1/2-IN BOLT)	
		2	**1S-7252**	1	TERMINAL-RING (FOR 3/8-IN BOLT)	
E		2	**5P-0747**		CABLE (00-GA, BLACK) (110-CM)	
		2	**6T-0465**	1	COVER-TERMINAL (BLACK)	
	12	1,2	**4P-8134**	2	CLIP	
M	13	1,2	**6V-8212**	2	BOLT (M10X1.5X16-MM)	
	14	2	**8M-2770**	3	CLIP	
	15	1,2	**8T-4121**	4	WASHER-HARD (11X21X2.5-MM THK)	
M	16	1	**8T-4136**	2	BOLT (M10X1.5X25-MM)	
	17	1	**9H-2082**	1	SWITCH AS-DISCONNECT	
	17A	2	**2H-3922**	1	LOCKWASHER	
	17B	2	**8H-5303**	1	NUT (3/4-16-THD)	
	17C	2	**9F-5644**	2	LOCKWASHER	
	17D	2	**6F-7045**	2	NUT-FULL (3/8X24-THD)	
	17E	2	**8F-3437**	1	LEVER-SWITCH	
	17F	2	**5L-7200**	1	SCREW (8-32X0.375-IN)	
	17G	2	**9B-7233**	1	LOCKWASHER	

E-ORDER BY THE CENTIMETER
M-METRIC PART
Y-SEPARATE ILLUSTRATION

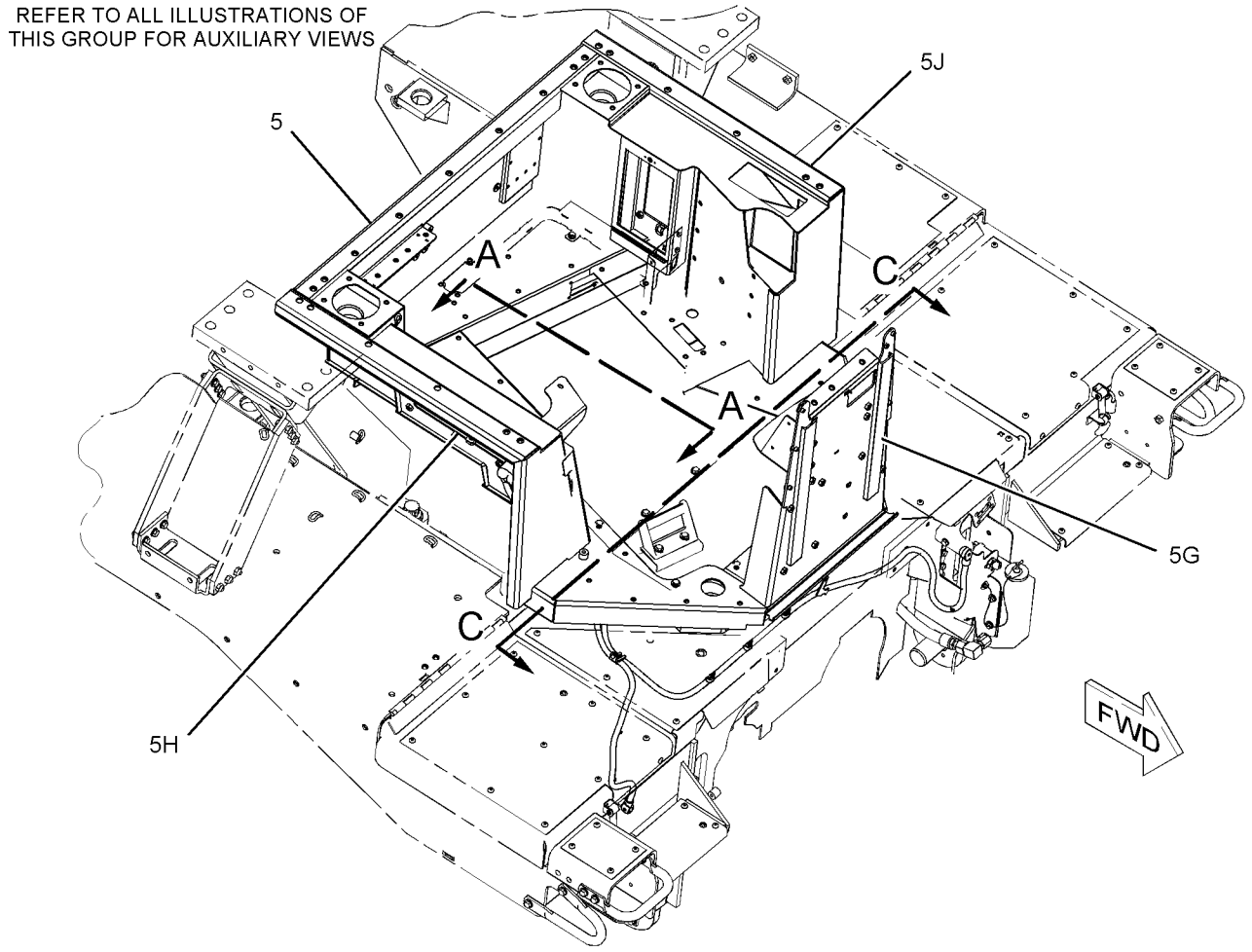

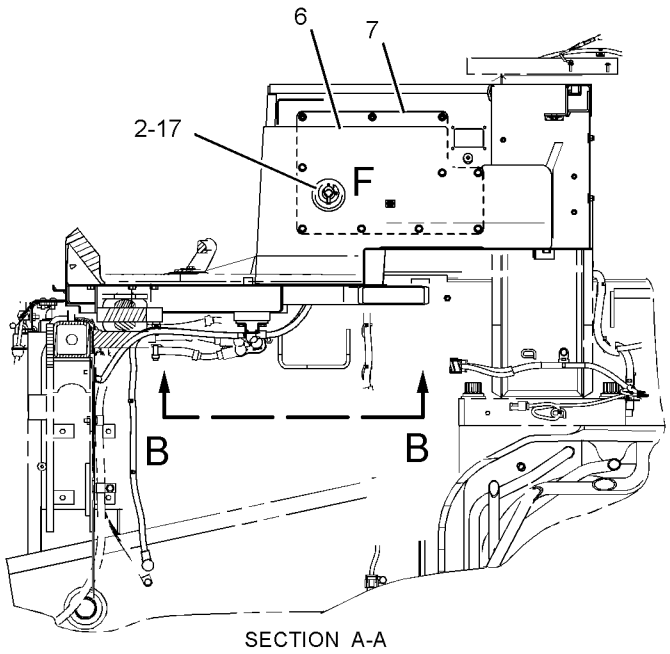

SECTION A-A

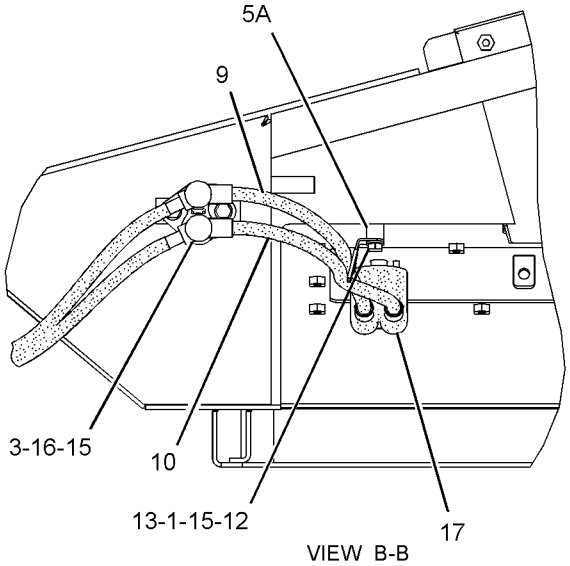

VIEW B-B

GRAPHIC #1 g01125917

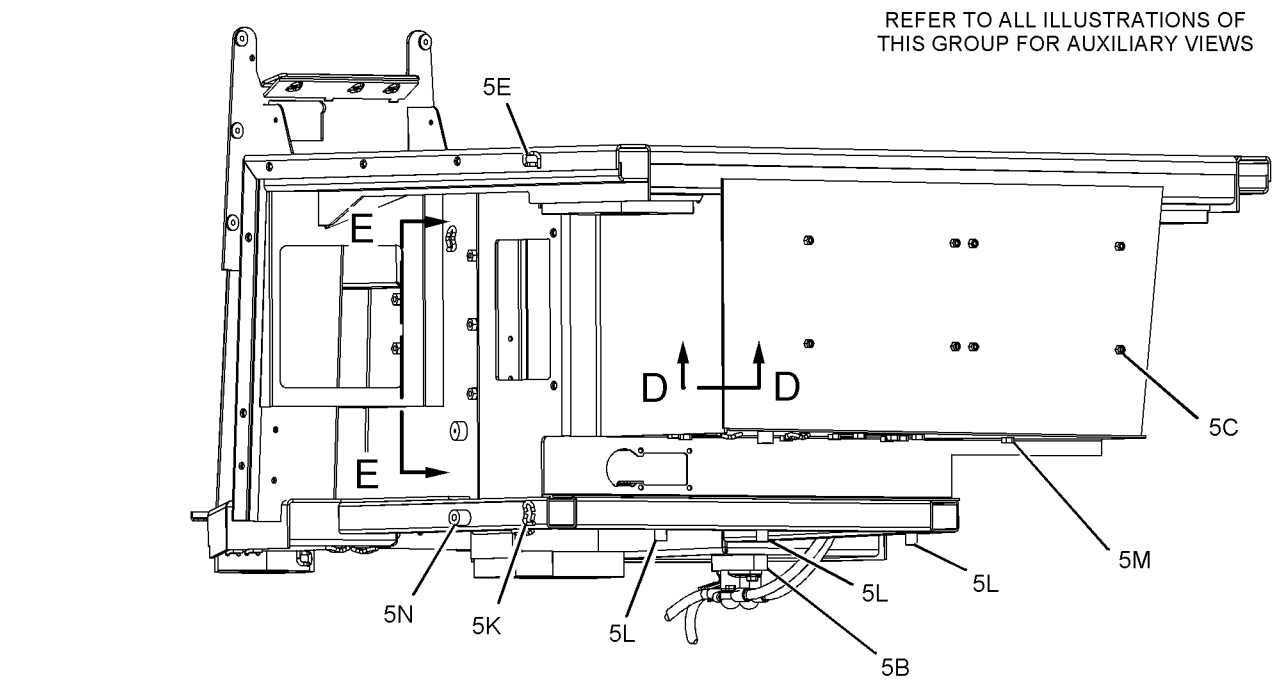

REAR VIEW

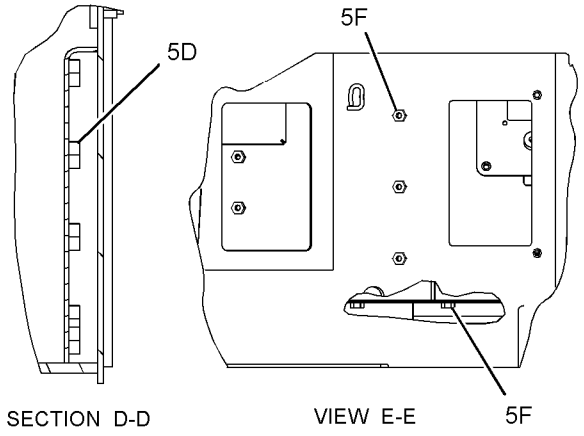

SECTION D-D VIEW E-E

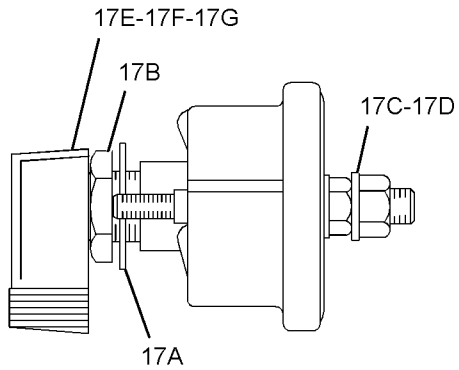

VIEW OF AREA F

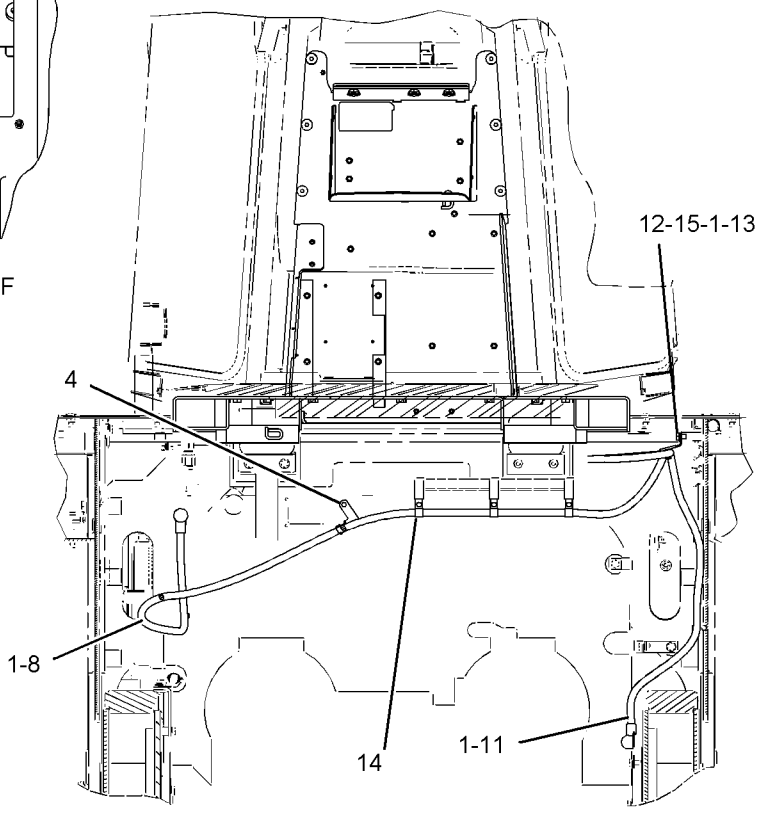

SECTION C-C

GRAPHIC #2 **<END>** g01125918

237-0151 SWITCH GP-LIMIT–STEERING CONTROL

S/N: RJS1-UP

PART OF 222-1462 CONTROL GP-STEERING & TMSN

SMCS-1435, 7332 **i02239802**

NOTE	REF NO	GRAPHIC REF	PART NUMBER	QTY	PART NAME 1 2 3 4 5 6 (PRODUCT LEVEL)	SEE PAGE
	1	1	**102-8805**	1	KIT-RECEPTACLE (6-PIN)	
					(INCLUDES RECEPTACLE AS & WEDGE)	
	2	1	**186-3735**	6	PIN-CONNECTOR	
BD	3	1	**6V-2689**		TUBE-HEAT SHRINK	

B-USE AS REQUIRED
D-ORDER BY THE METER

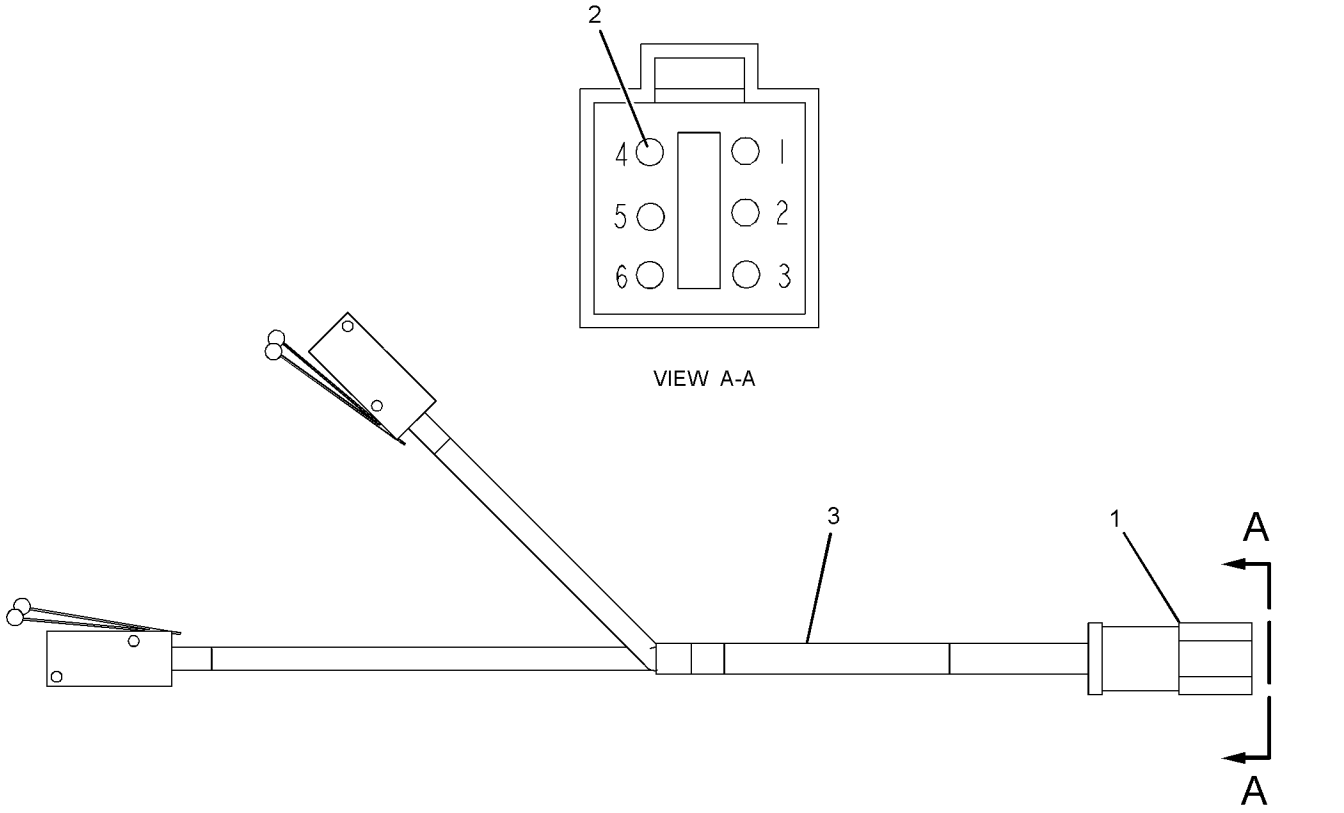

GRAPHIC #1 **<END>** g01105596

125-1302 SWITCH GP-MAGNETIC–START RELAY

S/N: RJS1-UP
PART OF 223-8176 PANEL GP-FUSE, 213-6675 STARTING AR-COLD WEATHER
FOR USE WITH 24-VOLT DC NOMINAL SYSTEM VOLTAGE
ALSO AN ATTACHMENT

SMCS-7499 **i02231144**

NOTE	REF NO	GRAPHIC REF	PART NUMBER	QTY	PART NAME 1 2 3 4 5 6 (PRODUCT LEVEL)	SEE PAGE
	1	1	**102-8802**	1	KIT-RECEPTACLE (2-PIN)	
					(INCLUDES RECEPTACLE AS AND WEDGE)	
	2	1	**186-3735**	2	PIN-CONNECTOR	
	3	1	**1H-3338**	2	LOCKWASHER	
	4	1	**012-0380**	2	LOCKWASHER	
M	5	1	**5C-2890**	2	NUT (M6X1-THD)	
BE	6	1	**9X-1813**		SLEEVE	

B-USE AS REQUIRED
E-ORDER BY THE CENTIMETER
M-METRIC PART

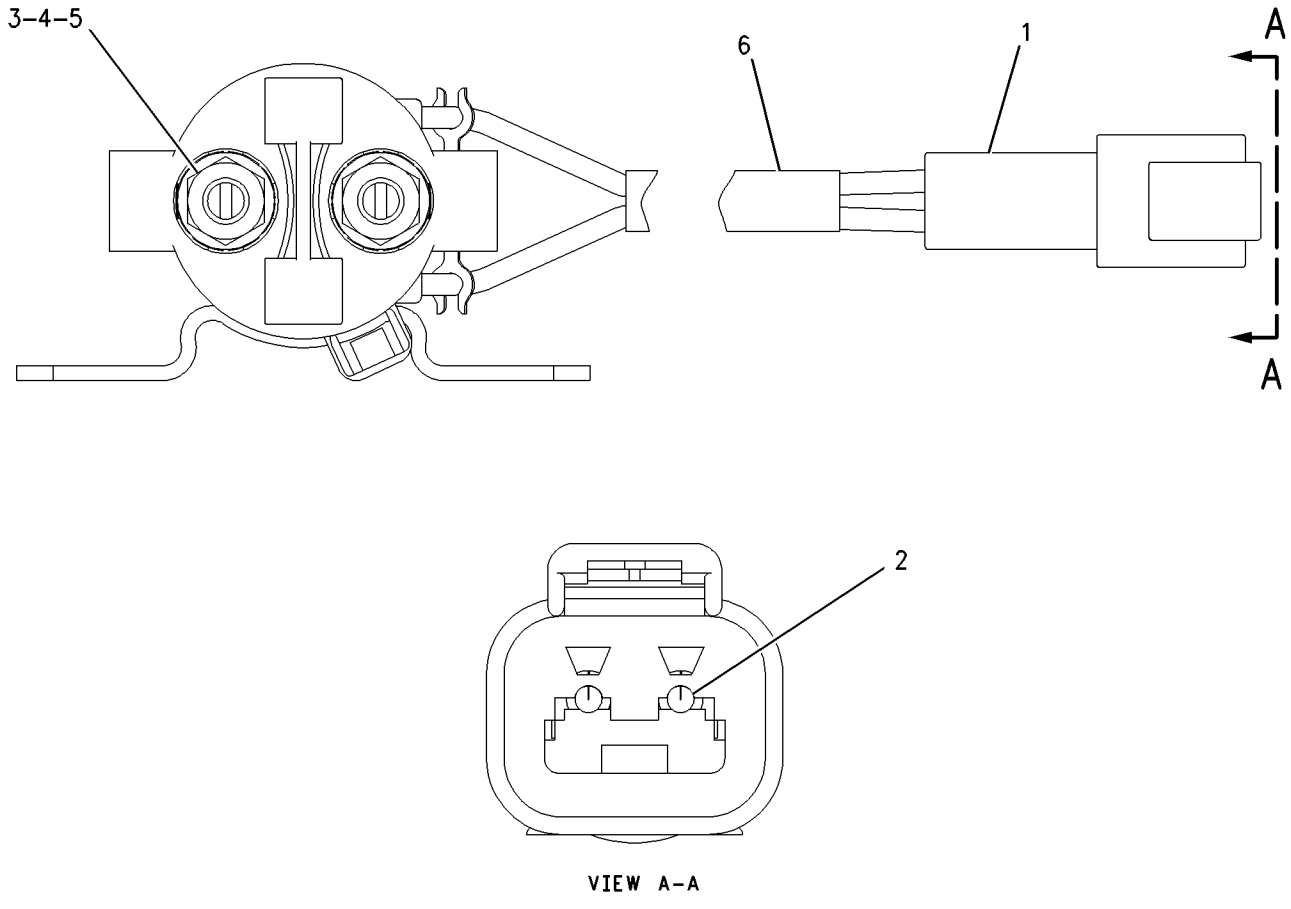

VIEW A–A

GRAPHIC #1 **<END>** g00988001

241-8368 SWITCH GP-MAGNETIC—MAIN RELAY

S/N: RJS1-UP
24 VOLTS
PART OF 223-8176 PANEL GP-FUSE

SMCS-7499 **i02112812**

NOTE	REF NO	GRAPHIC REF	PART NUMBER	QTY	PART NAME 1 2 3 4 5 6 (PRODUCT LEVEL)	SEE PAGE
	1	1	**155-2270**	1	KIT-CONNECTING PLUG (2-PIN)	
					(KIT INCLUDES PLUG AS, WEDGE & INTERFACE SEAL)	
	2	1	**4F-2294**	2	NUT-JAM (5/16-24-THD)	
	3	1	**186-3736**	2	SOCKET-CONNECTOR	

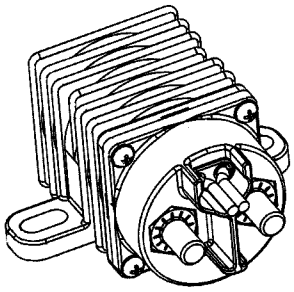

ISOMETRIC VIEW

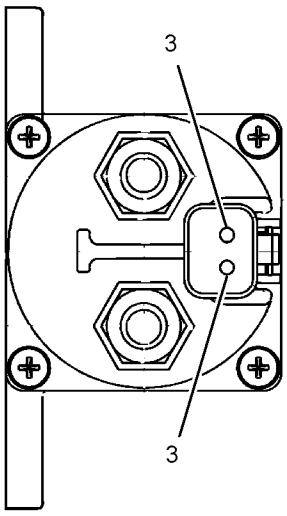

VIEW A-A

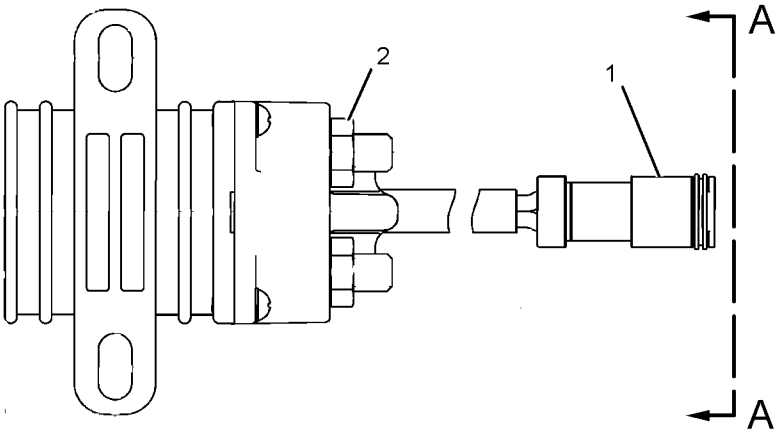

GRAPHIC #1 **<END>** g01077362

258-0883 SWITCH GP-PRESSURE–FUEL

S/N: RJS1-UP

PART OF 207-4802 FILTER & LINES GP-FUEL

SMCS-1435, 7400 **i02267120**

NOTE	REF NO	GRAPHIC REF	PART NUMBER	QTY	PART NAME 1 2 3 4 5 6 (PRODUCT LEVEL)	SEE PAGE
	1	1	**102-8802**	1	KIT-RECEPTACLE (2-PIN)	
					(INCLUDES RECEPTACLE AS AND WEDGE)	
	2	1	**3E-3365**	1	WEDGE-RECEPTACLE LOCK (2-PIN)	
	3	1	**186-3735**	2	PIN-CONNECTOR	
E	4	1	**9X-1813**		SLEEVE (14-CM)	
	5	1	**6V-4589**	1	SEAL-O-RING	
	6	1	**7L-9061**	1	SEAL-O-RING	

E-ORDER BY THE CENTIMETER

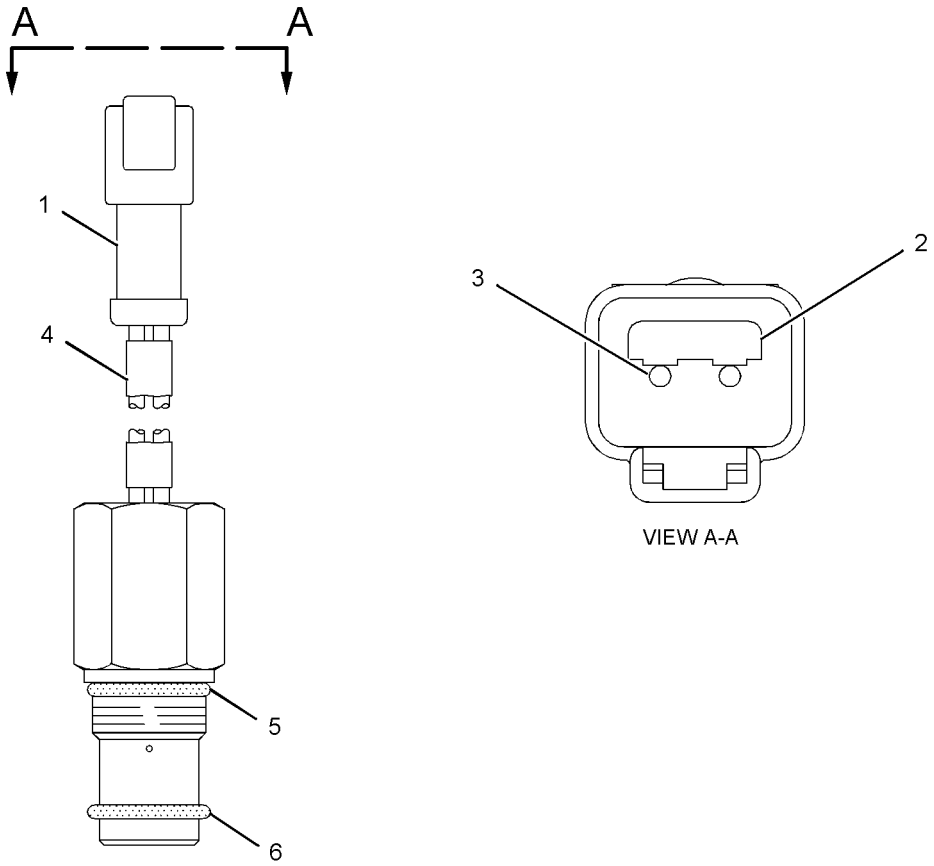

GRAPHIC #1 **<END>** g01072091

158-6632 SWITCH GP-PUSH BUTTON–HORN

S/N: RJS1-UP

PART OF 205-8579 WIRING GP-PLATFORM

SMCS-1435, 7332 **i01963642**

NOTE	REF NO	GRAPHIC REF	PART NUMBER	QTY	PART NAME 1 2 3 4 5 6 (PRODUCT LEVEL)	SEE PAGE
	1	1	**9X-0199**	1	BOOT-SWITCH	
	2	1	**7T-9515**	1	KNOB-HORN	
	3	1	**5L-7200**	1	SCREW (8-32X0.375-IN)	
	4	1	**3B-4501**	1	LOCKWASHER	
	5	1	**6V-8370**	1	NUT-HEX (3/4-32-THD)	
	6	1	**2H-3922**	1	LOCKWASHER	
	7	1	**102-8802**	1	KIT-RECEPTACLE (2-PIN) (HORN SWITCH)	
					(INCLUDES RECEPTACLE AS & WEDGE)	
	8	1	**9X-3401**	2	PIN-CONNECTOR	
	9	1	**3E-3365**	1	WEDGE-RECEPTACLE LOCK (2-PIN)	

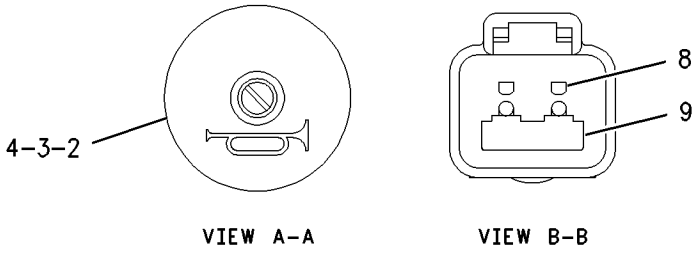

VIEW A–A VIEW B–B

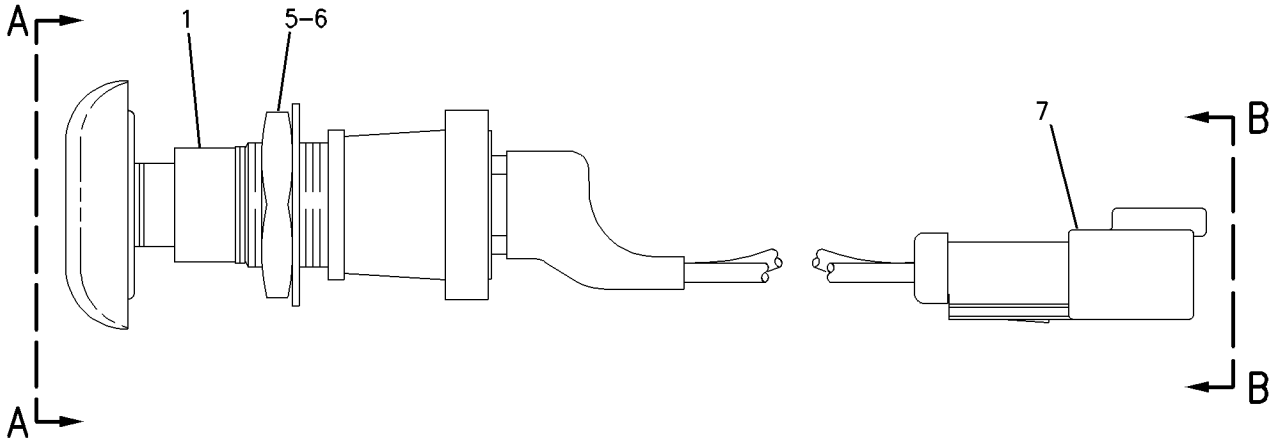

GRAPHIC #1 **<END>** g00942674

165-5970 SWITCH GP-TOGGLE–FUEL PRIMING PUMP

S/N: RJS1-UP

PART OF 205-8578 BATTERY & WIRING GP

SMCS-7332 **i02262653**

NOTE	REF NO	GRAPHIC REF	PART NUMBER	QTY	PART NAME 1 2 3 4 5 6 (PRODUCT LEVEL)	SEE PAGE
	1	1	**6T-3631**	2	NUT-HEX (15/32-32-THD)	
	2	1	**6T-3632**	1	LOCKWASHER	
	3	1	**6T-3633**	1	RING-LOCKING	
	4	1	**102-8803**	1	KIT-RECEPTACLE (3-PIN)	
					(INCLUDES RECEPTACLE AS & WEDGE)	
	5	1	**3E-3371**	1	WEDGE-RECEPTACLE LOCK (3-PIN)	
	6	1	**186-3735**	3	PIN-CONNECTOR	

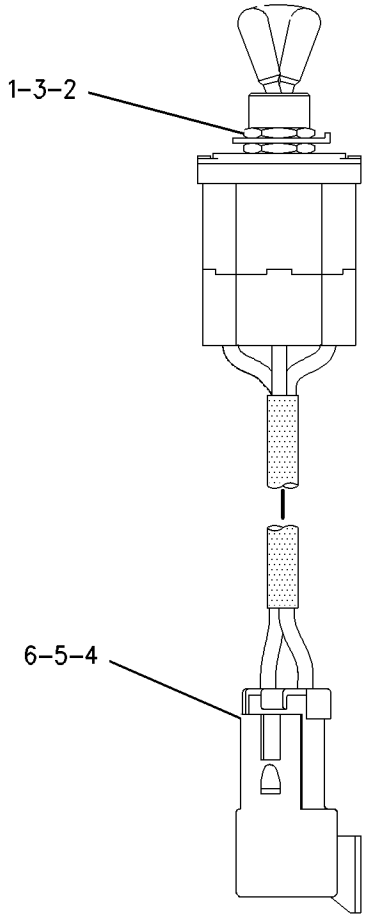

GRAPHIC #1 **<END>** g00749466

239-1134 VALVE GP-ETHER STARTING

S/N: RJS1-UP

PART OF 209-8389 STARTING AID GP-ETHER

SMCS-1456 **i02145416**

NOTE	REF NO	GRAPHIC REF	PART NUMBER	QTY	PART NAME 1 2 3 4 5 6 (PRODUCT LEVEL)	SEE PAGE
	1	1	**3E-3365**	1	WEDGE-RECEPTACLE LOCK (2-PIN)	
	2	1	**7N-9801**	1	GASKET	
	3	1	**102-8802**	1	KIT-RECEPTACLE (2-PIN)	
					(KIT INCLUDES RECEPTACLE AS & WEDGE)	
	4	1	**186-3735**	2	PIN-CONNECTOR	

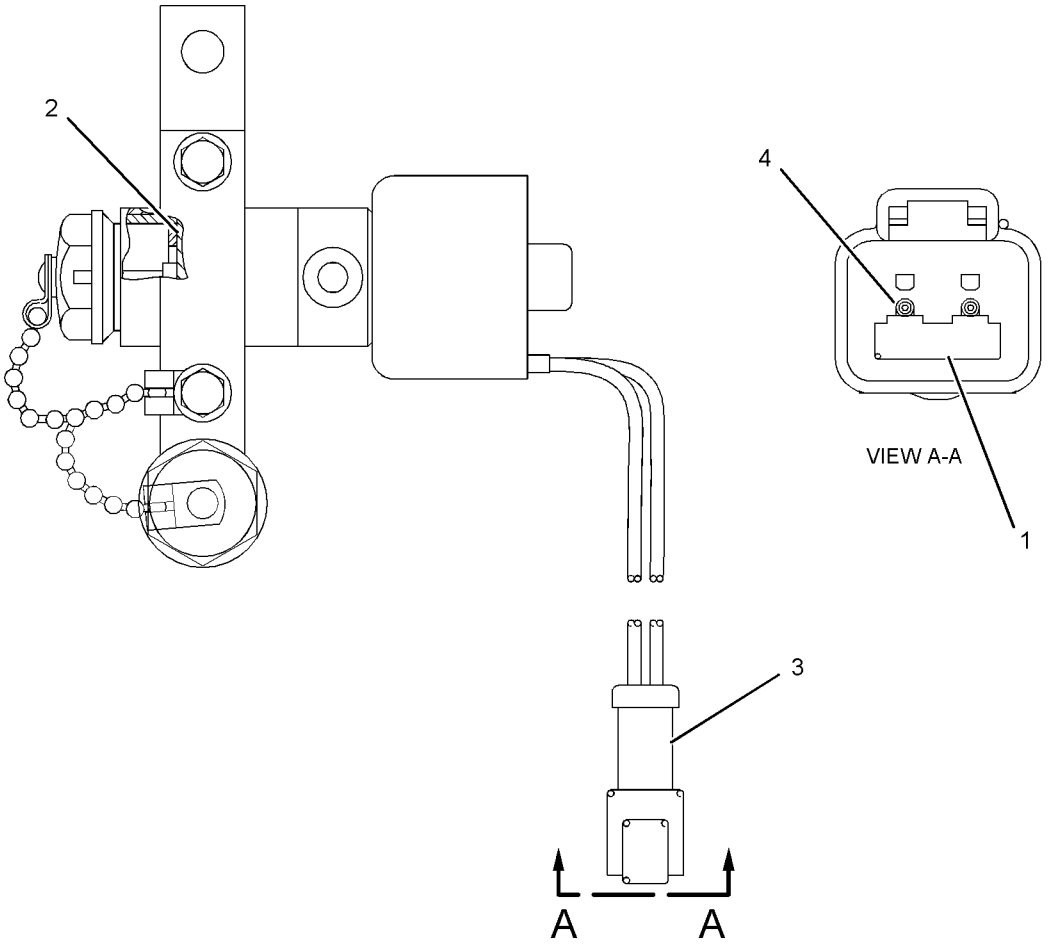

GRAPHIC #1 **<END>** g01053000

214-4763 WIRING GP-CAB

S/N: RJS1-UP
PART OF 208-9766, 213-1100 CAB AR
ALSO AN ATTACHMENT

SMCS-1408, 7301 **i02229499**

NOTE	REF NO	GRAPHIC REF	PART NUMBER	QTY	PART NAME 1 2 3 4 5 6 (PRODUCT LEVEL)	SEE PAGE
	1	1	**1S-2342**	1	STRAP AS-GROUND	
B	2	1	**7K-1181**	20	STRAP-CABLE	
	3	1	**213-1280**	1	HARNESS AS-CAB	
		1	**190-7614**	1	KIT-RECEPTACLE (12-PIN)	
		1	**102-8803**	1	KIT-RECEPTACLE (3-PIN)	
		1	**102-8805**	1	KIT-RECEPTACLE (6-PIN)	
		1	**102-8801**	1	KIT-RECEPTACLE (12-PIN)	
					(EACH INCLUDES RECEPTACLE AS & WEDGE)	
		1	**155-2265**	6	KIT-CONNECTING PLUG (8-PIN)	
		1	**155-2274**	6	KIT-CONNECTING PLUG (6-PIN)	
		1	**155-2260**	4	KIT-CONNECTING PLUG (3-PIN)	
		1	**155-2270**	1	KIT-CONNECTING PLUG (2-PIN)	
					(EACH INCLUDES PLUG AS & WEDGE)	
	4	1	**221-0851**	2	SWITCH AS (DOME LIGHT)	
					(EACH INCLUDES)	
		1	**105-8034**	1	SWITCH AS-LIMIT (DOME LIGHT)	
	4A	1	**3E-3371**	1	WEDGE-RECEPTACLE LOCK (3-PIN)	
	4B	1	**110-0203**	1	CONNECTOR AS	
	4C	1	**102-8803**	1	KIT-RECEPTACLE (3-PIN)	
					(INCLUDES RECEPTACLE AS & WEDGE)	
	4D	1	**126-1767**	3	PIN-CONNECTOR (14-GA WIRE)	
					—OR—	
		1	**9X-3401**	3	PIN-CONNECTOR (16-GA TO 18-GA WIRE)	
	5	1	**226-2811**	1	LAMP AS-DOME (24-VOLT)	
		1	**9X-4493**	1	LAMP (24-VOLT, 21-WATT)	
Y	6	1	*231-9290*	1	PANEL GP-CONTROL (OVERHEAD)	793
M	7	1	**3E-8020**	6	SCREW-TRUSS HEAD (M6X1X25-MM)	
	8	1	**8T-4121**	1	WASHER-HARD (11X21X2.5-MM THK)	
M	9	1	**8T-4137**	1	BOLT (M10X1.5X20-MM)	

B-USE AS REQUIRED
M-METRIC PART
Y-SEPARATE ILLUSTRATION

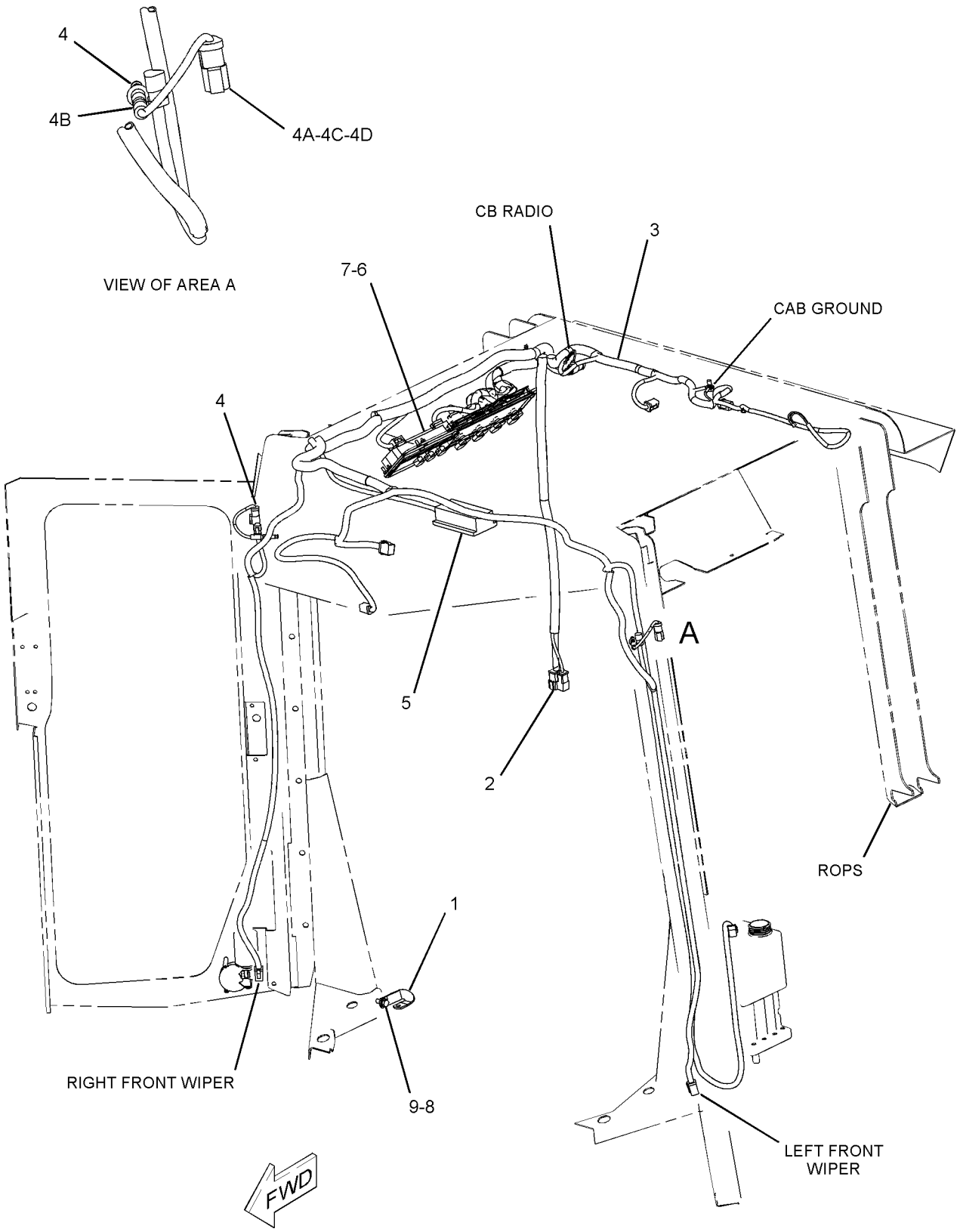

GRAPHIC #1 **<END>** g01035598

243-1546 WIRING GP-ELECTRONIC CONTROL

S/N: RHX1-UP

PART OF 205-8603, 231-3468 ENGINE AR-COMPLETE

ALSO AN ATTACHMENT

SMCS-1408 **i02217278**

NOTE	REF NO	GRAPHIC REF	PART NUMBER	QTY	PART NAME 1 2 3 4 5 6 (PRODUCT LEVEL)	SEE PAGE
	1	1	**3S-2093**	24	STRAP-CABLE	
	2	1	**7T-0266**	1	BRACKET AS	
		1	**1F-0750**	1	NUT-WELD (3/8-16-THD)	
	3	1	**239-5929**	1	HARNESS AS-ENGINE (ENGINE WIRING)	
		1	**102-8802**	1	KIT-RECEPTACLE (2-PIN)	
		1	**102-8803**	1	KIT-RECEPTACLE (3-PIN)	
					(ALL KIT RECEPTACLES INCLUDE RECEPTACLE AS AND WEDGE)	
		1	**155-2255**	1	KIT-CONNECTING PLUG (12-PIN)	
		1	**155-2265**	1	KIT-CONNECTING PLUG (8-PIN)	
		1	**155-2260**	1	KIT-CONNECTING PLUG (3-PIN)	
		1	**155-2270**	6	KIT-CONNECTING PLUG (2-PIN)	
					(ALL KIT PLUGS INCLUDE PLUG AS AND WEDGE)	
		1	**227-4002**	1	PLUG AS-CONNECTOR (108-PIN)	
	4	1	**0L-1351**	1	BOLT (3/8-16X0.875-IN)	
	5	1	**0S-0509**	3	BOLT (3/8-16X0.75-IN)	
	6	1	**0S-1571**	1	BOLT (3/8-16X1.75-IN)	
	7	1	**0S-1576**	1	BOLT (5/8-18X2-IN)	
	8	1	**104-6202**	2	CLIP	
	9	1	**132-5789**	2	CLIP	
	10	1	**1A-4273**	1	BOLT (5/8-18X1.25-IN)	
	11	1	**3B-1915**	1	BOLT (3/8-16X1.75-IN)	
	12	1	**4P-7429**	1	CLIP	
	13	1	**4P-7581**	8	CLIP	
	14	1	**4P-7582**	1	CLIP	
	15	1	**4P-8134**	3	CLIP	
	16	1	**5M-2894**	6	WASHER-HARD (10.2X18.5X2.5-MM THK)	
	17	1	**5P-8247**	2	WASHER-HARD (17X32X3.5-MM THK)	
	18	1	**8T-4223**	1	WASHER-HARD (13.5X25.5X3-MM THK)	

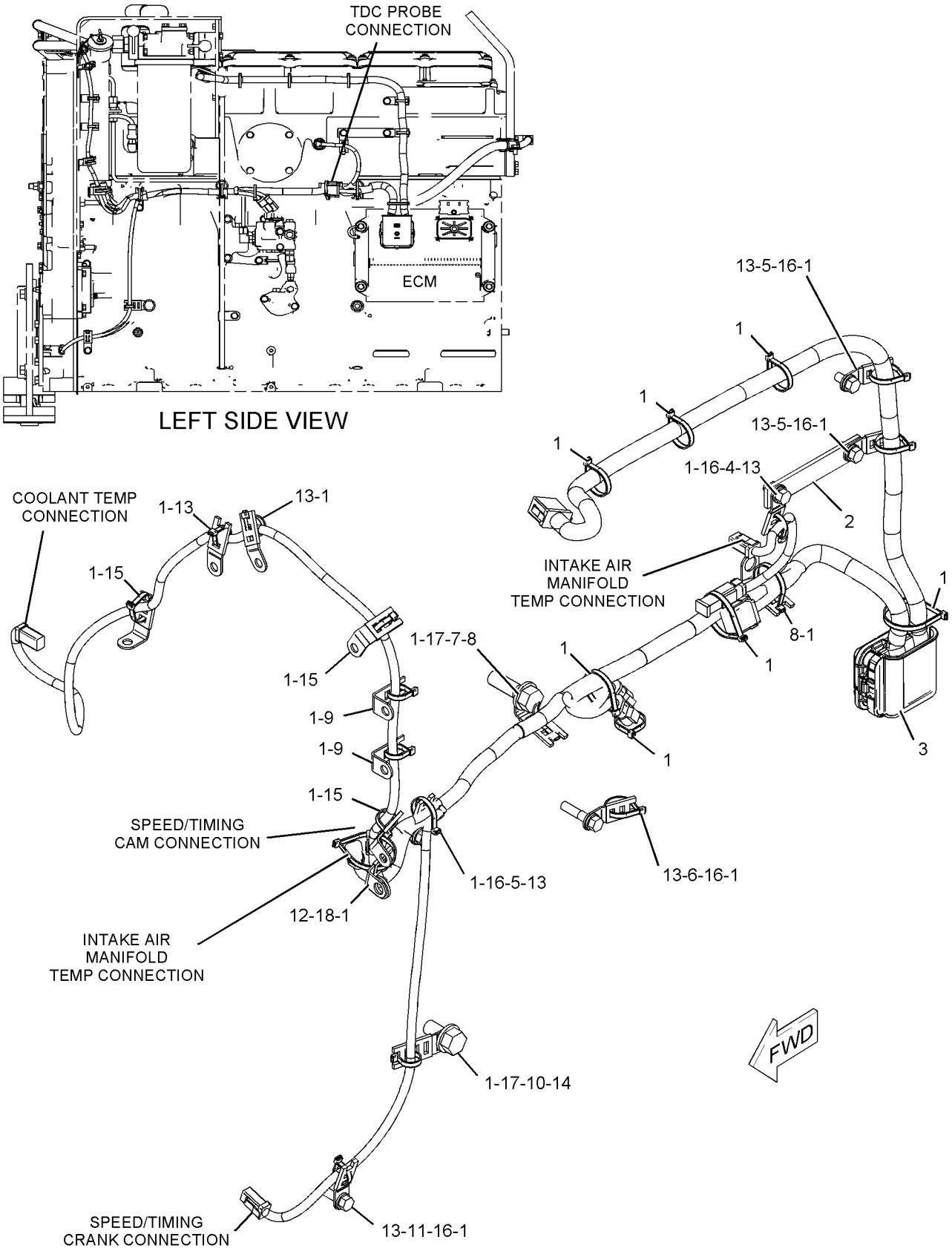

GRAPHIC #1 **<END>** g01119858

ELECTRICAL AND STARTING SYSTEM

222-7860 WIRING GP-ENGINE

S/N: RJS1-UP

PART OF 205-8604 INSTALLATION AR-ENGINE

SMCS-1403, 1408 **i02247418**

NOTE	REF NO	GRAPHIC REF	PART NUMBER	QTY	PART NAME 1 2 3 4 5 6 (PRODUCT LEVEL)	SEE PAGE
	1	1	**8D-8852**	1	SPACER (0.78X1.5X1.34-IN THK)	
	2	1	**110-8330**	3	SPACER (11.13X10.05X90-MM THK)	
Y	3	2	**145-7028**	1	SENSOR GP-TEMPERATURE (INLET AIR)	252
Y	4	1	**161-9926**	1	SENSOR GP-PRESSURE (ATMOSPHERIC AIR)	238
Y	5	2	**189-5746**	1	SENSOR GP-SPEED (ENGINE)	248
	6	1	**204-8000**	1	ANCHOR-TIE	
	7	2	**205-3079**	1	ADAPTER	
	8	1	**209-7807**	1	CABLE AS	
		1	**1S-4915**	2	LINER (CONDUIT)	
E		1	**5P-0695**		CONDUIT (364-CM)	
		1	**8N-0869**	2	COVER-TERMINAL (RED)	
BE		1	**8T-2225**		TUBE-HEAT SHRINK	
		1	**030-1707**	2	TERMINAL-RING	
BE		1	**114-8843**		SLEEVE-PLASTIC	
E		1	**159-8047**		CABLE-ELECTRICAL (0-GA, RED) (377-CM)	
	9	1	**230-0809**	1	PLATE	
	10	2	**231-1420**	1	HARNESS AS-ENGINE	
		2	**102-8802**	1	KIT-RECEPTACLE (2-PIN)	
		2	**102-8803**	2	KIT-RECEPTACLE (3-PIN)	
		2	**102-8806**	1	KIT-RECEPTACLE (8-PIN)	
		2	**190-7615**	1	KIT-RECEPTACLE (12-PIN)	
					(EACH INCLUDES RECEPTACLE AS & WEDGE)	
		2	**174-0503**	1	KIT-CONNECTING PLUG (3-PIN)	
		2	**155-2255**	1	KIT-CONNECTING PLUG (12-PIN)	
		2	**155-2257**	1	KIT-CONNECTING PLUG (12-PIN)	
		2	**155-2260**	1	KIT-CONNECTING PLUG (3-PIN)	
		2	**155-2270**	8	KIT-CONNECTING PLUG (2-PIN)	
		2	**155-2274**	1	KIT-CONNECTING PLUG (6-PIN)	
		2	**174-0503**	1	KIT-CONNECTING PLUG (3-PIN)	
					(EACH INCLUDES PLUG AS & WEDGE)	
		2	**127-5485**	1	PLUG AS-CONNECTOR (1-PIN)	
		2	**155-2272**	1	PLUG AS-CONNECTOR (4-PIN)	
		2	**160-7689**	1	PLUG AS-CONNECTOR (70-PIN)	
		2	**214-4208**	1	RECEPTACLE AS (70-PIN)	
	11	1	**232-1043**	1	PLATE AS	
Y	12	2	**237-0957**	1	SENSOR GP-PRESSURE (HYDRAULIC OIL)	242
	13	1	**248-0404**	1	CABLE AS	
		1	**1M-4986**	2	TERMINAL-RING (FOR 1/2-IN BOLT)	
E		1	**5P-0746**		CABLE (0-GA, BLACK) (139-CM)	
		1	**030-1709**	1	TERMINAL-RING	
BE		1	**114-8843**		SLEEVE-PLASTIC	
	14	1	**0S-1588**	1	BOLT (3/8-16X1.25-IN)	
	15	1	**0S-1594**	1	BOLT (3/8-16X1-IN)	
	16	1	**0S-1601**	1	BOLT (5/8-18X2.75-IN)	
	17	2	**104-6202**	2	CLIP	
	18	1	**132-5789**	3	CLIP	
	19	2	**1J-9671**	1	SEAL-O-RING	
	20	2	**3J-1907**	1	SEAL-O-RING	
	21	1,2	**4P-7428**	3	CLIP	
	22	2	**4P-7429**	2	CLIP	
	23	1,2	**4P-7581**	3	CLIP	
	24	1	**4P-7582**	1	CLIP	
	25	1	**4P-8134**	3	CLIP	
	26	2	**5C-6266**	2	BOLT (5/8-11X1-IN)	
	27	1	**5M-2894**	2	WASHER-HARD (10.2X18.5X2.5-MM THK)	
	28	1	**5P-8247**	1	WASHER-HARD (17X32X3.5-MM THK)	

222-7860 **WIRING GP-ENGINE** *(contd.)* **i02247418**

NOTE	REF NO	GRAPHIC REF	PART NUMBER	QTY	PART NAME 1 2 3 4 5 6 (PRODUCT LEVEL)	SEE PAGE
	29	1	**6D-4244**	2	CLIP	
	30	1	**6V-8188**	1	NUT (1/2-13-THD)	
	31	1,2	**7K-1181**	42	STRAP-CABLE	
M	32	1	**7X-2539**	3	BOLT (M8X1.25X110-MM)	
	33	1	**8T-4121**	3	WASHER-HARD (11X21X2.5-MM THK)	
	34	2	**8T-4122**	2	WASHER-HARD (17X32X3.5-MM THK)	
M	35	1	**8T-4136**	1	BOLT (M10X1.5X25-MM)	
M	36	1	**8T-4137**	2	BOLT (M10X1.5X20-MM)	
M	37	2	**8T-4138**	4	BOLT (M6X1X20-MM)	
	38	1	**8T-4223**	1	WASHER-HARD (13.5X25.5X3-MM THK)	
	39	1,2	**8T-4224**	3	WASHER-HARD (8.8X16X2-MM THK)	
	40	2	**9X-8256**	4	WASHER (6.6X12X2-MM THK)	

B-USE AS REQUIRED
E-ORDER BY THE CENTIMETER
M-METRIC PART
Y-SEPARATE ILLUSTRATION

REFER TO ALL ILLUSTRATIONS OF
THIS GROUP FOR AUXILIARY VIEWS

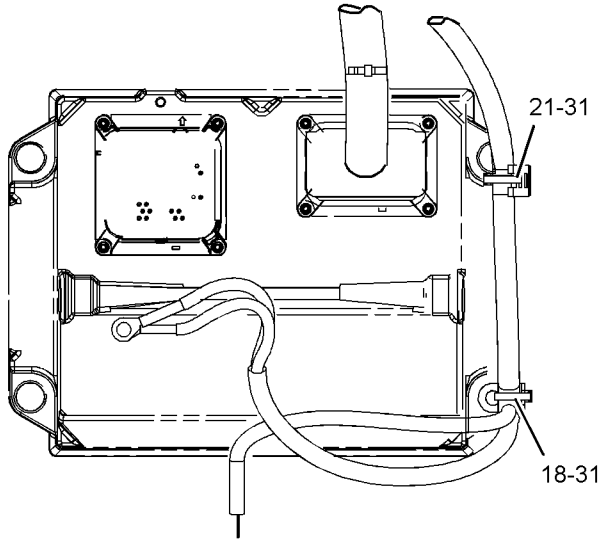

VIEW OF AREA C
(ECM CLIP POINTS)

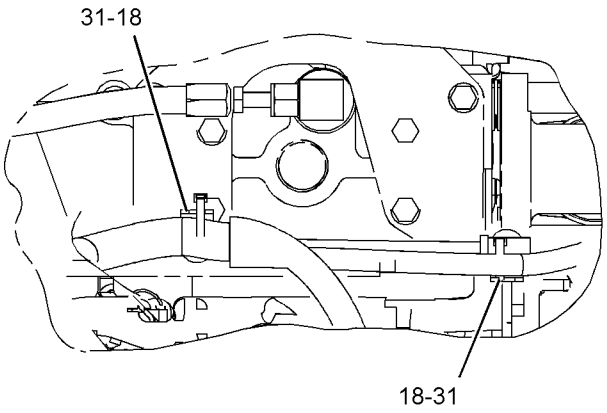

SECTION B-B

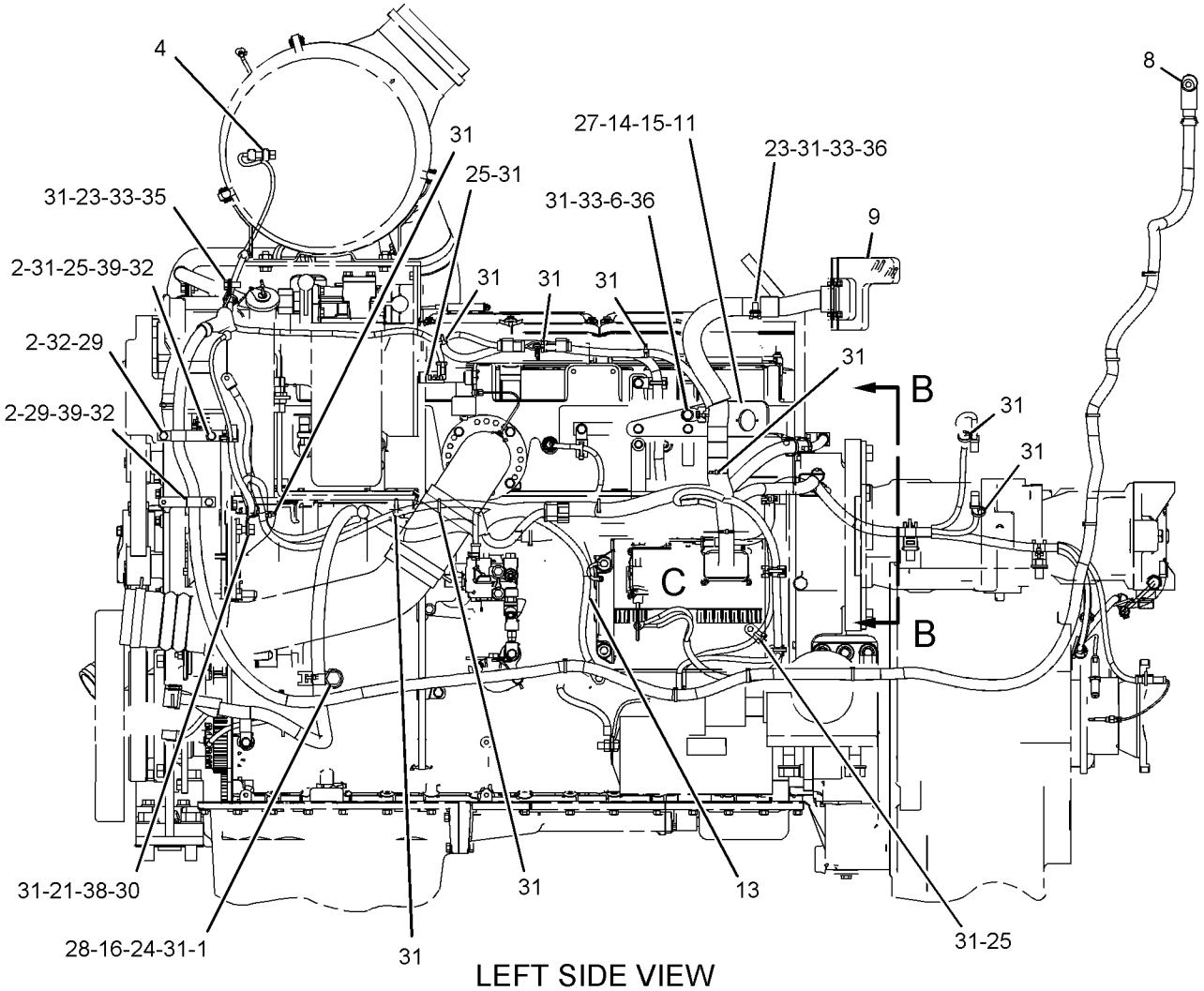

LEFT SIDE VIEW

GRAPHIC #1 g01118140

REFER TO ALL ILLUSTRATIONS OF
THIS GROUP FOR AUXILIARY VIEWS

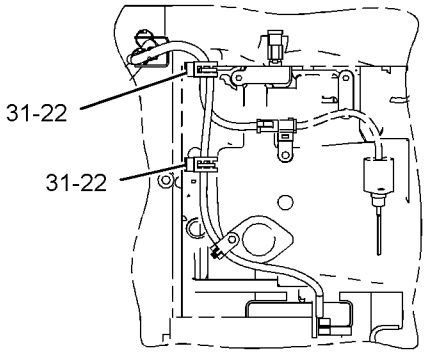

SECTION D-D

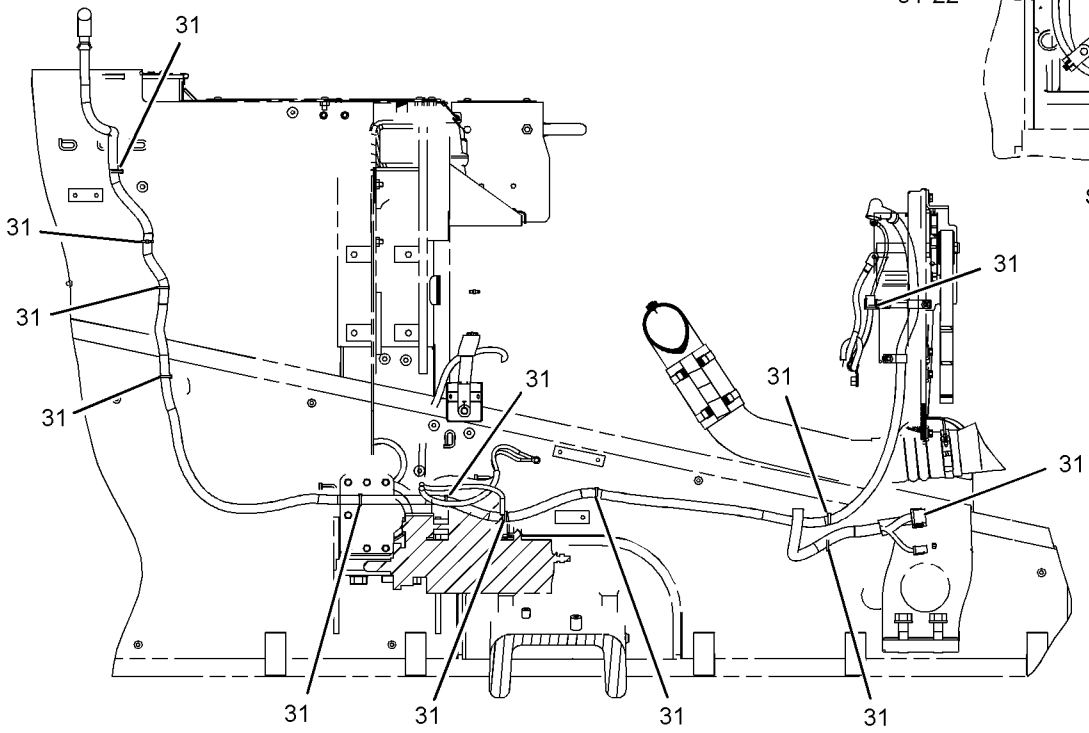

SECTION A-A

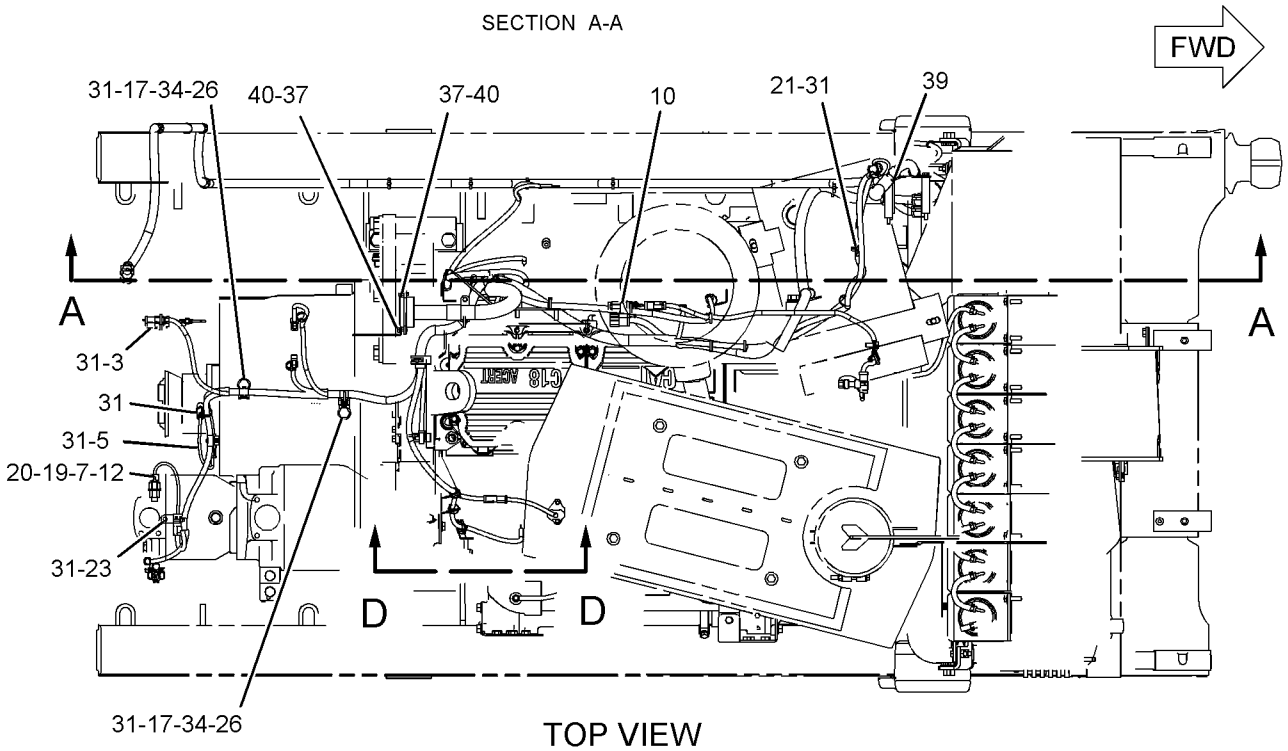

TOP VIEW

GRAPHIC #2 **<END>** g01118141

250-0875 WIRING GP-GRADE CONTROL

S/N: RJS1-UP

PART OF 245-4623 INSTALLATION AR-GRADE CONTROL

AN ATTACHMENT

SMCS-1408 **i02204723**

NOTE	REF NO	GRAPHIC REF	PART NUMBER	QTY	PART NAME 1 2 3 4 5 6 (PRODUCT LEVEL)	SEE PAGE
	1	1	**1Q-1592**	1	PLATE AS	
	2	1	**6S-4039**	2	GROMMET	
	3	1	**250-1832**	1	HARNESS AS-SENSOR (CYLINDER POSITION, RH)	
		1	**102-8804**	1	KIT-RECEPTACLE (4-PIN)	
		1	**102-8805**	1	KIT-RECEPTACLE (6-PIN)	
					(EACH KIT INCLUDES RECEPTACLE AS & WEDGE)	
		1	**155-2271**	1	KIT-CONNECTING PLUG (4-PIN)	
					(INCLUDES PLUG AS & WEDGE)	
	4	1	**250-1843**	1	HARNESS AS-SENSOR (INCLINATION, RECEIVER, LH)	
		1	**102-8804**	1	KIT-RECEPTACLE (4-PIN)	
		1	**102-8805**	1	KIT-RECEPTACLE (6-PIN)	
					(EACH KIT INCLUDES RECEPTACLE AS & WEDGE)	
	5	1	**250-1846**	1	HARNESS AS-FRONT CHASSIS	
		1	**102-8802**	2	KIT-RECEPTACLE (2-PIN)	
		1	**102-8803**	2	KIT-RECEPTACLE (3-PIN)	
		1	**102-8804**	3	KIT-RECEPTACLE (4-PIN)	
		1	**102-8805**	2	KIT-RECEPTACLE (6-PIN)	
		1	**102-8801**	1	KIT-RECEPTACLE (12-PIN)	
		1	**190-7615**	1	KIT-RECEPTACLE (12-PIN)	
		1	**190-7615**	1	KIT-RECEPTACLE (12-PIN)	
					(EACH KIT INCLUDES RECEPTACLE AS & WEDGE)	
		1	**155-2270**	1	KIT-CONNECTING PLUG (2-PIN)	
		1	**174-0503**	2	KIT-CONNECTING PLUG (3-PIN)	
		1	**155-2260**	2	KIT-CONNECTING PLUG (3-PIN)	
		1	**155-2270**	6	KIT-CONNECTING PLUG (2-PIN)	
		1	**155-2271**	3	KIT-CONNECTING PLUG (4-PIN)	
		1	**155-2274**	2	KIT-CONNECTING PLUG (6-PIN)	
					(EACH KIT INCLUDES PLUG AS & WEDGE)	
	6	1	**253-0040**	1	HARNESS AS-RADIO (RECEIVER)	
		1	**155-2255**	1	KIT-CONNECTING PLUG (12-PIN)	
					(INCLUDES PLUG AS & WEDGE)	
	7	1	**253-0241**	1	HARNESS AS-MONITOR (ACCUGRADE)	
		1	**102-8801**	1	KIT-RECEPTACLE (12-PIN)	
		1	**190-7615**	1	KIT-RECEPTACLE (12-PIN)	
					(EACH KIT INCLUDES RECEPTACLE AS & WEDGE)	
	8	1	**256-9989**	1	HARNESS AS-PLATFORM	
		1	**102-8804**	1	KIT-RECEPTACLE (4-PIN)	
		1	**102-8801**	1	KIT-RECEPTACLE (12-PIN)	
					(EACH KIT INCLUDES RECEPTACLE AS & WEDGE)	
		1	**174-0503**	2	KIT-CONNECTING PLUG (3-PIN)	
		1	**155-2255**	2	KIT-CONNECTING PLUG (12-PIN)	
		1	**155-2265**	1	KIT-CONNECTING PLUG (8-PIN)	
		1	**155-2271**	2	KIT-CONNECTING PLUG (4-PIN)	
		1	**174-0503**	2	KIT-CONNECTING PLUG (3-PIN)	
					(EACH KIT INCLUDES PLUG AS & WEDGE)	
		1	**8T-8736**	1	RECEPTACLE-CONNECTOR (9-PIN)	
	9	1	**261-6652**	1	HARNESS AS-CONTROL (ACCUGRADE)	
		1	**102-8806**	1	KIT-RECEPTACLE (8-PIN)	
					(INCLUDES RECEPTACLE AS & WEDGE)	
		1	**155-2271**	1	KIT-CONNECTING PLUG (4-PIN)	
					(INCLUDES PLUG AS & WEDGE)	
		1	**9X-4385**	1	PLUG AS-CONNECTOR	
	10	1	**130-5300**	3	CLIP	
	11	1	**132-5789**	1	CLIP	
	12	1	**148-9263**	2	GROMMET-SPLIT	

250-0875 **WIRING GP-GRADE CONTROL** *(contd.)* **i02204723**

NOTE	REF NO	GRAPHIC REF	PART NUMBER	QTY	PART NAME 1 2 3 4 5 6 (PRODUCT LEVEL)	SEE PAGE
	13	1	**2Y-5429**	2	GROMMET	
	14	1	**4P-7428**	1	CLIP	
	15	1	**4P-8134**	5	CLIP	
	16	1	**7K-1181**	55	STRAP-CABLE	
	17	1	**7X-0582**	2	WASHER-HARD (20X44.5X6-MM THK)	
	18	1	**8T-9397**	2	BOLT (3/4-10X1.25-IN)	

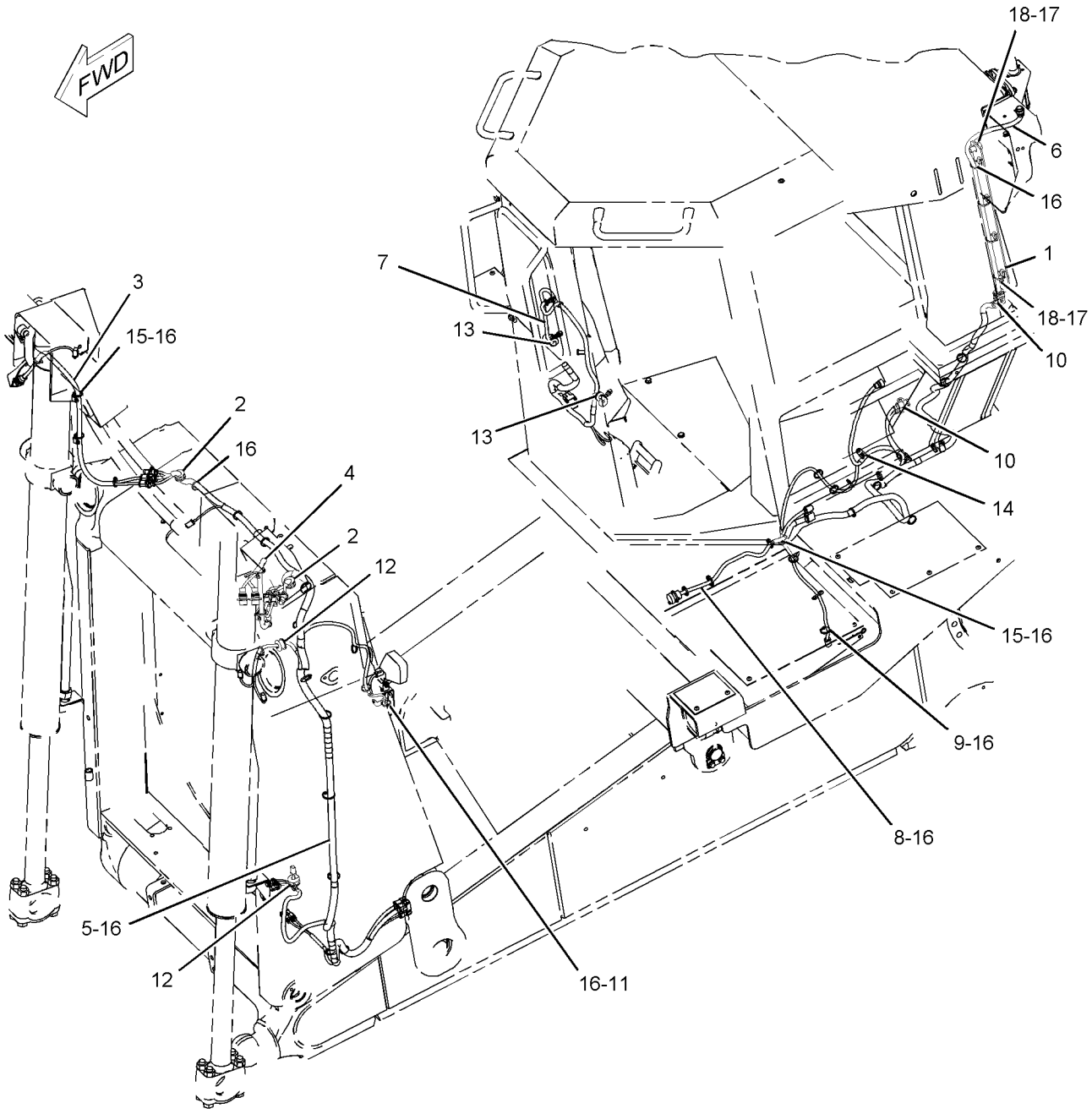

GRAPHIC #1 **<END>** g01124253

ELECTRICAL AND STARTING SYSTEM

205-8579 WIRING GP-PLATFORM

S/N: RJS1-UP

PART OF 214-4193 PLATFORM AR

SMCS-1408 **i02241574**

NOTE	REF NO	GRAPHIC REF	PART NUMBER	QTY	PART NAME 1 2 3 4 5 6 (PRODUCT LEVEL)	SEE PAGE
	1	1	**3E-5239**	2	RELAY AS (24-VOLT) (CAB CONNECTION)	
Y	2	1	**3E-6328**	1	ALARM GP (24-VOLT) (ACTION)	170
	3	1	**6I-1418**	8	SPACER (8.2X12.7X28.7-MM THK)	
	4	1	**6T-7058**	1	LENS-RED (ACTION LIGHT)	
	5	1	**7N-1996**	1	LAMP (24-VOLT) (ACTION LIGHT)	
	6	1	**8T-9655**	16	MOUNT-ISOLATION	
	7	1	**117-2311**	1	RECEPTACLE AS-POWER (12-VOLT)	
Y	8	1	**158-6632**	1	SWITCH GP-PUSH BUTTON (HORN)	276
	9	1	**170-3461**	1	LAMP AS-INDICATOR (ACTION LIGHT)	
		1	**3T-0304**	1	BASE-INDICATOR LIGHT	
E		1	**9X-1813**		SLEEVE (8-CM)	
		1	**102-8802**	1	KIT-RECEPTACLE (2-PIN)	
					(INCLUDES RECEPTACLE AS & WEDGE)	
	10	1	**204-2281**	9	TIE	
	11	1	**204-8000**	7	ANCHOR-TIE	
	12	1	**209-0381**	1	CONVERTER-POWER (24-VOLT TO 12-VOLT)	
	13	1	**210-3301**	1	HARNESS AS-PLATFORM	
		1	**102-8805**	1	KIT-RECEPTACLE (6-PIN)	
		1	**177-9653**	2	KIT-RECEPTACLE (4-PIN)	
		1	**102-8803**	1	KIT-RECEPTACLE (3-PIN)	
		1	**177-9653**	2	KIT-RECEPTACLE (4-PIN)	
		1	**102-8806**	1	KIT-RECEPTACLE (8-PIN)	
		1	**102-8801**	1	KIT-RECEPTACLE (12-PIN)	
		1	**166-5229**	1	KIT-RECEPTACLE (12-PIN)	
					(EACH INCLUDES RECEPTACLE AS & WEDGE)	
		1	**155-2270**	1	KIT-CONNECTING PLUG (2-PIN)	
		1	**155-2260**	1	KIT-CONNECTING PLUG (3-PIN)	
		1	**174-0503**	3	KIT-CONNECTING PLUG (3-PIN)	
		1	**155-2271**	2	KIT-CONNECTING PLUG (4-PIN)	
		1	**177-9656**	2	KIT-CONNECTING PLUG (4-PIN)	
		1	**155-2274**	3	KIT-CONNECTING PLUG (6-PIN)	
		1	**155-2265**	1	KIT-CONNECTING PLUG (8-PIN)	
		1	**155-2255**	3	KIT-CONNECTING PLUG (12-PIN)	
		1	**155-2256**	1	KIT-CONNECTING PLUG (12-PIN)	
					(EACH INCLUDES PLUG AS & WEDGE)	
		1	**214-4208**	2	RECEPTACLE AS (70-PIN)	
		1	**134-2540**	3	RECEPTACLE AS (3-PIN)	
		1	**9X-1054**	2	PLUG AS-CONNECTOR (4-PIN)	
		1	**3E-5519**	1	PLUG AS-CONNECTOR (5-PIN)	
		1	**147-1445**	2	PLUG AS-CONNECTOR (70-PIN)	
		1	**147-1446**	2	PLUG AS-CONNECTOR (70-PIN)	
		1	**160-7689**	4	PLUG AS-CONNECTOR (70-PIN)	
	14	1	**211-4232**	1	HARNESS AS-MONITOR (ADVISOR)	
		1	**102-8804**	1	KIT-RECEPTACLE (4-PIN)	
		1	**102-8801**	1	KIT-RECEPTACLE (12-PIN)	
					(EACH INCLUDES RECEPTACLE AS & WEDGE)	
		1	**147-1444**	1	PLUG AS-CONNECTOR (70-PIN)	
	15	1	**216-1319**	1	HARNESS AS-DASH	
		1	**102-8801**	1	KIT-RECEPTACLE (12-PIN)	
					(INCLUDES RECEPTACLE AS & WEDGE)	
		1	**155-2270**	1	KIT-CONNECTING PLUG (2-PIN)	
		1	**155-2260**	2	KIT-CONNECTING PLUG (3-PIN)	
		1	**155-2271**	1	KIT-CONNECTING PLUG (4-PIN)	
		1	**155-2274**	1	KIT-CONNECTING PLUG (6-PIN)	
		1	**155-2257**	1	KIT-CONNECTING PLUG (12-PIN)	

205-8579 **WIRING GP-PLATFORM** *(contd.)* **i02241574**

NOTE	REF NO	GRAPHIC REF	PART NUMBER	QTY	PART NAME 1 2 3 4 5 6 (PRODUCT LEVEL)	SEE PAGE
		1	**155-2255**	1	KIT-CONNECTING PLUG (12-PIN)	
					(EACH INCLUDES PLUG AS & WEDGE)	
		1	**214-4208**	1	RECEPTACLE AS (70-PIN)	
		1	**190-7613**	1	RECEPTACLE AS (12-PIN)	
		1	**7X-6222**	1	PLUG AS-CONNECTOR (24-PIN)	
Y	16	1	**223-8176**	1	PANEL GP-FUSE	226
	17	1	**223-8177**	1	HARNESS AS-CONSOLE	
		1	**102-8805**	1	KIT-RECEPTACLE (6-PIN)	
		1	**102-8803**	2	KIT-RECEPTACLE (3-PIN)	
		1	**102-8804**	1	KIT-RECEPTACLE (4-PIN)	
		1	**102-8801**	1	KIT-RECEPTACLE (12-PIN)	
					(EACH INCLUDES RECEPTACLE AS & WEDGE)	
		1	**155-2270**	2	KIT-CONNECTING PLUG (2-PIN)	
		1	**155-2260**	2	KIT-CONNECTING PLUG (3-PIN)	
		1	**155-2271**	2	KIT-CONNECTING PLUG (4-PIN)	
		1	**180-0050**	2	KIT-CONNECTING PLUG (4-PIN)	
		1	**155-2255**	1	KIT-CONNECTING PLUG (12-PIN)	
		1	**155-2274**	1	KIT-CONNECTING PLUG (6-PIN)	
					(EACH INCLUDES PLUG AS & WEDGE)	
		1	**214-4208**	1	RECEPTACLE AS (70-PIN)	
		1	**9X-0196**	1	TERMINAL AS	
	18	1	**224-9222**	1	BRACKET	
	19	1	**252-5879**	1	MODULE GP-DISPLAY (INSTRUMENT CLUSTER)	
	20	1	**227-3118**	1	PLUG AS-CODE (IMPLEMENT)	
		1	**9G-3695**	3	PLUG (GROMMET SEALING)	
		1	**102-8805**	1	KIT-RECEPTACLE (6-PIN)	
					(INCLUDES RECEPTACLE AS & WEDGE)	
	21	1	**228-6089**	8	PLUG	
	22	1	**229-0774**	1	SWITCH AS-ROCKER (CYLINDER LIGHT)	
	23	1	**262-1408**	2	CONTROL GP-UNPROGRAMMED (DRIVE TRAIN)	
M	24	1	**107-3786**	4	BOLT (M4X0.7X12-MM)	
	25	1	**110-7887**	1	SWITCH GP-START (KEY)	
		1	**7T-6799**	1	NUT-MOUNTING (1-32-THD)	
		1	**186-3735**	4	PIN-CONNECTOR	
		1	**102-8804**	1	KIT-RECEPTACLE (4-PIN)	
					(INCLUDES RECEPTACLE AS & WEDGE)	
	26	1	**130-5300**	4	CLIP	
	27	1	**156-6175**	1	CLIP	
	28	1	**254-8195**	1	MODULE GP-DISPLAY (ADVISOR)	
	29	1	**222-7877**	1	SWITCH AS-ROCKER (THROTTLE)	
	30	1	**222-7879**	1	SWITCH AS-ROCKER (BI-DIRECTIONAL SHIFT)	
	31	1	**222-7880**	1	SWITCH AS-ROCKER (AUTO DOWN SHIFT)	
	32	1	**222-7883**	1	SWITCH AS-ROCKER (HYDRAULIC LOCKOUT)	
	33	1	**222-7884**	1	SWITCH AS-ROCKER (FENDER LIGHT)	
	34	1	**4P-7581**	2	CLIP	
	35	1	**4P-8134**	8	CLIP	
M	36	1	**5C-9553**	1	BOLT (M6X1X16-MM)	
M	37	1	**5P-7970**	2	NUT (M8X1.25-THD)	
	38	1	**7K-1181**	33	STRAP-CABLE	
M	39	1	**7X-0818**	8	BOLT (M8X1.25X45-MM)	
M	40	1	**8T-0326**	6	BOLT (M5X0.5X25-MM)	
	41	1	**8T-0328**	6	WASHER-HARD (5.5X10X1-MM THK)	
	42	1	**8T-4121**	18	WASHER-HARD (11X21X2.5-MM THK)	
M	43	1	**8T-4136**	11	BOLT (M10X1.5X25-MM)	
M	44	1	**8T-4137**	5	BOLT (M10X1.5X20-MM)	
M	45	1	**8T-4138**	14	BOLT (M6X1X20-MM)	
M	46	1	**8T-4191**	2	BOLT (M10X1.5X16-MM)	
M	47	1	**8T-4200**	6	BOLT (M8X1.25X16-MM)	
	48	1	**8T-4224**	10	WASHER-HARD (8.8X16X2-MM THK)	

205-8579 **WIRING GP-PLATFORM** ***(contd.)*** **i02241574**

NOTE	REF NO	GRAPHIC REF	PART NUMBER	QTY	PART NAME 1 2 3 4 5 6 (PRODUCT LEVEL)	SEE PAGE
M	49	1	**8T-4908**	2	BOLT (M8X1.25X25-MM)	
	51	1	**9N-0869**	16	WASHER-HARD (8.8X25.5X2-MM THK)	
M	52	1	**9X-1046**	2	SCREW (M4X0.7X18-MM)	
M	53	1	**9X-2042**	8	SCREW-TRUSS HEAD (M6X1X12-MM)	
	54	1	**9X-8256**	19	WASHER (6.6X12X2-MM THK)	
	55	1	**246-4311**	1	GUARD (SWITCH)	
	56	1	**227-3118**	1	PLUG AS-CODE (POWER TRAIN)	
		1	**9G-3695**	3	PLUG (GROMMET SEALING)	
		1	**102-8805**	1	KIT-RECEPTACLE (6-PIN)	
					(INCLUDES RECEPTACLE AS & WEDGE)	

E-ORDER BY THE CENTIMETER
M-METRIC PART
Y-SEPARATE ILLUSTRATION

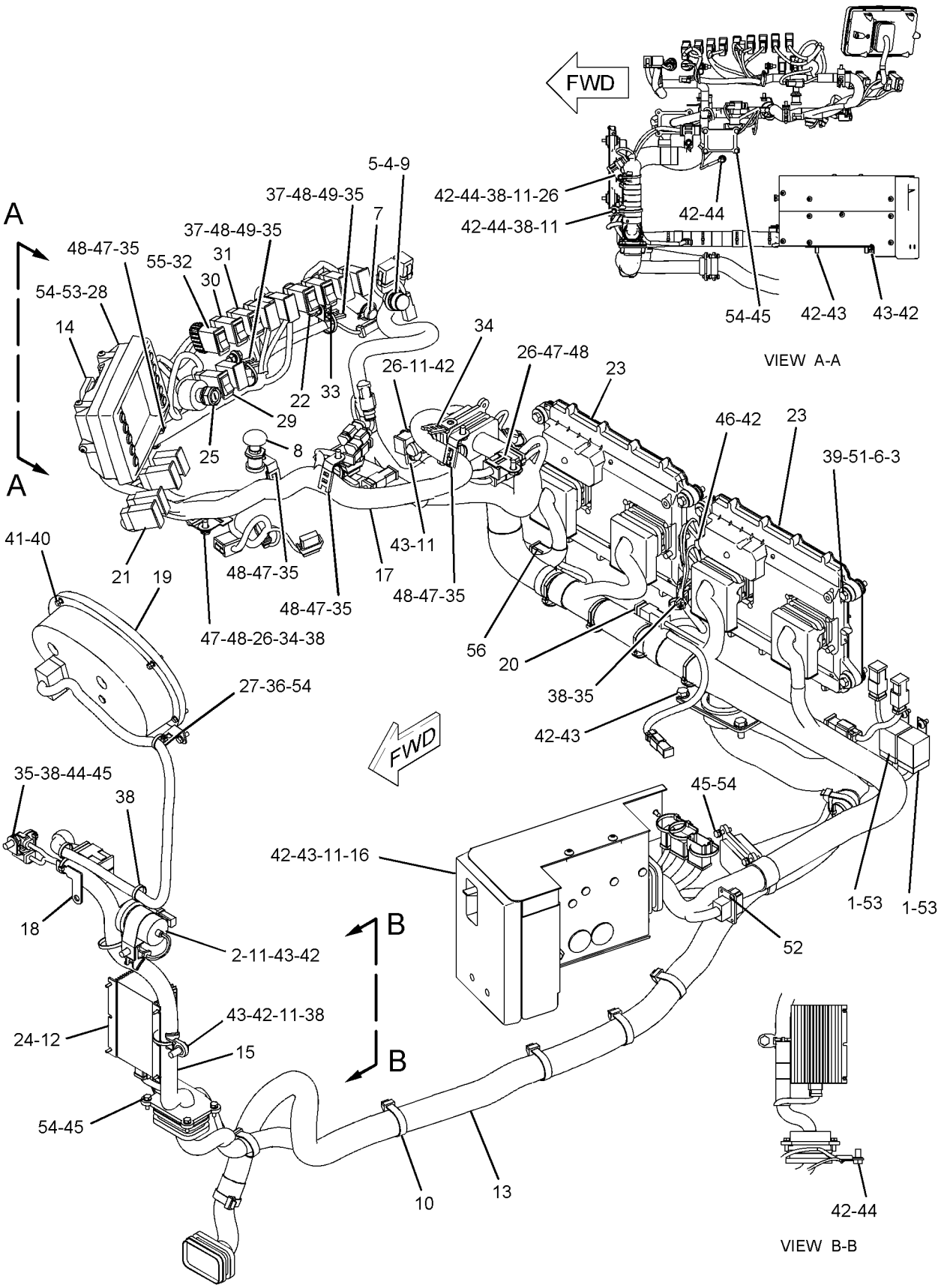

GRAPHIC #1 **<END>** g01127383

ELECTRICAL AND STARTING SYSTEM

257-4183 WIRING GP-UNIT INJECTOR

S/N: RJS1-UP

FOR USE WITH SERVICE REPAIR FOR INJECTOR HARNESSES, 7E-6513 CONNECTOR AS FIELD INSTALLATION

SMCS-1290, 1408 **i02231604**

NOTE	PART NUMBER	QTY	PART NAME 1 2 3 4 5 6 (PRODUCT LEVEL)	SEE PAGE
			(NO SERVICED PARTS)	

<END>

9W-9154 AXLE GP

S/N: RJS1-UP

PART OF 205-8605 POWER TRAIN AR

SMCS-3282 **i02247433**

NOTE	REF NO	GRAPHIC REF	PART NUMBER	QTY	PART NAME 1 2 3 4 5 6 (PRODUCT LEVEL)	SEE PAGE
	1	1	**104-3132**	1	SHAFT AS (RH)	
	2	1	**8E-0618**	1	BEARING-THRUST	
	3	1	**8E-3523**	1	SHAFT AS (LH)	
	4	1	**8E-0618**	1	BEARING-THRUST	
	5	1	**7D-7705**	2	RING-RETAINING	

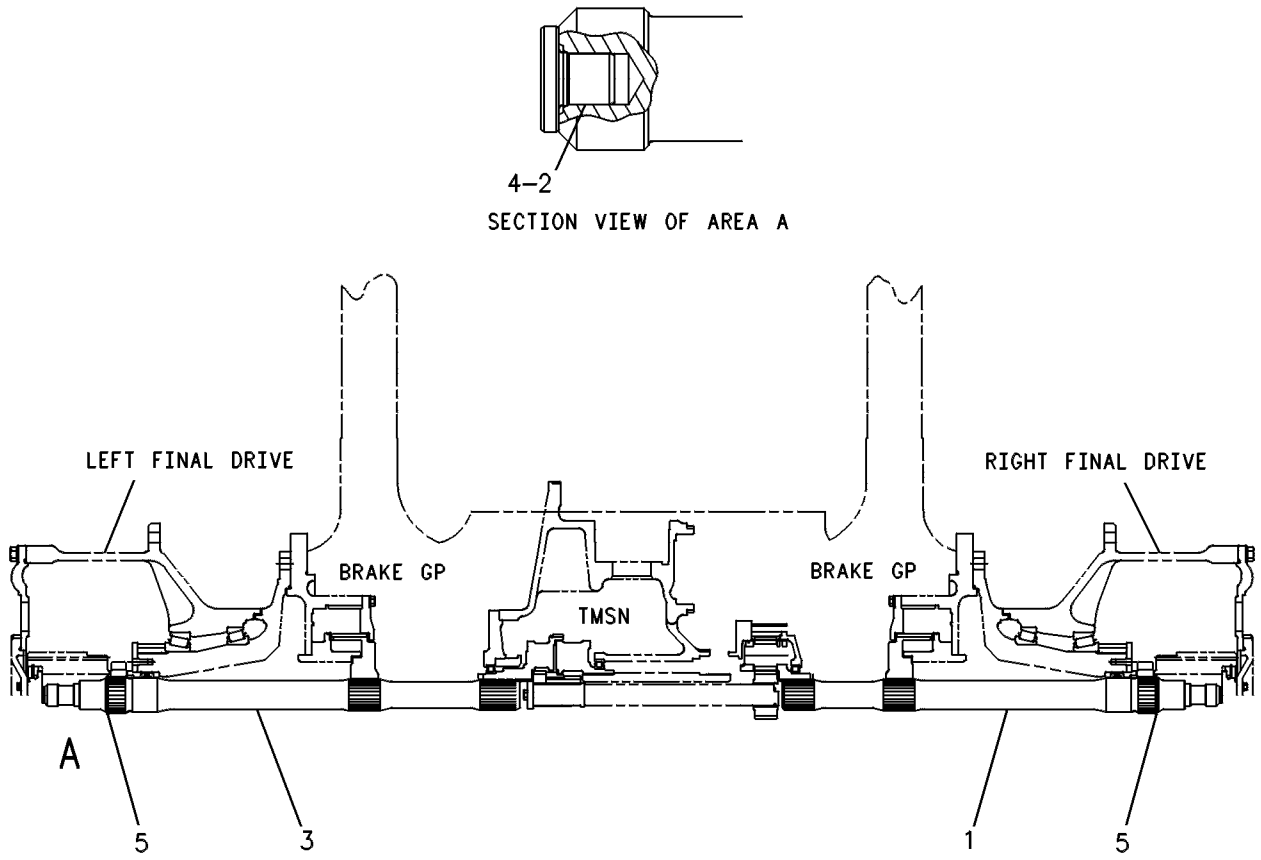

GRAPHIC #1 **<END>** g00240040

202-2723 CASE & PARTS GP-PLANETARY

S/N: DXK1-UP

PART OF 202-2719 TRANSMISSION AR

SMCS-3064 **i02247734**

NOTE	REF NO	GRAPHIC REF	PART NUMBER	QTY	PART NAME 1 2 3 4 5 6 (PRODUCT LEVEL)	SEE PAGE
	1	1	**5P-7815**	3	SEAL-O-RING	
	2	1	**9S-4191**	3	PLUG	
	3	1	**6V-5049**	4	SEAL-O-RING	
	4	1	**9S-6130**	3	PLUG	
	5	1	**6V-3965**	1	FITTING AS	
	6	1	**6V-0852**	1	CAP-DUST (QUICK DISCONNECT)	
	7	1	**030-8535**	6	BOLT-LOCKING (3/8-16X0.875-IN)	
	8	1	**172-4275**	1	COVER	
	9	1	**186-3161**	1	GASKET-COVER	
	10	1	**202-2725**	1	COVER AS	
	11	1	**9M-9647**	3	SEAL-O-RING	
	12	1	**6V-8625**	2	ELBOW	
	13	1	**6Y-9108**	1	TUBE AS	
	14	1	**6Y-9107**	1	TUBE AS	
	15	1	**6V-8639**	1	CONNECTOR	
	16	1	**8T-1686**	1	ELBOW	
	17	1	**7G-5751**	1	SLEEVE	
	18	1	**5K-9107**	1	BOLT-LOCKING (3/8-16X0.75-IN)	
	19	1	**5K-5120**	1	STRIP	
	20	1	**8M-2530**	4	BOLT-12 POINT HEAD (1/2-13X1.25-IN)	
	21	1	**2J-3118**	19	BOLT-LOCKING (3/8-16X1.25-IN)	
	22	1	**7W-3447**	19	SPACER (10.2X19.05X10.2-MM THK)	
	23	1	**0S-1589**	15	BOLT (5/8-11X1.75-IN)	
	24	1	**5P-8247**	15	WASHER-HARD (17X32X3.5-MM THK)	
	25	1	**5P-9519**	1	SEAL-O-RING	
	26	1	**6L-9284**	1	SEAL-O-RING	
	27	1	**8S-9130**	1	SCREEN-SUCTION	
	28	1	**6L-9965**	1	SEAL-O-RING	
Y	29	1	**106-4150**	1	DRAIN GP-ECOLOGY (TRANSMISSION CASE)	303
	30	1	**8T-2501**	4	BOLT (3/8-16X2-IN)	
	31	1	**8P-0058**	1	GASKET-COVER	
	32	1	**9G-8615**	1	COVER	
	33	1	**6Y-9101**	1	CASE AS-TRANSMISSION	
	33A	2	**2D-6642**	2	BALL	
	33B	2	**3D-4072**	3	BALL (CHECK VALVE)	
	33C	2	**3E-4354**	1	BALL	
	33D	2	**4B-9782**	2	BALL	
	33E	2	**4B-9784**	1	BALL	
	33F	1,2	**5B-5821**	2	DOWEL	
	33G	2	**9M-4007**	1	DOWEL	
	33H	2	**6Y-9103**	1	CASE AS	
	33J	1	**1A-1135**	18	BOLT (5/8-11X2-IN)	
	33K	2	**4D-8148**	2	DOWEL	
	33L	1	**5J-5793**	17	BOLT-12 POINT HEAD (1/2-13X1.75-IN)	
	33M	1	**5P-8247**	18	WASHER-HARD (17X32X3.5-MM THK)	
	34	1	**8M-4432**	2	SEAL-O-RING	
	35	1	**8L-2786**	4	SEAL-O-RING	
	36	1	**6V-3250**	4	SEAL-O-RING	
	37	1	**8T-6762**	1	PLUG-PIPE	
	38	1	**6V-0484**	1	ADAPTER-O-RING	

Y-SEPARATE ILLUSTRATION

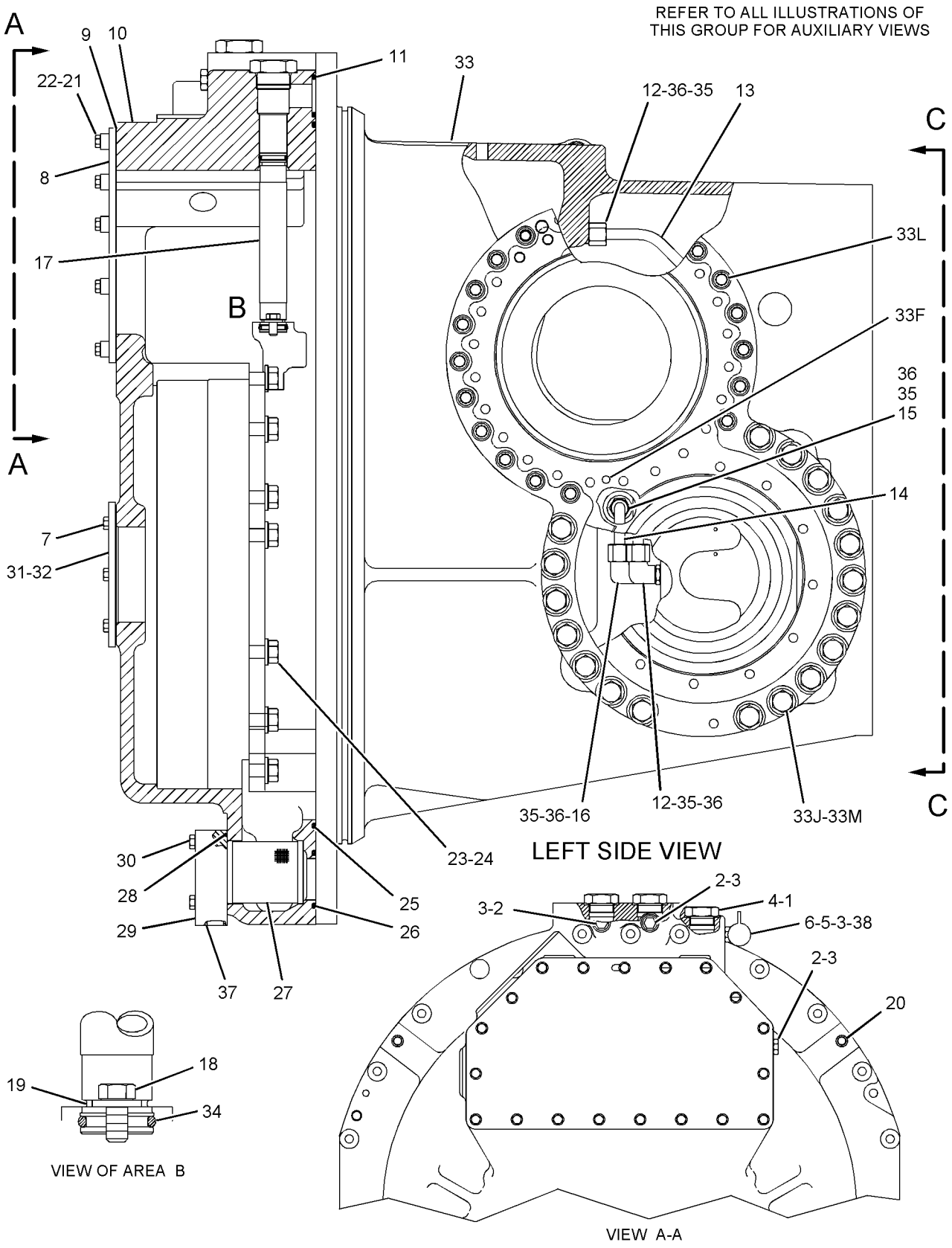

GRAPHIC #1 g01113454

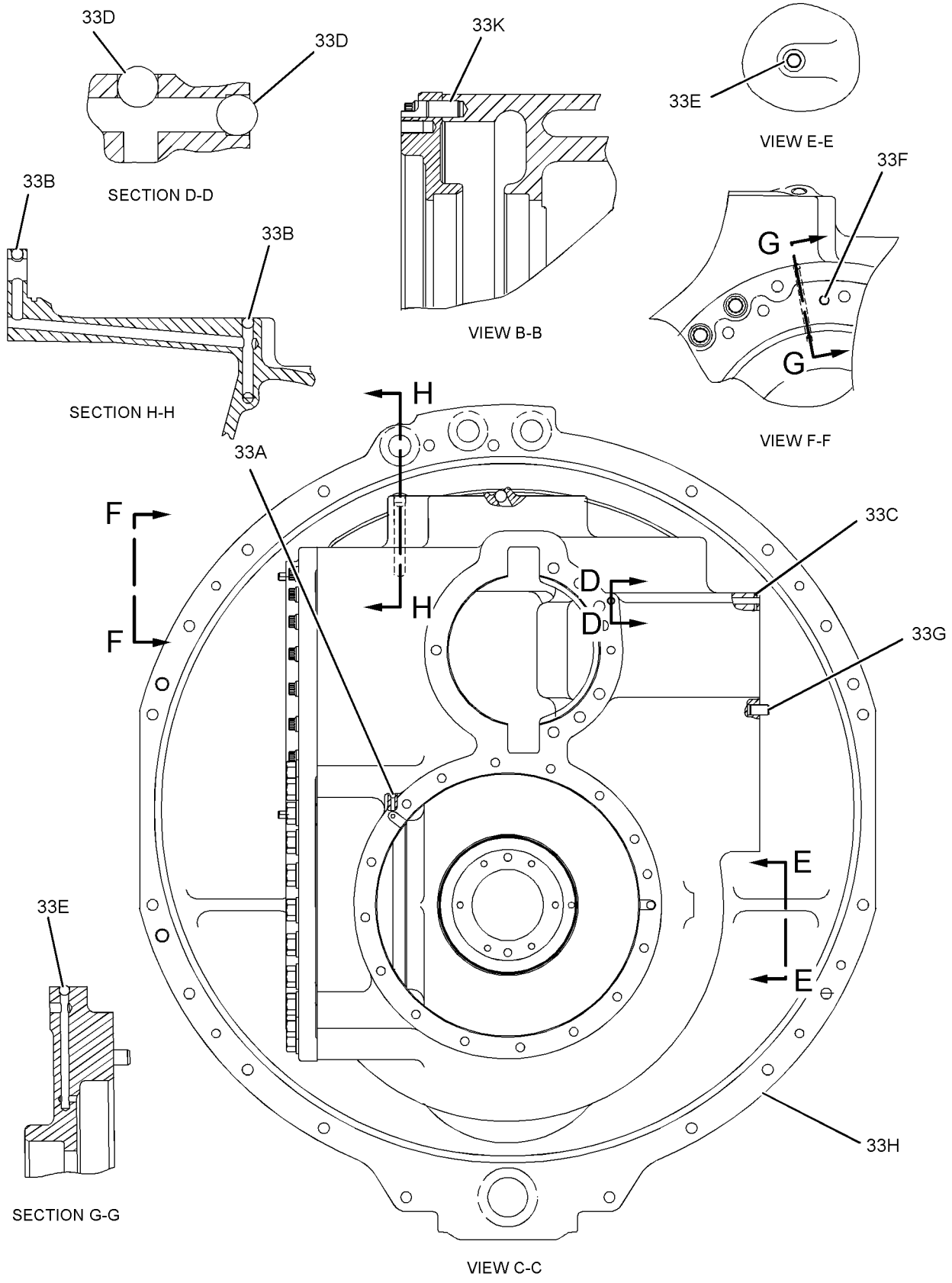

GRAPHIC #2 **<END>** g01113456

202-2721 CONTROL GP-TRANSMISSION HYD

S/N: DXK1-UP

PART OF 202-2719 TRANSMISSION AR

SMCS-3073, 3167 **i02203096**

NOTE	REF NO	GRAPHIC REF	PART NUMBER	QTY	PART NAME 1 2 3 4 5 6 (PRODUCT LEVEL)	SEE PAGE
	1	1	**206-0056**	1	HARNESS AS-TRANSMISSION	
		1	**102-8804**	1	KIT-RECEPTACLE (4-PIN)	
					(INCLUDES RECEPTACLE AS & WEDGE)	
		1	**155-2270**	7	KIT-CONNECTING PLUG (2-PIN)	
					(EACH INCLUDES PLUG AS & WEDGE)	
Y	2	1	**202-2731**	1	VALVE GP-CONTROL (TRANSMISSION)	350
	3	1	**165-7787**	1	CLIP AS	
	4	1	**132-5789**	2	CLIP	
	5	1	**3T-6457**	2	SLEEVE	
	6	1	**8M-4432**	4	SEAL-O-RING	
	7	1	**3S-2093**	4	STRAP-CABLE	
Y	8	1	**216-5338**	5	VALVE GP-MODULATING (24-VOLT) (TRANSMISSION CONTROL)	352
	9	1	**5M-2894**	4	WASHER-HARD (10.2X18.5X2.5-MM THK)	
	10	1	**0S-1619**	4	BOLT (3/8-16X3-IN)	
	11	1	**9M-1974**	13	WASHER-HARD (8.8X16X2-MM THK)	
	12	1	**1D-4540**	10	BOLT (5/16-18X2.75-IN)	
	13	1	**104-6729**	1	RETAINER	
	14	1	**104-6730**	1	GASKET	
	15	1	**1A-2029**	2	BOLT (3/8-16X1.125-IN)	
	16	1	**2H-3755**	1	BOLT (5/16-18X0.62-IN)	
	17	1	**4P-7581**	2	CLIP	
	18	1	**1B-7182**	2	BOLT (5/16-18X1.25-IN)	
	19	1	**3T-4403**	2	SPRING	
	20	1	**193-0711**	1	COVER	
	21	1	**125-5341**	1	NUT (1 1/4-18-THD)	
	22	1	**6J-2419**	1	SEAL-O-RING	

Y-SEPARATE ILLUSTRATION

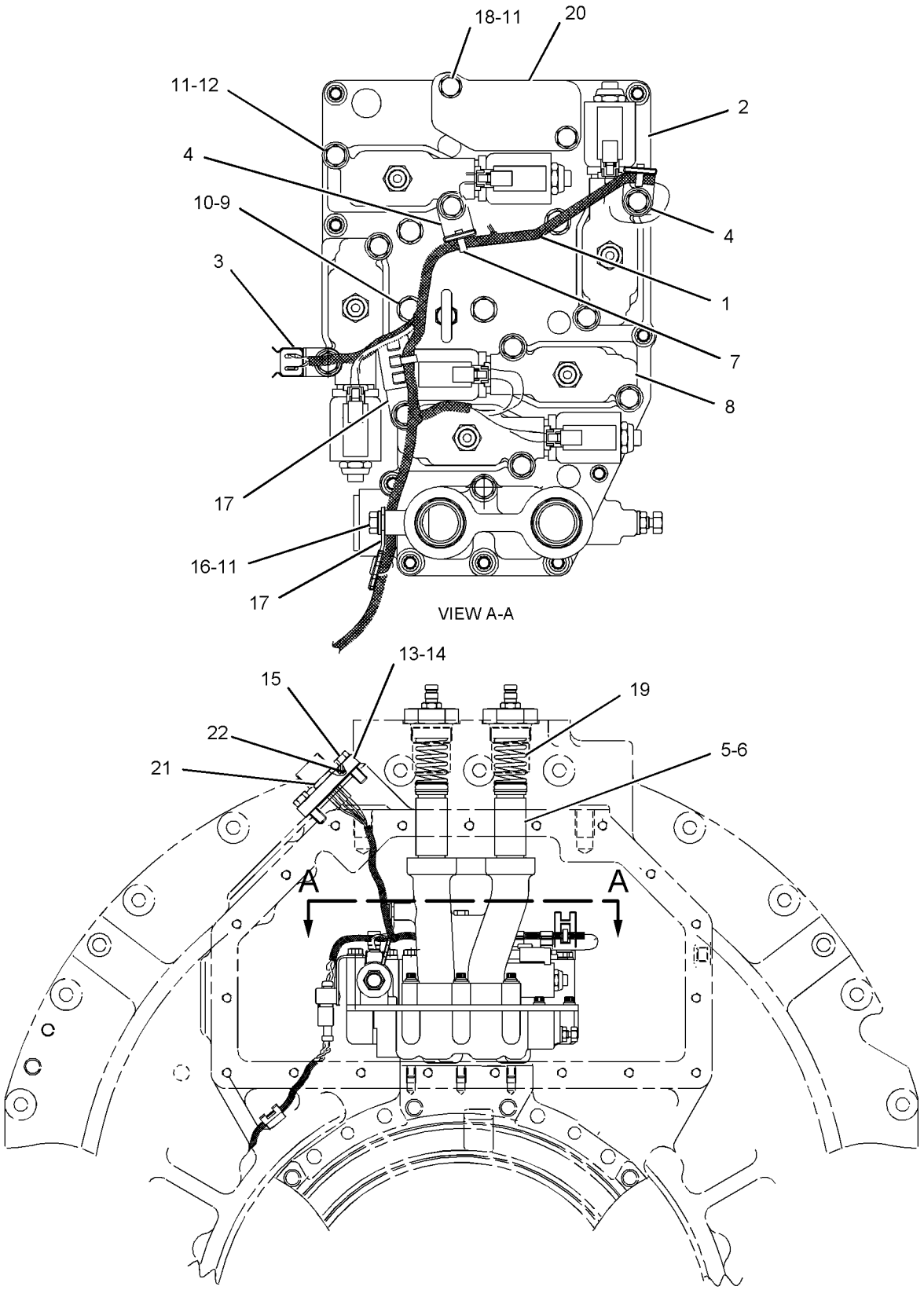

GRAPHIC #1

<END>

g01037778

205-8589 COOLER GP-TRANSMISSION OIL

S/N: RJS1-UP

PART OF 205-8604 INSTALLATION AR-ENGINE

SMCS-1375 **i01995237**

NOTE	REF NO	GRAPHIC REF	PART NUMBER	QTY	PART NAME 1 2 3 4 5 6 (PRODUCT LEVEL)	SEE PAGE
R	1	1	**101-1741**	1	CORE AS (TRANSMISSION)	
	2	1	**226-8301**	2	BRACKET AS	
	3	1	**226-8302**	2	CLAMP	
	4	1	**4L-9337**	4	BOLT (3/8-16X1.5-IN)	
	5	1	**5P-2566**	8	BOLT (1/2-13X1.5-IN)	
	6	1	**8T-4223**	8	WASHER-HARD (13.5X25.5X3-MM THK)	
	7	1	**8T-4896**	4	WASHER-HARD (10.2X18.5X2.5-MM THK)	

R-REMFG PART MAY BE AVAILABLE

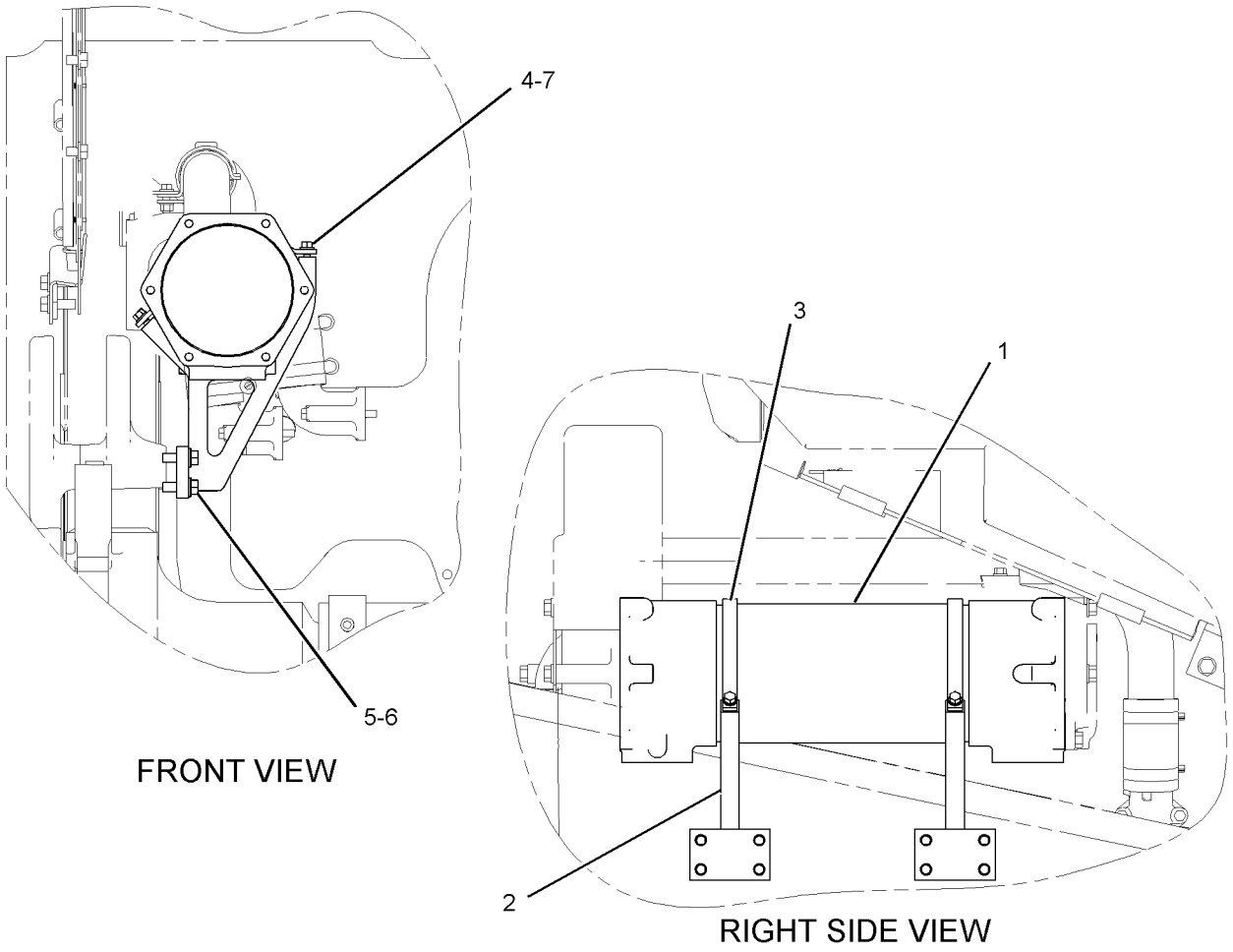

GRAPHIC #1 **<END>** g01033232

205-8617 COUPLING GP-PUMP

S/N: RJS1-UP

PART OF 205-8605 POWER TRAIN AR

SMCS-5062 **i02001114**

NOTE	REF NO	GRAPHIC REF	PART NUMBER	QTY	PART NAME 1 2 3 4 5 6 (PRODUCT LEVEL)	SEE PAGE
Y	1	1	*209-3426*	1	SLIP JOINT GP	343
	2	1	**211-9087**	2	COUPLING AS	
					(EACH INCLUDES)	
		1	**6Y-2130**	3	BUSHING AS	
		1	**211-9085**	3	BUSHING AS	
	3	1	**8T-4121**	12	WASHER-HARD (11X21X2.5-MM THK)	
M	4	1	**8T-4182**	6	BOLT (M10X1.5X45-MM)	
M	5	1	**8T-4185**	6	BOLT (M10X1.5X50-MM)	

M-METRIC PART
Y-SEPARATE ILLUSTRATION

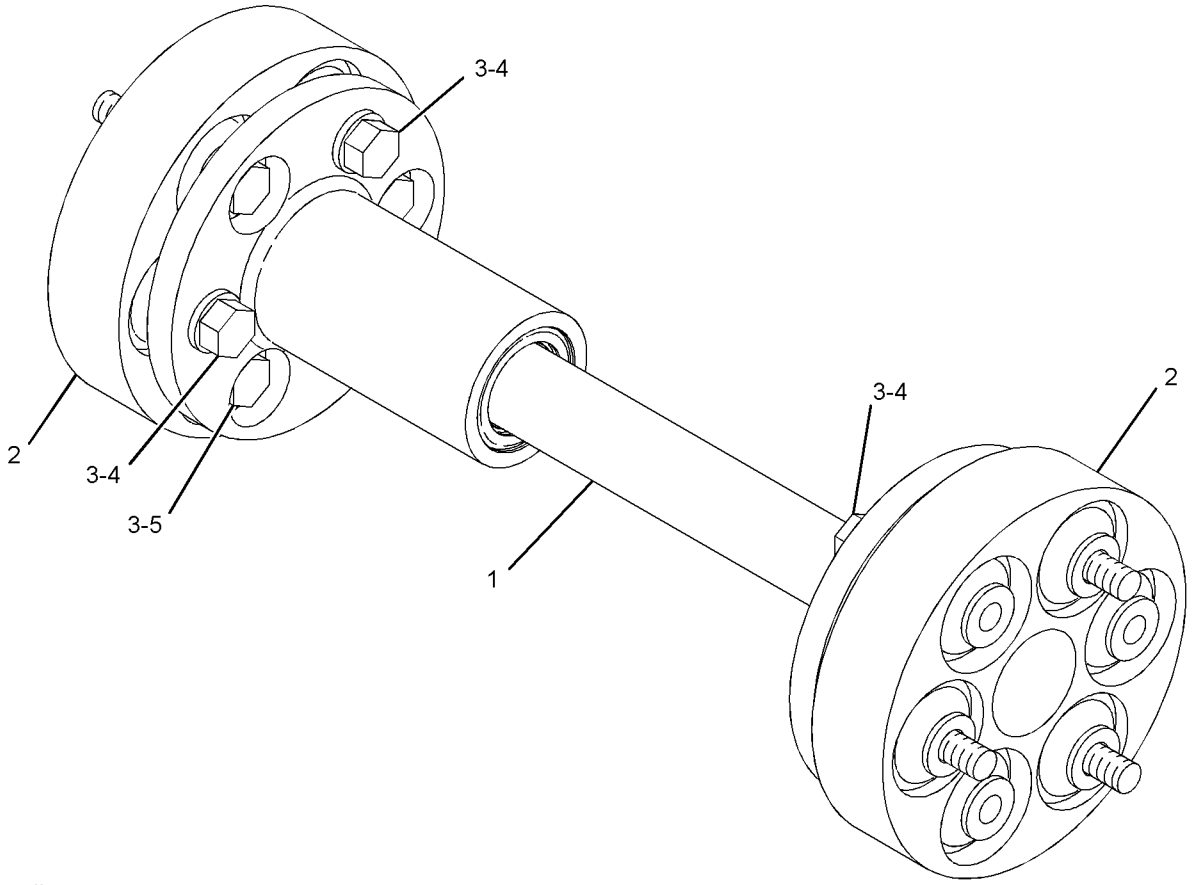

GRAPHIC #1 **<END>** g01039350

106-4150 DRAIN GP-ECOLOGY–TORQUE CONVERTER–TRANSMISSION CASE

S/N: DXK1-UP; RJS1-UP

PART OF 202-2723 CASE & PARTS GP-PLANETARY, 205-4199 TORQUE CONVERTER GP

SMCS-3100 **i02128166**

NOTE	REF NO	GRAPHIC REF	PART NUMBER	QTY	PART NAME 1 2 3 4 5 6 (PRODUCT LEVEL)	SEE PAGE
	1	1	**4N-3808**	1	PIN-SPRING	
	2	1	**5P-9658**	1	SEAL-O-RING	

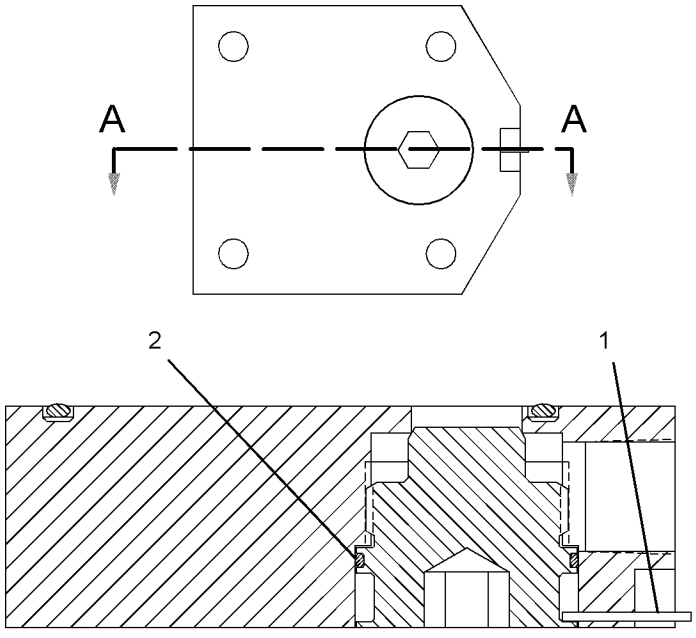

SEC-
TION
A-A

GRAPHIC #1 **<END>** g01083446

6I-3638 DRIVE GP-PUMP

S/N: RHX1-UP
LEFT HAND REARWARD FACING SAE 2 BOLT FLANGE WITH SPLINE DRIVE
PART OF 205-8603, 231-3468 ENGINE AR-COMPLETE
FOR USE WITH THE 2.5 BASE MODULE LARGE CAM GEAR TRAIN, CUSTOMER SUPPLIED SAE "A" PUMP WITH 11 TOOTH 16/32 DEPTH SPLINE
ALSO AN ATTACHMENT

SMCS-3108 **i01949792**

NOTE	REF NO	GRAPHIC REF	PART NUMBER	QTY	PART NAME 1 2 3 4 5 6 (PRODUCT LEVEL)	SEE PAGE
	1	1	**0S-1590**	3	BOLT (3/8-16X2-IN)	
	2	1	**8T-9527**	1	SEAL-O-RING	
YC	3	1	*133-9907*	1	ADAPTER GP-PUMP DRIVE	143
	4	1	**5M-2894**	4	WASHER-HARD (10.2X18.5X2.5-MM THK)	
	5	1	**9S-8752**	1	NUT-FULL (3/8-16-THD)	

C-CHANGE FROM PREVIOUS TYPE
Y-SEPARATE ILLUSTRATION

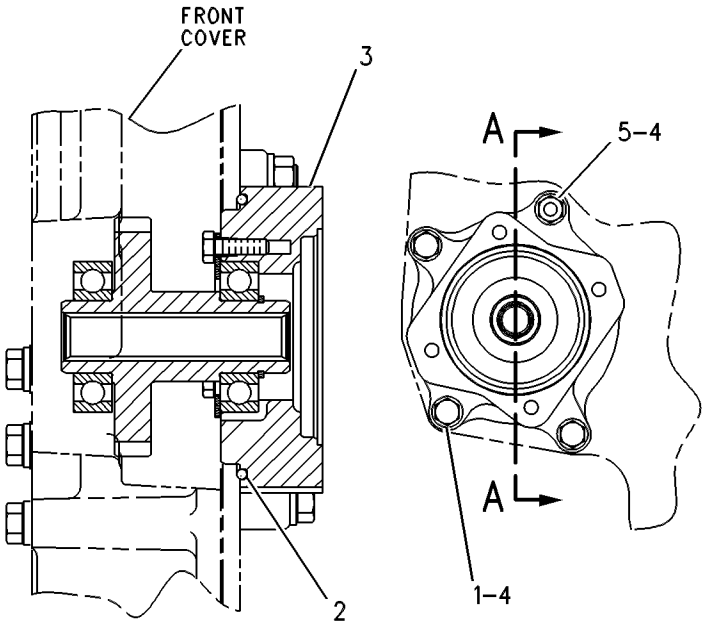

VIEW A–A

GRAPHIC #1 **<END>** g00263601

245-6555 FILTER GP-OIL–TRANSMISSION

S/N: RJS1-UP
WITH HOUSING
PART OF 205-8619 LINES GP-POWER TRAIN OIL

SMCS-3004, 3067 **i02001505**

NOTE	REF NO	GRAPHIC REF	PART NUMBER	QTY	PART NAME 1 2 3 4 5 6 (PRODUCT LEVEL)	SEE PAGE
	1	1	**1R-1809**	1	FILTER ELEMENT AS-OIL (HIGH EFFICIENCY, HYDRAULIC) (TRANSMISSION)	
	1A	1	**5P-8286**	1	SEAL-O-RING	
	3	1	**7G-4998**	1	SPOOL-BYPASS	
	4	1	**7M-1297**	1	SPRING	
	5	1	**133-2198**	1	SPRING	
	6	1	**241-3352**	1	HOUSING AS	
	6A	1	**9S-4191**	1	PLUG	
	6B	1	**3J-1907**	1	SEAL-O-RING	
	7	1	**245-6520**	1	BASE AS	
	9	1	**2S-4078**	1	SEAL-O-RING	
	10	1	**3D-2824**	1	SEAL-O-RING	
	11	1	**3J-1907**	1	SEAL-O-RING	
	12	1	**7M-8485**	1	SEAL-O-RING	
	13	1	**8T-4896**	6	WASHER-HARD (10.2X18.5X2.5-MM THK)	
	14	1	**8T-8915**	6	BOLT (3/8-16X3.25-IN)	
	15	1	**9S-4191**	1	PLUG	
	16	1	**9S-8008**	1	PLUG	
	17	1	**9S-8010**	1	PLUG	
	18	1	**9S-9334**	1	PLUG	

245-6555 **FILTER GP-OIL** *(contd.)* **i02001505**

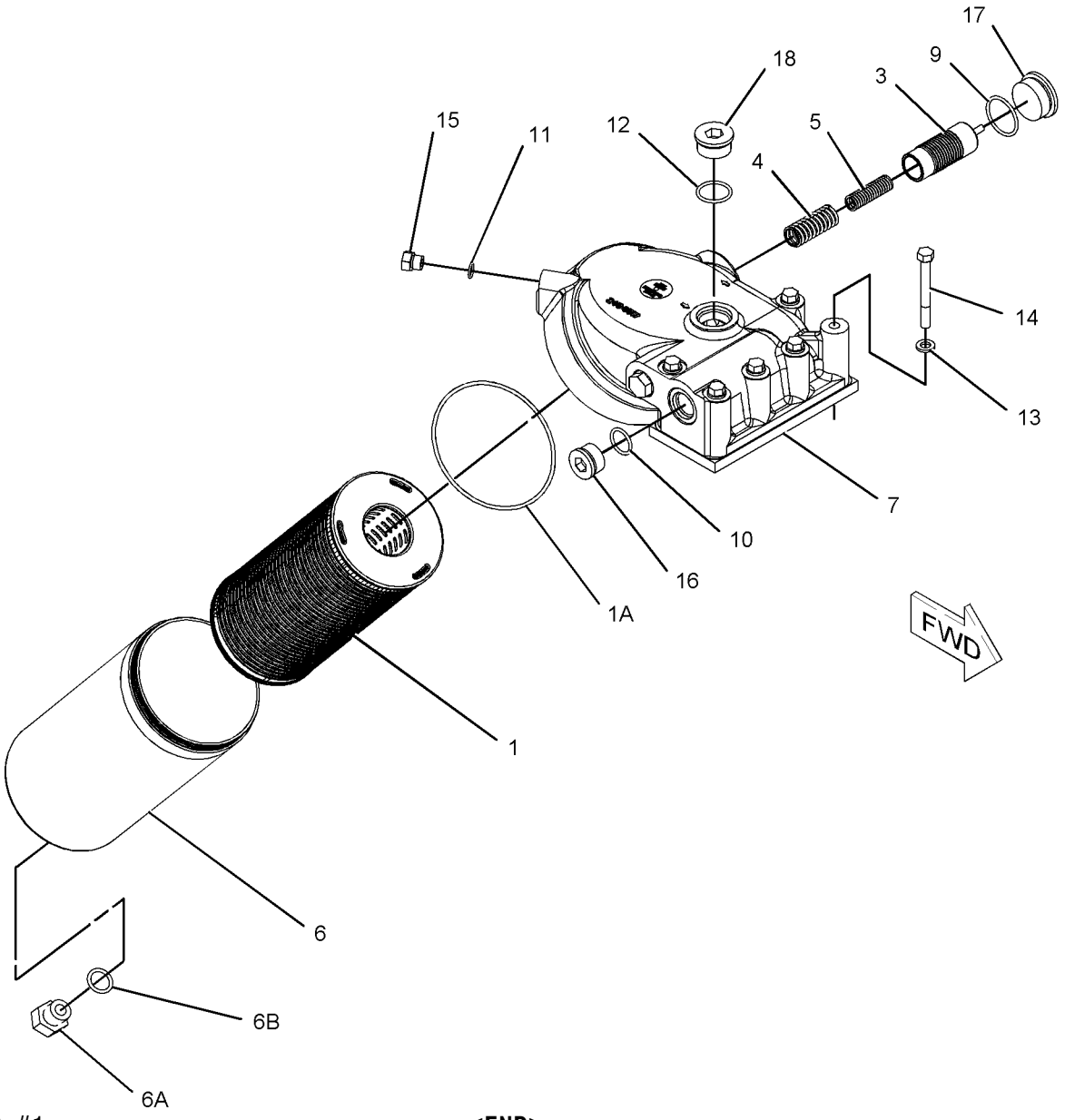

GRAPHIC #1 **<END>** g01039950

POWER TRAIN

164-4210 FINAL DRIVE GP

S/N: RJS1-UP

PART OF 205-8605 POWER TRAIN AR

FIELD REPLACEMENT ORDER 185-7593—PAGE 310

SMCS-4050 **i02247891**

NOTE	REF NO	GRAPHIC REF	PART NUMBER	QTY	PART NAME 1 2 3 4 5 6 (PRODUCT LEVEL)	SEE PAGE
	1	1	**8T-2502**	3	BOLT (3/8-16X1.125-IN)	
	2	1	**8T-4896**	3	WASHER-HARD (10.2X18.5X2.5-MM THK)	
	3	1	**030-8538**	18	BOLT (1/2-13X1.25-IN)	
M	4	1	**5P-8245**	6	WASHER-HARD (13.5X25.5X3-MM THK)	
	5	1	**9P-3474**	1	COVER	
	6	1	**6V-3298**	1	PLUG-MAGNETIC (FINAL DRIVE, OIL FILL)	
	7	1	**2S-4078**	1	SEAL-O-RING	
	8	1	**9S-4185**	1	PLUG (FINAL DRIVE, OIL DRAIN)	
	9	1	**3K-0360**	1	SEAL-O-RING	
	10	1	**5F-7054**	1	SEAL-O-RING	
	11	1	**9P-3468**	1	CARRIER-PLANETARY	
	12	1	**3D-8422**	1	SEAL-O-RING	
	13	1	**9M-5894**	1	SEAL-O-RING	
	14	1	**2S-0613**	1	RING-RETAINING	
	15	1	**3P-8827**	3	PLATE	
	16	1	**6V-1653**	3	SEAL-QUAD RING	
	17	1	**8T-8924**	35	BOLT (3/4-10X2.5-IN)	
	18	1	**8T-4994**	35	WASHER-HARD (20X36.5X3.5-MM THK)	
	19	1	**6I-8849**	6	CONE-BEARING (TAPERED ROLLER)	
	20	1	**6I-8860**	6	CUP-BEARING	
	21	1	**9P-3366**	3	GEAR-PLANETARY (24-TEETH)	
	22	1	**9P-3471**	1	GEAR-SUN (24-TEETH)	
	23	1	**7S-4326**	1	DOWEL	
	24	1	**104-3133**	1	CARRIER-PLANETARY	
	25	1	**3P-8820**	1	RING-THRUST	
	26	1	**6F-8146**	1	SEAL-O-RING	
	27	1	**8E-3124**	1	RETAINER	
	28	1	**8D-4771**	1	SEAL-O-RING	
	29	1	**110-2665**	3	SHAFT-PLANETARY	
	30	1	**5P-7911**	1	RING-RETAINING	
	31	1	**8P-5698**	3	PLATE	
	32	1	**5D-0353**	6	BOLT-LOCKING (3/8-16X1-IN)	
	33	1	**164-5808**	1	GEAR-SUN (18-TEETH)	
	34	1	**9P-3467**	3	SHAFT-PLANETARY	
	35	1	**137-4835**	1	BEARING-THRUST	
	36	1	**104-3136**	1	RETAINER	
	37	1	**9P-3320**	1	GEAR-RING (72-TEETH)	
	38	1	**166-6930**	6	CONE-BEARING	
	39	1	**166-6931**	6	CUP (BEARING)	
	40	1	**9P-3429**	3	GEAR-PLANETARY (27-TEETH)	
	41	1	**9P-3657**	3	RING-LOCK	
	42	1	**3T-6882**	12	PIN	
	43	1	**104-3140**	1	HUB	
	44	1	**9P-4959**	1	RING-RETAINING	
	45	1	**104-3153**	1	SEAL-DOUBLE LIP	
	46	1	**107-7088**	1	CONE-BEARING	
	47	1	**107-7089**	1	CUP-BEARING	
R	48	1	**104-3139**	1	HUB-SPINDLE	
	49	1	**3D-9133**	1	CUP-BEARING	
	50	1	**126-0588**	1	CONE-SPECIAL TAPERED	
	51	1	**173-3071**	1	SEAL GP-DUO-CONE	
		1	**127-0116**	2	RING-TORIC	
	52	1	**104-3137**	1	HUB	
	53	1	**8T-4223**	3	WASHER-HARD (13.5X25.5X3-MM THK)	
	54	1	**8T-8917**	3	BOLT (1/2-13X1.25-IN)	

164-4210 **FINAL DRIVE GP** *(contd.)* **i02247891**

NOTE	REF NO	GRAPHIC REF	PART NUMBER	QTY	PART NAME 1 2 3 4 5 6 (PRODUCT LEVEL)	SEE PAGE
	55	1	**137-4836**	1	BEARING-SLEEVE	
	56	1	**1D-4640**	30	BOLT (1-8X4.25-IN)	
		1	**5P-8250**	30	WASHER (28X49X5-MM THK)	
Y	57	1	*160-4927*	1	SEGMENT GP-SPROCKET	341
	58	1	**8T-9412**	3	BOLT-12 POINT HEAD (1/2-13X1.5-IN)	

M-METRIC PART
R-REMFG PART MAY BE AVAILABLE
Y-SEPARATE ILLUSTRATION

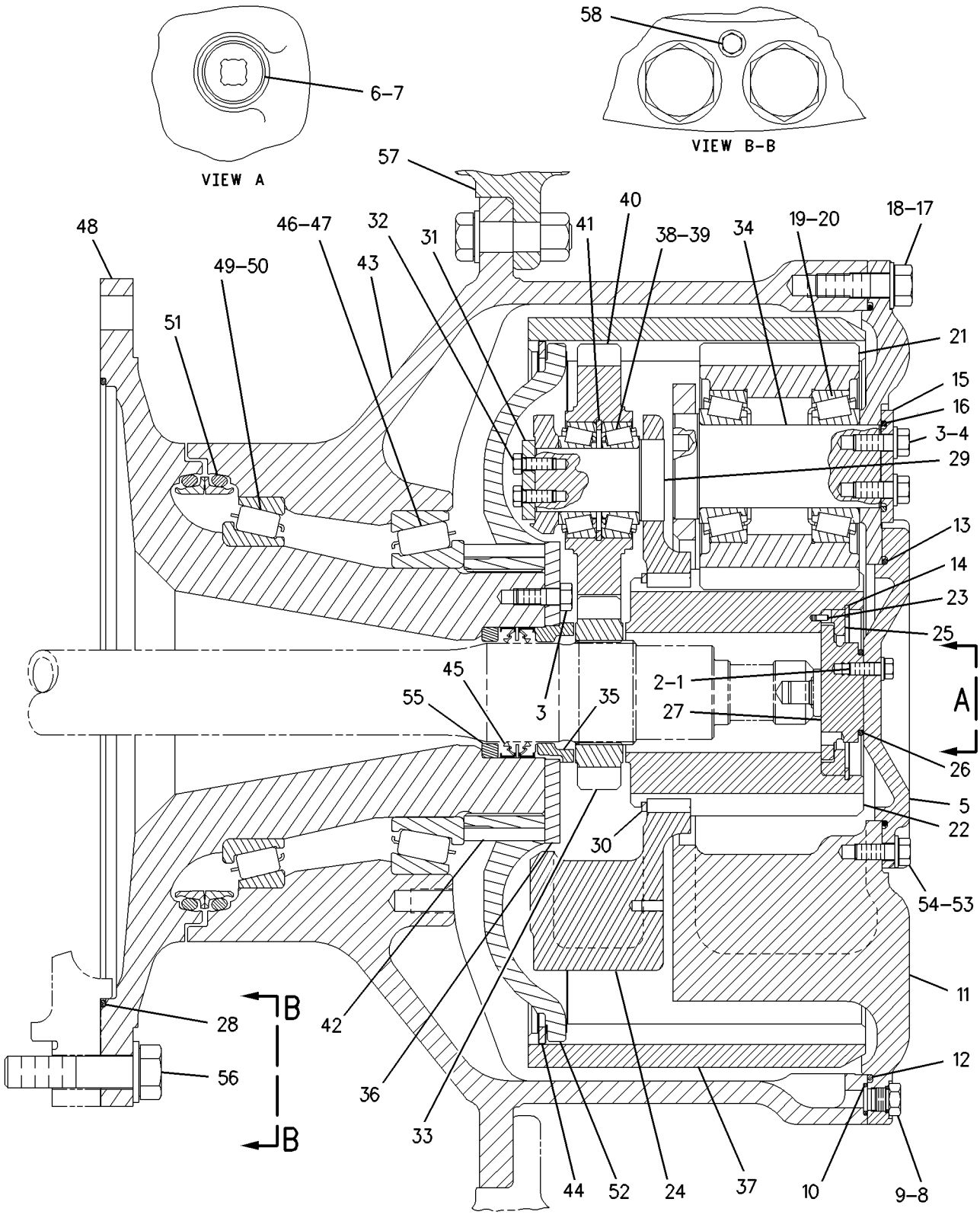

GRAPHIC #1 **<END>** g00700275

POWER TRAIN

185-7593 FINAL DRIVE GP*R

S/N: RJS1-UP

FIELD REPLACEMENT FOR 164-4210—PAGE 307

SMCS-4050 **i02247926**

NOTE	REF NO	GRAPHIC REF	PART NUMBER	QTY	PART NAME 1 2 3 4 5 6 (PRODUCT LEVEL)	SEE PAGE
R	1	1	**104-3139**	1	HUB-SPINDLE	
	2	1	**173-3071**	1	SEAL GP-DUO-CONE	
		1	**127-0116**	2	RING-TORIC	
	3	1	**3D-9133**	1	CUP-BEARING	
	4	1	**126-0588**	1	CONE-SPECIAL TAPERED	
	5	1	**107-7089**	1	CUP-BEARING	
	6	1	**107-7088**	1	CONE-BEARING	
	7	1	**104-3140**	1	HUB	
	8	1	**5D-0353**	6	BOLT-LOCKING (3/8-16X1-IN)	
	9	1	**8P-5698**	3	PLATE	
	10	1	**9P-3429**	3	GEAR-PLANETARY (27-TEETH)	
	11	1	**9P-3657**	3	RING-LOCK	
	12	1	**166-6930**	6	CONE-BEARING	
	13	1	**166-6931**	6	CUP (BEARING)	
	14	1	**9P-3467**	3	SHAFT-PLANETARY	
	15	1	**6I-8860**	6	CUP-BEARING	
	16	1	**6I-8849**	6	CONE-BEARING (TAPERED ROLLER)	
	17	1	**8T-8924**	35	BOLT (3/4-10X2.5-IN)	
	18	1	**8T-4994**	35	WASHER-HARD (20X36.5X3.5-MM THK)	
	19	1	**9P-3366**	3	GEAR-PLANETARY (24-TEETH)	
	20	1	**6V-1653**	3	SEAL-QUAD RING	
	21	1	**3P-8827**	3	PLATE	
	22	1	**030-8538**	18	BOLT (1/2-13X1.25-IN)	
M	23	1	**5P-8245**	6	WASHER-HARD (13.5X25.5X3-MM THK)	
	24	1	**110-2665**	3	SHAFT-PLANETARY	
	25	1	**9M-5894**	1	SEAL-O-RING	
	26	1	**2S-4078**	1	SEAL-O-RING	
	27	1	**6V-3298**	1	PLUG-MAGNETIC (FINAL DRIVE, OIL FILL)	
	28	1	**3T-6882**	12	PIN	
	29	1	**9P-3474**	1	COVER	
	30	1	**8T-8917**	3	BOLT (1/2-13X1.25-IN)	
	31	1	**9P-3471**	1	GEAR-SUN (24-TEETH)	
	32	1	**2S-0613**	1	RING-RETAINING	
	33	1	**9P-3468**	1	CARRIER-PLANETARY	
	34	1	**9S-4185**	1	PLUG (FINAL DRIVE, OIL DRAIN)	
	35	1	**8D-4771**	1	SEAL-O-RING	
	36	1	**3K-0360**	1	SEAL-O-RING	
	37	1	**5F-7054**	1	SEAL-O-RING	
	38	1	**3D-8422**	1	SEAL-O-RING	
	39	1	**9P-3320**	1	GEAR-RING (72-TEETH)	
	40	1	**5P-7911**	1	RING-RETAINING	
	41	1	**164-5808**	1	GEAR-SUN (18-TEETH)	
	42	1	**104-3137**	1	HUB	
	43	1	**137-4835**	1	BEARING-THRUST	
	44	1	**104-3136**	1	RETAINER	
	45	1	**9P-4959**	1	RING-RETAINING	
	46	1	**104-3133**	1	CARRIER-PLANETARY	
	47	1	**104-3153**	1	SEAL-DOUBLE LIP	
	48	1	**7S-4326**	1	DOWEL	
	49	1	**3P-8820**	1	RING-THRUST	
	50	1	**6F-8146**	1	SEAL-O-RING	
	51	1	**8T-2502**	3	BOLT (3/8-16X1.125-IN)	
	52	1	**8T-4896**	3	WASHER-HARD (10.2X18.5X2.5-MM THK)	
	53	1	**8T-4223**	3	WASHER-HARD (13.5X25.5X3-MM THK)	
	54	1	**8E-3124**	1	RETAINER	
	55	1	**137-4836**	1	BEARING-SLEEVE	

M-METRIC PART
R-REMFG PART MAY BE AVAILABLE

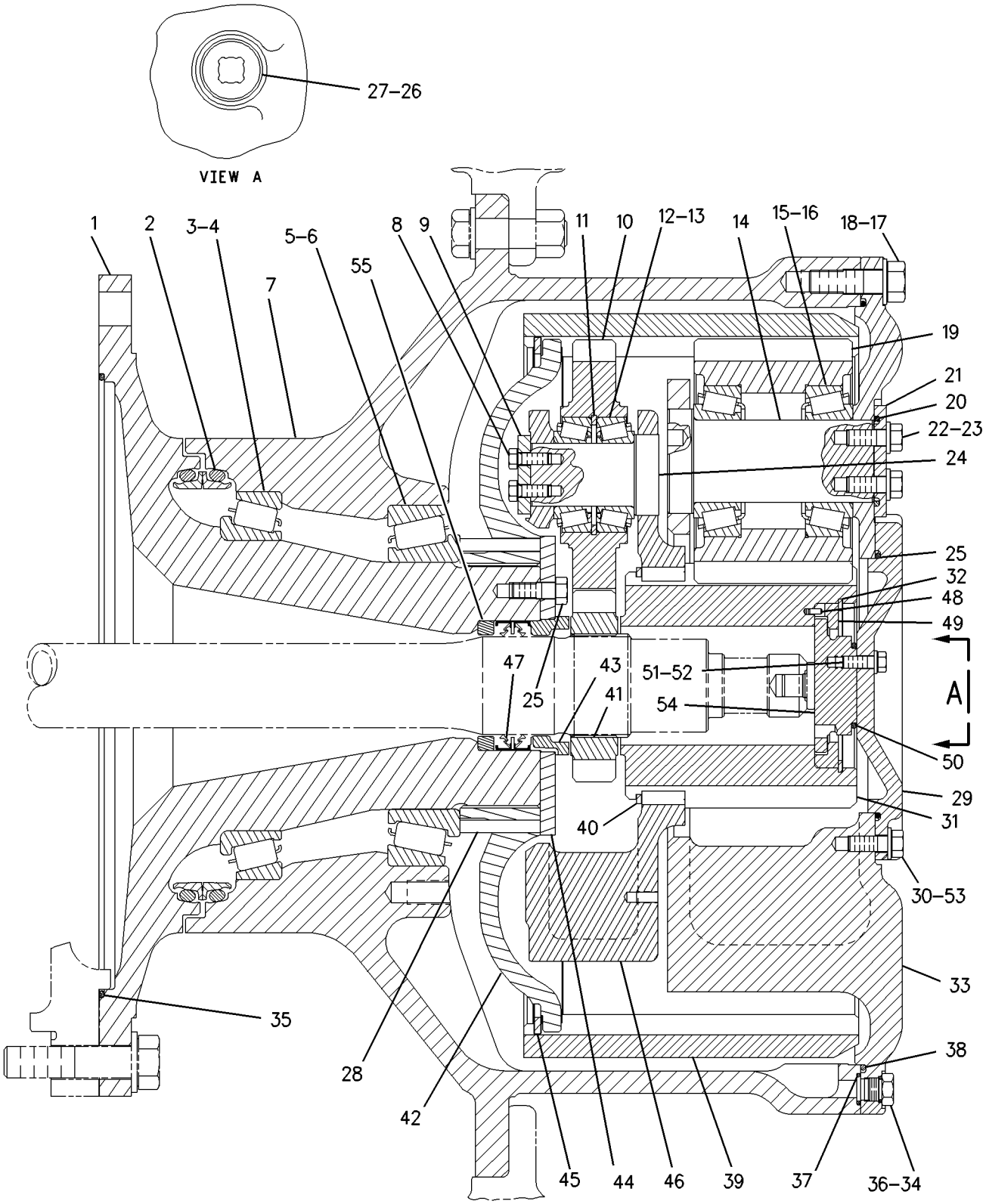

GRAPHIC #1 **<END>** g00681104

186-2949 FINAL DRIVE GP–ARCTIC

S/N: RJS1-UP

PART OF 211-5087 COLD WEATHER AR

AN ATTACHMENT

SMCS-4050 **i02247934**

NOTE	REF NO	GRAPHIC REF	PART NUMBER	QTY	PART NAME 1 2 3 4 5 6 (PRODUCT LEVEL)	SEE PAGE
	1	1	**8T-2502**	3	BOLT (3/8-16X1.125-IN)	
	2	1	**8T-4896**	3	WASHER-HARD (10.2X18.5X2.5-MM THK)	
	3	1	**030-8538**	18	BOLT (1/2-13X1.25-IN)	
M	4	1	**5P-8245**	6	WASHER-HARD (13.5X25.5X3-MM THK)	
	5	1	**9P-3474**	1	COVER	
	6	1	**6V-3298**	1	PLUG-MAGNETIC (FINAL DRIVE, OIL FILL)	
	7	1	**2S-4078**	1	SEAL-O-RING	
	8	1	**9S-4185**	1	PLUG (FINAL DRIVE, OIL DRAIN)	
	9	1	**3K-0360**	1	SEAL-O-RING	
	10	1	**5F-7054**	1	SEAL-O-RING	
	11	1	**9P-3468**	1	CARRIER-PLANETARY	
	12	1	**3D-8422**	1	SEAL-O-RING	
	13	1	**9M-5894**	1	SEAL-O-RING	
	14	1	**2S-0613**	1	RING-RETAINING	
	15	1	**3P-8827**	3	PLATE	
	16	1	**6V-1653**	3	SEAL-QUAD RING	
	17	1	**8T-8924**	35	BOLT (3/4-10X2.5-IN)	
	18	1	**8T-4994**	35	WASHER-HARD (20X36.5X3.5-MM THK)	
	19	1	**6I-8849**	6	CONE-BEARING (TAPERED ROLLER)	
	20	1	**6I-8860**	6	CUP-BEARING	
	21	1	**9P-3366**	3	GEAR-PLANETARY (24-TEETH)	
	22	1	**9P-3471**	1	GEAR-SUN (24-TEETH)	
	23	1	**7S-4326**	1	DOWEL	
	24	1	**104-3133**	1	CARRIER-PLANETARY	
	25	1	**3P-8820**	1	RING-THRUST	
	26	1	**6F-8146**	1	SEAL-O-RING	
	27	1	**8E-3124**	1	RETAINER	
	28	1	**8D-4771**	1	SEAL-O-RING	
	29	1	**110-2665**	3	SHAFT-PLANETARY	
	30	1	**5P-7911**	1	RING-RETAINING	
	31	1	**8P-5698**	3	PLATE	
	32	1	**5D-0353**	6	BOLT-LOCKING (3/8-16X1-IN)	
	33	1	**164-5808**	1	GEAR-SUN (18-TEETH)	
	34	1	**9P-3467**	3	SHAFT-PLANETARY	
	35	1	**137-4835**	1	BEARING-THRUST	
	36	1	**104-3136**	1	RETAINER	
	37	1	**9P-3320**	1	GEAR-RING (72-TEETH)	
	38	1	**166-6930**	6	CONE-BEARING	
	39	1	**166-6931**	6	CUP (BEARING)	
	40	1	**9P-3429**	3	GEAR-PLANETARY (27-TEETH)	
	41	1	**9P-3657**	3	RING-LOCK	
	42	1	**3T-6882**	12	PIN	
	43	1	**104-3140**	1	HUB	
	44	1	**9P-4959**	1	RING-RETAINING	
	45	1	**7X-1551**	1	SEAL-LIP TYPE	
	46	1	**107-7088**	1	CONE-BEARING	
	47	1	**107-7089**	1	CUP-BEARING	
R	48	1	**104-3139**	1	HUB-SPINDLE	
	49	1	**3D-9133**	1	CUP-BEARING	
	50	1	**126-0588**	1	CONE-SPECIAL TAPERED	
	51	1	**186-3277**	1	SEAL GP-DUO-CONE	
		1	**3P-1849**	2	RING-SEALING	
	52	1	**104-3137**	1	HUB	
	53	1	**8T-4223**	3	WASHER-HARD (13.5X25.5X3-MM THK)	
	54	1	**8T-8917**	3	BOLT (1/2-13X1.25-IN)	

186-2949 **FINAL DRIVE GP** *(contd.)* **i02247934**

NOTE	REF NO	GRAPHIC REF	PART NUMBER	QTY	PART NAME 1 2 3 4 5 6 (PRODUCT LEVEL)	SEE PAGE
	55	1	**137-4836**	1	BEARING-SLEEVE	
	56	1	**1D-4640**	30	BOLT (1-8X4.25-IN)	
		1	**5P-8250**	30	WASHER (28X49X5-MM THK)	
Y	57	1	*160-4927*	1	SEGMENT GP-SPROCKET	341
	58	1	**8T-9412**	3	BOLT-12 POINT HEAD (1/2-13X1.5-IN)	

M-METRIC PART
R-REMFG PART MAY BE AVAILABLE
Y-SEPARATE ILLUSTRATION

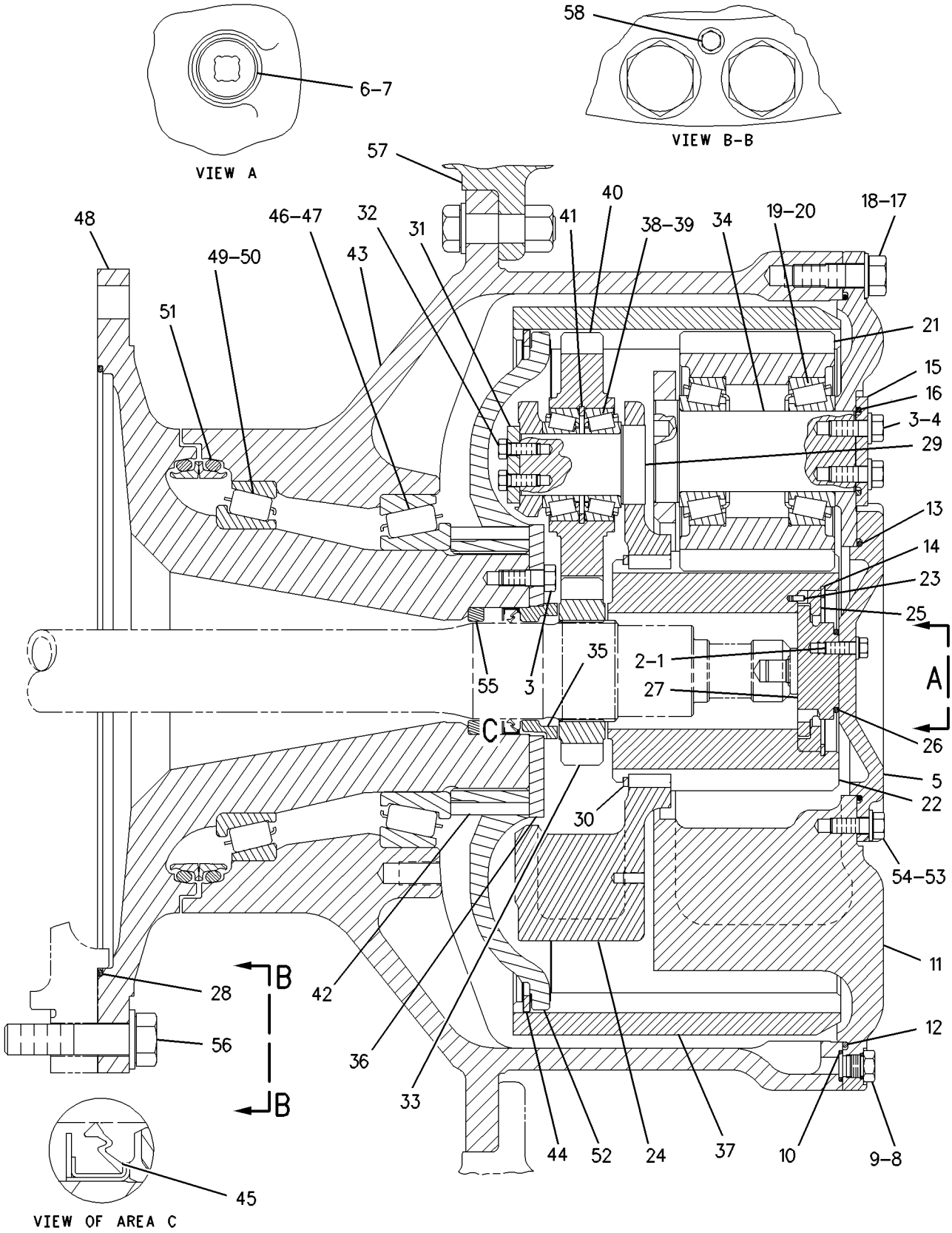

GRAPHIC #1 **<END>** g00700298

192-9147 FINAL DRIVE GP–WASTE HANDLING

S/N: RJS1-UP
DUO-CONE GUARD
PART OF 188-0532 GUARD AR-FINAL DRIVE
AN ATTACHMENT

SMCS-4050 **i02247941**

NOTE	REF NO	GRAPHIC REF	PART NUMBER	QTY	PART NAME 1 2 3 4 5 6 (PRODUCT LEVEL)	SEE PAGE
	1	1	**189-8867**	1	HUB AS	
	1A	1	**189-3064**	1	GUARD	
	2	1	**173-3071**	1	SEAL GP-DUO-CONE	
		1	**127-0116**	2	RING-TORIC	
	3	1	**3D-9133**	1	CUP-BEARING	
	4	1	**126-0588**	1	CONE-SPECIAL TAPERED	
	5	1	**107-7089**	1	CUP-BEARING	
	6	1	**107-7088**	1	CONE-BEARING	
	7	1	**189-8868**	1	HUB AS	
	7A	1	**189-3065**	1	GUARD	
	8	1	**5D-0353**	6	BOLT-LOCKING (3/8-16X1-IN)	
	9	1	**8P-5698**	3	PLATE	
	10	1	**9P-3429**	3	GEAR-PLANETARY (27-TEETH)	
	11	1	**9P-3657**	3	RING-LOCK	
	12	1	**166-6930**	6	CONE-BEARING	
	13	1	**166-6931**	6	CUP (BEARING)	
	14	1	**9P-3467**	3	SHAFT-PLANETARY	
	15	1	**6I-8860**	6	CUP-BEARING	
	16	1	**6I-8849**	6	CONE-BEARING (TAPERED ROLLER)	
	17	1	**8T-8924**	35	BOLT (3/4-10X2.5-IN)	
	18	1	**8T-4994**	35	WASHER-HARD (20X36.5X3.5-MM THK)	
	19	1	**9P-3366**	3	GEAR-PLANETARY (24-TEETH)	
	20	1	**6V-1653**	3	SEAL-QUAD RING	
	21	1	**3P-8827**	3	PLATE	
	22	1	**030-8538**	18	BOLT (1/2-13X1.25-IN)	
M	23	1	**5P-8245**	6	WASHER-HARD (13.5X25.5X3-MM THK)	
	24	1	**110-2665**	3	SHAFT-PLANETARY	
	25	1	**9M-5894**	1	SEAL-O-RING	
	26	1	**8T-9412**	3	BOLT-12 POINT HEAD (1/2-13X1.5-IN)	
	27	1	**2S-4078**	1	SEAL-O-RING	
	28	1	**6V-3298**	1	PLUG-MAGNETIC (FINAL DRIVE, OIL FILL)	
	29	1	**1D-4640**	30	BOLT (1-8X4.25-IN)	
	30	1	**3T-6882**	12	PIN	
	31	1	**9P-3474**	1	COVER	
Y	32	1	*160-4927*	1	SEGMENT GP-SPROCKET	341
	33	1	**5P-8250**	30	WASHER (28X49X5-MM THK)	
	34	1	**8T-8917**	3	BOLT (1/2-13X1.25-IN)	
	35	1	**9P-3471**	1	GEAR-SUN (24-TEETH)	
	36	1	**2S-0613**	1	RING-RETAINING	
	37	1	**9P-3468**	1	CARRIER-PLANETARY	
	38	1	**9S-4185**	1	PLUG (FINAL DRIVE, OIL DRAIN)	
	39	1	**8D-4771**	1	SEAL-O-RING	
	40	1	**3K-0360**	1	SEAL-O-RING	
	41	1	**5F-7054**	1	SEAL-O-RING	
	42	1	**3D-8422**	1	SEAL-O-RING	
	43	1	**9P-3320**	1	GEAR-RING (72-TEETH)	
	44	1	**5P-7911**	1	RING-RETAINING	
	45	1	**164-5808**	1	GEAR-SUN (18-TEETH)	
	46	1	**104-3137**	1	HUB	
	47	1	**137-4835**	1	BEARING-THRUST	
	48	1	**104-3136**	1	RETAINER	
	49	1	**9P-4959**	1	RING-RETAINING	
	50	1	**104-3133**	1	CARRIER-PLANETARY	
	51	1	**104-3153**	1	SEAL-DOUBLE LIP	

192-9147 FINAL DRIVE GP *(contd.)* i02247941

NOTE	REF NO	GRAPHIC REF	PART NUMBER	QTY	PART NAME 1 2 3 4 5 6 (PRODUCT LEVEL)	SEE PAGE
	52	1	**7S-4326**	1	DOWEL	
	53	1	**3P-8820**	1	RING-THRUST	
	54	1	**6F-8146**	1	SEAL-O-RING	
	55	1	**8T-2502**	3	BOLT (3/8-16X1.125-IN)	
	56	1	**8T-4896**	3	WASHER-HARD (10.2X18.5X2.5-MM THK)	
	57	1	**8T-4223**	3	WASHER-HARD (13.5X25.5X3-MM THK)	
	58	1	**8E-3124**	1	RETAINER	
	59	1	**137-4836**	1	BEARING-SLEEVE	
	60	1	**189-6244**	2	SEAL	
	61	1	**8C-6561**	16	BOLT (5/16-18X1.375-IN)	
	62	1	**8T-4224**	16	WASHER-HARD (8.8X16X2-MM THK)	
	63	1	**189-3063**	2	RETAINER	

M-METRIC PART
Y-SEPARATE ILLUSTRATION

192-9147 FINAL DRIVE GP *(contd.)* **i02247941**

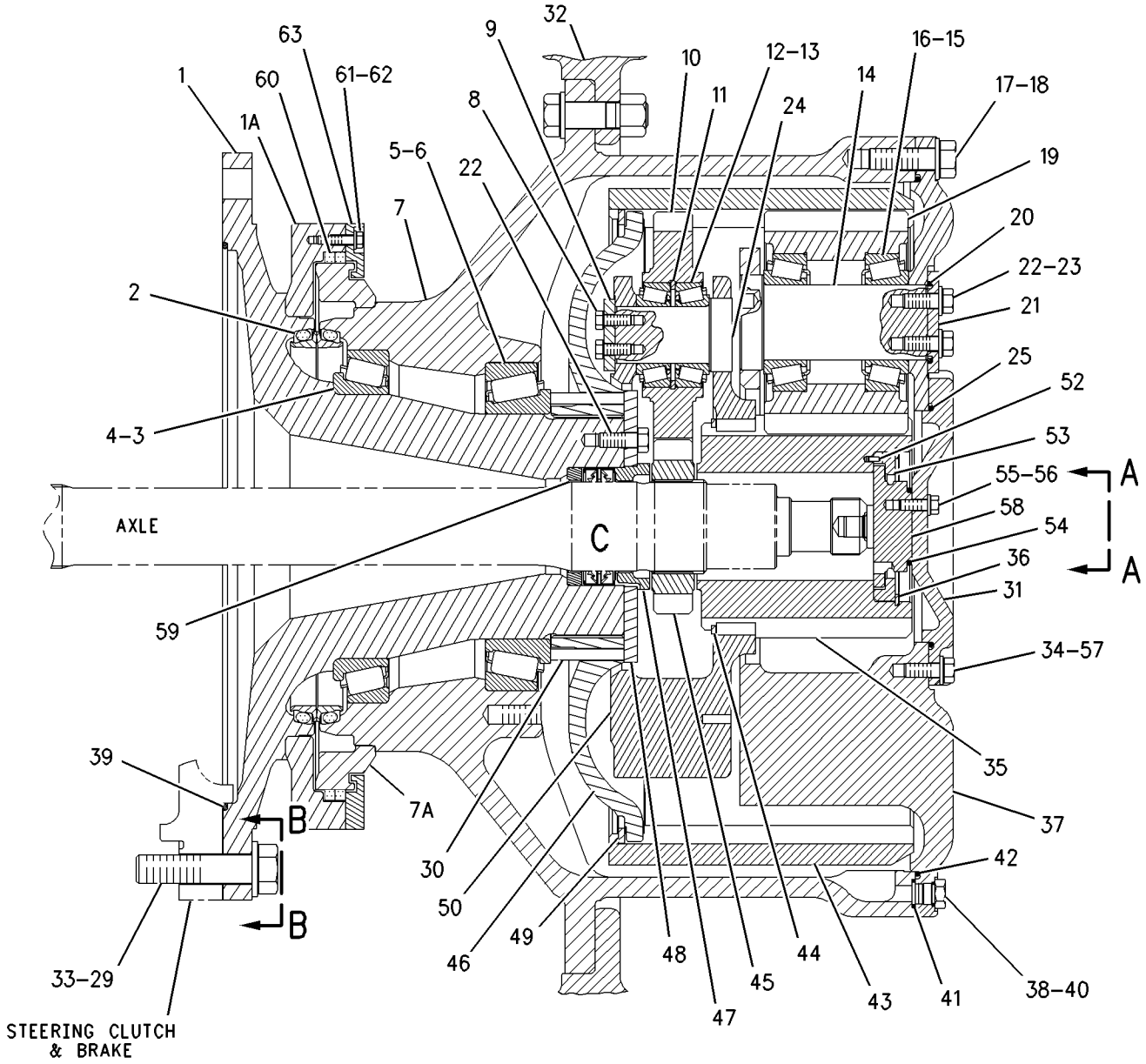

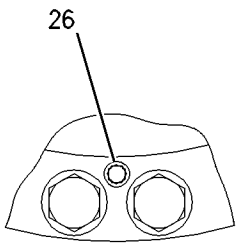

VIEW B-B

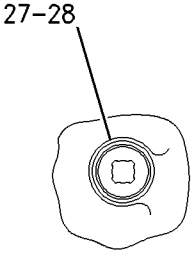

VIEW A-A

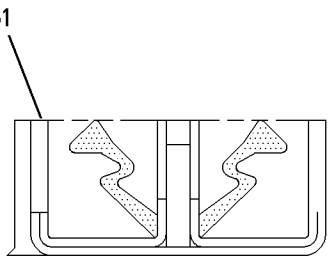

VIEW OF AREA C

GRAPHIC #1 **<END>** g00751425

202-2720 GEAR GP-BEVEL & PINION

S/N: DXK1-UP

PART OF 202-2719 TRANSMISSION AR

SMCS-3254, 3256 **i02000688**

NOTE	REF NO	GRAPHIC REF	PART NUMBER	QTY	PART NAME 1 2 3 4 5 6 (PRODUCT LEVEL)	SEE PAGE
	1	1	**6Y-9057**	1	CAGE-BEARING	
	2	1	**216-0273**	1	SEAL-LIP TYPE	
	3	1	**7H-7628**	1	BEARING	
	4	1	**5F-1248**	1	CONE-BEARING	
	5	1	**5D-7449**	1	CUP-BEARING	
	6	1	**0S-1585**	9	BOLT (1/2-13X1.50 IN)	
	7	1	**5P-8245**	27	WASHER-HARD (13.5X25.5X3MM THK)	
B	8	1	**6Y-9065**	1	SHIM PACK (INCLUDES 14 SHIMS)	
	9	1	**0S-1587**	11	BOLT (1/2-13X1.75 IN)	
	10	1	**6Y-9064**	1	CAGE-BEARING	
	11	1	**4B-8393**	1	CUP-BEARING	
	12	1	**1B-4034**	1	CONE-BEARING	
	13	1	**220-4341**	1	GEAR-TRANSFER (39 TEETH)	
	14	1	**0S-1600**	18	BOLT (5/8-18X2.5 IN)	
	15	1	**7M-1419**	2	RACE-BEARING OUTER	
	16	1	**8H-8819**	2	BEARING-INNER	
	17	1	**220-4340**	1	GEAR-TRANSFER (60 TEETH)	
	18	1	**6Y-9061**	1	GEAR-BEVEL (25 TEETH)	
	19	1	**9U-9501**	1	PLATE	
B	20	1	**6Y-9055**	1	SHIM PACK (INCLUDES 15 SHIMS)	
	21	1	**1J-2860**	1	CUP-BEARING	
	22	1	**1J-4757**	1	CONE-BEARING	
	23	1	**5M-2894**	6	WASHER-HARD (10.2X18.5X2.5MM THK)	
	24	1	**3B-1915**	6	BOLT (3/8-16X1.75 IN)	
B	25	1	**6Y-9062**	1	SHIM PACK (INCLUDES 15 SHIMS)	
	26	1	**6Y-9054**	1	SPACER-BEARING	
	27	1	**6Y-9322**	1	CUP-BEARING	
	28	1	**6Y-9321**	1	CONE-BEARING	
	29	1	**6Y-9053**	1	PINION-BEVEL	
B	30	1	**6Y-9058**	1	SHIM PACK (INCLUDES 14 SHIMS)	
	31	1	**8E-8215**	1	WASHER-THRUST	
	32	1	**9X-8874**	2	BOLT (1/2-13X3 IN)	
	33	1	**7D-1649**	2	WASHER-HARD (13.5X32X5MM THK)	
	34	1	**9G-3464**	2	BUSHING-TERMINAL	
	35	1	**8E-7706**	1	BRACKET AS	
	36	1	**1A-1460**	7	BOLT (1/2-13X2 IN)	
	37	1	**8E-7707**	1	BRACKET AS	

B-USE AS REQUIRED

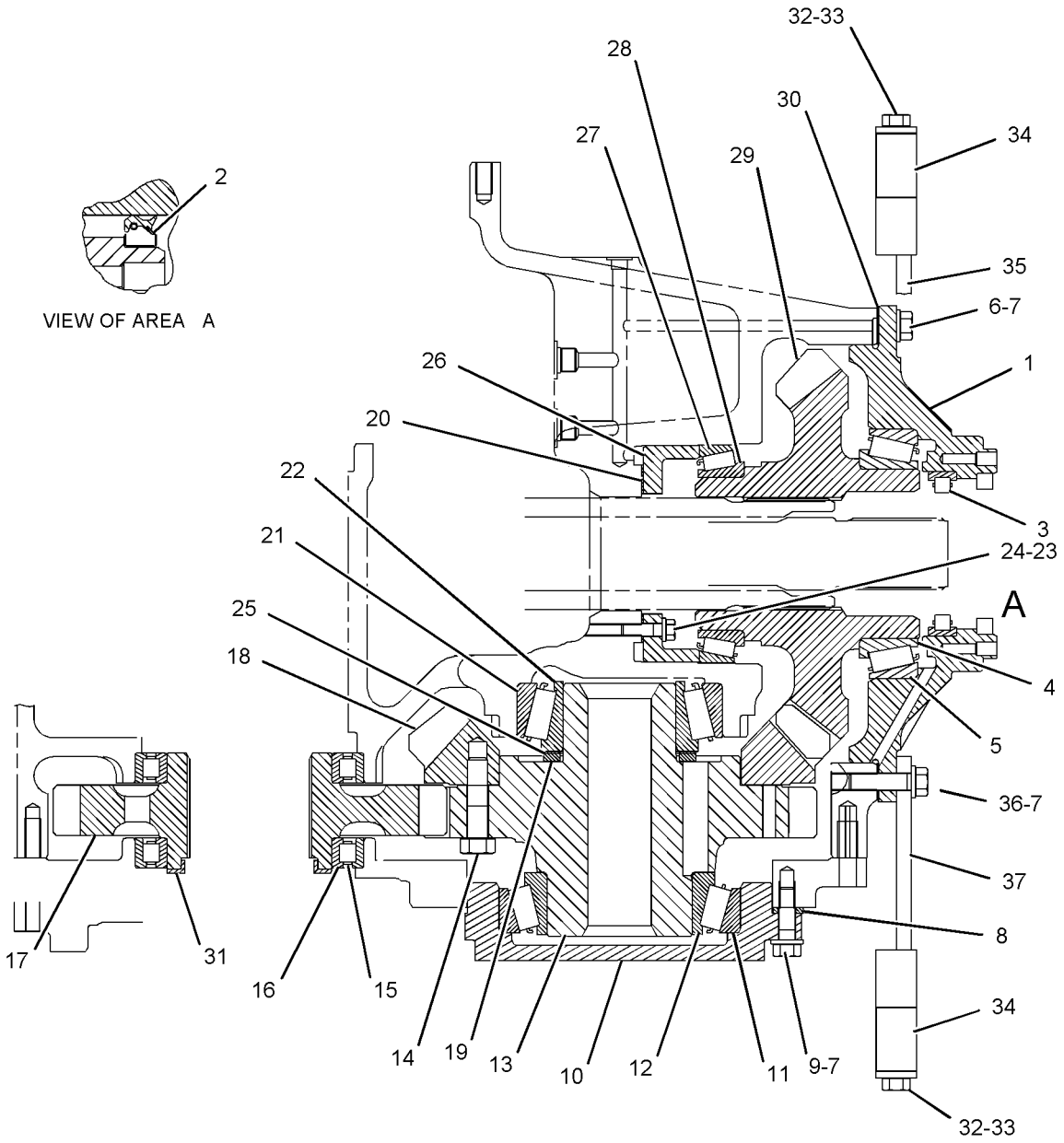

GRAPHIC #1 **<END>** g01040799

205-8571 GUARD GP-DRIVE SHAFT

S/N: RJS1-UP

PART OF 205-8601 CHASSIS AR

SMCS-7153 **i02194323**

NOTE	REF NO	GRAPHIC REF	PART NUMBER	QTY	PART NAME 1 2 3 4 5 6 (PRODUCT LEVEL)	SEE PAGE
	1	1	**214-0535**	2	GUARD AS	
	2	1	**214-0538**	1	GUARD	
	3	1	**5M-3062**	4	BOLT (3/8-16X0.75-IN)	
	4	1	**5C-6565**	6	BOLT (1/2-13X1.125-IN)	
	5	1	**8T-4223**	6	WASHER-HARD (13.5X25.5X3-MM THK)	
	6	1	**8T-4896**	4	WASHER-HARD (10.2X18.5X2.5-MM THK)	

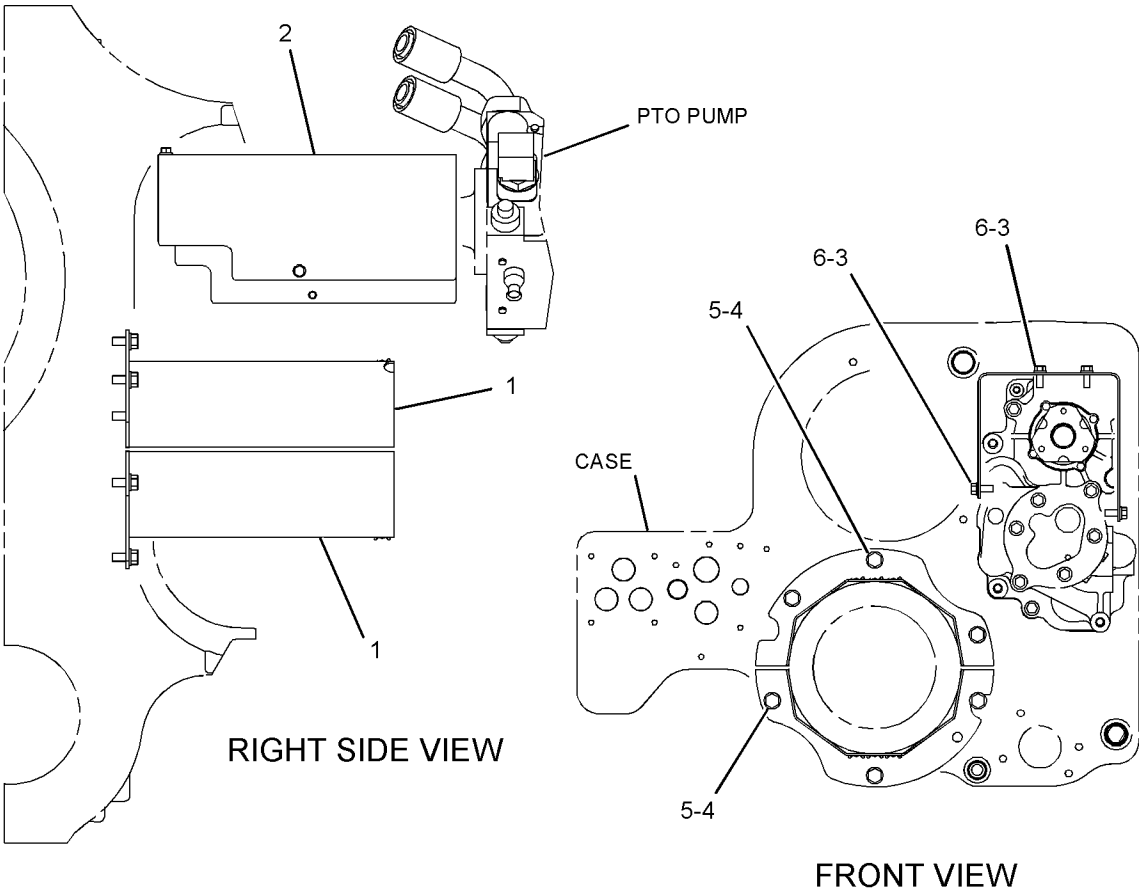

GRAPHIC #1 **<END>** g01035472

213-1116 GUARD GP-POWER TRAIN–REAR

S/N: RJS1-UP

AN ATTACHMENT

SMCS-7153 **i01995992**

NOTE	REF NO	GRAPHIC REF	PART NUMBER	QTY	PART NAME 1 2 3 4 5 6 (PRODUCT LEVEL)	SEE PAGE
	1	1	**114-2194**	1	PLATE	
	2	1	**114-2195**	1	GUARD AS	
	3	1	**114-2197**	2	BRACKET AS	
	4	1	**214-3877**	1	GUARD AS	
	5	1	**4L-6454**	4	BOLT (3/8-16X1 IN)	
	6	1	**6V-8182**	8	NUT (3/4-10 THD)	
	7	1	**8C-6857**	8	BOLT (3/4-10X2.75 IN)	
	8	1	**8T-4896**	4	WASHER-HARD (10.2X18.5X2.5MM THK)	
	9	1	**8T-4994**	26	WASHER-HARD (20X36.5X3.5MM THK)	
	10	1	**8T-9399**	10	BOLT (3/4-10X2.25 IN)	

213-1116 **GUARD GP-POWER TRAIN** *(contd.)* **i01995992**

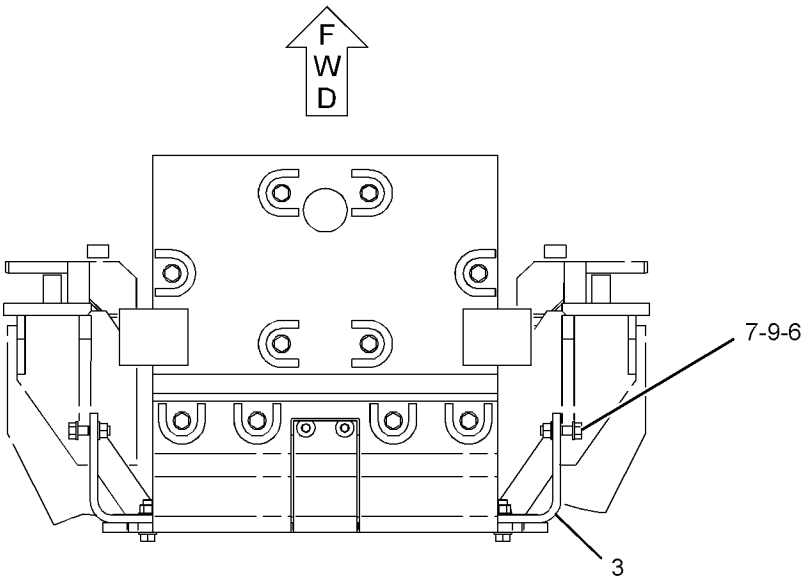

TOP VIEW

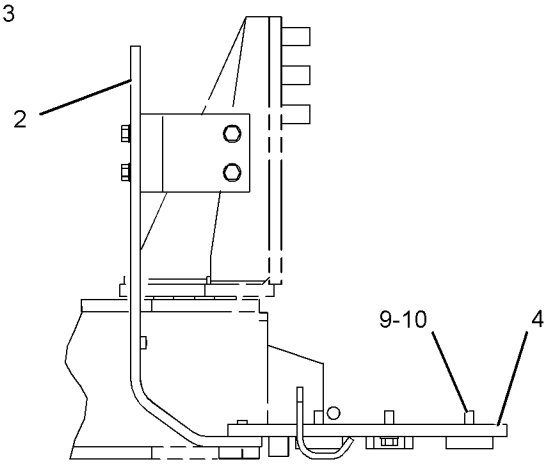

RIGHT SIDE VIEW

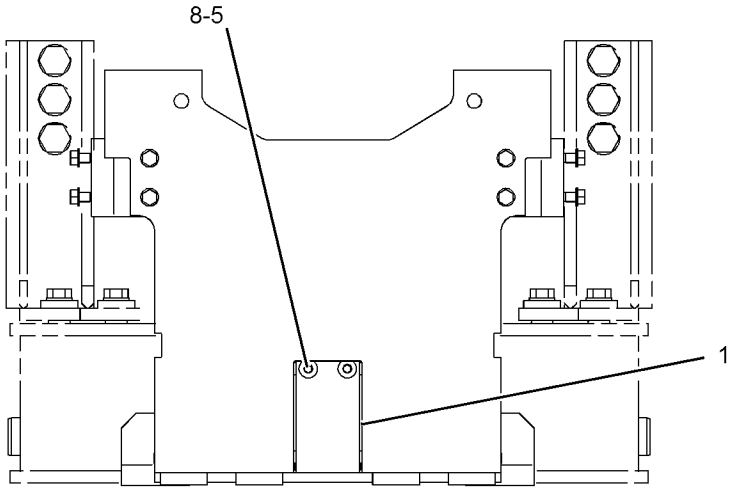

REAR VIEW

GRAPHIC #1 **<END>** g01037046

241-4104 GUARD GP-POWER TRAIN

S/N: RJS1-UP

AN ATTACHMENT

SMCS-7153 **i02235440**

NOTE	REF NO	GRAPHIC REF	PART NUMBER	QTY	PART NAME 1 2 3 4 5 6 (PRODUCT LEVEL)	SEE PAGE
	1	1	**2J-8239**	2	ADAPTER	
	2	1	**7G-9592**	1	SHIM (1.8-MM THK)	
	3	1	**8E-7561**	1	KNOB AS	
	3A	1	**8E-1205**	1	KNOB	
	3B	1	**8T-7566**	1	PIN-SPRING	
	3C	1	**7S-2042**	1	STUD	
	4	1	**113-3394**	1	STRAP	
	5	1	**200-7958**	1	PLATE	
	6	1	**200-7959**	1	PLATE	
	7	1	**200-7961**	1	PLATE AS	
		1	**2K-2794**	2	WASHER (22.6X34.9X9.52-MM THK)	
	8	1	**241-4271**	1	GUARD AS	
	9	1	**241-4933**	1	PLATE AS	
	10	1	**4H-1641**	1	PIN-SPRING	
	11	1	**7X-0550**	12	WASHER-HARD (13.5X32X5-MM THK)	
	12	1	**7X-0590**	2	WASHER-HARD (13.5X44.5X6-MM THK)	
M	13	1	**8T-4183**	8	BOLT (M12X1.75X40-MM)	
M	14	1	**8T-4184**	2	BOLT (M12X1.75X45-MM)	
	15	1	**8T-4223**	4	WASHER-HARD (13.5X25.5X3-MM THK)	
M	16	1	**8T-4956**	8	BOLT (M12X1.75X35-MM)	
	17	1	**8T-4994**	2	WASHER-HARD (20X36.5X3.5-MM THK)	
	18	1	**8T-9398**	2	BOLT (3/4-10X1.75-IN)	

M-METRIC PART

241-4104 **GUARD GP-POWER TRAIN** *(contd.)* **i02235440**

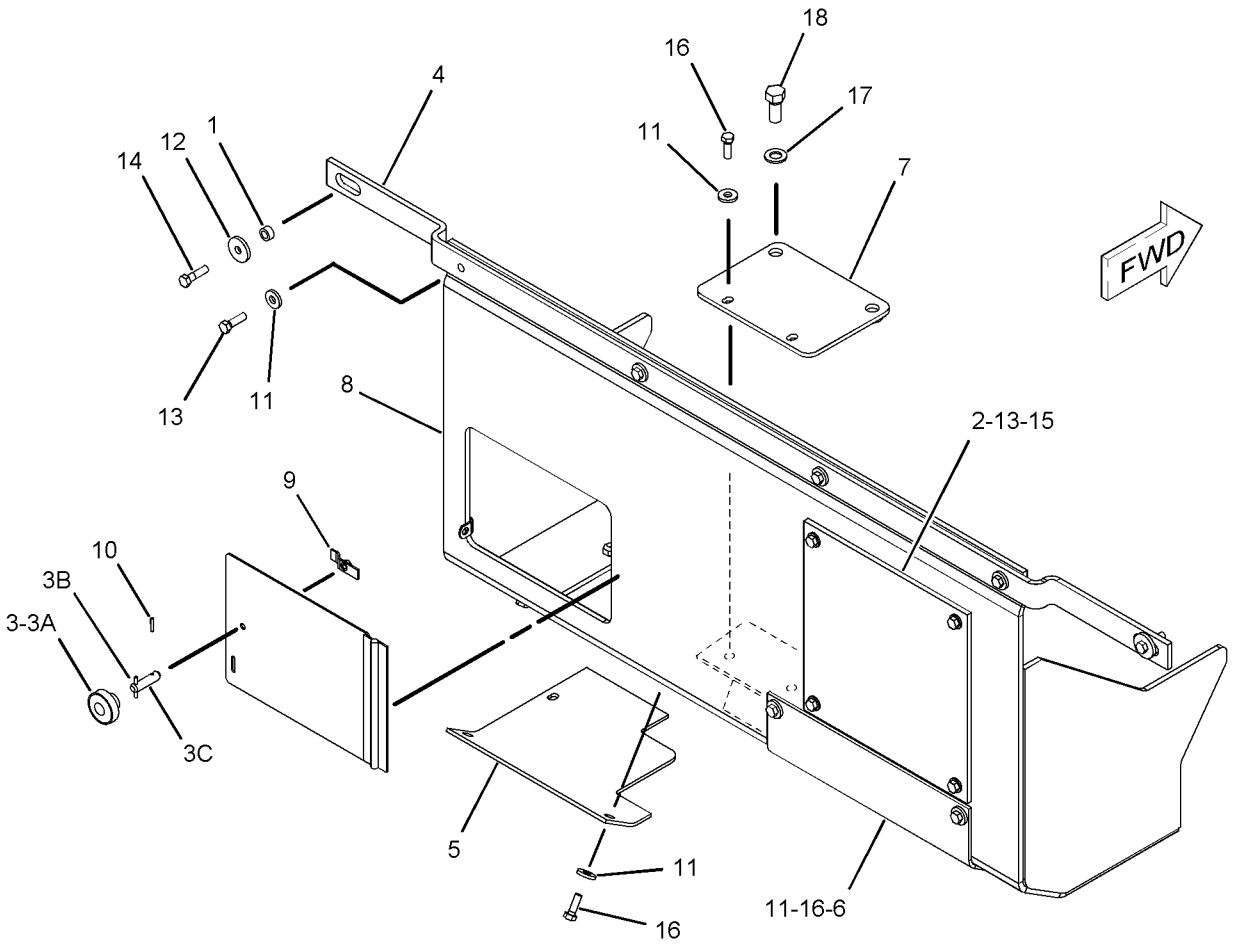

GRAPHIC #1 **<END>** g01038271

205-8619 LINES GP-POWER TRAIN OIL

S/N: RJS1-UP

PART OF 205-8605 POWER TRAIN AR

SMCS-3016 **i02247943**

NOTE	REF NO	GRAPHIC REF	PART NUMBER	QTY	PART NAME 1 2 3 4 5 6 (PRODUCT LEVEL)	SEE PAGE
	1	1	**1R-1809**	2	FILTER ELEMENT AS-OIL (HIGH EFFICIENCY, HYDRAULIC) (POWER TRAIN)	
	2	1	**5P-0597**	2	CLAMP-HOSE	
	3	1	**6N-2985**	1	CAP AS-FILLER (POWER TRAIN OIL)	
	4	1	**6V-0852**	5	CAP-DUST	
	5	1	**6V-3965**	5	FITTING AS	
	6	1	**6V-5387**	1	PLATE-ORIFICE	
	7	1	**8C-3447**	1	CAP-DUST	
	8	2	**8P-9859**	1	ELBOW	
	9	1	**9G-5127**	1	BREATHER AS (POWER TRAIN)	
	10	1	**114-0795**	1	HOSE	
	11	1	*150-3059*	1	TEE AS	
		1	**5K-9090**	1	SEAL-O-RING	
		1	**7M-8485**	1	SEAL-O-RING	
		1	**8T-1674**	1	TEE	
Y	12	2	**202-7999**	1	PUMP GP-GEAR (POWER TRAIN OIL)	336
Y	13	2	**205-4652**	1	VALVE GP-PRIORITY (POWER TRAIN OIL)	354
I	14	1	**205-8366**	1	HOSE AS	
I	15	1	**205-8367**	1	HOSE AS	
I	16	1	**205-8369**	1	HOSE AS	
	17	1	**205-8370**	1	TUBE AS	
I	18	1	**205-8371**	1	HOSE AS	
Y	19	2	**207-2833**	1	VALVE GP-RELIEF (POWER TRAIN OIL)	356
	20	1	**209-9359**	1	TUBE AS	
I	21	1	**209-9590**	1	HOSE AS	
	22	2	**211-5212**	1	ADAPTER	
	23	1	**213-8791**	1	TUBE AS	
Y	24	2	*213-8793*	1	SCREEN GP-MAGNETIC (POWER TRAIN OIL SUMP)	340
	25	1	**214-0790**	1	GAUGE AS-OIL LEVEL (DIPSTICK) (POWER TRAIN)	
	26	1	**216-1331**	1	TUBE AS	
	27	2	**216-4349**	1	SLEEVE	
	28	1	**227-6668**	1	TUBE AS	
	29	1	**230-4190**	1	TUBE AS	
Y	30	1	**245-6555**	2	FILTER GP-OIL (TRANSMISSION)	305
	31	1	**256-6938**	1	BRACKET	
	32	2	**061-8561**	2	SEAL-O-RING	
	33	2	**061-9455**	2	SEAL-O-RING	
	34	1	**109-1633**	1	CLIP (SLOT)	
	35	1	**109-1634**	1	CLIP (TAB)	
	36	2	**112-1574**	2	SEAL-O-RING	
	37	1	**118-0275**	1	WASHER (13.5X32X8-MM THK)	
	38	2	**118-8586**	2	SEAL-O-RING	
	39	1	*148-8305*	1	ADAPTER AS	
		1	**3J-1907**	1	SEAL-O-RING	
		1	**5P-9617**	1	ADAPTER	
	40	1	*148-8313*	2	ADAPTER AS	
					(EACH INCLUDES)	
		1	**3K-0360**	1	SEAL-O-RING	
		1	**5P-6944**	1	ADAPTER	
	41	1	*148-8317*	1	CONNECTOR GP	
		1	**3D-2824**	1	SEAL-O-RING	
		1	**5K-9090**	1	SEAL-O-RING	
		1	**6V-8714**	1	CONNECTOR	
	42	1	*148-8364*	2	ELBOW AS	
					(EACH INCLUDES)	

205-8619 LINES GP-POWER TRAIN OIL *(contd.)* i02247943

NOTE	REF NO	GRAPHIC REF	PART NUMBER	QTY	PART NAME 1 2 3 4 5 6 (PRODUCT LEVEL)	SEE PAGE
		1	**3K-0360**	1	SEAL-O-RING	
		1	**6V-8398**	1	SEAL-O-RING	
		1	**6V-8625**	1	ELBOW	
	43	1	*148-8381*	1	ELBOW AS	
		1	**3D-2824**	1	SEAL-O-RING	
		1	**6V-8398**	1	SEAL-O-RING	
		1	**8T-5429**	1	ELBOW	
	44	1	**1P-3708**	2	SEAL-RECTANGULAR	
	45	2	**1P-4577**	4	FLANGE-HALF	
	46	1	**1P-4579**	4	FLANGE-HALF	
	47	1,2	**1P-4582**	8	FLANGE-HALF	
	48	2	**2M-1538**	2	STUD-TAPERLOCK	
	49	1	**3J-1907**	6	SEAL-O-RING	
	50	1	**3J-7354**	1	SEAL-O-RING	
	51	1	**4B-0418**	2	CLIP	
	52	2	**4J-0520**	2	SEAL-O-RING	
	53	1	**4J-0524**	2	SEAL-O-RING	
	54	1,2	**4J-0527**	5	SEAL-O-RING	
M	55	1	**5C-2890**	1	NUT (M6X1-THD)	
M	56	1	**5C-9553**	1	BOLT (M6X1X16-MM)	
	57	2	**5D-5957**	3	SEAL-O-RING	
	58	1	**5F-8000**	1	SEAL-O-RING	
	59	1	**5H-7153**	2	SEAL-O-RING	
	60	2	**5K-3294**	1	CLIP	
	61	1	**5M-3062**	2	BOLT (3/8-16X0.75-IN)	
	62	2	**5P-0840**	3	SEAL-O-RING	
	63	1	**5P-2424**	8	BOLT (1/2-13X2.25-IN)	
	64	1,2	**5P-2566**	24	BOLT (1/2-13X1.5-IN)	
	65	1	**5P-3501**	1	ADAPTER	
	66	2	**5P-4268**	1	SEAL-O-RING	
	67	2	**5P-4889**	1	SEAL-O-RING	
	68	1	**5P-7703**	1	GROMMET	
	69	1	**6L-1651**	4	SEAL-O-RING	
	70	2	**6V-4365**	1	SEAL-O-RING	
	71	2	**6V-8801**	2	NUT (3/8-16-THD)	
	72	1,2	**7X-0290**	11	BOLT (3/8-16X3.5-IN)	
	73	1	**7X-0325**	2	BOLT (1/2-13X2.5-IN)	
	74	1,2	**7X-0326**	5	BOLT (1/2-13X3-IN)	
	75	2	**7X-0332**	2	BOLT (1/2-13X4.5-IN)	
	76	2	**7X-0481**	1	BOLT (203.2-MM)	
	77	1	**8C-3446**	1	VALVE AS-FLUID SAMPLING (POWER TRAIN OIL)	
	78	2	**8J-4351**	1	SEAL-O-RING	
	79	2	**8T-4121**	8	WASHER-HARD (11X21X2.5-MM THK)	
M	80	1	**8T-4183**	1	BOLT (M12X1.75X40-MM)	
M	81	2	**8T-4196**	8	BOLT (M10X1.5X35-MM)	
	82	1,2	**8T-4223**	57	WASHER-HARD (13.5X25.5X3-MM THK)	
	83	1,2	**8T-4896**	16	WASHER-HARD (10.2X18.5X2.5-MM THK)	
M	84	1,2	**8T-4956**	2	BOLT (M12X1.75X35-MM)	
	85	1	**8T-8917**	1	BOLT (1/2-13X1.25-IN)	
	86	2	**8T-8919**	3	BOLT (1/2-13X1.75-IN)	
	87	1	**8T-8920**	2	BOLT (1/2-13X3.25-IN)	
	88	1	**8T-9383**	4	BOLT (1/2-13X0.75-IN)	
	89	2	**8T-9392**	1	BOLT (1/2-13X7.5-IN)	
	90	1	**9D-6196**	1	CLIP (SLOT)	
	91	1	**9D-6197**	1	CLIP (TAB)	
	92	2	**9M-7539**	1	SEAL-O-RING	
	93	1	**9X-8256**	1	WASHER (6.6X12X2-MM THK)	

I-REFER TO HYDRAULIC INFORMATION SYSTEM
M-METRIC PART
Y-SEPARATE ILLUSTRATION

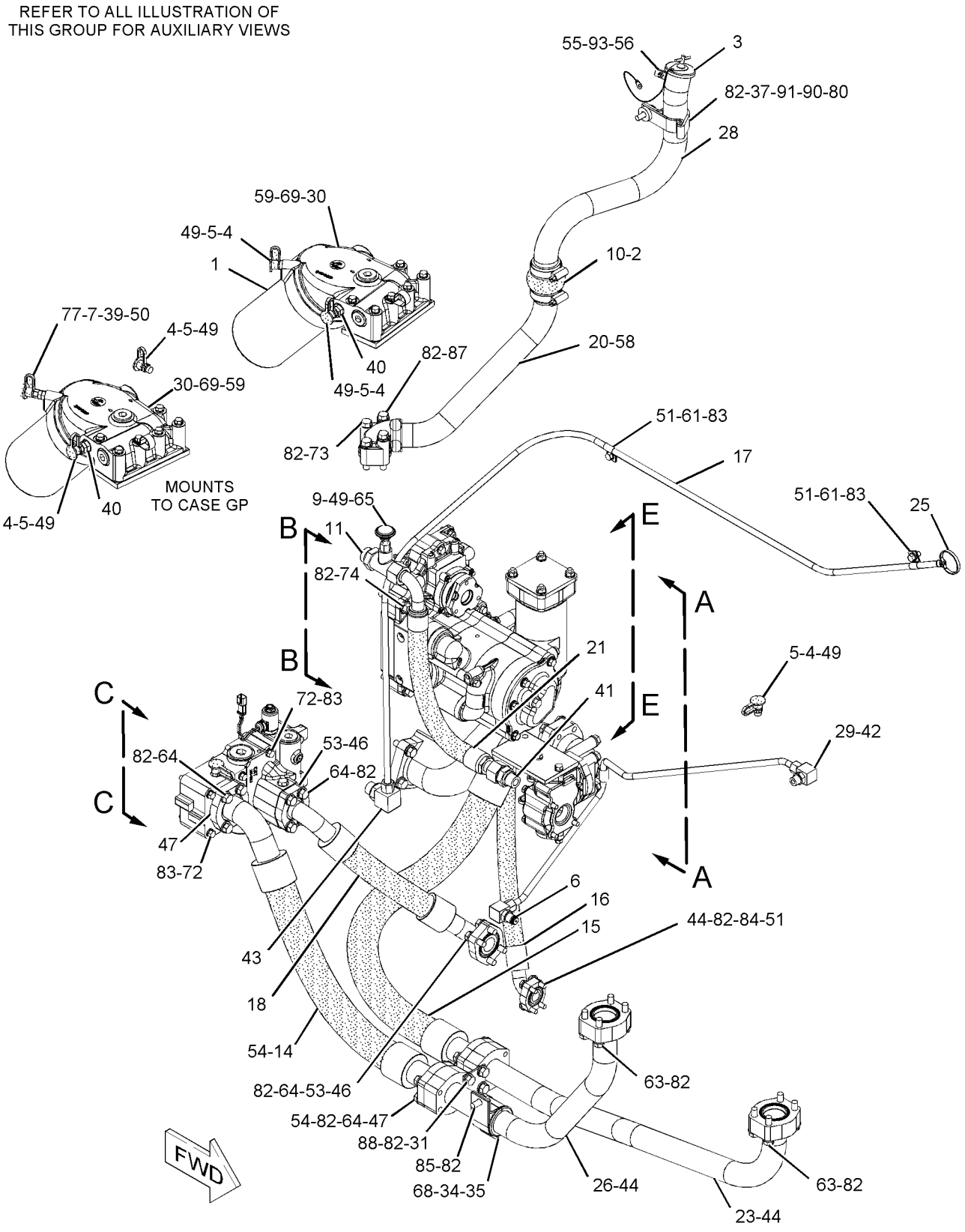

GRAPHIC #1

g01123584

205-8619 **LINES GP-POWER TRAIN OIL** ***(contd.)*** **i02247943**

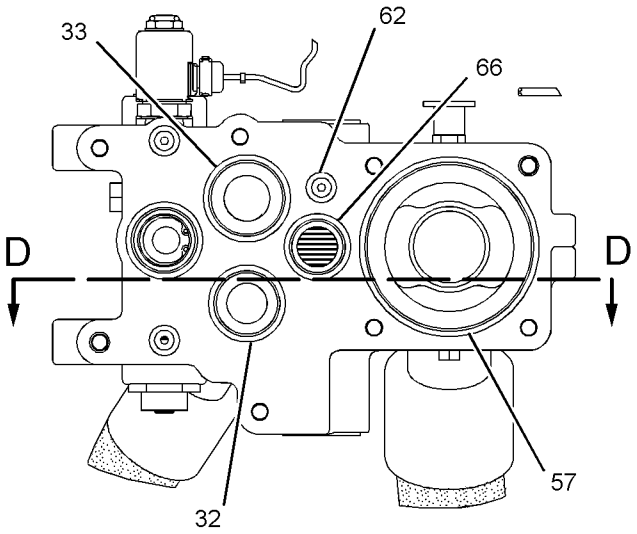

VIEW C-C

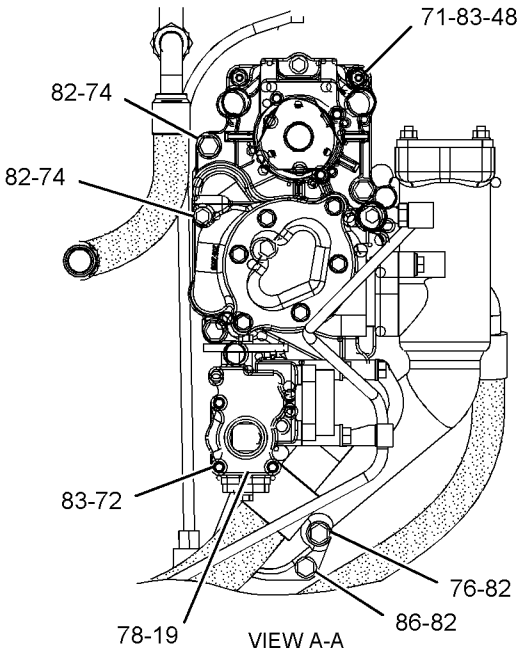

VIEW A-A

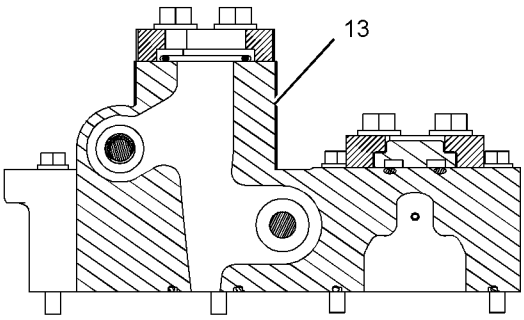

SECTION D-D

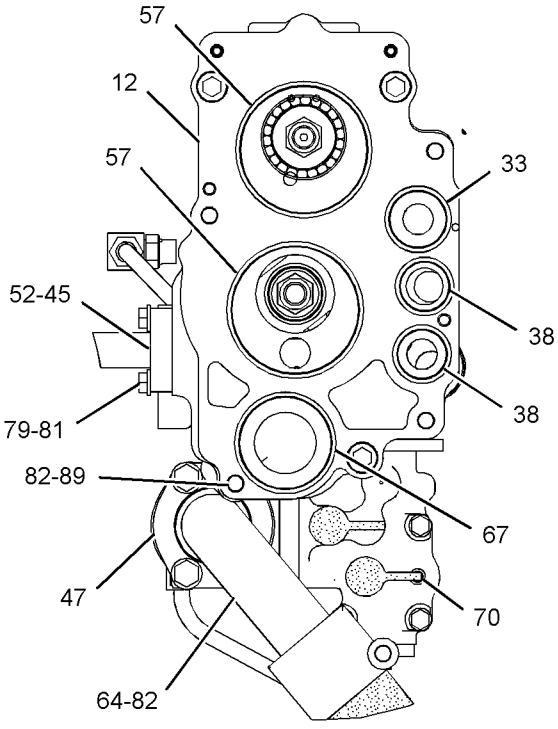

VIEW B-B

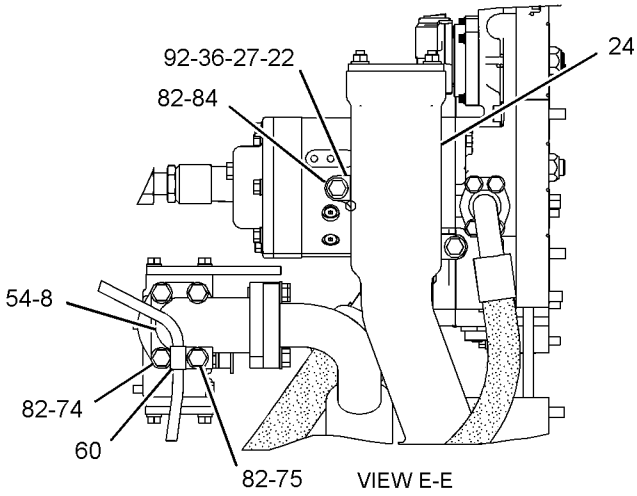

VIEW E-E

GRAPHIC #2 **<END>** g01123585

8E-7695 MOUNTING GP-TRANSMISSION

S/N: RJS1-UP

PART OF 205-8605 POWER TRAIN AR

SMCS-3082 **i01421811**

NOTE	REF NO	GRAPHIC REF	PART NUMBER	QTY	PART NAME 1 2 3 4 5 6 (PRODUCT LEVEL)	SEE PAGE
	1	1	**6J-2515**	2	BOLT-12 POINT HEAD	
	2	1	**1S-4305**	18	WASHER (.531X1X.56 IN THK)	
	3	1	**0V-0375**	16	BOLT (1/2-13X3.25 IN)	
	4	1	**1A-7669**	3	BOLT (1/2-13X7 IN)	
	5	1	**5P-8245**	3	WASHER-HARD (13.5X25.5X3MM THK)	
	6	1	**9M-9647**	3	SEAL-O-RING (40.64MM ID)	
	7	1	**6L-9284**	1	SEAL-O-RING (59.7MM ID)	
	8	1	**5P-9519**	1	SEAL-O-RING (843.0MM ID)	
	9	1	**7M-0475**	1	RING-SEALING	
	10	1	**3T-5830**	1	PLATE	
	11	1	**4L-9337**	4	BOLT (3/8-16X1.5 IN)	
	12	1	**8T-4896**	4	WASHER-HARD (10.2X18.5X2.5MM THK)	
	13	1	**9W-6612**	1	RING-SEALING	
	14	1	**5D-9514**	6	BOLT (5/8-11X6.25 IN)	
	15	1	**5P-8247**	6	WASHER-HARD (17X32X3.5MM THK)	

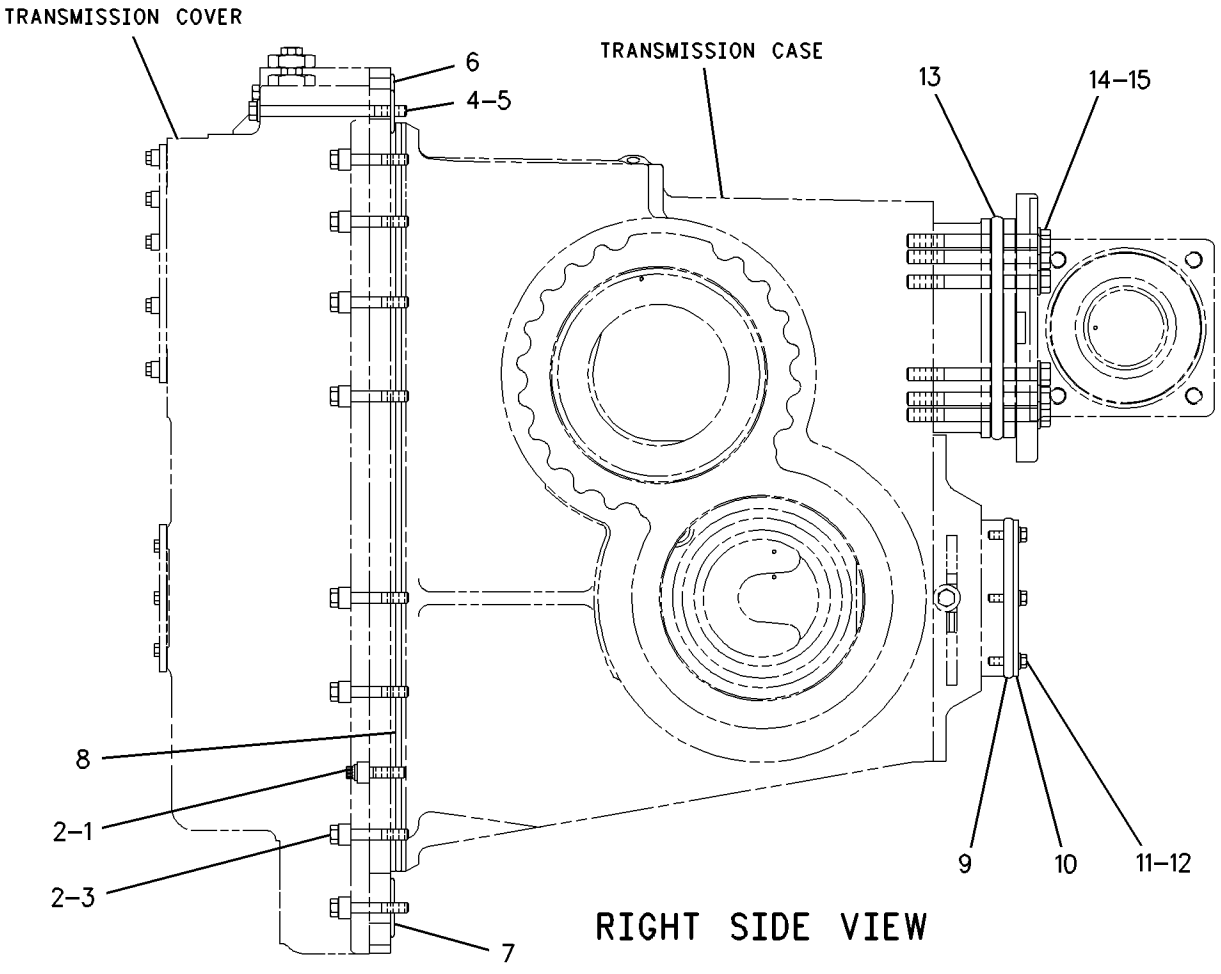

GRAPHIC #1 **<END>** g00746402

POWER TRAIN

202-2722 PLANETARY GP-TRANSMISSION

S/N: DXK1-UP

PART OF 202-2719 TRANSMISSION AR

SMCS-3160 **i02203095**

NOTE	REF NO	GRAPHIC REF	PART NUMBER	QTY	PART NAME 1 2 3 4 5 6 (PRODUCT LEVEL)	SEE PAGE
	1	1	**6P-3458**	1	SPACER (21.79X30X3.66-MM THK)	
	2	1	**8K-2692**	1	RING-RETAINING	
	3	1	**6F-0156**	1	RING-METAL SEAL	
	4	1	**9G-1918**	1	GEAR-SUN (34-TEETH)	
	5	1	**106-7798**	2	BALL BEARING	
	6	1	**9F-3788**	1	RING-METAL SEAL	
	7	1	**8S-9104**	2	RING-RETAINING	
	8	1	**3P-3321**	2	SEAL-METAL RING	
	9	1	**6T-3726**	1	CARRIER AS	
		1	**4S-8537**	1	DOWEL	
	10	1	**108-2736**	2	RING-LOCK	
	11	1	**238-5092**	1	PISTON	
	12	1	**202-2729**	1	HOUSING AS (CLUTCH)	
	13	1	**232-7575**	2	PLATE-CLUTCH	
	14	1	**8P-4617**	1	SEAL-METAL RING	
	15	1	**166-3544**	1	PLATE AS	
		1	**2L-1699**	1	PIN-SPRING	
		1	**8T-1443**	1	DOWEL	
		1	**8T-1444**	2	DOWEL	
	16	1	**112-7308**	1	CARRIER-PLANETARY	
	17	1	**3P-3059**	1	GEAR-SUN (42-TEETH)	
	18	1	**221-3702**	1	TUBE AS	
	19	1	**0S-1587**	1	BOLT (1/2-13X1.75-IN)	
M	20	1,2	**5P-8245**	22	WASHER-HARD (13.5X25.5X3-MM THK)	
	21	1	**7G-5746**	1	HOUSING-CLUTCH	
	22	1	**6S-1753**	1	RING-RETAINING	
	23	1	**5M-6187**	1	RING-METAL SEAL	
	24	1	**8F-8544**	2	BOLT (3/8-16X6.25-IN)	
	25	1	**9M-1503**	1	RING-METAL SEAL	
	26	1	**9M-4355**	20	DAMPER-BOLT	
	27	1	**108-2735**	1	RING-LOCK	
	28	1	**7G-6772**	1	CARRIER AS (PLANET)	
		1	**2D-6642**	2	BALL	
	29	1	**9P-5531**	1	GEAR-SUN (50-TEETH)	
	30	1	**3P-3738**	1	HOUSING AS-CLUTCH	
		1	**3P-2413**	1	HOUSING-CLUTCH	
		1	**7M-8480**	4	DOWEL	
	31	1	**3P-2791**	1	HOUSING-CLUTCH	
	32	1	**153-5481**	2	PISTON-CLUTCH	
	33	1	**8M-5266**	1	SEAL-O-RING	
R	34	1	**3P-7489**	4	PLATE-CLUTCH	
	35	1	**6I-9255**	5	DISC-FRICTION	
	36	1	**9W-2977**	1	HUB AS	
		1	**4S-8537**	1	DOWEL	
	37	1	**6P-7379**	1	HOUSING AS	
		1	**8B-1312**	3	DOWEL	
	38	1	**206-2940**	1	HOUSING AS (ROTATING)	
	39	1	**6L-3616**	2	CONNECTOR	
	40	1	**6Y-9956**	1	TUBE AS	
	41	1	**0T-0065**	20	BOLT (3/8-16X3.5-IN)	
	42	1,2	**5M-2894**	26	WASHER-HARD (10.2X18.5X2.5-MM THK)	
	43	1	**3P-2792**	1	SEAL-RING	
	44	1	**153-5482**	1	PISTON-CLUTCH	
	45	1	**206-2603**	1	MANIFOLD AS	
		1	**7M-8480**	2	DOWEL	
	46	1	**1P-9261**	1	SEAL-RING	

202-2722 **PLANETARY GP-TRANSMISSION** *(contd.)* **i02203095**

NOTE	REF NO	GRAPHIC REF	PART NUMBER	QTY	PART NAME 1 2 3 4 5 6 (PRODUCT LEVEL)	SEE PAGE
	47	1	**8S-6212**	2	BOLT (1/2-13X13-IN)	
	48	1	**6V-0836**	3	RING-RETAINING	
	49	1	**0S-1594**	4	BOLT (3/8-16X1-IN)	
	50	1	**6Y-3484**	3	BALL BEARING	
	51	1	**241-0635**	1	SEAL-LIP TYPE	
	52	1	**6V-1720**	1	PLATE-SERIAL NUMBER (TRANSMISSION)	
	53	1	**205-3255**	1	SHAFT-TRANSMISSION INPUT	
	54	1	**240-8966**	1	SHAFT AS (TRANSMISSION OUTPUT)	
	55	1	**6J-3473**	2	RING-SNAP	
	56	1	**240-9017**	1	ROTOR	
	57	1	**8T-1141**	3	RING-RETAINING	
	58	1	**240-8586**	1	PLATE	
	59	1	**9W-6991**	2	RING-SEAL	
	60	1	**5P-3150**	1	RING-RETAINING	
	61	1	**8P-6997**	3	SPRING-DISC	
	62	1	**8P-6986**	1	PLATE-RETAINER	
	63	1	**5P-3119**	1	RING-RETAINING	
	64	1	**5M-7900**	16	BOLT (7/16-14X14-IN)	
	65	1	**3P-2794**	3	SEAL-RING	
	66	1	**3P-2793**	4	SEAL-RING	
	67	1	**6P-5751**	1	GEAR-RING (90-TEETH)	
	68	1	**8E-8304**	8	DISC-THRUST	
	69	1	**7G-2476**	4	GEAR-PLANETARY (20-TEETH)	
	70	1	**5M-6126**	4	BEARING AS-ROLLER	
	71	1	**6P-6739**	4	SHAFT-PLANETARY	
	72	1	**169-7055**	5	DISC-CLUTCH	
	73	1	**9W-8298**	6	DOWEL	
	74	1	**9H-5537**	24	SPRING	
	75	1	**3P-3098**	1	GEAR-RING (90-TEETH)	
	76	1	**7G-3457**	8	GEAR (25-TEETH)	
	77	1	**7G-4817**	1	RING-SEAL	
	78	1	**238-5090**	1	PISTON (CLUTCH)	
	79	1	**112-4511**	4	PIN-SPRING	
	80	1	**5M-7925**	8	BEARING AS-ROLLER	
	81	1	**112-7309**	4	SHAFT-PLANETARY	
	82	1	**9W-9856**	9	DISC AS-FRICTION	
	83	1	**7G-3435**	1	GEAR-RING (90-TEETH)	
	84	1	**7H-7658**	12	SPRING	
R	85	1	**3P-7447**	10	PLATE-CLUTCH	
	86	1	**9W-8297**	6	DOWEL	
	87	1	**9W-5768**	1	GEAR-RING (86-TEETH)	
	88	1	**6T-3720**	1	GEAR-RING (92, 80-TEETH)	
	89	1	**7G-0897**	24	DISC-THRUST	
	90	1	**9G-1919**	4	GEAR-PLANETARY (25-TEETH)	
	91	1	**3S-2708**	8	PIN-SPRING	
	92	1	**8P-4047**	4	SHAFT-PLANETARY	
	93	1	**5P-6254**	4	BEARING	
	94	1	**8M-4390**	2	SEAL-O-RING	
	95	1	**2D-5658**	1	BALL BEARING	
	96	1	**6V-8344**	1	RING-RETAINING	
	97	1	**8M-5661**	1	SEAL-O-RING	
	98	2	**2S-8926**	1	BOLT (1/2-13X13.375-IN)	
	99	2	**0S-1619**	2	BOLT (3/8-16X3-IN)	
	100	2	**240-8587**	1	HARNESS AS-SENSOR (TRANSMISSION OUTPUT SPEED)	
		2	**155-2270**	2	KIT-CONNECTING PLUG (2-PIN)	
		1	**155-2271**	1	KIT-CONNECTING PLUG (4-PIN)	
					(EACH INCLUDES PLUG AS & WEDGE)	
	101	2	**2H-3855**	2	BOLT (1/2-13X0.875-IN)	
	102	2	**237-9601**	1	BRACKET AS	

202-2722 **PLANETARY GP-TRANSMISSION** *(contd.)* **i02203095**

NOTE	REF NO	GRAPHIC REF	PART NUMBER	QTY	PART NAME 1 2 3 4 5 6 (PRODUCT LEVEL)	SEE PAGE
	103	2	**2H-3755**	2	BOLT (5/16-18X0.62-IN)	
	104	2	**3E-4352**	2	WASHER-HARD (8.8X20.5X2.5-MM THK)	
	105	2	**191-8305**	1	SENSOR GP-SPEED (TRANSMISSION OUTPUT 2)	
	106	2	**191-8304**	1	SENSOR GP-SPEED (TRANSMISSION OUTPUT 1)	
	107	2	**4P-7581**	1	CLIP	
	108	2	**3S-2093**	1	STRAP-CABLE	
	109	2	**117-1385**	2	SEAL-O-RING	

M-METRIC PART
R-REMFG PART MAY BE AVAILABLE

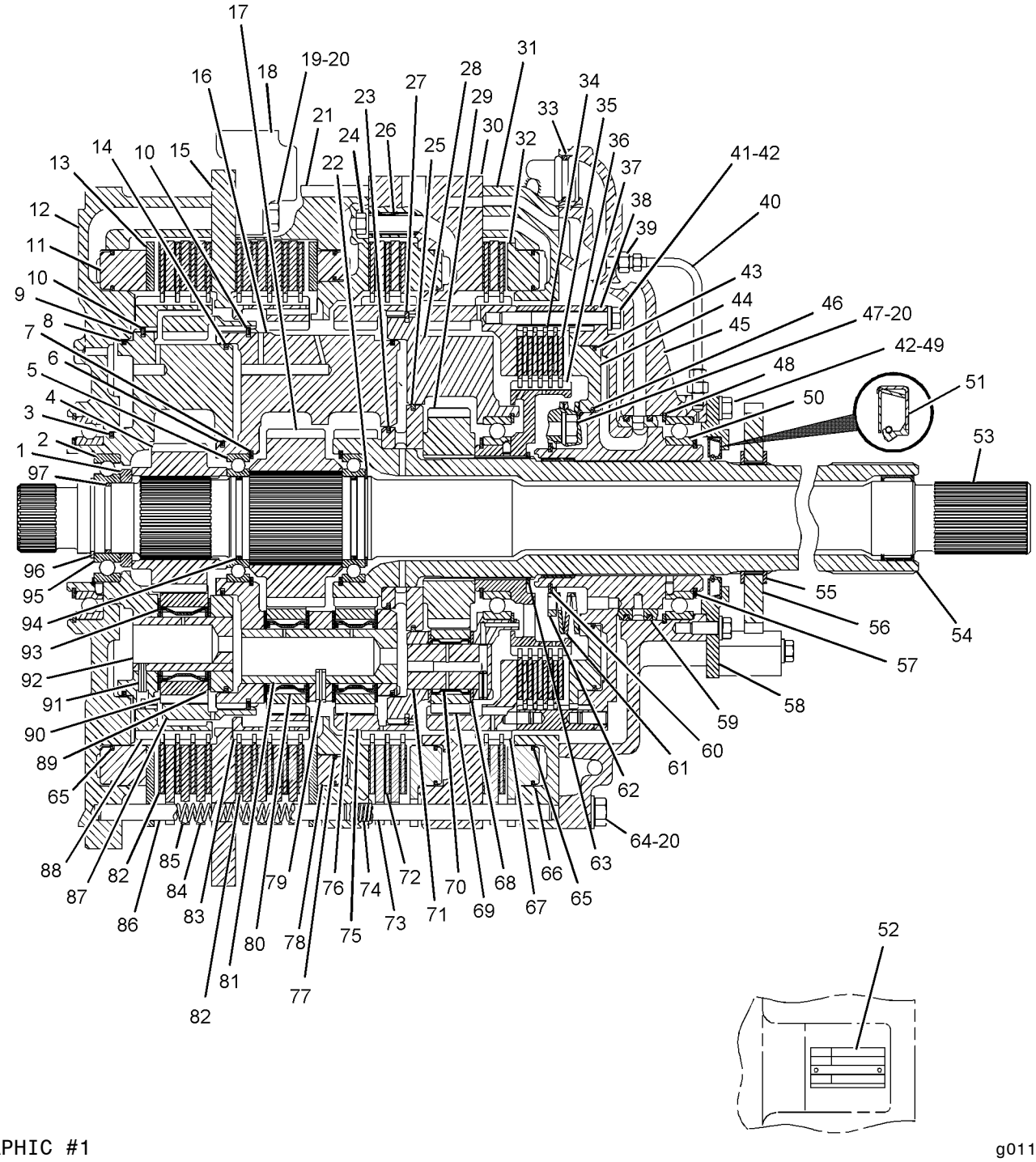

GRAPHIC #1 g01113086

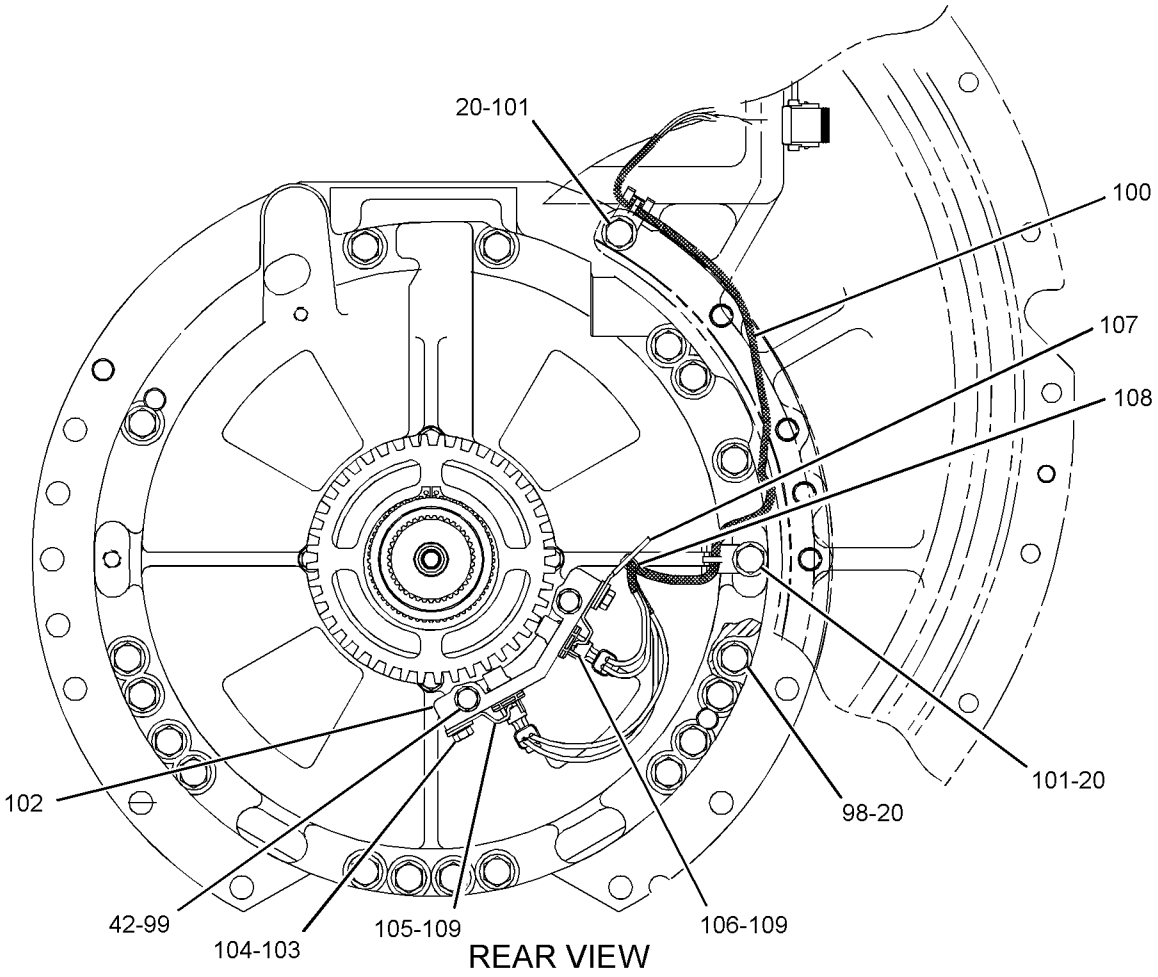

GRAPHIC #2 **<END>** g01113087

205-8605 POWER TRAIN AR

S/N: RJS1-UP

PART OF 205-8600 GENERAL AR-TRACTOR

SMCS-3000, 4000 **i02247980**

NOTE	PART NUMBER	QTY	PART NAME 1 2 3 4 5 6 (PRODUCT LEVEL)	SEE PAGE
Y	*9W-9154*	1	AXLE GP	295
Y	*207-1287*	2	BRAKE GP-SERVICE	469
Y	*232-6622*	1	CONTROL & MTG GP-PEDAL	749
Y	*242-5198*	1	CONTROL GP-STEERING	475
Y	*205-8617*	1	COUPLING GP-PUMP	302
Y	*6Y-9052*	1	DRIVE GP-STEERING	482
Y	*164-4210*	2	FINAL DRIVE GP	307
Y	*205-8619*	1	LINES GP-POWER TRAIN OIL	326
Y	*8E-7695*	1	MOUNTING GP-TRANSMISSION	330
Y	*207-4803*	1	SHAFT GP-DRIVE	342
Y	*205-4199*	1	TORQUE CONVERTER GP	346
Y	**202-2719**	1	TRANSMISSION AR	348
Y	*209-9360*	1	VALVE & MTG GP-STEER & BRAKE (STEERING, BRAKE)	493

Y-SEPARATE ILLUSTRATION

<END>

202-7999 PUMP GP-GEAR—POWER TRAIN OIL

S/N: RJS1-UP

PART OF 205-8619 LINES GP-POWER TRAIN OIL

SMCS-3066, 3115, 5073 **i02248005**

NOTE	REF NO	GRAPHIC REF	PART NUMBER	QTY	PART NAME 1 2 3 4 5 6 (PRODUCT LEVEL)	SEE PAGE
	1	1	**3T-5356**	1	CAGE-BEARING	
	2	1	**5H-4279**	1	PLUG-CUP	
	3	1	**5P-9439**	2	BALL BEARING	
	5	1	**118-8706**	1	SEAL-O-RING	
Y	6	1	**202-8000**	1	PUMP GP-GEAR (POWER TRAIN OIL)	338
	7	1	**206-4473**	1	GEAR (23-TEETH)	
	8	1	**206-8670**	1	PLATE-MOUNTING	
	9	1	**208-7524**	1	SHAFT	
	10	1	**212-2301**	1	FLANGE	
	12	1	**0S-1591**	3	BOLT (3/8-16X1.5-IN)	
	13	1	**0S-1619**	2	BOLT (3/8-16X3-IN)	
	14	1	**111-4919**	1	SEAL-LIP TYPE	
	15	1	**1B-8714**	1	KEY-WOODRUFF	
	16	1	**2H-5549**	1	RING-RETAINING	
	17	1	**2K-0337**	1	LOCKNUT (3/4-16-THD)	
	18	1	**2M-3974**	1	RING-RETAINING	
	19	1	**5P-8066**	3	SEAL-O-RING	
M	20	1	**5P-8245**	4	WASHER-HARD (13.5X25.5X3-MM THK)	
	21	1	**6K-8714**	1	WASHER (20X51X3-MM THK)	
	22	1	**6L-4783**	4	BOLT-12 POINT HEAD (5/16-18X1.25-IN)	
	23	1	**6V-1179**	1	SEAL-O-RING	
	24	1	**7L-7524**	1	BOLT (3/8-16X10.25-IN)	
	25	1	**7X-0326**	3	BOLT (1/2-13X3-IN)	
	26	1	**8T-9392**	1	BOLT (1/2-13X7.5-IN)	
B	27	1	**1U-8846**		SEALANT-GASKET	

B-USE AS REQUIRED
M-METRIC PART
Y-SEPARATE ILLUSTRATION

202-7999 PUMP GP-GEAR *(contd.)* **i02248005**

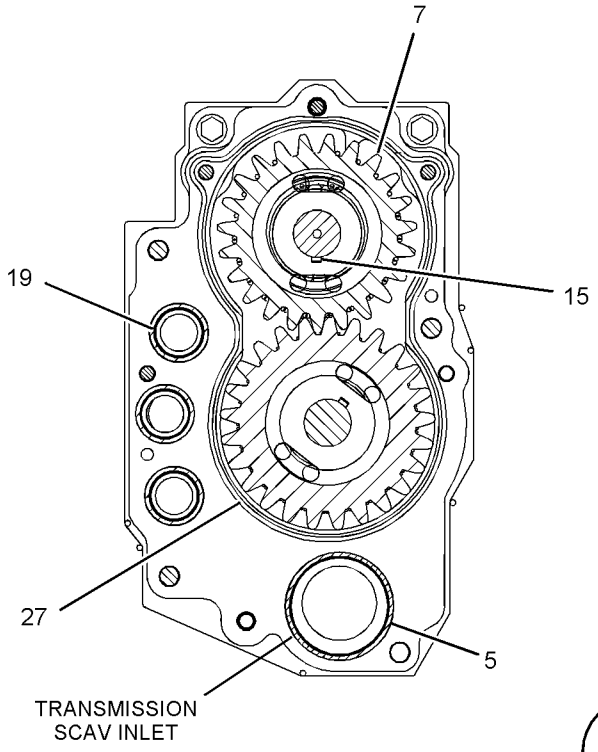

SECTION A-A

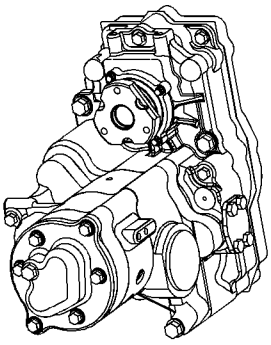

PICTORIAL VIEW

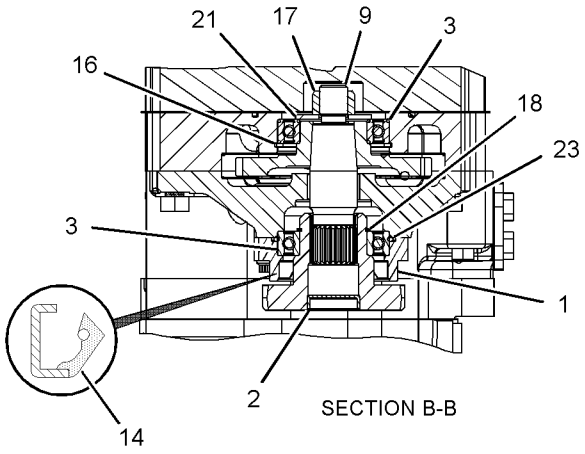

SECTION B-B

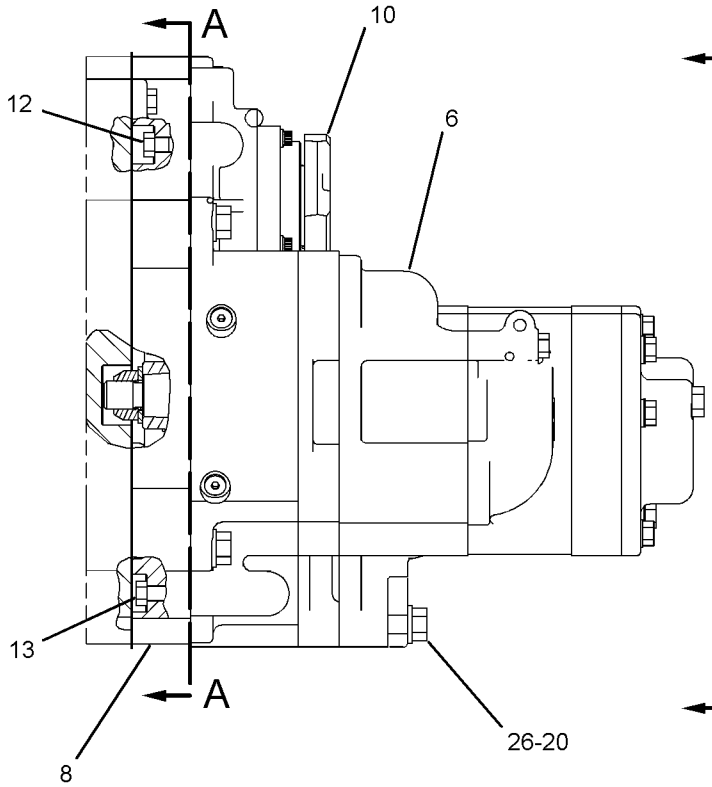

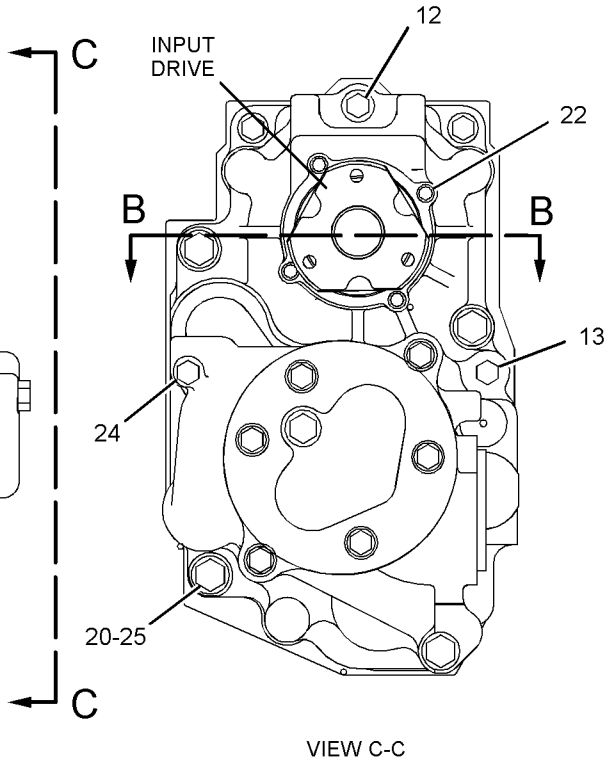

VIEW C-C

GRAPHIC #1 **<END>** g01038240

202-8000 PUMP GP-GEAR–POWER TRAIN OIL

S/N: RJS1-UP
4-SECTION
PART OF 202-7999 PUMP GP-GEAR

SMCS-3066, 3115, 5073 **i02001469**

NOTE	REF NO	GRAPHIC REF	PART NUMBER	QTY	PART NAME 1 2 3 4 5 6 (PRODUCT LEVEL)	SEE PAGE
	1	1	**3S-0004**	6	WASHER (0.406X0.728X0.09-IN THK)	
	3	1	**7S-6984**	1	COVER AS-PUMP (OIL)	
		1	**5M-3320**	2	BEARING-SLEEVE	
	4	1	**9P-8078**	2	GEAR (12-TEETH)	
	5	1	**9S-1018**	8	WASHER (9.73X19.05X0.84-MM THK)	
	6	1	**9W-3714**	2	GEAR (12-TEETH)	
	7	1	**129-1609**	5	SEAL-O-RING	
	8	1	**206-4475**	1	GEAR (25-TEETH)	
	9	1	**206-8666**	1	GEAR AS (OIL PUMP)	
	10	1	**206-8684**	1	BODY AS (OIL PUMP)	
	11	1	**206-8686**	1	BODY AS (OIL PUMP)	
	12	1	**206-8690**	1	BODY-OIL PUMP	
	13	1	**206-8706**	1	GEAR AS (OIL PUMP)	
	14	1	**208-8899**	2	GEAR (8-TEETH)	
	15	1	**209-2667**	1	CARRIER AS (OIL PUMP)	
	16	1	**222-3490**	1	BODY AS-OIL PUMP	
	18	1	**1B-8705**	1	KEY-WOODRUFF	
	19	1	**1B-8714**	1	KEY-WOODRUFF	
	20	1	**2B-9373**	2	KEY-WOODRUFF	
	21	1	**2K-0337**	1	LOCKNUT (3/4-16-THD)	
	22	1	**3J-1907**	1	SEAL-O-RING	
	23	1	**4S-9134**	1	WASHER-HARD (20X30X3-MM THK)	
	24	1	**5P-8066**	6	SEAL-O-RING	
	25	1	**7L-7524**	6	BOLT (3/8-16X10.25-IN)	
	26	1	**9S-4191**	1	PLUG	

202-8000 PUMP GP-GEAR *(contd.)* **i02001469**

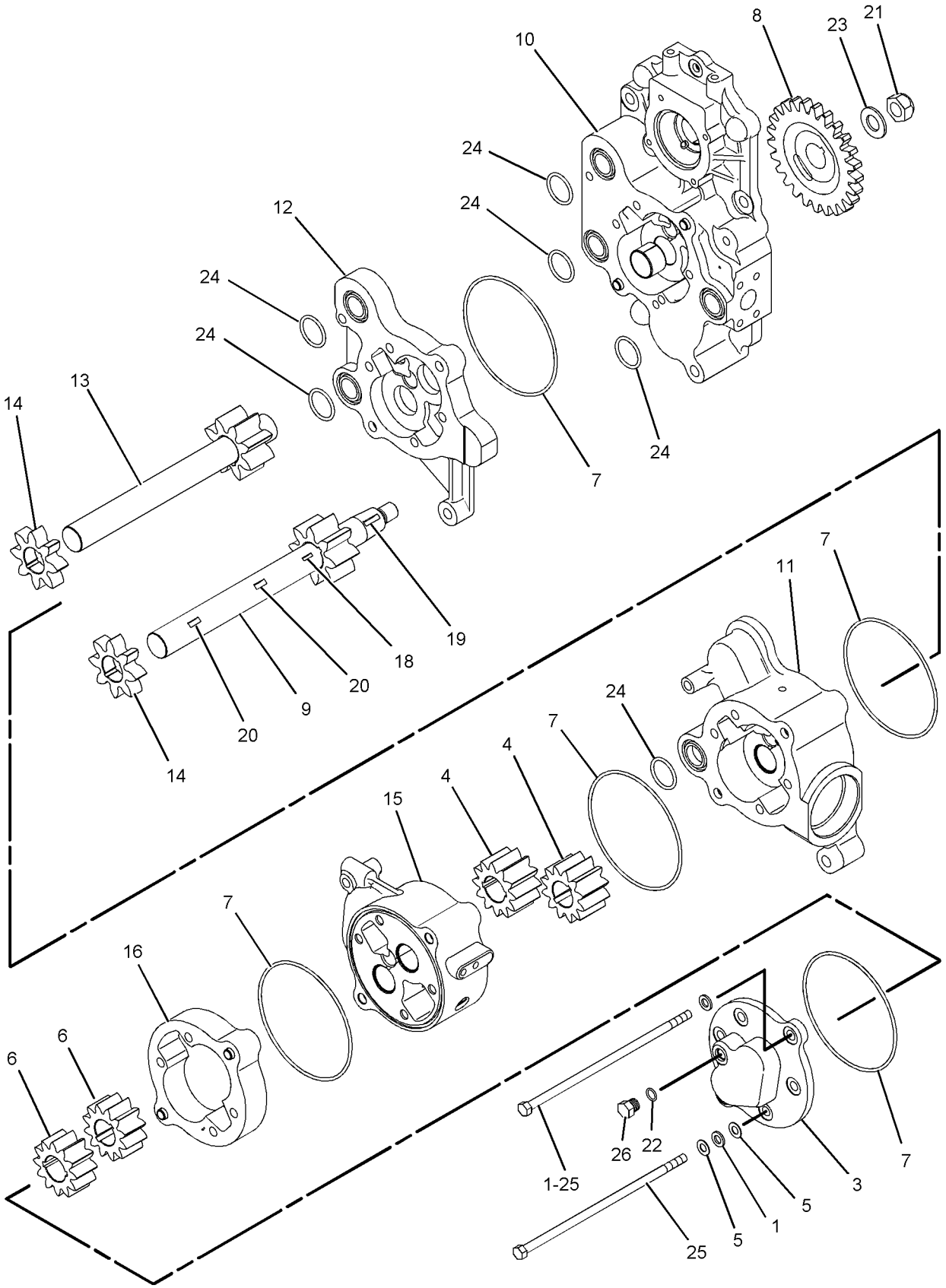

GRAPHIC #1 **<END>** g01037521

213-8793 SCREEN GP-MAGNETIC—POWER TRAIN OIL SUMP

S/N: RJS1-UP

PART OF 205-8619 LINES GP-POWER TRAIN OIL

SMCS-3067 **i02259749**

NOTE	REF NO	GRAPHIC REF	PART NUMBER	QTY	PART NAME 1 2 3 4 5 6 (PRODUCT LEVEL)	SEE PAGE
	1	1	**3S-3440**	1	WASHER-WAVE	
	2	1	**3S-3875**	1	SCREEN-SUCTION (POWER TRAIN OIL SUMP)	
	3	1	**213-8790**	1	HOUSING	
	4	1	**3S-3439**	1	COVER-TOP	
	5	1	**6L-5359**	1	SEAL-O-RING	
	6	1	**6V-5188**	1	SEAL-O-RING	
	7	1	**8T-4121**	4	WASHER-HARD (11X21X2.5-MM THK)	
M	8	1	**8T-4133**	4	NUT (M10X1.5-THD)	
M	9	1	**9X-8281**	4	STUD-TAPERLOCK (M10X1.5X45-MM)	

M-METRIC PART

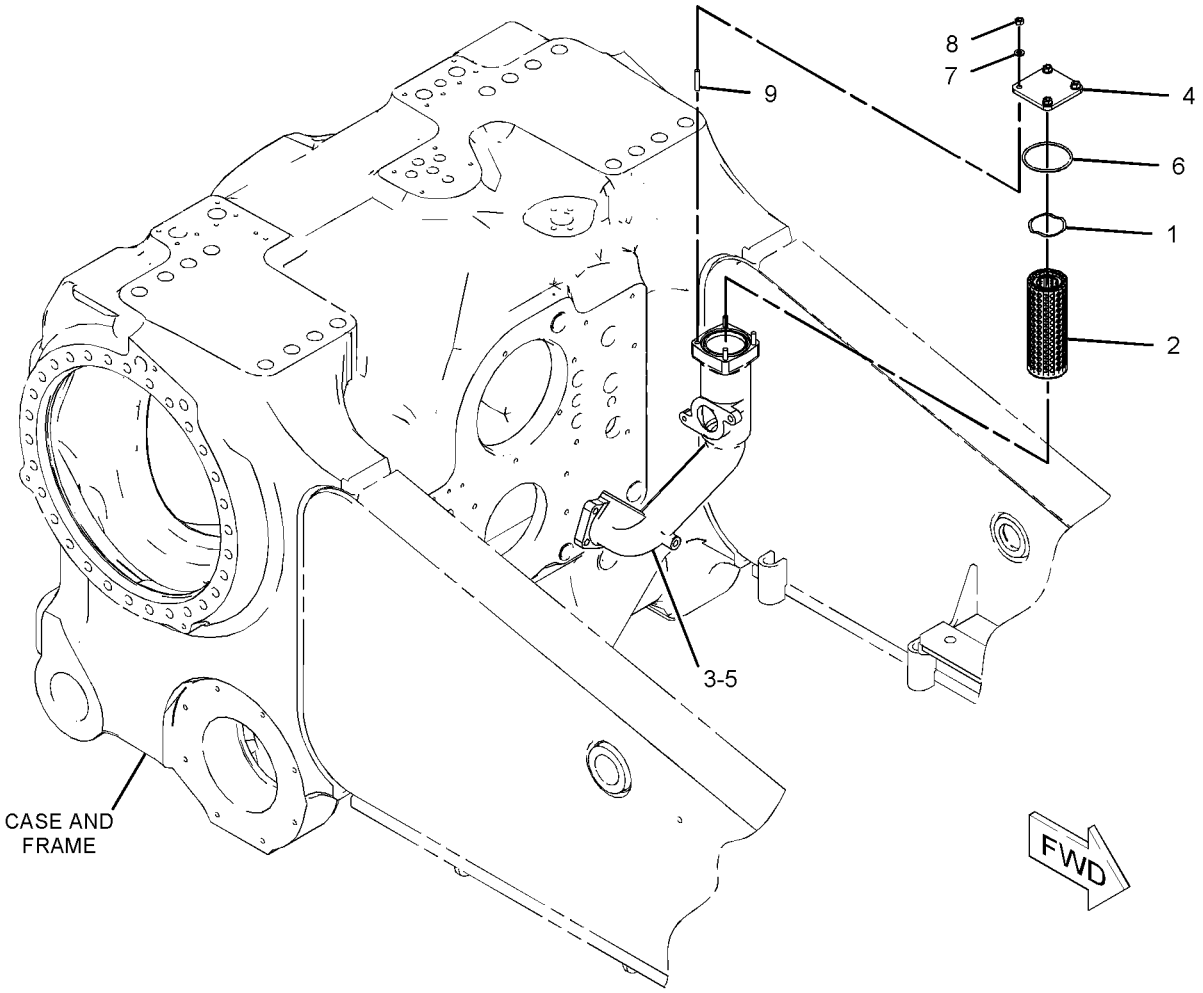

GRAPHIC #1 **<END>** g01039678

160-4927 SEGMENT GP-SPROCKET

S/N: RJS1-UP

PART OF 164-4210, 186-2949, 192-9147 FINAL DRIVE GP

ALSO AN ATTACHMENT

SMCS-4155 **i01629838**

NOTE	REF NO	GRAPHIC REF	PART NUMBER	QTY	PART NAME 1 2 3 4 5 6 (PRODUCT LEVEL)	SEE PAGE
	1	1	**7H-3609**	30	NUT (7/8-14 THD)	
	2	1	**7T-1248**	30	BOLT (7/8-14X2.9 IN)	
	3	1	**160-4926**	5	SEGMENT-SPROCKET	
	4	1	**5P-8249**	30	WASHER-HARD (24X41.5X4MM THK)	

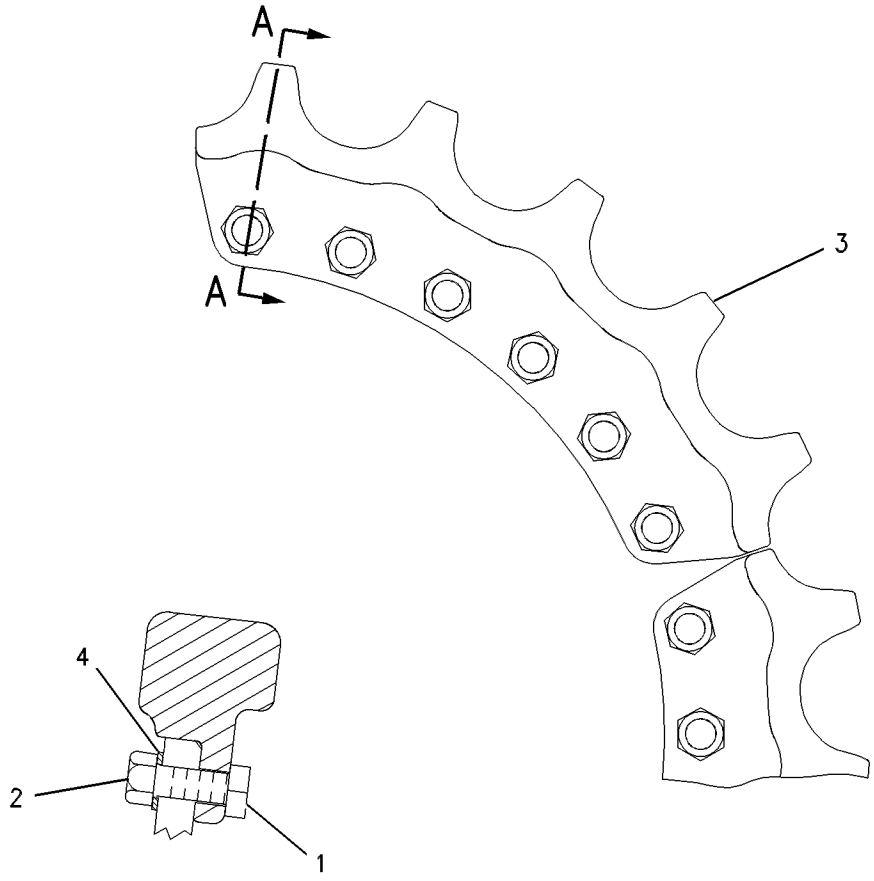

SECTION A-A

GRAPHIC #1 **<END>** g00561254

207-4803 SHAFT GP-DRIVE

S/N: RJS1-UP

PART OF 205-8605 POWER TRAIN AR

SMCS-3253 **i02248011**

NOTE	REF NO	GRAPHIC REF	PART NUMBER	QTY	PART NAME 1 2 3 4 5 6 (PRODUCT LEVEL)	SEE PAGE
Y	1	1	**7G-3265**	1	UNIVERSAL JOINT GP (DRIVE SHAFT)	349
	2	1	**8E-9487**	1	YOKE AS	
		1	**4F-8503**	1	PLUG-CUP	
	3	1	**0S-0484**	8	BOLT (1/2-20X2.25-IN)	
	4	1	**7D-1677**	1	RACE-BEARING INNER	

Y-SEPARATE ILLUSTRATION

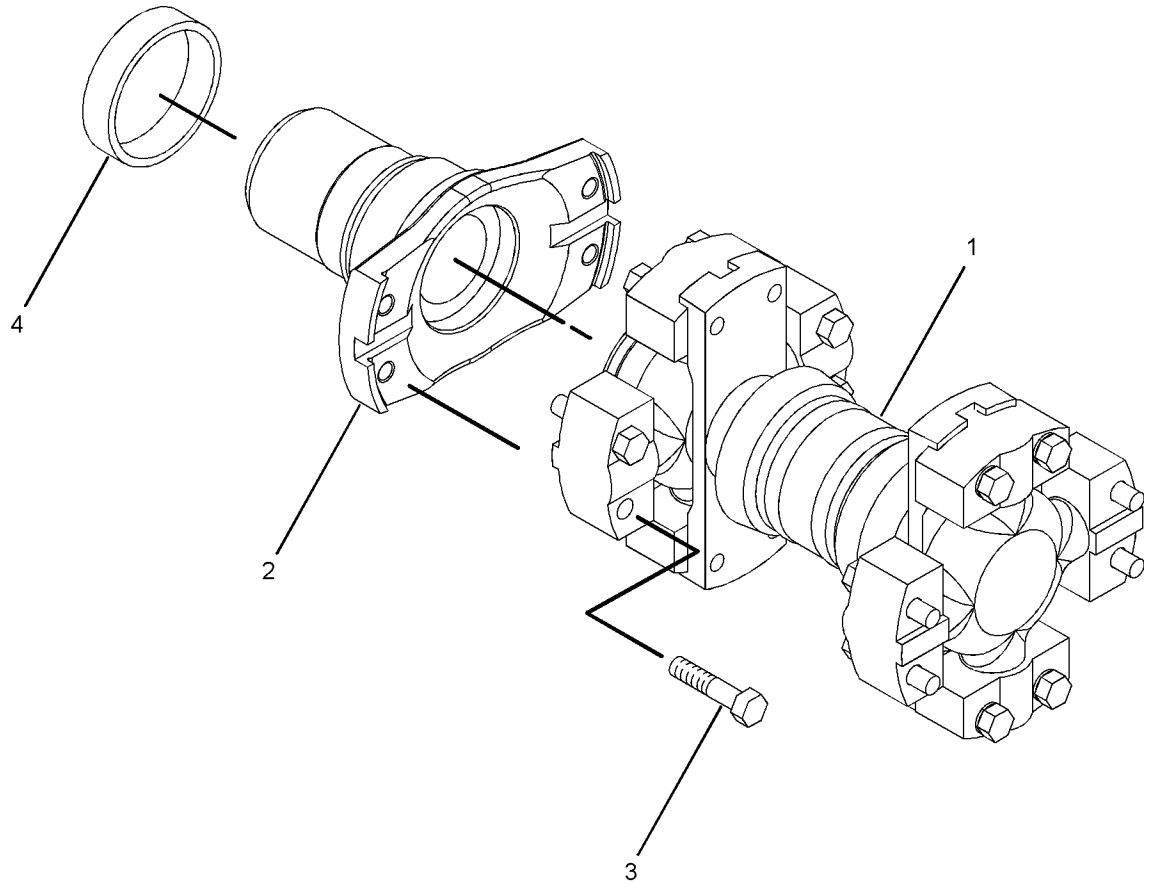

GRAPHIC #1 **<END>** g01037560

209-3426 SLIP JOINT GP

S/N: RJS1-UP

PART OF 205-8617 COUPLING GP-PUMP

SMCS-3251, 3253 **i02001181**

NOTE	REF NO	GRAPHIC REF	PART NUMBER	QTY	PART NAME 1 2 3 4 5 6 (PRODUCT LEVEL)	SEE PAGE
	1	1	**2J-8333**	1	SEAL-LIP TYPE	
	2	1	**5H-4279**	1	PLUG-CUP	
	3	1	**209-3424**	1	YOKE	
	4	1	**209-3428**	1	YOKE	

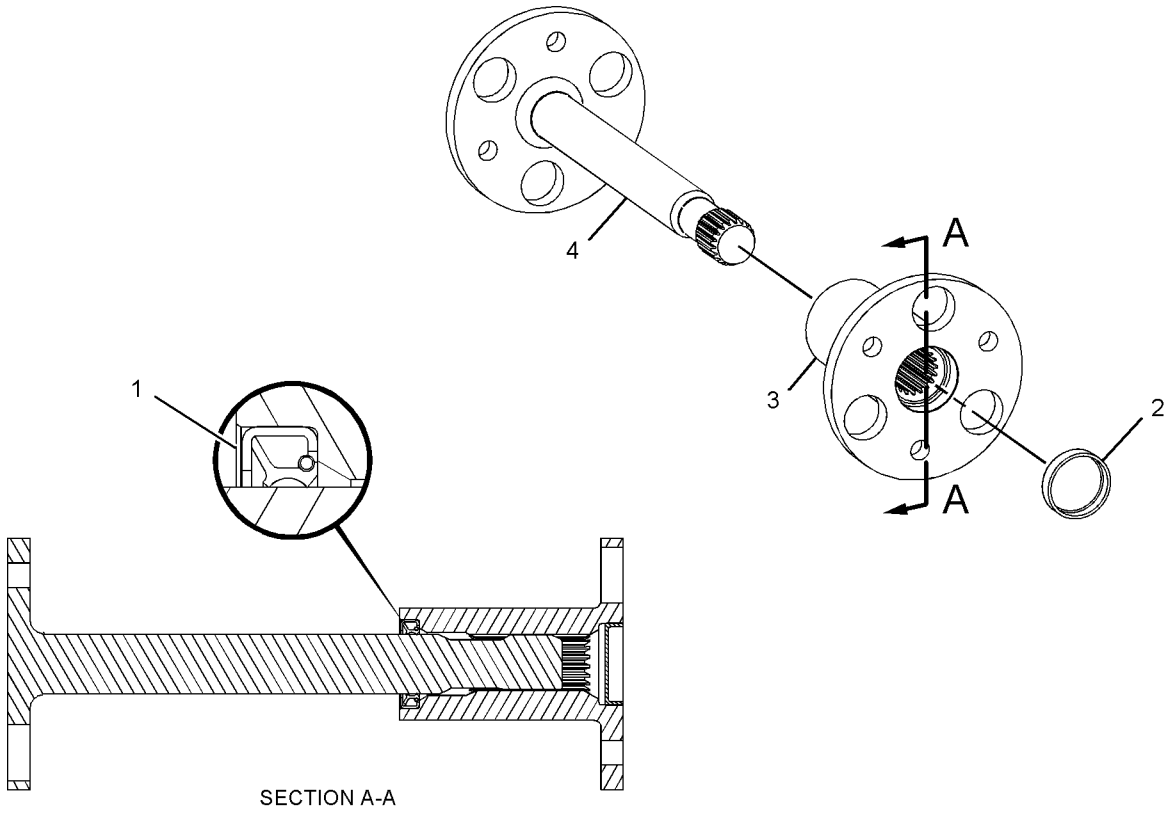

GRAPHIC #1 **<END>** g01039052

205-4198 TORQUE CONVERTER GP

S/N: TCW1-UP

PART OF 205-4199 TORQUE CONVERTER GP

SMCS-3101 **i02000944**

NOTE	REF NO	GRAPHIC REF	PART NUMBER	QTY	PART NAME 1 2 3 4 5 6 (PRODUCT LEVEL)	SEE PAGE
	1	1	**5D-7449**	1	CUP-BEARING	
	2	1	**5F-1248**	1	CONE-BEARING	
	3	1	**1T-0229**	1	LOCKNUT-BEARING	
	4	1	**1T-0242**	1	LOCKWASHER-BEARING	
	5	1	**6Y-5888**	1	RING-SEAL	
	6	1	**7G-9922**	1	RING-SEAL	
	7	1	**8P-5056**	1	CARRIER-RING	
	8	1	**8P-6817**	1	HUB	
	9	1	**205-4184**	1	SUPPORT-STATOR	
	10	1	**205-4186**	1	IMPELLER-CONVERTER	
	11	1	**205-4187**	1	TURBINE-CONVERTER	
	12	1	**205-4189**	1	RETAINER	
	13	1	**205-4190**	1	HOUSING-ROTATING	
	14	1	**205-4191**	1	FLANGE-IMPELLER	
	15	1	**205-4192**	1	SHAFT-OUTPUT	
	16	1	**205-4196**	1	COVER	
	17	1	**217-4611**	1	CARRIER-STATOR	
	18	1	**219-2528**	1	STATOR-CONVERTER	
	19	1	**226-7619**	1	RETAINER-BEARING	
	20	1	**242-8030**	1	CARRIER-SEAL	
	21	1	**242-8031**	1	SLEEVE-WEAR	
	22	1	**242-8033**	1	PLATE-THRUST	
	23	1	**0S-1571**	24	BOLT (3/8-16X1.75 IN)	
	24	1	**1A-2029**	8	BOLT (3/8-16X1.125 IN)	
	25	1	**1T-0241**	1	SETSCREW	
	26	1	**1T-0610**	1	BALL BEARING	
	27	1	**2L-3650**	5	PIN-SPRING	
	28	1	**3B-1915**	8	BOLT (3/8-16X1.75 IN)	
	29	1	**5M-2894**	40	WASHER-HARD (10.2X18.5X2.5MM THK)	
	30	1	**5P-6393**	2	RING-RETAINING	
	31	1	**5P-8245**	36	WASHER-HARD (13.5X25.5X3MM THK)	
	32	1	**6H-1717**	36	BOLT (1/2-13X1.125 IN)	
	33	1	**6V-5553**	1	SEAL-O-RING	
	34	1	**6V-9176**	1	BALL BEARING	
	35	1	**7L-9061**	1	SEAL-O-RING	
	36	1	**8B-7979**	12	BOLT (1/2-13X2.5 IN)	

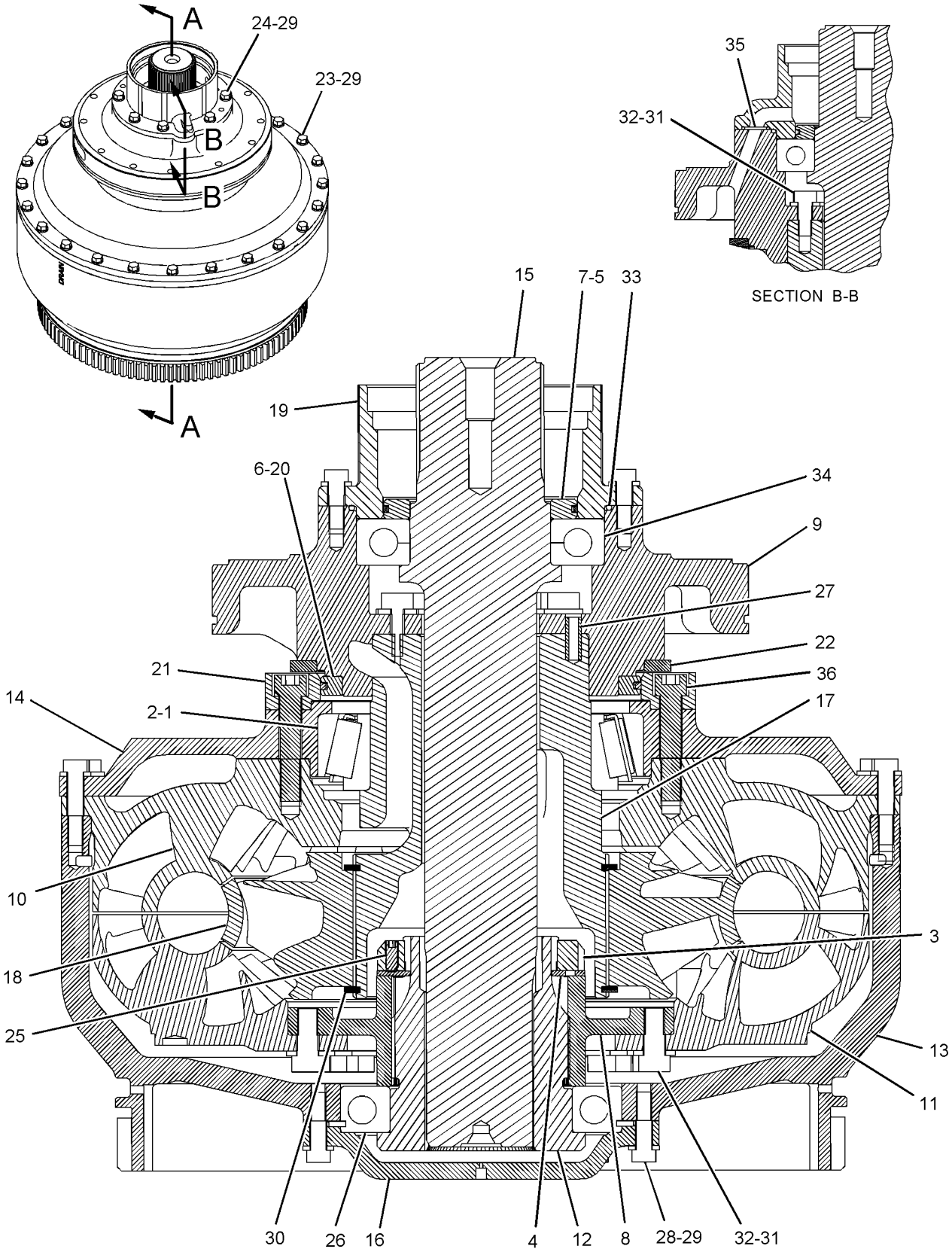

GRAPHIC #1

<END>

g01041095

205-4199 TORQUE CONVERTER GP

S/N: RJS1-UP

PART OF 205-8605 POWER TRAIN AR

SMCS-3101 **i02206612**

NOTE	REF NO	GRAPHIC REF	PART NUMBER	QTY	PART NAME 1 2 3 4 5 6 (PRODUCT LEVEL)	SEE PAGE
	1	1	**8S-9008**	1	SLEEVE	
	2	1	**8S-9130**	1	SCREEN-SUCTION (TORQUE CONVERTER)	
	3	1	**9S-4372**	1	RETAINER	
Y	4	1	**106-4150**	1	DRAIN GP-ECOLOGY (TORQUE CONVERTER)	303
	5	1	**165-4852**	2	SEAL-O-RING	
	6	1	**205-4157**	1	COVER-TORQUE CONVERTER	
Y	7	1	*205-4198*	1	TORQUE CONVERTER GP	344
	8	1	**210-4458**	1	ELBOW	
	9	1	**117-7127**	1	SEAL-LIP TYPE	
	10	1	**205-4177**	1	YOKE	
	11	1	**0S-1585**	12	BOLT (1/2-13X1.5-IN)	
	12	1	**165-4854**	2	SEAL-O-RING	
	13	1	**1B-4367**	1	BOLT (5/8-11X3-IN)	
	14	1	**1S-9799**	1	SEAL-O-RING	
	15	1	**3D-8241**	1	SEAL-O-RING	
	16	1	**3P-0653**	1	SEAL-O-RING	
M	17	1	**5P-8245**	12	WASHER-HARD (13.5X25.5X3-MM THK)	
	18	1	**6V-1196**	1	SEAL-O-RING	
	19	1	**8E-8994**	1	SEAL-RING	
	20	1	**8T-2501**	4	BOLT (3/8-16X2-IN)	
	21	1	**8T-4121**	2	WASHER-HARD (11X21X2.5-MM THK)	
M	22	1	**8T-4136**	2	BOLT (M10X1.5X25-MM)	
M	23	1	**8T-4183**	12	BOLT (M12X1.75X40-MM)	
	24	1	**8T-4223**	12	WASHER-HARD (13.5X25.5X3-MM THK)	
	25	1	**8T-6762**	1	PLUG-PIPE (ECOLOGY DRAIN)	

M-METRIC PART
Y-SEPARATE ILLUSTRATION

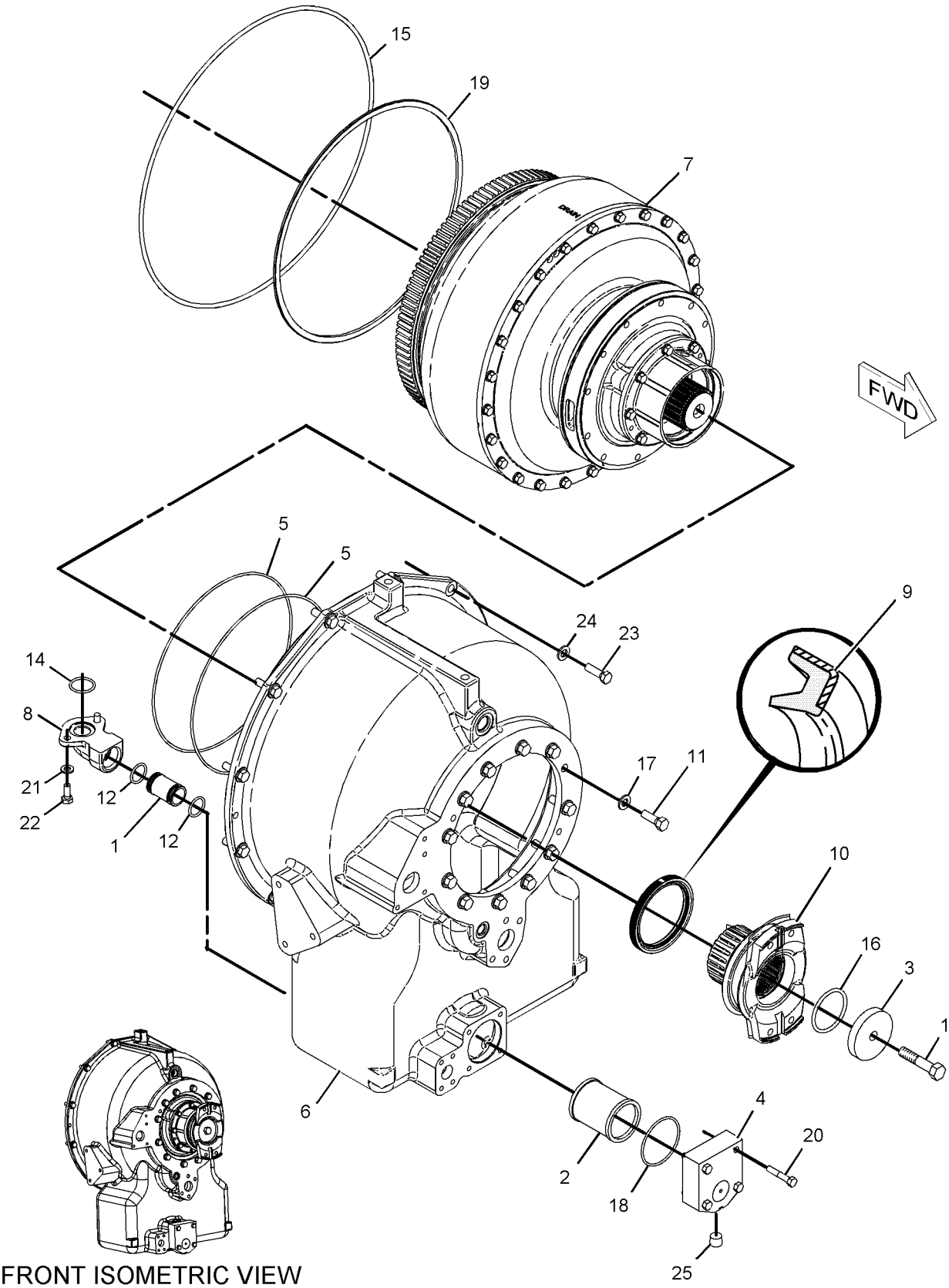

FRONT ISOMETRIC VIEW

GRAPHIC #1 **<END>** g01120861

POWER TRAIN

202-2719 TRANSMISSION AR

S/N: DXK1-UP

PART OF 205-8605 POWER TRAIN AR

SMCS-3030 **i02000427**

NOTE	PART NUMBER	QTY	PART NAME 1 2 3 4 5 6 (PRODUCT LEVEL)	SEE PAGE
Y	*202-2723*	1	CASE & PARTS GP-PLANETARY	296
Y	*202-2721*	1	CONTROL GP-TRANSMISSION HYD	299
Y	*166-0666*	1	DRIVE GP-DIFFERENTIAL STEERING	480
Y	*202-2720*	1	GEAR GP-BEVEL & PINION	319
Y	*202-2722*	1	PLANETARY GP-TRANSMISSION	331

Y-SEPARATE ILLUSTRATION

<END>

7G-3265 UNIVERSAL JOINT GP–DRIVE SHAFT

S/N: RJS1-UP

PART OF 207-4803 SHAFT GP-DRIVE

SMCS-3251, 3253 **i00596256**

NOTE	REF NO	GRAPHIC REF	PART NUMBER	QTY	PART NAME 1 2 3 4 5 6 (PRODUCT LEVEL)	SEE PAGE
	1	1	**9P-4809**	2	SPIDER & BEARING AS	
	2	1	**0S-0484**	8	BOLT (1/2-20X2.25IN)	
		1	**5P-7213**	8	WASHER-HARD (2MM THK)	

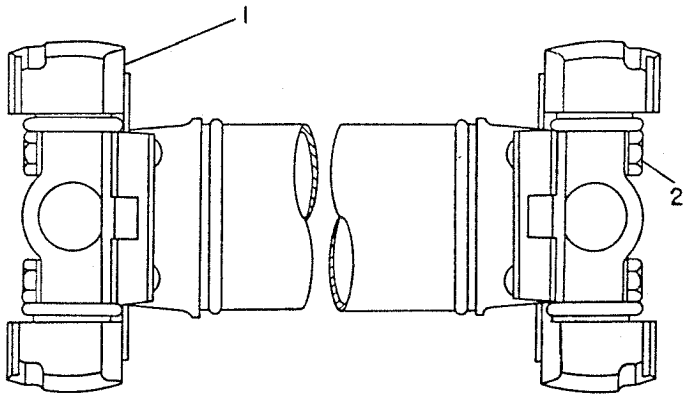

GRAPHIC #1 **<END>** g00149361

202-2731 VALVE GP-CONTROL—TRANSMISSION

S/N: DXK1-UP

PART OF 202-2721 CONTROL GP-TRANSMISSION HYD

SMCS-3167 **i02000712**

NOTE	REF NO	GRAPHIC REF	PART NUMBER	QTY	PART NAME 1 2 3 4 5 6 (PRODUCT LEVEL)	SEE PAGE
	1	1	**133-4772**	1	MANIFOLD	
	2	1	**133-0772**	1	PLATE	
	3	1	**169-0486**	1	MANIFOLD	
	4	1	**6Y-4638**	1	PLUG-HEX SOCKET (1 5/16-12-2A THD)	
	5	1	**7M-8485**	1	SEAL-O-RING	
	6	1	**106-9212**	1	SPRING	
	7	1	**133-6567**	1	SPOOL AS-RELIEF	
	7A	1	**3D-8317**	1	RING-RETAINING	
	7B	1	**4B-9880**	1	BALL	
	7C	1	**4M-2381**	1	SPRING	
	7D	1	**8M-1013**	1	RETAINER	
	8	1	**109-3969**	1	STOP	
	9	1	**5B-3180**	1	NUT (5/16-18-THD)	
	10	1	**9M-1974**	5	WASHER-HARD (8.8X16X2-MM THK)	
	11	1	**4M-5905**	1	SCREW-ADJUSTMENT (5/16-18X1-IN)	
	12	1	**9W-5568**	1	SLUG	
	14	1	**6L-4784**	3	BOLT-12 POINT HEAD (5/16-18X1.75-IN)	
	15	1	**8H-8769**	1	BOLT (5/16-18X4.25-IN)	
	16	1	**1T-0416**	6	BOLT (5/16-18X0.75-IN)	
	17	1	**1P-7404**	1	EYEBOLT (5/16-18X1.15-IN)	
	18	1	**5S-0003**	1	NUT (5/16-18-THD)	

202-2731 VALVE GP-CONTROL *(contd.)* **i02000712**

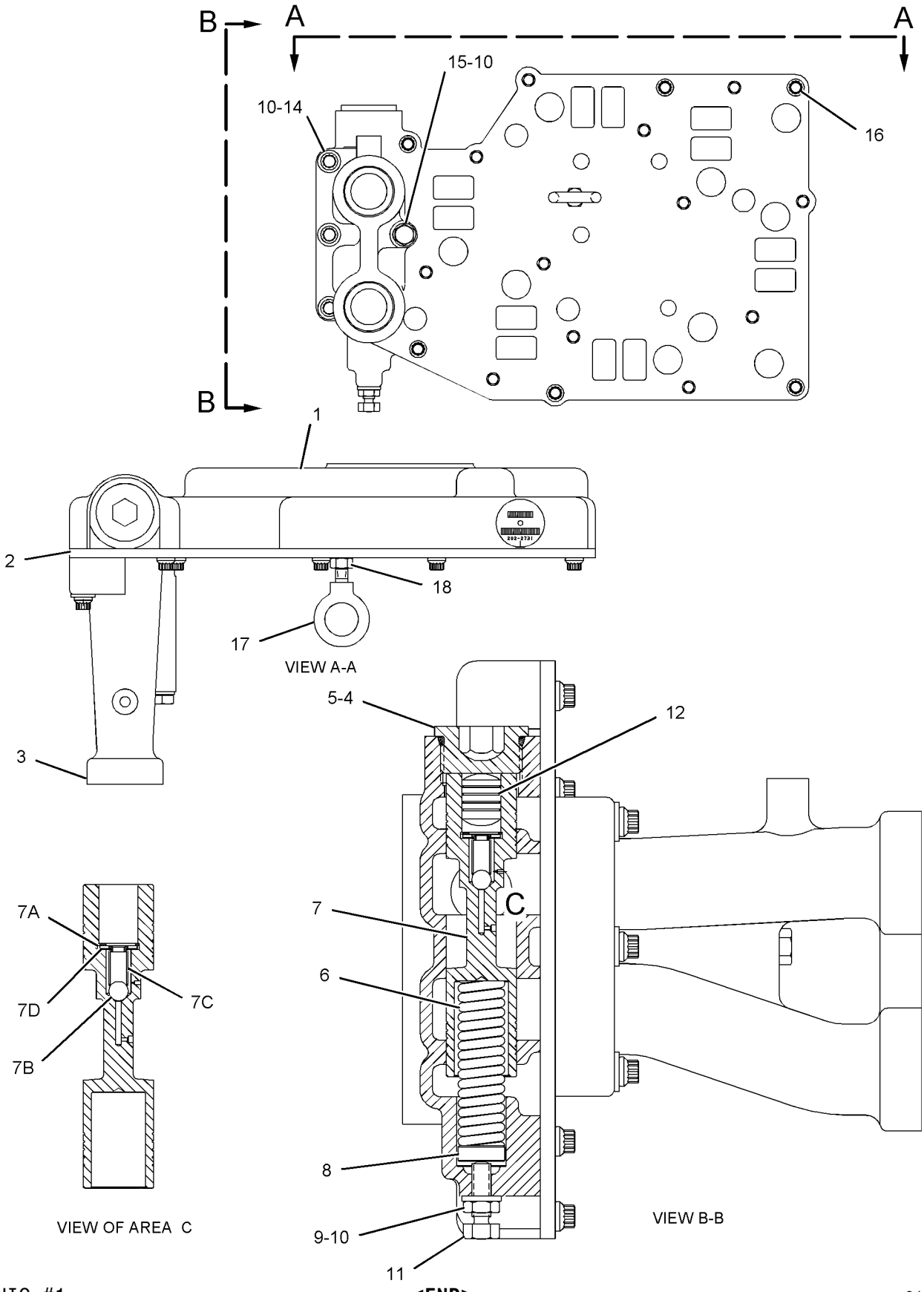

GRAPHIC #1

<END>

g01036369

216-5338 VALVE GP-MODULATING—TRANSMISSION CONTROL

S/N: DXK1-UP
24-VOLT
PART OF 202-2721 CONTROL GP-TRANSMISSION HYD
FIELD REPLACEMENT ORDER 244-3114—PAGE 353

SMCS-3139 **i01795187**

NOTE	REF NO	GRAPHIC REF	PART NUMBER	QTY	PART NAME 1 2 3 4 5 6 (PRODUCT LEVEL)	SEE PAGE
	1	1	**6V-3965**	1	FITTING AS	
	2	1	**145-1144**	1	COIL AS	
	3	1	**3J-1907**	1	SEAL-O-RING	
	4	1	**164-2108**	1	WASHER (13.03X25.4X2.38-MM THK)	
	5	1	**167-9524**	1	NUT-SELF-LOCKING (1/2-28-THD)	

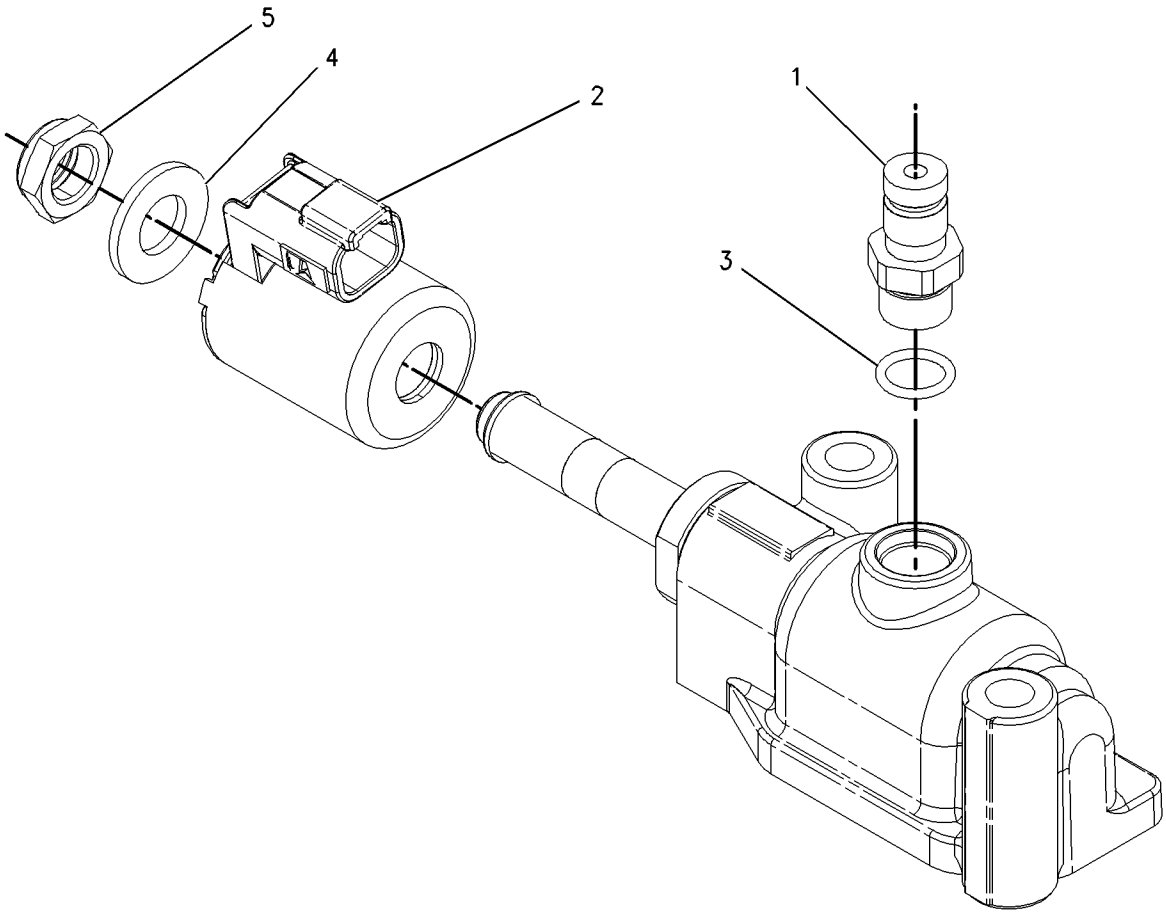

GRAPHIC #1 **<END>** g00919065

244-3114 VALVE GP-MODULATING

S/N: DXK1-UP
24-VOLT

SMCS-3139 **i02225879**

NOTE	REF NO	GRAPHIC REF	PART NUMBER	QTY	PART NAME 1 2 3 4 5 6 (PRODUCT LEVEL)	SEE PAGE
	1	1	**6V-3965**	1	FITTING AS	
	2	1	**226-9622**	1	COIL AS	
	3	1	**3J-1907**	1	SEAL-O-RING	
	4	1	**164-2108**	1	WASHER (13.03X25.4X2.38-MM THK)	
	5	1	**167-9524**	1	NUT-SELF-LOCKING (1/2-28-THD)	

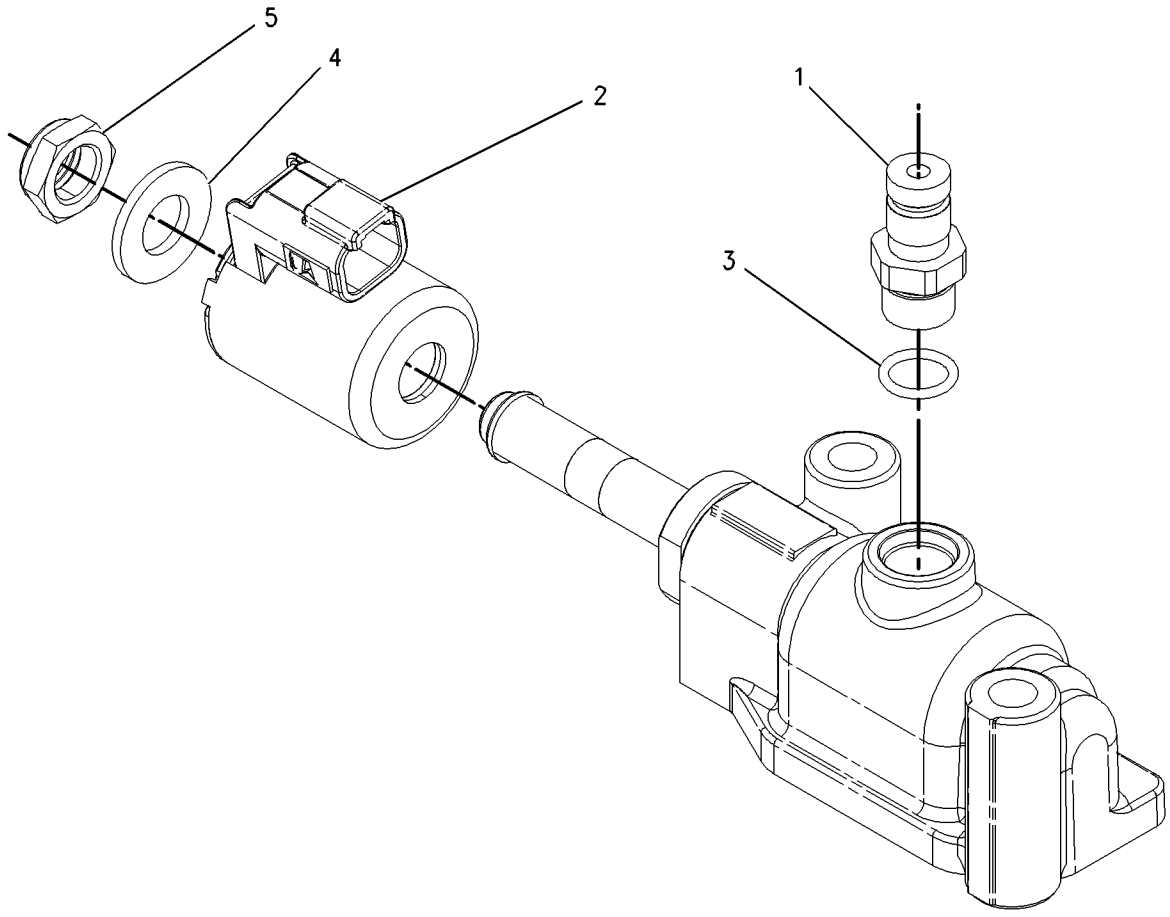

GRAPHIC #1 **<END>** g00919065

205-4652 VALVE GP-PRIORITY—POWER TRAIN OIL

S/N: RJS1-UP

PART OF 205-8619 LINES GP-POWER TRAIN OIL

SMCS-3180 **i02001474**

NOTE	REF NO	GRAPHIC REF	PART NUMBER	QTY	PART NAME 1 2 3 4 5 6 (PRODUCT LEVEL)	SEE PAGE
	1	1	**2P-4538**	1	SPOOL AS-RELIEF	
	1A	1	**1L-3162**	1	RING-RETAINING	
	1B	1	**5M-9548**	1	SPRING	
	1C	1	**8M-2537**	1	RETAINER	
	1D	1	**9M-4313**	1	POPPET	
	2	1	**3P-0246**	1	SPRING	
	3	1	**5S-7816**	1	SLUG	
	4	1	**6V-0852**	1	CAP-DUST (QUICK DISCONNECT)	
	6	1	**108-6523**	1	ADJUSTER AS	
	6A	1	**4K-2039**	1	SEAL-O-RING	
	6B	1	**7M-8485**	1	SEAL-O-RING	
	6C	1	**8T-4223**	1	WASHER-HARD (13.5X25.5X3-MM THK)	
	6D	1	**9U-8069**	1	PLUG	
M	6E	1	**095-1207**	1	NUT (M12X1.75-THD)	
	6F	1	**101-9754**	1	SCREW-ADJUSTMENT (M12X1.75X18-MM THD)	
	7	1	**110-9734**	1	VALVE-PRIORITY (FLOW CONTROL)	
	8	1	**153-4247**	1	STOP	
Y	9	1	**198-4607**	1	VALVE GP-SOLENOID	358
	12	1	**208-5460**	1	SPACER (17X30.25X3-MM THK)	
	13	1	**214-6297**	1	SPRING	
	14	1	**241-4661**	1	SPOOL AS	
	14A	1	**5M-9548**	1	SPRING	
	14B	1	**9M-4313**	1	POPPET	
	14C	1	**173-0887**	1	RING-RETAINING	
	15	1	**2S-4078**	2	SEAL-O-RING	
	16	1	**3J-1907**	3	SEAL-O-RING	
B	17	1	**5M-9623**	3	SHIM (0.9-MM THK)	
B	18	1	**5M-9624**	1	SHIM (0.25-MM THK)	
	19	1	**6V-3965**	1	FITTING AS	
	20	1	**7J-0204**	1	SEAL-O-RING	
	21	1	**7M-8485**	1	SEAL-O-RING	
	22	1	**8C-3101**	1	SEAL-O-RING	
	23	1	**8C-3428**	1	RING-RETAINING	
	24	1	**9S-4191**	2	PLUG	
	25	1	**9S-8007**	1	PLUG	
	26	1	**9S-8010**	2	PLUG	
	27	1	**9S-9334**	1	PLUG	

B-USE AS REQUIRED
M-METRIC PART
Y-SEPARATE ILLUSTRATION

205-4652 VALVE GP-PRIORITY *(contd.)* **i02001474**

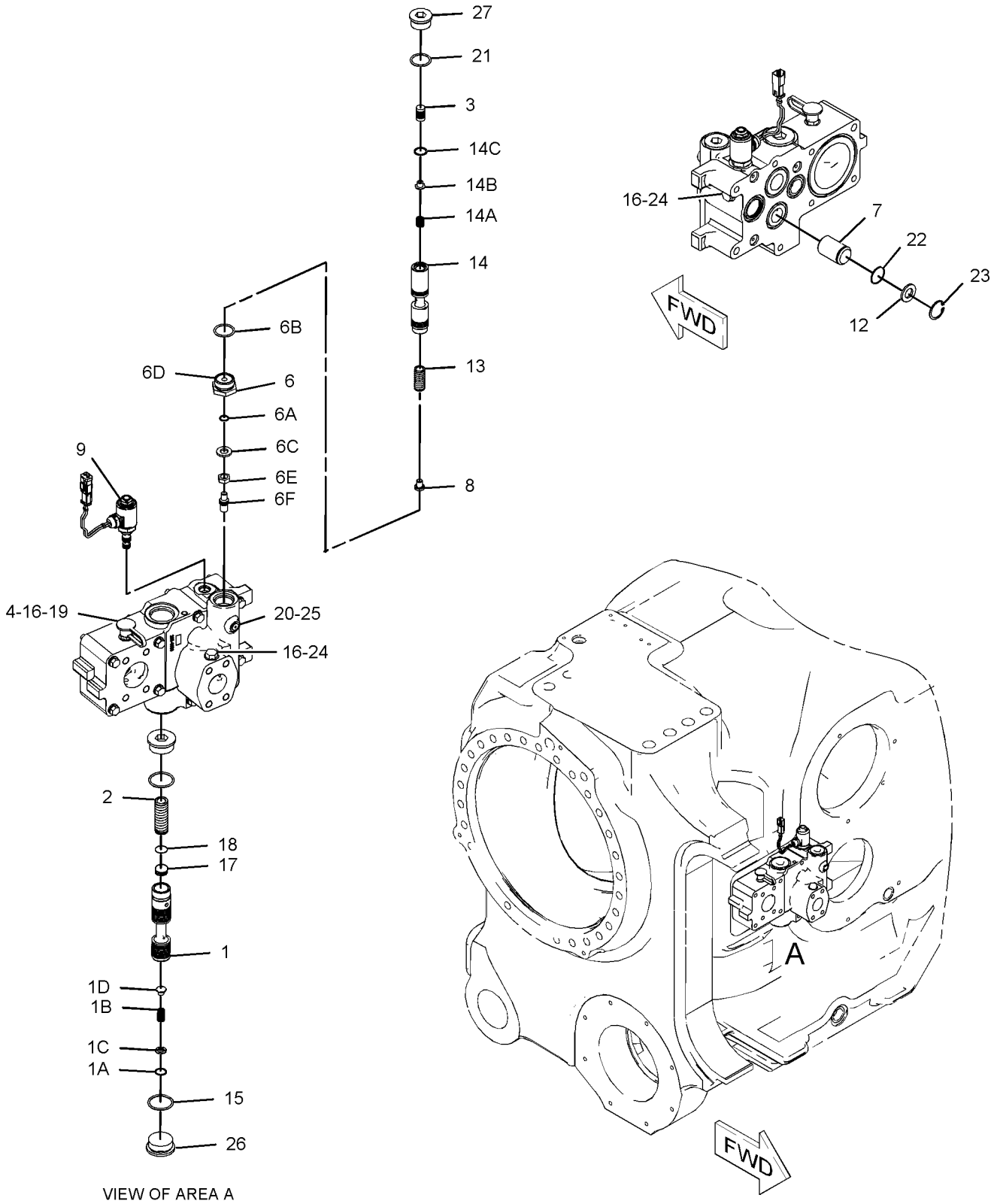

VIEW OF AREA A

GRAPHIC #1 **<END>** g01039437

207-2833 VALVE GP-RELIEF—POWER TRAIN OIL

S/N: RJS1-UP

PART OF 205-8619 LINES GP-POWER TRAIN OIL

SMCS-3133, 3182 **i02001503**

NOTE	REF NO	GRAPHIC REF	PART NUMBER	QTY	PART NAME 1 2 3 4 5 6 (PRODUCT LEVEL)	SEE PAGE
	2	1	**4M-8239**	1	COVER	
	3	1	**8E-6927**	1	PLATE	
	4	1	**0S-1594**	4	BOLT (3/8-16X1-IN)	
	5	1	**3B-4506**	4	LOCKWASHER	
B	6	1	**8J-6709**	4	SHIM (0.25-MM THK)	
B	7	1	**2R-4330**	1	WASHER (0.26X0.88X0.105-IN THK)	
	8	1	**1W-9860**	1	SPRING	
	9	1	**193-5463**	1	SPOOL	
	10	1	**8M-4992**	2	SEAL-O-RING	
	11	1	**3J-1907**	2	SEAL-O-RING	
	14	1	**6V-3965**	2	FITTING AS	
	15	1	**6V-0852**	2	CAP-DUST (QUICK DISCONNECT)	

B-USE AS REQUIRED

207-2833 VALVE GP-RELIEF *(contd.)* **i02001503**

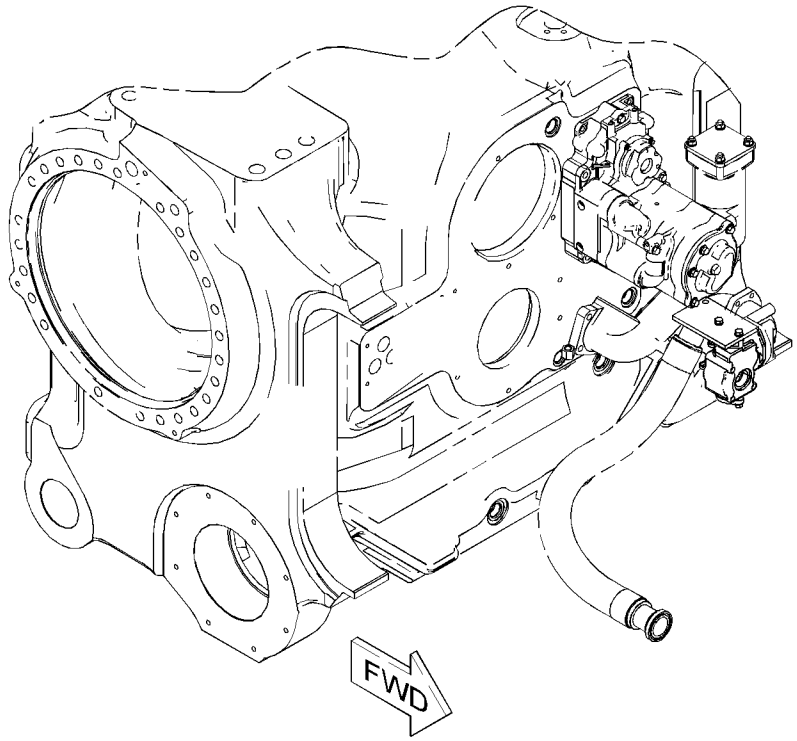

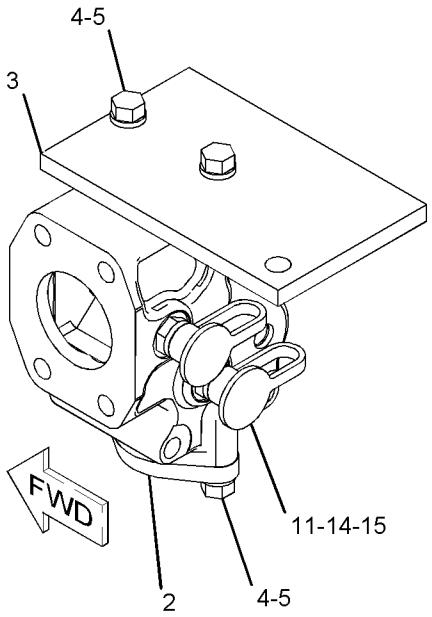

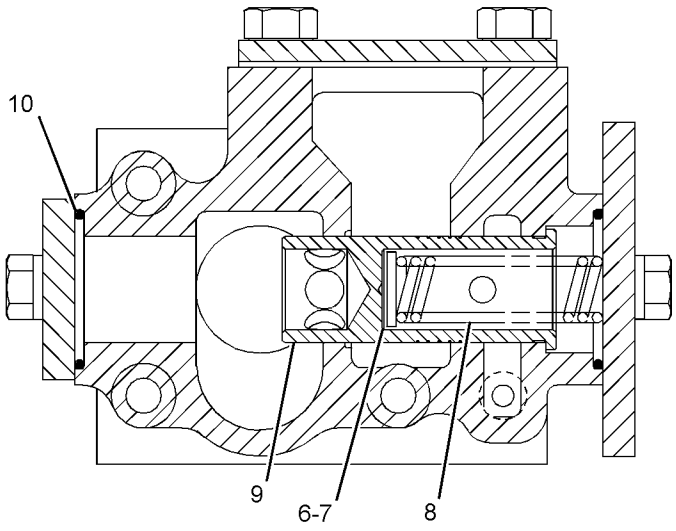

SECTION A-A

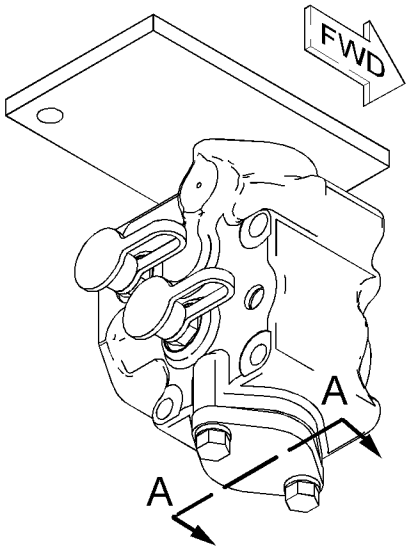

GRAPHIC #1 **<END>** g01040052

198-4607 VALVE GP-SOLENOID—POWER TRAIN OIL

S/N: RJS1-UP

PART OF 205-4652 VALVE GP-PRIORITY

SMCS-4282, 5479 **i02149333**

NOTE	REF NO	GRAPHIC REF	PART NUMBER	QTY	PART NAME 1 2 3 4 5 6 (PRODUCT LEVEL)	SEE PAGE
	1	1	**9X-7202**	1	WASHER (13.59X23.88X1.02-MM THK)	
	2	1	**156-5970**	1	NUT (1/2-20-2B THD)	
	3	1	**240-6822**	1	COIL AS	
		1	**1S-9593**	2	STRAP-CABLE	
		1	**102-8802**	1	KIT-RECEPTACLE (2-PIN)	
					(INCLUDES RECEPTACLE AS & WEDGE)	
		1	**186-3735**	2	PIN-CONNECTOR	
		1	**3E-3365**	1	WEDGE-RECEPTACLE LOCK (2-PIN)	
J	4	1	**198-4605**	1	SPOOL AS	
		1	**9X-7202**	1	WASHER (13.59X23.88X1.02-MM THK)	
		1	**156-5970**	1	NUT (1/2-20-2B THD)	
					AVAILABLE REPAIR KIT(S):	
J			**7T-4515**	1	KIT-SEAL (SOLENOID VALVE)	
					(INCLUDES 3 SEALS)	

J-KIT MARKED J SERVICES PART MARKED J

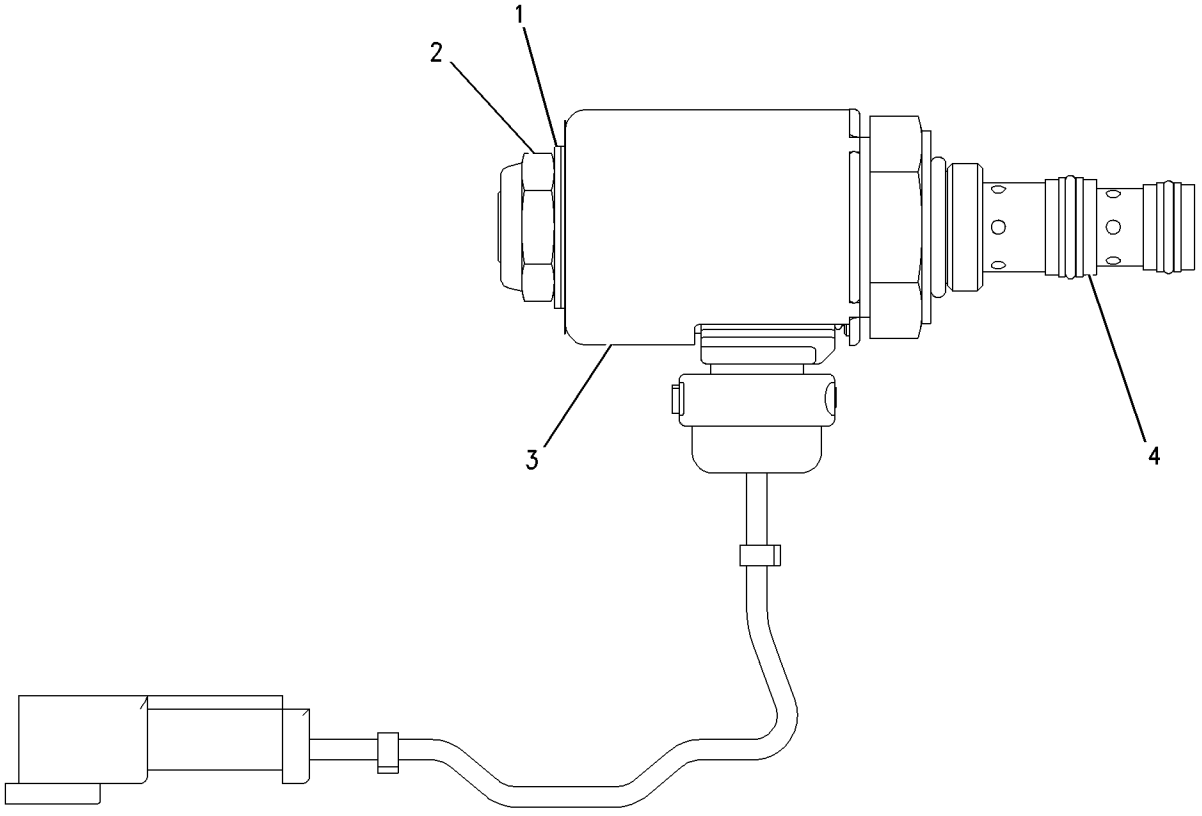

GRAPHIC #1 **<END>** g00845356

201-7269 VALVE GP-TRANSMISSION CONTROL

S/N: RJS1-UP

PART OF 201-7274 VALVE GP-TRANSMISSION CONTROL

SMCS-3073 **i01833551**

NOTE	REF NO	GRAPHIC REF	PART NUMBER	QTY	PART NAME 1 2 3 4 5 6 (PRODUCT LEVEL)	SEE PAGE
Z	1	1		1	BODY-VALVE	
	2	1	**188-7067**	2	SPRING	
	3	1	**188-7068**	2	RETAINER	
	4	1	**188-7069**	2	PISTON-LOAD	
	5	1	**108-4430**	2	SPRING	
	6	1	**110-2842**	1	PLATE-END	
	7	1	**137-6603**	2	SPOOL	
	8	1	*148-8410*	2	PLUG AS	
					(EACH INCLUDES)	
		1	**2M-9780**	1	SEAL-O-RING	
		1	**9S-4190**	1	PLUG	
	9	1	*148-8409*	2	PLUG AS	
					(EACH INCLUDES)	
		1	**3D-2824**	1	SEAL-O-RING	
		1	**9S-8008**	1	PLUG	
	10	1	**6J-2419**	2	SEAL-O-RING	
M	11	1	**7X-2537**	2	BOLT (M8X1.25X35-MM)	
	12	1	**8T-4224**	2	WASHER-HARD (8.8X16X2-MM THK)	
M	13	1	**8T-7547**	2	BOLT (M8X1.25X30-MM)	

M-METRIC PART
Z-NOT SERVICED SEPARATELY

201-7269 **VALVE GP-TRANSMISSION CONTROL** *(contd.)* **i01833551**

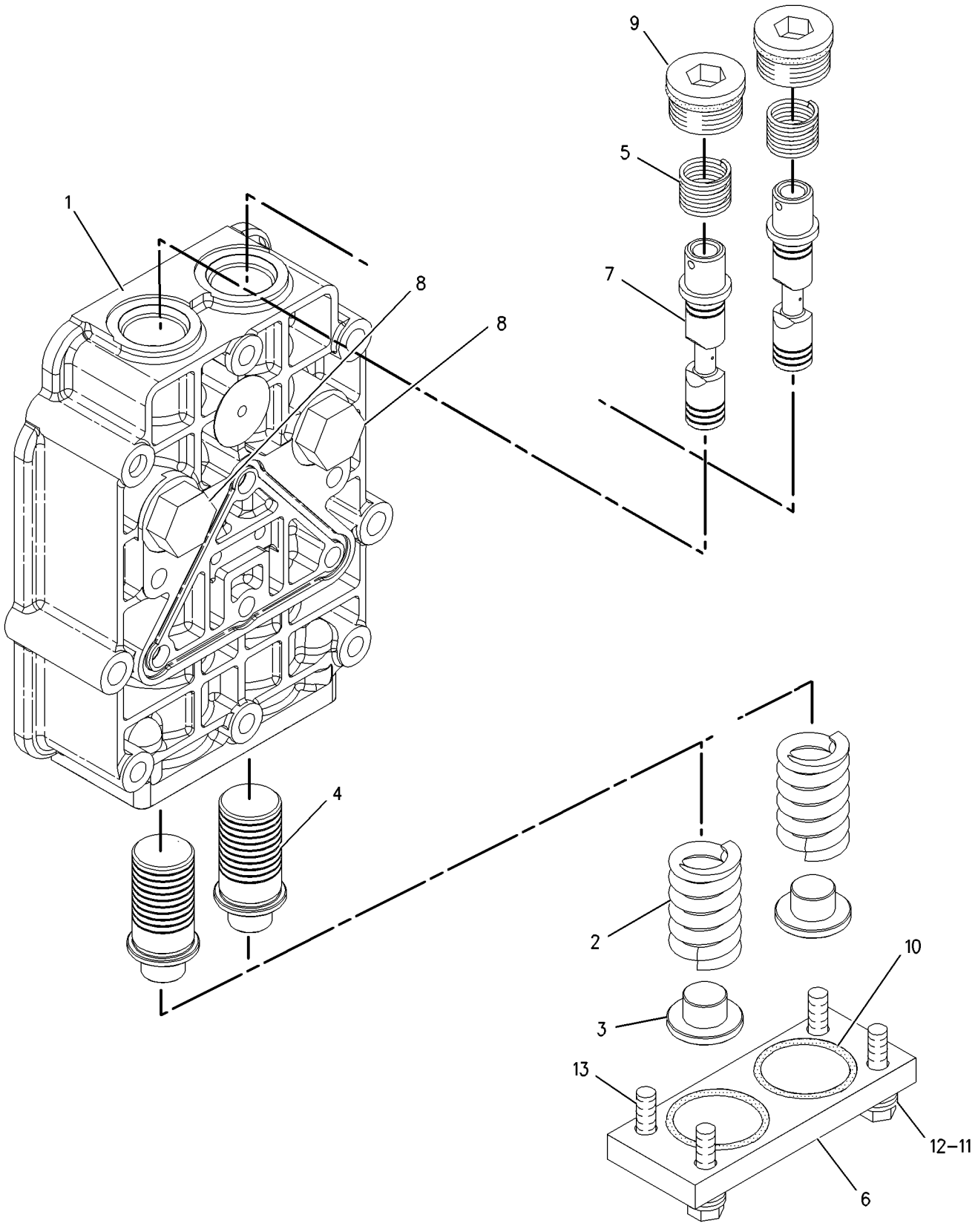

GRAPHIC #1 **<END>** g00936934

201-7274 VALVE GP-TRANSMISSION CONTROL

S/N: RJS1-UP

PART OF 209-9360 VALVE & MTG GP-STEER & BRAKE

SMCS-3073 **i02210571**

NOTE	REF NO	GRAPHIC REF	PART NUMBER	QTY	PART NAME 1 2 3 4 5 6 (PRODUCT LEVEL)	SEE PAGE
	1	1	**9L-9068**	4	DOWEL	
Y	2	1	*162-5357*	1	MANIFOLD & VALVE GP (RH, LH STEERING CLUTCH, BRAKE)	488
Y	3	1	*175-4972*	1	MANIFOLD & VALVE GP (PARKING & SECONDARY BRAKE)	489
	4	1	**176-0259**	1	PLUG AS (ORIFICE SCREEN)	
M	5	1	**8T-4177**	2	BOLT (M8X1.25X90-MM)	
Y	6	1	**201-7269**	1	VALVE GP-TRANSMISSION CONTROL	359
	7	1	**122-3771**	2	SEAL-O-RING	
	8	1	**132-9899**	1	PLATE	
	9	1	**132-9900**	1	PLATE	
	10	1	**134-1251**	1	PLATE-SEPARATOR	
	11	1	**185-3503**	2	SEAL-O-RING	
	12	1	**1T-0738**	10	WASHER (8.4X19X1.83-MM THK)	
	13	1	**3S-2093**	4	STRAP-CABLE	
	14	1	**4J-7533**	1	SEAL-O-RING	
M	15	1	**7X-2541**	4	BOLT (M8X1.25X140-MM)	
M	16	1	**8T-3647**	4	BOLT (M8X1.25X80-MM)	
	17	1	**9P-9150**	24	WASHER (8.25X18X0.84-MM THK)	

M-METRIC PART
Y-SEPARATE ILLUSTRATION

201-7274 VALVE GP-TRANSMISSION CONTROL *(contd.)* i02210571

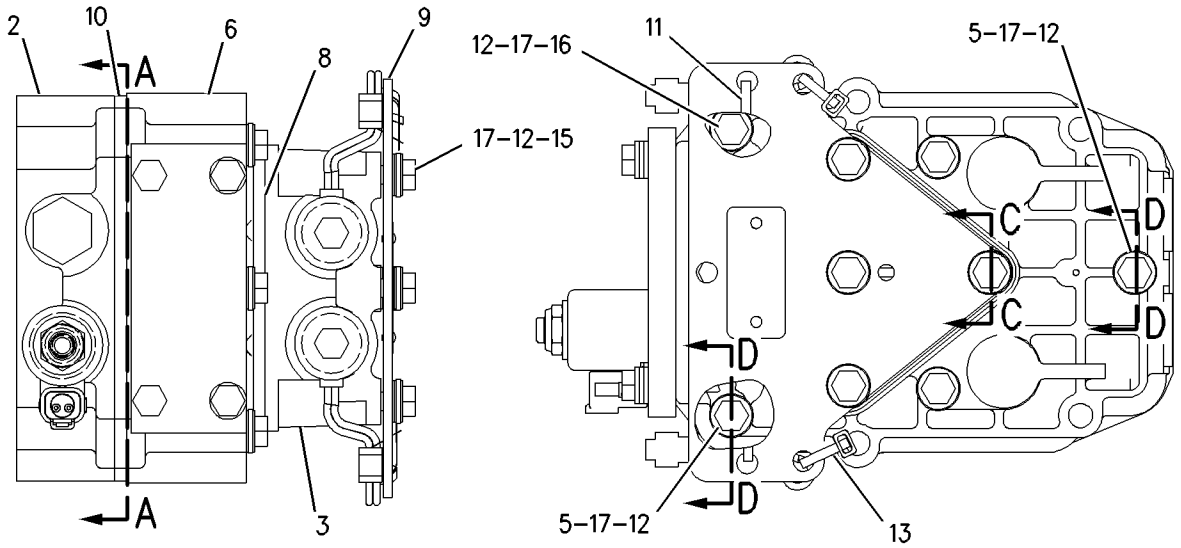

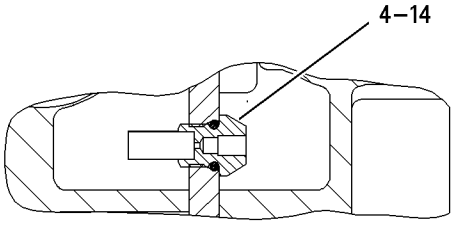

SECTION E-E

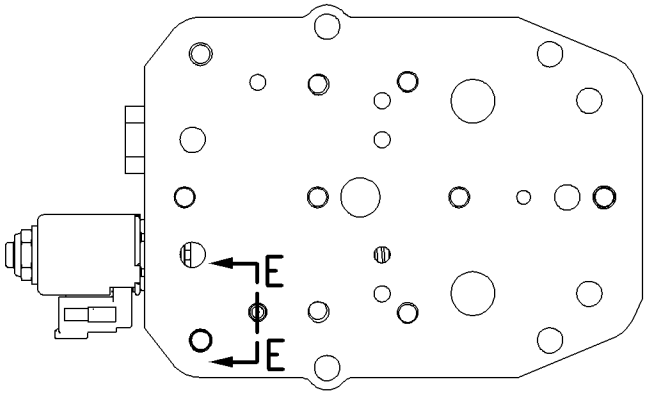

SECTION A-A

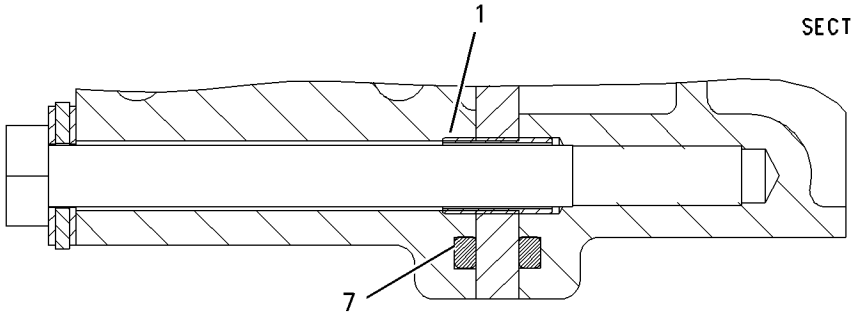

SECTION D-D

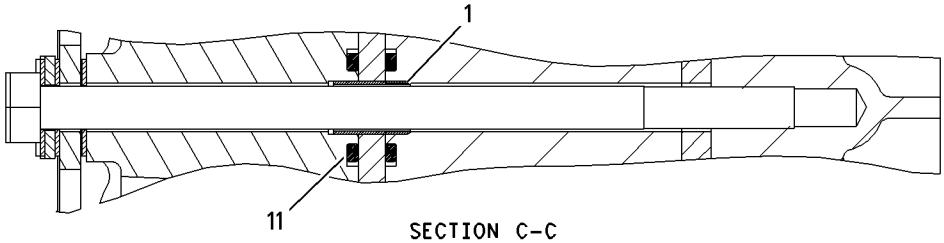

SECTION C-C

GRAPHIC #1 **<END>** g00794774

FRAME AND BODY

205-8632 CASE & FRAME GP

S/N: RJS1-UP

PART OF 205-8601 CHASSIS AR

SMCS-7051 **i02204853**

NOTE	REF NO	GRAPHIC REF	PART NUMBER	QTY	PART NAME 1 2 3 4 5 6 (PRODUCT LEVEL)	SEE PAGE
	1	1	**106-8186**	1	VALVE-DRAIN (TRANSMISSION)	
	2	1	**106-8187**	1	PLUG (DRAIN) (TRANSMISSION)	
	3	1	**205-4707**	1	CASE & FRAME AS	
	4	1	**209-9782**	2	TUBE AS	
	5	1	*164-4180*	2	PLUG AS	
					(EACH INCLUDES)	
		1	**7M-8485**	1	SEAL-O-RING	
		1	**9S-4181**	1	PLUG	
	6	1	**3G-6402**	2	BEARING-SLEEVE	
	7	1	**3P-8845**	2	BEARING-SLEEVE	
	8	1	**6F-0711**	1	SEAL-O-RING	
	9	1	**7M-8480**	1	DOWEL	
	10	1	**8P-0420**	4	BEARING	
	11	1	**8T-2502**	4	BOLT (3/8-16X1.125-IN)	
	12	1	**8T-4896**	4	WASHER-HARD (10.2X18.5X2.5-MM THK)	
	13	1	**9W-0330**	4	BEARING	

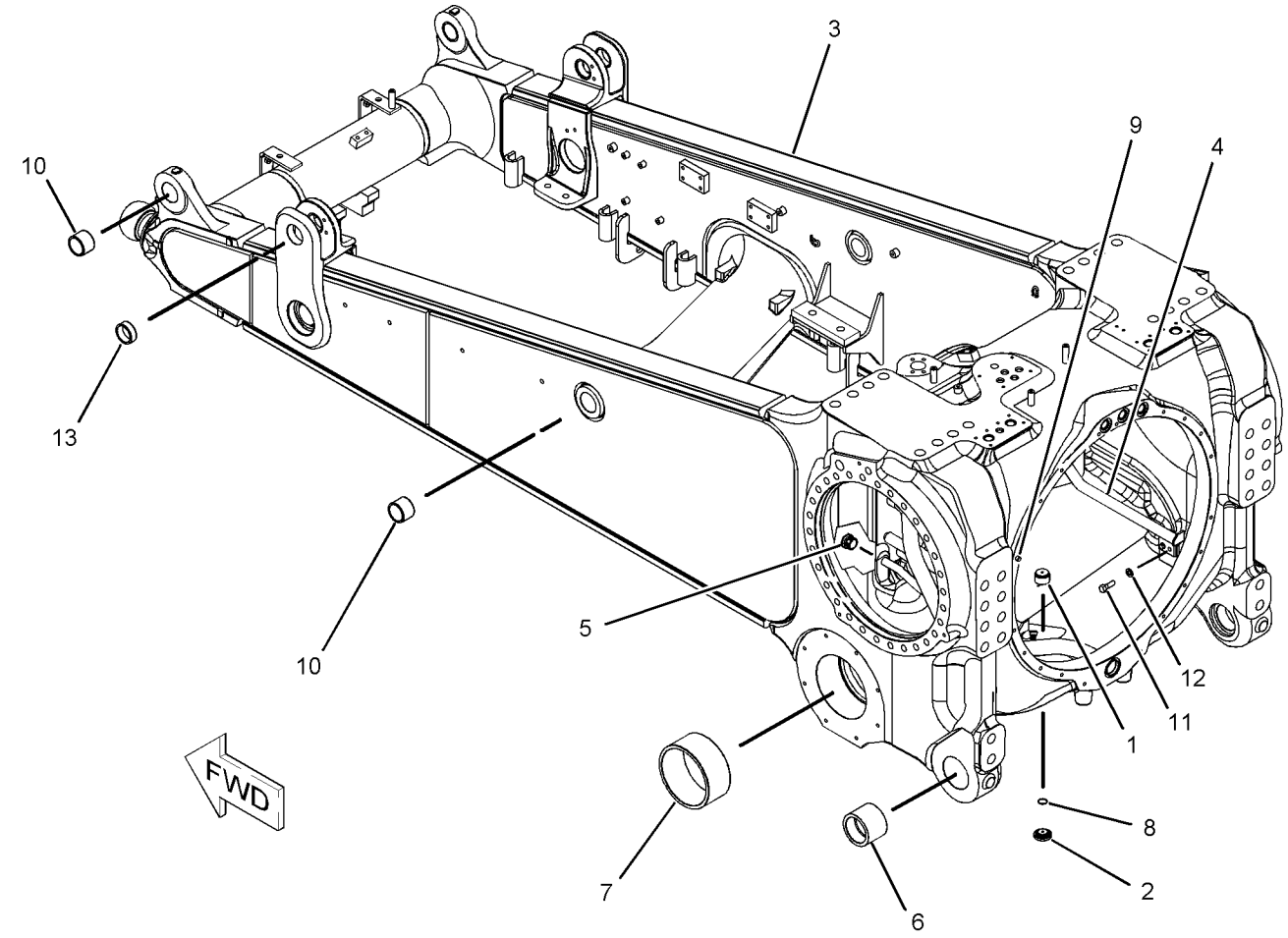

GRAPHIC #1 **<END>** g01037125

236-2245 CASE & FRAME GP–CUSHION DOZER

S/N: RJS1-UP
PART OF 241-3360 TRUNNION GP-BULLDOZER
AN ATTACHMENT

SMCS-7051 **i02194721**

NOTE	REF NO	GRAPHIC REF	PART NUMBER	QTY	PART NAME 1 2 3 4 5 6 (PRODUCT LEVEL)	SEE PAGE
	1	1	**106-8186**	1	VALVE-DRAIN (TRANSMISSION)	
	2	1	**106-8187**	1	PLUG (DRAIN) (TRANSMISSION)	
	3	1	**209-9782**	2	TUBE AS	
	4	1	**236-2244**	1	CASE & FRAME AS	
	5	1	*164-4180*	2	PLUG AS	
					(EACH INCLUDES)	
		1	**7M-8485**	1	SEAL-O-RING	
		1	**9S-4181**	1	PLUG (5/16-12-2A THD)	
	6	1	**3G-6402**	2	BEARING-SLEEVE	
	7	1	**3P-8845**	2	BEARING-SLEEVE	
	8	1	**6F-0711**	1	SEAL-O-RING	
	9	1	**7M-8480**	1	DOWEL	
	10	1	**8P-0420**	4	BEARING	
	11	1	**8T-2502**	4	BOLT (3/8-16X1.125-IN)	
	12	1	**8T-4896**	4	WASHER-HARD (10.2X18.5X2.5-MM THK)	
	13	1	**9W-0330**	4	BEARING	

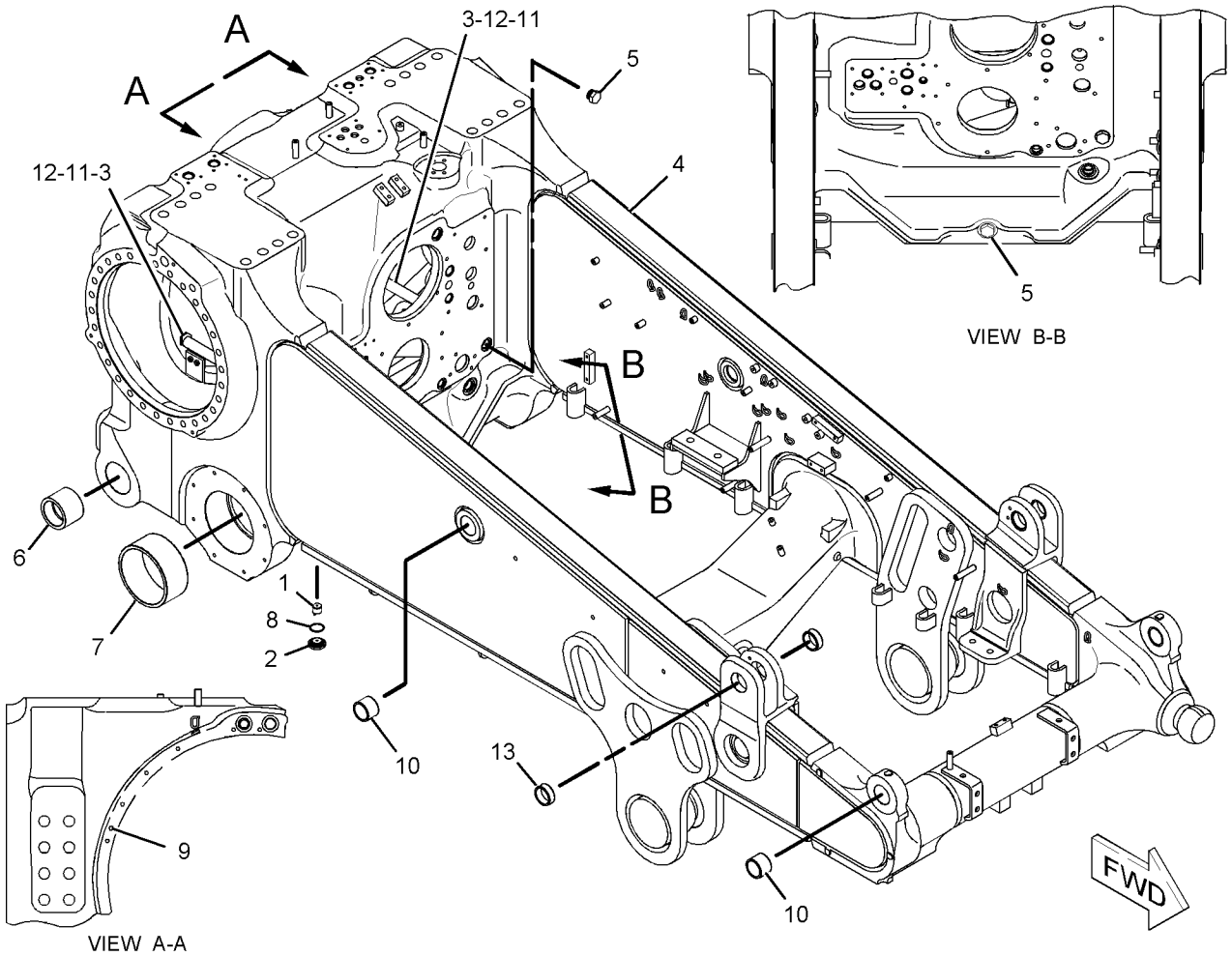

GRAPHIC #1 **<END>** g01115343

8E-9051 COUNTERWEIGHT GP

S/N: RJS1-UP
4078-KG (8990-LBS)
AN ATTACHMENT

SMCS-7056 **i01446712**

NOTE	REF NO	GRAPHIC REF	PART NUMBER	QTY	PART NAME 1 2 3 4 5 6 (PRODUCT LEVEL)	SEE PAGE
	1	1	**6T-3594**	1	COUNTERWEIGHT AS	
		1	**5H-8803**	2	SUPPORT-PIN	
	2	1	**9G-1935**	1	PIN AS-DRAWBAR	
	3	1	**6V-8970**	8	BOLT (1-1/2-6-THD)	
		1	**3S-6162**	8	WASHER-HARD (40.5X67X6-MM THK)	
		1	**5T-4896**	8	SPACER (40.5X67X12-MM THK)	
	4	1	**5P-2566**	12	BOLT (1/2-13X1.5-IN)	
		1	**8T-4223**	12	WASHER-HARD (13.5X25.5X3-MM THK)	
	5	1	**1K-9415**	4	BOLT (1-1/8-7X11-IN)	
		1	**4K-0684**	4	WASHER-HARD (34X55X6-MM THK)	
	6	1	**6T-3591**	1	PLATE AS (RIGHT SIDE)	
	7	1	**8E-8630**	2	LINK AS	
	8	1	**7X-0347**	1	BOLT (5/8-11X2.25-IN)	
		1	**3K-2889**	1	LOCKNUT (5/8-11-THD)	
	9	1	**6T-3590**	1	PLATE AS (LEFT SIDE)	
	10	1	**8E-9289**	1	LATCH	
	11	1	**3T-7566**	6	PIN	
	12	1	**3T-7567**	6	BAR	
	13	1	**6T-3589**	2	PLATE	
	14	1	**6T-3588**	1	PLATE	

8E-9051 **COUNTERWEIGHT GP** ***(contd.)*** **i01446712**

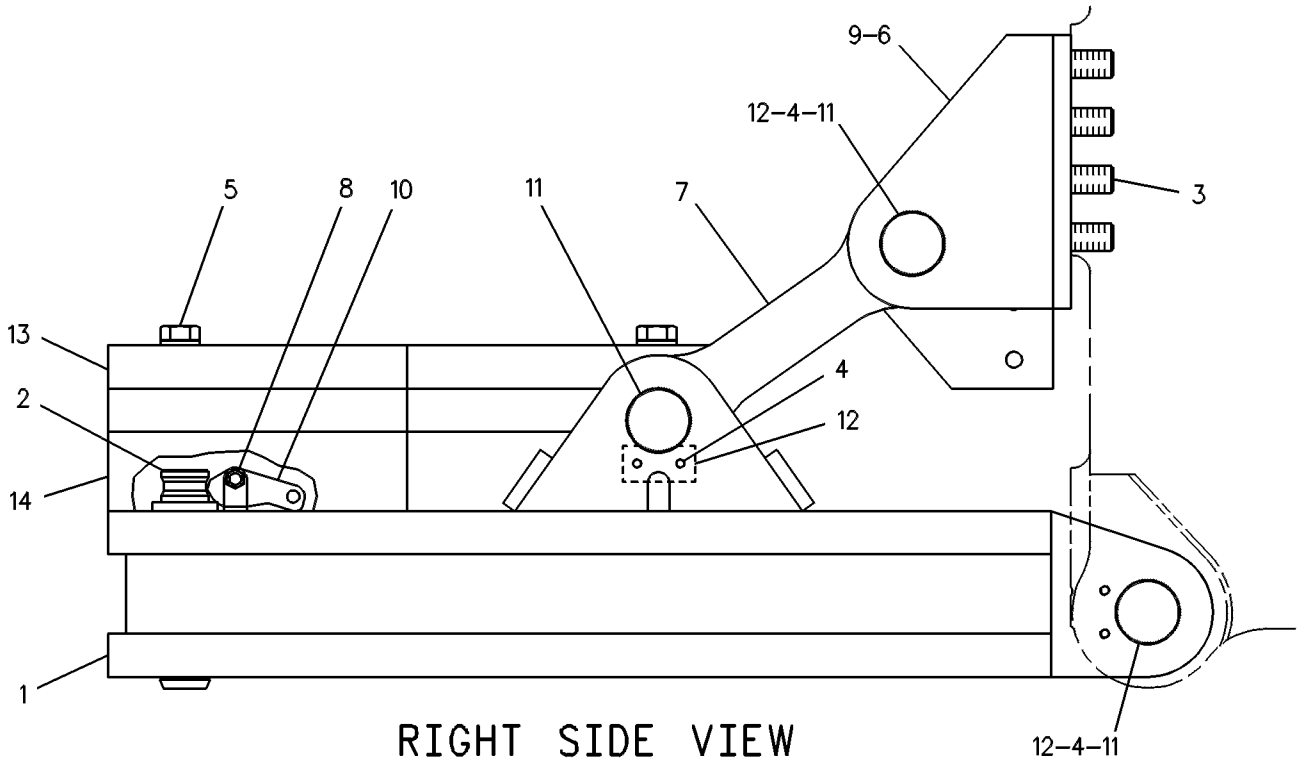

RIGHT SIDE VIEW

GRAPHIC #1 **<END>** g00234776

8E-9052 COUNTERWEIGHT GP

S/N: RJS1-UP
1259-KG (2776-LBS)
FOR USE WITH BASIC REAR COUNTERWEIGHTS
AN ATTACHMENT

SMCS-7056 **i02039674**

NOTE	REF NO	GRAPHIC REF	PART NUMBER	QTY	PART NAME 1 2 3 4 5 6 (PRODUCT LEVEL)	SEE PAGE
	1	1	**6T-3588**	2	PLATE	
	2	1	**033-0512**	4	BOLT	

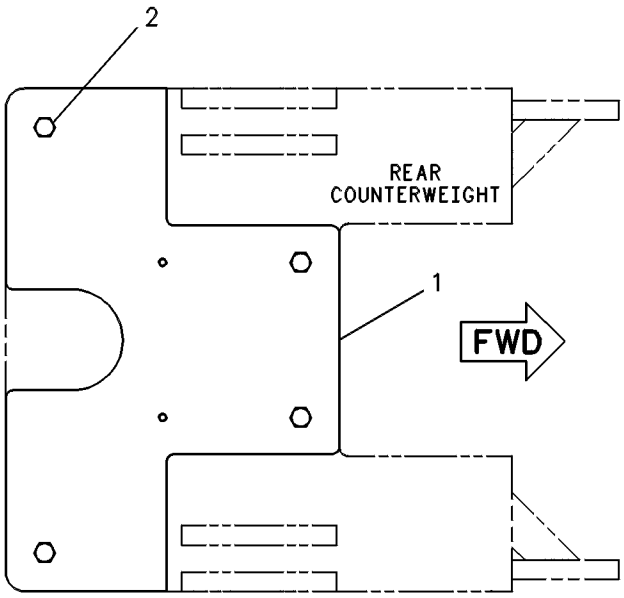

TOP VIEW

GRAPHIC #1 **<END>** g00234780

188-2526 COUNTERWEIGHT GP

S/N: RJS1-UP

305-KG (672-LBS). ADDITIONAL SLAB FOR STRIKER BAR AN ATTACHMENT

SMCS-7056 **i01557224**

NOTE	PART NUMBER	QTY	PART NAME 1 2 3 4 5 6 (PRODUCT LEVEL)	SEE PAGE
	7X-0430	8	BOLT (1-1/4-7X5.50 IN)	
	189-2160	1	PLATE	
	7X-0533	8	WASHER-HARD (34X55X6MM THK)	

<END>

FRAME AND BODY

215-2955 COUNTERWEIGHT GP

S/N: RJS1-UP
1412-KG (3113-LBS)
AN ATTACHMENT

SMCS-7056 **i02223958**

NOTE	REF NO	GRAPHIC REF	PART NUMBER	QTY	PART NAME 1 2 3 4 5 6 (PRODUCT LEVEL)	SEE PAGE
	1	1	**6P-8829**	2	RETAINER	
	2	1	**7K-4363**	2	BOLT (7/8-9X11.5-IN)	
	3		**9W-2971**	1	COUNTERWEIGHT AS	
	3A	1	**6F-8668**	1	LUG	
	4	1	**215-2954**	1	PLATE	
	5	1	**1D-4645**	2	BOLT (1-8X8.5-IN)	
	6	1	**2J-3507**	2	NUT-FULL (1-8-THD)	
	7	1	**5P-1076**	4	WASHER-HARD (13.5X30X4-MM THK)	
	8	1	**5P-8250**	10	WASHER (28X49X5-MM THK)	
	9	1	**7X-0418**	6	BOLT (1-8X9.5-IN)	
	10	1	**8C-4436**	4	BOLT (1/2-13X1.375-IN)	

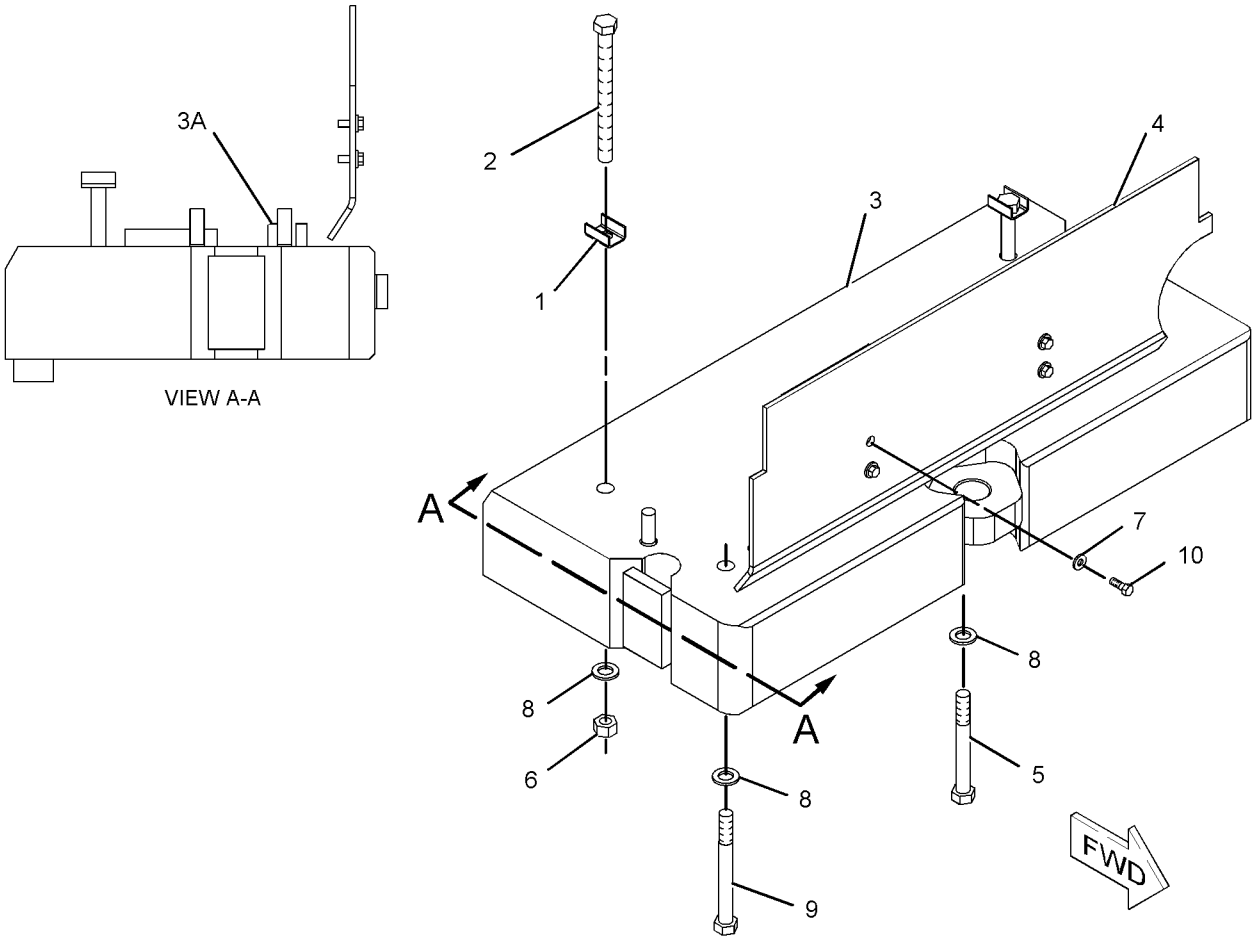

GRAPHIC #1 **<END>** g01122837

FRAME AND BODY

7T-6040 COVER GP-TRUNNION

S/N: RJS1-UP
CANNOT BE USED WITH BULLDOZER TRUNNIONS
AN ATTACHMENT

SMCS-7050, 7250 **i02039647**

NOTE	REF NO	GRAPHIC REF	PART NUMBER	QTY	PART NAME 1 2 3 4 5 6 (PRODUCT LEVEL)	SEE PAGE
	1	1	**6P-8901**	2	COVER	
	2	1	**7X-0403**	12	BOLT (1-8X2.25-IN)	
	3	1	**8T-5361**	12	WASHER-HARD (28X49X5-MM THK)	

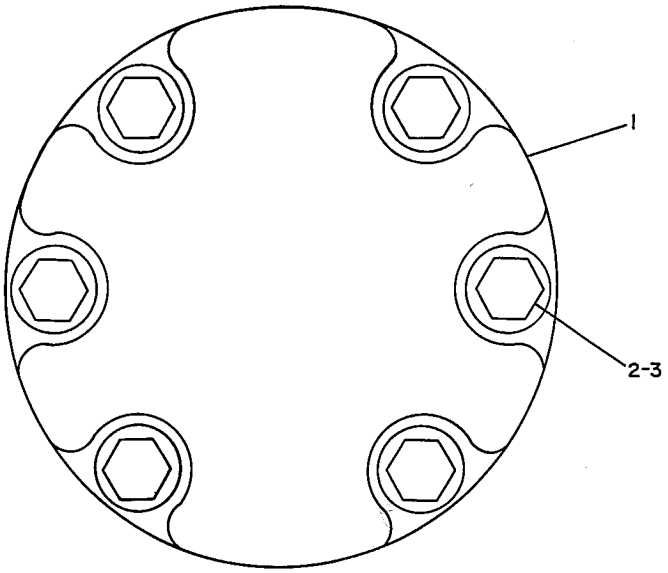

GRAPHIC #1 **<END>** g00172067

210-1668 DOOR GP-ACCESS–LH

S/N: RJS1-UP
PART OF 248-4763, 260-2993 ENCLOSURE GP-LH
ALSO AN ATTACHMENT

SMCS-7273 **i02200050**

NOTE	REF NO	GRAPHIC REF	PART NUMBER	QTY	PART NAME 1 2 3 4 5 6 (PRODUCT LEVEL)	SEE PAGE
	1	1	**3B-4605**	1	PIN-COTTER	
	2	1	**3V-9399**	1	ROD AS	
		1	**4B-4278**	2	WASHER (10.2X20.5X1.6-MM THK)	
	3	1	**4B-4278**	1	WASHER (10.2X20.5X1.6-MM THK)	
	4	1	**4H-2558**	1	GROMMET	
	5	1	**8C-8584**	1	PAWL-T-BAR LATCH	
	6	1	**8T-9496**	2	LOCKNUT (9/16-18-THD)	
	7	1	**8Y-4000**	1	LATCH AS	
	8	1	**210-1717**	1	DOOR AS (LH)	
	9	1	**4M-7470**	1	GROMMET	
M	10	1	**6V-7744**	2	LOCKNUT (M10X1.5-THD)	
	11	1	**8T-4121**	4	WASHER-HARD (11X21X2.5-MM THK)	
M	12	1	**8T-4136**	2	BOLT (M10X1.5X25-MM)	

M-METRIC PART

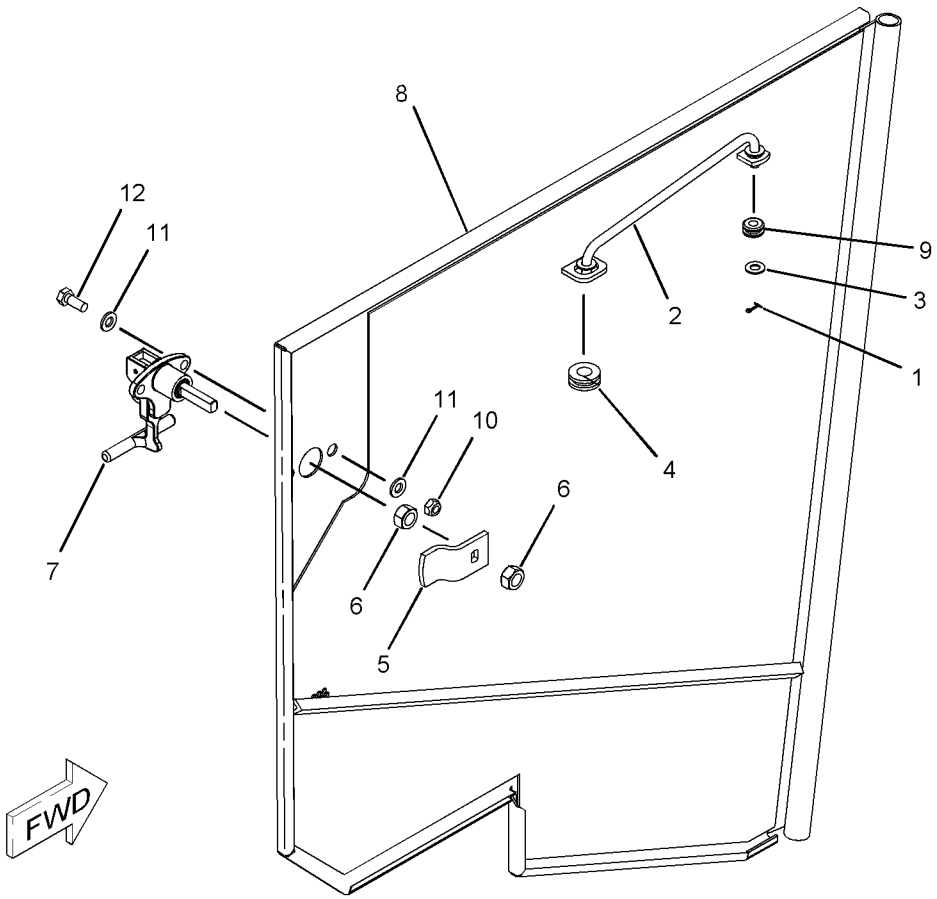

GRAPHIC #1 **<END>** g01035968

FRAME AND BODY

210-1669 DOOR GP-ACCESS–RH

S/N: RJS1-UP
PART OF 248-4761, 260-2992 ENCLOSURE GP-RH
ALSO AN ATTACHMENT

SMCS-7273 **i02200048**

NOTE	REF NO	GRAPHIC REF	PART NUMBER	QTY	PART NAME 1 2 3 4 5 6 (PRODUCT LEVEL)	SEE PAGE
	1	1	**3B-4605**	1	PIN-COTTER	
	2	1	**3V-9399**	1	ROD AS	
		1	**4B-4278**	2	WASHER (10.2X20.5X1.6-MM THK)	
	3	1	**4B-4278**	1	WASHER (10.2X20.5X1.6-MM THK)	
	4	1	**4H-2558**	1	GROMMET	
	5	1	**8C-8584**	1	PAWL-T-BAR LATCH	
	6	1	**8T-9496**	2	LOCKNUT (9/16-18-THD)	
	7	1	**8Y-4000**	1	LATCH AS	
	8	1	**210-1718**	1	DOOR AS (RH)	
	9	1	**4M-7470**	1	GROMMET	
M	10	1	**6V-7744**	2	LOCKNUT (M10X1.5-THD)	
	11	1	**8T-4121**	4	WASHER-HARD (11X21X2.5-MM THK)	
M	12	1	**8T-4136**	2	BOLT (M10X1.5X25-MM)	

M-METRIC PART

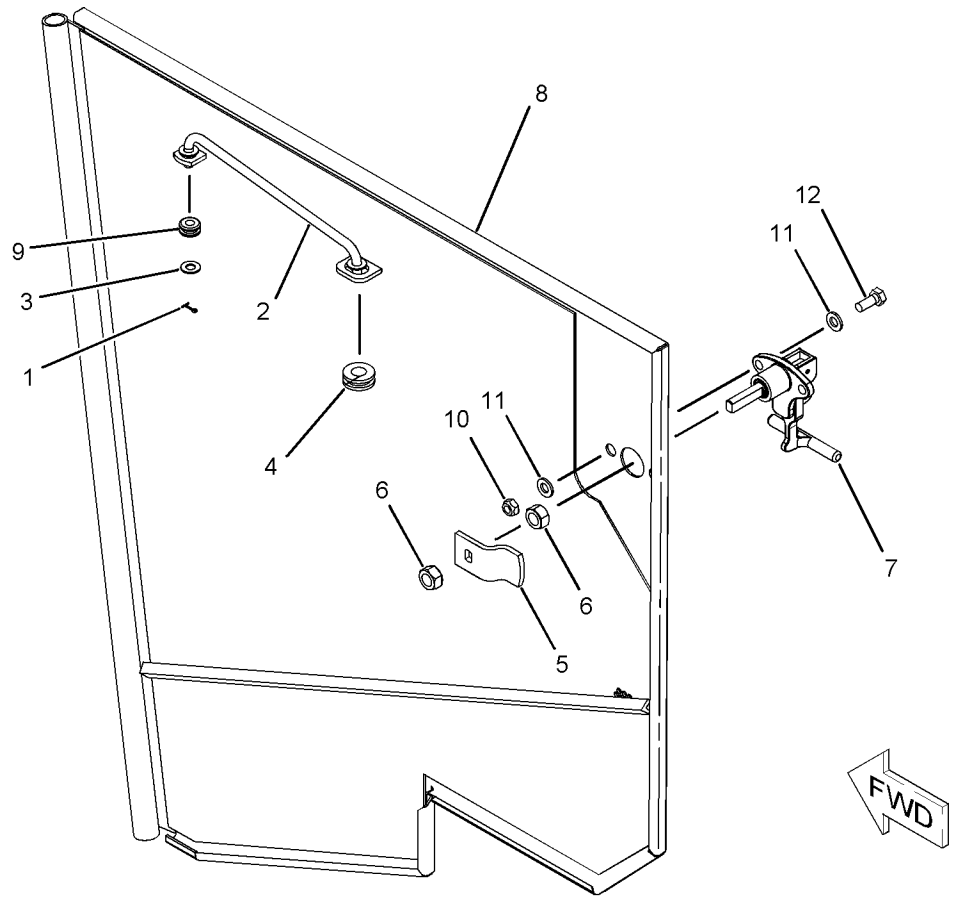

GRAPHIC #1 **<END>** g01035951

210-1684 DOOR GP-ACCESS—LH—SOUND SUPPRESSION

S/N: RJS1-UP

PART OF 248-5527 ENCLOSURE GP-LH

AN ATTACHMENT

SMCS-7273 **i02208290**

NOTE	REF NO	GRAPHIC REF	PART NUMBER	QTY	PART NAME 1 2 3 4 5 6 (PRODUCT LEVEL)	SEE PAGE
	1	1	**3B-4605**	1	PIN-COTTER	
	2	1	**3V-9399**	1	ROD AS	
	2A	1	**4B-4278**	2	WASHER (10.2X20.5X1.6-MM THK)	
	3	1	**4B-4278**	1	WASHER (10.2X20.5X1.6-MM THK)	
	4	1	**4H-2558**	1	GROMMET	
	5	1	**8C-8584**	1	PAWL-T-BAR LATCH	
	6	1	**8T-9496**	2	LOCKNUT (9/16-18-THD)	
	7	1	**8Y-4000**	1	LATCH AS	
	8	1	**210-1719**	1	DOOR AS (LH)	
	9	1	**4M-7470**	1	GROMMET	
M	10	1	**6V-7744**	2	LOCKNUT (M10X1.5-THD)	
	11	1	**8T-4121**	4	WASHER-HARD (11X21X2.5-MM THK)	
M	12	1	**8T-4136**	2	BOLT (M10X1.5X25-MM)	

M-METRIC PART

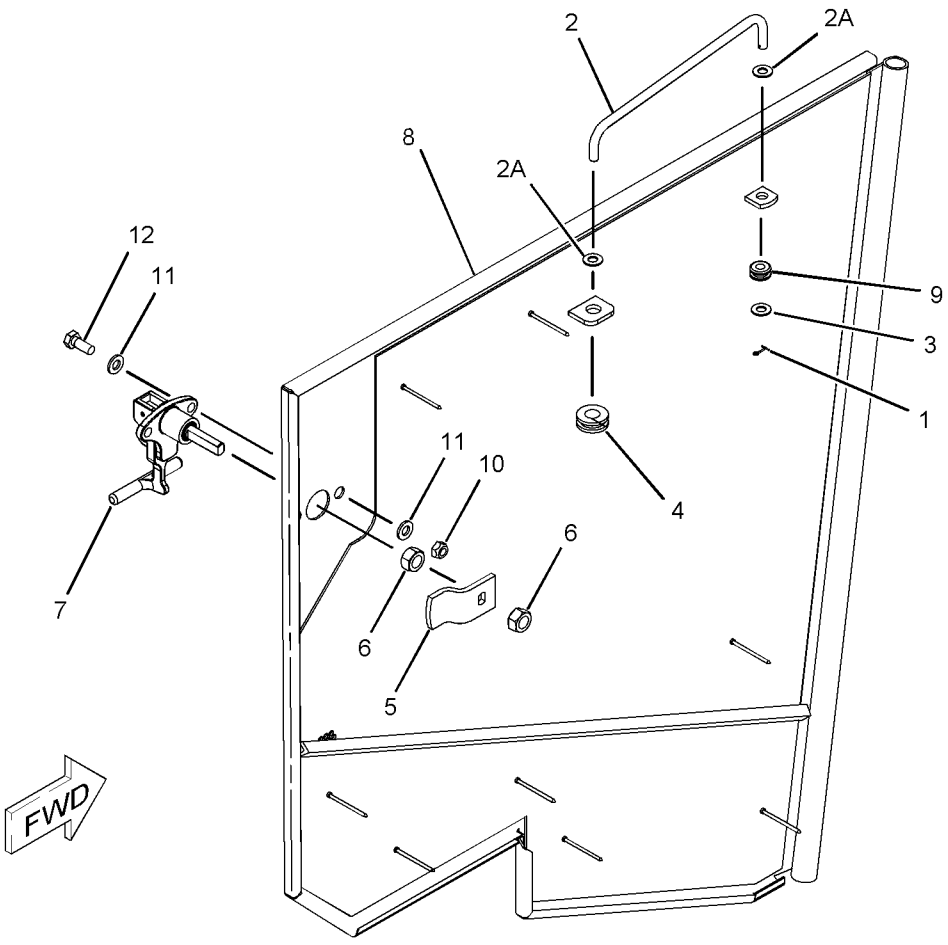

GRAPHIC #1 **<END>** g01117726

210-1686 DOOR GP-ACCESS—RH—SOUND SUPPRESSION

S/N: RJS1-UP

PART OF 248-5522 ENCLOSURE GP-RH

AN ATTACHMENT

SMCS-7273 **i02208296**

NOTE	REF NO	GRAPHIC REF	PART NUMBER	QTY	PART NAME 1 2 3 4 5 6 (PRODUCT LEVEL)	SEE PAGE
	1	1	**3B-4605**	1	PIN-COTTER	
	2	1	**3V-9399**	1	ROD AS	
	2A	1	**4B-4278**	2	WASHER (10.2X20.5X1.6-MM THK)	
	3	1	**4B-4278**	1	WASHER (10.2X20.5X1.6-MM THK)	
	4	1	**4H-2558**	1	GROMMET	
	5	1	**8C-8584**	1	PAWL-T-BAR LATCH	
	6	1	**8T-9496**	2	LOCKNUT (9/16-18-THD)	
	7	1	**8Y-4000**	1	LATCH AS	
	8	1	**210-1720**	1	DOOR AS (RH)	
	9	1	**4M-7470**	1	GROMMET	
M	10	1	**6V-7744**	2	LOCKNUT (M10X1.5-THD)	
	11	1	**8T-4121**	4	WASHER-HARD (11X21X2.5-MM THK)	
M	12	1	**8T-4136**	2	BOLT (M10X1.5X25-MM)	

M-METRIC PART

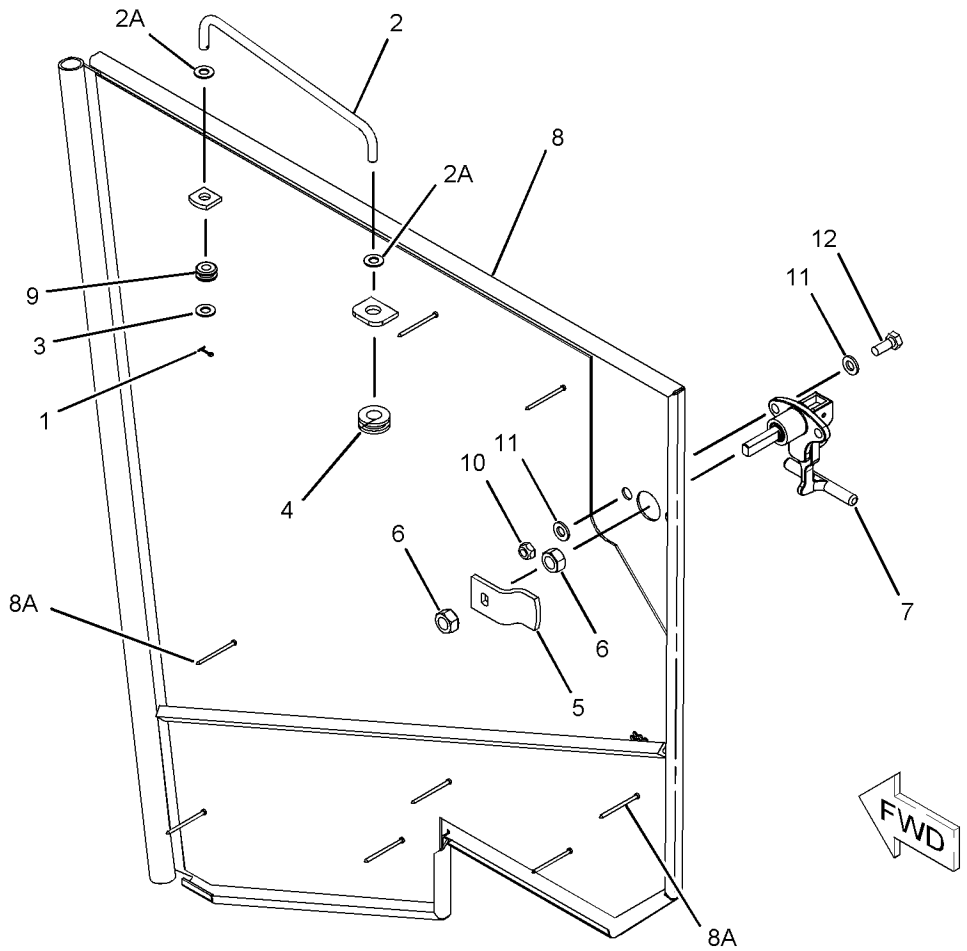

GRAPHIC #1 **<END>** g01036072

FRAME AND BODY

7T-3896 DRAWBAR GP

S/N: RJS1-UP

AN ATTACHMENT

SMCS-7105, 7119 **i01446723**

NOTE	REF NO	GRAPHIC REF	PART NUMBER	QTY	PART NAME 1 2 3 4 5 6 (PRODUCT LEVEL)	SEE PAGE
	1	1	**3T-7566**	2	PIN	
	2	1	**3T-8792**	1	BRACKET AS	
	3	1	**7X-0349**	1	BOLT (5/8-11X3-IN)	
	4	1	**3K-2889**	1	LOCKNUT (5/8-11-THD)	
	5	1	**3T-8791**	1	BRACKET AS	
	6	1	**8E-9289**	1	LATCH	
	7	1	**1H-4106**	1	PIN AS-DRAWBAR	
	8	1	**7G-6623**	1	HITCH	
	9	1	**2H-1537**	6	BOLT (1-1/4-7X6-IN)	
	10	1	**3K-9770**	6	NUT-FULL (1-1/4-7-THD)	
		1	**4K-0684**	12	WASHER-HARD (34X55X6-MM THK)	
	11	1	**7T-8733**	1	DRAWBAR AS	
	12	1	**5M-0544**	8	BOLT (1-1/8-7X4.5-IN)	
		1	**3S-1349**	16	WASHER-HARD (31X52.5X6-MM THK)	
		1	**7F-5711**	8	WASHER (1 9/32X3X5/8-IN THK)	
	13	1	**3D-8012**	8	SPACER (32.4X44.5X31-MM THK)	
	14	1	**4J-5977**	8	NUT-FULL (1-1/8-7-THD)	
	15	1	**6V-8970**	6	BOLT (1-1/2-6-THD)	
		1	**3S-6162**	6	WASHER-HARD (40.5X67X6-MM THK)	
		1	**5T-4896**	6	SPACER (40.5X67X12-MM THK)	
	16	1	**3T-7567**	2	BAR	
	17	1	**5P-2566**	4	BOLT (1/2-13X1.5-IN)	
		1	**8T-4223**	4	WASHER-HARD (13.5X25.5X3-MM THK)	

7T-3896 **DRAWBAR GP** *(contd.)* **i01446723**

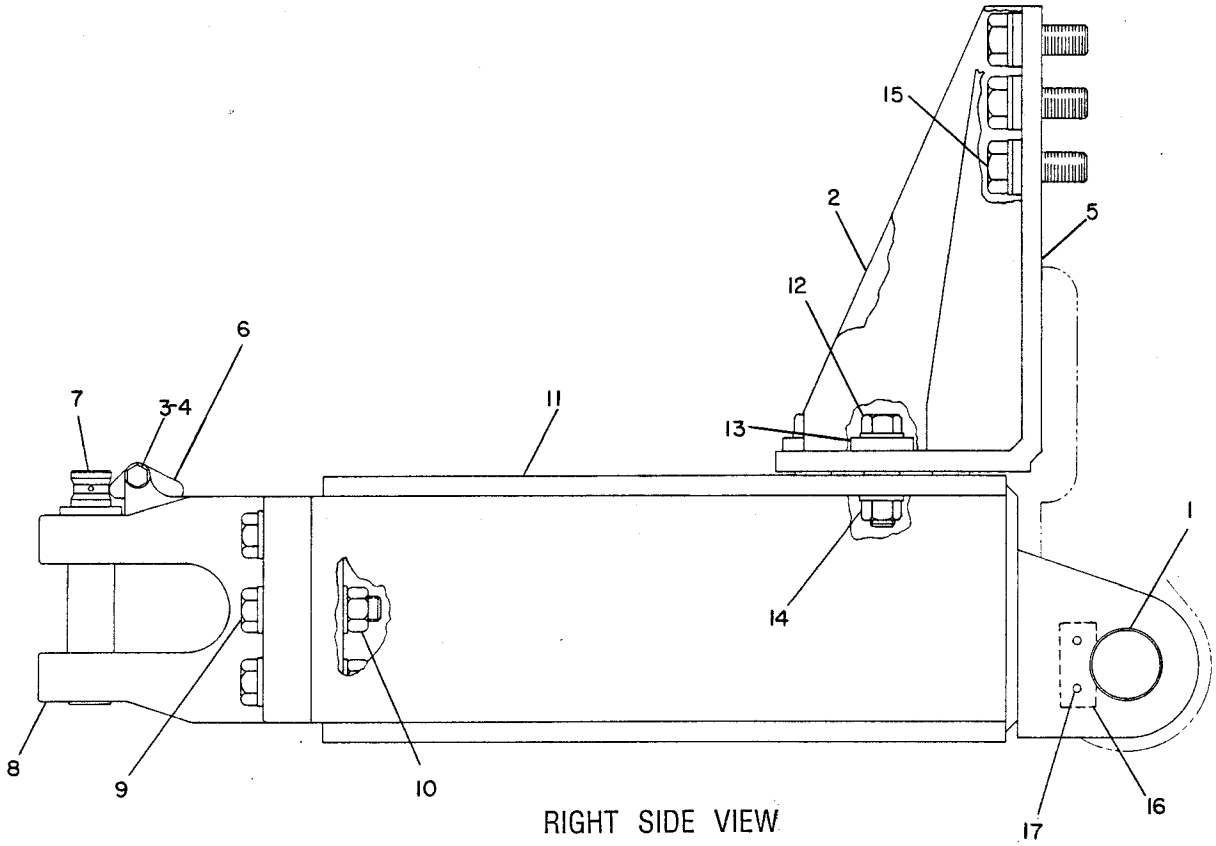

RIGHT SIDE VIEW

GRAPHIC #1 **<END>** g00189355

210-1681 ENCLOSURE GP-ENGINE—SOUND SUPPRESSION

S/N: RJS1-UP
PART OF 205-8609 SUPPRESSION AR-SOUND
AN ATTACHMENT

SMCS-7263 **i02248038**

NOTE	REF NO	GRAPHIC REF	PART NUMBER	QTY	PART NAME 1 2 3 4 5 6 (PRODUCT LEVEL)	SEE PAGE
	1	1	**246-2641**	4	PADLOCK GP (ENGINE ENCLOSURE)	
					(EACH INCLUDES)	
		1	**5P-8500**	2	KEY	
	2	1	**6P-2216**	28	CAP (PUSH ON)	
	3	2	**6T-9927**	2	SLIDE	
	4	2	**6V-9197**	2	LOCK PIN	
	5	2	**9M-3835**	2	LATCH-RUBBER	
	6	2	**9P-3066**	2	MOUNTING	
	7	2	**210-1678**	1	HINGE AS (LH)	
	8	2	**210-1679**	1	HINGE AS (RH)	
	9	1	**210-1680**	1	HOOD AS	
	10	2	**211-2842**	1	SUPPORT AS	
	11	2	**232-1742**	1	LINER (LH)	
	12	2	**232-1744**	1	LINER -RH	
Y	13	1	*248-5522*	1	ENCLOSURE GP-RH	389
Y	14	1	*248-5527*	1	ENCLOSURE GP-LH	385
	15	1	**030-7335**	8	BOLT-LOCKING (5/8-11X1.5-IN)	
	16	2	**2M-5795**	2	PIN-CLEVIS	
	17	2	**6P-8269**	1	WASHER (20.5X88X6-MM THK)	
M	18	2	**7X-2564**	1	BOLT (M20X2.5X90-MM)	
	19	1	**7X-7729**	6	WASHER (11X25X3-MM THK)	
	20	1	**8T-4121**	4	WASHER-HARD (11X21X2.5-MM THK)	
	21	1	**8T-4122**	8	WASHER-HARD (17X32X3.5-MM THK)	
B	22	1,2	**8T-4123**	3	WASHER-PLATED (22X35X3.5-MM THK)	
M	23	1	**8T-4133**	4	NUT (M10X1.5-THD)	
M	24	1	**8T-4137**	2	BOLT (M10X1.5X20-MM)	
M	25	1	**8T-4139**	12	BOLT (M12X1.75X30-MM)	
M	26	1	**8T-4179**	7	BOLT (M12X1.75X20-MM)	
M	27	1,2	**8T-4183**	12	BOLT (M12X1.75X40-MM)	
M	28	1	**8T-4185**	4	BOLT (M10X1.5X50-MM)	
M	29	1	**8T-4195**	4	BOLT (M10X1.5X30-MM)	
	30	1,2	**8T-4223**	31	WASHER-HARD (13.5X25.5X3-MM THK)	
	31	1	**8T-4226**	4	WASHER-PLATED (10.5X45X3-MM THK)	
BD	32	2	**5P-5643**		SEAL	
BD	33	1	**5P-7483**		SEAL	

B-USE AS REQUIRED
D-ORDER BY THE METER
M-METRIC PART
Y-SEPARATE ILLUSTRATION

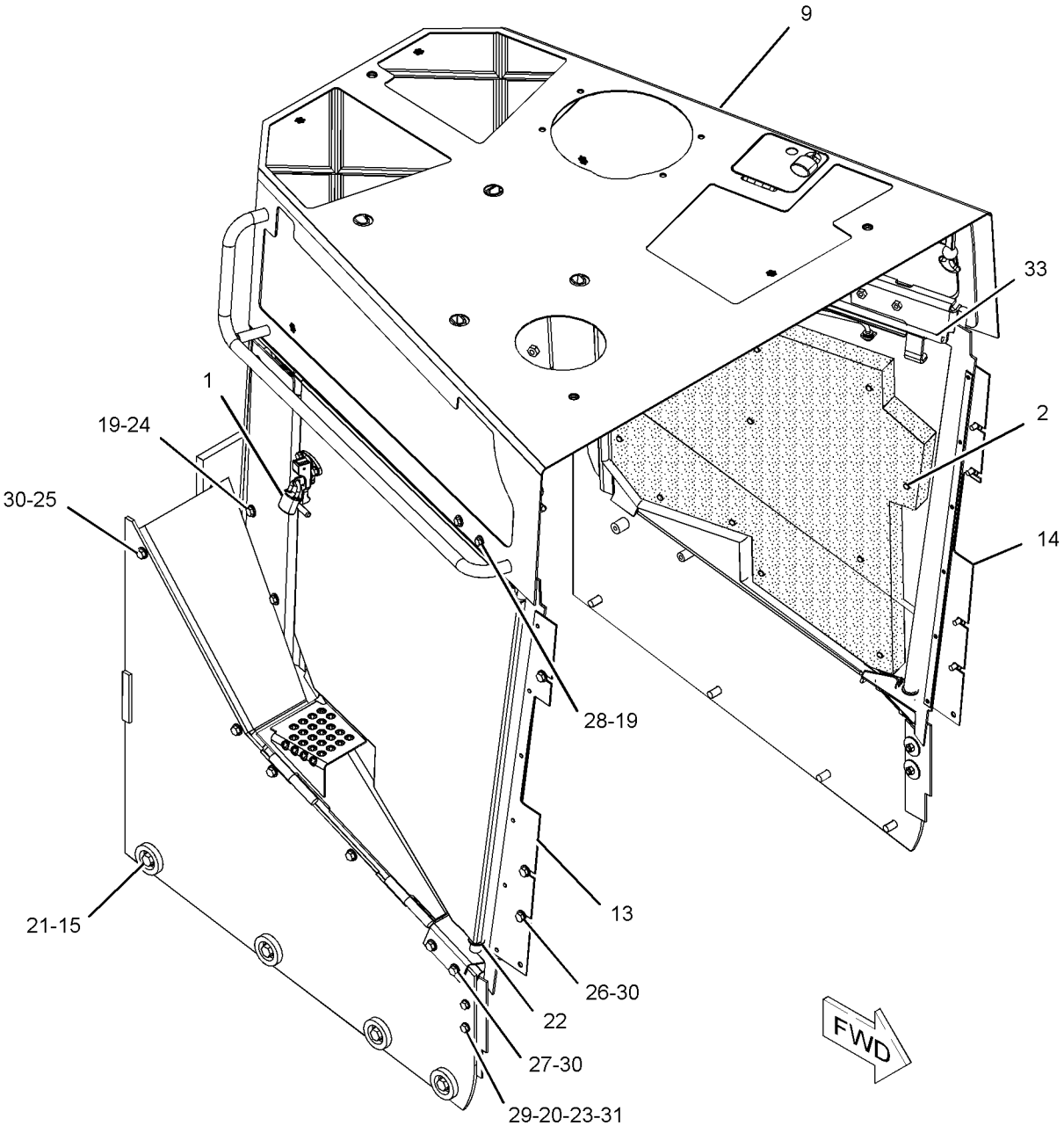

GRAPHIC #1 g01119184

210-1681 **ENCLOSURE GP-ENGINE** *(contd.)* **i02248038**

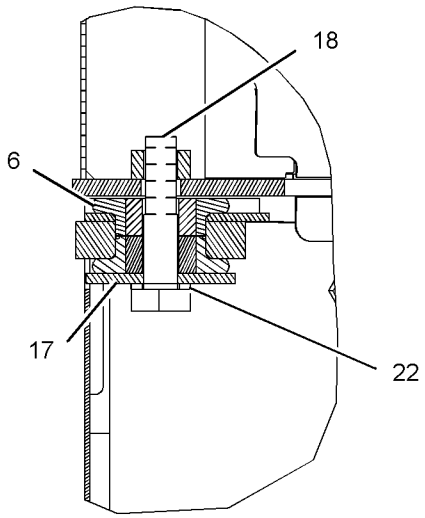

SECTION B-B

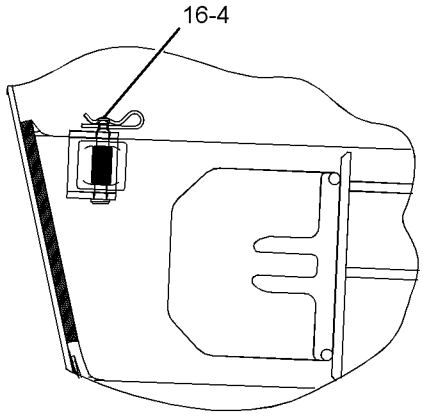

SECTION A-A

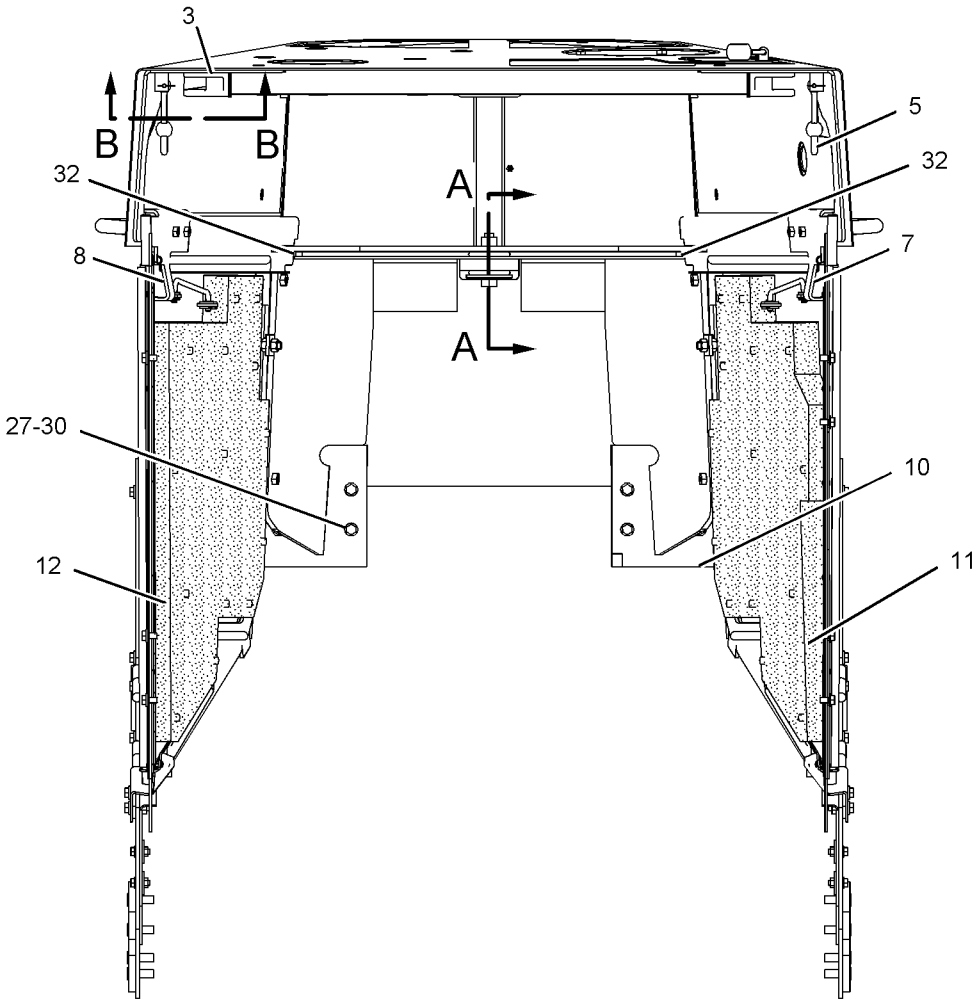

FRONT VIEW

GRAPHIC #2 **<END>** g01119185

215-5599 ENCLOSURE GP-ENGINE

S/N: RJS1-UP

PART OF 205-8601 CHASSIS AR

SMCS-7263 **i02248049**

NOTE	REF NO	GRAPHIC REF	PART NUMBER	QTY	PART NAME 1 2 3 4 5 6 (PRODUCT LEVEL)	SEE PAGE
	1	1	**246-2641**	4	PADLOCK GP (ENGINE ENCLOSURE)	
					(EACH INCLUDES)	
		1	**5P-8500**	2	KEY	
	2	2	**6T-9927**	2	SLIDE	
	3	2	**6V-9197**	2	LOCK PIN	
	4	2	**9M-3835**	2	LATCH-RUBBER	
	5	2	**9P-3066**	2	MOUNTING	
	6	2	**210-1678**	1	HINGE AS (LH)	
	7	2	**210-1679**	1	HINGE AS (RH)	
	8	1	**210-1680**	1	HOOD AS	
	9	2	**211-2842**	1	SUPPORT AS	
Y	10	1	**248-4761**	1	ENCLOSURE GP-RH	388
Y	11	1	**248-4763**	1	ENCLOSURE GP-LH	384
	12	1	**030-7335**	8	BOLT-LOCKING (5/8-11X1.5-IN)	
	13	2	**2M-5795**	2	PIN-CLEVIS	
	14	2	**6P-8269**	1	WASHER (20.5X88X6-MM THK)	
M	15	2	**7X-2564**	1	BOLT (M20X2.5X90-MM)	
	16	1	**7X-7729**	6	WASHER (11X25X3-MM THK)	
	17	1	**8T-4121**	4	WASHER-HARD (11X21X2.5-MM THK)	
	18	1	**8T-4122**	8	WASHER-HARD (17X32X3.5-MM THK)	
	19	1,2	**8T-4123**	3	WASHER-PLATED (22X35X3.5-MM THK)	
M	20	1	**8T-4133**	4	NUT (M10X1.5-THD)	
M	21	1	**8T-4137**	2	BOLT (M10X1.5X20-MM)	
M	22	1	**8T-4139**	12	BOLT (M12X1.75X30-MM)	
M	23	1	**8T-4179**	7	BOLT (M12X1.75X20-MM)	
M	24	1,2	**8T-4183**	12	BOLT (M12X1.75X40-MM)	
M	25	1	**8T-4185**	4	BOLT (M10X1.5X50-MM)	
M	26	1	**8T-4195**	4	BOLT (M10X1.5X30-MM)	
	27	1,2	**8T-4223**	31	WASHER-HARD (13.5X25.5X3-MM THK)	
	28	1	**8T-4226**	4	WASHER-PLATED (10.5X45X3-MM THK)	
BD	29	2	**5P-5643**		SEAL	
BD	30	2	**5P-7483**		SEAL	

B-USE AS REQUIRED
D-ORDER BY THE METER
M-METRIC PART
Y-SEPARATE ILLUSTRATION

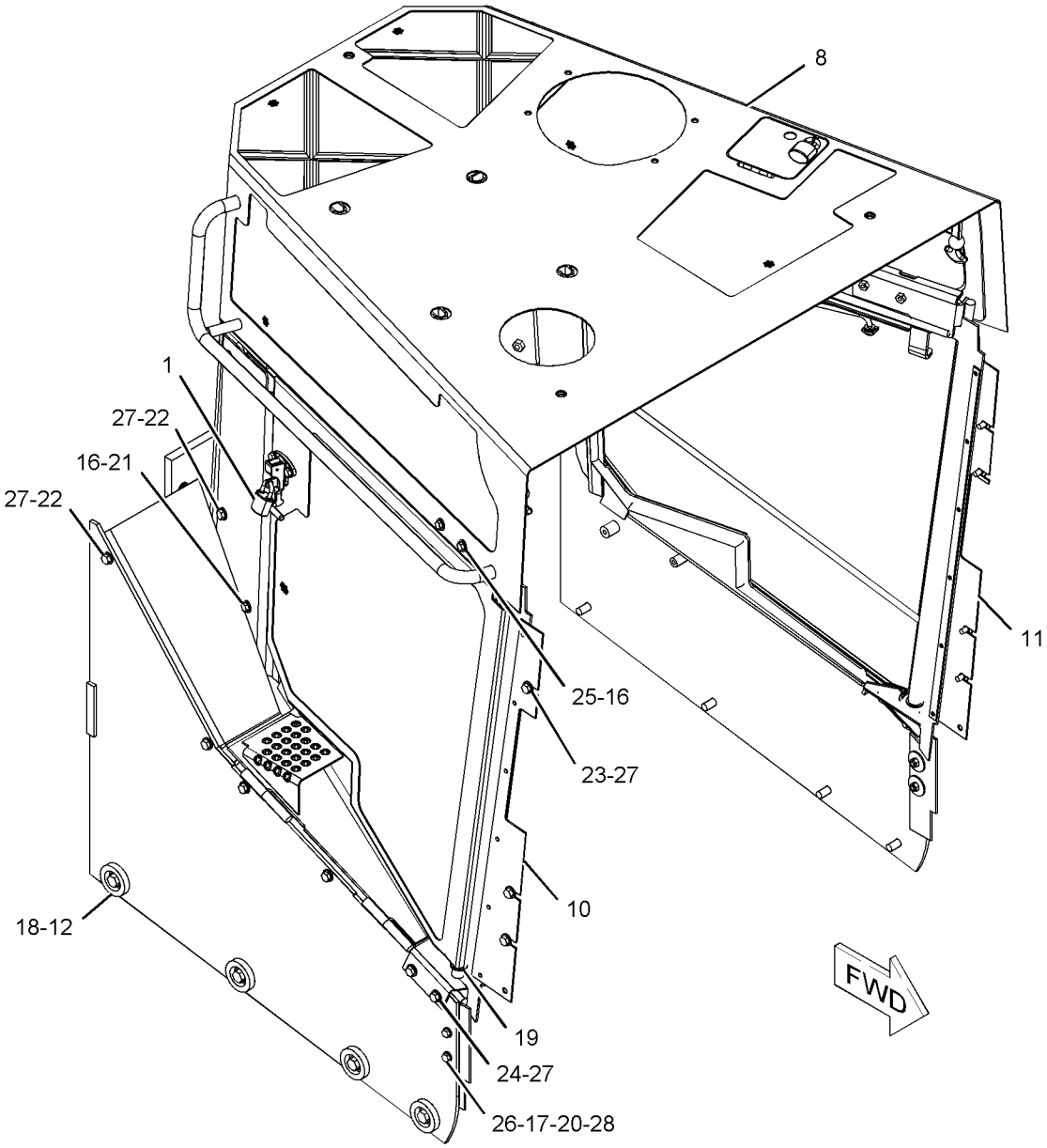

GRAPHIC #1 g01120044

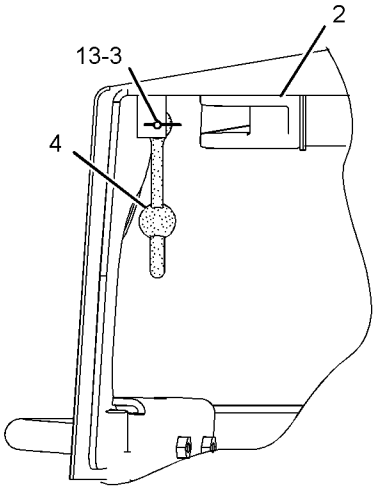

VIEW OF AREA B

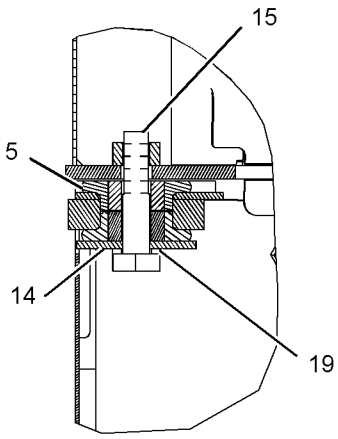

SECTION A-A

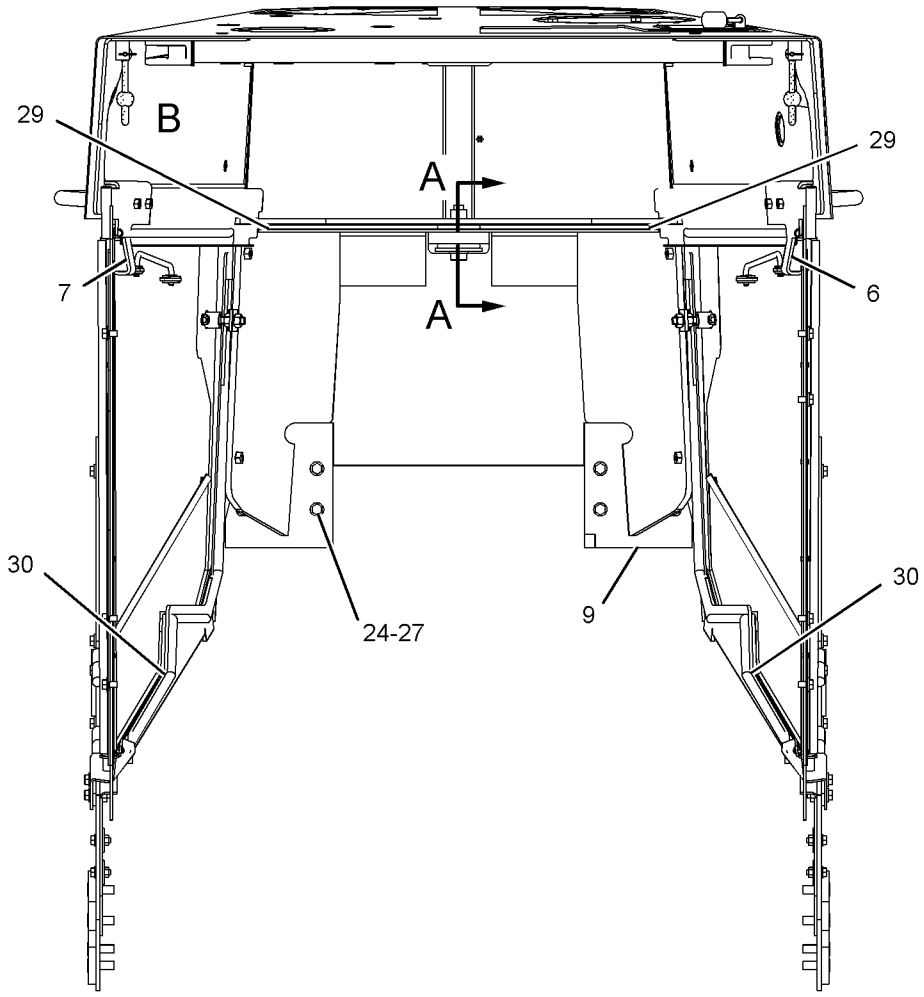

FRONT VIEW

GRAPHIC #2 **<END>** g01120045

FRAME AND BODY

242-9355 ENCLOSURE GP-ENGINE—WASTE HANDLING

S/N: RJS1-UP

PART OF 211-5088 WASTE HANDLING AR

AN ATTACHMENT

SMCS-7263 **i02219932**

NOTE	REF NO	GRAPHIC REF	PART NUMBER	QTY	PART NAME 1 2 3 4 5 6 (PRODUCT LEVEL)	SEE PAGE
	1	1	**243-5317**	1	GUARD AS	
Y	2	1	*260-2992*	1	ENCLOSURE GP-RH	390
Y	3	1	*260-2993*	1	ENCLOSURE GP-LH	386
	4	1	**8T-4994**	4	WASHER-HARD (20X36.5X3.5-MM THK)	
	5	1	**8T-9399**	4	BOLT (3/4-10X2.25-IN)	

Y-SEPARATE ILLUSTRATION

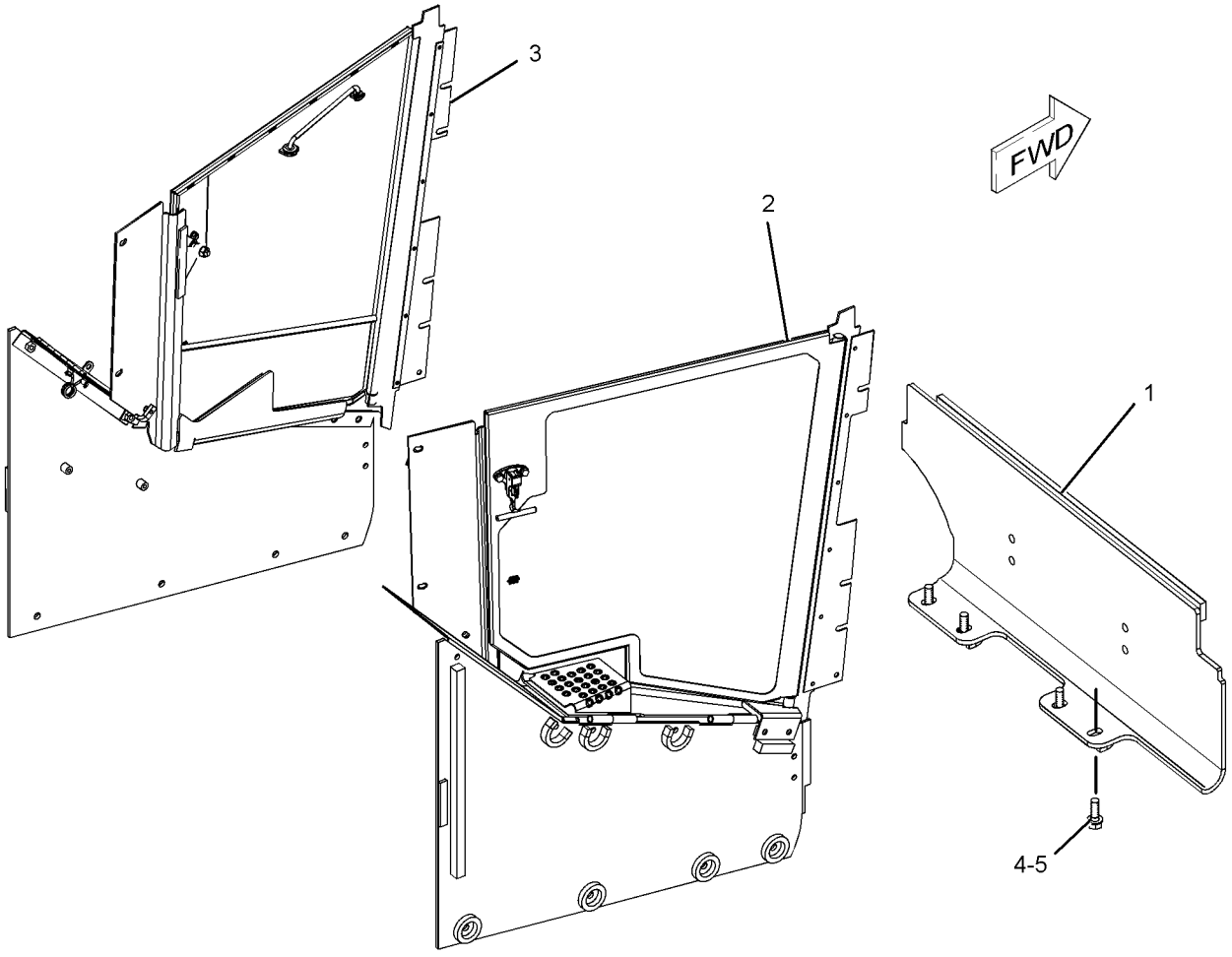

GRAPHIC #1 **<END>** g01125453

FRAME AND BODY

248-4763 ENCLOSURE GP-LH

S/N: RJS1-UP

PART OF 215-5599 ENCLOSURE GP-ENGINE

SMCS-7267, 7276 **i02199969**

NOTE	REF NO	GRAPHIC REF	PART NUMBER	QTY	PART NAME 1 2 3 4 5 6 (PRODUCT LEVEL)	SEE PAGE
	1	1	**210-1653**	1	PLATE AS (LH)	
	2	1	**210-1655**	1	PLATE AS (LH)	
	3	1	**210-1660**	1	PLATE AS (LH)	
	4	1	**210-1663**	1	PLATE AS (LH)	
Y	5	1	*210-1668*	1	DOOR GP-ACCESS (LH)	371
	6	1	**210-1673**	1	PLATE AS (LH)	
	7	1	**210-1676**	1	PIN AS	
	8	1	**233-9316**	1	BAFFLE AS (LH)	
	9	1	**243-0513**	1	BAFFLE AS	

Y-SEPARATE ILLUSTRATION

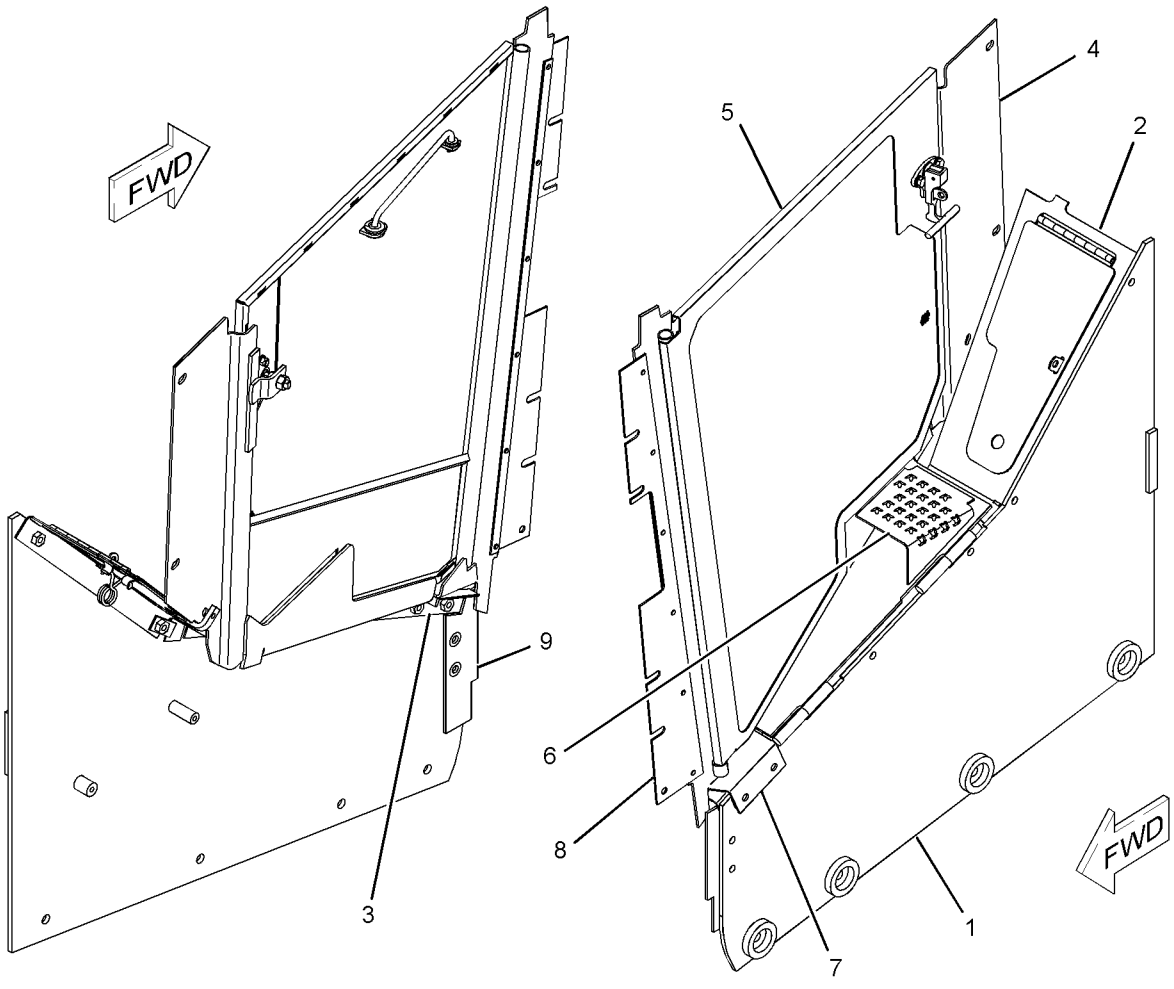

GRAPHIC #1 **<END>** g01125363

248-5527 ENCLOSURE GP-LH—SOUND SUPPRESSION

S/N: RJS1-UP

PART OF 210-1681 ENCLOSURE GP-ENGINE

AN ATTACHMENT

SMCS-7267, 7276 **i02208292**

NOTE	REF NO	GRAPHIC REF	PART NUMBER	QTY	PART NAME 1 2 3 4 5 6 (PRODUCT LEVEL)	SEE PAGE
	1	1	**210-1653**	1	PLATE AS (LH)	
	2	1	**210-1655**	1	PLATE AS (LH)	
	3	1	**210-1660**	1	PLATE AS (LH)	
	4	1	**210-1663**	1	PLATE AS (LH)	
	5	1	**210-1673**	1	PLATE AS (LH)	
	6	1	**210-1676**	1	PIN AS	
Y	7	1	*210-1684*	1	DOOR GP-ACCESS (LH)	373
	8	1	**233-9316**	1	BAFFLE AS (LH)	
	9	1	**243-0513**	1	BAFFLE AS	

Y-SEPARATE ILLUSTRATION

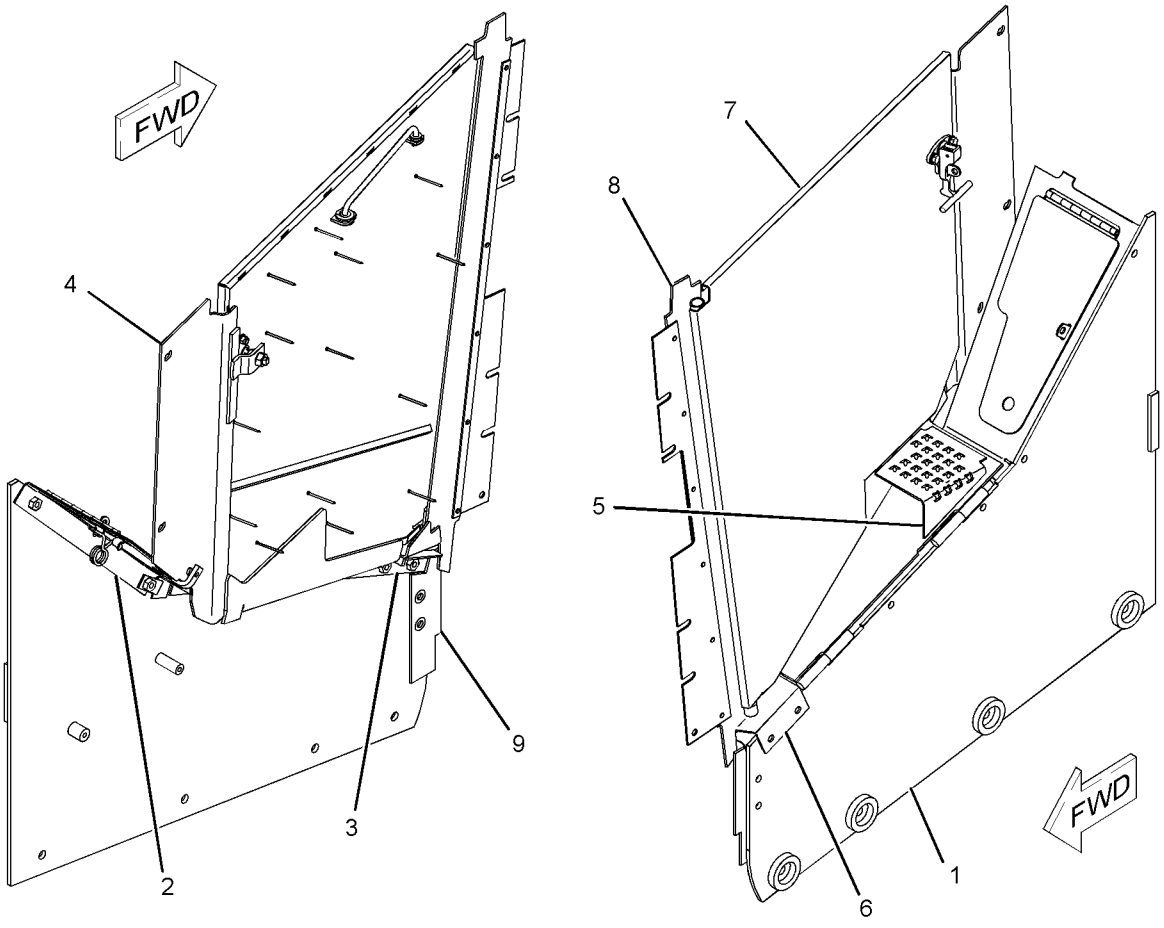

GRAPHIC #1 **<END>** g01125222

260-2993 ENCLOSURE GP-LH—WASTE HANDLING

S/N: RJS1-UP
PART OF 242-9355 ENCLOSURE GP-ENGINE
AN ATTACHMENT

SMCS-7267, 7276 **i02225648**

NOTE	REF NO	GRAPHIC REF	PART NUMBER	QTY	PART NAME 1 2 3 4 5 6 (PRODUCT LEVEL)	SEE PAGE
	1	1	**210-1655**	1	PLATE AS (LH)	
	2	1	**210-1660**	1	PLATE AS (LH)	
	3	1	**210-1663**	1	PLATE AS (LH)	
Y	4	1	*210-1668*	1	DOOR GP-ACCESS (LH)	371
	5	1	**210-1673**	1	PLATE AS (LH)	
	6	1	**210-1676**	1	PIN AS	
	7	1	**233-9316**	1	BAFFLE AS (LH)	
	8	1	**240-9722**	1	PLATE AS (LH)	
	8A	1	**9Z-9377**	1	BAR	
	8B	1	**210-1653**	1	PLATE AS (LH)	
	9	1	**243-0513**	1	BAFFLE AS	

Y-SEPARATE ILLUSTRATION

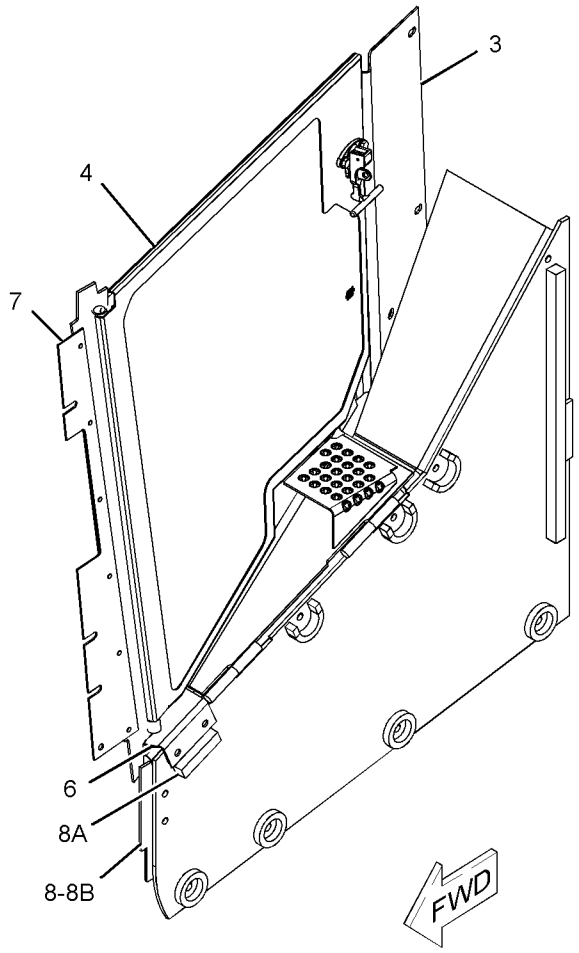

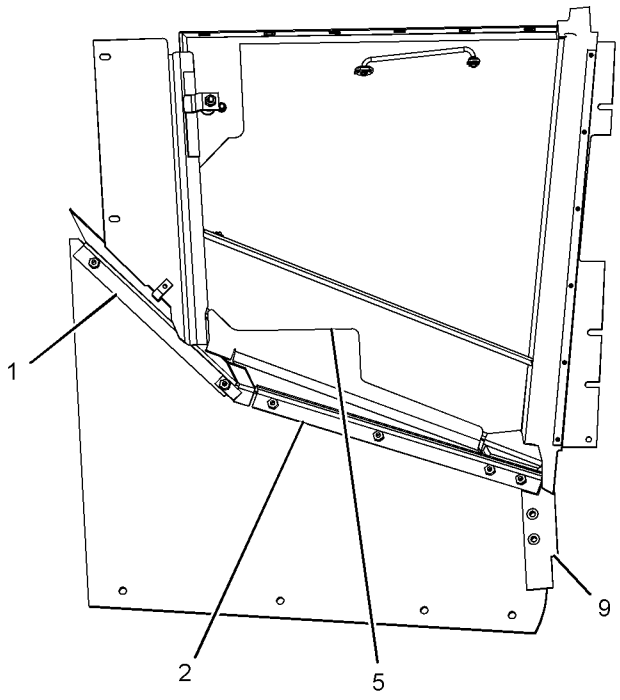

BACKSIDE OF ENCLOSURE

GRAPHIC #1 **<END>** g01125980

FRAME AND BODY

210-1689 ENCLOSURE GP-REAR

S/N: RJS1-UP

PART OF 205-8601 CHASSIS AR

SMCS-7263 **i02248054**

NOTE	REF NO	GRAPHIC REF	PART NUMBER	QTY	PART NAME 1 2 3 4 5 6 (PRODUCT LEVEL)	SEE PAGE
	1	1	**4H-1641**	1	PIN-SPRING	
	2	1	**246-2641**	1	PADLOCK GP (REAR ENCLOSURE)	
		1	**5P-8500**	2	KEY	
	3	1	**8E-7561**	1	KNOB AS	
		1	**7S-2042**	1	STUD	
		1	**8E-1205**	1	KNOB	
		1	**8T-7566**	1	PIN-SPRING	
	4	1	**9S-8230**	1	PLATE AS	
		1	**1F-0750**	1	NUT-WELD (3/8-16-THD)	
	5	1	**104-5771**	1	PLATE	
	6	1	**104-5773**	1	PLATE	
	7	1	**210-1692**	1	COVER AS	
	8	1	**210-1693**	1	COVER AS	
	9	1	**226-2316**	2	PLATE AS	
	10	1	**5P-1076**	5	WASHER-HARD (13.5X30X4-MM THK)	
M	11	1	**7X-2552**	4	BOLT (M16X2X30-MM)	
	12	1	**7X-7729**	2	WASHER (11X25X3-MM THK)	
M	13	1	**8T-4136**	4	BOLT (M10X1.5X25-MM)	
M	14	1	**8T-4139**	9	BOLT (M12X1.75X30-MM)	
	15	1	**8T-4222**	2	WASHER-PLATED (11X32X2.5-MM THK)	
	16	1	**8T-4223**	4	WASHER-HARD (13.5X25.5X3-MM THK)	
	17	1	**8T-7934**	2	WASHER-HARD (11X21X5-MM THK)	
	18	1	**9X-8257**	4	WASHER (17.5X30X3.5-MM THK)	

M-METRIC PART

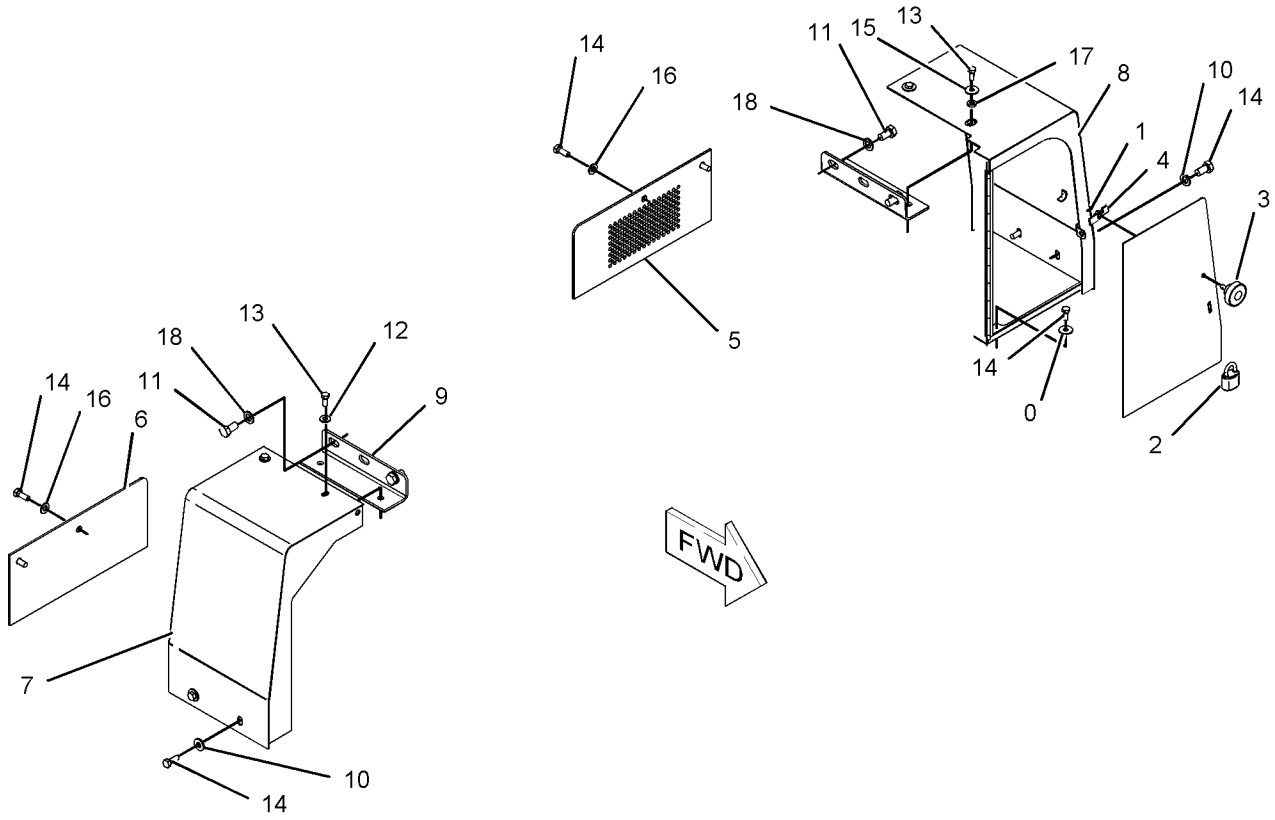

GRAPHIC #1 **<END>** g01035900

FRAME AND BODY

248-4761 ENCLOSURE GP-RH

S/N: RJS1-UP

PART OF 215-5599 ENCLOSURE GP-ENGINE

SMCS-7267, 7276 **i02199968**

NOTE	REF NO	GRAPHIC REF	PART NUMBER	QTY	PART NAME 1 2 3 4 5 6 (PRODUCT LEVEL)	SEE PAGE
	1	1	**210-1652**	1	PLATE AS (RH)	
	2	1	**210-1654**	1	PLATE AS (RH)	
	3	1	**210-1661**	1	PLATE AS (RH)	
Y	4	1	*210-1669*	1	DOOR GP-ACCESS (RH)	372
	5	1	**210-1671**	1	PLATE AS (RH)	
	6	1	**210-1674**	1	PLATE AS (RH)	
	7	1	**210-1677**	1	PIN AS	
	8	1	**243-0513**	1	BAFFLE AS	
	9	1	**244-8823**	1	BAFFLE AS (RH)	

Y-SEPARATE ILLUSTRATION

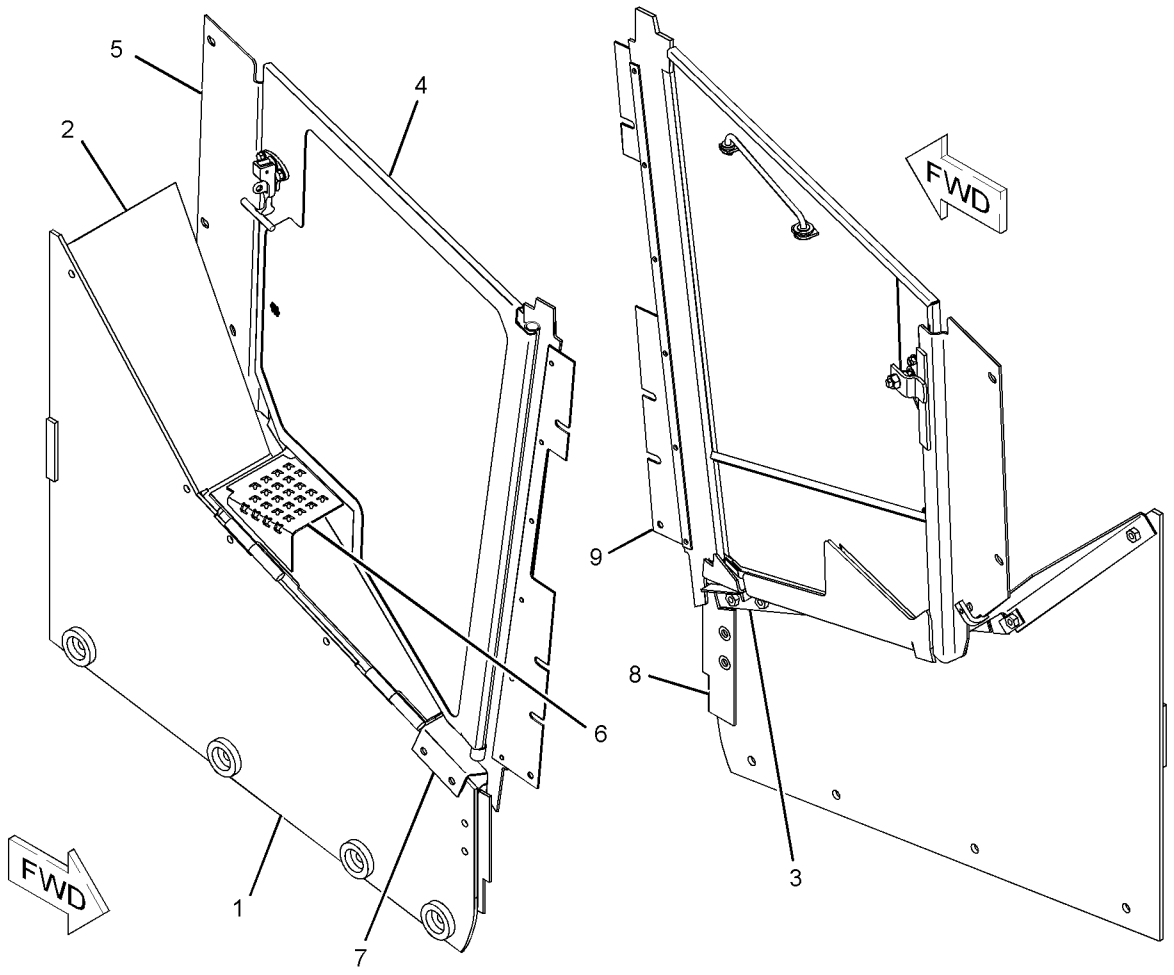

GRAPHIC #1 **<END>** g01118933

248-5522 ENCLOSURE GP-RH—SOUND SUPPRESSION

S/N: RJS1-UP
PART OF 210-1681 ENCLOSURE GP-ENGINE
AN ATTACHMENT

SMCS-7267, 7276 **i02208295**

NOTE	REF NO	GRAPHIC REF	PART NUMBER	QTY	PART NAME 1 2 3 4 5 6 (PRODUCT LEVEL)	SEE PAGE
	1	1	**210-1652**	1	PLATE AS (RH)	
	2	1	**210-1654**	1	PLATE AS (RH)	
	3	1	**210-1661**	1	PLATE AS (RH)	
	4	1	**210-1671**	1	PLATE AS (RH)	
	5	1	**210-1674**	1	PLATE AS (RH)	
	6	1	**210-1677**	1	PIN AS	
Y	7	1	*210-1686*	1	DOOR GP-ACCESS (RH)	374
	8	1	**243-0513**	1	BAFFLE AS	
	9	1	**244-8823**	1	BAFFLE AS (RH)	

Y-SEPARATE ILLUSTRATION

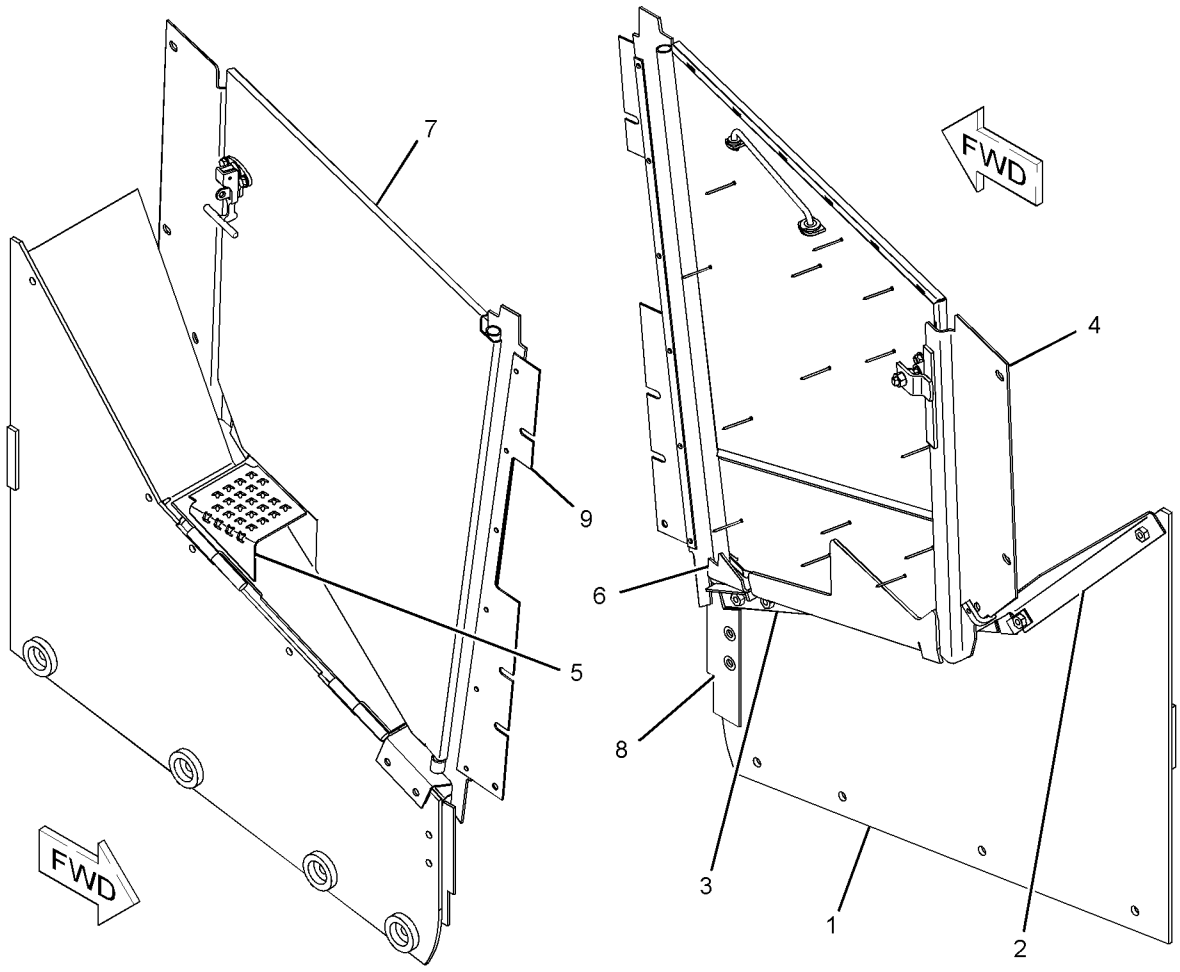

GRAPHIC #1 **<END>** g01125328

260-2992 ENCLOSURE GP-RH—WASTE HANDLING

S/N: RJS1-UP
PART OF 242-9355 ENCLOSURE GP-ENGINE
AN ATTACHMENT

SMCS-7267, 7276 **i02225647**

NOTE	REF NO	GRAPHIC REF	PART NUMBER	QTY	PART NAME 1 2 3 4 5 6 (PRODUCT LEVEL)	SEE PAGE
	1	1	**210-1654**	1	PLATE AS (RH)	
	2	1	**210-1661**	1	PLATE AS (RH)	
Y	3	1	*210-1669*	1	DOOR GP-ACCESS (RH)	372
	4	1	**210-1671**	1	PLATE AS (RH)	
	5	1	**210-1674**	1	PLATE AS (RH)	
	6	1	**210-1677**	1	PIN AS	
	7	1	**240-9723**	1	PLATE AS (RH)	
	7A	1	**9Z-9377**	1	BAR	
	7B	1	**210-1652**	1	PLATE AS (RH)	
	8	1	**243-0513**	1	BAFFLE AS	
	9	1	**244-8823**	1	BAFFLE AS (RH)	

Y-SEPARATE ILLUSTRATION

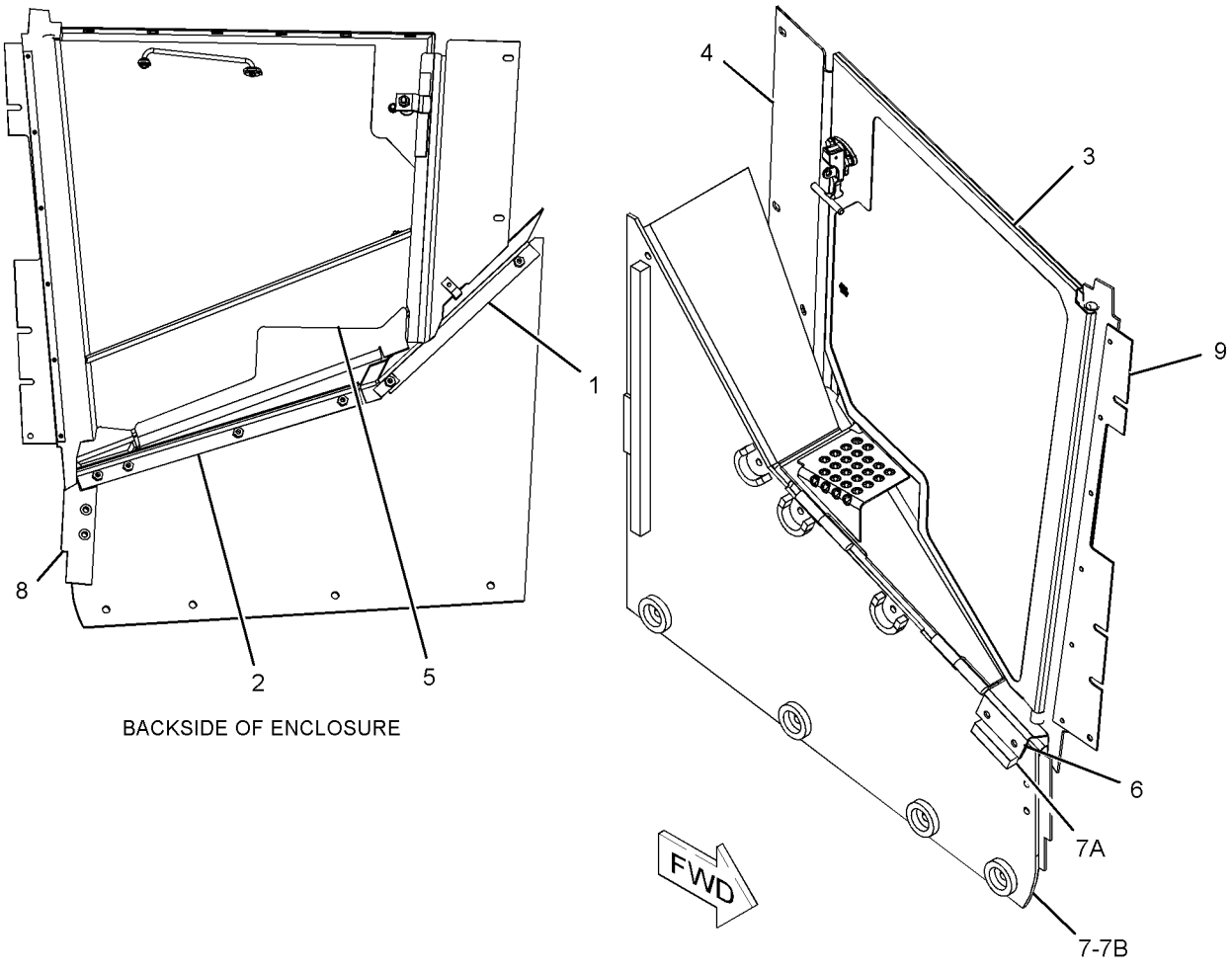

GRAPHIC #1 **<END>** g01125954

FRAME AND BODY

205-8570 FENDER GP

S/N: RJS1-UP

PART OF 205-8601 CHASSIS AR

SMCS-7252 **i02248057**

NOTE	REF NO	GRAPHIC REF	PART NUMBER	QTY	PART NAME 1 2 3 4 5 6 (PRODUCT LEVEL)	SEE PAGE
	1	1	**3W-3110**	4	LOCK PIN	
	2	1	**246-2641**	2	PADLOCK GP (BATTERY BOX)	
					(EACH INCLUDES)	
		1	**5P-8500**	2	KEY	
	3	1	**9M-3835**	2	LATCH-RUBBER	
	4	1	**9W-0352**	2	LINK	
	5	1	**9W-6958**	2	HANDHOLD (GRAB)	
	6	1	**9W-7006**	2	PIN	
	7	1	**9W-9173**	2	HANDHOLD (GRAB)	
	8	1	**210-8543**	1	PLATE	
	9	1	**210-8544**	1	COVER AS	
	10	1	**210-8545**	1	COVER AS	
	11	1	**210-8546**	1	BARRIER AS	
	11A	1	**8T-7971**	7	WASHER-HARD (13.5X25.5X5-MM THK)	
	12	1	**210-8547**	1	BEAM AS	
	12A	1	**9W-0330**	2	BEARING	
	13	1	**211-6092**	2	PLATE AS	
	14	1	**214-6502**	1	PLATE	
	15	1	**222-3590**	2	STEP	
Y	16	1	*231-9286*	1	FENDER GP (LH)	393
Y	17	1	*231-9287*	1	FENDER GP (RH)	394
	18	1	**232-3755**	2	PLATE	
	19	1	**238-0251**	18	SCREW-BUTTON HEAD (M10X1.5X25-MM)	
	20	1	**2M-5795**	2	PIN-CLEVIS	
	21	1	**5V-1496**	2	RETAINER	
M	22	1	**7X-2555**	16	BOLT (M16X2X80-MM)	
M	23	1	**8T-4137**	2	BOLT (M10X1.5X20-MM)	
M	24	1	**8T-4139**	14	BOLT (M12X1.75X30-MM)	
M	25	1	**8T-4140**	8	BOLT (M16X2X60-MM)	
M	26	1	**8T-4184**	12	BOLT (M12X1.75X45-MM)	
M	27	1	**8T-4195**	7	BOLT (M10X1.5X30-MM)	
	28	1	**8T-4223**	30	WASHER-HARD (13.5X25.5X3-MM THK)	
	29	1	**8T-4226**	7	WASHER-PLATED (10.5X45X3-MM THK)	
	30	1	**9X-8257**	24	WASHER (17.5X30X3.5-MM THK)	
BE	31	1	**112-9736**		SEAL	

B-USE AS REQUIRED
E-ORDER BY THE CENTIMETER
M-METRIC PART
Y-SEPARATE ILLUSTRATION

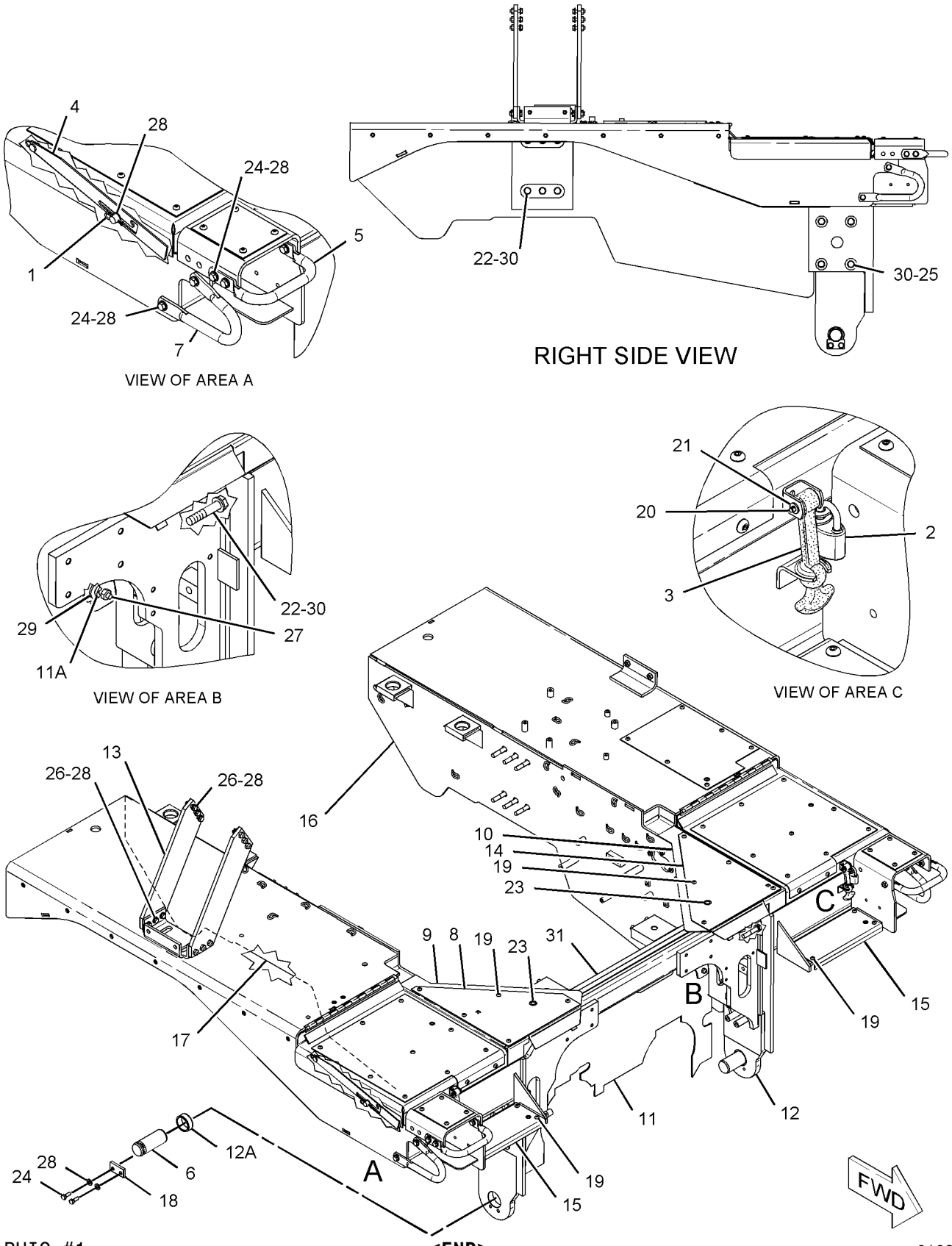

GRAPHIC #1 **<END>** g01035631

FRAME AND BODY

231-9286 FENDER GP–LH

S/N: RJS1-UP

PART OF 205-8570 FENDER GP

SMCS-7252 **i01989410**

NOTE	REF NO	GRAPHIC REF	PART NUMBER	QTY	PART NAME 1 2 3 4 5 6 (PRODUCT LEVEL)	SEE PAGE
	1	1	**210-8548**	1	FENDER AS (LH)	
	1A	1	**9W-0648**	1	HINGE	
	2	1	**222-4133**	1	PLATE (LH)	
	3	1	**231-8110**	1	PLATE	
	4	1	**238-0251**	21	SCREW-BUTTON HEAD (M10X1.5X25-MM)	
	5	1	**3T-2977**	1	PLATE	

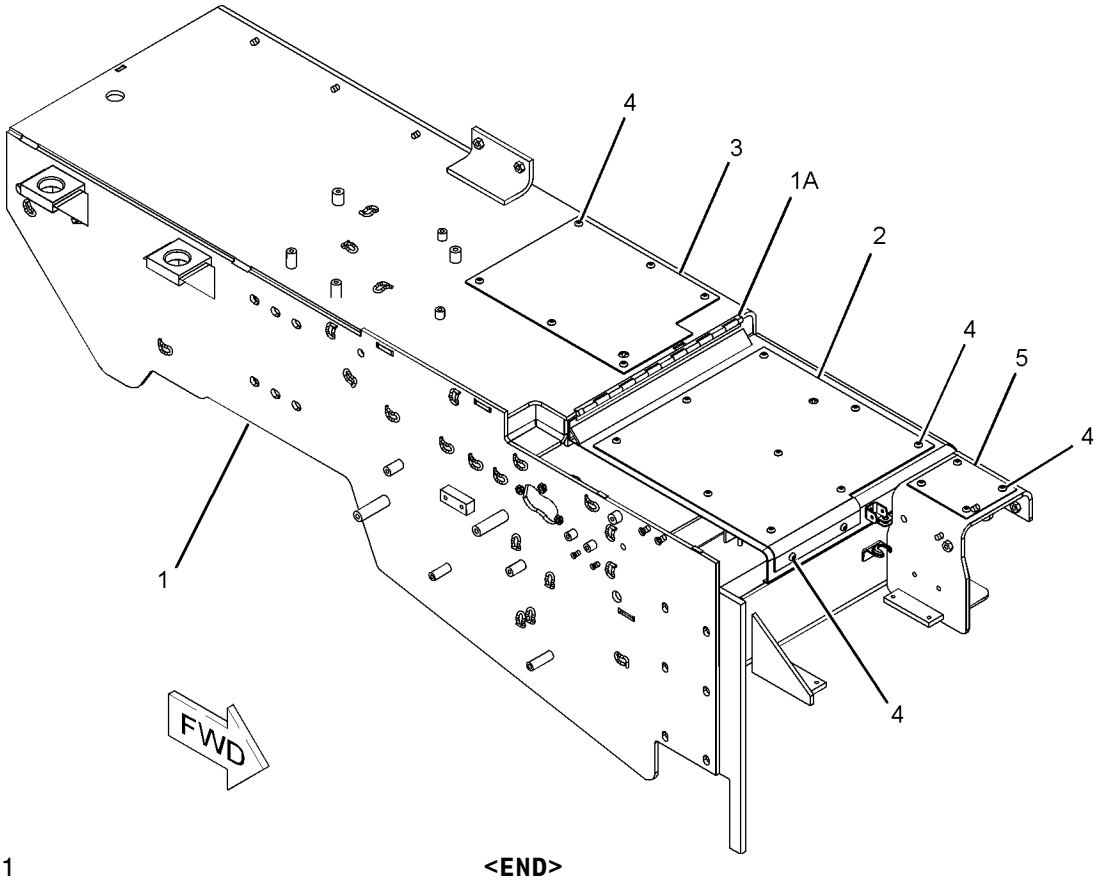

GRAPHIC #1 **<END>** g01035693

FRAME AND BODY

231-9287 FENDER GP–RH

S/N: RJS1-UP

PART OF 205-8570 FENDER GP

SMCS-7252 **i02236127**

NOTE	REF NO	GRAPHIC REF	PART NUMBER	QTY	PART NAME 1 2 3 4 5 6 (PRODUCT LEVEL)	SEE PAGE
	1	1	**210-8549**	1	FENDER AS (RH)	
	2	1	**222-4132**	1	PLATE (RH)	
	3	1	**238-0251**	15	SCREW-BUTTON HEAD (M10X1.5X25-MM)	
	4	1	**3T-2977**	1	PLATE	

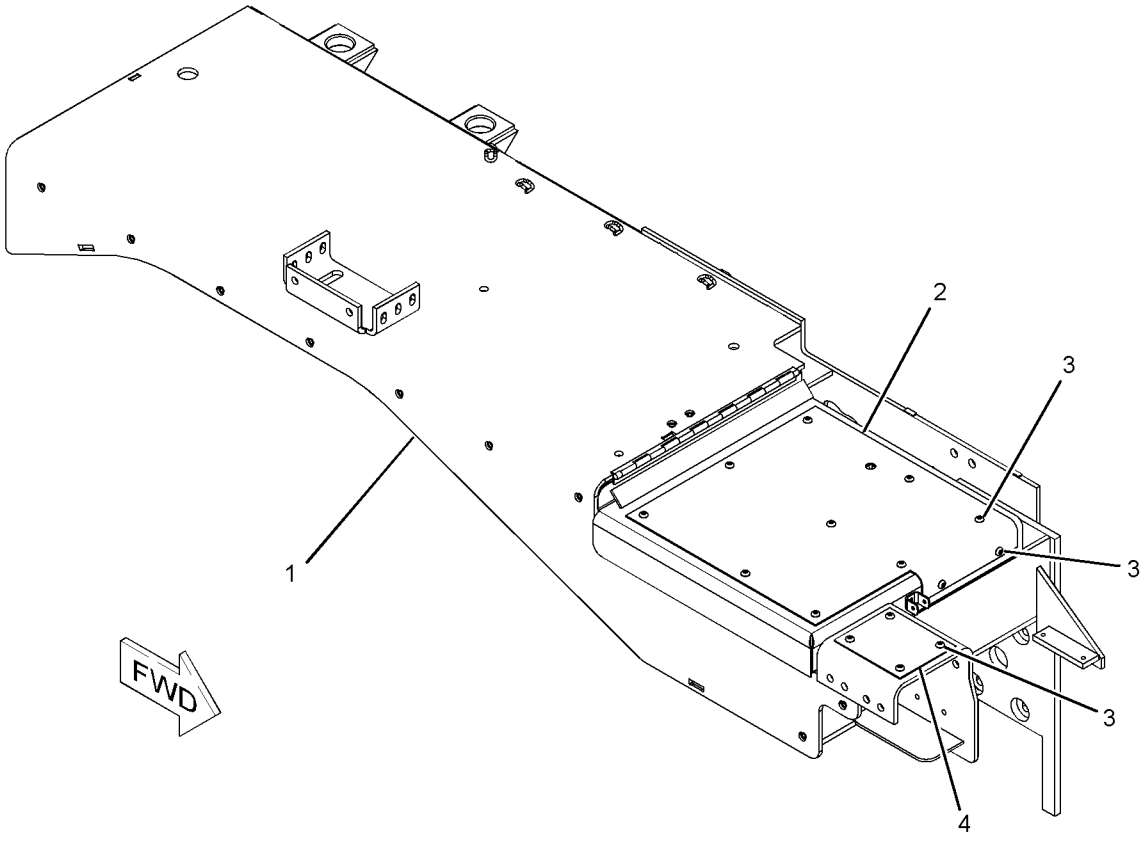

GRAPHIC #1 **<END>** g01127902

4Z-9484 FRAME & BEARING AS—TRASH—SINGLE SHANK RIPPER

S/N: RJS1-UP

PART OF 4Z-0654 BAR AS-STRIKER

AN ATTACHMENT

SMCS-4150, 7051 **i02220475**

NOTE	REF NO	GRAPHIC REF	PART NUMBER	QTY	PART NAME 1 2 3 4 5 6 (PRODUCT LEVEL)	SEE PAGE
	1	1	**3B-8489**	2	FITTING-GREASE	
	2	1	*4Z-9485*	1	FRAME AS	
	2A	1	**4Z-8959**	1	STRIKER AS-LH	
	2B	1	**4Z-8965**	1	PLATE	
	2C	1	**4Z-8961**	1	STRIKER AS-RH	
	2D	1	**4Z-8965**	1	PLATE	
	2E	1	**8P-9770**	1	PLATE	
	3	1	**4T-9751**	4	BEARING-SLEEVE	

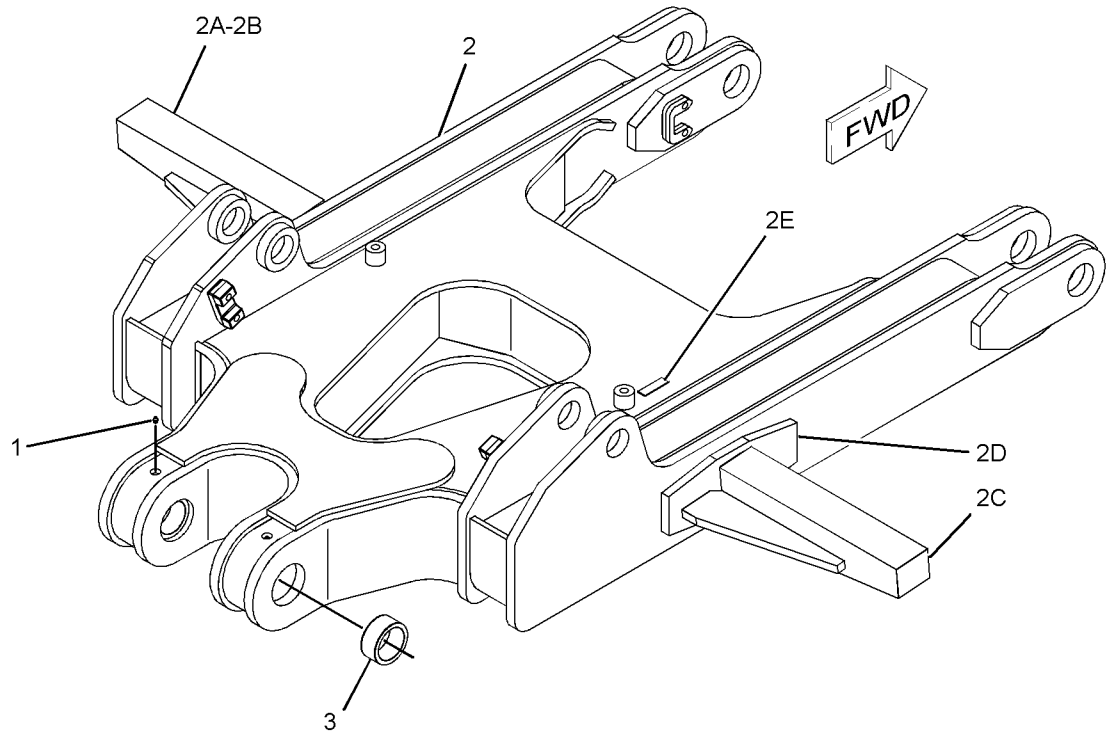

GRAPHIC #1 **<END>** g01122212

200-2434 FRAME & BEARING AS–TRASH–MULTI-SHANK RIPPER

S/N: RJS1-UP
PART OF 4Z-0663 BAR AS-STRIKER
AN ATTACHMENT

SMCS-4150, 7051 **i02220518**

NOTE	REF NO	GRAPHIC REF	PART NUMBER	QTY	PART NAME 1 2 3 4 5 6 (PRODUCT LEVEL)	SEE PAGE
	1	1	**3B-8489**	2	FITTING-GREASE	
	2	1	*218-2827*	1	FRAME AS	
	2A	1	**4Z-8959**	1	STRIKER AS-LH	
	2B	1	**4Z-8961**	1	STRIKER AS-RH	
	3	1	**4T-0208**	4	BEARING-SLEEVE	

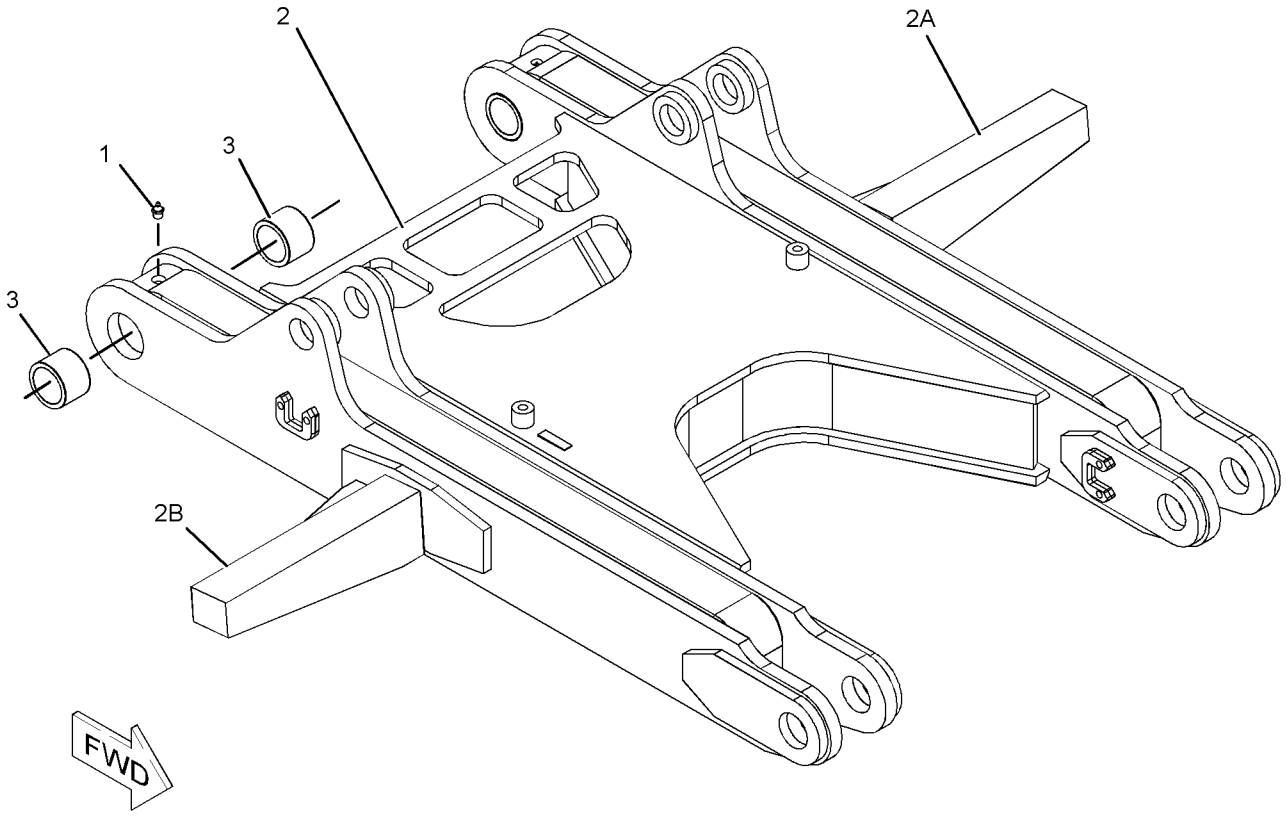

GRAPHIC #1 **<END>** g01125622

188-0532 GUARD AR-FINAL DRIVE—WASTE HANDLING

S/N: RJS1-UP
DUO-CONE GUARD AND PACKING SEAL
PART OF 211-5065 WASTE HANDLING AR
AN ATTACHMENT

SMCS-7172 **i01428810**

NOTE	PART NUMBER	QTY	PART NAME 1 2 3 4 5 6 (PRODUCT LEVEL)	SEE PAGE
Y	**192-9147**	2	FINAL DRIVE GP	316
Y-SEPARATE ILLUSTRATION				

<END>

196-1353 GUARD AR-IDLER—WASTE HANDLING

S/N: RJS1-UP
PART OF 211-5065 WASTE HANDLING AR
AN ATTACHMENT

SMCS-4159 **i01429005**

NOTE	PART NUMBER	QTY	PART NAME 1 2 3 4 5 6 (PRODUCT LEVEL)	SEE PAGE
Y	**167-1947**	4	IDLER GP-TRACK	435
Y-SEPARATE ILLUSTRATION				

<END>

210-8373 GUARD GP-BOTTOM

S/N: RJS1-UP

PART OF 205-8601 CHASSIS AR

SMCS-7153 **i02205349**

NOTE	REF NO	GRAPHIC REF	PART NUMBER	QTY	PART NAME 1 2 3 4 5 6 (PRODUCT LEVEL)	SEE PAGE
	1	1	**3B-5317**	4	PIN-COTTER	
	2	1	**6P-8829**	12	RETAINER	
	3	1	**6T-5941**	4	PIN-SECONDARY BAR	
	4	1	**7T-6228**	1	GUARD AS	
	5	1	**200-7136**	1	COVER	
	6	1	**210-7429**	1	GUARD AS	
	7	1	**210-8370**	1	GUARD AS	
	8	1	**210-8372**	1	GUARD AS	
	9	1	**214-3876**	1	COVER AS	
	10	1	**1J-5929**	12	BOLT (1-8X6-IN)	
	11	1	**4L-6454**	1	BOLT (3/8-16X1-IN)	
	12	1	**5P-1075**	2	WASHER-HARD (10.2X22.5X3-MM THK)	
	13	1	**6V-8190**	12	NUT (1-8-THD)	
	14	1	**7X-0401**	2	BOLT (1-8X1.75-IN)	
	15	1	**7X-0405**	6	BOLT (1-8X2.75-IN)	
	16	1	**7X-0549**	20	WASHER-HARD (28X52.5X8-MM THK)	
	17	1	**7X-0578**	1	WASHER-HARD (10.2X32X2.5-MM THK)	
	18	1	**8T-4994**	4	WASHER-HARD (20X36.5X3.5-MM THK)	
	19	1	**8T-5361**	4	WASHER-HARD (28X49X5-MM THK)	
	20	1	**8T-9398**	4	BOLT (3/4-10X1.75-IN)	
	21	1	**9B-7237**	2	BOLT (3/8-16X1.25-IN)	

210-8373 **GUARD GP-BOTTOM** *(contd.)* **i02205349**

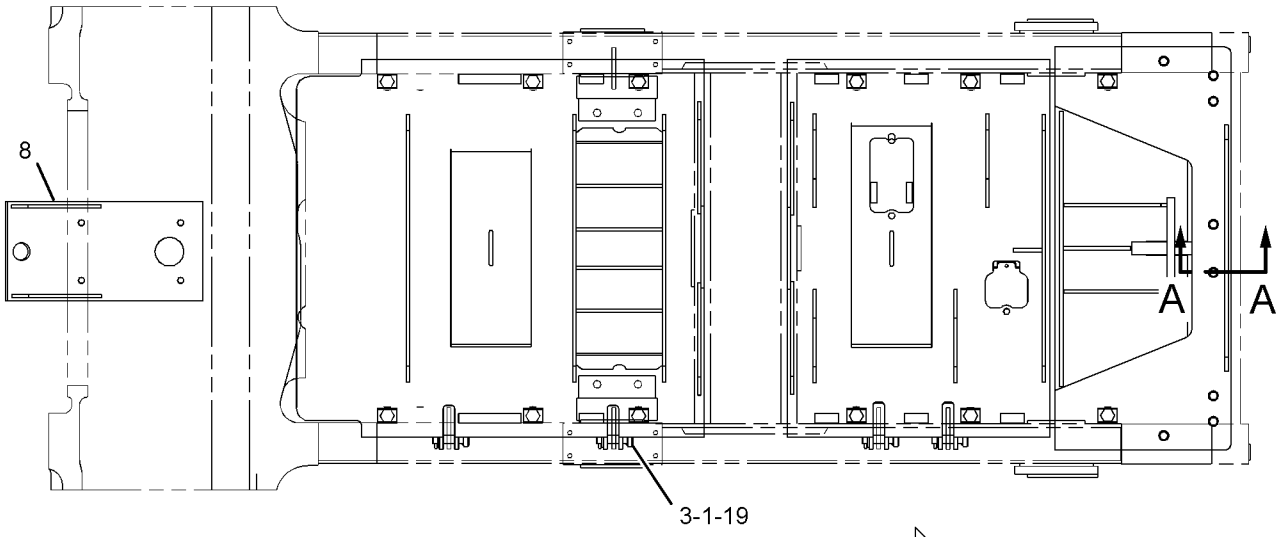

TOP VIEW FWD

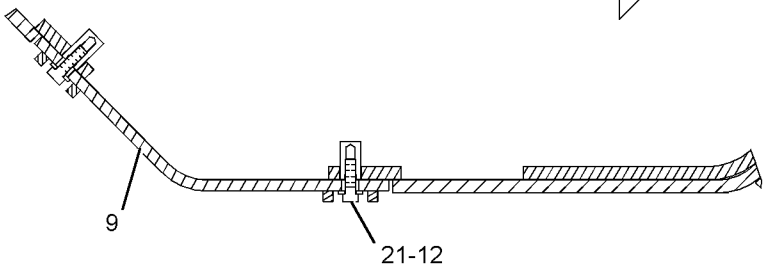

SECTION B-B

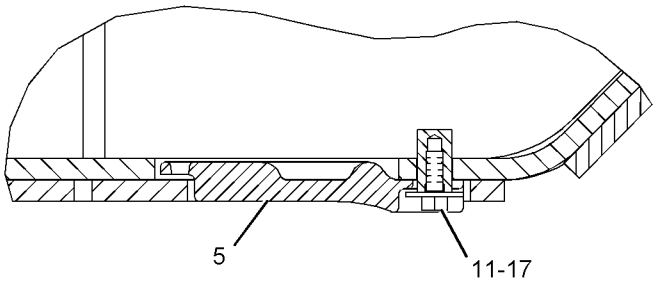

SECTION C-C

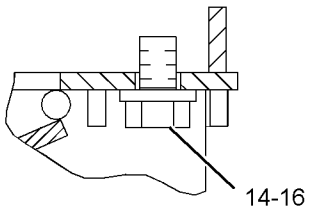

SECTION A-A

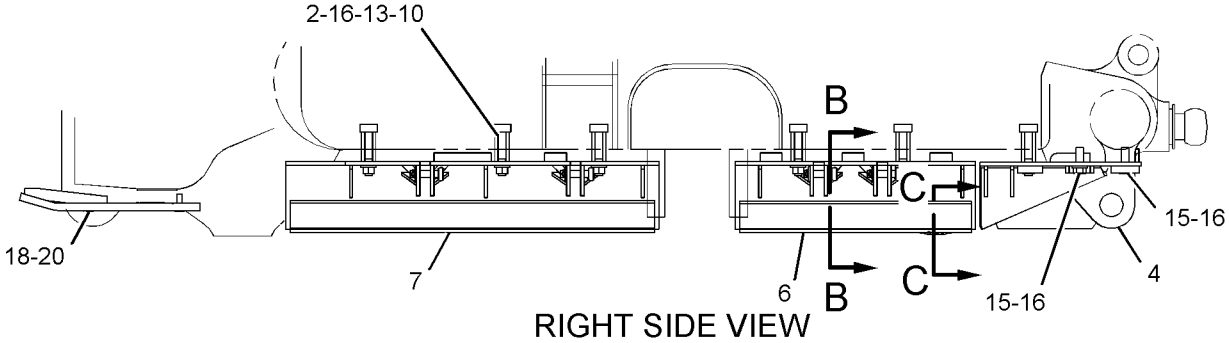

RIGHT SIDE VIEW

GRAPHIC #1 **<END>** g01119048

FRAME AND BODY

211-5080 GUARD GP-BOTTOM

S/N: RJS1-UP
CENTER, REAR GUARDS REMOVED
PART OF 211-5069 MODIFICATION AR-WOODCHIP, 211-5072 STOCKPILE AR
CANNOT BE USED WITH 211-5065—PAGE 3, 243-2742—PAGE 401
AN ATTACHMENT

SMCS-7153 **i02236794**

NOTE	REF NO	GRAPHIC REF	PART NUMBER	QTY	PART NAME 1 2 3 4 5 6 (PRODUCT LEVEL)	SEE PAGE
	1	1	**6P-8829**	2	RETAINER	
	2	1	**266-0398**	1	GUARD AS	
	3	1	**210-8372**	1	GUARD AS	
	4	1	**1J-5929**	2	BOLT (1-8X6-IN)	
	5	1	**6V-8190**	2	NUT (1-8-THD)	
	6	1	**7X-0401**	2	BOLT (1-8X1.75-IN)	
	7	1	**7X-0405**	6	BOLT (1-8X2.75-IN)	
	8	1	**7X-0549**	10	WASHER-HARD (28X52.5X8-MM THK)	
	9	1	**8T-4994**	4	WASHER-HARD (20X36.5X3.5-MM THK)	
	10	1	**8T-9398**	4	BOLT (3/4-10X1.75-IN)	

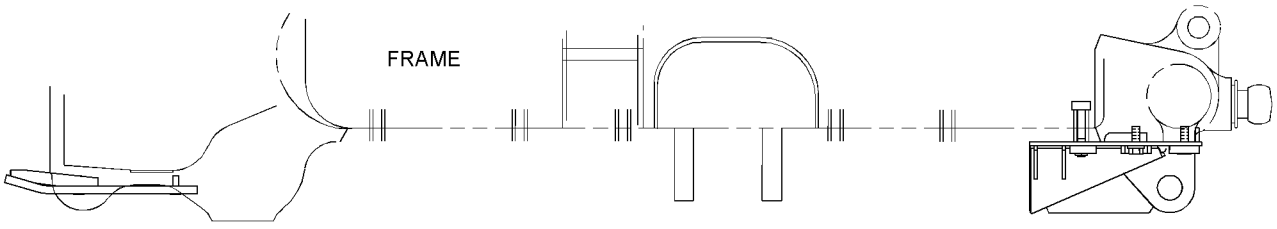

RIGHT SIDE VIEW

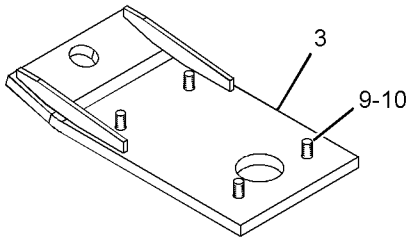

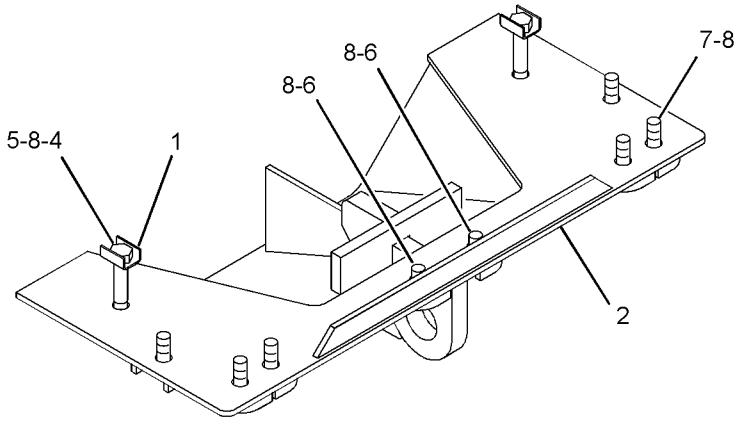



GRAPHIC #1 **<END>** g01128404

243-2742 GUARD GP-BOTTOM—WASTE HANDLING

S/N: RJS1-UP
PART OF 211-5088 WASTE HANDLING AR
AN ATTACHMENT

SMCS-7153 **i02207558**

NOTE	REF NO	GRAPHIC REF	PART NUMBER	QTY	PART NAME 1 2 3 4 5 6 (PRODUCT LEVEL)	SEE PAGE
	1	1	**1Q-3642**	1	GUARD AS	
	2	1	**6P-8829**	12	RETAINER	
	3	1	**6T-5941**	4	PIN-SECONDARY BAR	
	4	1	**200-7136**	1	COVER	
	5	1	**210-8372**	1	GUARD AS	
	6	1	**214-3876**	1	COVER AS	
	7	1	**243-2743**	1	GUARD AS	
	8	1	**243-2744**	1	GUARD AS	
	9	1	**1J-5929**	12	BOLT (1-8X6-IN)	
	10	1	**3B-5317**	4	PIN-COTTER	
	11	1	**4L-6454**	1	BOLT (3/8-16X1-IN)	
	12	1	**5P-1075**	2	WASHER-HARD (10.2X22.5X3-MM THK)	
	13	1	**6V-8190**	12	NUT (1-8-THD)	
	14	1	**7X-0401**	2	BOLT (1-8X1.75-IN)	
	15	1	**7X-0405**	6	BOLT (1-8X2.75-IN)	
	16	1	**7X-0549**	20	WASHER-HARD (28X52.5X8-MM THK)	
	17	1	**7X-0578**	1	WASHER-HARD (10.2X32X2.5-MM THK)	
	18	1	**8T-4994**	4	WASHER-HARD (20X36.5X3.5-MM THK)	
	19	1	**8T-5361**	4	WASHER-HARD (28X49X5-MM THK)	
	20	1	**8T-9398**	4	BOLT (3/4-10X1.75-IN)	
	21	1	**9B-7237**	2	BOLT (3/8-16X1.25-IN)	
BD	22	1	**5P-5755**		SEAL	
BD	23	1	**5P-7514**		SEAL	
BE	24	1	**155-0755**		SEAL	

B-USE AS REQUIRED
D-ORDER BY THE METER
E-ORDER BY THE CENTIMETER

243-2742 **GUARD GP-BOTTOM** *(contd.)* **i02207558**

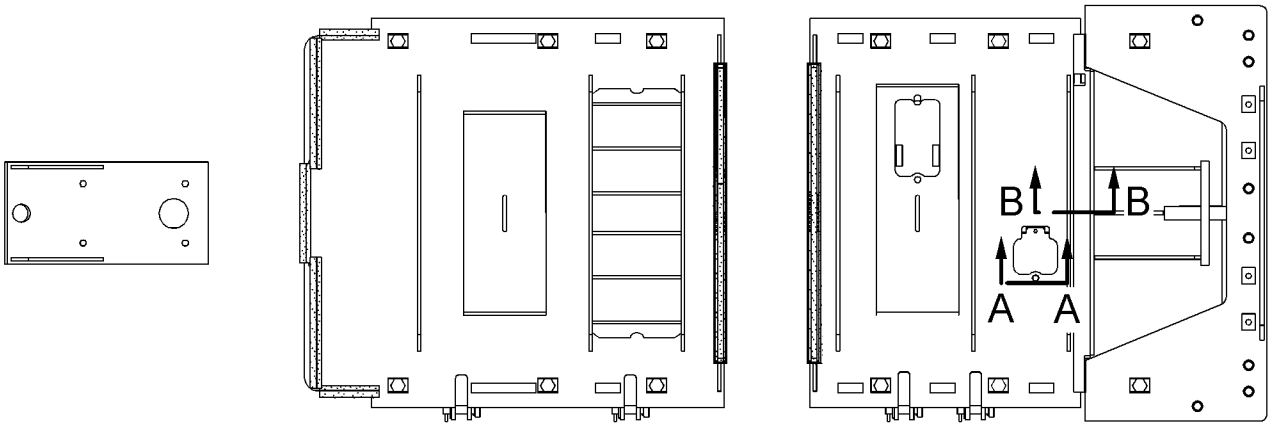

TOP VIEW

FWD

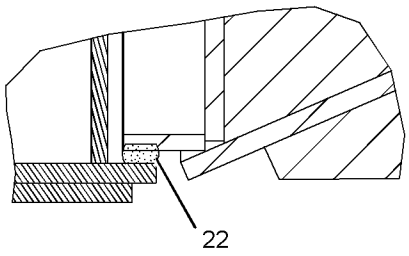

SECTION B-B

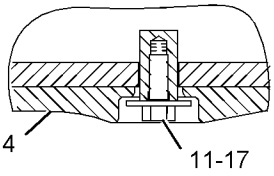

SECTION A-A

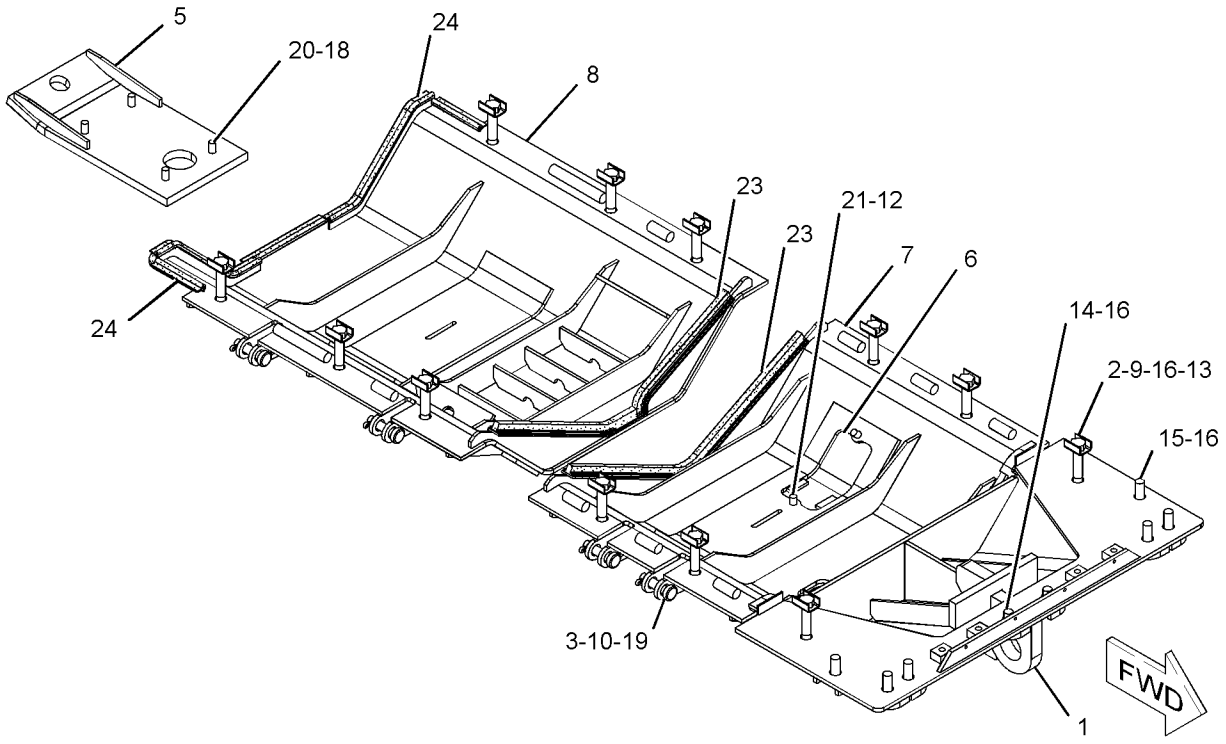

GRAPHIC #1 **<END>** g01121517

FRAME AND BODY

190-8429 GUARD GP-FINAL DRIVE

S/N: RJS1-UP
AN ATTACHMENT

SMCS-7172 **i02248216**

NOTE	REF NO	GRAPHIC REF	PART NUMBER	QTY	PART NAME 1 2 3 4 5 6 (PRODUCT LEVEL)	SEE PAGE
	1	1	**186-3641**	4	GUARD	
	2	1	**188-8963**	4	SPACER	
	3	1	**188-9042**	4	COVER	
	4	1	**5B-5473**	16	BOLT (1-8X6.5-IN)	
	5	1	**5D-4661**	16	WASHER-HARD (28X52.5X8-MM THK)	
	6	1	**5M-2894**	16	WASHER-HARD (10.2X18.5X2.5-MM THK)	
	7	1	**9B-7237**	16	BOLT (3/8-16X1.25-IN)	

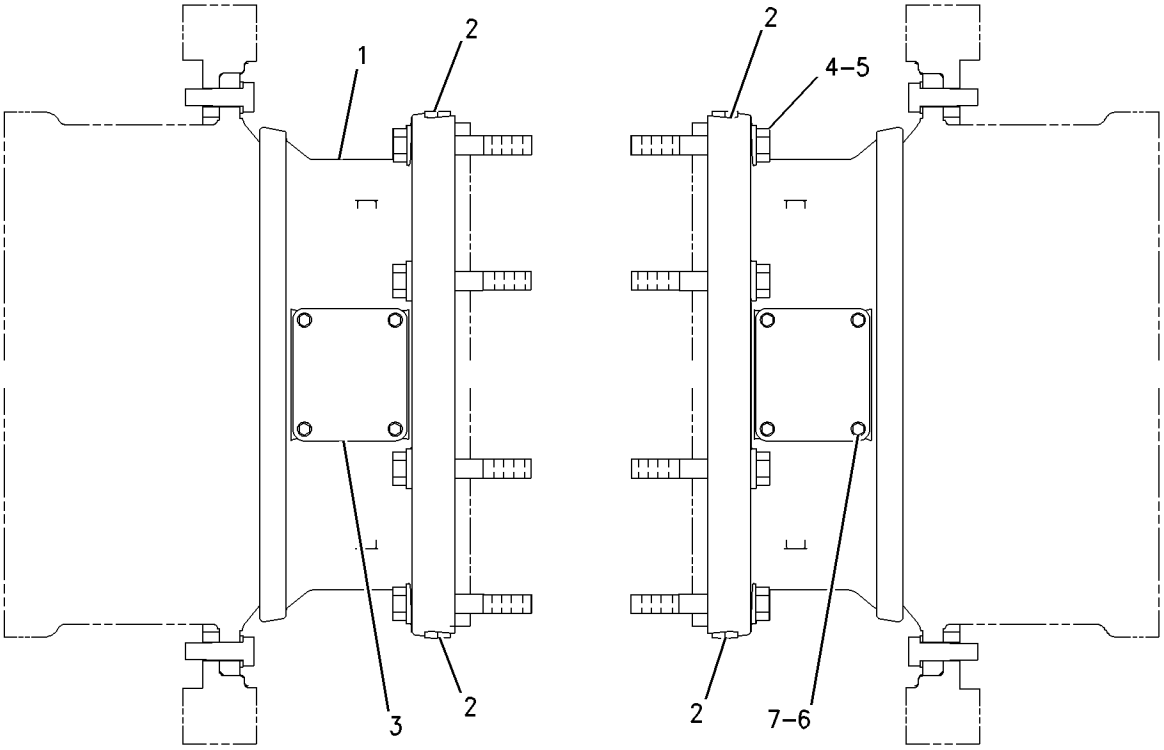

GRAPHIC #1 **<END>** g00826492

FRAME AND BODY

223-9054 GUARD GP-FUEL TANK

S/N: RJS1-UP

AN ATTACHMENT

SMCS-1273, 7150 **i02262729**

NOTE	REF NO	GRAPHIC REF	PART NUMBER	QTY	PART NAME 1 2 3 4 5 6 (PRODUCT LEVEL)	SEE PAGE
	2	1	**238-9155**	1	GUARD AS (REAR)	
	3	1	**230-3237**	1	GUARD AS (RH)	
	4	1	**230-3238**	1	GUARD AS (LH)	
	5	1	**242-1826**	1	BRACKET AS	
	6	1	**114-2492**	2	FILM-STRIPE (REAR)	
	7	1	**242-3513**	1	FILM (D9T, LH)	
	8	1	**242-3556**	1	FILM (D9T, RH)	
	9	1	**7X-0550**	24	WASHER-HARD (13.5X32X5-MM THK)	
	10	1	**7X-0590**	4	WASHER-HARD (13.5X44.5X6-MM THK)	
M	11	1	**8T-4139**	8	BOLT (M12X1.75X30-MM)	
M	12	1	**8T-4183**	16	BOLT (M12X1.75X40-MM)	
M	13	1	**8T-6868**	4	BOLT (M12X1.75X80-MM)	

M-METRIC PART

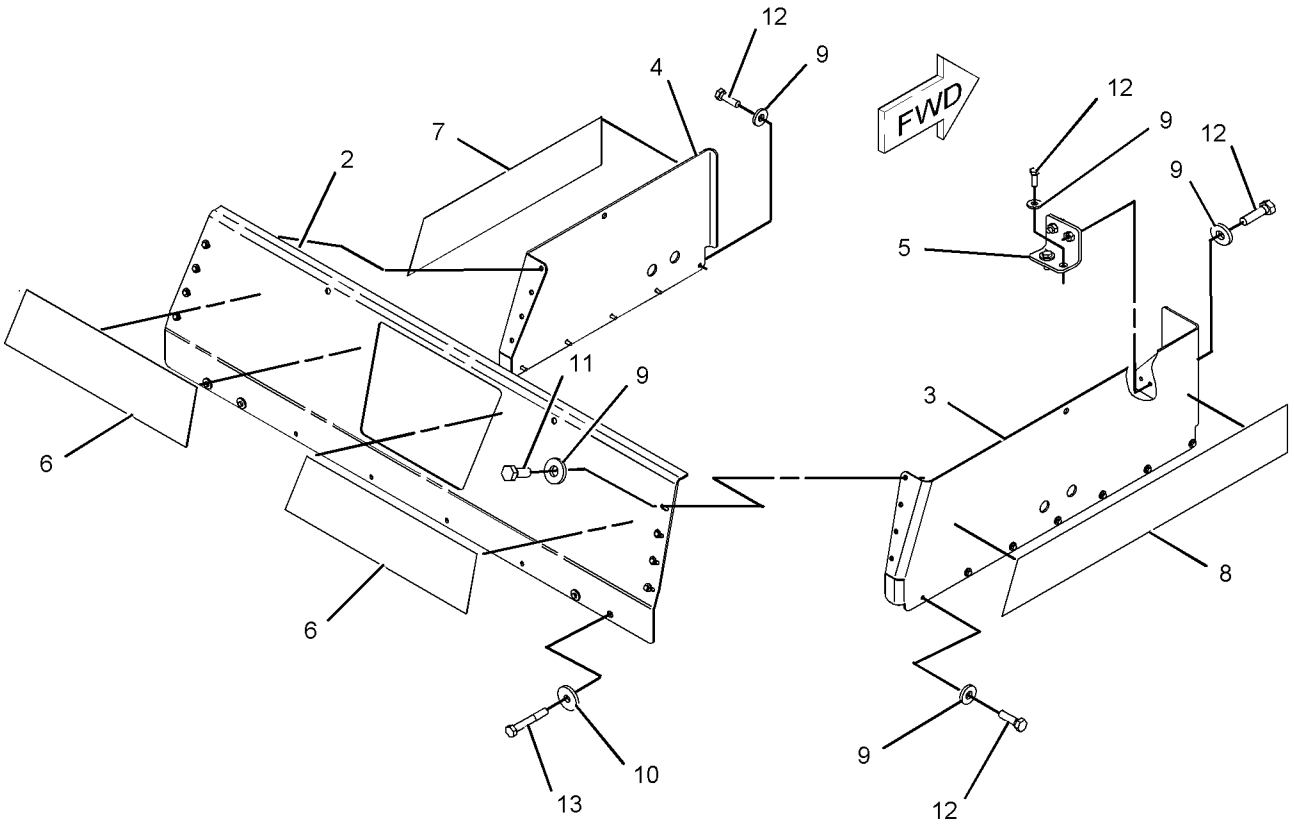

GRAPHIC #1 **<END>** g01106475

196-8564 GUARD GP-IDLER—WITH RUBBER GUARDS

S/N: RJS1-UP
CANNOT BE USED WITH DISPOSAL AR
AN ATTACHMENT

SMCS-4159 **i01990093**

NOTE	REF NO	GRAPHIC REF	PART NUMBER	QTY	PART NAME 1 2 3 4 5 6 (PRODUCT LEVEL)	SEE PAGE
	1	1	**165-7855**	4	GUARD AS-IDLER	
	2	1	**8T-6871**	12	BOLT (5/8-11X2.50 IN)	
	3	1	**165-7861**	2	GUARD AS (RH)	
	4	1	**165-7862**	2	GUARD AS (LH)	
	5	1	**7X-0345**	12	BOLT (5/8-11X1.75 IN)	
	6	1	**8T-4122**	24	WASHER-HARD (17X32X3.5MM THK)	
	7	1	**165-7860**	4	BAR	

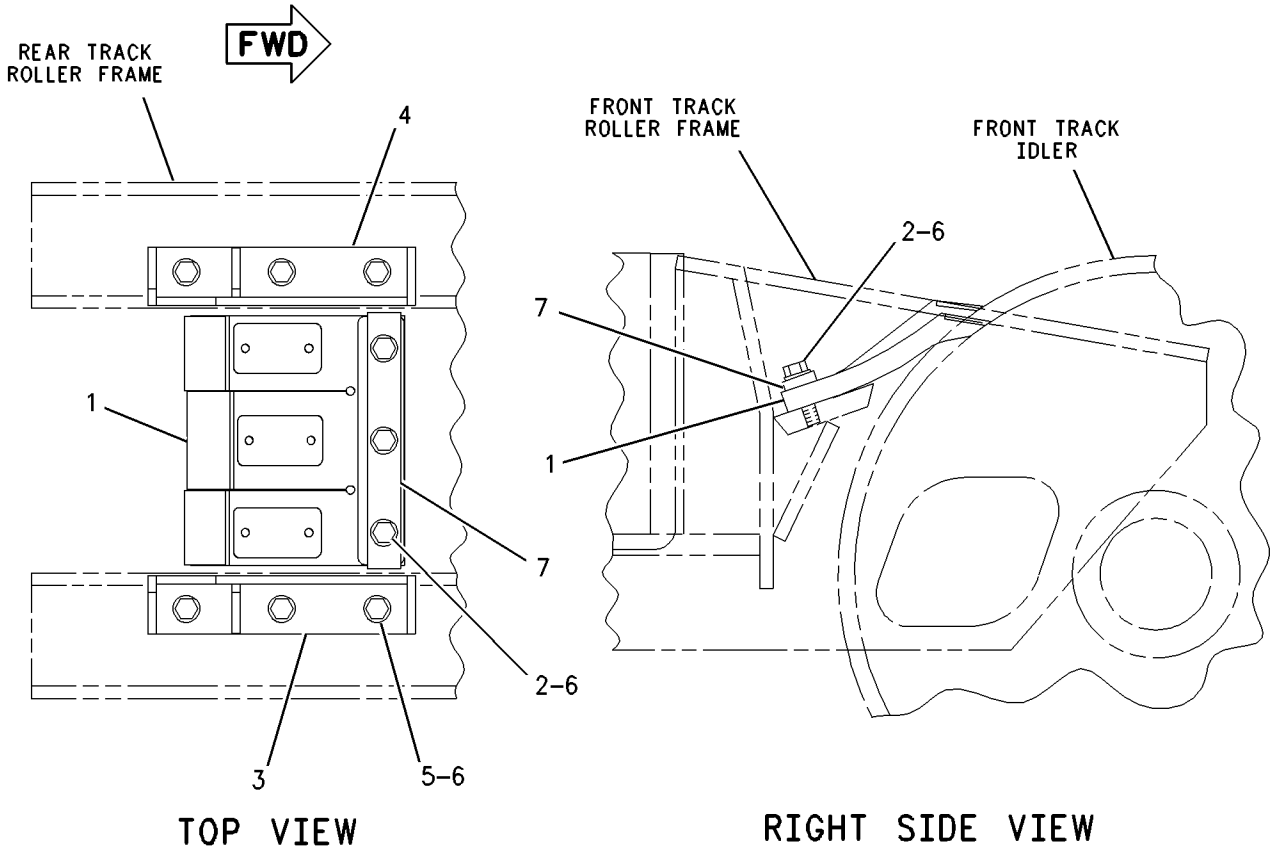

GRAPHIC #1 **<END>** g00752037

1Z-0749 GUARD GP-PIVOT SHAFT

S/N: RJS1-UP
PART OF 211-5088 WASTE HANDLING AR
AN ATTACHMENT

SMCS-7150 **i02019512**

NOTE	REF NO	GRAPHIC REF	PART NUMBER	QTY	PART NAME 1 2 3 4 5 6 (PRODUCT LEVEL)	SEE PAGE
	1	1	**1Q-3626**	2	RETAINER	
	2	1	**1Q-3627**	2	GUARD	

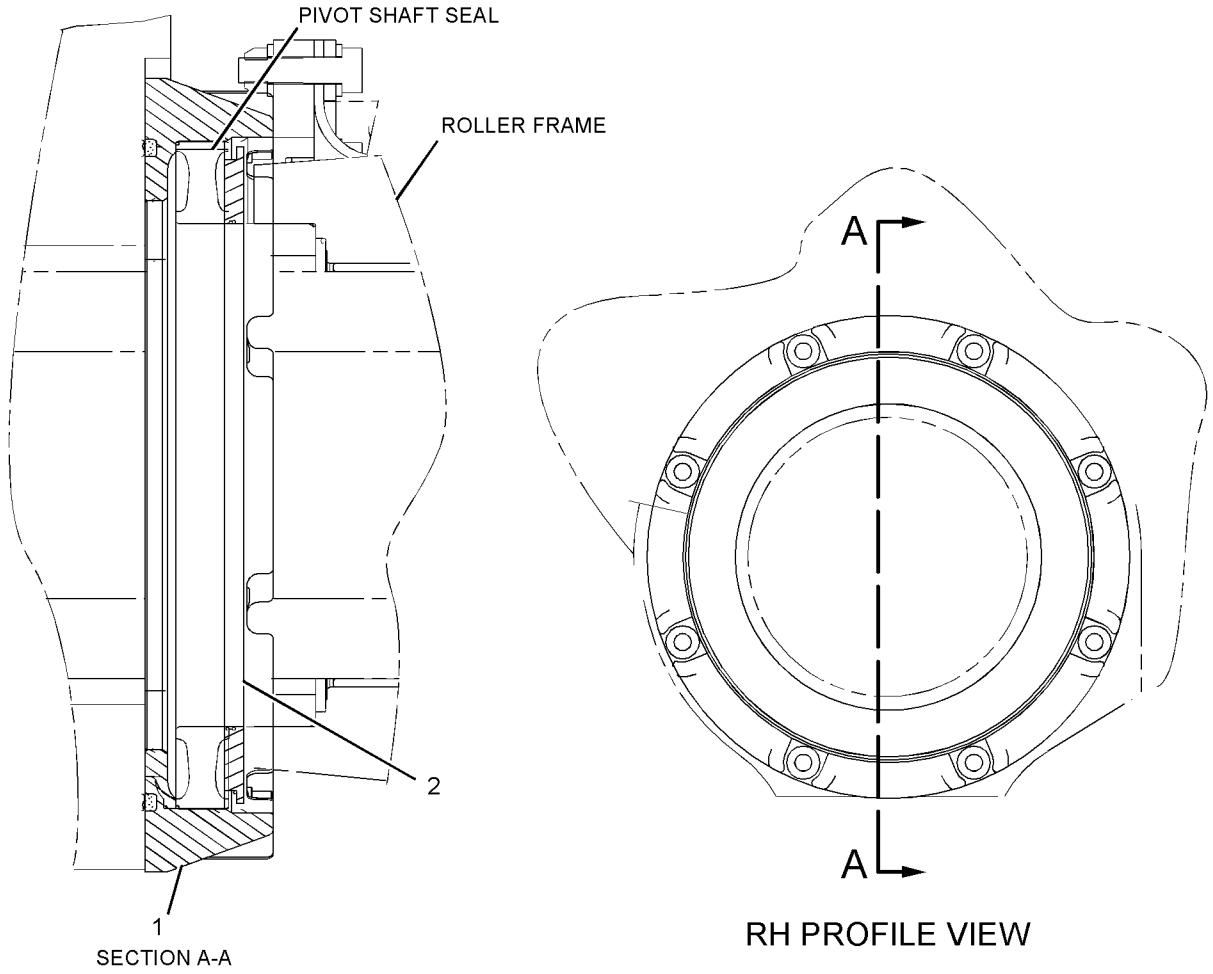

GRAPHIC #1 **<END>** g01050317

204-9876 GUARD GP-RADIATOR

S/N: RJS1-UP

PART OF 205-8601 CHASSIS AR

SMCS-7155 **i01989389**

NOTE	REF NO	GRAPHIC REF	PART NUMBER	QTY	PART NAME 1 2 3 4 5 6 (PRODUCT LEVEL)	SEE PAGE
	1	1	**9C-6984**	2	PLATE	
	2	1	**9G-9239**	2	HANDHOLD AS (GRAB)	
	3	1	**9W-2822**	2	ROD	
	4	1	**9W-7006**	2	PIN	
	5	1	**103-6293**	2	PIN	
	6	1	**198-9172**	2	PLUG	
	7	1	**204-9874**	1	GUARD AS	
	7A	1	**7J-1335**	2	BEARING (133.56X139.80X79.25MM THK)	
	7B	1	**7J-1336**	2	BEARING (108.15X114.39X50.8MM THK)	
	7C	1	**8P-0420**	2	BEARING (57.4X69.9X50MM THK)	
	7D	1	**9W-0330**	4	BEARING (57.4X69.9X25MM THK)	
	8	1	**210-1071**	1	PLATE	
	9	1	**210-1549**	1	DOOR AS (RIGHT)	
	10	1	**210-1550**	1	DOOR AS (LEFT)	
	11	1	**232-3755**	2	PLATE	
	12	1	**3B-4615**	4	PIN-COTTER	
	13	1	**5M-6214**	2	PLUG-PIPE	
	14	1	**5P-1075**	4	WASHER-HARD (10.2X22.5X3-MM THK)	
	15	1	**5P-1076**	8	WASHER-HARD (13.5X30X4-MM THK)	
M	16	1	**7X-2555**	8	BOLT (M16X2X80-MM)	
	17	1	**8C-4436**	4	BOLT (1/2-13X1.375-IN)	
	18	1	**8E-1050**	4	PLATE	
	19	1	**8T-4122**	8	WASHER-HARD (17X32X3.5-MM THK)	
M	20	1	**8T-4139**	12	BOLT (M12X1.75X30-MM)	
M	21	1	**8T-4193**	2	BOLT (M16X2X50-MM)	
	22	1	**8T-4223**	14	WASHER-HARD (13.5X25.5X3-MM THK)	
M	23	1	**8T-4956**	6	BOLT (M12X1.75X35-MM)	
	24	1	**9J-5717**	2	COVER	
	25	1	**9J-5718**	2	GASKET	

M-METRIC PART

204-9876 **GUARD GP-RADIATOR** *(contd.)* **i01989389**

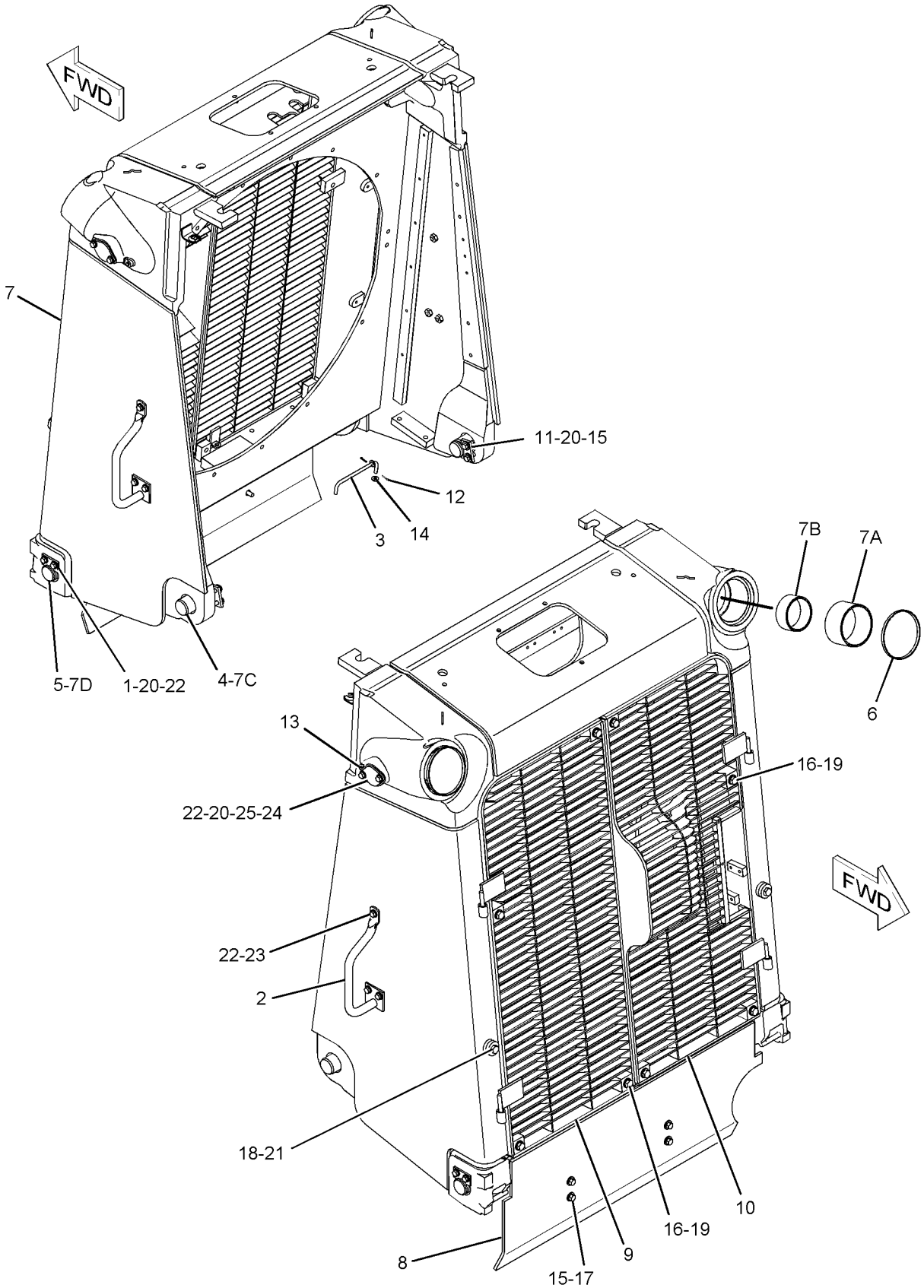

GRAPHIC #1 **<END>** g01034337

102-1937 GUARD GP-ROCK—SEMI-UNIVERSAL

S/N: T9J1-UP

PART OF 102-1938 BLADE AS-SEMI-UNIVERSAL

AN ATTACHMENT

SMCS-7182 **i00589904**

NOTE	REF NO	GRAPHIC REF	PART NUMBER	QTY	PART NAME 1 2 3 4 5 6 (PRODUCT LEVEL)	SEE PAGE
	1	1	**102-6348**	1	GUARD AS-CENTER	
	2	1	**8K-5818**	4	BAR	
	3	1	**102-6351**	1	GUARD AS-RH	
	4	1	**102-6357**	1	GUARD AS-LH	

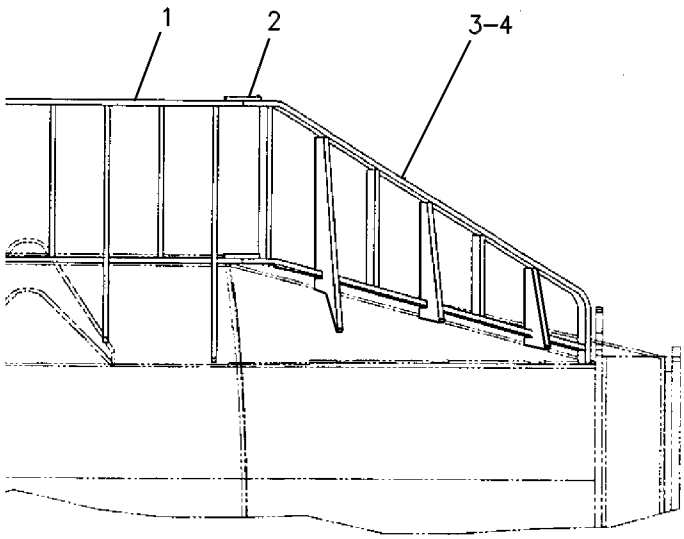

REAR VIEW

GRAPHIC #1 **<END>** g00234797

113-6041 GUARD GP-ROCK–UNIVERSAL

S/N: T9H1-UP
PART OF 113-3241 BLADE AS-UNIVERSAL
AN ATTACHMENT

SMCS-7182 **i00591655**

NOTE	REF NO	GRAPHIC REF	PART NUMBER	QTY	PART NAME 1 2 3 4 5 6 (PRODUCT LEVEL)	SEE PAGE
	1	1	**102-6348**	1	GUARD AS-CENTER	
	2	1	**8K-5818**	4	BAR	
	3	1	**113-6317**	1	GUARD AS-RH	
	4	1	**113-6318**	1	GUARD AS-LH	

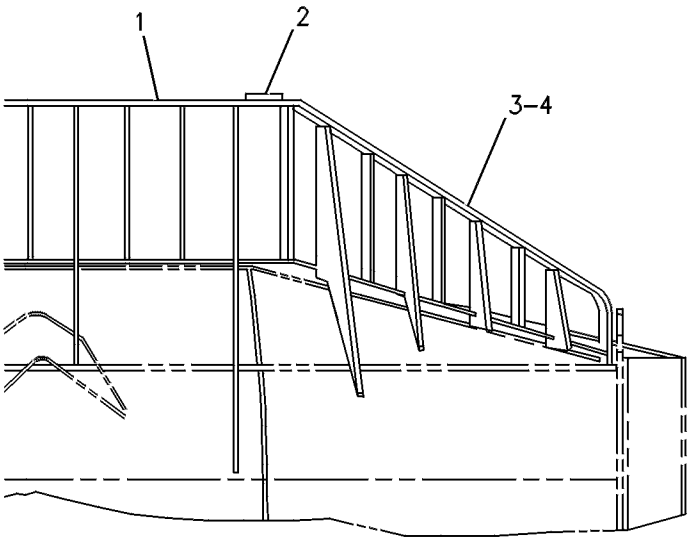

REAR VIEW

GRAPHIC #1 **<END>** g00240724

203-9380 GUARD GP-SEAL–PIVOT SHAFT

S/N: RJS1-UP
HIGH DEBRIS PACKING APPLICATIONS
AN ATTACHMENT

SMCS-7150 **i01990806**

NOTE	REF NO	GRAPHIC REF	PART NUMBER	QTY	PART NAME 1 2 3 4 5 6 (PRODUCT LEVEL)	SEE PAGE
	1	1	**203-9381**	2	RING	
	2	1	**203-9382**	2	GUARD-SEAL	
	3	1	**203-9383**	2	PLATE	
	4	1	**1K-6872**	6	LOCKNUT (1/2-13-THD)	
	5	1	**7X-0328**	8	BOLT (1/2-13X3.5-IN)	
	6	1	**8T-4223**	20	WASHER-HARD (13.5X25.5X3-MM THK)	
	7	1	**8T-4835**	6	BOLT (1/2-13X2-IN)	

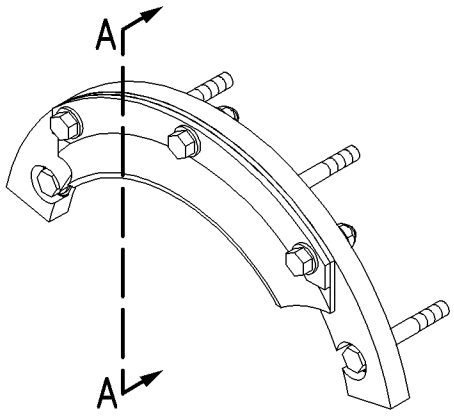

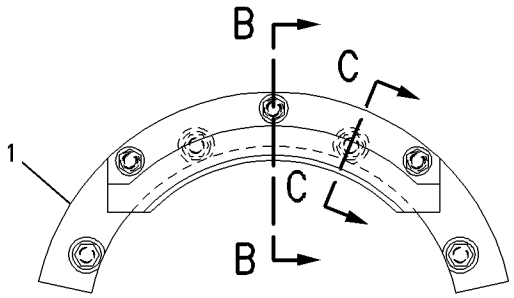

VIEW A-A

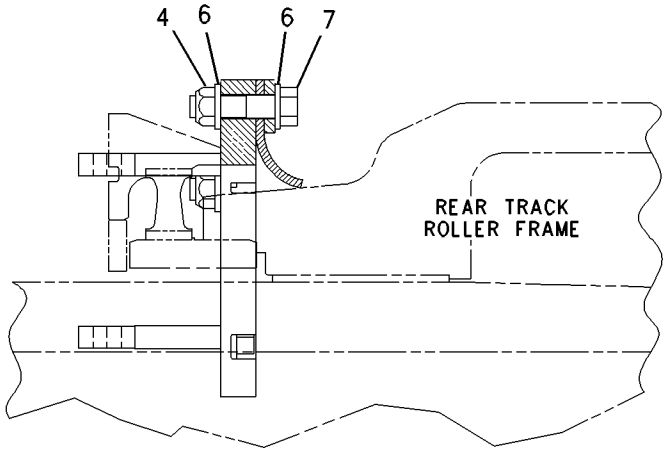

SECTION B-B

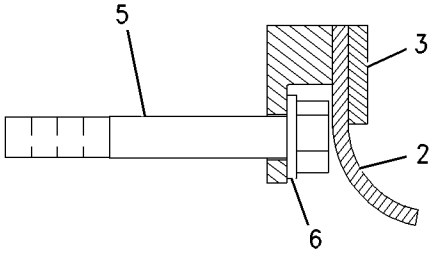

SECTION C-C

GRAPHIC #1 **<END>** g00854824

174-3874 PANEL GP-SOUND SUPPRESSION

S/N: RHX1-UP
LEFT HAND MOUNTED SOUND PANEL
PART OF 231-3468 ENGINE AR-COMPLETE
FOR USE WITH BRAKESAVER OR NON-BRAKESAVER ENGINES, ALL APPLICATIONS
AN ATTACHMENT

SMCS-7076 **i01161493**

NOTE	REF NO	GRAPHIC REF	PART NUMBER	QTY	PART NAME 1 2 3 4 5 6 (PRODUCT LEVEL)	SEE PAGE
	1	1	**173-1957**	1	PANEL AS	
	2	1	**0S-1588**	3	BOLT (3/8-16X1.25IN)	
	3	1	**5M-2894**	3	WASHER (2.5MM THK)	

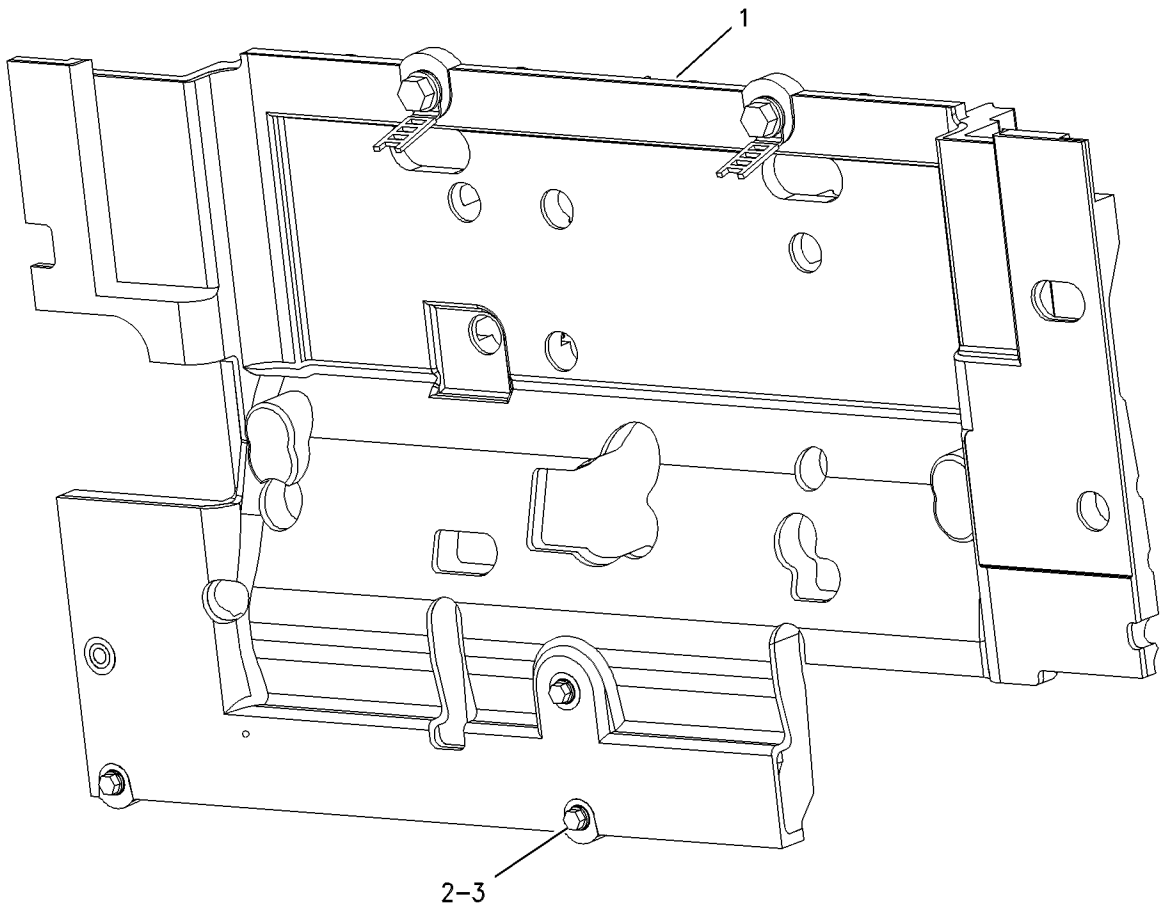

GRAPHIC #1 **<END>** g00618571

UNDERCARRIAGE

211-5067 BAR AR-STRIKER

S/N: RJS1-UP

AN ATTACHMENT

SMCS-7180 **i02219623**

NOTE	PART NUMBER	QTY	PART NAME 1 2 3 4 5 6 (PRODUCT LEVEL)	SEE PAGE
Y	*245-3830*	1	BAR AR-STRIKER	414
Y-SEPARATE ILLUSTRATION				

<END>

UNDERCARRIAGE

245-3830 BAR AR-STRIKER

S/N: RJS1-UP
PART OF 211-5067 BAR AR-STRIKER
AN ATTACHMENT

SMCS-7180 **i02219627**

NOTE	REF NO	GRAPHIC REF	PART NUMBER	QTY	PART NAME 1 2 3 4 5 6 (PRODUCT LEVEL)	SEE PAGE
	1	1	**1H-4106**	1	PIN AS-DRAWBAR	
	2	1	**7G-6623**	1	HITCH	
	3	1	**8E-9289**	1	LATCH	
	4	1	**9Z-9304**	2	PIN	
	5	1	**221-9665**	1	BAR AS	
	6	1	**245-3831**	1	GUARD AS	
	7	1	**245-8134**	1	PLATE AS	
	8	1	**3K-2889**	1	LOCKNUT (5/8-11-THD)	
	9	1	**3T-7567**	2	BAR	
	10	1	**4L-6454**	4	BOLT (3/8-16X1-IN)	
	11	1	**5P-1075**	4	WASHER-HARD (10.2X22.5X3-MM THK)	
	12	1	**5P-1076**	4	WASHER-HARD (13.5X30X4-MM THK)	
	13	1	**5T-4896**	16	SPACER (40.5X67X12-MM THK)	
	14	1	**6V-8536**	8	BOLT (1-1/2-6-THD)	
	15	1	**7X-0349**	1	BOLT (5/8-11X3-IN)	
	16	1	**7X-0366**	6	BOLT (3/4-10X2-IN)	
	17	1	**7X-0431**	6	BOLT (1-1/4-7X6-IN)	
	18	1	**7X-0533**	6	WASHER-HARD (34X55X6-MM THK)	
	19	1	**7X-0537**	8	WASHER-HARD (40.5X67X6-MM THK)	
	20	1	**8T-4835**	4	BOLT (1/2-13X2-IN)	
	21	1	**8T-4994**	6	WASHER-HARD (20X36.5X3.5-MM THK)	
BD	22	1	**5P-5755**		SEAL	
BE	23	1	**155-0755**		SEAL	
BE	24	1	**204-9840**		SEAL	

B-USE AS REQUIRED
D-ORDER BY THE METER
E-ORDER BY THE CENTIMETER

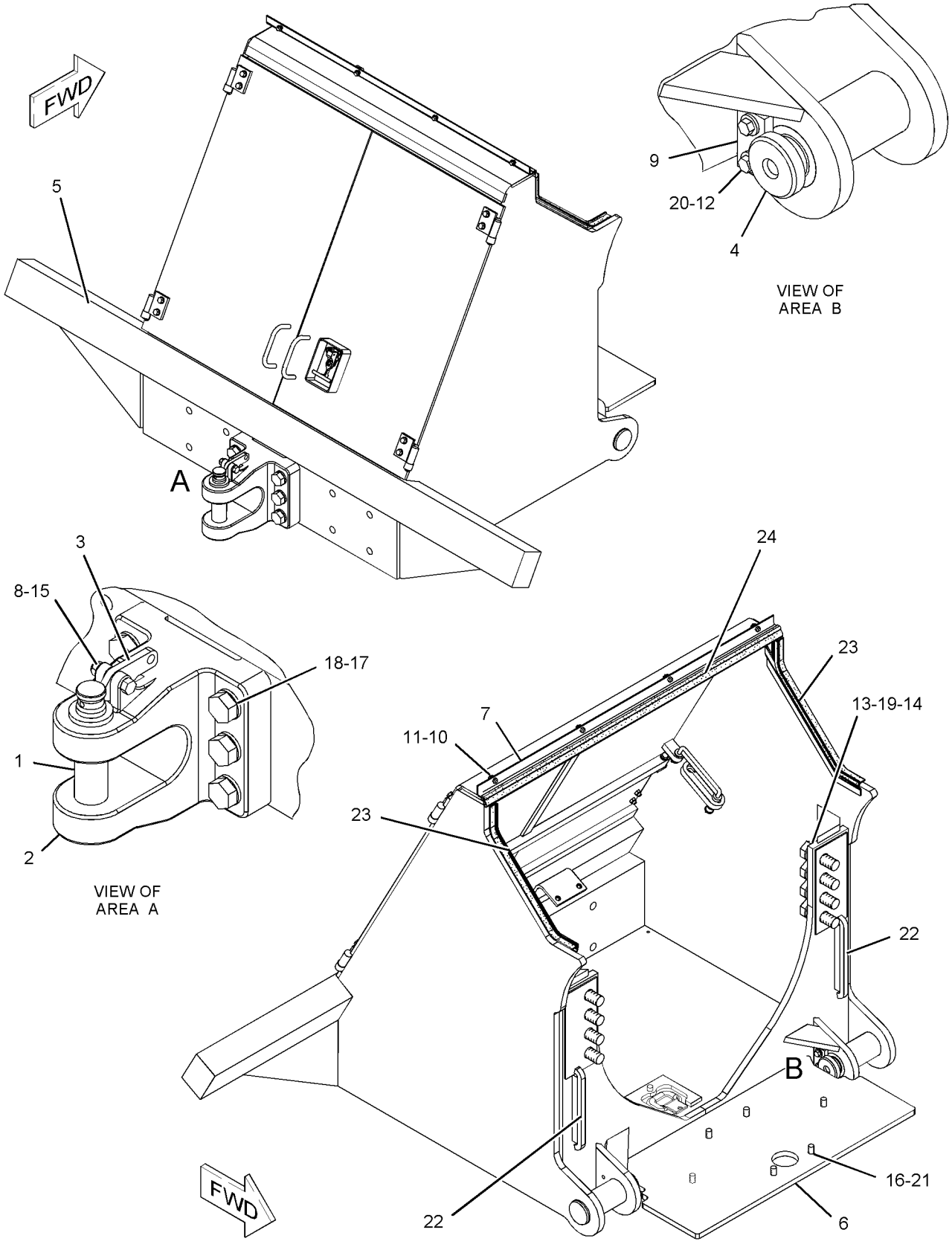

GRAPHIC #1 **<END>** g01125621

179-6823 BAR AS-EQUALIZER–COLD WEATHER

S/N: RJS1-UP
PART OF 211-5087 COLD WEATHER AR
AN ATTACHMENT

SMCS-7206 **i01238900**

NOTE	REF NO	GRAPHIC REF	PART NUMBER	QTY	PART NAME 1 2 3 4 5 6 (PRODUCT LEVEL)	SEE PAGE
	1	1	**5L-4751**	4	RING-RETAINING	
	2	1	**117-4015**	2	BEARING-SLEEVE	
	3	1	**6P-8369**	1	SEAL	
	4	1	**9G-7127**	1	SEAL	
	5	1	**127-3422**	4	SEAL AS	
	6	1	**117-4013**	2	BEARING-SELF ALIGNING	

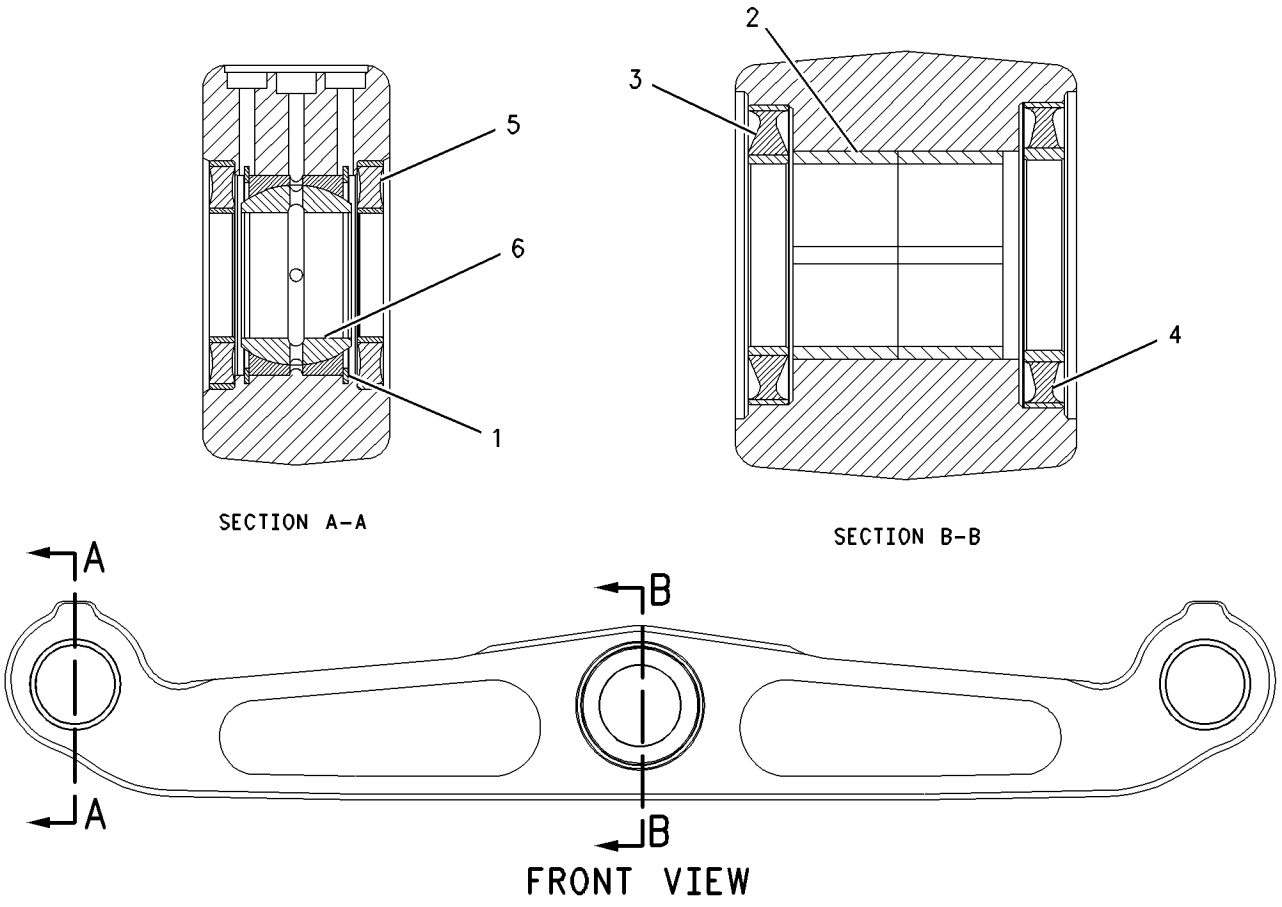

GRAPHIC #1 **<END>** g00666198

4Z-0569 BAR AS-STRIKER—TRASH

S/N: RJS1-UP
FIELD INSTALLATION
FOR USE WITH 217-3562—PAGE 712, 217-3563—PAGE 713
AN ATTACHMENT

SMCS-7180 **i00603226**

NOTE	REF NO	GRAPHIC REF	PART NUMBER	QTY	PART NAME 1 2 3 4 5 6 (PRODUCT LEVEL)	SEE PAGE
	1	1	**4Z-8961**	1	STRIKER AS-RH	
	2	1	**4Z-8959**	1	STRIKER AS-LH	

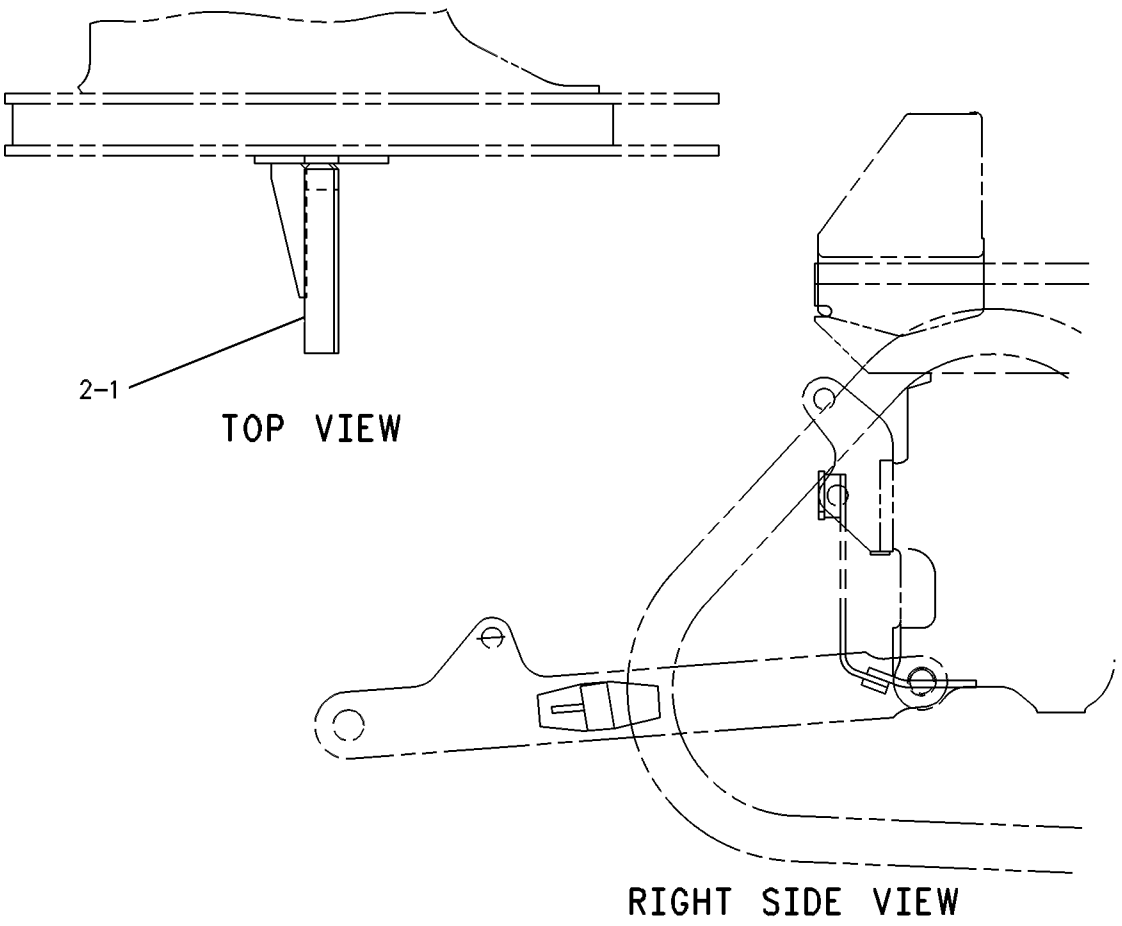

GRAPHIC #1 **<END>** g00276952

4Z-0654 BAR AS-STRIKER—TRASH

S/N: RJS1-UP
SINGLE SHANK RIPPER
FOR USE WITH 217-3563—PAGE 713
AN ATTACHMENT

SMCS-7180 **i02223294**

NOTE	REF NO	GRAPHIC REF	PART NUMBER	QTY	PART NAME 1 2 3 4 5 6 (PRODUCT LEVEL)	SEE PAGE
Y	1	1	**4Z-9484**	1	FRAME & BEARING AS	395

Y-SEPARATE ILLUSTRATION

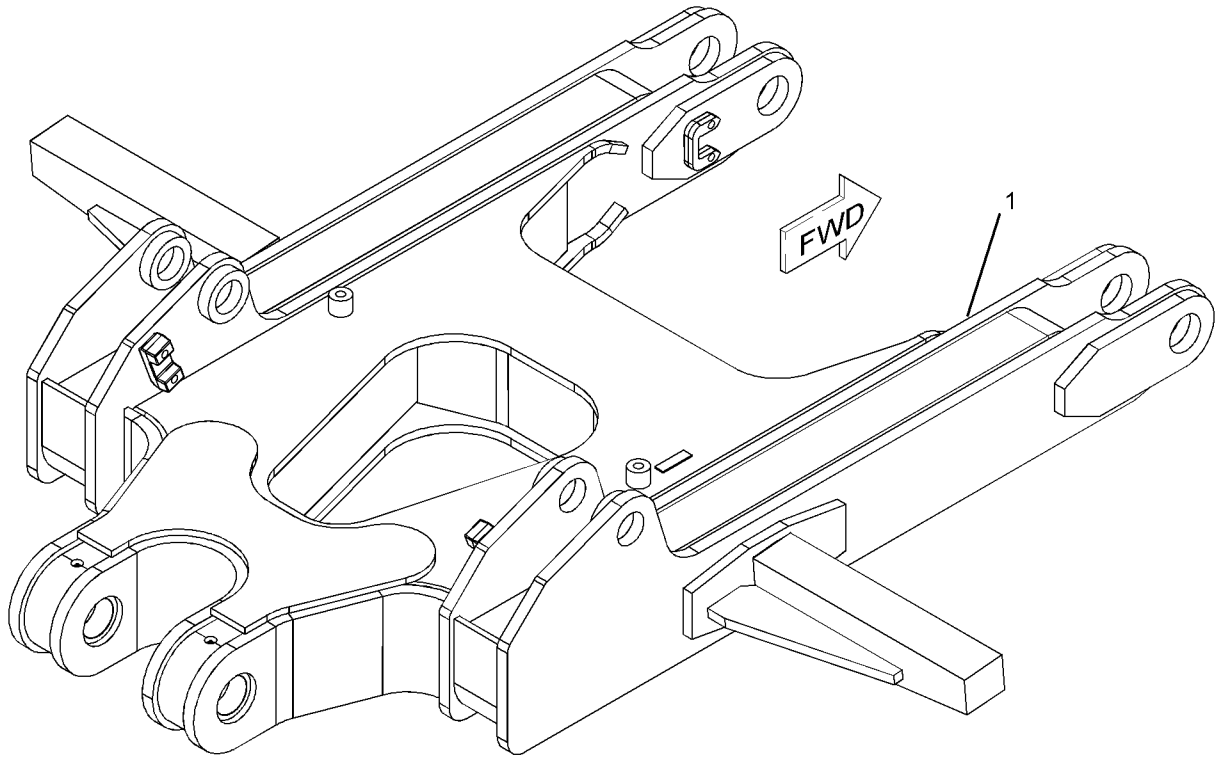

GRAPHIC #1 **<END>** g01123084

4Z-0663 BAR AS-STRIKER—TRASH

S/N: RJS1-UP
MULTI-SHANK RIPPER
FOR USE WITH 217-3562—PAGE 712
AN ATTACHMENT

SMCS-7180 **i02223350**

NOTE	REF NO	GRAPHIC REF	PART NUMBER	QTY	PART NAME 1 2 3 4 5 6 (PRODUCT LEVEL)	SEE PAGE
Y	1	1	**200-2434**	1	FRAME & BEARING AS	396
Y-SEPARATE ILLUSTRATION						

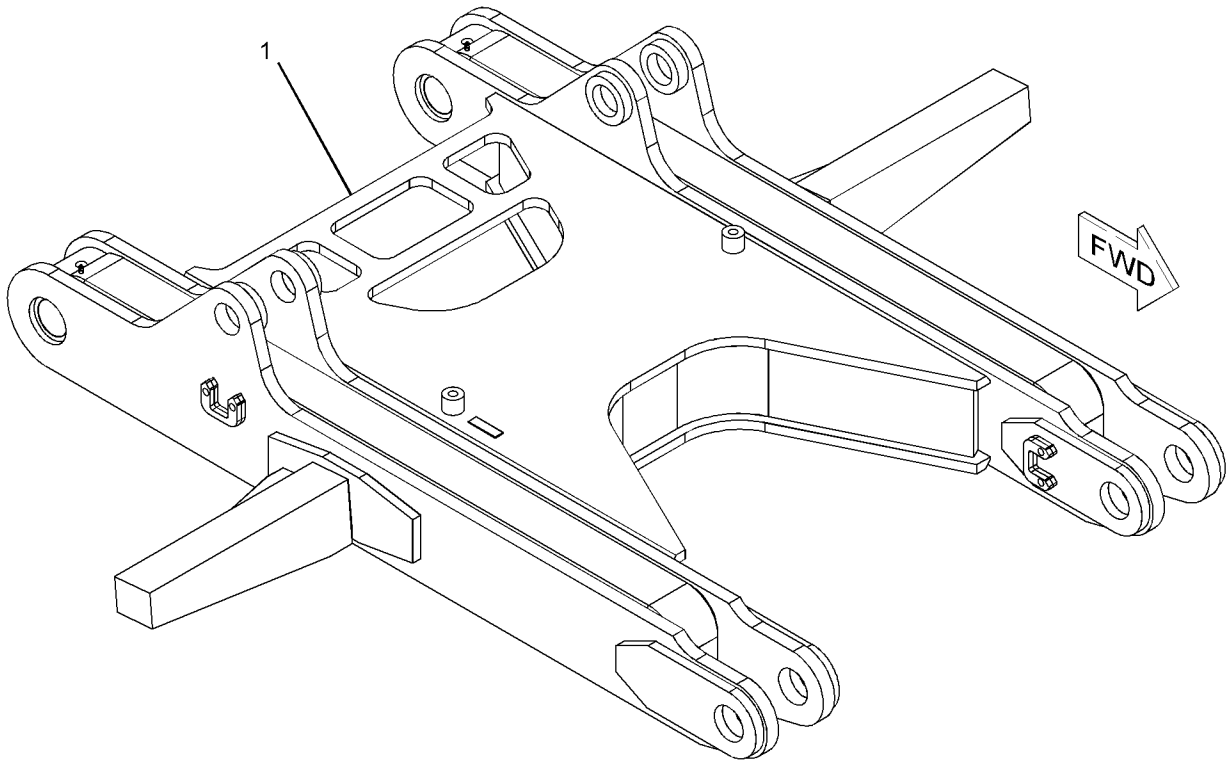

GRAPHIC #1 **<END>** g01122174

140-9699 BAR GP-EQUALIZER–ROLLER FRAME, STRAIGHT

S/N: RJS1-UP
PART OF 242-5297 UNDERCARRIAGE AR
AN ATTACHMENT

SMCS-7206 **i00704495**

NOTE	REF NO	GRAPHIC REF	PART NUMBER	QTY	PART NAME 1 2 3 4 5 6 (PRODUCT LEVEL)	SEE PAGE
	1	1	**117-3355**	1	BAR-EQUALIZER	
	2	1	**117-4015**	2	BEARING-SLEEVE	
	3	1	**6P-8369**	1	SEAL	
	4	1	**9G-7127**	1	SEAL	
	5	1	**9X-7505**	4	SEAL AS	
	6	1	**117-4013**	2	BEARING-SELF-ALIGNING	
	7	1	**5L-4751**	4	RING-RETAINING	
	8	1	**2F-5326**	8	SETSCREW (3/8-16X0.37-IN)	
	9	1	**3B-8489**	2	FITTING-GREASE	
	10	1	**133-5631**	2	PLUG	
	11	1	**5F-1678**	2	SEAL-O-RING	

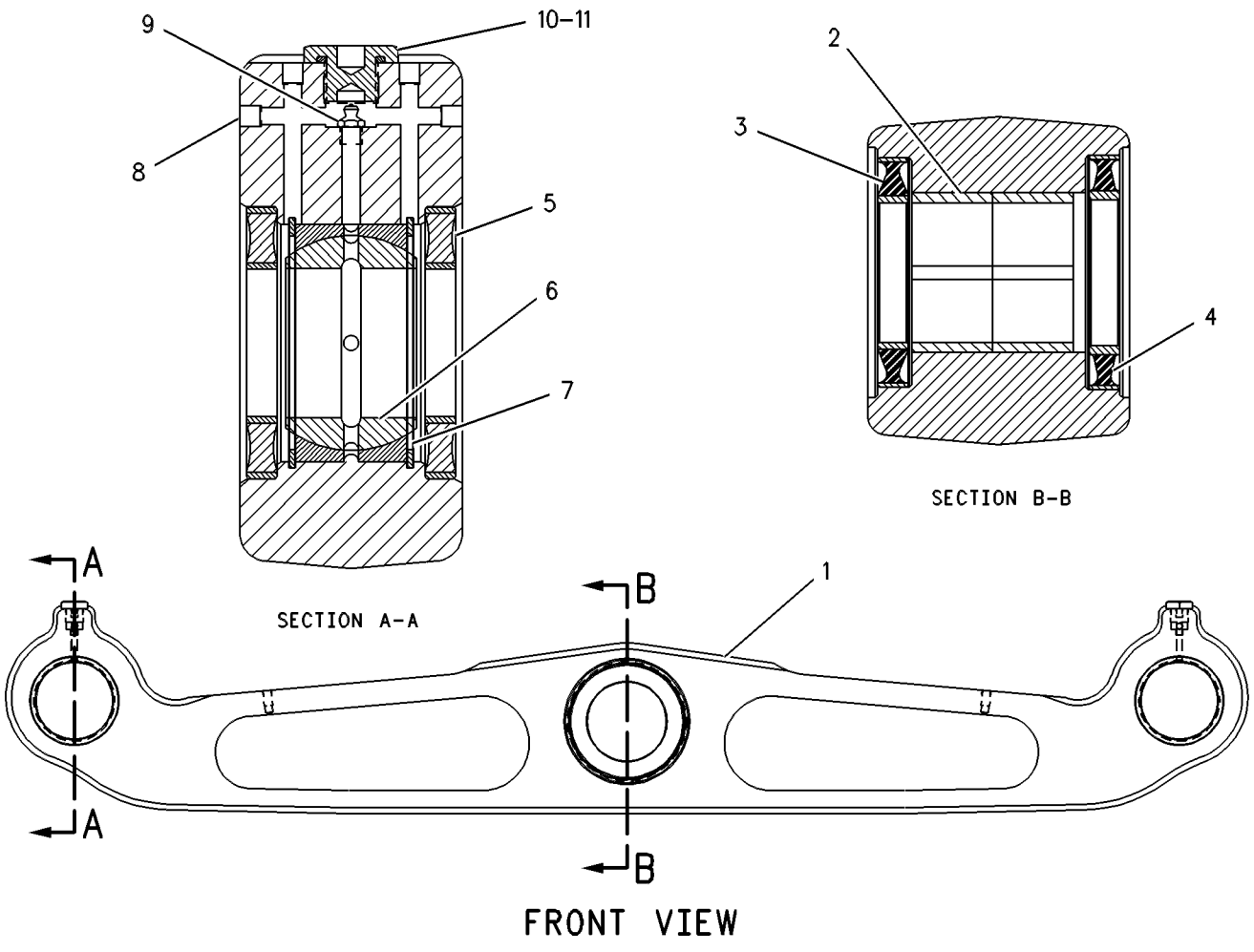

GRAPHIC #1 **<END>** g00285395

160-2539 BAR GP-EQUALIZER

S/N: RJS1-UP

PART OF 205-8606 UNDERCARRIAGE AR

SMCS-7206 **i01888576**

NOTE	REF NO	GRAPHIC REF	PART NUMBER	QTY	PART NAME 1 2 3 4 5 6 (PRODUCT LEVEL)	SEE PAGE
	1	1	**2H-3745**	2	BOLT (1-14X2.75-IN)	
	2	1	**3J-4278**	4	SPACER (13.5X22.2X6.5-MM THK)	
	3	1	**7F-6112**	1	BOLT (1-1/4-12X3-IN)	
	4	1	**9G-1696**	2	PAD AS	
					(EACH INCLUDES)	
		1	**1F-0748**	4	NUT-WELD (1/2-13-THD)	
	5	1	**9G-1697**	2	PAD AS	
	6	1	**9G-2790**	2	SPACER (109X176.5X12-MM THK)	
	7	1	**9P-6911**	1	PLATE	
	8	1	**9P-6912**	1	PIN	
Y	9	1	**177-4651**	1	BAR GP-EQUALIZER	423
	10	1	**2M-3530**	4	BOLT (1-1/8-12-THD)	
	11	1	**3S-1356**	4	NUT-FULL (1-1/8-12-THD)	
	12	1	**5C-6565**	12	BOLT (1/2-13X1.125-IN)	
	13	1	**7T-4865**	2	PIN	
	14	1	**7X-0531**	8	WASHER-HARD (31X52.5X6-MM THK)	
	15	1	**7X-0533**	1	WASHER-HARD (34X55X6-MM THK)	
	16	1	**7X-0590**	4	WASHER-HARD (13.5X44.5X6-MM THK)	
	17	1	**8T-4223**	8	WASHER-HARD (13.5X25.5X3-MM THK)	
	18	1	**8T-5361**	2	WASHER-HARD (28X49X5-MM THK)	

Y-SEPARATE ILLUSTRATION

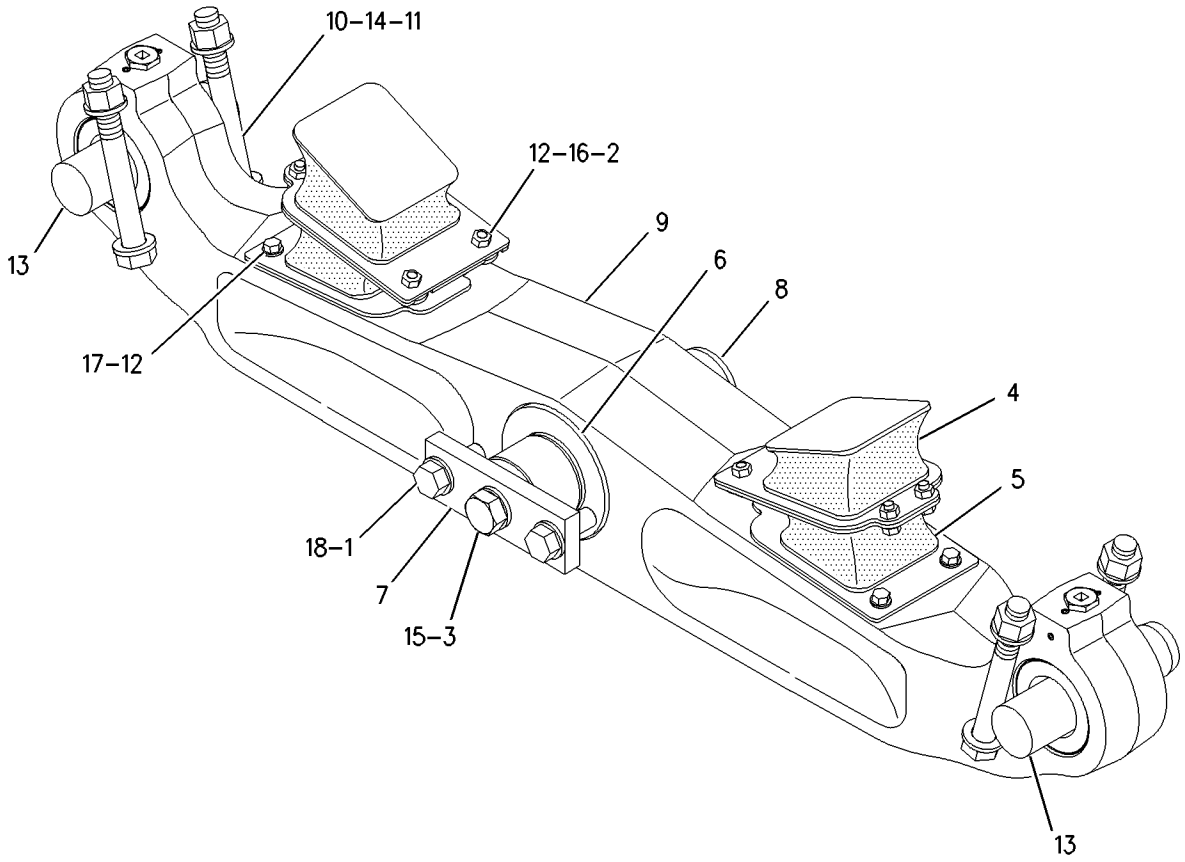

GRAPHIC #1 **<END>** g00984739

UNDERCARRIAGE

177-4651 BAR GP-EQUALIZER

S/N: RJS1-UP

PART OF 160-2539 BAR GP-EQUALIZER

SMCS-7206 **i01902491**

NOTE	REF NO	GRAPHIC REF	PART NUMBER	QTY	PART NAME 1 2 3 4 5 6 (PRODUCT LEVEL)	SEE PAGE
	1	1	**3B-8489**	2	FITTING-GREASE (EQUALIZER BAR)	
	2	1	**6P-8369**	1	SEAL	
	3	1	**9G-7127**	1	SEAL	
	4	1	**9X-7505**	4	SEAL AS	
	5	1	**117-4013**	2	BEARING-SELF-ALIGNING	
	6	1	**117-4015**	2	BEARING-SLEEVE	
	7	1	**133-5631**	2	PLUG	
	8	1	**5L-4751**	4	RING-RETAINING	
	9	1	**2F-5326**	8	SETSCREW (3/8-16X0.37-IN)	
	10	1	**5F-1678**	2	SEAL-O-RING	

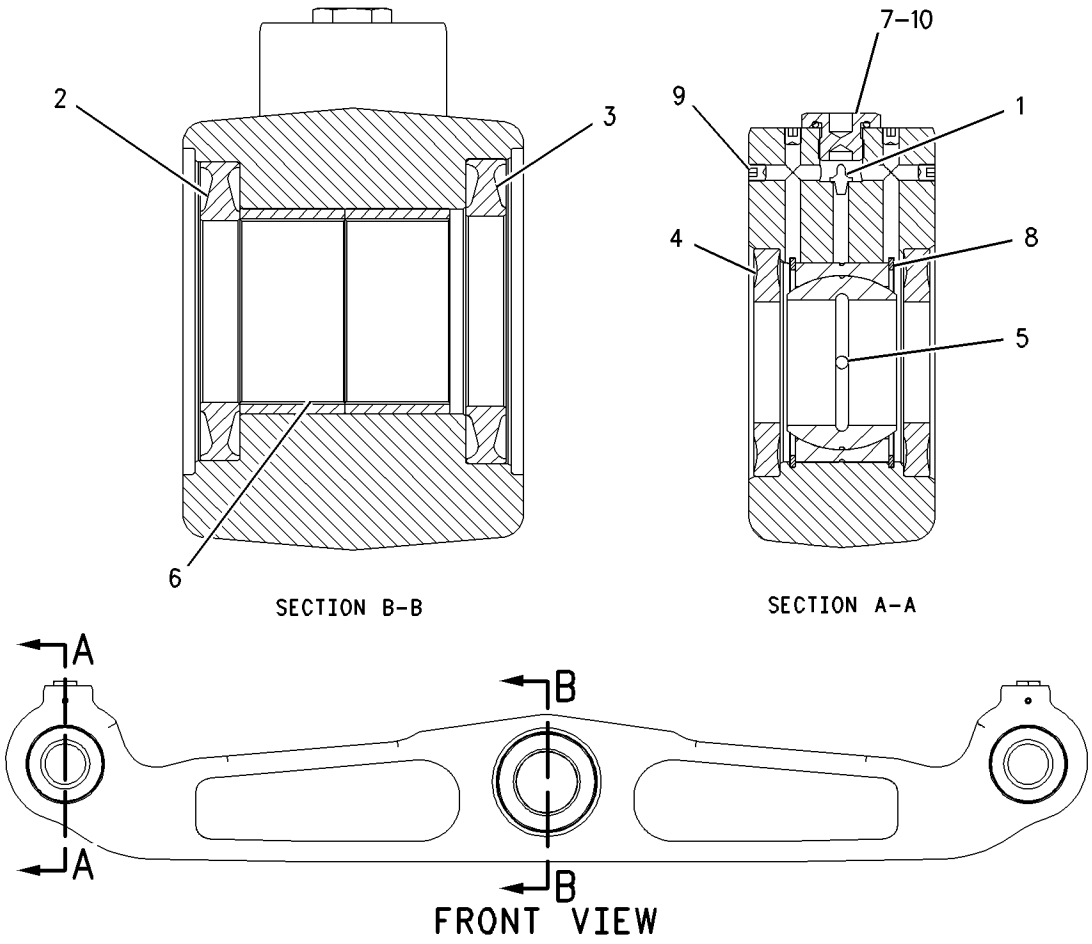

GRAPHIC #1 **<END>** g00636526

UNDERCARRIAGE

224-4644 BAR GP-STRIKER—FRONT

S/N: RJS1-UP
690MM (27 IN) MAXIMUM TRACK WIDTH
FOR USE WITH DUAL TILT DOZER
AN ATTACHMENT

SMCS-7180 **i01999191**

NOTE	REF NO	GRAPHIC REF	PART NUMBER	QTY	PART NAME 1 2 3 4 5 6 (PRODUCT LEVEL)	SEE PAGE
	1	1	**118-3288**	1	PLATE AS-LH	
	2	1	**118-3291**	1	PLATE AS-RH	
	3	1	**240-1882**	1	PLATE AS (RH)	
	4	1	**240-1883**	1	PLATE AS (LH)	
	5	1	**240-1884**	1	PLATE AS (RH)	
	6	1	**240-1885**	1	PLATE AS (LH)	
	7	1	**7X-0420**	24	BOLT (1 1/8-7X50.8-MM)	
	8	1	**7X-0421**	12	BOLT (1 1/8-7X3-IN)	
	9	1	**7X-0531**	36	WASHER-HARD (31X52.5X6-MM THK)	

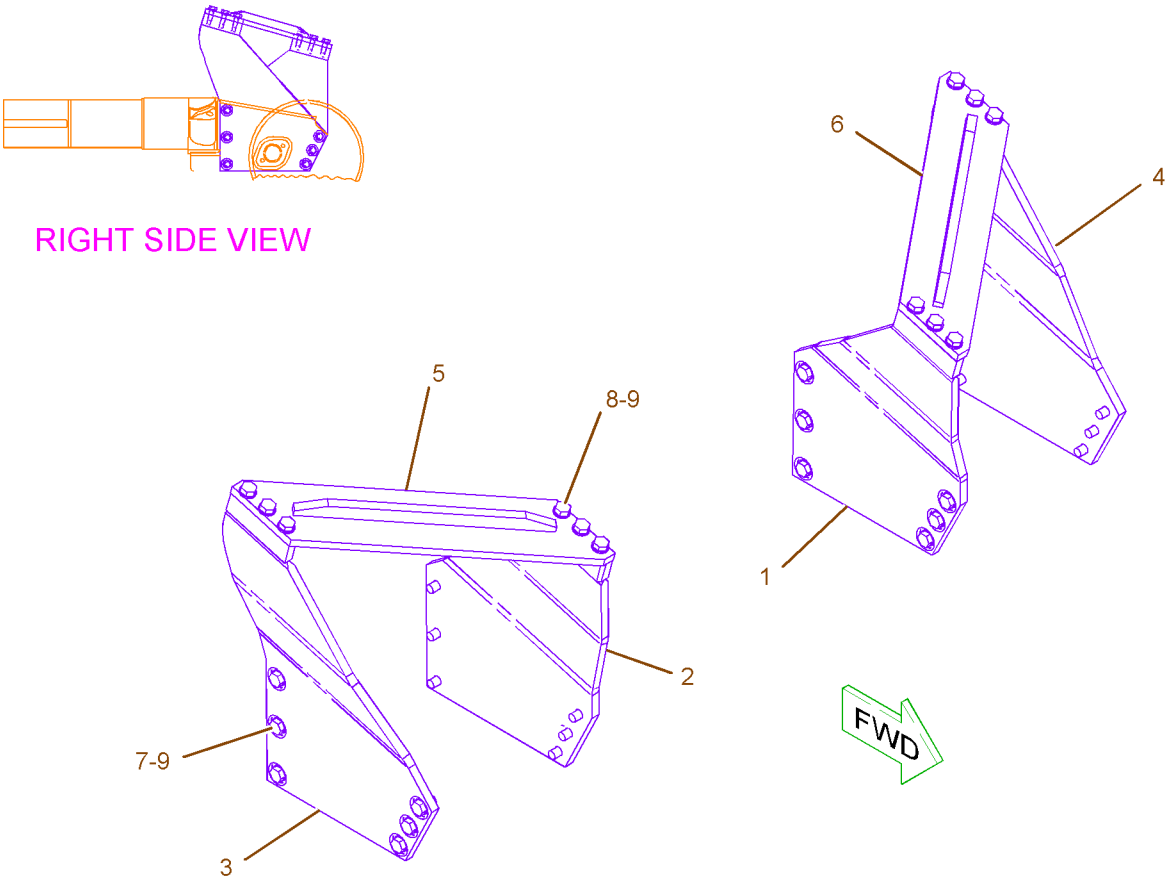

GRAPHIC #1 **<END>** g01037820

UNDERCARRIAGE

9W-3990 BEARING-SLEEVE

S/N: RJS1-UP
FOR USE WITH RECONDITIONED PIVOT SHAFTS
FIELD INSTALLATION

SMCS-4153, 7551 **i01069358**

NOTE	REF NO	GRAPHIC REF	PART NUMBER	QTY	PART NAME 1 2 3 4 5 6 (PRODUCT LEVEL)	SEE PAGE
					(NO SERVICED PARTS)	

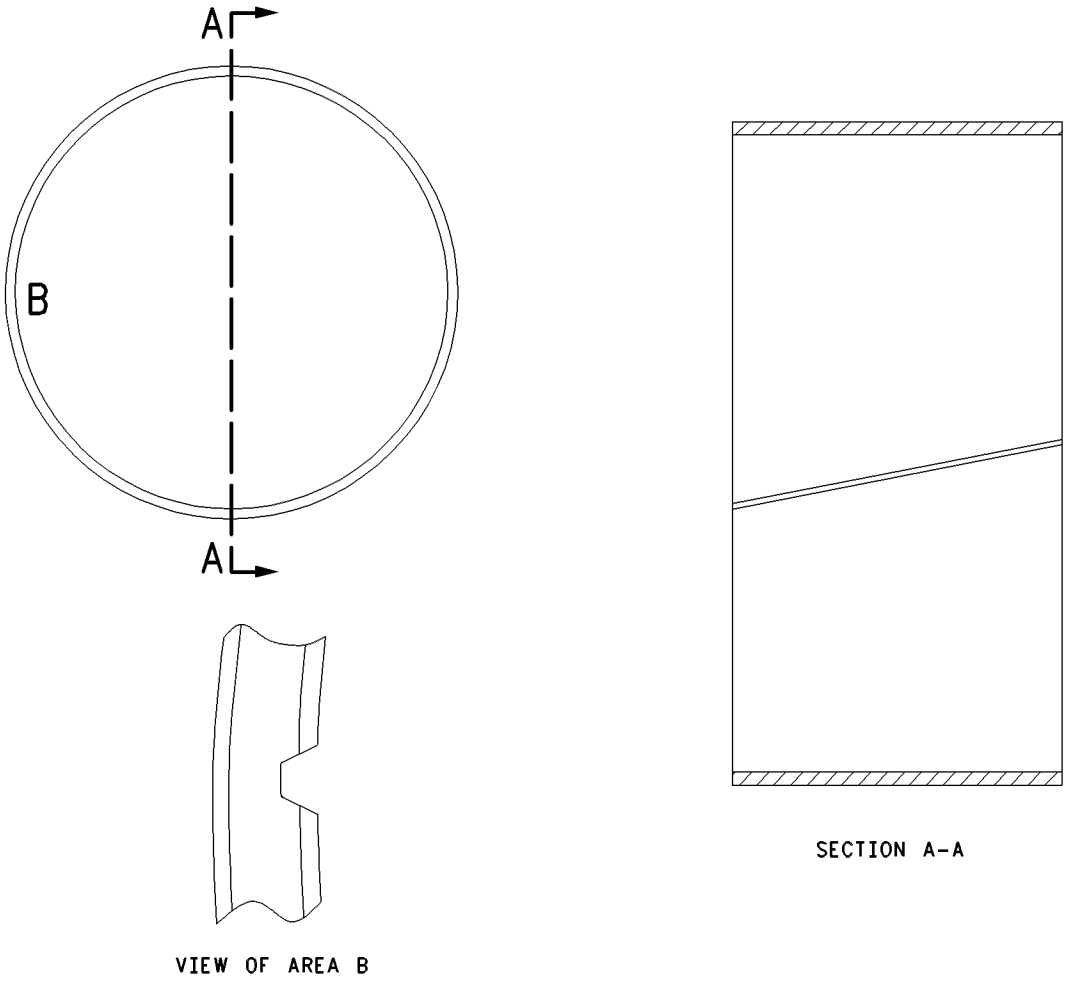

GRAPHIC #1 **<END>** g00558216

9W-7919 BEARING-SLEEVE

S/N: RJS1-UP
FOR USE WITH RECONDITIONED (2MM UNDERSIZE) PIVOT SHAFTS
FIELD INSTALLATION

SMCS-4153, 7551 **i01423211**

NOTE	REF NO	GRAPHIC REF	PART NUMBER	QTY	PART NAME 1 2 3 4 5 6 (PRODUCT LEVEL)	SEE PAGE
					(NO SERVICED PARTS)	

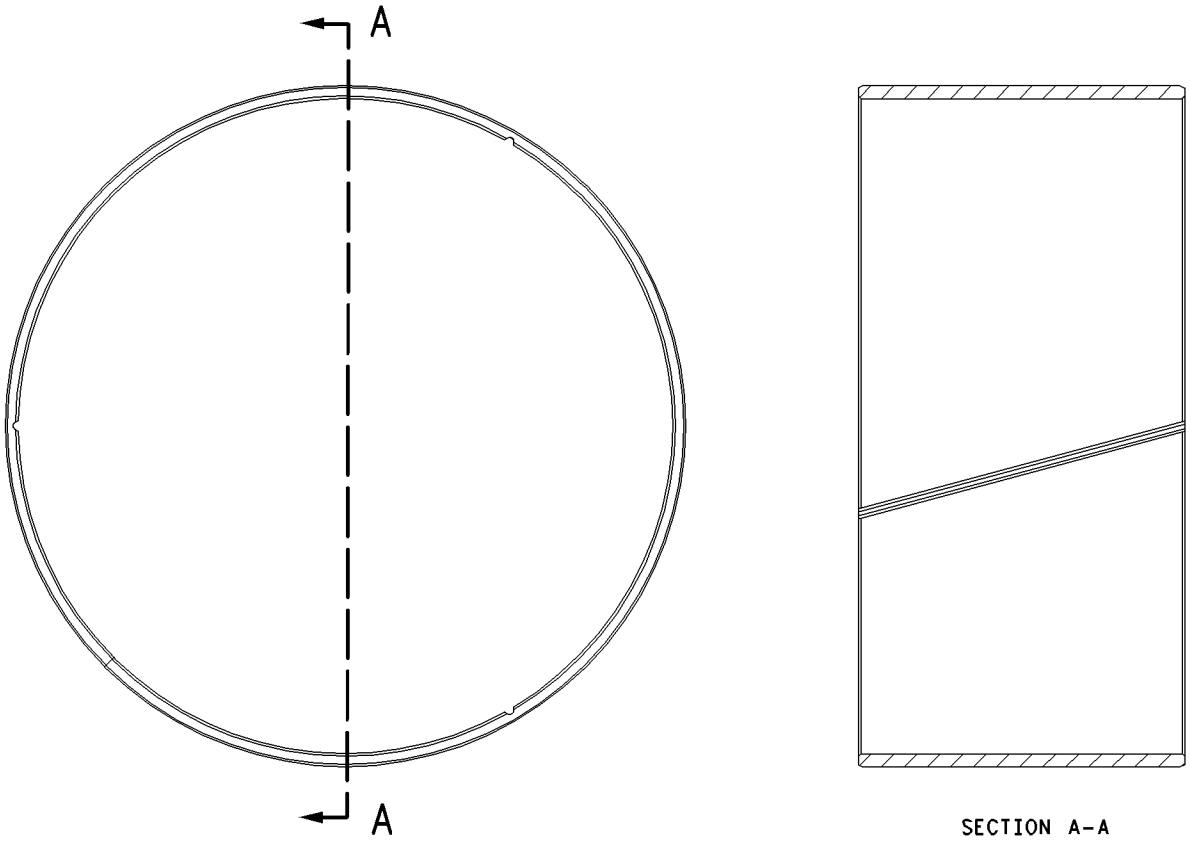

GRAPHIC #1 **<END>** g00748816

131-1625 CAP GP-TRACK IDLER

S/N: RJS1-UP

PART OF 205-8606 UNDERCARRIAGE AR

SMCS-4159 **i01446737**

NOTE	REF NO	GRAPHIC REF	PART NUMBER	QTY	PART NAME 1 2 3 4 5 6 (PRODUCT LEVEL)	SEE PAGE
	1	1	**131-1642**	1	CAP AS-TRACK IDLER	
		1	**1T-0068**	1	PIN-SPRING	
	2	1	**3S-1349**	3	WASHER-HARD (31X52.5X6MM THK)	
	3	1	**9W-4480**	3	BOLT	

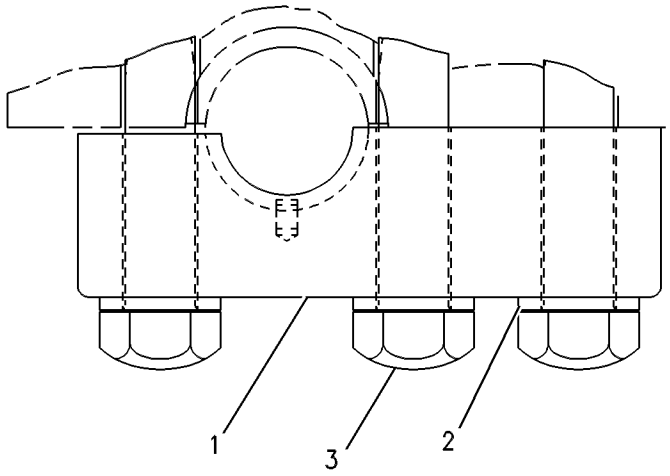

GRAPHIC #1 **<END>** g00270925

131-1626 CAP GP-TRACK IDLER

S/N: RJS1-UP

PART OF 205-8606 UNDERCARRIAGE AR

SMCS-4159 **i01446739**

NOTE	REF NO	GRAPHIC REF	PART NUMBER	QTY	PART NAME 1 2 3 4 5 6 (PRODUCT LEVEL)	SEE PAGE
	1	1	**131-1643**	1	CAP AS-TRACK IDLER	
		1	**1T-0068**	1	PIN-SPRING	
	2	1	**3S-1349**	3	WASHER-HARD (31X52.5X6MM THK)	
	3	1	**9W-4480**	3	BOLT	

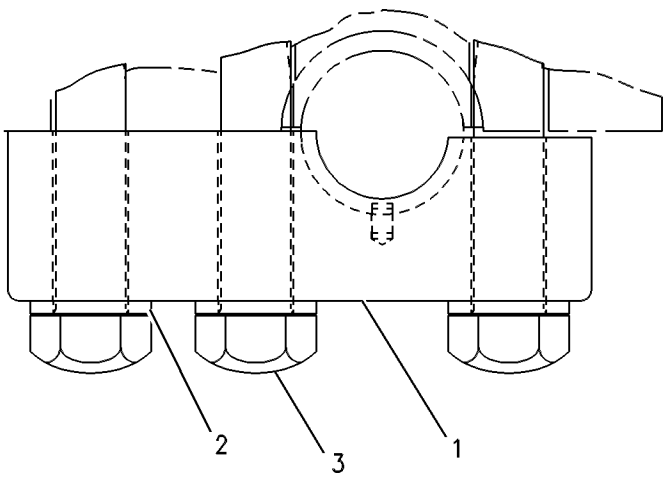

GRAPHIC #1 **<END>** g00270926

6T-1142 CAP GP-TRACK ROLLER

S/N: RJS1-UP

PART OF 211-9297 ROLLER AR-TRACK CARRIER, 205-8606 UNDERCARRIAGE AR

ALSO AN ATTACHMENT

SMCS-4180 **i01624792**

NOTE	REF NO	GRAPHIC REF	PART NUMBER	QTY	PART NAME 1 2 3 4 5 6 (PRODUCT LEVEL)	SEE PAGE
	1	1	**6T-1140**	2	BOLT-ROLLER MOUNTING	
	2	1	**5P-8249**	2	WASHER-HARD (24X41.5X4MM THK)	
	3	1	**131-1651**	1	CAP AS-TRACK ROLLER	
	4	1	**1T-0068**	1	PIN-SPRING	

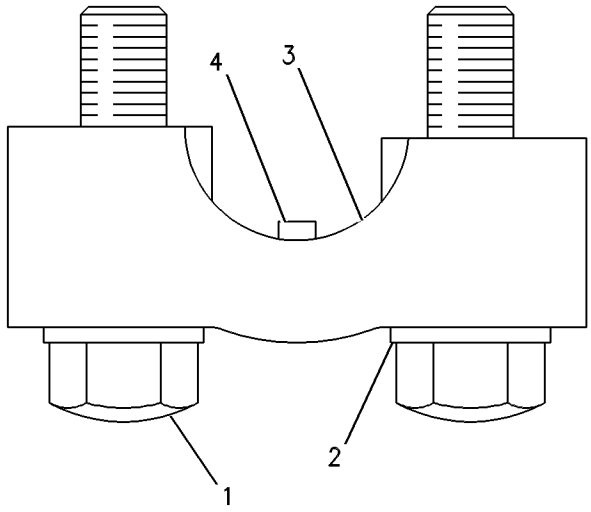

GRAPHIC #1 **<END>** g00465296

UNDERCARRIAGE

204-1327 FRAME GP-TELESCOPING RECOIL

S/N: RJS1-UP

PART OF 205-8606 UNDERCARRIAGE AR

SMCS-4151 **i02201144**

NOTE	REF NO	GRAPHIC REF	PART NUMBER	QTY	PART NAME 1 2 3 4 5 6 (PRODUCT LEVEL)	SEE PAGE
	1	2	**6P-8931**	4	COVER	
	2	2	**6T-8801**	4	GUIDE AS	
					(EACH INCLUDES)	
	2A	2	**242-7104**	1	FILM-WARNING (RECOIL SPRING)	
	3	2	**6Y-0210**	2	BEARING-SLEEVE	
	4	2	**7G-9708**	2	PLATE-THRUST	
	5	2	**7G-9709**	2	BEARING-SLEEVE	
	6	2	**7T-4132**	2	RING-THRUST	
	7	2	**7T-4145**	2	SLEEVE	
	8	2	**8E-2901**	2	PLATE-THRUST	
	9	2	**8T-0208**	2	SEAL-PIVOT SHAFT	
	10	1	**9G-0296**	2	BEARING	
	11	1	**9G-7516**	32	PLUG	
	12	2	**9P-7053**	2	PLATE-THRUST	
	13	2	**9W-2380**	2	RETAINER	
	14	1	**9X-4586**	2	SEAL AS	
	15	1	**188-2557**	2	FRAME AS-TRACK ROLLER (FRONT)	
					(EACH INCLUDES)	
	15A	1	**4B-4158**	4	SCREW-DRIVE (3/16X0.25-IN)	
	15B	1	**253-1347**	1	PLATE-WARNING (RECOIL SPRING)	
	15C	1	**9P-7990**	1	SLEEVE-WEAR	
	15D	1	**6T-3793**	2	SUPPORT (SLEEVE)	
	15E	1	**9P-5708**	2	SUPPORT (SLEEVE)	
	16	1	**195-1444**	1	FRAME AS (RH)	
		1	**9P-5708**	2	SUPPORT (SLEEVE)	
		1	**6T-3793**	2	SUPPORT (SLEEVE)	
	17	1	**195-1445**	1	FRAME AS (LH)	
		1	**9P-5708**	2	SUPPORT (SLEEVE)	
		1	**6T-3793**	2	SUPPORT (SLEEVE)	
	18	2	**203-9381**	2	RING	
	19	2	**203-9382**	2	GUARD-SEAL	
	20	2	**203-9383**	2	PLATE	
	21	2	**204-1324**	2	COVER AS	
					(EACH INCLUDES)	
	21A	2	**253-1346**	2	PLATE-WARNING (HIGH PRESSURE CYLINDER)	
	21B	2	**9N-1995**	4	RIVET-POP	
	22	1	**206-5214**	1	SHAFT-PIVOT	
	24	1	**252-6375**	8	WASHER-HARD (31X74X10-MM THK)	
	25	2	**261-8029**	24	SPACER (17X32X25-MM THK)	
	26	2	**1K-6872**	6	LOCKNUT (1/2-13-THD)	
	27	2	**1P-9254**	2	RING-RETAINING	
	28	2	**2H-3932**	6	SEAL-O-RING	
	29	2	**2K-4472**	4	SEAL-O-RING	
	30	2	**2P-1692**	2	SEAL-O-RING	
	31	2	**3K-0360**	2	SEAL-O-RING	
	32	2	**4D-4508**	2	SEAL-O-RING	
	33	2	**4T-2069**	2	PLUG-DRAIN (PIVOT SHAFT OIL FILL)	
	33A	2	**4T-2069**	4	PLUG-DRAIN (PIVOT SHAFT OIL)	
	34	2	**5P-1979**	2	SEAL-O-RING	
	35	2	**5P-2566**	8	BOLT (1/2-13X1.5-IN)	
	36	1	**7T-8004**	2	RING-RETAINING	
	37	2	**7X-0328**	8	BOLT (1/2-13X3.5-IN)	
	38	1	**7X-0342**	24	BOLT (5/8-11X0.75-IN)	
	39	2	**7X-0345**	24	BOLT (5/8-11X1.75-IN)	
	40	1	**7X-0420**	8	BOLT (1.125-7X50.8-MM)	
	41	1	**8E-2819**	2	RING-RETAINING	

204-1327 **FRAME GP-TELESCOPING RECOIL** *(contd.)* **i02201144**

NOTE	REF NO	GRAPHIC REF	PART NUMBER	QTY	PART NAME 1 2 3 4 5 6 (PRODUCT LEVEL)	SEE PAGE
	42	1,2	**8T-4122**	48	WASHER-HARD (17X32X3.5-MM THK)	
	43	2	**8T-4223**	36	WASHER-HARD (13.5X25.5X3-MM THK)	
	44	2	**8T-4835**	6	BOLT (1/2-13X2-IN)	
	45	2	**8T-9389**	8	BOLT (1/2-13X2.75-IN)	
	46	2	**9M-5894**	2	SEAL-O-RING	
	47	2	**9S-4185**	2	PLUG	
	48	2	**9X-6417**	24	BOLT (5/8-11X3.75-IN)	

REFER TO ALL ILLUSTRATIONS OF
THIS GROUP FOR AUXILIARY VIEWS

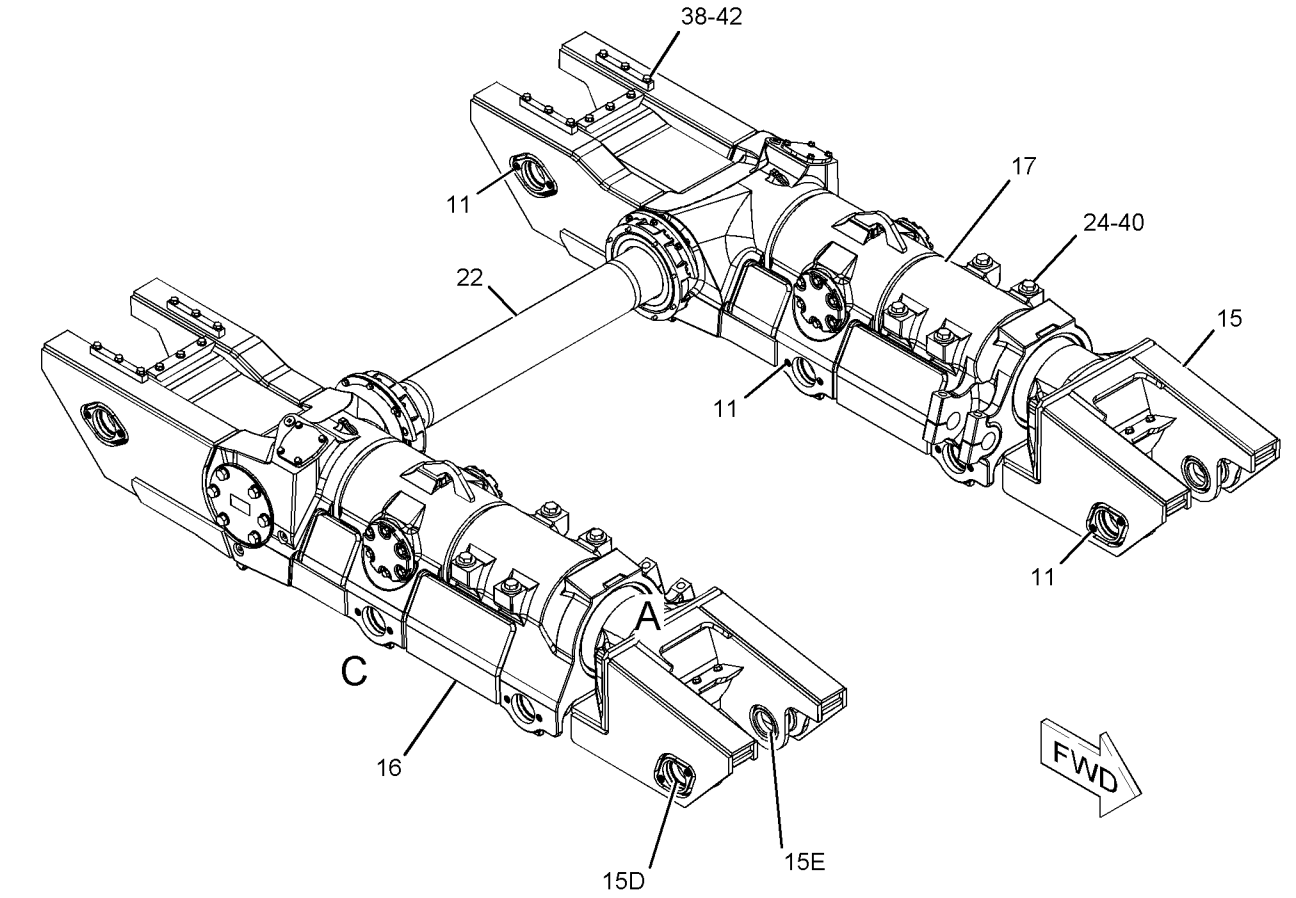

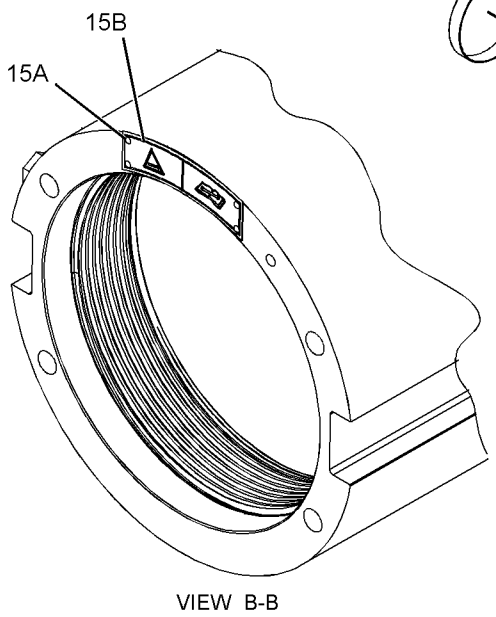

VIEW B-B

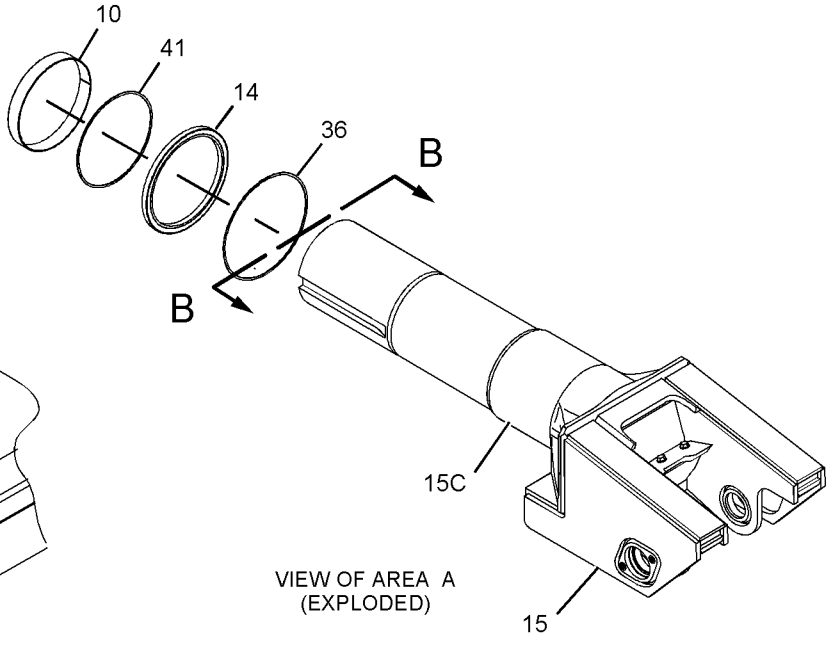

VIEW OF AREA A
(EXPLODED)

GRAPHIC #1

g01127571

204-1327 **FRAME GP-TELESCOPING RECOIL** *(contd.)* **i02201144**

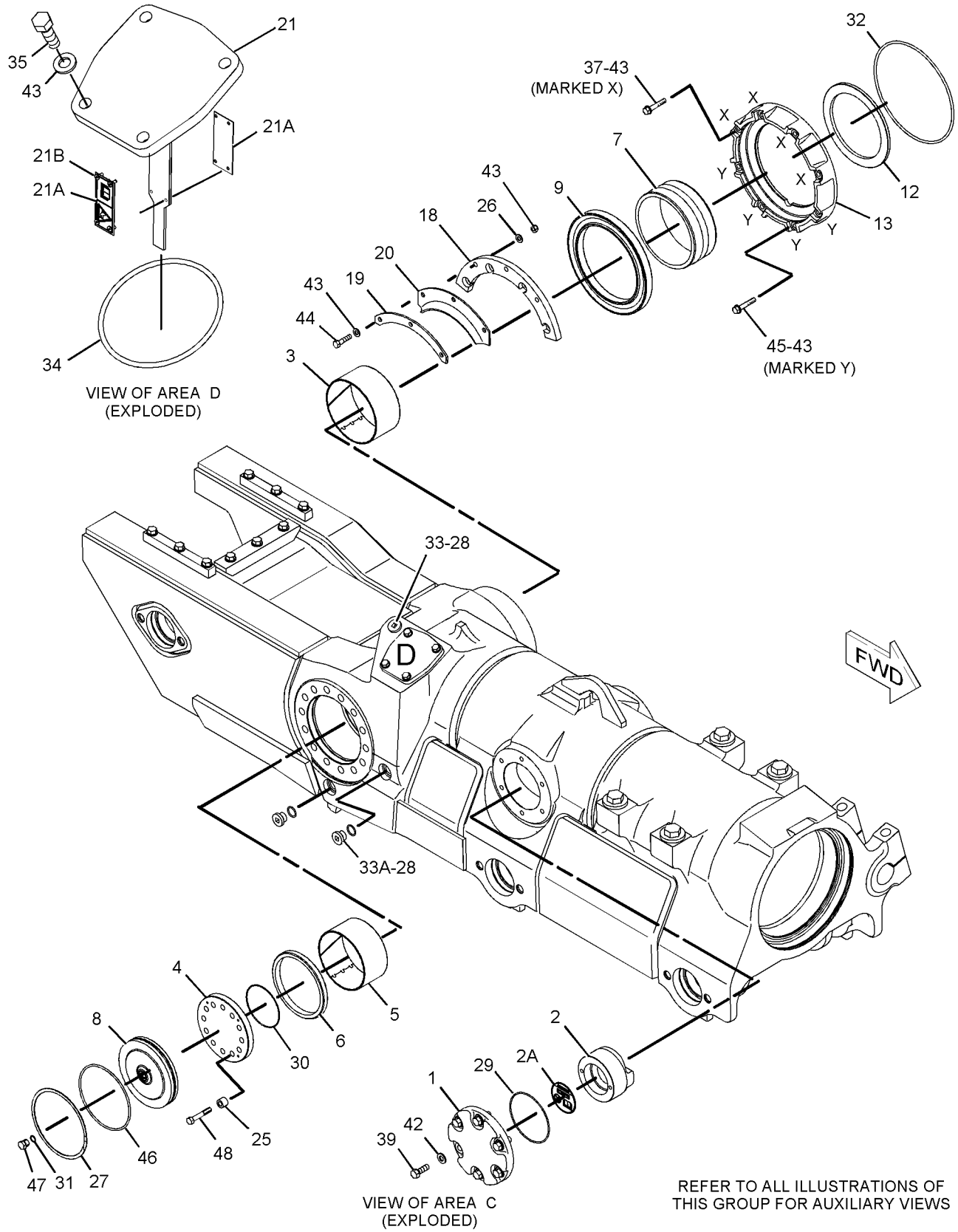

GRAPHIC #2 **<END>** g01127572

UNDERCARRIAGE

125-4655 IDLER GP-TRACK

S/N: RJS1-UP

PART OF 205-8606 UNDERCARRIAGE AR

SMCS-4159 **i01590797**

NOTE	REF NO	GRAPHIC REF	PART NUMBER	QTY	PART NAME 1 2 3 4 5 6 (PRODUCT LEVEL)	SEE PAGE
	1	1	**7T-2770**	1	IDLER & BEARING AS	
		1	**9W-9499**	2	BEARING-SLEEVE	
	2	1	**107-3946**	2	RETAINER	
	3	1	**107-3947**	2	COLLAR-SEAL	
	4	1	**154-3309**	1	SHAFT-TRACK IDLER	
	5	1	**8E-6619**	2	WASHER-THRUST	
	6	1	**107-4057**	2	SEAL-O-RING	
	7	1	**162-7863**	2	SEAL GP-DUO-CONE	
					(EACH INCLUDES)	
		1	**162-2167**	2	RING-TORIC	
	8	1	**3K-6113**	24	WASHER-HARD (12X18.5X3MM THK)	
	9	1	**5P-2546**	24	BOLT-12 POINT HEAD (7/16-14X1.25 IN)	
	10	1	**8F-9516**	2	SEAL-O-RING	
	11	1	**6Y-0473**	1	PLUG-CLEAR	
	12	1	**9G-4872**	1	STOPPER-RUBBER	

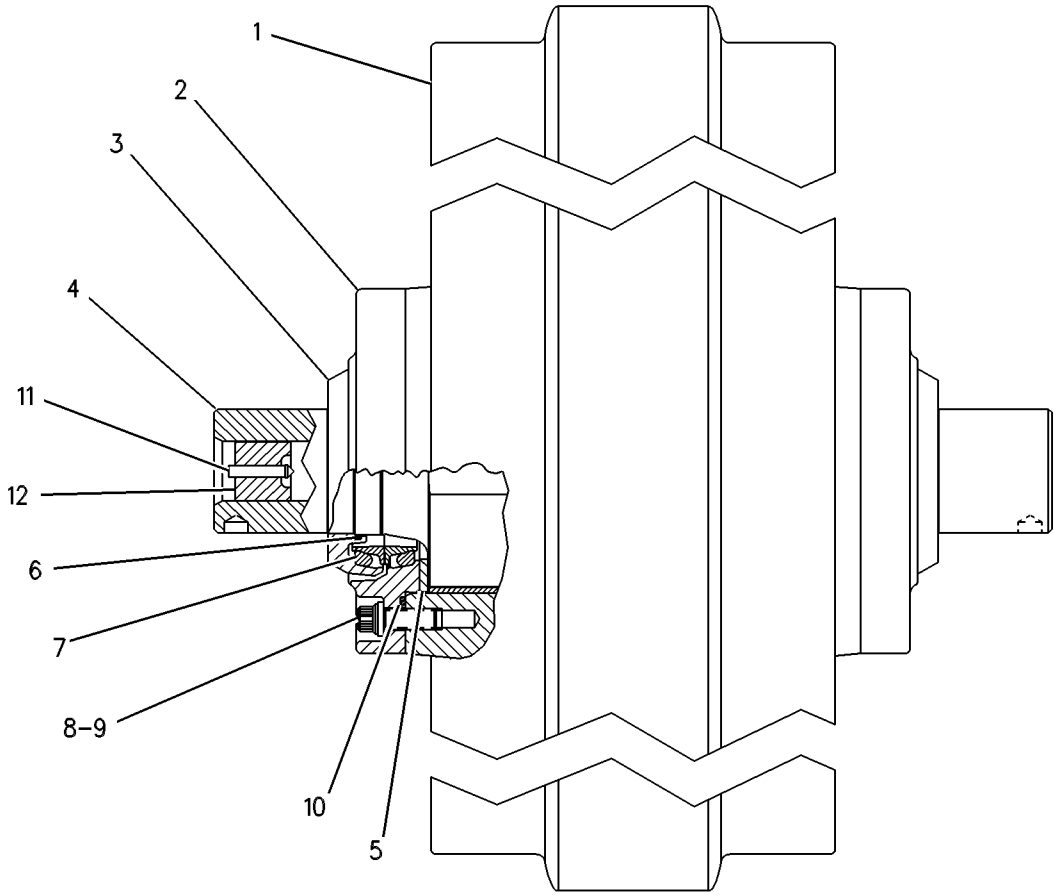

GRAPHIC #1 **<END>** g00272232

167-1947 IDLER GP-TRACK—WASTE HANDLING

S/N: RJS1-UP
PART OF 196-1353 GUARD AR-IDLER
AN ATTACHMENT

SMCS-4159 **i02157466**

NOTE	REF NO	GRAPHIC REF	PART NUMBER	QTY	PART NAME 1 2 3 4 5 6 (PRODUCT LEVEL)	SEE PAGE
	1	1	**7T-2770**	1	IDLER & BEARING AS	
	2	1	**9W-9499**	2	BEARING-SLEEVE	
	3	1	**166-3321**	2	COLLAR-SEAL	
	4	1	**154-3309**	1	SHAFT-TRACK IDLER	
	5	1	**6Y-0473**	1	PLUG-CLEAR	
	6	1	**107-4057**	2	SEAL-O-RING	
	7	1	**162-7863**	2	SEAL GP-DUO-CONE	
					(EACH INCLUDES)	
		1	**162-2167**	2	RING-TORIC	
	8	1	**8C-6877**	24	BOLT (7/16-14X1.75-IN)	
	9	1	**8T-5360**	24	WASHER (12X22.5X2.5-MM THK)	
	10	1	**8F-9516**	2	SEAL-O-RING	
	11	1	**8E-6619**	2	WASHER-THRUST (12X18.5X3-MM THK)	
	12	1	**166-3320**	2	RETAINER	
	13	1	**9G-4872**	1	STOPPER-RUBBER	
	14	1	**166-3324**	4	PLATE	

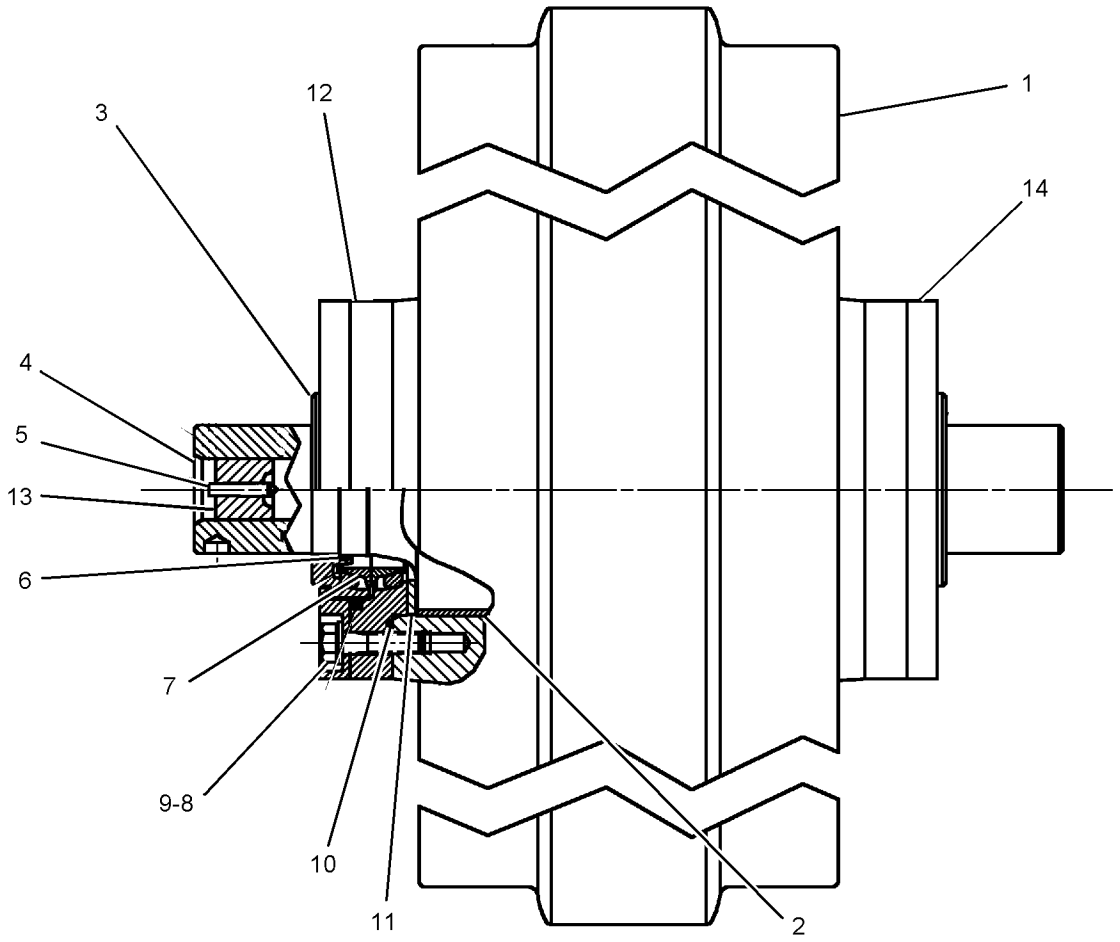

GRAPHIC #1 **<END>** g01096993

245-9942 IDLER GP-TRACK–COLD WEATHER

S/N: RJS1-UP
PART OF 125-2140 ROLLER & IDLER AR
AN ATTACHMENT

SMCS-4159 **i02118840**

NOTE	REF NO	GRAPHIC REF	PART NUMBER	QTY	PART NAME 1 2 3 4 5 6 (PRODUCT LEVEL)	SEE PAGE
	1	1	**6Y-0473**	1	PLUG-CLEAR	
	2	1	**7T-2770**	1	IDLER & BEARING AS	
	2A	1	**254-6182**	2	BEARING-SLEEVE	
	3	1	**8E-6619**	2	WASHER-THRUST (12X18.5X3-MM THK)	
	4	1	**8F-9516**	2	SEAL-O-RING	
	5	1	**9G-4872**	1	STOPPER-RUBBER	
	6	1	**107-3946**	2	RETAINER	
	7	1	**107-3947**	2	COLLAR-SEAL	
	8	1	**107-4057**	2	SEAL-O-RING	
	9	1	**154-3309**	1	SHAFT-TRACK IDLER	
	10	1	**162-7863**	2	SEAL GP-DUO-CONE	
					(EACH INCLUDES)	
	10A	1	**162-2167**	2	RING-TORIC	
Z	10B	1		2	SEAL-RING	
	11	1	**3K-6113**	24	WASHER-HARD (12X18.5X3-MM THK)	
	12	1	**5P-2546**	24	BOLT-12 POINT HEAD (7/16-14X1.25-IN)	

Z-NOT SERVICED SEPARATELY

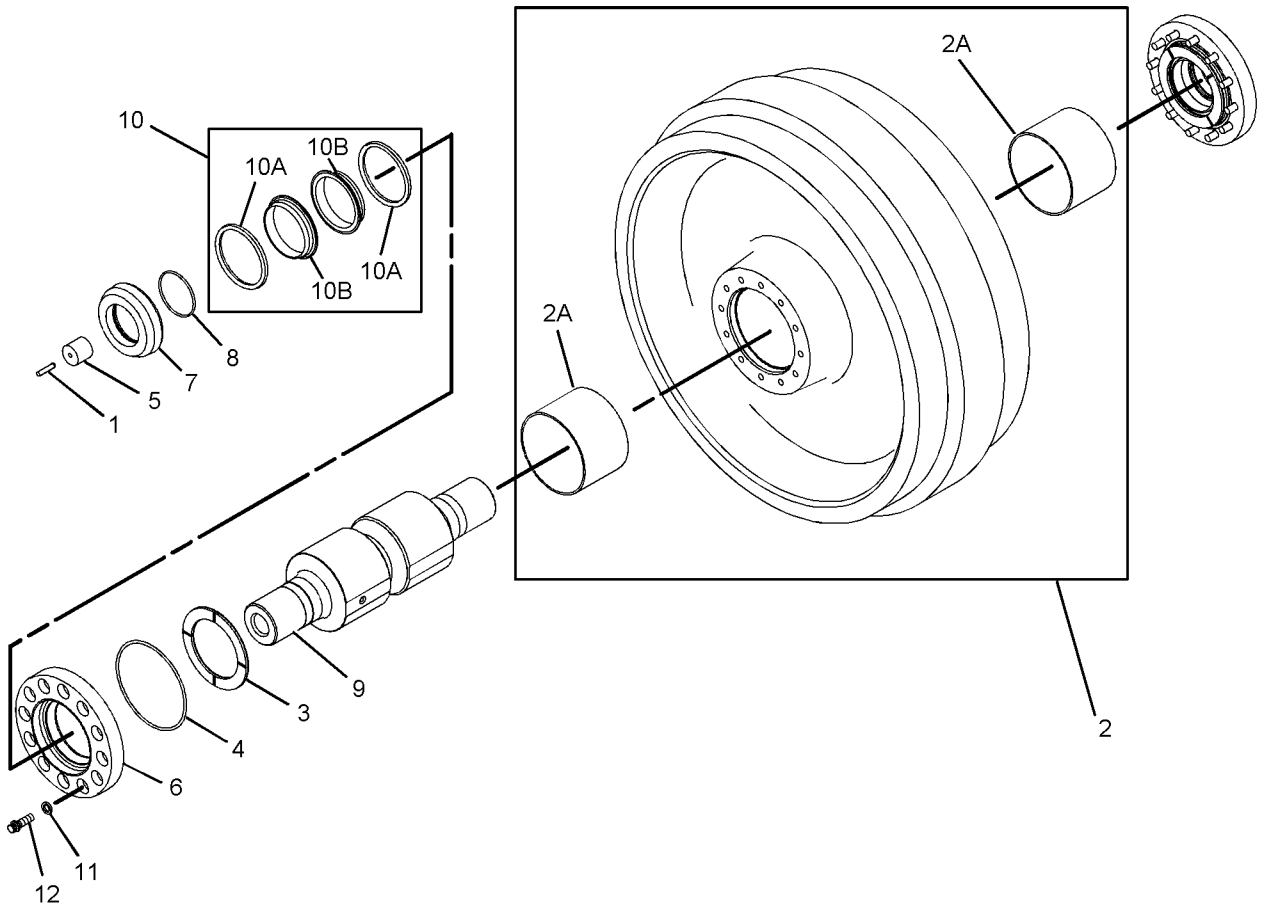

GRAPHIC #1 **<END>** g01117291

199-5525 LINK AS-TRACK

S/N: RJS1-UP
SEALED & LUBRICATED, POSITIVE PIN RETENTION
PART OF 161-4370, 183-2121, 183-2122, 183-2123, 183-2124, 183-2127, 199-5536, 199-5537, 199-5538, 203-2199, 203-2200, 244-8637, 7T-2289 TRACK GP
ALSO AN ATTACHMENT

SMCS-4169, 4171 **i02201365**

NOTE	REF NO	GRAPHIC REF	PART NUMBER	QTY	PART NAME 1 2 3 4 5 6 (PRODUCT LEVEL)	SEE PAGE
	1	1	**6Y-0473**	43	PLUG-CLEAR	
		1	**7G-4332**	43	STOPPER	
	2	1	**6Y-0470**	86	RING-RETAINING	
	3	1	**186-0781**	43	BUSHING-TRACK	
	4	1	**186-0780**	43	PIN-TRACK	
	5	1	**7T-2275**	42	LINK-TRACK (RH)	
	6	1	**7T-2276**	42	LINK-TRACK (LH)	
	7	1	**250-4245**	1	LINK-TRACK MASTER (PIN END, RH)	
	8	1	**250-4246**	1	LINK-TRACK MASTER (PIN END, LH)	
	9	1	**250-4247**	1	LINK-TRACK MASTER (BUSHING END, RH)	
	10	1	**250-4248**	1	LINK-TRACK MASTER (BUSHING END, LH)	
	11	1	**207-0545**	86	SEAL AS	
	12	1	**9W-2755**	86	RING-THRUST	

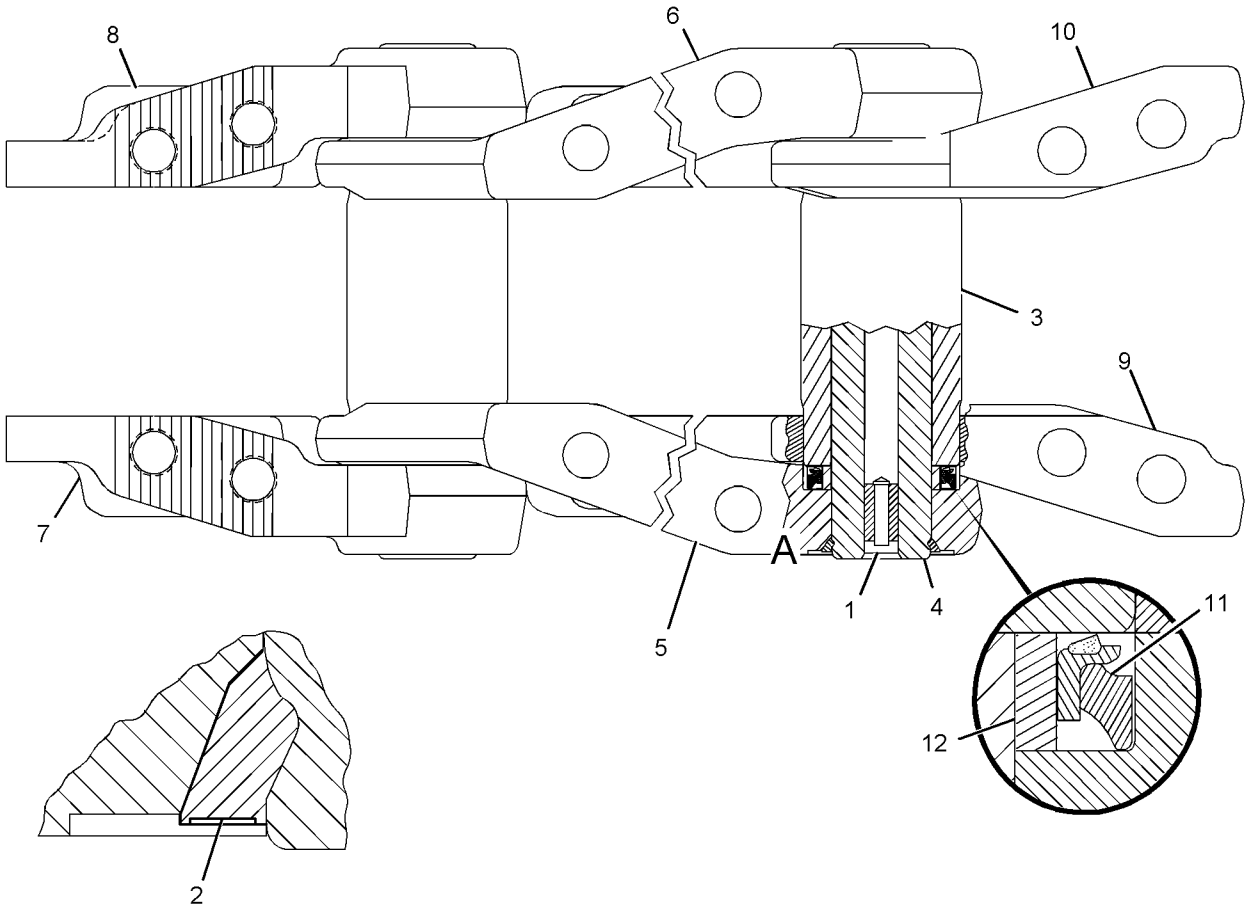

VIEW OF AREA A

GRAPHIC #1 **<END>** g01117097

199-5531 LINK AS-TRACK

S/N: RJS1-UP
SEALED & LUBRICATED
PART OF 222-9936, 228-9812, 230-4142, 234-9441 TRACK GP

SMCS-4169, 4171 **i02206617**

NOTE	REF NO	GRAPHIC REF	PART NUMBER	QTY	PART NAME 1 2 3 4 5 6 (PRODUCT LEVEL)	SEE PAGE
	1	1	**6K-3631**	2	RING	
	2	1	**250-4247**	1	LINK-TRACK MASTER (BUSHING END, RH)	
	3	1	**199-5522**	42	PIN-TRACK	
	4	1	**9W-2743**	42	LINK-TRACK (RH)	
	5	1	**199-5523**	1	PIN-TRACK (MASTER)	
	6	1	**7G-4332**	43	STOPPER	
	7	1	**6Y-0473**	43	PLUG-CLEAR	
	8	1	**9W-2755**	86	RING-THRUST	
	9	1	**250-4243**	1	LINK-TRACK MASTER (PIN END, RH)	
	10	1	**186-0781**	43	BUSHING-TRACK	
	11	1	**207-0545**	86	SEAL AS	
	12	1	**250-4244**	1	LINK-TRACK MASTER (PIN END, LH)	
	13	1	**9W-2744**	42	LINK-TRACK (LH)	
	14	1	**250-4248**	1	LINK-TRACK MASTER (BUSHING END, LH)	

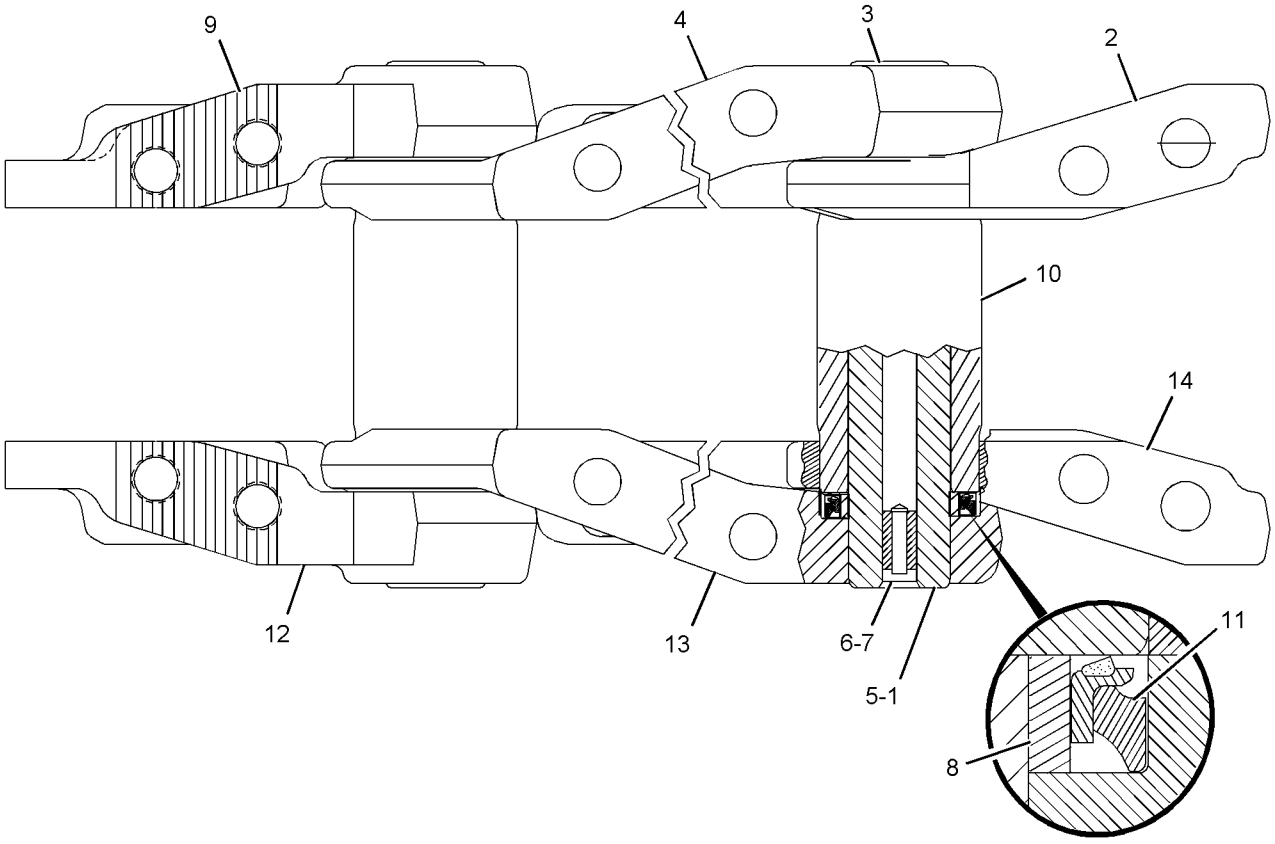

GRAPHIC #1 **<END>** g01120294

213-9253 LUBRICATION GP-PIVOT SHAFT

S/N: RJS1-UP

PART OF 205-8601 CHASSIS AR

SMCS-3286 **i02265133**

NOTE	REF NO	GRAPHIC REF	PART NUMBER	QTY	PART NAME 1 2 3 4 5 6 (PRODUCT LEVEL)	SEE PAGE
	1	1	**9W-1694**	2	PAD	
	2	1	**8T-1786**	1	FITTING-90 DEGREE	
	3	1	**9U-9409**	1	TANK (PIVOT SHAFT OIL)	
I	4	1	**9W-6261**	1	HOSE AS	
	5	1	**9W-8277**	1	CAP AS-OIL FILLER (PIVOT SHAFT)	
	6	1	**213-6678**	1	PLATE AS	
	7	1	**214-7141**	1	PLATE	
	8	1	**214-7142**	1	PLATE AS	
	9	1	**215-9217**	1	PLATE AS	
	10	1	*148-8311*	1	ADAPTER GP	
		1	**3K-0360**	1	SEAL-O-RING	
		1	**8T-1715**	1	ADAPTER	
	11	1	*148-8359*	1	ELBOW GP	
		1	**3K-0360**	1	SEAL-O-RING	
		1	**6V-9746**	1	SEAL-O-RING	
		1	**6V-9877**	1	ELBOW	
	12	1	*150-4049*	1	ELBOW AS	
		1	**6V-9746**	1	SEAL-O-RING	
		1	**7M-8485**	1	SEAL-O-RING	
		1	**8T-4149**	1	ELBOW	
	13	1	**4L-6454**	3	BOLT (3/8-16X1-IN)	
	14	1	**4M-5317**	1	BUSHING-REDUCING	
	16	1	**5P-1075**	4	WASHER-HARD (10.2X22.5X3-MM THK)	
	17	1	**5S-7379**	4	BOLT (3/8-16X0.875-IN)	
	18	1	**8T-1896**	2	CLIP (TAB)	
	19	1	**8T-4121**	6	WASHER-HARD (11X21X2.5-MM THK)	
M	20	1	**8T-4136**	6	BOLT (M10X1.5X25-MM)	
M	21	1	**8T-4171**	1	BOLT (M6X1X12-MM)	
	22	1	**8T-4205**	1	WASHER-HARD (7.2X14.5X2-MM THK)	
	23	1	**8T-4896**	3	WASHER-HARD (10.2X18.5X2.5-MM THK)	
	24	1	**9W-6260**	2	SPACER	
E	25	1	**144-0195**		HOSE (120-CM)	
	26	1	**8T-1895**	2	CLIP (SLOT)	

E-ORDER BY THE CENTIMETER
I-REFER TO HYDRAULIC INFORMATION SYSTEM
M-METRIC PART

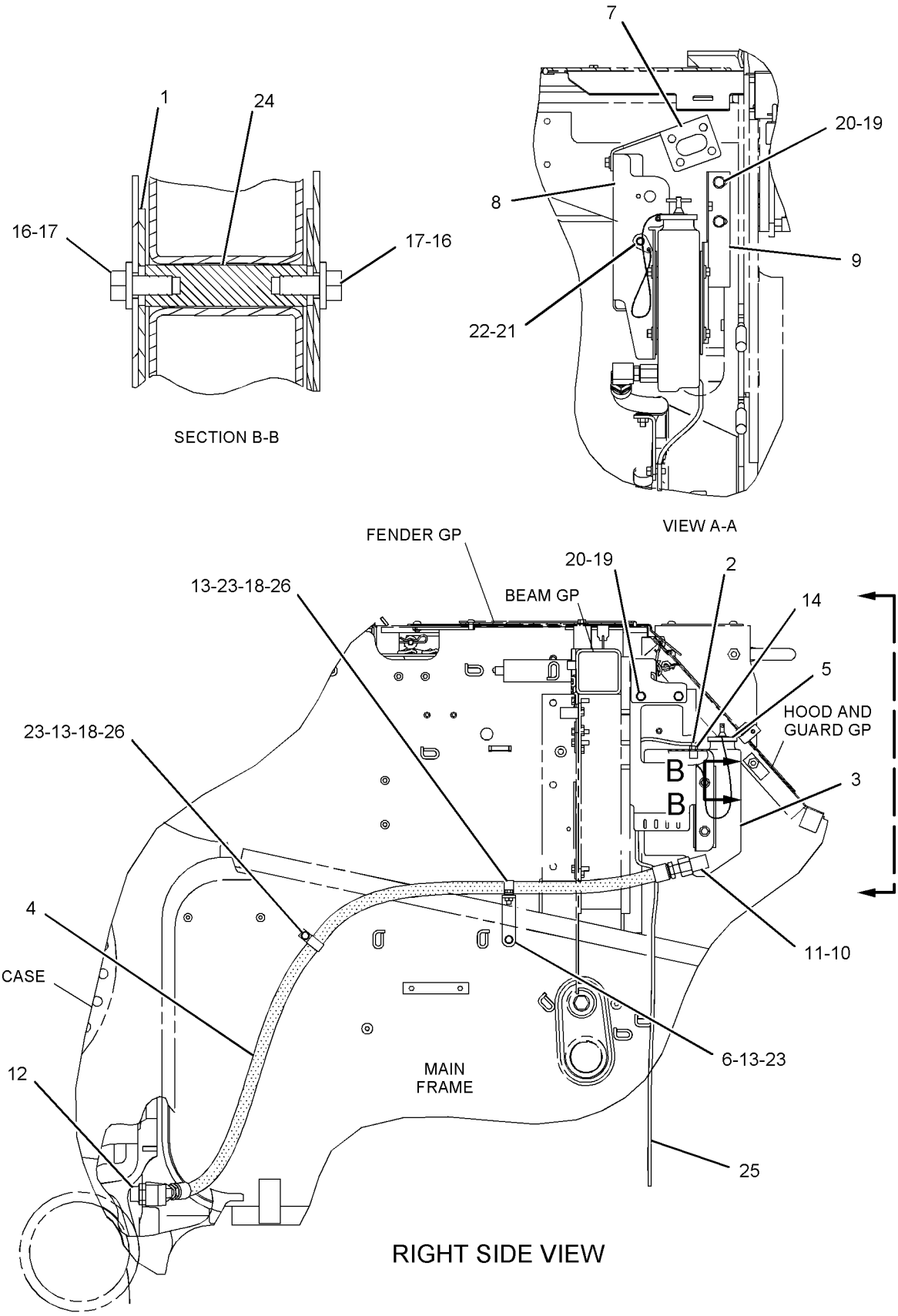

GRAPHIC #1 **<END>** g01113948

125-2140 ROLLER & IDLER AR—COLD WEATHER

S/N: RJS1-UP
SYMMETRICAL DUO-CONE, NITRIL RUBBER TORICS, SYNTHETIC OIL
PART OF 211-5087 COLD WEATHER AR
AN ATTACHMENT

SMCS-4159, 4180 **i02118767**

NOTE	PART NUMBER	QTY	PART NAME 1 2 3 4 5 6 (PRODUCT LEVEL)	SEE PAGE
Y	**245-9942**	4	IDLER GP-TRACK	436
Y	**245-9944**	8	ROLLER GP-TRACK-DOUBLE FLANGE	445
Y	**245-9943**	8	ROLLER GP-TRACK-SINGLE FLANGE	448

Y-SEPARATE ILLUSTRATION

<END>

211-5079 ROLLER AR-TRACK

S/N: RJS1-UP
PART OF 211-5077 MINING AR
CANNOT BE USED WITH 211-5077—PAGE 2
AN ATTACHMENT

SMCS-4180 **i02223270**

NOTE	REF NO	GRAPHIC REF	PART NUMBER	QTY	PART NAME 1 2 3 4 5 6 (PRODUCT LEVEL)	SEE PAGE
	1	1	**7T-5422**	6	PLATE	
YR	2	1	**196-9955**	8	ROLLER GP-TRACK-SINGLE FLANGE	446
	3	1	**5P-2566**	24	BOLT (1/2-13X1.5-IN)	

R-REMFG PART MAY BE AVAILABLE
Y-SEPARATE ILLUSTRATION

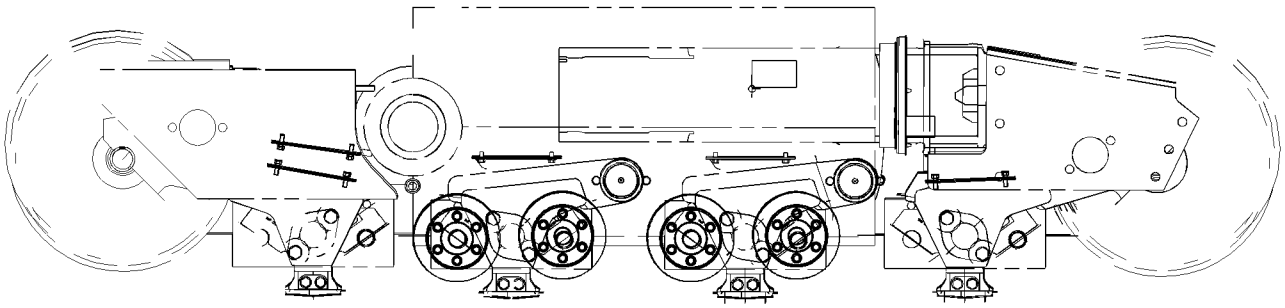

RIGHT SIDE VIEW

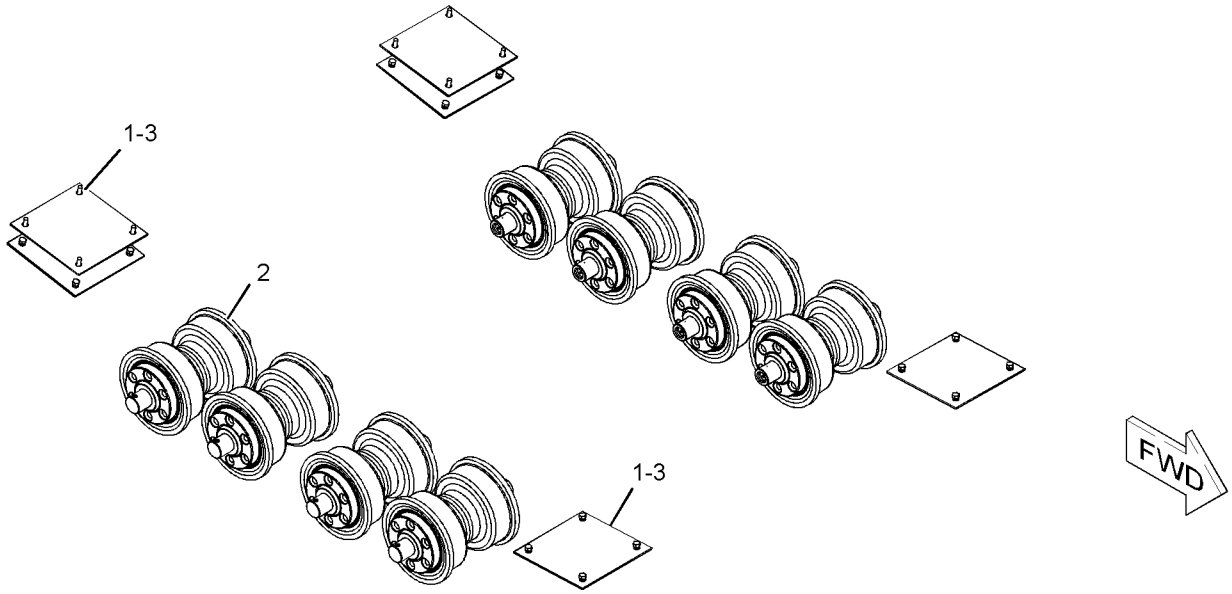

GRAPHIC #1 **<END>** g01125315

211-9297 ROLLER AR-TRACK CARRIER—HORIZONTAL MOUNTED

S/N: RJS1-UP

PART OF 211-5069 MODIFICATION AR-WOODCHIP, 211-5072 STOCKPILE AR AN ATTACHMENT

SMCS-4154 **i01995891**

NOTE	REF NO	GRAPHIC REF	PART NUMBER	QTY	PART NAME 1 2 3 4 5 6 (PRODUCT LEVEL)	SEE PAGE
Y	1	1	*6T-1142*	4	CAP GP-TRACK ROLLER	429
Y	2	1	**196-9955**	2	ROLLER GP-TRACK-SINGLE FLANGE	446
	3	1	**211-9298**	4	SUPPORT	
	4	1	**7X-0423**	8	BOLT (1-1/8-7 X4.5 IN)	
	5	1	**7X-0531**	8	WASHER-HARD (31X52.5X6MM THK)	

Y-SEPARATE ILLUSTRATION

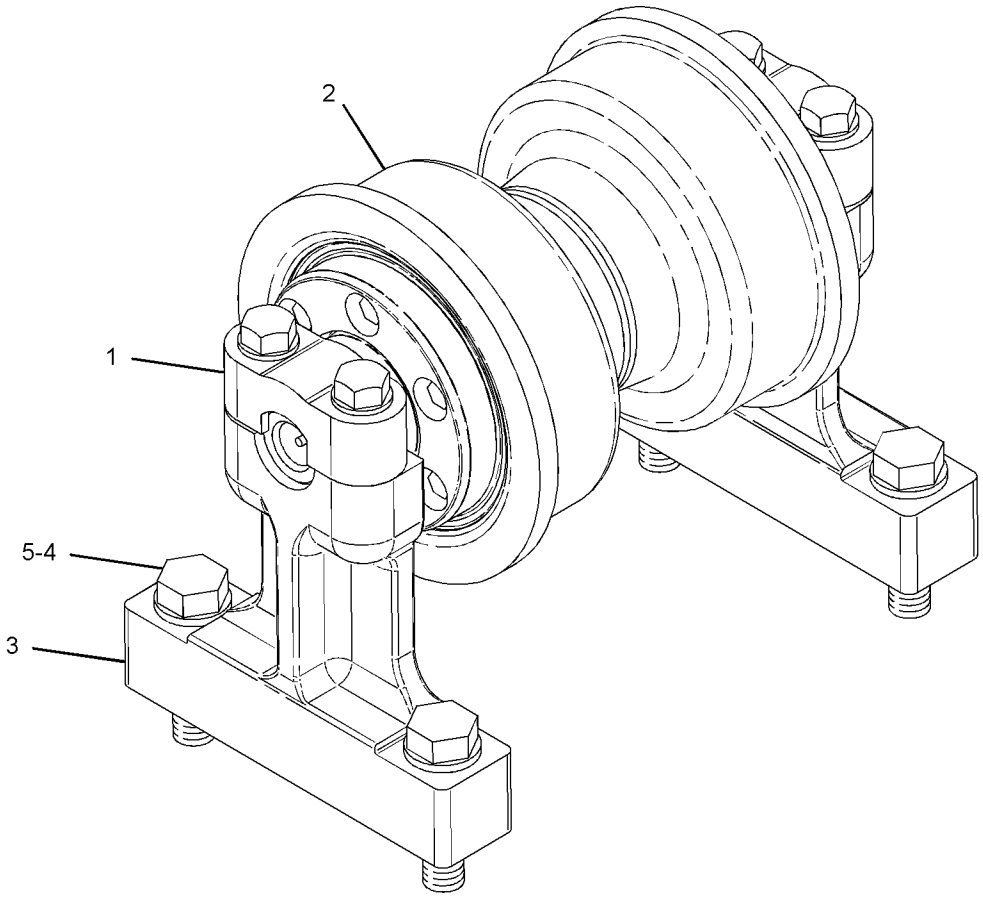

GRAPHIC #1 **<END>** g01037158

UNDERCARRIAGE

196-9954 ROLLER GP-TRACK-DOUBLE FLANGE*R

S/N: RJS1-UP

PART OF 205-8606 UNDERCARRIAGE AR

SMCS-4180 **i02201160**

NOTE	REF NO	GRAPHIC REF	PART NUMBER	QTY	PART NAME 1 2 3 4 5 6 (PRODUCT LEVEL)	SEE PAGE
	1	1	**5F-3106**	2	SEAL-O-RING	
	2	1	**7J-2036**	2	SEAL-O-RING	
	3	1	**9G-4872**	1	STOPPER-RUBBER	
	3A	1	**6Y-0473**	1	PLUG-CLEAR	
	4	1	**8E-7510**	2	WASHER-THRUST (86X120.27X4.52-MM THK)	
	5	1	**104-3494**	1	SHAFT-TRACK ROLLER	
	6	1	**107-3944**	2	RETAINER	
	7	1	**107-3945**	2	COLLAR-SEAL	
	8	1	**162-7862**	2	SEAL GP-DUO-CONE	
					(EACH INCLUDES)	
	8A	1	**162-2166**	2	RING-TORIC	
Z	8B	1		2	SEAL-RING	
	9	1	**196-9956**	1	ROLLER & BEARING AS	
	9A	1	**9W-9844**	2	BEARING-SLEEVE (BURNISHED)	
	10	1	**241-1855**	12	BOLT (1/2-13X2-IN)	
M	11	1	**5P-8245**	12	WASHER-HARD (13.5X25.5X3-MM THK)	

M-METRIC PART
Z-NOT SERVICED SEPARATELY

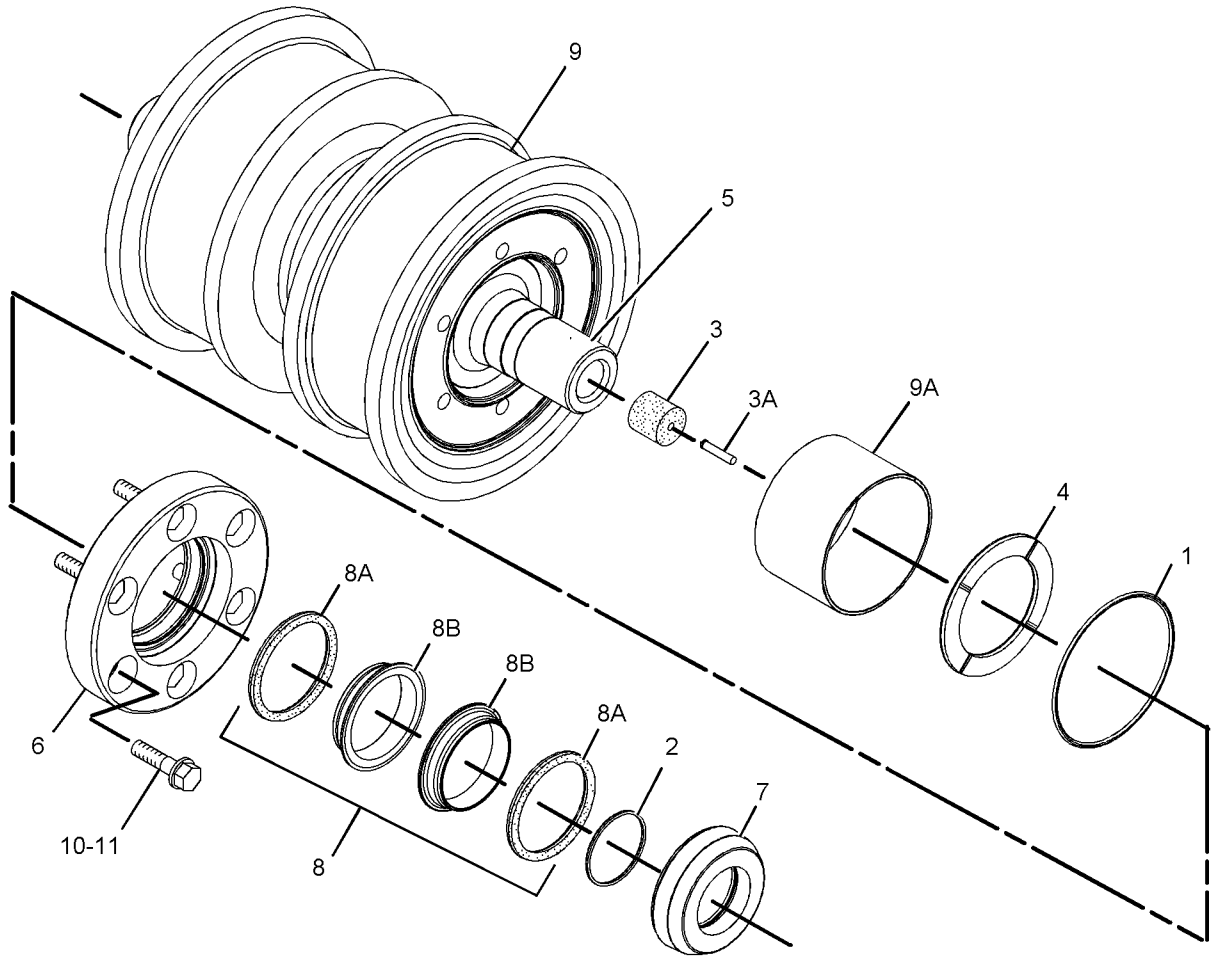

GRAPHIC #1 **<END>** g01125203

UNDERCARRIAGE

245-9944 ROLLER GP-TRACK-DOUBLE FLANGE–COLD WEATHER

S/N: RJS1-UP
PART OF 125-2140 ROLLER & IDLER AR
AN ATTACHMENT

SMCS-4180 **i02118994**

NOTE	REF NO	GRAPHIC REF	PART NUMBER	QTY	PART NAME 1 2 3 4 5 6 (PRODUCT LEVEL)	SEE PAGE
	1	1	**5F-3106**	2	SEAL-O-RING	
	2	1	**7J-2036**	2	SEAL-O-RING	
	3	1	**9G-4872**	1	STOPPER-RUBBER	
	3A	1	**6Y-0473**	1	PLUG-CLEAR	
	4	1	**8E-7510**	2	WASHER-THRUST (86X120.27X4.52-MM THK)	
	5	1	**104-3494**	1	SHAFT-TRACK ROLLER	
	6	1	**107-3944**	2	RETAINER	
	7	1	**107-3945**	2	COLLAR-SEAL	
	8	1	**162-7862**	2	SEAL GP-DUO-CONE	
					(EACH INCLUDES)	
	8A	1	**162-2166**	2	RING-TORIC	
Z	8B	1		2	SEAL-RING	
	9	1	**196-9956**	1	ROLLER & BEARING AS	
	9A	1	**252-5615**	2	BEARING-SLEEVE	
	10	1	**241-1855**	12	BOLT (1/2-13X2-IN)	
M	11	1	**5P-8245**	12	WASHER-HARD (13.5X25.5X3-MM THK)	

M-METRIC PART
Z-NOT SERVICED SEPARATELY

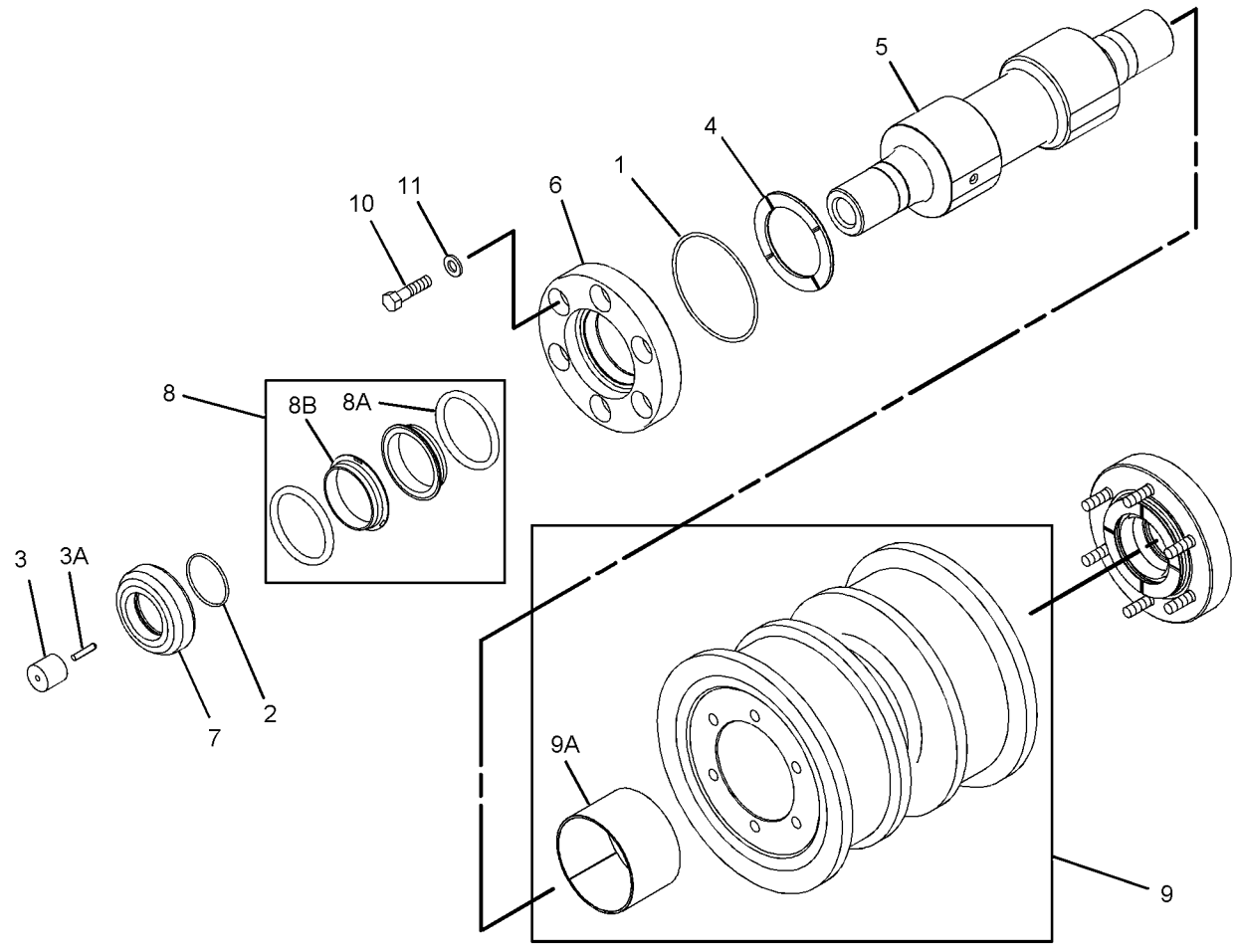

GRAPHIC #1 **<END>** g01117340

196-9955 ROLLER GP-TRACK-SINGLE FLANGE*R

S/N: RJS1-UP

PART OF 211-5079 ROLLER AR-TRACK, 211-9297 ROLLER AR-TRACK CARRIER, 205-8606 UNDERCARRIAGE AR

ALSO AN ATTACHMENT

SMCS-4180 **i02201159**

NOTE	REF NO	GRAPHIC REF	PART NUMBER	QTY	PART NAME 1 2 3 4 5 6 (PRODUCT LEVEL)	SEE PAGE
	1	1	**5F-3106**	2	SEAL-O-RING	
	2	1	**7J-2036**	2	SEAL-O-RING	
	3	1	**9G-4872**	1	STOPPER-RUBBER	
	3A	1	**6Y-0473**	1	PLUG-CLEAR	
	4	1	**8E-7510**	2	WASHER-THRUST (86X120.27X4.52-MM THK)	
	5	1	**104-3494**	1	SHAFT-TRACK ROLLER	
	6	1	**107-3944**	2	RETAINER	
	7	1	**107-3945**	2	COLLAR-SEAL	
	8	1	**162-7862**	2	SEAL GP-DUO-CONE	
					(EACH INCLUDES)	
	8A	1	**162-2166**	2	RING-TORIC	
Z	8B	1		2	SEAL-RING	
	9	1	**196-9957**	1	ROLLER & BEARING AS	
	9A	1	**9W-9844**	2	BEARING-SLEEVE (BURNISHED)	
	10	1	**241-1855**	12	BOLT (1/2-13X2-IN)	
M	11	1	**5P-8245**	12	WASHER-HARD (13.5X25.5X3-MM THK)	

M-METRIC PART
Z-NOT SERVICED SEPARATELY

196-9955 ROLLER GP-TRACK-SINGLE FLANGE *(contd.)* **i02201159**

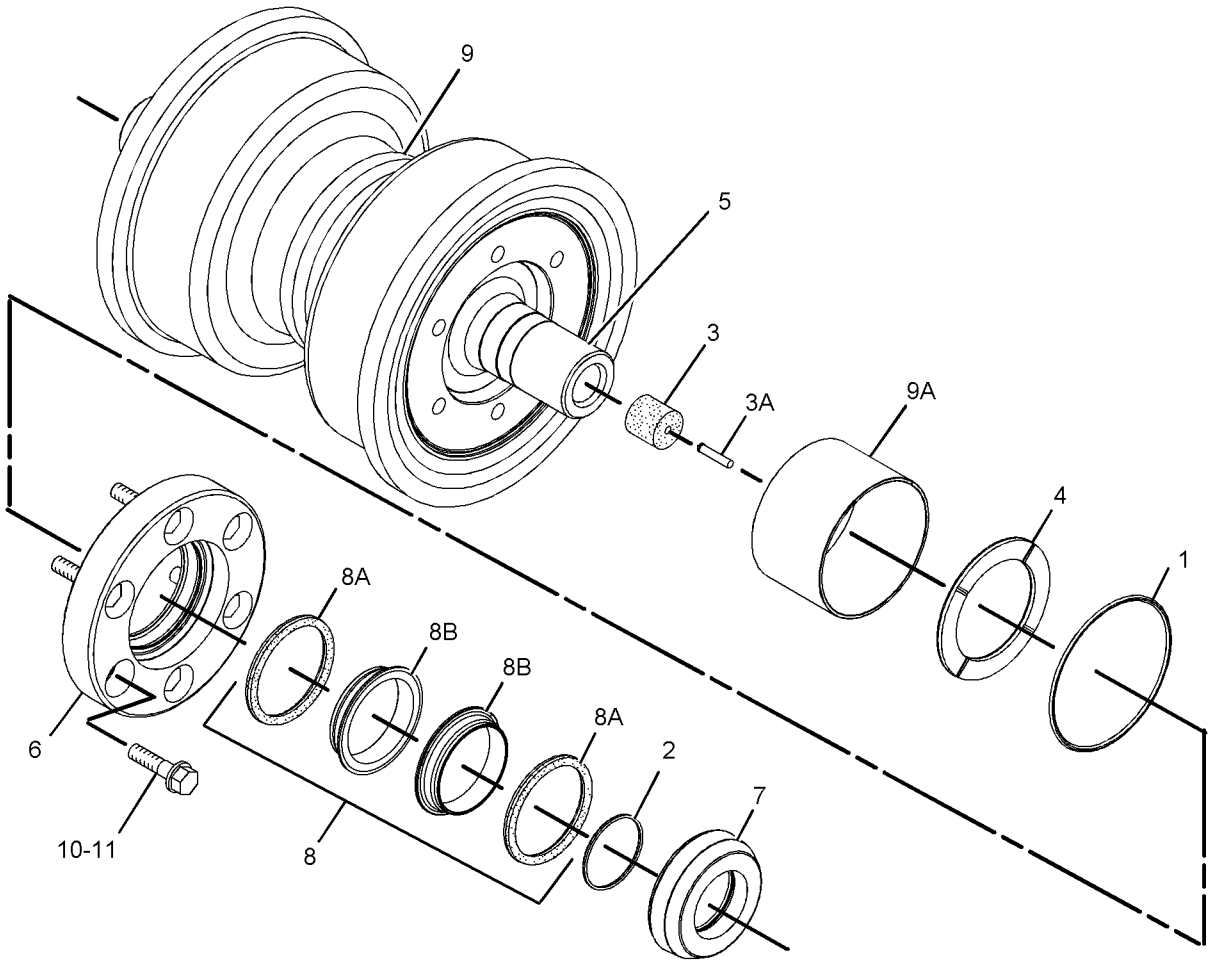

GRAPHIC #1 **<END>** g01113301

UNDERCARRIAGE

245-9943 ROLLER GP-TRACK-SINGLE FLANGE–COLD WEATHER

S/N: RJS1-UP
PART OF 125-2140 ROLLER & IDLER AR
AN ATTACHMENT

SMCS-4180 **i02119079**

NOTE	REF NO	GRAPHIC REF	PART NUMBER	QTY	PART NAME 1 2 3 4 5 6 (PRODUCT LEVEL)	SEE PAGE
	1	1	**5F-3106**	2	SEAL-O-RING	
	2	1	**7J-2036**	2	SEAL-O-RING	
	3	1	**6Y-0473**	1	PLUG-CLEAR	
	3A	1	**9G-4872**	1	STOPPER-RUBBER	
	4	1	**8E-7510**	2	WASHER-THRUST (86X120.27X4.52-MM THK)	
	5	1	**104-3494**	1	SHAFT-TRACK ROLLER	
	6	1	**107-3944**	2	RETAINER	
	7	1	**107-3945**	2	COLLAR-SEAL	
	8	1	**162-7862**	2	SEAL GP-DUO-CONE	
					(EACH INCLUDES)	
	8A	1	**162-2166**	2	RING-TORIC	
Z	8B	1		2	SEAL-RING	
	9	1	**196-9957**	1	ROLLER & BEARING AS	
	9A	1	**252-5615**	2	BEARING-SLEEVE	
	10	1	**1A-1460**	12	BOLT (1/2-13X2-IN)	
M	11	1	**5P-8245**	12	WASHER-HARD (13.5X25.5X3-MM THK)	

M-METRIC PART
Z-NOT SERVICED SEPARATELY

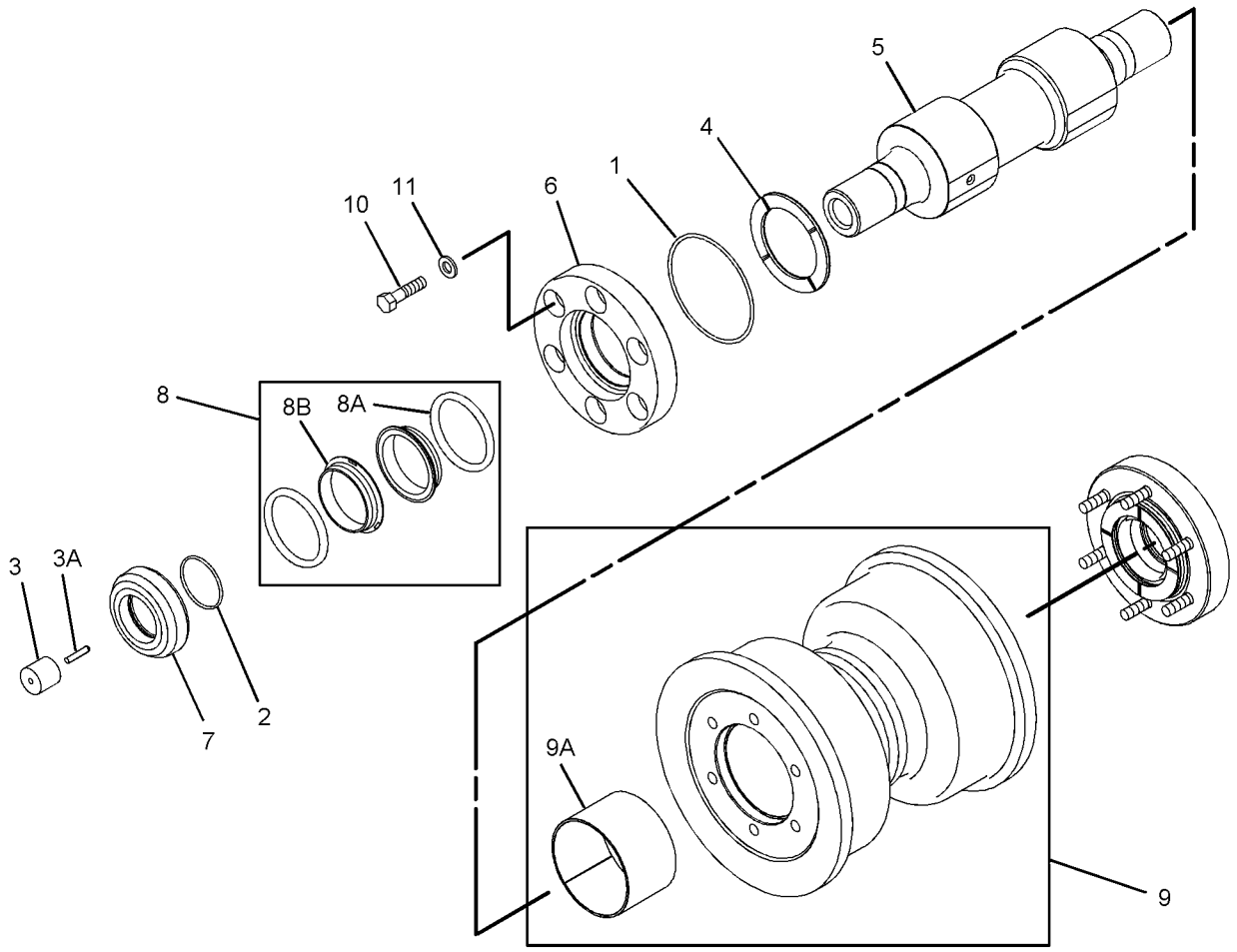

GRAPHIC #1 **<END>** g01117319

232-3326 SHOE-TRACK–ABRASIVE RESISTANT MATERIAL

S/N: RJS1-UP

685MM (27 IN)GROUSER SHOE. EXTREME SERVICE

FIELD INSTALLATION

SMCS-4172 **i02001179**

NOTE	REF NO	GRAPHIC REF	PART NUMBER	QTY	PART NAME 1 2 3 4 5 6 (PRODUCT LEVEL)	SEE PAGE
					(NO SERVICED PARTS)	

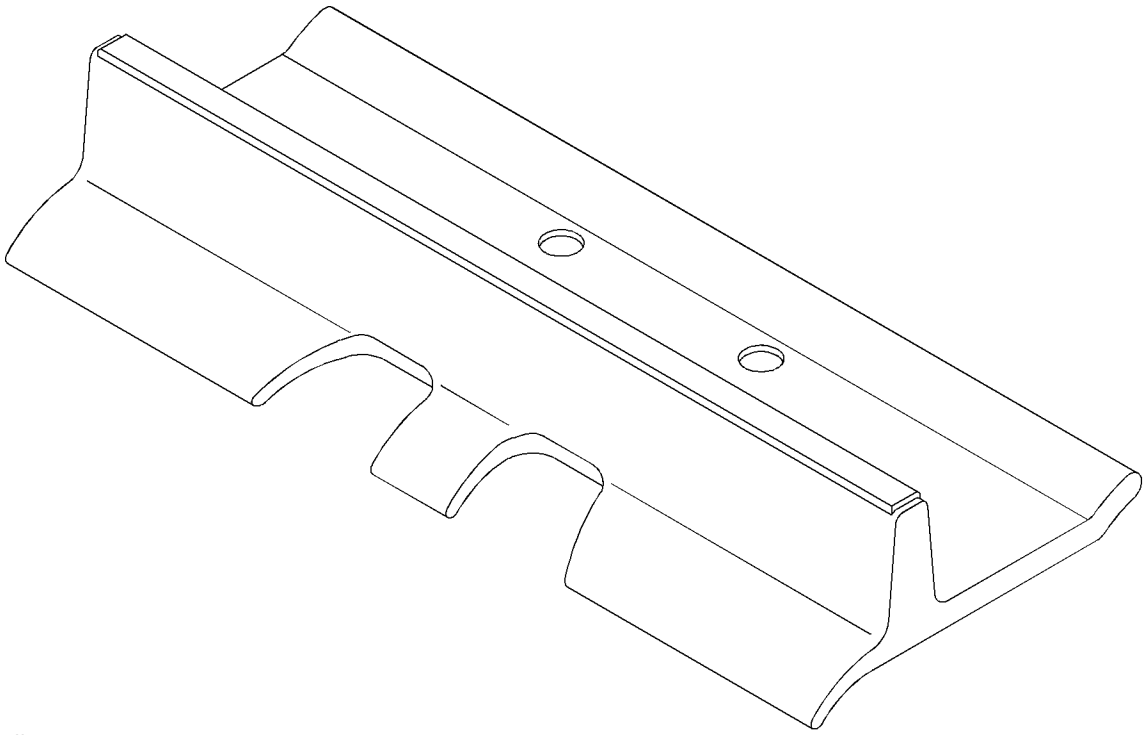

GRAPHIC #1 **<END>** g01037573

243-4365 SHOE-TRACK–ABRASIVE RESISTANT MATERIAL

S/N: RJS1-UP

610-MM (24-IN)GROUSER SHOE. SUPER EXTREME SERVICE

FIELD INSTALLATION

SMCS-4172 **i02001457**

NOTE	REF NO	GRAPHIC REF	PART NUMBER	QTY	PART NAME 1 2 3 4 5 6 (PRODUCT LEVEL)	SEE PAGE
					(NO SERVICED PARTS)	

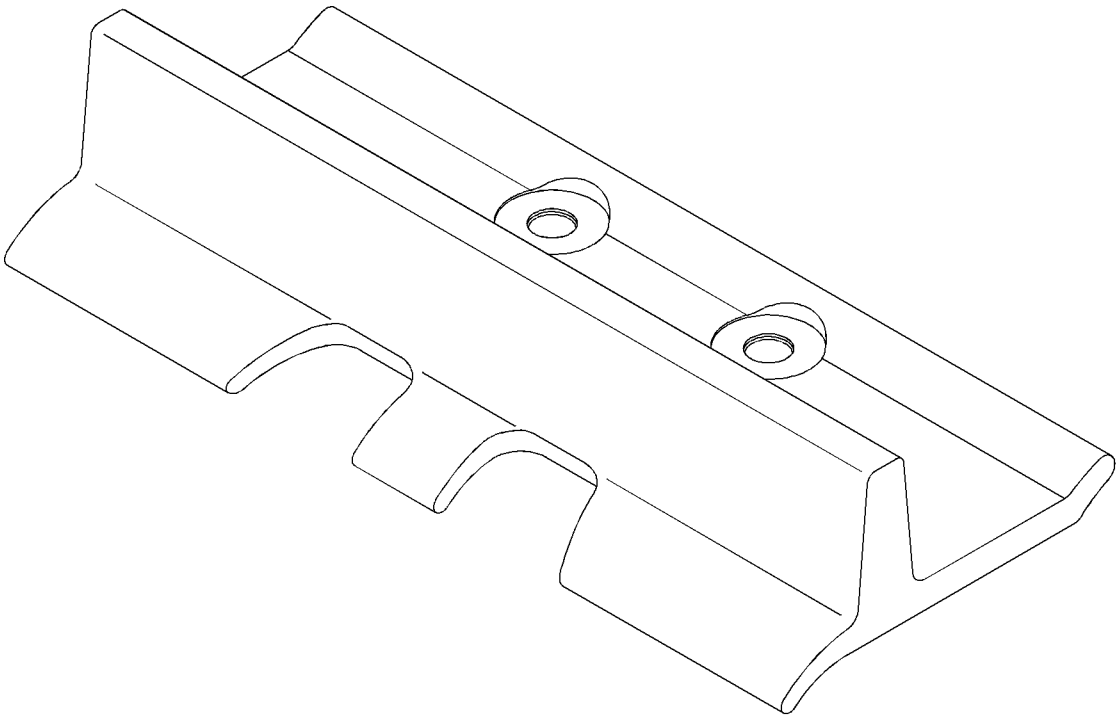

GRAPHIC #1 **<END>** g01037570

243-4366 SHOE-TRACK–ABRASIVE RESISTANT MATERIAL

S/N: RJS1-UP

685-MM (27-IN GROUSER SHOE). SUPER EXTREME SERVICE

FIELD INSTALLATION

SMCS-4172 **i02001477**

NOTE	REF NO	GRAPHIC REF	PART NUMBER	QTY	PART NAME 1 2 3 4 5 6 (PRODUCT LEVEL)	SEE PAGE
					(NO SERVICED PARTS)	

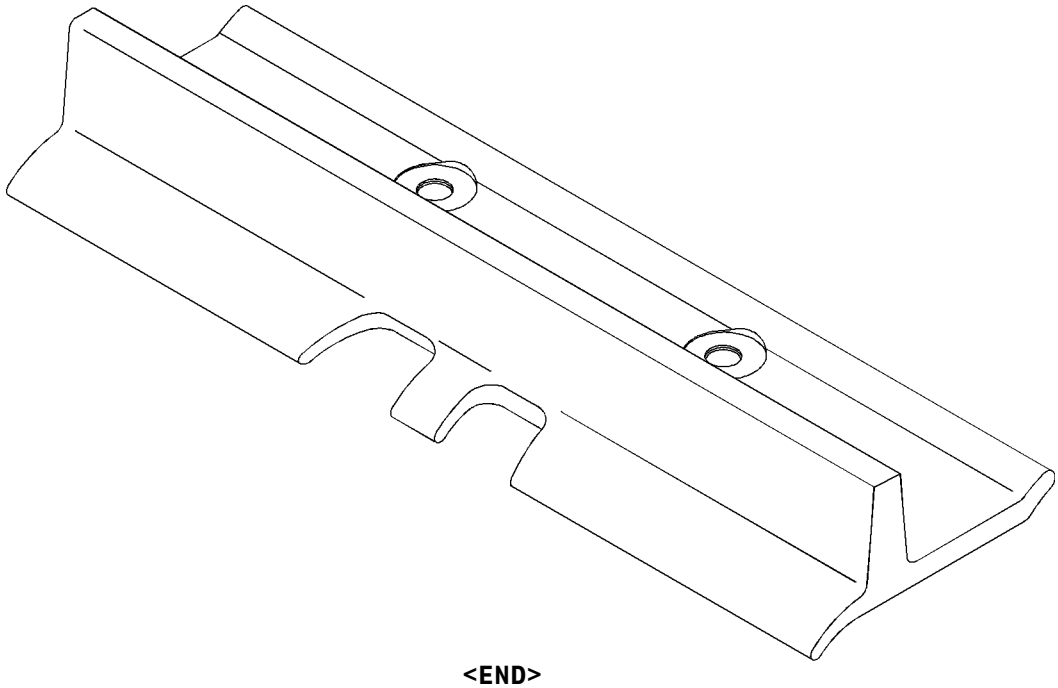

GRAPHIC #1 **<END>** g01037355

243-4367 SHOE-TRACK–ABRASIVE RESISTANT MATERIAL

S/N: RJS1-UP

760MM (29.9 IN) GROUSER SHOE. EXTREME SERVICE

FIELD INSTALLATION

SMCS-4172 **i02001486**

NOTE	REF NO	GRAPHIC REF	PART NUMBER	QTY	PART NAME 1 2 3 4 5 6 (PRODUCT LEVEL)	SEE PAGE
					(NO SERVICED PARTS)	

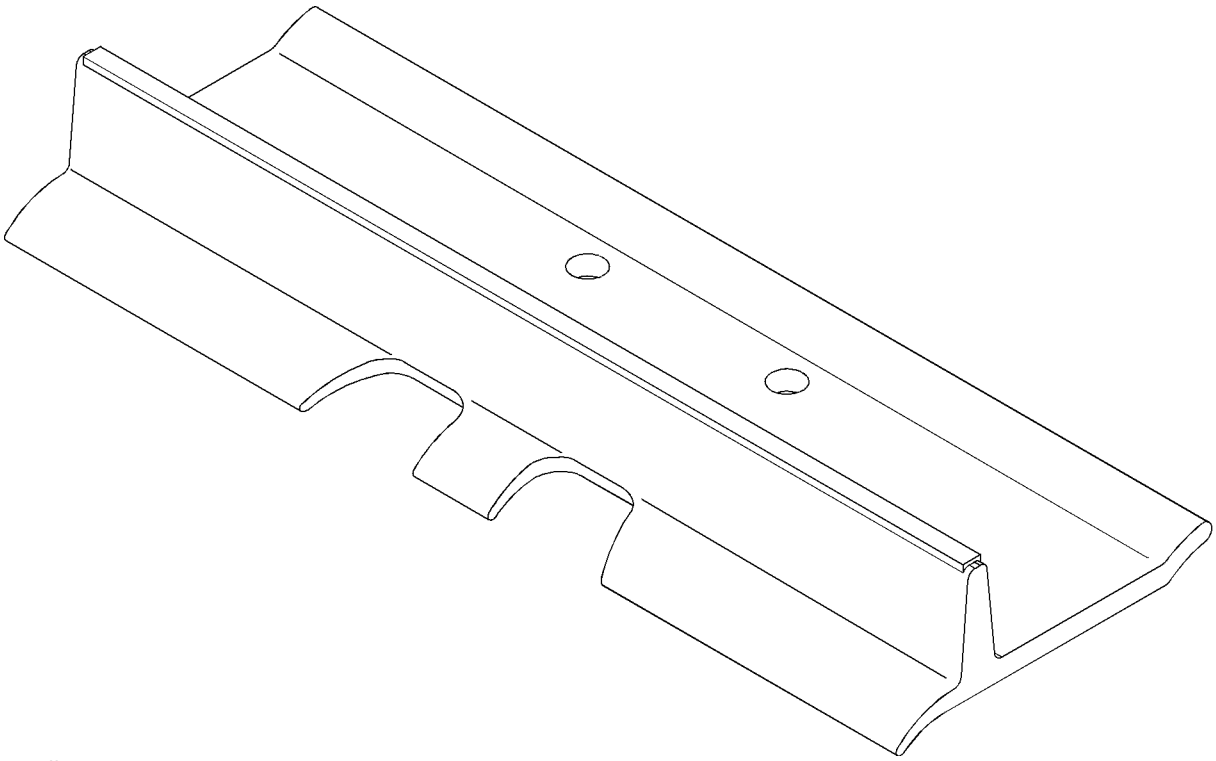

GRAPHIC #1 **<END>** g01037354

243-4368 SHOE-TRACK–ABRASIVE RESISTANT MATERIAL

S/N: RJS1-UP

610MM (24 IN) GROUSER SHOE. EXTREME SERVICE

FIELD INSTALLATION

SMCS-4172 i02001663

NOTE	REF NO	GRAPHIC REF	PART NUMBER	QTY	PART NAME 1 2 3 4 5 6 (PRODUCT LEVEL)	SEE PAGE
					(NO SERVICED PARTS)	

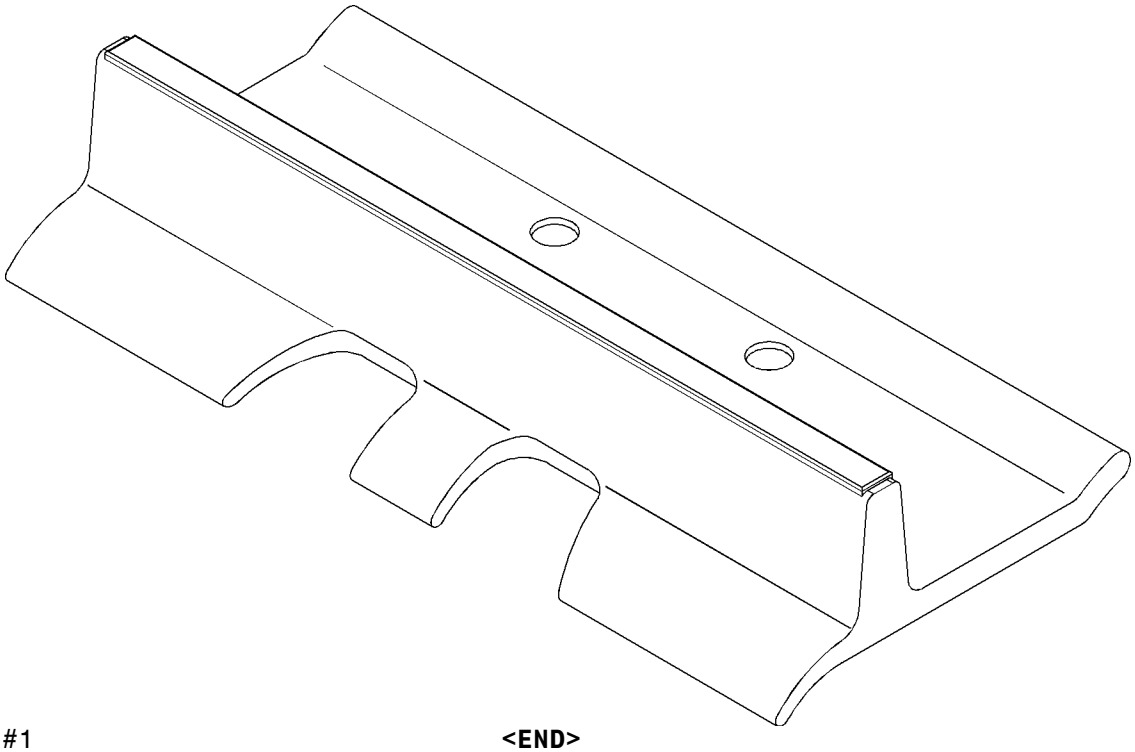

GRAPHIC #1 **<END>** g01037352

243-4370 SHOE-TRACK–ABRASIVE RESISTANT MATERIAL

S/N: RJS1-UP

560MM (22 IN)GROUSER SHOE. EXTREME SERVICE

FIELD INSTALLATION

SMCS-4172 **i02001836**

NOTE	REF NO	GRAPHIC REF	PART NUMBER	QTY	PART NAME 1 2 3 4 5 6 (PRODUCT LEVEL)	SEE PAGE
					(NO SERVICED PARTS)	

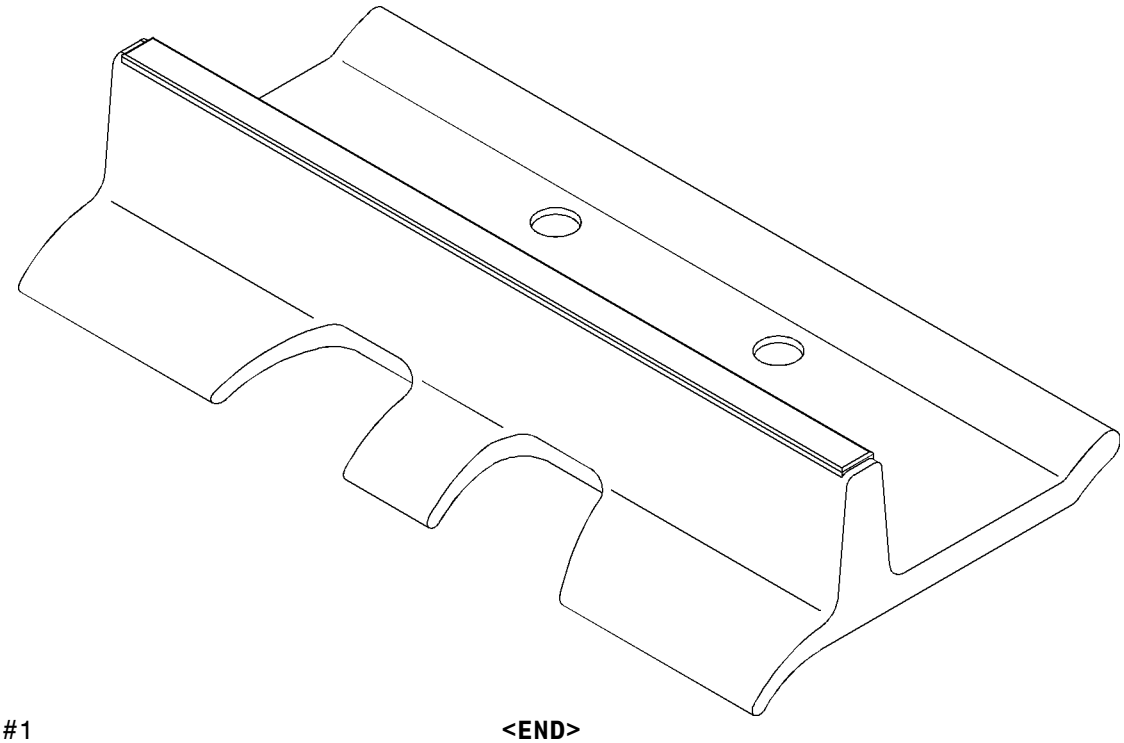

GRAPHIC #1 **<END>** g01037343

UNDERCARRIAGE

155-8096 SUSPENSION GP-BOGIE

S/N: RJS1-UP

PART OF 205-8606 UNDERCARRIAGE AR

SMCS-7217 **i01902636**

NOTE	REF NO	GRAPHIC REF	PART NUMBER	QTY	PART NAME 1 2 3 4 5 6 (PRODUCT LEVEL)	SEE PAGE
	1	1	**134-2679**	2	BOGIE AS-FRONT	
	2	1	**7T-5417**	4	BOGIE AS-MIDDLE	
	3	1	**134-2680**	2	BOGIE AS-REAR	
	4	1	**157-3106**	8	BOGIE-MINOR (RH)	
	5	1	**7T-9307**	32	PIN AS-CARTRIDGE	
					(EACH INCLUDES)	
		1	**6Y-0473**	2	PLUG-CLEAR	
		1	**9G-4872**	2	STOPPER-RUBBER	
	6	1	**184-4395**	16	GUIDE	
	7	1	**8C-6857**	32	BOLT (3/4-10X2.75 IN)	
	8	1	**8T-4994**	32	WASHER-HARD (20X36.5X3.5MM THK)	
	9	1	**7T-5419**	16	PAD AS-RESILIENT	
					(EACH INCLUDES)	
	10	1	**7T-5422**	1	PLATE	
	11	1	**5P-1076**	64	WASHER-HARD (13.5X30X4MM THK)	
	12	1	**7G-5221**	16	PLATE-RETAINER	
	13	1	**067-3161**	16	RING-RETAINING	
	14	1	**9W-4481**	8	INSERT	
	15	1	**8S-4755**	32	BOLT (1-14X1.5IN)	
	16	1	**9P-7823**	16	COVER	
	17	1	**157-3107**	8	BOGIE-MINOR (LH)	
	18	1	**5P-2228**	64	BOLT (1/2-13X1 IN)	

QUANTITIES SHOWN ARE THOSE REQUIRED FOR BOTH LH AND RH SIDES

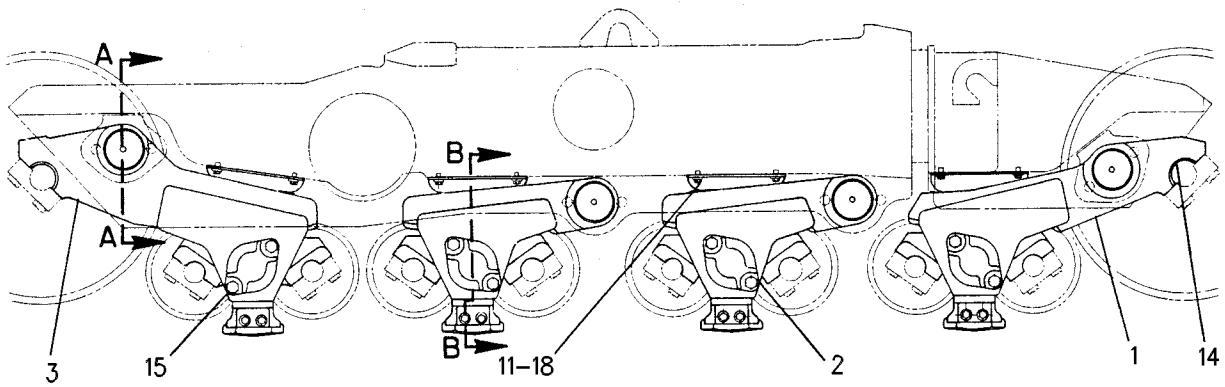

RIGHT SIDE VIEW

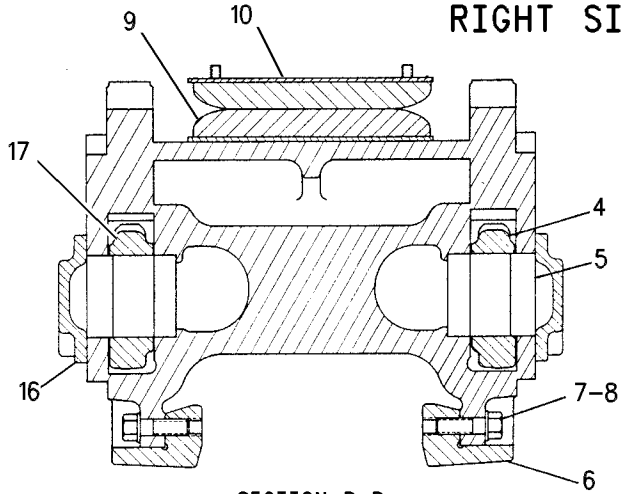

SECTION B-B

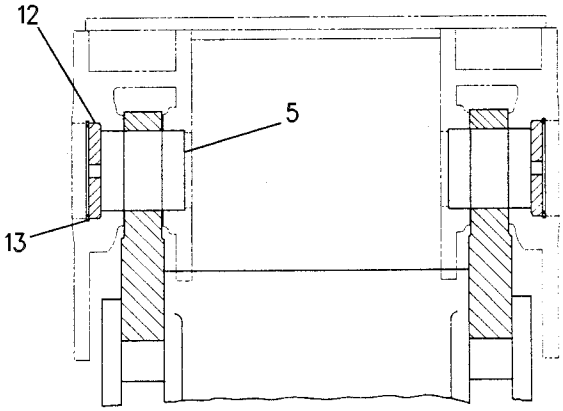

SECTION A-A

GRAPHIC #1 **<END>** g00577627

196-8561 TRACK ADJUSTER & RECOIL GP

S/N: RJS1-UP

PART OF 205-8606 UNDERCARRIAGE AR

SMCS-4157, 4158 **i02201225**

NOTE	REF NO	GRAPHIC REF	PART NUMBER	QTY	PART NAME 1 2 3 4 5 6 (PRODUCT LEVEL)	SEE PAGE
	1	1	**1L-5081**	2	SPACER (0.41X0.75X0.56-IN THK)	
	2	1	**190-8609**	2	VALVE-FILL (TRACK ADJUSTER)	
	3	1	**2S-5926**	2	VALVE-RELIEF (TRACK ADJUSTER)	
	4	1	**6T-0209**	2	GUIDE	
	5	1	**6T-0481**	8	RING	
	6	1	**6V-6900**	2	SEAL-U-CUP	
	7	1	**7G-8282**	2	CABLE AS	
					(EACH INCLUDES)	
		1	**1P-7405**	1	EYEBOLT	
	8	1	**7T-5351**	2	PISTON	
	9	1	**7T-5352**	2	SPRING	
	10	1	**9G-0611**	4	STOP	
	11	1	**9P-7255**	4	RING	
	12	1	**9P-7256**	2	RING	
	13	1	**9P-7380**	2	SLEEVE	
	14	1	**138-7772**	2	RETAINER	
R	15	1	**139-7700**	1	CYLINDER AS-RH	
R	16	1	**139-7701**	1	CYLINDER AS-LH	
	17	1	**192-5112**	2	SUPPORT AS	
	18	1	**0L-1178**	8	BOLT (3/4-10X2-IN)	
	19	1	**1P-7346**	2	WASHER-HARD (10.2X35X6-MM THK)	
	20	1	**3B-1915**	2	BOLT (3/8-16X1.75-IN)	
	21	1	**6V-2360**	8	WASHER-HARD (20X32X3-MM THK)	
	22	1	**6V-8801**	2	NUT (3/8-16-THD)	
	23	1	**7J-6580**	2	RING-RETAINING	

QUANTITIES SHOWN ARE THOSE REQUIRED FOR BOTH LH AND RH SIDES
R-REMFG PART MAY BE AVAILABLE

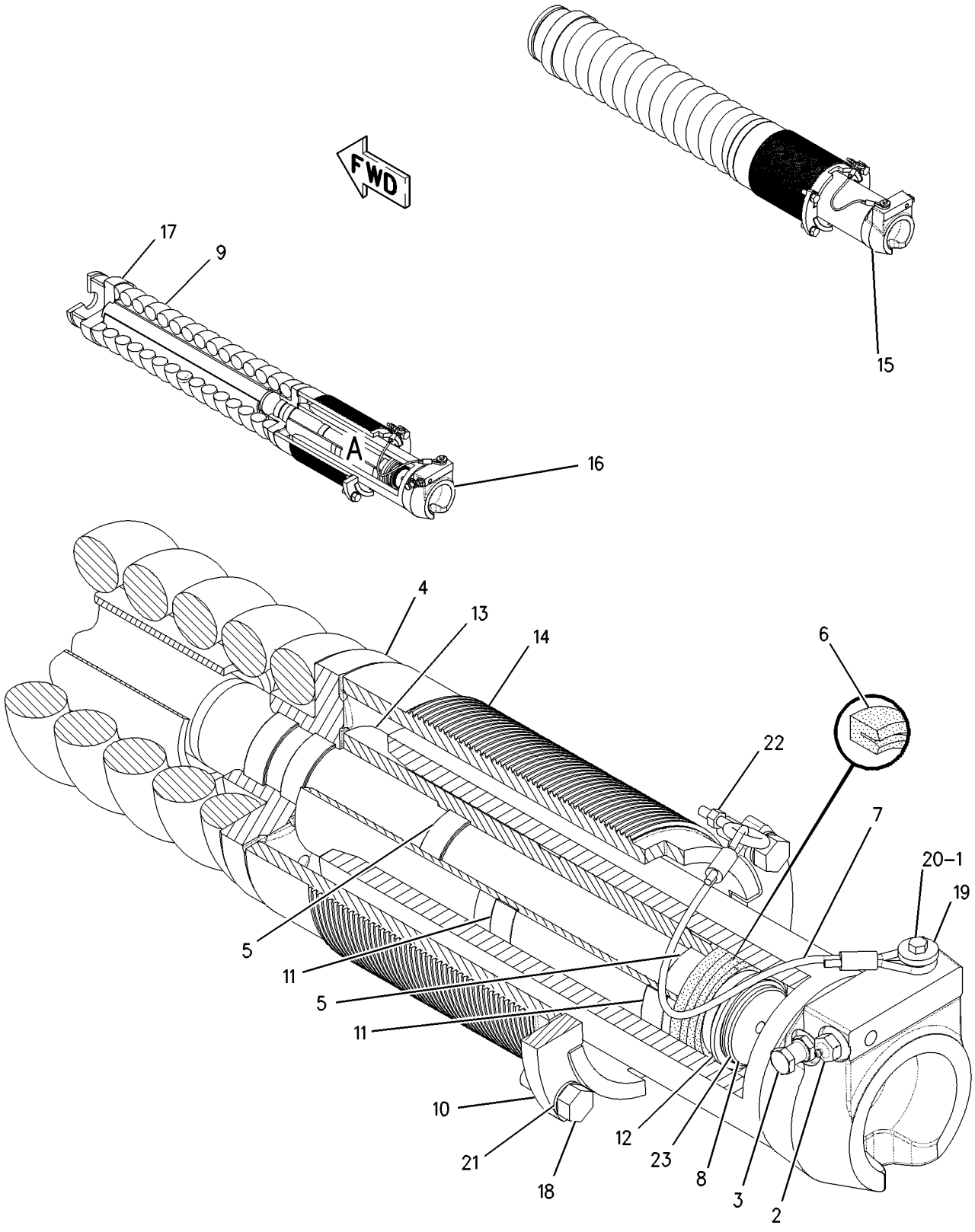

VIEW OF AREA A

GRAPHIC #1 **<END>** g00750004

7T-2289 TRACK GP–2-REQUIRED

S/N: RJS1-UP
560-MM (22-IN) GROUSER SHOE.
SEALED, LUBRICATED, EXTREME SERVICE, POSITIVE PIN RETENTION
AN ATTACHMENT

SMCS-4170 **i01546856**

NOTE	PART NUMBER	QTY	PART NAME 1 2 3 4 5 6 (PRODUCT LEVEL)	SEE PAGE
Y	**199-5525**	1	LINK AS-TRACK	437
	6T-2638	168	BOLT-TRACK (1-14X3.54-IN)	
	6V-1728	2	BOLT-MASTER TRACK (1-14X5.83-IN)	
	7T-2283	2	BOLT-MASTER TRACK (1-14X4.84-IN)	
	7G-0343	168	NUT-TRACK (1-14-THD)	
	7T-2288	43	SHOE-TRACK	
Y-SEPARATE ILLUSTRATION				

<END>

161-4370 TRACK GP–2-REQUIRED

S/N: RJS1-UP
610-MM (24-IN) GROUSER SHOE.
SEALED, LUBRICATED, EXTREME SERVICE, POSITIVE PIN RETENTION, TRAPEZIODAL
AN ATTACHMENT

SMCS-4170 **i02248249**

NOTE	PART NUMBER	QTY	PART NAME 1 2 3 4 5 6 (PRODUCT LEVEL)	SEE PAGE
Y	**199-5525**	1	LINK AS-TRACK	437
	6V-1728	2	BOLT-MASTER TRACK (1-14X5.83-IN)	
	7T-2283	2	BOLT-MASTER TRACK (1-14X4.84-IN)	
	6T-2638	2	BOLT-TRACK (1-14X3.54-IN)	
	7G-0343	168	NUT-TRACK (1-14-THD)	
	234-5975	43	SHOE-TRACK	
Y-SEPARATE ILLUSTRATION				

<END>

183-2121 TRACK GP–2-REQUIRED

S/N: RJS1-UP
685-MM (27-IN) GROUSER SHOE.
SEALED, LUBRICATED, EXTREME SERVICE, POSITIVE PIN RETENTION, CLIPPED
AN ATTACHMENT

SMCS-4170 **i02248277**

NOTE	PART NUMBER	QTY	PART NAME 1 2 3 4 5 6 (PRODUCT LEVEL)	SEE PAGE
Y	**199-5525**	1	LINK AS-TRACK	437
	6V-1728	2	BOLT-MASTER TRACK (1-14X5.83-IN)	
	7T-2283	2	BOLT-MASTER TRACK (1-14X4.84-IN)	
	6T-2638	168	BOLT-TRACK (1-14X3.54-IN)	
	7G-0343	168	NUT-TRACK (1-14-THD)	
	1Q-4649	43	SHOE-TRACK	
Y-SEPARATE ILLUSTRATION				

<END>

183-2122 TRACK GP–2-REQUIRED

S/N: RJS1-UP
685-MM (27-IN) GROUSER SHOE.
SEALED, LUBRICATED, EXTREME SERVICE, POSITIVE PIN RETENTION, TRAPEZOIDAL
AN ATTACHMENT

SMCS-4170 **i02248283**

NOTE	PART NUMBER	QTY	PART NAME 1 2 3 4 5 6 (PRODUCT LEVEL)	SEE PAGE
Y	**199-5525**	1	LINK AS-TRACK	437
	6V-1728	2	BOLT-MASTER TRACK (1-14X5.83-IN)	
	7T-2283	2	BOLT-MASTER TRACK (1-14X4.84-IN)	
	6T-2638	168	BOLT-TRACK (1-14X3.54-IN)	
	7G-0343	168	NUT-TRACK (1-14-THD)	
	234-5974	43	SHOE-TRACK	
Y-SEPARATE ILLUSTRATION				

<END>

183-2123 TRACK GP–2-REQUIRED

S/N: RJS1-UP
760-MM (30-IN) GROUSER SHOE.
SEALED, LUBRICATED, MODERATE SEVICE, POSITIVE PIN RETENTION, TRAPEZIODAL
CANNOT BE USED WITH RIPPER OR BULLDOZER DUAL TILT
AN ATTACHMENT

SMCS-4170 **i02248287**

NOTE	PART NUMBER	QTY	PART NAME 1 2 3 4 5 6 (PRODUCT LEVEL)	SEE PAGE
Y	**199-5525**	1	LINK AS-TRACK	437
	6V-1728	2	BOLT-MASTER TRACK (1-14X5.83-IN)	
	7T-2283	2	BOLT-MASTER TRACK (1-14X4.84-IN)	
	6T-2638	168	BOLT-TRACK (1-14X3.54-IN)	
	7G-0343	168	NUT-TRACK (1-14-THD)	
	234-6084	43	SHOE-TRACK	
Y-SEPARATE ILLUSTRATION				

<END>

183-2124 TRACK GP–2-REQUIRED

S/N: RJS1-UP
760-MM (30-IN) GROUSER SHOE. SEALED, LUBRICATED, EXTREME SERVICE, POSITIVE PIN RETENTION, TRAPEZIODAL, CLIPPED
CANNOT BE USED WITH RIPPER OR BULLDOZER DUAL TILT CYLINDERS
AN ATTACHMENT

SMCS-4170 **i02248344**

NOTE	PART NUMBER	QTY	PART NAME 1 2 3 4 5 6 (PRODUCT LEVEL)	SEE PAGE
Y	**199-5525**	1	LINK AS-TRACK	437
	6V-1728	2	BOLT-MASTER TRACK (1-14X5.83-IN)	
	7T-2283	2	BOLT-MASTER TRACK (1-14X4.84-IN)	
	6T-2638	168	BOLT-TRACK (1-14X3.54-IN)	
	7G-0343	168	NUT-TRACK (1-14-THD)	
	234-5973	43	SHOE-TRACK	
Y-SEPARATE ILLUSTRATION				

<END>

UNDERCARRIAGE

183-2127 TRACK GP–2-REQUIRED

S/N: RJS1-UP
660-MM (26-IN) CHOPPING SHOE. SEALED, LUBRICATED, POSITIVE PIN RETENTION
FOR USE WITH WASTE DISPOSAL AR
AN ATTACHMENT

SMCS-4170 **i02248360**

NOTE	PART NUMBER	QTY	PART NAME 1 2 3 4 5 6 (PRODUCT LEVEL)	SEE PAGE
Y	**199-5525**	1	LINK AS-TRACK	437
	6V-1728	2	BOLT-MASTER TRACK (1-14X5.83-IN)	
	7T-2283	2	BOLT-MASTER TRACK (1-14X4.84-IN)	
	6T-2638	168	BOLT-TRACK (1-14X3.54-IN)	
	7G-0343	168	NUT-TRACK (1-14-THD)	
	9U-9577	43	SHOE-TRACK	
Y-SEPARATE ILLUSTRATION				

<END>

199-5536 TRACK GP–2-REQUIRED

S/N: RJS1-UP
760-MM (30-IN) GROUSER SHOE.
SEALED, LUBRICATED, MODERATE SERVICE, POSITIVE PIN RETENTION
CANNOT BE USED WITH RIPPER, FRONT STRIKER BAR
AN ATTACHMENT

SMCS-4170 **i01550575**

NOTE	PART NUMBER	QTY	PART NAME 1 2 3 4 5 6 (PRODUCT LEVEL)	SEE PAGE
Y	**199-5525**	1	LINK AS-TRACK	437
	6V-1728	2	BOLT-MASTER TRACK (1-14X5.83 IN)	
	7T-2283	2	BOLT-MASTER TRACK (1-14X4.84 IN)	
	6T-2638	168	BOLT-TRACK (1-14X3.54 IN)	
	7G-0343	168	NUT-TRACK (1-14 THD)	
	121-5907	43	SHOE-TRACK	
Y-SEPARATE ILLUSTRATION				

<END>

199-5537 TRACK GP—2-REQUIRED

S/N: RJS1-UP
610-MM (24-IN) GROUSER SHOE.
SEALED, LUBRICATED, EXTREME SERVICE, POSITIVE PIN RETENTION
PART OF 205-8606 UNDERCARRIAGE AR

SMCS-4170 **i01595960**

NOTE	PART NUMBER	QTY	PART NAME 1 2 3 4 5 6 (PRODUCT LEVEL)	SEE PAGE
Y	**199-5525**	1	LINK AS-TRACK	437
	6V-1728	2	BOLT-MASTER TRACK (1-14X5.83 IN)	
	7T-2283	2	BOLT-MASTER TRACK (1-14X4.84 IN)	
	6T-2638	168	BOLT-TRACK (1-14X3.54 IN)	
	7G-0343	168	NUT-TRACK (1-14 THD)	
	7T-2294	43	SHOE-TRACK	

Y-SEPARATE ILLUSTRATION

<END>

199-5538 TRACK GP—2-REQUIRED

S/N: RJS1-UP
685-MM (27-IN) GROUSER SHOE.
SEALED, LUBRICATED, EXTREME SERVICE, POSITIVE PIN RETENTION
AN ATTACHMENT

SMCS-4170 **i01551172**

NOTE	PART NUMBER	QTY	PART NAME 1 2 3 4 5 6 (PRODUCT LEVEL)	SEE PAGE
Y	**199-5525**	1	LINK AS-TRACK	437
	6T-2638	168	BOLT-TRACK (1-14X3.54 IN)	
	6V-1728	2	BOLT-MASTER TRACK (1-14X5.83 IN)	
	7T-2283	2	BOLT-MASTER TRACK (1-14X4.84 IN)	
	7G-0343	168	NUT-TRACK (1-14 THD)	
	9W-2738	43	SHOE-TRACK	

Y-SEPARATE ILLUSTRATION

<END>

UNDERCARRIAGE

203-2199 TRACK GP–2-REQUIRED

S/N: RJS1-UP
610-MM (24-IN) GROUSER SHOE.
SEALED, LUBRICATED, SUPER EXTREME SERVICE, POSITIVE PIN RETENTION
AN ATTACHMENT

SMCS-4170 **i01990641**

NOTE	PART NUMBER	QTY	PART NAME 1 2 3 4 5 6 (PRODUCT LEVEL)	SEE PAGE
Y	**199-5525**	1	LINK AS-TRACK	437
	6V-1728	2	BOLT-MASTER TRACK (1-14X5.83 IN)	
	7T-2283	2	BOLT-MASTER TRACK (1-14X4.84 IN)	
	6T-2638	168	BOLT-TRACK (1-14X3.54 IN)	
	7G-0343	168	NUT-TRACK (1-14 THD)	
	139-0617	43	SHOE-TRACK	
Y-SEPARATE ILLUSTRATION				

<END>

203-2200 TRACK GP–2-REQUIRED

S/N: RJS1-UP
685-MM (27-IN) GROUSER SHOE.
SEALED, LUBRICATED, SUPER EXTREME SERVICE, POSITIVE PIN RETENTION
FIELD INSTALLATION

SMCS-4170 **i01990761**

NOTE	PART NUMBER	QTY	PART NAME 1 2 3 4 5 6 (PRODUCT LEVEL)	SEE PAGE
Y	**199-5525**	1	LINK AS-TRACK	437
	6V-1728	2	BOLT-MASTER TRACK (1-14X5.83 IN)	
	7T-2283	2	BOLT-MASTER TRACK (1-14X4.84 IN)	
	6T-2638	168	BOLT-TRACK (1-14X3.54 IN)	
	7G-0343	168	NUT-TRACK (1-14 THD)	
	1Q-4755	43	SHOE-TRACK	
Y-SEPARATE ILLUSTRATION				

<END>

222-9936 TRACK GP–2-REQUIRED

S/N: RJS1-UP
685-MM (27-IN) GROUSER SHOE.
SEALED, LUBRICATED, EXTREME SERVICE, TRAPEZOIDAL
FIELD INSTALLATION

SMCS-4170 **i01998884**

NOTE	PART NUMBER	QTY	PART NAME 1 2 3 4 5 6 (PRODUCT LEVEL)	SEE PAGE
Y	**199-5531**	1	LINK AS-TRACK	438
	6V-1728	2	BOLT-MASTER TRACK (1-14X5.83 IN)	
	7T-2283	2	BOLT-MASTER TRACK (1-14X4.84 IN)	
	6T-2638	168	BOLT-TRACK (1-14X3.54 IN)	
	7G-0343	168	NUT-TRACK (1-14 THD)	
	234-5974	43	SHOE-TRACK	
Y-SEPARATE ILLUSTRATION				

<END>

228-9812 TRACK GP–2-REQUIRED

S/N: RJS1-UP
610-MM (24-IN) GROUSER SHOE. SEALED, LUBRICATED, SUPER EXTREME SERVICE
FIELD INSTALLATION

SMCS-4170 **i02010024**

NOTE	PART NUMBER	QTY	PART NAME 1 2 3 4 5 6 (PRODUCT LEVEL)	SEE PAGE
Y	**199-5531**	1	LINK AS-TRACK	438
	6V-1728	2	BOLT-MASTER TRACK (1-14X5.83 IN)	
	7T-2283	2	BOLT-MASTER TRACK (1-14X4.84 IN)	
	6T-2638	168	BOLT-TRACK (1-14X3.54 IN)	
	7G-0343	168	NUT-TRACK (1-14 THD)	
	139-0617	43	SHOE-TRACK	
Y-SEPARATE ILLUSTRATION				

<END>

230-4142 TRACK GP–2-REQUIRED

S/N: RJS1-UP
685-MM (27-IN) GROUSER SHOE. SEALED, LUBRICATED, EXTREME SERVICE
FIELD INSTALLATION

SMCS-4170 **i02000926**

NOTE	PART NUMBER	QTY	PART NAME 1 2 3 4 5 6 (PRODUCT LEVEL)	SEE PAGE
Y	**199-5531**	1	LINK AS-TRACK	438
	6V-1728	2	BOLT-MASTER TRACK (1-14X5.83 IN)	
	7T-2283	2	BOLT-MASTER TRACK (1-14X4.84 IN)	
	6T-2638	168	BOLT-TRACK (1-14X3.54 IN)	
	7G-0343	168	NUT-TRACK (1-14 THD)	
	9W-2738	43	SHOE-TRACK	
Y-SEPARATE ILLUSTRATION				

<END>

234-9441 TRACK GP–2-REQUIRED

S/N: RJS1-UP
660-MM (26-IN) CHOPPING SHOE. SEALED, LUBRICATED
FIELD INSTALLATION

SMCS-4170 **i02001202**

NOTE	PART NUMBER	QTY	PART NAME 1 2 3 4 5 6 (PRODUCT LEVEL)	SEE PAGE
Y	**199-5531**	1	LINK AS-TRACK	438
	6V-1728	2	BOLT-MASTER TRACK (1-14X5.83 IN)	
	7T-2283	2	BOLT-MASTER TRACK (1-14X4.84 IN)	
	6T-2638	168	BOLT-TRACK (1-14X3.54 IN)	
	7G-0343	168	NUT-TRACK (1-14 THD)	
	9U-9577	43	SHOE-TRACK	

Y-SEPARATE ILLUSTRATION

<END>

244-8637 TRACK GP–2-REQUIRED

S/N: RJS1-UP
610-MM (24-IN) GROUSER SHOE. SEALED, LUBRICATED, SUPER EXTREME SERVICE, POSITIVE PIN RETENTION, TRAPEZOIDAL
AN ATTACHMENT

SMCS-4170 **i02237474**

NOTE	PART NUMBER	QTY	PART NAME 1 2 3 4 5 6 (PRODUCT LEVEL)	SEE PAGE
Y	**199-5525**	1	LINK AS-TRACK	437
	6V-1728	2	BOLT-MASTER TRACK (1-14X5.83-IN)	
	7T-2283	2	BOLT-MASTER TRACK (1-14X4.84-IN)	
	6T-2638	168	BOLT-TRACK (1-14X3.54-IN)	
	7G-0343	168	NUT-TRACK (1-14-THD)	
	244-7568	43	SHOE-TRACK	

Y-SEPARATE ILLUSTRATION

<END>

175-2962 TUBE AS-ROLLER FRAME

S/N: RJS1-UP

FOR FIELD REPAIR OF FRONT TRACK ROLLER FRAMES

FIELD INSTALLATION

SMCS-4151 **i01428378**

NOTE	REF NO	GRAPHIC REF	PART NUMBER	QTY	PART NAME 1 2 3 4 5 6 (PRODUCT LEVEL)	SEE PAGE
	1	1	**4B-4158**	4	SCREW-DRIVE (3/16X0.25 IN)	
	2	1	**6V-2226**	1	PLATE-WARNING (RECOIL SPRING)	
Z	3	1			TUBE	

Z-NOT SERVICED SEPARATELY

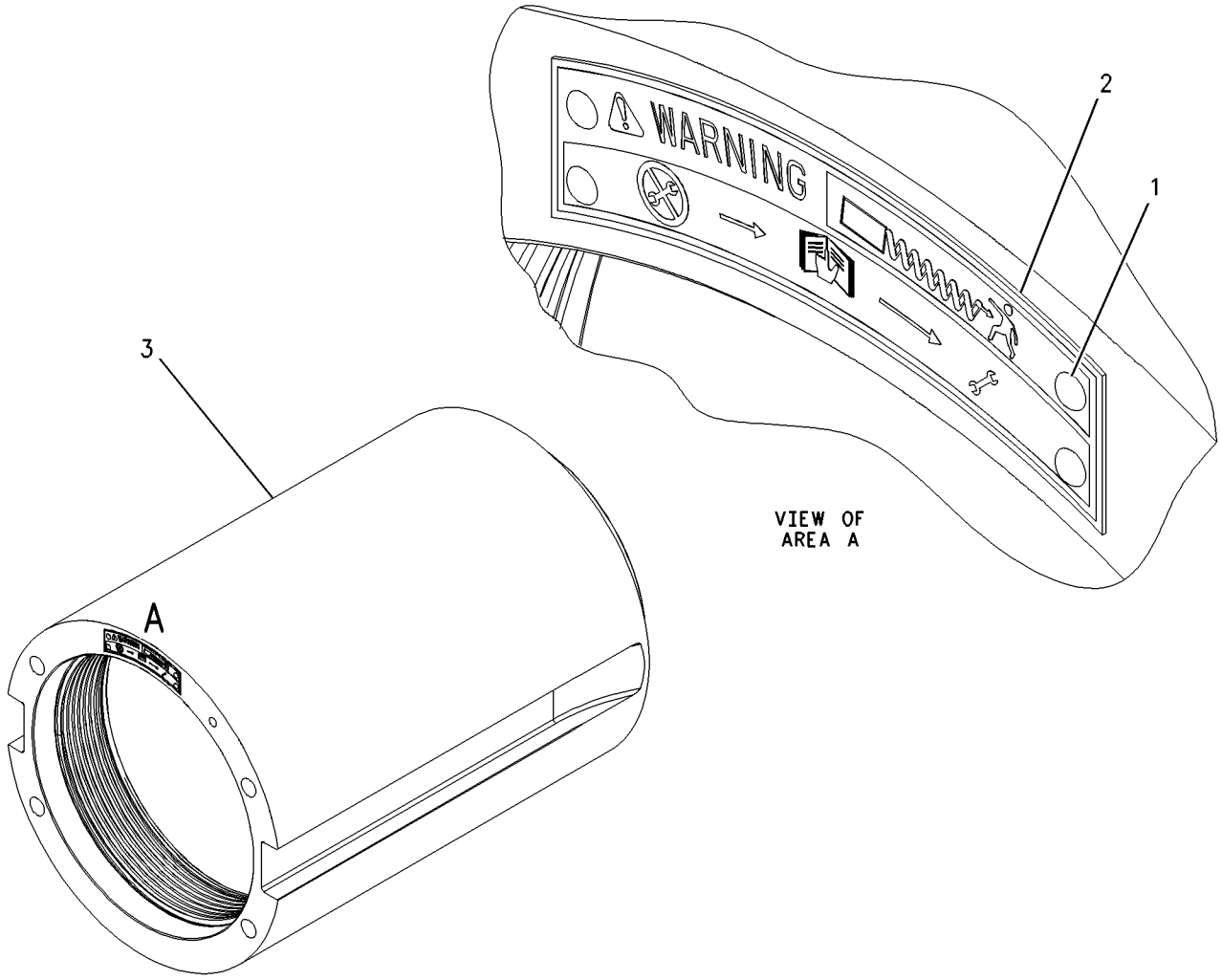

GRAPHIC #1 **<END>** g00755089

UNDERCARRIAGE

205-8606 UNDERCARRIAGE AR

S/N: RJS1-UP

PART OF 205-8600 GENERAL AR-TRACTOR

SMCS-4150 **i02266942**

NOTE	PART NUMBER	QTY	PART NAME 1 2 3 4 5 6 (PRODUCT LEVEL)	SEE PAGE
Y	*160-2539*	1	BAR GP-EQUALIZER	421
Y	*131-1625*	4	CAP GP-TRACK IDLER	427
			(FRONT - LH OUTER/RH INNER)	
			(REAR - LH INNER/RH OUTER)	
Y	*131-1626*	4	CAP GP-TRACK IDLER	428
			(FRONT - LH INNER/RH OUTER)	
			(REAR - LH OUTER/RH INNER)	
Y	*6T-1142*	32	CAP GP-TRACK ROLLER	429
Y	*204-1327*	1	FRAME GP-TELESCOPING RECOIL	430
Y	**125-4655**	4	IDLER GP-TRACK	434
YR	**196-9954**	8	ROLLER GP-TRACK-DOUBLE FLANGE	444
YR	**196-9955**	8	ROLLER GP-TRACK-SINGLE FLANGE	446
Y	*155-8096*	1	SUSPENSION GP-BOGIE	455
Y	*196-8561*	1	TRACK ADJUSTER & RECOIL GP	457
Y	**199-5537**	2	TRACK GP	463

R-REMFG PART MAY BE AVAILABLE
Y-SEPARATE ILLUSTRATION

<END>

242-5297 UNDERCARRIAGE AR—ROLLER FRAME, STRAIGHT

S/N: RJS1-UP

AN ATTACHMENT

SMCS-4150 **i02233113**

NOTE	PART NUMBER	QTY	PART NAME 1 2 3 4 5 6 (PRODUCT LEVEL)	SEE PAGE
Y	**140-9699**	1	BAR GP-EQUALIZER	420
	7T-5420	16	BOGIE-MINOR	
	229-2593	1	FRAME AS (LH)	
	9P-5708	2	SUPPORT (SLEEVE) (SLEEVE)	
	6T-3793	2	SUPPORT (SLEEVE) (SLEEVE)	
	229-2592	1	FRAME AS (RH)	
	9P-5708	2	SUPPORT (SLEEVE) (SLEEVE)	
	6T-3793	2	SUPPORT (SLEEVE) (SLEEVE)	

Y-SEPARATE ILLUSTRATION

<END>

207-1287 BRAKE GP-SERVICE

S/N: RJS1-UP

PART OF 205-8605 POWER TRAIN AR

SMCS-4251, 4255 **i02003327**

NOTE	REF NO	GRAPHIC REF	PART NUMBER	QTY	PART NAME 1 2 3 4 5 6 (PRODUCT LEVEL)	SEE PAGE
	1	1	**3T-3601**	1	RING-SPACER	
	2	1	**3T-3602**	1	RING-SPACER	
	3	1	**3T-4717**	2	SPRING-DISC	
	4	1	**6D-9953**	1	PIN-SPRING	
	5	1	**6P-5317**	1	RING-SEAL	
	6	1	**6T-0850**	1	WASHER-THRUST (287X255X2.75 THK)	
	7	1	**6T-7863**	1	SLEEVE	
	8	1	**7G-5675**	1	RING-SEAL	
	9	1	**7T-1885**	1	RING	
	10	1	**7T-6994**	8	PLATE-CLUTCH & BRAKE	
	11	1	**8E-2234**	1	HUB	
	12	1	**9S-8006**	2	PLUG	
	13	1	**9U-9821**	1	RETAINER	
	14	1	**110-2631**	8	DISC-FRICTION	
	15	1	**124-8966**	1	SPOOL	
	16	1	**207-1290**	1	HOUSING-BRAKE	
	17	1	**207-1291**	1	RETAINER	
	18	1	**207-1292**	1	PISTON	
	19	1	**231-4173**	1	WASHER-THRUST	
	20	1	**0S-1585**	10	BOLT (1/2-13X1.50 IN)	
	21	1	**0S-1587**	7	BOLT (1/2-13X1.75 IN)	
	22	1	**2M-9780**	2	SEAL-O-RING	
	23	1	**4F-7389**	2	SEAL-O-RING	
	24	1	**5P-8245**	20	WASHER-HARD (13.5X25.5X3MM THK)	
	25	1	**6J-7836**	1	RING-SNAP	
	26	1	**8M-4389**	1	SEAL-O-RING	
	27	1	**9H-3360**	1	SEAL-O-RING	
	28	1	**9S-1366**	3	BOLT (1/2-13X2.5 IN)	

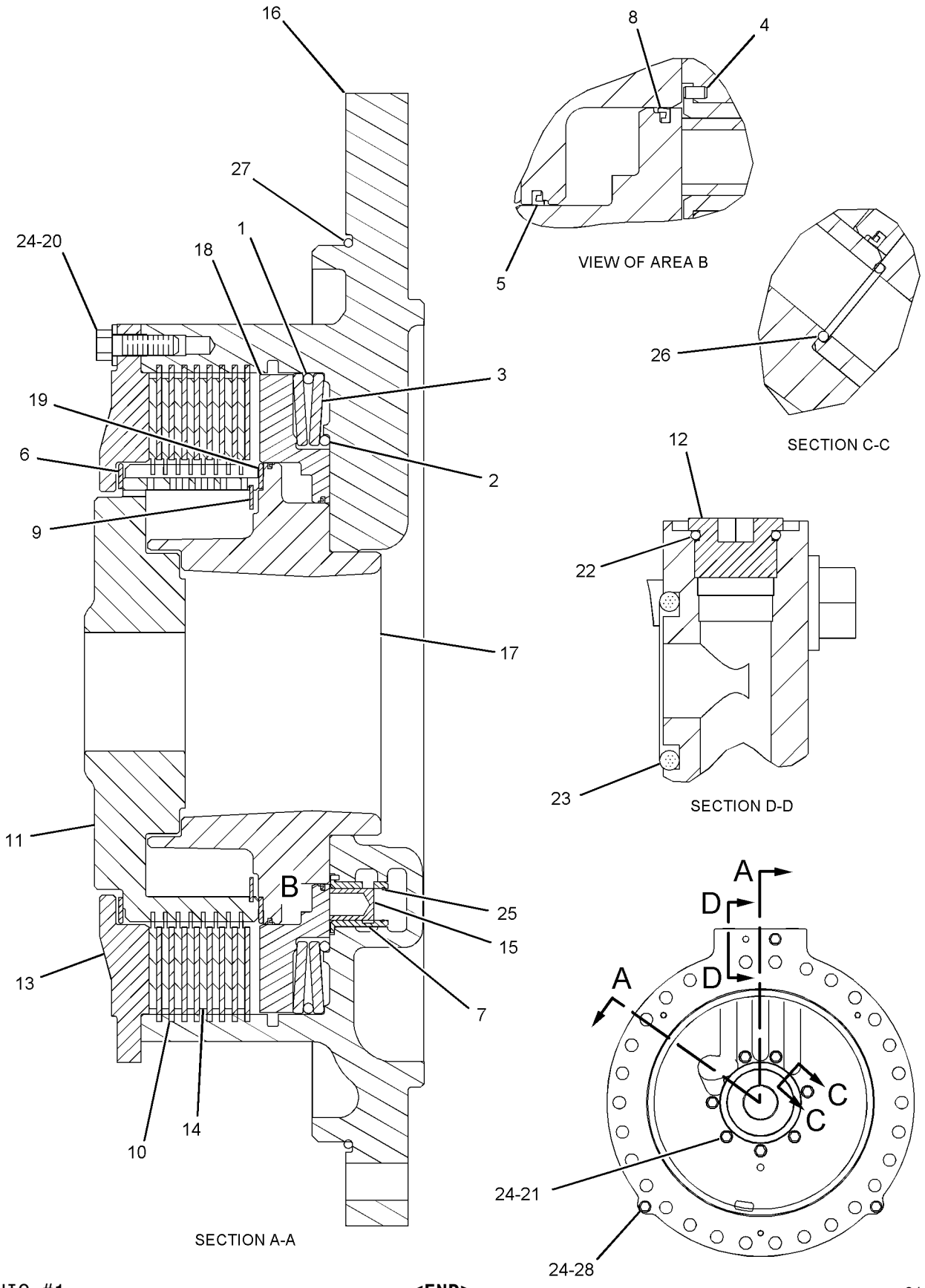

GRAPHIC #1 **<END>** g01037706

222-1546 CONTROL GP-HANDLE–
BRAKE, STEERING, TRANSMISSION
S/N: RJS1-UP

PART OF 237-0158 CONTROL GP-STEERING & TMSN

SMCS-5063, 5705 **i02252205**

NOTE	REF NO	GRAPHIC REF	PART NUMBER	QTY	PART NAME 1 2 3 4 5 6 (PRODUCT LEVEL)	SEE PAGE
	1	1	**208-9647**	1	KNOB (PARKING BRAKE)	
	2	1	**214-1962**	1	HOUSING	
	3	1	**216-0380**	1	PLATE	
Y	4	1	**222-1462**	1	CONTROL GP-STEERING & TMSN	476
Y	5	1	**223-2115**	1	CONTROL GP-PARKING BRAKE	472
	6	1	**225-3195**	1	GASKET	
	7	1	**237-0150**	1	HARNESS AS-STEERING	
		1	**102-8806**	1	KIT-RECEPTACLE (8-PIN)	
					(INCLUDES RECEPTACLE AS & WEDGE)	
	8	1	**239-6891**	1	SWITCH AS-ROCKER (PARKING BRAKE ON, OFF)	
M	9	1	**166-3777**	3	SCREW-BUTTON HEAD (M6X1X28-MM)	
M	10	1	**5C-2890**	1	NUT (M6X1-THD)	
M	11	1	**8T-4138**	2	BOLT (M6X1X20-MM)	
	12	1	**8T-5410**	1	SEAL-LIP TYPE	

M-METRIC PART
Y-SEPARATE ILLUSTRATION

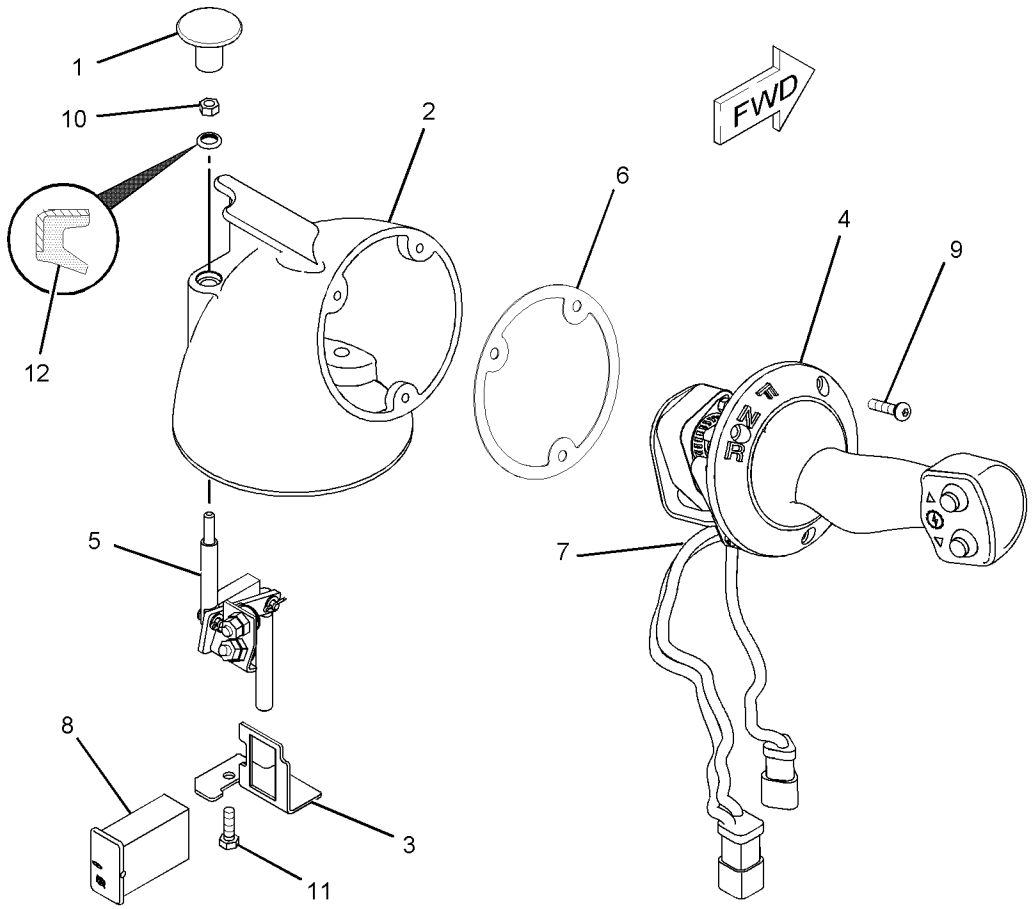

GRAPHIC #1 **<END>** g01105642

STEERING AND BRAKING SYSTEM

223-2115 CONTROL GP-PARKING BRAKE

S/N: RJS1-UP

PART OF 222-1546 CONTROL GP-HANDLE

SMCS-4269, 4284 **i02239809**

NOTE	REF NO	GRAPHIC REF	PART NUMBER	QTY	PART NAME 1 2 3 4 5 6 (PRODUCT LEVEL)	SEE PAGE
	1	1	**2R-5001**	1	DOWEL	
	2	1	**3B-4605**	2	PIN-COTTER	
	3	1	**7H-9737**	1	PIN-COTTER	
	4	1	**9S-1305**	2	PIN-CLEVIS	
	5	1	**216-0381**	1	PLATE AS	
	6	1	**223-2113**	1	BLOCK	
	7	1	**225-3194**	1	SHAFT	
	8	1	**225-3201**	1	SHAFT	
	9	1	**242-5206**	1	SPACER (6.4X12.5X0.76-MM THK)	
	10	1	**1W-6448**	1	DOWEL	
	11	1	**4V-6981**	2	SCREW-BUTTON HEAD (1/4-20X0.75-IN)	
	12	1	**6V-8185**	2	NUT (1/4-20-THD)	
	13	1	**8T-0328**	2	WASHER-HARD (5.5X10X1-MM THK)	
	14	1	**8T-4205**	1	WASHER-HARD (7.2X14.5X2-MM THK)	

223-2115 CONTROL GP-PARKING BRAKE *(contd.)* **i02239809**

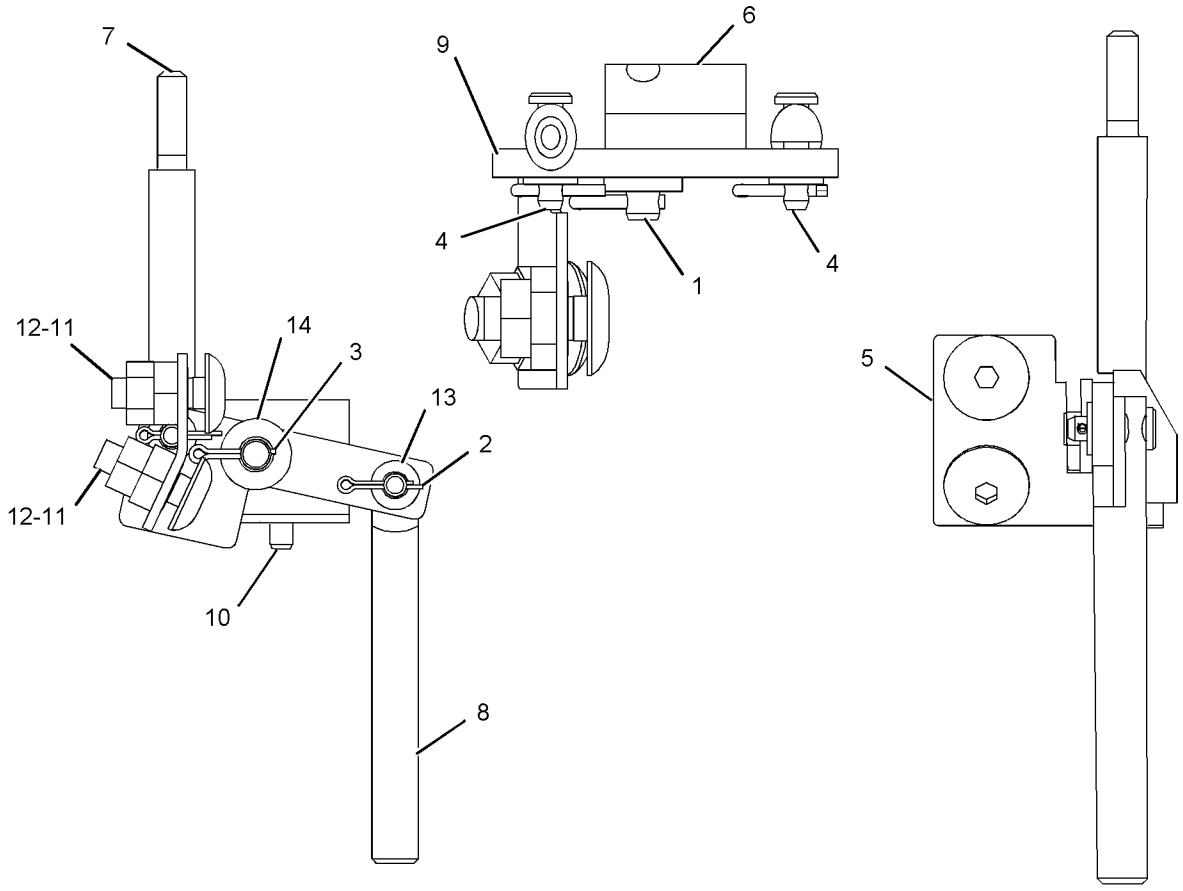

GRAPHIC #1 **<END>** g01129397

237-0160 CONTROL GP-STEERING

S/N: RJS1-UP

PART OF 242-5198 CONTROL GP-STEERING

SMCS-4135 **i02248616**

NOTE	REF NO	GRAPHIC REF	PART NUMBER	QTY	PART NAME 1 2 3 4 5 6 (PRODUCT LEVEL)	SEE PAGE
	1	1	**237-0149**	1	COVER	
	2	1	**237-0152**	1	PLATE AS	
	3	1	**237-0154**	1	PLATE	
	4	1	**237-0155**	1	COVER	
	5	1	**237-0156**	1	COVER	
Y	6	1	*237-0158*	1	CONTROL GP-STEERING & TMSN	478
M	7	1	**3E-8020**	1	SCREW-TRUSS HEAD (M6X1X25-MM)	
M	8	1	**5C-2890**	3	NUT (M6X1-THD)	
M	9	1	**6V-7357**	3	BOLT (M6X1X25-MM)	
	10	1	**8T-4224**	4	WASHER-HARD (8.8X16X2-MM THK)	
M	11	1	**8T-4908**	4	BOLT (M8X1.25X25-MM)	
M	12	1	**9X-2043**	4	SCREW-TRUSS HEAD (M6X1X14-MM)	
M	13	1	**9X-2045**	5	SCREW-TRUSS HEAD (M6X1X20-MM)	
	14	1	**9X-8256**	6	WASHER (6.6X12X2-MM THK)	

M-METRIC PART
Y-SEPARATE ILLUSTRATION

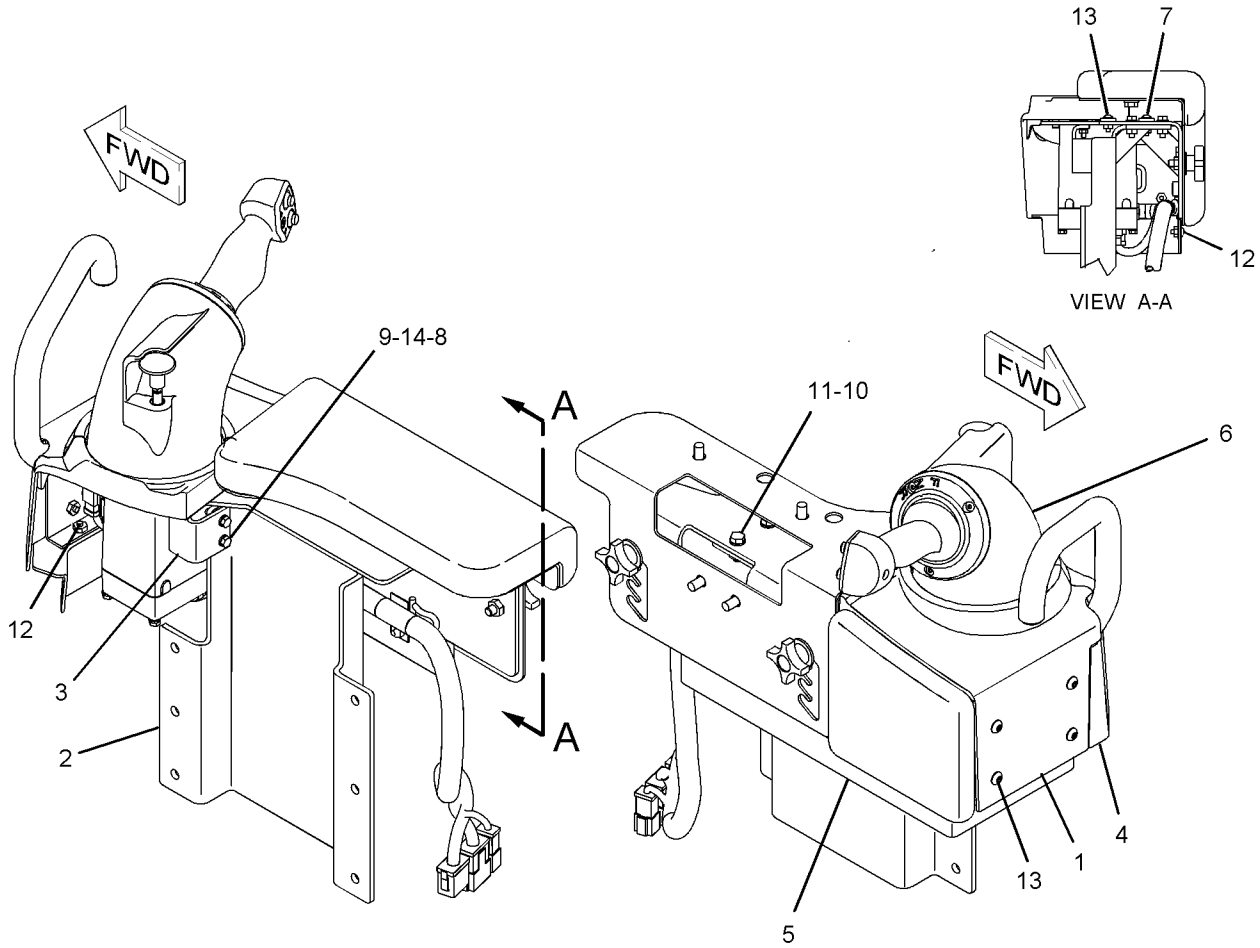

GRAPHIC #1 **<END>** g01132167

STEERING AND BRAKING SYSTEM

242-5198 CONTROL GP-STEERING

S/N: RJS1-UP

PART OF 205-8605 POWER TRAIN AR

SMCS-4135 **i02003402**

NOTE	REF NO	GRAPHIC REF	PART NUMBER	QTY	PART NAME 1 2 3 4 5 6 (PRODUCT LEVEL)	SEE PAGE
	1	1	**171-7077**	2	ROD-THREADED	
Y	2	1	*237-0160*	1	CONTROL GP-STEERING	474
	3	1	**8T-4121**	6	WASHER-HARD (11X21X2.5-MM THK)	
M	4	1	**8T-4133**	2	NUT (M10X1.5-THD)	
M	5	1	**8T-4136**	4	BOLT (M10X1.5X25-MM)	

M-METRIC PART
Y-SEPARATE ILLUSTRATION

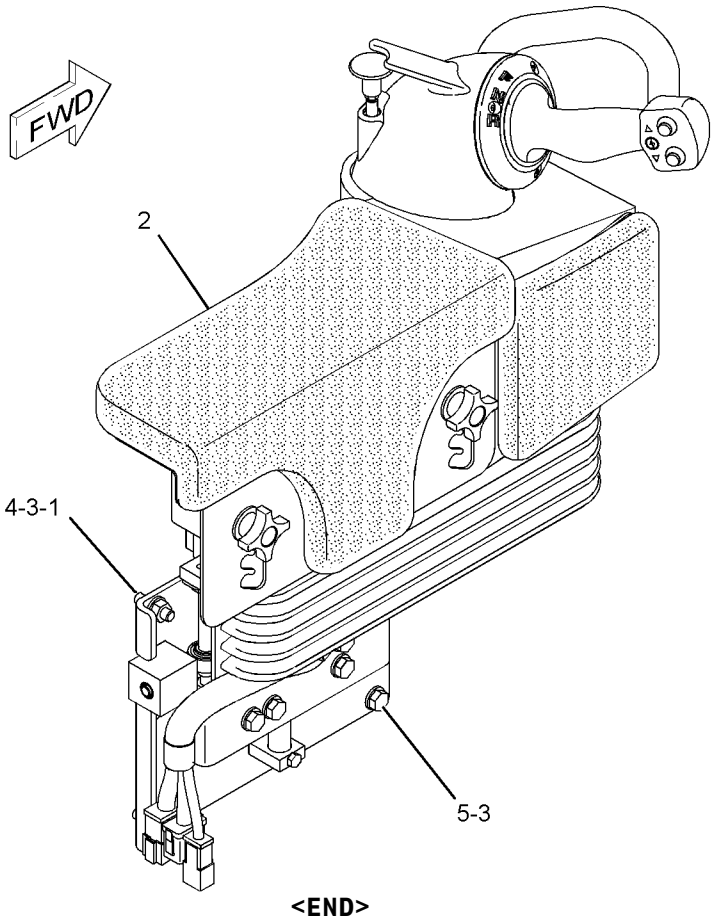

GRAPHIC #1 **<END>** g01020749

STEERING AND BRAKING SYSTEM

222-1462 CONTROL GP-STEERING & TMSN

S/N: RJS1-UP

PART OF 222-1546 CONTROL GP-HANDLE

SMCS-4122 **i02265142**

NOTE	REF NO	GRAPHIC REF	PART NUMBER	QTY	PART NAME 1 2 3 4 5 6 (PRODUCT LEVEL)	SEE PAGE
	1	1	**102-8805**	1	KIT-RECEPTACLE (6-PIN)	
					(INCLUDES RECEPTACLE AS & WEDGE)	
	2	1	**6V-3545**	1	BEARING-ROLLER	
	3	1	**186-3735**	6	PIN-CONNECTOR	
	4	1	**9W-1464**	2	SCREW (1/4-20X1-IN)	
	5	1	**9X-4610**	1	SEAL-V-RING	
M	6	1	**130-3265**	1	SCREW (M6X1X20-MM)	
	7	1	**131-0447**	2	NUT (15/32-32-THD)	
	8	1	**132-7419**	1	SWITCH AS-PUSH BUTTON (ELECTRONIC DOWNSHIFT)	
	9	1	**132-7450**	1	SWITCH AS-PUSH BUTTON (ELECTRONIC UPSHIFT)	
					(EACH SWITCH AS INCLUDES)	
		1	**144-0331**	1	CAP-PUSH BUTTON	
	10	1	**151-9275**	1	KIT-RECEPTACLE (6-PIN)	
					(INCLUDES RECEPTACLE AS & WEDGE)	
	11	1	**158-2734**	2	SPRING	
	12	1	**158-2735**	1	BASE	
	14	1		1	ANGLE	
	16	1		1	SHAFT AS	
	18	1	**226-9423**	2	SPRING	
Y	19	1	**237-0151**	1	SWITCH GP-LIMIT (STEERING CONTROL)	272
	20	1	**103-6262**	4	SCREW-MACHINE (4-40X0.63-IN)	
	21	1	**5H-9899**	1	RING-RETAINING (EXTERNAL)	
	22	1	**6V-1051**	1	SCREW-BUTTON HEAD (10-24X19.05-MM)	
	23	1	**6V-1232**	2	SCREW-BUTTON HEAD (8-32X9.52-MM)	
M	24	1	**6V-2314**	2	BOLT (M5X0.8X35-MM)	
	25	1	**7X-0584**	1	WASHER-HARD (13.5X20.5X2-MM THK)	
M	26	1	**7Y-5226**	2	NUT (M5X0.8-THD)	
	27	1	**8T-4205**	2	WASHER-HARD (7.2X14.5X2-MM THK)	
	28	1	**9X-8256**	3	WASHER (6.6X12X2-MM THK)	
	29	1	**219-2391**	1	SENSOR GP-POSITION (STEERING, TMSN CONTROL)	
		1	**3E-3377**	1	WEDGE-RECEPTACLE LOCK (4-PIN)	
		1	**186-3735**	3	PIN-CONNECTOR	
		1	**9G-3695**	1	PLUG (GROMMET SEALING)	
		1	**102-8804**	1	KIT-RECEPTACLE (4-PIN)	
					(INCLUDES RECEPTACLE AS & WEDGE)	
BD	30	1	**6V-2689**		TUBE-HEAT SHRINK	

B-USE AS REQUIRED
D-ORDER BY THE METER
M-METRIC PART
Y-SEPARATE ILLUSTRATION

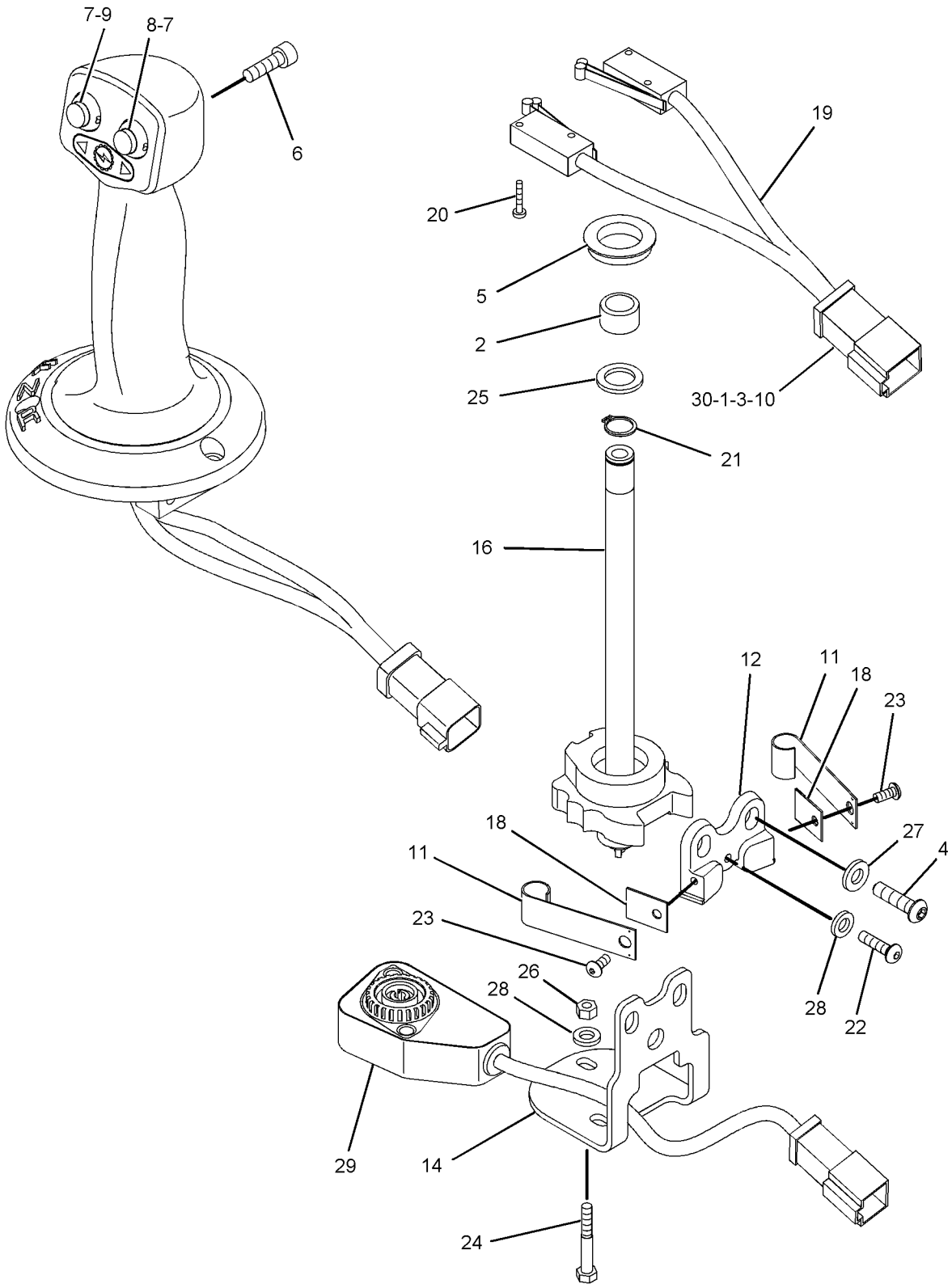

GRAPHIC #1 **<END>** g01129847

STEERING AND BRAKING SYSTEM

237-0158 CONTROL GP-STEERING & TMSN

S/N: RJS1-UP

PART OF 237-0160 CONTROL GP-STEERING

SMCS-4122 **i02252189**

NOTE	REF NO	GRAPHIC REF	PART NUMBER	QTY	PART NAME 1 2 3 4 5 6 (PRODUCT LEVEL)	SEE PAGE
	1	1	**9X-6772**	3	STRAP-CABLE	
	2	1	**112-0858**	2	BEARING	
	3	1	**159-7351**	2	CLIP	
	4	1	**215-7446**	1	CUSHION AS	
	5	1	**220-3990**	1	PLATE	
	6	1	**221-9409**	2	KNOB	
	7	1	**222-1465**	1	COVER	
	8	1	**222-1545**	1	SENSOR AS-POSITION (STEERING, TMSN CONTROL HANDLE)	
Y	9	1	**222-1546**	1	CONTROL GP-HANDLE (STEERING, TMSN)	471
	10	1	**224-4973**	1	CUSHION AS	
	11	1	**237-0153**	1	PLATE AS	
	12	1	**242-5199**	1	HARNESS AS-CONSOLE	
		1	**102-8804**	1	KIT-RECEPTACLE (4-PIN)	
		1	**102-8801**	1	KIT-RECEPTACLE (12-PIN)	
					(EACH INCLUDES RECEPTACLE AS & WEDGE)	
		1	**155-2255**	2	KIT-CONNECTING PLUG (12-PIN)	
		1	**155-2265**	1	KIT-CONNECTING PLUG (8-PIN)	
		1	**155-2274**	2	KIT-CONNECTING PLUG (6-PIN)	
					(EACH INCLUDES PLUG AS & WEDGE)	
		1	**155-2272**	1	PLUG AS-CONNECTOR (4-PIN)	
	13	1	**242-5204**	1	BRACKET	
	14	1	**1B-8706**	1	KEY-WOODRUFF	
	15	1	**7X-0578**	2	WASHER-HARD (10.2X32X2.5-MM THK)	
	16	1	**8T-4121**	7	WASHER-HARD (11X21X2.5-MM THK)	
M	17	1	**8T-4137**	5	BOLT (M10X1.5X20-MM)	
M	18	1	**8T-4186**	1	BOLT (M10X1.5X40-MM)	
M	19	1	**8T-4189**	3	BOLT (M8X1.25X20-MM)	
M	20	1	**8T-4191**	2	BOLT (M10X1.5X16-MM)	
M	21	1	**8T-4195**	2	BOLT (M10X1.5X30-MM)	
	22	1	**8T-4224**	3	WASHER-HARD (8.8X16X2-MM THK)	
	23	1	**8T-5410**	2	SEAL-LIP TYPE	
	24	1	**9D-3769**	1	GROMMET	

M-METRIC PART
Y-SEPARATE ILLUSTRATION

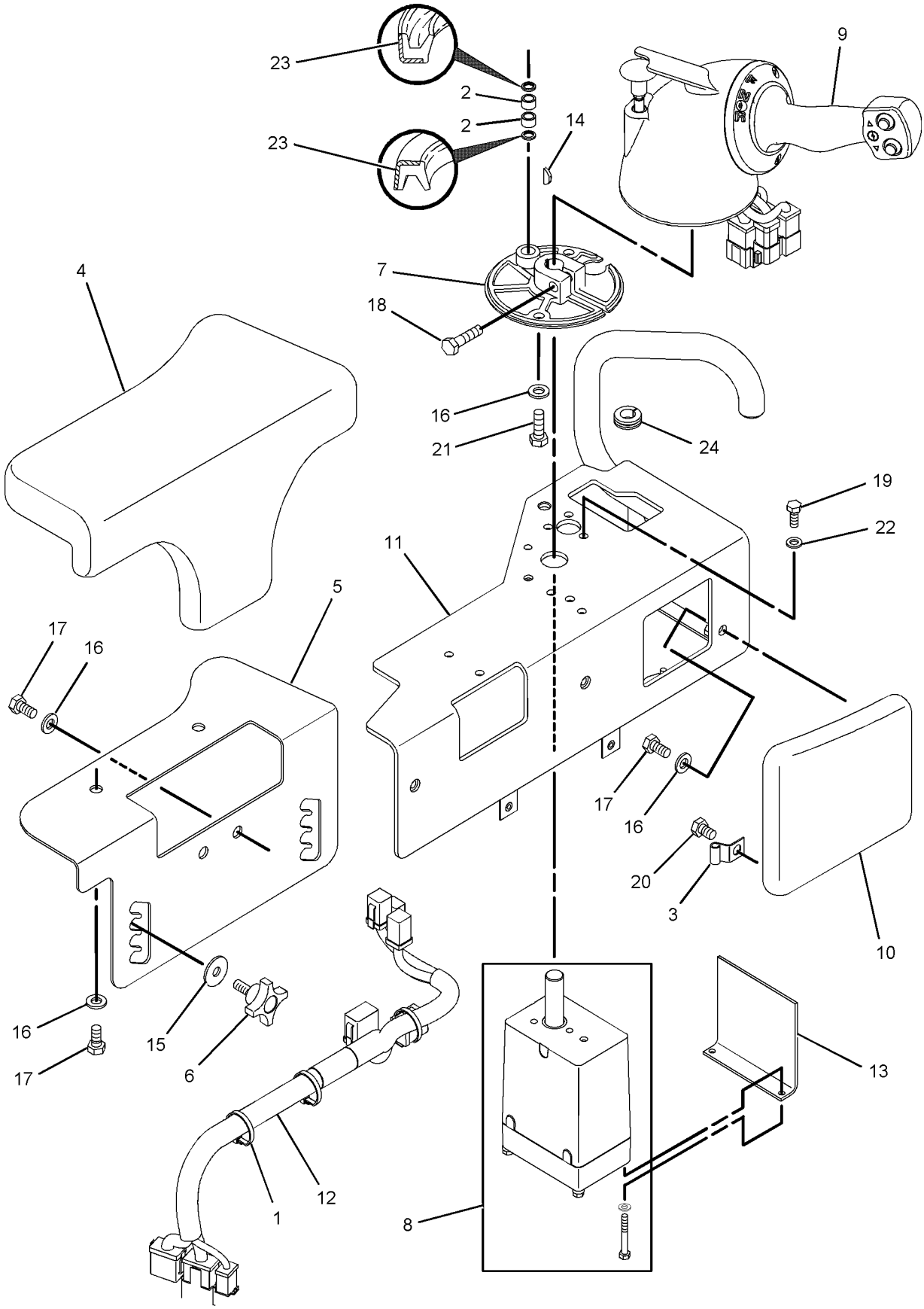

GRAPHIC #1 **<END>** g01129366

STEERING AND BRAKING SYSTEM

166-0666 DRIVE GP-DIFFERENTIAL STEERING

S/N: DXK1-UP

PART OF 202-2719 TRANSMISSION AR

SMCS-4135 **i01445960**

NOTE	REF NO	GRAPHIC REF	PART NUMBER	QTY	PART NAME 1 2 3 4 5 6 (PRODUCT LEVEL)	SEE PAGE
	1	1	**6Y-9087**	1	CAGE-BEARING	
	2	1	**2S-4570**	2	RACE-BEARING OUTER	
	3	1	**2S-4569**	2	BEARING-INNER	
	4	1	**7T-8136**	4	SHAFT-PLANETARY	
	5	1	**3S-2708**	12	PIN-SPRING	
	6	1	**8S-9089**	23	BOLT (1/2-13X4.5IN)	
	7	1	**5P-8245**	44	WASHER-HARD (13.5X25.5X3MM THK)	
	8	1	**6Y-9083**	4	GEAR-PLANETARY (24 TEETH)	
	9	1	**5M-0578**	12	BEARING AS	
	10	1	**6Y-9086**	1	GEAR-RING (80 TEETH)	
	11	1	**6Y-9067**	1	SHAFT-OUTPUT	
	12	1	**165-9143**	1	SHAFT-INPUT	
	13	1	**6Y-9068**	1	CARRIER-PLANETARY	
	14	1	**9H-5322**	1	RACE-SPECIAL ROLLER BEARING	
	15	1	**9S-5279**	1	BEARING-INNER	
	16	1	**6Y-9076**	1	GEAR-SUN (24 TEETH)	
	17	1	**6Y-9078**	1	SPACER	
	18	1	**6Y-9074**	1	GEAR-RING (84 TEETH)	
	19	1	**3T-6963**	1	SEAL-RING	
	20	1	**6Y-9077**	1	GEAR-SUN (32 TEETH)	
	21	1	**6I-8724**	1	LOCK RING	
	22	1	**6Y-9071**	1	CARRIER-PLANETARY	
	23	1	**131-9307**	1	GEAR-RING (80 TEETH)	
	24	1	**131-9306**	1	GEAR-TRANSFER (65 TEETH)	
	25	1	**8M-2530**	18	BOLT-12 POINT HEAD (1/2-13X1.25 IN)	
	26	1	**0S-1587**	21	BOLT (1/2-13X1.75 IN)	
	27	1	**106-3958**	1	SLINGER-OIL	
	28	1	**6Y-9092**	1	RACE-ROLLER BEARING	
	29	1	**2M-1156**	1	BEARING-INNER	
	30	1	**6Y-9093**	1	RING-MOUNTING	
	31	1	**1A-1460**	1	BOLT (1/2-13X2 IN)	
	32	1	**0S-1571**	8	BOLT (3/8-16X1.75 IN)	
	33	1	**5M-2894**	8	WASHER-HARD (10.2X18.5X2.5MM THK)	
	34	1	**6Y-9073**	4	SHAFT-PLANETARY	
	35	1	**5H-5339**	1	RACE-ROLLER BEARING	
	36	1	**6Y-9097**	1	BEARING-ROLLER	
	37	1	**6Y-9098**	1	GEAR-TRANSFER (18 TEETH)	
	38	1	**1T-0416**	16	BOLT (5/16-18X0.75 IN)	
	39	1	**7G-2519**	4	GEAR-PLANETARY (24 TEETH)	
	40	1	**8E-8307**	16	DISC-THRUST	
	41	1	**5P-6254**	4	BEARING	
	42	1	**6Y-9069**	4	GEAR-PLANETARY (30 TEETH)	
	43	1	**8E-8310**	8	DISC-THRUST	
	44	1	**6Y-9125**	1	RACE-ROLLER BEARING	
	45	1	**6Y-9099**	1	BEARING-ROLLER	
	46	1	**8E-1682**	1	GEAR-TRANSFER (53 TEETH)	
	47	1	**1P-6563**	2	WASHER-RETAINER (.48MM THK)	
	48	1	**6Y-9070**	4	SHAFT-PLANETARY	
	49	1	**165-9142**	1	GEAR-SUN (32 TEETH)	
	50	1	**6Y-9079**	1	CARRIER-PLANETARY	
	51	1	**166-0663**	1	RING-RETAINING	
	52	1	**106-3959**	1	SLINGER-OIL	
	53	1	**6Y-9088**	1	CAGE AS-BEARING	
	54	1	**4B-9782**	2	BALL	

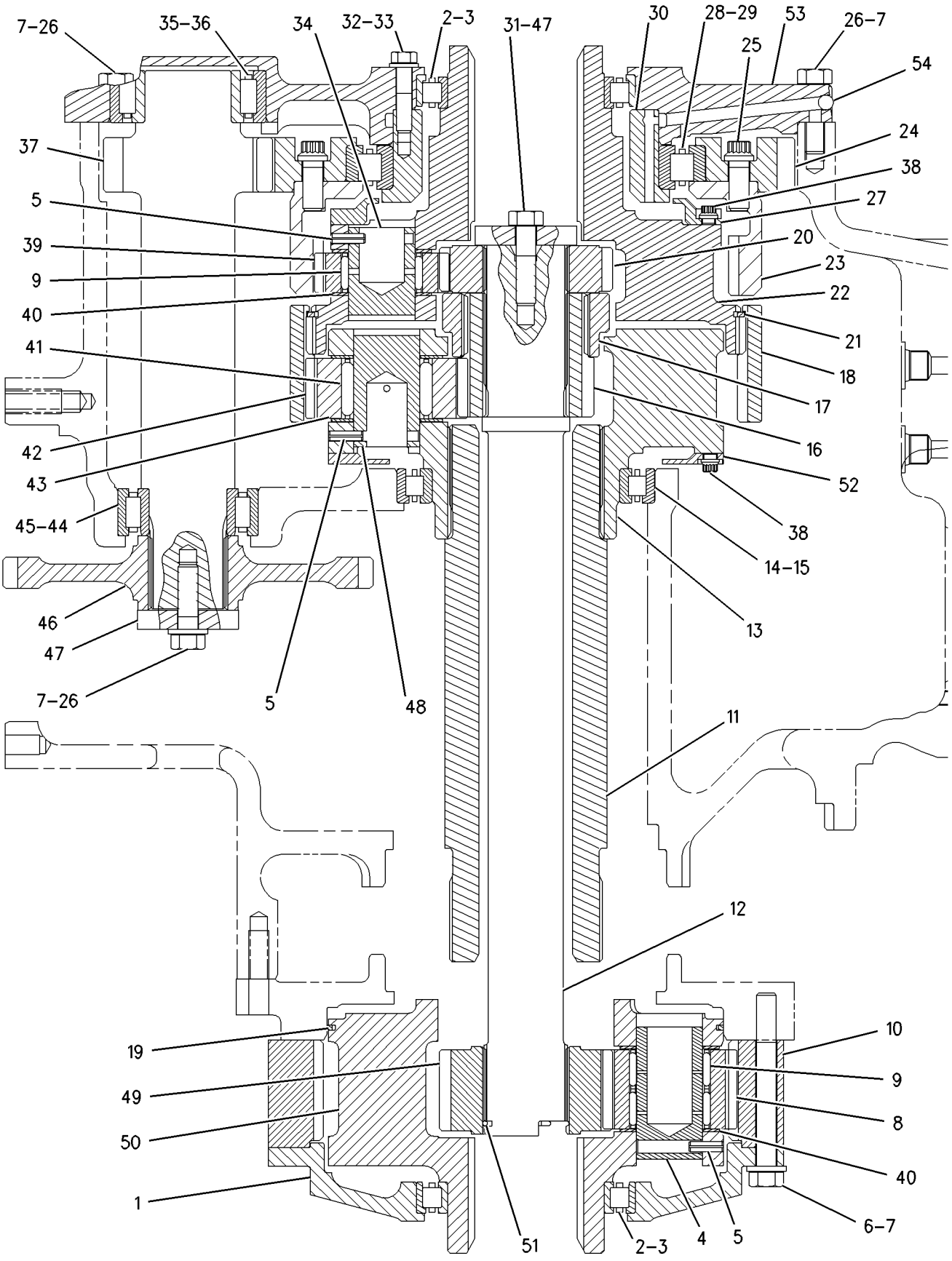

GRAPHIC #1 **<END>** g00687641

STEERING AND BRAKING SYSTEM

6Y-9052 DRIVE GP-STEERING

S/N: RJS1-UP

PART OF 205-8605 POWER TRAIN AR

SMCS-3008 **i00592066**

NOTE	REF NO	GRAPHIC REF	PART NUMBER	QTY	PART NAME 1 2 3 4 5 6 (PRODUCT LEVEL)	SEE PAGE
	1	1	**8E-2126**	1	SPACER AS	
		1	**9M-4007**	2	DOWEL	
	2	1	**8E-2075**	1	HOUSING AS	
		1	**4B-9782**	1	BALL (9.52MM)	
	3	1	**1A-1460**	6	BOLT (1/2-13X2IN)	
	4	1	**5P-8245**	6	WASHER (3MM THK)	
	5	1	**8E-5553**	1	SPACER	
	6	1	**4F-2129**	1	BALL BEARING	
	7	1	**6Y-9112**	1	GEAR-TRANSFER (36 TEETH)	
	8	1	**5V-7574**	2	RING-RETAINING	
	9	1	**3S-2708**	1	PIN-SPRING	
	10	1	**1T-0295**	1	RACE-ROLLER BEARING	
	11	1	**2H-3517**	1	RACE & ROLLER AS-INNER	
	12	1	**4H-6520**	1	SEAL-O-RING (183.74MM ID)	
	13	1	**6Y-9114**	1	SHAFT-PLANETARY	
	14	1	**8E-8310**	2	DISC-THRUST	
	15	1	**6Y-9113**	1	GEAR-PLANETARY (35 TEETH)	
	16	1	**5M-7925**	2	BEARING-ROLLER	

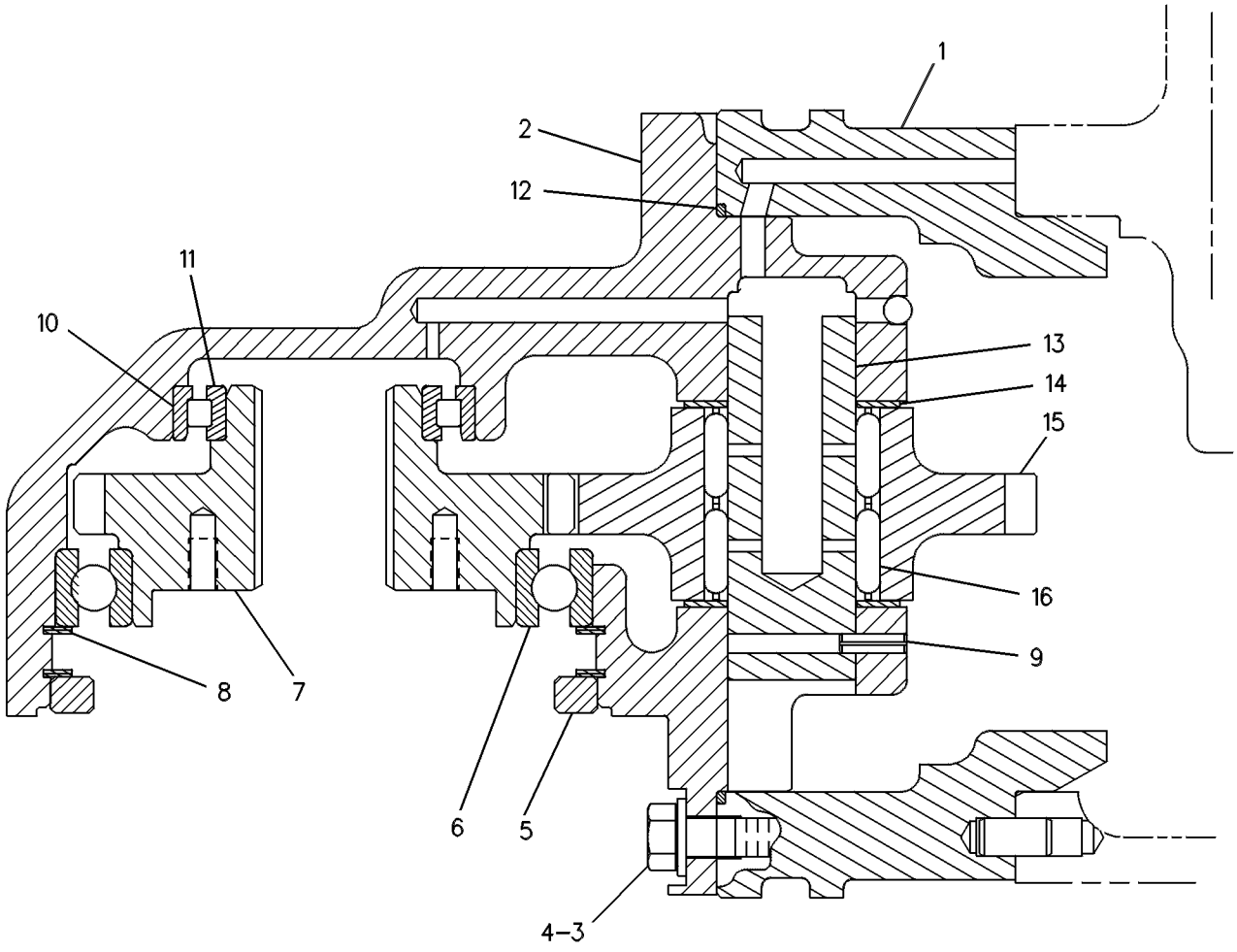

GRAPHIC #1 **<END>** g00240032

212-2297 FILTER GP-OIL–STEERING

S/N: RJS1-UP

PART OF 205-8615 LINES GP-STEERING

SMCS-5068 **i02217889**

NOTE	REF NO	GRAPHIC REF	PART NUMBER	QTY	PART NAME 1 2 3 4 5 6 (PRODUCT LEVEL)	SEE PAGE
	1	1	**6T-9222**	1	SPOOL	
	3	1	**8C-3447**	1	CAP-DUST	
	4	1	**132-8875**	1	FILTER ELEMENT AS-OIL (HYDRAULIC) (HIGH EFFICIENCY)	
	5	1	**133-1274**	1	COVER AS	
	5A	1	**133-8528**	1	STUD-TAPERLOCK	
	6	1	**133-2199**	1	SPRING	
Y	7	1	**164-7577**	1	SWITCH GP-BYPASS (HYDRAULIC OIL FILTER)	267
	8	1	**212-2298**	1	HOUSING	
	10	1	**2H-3928**	1	SEAL-O-RING	
	11	1	**3J-1907**	1	SEAL-O-RING	
	12	1	**3J-7354**	2	SEAL-O-RING	
	13	1	**4L-4986**	1	LOCKNUT (7/8-14-THD)	
	14	1	**5K-1770**	1	SEAL-O-RING	
	15	1	**7M-8485**	1	SEAL-O-RING	
	16	1	**8C-3446**	1	VALVE AS-FLUID SAMPLING (HYDRAULIC OIL)	
M	17	1	**8T-4956**	6	BOLT (M12X1.75X35-MM)	
	18	1	**9S-4182**	1	PLUG	
	19	1	**9S-4191**	1	PLUG	
	20	1	**9S-4205**	1	PLUG	
	21	1	**133-1287**	1	RETAINER	

M-METRIC PART
Y-SEPARATE ILLUSTRATION

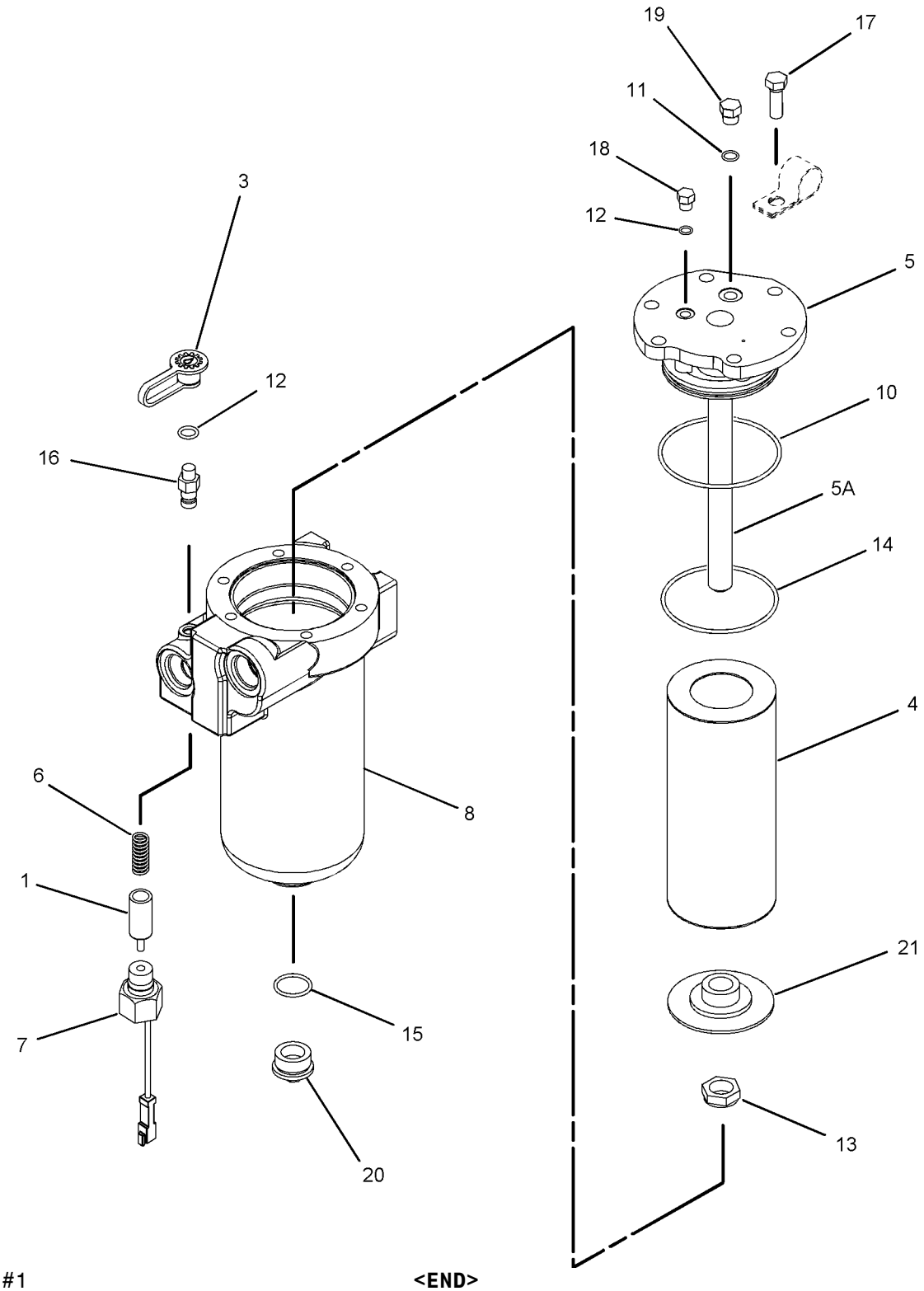

GRAPHIC #1 **<END>** g01037181

205-8615 LINES GP-STEERING

S/N: RJS1-UP

PART OF 205-8602 HYDRAULIC AR

SMCS-4104, 4133, 4304 **i02265139**

NOTE	REF NO	GRAPHIC REF	PART NUMBER	QTY	PART NAME 1 2 3 4 5 6 (PRODUCT LEVEL)	SEE PAGE
	1	1	**6V-0852**	5	CAP-DUST	
I	2	1	**208-1578**	1	HOSE AS	
I	3	1	**208-1579**	1	HOSE AS	
I	4	1	**208-1587**	1	HOSE AS	
I	5	1	**208-1592**	1	HOSE AS	
Y	6	1	*212-2297*	1	FILTER GP-OIL (HYDRAULIC) (STEERING)	483
	7	1	**214-9429**	2	MANIFOLD	
	8	1	**214-9430**	1	PLATE	
I	9	1	**224-6838**	1	HOSE AS	
I	10	1	**224-6853**	1	HOSE AS	
I	11	1	**224-6857**	1	HOSE AS	
	12	1	*244-2777*	1	TEE AS	
		1	**8T-0315**	2	SEAL-O-RING	
		1	**244-2776**	1	TEE	
I	13	1	**261-4380**	1	HOSE AS	
Y	14	1	**261-7593**	1	VALVE GP-RELIEF (STEERING PUMP OIL)	496
	15	1	**263-3275**	1	PLATE	
	16	1	**0L-1178**	4	BOLT (3/4-10X2-IN)	
	17	1	*148-8339*	1	CONNECTOR GP	
		1	**6V-8716**	1	CONNECTOR	
		1	**6V-9746**	1	SEAL-O-RING	
		1	**7M-8485**	1	SEAL-O-RING	
	18	1	*148-8347*	1	ELBOW AS	
		1	**3D-2824**	1	SEAL-O-RING	
		1	**6V-9007**	1	ELBOW	
		1	**6V-9746**	1	SEAL-O-RING	
	19	1	*148-8360*	2	ELBOW AS	
					(EACH INCLUDES)	
		1	**6V-9182**	1	ELBOW	
		1	**6V-9746**	1	SEAL-O-RING	
		1	**7M-8485**	1	SEAL-O-RING	
	20	1	*148-8388*	1	ELBOW AS	
		1	**2M-9780**	1	SEAL-O-RING	
		1	**6V-8629**	1	ELBOW	
		1	**6V-9746**	1	SEAL-O-RING	
	21	1	*153-6238*	1	ELBOW AS	
		1	**2S-4078**	1	SEAL-O-RING	
		1	**6V-8400**	1	SEAL-O-RING	
		1	**6V-9006**	1	ELBOW	
	22	1	*156-4283*	2	CONNECTOR AS	
					(EACH INCLUDES)	
		1	**6K-6307**	1	SEAL-O-RING	
		1	**8T-0315**	1	SEAL-O-RING	
		1	**8T-7926**	1	CONNECTOR	
	23	1	*164-5574*	1	TEE GP	
		1	**3D-2824**	1	SEAL-O-RING	
		1	**6V-8784**	1	TEE-FACE SEAL	
		1	**6V-9746**	2	SEAL-O-RING	
	24	1	*165-4932*	1	TEE GP	
		1	**2S-4078**	1	SEAL-O-RING	
		1	**6V-8400**	2	SEAL-O-RING	
		1	**6V-8786**	1	TEE	
	25	1	**1P-3704**	4	SEAL-RECTANGULAR	
	26	1	**1P-3705**	2	SEAL-RECTANGULAR	
	27	1	**1P-5767**	8	FLANGE-HALF	
	28	1	**3J-1907**	5	SEAL-O-RING	

205-8615 **LINES GP-STEERING** *(contd.)* **i02265139**

NOTE	REF NO	GRAPHIC REF	PART NUMBER	QTY	PART NAME 1 2 3 4 5 6 (PRODUCT LEVEL)	SEE PAGE
	29	1	**4H-6520**	1	SEAL-O-RING	
	30	1	**4L-6454**	4	BOLT (3/8-16X1-IN)	
	31	1	**5P-1075**	4	WASHER-HARD (10.2X22.5X3-MM THK)	
	32	1	**5P-1076**	4	WASHER-HARD (13.5X30X4-MM THK)	
	33	1	**5P-2566**	2	BOLT (1/2-13X1.5-IN)	
	34	1	**5P-8248**	4	WASHER-HARD (20X36.5X3.5-MM THK)	
	35	1	**6F-4718**	1	SEAL-O-RING	
	36	1	**6V-3965**	5	FITTING AS	
	37	1	**8T-4121**	4	WASHER-HARD (11X21X2.5-MM THK)	
	38	1	**8T-4123**	4	WASHER-PLATED (22X35X3.5-MM THK)	
M	39	1	**8T-4136**	4	BOLT (M10X1.5X25-MM)	
M	40	1	**8T-4183**	2	BOLT (M12X1.75X40-MM)	
M	41	1	**8T-4194**	8	BOLT (M12X1.75X50-MM)	
	42	1	**8T-4223**	16	WASHER-HARD (13.5X25.5X3-MM THK)	
M	43	1	**8T-6430**	4	BOLT (M20X2.5X50-MM)	
M	44	1	**8T-6868**	8	BOLT (M12X1.75X80-MM)	

I-REFER TO HYDRAULIC INFORMATION SYSTEM
M-METRIC PART
Y-SEPARATE ILLUSTRATION

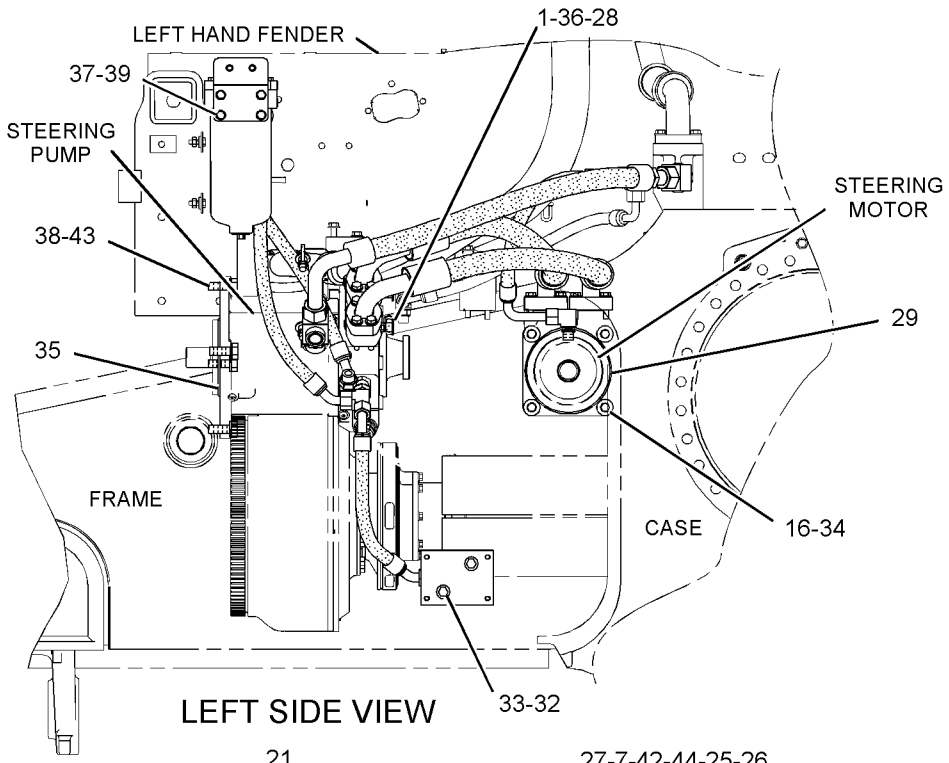

LEFT SIDE VIEW

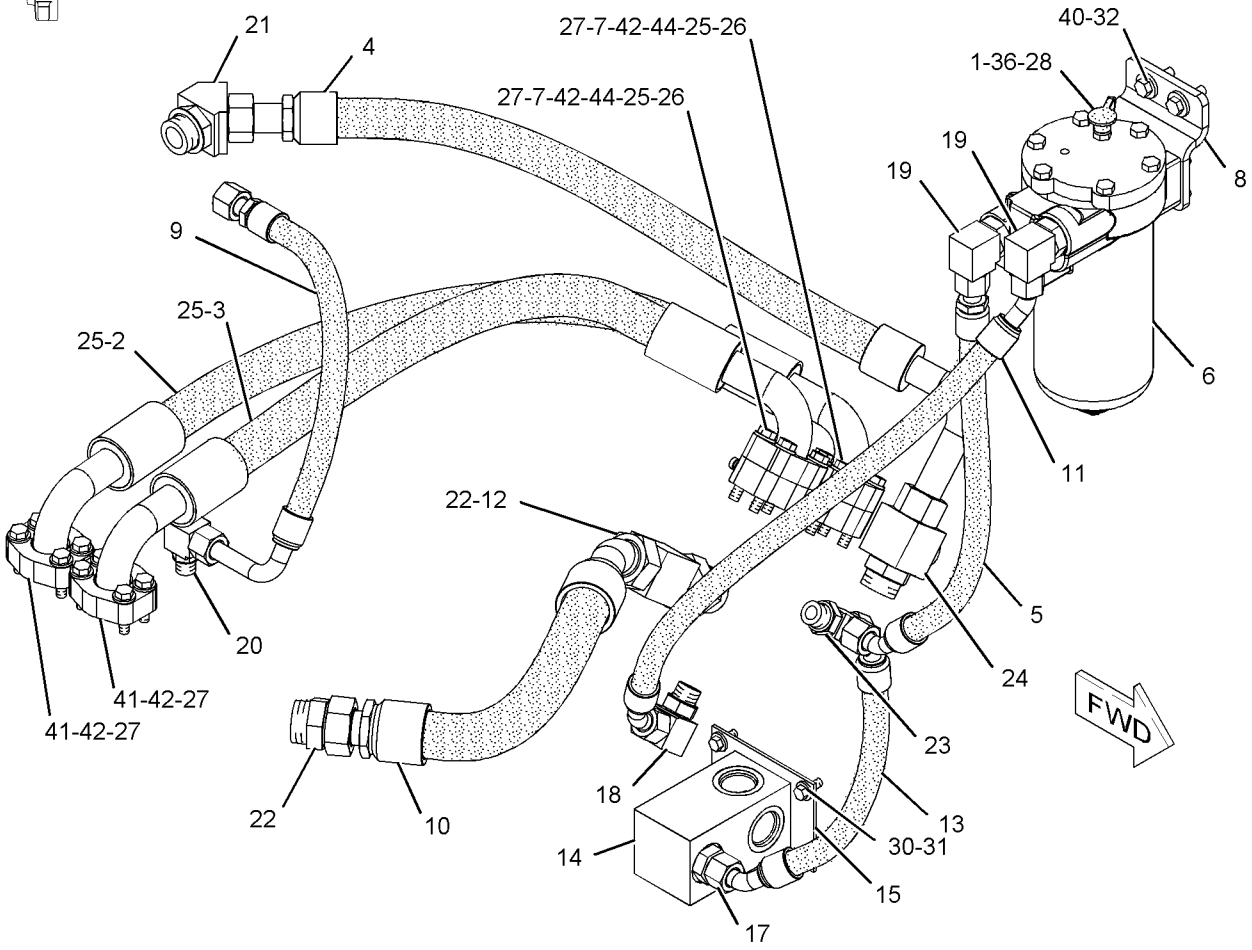

GRAPHIC #1 **<END>** g01119631

162-5357 MANIFOLD & VALVE GP–

RH, LH STEERING CLUTCH, BRAKE

S/N: RJS1-UP

PART OF 201-7274 VALVE GP-TRANSMISSION CONTROL

SMCS-3206, 5479 **i02210596**

NOTE	REF NO	GRAPHIC REF	PART NUMBER	QTY	PART NAME 1 2 3 4 5 6 (PRODUCT LEVEL)	SEE PAGE
	1	1	**148-8410**	1	PLUG AS	
	1A	1	**2M-9780**	1	SEAL-O-RING	
	2	1	**162-5358**	1	MANIFOLD	
Y	3	1	**174-4909**	1	VALVE GP-SOLENOID (SECONDARY BRAKE)	498
	4	1	**1P-1744**	1	DOWEL	
	5	1	**137-8794**	1	SPOOL AS	
	5A	1	**5L-4758**	1	SEAL-O-RING	
	5B	1	**137-8793**	1	SPRING	
	5C	1	**3D-7943**	1	RING-RETAINING	

Y-SEPARATE ILLUSTRATION

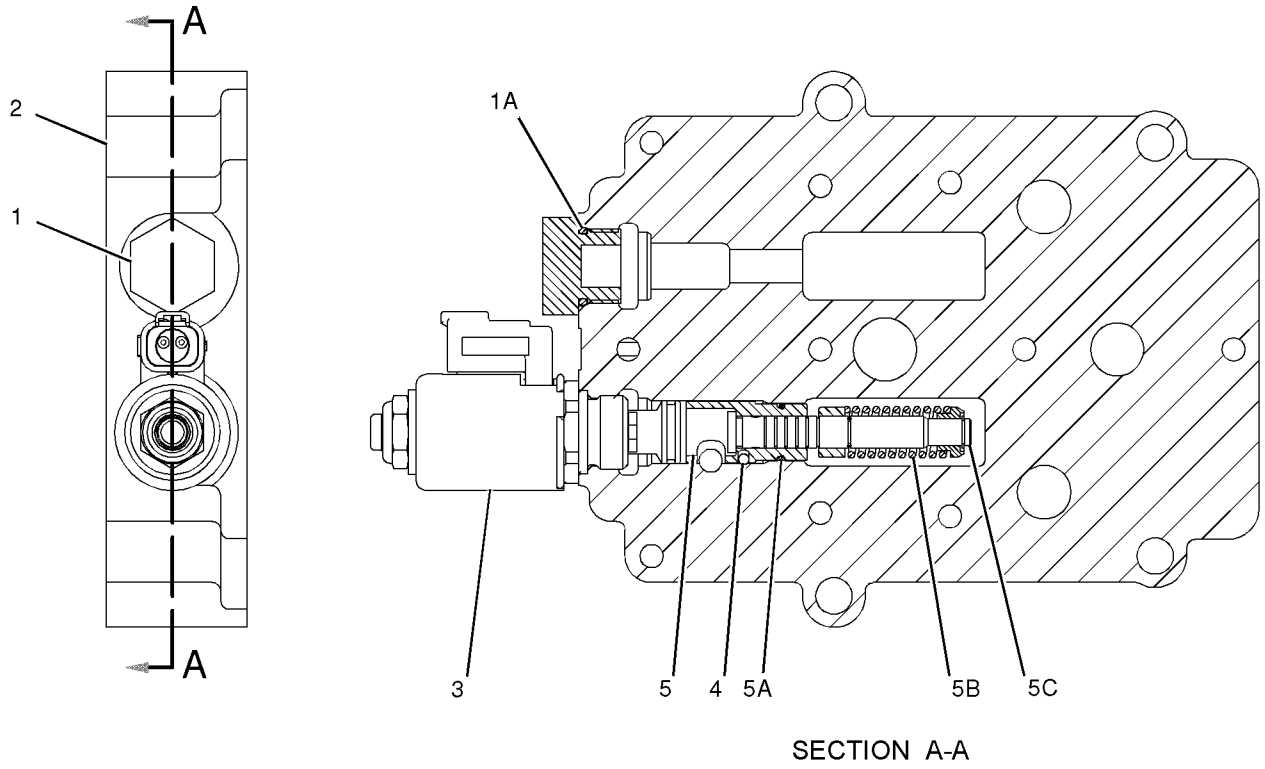

SECTION A-A

GRAPHIC #1 **<END>** g01019286

175-4972 MANIFOLD & VALVE GP–PARKING, SECONDARY BRAKE

S/N: RJS1-UP

PART OF 201-7274 VALVE GP-TRANSMISSION CONTROL

SMCS-3206, 5479 **i02149658**

NOTE	REF NO	GRAPHIC REF	PART NUMBER	QTY	PART NAME 1 2 3 4 5 6 (PRODUCT LEVEL)	SEE PAGE
	1	1	**132-9455**	1	MANIFOLD	
Y	2	1	*172-2392*	2	VALVE GP-SOLENOID (PARKING, SECONDARY BRAKE)	497

Y-SEPARATE ILLUSTRATION

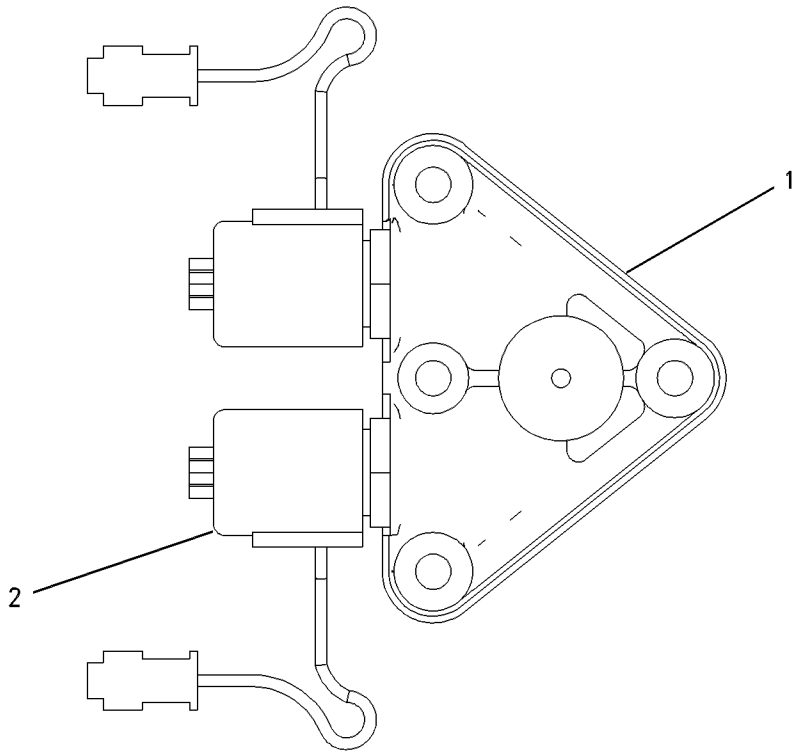

GRAPHIC #1 **<END>** g00653425

STEERING AND BRAKING SYSTEM

231-7314 PEDAL GP-GOVERNOR & BRAKE

S/N: RJS1-UP

PART OF 232-6622, 263-3318 CONTROL & MTG GP-PEDAL

ALSO AN ATTACHMENT

SMCS-4122 **i02252197**

NOTE	REF NO	GRAPHIC REF	PART NUMBER	QTY	PART NAME 1 2 3 4 5 6 (PRODUCT LEVEL)	SEE PAGE
	1	2	**1B-8706**	1	KEY-WOODRUFF	
	2	2	**1B-8714**	1	KEY-WOODRUFF	
	3	2	**2J-6356**	4	RING-RETAINING	
	4	2	**7P-4190**	4	BEARING-ROLLER	
	5	1	**9M-5731**	2	RIVET-POP	
M	6	1	**9X-6615**	4	BOLT (M5X0.8X30-MM)	
	7	1	**110-8379**	1	PEDAL (BRAKE) (SERVICE)	
	8	2	**111-3780**	1	SPRING	
	9	1	**111-3781**	2	BOLT-ANCHOR	
	10	1	**132-7077**	1	SWITCH AS-LIMIT (SERVICE BRAKE PEDAL)	
		1	**6V-8376**	3	SCREW-MACHINE (8-32X0.25-IN)	
		1	**9B-7233**	3	LOCKWASHER	
	11	1	**145-3405**	2	SPACER (10.3X16.7X8-MM THK)	
	12	1	**160-1433**	1	LEVER	
	13	2	**160-1434**	1	LEVER	
Y	14	1	**160-2443**	1	SENSOR GP-POSITION (ROTARY) (SERVICE BRAKE PEDAL)	236
	15	1	**164-9541**	1	HARNESS AS-SWITCH (SERVICE BRAKE)	
		1	**102-8804**	1	KIT-RECEPTACLE (4-PIN)	
					(INCLUDES RECEPTACLE AS & WEDGE)	
	16	1	**165-9100**	1	LINK	
	17	1	**165-9103**	1	SPRING	
	18	1	**165-9104**	1	SPACER (6.5X9.5X10-MM THK)	
	19	1	**244-1419**	1	SPRING	
	20	1	**205-7331**	1	SPACER (20.32X28.01X0.41-MM THK)	
Y	21	1	**224-5530**	1	SENSOR GP-POSITION (DECELERATOR PEDAL)	237
	22	1	**231-7306**	1	PEDAL (DECELERATOR)	
	23	1	**231-7307**	1	PLATE	
	24	1	**231-7308**	1	GASKET	
	25	2	**231-7309**	1	PLATE	
	26	1	**231-7310**	1	BRACKET AS	
	27	2	**231-7311**	1	SHAFT	
	28	2	**231-7312**	1	SHAFT	
	29	1	**231-7313**	1	HOUSING	
	30	1	**096-5962**	2	WASHER-HARD (3.4X7X0.8-MM THK)	
M	31	2	**106-5472**	1	SETSCREW-HEX SOCKET (M5X0.8X20-MM)	
	32	2	**111-9251**	4	WASHER-HARD (20X35X1.6-MM THK)	
M	33	1	**127-2170**	2	SCREW-TRUSS HEAD (M8X1.25X20-MM)	
	34	1	**4B-3609**	1	SETSCREW-SQUARE HEAD (3/8-16X1.5-IN)	
	35	2	**6V-0894**	2	SEAL-O-RING	
M	36	1	**6V-7357**	1	BOLT (M6X1X25-MM)	
M	37	1	**6V-7744**	2	LOCKNUT (M10X1.5-THD)	
	38	1	**6V-8801**	1	NUT (3/8-16-THD)	
	39	1	**7X-7729**	2	WASHER (11X25X3-MM THK)	
	40	2	**8F-7702**	2	SEAL-LIP TYPE	
	41	1	**8T-4121**	4	WASHER-HARD (11X21X2.5-MM THK)	
M	42	1	**8T-4136**	2	BOLT (M10X1.5X25-MM)	
M	43	1	**8T-4186**	2	BOLT (M10X1.5X40-MM)	
M	44	1	**8T-4195**	2	BOLT (M10X1.5X30-MM)	
	45	1	**8T-4205**	2	WASHER-HARD (7.2X14.5X2-MM THK)	
M	46	2	**8T-4970**	2	BOLT (M6X1X14-MM)	
	47	1	**9X-6281**	2	SCREW-MACHINE (4-40X1-IN)	
	48	2	**9X-8256**	2	WASHER (6.6X12X2-MM THK)	

M-METRIC PART
Y-SEPARATE ILLUSTRATION

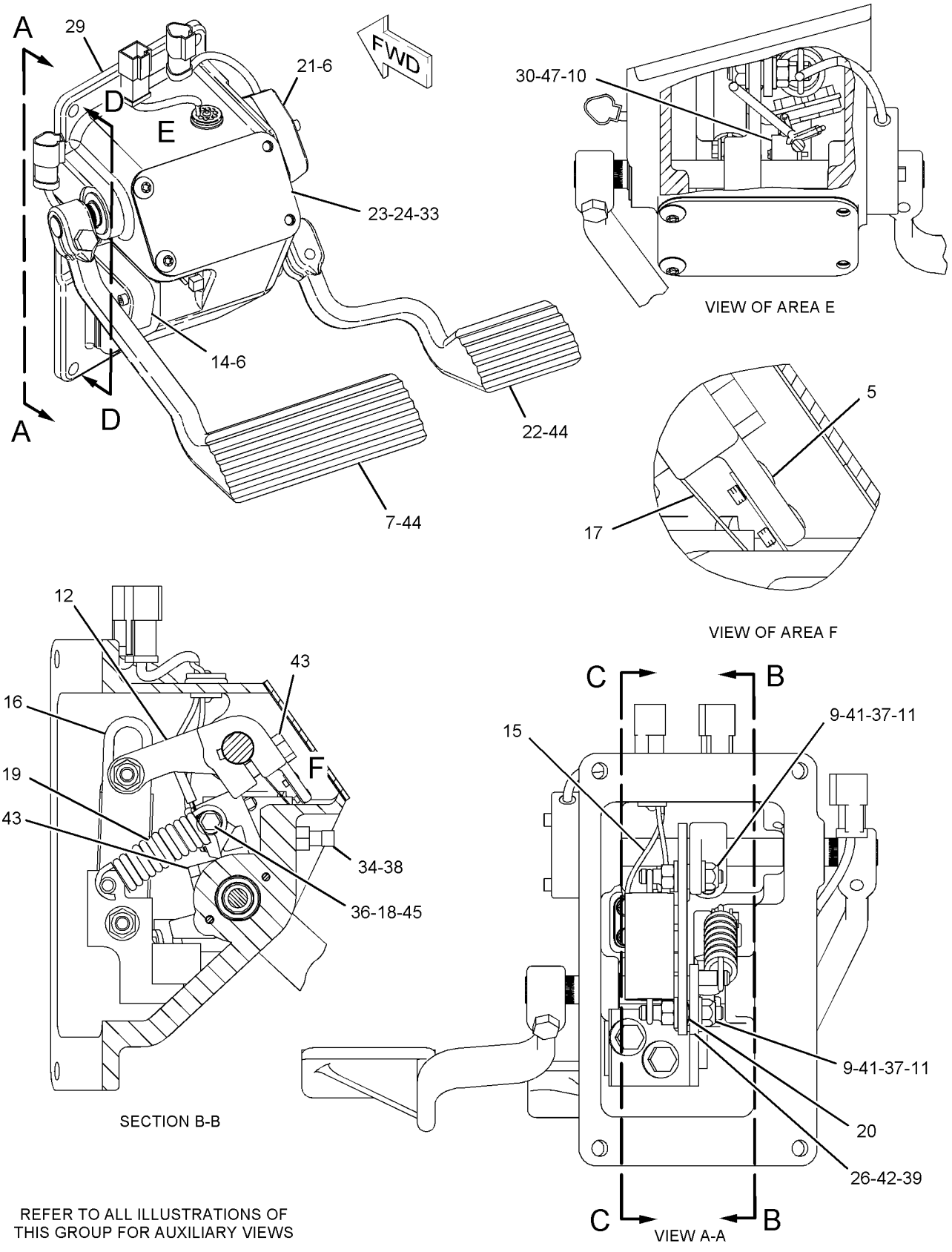

REFER TO ALL ILLUSTRATIONS OF THIS GROUP FOR AUXILIARY VIEWS

GRAPHIC #1

g01110949

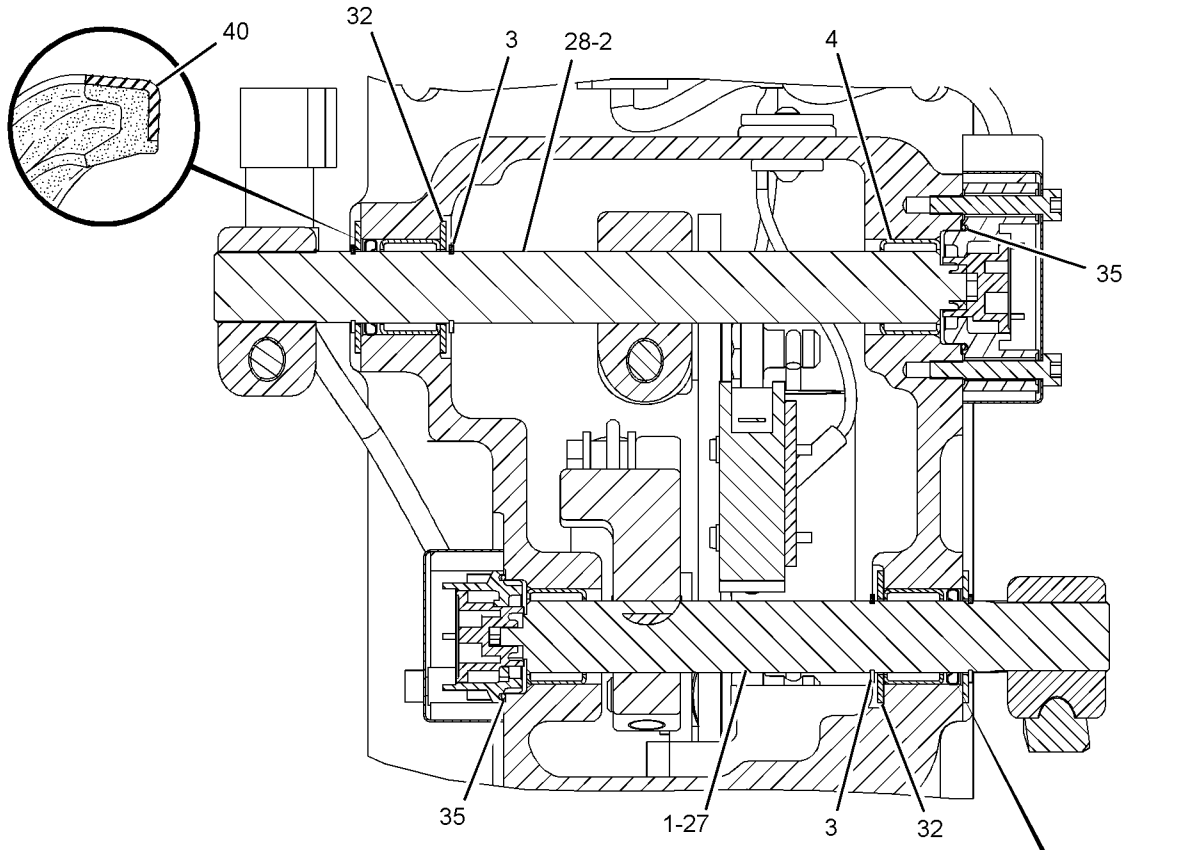

SECTION D-D

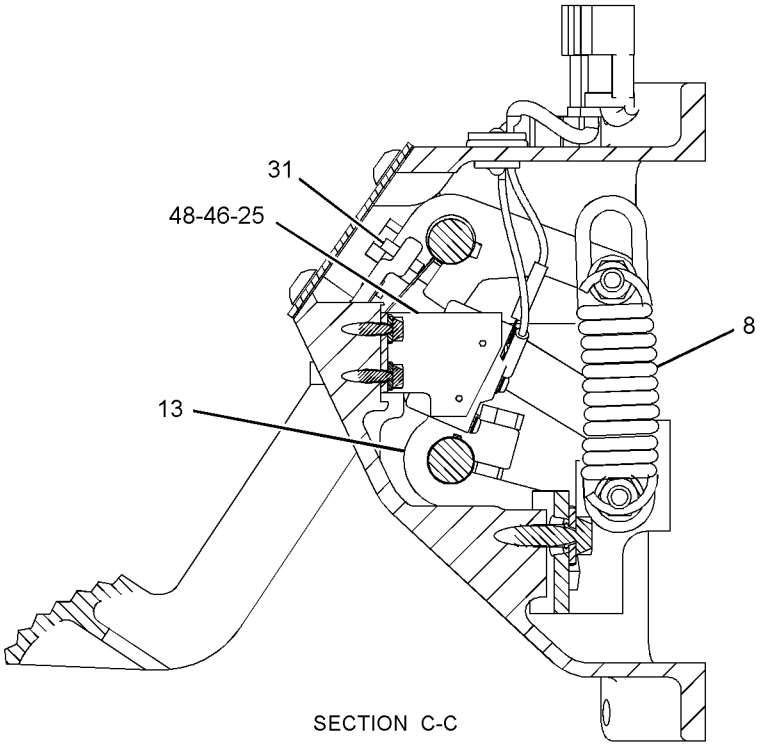

SECTION C-C

REFER TO ALL ILLUSTRATIONS OF THIS GROUP FOR AUXILIARY VIEWS

GRAPHIC #2 **<END>** g01111651

STEERING AND BRAKING SYSTEM

209-9360 VALVE & MTG GP-STEER & BRAKE

S/N: RJS1-UP

PART OF 205-8605 POWER TRAIN AR

SMCS-4120 **i02003365**

NOTE	REF NO	GRAPHIC REF	PART NUMBER	QTY	PART NAME 1 2 3 4 5 6 (PRODUCT LEVEL)	SEE PAGE
	1	1	**3S-0004**	4	WASHER (0.406X0.728X0.09-IN THK)	
	2	1	**6V-0852**	1	CAP-DUST	
	3	1	**115-4371**	1	PLATE	
Y	4	1	**201-7274**	1	VALVE GP-TRANSMISSION CONTROL	361
	5	1	**209-9356**	1	MANIFOLD	
	6	1	**2M-9780**	1	SEAL-O-RING	
	7	1	**3J-1907**	2	SEAL-O-RING	
	8	1	**5P-1404**	1	ADAPTER-O-RING	
	9	1	**6V-0484**	1	ADAPTER-O-RING	
	10	1	**6V-3965**	1	FITTING AS	
	11	1	**8F-8544**	4	BOLT (3/8-16X6.25-IN)	
	12	1	**8M-5254**	9	SEAL-O-RING	

Y-SEPARATE ILLUSTRATION

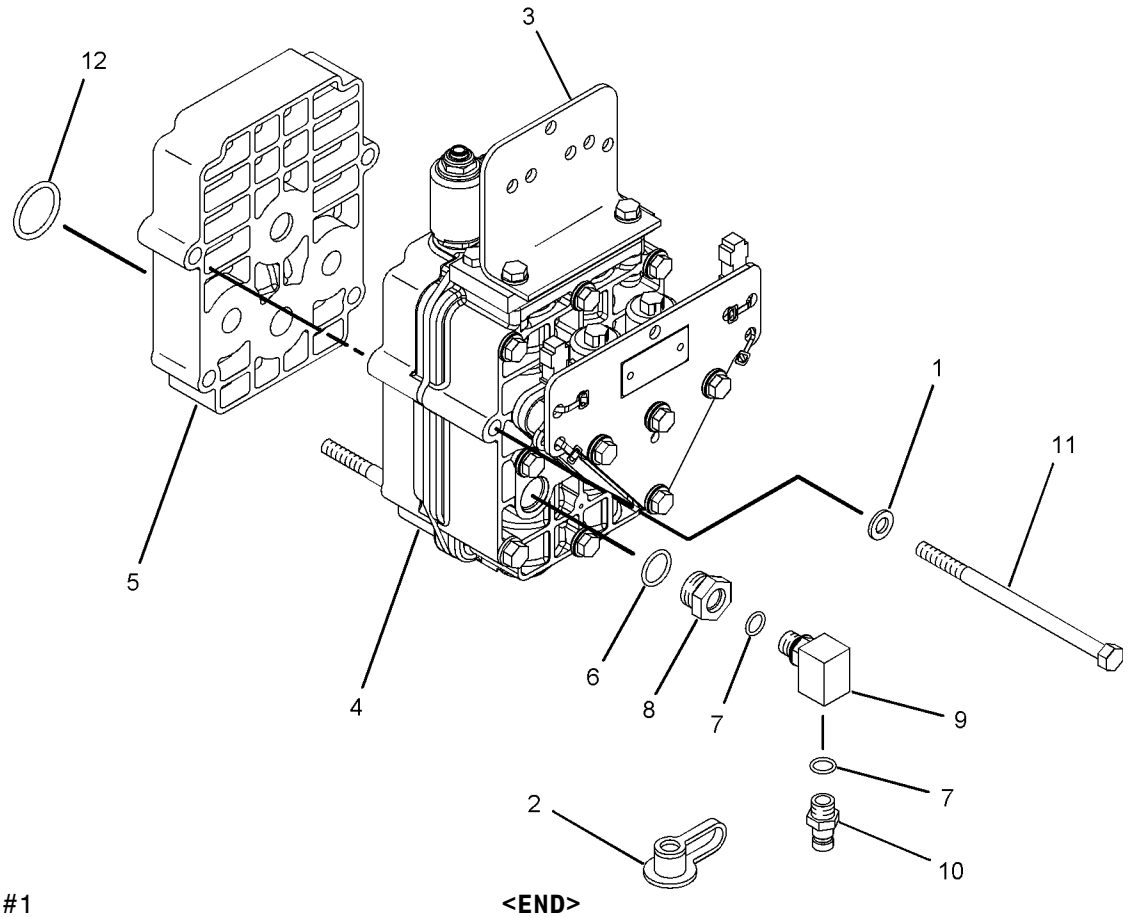

GRAPHIC #1 **<END>** g01037663

9T-9850 VALVE GP-RELIEF—STEERING PUMP OIL

S/N: RJS1-UP
DIRECT OPERATED
PART OF 261-7593 VALVE GP-RELIEF

SMCS-4307 **i01896494**

NOTE	REF NO	GRAPHIC REF	PART NUMBER	QTY	PART NAME 1 2 3 4 5 6 (PRODUCT LEVEL)	SEE PAGE
	1	1	**9S-8005**	1	PLUG	
	2	1	**9T-6783**	1	WASHER (3.5X12.5X1.6-MM THK)	
	3	1	**4T-1044**	1	SPRING	
	4	1	**9T-6043**	1	VALVE	
B	5	1	**6J-8696**	2	SHIM (1.22-MM THK)	
	6	1	**3K-0360**	2	SEAL-O-RING	
B	7	1	**5J-6153**	2	SHIM (0.193-MM THK)	

B-USE AS REQUIRED

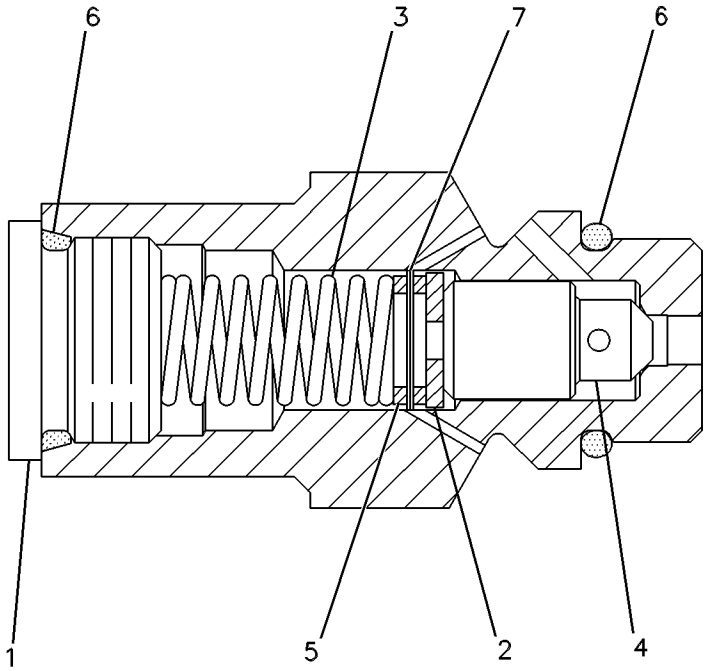

GRAPHIC #1 **<END>** g00257054

246-1246 VALVE GP-RELIEF—STEERING PISTON PUMP

S/N: RJS1-UP

PART OF 244-8864 HEAD GP-PUMP

SMCS-4307 **i02185528**

NOTE	REF NO	GRAPHIC REF	PART NUMBER	QTY	PART NAME 1 2 3 4 5 6 (PRODUCT LEVEL)	SEE PAGE
	1	1	**246-1703**	1	ADJUSTER	
	2	1	**246-1705**	1	RETAINER-SPRING	
	3	1	**246-1707**	1	SPRING	
M	4	1	**6E-4240**	1	NUT-SEALING (M10X1-THD)	
	5	1	**246-1702**	1	PLUG-SPECIAL	
	6	1	**246-1704**	1	PISTON	
	7	1	**6V-5556**	1	SEAL-O-RING	

M-METRIC PART

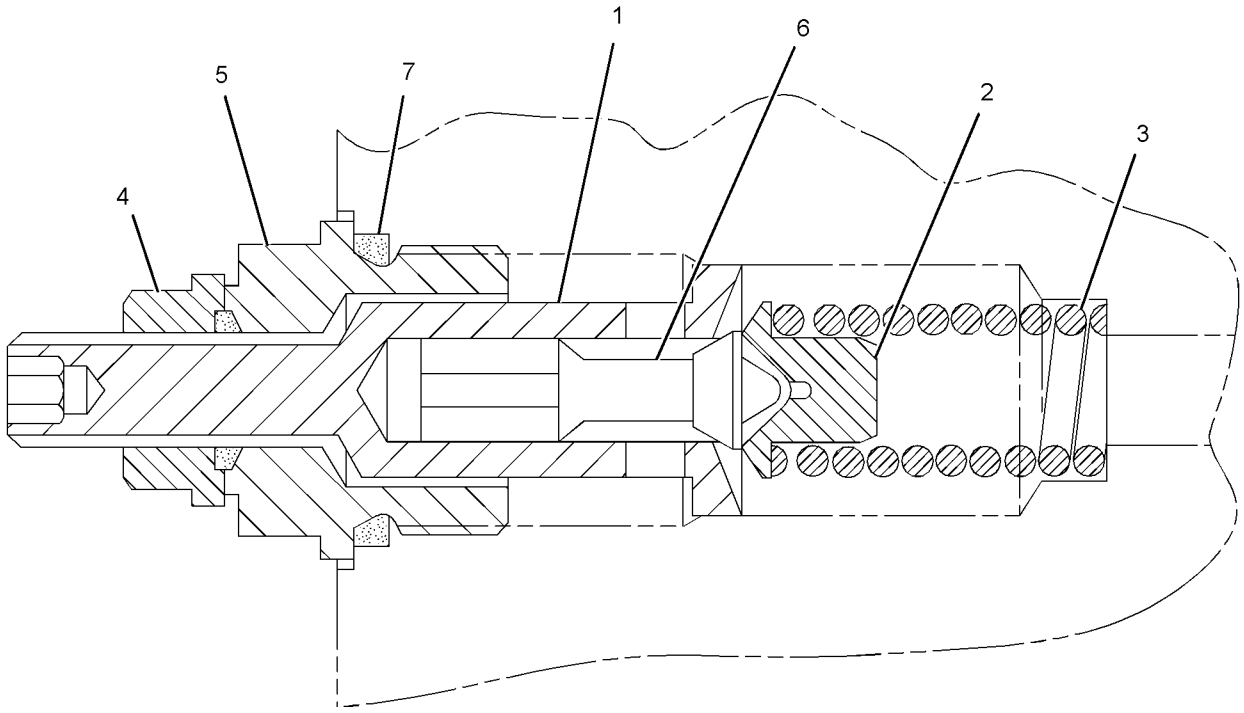

GRAPHIC #1 **<END>** g01115335

261-7593 VALVE GP-RELIEF—STEERING PUMP OIL

S/N: RJS1-UP

PART OF 205-8615 LINES GP-STEERING

SMCS-4307 **i02204685**

NOTE	REF NO	GRAPHIC REF	PART NUMBER	QTY	PART NAME 1 2 3 4 5 6 (PRODUCT LEVEL)	SEE PAGE
Y	1	1	**9T-9850**	1	VALVE GP-RELIEF (STEERING PUMP OIL)	494
	2		*183-7262*	1	PLUG AS	
	2A	1	**9S-8010**	1	PLUG	
	2B	1	**2S-4078**	1	SEAL-O-RING	

Y-SEPARATE ILLUSTRATION

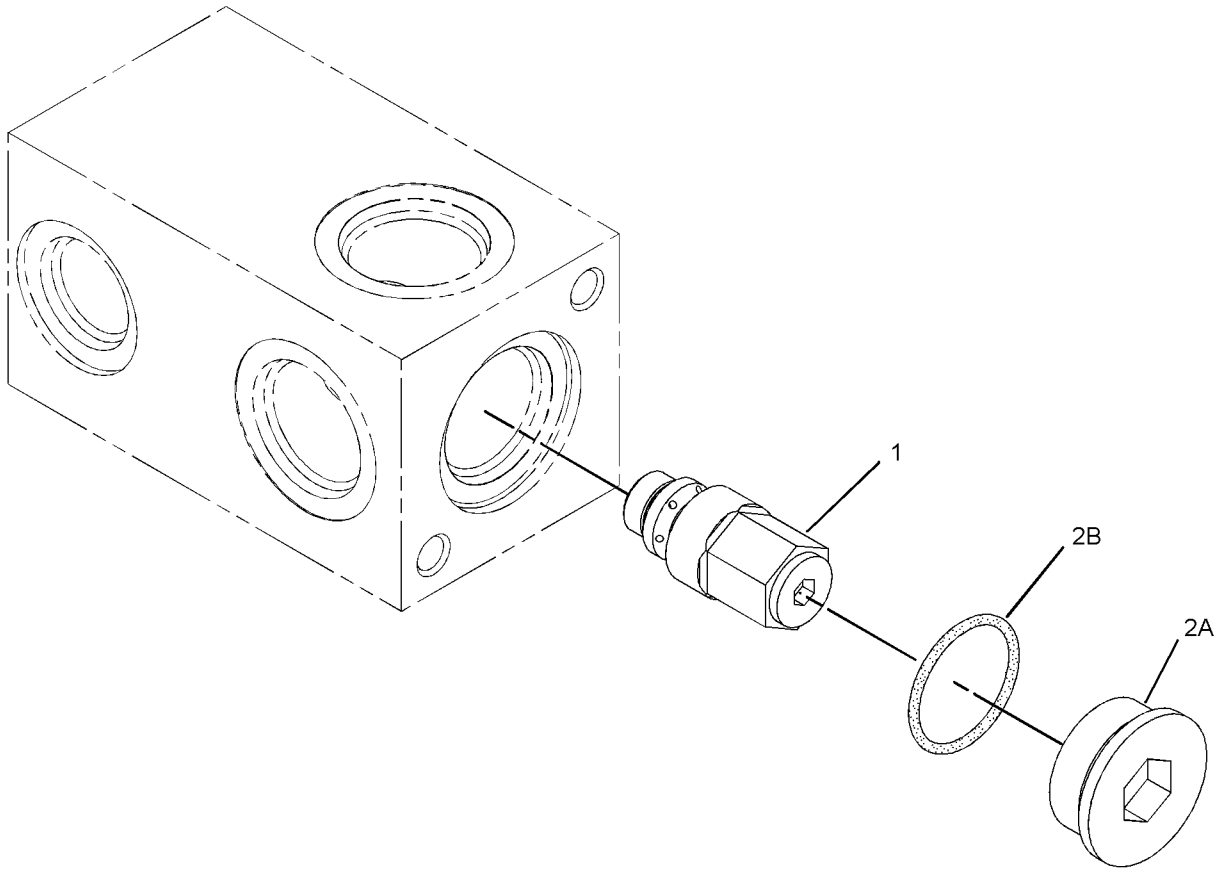

GRAPHIC #1 **<END>** g01119232

172-2392 VALVE GP-SOLENOID—PARKING, SECONDARY BRAKE

S/N: RJS1-UP
24 VOLT
PART OF 175-4972 MANIFOLD & VALVE GP

SMCS-4804 **i02149751**

NOTE	REF NO	GRAPHIC REF	PART NUMBER	QTY	PART NAME 1 2 3 4 5 6 (PRODUCT LEVEL)	SEE PAGE
	1	1	**156-5970**	1	NUT (1/2-20-2B THD)	
	2	1	**133-2249**	1	COIL AS	
		1	**1S-9593**	2	STRAP-CABLE	
		1	**186-3735**	2	PIN-CONNECTOR	
		1	**8T-8737**	2	PLUG-SEAL	
		1	**102-8804**	1	KIT-RECEPTACLE (4-PIN)	
					(INCLUDES RECEPTACLE AS & WEDGE)	
	3	1	**172-2391**	1	SPOOL AS	
		1	**156-5970**	1	NUT (1/2-20-2B THD)	
					AVAILABLE REPAIR KIT(S):	
			189-1839	1	KIT-SEAL (SOLENOID VALVE)	
					(INCLUDES O-RING SEALS & BACK UP RING)	

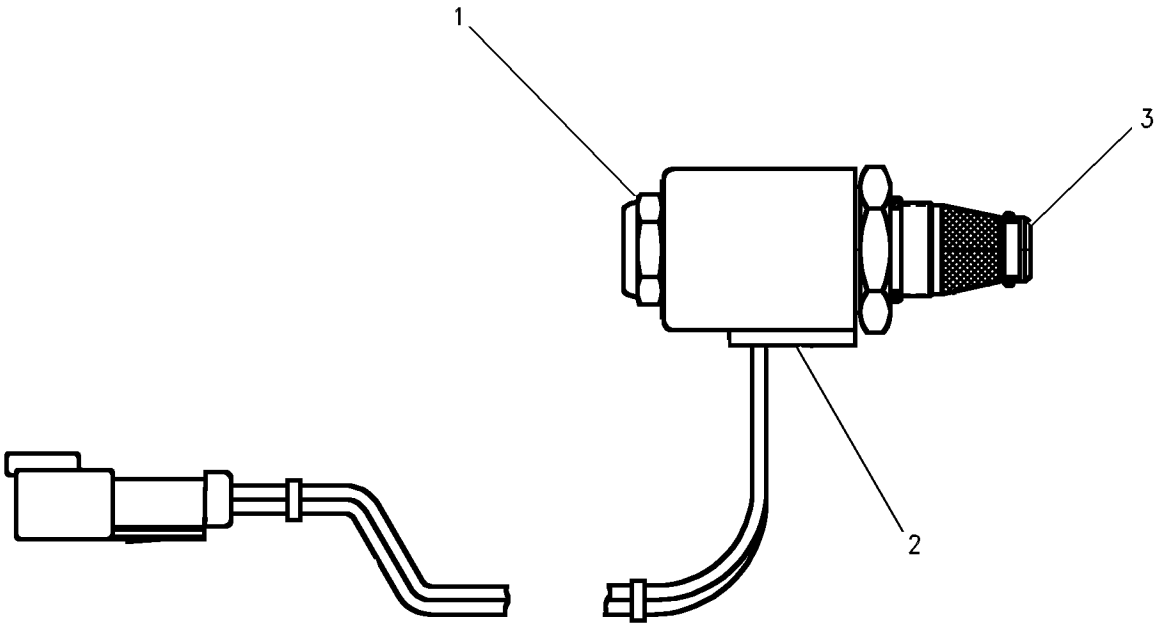

GRAPHIC #1 **<END>** g00653409

174-4909 VALVE GP-SOLENOID–SECONDARY BRAKE

S/N: RJS1-UP

PART OF 162-5357 MANIFOLD & VALVE GP

SMCS-4804 **i02184031**

NOTE	REF NO	GRAPHIC REF	PART NUMBER	QTY	PART NAME 1 2 3 4 5 6 (PRODUCT LEVEL)	SEE PAGE
	1	1	**145-1144**	1	COIL AS	
	2	1	**164-2108**	1	WASHER (13.03X25.4X2.38-MM THK)	
	3	1	**218-2373**	1	NUT (1/2-28-THD)	

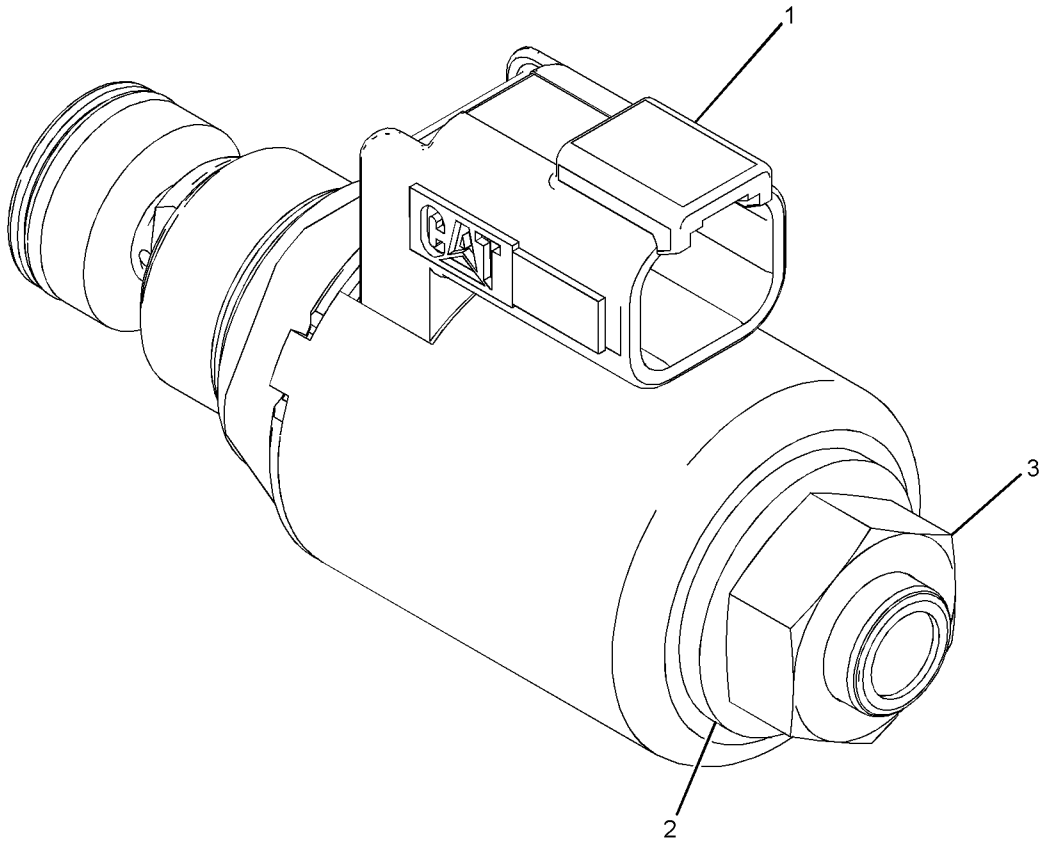

GRAPHIC #1 **<END>** g01106166

179-9387 ACCUMULATOR GP-HYDRAULIC—UNCHARGED

S/N: RJS1-UP

FIELD REPLACEMENT FOR 200-0750—PAGE 500

SMCS-5077 **i01929992**

NOTE	REF NO	GRAPHIC REF	PART NUMBER	QTY	PART NAME 1 2 3 4 5 6 (PRODUCT LEVEL)	SEE PAGE
	1	1	**204-8758**	2	FILM-WARNING (ACCUMULATOR)	

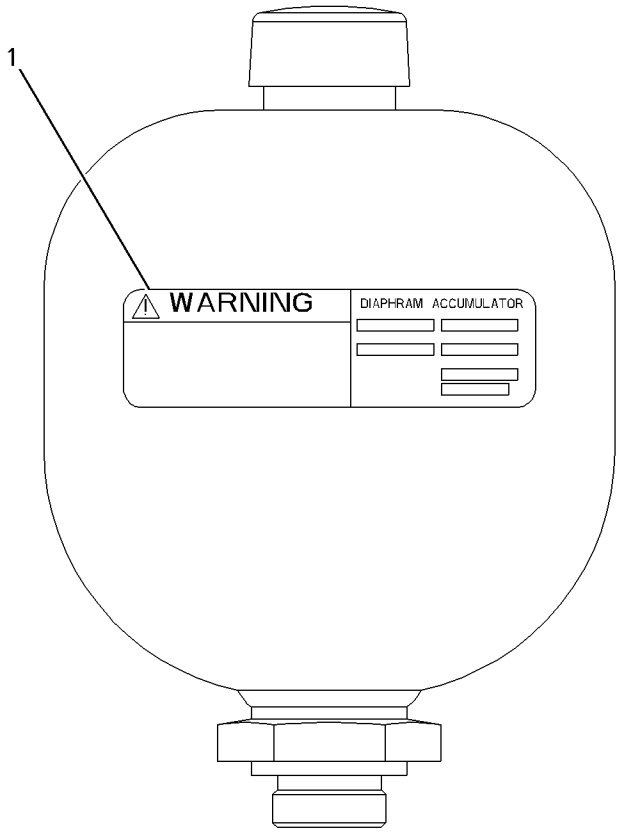

GRAPHIC #1 **<END>** g01004085

HYDRAULIC SYSTEM

200-0750 ACCUMULATOR GP-HYDRAULIC—CHARGED

S/N: RJS1-UP

PART OF 205-8582 LINES GP-PUMP

FIELD REPLACEMENT ORDER 179-9387—PAGE 499

SMCS-5077 **i02210642**

NOTE	REF NO	GRAPHIC REF	PART NUMBER	QTY	PART NAME 1 2 3 4 5 6 (PRODUCT LEVEL)	SEE PAGE
	1	1	**204-8758**	2	FILM-WARNING (ACCUMULATOR)	

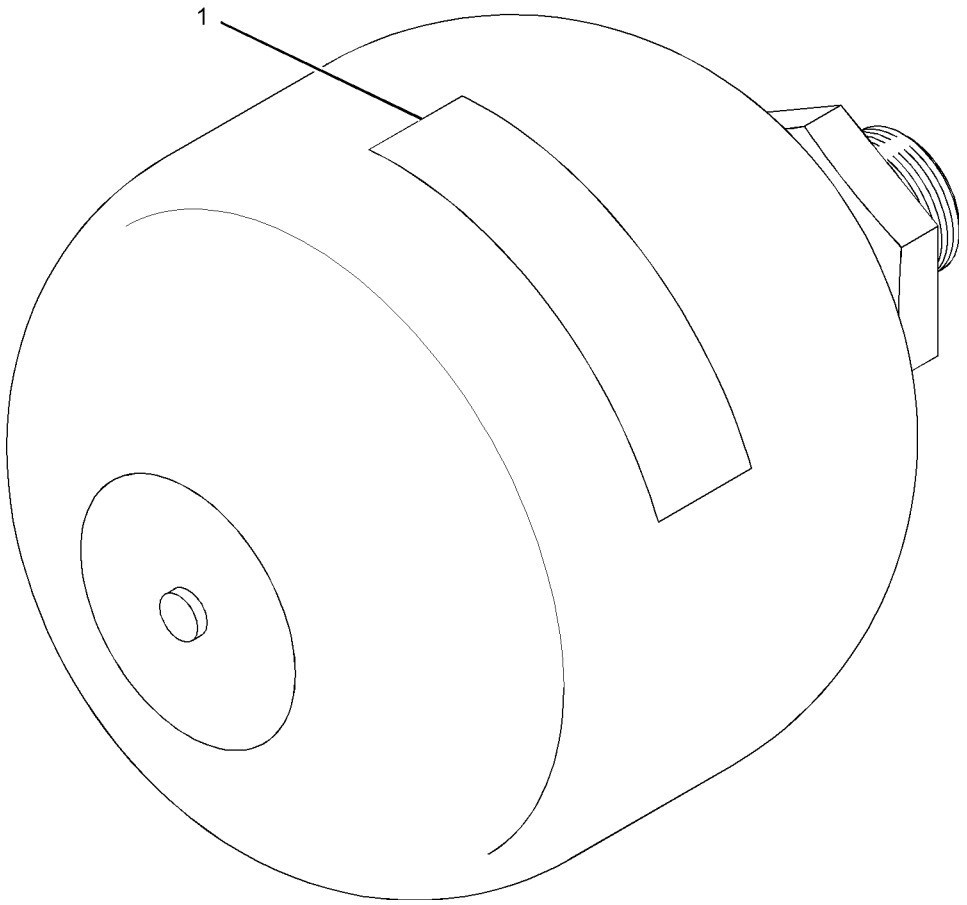

GRAPHIC #1 **<END>** g01034166

247-3005 ACTUATOR GP-PUMP–STEERING

S/N: RJS1-UP

PART OF 244-8862 VALVE GP-PUMP CONTROL

SMCS-5070, 5078 **i02185516**

NOTE	REF NO	GRAPHIC REF	PART NUMBER	QTY	PART NAME 1 2 3 4 5 6 (PRODUCT LEVEL)	SEE PAGE
	1	1	**111-8947**	2	SPRING (INNER)	
	2	1	**111-8938**	2	SPRING (OUTER)	
	3	1	**183-8429**	2	RING	
	4	1	**095-0942**	2	RING-RETAINING	
	5	1	**161-6149**	1	SEAL-O-RING	

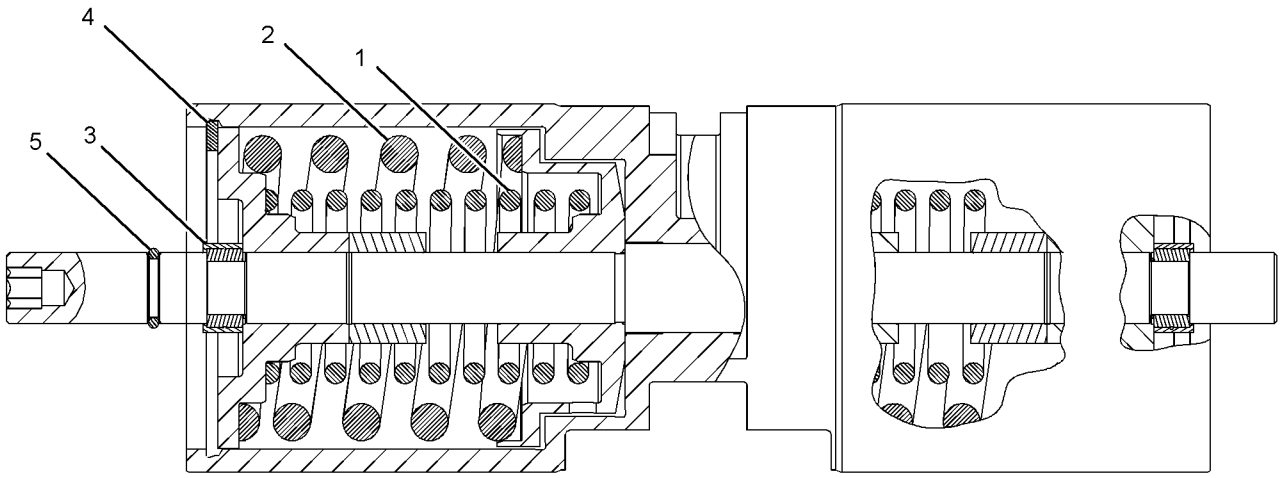

GRAPHIC #1 **<END>** g01113138

196-9987 CONTROL & MOUNTING GP–RIPPER

S/N: RJS1-UP
PART OF 205-8612 CONTROL AR-HYDRAULIC
AN ATTACHMENT

SMCS-5050 **i02196114**

NOTE	REF NO	GRAPHIC REF	PART NUMBER	QTY	PART NAME 1 2 3 4 5 6 (PRODUCT LEVEL)	SEE PAGE
	1	1	**137-3928**	1	FILM-INSTRUCTION (RIPPER CONTROL)	
	2	1	**224-5871**	1	PLATE	
Y	3	1	**226-7420**	1	CONTROL GP-IMPLEMENT (RIPPER)	511
	4	1	**5P-4116**	4	WASHER-HARD (8.8X20.5X2-MM THK)	
M	5	1	**8T-4908**	2	BOLT (M8X1.25X25-MM)	
M	6	1	**8T-7547**	2	BOLT (M8X1.25X30-MM)	

M-METRIC PART
Y-SEPARATE ILLUSTRATION

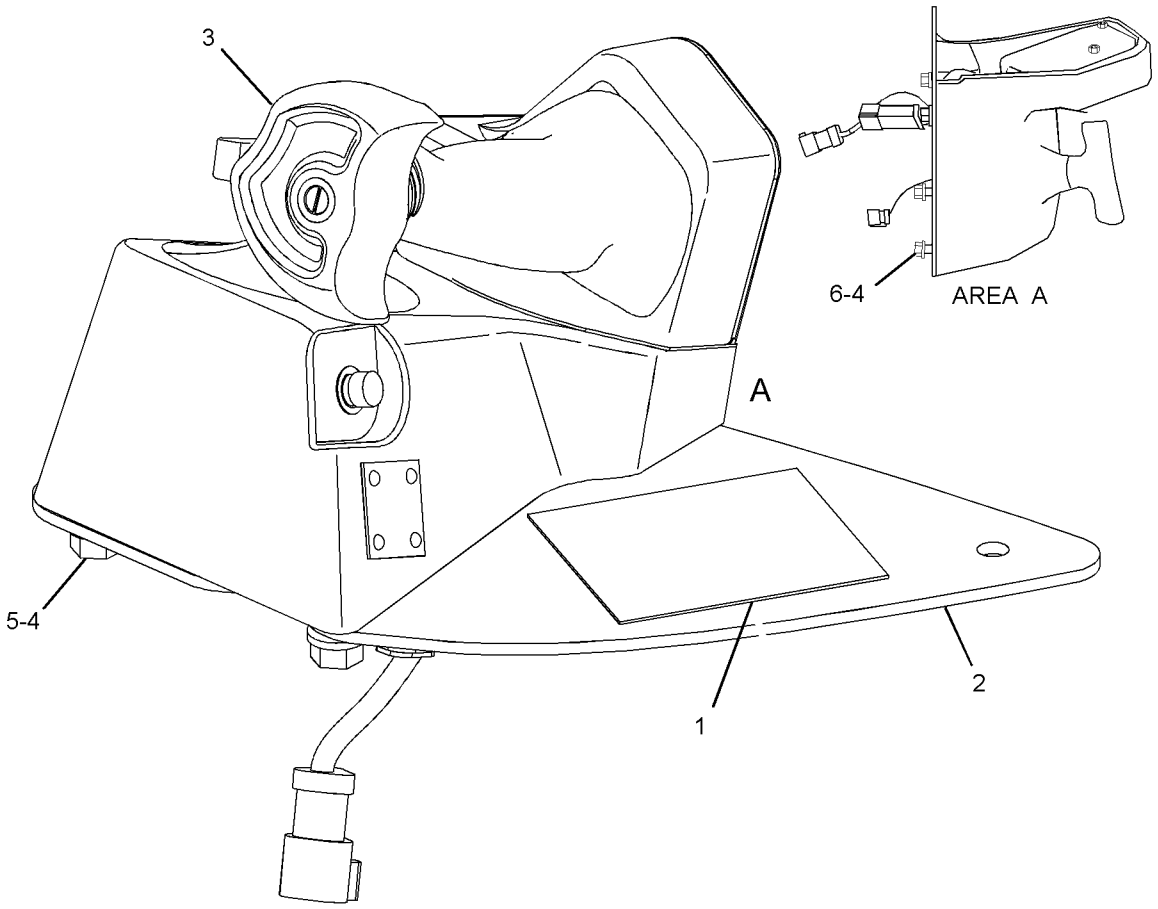

GRAPHIC #1 **<END>** g01110204

HYDRAULIC SYSTEM

205-8607 CONTROL AR-DUAL TILT

S/N: RJS1-UP

AN ATTACHMENT

SMCS-5050 **i02248625**

NOTE	PART NUMBER	QTY	PART NAME 1 2 3 4 5 6 (PRODUCT LEVEL)	SEE PAGE
Y	**208-6072**	1	CONTROL GP-JOYSTICK	513
Y	*204-7440*	1	LINES GP-TILT CYLINDER	576
Y	**217-4326**	1	VALVE GP-CONTROL (DUAL TILT)	631
	233-7894	1	FILM (DUAL TILT)	
			(ON UPPER RH CONSOLE BETWEEN SWITCH PANELS)	
	234-3404	1	FILM (AUTOMATIC BLADE)	
			(ON LOWER RH CONSOLE IN FRONT OF BULLDOZER CONTROL)	
Y-SEPARATE ILLUSTRATION				

<END>

HYDRAULIC SYSTEM

208-1607 CONTROL AR-HYD PIN PULLER

S/N: RJS1-UP

AN ATTACHMENT

SMCS-5353 **i02249327**

NOTE	REF NO	GRAPHIC REF	PART NUMBER	QTY	PART NAME 1 2 3 4 5 6 (PRODUCT LEVEL)	SEE PAGE
	1	1	**120-5820**	1	PLATE	
	2	1	**120-5821**	1	PLATE AS	
Y	3	1	*188-6140*	1	VALVE & MTG GP-CONTROL (HYDRAULIC PIN PULLER)	609
	4	1	**212-4888**	1	TUBE AS	
	5	1	**212-4890**	1	TUBE AS	
	6	1	**222-7889**	1	SWITCH AS-ROCKER (HYDRAULIC PIN PULLER)	
	7	1	*148-8336*	2	CONNECTOR AS	
					(EACH INCLUDES)	
		1	**6V-8636**	1	CONNECTOR	
		1	**3J-1907**	1	SEAL-O-RING	
		1	**6V-8397**	1	SEAL-O-RING	
	8	1	*148-8378*	2	ELBOW AS	
					(EACH INCLUDES)	
		1	**6V-8724**	1	ELBOW	
		1	**3J-1907**	1	SEAL-O-RING	
		1	**6V-8397**	1	SEAL-O-RING	
	10	1	**4L-6454**	2	BOLT (3/8-16X1-IN)	
	11	1	**4P-8134**	2	CLIP	
	12	1	**5P-9938**	2	BOLT-LOCKING (3/8-16X1.375-IN)	
	13	1	**6V-8801**	2	NUT (3/8-16-THD)	
	14	1	**7K-1181**	3	STRAP-CABLE	
	15	1	**7X-0290**	2	BOLT (3/8-16X3.5-IN)	
	16	1	**7X-0578**	4	WASHER-HARD (10.2X32X2.5-MM THK)	
	17	1	**8T-4896**	4	WASHER-HARD (10.2X18.5X2.5-MM THK)	
	18	1	**246-4311**	1	GUARD (SWITCH)	

Y-SEPARATE ILLUSTRATION

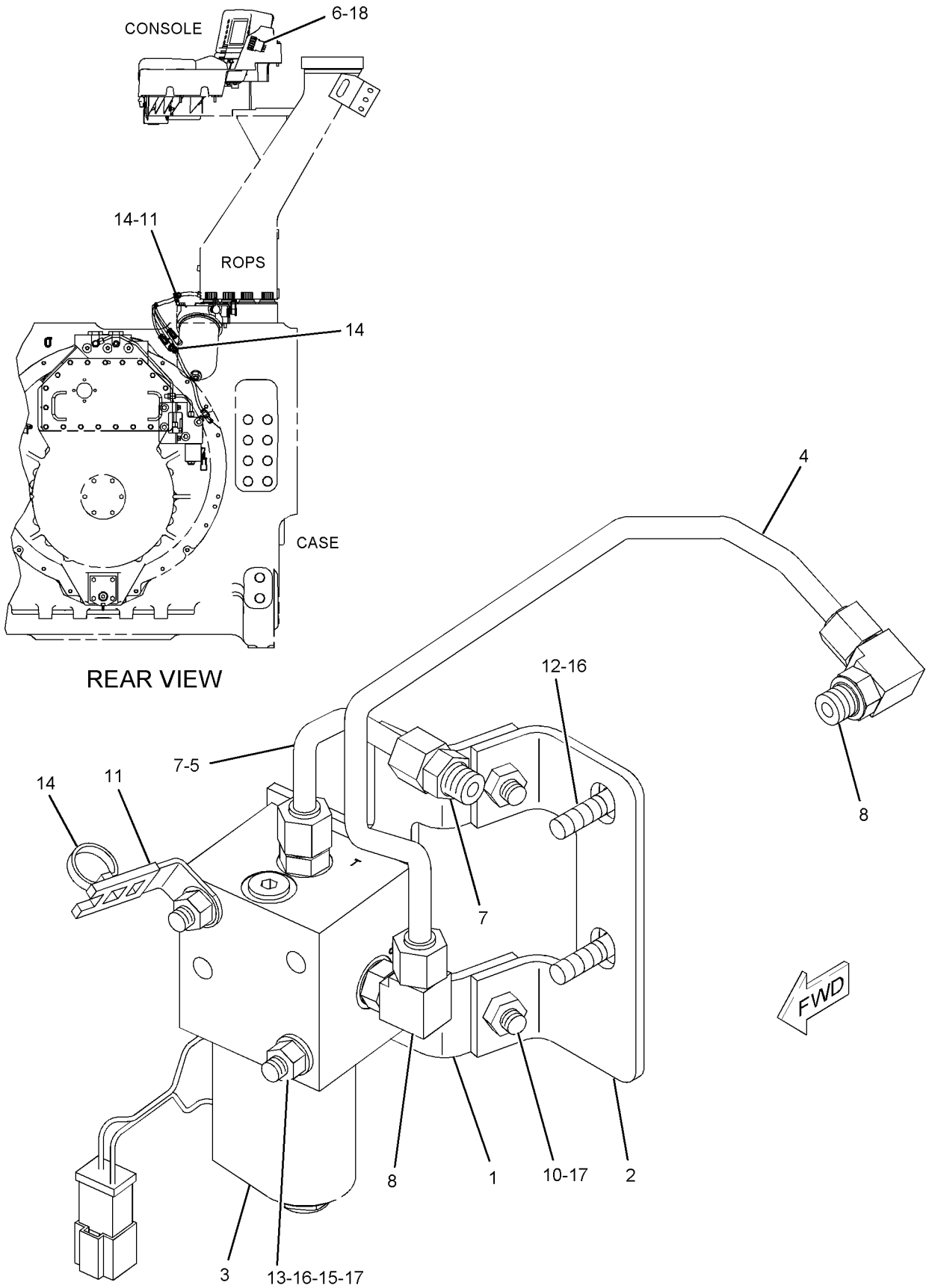

GRAPHIC #1 **<END>** g01113580

205-8612 CONTROL AR-HYDRAULIC—RIPPER

S/N: RJS1-UP

AN ATTACHMENT

SMCS-5050, 5057, 5170, 5357 **i01991884**

NOTE	PART NUMBER	QTY	PART NAME 1 2 3 4 5 6 (PRODUCT LEVEL)	SEE PAGE
Y	*196-9987*	1	CONTROL & MOUNTING GP	502
Y	*207-4455*	1	LINES GP-RIPPER	570

Y-SEPARATE ILLUSTRATION

<END>

205-8636 CONTROL AR-HYDRAULIC—WINCH

S/N: RJS1-UP

AN ATTACHMENT

SMCS-5050, 5057, 5170, 5357 **i02252202**

NOTE	PART NUMBER	QTY	PART NAME 1 2 3 4 5 6 (PRODUCT LEVEL)	SEE PAGE
Y	*209-2608*	1	CONTROL & MTG GP-ELECTRONIC	187
Y	*209-2609*	1	LINES GP-WINCH	700
Y	*222-7247*	1	VALVE & MTG GP-CONTROL	610
	235-7152	1	FILM (WINCH)	
			ON RH CONSOLE NEXT TO CONTROL	
	222-7888	1	SWITCH AS-ROCKER (24-VOLT, SEALED, ILLUMINATED) (WINCH)	

Y-SEPARATE ILLUSTRATION

<END>

HYDRAULIC SYSTEM

188-1079 CONTROL GP-HANDLE–BULLDOZER

S/N: RJS1-UP

PART OF 208-6074 CONTROL GP-JOYSTICK

SMCS-5063, 5705 **i01499097**

NOTE	REF NO	GRAPHIC REF	PART NUMBER	QTY	PART NAME 1 2 3 4 5 6 (PRODUCT LEVEL)	SEE PAGE
Z	1	1		1	HANDGRIP AS	

Z-NOT SERVICED SEPARATELY

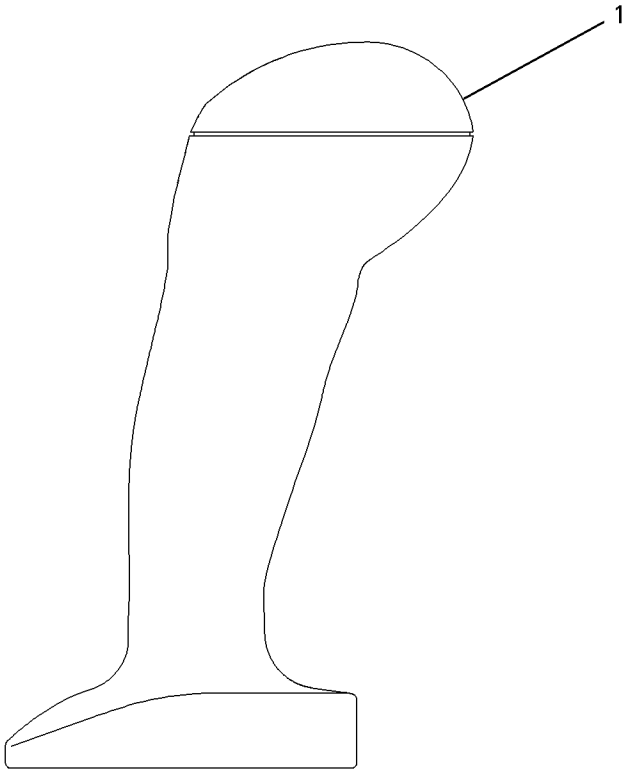

GRAPHIC #1 **<END>** g00721034

208-6070 CONTROL GP-HANDLE—WITH TRIGGER—DUAL TILT

S/N: RJS1-UP
PART OF 208-6072 CONTROL GP-JOYSTICK
AN ATTACHMENT

SMCS-5063, 5705 **i02242168**

NOTE	REF NO	GRAPHIC REF	PART NUMBER	QTY	PART NAME 1 2 3 4 5 6 (PRODUCT LEVEL)	SEE PAGE
Z	1	1		1	HANDHOLD AS	
	2	1	**144-0331**	3	CAP-PUSH BUTTON	
	3	1	**208-6067**	1	HOUSING AS	
	4	1	**162-8387**	1	LEVER	
	5	1	**9B-1117**	2	LOCKWASHER	
	6	1	**162-8389**	1	PLATE	
	7	1	**175-4170**	2	SCREW-PAN HEAD (NO 6X1.625-IN)	
	8	1	**208-6081**	1	SLEEVE	
E	9	1	**218-7136**		SLEEVE (36-CM)	
	10	1	**179-7376**	1	SWITCH AS-PUSH BUTTON (BULLDOZER TILT)	
BD	11	1	**6V-1614**		TUBE-HEAT SHRINK	

B-USE AS REQUIRED
D-ORDER BY THE METER
E-ORDER BY THE CENTIMETER
Z-NOT SERVICED SEPARATELY

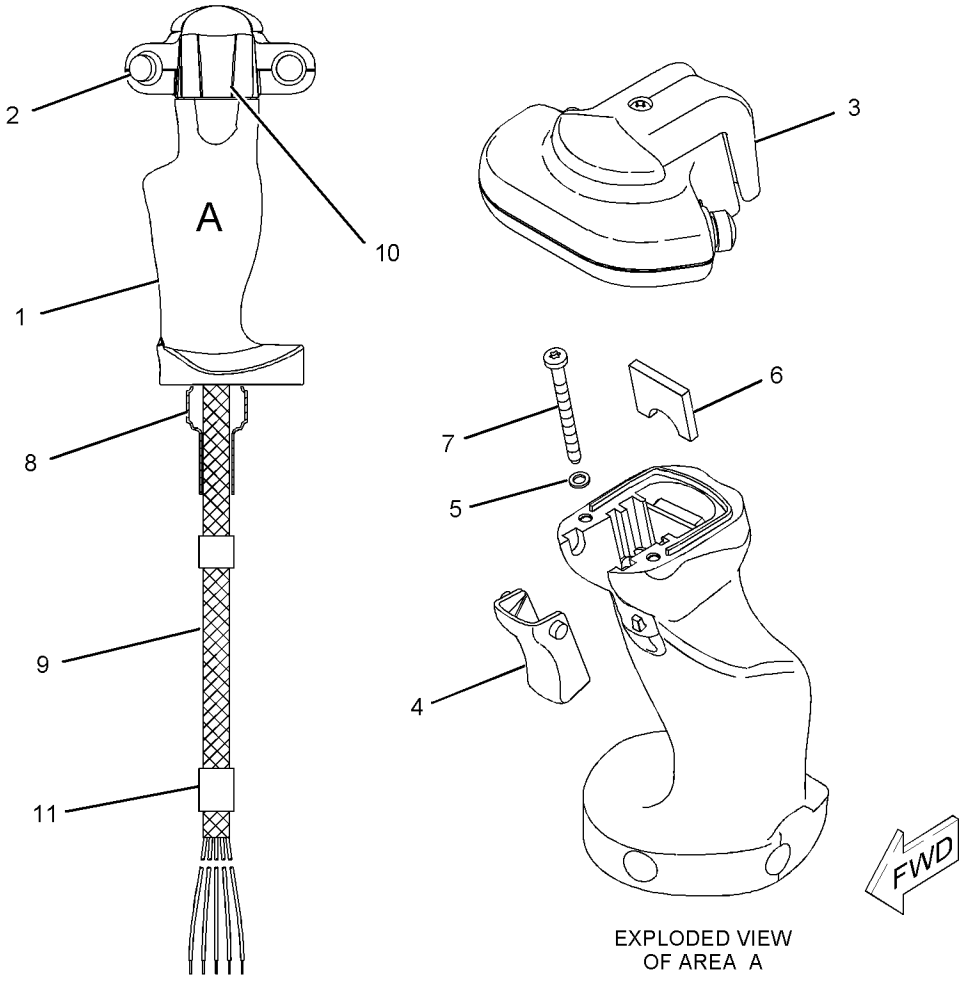

EXPLODED VIEW
OF AREA A

GRAPHIC #1 **<END>** g01130131

HYDRAULIC SYSTEM

240-7837 CONTROL GP-HANDLE—GRADE CONTROL

S/N: RJS1-UP
PART OF 247-0747 CONTROL GP-JOYSTICK
AN ATTACHMENT

SMCS-5063, 5705 **i02199187**

NOTE	REF NO	GRAPHIC REF	PART NUMBER	QTY	PART NAME 1 2 3 4 5 6 (PRODUCT LEVEL)	SEE PAGE
E	1	1	**218-7136**		SLEEVE (36-CM)	
D	2	1	**6V-1614**		TUBE-HEAT SHRINK (1-M)	
	3	1	**144-0331**	3	CAP-PUSH BUTTON	

D-ORDER BY THE METER
E-ORDER BY THE CENTIMETER

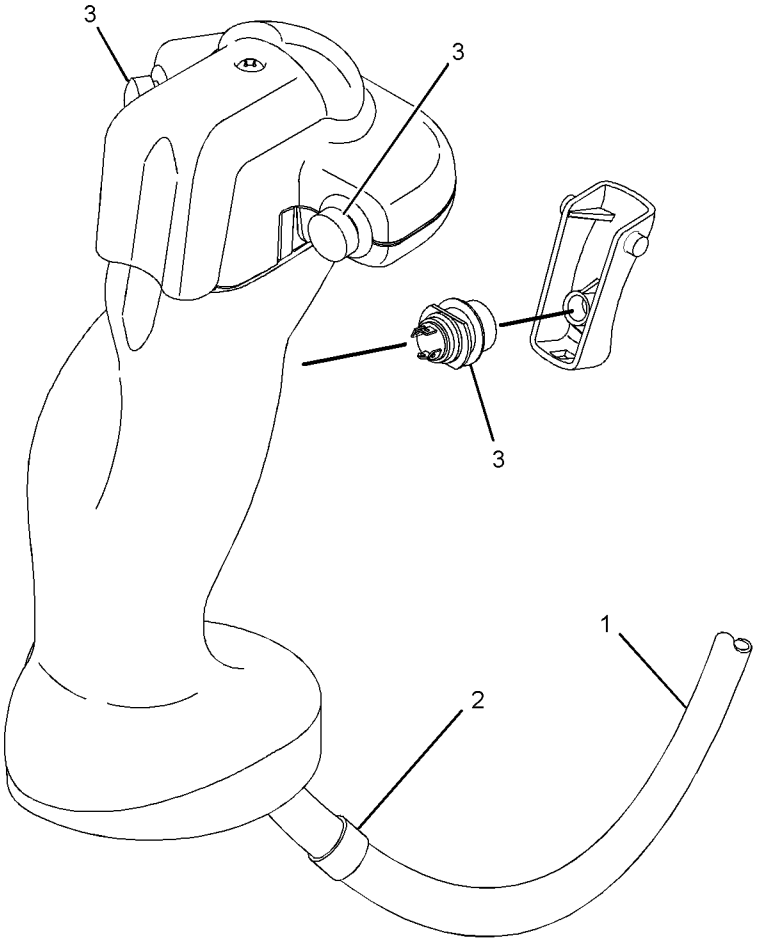

GRAPHIC #1 **<END>** g01112658

HYDRAULIC SYSTEM

226-7420 CONTROL GP-IMPLEMENT–RIPPER

S/N: RJS1-UP
PART OF 196-9987 CONTROL & MOUNTING GP
AN ATTACHMENT

SMCS-5063 **i02242725**

NOTE	REF NO	GRAPHIC REF	PART NUMBER	QTY	PART NAME 1 2 3 4 5 6 (PRODUCT LEVEL)	SEE PAGE
	1	1	**4B-1270**	2	SCREW-MACHINE (8-32X0.75-IN)	
	2	1	**8T-5410**	2	SEAL-LIP TYPE	
M	3	1	**8T-6699**	4	BOLT-SOCKET HEAD (M5X0.8X35-MM)	
	4	1	**112-0858**	4	BEARING	
	5	1	**137-5817**	1	KNOB AS (RIPPER CONTROL) (RAISE, LOWER)	
	6	1		1	SHAFT	
	7	1	**142-2526**	2	PLATE	
	8	1		1	CAM	
	9	1	**144-0326**	1	SWITCH AS-PUSH BUTTON (RIPPER AUTOMATIC STOW)	
		1	**144-0331**	1	CAP-PUSH BUTTON	
	10	1	**155-2260**	1	KIT-CONNECTING PLUG (3-PIN)	
					(INCLUDES PLUG AS & WEDGE)	
B	11	1	**195-7869**	1	SHIM (0.15-MM THK)	
B	12	1	**195-7870**	1	SHIM (0.51-MM THK)	
B	13	1	**195-7871**	1	SHIM (0.25-MM THK)	
B	14	1	**195-7872**	1	SHIM (0.41-MM THK)	
	15	1	**219-2390**	1	SENSOR GP-POSITION (RIPPER SHANK IN, OUT)	
		1	**102-8803**	1	KIT-RECEPTACLE (3-PIN)	
					(INCLUDES RECEPTACLE AS & WEDGE)	
		1	**3E-3371**	1	WEDGE-RECEPTACLE LOCK (3-PIN)	
		1	**186-3735**	3	PIN-CONNECTOR	
E		1	**9X-1813**		SLEEVE (13-CM)	
	16	1	**219-2391**	1	SENSOR GP-POSITION (RIPPER RAISE, LOWER)	
		1	**102-8804**	1	KIT-RECEPTACLE (4-PIN)	
					(INCLUDES RECEPTACLE AS & WEDGE)	
		1	**3E-3377**	1	WEDGE-RECEPTACLE LOCK (4-PIN)	
		1	**186-3735**	3	PIN-CONNECTOR	
		1	**9G-3695**	1	PLUG (GROMMET SEALING)	
	17	1	**223-4461**	1	BASE AS	
	18	1	**226-2751**	1	LEVER-FINGER (RIPPER SHANK IN, OUT)	
	19	1	**226-7295**	1	FILM-INFORMATION (AUTOMATIC RIPPER)	
	20	1	**226-7480**	1	SHAFT	
	21	1	**242-5205**	2	GASKET	
	22	1	**245-3856**	2	SPRING	
	23	1	**1W-6448**	4	DOWEL	
	24	1	**2L-5894**	4	PIN-SPRING	
	25	1	**3K-4897**	2	PIN-SPRING	
	26	1	**6V-0894**	2	SEAL-O-RING	
D	27	1	**8T-5677**		SLEEVE (0.5-M)	
	28	1	**8T-0328**	4	WASHER-HARD (5.5X10X1-MM THK)	
	29	1	**186-3736**	3	SOCKET-CONNECTOR	
BE	30	1	**7X-3159**		TUBE-HEAT SHRINK	

B-USE AS REQUIRED
D-ORDER BY THE METER
E-ORDER BY THE CENTIMETER
M-METRIC PART

226-7420 CONTROL GP-IMPLEMENT *(contd.)* i02242725

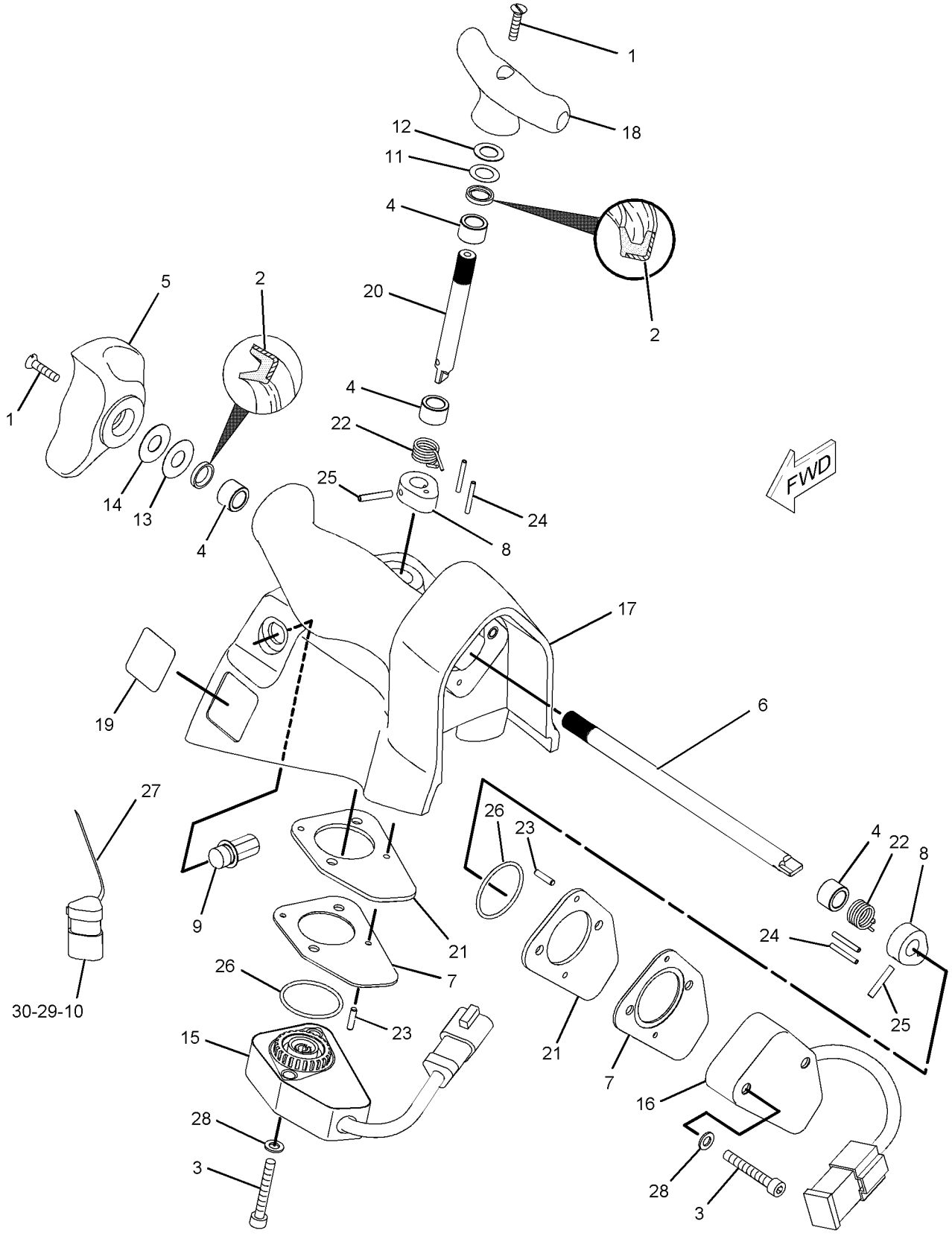

GRAPHIC #1 **<END>** g01130543

208-6072 CONTROL GP-JOYSTICK—DUAL TILT

S/N: RJS1-UP
PART OF 205-8607 CONTROL AR-DUAL TILT
AN ATTACHMENT

SMCS-5063 **i02208073**

NOTE	REF NO	GRAPHIC REF	PART NUMBER	QTY	PART NAME 1 2 3 4 5 6 (PRODUCT LEVEL)	SEE PAGE
M	1	1	**192-4658**	4	SCREW-PAN HEAD (M4X0.7X20-MM)	
M	2	1	**193-4476**	8	SCREW-PAN HEAD (M4X0.7X35-MM)	
	3	1	*206-7421*	1	BASE AS	
		1	**205-2941**	4	SCREW-FLAT HEAD (M5X0.08X2.8-MM)	
		1	**175-1529**	1	BOOT	
Y	4	1	**208-6070**	1	CONTROL GP-HANDLE (BULLDOZER CONTROL)	508
	5	1	**216-3002**	1	DETENT GP-CONTROL (BLADE LIFT, LOWER)	
	6	1	**227-6718**	1	DETENT GP-CONTROL (BLADE TILT)	
	7	1	**151-4977**	12	WASHER (4.445X9.525X1.092-MM THK)	
	8	1	**175-3265**	1	SCREW (8-16X0.63-IN)	
	9	1	**257-2529**	1	SENSOR GP-POSITION (BLADE LIFT, LOWER)	
	10	1	**257-2532**	1	SENSOR GP-POSITION (BLADE TILT)	
	11	1	**2K-4898**	1	CLAMP-TUBE	
	12	1	**4B-9808**	2	SETSCREW (1/4-20X0.5-IN)	
	13	1	**186-3735**	11	PIN-CONNECTOR	
	14	1	**8T-8737**	1	PLUG-SEAL	
	15	1	**174-3091**	1	KIT-RECEPTACLE (12-PIN)	
					(INCLUDES RECEPTACLE AS & WEDGE)	
	16	1	**208-6081**	1	SLEEVE	

M-METRIC PART
Y-SEPARATE ILLUSTRATION

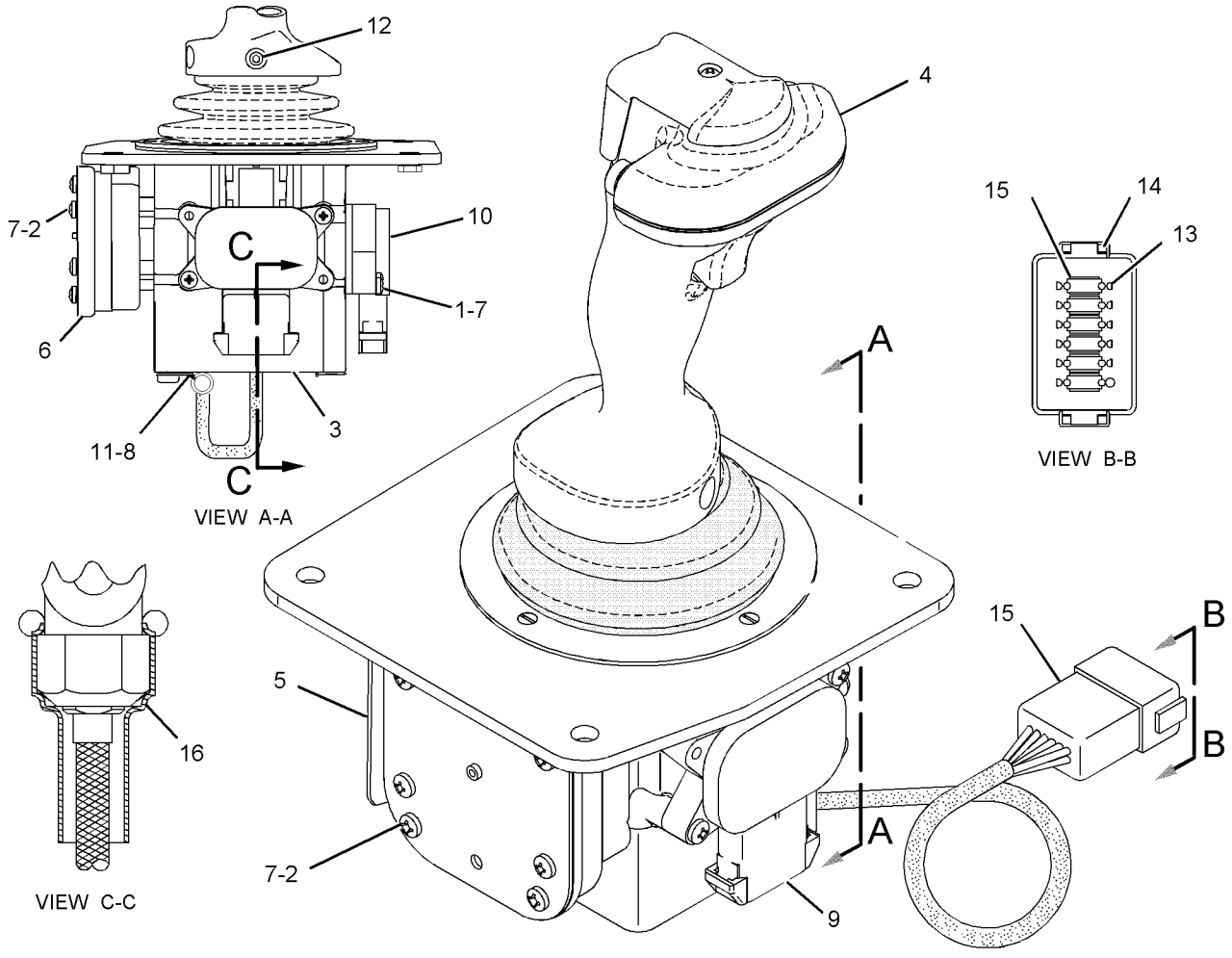

GRAPHIC #1 **<END>** g01110614

208-6074 CONTROL GP-JOYSTICK–BULLDOZER

S/N: RJS1-UP

PART OF 205-8602 HYDRAULIC AR

SMCS-5063 **i02234893**

NOTE	REF NO	GRAPHIC REF	PART NUMBER	QTY	PART NAME 1 2 3 4 5 6 (PRODUCT LEVEL)	SEE PAGE
Y	1	1	**188-1079**	1	CONTROL GP-HANDLE (BULLDOZER CONTROL)	507
M	2	1	**192-4658**	4	SCREW-PAN HEAD (M4X0.7X20-MM)	
M	3	1	**193-4476**	8	SCREW-PAN HEAD (M4X0.7X35-MM)	
	4	1	**175-1529**	1	BOOT	
	4A	1	**205-2941**	4	SCREW-FLAT HEAD (M5X0.08X2.8-MM)	
	5	1	**216-3002**	1	DETENT GP-CONTROL (BLADE LIFT, LOWER)	
	6	1	**227-6718**	1	DETENT GP-CONTROL (BLADE TILT)	
	7	1	**257-2529**	1	SENSOR GP-POSITION (BLADE LIFT, LOWER)	
	8	1	**257-2532**	1	SENSOR GP-POSITION (BLADE TILT)	
	9	1	**151-4977**	12	WASHER (4.445X9.525X1.092-MM THK)	
	10	1	**4B-9808**	2	SETSCREW (1/4-20X0.5-IN)	

M-METRIC PART
Y-SEPARATE ILLUSTRATION

208-6074 CONTROL GP-JOYSTICK *(contd.)* **i02234893**

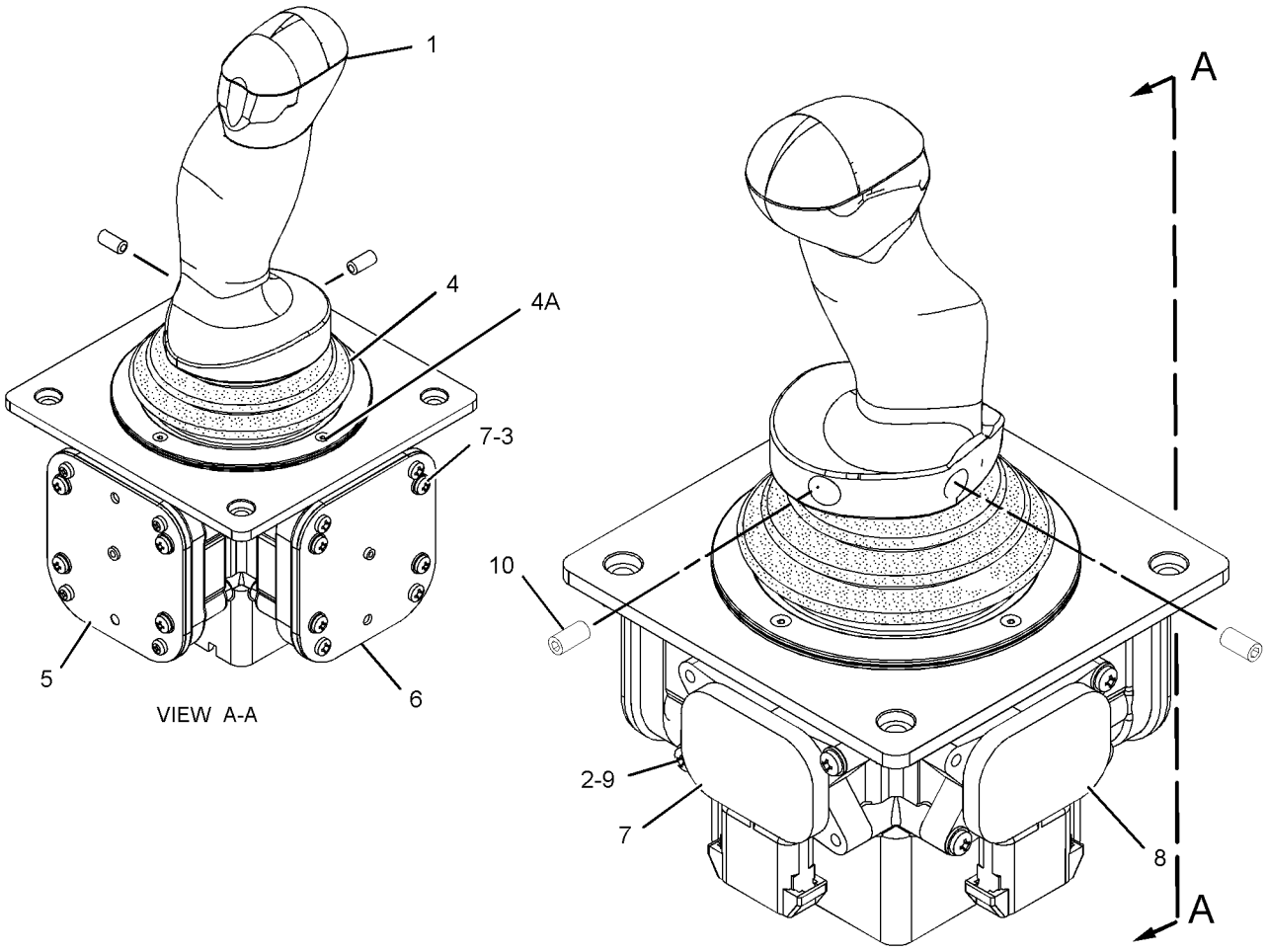

GRAPHIC #1 **<END>** g01106082

208-6075 CONTROL GP-JOYSTICK–WINCH

S/N: RJS1-UP
PART OF 209-2608 CONTROL & MTG GP-ELECTRONIC
AN ATTACHMENT

SMCS-5063 **i02270796**

NOTE	REF NO	GRAPHIC REF	PART NUMBER	QTY	PART NAME 1 2 3 4 5 6 (PRODUCT LEVEL)	SEE PAGE
	1	1	**188-1080**	1	DETENT GP-CONTROL (DRUM CLUTCH RELEASE)	
	2	1	**189-2305**	1	DETENT GP-CONTROL (REEL IN, REEL OUT)	
M	3	1	**193-4476**	8	SCREW-PAN HEAD (M4X0.7X35-MM)	
	4	1	**219-7912**	1	HANDLE GP-MODULAR (WINCH)	
Z	5	1		1	BASE AS	
	6	1	**257-2529**	1	SENSOR GP-POSITION (REEL IN, REEL OUT)	
	7	1	**257-2530**	1	SENSOR GP-POSITION (DRUM CLUTCH RELEASE)	
M	8	1	**150-1293**	2	SCREW-BUTTON HEAD (M4X0.7X12-MM)	
	9	1	**151-4977**	12	WASHER (4.445X9.525X1.092-MM THK)	
	10	1	**175-3265**	1	SCREW (8-16X0.63-IN)	
M	11	1	**192-4658**	4	SCREW-PAN HEAD (M4X0.7X20-MM)	
	12	1	**2K-4898**	1	CLAMP-TUBE	
	13	1	**102-8804**	1	KIT-RECEPTACLE (4-PIN)	
					(INCLUDES RECEPTACLE AS & WEDGE)	
	14	1	**8T-8737**	1	PLUG-SEAL	
	15	1	**186-3735**	3	PIN-CONNECTOR	

M-METRIC PART
Z-NOT SERVICED SEPARATELY

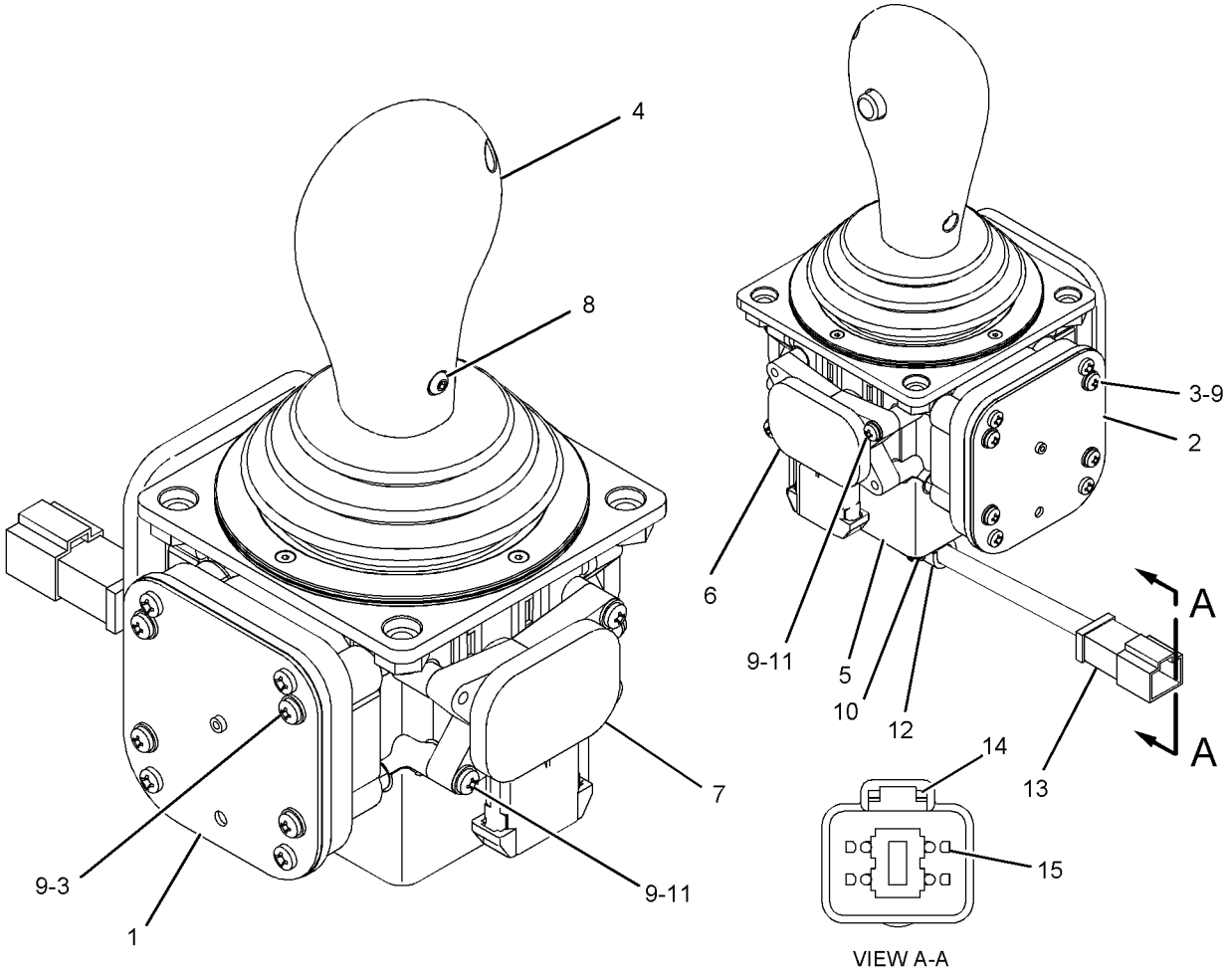

GRAPHIC #1 **<END>** g01130699

HYDRAULIC SYSTEM

247-0747 CONTROL GP-JOYSTICK–GRADE CONTROL

S/N: RJS1-UP

PART OF 245-4623 INSTALLATION AR-GRADE CONTROL

AN ATTACHMENT

SMCS-5063 **i02248021**

NOTE	REF NO	GRAPHIC REF	PART NUMBER	QTY	PART NAME 1 2 3 4 5 6 (PRODUCT LEVEL)	SEE PAGE
M	1	1	**192-4658**	4	SCREW-PAN HEAD (M4X0.7X20-MM)	
M	2	1	**193-4476**	8	SCREW-PAN HEAD (M4X0.7X35-MM)	
	4	1	**216-3002**	1	DETENT GP-CONTROL (BLADE LIFT, LOWER)	
M		1	**193-4476**	4	SCREW-PAN HEAD (M4X0.7X35-MM)	
		1	**151-4977**	4	WASHER (4.445X9.525X1.092-MM THK)	
	5	1	**227-6718**	1	DETENT GP-CONTROL (BLADE TILT)	
M		1	**193-4476**	4	SCREW-PAN HEAD (M4X0.7X35-MM)	
		1	**151-4977**	4	WASHER (4.445X9.525X1.092-MM THK)	
Y	6	1	**240-7837**	1	CONTROL GP-HANDLE (BULLDOZER CONTROL)	510
	7	1	**257-2529**	1	SENSOR GP-POSITION (BLADE LIFT, LOWER)	
	8	1	**257-2532**	1	SENSOR GP-POSITION (BLADE TILT)	
	9	1	**151-4977**	12	WASHER (4.445X9.525X1.092-MM THK)	
	10	1	**175-3265**	1	SCREW (8-16X0.63-IN)	
	11	1	**2K-4898**	1	CLAMP-TUBE	
	12	1	**4B-9808**	2	SETSCREW (1/4-20X0.5-IN)	
	13	1	**8T-8729**	7	PIN-CONNECTOR	
	14	1	**8T-8737**	5	PLUG-SEAL	
	15	1	**174-3091**	1	KIT-RECEPTACLE (12-PIN)	
					(INCLUDES RECEPTACLE AS & WEDGE)	
	16	1	**208-6081**	1	SLEEVE	

M-METRIC PART
Y-SEPARATE ILLUSTRATION

247-0747 CONTROL GP-JOYSTICK *(contd.)* i02248021

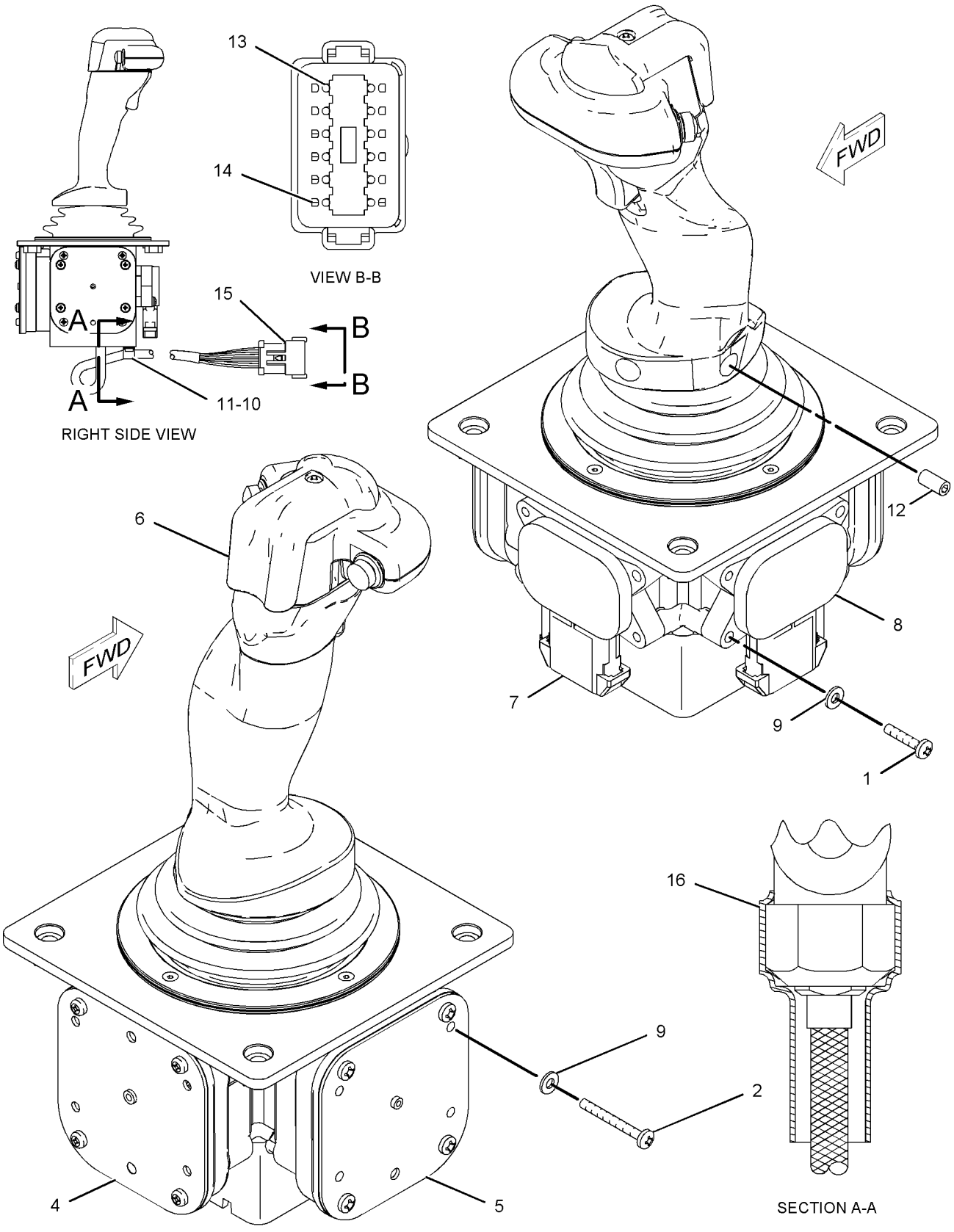

GRAPHIC #1 **<END>** g01112500

HYDRAULIC SYSTEM

205-8590 COOLER & MTG GP-HYDRAULIC OIL

S/N: RJS1-UP

PART OF 205-8604 INSTALLATION AR-ENGINE

SMCS-1374 **i01995229**

NOTE	REF NO	GRAPHIC REF	PART NUMBER	QTY	PART NAME 1 2 3 4 5 6 (PRODUCT LEVEL)	SEE PAGE
	1	1	**6N-6984**	4	MOUNT-RUBBER	
	2	1	**206-7353**	1	CORE AS-OIL COOLER (HYDRAULIC)	
		1	**124-8335**	1	VALVE AS-CONTROL (HYDRAULIC OIL)	
		1	**215-3512**	1	SEAL-O-RING	
	3	1	**6V-8801**	4	NUT (3/8-16-THD)	
	4	1	**8T-2561**	4	WASHER-HARD (10.5X28.5X5-MM THK)	

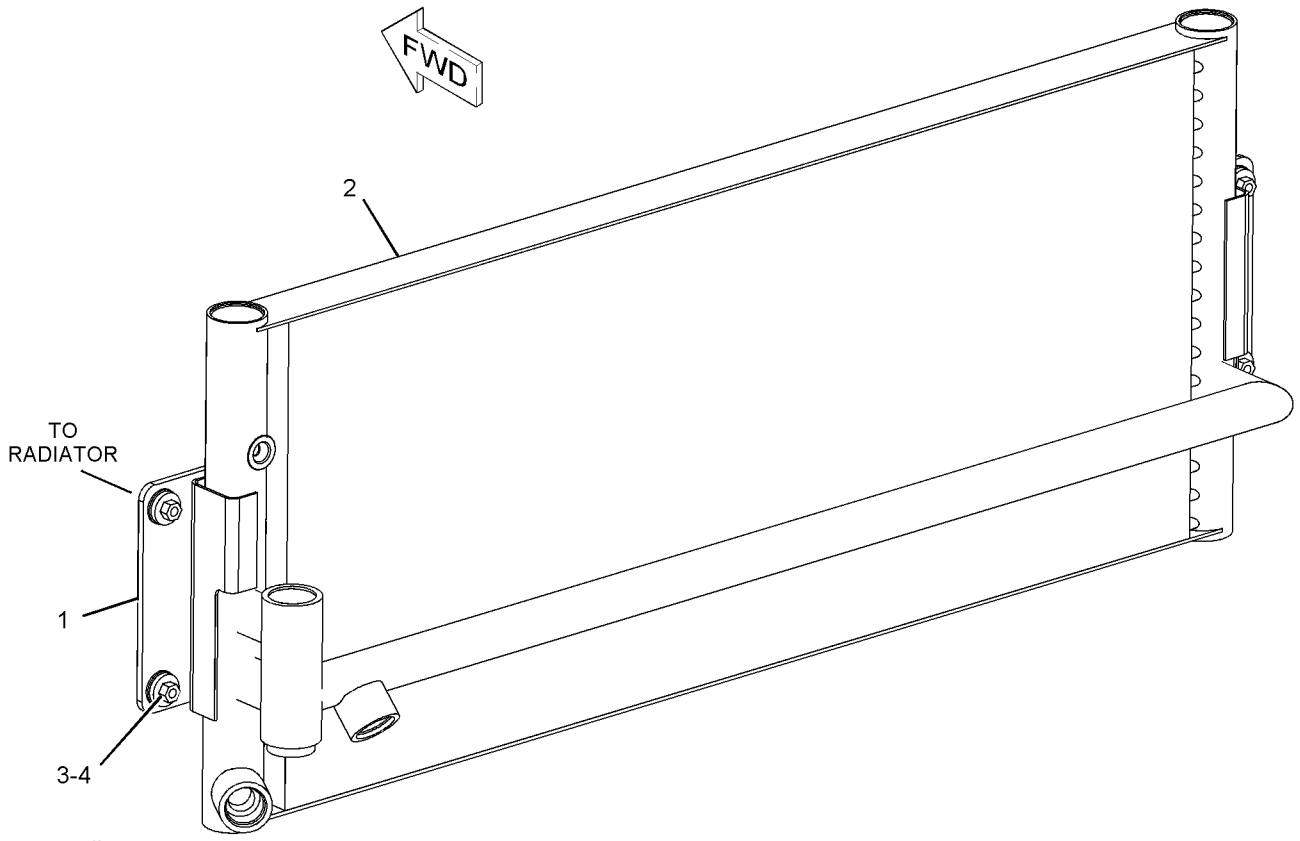

GRAPHIC #1 **<END>** g01033343

9G-9288 COVER GP-HYDRAULIC TANK CAP

S/N: RJS1-UP

PART OF 205-8602 HYDRAULIC AR

SMCS-5056, 7315 **i02248629**

NOTE	REF NO	GRAPHIC REF	PART NUMBER	QTY	PART NAME 1 2 3 4 5 6 (PRODUCT LEVEL)	SEE PAGE
	1	1	**1L-5072**	1	DOWEL	
	2	1	**9M-7394**	1	LEVER (COVER) (HYDRAULIC TANK FILL)	
	3	1	**5D-1911**	1	COVER-HYDRAULIC CAP	
	4	1	**2J-7761**	1	RING-RETAINING	
	5	1	**246-2641**	1	PADLOCK GP (HYDRAULIC TANK FILL)	
		1	**5P-8500**	2	KEY	

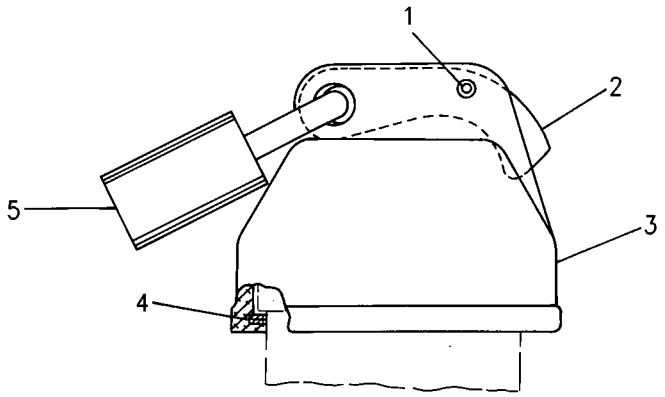

GRAPHIC #1 **<END>** g00600453

204-7462 CYLINDER & LINES GP-LIFT—RH—BULLDOZER

S/N: T9H1-UP; T9J1-UP; RJS1-UP
PART OF 228-1854 BULLDOZER AR-SEMI-UNIVERSAL, 228-1853 BULLDOZER AR-UNIVERSAL AN ATTACHMENT

SMCS-5102 **i01990869**

NOTE	REF NO	GRAPHIC REF	PART NUMBER	QTY	PART NAME 1 2 3 4 5 6 (PRODUCT LEVEL)	SEE PAGE
	1	1	**8E-1244**	1	BRACKET AS	
	2	1	**8E-1477**	1	PLATE	
	3	1	*153-6251*	1	CONNECTOR GP	
		1	**9X-8260**	1	CONNECTOR	
		1	**4K-1388**	1	SEAL-O-RING	
		1	**6V-8400**	1	SEAL-O-RING	
	4	1	**163-1623**	1	TUBE AS-LH	
Y	5	1	**165-8633**	1	CYLINDER GP-LIFT (BULLDOZER)	531
I	6	1	**211-9957**	1	HOSE AS	
	7	1	**221-5379**	1	MANIFOLD	
	8	1	**221-5397**	1	PLATE	
	9	1	**228-6506**	1	PLATE AS	
M		1	**8T-3490**	6	NUT-WELD (M10X1.5-THD)	
I	10	1	**228-9112**	1	HOSE AS	
	11	1	**1P-3704**	1	SEAL-RECTANGULAR	
	12	1	**4J-0520**	4	SEAL-O-RING	
	13	1	**4J-0526**	1	SEAL-O-RING	
	14	1	**4P-7581**	1	CLIP	
	15	1	**7X-0353**	2	BOLT (5/8-11X4.25-IN)	
	16	1	**7X-7729**	9	WASHER (11X25X3-MM THK)	
	17	1	**8C-3206**	4	FLANGE-HALF	
	18	1	**8T-4121**	12	WASHER-HARD (11X21X2.5-MM THK)	
	19	1	**8T-4122**	2	WASHER-HARD (17X32X3.5-MM THK)	
M	20	1	**8T-4185**	4	BOLT (M10X1.5X50-MM)	
M	21	1	**8T-4195**	17	BOLT (M10X1.5X30-MM)	

I-REFER TO HYDRAULIC INFORMATION SYSTEM
M-METRIC PART
Y-SEPARATE ILLUSTRATION

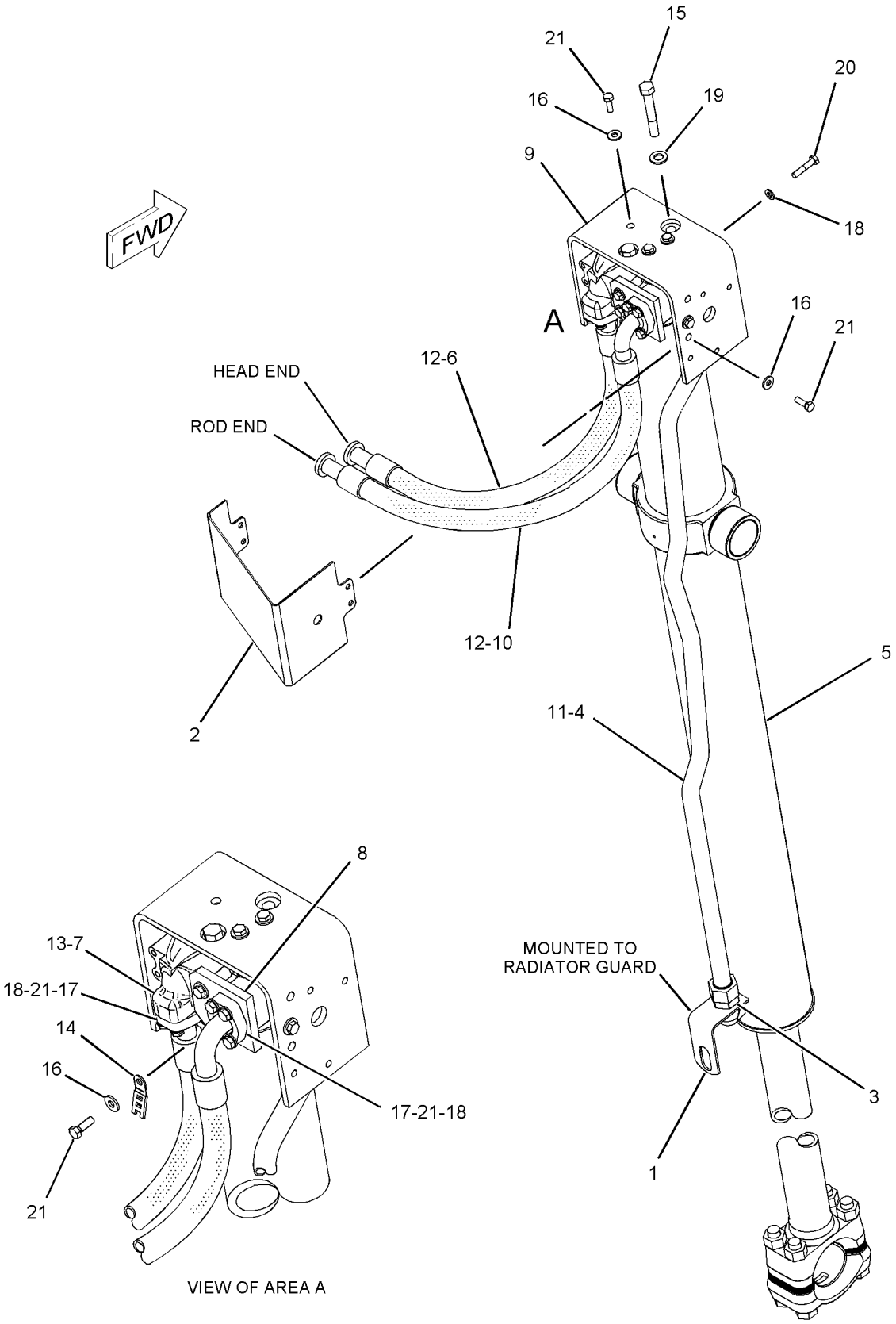

GRAPHIC #1 **<END>** g01036349

204-7463 CYLINDER & LINES GP-LIFT–LH–BULLDOZER

S/N: T9H1-UP; T9J1-UP; RJS1-UP
PART OF 228-1854 BULLDOZER AR-SEMI-UNIVERSAL, 228-1853 BULLDOZER AR-UNIVERSAL
AN ATTACHMENT

SMCS-5102 **i01991047**

NOTE	REF NO	GRAPHIC REF	PART NUMBER	QTY	PART NAME 1 2 3 4 5 6 (PRODUCT LEVEL)	SEE PAGE
	1	1	**8E-1244**	1	BRACKET AS	
	2	1	**8E-1477**	1	PLATE	
	3	1	*153-6251*	1	CONNECTOR GP	
		1	**9X-8260**	1	CONNECTOR	
		1	**4K-1388**	1	SEAL-O-RING	
		1	**6V-8400**	1	SEAL-O-RING	
	4	1	**163-1623**	1	TUBE AS-LH	
Y	5	1	**165-8633**	1	CYLINDER GP-LIFT (BULLDOZER)	531
I	6	1	**211-9957**	1	HOSE AS	
I	7	1	**211-9958**	1	HOSE AS	
	8	1	**221-5379**	1	MANIFOLD	
	9	1	**221-5397**	1	PLATE	
	10	1	**228-6506**	1	PLATE AS	
M		1	**8T-3490**	6	NUT-WELD (M10X1.5-THD)	
	11	1	**1P-3704**	1	SEAL-RECTANGULAR	
	12	1	**4J-0520**	4	SEAL-O-RING	
	13	1	**4J-0526**	1	SEAL-O-RING	
	14	1	**4P-7581**	1	CLIP	
	15	1	**7X-0353**	2	BOLT (5/8-11X4.25-IN)	
	16	1	**7X-7729**	9	WASHER (11X25X3-MM THK)	
	17	1	**8C-3206**	4	FLANGE-HALF	
	18	1	**8T-4121**	12	WASHER-HARD (11X21X2.5-MM THK)	
	19	1	**8T-4122**	2	WASHER-HARD (17X32X3.5-MM THK)	
M	20	1	**8T-4185**	4	BOLT (M10X1.5X50-MM)	
M	21	1	**8T-4195**	17	BOLT (M10X1.5X30-MM)	

I-REFER TO HYDRAULIC INFORMATION SYSTEM
M-METRIC PART
Y-SEPARATE ILLUSTRATION

204-7463 **CYLINDER & LINES GP-LIFT** *(contd.)* **i01991047**

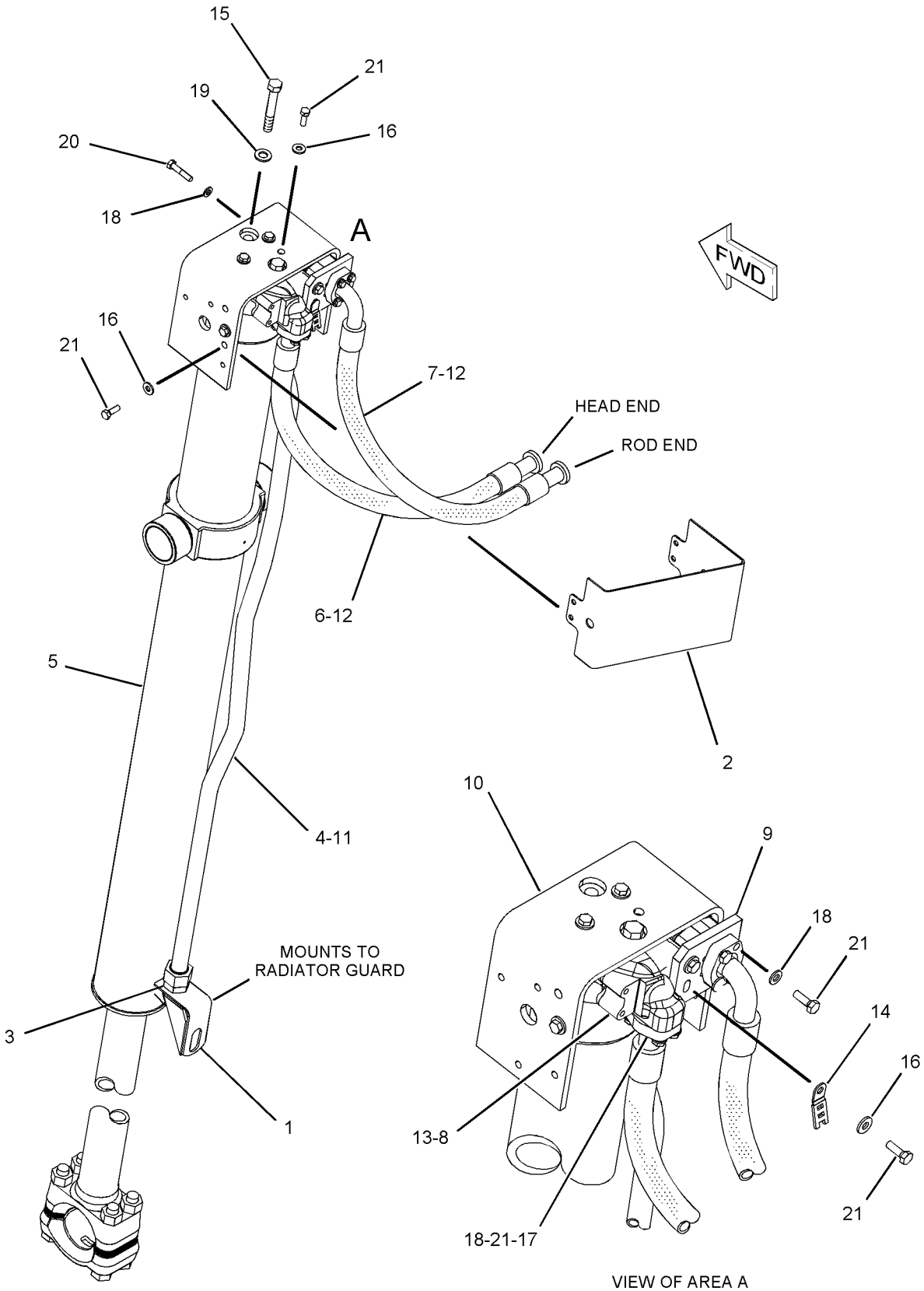

GRAPHIC #1 **<END>** g01036391

236-5216 CYLINDER & LINES GP-LIFT—RH—BULLDOZER

S/N: RJS1-UP
FOR USE WITH 204-7463—PAGE 525
AN ATTACHMENT

SMCS-5102 **i02208394**

NOTE	REF NO	GRAPHIC REF	PART NUMBER	QTY	PART NAME 1 2 3 4 5 6 (PRODUCT LEVEL)	SEE PAGE
	1	1	**8E-1244**	1	BRACKET AS	
	2	1	*153-6251*	1	CONNECTOR GP	
		1	**4K-1388**	1	SEAL-O-RING	
		1	**6V-8400**	1	SEAL-O-RING	
		1	**9X-8260**	1	CONNECTOR	
	3	1	**163-1623**	1	TUBE AS-LH	
	4	1	**221-5397**	1	PLATE	
Y	5	1	**225-6727**	1	CYLINDER GP-LIFT (BULLDOZER)	533
I	6	1	**228-9112**	1	HOSE AS	
I	7	1	**230-3218**	1	HOSE AS	
	8	1	**230-3219**	1	BRACKET AS	
	9	1	**239-3301**	1	PLATE	
	10	1	**239-4115**	1	PLATE AS	
	11	1	*250-1480*	1	ELBOW AS	
		1	**5K-9090**	1	SEAL-O-RING	
		1	**6K-6307**	1	SEAL-O-RING	
		1	**8C-3417**	1	ELBOW	
	12	1	**1P-3704**	1	SEAL-RECTANGULAR	
	13	1	**4J-0520**	3	SEAL-O-RING	
	14	1	**4P-7581**	1	CLIP	
	15	1	**7X-7729**	11	WASHER (11X25X3-MM THK)	
	16	1	**8C-3206**	2	FLANGE-HALF	
	17	1	**8T-4121**	8	WASHER-HARD (11X21X2.5-MM THK)	
M	18	1	**8T-4185**	4	BOLT (M10X1.5X50-MM)	
M	19	1	**8T-4195**	15	BOLT (M10X1.5X30-MM)	

I-REFER TO HYDRAULIC INFORMATION SYSTEM
M-METRIC PART
Y-SEPARATE ILLUSTRATION

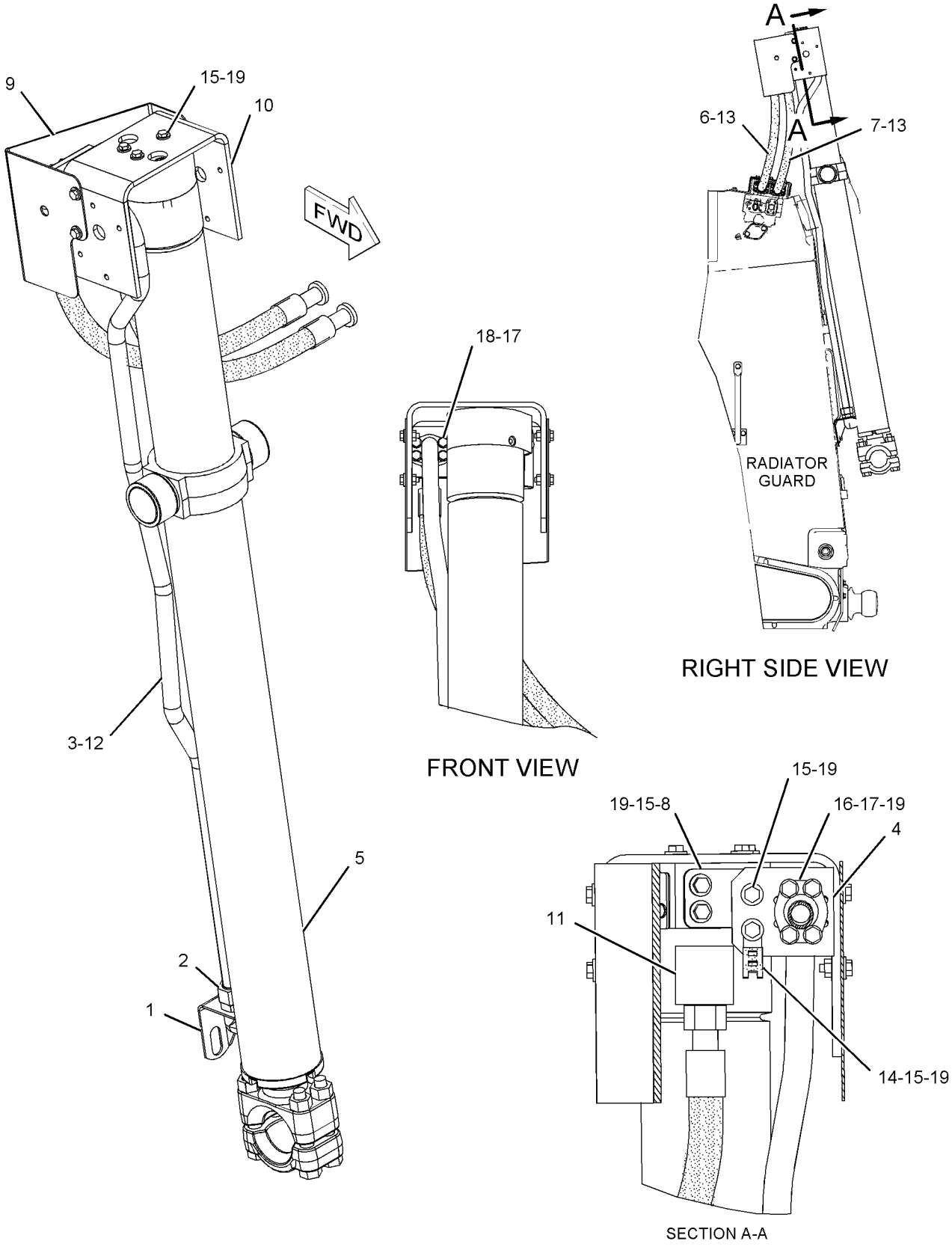

GRAPHIC #1 **<END>** g01120510

211-5059 CYLINDER & LINES GP-RIPPER–
COLD WEATHER OPERATION
S/N: RJS1-UP
FOR USE WITH 217-3562–PAGE 712, 217-3563–PAGE 713
AN ATTACHMENT

SMCS-5352 **i02223339**

NOTE	PART NUMBER	QTY	PART NAME 1 2 3 4 5 6 (PRODUCT LEVEL)	SEE PAGE
Y	**4Z-6363**	2	CYLINDER GP-RIPPER	535
Y	**4Z-6364**	2	CYLINDER GP-RIPPER TIP	540
I	**145-8274**	2	HOSE AS (ARCTIC)	
I	**145-8276**	2	HOSE AS (ARCTIC)	
I	**145-8277**	1	HOSE AS (ARCTIC)	
I	**145-8278**	1	HOSE AS (ARCTIC)	
I	**215-2405**	2	HOSE AS (ARCTIC)	

I-REFER TO HYDRAULIC INFORMATION SYSTEM
Y-SEPARATE ILLUSTRATION

<END>

HYDRAULIC SYSTEM

246-1026 CYLINDER AR-TILT

S/N: RJS1-UP

AN ATTACHMENT

SMCS-5104 **i02003767**

NOTE	REF NO	GRAPHIC REF	PART NUMBER	QTY	PART NAME 1 2 3 4 5 6 (PRODUCT LEVEL)	SEE PAGE
Y	1	1	*8E-9891*	1	LINES GP-TILT CYLINDER	574
Y	2	1	**109-8832**	1	CYLINDER GP-TILT (RH)	546
Y	3	1	**109-8833**	1	CYLINDER GP-TILT (LH)	548
Y	4	1	*246-1041*	1	LINK GP-STABILIZER	667

Y-SEPARATE ILLUSTRATION

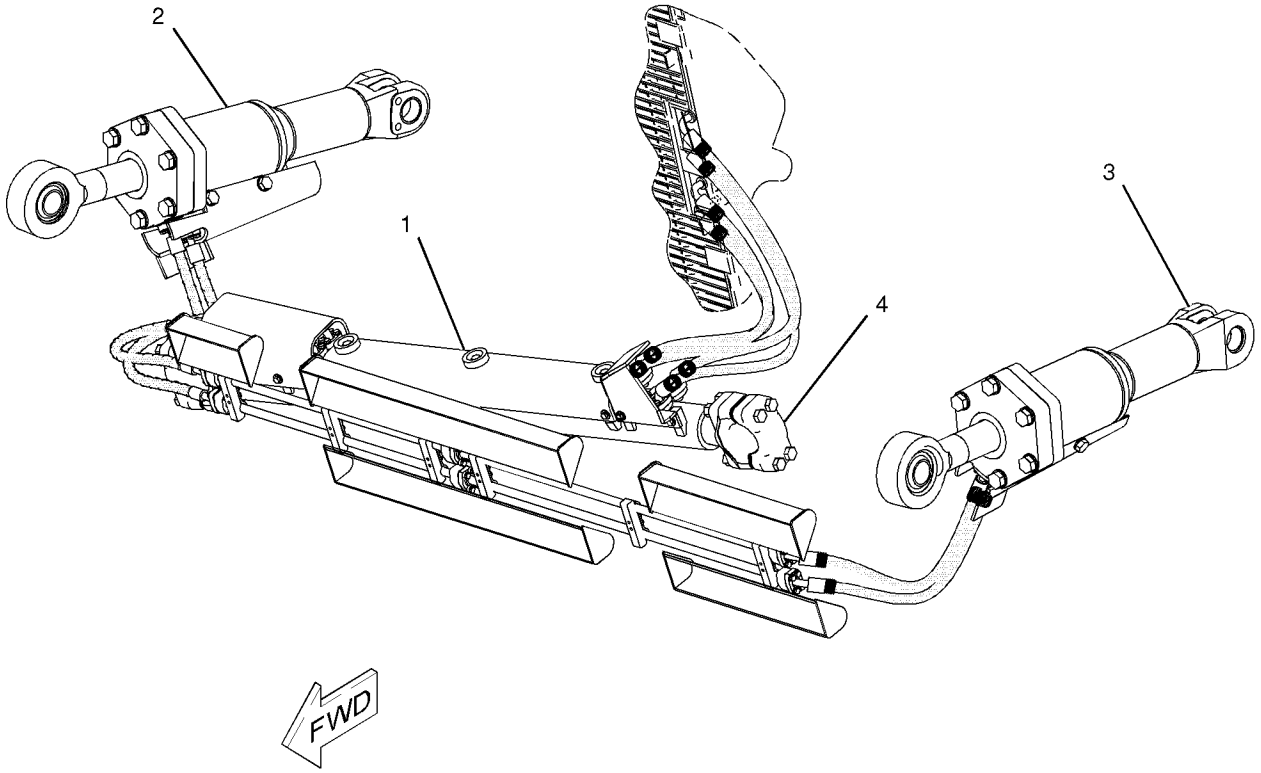

GRAPHIC #1 **<END>** g01037515

165-8633 CYLINDER GP-LIFT–BULLDOZER

S/N: T9H1-UP; T9J1-UP; RJS1-UP
120.65-MM (4.75-IN) BORE X 1570-MM (61.8-IN) STROKE
PART OF 204-7462, 204-7463 CYLINDER & LINES GP-LIFT
AN ATTACHMENT

SMCS-5102 **i02248650**

NOTE	REF NO	GRAPHIC REF	PART NUMBER	QTY	PART NAME 1 2 3 4 5 6 (PRODUCT LEVEL)	SEE PAGE
	1	1	**166-1855**	1	CYLINDER AS	
		1	**5J-1192**	2	BEARING-SLEEVE	
M	2	1	**173-9682**	1	BOLT (M36X4X100-MM)	
	3	1	**106-1017**	1	WASHER (36.7X77X6-MM THK)	
	4	1	**131-7823**	1	PISTON AS	
		1	**4T-8588**	1	SEAL AS	
	5	1	**175-7903**	1	SEAL-O-RING	
	6	1	**2J-3961**	1	RING-BACKUP	
	7	1	**164-6403**	1	HEAD	
R	8	1	**6E-4497**	1	ROD AS	
	9	1	**160-6310**	1	CAP-BEARING	
M	10	1	**8T-0672**	4	BOLT (M24X3X160-MM)	
B	11	1	**3G-0911**	28	SHIM (0.8-MM THK)	
M	12	1	**7X-0851**	4	NUT (M24X3-THD)	
	13	1	**225-3284**	1	SEAL-WIPER	
	14	1	**9X-7412**	1	SEAL-U-CUP	
	15	1	**167-2208**	1	SEAL AS-BUFFER	
	16	1	**8C-9161**	1	RING-WEAR	
	17	1	**131-7184**	1	RING-WEAR	

B-USE AS REQUIRED
M-METRIC PART
R-REMFG PART MAY BE AVAILABLE

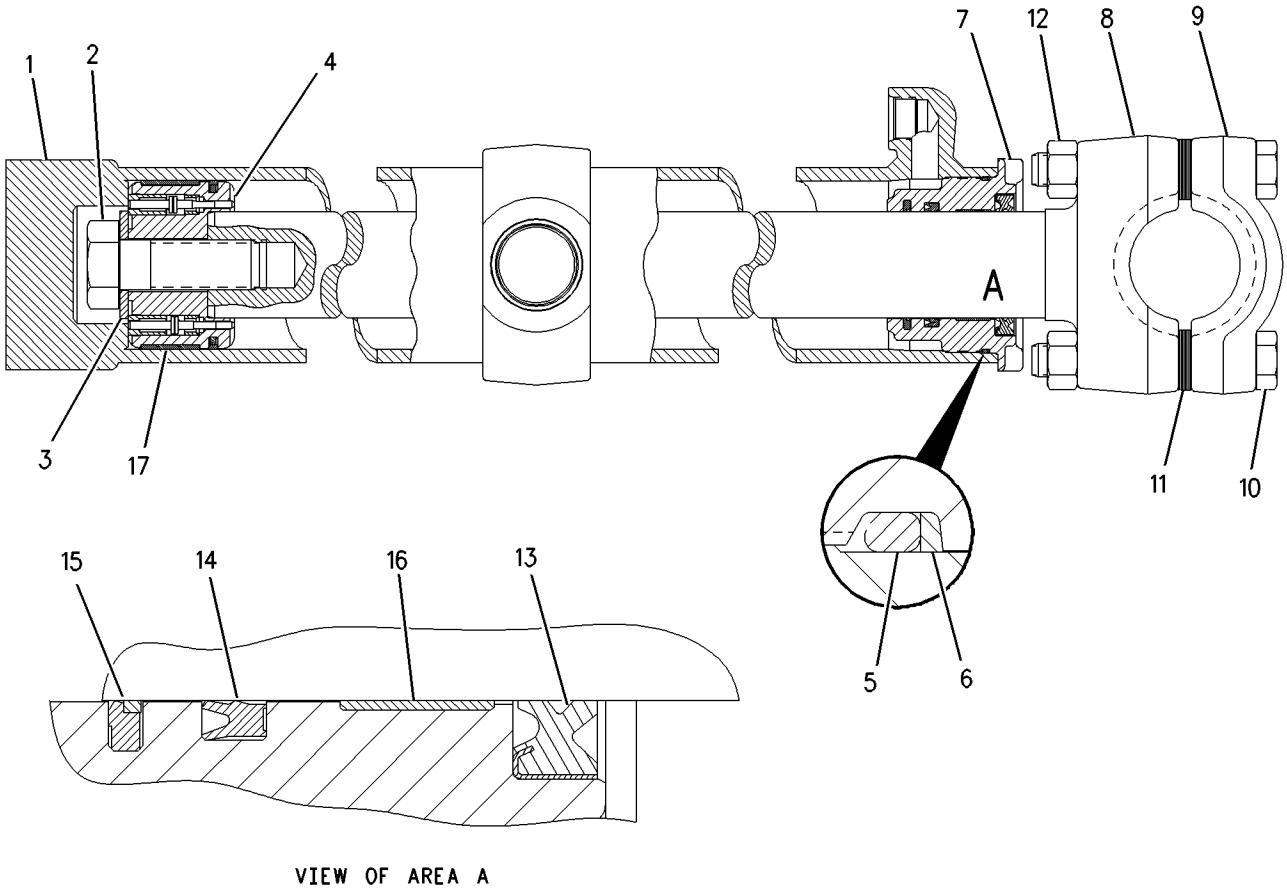

VIEW OF AREA A

GRAPHIC #1 **<END>** g00984748

225-6727 CYLINDER GP-LIFT—BULLDOZER

S/N: RJS1-UP
120.65-MM (4.75-IN) BORE X 1570-MM (61.81-IN) STROKE
PART OF 236-5216 CYLINDER & LINES GP-LIFT
AN ATTACHMENT

SMCS-5102 **i02214581**

NOTE	REF NO	GRAPHIC REF	PART NUMBER	QTY	PART NAME 1 2 3 4 5 6 (PRODUCT LEVEL)	SEE PAGE
	1	1	**131-7184**	1	RING-WEAR	
	2	1	**131-7823**	1	PISTON AS	
	3	1	**164-6403**	1	HEAD	
	4	1	**222-1395**	1	BOLT AS	
	5	1	**225-3284**	1	SEAL-WIPER	
	6	1	**225-6730**	1	CYLINDER AS	
		1	**5J-1192**	2	BEARING-SLEEVE	
Y	7	1	**225-6733**	1	SENSOR & MOUNTING GP	231
	8	1	**225-6736**	1	ROD AS	
M	9	1	**095-9806**	3	BOLT-SOCKET HEAD (M16X2X80-MM)	
	10	1	**106-1017**	1	WASHER (36.7X77X6-MM THK)	
	11	1	**167-2208**	1	SEAL AS-BUFFER	
	12	1	**175-7903**	1	SEAL-O-RING	
	13	1	**2J-3961**	1	RING-BACKUP	
	14	1	**3G-0910**	1	CAP-BEARING	
B	15	1	**3G-0911**	28	SHIM (0.8-MM THK)	
	16	1	**3S-4489**	1	SEAL-O-RING	
M	17	1	**7X-0851**	4	NUT (M24X3-THD)	
	18	1	**8C-9161**	1	RING-WEAR	
M	19	1	**8T-0672**	4	BOLT (M24X3X160-MM)	
	20	1	**9X-7412**	1	SEAL-U-CUP	

B-USE AS REQUIRED
M-METRIC PART
Y-SEPARATE ILLUSTRATION

225-6727 CYLINDER GP-LIFT *(contd.)* **i02214581**

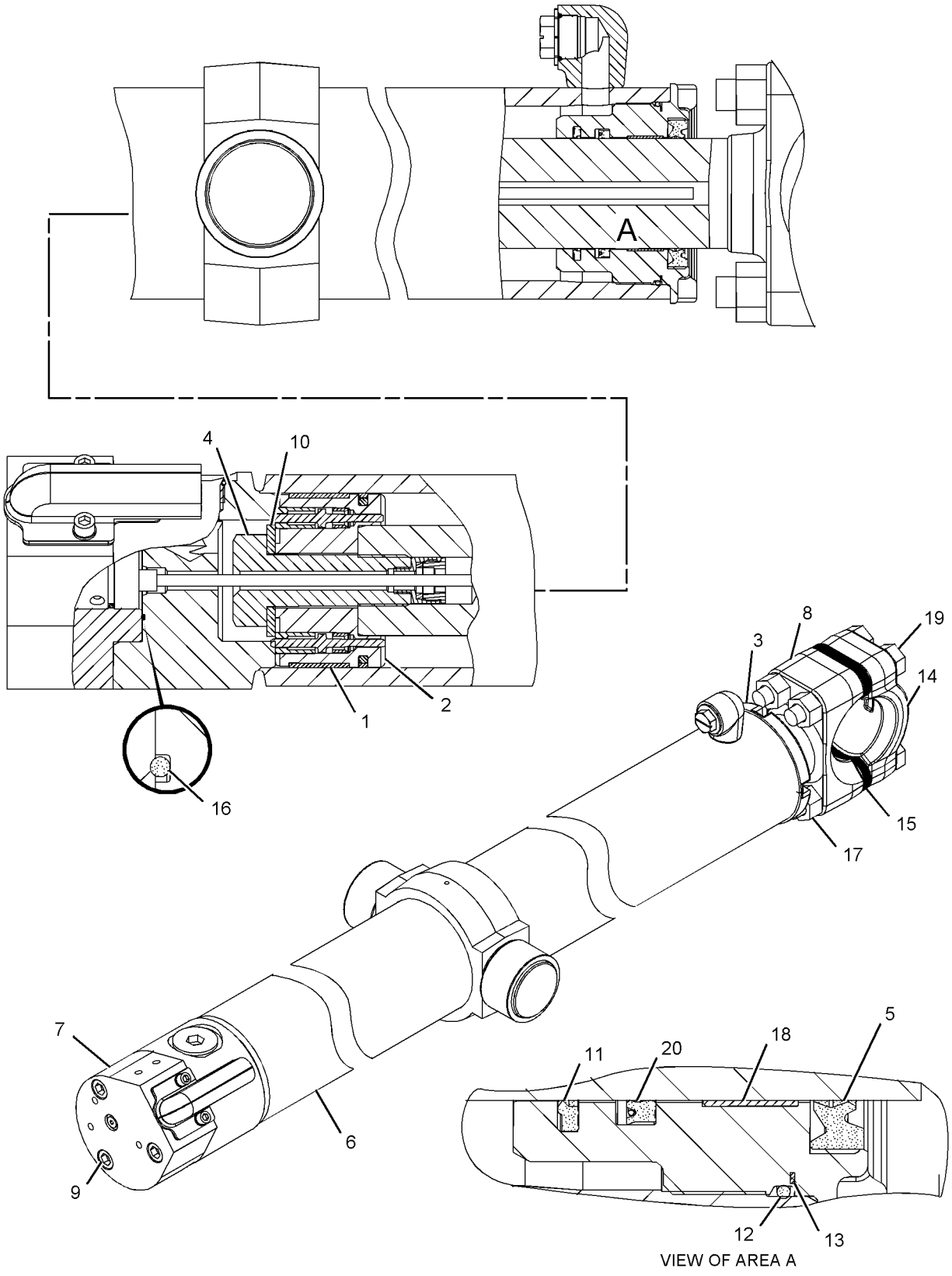

GRAPHIC #1 **<END>** g01120427

4Z-6363 CYLINDER GP-RIPPER

S/N: RJS1-UP
184.15-MM (7.25-IN)BORE X 454-MM (17.9-IN)STROKE. COLD WEATHER
PART OF 211-5059 CYLINDER & LINES GP-RIPPER
AN ATTACHMENT

SMCS-5352, 5356 **i01989493**

NOTE	REF NO	GRAPHIC REF	PART NUMBER	QTY	PART NAME 1 2 3 4 5 6 (PRODUCT LEVEL)	SEE PAGE
R	1	1	**132-5121**	1	CYLINDER AS	
	1A	1	**3G-5999**	1	BEARING-SLEEVE	
	2	1	**3B-8489**	2	FITTING-GREASE (RIPPER CYLINDER)	
	3	1	**5J-3488**	1	LOCKNUT (2-1/4-12-2B-THD)	
	4	1	**1J-2674**	1	RING-WEAR	
	5	1	**8T-1790**	1	SEAL AS	
	6	1	**9T-5809**	1	PISTON	
	7	1	**119-8455**	2	WASHER (57.3X100X6.35-MM THK)	
	8	1	**5P-7593**	1	SEAL-O-RING	
	9	1	**1U-1738**	1	RING-BACKUP	
	10	1	**132-5122**	1	HEAD	
	11	1	**8T-3282**	8	WASHER-HARD (22X35X3.5-MM THK)	
M	12	1	**6V-9667**	2	BOLT (M20X2.5X100-MM)	
R	13	1	**147-6116**	1	ROD AS	
	13A	1	**3G-5999**	1	BEARING-SLEEVE	
M	14	1	**6V-5845**	6	BOLT (M20X2.5X70-MM)	
	15	1	**225-3285**	1	SEAL-WIPER	
	16	1	**9X-7404**	1	SEAL-U-CUP	
	17	1	**167-2209**	1	SEAL AS-BUFFER	
	18	1	**8T-6745**	1	RING-WEAR	
	19	1	**1P-4576**	4	FLANGE-HALF	
M	20	1	**8T-4196**	8	BOLT (M10X1.5X35-MM)	
	21	1	**8T-4121**	8	WASHER-HARD (11X21X2.5-MM THK)	

M-METRIC PART
R-REMFG PART MAY BE AVAILABLE

4Z-6363 CYLINDER GP-RIPPER *(contd.)* i01989493

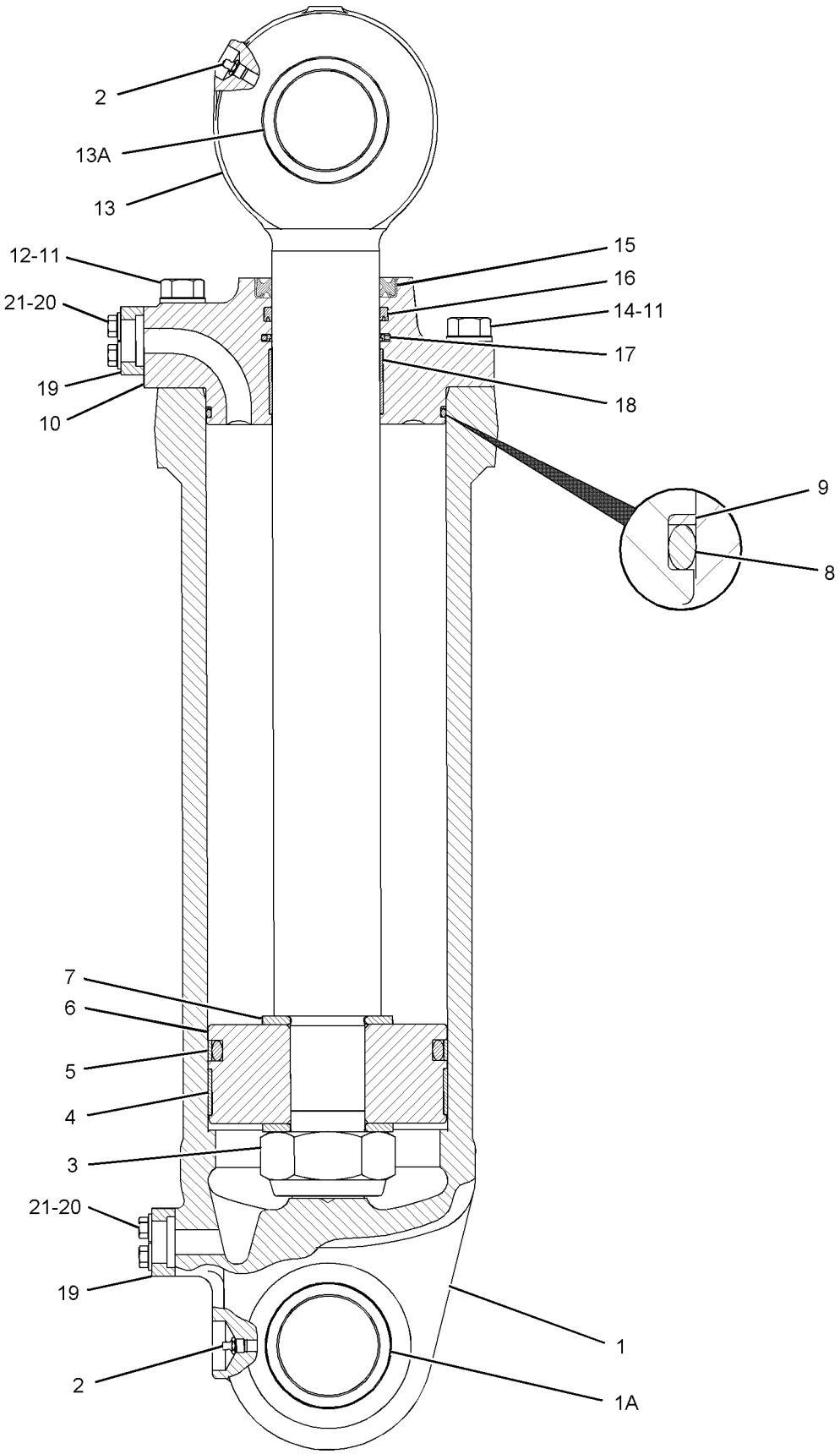

GRAPHIC #1 **<END>** g01031618

132-5123 CYLINDER GP-RIPPER–RAISE, LOWER

S/N: CRM1-UP; MAM1-UP
184.15-MM (7.25-IN) BORE X 454-MM (17.9-IN) STROKE
PART OF 217-3562, 217-3563 RIPPER AR
AN ATTACHMENT

SMCS-5352, 5356 **i01989489**

NOTE	REF NO	GRAPHIC REF	PART NUMBER	QTY	PART NAME 1 2 3 4 5 6 (PRODUCT LEVEL)	SEE PAGE
R	1	1	**132-5121**	1	CYLINDER AS	
	1A	1	**3G-5999**	1	BEARING-SLEEVE	
	2	1	**3B-8489**	2	FITTING-GREASE (RIPPER LIFT)	
	3	1	**5J-3488**	1	LOCKNUT (2-1/4-12-2B-THD)	
	4	1	**1J-2674**	1	RING-WEAR	
	5	1	**8T-1790**	1	SEAL AS	
	6	1	**9T-5809**	1	PISTON	
	7	1	**119-8455**	2	WASHER (57.3X100X6.35-MM THK)	
	8	1	**5P-7593**	1	SEAL-O-RING	
	9	1	**1U-1738**	1	RING-BACKUP	
	10	1	**132-5122**	1	HEAD	
	11	1	**8T-3282**	8	WASHER-HARD (22X35X3.5-MM THK)	
M	12	1	**6V-9667**	2	BOLT (M20X2.5X100-MM)	
R	13	1	**147-6116**	1	ROD AS	
	13A	1	**3G-5999**	1	BEARING-SLEEVE	
M	14	1	**6V-5845**	6	BOLT (M20X2.5X70-MM)	
	15	1	**225-3285**	1	SEAL-WIPER	
	16	1	**167-2320**	1	SEAL-U-CUP	
	17	1	**167-2209**	1	SEAL AS-BUFFER	
	18	1	**8T-6745**	1	RING-WEAR	
	19	1	**1P-4576**	4	FLANGE-HALF	
M	20	1	**8T-4196**	8	BOLT (M10X1.5X35-MM)	
	21	1	**8T-4121**	8	WASHER-HARD (11X21X2.5-MM THK)	

M-METRIC PART
R-REMFG PART MAY BE AVAILABLE

132-5123 CYLINDER GP-RIPPER *(contd.)* i01989489

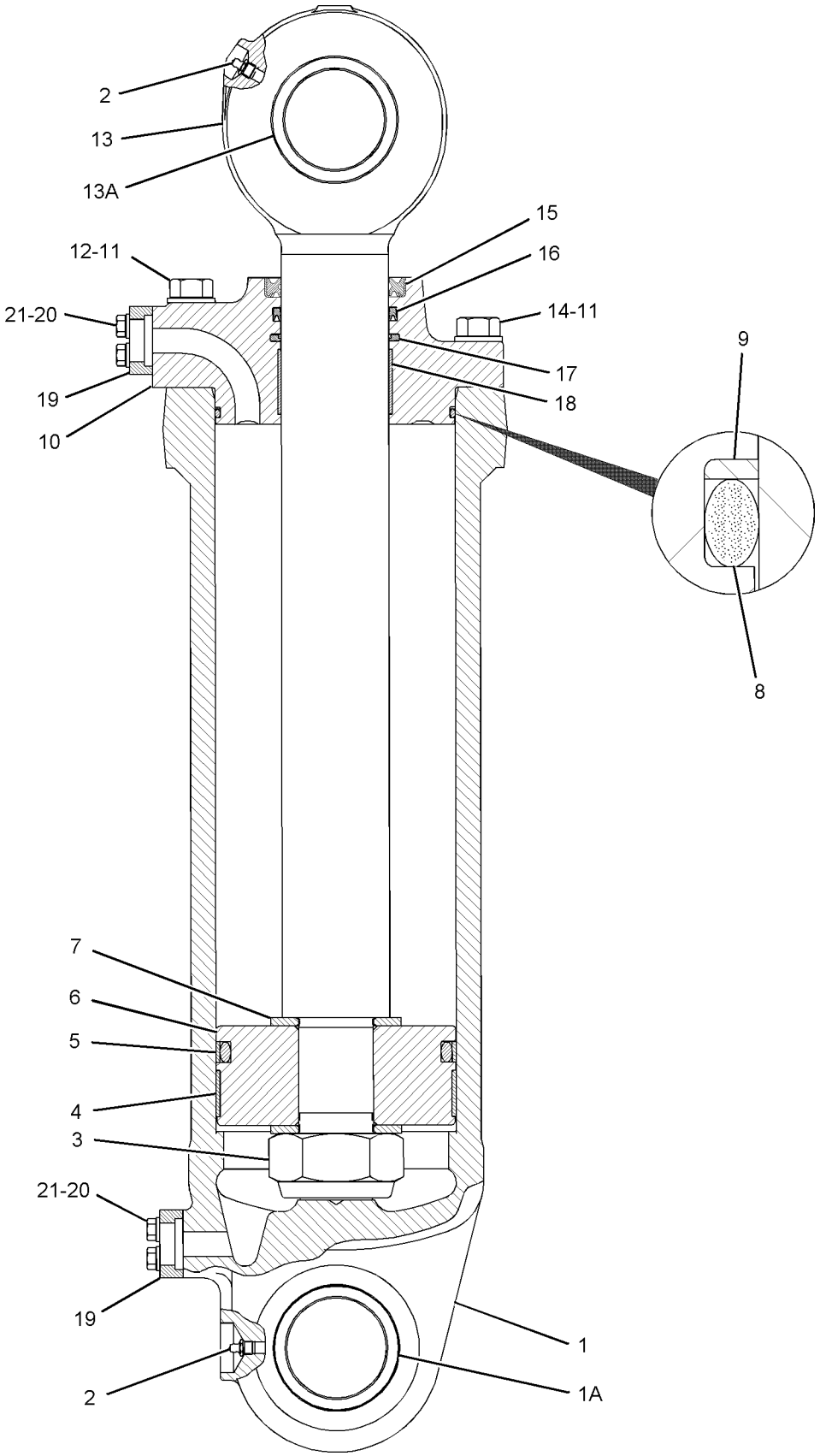

GRAPHIC #1 **<END>** g01031577

6E-3113 CYLINDER GP-RIPPER PIN PULLER

S/N: GNM1-UP; SEM1-UP; RJS1-UP
101.6-MM (4-IN) BORE X 138.5-MM (5.5-IN) STROKE
PART OF 216-0124 PULLER AR-PIN, 166-1820, 4Z-9490 PULLER GP-PIN
AN ATTACHMENT

SMCS-5354 **i02024570**

NOTE	REF NO	GRAPHIC REF	PART NUMBER	QTY	PART NAME 1 2 3 4 5 6 (PRODUCT LEVEL)	SEE PAGE
M	1	1	**173-9779**	1	BOLT (M24X3.0X80-MM)	
	2	1	**6J-2797**	1	RING-WEAR	
	3	1	**5J-5402**	1	SEAL AS	
	4	1	**9T-3493**	1	PISTON	
	5	1	**6V-8237**	1	WASHER (26X44X4-MM THK)	
	6	1	**4T-6907**	1	RING-WEAR	
	7	1	**6E-3980**	1	ROD AS	
	8	1	**231-3539**	1	SEAL-WIPER	
	9	1	**167-2300**	1	SEAL-U-CUP	
	10	1	**167-2190**	1	SEAL AS-BUFFER	
	11	1	**2K-6830**	1	RING-BACKUP	
	12	1	**175-7900**	1	SEAL-O-RING	
	13	1	**6E-4976**	1	HEAD	
	14	1	**6E-3976**	1	CYLINDER AS	

M-METRIC PART

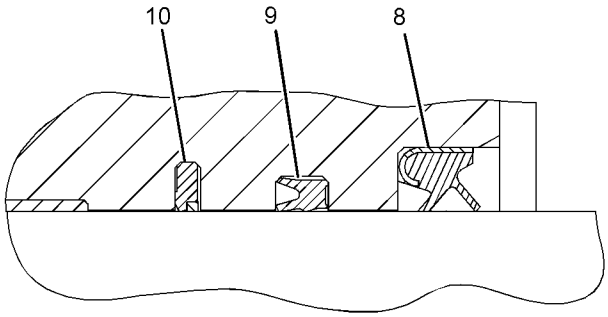

VIEW OF AREA A

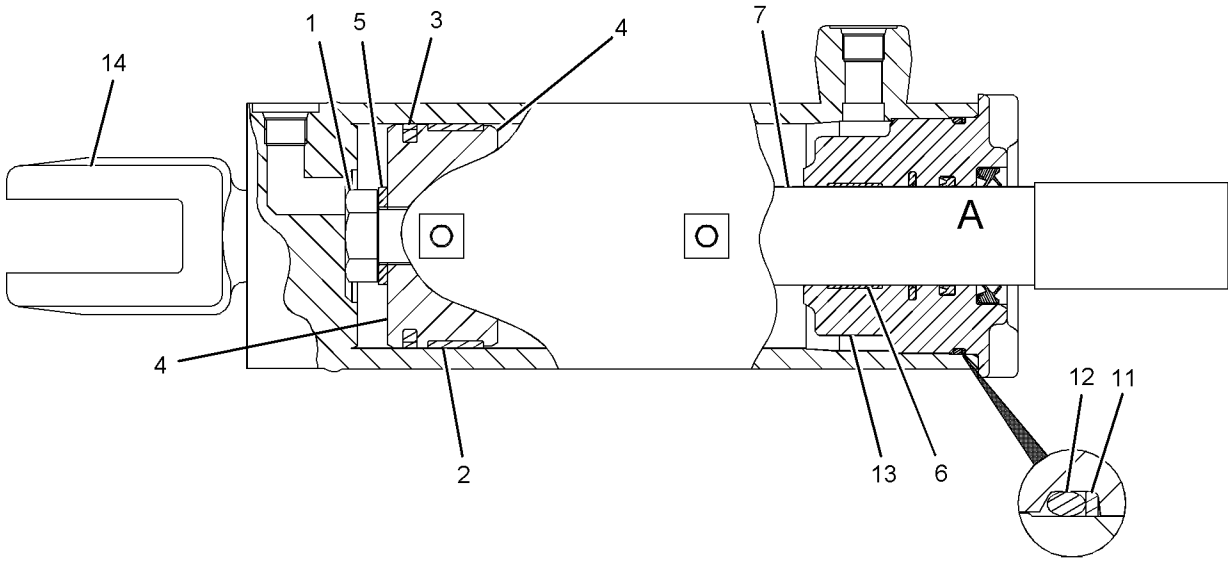

GRAPHIC #1 **<END>** g01016887

4Z-6364 CYLINDER GP-RIPPER TIP

S/N: RJS1-UP
152.4-MM (6-IN)BORE X 456.8-MM (18-IN)STROKE. COLD WEATHER
PART OF 211-5059 CYLINDER & LINES GP-RIPPER
AN ATTACHMENT

SMCS-5106 **i01989494**

NOTE	REF NO	GRAPHIC REF	PART NUMBER	QTY	PART NAME 1 2 3 4 5 6 (PRODUCT LEVEL)	SEE PAGE
R	1	1	**132-5146**	1	CYLINDER AS	
	1A	1	**3G-5999**	1	BEARING-SLEEVE	
	2	1	**3B-8489**	2	FITTING-GREASE (CYLINDER-RIPPER TIP)	
	3	1	**2J-0564**	1	LOCKNUT (2-12-2B THD)	
	4	1	**9J-5860**	1	RING-WEAR	
	5	1	**4T-4144**	1	SEAL AS	
	6	1	**9T-5805**	1	PISTON	
	7	1	**6J-9747**	1	WASHER (53X105X12.7-MM THK)	
	8	1	**6D-9157**	1	SEAL-O-RING	
	9	1	**8J-1717**	1	RING-BACKUP	
	10	1	**132-5147**	1	HEAD	
R	11	1	**9T-0098**	1	ROD AS	
	11A	1	**3G-5999**	1	BEARING-SLEEVE	
M	12	1	**6V-5845**	4	BOLT (M20X2.5X70-MM)	
	13	1	**8T-3282**	4	WASHER-HARD (22X35X3.5-MM THK)	
	14	1	**225-3284**	1	SEAL-WIPER	
	15	1	**9X-7412**	1	SEAL-U-CUP	
	16	1	**167-2208**	1	SEAL AS-BUFFER	
	17	1	**9T-0094**	1	RING-WEAR	
	18	1	**1P-4576**	4	FLANGE-HALF	
	19	1	**8T-4121**	8	WASHER-HARD (11X21X2.5-MM THK)	
M	20	1	**8T-4196**	8	BOLT (M10X1.5X35-MM)	

M-METRIC PART
R-REMFG PART MAY BE AVAILABLE

4Z-6364 CYLINDER GP-RIPPER TIP *(contd.)* **i01989494**

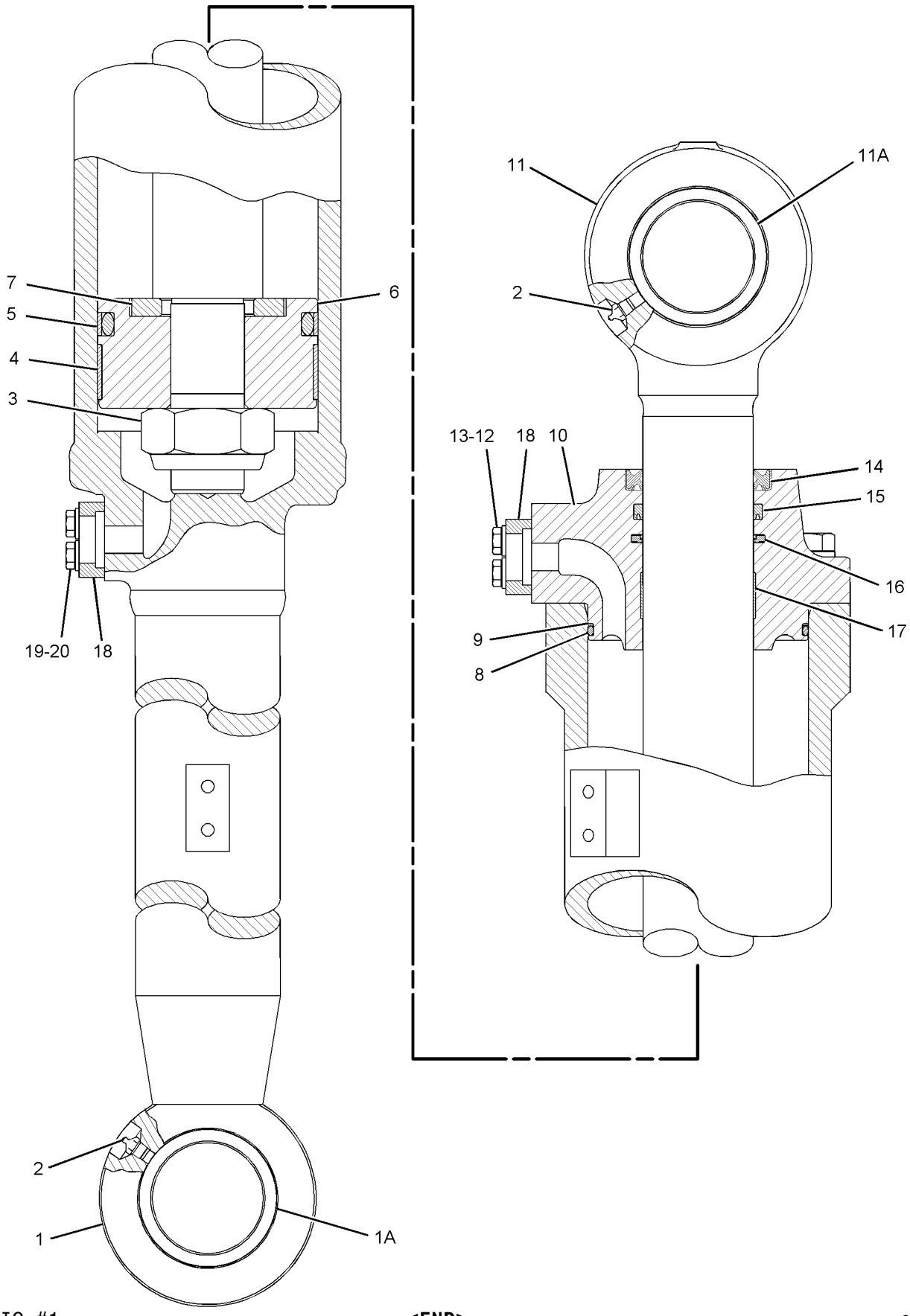

GRAPHIC #1 **<END>** g01031639

132-5149 CYLINDER GP-RIPPER TIP

S/N: CRM1-UP; MAM1-UP
152.4-MM (6-IN)BORE X 456.8-MM (18-IN)STROKE
PART OF 217-3562, 217-3563 RIPPER AR
AN ATTACHMENT

SMCS-5106 **i01989491**

NOTE	REF NO	GRAPHIC REF	PART NUMBER	QTY	PART NAME 1 2 3 4 5 6 (PRODUCT LEVEL)	SEE PAGE
R	1	1	**132-5146**	1	CYLINDER AS	
	1A	1	**3G-5999**	1	BEARING-SLEEVE	
	2	1	**3B-8489**	2	FITTING-GREASE (RIPPER TIP)	
	3	1	**2J-0564**	1	LOCKNUT (2-12-2B THD) (2.0-12THD)	
	4	1	**9J-5860**	1	RING-WEAR	
	5	1	**4T-4144**	1	SEAL AS	
	6	1	**9T-5805**	1	PISTON	
	7	1	**6J-9747**	1	WASHER (53X105X12.7-MM THK)	
	8	1	**6D-9157**	1	SEAL-O-RING	
	9	1	**8J-1717**	1	RING-BACKUP	
	10	1	**132-5147**	1	HEAD	
R	11	1	**9T-0098**	1	ROD AS	
	11A	1	**3G-5999**	1	BEARING-SLEEVE	
M	12	1	**6V-5845**	4	BOLT (M20X2.5X70-MM)	
	13	1	**8T-3282**	4	WASHER-HARD (22X35X3.5-MM THK)	
	14	1	**225-3284**	1	SEAL-WIPER	
	15	1	**167-2319**	1	SEAL-U-CUP	
	16	1	**167-2208**	1	SEAL AS-BUFFER	
	17	1	**9T-0094**	1	RING-WEAR	
	18	1	**1P-4576**	4	FLANGE-HALF	
	19	1	**8T-4121**	8	WASHER-HARD (11X21X2.5-MM THK)	
M	20	1	**8T-4196**	8	BOLT (M10X1.5X35-MM)	

M-METRIC PART
R-REMFG PART MAY BE AVAILABLE

132-5149 CYLINDER GP-RIPPER TIP *(contd.)* **i01989491**

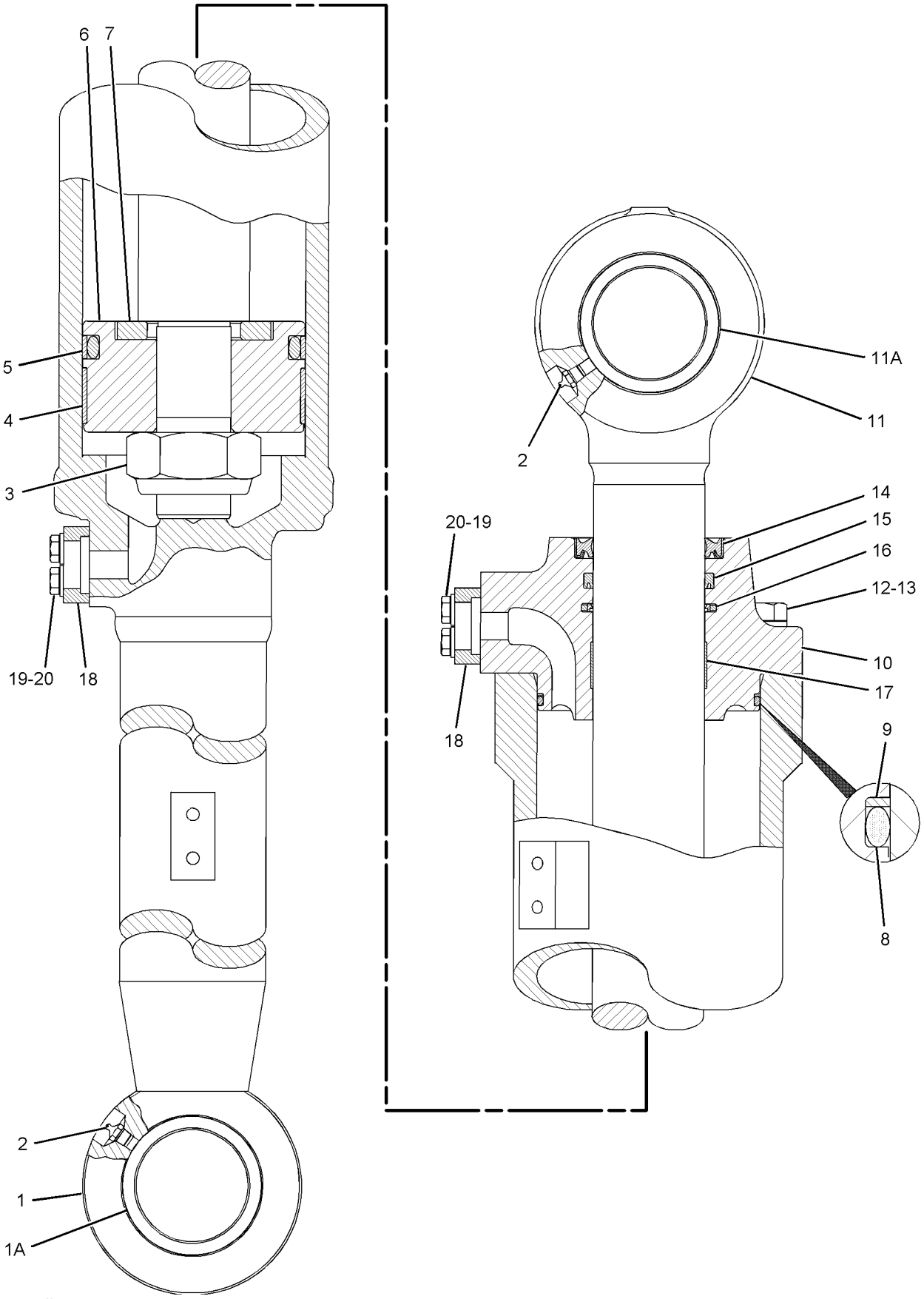

GRAPHIC #1 **<END>** g01031533

109-6778 CYLINDER GP-TILT–STABILIZER

S/N: T9H1-UP; T9J1-UP
209.5-MM (8.25-IN) BORE X 188-MM (7.4-IN) STROKE
PART OF 246-1045 PUSH ARM GP-STABILIZER
AN ATTACHMENT

SMCS-5104 **i02193984**

NOTE	REF NO	GRAPHIC REF	PART NUMBER	QTY	PART NAME 1 2 3 4 5 6 (PRODUCT LEVEL)	SEE PAGE
R	1	1	**109-6783**	1	CYLINDER AS	
	1A	1	**1U-2182**	2	BEARING-SLEEVE	
	2	1	**8T-8382**	1	SEAL-HEAD	
	3	1	**4J-6888**	1	LOCKNUT (2 3/4-12-THD)	
	4	1	**109-6781**	1	PISTON	
	5	1	**109-6779**	1	HEAD	
	6	1	**8J-4386**	1	SEAL-O-RING	
M	7	1	**8T-0283**	6	BOLT (M30X3.5X110-MM)	
R	8	1	**6E-4859**	1	ROD AS	
	8A	1	**8T-9044**	1	RING-RETAINING	
	8B	1	**7J-3297**	1	BEARING	
	9	1	**3G-3747**	1	RING-BACKUP	
	10	1	**3B-8489**	1	FITTING-GREASE (TILT CYLINDER)	
	11	1	**225-3286**	1	SEAL-WIPER	
	12	1	**167-2324**	1	SEAL-U-CUP	
	13	1	**167-2211**	1	SEAL AS-BUFFER	
	14	1	**8T-1793**	1	SEAL AS	
	15	1	**4J-7376**	1	RING-WEAR	
	16	1	**8T-3329**	1	RING-WEAR	
	17	1	**9X-8399**	6	WASHER (33X56X6-MM THK)	

M-METRIC PART
R-REMFG PART MAY BE AVAILABLE

109-6778 CYLINDER GP-TILT *(contd.)* i02193984

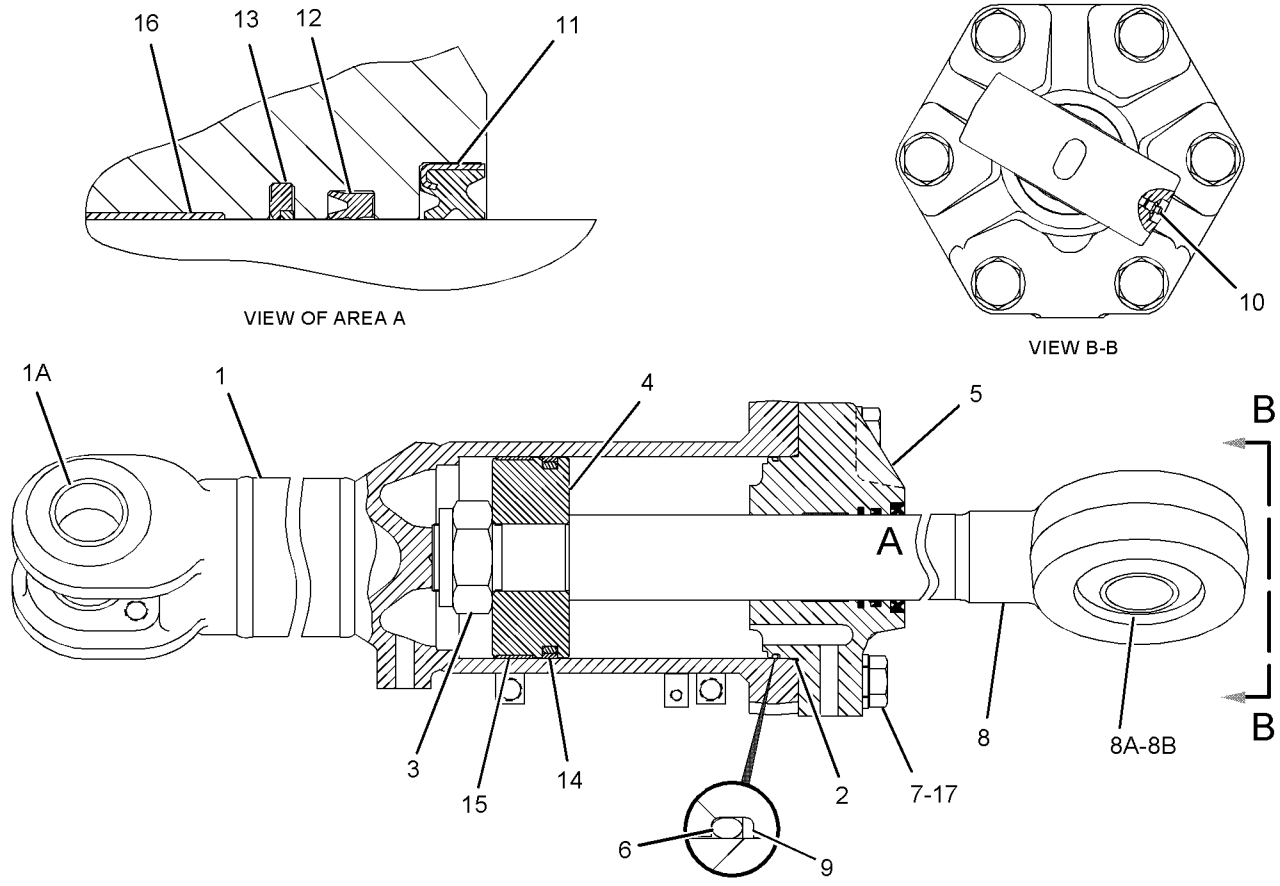

GRAPHIC #1 **<END>** g01107894

HYDRAULIC SYSTEM

109-8832 CYLINDER GP-TILT–RH

S/N: RJS1-UP
209.55-MM (8.25-IN) BORE X 188-MM (7.4-IN) STROKE
PART OF 246-1026 CYLINDER AR-TILT
AN ATTACHMENT

SMCS-5104 **i01989387**

NOTE	REF NO	GRAPHIC REF	PART NUMBER	QTY	PART NAME 1 2 3 4 5 6 (PRODUCT LEVEL)	SEE PAGE
R	1	1	**109-8836**	1	CYLINDER AS-RH	
	1A	1	**1U-2182**	2	BEARING-SLEEVE	
	1B	1	**109-6784**	4	LUG	
	2	1	**4J-6888**	1	LOCKNUT (2 3/4-12-THD)	
	3	1	**4J-7376**	1	RING-WEAR	
	4	1	**8T-1793**	1	SEAL AS	
	5	1	**122-9350**	1	PISTON AS	
	5A	1	**1J-8569**	2	INSERT-PISTON	
	5B	1	**2H-3932**	2	SEAL-O-RING	
	5C	1	**109-4670**	2	INSERT	
	5D	1	**122-9351**	2	PLUNGER	
	5E	1	**3K-8692**	4	RING-BACKUP	
	6	1	**9T-1878**	2	WASHER (70.5X120X4.76-MM THK)	
	7	1	**8J-4386**	1	SEAL-O-RING	
	8	1	**3G-3747**	1	RING-BACKUP	
	9	1	**109-6779**	1	HEAD	
R	10	1	**6E-4859**	1	ROD AS	
	10A	1	**7J-3297**	1	BEARING	
	10B	1	**8T-9044**	1	RING-RETAINING	
M	11	1	**8T-0283**	6	BOLT (M30X3.5X110-MM)	
	12	1	**9X-8399**	6	WASHER (33X56X6-MM THK)	
	13	1	**8T-8382**	1	SEAL-HEAD	
	14	1	**225-3286**	1	SEAL-WIPER	
	15	1	**167-2324**	1	SEAL-U-CUP	
	16	1	**167-2211**	1	SEAL AS-BUFFER	
	17	1	**8T-3329**	1	RING-WEAR	
	18	1	**3B-8489**	1	FITTING-GREASE	

M-METRIC PART
R-REMFG PART MAY BE AVAILABLE

109-8832 CYLINDER GP-TILT *(contd.)* **i01989387**

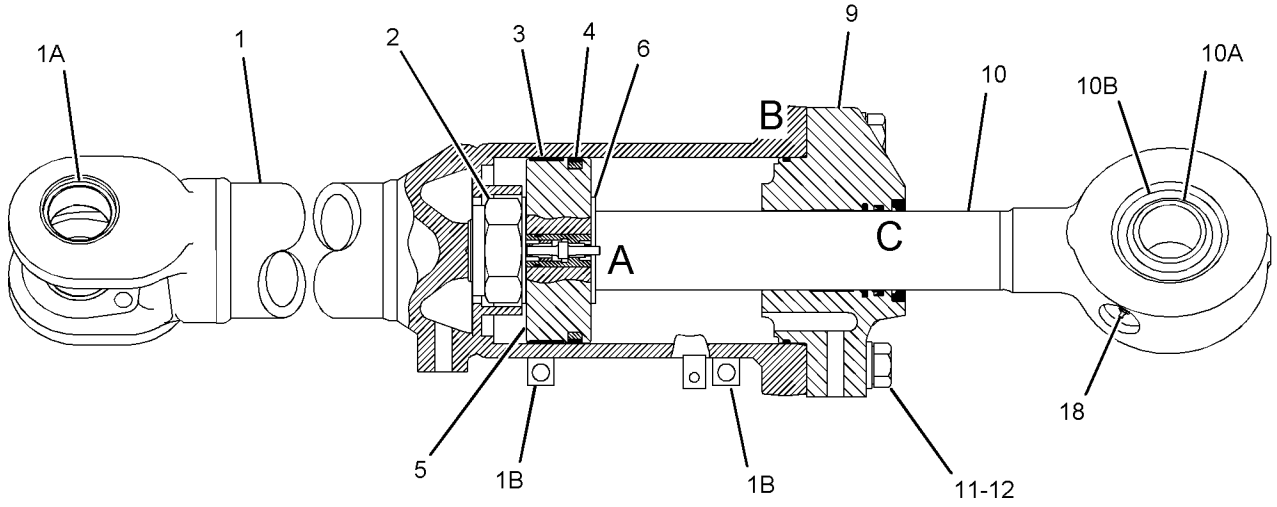

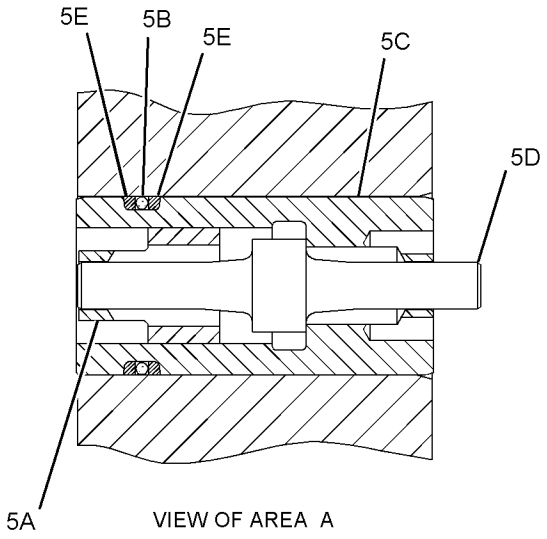

VIEW OF AREA A

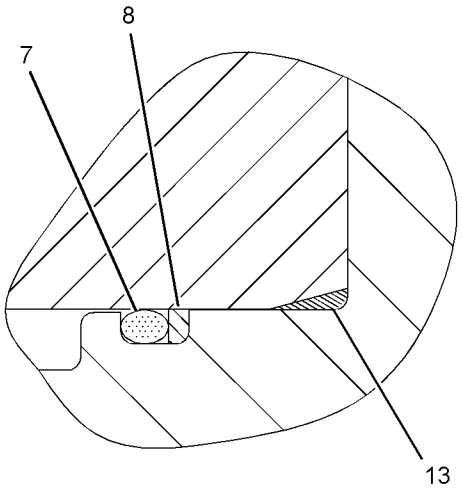

VIEW OF AREA B

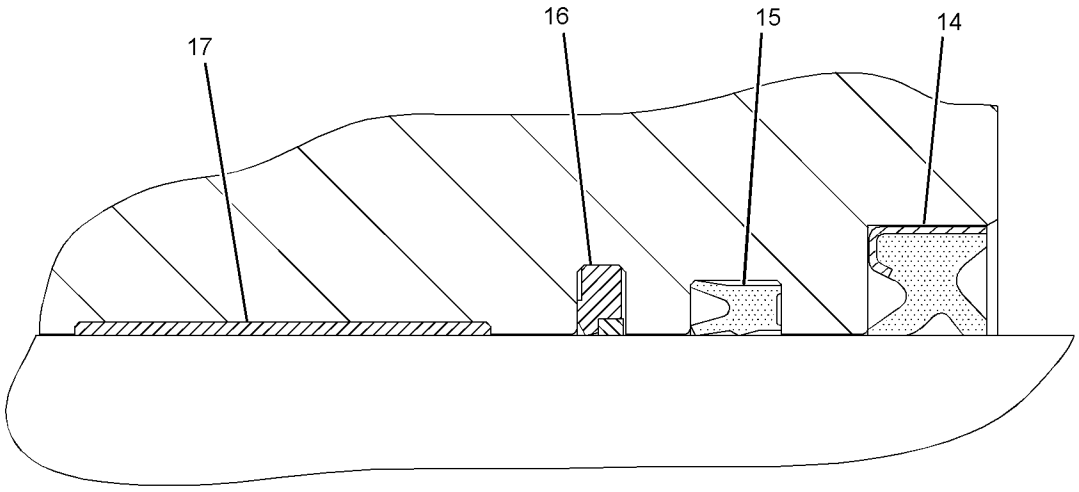

VIEW OF AREA C

GRAPHIC #1

<END>

g01036155

HYDRAULIC SYSTEM

109-8833 CYLINDER GP-TILT–LH

S/N: RJS1-UP
209.55-MM (8.25-IN) BORE X 188-MM (7.4-IN) STROKE
PART OF 246-1026 CYLINDER AR-TILT
AN ATTACHMENT

SMCS-5104 **i01989405**

NOTE	REF NO	GRAPHIC REF	PART NUMBER	QTY	PART NAME 1 2 3 4 5 6 (PRODUCT LEVEL)	SEE PAGE
R	1	1	**109-8837**	1	CYLINDER AS-LH	
	1A	1	**1U-2182**	2	BEARING-SLEEVE	
	1B	1	**109-6784**	4	LUG	
	2	1	**4J-6888**	1	LOCKNUT (2 3/4-12-THD)	
	3	1	**4J-7376**	1	RING-WEAR	
	4	1	**8T-1793**	1	SEAL AS	
	5	1	**122-9350**	1	PISTON AS	
	5A	1	**1J-8569**	2	INSERT-PISTON	
	5B	1	**2H-3932**	2	SEAL-O-RING	
	5C	1	**109-4670**	2	INSERT	
	5D	1	**122-9351**	2	PLUNGER	
	5E	1	**3K-8692**	4	RING-BACKUP	
	6	1	**9T-1878**	2	WASHER (70.5X120X4.76-MM THK)	
	7	1	**8J-4386**	1	SEAL-O-RING	
	8	1	**3G-3747**	1	RING-BACKUP	
	9	1	**109-6779**	1	HEAD	
R	10	1	**6E-4859**	1	ROD AS	
	10A	1	**7J-3297**	1	BEARING	
	10B	1	**8T-9044**	1	RING-RETAINING	
M	11	1	**8T-0283**	6	BOLT (M30X3.5X110-MM)	
	12	1	**9X-8399**	6	WASHER (33X56X6-MM THK)	
	13	1	**8T-8382**	1	SEAL-HEAD	
	14	1	**225-3286**	1	SEAL-WIPER	
C	15	1	**167-2324**	1	SEAL-U-CUP	
C	16	1	**167-2211**	1	SEAL AS-BUFFER	
C	17	1	**8T-3329**	1	RING-WEAR	
	18	1	**3B-8489**	1	FITTING-GREASE (CYLINDER EYE BEARING)	

C-CHANGE FROM PREVIOUS TYPE
M-METRIC PART
R-REMFG PART MAY BE AVAILABLE

109-8833 CYLINDER GP-TILT *(contd.)* **i01989405**

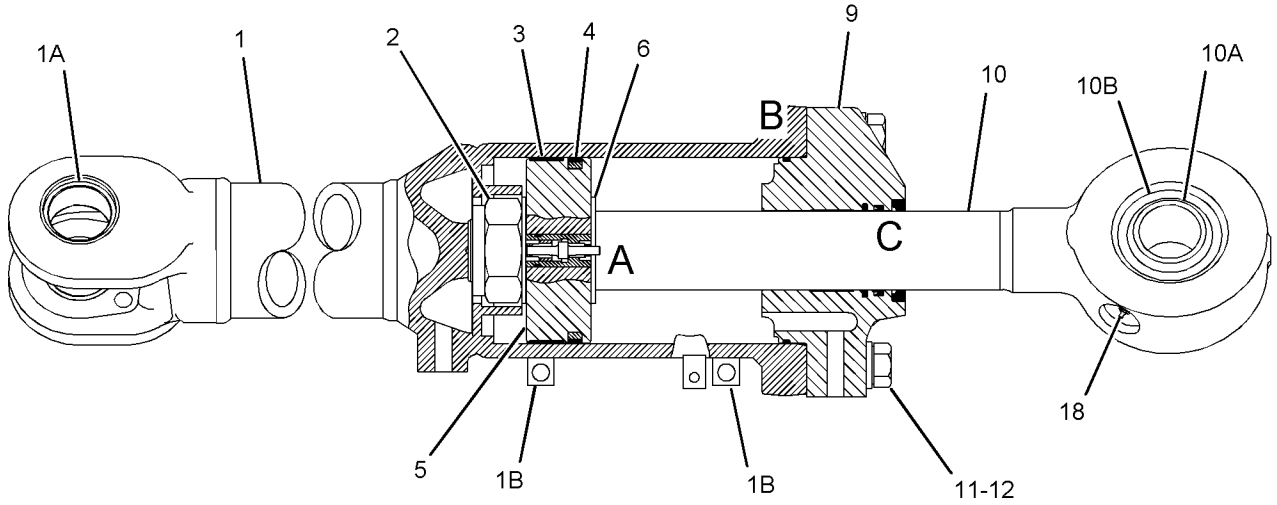

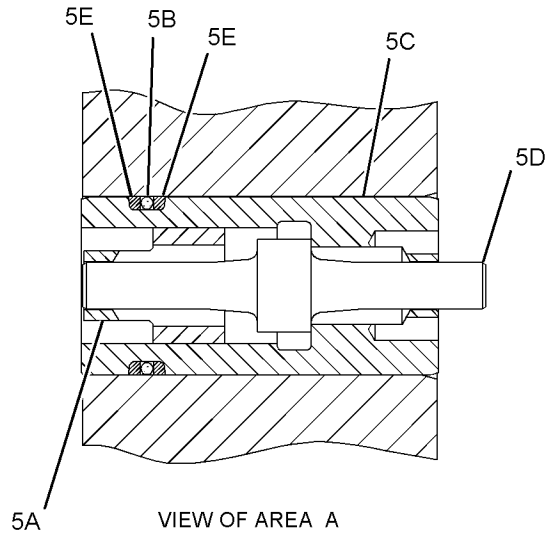

VIEW OF AREA A

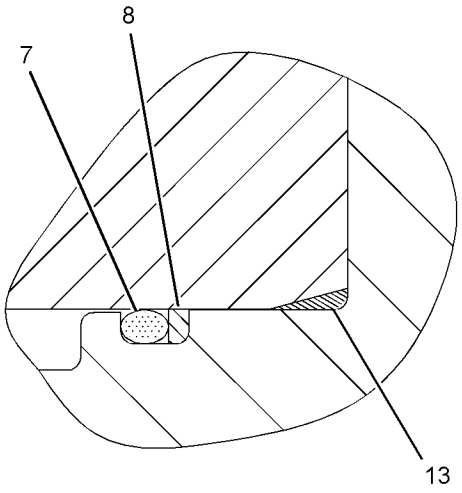

VIEW OF AREA B

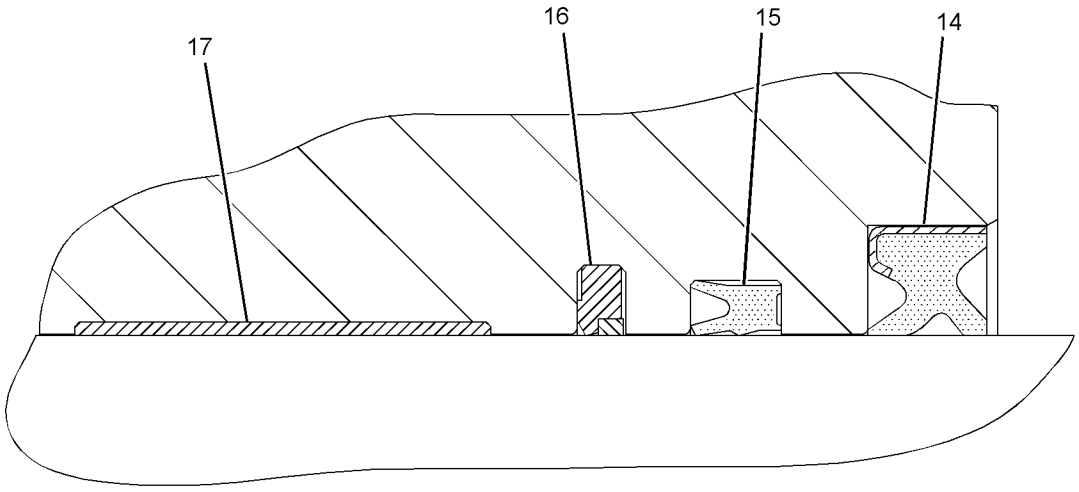

VIEW OF AREA C

GRAPHIC #1

<END>

g01036155

HYDRAULIC SYSTEM

244-8864 HEAD GP-PUMP—STEERING PUMP

S/N: RJS1-UP

PART OF 214-1093 PUMP GP-PISTON

SMCS-5070 **i02267024**

NOTE	REF NO	GRAPHIC REF	PART NUMBER	QTY	PART NAME 1 2 3 4 5 6 (PRODUCT LEVEL)	SEE PAGE
J	1	1	**178-4164**	2	VALVE GP-RELIEF (STEERING PISTON PUMP)	
					(EACH INCLUDES)	
		1	**123-7556**	1	CAP	
Y	2	1	**246-1246**	1	VALVE GP-RELIEF (STEERING PISTON PUMP)	495
Y	3	1	**6E-4392**	1	VALVE GP-PUMP CONTROL (PRESSURE COMPENSATOR) (STEERING PISTON PUMP)	636
	4	1	**6V-5326**	1	SEAL-O-RING	
	5	1	**183-8416**	1	BUSHING	
	6	1	**5I-4342**	4	BOLT (M20)	
	7	1	**2K-4472**	1	SEAL-O-RING	
	8	1	**144-9101**	2	PLUG-BREAK OFF	
	9	1	**9T-3929**	1	PLUG AS	
		1	**6E-5479**	1	SEAL	
	10	1	**134-7489**	3	PLUG	
	11	1	**6V-5586**	3	SEAL-O-RING	
	12	1	**6V-8398**	2	SEAL-O-RING	
	13	1	**099-5845**	2	PLUG (HEX)	
	14	1	**3J-1907**	2	SEAL-O-RING	
	15	1	**245-4120**	1	BUSHING	
	16	1	**111-8792**	1	BEARING	
	17	1	**120-4394**	1	PLUG-BREAK OFF	
	18	1	**9S-8006**	1	PLUG (STRAIGHT THREAD O-RING)	
	19	1	**2M-9780**	1	SEAL-O-RING	
	20	1	**6E-4353**	1	CONNECTOR	
					AVAILABLE REPAIR KIT(S):	
J			**178-4171**	1	KIT-SEAL (RELIEF VALVE) (STEERING PISTON PUMP)	

J-KIT MARKED J AVAILABLE FOR PARTS MARKED J
Y-SEPARATE ILLUSTRATION

244-8864 HEAD GP-PUMP *(contd.)* **i02267024**

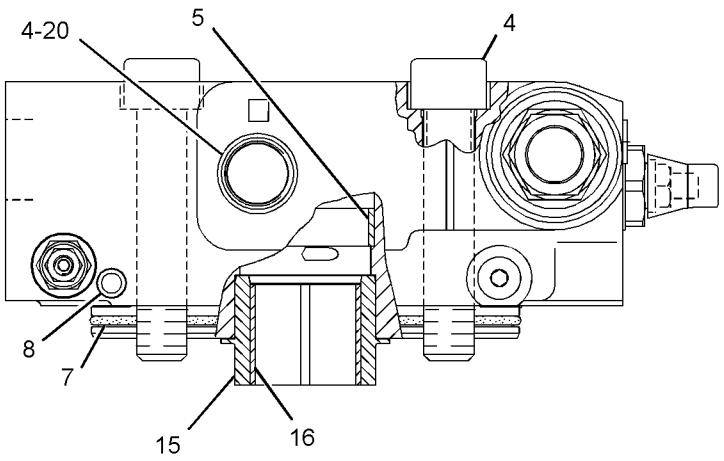

VIEW C-C

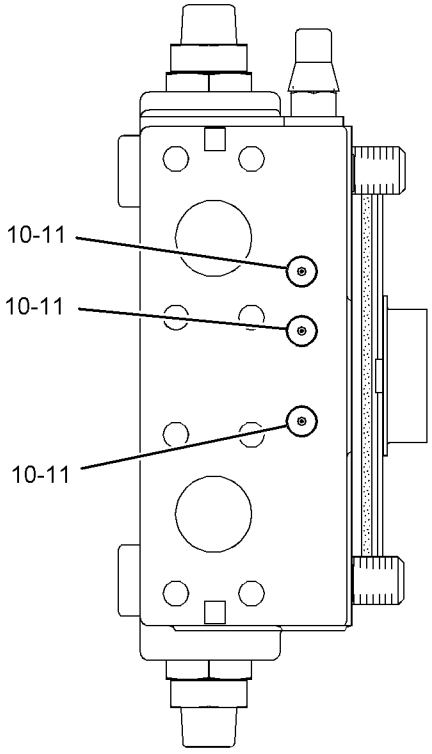

VIEW A-A

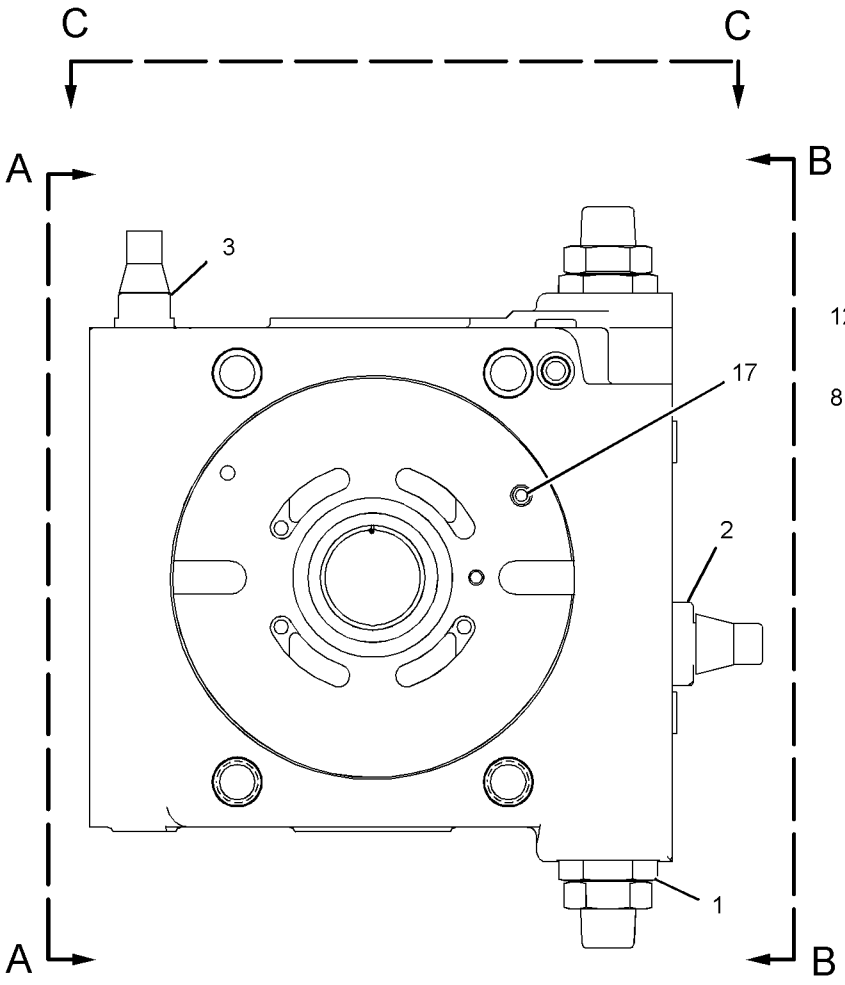

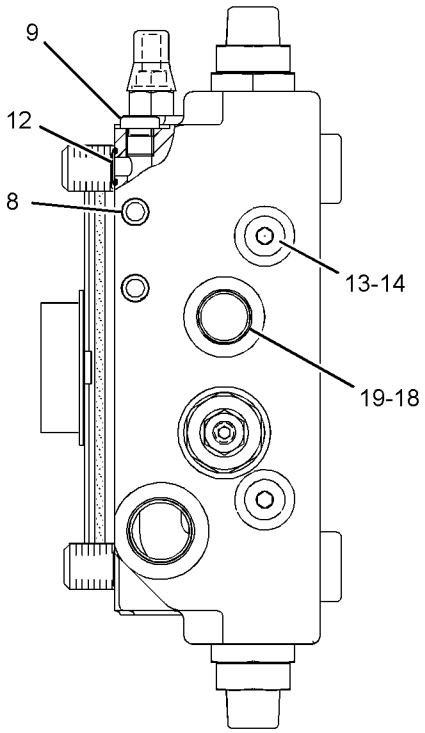

VIEW B-B

GRAPHIC #1 **<END>** g01115678

HYDRAULIC SYSTEM

205-8602 HYDRAULIC AR

S/N: RJS1-UP

PART OF 205-8600 GENERAL AR-TRACTOR

SMCS-5051, 5056, 5057, 5073 **i02267028**

NOTE	PART NUMBER	QTY	PART NAME 1 2 3 4 5 6 (PRODUCT LEVEL)	SEE PAGE
Y	**208-6074**	1	CONTROL GP-JOYSTICK (BULLDOZER)	515
Y	*9G-9288*	1	COVER GP-HYDRAULIC TANK CAP	522
Y	*204-7414*	1	LINES GP-HYDRAULIC FAN	553
Y	*205-8581*	1	LINES GP-LIFT CYLINDER	559
Y	*205-8582*	1	LINES GP-PUMP	564
Y	*205-8615*	1	LINES GP-STEERING	485
Y	*205-8583*	1	LINES GP-TILT CYLINDER	578
Y	**214-1099**	1	MOTOR GP-PISTON (HYDRAULIC FAN)	585
Y	**214-1094**	1	MOTOR GP-PISTON (STEERING)	584
Y	**214-1095**	1	PUMP GP-PISTON (IMPLEMENT, FAN)	592
Y	**214-1093**	1	PUMP GP-PISTON (STEERING)	590
Y	*222-0491*	1	TANK & FILTER GP-HYDRAULIC	605
Y	*217-3885*	1	VALVE & MTG GP-MAIN CONTROL	611
Y	**217-4327**	1	VALVE GP-QUICK-DROP (BLADE)	642

Y-SEPARATE ILLUSTRATION

<END>

HYDRAULIC SYSTEM

204-7414 LINES GP-HYDRAULIC FAN

S/N: RJS1-UP

PART OF 205-8602 HYDRAULIC AR

SMCS-1386, 1387, 5057 **i02204710**

NOTE	REF NO	GRAPHIC REF	PART NUMBER	QTY	PART NAME 1 2 3 4 5 6 (PRODUCT LEVEL)	SEE PAGE
	1	1	**1W-8793**	1	SPACER (13.8X30X20-MM THK)	
	2	2	**4E-1437**	1	VALVE AS-COOLER BYPASS	
	3	1	**6V-0852**	1	CAP-DUST	
	4	1	**8C-3451**	1	CAP-DUST	
	5	1	*185-0002*	1	REDUCER AS	
		1	**6V-8947**	1	REDUCER	
		1	**6V-9746**	1	SEAL-O-RING	
	6	1	**188-2501**	1	PLATE AS	
	7	1	**203-2789**	1	BRACKET AS	
I	8	1	**208-1568**	1	HOSE AS	
I	9	1	**208-1569**	1	HOSE AS	
I	10	1	**208-1572**	1	HOSE AS	
I	11	1	**208-1573**	1	HOSE AS	
I	12	1	**208-1574**	1	HOSE AS	
	13	2	**211-5474**	1	BRACKET	
	14	2	**217-6886**	1	MANIFOLD	
I	15	2	**226-2499**	1	HOSE AS	
I	16	1	**226-2500**	1	HOSE AS	
	17	2	**229-5693**	1	TUBE AS	
	18	2	**229-5694**	1	TUBE AS	
	19	1	**231-4579**	1	TUBE AS	
	20	1	**244-2197**	1	TUBE AS	
	21	1	**053-0558**	4	CLIP	
	22	1	*148-8305*	1	ADAPTER AS	
		1	**5P-9617**	1	ADAPTER	
		1	**3J-1907**	1	SEAL-O-RING	
	23	2	*148-8323*	1	CONNECTOR GP	
		2	**6V-9875**	1	CONNECTOR	
		2	**2S-4078**	1	SEAL-O-RING	
		2	**5K-9090**	1	SEAL-O-RING	
	24	2	*148-8334*	1	CONNECTOR AS	
		2	**8T-3611**	1	CONNECTOR	
		2	**2S-4078**	1	SEAL-O-RING	
		2	**6V-8400**	1	SEAL-O-RING	
	25	1	*148-8357*	2	ELBOW AS	
					(EACH INCLUDES)	
		1	**6V-9008**	1	ELBOW	
		1	**5K-9090**	1	SEAL-O-RING	
		1	**7M-8485**	1	SEAL-O-RING	
	26	2	*148-8390*	1	ELBOW AS	
		2	**6V-8626**	1	ELBOW	
		2	**2M-9780**	1	SEAL-O-RING	
		2	**7J-9108**	1	SEAL-O-RING	
	27	1	*150-3065*	1	ADAPTER AS	
		1	**6V-0484**	1	ADAPTER-O-RING	
		1	**3J-1907**	1	SEAL-O-RING	
	28	2	*164-5577*	1	ELBOW GP	
		2	**6V-8984**	1	ELBOW	
		2	**5K-9090**	2	SEAL-O-RING	
	29	2	*164-6860*	1	TEE AS	
		2	**6V-9350**	1	TEE-BULKHEAD	
		2	**7J-9108**	3	SEAL-O-RING	
	30	2	**1P-3703**	5	SEAL-RECTANGULAR	
	31	1	**3J-1907**	1	SEAL-O-RING	
	32	1	**3J-7354**	1	SEAL-O-RING	
	33	1,2	**4J-0520**	3	SEAL-O-RING	

204-7414 **LINES GP-HYDRAULIC FAN** *(contd.)* **i02204710**

NOTE	REF NO	GRAPHIC REF	PART NUMBER	QTY	PART NAME 1 2 3 4 5 6 (PRODUCT LEVEL)	SEE PAGE
	34	1	**4L-6454**	6	BOLT (3/8-16X1-IN)	
	35	1	**4L-6459**	1	BOLT (3/8-16X2.5-IN)	
	36	1	**5P-1075**	6	WASHER-HARD (10.2X22.5X3-MM THK)	
	37	2	**5P-2228**	2	BOLT (1/2-13X1-IN)	
	38	1	**5P-7466**	1	CLIP (SLOT)	
	39	1	**5P-7467**	1	CLIP (TAB)	
	40	1	**5P-8112**	1	GROMMET	
	41	1	**6V-3965**	1	FITTING AS	
	42	1	**6V-8400**	1	SEAL-O-RING	
	43	1	**6V-8558**	1	NUT-FACE SEAL (1-11/16-12-THD)	
	44	2	**6V-9170**	1	NUT-BULKHEAD (1-14-THD)	
	45	2	**6V-9172**	1	NUT (1-7/16-12-THD)	
	46	1,2	**7X-7729**	6	WASHER (11X25X3-MM THK)	
	47	1,2	**8C-3206**	6	FLANGE-HALF	
	48	1	**8C-3446**	1	VALVE AS-FLUID SAMPLING	
	49	1	**8T-1889**	1	CLIP (SLOT)	
	50	1	**8T-1890**	1	CLIP (TAB)	
	51	1	**8T-1891**	3	CLIP (SLOT)	
	52	1	**8T-1892**	3	CLIP (TAB)	
	53	1	**8T-1897**	2	CLIP (SLOT)	
	54	1	**8T-1898**	2	CLIP (TAB)	
	55	1,2	**8T-4121**	32	WASHER-HARD (11X21X2.5-MM THK)	
	56	2	**8T-4123**	2	WASHER-PLATED (22X35X3.5-MM THK)	
M	57	1	**8T-4136**	1	BOLT (M10X1.5X25-MM)	
M	58	2	**8T-4185**	16	BOLT (M10X1.5X50-MM)	
M	59	2	**8T-4186**	4	BOLT (M10X1.5X40-MM)	
M	60	1	**8T-4194**	1	BOLT (M12X1.75X50-MM)	
M	61	1,2	**8T-4195**	5	BOLT (M10X1.5X30-MM)	
M	62	1,2	**8T-4196**	12	BOLT (M10X1.5X35-MM)	
	63	1,2	**8T-4223**	3	WASHER-HARD (13.5X25.5X3-MM THK)	
	64	1	**8T-4896**	2	WASHER-HARD (10.2X18.5X2.5-MM THK)	
M	65	2	**8T-6430**	2	BOLT (M20X2.5X50-MM)	
	66	1	**9B-7237**	1	BOLT (3/8-16X1.25-IN)	

I-REFER TO HYDRAULIC INFORMATION SYSTEM
M-METRIC PART

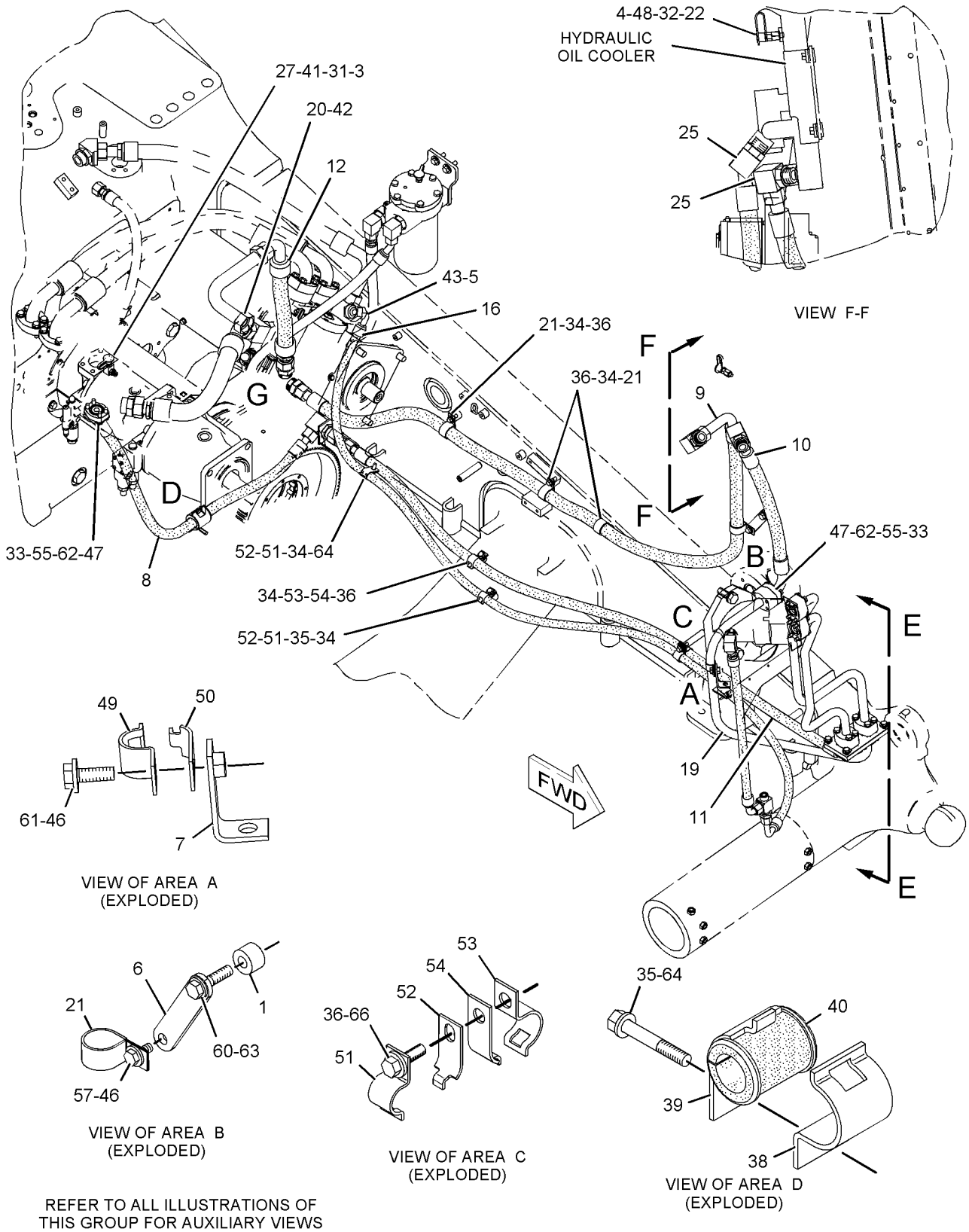

GRAPHIC #1 g01121313

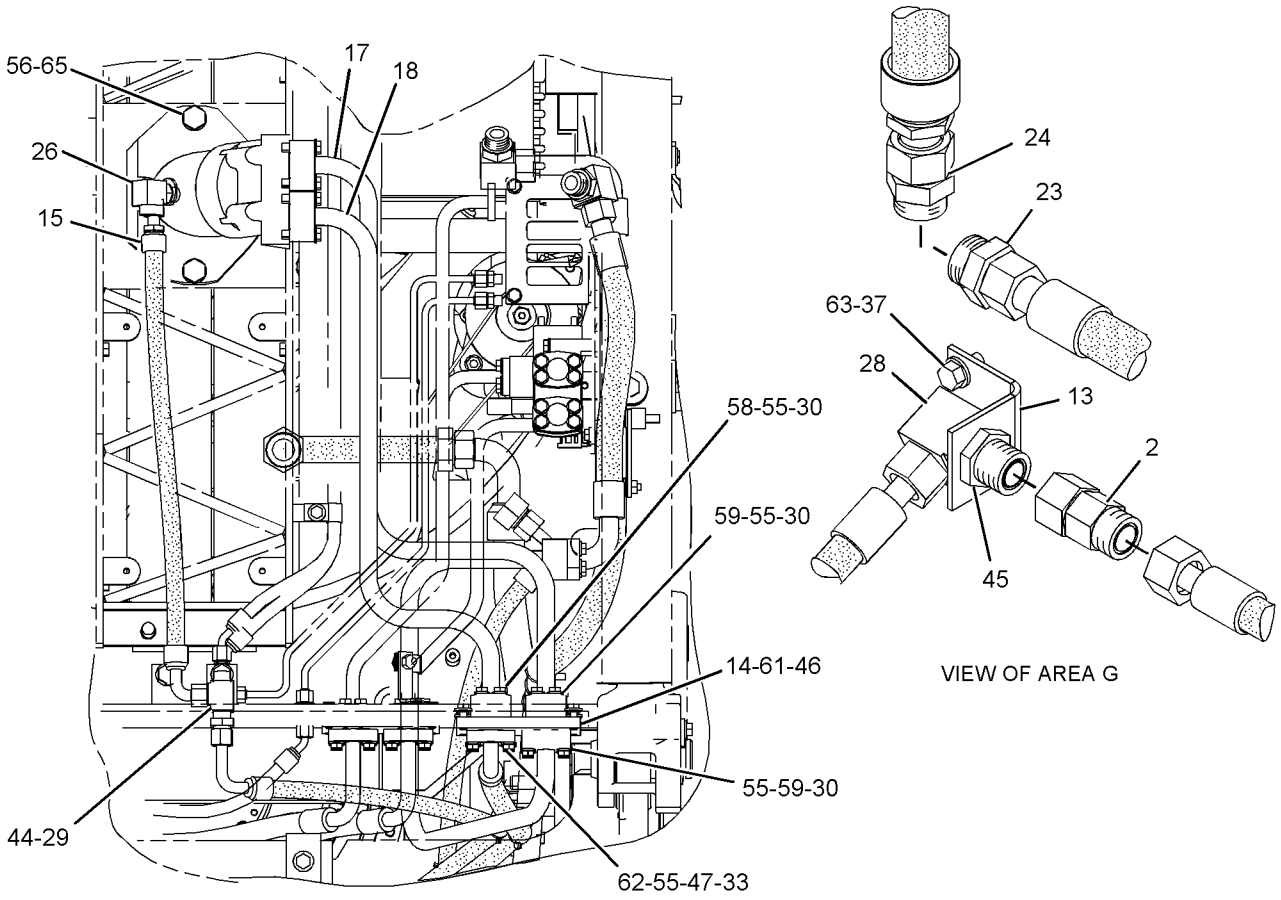

VIEW E-E

VIEW OF AREA G

REFER TO ALL ILLUSTRATIONS OF THIS GROUP FOR AUXILIARY VIEWS

GRAPHIC #2 **<END>** g01121314

208-1597 LINES GP-HYDRAULIC FAN—REVERSING FAN

S/N: RJS1-UP

PART OF 211-5069 MODIFICATION AR-WOODCHIP

AN ATTACHMENT

SMCS-1386, 1387, 5057 **i02248708**

NOTE	REF NO	GRAPHIC REF	PART NUMBER	QTY	PART NAME 1 2 3 4 5 6 (PRODUCT LEVEL)	SEE PAGE
	1	1	*197-0398*	1	CONNECTOR GP	
		1	**8C-3443**	1	CONNECTOR	
		1	**5K-9090**	1	SEAL-O-RING	
		1	**7M-8485**	1	SEAL-O-RING	
I	2	1	**208-1598**	1	HOSE AS	
	3	1	**208-1599**	1	TUBE AS	
	4	1	**208-1600**	1	TUBE AS	
	5	1	**208-1601**	1	TUBE AS	
Y	6	1	**214-1100**	1	MOTOR GP-PISTON (HYDRAULIC FAN)	586
	7	1	**222-7887**	1	SWITCH AS-ROCKER (REVERSING FAN)	
Y	8	1	**229-1466**	1	MANIFOLD GP-CONTROL (REVERSING FAN)	581
	9	1	*148-8335*	1	CONNECTOR AS	
		1	**6V-8635**	1	CONNECTOR	
		1	**5K-9090**	1	SEAL-O-RING	
		1	**7M-8485**	1	SEAL-O-RING	
	10	1	**7X-7729**	3	WASHER (11X25X3-MM THK)	
M	11	1	**8T-4196**	3	BOLT (M10X1.5X35-MM)	

I-REFER TO HYDRAULIC INFORMATION SYSTEM
M-METRIC PART
Y-SEPARATE ILLUSTRATION

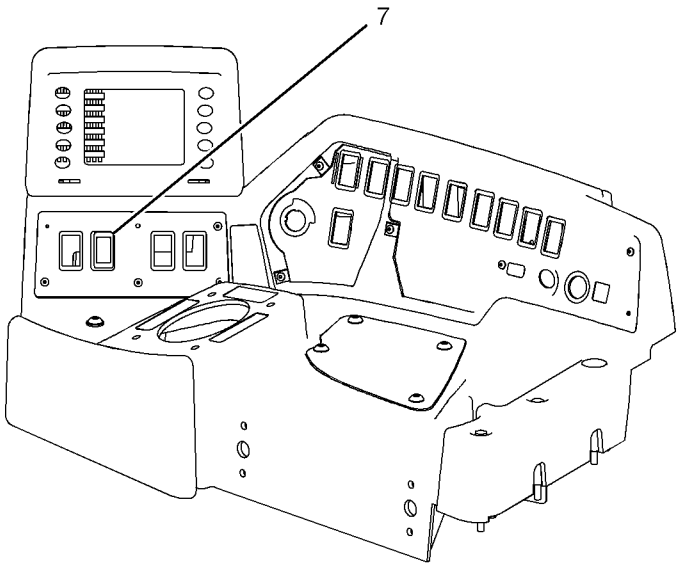

RIGHT SIDE VIEW

(CONSOLE)

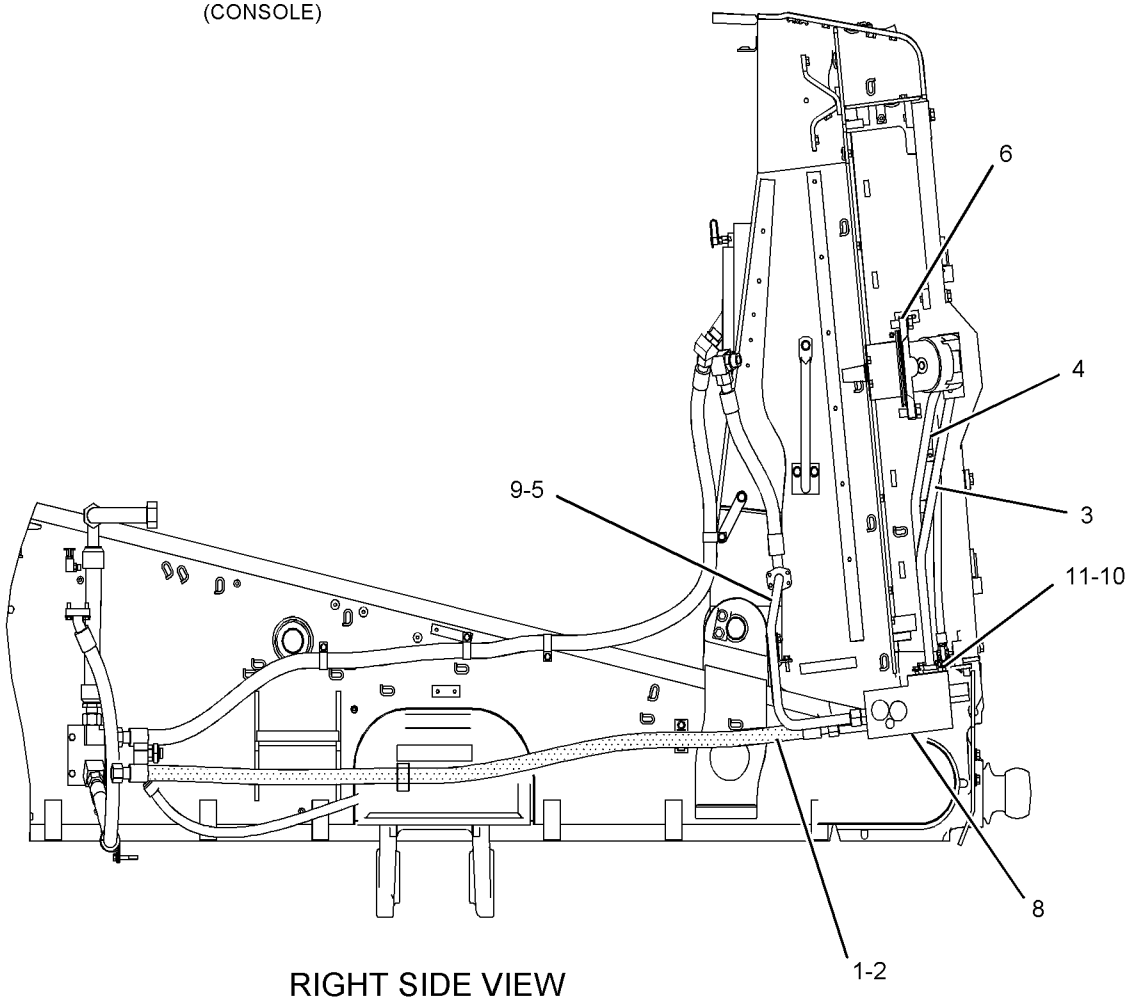

RIGHT SIDE VIEW

GRAPHIC #1 **<END>** g01034935

HYDRAULIC SYSTEM

205-8581 LINES GP-LIFT CYLINDER

S/N: RJS1-UP

PART OF 205-8602 HYDRAULIC AR

SMCS-5057, 5102 **i02248710**

NOTE	REF NO	GRAPHIC REF	PART NUMBER	QTY	PART NAME 1 2 3 4 5 6 (PRODUCT LEVEL)	SEE PAGE
	1	1	**8E-1247**	1	PLATE	
I	2	1	**208-1542**	1	HOSE AS	
	3	1	**208-1543**	1	TUBE AS	
	4	1	**208-1544**	1	TUBE AS	
I	5	1	**208-1545**	1	HOSE AS	
I	6	1	**208-1546**	1	HOSE AS	
I	7	1	**208-1547**	1	HOSE AS	
	8	1	**208-1548**	1	BRACKET AS	
I	9	1	**211-5436**	1	HOSE AS	
	10	1	**217-6886**	1	MANIFOLD	
	11	1	**227-5314**	1	BRACKET AS	
	12	1	*148-8353*	1	ELBOW AS	
		1	**3J-1907**	1	SEAL-O-RING	
		1	**6V-8397**	1	SEAL-O-RING	
		1	**6V-9001**	1	ELBOW	
	13	1	*148-8416*	1	REDUCER AS	
		1	**6V-8398**	1	SEAL-O-RING	
		1	**6V-8939**	1	REDUCER	
	14	1	**1P-3704**	2	SEAL-RECTANGULAR	
	15	1	**1S-6420**	3	CLIP	
	16	1	*216-9199*	2	UNION AS	
					(EACH INCLUDES)	
		1	**5K-9090**	1	SEAL-O-RING	
		1	**6V-8400**	1	SEAL-O-RING	
		1	**9X-2317**	1	UNION	
	18	1	**4J-0520**	6	SEAL-O-RING	
	20	1	**6V-8555**	1	NUT-FACE SEAL (1-14-THD)	
	22	1	**6V-9172**	2	NUT (1 7/16-12-THD)	
	23	1	**7G-5984**	4	CLIP (TAB)	
	24	1	**7G-5985**	5	CLIP (SLOT)	
	25	1	**7G-5986**	5	GROMMET	
	26	1	**7X-7729**	27	WASHER (11X25X3-MM THK)	
	27	1	**8C-3206**	8	FLANGE-HALF	
	28	1	**8T-4121**	24	WASHER-HARD (11X21X2.5-MM THK)	
M	29	1	**8T-4133**	4	NUT (M10X1.5-THD)	
M	30	1	**8T-4136**	8	BOLT (M10X1.5X25-MM)	
M	31	1	**8T-4137**	2	BOLT (M10X1.5X20-MM)	
M	32	1	**8T-4185**	8	BOLT (M10X1.5X50-MM)	
M	33	1	**8T-4195**	10	BOLT (M10X1.5X30-MM)	
M	34	1	**8T-4196**	19	BOLT (M10X1.5X35-MM)	

I-REFER TO HYDRAULIC INFORMATION SYSTEM
M-METRIC PART

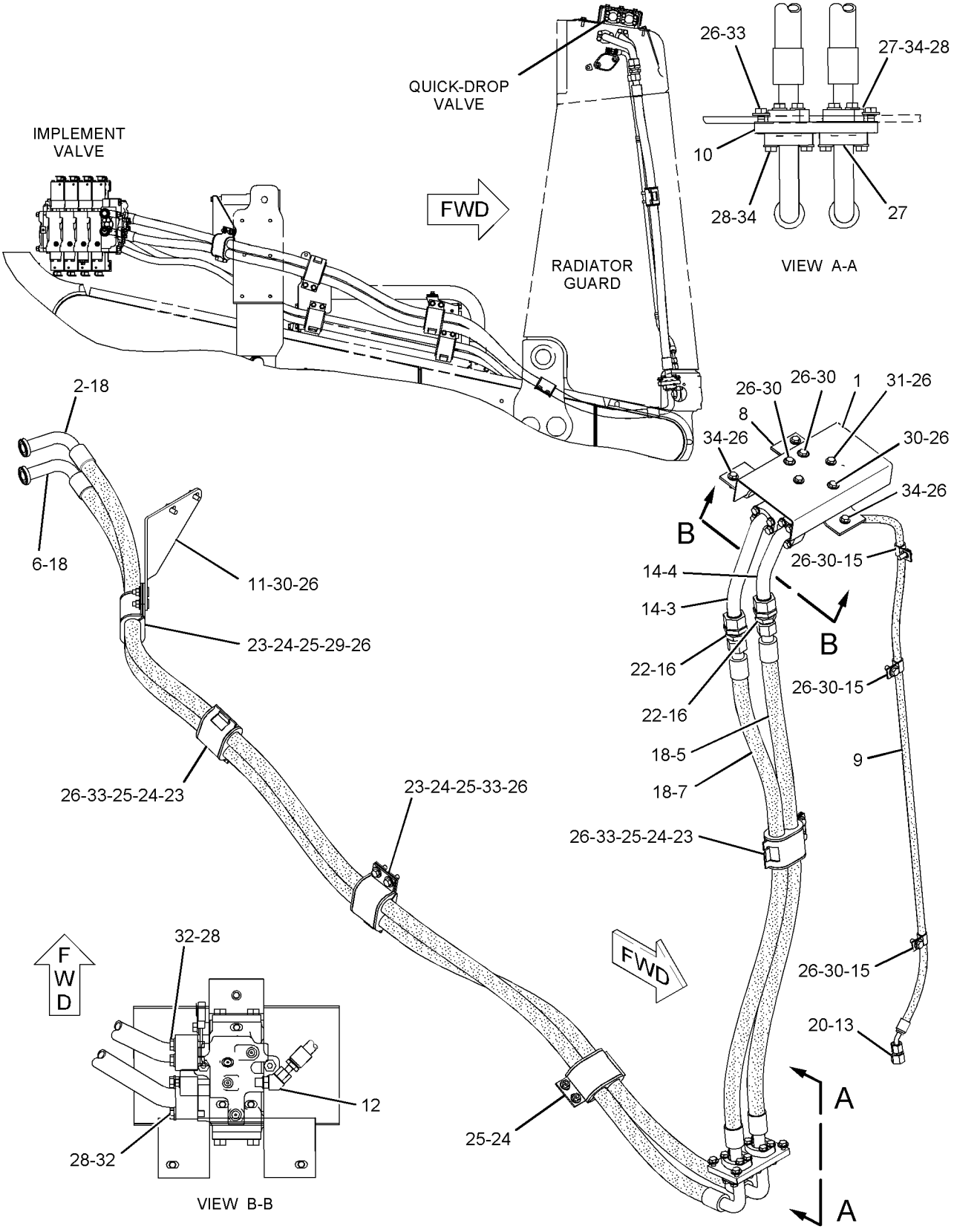

GRAPHIC #1 **<END>** g01113546

211-5056 LINES GP-LIFT CYLINDER–COLD WEATHER OPERATION

S/N: RJS1-UP

AN ATTACHMENT

SMCS-5057, 5102 **i02223366**

NOTE	PART NUMBER	QTY	PART NAME 1 2 3 4 5 6 (PRODUCT LEVEL)	SEE PAGE
	244-4494	2	HOSE AS	
	244-4495	1	HOSE AS	
	244-4496	1	HOSE AS	

<END>

211-5062 LINES GP-PIN PULLER–COLD WEATHER OPERATION

S/N: RJS1-UP

FOR USE WITH 216-0124–PAGE 707

AN ATTACHMENT

SMCS-5354 **i02223362**

NOTE	PART NUMBER	QTY	PART NAME 1 2 3 4 5 6 (PRODUCT LEVEL)	SEE PAGE
I	**137-7081**	1	HOSE AS	
I	**146-3730**	1	HOSE AS	

I-REFER TO HYDRAULIC INFORMATION SYSTEM

<END>

HYDRAULIC SYSTEM

4Z-0669 LINES GP-PIN PULLER CYLINDER–

MULTI-SHANK RIPPER
S/N: GNM1-UP; SEM1-UP
PART OF 4Z-0667, 4Z-0668 RIPPER AR
AN ATTACHMENT

SMCS-5057, 5354 **i02220629**

NOTE	REF NO	GRAPHIC REF	PART NUMBER	QTY	PART NAME 1 2 3 4 5 6 (PRODUCT LEVEL)	SEE PAGE
I	1	1	**4Z-9418**	1	HOSE AS	
I	2	1	**8W-0217**	1	HOSE AS	
	3	1	**3G-8054**	2	CLIP (TAB)	
	4	1	**3G-8057**	2	CLIP (SLOT)	
	5	1	**3J-1907**	2	SEAL-O-RING	
	6	1	**3K-0360**	2	SEAL-O-RING	
	7	1	**6V-0974**	2	GROMMET	
	8	1	**6V-8397**	4	SEAL-O-RING	
	9	1	**6V-8723**	2	ELBOW	
	10	1	**6V-8724**	1	ELBOW	
	11	1	**8T-1905**	1	ELBOW	
	12	1	**8T-4121**	4	WASHER-HARD (11X21X2.5-MM THK)	
M	13	1	**8T-4195**	4	BOLT (M10X1.5X30-MM)	

I-REFER TO HYDRAULIC INFORMATION SYSTEM
M-METRIC PART

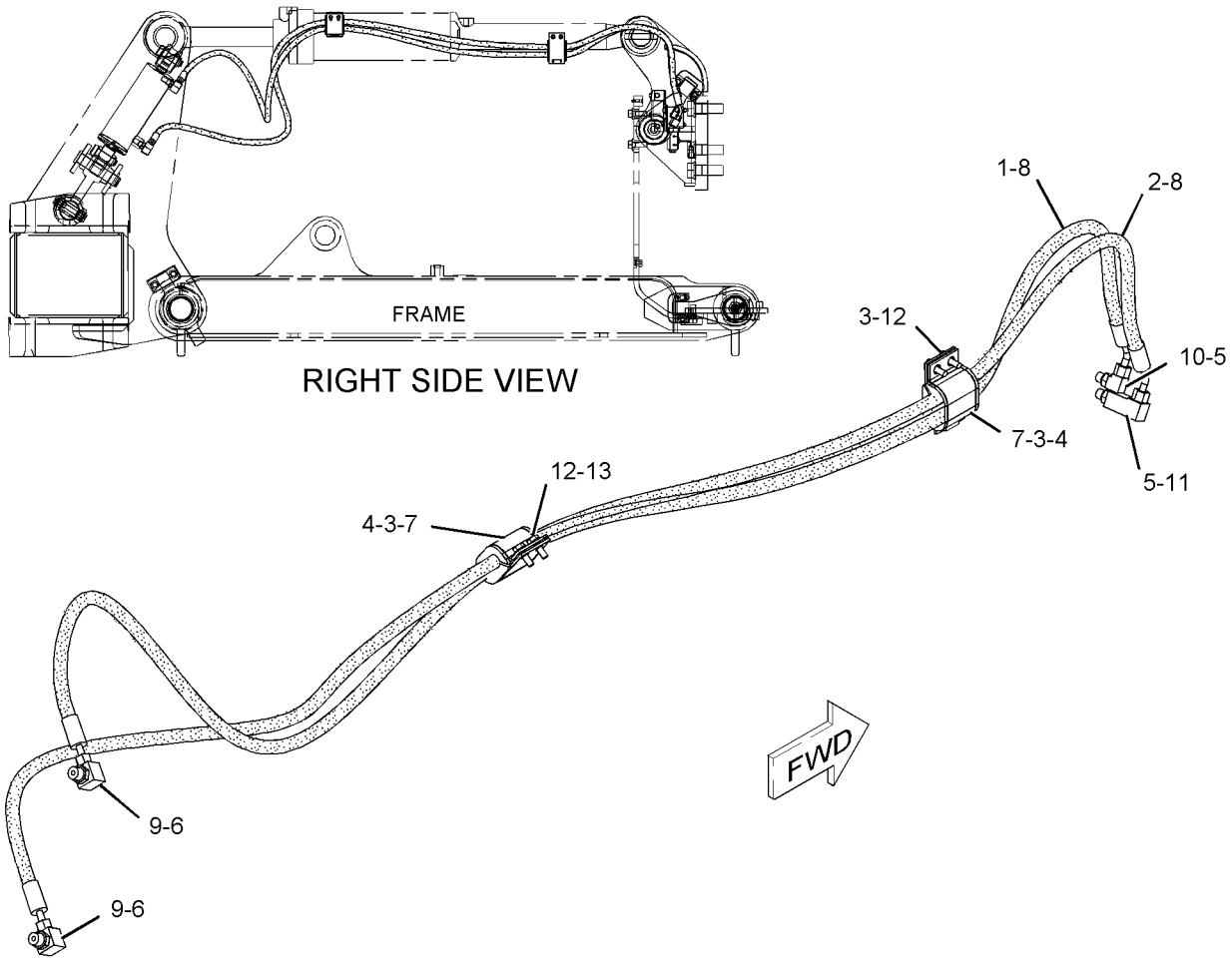

GRAPHIC #1 **<END>** g01123291

HYDRAULIC SYSTEM

216-0123 LINES GP-PIN PULLER CYLINDER–

SINGLE SHANK RIPPER

S/N: RJS1-UP

PART OF 216-0124 PULLER AR-PIN

AN ATTACHMENT

SMCS-5057, 5354 **i01998449**

NOTE	REF NO	GRAPHIC REF	PART NUMBER	QTY	PART NAME 1 2 3 4 5 6 (PRODUCT LEVEL)	SEE PAGE
I	1	1	**113-9326**	1	HOSE AS	
I	2	1	**154-7016**	1	HOSE AS	
	3	1	**3G-8054**	3	CLIP (TAB)	
	4	1	**3G-8057**	3	CLIP (SLOT)	
	5	1	**3J-1907**	2	SEAL-O-RING	
	6	1	**3K-0360**	2	SEAL-O-RING	
	7	1	**5P-4295**	2	CLIP	
	8	1	**6V-0974**	3	GROMMET	
	9	1	**6V-8397**	4	SEAL-O-RING	
	10	1	**6V-8723**	1	ELBOW	
	11	1	**6V-8724**	1	ELBOW	
	12	1	**6V-9876**	1	ELBOW	
	13	1	**8T-1905**	1	ELBOW	
	14	1	**8T-4121**	7	WASHER-HARD (11X21X2.5-MM THK)	
M	15	1	**8T-4195**	7	BOLT (M10X1.5X30-MM)	

I-REFER TO HYDRAULIC INFORMATION SYSTEM
M-METRIC PART

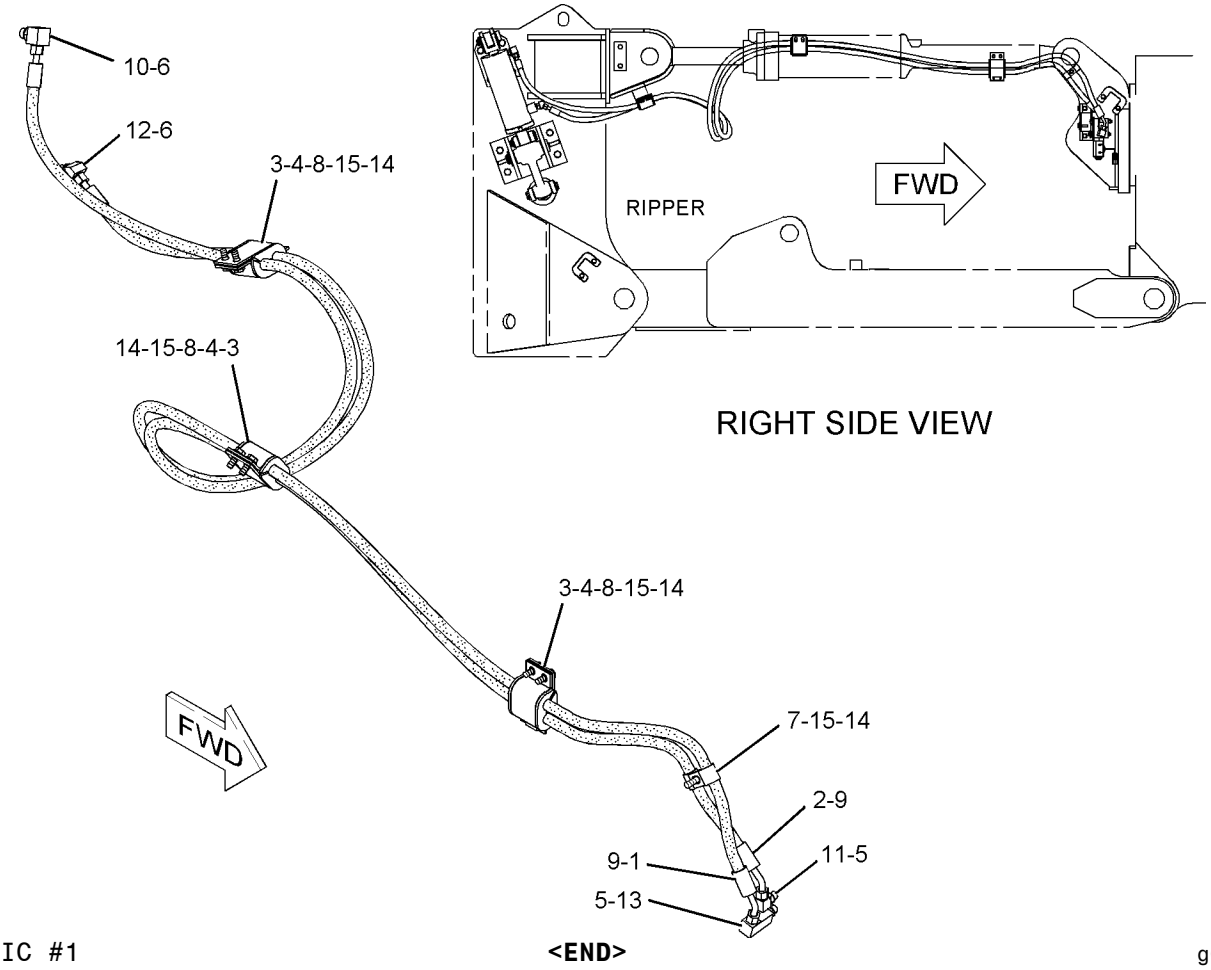

RIGHT SIDE VIEW

GRAPHIC #1 **<END>** g01036652

HYDRAULIC SYSTEM

205-8582 LINES GP-PUMP

S/N: RJS1-UP

PART OF 205-8602 HYDRAULIC AR

SMCS-5057 **i02248711**

NOTE	REF NO	GRAPHIC REF	PART NUMBER	QTY	PART NAME 1 2 3 4 5 6 (PRODUCT LEVEL)	SEE PAGE
	1	1	**6D-9926**	2	SPACER (0.75X1.25X0.47-IN THK)	
	2	2	**6V-0852**	1	CAP-DUST	
	3	1	**7T-8331**	2	MOUNTING	
	4	1	**8F-3556**	1	SPACER (3/4X1 1/4X1-IN THK)	
	5	2	**103-8236**	1	SEAL-O-RING	
	6	1	**110-5918**	1	VALVE-DRAIN	
	7	2	**126-0814**	1	FITTING AS (SWIVEL)	
		2	**6V-0852**	1	CAP-DUST	
	8	2	*148-8424*	1	TEE AS	
		2	**8T-8902**	1	TEE	
		2	**6V-8397**	1	SEAL-O-RING	
	9	2	**148-9727**	1	ADAPTER-ELBOW	
	10	1	**154-6165**	1	VALVE-CHECK (HYDRAULIC TANK)	
Y	11	2	*200-0750*	1	ACCUMULATOR GP-HYDRAULIC (PILOT OIL)	500
	12	2	**200-6345**	1	MOUNT (DUAL SWIVEL)	
	13	2	**204-2281**	2	TIE	
I	14	2	**9R-4976**	1	HOSE AS	
I	15	2	**208-1552**	1	HOSE AS	
I	16	2	**208-1553**	1	HOSE AS	
I	17	2	**208-1554**	1	HOSE AS	
	18	2	**208-1555**	1	HOSE AS	
I	19	2	**161-0000**	1	HOSE AS	
	20	2	**208-1558**	1	MANIFOLD	
I	21	2	**208-1559**	1	HOSE AS	
	22	2	**208-1564**	1	TUBE	
	23	2	**211-1067**	1	ELBOW	
I	24	2	**215-2701**	1	HOSE AS	
I	25	2	**217-7109**	1	HOSE AS	
Y	26	2	**223-8531**	1	MANIFOLD GP-CONTROL (IMPLEMENT PUMP)	580
I	27	2	**224-4275**	1	HOSE AS	
	28	2	**224-4388**	1	PLATE	
	29	2	**238-0376**	1	HOSE AS	
	30	2	**238-4428**	1	MANIFOLD	
	31	1	**115-6433**	2	WASHER (11X50X6-MM THK)	
	32	2	*148-8442*	1	TEE AS	
		2	**8T-1685**	1	TEE	
		2	**7M-8485**	1	SEAL-O-RING	
		2	**6V-9746**	2	SEAL-O-RING	
	33	2	**126-1813**	1	FILTER-OIL (HIGH EFFICIENCY)	
	34	2	*148-8318*	2	CONNECTOR AS	
					(EACH INCLUDES)	
		2	**6V-8634**	1	CONNECTOR	
		2	**3K-0360**	1	SEAL-O-RING	
		2	**6V-8397**	1	SEAL-O-RING	
	35	2	*148-8336*	1	CONNECTOR AS	
		2	**6V-8636**	1	CONNECTOR	
		2	**3J-1907**	1	SEAL-O-RING	
		2	**6V-8397**	1	SEAL-O-RING	
	36	2	*148-8338*	2	CONNECTOR AS	
					(EACH INCLUDES)	
		2	**8T-0075**	1	CONNECTOR	
		2	**3J-1907**	1	SEAL-O-RING	
		2	**6V-8397**	1	SEAL-O-RING	
	37	2	*148-8357*	1	ELBOW AS	
		2	**6V-9008**	1	ELBOW	
		2	**5K-9090**	1	SEAL-O-RING	

205-8582 **LINES GP-PUMP** *(contd.)* **i02248711**

NOTE	REF NO	GRAPHIC REF	PART NUMBER	QTY	PART NAME 1 2 3 4 5 6 (PRODUCT LEVEL)	SEE PAGE
		2	**7M-8485**	1	SEAL-O-RING	
	38	2	*148-8362*	1	ELBOW GP	
		2	**3D-2824**	1	SEAL-O-RING	
		2	**5K-9090**	1	SEAL-O-RING	
		2	**8T-6684**	1	ELBOW (90-DEG)	
	39	2	*148-8390*	1	ELBOW AS	
		2	**6V-8626**	1	ELBOW	
		2	**2M-9780**	1	SEAL-O-RING	
		2	**7J-9108**	1	SEAL-O-RING	
	40	2	*150-3056*	1	TEE AS	
		2	**6V-8788**	1	TEE	
		2	**6V-8397**	3	SEAL-O-RING	
	41	2	*150-3070*	1	ADAPTER AS	
		2	**7X-3163**	1	ADAPTER-SWIVEL	
		2	**3J-1907**	1	SEAL-O-RING	
	42	2	**1P-4578**	2	FLANGE-HALF	
	43	2	**1P-4582**	4	FLANGE-HALF	
	44	2	**1P-4584**	2	FLANGE-HALF	
	46	1	**2B-0858**	1	PLUG-PIPE	
	47	1	**2H-3908**	1	SETSCREW (1/2-13X1.5-IN)	
	48	1	**2M-9780**	1	SEAL-O-RING	
	49	1,2	**3D-2824**	2	SEAL-O-RING	
	50	2	**3H-2652**	2	SEAL-O-RING	
	51	2	**3J-1907**	1	SEAL-O-RING	
	52	2	**4J-0520**	1	SEAL-O-RING	
	53	2	**4J-0522**	3	SEAL-O-RING	
	54	2	**4J-0527**	4	SEAL-O-RING	
	56	1,2	**5P-1076**	4	WASHER-HARD (13.5X30X4-MM THK)	
	57	2	**5P-2566**	2	BOLT (1/2-13X1.5-IN)	
	58	2	**6J-2680**	3	SEAL-O-RING	
	59	2	**6V-3965**	1	FITTING AS	
M	63	2	**7X-2551**	2	BOLT (M12X1.75X200-MM)	
M	64	1	**7X-2554**	1	BOLT (M16X2X70-MM)	
	65	2	**7X-7729**	3	WASHER (11X25X3-MM THK)	
	66	1	**8F-8733**	1	SEAL-O-RING	
	67	1,2	**8T-4121**	9	WASHER-HARD (11X21X2.5-MM THK)	
	68	1	**8T-4123**	4	WASHER-PLATED (22X35X3.5-MM THK)	
M	69	1	**8T-4133**	2	NUT (M10X1.5-THD)	
M	70	2	**8T-4136**	6	BOLT (M10X1.5X25-MM)	
M	71	1	**8T-4140**	2	BOLT (M16X2X60-MM)	
M	72	2	**8T-4184**	4	BOLT (M12X1.75X45-MM)	
M	73	2	**8T-4194**	4	BOLT (M12X1.75X50-MM)	
M	74	2	**8T-4196**	4	BOLT (M10X1.5X35-MM)	
	75	2	**8T-4223**	20	WASHER-HARD (13.5X25.5X3-MM THK)	
M	76	2	**8T-5001**	2	BOLT (M12X1.75X130-MM)	
M	77	1	**8T-5005**	2	BOLT (M10X1.5X70-MM)	
M	78	2	**8T-5092**	2	BOLT (M12X1.75X150-MM)	
M	79	1	**8T-6430**	4	BOLT (M20X2.5X50-MM)	
M	81	2	**8T-7929**	2	BOLT (M12X1.75X180-MM)	
	82	1	**8T-8917**	2	BOLT (1/2-13X1.25-IN)	
	83	2	**8T-8919**	4	BOLT (1/2-13X1.75-IN)	
	84	1	**9X-8257**	3	WASHER (17.5X30X3.5-MM THK)	

I-REFER TO HYDRAULIC INFORMATION SYSTEM
M-METRIC PART
Y-SEPARATE ILLUSTRATION

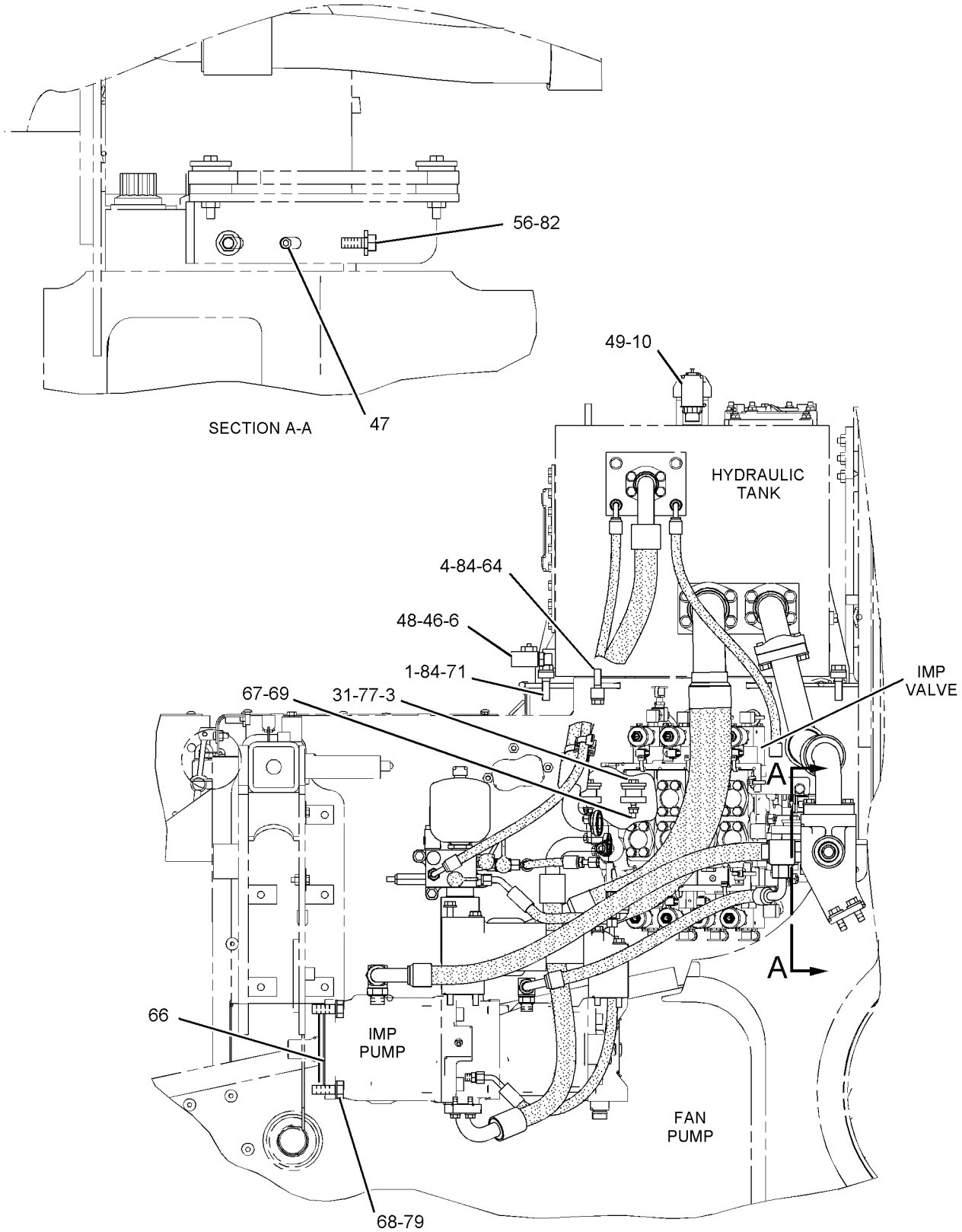

LEFT SIDE VIEW

GRAPHIC #1 g01119780

205-8582 **LINES GP-PUMP** *(contd.)* **i02248711**

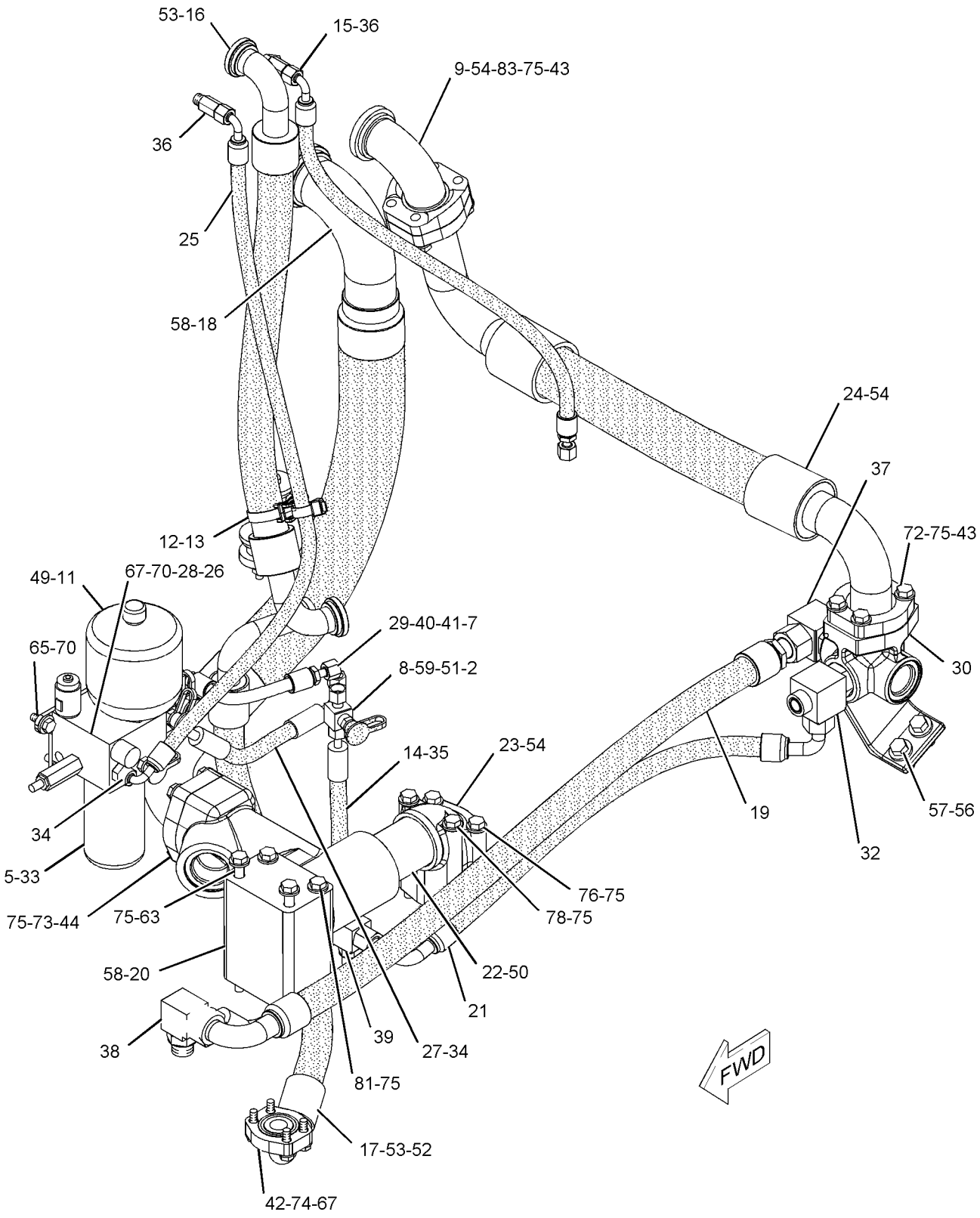

GRAPHIC #2 **<END>** g01119951

HYDRAULIC SYSTEM

135-6410 LINES GP-RIPPER

S/N: CRM1-UP; MAM1-UP
PART OF 217-3562, 217-3563 RIPPER AR
AN ATTACHMENT

SMCS-5057, 5352, 5356 **i02248721**

NOTE	REF NO	GRAPHIC REF	PART NUMBER	QTY	PART NAME 1 2 3 4 5 6 (PRODUCT LEVEL)	SEE PAGE
	1	1	**9M-2904**	12	CLAMP-HOSE	
	2	1	**130-1977**	12	SHIELD	
	3	1	**130-9191**	6	GROMMET	
I	4	1	**135-6411**	2	HOSE AS	
	5	1	**8E-6334**	2	CLIP (TAB)	
I	6	1	**214-8989**	2	HOSE AS	
M	7	1	**8T-4182**	4	BOLT (M10X1.5X45-MM)	
I	8	1	**135-6413**	2	HOSE AS	
M	9	1	**8T-4186**	12	BOLT (M10X1.5X40-MM)	
I	10	1	**135-6414**	1	HOSE AS	
I	11	1	**135-6415**	1	HOSE AS	
	12	1	**139-2455**	3	SHIELD-RH	
	13	1	**139-2456**	3	SHIELD-LH	
	14	1	**4J-0520**	8	SEAL-O-RING	
	15	1	**4J-5267**	8	SEAL-O-RING	
	16	1	**5P-8112**	2	GROMMET	
	17	1	**8E-6332**	2	CLIP (SLOT)	

QUANTITIES SHOWN ARE THOSE REQUIRED FOR BOTH LH AND RH SIDES
I-REFER TO HYDRAULIC INFORMATION SYSTEM
M-METRIC PART

135-6410 **LINES GP-RIPPER** *(contd.)* **i02248721**

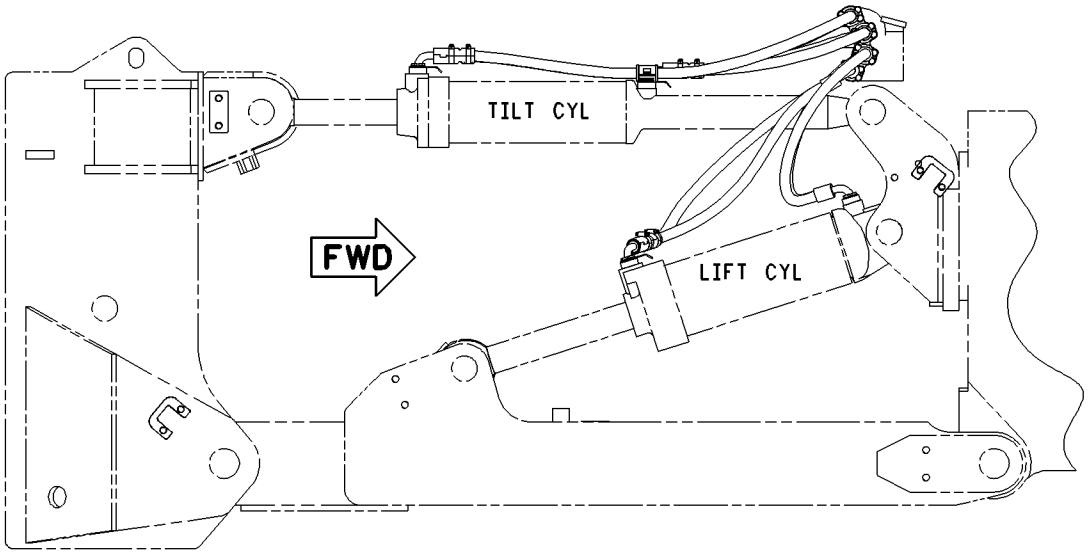

VIEW A-A

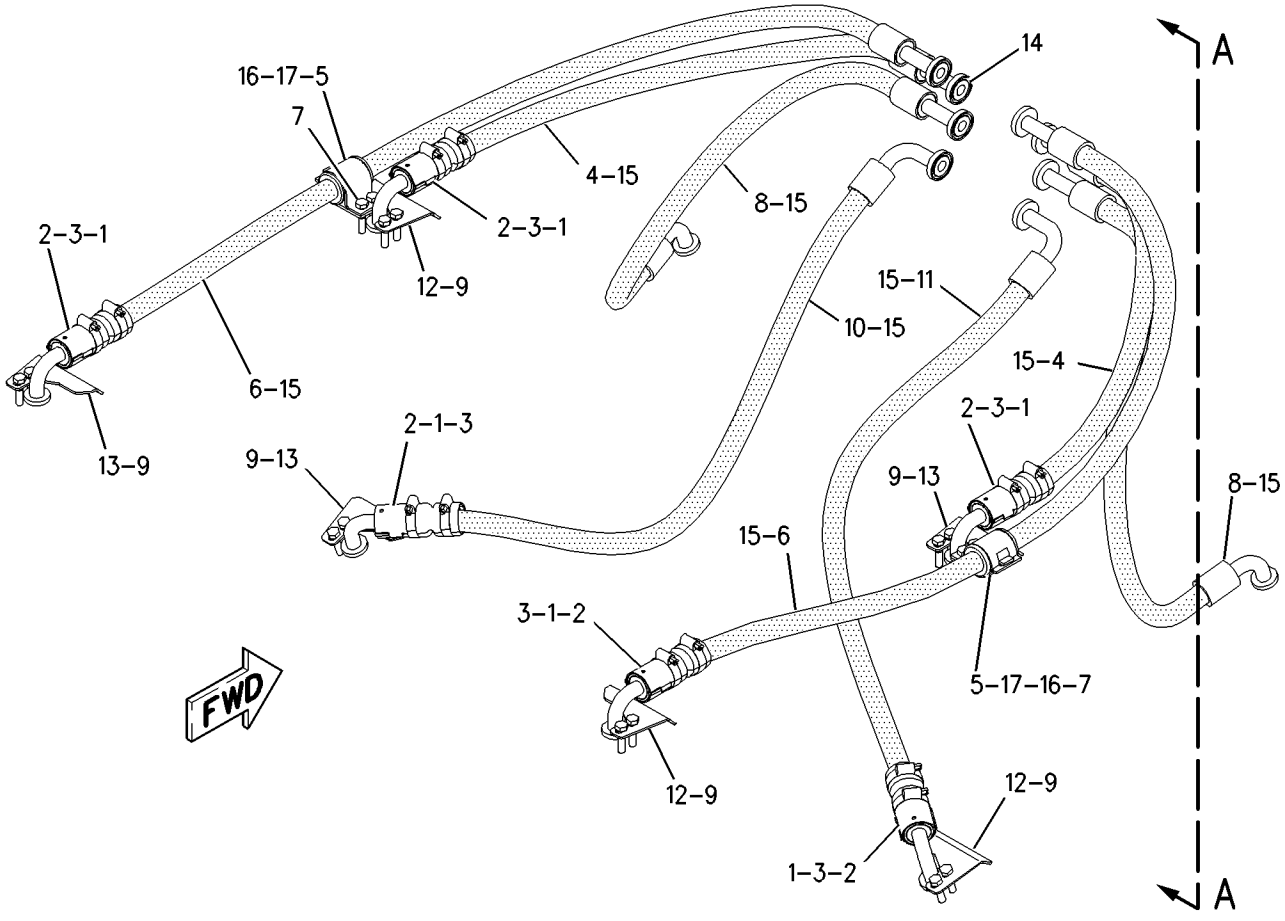

GRAPHIC #1 **<END>** g00928167

HYDRAULIC SYSTEM

207-4455 LINES GP-RIPPER

S/N: RJS1-UP
PART OF 205-8612 CONTROL AR-HYDRAULIC
AN ATTACHMENT

SMCS-5057, 5352, 5356 **i01993675**

NOTE	REF NO	GRAPHIC REF	PART NUMBER	QTY	PART NAME 1 2 3 4 5 6 (PRODUCT LEVEL)	SEE PAGE
	1	1	**7G-5985**	2	CLIP (SLOT)	
	2	1	**8E-7881**	1	BRACKET AS	
		1	**7G-5984**	2	CLIP (TAB)	
I	3	1	**8E-7882**	2	HOSE AS	
I	4	1	**8E-7883**	2	HOSE AS	
	5	1	**117-8727**	1	PLATE-ORIFICE	
	6	1	**211-9491**	1	MANIFOLD	
	7	1	**4J-0520**	17	SEAL-O-RING	
	8	1	**4L-6454**	2	BOLT (3/8-16X1-IN)	
	9	1	**5H-4019**	8	COVER	
	10	1	**5S-7383**	2	BOLT (3/8-16X1.75-IN)	
	11	1	**6V-8801**	2	NUT (3/8-16-THD)	
	12	1	**7G-5986**	2	GROMMET	
	13	1	**7X-0578**	4	WASHER-HARD (10.2X32X2.5-MM THK)	
	14	1	**8C-3206**	24	FLANGE-HALF	
	15	1	**8T-4121**	52	WASHER-HARD (11X21X2.5-MM THK)	
M	16	1	**8T-4186**	4	BOLT (M10X1.5X40-MM)	
M	17	1	**8T-4195**	4	BOLT (M10X1.5X30-MM)	
M	18	1	**8T-4196**	44	BOLT (M10X1.5X35-MM)	
	19	1	**8T-4896**	2	WASHER-HARD (10.2X18.5X2.5-MM THK)	

I-REFER TO HYDRAULIC INFORMATION SYSTEM
M-METRIC PART

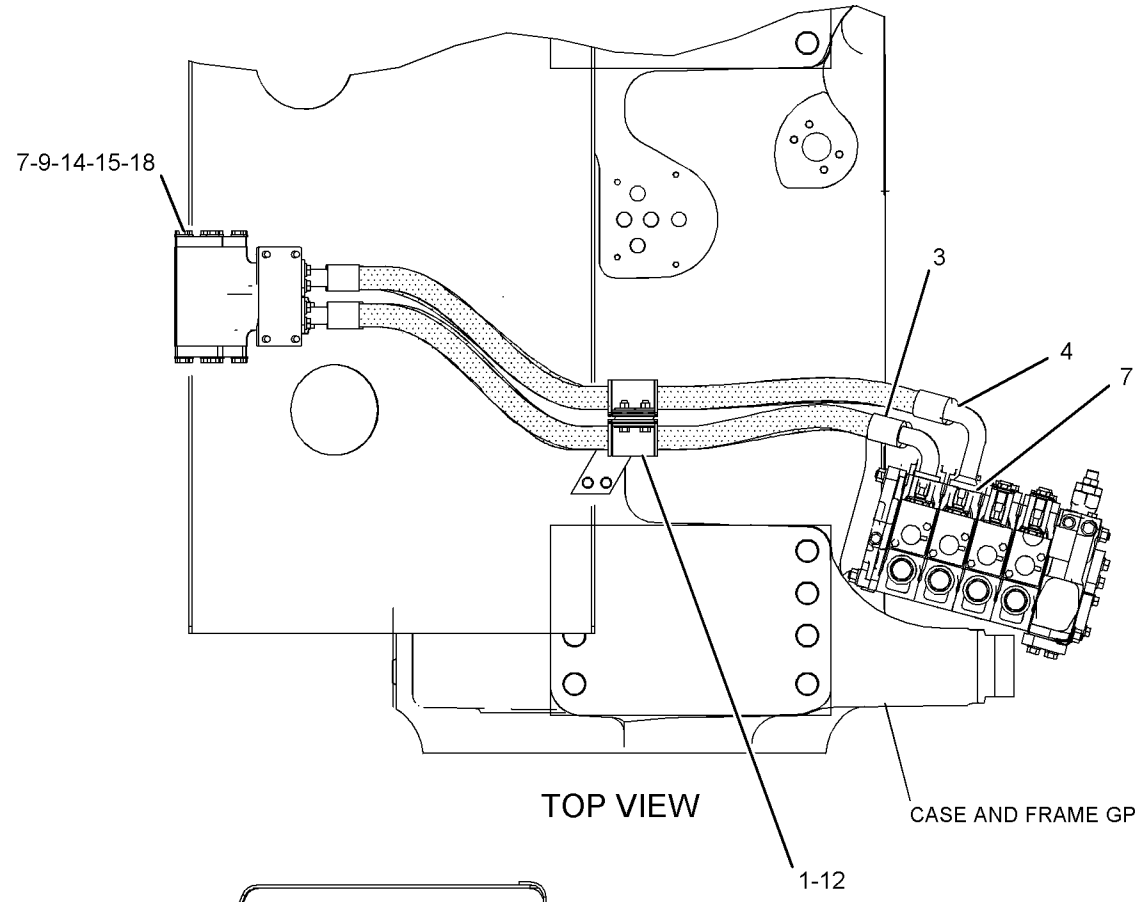

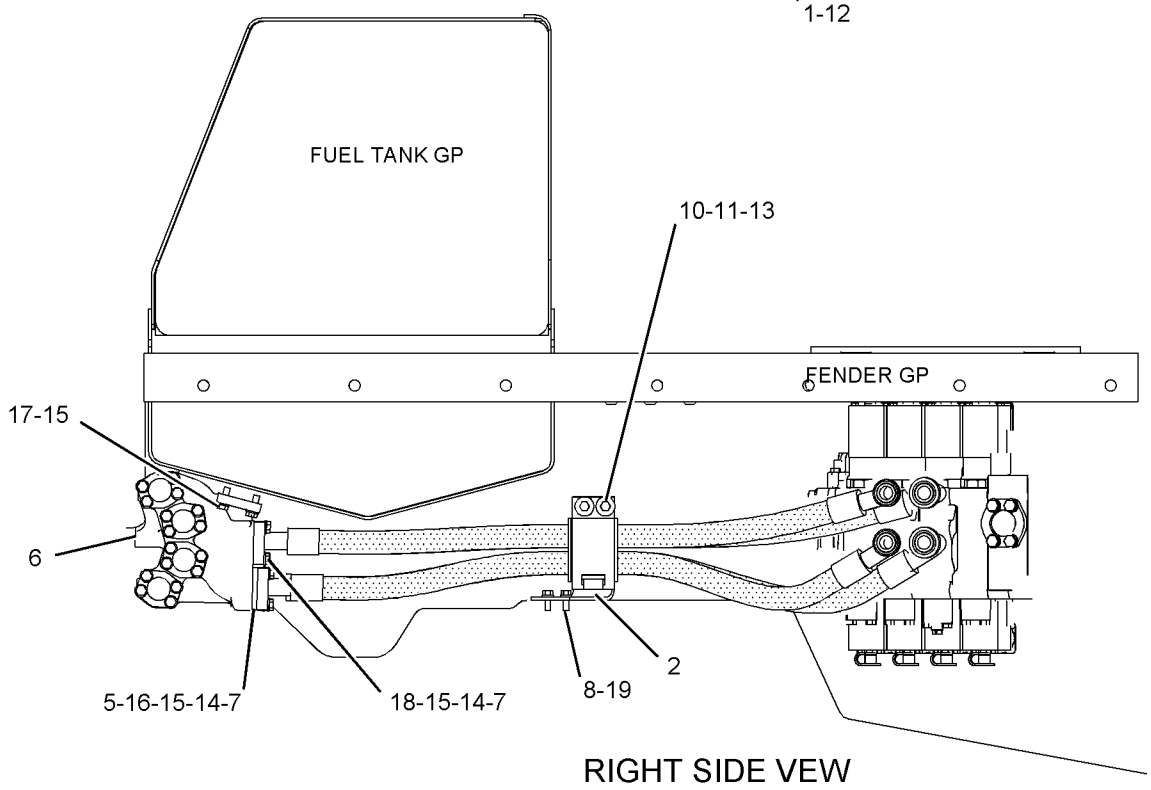

GRAPHIC #1 **<END>** g01036071

HYDRAULIC SYSTEM

8E-9890 LINES GP-TILT CYLINDER

S/N: T9H1-UP; T9J1-UP

PART OF 228-1854, 246-1025 BULLDOZER AR-SEMI-UNIVERSAL, 228-1853, 246-1024 BULLDOZER AR-UNIVERSAL

AN ATTACHMENT

SMCS-5057, 5104 **i01819827**

NOTE	REF NO	GRAPHIC REF	PART NUMBER	QTY	PART NAME 1 2 3 4 5 6 (PRODUCT LEVEL)	SEE PAGE
I	1	1	**3G-7452**	1	HOSE AS	
	2	1	**4J-5267**	9	SEAL-O-RING	
	3	1	**5H-2095**	4	CLAMP-TUBE	
	4	1	**5P-1076**	16	WASHER-HARD (13.5X30X4-MM THK)	
	5	1	**8C-3205**	12	FLANGE-HALF	
	6	1	**8E-9445**	1	GUARD AS	
I	7	1	**9W-9970**	1	HOSE AS	
	8	1	**9X-2027**	4	WASHER (11X18X2-MM THK)	
	9	1	**110-5205**	2	TUBE AS	
	10	1	**110-5207**	2	GUARD	
	11	1	**110-5890**	1	TUBE AS	
I	12	1	**111-7745**	1	HOSE AS	
I	13	1	**111-7746**	1	HOSE AS	
	14	1	**115-2947**	1	GUARD AS	
		1	**8L-5771**	3	SPACER (2X3X.88-IN THK)	
M	15	1	**7X-2573**	4	BOLT (M24X3X40-MM)	
	16	1	**8T-4121**	28	WASHER-HARD (11X21X2.5-MM THK)	
M	17	1	**8T-4136**	4	BOLT (M10X1.5X25-MM)	
M	18	1	**8T-4139**	16	BOLT (M12X1.75X30-MM)	
	19	1	**8T-4167**	4	WASHER-HARD (26X44X4-MM THK)	
M	20	1	**8T-4185**	4	BOLT (M10X1.5X50-MM)	
M	21	1	**8T-4196**	24	BOLT (M10X1.5X35-MM)	

I-REFER TO HYDRAULIC INFORMATION SYSTEM
M-METRIC PART

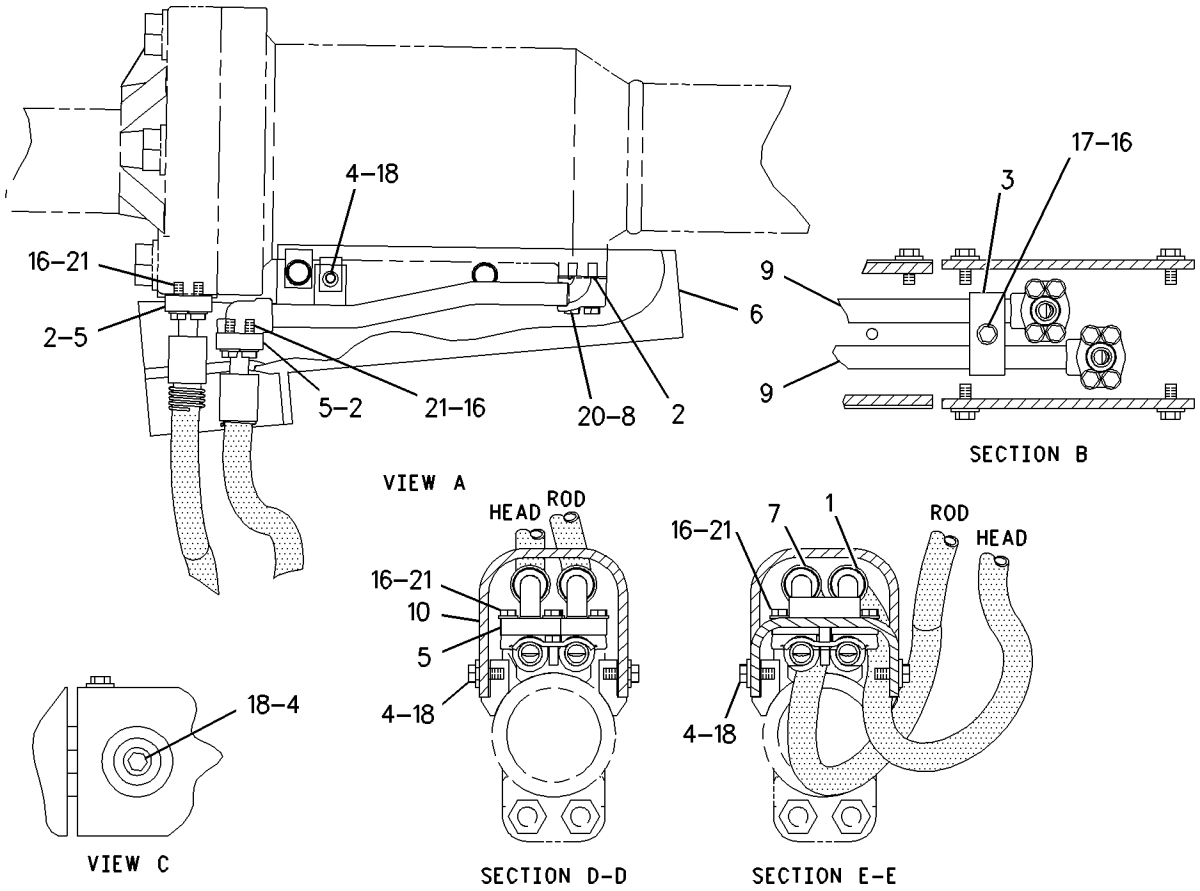

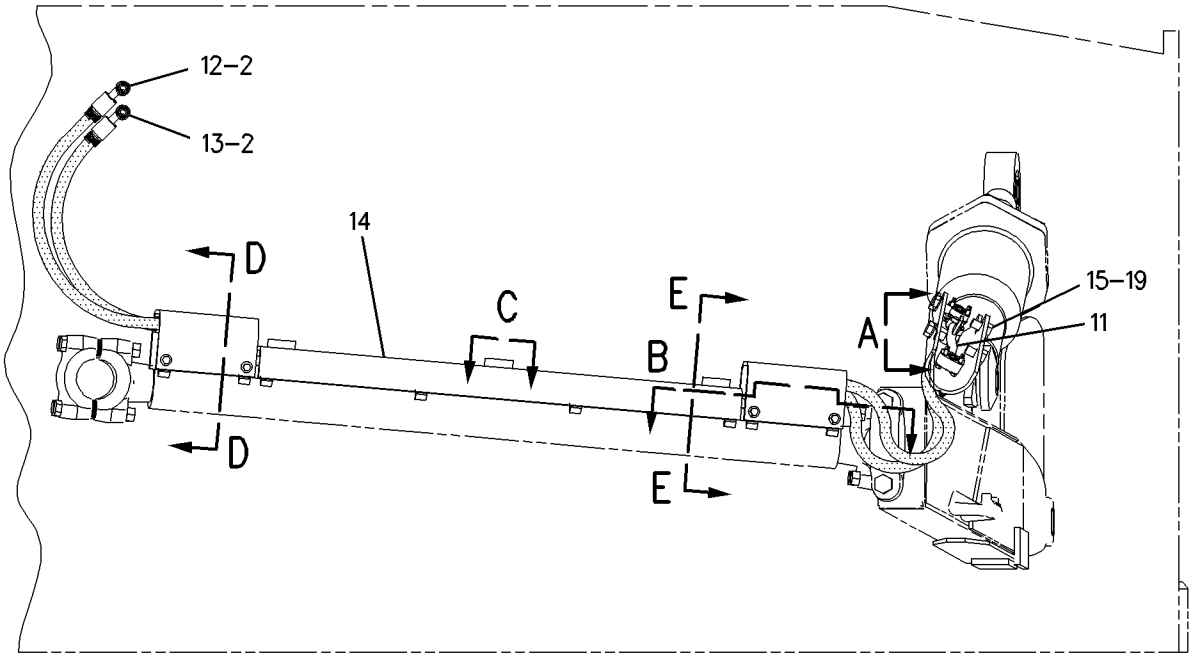

REAR VIEW

GRAPHIC #1 **<END>** g00928988

HYDRAULIC SYSTEM

8E-9891 LINES GP-TILT CYLINDER–DUAL

S/N: RJS1-UP
PART OF 246-1026 CYLINDER AR-TILT
AN ATTACHMENT

SMCS-5057, 5104 **i01453401**

NOTE	REF NO	GRAPHIC REF	PART NUMBER	QTY	PART NAME 1 2 3 4 5 6 (PRODUCT LEVEL)	SEE PAGE
	1	1	**1J-7468**	6	CLAMP	
	2	1	**4J-0520**	2	SEAL-O-RING	
	3	1	**4J-5267**	22	SEAL-O-RING	
	4	1	**4T-3981**	6	CLIP	
C	5	1	**5P-1076**	12	WASHER-HARD (13.5X30X4-MM THK)	
	6	1	**6I-8514**	2	ANGLE	
	7	1	**6I-8515**	1	ANGLE	
	8	1	**6I-8516**	2	ANGLE	
	9	1	**7X-0515**	3	WASHER-HARD (17X35X5-MM THK)	
	10	1	**8C-3205**	32	FLANGE-HALF	
	11	1	**8C-3206**	4	FLANGE-HALF	
C	12	1	**146-3672**	1	GUARD	
	13	1	**8E-3600**	10	PLATE	
I	14	1	**118-8138**	1	HOSE AS	
I	15	1	**8E-9427**	1	HOSE AS	
I	16	1	**8E-9428**	1	HOSE AS	
	17	1	**8E-9433**	1	GUARD AS	
CI	18	1	**200-2354**	1	HOSE AS	
I	19	1	**8E-9436**	2	HOSE AS	
	20	1	**8E-9438**	1	GUARD AS	
		1	**8L-5771**	3	SPACER (2X3X0.88-IN THK)	
C	21	1	**129-5082**	6	BLOCK	
CI	22	1	**165-3726**	2	HOSE AS	
	23	1	**8E-9445**	1	GUARD AS	
	24	1	**8E-9446**	1	GUARD AS	
	25	1	**9W-2877**	2	CLAMP	
	26	1	**9X-2027**	8	WASHER (11X18X2-MM THK)	
	27	1	**108-1225**	2	TUBE AS	
	28	1	**108-1226**	2	TUBE AS	
	29	1	**110-5205**	2	TUBE AS	
	30	1	**110-5890**	2	TUBE AS	
	31	1	**111-1588**	2	TUBE AS	
	32	1	**7W-3447**	8	SPACER (10.2X19.05X10.2-MM THK)	
I	33	1	**112-2671**	1	HOSE AS	
M	34	1	**7X-2553**	3	BOLT (M16X2X40-MM)	
M	35	1	**7X-2573**	8	BOLT (M24X3X40-MM)	
	36	1	**8T-4121**	84	WASHER-HARD (11X21X2.5-MM THK)	
M	37	1	**8T-4136**	12	BOLT (M10X1.5X25-MM)	
CM	38	1	**8T-4139**	14	BOLT (M12X1.75X30-MM)	
	39	1	**8T-4167**	8	WASHER-HARD (26X44X4-MM THK)	
M	40	1	**8T-4182**	14	BOLT (M10X1.5X45-MM)	
M	41	1	**8T-4185**	8	BOLT (M10X1.5X50-MM)	
M	42	1	**8T-4195**	2	BOLT (M10X1.5X30-MM)	
M	43	1	**8T-4196**	64	BOLT (M10X1.5X35-MM)	
	44	1	**7G-3832**	1	GROMMET	
	45	1	**7G-3833**	1	CLIP (TAB)	
	46	1	**7G-3834**	1	CLIP (SLOT)	
	47	1	**8T-4223**	4	WASHER-HARD (13.5X25.5X3-MM THK)	
M	48	1	**8T-4244**	2	NUT (M12X1.75-THD)	
I	49	1	**193-7004**	1	HOSE AS	

C-CHANGE FROM PREVIOUS TYPE
I-REFER TO HYDRAULIC INFORMATION SYSTEM
M-METRIC PART

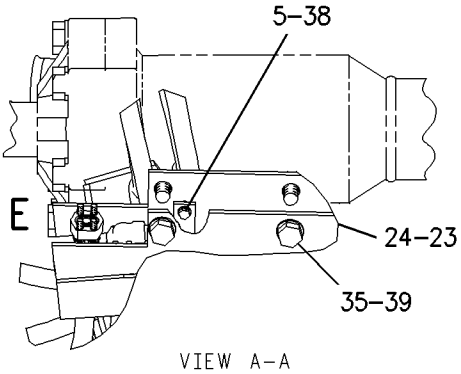

VIEW A–A

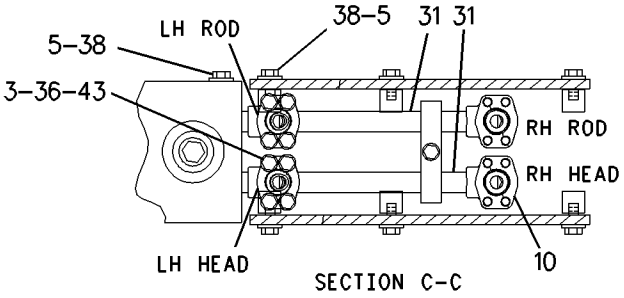

SECTION C–C

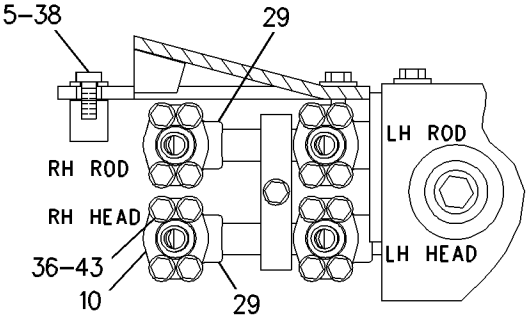

SECTION D–D

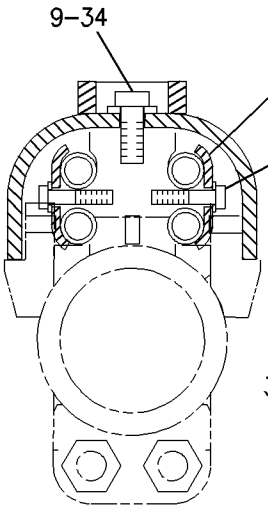

SECTION B

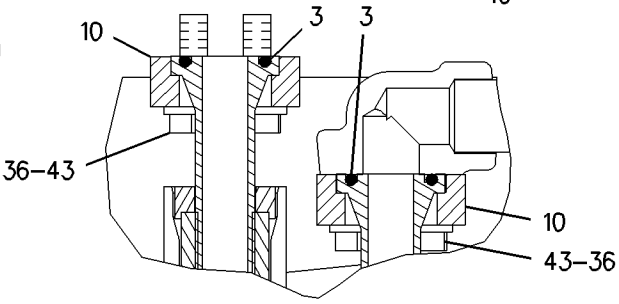

VIEW OF AREA E

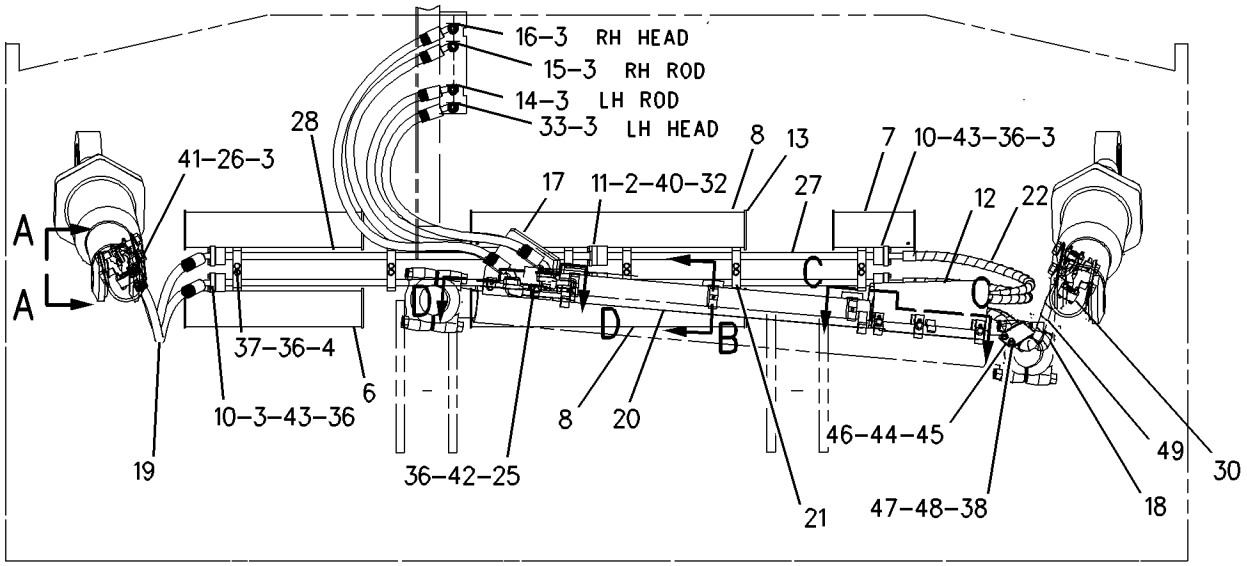

REAR VIEW

GRAPHIC #1 **<END>** g00721919

HYDRAULIC SYSTEM

204-7440 LINES GP-TILT CYLINDER—DUAL

S/N: RJS1-UP
PART OF 205-8607 CONTROL AR-DUAL TILT
AN ATTACHMENT

SMCS-5057, 5104 **i02206614**

NOTE	REF NO	GRAPHIC REF	PART NUMBER	QTY	PART NAME 1 2 3 4 5 6 (PRODUCT LEVEL)	SEE PAGE
	1	1	**1F-7854**	1	SPACER (11.01X19.05X49.21-MM THK)	
	2	1	**7K-1181**	1	STRAP-CABLE	
	3	1	**8E-7111**	1	PLATE	
I	4	1	**208-1594**	1	HOSE AS	
	5	1	**221-5400**	1	ELBOW	
	6	1	**222-7882**	1	SWITCH AS-ROCKER (24-VOLT)(AUTO BLADE ASSIST)	
	7	1	**224-6372**	1	TUBE AS	
	8	1	**224-6373**	1	TUBE AS	
	9	1	**224-6374**	1	TUBE AS	
	10	1	*224-9448*	1	CROSS AS	
	10A	1	**6V-8397**	1	SEAL-O-RING	
	10B	1	**6V-8398**	1	SEAL-O-RING	
	10C	1	**7J-9108**	2	SEAL-O-RING	
	10D	1	**224-2684**	1	CROSS	
M	11	1	**133-7810**	1	STUD-TAPERLOCK	
	12	1	*148-8336*	2	CONNECTOR AS	
					(EACH INCLUDES)	
		1	**6V-8636**	1	CONNECTOR	
		1	**3J-1907**	1	SEAL-O-RING	
		1	**6V-8397**	1	SEAL-O-RING	
	13	1	*149-5452*	1	UNION AS	
		1	**6V-8994**	1	UNION	
		1	**6V-8397**	2	SEAL-O-RING	
	14	1	*150-3069*	1	UNION AS	
		1	**6V-8397**	4	SEAL-O-RING	
		1	**7X-3406**	1	UNION-CROSS	
	15	1	**4J-5267**	1	SEAL-O-RING	
	16	1	**4P-7429**	1	CLIP	
	17	1	**5S-7379**	1	BOLT (3/8-16X0.875-IN)	
	18	1	**6V-9168**	1	NUT (11/16-16-THD)	
	19	1	**8T-1893**	4	CLIP (SLOT)	
	20	1	**8T-1894**	4	CLIP (TAB)	
	21	1	**8T-4121**	11	WASHER-HARD (11X21X2.5-MM THK)	
M	22	1	**8T-4133**	1	NUT (M10X1.5-THD)	
M	23	1	**8T-4136**	2	BOLT (M10X1.5X25-MM)	
M	24	1	**8T-4137**	2	BOLT (M10X1.5X20-MM)	
M	25	1	**8T-4172**	1	BOLT (M10X1.5X80-MM)	
M	26	1	**8T-4192**	3	BOLT (M12X1.75X25-MM)	
M	27	1	**8T-4195**	1	BOLT (M10X1.5X30-MM)	
	28	1	**8T-4223**	3	WASHER-HARD (13.5X25.5X3-MM THK)	
	29	1	**8T-4896**	1	WASHER-HARD (10.2X18.5X2.5-MM THK)	
M	30	1	**8T-6685**	4	BOLT (M10X1.5X110-MM)	

I-REFER TO HYDRAULIC INFORMATION SYSTEM
M-METRIC PART

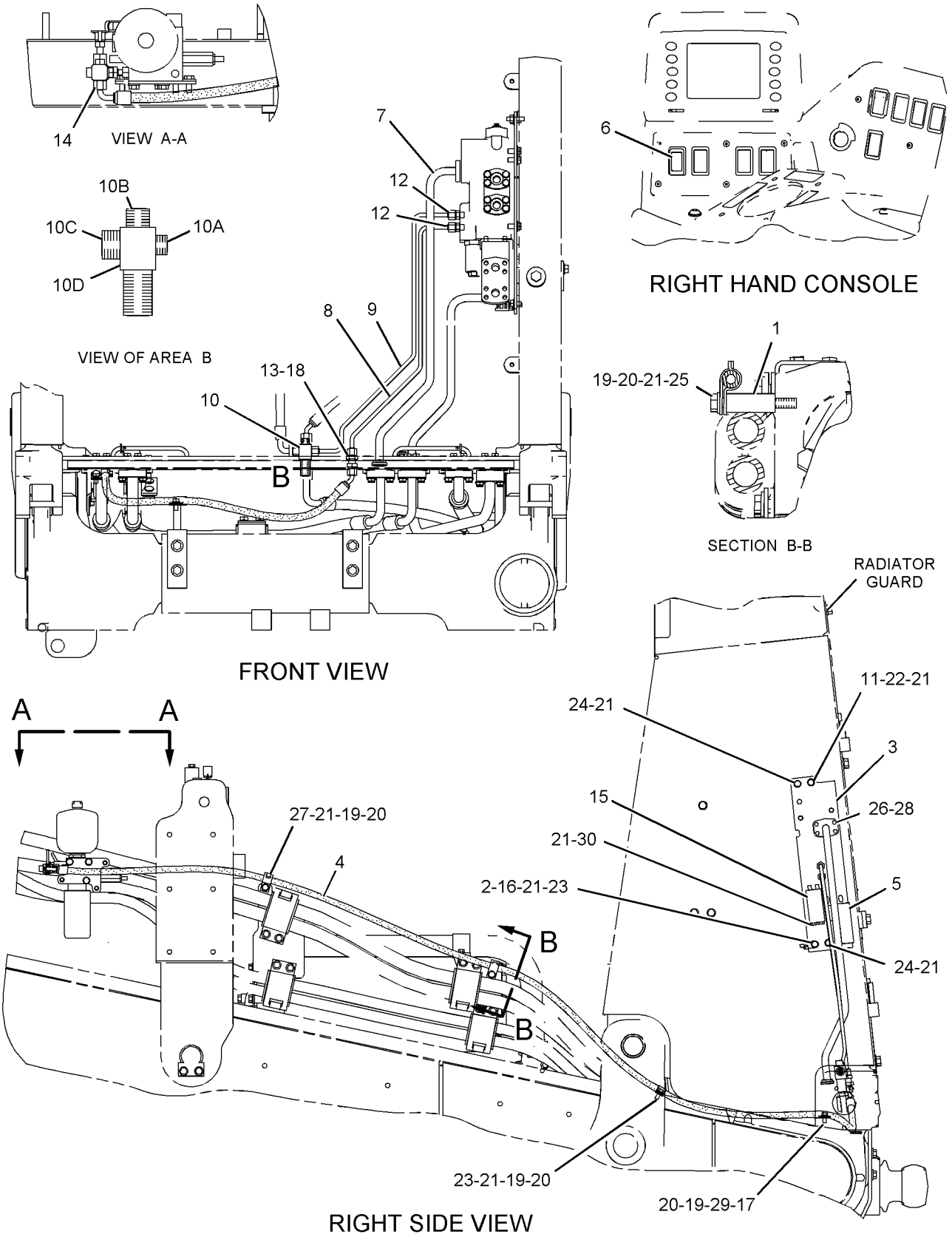

GRAPHIC #1 **<END>** g01120899

HYDRAULIC SYSTEM

205-8583 LINES GP-TILT CYLINDER

S/N: RJS1-UP

PART OF 205-8602 HYDRAULIC AR

SMCS-5057, 5104 **i02199334**

NOTE	REF NO	GRAPHIC REF	PART NUMBER	QTY	PART NAME 1 2 3 4 5 6 (PRODUCT LEVEL)	SEE PAGE
	1	1	**6Y-3568**	1	COVER	
	2	1	**136-1122**	2	BUSHING	
I	3	1	**208-1539**	1	HOSE AS	
I	4	1	**208-1540**	1	HOSE AS	
	5	1	**211-5431**	1	BRACKET AS	
	6	1	**217-6887**	1	MANIFOLD	
	7	1	**221-5401**	1	ELBOW	
	8	1	**224-6371**	1	TUBE AS	
	9	1	**242-8517**	1	TUBE AS	
	10	1	**4J-0520**	3	SEAL-O-RING	
	11	1	**4J-5267**	7	SEAL-O-RING	
	12	1	**5H-4018**	2	COVER	
	13	1	**5P-7466**	2	CLIP (SLOT)	
	14	1	**5P-7467**	2	CLIP (TAB)	
	15	1	**5P-8112**	2	GROMMET	
	16	1	**7G-3832**	4	GROMMET	
	17	1	**7G-3833**	3	CLIP (TAB)	
	18	1	**7G-3834**	4	CLIP (SLOT)	
	19	1	**7X-7729**	10	WASHER (11X25X3-MM THK)	
	20	1	**8C-3205**	14	FLANGE-HALF	
	21	1	**8T-4121**	36	WASHER-HARD (11X21X2.5-MM THK)	
M	22	1	**8T-4133**	2	NUT (M10X1.5-THD)	
M	23	1	**8T-4136**	4	BOLT (M10X1.5X25-MM)	
M	24	1	**8T-4137**	2	BOLT (M10X1.5X20-MM)	
M	25	1	**8T-4172**	2	BOLT (M10X1.5X80-MM)	
M	26	1	**8T-4186**	2	BOLT (M10X1.5X40-MM)	
M	27	1	**8T-4195**	6	BOLT (M10X1.5X30-MM)	
M	28	1	**8T-4196**	28	BOLT (M10X1.5X35-MM)	
	29	1	**8T-4223**	4	WASHER-HARD (13.5X25.5X3-MM THK)	
	30	1	**8T-8917**	4	BOLT (1/2-13X1.25-IN)	

I-REFER TO HYDRAULIC INFORMATION SYSTEM
M-METRIC PART

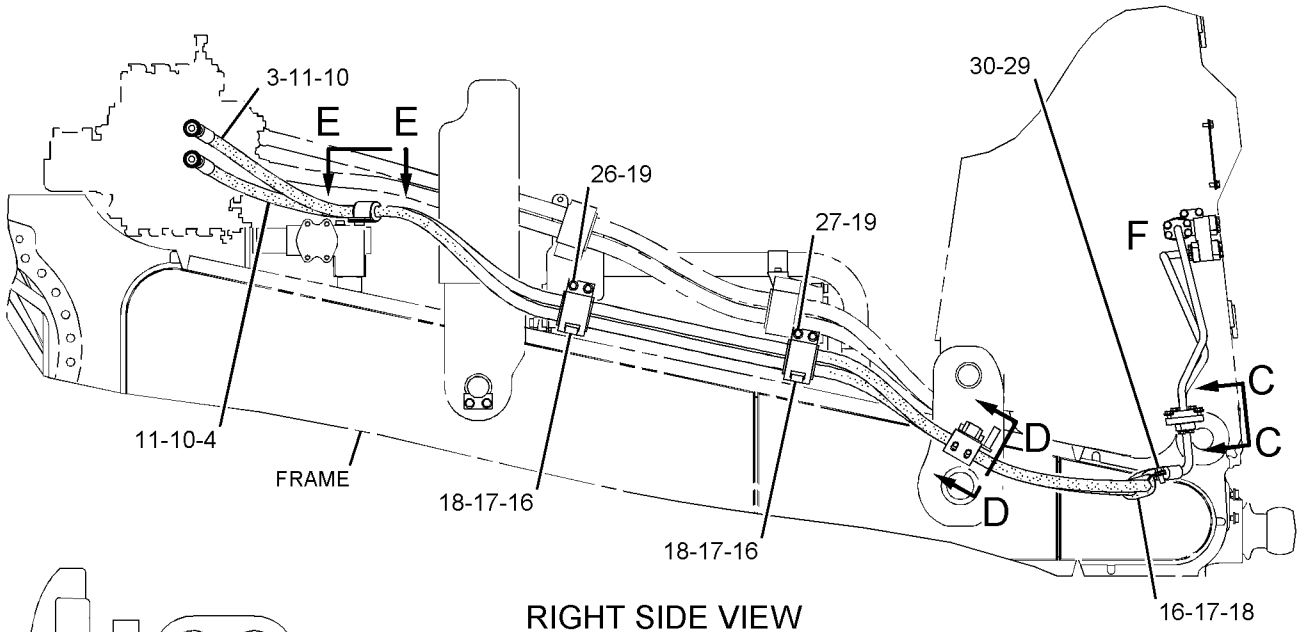

RIGHT SIDE VIEW

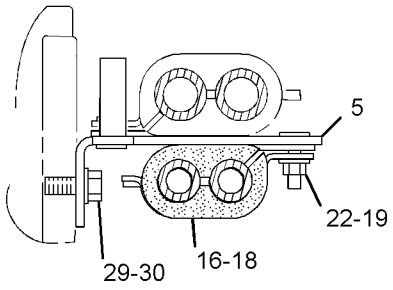

SECTION D-D

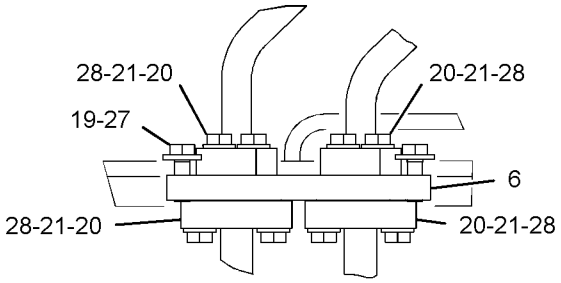

VIEW C-C

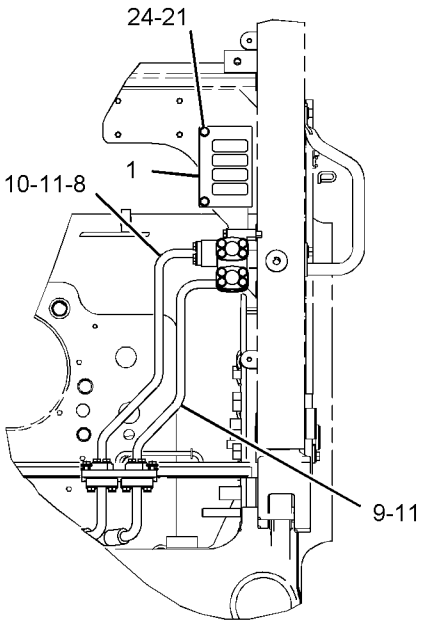

FRONT VIEW

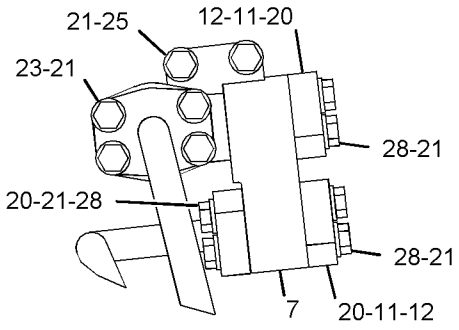

VIEW OF AREA F

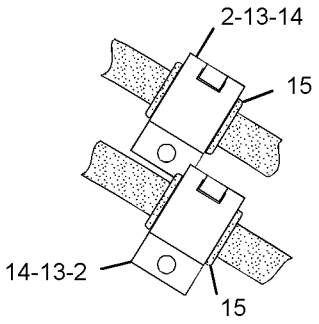

VIEW E-E

GRAPHIC #1 **<END>** g01113566

HYDRAULIC SYSTEM

223-8531 MANIFOLD GP-CONTROL–IMPLEMENT PUMP

S/N: RJS1-UP

PART OF 205-8582 LINES GP-PUMP

SMCS-5264 **i02185695**

NOTE	REF NO	GRAPHIC REF	PART NUMBER	QTY	PART NAME 1 2 3 4 5 6 (PRODUCT LEVEL)	SEE PAGE
Y	1	1	**158-9956**	1	VALVE GP-CHECK (IMPLEMENT PUMP OIL)	621
Y	2	1	**226-3800**	1	VALVE GP-CHECK (IMPLEMENT PUMP OIL)	622
Y	3	1	**201-0950**	1	VALVE GP-SOLENOID (IMPLEMENT MAKEUP)	654
Y	4	1	**170-3357**	1	VALVE GP-PRESSURE REDUCING (IMPLEMENT PUMP OIL)	635
	5	1	**9S-8002**	1	PLUG	
	6	1	**6V-3965**	2	FITTING AS	
	7	1	**226-3799**	1	PLUG-ORIFICE	
	8	1	**6E-5066**	1	SCREEN (CONTROL, RELIEF MANIFOLD)	
Y	9	1	**225-8026**	1	VALVE GP-RELIEF (IMPLEMENT PUMP OIL)	648
	10	1	**6V-0484**	1	ADAPTER-O-RING	
	11	1	**6V-0852**	2	CAP-DUST (QUICK DISCONNECT)	
	12	1	**3J-1907**	2	SEAL-O-RING	
	13	1	**3J-7354**	1	SEAL-O-RING	
	14	1	**9S-8001**	1	PLUG	
	15	1	**4J-7533**	1	SEAL-O-RING	

Y-SEPARATE ILLUSTRATION

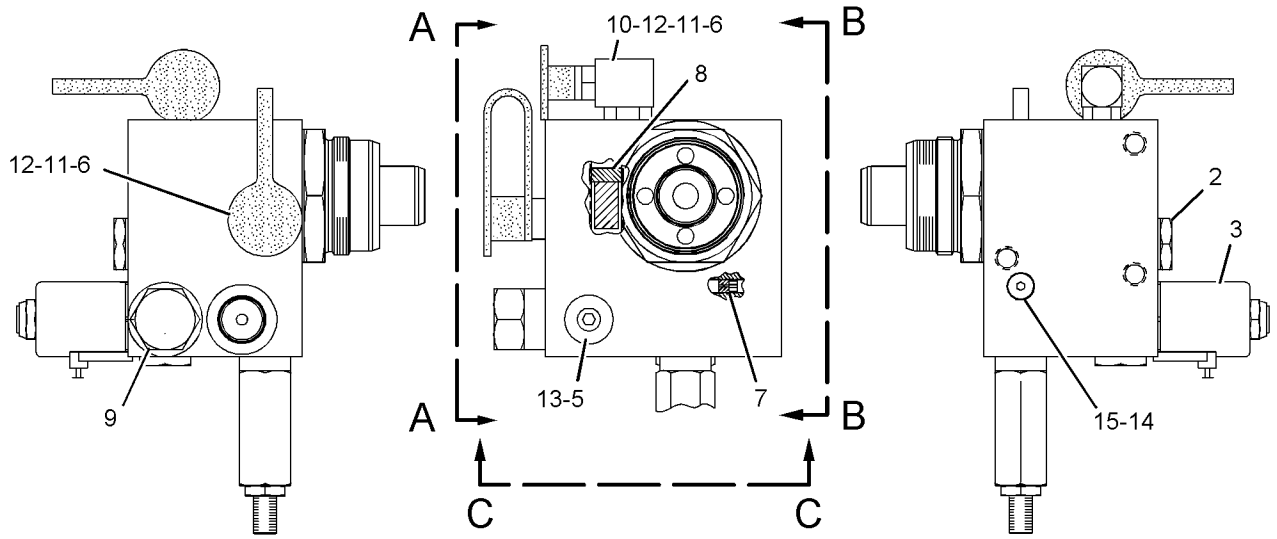

GRAPHIC #1 **<END>** g01107435

229-1466 MANIFOLD GP-CONTROL–HYDRAULIC FAN, REVERSING

S/N: RJS1-UP

PART OF 208-1597 LINES GP-HYDRAULIC FAN

AN ATTACHMENT

SMCS-5264 **i02267035**

NOTE	REF NO	GRAPHIC REF	PART NUMBER	QTY	PART NAME 1 2 3 4 5 6 (PRODUCT LEVEL)	SEE PAGE
Y	1	1	**152-8340**	1	VALVE GP-SOLENOID (24-VOLT) (HYDRAULIC FAN SPEED CONTROL)	652
Y	2	1	**203-4157**	1	VALVE GP-SOLENOID (24-VOLT) (HYDRAULIC LOCKOUT)	655
	3	1	**9S-8006**	1	PLUG	
	4	1	**9S-8005**	6	PLUG	
	5	1	**9S-8002**	4	PLUG	
	6	1	**9S-8001**	8	PLUG	
	7	1	**4J-7533**	8	SEAL-O-RING	
	8	1	**3J-7354**	4	SEAL-O-RING	
	9	1	**3K-0360**	6	SEAL-O-RING	
	10	1	**2M-9780**	1	SEAL-O-RING	
Y	11	1	**128-2780**	2	VALVE GP-CHECK (HYDRAULIC FAN, REVERSING)	620
	12	1	**235-4101**	3	VALVE GP-RELIEF (HYDRAULIC FAN, REVERSING)	
					(EACH INCLUDES)	
		1	**133-5545**	1	KIT-SEAL (RELIEF VALVE) (HYDRAULIC FAN, REVERSING)	
					(INCLUDES SEALS & BACKUP RINGS)	
	13	1	**236-6605**	2	VALVE GP-DIVERTER (HYDRAULIC FAN)	
					(EACH INCLUDES)	
		1	**2U-7354**	1	KIT-SEAL (DIVERTER VALVE) (HYDRAULIC FAN, REVERSING)	
					(INCLUDES SEALS & BACKUP RINGS)	

Y-SEPARATE ILLUSTRATION

229-1466 MANIFOLD GP-CONTROL *(contd.)* i02267035

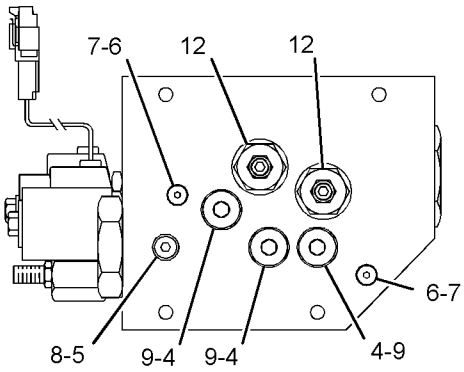

VIEW A-A

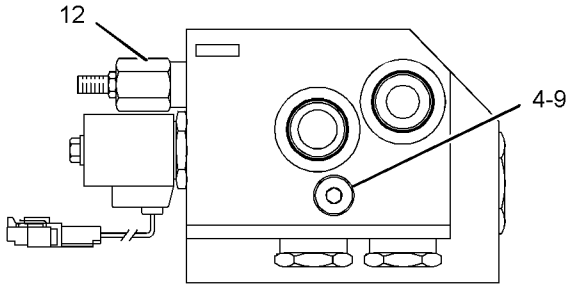

VIEW B-B

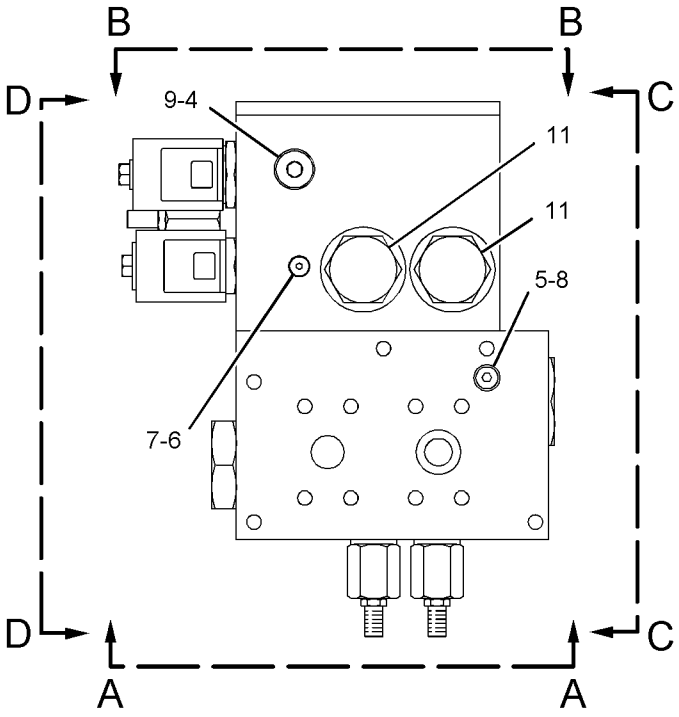

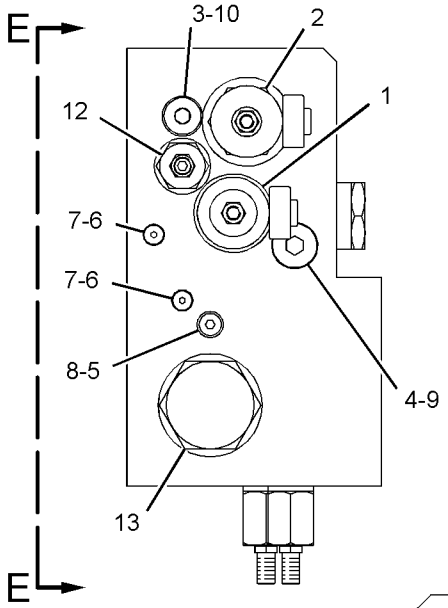

VIEW D-D

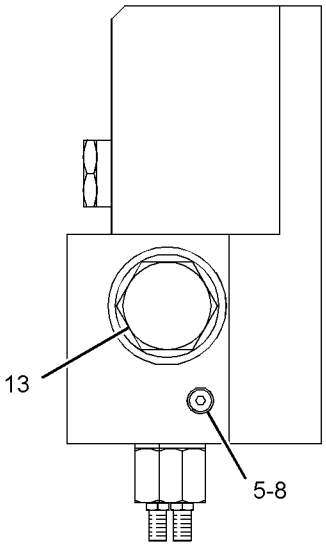

VIEW C-C

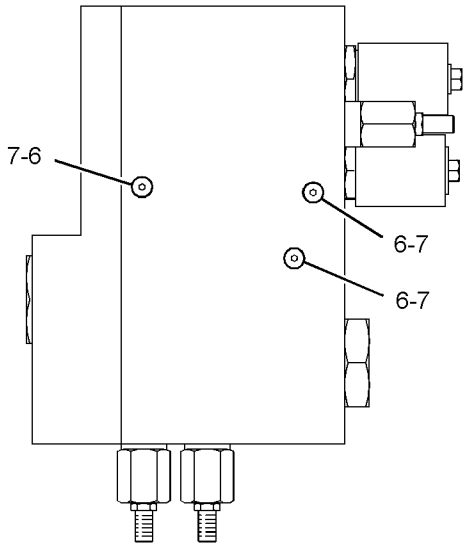

VIEW E-E

GRAPHIC #1 **<END>** g01104705

191-1443 MANIFOLD GP-HYDRAULIC–WINCH

S/N: RJS1-UP
PART OF 209-2609 LINES GP-WINCH
AN ATTACHMENT

SMCS-5264 **i02155093**

NOTE	REF NO	GRAPHIC REF	PART NUMBER	QTY	PART NAME 1 2 3 4 5 6 (PRODUCT LEVEL)	SEE PAGE
	2	1	**8T-8737**	1	PLUG-SEAL	
	3	1	**8T-4223**	2	WASHER-HARD (13.5X25.5X3-MM THK)	
M	4	1	**8T-4139**	2	BOLT (M12X1.75X30-MM)	
	5	1	**4P-7581**	2	CLIP	
M	6	1	**8T-4191**	2	BOLT (M10X1.5X16-MM)	
	7	1	**8T-4121**	2	WASHER-HARD (11X21X2.5-MM THK)	
	8	1	**102-8802**	1	KIT-RECEPTACLE (2-PIN)	
	9	1	**102-8803**	1	KIT-RECEPTACLE (3-PIN)	
					(EACH INCLUDES RECEPTACLE AS & WEDGE)	
	10	1	**3E-3365**	1	WEDGE-RECEPTACLE LOCK (2-PIN)	
	11	1	**3E-3371**	1	WEDGE-RECEPTACLE LOCK (3-PIN)	
	12	1	**186-3735**	4	PIN-CONNECTOR	

M-METRIC PART

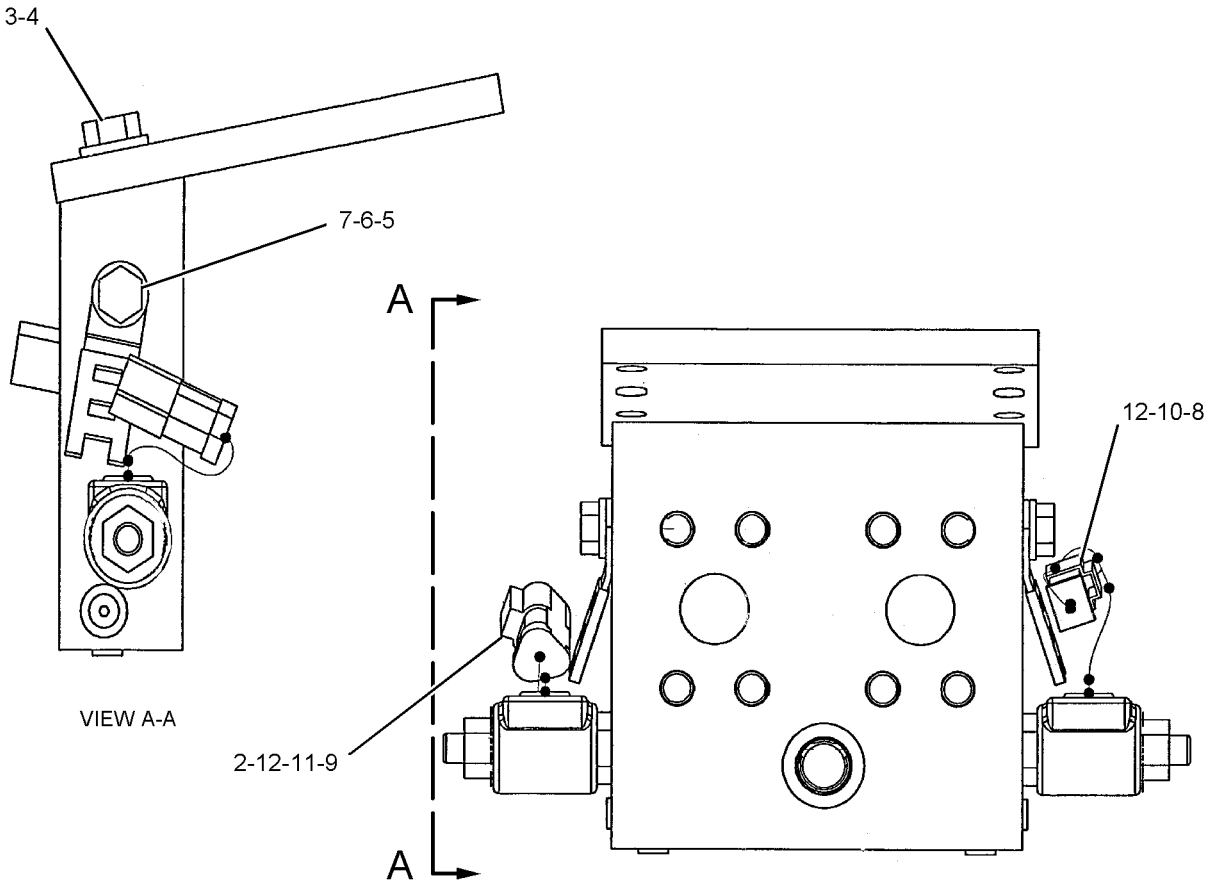

GRAPHIC #1 **<END>** g01104826

HYDRAULIC SYSTEM

214-1094 MOTOR GP-PISTON–STEERING

S/N: RJS1-UP

PART OF 205-8602 HYDRAULIC AR

SMCS-5058 **i02195657**

NOTE	REF NO	GRAPHIC REF	PART NUMBER	QTY	PART NAME 1 2 3 4 5 6 (PRODUCT LEVEL)	SEE PAGE
Y	1	1	**244-5689**	1	ROTATING GP-MOTOR (STEERING)	597
	2	1	**9S-8006**	1	PLUG (CASE DRAIN)	
	3	1	**2M-9780**	1	SEAL-O-RING	
	4	1	**247-2024**	1	HOUSING	
	5	1	**6V-1197**	1	SEAL-O-RING	
	6	1	**8T-4231**	1	DOWEL	
M	7	1	**8T-3957**	6	BOLT-SOCKET HEAD (M12X1.75X30-MM)	
	8	1	**106-1226**	1	HEAD	

M-METRIC PART
Y-SEPARATE ILLUSTRATION

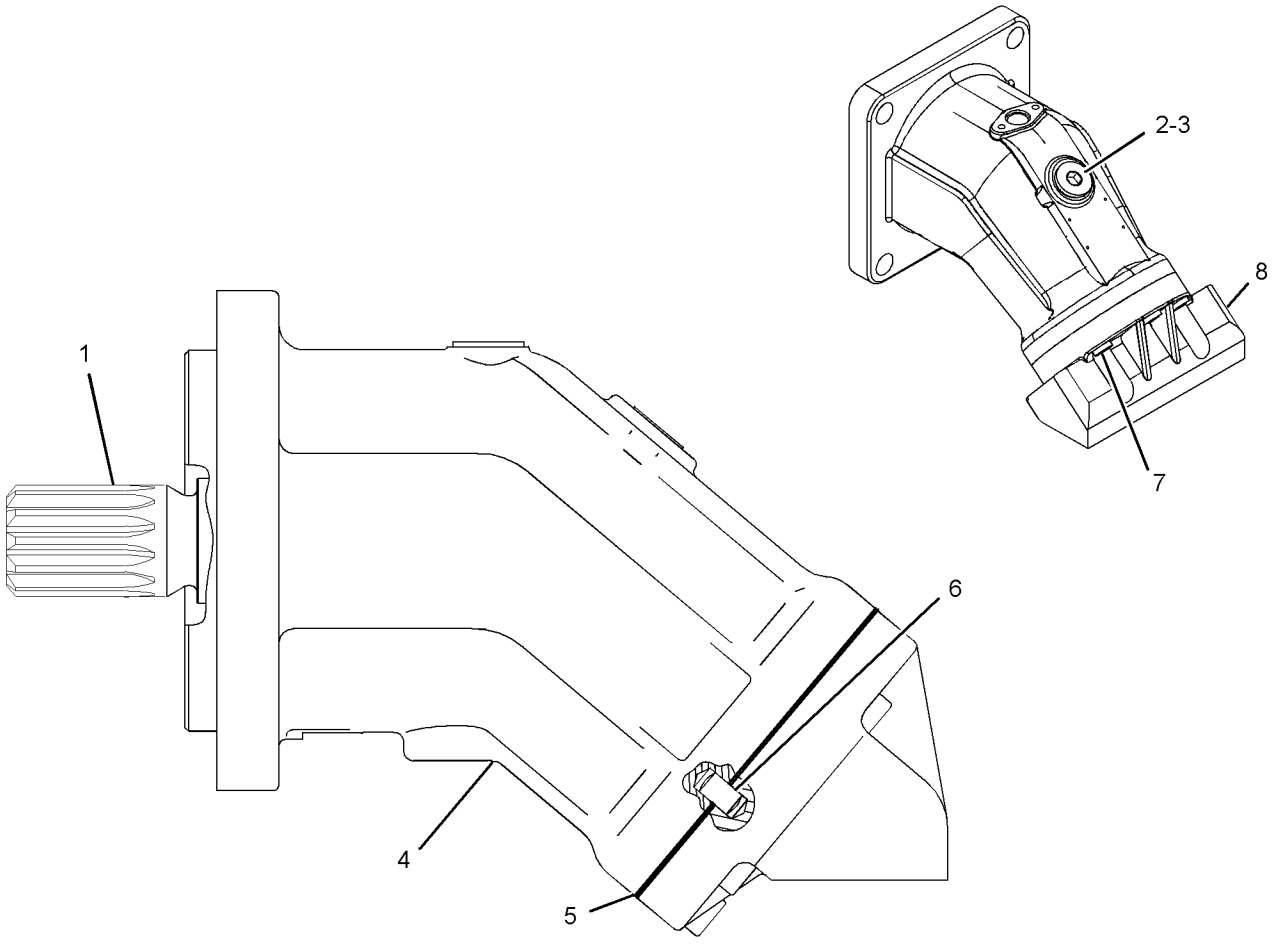

GRAPHIC #1 **<END>** g01115713

214-1099 MOTOR GP-PISTON–HYDRAULIC FAN

S/N: RJS1-UP

PART OF 205-8602 HYDRAULIC AR

SMCS-5058 **i02267878**

NOTE	REF NO	GRAPHIC REF	PART NUMBER	QTY	PART NAME 1 2 3 4 5 6 (PRODUCT LEVEL)	SEE PAGE
Y	1	1	**244-7018**	1	ROTATING GP-MOTOR (HYDRAULIC FAN)	599
	2	1	**123-3294**	1	HOUSING	
	3	1	**244-7019**	1	HEAD AS	
	3A	1	**241-2940**	1	VALVE-RELIEF	
	3B	1	**241-2943**	1	SPRING	
	3C	1	**241-5790**	1	SEAL-O-RING	
	3D	1	**244-7022**		HEAD	
	4	1	**8T-4231**	1	DOWEL	
	5	1	**2M-9780**	1	SEAL-O-RING	
	6	1	**2H-4145**	1	SEAL-O-RING	
M	7	1	**8T-3957**	2	BOLT-SOCKET HEAD (M12X1.75X30-MM)	
	8	1	**9S-8006**	1	PLUG	
M	9	1	**095-0673**	4	BOLT-SOCKET HEAD (M12X1.75X60-MM)	
	10	1	**9S-8004**	1	PLUG	
	11	1	**3J-1907**	1	SEAL-O-RING	
					AVAILABLE REPAIR KIT(S):	
			247-8207	1	KIT-SEAL (PISTON MOTOR) (HYDRAULIC FAN)	
					(INCLUDES SHAFT SEAL RING & O-RINGS)	

M-METRIC PART
Y-SEPARATE ILLUSTRATION

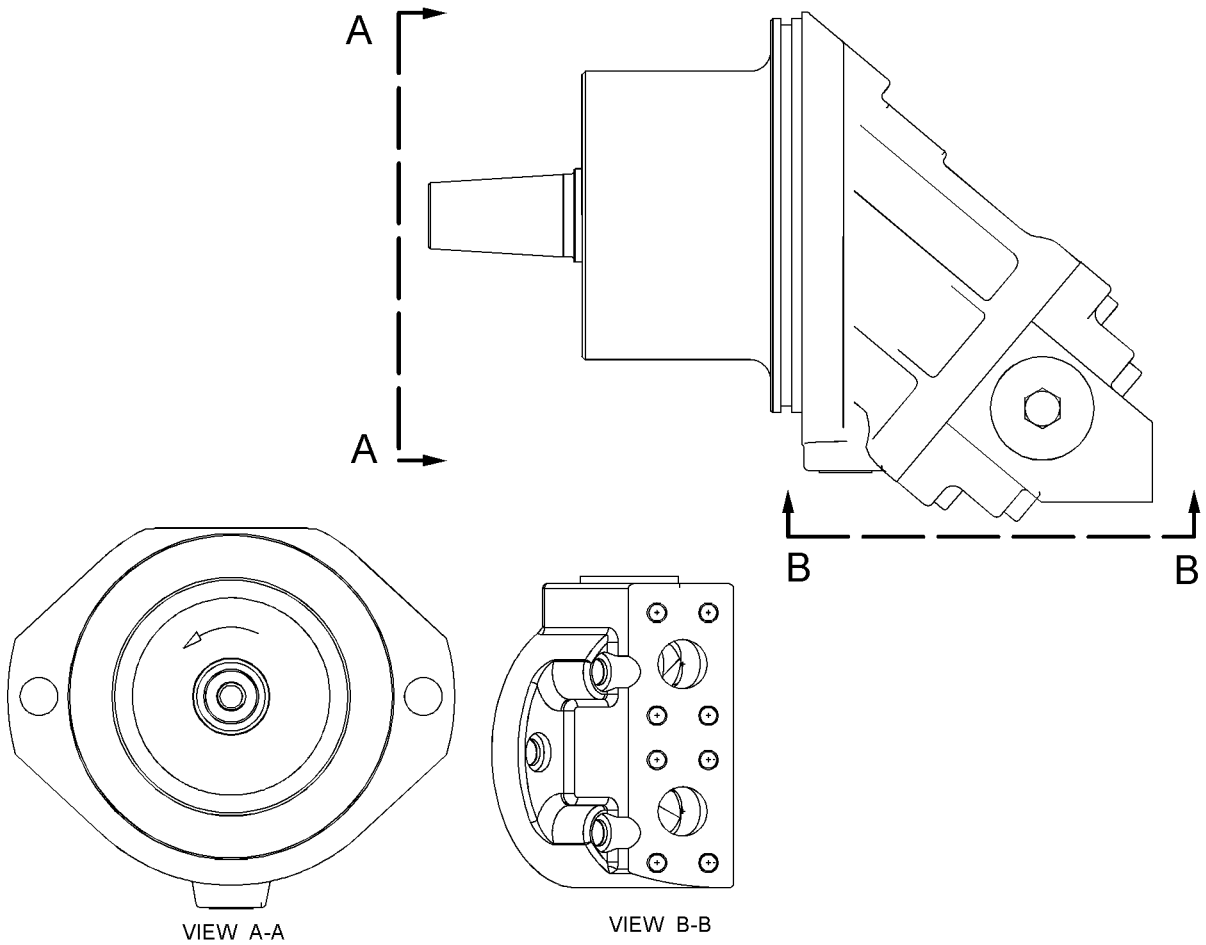

GRAPHIC #1 **<END>** g01034688

214-1100 MOTOR GP-PISTON–HYDRAULIC FAN

S/N: RJS1-UP
PART OF 208-1597 LINES GP-HYDRAULIC FAN
AN ATTACHMENT

SMCS-5058 **i02235415**

NOTE	REF NO	GRAPHIC REF	PART NUMBER	QTY	PART NAME 1 2 3 4 5 6 (PRODUCT LEVEL)	SEE PAGE
Y	1	1	**244-7018**	1	ROTATING GP-MOTOR (HYDRAULIC FAN)	599
	2	1	**123-3294**	1	HOUSING	
	3	1	**244-7202**	1	HEAD	
	4	1	**8T-4231**	1	DOWEL	
	5	1	**2M-9780**	1	SEAL-O-RING	
	6	1	**2H-4145**	1	SEAL-O-RING	
M	7	1	**8T-3957**	2	BOLT-SOCKET HEAD (M12X1.75X30-MM)	
	8	1	**9S-8006**	1	PLUG (CASE DRAIN)	
M	9	1	**095-0673**	4	BOLT-SOCKET HEAD (M12X1.75X60-MM)	

M-METRIC PART
Y-SEPARATE ILLUSTRATION

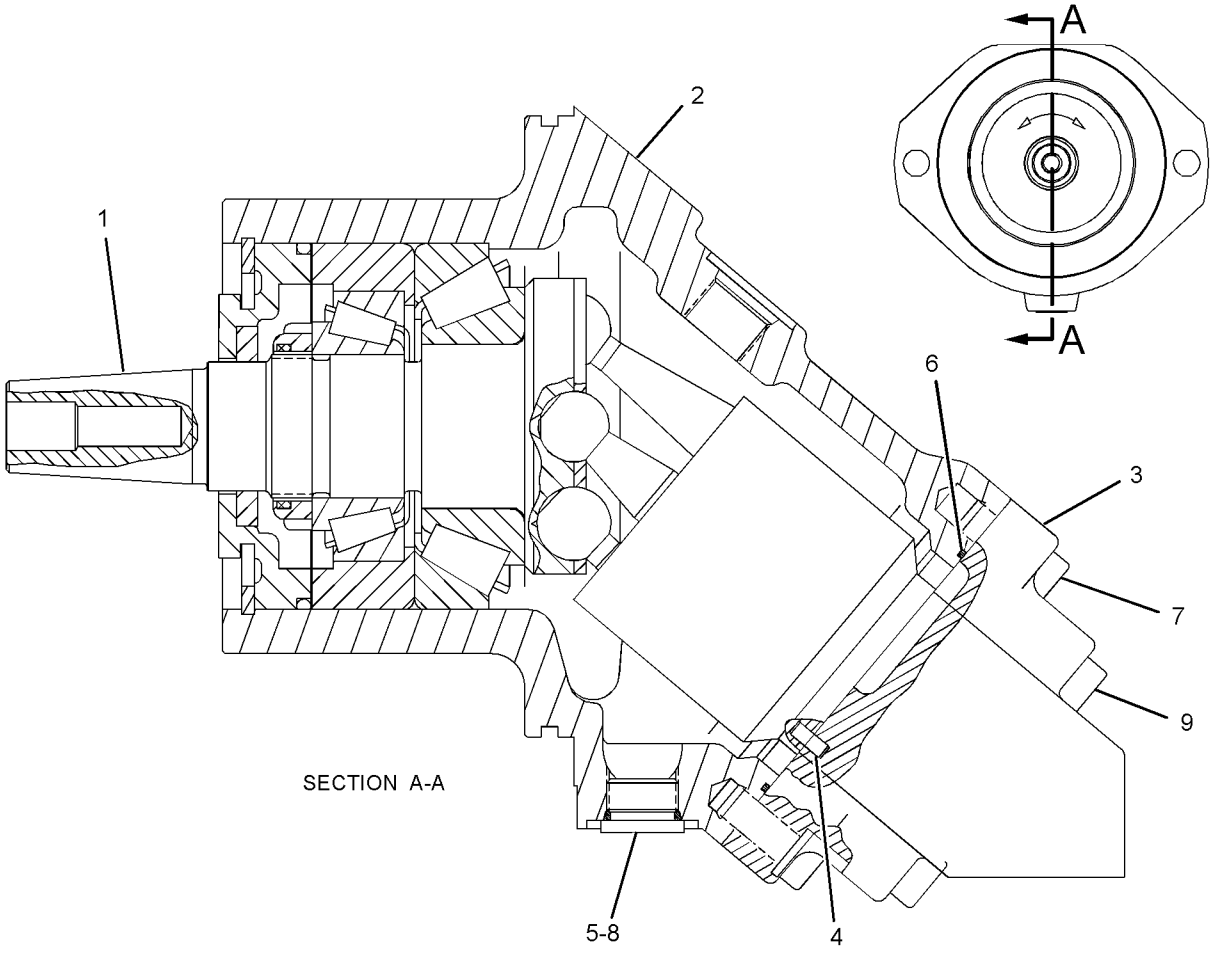

GRAPHIC #1 **<END>** g01127765

246-1043 MOUNTING GP-CYLINDER

S/N: T9H1-UP; T9J1-UP; RJS1-UP
PART OF 228-1854 BULLDOZER AR-SEMI-UNIVERSAL, 228-1853 BULLDOZER AR-UNIVERSAL
AN ATTACHMENT

SMCS-7562 **i02003826**

NOTE	REF NO	GRAPHIC REF	PART NUMBER	QTY	PART NAME 1 2 3 4 5 6 (PRODUCT LEVEL)	SEE PAGE
	1	1	**3B-8489**	2	FITTING-GREASE (CYLINDER)	
	2	1	**4T-4875**	2	PIN	
	3	1	**154-1580**	8	WASHER-HARD (M22X38X6-MM THK)	
	4	1	**168-6448**	2	SEAL-LIP TYPE	
	5	1	**233-4657**	2	YOKE	
	6	1	**241-3853**	4	CAP AS	
					(EACH INCLUDES)	
	6A	1	**9J-5284**	1	BEARING-SLEEVE	
M	7	1	**8T-4170**	8	BOLT (M20X2.5X150-MM)	

M-METRIC PART

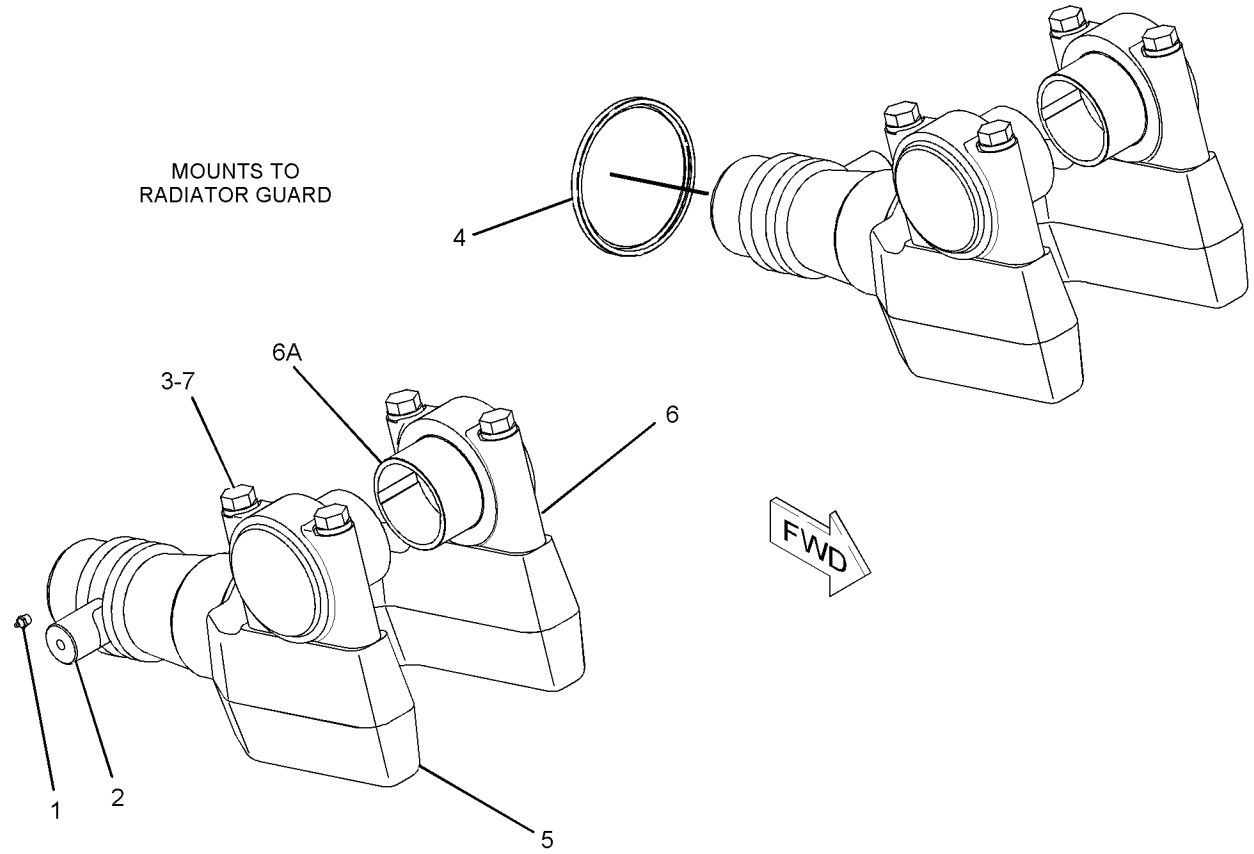

GRAPHIC #1 **<END>** g01037383

HYDRAULIC SYSTEM

194-3286 PLUG GP-CONTROL VALVE

S/N: RJS1-UP

PART OF 176-7520, 194-3899 VALVE GP-PUMP CONTROL

SMCS-0663, 5051, 5086 **i02262690**

NOTE	REF NO	GRAPHIC REF	PART NUMBER	QTY	PART NAME 1 2 3 4 5 6 (PRODUCT LEVEL)	SEE PAGE
	1	1	**191-7599**	1	PLUG	
M	2	1	**5C-2873**	1	NUT	
	3	1	**195-3324**	1	CAP	
	4	1	**195-3325**	1	RING	
	5	1	**195-3326**	1	SCREW	
	6	1	**195-3327**	1	RETAINER	
	7	1	**194-4497**	1	DISC	
	8	1	**3E-6761**	1	SEAL-O-RING	
	9	1	**187-8567**	1	SEAL-O-RING	
	10	1	**194-6849**	1	DISC	
	11	1	**195-3328**	1	DISC	

M-METRIC PART

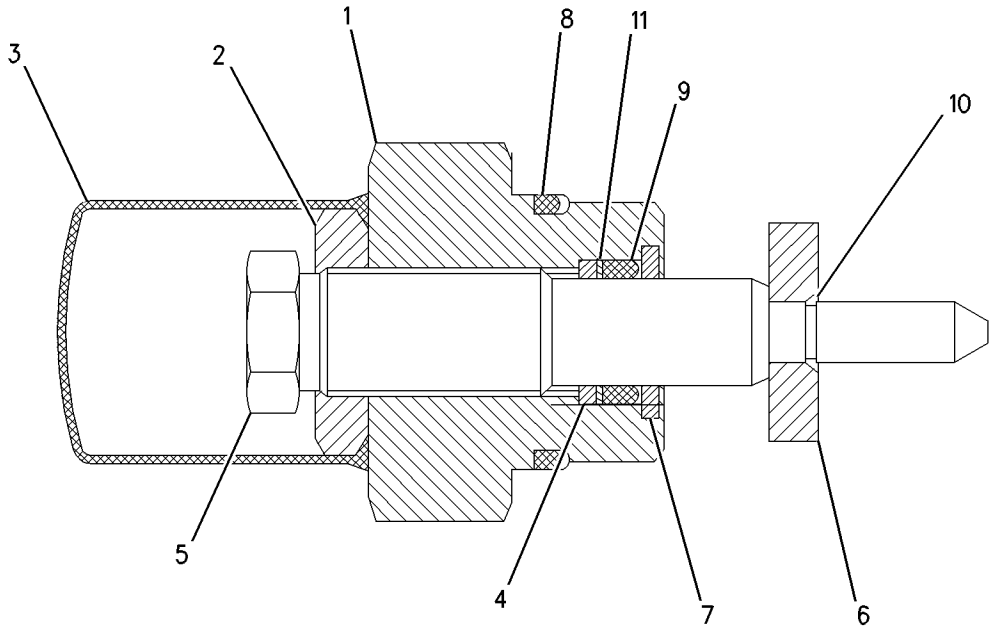

GRAPHIC #1 **<END>** g00751391

244-8872 PUMP GP-GEAR–STEERING

S/N: RJS1-UP

PART OF 214-1093 PUMP GP-PISTON

SMCS-5073 **i02185529**

NOTE	REF NO	GRAPHIC REF	PART NUMBER	QTY	PART NAME 1 2 3 4 5 6 (PRODUCT LEVEL)	SEE PAGE
	1	1	**8C-5237**	2	SEAL-O-RING	
	2	1	**144-9088**	1	PLATE-WEAR	
	3	1	**3E-5006**	1	RING-RETAINING	
	4	1	**247-6472**	1	COUPLING	
	5	1	**192-0942**	1	KEY	
	6	1	**4J-0985**	1	BALL BEARING	
	7	1	**183-8416**	1	BUSHING	
	8	1	**248-4843**	1	SEAL-LIP TYPE	
	9	1	**6V-8754**	1	RING-RETAINING	
	10	1	**7Y-5267**	2	RING-RETAINING	
	11	1	**247-6469**	1	SHAFT-DRIVE	
	12	1	**246-5804**	2	PLUG	

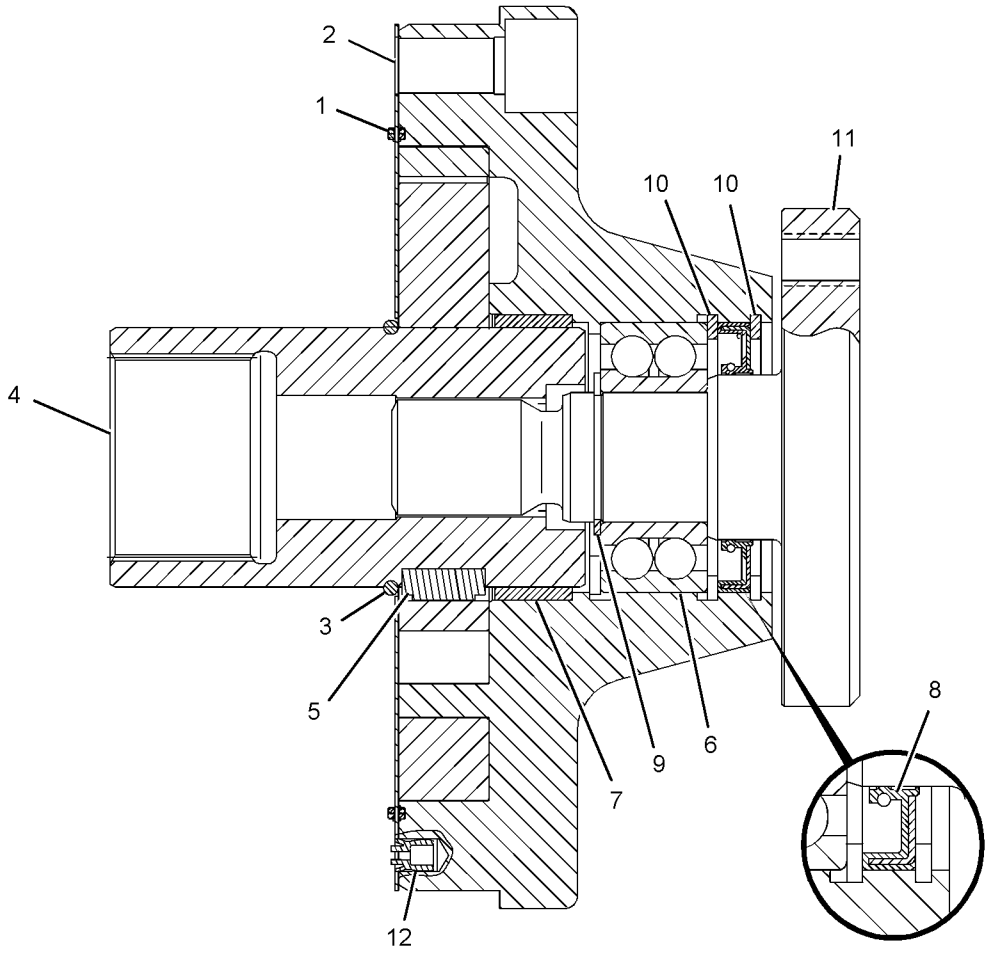

GRAPHIC #1 **<END>** g01117646

HYDRAULIC SYSTEM

214-1093 PUMP GP-PISTON—STEERING

S/N: RJS1-UP

PART OF 205-8602 HYDRAULIC AR

SMCS-5070 **i02249308**

NOTE	REF NO	GRAPHIC REF	PART NUMBER	QTY	PART NAME 1 2 3 4 5 6 (PRODUCT LEVEL)	SEE PAGE
Y	1	1	**247-2724**	1	ROTATING GP-PUMP (STEERING)	602
Y	2	1	**244-8862**	1	VALVE GP-PUMP CONTROL (STEERING)	641
Y	3	1	**244-8864**	1	HEAD GP-PUMP (STEERING)	550
Y	4	1	**244-8872**	1	PUMP GP-GEAR (STEERING)	589
Y	5	1	**244-8860**	1	VALVE GP-PUMP CONTROL (STEERING)	640
	7	1	**111-9099**	2	PIN	
	8	1	**2S-4078**	1	SEAL-O-RING	
M	9	1	**8T-0271**	6	BOLT-SOCKET HEAD (M10X1.5X35-MM)	
	10	1	**9S-8010**	1	PLUG	
	11	1	**6E-4350**	1	PIN	
	12	1	**9T-3929**	2	PLUG AS	
		1	**6E-5479**	1	SEAL	
	13	1	**9S-8004**	5	PLUG	
	14	1	**3J-1907**	5	SEAL-O-RING	
	15	1	**111-9101**	1	ORIFICE	
	16	1	**111-9106**	1	LOCKNUT	
	17	1	**111-9105**	1	SETSCREW (M14)	
M	18	1	**9T-3928**	2	PLUG AS	
		1	**187-8001**	1	SEAL	
	19	1	**170-9900**	2	PIN	
	20	1	**5I-4342**	4	BOLT (M20)	

M-METRIC PART
Y-SEPARATE ILLUSTRATION

214-1093 PUMP GP-PISTON *(contd.)* **i02249308**

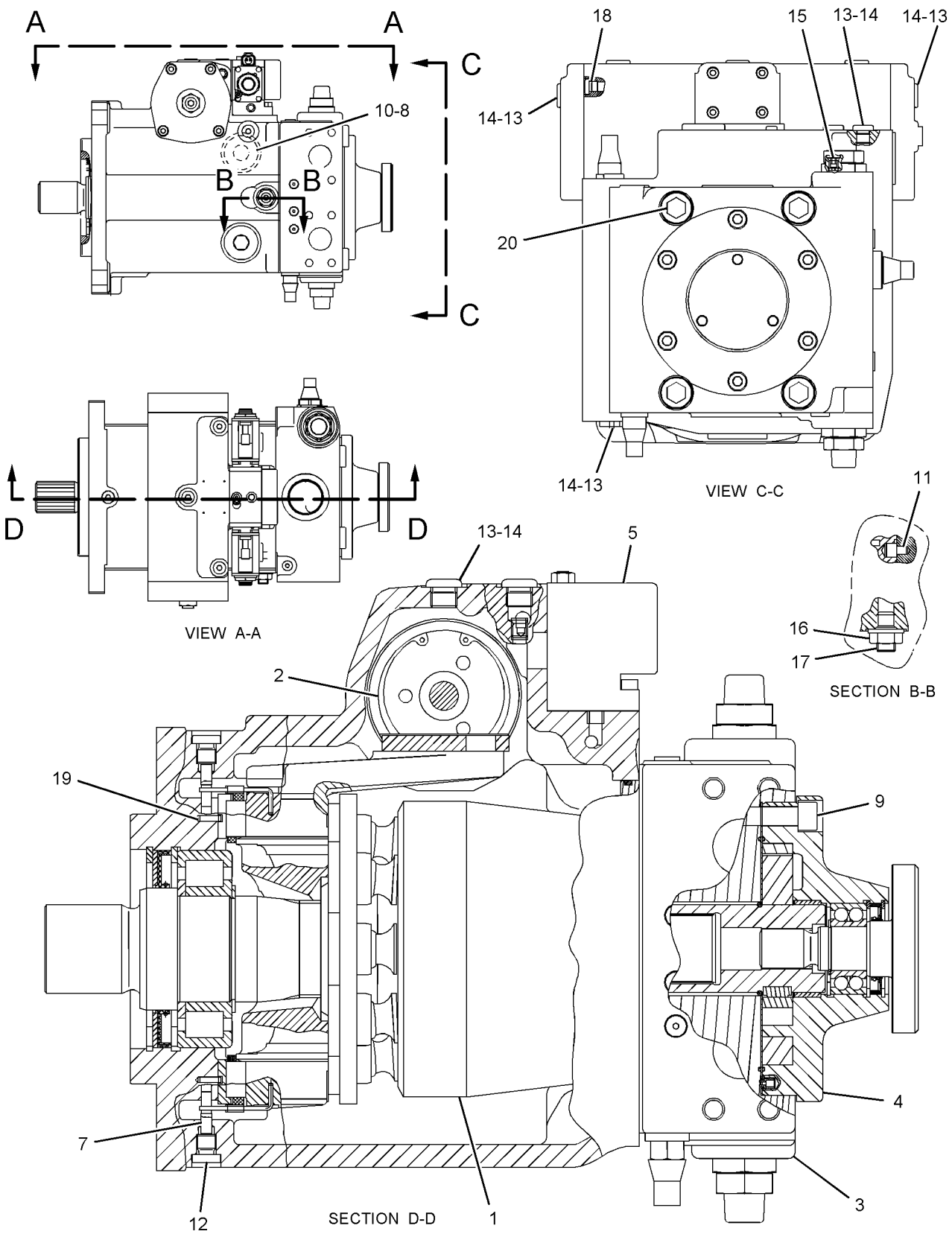

GRAPHIC #1 **<END>** g01114671

214-1095 PUMP GP-PISTON–IMPLEMENT, HYDRAULIC FAN

S/N: RJS1-UP

PART OF 205-8602 HYDRAULIC AR

SMCS-5070 **i02267744**

NOTE	REF NO	GRAPHIC REF	PART NUMBER	QTY	PART NAME 1 2 3 4 5 6 (PRODUCT LEVEL)	SEE PAGE
Y	1	1	*214-1098*	1	PUMP GP-PISTON (FRONT) (IMPLEMENT)	595
Y	2	1	*214-1097*	1	PUMP GP-PISTON (REAR) (HYDRAULIC FAN)	593
M	3	1	**8T-4944**	2	BOLT-SOCKET HEAD (M16X2X40-MM)	
	4	1	**9X-8257**	2	WASHER (17.5X30X3.5-MM THK)	

M-METRIC PART
Y-SEPARATE ILLUSTRATION

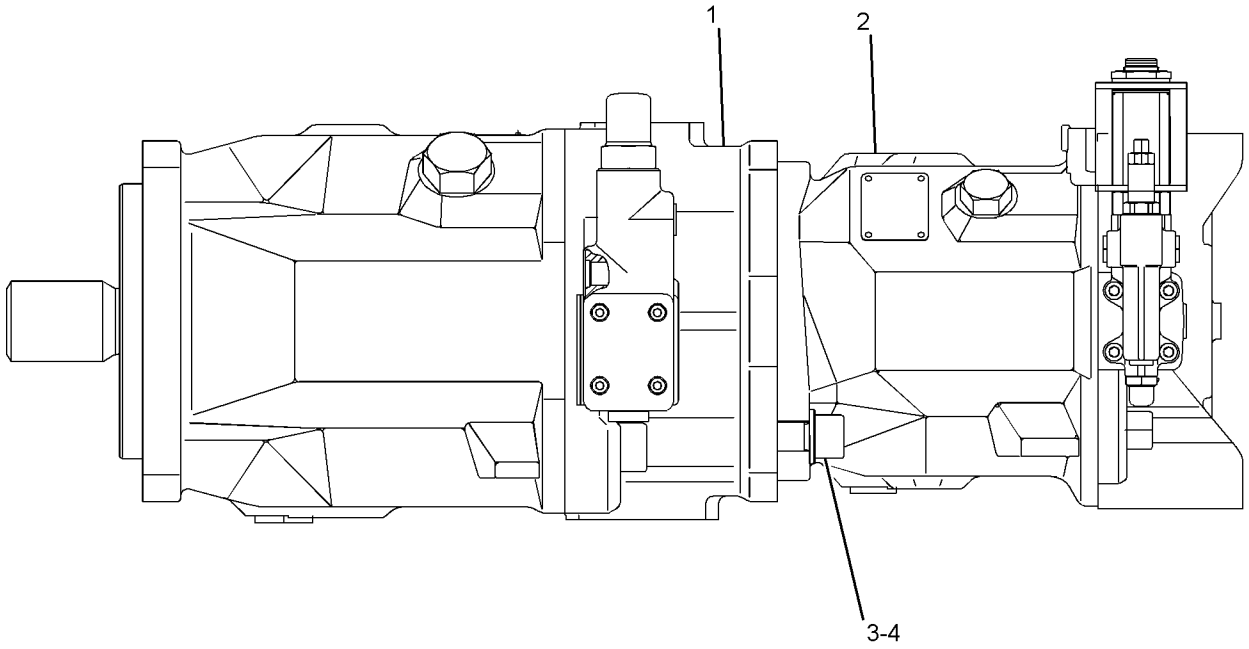

GRAPHIC #1 **<END>** g01109320

214-1097 PUMP GP-PISTON—REAR—HYDRAULIC FAN

S/N: RJS1-UP

PART OF 214-1095 PUMP GP-PISTON

SMCS-5070 **i02217908**

NOTE	REF NO	GRAPHIC REF	PART NUMBER	QTY	PART NAME 1 2 3 4 5 6 (PRODUCT LEVEL)	SEE PAGE
	1	1	**180-6213**	1	RING-RETAINING	
	2	1	**6E-4003**	2	BEARING	
	3	1	**6E-3995**	1	HOUSING	
Y	4	1	**196-0227**	1	ROTATING GP-PUMP (HYDRAULIC FAN)	601
	5	1	**3E-6769**	4	SEAL-O-RING	
M	6	1	**095-9805**	4	BOLT-SOCKET HEAD (M14X2X40-MM)	
	7	1	**1P-6872**	1	CUP-BEARING	
	8	1	**109-1779**	8	CONE-BEARING	
	9	1	**6E-4000**	1	SPACER (25.5X35X3-MM THK)	
	10	1	**3E-6770**	1	SEAL-O-RING	
	11	1	**6E-6175**	1	CYLINDER	
	12	1	**6E-6176**	1	SPRING	
	13	1	**6E-6174**	1	PLUNGER	
	14	1	**9S-8006**	1	PLUG	
	15	1	**2M-9780**	1	SEAL-O-RING	
	16	1	**162-1604**	1	SHAFT-DRIVE	
	17	1	**3P-1210**	1	CONE-BEARING	
	18	1	**8J-0412**	1	CUP-BEARING	
	19	1	**6E-4004**	1	SEAL-SHAFT	
	20	1	**121-3042**	1	SWASHPLATE AS	
	21	1	**120-5727**	1	PISTON-CONTROL	
	22	1	**120-5729**	1	GUIDE-PISTON	
	23	1	**136-8423**	1	PLUG-BREAK OFF	
	24	1	**204-2799**	1	DOWEL	
Y	25	1	**229-0890**	1	VALVE GP-PUMP CONTROL (HYDRAULIC FAN)	639
M	26	1	**8T-8442**	4	BOLT-SOCKET HEAD (M6X1X30-MM)	
	27	1	**9X-7680**	3	SEAL-O-RING	
	28	1	**135-8853**	1	PLUG	

M-METRIC PART
Y-SEPARATE ILLUSTRATION

214-1097 PUMP GP-PISTON *(contd.)* i02217908

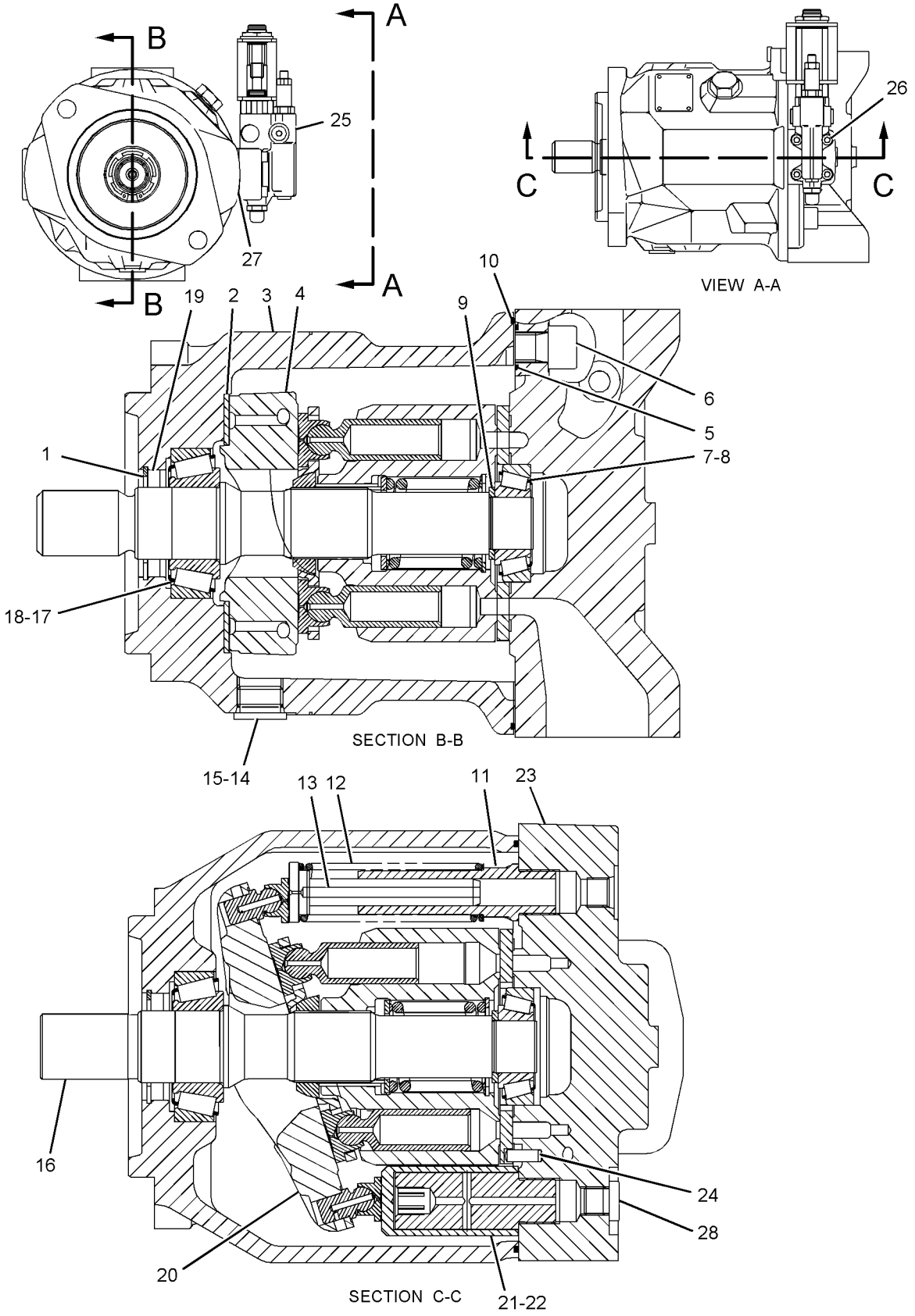

GRAPHIC #1 **<END>** g01114745

214-1098 PUMP GP-PISTON—FRONT—IMPLEMENT

S/N: RJS1-UP

PART OF 214-1095 PUMP GP-PISTON

SMCS-5070 **i02267753**

NOTE	REF NO	GRAPHIC REF	PART NUMBER	QTY	PART NAME 1 2 3 4 5 6 (PRODUCT LEVEL)	SEE PAGE
	1	1	**095-0942**	1	RING-RETAINING	
	2	1	**176-7507**	2	BEARING-CRADLE	
	3	1	**244-7227**	1	COUPLING	
Y	4	1	**249-9209**	1	ROTATING GP-PUMP (IMPLEMENT)	604
	5	1	**5P-9186**	4	SEAL-O-RING	
M	6	1	**7Y-0467**	4	BOLT-SOCKET HEAD (M18X2.5X55-MM)	
	7	1	**6Y-2736**	1	CONE-BEARING	
	8	1	**6Y-2737**	1	CUP-BEARING	
	9	1	**247-3761**	1	SPACER (45X3-MM THK)	
	10	1	**107-3114**	1	SEAL-O-RING	
	11	1	**176-7511**	1	GUIDE-PLUNGER	
	12	1	**176-7512**	1	SPRING	
	13	1	**176-7513**	1	PLUNGER	
	14	1	**9S-8008**	1	PLUG	
	15	1	**3D-2824**	1	SEAL-O-RING	
	16	1	**244-7353**	1	SHAFT	
	17	1	**1B-3908**	1	CONE-BEARING	
	18	1	**1B-3909**	1	CUP-BEARING	
	19	1	**203-1095**	1	SEAL	
	20	1	**256-7619**	1	SWASHPLATE AS	
	21	1	**176-7517**	1	PISTON-CONTROL	
	22	1	**176-7518**	1	GUIDE-PISTON	
	23	1	**120-4394**	1	PLUG-BREAK OFF	
	24	1	**7X-2438**	1	DOWEL	
	25	1	**135-7935**	1	SEAL-O-RING	
Y	26	1	**176-7520**	1	VALVE GP-PUMP CONTROL (PRESSURE COMPENSATOR) (IMPLEMENT PUMP)	637
Y	27	1	**194-3899**	1	VALVE GP-PUMP CONTROL (FLOW COMPENSATOR) (IMPLEMENT PUMP)	638
M	28	1	**127-4832**	4	BOLT-SOCKET HEAD (M5X0.8X90-MM)	
	29	1	**257-4385**	1	RING (FLOW LIMITING)	
	30	1	**176-7692**	1	SLEEVE-STOP	
	31	1	**9S-8004**	1	PLUG	
	32	1	**3J-1907**	1	SEAL-O-RING	
	33	1	**033-6039**	10	SEAL-O-RING	

M-METRIC PART
Y-SEPARATE ILLUSTRATION

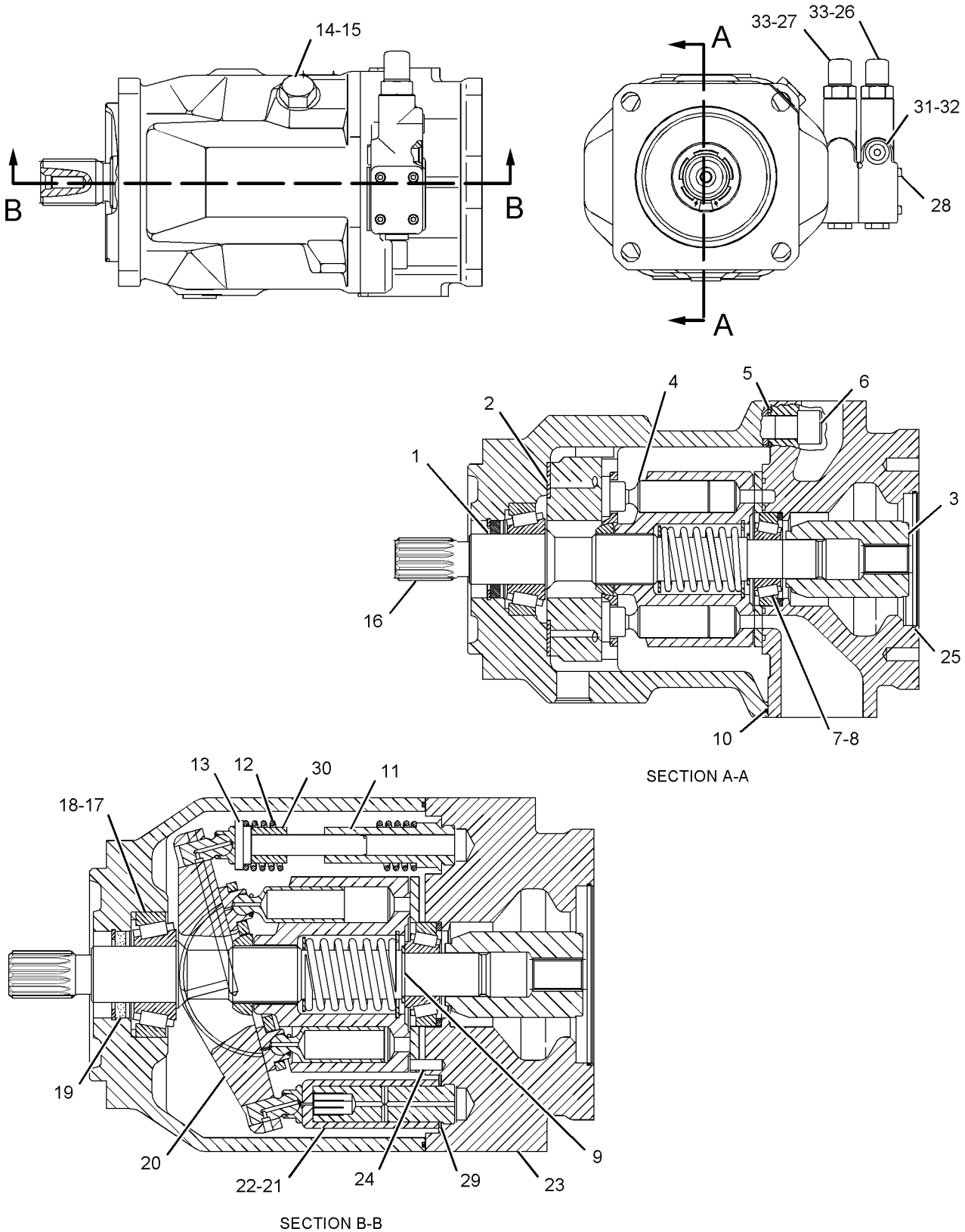

GRAPHIC #1 **<END>** g01120367

244-5689 ROTATING GP-MOTOR—STEERING

S/N: RJS1-UP

PART OF 214-1094 MOTOR GP-PISTON

SMCS-5058 **i02195658**

NOTE	REF NO	GRAPHIC REF	PART NUMBER	QTY	PART NAME 1 2 3 4 5 6 (PRODUCT LEVEL)	SEE PAGE
	1	1	**244-5707**	1	SHAFT-MOTOR	
	2	1	**123-5748**	1	SEAL-SHAFT	
	3	1	**9T-1637**	1	COVER-FRONT	
	4	1	**3E-4334**	1	RING-RETAINING	
	5	1	**5D-5958**	1	SEAL-O-RING	
B	6	1	**9T-1579**	1	SHIM (0.3-MM THK)	
B	7	1	**9T-1576**	2	SHIM (0.1-MM THK)	
	8	1	**216-0029**	7	SCREW (M6X20-MM)	
	9	1	**6E-4096**	1	BARREL	
	10	1	**171-3054**	1	PIN-CENTER	
	11	1	**171-3061**	1	SPRING	
B	12	1	**171-3055**	1	SHIM (4-MM THK)	
B	13	1	**171-3057**	1	SHIM (3.9-MM THK)	
B	14	1	**171-3058**	1	SHIM (3.8-MM THK)	
B	15	1	**171-3059**	1	SHIM (3.7-MM THK)	
B	16	1	**171-3060**	1	SHIM (3.6-MM THK)	
	17	1	**6E-4098**	1	DISC	
Y	18	1	**119-6114**	1	VALVE GP-FLUSHING (STEERING MOTOR)	634
	19	1	**165-6970**	7	PISTON AS	
					(EACH INCLUDES)	
	19A	1	**6E-4626**	4	RING	
	20	1	**9T-1642**	1	PLATE-RETAINING	
	21	1	**171-5989**	1	KIT-BEARING (MOTOR ROTATING GROUP)	
	22	1	**9T-1643**	1	DISC-RETAINING	
	23	1	**246-1156**	1	GEAR-RING (59-TEETH)	
	24	1	**096-5516**	1	RING-RETAINING	

B-USE AS REQUIRED
Y-SEPARATE ILLUSTRATION

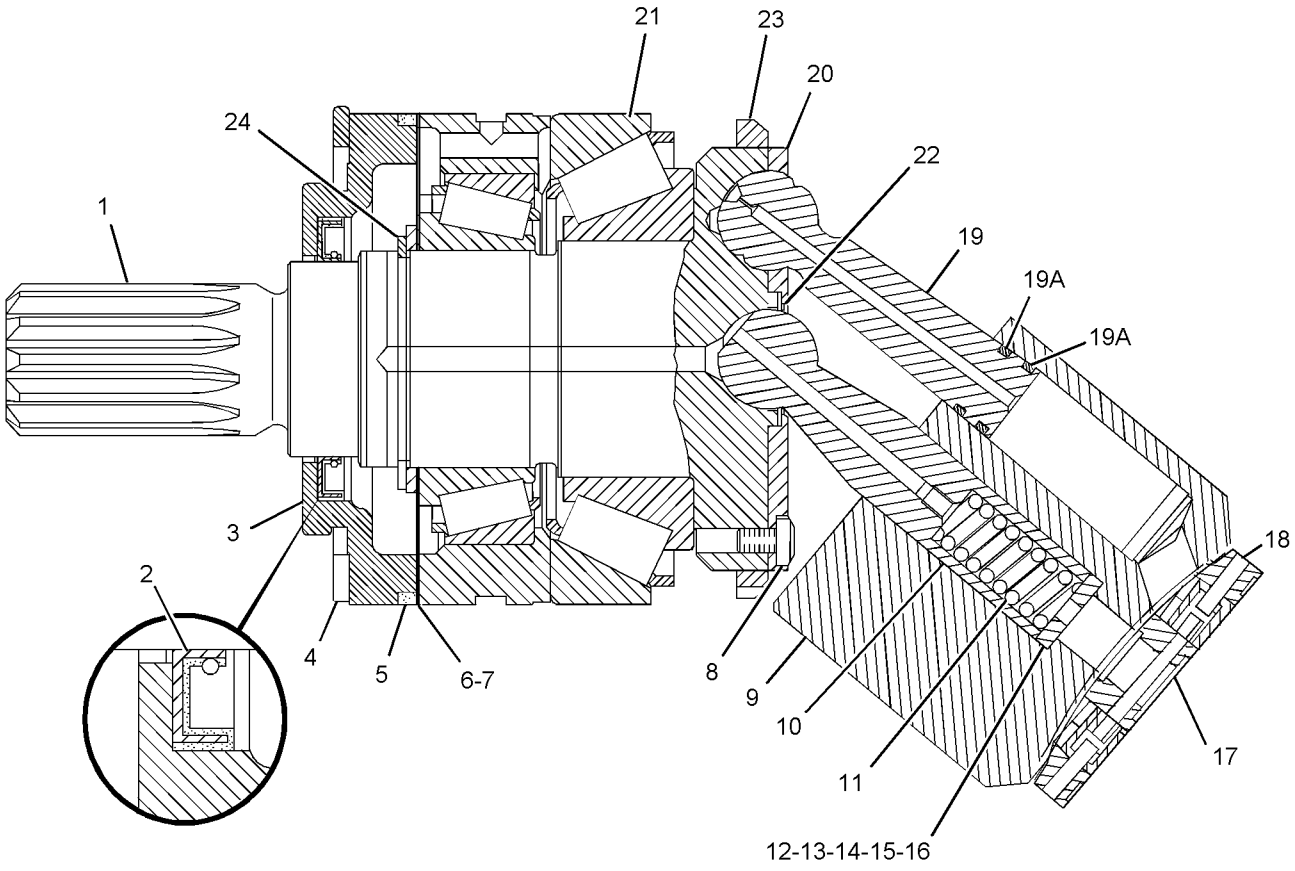

GRAPHIC #1 **<END>** g01117020

244-7018 ROTATING GP-MOTOR—HYDRAULIC FAN

S/N: RJS1-UP

PART OF 214-1099, 214-1100 MOTOR GP-PISTON

ALSO AN ATTACHMENT

SMCS-5058 **i02185671**

NOTE	REF NO	GRAPHIC REF	PART NUMBER	QTY	PART NAME 1 2 3 4 5 6 (PRODUCT LEVEL)	SEE PAGE
	1	1	**244-7020**	1	SHAFT	
	2	1	**9T-2560**	1	COVER	
	3	1	**9T-2584**	1	RING-RETAINING	
	4	1	**7X-1553**	1	SEAL-LIP TYPE	
	5	1	**2H-3928**	1	SEAL-O-RING	
B	6	1	**9T-2581**	2	SHIM (0.1-MM THK)	
B	7	1	**9T-2582**	1	SHIM (0.3-MM THK)	
	8	1	**9T-2558**	1	BARREL	
	9	1	**163-0683**	1	PLATE-PORT	
	10	1	**166-7409**	1	PIN-CENTER	
	11	1	**166-7408**	7	PISTON AS	
					(EACH INCLUDES)	
		1	**133-8743**	1	RING	
	12	1	**9T-2559**	1	DISC-RETAINING	
B	13	1	**141-0252**	1	SHIM (4-MM THK)	
B	14	1	**141-0251**	1	SHIM (3.9-MM THK)	
B	15	1	**141-0250**	1	SHIM (3.8-MM THK)	
B	16	1	**141-0249**	1	SHIM (3.7-MM THK)	
B	17	1	**141-0248**	1	SHIM (3.6-MM THK)	
B	18	1	**141-0247**	1	SHIM (3.5-MM THK)	
	19	1	**123-3299**	1	PLATE-RETAINING	
M	20	1	**113-4417**	7	SCREW (M6)	
	21	1	**166-7410**	1	SPRING	
	22	1	**171-5990**	1	KIT-BEARING	
	23	1	**8T-4241**	1	RING-RETAINING	

B-USE AS REQUIRED
M-METRIC PART

244-7018 ROTATING GP-MOTOR *(contd.)* i02185671

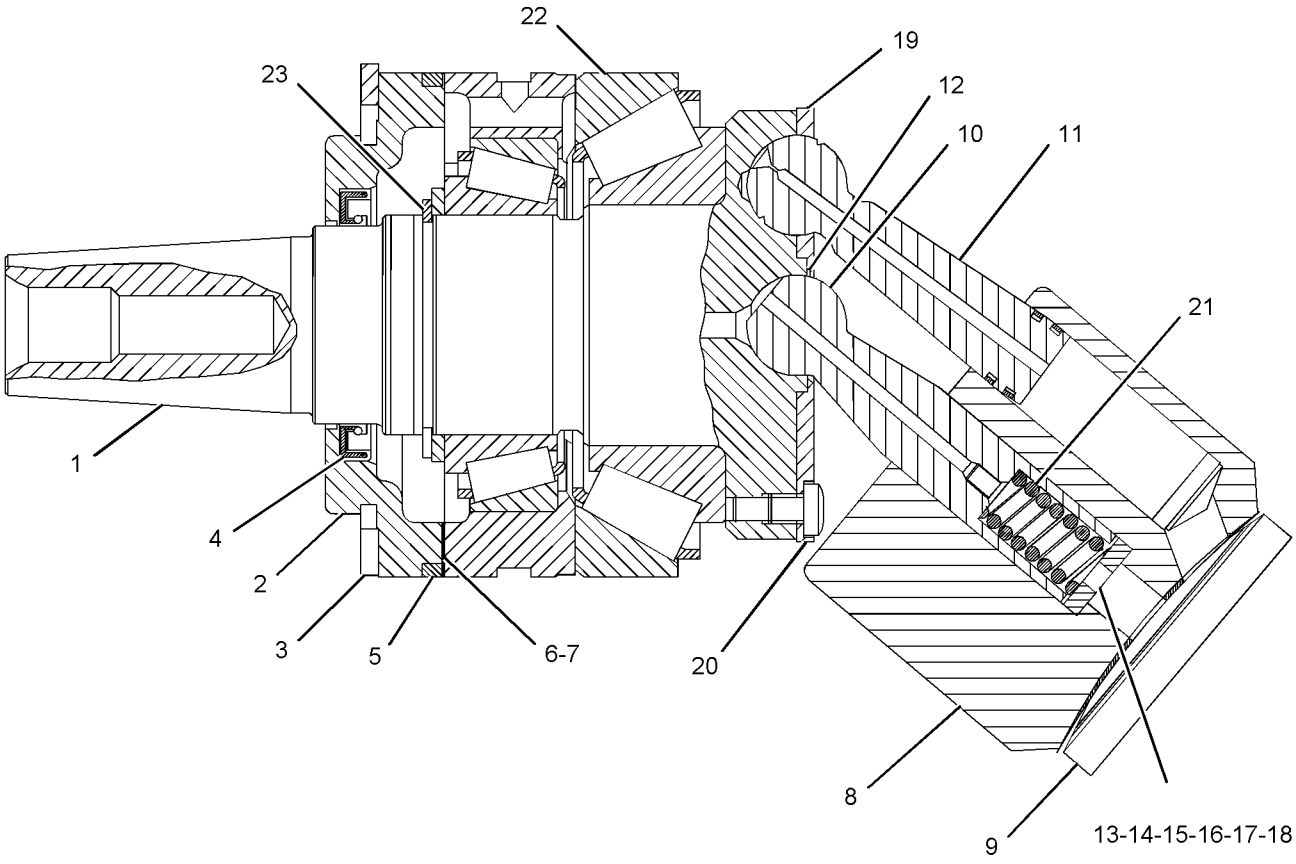

GRAPHIC #1 **<END>** g01113095

196-0227 ROTATING GP-PUMP–HYDRAULIC FAN

S/N: RJS1-UP

PART OF 214-1097 PUMP GP-PISTON

SMCS-5070 **i01686094**

NOTE	REF NO	GRAPHIC REF	PART NUMBER	QTY	PART NAME 1 2 3 4 5 6 (PRODUCT LEVEL)	SEE PAGE
	1	1	**192-9219**	1	PLATE	
	2	1	**6E-6151**	9	PISTON AS	
	3	1	**6E-4007**	1	BARREL	
	5	1	**6E-6155**	1	BEARING	
	6	1	**6E-4009**	1	SPRING	
	7	1	**168-3379**	3	PIN	
	8	1	**6E-6158**	1	RING	
	9	1	**6E-3341**	1	SEAT-SPRING	

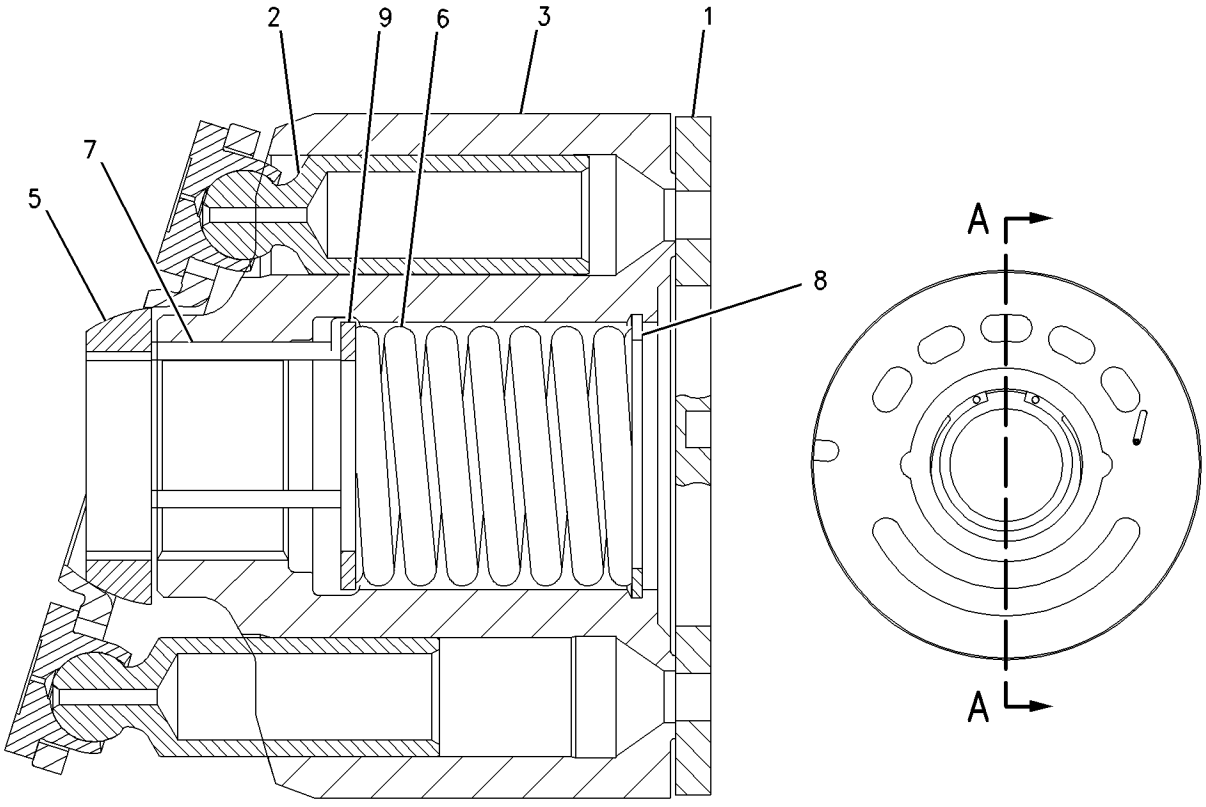

SECTION A–A

GRAPHIC #1 **<END>** g00878445

HYDRAULIC SYSTEM

247-2724 ROTATING GP-PUMP—STEERING

S/N: RJS1-UP

PART OF 214-1093 PUMP GP-PISTON

SMCS-5070 **i02185531**

NOTE	REF NO	GRAPHIC REF	PART NUMBER	QTY	PART NAME 1 2 3 4 5 6 (PRODUCT LEVEL)	SEE PAGE
	1	1	**247-2733**	1	SHAFT-DRIVE	
	2	1	**8T-7567**	1	RING	
	3	1	**208-9670**	1	RING-RETAINING	
	4	1	**247-2738**	1	RETAINER	
	5	1	**139-3885**	1	SWASHPLATE	
	6	1	**247-2735**	1	PLATE	
	7	1	**247-2726**	9	PISTON	
	8	1	**111-8513**	1	BARREL	
	9	1	**111-8514**	1	SHIM (1.2-MM THK)	
	10	1	**111-8515**	1	SHIM (47.7X64.6X1.0-MM THK)	
	11	1	**111-8516**	1	SHIM (0.8-MM THK)	
	12	1	**111-8517**	1	SHIM (0.6-MM THK)	
	13	1	**122-6607**	1	LEVER	
	14	1	**8T-9598**	1	RING-RETAINING	
	15	1	**111-8519**	1	SPRING	
	16	1	**247-2754**	2	WASHER (43.1X61.9X3.0-MM THK)	
	17	1	**247-2730**	1	SPRING	
	18	1	**095-0927**	1	RING-RETAINING	
	19	1	**6E-3840**	2	ROD	
	20	1	**247-2753**	1	BEARING	
	21	1	**111-8523**	1	BEARING	
	22	1	**247-8683**	1	SEAL-SHAFT	
	23	1	**5I-4275**	1	BEARING-ROLLER	

247-2724 ROTATING GP-PUMP *(contd.)* **i02185531**

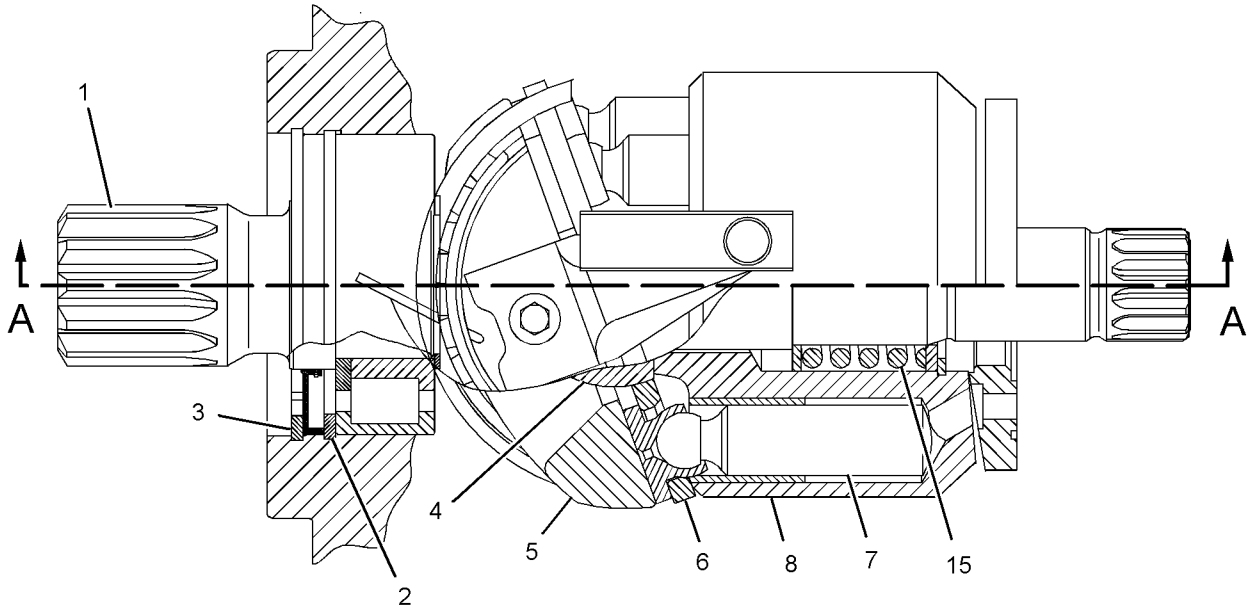

SECTION B-B

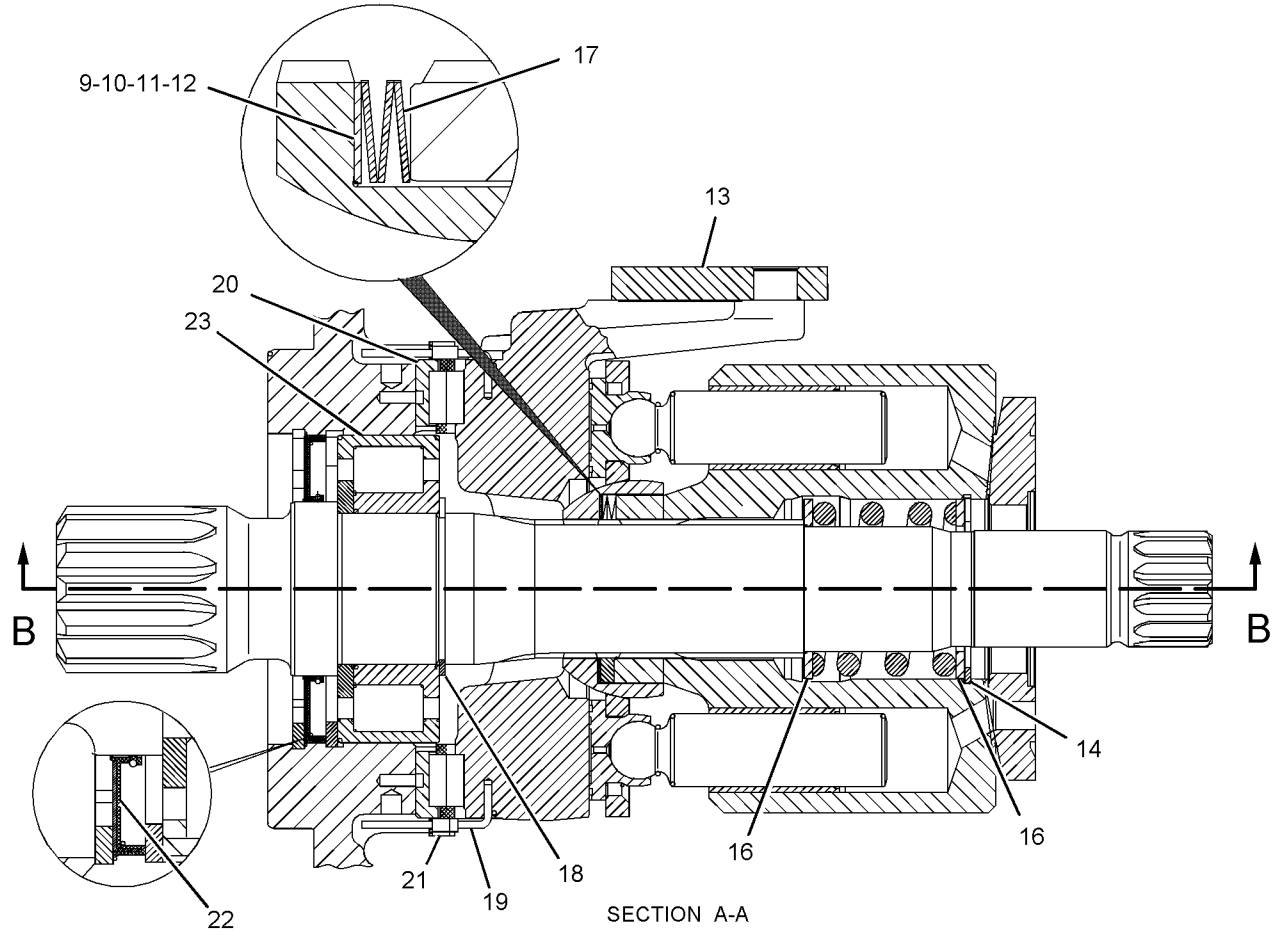

SECTION A-A

GRAPHIC #1 **<END>** g01117612

HYDRAULIC SYSTEM

249-9209 ROTATING GP-PUMP–IMPLEMENT

S/N: RJS1-UP

PART OF 214-1098 PUMP GP-PISTON

SMCS-5070 **i02195718**

NOTE	REF NO	GRAPHIC REF	PART NUMBER	QTY	PART NAME 1 2 3 4 5 6 (PRODUCT LEVEL)	SEE PAGE
	1	1	**191-7587**	9	PISTON AS	
	2	1	**248-4228**	1	BARREL	
	3	1	**191-7585**	1	PLATE-DISTRIBUTOR	
	4	1	**191-7591**	1	PLATE-RETAINING	
	5	1	**191-7592**	1	BEARING	
	6	1	**191-7594**	1	SPRING	
	7	1	**191-7596**	3	PIN	
	8	1	**095-0939**	1	RING-RETAINING	
	9	1	**191-7597**	1	SPACER (55X3-MM THK)	

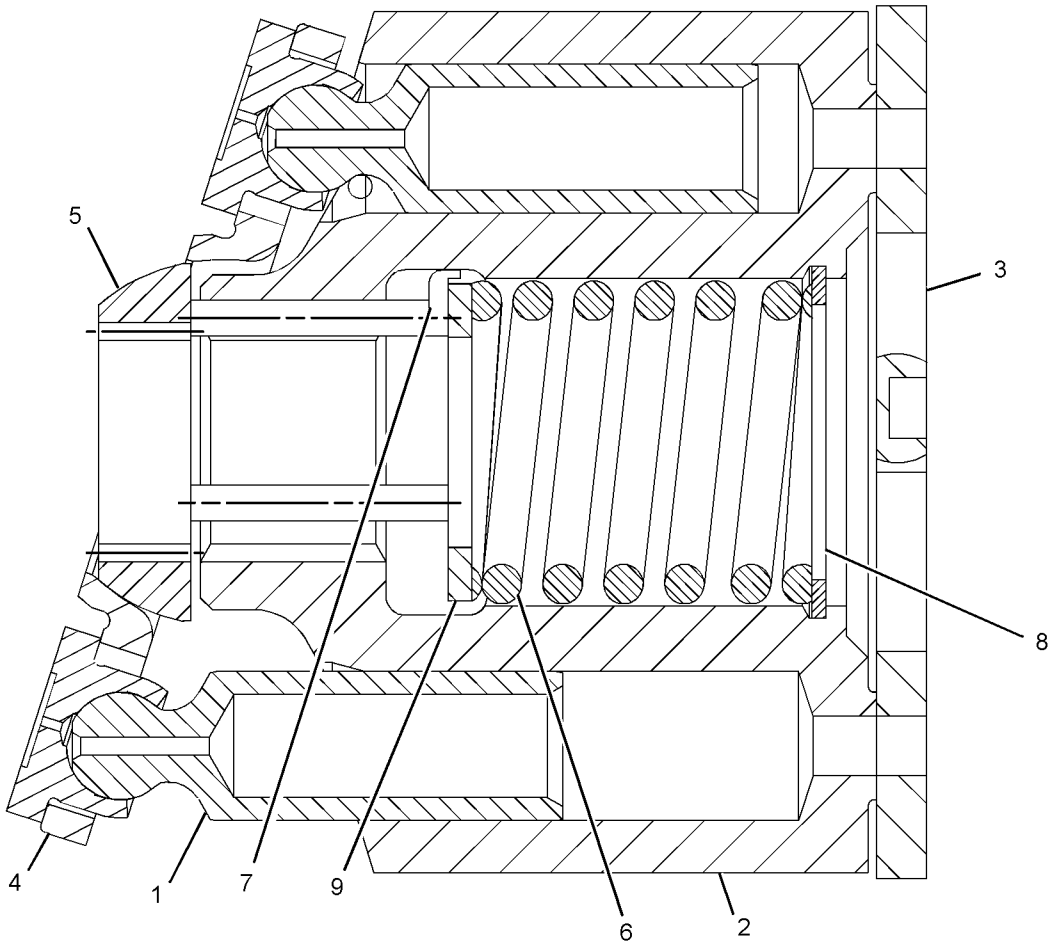

GRAPHIC #1 **<END>** g01117057

HYDRAULIC SYSTEM

222-0491 TANK & FILTER GP-HYDRAULIC

S/N: RJS1-UP

PART OF 205-8602 HYDRAULIC AR

SMCS-5056, 5068 **i02201140**

NOTE	REF NO	GRAPHIC REF	PART NUMBER	QTY	PART NAME 1 2 3 4 5 6 (PRODUCT LEVEL)	SEE PAGE
	1	1	**1P-4578**	2	FLANGE-HALF	
	2	1	**1P-4582**	2	FLANGE-HALF	
	3	1	**1P-4584**	2	FLANGE-HALF	
M	4	1	**8T-4196**	4	BOLT (M10X1.5X35-MM)	
	5	1	**1R-0774**	1	FILTER ELEMENT AS-OIL (HYDRAULIC) (STANDARD EFFICIENCY)	
					—OR—	
		1	**4T-3134**	1	FILTER ELEMENT AS-OIL (HYDRAULIC) (FIRE RESISTANT FLUID)	
					—OR—	
		1	**139-1536**	1	FILTER ELEMENT AS-OIL (HYDRAULIC) (HIGH EFFICIENCY)	
	6	1	**5D-7927**	1	STRAINER AS (HYDRAULIC TANK FILL)	
		1	**5F-3488**	1	END-STRAINER	
	7	2	**6E-1752**	1	SCREEN (HYDRAULIC TANK)	
	8	1	**6E-2060**	1	COVER AS (HYDRAULIC TANK)	
	9	1	**7H-1447**	1	CAP-FILLER (HYDRAULIC TANK)	
	10	1	**9J-1979**	1	RETAINER AS	
	11	2	**9T-7570**	1	VALVE-BYPASS (HYDRAULIC OIL FILTER)	
	12	2	**9T-7571**	1	SCREEN AS (HYDRAULIC OIL FILTER BYPASS)	
	13	2	**9T-7572**	1	FLANGE	
	14	1	**218-1966**	1	TUBE AS	
	15	1	**224-6220**	1	TANK AS-HYDRAULIC	
	16	1	**226-2009**	1	COVER AS	
M		1	**6V-8149**	2	NUT (M12X1.75-THD)	
	17	2	**232-2450**	1	TUBE AS	
	18	2	**243-0780**	1	SPRING	
	19	2	**244-4094**	1	BASE-FILTER (HYDRAULIC OIL)	
	20	2	**245-0824**	1	TUBE AS	
	21	1	**245-9740**	1	GASKET	
	22	2	**249-7780**	1	BLOCK	
	23	1	**260-8636**	1	GAUGE-LIQUID LEVEL (HYDRAULIC OIL)	
	24	1	**9S-4182**	1	PLUG	
			3J-7354	1	SEAL-O-RING	
M	25	2	**161-0158**	2	BOLT (M8X1.25X30-MM)	
	26	1	**2D-4202**	1	PLATE	
	27	2	**2H-3932**	2	SEAL-O-RING	
	28	1	**2H-6124**	1	SEAL-O-RING	
	29	2	**4J-0525**	1	SEAL-O-RING	
	30	2	**5F-7054**	2	SEAL-O-RING	
	31	1	**5H-6733**	1	SEAL-O-RING	
	32	2	**5K-5959**	1	SEAL-O-RING	
	33	2	**5P-1075**	2	WASHER-HARD (10.2X22.5X3-MM THK)	
	34	1	**6H-9361**	1	RING-RETAINING	
	35	1	**6V-5839**	4	WASHER (11X21X2.5-MM THK)	
M	36	2	**6V-7731**	2	BOLT (M10X1.5X70-MM)	
M	37	2	**6V-7732**	3	BOLT (M10X1.5X25-MM)	
M	38	1	**6V-7744**	5	LOCKNUT (M10X1.5-THD)	
M	39	2	**6V-8097**	2	BOLT (M12X1.75X30-MM)	
	40	1	**7D-1195**	1	SEAL-O-RING	
	41	2	**7F-8268**	1	SEAL-O-RING	
	42	1	**8T-2275**	1	BALL	
	43	1	**8T-4121**	40	WASHER-HARD (11X21X2.5-MM THK)	
M	44	1	**8T-4133**	4	NUT (M10X1.5-THD)	
M	45	1	**8T-4136**	36	BOLT (M10X1.5X25-MM)	
M	46	1	**8T-4184**	4	BOLT (M12X1.75X45-MM)	

222-0491 **TANK & FILTER GP-HYDRAULIC** *(contd.)* **i02201140**

NOTE	REF NO	GRAPHIC REF	PART NUMBER	QTY	PART NAME 1 2 3 4 5 6 (PRODUCT LEVEL)	SEE PAGE
M	47	2	**8T-4201**	2	BOLT-LOCKING (M10X1.5X20-MM)	
	48	1,2	**8T-4223**	10	WASHER-HARD (13.5X25.5X3-MM THK)	
	49	2	**8T-4224**	2	WASHER-HARD (8.8X16X2-MM THK)	
M	50	1	**8T-4956**	4	BOLT (M12X1.75X35-MM)	
M	51	1	**8T-7504**	1	STUD-TAPERLOCK	
	52	1	**9H-6454**	1	GASKET	

M-METRIC PART

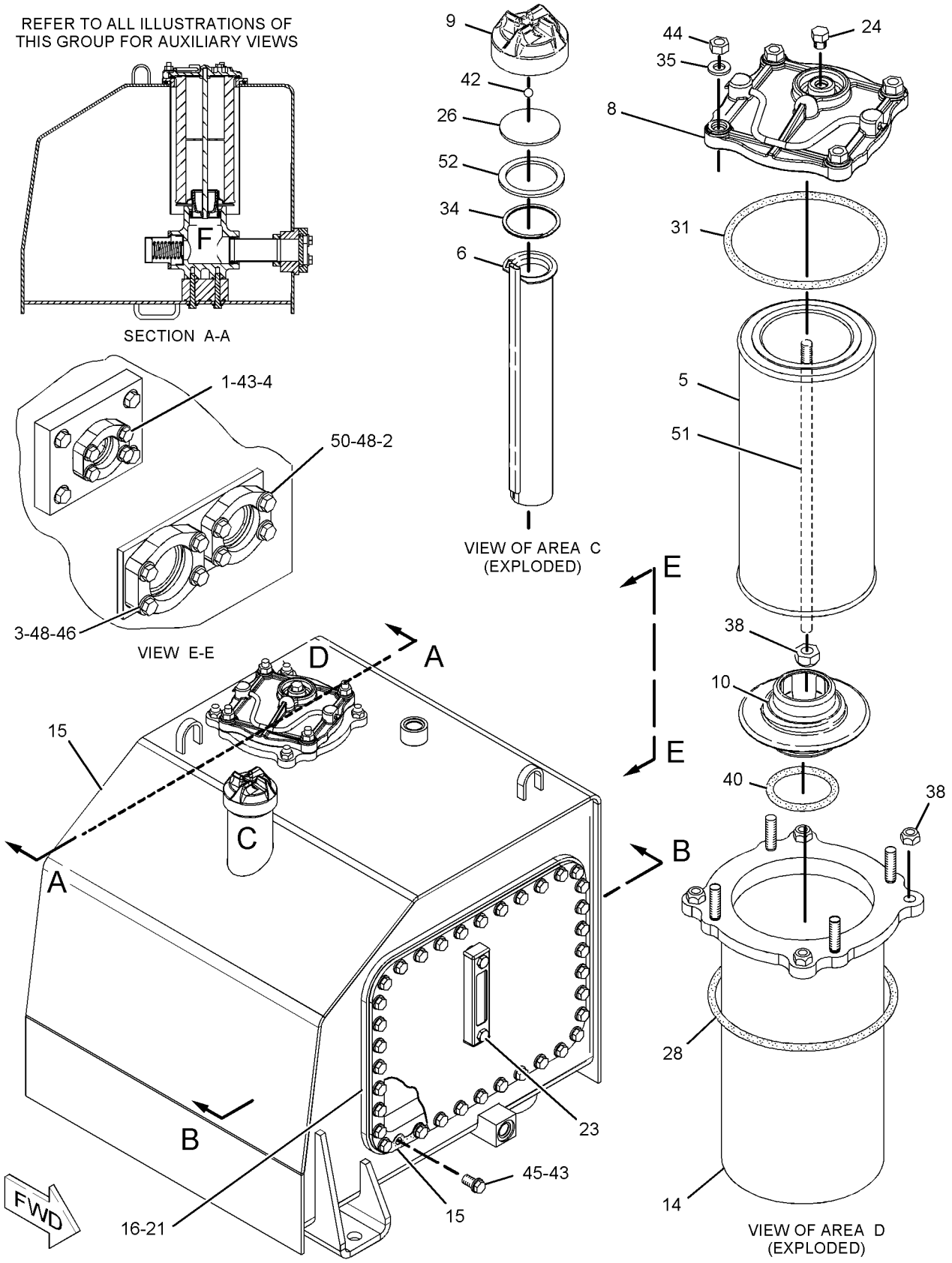

GRAPHIC #1

g01117408

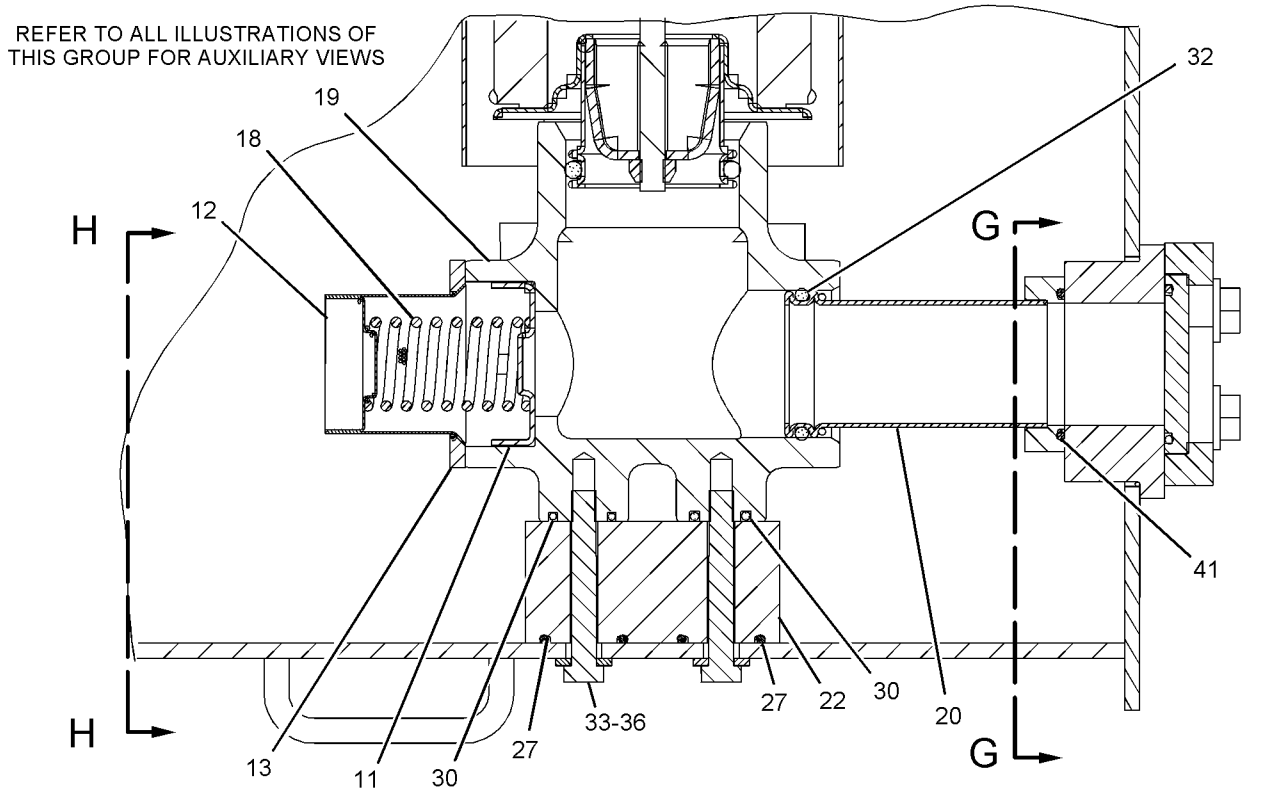

VIEW OF AREA F

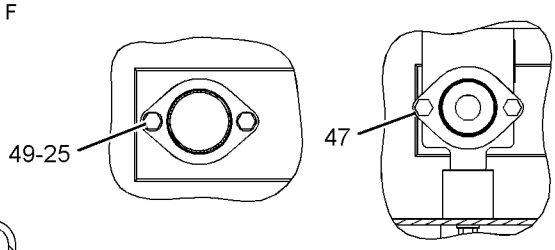

SECTION G-G

SECTION H-H

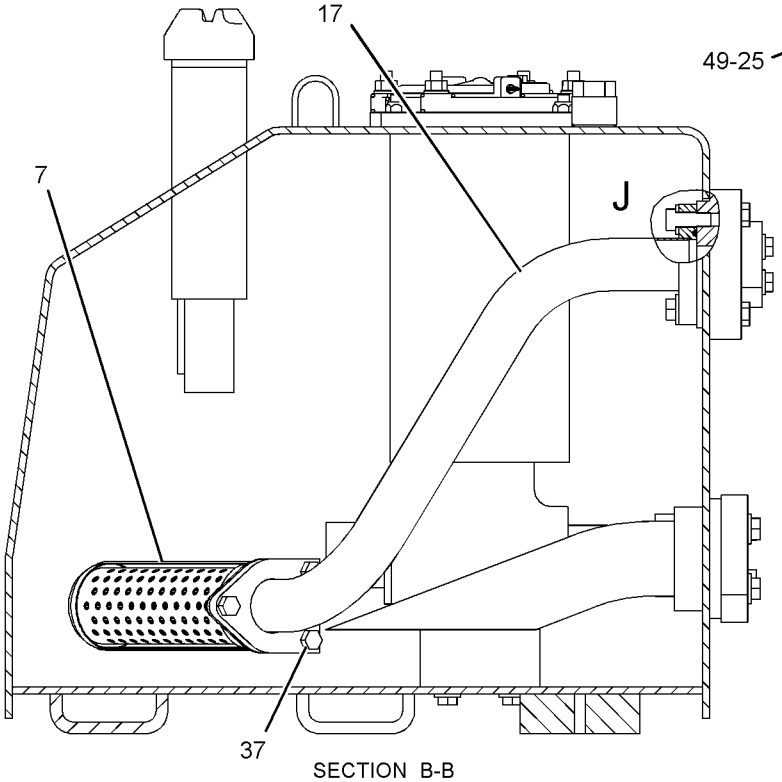

SECTION B-B

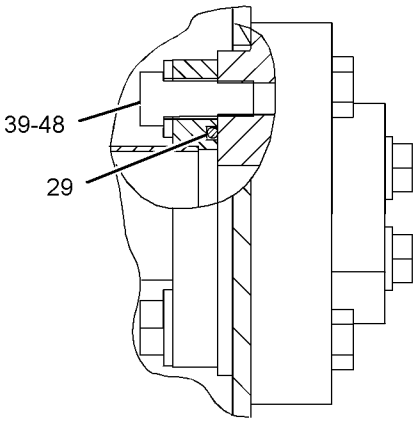

VIEW OF AREA J

GRAPHIC #2 **<END>** g01117409

188-6140 VALVE & MTG GP-CONTROL–HYDRAULIC PIN PULLER

S/N: RJS1-UP

PART OF 208-1607 CONTROL AR-HYD PIN PULLER

AN ATTACHMENT

SMCS-5051 **i02249319**

NOTE	REF NO	GRAPHIC REF	PART NUMBER	QTY	PART NAME 1 2 3 4 5 6 (PRODUCT LEVEL)	SEE PAGE
Y	1	1	**3E-8575**	1	VALVE GP-SOLENOID (HYDRAULIC PIN PULLER)	650
	2	1	**188-6141**	1	MANIFOLD AS	
	2A	1	**3J-1907**	1	SEAL-O-RING	
	2B	1	**9S-8004**	1	PLUG	
	2C	1	**200-2964**	1	ORIFICE AS	
	2D	1	**4J-7533**	1	SEAL-O-RING	

Y-SEPARATE ILLUSTRATION

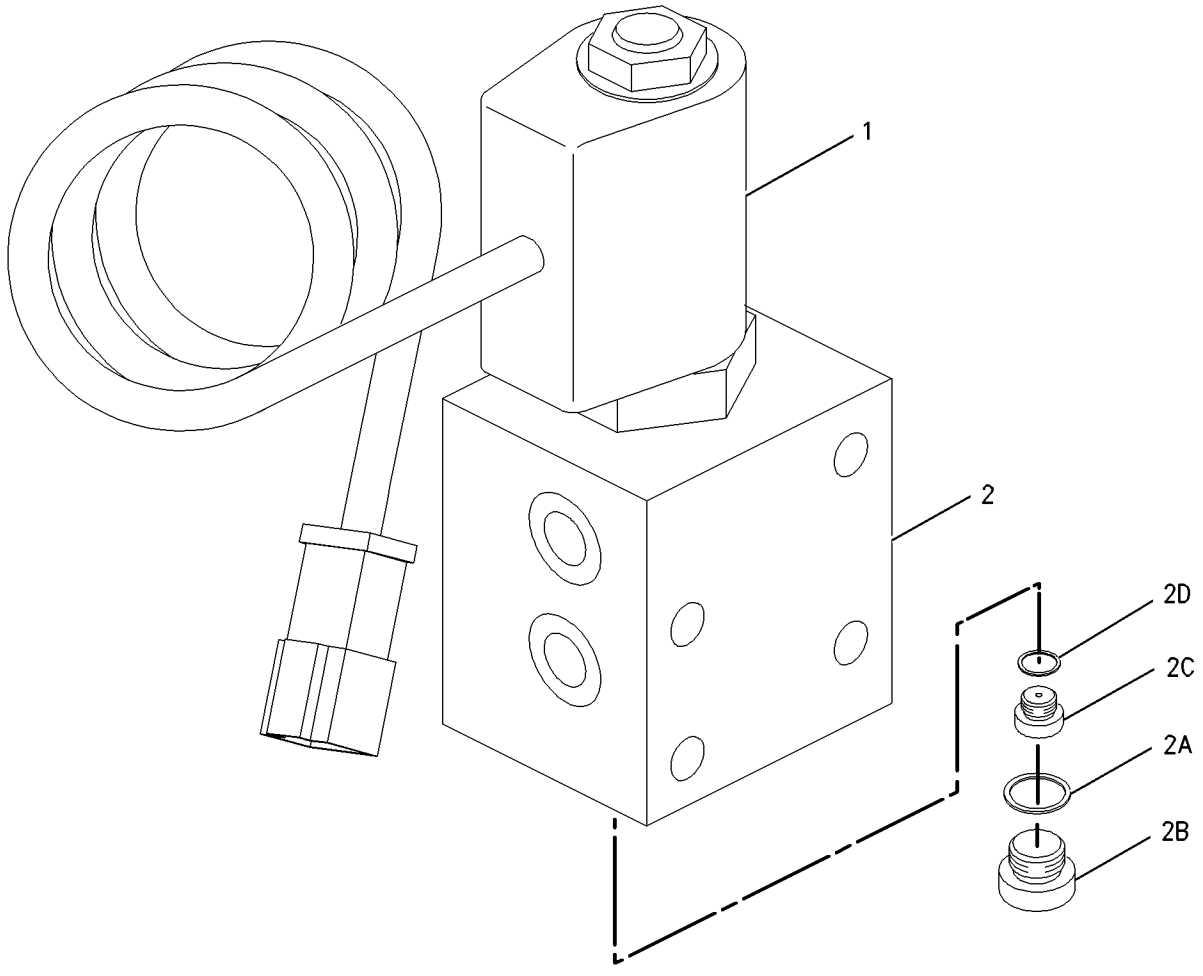

GRAPHIC #1 **<END>** g00764266

HYDRAULIC SYSTEM

222-7247 VALVE & MTG GP-CONTROL—IMPLEMENT

S/N: RJS1-UP
PART OF 205-8636 CONTROL AR-HYDRAULIC
AN ATTACHMENT

SMCS-5051 **i02249342**

NOTE	REF NO	GRAPHIC REF	PART NUMBER	QTY	PART NAME 1 2 3 4 5 6 (PRODUCT LEVEL)	SEE PAGE
	1	1	**7T-8331**	2	MOUNTING	
	2	1	**9U-8032**	1	PLATE AS	
	3	1	**9U-8036**	1	PLATE AS	
Y	4	1	**211-7817**	1	VALVE GP-BANK 4 (IMPLEMENT)	612
	5	1	**214-7905**	1	PLATE AS	
	6	1	**115-6433**	2	WASHER (11X50X6-MM THK)	
	7	1	**8T-4121**	4	WASHER-HARD (11X21X2.5-MM THK)	
M	8	1	**8T-4195**	4	BOLT (M10X1.5X30-MM)	
M	9	1	**8T-5005**	2	BOLT (M10X1.5X70-MM)	

M-METRIC PART
Y-SEPARATE ILLUSTRATION

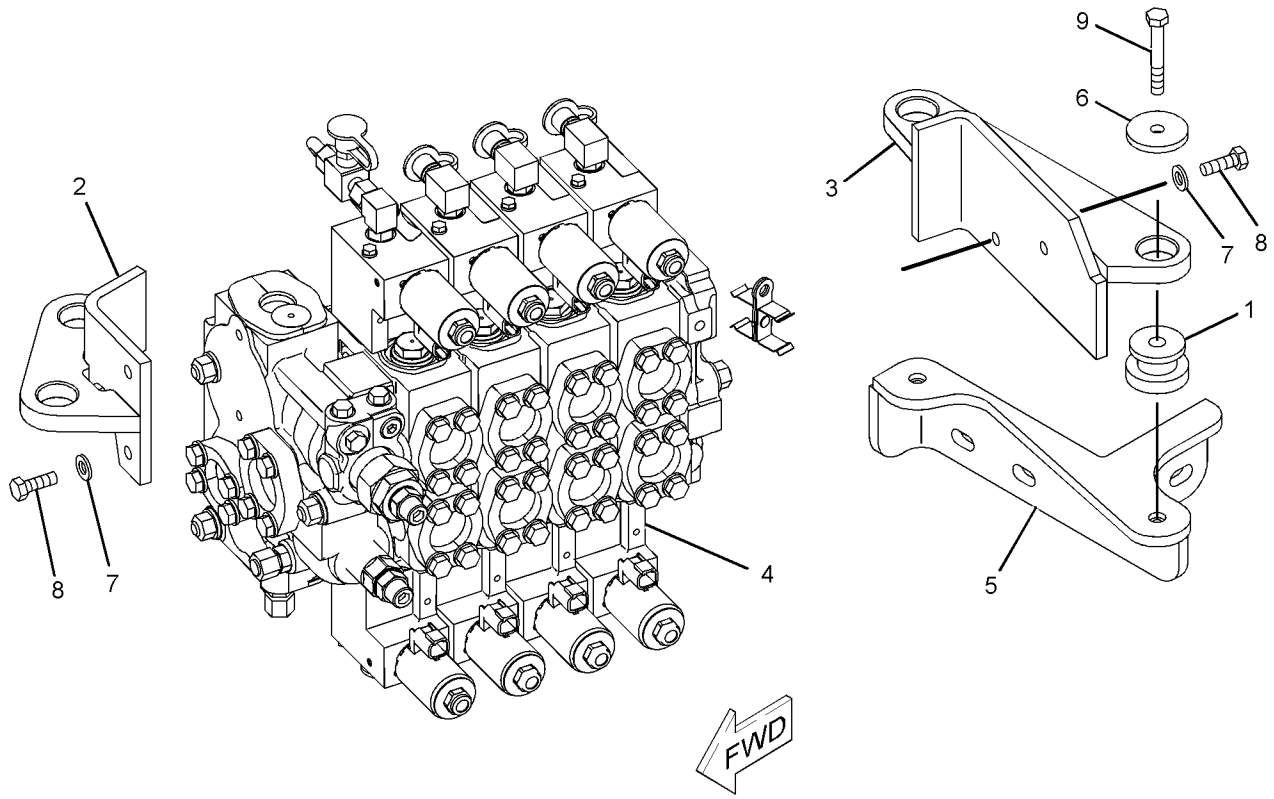

GRAPHIC #1 **<END>** g01037059

217-3885 VALVE & MTG GP-MAIN CONTROL–

BULLDOZER, RIPPER

S/N: RJS1-UP

PART OF 205-8602 HYDRAULIC AR

SMCS-5051 **i02249370**

NOTE	REF NO	GRAPHIC REF	PART NUMBER	QTY	PART NAME 1 2 3 4 5 6 (PRODUCT LEVEL)	SEE PAGE
	1	1	**7T-8331**	2	MOUNTING	
	2	1	**9U-8032**	1	PLATE AS	
	3	1	**9U-8036**	1	PLATE AS	
Y	4	1	*214-1079*	1	VALVE GP-BANK 4 (MAIN)	615
	5	1	**214-7905**	1	PLATE AS	
	6	1	**115-6433**	2	WASHER (11X50X6-MM THK)	
	7	1	**8T-4121**	4	WASHER-HARD (11X21X2.5-MM THK)	
M	8	1	**8T-4195**	4	BOLT (M10X1.5X30-MM)	
M	9	1	**8T-5005**	2	BOLT (M10X1.5X70-MM)	

M-METRIC PART
Y-SEPARATE ILLUSTRATION

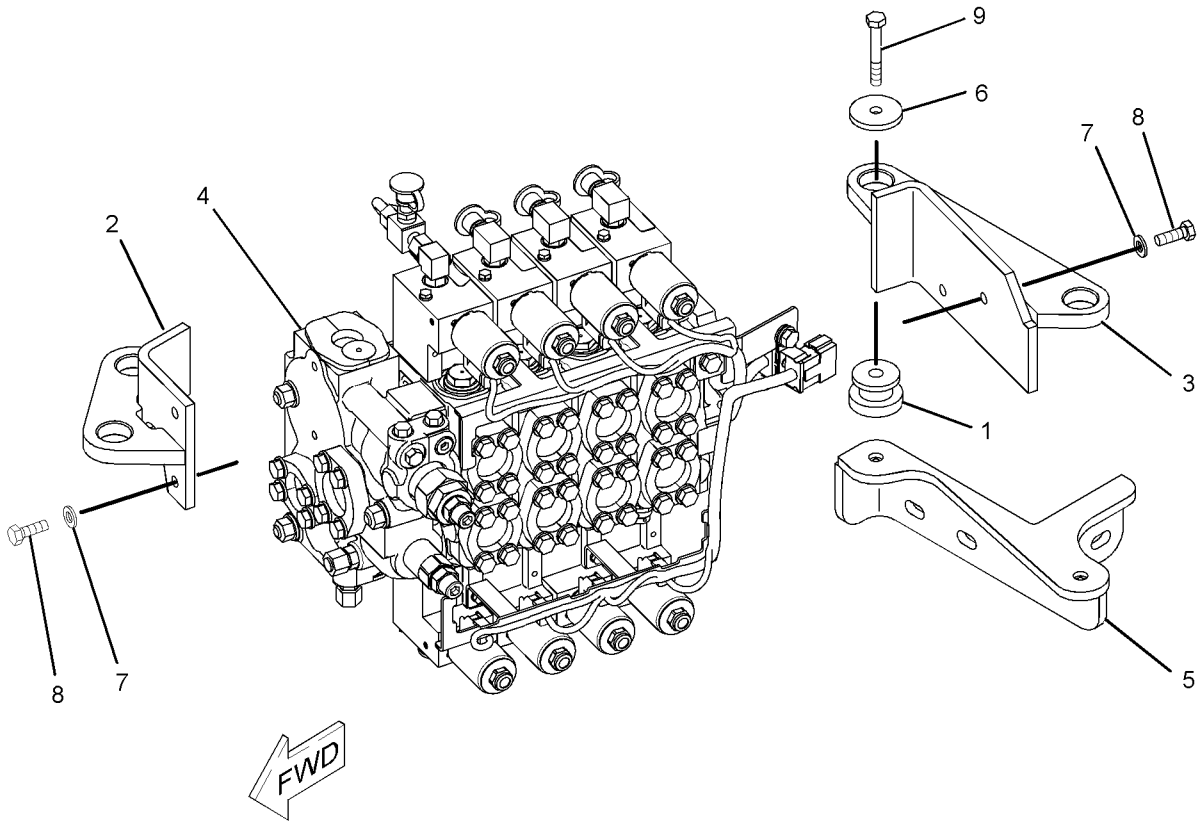

GRAPHIC #1 **<END>** g01037632

HYDRAULIC SYSTEM

211-7817 VALVE GP-BANK 4—AUXILIARY, BULLDOZER, WINCH

S/N: RJS1-UP
PART OF 222-7247 VALVE & MTG GP-CONTROL
FOR USE WITH WINCH CONTROLLED TRACTORS
AN ATTACHMENT

SMCS-5051 **i02267849**

NOTE	REF NO	GRAPHIC REF	PART NUMBER	QTY	PART NAME 1 2 3 4 5 6 (PRODUCT LEVEL)	SEE PAGE
	1	1	**4J-0522**	15	SEAL-O-RING	
	2	1	**7K-1181**	8	STRAP-CABLE	
	3	1	**9T-2856**	3	ROD	
	4	1	*148-8424*	1	TEE AS	
		1	**6V-8397**	1	SEAL-O-RING	
		1	**8T-8902**	1	TEE	
	5	1	*164-5567*	1	FITTING GP-COUPLING	
		1	**3J-1907**	1	SEAL-O-RING	
		1	**6V-3965**	1	FITTING AS	
	6	1	**208-9683**	1	COVER	
Y	7	1	**211-7816**	1	VALVE GP-WINCH CONTROL	723
	9	1	**213-6662**	1	HARNESS AS-VALVE (IMPLEMENT)	
		1	**102-8801**	1	KIT-RECEPTACLE (12-PIN)	
					(INCLUDES RECEPTACLE AS & WEDGE)	
		1	**9G-3695**	8	PLUG (GROMMET SEALING)	
BE		1	**114-8843**		SLEEVE-PLASTIC	
		1	**155-2255**	1	KIT-CONNECTING PLUG (12-PIN)	
					(INCLUDES PLUG AS & WEDGE)	
		1	**155-2270**	8	KIT-CONNECTING PLUG (2-PIN)	
					(EACH INCLUDES PLUG AS & WEDGE)	
Y	10	1	**214-1080**	1	VALVE GP-CONTROL (BULLDOZER LIFT)	623
Y	11	1	**214-1081**	1	VALVE GP-CONTROL (BULLDOZER TILT)	625
Y	12	1	**214-1082**	1	VALVE GP-CONTROL (AUXILIARY)	627
	13	1	**215-2828**	1	TUBE AS	
	14	1	**215-3708**	2	BRACKET	
	15	1	**215-5526**	1	PLATE AS	
Y	16	1	**223-1094**	1	VALVE GP-CONTROL (IMPLEMENT INLET MANIFOLD)	633
	17	1	**115-3073**	2	CLIP AS-CONNECTING	
	18	1	*148-8326*	2	CONNECTOR AS	
					(EACH INCLUDES)	
		1	**3J-7354**	1	SEAL-O-RING	
		1	**6V-8397**	1	SEAL-O-RING	
		1	**6V-9872**	1	CONNECTOR	
	19	1	*148-8336*	1	CONNECTOR AS	
		1	**3J-1907**	1	SEAL-O-RING	
		1	**6V-8397**	1	SEAL-O-RING	
		1	**6V-8636**	1	CONNECTOR	
	20	1	*148-8367*	1	ELBOW AS	
		1	**6V-8397**	1	SEAL-O-RING	
		1	**6V-9850**	1	ELBOW	
	21	1	*148-8378*	1	ELBOW AS	
		1	**3J-1907**	1	SEAL-O-RING	
		1	**6V-8397**	1	SEAL-O-RING	
		1	**6V-8724**	1	ELBOW	
	22	1	*155-3624*	1	PLUG AS	
		1	**3J-7354**	1	SEAL-O-RING	
		1	**9S-4182**	1	PLUG	
	23	1	**1P-3702**	1	SEAL-RECTANGULAR	
	24	1	**1P-4578**	2	FLANGE-HALF	
	26	1	**4J-8997**	4	SEAL-O-RING	
	27	1	**6V-0852**	1	CAP-DUST	
	28	1	**6V-5555**	15	SEAL-O-RING	
	29	1	**6V-8188**	6	NUT (1/2-13-THD)	
	30	1	**8C-3206**	18	FLANGE-HALF	

211-7817 VALVE GP-BANK 4 *(contd.)* i02267849

NOTE	REF NO	GRAPHIC REF	PART NUMBER	QTY	PART NAME 1 2 3 4 5 6 (PRODUCT LEVEL)	SEE PAGE
	31	1	**8T-4121**	42	WASHER-HARD (11X21X2.5-MM THK)	
M	32	1	**8T-4137**	2	BOLT (M10X1.5X20-MM)	
M	33	1	**8T-4171**	4	BOLT (M6X1X12-MM)	
M	34	1	**8T-4196**	40	BOLT (M10X1.5X35-MM)	
	35	1	**8T-4223**	6	WASHER-HARD (13.5X25.5X3-MM THK)	
	36	1	**9X-8256**	4	WASHER (6.6X12X2-MM THK)	

B-USE AS REQUIRED
E-ORDER BY THE CENTIMETER
M-METRIC PART
Y-SEPARATE ILLUSTRATION

211-7817 VALVE GP-BANK 4 *(contd.)* i02267849

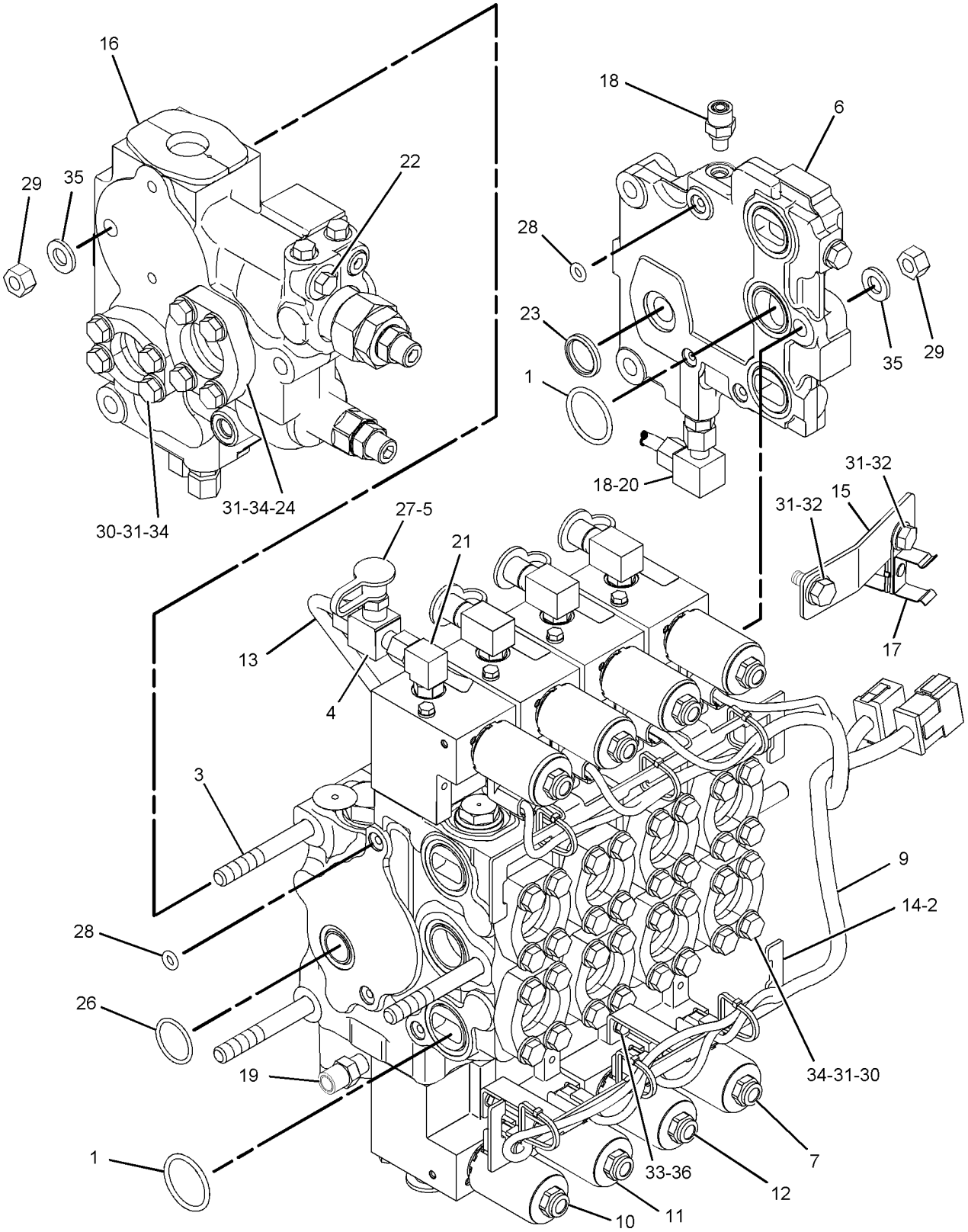

GRAPHIC #1 **<END>** g01035864

HYDRAULIC SYSTEM

214-1079 VALVE GP-BANK 4—BULLDOZER, RIPPER

S/N: RJS1-UP

PART OF 217-3885 VALVE & MTG GP-MAIN CONTROL

SMCS-5051 **i02267881**

NOTE	REF NO	GRAPHIC REF	PART NUMBER	QTY	PART NAME 1 2 3 4 5 6 (PRODUCT LEVEL)	SEE PAGE
	2	1	**6V-0852**	1	CAP-DUST	
	3	1	**7K-1181**	8	STRAP-CABLE	
	4	1	**9T-2856**	3	ROD	
	5	1	*148-8424*	1	TEE AS	
		1	**6V-8397**	1	SEAL-O-RING	
		1	**8T-8902**	1	TEE	
	6	1	**208-9683**	1	COVER	
	7	1	**213-6662**	1	HARNESS AS-VALVE	
		1	**102-8801**	1	KIT-RECEPTACLE (12-PIN)	
					(INCLUDES RECEPTACLE AS & WEDGE)	
		1	**155-2255**	1	KIT-CONNECTING PLUG (12-PIN)	
		1	**155-2270**	8	KIT-CONNECTING PLUG (2-PIN)	
					(EACH INCLUDES PLUG AS & WEDGE)	
Y	8	1	**214-1080**	1	VALVE GP-CONTROL (BULLDOZER LIFT)	623
Y	9	1	**214-1081**	1	VALVE GP-CONTROL (BULLDOZER TILT)	625
Y	10	1	**214-1082**	1	VALVE GP-CONTROL (RIPPER RAISE)	627
Y	11	1	**214-1083**	1	VALVE GP-CONTROL (RIPPER TIP)	629
	12	1	**215-2828**	1	TUBE AS	
	13	1	**215-3708**	2	BRACKET	
	14	1	**215-5526**	1	PLATE AS	
Y	16	1	**223-1094**	1	VALVE GP-CONTROL (IMPLEMENT INLET MANIFOLD)	633
	17	1	**115-3073**	2	CLIP AS-CONNECTING	
	18	1	*148-8326*	2	CONNECTOR AS	
					(EACH INCLUDES)	
		1	**3J-7354**	1	SEAL-O-RING	
		1	**6V-8397**	1	SEAL-O-RING	
		1	**6V-9872**	1	CONNECTOR	
	19	1	*148-8336*	1	CONNECTOR AS	
		1	**3J-1907**	1	SEAL-O-RING	
		1	**6V-8397**	1	SEAL-O-RING	
		1	**6V-8636**	1	CONNECTOR	
	20	1	*148-8367*	1	ELBOW AS	
		1	**6V-8397**	1	SEAL-O-RING	
		1	**6V-9850**	1	ELBOW	
	21	1	*148-8378*	1	ELBOW AS	
		1	**3J-1907**	1	SEAL-O-RING	
		1	**6V-8397**	1	SEAL-O-RING	
		1	**6V-8724**	1	ELBOW	
	22	1	*155-3624*	1	PLUG AS	
		1	**3J-7354**	1	SEAL-O-RING	
		1	**9S-4182**	1	PLUG	
	23	1	*164-5567*	1	FITTING GP-COUPLING	
		1	**3J-1907**	1	SEAL-O-RING	
		1	**6V-3965**	1	FITTING AS	
	24	1	**1P-3702**	1	SEAL-RECTANGULAR	
	25	1	**1P-4578**	2	FLANGE-HALF	
	26	1	**4J-0522**	15	SEAL-O-RING	
	27	1	**4J-8997**	4	SEAL-O-RING	
	28	1	**6V-5555**	15	SEAL-O-RING	
	29	1	**6V-8188**	6	NUT (1/2-13-THD)	
	30	1	**8C-3206**	18	FLANGE-HALF	
	31	1	**8T-4121**	42	WASHER-HARD (11X21X2.5-MM THK)	
M	32	1	**8T-4137**	2	BOLT (M10X1.5X20-MM)	
M	33	1	**8T-4171**	4	BOLT (M6X1X12-MM)	
M	34	1	**8T-4196**	40	BOLT (M10X1.5X35-MM)	
	35	1	**8T-4223**	6	WASHER-HARD (13.5X25.5X3-MM THK)	

214-1079 VALVE GP-BANK 4 *(contd.)* i02267881

NOTE	REF NO	GRAPHIC REF	PART NUMBER	QTY	PART NAME 1 2 3 4 5 6 (PRODUCT LEVEL)	SEE PAGE
	36	1	**9X-8256**	4	WASHER (6.6X12X2-MM THK)	

M-METRIC PART
Y-SEPARATE ILLUSTRATION

214-1079 VALVE GP-BANK 4 *(contd.)* i02267881

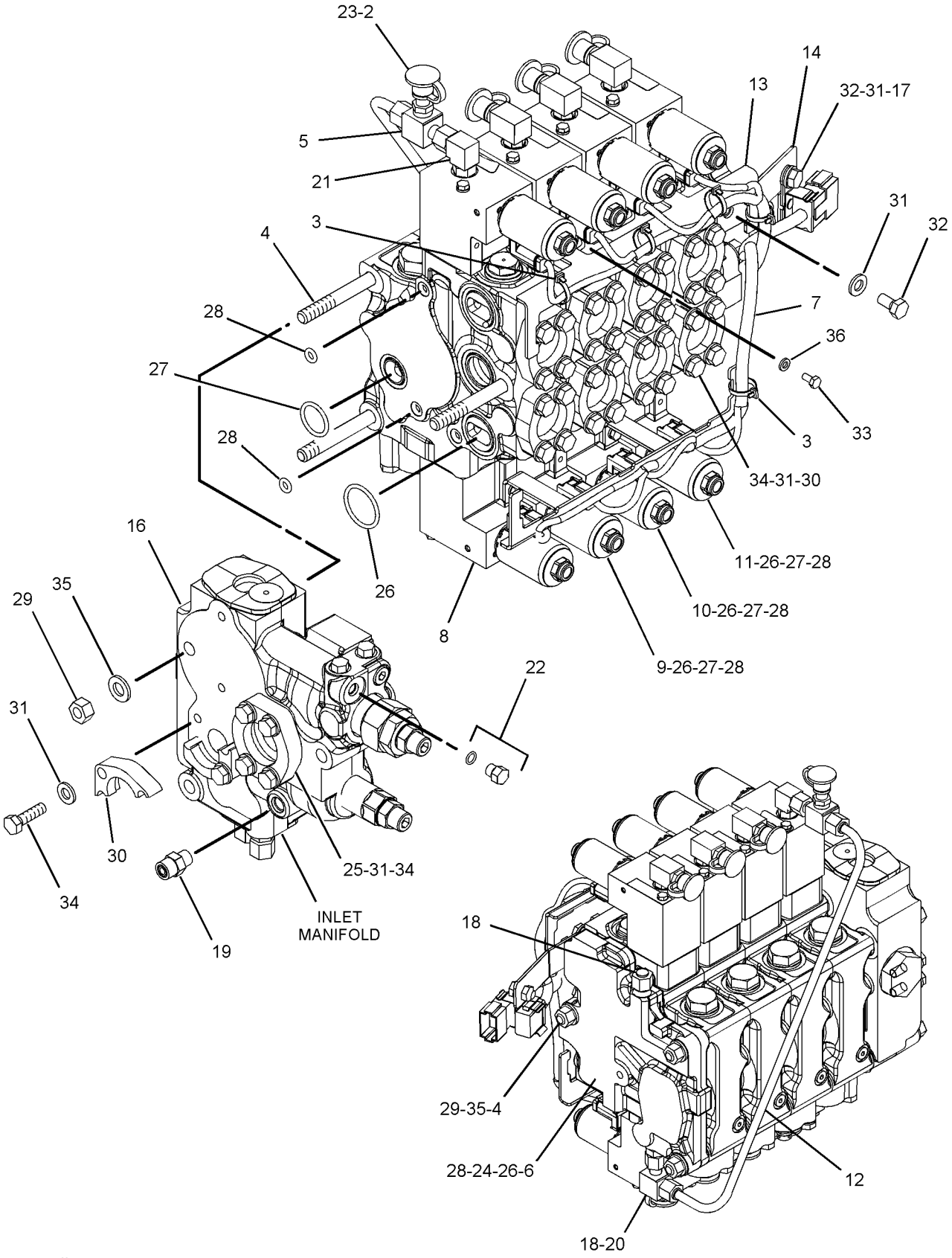

GRAPHIC #1 **<END>** g01038046

HYDRAULIC SYSTEM

249-7168 VALVE GP-BREAKER RELIEF

S/N: RJS1-UP

AN ATTACHMENT

SMCS-5118 **i02205322**

NOTE	PART NUMBER	QTY	PART NAME 1 2 3 4 5 6 (PRODUCT LEVEL)	SEE PAGE
	220-0813	1	VALVE AS-RELIEF (BREAKER)	

<END>

4T-5896 VALVE GP-CHECK–INLET MANIFOLD

S/N: RJS1-UP

PART OF 223-1094 VALVE GP-CONTROL

ALSO AN ATTACHMENT

SMCS-5067 **i01596268**

NOTE	REF NO	GRAPHIC REF	PART NUMBER	QTY	PART NAME 1 2 3 4 5 6 (PRODUCT LEVEL)	SEE PAGE
	1	1	**5H-1472**	1	BALL	
	2	1	**9G-0278**	1	SPRING	
	3	1	**3J-1907**	1	SEAL-O-RING	
	4	1	**4T-5071**	1	RING-BACKUP	
	5	1	**8C-3085**	1	SEAL-O-RING	
	6	1	**8L-6565**	1	PIN-SPRING	

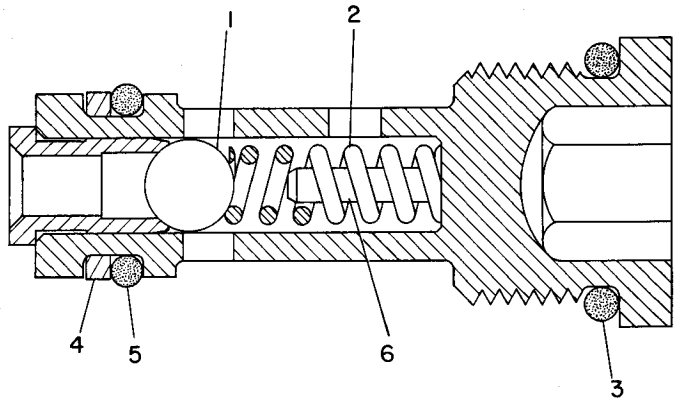

GRAPHIC #1 **<END>** g00124639

128-2780 VALVE GP-CHECK–HYDRAULIC FAN, REVERSING

S/N: RJS1-UP
PART OF 229-1466 MANIFOLD GP-CONTROL
AN ATTACHMENT

SMCS-5067 **i02212166**

NOTE	PART NUMBER	QTY	PART NAME 1 2 3 4 5 6 (PRODUCT LEVEL)	SEE PAGE
	128-2779	2	KIT-SEAL (CHECK VALVE) (HYDRAULIC FAN, REVERSING)	

<END>

158-9956 VALVE GP-CHECK–HYDRAULIC FAN–IMPLEMENT PUMP OIL

S/N: RJS1-UP

PART OF 223-8531 MANIFOLD GP-CONTROL

SMCS-5067 **i01950824**

NOTE	REF NO	GRAPHIC REF	PART NUMBER	QTY	PART NAME 1 2 3 4 5 6 (PRODUCT LEVEL)	SEE PAGE
	1	1	**3K-0360**	1	SEAL-O-RING	
	2	1	**161-6154**	1	SEAL-O-RING	
	3	1	**6E-0381**	1	RING-BACKUP	

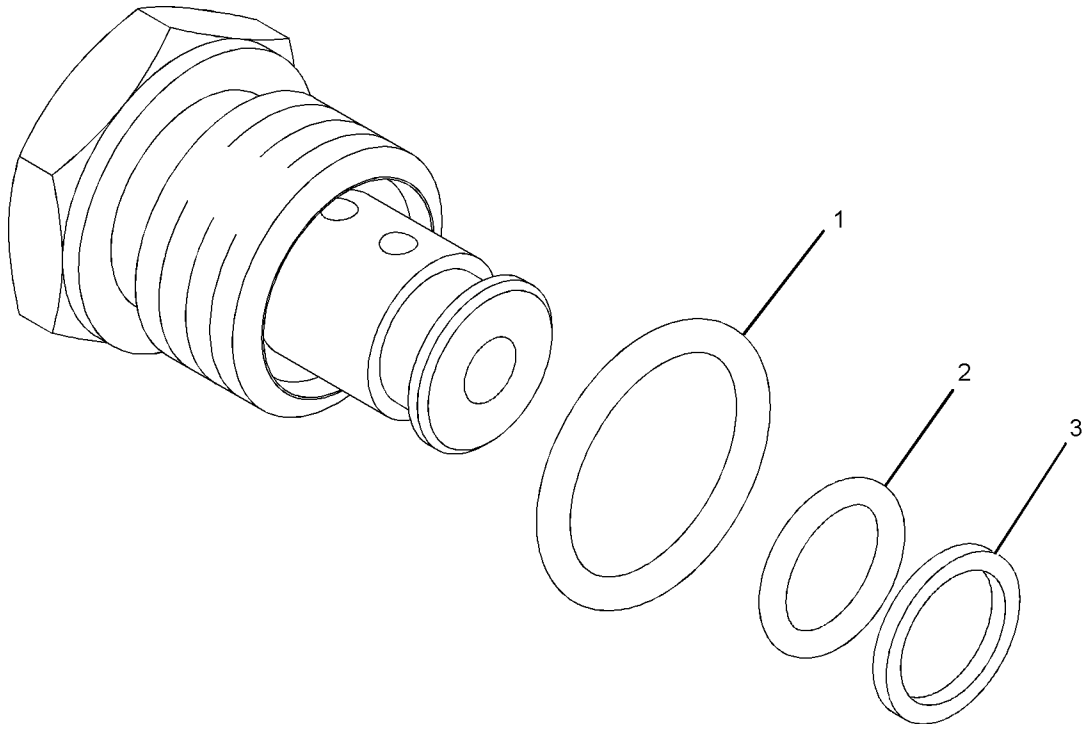

GRAPHIC #1 **<END>** g01016882

226-3800 VALVE GP-CHECK–IMPLEMENT PUMP OIL

S/N: RJS1-UP

PART OF 223-8531 MANIFOLD GP-CONTROL

SMCS-5067 **i01952326**

NOTE	REF NO	GRAPHIC REF	PART NUMBER	QTY	PART NAME 1 2 3 4 5 6 (PRODUCT LEVEL)	SEE PAGE
	1	1	**3K-0360**	2	SEAL-O-RING	
	2	1	**161-6154**	1	SEAL-O-RING	
	3	1	**6E-0381**	1	RING-BACKUP	

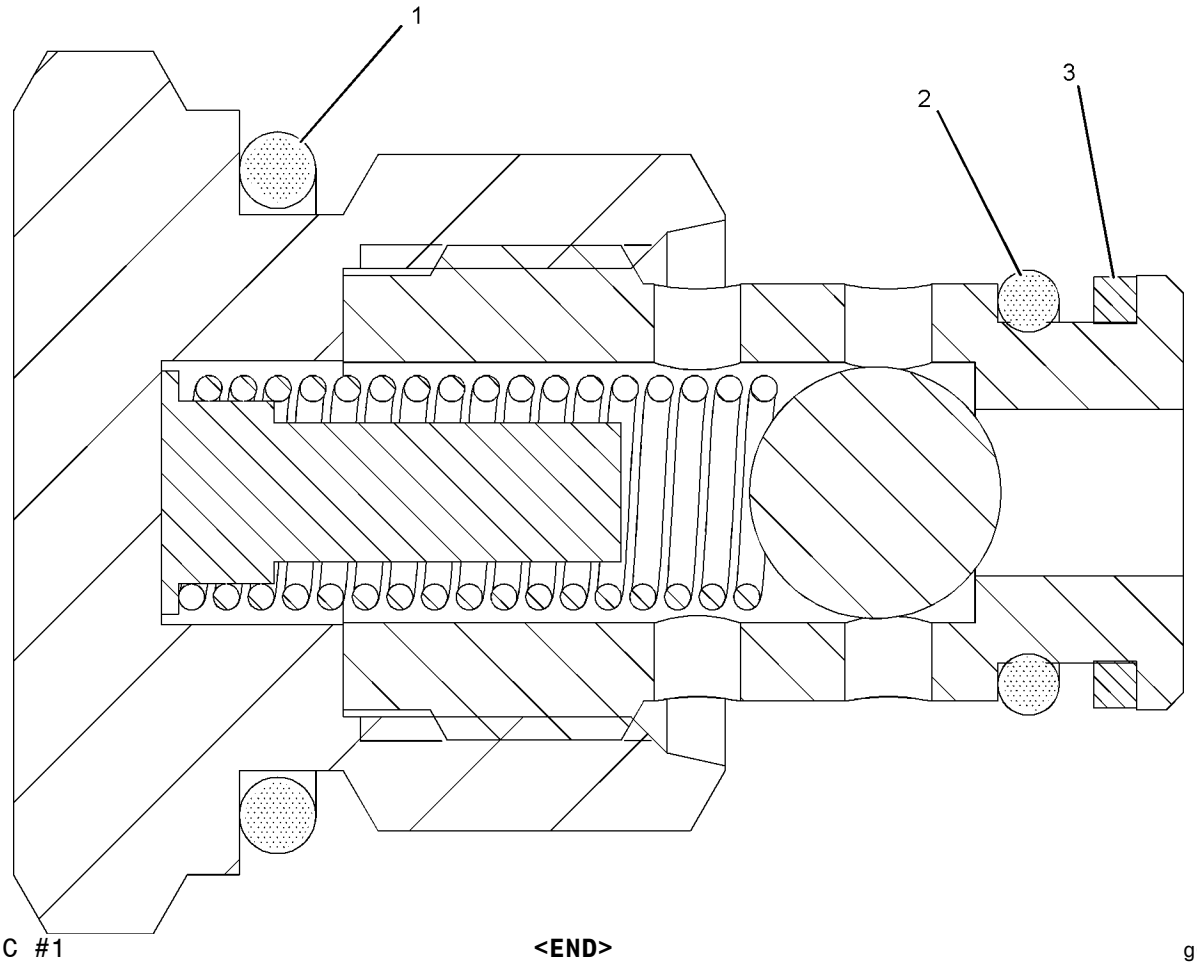

GRAPHIC #1 **<END>** g01019757

HYDRAULIC SYSTEM

214-1080 VALVE GP-CONTROL—BULLDOZER LIFT

S/N: RJS1-UP

PART OF 211-7817, 214-1079 VALVE GP-BANK 4

ALSO AN ATTACHMENT

SMCS-5051 **i02194140**

NOTE	REF NO	GRAPHIC REF	PART NUMBER	QTY	PART NAME 1 2 3 4 5 6 (PRODUCT LEVEL)	SEE PAGE
	1	1	**2S-2596**	2	SPRING	
B	2	1	**4B-4278**	5	WASHER (10.2X20.5X1.6-MM THK)	
	3	1	**4T-1108**	1	PLUG	
	4	1	**4T-1649**	1	HOUSING	
	5	1	**4T-1701**	1	SPRING	
	6	1	**4T-4511**	1	SLEEVE	
	7	1	**4T-5072**	1	RING-BACKUP	
	8	1	**4T-5074**	1	RING-BACKUP	
	9	1	**6V-0852**	1	CAP-DUST	
M	10	1	**8T-4145**	4	BOLT (M6X1-THD)	
	12	1	**100-8012**	1	BODY	
	13	1	*164-5567*	1	FITTING GP-COUPLING	
		1	**3J-1907**	1	SEAL-O-RING	
		1	**6V-3965**	1	FITTING AS	
	14	1	**207-7434**	2	RETAINER	
	15	1	**207-7435**	1	RETAINER	
	16	1	**207-7436**	1	RETAINER	
	17	1	**207-7437**	1	SPRING	
	18	1	**207-7438**	1	SPRING	
	23	1	**242-7955**	2	HOUSING AS	
Y	24	1	**257-0267**	2	VALVE GP-SOLENOID (BULLDOZER LIFT)	656
	25	1	**100-8010**	2	VALVE-CHECK (BULLDOZER LIFT)	
	26	1	**100-8011**	1	PLUG	
	27	1	**173-3993**	2	PLUG AS	
					(EACH INCLUDES)	
		1	**4J-7533**	1	SEAL-O-RING	
		1	**9S-8001**	1	PLUG	
	29	1	**187-9630**	2	SEAL-O-RING	
	30	1	**1H-1023**	4	SEAL-O-RING	
Y	31	1	**260-8590**	1	VALVE GP-SHUTTLE (BULLDOZER LIFT)	649
	32	1	**4J-5351**	1	SEAL-O-RING	
	33	1	**4K-1388**	2	SEAL-O-RING	
	34	1	**4T-5073**	2	RING-BACKUP	
	35	1	**5M-2057**	1	SEAL-O-RING	
	36	1	**6V-5556**	1	SEAL-O-RING	
	37	1	**7J-9933**	2	SEAL-O-RING	
	38	1	**7M-8485**	1	SEAL-O-RING	
M	39	1	**8T-4185**	2	BOLT (M10X1.5X50-MM)	
	40	1	**9J-8126**	1	PLUG-ORIFICE	
	41	1	**9X-8256**	4	WASHER (6.6X12X2-MM THK)	

B-USE AS REQUIRED
M-METRIC PART
Y-SEPARATE ILLUSTRATION

214-1080 VALVE GP-CONTROL *(contd.)* i02194140

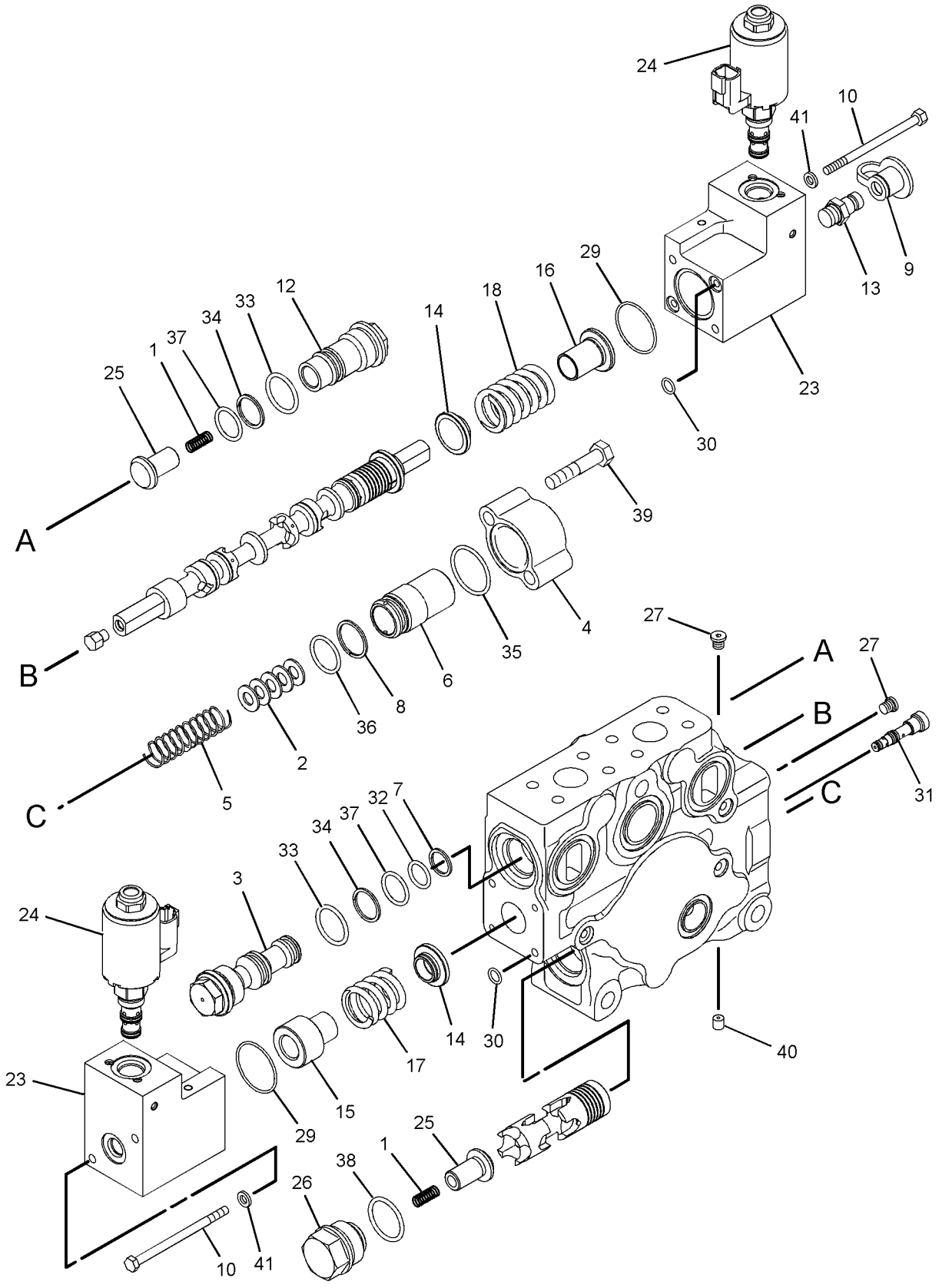

GRAPHIC #1 **<END>** g01114140

214-1081 VALVE GP-CONTROL—BULLDOZER TILT

S/N: RJS1-UP

PART OF 211-7817, 214-1079 VALVE GP-BANK 4

ALSO AN ATTACHMENT

SMCS-5051 **i02194867**

NOTE	REF NO	GRAPHIC REF	PART NUMBER	QTY	PART NAME 1 2 3 4 5 6 (PRODUCT LEVEL)	SEE PAGE
	1	1	**2S-2596**	1	SPRING	
	2	1	**4T-1108**	2	PLUG	
	3	1	**4T-5072**	2	RING-BACKUP	
B	4	1	**6E-1637**	4	SHIM (1-MM THK)	
	5	1	**6V-0852**	2	CAP-DUST	
M	6	1	**8T-4145**	4	BOLT (M6X1-THD)	
Y	7	1	**121-6649**	1	VALVE GP-RELIEF (BULLDOZER TILT)	647
	9	1	*164-5567*	2	FITTING GP-COUPLING	
					(EACH INCLUDES)	
		1	**3J-1907**	1	SEAL-O-RING	
		1	**6V-3965**	1	FITTING AS	
	10	1	**207-7434**	2	RETAINER	
	11	1	**207-7435**	2	RETAINER	
	12	1	**207-7437**	2	SPRING	
	17	1	**242-7955**	2	HOUSING AS	
Y	18	1	**257-0267**	2	VALVE GP-SOLENOID (BULLDOZER TILT)	656
M	19	1	**085-8091**	2	BOLT (M10X1.5X55-MM)	
	20	1	**100-8010**	1	VALVE-CHECK (BULLDOZER TILT)	
	21	1	**100-8011**	1	PLUG	
	22	1	**123-9624**	1	SPRING	
	23	1	*150-3065*	1	ADAPTER AS	
		1	**3J-1907**	1	SEAL-O-RING	
		1	**6V-0484**	1	ADAPTER-O-RING	
	24	1	**173-3993**	2	PLUG AS	
					(EACH INCLUDES)	
		1	**4J-7533**	1	SEAL-O-RING	
		1	**9S-8001**	1	PLUG	
	26	1	**187-9630**	2	SEAL-O-RING	
	27	1	**1H-1023**	4	SEAL-O-RING	
Y	28	1	**260-8590**	1	VALVE GP-SHUTTLE (BULLDOZER TILT)	649
	29	1	**4J-5351**	2	SEAL-O-RING	
	30	1	**4K-1388**	2	SEAL-O-RING	
	31	1	**4T-5073**	2	RING-BACKUP	
	32	1	**5M-2057**	1	SEAL-O-RING	
	33	1	**7J-9933**	2	SEAL-O-RING	
	34	1	**7M-8485**	1	SEAL-O-RING	
	35	1	**9J-8126**	1	PLUG-ORIFICE	
	36	1	**9X-2027**	2	WASHER (11X18X2-MM THK)	
	37	1	**9X-8256**	4	WASHER (6.6X12X2-MM THK)	

B-USE AS REQUIRED
M-METRIC PART
Y-SEPARATE ILLUSTRATION

214-1081 VALVE GP-CONTROL *(contd.)* i02194867

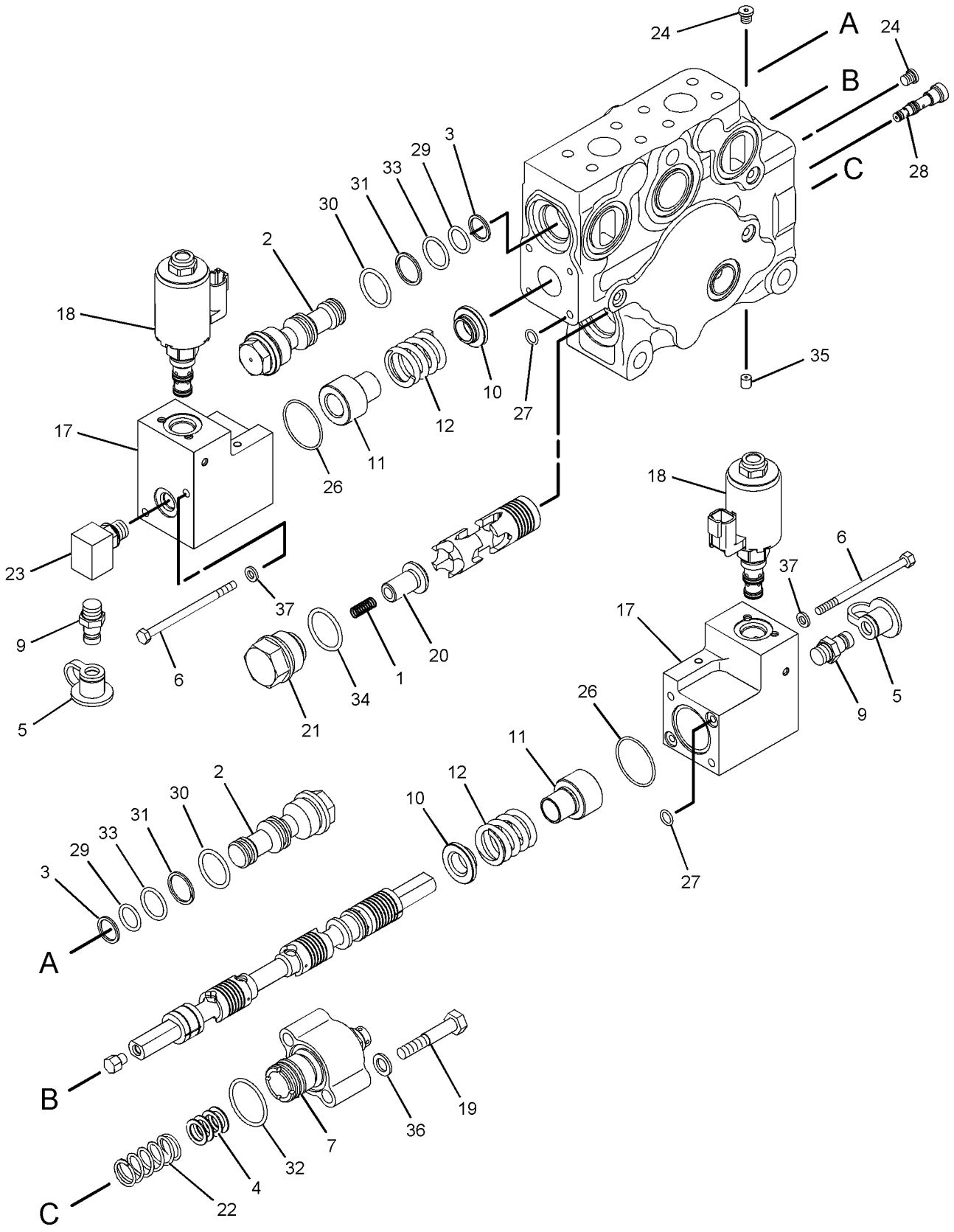

GRAPHIC #1 **<END>** g01114297

214-1082 VALVE GP-CONTROL—RIPPER RAISE

S/N: RJS1-UP

PART OF 211-7817, 214-1079 VALVE GP-BANK 4

ALSO AN ATTACHMENT

SMCS-5051 **i02194982**

NOTE	REF NO	GRAPHIC REF	PART NUMBER	QTY	PART NAME 1 2 3 4 5 6 (PRODUCT LEVEL)	SEE PAGE
	1	1	**2S-2596**	3	SPRING	
B	2	1	**4B-4278**	5	WASHER (10.2X20.5X1.6-MM THK)	
	3	1	**4T-1649**	1	HOUSING	
	4	1	**4T-1701**	1	SPRING	
	5	1	**4T-4511**	1	SLEEVE	
	6	1	**4T-5074**	1	RING-BACKUP	
	7	1	**6V-0852**	2	CAP-DUST	
M	8	1	**8T-4145**	4	BOLT (M6X1-THD)	
	10	1	**100-8012**	2	BODY	
	11	1	*164-5567*	2	FITTING GP-COUPLING	
					(EACH INCLUDES)	
		1	**6V-3965**	1	FITTING AS	
		1	**3J-1907**	1	SEAL-O-RING	
	12	1	**207-7434**	2	RETAINER	
	13	1	**207-7435**	2	RETAINER	
	14	1	**207-7437**	2	SPRING	
	19	1	**242-7955**	2	HOUSING AS	
Y	20	1	**257-0267**	2	VALVE GP-SOLENOID (RIPPER RAISE)	656
	21	1	**100-8010**	3	VALVE-CHECK (RIPPER RAISE)	
	22	1	**100-8011**	1	PLUG	
	23	1	*150-3065*	1	ADAPTER AS	
		1	**6V-0484**	1	ADAPTER-O-RING	
		1	**3J-1907**	1	SEAL-O-RING	
	24	1	**173-3993**	2	PLUG AS	
					(EACH INCLUDES)	
		1	**9S-8001**	1	PLUG	
		1	**4J-7533**	1	SEAL-O-RING	
	26	1	**187-9630**	2	SEAL-O-RING	
	27	1	**1H-1023**	4	SEAL-O-RING	
Y	28	1	**260-8590**	1	VALVE GP-SHUTTLE (RIPPER RAISE)	649
	29	1	**4K-1388**	2	SEAL-O-RING	
	30	1	**4T-5073**	2	RING-BACKUP	
	31	1	**5M-2057**	1	SEAL-O-RING	
	32	1	**6V-5556**	1	SEAL-O-RING	
	33	1	**7J-9933**	2	SEAL-O-RING	
	34	1	**7M-8485**	1	SEAL-O-RING	
M	35	1	**8T-4185**	2	BOLT (M10X1.5X50-MM)	
	36	1	**9J-8126**	1	PLUG-ORIFICE	
	37	1	**9X-8256**	4	WASHER (6.6X12X2-MM THK)	

B-USE AS REQUIRED
M-METRIC PART
Y-SEPARATE ILLUSTRATION

214-1082 VALVE GP-CONTROL *(contd.)* i02194982

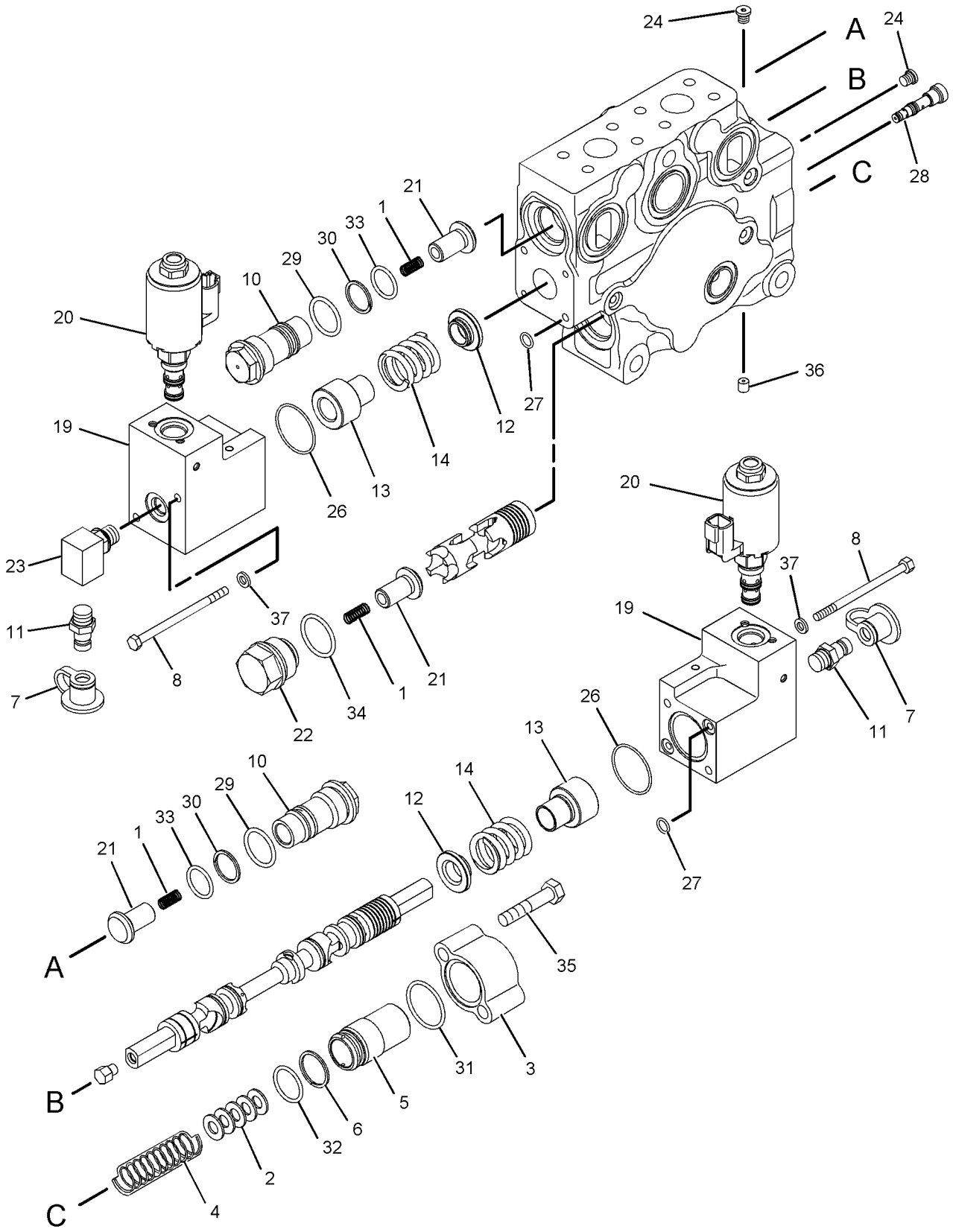

GRAPHIC #1 **<END>** g01114351

214-1083 VALVE GP-CONTROL—RIPPER TIP

S/N: RJS1-UP

PART OF 214-1079 VALVE GP-BANK 4

SMCS-5051 **i02195472**

NOTE	REF NO	GRAPHIC REF	PART NUMBER	QTY	PART NAME 1 2 3 4 5 6 (PRODUCT LEVEL)	SEE PAGE
	1	1	**2S-2596**	2	SPRING	
B	2	1	**4B-4278**	5	WASHER (10.2X20.5X1.6-MM THK)	
	3	1	**4T-1649**	1	HOUSING	
	4	1	**4T-1701**	1	SPRING	
	5	1	**4T-4511**	1	SLEEVE	
	6	1	**4T-5074**	1	RING-BACKUP	
	7	1	**6V-0852**	2	CAP-DUST	
M	8	1	**8T-4145**	4	BOLT (M6X1-THD)	
	10	1	**100-8012**	1	BODY	
	11	1	*164-5567*	2	FITTING GP-COUPLING	
					(EACH INCLUDES)	
		1	**3J-1907**	1	SEAL-O-RING	
		1	**6V-3965**	1	FITTING AS	
	12	1	**175-0453**	1	VALVE	
	13	1	**207-7434**	2	RETAINER	
	14	1	**207-7435**	2	RETAINER	
	15	1	**207-7437**	2	SPRING	
	20	1	**242-7955**	2	HOUSING AS	
Y	21	1	**257-0267**	2	VALVE GP-SOLENOID (RIPPER TIP)	656
	22	1	**100-8010**	1	VALVE-CHECK (RIPPER TIP)	
	23	1	**100-8011**	1	PLUG	
Y	24	1	**116-1895**	1	VALVE GP-RELIEF (RIPPER TIP)	646
	25	1	*150-3065*	1	ADAPTER AS	
		1	**3J-1907**	1	SEAL-O-RING	
		1	**6V-0484**	1	ADAPTER-O-RING	
	26	1	**173-3993**	2	PLUG AS	
					(EACH INCLUDES)	
		1	**4J-7533**	1	SEAL-O-RING	
		1	**9S-8001**	1	PLUG	
	28	1	**187-9630**	2	SEAL-O-RING	
	29	1	**1H-1023**	4	SEAL-O-RING	
Y	30	1	**260-8590**	1	VALVE GP-SHUTTLE (RIPPER TIP)	649
	31	1	**4K-1388**	1	SEAL-O-RING	
	32	1	**4T-5073**	1	RING-BACKUP	
	33	1	**5M-2057**	1	SEAL-O-RING	
	34	1	**6V-5556**	1	SEAL-O-RING	
	35	1	**7J-9933**	1	SEAL-O-RING	
	36	1	**7M-8485**	1	SEAL-O-RING	
M	37	1	**8T-4185**	2	BOLT (M10X1.5X50-MM)	
	38	1	**9J-8126**	1	PLUG-ORIFICE	
	39	1	**9X-8256**	4	WASHER (6.6X12X2-MM THK)	

B-USE AS REQUIRED
M-METRIC PART
Y-SEPARATE ILLUSTRATION

214-1083 VALVE GP-CONTROL *(contd.)* i02195472

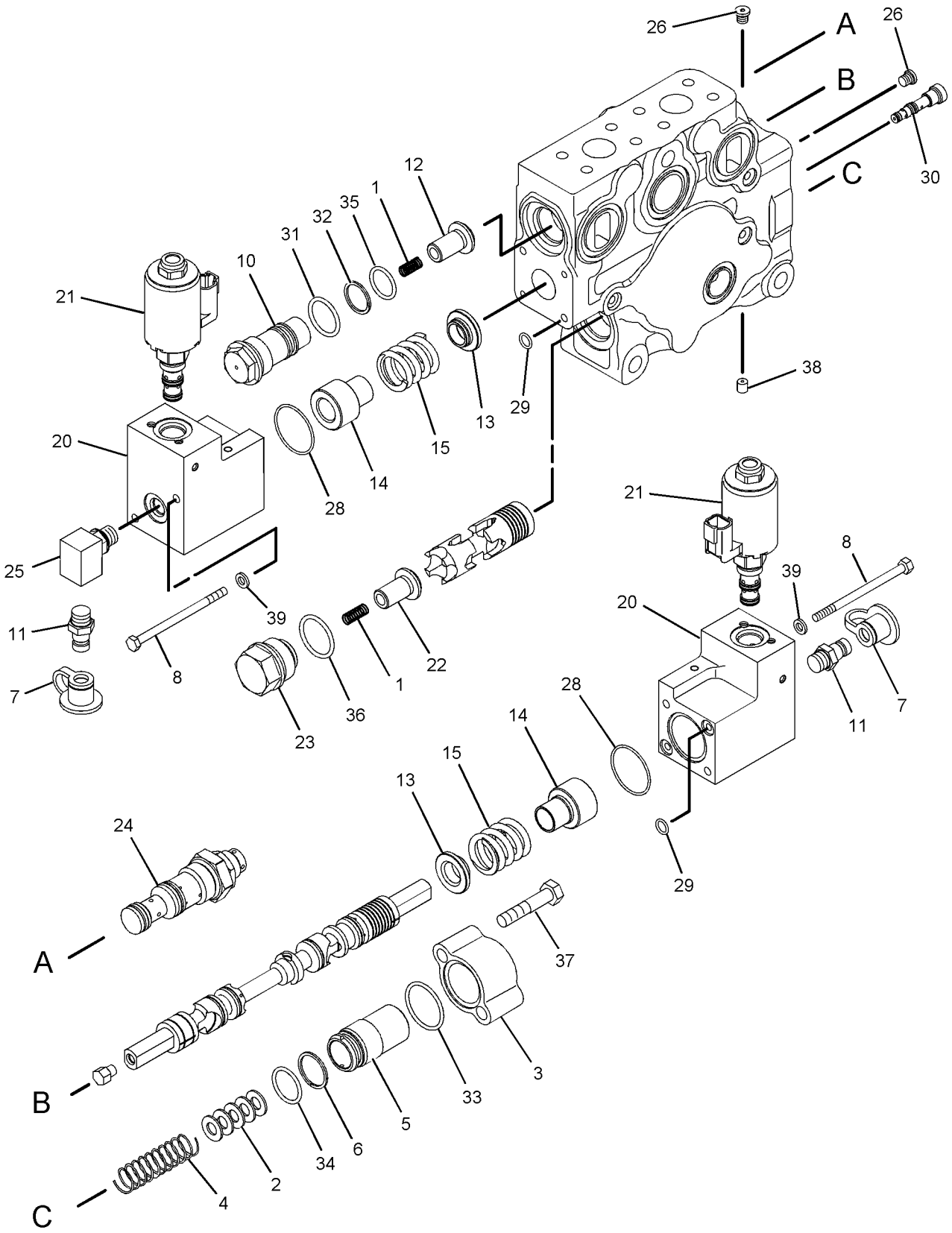

GRAPHIC #1 **<END>** g01114365

HYDRAULIC SYSTEM

217-4326 VALVE GP-CONTROL—DUAL TILT

S/N: RJS1-UP

PART OF 205-8607 CONTROL AR-DUAL TILT

AN ATTACHMENT

SMCS-5051 **i02252149**

NOTE	REF NO	GRAPHIC REF	PART NUMBER	QTY	PART NAME 1 2 3 4 5 6 (PRODUCT LEVEL)	SEE PAGE
Y	1	1	**3E-9205**	1	VALVE GP-SOLENOID (DUAL TILT)	651
M	2	1	**8T-4196**	16	BOLT (M10X1.5X35-MM)	
	3	1	**8J-8621**	2	SPRING	
	4	1	**9J-1722**	1	RETAINER	
	5	1	**9S-8004**	1	PLUG	
	6	1	**215-2899**	4	BOLT (M10X1.5X45-MM)	
	7	1	**217-3665**	2	COVER	
	8	1	**9S-8001**	4	PLUG	
	9	1	**9X-2027**	4	WASHER (11X18X2-MM THK)	
	10	1	**223-4445**	1	RETAINER	
	11	1	**3J-1907**	1	SEAL-O-RING	
	12	1	**4J-0522**	2	SEAL-O-RING	
	13	1	**4J-7533**	4	SEAL-O-RING	
	14	1	**8C-3205**	6	FLANGE-HALF	
	15	1	**8C-3206**	2	FLANGE-HALF	
	16	1	**8T-4121**	16	WASHER-HARD (11X21X2.5-MM THK)	

M-METRIC PART
Y-SEPARATE ILLUSTRATION

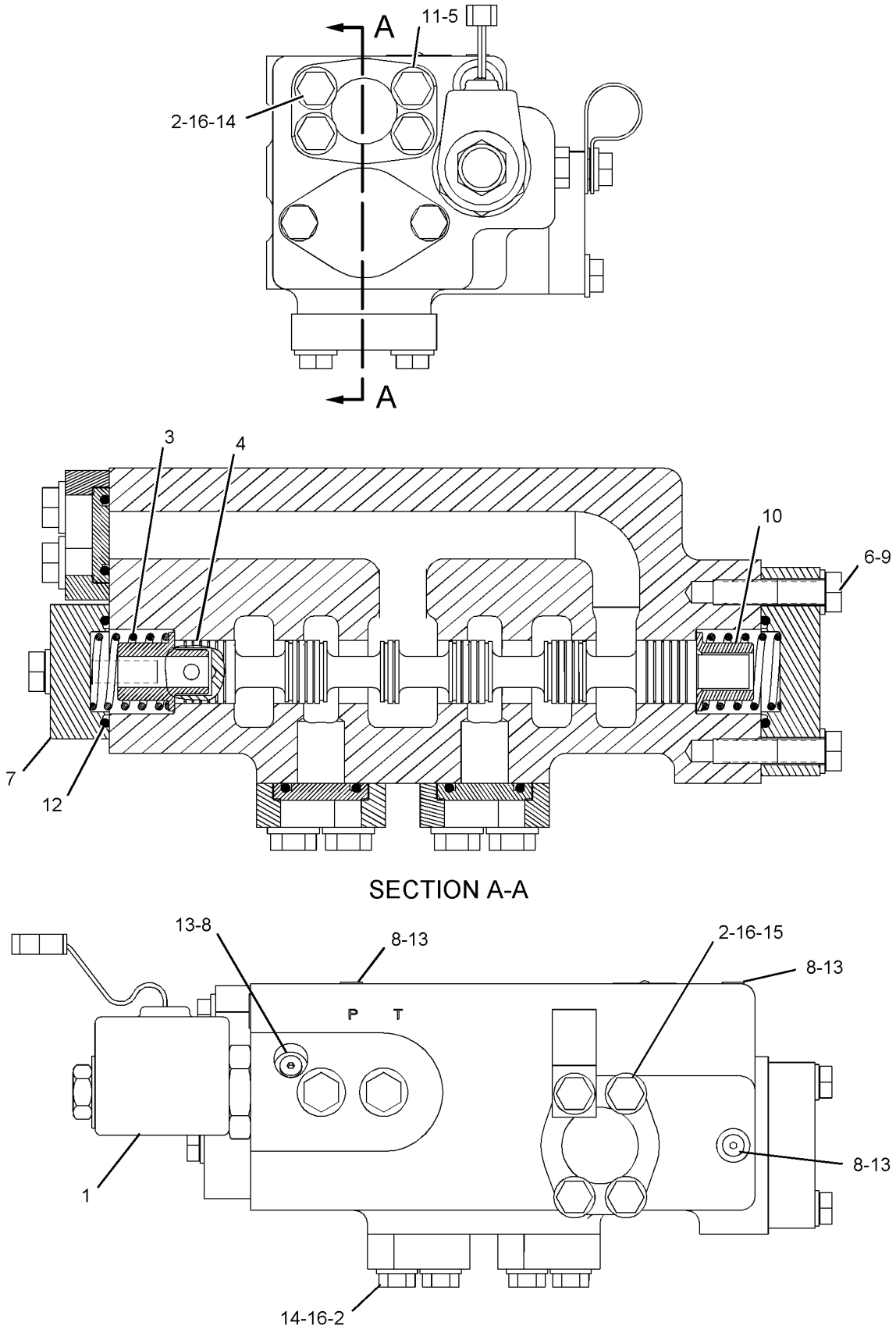

GRAPHIC #1 **<END>** g01021899

223-1094 VALVE GP-CONTROL—IMPLEMENT INLET MANIFOLD

S/N: RJS1-UP

PART OF 211-7817, 214-1079 VALVE GP-BANK 4

ALSO AN ATTACHMENT

SMCS-5051 **i02249432**

NOTE	REF NO	GRAPHIC REF	PART NUMBER	QTY	PART NAME 1 2 3 4 5 6 (PRODUCT LEVEL)	SEE PAGE
Y	1	1	**4T-1008**	1	VALVE GP-RELIEF (CHARGING)	644
Y	2	1	**6E-4139**	1	VALVE GP-RELIEF (MAIN)	645
	3	1	**8J-6815**	1	PLUG-ORIFICE	
	4	1	**223-1093**	1	MANIFOLD-INLET	
	5	1	*148-8336*	1	CONNECTOR AS	
		1	**6V-8636**	1	CONNECTOR	
		1	**3J-1907**	1	SEAL-O-RING	
		1	**6V-8397**	1	SEAL-O-RING	
	6	1	*155-3624*	2	PLUG AS	
					(EACH INCLUDES)	
		1	**9S-4182**	1	PLUG	
		1	**3J-7354**	1	SEAL-O-RING	
	7	1	*164-5605*	1	CONNECTOR AS	
		1	**8T-0076**	1	CONNECTOR	
		1	**3K-0360**	1	SEAL-O-RING	
		1	**6V-8397**	1	SEAL-O-RING	
	8	1	*164-5616*	1	PLUG AS	
		1	**9S-6130**	1	PLUG	
		1	**2S-4078**	1	SEAL-O-RING	
Y	9	1	**4T-5896**	1	VALVE GP-CHECK (INLET MANIFOLD)	619

Y-SEPARATE ILLUSTRATION

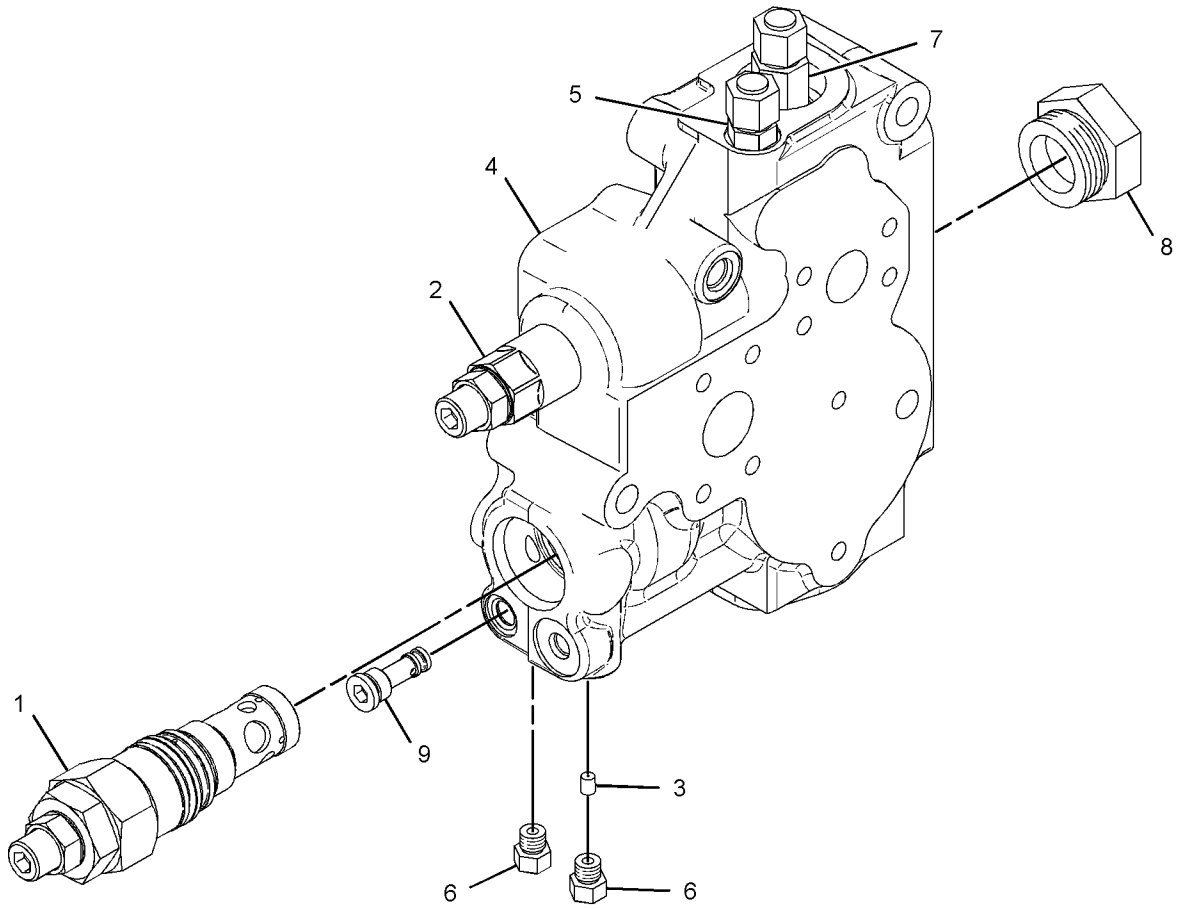

GRAPHIC #1 **<END>** g01037187

119-6114 VALVE GP-FLUSHING—STEERING MOTOR

S/N: RJS1-UP

PART OF 244-5689 ROTATING GP-MOTOR

SMCS-5051, 5066 **i00591895**

NOTE	REF NO	GRAPHIC REF	PART NUMBER	QTY	PART NAME 1 2 3 4 5 6 (PRODUCT LEVEL)	SEE PAGE
	1	1	**119-6109**	1	PLATE	
	2	1	**6E-4100**	1	PIN-FLUSHING	
	3	1	**119-6110**	2	RETAINER	
	4	1	**6E-4102**	2	SPRING	
	5	1	**119-6112**	2	PIN	
	6	1	**119-6113**	2	BUSHING	

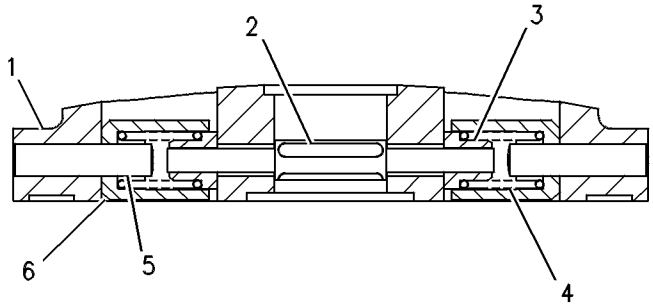

GRAPHIC #1 **<END>** g00246170

170-3357 VALVE GP-PRESSURE REDUCING–
IMPLEMENT PUMP OIL
S/N: RJS1-UP
PART OF 223-8531 MANIFOLD GP-CONTROL

SMCS-5117 **i01492708**

NOTE	REF NO	GRAPHIC REF	PART NUMBER	QTY	PART NAME 1 2 3 4 5 6 (PRODUCT LEVEL)	SEE PAGE
	1	1	**3K-0360**	1	SEAL-O-RING	
	2	1	**161-6149**	1	SEAL-O-RING	
	3	1	**095-1750**	1	SEAL-O-RING	
	4	1	**161-6161**	2	RING-BACKUP	
	5	1	**187-0541**	2	RING-BACKUP	

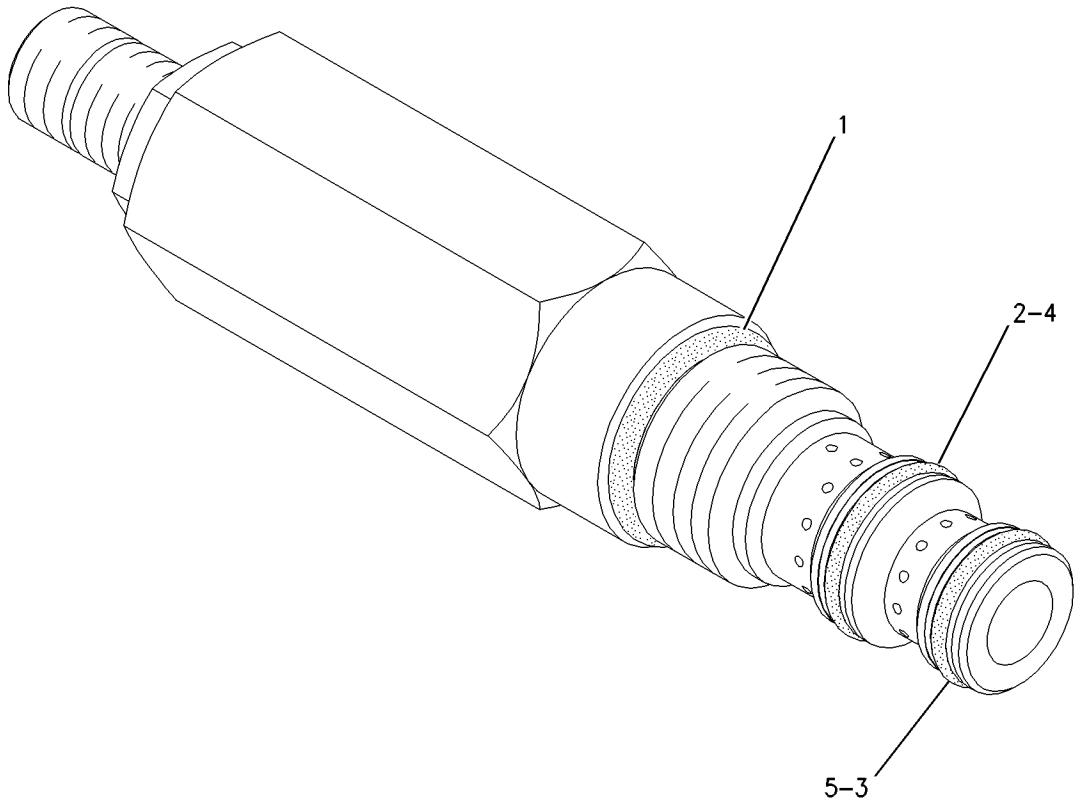

GRAPHIC #1 **<END>** g00777733

HYDRAULIC SYSTEM

6E-4392 VALVE GP-PRESSURE COMPENSATOR–

STEERING PISTON PUMP

S/N: RJS1-UP

PART OF 244-8864 HEAD GP-PUMP

SMCS-5455 **i01895411**

NOTE	REF NO	GRAPHIC REF	PART NUMBER	QTY	PART NAME 1 2 3 4 5 6 (PRODUCT LEVEL)	SEE PAGE
M	1	1	**6E-4401**	1	SETSCREW-ADJUSTMENT	
	2	1	**6V-8351**	1	SEAL-O-RING	
M	3	1	**6E-1607**	1	LOCKNUT-SEALING	
	4	1	**6V-5586**	1	SEAL-O-RING	

M-METRIC PART

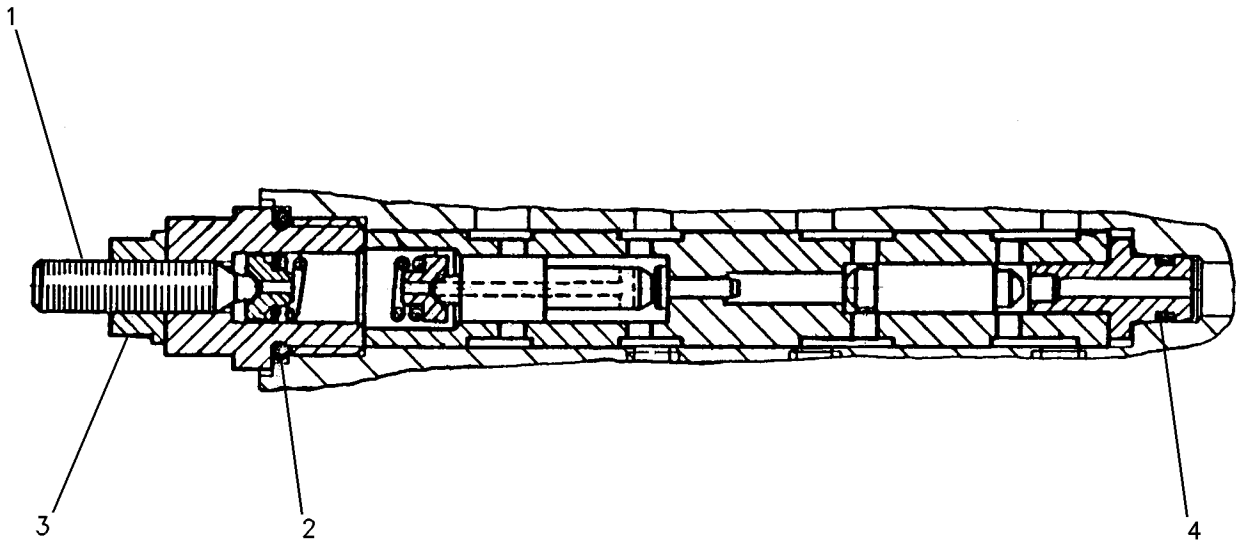

GRAPHIC #1 **<END>** g00986174

176-7520 VALVE GP-PUMP CONTROL–PRESSURE COMPENSATOR–IMPLEMENT

S/N: RJS1-UP

PART OF 214-1098 PUMP GP-PISTON

SMCS-5455 **i02269486**

NOTE	REF NO	GRAPHIC REF	PART NUMBER	QTY	PART NAME 1 2 3 4 5 6 (PRODUCT LEVEL)	SEE PAGE
JY	1	1	**194-3286**	1	PLUG GP-CONTROL VALVE (PRESSURE COMPENSATOR)	588
	2	1	**194-3285**	1	RETAINER	
J	3	1	**194-3287**	1	PLUG	
	4	1	**194-3288**	1	SPRING	
	5	1	**194-3289**	1	SPRING	
J	6	1	**6V-5142**	1	SEAL-O-RING	
					AVAILABLE REPAIR KIT(S):	
J			**191-7607**	1	KIT-VALVE REPAIR (PRESSURE COMPENSATOR VALVE)	
					(INCLUDES PLUG ASSEMBLIES, SEAL-O-RINGS, RING-BACKUP, & PARTS MARKED J)	

J-KIT MARKED J SERVICES PARTS MARKED J
Y-SEPARATE ILLUSTRATION

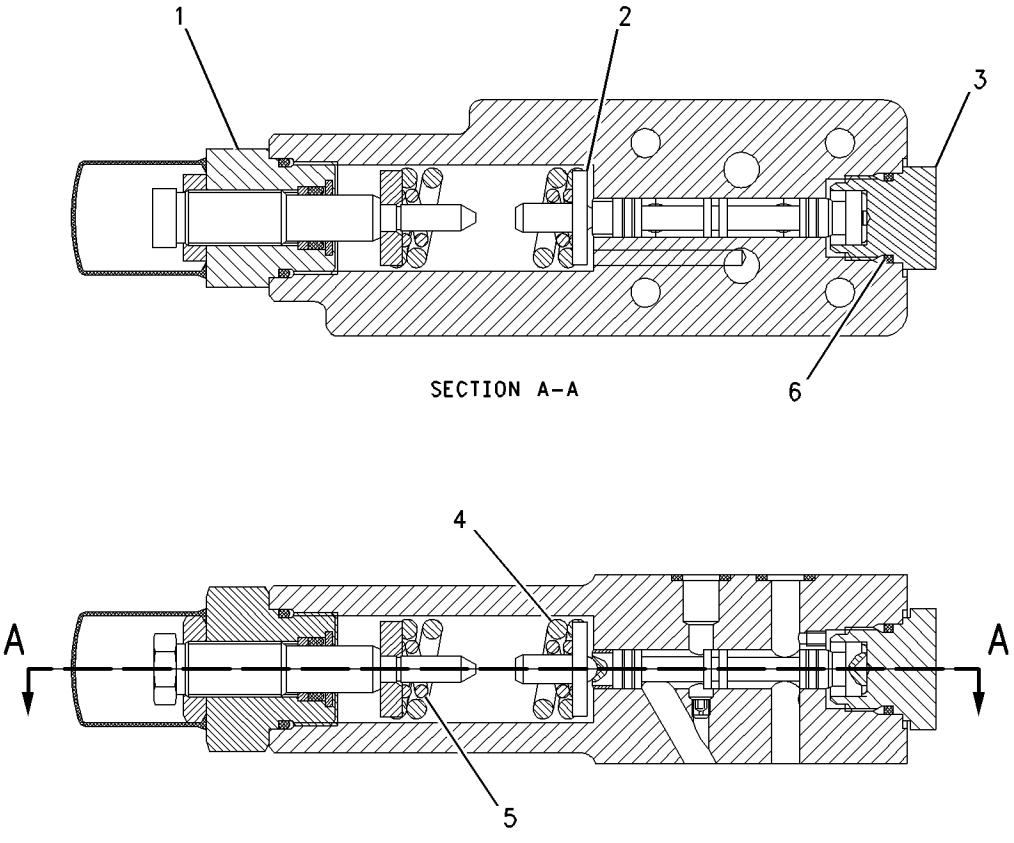

GRAPHIC #1 **<END>** g00751359

194-3899 VALVE GP-PUMP CONTROL–FLOW COMPENSATOR–IMPLEMENT

S/N: RJS1-UP

PART OF 214-1098 PUMP GP-PISTON

SMCS-5455 **i02269488**

NOTE	REF NO	GRAPHIC REF	PART NUMBER	QTY	PART NAME 1 2 3 4 5 6 (PRODUCT LEVEL)	SEE PAGE
JY	1	1	**194-3286**	1	PLUG GP-CONTROL VALVE (FLOW COMPENSATOR)	588
	2	1	**194-3285**	1	RETAINER	
J	3	1	**191-7600**	1	PLUG	
	4	1	**191-7605**	1	SPRING (10.9-MM OD)	
	5	1	**194-3279**	1	SPRING	
J	6	1	**6V-5142**	1	SEAL-O-RING	
	7	1	**194-3280**	2	PLUG	
	8	1	**194-3284**	1	WASHER	
					AVAILABLE REPAIR KIT(S):	
J			**191-7608**	1	KIT-VALVE REPAIR (FLOW COMPENSATOR) (IMPLEMENT PUMP)	
					(INCLUDES PLUG ASSEMBLIES, SEAL-O RINGS, RING-BACKUP, & PARTS MARKED J)	

J-KIT MARKED J SERVICES PARTS MARKED J
Y-SEPARATE ILLUSTRATION

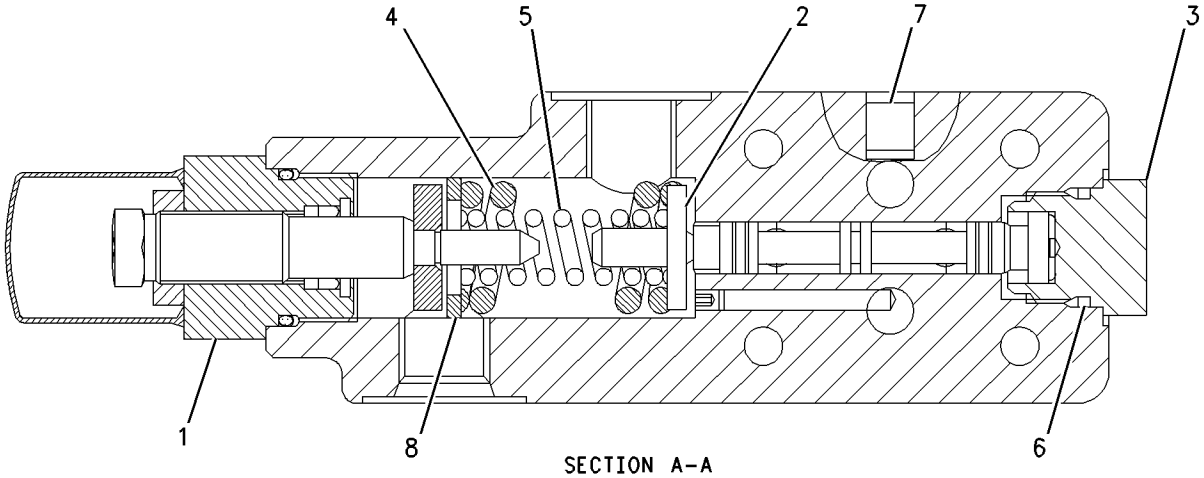

SECTION A-A

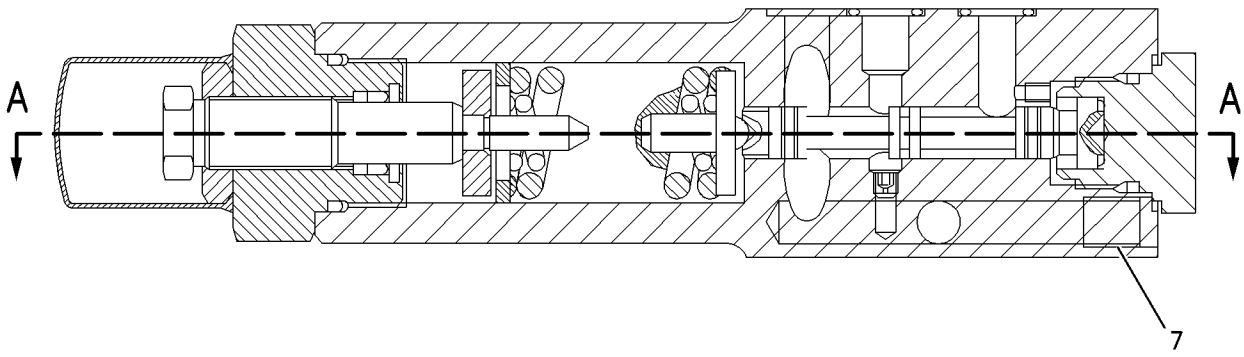

GRAPHIC #1 **<END>** g00751414

229-0890 VALVE GP-PUMP CONTROL–HYDRAULIC FAN

S/N: RJS1-UP

PART OF 214-1097 PUMP GP-PISTON

SMCS-5455 **i02185587**

NOTE	REF NO	GRAPHIC REF	PART NUMBER	QTY	PART NAME 1 2 3 4 5 6 (PRODUCT LEVEL)	SEE PAGE
	1	1	**192-4370**	1	SOLENOID GP-PROPORTIONAL (12-VDC) (HYDRAULIC FAN)	
	2	1	**213-9242**	1	SEAL-O-RING	
	3	1	**213-9247**	1	SEAL-O-RING	
	4	1	**033-6043**	1	SEAL-O-RING	
	5	1	**6V-5049**	1	SEAL-O-RING	
	6	1	**033-6033**	1	SEAL-O-RING	

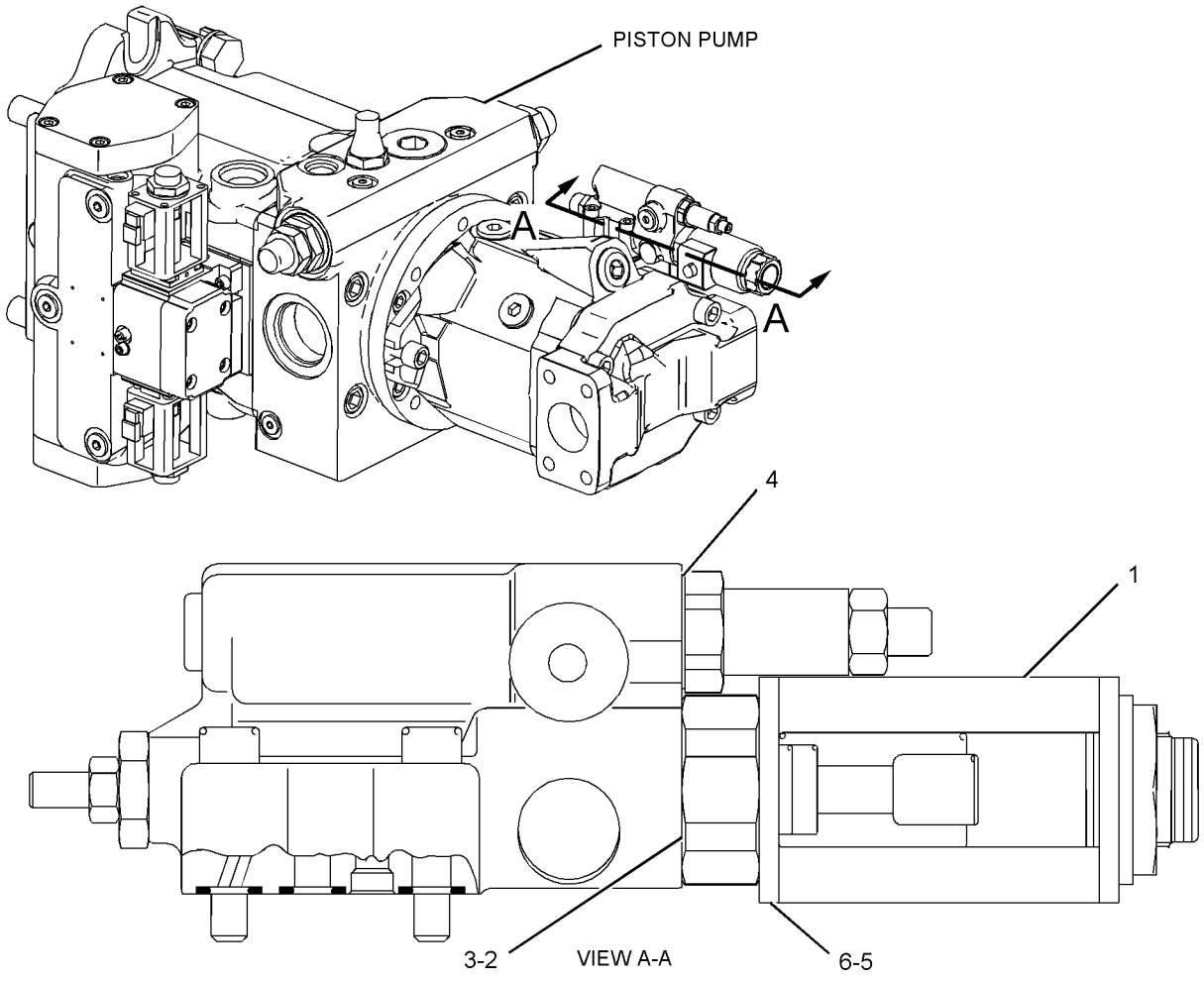

GRAPHIC #1 **<END>** g01106358

HYDRAULIC SYSTEM

244-8860 VALVE GP-PUMP CONTROL–STEERING

S/N: RJS1-UP

PART OF 214-1093 PUMP GP-PISTON

SMCS-5455 **i02268607**

NOTE	REF NO	GRAPHIC REF	PART NUMBER	QTY	PART NAME 1 2 3 4 5 6 (PRODUCT LEVEL)	SEE PAGE
	1	1	**247-4988**	1	HOUSING AS	
	2	1	**192-4370**	2	SOLENOID GP-PROPORTIONAL (12-VDC) (STEERING)	
	3	1	**196-4250**	2	SPACER (37X37X13-MM THK)	
	4	1	**2Y-2347**	1	SEAL-O-RING	
	5	1	**085-7539**	2	SEAL-O-RING	
	6	1	**247-7625**	1	SPRING	
	7	1	**247-7624**	1	GASKET	
M	8	1	**8T-2922**	4	BOLT-SOCKET HEAD (M6X1X65-MM)	
	9	1	**6M-5062**	3	SEAL-O-RING	
M	10	1	**196-9444**	8	BOLT-SOCKET HEAD (M5X0.8X10-MM)	
	11	1	**161-6149**	2	SEAL-O-RING	
	12	1	**6V-5586**	1	SEAL-O-RING	
	13	1	**196-4254**	2	SPRING	
	14	1	**202-6535**	1	PIN	
M	15	1	**8T-0269**	2	BOLT-SOCKET HEAD (M6X1X20-MM)	

M-METRIC PART

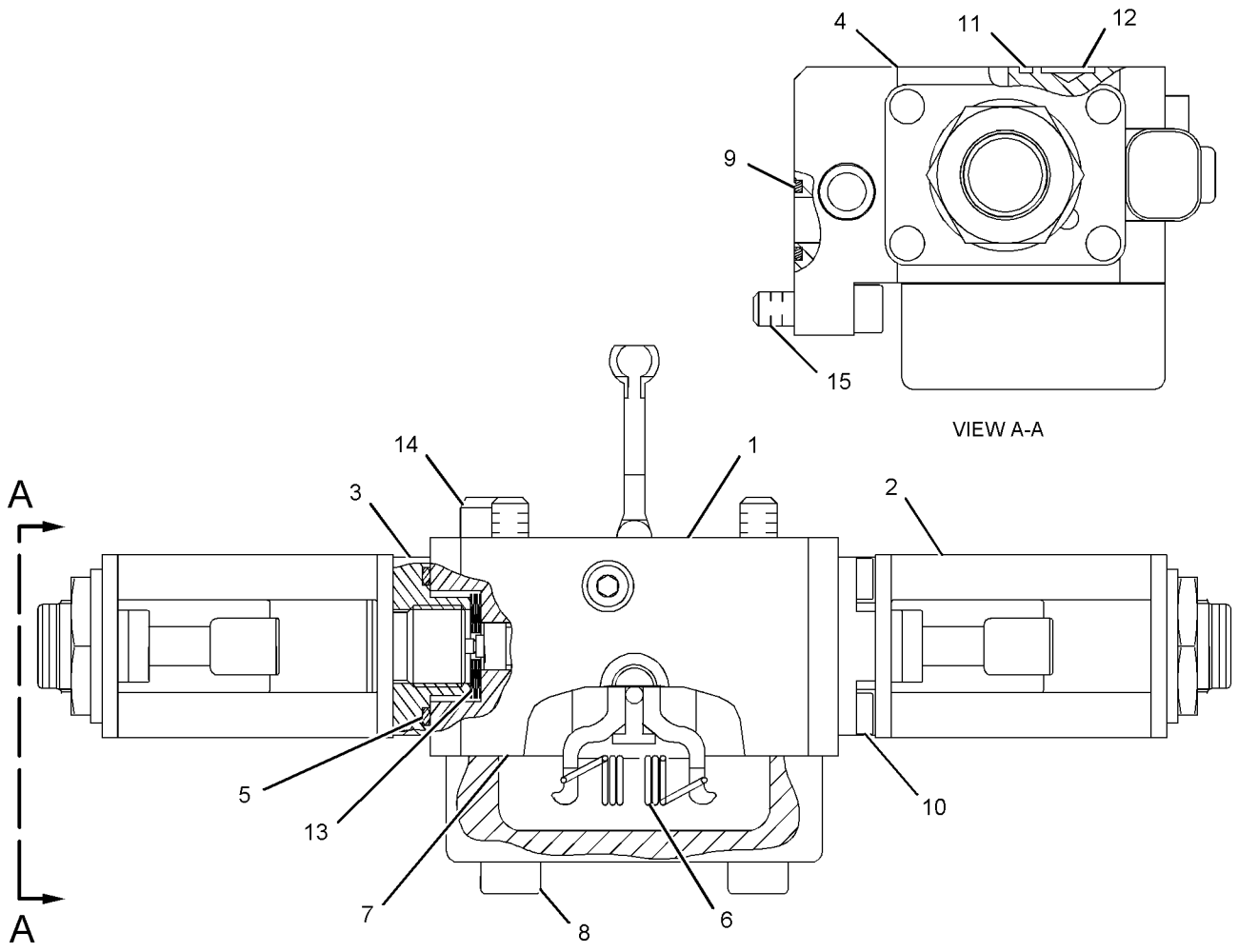

GRAPHIC #1 **<END>** g01113025

244-8862 VALVE GP-PUMP CONTROL–STEERING

S/N: RJS1-UP

PART OF 214-1093 PUMP GP-PISTON

SMCS-5455 **i02250074**

NOTE	REF NO	GRAPHIC REF	PART NUMBER	QTY	PART NAME 1 2 3 4 5 6 (PRODUCT LEVEL)	SEE PAGE
M	1	1	**6V-5192**	8	BOLT-SOCKET HEAD (M8X1.25X30-MM)	
	2	1	**6V-8002**	2	SEAL-O-RING	
	3	1	**119-0942**	1	NUT (M16X1.5-MM THD)	
	4	1	**245-3371**	1	COVER	
	5	1	**245-3375**	1	COVER	
Y	6	1	**247-3005**	1	ACTUATOR GP-PUMP (STEERING)	501
	7	1	**245-3530**	2	RING-WEAR	
	8	1	**246-0714**	2	RING-SEAL	

M-METRIC PART
Y-SEPARATE ILLUSTRATION

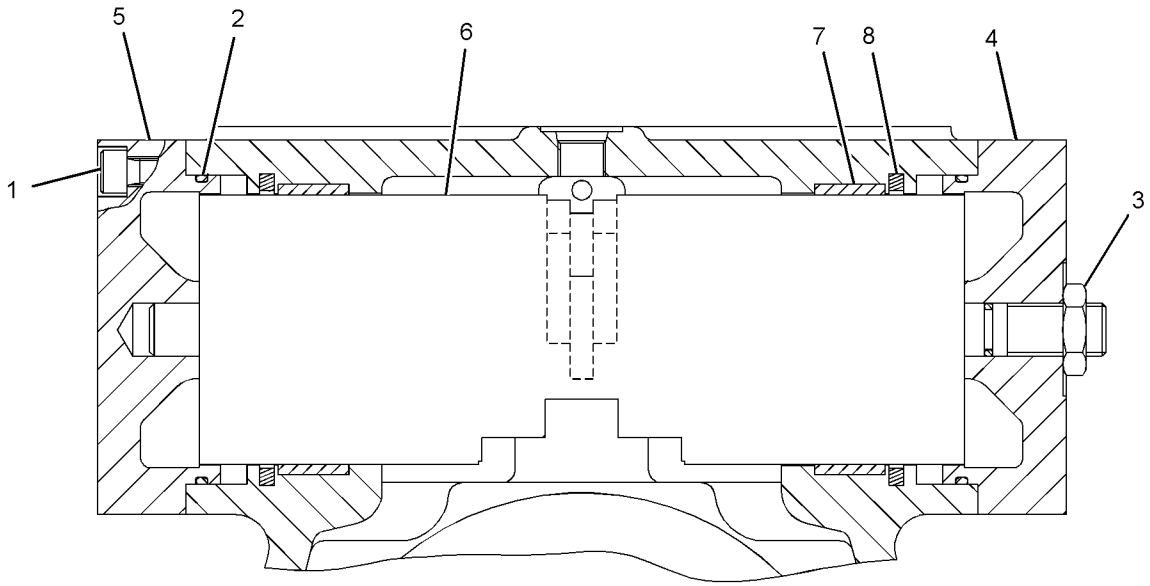

GRAPHIC #1 **<END>** g01114824

HYDRAULIC SYSTEM

217-4327 VALVE GP-QUICK-DROP

S/N: RJS1-UP

PART OF 205-8602 HYDRAULIC AR

SMCS-5110 **i02250085**

NOTE	REF NO	GRAPHIC REF	PART NUMBER	QTY	PART NAME 1 2 3 4 5 6 (PRODUCT LEVEL)	SEE PAGE
Y	5	1	**152-8346**	1	VALVE GP-SOLENOID (QUICK DROP)	653
	6	1	**1N-5999**	3	PLUG	
	7	1	**1P-3705**	2	SEAL-RECTANGULAR	
	8	1	**3J-1907**	2	SEAL-O-RING	
	9	1	**3P-0812**	1	SPRING	
	10	1	**4J-0520**	4	SEAL-O-RING	
	11	1	**4J-7533**	2	SEAL-O-RING	
	12	1	**5H-4019**	4	COVER	
	13	1	**5P-6719**	2	PLUG	
	15	1	**6E-4812**	1	SPRING (OUTER)	
	16	1	**6E-5502**	1	SPRING (INNER)	
	17	1	**6E-5503**	2	COVER	
	18	1	**7J-0204**	5	SEAL-O-RING	
	19	1	**8C-3206**	8	FLANGE-HALF	
	20	1	**8T-4121**	16	WASHER-HARD (11X21X2.5-MM THK)	
M	21	1	**8T-4139**	8	BOLT (M12X1.75X30-MM)	
M	22	1	**8T-4196**	16	BOLT (M10X1.5X35-MM)	
	23	1	**9S-4180**	1	PLUG	
	24	1	**9S-8001**	1	PLUG	
	25	1	**9S-8007**	2	PLUG	

M-METRIC PART
Y-SEPARATE ILLUSTRATION

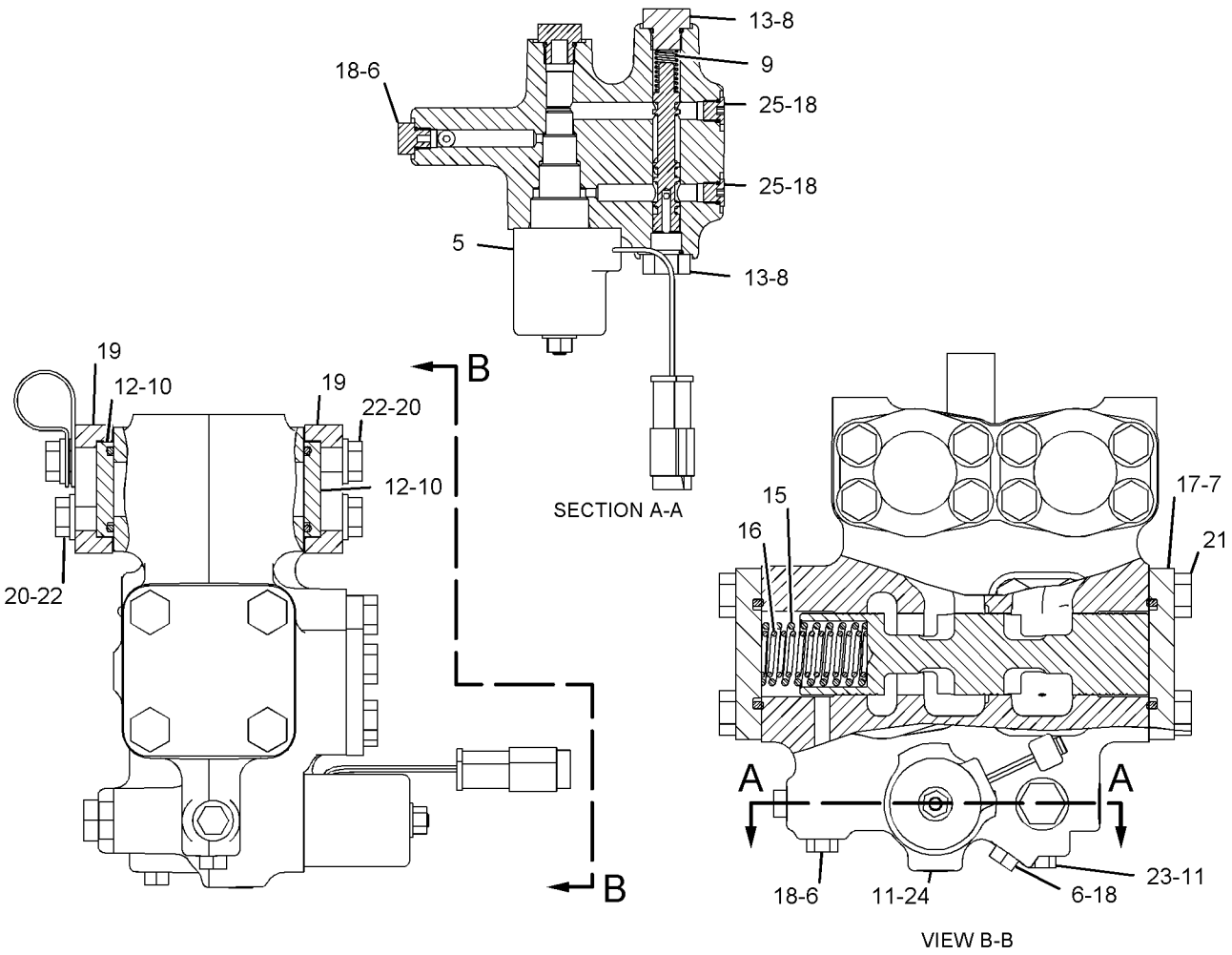

GRAPHIC #1 **<END>** g01038792

HYDRAULIC SYSTEM

4T-1008 VALVE GP-RELIEF–INLET MANIFOLD

S/N: RJS1-UP
PART OF 223-1094 VALVE GP-CONTROL
ALSO AN ATTACHMENT

SMCS-5069, 5117 **i02252212**

NOTE	REF NO	GRAPHIC REF	PART NUMBER	QTY	PART NAME 1 2 3 4 5 6 (PRODUCT LEVEL)	SEE PAGE
	1	1	**6E-5467**	1	PLUG	
	2	1	**7M-8485**	2	SEAL-O-RING	
	3	1	**4T-1009**	1	VALVE GP (MANIFOLD INLET)	
	4	1	**4T-5075**	1	RING-BACKUP	
	5	1	**6V-5393**	1	SEAL-O-RING	
	6	1	**4T-1011**	1	RING-SEAL	
	7	1	**5F-7054**	1	SEAL-O-RING	
	8	1	**4T-1005**	1	SPRING	
	9	1	**3K-0360**	1	SEAL-O-RING	
	10	1	**9X-6395**	1	NUT (3/4-16-THD)	
	11	1	**6E-1835**	1	RETAINER AS	
	12	1	**5S-7001**	1	SPACER (7.54X14.15X0.9-MM THK)	

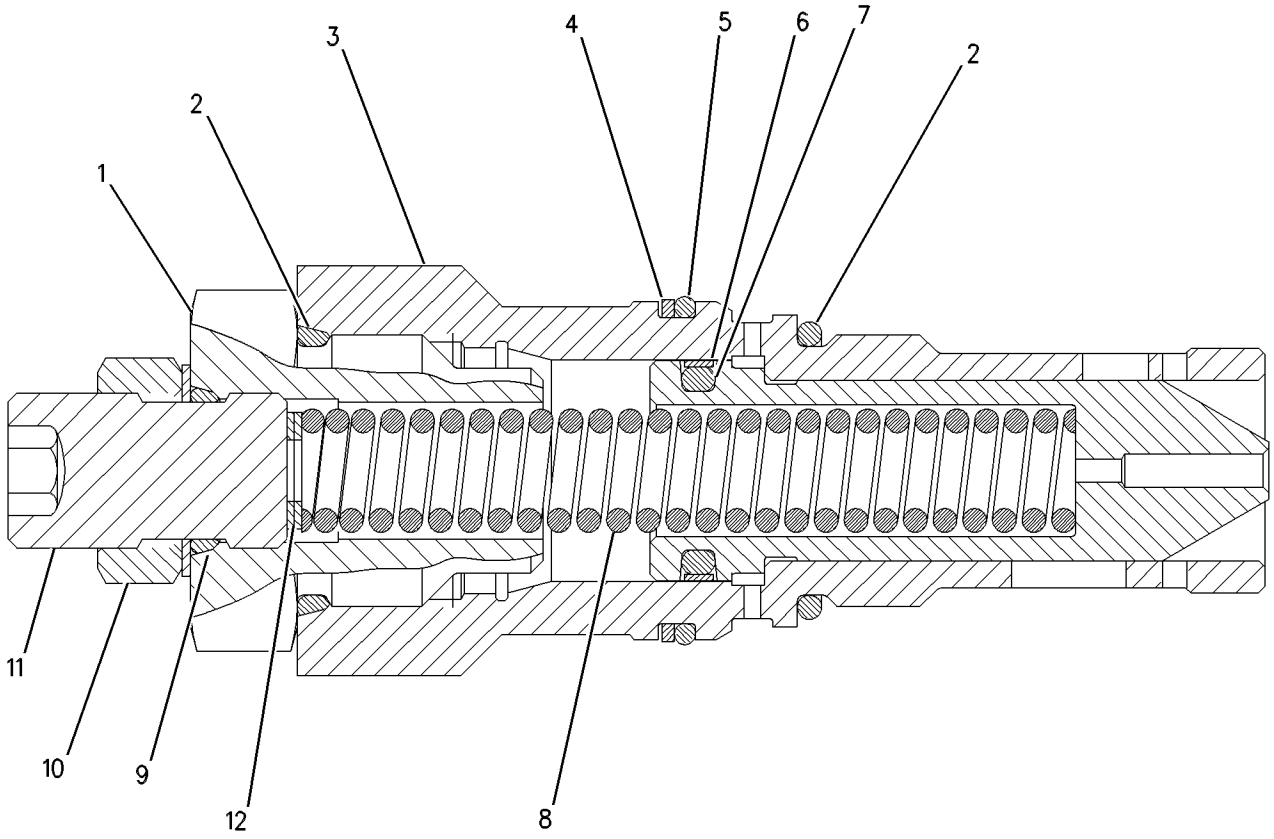

GRAPHIC #1 **<END>** g00546393

6E-4139 VALVE GP-RELIEF–INLET MANIFOLD

S/N: RJS1-UP
PART OF 223-1094 VALVE GP-CONTROL
ALSO AN ATTACHMENT

SMCS-5069, 5117 **i00591467**

NOTE	REF NO	GRAPHIC REF	PART NUMBER	QTY	PART NAME 1 2 3 4 5 6 (PRODUCT LEVEL)	SEE PAGE
	1	1	**6E-1835**	1	RETAINER AS	
	2	1	**9X-6395**	1	NUT (3/4-16-THD)	
	3	1	**3K-0360**	2	SEAL-O-RING	
	4	1	**4T-4942**	1	SPRING	
	5	1	**7J-9933**	1	SEAL-O-RING	
	6	1	**4T-7571**	1	PLATE	
	7	1	**6J-6439**	1	VALVE-POPPET	

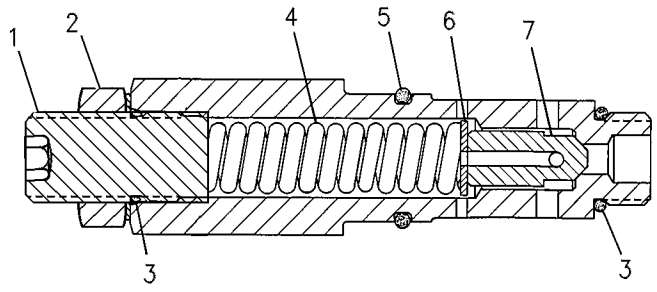

GRAPHIC #1 **<END>** g00239923

HYDRAULIC SYSTEM

116-1895 VALVE GP-RELIEF–RIPPER TIP

S/N: RJS1-UP

PART OF 214-1083 VALVE GP-CONTROL

SMCS-5069, 5117 **i01590908**

NOTE	REF NO	GRAPHIC REF	PART NUMBER	QTY	PART NAME 1 2 3 4 5 6 (PRODUCT LEVEL)	SEE PAGE
	1	1	**4K-1388**	1	SEAL-O-RING	
	2	1	**6E-2140**	1	RETAINER AS	
	3	1	**9T-6963**	2	SPACER	
	4	1	**4T-5073**	1	RING-BACKUP	
	5	1	**7J-9933**	1	SEAL-O-RING	
	6	1	**4T-5072**	1	RING-BACKUP	
	7	1	**4J-5351**	1	SEAL-O-RING	
	8	1	**9T-6043**	1	VALVE	
	9	1	**9T-6960**	1	SPRING	
	10	1	**6V-8371**	1	NUT-HEX	
	11	1	**2M-9780**	1	SEAL-O-RING	

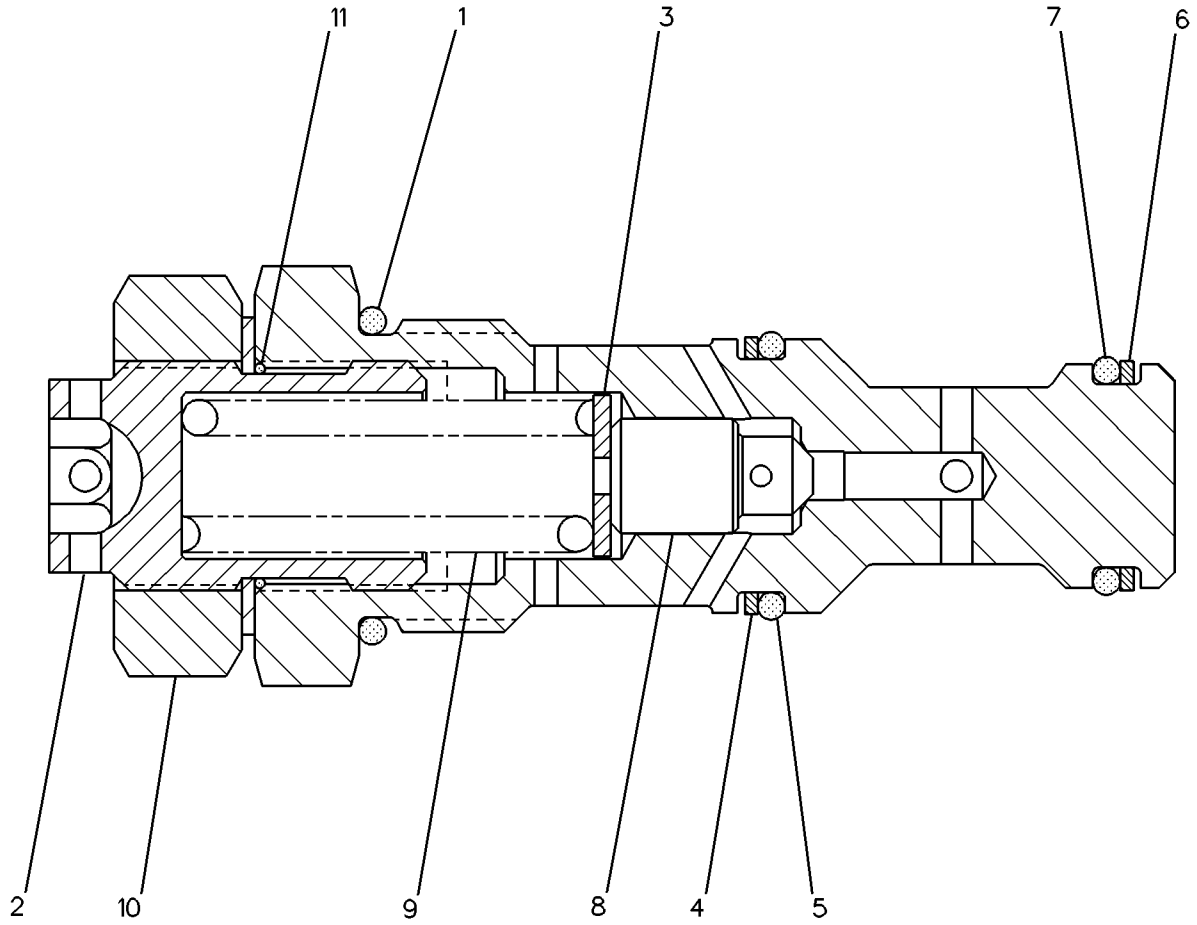

GRAPHIC #1 **<END>** g00130958

121-6649 VALVE GP-RELIEF–BULLDOZER TILT

S/N: RJS1-UP
PART OF 214-1081 VALVE GP-CONTROL
ALSO AN ATTACHMENT

SMCS-5069, 5117 **i01625749**

NOTE	REF NO	GRAPHIC REF	PART NUMBER	QTY	PART NAME 1 2 3 4 5 6 (PRODUCT LEVEL)	SEE PAGE
	1	1	**3J-7354**	1	SEAL-O-RING	
	2	1	**4T-5074**	1	RING-BACKUP	
	3	1	**6V-5556**	1	SEAL-O-RING	
	4	1	**4T-4509**	1	SEAT	
	5	1	**108-5157**	1	VALVE	
	6	1	**4T-1700**	1	SPRING	
	7	1	**3K-0360**	1	SEAL-O-RING	
	8	1	**9X-6395**	1	NUT (3/4-16-THD)	
	9	1	**6E-5200**	1	RETAINER AS	
B	10	1	**096-6166**	3	WASHER-HARD (4.5X9X1-MM THK)	

B-USE AS REQUIRED

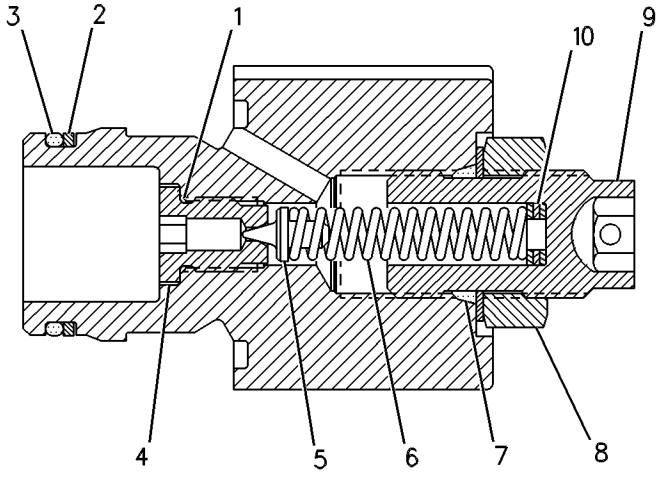

GRAPHIC #1 **<END>** g00263606

HYDRAULIC SYSTEM

225-8026 VALVE GP-RELIEF–IMPLEMENT PUMP OIL

S/N: RJS1-UP

PART OF 223-8531 MANIFOLD GP-CONTROL

SMCS-5069, 5117 **i01951099**

NOTE	REF NO	GRAPHIC REF	PART NUMBER	QTY	PART NAME 1 2 3 4 5 6 (PRODUCT LEVEL)	SEE PAGE
J	1	1	**161-6149**	1	SEAL-O-RING	
J	2	1	**161-6161**	2	RING-BACKUP	
J	3	1	**2M-9780**	1	SEAL-O-RING	
					AVAILABLE REPAIR KIT(S):	
J			**133-5545**	1	KIT-SEAL (RELIEF VALVE)	
J-KIT MARKED J SERVICES PARTS MARKED J						

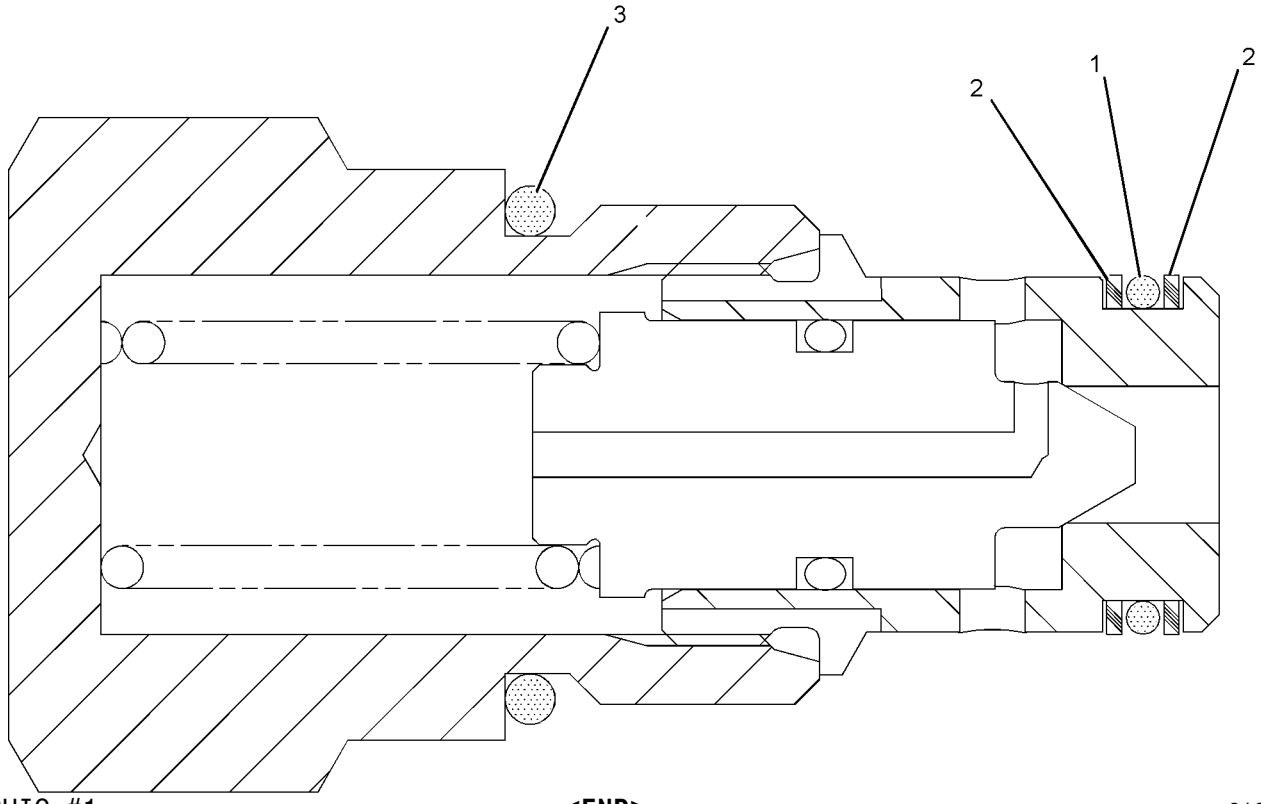

GRAPHIC #1 **<END>** g01019745

260-8590 VALVE GP-SHUTTLE–BULLDOZER LIFT–BULLDOZER TILT–RIPPER RAISE–RIPPER TIP–WINCH

S/N: RJS1-UP

PART OF 214-1080, 214-1081, 214-1082, 214-1083 VALVE GP-CONTROL, 211-7816 VALVE GP-WINCH CONTROL

ALSO AN ATTACHMENT

SMCS-5079 **i02265243**

NOTE	REF NO	GRAPHIC REF	PART NUMBER	QTY	PART NAME 1 2 3 4 5 6 (PRODUCT LEVEL)	SEE PAGE
J	1	1	**3J-7354**	1	SEAL-O-RING	
J	2	1	**9N-1756**	1	SEAL-O-RING	
J	3	1	**3H-0442**	1	SEAL-O-RING	
					AVAILABLE REPAIR KIT(S):	
J			**240-7356**	1	KIT-SEAL (SHUTTLE VALVE)	
					(INCLUDES BACKUP RINGS & PARTS MARKED J)	

J-KIT MARKED J SERVICES PARTS MARKED J

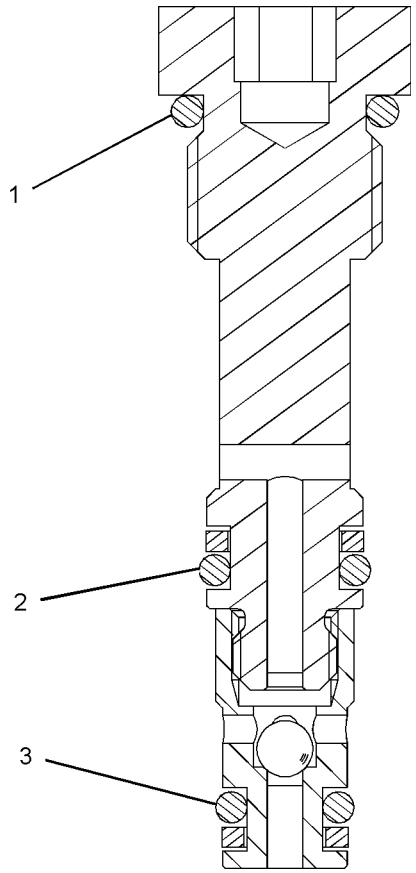

GRAPHIC #1 **<END>** g01018080

3E-8575 VALVE GP-SOLENOID—HYDRAULIC PIN PULLER

S/N: RJS1-UP
PART OF 188-6140 VALVE & MTG GP-CONTROL
AN ATTACHMENT

SMCS-5479 **i01896778**

NOTE	REF NO	GRAPHIC REF	PART NUMBER	QTY	PART NAME 1 2 3 4 5 6 (PRODUCT LEVEL)	SEE PAGE
	1	1	**6T-3382**	1	CARTRIDGE AS	
	2	1	**160-5843**	1	WASHER (16.8X38.1X.5-MM THK)	
	3	1	**157-2284**	1	LOCKNUT-SPECIAL (5/8-18-THD)	
	4	1	**160-5844**	1	WASHER-SPRING (16.3X31.5X1.85-MM THK)	
	5	1	**3E-8581**	1	COIL AS	
	6	1	**102-8804**	1	KIT-RECEPTACLE (4-PIN)	
					(INCLUDES RECEPTACLE AS & WEDGE)	
	7	1	**8T-8729**	4	PIN-CONNECTOR	
	8	1	**1S-9593**	2	STRAP-CABLE	
	9	1	**3E-3377**	1	WEDGE-RECEPTACLE LOCK (4-PIN)	
					AVAILABLE REPAIR KIT(S):	
			126-5948	1	KIT-SEAL (SOLENOID VALVE)	
					(INCLUDES SEAL-O-RINGS & RING-BACKUPS)	

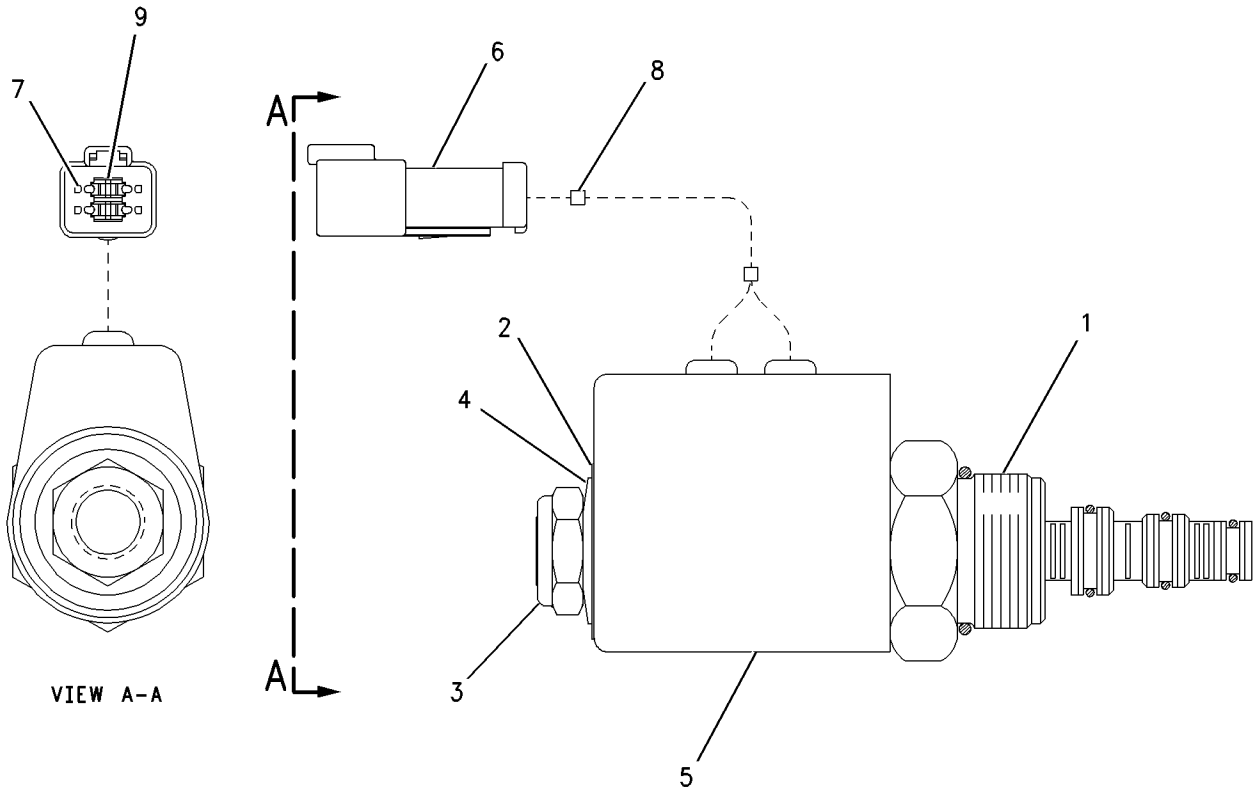

GRAPHIC #1 **<END>** g00623320

3E-9205 VALVE GP-SOLENOID—DUAL TILT

S/N: RJS1-UP
24 VOLT
PART OF 217-4326 VALVE GP-CONTROL
AN ATTACHMENT

SMCS-5479 **i02202816**

NOTE	REF NO	GRAPHIC REF	PART NUMBER	QTY	PART NAME 1 2 3 4 5 6 (PRODUCT LEVEL)	SEE PAGE
	1	1	**6T-9244**	1	CARTRIDGE AS	
	2	1	**3E-8581**	1	COIL AS	
	3	1	**102-8804**	1	KIT-RECEPTACLE (4-PIN)	
					(INCLUDES RECEPTACLE AS & WEDGE)	
		1	**3E-3377**	1	WEDGE-RECEPTACLE LOCK (4-PIN)	
		1	**186-3735**	4	PIN-CONNECTOR	
	4	1	**1S-9593**	2	STRAP-CABLE	
	5	1	**157-2284**	1	LOCKNUT-SPECIAL (5/8-18-THD)	
	6	1	**160-5843**	1	WASHER (16.8X38.1XO.5-MM THK)	
	7	1	**160-5844**	1	WASHER-SPRING (16.3X31.5X1.85-MM THK)	
					AVAILABLE REPAIR KIT(S):	
			126-5948	1	KIT-SEAL (SOLENOID VALVE)	
					(INCLUDES SEAL-O-RINGS & RING-BACKUPS)	

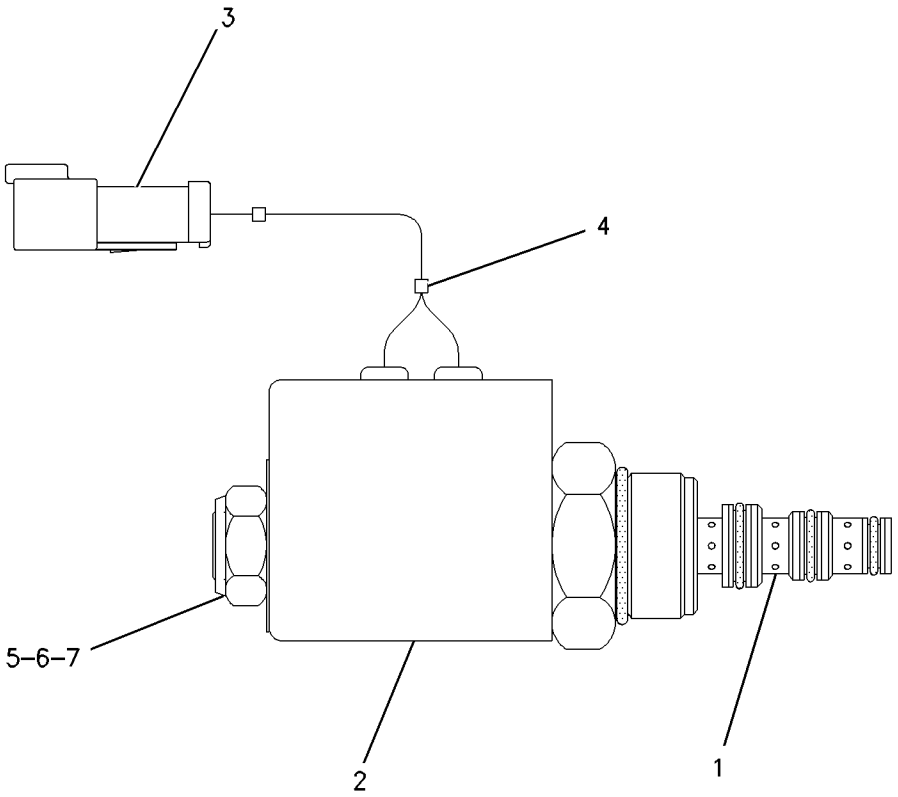

GRAPHIC #1 **<END>** g00657410

152-8340 VALVE GP-SOLENOID–HYDRAULIC FAN SPEED CONTROL

S/N: RJS1-UP
24-VOLT
PART OF 229-1466 MANIFOLD GP-CONTROL
AN ATTACHMENT

SMCS-5479 **i02235947**

NOTE	REF NO	GRAPHIC REF	PART NUMBER	QTY	PART NAME 1 2 3 4 5 6 (PRODUCT LEVEL)	SEE PAGE
	1	1	**8C-9987**	1	WASHER (8.3X28X2.5-MM THK)	
	2	1	**111-0343**	1	LOCKNUT (5/16-18-THD)	
	3	1	**152-8338**	1	CARTRIDGE AS	
		1	**8C-9987**	1	WASHER (8.3X28X2.5-MM THK)	
		1	**111-0343**	1	LOCKNUT (5/16-18-THD)	
	4	1	**189-0189**	1	COIL AS	
					–OR–	
	5	1	**227-4398**	1	COIL AS	
					(EACH COIL ASSEMBLY INCLUDES)	
	5A	1	**186-3735**	2	PIN-CONNECTOR	
	5B	1	**3E-3365**	1	WEDGE-RECEPTACLE LOCK (2-PIN)	
	5C	1	**102-8802**	1	KIT-RECEPTACLE (2-PIN)	
					(INCLUDES RECEPTACLE AS & WEDGE)	
	5D	1	**1S-9593**	2	STRAP-CABLE	
					AVAILABLE REPAIR KIT(S):	
			197-7701	1	KIT-SEAL (SOLENOID VALVE)	
					(INCLUDES SEALS AND RINGS)	

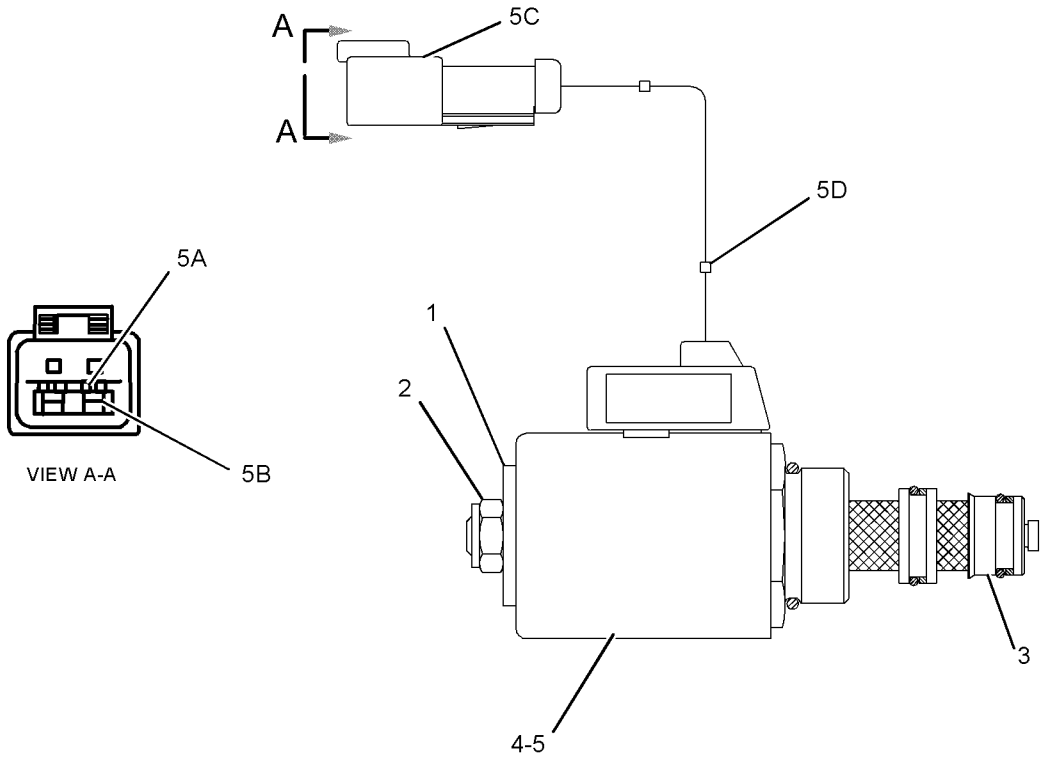

GRAPHIC #1 **<END>** g01127692

152-8346 VALVE GP-SOLENOID–QUICK-DROP

S/N: RJS1-UP
24-VOLT
PART OF 217-4327 VALVE GP-QUICK-DROP

SMCS-5479 **i02257148**

NOTE	REF NO	GRAPHIC REF	PART NUMBER	QTY	PART NAME 1 2 3 4 5 6 (PRODUCT LEVEL)	SEE PAGE
	1	1	**111-0343**	1	LOCKNUT (5/16-18-THD)	
	2	1	**8C-9987**	1	WASHER (8.3X28X2.5-MM THK)	
	3	1	**170-7485**	1	VALVE AS	
		1	**8C-9987**	1	WASHER (8.3X28X2.5-MM THK)	
		1	**111-0343**	1	LOCKNUT (5/16-18-THD)	
	4	1	**141-6787**	1	COIL AS	
		1	**102-8802**	1	KIT-RECEPTACLE (2-PIN)	
					(INCLUDES RECEPTACLE AS AND WEDGE)	
		1	**3E-3365**	1	WEDGE-RECEPTACLE LOCK (2-PIN)	
		1	**8T-8729**	2	PIN-CONNECTOR	
		1	**1S-9593**	2	STRAP-CABLE	
					AVAILABLE REPAIR KIT(S):	
			109-3036	1	KIT-SEAL (SOLENOID VALVE)	
					(INCLUDES SEALS & RINGS)	

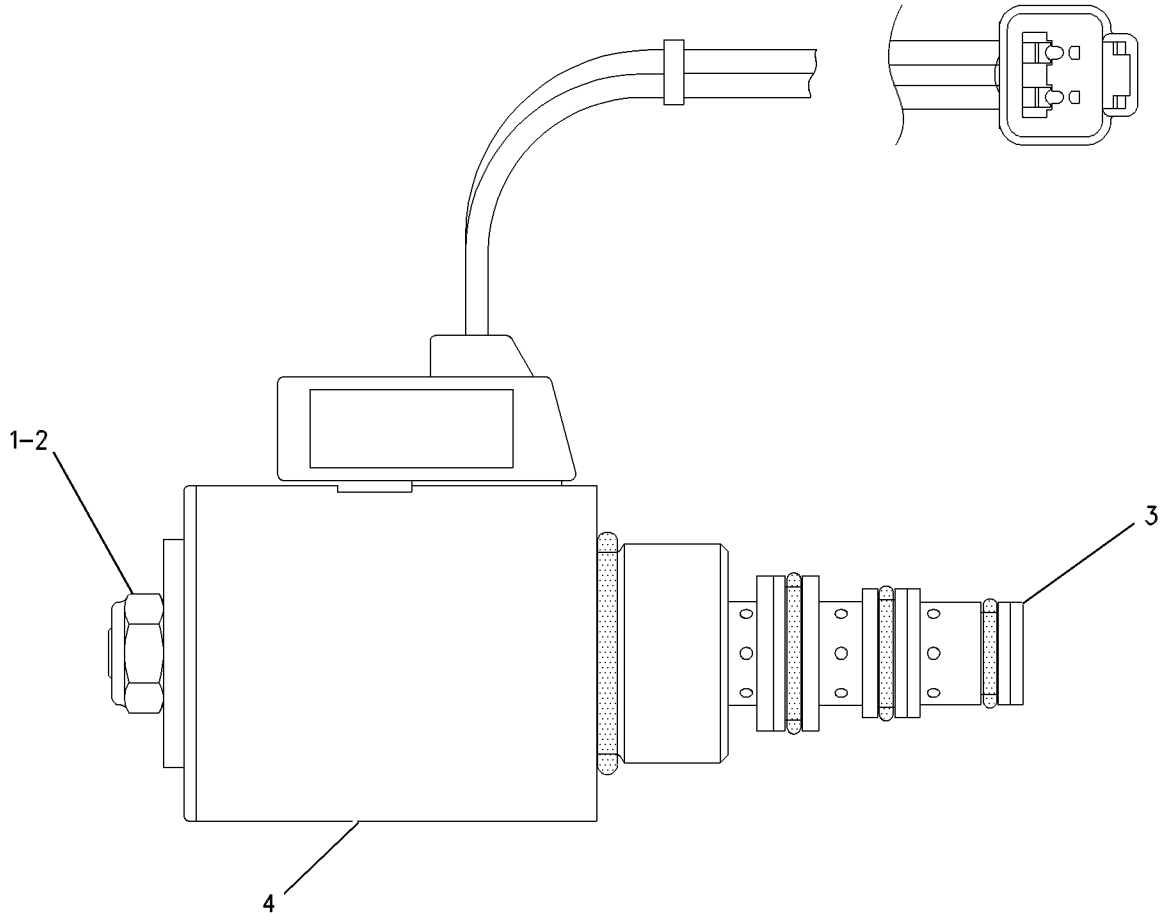

GRAPHIC #1 **<END>** g00612050

201-0950 VALVE GP-SOLENOID—IMPLEMENT, STEERING—IMPLEMENT MAKEUP

S/N: RJS1-UP

PART OF 223-8531 MANIFOLD GP-CONTROL

SMCS-5479 **i02214064**

NOTE	REF NO	GRAPHIC REF	PART NUMBER	QTY	PART NAME 1 2 3 4 5 6 (PRODUCT LEVEL)	SEE PAGE
	1	1	**122-1133**	1	COIL AS (24-VOLT)	
		1	**1S-9593**	2	STRAP-CABLE	
		1	**186-3735**	2	PIN-CONNECTOR	
		1	**102-8802**	1	KIT-RECEPTACLE (2-PIN)	
					(KIT INCLUDES RECEPTACLE AS & WEDGE)	
	2	1	**156-5970**	1	NUT (1/2-20-2B THD)	
	3	1	**171-8772**	1	VALVE AS-SOLENOID	
		1	**156-5970**	1	NUT (1/2-20-2B THD)	
					AVAILABLE REPAIR KIT(S):	
			195-7430	1	KIT-SEAL (SOLENOID VALVE)	

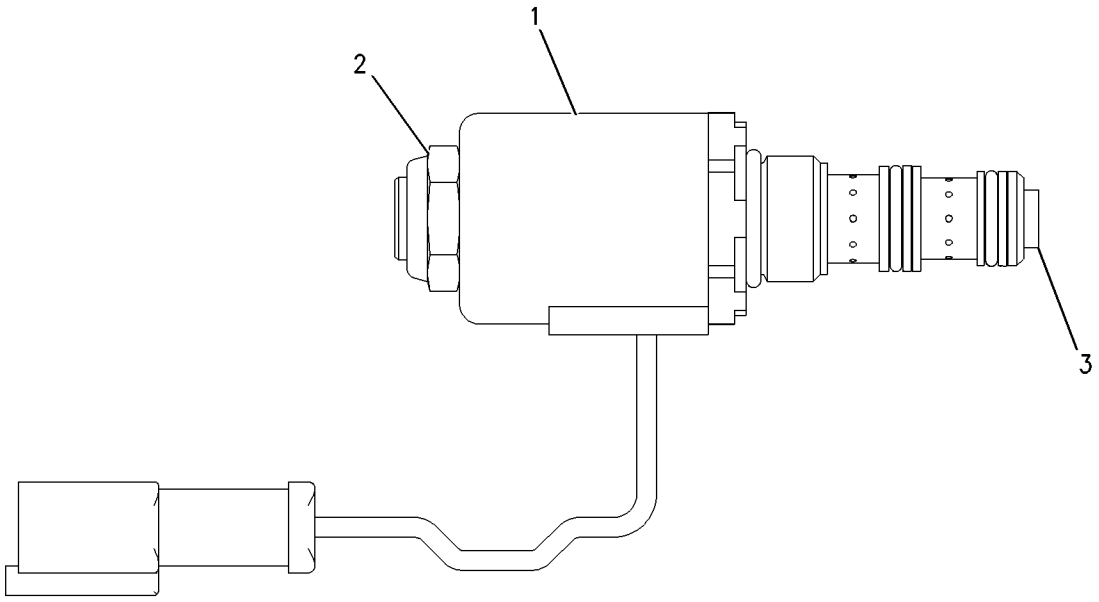

GRAPHIC #1 **<END>** g00888488

203-4157 VALVE GP-SOLENOID–HYDRAULIC LOCKOUT

S/N: RJS1-UP
PART OF 229-1466 MANIFOLD GP-CONTROL
AN ATTACHMENT

SMCS-5479 **i01989020**

NOTE	REF NO	GRAPHIC REF	PART NUMBER	QTY	PART NAME 1 2 3 4 5 6 (PRODUCT LEVEL)	SEE PAGE
	1	1	**111-0343**	1	LOCKNUT (5/16-18 THD)	
	2	1	**8C-9987**	1	WASHER (8.3X28X2.5MM THK)	
	3	1	**189-0189**	1	COIL AS	
		1	**1S-9593**	2	STRAP-CABLE	
		1	**102-8802**	1	KIT-RECEPTACLE (2-PIN)	
					(INCLUDES RECEPTACLE AS & WEDGE)	
		1	**3E-3365**	1	WEDGE-RECEPTACLE LOCK (2 PIN)	
		1	**186-3735**	2	PIN-CONNECTOR	
	4	1	**152-6760**	1	CARTRIDGE AS	
		1	**8C-9987**	1	WASHER (8.3X28X2.5MM THK)	
		1	**111-0343**	1	LOCKNUT (5/16-18 THD)	
					AVAILABLE REPAIR KIT(S):	
			3G-8175	1	KIT-SEAL (SOLENOID VALVE)	
					(INCLUDES SEAL-O-RINGS AND RING-BACKUP)	

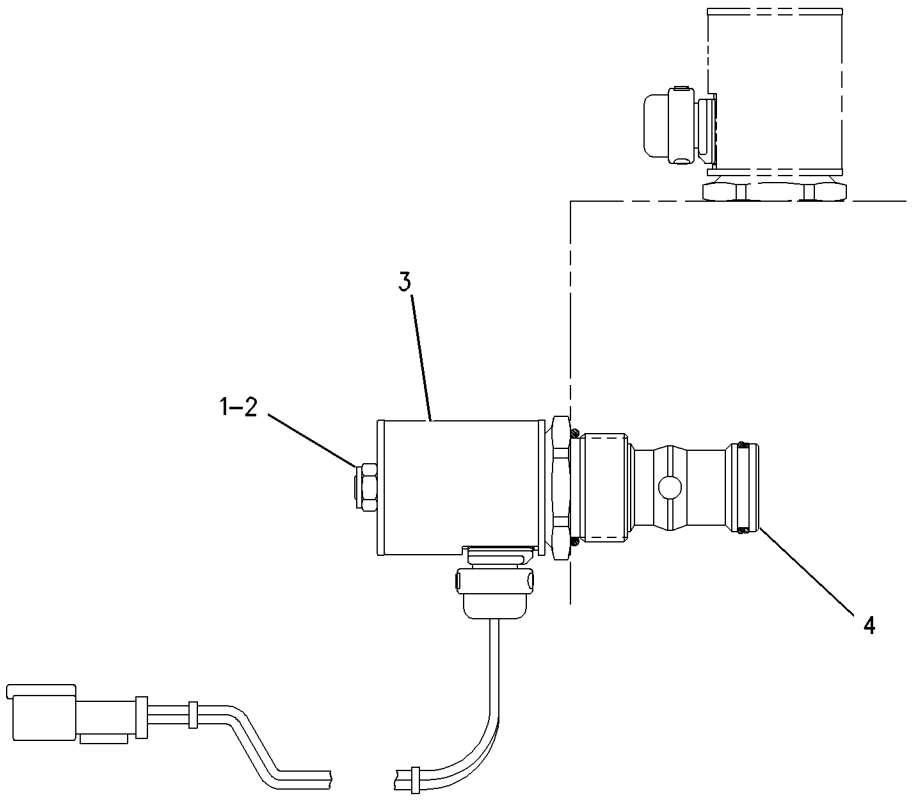

GRAPHIC #1 **<END>** g00805789

257-0267 VALVE GP-SOLENOID–BULLDOZER LIFT–BULLDOZER TILT–RIPPER RAISE–RIPPER TIP–WINCH

S/N: RJS1-UP

PART OF 214-1080, 214-1081, 214-1082, 214-1083 VALVE GP-CONTROL, 211-7816 VALVE GP-WINCH CONTROL

ALSO AN ATTACHMENT

SMCS-5479 **i02205561**

NOTE	REF NO	GRAPHIC REF	PART NUMBER	QTY	PART NAME 1 2 3 4 5 6 (PRODUCT LEVEL)	SEE PAGE
Z	1	1		1	CARTRIDGE AS	
Z	2	1		1	COIL AS	
Z	3	1		1	CARTRIDGE AS-VALVE	
Z	4	1		1	WASHER-SPRING	
	5	1	**6M-5062**	1	SEAL-O-RING	
	6	1	**3K-0360**	1	SEAL-O-RING	
	7	1	**4K-2039**	1	SEAL-O-RING	

Z-NOT SERVICED SEPARATELY

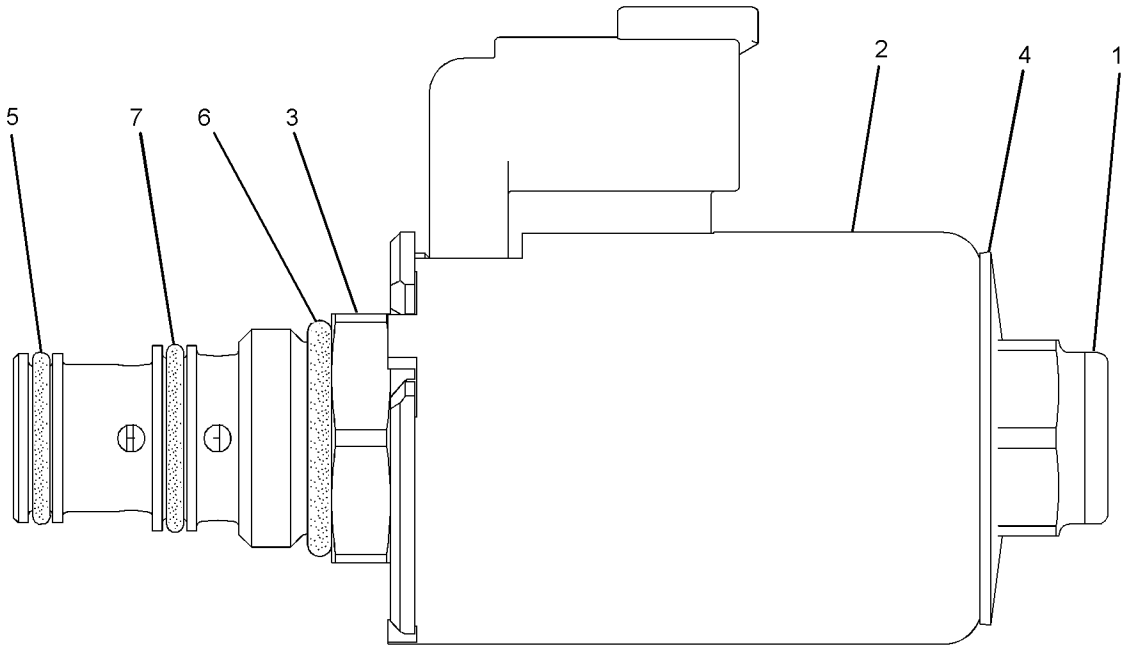

GRAPHIC #1 **<END>** g01022105

4Z-9487 BEAM AS—MULTI-SHANK RIPPER

S/N: SEM1-UP
PART OF 4Z-9486 RIPPER GP
AN ATTACHMENT

SMCS-5350 **i01350819**

NOTE	REF NO	GRAPHIC REF	PART NUMBER	QTY	PART NAME 1 2 3 4 5 6 (PRODUCT LEVEL)	SEE PAGE
	1	1	**9V-8427**	1	BAR	
	2	1	**4Z-8992**	1	BRACKET	
	3	1	**4Z-8840**	2	BRACKET	
	4	1	**3T-1208**	1	BAR	
	5	1	**4Z-8993**	1	BOSS	
	6	1	**138-0431**	1	BEAM AS	
	7	1	**6Y-3926**	2	PLATE AS	
	8	1	**6Y-9843**	1	BEAM AS	
	9	1	**8E-4037**	2	RETAINER	
	10	1	**8E-4648**	2	RETAINER	
	11	1	**8P-9770**	1	PLATE	

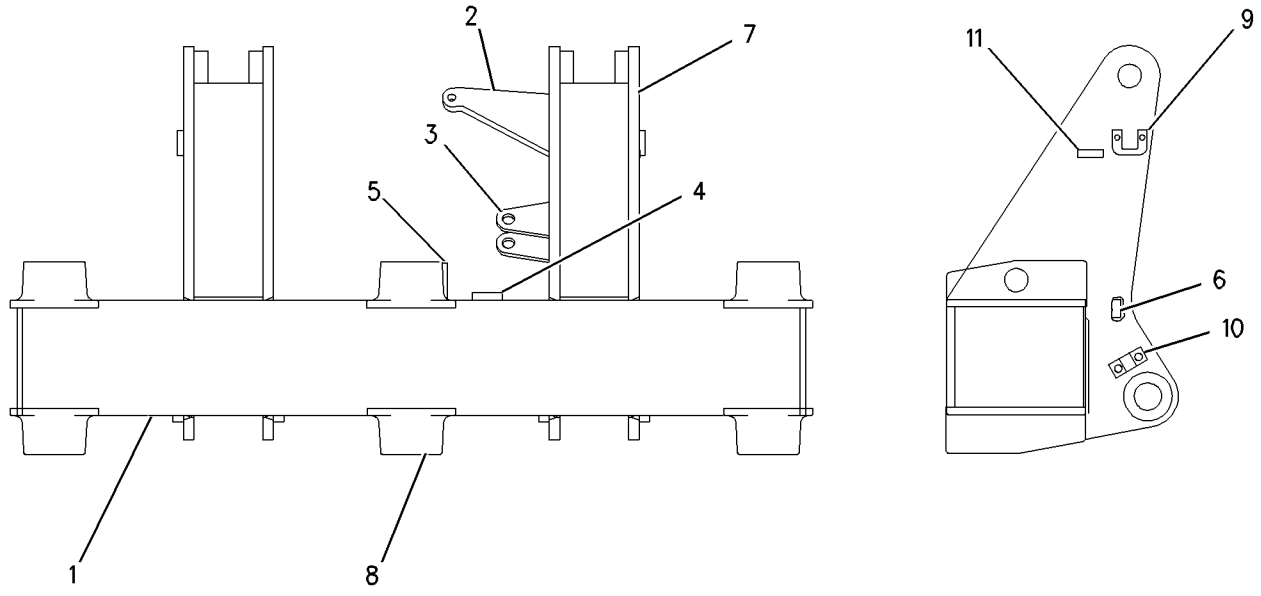

GRAPHIC #1 **<END>** g00714264

166-1810 BEAM AS—MULTI-SHANK, HEAVY DUTY

S/N: GNM1-UP
PART OF 166-1815 RIPPER GP
AN ATTACHMENT

SMCS-5350 **i02221846**

NOTE	REF NO	GRAPHIC REF	PART NUMBER	QTY	PART NAME 1 2 3 4 5 6 (PRODUCT LEVEL)	SEE PAGE
	1	1	**4Z-8840**	2	BRACKET	
	1A	1	**9V-8427**	1	BAR	
	1B	1	**8P-9770**	1	PLATE	
	1C	1	**8X-6954**	8	PLATE	
	1D	1	**175-1447**	2	BLOCK	
	1E	1	**175-1448**	2	BLOCK	
	1F	1	**177-2970**	1	BLOCK	
	1G	1	**177-2971**	1	BLOCK	

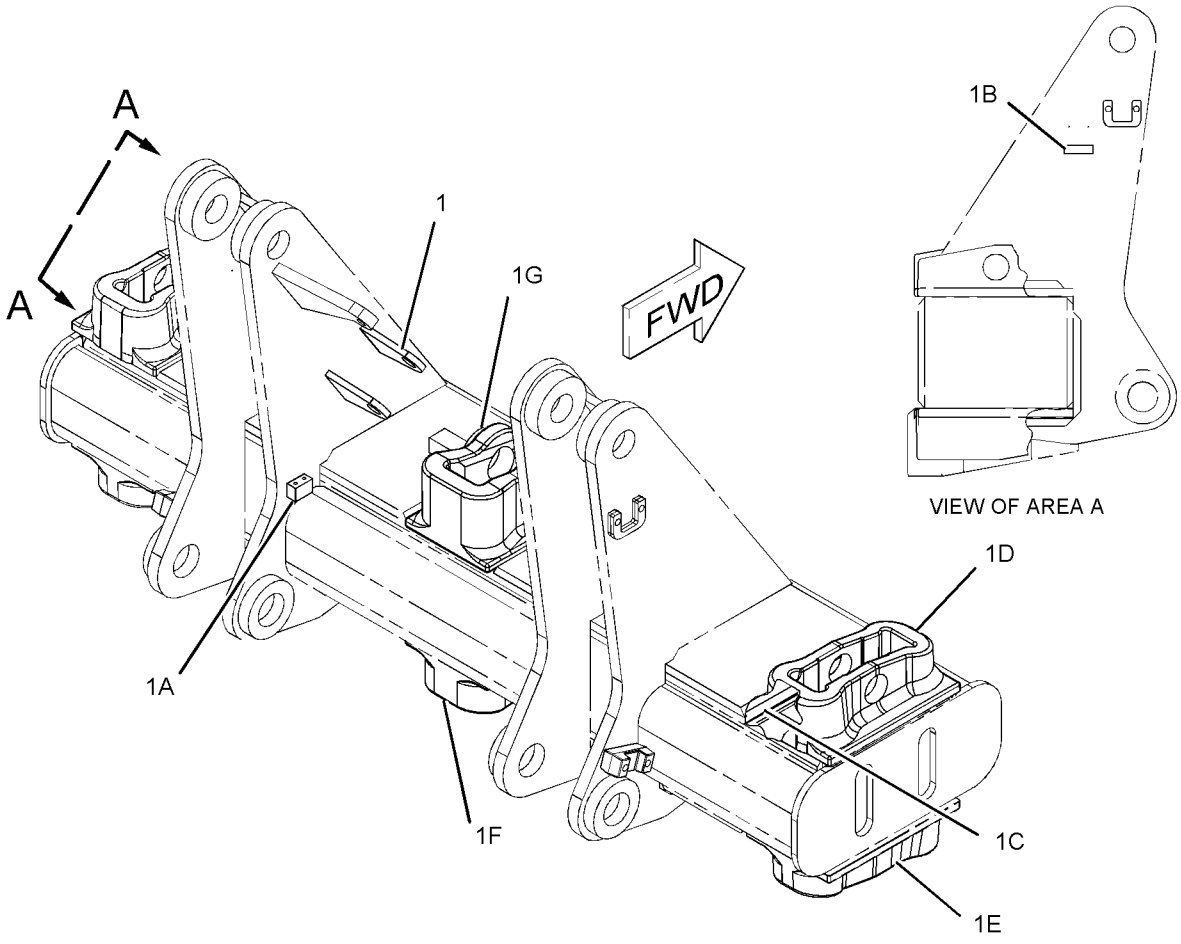

GRAPHIC #1 **<END>** g01122277

4Z-0629 BULLDOZER AR—SEMI-UNIVERSAL

S/N: T9J1-UP
LANDFILL
FOR USE WITH 228-1854—PAGE 661, 246-1025—PAGE 662
AN ATTACHMENT

SMCS-6050 **i02250233**

NOTE	PART NUMBER	QTY	PART NAME 1 2 3 4 5 6 (PRODUCT LEVEL)	SEE PAGE
Y	*4Z-9361*	1	BLADE & EDGE GP-SEMI-UNIVERSAL	675
Y-SEPARATE ILLUSTRATION				

<END>

4Z-0630 BULLDOZER AR—SEMI-UNIVERSAL

S/N: T9J1-UP
LANDFILL, WITH PUSH PLATE
FOR USE WITH 228-1854—PAGE 661, 246-1025—PAGE 662
AN ATTACHMENT

SMCS-6050 **i02250256**

NOTE	PART NUMBER	QTY	PART NAME 1 2 3 4 5 6 (PRODUCT LEVEL)	SEE PAGE
Y	*4Z-9363*	1	BLADE & EDGE GP-SEMI-UNIVERSAL	675
Y-SEPARATE ILLUSTRATION				

<END>

4Z-0631 BULLDOZER AR—SEMI-UNIVERSAL

S/N: T9J1-UP
LANDFILL, WITH WEAR PLATES
FOR USE WITH 228-1854—PAGE 661, 246-1025—PAGE 662
AN ATTACHMENT

SMCS-6050 **i02250267**

NOTE	PART NUMBER	QTY	PART NAME 1 2 3 4 5 6 (PRODUCT LEVEL)	SEE PAGE
Y	*4Z-9365*	1	BLADE & EDGE GP-SEMI-UNIVERSAL	676
Y-SEPARATE ILLUSTRATION				

<END>

4Z-0632 BULLDOZER AR—UNIVERSAL

S/N: T9H1-UP
WITH PUSH PLATE
FOR USE WITH 228-1854—PAGE 661, 246-1025—PAGE 662. CANNOT BE USED WITH PUSH LOADING SCRAPERS
AN ATTACHMENT

SMCS-6050 **i02250377**

NOTE	PART NUMBER	QTY	PART NAME 1 2 3 4 5 6 (PRODUCT LEVEL)	SEE PAGE
Y	*4Z-9367*	1	BLADE & EDGE GP-UNIVERSAL	677
Y-SEPARATE ILLUSTRATION				

<END>

IMPLEMENTS

4Z-0634 BULLDOZER AR—UNIVERSAL

S/N: T9H1-UP
WITH WEAR PLATES & ROCK GUARDS
AN ATTACHMENT

SMCS-6050 **i02250385**

NOTE	PART NUMBER	QTY	PART NAME 1 2 3 4 5 6 (PRODUCT LEVEL)	SEE PAGE
Y	*4Z-9370*	1	BLADE & EDGE GP-UNIVERSAL	677
Y-SEPARATE ILLUSTRATION				

<END>

4Z-0635 BULLDOZER AR—UNIVERSAL

S/N: T9H1-UP
LANDFILL BLADE
AN ATTACHMENT

SMCS-6050 **i02250390**

NOTE	PART NUMBER	QTY	PART NAME 1 2 3 4 5 6 (PRODUCT LEVEL)	SEE PAGE
Y	*4Z-9371*	1	BLADE & EDGE GP-UNIVERSAL	678
Y-SEPARATE ILLUSTRATION				

<END>

4Z-0627 BULLDOZER AR-SEMI-UNIVERSAL

S/N: T9J1-UP
WITH ROCK GUARDS & WEAR PLATES
AN ATTACHMENT

SMCS-6050, 6078 **i02250394**

NOTE	PART NUMBER	QTY	PART NAME 1 2 3 4 5 6 (PRODUCT LEVEL)	SEE PAGE
Y	*4Z-9360*	1	BLADE & EDGE GP-SEMI-UNIVERSAL	675
Y-SEPARATE ILLUSTRATION				

<END>

228-1854 BULLDOZER AR-SEMI-UNIVERSAL

S/N: T9J1-UP

AN ATTACHMENT

SMCS-6050, 6078 **i02208044**

NOTE	REF NO	GRAPHIC REF	PART NUMBER	QTY	PART NAME 1 2 3 4 5 6 (PRODUCT LEVEL)	SEE PAGE
Y	1	1	*8E-9890*	1	LINES GP-TILT CYLINDER	572
Y	2	1	*102-6345*	1	BLADE GP-SEMI-UNIVERSAL	690
Y	3	1	*106-7364*	1	TRUNNION GP-BULLDOZER	672
Y	4	1	*204-7462*	1	CYLINDER & LINES GP-LIFT (RH)	523
Y	5	1	*204-7463*	1	CYLINDER & LINES GP-LIFT (LH)	525
Y	6	1	*246-1043*	1	MOUNTING GP-CYLINDER	587
Y	7	1	*246-1045*	1	PUSH ARM GP-STABILIZER	671
F			**8T-7371**	1	PLATE-SERIAL NUMBER (BULLDOZER)	
					ON BACK OF MOLDBOARD NEAR TOP AT RH END	
F			**4B-4158**	2	SCREW-DRIVE (3/16X0.25-IN)	

F-NOT SHOWN
Y-SEPARATE ILLUSTRATION

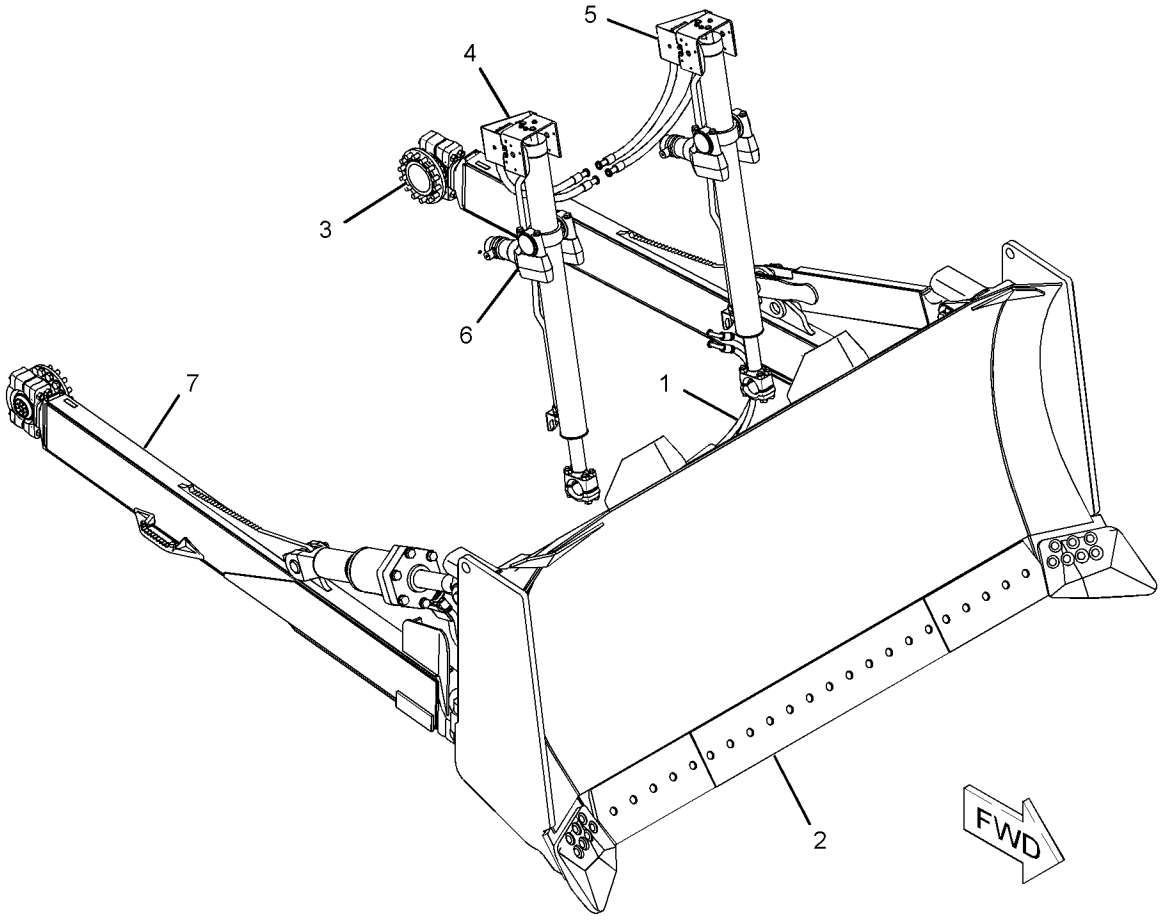

GRAPHIC #1 **<END>** g01118817

246-1025 BULLDOZER AR-SEMI-UNIVERSAL

S/N: T9J1-UP

AN ATTACHMENT

SMCS-6050, 6078 **i02215706**

NOTE	REF NO	GRAPHIC REF	PART NUMBER	QTY	PART NAME 1 2 3 4 5 6 (PRODUCT LEVEL)	SEE PAGE
Y	1	1	*8E-9890*	1	LINES GP-TILT CYLINDER	572
Y	2	1	*102-6345*	1	BLADE GP-SEMI-UNIVERSAL	690
Y	3	1	*106-7364*	1	TRUNNION GP-BULLDOZER	672
Y	4	1	*246-1045*	1	PUSH ARM GP-STABILIZER	671
F		1	**8T-7371**	1	PLATE-SERIAL NUMBER (BULLDOZER)	
F		1	**4B-4158**	2	SCREW-DRIVE (3/16X0.25-IN)	

F-NOT SHOWN
Y-SEPARATE ILLUSTRATION

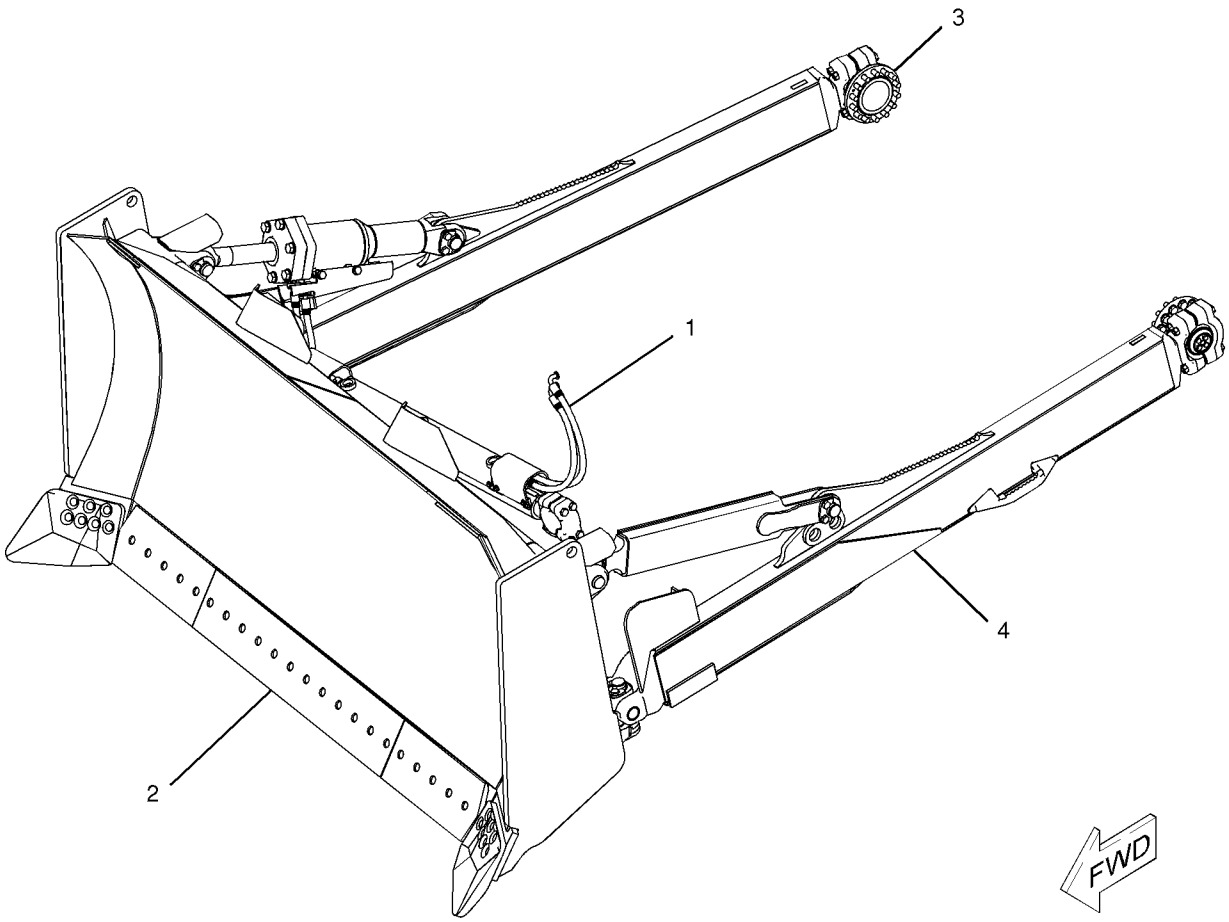

GRAPHIC #1 **<END>** g01037539

IMPLEMENTS

4Z-0625 BULLDOZER AR-UNIVERSAL

S/N: T9H1-UP
WITH ROCK GUARDS, WEAR PLATES AND EXTENDED WEAR LIFE GET AN ATTACHMENT

SMCS-6050, 6053 **i02250424**

NOTE	PART NUMBER	QTY	PART NAME 1 2 3 4 5 6 (PRODUCT LEVEL)	SEE PAGE
Y	*4Z-9335*	1	BLADE & EDGE GP-UNIVERSAL	677
Y-SEPARATE ILLUSTRATION				

<END>

4Z-0636 BULLDOZER AR-UNIVERSAL

S/N: T9H1-UP
LANDFILL, WITH WEAR PLATES AN ATTACHMENT

SMCS-6050, 6053 **i02250421**

NOTE	PART NUMBER	QTY	PART NAME 1 2 3 4 5 6 (PRODUCT LEVEL)	SEE PAGE
Y	*4Z-9373*	1	BLADE & EDGE GP-UNIVERSAL	678
Y-SEPARATE ILLUSTRATION				

<END>

IMPLEMENTS

228-1853 BULLDOZER AR-UNIVERSAL

S/N: T9H1-UP

AN ATTACHMENT

SMCS-6050, 6053 **i02207456**

NOTE	REF NO	GRAPHIC REF	PART NUMBER	QTY	PART NAME 1 2 3 4 5 6 (PRODUCT LEVEL)	SEE PAGE
Y	1	1	*8E-9890*	1	LINES GP-TILT CYLINDER	572
Y	2	1	*106-7364*	1	TRUNNION GP-BULLDOZER	672
Y	3	1	*106-7365*	1	BLADE GP-UNIVERSAL	691
Y	4	1	*204-7462*	1	CYLINDER & LINES GP-LIFT (RH)	523
Y	5	1	*204-7463*	1	CYLINDER & LINES GP-LIFT (LH)	525
Y	6	1	*246-1043*	1	MOUNTING GP-CYLINDER	587
Y	7	1	*246-1045*	1	PUSH ARM GP-STABILIZER	671
F			**8T-7371**	1	PLATE-SERIAL NUMBER	
					(ON BACK OF MOLDBOARD NEAR TOP AT RH END	
F			**4B-4158**	2	SCREW-DRIVE (3/16X0.25-IN)	

F-NOT SHOWN
Y-SEPARATE ILLUSTRATION

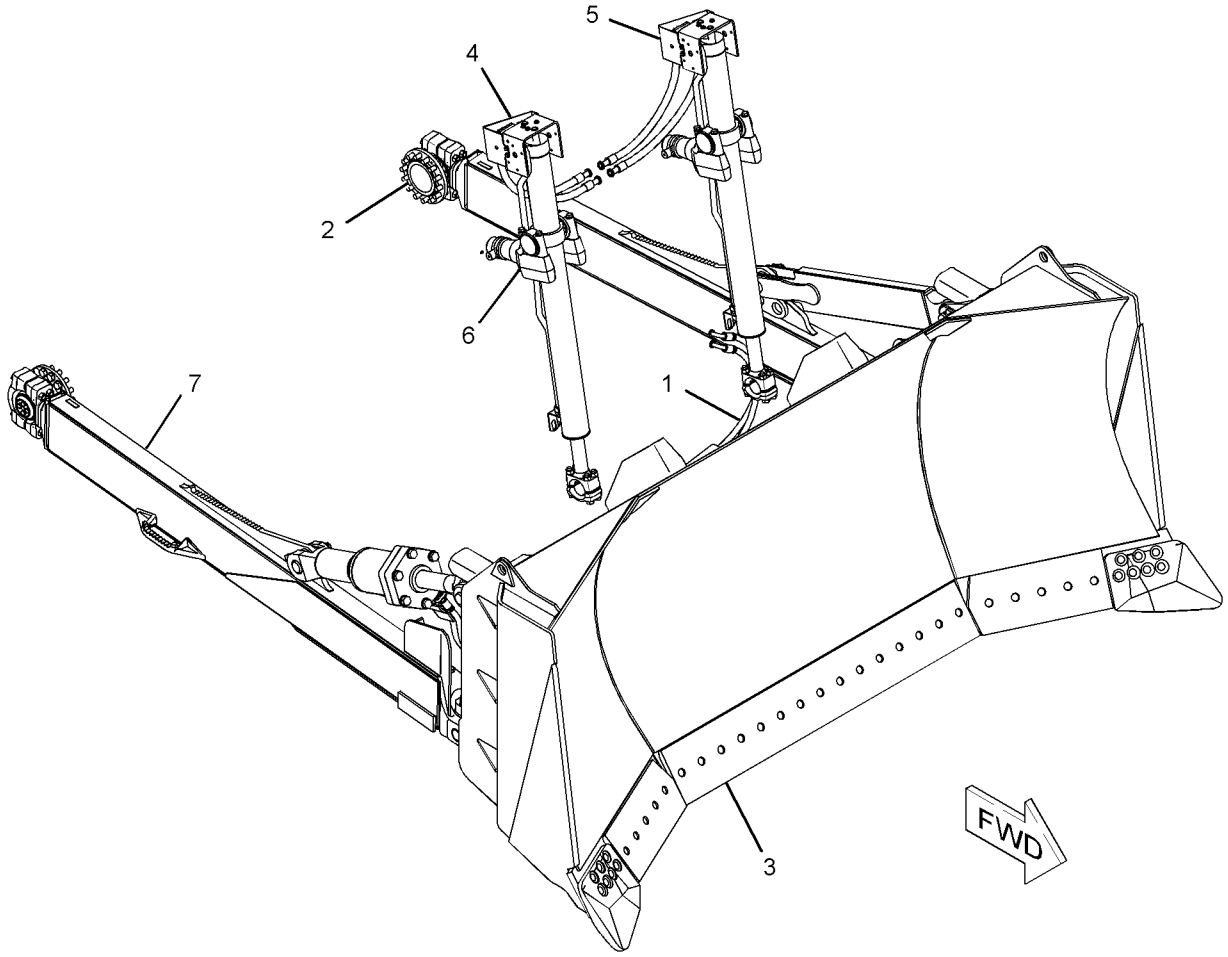

GRAPHIC #1 **<END>** g01118804

246-1024 BULLDOZER AR-UNIVERSAL

S/N: T9H1-UP

AN ATTACHMENT

SMCS-6050, 6053 **i02215697**

NOTE	REF NO	GRAPHIC REF	PART NUMBER	QTY	PART NAME 1 2 3 4 5 6 (PRODUCT LEVEL)	SEE PAGE
Y	1	1	*8E-9890*	1	LINES GP-TILT CYLINDER	572
Y	2	1	*106-7364*	1	TRUNNION GP-BULLDOZER	672
Y	3	1	*106-7365*	1	BLADE GP-UNIVERSAL	691
Y	4	1	*246-1045*	1	PUSH ARM GP-STABILIZER	671
F		1	**8T-7371**	1	PLATE-SERIAL NUMBER (BULLDOZER)	
F		1	**4B-4158**	2	SCREW-DRIVE (3/16X0.25-IN)	

F-NOT SHOWN
Y-SEPARATE ILLUSTRATION

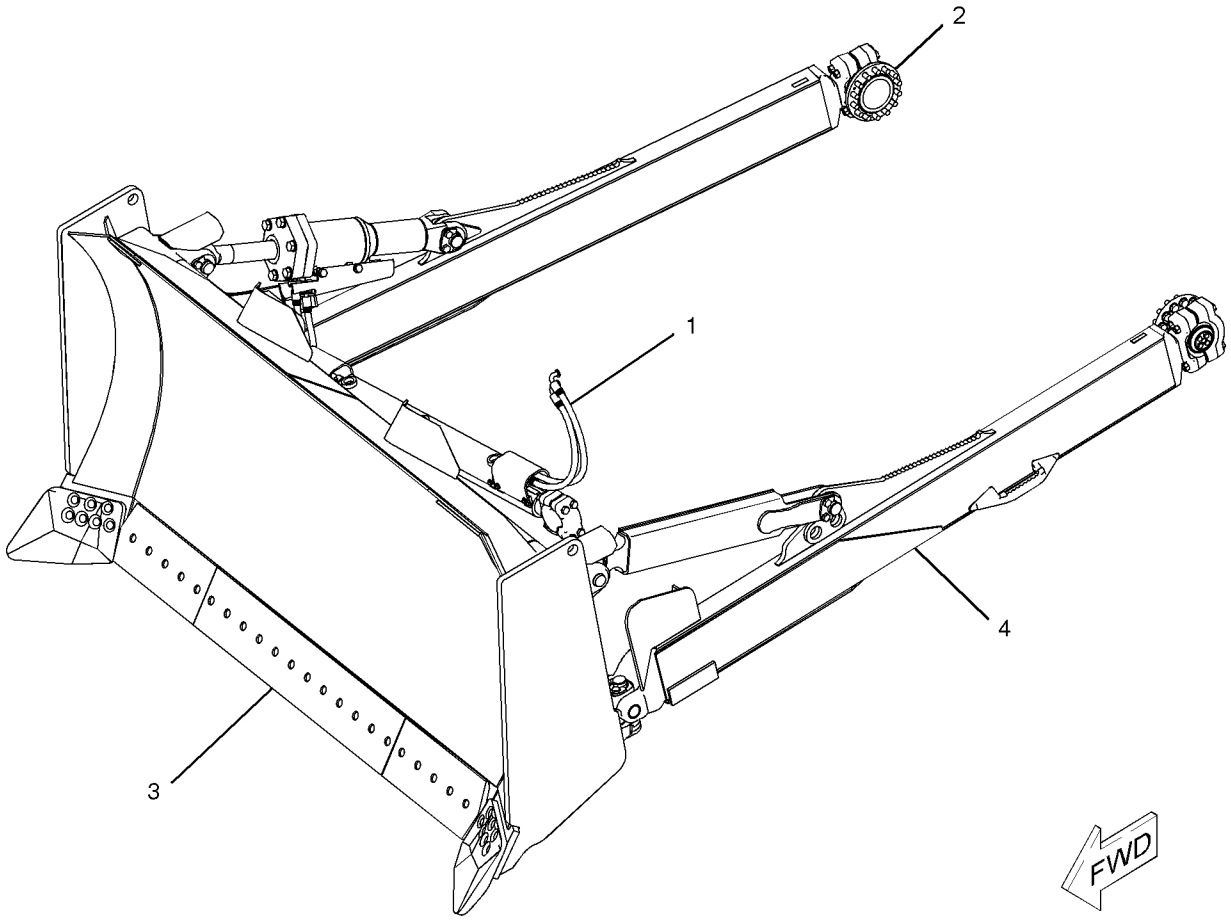

GRAPHIC #1 **<END>** g01038690

246-1039 LINK GP-STABILIZER

S/N: T9H1-UP; T9J1-UP
PART OF 246-1045 PUSH ARM GP-STABILIZER
AN ATTACHMENT

SMCS-6071, 7203 **i02235444**

NOTE	REF NO	GRAPHIC REF	PART NUMBER	QTY	PART NAME 1 2 3 4 5 6 (PRODUCT LEVEL)	SEE PAGE
B	1	1	**6I-8675**	52	SHIM (0.6-MM THK)	
	2	1	**160-6307**	2	CAP-BEARING	
	3	1	**246-1040**	1	LINK AS	
	3A	1	**239-4263**	2	BEARING	
M	4	1	**7X-2578**	8	BOLT (M24X3X200-MM)	
M	5	1	**8T-4001**	8	NUT (M24X3-THD)	

B-USE AS REQUIRED
M-METRIC PART

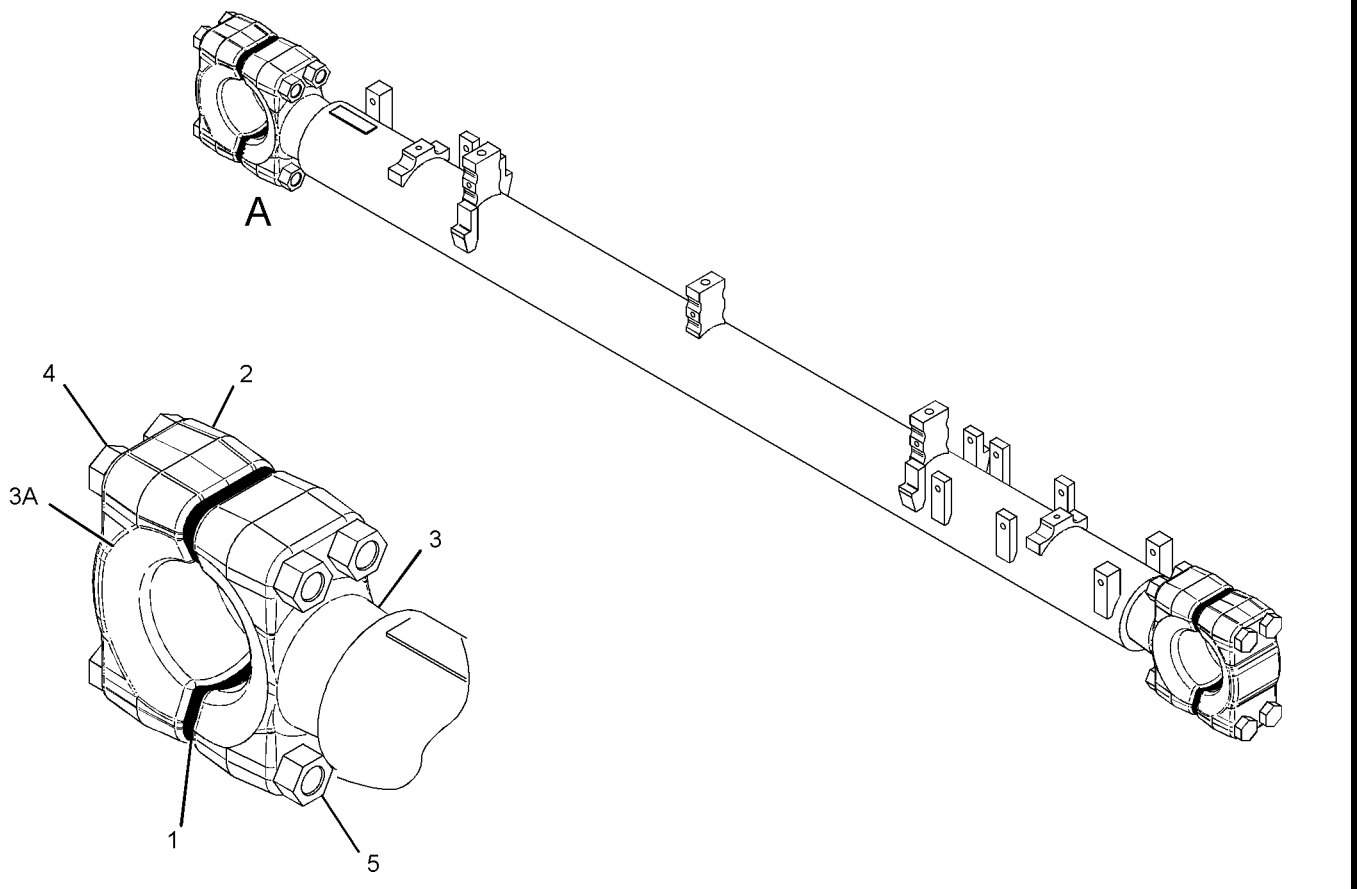

VIEW OF AREA A

GRAPHIC #1 **<END>** g01039335

246-1041 LINK GP-STABILIZER

S/N: RJS1-UP
PART OF 246-1026 CYLINDER AR-TILT
AN ATTACHMENT

SMCS-6071, 7203 **i02235447**

NOTE	REF NO	GRAPHIC REF	PART NUMBER	QTY	PART NAME 1 2 3 4 5 6 (PRODUCT LEVEL)	SEE PAGE
B	1	1	**6I-8675**	52	SHIM (0.6-MM THK)	
	2	1	**160-6307**	2	CAP-BEARING	
	3	1	**246-1042**	1	LINK AS	
	3A	1	**239-4263**	2	BEARING	
	3B	1	**110-5887**	5	LUG	
M	4	1	**7X-2578**	8	BOLT (M24X3X200-MM)	
M	5	1	**8T-4001**	8	NUT (M24X3-THD)	

B-USE AS REQUIRED
M-METRIC PART

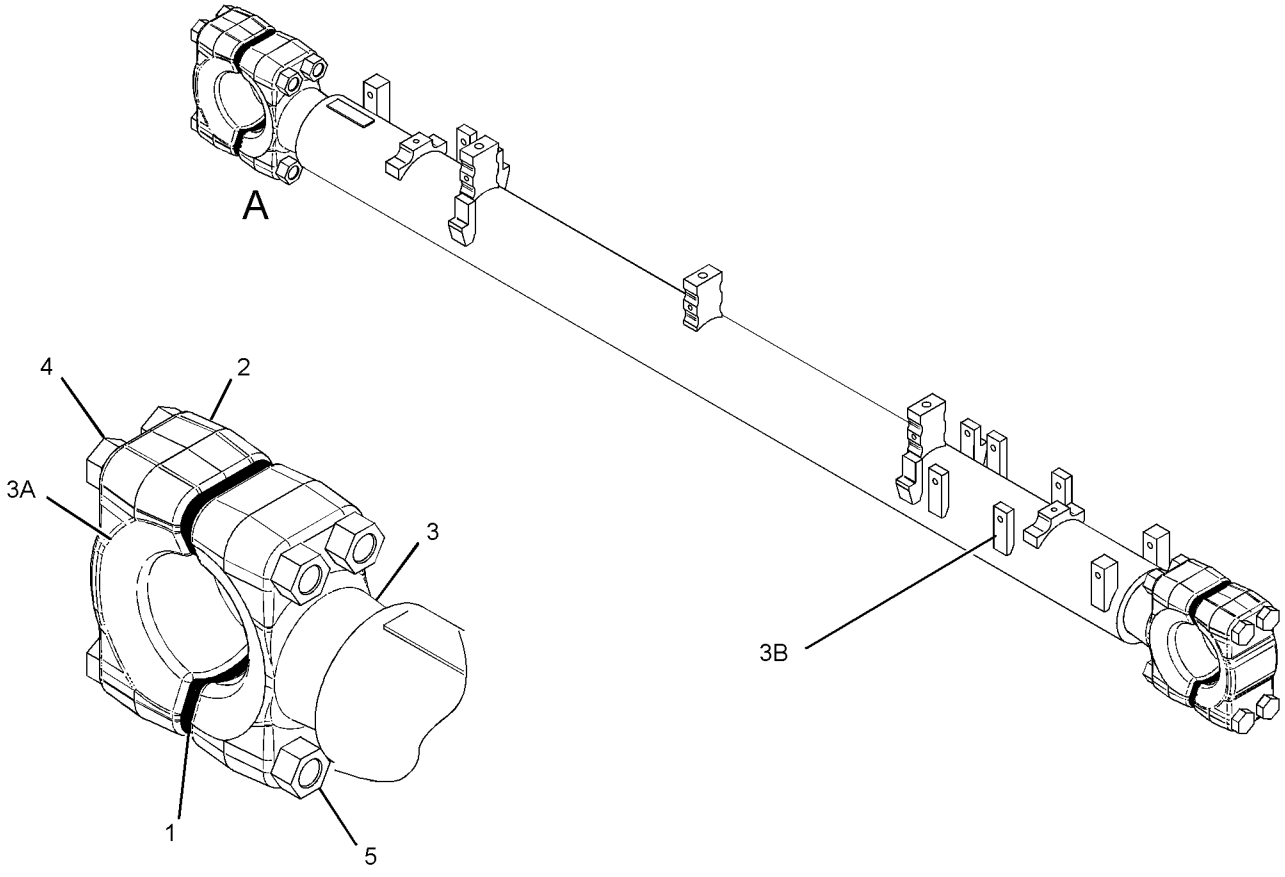

VIEW OF AREA A

GRAPHIC #1 **<END>** g01127620

132-9271 MODIFICATION AR-BULLDOZER—LANDFILL

S/N: RJS1-UP

FOR USE WITH MACHINES EQUIPPED WITH WASTE DISPOSAL AR AND DUAL TILT CYLINDERS

AN ATTACHMENT

SMCS-7000 **i01365683**

NOTE	PART NUMBER	QTY	PART NAME 1 2 3 4 5 6 (PRODUCT LEVEL)	SEE PAGE
I	**4Z-9189**	2	HOSE AS	
I	**132-8928**	2	HOSE AS	
I	**132-8930**	1	HOSE AS	
I	**132-8931**	1	HOSE AS	
I	**172-8833**	2	HOSE AS	
I	**4Z-9221**	2	HOSE AS	

I-SEE HOSE FABRICATION GUIDE

<END>

195-1174 MODIFICATION AR-BULLDOZER—LANDFILL

S/N: RJS1-UP

PART OF 211-5065 WASTE HANDLING AR

FOR USE WITH 228-1854—PAGE 661, 246-1025—PAGE 662

AN ATTACHMENT

SMCS-7000 **i02254046**

NOTE	PART NUMBER	QTY	PART NAME 1 2 3 4 5 6 (PRODUCT LEVEL)	SEE PAGE
I	**1Z-9375**	1	HOSE AS	
I	**4Z-9221**	1	HOSE AS	
I	**126-1103**	1	HOSE AS	
I	**126-1104**	1	HOSE AS	

I-REFER TO HYDRAULIC INFORMATION SYSTEM

<END>

108-1028 PUSH ARM GP–LH

S/N: T9H1-UP; T9J1-UP
PART OF 246-1045 PUSH ARM GP-STABILIZER
AN ATTACHMENT

SMCS-6061 **i01446818**

NOTE	REF NO	GRAPHIC REF	PART NUMBER	QTY	PART NAME 1 2 3 4 5 6 (PRODUCT LEVEL)	SEE PAGE
	1	1	**108-0685**	1	PUSH ARM AS-LH	
		1	**7T-5140**	1	STEP	
	2	1	**108-1806**	1	BRACKET AS	
	3	1	**109-5675**	1	BRACKET AS	
	4	1	**3G-9598**	2	BEARING-SLEEVE	
	5	1	**116-8046**	1	BEARING AS	
	6	1	**8E-9401**	1	GUARD	
	7	1	**8J-5326**	1	PLATE	
	8	1	**8P-9770**	1	PLATE	
M	9	1	**7X-2579**	4	BOLT (M24X3X240-MM)	
M		1	**8T-4001**	4	NUT (M24X3-THD)	
	10	1	**116-8038**	1	CAP-BEARING	
B	11	1	**3G-9401**	26	SHIM (0.8-MM THK)	

B-USE AS REQUIRED
M-METRIC PART

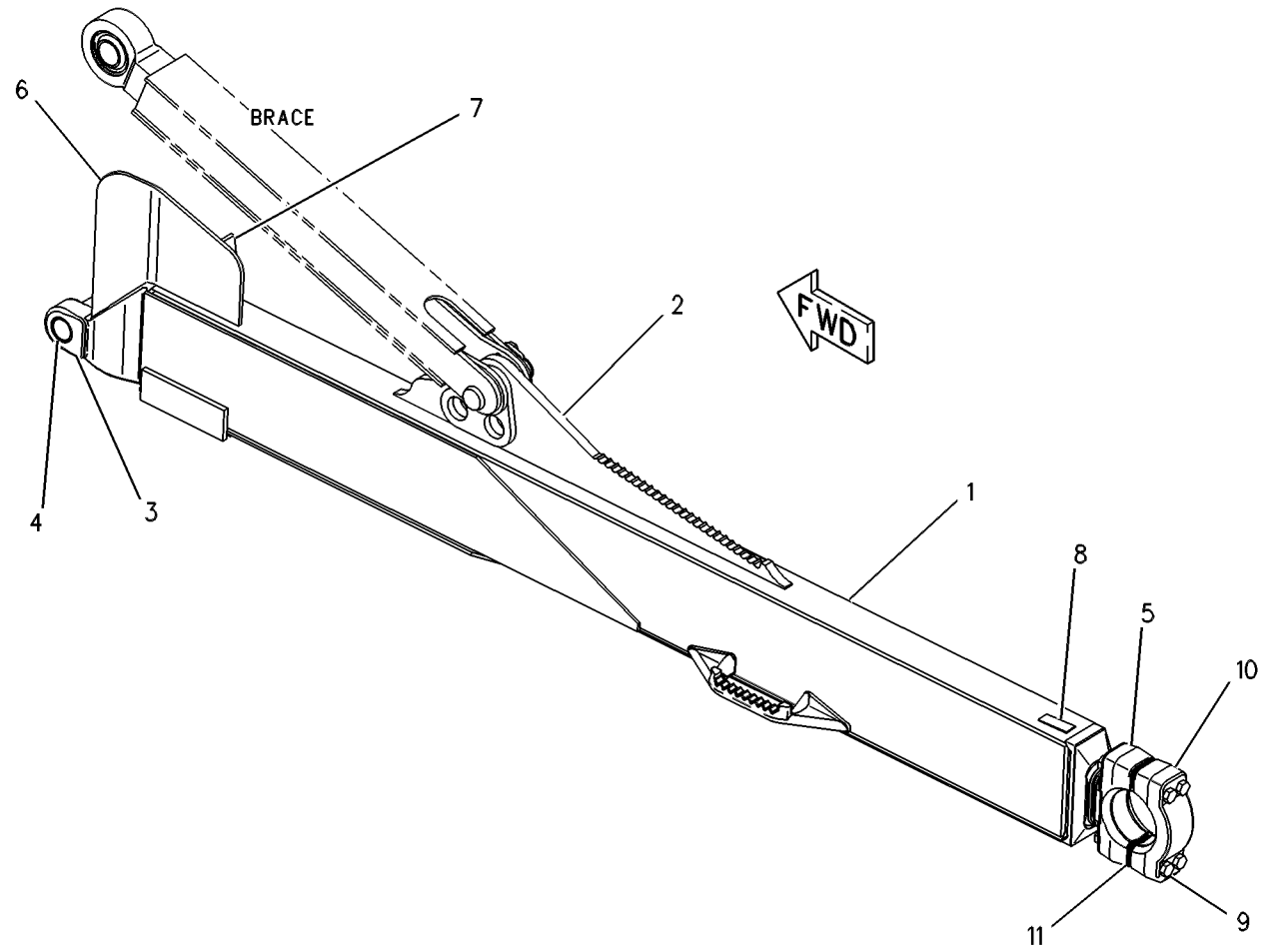

GRAPHIC #1 **<END>** g00267397

110-5744 PUSH ARM GP–RH

S/N: T9H1-UP; T9J1-UP
PART OF 246-1045 PUSH ARM GP-STABILIZER
AN ATTACHMENT

SMCS-6061 **i01446820**

NOTE	REF NO	GRAPHIC REF	PART NUMBER	QTY	PART NAME 1 2 3 4 5 6 (PRODUCT LEVEL)	SEE PAGE
M	1	1	**7X-2579**	4	BOLT (M24X3X240-MM)	
M		1	**8T-4001**	4	NUT (M24X3-THD)	
	2	1	**116-8038**	1	CAP-BEARING	
	3	1	**109-5676**	1	PUSH ARM AS-RH	
	4	1	**116-8046**	1	BEARING AS	
	5	1	**3G-7000**	1	BRACKET AS	
	6	1	**109-5674**	1	BRACKET AS	
	7	1	**3G-9598**	2	BEARING-SLEEVE	
	8	1	**8P-9770**	1	PLATE	
	9	1	**7T-5140**	1	STEP	
	10	1	**8J-5326**	1	PLATE	
B	11	1	**3G-9401**	14	SHIM (0.8-MM THK)	

B-USE AS REQUIRED
M-METRIC PART

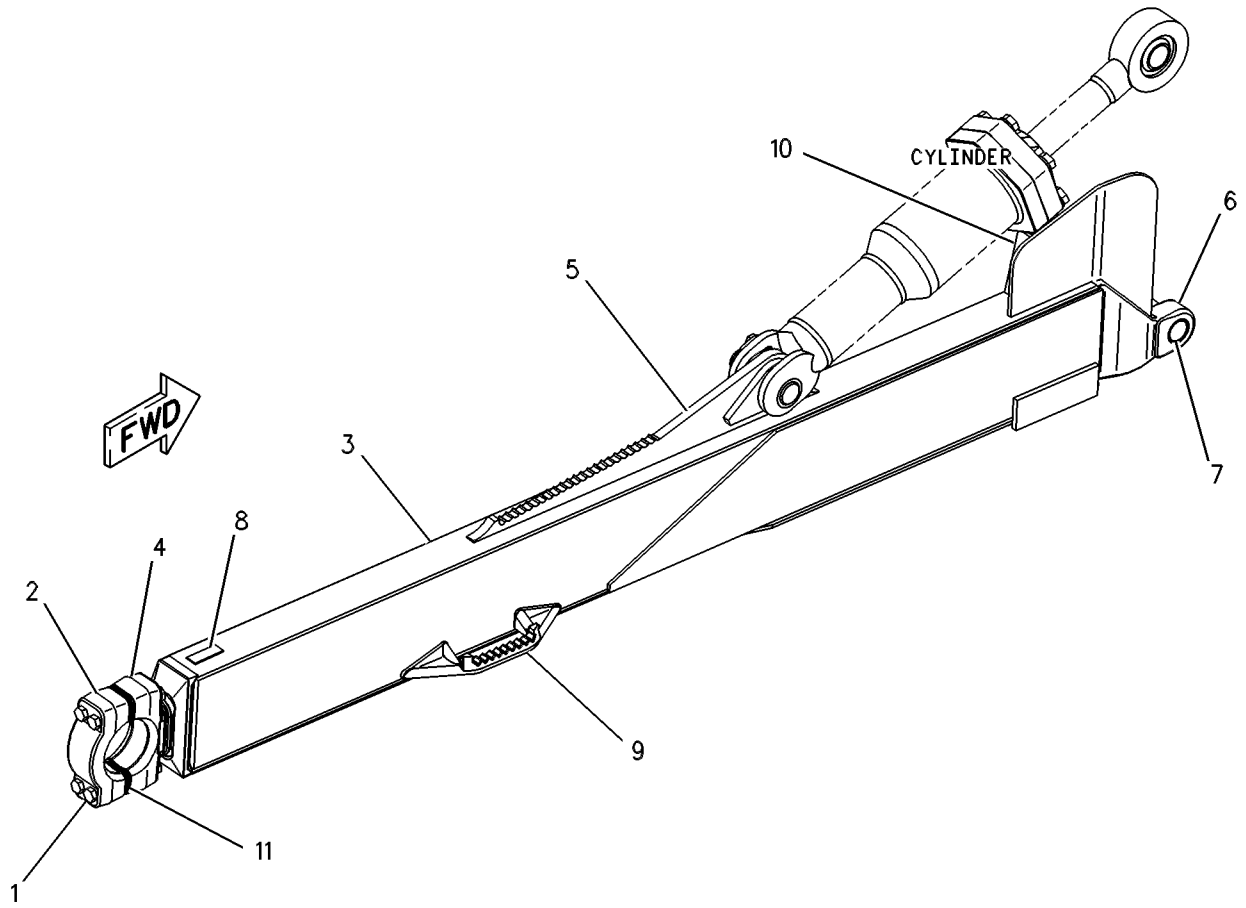

GRAPHIC #1 **<END>** g00267400

246-1045 PUSH ARM GP-STABILIZER

S/N: T9H1-UP; T9J1-UP
PART OF 228-1854, 246-1025 BULLDOZER AR-SEMI-UNIVERSAL, 228-1853, 246-1024 BULLDOZER AR-UNIVERSAL
AN ATTACHMENT

SMCS-6061 **i02002691**

NOTE	REF NO	GRAPHIC REF	PART NUMBER	QTY	PART NAME 1 2 3 4 5 6 (PRODUCT LEVEL)	SEE PAGE
	1	1	**3G-7016**	2	PIN	
	2	1	**4T-7534**	2	PIN	
	3	1	**6J-5179**	4	RETAINER	
Y	4	1	*108-1028*	1	PUSH ARM GP (LH)	669
Y	5	1	**109-6778**	1	CYLINDER GP-TILT	544
Y	6	1	*110-5744*	1	PUSH ARM GP (RH)	670
Y	7	1	*246-1039*	1	LINK GP-STABILIZER	666
	8	1	**246-1046**	1	BRACE AS	
	8A	1	**3B-8489**	1	FITTING-GREASE (ROD EYE BEARING)	
	8B	1	**7J-3296**	1	RING-LOCK	
	8C	1	**7J-3297**	1	BEARING (ROD EYE)	
	8D	1	**239-4238**	1	ROD-EYE	
M	9	1	**7X-2574**	8	BOLT (M24X3X45-MM)	

M-METRIC PART
Y-SEPARATE ILLUSTRATION

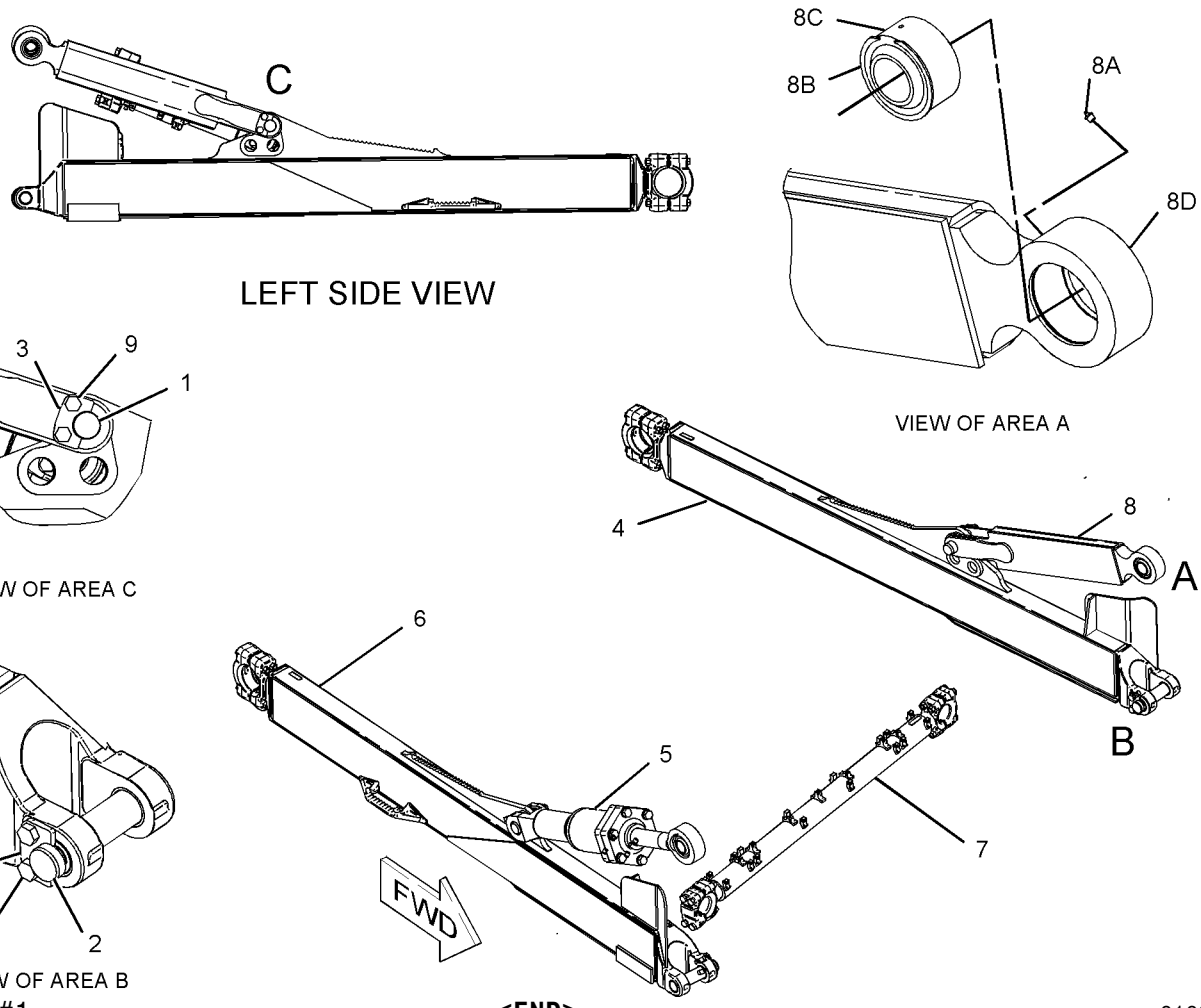

GRAPHIC #1

<END>

g01038867

106-7364 TRUNNION GP-BULLDOZER

S/N: T9H1-UP; T9J1-UP; RJS1-UP
PART OF 228-1854, 246-1025 BULLDOZER AR-SEMI-UNIVERSAL, 228-1853, 246-1024 BULLDOZER AR-UNIVERSAL
AN ATTACHMENT

SMCS-6069 **i00591476**

NOTE	REF NO	GRAPHIC REF	PART NUMBER	QTY	PART NAME 1 2 3 4 5 6 (PRODUCT LEVEL)	SEE PAGE
	1	1	**108-8283**	2	TRUNNION AS	
					(EACH INCLUDES)	
	2	1	**116-8052**	1	BEARING	
M	3	1	**8T-4193**	4	BOLT (M16X2.0X50MM)	
	4	1	**116-8050**	1	RETAINER	
	5	1	**7X-0404**	28	BOLT (1-8X2.50IN)	

M-METRIC PART

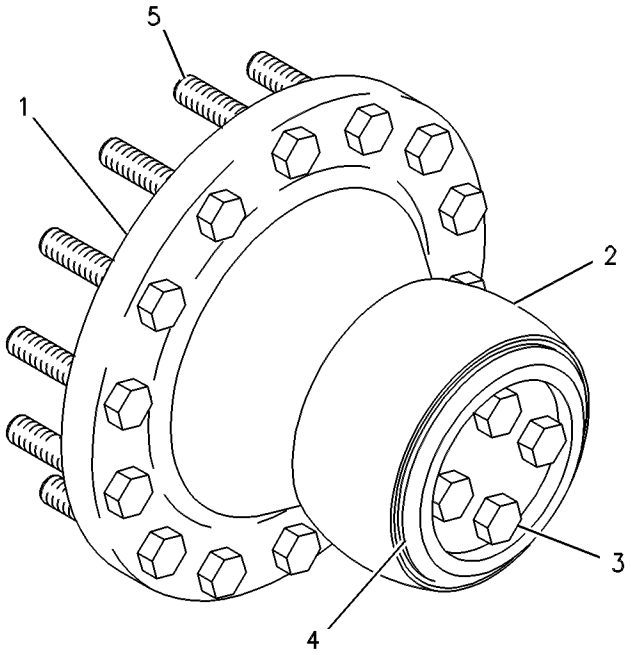

GRAPHIC #1 **<END>** g00267412

205-7249 TRUNNION GP-BULLDOZER

S/N: RJS1-UP

FOR USE WITH TRACK SHOES OVER 27-IN WHEN USED WITH DUAL TILT CYLINDERS AN ATTACHMENT

SMCS-6069 **i01991092**

NOTE	REF NO	GRAPHIC REF	PART NUMBER	QTY	PART NAME 1 2 3 4 5 6 (PRODUCT LEVEL)	SEE PAGE
	1	1	**108-8283**	2	TRUNNION AS	
					(EACH INCLUDES)	
M	1A	1	**8T-4193**	4	BOLT (M16X2X50MM)	
	1B	1	**116-8050**	1	RETAINER	
	1C	1	**116-8052**	1	BEARING	
	2	1	**205-7248**	2	SPACER	
	3	1	**7X-0443**	28	BOLT (1-8X5.50IN)	

M-METRIC PART

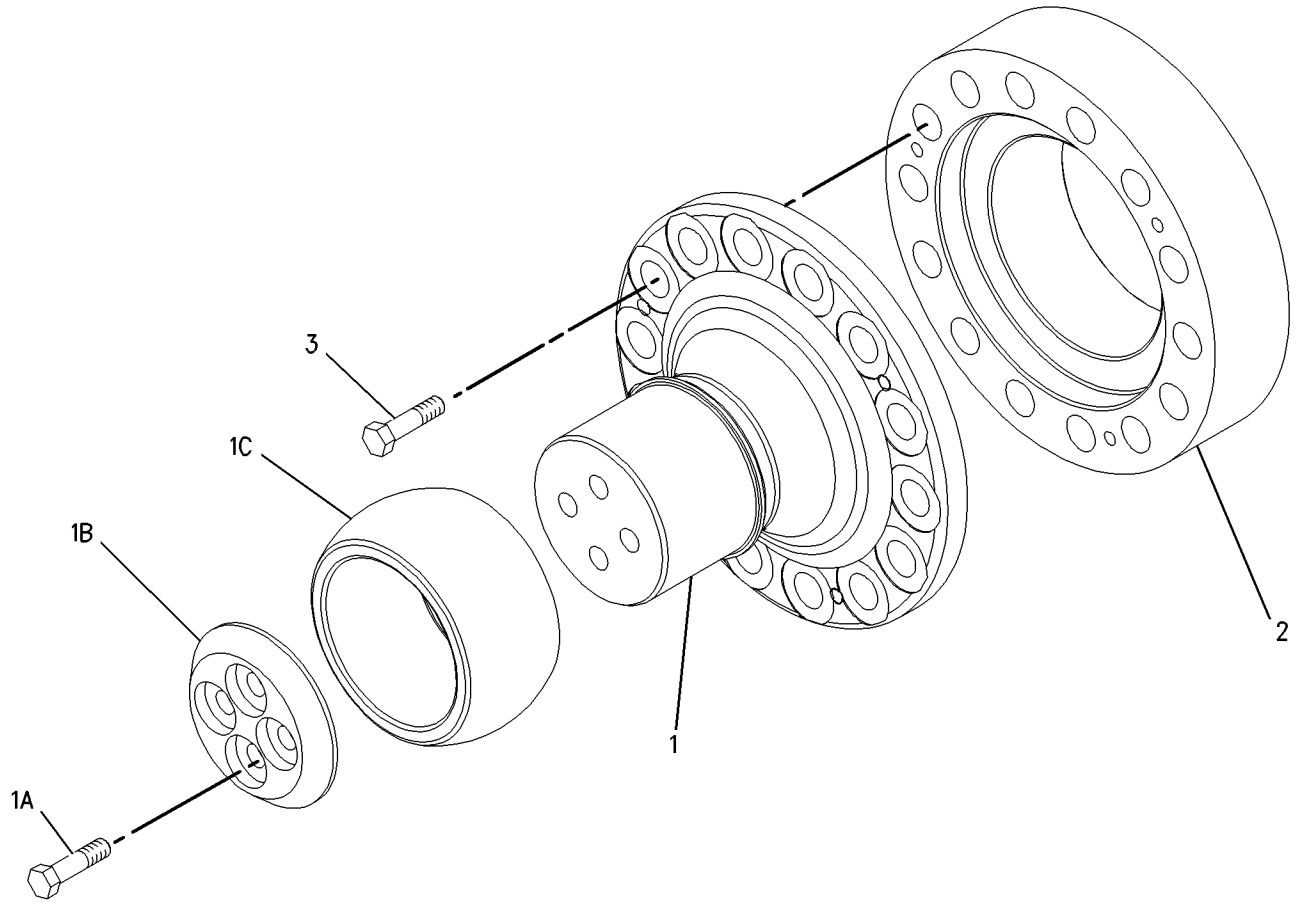

GRAPHIC #1 **<END>** g00826835

241-3360 TRUNNION GP-BULLDOZER–CUSHION DOZER

S/N: RJS1-UP

AN ATTACHMENT

SMCS-6069 **i02204801**

NOTE	REF NO	GRAPHIC REF	PART NUMBER	QTY	PART NAME 1 2 3 4 5 6 (PRODUCT LEVEL)	SEE PAGE
	1	1	**6P-8829**	4	RETAINER	
	2	1	**9G-8140**	2	SPACER (10.5X25X15-MM THK)	
	3	1	**9R-2216**	1	BOSS	
Y	4	1	*236-2245*	1	CASE & FRAME GP	364
	5	1	**241-3758**	1	GUARD AS	
	6	1	**257-9154**	1	BRACKET AS	
		1	**7T-1099**	4	LINK	
	7	1	**6V-8190**	4	NUT (1-8-THD)	
	8	1	**7K-1181**	6	STRAP-CABLE	
	9	1	**7X-0443**	4	BOLT (1-8X5.5-IN)	
	10	1	**7X-0549**	4	WASHER-HARD (28X52.5X8-MM THK)	
	11	1	**8T-4121**	3	WASHER-HARD (11X21X2.5-MM THK)	
M	12	1	**8T-4186**	2	BOLT (M10X1.5X40-MM)	
M	13	1	**8T-6466**	1	BOLT (M10X1.5X60-MM)	
M	14	1	**9X-8281**	4	STUD-TAPERLOCK (M10X1.5X45-MM)	

M-METRIC PART
Y-SEPARATE ILLUSTRATION

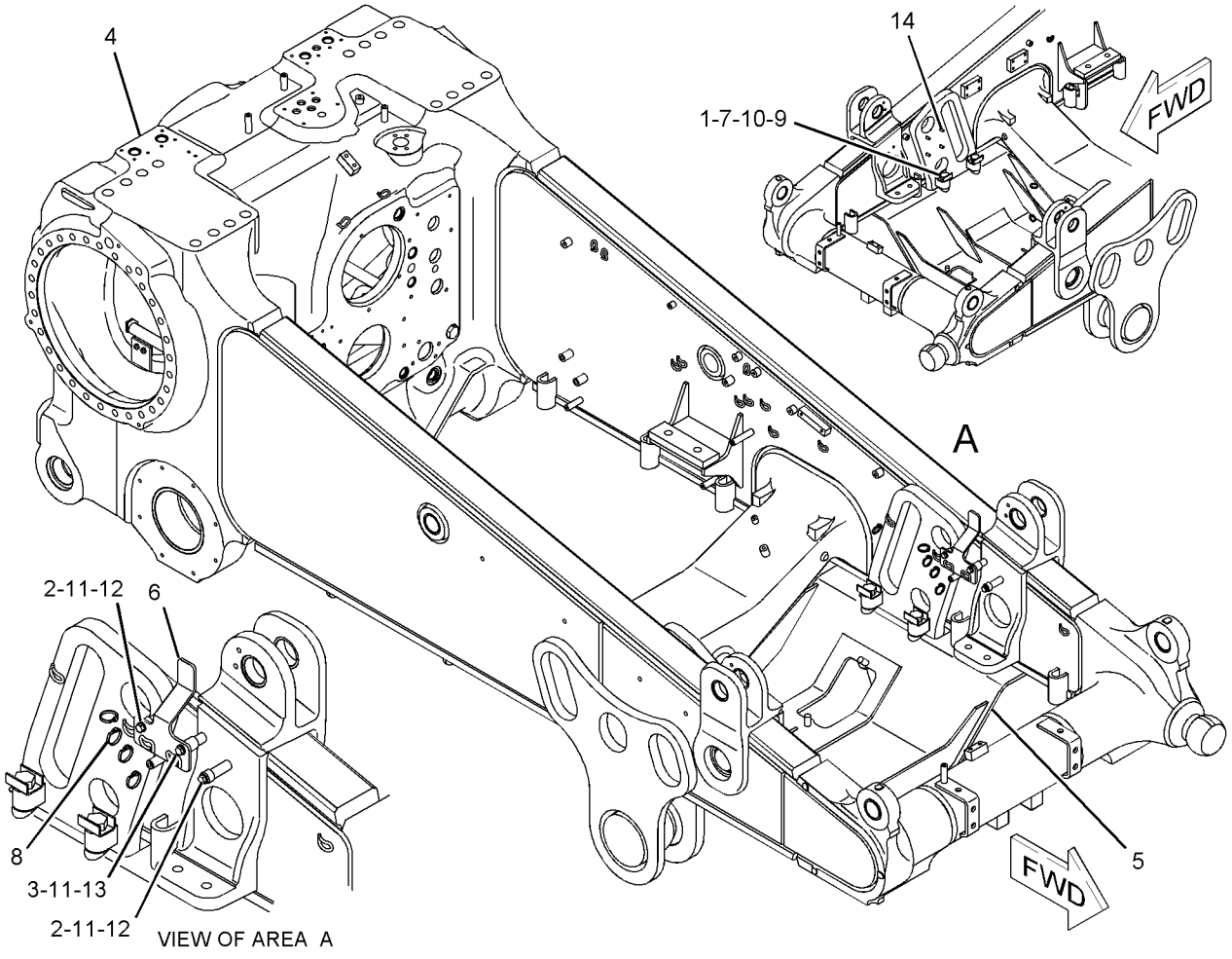

GRAPHIC #1 **<END>** g01125137

4Z-9360 BLADE & EDGE GP-SEMI-UNIVERSAL

S/N: T9J1-UP
WITH ROCK GUARDS, WEAR PLATES
PART OF 4Z-0627 BULLDOZER AR-SEMI-UNIVERSAL
AN ATTACHMENT

SMCS-6060 **i01091942**

NOTE	PART NUMBER	QTY	PART NAME 1 2 3 4 5 6 (PRODUCT LEVEL)	SEE PAGE
Y	*9W-7041*	1	EDGE GP-BIT & CUTTING	694
Y	**102-1938**	1	BLADE AS-SEMI-UNIVERSAL	684
Y-SEPARATE ILLUSTRATION				

<END>

4Z-9361 BLADE & EDGE GP-SEMI-UNIVERSAL

S/N: T9J1-UP
LANDFILL
PART OF 4Z-0629 BULLDOZER AR
AN ATTACHMENT

SMCS-6060 **i01096506**

NOTE	PART NUMBER	QTY	PART NAME 1 2 3 4 5 6 (PRODUCT LEVEL)	SEE PAGE
Y	*7T-5391*	1	EDGE GP-BIT & CUTTING	692
Y	**4Z-9362**	1	BLADE AS-SEMI-UNIVERSAL	680
Y-SEPARATE ILLUSTRATION				

<END>

4Z-9363 BLADE & EDGE GP-SEMI-UNIVERSAL

S/N: T9J1-UP
LANDFILL BLADE WITH PUSH PLATE
PART OF 4Z-0630 BULLDOZER AR
AN ATTACHMENT

SMCS-6060 **i01097787**

NOTE	PART NUMBER	QTY	PART NAME 1 2 3 4 5 6 (PRODUCT LEVEL)	SEE PAGE
Y	*7T-5391*	1	EDGE GP-BIT & CUTTING	692
Y	**4Z-9364**	1	BLADE AS-SEMI-UNIVERSAL	681
Y-SEPARATE ILLUSTRATION				

<END>

4Z-9365 BLADE & EDGE GP-SEMI-UNIVERSAL

S/N: T9J1-UP
LANDFILL BLADE WITH WEAR PLATES
PART OF 4Z-0631 BULLDOZER AR
AN ATTACHMENT

SMCS-6060 **i01097789**

NOTE	PART NUMBER	QTY	PART NAME 1 2 3 4 5 6 (PRODUCT LEVEL)	SEE PAGE
Y	*7T-5391*	1	EDGE GP-BIT & CUTTING	692
Y	**4Z-9366**	1	BLADE AS-SEMI-UNIVERSAL	682

Y-SEPARATE ILLUSTRATION

<END>

102-6346 BLADE & EDGE GP-SEMI-UNIVERSAL

S/N: T9J1-UP
PART OF 102-6345 BLADE GP-SEMI-UNIVERSAL
AN ATTACHMENT

SMCS-6060 **i00686991**

NOTE	PART NUMBER	QTY	PART NAME 1 2 3 4 5 6 (PRODUCT LEVEL)	SEE PAGE
Y	*7T-5391*	1	EDGE GP-BIT & CUTTING	692
Y	**102-1904**	1	BLADE AS-SEMI-UNIVERSAL	683

Y-SEPARATE ILLUSTRATION

<END>

102-6347 BLADE & EDGE GP-SEMI-UNIVERSAL

S/N: T9J1-UP
WITH ROCK GUARD & WEAR PLATE
AN ATTACHMENT

SMCS-6060 **i00686990**

NOTE	PART NUMBER	QTY	PART NAME 1 2 3 4 5 6 (PRODUCT LEVEL)	SEE PAGE
Y	*7T-5391*	1	EDGE GP-BIT & CUTTING	692
Y	**102-1938**	1	BLADE AS-SEMI-UNIVERSAL	684

Y-SEPARATE ILLUSTRATION

<END>

108-8290 BLADE & EDGE GP-SEMI-UNIVERSAL

S/N: T9J1-UP
WITH PUSH PLATE
AN ATTACHMENT

SMCS-6060 **i00686976**

NOTE	PART NUMBER	QTY	PART NAME 1 2 3 4 5 6 (PRODUCT LEVEL)	SEE PAGE
Y	*7T-5391*	1	EDGE GP-BIT & CUTTING	692
Y	**113-3239**	1	BLADE AS-SEMI-UNIVERSAL	685

Y-SEPARATE ILLUSTRATION

<END>

4Z-9335 BLADE & EDGE GP-UNIVERSAL

S/N: T9H1-UP
WITH ROCK GUARDS, WEAR PLATES, EXTENDED WEAR LIFE GET
PART OF 4Z-0625 BULLDOZER AR-UNIVERSAL
AN ATTACHMENT

SMCS-6060 **i01091950**

NOTE	PART NUMBER	QTY	PART NAME 1 2 3 4 5 6 (PRODUCT LEVEL)	SEE PAGE
Y	*9W-7042*	1	EDGE GP-BIT & CUTTING	695
Y	*4Z-9336*	1	BLADE AS-UNIVERSAL	685

Y-SEPARATE ILLUSTRATION

<END>

4Z-9367 BLADE & EDGE GP-UNIVERSAL

S/N: T9H1-UP
BLADE WITH PUSH PLATE
PART OF 4Z-0632 BULLDOZER AR
AN ATTACHMENT

SMCS-6060 **i01097790**

NOTE	PART NUMBER	QTY	PART NAME 1 2 3 4 5 6 (PRODUCT LEVEL)	SEE PAGE
Y	*7T-5394*	1	EDGE GP-BIT & CUTTING	693
Y	**4Z-9368**	1	BLADE AS-UNIVERSAL	685

Y-SEPARATE ILLUSTRATION

<END>

4Z-9370 BLADE & EDGE GP-UNIVERSAL

S/N: T9H1-UP
BLADE WITH ROCK GUARDS, WEAR PLATES
PART OF 4Z-0634 BULLDOZER AR
AN ATTACHMENT

SMCS-6060 **i01097792**

NOTE	PART NUMBER	QTY	PART NAME 1 2 3 4 5 6 (PRODUCT LEVEL)	SEE PAGE
Y	*7T-5394*	1	EDGE GP-BIT & CUTTING	693
Y	**4Z-9336**	1	BLADE AS-UNIVERSAL	685

Y-SEPARATE ILLUSTRATION

<END>

4Z-9371 BLADE & EDGE GP-UNIVERSAL

S/N: T9H1-UP
LANDFILL BLADE
PART OF 4Z-0635 BULLDOZER AR
AN ATTACHMENT

SMCS-6060 **i01097793**

NOTE	PART NUMBER	QTY	PART NAME 1 2 3 4 5 6 (PRODUCT LEVEL)	SEE PAGE
Y	*7T-5394*	1	EDGE GP-BIT & CUTTING	693
Y	**4Z-9372**	1	BLADE AS-UNIVERSAL	686
Y-SEPARATE ILLUSTRATION				

<END>

4Z-9373 BLADE & EDGE GP-UNIVERSAL

S/N: T9H1-UP
LANDFILL WITH WEAR PLATES
PART OF 4Z-0636 BULLDOZER AR-UNIVERSAL
AN ATTACHMENT

SMCS-6060 **i01097794**

NOTE	PART NUMBER	QTY	PART NAME 1 2 3 4 5 6 (PRODUCT LEVEL)	SEE PAGE
Y	*7T-5394*	1	EDGE GP-BIT & CUTTING	693
Y	**4Z-9374**	1	BLADE AS-UNIVERSAL	687
Y-SEPARATE ILLUSTRATION				

<END>

108-8291 BLADE & EDGE GP-UNIVERSAL

S/N: T9H1-UP
PART OF 106-7365 BLADE GP-UNIVERSAL
AN ATTACHMENT

SMCS-6060 **i00686975**

NOTE	PART NUMBER	QTY	PART NAME 1 2 3 4 5 6 (PRODUCT LEVEL)	SEE PAGE
Y	*7T-5394*	1	EDGE GP-BIT & CUTTING	693
Y	**108-8318**	1	BLADE AS-UNIVERSAL	688
Y-SEPARATE ILLUSTRATION				

<END>

WORK TOOLS

113-3240 BLADE & EDGE GP-UNIVERSAL

S/N: T9H1-UP
WITH ROCK GUARD
AN ATTACHMENT

SMCS-6060 **i00686960**

NOTE	PART NUMBER	QTY	PART NAME 1 2 3 4 5 6 (PRODUCT LEVEL)	SEE PAGE
Y	*7T-5394*	1	EDGE GP-BIT & CUTTING	693
Y	**113-3241**	1	BLADE AS-UNIVERSAL	689

Y-SEPARATE ILLUSTRATION

<END>

4Z-9362 BLADE AS-SEMI-UNIVERSAL

S/N: T9J1-UP
LANDFILL
PART OF 4Z-9361 BLADE & EDGE GP-SEMI-UNIVERSAL, 4Z-9364, 4Z-9366 BLADE AS-SEMI-UNIVERSAL
AN ATTACHMENT

SMCS-6060 **i02235145**

NOTE	REF NO	GRAPHIC REF	PART NUMBER	QTY	PART NAME 1 2 3 4 5 6 (PRODUCT LEVEL)	SEE PAGE
Y	1	1	**102-1904**	1	BLADE AS-SEMI-UNIVERSAL	683

Y-SEPARATE ILLUSTRATION

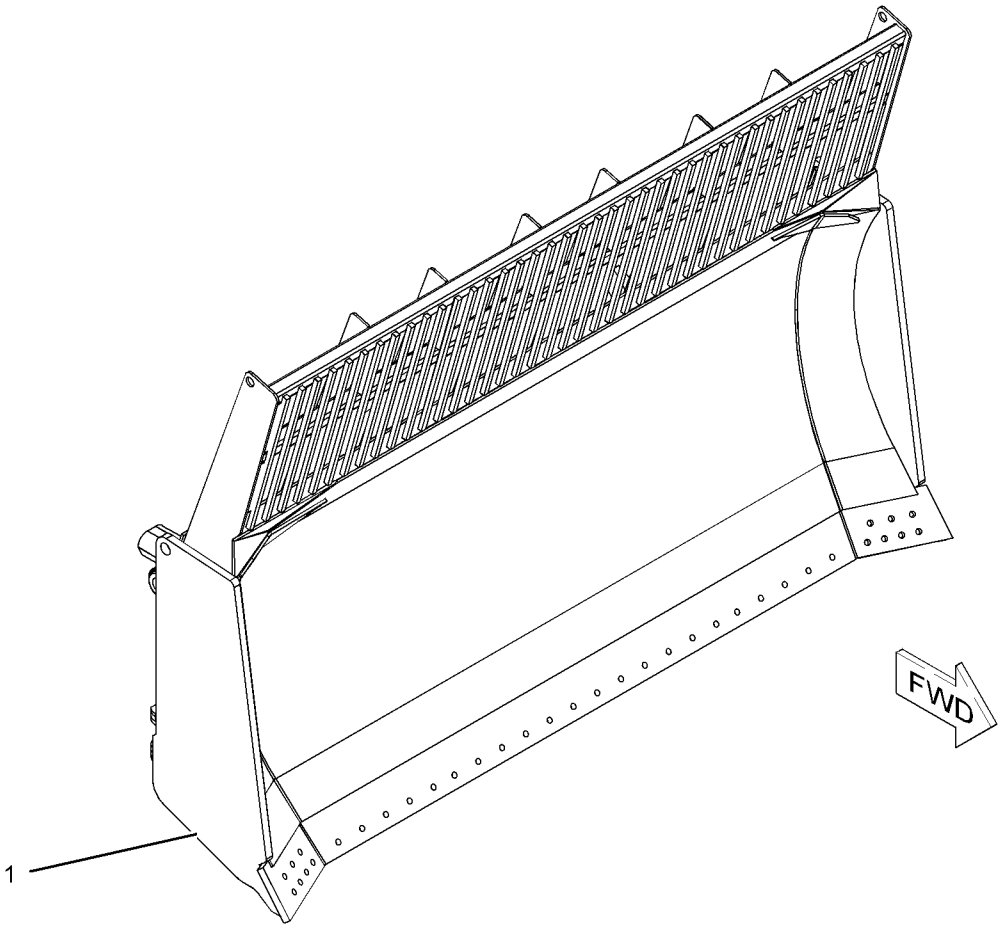

GRAPHIC #1 **<END>** g01127297

WORK TOOLS

4Z-9364 BLADE AS-SEMI-UNIVERSAL

S/N: T9J1-UP
LANDFILL BLADE WITH PUSH PLATE
PART OF 4Z-9363 BLADE & EDGE GP-SEMI-UNIVERSAL
AN ATTACHMENT

SMCS-6060 **i01096529**

NOTE	PART NUMBER	QTY	PART NAME 1 2 3 4 5 6 (PRODUCT LEVEL)	SEE PAGE
Y	**4Z-9362**	1	BLADE AS-SEMI-UNIVERSAL	680
	7T-5803	1	PLATE-PUSH	

Y-SEPARATE ILLUSTRATION

<END>

WORK TOOLS

4Z-9366 BLADE AS-SEMI-UNIVERSAL

S/N: T9J1-UP
LANDFILL BLADE WITH WEAR PLATES
PART OF 4Z-9365 BLADE & EDGE GP-SEMI-UNIVERSAL
AN ATTACHMENT

SMCS-6060 **i01786908**

NOTE	REF NO	GRAPHIC REF	PART NUMBER	QTY	PART NAME 1 2 3 4 5 6 (PRODUCT LEVEL)	SEE PAGE
Y	1	1	*4Z-9362*	1	BLADE AS-SEMI-UNIVERSAL	680
Y	2	1	*218-3884*	1	PLATE GP-WEAR	706

Y-SEPARATE ILLUSTRATION

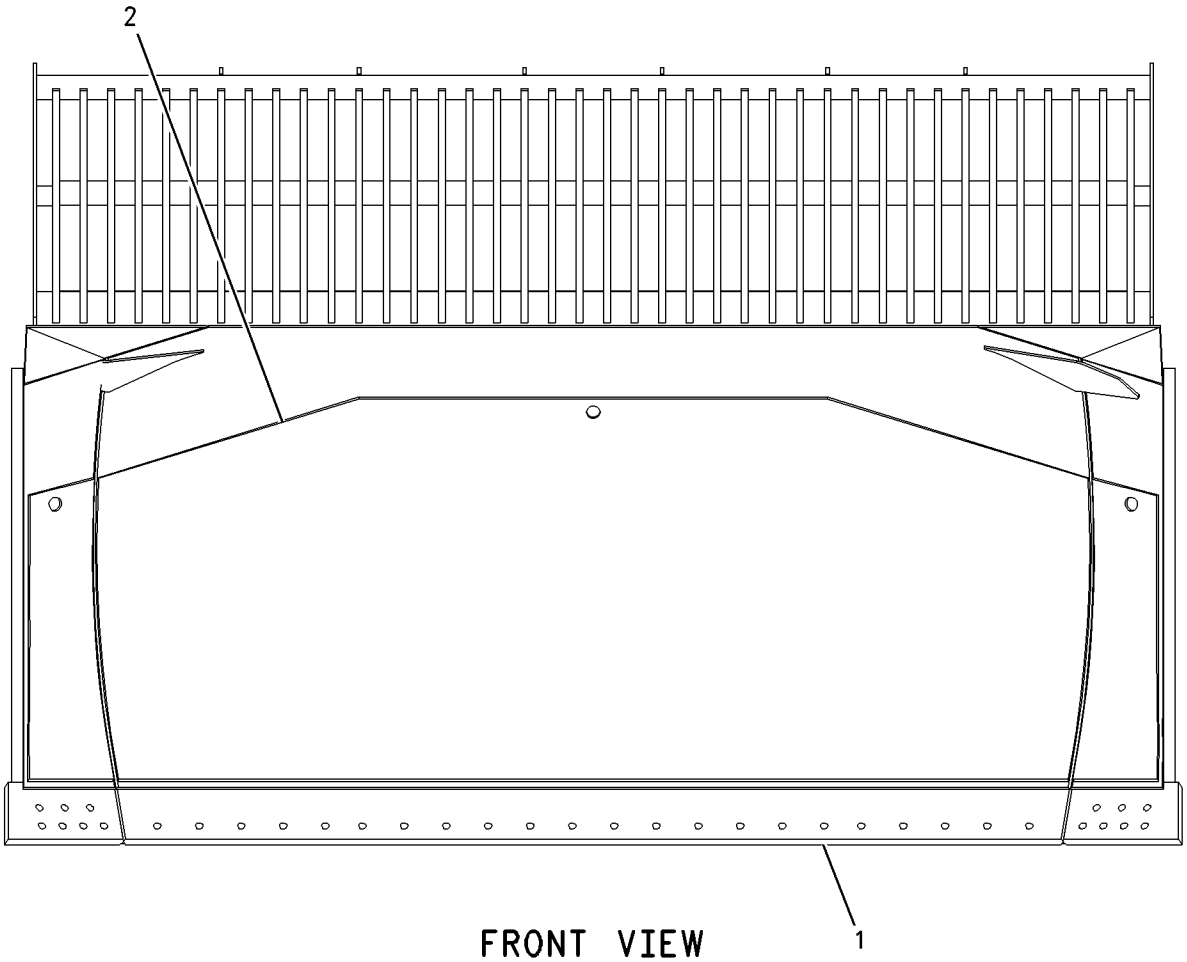

FRONT VIEW

GRAPHIC #1 **<END>** g00917120

102-1904 BLADE AS-SEMI-UNIVERSAL

S/N: T9J1-UP

PART OF 102-6346 BLADE & EDGE GP-SEMI-UNIVERSAL, 102-1938, 113-3239, 4Z-9362 BLADE AS-SEMI-UNIVERSAL AN ATTACHMENT

SMCS-6060 **i01989356**

NOTE	REF NO	GRAPHIC REF	PART NUMBER	QTY	PART NAME 1 2 3 4 5 6 (PRODUCT LEVEL)	SEE PAGE
	1	1	**9W-8546**	3	PLATE	
	2	1	**109-6347**	1	SUPPORT-CENTER	
	3	1	**108-8292**	2	BRACKET AS	
					(EACH INCLUDES)	
		1	**3G-9598**	2	BEARING-SLEEVE	
	4	1	**8P-9770**	1	PLATE	
	5	1	**110-7421**	1	TRUNNION AS	
	5A	1	**4T-9439**	1	TRUNNION	
	6	1	**7T-5869**	1	GUARD	
	7	1	**1U-4962**	1	PLATE-LH	
	8	1	**1U-4961**	1	PLATE-RH	
	9	1	**9W-6118**	2	GUARD	
	10	1	**9W-4681**	2	BRACKET AS	
					(EACH INCLUDES)	
	10A	1	**9J-0123**	1	TRUNNION	
	11	1	**6Y-3233**	2	DEFLECTOR	
	12	1	**8E-5590**	2	SUPPORT-OUTER	
	13	1	**108-8294**	1	BRACKET (RH)	
	13A	1	**108-8295**	1	BRACKET (LH)	

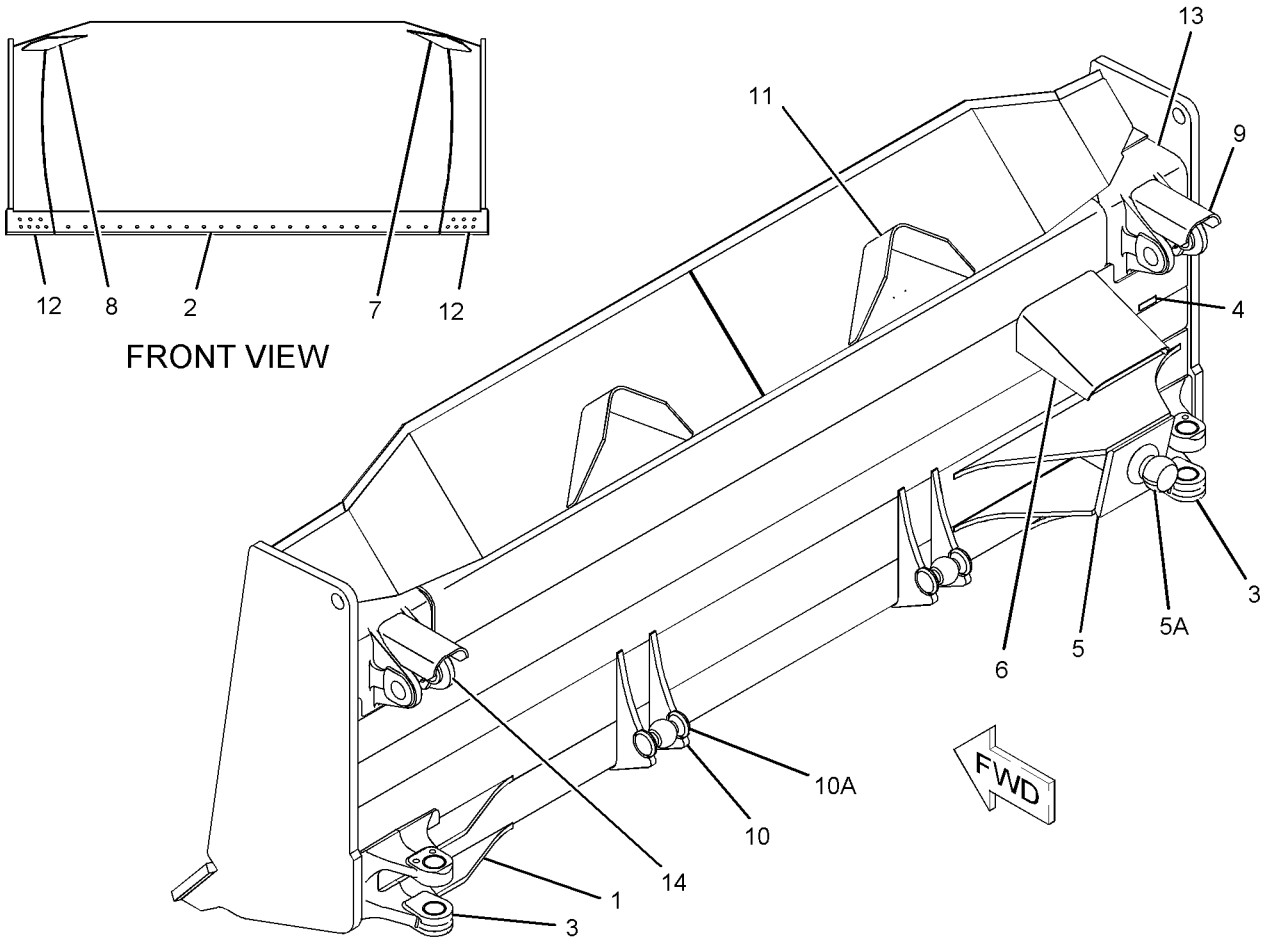

GRAPHIC #1 **<END>** g01038538

102-1938 BLADE AS-SEMI-UNIVERSAL

S/N: T9J1-UP
WITH ROCK GUARD & WEAR PLATE
PART OF 102-6347, 4Z-9360 BLADE & EDGE GP-SEMI-UNIVERSAL
AN ATTACHMENT

SMCS-6060 **i01786862**

NOTE	REF NO	GRAPHIC REF	PART NUMBER	QTY	PART NAME 1 2 3 4 5 6 (PRODUCT LEVEL)	SEE PAGE
Y	1	1	**102-1904**	1	BLADE AS-SEMI-UNIVERSAL	683
Y	2	1	*102-1937*	1	GUARD GP-ROCK	409
Y	3	1	*218-3884*	1	PLATE GP-WEAR	706

Y-SEPARATE ILLUSTRATION

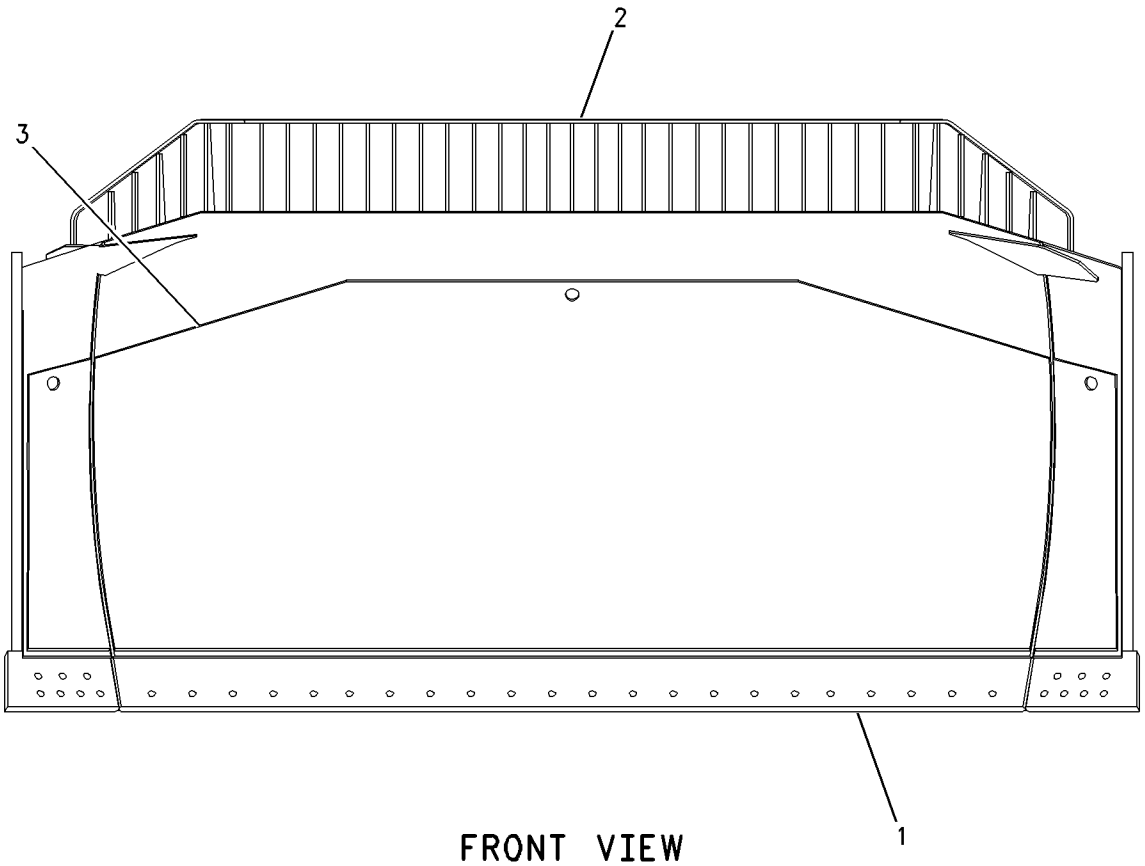

FRONT VIEW

GRAPHIC #1 **<END>** g00916720

113-3239 BLADE AS-SEMI-UNIVERSAL

S/N: T9J1-UP
WITH PUSH PLATE
PART OF 108-8290 BLADE & EDGE GP-SEMI-UNIVERSAL
AN ATTACHMENT

SMCS-6060 **i00686963**

NOTE	PART NUMBER	QTY	PART NAME 1 2 3 4 5 6 (PRODUCT LEVEL)	SEE PAGE
Y	**102-1904**	1	BLADE AS-SEMI-UNIVERSAL	683
	7T-5803	1	PLATE-PUSH	

Y-SEPARATE ILLUSTRATION

<END>

4Z-9336 BLADE AS-UNIVERSAL

S/N: T9H1-UP
PART OF 4Z-9335, 4Z-9370 BLADE & EDGE GP-UNIVERSAL
AN ATTACHMENT

SMCS-6053, 6060 **i01786897**

NOTE	PART NUMBER	QTY	PART NAME 1 2 3 4 5 6 (PRODUCT LEVEL)	SEE PAGE
Y	**113-3241**	1	BLADE AS-UNIVERSAL	689
Y	*217-7158*	1	PLATE GP-WEAR	705

Y-SEPARATE ILLUSTRATION

<END>

4Z-9368 BLADE AS-UNIVERSAL

S/N: T9H1-UP
WITH PUSH PLATE
PART OF 4Z-9367 BLADE & EDGE GP-UNIVERSAL
AN ATTACHMENT

SMCS-6053, 6060 **i02235138**

NOTE	PART NUMBER	QTY	PART NAME 1 2 3 4 5 6 (PRODUCT LEVEL)	SEE PAGE
Y	**108-8318**	1	BLADE AS-UNIVERSAL	688
	7T-5803	1	PLATE-PUSH	

Y-SEPARATE ILLUSTRATION

<END>

WORK TOOLS

4Z-9372 BLADE AS-UNIVERSAL

S/N: T9H1-UP

PART OF 4Z-9371 BLADE & EDGE GP-UNIVERSAL, 4Z-9374 BLADE AS-UNIVERSAL AN ATTACHMENT

SMCS-6053, 6060 **i00602990**

NOTE	REF NO	GRAPHIC REF	PART NUMBER	QTY	PART NAME 1 2 3 4 5 6 (PRODUCT LEVEL)	SEE PAGE
	1	1	**4Z-9380**	1	SCREEN AS	
Y	2	1	**108-8318**	1	BLADE AS-UNIVERSAL	688
	3	1	**4Z-8862**	8	STRAP	
	4	1	**4Z-9381**	2	PLATE	

Y-SEPARATE ILLUSTRATION

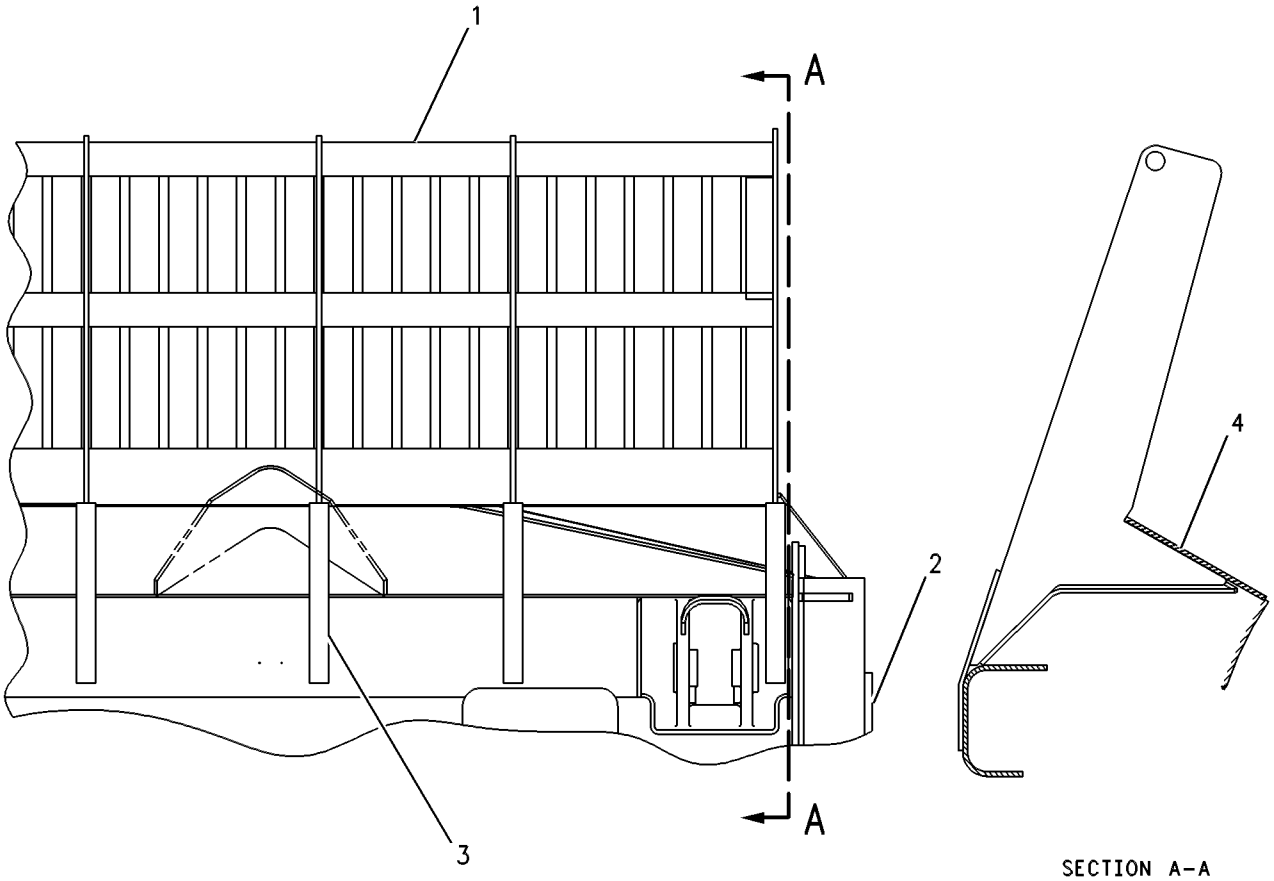

GRAPHIC #1 **<END>** g00276885

WORK TOOLS

4Z-9374 BLADE AS-UNIVERSAL

S/N: T9H1-UP
LANDFILL, WITH WEAR PLATES
PART OF 4Z-9373 BLADE & EDGE GP-UNIVERSAL
AN ATTACHMENT

SMCS-6053, 6060 **i01753060**

NOTE	REF NO	GRAPHIC REF	PART NUMBER	QTY	PART NAME 1 2 3 4 5 6 (PRODUCT LEVEL)	SEE PAGE
Y	1	1	**4Z-9372**	1	BLADE AS-UNIVERSAL	686
CY	2	1	*217-7158*	1	PLATE GP-WEAR	705

C-CHANGE FROM PREVIOUS TYPE
Y-SEPARATE ILLUSTRATION

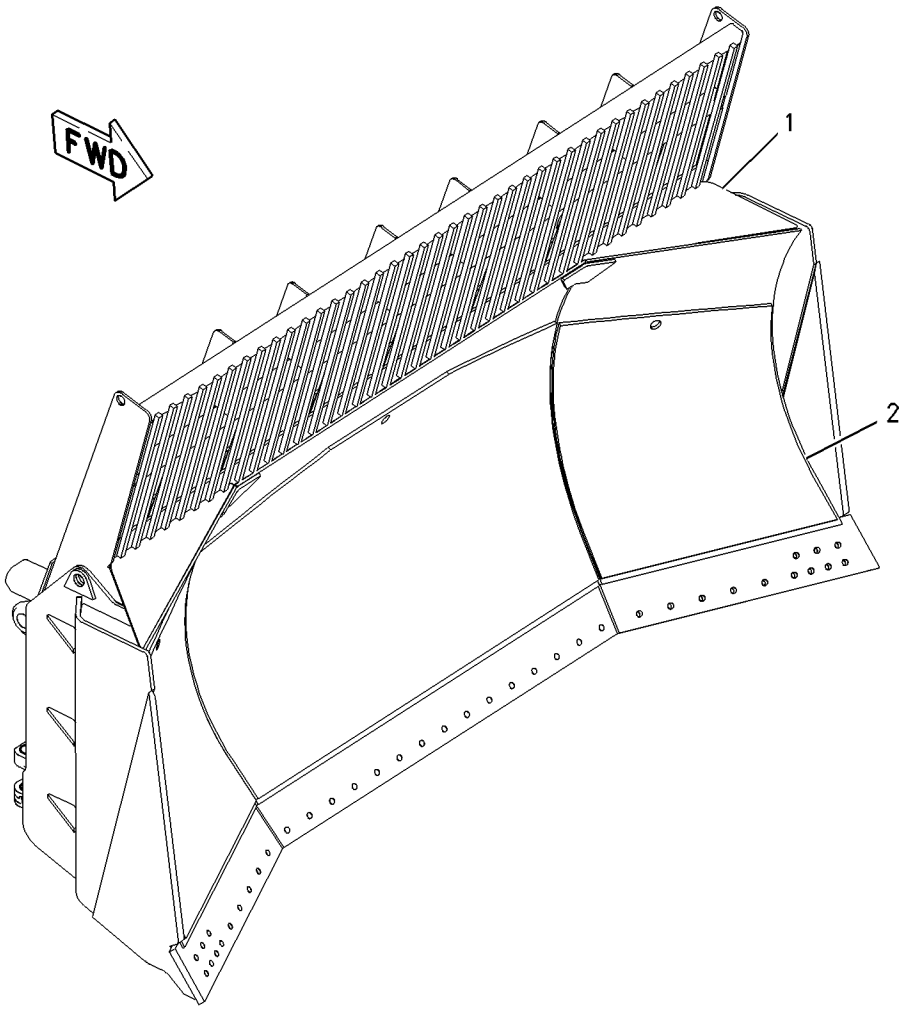

GRAPHIC #1 **<END>** g01001700

WORK TOOLS

108-8318 BLADE AS-UNIVERSAL

S/N: T9H1-UP

PART OF 108-8291 BLADE & EDGE GP-UNIVERSAL, 113-3241, 4Z-9368, 4Z-9372 BLADE AS-UNIVERSAL

AN ATTACHMENT

SMCS-6053, 6060 **i01540900**

NOTE	REF NO	GRAPHIC REF	PART NUMBER	QTY	PART NAME 1 2 3 4 5 6 (PRODUCT LEVEL)	SEE PAGE
	1	1	**6Y-3233**	2	DEFLECTOR	
	2	1	**7T-5869**	1	GUARD	
C	3	1	**8E-9228**	2	SUPPORT-OUTER	
	4	1	**8P-9770**	1	PLATE	
	5	1	**9W-4681**	2	BRACKET AS	
					(EACH INCLUDES)	
	6	1	**9J-0123**	1	TRUNNION	
	7	1	**9W-6118**	2	GUARD	
	8	1	**9W-8546**	3	PLATE	
	9	1	**108-8292**	2	BRACKET AS	
					(EACH INCLUDES)	
	10	1	**3G-9598**	2	BEARING-SLEEVE	
	11	1	**110-7421**	1	TRUNNION AS	
		1	**110-2966**	1	TRUNNION	

C-CHANGE FROM PREVIOUS TYPE

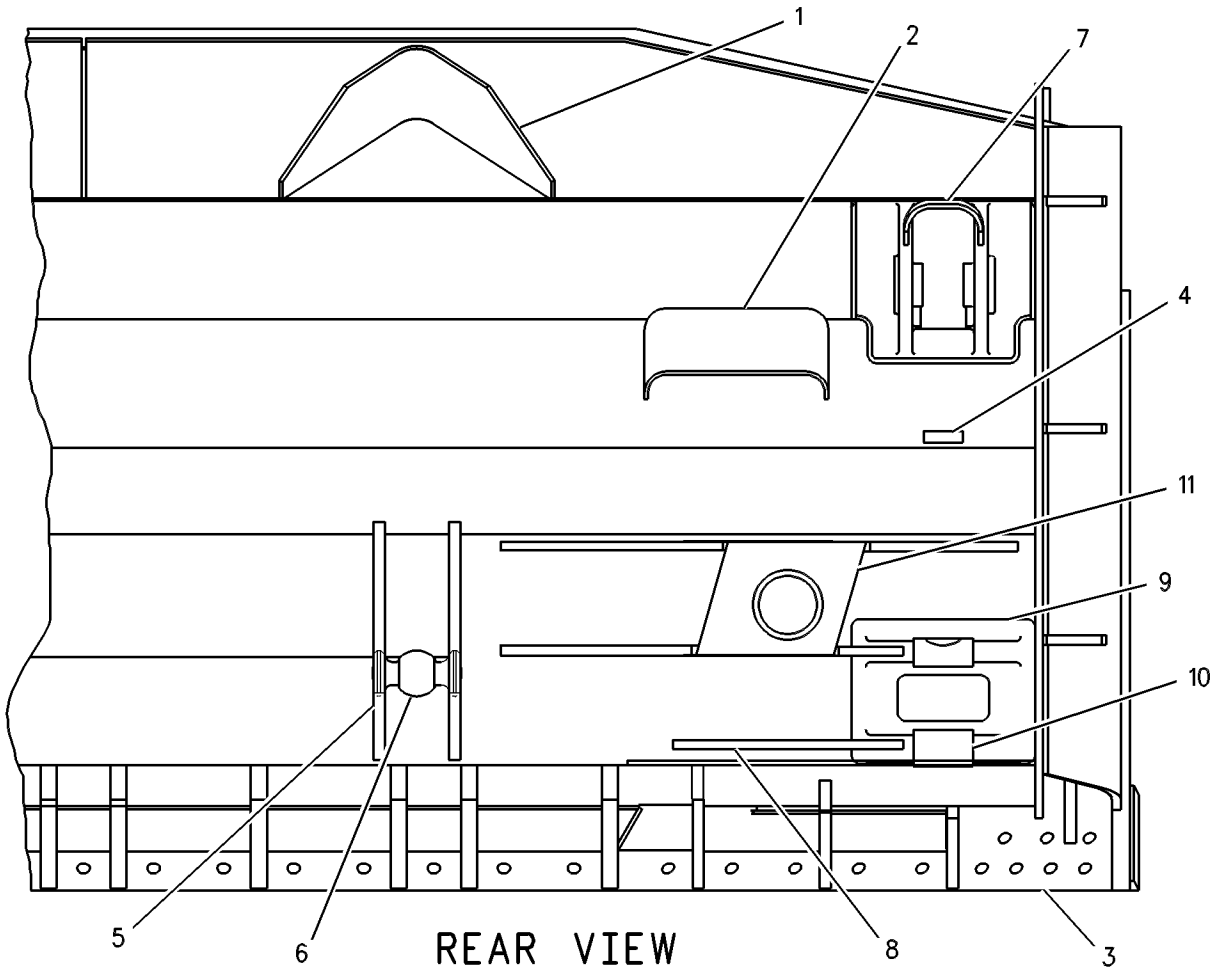

GRAPHIC #1 **<END>** g00554799

WORK TOOLS

113-3241 BLADE AS-UNIVERSAL

S/N: T9H1-UP
WITH ROCK GUARD
PART OF 113-3240 BLADE & EDGE GP-UNIVERSAL, 4Z-9336 BLADE AS-UNIVERSAL
AN ATTACHMENT

SMCS-6053, 6060 **i00719643**

NOTE	PART NUMBER	QTY	PART NAME 1 2 3 4 5 6 (PRODUCT LEVEL)	SEE PAGE
Y	**108-8318**	1	BLADE AS-UNIVERSAL	688
Y	*113-6041*	1	GUARD GP-ROCK	410

Y-SEPARATE ILLUSTRATION

<END>

WORK TOOLS

102-6345 BLADE GP-SEMI-UNIVERSAL

S/N: T9J1-UP

PART OF 228-1854, 246-1025 BULLDOZER AR-SEMI-UNIVERSAL

AN ATTACHMENT

SMCS-6060, 6078 **i00590028**

NOTE	REF NO	GRAPHIC REF	PART NUMBER	QTY	PART NAME 1 2 3 4 5 6 (PRODUCT LEVEL)	SEE PAGE
Y	1	1	*102-6346*	1	BLADE & EDGE GP-SEMI-UNIVERSAL	676
	2	1	**8E-6758**	2	CONNECTOR AS	
		1	**8E-6752**	4	BEARING-SLEEVE	
M	3	1	**7X-2574**	8	BOLT	
		1	**6J-5179**	4	RETAINER	
	4	1	**1U-2472**	2	PIN	
	5	1	**4T-7534**	2	PIN	

M-METRIC PART
Y-SEPARATE ILLUSTRATION

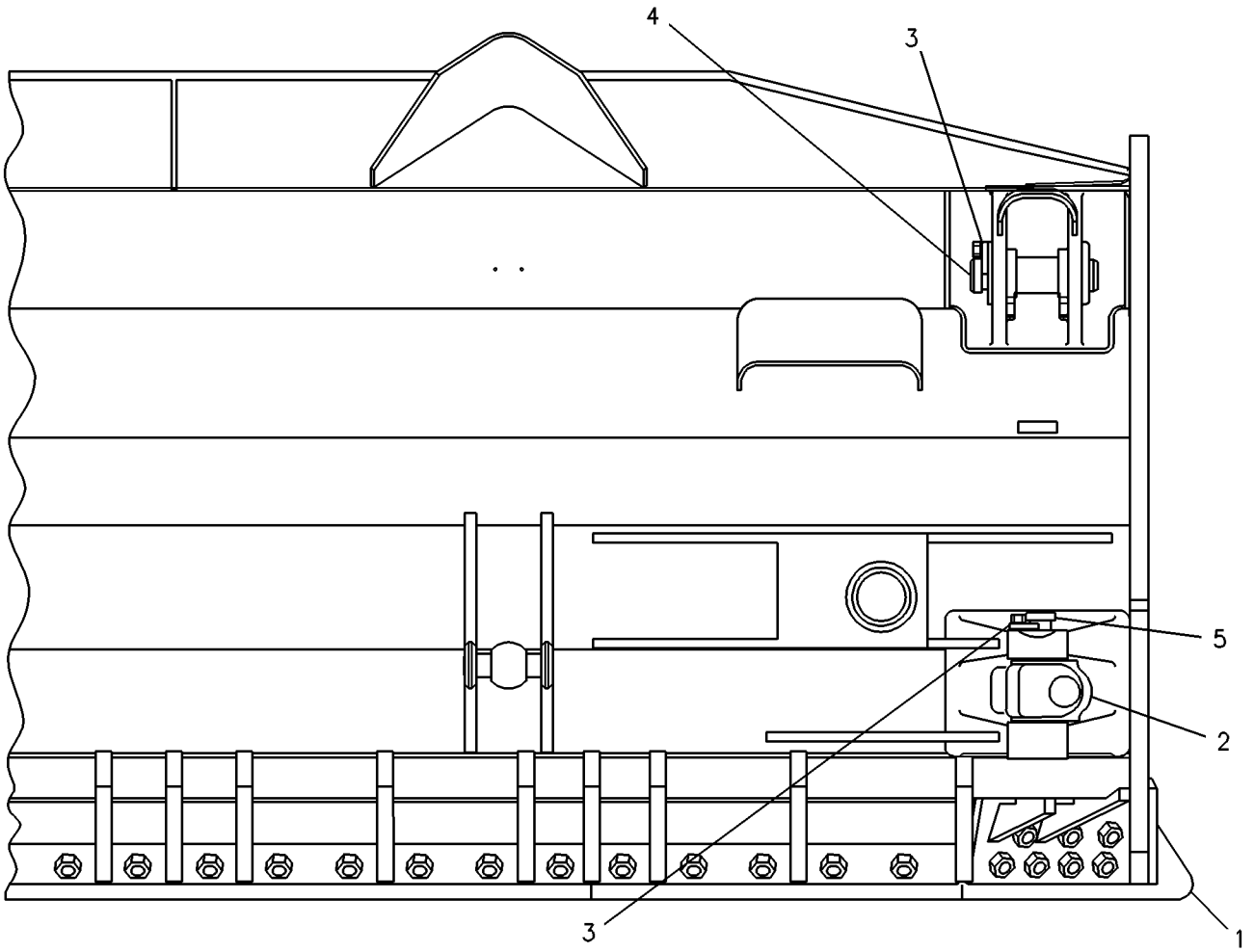

GRAPHIC #1 **<END>** g00233158

WORK TOOLS

106-7365 BLADE GP-UNIVERSAL

S/N: T9H1-UP
PART OF 228-1853, 246-1024 BULLDOZER AR-UNIVERSAL
AN ATTACHMENT

SMCS-6053, 6060 **i00591483**

NOTE	REF NO	GRAPHIC REF	PART NUMBER	QTY	PART NAME 1 2 3 4 5 6 (PRODUCT LEVEL)	SEE PAGE
	1	1	**4T-7534**	2	PIN	
M	2	1	**7X-2574**	8	BOLT (M24X3X45-MM)	
		1	**6J-5179**	4	RETAINER	
	3	1	**8E-6758**	2	CONNECTOR AS	
					(EACH INCLUDES)	
		1	**8E-6752**	4	BEARING-SLEEVE	
Y	4	1	*108-8291*	1	BLADE & EDGE GP-UNIVERSAL	678
	5	1	**1U-2472**	2	PIN	

M-METRIC PART
Y-SEPARATE ILLUSTRATION

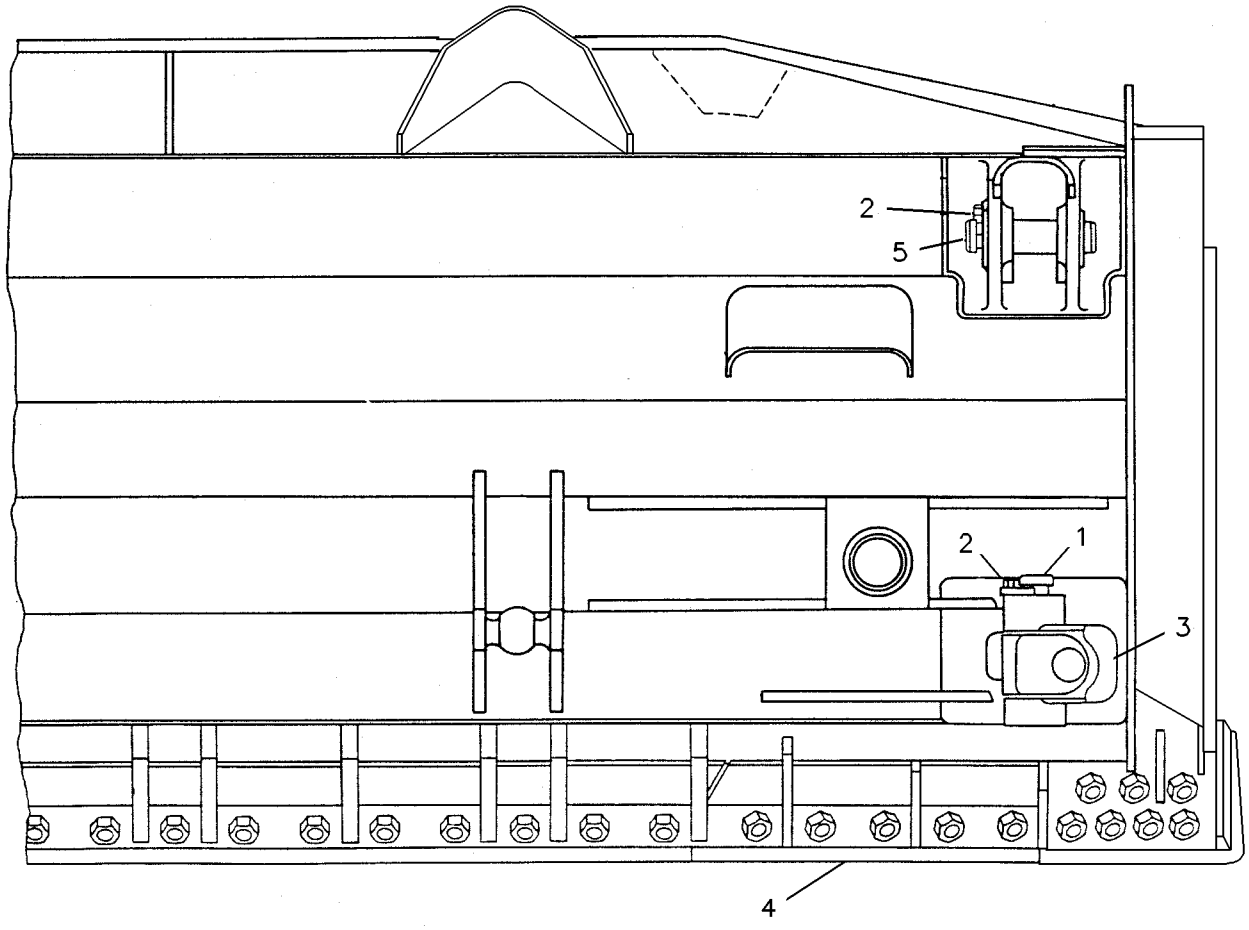

GRAPHIC #1 **<END>** g00225266

7T-5391 EDGE GP-BIT & CUTTING—SEMI-UNIVERSAL

S/N: T9J1-UP

PART OF 102-6346, 102-6347, 108-8290, 4Z-9361, 4Z-9363, 4Z-9365 BLADE & EDGE GP-SEMI-UNIVERSAL AN ATTACHMENT

SMCS-6801, 6804 **i00593021**

NOTE	REF NO	GRAPHIC REF	PART NUMBER	QTY	PART NAME 1 2 3 4 5 6 (PRODUCT LEVEL)	SEE PAGE
	1	1	**8E-4196**	1	BIT-END-LH	
	2	1	**8E-4197**	1	BIT-END-RH	
	3	1	**7T-9125**	2	EDGE-CUTTING	
	4	1	**7T-5702**	1	EDGE-CUTTING	
	5	1	**4J-9208**	36	BOLT-PLOW	
		1	**5P-8250**	36	WASHER (5.0MM THK)	
		1	**2J-3507**	36	NUT-FULL (1-8 THD)	

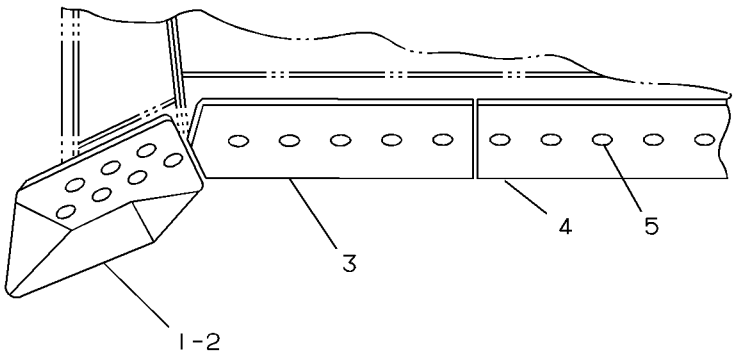

GRAPHIC #1 **<END>** g00210390

7T-5394 EDGE GP-BIT & CUTTING—UNIVERSAL

S/N: T9H1-UP

PART OF 108-8291, 113-3240, 4Z-9367, 4Z-9370, 4Z-9371, 4Z-9373 BLADE & EDGE GP-UNIVERSAL AN ATTACHMENT

SMCS-6801, 6804 **i01629930**

NOTE	REF NO	GRAPHIC REF	PART NUMBER	QTY	PART NAME 1 2 3 4 5 6 (PRODUCT LEVEL)	SEE PAGE
	1	1	**8E-4196**	1	BIT-END (LH)	
	2	1	**8E-4197**	1	BIT-END (RH)	
	3	1	**7T-9125**	2	EDGE-CUTTING	
	4	1	**7T-5701**	1	EDGE-CUTTING	
	5	1	**4J-9208**	39	BOLT-PLOW (1-8X3.5 IN)	
		1	**5P-8250**	39	WASHER (28X49X5MM THK)	
		1	**2J-3507**	39	NUT-FULL (1-8 THD)	

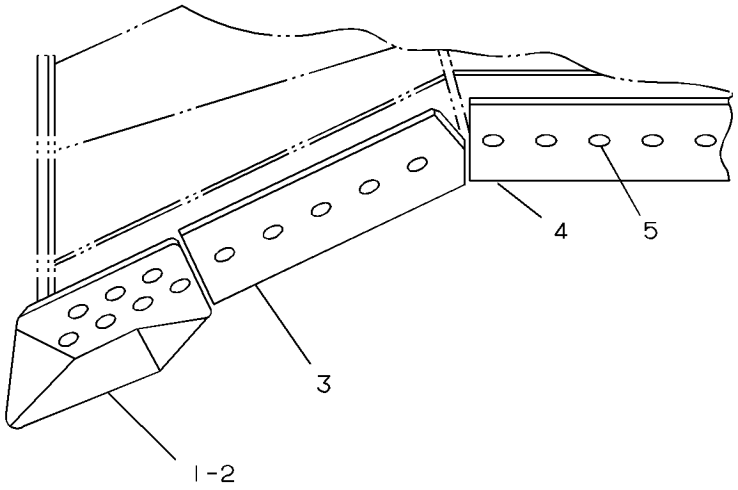

GRAPHIC #1 **<END>** g00210391

9W-7041 EDGE GP-BIT & CUTTING—SEMI-UNIVERSAL

S/N: T9J1-UP
ABRASION
PART OF 4Z-9360 BLADE & EDGE GP-SEMI-UNIVERSAL
AN ATTACHMENT

SMCS-6801, 6804 **i01786861**

NOTE	REF NO	GRAPHIC REF	PART NUMBER	QTY	PART NAME 1 2 3 4 5 6 (PRODUCT LEVEL)	SEE PAGE
	1	1	**8E-4539**	1	BIT-END (RH)	
		1	**8E-4540**	1	BIT-END (LH)	
	2	1	**9W-7043**	1	EDGE-CUTTING	
	3	1	**112-2471**	2	EDGE-CUTTING	
	4	1	**4J-9058**	36	BOLT-PLOW (1-8X3.25 IN)	
					—OR—	
		1	**4J-9208**	36	BOLT-PLOW (1-8X3.5 IN)	
		1	**5P-8250**	36	WASHER (28X49X5MM THK)	
		1	**2J-3507**	36	NUT-FULL (1-8 THD)	

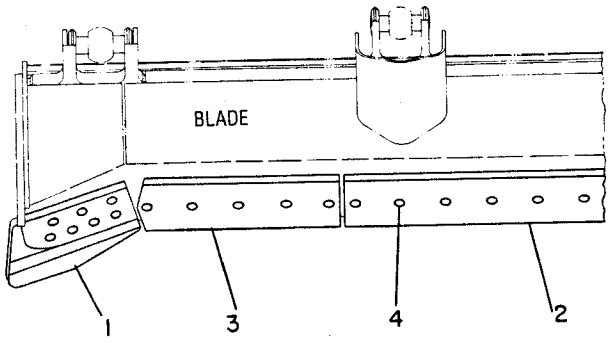

TOP VIEW

GRAPHIC #1 **<END>** g00180483

9W-7042 EDGE GP-BIT & CUTTING—SEMI-UNIVERSAL

S/N: T9H1-UP
ABRASION
PART OF 4Z-9335 BLADE & EDGE GP-UNIVERSAL
AN ATTACHMENT

SMCS-6801, 6804 **i01786899**

NOTE	REF NO	GRAPHIC REF	PART NUMBER	QTY	PART NAME 1 2 3 4 5 6 (PRODUCT LEVEL)	SEE PAGE
	1	1	**8E-4539**	1	BIT-END (RH)	
		1	**8E-4540**	1	BIT-END (LH)	
	2	1	**9W-7044**	1	EDGE-CUTTING	
	3	1	**112-2471**	2	EDGE-CUTTING	
	4	1	**4J-9058**	39	BOLT-PLOW (1-8X3.25 IN)	
					OR	
		1	**4J-9208**	39	BOLT-PLOW (1-8X3.5 IN)	
	5	1	**5P-8250**	39	WASHER (28X49X5MM THK)	
		1	**2J-3507**	39	NUT-FULL (1-8 THD)	

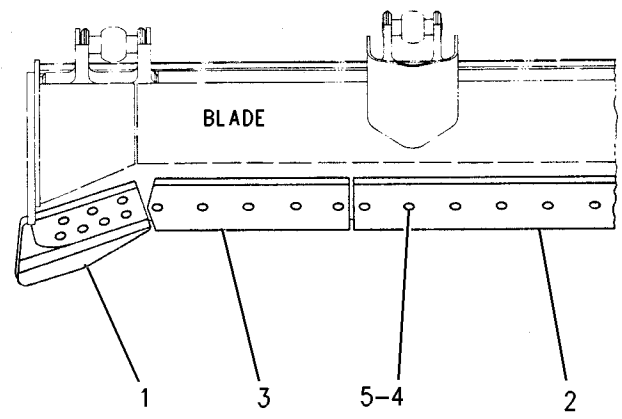

GRAPHIC #1 **<END>** g00922400

WORK TOOLS

135-2803 FRAME GP-RIPPER

S/N: MAM1-UP
PART OF 217-3563 RIPPER AR
FOR USE WITH SINGLE SHANK RIPPER
AN ATTACHMENT

SMCS-6314, 7067 **i00982748**

NOTE	REF NO	GRAPHIC REF	PART NUMBER	QTY	PART NAME 1 2 3 4 5 6 (PRODUCT LEVEL)	SEE PAGE
	1	1	**3B-8489**	2	FITTING-GREASE	
	2	1	**3E-6756**	16	SEAL-LIP TYPE	
	3	1	**3E-6757**	8	SEAL-LIP TYPE	
B	4	1	**4T-3522**	22	WASHER (95X170X3-MM THK)	
	5	1	**6J-9482**	2	PIN AS	
M	6	1	**8T-5460**	16	BOLT (M20X2.5X40-MM)	
	7	1	**7T-7305**	8	PLATE	
	8	1	**9J-9055**	2	PIN AS	
I	9	1	**9R-6776**	2	HOSE AS	
	10	1	**154-4492**	2	PLUG-ADAPTER	
	11	1	**111-2104**	2	PIN AS	
	12	1	**132-7994**	2	PIN AS	
	13	1	**135-2804**	1	FRAME & BEARING AS	
		1	**3B-8489**	2	FITTING-GREASE	
		1	**4T-9751**	4	BEARING-SLEEVE	
		1	**8P-9770**	1	PLATE	
	14	1	**136-7921**	2	SPACER	
	15	1	**3J-7354**	4	SEAL-O-RING	
	16	1	**4J-5477**	4	SEAL-O-RING	
	17	1	**6V-8628**	2	ELBOW	
	18	1	**6V-9000**	2	ELBOW	
	19	1	**6V-9313**	2	PLUG	

B-USE AS REQUIRED
I-REFER TO HYDRAULIC INFORMATION SYSTEM
M-METRIC PART

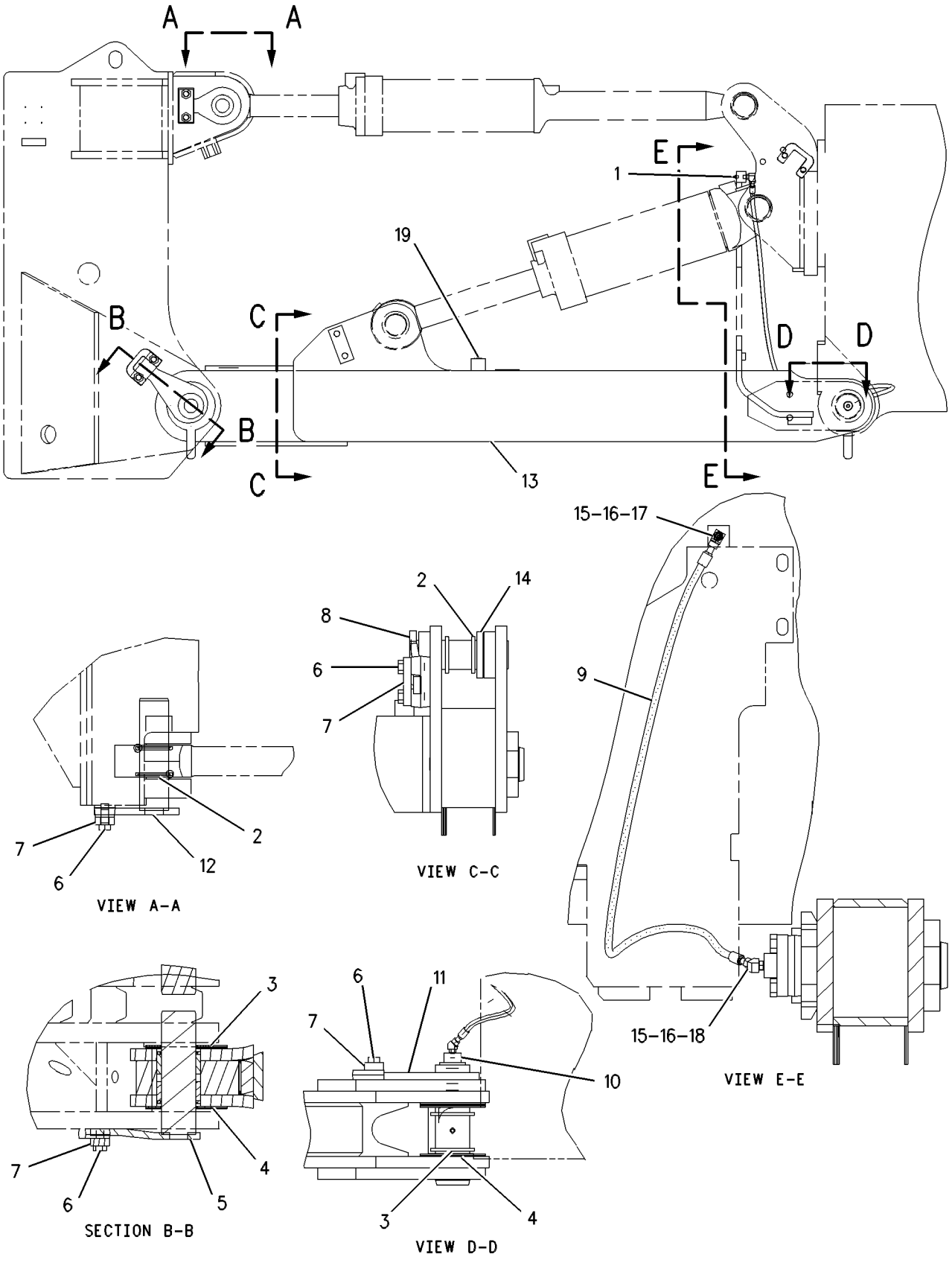

GRAPHIC #1 **<END>** g00500319

WORK TOOLS

159-9796 FRAME GP-RIPPER

S/N: CRM1-UP
PART OF 217-3562 RIPPER AR
FOR USE WITH MULTI-SHANK RIPPER
AN ATTACHMENT

SMCS-6314, 7067 **i01445915**

NOTE	REF NO	GRAPHIC REF	PART NUMBER	QTY	PART NAME 1 2 3 4 5 6 (PRODUCT LEVEL)	SEE PAGE
	1	1	**3B-8489**	2	FITTING-GREASE	
	2	1	**3E-6756**	16	SEAL-LIP TYPE	
	3	1	**3E-6757**	8	SEAL-LIP TYPE	
	4	1	**4T-0204**	2	PIN AS	
B	5	1	**4T-3522**	20	WASHER (95X170X3-MM THK)	
	6	1	**4T-9762**	2	PIN AS	
	7	1	**6J-9480**	2	PIN AS	
	8	1	**6V-9313**	2	PLUG	
	9	1	**6Y-9287**	2	SPACER (76.8X170X40-MM THK)	
	10	1	**7T-7305**	8	PLATE	
I	11	1	**9R-6776**	2	HOSE AS	
	12	1	**111-2104**	2	PIN AS	
	13	1	**136-7921**	2	SPACER	
	14	1	**154-4492**	2	PLUG-ADAPTER	
	15	1	**187-5341**	1	FRAME & BEARING AS	
	15A	1	**4T-0208**	4	BEARING-SLEEVE	
	15B	1	**3B-8489**	2	FITTING-GREASE	
	15C	1	**8P-9770**	1	PLATE	
	16	1	**3J-7354**	4	SEAL-O-RING	
	17	1	**4J-5477**	4	SEAL-O-RING	
	18	1	**6V-8628**	2	ELBOW	
	19	1	**6V-9000**	2	ELBOW	
M	20	1	**8T-5460**	16	BOLT (M20X2.5X40-MM)	

B-USE AS REQUIRED
I-REFER TO HYDRAULIC INFORMATION SYSTEM
M-METRIC PART

159-9796 **FRAME GP-RIPPER** *(contd.)* **i01445915**

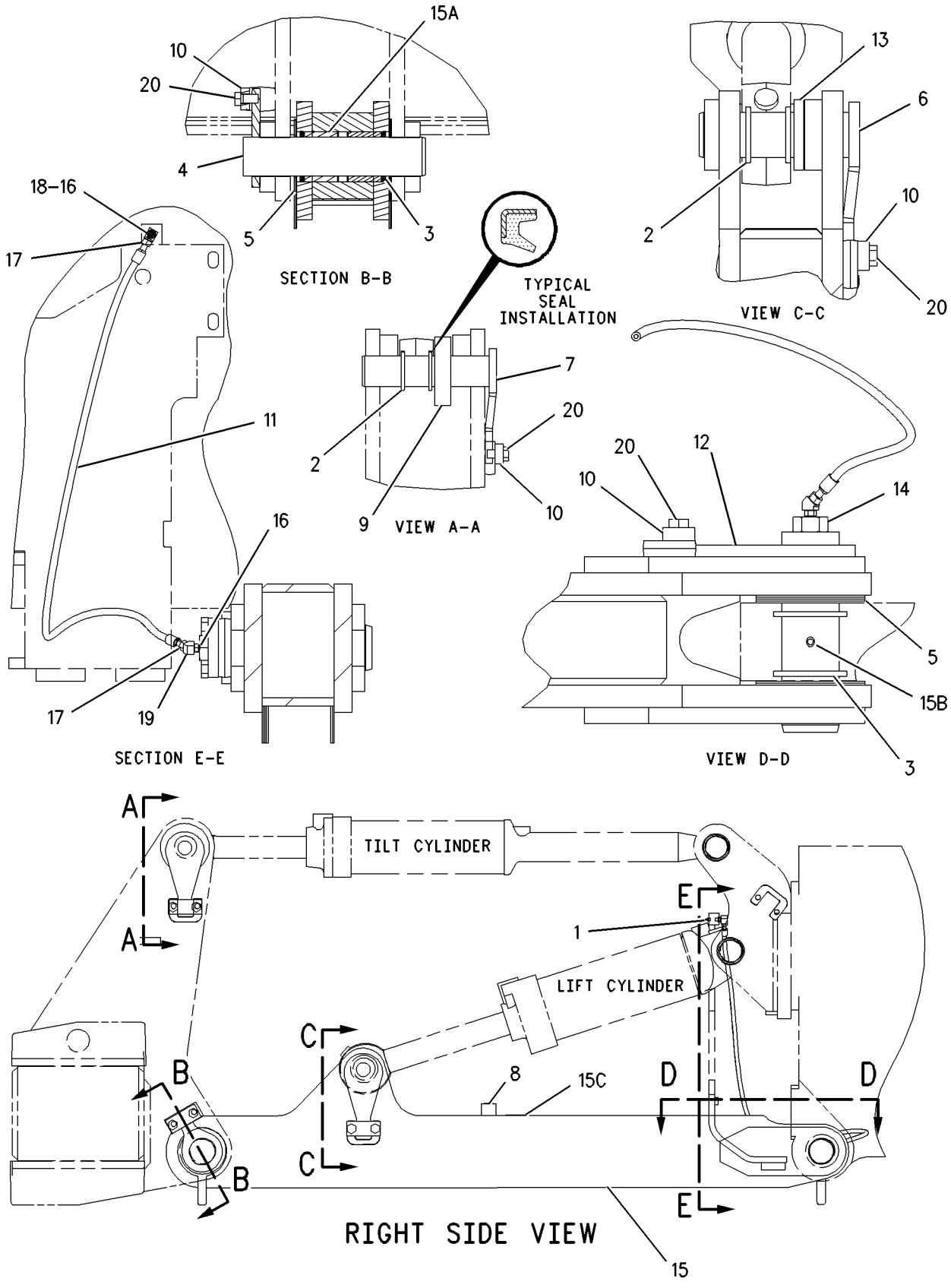

GRAPHIC #1 **<END>** g00698549

WORK TOOLS

209-2609 LINES GP-WINCH

S/N: RJS1-UP

PART OF 205-8636 CONTROL AR-HYDRAULIC

AN ATTACHMENT

SMCS-5179 **i02206638**

NOTE	REF NO	GRAPHIC REF	PART NUMBER	QTY	PART NAME 1 2 3 4 5 6 (PRODUCT LEVEL)	SEE PAGE
	1	1	**8E-7881**	1	BRACKET AS	
		1	**7G-5984**	2	CLIP (TAB)	
Y	2	1	**191-1443**	1	MANIFOLD GP-HYDRAULIC	583
I	3	1	**212-5076**	1	HOSE AS	
I	4	1	**212-5077**	1	HOSE AS	
	5	1	**219-8051**	1	HARNESS AS-SOLENOID	
		1	**102-8803**	1	KIT-RECEPTACLE (3-PIN)	
					(INCLUDES RECEPTACLE AS & WEDGE)	
		1	**155-2260**	1	KIT-CONNECTING PLUG (3-PIN)	
		1	**155-2270**	1	KIT-CONNECTING PLUG (2-PIN)	
					(EACH INCLUDES PLUG AS & WEDGE)	
I	6	1	**221-9161**	1	HOSE AS	
I	7	1	**221-9162**	1	HOSE AS	
I	8	1	**221-9163**	1	HOSE AS	
	9	1	*164-6858*	1	TEE AS	
		1	**5K-9090**	2	SEAL-O-RING	
		1	**7M-8485**	1	SEAL-O-RING	
		1	**6V-8778**	1	TEE-FACE SEAL	
	10	1	**067-2551**	1	CLIP	
	11	1	*148-8336*	1	CONNECTOR AS	
		1	**3J-1907**	1	SEAL-O-RING	
		1	**6V-8397**	1	SEAL-O-RING	
		1	**6V-8636**	1	CONNECTOR	
	12	1	*148-8340*	1	CONNECTOR AS	
		1	**3K-0360**	1	SEAL-O-RING	
		1	**6V-8398**	1	SEAL-O-RING	
		1	**6V-8639**	1	CONNECTOR	
	13	1	*148-8407*	1	PLUG AS	
		1	**3J-1907**	1	SEAL-O-RING	
		1	**9S-4191**	1	PLUG	
	14	1	*148-8411*	1	PLUG AS	
		1	**3K-0360**	1	SEAL-O-RING	
		1	**9S-4185**	1	PLUG	
	15	1	*148-8412*	1	REDUCER AS	
		1	**6V-8398**	1	SEAL-O-RING	
		1	**6V-8944**	1	REDUCER-O-RING	
	16	1	*150-3056*	1	TEE AS	
		1	**6V-8397**	3	SEAL-O-RING	
		1	**6V-8788**	1	TEE	
	17	1	*150-4050*	1	ELBOW AS	
		1	**3J-1907**	1	SEAL-O-RING	
		1	**8T-0788**	1	ELBOW	
	18	1	*155-3624*	1	PLUG AS	
		1	**3J-7354**	1	SEAL-O-RING	
		1	**9S-4182**	1	PLUG	
	19	1	**1P-3703**	2	SEAL-RECTANGULAR	
	20	1	**1S-0996**	1	CLIP	
	21	1	**1S-6420**	1	CLIP	
	22	1	**4J-0520**	4	SEAL-O-RING	
	23	1	**4L-6454**	2	BOLT (3/8-16X1-IN)	
	24	1	**4L-9337**	2	BOLT (3/8-16X1.5-IN)	
	25	1	**5P-0047**	2	COVER	
	26	1	**5P-1075**	1	WASHER-HARD (10.2X22.5X3-MM THK)	
	27	1	**5S-7379**	1	BOLT (3/8-16X0.875-IN)	
	28	1	**6V-0400**	4	FLANGE-HALF	

209-2609 **LINES GP-WINCH** *(contd.)* **i02206638**

NOTE	REF NO	GRAPHIC REF	PART NUMBER	QTY	PART NAME 1 2 3 4 5 6 (PRODUCT LEVEL)	SEE PAGE
	29	1	**6V-8557**	1	NUT-FACE SEAL (1-7/16-12-THD)	
	30	1	**6V-8801**	2	NUT (3/8-16-THD)	
	31	1	**7G-5985**	1	CLIP (SLOT)	
	32	1	**7G-5986**	1	GROMMET	
	33	1	**7X-0578**	4	WASHER-HARD (10.2X32X2.5-MM THK)	
	34	1	**8C-3206**	4	FLANGE-HALF	
	35	1	**8T-4121**	12	WASHER-HARD (11X21X2.5-MM THK)	
M	36	1	**8T-4184**	8	BOLT (M12X1.75X45-MM)	
M	37	1	**8T-4195**	4	BOLT (M10X1.5X30-MM)	
M	38	1	**8T-4196**	8	BOLT (M10X1.5X35-MM)	
	39	1	**8T-4223**	8	WASHER-HARD (13.5X25.5X3-MM THK)	
	40	1	**8T-4896**	2	WASHER-HARD (10.2X18.5X2.5-MM THK)	
	41	1	**7K-1181**	2	STRAP-CABLE	

I-REFER TO HYDRAULIC INFORMATION SYSTEM
M-METRIC PART
Y-SEPARATE ILLUSTRATION

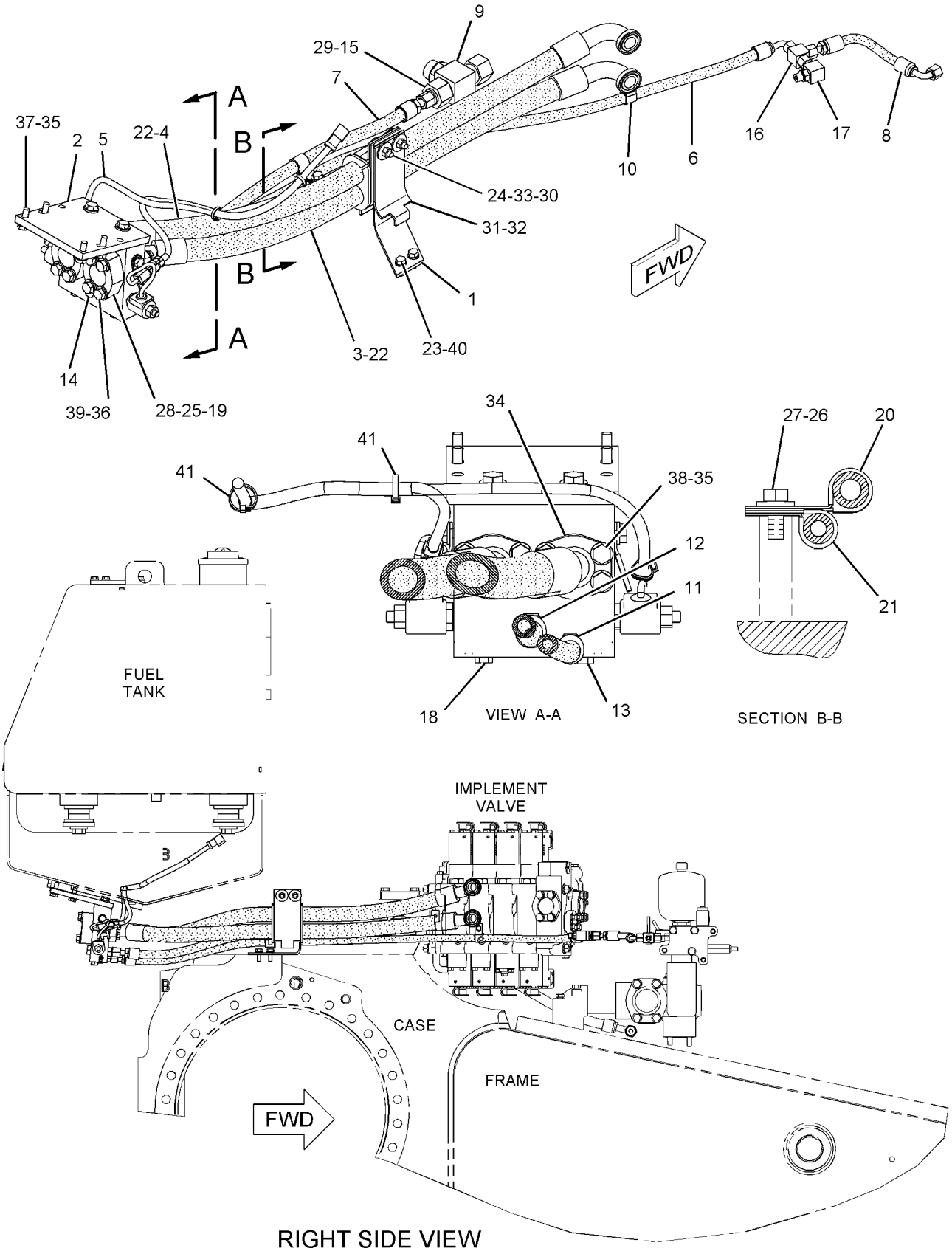

GRAPHIC #1

<END>

g01120219

WORK TOOLS

217-3561 MOUNTING GP-RIPPER

S/N: CRM1-UP; MAM1-UP
PART OF 217-3562, 217-3563 RIPPER AR
AN ATTACHMENT

SMCS-6165, 6310, 6324 **i02213872**

NOTE	REF NO	GRAPHIC REF	PART NUMBER	QTY	PART NAME 1 2 3 4 5 6 (PRODUCT LEVEL)	SEE PAGE
	1	1	**4T-1843**	2	TUBE	
	2	1	**6T-6954**	2	BLOCK	
	3	1	**7T-7305**	2	PLATE	
	4	1	**9U-9712**	1	GUARD AS	
	5	1	**9W-9243**	2	PIN AS	
	6	1	**114-2194**	1	PLATE	
	7	1	**214-3877**	1	GUARD AS	
	8	1	**216-9722**	1	PLATE AS (LH)	
	9	1	**216-9723**	1	PLATE AS (RH)	
	10	1	**216-9724**	2	PIN	
	11	1	**138-8455**	12	BOLT (1.5-6X114.3-MM THD)	
	12	1	**4L-6454**	4	BOLT (3/8-16X1-IN)	
	13	1	**5P-1075**	4	WASHER-HARD (10.2X22.5X3-MM THK)	
M	14	1	**6V-7688**	2	LOCKNUT (M20X2.5-THD)	
	15	1	**7X-0537**	12	WASHER-HARD (40.5X67X6-MM THK)	
	16	1	**7X-0582**	4	WASHER-HARD (20X44.5X6-MM THK)	
M	17	1	**7X-2488**	2	BOLT (M20X2.5X160-MM)	
	18	1	**8T-4994**	10	WASHER-HARD (20X36.5X3.5-MM THK)	
M	19	1	**8T-5460**	4	BOLT (M20X2.5X40-MM)	
	20	1	**8T-9399**	14	BOLT (3/4-10X2.25-IN)	

M-METRIC PART

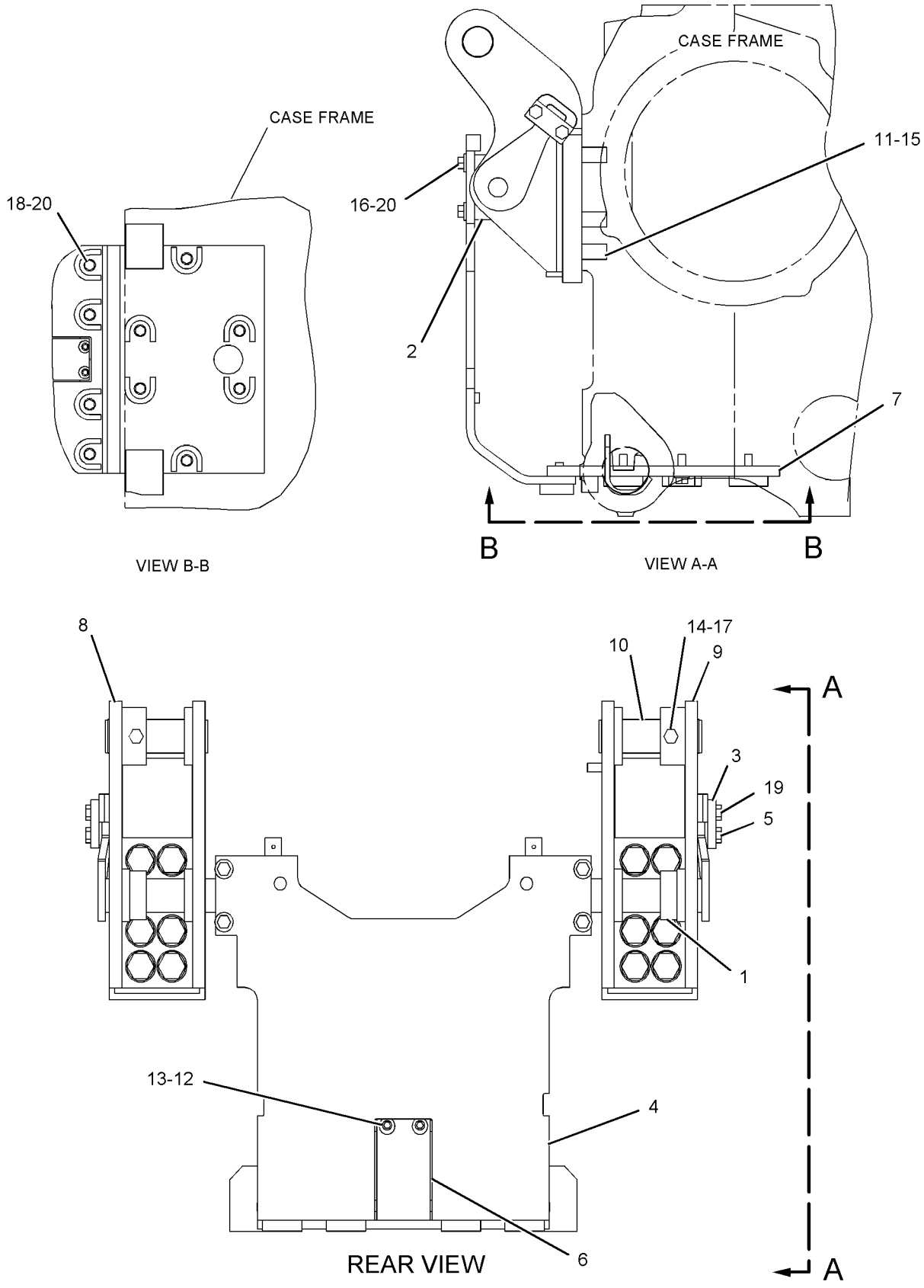

GRAPHIC #1

<END>

g01117512

217-7158 PLATE GP-WEAR–UNIVERSAL

S/N: T9H1-UP

PART OF 4Z-9336, 4Z-9374 BLADE AS-UNIVERSAL

AN ATTACHMENT

SMCS-6820 **i01753078**

NOTE	REF NO	GRAPHIC REF	PART NUMBER	QTY	PART NAME 1 2 3 4 5 6 (PRODUCT LEVEL)	SEE PAGE
	1	1	**217-7155**	1	PLATE (RH)	
	2	1	**217-7156**	1	PLATE	
	3	1	**217-7157**	1	PLATE (LH)	

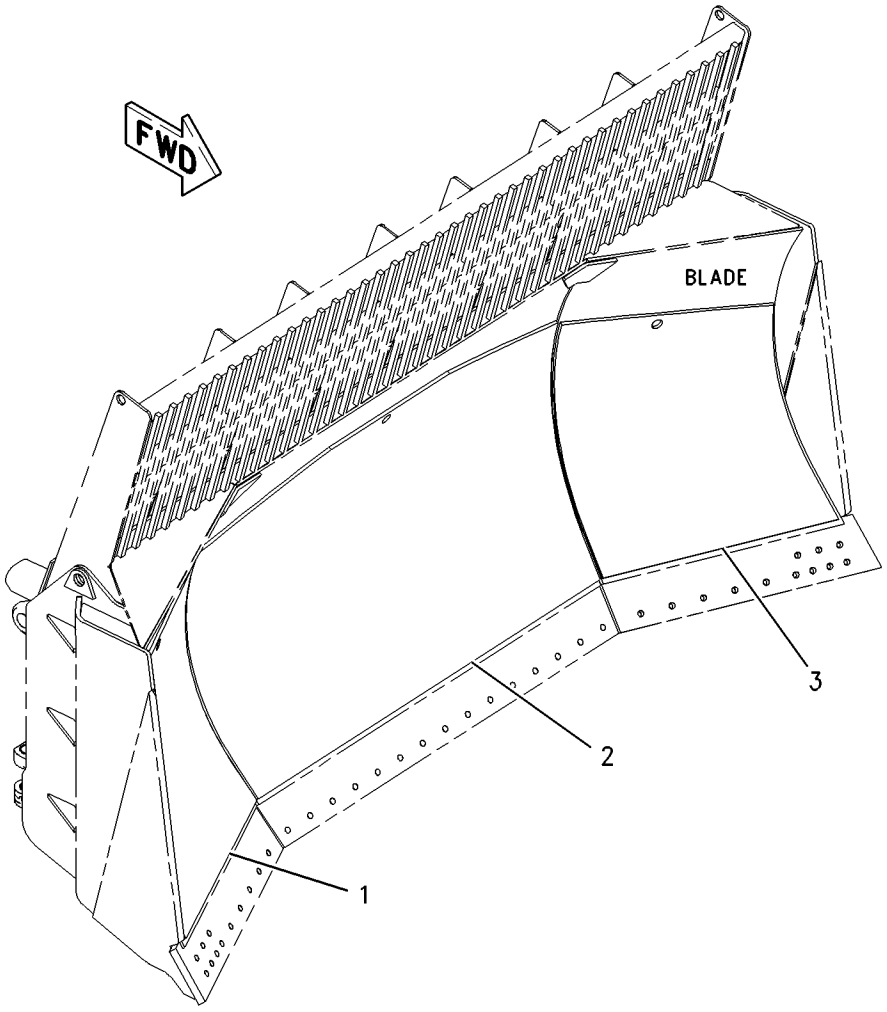

GRAPHIC #1 **<END>** g01001823

218-3884 PLATE GP-WEAR–SEMI-UNIVERSAL

S/N: T9J1-UP
PART OF 102-1938, 4Z-9366 BLADE AS-SEMI-UNIVERSAL
AN ATTACHMENT

SMCS-6820 **i01786868**

NOTE	REF NO	GRAPHIC REF	PART NUMBER	QTY	PART NAME 1 2 3 4 5 6 (PRODUCT LEVEL)	SEE PAGE
	1	1	**218-3885**	1	PLATE-WEAR (RH)	
	2	1	**218-3887**	1	PLATE-WEAR (LH)	
	3	1	**218-3888**	1	PLATE-WEAR	

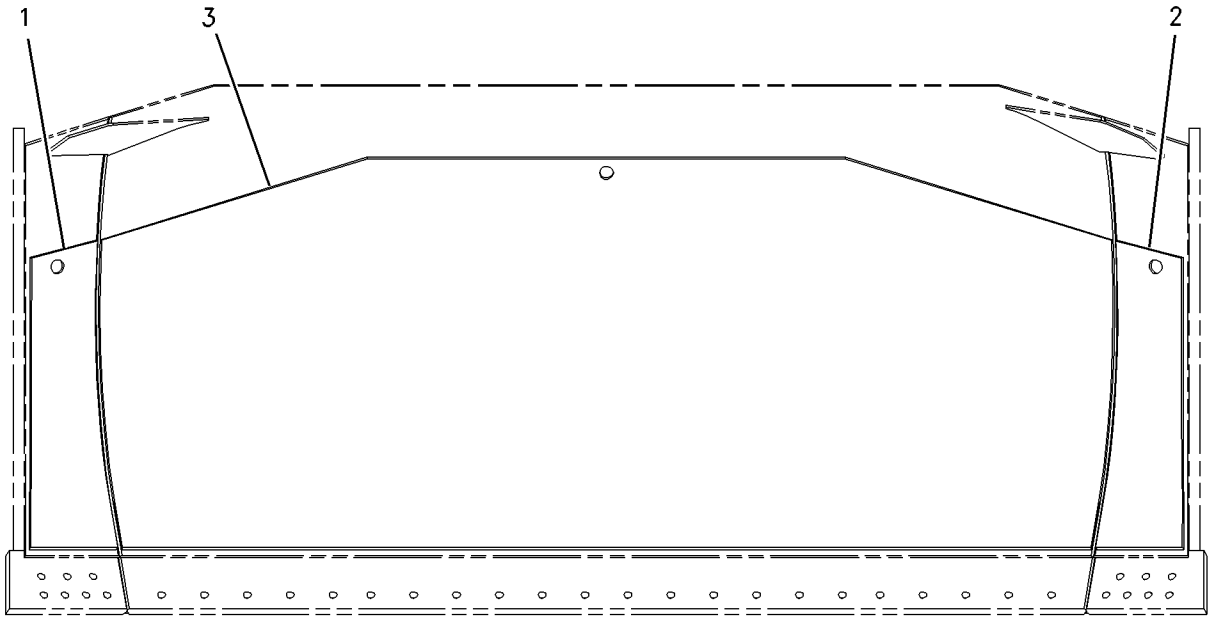

FRONT VIEW

GRAPHIC #1 **<END>** g00917112

216-0124 PULLER AR-PIN

S/N: RJS1-UP

FOR USE WITH 208-1607—PAGE 504, SINGLE SHANK RIPPERS

AN ATTACHMENT

SMCS-5353, 5354 **i01998382**

NOTE	REF NO	GRAPHIC REF	PART NUMBER	QTY	PART NAME 1 2 3 4 5 6 (PRODUCT LEVEL)	SEE PAGE
Y	1	1	**6E-3113**	1	CYLINDER GP-RIPPER PIN PULLER	539
Y	2	1	*135-5111*	1	PULLER GP-PIN	709
Y	3	1	*216-0123*	1	LINES GP-PIN PULLER CYLINDER	563

Y-SEPARATE ILLUSTRATION

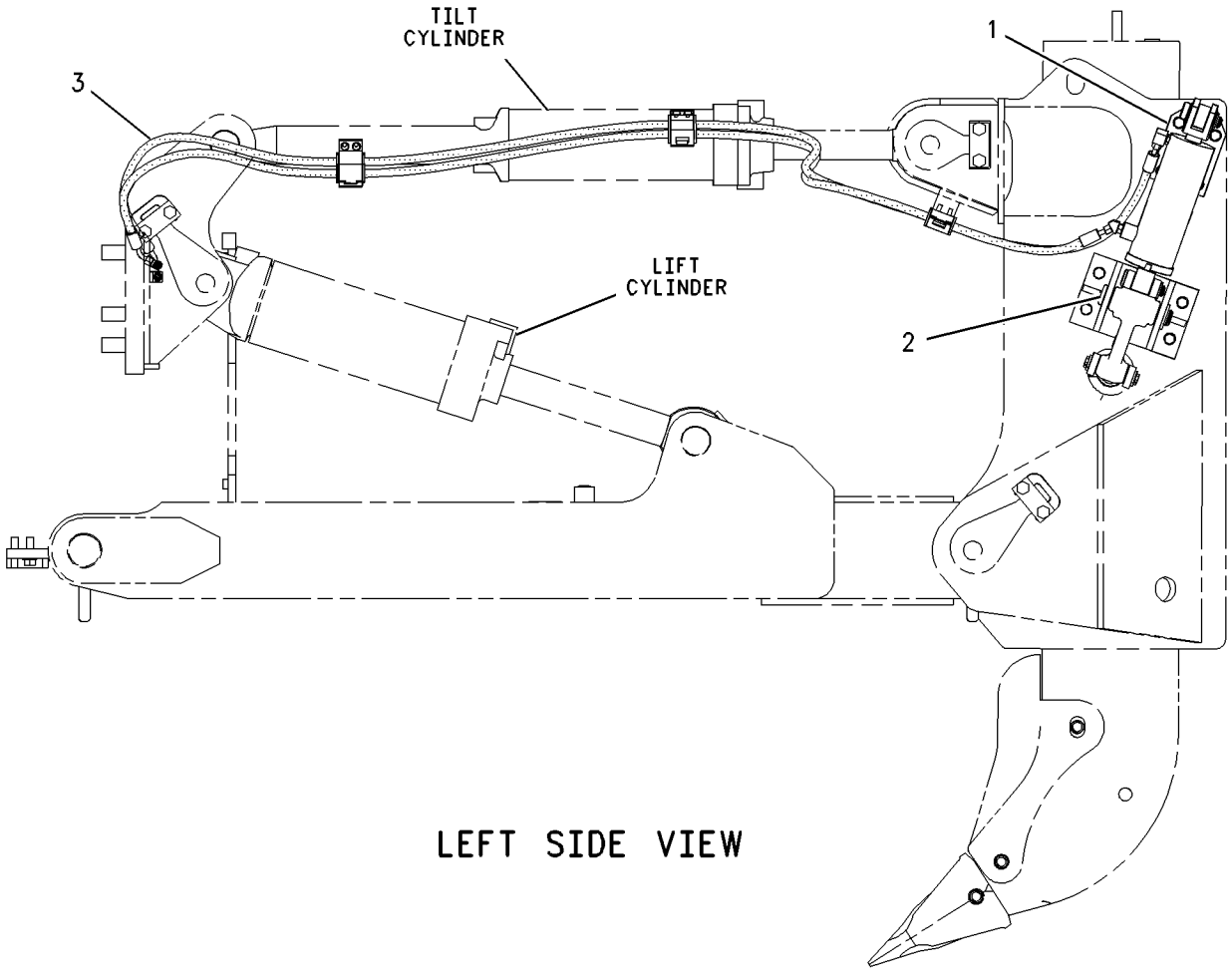

LEFT SIDE VIEW

GRAPHIC #1 **<END>** g00681145

4Z-9490 PULLER GP-PIN

S/N: SEM1-UP
PART OF 4Z-0667 RIPPER AR
FOR USE WITH MULTI-SHANK RIPPER WITH DEEP RIPPING SHANK, PIN PULLER AN ATTACHMENT

SMCS-5353, 5354 **i01629849**

NOTE	REF NO	GRAPHIC REF	PART NUMBER	QTY	PART NAME 1 2 3 4 5 6 (PRODUCT LEVEL)	SEE PAGE
	1	1	**4Z-8991**	1	PIN	
	2	1	**135-5113**	2	PIN	
M	3	1	**8C-8992**	4	BOLT-LOCKING (M12X1.75X30-MM)	
	4	1	**7X-3391**	4	WASHER-HARD (13.5X32X6-MM THK)	
	5	1	**4Z-9219**	1	LEVER	
	6	1	**7T-4502**	1	PIN	
	7	1	**3S-6162**	1	WASHER-HARD (40.5X67X6-MM THK)	
	8	1	**6K-3630**	1	RING	
	9	1	**7T-4501**	2	PIN	
	10	1	**5P-6604**	2	WASHER-HARD (25.4X40X5-MM THK) (25.4X40X5MM THK)	
	11	1	**7J-4169**	2	RING-SNAP	
Y	12	1	**6E-3113**	1	CYLINDER GP-RIPPER PIN PULLER	539
	13	1	**9J-4523**	2	LINK	

M-METRIC PART
Y-SEPARATE ILLUSTRATION

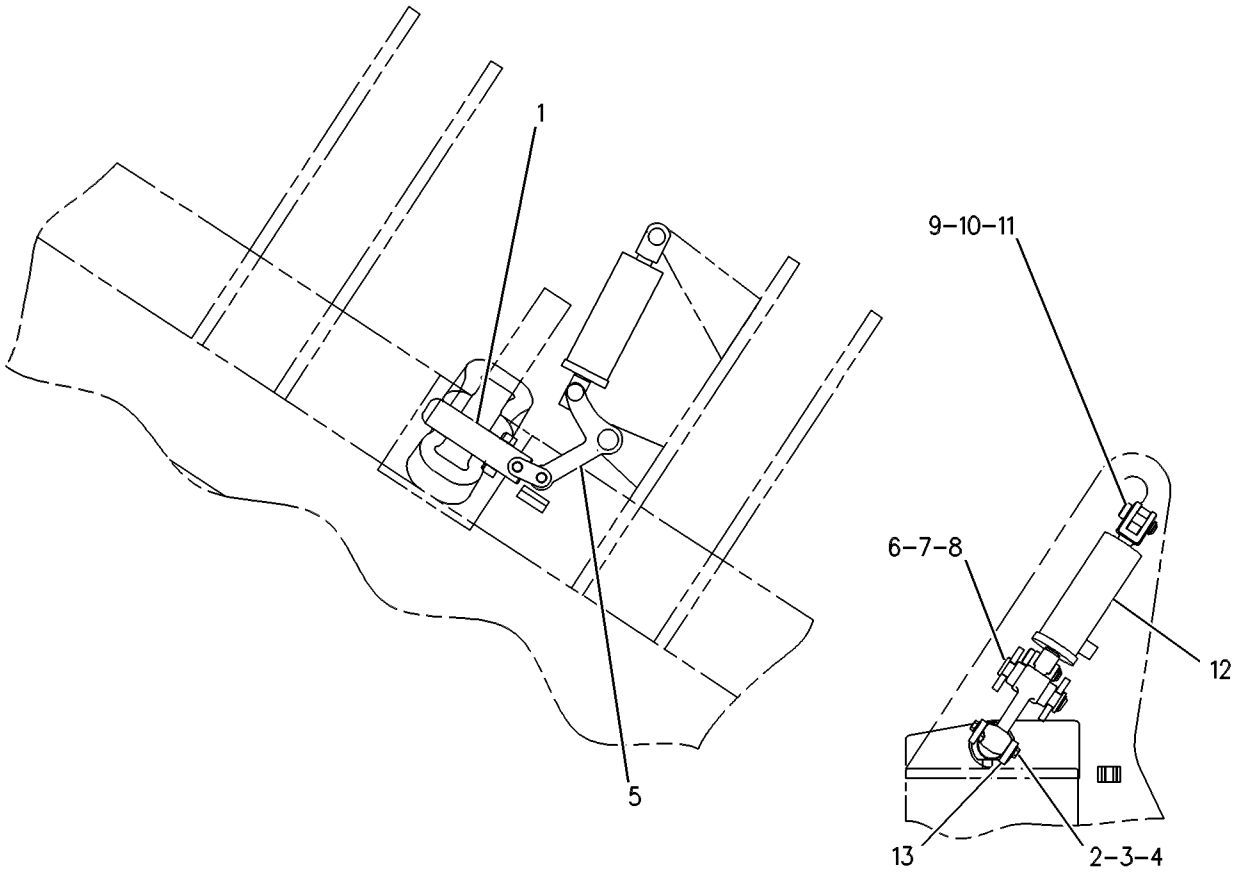

GRAPHIC #1 **<END>** g00279177

135-5111 PULLER GP-PIN–SINGLE SHANK RIPPER

S/N: RJS1-UP

PART OF 216-0124 PULLER AR-PIN

AN ATTACHMENT

SMCS-5353, 5354 **i01397287**

NOTE	REF NO	GRAPHIC REF	PART NUMBER	QTY	PART NAME 1 2 3 4 5 6 (PRODUCT LEVEL)	SEE PAGE
	1	1	**7T-4501**	1	PIN	
	2	1	**7T-4502**	1	PIN	
	3	1	**9X-8257**	8	WASHER (17.5X30X3.5MM THK)	
	4	1	**130-6366**	2	LINK	
	5	1	**135-5102**	1	PLATE AS	
	6	1	**135-5105**	1	PLATE AS	
	7	1	**135-5109**	1	PIN	
	8	1	**135-5113**	2	PIN	
	9	1	**135-5114**	1	PIN	
	10	1	**7X-3391**	4	WASHER-HARD (13.5X32X6MM THK)	
	11	1	**6K-3630**	1	RING	
	12	1	**7J-4169**	2	RING-SNAP	
	13	1	**7X-0537**	1	WASHER-HARD (40.5X67X6MM THK)	
M	14	1	**8C-8992**	4	BOLT-LOCKING (M12X1.75X30MM)	
	15	1	**8T-4167**	2	WASHER-HARD (26X44X4MM THK)	
M	16	1	**8T-7338**	8	BOLT (M16X2.0X45MM)	

M-METRIC PART

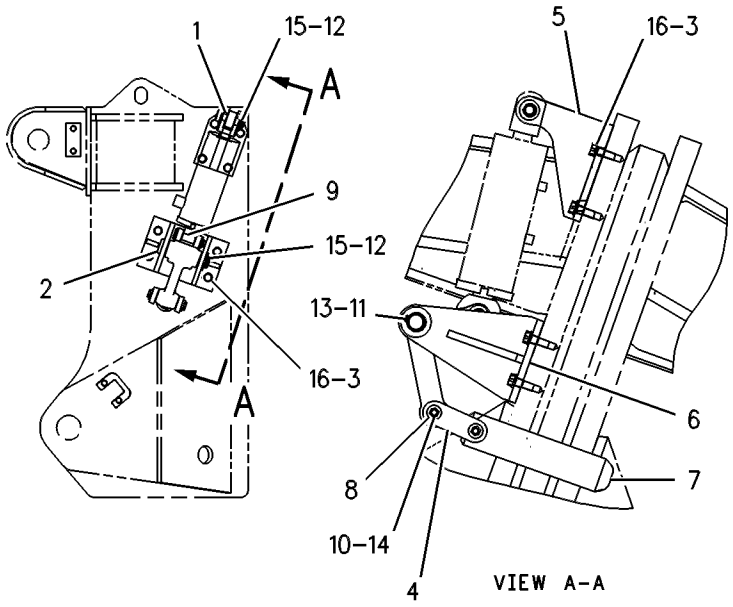

GRAPHIC #1 **<END>** g00271463

WORK TOOLS

166-1820 PULLER GP-PIN

S/N: GNM1-UP
PART OF 4Z-0668 RIPPER AR
FOR USE WITH HEAVY DUTY MULTI-SHANK RIPPER
AN ATTACHMENT

SMCS-5353, 5354 **i01629921**

NOTE	REF NO	GRAPHIC REF	PART NUMBER	QTY	PART NAME 1 2 3 4 5 6 (PRODUCT LEVEL)	SEE PAGE
	1	1	**4Z-9219**	1	LEVER	
Y	2	1	**6E-3113**	1	CYLINDER GP-RIPPER PIN PULLER	539
	3	1	**7T-4501**	2	PIN	
	4	1	**9J-4523**	2	LINK	
	5	1	**166-1821**	1	PIN	
	6	1	**135-5113**	2	PIN	
	7	1	**3S-6162**	1	WASHER-HARD (40.5X67X6-MM THK)	
	8	1	**5P-6604**	2	WASHER-HARD (25.4X40X5-MM THK)	
	9	1	**6K-3630**	1	RING	
	10	1	**7J-4169**	2	RING-SNAP	
	11	1	**7T-4502**	1	PIN	
	12	1	**7X-3391**	4	WASHER-HARD (13.5X32X6-MM THK)	
M	13	1	**8C-8992**	4	BOLT-LOCKING (M12X1.75X30-MM)	

M-METRIC PART
Y-SEPARATE ILLUSTRATION

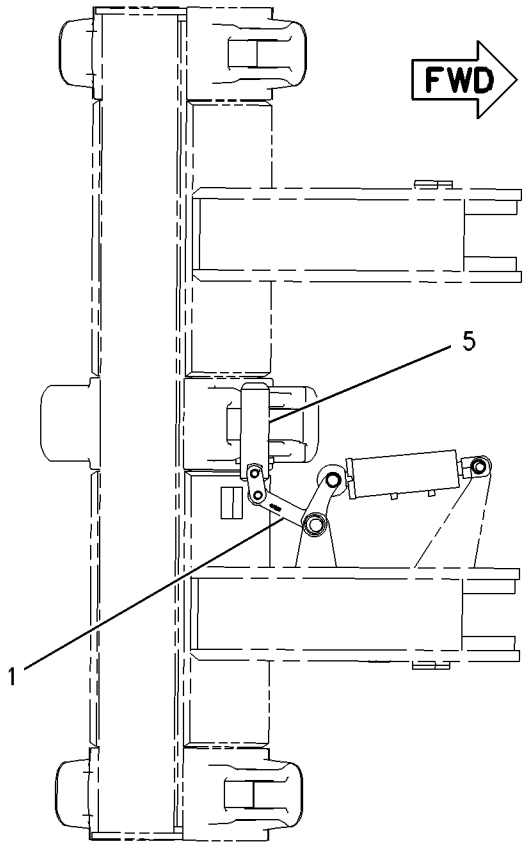

TOP VIEW

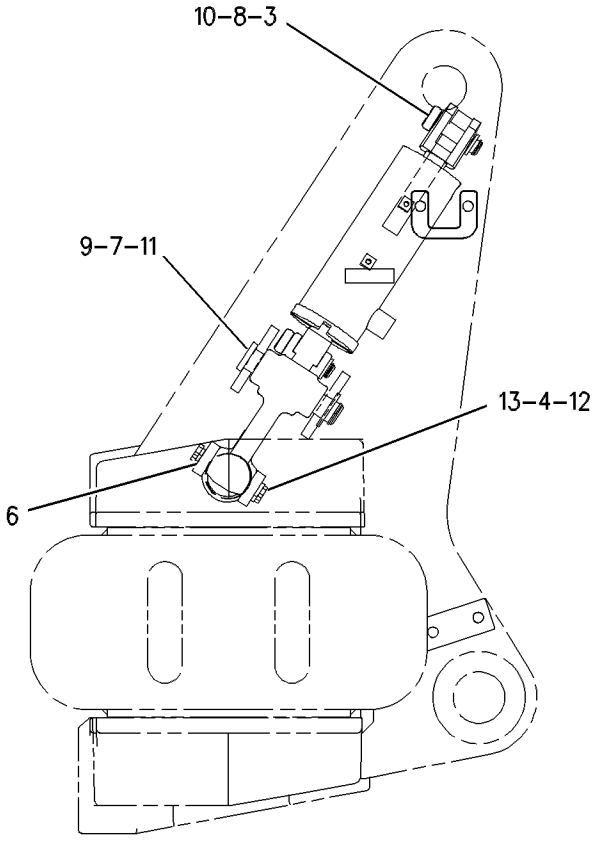

RIGHT SIDE VIEW

GRAPHIC #1 **<END>** g00591712

4Z-0667 RIPPER AR—MULTI-SHANK

S/N: SEM1-UP
FOR USE WITH 217-3562—PAGE 712, 208-1607—PAGE 504
AN ATTACHMENT

SMCS-6310 **i02220638**

NOTE	PART NUMBER	QTY	PART NAME 1 2 3 4 5 6 (PRODUCT LEVEL)	SEE PAGE
Y	*4Z-0669*	1	LINES GP-PIN PULLER CYLINDER	562
Y	*4Z-9490*	1	PULLER GP-PIN (MULTI-SHANK)	708
Y	*4Z-9486*	1	RIPPER GP (MULTI-SHANK)	714
Y-SEPARATE ILLUSTRATION				

<END>

4Z-0668 RIPPER AR—MULTI-SHANK, HEAVY DUTY

S/N: GNM1-UP
FOR USE WITH 217-3562—PAGE 712, 208-1607—PAGE 504
AN ATTACHMENT

SMCS-6310 **i02220552**

NOTE	PART NUMBER	QTY	PART NAME 1 2 3 4 5 6 (PRODUCT LEVEL)	SEE PAGE
Y	*4Z-0669*	1	LINES GP-PIN PULLER CYLINDER	562
Y	*166-1820*	1	PULLER GP-PIN (MULTI-SHANK, HEAVY DUTY)	710
Y	*166-1815*	1	RIPPER GP (MULTI-SHANK, HEAVY DUTY)	717
Y-SEPARATE ILLUSTRATION				

<END>

217-3562 RIPPER AR—MULTI-SHANK

S/N: CRM1-UP
DEEP RIP
FOR USE WITH 205-8612—PAGE 506
AN ATTACHMENT

SMCS-6310 **i02270467**

NOTE	REF NO	GRAPHIC REF	PART NUMBER	QTY	PART NAME 1 2 3 4 5 6 (PRODUCT LEVEL)	SEE PAGE
Y	1	1	**132-5123**	2	CYLINDER GP-RIPPER	537
Y	2	1	**132-5149**	2	CYLINDER GP-RIPPER TIP	542
Y	3	1	*135-6410*	1	LINES GP-RIPPER	568
Y	4	1	*138-0430*	1	RIPPER GP	716
Y	5	1	*159-9796*	1	FRAME GP-RIPPER	698
Y	6	1	*217-3561*	1	MOUNTING GP-RIPPER	703
Y	7	1	*222-1209*	1	LIGHTING GP-FLOOD	208
F			**4B-4158**	2	SCREW-DRIVE (3/16X0.25-IN)	
F			**5P-1327**	1	PLATE-SERIAL NUMBER (RIPPER) (ON CYLINDER TOWER)	

F-NOT SHOWN
Y-SEPARATE ILLUSTRATION

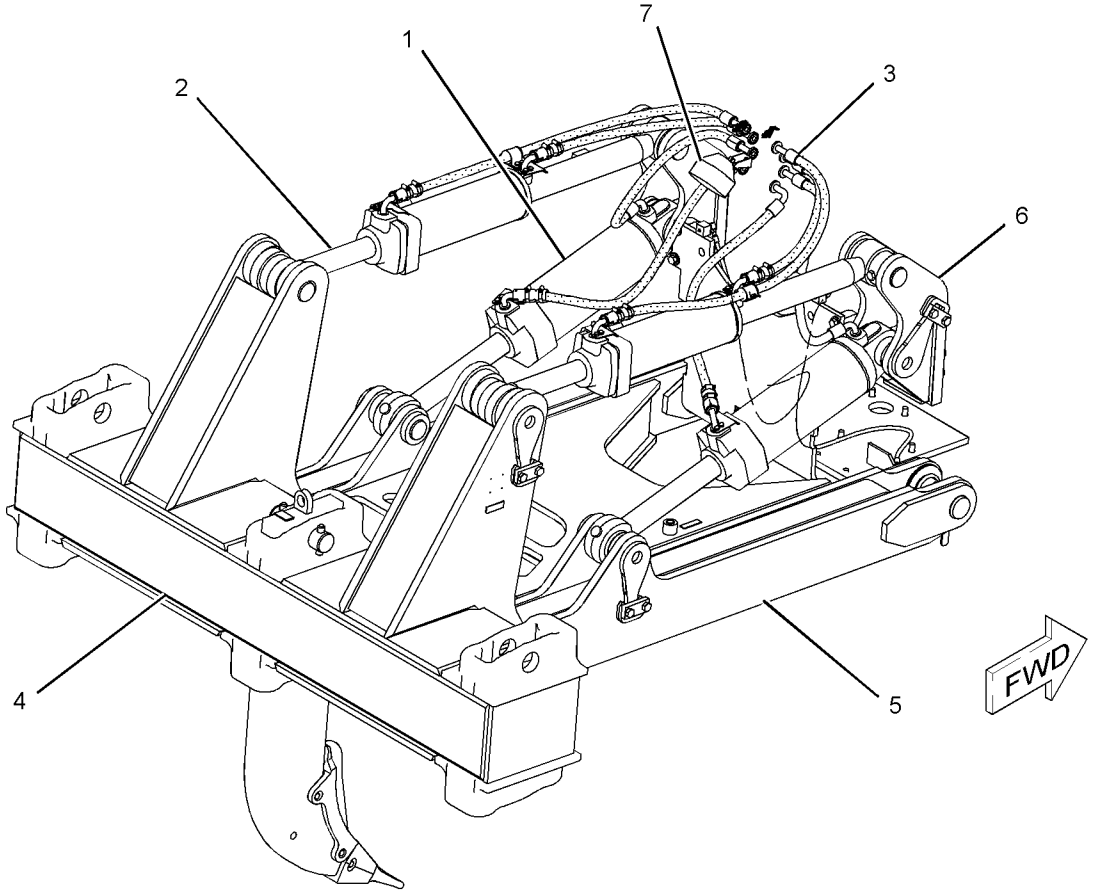

GRAPHIC #1 **<END>** g01037910

WORK TOOLS

217-3563 RIPPER AR—SINGLE SHANK

S/N: MAM1-UP

FOR USE WITH 205-8612—PAGE 506

AN ATTACHMENT

SMCS-6310 **i02270896**

NOTE	REF NO	GRAPHIC REF	PART NUMBER	QTY	PART NAME 1 2 3 4 5 6 (PRODUCT LEVEL)	SEE PAGE
Y	1	1	**132-5123**	2	CYLINDER GP-RIPPER	537
Y	2	1	**132-5149**	2	CYLINDER GP-RIPPER TIP	542
Y	3	1	*134-8107*	1	RIPPER GP	715
Y	4	1	*135-2803*	1	FRAME GP-RIPPER	696
Y	5	1	*135-6410*	1	LINES GP-RIPPER	568
Y	6	1	*217-3561*	1	MOUNTING GP-RIPPER	703
Y	7	1	*222-1209*	1	LIGHTING GP-FLOOD (RIPPER)	208
F			**4B-4158**	2	SCREW-DRIVE (3/16X0.25-IN)	
F			**5P-1327**	1	PLATE-SERIAL NUMBER (RIPPER)	
					(ON CYLINDER TOWER)	

F-NOT SHOWN
Y-SEPARATE ILLUSTRATION

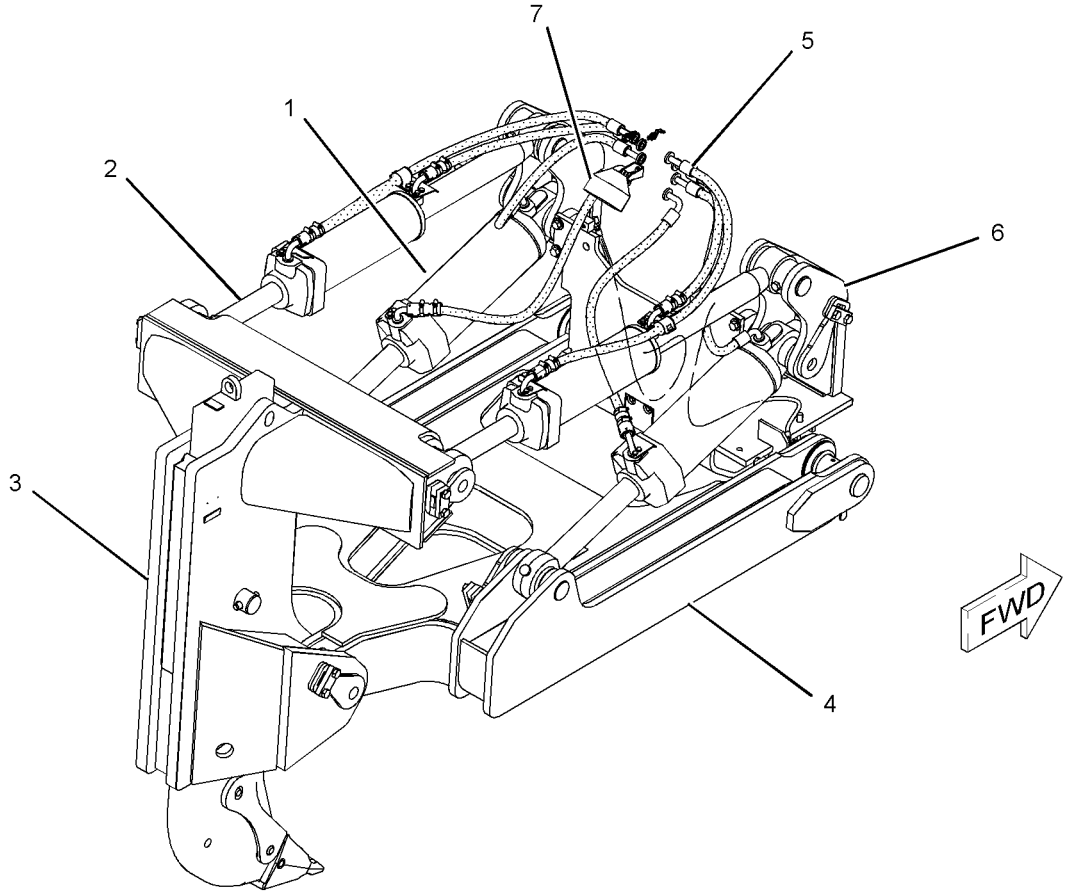

GRAPHIC #1 **<END>** g01037914

WORK TOOLS

4Z-9486 RIPPER GP—MULTI-SHANK

S/N: SEM1-UP
PART OF 4Z-0667 RIPPER AR
AN ATTACHMENT

SMCS-6310, 6325 **i01787004**

NOTE	PART NUMBER	QTY	PART NAME 1 2 3 4 5 6 (PRODUCT LEVEL)	SEE PAGE
Y	**4Z-9487**	1	BEAM AS	657
Y	*4T-8987*	2	TOOTH GP-RIPPER	718
Y	*4Z-8995*	1	TOOTH GP-RIPPER	719
	6J-6680	2	PIN	
	4T-2479	4	PIN AS	
			(EACH INCLUDES)	
	5J-3576	1	SPRING	

Y-SEPARATE ILLUSTRATION

<END>

134-8107 RIPPER GP—SINGLE SHANK

S/N: MAM1-UP
PART OF 217-3563 RIPPER AR
AN ATTACHMENT

SMCS-6310, 6325 **i01446830**

NOTE	REF NO	GRAPHIC REF	PART NUMBER	QTY	PART NAME 1 2 3 4 5 6 (PRODUCT LEVEL)	SEE PAGE
	1	1	**4T-2479**	2	PIN AS	
					(EACH INCLUDES)	
		1	**5J-3576**	1	SPRING	
Y	2	1	*114-4502*	1	TOOTH GP-RIPPER	721
	3	1	**134-0825**	1	CARRIAGE AS	
		1	**8P-9770**	1	PLATE	
	4	1	**6J-6703**	1	PIN	

Y-SEPARATE ILLUSTRATION

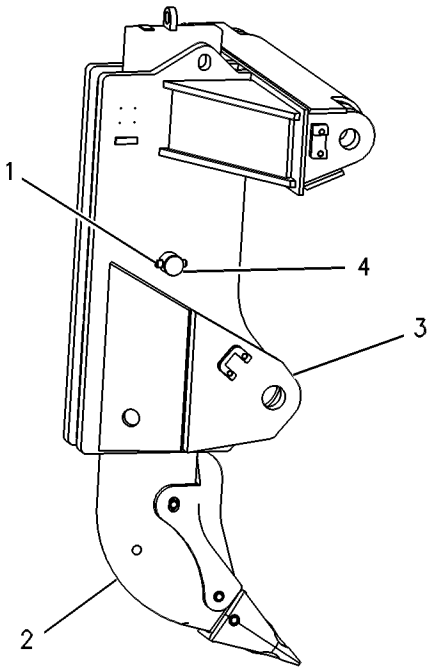

GRAPHIC #1 **<END>** g00271306

138-0430 RIPPER GP—MULTI-SHANK

S/N: CRM1-UP
DEEP RIP
PART OF 217-3562 RIPPER AR
AN ATTACHMENT

SMCS-6310, 6325 **i01288550**

NOTE	REF NO	GRAPHIC REF	PART NUMBER	QTY	PART NAME 1 2 3 4 5 6 (PRODUCT LEVEL)	SEE PAGE
Y	1	1	*4T-8987*	1	TOOTH GP-RIPPER	718
	2	1	**138-0431**	1	BEAM AS	
	3	1	**8P-9770**	1	PLATE	
	4	1	**175-1447**	3	BLOCK	
	5	1	**175-1448**	3	BLOCK	

Y-SEPARATE ILLUSTRATION

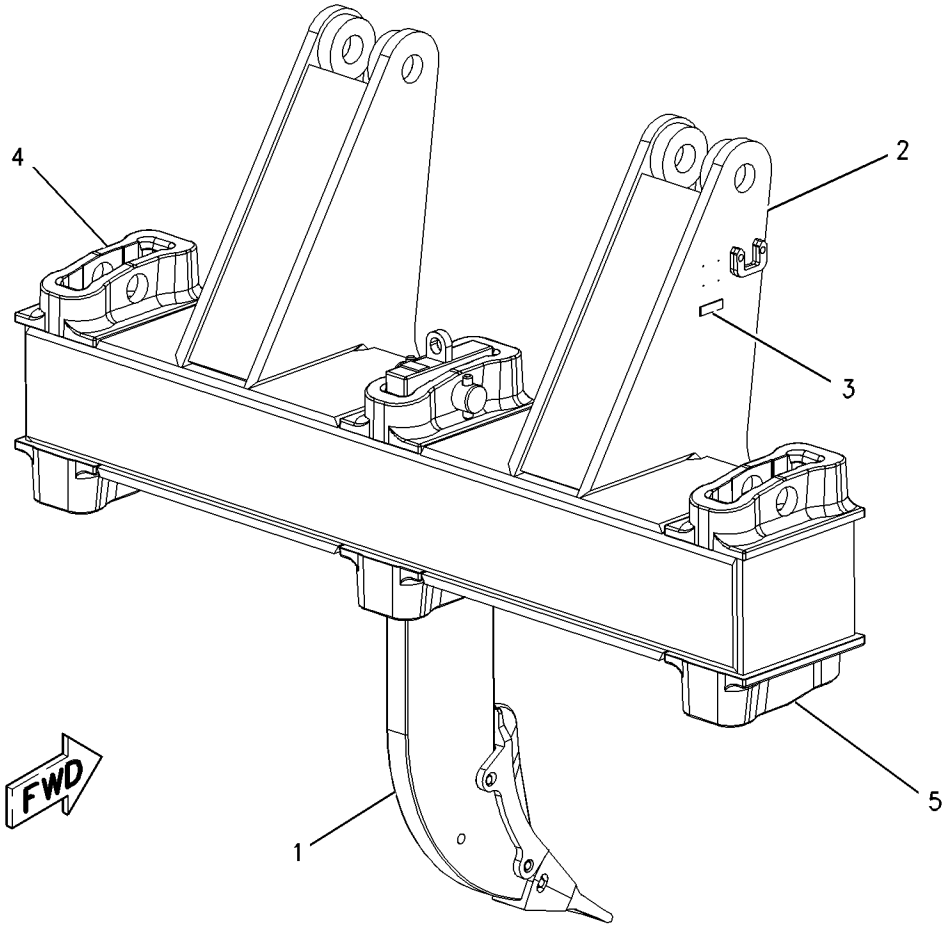

GRAPHIC #1 **<END>** g00683468

WORK TOOLS

166-1815 RIPPER GP—MULTI-SHANK, HEAVY DUTY

S/N: GNM1-UP

PART OF 4Z-0668 RIPPER AR

AN ATTACHMENT

SMCS-6310, 6325 **i02270532**

NOTE	PART NUMBER	QTY	PART NAME 1 2 3 4 5 6 (PRODUCT LEVEL)	SEE PAGE
Y	**166-1810**	1	BEAM AS	658
Y	*109-9113*	1	TOOTH GP-RIPPER	720
			—OR—	
Y	*138-0875*	1	TOOTH GP-RIPPER	722
Y	*4T-8987*	2	TOOTH GP-RIPPER	718

Y-SEPARATE ILLUSTRATION

<END>

WORK TOOLS

4T-8987 TOOTH GP-RIPPER

S/N: CRM1-UP; GNM1-UP; SEM1-UP; RJS1-UP
PART OF 138-0430, 166-1815, 4Z-9486 RIPPER GP
AN ATTACHMENT

SMCS-6808, 6810 **i02250452**

NOTE	REF NO	GRAPHIC REF	PART NUMBER	QTY	PART NAME 1 2 3 4 5 6 (PRODUCT LEVEL)	SEE PAGE
	1	1	**4T-2479**	2	PIN AS	
					(EACH INCLUDES)	
		1	**5J-3576**	1	SPRING	
C	2	1	**6Y-3394**	3	PIN	
	3	1	**9W-2452**	1	TIP-RIPPER	
	4	1	**8E-1848**	1	PROTECTOR	
C	5	1	**8E-5346**	1	SHANK AS-RIPPER	
	6	1	**3G-5596**	1	LUG	
C	7	1	**8E-4743**	3	RETAINER	
	8	1	**6J-6680**	1	PIN	

C-CHANGE FROM PREVIOUS TYPE

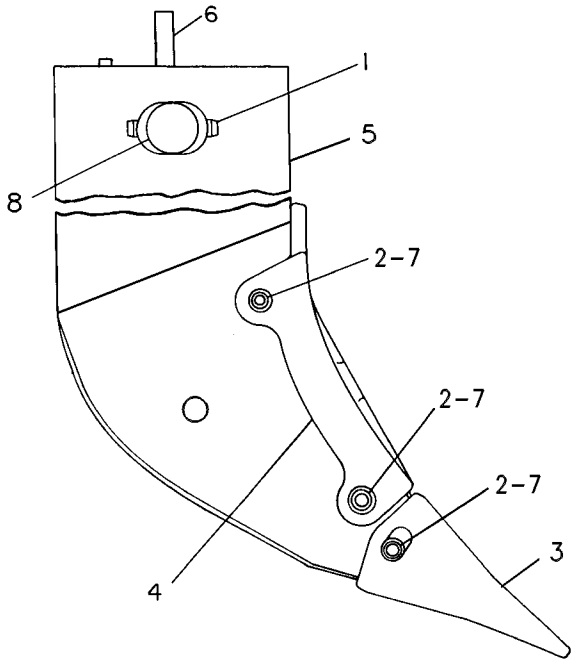

GRAPHIC #1 **<END>** g00240655

WORK TOOLS

4Z-8995 TOOTH GP-RIPPER—MULTI-SHANK

S/N: SEM1-UP
PART OF 4Z-9486 RIPPER GP
AN ATTACHMENT

SMCS-6808, 6810 **i02250451**

NOTE	REF NO	GRAPHIC REF	PART NUMBER	QTY	PART NAME 1 2 3 4 5 6 (PRODUCT LEVEL)	SEE PAGE
	1	1	**6Y-3394**	3	PIN	
		1	**8E-4743**	3	RETAINER	
	2	1	**9W-2452**	1	TIP-RIPPER	
	3	1	**8E-1848**	1	PROTECTOR	
	4	1	**4Z-9018**	1	SHANK AS-RIPPER	
	5	1	**3G-5596**	1	LUG	

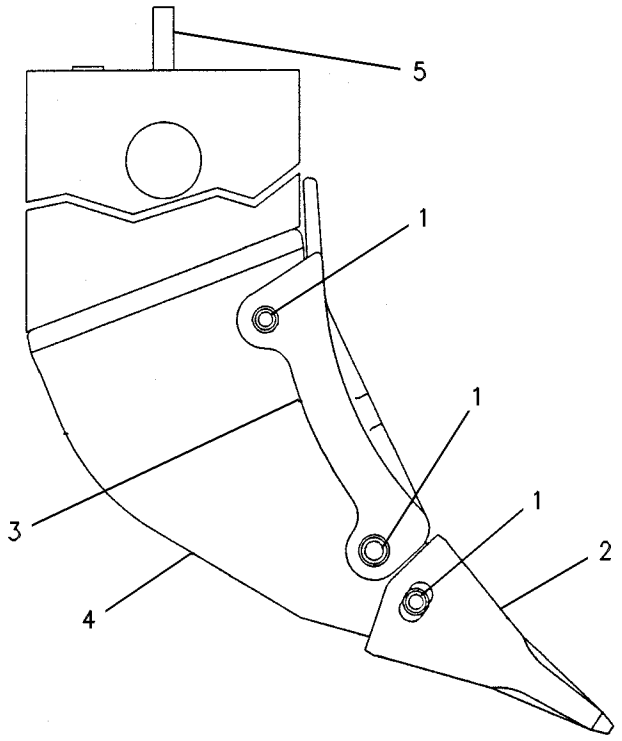

GRAPHIC #1 **<END>** g00234762

109-9113 TOOTH GP-RIPPER—SINGLE SHANK

S/N: RJS1-UP

FOR USE WITH 217-3563—PAGE 713

AN ATTACHMENT

SMCS-6808, 6810 **i02250453**

NOTE	REF NO	GRAPHIC REF	PART NUMBER	QTY	PART NAME 1 2 3 4 5 6 (PRODUCT LEVEL)	SEE PAGE
	1	1	**109-9114**	1	SHANK AS-RIPPER	
	2	1	**3G-5596**	1	LUG	
	3	1	**9W-8365**	1	PROTECTOR	
	4	1	**4T-5502**	1	TIP-RIPPER	
	5	1	**6Y-1202**	3	RETAINER AS	
					(EACH INCLUDES)	
		1	**7M-9107**	1	RING-LOCK	
	6	1	**6Y-1204**	3	PIN	

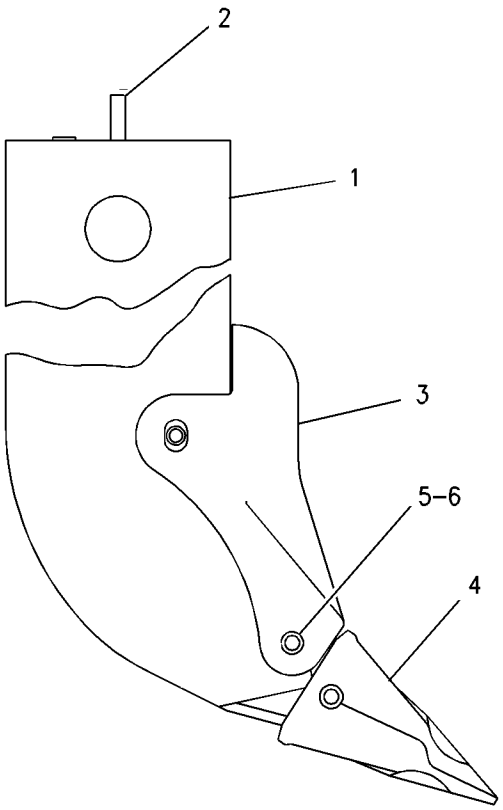

GRAPHIC #1 **<END>** g00892910

WORK TOOLS

114-4502 TOOTH GP-RIPPER—SINGLE SHANK

S/N: MAM1-UP
PART OF 134-8107 RIPPER GP
AN ATTACHMENT

SMCS-6808, 6810 **i01928923**

NOTE	REF NO	GRAPHIC REF	PART NUMBER	QTY	PART NAME 1 2 3 4 5 6 (PRODUCT LEVEL)	SEE PAGE
	1	1	**114-4503**	1	SHANK AS-RIPPER	
	1A	1	**3G-5596**	1	LUG	
	2	1	**9W-8365**	1	PROTECTOR	
	3	1	**4T-4501**	1	TIP-RIPPER	
	4	1	**6Y-1204**	3	PIN	
		1	**6Y-1202**	3	RETAINER AS	
					(EACH INCLUDES)	
		1	**7M-9107**	1	RING-LOCK	

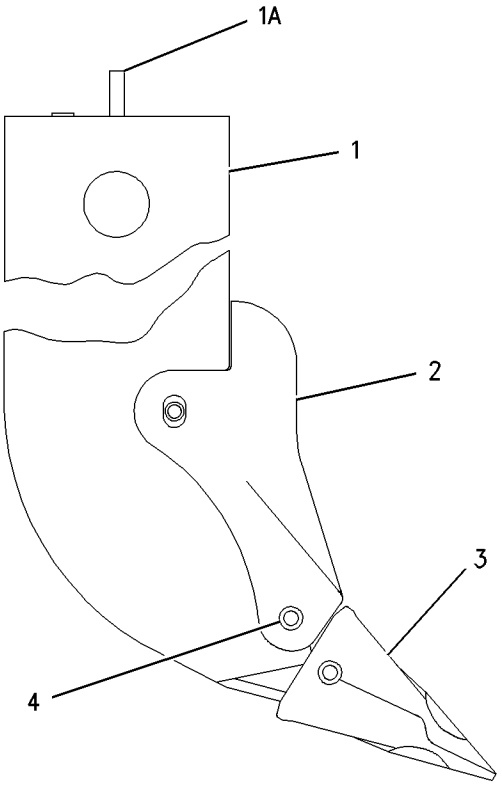

GRAPHIC #1 **<END>** g01003414

138-0875 TOOTH GP-RIPPER—MULTI-SHANK

S/N: GNM1-UP
PART OF 166-1815 RIPPER GP
AN ATTACHMENT

SMCS-6808, 6810 **i02250454**

NOTE	REF NO	GRAPHIC REF	PART NUMBER	QTY	PART NAME 1 2 3 4 5 6 (PRODUCT LEVEL)	SEE PAGE
	1	1	**6Y-1202**	3	RETAINER AS	
		1	**7M-9107**	1	RING-LOCK	
	2	1	**6Y-1204**	3	PIN	
	3	1	**4T-4502**	1	TIP-RIPPER	
	4	1	**9W-8365**	1	PROTECTOR	
	5	1	**138-0876**	1	SHANK AS-RIPPER	
	6	1	**3G-5596**	1	LUG	

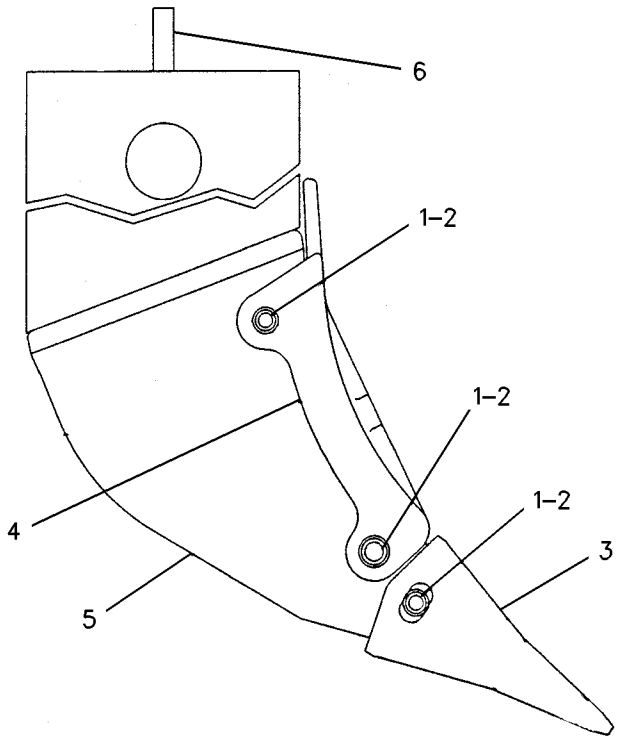

GRAPHIC #1 **<END>** g00646343

WORK TOOLS

211-7816 VALVE GP-WINCH CONTROL

S/N: RJS1-UP
PART OF 211-7817 VALVE GP-BANK 4
AN ATTACHMENT

SMCS-5170 **i02190010**

NOTE	REF NO	GRAPHIC REF	PART NUMBER	QTY	PART NAME 1 2 3 4 5 6 (PRODUCT LEVEL)	SEE PAGE
	1	1	**2S-2596**	1	SPRING	
	2	1	*3J-3679*	1	PLUG AS	
		1	**1J-9671**	2	SEAL-O-RING	
		1	**9S-8003**	2	PLUG	
B	3	1	**4B-4278**	5	WASHER (10.2X20.5X1.6-MM THK)	
	4	1	**4T-1108**	2	PLUG	
	5	1	**4T-1649**	1	HOUSING	
	6	1	**4T-1701**	1	SPRING	
	7	1	**4T-4511**	1	SLEEVE	
	8	1	**4T-5072**	2	RING-BACKUP	
	9	1	**4T-5074**	1	RING-BACKUP	
	10	1	**6V-0852**	2	CAP-DUST	
	11	1	**7N-4333**	1	PLUG-ORIFICE	
	12	1	**7Y-4224**	1	ORIFICE	
M	13	1	**8T-4145**	4	BOLT (M6X1-THD)	
	15	1	*164-5567*	2	FITTING GP-COUPLING	
					(EACH INCLUDES)	
		1	**3J-1907**	1	SEAL-O-RING	
		1	**6V-3965**	1	FITTING AS	
	16	1	**207-7434**	2	RETAINER	
	17	1	**207-7435**	2	RETAINER	
	18	1	**207-7437**	2	SPRING	
	22	1	**242-7955**	2	HOUSING AS	
Y	23	1	**257-0267**	2	VALVE GP-SOLENOID (WINCH)	656
	24	1	**100-8010**	1	VALVE-CHECK (WINCH)	
	25	1	**100-8011**	1	PLUG	
	26	1	*150-3065*	1	ADAPTER AS	
		1	**3J-1907**	1	SEAL-O-RING	
		1	**6V-0484**	1	ADAPTER-O-RING	
	27	1	*173-3993*	2	PLUG AS	
					(EACH INCLUDES)	
		1	**4J-7533**	1	SEAL-O-RING	
		1	**9S-8001**	1	PLUG	
	28	1	**187-9630**	2	SEAL-O-RING	
	29	1	**1H-1023**	4	SEAL-O-RING	
Y	30	1	**260-8590**	1	VALVE GP-SHUTTLE (WINCH)	649
	31	1	**4J-5351**	2	SEAL-O-RING	
	32	1	**4K-1388**	2	SEAL-O-RING	
	33	1	**4T-5073**	2	RING-BACKUP	
	34	1	**5M-2057**	1	SEAL-O-RING	
	35	1	**6V-5556**	1	SEAL-O-RING	
	36	1	**7J-9933**	2	SEAL-O-RING	
	37	1	**7M-8485**	1	SEAL-O-RING	
M	38	1	**8T-4185**	2	BOLT (M10X1.5X50-MM)	
	39	1	**9X-8256**	4	WASHER (6.6X12X2-MM THK)	

B-USE AS REQUIRED
M-METRIC PART
Y-SEPARATE ILLUSTRATION

211-7816 VALVE GP-WINCH CONTROL *(contd.)* i02190010

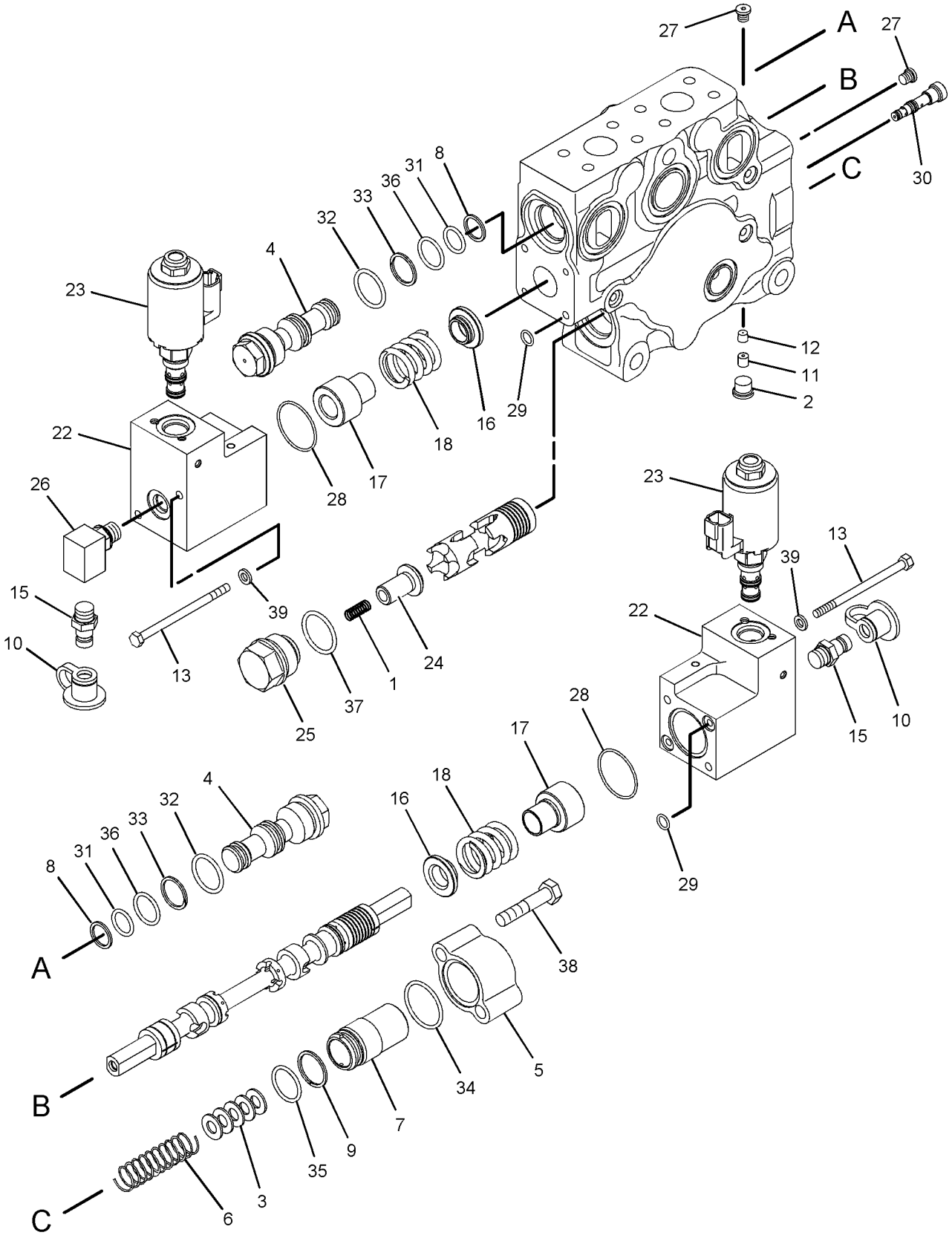

GRAPHIC #1 **<END>** g01114470

OPERATOR STATION

173-1028 ADJUSTER GP-SEAT

S/N: RJS1-UP
PART OF 178-0603, 180-7304 SEAT GP
ALSO AN ATTACHMENT

SMCS-7321 **i02011756**

NOTE	REF NO	GRAPHIC REF	PART NUMBER	QTY	PART NAME 1 2 3 4 5 6 (PRODUCT LEVEL)	SEE PAGE
	1	1	**4V-8256**	4	SPRING	
	2	1	**117-4492**	1	ROD	
	3	1	**136-1544**	1	LATCH AS-LH	
	4	1	**156-5545**	1	LATCH AS-RH	
	5	1	**164-4531**	1	ROD	
	6	1	**170-1112**	1	PLATE AS	
	7	1	**170-1114**	1	HANDLE (SLIDE ADJUSTMENT)	
	8	1	**170-1115**	1	HANDLE (TILT ADJUSTMENT)	
	9	1	**132-0338**	2	WASHER-PLASTIC (13X31.7X.8-MM THK)	
	10	1	**2K-4973**	2	LOCKNUT (3/8-16-THD)	
	11	1	**7X-0608**	2	WASHER-HARD (10.2X16X2-MM THK)	

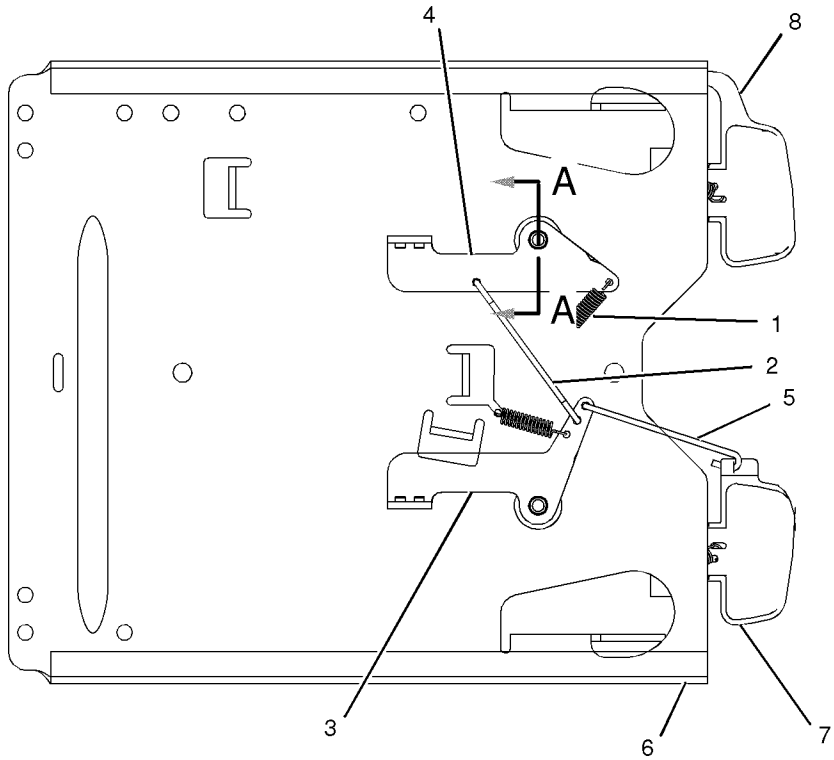

BOTTOM VIEW

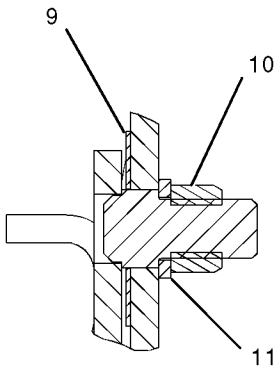

SECTION A-A

GRAPHIC #1 **<END>** g01040300

OPERATOR STATION

214-0783 AIR COMPRESSOR GP-SEAT

S/N: RJS1-UP

PROVIDES OPTIONAL FIELD REPLACEMENT AIR COMPRESSOR

FIELD REPLACEMENT FOR 237-3970—PAGE 727

SMCS-731S, 7324 **i02012101**

NOTE	REF NO	GRAPHIC REF	PART NUMBER	QTY	PART NAME 1 2 3 4 5 6 (PRODUCT LEVEL)	SEE PAGE
	1	1	**5P-4423**	1	ELBOW	
	2	1	**5P-4432**	1	ELBOW-AIR BRAKE	
	3	1	**175-5058**	1	MOUNT	
	4	1	**186-5107**	3	SCREW (NO 8X1.25-IN)	
	5	1	**214-0784**	1	COMPRESSOR AS	
AEF			**211-5358**		CONDUIT (100CM)	
ADF			**5P-6010**		TUBE (1M)	

A-NOT PART OF THIS GROUP
D-ORDER BY THE METER
E-ORDER BY THE CENTIMETER
F-NOT SHOWN

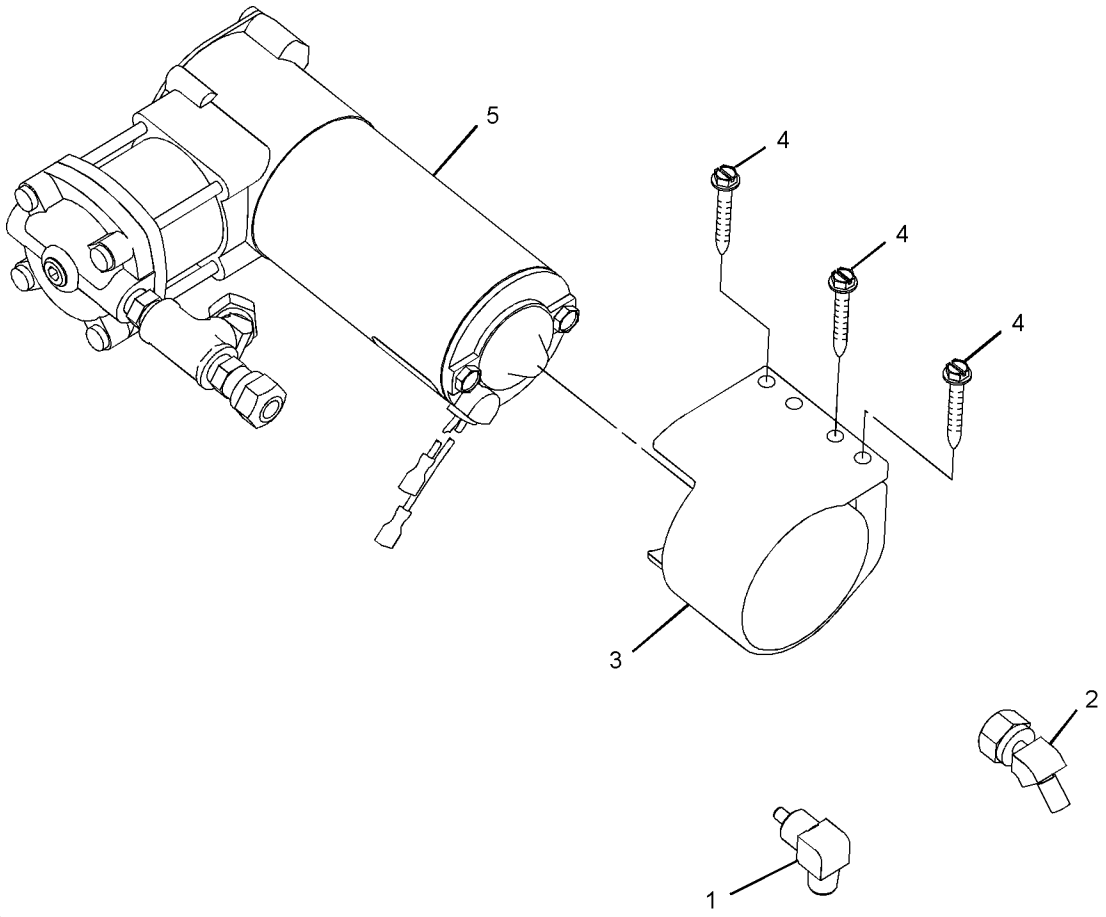

GRAPHIC #1 **<END>** g01040572

OPERATOR STATION

237-3970 AIR COMPRESSOR GP-SEAT

S/N: RJS1-UP
PART OF 191-2933 SUSPENSION GP-SEAT
FIELD REPLACEMENT ORDER 214-0783—PAGE 726
AN ATTACHMENT

SMCS-731S, 7324 **i02012095**

NOTE	REF NO	GRAPHIC REF	PART NUMBER	QTY	PART NAME 1 2 3 4 5 6 (PRODUCT LEVEL)	SEE PAGE
					(NO SERVICED PARTS)	

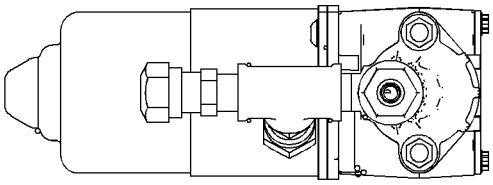

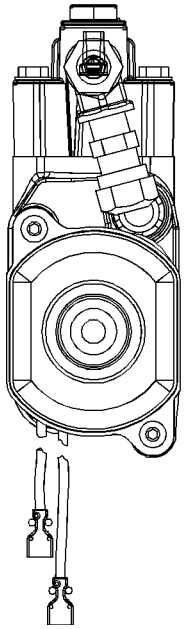

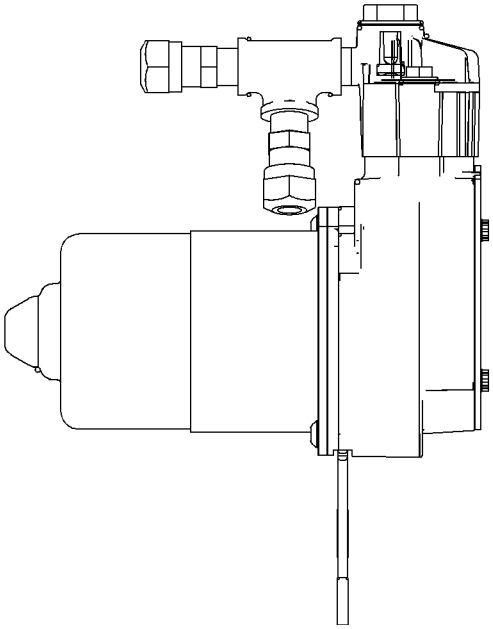

GRAPHIC #1

<END>

g01040576

OPERATOR STATION

205-8638 AIR CONDITIONER AR

S/N: RJS1-UP
CONDENSER, FENDER MOUNTED
AN ATTACHMENT

SMCS-7320 **i02194176**

NOTE	PART NUMBER	QTY	PART NAME 1 2 3 4 5 6 (PRODUCT LEVEL)	SEE PAGE
Y	*228-9023*	1	COMPRESSOR GP-REFRIGERANT	743
Y	**103-9527**	1	CONDENSER GP-REFRIGERANT	744
Y	*205-8639*	1	LINES GP-AIR CONDITIONER	775
Y	*231-3510*	1	MIRROR GP-REAR VIEW	781
	110-6393	1	PLATE-INSTRUCTION (AIR CONDITIONER)	
			ON LH SIDE OF DASH BELOW FOOTPAD & ABOVE S/N PLATE	

Y-SEPARATE ILLUSTRATION

<END>

OPERATOR STATION

248-2926 BLOWER GP-CAB–HEATER

S/N: RJS1-UP

PART OF 205-3645 HEATER GP-CAB

SMCS-7316 **i02189678**

NOTE	REF NO	GRAPHIC REF	PART NUMBER	QTY	PART NAME 1 2 3 4 5 6 (PRODUCT LEVEL)	SEE PAGE
	1	1	**174-1497**	1	MOTOR AS-BLOWER (24-VOLT, A/C, HEATER)	
		1	**102-8802**	1	KIT-RECEPTACLE (2-PIN)	
					(INCLUDES RECEPTACLE AS & WEDGE)	
		1	**3E-3365**	1	WEDGE-RECEPTACLE LOCK (2-PIN)	
		1	**9W-0852**	2	PIN-CONNECTOR	
	2	1	**227-7305**	1	PLATE	
	3	1	**248-2925**	1	PLATE AS	
M	4	1	**129-3178**	1	LOCKNUT (M6X1-THD)	
M	5	1	**8T-4971**	1	BOLT (M6X1X30-MM)	
	6	1	**9X-6165**	1	WASHER (6.5X22X2.5-MM THK)	
	7	1	**9X-8256**	1	WASHER (6.6X12X2-MM THK)	

M-METRIC PART

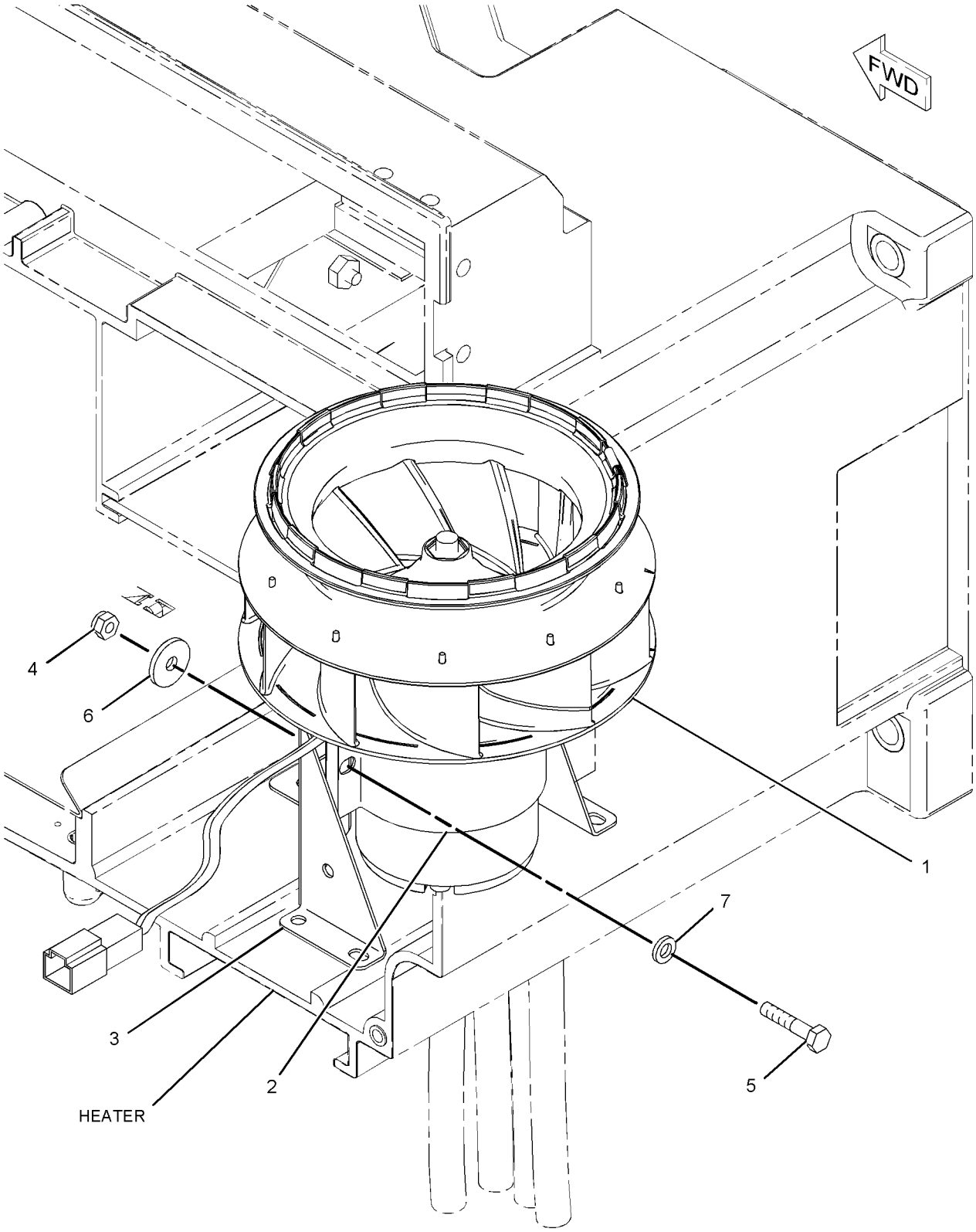

GRAPHIC #1 **<END>** g01107447

OPERATOR STATION

214-4176 BOX GP-STORAGE

S/N: RJS1-UP

PART OF 214-2014 CONSOLE GP-FRONT

SMCS-7268 **i01955086**

NOTE	REF NO	GRAPHIC REF	PART NUMBER	QTY	PART NAME 1 2 3 4 5 6 (PRODUCT LEVEL)	SEE PAGE
	1	1	**9M-5733**	6	RIVET-POP (4.78MM DIA)	
	2	1	**178-0266**	1	HINGE AS	
	3	1	**209-5157**	1	DOOR-FRONT	
	4	1	**214-2015**	1	LATCH (STORAGE COMPARTMENT)	
	5	1	**224-4905**	4	BUMPER	
	6	1	**226-7665**	1	BOX AS-STORAGE	
	7	1	**3H-0240**	6	WASHER (5X9.7X.8MM THK)	
M	8	1	**8C-7581**	5	SCREW-MACHINE (M4X0.7X8MM)	

M-METRIC PART

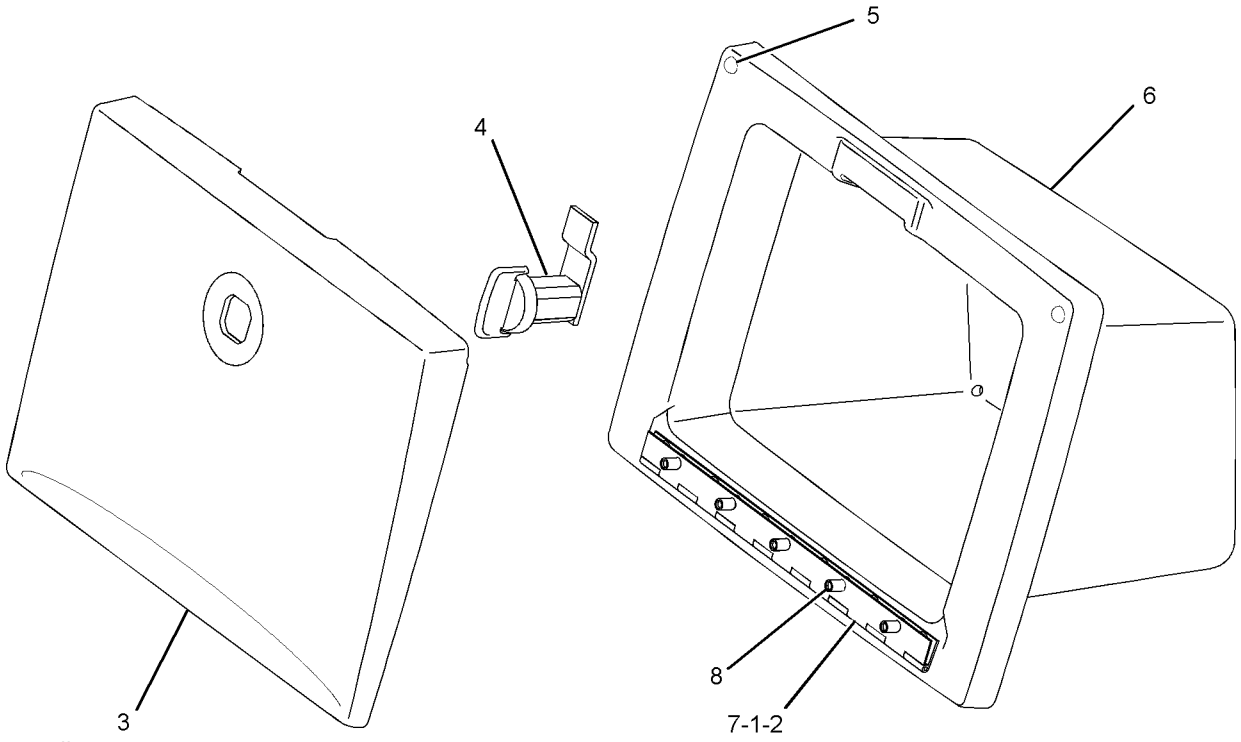

GRAPHIC #1 **<END>** g01019845

OPERATOR STATION

245-4196 BRACKET GP-MOUNTING–ACCUGRADE

S/N: RJS1-UP
FOR USE WITH UNIVERSAL BLADE
AN ATTACHMENT

SMCS-7301 **i02213883**

NOTE	REF NO	GRAPHIC REF	PART NUMBER	QTY	PART NAME 1 2 3 4 5 6 (PRODUCT LEVEL)	SEE PAGE
	1	1	**245-4150**	1	BRACKET AS	
	1A	1	**1J-0245**	4	PLUG-PROTECTION	
	1B	1	**4H-0407**	4	PLUG-PROTECTION	
	2	1	**245-4249**	1	BRACKET AS	
	3	1	**245-4252**	1	SHIELD AS	
	3A	1	**189-9240**	1	LINK	
	4	1	**5P-1076**	4	WASHER-HARD (13.5X30X4-MM THK)	
M	5	1	**8T-4179**	4	BOLT (M12X1.75X20-MM)	

M-METRIC PART

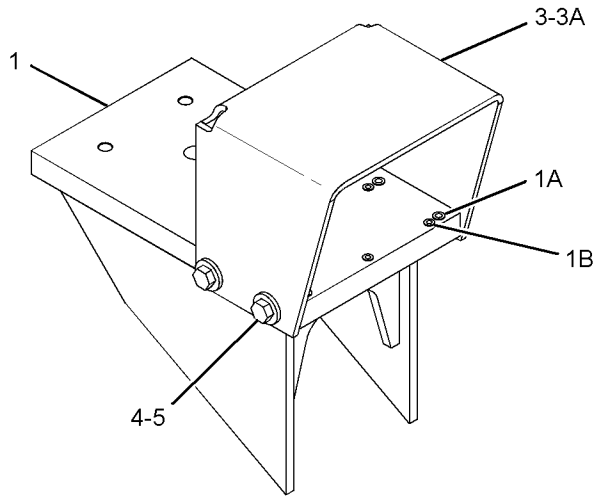

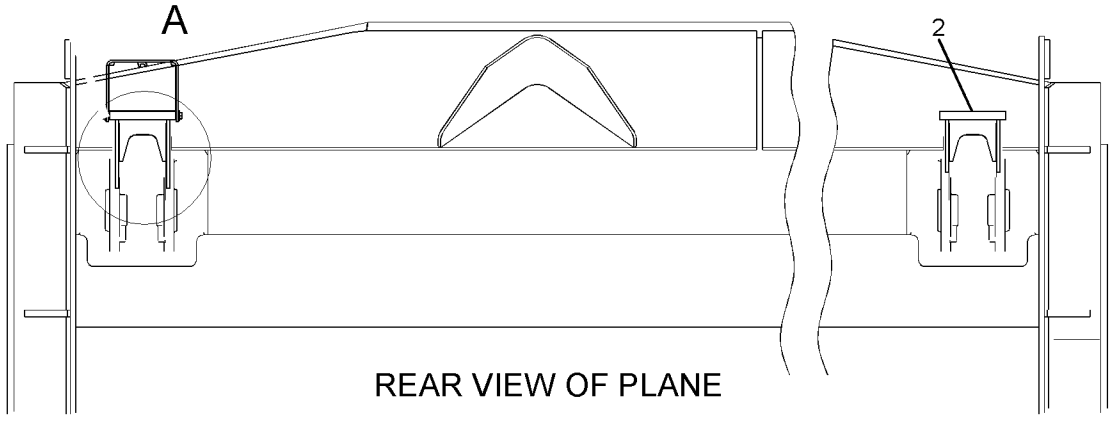

GRAPHIC #1 **<END>** g01121658

OPERATOR STATION

254-9317 BRACKET GP-MOUNTING–DOOR

S/N: RJS1-UP

PART OF 205-8640 CAB AR

SMCS-7301 **i02196530**

NOTE	REF NO	GRAPHIC REF	PART NUMBER	QTY	PART NAME 1 2 3 4 5 6 (PRODUCT LEVEL)	SEE PAGE
	1	1	**254-9012**	1	BRACKET AS (LEFT)	
	2	1	**254-9013**	1	BRACKET AS (RIGHT)	
	3	1	**7X-7729**	6	WASHER (11X25X3-MM THK)	
M	4	1	**8T-4136**	6	BOLT (M10X1.5X25-MM)	

M-METRIC PART

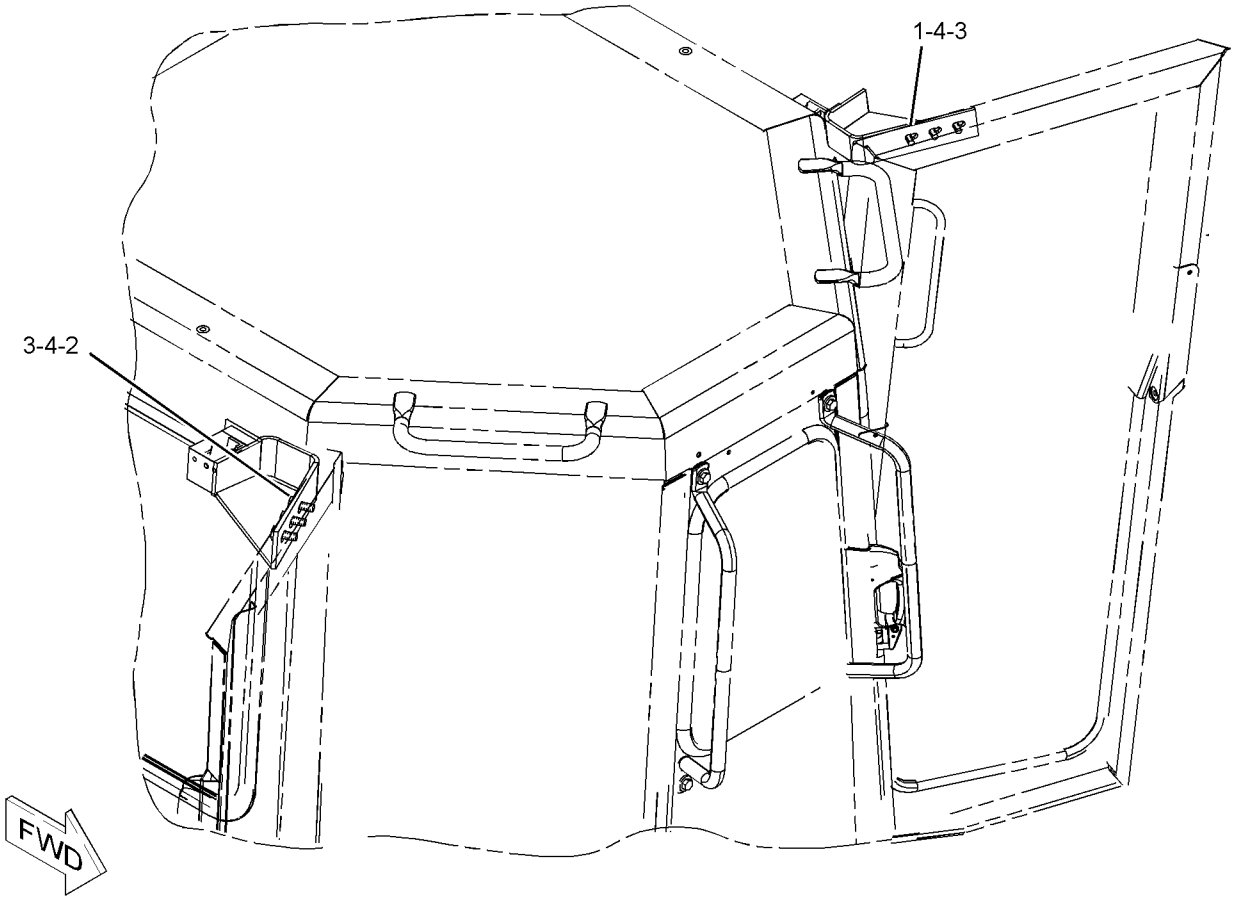

GRAPHIC #1 **<END>** g01117752

OPERATOR STATION

261-3768 BRACKET GP-MOUNTING—FIRST AID KIT

S/N: RJS1-UP
PART OF 214-1800 CAB GP
ALSO AN ATTACHMENT

SMCS-7301 **i02194174**

NOTE	REF NO	GRAPHIC REF	PART NUMBER	QTY	PART NAME 1 2 3 4 5 6 (PRODUCT LEVEL)	SEE PAGE
	1	1	**7G-4824**	1	STRAP	
	2	1	**8E-7791**	1	STRAP	
	3	1	**247-4156**	1	BRACKET	
	4	1	**8T-4121**	2	WASHER-HARD (11X21X2.5-MM THK)	
M	5	1	**8T-4195**	2	BOLT (M10X1.5X30-MM)	

M-METRIC PART

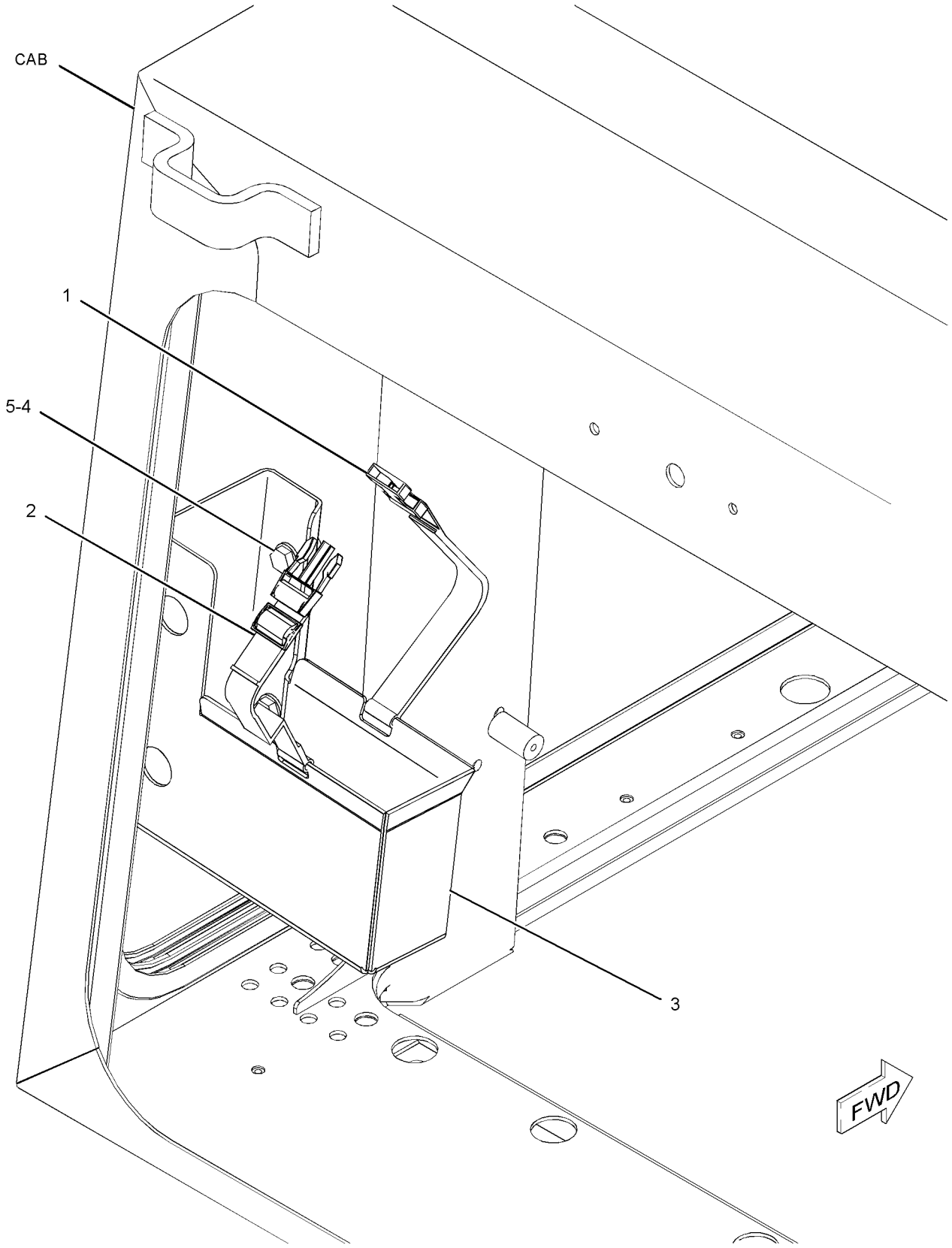

GRAPHIC #1 **<END>** g01110014

OPERATOR STATION

205-8630 CAB AR—ROPS MOUNTED CONDENSER

S/N: RJS1-UP

AN ATTACHMENT

SMCS-7301 **i02206471**

NOTE	PART NUMBER	QTY	PART NAME 1 2 3 4 5 6 (PRODUCT LEVEL)	SEE PAGE
Y	*208-9766*	1	CAB AR	736
Y	*228-9023*	1	COMPRESSOR GP-REFRIGERANT	743
Y	**103-9527**	1	CONDENSER GP-REFRIGERANT	744
Y	*205-8631*	1	LINES GP-AIR CONDITIONER	772
Y	**217-4531**	1	ROPS GP	801
	110-6393	1	PLATE-INSTRUCTION (AIR CONDITIONER)	
			(ON LH SIDE OF DASH BELOW FOOT PAD TO BE SEEN THROUGH CAB DOOR)	
Y-SEPARATE ILLUSTRATION				

<END>

205-8640 CAB AR

S/N: RJS1-UP

PART OF 205-8601 CHASSIS AR

SMCS-7301 **i02250616**

NOTE	PART NUMBER	QTY	PART NAME 1 2 3 4 5 6 (PRODUCT LEVEL)	SEE PAGE
Y	*254-9317*	1	BRACKET GP-MOUNTING (DOOR)	733
Y	*213-1100*	1	CAB AR	737
Y	*209-5192*	1	COVER GP-CAB	751
Y	*214-1740*	1	MOUNTING GP-CAB	782
Y-SEPARATE ILLUSTRATION				

<END>

208-9766 CAB AR—ROPS MOUNTED CONDENSER

S/N: RJS1-UP

PART OF 205-8630 CAB AR

AN ATTACHMENT

SMCS-7301 **i02200380**

NOTE	PART NUMBER	QTY	PART NAME 1 2 3 4 5 6 (PRODUCT LEVEL)	SEE PAGE
Y	*252-7169*	1	CAB GP	741
Y	*214-1760*	1	INSTALLATION GP-RADIO	768
Y	*212-8725*	1	LINER GP-CAB	770
Y	*105-9659*	1	MIRROR GP-REAR VIEW	780
Y	*214-1780*	1	WASHER GP-WINDOW	824
Y	*214-1770*	1	WIPER GP-WINDOW	826
Y	*214-4763*	1	WIRING GP-CAB	279
Y-SEPARATE ILLUSTRATION				

<END>

OPERATOR STATION

213-1100 CAB AR

S/N: RJS1-UP
PART OF 205-8640, 247-4851 CAB AR, 248-4178 WINDOW GP-CAB
ALSO AN ATTACHMENT

SMCS-7301 **i01946620**

NOTE	PART NUMBER	QTY	PART NAME 1 2 3 4 5 6 (PRODUCT LEVEL)	SEE PAGE
Y	*214-1800*	1	CAB GP	739
Y	*214-1760*	1	INSTALLATION GP-RADIO	768
Y	*212-8725*	1	LINER GP-CAB	770
Y	*105-9659*	1	MIRROR GP-REAR VIEW	780
Y	*214-1780*	1	WASHER GP-WINDOW	824
Y	*214-1770*	1	WIPER GP-WINDOW	826
Y	*214-4763*	1	WIRING GP-CAB	279
Y-SEPARATE ILLUSTRATION				

<END>

247-4851 CAB AR

S/N: RJS1-UP
40-PSI GLASS
PART OF 247-8271 CAB AR
AN ATTACHMENT

SMCS-7301 **i02050202**

NOTE	PART NUMBER	QTY	PART NAME 1 2 3 4 5 6 (PRODUCT LEVEL)	SEE PAGE
Y	*213-1100*	1	CAB AR	737
	247-4837	1	FRAME-LH	
	247-4836	1	FRAME-RH	
	222-2825	2	GLASS-CAB (DOOR)	
	222-2824	1	GLASS-FRONT	
	222-2828	1	GLASS-REAR	
	222-2827	2	GLASS-SIDE	
Y-SEPARATE ILLUSTRATION				

<END>

247-8271 CAB AR

S/N: RJS1-UP
40-PSI GLASS
PART OF 248-4172 CAB AR
AN ATTACHMENT

SMCS-7301 **i02050191**

NOTE	PART NUMBER	QTY	PART NAME 1 2 3 4 5 6 (PRODUCT LEVEL)	SEE PAGE
Y	*247-4851*	1	CAB AR	737
Y-SEPARATE ILLUSTRATION				

<END>

OPERATOR STATION

248-4172 CAB AR

S/N: RJS1-UP
4O-PSI GLASS
AN ATTACHMENT

SMCS-7301 **i02225999**

NOTE	PART NUMBER	QTY	PART NAME 1 2 3 4 5 6 (PRODUCT LEVEL)	SEE PAGE
Y	*247-8271*	1	CAB AR	737
Y	*245-8220*	1	FILTER GP-CAB AIR	757
Y	*254-9371*	1	WIPER GP-WINDOW	829

Y-SEPARATE ILLUSTRATION

<END>

248-4171 CAB AR-COLD WEATHER

S/N: RJS1-UP
AN ATTACHMENT

SMCS-7301 **i02226002**

NOTE	PART NUMBER	QTY	PART NAME 1 2 3 4 5 6 (PRODUCT LEVEL)	SEE PAGE
Y	*245-8220*	1	FILTER GP-CAB AIR	757
Y	*248-4178*	1	WINDOW GP-CAB (ARCTIC)	825
Y	*254-9371*	1	WIPER GP-WINDOW	829

Y-SEPARATE ILLUSTRATION

<END>

OPERATOR STATION

214-1800 CAB GP

S/N: RJS1-UP

PART OF 213-1100 CAB AR, 252-7169 CAB GP

ALSO AN ATTACHMENT

SMCS-7301 **i02229451**

NOTE	REF NO	GRAPHIC REF	PART NUMBER	QTY	PART NAME 1 2 3 4 5 6 (PRODUCT LEVEL)	SEE PAGE
	1	1	**3H-6660**	4	PIN-SPRING	
	2	1	**5M-8500**	2	KNOB (DOOR LATCH)	
	3	1	**6V-8928**	1	HOOK-COAT	
	4	1	**6Y-3732**	1	BRACKET	
	5	1	**8C-3442**	2	SPRING-COIL	
	6	1	**8E-2685**	1	BRACKET	
	7	1	**8E-5922**	2	LATCH (WINDOW)	
	8	1	**9N-1995**	4	RIVET-POP	
	9	1	**9P-6572**	1	PLUG	
	10	1	**205-7048**	4	INSERT-THREADED (M6X1-6H THD)	
	11	1	**214-1801**	1	GLASS (TINTED)	
	12	1	**214-1808**	2	HANDHOLD	
	13	1	**214-7244**	1	WINDOW AS (RH)	
	14	1	**214-7245**	1	WINDOW AS (LH)	
	15	1	**214-7246**	1	WINDOW AS (REAR)	
	16	1	**225-6169**	1	ROD	
	17	1	**225-6170**	1	ROD	
	18	1	**236-1300**	1	CAB AS	
	19	1	**239-9961**	2	STRIKER AS (LATCH)	
Y	20	1	*255-6899*	1	DOOR GP-CAB (RH)	753
Y	21	1	*255-6900*	1	DOOR GP-CAB (LH)	755
	22	1	**256-0271**	1	COVER AS	
	23	1	**258-8885**	1	GASKET	
Y	24	1	*261-3768*	1	BRACKET GP-MOUNTING (FIRST AID KIT)	734
	25	1	**110-7524**	18	BUTTON	
	26	1	**180-3748**	3	INSERT-THREADED	
	27	1	**224-6208**	2	INSERT-THREADED	
M	28	1	**3E-8020**	6	SCREW-TRUSS HEAD (M6X1X25-MM)	
	29	1	**3K-6235**	2	SEAL-LIP TYPE	
M	30	1	**5C-9553**	6	BOLT (M6X1X16-MM)	
	31	1	**5P-1076**	8	WASHER-HARD (13.5X30X4-MM THK)	
	32	1	**7X-7729**	8	WASHER (11X25X3-MM THK)	
	33	1	**8E-6856**	1	COVER	
	34	1	**8T-2501**	4	BOLT (3/8-16X2-IN)	
	35	1	**8T-4121**	4	WASHER-HARD (11X21X2.5-MM THK)	
M	36	1	**8T-4139**	4	BOLT (M12X1.75X30-MM)	
M	37	1	**8T-4183**	4	BOLT (M12X1.75X40-MM)	
M	38	1	**8T-4191**	4	BOLT (M10X1.5X16-MM)	
	39	1	**9M-5884**	2	BUMPER	
M	40	1	**9X-2041**	4	SCREW-TRUSS HEAD (M10X1.5X20-MM)	
	41	1	**9X-8256**	6	WASHER (6.6X12X2-MM THK)	
BD	42	1	**5P-6605**		SEAL	

B-USE AS REQUIRED
D-ORDER BY THE METER
M-METRIC PART
Y-SEPARATE ILLUSTRATION

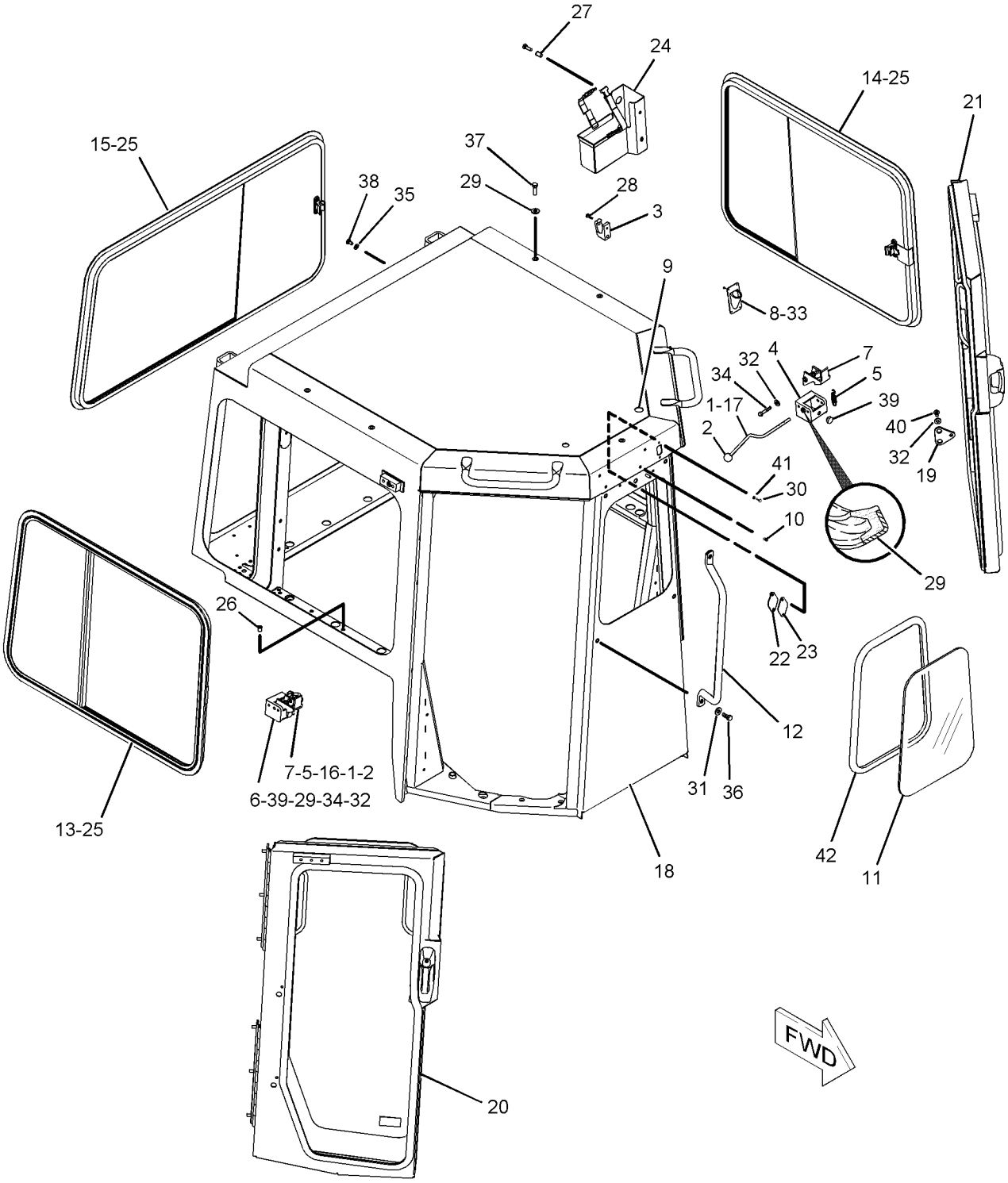

GRAPHIC #1 **<END>** g01125695

OPERATOR STATION

252-7169 CAB GP—ROPS MOUNTED CONDENSER

S/N: RJS1-UP
PART OF 208-9766 CAB AR
AN ATTACHMENT

SMCS-7301 **i02200381**

NOTE	REF NO	GRAPHIC REF	PART NUMBER	QTY	PART NAME 1 2 3 4 5 6 (PRODUCT LEVEL)	SEE PAGE
Y	1	1	*214-1800*	1	CAB GP	739
	2	1	**6G-9102**	4	BOSS	
	3	1	**8T-4223**	4	WASHER-HARD (13.5X25.5X3-MM THK)	
	4	1	**8T-9383**	4	BOLT (1/2-13X0.75-IN)	

Y-SEPARATE ILLUSTRATION

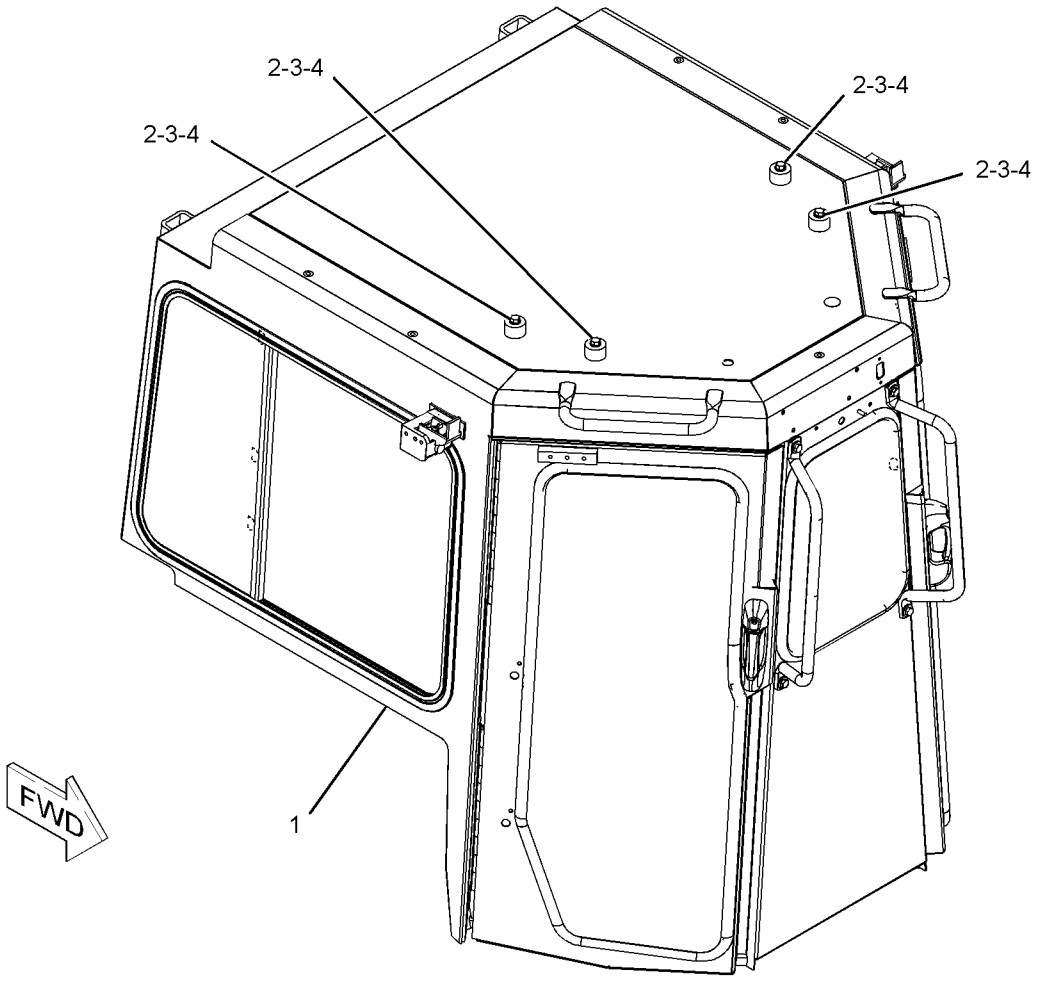

GRAPHIC #1 **<END>** g01117133

OPERATOR STATION

183-5106 COMPRESSOR GP-REFRIGERANT

S/N: RJS1-UP

PART OF 228-9023 COMPRESSOR GP-REFRIGERANT

AN ATTACHMENT

SMCS-1802 **i02232341**

NOTE	REF NO	GRAPHIC REF	PART NUMBER	QTY	PART NAME 1 2 3 4 5 6 (PRODUCT LEVEL)	SEE PAGE
	1	1	**102-8802**	1	KIT-RECEPTACLE (2-PIN)	
					(INCLUDES RECEPTACLE AS & WEDGE)	
	2	1	**114-3469**	1	VALVE GP-RELIEF (REFRIGERANT COMPRESSOR)	
		1	**9X-7378**	1	SEAL-O-RING	
	3	1	**7T-4532**	1	PLUG AS	
	4	1	**9X-7385**	2	SEAL-O-RING	

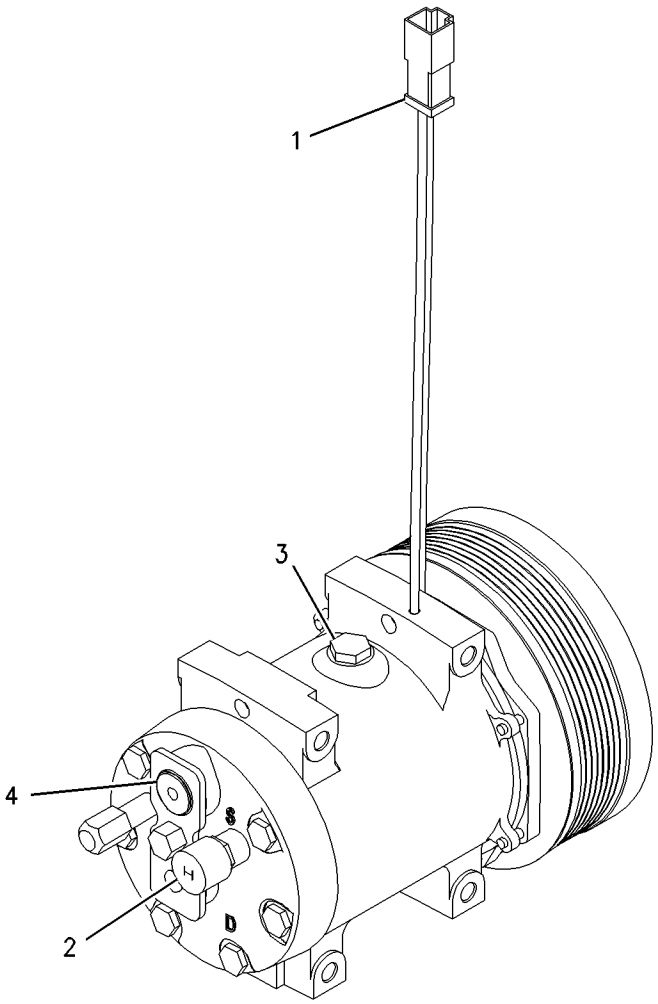

GRAPHIC #1 **<END>** g00781120

228-9023 COMPRESSOR GP-REFRIGERANT

S/N: RJS1-UP
PART OF 205-8638 AIR CONDITIONER AR, 205-8630 CAB AR
AN ATTACHMENT

SMCS-1802 **i02194181**

NOTE	REF NO	GRAPHIC REF	PART NUMBER	QTY	PART NAME 1 2 3 4 5 6 (PRODUCT LEVEL)	SEE PAGE
	1	1	**9G-8661**	1	SPACER (10X16X20-MM THK)	
Y	3	1	**183-5106**	1	COMPRESSOR GP-REFRIGERANT	742
	4	1	**243-1325**	1	BELT-SERPENTINE (A/C COMPRESSOR PULLEY)	
M	5	1	**7X-2538**	2	BOLT (M8X1.25X100-MM)	
M	6	1	**7X-2540**	2	BOLT (M8X1.25X120-MM)	
	7	1	**8T-4224**	4	WASHER-HARD (8.8X16X2-MM THK)	

M-METRIC PART
Y-SEPARATE ILLUSTRATION

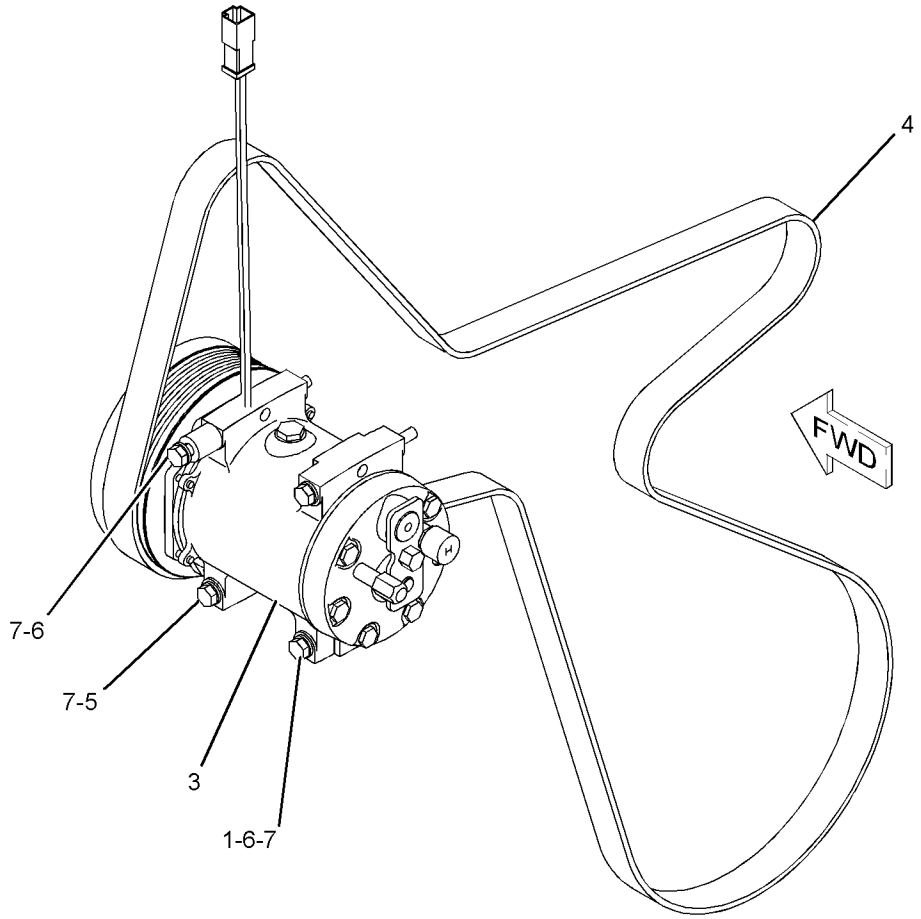

GRAPHIC #1 **<END>** g01113134

OPERATOR STATION

103-9527 CONDENSER GP-REFRIGERANT–A/C

S/N: RJS1-UP

PART OF 205-8638 AIR CONDITIONER AR, 205-8630 CAB AR

AN ATTACHMENT

SMCS-1805 **i02212581**

NOTE	REF NO	GRAPHIC REF	PART NUMBER	QTY	PART NAME 1 2 3 4 5 6 (PRODUCT LEVEL)	SEE PAGE
	1	1	**3E-5239**	1	RELAY AS (24-VOLT) (CONDENSER BLOWER MOTOR)	
	2	1	**3S-2093**	7	STRAP-CABLE	
C	3	1	**7K-1181**	2	STRAP-CABLE	
	4	1	**7T-5856**	4	CLAMP	
	5	1	**8C-3756**	1	FILM-IDENTIFICATION (GROUP NUMBER) (REFRIGERANT CONDENSER)	
	6	1	**8P-6363**	1	PLUG	
	7	1	**9X-3452**	2	GUARD AS-FAN	
C	8	1	**124-8490**	1	HARNESS AS-HEATER & AIR COND (CONDENSER BLOWER MOTORS)	
		1	**155-2270**	1	KIT-CONNECTING PLUG (2-PIN)	
					(INCLUDES PLUG AS & WEDGE)	
		1	**102-8803**	1	KIT-RECEPTACLE (3-PIN)	
					(INCLUDES RECEPTACLE AS & WEDGE)	
		1	**9X-1054**	1	PLUG AS-CONNECTOR (4-PIN)	
	9	1	**142-8620**	2	FAN AS-CONDENSER	
	10	1	**174-1495**	2	MOTOR GP-ELECTRIC (CONDENSER BLOWER)	
					(EACH INCLUDES)	
		1	**3E-3365**	1	WEDGE-RECEPTACLE LOCK (2-PIN)	
		1	**9W-0852**	2	PIN-CONNECTOR	
		1	**102-8802**	1	KIT-RECEPTACLE (2-PIN)	
					(INCLUDES RECEPTACLE AS & WEDGE)	
C	11	1	**203-2070**	8	MOUNT	
C	12	1	**204-9530**	4	TUBE	
C	13	1	**204-9531**	1	COIL-CONDENSER	
C	14	1	**204-9532**	1	CASE AS	
C	15	1	**4P-8134**	2	CLIP	
M	16	1	**5C-2890**	1	NUT (M6X1-THD)	
	17	1	**5P-1075**	8	WASHER-HARD (10.2X22.5X3-MM THK)	
	18	1	**5P-8441**	1	GROMMET	
	19	1	**7X-0578**	4	WASHER-HARD (10.2X32X2.5-MM THK)	
C	20	1	**8T-4121**	4	WASHER-HARD (11X21X2.5-MM THK)	
M	21	1	**8T-4133**	4	NUT (M10X1.5-THD)	
M	22	1	**8T-4137**	8	BOLT (M10X1.5X20-MM)	
M	23	1	**8T-4192**	12	BOLT (M12X1.75X25-MM)	
	24	1	**8T-4205**	1	WASHER-HARD (7.2X14.5X2-MM THK)	
	25	1	**8T-4223**	12	WASHER-HARD (13.5X25.5X3-MM THK)	
CM	26	1	**8T-6685**	4	BOLT (M10X1.5X110-MM)	
	27	1	**9X-7373**	1	GROMMET	
BD	28	1	**5P-5924**		SEAL	
BCD	29	1	**5P-5672**		SEAL	
BD	30	1	**5P-5908**		SEAL	

B-USE AS REQUIRED
C-CHANGE FROM PREVIOUS TYPE
D-ORDER BY THE METER
M-METRIC PART

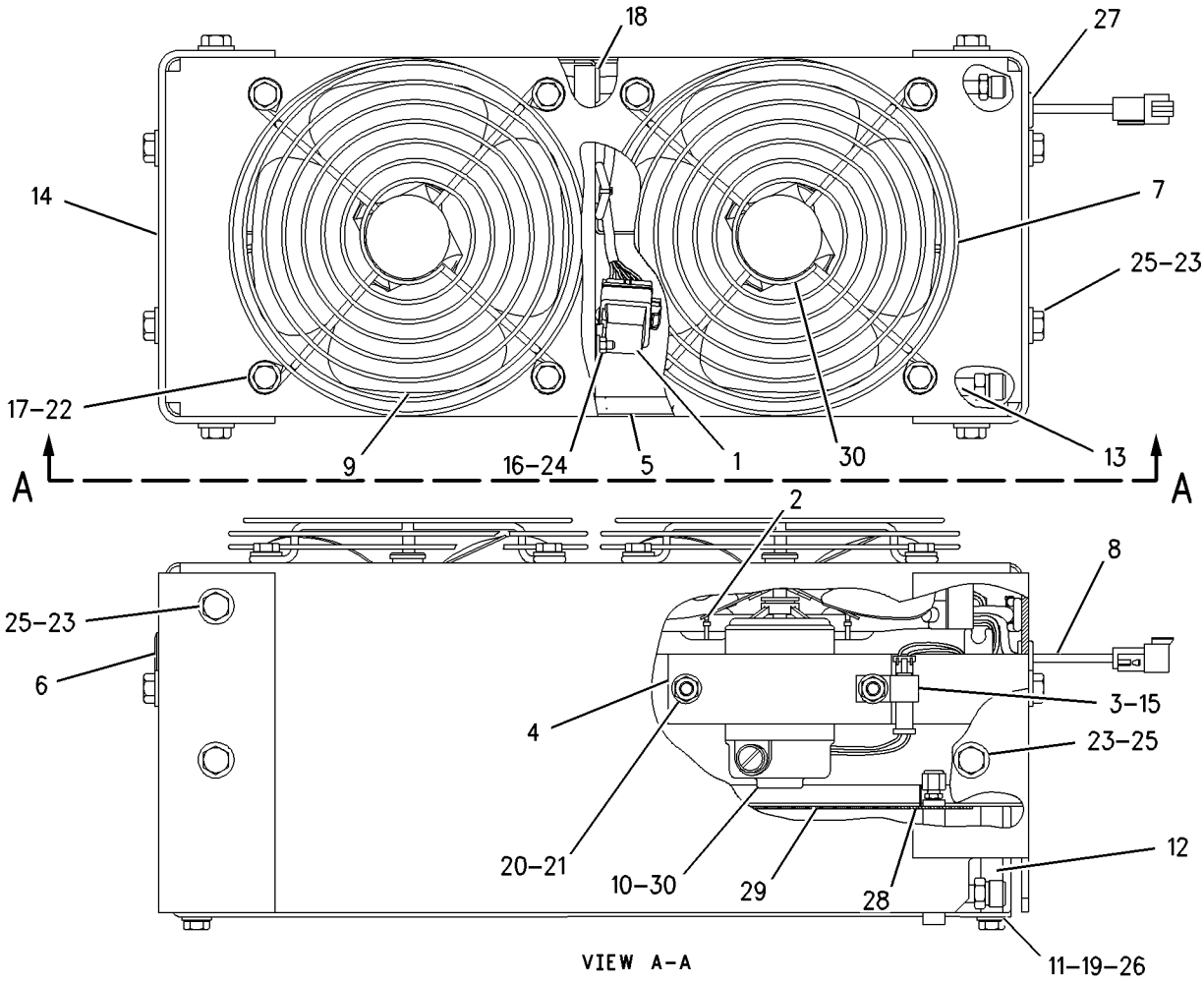

GRAPHIC #1 **<END>** g00937470

OPERATOR STATION

214-2014 CONSOLE GP-FRONT

S/N: RJS1-UP

PART OF 214-4193 PLATFORM AR

SMCS-5258 **i02237758**

NOTE	REF NO	GRAPHIC REF	PART NUMBER	QTY	PART NAME 1 2 3 4 5 6 (PRODUCT LEVEL)	SEE PAGE
	1	1	**6Y-5094**	1	CABLE	
	2	1	**209-5155**	1	CONSOLE-FRONT	
Y	3	1	**214-4176**	1	BOX GP-STORAGE	731
	4	1	**232-6668**	1	PAD AS (FOOT)	
	5	1	**244-6529**	1	FOAM AS	
M	6	1	**127-2170**	10	SCREW-TRUSS HEAD (M8X1.25X20-MM)	
	7	1	**4B-4274**	4	WASHER (5.5X13X1.2-MM THK)	
M	8	1	**7X-2619**	1	BOLT (M6X1X20-MM)	
M	9	1	**8C-6364**	4	BOLT-SOCKET HEAD (M5X0.8X14-MM)	
	10	1	**9X-8256**	1	WASHER (6.6X12X2-MM THK)	

M-METRIC PART
Y-SEPARATE ILLUSTRATION

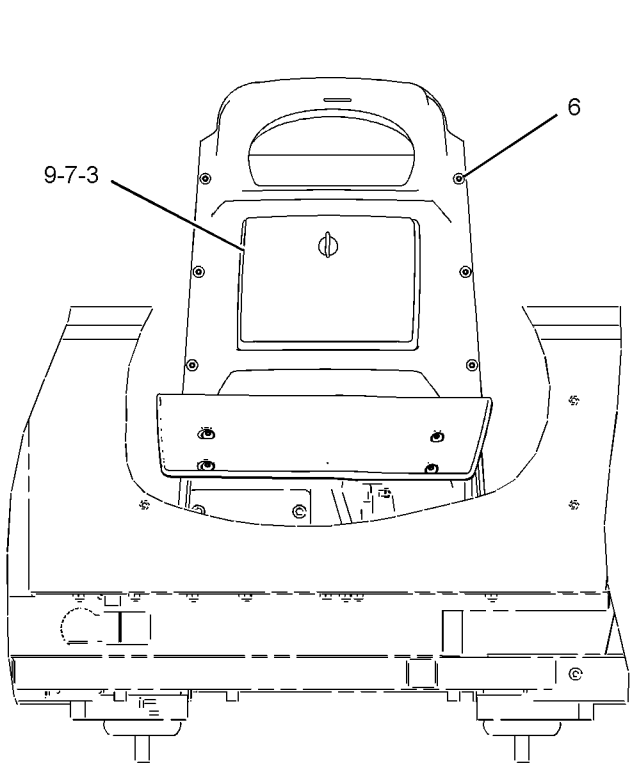

REAR VIEW

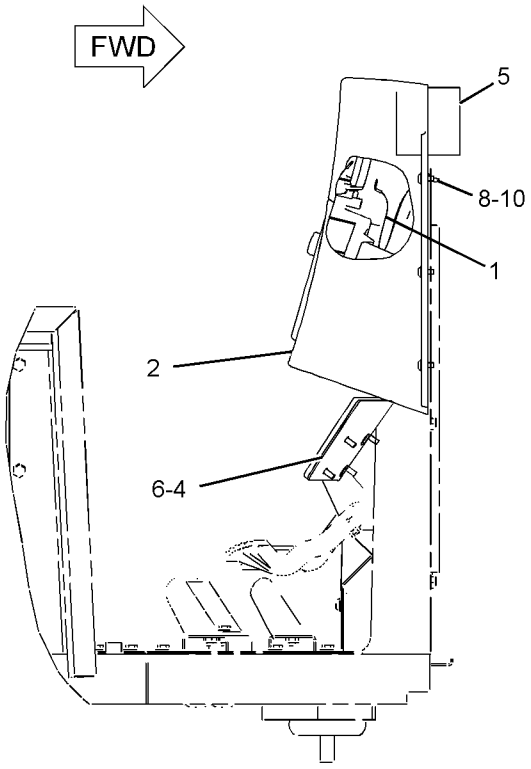

RIGHT SIDE VIEW

GRAPHIC #1 **<END>** g01128755

OPERATOR STATION

209-5154 CONSOLE GP-OPERATOR

S/N: RJS1-UP

PART OF 214-4193 PLATFORM AR

SMCS-5258, 7451 **i02237555**

NOTE	REF NO	GRAPHIC REF	PART NUMBER	QTY	PART NAME 1 2 3 4 5 6 (PRODUCT LEVEL)	SEE PAGE
	1	1	**154-8079**	12	NUT (U-TYPE RETAINER)	
	2	1	**209-9542**	1	PLATE	
	3	1	**212-2770**	1	PLATE	
	4	1	**216-0382**	1	CUSHION AS	
	5	1	**216-0385**	1	CUSHION AS	
	6	1	**218-3266**	1	PANEL	
	7	1	**218-3269**	1	PANEL	
	8	1	**220-3439**	1	PLATE	
	9	1	**220-6126**	2	PLATE AS	
	10	1	**221-9403**	1	CONSOLE AS	
	11	1	**221-9409**	2	KNOB (ARMREST ADJUSTMENT)	
	12	1	**230-0093**	1	BRACKET AS	
	13	1	**233-9161**	12	SCREW-TRUSS HEAD	
	14	1	**235-3560**	1	CASE-REAR	
	15	1	**235-3561**	1	PANEL AS	
M	16	1	**127-2170**	9	SCREW-TRUSS HEAD (M8X1.25X20-MM)	
M	17	1	**131-3539**	4	SCREW-FLAT HEAD (M8X1.25-MM THD)	
	18	1	**198-9706**	8	SCREW-TRUSS HEAD	
	19	1	**2D-3406**	3	PLUG-BUTTON	
	20	1	**3E-4352**	6	WASHER-HARD (8.8X20.5X2.5-MM THK)	
M	21	1	**5C-9553**	4	BOLT (M6X1X16-MM)	
	22	1	**5P-4116**	15	WASHER-HARD (8.8X20.5X2-MM THK)	
M	23	1	**6V-9189**	8	LOCKNUT (M8X1.25-THD)	
	24	1	**7X-0578**	2	WASHER-HARD (10.2X32X2.5-MM THK)	
M	25	1	**7X-2538**	3	BOLT (M8X1.25X100-MM)	
M	26	1	**7X-2540**	3	BOLT (M8X1.25X120-MM)	
	27	1	**7X-7729**	2	WASHER (11X25X3-MM THK)	
	28	1	**7Y-8169**	1	GROMMET	
M	29	1	**8T-4136**	4	BOLT (M10X1.5X25-MM)	
M	30	1	**8T-4200**	2	BOLT (M8X1.25X16-MM)	
	31	1	**9X-8267**	4	WASHER (6.6X12X2-MM THK)	
B	32	1	**1U-8846**		SEALANT-GASKET	

B-USE AS REQUIRED
M-METRIC PART

209-5154 **CONSOLE GP-OPERATOR** *(contd.)* **i02237555**

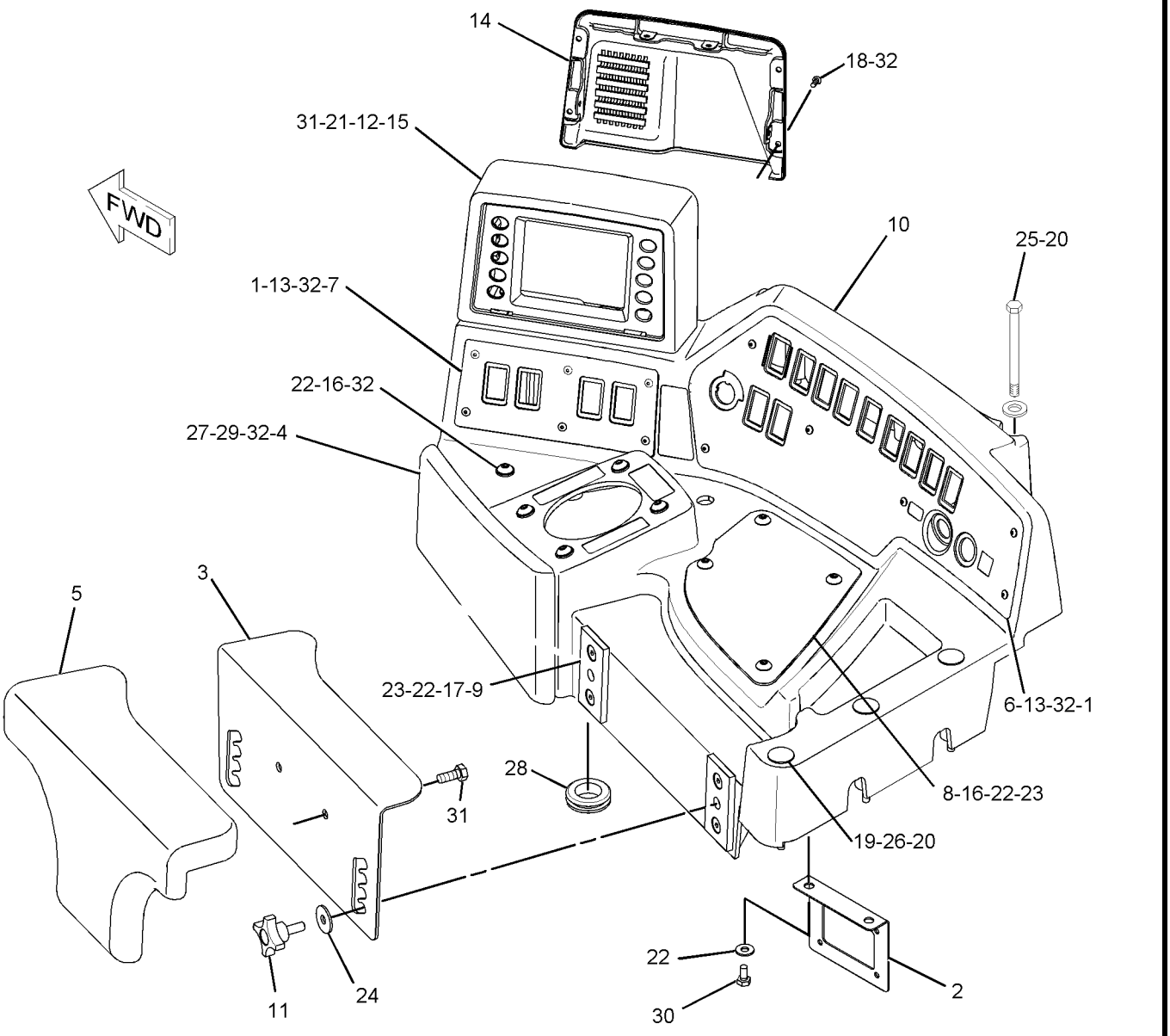

GRAPHIC #1 **<END>** g01128403

OPERATOR STATION

232-6622 CONTROL & MTG GP-PEDAL–GOVERNOR, BRAKE

S/N: RJS1-UP

PART OF 205-8605 POWER TRAIN AR

SMCS-5462 **i01961419**

NOTE	REF NO	GRAPHIC REF	PART NUMBER	QTY	PART NAME 1 2 3 4 5 6 (PRODUCT LEVEL)	SEE PAGE
	1	1	**171-7077**	2	ROD-THREADED	
Y	2	1	*231-7314*	1	PEDAL GP-GOVERNOR & BRAKE	490
	3	1	**8T-4121**	4	WASHER-HARD (11X21X2.5-MM THK)	
M	4	1	**8T-4133**	2	NUT (M10X1.5-THD)	
M	5	1	**8T-4195**	2	BOLT (M10X1.5X30-MM)	

M-METRIC PART
Y-SEPARATE ILLUSTRATION

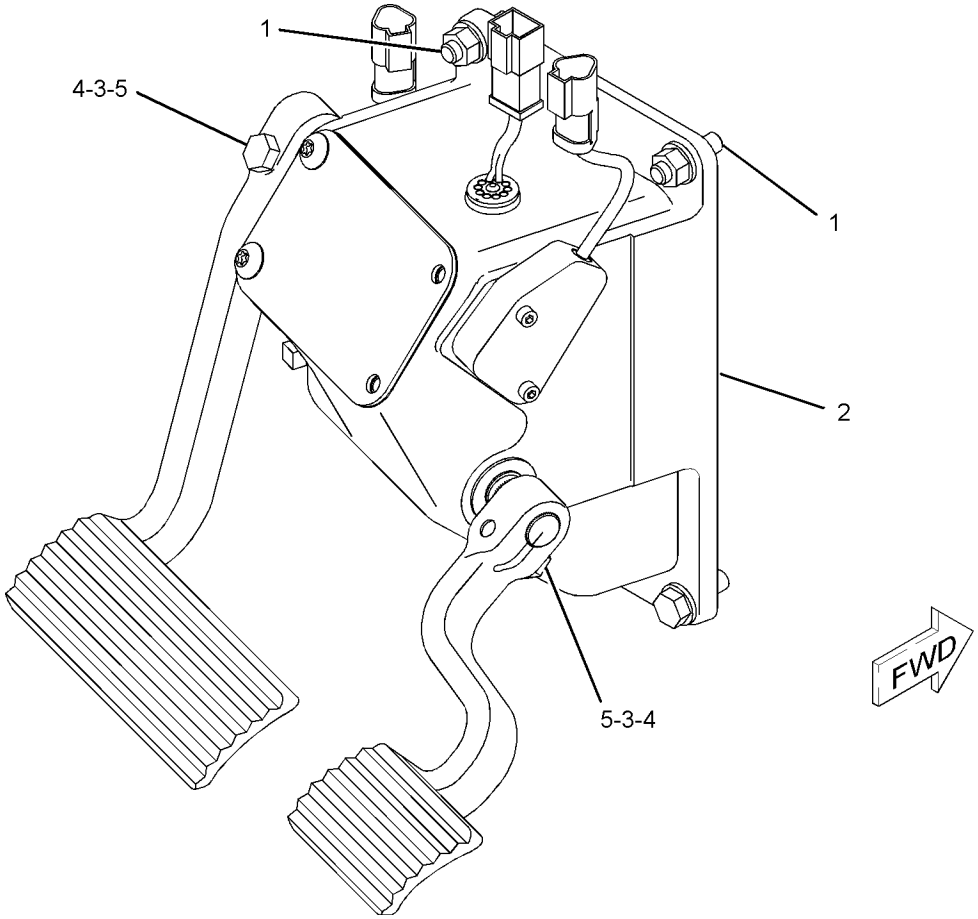

GRAPHIC #1 **<END>** g01021937

OPERATOR STATION

263-3318 CONTROL & MTG GP-PEDAL–GOVERNOR, BRAKE

S/N: RJS1-UP
PART OF 256-0190 OPERATOR AR
AN ATTACHMENT

SMCS-5462 **i02224110**

NOTE	REF NO	GRAPHIC REF	PART NUMBER	QTY	PART NAME 1 2 3 4 5 6 (PRODUCT LEVEL)	SEE PAGE
	1	1	**171-7077**	2	ROD-THREADED	
Y	2	1	*231-7314*	1	PEDAL GP-GOVERNOR & BRAKE	490
	3	1	**258-0978**	1	PEDAL AS (LH)	
	4	1	**258-0980**	1	PEDAL AS (RH)	
	5	1	**8T-4121**	4	WASHER-HARD (11X21X2.5-MM THK)	
M	6	1	**8T-4133**	2	NUT (M10X1.5-THD)	
M	7	1	**8T-4195**	4	BOLT (M10X1.5X30-MM)	

M-METRIC PART
Y-SEPARATE ILLUSTRATION

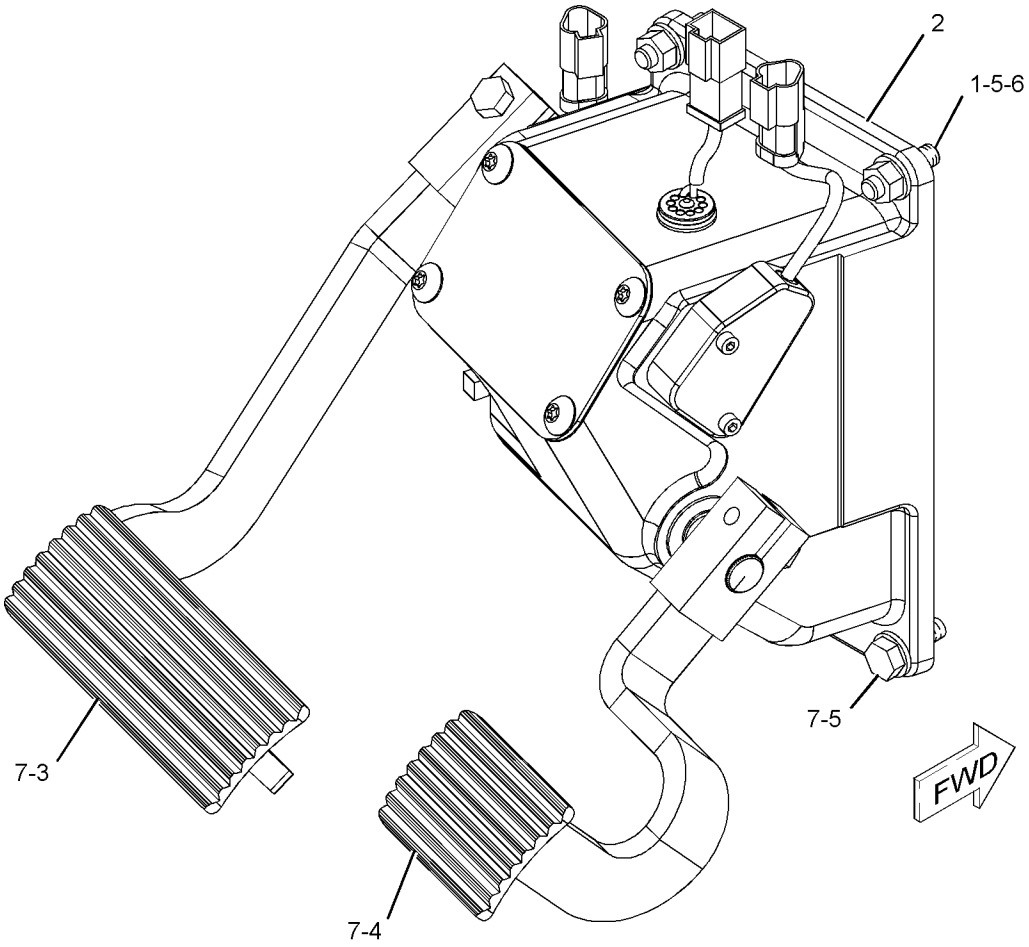

GRAPHIC #1 **<END>** g01122716

OPERATOR STATION

209-5192 COVER GP-CAB

S/N: RJS1-UP

PART OF 205-8640 CAB AR

SMCS-7301 **i02214750**

NOTE	REF NO	GRAPHIC REF	PART NUMBER	QTY	PART NAME 1 2 3 4 5 6 (PRODUCT LEVEL)	SEE PAGE
	1	1	**6Y-0206**	2	RETAINER	
	2	1	**7G-4824**	1	STRAP	
	3	1	**8E-7791**	1	STRAP	
	4	1	**190-8505**	1	ASHTRAY (CAB)	
	5	1	**209-5163**	1	FLOOR MAT-LOWER (CAB)	
	6	1	**209-5164**	1	FLOOR MAT-UPPER (CAB)	
	7	1	**209-5196**	1	PANEL-ACOUSTICAL	
	8	1	**212-4994**	1	PANEL-ACOUSTICAL	
	9	1	**237-0190**	1	GASKET	
M	10	1	**9X-2043**	2	SCREW-TRUSS HEAD (M6X1X14-MM)	
M	11	1	**9X-2045**	5	SCREW-TRUSS HEAD (M6X1X20-MM)	

M-METRIC PART

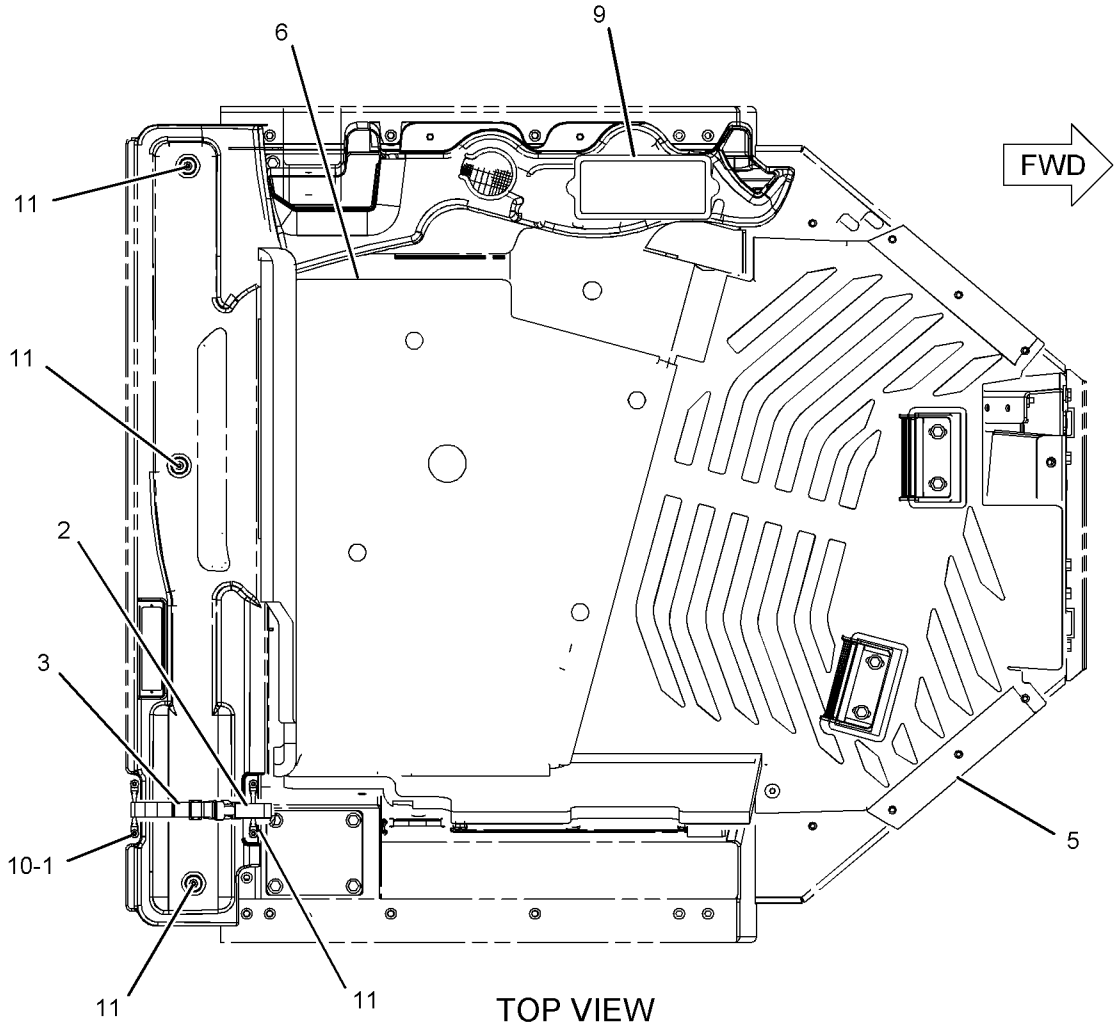

TOP VIEW

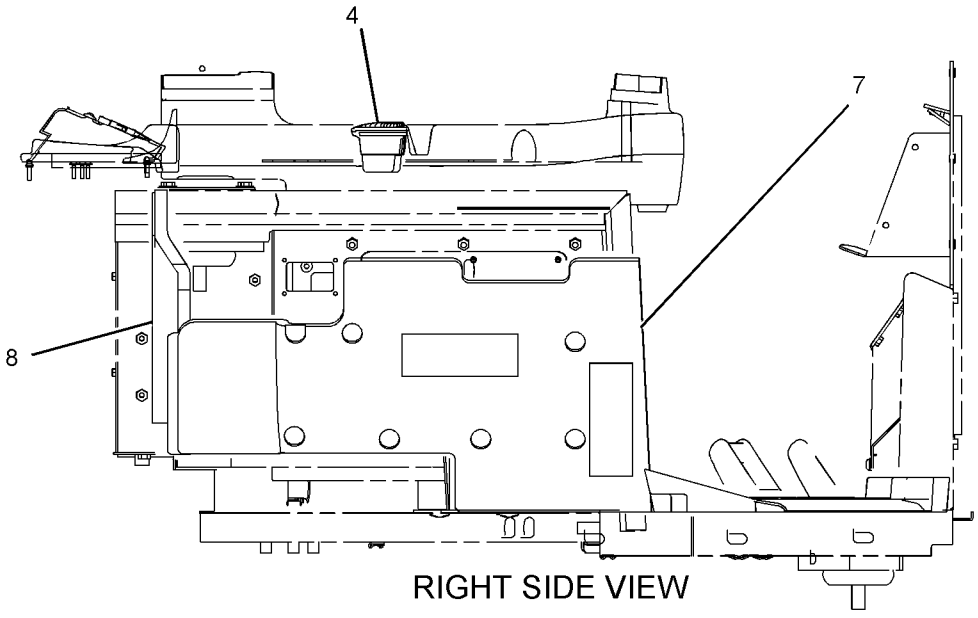

RIGHT SIDE VIEW

GRAPHIC #1 **<END>** g01117892

OPERATOR STATION

255-6899 DOOR GP-CAB—RH

S/N: RJS1-UP
PART OF 214-1800 CAB GP
ALSO AN ATTACHMENT

SMCS-7308 **i02250480**

NOTE	REF NO	GRAPHIC REF	PART NUMBER	QTY	PART NAME 1 2 3 4 5 6 (PRODUCT LEVEL)	SEE PAGE
	1	1	**200-7836**	1	HANDLE AS (PULL)	
	2	1	**212-7670**	1	PLATE	
	3	1	**214-1802**	1	GLASS	
	4	1	**255-0845**	1	DOOR AS (RH)	
	5	1	**255-0849**	1	COVER (RH)	
	6	1	**256-7745**	1	LATCH AS (RH)	
M	7	1	**127-2170**	4	SCREW-TRUSS HEAD (M8X1.25X20-MM)	
M	8	1	**3E-4304**	7	INSERT-THREADED	
	9	1	**7X-7729**	6	WASHER (11X25X3-MM THK)	
	10	1	**8E-6856**	1	COVER	
M	11	1	**8T-4136**	6	BOLT (M10X1.5X25-MM)	
	12	1	**9N-1995**	4	RIVET-POP	
M	13	1	**9X-2042**	4	SCREW-TRUSS HEAD (M6X1X12-MM)	
M	14	1	**9X-2044**	4	SCREW-TRUSS HEAD (M6X1X16-MM)	
BD	15	1	**5P-6605**		SEAL	
BE	16	1	**178-8894**		SEAL	

B-USE AS REQUIRED
D-ORDER BY THE METER
E-ORDER BY THE CENTIMETER
M-METRIC PART

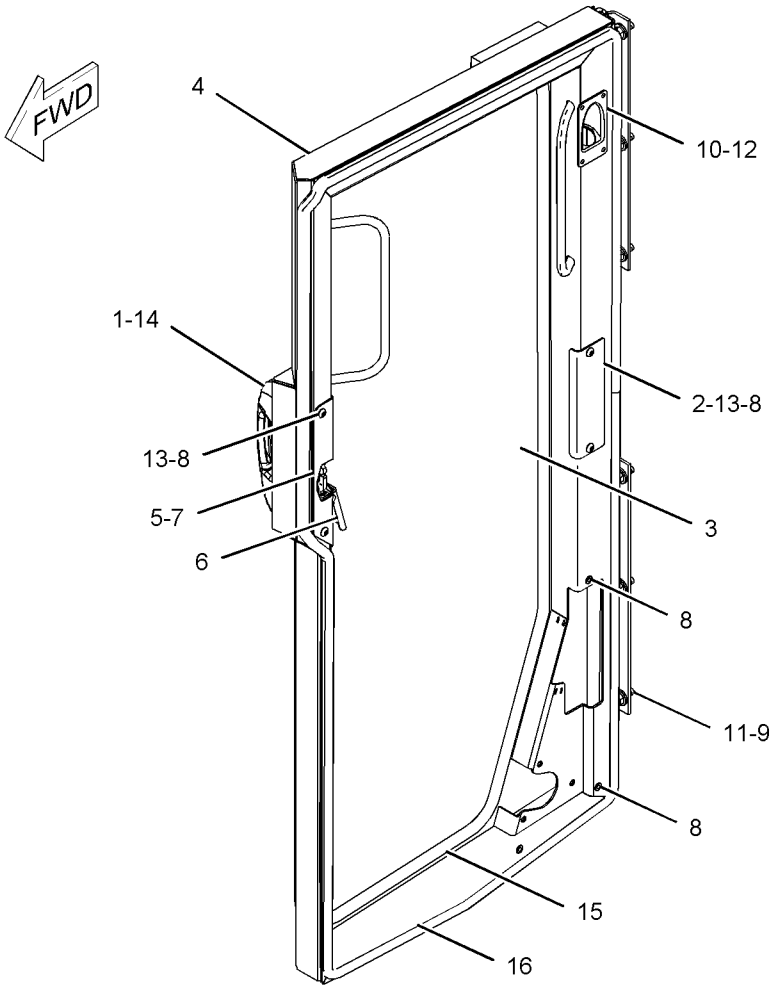

GRAPHIC #1 **<END>** g01109995

OPERATOR STATION

255-6900 DOOR GP-CAB—LH

S/N: RJS1-UP
PART OF 214-1800 CAB GP
ALSO AN ATTACHMENT

SMCS-7308 **i02250481**

NOTE	REF NO	GRAPHIC REF	PART NUMBER	QTY	PART NAME 1 2 3 4 5 6 (PRODUCT LEVEL)	SEE PAGE
	1	1	**200-7836**	1	HANDLE AS (PULL)	
	2	1	**212-7670**	1	PLATE	
	3	1	**214-1802**	1	GLASS	
	4	1	**255-0844**	1	DOOR AS (LH)	
	5	1	**255-0848**	1	COVER (LH)	
	6	1	**256-7744**	1	LATCH AS (LH)	
M	7	1	**127-2170**	4	SCREW-TRUSS HEAD (M8X1.25X20-MM)	
M	8	1	**3E-4304**	7	INSERT-THREADED	
	9	1	**7X-7729**	6	WASHER (11X25X3-MM THK)	
	10	1	**8E-6856**	1	COVER	
M	11	1	**8T-4136**	6	BOLT (M10X1.5X25-MM)	
	12	1	**9N-1995**	4	RIVET-POP	
M	13	1	**9X-2042**	4	SCREW-TRUSS HEAD (M6X1X12-MM)	
M	14	1	**9X-2044**	4	SCREW-TRUSS HEAD (M6X1X16-MM)	
BD	15	1	**5P-6605**		SEAL	
BE	16	1	**178-8894**		SEAL	

B-USE AS REQUIRED
D-ORDER BY THE METER
E-ORDER BY THE CENTIMETER
M-METRIC PART

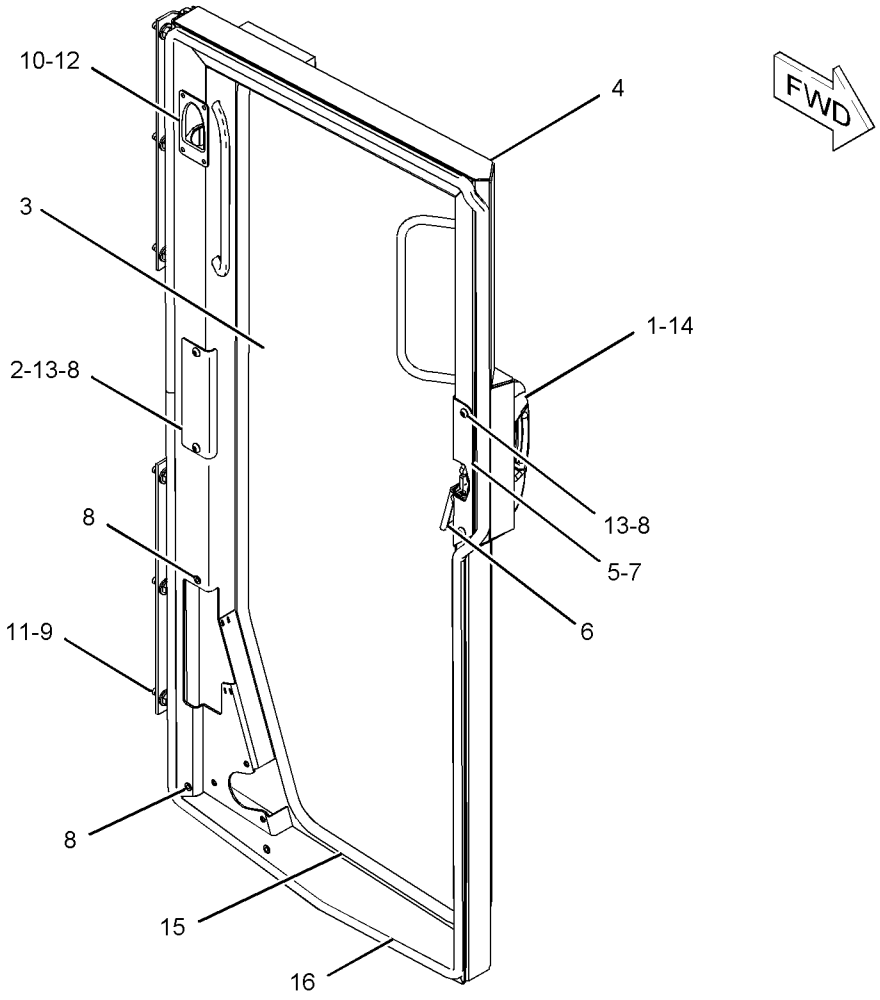

GRAPHIC #1 **<END>** g01109954

OPERATOR STATION

245-8220 FILTER GP-CAB AIR

S/N: RJS1-UP
PART OF 248-4172 CAB AR, 248-4171 CAB AR-COLD WEATHER
AN ATTACHMENT

SMCS-7342 **i02270609**

NOTE	REF NO	GRAPHIC REF	PART NUMBER	QTY	PART NAME 1 2 3 4 5 6 (PRODUCT LEVEL)	SEE PAGE
	1	1	**8L-7905**	4	RIVET-POP	
	2	1	**117-9066**	1	LATCH AS	
	3	1	*232-3583*	1	PRECLEANER GP	
		1	**186-3735**	2	PIN-CONNECTOR	
		1	**197-1932**	1	MOTOR AS (24V DC)	
		1	**3E-3365**	1	WEDGE-RECEPTACLE LOCK (2-PIN)	
		1	**9W-0852**	2	PIN-CONNECTOR	
		1	**102-8802**	1	KIT-RECEPTACLE (2-PIN)	
					(INCLUDES RECEPTACLE AS & WEDGE)	
	4	1	**235-0320**	1	CAP AS-RAIN	
	5	1	**261-8821**	1	BRACKET AS	
M	5A	1	**6V-9632**	4	NUT-WELD (M6X1-THD)	
	6	1	**262-5228**	1	COVER AS	
	7	1	**262-5229**	1	PLATE AS	
	8	1	**262-5230**	1	PLATE AS	
	9	1	**265-0959**	1	BRACKET AS	
	10	1	**5P-4116**	4	WASHER-HARD (8.8X20.5X2-MM THK)	
	11	1	**5P-8525**	1	GROMMET	
M	12	1	**8T-4138**	10	BOLT (M6X1X20-MM)	
M	13	1	**8T-4189**	4	BOLT (M8X1.25X20-MM)	
	14	1	**8T-4205**	6	WASHER-HARD (7.2X14.5X2-MM THK)	
	15	1	**9X-8256**	4	WASHER (6.6X12X2-MM THK)	
BD	16	1	**6V-9335**		SEAL	
BE	17	1	**8T-9005**		SEAL	
BE	18	1	**3E-3892**		SEAL	

B-USE AS REQUIRED
D-ORDER BY THE METER
E-ORDER BY THE CENTIMETER
M-METRIC PART

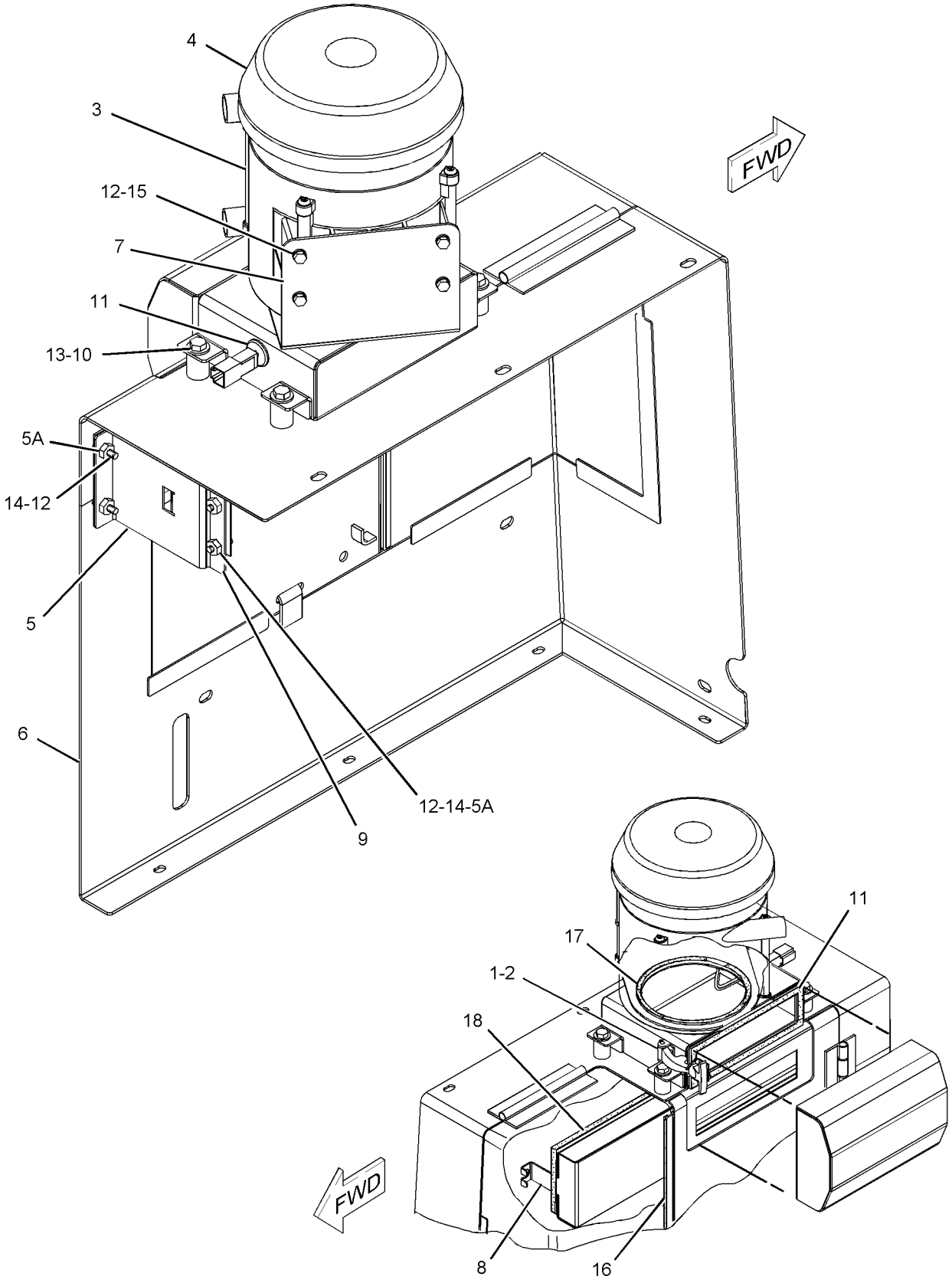

GRAPHIC #1 **<END>** g01127869

OPERATOR STATION

205-3645 HEATER GP-CAB

S/N: RJS1-UP

PART OF 206-8637 HEATER GP-CAB

SMCS-7304 **i02270615**

NOTE	REF NO	GRAPHIC REF	PART NUMBER	QTY	PART NAME 1 2 3 4 5 6 (PRODUCT LEVEL)	SEE PAGE
	1	1	**3E-5239**	1	RELAY AS (24-VOLT) (HEATER, AIR CONDITIONER)	
	2	1	**3E-5464**	1	SWITCH AS-TEMPERATURE (THERMOSTAT) (HEATER, AIR CONDITIONER)	
	3	1	**8C-3756**	1	FILM-IDENTIFICATION (GROUP NUMBER) (CAB HEATER)	
	4	1	**117-9066**	1	LATCH AS	
	5	1	**133-8715**	1	GROMMET	
	6	1	**134-3518**	1	TIE-PUSH MOUNT	
M	7	2	**187-7719**	2	BOLT (M5X2.24X14-MM)	
	8	1	**216-8731**	1	COIL AS-HEATER	
	9	1	**216-8732**	1	COIL AS-EVAPORATOR	
	10	2	**219-9752**	1	VALVE AS (WATER) (HEATER)	
	11	1	**222-8841**	1	CASE AS	
	12	2	**222-8843**	1	COVER	
	13	2	**225-2338**	1	GASKET	
	14	2	**225-2339**	1	SEAL	
	15	1	**245-1596**	1	ACTUATOR	
	16	2	**248-2921**	1	RESISTOR AS	
	16A	2	**6T-6708**	2	WASHER (7X28.6X4.1-MM THK)	
	16B	2	**6V-1668**	2	WASHER (6.5X29.1X3-MM THK)	
M	16C	2	**8C-7581**	1	SCREW-MACHINE (M4X0.7X8-MM)	
	16D	2	**8T-4205**	2	WASHER-HARD (7.2X14.5X2-MM THK)	
	16E	2	**125-9740**	1	RESISTOR	
M	16F	2	**129-3178**	1	LOCKNUT (M6X1-THD)	
	16G	2	**133-9012**	1	FUSE (15-AMPERE) (HEATER)	
M	16H	2	**141-9784**	1	BOLT (M6X1X190-MM)	
	16J	2	**248-2922**	1	BRACKET AS	
	17	2	**248-2923**	4	FITTING-DRAIN	
	18	2	**248-2924**	3	SPACER (4.3X9.5X19.1-MM THK)	
Y	19	2	**248-2926**	1	BLOWER GP-CAB (HEATER)	729
	20	1	**248-2927**	1	PLATE	
	21	2	**248-2928**	1	PLATE AS	
	22	1	**248-2929**	1	GASKET	
	23	1	**248-2930**	1	GASKET	
	24	2	**248-2931**	1	PLATE	
	25	2	**248-2932**	1	PLATE AS	
	26	2	**248-6772**	10	SCREW-MACHINE (8-16X7.75-IN)	
	27	1	**249-9311**	1	HARNESS AS-HEATER & AIR COND	
		1	**155-2255**	1	KIT-CONNECTING PLUG (12-PIN)	
		1	**155-2270**	3	KIT-CONNECTING PLUG (2-PIN)	
					(EACH INCLUDES PLUG AS & WEDGE)	
		1	**9X-1054**	1	PLUG AS-CONNECTOR (4-PIN)	
	28	2	**250-7556**	13	SCREW-HEX HEAD (8-15X8.3X0.33-IN)	
	29	2	**259-0078**	4	PLATE	
M	30	2	**129-3178**	4	LOCKNUT (M6X1-THD)	
	31	2	**3B-4501**	5	LOCKWASHER	
	32	2	**4M-6582**	1	SEAL-O-RING	
	33	2	**6C-3680**	4	RIVET-POP	
	34	1	**6P-1301**	1	GROMMET	
M	35	2	**6V-8214**	2	BOLT (M6X1X20-MM)	
M	36	2	**7Y-7256**	3	SCREW-TRUSS HEAD (M4X0.7-MM)	
	37	2	**8J-1256**	1	CLIP	
M	38	1	**8T-4138**	1	BOLT (M6X1X20-MM)	
	39	2	**8T-4205**	2	WASHER-HARD (7.2X14.5X2-MM THK)	
	40	2	**8T-6631**	2	SCREW-MACHINE (8-32X0.5-IN)	
	41	2	**9X-6165**	1	WASHER (6.5X22X2.5-MM THK)	

205-3645 HEATER GP-CAB *(contd.)* i02270615

NOTE	REF NO	GRAPHIC REF	PART NUMBER	QTY	PART NAME 1 2 3 4 5 6 (PRODUCT LEVEL)	SEE PAGE
	42	2	**9X-8256**	4	WASHER (6.6X12X2-MM THK)	
BD	43	2	**5P-5639**		SEAL	
	44	2	**248-2933**	1	TUBE	

B-USE AS REQUIRED
D-ORDER BY THE METER
M-METRIC PART
Y-SEPARATE ILLUSTRATION

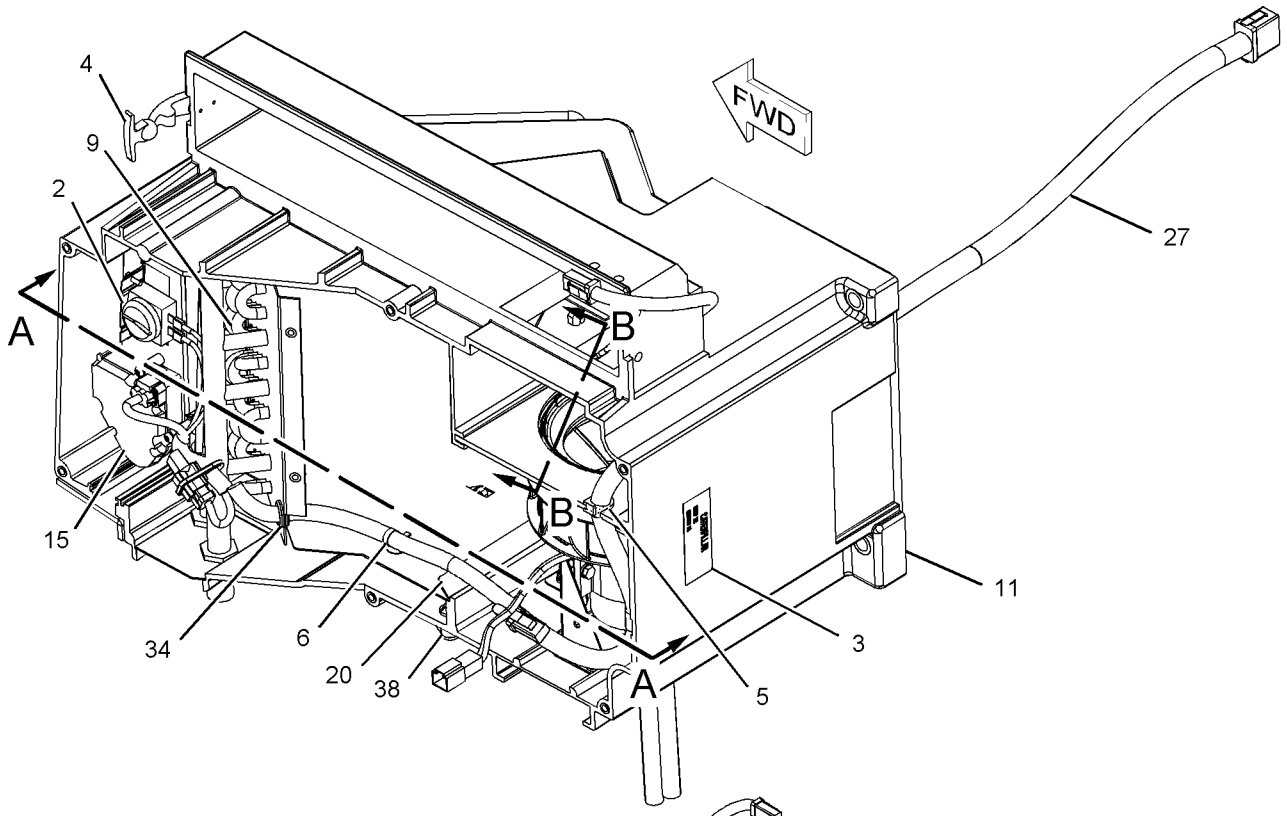

REFER TO ALL ILLUSTRATIONS OF
THIS GROUP FOR AUXILIARY VIEW

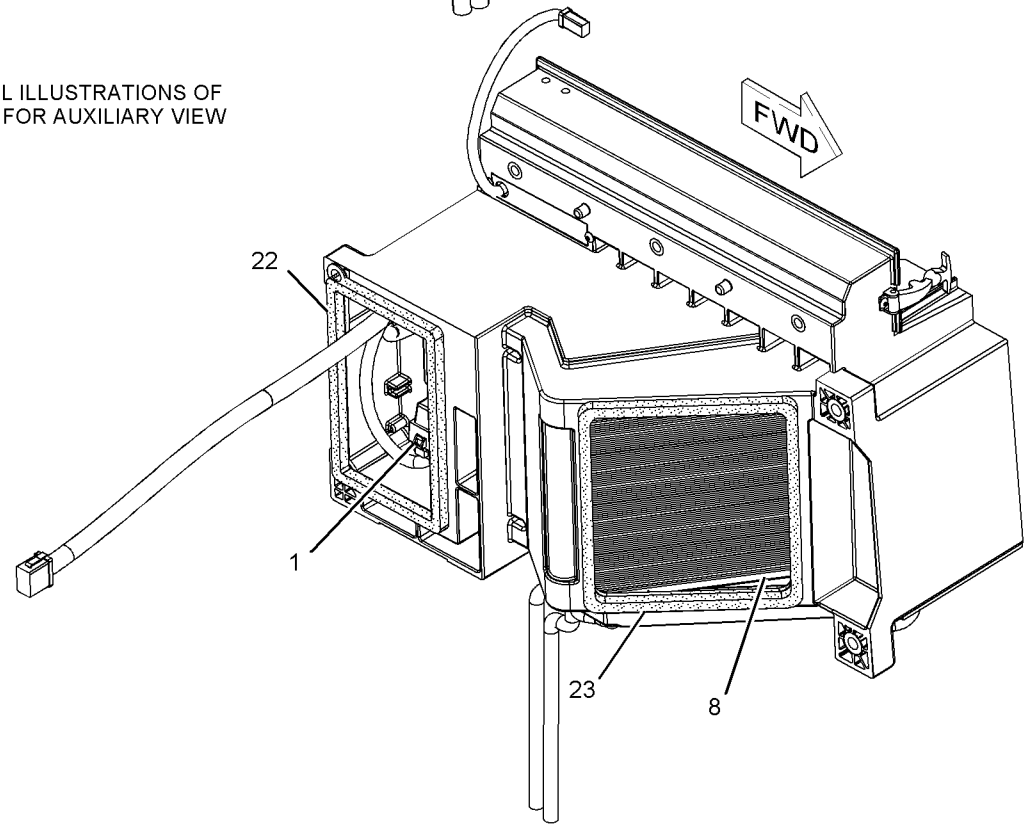

GRAPHIC #1 g01121998

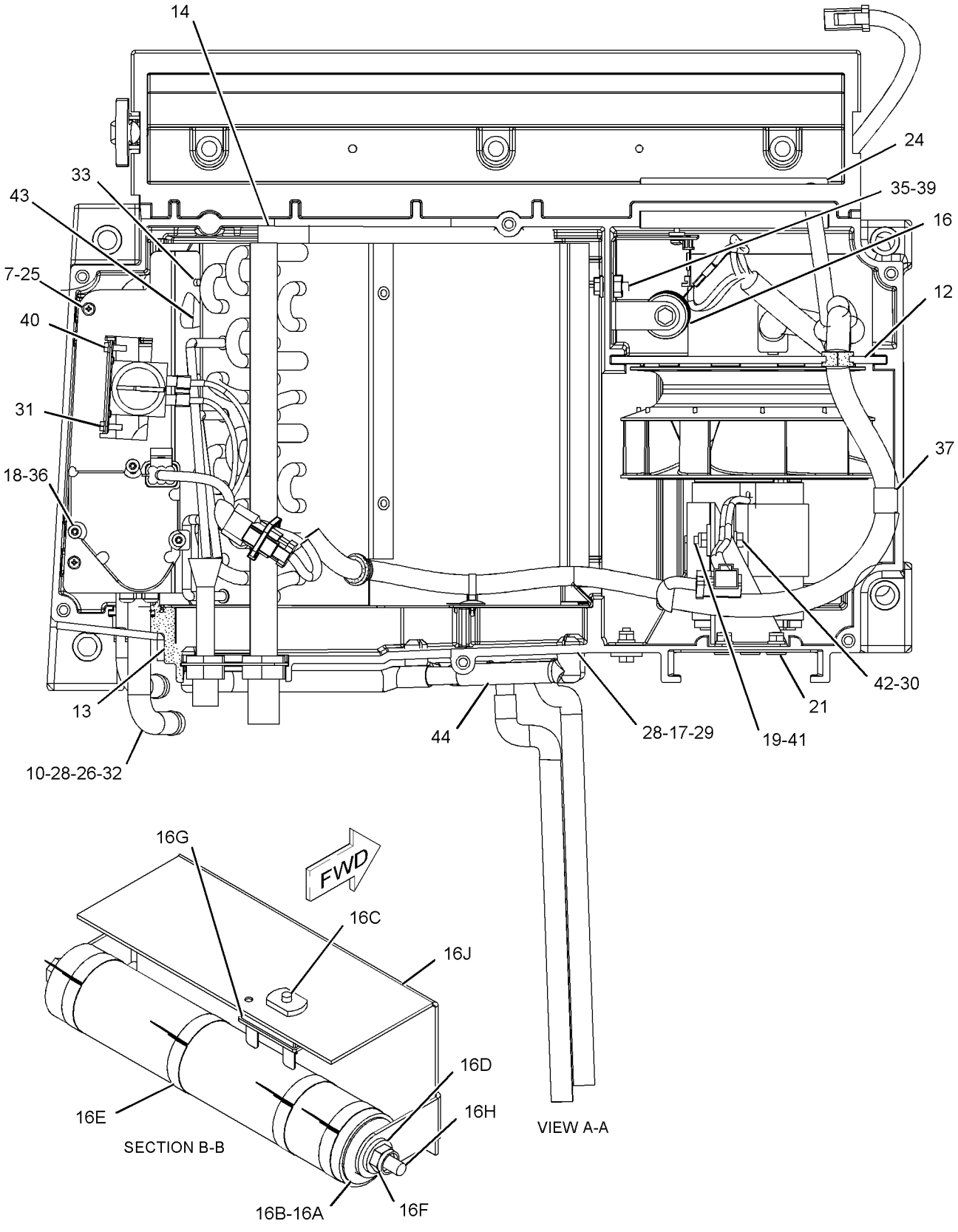

GRAPHIC #2 **<END>** g01121999

OPERATOR STATION

206-8637 HEATER GP-CAB

S/N: RJS1-UP

PART OF 214-4193 PLATFORM AR

SMCS-7304 **i02250619**

NOTE	REF NO	GRAPHIC REF	PART NUMBER	QTY	PART NAME 1 2 3 4 5 6 (PRODUCT LEVEL)	SEE PAGE
	1	1	**246-2641**	1	PADLOCK GP (HEATER)	
		1	**5P-8500**	2	KEY	
	2	1	**8E-7561**	1	KNOB AS	
	2A	1	**7S-2042**	1	STUD	
	2B	1	**8E-1205**	1	KNOB	
	2C	1	**8T-7566**	1	PIN-SPRING	
	3	1	**9S-8230**	1	PLATE AS	
Y	4	1	**205-3645**	1	HEATER GP-CAB	759
	5	1	**209-8217**	1	FILTER ELEMENT AS-AIR (CAB)	
	6	1	**216-4998**	1	PLATE AS	
	7	1	**226-7956**	1	PLATE AS	
	8	1	**227-4159**	1	COVER AS	
	9	1	**227-5334**	1	SEAL	
	10	1	**229-7288**	1	PLATE AS	
	11	1	**230-7645**	1	BRACKET AS	
	12	1	**238-0479**	1	FILTER-AIR (STANDARD) (CAB)	
	13	1	**248-2949**	1	BRACKET AS	
	14	1	**3V-5349**	3	PLUG-BUTTON	
	15	1	**4H-1641**	1	PIN-SPRING	
	16	1	**5P-4116**	8	WASHER-HARD (8.8X20.5X2-MM THK)	
	17	1	**7X-7729**	4	WASHER (11X25X3-MM THK)	
	18	1	**8T-4121**	3	WASHER-HARD (11X21X2.5-MM THK)	
M	19	1	**8T-4136**	3	BOLT (M10X1.5X25-MM)	
M	20	1	**8T-4171**	8	BOLT (M6X1X12-MM)	
M	21	1	**8T-4189**	7	BOLT (M8X1.25X20-MM)	
M	22	1	**8T-6466**	4	BOLT (M10X1.5X60-MM)	
M	23	1	**8T-7547**	1	BOLT (M8X1.25X30-MM)	
	24	1	**9M-5884**	1	BUMPER	
	25	1	**9X-8256**	8	WASHER (6.6X12X2-MM THK)	

M-METRIC PART
Y-SEPARATE ILLUSTRATION

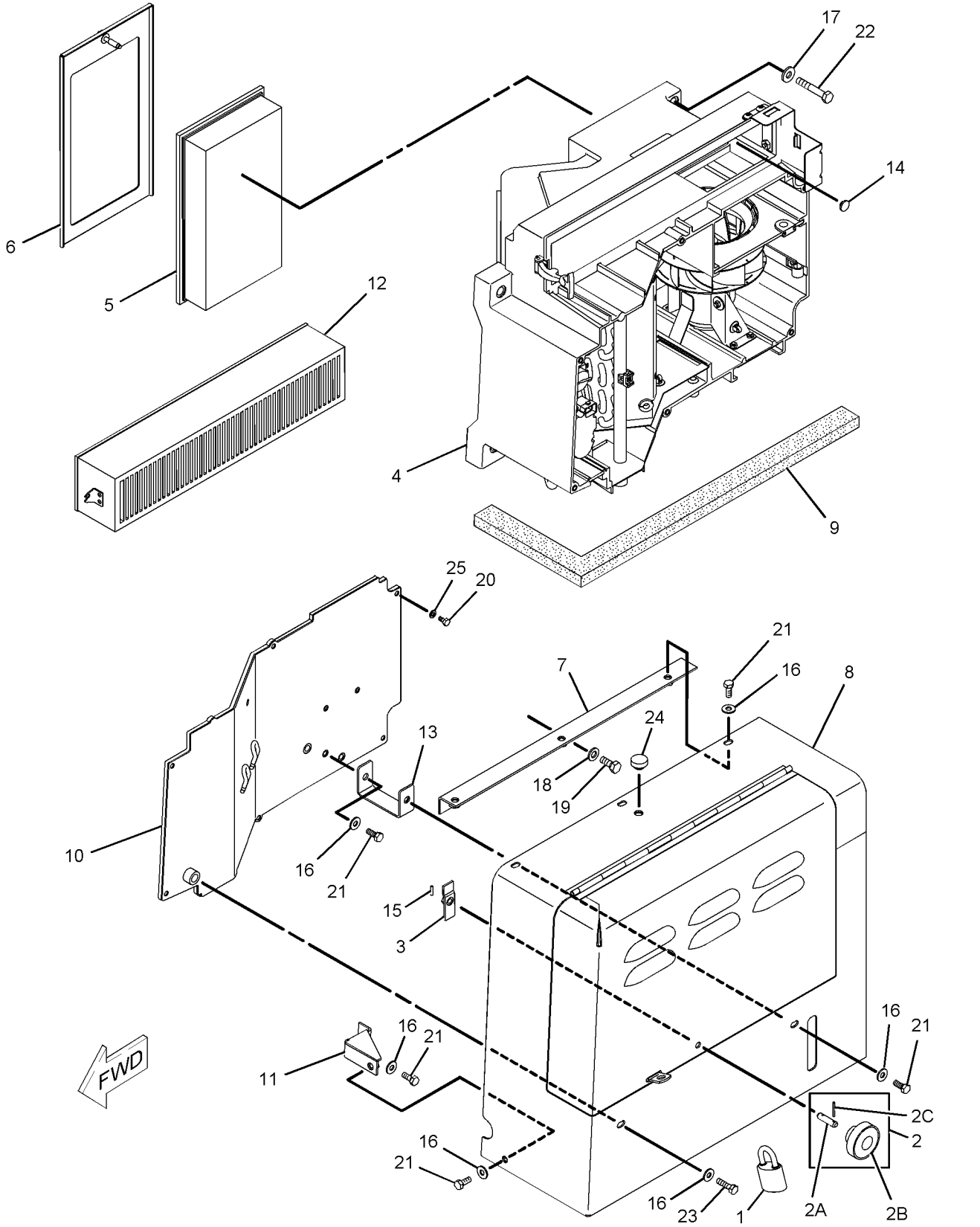

GRAPHIC #1 **<END>** g01113799

OPERATOR STATION

174-2231 HOUSING GP-SEAT SUSPENSION

S/N: RJS1-UP
PART OF 160-7165 SUSPENSION GP-SEAT
ALSO AN ATTACHMENT

SMCS-7321 **i02270624**

NOTE	REF NO	GRAPHIC REF	PART NUMBER	QTY	PART NAME 1 2 3 4 5 6 (PRODUCT LEVEL)	SEE PAGE
	1	1	**1Y-7927**	1	PIN	
	2	1	**2D-6235**	2	LOCKNUT (1/4-20-THD)	
	3	1	**2M-7819**	4	RING-RETAINING	
	4	1	**3D-2975**	2	RING-RETAINING	
	5	1	**4B-5059**	6	WASHER (29.5X15X2.5-MM THK)	
	6	1	**4N-2927**	2	RACE-THRUST BEARING	
	7	1	**5D-4822**	2	RING-RETAINING	
	8	1	**5P-8445**	4	RING-RETAINING	
	9	1	**5V-0770**	2	BOLT-CARRIAGE (1/4-20X0.74-IN)	
	10	1	**7M-7219**	1	BEARING-THRUST	
	11	1	**7V-5191**	2	SPACER (28X10X7.1-MM THK)	
	12	1	**8L-8413**	2	STRAP-CABLE	
	13	1	**8S-7803**	4	RING-RETAINING	
	14	1	**8Y-6041**	1	ARM AS	
	15	1	**8Y-6045**	1	CAM	
	16	1	**8Y-6046**	1	PIN	
	17	1	**8Y-6047**	2	PIN	
	18	1	**8Y-6060**	2	ROLLER	
	19	1	**8Y-6062**	1	LINK-ACTUATOR	
	20	1	**8Y-6063**	1	LINK-ACTUATOR	
	21	1	**8Y-6064**	2	ROLLER-SLIDER	
	22	1	**8Y-6066**	1	SPRING	
	23	1	**8Y-6067**	1	SPACER (10.54-MM THK)	
	24	1	**8Y-6068**	1	NUT (3/8X16-THD)	
	25	1	**8Y-6069**	1	ADJUSTER AS	
	26	1	**9X-8918**	3	SCREW-FLAT HEAD (8-32X0.5-IN)	
	27	1	**095-0878**	1	PIN-SPRING	
	28	1	**131-4242**	1	BOLT (3/8-16X5.18-IN)	
	29	1	**131-5167**	1	KNOB AS-ADJUSTMENT (WEIGHT)	
	30	1	**161-5967**	1	SHAFT	
	31	1	**174-2237**	1	HOUSING AS-UPPER	
JZ	32	1		1	KNOB-HEIGHT (SUSPENSION SEAT)	
JZ	33	1		1	KNOB-HEIGHT (SUSPENSION SEAT)	
LZ	34	1		2	SPRING	
LZ	35	1		2	BUSHING	
VZ	36	1		2	SPRING	
VZ	37	1		2	SPACER	
VZ	38	1		2	BUSHING-GUIDE	
VZ	39	1		2	ROD	
PZ	40	1		1	TAPE-INDICATOR	
PZ	41	1		1	GUIDE	
SZ	42	1		1	PIN	
SZ	43	1		1	FOLLOWER-CAM	
TZ	44	1		1	PIN	
TZ	45	1		1	FOLLOWER-CAM	
UZ	46	1		2	ROLLER AS	
UZ	47	1		1	ROLLER AS	
QZ	48	1		3	BUMPER	
					AVAILABLE REPAIR KIT(S):	
J			**8Y-5945**	1	KIT-SUSPENSION KNOB (HEIGHT ADJUSTMENT) (SUSPENSION SEAT)	
L			**8Y-6859**	1	KIT-SPRING (SUSPENSION SEAT)	
V			**8Y-6860**	1	KIT-SPRING (HEIGHT ADJUSTMENT) (SUSPENSION SEAT)	

174-2231 **HOUSING GP-SEAT SUSPENSION** *(contd.)* **i02270624**

NOTE	REF NO	GRAPHIC REF	PART NUMBER	QTY	PART NAME 1 2 3 4 5 6 (PRODUCT LEVEL)	SEE PAGE
P			**100-3224**	1	KIT-INDICATOR (WEIGHT ADJUSTMENT) (SUSPENSION SEAT)	
Q			**100-5179**	1	KIT-BUMPER (WEIGHT ADJUSTMENT) (SUSPENSION SEAT)	
S			**108-4086**	1	KIT-FOLLOWER (SUSPENSION SEAT)	
T			**108-4087**	1	KIT-FOLLOWER (SUSPENSION SEAT)	
U			**108-4103**	1	KIT-BEARING (SUSPENSION SEAT)	

J-KIT MARKED J INCLUDES PARTS MARKED J
L-KIT MARKED L INCLUDES PARTS MARKED L AND RETAINING RING
P-KIT MARKED P INCLUDES PARTS MARKED P AND CABLE STRAP
Q-KIT MARKED Q INCLUDES PARTS MARKED Q
S-KIT MARKED S INCLUDES PARTS MARKED S
T-KIT MARKED T INCLUDES PARTS MARKED T
U-KIT MARKED U INCLUDES PARTS MARKED U
V-KIT MARKED V INCLUDES PARTS MARKED V
Z-NOT SERVICED SEPARATELY

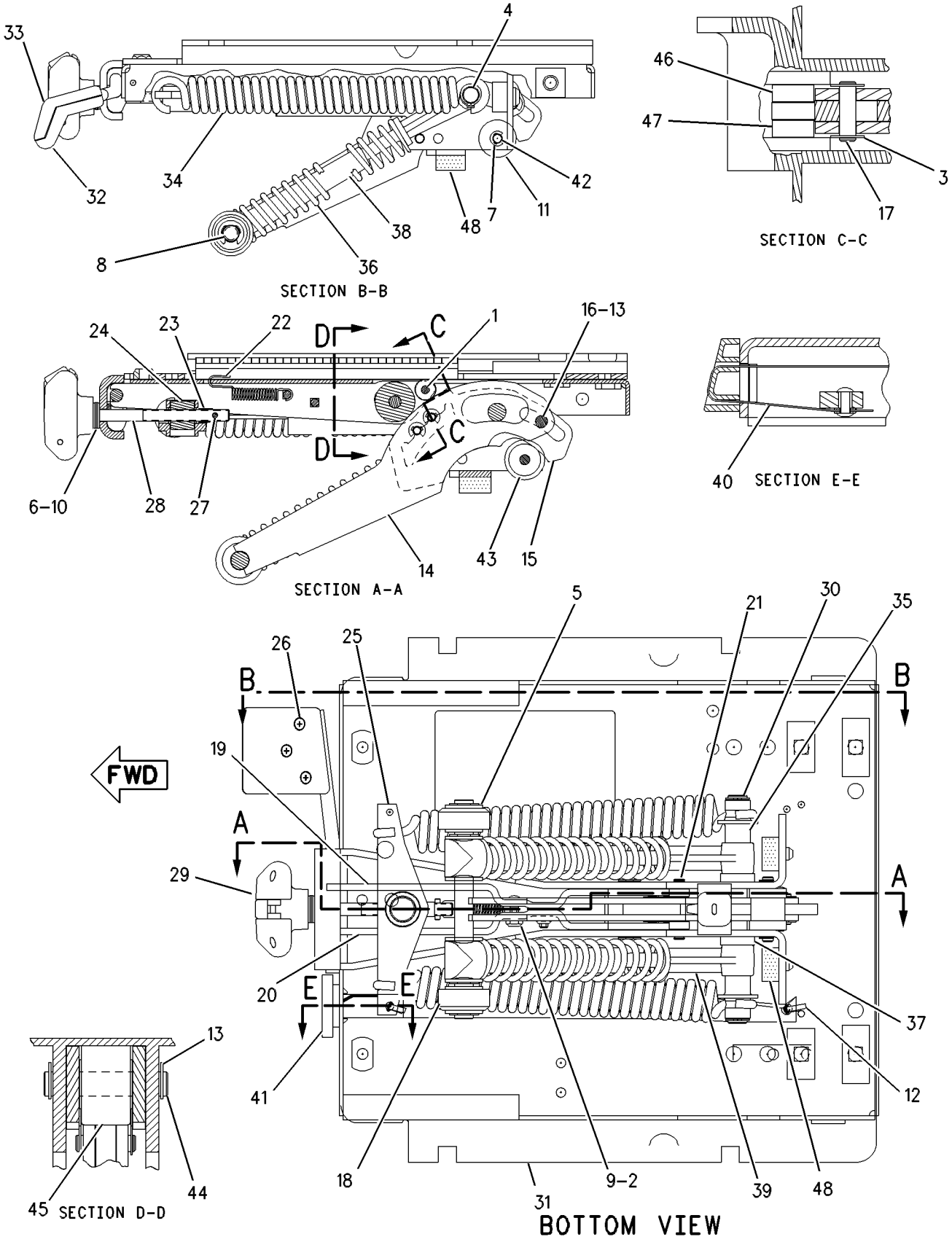

GRAPHIC #1 **<END>** g00608620

OPERATOR STATION

214-1760 INSTALLATION GP-RADIO

S/N: RJS1-UP

PART OF 208-9766, 213-1100 CAB AR

ALSO AN ATTACHMENT

SMCS-7338 **i02194022**

NOTE	REF NO	GRAPHIC REF	PART NUMBER	QTY	PART NAME 1 2 3 4 5 6 (PRODUCT LEVEL)	SEE PAGE
	1	1	**3E-4356**	4	WASHER-HARD (17.5X30X6-MM THK)	
	2	1	**4N-9915**	4	GROMMET AS	
	3	1	**6V-7646**	4	WASHER-HARD (7.2X25X2-MM THK)	
	4	1	**6Y-7385**	1	BRACKET	
	5	1	**8E-1118**	1	ANTENNA AS	
	6	1	**8K-1433**	1	GROMMET	
	7	1	**9U-8263**	1	COVER	
	8	1	**9U-8746**	1	CABLE AS-COAXIAL	
	9	1	**168-8772**	2	SPEAKER AS-RADIO	
	10	1	**108-3138**	1	BRACKET AS	
	11	1	**217-8433**	1	FILM-NOTICE (RADIO)	
M	12	1	**5C-2890**	4	NUT (M6X1-THD)	
M	13	1	**8T-4171**	1	BOLT (M6X1X12-MM)	
M	14	1	**9X-1046**	8	SCREW (M4X0.7X18-MM)	
	15	1	**9X-8256**	1	WASHER (6.6X12X2-MM THK)	

M-METRIC PART

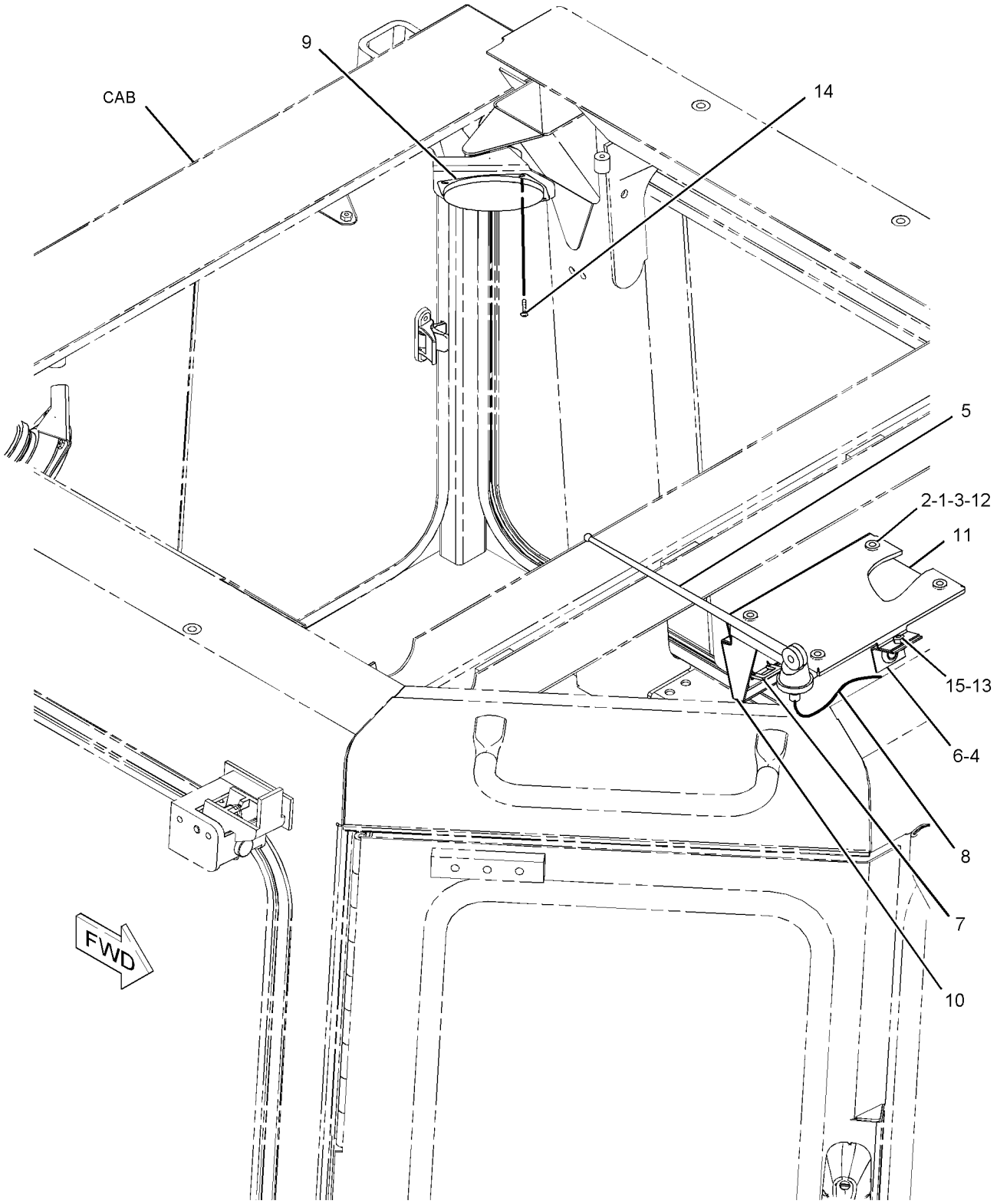

GRAPHIC #1 **<END>** g01110176

OPERATOR STATION

212-8725 LINER GP-CAB

S/N: RJS1-UP
PART OF 208-9766, 213-1100 CAB AR
ALSO AN ATTACHMENT

SMCS-7329 **i02228542**

NOTE	REF NO	GRAPHIC REF	PART NUMBER	QTY	PART NAME 1 2 3 4 5 6 (PRODUCT LEVEL)	SEE PAGE
M	1	1	**3E-6924**	2	SCREW-TRUSS HEAD (M6X1X50-MM)	
	2	1	**8Y-6388**	6	LOUVER AS	
	3	1	**141-5169**	2	WASHER (7.5X40X3-MM THK)	
	4	1	**171-4047**	5	LOUVER AS	
	5	1	**209-5161**	1	CONSOLE-REAR	
	6	1	**209-5162**	1	LINER AS	
	7	1	**209-5193**	1	DUCT-RH	
	8	1	**209-5194**	1	CONSOLE-LH	
	9	1	**212-8948**	1	LINER AS (REAR)	
	10	1	**212-9973**	1	DUCT (LH)	
	11	1	**212-9974**	1	DUCT (LH)	
	12	1	**212-9975**	1	DUCT (UPPER)	
	13	1	**212-9976**	1	DUCT (LH)	
	14	1	**214-1751**	1	BARRIER	
	15	1	**214-3316**	1	LINER AS	
	16	1	**214-7737**	1	DUCT-RH	
	17	1	**216-2813**	1	DUCT-UPPER	
	18	1	**220-3987**	1	COVER	
	19	1	**220-3988**	1	COVER (WIPER MOTOR, LH DOOR)	
	20	1	**220-3989**	1	COVER (WIPER MOTOR, RH DOOR)	
	21	1	**227-4158**	1	PLATE	
	22	1	**238-1265**	1	DUCT (UPPER)	
	23	1	**256-5701**	1	COVER AS (RH)	
		1	**209-5204**	1	COVER (RH)	
	24	1	**101-2867**	12	WASHER-HARD (7.2X25X2-MM THK)	
	25	1	**104-2091**	22	SCREW-FLAT HEAD (6-20X0.5-IN)	
M	26	1	**3E-8020**	22	SCREW-TRUSS HEAD (M6X1X25-MM)	
M	27	1	**9X-2046**	6	SCREW-TRUSS HEAD (M6X1X35-MM)	
BD	28	1	**5P-5969**		SEAL	
BD	29	1	**6V-5163**		SEAL	

B-USE AS REQUIRED
D-ORDER BY THE METER
M-METRIC PART

212-8725 **LINER GP-CAB** *(contd.)* **i02228542**

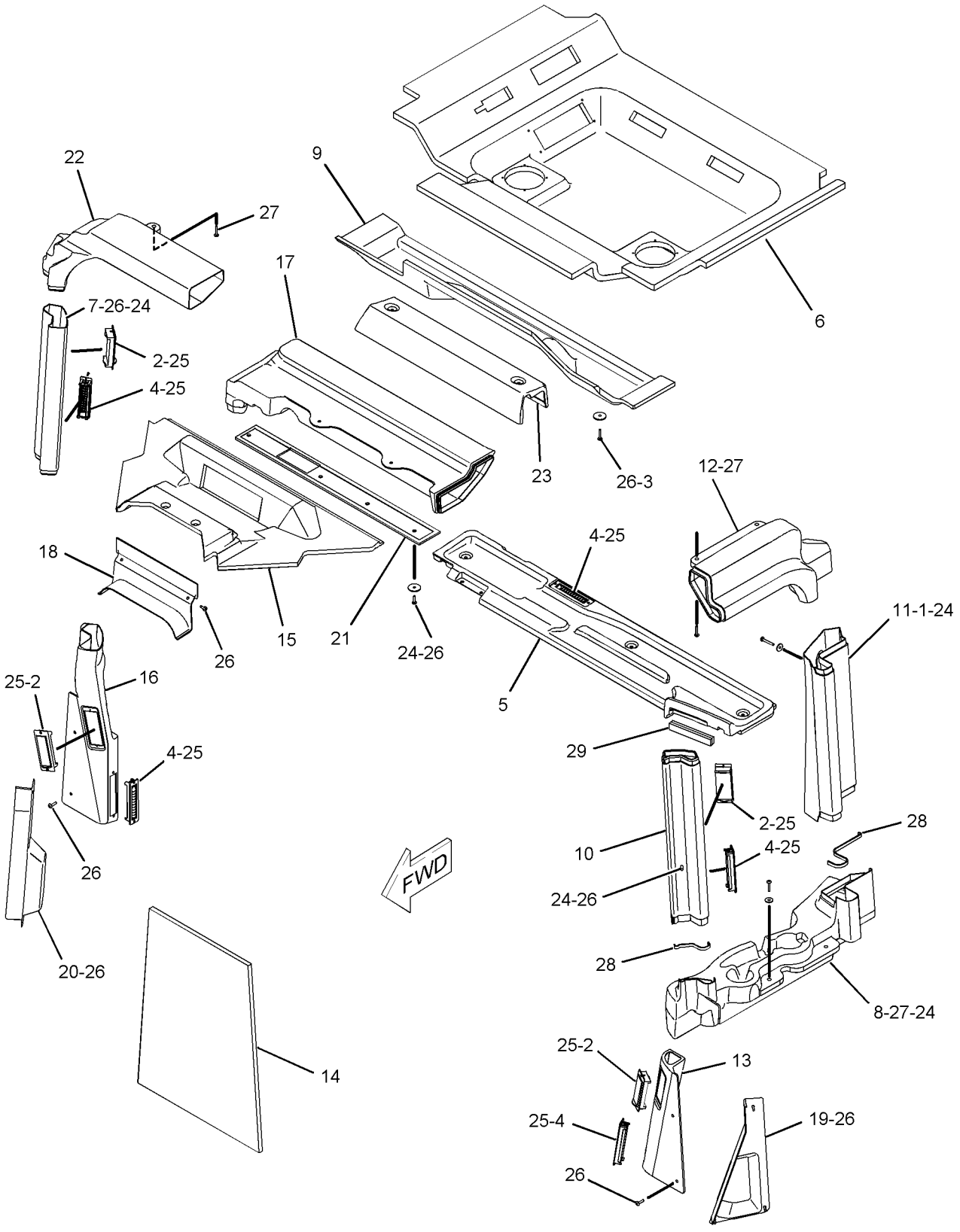

GRAPHIC #1 **<END>** g01126513

OPERATOR STATION

205-8631 LINES GP-AIR CONDITIONER–
ROPS MOUNTED CONDENSER
S/N: RJS1-UP
PART OF 205-8630 CAB AR
AN ATTACHMENT

SMCS-1808 **i02252169**

NOTE	REF NO	GRAPHIC REF	PART NUMBER	QTY	PART NAME 1 2 3 4 5 6 (PRODUCT LEVEL)	SEE PAGE
	1	1	**1P-6356**	1	PLATE	
I	2	1	**1Q-1742**	1	HOSE AS	
I	3	1	**1Q-1743**	1	HOSE AS	
	4	1	**175-7162**	1	RECEIVER-DRYER GP (AIR CONDITIONER)	
	5	1	**5P-3948**	1	COUPLING AS-REFRIGERANT	
		1	**7F-8607**	1	SEAL-O-RING	
		1	**107-4399**	1	VALVE AS	
	6	1	**6T-3643**	1	CIRCUIT BREAKER AS (15-AMPERE) (CONDENSOR FAN MOTOR)	
		1	**6V-8376**	2	SCREW-MACHINE (8-32X0.25-IN)	
		1	**9B-7233**	2	LOCKWASHER	
	7	1	**7K-1181**	9	STRAP-CABLE	
	8	1	**7K-3176**	1	COUPLING AS	
		1	**107-4393**	1	VALVE AS	
		1	**107-4394**	1	GASKET	
	9	1	**8D-3932**	4	MOUNTING	
	10	1	**9X-0358**	1	FITTING AS	
	11	1	**103-6100**	3	COUPLER AS-QUICK	
					(EACH INCLUDES)	
		1	**9X-7382**	2	SEAL-O-RING	
	12	1	**109-3875**	2	HARNESS AS-HEATER & AIR COND (CONDENSER FAN)	
					(EACH INCLUDES)	
		1	**155-2260**	1	KIT-CONNECTING PLUG (3-PIN)	
					(INCLUDES PLUG AS & WEDGE)	
		1	**102-8803**	1	KIT-RECEPTACLE (3-PIN)	
					(INCLUDES RECEPTACLE AS & WEDGE)	
	13	1	**110-4506**	1	PLATE	
	14	1	**114-5333**	1	SWITCH AS-PRESSURE (REFRIGERANT) (COMPRESSOR-HIGH SIDE)	
		1	**102-8802**	1	KIT-RECEPTACLE (2-PIN)	
					(INCLUDES RECEPTACLE AS & WEDGE)	
		1	**3E-3365**	1	WEDGE-RECEPTACLE LOCK (2-PIN)	
E		1	**9X-1386**		SLEEVE (25-CM)	
		1	**186-3735**	2	PIN-CONNECTOR	
	15	1	**116-6202**	2	BOOT	
	16	1	**134-0165**	4	WASHER (13.8X45X3-MM THK)	
	17	1	**149-6371**	1	SWITCH AS-PRESSURE (COMPRESSOR-LOW SIDE)	
		1	**102-8802**	1	KIT-RECEPTACLE (2-PIN)	
					(INCLUDES RECEPTACLE AS & WEDGE)	
		1	**3E-3365**	1	WEDGE-RECEPTACLE LOCK (2-PIN)	
		1	**186-3735**	2	PIN-CONNECTOR	
	18	1	**169-7443**	1	TIMER AS-ON DELAY (24-VOLT) (COMPRESSOR CYCLE LIMITER)	
		1	**186-3735**	4	PIN-CONNECTOR	
		1	**102-8804**	1	KIT-RECEPTACLE (4-PIN)	
					(INCLUDES RECEPTACLE AS & WEDGE)	
	19	1	**170-0235**	1	ACCUMULATOR-REFRIGERANT	
	20	1	**170-5293**	1	HARNESS AS-HEATER & AIR COND	
		1	**102-8805**	1	KIT-RECEPTACLE (6-PIN)	
					(INCLUDES RECEPTACLE AS & WEDGE)	
		1	**155-2270**	3	KIT-CONNECTING PLUG (2-PIN)	
					(EACH INCLUDES RECEPTACLE AS & WEDGE)	
		1	**155-2272**	1	PLUG AS-CONNECTOR (4-PIN)	
	21	1	**207-4253**	1	PLATE	

205-8631 LINES GP-AIR CONDITIONER *(contd.)* i02252169

NOTE	REF NO	GRAPHIC REF	PART NUMBER	QTY	PART NAME 1 2 3 4 5 6 (PRODUCT LEVEL)	SEE PAGE
	22	1	**207-4285**	2	U-BOLT	
	23	1	**219-0944**	1	FITTING GP-AIR CONDITIONER	
		1	**3E-4051**	1	CAP-SEAL	
		1	**3E-4057**	1	VALVE AS	
		1	**180-7180**	1	CORE-VALVE	
		1	**221-2389**	1	CAP-SEAL	
	24	1	**242-6233**	1	BRACKET (ACCUMULATOR)	
I	25	1	**242-6234**	1	HOSE AS	
I	26	1	**242-6235**	1	HOSE AS	
I	27	1	**242-6236**	1	HOSE AS	
I	28	1	**242-6237**	1	HOSE AS	
I	29	1	**242-6238**	1	HOSE AS	
	30	1	**068-4209**	2	SCREW (8-32X0.75-IN)	
	31	1	**109-1633**	1	CLIP (SLOT)	
	32	1	**109-1634**	1	CLIP (TAB)	
	33	1	**219-0943**	1	FITTING AS	
		1	**3E-4052**	1	CAP-SEAL	
		1	**3E-4058**	1	VALVE AS	
	34	1	**1S-6420**	3	CLIP	
	35	1	**2K-4973**	4	LOCKNUT (3/8-16-THD)	
	36	1	**2Y-1834**	1	CLIP	
M	37	1	**3E-4319**	1	STUD-TAPERLOCK (M12-1.75X55 OAL)	
	38	1	**4K-8302**	3	CLIP	
	39	1	**4K-8864**	4	CLIP	
	40	1	**4L-6454**	3	BOLT (3/8-16X1-IN)	
	41	1	**4P-7428**	5	CLIP	
	42	1	**4P-7581**	5	CLIP	
	43	1	**5M-3062**	4	BOLT (3/8-16X0.75-IN)	
	44	1	**5P-1075**	5	WASHER-HARD (10.2X22.5X3-MM THK)	
	45	1	**5P-2228**	4	BOLT (1/2-13X1-IN)	
	46	1	**5P-4295**	1	CLIP	
	47	1	**6D-4246**	2	CLIP	
	48	1	**6D-4247**	1	CLIP	
	49	1	**6D-7573**	1	CLIP	
	50	1	**8T-4121**	5	WASHER-HARD (11X21X2.5-MM THK)	
M	51	1	**8T-4137**	1	BOLT (M10X1.5X20-MM)	
M	52	1	**8T-4179**	1	BOLT (M12X1.75X20-MM)	
M	53	1	**8T-4191**	1	BOLT (M10X1.5X16-MM)	
M	54	1	**8T-4195**	3	BOLT (M10X1.5X30-MM)	
	55	1	**8T-4223**	5	WASHER-HARD (13.5X25.5X3-MM THK)	
M	56	1	**8T-4244**	1	NUT (M12X1.75-THD)	
	57	1	**8T-4835**	4	BOLT (1/2-13X2-IN)	
	58	1	**8T-4896**	7	WASHER-HARD (10.2X18.5X2.5-MM THK)	
	59	1	**8T-5360**	1	WASHER (12X22.5X2.5-MM THK)	
M	60	1	**8T-6466**	1	BOLT (M10X1.5X60-MM)	
	61	1	**9X-6772**	7	STRAP-CABLE	
	62	1	**9X-7378**	1	SEAL-O-RING	
	63	1	**9X-7380**	5	SEAL-O-RING	
	64	1	**9X-7381**	3	SEAL-O-RING	
	65	1	**9X-7382**	2	SEAL-O-RING	
	66	1	**9X-7383**	1	SEAL-O-RING	
	67	1	**9X-7385**	2	SEAL-O-RING	

E-ORDER BY THE CENTIMETER
I-REFER TO HYDRAULIC INFORMATION SYSTEM
M-METRIC PART

205-8631 **LINES GP-AIR CONDITIONER** *(contd.)* **i02252169**

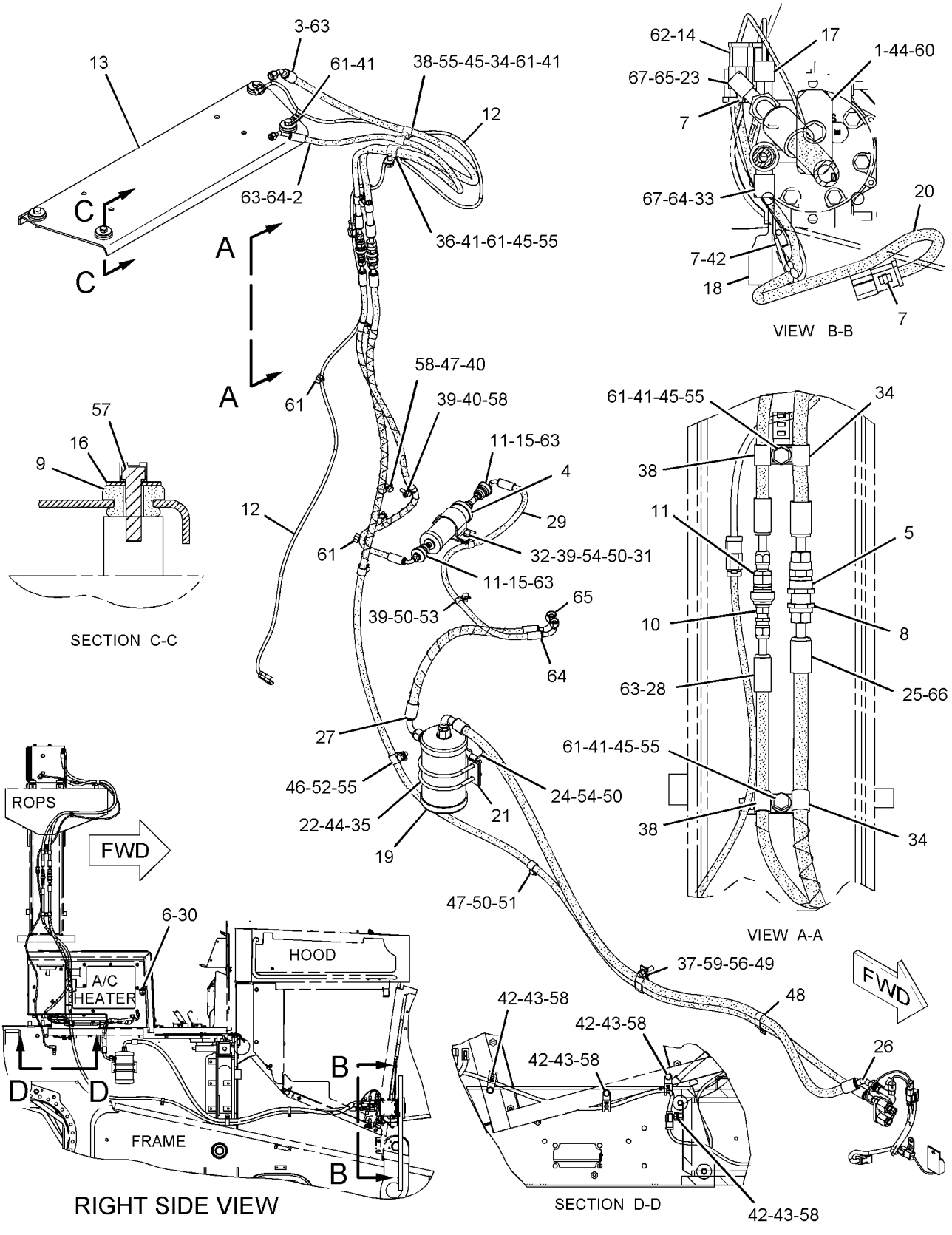

GRAPHIC #1 **<END>** g01118937

OPERATOR STATION

205-8639 LINES GP-AIR CONDITIONER–
CONDENSER, FENDER MOUNTED
S/N: RJS1-UP
PART OF 205-8638 AIR CONDITIONER AR
AN ATTACHMENT

SMCS-1808 **i02252204**

NOTE	REF NO	GRAPHIC REF	PART NUMBER	QTY	PART NAME 1 2 3 4 5 6 (PRODUCT LEVEL)	SEE PAGE
	1	1	**1P-6356**	1	PLATE	
	2	1	**175-7162**	1	RECEIVER-DRYER GP (AIR CONDITIONER)	
		1	**7X-2049**	1	TUBE AS-REFRIGERANT ORIFICE	
	3	1	**6T-3643**	1	CIRCUIT BREAKER AS (15-AMPERE) (AIR CONDITIONER)	
	4	1	**7K-1181**	5	STRAP-CABLE	
	5	1	**103-6100**	2	COUPLER AS-QUICK	
	6	1	**114-5333**	1	SWITCH AS-PRESSURE (REFRIGERANT) (AIR CONDITIONER, HIGH)	
		1	**3E-3365**	1	WEDGE-RECEPTACLE LOCK (2-PIN)	
E		1	**9X-1386**		SLEEVE (25-CM)	
		1	**186-3735**	2	PIN-CONNECTOR	
		1	**102-8802**	2	KIT-RECEPTACLE (2-PIN)	
					(INCLUDES RECEPTACLE AS & WEDGE)	
	7	1	**116-6202**	2	BOOT	
	8	1	**121-3307**	4	MOUNT AS-RESILIENT	
	9	1	**149-6371**	1	SWITCH AS-PRESSURE (AIR CONDITIONER, LOW)	
		1	**186-3735**	2	PIN-CONNECTOR	
	10	1	**169-7443**	1	TIMER AS-ON DELAY (24-VOLT) (AIR CONDITIONER)	
		1	**186-3735**	4	PIN-CONNECTOR	
		1	**102-8804**	1	KIT-RECEPTACLE (4-PIN)	
					(INCLUDES RECEPTACLE AS & WEDGE)	
	11	1	**170-0235**	1	ACCUMULATOR-REFRIGERANT	
	12	1	**170-5293**	1	HARNESS AS-HEATER & AIR COND	
		1	**102-8805**	1	KIT-RECEPTACLE (6-PIN)	
					(INCLUDES RECEPTACLE AS & WEDGE)	
		1	**155-2270**	3	KIT-CONNECTING PLUG (2-PIN)	
					(EACH INCLUDES PLUG AS & WEDGEO	
		1	**155-2272**	1	PLUG AS-CONNECTOR (4-PIN)	
	13	1	**207-4253**	1	PLATE	
	14	1	**207-4285**	2	U-BOLT	
I	15	1	**215-1372**	1	HOSE AS	
I	16	1	**215-1374**	1	HOSE AS	
	17	1	**215-8155**	1	BRACKET AS	
	18	1	**215-8169**	1	BRACKET AS	
	19	1	**215-8170**	2	PLATE	
	20	1	**215-8171**	2	PLATE	
	21	1	**219-0944**	1	FITTING GP-AIR CONDITIONER	
		1	**3E-4051**	1	CAP-SEAL	
		1	**3E-4057**	1	VALVE AS	
		1	**180-7180**	1	CORE-VALVE	
	22	1	**242-6233**	1	BRACKET	
I	23	1	**242-6235**	1	HOSE AS	
I	24	1	**242-6236**	1	HOSE AS	
I	25	1	**242-6238**	1	HOSE AS	
	26	1	**246-3258**	1	COVER	
	27	1	**068-4209**	2	SCREW (8-32X0.75-IN)	
	28	1	**109-1633**	1	CLIP (SLOT)	
	29	1	**109-1634**	1	CLIP (TAB)	
	30	1	**177-8839**	1	CLIP	
	31	1	**219-0943**	1	FITTING AS	
		1	**221-2389**	1	CAP-SEAL	
		1	**3E-4052**	1	CAP-SEAL	
		1	**3E-4058**	1	VALVE AS	

205-8639 **LINES GP-AIR CONDITIONER** *(contd.)* **i02252204**

NOTE	REF NO	GRAPHIC REF	PART NUMBER	QTY	PART NAME 1 2 3 4 5 6 (PRODUCT LEVEL)	SEE PAGE
	32	1	**2K-4973**	4	LOCKNUT (3/8-16-THD)	
	33	1	**3E-4321**	1	CLIP	
	34	1	**4D-7733**	3	CLIP	
	35	1	**4K-8864**	2	CLIP	
	36	1	**4L-6459**	4	BOLT (3/8-16X2.5-IN)	
	37	1	**4L-9337**	6	BOLT (3/8-16X1.5-IN)	
	38	1	**4P-7581**	1	CLIP	
	39	1	**5M-3062**	4	BOLT (3/8-16X0.75-IN)	
	40	1	**5P-1075**	15	WASHER-HARD (10.2X22.5X3-MM THK)	
	41	1	**5P-1076**	14	WASHER-HARD (13.5X30X4-MM THK)	
	42	1	**5P-4295**	2	CLIP	
	43	1	**5P-6994**	1	CLIP	
	44	1	**6D-4246**	2	CLIP	
	45	1	**6D-4247**	1	CLIP	
	46	1	**6D-7573**	1	CLIP	
	47	1	**6V-8801**	4	NUT (3/8-16-THD)	
M	48	1	**7X-2552**	1	BOLT (M16X2X30-MM)	
	49	1	**8T-4121**	6	WASHER-HARD (11X21X2.5-MM THK)	
M	50	1	**8T-4137**	2	BOLT (M10X1.5X20-MM)	
M	51	1	**8T-4139**	5	BOLT (M12X1.75X30-MM)	
M	52	1	**8T-4179**	1	BOLT (M12X1.75X20-MM)	
M	53	1	**8T-4184**	12	BOLT (M12X1.75X45-MM)	
M	54	1	**8T-4191**	1	BOLT (M10X1.5X16-MM)	
M	55	1	**8T-4195**	3	BOLT (M10X1.5X30-MM)	
	56	1	**8T-4223**	5	WASHER-HARD (13.5X25.5X3-MM THK)	
	57	1	**8T-4226**	8	WASHER-PLATED (10.5X45X3-MM THK)	
M	58	1	**8T-4244**	1	NUT (M12X1.75-THD)	
	59	1	**8T-4895**	2	WASHER (13.5X50X5-MM THK)	
	60	1	**8T-4896**	4	WASHER-HARD (10.2X18.5X2.5-MM THK)	
M	61	1	**8T-4956**	4	BOLT (M12X1.75X35-MM)	
	62	1	**8T-5360**	1	WASHER (12X22.5X2.5-MM THK)	
M	63	1	**8T-5414**	1	STUD (M12X1.75X50-MM)	
M	64	1	**8T-6466**	1	BOLT (M10X1.5X60-MM)	
	65	1	**9X-7378**	1	SEAL-O-RING	
	66	1	**9X-7380**	3	SEAL-O-RING	
	67	1	**9X-7381**	3	SEAL-O-RING	
	68	1	**9X-7382**	2	SEAL-O-RING	
	69	1	**9X-7383**	2	SEAL-O-RING	
	70	1	**9X-7385**	2	SEAL-O-RING	
	71	1	**9X-8257**	1	WASHER (17.5X30X3.5-MM THK)	

E-ORDER BY THE CENTIMETER
I-REFER TO HYDRAULIC INFORMATION SYSTEM
M-METRIC PART

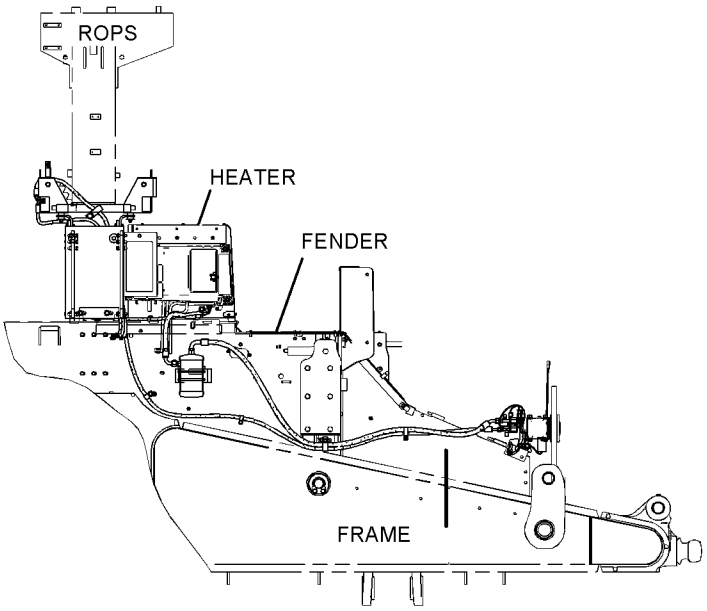

RIGHT SIDE VIEW

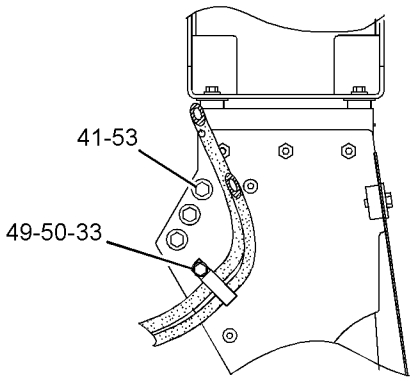

SECTION B-B

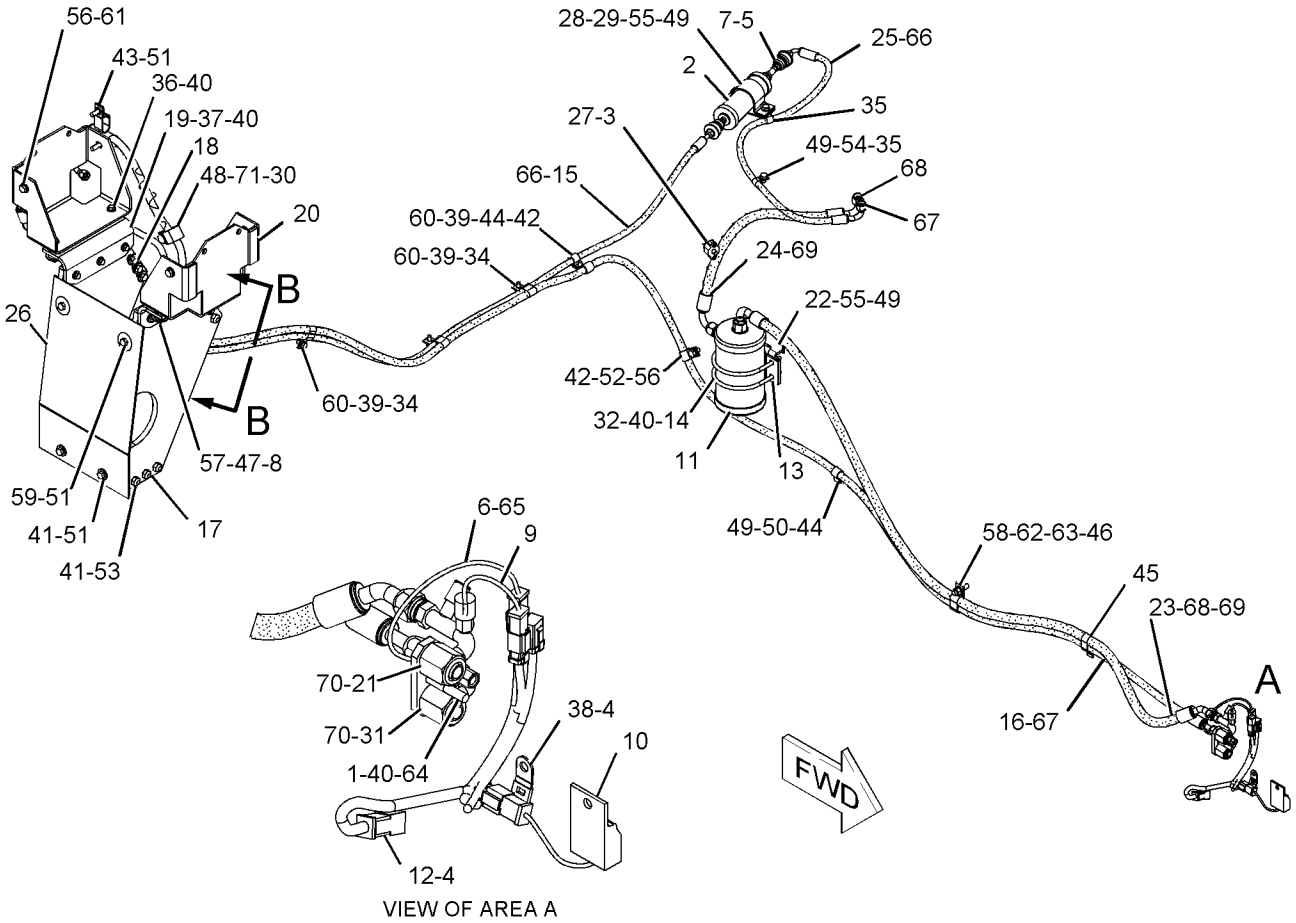

VIEW OF AREA A

GRAPHIC #1 **<END>** g01123804

OPERATOR STATION

205-8634 LINES GP-HEATER

S/N: RJS1-UP

PART OF 205-8601 CHASSIS AR

SMCS-7304 **i02252216**

NOTE	REF NO	GRAPHIC REF	PART NUMBER	QTY	PART NAME 1 2 3 4 5 6 (PRODUCT LEVEL)	SEE PAGE
	1	1	**2B-0941**	1	SPACER (10.5X19X19-MM THK)	
	2	1	**6V-7238**	1	VALVE-MANUAL (CAB HEATER-OUTLET)	
	3	1	**8F-8151**	1	VALVE AS-SHUTOFF (CAB HEATER-INLET)	
	4	1	**159-1503**	4	CLAMP-HOSE	
	5	1	**215-9002**	1	BRACKET AS	
	6	1	**233-4444**	1	BRACKET AS	
	7	1	**236-0795**	1	PLATE AS	
	8	1	**030-8324**	1	ELBOW	
	9	1	**3K-0360**	1	SEAL-O-RING	
	11	1	**3D-2824**	1	SEAL-O-RING	
	12	1	**5M-3062**	2	BOLT (3/8-16X0.75-IN)	
	13	1	**5P-6994**	1	CLIP	
	14	1	**5S-7379**	1	BOLT (3/8-16X0.875-IN)	
	15	1	**6D-1641**	5	CLIP	
	16	1	**6D-4492**	1	CONNECTOR	
	17	1	*155-7321*	1	ADAPTER GP	
		1	**3D-2824**	1	SEAL-O-RING	
		1	**6V-1722**	1	ADAPTER-O-RING	
	18	1	*148-8311*	1	ADAPTER GP	
		1	**3K-0360**	1	SEAL-O-RING	
		1	**8T-1715**	1	ADAPTER	
	19	1	**8T-4121**	3	WASHER-HARD (11X21X2.5-MM THK)	
M	20	1	**8T-4137**	1	BOLT (M10X1.5X20-MM)	
M	21	1	**8T-4179**	1	BOLT (M12X1.75X20-MM)	
M	22	1	**8T-4186**	1	BOLT (M10X1.5X40-MM)	
	23	1	**8T-4223**	1	WASHER-HARD (13.5X25.5X3-MM THK)	
	24	1	**8T-4896**	2	WASHER-HARD (10.2X18.5X2.5-MM THK)	
E	25	1	**5P-0767**		HOSE (369.1-CM)	
E	25A	1	**5P-0767**		HOSE (375.7-CM)	

E-ORDER BY THE CENTIMETER
M-METRIC PART

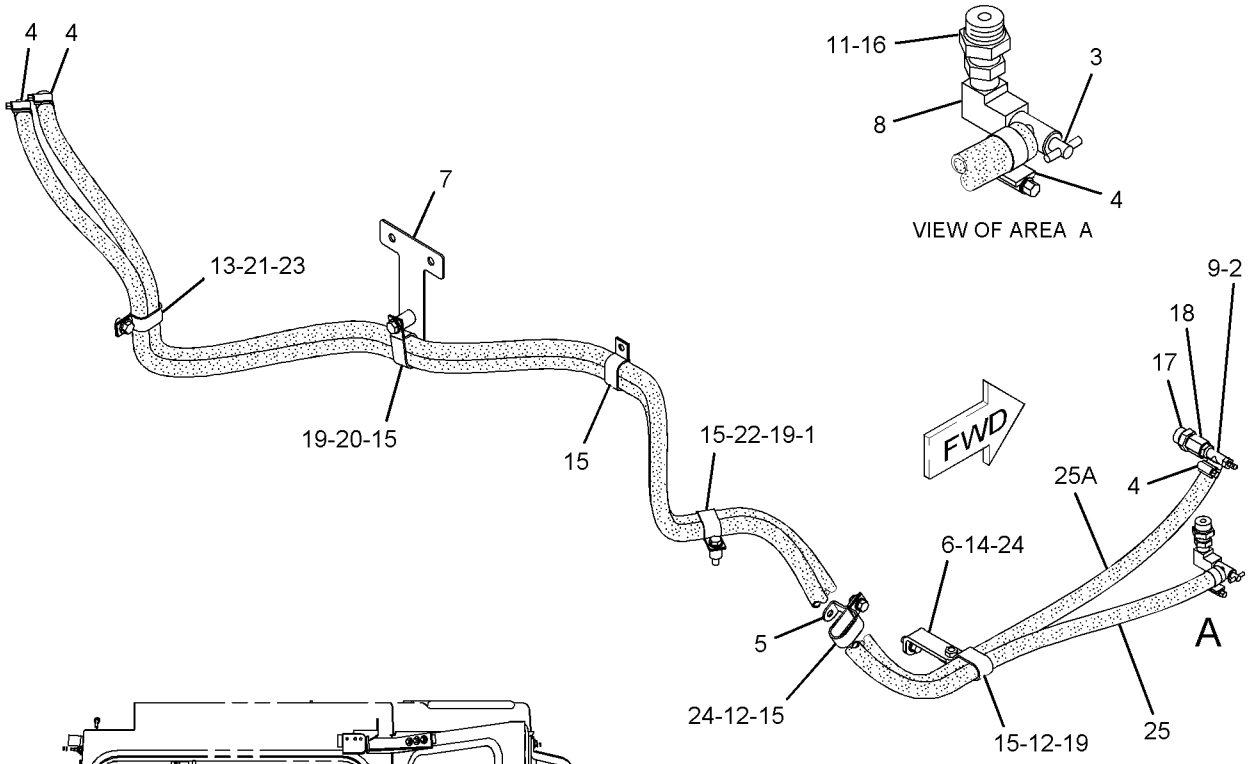

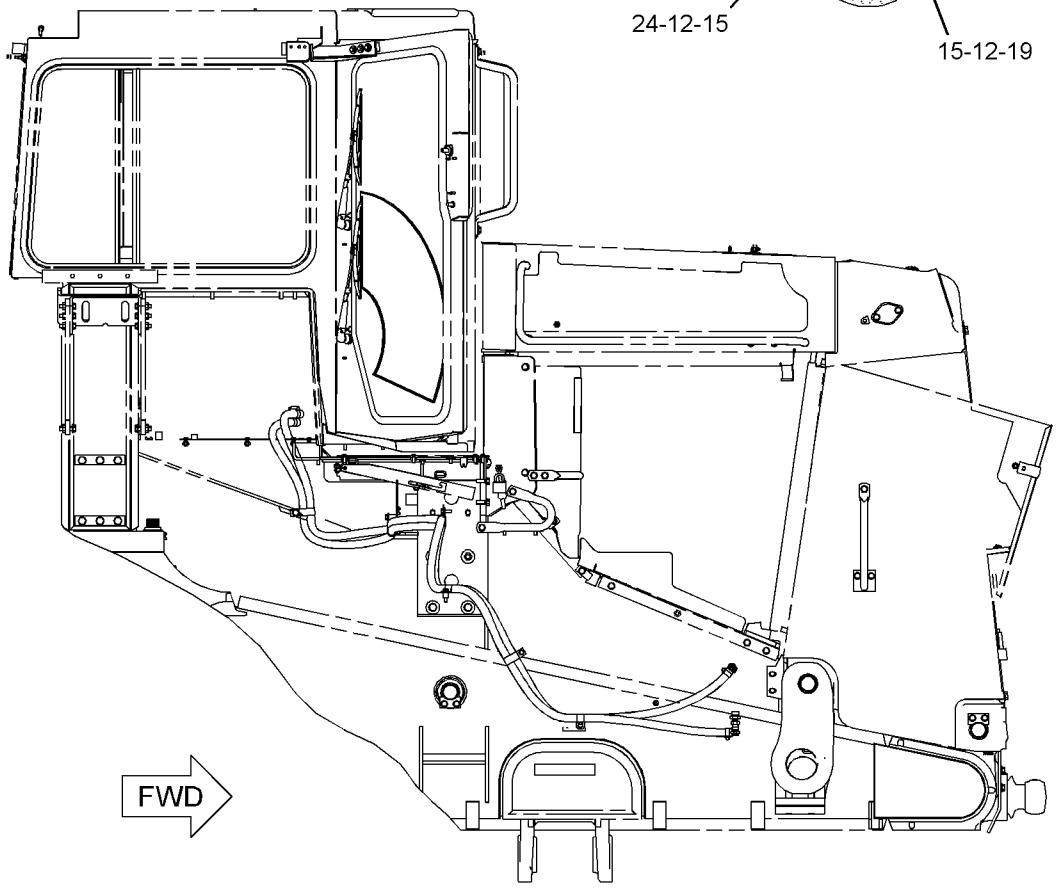

RIGHT SIDE VIEW

GRAPHIC #1 **<END>** g01114580

OPERATOR STATION

105-9659 MIRROR GP-REAR VIEW

S/N: RJS1-UP
PART OF 208-9766, 213-1100 CAB AR
ALSO AN ATTACHMENT

SMCS-7319 **i01901909**

NOTE	REF NO	GRAPHIC REF	PART NUMBER	QTY	PART NAME 1 2 3 4 5 6 (PRODUCT LEVEL)	SEE PAGE
	1	1	**9P-9388**	1	KNOB (MIRROR ADJUSTMENT)	
	2	1	**5P-6874**	1	MIRROR (REAR VIEW)	
	3	1	**5K-9179**	1	BOLT-ROUND HEAD (3/8-16X11-IN)	
	4	1	**6Y-5113**	1	BRACKET	
	5	1	**8T-4121**	2	WASHER-HARD (11X21X2.5-MM THK)	
M	6	1	**8T-4195**	2	BOLT (M10X1.5X30-MM)	

M-METRIC PART

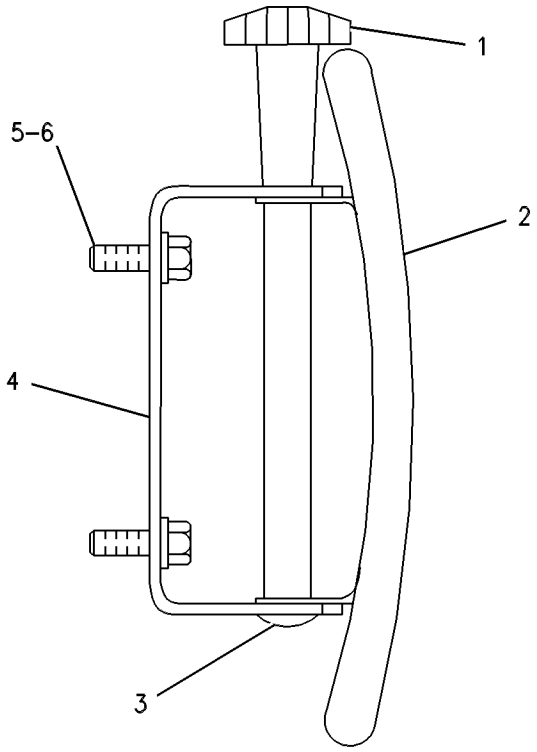

GRAPHIC #1 **<END>** g00254288

OPERATOR STATION

231-3510 MIRROR GP-REAR VIEW—LIFT CYLINDER

S/N: RJS1-UP

PART OF 205-8638 AIR CONDITIONER AR

AN ATTACHMENT

SMCS-7319 **i02194316**

NOTE	REF NO	GRAPHIC REF	PART NUMBER	QTY	PART NAME 1 2 3 4 5 6 (PRODUCT LEVEL)	SEE PAGE
	1	1	**6V-9156**	1	MIRROR	
	2	1	**231-3511**	1	PLATE AS	
	3	1	**5P-7648**	2	GROMMET	
	4	1	**7D-1649**	2	WASHER-HARD (13.5X32X5-MM THK)	
M	5	1	**8T-4136**	2	BOLT (M10X1.5X25-MM)	

M-METRIC PART

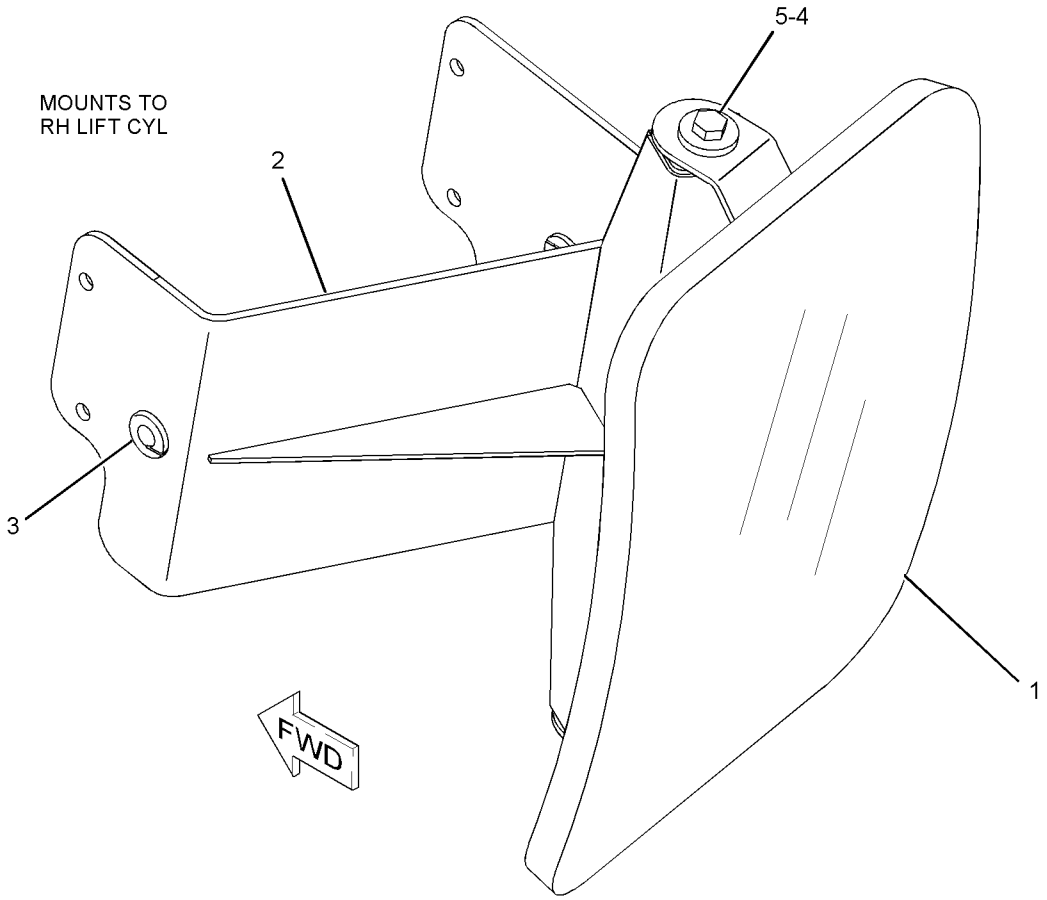

GRAPHIC #1 **<END>** g01113568

OPERATOR STATION

214-1740 MOUNTING GP-CAB

S/N: RJS1-UP

PART OF 205-8640 CAB AR

SMCS-7266, 7301 **i02229502**

NOTE	REF NO	GRAPHIC REF	PART NUMBER	QTY	PART NAME 1 2 3 4 5 6 (PRODUCT LEVEL)	SEE PAGE
	1	1	**230-4691**	1	PLATE	
	2	1	**7X-0618**	6	WASHER-HARD (13.5X40X5-MM THK)	
	3	1	**7X-3392**	42	WASHER-HARD (13.5X22.5X3-MM THK)	
	4	1	**7X-7729**	8	WASHER (11X25X3-MM THK)	
	5	1	**8T-4121**	1	WASHER-HARD (11X21X2.5-MM THK)	
M	6	1	**8T-4137**	1	BOLT (M10X1.5X20-MM)	
M	7	1	**8T-4139**	6	BOLT (M12X1.75X30-MM)	
M	8	1	**8T-4178**	2	BOLT (M10X1.5X90-MM)	
M	9	1	**8T-4195**	6	BOLT (M10X1.5X30-MM)	
M	10	1	**8T-4648**	4	BOLT (M12X1.75X70-MM)	
M	11	1	**8T-4910**	11	BOLT (M12X1.75X60-MM)	
M	12	1	**8T-6868**	6	BOLT (M12X1.75X80-MM)	
	13	1	**247-4144**	1	SEAL	
BD	14	1	**5P-7513**		SEAL	

B-USE AS REQUIRED
D-ORDER BY THE METER
M-METRIC PART

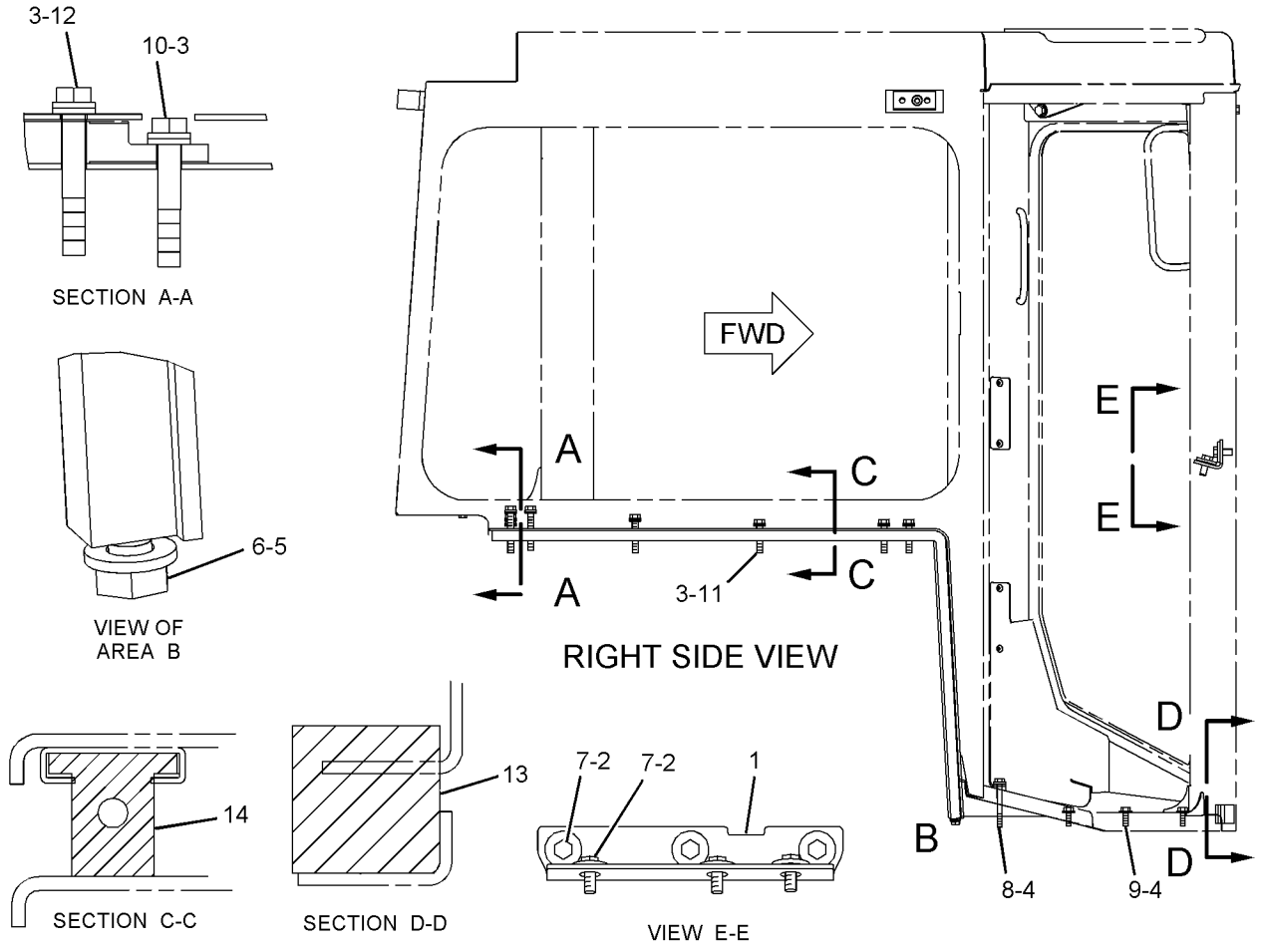

GRAPHIC #1 **<END>** g01124962

OPERATOR STATION

245-4146 MOUNTING GP-CONTROL–MAST

S/N: RJS1-UP
FOR USE WITH SEMI-UNIVERSAL BLADE
AN ATTACHMENT

SMCS-5063 **i02214887**

NOTE	REF NO	GRAPHIC REF	PART NUMBER	QTY	PART NAME 1 2 3 4 5 6 (PRODUCT LEVEL)	SEE PAGE
	1	1	**245-4159**	1	BRACKET AS	
	1A	1	**1J-0245**	4	PLUG-PROTECTION	
	1B	1	**4H-0407**	4	PLUG-PROTECTION	
	2	1	**245-4246**	1	BRACKET AS	
	3	1	**245-4252**	1	SHIELD AS	
	3A	1	**189-9240**	1	LINK	
	4	1	**5P-1076**	4	WASHER-HARD (13.5X30X4-MM THK)	
M	5	1	**8T-4179**	4	BOLT (M12X1.75X20-MM)	

M-METRIC PART

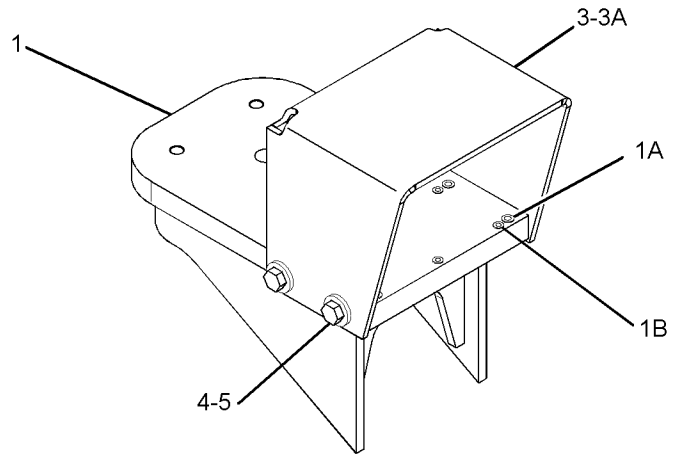

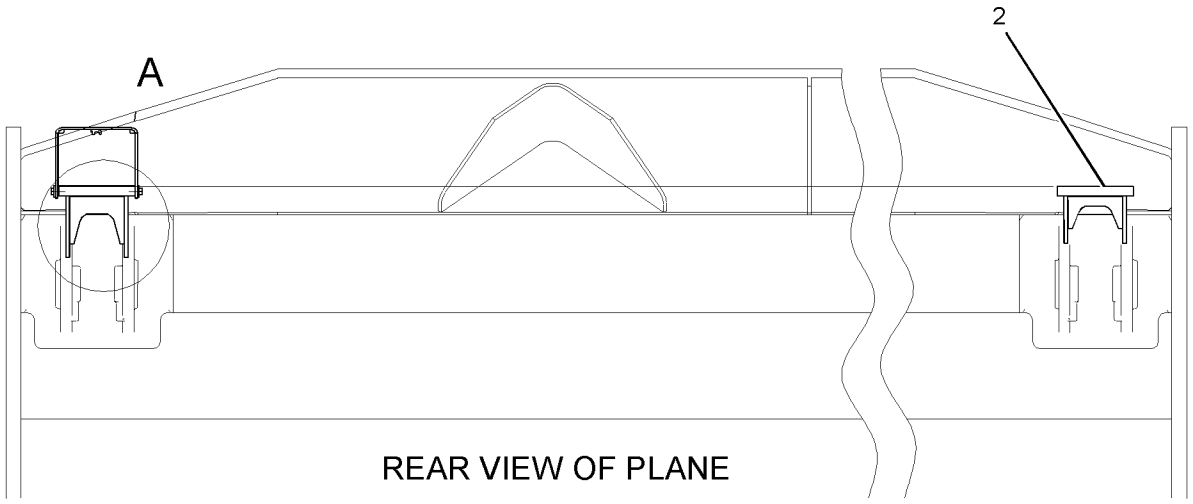

GRAPHIC #1 **<END>** g01121873

OPERATOR STATION

241-7920 MOUNTING GP-MONITOR—GRADE CONTROL

S/N: RJS1-UP

PART OF 245-4623 INSTALLATION AR-GRADE CONTROL

AN ATTACHMENT

SMCS-7490 **i02207893**

NOTE	PART NUMBER	QTY	PART NAME 1 2 3 4 5 6 (PRODUCT LEVEL)	SEE PAGE
	252-5112	1	BASE AS	
M	**8T-4137**	4	BOLT (M10X1.5X20-MM)	
	252-5109	1	CONSOLE-FRONT	
	252-5110	1	COVER	
	252-5111	2	GASKET	
M	**8T-2659**	2	LOCKNUT (M4X0.7-THD)	
M	**179-4324**	4	LOCKNUT (M5X0.8-THD)	
	247-4151	1	PLATE AS	
	247-4152	1	PLATE AS	
M	**9X-1046**	2	SCREW (M4X0.7X18-MM)	
	198-9706	4	SCREW-TRUSS HEAD	
	4B-4274	4	WASHER (5.5X13X1.2-MM THK)	
	4B-4863	2	WASHER (4.7X11X1.2-MM THK)	
	8T-4121	4	WASHER-HARD (11X21X2.5-MM THK)	

M-METRIC PART

<END>

OPERATOR STATION

243-5158 MOUNTING GP-RADIO–GRADE CONTROL

S/N: RJS1-UP

PART OF 245-4623 INSTALLATION AR-GRADE CONTROL

AN ATTACHMENT

SMCS-7338 **i02204791**

NOTE	REF NO	GRAPHIC REF	PART NUMBER	QTY	PART NAME 1 2 3 4 5 6 (PRODUCT LEVEL)	SEE PAGE
	1	1	**8C-5607**	6	MOUNT-ISOLATION	
	2	1	**140-7480**	1	BRACKET-MOUNTING	
	3	1	**167-8610**	1	BRACKET AS	
	4	1	**243-5156**	1	PLATE AS	
	5	1	**4L-6454**	4	BOLT (3/8-16X1-IN)	
	6	1	**5P-1075**	4	WASHER-HARD (10.2X22.5X3-MM THK)	
	7	1	**5S-7349**	2	BOLT (1/4-20X0.5-IN)	
M	8	1	**7X-2533**	3	BOLT (M6X1X35-MM)	
	9	1	**9X-6165**	3	WASHER (6.5X22X2.5-MM THK)	
	10	1	**9X-8256**	2	WASHER (6.6X12X2-MM THK)	

M-METRIC PART

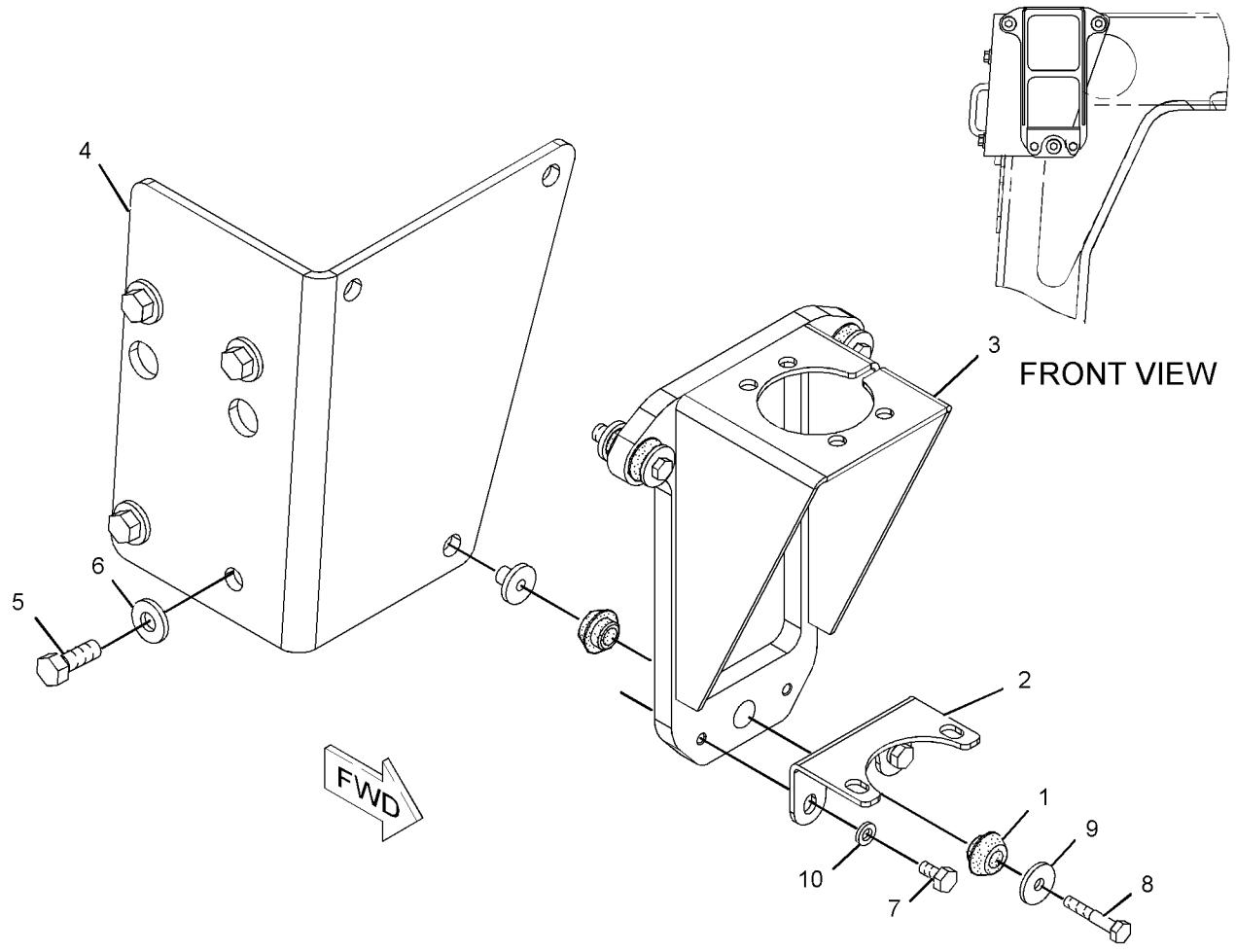

GRAPHIC #1 **<END>** g01121669

OPERATOR STATION

259-4746 MOUNTING GP-RADIO–GRADE CONTROL

S/N: RJS1-UP

PART OF 255-2430 INSTALLATION GP-GRADE CONTROL

AN ATTACHMENT

SMCS-7338 **i02230701**

NOTE	REF NO	GRAPHIC REF	PART NUMBER	QTY	PART NAME 1 2 3 4 5 6 (PRODUCT LEVEL)	SEE PAGE
	1	1	**8C-5607**	6	MOUNT-ISOLATION	
	2	1	**8C-5608**	3	SPACER (6.5X9.5X25.4-MM THK)	
	3	1	**140-7480**	1	BRACKET-MOUNTING	
	4	1	**167-8610**	1	BRACKET AS	
	5	1	**5S-7349**	2	BOLT (1/4-20X0.5-IN)	
	6	1	**8T-4205**	2	WASHER-HARD (7.2X14.5X2-MM THK)	
M	7	1	**9X-2480**	3	BOLT (M6X1X45-MM)	
	8	1	**9X-6165**	3	WASHER (6.5X22X2.5-MM THK)	

M-METRIC PART

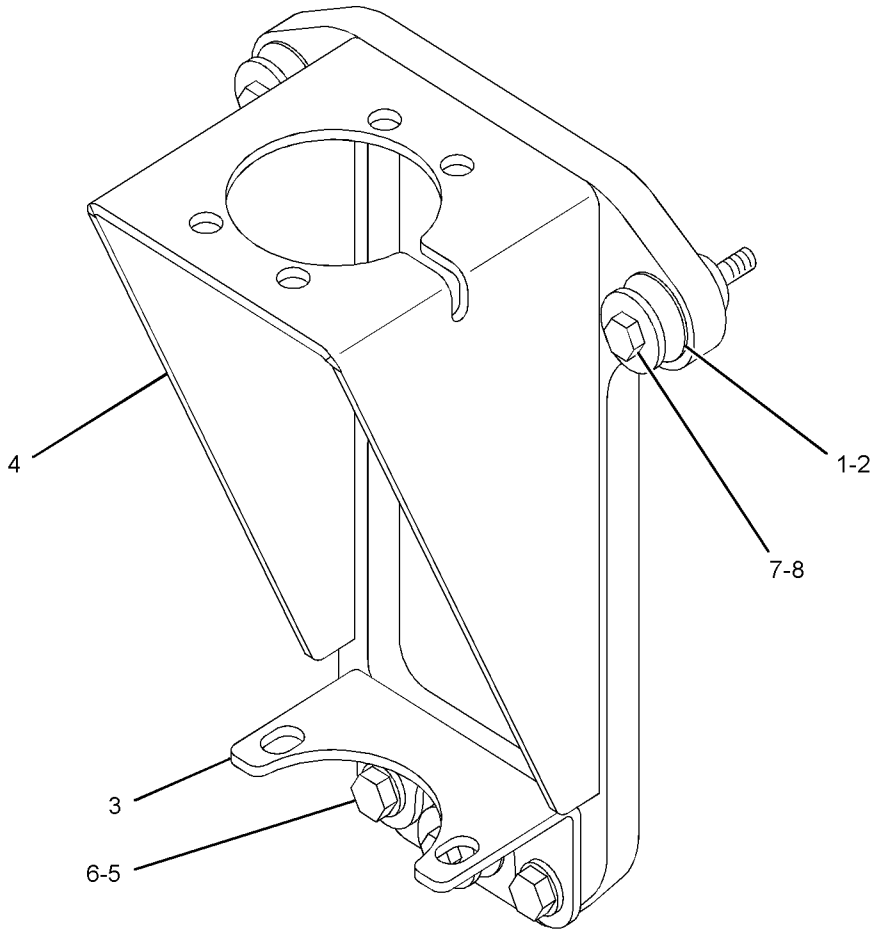

GRAPHIC #1 **<END>** g01127229

OPERATOR STATION

207-4801 MOUNTING GP-ROPS

S/N: RJS1-UP

PART OF 205-8601 CHASSIS AR

SMCS-7266 **i01994589**

NOTE	REF NO	GRAPHIC REF	PART NUMBER	QTY	PART NAME 1 2 3 4 5 6 (PRODUCT LEVEL)	SEE PAGE
	1	1	**6V-8381**	16	BOLT	
	2	1	**208-8695**	1	SUPPORT AS-ROPS (RH)	
	3	1	**208-8696**	1	SUPPORT AS-ROPS (LH)	
	4	1	**7X-0537**	16	WASHER-HARD (40.5X67X6MM THK)	

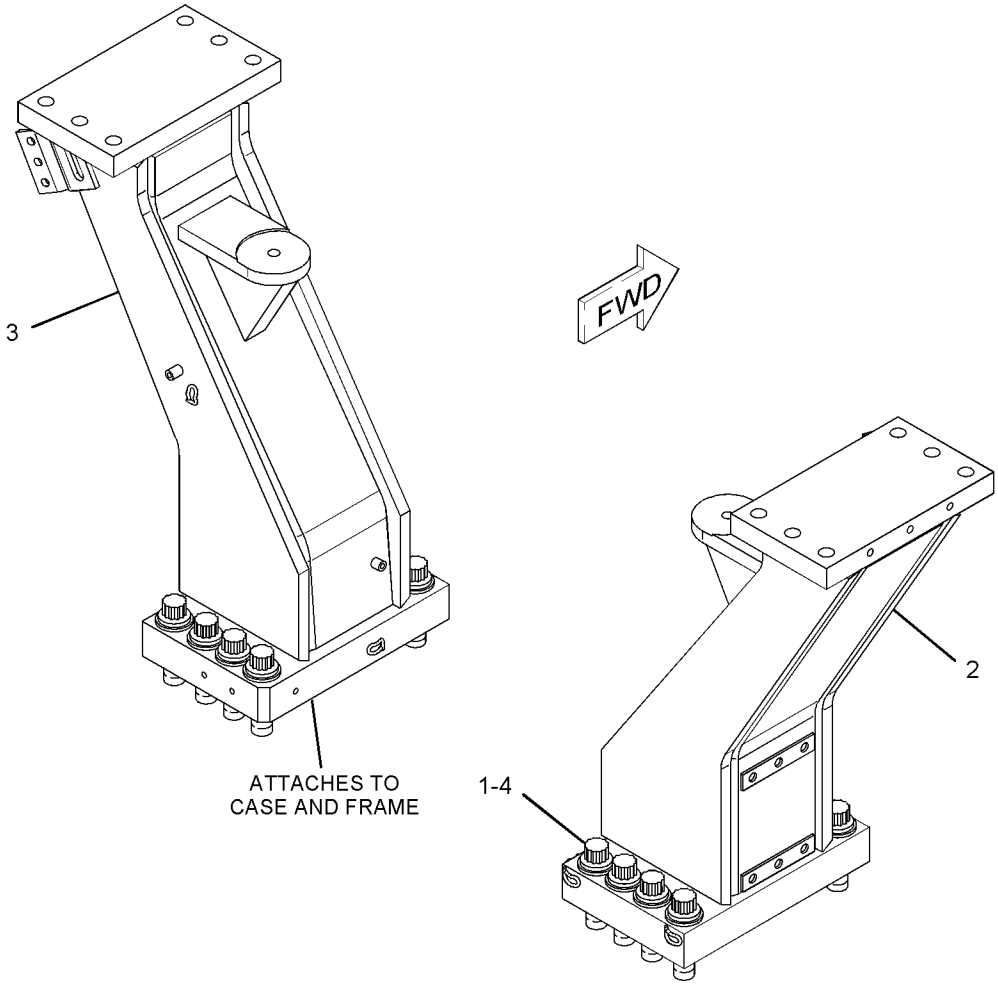

GRAPHIC #1 **<END>** g01035905

OPERATOR STATION

256-0190 OPERATOR AR

S/N: RJS1-UP

AN ATTACHMENT

SMCS-7301 **i02270711**

NOTE	REF NO	GRAPHIC REF	PART NUMBER	QTY	PART NAME 1 2 3 4 5 6 (PRODUCT LEVEL)	SEE PAGE
	1	1	**1Q-3783**	2	PLATE AS	
	2	1	**1Q-3785**	2	PLATE AS	
					(EACH INCLUDES)	
	2A	1	**1F-0750**	6	NUT-WELD (3/8-16-THD)	
	3	1	**258-0975**	1	TREAD	
	4	1	**258-0977**	1	BOX AS	
	5	1	**258-0985**	1	FLOOR MAT-LOWER	
	6	1	**258-0986**	1	FLOOR MAT-UPPER	
Y	7	1	*263-3318*	1	CONTROL & MTG GP-PEDAL (GOVERNOR, BRAKE)	750
	8	1	**263-5043**	1	FLOORPLATE AS	
	9	1	**5S-7379**	8	BOLT (3/8-16X0.875-IN)	
	10	1	**7X-7729**	19	WASHER (11X25X3-MM THK)	
M	11	1	**8T-4136**	12	BOLT (M10X1.5X25-MM)	
M	12	1	**8T-4195**	7	BOLT (M10X1.5X30-MM)	
	13	1	**8T-4896**	8	WASHER-HARD (10.2X18.5X2.5-MM THK)	
BD	14	1	**8T-5372**		SEAL	

B-USE AS REQUIRED
D-ORDER BY THE METER
M-METRIC PART
Y-SEPARATE ILLUSTRATION

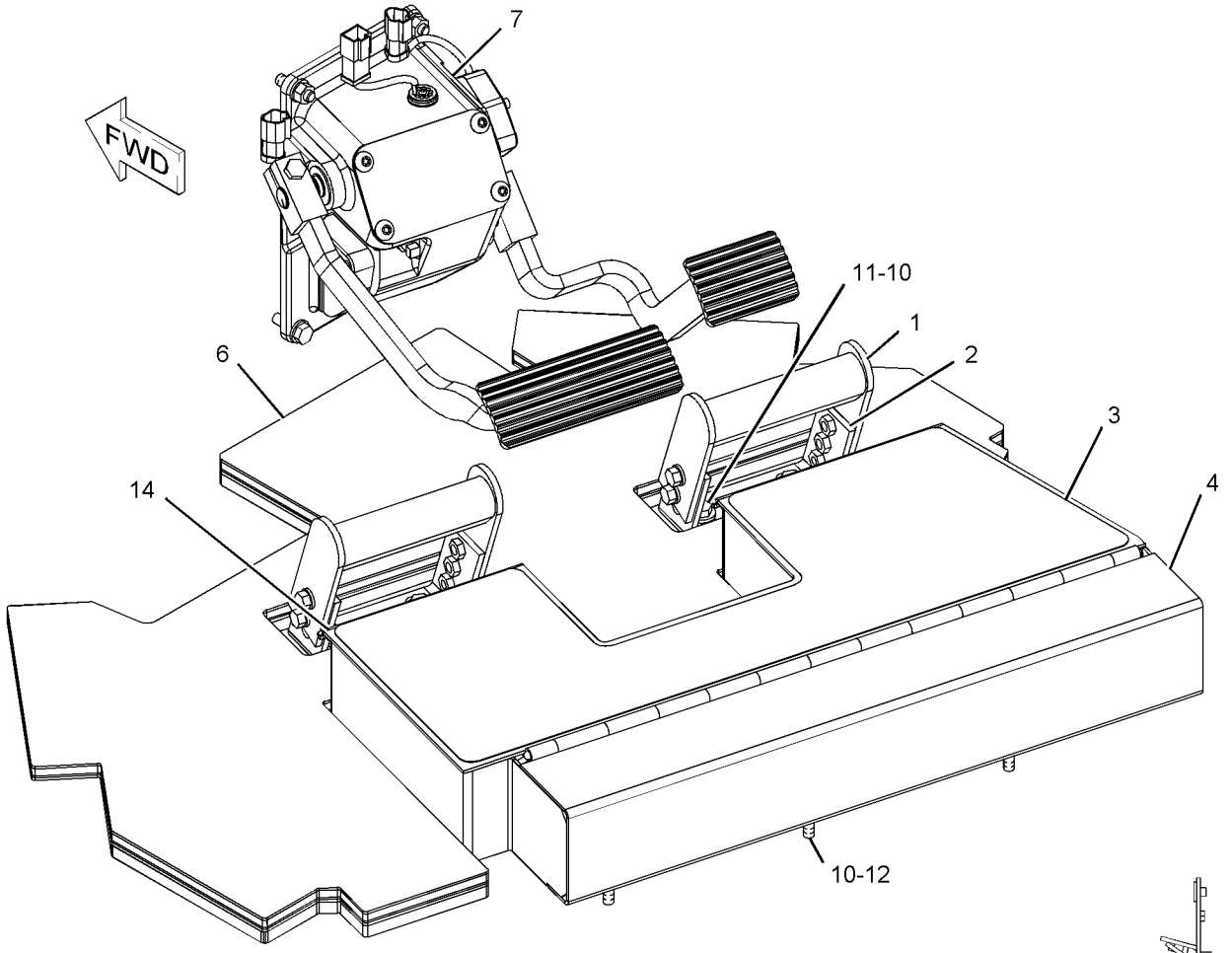

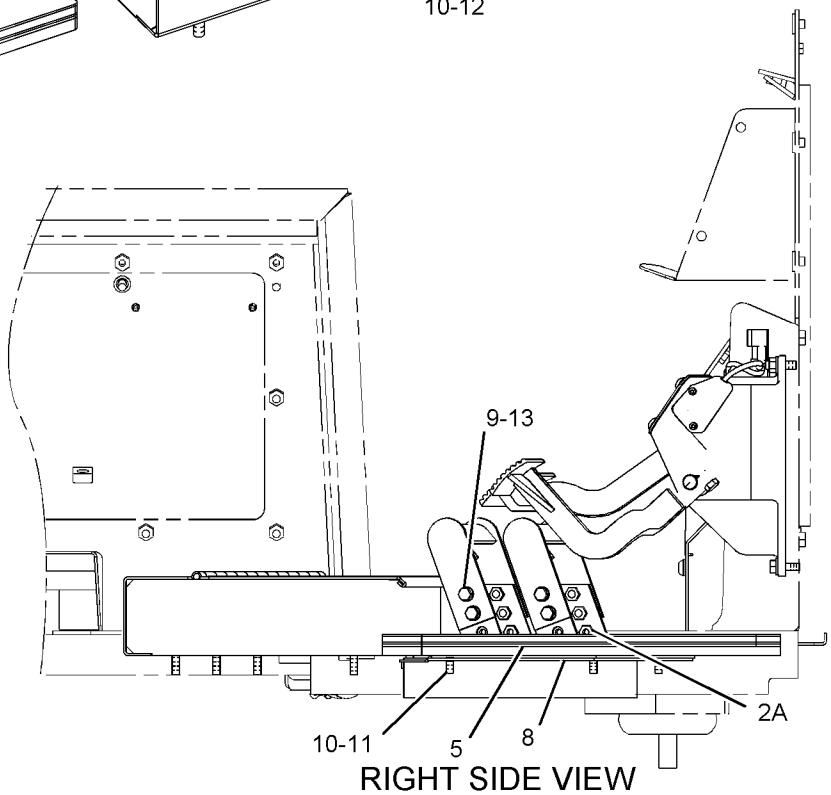

RIGHT SIDE VIEW

GRAPHIC #1 **<END>** g01123141

178-0604 PAN GP-BACKREST–CLOTH

S/N: RJS1-UP
PART OF 178-0603 SEAT GP
ALSO AN ATTACHMENT

SMCS-7312 **i02267748**

NOTE	REF NO	GRAPHIC REF	PART NUMBER	QTY	PART NAME 1 2 3 4 5 6 (PRODUCT LEVEL)	SEE PAGE
	1	1	**164-4883**	1	KNOB-LUMBAR	
Y	2	1	*178-0605*	1	PAN GP-BACKREST (CLOTH)	791
	3	1	**233-6745**	1	CUSHION AS (CLOTH)	
	4	1	**250-4628**	3	PLUG	
	5	1	**8T-7566**	1	PIN-SPRING	

Y-SEPARATE ILLUSTRATION

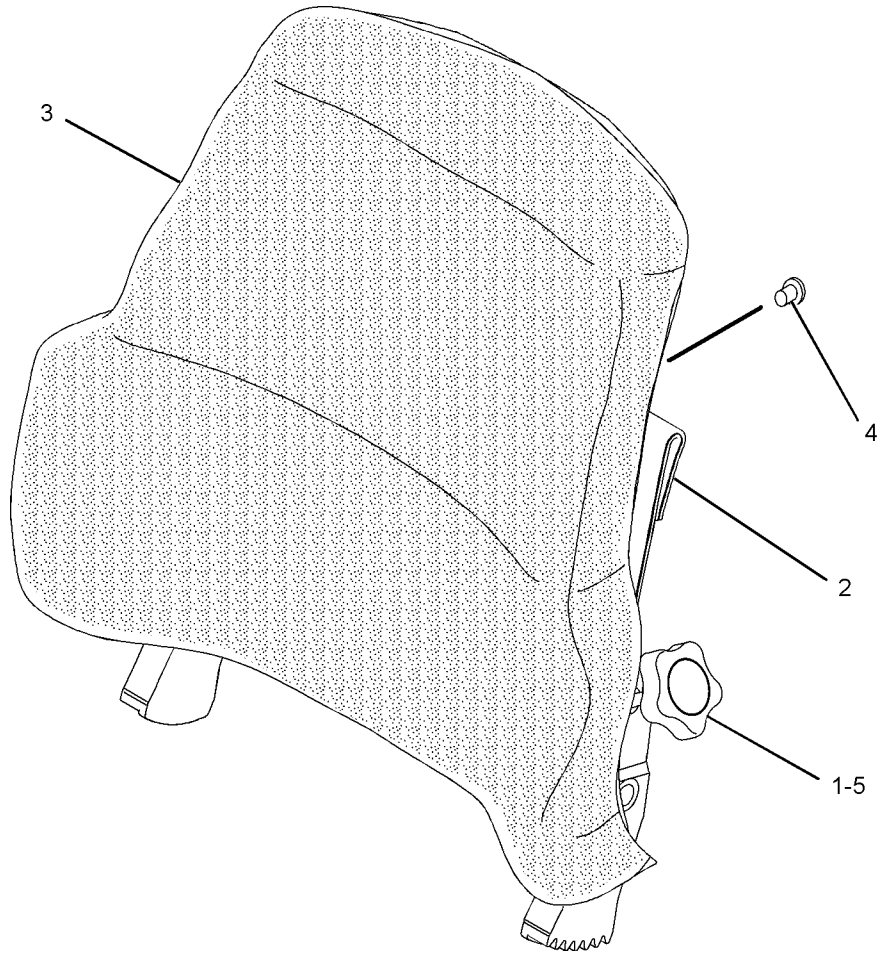

GRAPHIC #1 **<END>** g01092296

OPERATOR STATION

178-0605 PAN GP-BACKREST

S/N: RJS1-UP

PART OF 178-0604, 180-7305 PAN GP-BACKREST

ALSO AN ATTACHMENT

SMCS-7312 **i01508995**

NOTE	REF NO	GRAPHIC REF	PART NUMBER	QTY	PART NAME 1 2 3 4 5 6 (PRODUCT LEVEL)	SEE PAGE
	1	1	**4K-9429**	8	RIVET-POP	
	2	1	**5P-7957**	1	LANYARD	
	3	1	**136-1543**	1	PLATE AS-LUMBAR	
	4	1	**173-2052**	1	RETAINER	
	5	1	**178-7907**	1	HOLDER	
	6	1	**177-4930**	1	PAN AS-BACK	

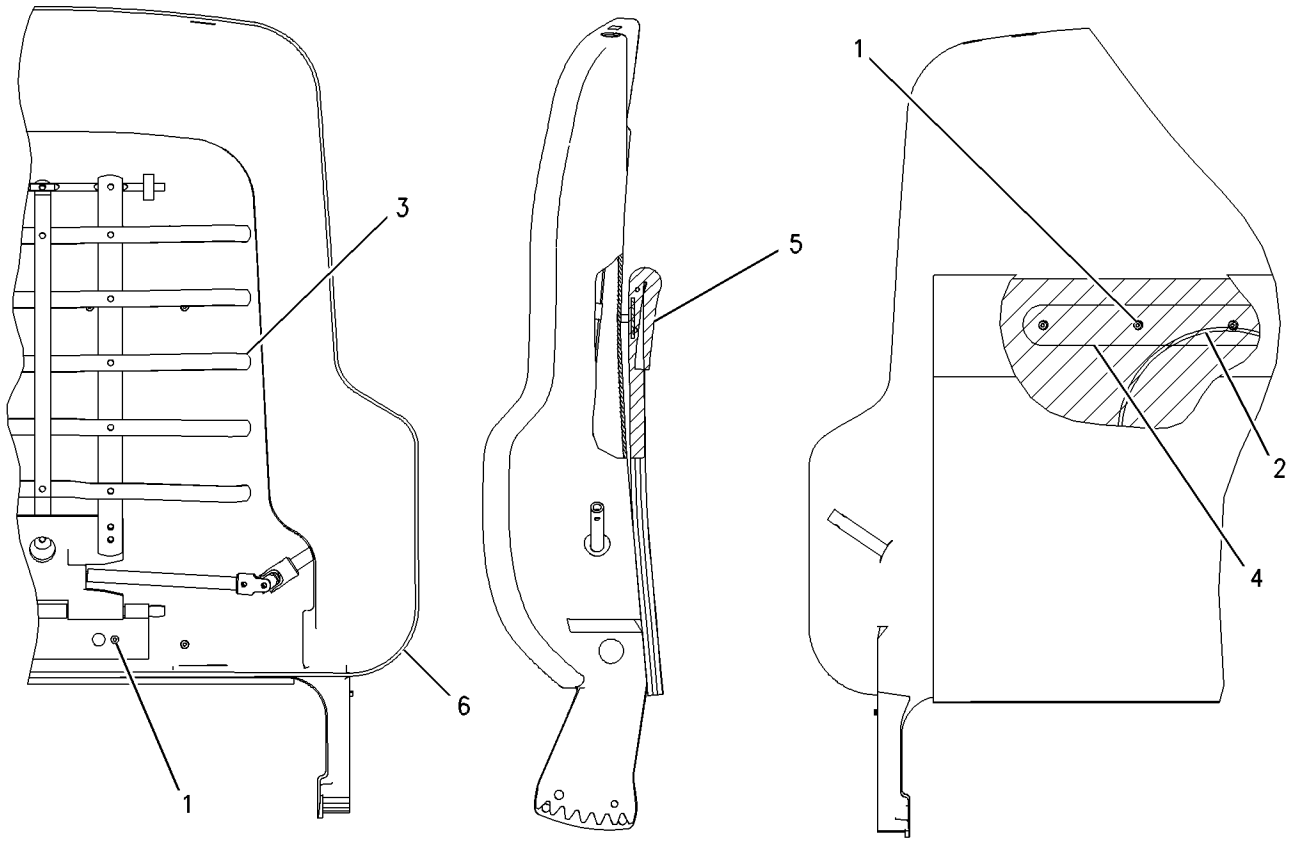

GRAPHIC #1 **<END>** g00716497

OPERATOR STATION

180-7305 PAN GP-BACKREST–VINYL

S/N: RJS1-UP
PART OF 180-7304 SEAT GP
AN ATTACHMENT

SMCS-7312 **i02122312**

NOTE	REF NO	GRAPHIC REF	PART NUMBER	QTY	PART NAME 1 2 3 4 5 6 (PRODUCT LEVEL)	SEE PAGE
	1	1	**164-4883**	1	KNOB-LUMBAR	
	2	1	**169-0697**	1	CUSHION AS	
Y	3	1	*178-0605*	1	PAN GP-BACKREST	791
	4	1	**250-4628**	3	PLUG	
	5	1	**8T-7566**	1	PIN-SPRING	

Y-SEPARATE ILLUSTRATION

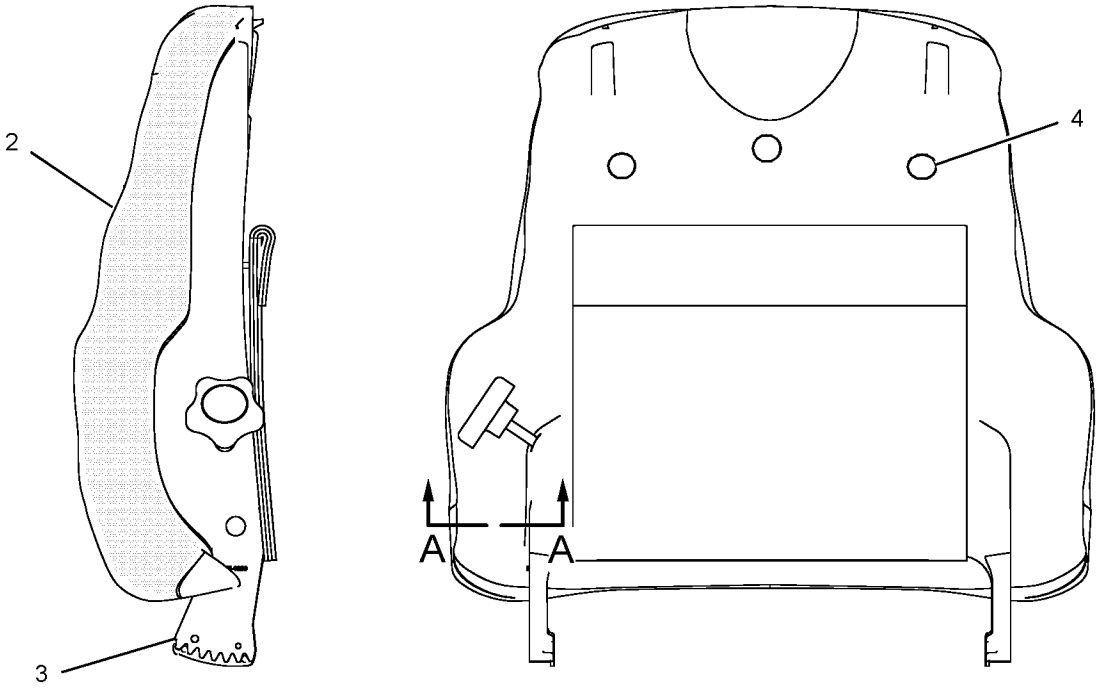

LEFT SIDE VIEW

REAR VIEW

SECTION A-A

<END>

GRAPHIC #1

g01082619

OPERATOR STATION

231-9290 PANEL GP-CONTROL

S/N: RJS1-UP
OVERHEAD WIPER, HEATER, A/C SWITCHES
PART OF 214-4763 WIRING GP-CAB
ALSO AN ATTACHMENT

SMCS-4490, 7332, 7451 **i02229981**

NOTE	REF NO	GRAPHIC REF	PART NUMBER	QTY	PART NAME 1 2 3 4 5 6 (PRODUCT LEVEL)	SEE PAGE
	1	1	**2P-4339**	1	NUT-JAM (7/16-28-THD)	
	2	1	**7F-6998**	1	LOCKWASHER	
	3	1	**9X-1138**	1	CONTROL AS-ELECTRONIC (WIPER)	
M	4	1	**096-3773**	8	SCREW-MACHINE (M4X0.7X25-MM)	
	5	1	**110-6109**	1	KNOB-CONTROL (WIPER, WASHER REAR)	
	5A	1	**110-6109**	1	KNOB-CONTROL (WIPER, WASHER, RH DOOR)	
	5B	1	**110-6109**	1	KNOB-CONTROL (WIPER, WASHER, LH DOOR)	
	5C	1	**110-6109**	1	KNOB-CONTROL (WIPER, WASHER FRONT)	
	5D	1	**110-6109**	1	KNOB-CONTROL (CAB HEATER, AIR CONDITIONER)	
	5E	1	**110-6109**	1	KNOB-CONTROL (BLOWER FAN SPEED)	
	6	1	**110-7886**	1	SWITCH AS-WIPER (24-VOLT) (FRONT INTERMITTENT)	
	6A	1	**110-7886**	1	SWITCH AS-WIPER (24-VOLT) (LH DOOR)	
	6B	1	**110-7886**	1	SWITCH AS-WIPER (24-VOLT) (RH DOOR)	
	6C	1	**110-7886**	1	SWITCH AS-WIPER (24-VOLT) (REAR INTERMITTENT)	
					(EACH INCLUDES)	
		1	**2H-3920**	1	LOCKWASHER	
		1	**3E-3389**	1	WEDGE-RECEPTACLE LOCK	
		1	**6V-8369**	1	NUT (7/16-28-THD)	
		1	**8T-8737**	1	PLUG-SEAL	
		1	**9W-0852**	4	PIN-CONNECTOR	
		1	**186-3735**	3	PIN-CONNECTOR	
		1	**102-8806**	1	KIT-RECEPTACLE (8-PIN)	
					(INCLUDES RECEPTACLE AS & WEDGE)	
	7	1	**157-1361**	1	SWITCH AS-ROTARY (A/C CONTROL)	
		1	**9W-0852**	6	PIN-CONNECTOR	
		1	**102-8805**	1	KIT-RECEPTACLE (6-PIN)	
					(INCLUDES RECEPTACLE AS & WEDGE)	
	8	1	**229-2578**	1	SWITCH AS-ROCKER (AIR CONDITIONER ON, OFF)	
	9	1	**230-3023**	1	PLATE	
	10	1	**236-8721**	1	POTENTIOMETER AS	
		1	**102-8803**	1	KIT-RECEPTACLE (3-PIN)	
					(INCLUDES RECEPTACLE AS & WEDGE)	
		1	**186-3735**	3	PIN-CONNECTOR	
	11	1	**245-2760**	8	SPACER (6.5X12.7X9.5-MM THK)	
	12	1	**246-4296**	1	CONTROL GP-HEAT & AIR COND	
		1	**102-8802**	1	KIT-RECEPTACLE (2-PIN)	
					(INCLUDES RECEPTACLE AS & WEDGE)	
		1	**3E-3365**	1	WEDGE-RECEPTACLE LOCK (2-PIN)	
		1	**186-3735**	2	PIN-CONNECTOR	
	13	1	**246-5785**	1	FILM-PANEL (WIPER CONTROL)	
M	14	1	**5C-8312**	19	NUT (M4X0.7-THD)	

M-METRIC PART

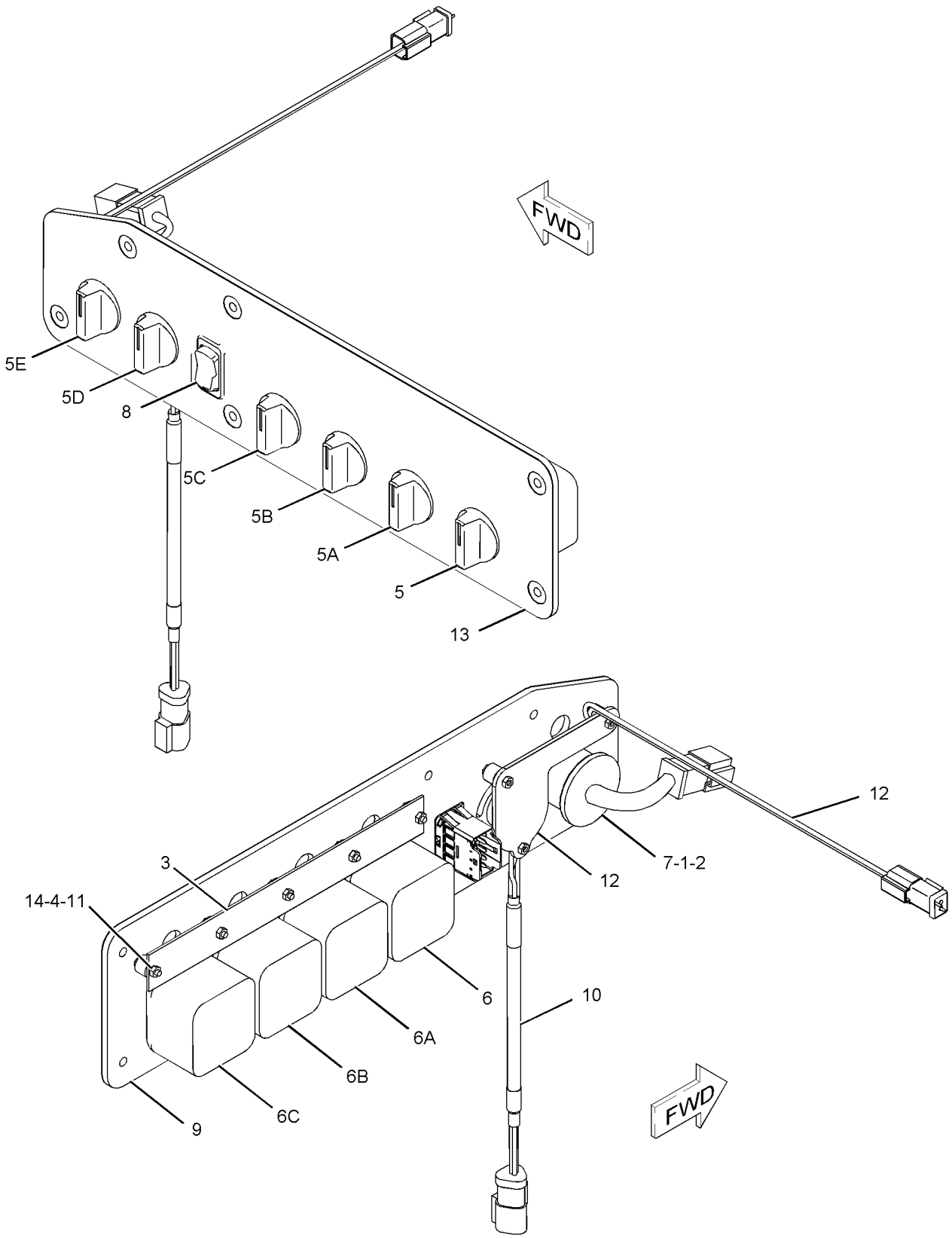

GRAPHIC #1 **<END>** g01110053

OPERATOR STATION

214-4193 PLATFORM AR

S/N: RJS1-UP

PART OF 205-8601 CHASSIS AR

SMCS-7253 **i01995212**

NOTE	PART NUMBER	QTY	PART NAME 1 2 3 4 5 6 (PRODUCT LEVEL)	SEE PAGE
Y	*214-2014*	1	CONSOLE GP-FRONT	746
Y	*209-5154*	1	CONSOLE GP-OPERATOR	747
Y	*206-8637*	1	HEATER GP-CAB	763
Y	*205-8576*	1	PLATFORM GP	796
Y	*226-9249*	1	TANK GP-WINDOW WASHER	823
Y	*205-8579*	1	WIRING GP-PLATFORM	290

Y-SEPARATE ILLUSTRATION

<END>

OPERATOR STATION

205-8576 PLATFORM GP

S/N: RJS1-UP

PART OF 214-4193 PLATFORM AR

SMCS-7253, 7254 **i02196721**

NOTE	REF NO	GRAPHIC REF	PART NUMBER	QTY	PART NAME 1 2 3 4 5 6 (PRODUCT LEVEL)	SEE PAGE
	1	2	**117-8131**	8	MOUNT (CAB)	
	2	2	**185-3666**	4	SLEEVE	
	3	1	**209-9331**	1	PLATFORM AS	
	3A	1	**209-9336**	1	PANEL AS-DASH	
	3B	1	**209-9342**	1	CONSOLE AS-RH	
	3C	1	**209-9343**	1	CONSOLE AS-LH	
M	3D	2	**5C-7261**	8	NUT (M8X1.25-THD)	
M	3E	2	**6V-9632**	8	NUT-WELD (M6X1 THD)	
	3F	2	**7T-1099**	15	LINK	
M	3G	1	**8T-3490**	20	NUT-WELD (M10X1.5-THD)	
	3J	2	**8F-9836**	3	BOSS-THREADED	
M	3K	2	**8T-3490**	15	NUT-WELD (M10X1.5-THD)	
M	3L	1	**9R-2640**	1	BOSS (M12X1.75X25-MM)	
	4	1	**209-9537**	1	PLATE AS	
	5	1	**209-9706**	2	STRIP	
	6	2	**215-2802**	1	PLATE	
	7	1	**215-2809**	2	PLATE AS	
	8	1	**215-2812**	2	GASKET	
	9	1	**215-2815**	1	GASKET	
	10	1	**226-7874**	1	PLATE	
	11	1	**226-7875**	1	PLATE	
	12	2	**233-6313**	2	SUPPORT (FOOT)	
	13	1	**235-8110**	1	PLATE AS	
	14	1	**245-1737**	1	BOLT (9/16-18-THD)	
	15	1	**252-6953**	1	PLATE AS	
	16	1	**252-6954**	1	GASKET	
	17	1	*256-4313*	1	FLOORPLATE AS	
	17A	2	**215-2807**	1	PLATE AS	
	17B	2	**215-2814**	1	GASKET	
	17C	2	**226-9189**	1	PANEL	
	18	1	*256-4314*	1	FLOORPLATE AS	
	18A	2	**215-2807**	1	PLATE AS	
	18B	2	**215-2813**	1	GASKET	
	18C	2	**226-9193**	1	PANEL	
M	19	1	**5C-9553**	2	BOLT (M6X1X16-MM)	
	20	2	**6T-8714**	4	WASHER-HARD (28X125X12-MM THK)	
	21	1,2	**7X-7729**	47	WASHER (11X25X3-MM THK)	
M	22	2	**8C-3290**	4	BOLT (M24X3X150-MM)	
	23	1,2	**8T-4121**	9	WASHER-HARD (11X21X2.5-MM THK)	
M	24	1,2	**8T-4136**	47	BOLT (M10X1.5X25-MM)	
M	25	1	**8T-4137**	5	BOLT (M10X1.5X20-MM)	
	26	2	**8T-4167**	4	WASHER-HARD (26X44X4-MM THK)	
M	27	2	**9X-2040**	4	SCREW-TRUSS HEAD (M10X1.5X25-MM)	
	28	1	**9X-8256**	2	WASHER (6.6X12X2-MM THK)	

M-METRIC PART

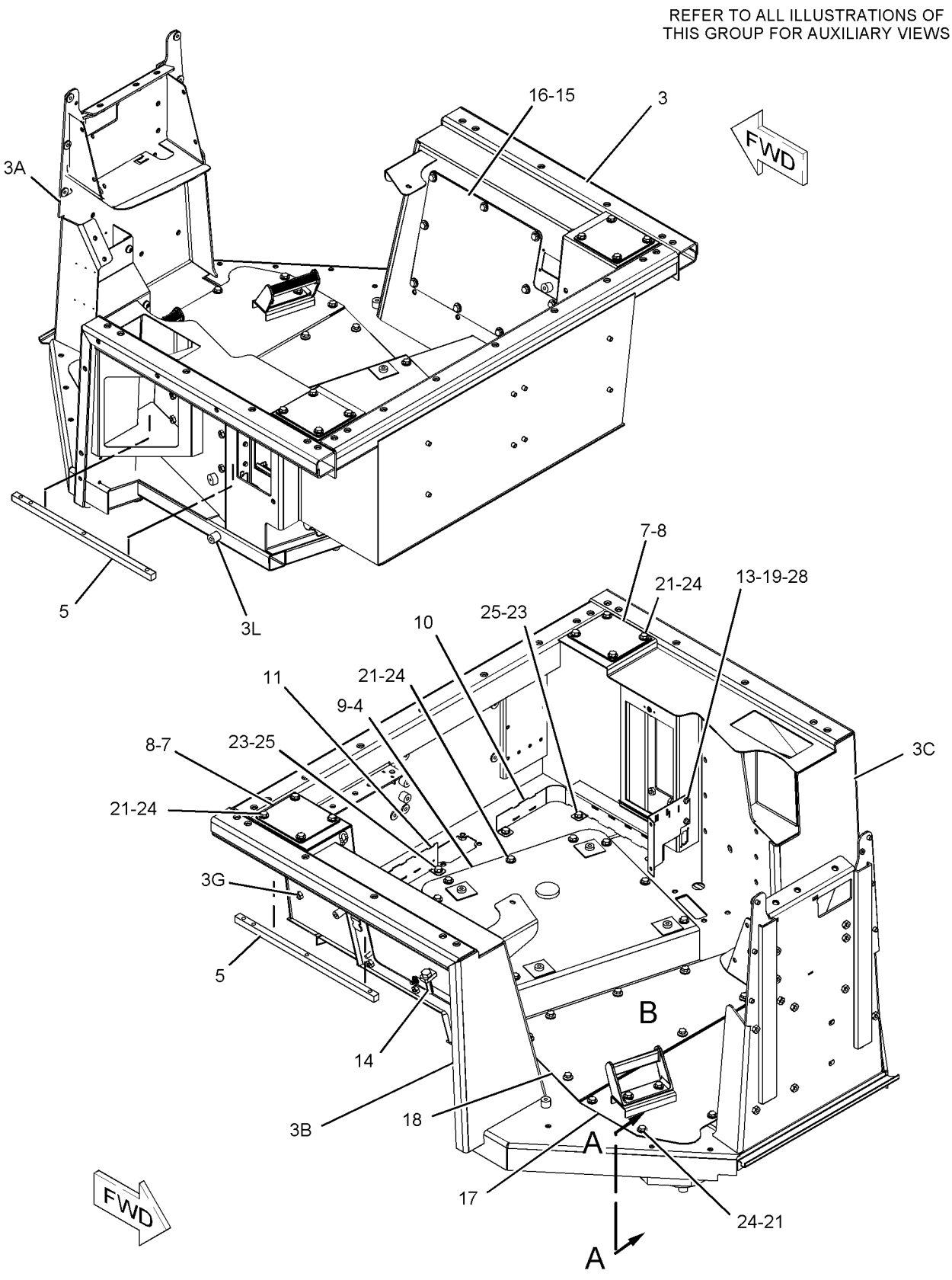

GRAPHIC #1

g01120722

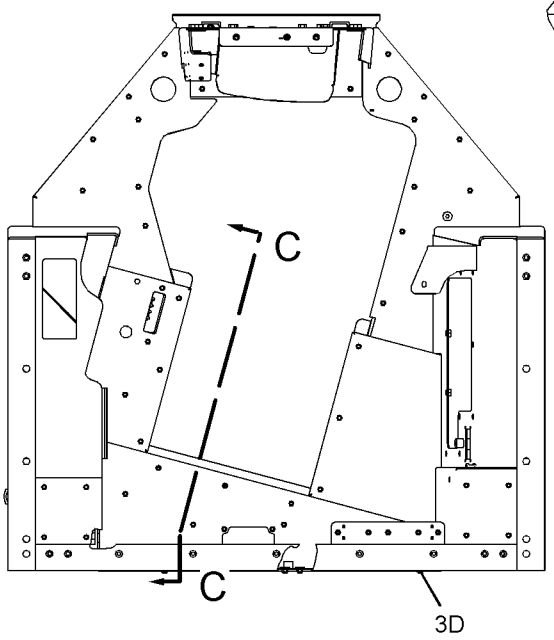

TOP VIEW

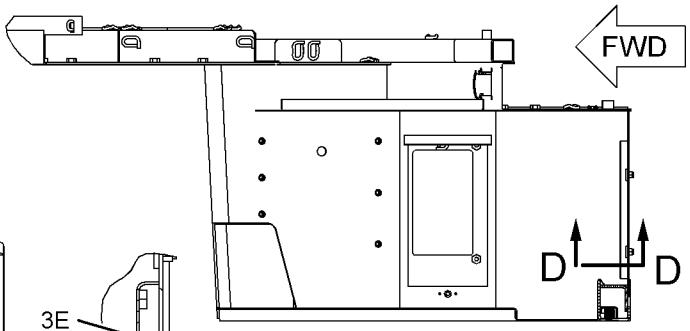

SECTION C-C

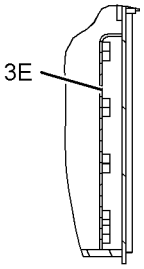

SECTION D-D

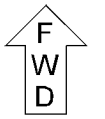

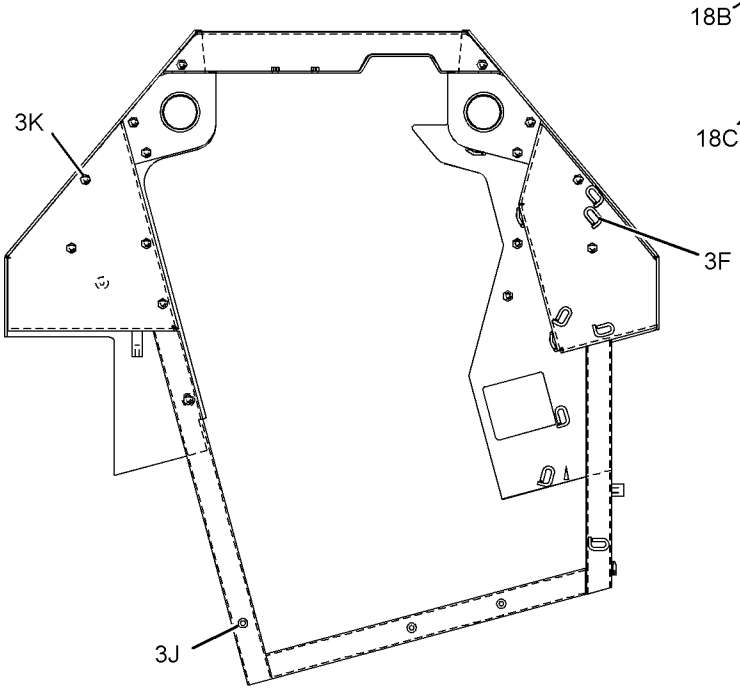

BOTTOM VIEW

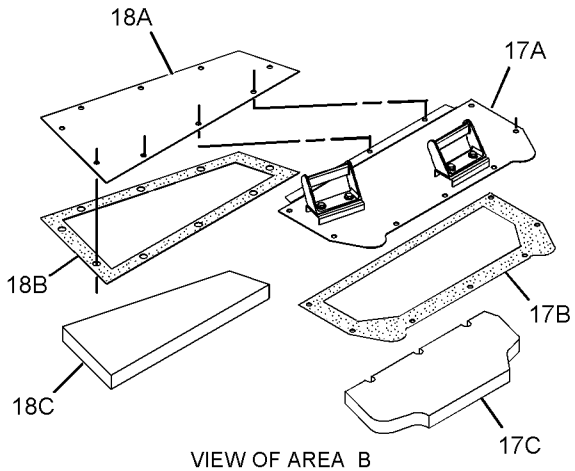

VIEW OF AREA B
(EXPLODED)

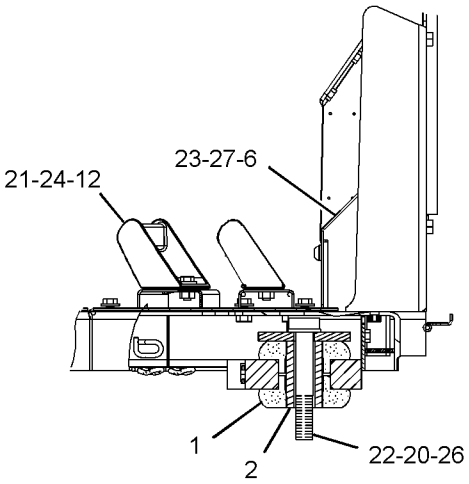

VIEW A-A

REFER TO ALL ILLUSTRATIONS OF
THIS GROUP FOR AUXILIARY VIEWS

GRAPHIC #2 **<END>** g01120723

OPERATOR STATION

210-2270 RECLINER GP-SEAT

S/N: RJS1-UP
PART OF 178-0603, 180-7304 SEAT GP
ALSO AN ATTACHMENT

SMCS-7312 **i02179368**

NOTE	REF NO	GRAPHIC REF	PART NUMBER	QTY	PART NAME 1 2 3 4 5 6 (PRODUCT LEVEL)	SEE PAGE
	1	1	**177-1862**	1	BRACKET (SEAT BELT)	
	2	1	**210-2262**	1	BRACKET AS	
	3	1	**210-2263**	1	BRACKET AS	
	4	1	**210-2266**	1	GEAR (14 TEETH)	
	5	1	**210-2268**	1	SHAFT AS	
	6	1	**217-7933**	1	LATCH	
	7	1	**236-5197**	1	SPRING	
	8	1	**031-0214**	1	BOLT-LOCKING (1/4-20X0.5-IN)	
	9	1	**101-2867**	1	WASHER-HARD (7.2X25X2-MM THK)	
	10	1	**4M-6425**	1	BOLT (5/16-18X1-IN)	
	11	1	**5M-2894**	1	WASHER-HARD (10.2X18.5X2.5-MM THK)	
	12	1	**5S-7383**	1	BOLT (3/8-16X1.75-IN)	
	13	1	**8T-4224**	1	WASHER-HARD (8.8X16X2-MM THK)	

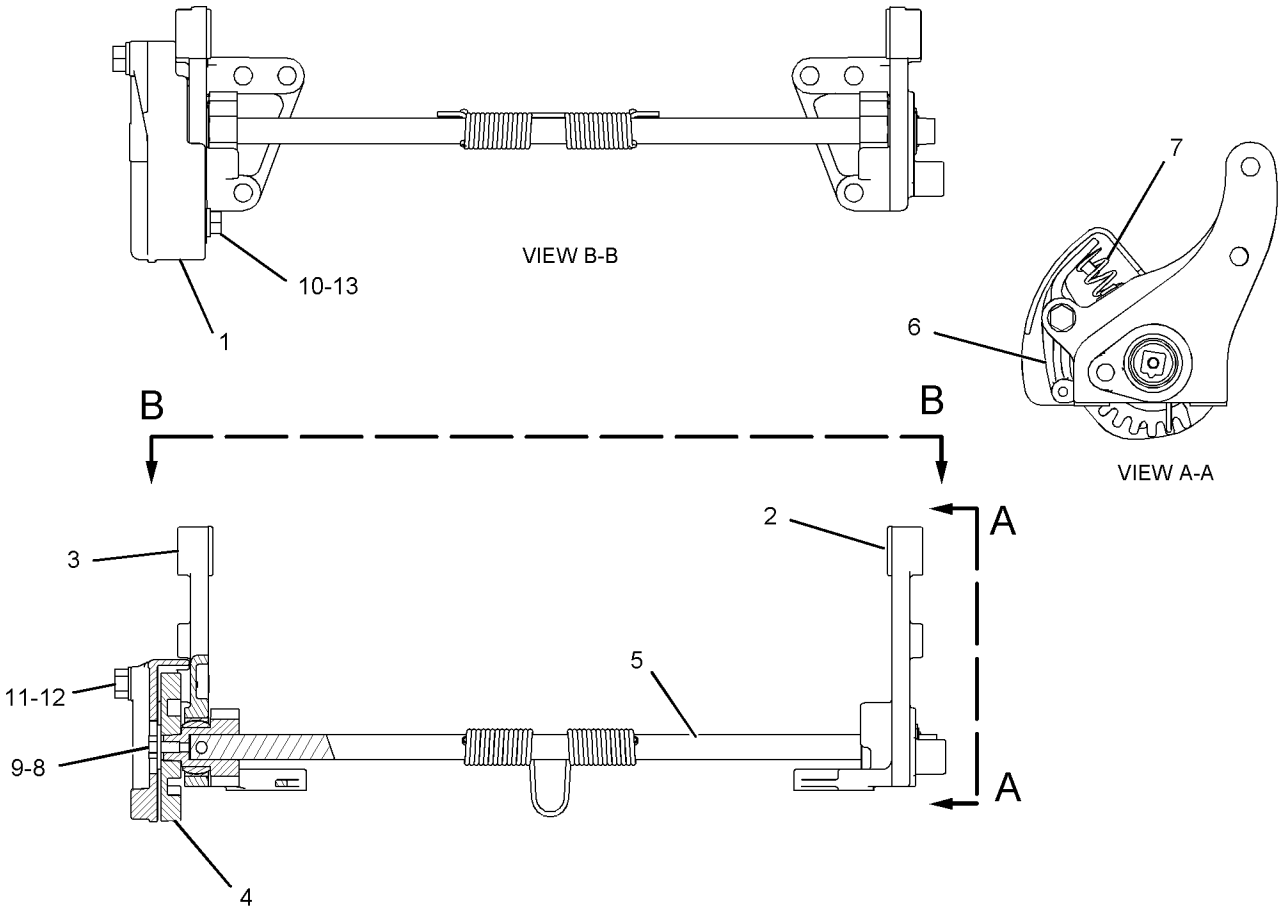

GRAPHIC #1 **<END>** g01040293

OPERATOR STATION

207-4800 ROPS GP

S/N: RJS1-UP

PART OF 205-8601 CHASSIS AR

SMCS-7177, 7301 **i01994587**

NOTE	REF NO	GRAPHIC REF	PART NUMBER	QTY	PART NAME 1 2 3 4 5 6 (PRODUCT LEVEL)	SEE PAGE
	1	1	**208-8697**	1	ROPS AS	
	2	1	**224-9017**	1	HANDHOLD (RH)	
	3	1	**233-9314**	1	HANDHOLD (LH)	
	4	1	**5C-6565**	4	BOLT (1/2-13X1.125 IN)	
	5	1	**5P-1076**	4	WASHER-HARD (13.5X30X4MM THK)	
	6	1	**7X-0428**	12	BOLT (1 1/4-7X4 IN)	
	7	1	**7X-0533**	12	WASHER-HARD (34X55X6MM THK)	

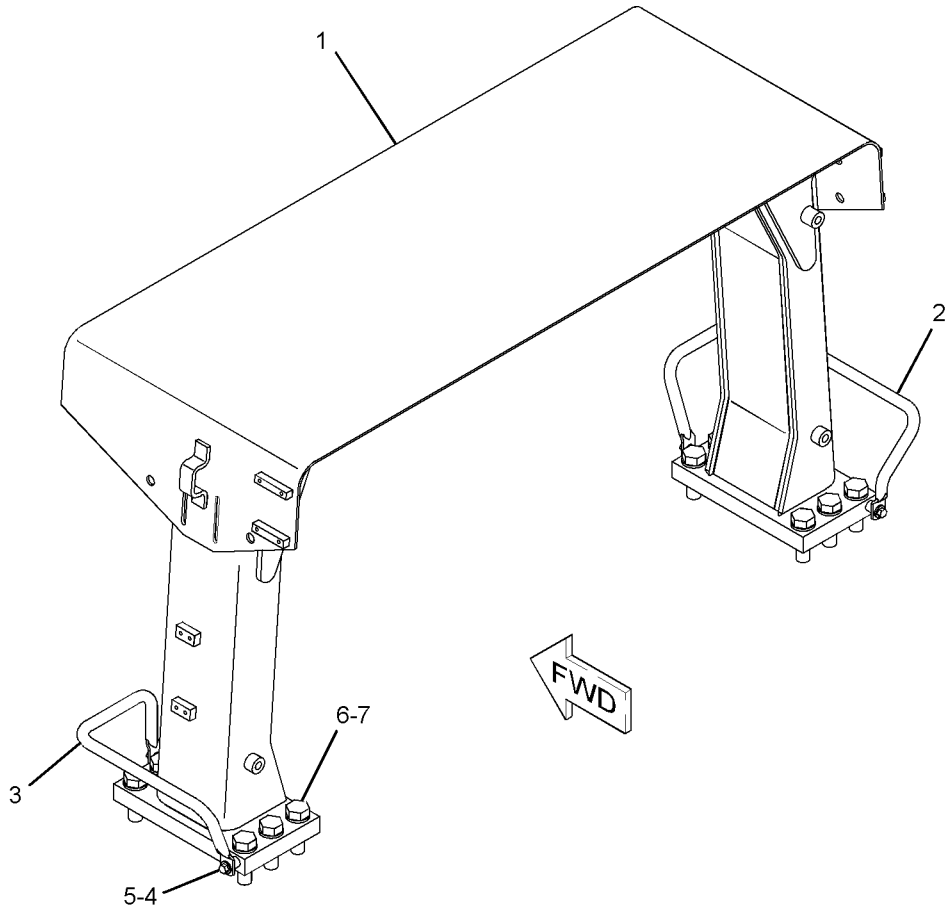

GRAPHIC #1 **<END>** g01036246

OPERATOR STATION

217-4531 ROPS AS–ROPS MOUNTED CONDENSOR

S/N: RJS1-UP
PART OF 205-8630 CAB AR
AN ATTACHMENT

SMCS-7177, 7301 **i01994406**

NOTE	REF NO	GRAPHIC REF	PART NUMBER	QTY	PART NAME 1 2 3 4 5 6 (PRODUCT LEVEL)	SEE PAGE
	1	1	**208-8697**	1	ROPS AS	

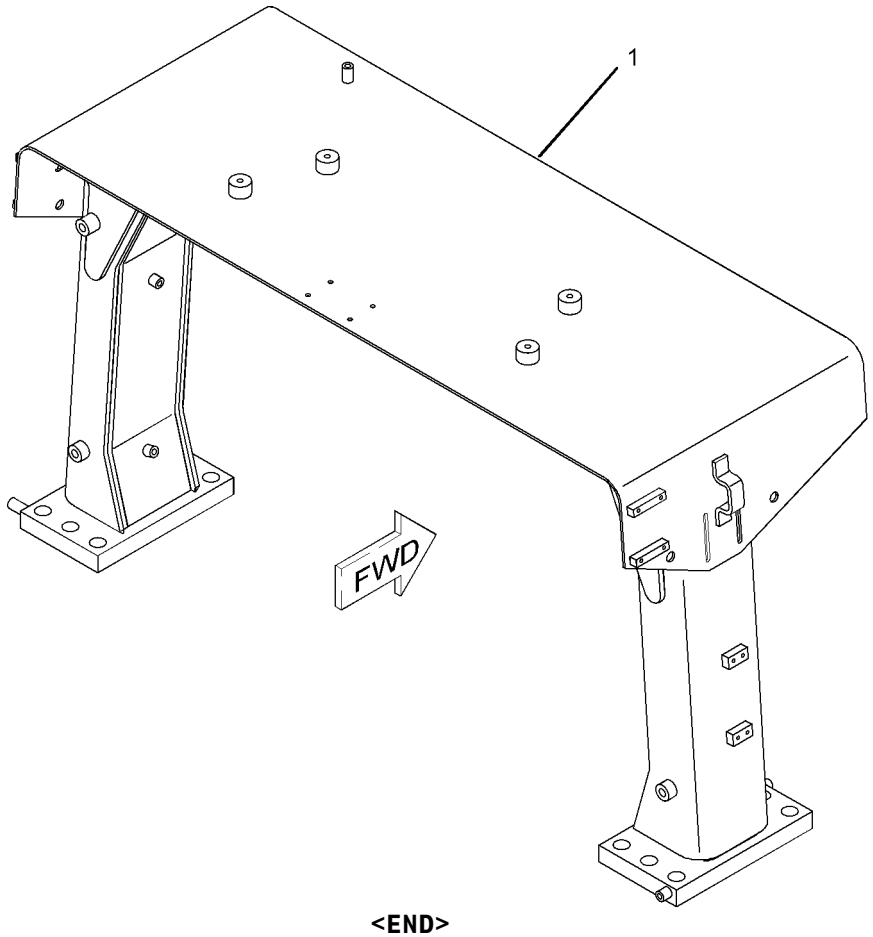

GRAPHIC #1 **<END>** g01034661

OPERATOR STATION

213-6382 SCREEN GP-PROTECTION–REAR

S/N: RJS1-UP

AN ATTACHMENT

SMCS-7165 **i02206776**

NOTE	REF NO	GRAPHIC REF	PART NUMBER	QTY	PART NAME 1 2 3 4 5 6 (PRODUCT LEVEL)	SEE PAGE
	1	1	**216-8198**	1	SCREEN AS	
	2	1	**258-7318**	1	PLATE AS	
		1	**7T-1099**	4	LINK	
		1	**8J-7236**	3	NUT-WELD (3/4-10-THD)	
	3	1	**258-7319**	1	PLATE AS	
		1	**7T-1099**	4	LINK	
		1	**8J-7236**	3	NUT-WELD (3/4-10-THD)	
	4	1	**7X-0365**	10	BOLT (3/4-10X1.5-IN)	
	5	1	**7X-0582**	4	WASHER-HARD (20X44.5X6-MM THK)	
	6	1	**8T-4994**	6	WASHER-HARD (20X36.5X3.5-MM THK)	

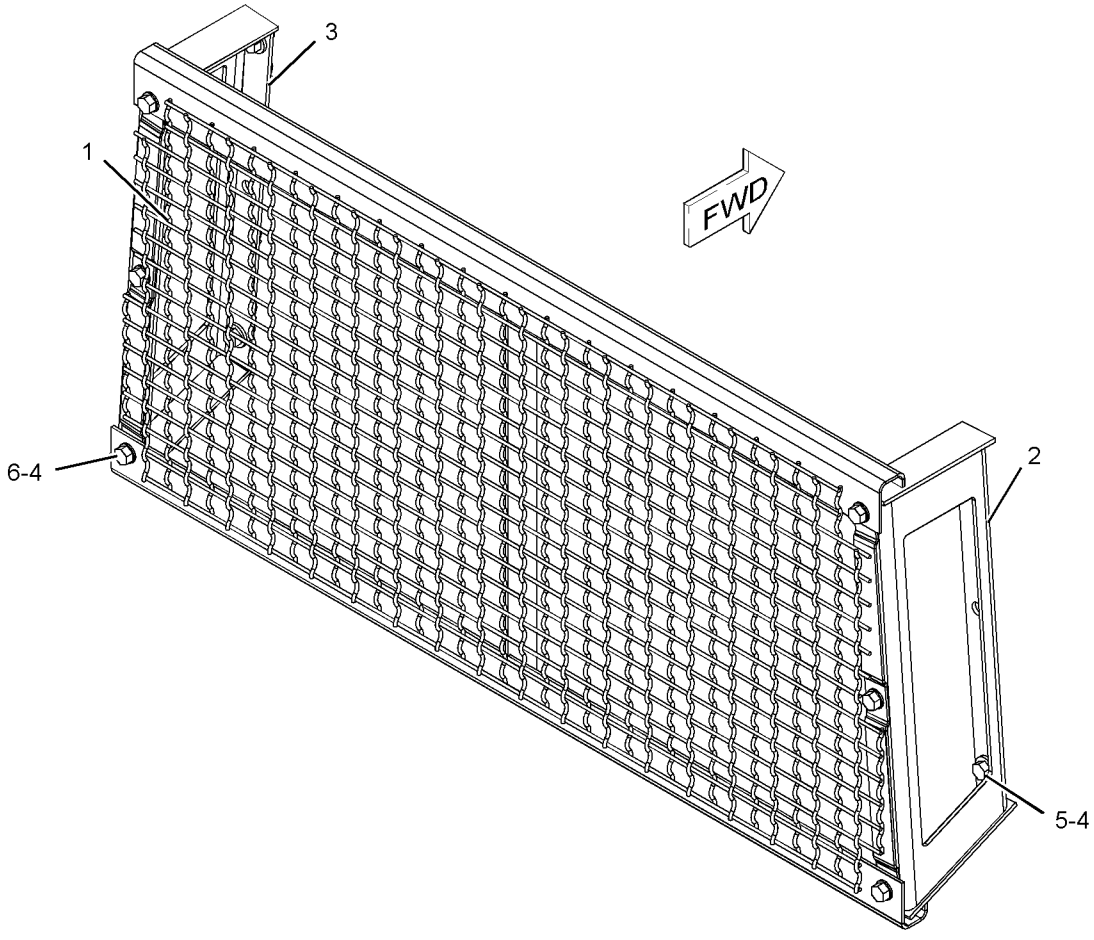

GRAPHIC #1 **<END>** g01118969

OPERATOR STATION

214-1096 SEAT & MOUNTING GP–CLOTH

S/N: RJS1-UP

PART OF 205-8601 CHASSIS AR

SMCS-7312 **i02250647**

NOTE	REF NO	GRAPHIC REF	PART NUMBER	QTY	PART NAME 1 2 3 4 5 6 (PRODUCT LEVEL)	SEE PAGE
Y	1	1	**160-7186**	1	SEAT GP-SUSPENSION (CLOTH)	813
	2	1	**7X-7729**	4	WASHER (11X25X3-MM THK)	
M	3	1	**9X-2125**	4	BOLT-LOCKING (M10X1.5X25-MM)	

M-METRIC PART
Y-SEPARATE ILLUSTRATION

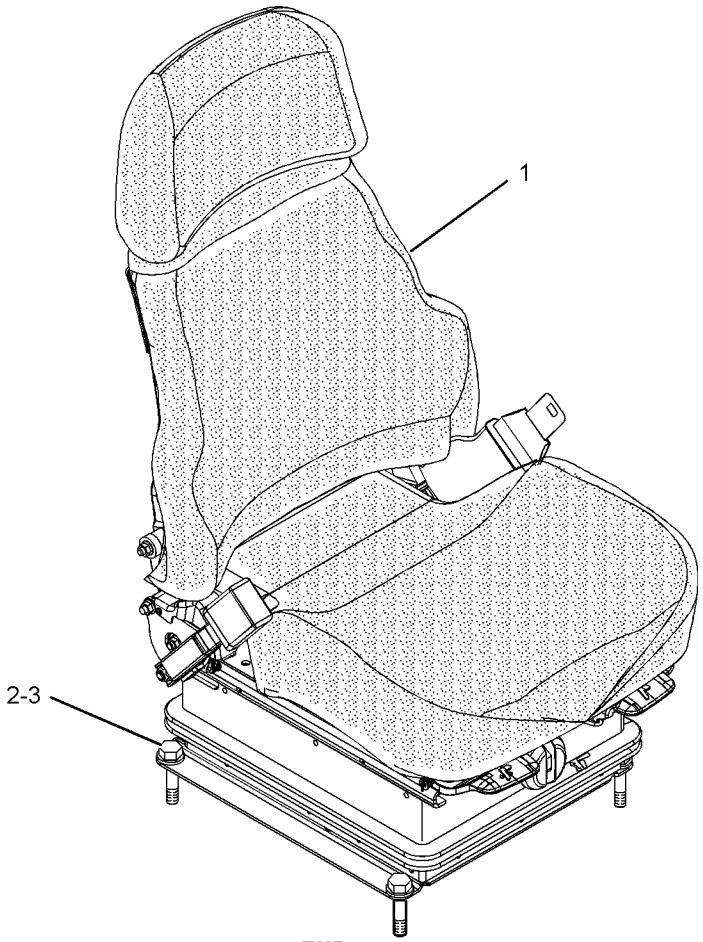

GRAPHIC #1 **<END>** g01017306

OPERATOR STATION

178-0603 SEAT GP—CLOTH

S/N: RJS1-UP
PART OF 178-0606 SEAT GP
ALSO AN ATTACHMENT

SMCS-7312 **i02011971**

NOTE	REF NO	GRAPHIC REF	PART NUMBER	QTY	PART NAME 1 2 3 4 5 6 (PRODUCT LEVEL)	SEE PAGE
	1	1	**218-0861**	1	PAN AS	
		1	**8T-9082**	5	RIVET-POP	
		1	**217-9049**	1	CUSHION AS	
	2	1	**143-1288**	8	LOCKNUT-FLANGE (3/8-16-THD)	
	3	1	**171-1230**	6	SCREW-BUTTON HEAD (3/8-16X1-IN)	
	4	1	**171-6682**	1	BAR	
	5	1	**172-2416**	2	PIN	
Y	6	1	*173-1028*	1	ADJUSTER GP-SEAT	725
	7	1	**177-1863**	2	BOLT-PIVOT (3/8-16X2.89-IN)	
Y	8	1	*210-2270*	1	RECLINER GP-SEAT	799
Y	9	1	*178-0604*	1	PAN GP-BACKREST (CLOTH)	790
	10	1	**184-2298**	1	ROD	
	11	1	**184-2299**	4	WASHER (7X25.4X2.54-MM THK)	
	12	1	**095-0843**	2	PIN-COTTER	
	13	1	**5V-1496**	2	RETAINER	
	14	1	**6V-7646**	2	WASHER-HARD (7.2X25X2-MM THK)	
	15	1	**8T-0328**	1	WASHER-HARD (5.5X10X1-MM THK)	
	16	1	**8T-4205**	1	WASHER-HARD (7.2X14.5X2-MM THK)	
	17	1	**8Y-6277**	2	SPACER (10.5X28.6X10-MM THK)	

Y-SEPARATE ILLUSTRATION

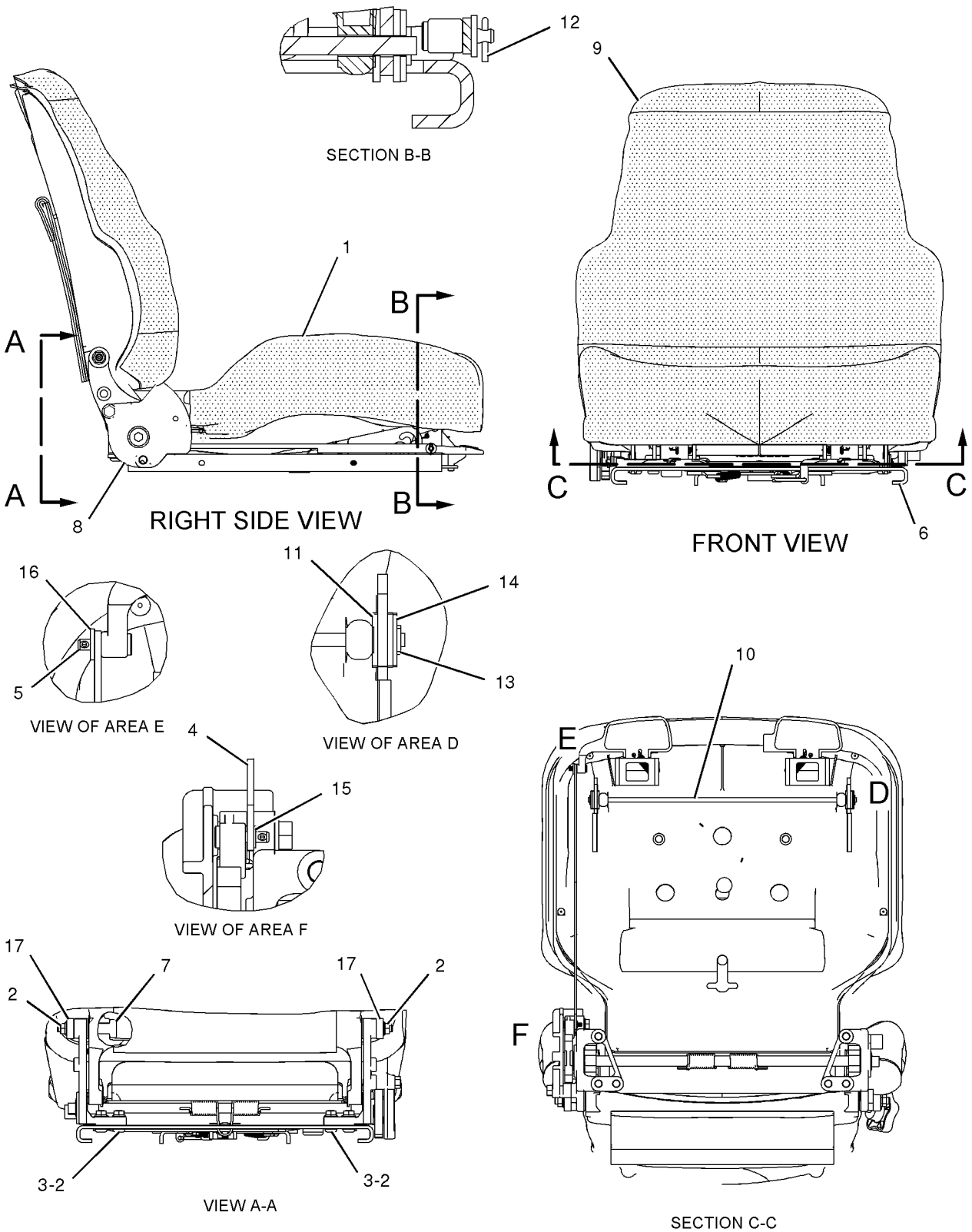

GRAPHIC #1 **<END>** g01023456

OPERATOR STATION

178-0606 SEAT GP–CLOTH

S/N: RJS1-UP
PART OF 160-7186, 200-3174 SEAT GP-SUSPENSION
ALSO AN ATTACHMENT

SMCS-7312 **i02212856**

NOTE	REF NO	GRAPHIC REF	PART NUMBER	QTY	PART NAME 1 2 3 4 5 6 (PRODUCT LEVEL)	SEE PAGE
	1	1	**177-4937**	1	SPACER (11.7X19.8X20.3-MM THK)	
Y	2	1	**178-0603**	1	SEAT GP (CLOTH)	804
	3	1	**222-0345**	1	SEAT BELT GP	
C	4	1	**229-1494**	1	EXTENSION GP-BACKREST (CLOTH)	
	5	1	**0T-0244**	1	BOLT (7/16-20X1.25-IN)	
	6	1	**205-6388**	1	BOLT (7/16-20X44.45-MM)	

C-CHANGE FROM PREVIOUS TYPE
Y-SEPARATE ILLUSTRATION

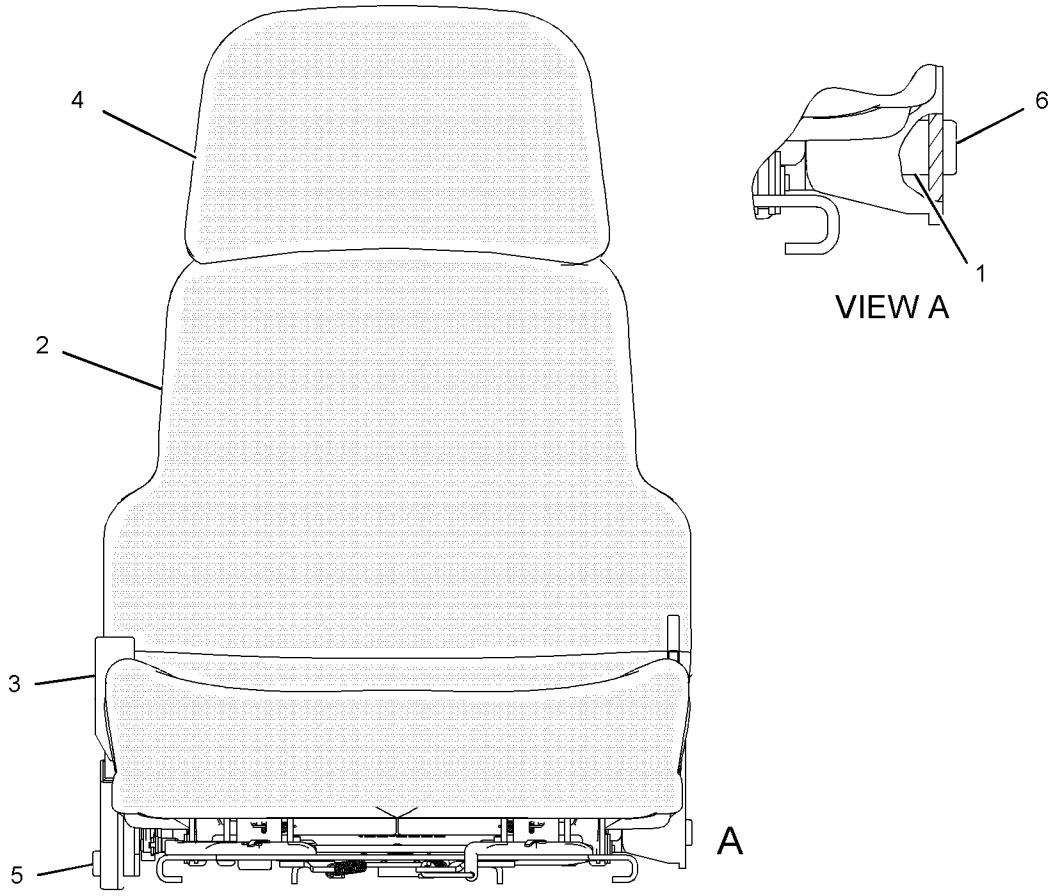

GRAPHIC #1

<END>

g01084230

OPERATOR STATION

180-7304 SEAT GP–VINYL

S/N: RJS1-UP
PART OF 184-6011 SEAT GP
AN ATTACHMENT

SMCS-7312 **i01998035**

NOTE	REF NO	GRAPHIC REF	PART NUMBER	QTY	PART NAME 1 2 3 4 5 6 (PRODUCT LEVEL)	SEE PAGE
	1	1	**143-1288**	8	LOCKNUT-FLANGE (3/8-16-THD)	
	2	1	**171-1230**	6	SCREW-BUTTON HEAD (3/8-16X1-IN)	
	3	1	**171-6682**	1	BAR	
	4	1	**172-2416**	2	PIN	
Y	5	1	*173-1028*	1	ADJUSTER GP-SEAT	725
	6	1	**173-3283**	1	PAN AS	
		1	**169-1026**	1	CUSHION AS	
		1	**6K-3273**	5	RIVET-POP	
	7	1	**177-1863**	2	BOLT-PIVOT (3/8-16X2.89-IN)	
Y	8	1	*180-7305*	1	PAN GP-BACKREST (VINYL)	792
	9	1	**184-2298**	1	ROD	
	10	1	**184-2299**	4	WASHER (7X25.4X2.54-MM THK)	
Y	11	1	*210-2270*	1	RECLINER GP-SEAT	799
	12	1	**095-0843**	2	PIN-COTTER	
	13	1	**5V-1496**	2	RETAINER	
	14	1	**6V-7646**	2	WASHER-HARD (7.2X25X2-MM THK)	
	15	1	**8T-0328**	1	WASHER-HARD (5.5X10X1-MM THK)	
	16	1	**8T-4205**	1	WASHER-HARD (7.2X14.5X2-MM THK)	
	17	1	**8Y-6277**	2	SPACER (10.5X28.6X10-MM THK)	

Y-SEPARATE ILLUSTRATION

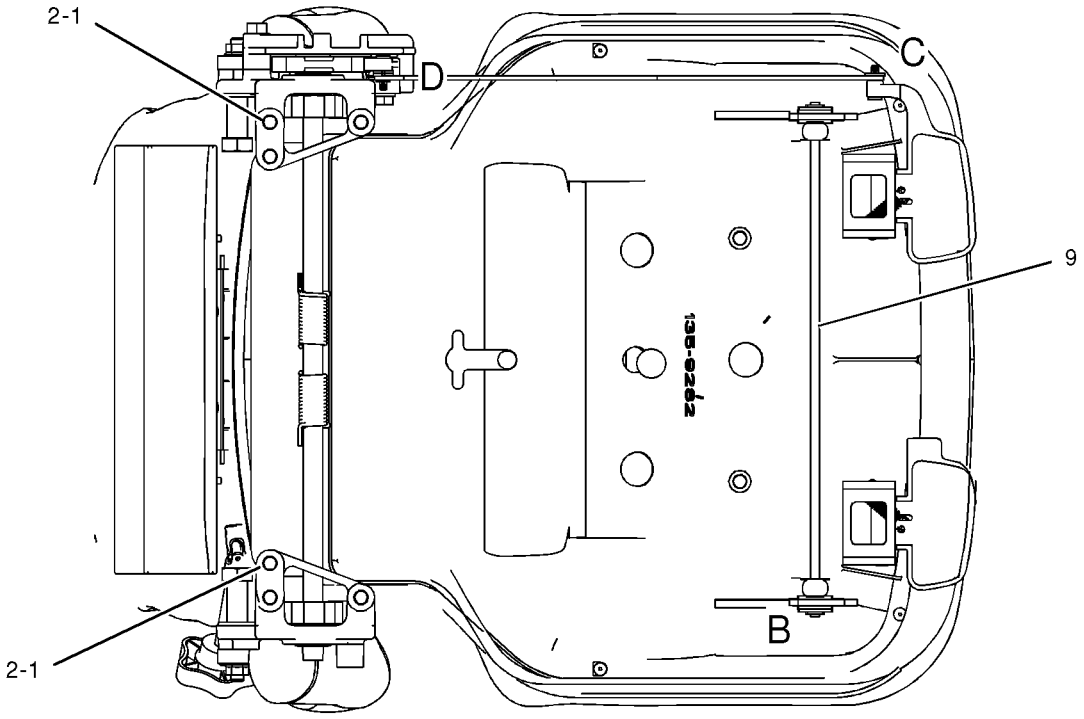

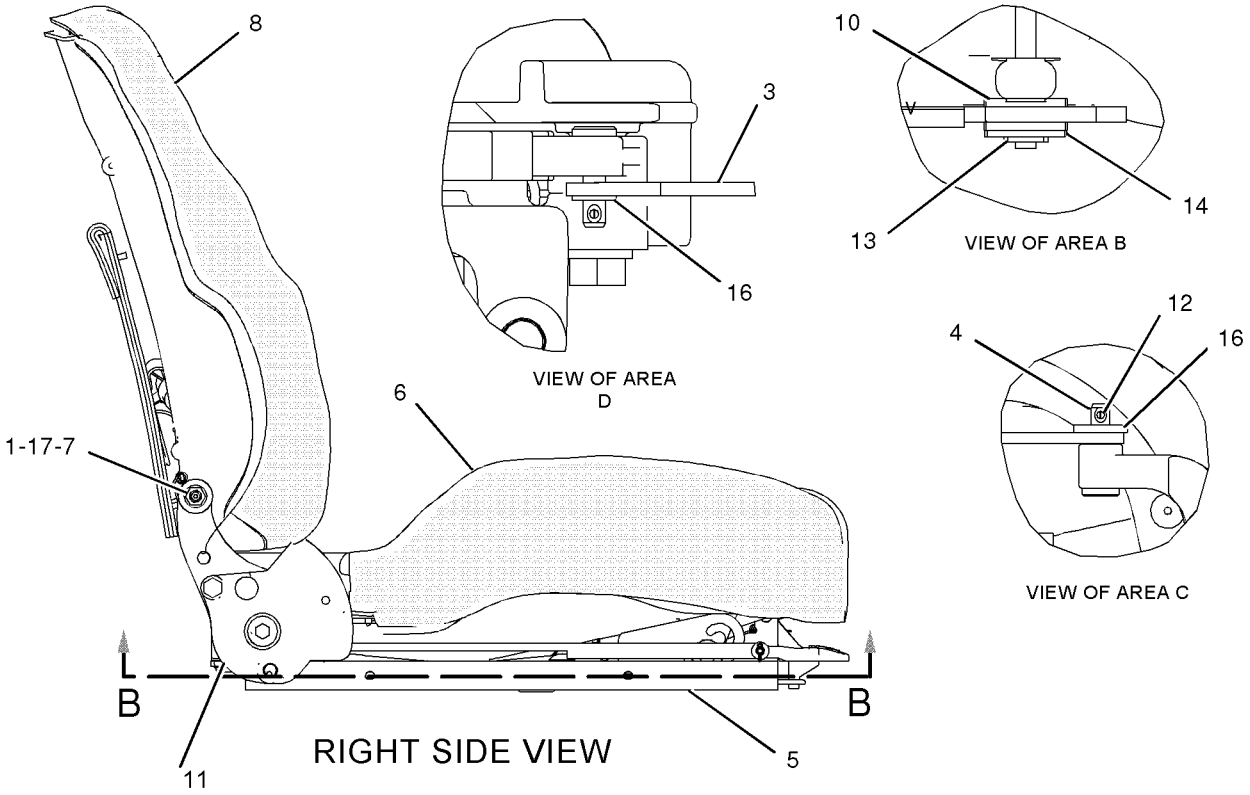

GRAPHIC #1 **<END>** g01037175

OPERATOR STATION

184-6011 SEAT GP–VINYL

S/N: RJS1-UP
PART OF 159-2950 SEAT GP-SUSPENSION
AN ATTACHMENT

SMCS-7312 **i01989143**

NOTE	REF NO	GRAPHIC REF	PART NUMBER	QTY	PART NAME 1 2 3 4 5 6 (PRODUCT LEVEL)	SEE PAGE
	1	1	**173-3083**	1	EXTENSION GP-BACKREST (VINYL)	
		1	**117-4491**	1	ROD	
	2	1	**177-4937**	1	SPACER (11.7X19.8X20.3-MM THK)	
	3	1	**205-6388**	1	BOLT (7/16-20X44.45-MM)	
	4	1	**0T-0244**	1	BOLT (7/16-20X1.25-IN)	
Y	5	1	**180-7304**	1	SEAT GP (VINYL)	807
	6	1	**222-0345**	1	SEAT BELT GP (RETRACTABLE)	

Y-SEPARATE ILLUSTRATION

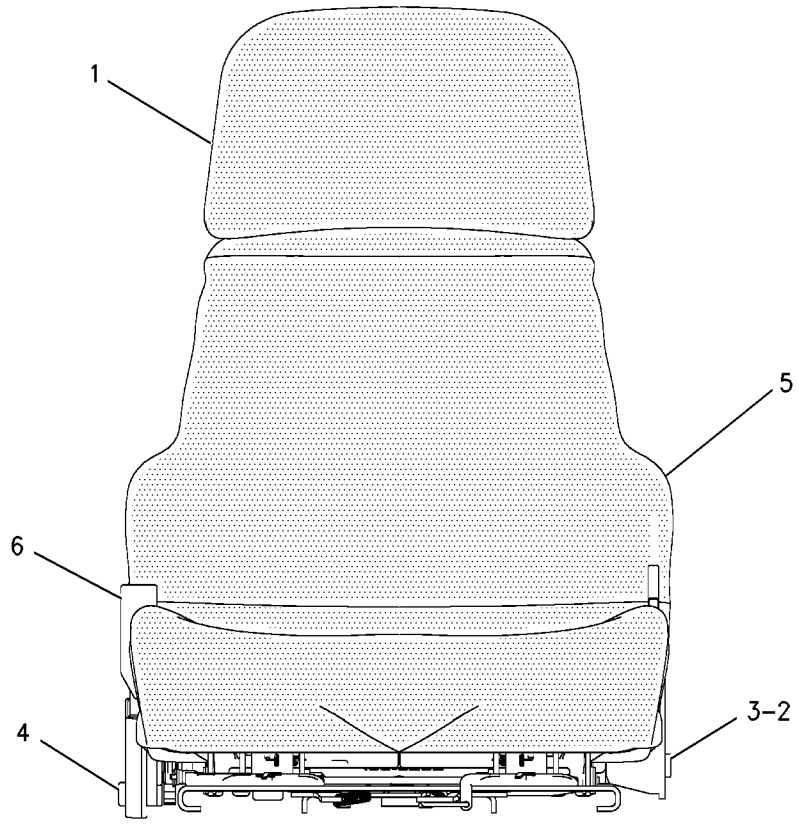

FRONT VIEW

GRAPHIC #1 **<END>** g00683843

OPERATOR STATION

214-1196 SEAT GP—AIR SUSPENSION, CLOTH

S/N: RJS1-UP

AN ATTACHMENT

SMCS-7312 **i02250648**

NOTE	REF NO	GRAPHIC REF	PART NUMBER	QTY	PART NAME 1 2 3 4 5 6 (PRODUCT LEVEL)	SEE PAGE
Y	1	1	**200-3174**	1	SEAT GP-SUSPENSION (CLOTH)	814
	2	1	**9V-2818**	1	GROMMET	

Y-SEPARATE ILLUSTRATION

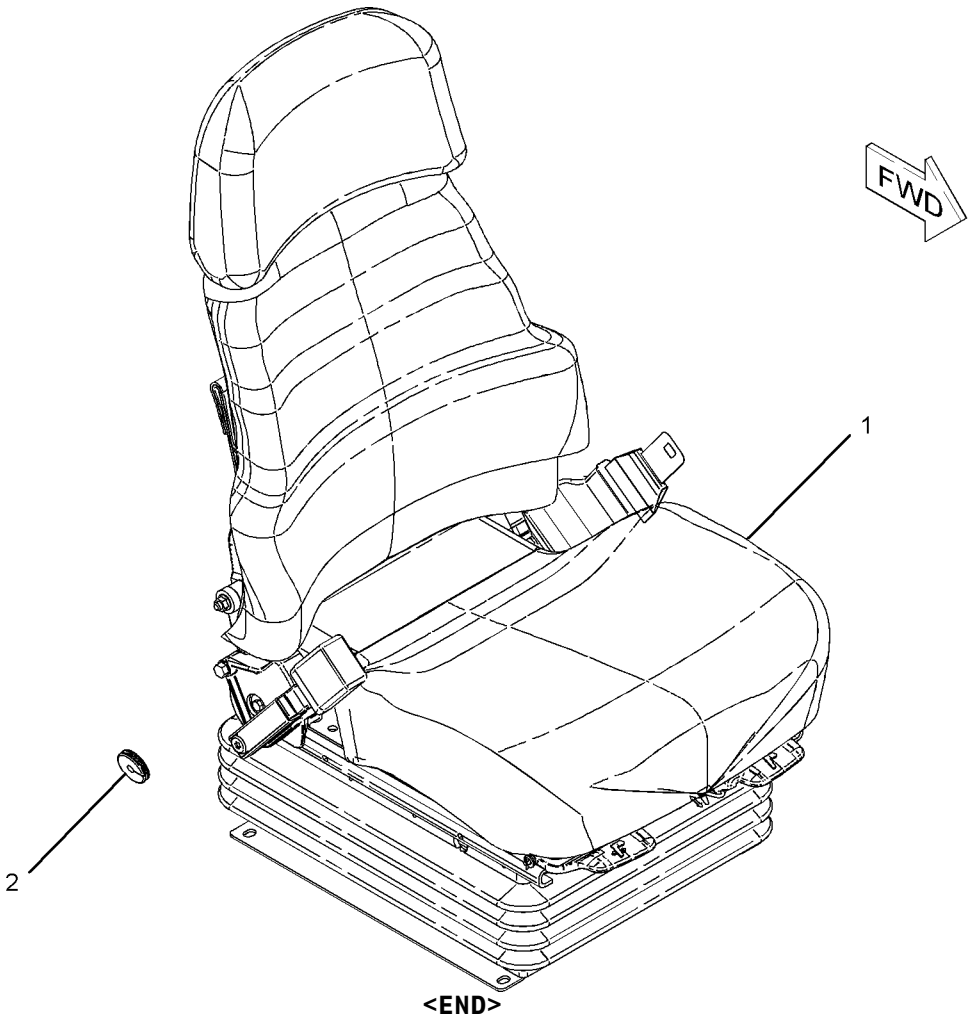

GRAPHIC #1 **<END>** g01021550

OPERATOR STATION

214-1197 SEAT GP—AIR SUSPENSION, VINYL

S/N: RJS1-UP

AN ATTACHMENT

SMCS-7312 **i02250650**

NOTE	REF NO	GRAPHIC REF	PART NUMBER	QTY	PART NAME 1 2 3 4 5 6 (PRODUCT LEVEL)	SEE PAGE
Y	1	1	**159-2950**	1	SEAT GP-SUSPENSION (VINYL)	812

Y-SEPARATE ILLUSTRATION

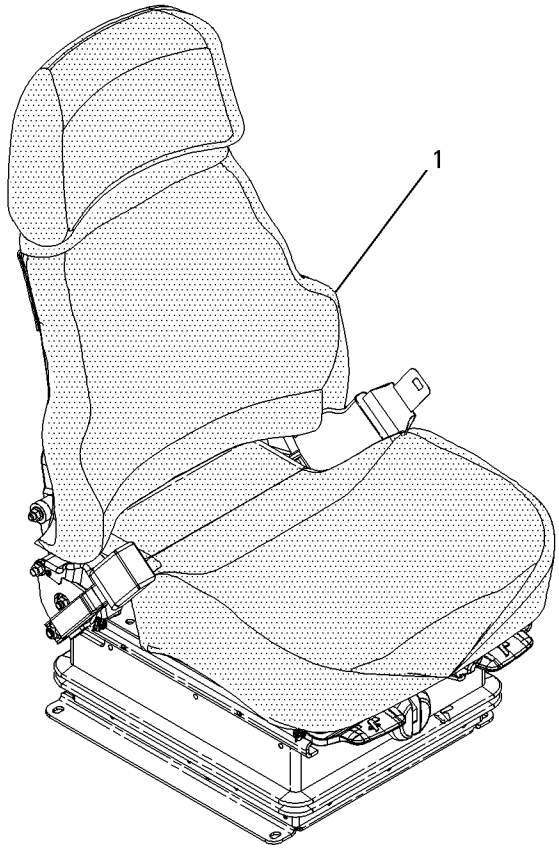

GRAPHIC #1 **<END>** g00695004

OPERATOR STATION

159-2950 SEAT GP-SUSPENSION—VINYL

S/N: RJS1-UP
PART OF 214-1197 SEAT GP
AN ATTACHMENT

SMCS-7321, 7324, 7336 **i01969002**

NOTE	REF NO	GRAPHIC REF	PART NUMBER	QTY	PART NAME 1 2 3 4 5 6 (PRODUCT LEVEL)	SEE PAGE
Y	1	1	**160-7165**	1	SUSPENSION GP-SEAT	817
Y	2	1	**184-6011**	1	SEAT GP (VINYL)	809
J	3	1	**161-9289**	4	BLOCK-SLIDER	
J	4	1	**4F-4879**	1	BOLT (3/8-16X.5 IN)	
J	5	1	**203-7703**	2	WASHER-HARD (10.2X22.22X2.38MM THK)	
J	6	1	**173-5787**	4	SETSCREW (1/4-20 THD)	
					AVAILABLE REPAIR KIT(S):	
J			**173-7035**	1	KIT-SLIDER BLOCK (SUSPENSION SEAT)	

J-KIT MARKED J SERVICES PART(S) MARKED J
Y-SEPARATE ILLUSTRATION

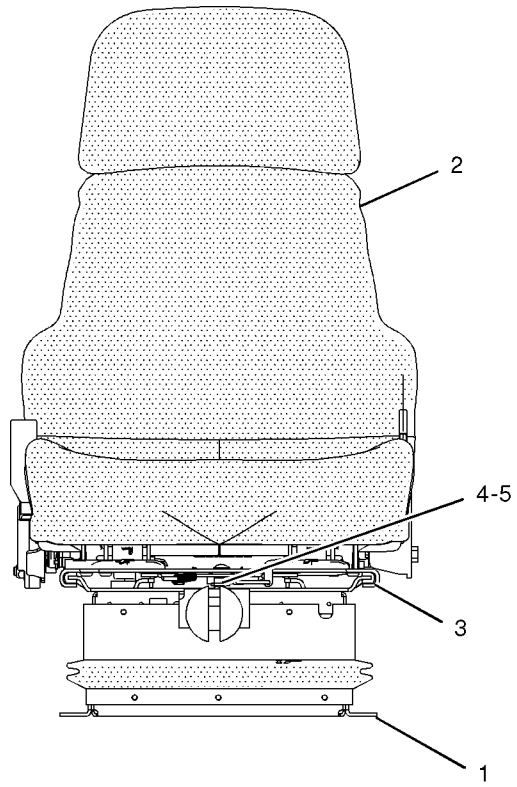

FRONT VIEW

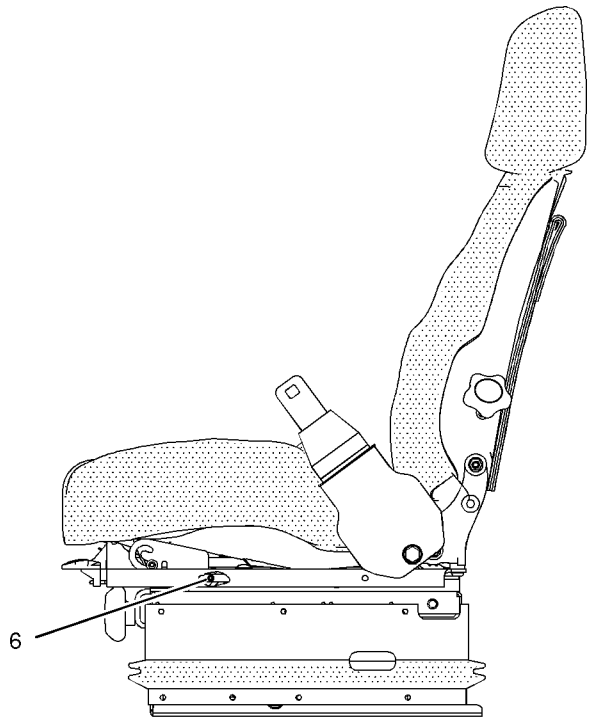

LEFT SIDE VIEW

GRAPHIC #1 **<END>** g01023474

160-7186 SEAT GP-SUSPENSION–CLOTH

S/N: RJS1-UP

PART OF 214-1096 SEAT & MOUNTING GP

SMCS-7321, 7324, 7336 **i02250652**

NOTE	REF NO	GRAPHIC REF	PART NUMBER	QTY	PART NAME 1 2 3 4 5 6 (PRODUCT LEVEL)	SEE PAGE
Y	1	1	**160-7165**	1	SUSPENSION GP-SEAT	817
Y	2	1	**178-0606**	1	SEAT GP (CLOTH)	806
J	3	1	**161-9289**	4	BLOCK-SLIDER	
J	4	1	**4F-4879**	1	BOLT (3/8-16X0.5-IN)	
J	5	1	**203-7703**	2	WASHER-HARD (10.2X22.22X2.38-MM THK)	
J	6	1	**173-5787**	4	SETSCREW (1/4-20-THD)	
					AVAILABLE REPAIR KIT(S):	
J			**173-7035**	1	KIT-SLIDER BLOCK (SUSPENSION SEAT)	

J-KIT MARKED J SERVICES PART(S) MARKED J
Y-SEPARATE ILLUSTRATION

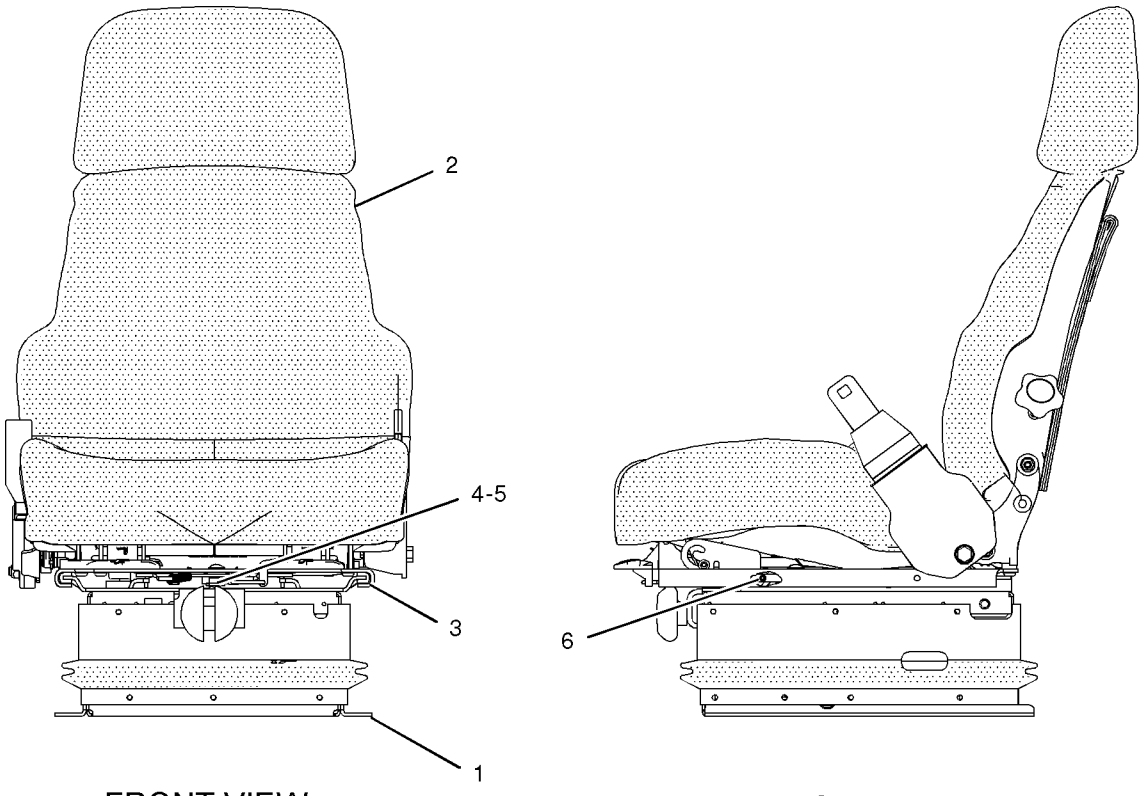

FRONT VIEW LEFT SIDE VIEW

GRAPHIC #1 **<END>** g01023474

OPERATOR STATION

200-3174 SEAT GP-SUSPENSION–CLOTH, AIR

S/N: RJS1-UP
PART OF 214-1196 SEAT GP
AN ATTACHMENT

SMCS-7321, 7324, 7336 **i02252158**

NOTE	REF NO	GRAPHIC REF	PART NUMBER	QTY	PART NAME 1 2 3 4 5 6 (PRODUCT LEVEL)	SEE PAGE
J	1	1	**161-9289**	4	BLOCK-SLIDER	
J	2	1	**173-5787**	4	SETSCREW (1/4-20-THD)	
Y	3	1	**178-0606**	1	SEAT GP (CLOTH)	806
Y	4	1	**191-2933**	1	SUSPENSION GP-SEAT (AIR)	819
J	5	1	**203-7703**	2	WASHER-HARD (10.2X22.22X2.38-MM THK)	
J	6	1	**4F-4879**	1	BOLT (3/8-16X0.5-IN)	
					AVAILABLE REPAIR KIT(S):	
J			**173-7035**	1	KIT-SLIDER BLOCK (SUSPENSION SEAT)	

J-KIT MARKED J INCLUDES PARTS MARKED J
Y-SEPARATE ILLUSTRATION

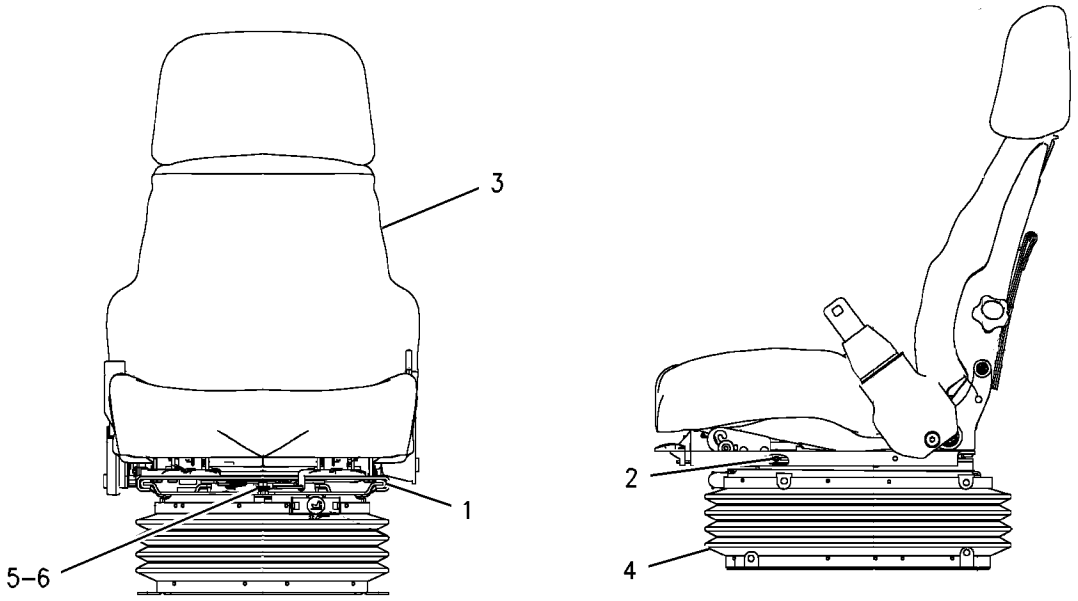

GRAPHIC #1 **<END>** g00909437

OPERATOR STATION

211-5068 STEP AR—HEAVY DUTY

S/N: RJS1-UP

PART OF 211-5077 MINING AR, 211-5088 WASTE HANDLING AR

AN ATTACHMENT

SMCS-7254 **i02195493**

NOTE	REF NO	GRAPHIC REF	PART NUMBER	QTY	PART NAME 1 2 3 4 5 6 (PRODUCT LEVEL)	SEE PAGE
	1	1	**1Q-2100**	2	HANDLE AS	
	2	1	**117-1071**	1	GUARD AS (RH)	
	2A	1	**1Q-2098**	1	HANDHOLD (GRAB)	
	2B	1	**9W-6958**	1	HANDHOLD (GRAB)	
	3	1	**117-1073**	1	GUARD AS (LH)	
	3A	1	**1Q-2098**	1	HANDHOLD (GRAB)	
	3B	1	**9W-6958**	1	HANDHOLD (GRAB)	
	4	1	**117-1855**	2	STEP AS	
	5	1	**5P-1076**	10	WASHER-HARD (13.5X30X4-MM THK)	
M	6	1	**8T-4194**	6	BOLT (M12X1.75X50-MM)	
	7	1	**8C-4436**	4	BOLT (1/2-13X1.375-IN)	

M-METRIC PART

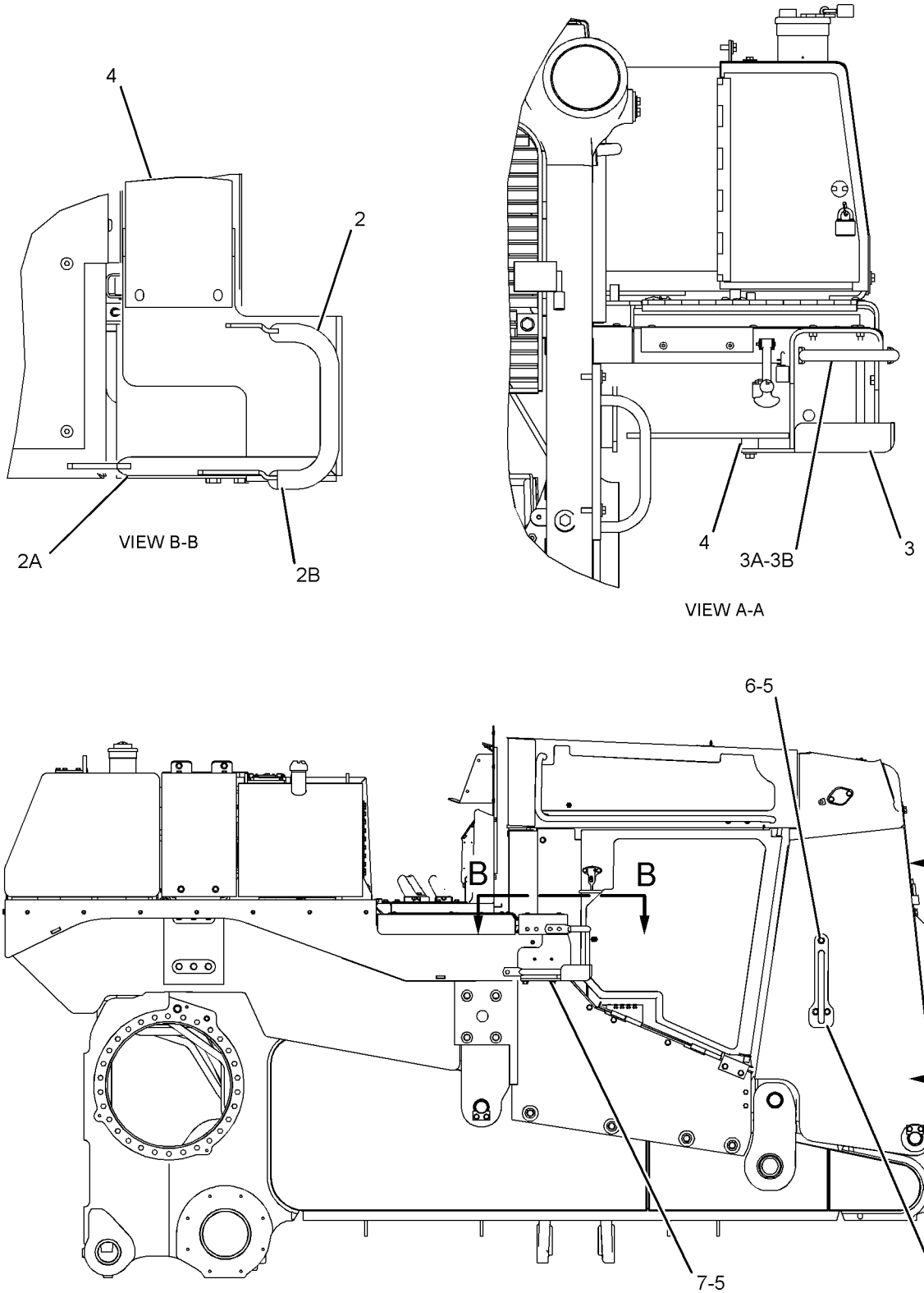

RIGHT SIDE VIEW

GRAPHIC #1

<END>

g01108949

OPERATOR STATION

160-7165 SUSPENSION GP-SEAT

S/N: RJS1-UP

PART OF 159-2950, 160-7186 SEAT GP-SUSPENSION

ALSO AN ATTACHMENT

SMCS-7324 **i02238322**

NOTE	REF NO	GRAPHIC REF	PART NUMBER	QTY	PART NAME 1 2 3 4 5 6 (PRODUCT LEVEL)	SEE PAGE
	1	1	**2K-4973**	2	LOCKNUT (3/8-16-THD)	
	2	1	**4V-7884**	2	BEARING	
	3	1	**4V-8577**	4	BEARING	
	4	1	**5V-1497**	1	RETAINER	
	5	1	**8Y-5965**	1	ABSORBER AS-SHOCK	
	6	1	**8Y-6012**	1	ARM AS-SUSPENSION	
	7	1	**8Y-6014**	1	HOUSING AS-LOWER	
	8	1	**8Y-6024**	2	SHAFT AS	
J	9	1	**101-0003**	20	FASTENER	
J	10	1	**166-6781**	6	FASTENER	
J	11	1	**163-1146**	3	FASTENER	
	12	1	**145-0326**	1	FILM-INSTRUCTION (SEAT ADJUSTMENT)	
	13	1	**169-7380**	1	BOLT-SOCKET HEAD (3/8-16X0.375-IN)	
Y	14	1	**174-2231**	1	HOUSING GP-SEAT SUSPENSION	765
J	15	1	**197-7689**	3	FASTENER	
					AVAILABLE REPAIR KIT(S):	
J				1	KIT-SUSPENSION BOOT	
					(INCLUDES BOOT, RETAINER & FASTENERS)	
				1	KIT-BELT TETHER	
					(INCLUDES BELTS)	
				1	KIT-SUSPENSION ROLLER	
					(INCLUDES ROLLERS)	

J-KIT MARKED J INCLUDES PARTS MARKED J
Y-SEPARATE ILLUSTRATION

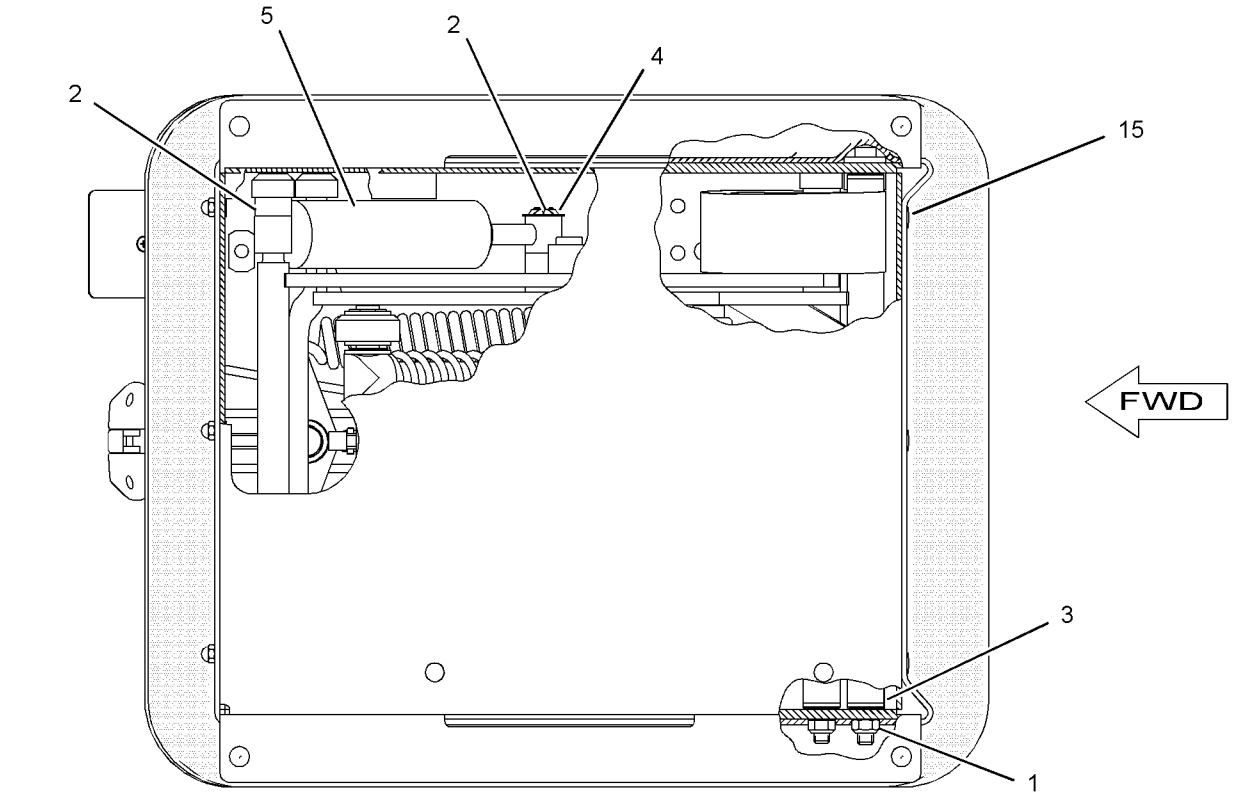

BOTTOM VIEW

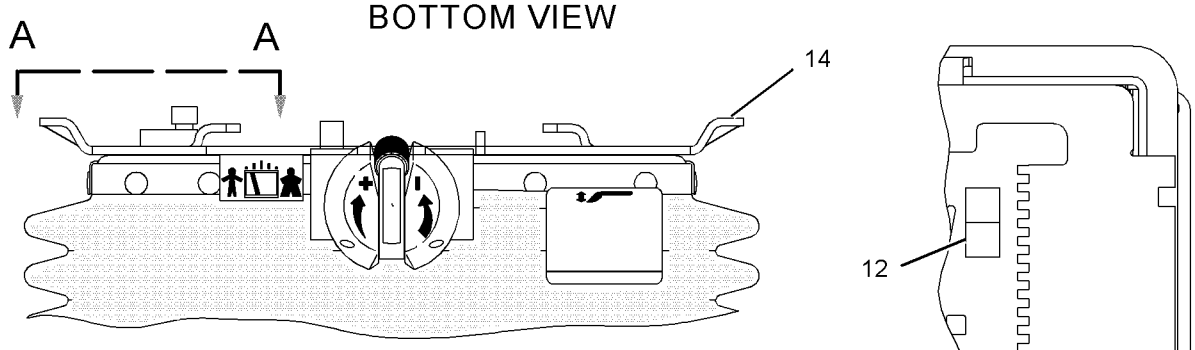

FRONT VIEW

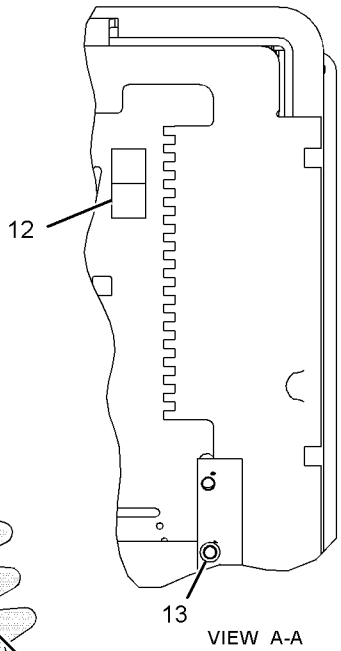

VIEW A-A

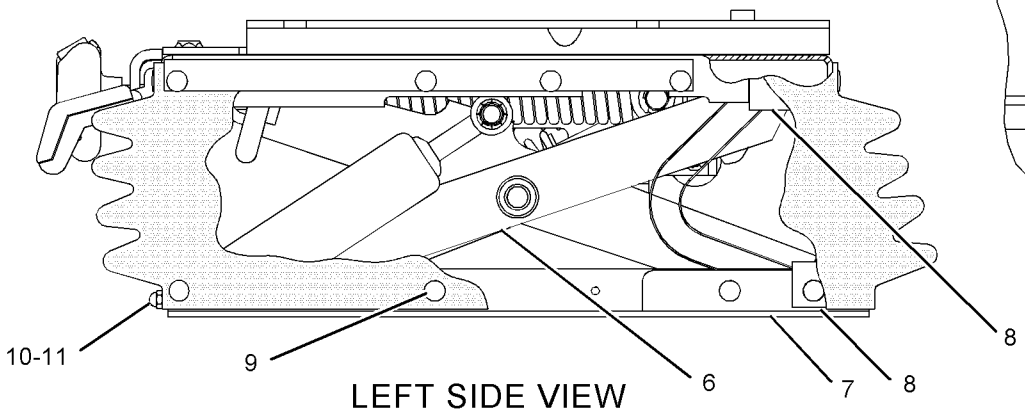

LEFT SIDE VIEW

GRAPHIC #1 **<END>** g01129757

OPERATOR STATION

191-2933 SUSPENSION GP-SEAT—CLOTH, AIR

S/N: RJS1-UP
PART OF 200-3174 SEAT GP-SUSPENSION
AN ATTACHMENT

SMCS-7324 **i02043909**

NOTE	REF NO	GRAPHIC REF	PART NUMBER	QTY	PART NAME 1 2 3 4 5 6 (PRODUCT LEVEL)	SEE PAGE
	1	1	**3P-9900**	5	WASHER (10.5X30X3-MM THK)	
	2	1	**4B-4278**	2	WASHER (10.2X20.5X1.6-MM THK)	
	3	1	**4V-8577**	12	BEARING	
	4	1	**8L-8413**	1	STRAP-CABLE	
	5	1	**145-0326**	1	FILM-INSTRUCTION (SEAT ADJUSTMENT)	
	6	1	**164-1234**	1	PLATE	
	7	1	**101-0003**	33	FASTENER	
	8	1	**169-7380**	1	BOLT-SOCKET HEAD (3/8-16X0.375-IN)	
	9	1	**186-5107**	2	SCREW (NO 8X1.25-IN)	
	10	1	**192-7752**	4	SHAFT AS	
	11	1	**192-7755**	1	HOUSING AS	
	12	1	**192-7760**	1	SHAFT	
	13	1	**192-7767**	1	SCISSORS AS	
	14	1	**192-7783**	1	TOGGLE AS	
	15	1	**192-7787**	1	TOGGLE AS	
	16	1	**192-7790**	1	HOUSING AS	
	17	1	**192-7795**	1	BOOT	
	18	1	**192-7805**	1	HARNESS AS-VALVE (SEAT AIR COMPRESSOR)	
		1	**102-8802**	1	KIT-RECEPTACLE (2-PIN)	
					(INCLUDES RECEPTACLE AS & WEDGE)	
	19	1	**192-7810**	1	SPRING AS-AIR	
		1	**5P-4423**	1	ELBOW	
		1	**163-1135**	1	SPRING	
	20	1	**192-7812**	1	BOLT-SHOULDER	
	21	1	**192-7820**	3	BUMPER	
	22	1	**192-7822**	1	SHAFT	
	23	1	**237-3943**	1	BRACKET	
Y	24	1	**237-3970**	1	AIR COMPRESSOR GP-SEAT	727
	25	1	**1H-8296**	1	SCREW-MACHINE (3/8-16X0.52-IN)	
	26	1	**2K-4973**	8	LOCKNUT (3/8-16-THD)	
	27	1	**3J-4818**	1	LOCKWASHER	
M	28	1	**5C-2890**	3	NUT (M6X1-THD)	
	29	1	**8T-9371**	1	BOLT (3/8-16X0.5-IN)	
E	30	1	**211-5358**		CONDUIT (100CM)	
BD	31	1	**5P-6010**		TUBE	
					AVAILABLE REPAIR KIT(S):	
			192-7799	1	KIT-AIR VALVE (SUSPENSION SEAT)	
					(INCLUDES KNOB AS, NUT, VALVE, LOCKWASHER & FITTING)	
			192-7848	1	KIT-SHOCK ABSORBER (SUSPENSION SEAT)	
					(INCLUDES LOCKNUT, LOCKWASHER, SHOCK ABSORBER, BEARING, WASHER, & BOLTS)	
			211-9294	1	KIT-TETHER (SUSPENSION SEAT)	

B-USE AS REQUIRED
D-ORDER BY THE METER
E-ORDER BY THE CENTIMETER
M-METRIC PART
Y-SEPARATE ILLUSTRATION

191-2933 SUSPENSION GP-SEAT *(contd.)* i02043909

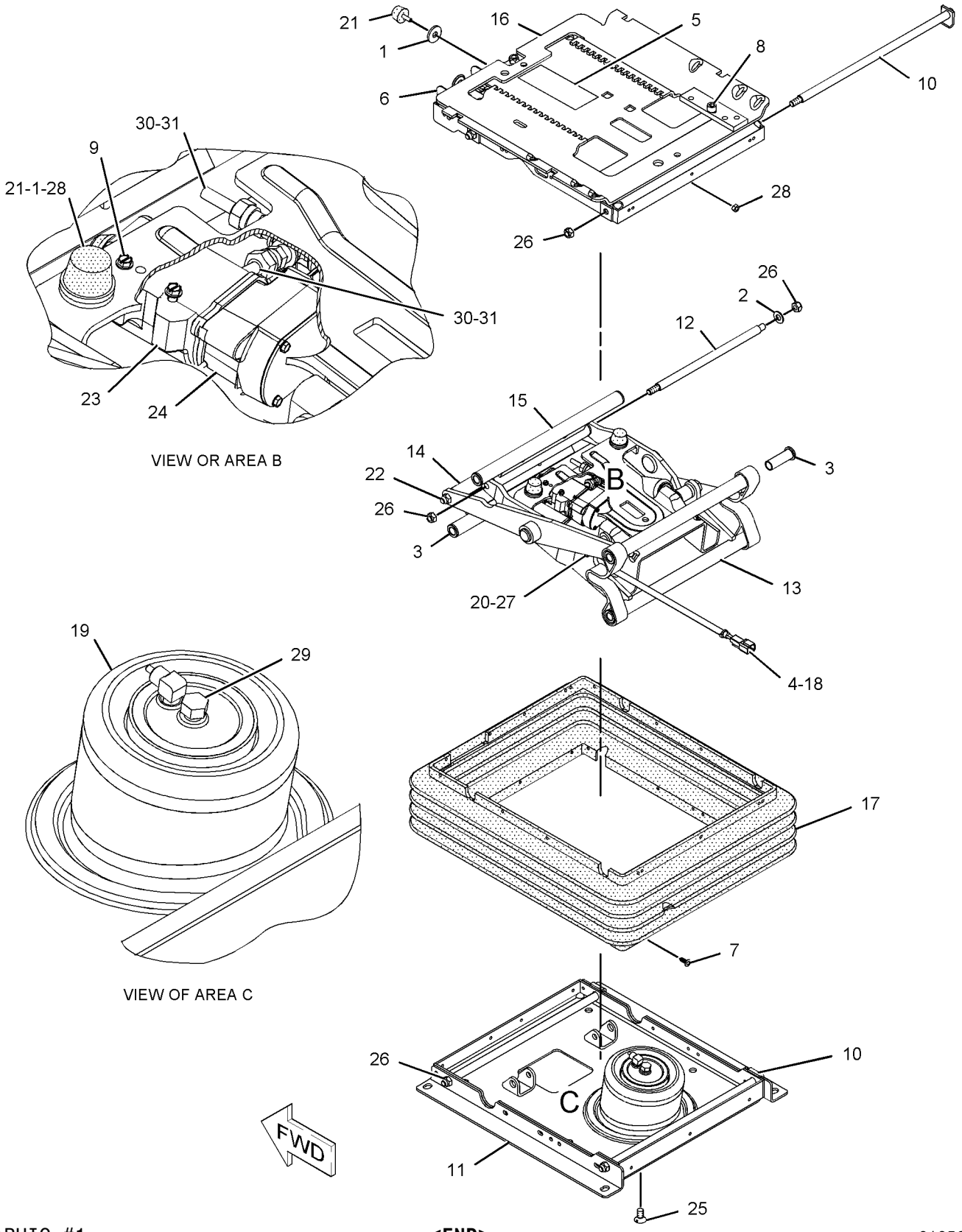

GRAPHIC #1 **<END>** g01056291

OPERATOR STATION

214-1790 TANK GP-WINDOW WASHER

S/N: RJS1-UP

PART OF 226-9249 TANK GP-WINDOW WASHER

SMCS-7306 **i01995838**

NOTE	REF NO	GRAPHIC REF	PART NUMBER	QTY	PART NAME 1 2 3 4 5 6 (PRODUCT LEVEL)	SEE PAGE
	1	1	**3S-2093**	2	STRAP-CABLE	
	2	1	**5D-1026**	2	CLAMP-HOSE	
	3	1	**6W-5698**	1	GROMMET	
	4	1	**7T-8891**	4	PUMP AS-WASHER	
	5	1	**8E-8292**	1	CAP-VENTED (WINDOW WASHER TANK)	
	6	1	**8E-8293**	4	GROMMET	
	7	1	**8X-5280**	1	CONNECTOR	
	8	1	**110-8760**	2	STRAP	
	9	1	**153-0136**	1	SPOUT	
	10	1	**226-9248**	1	TANK (WINDOW WASHER)	
	11	1	**226-9429**	1	HOSE	
	12	1	**231-7585**	1	CLAMP	
	13	1	**186-4857**	1	HARNESS AS-WIRING (WINDOW WASHER)	
		1	**102-8805**	1	KIT-RECEPTACLE (6-PIN)	
					(INCLUDES RECEPTACLE AS, WEDGE)	
		1	**9X-0194**	4	TERMINAL AS	
		1	**8T-8737**	1	PLUG-SEAL	
D	14	1	**6V-5817**		CONDUIT-FLEXIBLE (0.30M)	
E	15	1	**144-0195**		HOSE (45CM)	
E	15A	1	**144-0195**		HOSE (68CM EACH)	
B	16	1	**7X-7927**		TAPE (A)	
B	17	1	**7X-7928**		TAPE (B)	
B	18	1	**7X-7929**		TAPE (C)	
B	19	1	**7X-7930**		TAPE (D)	

B-USE AS REQUIRED
D-ORDER BY THE METER
E-ORDER BY THE CENTIMETER

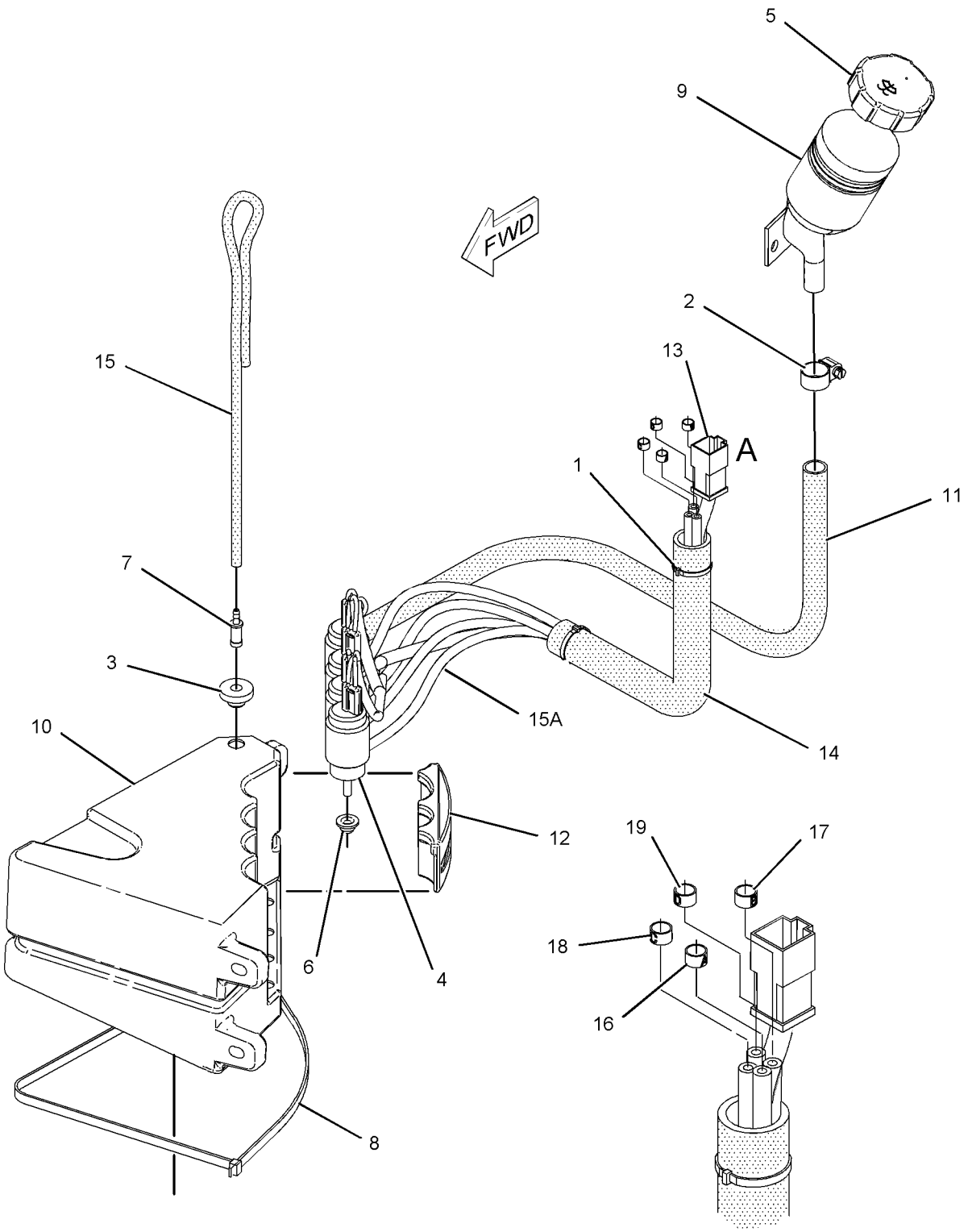

VIEW OF AREA A

GRAPHIC #1 **<END>** g01035143

OPERATOR STATION

226-9249 TANK GP-WINDOW WASHER

S/N: RJS1-UP

PART OF 214-4193 PLATFORM AR

SMCS-7306 **i02253355**

NOTE	REF NO	GRAPHIC REF	PART NUMBER	QTY	PART NAME 1 2 3 4 5 6 (PRODUCT LEVEL)	SEE PAGE
	1	1	**3S-2093**	2	STRAP-CABLE	
Y	2	1	*214-1790*	1	TANK GP-WINDOW WASHER	821
	3	1	**6D-4246**	1	CLIP	
	4	1	**7X-0732**	1	WASHER-HARD (10X22.5X8-MM THK)	
	5	1	**8T-4121**	1	WASHER-HARD (11X21X2.5-MM THK)	
M	6	1	**8T-4136**	1	BOLT (M10X1.5X25-MM)	
M	7	1	**8T-4138**	2	BOLT (M6X1X20-MM)	
M	8	1	**8T-4971**	3	BOLT (M6X1X30-MM)	
	9	1	**9X-6165**	5	WASHER (6.5X22X2.5-MM THK)	

M-METRIC PART
Y-SEPARATE ILLUSTRATION

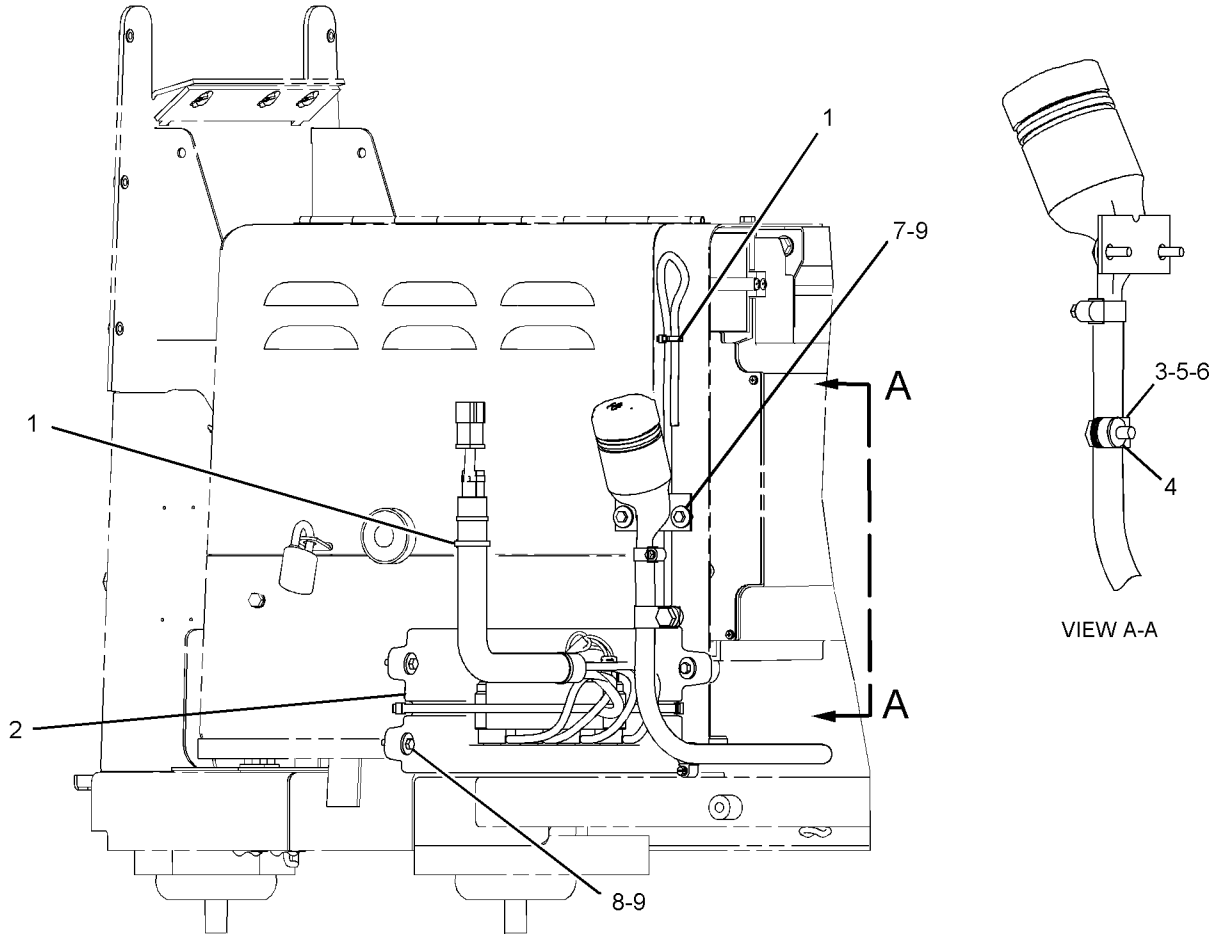

LEFT SIDE VIEW

GRAPHIC #1 **<END>** g01135789

OPERATOR STATION

214-1780 WASHER GP-WINDOW

S/N: RJS1-UP
PART OF 208-9766, 213-1100 CAB AR
ALSO AN ATTACHMENT

SMCS-7306 **i02231541**

NOTE	PART NUMBER	QTY	PART NAME 1 2 3 4 5 6 (PRODUCT LEVEL)	SEE PAGE
D	**6V-5818**		CONDUIT-FLEXIBLE (0.8-M)	
E	**7X-7702**		CONDUIT-FLEXIBLE (83-CM)	
	8T-5400	6	CONNECTOR	
	8E-6856	1	COVER	
	145-7328	2	ELBOW-HOSE (WINDSHIELD WASHER)	
BE	**144-0195**		HOSE (1626-CM)	
	9N-1995	4	RIVET-POP	
	3S-2093	19	STRAP-CABLE	
B	**7X-7927**		TAPE (A)	
B	**7X-7928**		TAPE (B)	
B	**7X-7929**		TAPE (C)	
B	**7X-7930**		TAPE (D)	
	6K-9632	2	TEE	
BD	**5P-7086**		TRIM	
	8T-5383	4	VALVE AS-CHECK (WASHER, WIPER SYSTEM)	

B-USE AS REQUIRED
D-ORDER BY THE METER
E-ORDER BY THE CENTIMETER

<END>

244-1735 WINDOW GP-CAB

S/N: RJS1-UP
40 PSI GLASS
FIELD INSTALLATION

SMCS-7310 **i02052475**

NOTE	PART NUMBER	QTY	PART NAME 1 2 3 4 5 6 (PRODUCT LEVEL)	SEE PAGE
	247-4837	1	FRAME-LH	
	247-4836	1	FRAME-RH	
	222-2825	2	GLASS-DOOR	
	222-2824	1	GLASS-FRONT	
	222-2828	1	GLASS-REAR	
	222-2827	2	GLASS-SIDE	

<END>

OPERATOR STATION

248-4178 WINDOW GP-CAB—ARCTIC

S/N: RJS1-UP

PART OF 248-4171 CAB AR-COLD WEATHER

AN ATTACHMENT

SMCS-7310 **i02226039**

NOTE	PART NUMBER	QTY	PART NAME 1 2 3 4 5 6 (PRODUCT LEVEL)	SEE PAGE
Y	*213-1100*	1	CAB AR	737
	262-2046	1	WINDOW AS (FRONT)	
	262-2047	1	WINDOW AS (DOOR, LH)	
	262-2048	1	WINDOW AS (DOOR, RH)	
	262-2049	1	WINDOW AS (SIDE, LH)	
	262-2050	1	WINDOW AS (SIDE, RH)	
	262-2051	1	WINDOW AS (REAR)	

Y-SEPARATE ILLUSTRATION

<END>

OPERATOR STATION

214-1770 WIPER GP-WINDOW

S/N: RJS1-UP
PART OF 208-9766, 213-1100 CAB AR
ALSO AN ATTACHMENT

SMCS-7305 **i02250479**

NOTE	REF NO	GRAPHIC REF	PART NUMBER	QTY	PART NAME 1 2 3 4 5 6 (PRODUCT LEVEL)	SEE PAGE
	1	1	**4N-9915**	6	GROMMET AS	
	2	1	**5C-8811**	1	BLADE AS-WIPER (REAR)	
	3	1	**6V-5851**	1	BLADE AS-WIPER (FRONT)	
	4	1	**6V-6888**	2	WASHER-SPRING (8.31X15.54X1.07-MM THK)	
	5	1	**128-5040**	4	BLADE AS-WIPER (SIDE)	
	6	1	**135-0611**	1	MOTOR GP-WINDOW WIPER (24-VOLT) (RH, FRONT)	
		1	**186-3735**	5	PIN-CONNECTOR	
		1	**8T-8737**	1	PLUG-SEAL	
		1	**102-8805**	1	KIT-RECEPTACLE (6-PIN)	
					(INCLUDES RECEPTACLE AS & WEDGE)	
	7	1	**8Y-6343**	1	ARM AS-WIPER (REAR)	
	8	1	**146-6346**	1	CLIP	
	9	1	**175-3761**	1	ARM AS (WIPER) (FRONT)	
		1	**136-3189**	3	CLIP	
		1	**136-3191**	1	NOZZLE AS-WASHER	
E		1	**194-5171**		HOSE (50-CM)	
	10	1	**214-1838**	2	PLATE	
	11	1	**222-5369**	2	CRANK AS (WIPER)	
	12	1	**222-5370**	2	LINKAGE AS (BOTTOM FRONT)	
	13	1	**222-5371**	1	SHAFT AS (BOTTOM FRONT)	
	14	1	**222-5372**	2	SHAFT AS (TOP FRONT)	
	15	1	**222-5373**	2	LINKAGE AS (TOP FRONT)	
	16	1	**222-5374**	2	ARM GP-WINDOW WIPER (RH)	
	17	1	**222-5376**	1	MOTOR GP-WINDOW WIPER (24-VOLT) (LH, FRONT)	
		1	**186-3735**	5	PIN-CONNECTOR	
		1	**8T-8737**	1	PLUG-SEAL	
		1	**102-8805**	1	KIT-RECEPTACLE (6-PIN)	
					(INCLUDES RECEPTACLE AS & WEDGE)	
	18	1	**222-5377**	1	SHAFT AS (BOTTOM FRONT)	
		1	**3F-9556**	1	LOCKWASHER	
M		1	**5C-7261**	1	NUT (M8X1.25-THD)	
M		1	**6V-6213**	2	NUT (M20X1-THD)	
		1	**206-5823**	1	CAP (WIPER)	
	19	1	**222-5378**	2	ARM GP-WINDOW WIPER (LH)	
					(EACH INCLUDES)	
		1	**136-3193**	1	NOZZLE AS-WASHER	
E		1	**194-5171**		HOSE (33-CM)	
	20	1	**222-5379**	1	MOTOR GP-WINDOW WIPER (24-VOLT) (CENTER, FRONT)	
		1	**186-3735**	5	PIN-CONNECTOR	
		1	**8T-8737**	1	PLUG-SEAL	
		1	**3F-9556**	1	LOCKWASHER	
M		1	**5C-7261**	1	NUT (M8X1.25-THD)	
		1	**102-8805**	1	KIT-RECEPTACLE (6-PIN)	
					(INCLUDES RECEPTACLE AS & WEDGE)	
	21	1	**222-5382**	1	MOTOR GP-WINDOW WIPER (24-VOLT, 2-SPEED) (REAR)	
		1	**186-3735**	5	PIN-CONNECTOR	
		1	**8T-8737**	1	PLUG-SEAL	
		1	**3F-9556**	1	LOCKWASHER	
		1	**102-8805**	1	KIT-RECEPTACLE (6-PIN)	
					(INCLUDES RECEPTACLE AS & WEDGE)	
M		1	**5C-7261**	1	NUT (M8X1.25-THD)	
	22	1	**2M-6102**	1	PIPE	
	23	1	**3E-4356**	6	WASHER-HARD (17.5X30X6-MM THK)	

214-1770 **WIPER GP-WINDOW** *(contd.)* **i02250479**

NOTE	REF NO	GRAPHIC REF	PART NUMBER	QTY	PART NAME 1 2 3 4 5 6 (PRODUCT LEVEL)	SEE PAGE
M	24	1	**5C-7261**	2	NUT (M8X1.25-THD)	
M	25	1	**6V-7357**	6	BOLT (M6X1X25-MM)	
	26	1	**6V-7646**	6	WASHER-HARD (7.2X25X2-MM THK)	
M	27	1	**8T-4171**	6	BOLT (M6X1X12-MM)	
	28	1	**9X-2038**	1	WASHER (7X19X2-MM THK)	
M	29	1	**9X-2046**	1	SCREW-TRUSS HEAD (M6X1X35-MM)	

E-ORDER BY THE CENTIMETER
M-METRIC PART

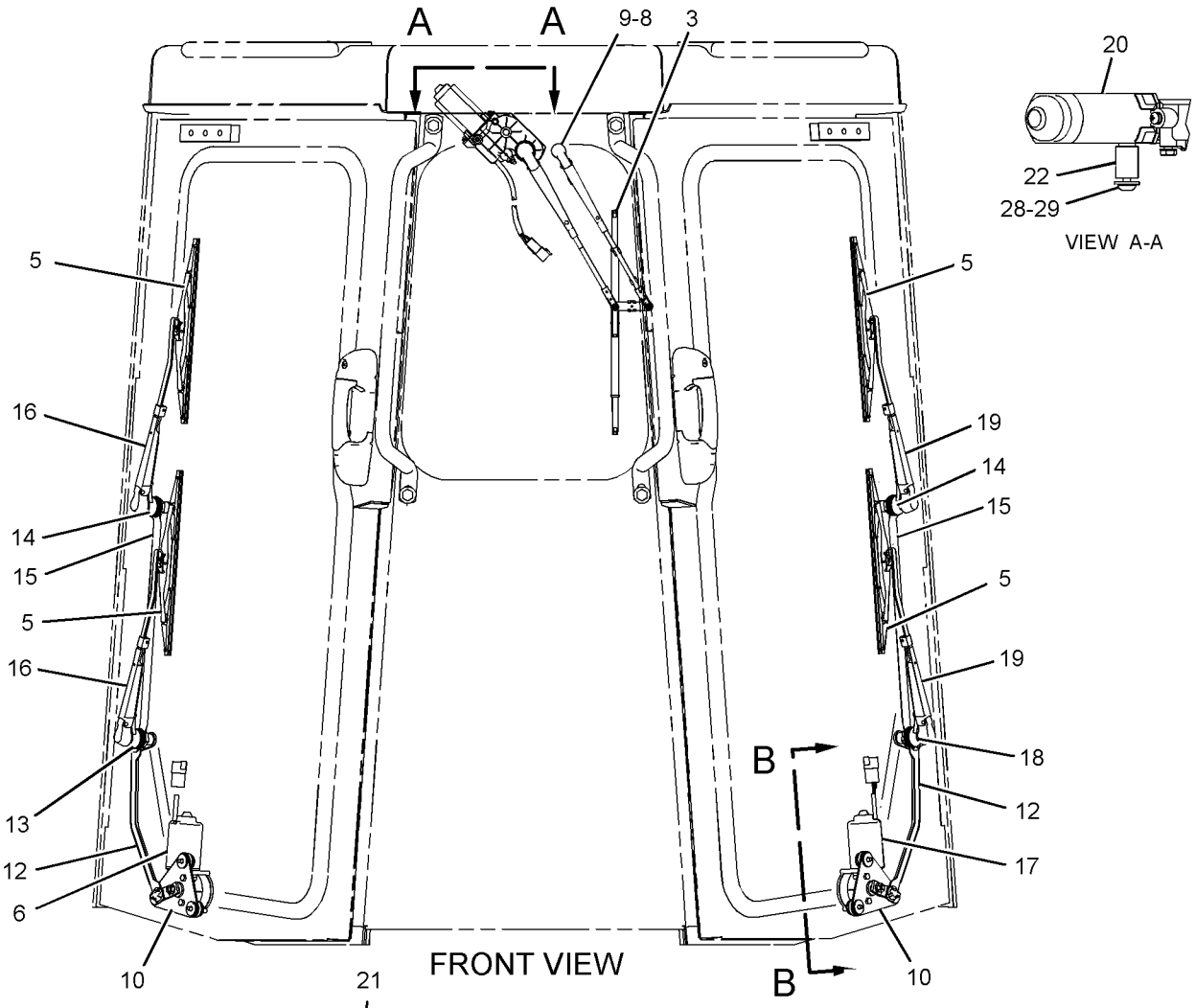

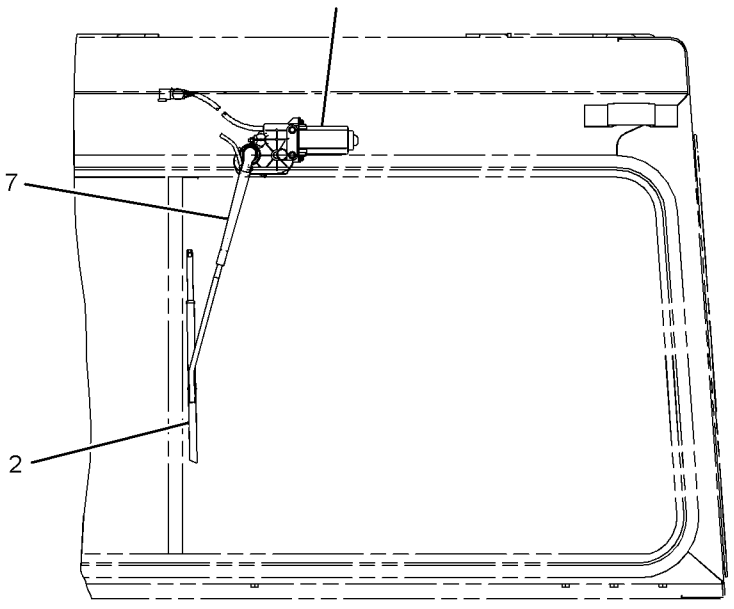

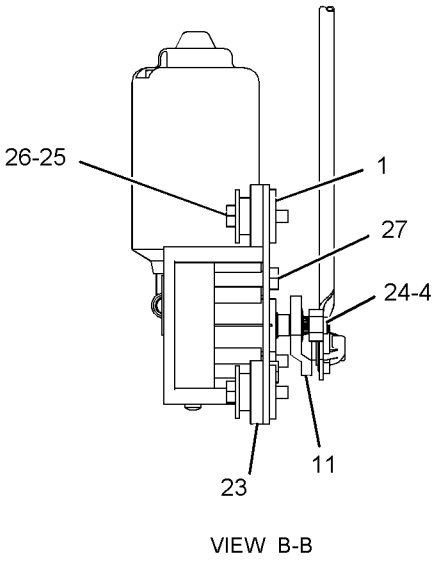

GRAPHIC #1 **<END>** g01109326

OPERATOR STATION

254-9371 WIPER GP-WINDOW—REAR CAB

S/N: RJS1-UP

PART OF 248-4172 CAB AR, 248-4171 CAB AR-COLD WEATHER

AN ATTACHMENT

SMCS-7305 **i02270741**

NOTE	REF NO	GRAPHIC REF	PART NUMBER	QTY	PART NAME 1 2 3 4 5 6 (PRODUCT LEVEL)	SEE PAGE
	1	1	**6V-6864**	1	BLADE AS-WIPER	
	2	1	**7K-1181**	3	STRAP-CABLE	
	3	1	**8T-5400**	2	CONNECTOR	
	4	1	**134-1935**	1	BLADE-WIPER	
	5	1	**135-0611**	1	MOTOR GP-WINDOW WIPER (24-VOLT) (REAR)	
	5A	1	**102-8805**	1	KIT-RECEPTACLE (6-PIN)	
					(INCLUDES RECEPTACLE AS & WEDGE)	
	5B	1	**8T-8737**	1	PLUG-SEAL	
	5C	1	**186-3735**	5	PIN-CONNECTOR	
Y	6	1	**254-8961**	1	WIPER PIVOT GP (REAR, LH)	831
Y	7	1	**254-8962**	1	WIPER PIVOT GP (REAR, RH)	832
	8	1	**254-8974**	1	ARM GP-WINDOW WIPER (REAR, RH)	
	8A	1	**136-3188**	2	CLIP	
	8B	1	**136-3196**	1	NOZZLE AS-WASHER	
E	8C	1	**194-5171**		HOSE (57-CM)	
	9	1	**254-8982**	1	ARM GP-WINDOW WIPER (REAR, LH)	
	9A	1	**136-3188**	2	CLIP	
	9B	1	**136-3196**	1	NOZZLE AS-WASHER	
E	9C	1	**194-5171**		HOSE (58-CM)	
	10	1	**254-8986**	1	HOUSING AS	
	11	1	**6K-9632**	1	TEE	
	12	1	**6V-5839**	4	WASHER (11X21X2.5-MM THK)	
M	13	1	**6V-8837**	4	BOLT (M6X1X16-MM)	
M	14	1	**8T-4178**	4	BOLT (M10X1.5X90-MM)	
	15	1	**9X-8267**	7	WASHER (6.6X12X2-MM THK)	
E	16	1	**144-0195**		HOSE (40.5-CM)	
E	16A	1	**144-0195**		HOSE (30.0-CM)	
E	16B	1	**144-0195**		HOSE (13.0-CM)	
	17	1	**3F-9556**	1	LOCKWASHER	
M	18	1	**5C-7261**	1	NUT (M8X1.25-THD)	
M	19	1	**6V-8836**	3	BOLT (M6X1X14-MM)	

E-ORDER BY THE CENTIMETER
M-METRIC PART
Y-SEPARATE ILLUSTRATION

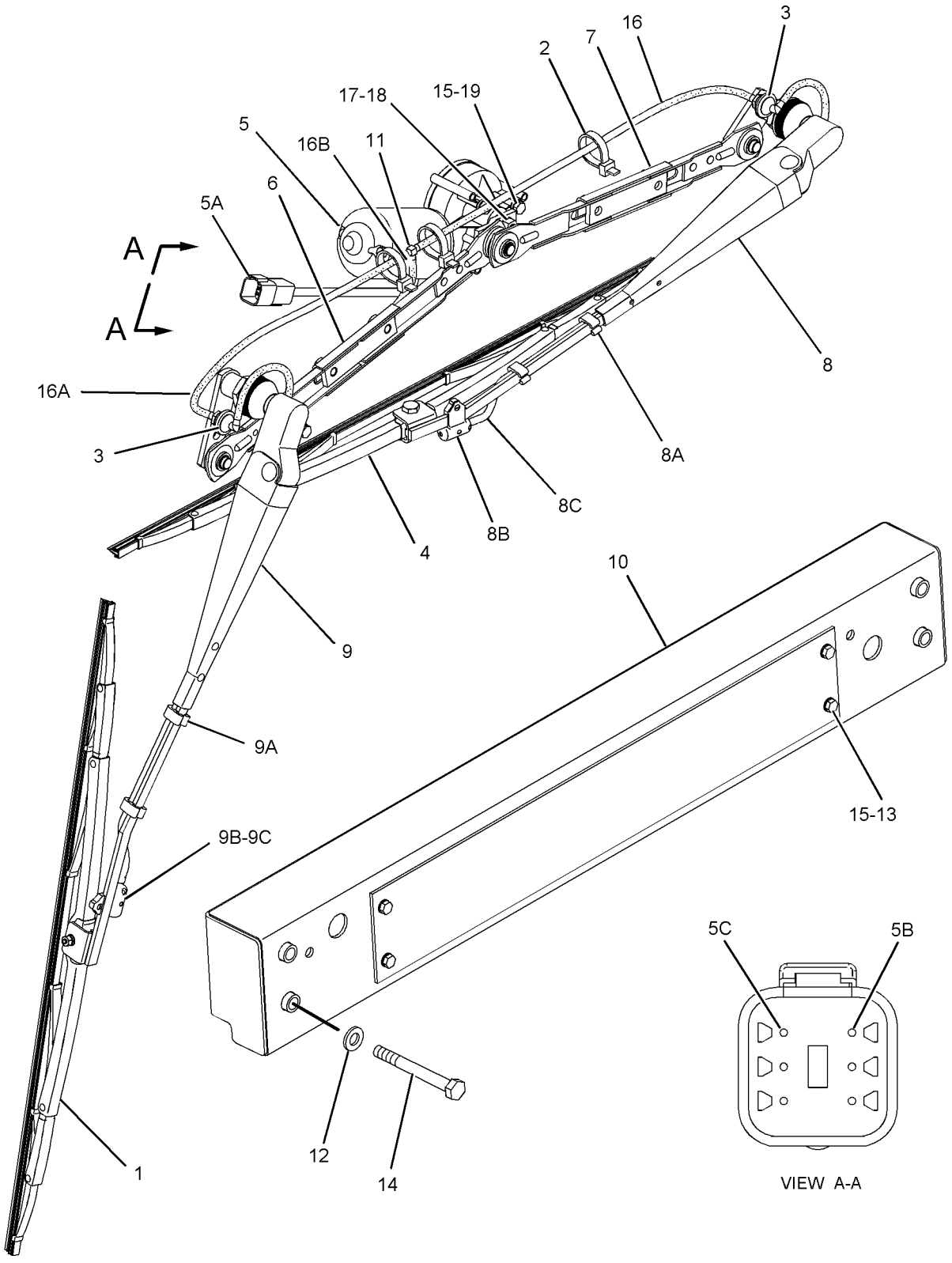

GRAPHIC #1 **<END>** g01125950

OPERATOR STATION

254-8961 WIPER PIVOT GP–REAR, LH

S/N: RJS1-UP
PART OF 254-9371 WIPER GP-WINDOW
AN ATTACHMENT

SMCS-7305 **i02226225**

NOTE	REF NO	GRAPHIC REF	PART NUMBER	QTY	PART NAME 1 2 3 4 5 6 (PRODUCT LEVEL)	SEE PAGE
	1	1	**206-5823**	1	CAP (WIPER)	
	2	1	**261-1173**	1	SHAFT AS-PIVOT	
	3	1	**261-1175**	1	LINK AS-WIPER	
	4	1	**261-1177**	1	DRIVE AS (WIPER)	
	5	1	**3F-9556**	1	LOCKWASHER	
M	6	1	**5C-7261**	1	NUT (M8X1.25-THD)	

M-METRIC PART

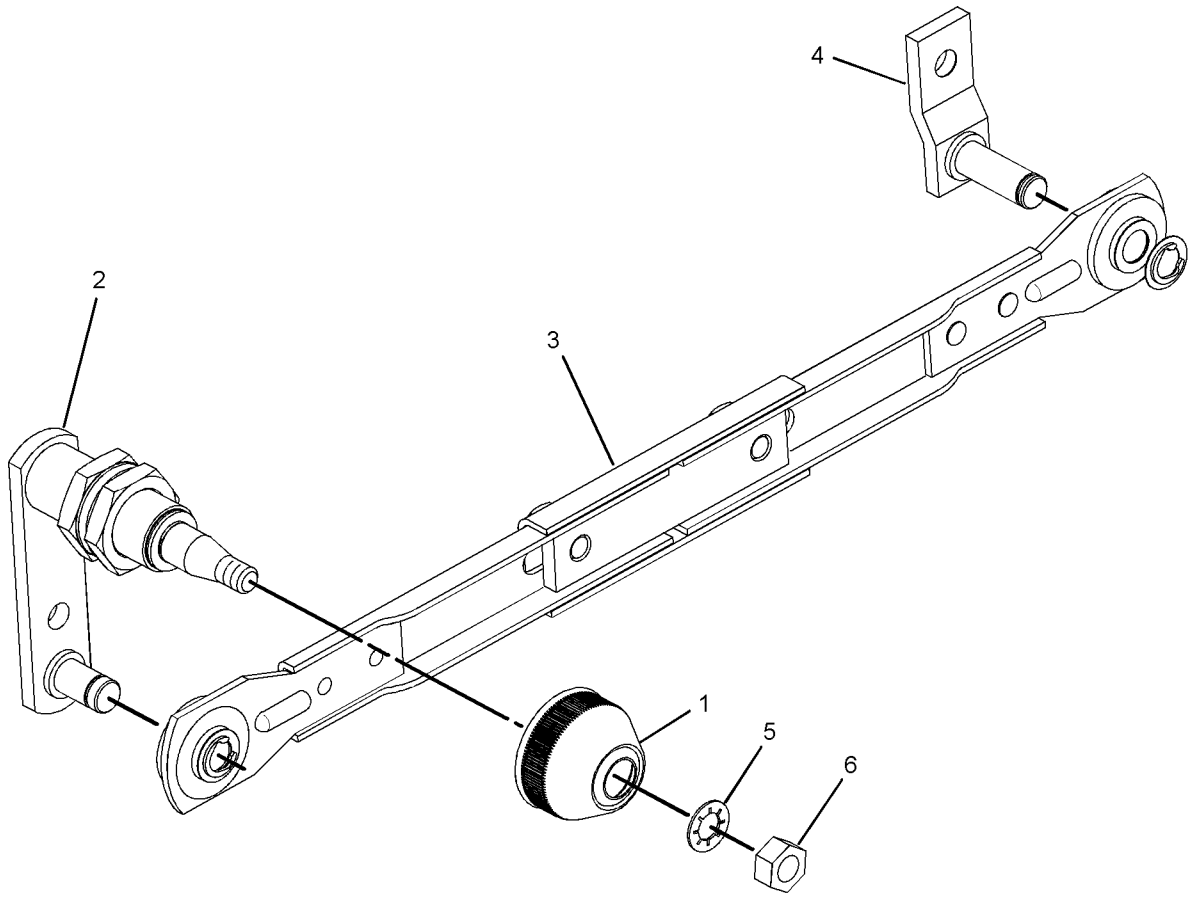

GRAPHIC #1 **<END>** g01125780

OPERATOR STATION

254-8962 WIPER PIVOT GP–REAR, RH

S/N: RJS1-UP
PART OF 254-9371 WIPER GP-WINDOW
AN ATTACHMENT

SMCS-7305 **i02226226**

NOTE	REF NO	GRAPHIC REF	PART NUMBER	QTY	PART NAME 1 2 3 4 5 6 (PRODUCT LEVEL)	SEE PAGE
	1	1	**206-5823**	1	CAP (WIPER)	
	2	1	**261-1174**	1	SHAFT AS-PIVOT	
	3	1	**261-1176**	1	LINK AS	
	4	1	**3F-9556**	1	LOCKWASHER	
M	5	1	**5C-7261**	1	NUT (M8X1.25-THD)	

M-METRIC PART

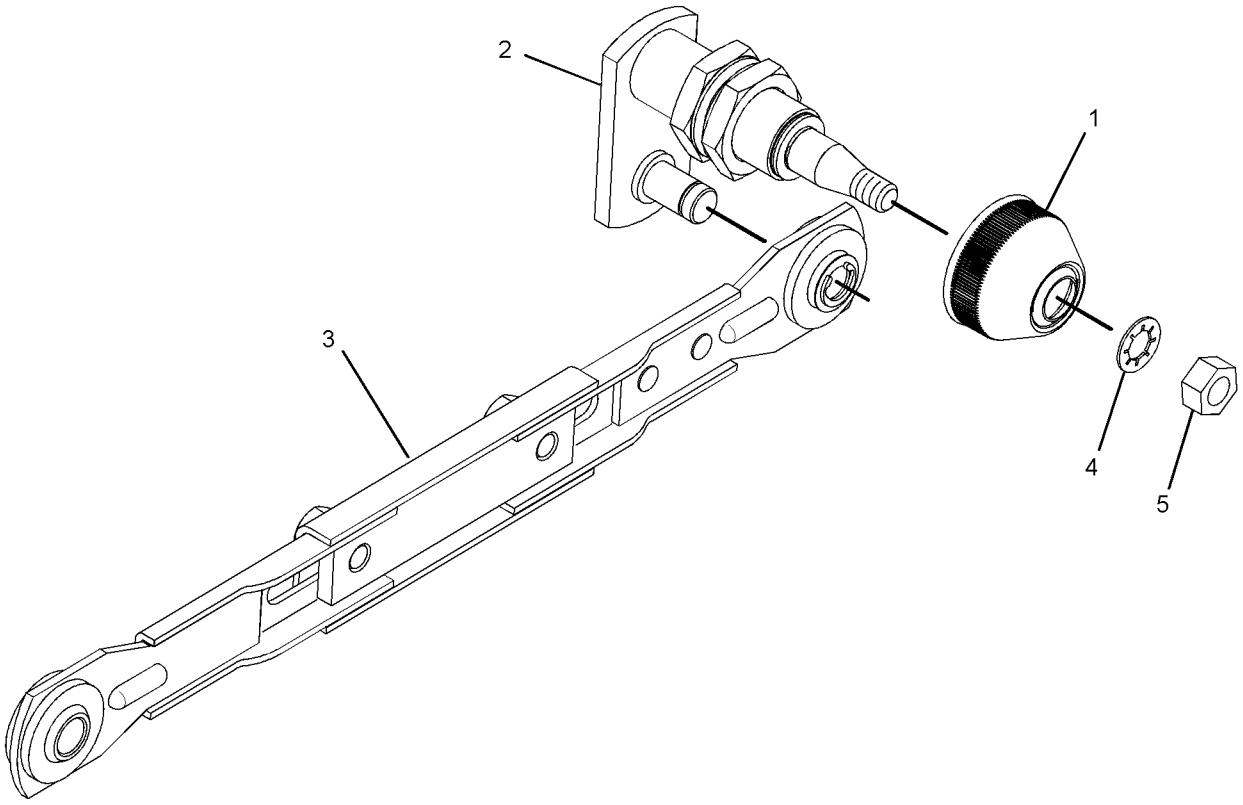

GRAPHIC #1 **<END>** g01125803

SERVICE EQUIPMENT AND SUPPLIES

205-8575 FILM GP

S/N: RJS1-UP

PART OF 205-8574 PLATE & FILM GP

SMCS-7000 **i02206607**

NOTE	REF NO	GRAPHIC REF	PART NUMBER	QTY	PART NAME 1 2 3 4 5 6 (PRODUCT LEVEL)	SEE PAGE
	1	1	**174-4600**	1	FILM-STRIPE (CAT, FRONT, LH)	
	2	1	**174-4599**	1	FILM-STRIPE (CAT, FRONT, RH)	
	3	1	**3E-8273**	1	FILM-STRIPE (CATERPILLAR, FRONT)	
	4	1	**242-3506**	1	FILM-STRIPE (D9T, LH, REAR)	
	5	1	**114-2497**	1	FILM-STRIPE (REAR, LH)	
	6	1	**242-3507**	1	FILM-STRIPE (D9T, RH, REAR)	
	7	1	**114-2496**	1	FILM-STRIPE (REAR, RH)	
	8	1	**242-3511**	1	FILM-STRIPE (REAR, LH)	
	9	1	**242-3509**	1	FILM-STRIPE (REAR, RH)	
	10	1	**242-3505**	1	FILM-STRIPE (REAR, RH)	
	11	1	**253-0861**	2	FILM-INFORMATION (CAT POWER, ACERT TECHNOLOGY) (FRONT, RH, LH)	
	12	1	**257-3899**	1	FILM-STRIPE (REAR, CENTER)	

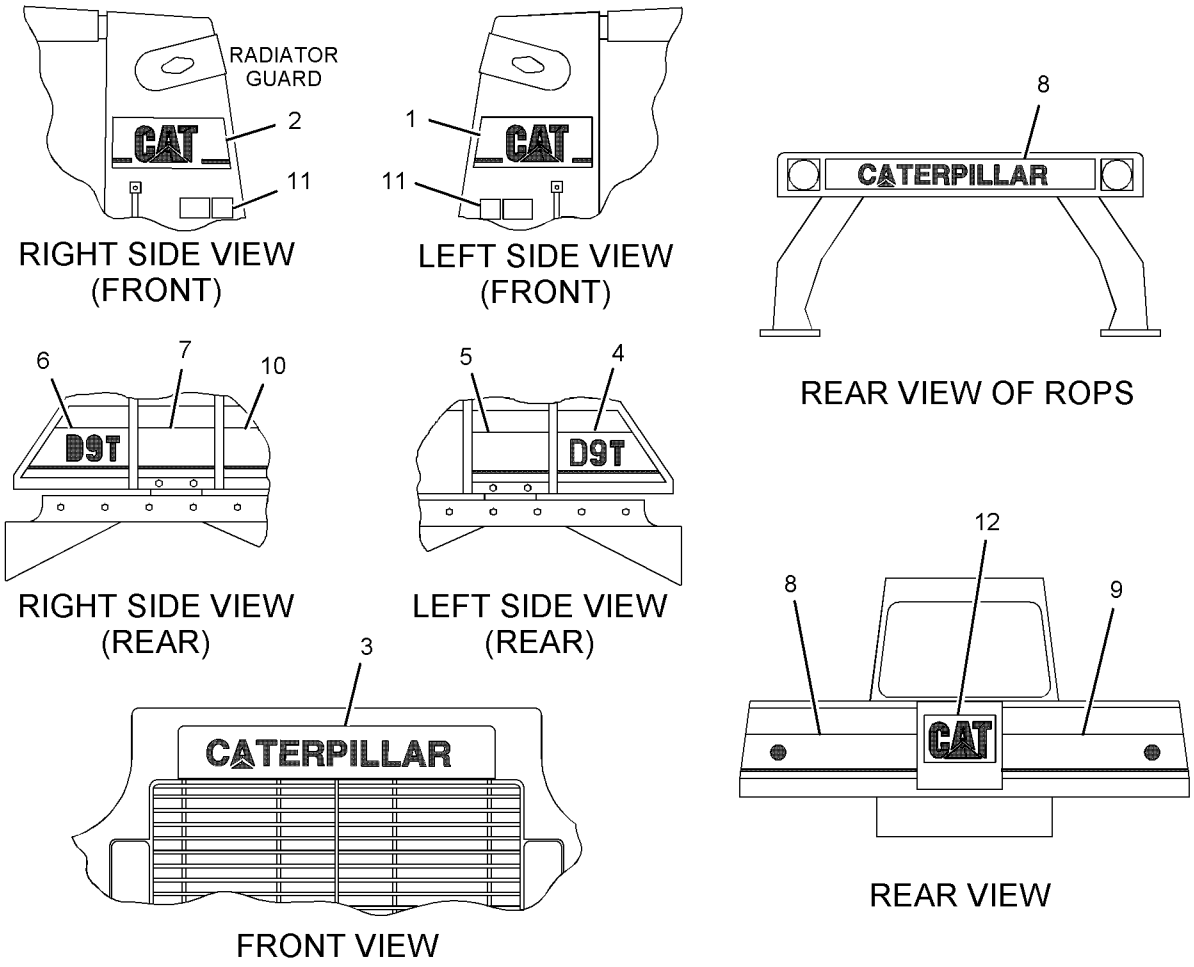

GRAPHIC #1 **<END>** g01120874

SERVICE EQUIPMENT AND SUPPLIES

1Z-0886 PAINT GP—BLACK

S/N: RJS1-UP
PART OF 211-5077 MINING AR, 211-5069 MODIFICATION AR-WOODCHIP, 211-5072 STOCKPILE AR
CANNOT BE USED WITH MINING AR
AN ATTACHMENT

SMCS-0652 **i01407097**

NOTE	PART NUMBER	QTY	PART NAME 1 2 3 4 5 6 (PRODUCT LEVEL)	SEE PAGE
			(NO SERVICED PARTS)	

<END>

205-8574 PLATE & FILM GP

S/N: RJS1-UP
PART OF 205-8601 CHASSIS AR

SMCS-7557, 7563 **i02250704**

NOTE	PART NUMBER	QTY	PART NAME 1 2 3 4 5 6 (PRODUCT LEVEL)	SEE PAGE
Y	*205-8575*	1	FILM GP	833
	239-6987	1	PLATE (PRODUCT IDENTIFICATION)	
			ON UPPER LH REAR OF CASE BELOW FENDER & ROPS	
	8T-9905	1	PLATE-IDENTIFICATION (TRANSMISSION OIL FILL TUBE)	
			ON PTO FILLER CAP TAG CHAIN	
	174-4590	1	PLATE-INFORMATION (SERVICE INFORMATION NUMBERS)	
			ON LH SIDE OF DASH	
A	**3N-3790**	1	PLATE-SERIAL NUMBER (ENGINE)	
			ON LOWER RH SIDE OF CYLINDER BLOCK	
	9F-6656	1	RING-RETAINING	
			ON TOP LINK OF FILLER CAP CHAIN	
	190-5386	2	FILM-IDENTIFICATION (ROUND RED REFLECTIVE)	
			1-ON REAR LH SIDE OF MACHINE ON FILM STRIPE	
			1-ON REAR RH SIDE OF MACHINE ON FILM STRIPE	
	244-2619	1	FILM-IDENTIFICATION (ROPS)	
			ON FRONT RH CORNER OF ROPS ROLLOVER ASSEMBLY	
	215-3192	1	FILM-IDENTIFICATION (FUSE)	
			ON FACE OF FUSE PANEL	
	248-6862	1	FILM-IDENTIFICATION (WORK LIGHT)	
			ON BRACKET NEXT TO THE UNDERHOOD SERVICE LIGHT LOCATED INSIDE THE TOP FRONT CORNER OF THE LH ENCLOSURE DOOR	
	245-1750	1	FILM-IDENTIFICATION (FUSE PANEL)	
			ON INSIDE OF FUSE PANEL WITH TOP OF FILM AT TOP OF PANEL	
	8C-5346	1	FILM-IDENTIFICATION (HYDRAULIC OIL FILTER)	
			ON FRONT OF LH FENDER TRIANGULAR PLATE NEXT TO DISCONNECT SWITCH DOOR	
	1P-2807	4	FILM-IDENTIFICATION (LIFT POINT)	
			WITHOUT RIPPER (4 REQUIRED)	
			1-ON RH TRACK ROLLER FRAME BETWEEN FRONT IDLER & FRONT ROLLER	
			1-ON RH TRACK ROLLER FRAME BETWEEN REAR IDLER & REAR ROLLER	
			1-ON LH TRACK ROLLER FRAME BETWEEN FRONT IDLER & FRONT ROLLER	

205-8574 **PLATE & FILM GP** *(contd.)* **i02250704**

NOTE	PART NUMBER	QTY	PART NAME 1 2 3 4 5 6 (PRODUCT LEVEL)	SEE PAGE
			1-ON LH TRACK ROLLER FRAME BETWEEN REAR IDLER & REAR ROLLER	
			WITH RIPPER (3 REQUIRED)	
			1-ON RH TRACK ROLLER FRAME BETWEEN FRONT IDLER & FRONT ROLLER	
			1-ON LH TRACK ROLLER FRAME BETWEEN FRONT IDLER & FRONT ROLLER	
			1-ON REAR OF RIPPER FRAME	
	114-5988	1	FILM-IDENTIFICATION (FUEL FILTER)	
			ON SECONDARY FUEL FILTER	
	211-1808	2	FILM-IDENTIFICATION (LUBRICATION)	
			1-ON RH SIDE OF TRACTOR ABOVE EQUALIZER BAR	
			1-ON LH SIDE OF TRACTOR ABOVE EQUALIZER BAR	
	137-3937	1	FILM-IDENTIFICATION (ACTION LIGHT)	
			ON REAR CORNER OF RH CONSOLE	
	134-7258	1	FILM-IDENTIFICATION (EXTENDED LIFE COOLANT)	
			ON INSIDE OF DOOR TO RADIATOR FILL	
	169-2876	1	FILM-IDENTIFICATION (12-VOLT)	
			IN FRONT OF POWER OUTLET ON RH CONSOLE	
	233-7895	1	FILM-IDENTIFICATION (IGNITION)	
			NEXT TO KEY SWITCH ON RH CAB CONSOLE	
	4P-6242	1	FILM-IDENTIFICATION (TRANSMISSION OIL)	
			ON OUTER SIDE OF PTO FILL COMPARTMENT DOOR LOCATED ON THE LH FENDER NEXT TO THE CAB DOOR	
	235-7128	1	FILM-INFORMATION (ENGINE OIL)	
			ON ENGINE OIL FILLER CAP	
	233-7893	1	FILM-INFORMATION (BLADE, LOWER, RAISE)	
			ON RH SIDE OF DOZER CONTROL MOUNTING BASE	
	233-7892	1	FILM-INFORMATION (BLADE, SINGLE TILT)	
			ON DOZER CONTROL MOUNTING BASE REARWARD OF THE DOZER CONTROL	
	229-0887	1	FILM-INFORMATION (AIR CLEANER)	
			ON ENGINE AIR FILTER COVER	
	188-8044	1	FILM-INFORMATION (FUEL FILTER, WATER SEP IDENT)	
			ON WATER, FUEL SEPARATOR ELEMENT	
	146-6747	2	FILM-INFORMATION (24-VOLT)	
			1-ON BRACKET ADJACENT TO AUXILIARY START RECEPTACLE	
			1-ON UNDERSIDE OF LH BATTERY COMPARTMENT COVER ON FENDER	
	244-2620	1	FILM-INFORMATION (ROPS, FOPS)	
			ON OUTSIDE UPPER RH CORNER OF CAB	
	235-8026	1	FILM-INFORMATION (TRANSMISSION OIL LEVEL)	
			ON UNDERSIDE OF ENGINE DISCONNECT DOOR	
	243-0782	2	FILM-INSTRUCTION (ALTERNATOR BELT MOUNTING)	
			1-ON ENGINE AIR FILTER COVER	
			1-ON J-SHAPED WATER TUBE AT FRONT RIGHT SIDE OF ENGINE POSITIONED BETWEEN THE TWO HORIZONTAL CLIPS	
	257-7446	1	FILM-INSTRUCTION (FUEL PUMP, PRIMER)	
			ON BRACKET ADJACENT TO ELECTRIC PRIMING PUMP SWITCH	
	8T-4999	1	FILM-INSTRUCTION (BATTERY DISCONNECT)	
			AROUND DISCONNECT SWITCH	
	9X-6340	1	FILM-INSTRUCTION (ENGINE OIL)	
			ON ENGINE OIL FILL TUBE	
	7X-7644	10	FILM-INSTRUCTION (TIE-DOWN)	
			1-ON FRONT TOWING EYE	

205-8574 **PLATE & FILM GP** ***(contd.)*** **i02250704**

NOTE	PART NUMBER	QTY	PART NAME 1 2 3 4 5 6 (PRODUCT LEVEL)	SEE PAGE
			6-ON TRACK ROLLER FRAMES AT FRONT & REAR MAJOR BOGIE CARTRIDGE PINS AND CENTERED BETWEEN FRONT & REAR IDLERS	
			1-ON REAR OF DRAWBAR OR COUNTERWEIGHT	
			2-ON BOTH SIDES OF RIPPER FRAME JUST AHEAD OF CARRIAGE OR BEAM MOUNTING PINS	
	3E-2378	1	FILM-INSTRUCTION (PIVOT SHAFT LUBRICATION)	
			ON FRONT OF PIVOT SHAFT LUBRICATION RESERVOIR BOTTLE	
	158-7864	1	FILM-INSTRUCTION (HYDRAULIC OIL)	
			ON TOP OF HYDRAULIC OIL TANK ADJACENT TO FILLER SPOUT	
	9X-8372	1	FILM-INSTRUCTION (WASHER FILL)	
			ON OUTER SIDE OF PTO FILL COMPARTMENT DOOR LOCATED ON THE LH FENDER NEXT TO THE CAB DOOR	
	241-4167	1	FILM-INSTRUCTION (READ OMM, STEERING)	
			ON HORIZONTAL SURFACE ADJACENT TO STEERING CONTROL	
	247-6875	1	FILM-WARNING (READ OPERATION MANUAL)	
			ON LH VERTICAL AIR DUCT BEHIND CAB DOOR	
	247-6877	1	FILM-WARNING (SEAT BELT)	
			ON LH VERTICAL AIR DUCT BEHIND CAB DOOR	
	232-2960	1	FILM-WARNING (SHOCK HAZARD)	
			ON FUSE CAP AT BOTTOM OF FUSE PANEL	
	239-4990	1	FILM-WARNING (HIGH PRESSURE CYLINDER)	
			ON TOP FRONT SIDE OF CAB FLOORPLATE	
	228-3581	2	FILM-WARNING (READ OPERATION MANUAL)	
			1-ON LH ENGINE VALVE COVER BASE	
			1-ON RH ENGINE VALVE COVER BASE	
	219-0305	2	FILM-WARNING (NO WELD, NO DRILL)	
			1-ON FRONT RH CORNER OF ROPS ROLLOVER AS	
			1-ON OUTSIDE UPPER RH CORNER OF CAB	
	225-4256	1	FILM-WARNING (HOT FLUID UNDER PRESSURE)	
			ON INSIDE OF DOOR TO RADIATOR FILL	
	225-0313	1	FILM-WARNING (JUMP START, READ OMM)	
			ON UNDERSIDE OF LH BATTERY COMPARTMENT COVER ON FENDER	

A-NOT PART OF THIS GROUP
Y-SEPARATE ILLUSTRATION

<END>

SERVICE EQUIPMENT AND SUPPLIES

256-7916 PLATE & FILM GP

S/N: RJS1-UP

AN ATTACHMENT

SMCS-7557, 7563 **i02223974**

NOTE	PART NUMBER	QTY	PART NAME 1 2 3 4 5 6 (PRODUCT LEVEL)	SEE PAGE
	222-7944	2	FILM-WARNING (READ OPERATION MANUAL)	
			1-ON LH ENGINE VALVE COVER BASE	
			1-ON RH ENGINE VALVE COVER BASE	
	225-0312	2	FILM-WARNING (JUMP START, READ OMM)	
			1-ON UNDERSIDE OF RH BATTERY COMPARTMENT COVER	
			1-ON UNDERSIDE OF LH BATTERY COMPARTMENT COVER ON FENDER	
	225-4257	1	FILM-WARNING (HOT FLUID UNDER PRESSURE)	
			ON INSIDE OF DOOR TO RADIATOR FILL	
	232-3402	1	FILM-WARNING (ELECTRICAL SHOCK)	
			ON FUSE CAP AT BOTTOM OF FUSE PANEL	
	239-4991	1	FILM-WARNING (HIGH PRESSURE CYLINDER)	
			ON TOP FRONT SIDE OF CAB FLOORPLATE	
	247-6876	1	FILM-WARNING (UNIVERSAL)	
			ON LH VERTICAL AIR DUCT BEHIND CAB DOOR	
	247-6878	1	FILM-WARNING (SEAT BELT)	
			ON LH VERTICAL AIR DUCT BEHIND CAB DOOR	
	260-7653	1	FILM-WARNING (PRODUCT LINK)	
			ON RH POST COVER	

<END>

MEMORANDA

PART NUMBER INDEX

Part	Page
0	
0L-1143	17
	81
	89
	151
0L-1178	457
	485
0L-1351	58
	83
	88
	151
	281
0L-1352	105
	151
0L-1407	179
0L-2070	56
	58
	83
0S-0484	342
	349
0S-0509	87
	134
	281
0S-0699	155
0S-1571	49
	89
	151
	281
	344
	480
0S-1576	151
	281
0S-1585	41
	319
	346
	469
0S-1587	64
	66
	319
	331
	469
	480
0S-1588	56
	58
	64
	66
	83
	109
	225
	283
	412
0S-1589	76
	296
0S-1590	81
	88
	304
0S-1591	61
	64
	66
	82
	83
	88
	121
	151
0S-1594	13
	42
	82
	83
	87
	105
	109
	283
	332
	356
0S-1595	60
0S-1600	319
0S-1601	283
0S-1618	89
0S-1619	299
	332
	336
0T-0055	44
	56
	58
	91
0T-0065	105
	331
0T-0244	806
	809
0V-0375	330
0V-0523	47
1	
1A-1135	296
1A-1460	319
	448
	480
	482
1A-2029	58
	83
	88
	105
	109
	299
	344
1A-4273	281
1A-5964	58
1A-7669	330
1B-3623	41
1B-3867	143
1B-3908	595
1B-3909	595
1B-4034	319
1B-4367	346
1B-7182	111
	145
	299
1B-8705	49
	338
1B-8706	478
	490
1B-8714	336
	338
	490
1B-9575	188
1C-2251	128
1D-4539	145
1D-4540	299
1D-4627	62
1D-4640	308
	314
	316
1D-4645	369
1D-5117	185
1F-0748	421
1F-0750	66
	83
	105
	109
	114
	128
	192
	193
	205
	206
	209
	211
	216
	281
	387
	788
1F-7854	576
1F-7958	43
	82
1H-1023	259
	263
	623
	625
	627
	629
	723
1H-2629	259
	263
1H-3244	171
	226
1H-3338	273
1H-4106	375
	414
1H-8128	136
	138
	139
	141
	163
	166
1H-8296	819
1H-8647	143
1J-0245	732
	783
1J-2674	535
	537
1J-2860	319
1J-4757	319
1J-5929	398
	400
	401
1J-7468	574
1J-8569	546
	548
1J-9671	54
	136
1K-6872	136
	411
	430
1K-9415	365
1L-3162	354
1L-5072	522
1L-5081	457
1M-0644	97
	99
1M-4986	262
	283
1M-6119	177
	256
1M-6120	177
	256
1M-9968	260
	264
1M-9971	259
	263
1N-5999	642
1P-0436	144
1P-1744	488
1P-2807	834
1P-3702	612
	615
1P-3703	553
	700
1P-3704	485
	523
	525
	527
	559
1P-3705	485
	642
1P-3708	327
1P-4278	114
	118
	145
1P-4576	535
	537
	540
	542
1P-4577	327
1P-4578	565
	605
	612
	615
1P-4579	327
1P-4582	136
	139
	141
	327
	565
	605
1P-4584	565
	605
1P-5767	485
1P-6356	772
	775

► **PRIMARY REFERENCE**

PART NUMBER INDEX

Part	Page	Part	Page	Part	Page	Part	Page
1P-6563	480		650	2D-4202	605		519
1P-6872	593		651	2D-5658	332	2K-4973	123
1P-7346	49		652	2D-6235	159		725
	457		653		765		773
1P-7404	350		654	2D-6392	259		776
1P-7405	457		655		263		817
1P-9254	430	1S-9799	346	2D-6642	296		819
1P-9261	331	1T-0068	427		331	2K-6830	539
1P-9328	118		428	2D-7325	118	2L-1699	331
1Q-1591	211		429	2F-5326	420	2L-3650	344
	219	1T-0229	344		423	2L-5894	511
1Q-1592	211	1T-0241	344	2F-6678	260	2L-6679	259
	214	1T-0242	344		264		263
	216	1T-0295	482	2H-1537	375	2M-1156	480
	219	1T-0416	350	2H-2665	103	2M-1538	327
	287		480	2H-3429	259	2M-3530	421
1Q-1742	772	1T-0610	344		263	2M-3974	336
1Q-1743	772	1T-0738	361	2H-3517	482	2M-5795	377
1Q-2098	815	1T-0765	155	2H-3745	421		380
1Q-2100	815	1U-1738	535	2H-3755	233		391
1Q-3160	141		537		299	2M-6102	826
1Q-3626	406	1U-2182	544		333	2M-7819	765
1Q-3627	406		546	2H-3855	332	2M-9780	94
1Q-3642	401		548	2H-3908	565		144
1Q-3783	788	1U-2472	690	2H-3920	793		145
1Q-3785	788		691	2H-3922	268		194
1Q-4649	460	1U-4961	683		269		359
1Q-4755	464	1U-4962	683		276		469
1R-0716	83	1U-8846	336	2H-3928	483		485
1R-0749	148		747		599		488
1R-0770	149	1W-2860	144	2H-3932	430		493
1R-0774	605	1W-3014	78		546		550
1R-1809	305	1W-3136	54		548		553
	326	1W-4724	175		605		565
1S-0996	700	1W-6448	233	2H-4145	585		581
1S-2342	279		472		586		584
1S-4295	135		511	2H-5549	336		585
1S-4305	330	1W-6632	64	2H-6124	605		586
1S-4915	94		66	2J-0564	540		593
	177	1W-8620	130		542		646
	178		131	2J-3118	49		648
	179	1W-8793	118		296	2N-3350	83
	256		553	2J-3507	369	2N-8109	80
	257	1W-9860	356		692	2P-1286	92
	283	1Y-7927	765		693	2P-1692	430
1S-6420	559	1Z-0749	4		694	2P-2772	54
	700		▶406		695	2P-2975	177
	773	1Z-0886	2	2J-3961	531	2P-3203	45
1S-7251	94		3		533		64
	177		▶834	2J-5245	179		66
	178	1Z-9375	668		257	2P-3760	83
	179			2J-6356	490	2P-3761	83
	256			2J-7761	522	2P-4301	83
	257	**2**		2J-8163	259	2P-4304	83
	269				263	2P-4305	83
1S-7252	178	2A-4429	39	2J-8239	324	2P-4339	793
	179	2A-4639	105	2J-8333	343	2P-4538	354
	256		128	2K-0337	336	2R-4330	356
	257	2B-0858	565		338	2R-5001	472
	269	2B-0941	778	2K-2794	324	2S-0613	307
1S-7446	259	2B-2695	56	2K-4472	430		310
	263		58		550		313
1S-9540	32		105	2K-4821	171		316
1S-9593	358	2B-9373	338	2K-4898	513	2S-2596	623
	497	2D-3406	747		517		625

▶ **PRIMARY REFERENCE**

PART NUMBER INDEX

Part	Page
	627
	629
	723
2S-2760	97
	99
2S-4078	179
	305
	307
	310
	313
	316
	354
	485
	496
	553
	590
	633
2S-4569	480
2S-4570	480
2S-5926	457
2S-7905	99
2S-8926	332
2U-7354	581
2V-2043	92
2W-1160	62
2W-2072	52
2W-6965	126
2Y-1834	773
2Y-2347	640
2Y-5429	288
2Y-6448	109
3	
3B-0551	64
	66
3B-0623	34
	36
3B-0645	34
	36
3B-1915	89
	281
	319
	344
	457
3B-2968	62
3B-4501	276
	759
3B-4506	356
3B-4605	371
	372
	373
	374
	472
3B-4615	407
3B-5317	398
	401
3B-8489	395
	396
	420
	423
	535
	537
	540
	542
	544
	546
	548
	587
	671
	696
	698
3D-2824	92
	118
	144
	145
	179
	267
	305
	326
	327
	359
	485
	565
	595
	778
3D-2975	765
3D-4072	296
3D-7943	488
3D-8012	375
3D-8241	346
3D-8317	350
3D-8422	307
	310
	313
	316
3D-9133	307
	310
	313
	316
3E-2378	836
3E-3365	116
	170
	177
	179
	248
	252
	267
	275
	276
	278
	358
	583
	652
	653
	655
	729
	744
	757
	772
	775
	793
3E-3368	238
	239
	240
3E-3371	236
	237
	245
	277
	279
	511
	583
3E-3377	235
	476
	511
	650
	651
3E-3389	793
3E-3892	757
3E-4051	773
	775
3E-4052	773
	775
3E-4057	773
	775
3E-4058	773
	775
3E-4304	753
	755
3E-4319	773
3E-4321	776
3E-4334	597
3E-4352	333
	747
3E-4354	296
3E-4356	768
	826
3E-5006	589
3E-5239	290
	744
	759
3E-5464	759
3E-5519	290
3E-6328	▶170
	290
3E-6756	696
	698
3E-6757	696
	698
3E-6761	588
3E-6769	593
3E-6770	593
3E-6772	40
3E-6924	770
3E-7753	177
3E-7771	260
	264
3E-7990	197
3E-8020	279
	474
	739
	770
3E-8273	833
3E-8575	609
	▶650
3E-8581	650
	651
3E-9205	631
	▶651
3F-0379	259
	263
3F-9556	171
	826
	829
	831
	832
3G-0910	533
3G-0911	531
	533
3G-3747	544
	546
	548
3G-5596	718
	719
	720
	721
	722
3G-5999	535
	537
	540
	542
3G-6402	363
	364
3G-7000	670
3G-7016	671
3G-7452	572
3G-8054	562
	563
3G-8057	562
	563
3G-8175	655
3G-9401	669
	670
3G-9598	669
	670
	683
	688
3H-0240	731
3H-0442	649
3H-2652	565
3H-5932	145
3H-6660	739
3J-1907	107
	144
	151
	179
	283
	305
	326
	327
	338
	352
	353
	354
	356
	483
	485
	493
	504
	550
	553
	559
	562
	563
	564
	565
	576
	580
	585

▶ **PRIMARY REFERENCE**

PART NUMBER INDEX

Part	Page	Part	Page	Part	Page	Part	Page
	590		644		281		260
	595		645		299		263
	609		647		333		264
	612		656		361	3T-9524	260
	615		700		744		264
	619		778		821	3T-9525	259
	623	3K-2889	365		823		263
	625		375		824	3T-9549	177
	627		414	3S-2708	332	3V-2431	231
	629	3K-4897	511		480	3V-5349	763
	631	3K-6060	180		482	3V-9399	371
	633		185	3S-3439	340		372
	642		257	3S-3440	340		373
	700	3K-6113	434	3S-3875	340		374
	723		436	3S-4489	533	3W-3110	391
3J-3679	723	3K-6235	739	3S-6162	365		
3J-4278	421	3K-8460	83		375		
3J-4818	819	3K-8692	546		708	**4**	
3J-7354	54		548		710		
	107	3K-9770	375	3S-9557	226	4B-0418	327
	118	3L-3380	259	3S-9643	105	4B-1270	511
	145		263	3T-0304	290	4B-2049	260
	151	3N-3763	260	3T-1208	657		264
	179		264	3T-2977	393	4B-3609	490
	231	3N-3790	834		394	4B-4158	3
	327	3P-0246	354	3T-3418	259		430
	483	3P-0653	346		263		467
	553	3P-0812	642	3T-3422	259		661
	580	3P-1155	233		263		662
	581	3P-1210	593	3T-3423	259		664
	605	3P-1849	313		260		665
	612	3P-2404	145		263		712
	615	3P-2413	331		264		713
	633	3P-2791	331	3T-3424	259	4B-4274	746
	647	3P-2792	331		260		784
	649	3P-2793	332		263	4B-4278	371
	696	3P-2794	332		264		372
	698	3P-3059	331	3T-3434	259		373
	700	3P-3098	332		263		374
3K-0360	54	3P-3321	331	3T-3601	469		623
	94	3P-3738	331	3T-3602	469		627
	107	3P-7447	332	3T-4403	299		629
	118	3P-7489	331	3T-4709	259		723
	144	3P-8820	307		263		819
	145		310	3T-4710	259	4B-4311	82
	151		313		263	4B-4863	199
	180		317	3T-4717	469		784
	194	3P-8827	307	3T-4965	118	4B-5059	765
	307		310		144	4B-8393	319
	310		313	3T-5356	336	4B-9782	74
	313		316	3T-5830	330		296
	316	3P-8845	363	3T-6457	299		480
	326		364	3T-6882	307		482
	327	3P-9900	819		310	4B-9784	296
	430	3R-8801	260		313	4B-9808	513
	439		264		316		515
	494	3S-0004	338	3T-6963	480		519
	562		493	3T-7566	365	4B-9880	350
	563	3S-1349	375		375	4D-3704	47
	564		427	3T-7567	365	4D-4508	430
	581		428		375	4D-7388	86
	621	3S-1356	421		414	4D-7733	145
	622	3S-2093	105	3T-8791	375		776
	633		151	3T-8792	375	4D-8148	296
	635		230	3T-9494	259	4D-9517	87

PART NUMBER INDEX

Part	Page	Part	Page	Part	Page	Part	Page
	118	4J-5477	696		486	4N-2514	47
4E-0550	144		698		504	4N-2927	765
4E-1437	553	4J-5977	375		554	4N-3661	64
4F-0411	105	4J-6888	544		570		66
4F-2129	482		546		700	4N-3808	303
4F-2294	274		548		703	4N-3840	105
4F-4879	812	4J-7376	544		773	4N-3841	105
	813		546		785	4N-4771	6
	814		548	4L-6459	107		7
4F-6024	52	4J-7533	107		175		▶88
4F-7389	469		361		554	4N-5339	97
4F-7390	80		580		776		99
4F-7957	10		581	4L-9337	301	4N-6228	88
	143		609		330	4N-6229	88
4F-8503	342		623		700	4N-7082	83
4F-8711	226		625		776	4N-7266	64
4H-0407	732		627	4M-0189	54		66
	783		629	4M-1827	259	4N-7489	88
4H-1641	324		631		263	4N-7497	88
	387		642	4M-1828	259	4N-8150	83
	763		723		263	4N-9915	768
4H-2558	371	4J-8997	612	4M-1829	259		826
	372		615		263	4P-0513	64
	373	4J-9058	694	4M-1831	259	4P-0519	64
	374		695		263		66
4H-6520	482	4J-9208	692	4M-1853	259	4P-4278	74
	486		693		263	4P-4279	74
4H-9541	89		694	4M-1854	259	4P-5546	62
4J-0520	327		695		263	4P-6242	835
	523	4K-0684	365	4M-1896	260	4P-6846	6
	525		375		264		7
	527	4K-1388	523	4M-2381	350		▶42
	553		525	4M-5317	255	4P-7371	74
	559		527		439	4P-7428	94
	565		623	4M-5905	350		180
	568		625	4M-6425	180		283
	570		627		799		288
	574		629	4M-6480	14		773
	578		646	4M-6582	759	4P-7429	94
	642		723	4M-7470	371		180
	700	4K-2039	354		372		281
4J-0522	565		656		373		283
	612	4K-8302	773		374		576
	615	4K-8864	773	4M-8239	356	4P-7581	94
	631		776	4N-0513	97		105
4J-0524	327	4K-9429	791	4N-0587	97		180
4J-0525	605	4L-2729	260	4N-0683	32		192
4J-0526	523		264		78		193
	525	4L-4986	483	4N-0684	29		209
4J-0527	136	4L-6454	94		52		211
	138		136	4N-0699	13		214
	139		141	4N-0794	105		216
	141		145	4N-0913	88		219
	327		159	4N-0914	88		222
	565		194	4N-0933	54		281
4J-0985	589		209	4N-0995	88		283
4J-5267	568		211	4N-1059	256		291
	572		214		262		299
	574		216	4N-1114	15		333
	576		219	4N-1216	83		523
	578		322	4N-1294	87		525
4J-5351	623		398	4N-1650	32		527
	625		401	4N-2481	6		583
	646		414		7		773
	723		439		▶81		776

▶ **PRIMARY REFERENCE**

PART NUMBER INDEX

Part	Page
4P-7582	281
	283
4P-8134	94
	180
	192
	193
	208
	269
	281
	283
	288
	291
	504
	744
4S-1936	209
	211
	214
	216
	219
4S-5565	231
4S-8537	331
4S-9134	338
4T-0204	698
4T-0208	396
	698
4T-1005	644
4T-1008	633
	▶644
4T-1009	644
4T-1011	644
4T-1044	494
4T-1108	623
	625
	723
4T-1649	623
	627
	629
	723
4T-1700	647
4T-1701	623
	627
	629
	723
4T-1843	703
4T-2069	430
4T-2479	714
	715
	718
4T-3134	605
4T-3522	696
	698
4T-3981	574
4T-4144	540
	542
4T-4501	721
4T-4502	722
4T-4509	647
4T-4511	623
	627
	629
	723
4T-4875	587
4T-4942	645
4T-5071	619
4T-5072	623
	625
	646
	723
4T-5073	623
	625
	627
	629
	646
	723
4T-5074	623
	627
	629
	647
	723
4T-5075	644
4T-5502	720
4T-5896	▶619
	633
4T-6907	539
4T-7534	671
	690
	691
4T-7571	645
4T-8588	531
4T-8987	714
	716
	717
	▶718
4T-9439	683
4T-9751	395
	696
4T-9762	698
4V-6981	472
4V-7884	817
4V-8256	725
4V-8577	817
	819
4W-9890	13
4Z-0569	▶417
4Z-0625	▶663
4Z-0627	▶660
4Z-0629	▶659
4Z-0630	▶659
4Z-0631	▶659
4Z-0632	▶659
4Z-0634	▶660
4Z-0635	▶660
4Z-0636	▶663
4Z-0654	▶418
4Z-0663	▶419
4Z-0667	▶711
4Z-0668	▶711
4Z-0669	▶562
	711
4Z-6363	529
	▶535
4Z-6364	529
	▶540
4Z-8840	657
	658
4Z-8862	686
4Z-8959	395
	396
	417
4Z-8961	395
	396
	417
4Z-8965	395
4Z-8991	708
4Z-8992	657
4Z-8993	657
4Z-8995	714
	▶719
4Z-9018	719
4Z-9189	668
4Z-9219	708
	710
4Z-9221	668
4Z-9335	663
	▶677
4Z-9336	677
	▶685
4Z-9360	660
	▶675
4Z-9361	659
	▶675
4Z-9362	675
	▶680
	681
	682
4Z-9363	659
	▶675
4Z-9364	675
	▶681
4Z-9365	659
	▶676
4Z-9366	676
	▶682
4Z-9367	659
	▶677
4Z-9368	677
	▶685
4Z-9370	660
	▶677
4Z-9371	660
	▶678
4Z-9372	678
	▶686
	687
4Z-9373	663
	▶678
4Z-9374	678
	▶687
4Z-9380	686
4Z-9381	686
4Z-9418	562
4Z-9484	▶395
	418
4Z-9485	395
4Z-9486	711
	▶714
4Z-9487	▶657
	714
4Z-9490	▶708
	711
5B-3180	350
5B-5473	403
5B-5821	52
	296
5C-2873	588
5C-2890	226
	257
	273
	327
	471
	474
	744
	768
	819
5C-6266	283
5C-6565	103
	321
	421
	800
5C-7261	208
	269
	796
	826
	827
	829
	831
	832
5C-8312	793
5C-8811	826
5C-9553	291
	327
	739
	747
	796
5D-0353	307
	310
	313
	316
5D-1026	821
5D-1911	522
5D-4661	403
5D-4822	765
5D-5957	327
5D-5958	597
5D-7449	319
	344
5D-7927	605
5D-9514	330
5E-8771	49
5F-1248	319
	344
5F-1678	420
	423
5F-3106	444
	445
	446
	448
5F-3144	222
5F-3488	605
5F-4899	97
	99
	105
5F-7054	307
	310
	313
	316

5

▶ PRIMARY REFERENCE

PART NUMBER INDEX

Part	Page	Part	Page	Part	Page	Part	Page
	605	5M-0544	375	5M-6214	407		773
	644	5M-0578	480	5M-7900	332		776
5F-8000	327	5M-2057	623	5M-7925	332		785
5G-4109	144		625		482	5P-1076	118
5H-1472	619		627	5M-8500	739		185
5H-1504	40		629	5M-9548	354		216
5H-2095	572		723	5M-9623	354		219
5H-4018	578	5M-2894	13	5M-9624	354		369
5H-4019	570		17	5P-0047	700		387
	642		42	5P-0537	10		407
5H-4279	336		44		145		414
	343		56	5P-0597	123		455
5H-5339	480		58		130		486
5H-6733	605		61		131		565
5H-6734	136		64		175		572
	138		66		326		574
	139		81	5P-0695	94		732
	141		82		177		739
	163		83		178		776
	166		87		179		783
5H-7153	327		89		256		800
5H-8803	365		91		257		815
5H-9899	476		97		283	5P-1230	118
5I-4275	602		99	5P-0746	262	5P-1251	118
5I-4342	550		105		283	5P-1255	86
	590		109	5P-0747	179	5P-1262	103
5J-1192	531		151		256		107
	533		155		257	5P-1265	107
5J-3488	535		225		269	5P-1327	712
	537		233	5P-0761	94		713
5J-3576	714		281		177	5P-1404	493
	715		283		178	5P-1465	118
	718		299		179	5P-1471	123
5J-4982	4		304		256		130
5J-5314	259		319		257		131
	263		331	5P-0767	778		175
5J-5402	539		344	5P-0840	32	5P-1505	145
5J-5793	54		403		40	5P-1979	430
	296		412		327	5P-2228	222
5J-5794	46		480	5P-1075	92		455
	54		799		94		554
5J-6153	494	5M-3034	259		114		773
5K-1770	483		263		180	5P-2230	118
5K-3294	327	5M-3062	94		185	5P-2424	173
5K-5120	296		118		192		327
5K-5959	605		145		193	5P-2546	434
5K-9090	92		180		205		436
	94		192		206	5P-2566	136
	326		193		209		139
	527		205		211		141
	553		206		214		185
	557		209		216		301
	559		211		219		327
	564		214		257		365
	565		216		398		375
	700		219		401		430
5K-9107	296		257		407		442
5K-9179	780		321		414		486
5L-3708	188		327		439		565
5L-4751	416		773		486	5P-2618	136
	420		776		554		138
	423		778		605		139
5L-4758	488	5M-3320	338		700		141
5L-7200	269	5M-6126	332		703	5P-2955	205
	276	5M-6187	331		744		206

► **PRIMARY REFERENCE**

PART NUMBER INDEX

Part	Page
	209
	211
	214
	216
	219
5P-3119	332
5P-3150	332
5P-3501	327
5P-3948	772
5P-4115	159
5P-4116	208
	502
	747
	757
	763
5P-4142	49
5P-4255	56
	58
5P-4268	327
5P-4295	94
	257
	563
	773
	776
5P-4325	130
	131
	175
5P-4423	726
	819
5P-4432	726
5P-4674	180
5P-4869	121
5P-4889	327
5P-5623	179
5P-5639	760
5P-5643	377
	380
5P-5672	744
5P-5678	10
5P-5755	401
	414
5P-5908	744
5P-5924	744
5P-5969	770
5P-5991	145
5P-6010	726
	819
5P-6254	332
	480
5P-6298	259
	263
5P-6313	255
5P-6314	255
5P-6393	344
5P-6604	708
	710
5P-6605	739
	753
	755
5P-6719	642
5P-6874	780
5P-6944	326
5P-6994	776
	778
5P-7086	824
5P-7211	159
5P-7213	349
5P-7466	554
	578
5P-7467	554
	578
5P-7483	159
	377
	380
5P-7513	782
5P-7514	401
5P-7593	535
	537
5P-7648	781
5P-7701	83
5P-7703	327
5P-7814	83
5P-7815	296
5P-7911	307
	310
	313
	316
5P-7957	791
5P-7970	291
5P-8066	336
	338
5P-8068	83
5P-8112	554
	568
	578
5P-8245	43
	54
	60
	307
	310
	313
	316
	319
	330
	331
	336
	344
	346
	444
	445
	446
	448
	469
	480
	482
5P-8247	62
	76
	151
	171
	186
	281
	283
	296
	330
5P-8248	62
	486
5P-8249	62
	341
	429
5P-8250	308
	314
	316
	369
	692
	693
	694
	695
5P-8286	305
5P-8441	744
5P-8445	765
5P-8500	1
	9
	144
	162
	165
	377
	380
	387
	391
	522
	763
5P-8525	757
5P-9186	595
5P-9299	109
	118
5P-9439	336
5P-9519	296
	330
5P-9617	326
	553
5P-9658	303
5P-9938	504
5S-0003	16
	89
	350
5S-7001	644
5S-7349	171
	785
	786
5S-7379	92
	94
	180
	439
	576
	700
	778
	788
5S-7382	180
	216
	219
5S-7383	570
	799
5S-7816	354
5T-4896	365
	375
	414
5V-0770	765
5V-1496	391
	804
	807
5V-1497	817
5V-7574	482

6

Part	Page
6A-5591	54
6B-4594	114
6C-3680	759
6D-1641	778
6D-4244	284
6D-4246	194
	773
	776
	823
6D-4247	145
	257
	773
	776
6D-4492	778
6D-5801	226
6D-7573	145
	773
	776
6D-9157	540
	542
6D-9926	564
6D-9953	469
6E-0381	621
	622
6E-1607	636
6E-1637	625
6E-1752	605
6E-1835	644
	645
6E-2060	605
6E-2140	646
6E-3113	▶539
	707
	708
	710
6E-3341	601
6E-3840	602
6E-3976	539
6E-3980	539
6E-3995	593
6E-4000	593
6E-4003	593
6E-4004	593
6E-4007	601
6E-4009	601
6E-4096	597
6E-4098	597
6E-4100	634
6E-4102	634
6E-4139	633
	▶645
6E-4240	495
6E-4350	590
6E-4353	550
6E-4392	550
	▶636
6E-4401	636
6E-4497	531
6E-4626	597
6E-4812	642
6E-4859	544
	546
	548

▶ PRIMARY REFERENCE

PART NUMBER INDEX

Part	Page	Part	Page	Part	Page	Part	Page
6E-4976	539		316	6N-6984	521		277
6E-5066	580	6I-9255	331	6N-7654	41	6T-3633	177
6E-5200	647	6I-9471	100	6P-1301	759		277
6E-5467	644	6J-2245	247	6P-2216	377	6T-3643	226
6E-5479	550	6J-2419	299	6P-3458	331		772
	590		359	6P-5317	469		775
6E-5502	642	6J-2515	330	6P-5751	332	6T-3720	332
6E-5503	642	6J-2680	565	6P-6739	332	6T-3726	331
6E-6151	601	6J-2797	539	6P-7379	331	6T-3793	430
6E-6155	601	6J-3473	332	6P-8269	377		468
6E-6158	601	6J-5179	671		380	6T-5385	159
6E-6174	593		690	6P-8369	416	6T-5941	398
6E-6175	593		691		420		401
6E-6176	593	6J-6439	645		423	6T-6708	759
6F-0156	331	6J-6680	714	6P-8829	369	6T-6954	703
6F-0711	363		718		398	6T-7058	290
	364	6J-6703	715		400	6T-7863	469
6F-4718	486	6J-7836	469		401	6T-8714	796
6F-7045	268	6J-8696	494		674	6T-8801	430
	269	6J-9480	698	6P-8901	370	6T-9222	483
6F-8146	307	6J-9482	696	6P-8931	430	6T-9244	651
	310	6J-9747	540	6S-1753	331	6T-9927	377
	313		542	6S-4039	209		380
	317	6K-3273	807		211	6V-0128	10
6F-8668	369	6K-3630	708		216	6V-0400	700
6G-9102	741		709		287	6V-0484	296
6H-1717	344		710	6S-6251	120		493
6H-9361	605	6K-3631	438	6T-0209	457		553
6I-0213	156	6K-4934	209	6T-0363	259		580
	157		211		263		625
	158		214	6T-0371	259		627
6I-0901	74		216		263		629
6I-0928	39		219	6T-0372	259		723
6I-1055	32	6K-4935	209		263	6V-0836	332
6I-1418	188		211	6T-0465	269	6V-0852	83
	290		214	6T-0481	457		296
6I-1458	79		216	6T-0850	469		326
6I-2431	114		219	6T-1140	429		354
6I-2435	114	6K-6307	485	6T-1142	▶429		356
	120		527		443		485
6I-2436	114	6K-8178	151		468		493
	120	6K-8714	336	6T-1698	162		553
6I-3623	49	6K-9632	824		165		564
6I-3624	49		829	6T-2638	459		580
6I-3625	49	6L-1651	327		460		612
6I-3638	6	6L-3616	331		461		615
	7	6L-4783	336		462		623
	▶304	6L-4784	350		463		625
6I-4025	40	6L-5359	340		464		627
6I-4421	32	6L-9284	296		465		629
6I-4575	143		330		466		723
6I-4582	49	6L-9965	296	6T-2723	192	6V-0885	256
6I-8514	574	6M-5062	640		193		▶259
6I-8515	574		656	6T-2724	192	6V-0894	490
6I-8516	574	6N-1931	97		193		511
6I-8675	666		99	6T-3382	650	6V-0974	562
	667	6N-2343	99	6T-3588	365		563
6I-8724	480	6N-2985	82		367	6V-1051	476
6I-8849	307		326	6T-3589	365	6V-1179	336
	310	6N-3279	259	6T-3590	365	6V-1196	346
	313		263	6T-3591	365	6V-1197	12
	316	6N-3826	259	6T-3594	365		584
6I-8860	307		263	6T-3631	177	6V-1232	476
	310	6N-3896	62		277	6V-1322	259
	313	6N-4414	144	6T-3632	177		263

▶ **PRIMARY REFERENCE**

PART NUMBER INDEX

Part	Page
6V-1355	118
6V-1525	127
6V-1614	508
	510
6V-1653	307
	310
	313
	316
6V-1668	759
6V-1720	332
6V-1722	778
6V-1728	459
	460
	461
	462
	463
	464
	465
	466
6V-1971	1
6V-2226	467
6V-2314	476
6V-2360	457
6V-2491	226
6V-2686	136
	141
6V-2689	272
	476
6V-2722	184
6V-3250	296
6V-3251	73
6V-3298	307
	310
	313
	316
6V-3545	476
6V-3677	49
6V-3683	225
6V-3830	64
	66
6V-3964	188
6V-3965	83
	296
	326
	352
	353
	354
	356
	486
	493
	554
	565
	580
	612
	615
	623
	625
	627
	629
	723
6V-4248	14
	54
6V-4298	222
6V-4365	327
6V-4429	15
6V-4589	83
	167
	275
6V-5048	83
	125
	225
	233
	244
	246
6V-5049	40
	83
	233
	243
	296
	639
6V-5051	177
6V-5063	105
6V-5064	105
6V-5100	18
	28
6V-5142	637
	638
6V-5163	770
6V-5188	340
6V-5192	641
6V-5326	550
6V-5387	326
6V-5393	644
6V-5553	344
6V-5555	612
	615
6V-5556	495
	623
	627
	629
	647
	723
6V-5586	550
	636
	640
6V-5645	226
6V-5683	226
6V-5817	821
6V-5818	824
6V-5839	14
	54
	152
	605
	829
6V-5845	535
	537
	540
	542
6V-5851	826
6V-6213	826
6V-6317	152
6V-6609	71
	72
	73
	105
	254
6V-6782	118
	130
	131
6V-6783	118
6V-6789	222
6V-6864	829
6V-6888	826
6V-6900	457
6V-6923	168
6V-7238	778
6V-7357	197
	474
	490
	827
6V-7646	768
	804
	807
	827
6V-7688	703
6V-7731	605
6V-7732	605
6V-7744	371
	372
	373
	374
	490
	605
6V-8002	641
6V-8097	605
6V-8149	605
6V-8182	322
6V-8185	226
	472
6V-8188	173
	260
	264
	284
	612
	615
6V-8189	171
	205
	206
	209
	211
	214
	216
	219
6V-8190	139
	398
	400
	401
	674
6V-8212	269
6V-8214	759
6V-8237	539
6V-8260	82
6V-8344	332
6V-8351	636
6V-8358	144
6V-8369	793
6V-8370	276
6V-8371	646
6V-8376	226
	490
	772
6V-8381	787
6V-8397	107
6V-8398	118
	144
	151
	152
	504
	559
	562
	563
	564
	565
	576
	612
	615
	633
	700
6V-8400	485
	523
	525
	527
	553
	554
	559
6V-8536	414
6V-8555	559
6V-8557	701
6V-8558	554
6V-8625	109
	296
	327
6V-8626	553
	565
6V-8628	696
	698
6V-8629	485
6V-8632	89
6V-8634	107
	564
6V-8635	83
	92
	557
6V-8636	151
	504
	564
	576
	612
	615
	633
	700
6V-8639	144
	296
	700
6V-8714	92
	326
6V-8716	485
6V-8721	144
6V-8722	94

► **PRIMARY REFERENCE**

PART NUMBER INDEX

Part	Page
	151
	194
6V-8723	562
	563
6V-8724	107
	504
	562
	563
	612
	615
6V-8754	589
6V-8778	700
6V-8784	485
6V-8785	92
	94
6V-8786	485
6V-8788	565
	700
6V-8801	103
	121
	136
	141
	145
	180
	185
	186
	205
	209
	211
	214
	216
	220
	327
	457
	490
	504
	521
	570
	701
	776
6V-8836	829
6V-8837	829
6V-8928	739
6V-8939	559
6V-8944	700
6V-8947	553
6V-8970	365
	375
6V-8980	152
6V-8984	553
6V-8994	576
6V-9000	696
	698
6V-9001	144
	559
6V-9005	92
6V-9006	485
6V-9007	485
6V-9008	553
	564
6V-9156	781
6V-9168	152
	576
6V-9170	554
6V-9172	554
6V-9176	344
6V-9182	485
6V-9189	747
6V-9197	377
	380
6V-9313	696
	698
6V-9335	757
6V-9350	553
6V-9632	269
	757
	796
6V-9667	535
	537
6V-9746	439
	485
	553
	564
6V-9830	144
6V-9833	92
	94
6V-9836	107
6V-9850	612
	615
6V-9854	94
6V-9872	612
	615
6V-9875	553
6V-9876	563
6V-9877	439
6W-5698	821
6Y-0091	136
	141
6Y-0206	751
6Y-0210	430
6Y-0470	437
6Y-0473	1
	434
	435
	436
	437
	438
	444
	445
	446
	448
	455
6Y-1202	720
	721
	722
6Y-1204	720
	721
	722
6Y-2090	62
6Y-2130	302
6Y-2736	595
6Y-2737	595
6Y-3233	683
	688
6Y-3394	718
	719
6Y-3484	332
6Y-3568	578
6Y-3732	739
6Y-3926	657
6Y-4638	350
6Y-5094	746
6Y-5113	780
6Y-5888	344
6Y-7385	768
6Y-7669	138
6Y-9052	335
	▶482
6Y-9053	319
6Y-9054	319
6Y-9055	319
6Y-9057	319
6Y-9058	319
6Y-9061	319
6Y-9062	319
6Y-9064	319
6Y-9065	319
6Y-9067	480
6Y-9068	480
6Y-9069	480
6Y-9070	480
6Y-9071	480
6Y-9073	480
6Y-9074	480
6Y-9076	480
6Y-9077	480
6Y-9078	480
6Y-9079	480
6Y-9083	480
6Y-9086	480
6Y-9087	480
6Y-9088	480
6Y-9092	480
6Y-9093	480
6Y-9097	480
6Y-9098	480
6Y-9099	480
6Y-9101	296
6Y-9103	296
6Y-9107	296
6Y-9108	296
6Y-9112	482
6Y-9113	482
6Y-9114	482
6Y-9125	480
6Y-9287	698
6Y-9321	319
6Y-9322	319
6Y-9843	657
6Y-9956	331
7	
7B-1251	180
7B-2742	145
7C-0145	105
7C-0307	103
	105
7C-0754	194
7C-1445	56
	58
7C-6514	18
	28
7D-1195	605
7D-1649	129
	319
	781
7D-1677	342
7D-7233	118
7D-7705	295
7E-6508	10
7E-9262	29
7F-0560	184
7F-3488	260
	264
7F-3491	259
	263
7F-3525	259
	263
7F-5711	375
7F-6112	421
7F-6998	793
7F-8268	605
7F-8607	772
7F-9090	83
7G-0343	459
	460
	461
	462
	463
	464
	465
	466
7G-0897	332
7G-1060	94
	177
7G-2476	332
7G-2519	480
7G-3265	342
	▶349
7G-3435	332
7G-3457	332
7G-3832	574
	578
7G-3833	574
	578
7G-3834	574
	578
7G-4332	437
	438
7G-4817	332
7G-4824	734
	751
7G-4998	305
7G-5186	100
7G-5221	455
7G-5675	469
7G-5746	331
7G-5751	296
7G-5984	559
	570
	700
7G-5985	559
	570
	701
7G-5986	559
	570
	701

▶ **PRIMARY REFERENCE**

PART NUMBER INDEX

Part	Page
7G-6623	375
	414
7G-6772	331
7G-7053	211
	214
	216
	220
7G-8282	457
7G-8839	120
7G-9592	324
7G-9708	430
7G-9709	430
7G-9922	344
7H-1447	605
7H-3609	341
7H-7628	319
7H-7658	332
7H-9737	472
7J-0204	180
	354
	642
7J-1335	407
7J-1336	407
7J-2036	444
	445
	446
	448
7J-3296	671
7J-3297	544
	546
	548
	671
7J-4169	708
	709
	710
7J-6580	457
7J-9108	94
	145
	151
	194
	553
	565
	576
7J-9933	623
	625
	627
	629
	645
	646
	723
7K-1181	94
	177
	197
	208
	209
	211
	214
	216
	219
	222
	226
	256
	269
	279
	284
	288
	291
	504
	576
	612
	615
	674
	701
	744
	772
	775
	829
7K-3176	772
7K-4363	369
7L-2894	259
	263
7L-7524	336
	338
7L-9061	275
	344
7M-0324	259
	263
7M-0325	260
	264
7M-0326	259
	263
7M-0327	259
	263
7M-0475	330
7M-1297	305
7M-1419	319
7M-7219	765
7M-8480	331
	363
	364
7M-8485	64
	66
	92
	94
	118
	305
	326
	350
	354
	363
	364
	439
	483
	485
	553
	557
	564
	565
	623
	625
	627
	629
	644
	700
	723
7M-8651	260
	264
7M-9107	720
	721
	722
7N-0452	42
7N-0718	177
	▶268
7N-1210	78
7N-1637	134
7N-1996	290
7N-2043	68
7N-2059	255
7N-2155	97
7N-2156	97
	99
7N-2213	97
7N-4333	723
7N-7559	89
7N-7628	109
7N-7878	109
7N-9801	278
7P-4190	490
7S-1912	145
7S-2042	324
	387
	763
7S-4326	307
	310
	313
	317
7S-5003	123
7S-5005	29
7S-6984	338
7S-8817	121
7T-0266	281
7T-1099	177
	211
	214
	219
	256
	269
	674
	796
	802
7T-1248	341
7T-1885	469
7T-2275	437
7T-2276	437
7T-2283	459
	460
	461
	462
	463
	464
	465
	466
7T-2288	459
7T-2289	▶459
7T-2294	463
7T-2770	434
	435
	436
7T-3896	▶375
7T-3974	259
	263
7T-4132	430
7T-4145	430
7T-4501	708
	709
	710
7T-4502	708
	709
	710
7T-4515	358
7T-4532	742
7T-4865	421
7T-5140	669
	670
7T-5351	457
7T-5352	457
7T-5391	675
	676
	▶692
7T-5394	677
	678
	679
	▶693
7T-5417	455
7T-5419	455
7T-5420	468
7T-5422	442
	455
7T-5701	693
7T-5702	692
7T-5803	681
	685
7T-5856	744
7T-5869	683
	688
7T-6040	▶370
7T-6228	398
7T-6799	291
7T-6994	469
7T-7305	696
	698
	703
7T-8004	430
7T-8136	480
7T-8331	564
	610
	611
7T-8733	375
7T-8891	821
7T-9123	260
	264
7T-9125	692
	693
7T-9307	455
7T-9308	1
7T-9515	276
7U-4892	226
7V-5191	765
7W-0158	6
	▶64
7W-0843	64
	66
7W-0844	64
	66
7W-0845	64
	66
7W-1208	123
7W-3447	296
	574
7W-5157	145

▶ PRIMARY REFERENCE

PART NUMBER INDEX

Part	Page
7W-5524	123
7W-6528	99
7W-6529	97
7W-7000	103
7W-7141	99
7W-7142	97
7X-0290	123
	327
	504
7X-0325	327
7X-0326	173
	327
	336
7X-0328	411
	430
7X-0331	103
7X-0332	103
	327
7X-0337	103
7X-0339	136
	173
7X-0340	141
7X-0342	430
7X-0345	405
	430
7X-0347	365
7X-0349	375
	414
7X-0353	523
	525
7X-0365	802
7X-0366	414
7X-0401	398
	400
	401
7X-0403	370
7X-0404	672
7X-0405	398
	400
	401
7X-0408	139
7X-0418	369
7X-0420	424
	430
7X-0421	424
7X-0423	443
7X-0428	800
7X-0430	368
7X-0431	414
7X-0443	673
	674
7X-0481	327
7X-0515	100
	574
7X-0531	421
	424
	443
7X-0533	368
	414
	421
	800
7X-0537	414
	703
	709
	787
7X-0549	398
	400
	401
	674
7X-0550	324
	404
7X-0562	260
	264
7X-0578	159
	398
	401
	478
	504
	570
	701
	744
	747
7X-0582	211
	214
	216
	220
	288
	703
	802
7X-0584	476
7X-0590	324
	404
	421
7X-0608	725
7X-0618	782
7X-0732	823
7X-0818	291
7X-0851	531
	533
7X-1551	313
7X-1553	599
7X-2049	775
7X-2438	595
7X-2488	703
7X-2533	203
	204
	785
7X-2537	359
7X-2538	743
	747
7X-2539	284
7X-2540	743
	747
7X-2541	361
7X-2548	227
7X-2549	129
7X-2551	565
7X-2552	387
	776
7X-2553	114
	574
	100
7X-2554	565
	391
	407
7X-2563	100
7X-2564	162
	165
	377
	380
7X-2573	572
	574
7X-2574	671
	690
	691
7X-2578	666
	667
7X-2579	669
	670
7X-2619	746
7X-3159	511
7X-3163	565
7X-3373	259
	263
7X-3391	708
	709
	710
7X-3392	782
7X-3406	576
7X-6222	291
7X-6315	197
7X-7644	835
7X-7700	163
	166
7X-7702	824
7X-7729	114
	120
	180
	208
	224
	257
	377
	380
	387
	490
	523
	525
	527
	554
	559
	570
	574
	612
	615
	631
	642
	701
7X-7927	821
	824
7X-7928	821
	824
7X-7929	821
	824
7X-7930	821
	824
7Y-0467	595
7Y-4224	723
7Y-5226	476
7Y-5267	589
7Y-7256	759
7Y-8169	747
8B-1312	331
8B-7979	344
8B-9294	222
8C-3085	619
8C-3089	125
	259
	263
8C-3093	83
8C-3101	354
8C-3205	572
	574
	578
	631
8C-3206	523
	525
	527
	554
	559
	570
	574
	612
	615
	631
	642
	701
8C-3290	796
8C-3417	527
8C-3428	354
8C-3442	739
8C-3443	557
8C-3445	83
8C-3446	83
	327
	483
	554
8C-3447	326
	483
8C-3451	553
8C-3681	118
8C-3756	744
	759
8C-4436	369
	407
	815
8C-5064	152
8C-5230	83
8C-5237	589
8C-5346	834
8C-5607	197
	785
	786
8C-5608	197
	203
	204
	786
8C-5917	177
	256
8C-5918	256
8C-6358	184

8

► **PRIMARY REFERENCE**

PART NUMBER INDEX

Part	Page	Part	Page	Part	Page	Part	Page
8C-6364	746	8E-4196	692	8E-9433	574	8L-8413	46
8C-6561	317		693	8E-9436	574		765
8C-6857	322	8E-4197	692	8E-9438	574		819
	455		693	8E-9445	572	8M-1013	350
8C-6869	107	8E-4539	694		574	8M-1869	107
8C-6877	435		695	8E-9446	574	8M-2530	296
8C-7311	118	8E-4540	694	8E-9487	342		480
8C-7325	180		695	8E-9890	▶572	8M-2537	354
8C-7514	144	8E-4648	657		661	8M-2770	269
8C-7563	145	8E-4743	718		662	8M-4389	469
8C-7581	731		719		664	8M-4390	332
	759	8E-5346	718		665	8M-4432	296
8C-8451	197	8E-5553	482	8E-9891	530		299
8C-8584	371	8E-5590	683		▶574	8M-4553	109
	372	8E-5922	739	8F-1434	260	8M-4992	356
	373	8E-6332	568		264	8M-5254	493
	374	8E-6334	568	8F-3437	269	8M-5266	331
8C-8992	708	8E-6619	434	8F-3556	564	8M-5661	332
	709		435	8F-7702	490	8M-7057	107
	710		436	8F-8151	778	8M-7066	107
8C-9161	531	8E-6752	690	8F-8544	331	8M-8489	97
	533		691		493		99
8C-9660	259	8E-6758	690	8F-8733	565	8N-0869	94
	263		691	8F-9516	434		177
8C-9987	652	8E-6856	739		435		178
	653		753		436		179
	655		755	8F-9836	269		256
8D-3932	772		824		796		257
8D-4771	307	8E-6927	356	8H-3127	10		283
	310	8E-7111	576	8H-5303	268	8N-2104	88
	313	8E-7510	444		269	8N-2729	126
	316		445	8H-5306	268	8N-2730	126
8D-8852	283		446	8H-8769	350	8N-3148	6
8E-0618	295		448	8H-8819	319		7
8E-1050	407	8E-7561	324	8J-0412	593		▶13
8E-1118	768		387	8J-1256	759	8N-4617	122
8E-1205	324		763	8J-1717	540	8P-0058	296
	387	8E-7695	▶330		542	8P-0420	363
	763		335	8J-4351	225		364
8E-1244	523	8E-7706	319		327		407
	525	8E-7707	319	8J-4386	544	8P-4047	332
	527	8E-7791	734		546	8P-4617	331
8E-1247	559		751		548	8P-5056	344
8E-1477	523	8E-7881	570	8J-5326	669	8P-5411	175
	525		700		670	8P-5698	307
8E-1682	480	8E-7882	570	8J-6709	356		310
8E-1848	718	8E-7883	570	8J-6815	633		313
	719	8E-8215	319	8J-7236	802		316
8E-2075	482	8E-8292	821	8J-8621	631	8P-6363	744
8E-2126	482	8E-8293	821	8K-1433	768	8P-6817	344
8E-2234	469	8E-8304	332	8K-2692	331	8P-6986	332
8E-2685	739	8E-8307	480	8K-5818	409	8P-6997	332
8E-2819	430	8E-8310	480		410	8P-9770	395
8E-2901	430		482	8L-2777	74		657
8E-3124	307	8E-8630	365	8L-2786	71		658
	310	8E-8994	346		72		669
	313	8E-9051	▶365		83		670
	317	8E-9052	▶367		89		683
8E-3241	206	8E-9228	688		109		688
	209	8E-9289	365		253		696
	211		375		296		698
	216		414	8L-5771	572		715
8E-3523	295	8E-9401	669		574		716
8E-3600	574	8E-9427	574	8L-6565	619	8P-9859	326
8E-4037	657	8E-9428	574	8L-7905	757	8S-2634	177

▶ **PRIMARY REFERENCE**

PART NUMBER INDEX

Part	Page	Part	Page	Part	Page	Part	Page
8S-4211	177	8T-1896	439	8T-4121	86		734
8S-4755	455	8T-1897	92		100		739
8S-6212	332		554		118		744
8S-7803	765	8T-1898	92		121		749
8S-9008	346		554		130		750
8S-9089	480	8T-1905	151		131		763
8S-9094	32		562		136		773
8S-9104	331		563		138		776
8S-9130	296	8T-2225	94		139		778
	346		177		141		780
8S-9191	56		178		145		782
	105		179		159		784
	156		256		163		796
	157		257		166		823
	158		283		173	8T-4122	284
8T-0075	564	8T-2275	605		175		377
8T-0076	633	8T-2501	296		180		380
8T-0208	430		346		227		405
8T-0267	227		739		257		407
8T-0269	640	8T-2502	107		269		431
8T-0271	590		125		279		523
8T-0283	544		206		284		525
	546		209		291	8T-4123	100
	548		211		302		377
8T-0315	485		216		327		380
8T-0326	291		307		340		486
8T-0328	222		310		346		554
	260		313		371		565
	264		317		372	8T-4133	94
	291		363		373		118
	472		364		374		130
	511	8T-2530	194		377		131
	804	8T-2561	145		380		145
	807		521		439		159
8T-0643	54	8T-2659	199		475		180
8T-0672	531		784		478		202
	533	8T-2922	640		486		257
8T-0788	700	8T-3282	535		490		340
8T-1141	332		537		523		377
8T-1159	136		540		525		380
	138		542		527		475
	139	8T-3329	544		535		559
	141		546		537		565
8T-1443	331		548		540		576
8T-1444	331	8T-3490	103		542		578
8T-1674	326		128		554		605
8T-1685	564		224		559		744
8T-1686	296		269		562		749
8T-1715	439		523		563		750
	778		525		565	8T-4136	114
8T-1786	439		796		570		136
8T-1790	535	8T-3491	144		572		138
	537	8T-3518	184		574		139
8T-1793	544	8T-3519	184		576		141
	546	8T-3597	128		578		145
	548	8T-3611	553		583		159
8T-1889	83	8T-3612	128		605		163
	554	8T-3647	361		610		166
8T-1890	83	8T-3957	584		611		214
	554		585		613		220
8T-1891	554		586		615		224
8T-1892	554	8T-4001	666		631		227
8T-1893	576		667		642		269
8T-1894	576		669		674		284
8T-1895	439		670		701		291

► **PRIMARY REFERENCE**

PART NUMBER INDEX

Part	Page
	346
	371
	372
	373
	374
	387
	439
	475
	486
	490
	554
	559
	565
	572
	574
	576
	578
	605
	733
	747
	753
	755
	763
	781
	788
	796
	823
8T-4137	121
	145
	175
	180
	208
	257
	279
	284
	291
	377
	380
	391
	478
	559
	576
	578
	613
	615
	744
	773
	776
	778
	782
	784
	796
8T-4138	222
	284
	291
	471
	757
	759
	823
8T-4139	94
	121
	145
	216
	220
	257

PART NUMBER INDEX

Part	Page	Part	Page	Part	Page	Part	Page
	257		586		483	8T-6639	144
	281	8T-4241	599		606	8T-6684	565
	284	8T-4244	95		776	8T-6685	130
	301		145	8T-4970	490		131
	307		574	8T-4971	729		576
	310		773		823		744
	313		776	8T-4984	107	8T-6699	511
	317	8T-4648	199	8T-4994	307	8T-6745	535
	321		782		310		537
	324	8T-4835	103		313	8T-6757	34
	327		136		316		36
	346		411		322	8T-6762	107
	354		414		324		296
	365		431		383		346
	375		773		398	8T-6767	107
	377	8T-4895	776		400	8T-6868	203
	380	8T-4896	92		401		204
	387		95		414		404
	391		103		455		486
	407		107		703		782
	411		114		802	8T-6869	208
	421		118	8T-4999	269	8T-6871	405
	431		123		835	8T-6876	144
	486		125	8T-5001	565		151
	554		136	8T-5005	565	8T-7008	173
	565		141		610	8T-7338	709
	574		145		611	8T-7371	661
	576		173	8T-5041	129		662
	578		180	8T-5070	231		664
	583		186	8T-5092	565		665
	606		194	8T-5360	145	8T-7504	606
	613		301		222	8T-7525	192
	615		305		435		193
	701		307		773	8T-7547	359
	741		310		776		502
	744		313	8T-5361	139		763
	773		317		370	8T-7566	324
	776		321		398		387
	778		322		401		763
8T-4224	171		327		421		790
	180		330	8T-5372	788		792
	205		363	8T-5383	824	8T-7567	602
	206		364	8T-5400	824	8T-7926	485
	209		439		829	8T-7929	565
	211		504	8T-5410	471	8T-7934	387
	214		554		478	8T-7971	391
	216		570		511	8T-8382	544
	220		576	8T-5414	776		546
	227		701	8T-5429	144		548
	255		773		327	8T-8442	593
	284		776	8T-5439	162	8T-8729	236
	291		778		165		237
	317		788	8T-5460	696		252
	359	8T-4908	255		698		519
	474		292		703		650
	478		474	8T-5677	511		653
	606		502	8T-5912	114	8T-8736	287
	743	8T-4910	118	8T-6430	486	8T-8737	151
	799		120		554		230
8T-4226	377		222		565		231
	380		782	8T-6466	674		497
	391	8T-4944	592		763		513
	776	8T-4956	324		773		517
8T-4231	584		327		776		519
	585		407	8T-6631	759		583

► **PRIMARY REFERENCE**

PART NUMBER INDEX

Part	Page
	793
	821
	826
	829
8T-8902	564
	612
	615
8T-8908	159
8T-8915	103
	305
8T-8917	103
	307
	310
	313
	316
	327
	565
	578
8T-8919	95
	107
	136
	138
	139
	141
	257
	327
	565
8T-8920	327
8T-8924	307
	310
	313
	316
8T-9005	757
8T-9041	152
8T-9044	544
	546
	548
8T-9082	804
8T-9371	257
	819
8T-9380	222
8T-9383	327
	741
8T-9386	94
8T-9389	431
8T-9392	327
	336
8T-9397	211
	214
	217
	220
	288
8T-9398	324
	398
	400
	401
8T-9399	322
	383
	703
8T-9412	308
	314
	316
8T-9496	371
	372
	373
	374
8T-9527	304
8T-9598	602
8T-9655	144
	188
	290
8T-9756	177
8T-9757	177
	179
	256
8T-9905	834
8V-0622	177
	256
8W-0217	562
8W-6153	151
8X-5280	821
8X-6954	658
8Y-4000	371
	372
	373
	374
8Y-5945	765
8Y-5965	817
8Y-6012	817
8Y-6014	817
8Y-6024	817
8Y-6041	765
8Y-6045	765
8Y-6046	765
8Y-6047	765
8Y-6060	765
8Y-6062	765
8Y-6063	765
8Y-6064	765
8Y-6066	765
8Y-6067	765
8Y-6068	765
8Y-6069	765
8Y-6277	804
	807
8Y-6343	826
8Y-6388	770
8Y-6859	765
8Y-6860	765
	9
9B-1117	508
9B-7233	226
	269
	490
	772
9B-7237	92
	103
	114
	145
	185
	220
	398
	401
	403
	554
9C-6984	407
9D-0630	136
	138
	139
	141
9D-3768	209
	211
	217
9D-3769	478
9D-4439	177
9D-6196	95
	327
9D-6197	95
	327
9F-2978	64
	88
9F-3691	159
9F-3788	331
9F-5599	259
	263
9F-5644	268
	269
9F-6656	834
9F-8999	105
9G-0002	177
9G-0003	177
	179
	256
9G-0004	177
	256
9G-0005	256
9G-0278	619
9G-0296	430
9G-0611	457
9G-1696	421
9G-1697	421
9G-1918	331
9G-1919	332
9G-1935	365
9G-2790	421
9G-3464	319
9G-3695	291
	292
	476
	511
	612
9G-4101	259
	263
	264
9G-4872	1
	434
	435
	436
	444
	445
	446
	448
	455
9G-5127	326
9G-7127	416
	420
	423
9G-7516	430
9G-8140	134
	151
	154
	674
9G-8615	296
9G-8661	743
9G-8909	179
	256
9G-9239	407
9G-9288	▶522
	552
9H-1031	30
9H-2082	269
9H-3360	469
9H-3757	259
	263
9H-5322	480
9H-5537	332
9H-6454	606
9J-0123	683
	688
9J-1722	631
9J-1979	605
9J-4523	708
	710
9J-5284	587
9J-5717	407
9J-5718	407
9J-5860	540
	542
9J-8126	623
	625
	627
	629
9J-9055	696
9K-0416	56
	58
9L-5854	31
9L-6770	171
9L-7712	74
9L-8925	10
9L-9068	361
9M-0853	83
9M-1503	331
9M-1974	56
	58
	105
	145
	188
	233
	299
	350
9M-2904	86
	568
9M-3835	377
	380
	391
9M-4007	296
	482
9M-4313	354
9M-4355	331
9M-5731	490
9M-5733	731
9M-5884	739
	763
9M-5894	307
	310
	313
	316

▶ **PRIMARY REFERENCE**

PART NUMBER INDEX

Part	Page	Part	Page	Part	Page	Part	Page
	431	9P-6572	739	9S-4372	346		354
9M-7394	522	9P-6911	421	9S-5279	480	9T-0094	540
9M-7539	327	9P-6912	421	9S-6130	296		542
9M-7609	259	9P-7053	430		633	9T-0098	540
	263	9P-7121	163	9S-8001	580		542
9M-7783	186		166		581	9T-1576	597
9M-7961	118	9P-7255	457		623	9T-1579	597
9M-8406	89	9P-7256	457		625	9T-1637	597
9M-9647	296	9P-7380	457		627	9T-1642	597
	330	9P-7823	455		629	9T-1643	597
9N-0720	124	9P-7990	3		631	9T-1878	546
9N-0869	145		430		642		548
	188	9P-8078	338		723	9T-2558	599
	292	9P-9150	361	9S-8002	71	9T-2559	599
9N-1756	649	9P-9388	780		72	9T-2560	599
9N-1941	126	9R-2216	674		125	9T-2581	599
9N-1995	430	9R-2613	269		231	9T-2582	599
	739	9R-2640	269		580	9T-2584	599
	753		796		581	9T-2856	612
	755	9R-4976	564	9S-8003	54		615
	824	9R-6776	696		723	9T-3493	539
9N-3666	118		698	9S-8004	40	9T-3928	590
9N-6108	17	9R-9733	154		73	9T-3929	550
9P-3066	377	9S-1018	338		585		590
	380	9S-1305	472		590	9T-5805	540
9P-3320	307	9S-1366	469		595		542
	310	9S-1803	175		609	9T-5809	535
	313	9S-2544	259		631		537
	316		263	9S-8005	54	9T-6043	494
9P-3366	307	9S-4167	148		71		646
	310	9S-4180	107		72	9T-6783	494
	313		642		73	9T-6960	646
	316	9S-4181	64		83	9T-6963	646
9P-3429	307		66		494	9T-7570	605
	310		105		581	9T-7571	605
	313		363	9S-8006	72	9T-7572	605
	316		364		73	9T-9850	▶494
9P-3467	307	9S-4182	54		83		496
	310		151		145	9U-8032	610
	313		225		469		611
	316		483		550	9U-8036	610
9P-3468	307		605		581		611
	310		612		584	9U-8069	354
	313		615		585	9U-8263	768
	316		633		586	9U-8746	768
9P-3471	307		700		593	9U-9409	439
	310	9S-4183	105	9S-8007	354	9U-9501	319
	313	9S-4185	54		642	9U-9577	462
	316		105	9S-8008	305		466
9P-3474	307		307		359	9U-9712	703
	310		310		595	9U-9821	469
	313		313	9S-8010	305	9V-2818	810
	316		316		354	9V-8427	657
9P-3657	307		431		496		658
	310		700		590	9W-0330	363
	313	9S-4190	145	9S-8230	387		364
	316		359		763		391
9P-4809	349	9S-4191	151	9S-8752	49		407
9P-4959	307		296		56	9W-0352	391
	310		305		58	9W-0648	393
	313		338		83	9W-0742	94
	316		354		134		▶184
9P-5531	331		483		155		256
9P-5708	430		700		304	9W-0852	729
	468	9S-4205	483	9S-9334	305		744

▶ **PRIMARY REFERENCE**

PART NUMBER INDEX

Part	Page	Part	Page	Part	Page	Part	Page
	757		435	9X-2317	559	9X-7418	157
	793	9W-9844	444	9X-2480	197	9X-7419	157
9W-1441	226		446		786	9X-7430	34
9W-1442	226	9W-9856	332	9X-2488	194		36
9W-1446	226	9W-9970	572	9X-3401	245	9X-7449	86
9W-1464	476	9X-0194	821		276	9X-7487	1
9W-1599	144	9X-0196	291		279	9X-7505	420
9W-1694	439	9X-0199	276	9X-3452	744		423
9W-2380	430	9X-0262	144	9X-3463	200	9X-7680	593
9W-2452	718		233		201	9X-8256	197
	719	9X-0358	772		202		227
9W-2738	463	9X-0941	185	9X-4244	202		257
	465	9X-1046	199	9X-4385	287		284
9W-2743	438		292	9X-4493	279		292
9W-2744	438		768	9X-4586	430		327
9W-2755	437		784	9X-4610	476		474
	438	9X-1054	290	9X-6153	180		476
9W-2822	407		744	9X-6165	197		490
9W-2877	574		759		203		613
9W-2971	369	9X-1138	793		204		616
9W-2977	331	9X-1386	231		729		623
9W-3714	338		248		759		625
9W-3990	▶425		772		785		627
9W-4361	205		775		786		629
	214	9X-1813	116		823		723
	216		179	9X-6281	490		729
	219		235	9X-6340	835		739
9W-4480	427		237	9X-6395	644		746
	428		238		645		757
9W-4481	455		239		647		760
9W-4681	683		240	9X-6417	431		763
	688		241	9X-6458	49		768
9W-5568	350		242		83		785
9W-5768	332		245		88		796
9W-6118	683		267		128	9X-8257	114
	688		273		134		152
9W-6260	439		275	9X-6615	490		387
9W-6261	439		290	9X-6772	192		391
9W-6612	330		511		193		565
9W-6958	391	9X-2027	572		478		592
	815		574		773		709
9W-6991	332		625	9X-7202	358		776
9W-7006	391		631	9X-7317	156	9X-8260	523
	407	9X-2038	143		157		525
9W-7041	675		827		158		527
	▶694	9X-2040	796	9X-7373	744	9X-8267	747
9W-7042	677	9X-2041	739	9X-7378	742		829
	▶695	9X-2042	189		773	9X-8268	15
9W-7043	694		227		776	9X-8281	145
9W-7044	695		292	9X-7380	773		340
9W-7919	▶426		753		776		674
9W-8277	439		755	9X-7381	773	9X-8372	836
9W-8297	332	9X-2043	474		776	9X-8399	544
9W-8298	332		751	9X-7382	772		546
9W-8365	720	9X-2044	753		773		548
	721		755		776	9X-8600	163
	722	9X-2045	474	9X-7383	773		166
9W-8394	194		751		776	9X-8699	159
9W-8546	683	9X-2046	770	9X-7385	742	9X-8872	48
	688		827		773	9X-8874	319
9W-9154	▶295	9X-2060	257		776	9X-8876	78
	335	9X-2085	151	9X-7404	535	9X-8895	62
9W-9173	391	9X-2125	803	9X-7412	531	9X-8918	765
9W-9243	703	9X-2205	163		533	9X-9120	257
9W-9499	434		166		540	9X-9825	257

▶ **PRIMARY REFERENCE**

PART NUMBER INDEX

Part	Page
9X-9896	203
	204
9Y-1792	97
	99
9Y-5281	86
9Y-6089	15
9Y-7595	103
9Y-9236	118
9Z-9304	414
9Z-9377	386
	390
0	
012-0380	273
030-1707	262
	283
030-1709	283
030-7335	377
	380
030-8324	778
030-8535	296
030-8538	307
	310
	313
	316
031-0214	799
031-1119	117
031-3185	49
032-9313	74
033-0512	367
033-5853	71
	72
033-6033	109
	168
	639
033-6039	595
033-6043	639
034-3679	144
036-9821	259
	263
036-9823	259
	263
045-4065	260
	264
053-0558	553
061-7208	107
061-7661	256
061-8561	326
061-8639	74
	87
061-9455	56
	58
	326
067-2551	151
	700
067-3161	455
068-4209	226
	773
	775
085-7539	640
085-8091	625
090-8635	105
095-0673	585
	586
095-0843	804
	807
095-0878	765
095-0879	231
095-0927	602
095-0939	604
095-0942	501
	595
095-1207	354
095-1750	635
095-9805	593
095-9806	533
096-3773	793
096-5516	597
096-5962	490
096-6166	192
	193
	647
099-5845	550
1	
100-3224	766
100-5072	156
	157
	158
100-5179	766
100-5218	10
100-5219	10
100-7399	32
100-8010	623
	625
	627
	629
	723
100-8011	623
	625
	627
	629
	723
100-8012	623
	627
	629
101-0003	817
	819
101-1741	301
101-2867	770
	799
101-3120	128
	151
101-3125	125
101-3129	144
101-6603	186
101-8240	194
101-8468	49
101-9754	354
102-1904	676
	680
	▶683
	684
	685
102-1937	▶409
	684
102-1938	675
	676
	▶684
102-2244	231
102-5861	49
102-6345	661
	662
	▶690
102-6346	▶676
	690
102-6347	▶676
102-6348	409
	410
102-6351	409
102-6357	409
102-8801	178
	197
	279
	287
	290
	291
	478
	612
	615
102-8802	94
	116
	170
	177
	178
	179
	209
	211
	214
	216
	219
	222
	226
	248
	249
	252
	267
	273
	275
	276
	278
	281
	283
	287
	290
	358
	583
	652
	653
	654
	655
	729
	742
	744
	757
	772
	775
	793
	819
102-8803	178
	209
	211
	214
	▶684
	216
	219
	236
	237
	245
	277
	279
	281
	283
	287
	290
	291
	511
	583
	700
	744
	772
	793
102-8804	178
	231
	235
	287
	290
	291
	299
	476
	478
	490
	497
	511
	517
	650
	651
	772
	775
102-8805	178
	187
	211
	214
	216
	219
	272
	279
	287
	290
	291
	292
	476
	772
	775
	793
	821
	826
	829
102-8806	179
	197
	230
	283
	287
	290
	471
	793
102-9089	12

▶ **PRIMARY REFERENCE**

PART NUMBER INDEX

Part	Page
102-9445	177
103-4656	151
103-6100	772
	775
103-6262	476
103-6293	407
103-8134	10
103-8236	564
103-9527	728
	736
	▶744
104-2091	770
104-3132	295
104-3133	307
	310
	313
	316
104-3136	307
	310
	313
	316
104-3137	307
	310
	313
	316
104-3139	307
	310
	313
104-3140	307
	310
	313
104-3153	307
	310
	316
104-3494	444
	445
	446
	448
104-4820	17
104-5771	387
104-5773	387
104-6202	281
	283
104-6729	299
104-6730	299
104-9270	74
105-8034	279
105-8901	103
105-9659	736
	737
	▶780
106-1017	531
	533
106-1226	584
106-1792	127
106-3958	480
106-3959	480
106-4150	296
	▶303
	346
106-4572	114
106-5472	490
106-5673	40
106-5823	194
106-7364	661
	662
	664
	665
	▶672
106-7365	664
	665
	▶691
106-7798	331
106-8186	363
	364
106-8187	363
	364
106-9212	350
107-0583	49
107-3114	595
107-3786	291
107-3944	444
	445
	446
	448
107-3945	444
	445
	446
	448
107-3946	434
	436
107-3947	434
	436
107-4057	434
	435
	436
107-4393	772
107-4394	772
107-4399	772
107-5769	155
107-7088	307
	310
	313
	316
107-7089	307
	310
	313
	316
107-7378	7
	▶66
108-0685	669
108-1028	▶669
	671
108-1225	574
108-1226	574
108-1806	669
108-2735	331
108-2736	331
108-3138	768
108-3612	127
108-4086	766
108-4087	766
108-4103	766
108-4430	359
108-5157	647
108-6259	178
108-6523	354
108-7930	111
108-8283	672
	673
108-8290	▶676
108-8291	▶678
	691
108-8292	683
	688
108-8294	683
108-8295	683
108-8318	678
	685
	686
	▶688
	689
108-9382	6
	7
	▶43
109-0072	88
109-0077	105
109-0078	88
109-1633	103
	326
	773
	775
109-1634	103
	326
	773
	775
109-1657	8
	▶46
109-1779	593
109-3036	653
109-3875	772
109-3969	350
109-4203	125
109-4670	546
	548
109-5196	4
109-5674	670
109-5675	669
109-5676	670
109-5839	66
109-6347	683
109-6778	▶544
	671
109-6779	544
	546
	548
109-6781	544
109-6783	544
109-6784	546
	548
109-8832	530
	▶546
109-8833	530
	▶548
109-8836	546
109-8837	548
109-9113	717
	▶720
109-9114	720
110-0203	279
110-2631	469
110-2665	307
	310
	313
	316
110-2842	359
110-2966	688
110-4344	60
110-4506	772
110-5205	572
	574
110-5207	572
110-5358	159
110-5744	▶670
	671
110-5887	667
110-5890	572
	574
110-5918	564
110-5979	92
110-6109	793
110-6393	728
	736
110-7421	683
	688
110-7524	739
110-7886	793
110-7887	291
110-8318	92
110-8319	92
110-8330	130
	131
	283
110-8379	490
110-8760	821
110-8826	92
110-8827	92
110-9734	354
111-0343	652
	653
	655
111-1588	574
111-2104	696
	698
111-2355	6
	7
	▶60
111-2721	111
111-3780	490
111-3781	490
111-4402	177
111-4919	336
111-7421	114
111-7745	572
111-7746	572
111-8314	205
	206
	209
	211
	214
	216
	219
111-8513	602
111-8514	602
111-8515	602
111-8516	602
111-8517	602
111-8519	602
111-8523	602
111-8792	550

▶ PRIMARY REFERENCE

PART NUMBER INDEX

Part	Page	Part	Page	Part	Page	Part	Page
111-8938	501	115-3072	179	120-5821	504		264
111-8947	501	115-3073	612	120-9027	203	125-6537	260
111-9099	590		615		204		264
111-9101	590	115-4371	493	120-9243	56	125-9740	759
111-9105	590	115-6433	564		58	126-0588	307
111-9106	590		610	120-9317	151		310
111-9251	490		611	121-3042	593		313
111-9289	194	116-1895	629	121-3307	775		316
111-9827	194		▶646	121-5907	462	126-0814	564
112-0858	478	116-6202	772	121-6649	625	126-1103	668
	511		775		▶647	126-1104	668
112-1574	326	116-7885	64	121-8886	139	126-1756	49
112-2471	694		66	122-0447	36	126-1757	56
	695	116-8038	669	122-1133	654		58
112-2671	574		670	122-1472	10	126-1767	279
112-4511	332	116-8046	669	122-3771	361	126-1813	564
112-7308	331		670	122-6607	602	126-4935	105
112-7309	332	116-8050	672	122-7375	34	126-5948	650
112-8186	105		673		36		651
112-9217	49	116-8052	672	122-8612	36	126-7574	197
112-9736	391		673	122-9350	546	126-7631	6
113-0715	136	117-1071	815		548		7
113-0716	136	117-1073	815	122-9351	546		▶186
113-3239	676	117-1385	333		548	126-8449	186
	▶685	117-1855	815	123-0791	173	127-0116	307
113-3240	▶679	117-2311	226	123-3202	10		310
113-3241	679		290	123-3294	585		316
	685	117-3355	420		586	127-0929	125
	▶689	117-4013	416	123-3299	599	127-2170	187
113-3394	324		420	123-5150	94		490
113-4417	599		423	123-5748	597		746
113-5304	83	117-4015	416	123-6855	122		747
113-6041	▶410		420	123-6856	122		753
	689		423	123-7556	550		755
113-6317	410	117-4491	809	123-9624	625	127-3422	416
113-6318	410	117-4492	725	124-1854	40	127-4832	595
113-9326	563	117-4897	83	124-1855	40	127-5485	283
114-0795	326	117-7127	346	124-2463	136	127-7443	255
114-2194	322	117-8131	796		138	128-0317	111
	703	117-8727	570		139	128-2661	49
114-2195	322	117-8801	49		141	128-2779	620
114-2197	322	117-9066	757	124-7000	94	128-2780	581
114-2492	404		759		256		▶620
114-2496	833	118-0275	326	124-8335	521	128-3231	269
114-2497	833	118-3288	424	124-8490	744	128-5040	826
114-3469	742	118-3291	424	124-8966	469	128-6157	226
114-4502	715	118-4728	118	124-9325	177	128-8423	159
	▶721	118-8138	574		▶235	129-1609	338
114-4503	721	118-8586	326	125-0434	105	129-3178	729
114-5333	772	118-8706	336	125-1302	226		759
	775	119-0036	12		256	129-3180	203
114-5988	835	119-0942	641		▶273		204
114-8843	177	119-6109	634	125-2001	▶205	129-5082	574
	178	119-6110	634		209	129-5427	56
	179	119-6112	634		211		58
	256	119-6113	634		216	129-5428	56
	257	119-6114	597	125-2140	1		58
	283		▶634		▶441	130-1977	568
	612	119-8455	535	125-4655	▶434	130-3265	476
114-9363	214		537		468	130-3281	132
114-9365	211	120-4394	550	125-5341	299		133
	214		595	125-5835	225	130-4698	49
115-1032	214	120-5727	593	125-6535	260	130-4701	49
	219	120-5729	593		264	130-5300	287
115-2947	572	120-5820	504	125-6536	260		291

▶ **PRIMARY REFERENCE**

PART NUMBER INDEX

Part	Page
130-5301	222
130-6366	709
130-9191	568
130-9811	253
	254
131-0447	476
131-1625	▶427
	468
131-1626	▶428
	468
131-1642	427
131-1643	428
131-1651	429
131-3539	747
131-4242	765
131-5167	765
131-7184	531
	533
131-7823	531
	533
131-9306	480
131-9307	480
132-0338	725
132-5121	535
	537
132-5122	535
	537
132-5123	▶537
	712
	713
132-5146	540
	542
132-5147	540
	542
132-5149	▶542
	712
	713
132-5789	179
	281
	283
	287
	299
132-7077	490
132-7419	476
132-7450	476
132-7994	696
132-8502	159
132-8875	483
132-8928	668
132-8930	668
132-8931	668
132-9271	▶668
132-9455	489
132-9770	233
132-9899	361
132-9900	361
133-0261	249
133-0772	350
133-1274	483
133-1287	483
133-2198	305
133-2199	483
133-2249	497
133-3359	127
133-4772	350
133-5545	581
	648
133-5631	420
	423
133-6567	350
133-7023	173
133-7810	576
133-8528	483
133-8715	759
133-8743	599
133-9012	759
133-9116	155
133-9906	143
133-9907	▶143
	304
134-0165	772
134-0825	715
134-0978	1
	▶206
134-1251	361
134-1935	829
134-2540	290
134-2679	455
134-2680	455
134-3518	759
134-4126	197
134-6054	105
	▶116
134-7258	835
134-7489	550
134-8107	713
	▶715
135-0611	826
	829
135-2803	▶696
	713
135-2804	696
135-5102	709
135-5105	709
135-5109	709
135-5111	707
	▶709
135-5113	708
	709
	710
135-5114	709
135-6410	▶568
	712
	713
135-6411	568
135-6413	568
135-6414	568
135-6415	568
135-7935	595
135-8853	593
136-1107	111
136-1122	578
136-1543	791
136-1544	725
136-3188	829
136-3189	826
136-3191	826
136-3193	826
136-3196	829
136-4183	52
136-4303	105
136-7226	89
136-7227	72
136-7921	696
	698
136-8423	593
136-8424	107
137-3928	502
137-3937	835
137-4835	307
	310
	313
	316
137-4836	308
	310
	314
	317
137-5817	511
137-6603	359
137-7081	561
137-8793	488
137-8794	488
138-0430	712
	▶716
138-0431	657
	716
138-0875	717
	▶722
138-0876	722
138-7772	457
138-8455	703
139-0617	464
	465
139-1536	605
139-2118	177
139-2455	568
139-2456	568
139-3885	602
139-7700	457
139-7701	457
140-0860	177
140-7480	785
	786
140-9699	▶420
	468
141-0247	599
141-0248	599
141-0249	599
141-0250	599
141-0251	599
141-0252	599
141-5169	770
141-6787	653
141-9308	151
141-9784	759
142-2329	32
142-2526	511
142-5867	29
142-5868	54
142-8620	744
143-1288	804
	807
143-2466	216
	219
144-0195	439
	821
	824
	829
144-0326	511
144-0331	476
	508
	510
	511
144-0367	103
	107
144-9088	589
144-9101	550
145-0060	159
145-0326	817
	819
145-1144	352
	498
145-3405	490
145-6669	132
145-7028	177
	▶252
	283
145-7328	824
145-8274	529
145-8276	529
145-8277	529
145-8278	529
145-8503	99
145-9987	132
	133
146-3672	574
146-3730	561
146-6346	826
146-6747	256
	835
147-0319	▶200
	205
	214
	219
147-1444	290
147-1445	290
147-1446	290
147-6116	535
	537
147-7109	125
148-7482	8
	▶79
148-8305	326
	553
148-8311	439
	778
148-8312	118
	144
148-8313	326
148-8317	92
	326
148-8318	107
	564
148-8323	553
148-8326	612
	615
148-8334	553
148-8335	92
	557
148-8336	151

▶ **PRIMARY REFERENCE**

PART NUMBER INDEX

Part	Page	Part	Page	Part	Page	Part	Page
	504	150-3037	194	153-7024	39		281
	564	150-3056	565	154-1580	587		283
	576		700	154-3309	434		287
	612	150-3059	326		435		290
	615	150-3065	553		436		291
	633		625	154-4492	696		299
	700		627		698		332
148-8338	564		629	154-6165	564		612
148-8339	485		723	154-7016	563		615
148-8340	144	150-3069	576	154-8079	747		700
	700	150-3070	565	154-9023	107		744
148-8347	485	150-4048	94	155-0696	188		759
148-8352	94		151	155-0698	188		772
148-8353	144		194	155-0755	401		775
	559	150-4049	439		414	155-2271	287
148-8355	92	150-4050	700	155-0809	31		290
148-8357	553	150-4279	6	155-0810	31		291
	564		7	155-2255	178		332
148-8359	439		▶155		197	155-2272	178
148-8360	485	150-5931	159		281		179
148-8362	565	151-1398	226		283		187
148-8364	326	151-2898	173		287		283
148-8365	144	151-2900	173		290		478
	151	151-4977	513		291		772
148-8367	612		515		478		775
	615		517		612	155-2274	178
148-8372	144		519		615		279
148-8378	107	151-5925	68		759		283
	504		69	155-2256	290		287
	612	151-5966	49	155-2257	283		290
	615	151-6283	199		290		291
148-8381	144	151-9275	476	155-2260	178		478
	327	152-1035	118		238	155-2276	241
148-8388	485	152-6760	655		239	155-2793	31
148-8390	553	152-7582	35		240	155-3624	54
	565	152-8338	652		241		151
148-8395	54	152-8340	581		242		612
148-8407	151		▶652		279		615
	700	152-8346	642		281		633
148-8409	359		▶653		283		700
148-8410	359	153-0136	821		287	155-5619	54
	488	153-1256	111		290	155-7319	118
148-8411	54	153-2073	▶201		291	155-7321	778
	700		206		511	155-8096	▶455
148-8412	700		208		700		468
148-8416	559		209		772	155-9524	56
148-8424	564		211	155-2265	178		58
	612		216		279	156-4283	485
	615	153-4247	354		281	156-5198	112
148-8431	92	153-4906	73		287	156-5545	725
	94	153-5043	252		290	156-5970	358
148-8433	107	153-5481	331		478		497
148-8442	564	153-5482	331	155-2270	151		654
148-9263	179	153-5710	177		178	156-6175	222
	287		256		179		291
148-9727	564	153-6230	94		209	157-0670	107
149-5268	43	153-6238	485		211	157-1361	793
149-5452	576	153-6240	144		214	157-2284	650
149-5933	159	153-6251	523		216		651
149-6371	772		525		219	157-3106	455
	775		527		222	157-3107	455
149-7378	25	153-6256	145		226	158-0248	200
149-9110	49	153-6281	177		249		201
150-1293	517		256		274	158-0250	200
150-3036	151	153-7023	39		279		201

▶ **PRIMARY REFERENCE**

PART NUMBER INDEX

Part	Page
158-0252	200
	201
158-2734	476
158-2735	476
158-3416	49
158-6632	▶276
	290
158-7864	836
158-9956	580
	▶621
159-1503	778
159-1533	49
159-2950	811
	▶812
159-6159	6
	7
	▶16
159-7351	478
159-8047	283
159-8050	179
159-8524	49
159-9796	▶698
	712
160-1433	490
160-1434	490
160-2443	▶236
	490
160-2539	▶421
	468
160-4926	341
160-4927	308
	314
	316
	▶341
160-5843	650
	651
160-5844	650
	651
160-6307	666
	667
160-6310	531
160-7165	812
	813
	▶817
160-7186	803
	▶813
160-7271	16
160-7689	178
	283
	290
160-7690	197
161-0000	564
161-0158	605
161-4370	▶459
161-5967	765
161-6149	501
	635
	640
	648
161-6154	621
	622
161-6161	635
	648
161-7419	188
161-9289	812
	813
	814
161-9926	▶238
	283
162-1604	593
162-2166	444
	445
	446
	448
162-2167	434
	435
	436
162-2266	80
162-2679	97
162-2682	97
162-5357	361
	▶488
162-5358	488
162-5369	151
162-7838	148
162-7862	444
	445
	446
	448
162-7863	434
	435
	436
162-8387	508
162-8389	508
162-9728	175
163-0683	599
163-1135	819
163-1146	817
163-1201	179
163-1623	523
	525
	527
163-2478	39
163-4565	16
163-5455	136
	138
	139
	141
163-5456	136
	138
	139
	141
164-1234	819
164-2108	352
	353
	498
164-3417	163
	166
164-3651	177
164-4180	363
	364
164-4210	▶307
	335
164-4531	725
164-4883	790
	792
164-5567	612
	615
	623
	625
	627
	629
	723
164-5574	485
164-5577	553
164-5605	633
164-5616	633
164-5624	151
164-5798	175
164-5808	307
	310
	313
	316
	531
	533
164-6858	700
164-6860	553
164-7556	202
164-7577	177
	▶267
	483
164-8101	208
164-9436	▶185
	269
164-9541	490
165-3726	574
165-3930	54
165-3932	54
165-4852	346
165-4854	346
165-4932	485
165-5970	177
	▶277
165-6170	87
165-6970	597
165-7787	299
165-7855	405
165-7860	405
165-7861	405
165-7862	405
165-8633	523
	525
	▶531
165-9100	490
165-9103	490
165-9104	490
165-9142	480
165-9143	480
166-0663	480
166-0666	348
	▶480
166-1810	▶658
	717
166-1815	711
	▶717
166-1820	▶710
	711
166-1821	710
166-1855	531
166-2340	105
166-2903	34
	36
166-2904	34
	36
166-3320	435
166-3321	435
166-3324	435
166-3501	105
166-3544	331
166-3777	471
166-5229	290
166-6358	173
166-6781	817
166-6930	307
	310
	313
	316
166-6931	307
	310
	313
	316
166-7408	599
166-7409	599
166-7410	599
166-9144	56
	58
167-0642	35
167-0643	35
167-1795	144
167-1884	205
	214
	219
167-1947	397
	▶435
167-2190	539
167-2208	531
	533
	540
	542
167-2209	535
	537
167-2211	544
	546
	548
167-2300	539
167-2319	542
167-2320	537
167-2324	544
	546
	548
167-4407	105
167-8081	30
167-8083	30
167-8130	41
167-8610	785
	786
167-9524	352
	353
168-3379	601
168-6448	587
168-7800	127
	135
168-8772	768
169-0486	350
169-0697	792
169-1026	807
169-2876	835
169-7055	332
169-7380	817
	819

▶ PRIMARY REFERENCE

PART NUMBER INDEX

Part	Page
169-7443	772
	775
170-0235	772
	775
170-1112	725
170-1114	725
170-1115	725
170-3357	580
	▶635
170-3461	290
170-4737	35
170-4738	35
170-5293	772
	775
170-5632	192
	193
170-7485	653
170-9900	590
171-1230	804
	807
171-3054	597
171-3055	597
171-3057	597
171-3058	597
171-3059	597
171-3060	597
171-3061	597
171-4047	770
171-4358	105
171-5349	248
171-5989	597
171-5990	599
171-6682	804
	807
171-7077	475
	749
	750
171-8772	654
172-0197	105
172-2391	497
172-2392	489
	▶497
172-2416	804
	807
172-4275	296
172-4863	226
172-8833	668
173-0887	354
173-1028	▶725
	804
	807
173-1498	173
173-1957	412
173-2052	791
173-3071	307
	310
	316
173-3083	809
173-3283	807
173-3993	623
	625
	627
	629
	723
173-5787	812
	813
	814
173-7035	812
	813
	814
173-7126	149
173-9431	136
173-9682	531
173-9749	144
	▶148
173-9779	539
174-0503	283
	287
	290
174-1495	744
174-1497	729
174-2231	▶765
	817
174-2237	765
174-3091	513
	519
174-3874	7
	▶412
174-4590	834
174-4599	833
174-4600	833
174-4895	132
	133
174-4909	488
	▶498
174-7462	16
174-7464	6
	▶154
174-7875	177
174-9169	255
174-9570	▶149
	169
175-0453	629
175-1366	16
175-1367	16
175-1447	658
	716
175-1448	658
	716
175-1529	513
	515
175-2962	▶467
175-3265	513
	517
	519
175-3617	35
175-3721	54
175-3761	826
175-4170	508
175-4972	361
	▶489
175-5058	726
175-7162	772
	775
175-7900	539
175-7903	531
	533
176-0259	361
176-7507	595
176-7511	595
176-7512	595
176-7513	595
176-7517	595
176-7518	595
176-7520	595
	▶637
176-7692	595
177-1862	799
177-1863	804
	807
177-2970	658
177-2971	658
177-4152	10
177-4651	421
	▶423
177-4930	791
177-4937	806
	809
177-8839	775
177-9653	290
177-9656	290
178-0266	731
178-0603	▶804
	806
178-0604	▶790
	804
178-0605	790
	▶791
	792
178-0606	▶806
	813
	814
178-4164	550
178-4171	550
178-7907	791
178-8894	753
	755
179-4324	222
	784
179-6823	1
	▶416
179-7376	508
179-9387	▶499
180-0050	187
	291
180-3748	739
180-6213	593
180-7180	773
	775
180-7304	▶807
	809
180-7305	▶792
	807
180-7350	68
	69
180-9340	238
	239
183-1961	214
	219
183-2121	▶460
183-2122	▶460
183-2123	▶461
183-2124	▶461
183-2127	▶462
183-3408	73
183-3409	71
	72
183-4584	177
	▶247
183-5106	▶742
	743
183-7262	496
183-8416	550
	589
183-8429	501
184-2298	804
	807
184-2299	804
	807
184-4395	455
184-6011	▶809
	812
185-0002	553
185-2058	151
185-2638	171
185-2639	171
185-2644	171
185-2645	171
185-2647	171
185-2648	171
185-2650	171
185-2651	171
185-2653	171
185-2654	171
185-2655	171
185-2658	171
185-3503	361
185-3666	796
185-6393	256
	262
185-7593	▶310
185-9464	226
186-0780	437
186-0781	437
	438
186-2001	39
186-2002	125
186-2949	1
	▶313
186-3161	296
186-3277	313
186-3641	403
186-3735	116
	170
	177
	179
	235
	248
	267
	272
	273
	275
	277
	278
	291
	358
	476
	497
	511
	513

▶ **PRIMARY REFERENCE**

PART NUMBER INDEX

Part	Page
	517
	583
	651
	652
	654
	655
	757
	772
	775
	793
	826
	829
186-3736	274
	511
186-4857	821
186-5107	726
	819
187-0541	635
187-1503	68
187-1679	163
	166
187-5275	139
187-5341	698
187-5420	56
	58
187-7719	759
187-8001	590
187-8567	588
187-8677	94
	256
187-8979	49
187-8980	49
187-8981	29
187-9630	623
	625
	627
	629
	723
188-0532	3
	▶397
188-1079	▶507
	515
188-1080	517
188-2128	151
188-2199	231
188-2501	553
188-2526	▶368
188-2557	430
188-2559	3
188-5095	136
	138
	139
	141
188-6140	504
	▶609
188-6141	609
188-7067	359
188-7068	359
188-7069	359
188-8044	835
188-8849	200
	201
188-8963	403
188-9042	403
188-9644	224
189-0189	652
	655
189-0852	249
189-1839	497
189-2160	368
189-2305	517
189-3063	317
189-3064	316
189-3065	316
189-3158	226
189-4918	29
189-5746	▶248
	283
189-6123	52
189-6244	317
189-8867	316
189-8868	316
189-9240	732
	783
190-0643	173
190-3443	155
190-5386	834
190-7613	291
190-7614	279
190-7615	283
	287
190-8429	▶403
190-8505	751
190-8609	457
191-1443	▶583
	700
191-1782	144
191-1783	144
191-2933	814
	▶819
191-7585	604
191-7587	604
191-7591	604
191-7592	604
191-7594	604
191-7596	604
191-7597	604
191-7599	588
191-7600	638
191-7605	638
191-7607	637
191-7608	638
191-8303	250
191-8304	333
191-8305	333
191-8726	177
191-8729	256
192-0542	6
	7
	▶78
192-0942	589
192-4151	74
192-4370	639
	640
192-4658	513
	515
	517
	519
192-5112	457
192-7752	819
192-7755	819
192-7760	819
192-7767	819
192-7783	819
192-7787	819
192-7790	819
192-7795	819
192-7799	819
192-7805	819
192-7810	819
192-7812	819
192-7820	819
192-7822	819
192-7848	819
192-9147	▶316
	397
192-9219	601
193-0711	299
193-3973	92
193-4476	513
	515
	517
	519
193-5463	356
193-7004	574
194-3279	638
194-3280	638
194-3284	638
194-3285	637
	638
194-3286	▶588
	637
	638
194-3287	637
194-3288	637
194-3289	637
194-3899	595
	▶638
194-4497	588
194-5171	826
	829
194-5226	240
	241
194-6722	▶239
	243
194-6725	144
	▶240
	244
194-6849	588
194-8031	199
195-0319	111
195-1174	3
	▶668
195-1444	430
195-1445	430
195-3187	40
195-3324	588
195-3325	588
195-3326	588
195-3327	588
195-3328	588
195-7430	654
195-7869	511
195-7870	511
195-7871	511
195-7872	511
196-0227	593
	▶601
196-1353	3
	▶397
196-4250	640
196-4254	640
196-4813	105
196-5069	74
196-5070	74
196-8561	▶457
	468
196-8564	▶405
196-9444	640
196-9954	▶444
	468
196-9955	442
	443
	▶446
	468
196-9956	444
	445
196-9957	446
	448
196-9987	▶502
	506
197-0398	557
197-1932	757
197-4971	49
197-6281	192
197-7689	817
197-7701	652
197-8006	105
197-8391	151
	233
	▶253
197-8392	233
	▶254
197-8820	▶171
	173
197-9296	68
197-9360	68
	69
198-1508	6
	7
	▶97
	▶99
198-4605	358
198-4607	354
	▶358
198-9172	407
198-9706	747
	784
198-9898	▶74
	79
199-5128	192
	193
199-5142	193
199-5522	438
199-5523	438
199-5525	▶437
	459
	460
	461
	462

▶ PRIMARY REFERENCE

PART NUMBER INDEX

Part	Page
	463
	464
	466
199-5531	▶438
	465
	466
199-5536	▶462
199-5537	▶463
	468
199-5538	▶463
199-7891	171
199-8436	171
199-9800	177
	256
2	
200-0750	▶500
	564
200-2354	574
200-2434	▶396
	419
200-2964	609
200-3174	810
	▶814
200-6345	92
	564
200-7136	398
	401
200-7836	753
	755
200-7958	324
200-7959	324
200-7961	324
201-0950	580
	▶654
201-6617	▶249
	251
201-7269	▶359
	361
201-7274	▶361
	493
202-2719	335
	▶348
202-2720	▶319
	348
202-2721	▶299
	348
202-2722	▶331
	348
202-2723	▶296
	348
202-2725	296
202-2729	331
202-2731	299
	▶350
202-3572	99
202-4327	226
202-6535	640
202-6614	202
202-7999	326
	▶336
202-8000	336
	▶338
203-1095	595
203-2070	744
203-2199	▶464
203-2200	▶464
203-2789	553
203-3940	250
203-4157	581
	▶655
203-7703	812
	813
	814
203-8822	74
203-8824	74
203-9380	▶411
203-9381	411
	430
203-9382	411
	430
203-9383	411
	430
204-1324	430
204-1327	▶430
	468
204-2281	94
	256
	290
	564
204-2799	593
204-6606	199
204-7414	552
	▶553
204-7440	503
	▶576
204-7462	▶523
	661
	664
204-7463	▶525
	661
	664
204-8000	177
	226
	283
	290
204-8758	499
	500
204-9316	▶48
	49
204-9530	744
204-9531	744
204-9532	744
204-9840	414
204-9874	407
204-9876	1
	▶407
205-0311	100
205-0626	171
205-2941	513
	515
205-3079	177
	283
205-3255	332
205-3645	▶759
	763
205-4157	346
205-4177	346
205-4184	344
205-4186	344
205-4187	344
205-4189	344
205-4190	344
205-4191	344
205-4192	344
205-4196	344
205-4198	▶344
	346
205-4199	335
	▶346
205-4652	326
	▶354
205-4707	363
205-4709	9
	▶62
205-6388	806
	809
205-7048	739
205-7248	673
205-7249	▶673
205-7331	490
205-8366	326
205-8367	326
205-8369	326
205-8370	326
205-8371	326
205-8570	1
	▶391
205-8571	1
	▶321
205-8574	1
	▶834
205-8575	▶833
	834
205-8576	795
	▶796
205-8577	1
	▶162
205-8578	1
	▶177
205-8579	▶290
	795
205-8581	552
	▶559
205-8582	552
	▶564
205-8583	552
	▶578
205-8586	▶194
205-8587	9
	▶173
205-8588	9
	▶121
205-8589	9
	▶301
205-8590	9
	▶521
205-8593	9
	▶123
205-8594	9
	▶100
205-8595	9
	▶124
205-8597	9
	▶103
205-8600	▶2
205-8601	▶1
	2
205-8602	2
	▶552
205-8603	2
	▶6
205-8604	2
	▶9
205-8605	2
	▶335
205-8606	2
	▶468
205-8607	▶503
205-8609	▶77
205-8610	9
	▶129
205-8611	9
	▶114
205-8612	▶506
205-8615	▶485
	552
205-8617	▶302
	335
205-8619	▶326
	335
205-8624	2
	▶190
205-8630	▶736
205-8631	736
	▶772
205-8632	1
	▶363
205-8634	1
	▶778
205-8636	▶506
205-8638	▶728
205-8639	728
	▶775
205-8640	1
	▶736
206-0056	299
206-2603	331
206-2940	331
206-4198	52
206-4225	52
206-4231	52
206-4236	52
206-4473	336
206-4475	338
206-5214	430
206-5575	144
206-5823	826
	831
	832
206-7335	9
	▶120
206-7339	9
	▶125
206-7340	125
206-7341	121
206-7342	121
	▶122

▶ **PRIMARY REFERENCE**

PART NUMBER INDEX

Part	Page
206-7346	9
	▶126
206-7353	521
206-7355	103
206-7363	114
206-7364	9
	▶118
206-7365	▶117
	118
206-7371	9
	▶86
206-7383	114
206-7421	513
206-8637	▶763
	795
206-8666	338
206-8670	336
206-8684	338
206-8686	338
206-8690	338
206-8706	338
206-9254	125
207-0449	8
	▶49
207-0545	150
	437
	438
207-1287	335
	▶469
207-1290	469
207-1291	469
207-1292	469
207-2833	326
	▶356
207-4253	772
	775
207-4285	773
	775
207-4455	506
	▶570
207-4456	190
	▶191
207-4457	190
	▶191
207-4458	▶190
207-4800	1
	▶800
207-4801	1
	▶787
207-4802	1
	▶144
207-4803	335
	▶342
207-5248	74
207-7434	623
	625
	627
	629
	723
207-7435	623
	625
	627
	629
	723
207-7436	623
207-7437	623
	625
	627
	629
	723
207-7438	623
207-8211	52
207-8213	52
208-1539	578
208-1540	578
208-1542	559
208-1543	559
208-1544	559
208-1545	559
208-1546	559
208-1547	559
208-1548	559
208-1552	564
208-1553	564
208-1554	564
208-1555	564
208-1558	564
208-1559	564
208-1564	564
208-1568	553
208-1569	553
208-1572	553
208-1573	553
208-1574	553
208-1578	485
208-1579	485
208-1587	485
208-1592	485
208-1594	576
208-1597	2
	▶557
208-1598	557
208-1599	557
208-1600	557
208-1601	557
208-1607	▶504
208-5460	354
208-5837	132
208-6067	508
208-6070	▶508
	513
208-6072	503
	▶513
208-6074	▶515
	552
208-6075	187
	▶517
208-6081	508
	513
	519
208-7448	125
208-7524	336
208-8632	100
208-8695	787
208-8696	787
208-8697	800
	801
208-8899	338
208-9647	471
208-9670	602
208-9683	612
	615
208-9766	736
209-0381	290
209-2608	▶187
	506
209-2609	506
	▶700
209-2667	338
209-3424	343
209-3426	302
	▶343
209-3428	343
209-3569	16
209-5154	▶747
	795
209-5155	746
209-5157	731
209-5161	770
209-5162	770
209-5163	751
209-5164	751
209-5192	736
	▶751
209-5193	770
209-5194	770
209-5196	269
	751
209-5204	770
209-7306	47
209-7307	6
	7
	▶47
209-7803	177
209-7804	178
209-7805	178
209-7807	283
209-7808	178
209-7809	178
209-8217	763
209-8389	9
	▶255
209-8423	9
	▶262
209-8621	52
209-8622	54
209-8624	52
209-9331	796
209-9336	269
	796
209-9342	269
	796
209-9343	269
	796
209-9356	493
209-9359	326
209-9360	335
	▶493
209-9537	796
209-9542	747
209-9590	326
209-9706	796
209-9770	52
209-9771	52
209-9782	363
	364
210-1071	407
210-1549	407
210-1550	407
210-1652	388
	389
	390
210-1653	384
	385
	386
210-1654	388
	389
	390
210-1655	384
	385
	386
210-1660	384
	385
	386
210-1661	388
	389
	390
210-1663	384
	385
	386
210-1668	▶371
	384
	386
210-1669	▶372
	388
	390
210-1671	388
	389
	390
210-1673	384
	385
	386
210-1674	388
	389
	390
210-1676	384
	385
	386
210-1677	388
	389
	390
210-1678	377
	380
210-1679	377
	380
210-1680	377
	380
210-1681	77
	▶377
210-1684	▶373
	385
210-1686	▶374
	389
210-1689	1
	▶387
210-1692	387
210-1693	387
210-1717	371
210-1718	372
210-1719	373

▶ **PRIMARY REFERENCE**

PART NUMBER INDEX

Part	Page	Part	Page	Part	Page	Part	Page
210-1720	374	211-5358	726		▶770	214-1095	552
210-2262	799		819	212-8948	770		▶592
210-2263	799	211-5431	578	212-9973	770	214-1096	1
210-2266	799	211-5436	559	212-9974	770		▶803
210-2268	799	211-5474	553	212-9975	770	214-1097	592
210-2270	▶799	211-5959	105	212-9976	770		▶593
	804	211-6092	391	213-1046	256	214-1098	592
	807	211-6636	124	213-1100	736		▶595
210-3301	290	211-7589	▶131		737	214-1099	552
210-4458	346	211-7816	612		825		▶585
210-7429	398		▶723	213-1116	▶322	214-1100	557
210-8370	398	211-7817	610	213-1280	279		▶586
210-8372	398		▶612	213-2304	226	214-1196	▶810
	400	211-9085	302	213-3064	226	214-1197	▶811
	401	211-9087	302	213-3217	68	214-1703	226
210-8373	1	211-9294	819		69	214-1740	736
	▶398	211-9295	6	213-4998	203		▶782
210-8543	391		7		204	214-1751	770
210-8544	391		▶105	213-6382	▶802	214-1760	736
210-8545	391	211-9297	2	213-6661	178		737
210-8546	391		3	213-6662	612		▶768
210-8547	391		▶443		615	214-1770	736
210-8548	393	211-9298	443	213-6664	178		737
210-8549	394	211-9491	570	213-6665	179		▶826
210-9246	89	211-9957	523	213-6666	179	214-1780	736
211-0592	29		525	213-6667	256		737
211-0679	163	211-9958	525	213-6668	256		▶824
211-0681	162	212-0907	231	213-6669	257	214-1790	▶821
	▶163	212-2086	41	213-6671	257		823
211-1067	564	212-2113	6	213-6672	179	214-1800	737
211-1808	835		7	213-6673	▶192		▶739
211-2842	377		▶41	213-6675	▶256		741
	380	212-2297	▶483	213-6678	439	214-1801	739
211-2853	114		485	213-8790	340	214-1802	753
211-2854	114	212-2298	483	213-8791	326		755
211-3122	39	212-2301	336	213-8793	326	214-1808	739
211-3123	39	212-2770	747		▶340	214-1838	826
211-3686	226	212-4888	504	213-9100	179	214-1962	471
211-3703	226	212-4890	504	213-9242	639	214-2014	▶746
211-4232	290	212-4994	751	213-9247	639		795
211-5053	2	212-5076	700	213-9253	1	214-2015	731
	3	212-5077	700		▶439	214-2484	233
	▶130	212-6157	226	213-9906	114		▶250
211-5056	▶561	212-6167	226	214-0535	321	214-2539	▶193
211-5059	▶529	212-6168	226	214-0538	321	214-2540	▶189
211-5062	▶561	212-6169	226	214-0783	▶726	214-3316	770
211-5065	▶3	212-7537	103	214-0784	726	214-3876	398
211-5067	▶413	212-7543	114	214-0790	326		401
211-5068	2	212-7547	114	214-1079	611	214-3877	322
	4	212-7548	121		▶615		703
	▶815	212-7551	114	214-1080	612	214-4176	▶731
211-5069	▶2	212-7557	9		615		746
211-5072	▶3		▶107		▶623	214-4193	1
211-5077	▶2	212-7559	107	214-1081	612		▶795
211-5078	2	212-7561	91		615	214-4208	226
	▶113	212-7563	103		▶625		283
211-5079	2	212-7564	103	214-1082	612		290
	▶442	212-7566	114		615		291
211-5080	2	212-7568	107		▶627	214-4763	▶279
	3	212-7569	107	214-1083	615		736
	▶400	212-7573	114		▶629		737
211-5087	▶1	212-7670	753	214-1093	552	214-6297	354
211-5088	3		755		▶590	214-6502	391
	▶4	212-8725	736	214-1094	552	214-7141	439
211-5212	326		737		▶584	214-7142	439

▶ **PRIMARY REFERENCE**

PART NUMBER INDEX

Part	Page	Part	Page	Part	Page	Part	Page
214-7244	739	216-4349	326	218-3887	706	220-8397	179
214-7245	739	216-4998	763	218-3888	706	220-8678	149
214-7246	739	216-5338	299	218-7136	508	221-0851	279
214-7737	770		▶352		510	221-1002	6
214-7905	610	216-5540	6	219-0305	836	221-1424	61
	611		7	219-0943	773	221-1426	127
214-8989	568		▶14		775	221-1737	82
214-9429	485	216-5582	34	219-0944	773	221-2389	773
214-9430	485		36		775		775
215-1368	144	216-8198	802	219-2390	511	221-2991	83
215-1369	144	216-8401	100	219-2391	476	221-2995	83
215-1370	144	216-8402	100		511	221-3702	331
215-1371	144	216-8731	759	219-2528	344	221-5379	523
215-1372	775	216-8732	759	219-4458	69		525
215-1374	775	216-9199	559	219-7912	517	221-5397	523
215-1933	203	216-9722	703	219-8051	700		525
	204	216-9723	703	219-9752	759		527
215-1942	231	216-9724	703	220-0771	62	221-5400	576
215-2405	529	217-0751	34		257	221-5401	578
215-2701	564		36		262	221-9161	700
215-2802	796	217-0752	34	220-0813	77	221-9162	700
215-2807	796		36		618	221-9163	700
215-2809	796	217-1546	109	220-1441	8	221-9403	747
215-2812	796	217-1547	109		▶68	221-9409	478
215-2813	796	217-3561	▶703		▶69		747
215-2814	796		712	220-3439	747	221-9665	414
215-2815	796		713	220-3987	770	222-0345	806
215-2828	612	217-3562	▶712	220-3988	770		809
	615	217-3563	▶713	220-3989	770	222-0446	92
215-2899	631	217-3665	631	220-3990	478	222-0491	552
215-2954	369	217-3885	552	220-4340	319		▶605
215-2955	▶369		▶611	220-4341	319	222-1209	▶208
215-3192	834	217-4326	503	220-6126	747		712
215-3512	521		▶631	220-6365	6		713
215-3708	612	217-4327	552		7	222-1395	533
	615		▶642		▶52	222-1462	471
215-3712	226	217-4531	736	220-6367	6		▶476
215-5526	612		▶801		7	222-1465	478
	615	217-4611	344		▶87	222-1545	478
215-5599	1	217-5900	14	220-6368	6	222-1546	▶471
	▶380	217-6886	553		7		478
215-7446	478		559		▶54	222-1982	34
215-8155	775	217-6887	578	220-6370	6	222-2824	737
215-8169	775	217-7109	564		7		824
215-8170	775	217-7155	705		▶61	222-2825	737
215-8171	775	217-7156	705	220-6371	6		824
215-9002	778	217-7157	705		7	222-2827	737
215-9217	439	217-7158	685		▶83		824
216-0029	597		687	220-6372	6	222-2828	737
216-0123	▶563		▶705		7		824
	707	217-7933	799		▶127	222-3490	338
216-0124	▶707	217-8433	768	220-6374	6	222-3590	391
216-0273	319	217-8763	231		7	222-4132	394
216-0380	471	217-8947	125		▶82	222-4133	393
216-0381	472	217-9049	804	220-6377	6	222-5314	6
216-0382	747	218-0861	804		7		7
216-0385	747	218-1966	605		▶91		▶128
216-1319	290	218-2373	498	220-6390	6	222-5369	826
216-1331	326	218-2827	396		7	222-5370	826
216-2212	124	218-3266	747		▶15	222-5371	826
216-2813	770	218-3269	747	220-7185	▶92	222-5372	826
216-3002	513	218-3884	682	220-7243	87	222-5373	826
	515		684	220-7244	87	222-5374	826
	519		▶706	220-8217	54	222-5376	826
216-3425	100	218-3885	706	220-8225	52	222-5377	826

▶ PRIMARY REFERENCE

PART NUMBER INDEX

Part	Page	Part	Page	Part	Page	Part	Page
222-5378	826	224-4275	564	225-4256	836	227-4119	126
222-5379	826	224-4388	564	225-4257	837	227-4158	770
222-5382	826	224-4535	179	225-5928	226	227-4159	763
222-7247	506		▶241	225-6169	739	227-4239	34
	▶610	224-4644	▶424	225-6170	739		36
222-7860	9	224-4905	731	225-6329	6	227-4398	652
	▶283	224-4973	478		7	227-5314	559
222-7877	291	224-5122	40		▶71	227-5334	763
222-7879	291	224-5137	▶209	225-6727	527	227-6668	326
222-7880	291	224-5138	▶211		▶533	227-6718	513
222-7882	576	224-5139	▶214	225-6730	533		515
222-7883	291	224-5142	▶216	225-6733	▶231		519
222-7884	291	224-5144	▶219		533	227-7305	729
222-7887	557	224-5530	▶237	225-6736	533	227-7545	107
222-7888	506		490	225-8026	580	227-8851	105
222-7889	504	224-5871	502		▶648	228-0805	231
222-7944	837	224-6208	739	225-8363	6	228-1761	144
222-8841	759	224-6220	605		▶56	228-1847	114
222-8843	759	224-6316	179	225-8553	226	228-1853	▶664
222-9936	▶465	224-6371	578	226-0759	94	228-1854	▶661
223-0533	56	224-6372	576		256	228-3581	836
	58	224-6373	576	226-0857	257	228-4176	144
223-1093	633	224-6374	576	226-2009	605	228-4947	251
223-1094	612	224-6838	485	226-2316	387	228-6089	291
	615	224-6853	485	226-2499	553	228-6506	523
	▶633	224-6857	485	226-2500	553		525
223-2113	472	224-9017	800	226-2751	511	228-8553	94
223-2115	471	224-9044	179	226-2811	279	228-9023	728
	▶472	224-9222	269	226-3799	580		736
223-4445	631		291	226-3800	580		▶743
223-4461	511	224-9448	576		▶622	228-9112	523
223-4903	54	225-0312	837	226-4909	175		527
223-5813	105	225-0313	257	226-5561	34	228-9812	▶465
223-5814	83		836	226-6115	199	229-0774	291
223-7263	▶34	225-1144	19	226-7295	511	229-0887	835
	36	225-1145	18	226-7420	502	229-0890	593
223-8173	226	225-1147	▶18		▶511		▶639
223-8175	226		24	226-7480	511	229-1466	557
223-8176	▶226	225-1148	▶19	226-7619	344		▶581
	291		21	226-7665	731	229-1494	806
223-8177	291		23	226-7874	796	229-1497	6
223-8531	564	225-1150	▶20	226-7875	796		7
	▶580		21	226-7956	763		▶151
223-9054	▶404		23	226-8301	301	229-2578	793
223-9158	68	225-2338	759	226-8302	301	229-2592	468
223-9159	68	225-2339	759	226-9170	199	229-2593	468
	69	225-3194	472	226-9189	796	229-3693	6
223-9250	▶39	225-3195	471	226-9193	796		7
	40	225-3201	472	226-9248	821		▶76
223-9732	8	225-3284	531	226-9249	795	229-5693	553
	▶29		533		▶823	229-5694	553
224-2684	576		540	226-9423	476	229-6259	68
224-3235	111		542	226-9429	821		69
224-3236	111	225-3285	535	226-9622	353	229-6711	6
224-3237	111		537	227-0912	226		7
224-3238	▶111	225-3286	544	227-0920	231		▶73
	112		546	227-1204	32	229-7288	763
224-3239	6		548	227-1362	86	229-8568	▶30
	7	225-3797	226	227-1363	86		31
	▶112	225-4126	6	227-1395	117	229-8779	216
224-3245	68		7	227-3033	6		219
	69		▶89		▶44	229-8907	209
224-3246	68	225-4127	6	227-3118	291		211
	69		7		292		214
224-3983	34		▶109	227-4002	281		216

▶ **PRIMARY REFERENCE**

PART NUMBER INDEX

Part	Page	Part	Page	Part	Page	Part	Page
	219	231-7308	490	233-9316	384	237-0151	▶272
229-9477	6	231-7309	490		385		476
	7	231-7310	490		386	237-0152	474
	▶72	231-7311	490	233-9843	179	237-0153	478
230-0093	747	231-7312	490	234-2916	20	237-0154	474
230-0809	283	231-7313	490		26	237-0155	474
230-1434	255	231-7314	▶490		▶80	237-0156	474
230-2569	68		749	234-3404	503	237-0158	474
	69		750	234-4323	179		▶478
230-3023	793	231-7585	821		▶202	237-0160	▶474
230-3218	527	231-7913	9	234-5002	10		475
230-3219	527		▶134	234-5005	8	237-0190	751
230-3237	404	231-7914	120		▶10	237-0957	179
230-3238	404	231-8103	120	234-5880	226		▶242
230-3525	192	231-8110	393	234-5973	461		283
230-3728	156	231-9286	391	234-5974	460	237-1962	262
	158		▶393		465		▶263
230-3775	156	231-9287	391	234-5975	459	237-2305	83
	158		▶394	234-6084	461	237-2789	109
230-3818	6	231-9290	279	234-6845	226	237-3943	819
	7		▶793	234-7730	202	237-3970	▶727
	▶21	231-9306	216	234-7731	202		819
	▶22		219	234-7900	12	237-9601	332
	▶23	232-0253	74	234-7935	8	238-0251	391
230-4087	94	232-0363	122		▶12		393
230-4088	94	232-1043	283	234-9441	▶466		394
230-4089	94	232-1206	157	235-0320	757	238-0296	167
230-4090	▶94	232-1742	377	235-1402	8		▶168
230-4091	94	232-1744	377		▶156	238-0376	564
230-4092	94	232-2450	605		▶157	238-0479	763
	257	232-2960	836		▶158	238-1262	7
230-4093	94	232-3235	68	235-1587	99		▶17
230-4094	94		69	235-2974	8	238-1265	770
230-4142	▶465	232-3236	68		▶40	238-1851	260
230-4190	326		69	235-3560	747		264
230-4691	782	232-3326	▶449	235-3561	747	238-2707	69
230-7645	763	232-3402	837	235-4101	581	238-4428	564
230-7732	94	232-3583	757	235-5801	187	238-5090	332
	257	232-3755	391	235-7128	835	238-5092	331
231-0858	175		407	235-7152	506	238-5105	135
231-1420	283	232-4719	92	235-8026	835	238-9155	404
231-1946	216	232-6622	335	235-8110	796	238-9166	159
	219		▶749	235-8200	6	239-1134	255
231-1947	216	232-6668	746		▶230		▶278
	219	232-7575	331	236-0795	778	239-2395	233
231-1973	6	233-0891	188	236-1300	739		▶243
	7	233-4444	778	236-1665	83	239-2396	233
	▶233	233-4657	587	236-1666	83		▶244
231-2762	124	233-5070	94	236-1687	105	239-3301	527
231-2940	257	233-6020	216	236-2230	20	239-3478	▶245
231-3468	▶7		219		▶24		246
	77	233-6313	796	236-2244	364	239-3902	189
231-3510	728	233-6742	151	236-2245	▶364	239-4115	527
	▶781		▶167		674	239-4238	671
231-3511	781	233-6745	790	236-5177	▶136	239-4263	666
231-3539	539	233-7892	835	236-5178	▶138		667
231-3889	105	233-7893	835	236-5179	▶139	239-4990	836
231-3896	105	233-7894	503	236-5180	▶141	239-4991	837
231-3916	83	233-7895	835	236-5197	799	239-5674	233
231-4173	469	233-7920	134	236-5216	▶527		▶246
231-4579	553	233-7921	134	236-6605	581	239-5928	233
231-5210	124	233-7922	134	236-8721	793		▶251
231-6270	226	233-7923	134	236-8826	224	239-5929	281
231-7306	490	233-9161	747	237-0149	474	239-6891	471
231-7307	490	233-9314	800	237-0150	471	239-6987	834

▶ PRIMARY REFERENCE

PART NUMBER INDEX

Part	Page	Part	Page	Part	Page	Part	Page
239-7037	173	242-5199	478	243-1956	194		219
239-8051	193	242-5204	478	243-2742	4	244-7568	466
239-8107	226	242-5205	511		▶401	244-7716	156
239-9667	6	242-5206	472	243-2743	401	244-8637	▶466
	7	242-5297	▶468	243-2744	401	244-8689	7
	▶135	242-6233	773	243-4311	2	244-8823	388
239-9954	197		775		3		389
239-9961	739	242-6234	773		▶159		390
240-1882	424	242-6235	773	243-4312	159	244-8860	590
240-1883	424		775	243-4313	159		▶640
240-1884	424	242-6236	773	243-4314	159	244-8862	590
240-1885	424		775	243-4318	159		▶641
240-6822	358	242-6237	773	243-4321	159	244-8864	▶550
240-7356	649	242-6238	773	243-4365	▶450		590
240-7837	▶510		775	243-4366	▶451	244-8872	▶589
	519	242-7104	430	243-4367	▶452		590
240-8586	332	242-7955	623	243-4368	▶453	245-0175	211
240-8587	332		625	243-4370	▶454		214
240-8605	4		627	243-5156	785		216
240-8966	332		629	243-5158	196		219
240-9017	332		723		▶785	245-0824	605
240-9722	386	242-8030	344	243-5194	6	245-1596	759
240-9723	390	242-8031	344		7	245-1737	796
241-0635	332	242-8033	344		▶45	245-1750	834
241-1855	444	242-8511	89	243-5317	383	245-2760	793
	445	242-8517	578	243-5449	58	245-3371	641
	446	242-9228	216	243-5455	58	245-3375	641
241-2501	162		219	243-5644	7	245-3530	641
	165	242-9230	197		▶58	245-3830	413
241-2940	585	242-9279	2	243-6741	▶36		▶414
241-2943	585		3		39	245-3831	414
241-3352	305		▶175	244-1419	490	245-3856	511
241-3360	▶674	242-9355	4	244-1717	199	245-4120	550
241-3758	674		▶383	244-1720	199	245-4146	▶783
241-3853	587	242-9537	19	244-1735	▶824	245-4150	732
241-4104	▶324		24	244-2197	553	245-4159	783
241-4167	836		25	244-2619	834	245-4196	▶732
241-4271	324		27	244-2620	835	245-4246	783
241-4661	354	242-9911	159	244-2776	485	245-4249	732
241-4933	324	242-9939	159	244-2777	485	245-4252	732
241-5790	585	242-9941	159	244-3114	▶353		783
241-5933	6	242-9960	219	244-3457	130	245-4623	▶196
	7	243-0513	384		▶132	245-4849	175
	▶8		385	244-3459	131	245-6520	305
241-6186	233		386		▶133	245-6555	▶305
241-7920	196		388	244-3462	132		326
	▶784		389		133	245-6777	4
241-8368	226		390	244-4094	605	245-7303	175
	▶274	243-0780	605	244-4494	561	245-7725	196
242-1826	404	243-0782	835	244-4495	561	245-8134	414
242-3370	▶165	243-0943	▶35	244-4496	561	245-8220	738
	214		36	244-5689	584		▶757
	219	243-1159	19		▶597	245-9740	605
242-3383	165		24	244-5707	597	245-9942	▶436
	▶166		25	244-6529	746		441
242-3505	833		27	244-7018	585	245-9943	441
242-3506	833	243-1324	173		586		▶448
242-3507	833	243-1325	743		▶599	245-9944	441
242-3509	833	243-1546	6	244-7019	585		▶445
242-3511	833		7	244-7020	599	246-0714	641
242-3513	404		▶281	244-7022	585	246-1024	▶665
242-3556	404	243-1560	6	244-7202	586	246-1025	▶662
242-5124	103		7	244-7227	595	246-1026	▶530
242-5198	335		▶188	244-7353	595	246-1039	▶666
	▶475	243-1955	194	244-7357	214		671

▶ **PRIMARY REFERENCE**

PART NUMBER INDEX

Part	Page
246-1040	666
246-1041	530
	▶667
246-1042	667
246-1043	▶587
	661
	664
246-1045	661
	662
	664
	665
	▶671
246-1046	671
246-1156	597
246-1246	▶495
	550
246-1702	495
246-1703	495
246-1704	495
246-1705	495
246-1707	495
246-2641	1
	9
	144
	162
	165
	377
	380
	387
	391
	522
	763
246-3258	775
246-4296	793
246-4311	292
	504
246-5625	214
246-5626	211
	214
	216
	219
246-5659	69
246-5785	793
246-5804	589
246-5960	224
246-5961	224
246-6036	89
246-6720	203
	204
246-9353	230
247-0293	▶203
	216
	219
247-0294	▶204
	216
	219
247-0747	196
	▶519
247-2024	584
247-2724	590
	▶602
247-2726	602
247-2730	602
247-2733	602
247-2735	602
247-2738	602
247-2753	602
247-2754	602
247-3005	▶501
	641
247-3761	595
247-4144	782
247-4151	784
247-4152	784
247-4156	734
247-4822	129
247-4836	737
	824
247-4837	737
	824
247-4851	737
247-4988	640
247-6050	169
247-6120	69
247-6469	589
247-6472	589
247-6875	836
247-6876	837
247-6877	836
247-6878	837
247-7624	640
247-7625	640
247-8207	585
247-8271	▶737
	738
247-8333	76
247-8683	602
248-0346	103
248-0404	283
248-1500	199
248-2917	179
248-2921	759
248-2922	759
248-2923	759
248-2924	759
248-2925	729
248-2926	▶729
	759
248-2927	759
248-2928	759
248-2929	759
248-2930	759
248-2931	759
248-2932	759
248-2933	760
248-2949	763
248-2985	222
248-2986	222
248-4068	188
248-4171	▶738
248-4172	▶738
248-4178	738
	▶825
248-4228	604
248-4761	380
	▶388
248-4763	380
	▶384
248-4843	589
248-5513	105
248-5522	377
	▶389
248-5527	377
	▶385
248-6772	759
248-6862	834
249-0951	226
249-5592	222
249-7168	▶618
249-7174	▶150
249-7780	605
249-9209	595
	▶604
249-9311	759
250-0466	32
250-0875	196
	▶287
250-1480	527
250-1832	287
250-1843	287
250-1846	287
250-2168	199
250-3076	222
250-3077	222
250-4243	438
250-4244	438
250-4245	437
250-4246	437
250-4247	437
	438
250-4248	437
	438
250-4628	790
	792
250-7556	759
252-1363	144
	▶169
252-5109	196
	784
252-5110	784
252-5111	784
252-5112	784
252-5615	445
	448
252-5879	291
252-6375	430
252-6953	269
	796
252-6954	796
252-7169	736
	▶741
252-8744	199
252-9628	199
253-0000	83
253-0040	287
253-0241	287
253-0616	158
253-0861	833
253-1346	430
253-1347	3
	430
253-2626	89
253-8766	31
254-4957	225
254-5570	89
254-5571	89
254-6182	436
254-7334	83
254-8195	291
254-8961	829
	▶831
254-8962	829
	▶832
254-8974	829
254-8982	829
254-8986	829
254-9012	733
254-9013	733
254-9136	199
254-9317	▶733
	736
254-9371	738
	▶829
254-9951	199
255-0844	755
255-0845	753
255-0848	755
255-0849	753
255-0939	199
255-0940	199
255-2430	▶199
255-3632	196
	▶224
255-3634	224
255-4206	▶197
255-4517	197
255-4518	197
255-6899	739
	▶753
255-6900	739
	▶755
255-9215	199
256-0190	▶788
256-0270	197
256-0271	739
256-2090	113
256-3818	22
	▶25
256-3820	22
	▶26
256-3824	26
	▶27
256-3826	27
	▶28
256-3828	25
256-3829	28
256-4313	796
256-4314	796
256-5701	770
256-6938	326
256-7619	595
256-7744	755
256-7745	753
256-7916	▶837
256-9989	287
257-0267	623
	625
	627
	629
	▶656

▶ PRIMARY REFERENCE

PART NUMBER INDEX

Part	Page	Part	Page	Part	Page	Part	Page
	723	261-1176	832				
257-2529	513	261-1177	831				
	515	261-3768	▶734				
	517		739				
	519	261-4284	196				
257-2530	517	261-4380	485				
257-2532	513	261-5734	95				
	515	261-6652	287				
	519	261-7471	151				
257-3899	833	261-7593	485				
257-4183	▶294		▶496				
257-4385	595	261-8029	430				
257-7446	835	261-8821	757				
257-9154	674	262-1408	291				
258-0883	144	262-2043	▶190				
	▶275		197				
258-0975	788	262-2046	825				
258-0977	788	262-2047	825				
258-0978	750	262-2048	825				
258-0980	750	262-2049	825				
258-0985	788	262-2050	825				
258-0986	788	262-2051	825				
258-5440	191	262-5228	757				
258-5441	191	262-5229	757				
258-5460	190	262-5230	757				
258-5461	190	263-0009	222				
258-7318	802	263-2224	151				
258-7319	802	263-3275	485				
258-8885	739	263-3318	▶750				
258-8886	197		788				
258-8985	190	263-5043	788				
258-8986	190	263-5425	222				
259-0078	759	263-5426	222				
259-1868	▶222	263-8583	269				
259-1869	▶269	263-8584	269				
259-4746	199	263-8585	269				
	▶786	263-8586	269				
259-4756	6	263-8587	269				
	7	263-8588	269				
	▶225	263-8589	269				
260-1982	187	263-9973	128				
260-2992	383	264-3167	159				
	▶390	265-0959	757				
260-2993	383	266-0398	400				
	▶386						
260-3639	191						
260-3640	191						
260-7652	197						
260-7653	837						
260-8590	623						
	625						
	627						
	629						
	▶649						
	723						
260-8636	605						
261-0052	▶31						
	32						
261-0191	8						
	▶32						
261-0634	192						
	193						
261-1173	831						
261-1174	832						
261-1175	831						

▶ **PRIMARY REFERENCE**

MEMORANDA



© 2005 Caterpillar
All Rights Reserved

Printed in U.S.A.