RUTHZIL TRATOR COMERCIAL DE PEÇAS LTDA 11 97083-6812 ROLANDO CITRANGULO

DD90/DD90HF VOLVO

Vibratory compactor

S/N 197375 – USA

SPARE PARTS CATALOG

Ingersoll-Rand

VOLVO
Construction Equipment

VOLVO
Construction Equipment

DD90/DD90HF Vibratory compactor S/N 197375 - USA

Name group		Kod Group
Engine Installation	59190116, 59190124, 59233742	210/100
Engine Installation	59190116, 59190124, 59233742	210/150
Air cleaner installation	59189118	256/100
Air cleaner installation	59189118	256/150
Air Pre-cleaner Installation	59104737	256/200
Radiator and Oil Cooler Assembly	59189340	261/100
Radiator and Oil Cooler Assembly	59189340	261/150
Sound Kit Installation	59232710	263/100
Fan Assembly	59232702	263/150
Throttle Cable Installation	59097915	271/100
Work light Installation	59233692	356/100
Work light Installation	59233692	356/150
Work light Installation	59233692	356/200
Hazard Flasher/Turn Signal Installation	59206318	356/250
HID/work light installation	13199500,S/N 170893-	356/300
HID/work light installation	13199500,S/N 170893-	356/350
HID/work light installation	13199500,S/N 170893-	356/400
HID/work light installation	13199500,S/N 170893-	356/450
HID/work light installation	13199500,S/N 170893-	356/500
HID/work light installation	13199500,S/N 170893-	356/550
HID/work light installation	59233791,S/N -170892	356/600
HID/work light installation	59233791,S/N -170892	356/650
HID/work light installation	59233791,S/N -170892	356/700
HID/work light installation	59233791,S/N -170892	356/750
HID/work light installation	59233791,S/N -170892	356/800
HID/work light installation	59233791,S/N -170892	356/850
HID Spotlight Installation	13199518,S/N 170893-	356/900
HID Spotlight Installation	13199518,S/N 170893-	356/950
HID Spotlight Installation	13199518,S/N 170893-	356/1000
HID Spotlight Installation	59222166,S/N -170892	356/1050
HID Spotlight Installation	59222166,S/N -170892	356/1100
HID Spotlight Installation	59222166,S/N -170892	356/1150
HID Guard Installation	13160999	356/1200
Rotating beacon Installation	59206367	362/100
Rotating beacon Installation	59206367	362/150
Back-up Alarm Installation	59216598	362/200
Console Assembly	59189829, 59189837, 59233205	364/100
Console Assembly	59189829, 59189837, 59233205	364/150
Cable Harness Installation	59233296	371/100
Cable Harness Installation	59233296	371/150
Cable Harness Installation	59233296	371/200
Cable Harness Installation	59233296	371/250
Cable Harness Installation	59233296	371/300
Battery installation	59203216	371/350
Vibration Indicator Light Installation	59216630	371/400
Instrument Panel Assembly	59233262, 59233254	380/100

VOLVO
Construction Equipment

DD90/DD90HF Vibratory compactor S/N 197375 - USA

Name group		Kod Group
Speedometer / Vpm Meter Installation	13287560,DD-90 S/N 172679-	383/100
Speedometer / Vpm Meter Installation	13287560,DD-90 S/N 172679-	383/150
Speedometer / Vpm Meter Installation	59197202,DD-90 S/N -172678	383/200
Speedometer / Vpm Meter Installation	59197202,DD-90 S/N -172678	383/250
Speedometer / Vpm Meter Installation	59217588	383/300
Speedometer / Vpm Meter Installation	59217588	383/350
Speedometer/tachometer Installation	59096396	383/400
Material Temperature Sensor Installation	13249479,S/N 173355-	386/100
Material Temperature Sensor Installation	13249479,S/N 173355-	386/150
Material Temperature Sensor Installation	59279356,S/N -173354	386/200
Material Temperature Kit	59279323,S/N -173354	386/250
Material Temperature Kit	59279323,S/N -173354	386/300
Material Temperature Kit	59279323,S/N -173354	386/350
F-stop-r Control Assembly	59096917	424/100
F-stop-r Control Assembly	59096917	424/150
F-stop-r Control	59240242	424/200
Drum Drive Assembly	59233221,5920385,S/N 166273-	441/100
Drum Drive Assembly	59166850,5916687,S/N -166272	441/150
Drive Motor	54452339	441/200
Triple Pump Drive	59006510	442/100
Triple Pump Drive	59006650	442/150
Propulsion Pump Assembly	59233247	442/200
Propulsion Pump	59011536	442/250
Propulsion Pump	59011536	442/300
Propulsion Pump	59011536	442/350
Loop Flushing Valve	59077602	442/400
Steering Knob Installation	59288548	641/100
Steering Pump Kit	43895077	645/100
Steering Hoses Installation	59233189	645/150
Steering Hoses Installation	59233189	645/200
Frame and Swivel Installation	59189282	711/100
Console Bearing Pack Assembly	59035782	740/100
Drum Installation	59203778,S/N 166273-	777/100
Drum Installation	59187385,S/N -166272	777/150
Front/Rear Drum Assembly	59203802, 59203810, 59203828,DD-90	777/200
Front/Rear Drum Assembly	59203802, 59203810, 59203828,DD-90	777/250
Front/Rear Drum Assembly	59203802, 59203810, 59188839,DD-	777/300
Front/Rear Drum Assembly	59203802, 59203810, 59188839,DD-	777/350
Front/Rear Drum Assembly	DD-90/90HF S/N -166272	777/400
Front/Rear Drum Assembly	DD-90/90HF S/N -166272	777/450
Eccentric Shaft Assembly	59821769	777/500
Eccentric Shaft Assembly	58962366	777/550
Carrier And Spindle Assembly	59896514	777/600
Carrier Assembly	59093377	777/650
Vibration Motor Assembly	13287545,DD-90 S/N 172679-	777/700
Vibration Motor Assembly	59203836,5979723,DD-90 S/N -172678	777/750

VOLVO
Construction Equipment

DD90/DD90HF Vibratory compactor S/N 197375 - USA

Name group		Kod Group
Vibration Motor Assembly	58962432	777/800
Vibration Motor	13227848,DD-90 S/N 172679-	777/850
Vibration Motor	12961116,DD-90 S/N 168646-172678	777/900
Vibration Motor	59385864,DD-90 S/N -168645	777/950
Vibration Motor	58936824	777/1000
Handwheel Assembly	59648402	777/1050
Inside Wiper Installation	58817057,58996695, 59020545	777/1100
Cocoa Mat Installation	58928011	777/1150
Deck Installation	59233171	810/100
Flex Tread Installation	59077842	810/150
Engine Cowling Installation	13227228,S/N 169724-	821/100
Engine Cowling Installation	13227228,S/N 169724-	821/150
Engine Cowling Installation	13227228,S/N 169724-	821/200
Engine Cowling Installation	13227228,S/N 169724-	821/250
Engine Cowling and Hydraulic Tank Installation	59233767,S/N -169723	821/300
Engine Cowling and Hydraulic Tank Installation	59233767,S/N -169723	821/350
Engine Cowling and Hydraulic Tank Installation	59233767,S/N -169723	821/400
Spray Shield Installation	59264119	827/100
Railing Installation	59216713	827/150
Console Installation	59233759	837/100
Suspension Seat (43844331)	43844331	852/100
Suspension Seat (43844331)	43844331	852/150
ROPS And Seat Belt Installation	59189720,59189738, 59189746	867/100
Umbrella Installation	58936014	867/150
Vci Pre-cab Modification	59263103, 59216739	867/200
Vci Pre-cab Modification	59263103, 59216739	867/250
Vci Pre-cab Modification	59263103, 59216739	867/300
Cab Heater Installation	13161468	873/100
Cab Heater Installation	13161468	873/150
Cab Heater Installation	13161468	873/200
Safety Manual Pouch Installation	59203794	882/100
Decal Installation	59264234, 59216978, 59216986,S/N	897/100
Decal Installation	59216978, 59216986, 59233817,S/N -	897/150
Hydraulic Tank Installation	13227210,S/N 169724-	911/100
Hydraulic Tank Assembly	59233239,S/N 166117-	911/150
Hydraulic Tank Assembly	59189779,S/N -166116	911/200
Vibration Hoses Installation	59203513, 59203604, 59203612	911/250
Vibration Hoses Installation	59203513, 59203604, 59203612	911/300
Vibration Hoses Installation	59203513, 59203604, 59203612	911/350
Traction Hoses Installation	59233197	911/400
Traction Hoses Installation	59233197	911/450
Brake Valve Assembly	59098541,S/N -164228	912/100
Vibration Pump Assembly	58791039, 13345467	913/100
Vibration Pump	13345442,DD-90 S/N 174736-	913/150
Vibration Pump	13345442,DD-90 S/N 174736-	913/200
Vibration Pump	59162727,DD-90/90HF S/N -174735	913/250

VOLVO
Construction Equipment

DD90/DD90HF Vibratory compactor S/N 197375 - USA

Name group		Kod Group
Vibration Pump	59162727,DD-90/90HF S/N -174735	913/300
Steering Pump Assembly	58791021	913/350
Vibration Motor	13228036	913/400
Vibration Motor	59385864	913/450
Vibration Motor	59196949	913/500
Hydraulic Oil Temperature Gauge Installation Optional	59232470	913/550
Speed Limiter Installation	59092932	915/100
Water System Installation	59203950	985/100
Water Tank Installation	59216572	985/150
Spray Bar Assembly	13222690	985/200
Water Hose Installation	59203968	985/250
Water Pump Installation	59096974	985/300
Water Pump Assembly	59475434	985/350
Water pump	59262410	985/400
Edge Compactor/Cutter Installation	59106732	989/100
Edge Compactor/Cutter Installation	59106732	989/150

Engine Installation

POS	PART NUMBER	QTY	PART NAME	NOTES
1	RM 13846811	1	Engine	S/N 173586 -
	RM 13887500	1	Oil Filter	
	RM 43924422	1	Fuel Filter	PRIMARY
	RM 13887484	1	Fuel Filter	
	RM 58827932	1	Fuel Filter	INLINE
	RM 59728196	1	Fuel Filter Insert	
	RM 13378401	1	Starter Motor	
	RM 43830728	1	Starter Motor	
	RM 43830736	1	Starter Motor	ARC
	RM 59309104	1	Fan Belt	
	RM 13154752	1	Engine	S/N - 173585
	RM 35387489	1	Oil Filter	
	RM 43924422	1	Fuel Filter	PRIMARY
	RM 58827932	1	Fuel Filter	
	RM 59728196	1	Fuel Filter Insert	
	RM 59242511	1	Starter Motor	
	RM 58875196	1	Solenoid	
	RM 59196071	1	Alternator	
	RM 59140202	1	Fan Belt	
9	RM 96741046	18	Plain Washer	
10	RM 59816322	1	Temperature sensor	
11	RM 59206755	1	Mounting Plate	
14	RM 96704549	4	Hexagon screw	
24	RM 96738596	14	Washer	
25	RM 96704226	2	Bolt	
27	RM 59568832	1	Hose assembly	
33	RM 59965962	2	Screw	
35	RM 59442038	1	Plate	
38	RM 96702881	4	Lock nut	
39	RM 96715081	4	Hexagon screw	
40	RM 95931366	2	Lock Washer	
42	RM 96701495	2	Hexagon screw	
45	RM 96704622	4	Hexagon Nut	
46	RM 50274299	2	Hose Clamp	
47	RM 95359410	1	Adapter	
51	RM 59098772	1	Hose assembly	
52	RM 13198080	1	Hose assembly	S/N 169339 -
	RM 58926973	1	Hose assembly	S/N - 169338
62	RM 95302147	1	Elbow nipple	
64	RM 95280186	1	Adapter	90 DEG
65	RM 59363259	1	Hose Clamp	
68	RM 59044065	1	Fuel hose	
76	RM 59409508	1	Strap	
79	RM 59924225	1	Reducer	

80	RM 59454389	1	Nipple

Engine Installation

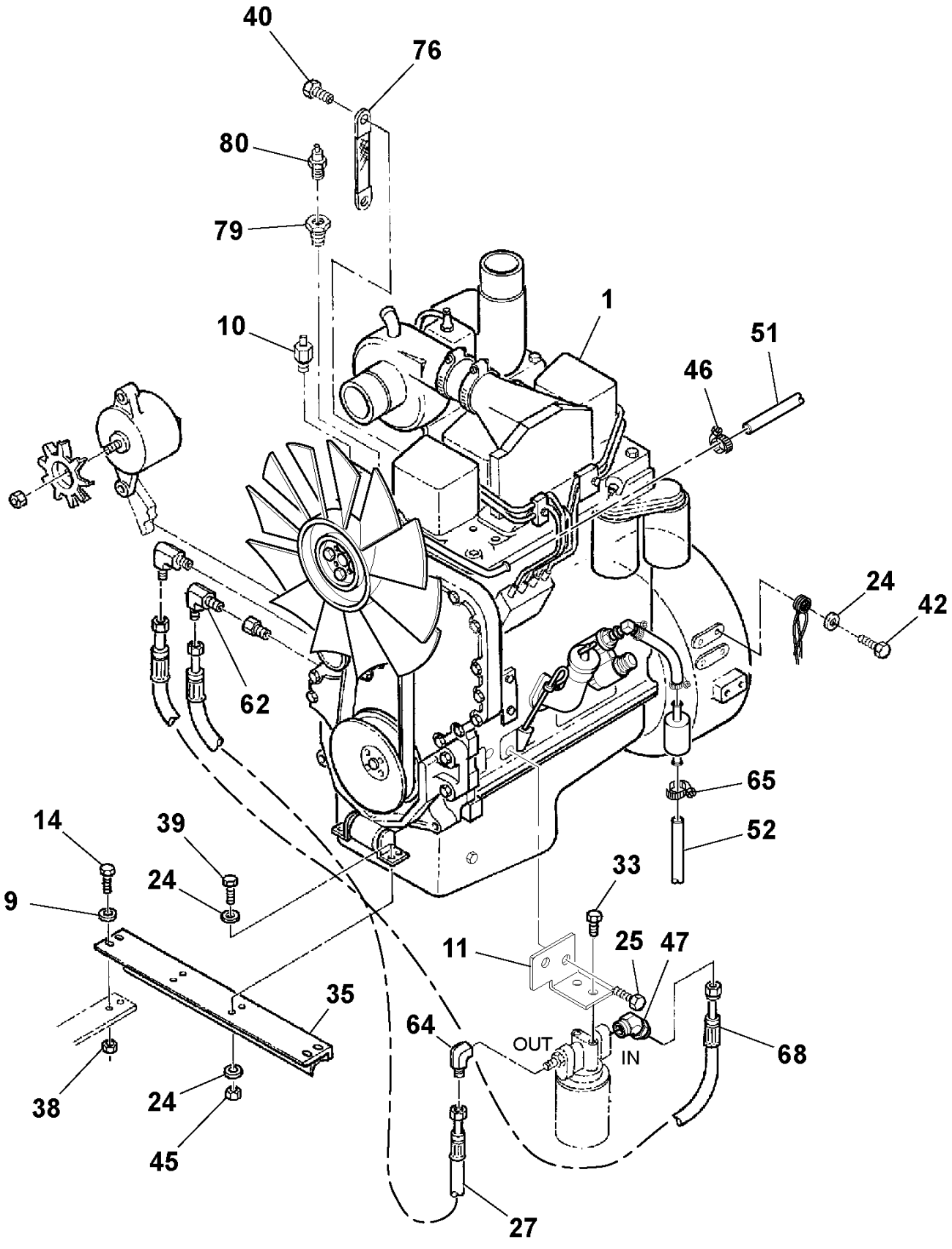

Engine Installation

POS	PART NUMBER	QTY	PART NAME	NOTES
1	RM 13846811	1	Engine	S/N 173586 -
	RM 13887500	1	Oil filter	
	RM 43924422	1	Fuel filter	PRIMARY
	RM 13887484	1	Fuel filter	
	RM 58827932	1	Fuel filter	INLINE
	RM 59728196	1	Fuel filter insert	
	RM 13378401	1	Starter motor	
	RM 43830728	1	Starter motor	
	RM 43830736	1	Starter motor	ARC
	RM 59309104	1	Fan belt	
	RM 13154752	1	Engine	S/N - 173585
	RM 35387489	1	Oil filter	
	RM 43924422	1	Fuel filter	PRIMARY
	RM 58827932	1	Fuel filter	
	RM 59728196	1	Fuel filter insert	
	RM 59242511	1	Starter motor	
	RM 58875196	1	Solenoid	
	RM 59196071	1	Alternator	
	RM 59140202	1	Fan belt	
2		1	Hydraulic Pump	DD-90
	RM 59246918	1	Hydraulic pump	DD-90
		1	Hydraulic Pump	DD-90HF
3		1	Propulsion Pump	
4	RM 96701917	14	Hexagon screw	
5		2	Vibration Pump	
6		1	Steering Pump	
7	RM 95309829	4	Screw	
8	RM 59232553	1	Engine anchorage	LH
9	RM 96741046	18	Plain washer	
10	RM 59816322	1	Temperature sensor	
12	RM 58879784	2	Rubber damper	
13	RM 58879768	4	Washer	
15	RM 59532093	1	Adapter	
16	RM 95919569	4	Hexagon screw	
17	RM 96738596	4	Washer	
18	RM 96702444	2	Hexagon screw	
20	RM 59565044	10	Washer	
21	RM 96703657	2	Hexagon nut	
22	RM 59279513	1	Bracket	
26	RM 95028494	2	O-ring	
29	RM 96704572	2	Bolt	
30	RM 59216317	1	Bracket	
31	RM 95068110	8	Hex. socket screw	
32	RM 96704325	8	Washer	

34	RM 59232546	1	Engine anchorage	RH
36	RM 95919817	8	Screw	
37	RM 95923124	2	Hexagon nut	
40	RM 95931366	2	Lock washer	
54	RM 96740493	2	Hexagon screw	
60	RM 59539569	4	Washer	
63	RM 95086708	1	O-ring	
73	RM 59580571	1	Cable clamp	
74	RM 59617985	1	Shim	
75	RM 95932141	2	Screw	
77	RM 59091900	1	Bracket	
78	RM 96701958	2	Hexagon screw	
82	RM 95285946	1	Adapter	
83	RM 95469128	1	Adapter	45 DEG

Engine Installation

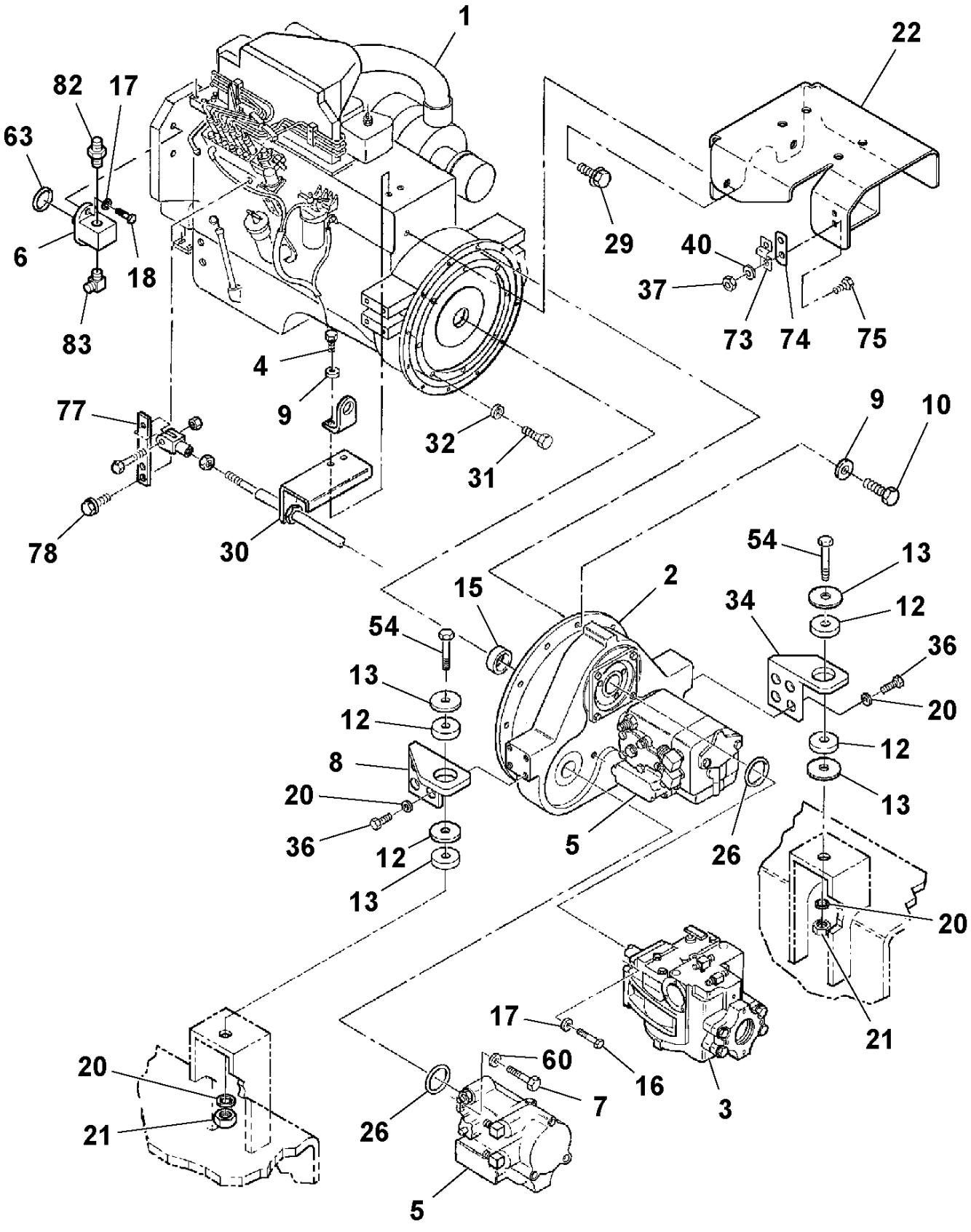

Air cleaner installation

POS	PART NUMBER	QTY	PART NAME	NOTES
1	RM 43931914	1	Air Cleaner	
	RM 35318252	1	Air filter	
	RM 35328442	1	Safety filter	
	RM 50938935	2	Nut	
	RM 50938950	1	Baffle	
	RM 59155564	1	Cup	
	RM 56982143	1	Valve	
	RM 50938943	1	Clamp	
2	RM 58937921	2	Clamp	
3	RM 59869917	4	Lock screw	
4	RM 95923314	4	Lock nut	
5	RM 59189126	1	Tube	
7	RM 59801886	1	Adapter	
9	RM 54680087	3	Clamp	
10	RM 59171991	1	Tube	
11	RM 59104810	1	Elbow	
14	RM 59152058	1	Tube	
16	RM 58994500	1	Cap	
17	RM 96702287	3	Hexagon screw	
18	RM 54680103	2	Clamp	
19	RM 59189159	1	Ring	
21	RM 95920526	3	Screw	
23	RM 96741046	5	Plain washer	

Air cleaner installation

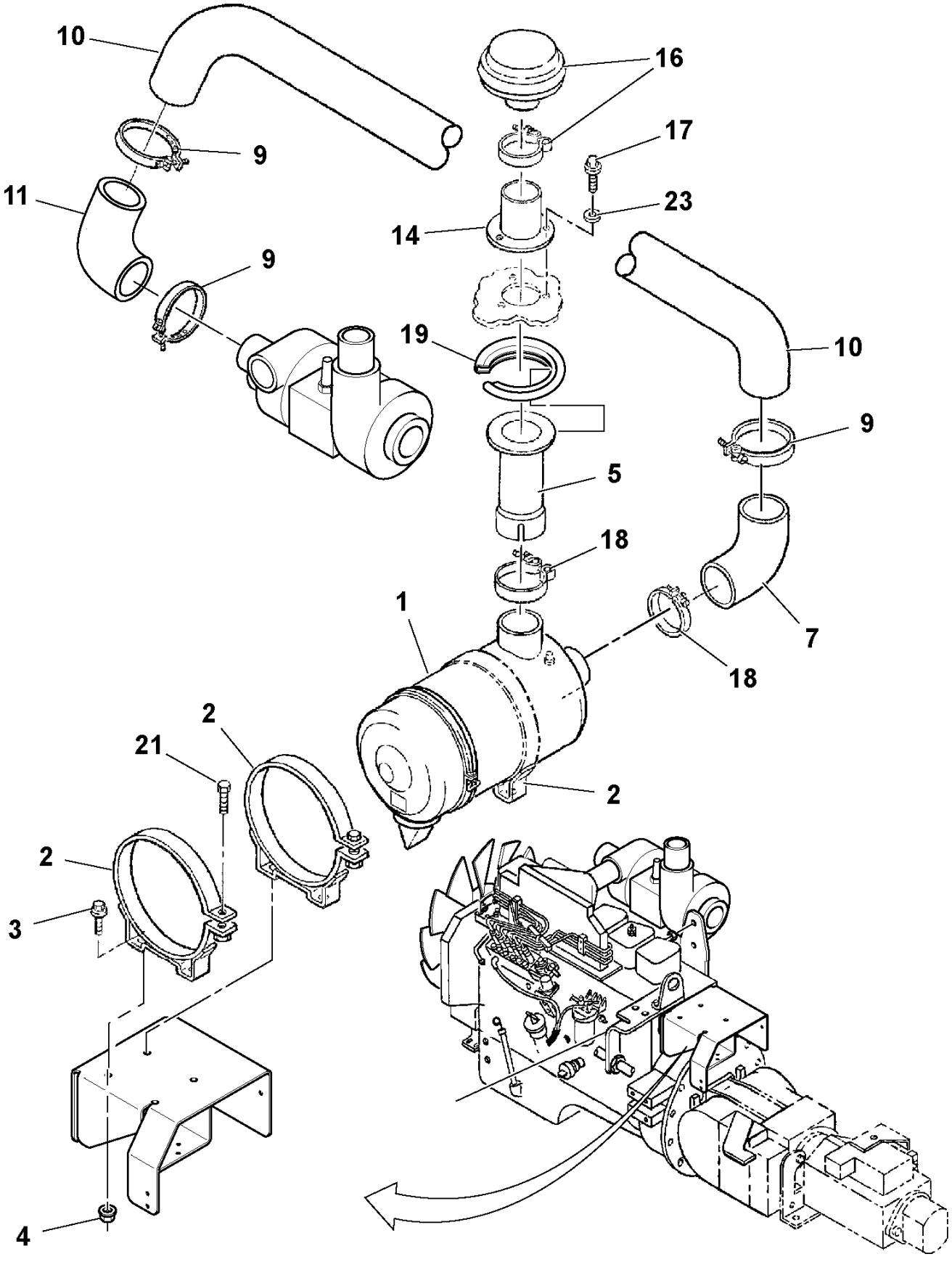

Air cleaner installation

POS	PART NUMBER	QTY	PART NAME	NOTES
1	RM 43931914	1	Air Cleaner	
	RM 35318252	1	Air filter	
	RM 35328442	1	Safety filter	
	RM 50938935	2	Nut	
	RM 50938950	1	Baffle	
	RM 59155564	1	Cup	
	RM 56982143	1	Valve	
	RM 50938943	1	Clamp	
6	RM 50266907	1	Indicator	
12	RM 50266972	2	Clamp	
13	RM 59216754	1	Exhaust pipe	
15	RM 59189100	1	Silencer	
22	RM 59495036	1	Clamp	
23	RM 96741046	5	Plain washer	
24	RM 59206813	1	Bracket	
25	RM 59311621	2	Connector	
26	RM 59312868	1	Tube	
27	RM 95423331	1	Elbow	
28	RM 95921755	2	Screw	
29	RM 95922332	2	Plain washer	
30	RM 95943346	2	Nut	
31	RM 59210757	1	Tail pipe	

Air cleaner installation

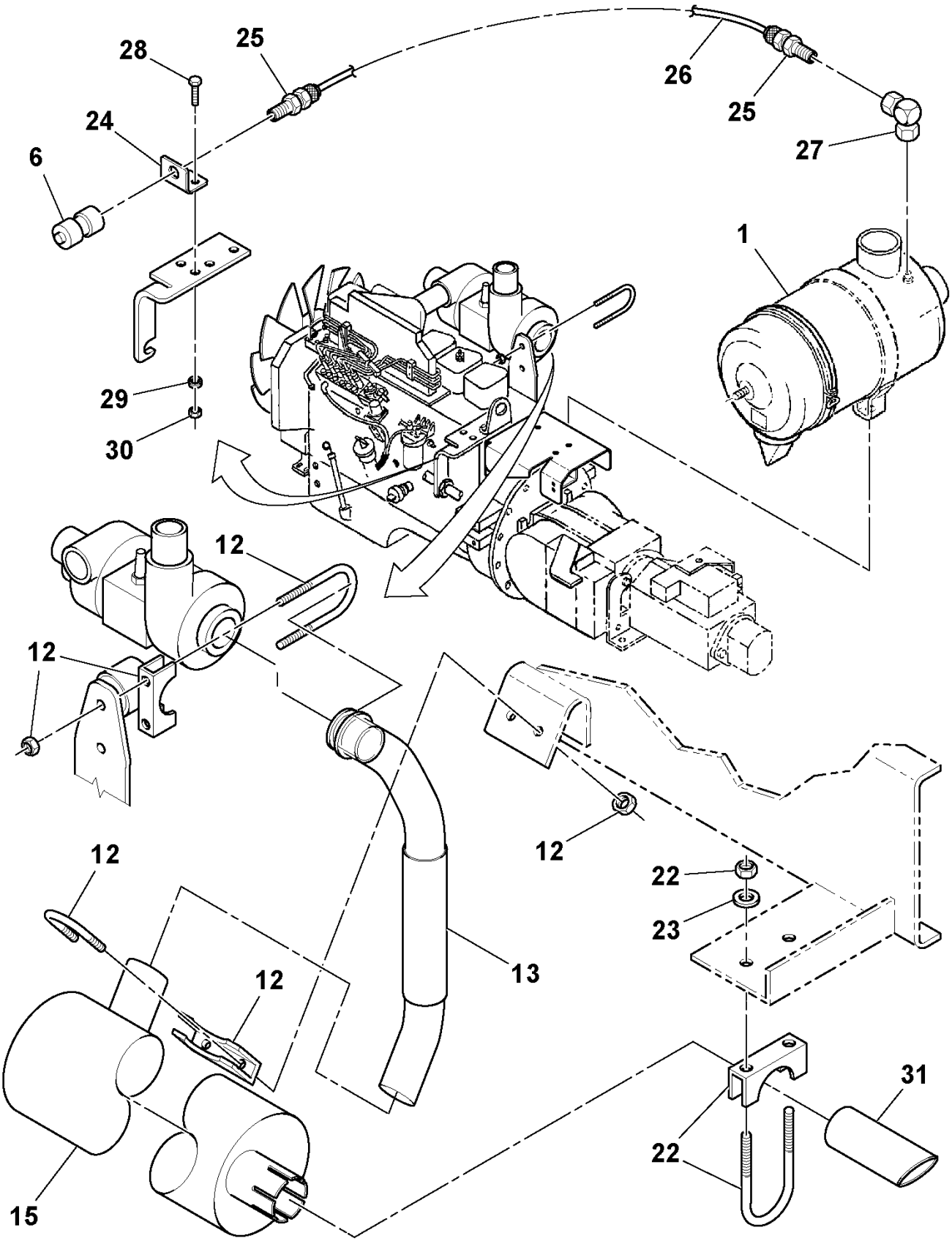

Air Pre-cleaner Installation

POS	PART NUMBER	QTY	PART NAME	NOTES
1	RM 59081323	1	Pre-cleaner	
	RM 59103259	1	Cover	
	RM 58938275	1	Bowl	
	RM 59103267	1	Sleeve	
	RM 59103275	1	Clamp	

Air Pre-cleaner Installation

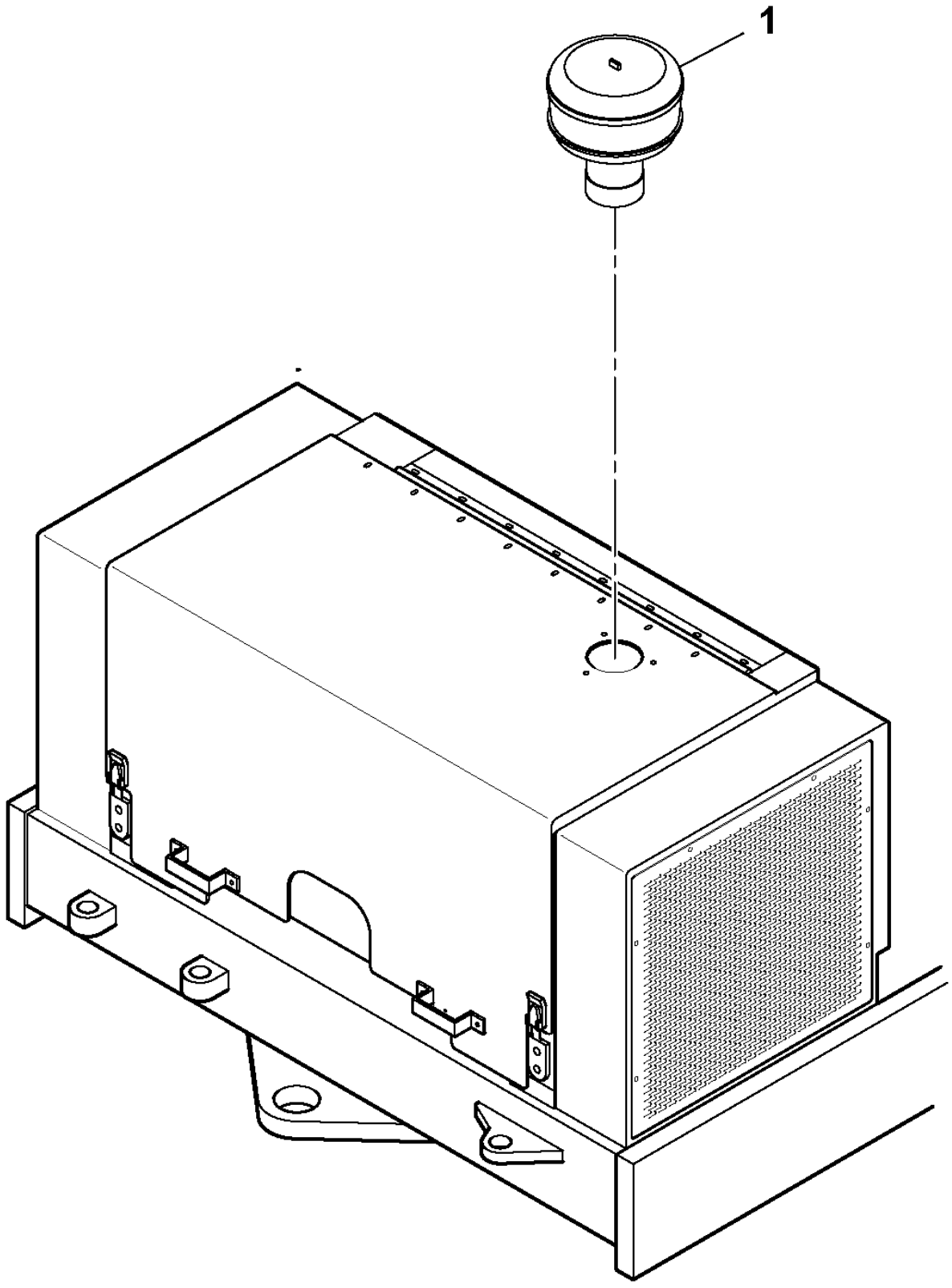

Radiator and Oil Cooler Assembly

POS	PART NUMBER	QTY	PART NAME	NOTES
1	RM 59172478	1	Mounting Plate	
2	RM 59171975	1	Oil Cooler	S/N 170343 -
	RM 59972521	1	Oil Cooler	S/N - 170342
3	RM 13227269	1	Radiator	
	RM 59120881	1	Radiator Cap	
4	RM 58848920	1	Drain	
5	RM 95090106	4	Clamp	
6	RM 59364950	2	Hose assembly	
7	RM 50281120	1	Non-return valve	
	RM 95097655	1	O-ring	
8	RM 95739306	1	T-nipple	
9	RM 59172072	1	Hose	
10	RM 95278008	3	Hose Clamp	
11	RM 59731638	1	Radiator Hose	
12	RM 96701917	6	Hexagon screw	
14	RM 96711833	6	Washer	
15	RM 59918573	4	Nut	
18	RM 59717660	1	Angle Bar	
19	RM 95220901	1	Hose Clamp	
24	RM 59869917	4	Lock Screw	
26	RM 59465427	1	Fitting	
27	RM 59104554	1	Hose assembly	
28	RM 50274299	2	Hose Clamp	
29	RM 50829654	1	Trim moulding	

Radiator and Oil Cooler Assembly

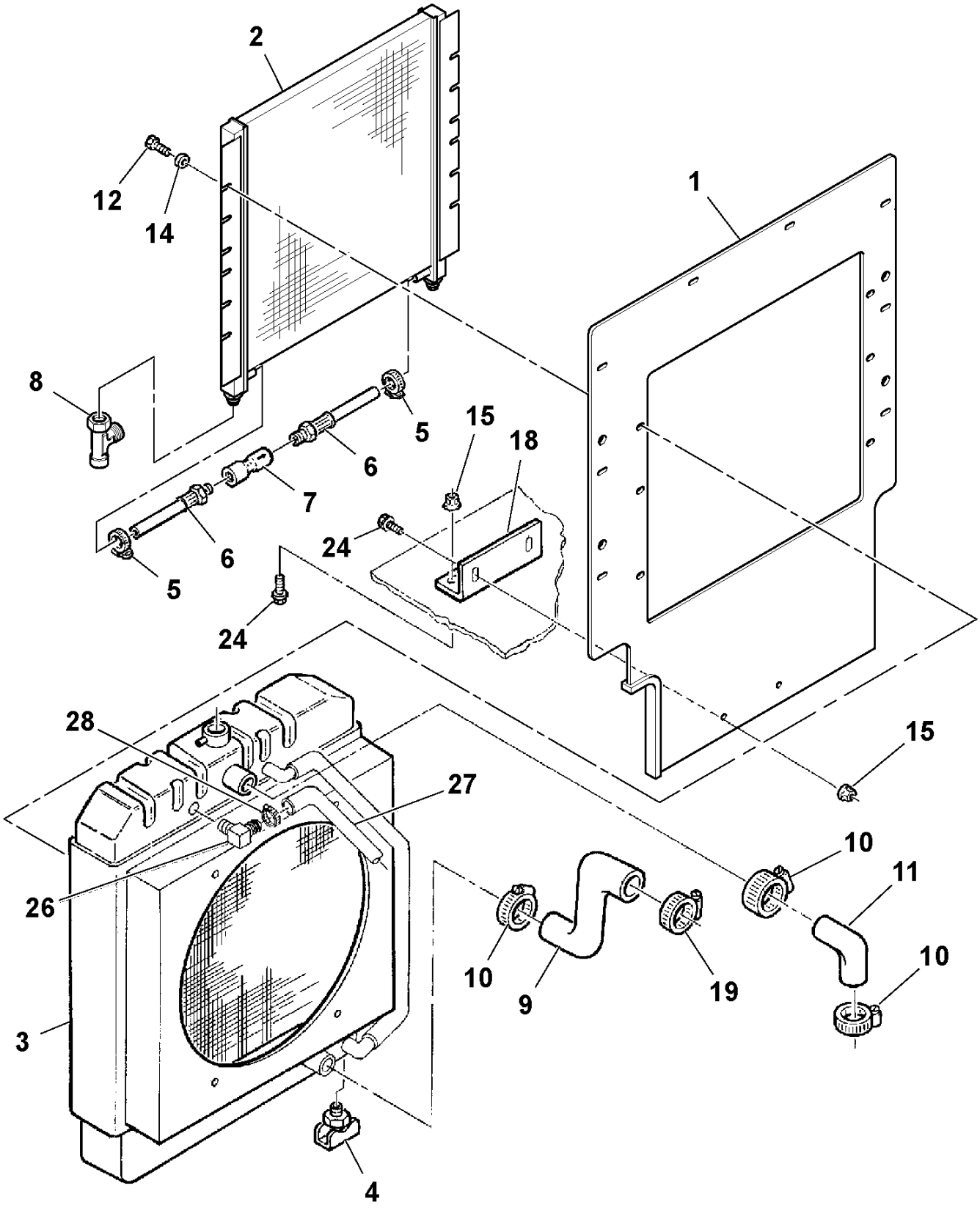

Radiator and Oil Cooler Assembly

POS	PART NUMBER	QTY	PART NAME	NOTES
3	RM 13227269	1	Radiator	
	RM 59120881	1	Radiator Cap	
5	RM 95090106	4	Clamp	
22	RM 13234497	1	Fan Guard	
23	RM 96702287	4	Hexagon screw	
25	RM 96711833	4	Washer	
30	RM 13227186	1	Fan Shroud	
31	RM 96701461	2	Hexagon screw	
33	RM 95919767	8	Screw	
34	RM 95457586	2	Clamp	
35	RM 96704663	12	Washer	
36	RM 13227426	1	Radiator Hose	
38	RM 58848979	1	Wrapper	
39	RM 95424586	REQ	Cable Tie	

Radiator and Oil Cooler Assembly

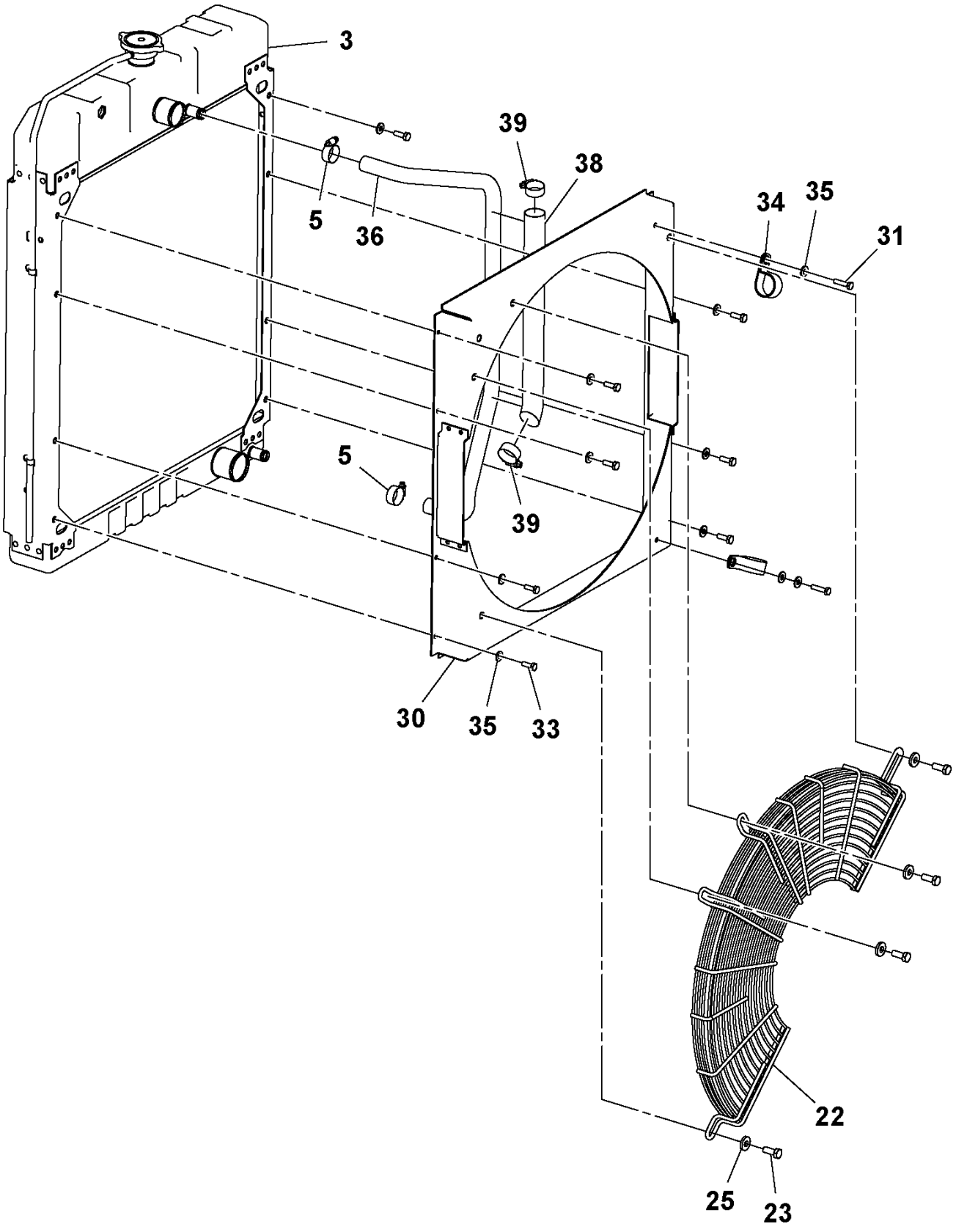

Sound Kit Installation

POS	PART NUMBER	QTY	PART NAME	NOTES
1		1	Fan	

Sound Kit Installation

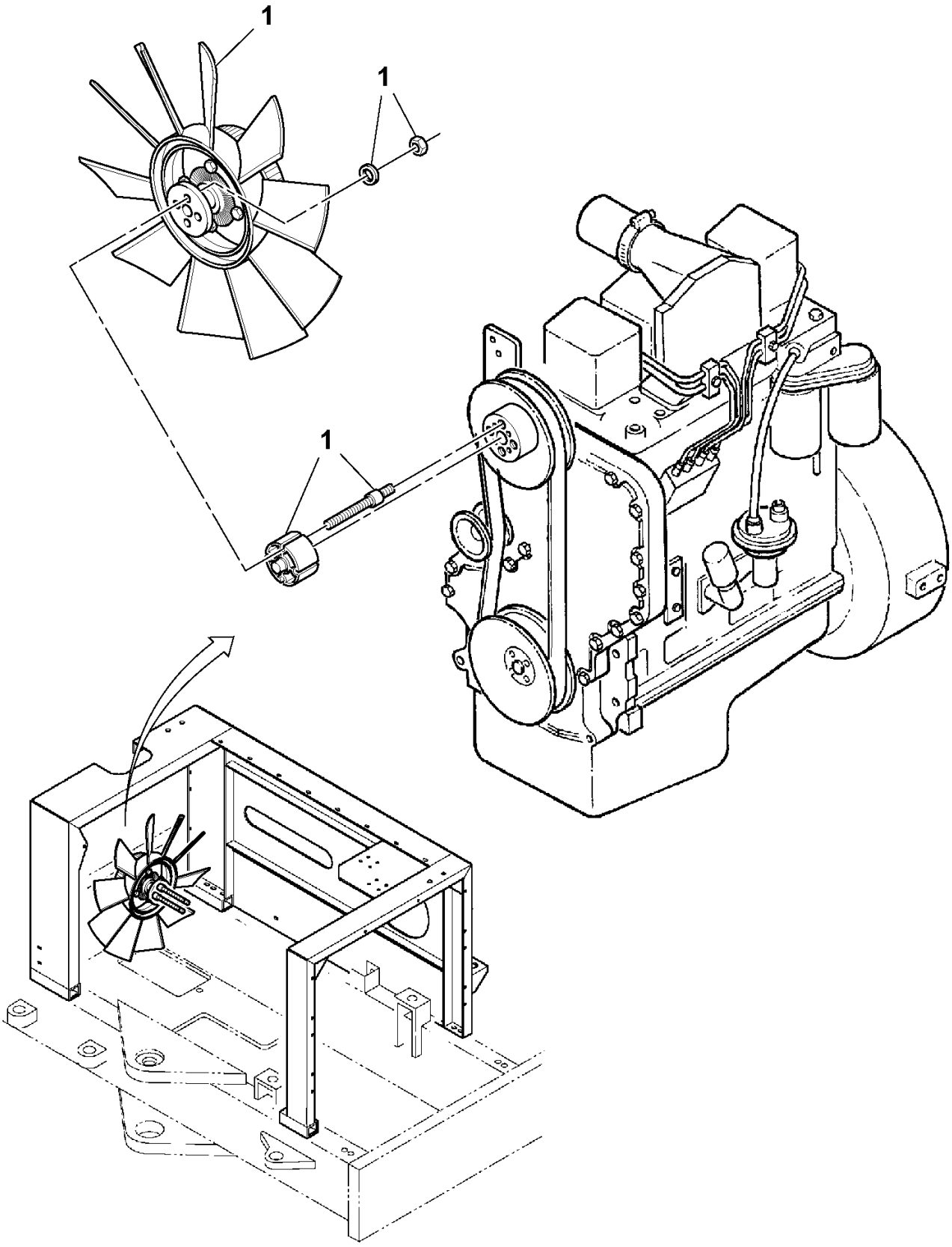

Fan Assembly

POS	PART NUMBER	QTY	PART NAME	NOTES
1	RM 59104711	1	Fan Motor	
2	RM 96701370	4	Nut	
3	RM 96741038	4	Washer	
4	RM 96739750	4	Stud	
5	RM 58772195	1	Spacer	

Fan Assembly

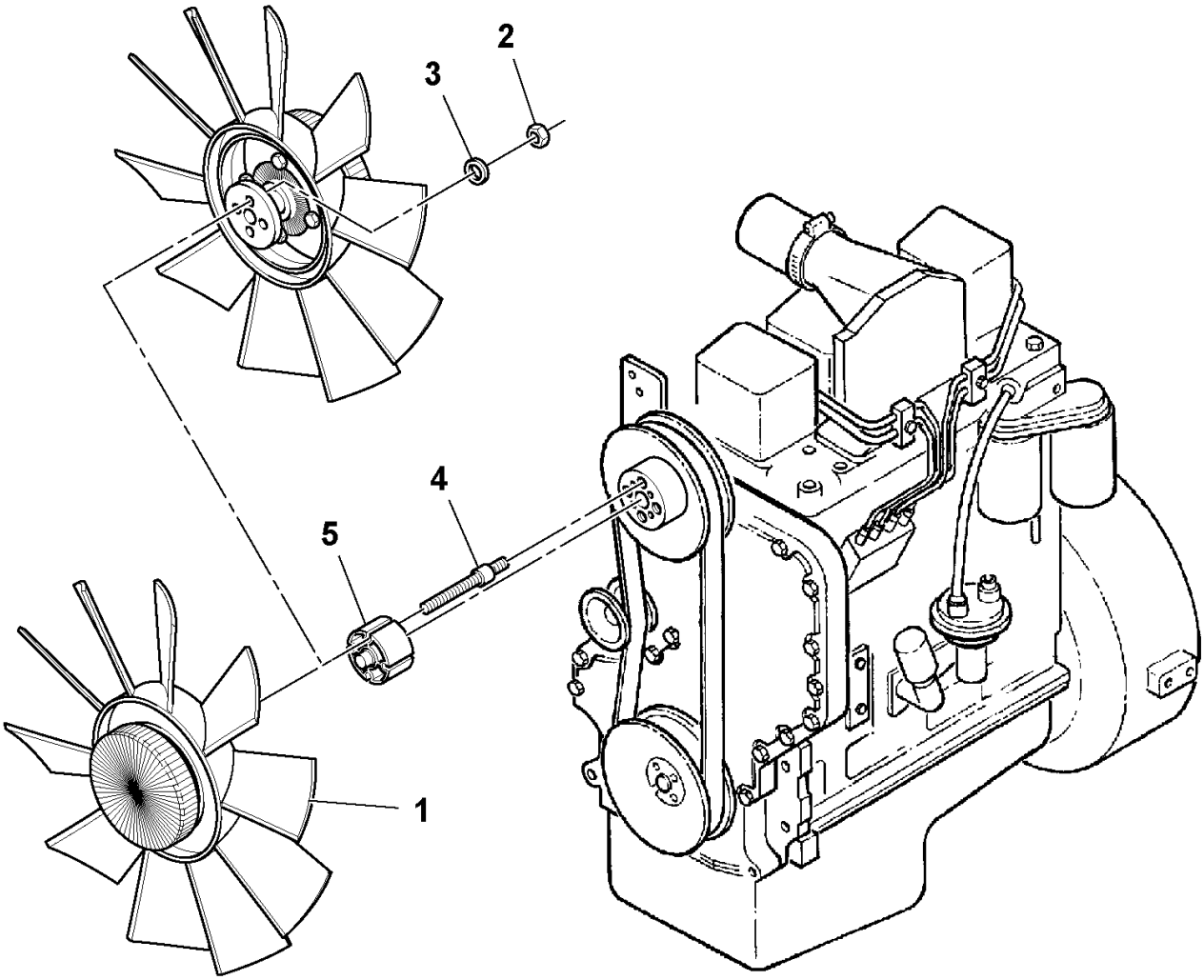

Throttle Cable Installation

POS	PART NUMBER	QTY	PART NAME	NOTES
1	RM 59650721	1	Cable Kit	
2	RM 59550301	1	Control	
3	RM 59646323	1	Hand Lever	
4	RM 95919767	4	Screw	
5	RM 95922720	4	Lock Washer	
6	RM 59327825	4	Hexagon Nut	
7	RM 59097907	1	Control Cable	
8	RM 59901306	1	Clevis	
9	RM 95860052	1	Screw	
10	RM 95943346	1	Nut	

Throttle Cable Installation

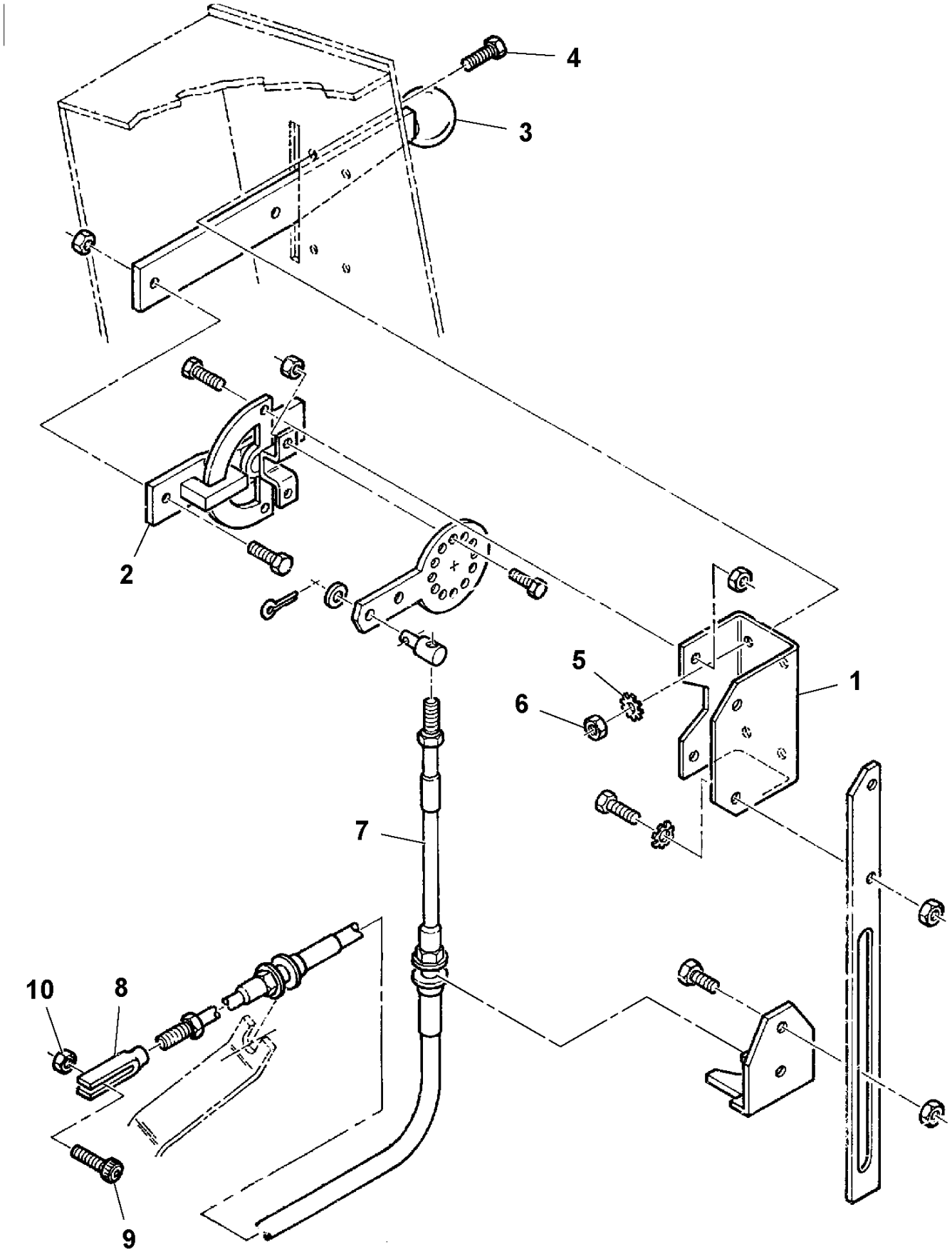

Work light Installation

POS	PART NUMBER	QTY	PART NAME	NOTES
1	RM 58814922	1	Cable harness	
2	RM 43963859	1	Cable harness	
5	RM 58837956	4	Work lamp	
	RM 59928986	4	Connector	
	RM 59858662	8	Cable sheating	
	RM 59854877	8	Cable seal	
	RM 43804483	4	Work lamp	
6	RM 59010033	2	Bracket	
7	RM 59010025	2	Bracket	
8	RM 58820143	2	Grommet	
10	RM 95424586	REQ	Cable tie	
14	RM 59009688	2	U-bolt	
15	RM 96702287	2	Hexagon screw	
16	RM 96711833	2	Washer	
17	RM 96704812	2	Hexagon nut	

Work light Installation

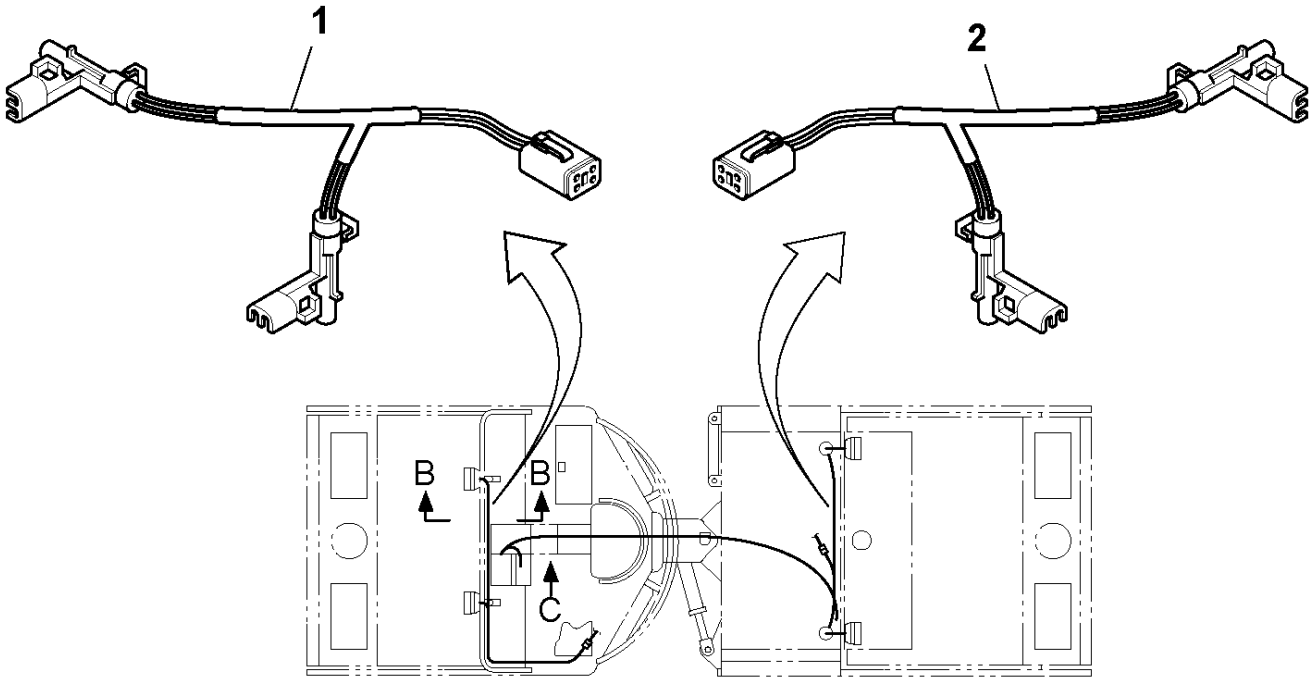

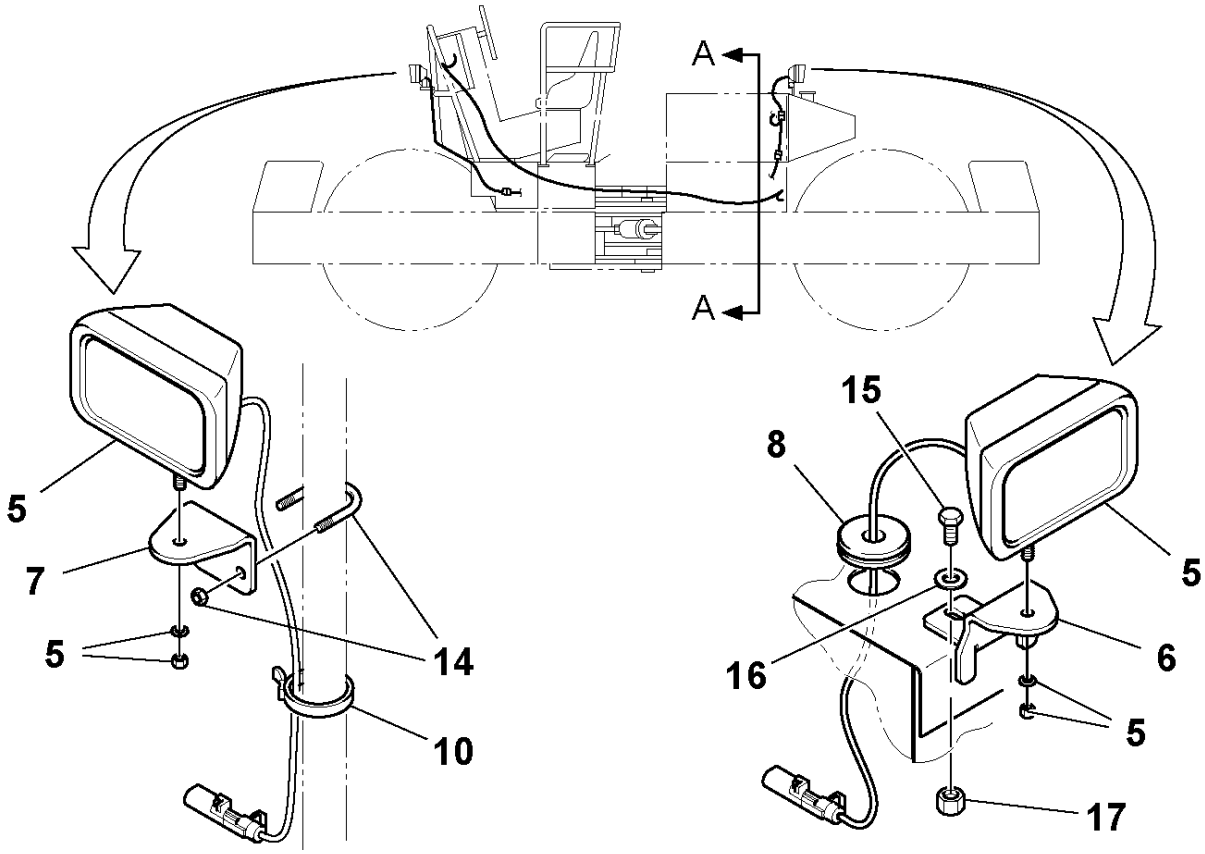

Work light Installation

POS	PART NUMBER	QTY	PART NAME	NOTES
3	RM 59110163	1	Electric Equipment	
	RM 59824250	4	Kit	
12	RM 59634105	1	Switch	

Work light Installation

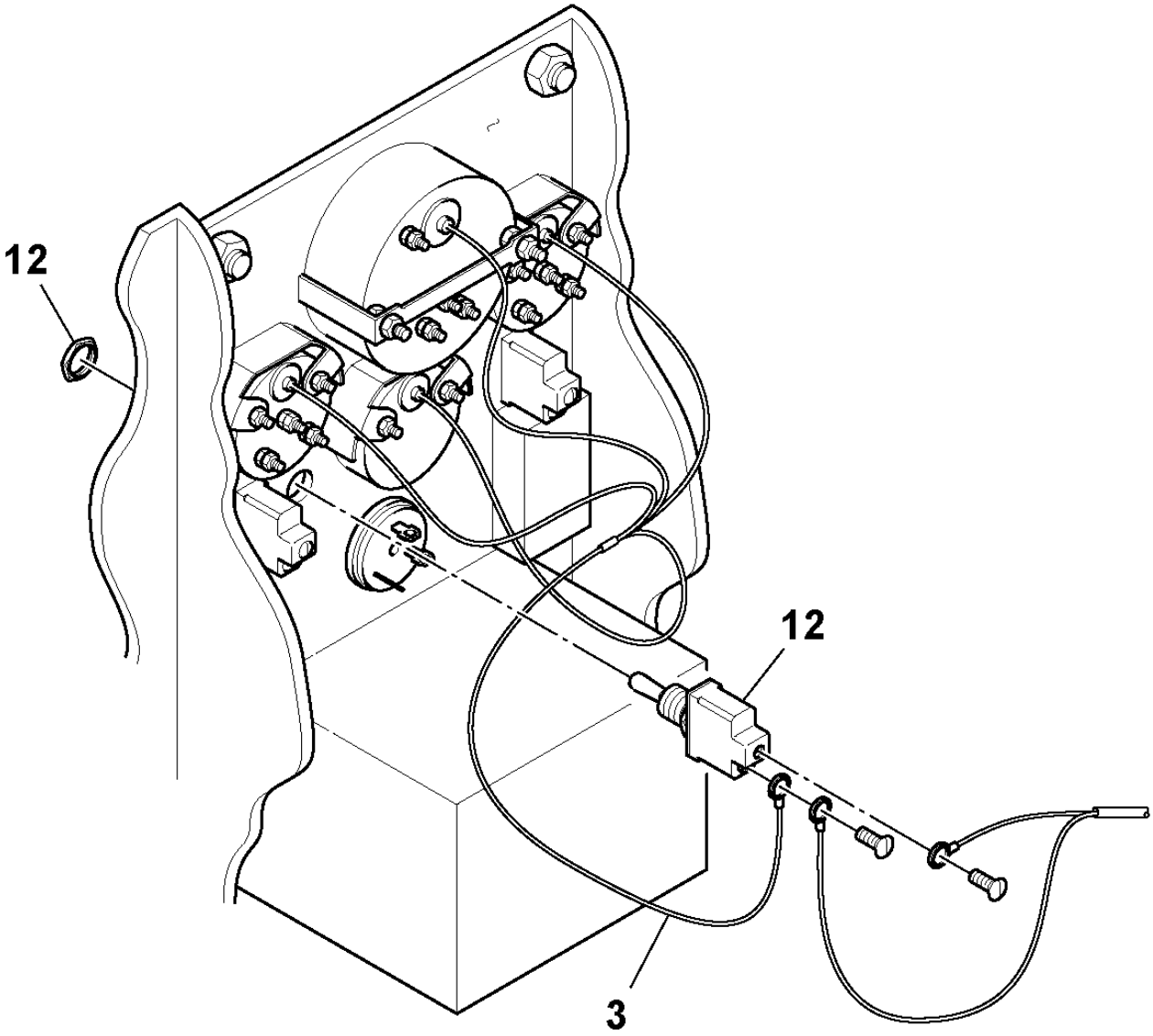

Work light Installation

POS	PART NUMBER	QTY	PART NAME	NOTES
1	RM 58814922	1	Cable harness	
4	RM 59233676	1	Cable harness	S/N 164017 -
	RM 58965377	1	Relay	
	RM 59325720	1	Fuse	25 AMP
	RM 58817172	1	Cable harness	S/N - 164016
9	RM 58820168	REQ	Locking Wire	
10	RM 95424586	REQ	Cable Tie	
13	RM 59483339	2	Fuse	15 AMP
18	RM 59970384	3	Rubber Damper	
19	RM 59327825	4	Hexagon Nut	

Work light Installation

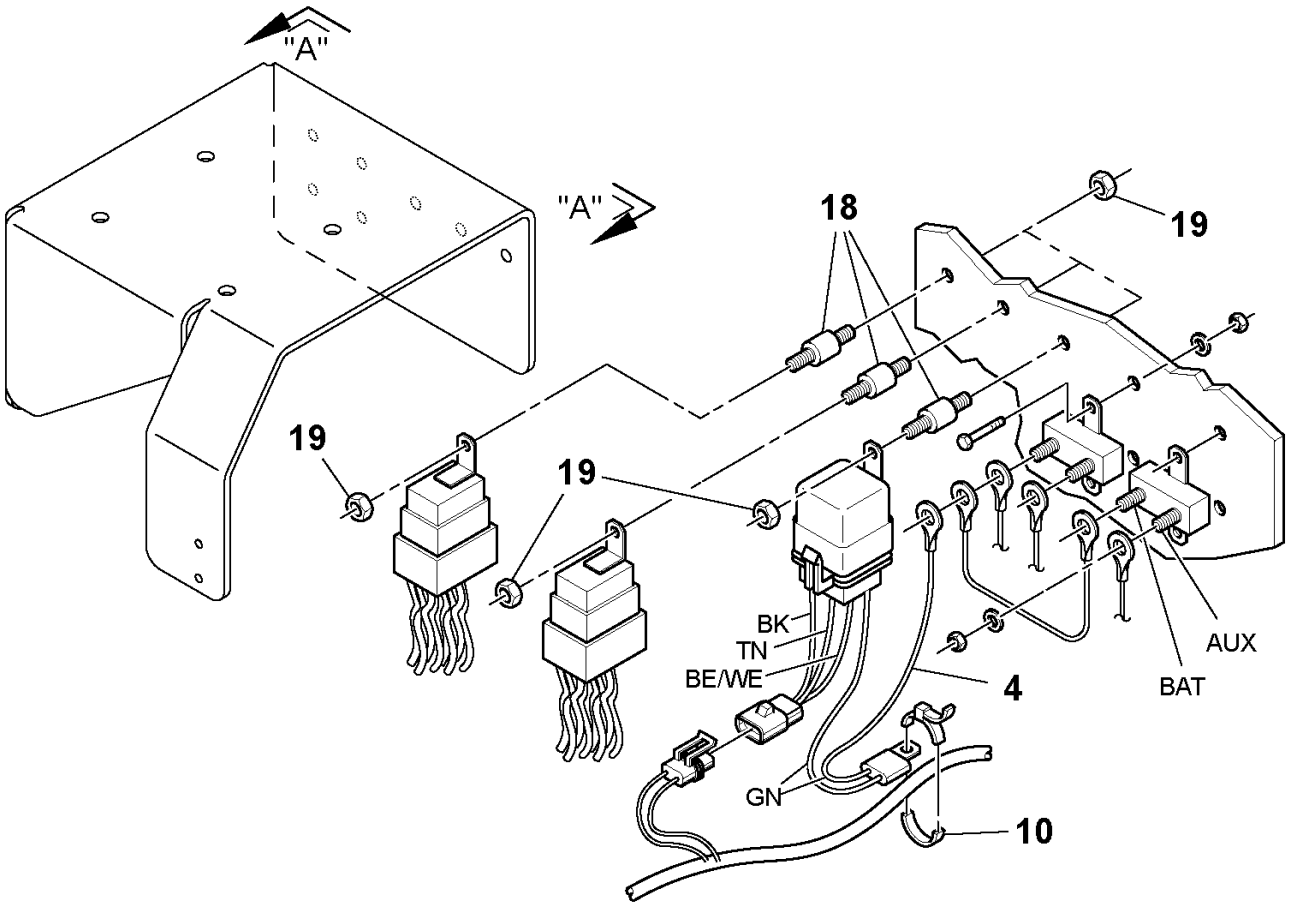

"A-A"

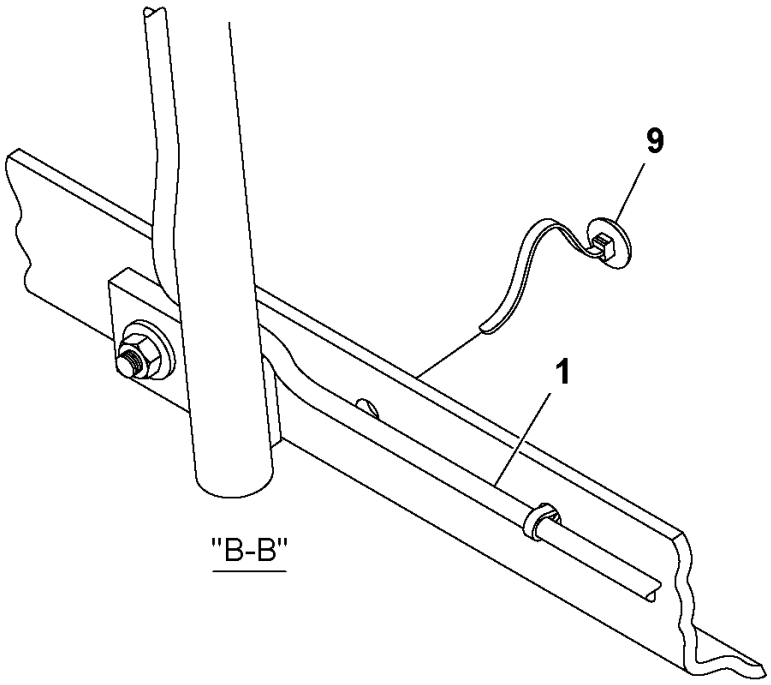

"B-B"

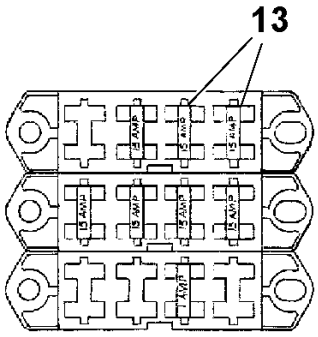

"C"

Hazard Flasher/Turn Signal Installation

POS	PART NUMBER	QTY	PART NAME	NOTES
1	RM 59972224	1	Switch	
2	RM 59634105	1	Switch	
3	RM 13207378	2	Cable	
4	RM 59759753	4	Lamp	
	RM 58844796	1	Lens	
	RM 58844804	1	Lens	
	RM 58844812	1	Bulb	SINGLE CONTACT
5	RM 59608588	4	Connector	
6	RM 59106880	1	Cable harness	
7	RM 59206300	1	Fuse Holder	
8	RM 95738282	REQ	Tie Straps	
9	RM 59973065	1	Decal	
10	RM 59973073	1	Decal	
11	RM 59630020	1	Fuse	10 AMP
12	RM 13340252	4	Mounting Plate	
13	RM 59397059	8	Clamp	

Hazard Flasher/Turn Signal Installation

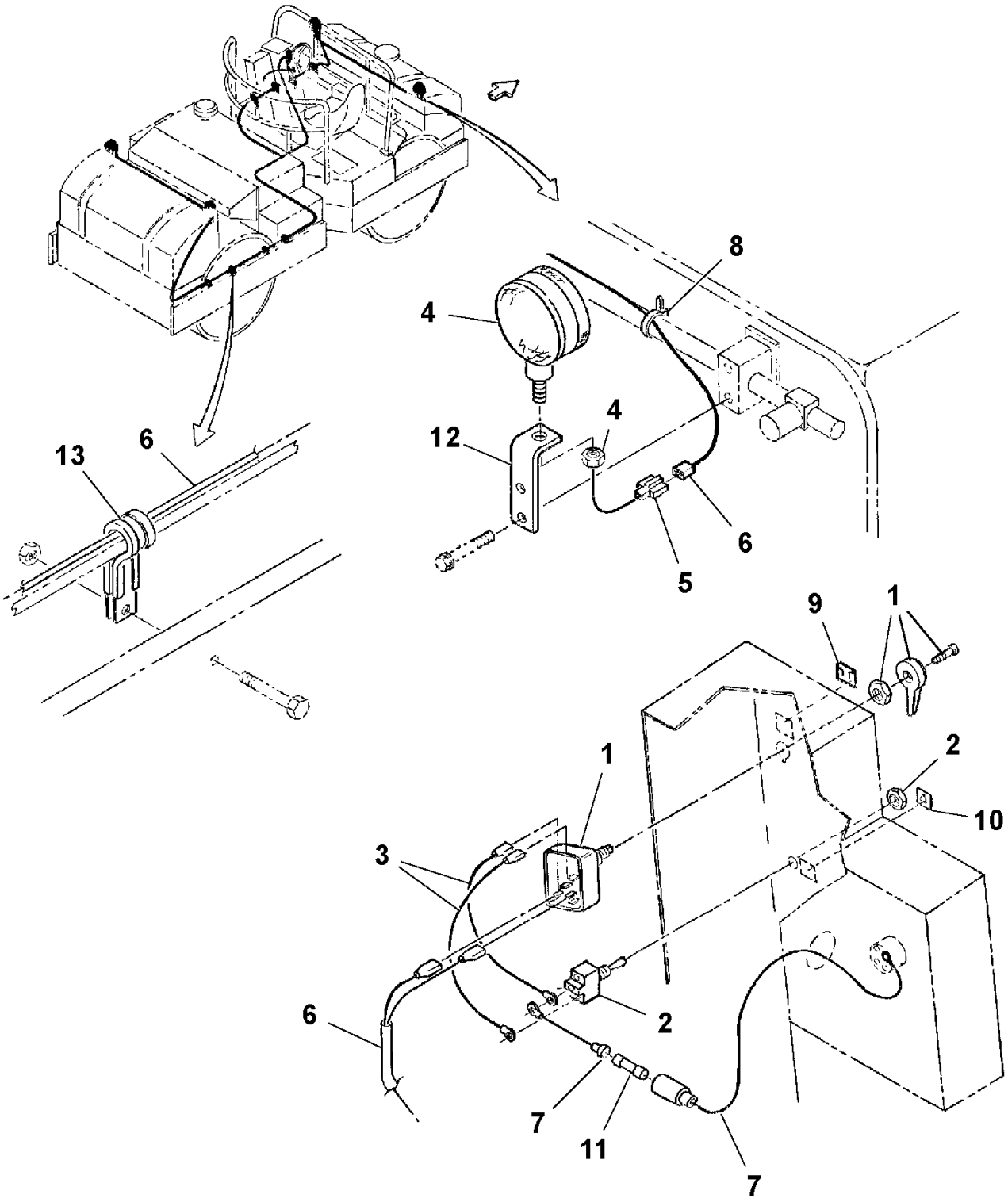

HID/work light installation

POS	PART NUMBER	QTY	PART NAME	NOTES
1	RM 13292388	6	Lamp	
	RM 13360623	6	Lamp	
2	RM 59222182	2	Bracket	
3	RM 59170613	4	Light holder	
13	RM 59172510	1	Cable harness	
15	RM 59172569	10	Chain Link	
35	RM 95922894	8	Hexagon Nut	
37	RM 95922233	16	Washer	
38	RM 95919239	8	Hexagon screw	

HID/work light installation

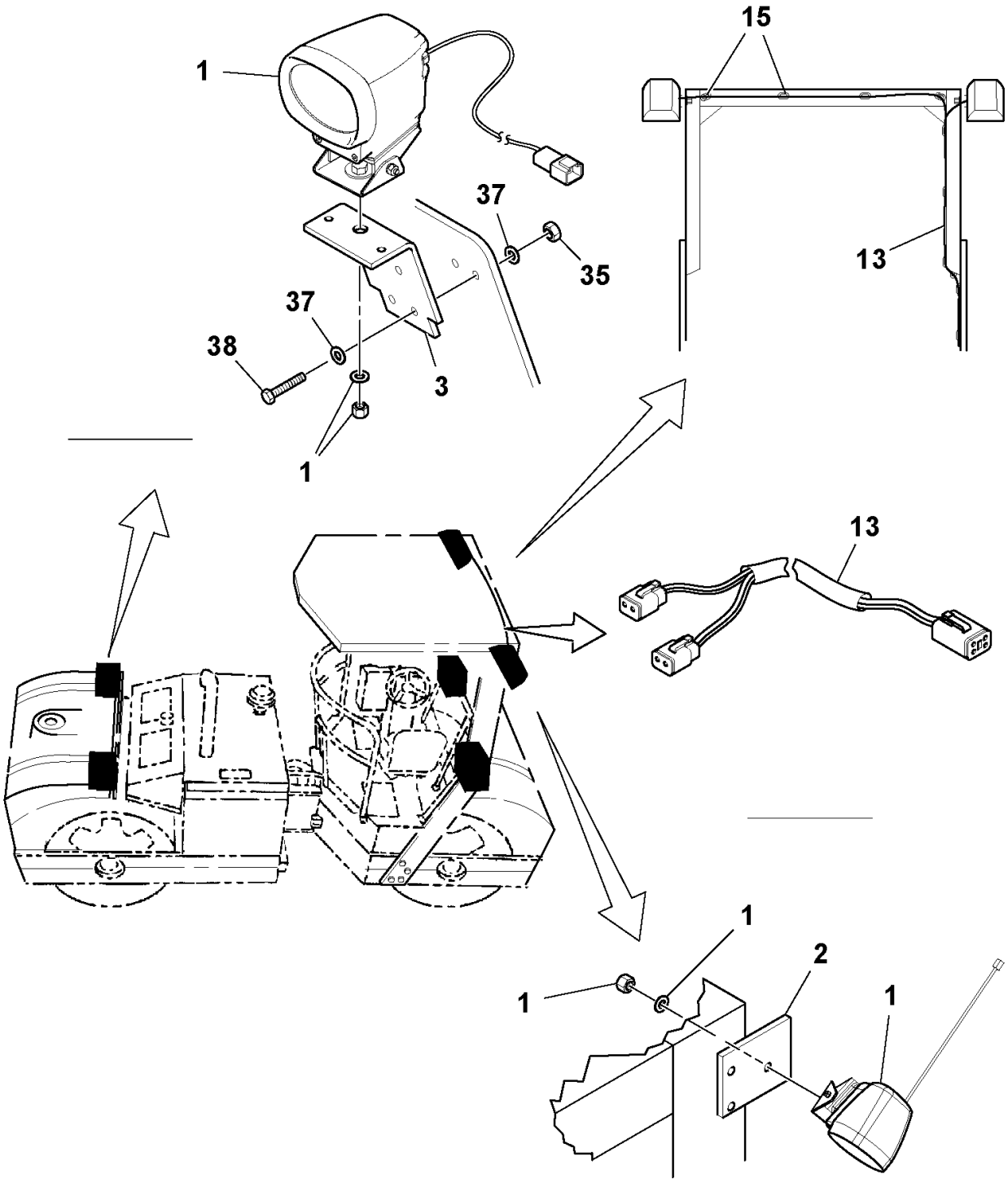

HID/work light installation

POS	PART NUMBER	QTY	PART NAME	NOTES
4	RM 10354983	1	Bracket	
5	RM 13035464	2	Bar	
6	RM 59175422	6	Breaker	15 AMP
7	RM 59172502	1	Light Relay	
	RM 58965377	2	Relay	
10	RM 59212928	1	Cable harness	
12	RM 59170654	1	Cable harness	
14	RM 58965377	2	Relay	
36	RM 96701495	1	Hexagon screw	
40	RM 96704861	2	Hexagon screw	
41	RM 96741053	4	Washer	
42	RM 96704598	2	Lock nut	
43	RM 95919171	1	Screw	

HID/work light installation

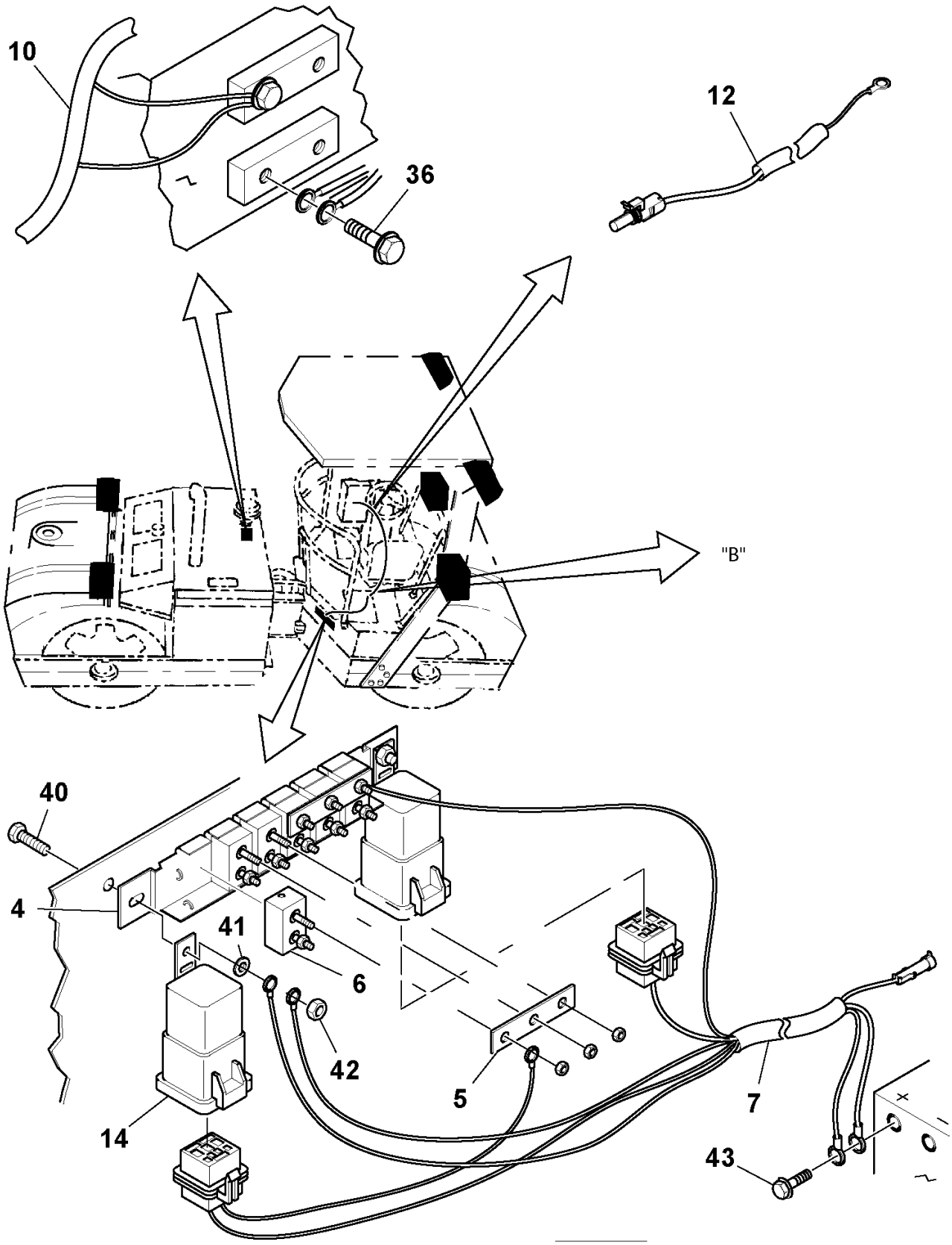

HID/work light installation

POS	PART NUMBER	QTY	PART NAME	NOTES
1	RM 13292388	6	Lamp	
	RM 13360623	6	Lamp	
8	RM 59170670	1	Cable harness	FRONT LAMP
9	RM 59170662	1	Cable harness	FRONT TANK LAMP
10	RM 59212928	1	Cable harness	REAR LAMP
11	RM 59170688	1	Cable harness	REAR TANK LAMP
39	RM 95373973	REQ	Locking Wire	

HID/work light installation

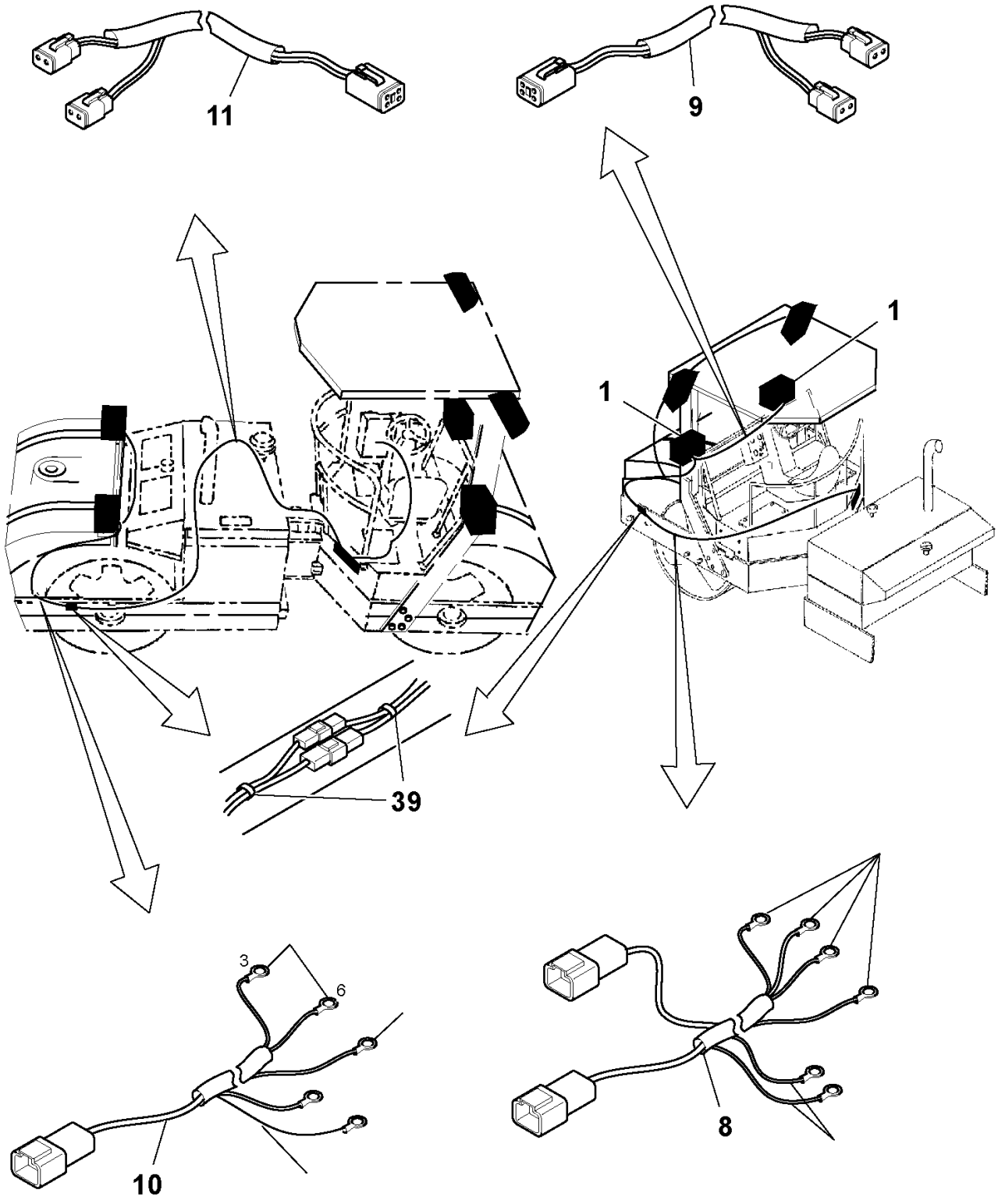

HID/work light installation

POS	PART NUMBER	QTY	PART NAME	NOTES
16	RM 58814922	1	Cable harness	FRONT LAMP
17	RM 43963859	1	Cable harness	REAR LAMP
20	RM 58837956	4	Work lamp	
	RM 59928986	4	Connector	
	RM 59858662	8	Cable sheating	
	RM 59854877	8	Cable seal	
	RM 43804483	4	Work lamp	
21	RM 59010033	2	Bracket	REAR
22	RM 59010025	2	Bracket	FRONT
23	RM 58820143	2	Grommet	
25	RM 95424586	REQ	Cable tie	
30	RM 59009688	2	U-bolt	
32	RM 96702287	2	Hexagon screw	
33	RM 96711833	2	Washer	
34	RM 96704812	2	Hexagon nut	

HID/work light installation

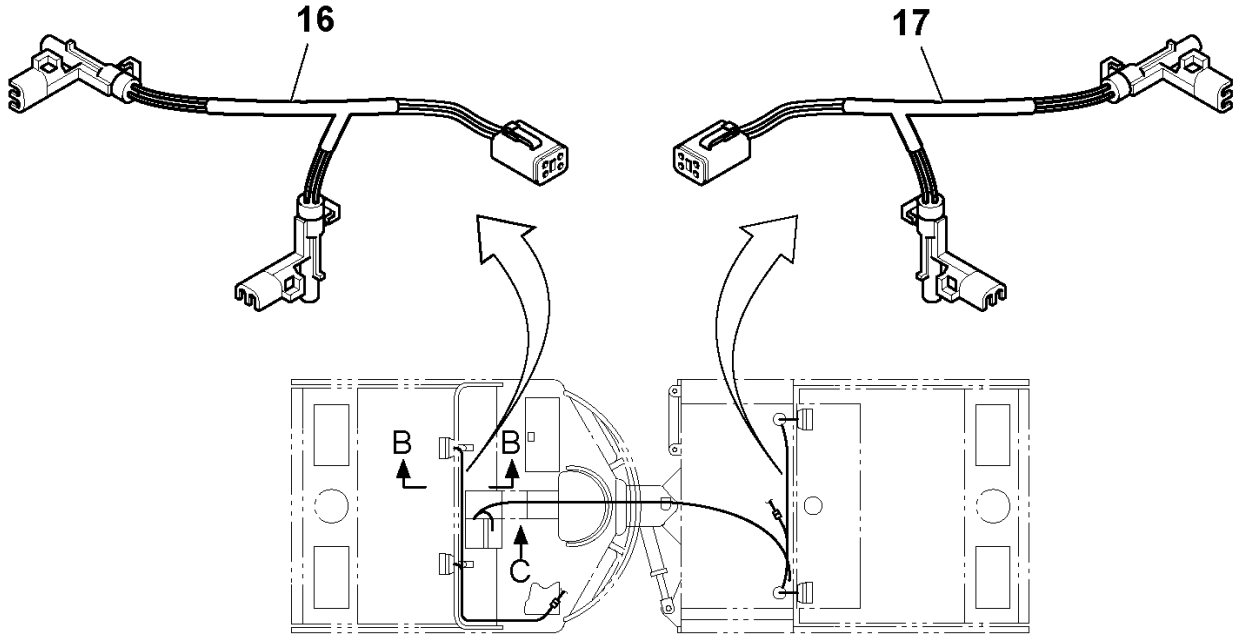

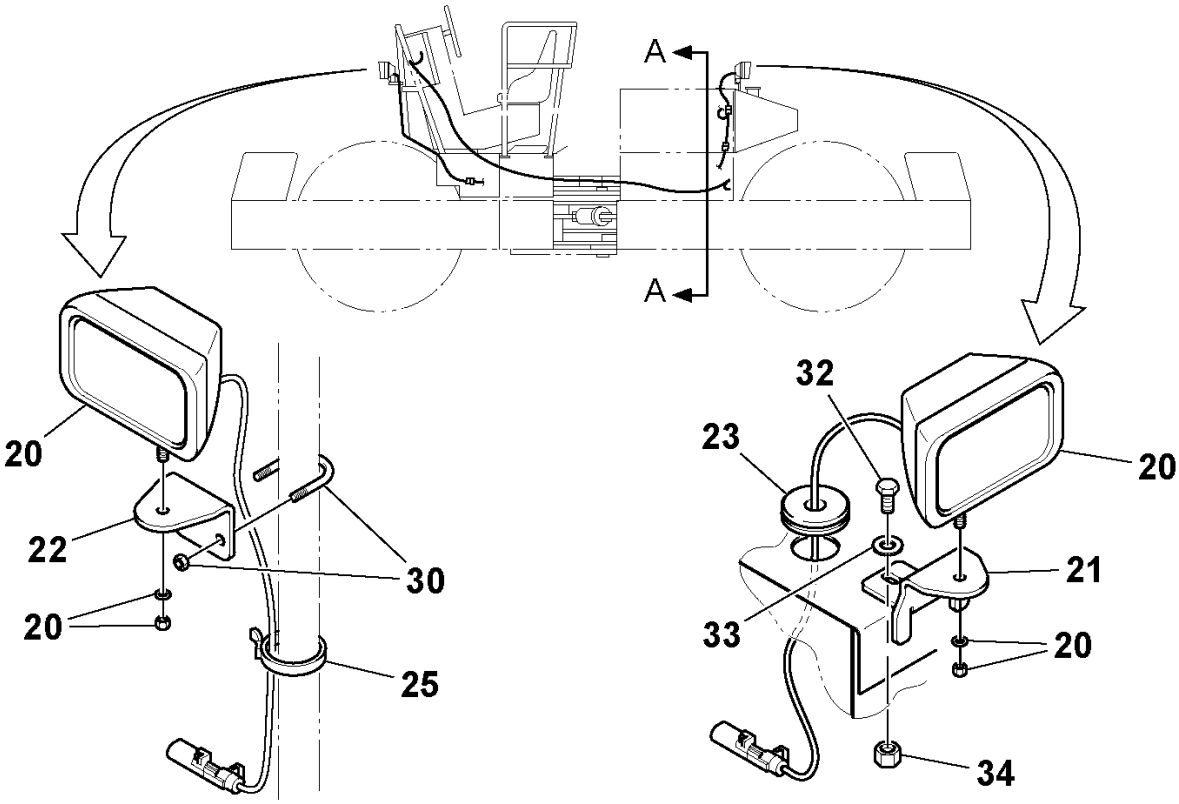

HID/work light installation

POS	PART NUMBER	QTY	PART NAME	NOTES
18	RM 59110163	1	Electric Equipment	
	RM 59824250	4	Kit	
28	RM 59634105	1	Switch	

HID/work light installation

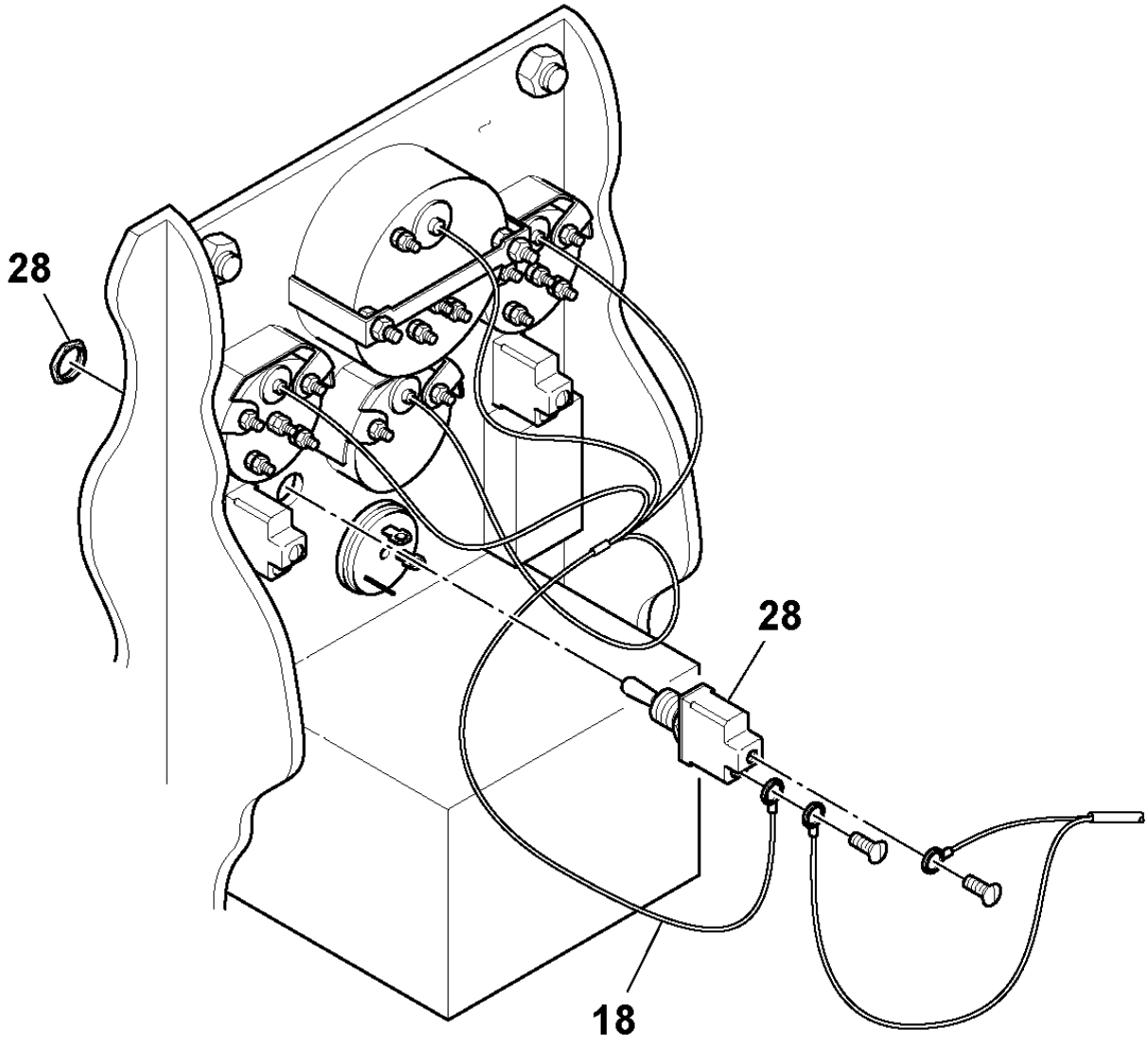

HID/work light installation

POS	PART NUMBER	QTY	PART NAME	NOTES
16	RM 58814922	1	Cable harness	FRONT LAMP
19	RM 59233676	1	Cable harness	
	RM 58965377	1	Relay	
	RM 59325720	1	Fuse	25 AMP
24	RM 58820168	REQ	Locking Wire	
25	RM 95424586	REQ	Cable Tie	
26	RM 59327825	1	Hexagon Nut	
29	RM 59483339	2	Fuse	15 AMP
31	RM 59970384	1	Rubber Damper	

HID/work light installation

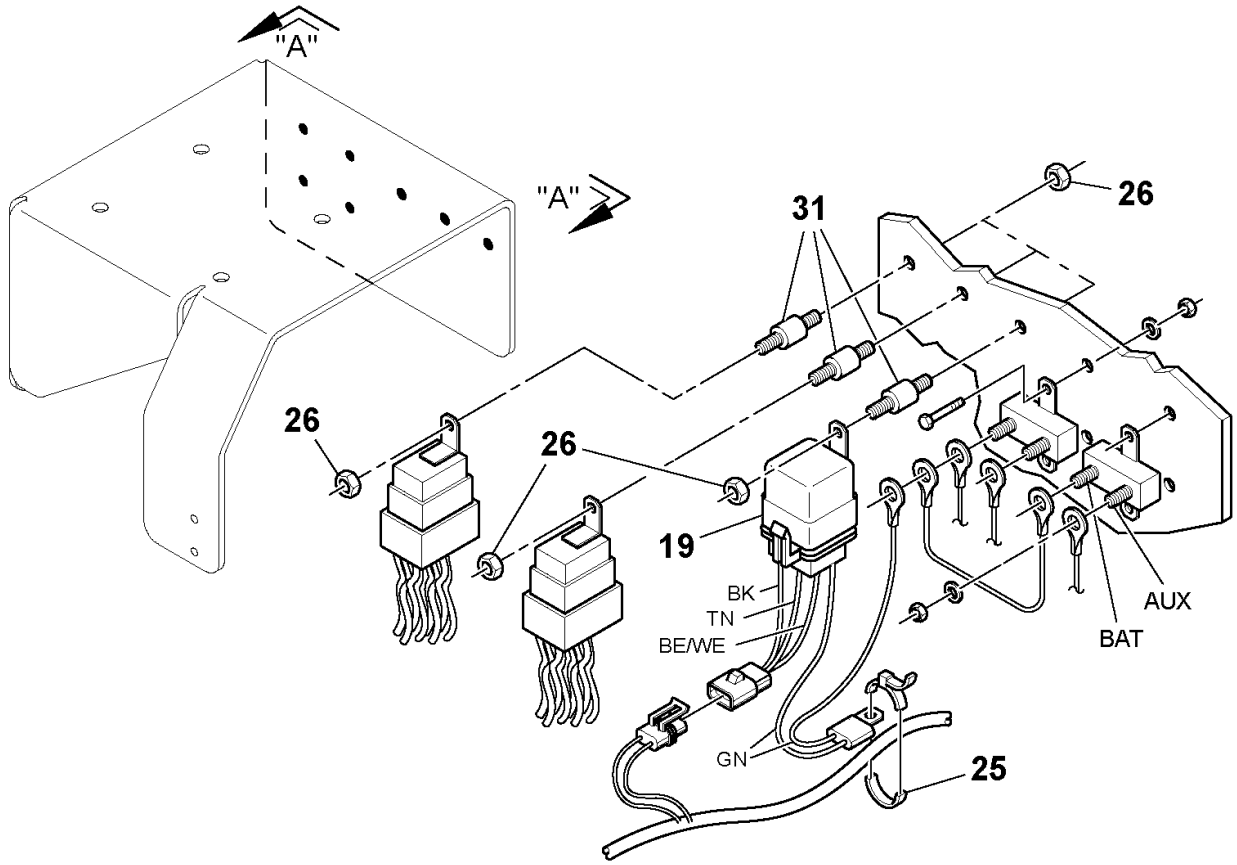

"A-A"

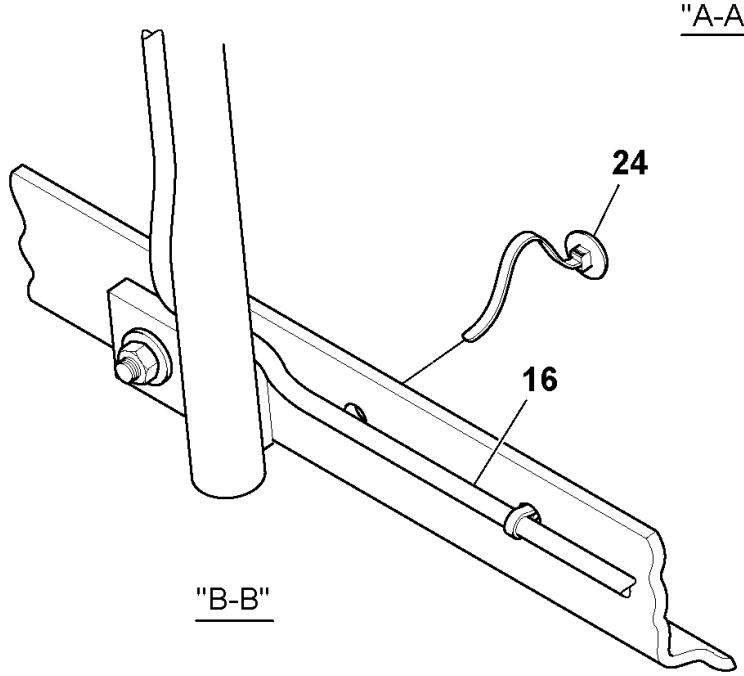

"B-B"

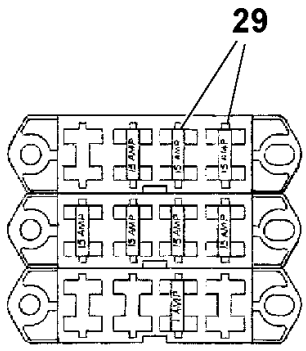

"C"

HID/work light installation

POS	PART NUMBER	QTY	PART NAME	NOTES
1	RM 13292388	6	Lamp	
	RM 13360623	6	Lamp	
3	RM 59170613	4	Light holder	
13	RM 59172510	1	Cable harness	OVERHEAD LAMP
15	RM 59172569	8	Chain Link	
35	RM 95922894	8	Hexagon Nut	
38	RM 95919239	8	Hexagon screw	

HID/work light installation

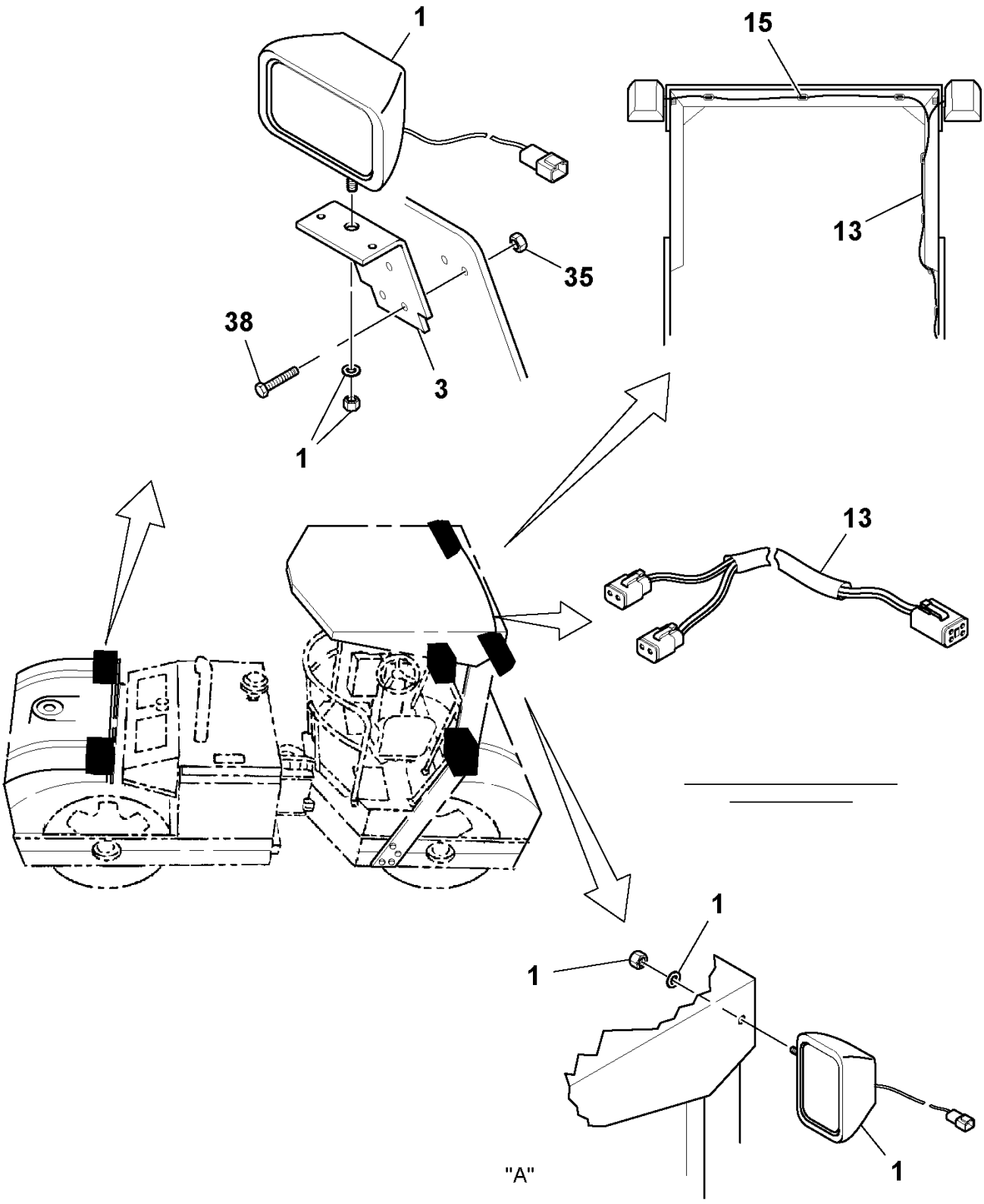

HID/work light installation

POS	PART NUMBER	QTY	PART NAME	NOTES
4	RM 10354983	1	Bracket	
5	RM 13035464	2	Bar	
6	RM 59175422	6	Breaker	15 AMP
7	RM 59172502	1	Light Relay	
	RM 58965377	2	Relay	
10	RM 59212928	1	Cable harness	REAR LAMP
12	RM 59170654	1	Cable harness	
14	RM 58965377	2	Relay	
36	RM 96701495	1	Hexagon screw	
40	RM 96704861	2	Hexagon screw	
41	RM 96741053	4	Washer	
42	RM 96704598	2	Lock nut	
43	RM 95919171	1	Screw	

HID/work light installation

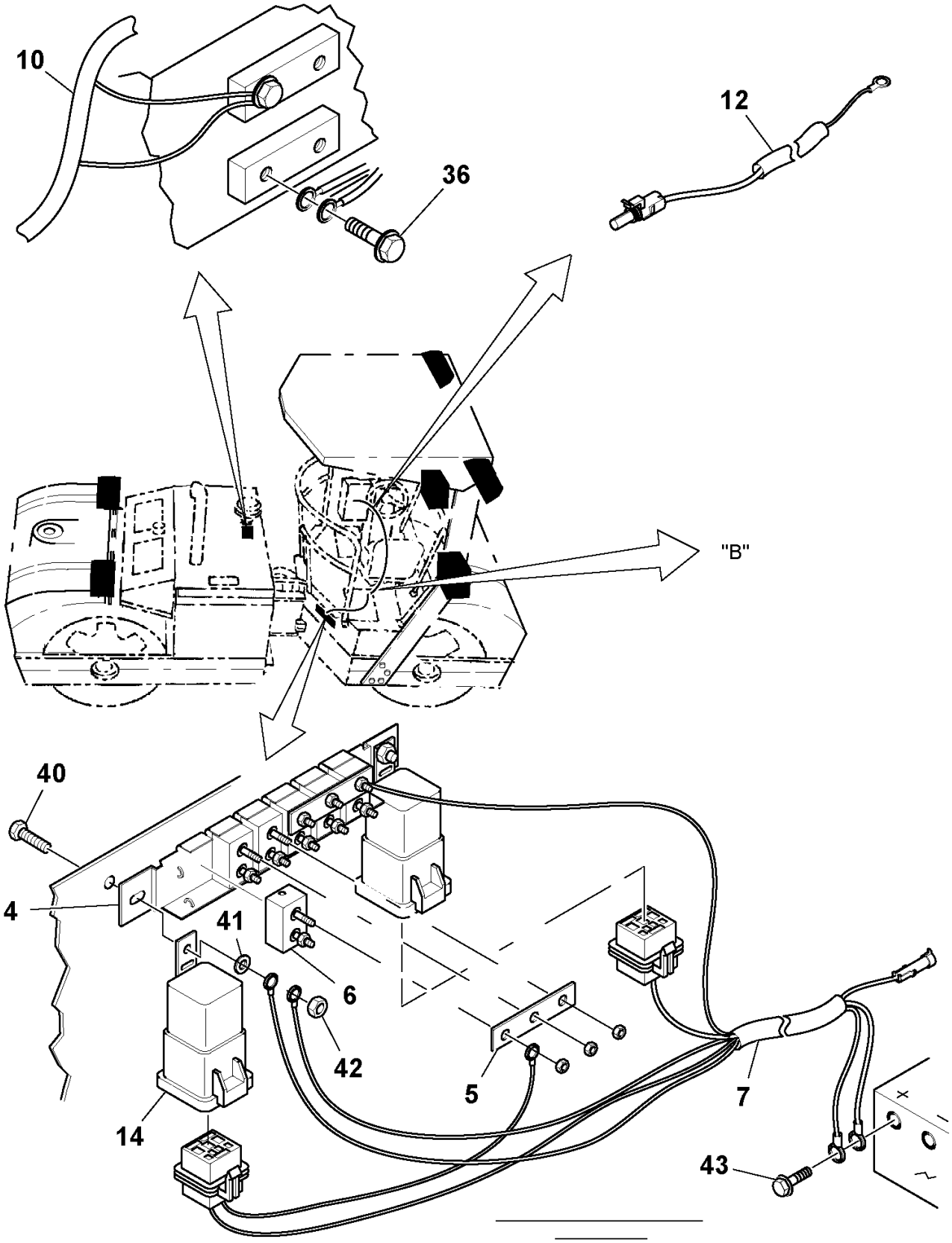

HID/work light installation

POS	PART NUMBER	QTY	PART NAME	NOTES
1	RM 13292388	6	Lamp	
	RM 13360623	6	Lamp	
8	RM 59170670	1	Cable harness	FRONT LAMP
9	RM 59170662	1	Cable harness	FRONT TANK LAMPS
10	RM 59212928	1	Cable harness	REAR LAMP
11	RM 59170688	1	Cable harness	REAR TANK LAMPS
39	RM 95373973	REQ	Locking Wire	

HID/work light installation

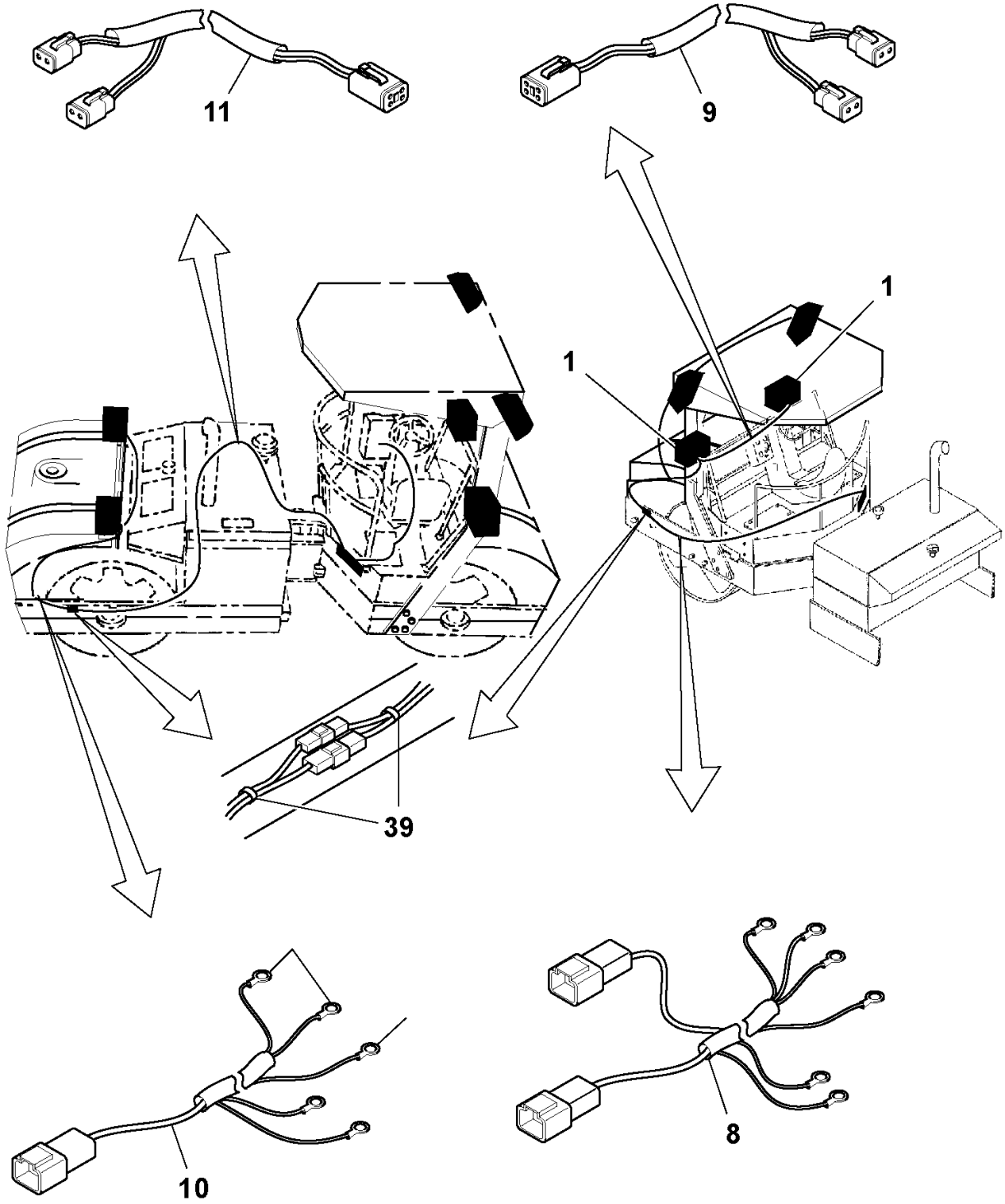

HID/work light installation

POS	PART NUMBER	QTY	PART NAME	NOTES
16	RM 58814922	1	Cable harness	FRONT LAMP
17	RM 43963859	1	Cable harness	REAR LAMP
20	RM 58837956	4	Work lamp	
	RM 59928986	4	Connector	
	RM 59858662	8	Cable sheating	
	RM 59854877	8	Cable seal	
	RM 43804483	4	Work lamp	
21	RM 59010033	2	Bracket	REAR
22	RM 59010025	2	Bracket	FRONT
23	RM 58820143	2	Grommet	
25	RM 95424586	REQ	Cable tie	
30	RM 59009688	2	U-bolt	
32	RM 96702287	2	Hexagon screw	
33	RM 96711833	2	Washer	
34	RM 96704812	2	Hexagon nut	

HID/work light installation

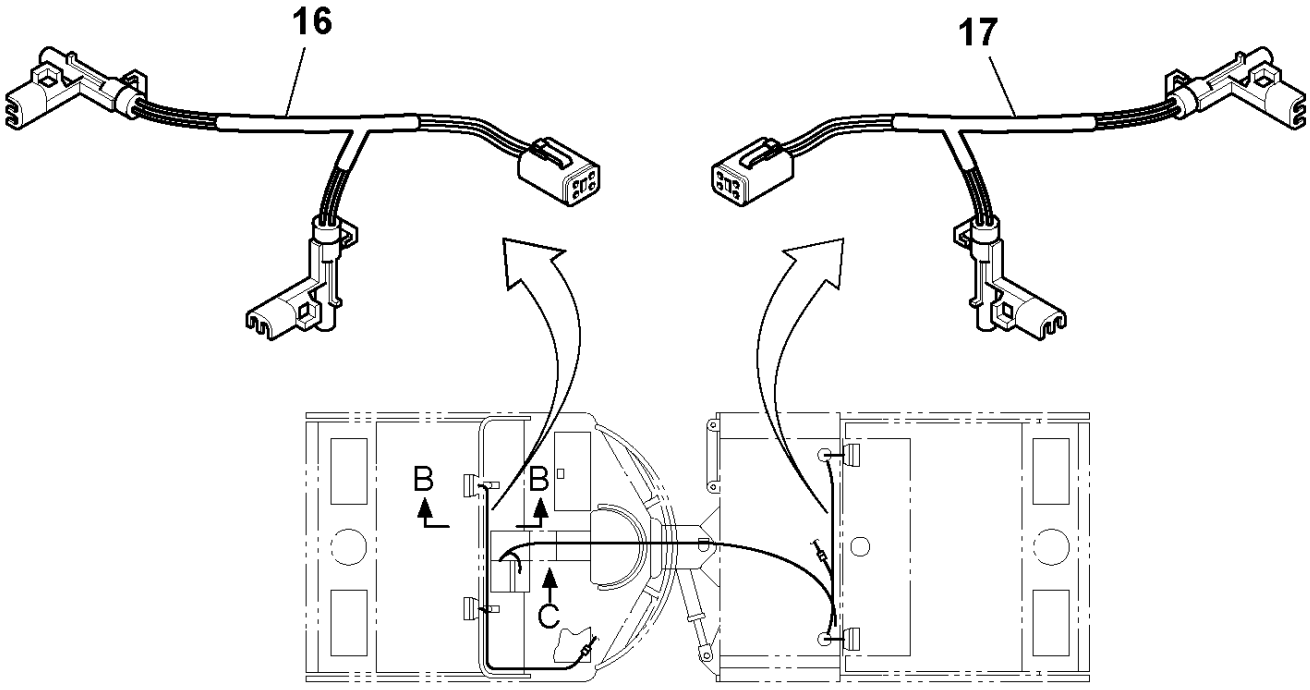

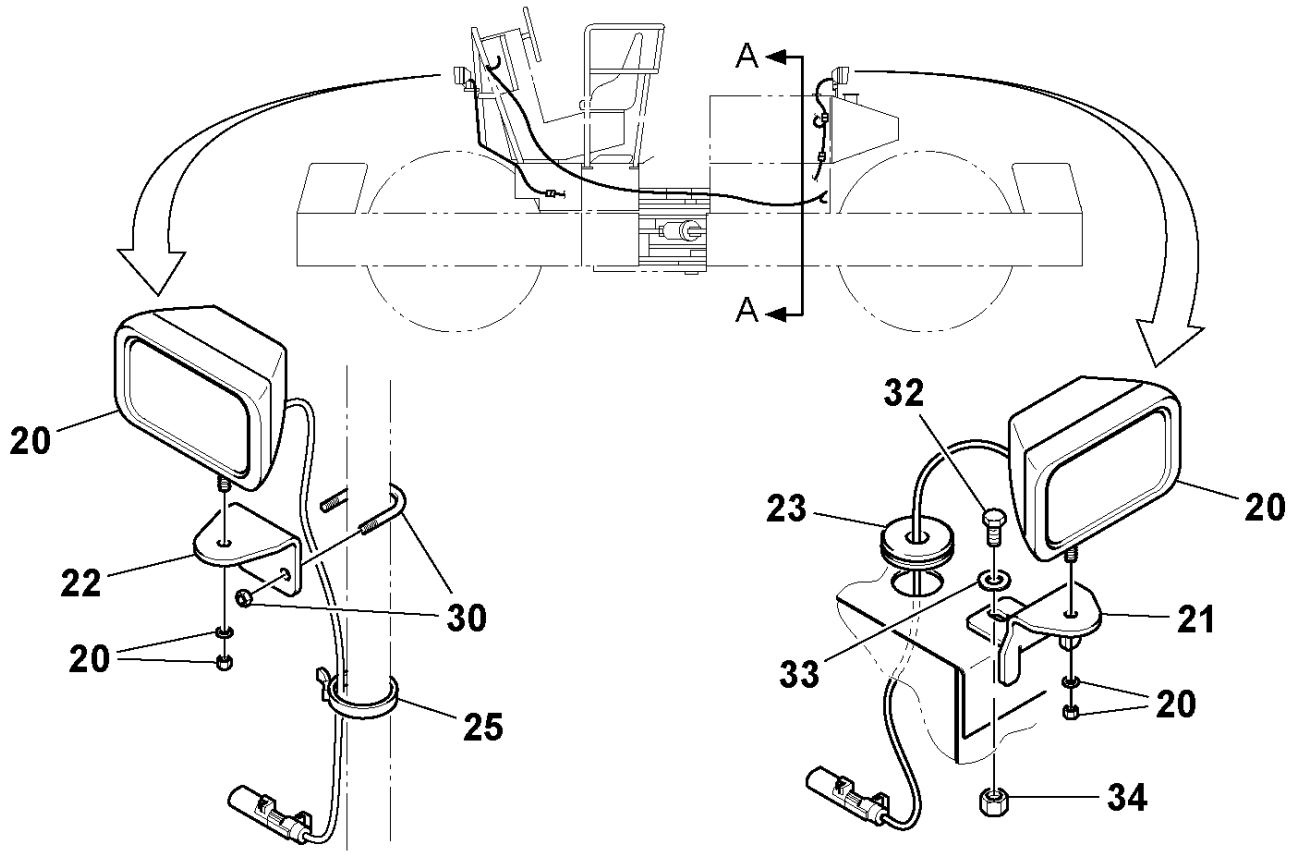

HID/work light installation

POS	PART NUMBER	QTY	PART NAME	NOTES
18	RM 59110163	1	Electric Equipment	
	RM 59824250	4	Kit	
28	RM 59634105	1	Switch	

HID/work light installation

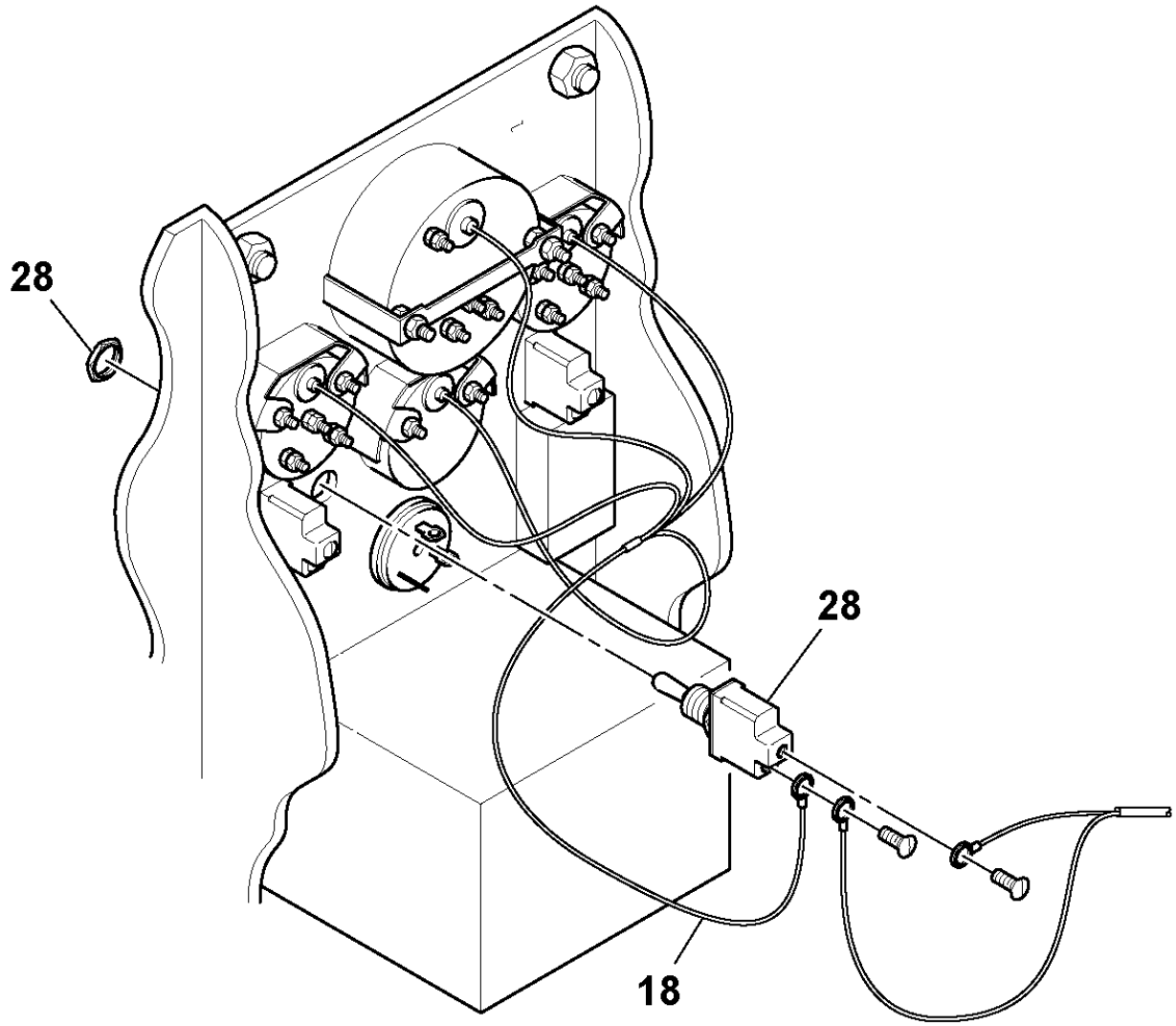

HID/work light installation

POS	PART NUMBER	QTY	PART NAME	NOTES
16	RM 58814922	1	Cable harness	FRONT LAMP
19	RM 59233676	1	Cable harness	S/N 164018 -
	RM 58965377	1	Relay	
	RM 59325720	1	Fuse	25 AMP
	RM 58817172	1	Cable harness	S/N - 164017
24	RM 58820168	REQ	Locking Wire	
25	RM 95424586	REQ	Cable Tie	
26	RM 59327825	4	Hexagon Nut	
29	RM 59483339	2	Fuse	15 AMP
31	RM 59325720	1	Fuse	25 AMP

HID/work light installation

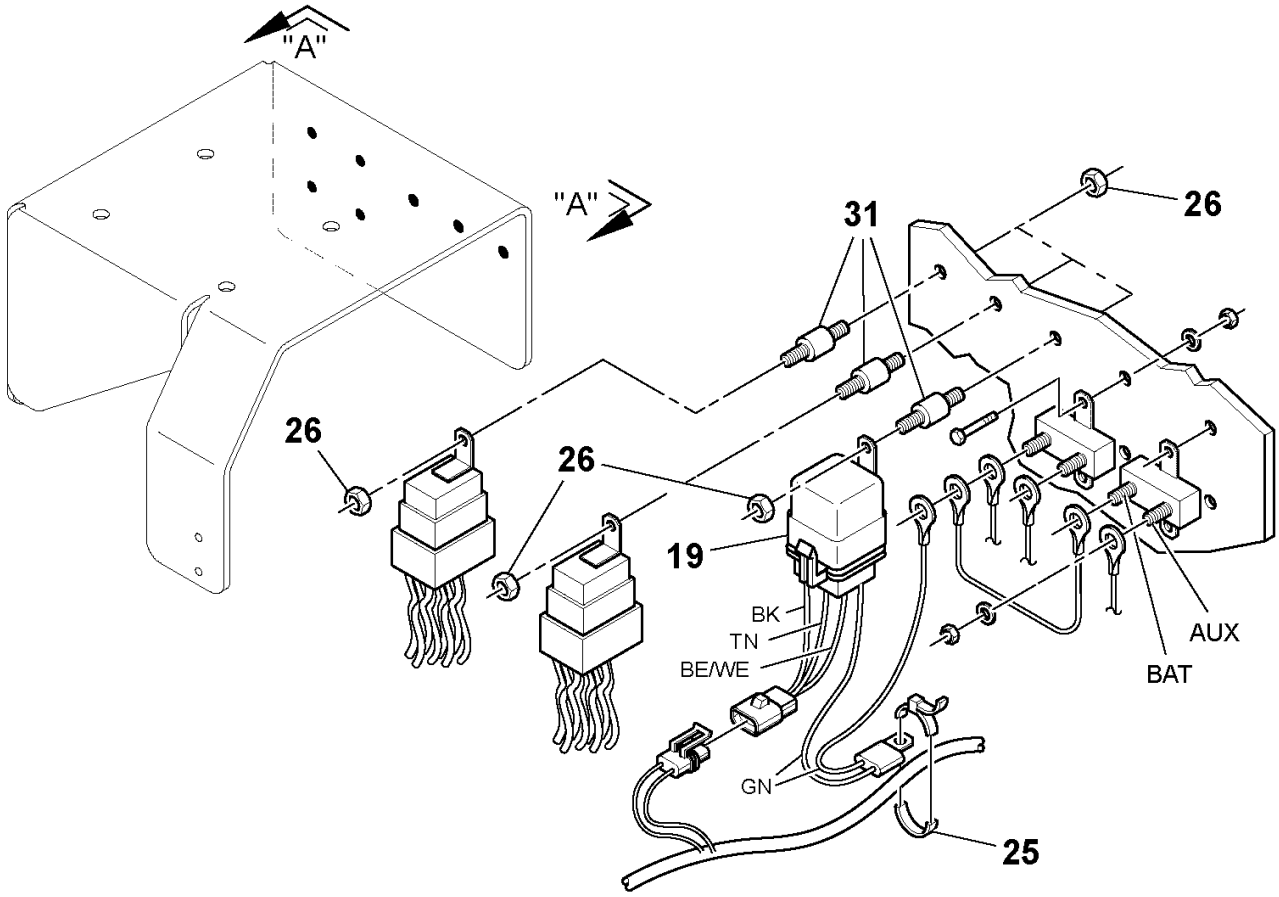

"A-A"

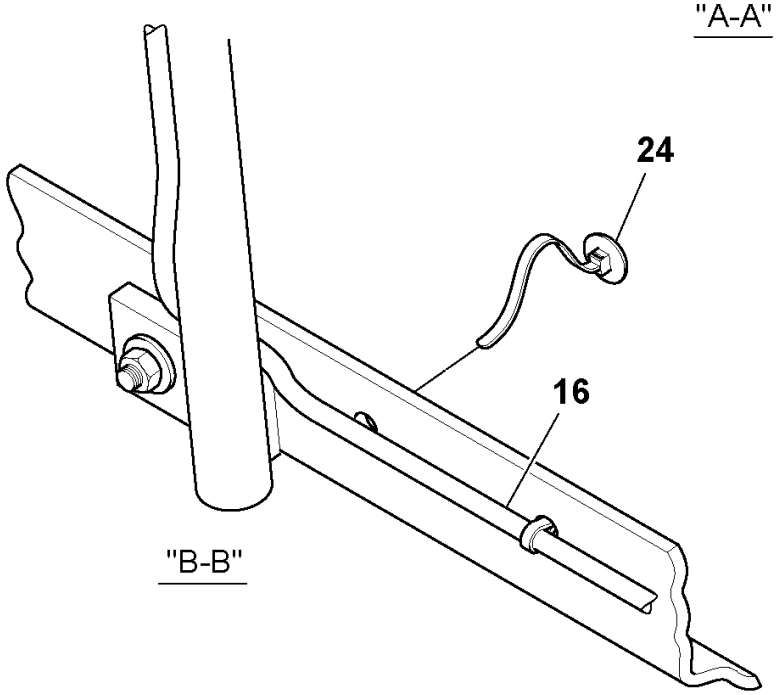

"B-B"

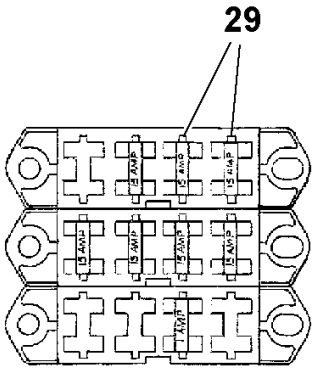

"C"

HID Spotlight Installation

POS	PART NUMBER	QTY	PART NAME	NOTES
6	RM 59172502	1	Light Relay	
	RM 58965377	2	Relay	
7	RM 59170654	1	Cable harness	
9	RM 59634105	1	Switch	
19	RM 59222349	1	Cable harness	
20	RM 54637418	1	Decal	HID SPOT LIGHTS

HID Spotlight Installation

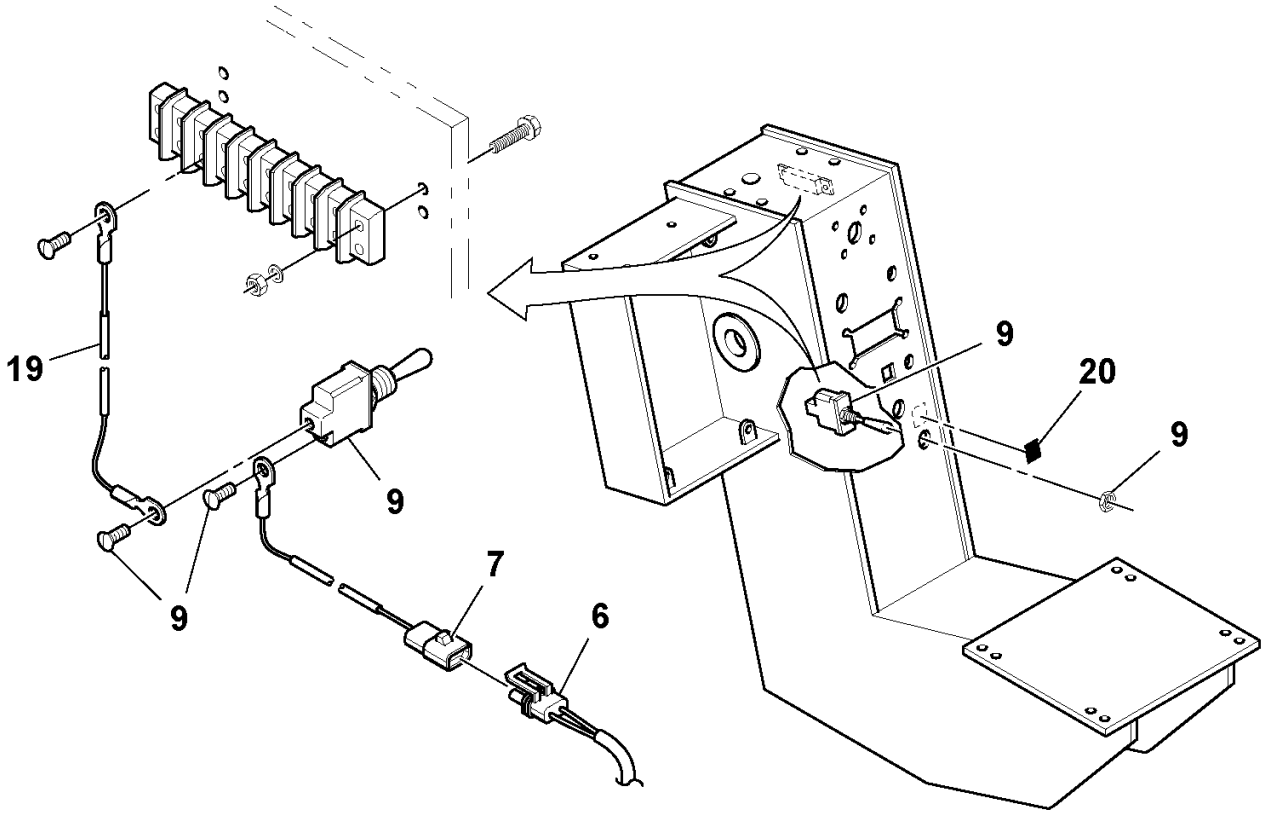

HID Spotlight Installation

POS	PART NUMBER	QTY	PART NAME	NOTES
1	RM 13293659	4	Spot Lamp	
	RM 13853072	4	Additional Light	
	RM 13853080	4	Weight	
3	RM 59211797	4	Angle Bar	
11	RM 59222141	1	Cable harness	SPOT LIGHT CHASSIS
12	RM 13159819	1	Cable harness	ROPS/FOPS SPOT LIGHT
21	RM 95373973	REQ	Locking Wire	
23	RM 59186262	6	Bar	

HID Spotlight Installation

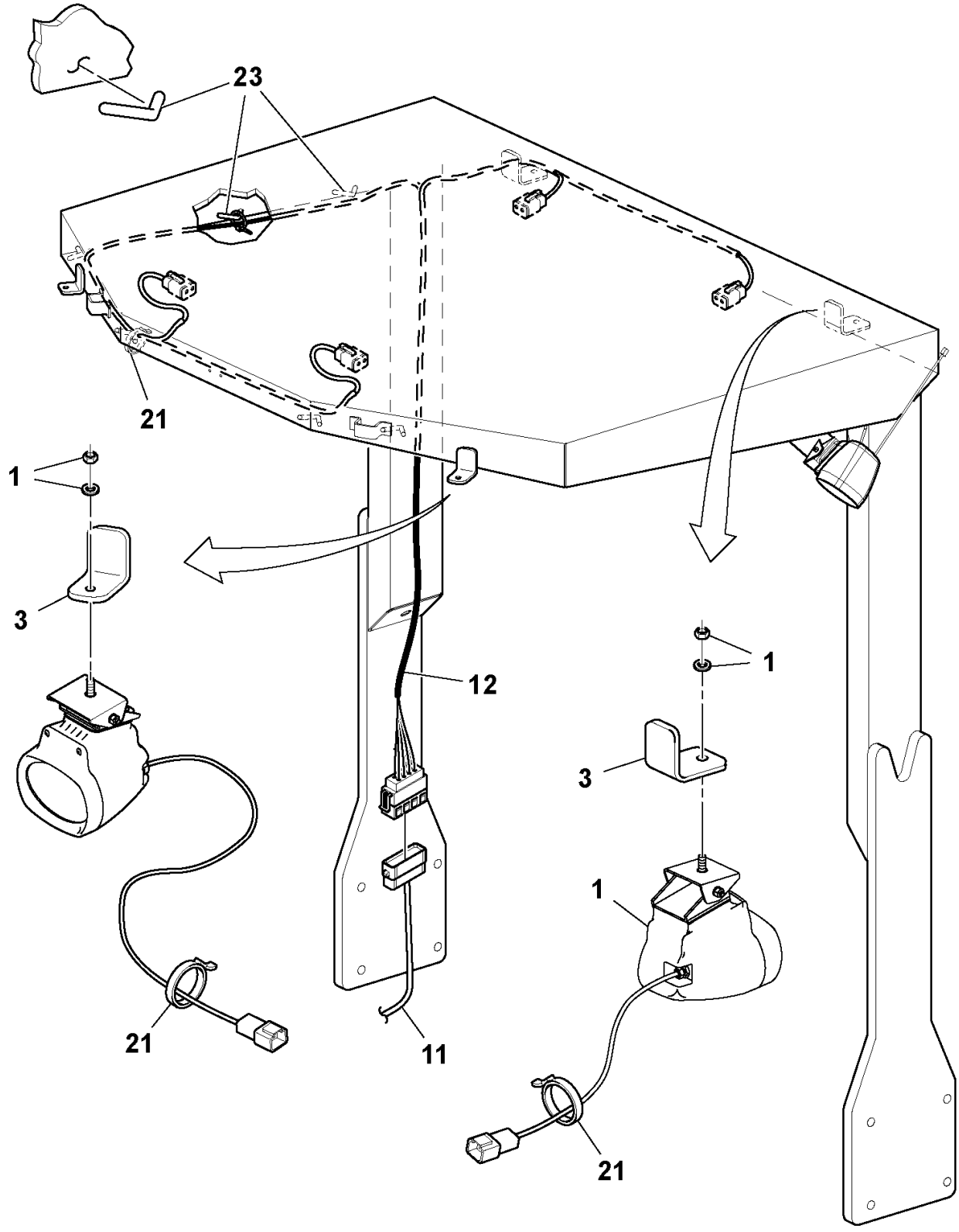

HID Spotlight Installation

POS	PART NUMBER	QTY	PART NAME	NOTES
4	RM 13035456	2	Plate	
5	RM 59175422	4	Breaker	15 AMP
6	RM 59172502	1	Light Relay	
8	RM 58965377	2	Relay	
10	RM 54637277	1	Bracket	
11	RM 59222141	1	Cable harness	SPOT LIGHT CHASSIS
13	RM 96704861	2	Hexagon screw	
14	RM 96741053	4	Washer	
15	RM 96704598	2	Lock nut	

HID Spotlight Installation

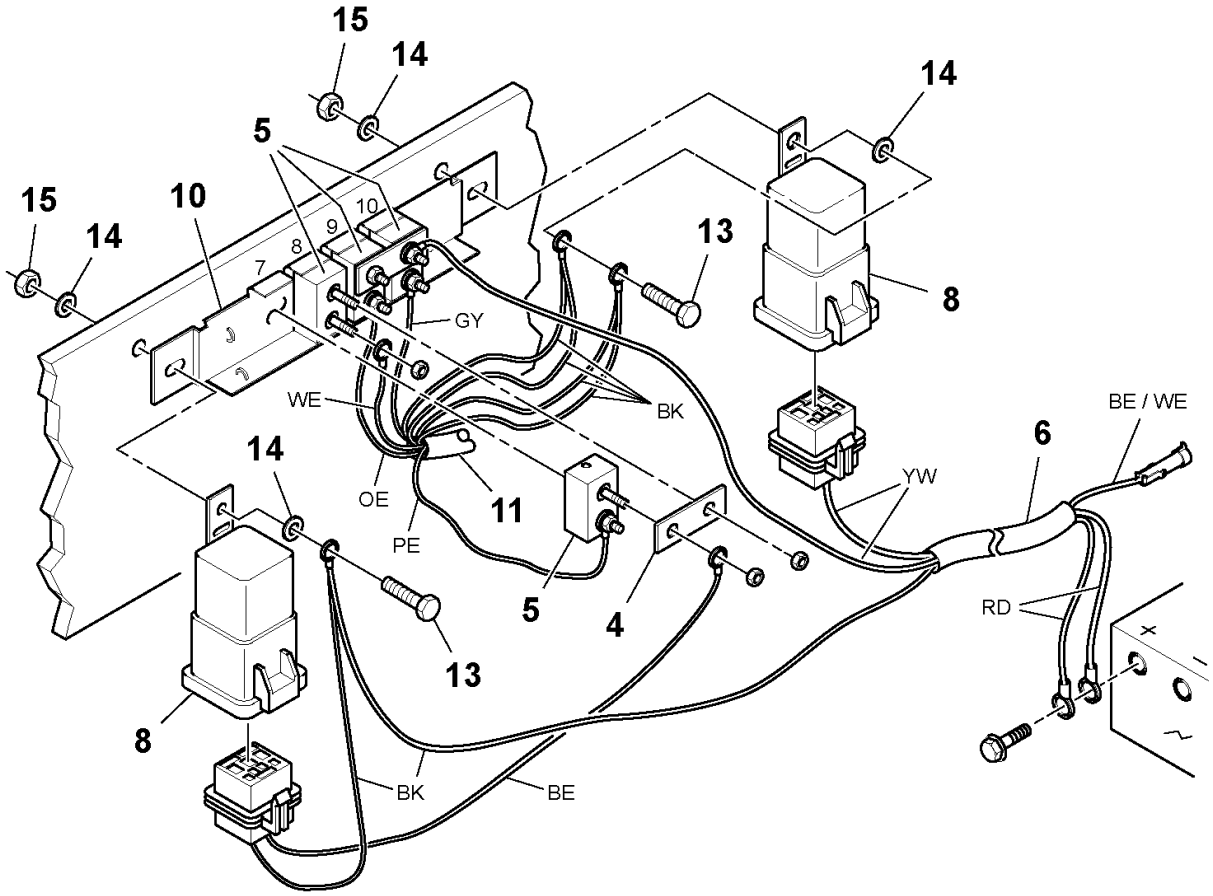

HID Spotlight Installation

POS	PART NUMBER	QTY	PART NAME	NOTES
1	RM 59278762	4	Spot Lamp	
2	RM 59222182	2	Bracket	
3	RM 13161617	4	Bracket	
11	RM 59222141	1	Cable harness	SPOT LIGHT CHASSIS
12	RM 13159819	1	Cable harness	SPOT LIGHT ROPS/FOPS
16	RM 96704309	8	Hexagon screw	
17	RM 96741046	16	Plain Washer	
18	RM 96704614	8	Nut	
21	RM 95373973	REQ	Locking Wire	
23	RM 59186262	6	Bar	

HID Spotlight Installation

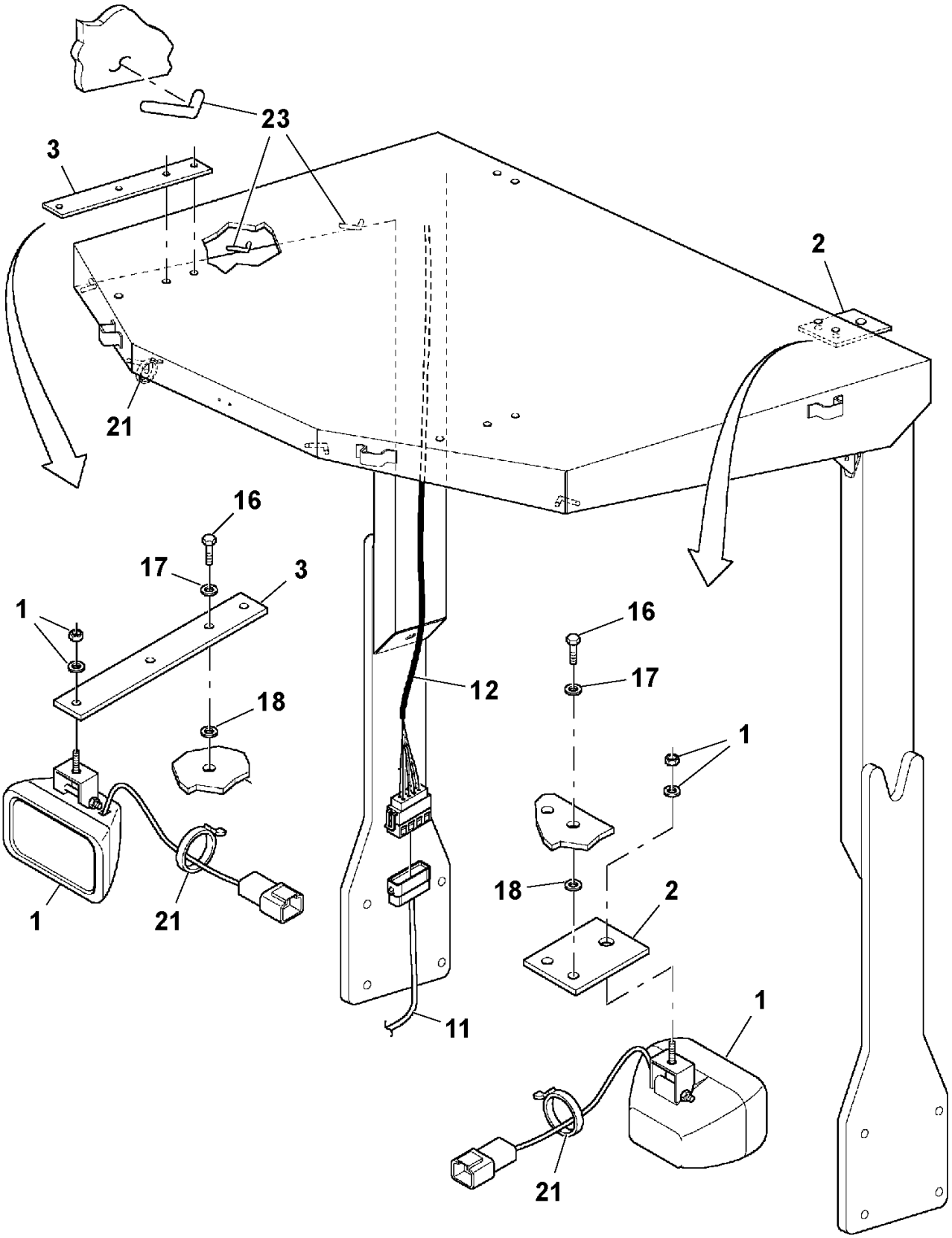

HID Spotlight Installation

POS	PART NUMBER	QTY	PART NAME	NOTES
1	RM 59278762	4	Spot Lamp	
2	RM 59222182	2	Bracket	
3	RM 13161617	4	Bracket	
12	RM 13159819	1	Cable harness	SPOT LIGHT ROPS/FOPS
16	RM 96704309	8	Hexagon screw	
17	RM 96741046	16	Plain Washer	
18	RM 96704614	8	Nut	
21	RM 95373973	REQ	Locking Wire	
22			-	
23	RM 59186262	6	Bar	

HID Spotlight Installation

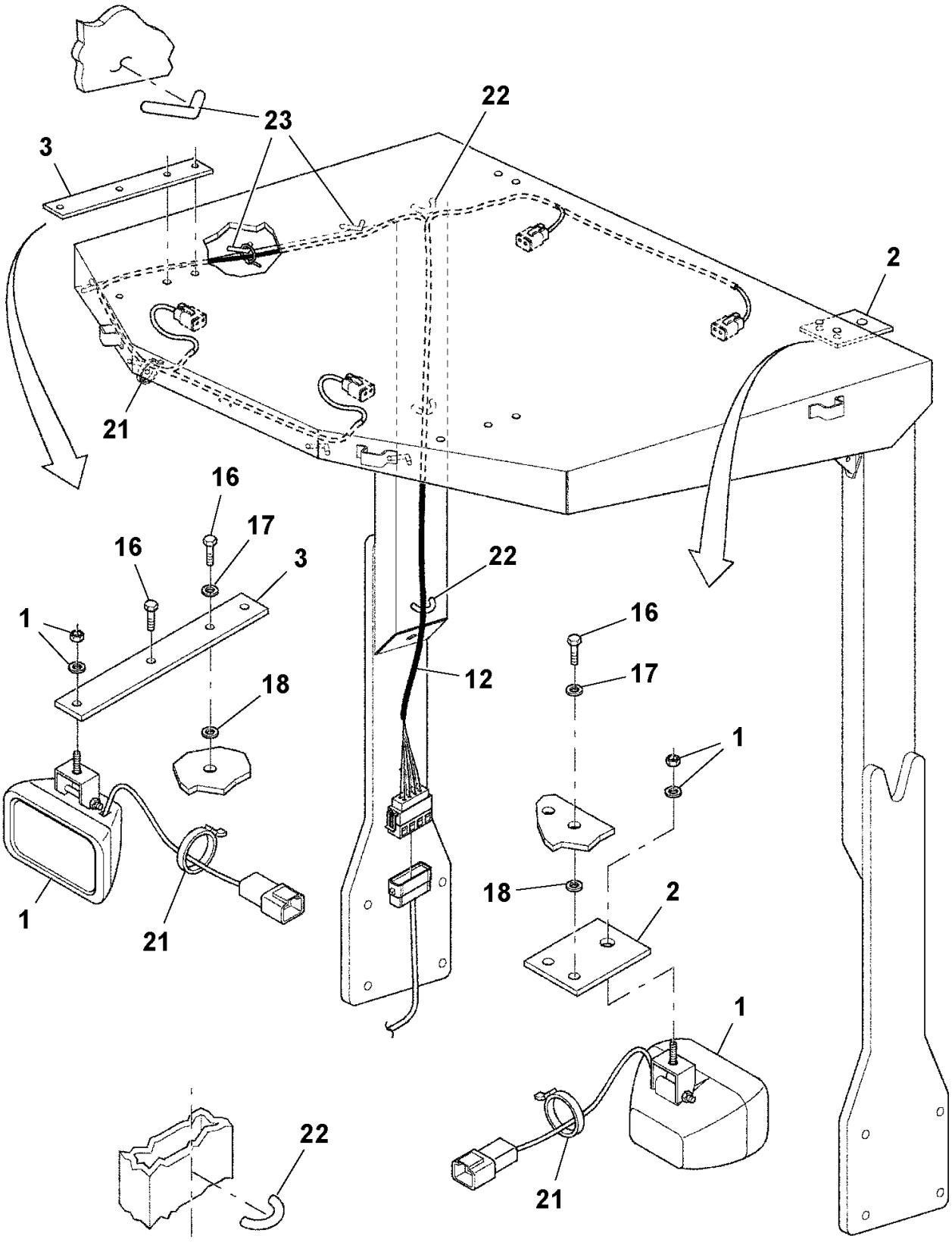

HID Spotlight Installation

POS	PART NUMBER	QTY	PART NAME	NOTES
4	RM 13035456	2	Plate	
5	RM 59175422	4	Breaker	15 AMP
6	RM 59172502	1	Light Relay	
	RM 58965377	2	Relay	
7	RM 59170654	1	Cable harness	
8	RM 58965377	2	Relay	
9	RM 59634105	1	Switch	
10	RM 54637277	1	Bracket	
13	RM 96704796	2	Screw	
14	RM 96741053	4	Washer	
15	RM 96704598	2	Lock nut	
19	RM 59222349	1	Cable harness	
20	RM 54637418	1	Decal	HID SPOT LIGHTS
24			-	

HID Spotlight Installation

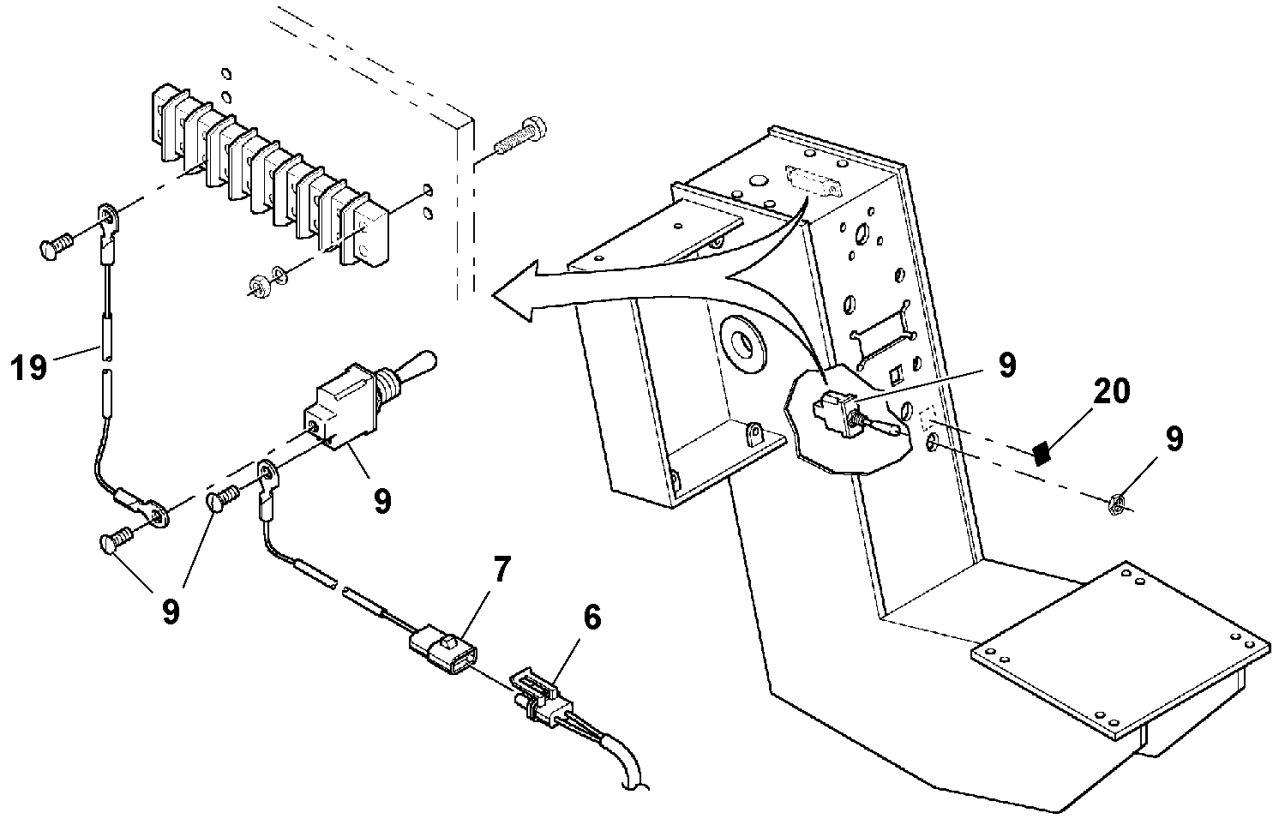

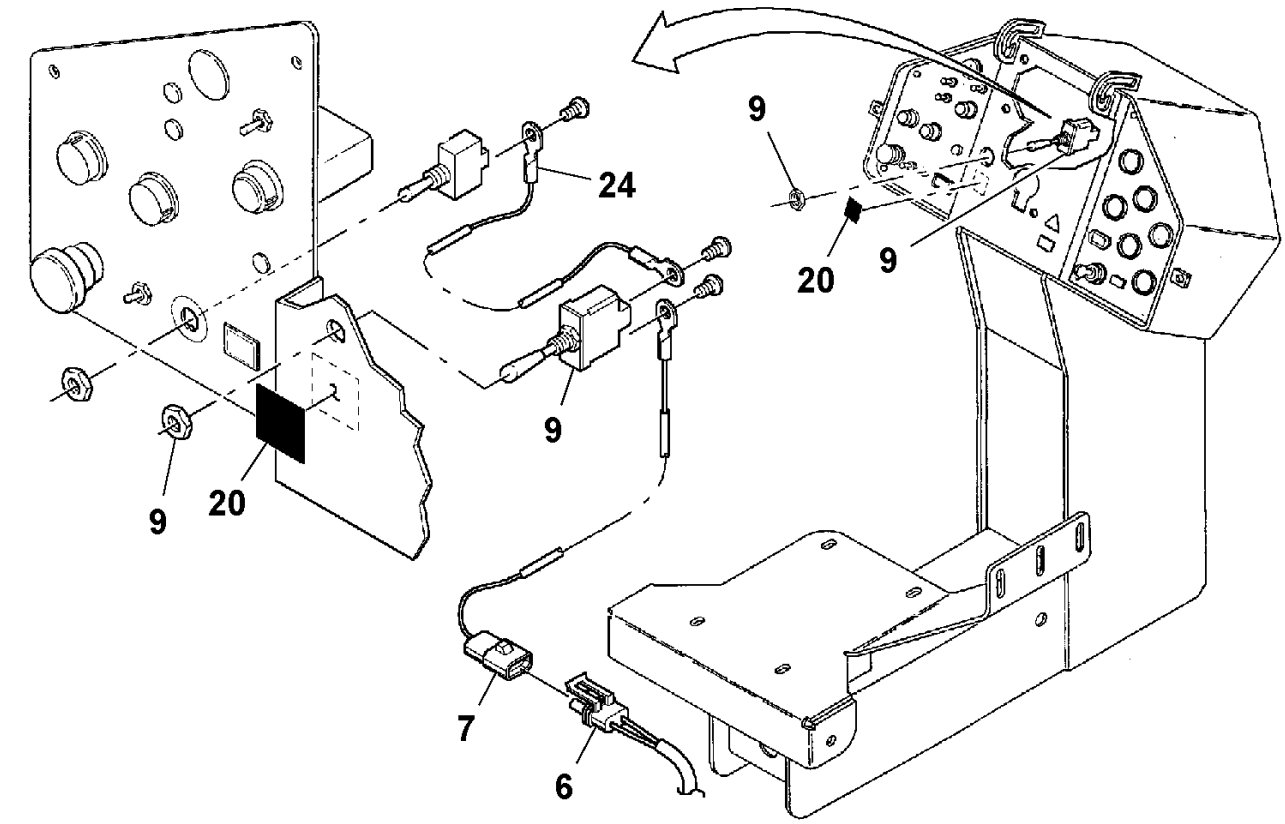

HID Guard Installation

POS	PART NUMBER	QTY	PART NAME	NOTES
1	RM 13292412	4	Guard	

HID Guard Installation

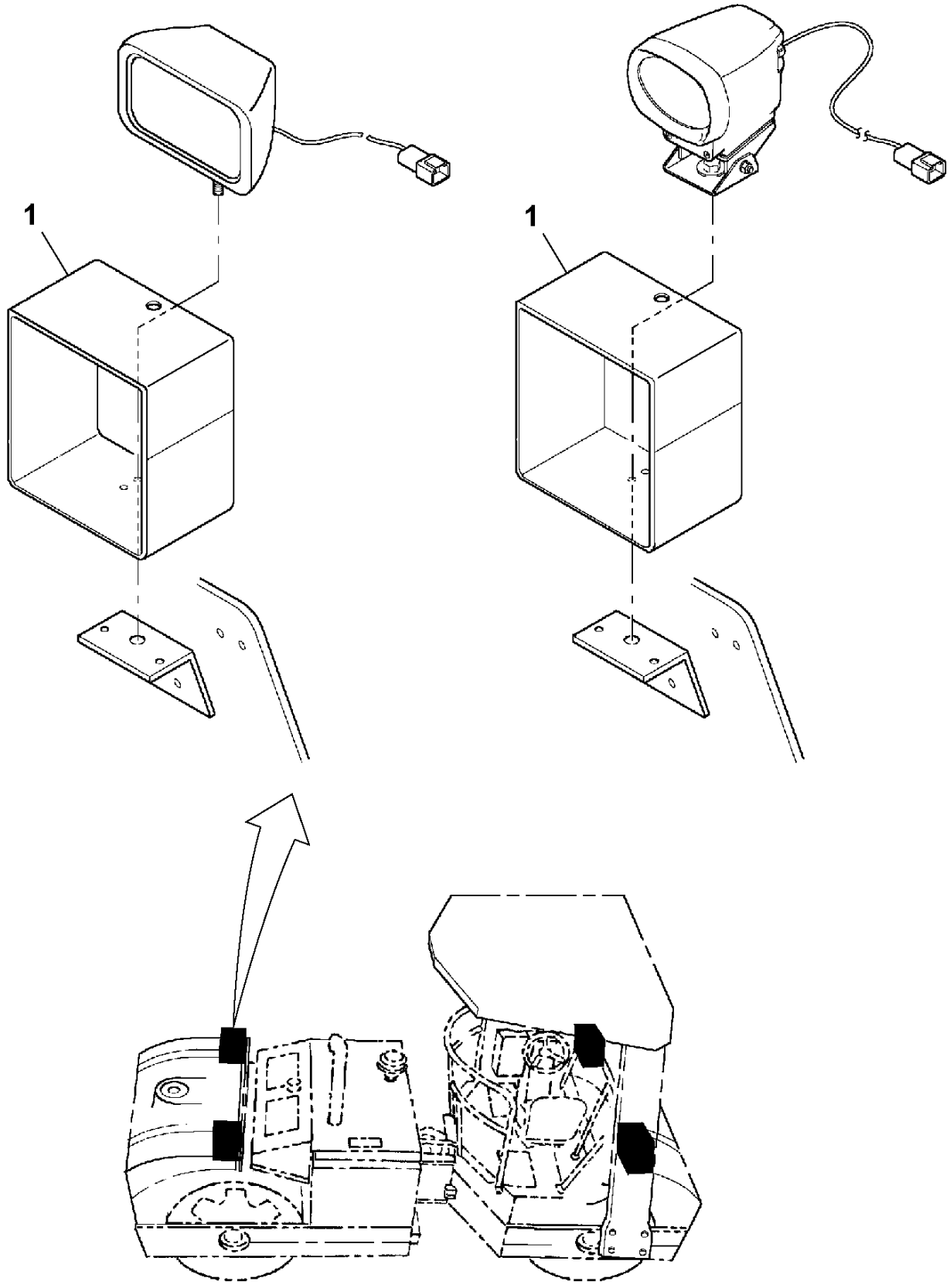

Rotating beacon Installation

POS	PART NUMBER	QTY	PART NAME	NOTES
1	RM 13836994	1	Warning Lamp	
	RM 13837000	1	Lens	
	RM 13837018	1	Tube	
	RM 13837026	1	Guard	
3	RM 96705744	3	Hexagon screw	
4	RM 96705132	3	Hexagon Nut	
5	RM 96738554	6	Plain Washer	
6	RM 59044099	1	Grommet	
7	RM 59186254	1	Cable harness	
11	RM 95373973	REQ	Locking Wire	
12	RM 59186262	13	Bar	

Rotating beacon Installation

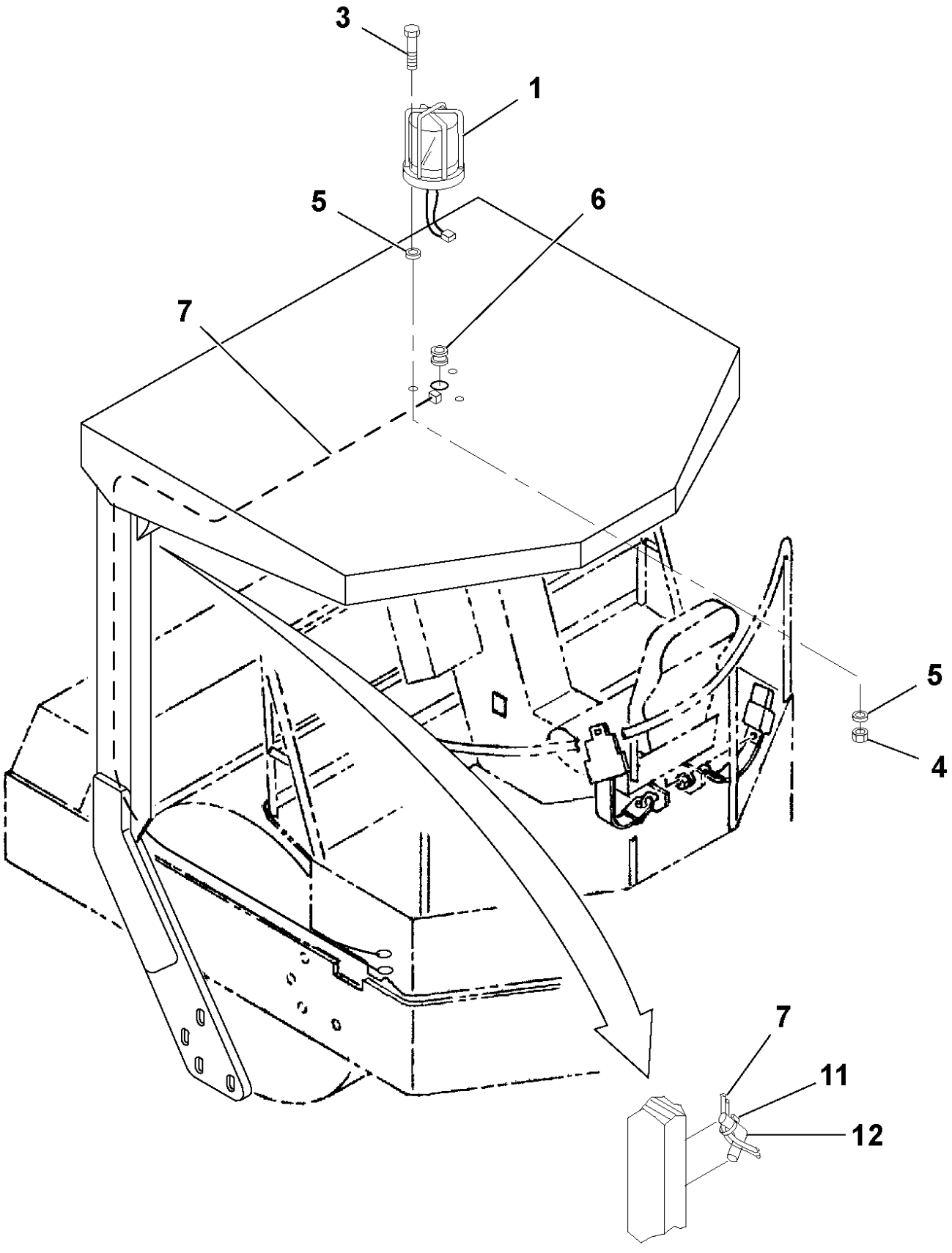

Rotating beacon Installation

POS	PART NUMBER	QTY	PART NAME	NOTES
2	RM 59634105	1	Switch	BEACON LAMP
7	RM 59186254	1	Cable harness	BEACON LAMP
8	RM 59079020	1	Decal	BEACON
9	RM 59206359	1	Cable harness	
10	RM 59325712	1	Fuse	10 AMP
13	RM 95919767	1	Screw	
14	RM 95922720	1	Lock Washer	
15	RM 59327825	1	Hexagon Nut	

Rotating beacon Installation

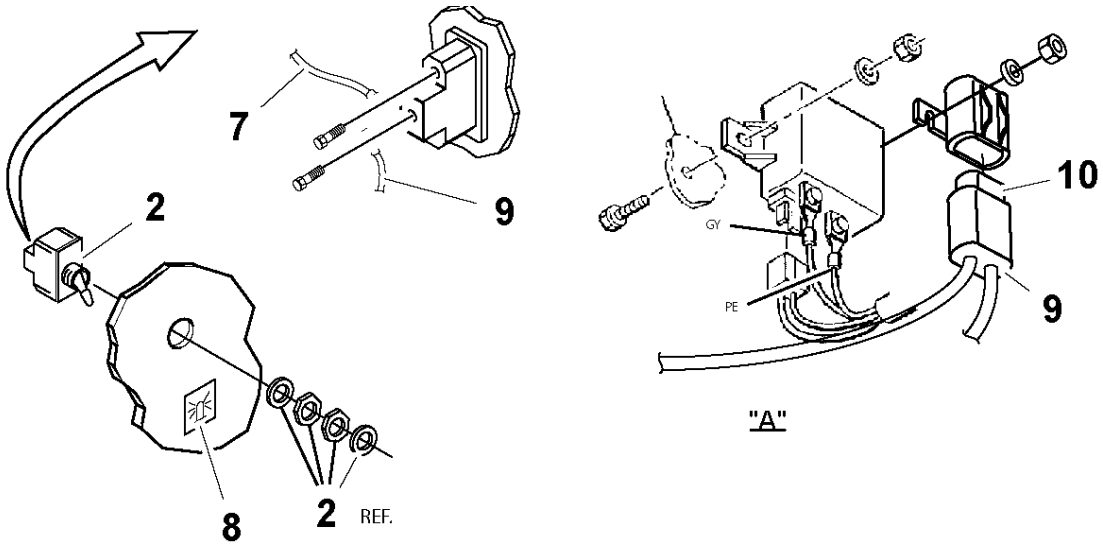

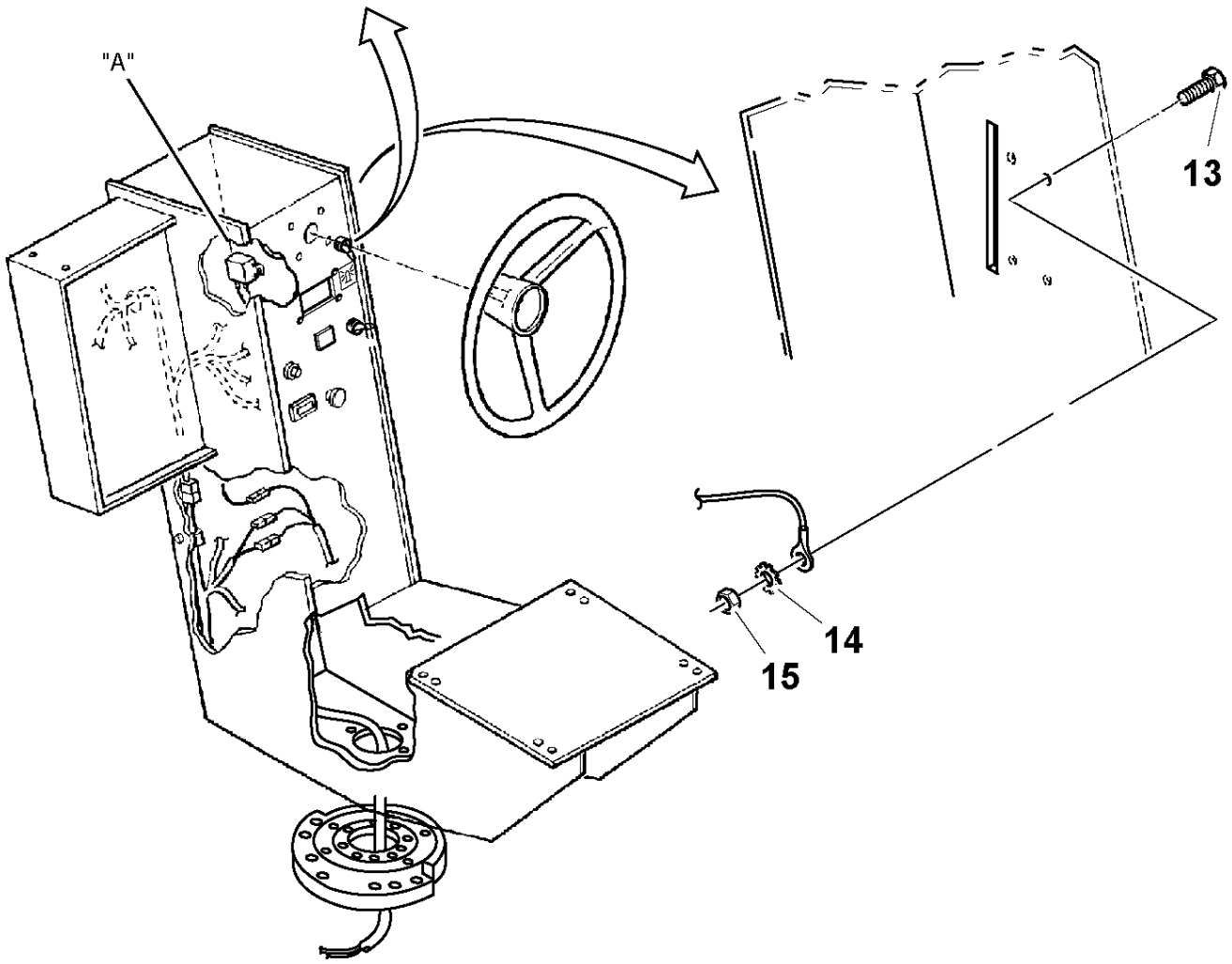

Back-up Alarm Installation

POS	PART NUMBER	QTY	PART NAME	NOTES
1	RM 59184143	1	Reversing warning unit	
2	RM 59191007	1	Bracket	
3	RM 96702824	2	Hexagon screw	
4	RM 96741038	2	Washer	
5	RM 96704564	2	Hexagon screw	
6	RM 96741053	2	Washer	

Back-up Alarm Installation

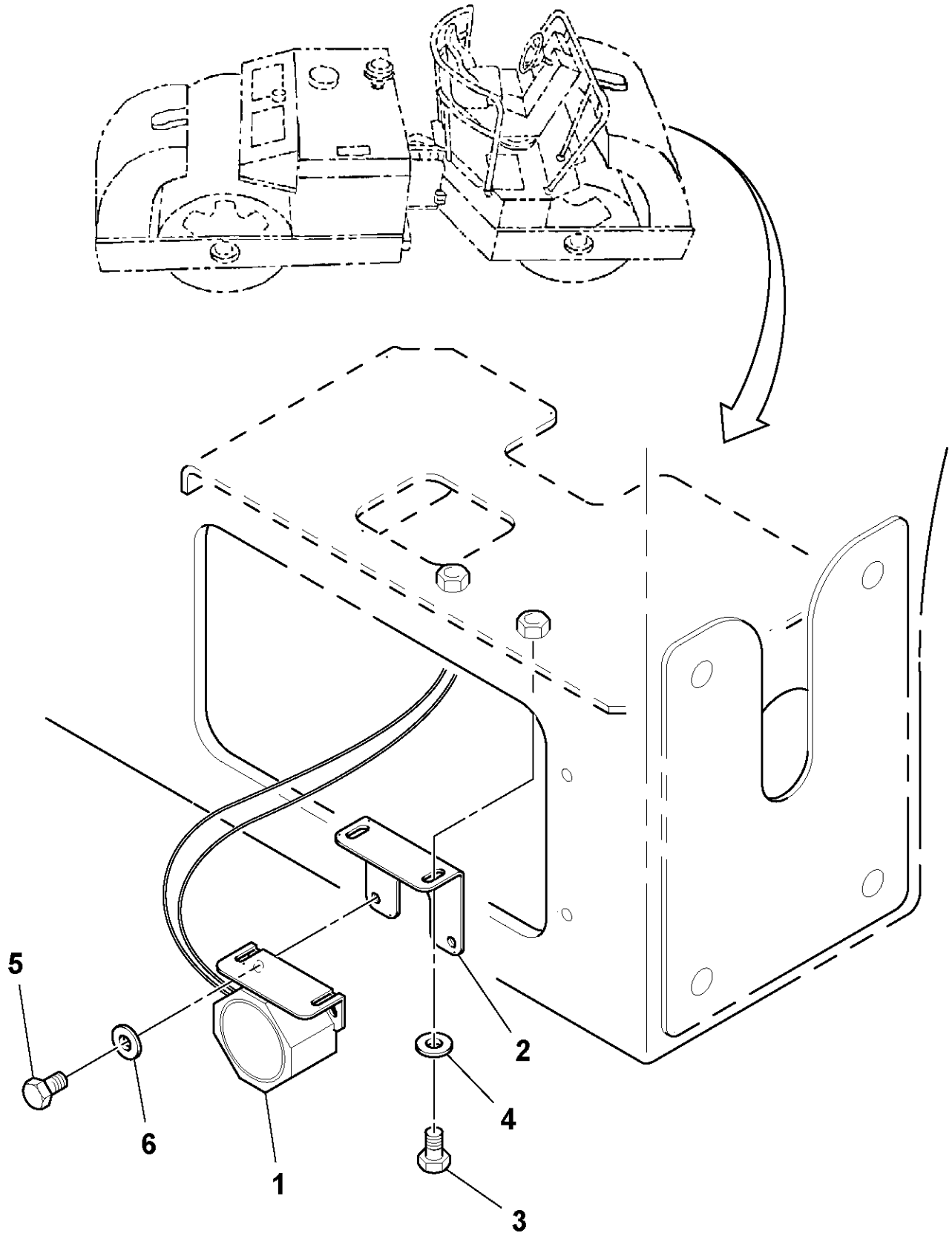

Console Assembly

POS	PART NUMBER	QTY	PART NAME	NOTES
1	RM 13250451	1	Instrument Console	
2		1	Instrument panel	
3	RM 95973921	4	Cap Nut	
4	RM 95922738	4	Washer	
5	RM 95922225	4	Washer	
6	RM 59579755	4	Rubber Damper	
7	RM 59918573	4	Nut	
8	RM 59579615	1	Panel	
10	RM 95922324	2	Plain Washer	
12	RM 59551978	4	Washer	
13	RM 95920609	2	Screw	
16	RM 59492512	1	Brake Lamp	S/N 164229 -
17		1	Steering valve	
	RM 54669544	1	Valve	
	RM 54747340	1	Sealing Kit	
	RM 96701917	4	Hexagon screw	
18	RM 58858564	1	Steering Wheel	
19	RM 95157400	4	Adapter	
20	RM 59887000	1	Plug	
22	RM 59731091	1	Grommet	
32	RM 59132563	1	Toggle switch	S/N 164229 -
37	RM 59111450	1	Emergency switch	
	RM 58917543	1	Bulb	
38	RM 59546762	1	Horn Button	
	RM 58889460	1	Cap	
43	RM 59128900	1	Cover	
47	RM 58769084	1	Hose assembly	
49	RM 50474899	1	Steering Column	
50	RM 59461368	1	Nut	
54	RM 59326827	1	Plug	
59	RM 59813279	1	Button	
60	RM 59165001	1	Hour counter	
61	RM 95932117	2	Hexagon screw	
62	RM 95931341	2	Lock Washer	
63	RM 95923025	2	Hexagon Nut	
64	RM 59108605	1	Dust Cover	
65	RM 59109116	1	Washer	
66	RM 59108100	1	Dust Cover	
71	RM 59058156	7	Plug	
72	RM 59328195	1	Plug	

Console Assembly

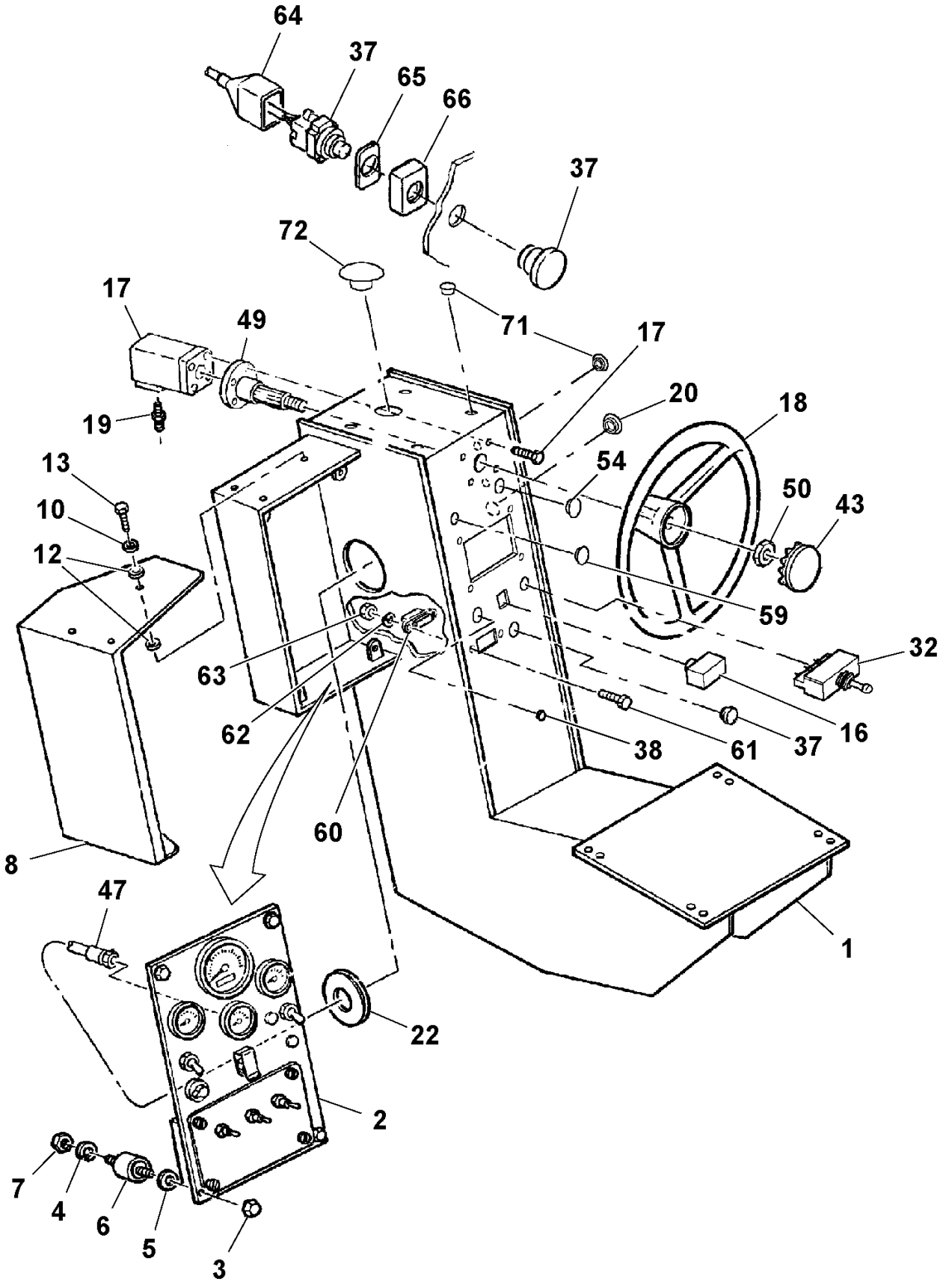

Console Assembly

POS	PART NUMBER	QTY	PART NAME	NOTES
1	RM 59259390	1	Instrument Console	
9	RM 59753657	1	Hose	
14	RM 59965962	6	Screw	
21		1	Fsr Control	
23	RM 59727693	1	Control Lever	
24	RM 50268697	1	Handle	
25	RM 59181487	1	Actuator	
26	RM 59762724	1	Lock Pin	
27	RM 35675370	1	Spring	
28	RM 95922290	1	Washer	
29	RM 95034039	1	Pin	
30	RM 95923934	1	Split Pin	
31	RM 95246419	1	Grease nipple	
33	RM 59012286	1	Mounting Plate	
34	RM 43844331	1	Seat	
36	RM 59003335	1	Cover Plate	
39		1	Console Bearing Pack	
40	RM 59731380	8	Washer	
41	RM 95919312	8	Screw	
42	RM 59035741	2	Adapter	
44	RM 95201547	2	Fitting	
45	RM 59680983	4	Lock Screw	
46	RM 50270248	2	Cap	
48	RM 59789990	1	Hose	
52	RM 95365615	1	Terminal	
55	RM 95457586	1	Clamp	
56	RM 58779943	1	U-bolt	
57	RM 59807941	3	Nut	
58	RM 95923322	2	Lock nut	
67	RM 13515630	1	Level Indicator	S/N 165140 -
68	RM 59266726	4	Screw	S/N 165140 -
69	RM 97602865	4	Nut	S/N 165140 -
70	RM 96738554	4	Plain Washer	S/N 165140 -
73	RM 13165071	1	Cable harness	S/N 167012 -
74	RM 59887182	4	Washer	
75	RM 95922829	4	Nut	
		1	Brake valve	S/N - 164228
	RM 95922720	2	Lock Washer	S/N - 164228
	RM 95919163	2	Screw	S/N - 164228

Console Assembly

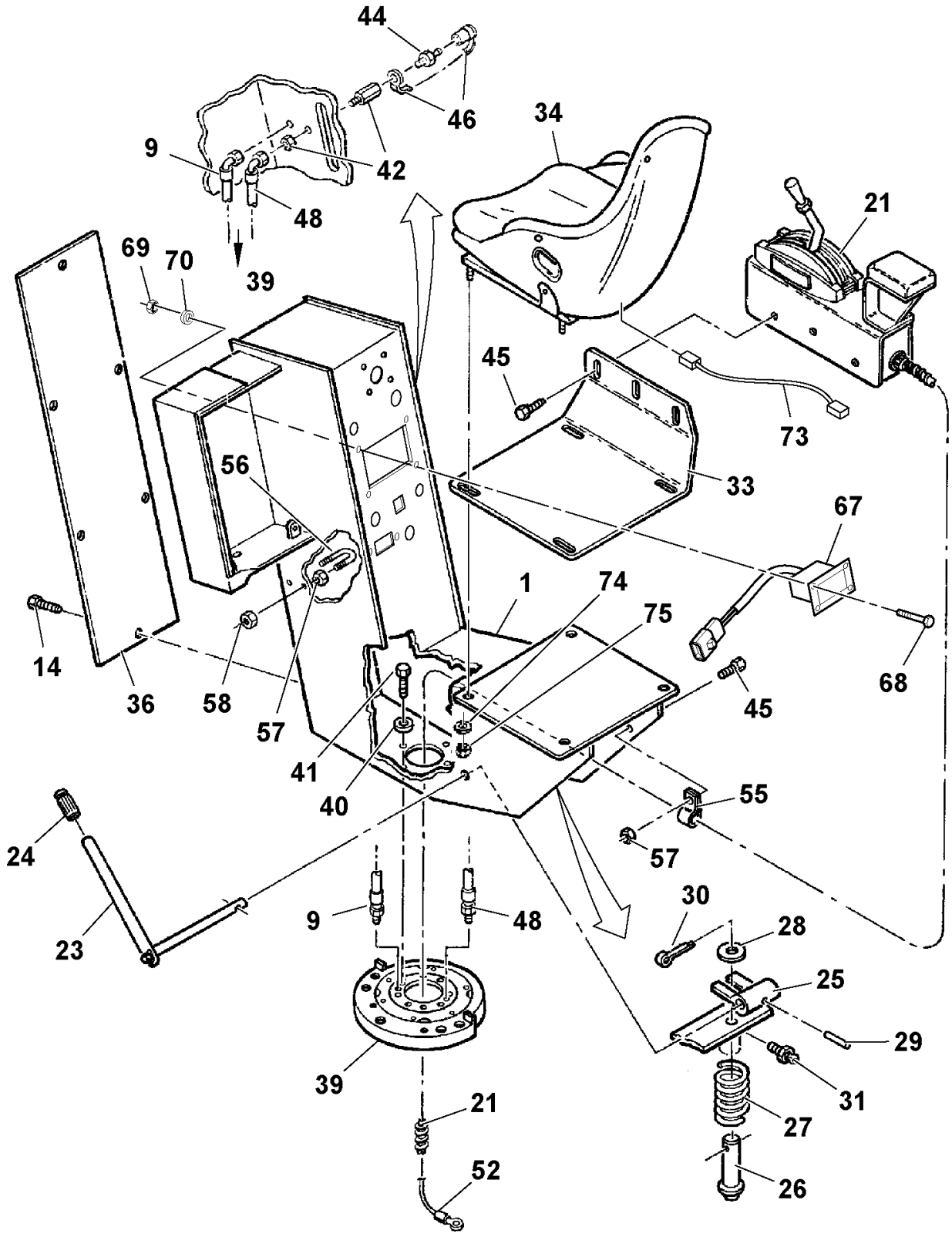

Cable Harness Installation

POS	PART NUMBER	QTY	PART NAME	NOTES
1	RM 13847744	1	Cable harness	S/N 189096 -
	RM 13470117	1	Cable harness	S/N 164018 - 189095
	RM 59203182	1	Cable harness	S/N - 164017
2	RM 95922134	20	Screw	
11	RM 96701495	2	Hexagon screw	
12	RM 96738596	2	Washer	
14	RM 95922332	30	Plain Washer	
15	RM 95943346	20	Nut	
19	RM 96741053	1	Washer	S/N 189096 -
22	RM 59970384	2	Rubber Damper	
23	RM 59603746	2	Breaker	
25	RM 95923124	8	Hexagon Nut	
26	RM 95931366	4	Lock Washer	
27	RM 96738554	5	Plain Washer	S/N 189096 -
	RM 96738554	6	Plain Washer	S/N - 164017
28	RM 59327825	4	Hexagon Nut	
33	RM 96741038	5	Washer	
37	RM 59726075	4	Clamp	
42	RM 58902453	1	Wire	
48	RM 96701917	1	Hexagon screw	
49	RM 96741046	1	Plain Washer	
50	RM 96704234	2	Nut	S/N 189096 -
	RM 96705132	2	Hexagon Nut	S/N - 164017
51	RM 96701370	1	Nut	

Cable Harness Installation

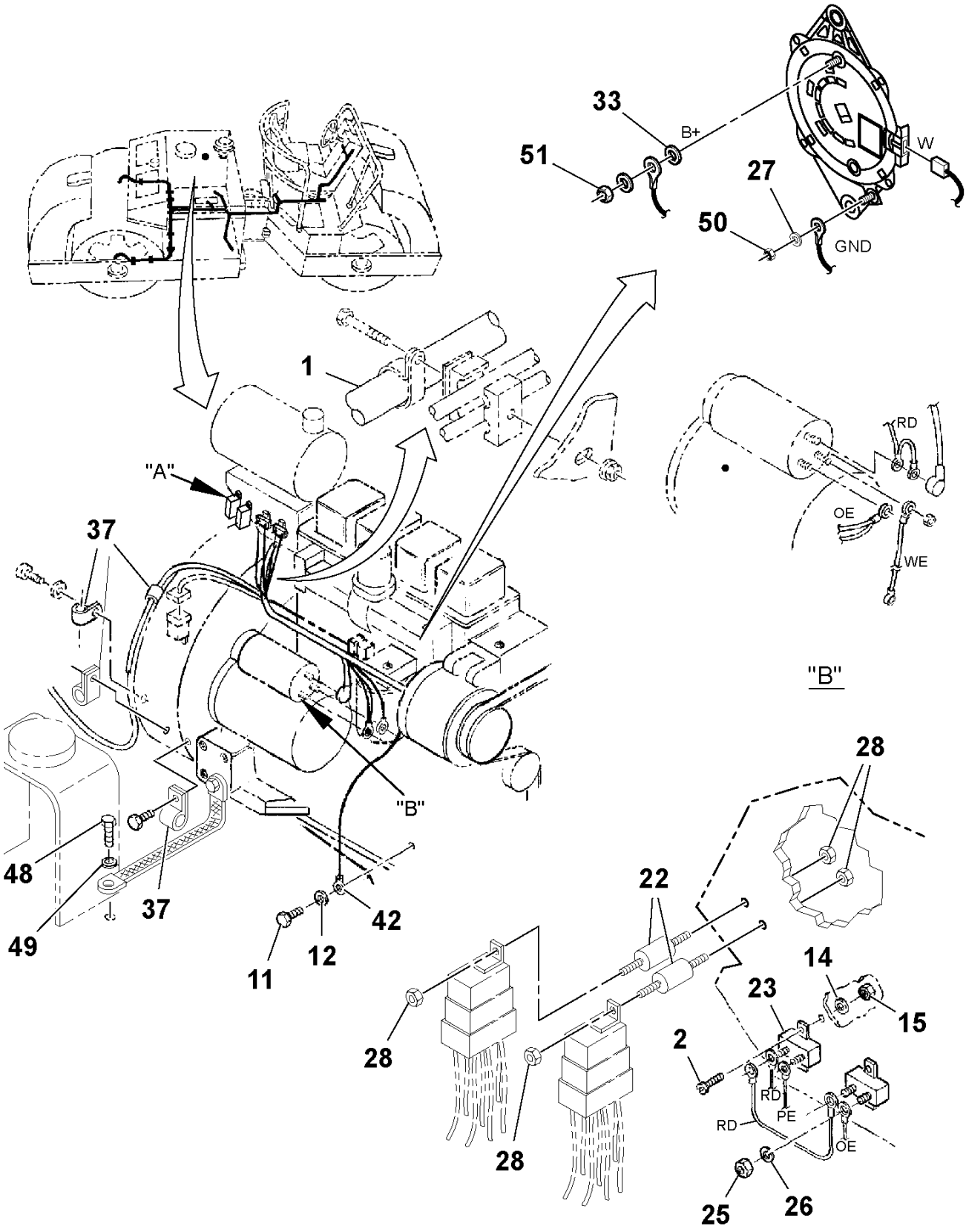

Cable Harness Installation

POS	PART NUMBER	QTY	PART NAME	NOTES
1	RM 13847744	1	Cable harness	S/N 189096 -
	RM 13470117	1	Cable harness	S/N 164018 - 189095
	RM 59203182	1	Cable harness	S/N - 164017
2	RM 95922134	20	Screw	
9	RM 58856535	2	Bracket	
13	RM 95457586	2	Clamp	
14	RM 95922332	30	Plain Washer	
15	RM 95943346	20	Nut	
20	RM 95922373	2	Plain Washer	
21	RM 95919239	2	Hexagon screw	
24	RM 95923322	2	Lock nut	
39	RM 13305081	1	Control Unit	
	RM 13286190	1	Switch	
	RM 13305008	2	Switch	

Cable Harness Installation

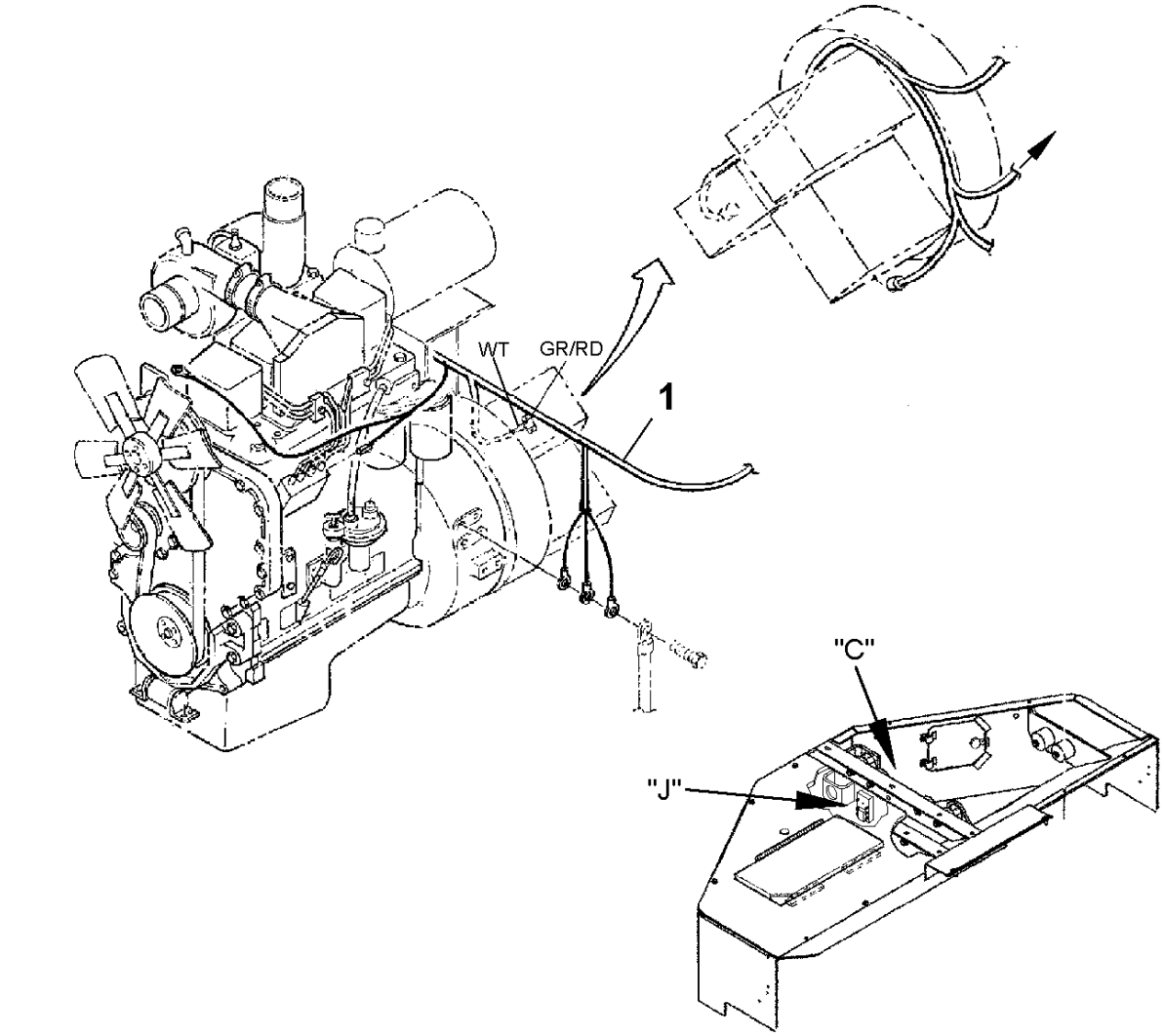

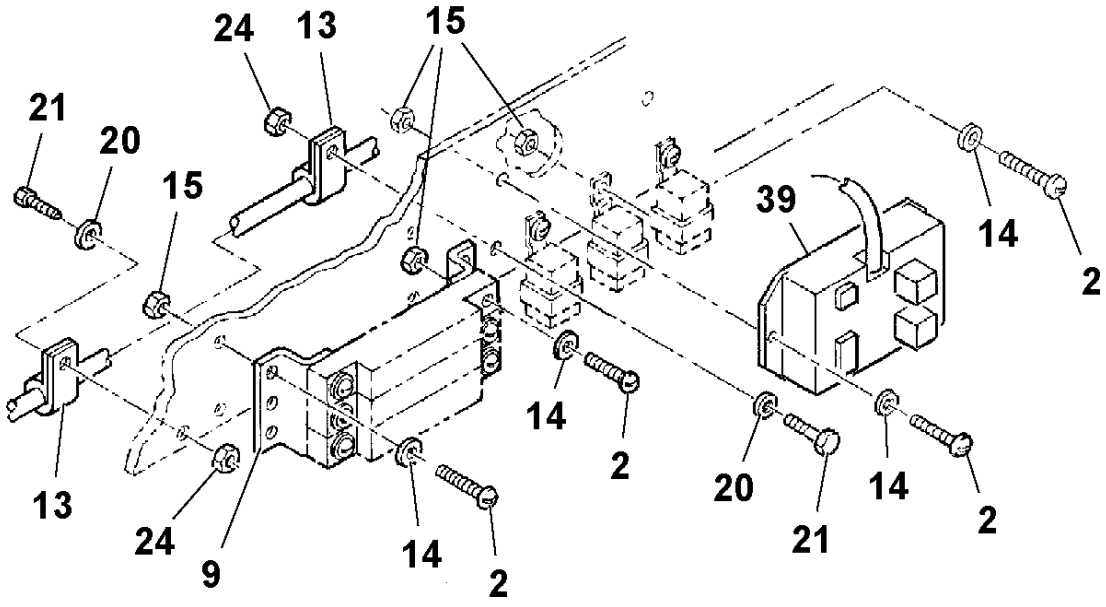

"C"

Cable Harness Installation

POS	PART NUMBER	QTY	PART NAME	NOTES
2	RM 95922134	20	Screw	
8	RM 59818393	1	Relay	
10	RM 59480996	4	Screw	
14	RM 95922332	30	Plain Washer	
15	RM 95943346	20	Nut	
16	RM 59099663	1	Terminal Block	
25	RM 95923124	8	Hexagon Nut	
27	RM 96738554	5	Plain Washer	S/N 189096 -
	RM 96738554	6	Plain Washer	S/N - 189095
44	RM 59262469	1	Module	
	RM 59151498		Module	
45	RM 96738430	1	Hexagon screw	
47	RM 96702865	1	Nut	

Cable Harness Installation

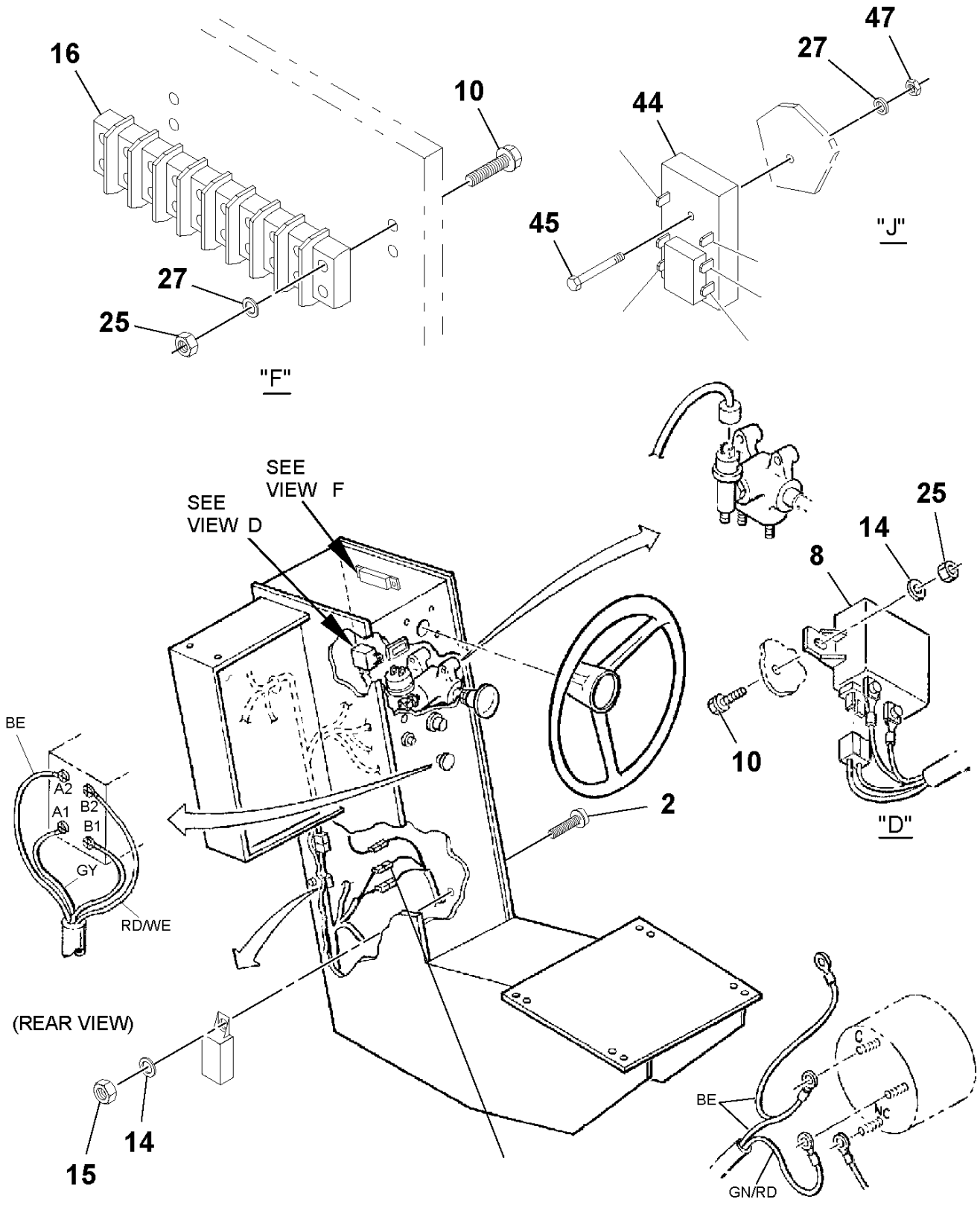

Cable Harness Installation

POS	PART NUMBER	QTY	PART NAME	NOTES
40	RM 59222661	1	Sensor	
41	RM 58776675	1	Lock nut	

Cable Harness Installation

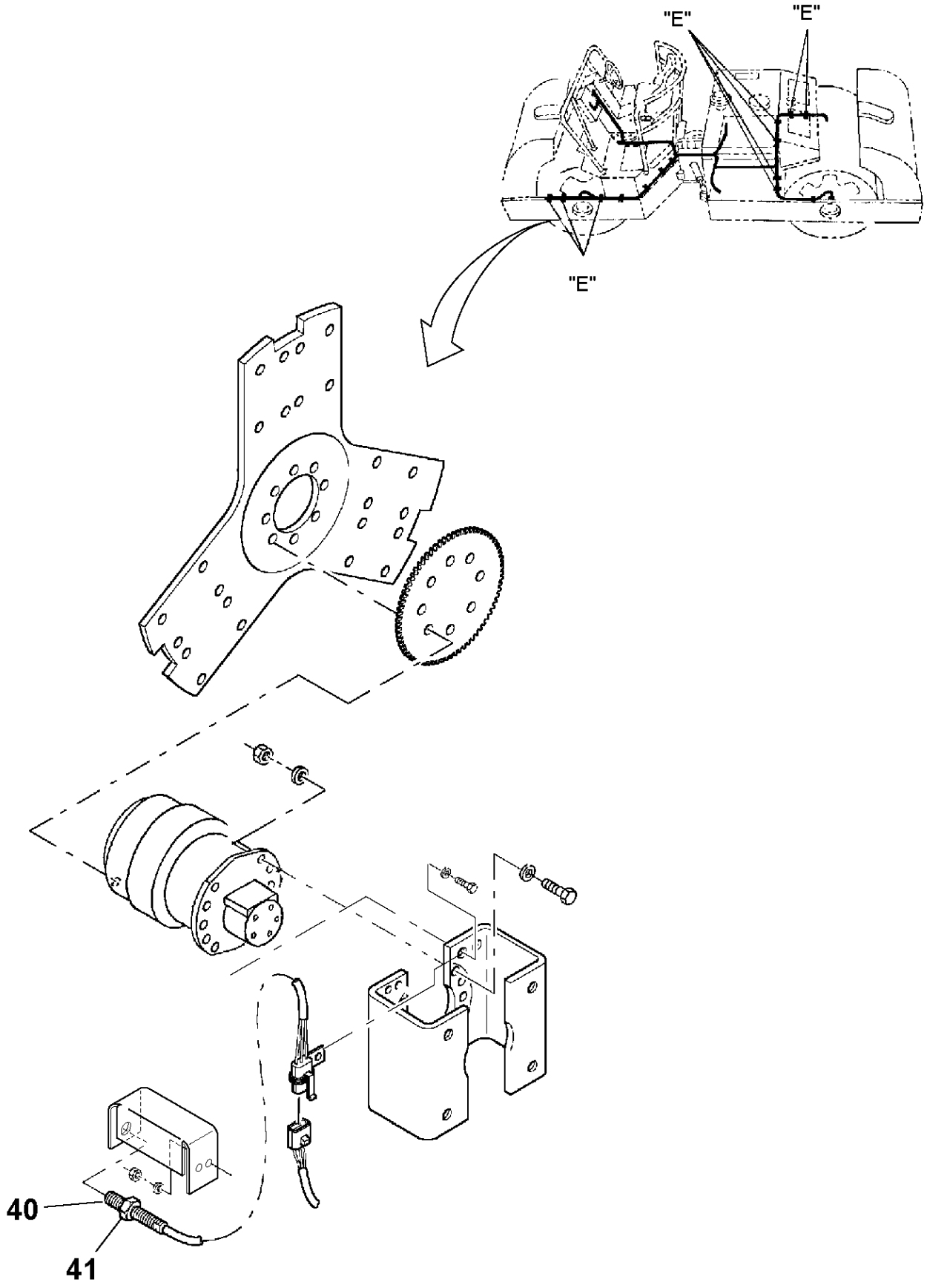

Cable Harness Installation

POS	PART NUMBER	QTY	PART NAME	NOTES
3	RM 59397059	11	Clamp	
4	RM 95919205	11	Screw	
5	RM 95922324	11	Plain Washer	
6	RM 95923298	11	Lock nut	
7	RM 95373973	REQ	Locking Wire	
17	RM 13469010	1	Horn	
18	RM 59812826	1	Guard	
32	RM 96702824	3	Hexagon screw	
33	RM 96741038	5	Washer	
34	RM 59191007	1	Bracket	

Cable Harness Installation

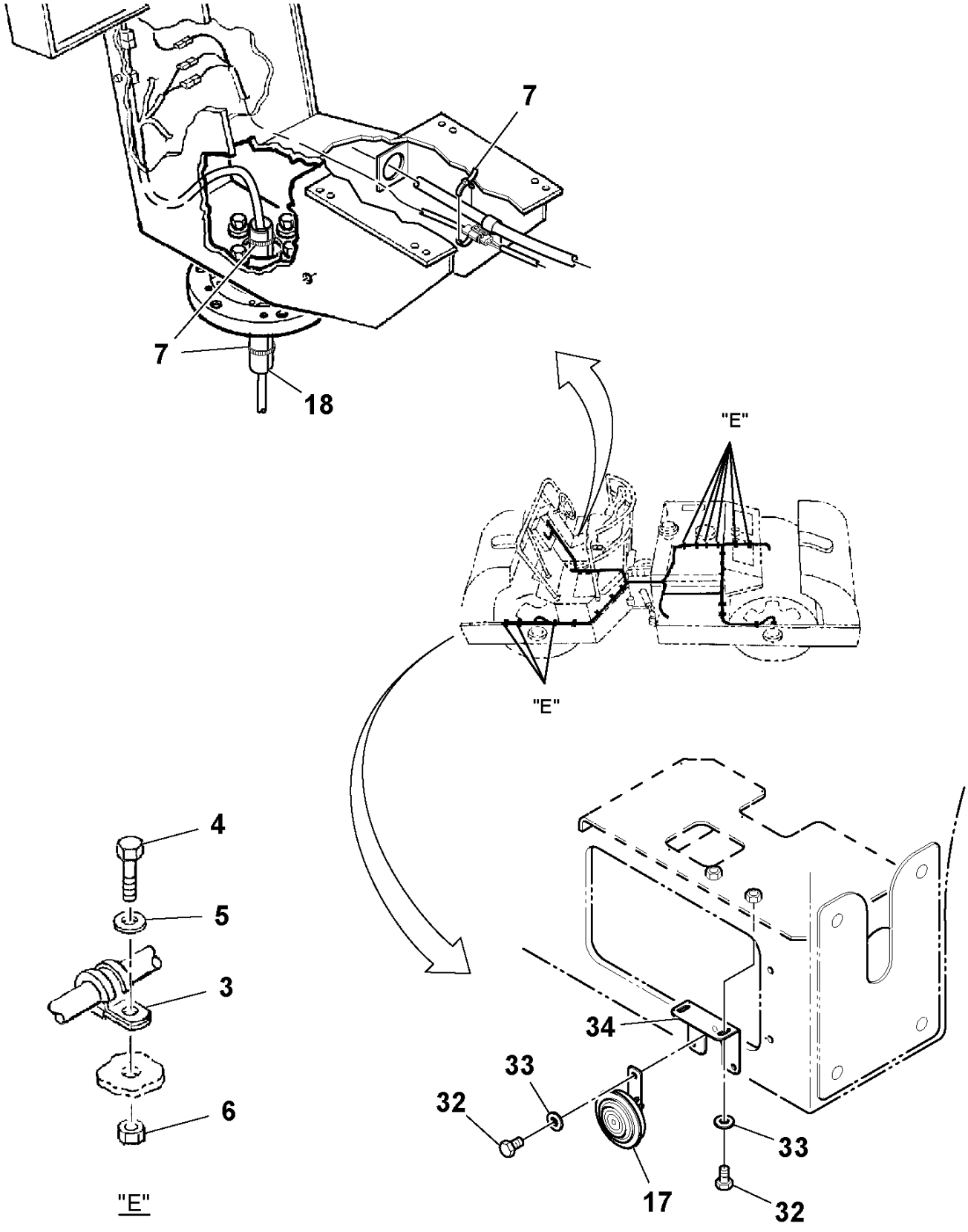

Battery installation

POS	PART NUMBER	QTY	PART NAME	NOTES
1	RM 54616081	1	Battery	
2	RM 19295492	1	Battery Clamp	
3	RM 58927948	1	Battery Clamp	
4	RM 95942223	2	Hexagon screw	
5	RM 59731380	2	Washer	
6	RM 13251038	1	Battery Cable	S/N 173586 -
	RM 59203232	1	Battery Cable	S/N - 173585
7	RM 59203224	1	Battery Cable	
11	RM 96701495	1	Hexagon screw	
12	RM 96738596	1	Washer	

Battery installation

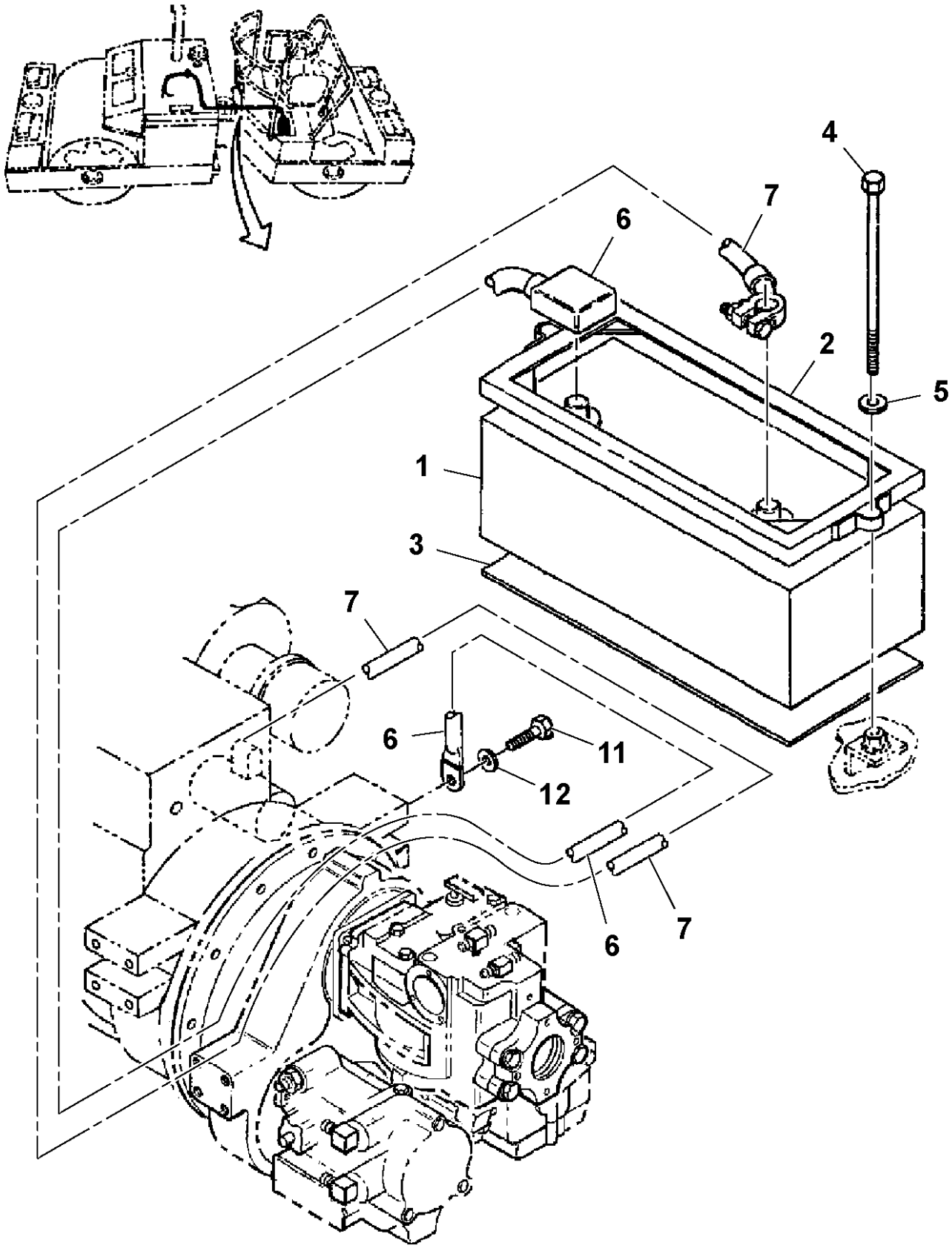

Vibration Indicator Light Installation

POS	PART NUMBER	QTY	PART NAME	NOTES
1	RM 58961582	1	Flasher Relay	
2	RM 59768929	1	Socket	
3	RM 59816447	1	Indicator Lamp	
	RM 58909268	1	Bulb	
4	RM 59240705	1	Rocker Switch	
5	RM 95917449	2	Hexagon screw	
6	RM 95923025	2	Hexagon Nut	
7	RM 95922357	4	Washer	
9	RM 59891689	4	Cable	
10	RM 59891671	1	Cable	
11	RM 59893529	1	Cable	
12	RM 95373973	REQ	Locking Wire	

Vibration Indicator Light Installation

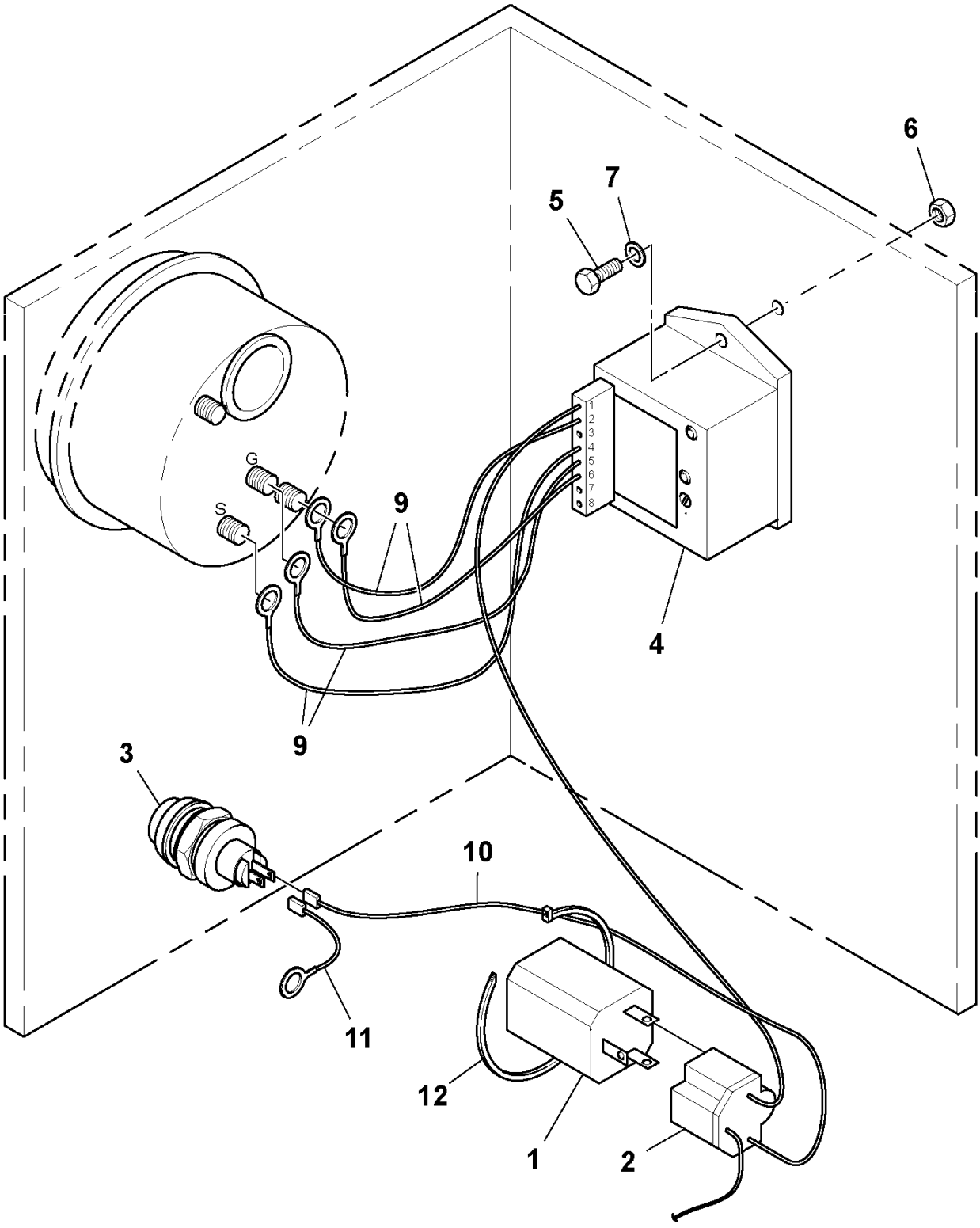

Instrument Panel Assembly

POS	PART NUMBER	QTY	PART NAME	NOTES
1	RM 59233213	1	Instrument panel	S/N 161839 -
	RM 59104430	1	Instrument panel	S/N - 161838
2	RM 13285986	1	Box	
3	RM 95924106	4	Screw	
4	RM 95923298	4	Lock nut	
5	RM 59126946	1	Contact	
	RM 58917261	REQ	Key	
	RM 13284690	1	Tag	
6	RM 13163506	1	Control	WATER PUMP
	RM 59778886	1	Knob	WATER PUMP
7	RM 59355602	1	Gauge	
8	RM 59816736	1	Voltmeter	
9	RM 59166942	1	Gauge	DD-90
	RM 59134981	1	Gauge	DD-90HF
10	RM 59816728	1	Water Level Gauge	
11	RM 59813279	1	Button	
12	RM 59634105	1	Switch	
13	RM 59427245	1	Plug	
14	RM 95680880	1	Adapter	
15	RM 95302113	1	Adapter	
16	RM 13207337	1	Cable harness	S/N 169962 -
	RM 59232983	1	Cable harness	S/N - 169961
17	RM 58788787	1	Filter	
18	RM 58892902	1	Cover	
19	RM 95923033	1	Hexagon Nut	
20	RM 59417493	1	Additional Light	
21	RM 59126961	1	Nut	
22	RM 59331702	1	Switch	
	RM 59680132	1	Toggle switch	

Instrument Panel Assembly

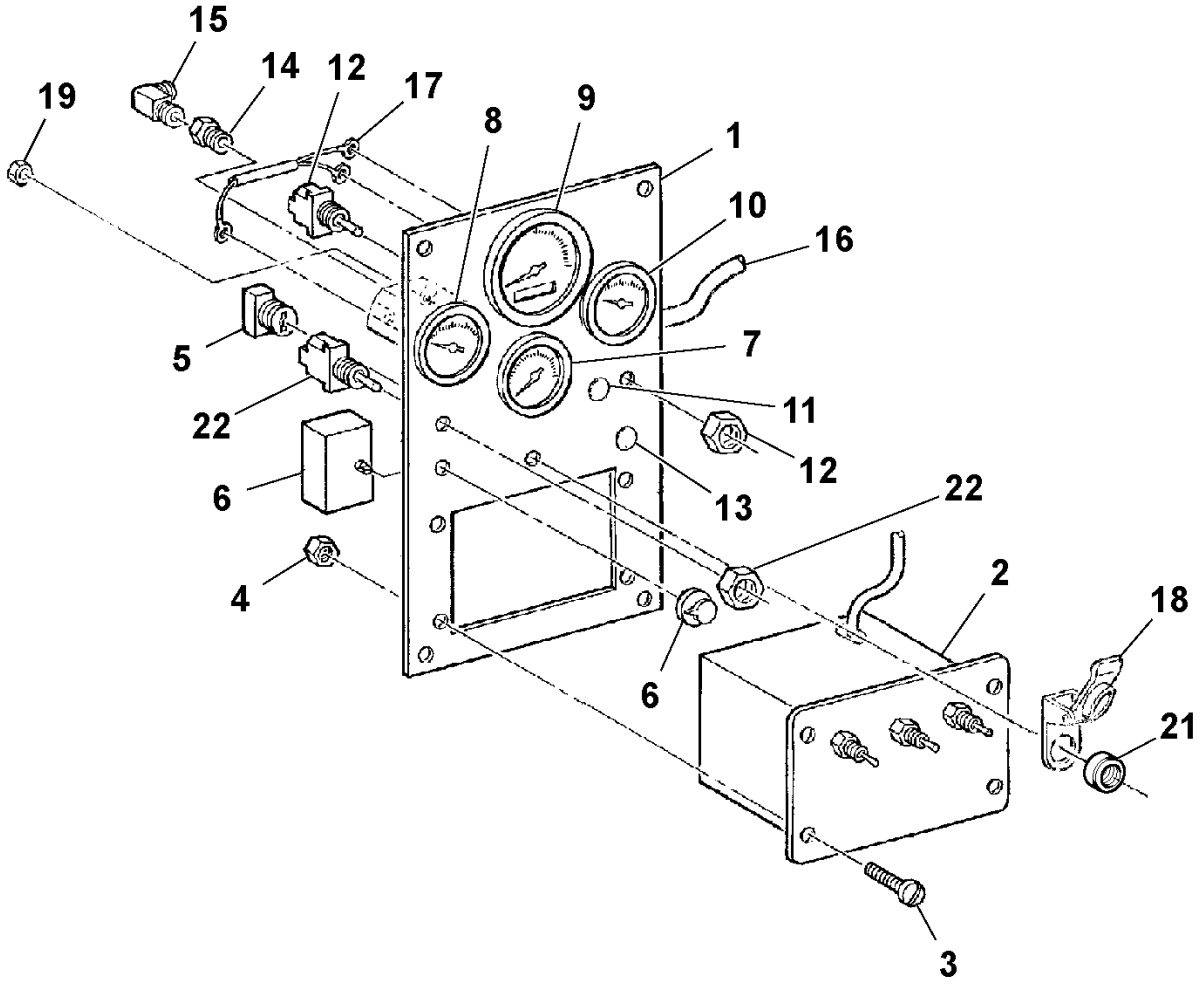

Speedometer / Vpm Meter Installation

POS	PART NUMBER	QTY	PART NAME	NOTES
2			-	
3	RM 95373973	REQ	Locking Wire	
5	RM 59629097	1	Cable harness	
6	RM 58776675	2	Lock nut	
7	RM 59587410	1	Housing	
8	RM 59587394	1	Panel	
9	RM 59170001	1	Speedometer	
10	RM 58954660	1	Speedometer	
11	RM 59579755	4	Rubber Damper	
12	RM 95973921	4	Cap Nut	
13	RM 59327833	4	Hexagon Nut	
14	RM 95920377	4	Hexagon screw	
15	RM 95924239	8	Washer	
16	RM 58956624	1	Grommet	
17	RM 59629063	1	Decal	VPM SWITCH
18	RM 59624635	1	Switch	
19	RM 58937970	1	Cable harness	POWER AND GROUND
20	RM 59217570	1	Cable harness	VPM MAIN
21	RM 59217562	1	Cable harness	VPM CONSOLE
22	RM 59327825	4	Hexagon Nut	
23	RM 95922324	4	Plain Washer	
24	RM 58957291	1	Cable harness	LAMP POWER
25	RM 59824268	1	Lamp	
	RM 12963864	2	Lamp	
	RM 58951229	2	Bulb Socket	
26	RM 59096347	1	Cable harness	SPEEDOMETER
27	RM 59329979	4	Spacer	
28		2	Hydraulic motor	
	RM 19291376	2	Hydraulic motor	ARC
29	RM 59110171	1	Lamp	
	RM 59824250	1	Kit	

Speedometer / Vpm Meter Installation

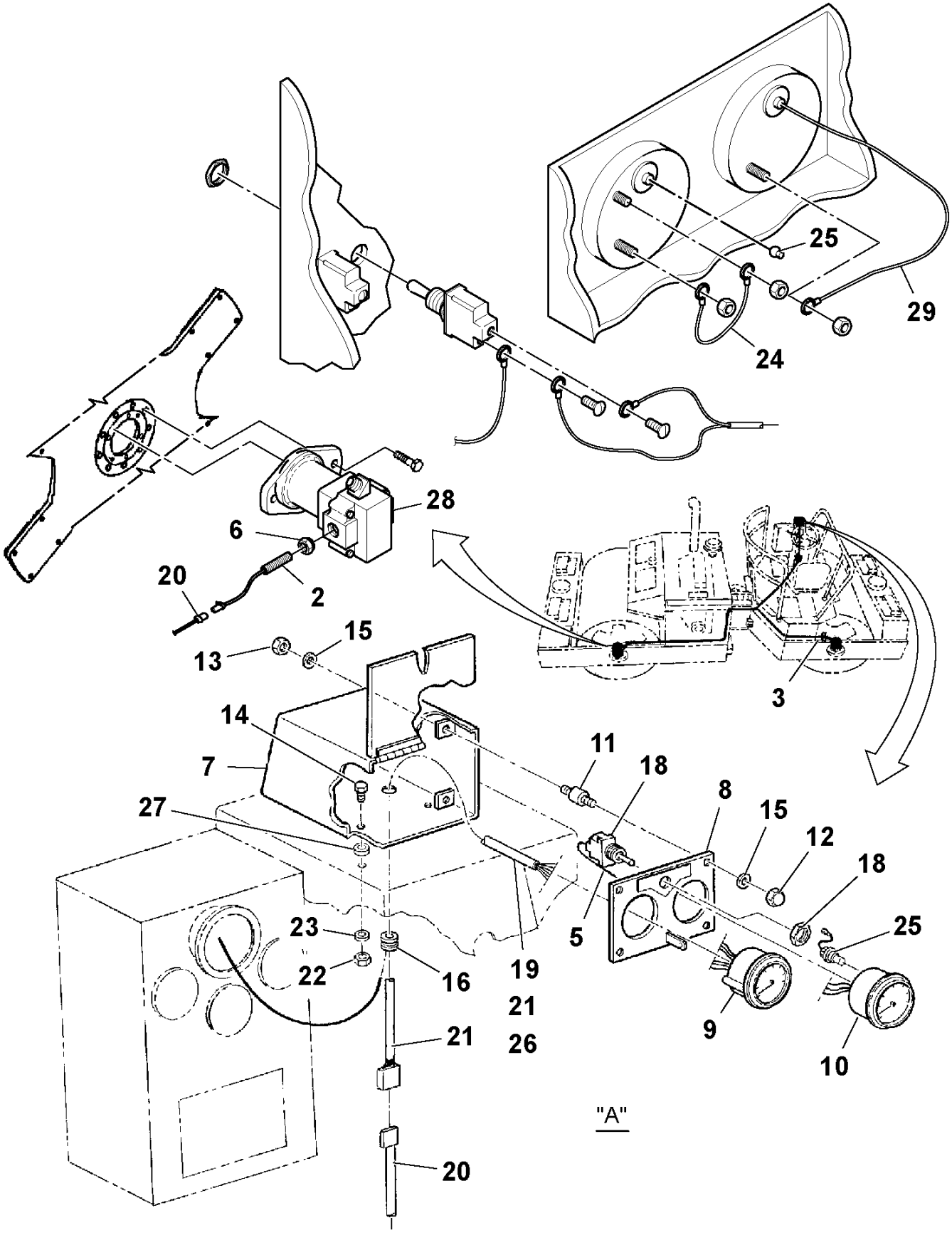

Speedometer / Vpm Meter Installation

POS	PART NUMBER	QTY	PART NAME	NOTES
5	RM 59629097	1	Cable harness	
19	RM 58937970	1	Cable harness	POWER AND GROUND
20	RM 59217570	1	Cable harness	VPM MAIN
21	RM 59217562	1	Cable harness	VPM CONSOLE
24	RM 58957291	1	Cable harness	LAMP POWER
25	RM 59824268	1	Lamp	
	RM 12963864	2	Lamp	
	RM 58951229	2	Bulb Socket	
26	RM 59096347	1	Cable harness	SPEEDOMETER
29	RM 59110171	1	Lamp	
	RM 59824250	1	Kit	

Speedometer / Vpm Meter Installation

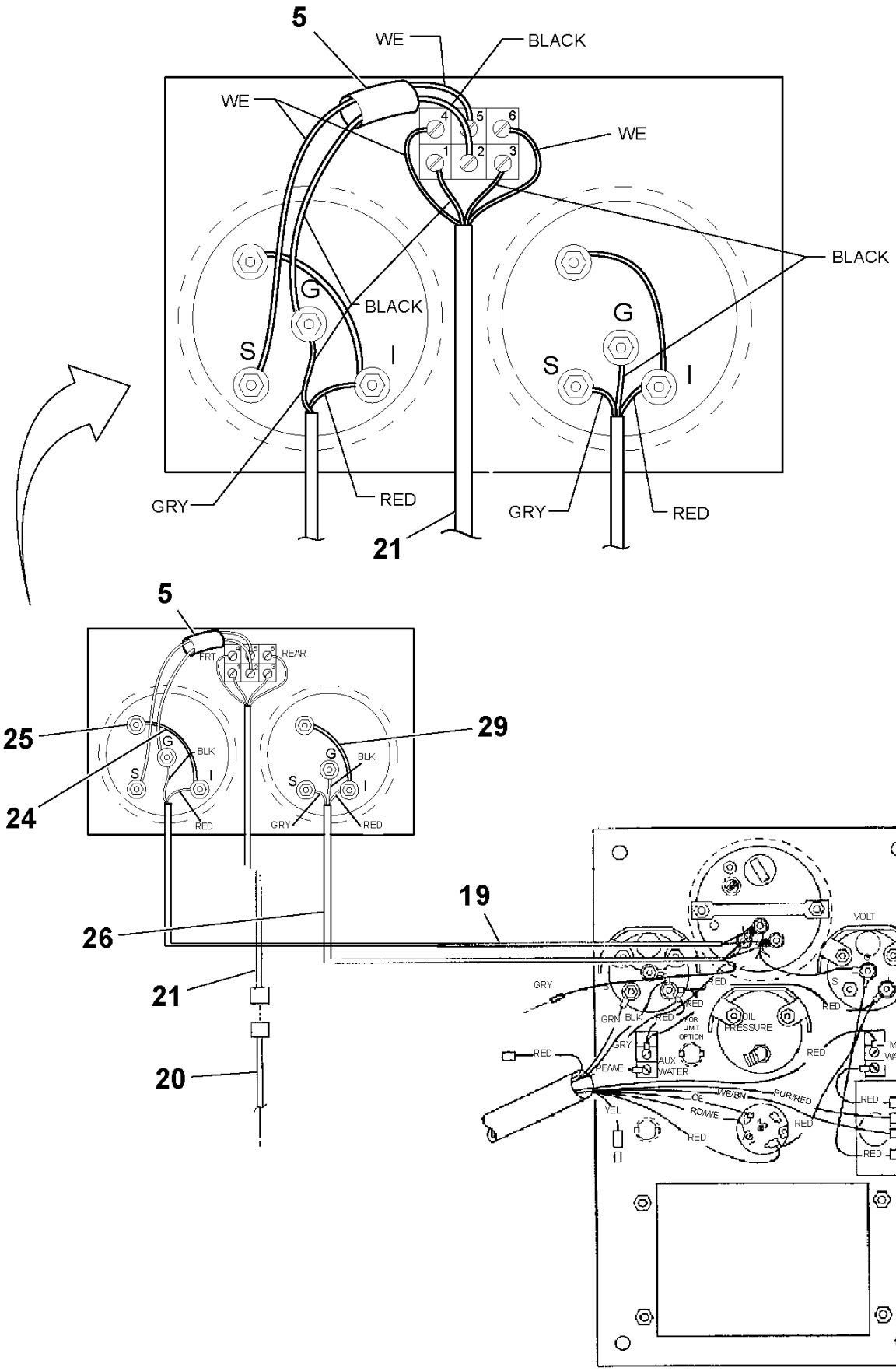

Speedometer / Vpm Meter Installation

POS	PART NUMBER	QTY	PART NAME	NOTES
2	RM 59191189	2	Vehicle Speed Sensor	
3	RM 95495149	REQ	Cable Tie	
5	RM 59629097	1	Cable harness	
6	RM 58776675	2	Lock nut	
7	RM 59587410	1	Housing	
8	RM 59587394	1	Panel	
9	RM 59170001	1	Speedometer	
10	RM 59876284	1	Tachometer	
11	RM 59579755	4	Rubber Damper	
12	RM 95973921	4	Cap Nut	
13	RM 59327833	4	Hexagon Nut	
14	RM 95920377	4	Hexagon screw	
15	RM 95924239	8	Washer	
16	RM 58956624	1	Grommet	
17	RM 59629063	1	Decal	VPM SWITCH
18	RM 59624635	1	Switch	
19	RM 58937970	1	Cable harness	POWER AND GROUND
20	RM 58947771	1	Cable harness	VPM MAIN
21	RM 58937947	1	Cable harness	VPM CONSOLE
22	RM 59327825	4	Hexagon Nut	
23	RM 95922324	4	Plain Washer	
24	RM 58957291	1	Cable harness	S/N - 167446
25	RM 59824268	1	Lamp	
	RM 12963864	2	Lamp	
	RM 58951229	2	Bulb Socket	
26	RM 59096347	1	Cable harness	SPEEDOMETER
27	RM 59329979	4	Spacer	
28	RM 59385864	2	Hydraulic motor	
	RM 59484162	2	Hydraulic motor	
29	RM 59110171	1	Lamp	
	RM 59824250	1	Kit	

Speedometer / Vpm Meter Installation

POS	PART NUMBER	QTY	PART NAME	NOTES
5	RM 59629097	1	Cable harness	
19	RM 58937970	1	Cable harness	POWER AND GROUND
20	RM 58947771	1	Cable harness	VPM MAIN
21	RM 58937947	1	Cable harness	VPM CONSOLE
24	RM 58957291	1	Cable harness	LAMP POWER
25	RM 59824268	1	Lamp	
	RM 12963864	2	Lamp	
	RM 58951229	2	Bulb Socket	
26	RM 59096347	1	Cable harness	SPEEDOMETER
29	RM 59110171	1	Lamp	
	RM 59824250	1	Kit	

Speedometer / Vpm Meter Installation

POS	PART NUMBER	QTY	PART NAME	NOTES
5	RM 59629097	1	Cable harness	
19	RM 58937970	1	Cable harness	POWER AND GROUND
20	RM 58947771	1	Cable harness	VPM MAIN
21	RM 58937947	1	Cable harness	VPM CONSOLE
24	RM 58957291	1	Cable harness	LAMP POWER
25	RM 59824268	1	Lamp	
	RM 12963864	2	Lamp	
	RM 58951229	2	Bulb Socket	
26	RM 59096347	1	Cable harness	SPEEDOMETER
29	RM 59110171	1	Lamp	
	RM 59824250	1	Kit	

Speedometer / Vpm Meter Installation

POS	PART NUMBER	QTY	PART NAME	NOTES
3	RM 95495149	REQ	Cable Tie	
4		2	Hydraulic motor	
	RM 19291822	2	Hydraulic motor	ARC
5	RM 59629097	1	Cable harness	
7	RM 59587410	1	Housing	
8	RM 59587394	1	Panel	
9	RM 59170001	1	Speedometer	
10	RM 59196931	1	Gauge	
11	RM 59579755	4	Rubber Damper	
12	RM 95973921	4	Cap Nut	
13	RM 59327833	4	Hexagon Nut	
14	RM 95920377	4	Hexagon screw	
15	RM 95924239	8	Washer	
16	RM 58956624	1	Grommet	
17	RM 59629063	1	Decal	VPM SWITCH
18	RM 59624635	1	Switch	
19	RM 58937970	1	Cable harness	POWER AND GROUND
20	RM 59217562	1	Cable harness	VPM MAIN
21	RM 59217570	1	Cable harness	VPM CONSOLE
22	RM 59327825	4	Hexagon Nut	
23	RM 95922324	4	Plain Washer	
24	RM 58957291	2	Cable harness	S/N - 167446
25	RM 59110171	1	Lamp	
	RM 59824250	1	Kit	
26	RM 59096347	1	Cable harness	SPEEDOMETER
27	RM 59329979	4	Spacer	

Speedometer / Vpm Meter Installation

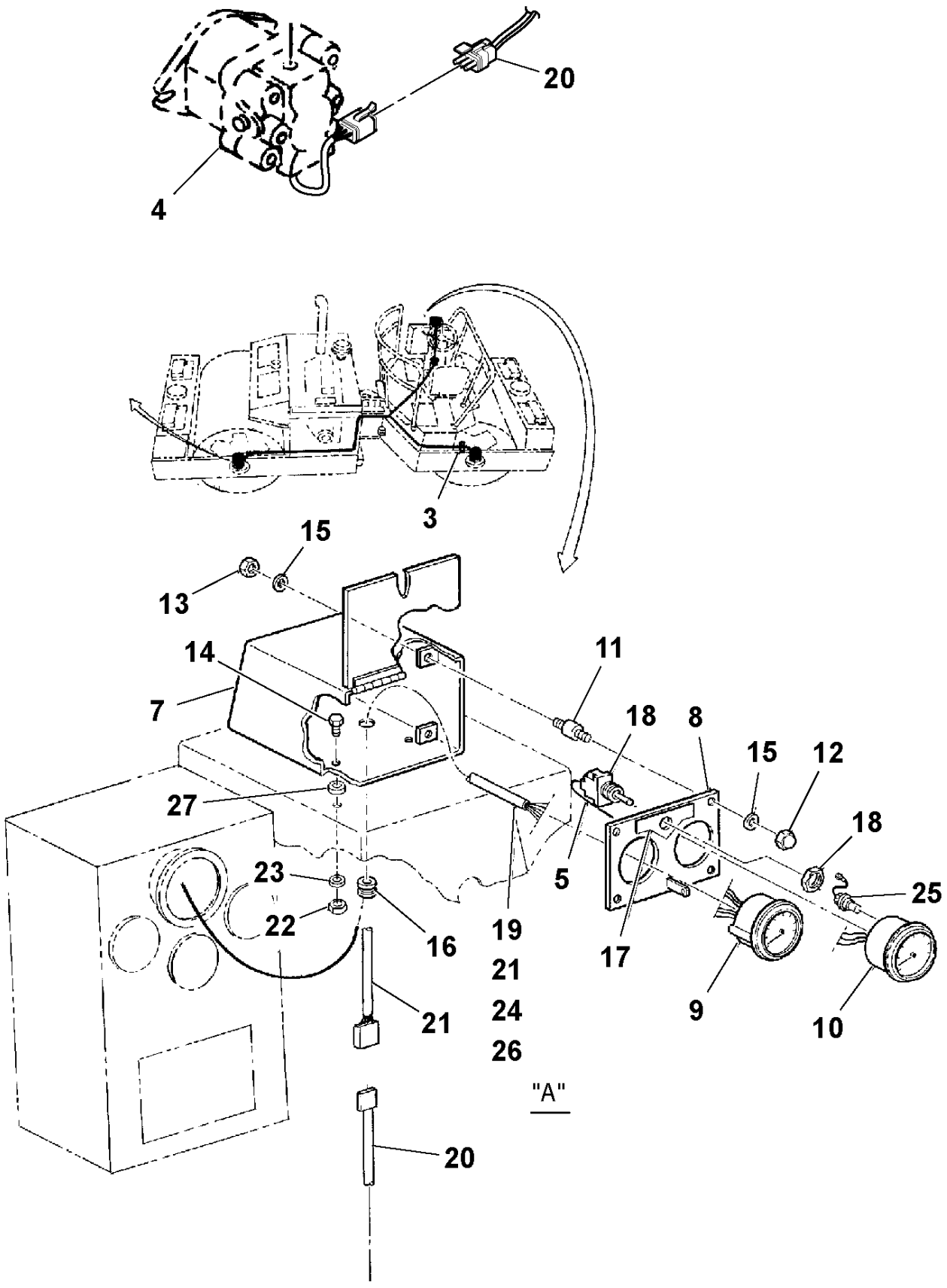

Speedometer / Vpm Meter Installation

POS	PART NUMBER	QTY	PART NAME	NOTES
5	RM 59629097	1	Cable harness	
19	RM 58937970	1	Cable harness	POWER AND GROUND
20	RM 59217562	1	Cable harness	VPM MAIN
21	RM 59217570	1	Cable harness	VPM CONSOLE
25	RM 59110171	1	Lamp	
	RM 59824250	1	Kit	
26	RM 59096347	1	Cable harness	SPEEDOMETER

Speedometer / Vpm Meter Installation

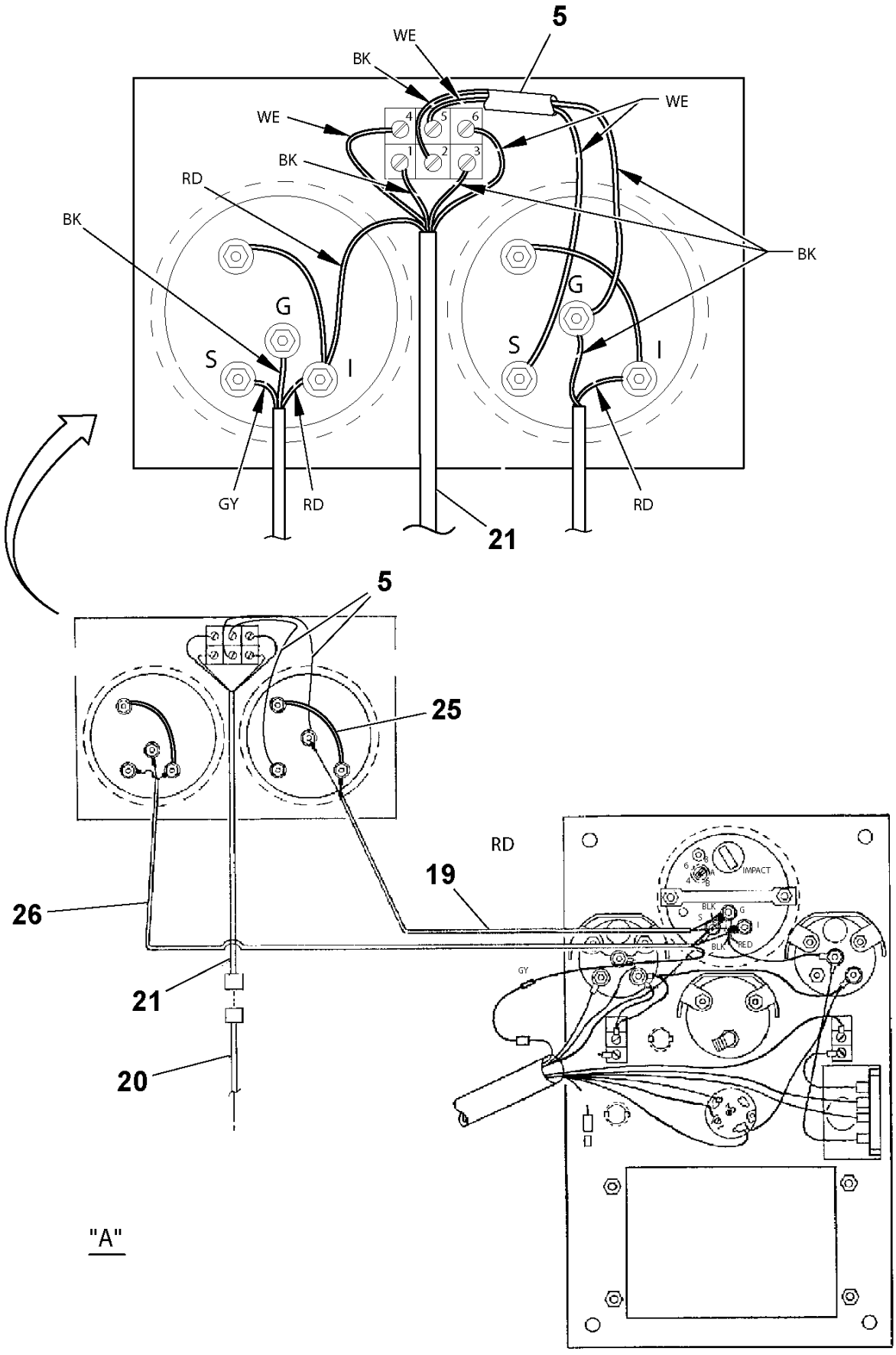

Speedometer/tachometer Installation

POS	PART NUMBER	QTY	PART NAME	NOTES
2	RM 59587410	1	Housing	
3	RM 59587394	1	Panel	
4	RM 59170001	1	Speedometer	
5	RM 59873323	1	Tachometer	
6	RM 59579755	4	Rubber Damper	
7	RM 95973921	4	Cap Nut	
8	RM 59327833	4	Hexagon Nut	
9	RM 95920377	4	Hexagon screw	
10	RM 95924239	8	Washer	
11	RM 58956624	1	Grommet	
12	RM 59096339	1	Cable harness	
13	RM 59327825	4	Hexagon Nut	
14	RM 95922324	4	Plain Washer	
15	RM 58957291	2	Cable harness	LAMP POWE
16	RM 59824268	2	Lamp	
	RM 12963864	2	Lamp	
	RM 58951229	2	Bulb Socket	
17	RM 59096347	1	Cable harness	SPEEDOMETER
18	RM 59329979	4	Spacer	
19	RM 59813279	1	Button	
20	RM 58902453	1	Wire	

Speedometer/tachometer Installation

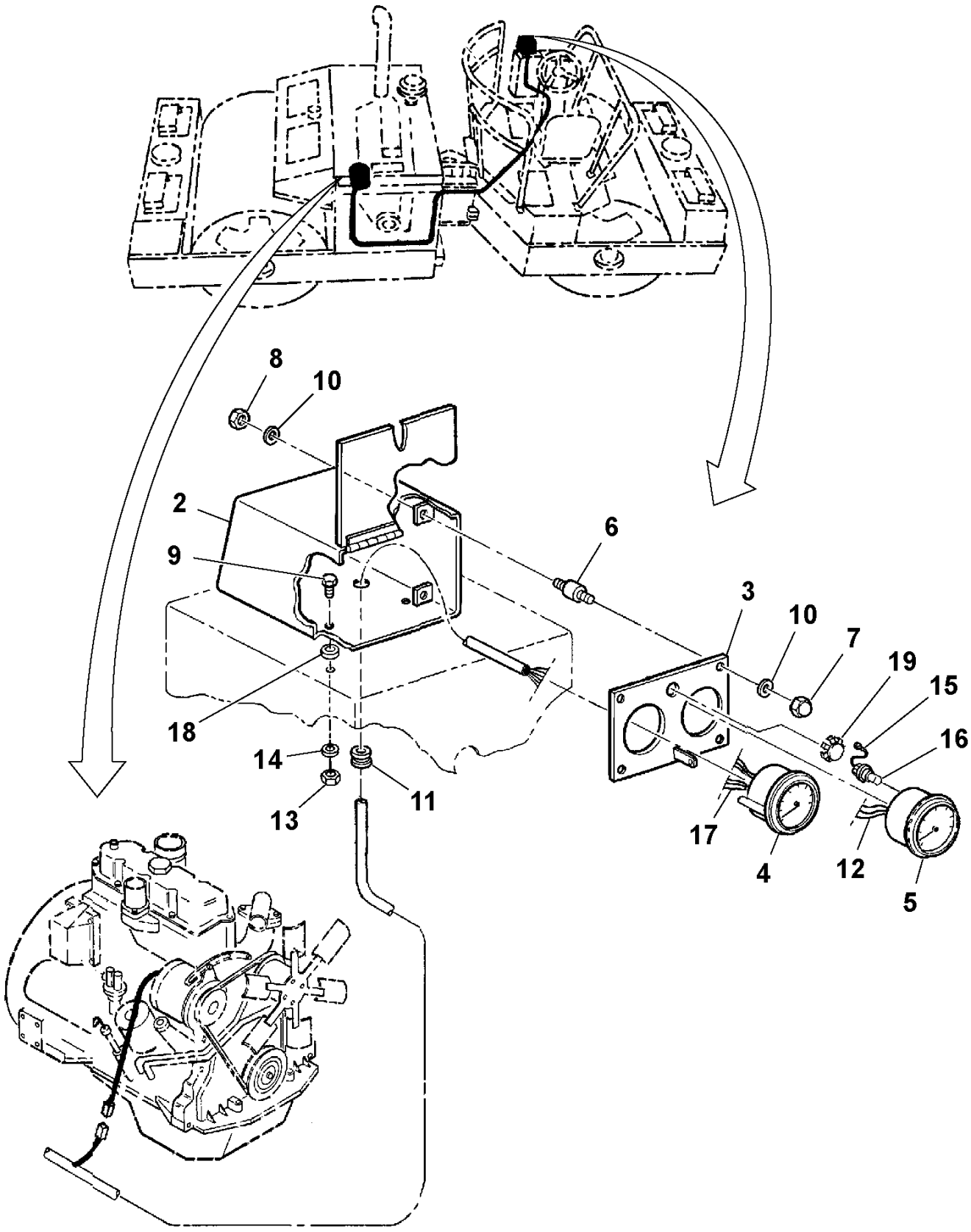

Material Temperature Sensor Installation

POS	PART NUMBER	QTY	PART NAME	NOTES
1	RM 13249644	1	Sensor	
2	RM 13249446	1	Collar	
4	RM 13250766	1	Pump	
5	RM 13249537	1	Air filter	
6	RM 13249545	1	Fitting	
7	RM 13249651	1	Cable harness	PURGE PUMP
9	RM 13250881	1	Support	
11	RM 13250857	1	Mounting Plate	
12	RM 59242305	1	Hose	
14	RM 95373973	REQ	Locking Wire	
16	RM 96704564	4	Hexagon screw	
17	RM 96704176	4	Hexagon Nut	
18	RM 96741053	4	Washer	
19	RM 13249677	2	Screw	
20	RM 96743653	2	Screw	
21	RM 50274299	1	Hose Clamp	
22			-	

Material Temperature Sensor Installation

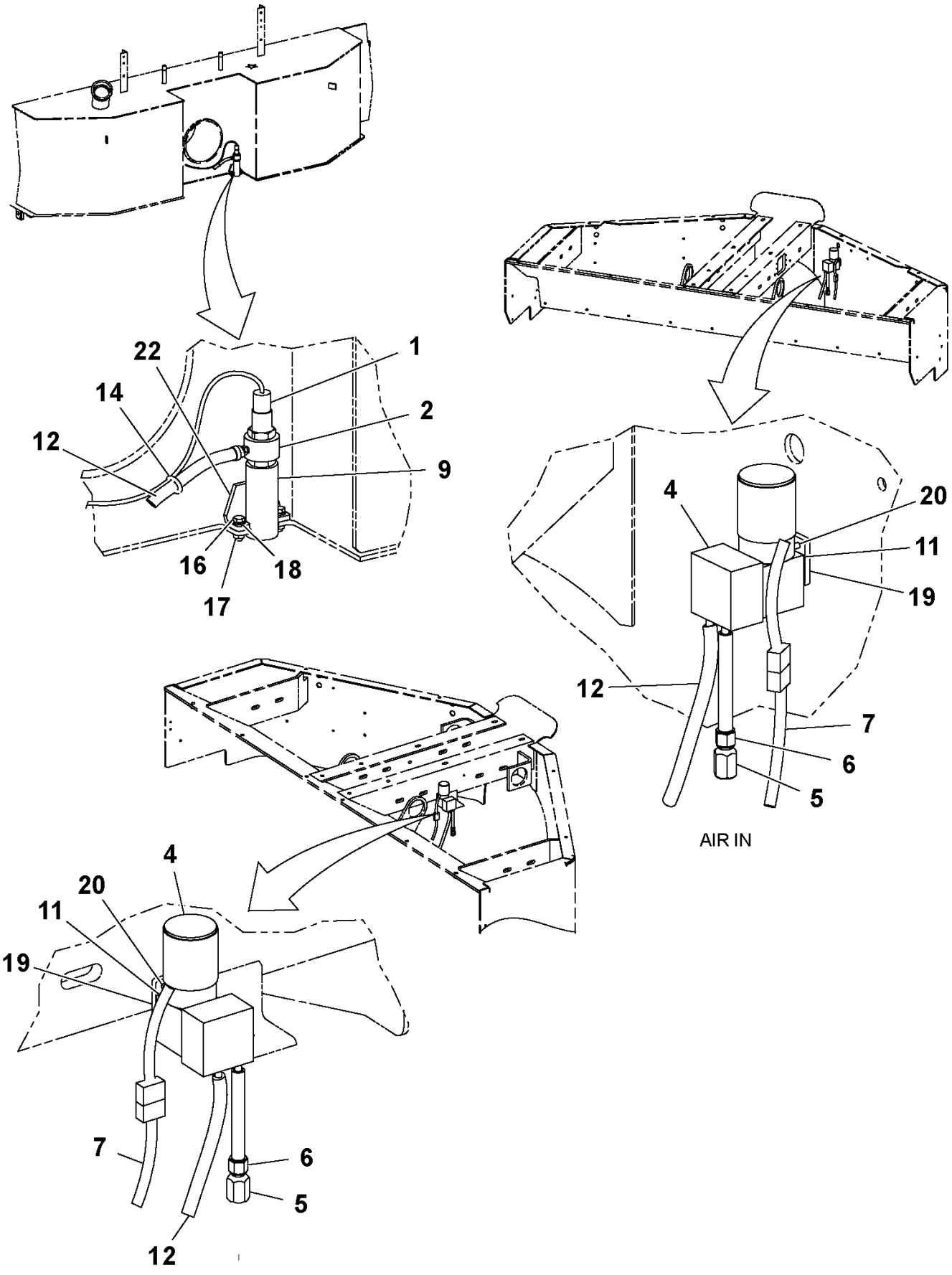

Material Temperature Sensor Installation

POS	PART NUMBER	QTY	PART NAME	NOTES
3	RM 13497045	1	Display	
8	RM 13249669	1	Cable harness	
10	RM 13249404	1	Bracket	
13	RM 35895440	1	Grommet	
15	RM 95922084	2	Screw	
16	RM 96704564	4	Hexagon screw	
17	RM 96704176	4	Hexagon Nut	
18	RM 96741053	4	Washer	

Material Temperature Sensor Installation

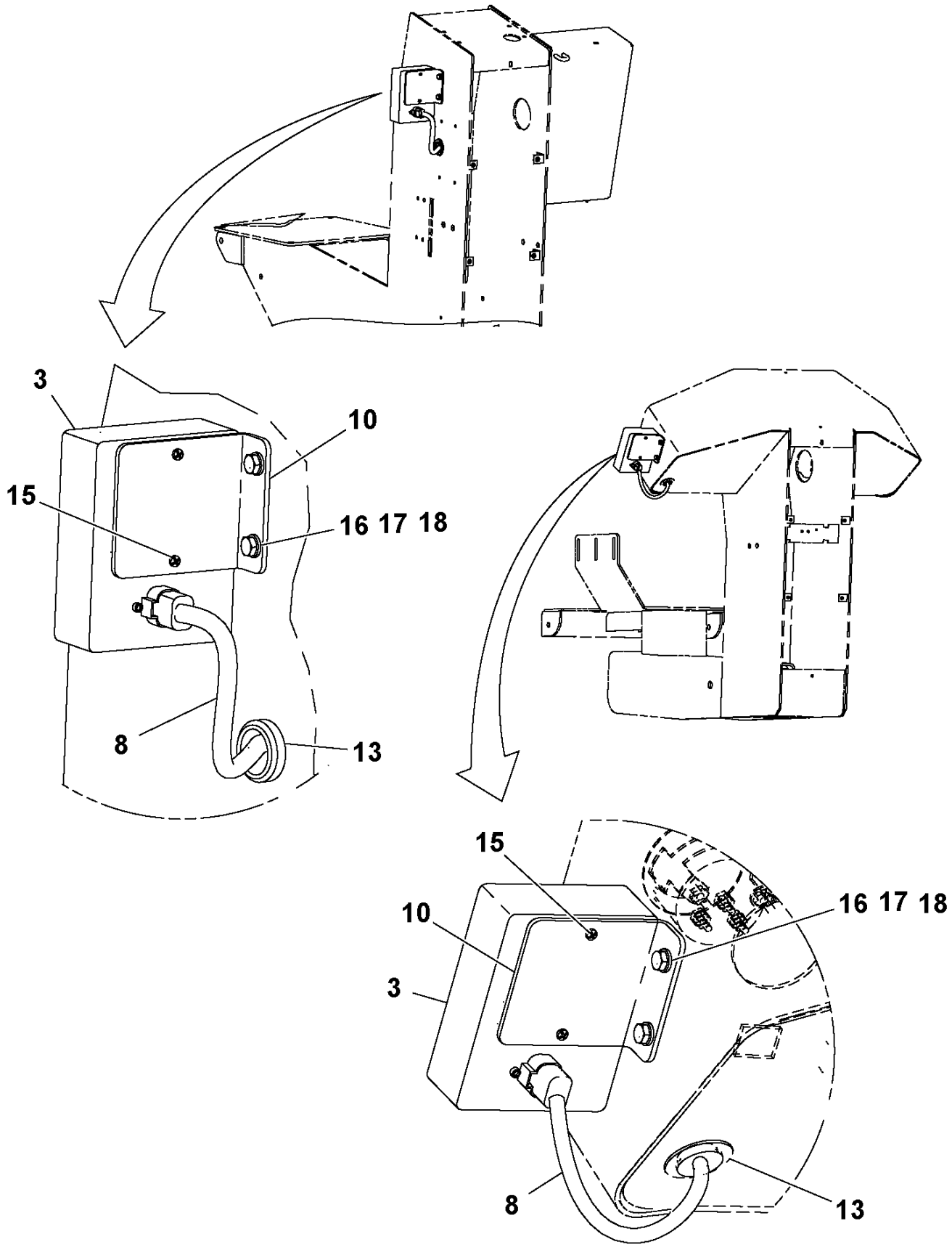

Material Temperature Sensor Installation

POS	PART NUMBER	QTY	PART NAME	NOTES
1		1	Kit	

Material Temperature Sensor Installation

No graphic exists!
Absence d'illustration
Keine Abbildung vorhanden!
No hay gráfico
Grafisk framställning saknas!
没有图！
그래픽 없음!
図がありません。

Flex Tread Installation

POS	PART NUMBER	QTY	PART NAME	NOTES
	RM 59077842	1	Slip protection	INCLUDES ITEMS 2-10
2	RM 59077768	2	Slip protection	FRONT
3	RM 59077776	2	Slip protection	SIDE
4	RM 59077784	2	Slip protection	DOOR
5	RM 59077800	1	Slip protection	LEFT
6	RM 59077818	1	Slip protection	LEFT
7	RM 59077792	1	Slip protection	RIGHT
8	RM 59077826	1	Slip protection	RIGHT
9	RM 59012302	1	Slip protection	FRONT
10	RM 59012377	1	Slip protection	CENTER

Flex Tread Installation

No graphic exists!
Absence d'illustration
Keine Abbildung vorhanden!
No hay gráfico
Grafisk framställning saknas!
没有图！
그래픽 없음!
図がありません。

Material Temperature Kit

POS	PART NUMBER	QTY	PART NAME	NOTES
5	RM 59175976	1	Air Pump	
10	RM 59185611	1	Air filter	
11	RM 59208553	1	Cable harness	MATERIAL TEMPERATURE KIT
12	RM 59185603	1	Air Tube	

Material Temperature Kit

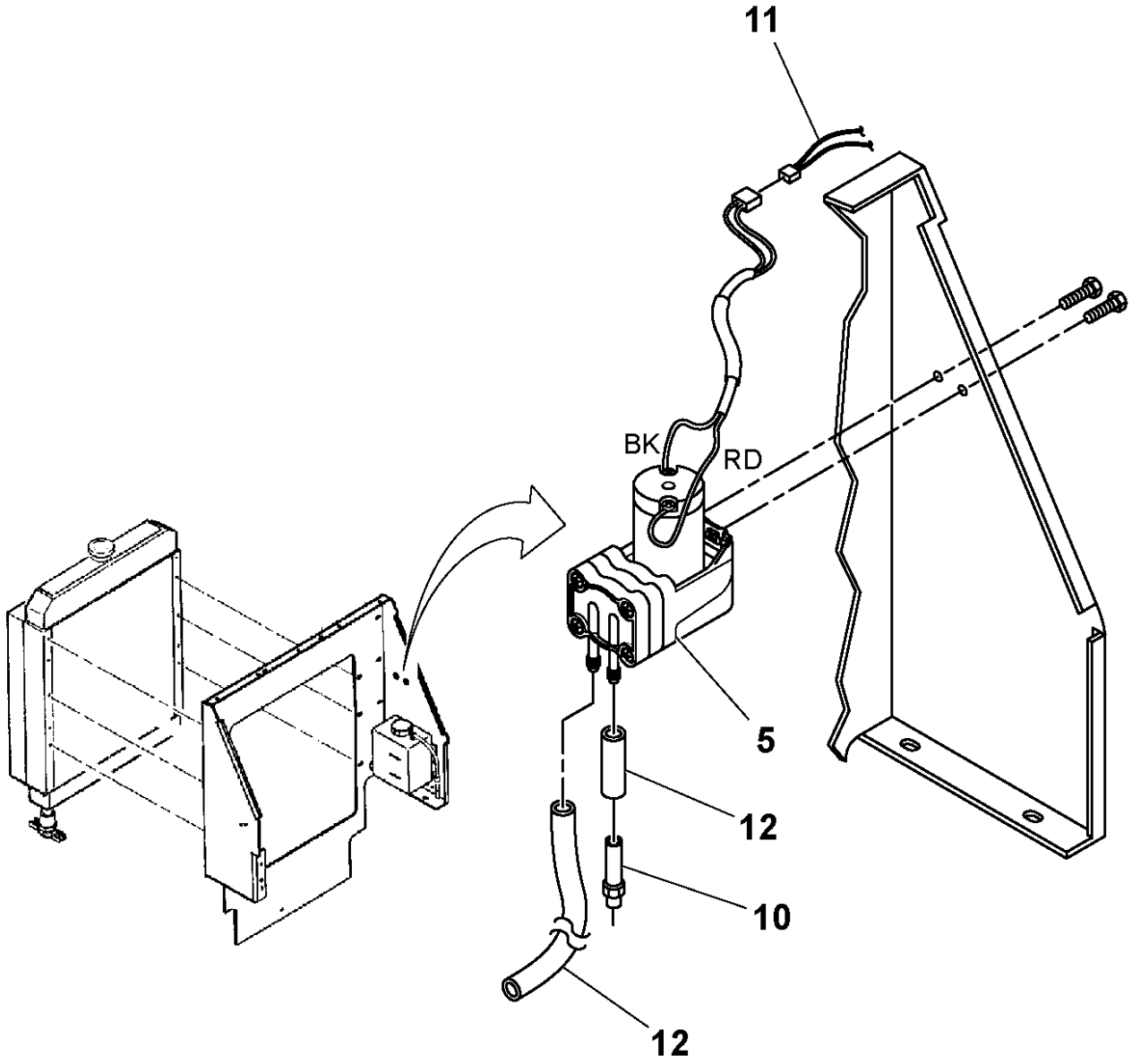

Material Temperature Kit

POS	PART NUMBER	QTY	PART NAME	NOTES
2	RM 59164418	1	Bracket	
3	RM 59233908	1	Temperature sensor	
6	RM 59175992	1	Bolt	
7	RM 59965962	4	Screw	
8	RM 59941682	4	Lock nut	
9	RM 59044099	2	Grommet	
11	RM 59208553	1	Cable harness	MATERIAL TEMPERATURE KIT
13	RM 59233924	1	Power Cable	

Material Temperature Kit

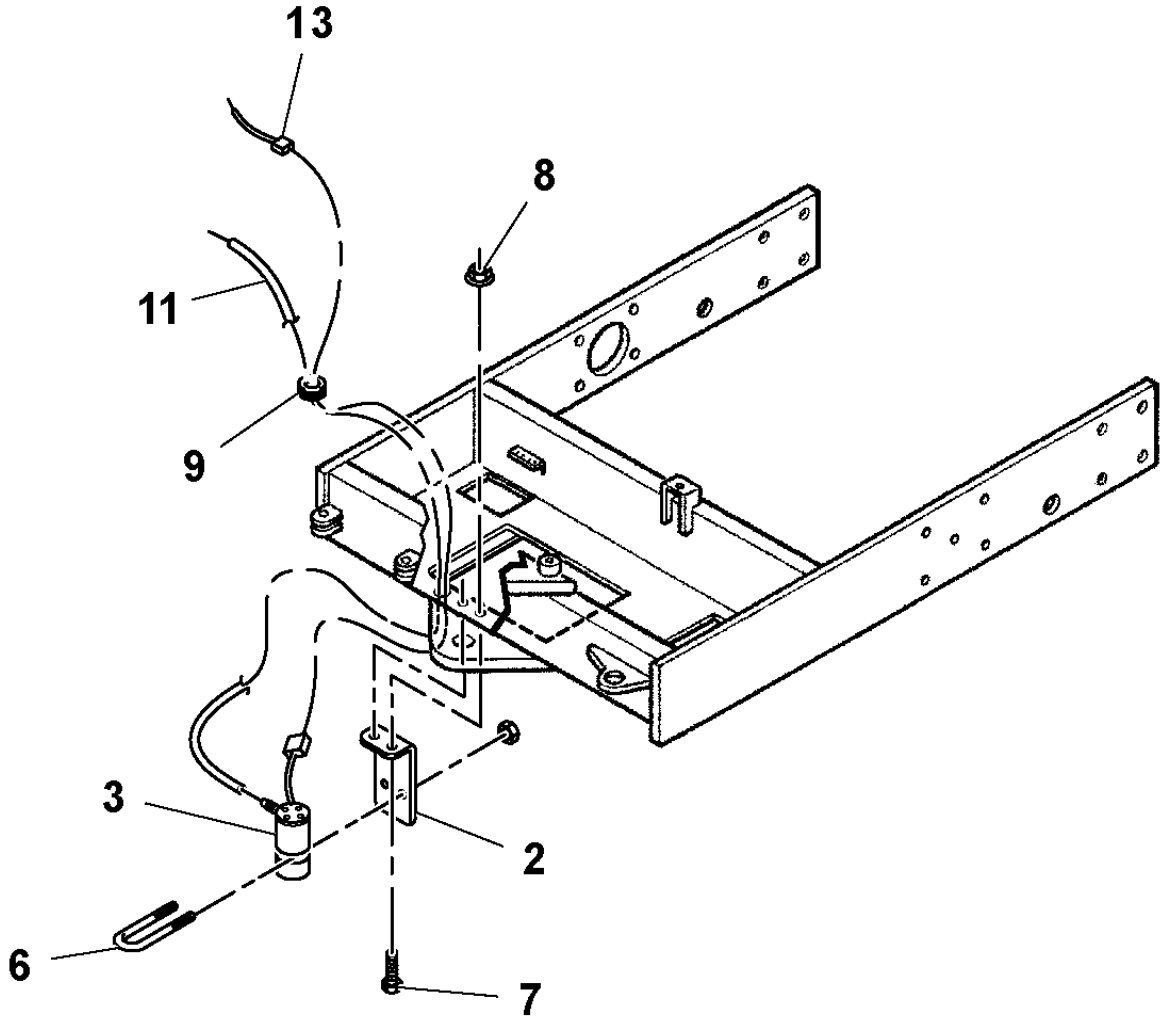

Material Temperature Kit

POS	PART NUMBER	QTY	PART NAME	NOTES
1	RM 59233932	1	Bracket	
4	RM 59279307	1	Temperature gauge	
7	RM 59965962	4	Screw	
8	RM 59941682	4	Lock nut	
9	RM 59044099	2	Grommet	

Material Temperature Kit

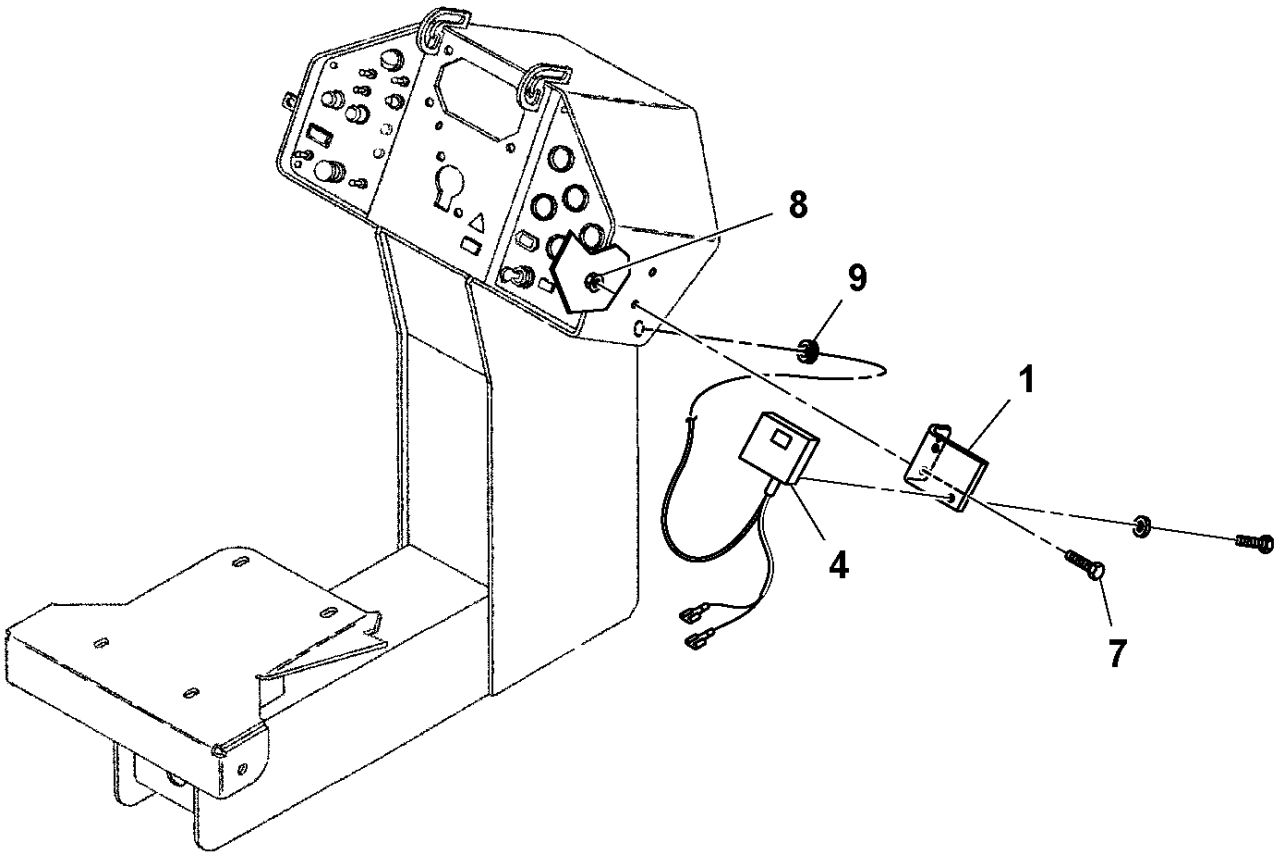

F-stop-r Control Assembly

POS	PART NUMBER	QTY	PART NAME	NOTES
1	RM 59240242	1	Control Lever	F-S-R
2	RM 58923954	1	Control Cable	
3	RM 59889584	2	Fitting	
4	RM 58779844	1	Cable Conduit	
5	RM 59787465	2	Lock Screw	
6	RM 58843970	1	Side Plate	
7	RM 59096883	1	Control Box	
8	RM 59040386	1	Spacer	
9	RM 59648543	1	Switch	F-S-R
10	RM 59313593	1	Rear plate	
11	RM 59429464	1	Arm Rest	
12	RM 59998146	6	Lock Screw	
13	RM 59976548	1	Pad	
15	RM 59612432	REQ	Solvent	
16	RM 59313585	1	Front Plate	
17	RM 59965962	5	Screw	
18	RM 59887000	1	Plug	
19	RM 59096313	1	Cable	F-S-R
20	RM 59096925	1	Plug	
21	RM 59326827	2	Plug	

F-stop-r Control Assembly

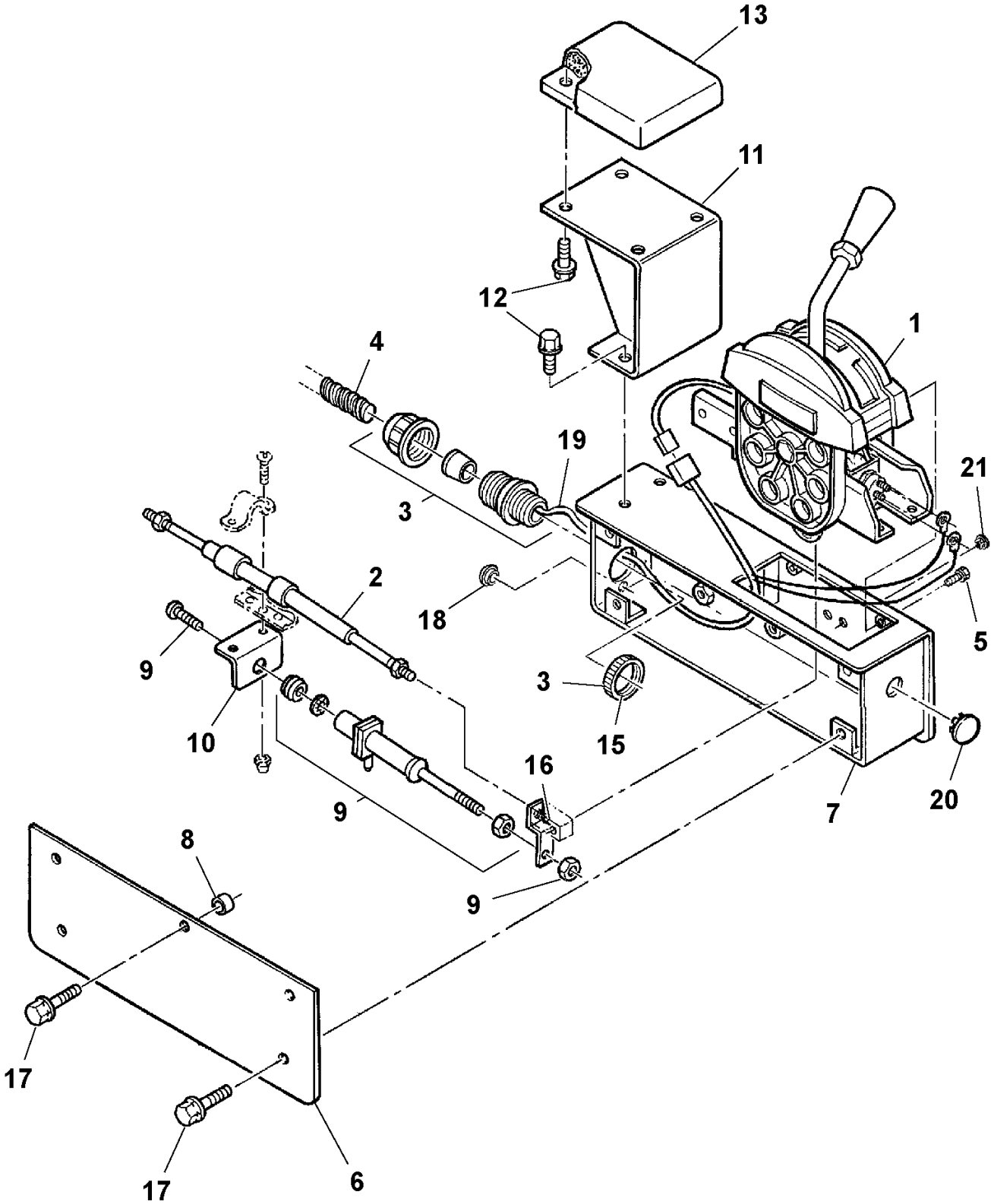

F-stop-r Control Assembly

POS	PART NUMBER	QTY	PART NAME	NOTES
2	RM 58923954	1	Control Cable	
19	RM 59096313	1	Cable	F-S-R

F-stop-r Control Assembly

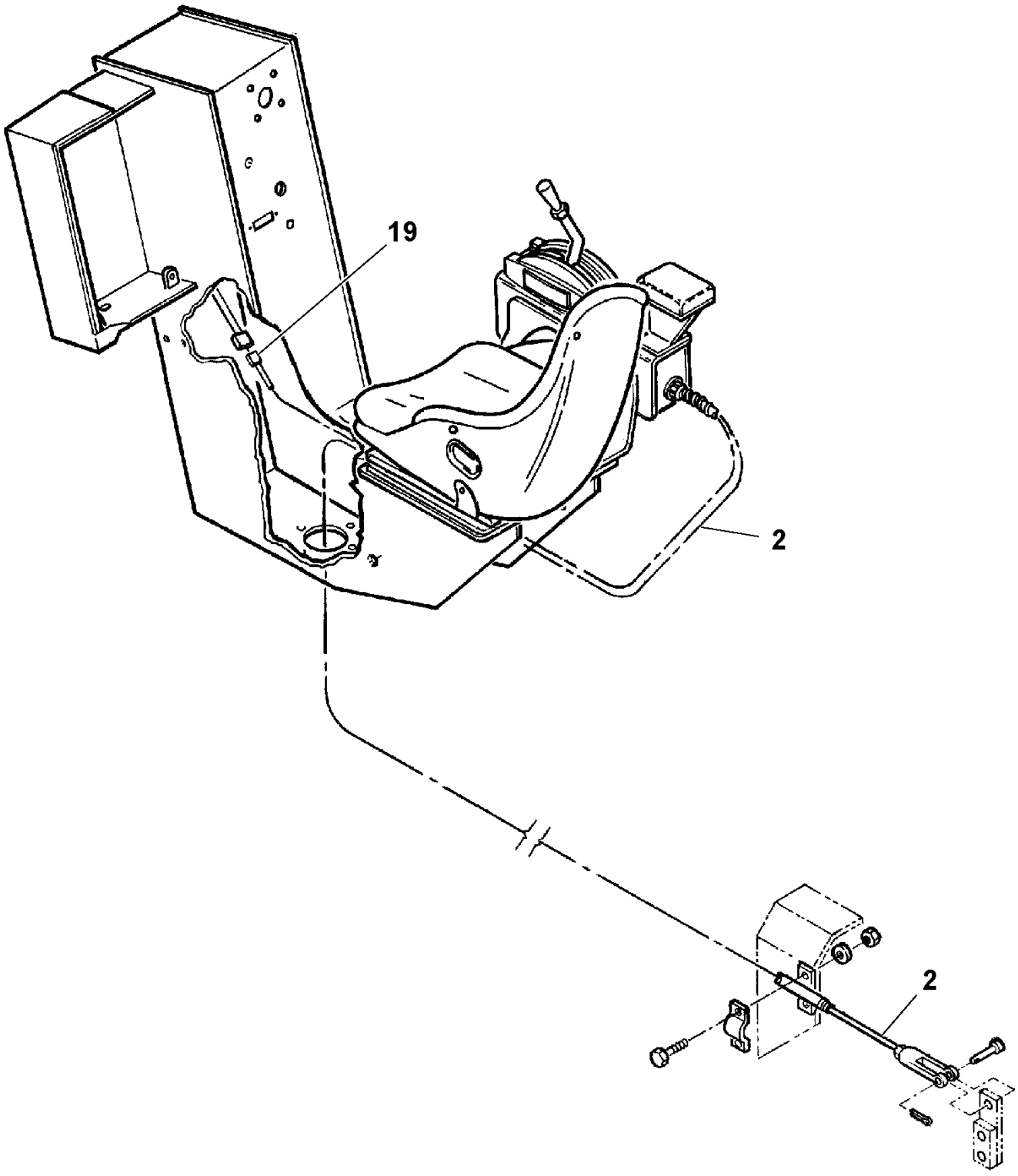

F-stop-r Control

POS	PART NUMBER	QTY	PART NAME	NOTES
1	RM 59074039	1	Plate	
2	RM 59074047	1	Gear Position Detent	
3	RM 59262303	1	Control Lever	
	RM 59240291	1	Handle	
	RM 59155366	1	Nut	
	RM 59072264	1	Switch	
	RM 13229059	1	Plastic Hose	
	RM 59074070	1	Spring Pin	
	RM 59074047	1	Gear Position Detent	
	RM 13229067	2	Heat-shrinkable Tubing	
	RM 59262311	1	Hand Lever	
	RM 59240291	1	Handle	
	RM 59262311	1	Hand Lever	
	RM 59240291	1	Handle	
4	RM 50849751	1	Spring Pin	
5	RM 59074070	1	Spring Pin	
6	RM 59074088	1	Actuator	
7	RM 59074096	4	Spacer	
8	RM 59074104	2	Hexagon screw	
9	RM 59074112	2	Nut	
10	RM 59652099	1	Spring	RH
11	RM 59652081	1	Spring	LH
12	RM 59074146	1	Spring	
13	RM 59074153	1	Plate	
14	RM 59073957	1	Switch	

F-stop-r Control

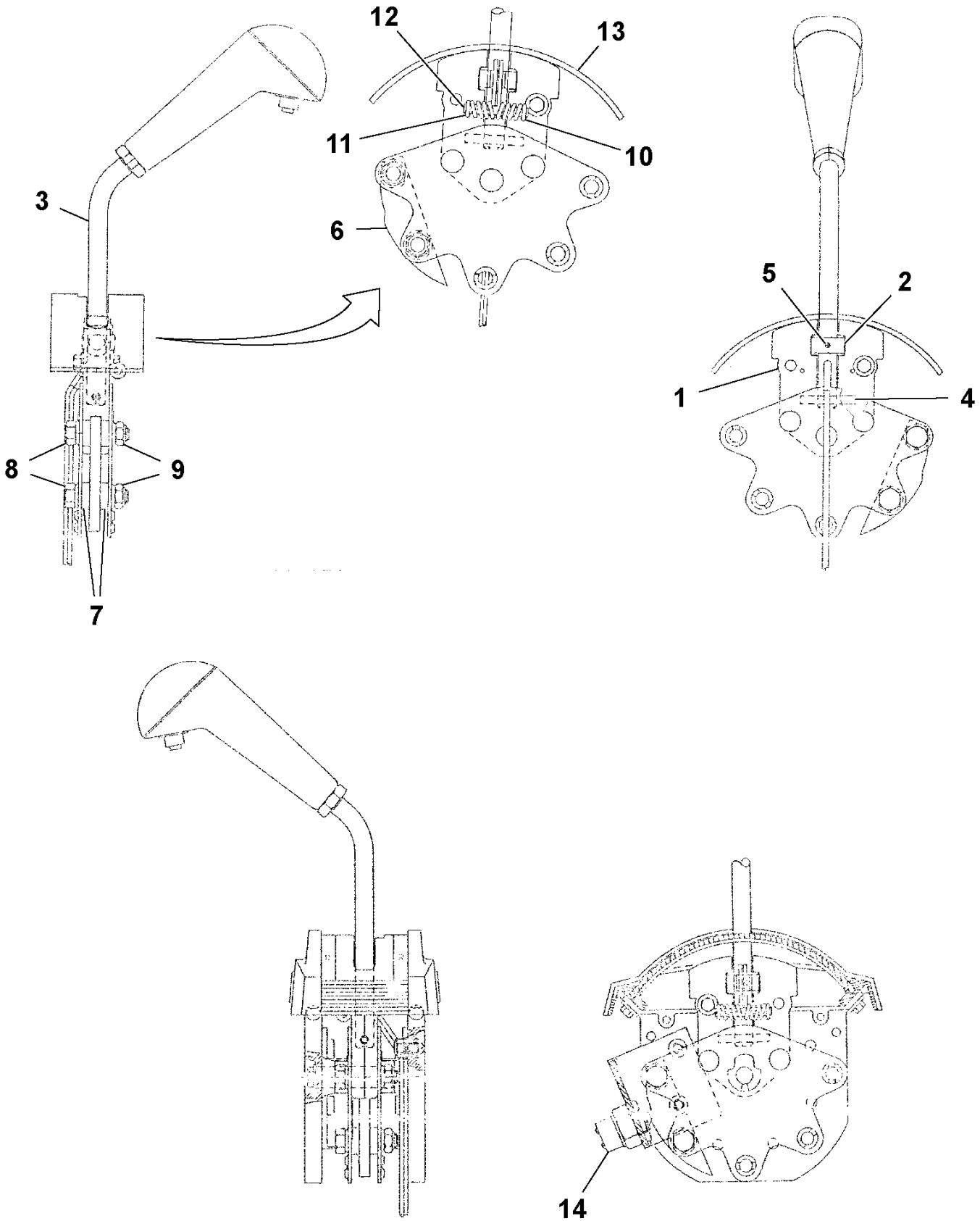

Drum Drive Assembly

POS	PART NUMBER	QTY	PART NAME	NOTES
1		1	Hydraulic motor	
	RM 13247564	1	Hydraulic motor	ARC
2	RM 59203869	1	Mounting Plate	LH
3	RM 59166728	1	Drive Plate	
4	RM 59168054	1	Spacer	
5	RM 96734025	10	Hexagon screw	
6	RM 96738638	20	Plain Washer	
7	RM 96728829	10	Hexagon Nut	
8	RM 96704978	8	Hexagon screw	
9	RM 96738620	10	Plain Washer	
10	RM 95175881	4	Flange	
11	RM 96704309	8	Hexagon screw	
12	RM 96704325	8	Washer	
13	RM 95028528	2	O-ring	
14	RM 59926659	1	Adapter	
15	RM 59926642	1	Adapter	
18	RM 59166967	1	Ring	
19	RM 59203885	1	Bracket	
20	RM 96719786	2	Hexagon screw	
21	RM 96741038	4	Washer	
22	RM 96704606	2	Lock nut	
23	RM 59203877	1	Flange	RH
24			-	

Drum Drive Assembly

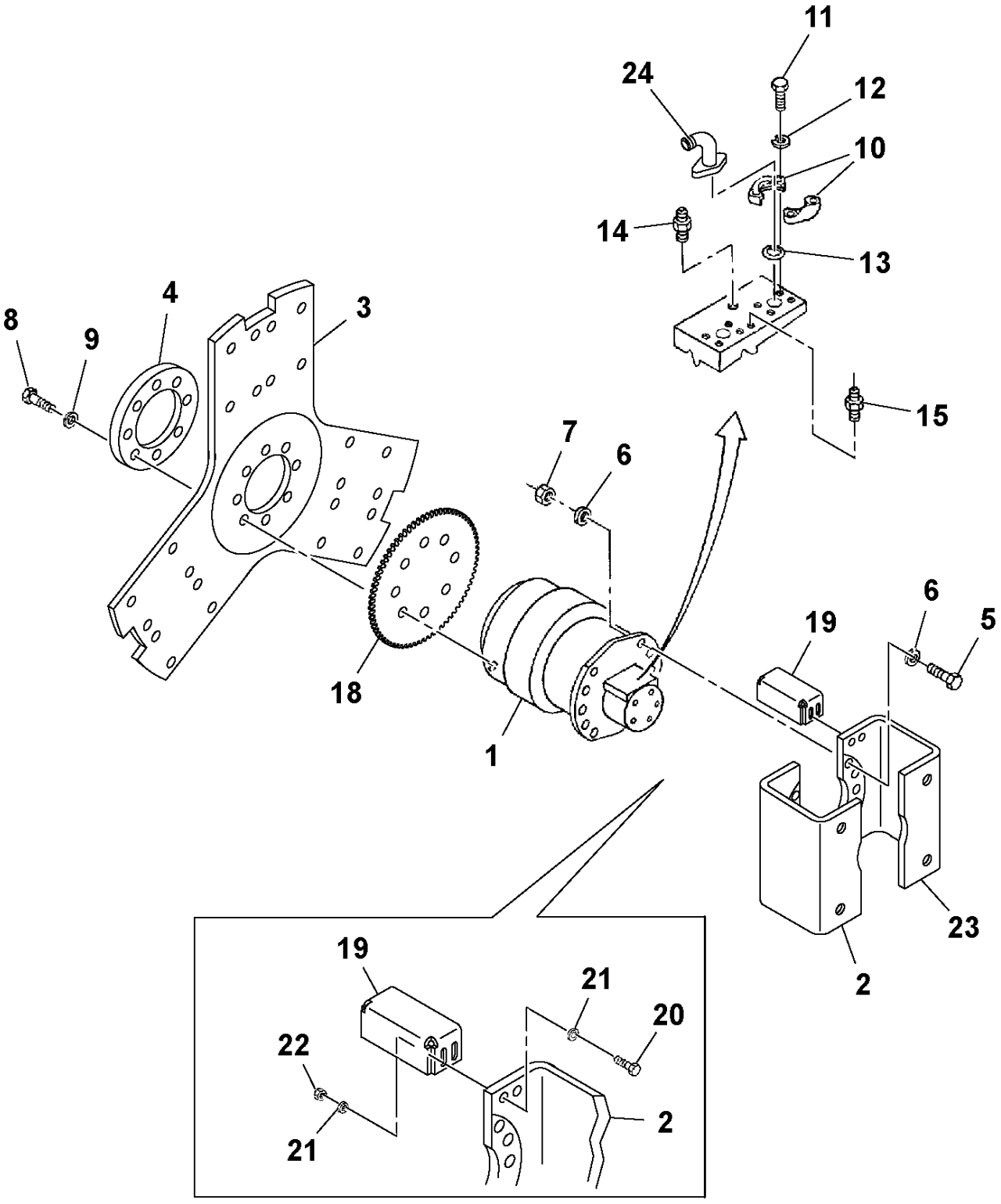

Drum Drive Assembly

POS	PART NUMBER	QTY	PART NAME	NOTES
1		1	Hydraulic motor	
	RM 13247564	1	Hydraulic motor	
2	RM 59177899	1	Mounting Plate	LH
3	RM 59166728	1	Drive Plate	
4	RM 59168054	1	Spacer	
5	RM 96734025	10	Hexagon screw	
6	RM 96738638	20	Plain Washer	
7	RM 96728829	10	Hexagon Nut	
8	RM 96704978	8	Hexagon screw	
9	RM 96738620	10	Plain Washer	
10	RM 95175881	4	Flange	
11	RM 96704309	8	Hexagon screw	
12	RM 96704325	8	Washer	
13	RM 95028528	2	O-ring	
14	RM 59926659	1	Adapter	
15	RM 59926642	1	Adapter	
18	RM 59166967	1	Ring	
19	RM 59170241	1	Bracket	
20	RM 96719786	2	Hexagon screw	
21	RM 96741038	4	Washer	
22	RM 96704606	2	Lock nut	
23	RM 59203877	1	Flange	RH, S/N 155726 -
	RM 59177907	1	Flange	RH, S/N - 155725
24			-	
25	RM 59148841	1	Adapter	45 DEG, S/N - 164018

Drum Drive Assembly

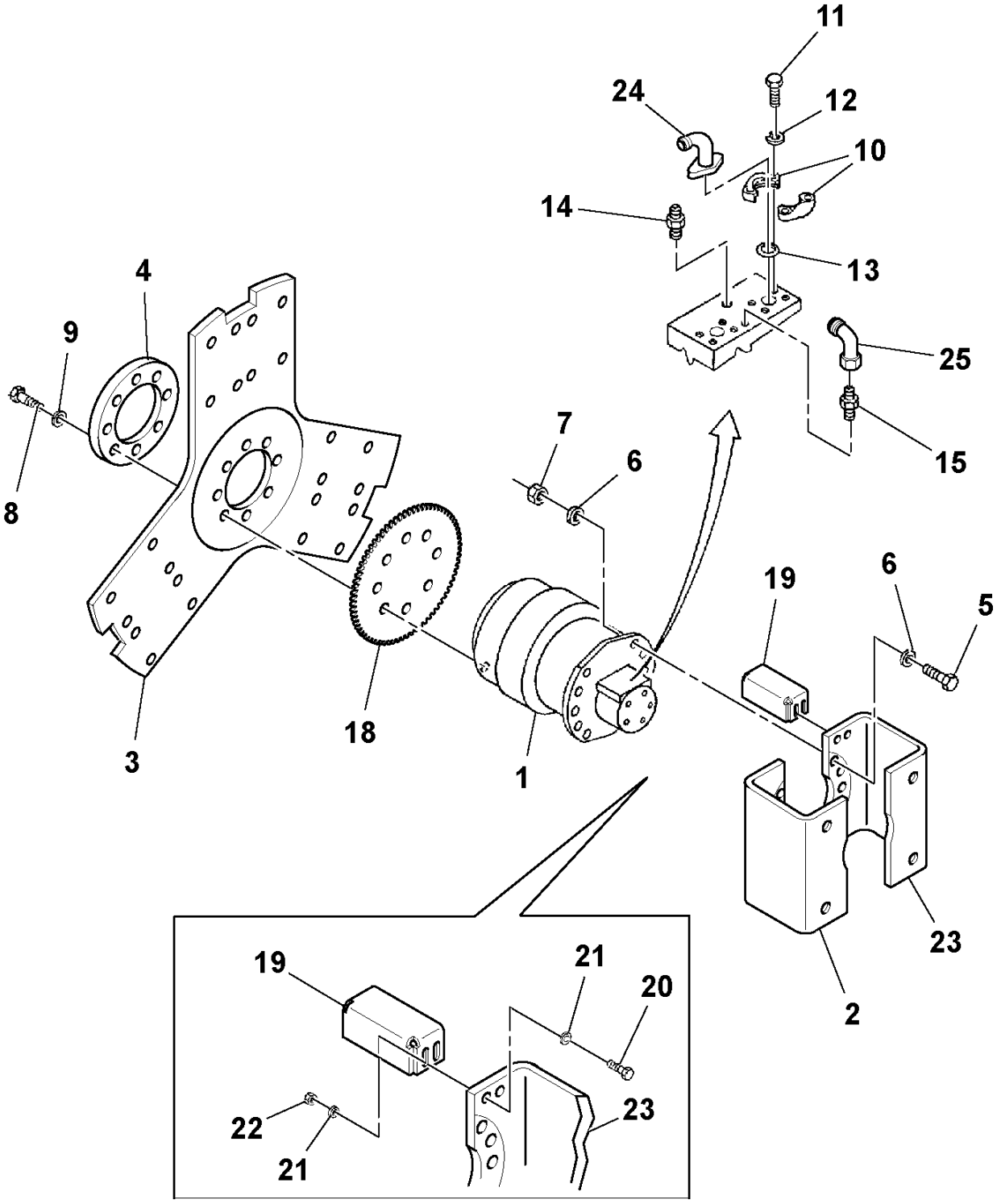

Drive Motor

POS	PART NUMBER	QTY	PART NAME	NOTES
1	RM 59218552	1	Drive Shaft Seal	
2	RM 59241802	1	O-ring	
3	RM 59241810	1	Plug	
4	RM 59241505	2	O-ring	
5	RM 59241851	1	Repair Kit	
6	RM 59080309	12	Spring	
7	RM 59193854	1	Sealing Kit	
8	RM 59902668	2	Sealing	
9	RM 59902676	2	Bleeder Screw	
10	RM 59241877	16	Screw	
11	RM 59080275	1	O-ring	
12	RM 59241935	1	Sealing	
13	RM 59241927	1	Shaft	
14	RM 59241943	1	Brake Disc Kit	
15	RM 59934695	1	Spring Washer	
16	RM 59902668	1	Sealing	
17	RM 59934679	1	O-ring	
18	RM 59934687	1	Brake Piston	
19	RM 59934695	1	Spring Washer	
20	RM 59934703	1	Retaining ring	
21	RM 59080556	1	O-ring	
22	RM 59241950	1	Protecting Ring	
23	RM 59080549	1	Plug	
24	RM 54759006	1	Kit	

Drive Motor

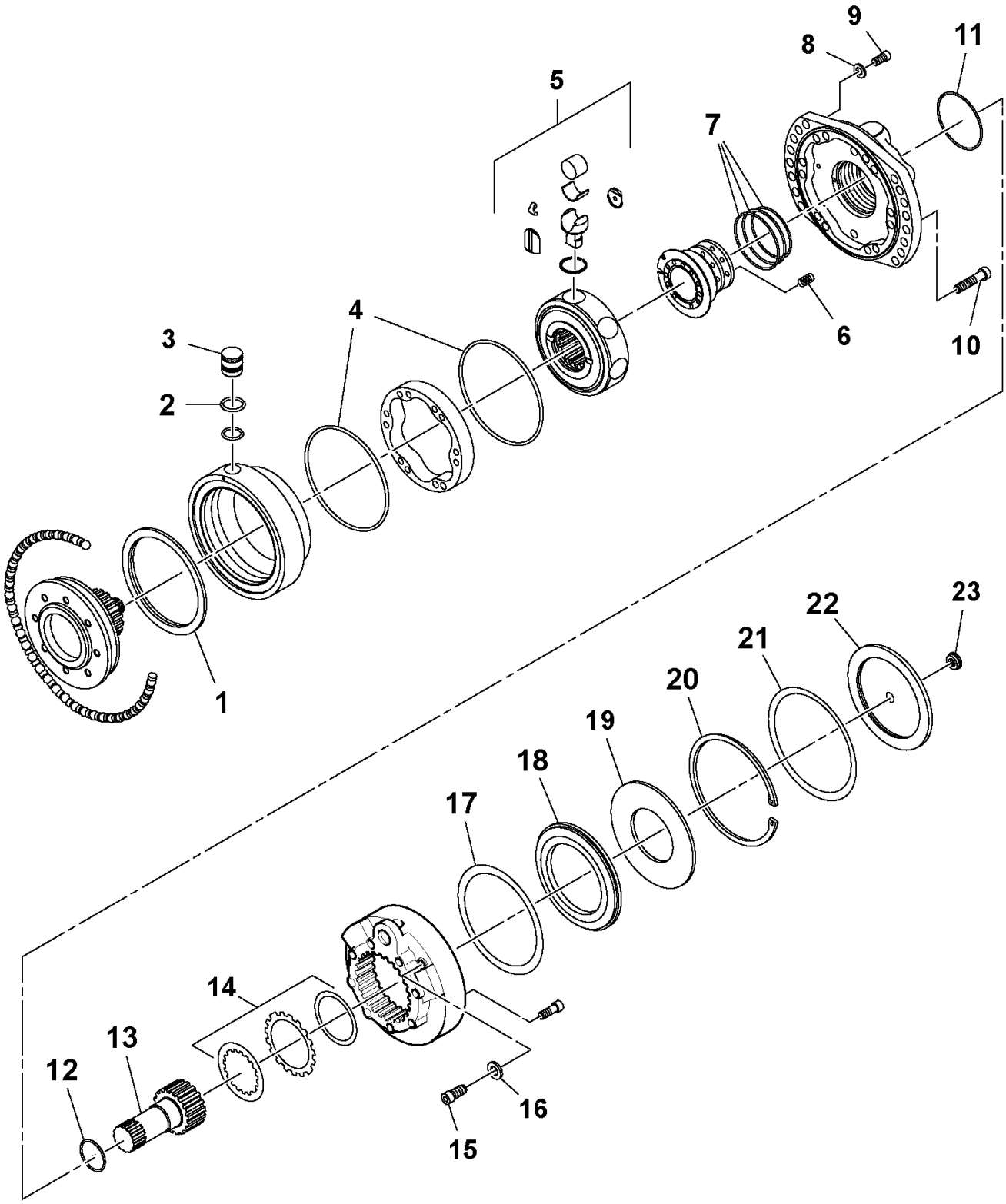

Triple Pump Drive

POS	PART NUMBER	QTY	PART NAME	NOTES
1	RM 59004424	1	Drive Plate	
2	RM 50565845	1	Drive Shaft	
3	RM 59888248	7	Bolt	
4	RM 59514836	1	Cover	
5	RM 59677864	1	Sealing	
7	RM 95200663	8	Bearing	
8	RM 59677856	1	Gear	
9	RM 59515007	1	Dipstick	
10	RM 50906379	1	Dipstick Tube	
13	RM 59686451	1	Elbow	90 DEG
14	RM 59551242	1	Bushing	
15	RM 59677831	1	Breather	
16	RM 59677849	3	Gear	
17	RM 50597624	1	Adapter	
18	RM 59595629	1	O-ring	
19	RM 59516096	1	Sleeve	
21	RM 59572917	2	Adapter	
22	RM 59888248	4	Bolt	
23	RM 95086641	2	O-ring	
24	RM 50594779	2	Adapter	
25	RM 59514976	1	Plug	

Triple Pump Drive

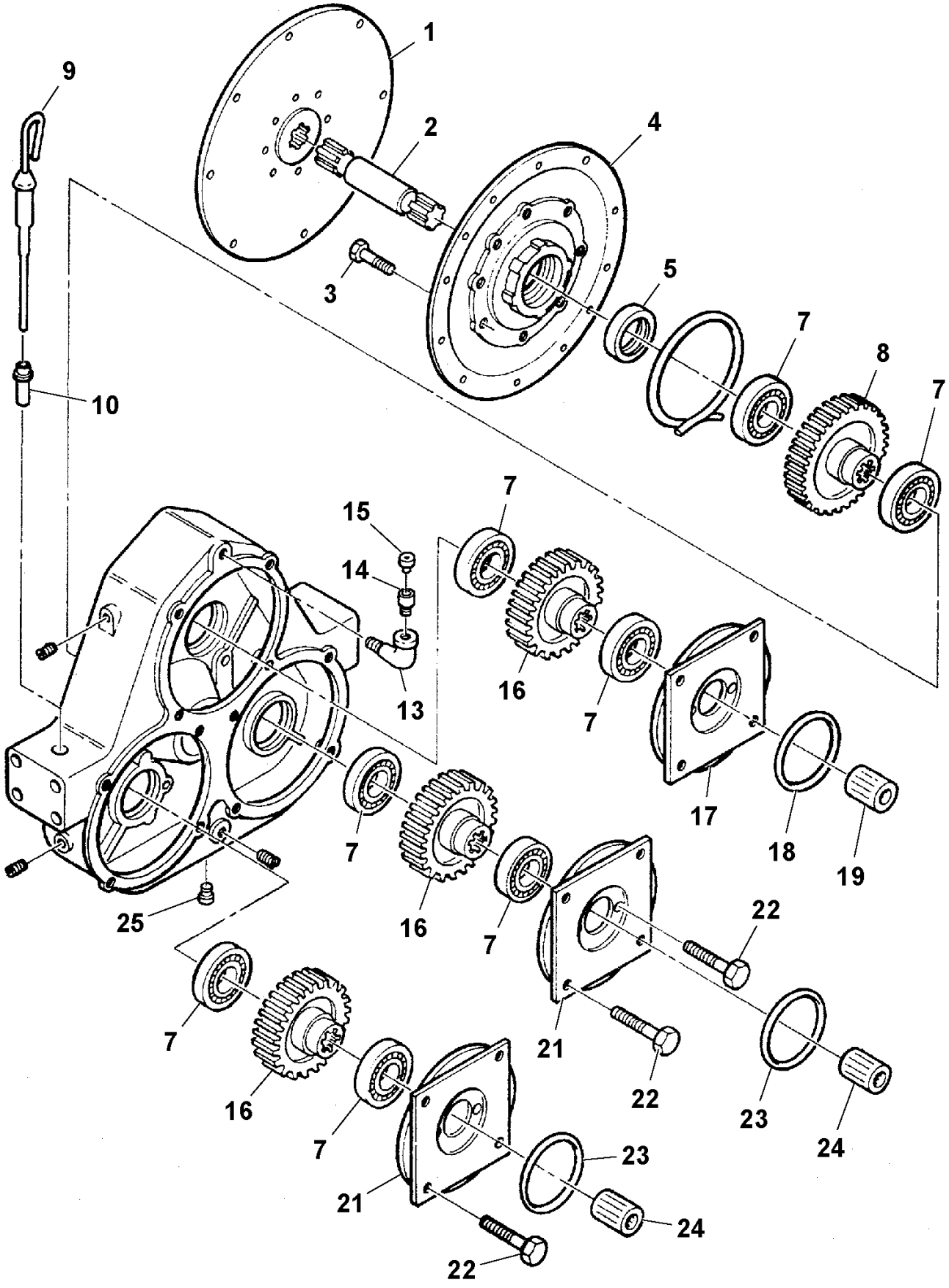

Triple Pump Drive

POS	PART NUMBER	QTY	PART NAME	NOTES
1	RM 59004424	1	Drive Plate	
2	RM 50565845	1	Drive Shaft	
3	RM 59888248	7	Bolt	
4	RM 59514836	1	Cover	
5	RM 59677864	1	Sealing	
7	RM 57528655	8	Bearing	
8	RM 57114332	1	Gear	
9	RM 59515007	1	Dipstick	
10	RM 50906379	1	Dipstick Tube	
13	RM 59686451	1	Elbow	90 DEG
14	RM 59551242	1	Bushing	
15	RM 59677831	1	Breather	
16	RM 50565837	3	Gear	
17	RM 50597624	1	Adapter	
18	RM 59595629	1	O-ring	
19	RM 59516096	1	Sleeve	
21	RM 59572917	2	Adapter	
22	RM 59888248	4	Bolt	
23	RM 95086641	1	O-ring	
24	RM 50594779	2	Adapter	
25	RM 59514976	1	Plug	

Triple Pump Drive

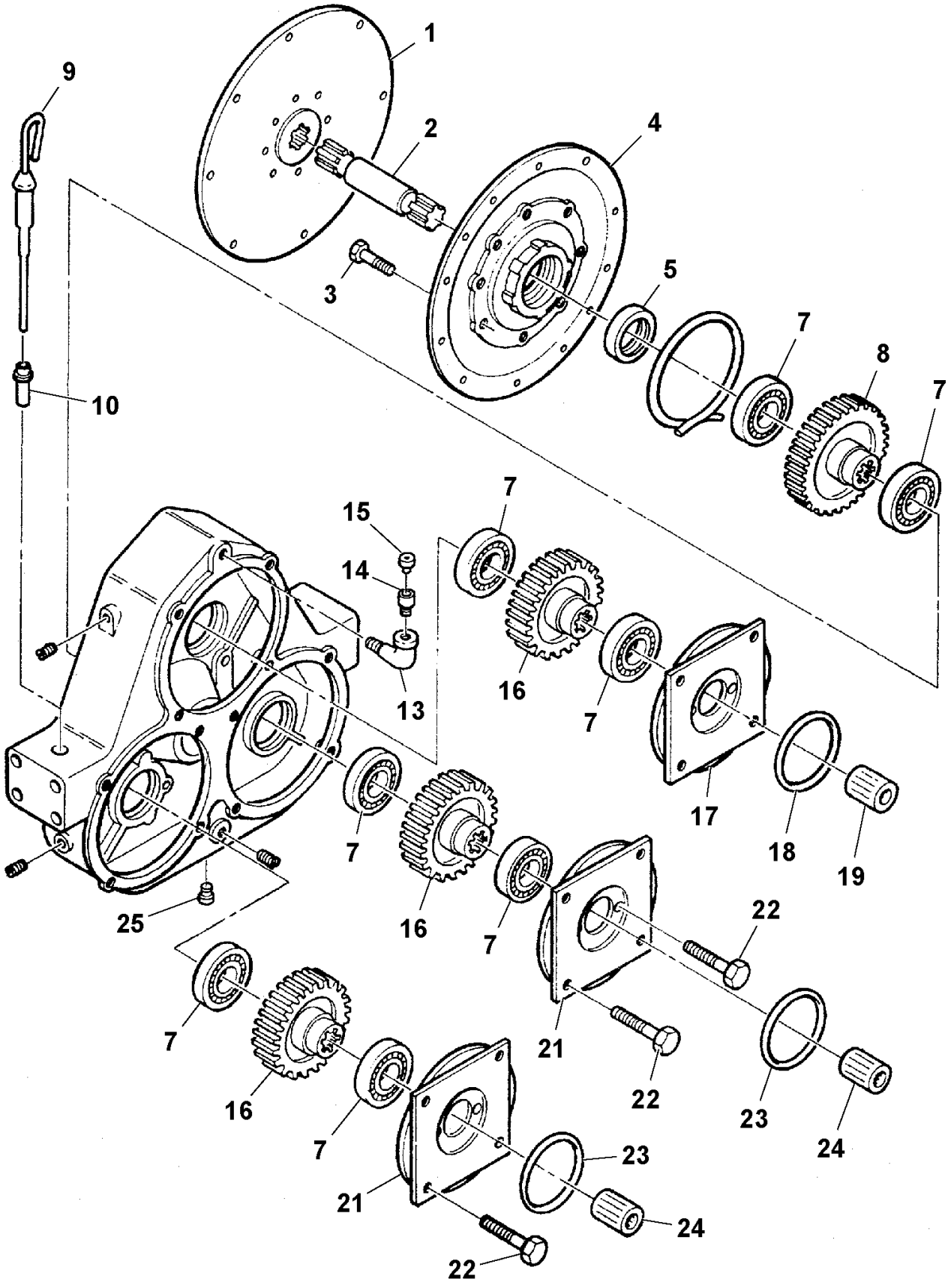

Propulsion Pump Assembly

POS	PART NUMBER	QTY	PART NAME	NOTES
1		1	Hydraulic Pump	
	RM 59140632	1	Hydraulic Pump, Exch	ARC
2	RM 58812348	1	Hand Lever	
4	RM 95919767	2	Screw	
5	RM 59993881	2	O-ring	
6	RM 59328484	2	Adapter	
7	RM 58901653	4	Clamp	
8	RM 95919460	8	Hexagon screw	
9	RM 59995126	8	Plain Washer	
10	RM 95357570	1	Adapter	
11	RM 95329983	1	Adapter	
13	RM 59922823	1	Adapter	90 DEG
14	RM 95280186	1	Adapter	90 DEG
15	RM 59919670	2	Adapter	

Propulsion Pump Assembly

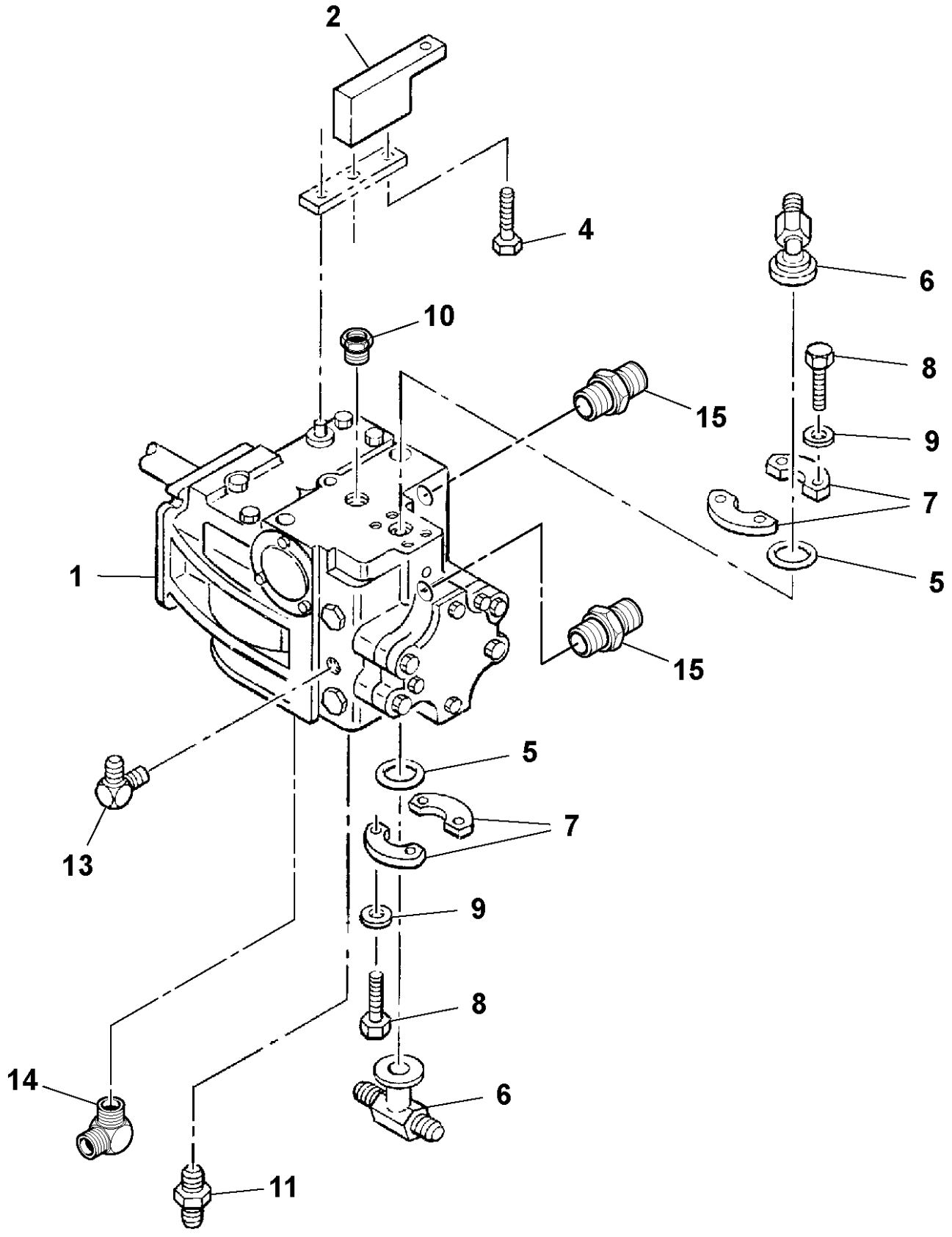

Propulsion Pump

POS	PART NUMBER	QTY	PART NAME	NOTES
1	RM 59446138	1	Kit	
2	RM 58220567	1	O-ring	
3	RM 58795766	3	Protecting screen	
4	RM 19281252	1	Sealing kit	
5	RM 19282987	1	Lip seal	
6	RM 59369504	1	O-ring	
7	RM 59040915	1	Plate	
8	RM 58815564	3	Screw	
9	RM 58921495	1	Valve	
10	RM 95210258	1	O-ring	
11	RM 59360735	1	O-ring	
12	RM 59041186	1	Solenoid valve	
13	RM 58921446	1	Solenoid valve	
14	RM 59026039	1	Gasket	
15	RM 59932418	1	Control handle	
16	RM 59360669	1	Washer	
17	RM 59360677	1	Nut	
18	RM 59360693	6	Screw	
19	RM 59360685	1	Gasket	
20	RM 58921602	1	Kit	
21	RM 59360792	1	Spring	
22	RM 59360800	1	Retainer	

Propulsion Pump

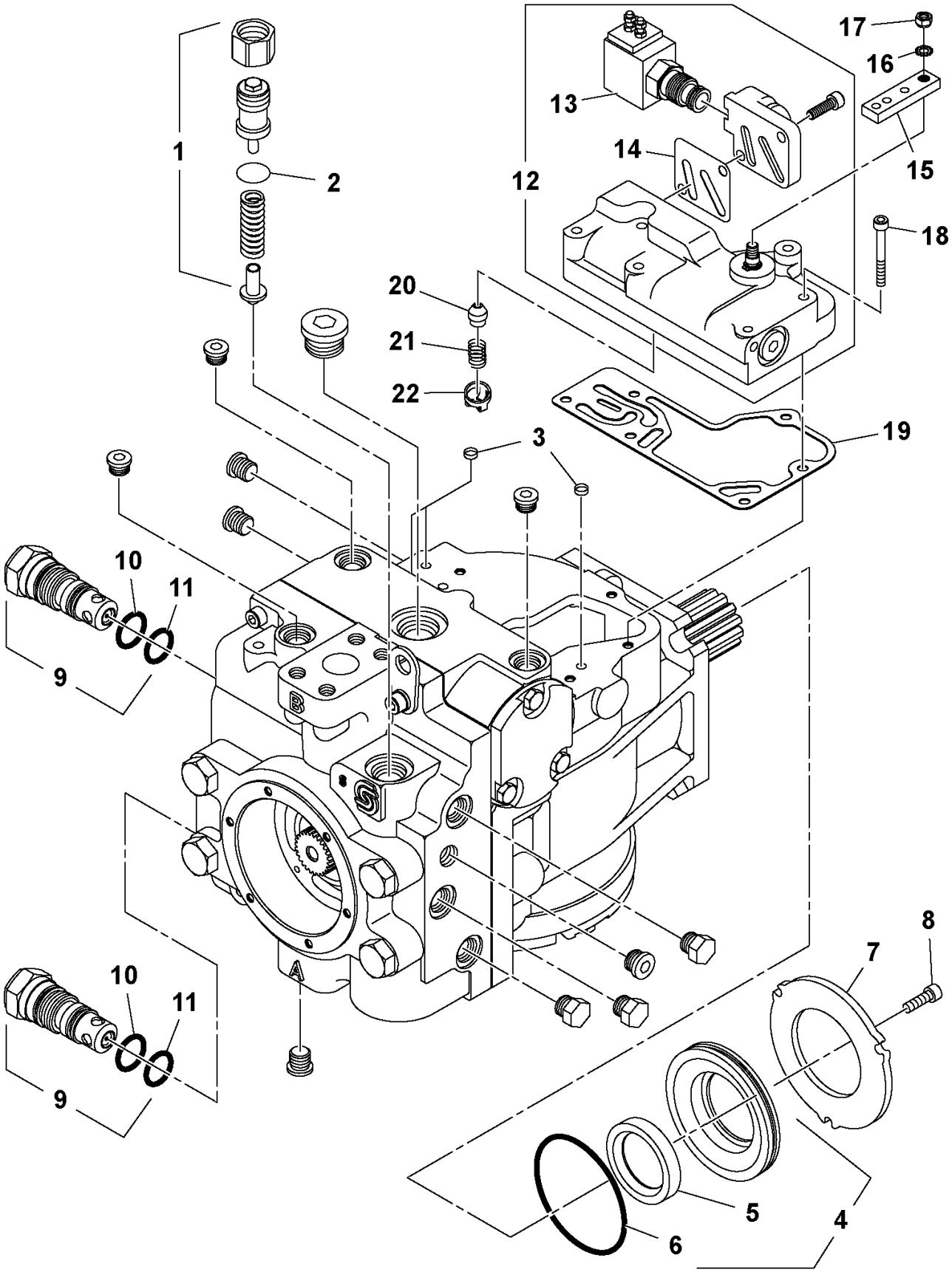

Propulsion Pump

POS	PART NUMBER	QTY	PART NAME	NOTES
23	RM 59933622	1	Plug	
24	RM 59698811	1	O-ring	
25	RM 59034470	1	Plug	
26	RM 59360941	1	O-ring	
27	RM 58941105	1	Shaft	
28	RM 59369637	1	Pin	
29	RM 13248026	1	Pump shaft	
30	RM 59360487	1	Key	
31	RM 59028498	1	Pump Cover	
32	RM 59360354	1	Bushing	
33	RM 59360545	1	O-ring	
34	RM 59360495	1	Retaining Plate	
35	RM 59336123	6	Retaining Plate	
50	RM 59360354	1	Bushing	
51	RM 59369603	1	Bearing	
52	RM 59369561	1	Gasket	
53	RM 59360750	2	Non-return valve	
54	RM 59369751	2	Plug	

Propulsion Pump

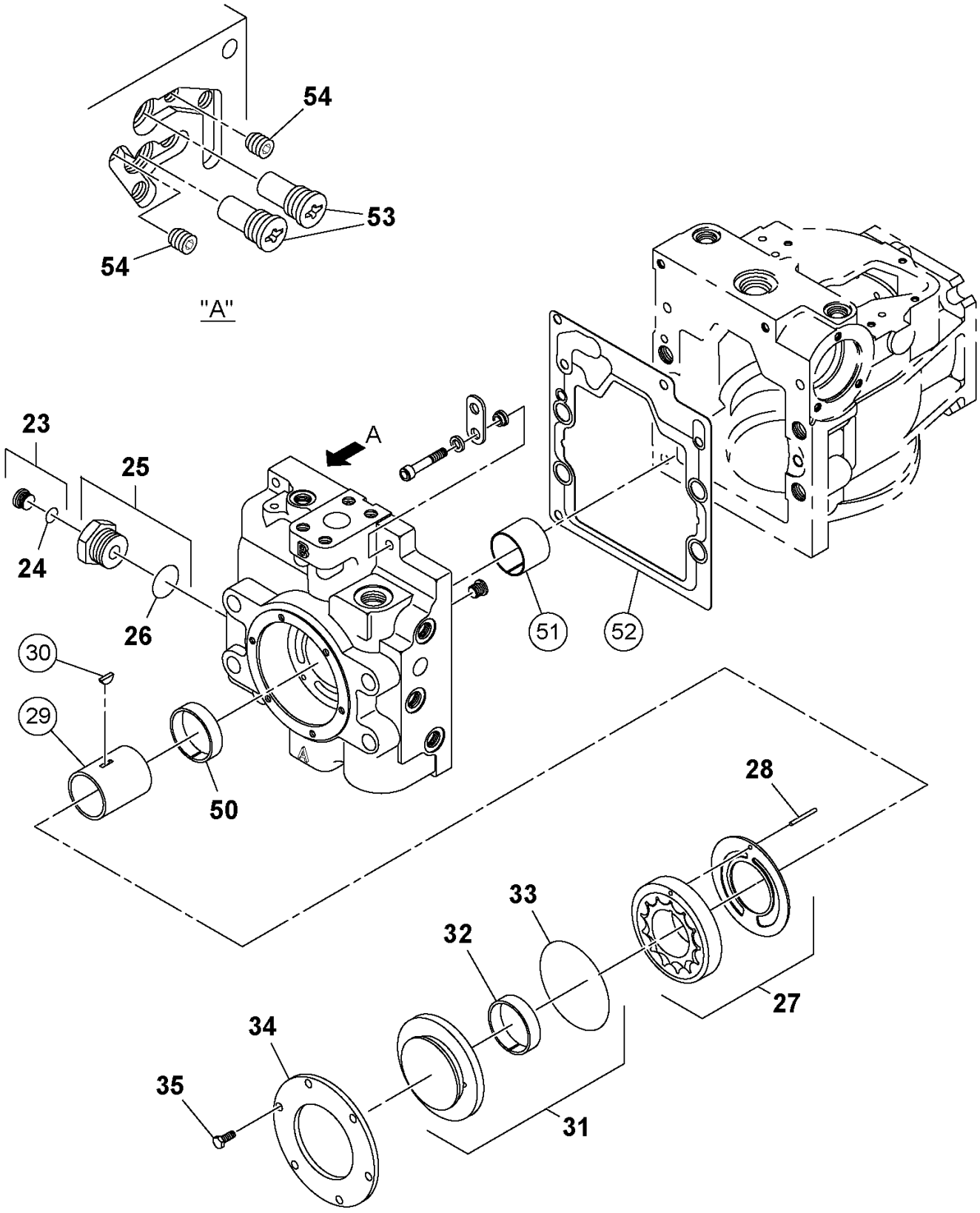

Propulsion Pump

POS	PART NUMBER	QTY	PART NAME	NOTES
36	RM 58763491	1	Kit	
37	RM 59360321	3	Screw	
38	RM 58769209	1	O-ring	
39	RM 59369454	1	O-ring	
40	RM 59369462	1	Bearing	
41	RM 59369470	1	Retaining ring	
42	RM 58828492	1	Shaft	
43	RM 13228945	1	Piston Kit	
44	RM 59369413	2	O-ring	
45	RM 59369421	2	Piston ring	
46	RM 59369371	1	O-ring	
47	RM 13495940	1	Insert	
48	RM 59034447	1	Screw	
49	RM 59360115	1	Nut	

Propulsion Pump

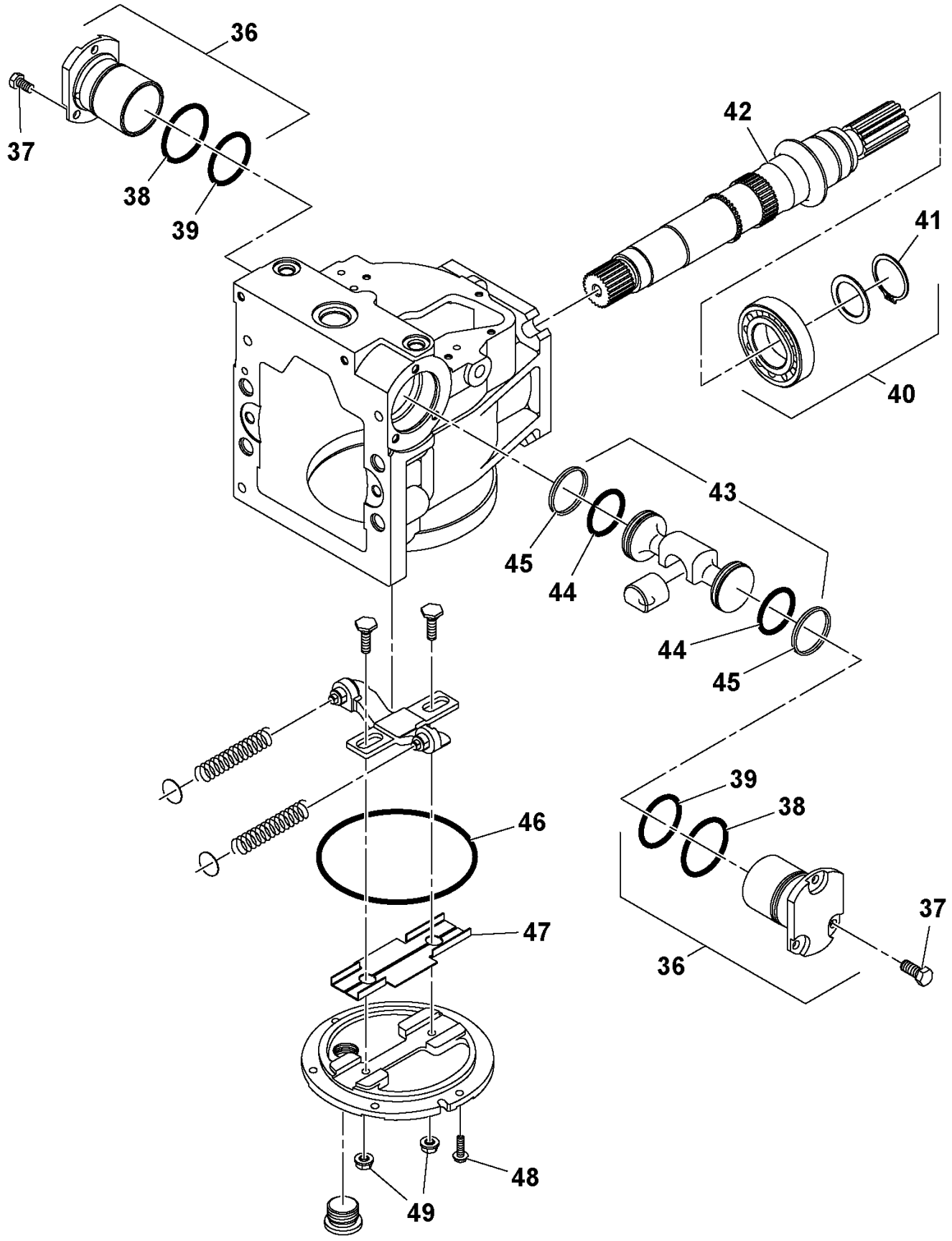

Loop Flushing Valve

POS	PART NUMBER	QTY	PART NAME	NOTES
1	RM 59040923	1	Relief valve	
3	RM 50278019	1	O-ring	
6	RM 59933622	3	Plug	INCL ONE ITEM 7
7	RM 59698811	5	O-ring	
8	RM 58799784	2	Plug	INCL ONE ITEM 7
9	RM 58799768	2	Spring	
10	RM 58799750	2	Guide Spring	
11	RM 59102913	1	Plug	

Loop Flushing Valve

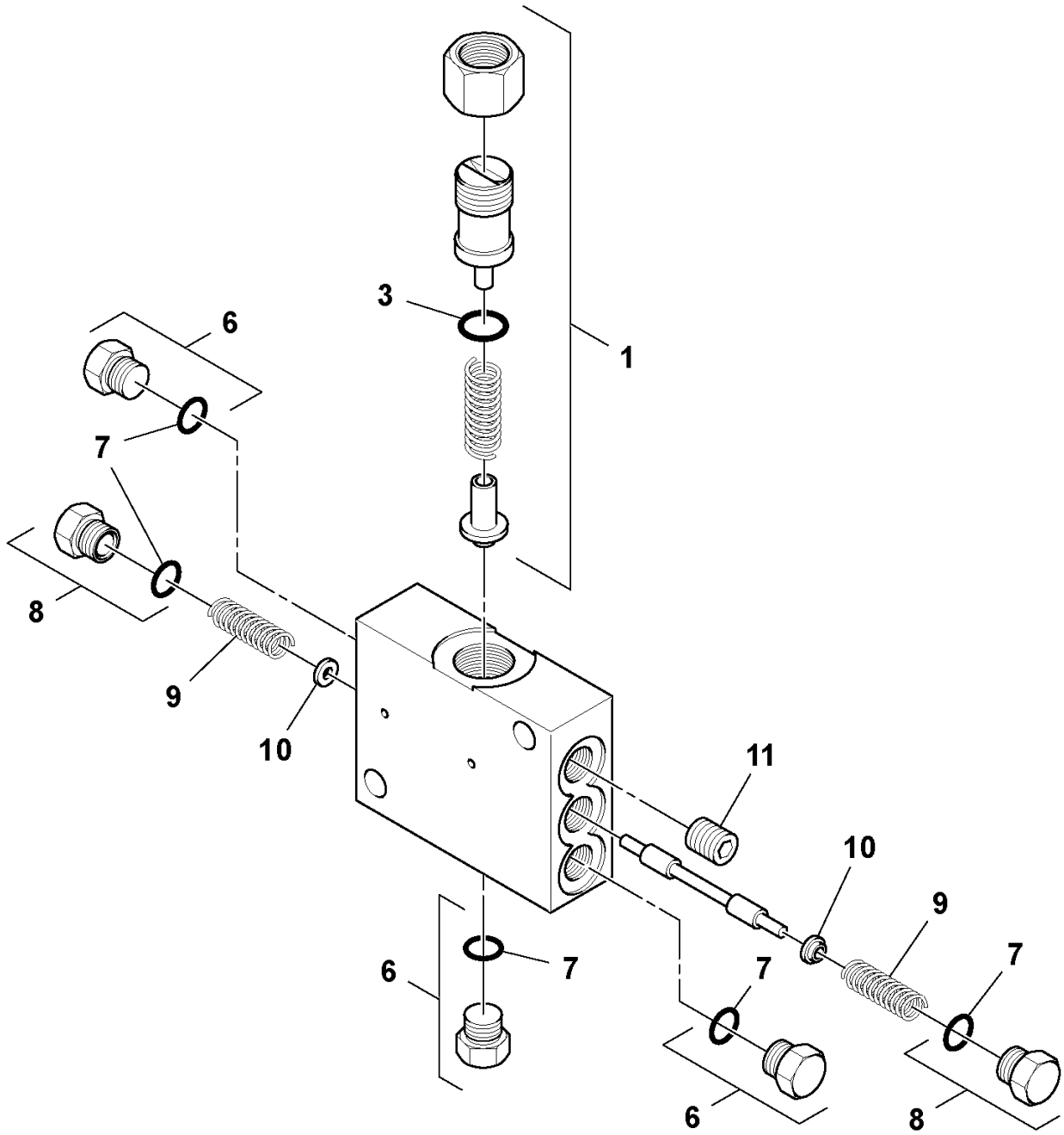

Steering Knob Installation

POS	PART NUMBER	QTY	PART NAME	NOTES
1	RM 59199141	1	Spinner	

Steering Knob Installation

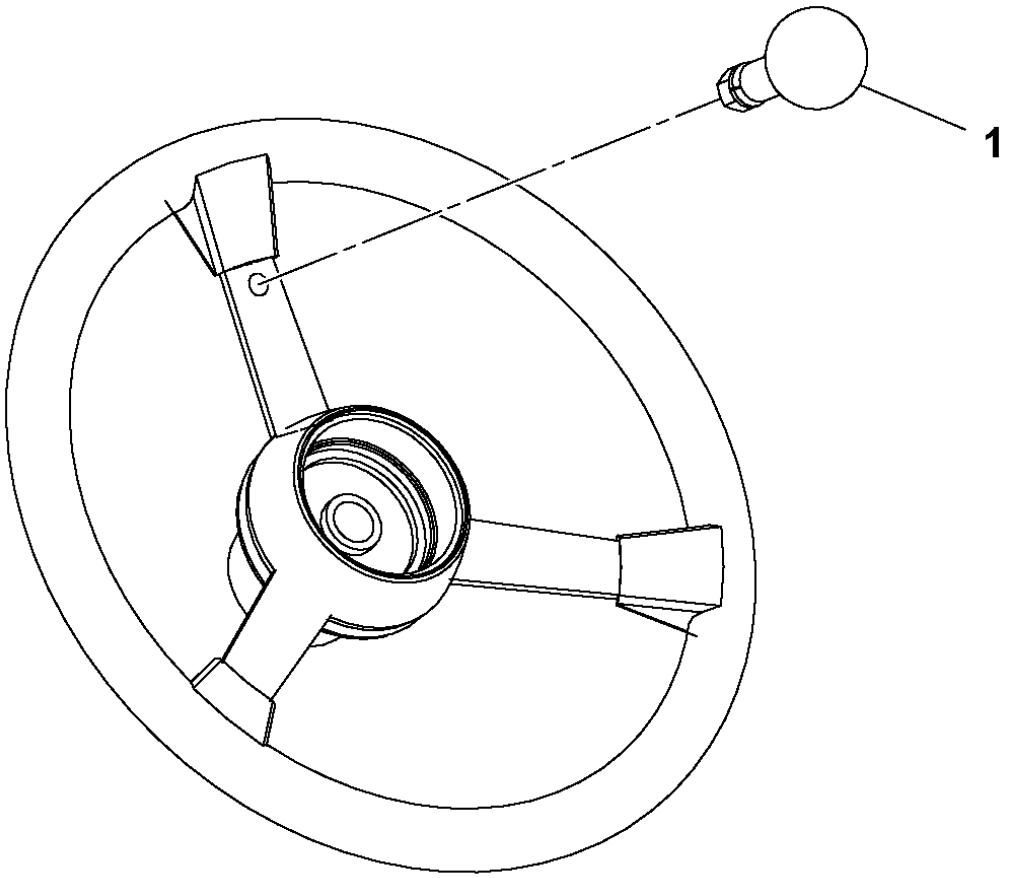

Steering Pump Kit

POS	PART NUMBER	QTY	PART NAME	NOTES
1	RM 43895085	1	Adapter	
2	RM 59389007	1	Gasket	
3	RM 57108284	1	Gasket	
4	RM 13356670	1	Adapter	
5	RM 13356662	1	Hose assembly	
6	RM 58859380	1	Gear Pump	
1	RM 58898677	1	Sealing Kit	
7	RM 59565036	2	Washer	
8	RM 96739610	2	Hexagon screw	
9	RM 95796090	1	Adapter	

Steering Pump Kit

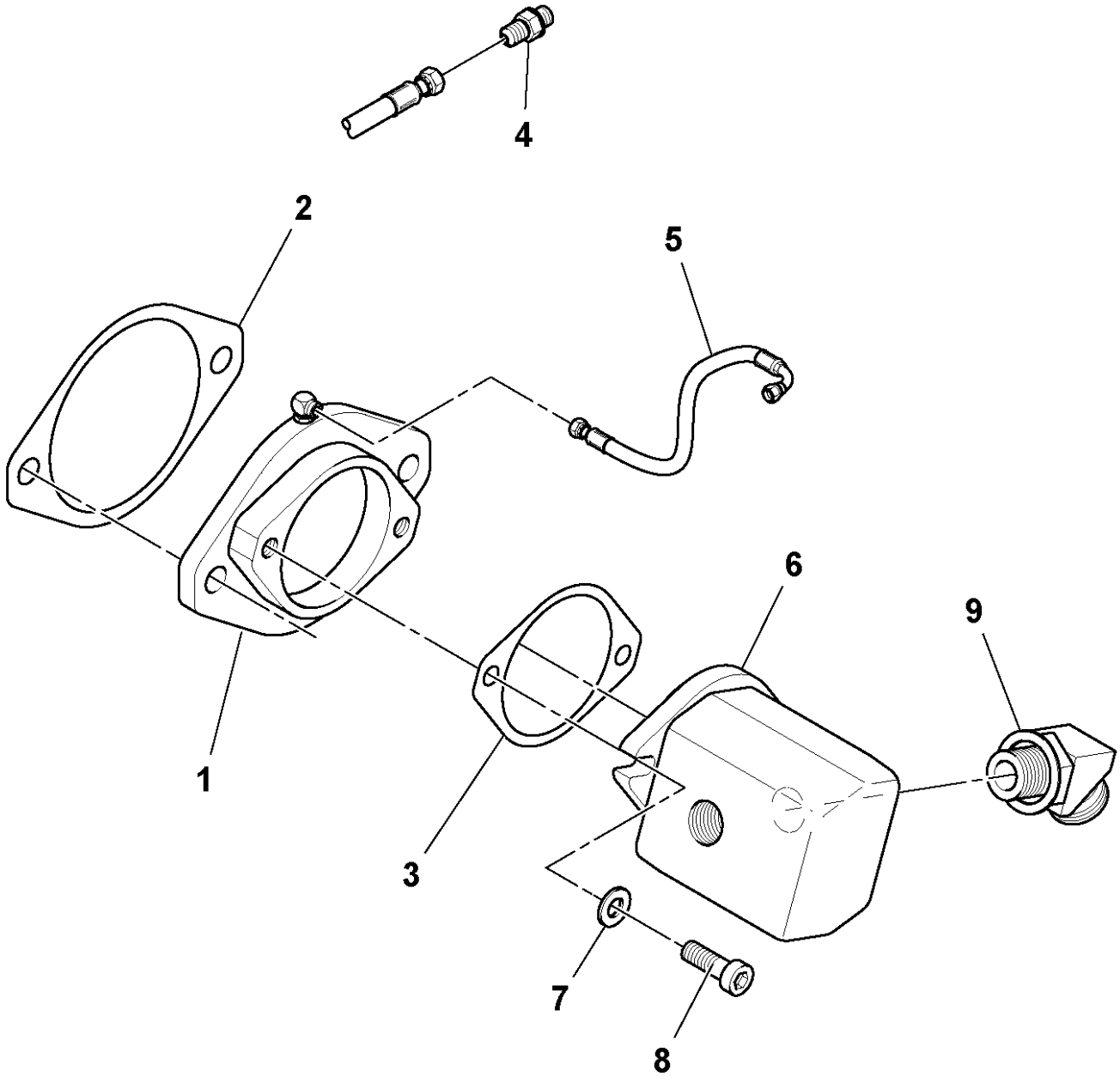

Steering Hoses Installation

POS	PART NUMBER	QTY	PART NAME	NOTES
1	RM 59216796	1	Hose assembly	
2	RM 59203356	1	Hose assembly	
4	RM 59708982	2	Hose assembly	
5	RM 18008045	1	Hose assembly	
6	RM 59203364	1	Hose assembly	
7	RM 59233007	1	Hose assembly	
9	RM 59232967	1	Hose assembly	
10	RM 59232827	1	Hose assembly	
12	RM 13107511	1	Hose assembly	

Steering Hoses Installation

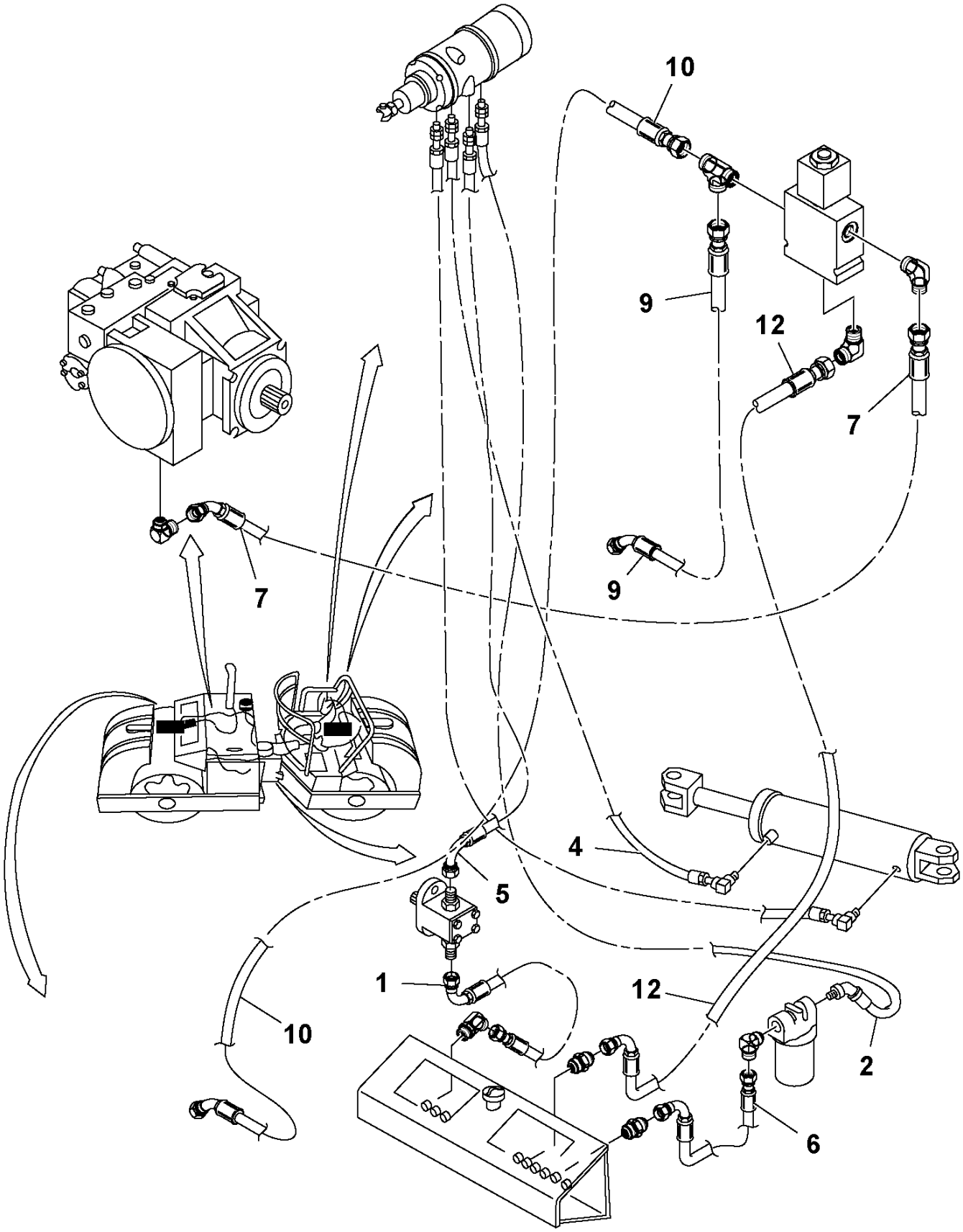

Steering Hoses Installation

POS	PART NUMBER	QTY	PART NAME	NOTES
13	RM 59586941	1	Guard	
14	RM 95302667	4	Hose Clamp	
16	RM 95424586	REQ	Cable Tie	

Steering Hoses Installation

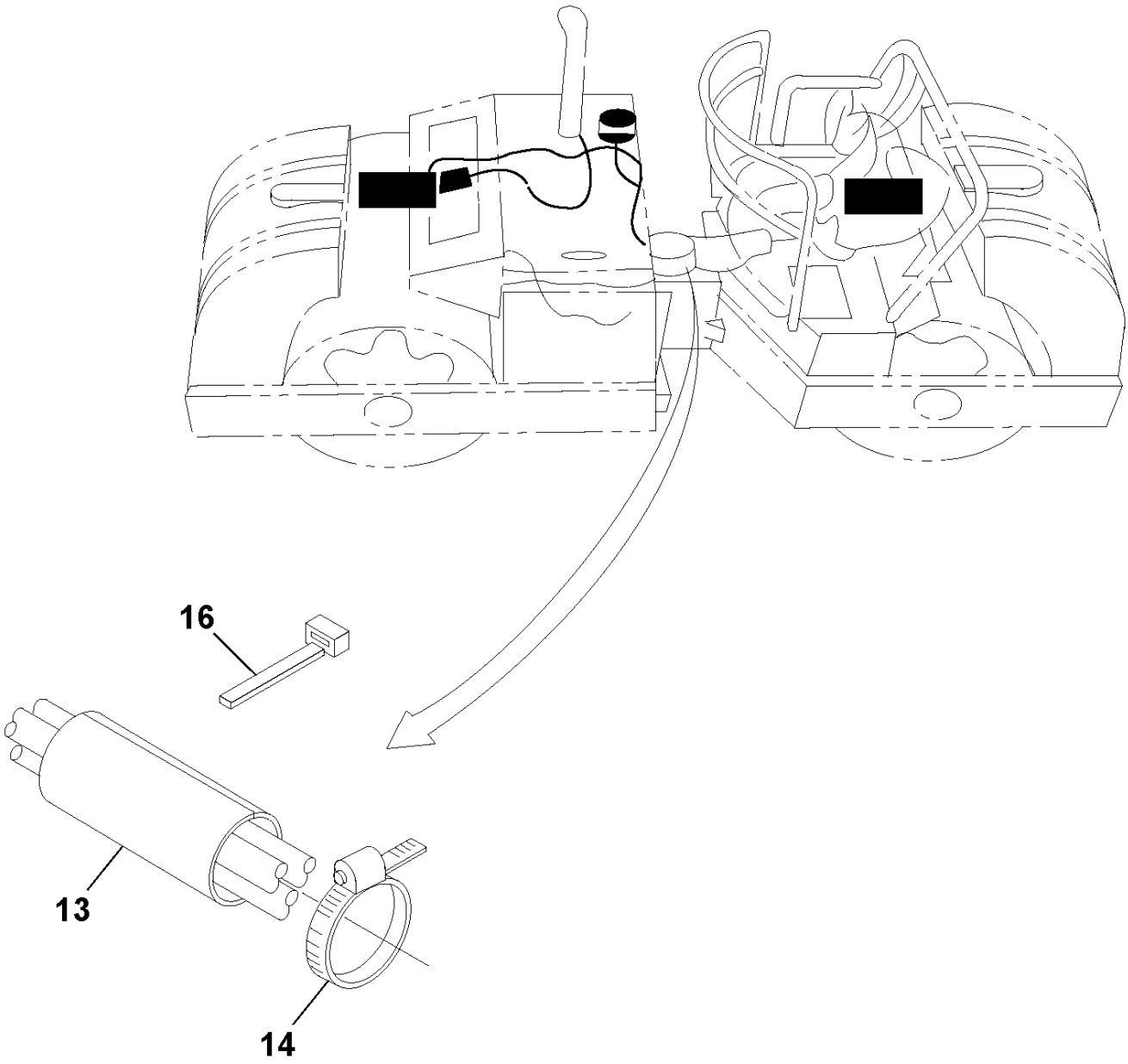

Frame and Swivel Installation

POS	PART NUMBER	QTY	PART NAME	NOTES
1	RM 13250410	1	Front frame	
2	RM 13216031	1	Rear frame	
3	RM 59054387	1	Swivel	
4	RM 13515382	1	Hydraulic cylinder	
	RM 13495098	1	Lock nut	
	RM 13495106	1	Sealing Kit	
5	RM 59689968	1	Bar	
6	RM 59683086	1	Plate	
7	RM 96738620	8	Plain Washer	
8	RM 59809947	1	Spacer	
9	RM 59689950	2	Shim	
10	RM 59689943	2	Shim	
11	RM 58977711	1	Pin	
12	RM 95922217	1	Washer	
13	RM 59003434	1	Nut	
14	RM 50268259	2	Bearing	
15	RM 58977703	2	Pin	
16	RM 95922175	2	Plain Washer	
17	RM 59003442	2	Nut	
18	RM 50268242	2	Bearing	
19	RM 59043190	2	Sealing	
20	RM 59043182	2	Sealing	
21	RM 95208971	5	Fitting	
22	RM 50270248	5	Cap	
23	RM 95920286	1	Hexagon screw	
24	RM 95923207	1	Lock nut	
25	RM 59978858	1	Fuel Filler Cap	
26	RM 50273945	2	Sealing	
27	RM 59683805	2	Pivot Pin	
28	RM 95223384	4	Circlip	
29	RM 50273986	2	Bearing	
30	RM 95303335	2	Elbow	
31	RM 96726658	8	Hexagon screw	
32	RM 50268309	1	Plug	
33	RM 59324392	1	Filter	
	RM 58877515	1	Gasket	
34	RM 59798884	2	Rubber Washer	
35	RM 58809096	2	Bar	
36	RM 96741046	4	Plain Washer	
37	RM 96701917	4	Hexagon screw	
38	RM 59590182	1	Pin	

Frame and Swivel Installation

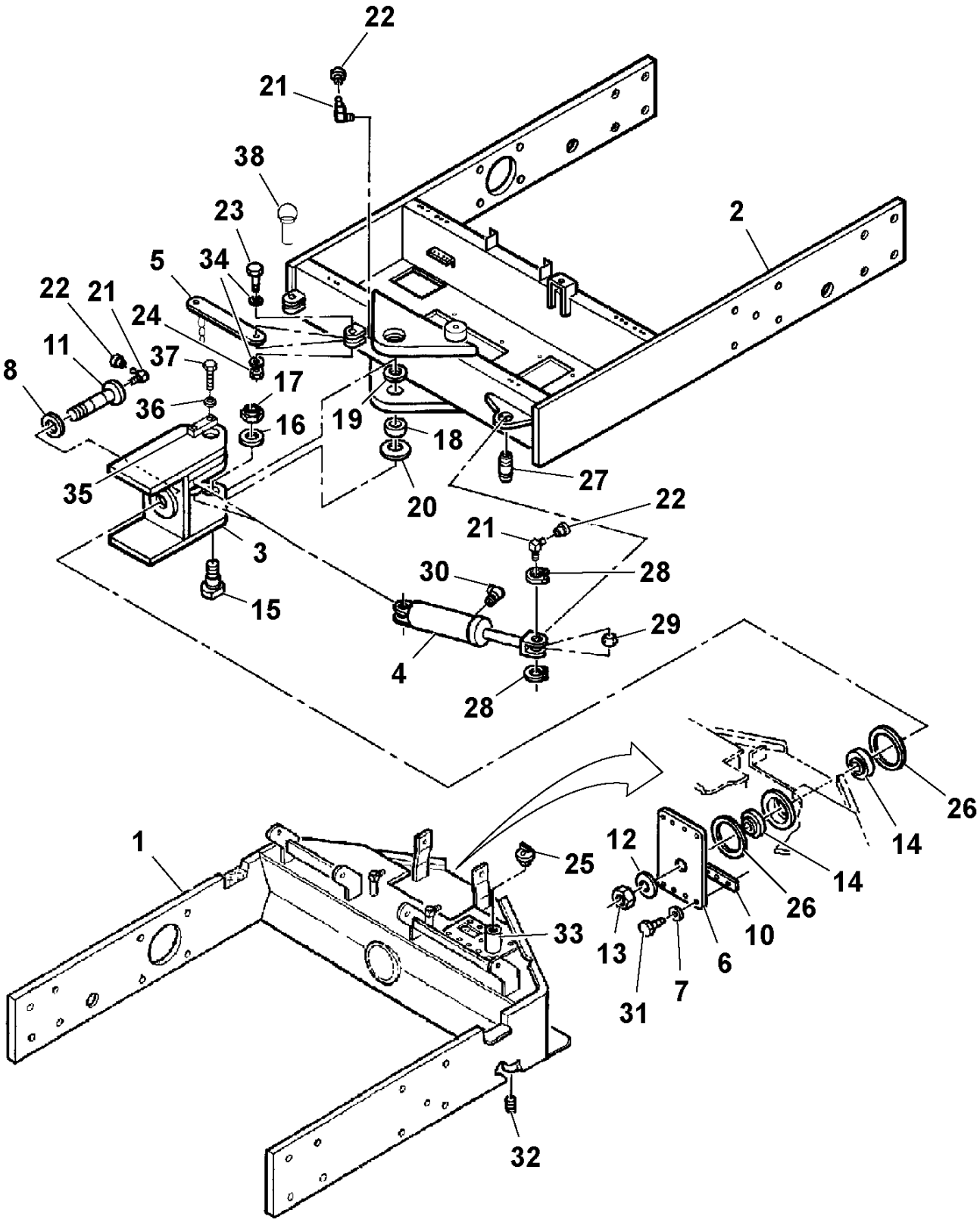

Console Bearing Pack Assembly

POS	PART NUMBER	QTY	PART NAME	NOTES
1	RM 59875013	1	Base Plate	
2	RM 59028332	1	Inner Race	
3	RM 59480889	1	Inner Race	
4	RM 59800854	1	Bearing Arrangement	
5	RM 59875047	1	Bearing	
6	RM 59038182	1	Closure	
7	RM 59868778	1	V-ring	
8	RM 95920377	2	Hexagon screw	
9	RM 95922373	6	Plain Washer	
10	RM 95919254	6	Hexagon screw	
11	RM 95048088	2	Nipple	
12	RM 95680880	2	Adapter	

Console Bearing Pack Assembly

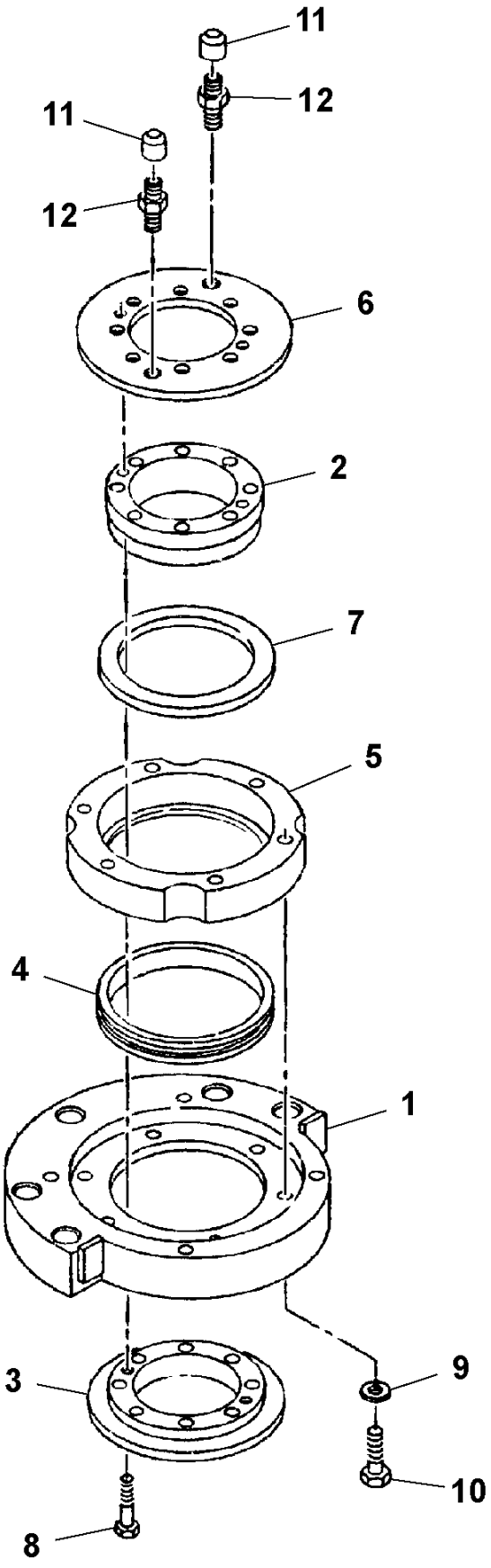

Drum Installation

POS	PART NUMBER	QTY	PART NAME	NOTES
1		1	Drum	DD-90, REAR
		1	Drum	DD-90HF, REAR
2		1	Drum	DD-90, FRONT
		1	Drum	DD-90HF, FRONT
3	RM 59374686	2	Shim	
4	RM 59374694	2	Shim	
5	RM 59396531	2	Shim	
6	RM 95920294	4	Hexagon screw	
8	RM 59327916	8	Hexagon Nut	
9	RM 59565077	8	Washer	
10	RM 59647727	2	Shim	
11	RM 59647735	2	Shim	
12	RM 59647743	2	Shim	

Drum Installation

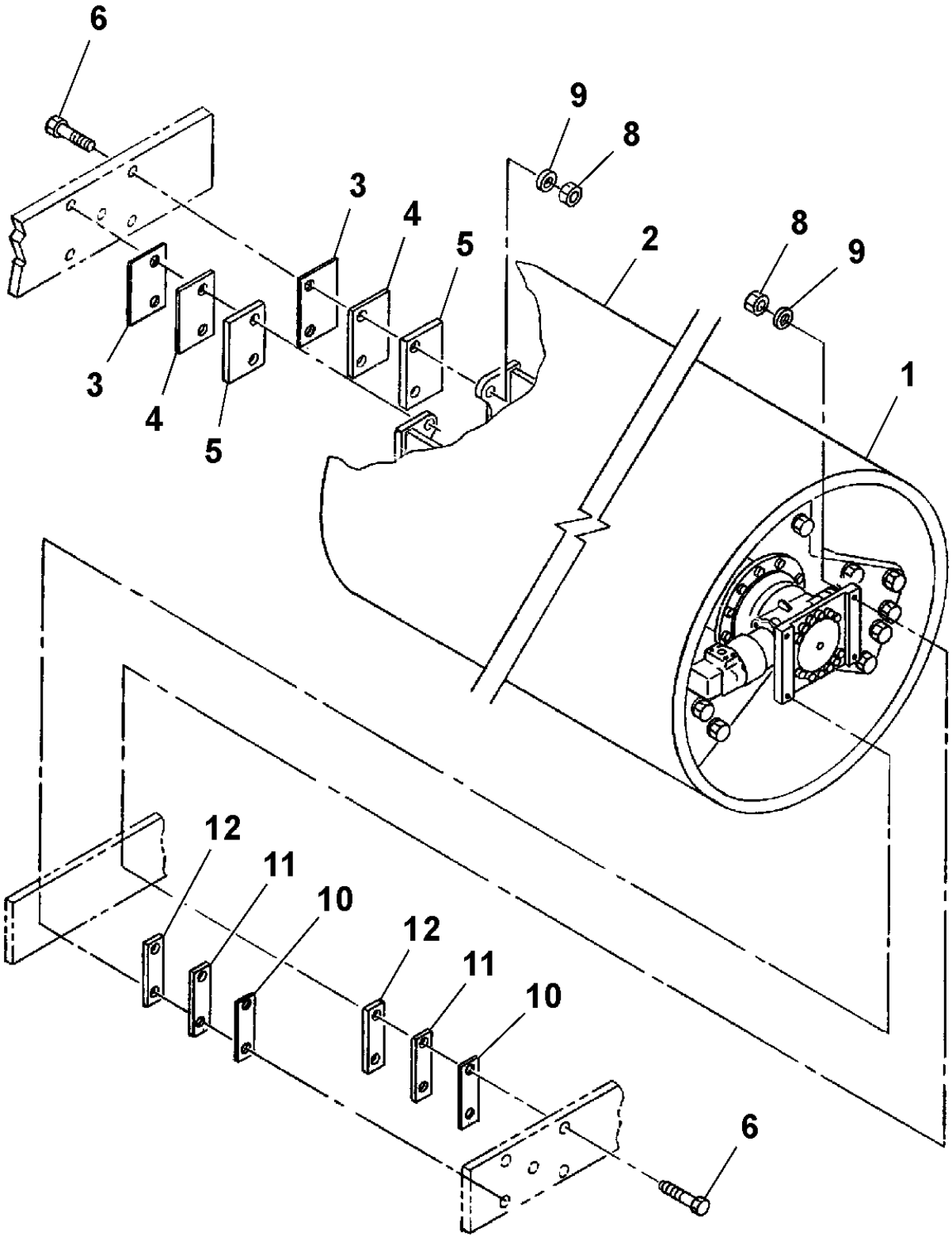

Drum Installation

POS	PART NUMBER	QTY	PART NAME	NOTES
1		1	Drum	DD-90/DD-90HF, REAR
2		1	Drum	DD-90/DD-90HF, FRONT
3	RM 59374686	4	Shim	
4	RM 59374694	4	Shim	
5	RM 59396531	4	Shim	
6	RM 95920294	16	Hexagon screw	
8	RM 59327916	16	Hexagon Nut	
9	RM 59565077	16	Washer	
10	RM 59647727	4	Shim	
11	RM 59647735	4	Shim	
12	RM 59647743	4	Shim	

Drum Installation

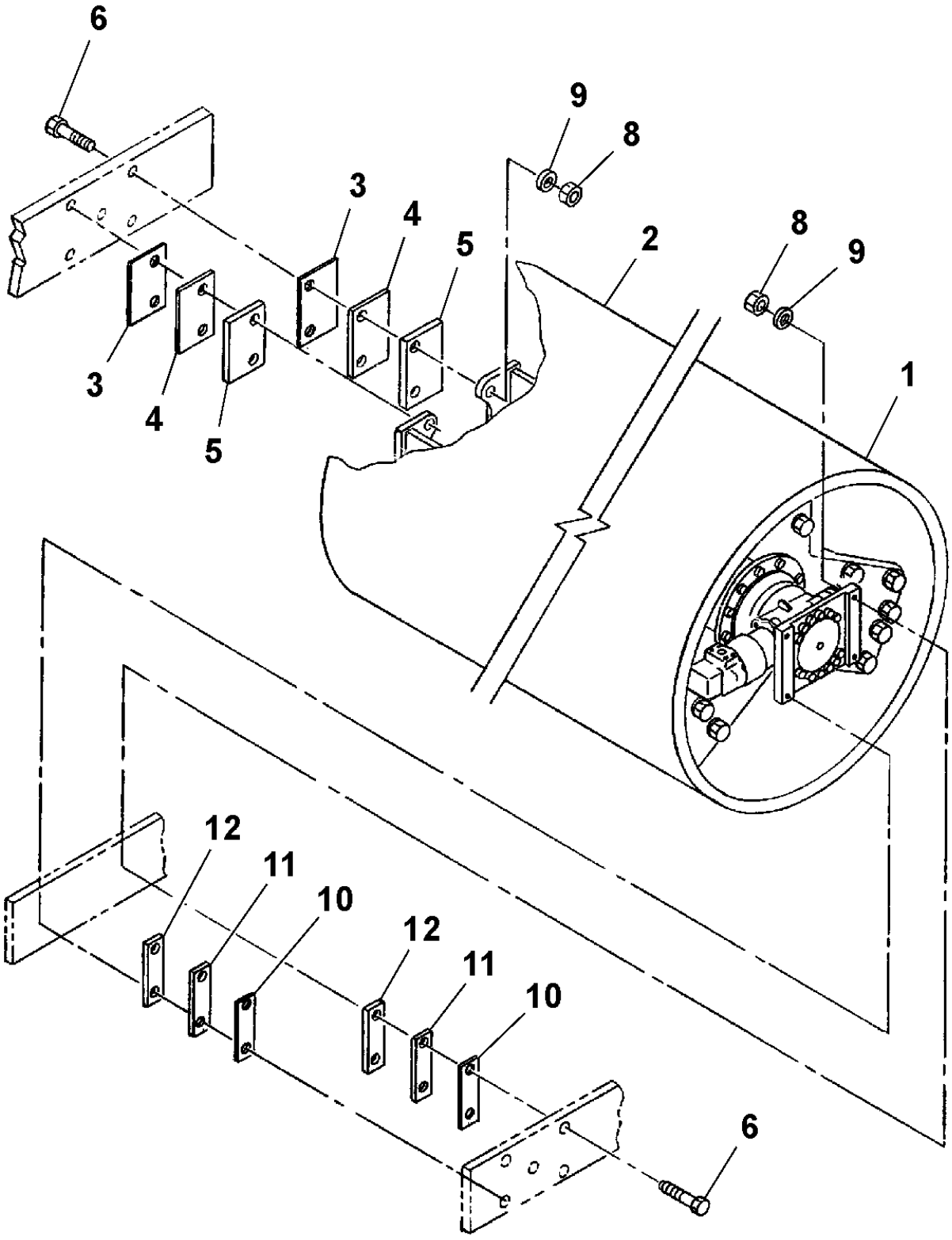

Drum Installation

POS	PART NUMBER	QTY	PART NAME	NOTES
1		1	Drum	DD-90/DD-90HF, REAR
2		1	Drum	DD-90/DD-90HF, FRONT
3	RM 59374686	4	Shim	
4	RM 59374694	4	Shim	
5	RM 59396531	4	Shim	
6	RM 95920294	16	Hexagon screw	
8	RM 59327916	16	Hexagon Nut	
9	RM 59565077	16	Washer	
10	RM 59647727	4	Shim	
11	RM 59647735	4	Shim	
12	RM 59647743	4	Shim	

Drum Installation

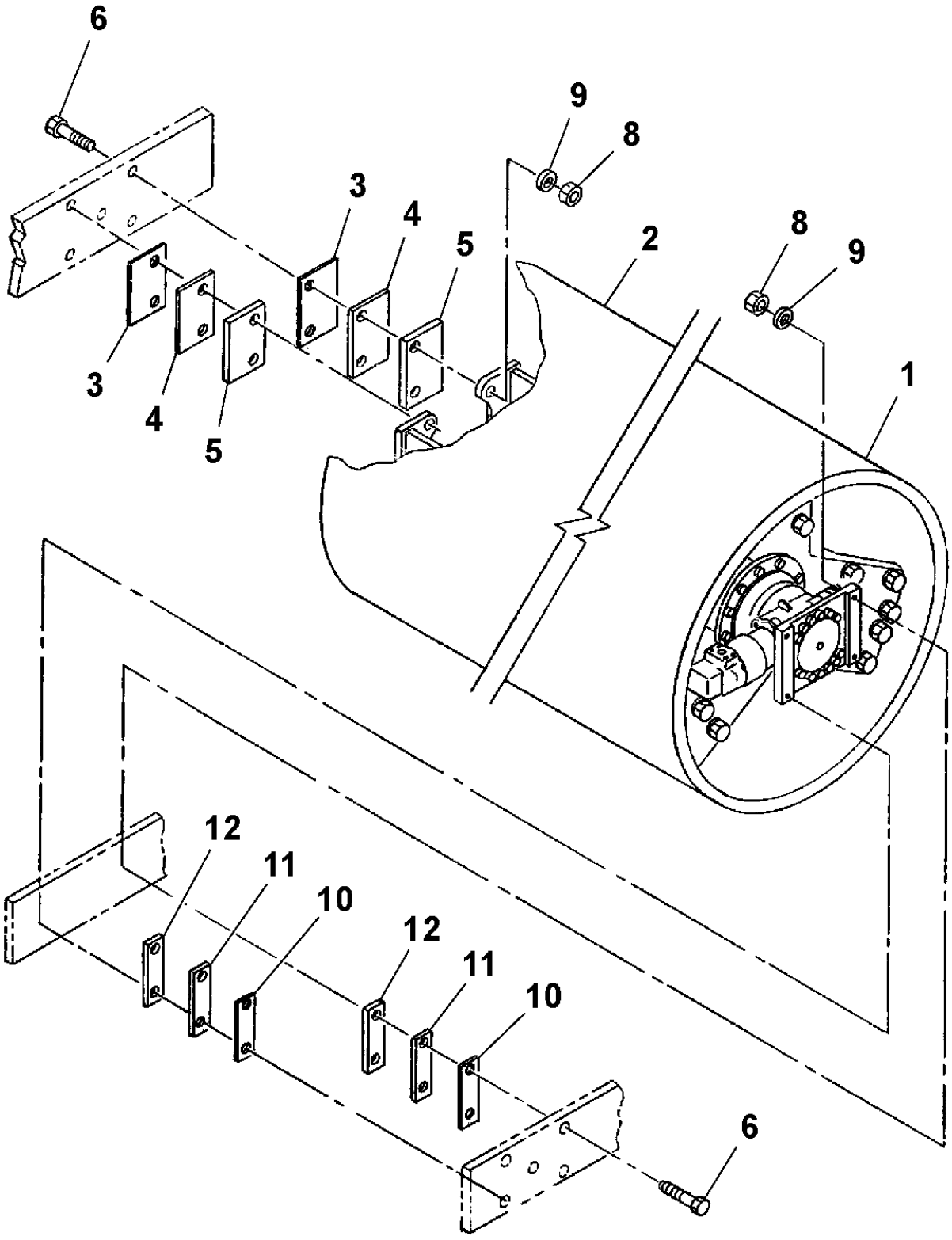

Front/Rear Drum Assembly

POS	PART NUMBER	QTY	PART NAME	NOTES
3		1	Carrier and Spindle	
4		1	Carrier	
6	RM 59600593	2	Tube Plug	
7	RM 59082875	1	Bearing Cover	
10	RM 58880360	2	Bearing	
18	RM 95270575	3	Hex. Socket Screw	
19	RM 59650648	12	Stud	
20	RM 58994625	12	Wheel nut	
21	RM 95989026	1	O-ring	
22	RM 95989059	2	O-ring	
23	RM 95454914	1	Retaining ring	
24	RM 59622217	1	Gasket	
25	RM 95335386	9	Hexagon screw	
26	RM 59544213	9	Washer	
27		1	Vibration Motor	DD-90, S/N 172679-
		1	Vibration Motor	DD-90, S/N -172678
28	RM 95919569	2	Hexagon screw	
29	RM 59444463	1	Shaft	
33	RM 95213294	1	Locking Pin	
37	RM 13480801	1	Drive Sleeve	
47	RM 95988739	1	O-ring	
48	RM 59957134	2	Washer	

Front/Rear Drum Assembly

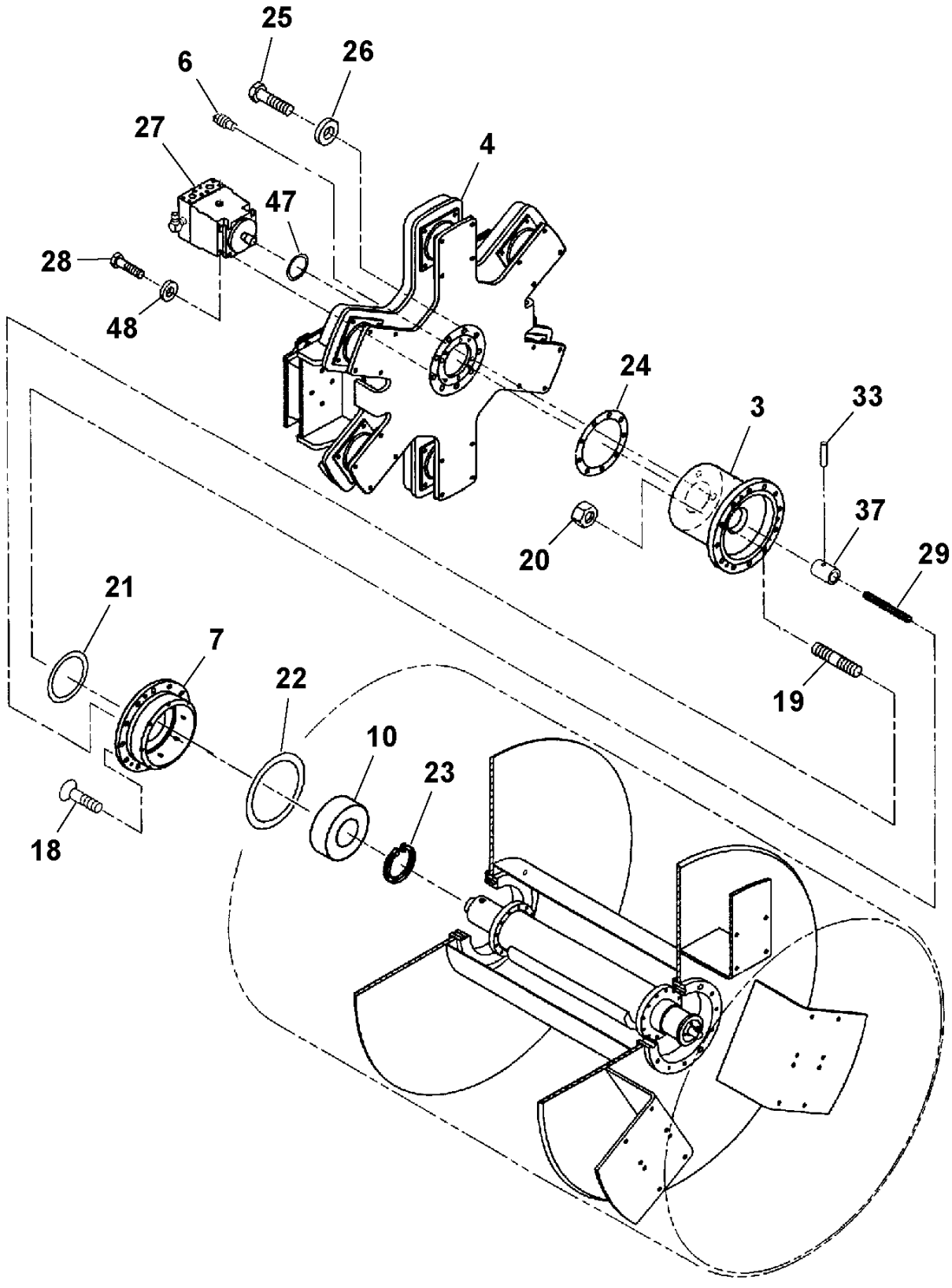

Front/Rear Drum Assembly

POS	PART NUMBER	QTY	PART NAME	NOTES
3		1	Carrier and Spindle	
4		1	Carrier	
6	RM 59600593	2	Tube Plug	
7	RM 59082875	1	Bearing Cover	
10	RM 59105072	2	Bearing	
18	RM 95270575	3	Hex. Socket Screw	
19	RM 59650648	12	Stud	
20	RM 58994625	12	Wheel nut	
21	RM 95989026	1	O-ring	
22	RM 95989059	2	O-ring	
23	RM 95454914	1	Retaining ring	
24	RM 59622217	1	Gasket	
25	RM 95335386	9	Hexagon screw	
26	RM 59544213	9	Washer	
27		1	Vibration Motor	DD-90HF
28	RM 95919569	2	Hexagon screw	
29	RM 59444463	1	Shaft	
33	RM 95213294	1	Locking Pin	
37	RM 13480801	1	Drive Sleeve	
47	RM 95988739	1	O-ring	
48	RM 59957134	2	Washer	

Front/Rear Drum Assembly

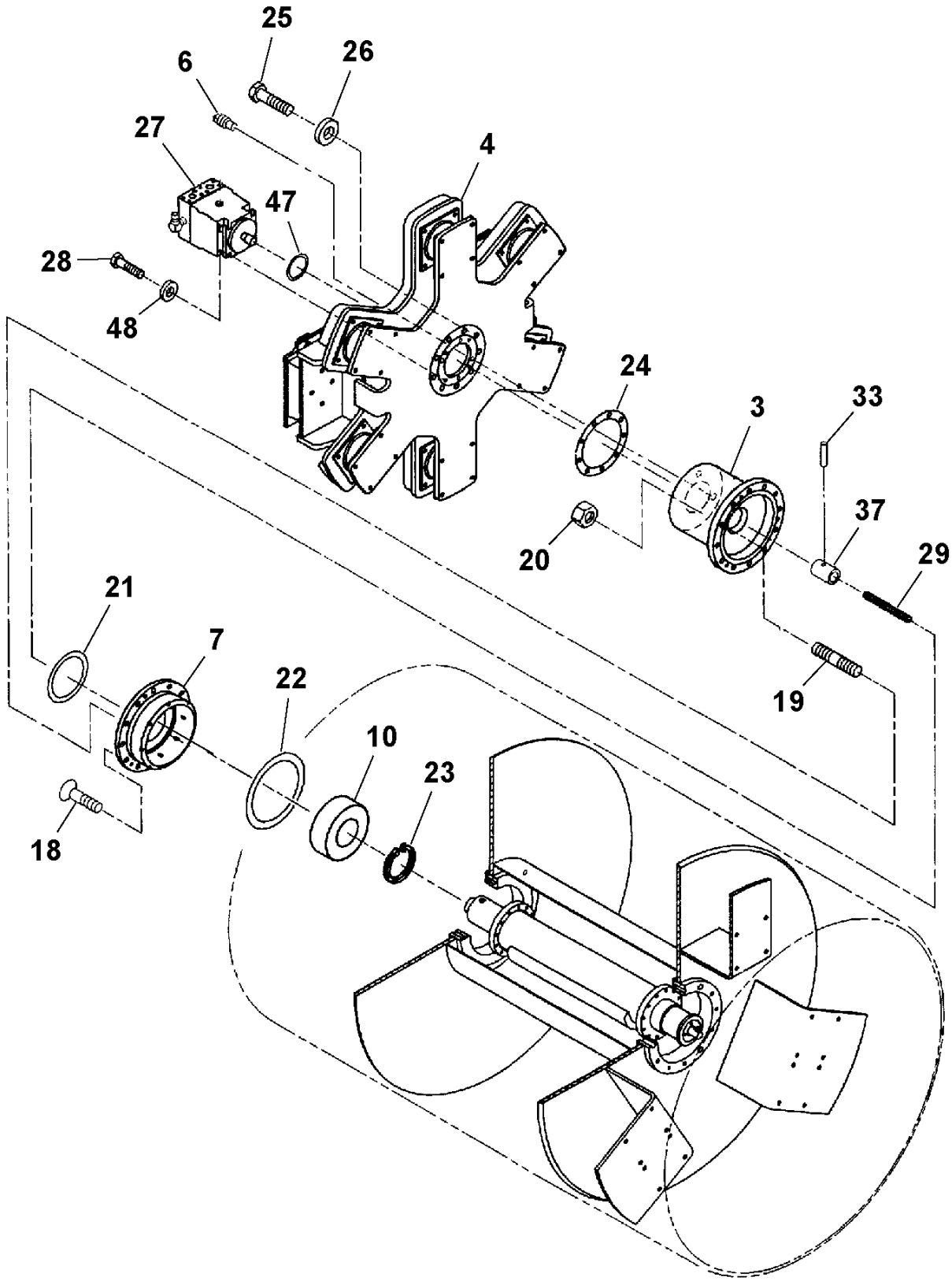

Front/Rear Drum Assembly

POS	PART NUMBER	QTY	PART NAME	NOTES
1	RM 59166694	1	Drum	
2		1	Eccentric Shaft	
5		1	Drum Drive	
6	RM 59600593	2	Tube Plug	
8	RM 59209361	1	Bearing Housing	
9	RM 59277178	1	Bearing Cover	
10	RM 58880360	2	Bearing	
12		1	Handwheel	
13	RM 59298331	1	Indicator	
14	RM 59900696	6	Rubber Damper	
15	RM 59090712	1	Sealing ring	
16	RM 58796038	3	Stud	
17	RM 59582239	3	Wheel nut	
22	RM 95989059	2	O-ring	
30	RM 59565044	6	Washer	
31	RM 95373585	6	Hexagon screw	
32	RM 95738779	6	Hexagon screw	
34	RM 95988952	1	O-ring	
35	RM 54610696	1	Sealing ring	
40	RM 96702394	3	Hexagon screw	
41	RM 95428520	1	Retaining ring	
42	RM 95919585	48	Hexagon screw	
43	RM 95922399	96	Washer	
45	RM 95922902	48	Hexagon Nut	
46	RM 95531703	1	Key	
50	RM 59203802	1	Cover	S/N 169449 -

Front/Rear Drum Assembly

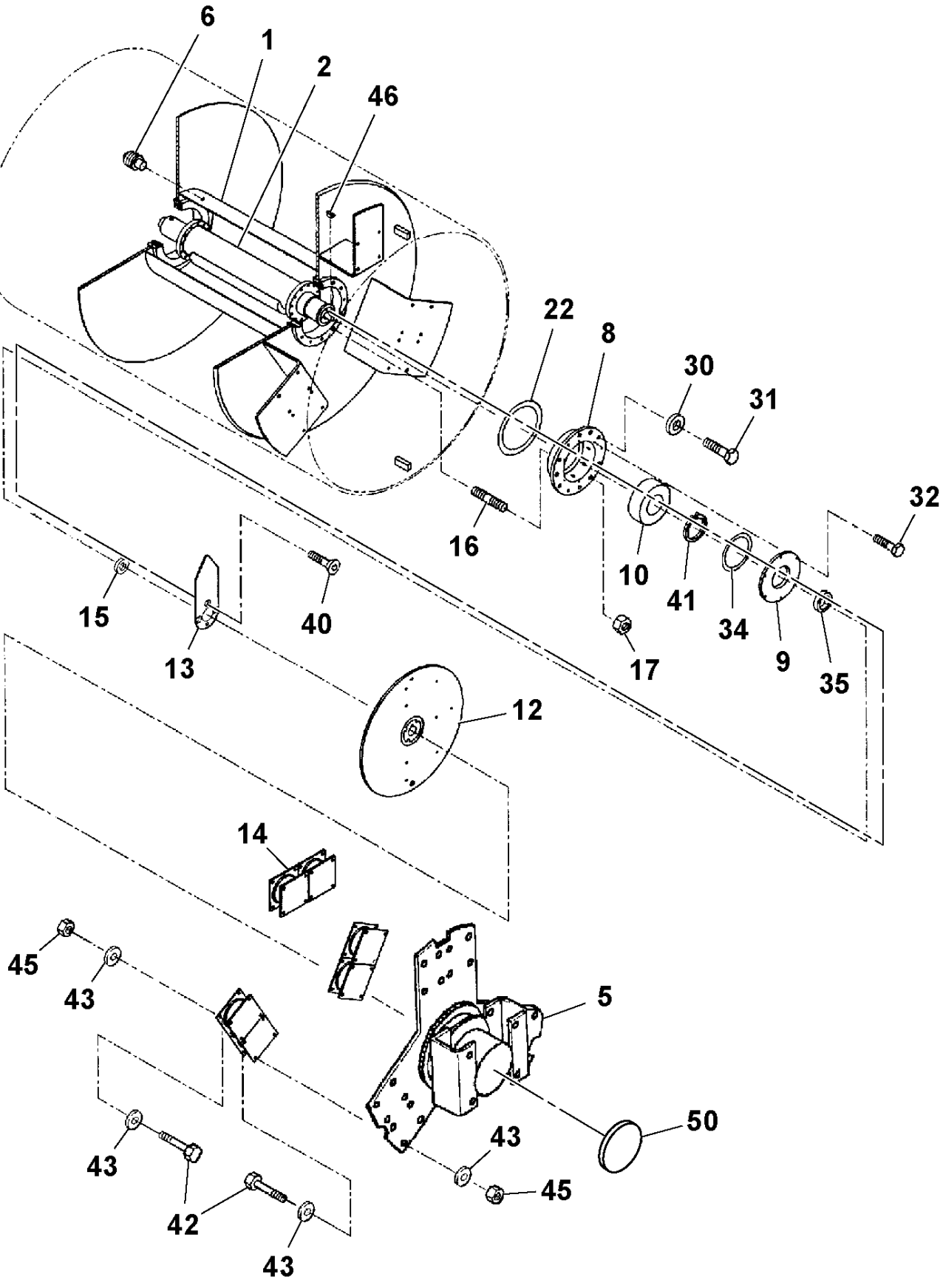

Front/Rear Drum Assembly

POS	PART NUMBER	QTY	PART NAME	NOTES
1	RM 59166710	1	Drum	
2		1	Eccentric Shaft	
5		1	Drum Drive	
6	RM 59600593	2	Tube Plug	
8	RM 59209361	1	Bearing Housing	
9	RM 59298794	1	Cup	
10	RM 59105072	2	Bearing	
12		1	Handwheel	
13	RM 59278291	1	Indicator	S/N 166458 -
	RM 59209304	1	Indicator	S/N - 166457
14	RM 59900696	6	Rubber Damper	
15	RM 59090712	1	Sealing ring	
16	RM 58796038	3	Stud	
17	RM 59582239	3	Wheel nut	
22	RM 95989059	2	O-ring	
30	RM 59565044	6	Washer	
31	RM 95373585	6	Hexagon screw	
32	RM 95738779	6	Hexagon screw	
34	RM 95988952	1	O-ring	
35	RM 54614995	1	Sealing ring	
40	RM 96704861	3	Hexagon screw	
41			-	
42	RM 95919585	48	Hexagon screw	
43	RM 95922399	96	Washer	
45	RM 95922902	48	Hexagon Nut	
46	RM 95531703	1	Key	
50	RM 59203802	1	Cover	S/N 169449 -

Front/Rear Drum Assembly

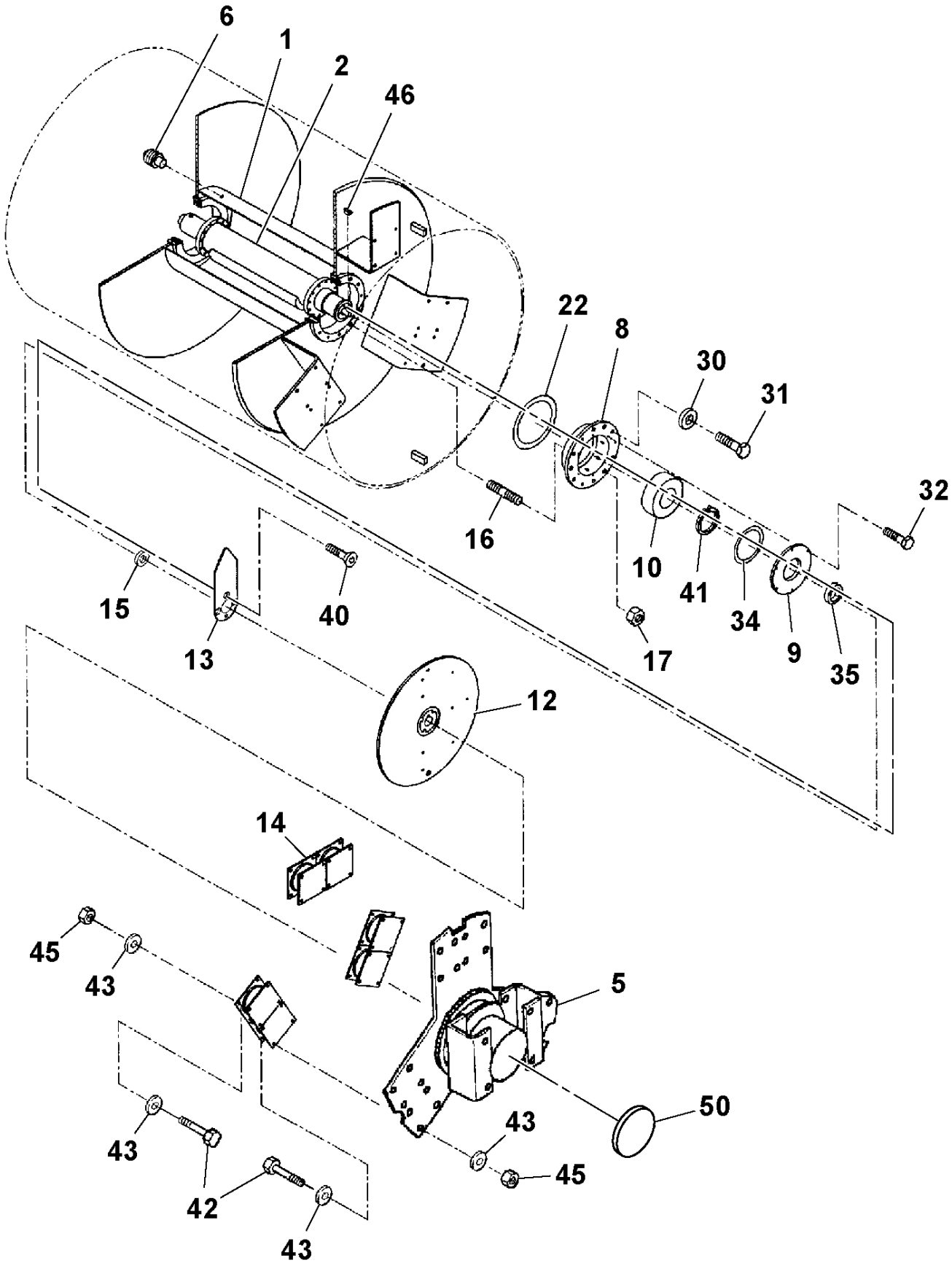

Front/Rear Drum Assembly

POS	PART NUMBER	QTY	PART NAME	NOTES
3		1	Carrier and Spindle	
4		1	Carrier	
6	RM 59600593	2	Tube Plug	
7	RM 59082875	1	Bearing Cover	
10	RM 59105072	2	Bearing	
18	RM 95270575	3	Hex. Socket Screw	
19	RM 59650648	12	Stud	
20	RM 58994625	12	Wheel nut	
21	RM 95989026	1	O-ring	
22	RM 95989059	2	O-ring	
23	RM 95454914	1	Retaining ring	
24	RM 59622217	1	Gasket	
25	RM 95335386	9	Hexagon screw	
26	RM 59544213	9	Washer	
27		1	Vibration Motor	DD-90HF
28	RM 95919569	2	Hexagon screw	
29	RM 59444463	1	Shaft	
33	RM 95213294	1	Locking Pin	
37	RM 13480801	1	Drive Sleeve	
47	RM 95988739	1	O-ring	
48	RM 59957134	2	Washer	

Front/Rear Drum Assembly

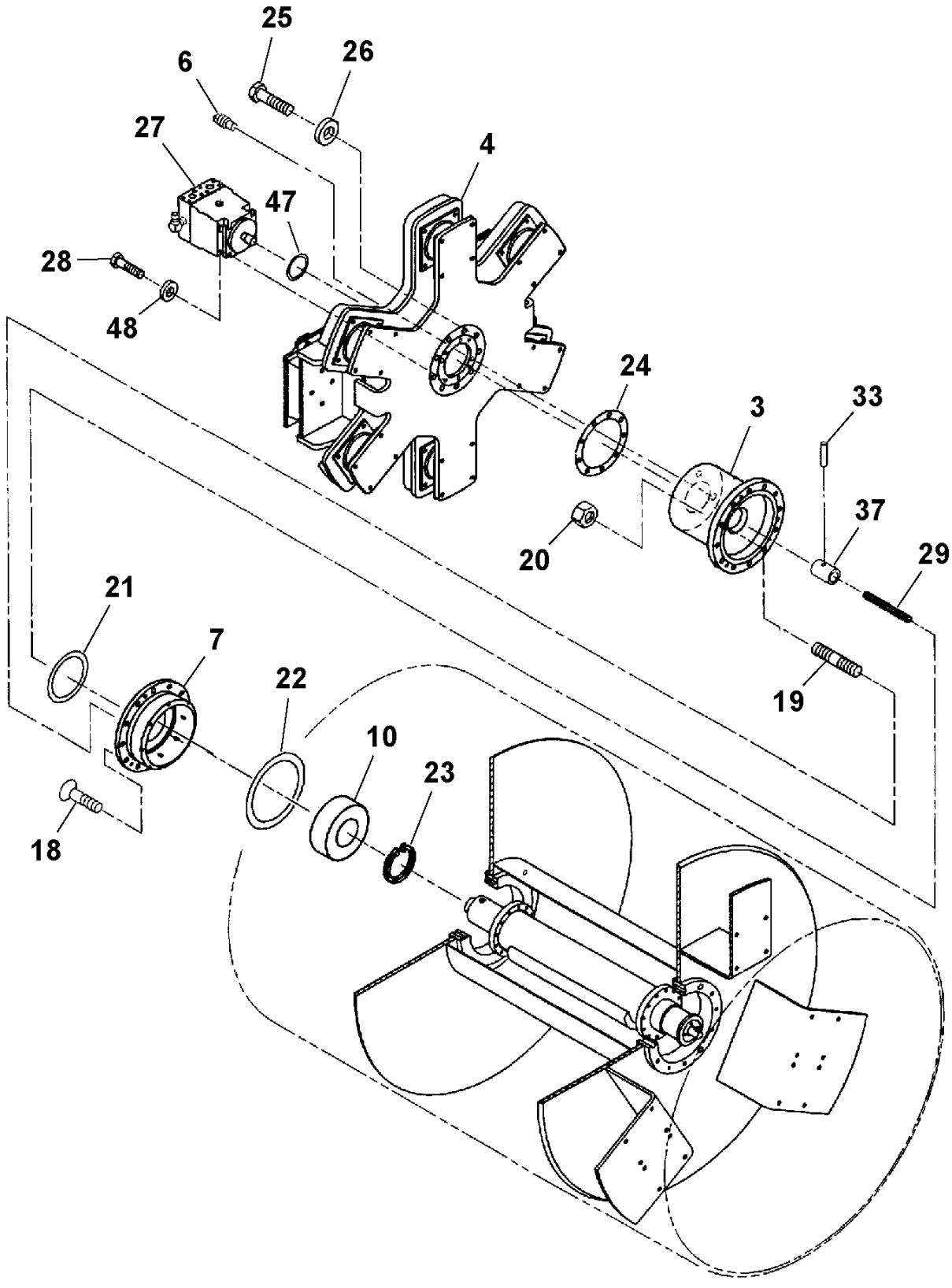

Front/Rear Drum Assembly

POS	PART NUMBER	QTY	PART NAME	NOTES
1	RM 59166710	1	Drum	
2		1	Eccentric Shaft	
5		1	Drum Drive	
6	RM 59600593	2	Tube Plug	
8	RM 59209361	1	Bearing Housing	
9	RM 59298794	1	Cup	
10	RM 59105072	2	Bearing	
12		1	Handwheel	
13	RM 59278291	1	Indicator	S/N 166458 -
	RM 59209304	1	Indicator	S/N - 166457
14	RM 59900696	6	Rubber Damper	
15	RM 59090712	1	Sealing ring	
16	RM 58796038	3	Stud	
17	RM 59582239	3	Wheel nut	
22	RM 95989059	2	O-ring	
30	RM 59565044	6	Washer	
31	RM 95373585	6	Hexagon screw	
32	RM 95738779	6	Hexagon screw	
34	RM 95988952	1	O-ring	
35	RM 54614995	1	Sealing ring	
40	RM 96704861	3	Hexagon screw	
41			-	
42	RM 95919585	48	Hexagon screw	
43	RM 95922399	96	Washer	
45	RM 95922902	48	Hexagon Nut	
46	RM 95531703	1	Key	
50	RM 59203802	1	Cover	S/N 169449 -

Front/Rear Drum Assembly

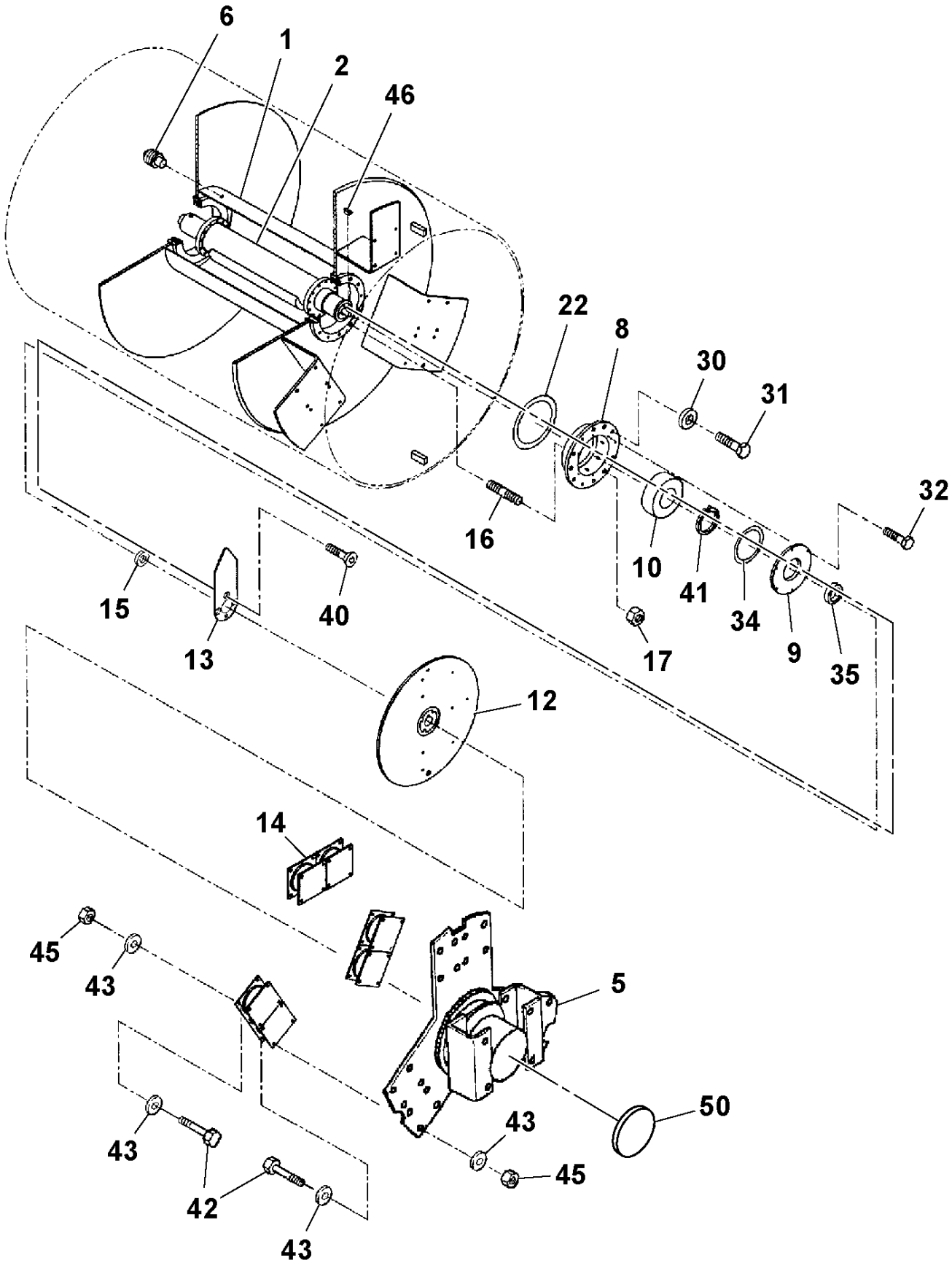

Front/Rear Drum Assembly

POS	PART NUMBER	QTY	PART NAME	NOTES
3		1	Carrier and Spindle	
4		1	Carrier	
6	RM 59600593	2	Tube Plug	
7	RM 59082875	1	Bearing Cover	
10	RM 58880360	2	Bearing	DD-90
	RM 59105072		Bearing	DD-90HF
18	RM 95270575	3	Hex. Socket Screw	
19	RM 59650648	12	Stud	
20	RM 58994625	12	Wheel nut	
21	RM 95989026	1	O-ring	
22	RM 95989059	2	O-ring	
23	RM 95454914	1	Retaining ring	
24	RM 59622217	1	Gasket	
25	RM 95920039	9	Hexagon screw	
26	RM 59544213	9	Washer	
27		1	Vibration Motor	DD-90, S/N - 172678
		1	Vibration Motor	DD-90HF
28	RM 95919569	2	Hexagon screw	
29	RM 59444463	1	Shaft	
33	RM 95213294	1	Locking Pin	
37	RM 59119057	1	Coupling Piece	
47	RM 95988739	1	O-ring	
48	RM 59957134	2	Washer	

Front/Rear Drum Assembly

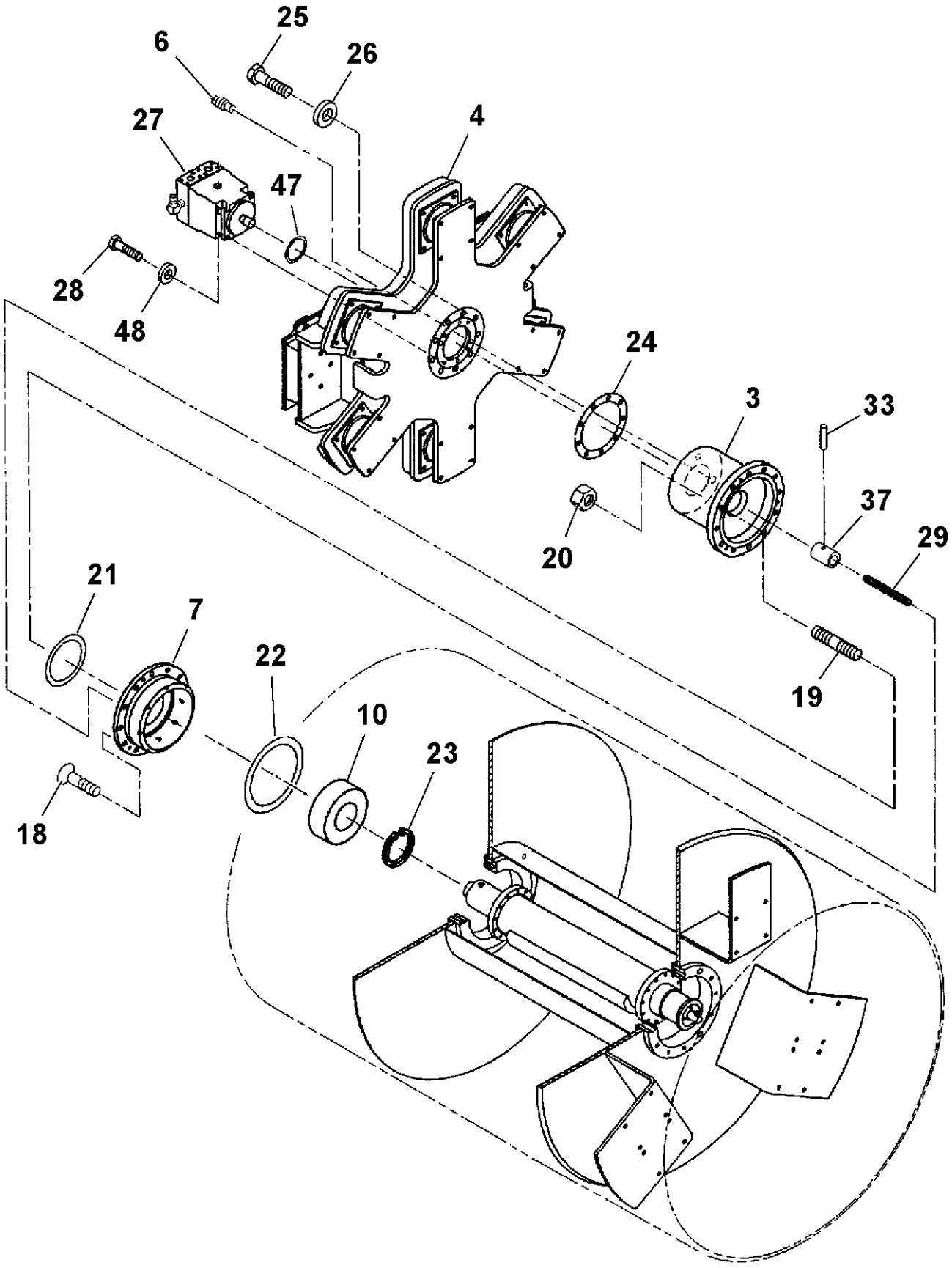

Front/Rear Drum Assembly

POS	PART NUMBER	QTY	PART NAME	NOTES
1	RM 59166694	1	Drum	DD-90
	RM 59166710	1	Drum	DD-90HF
2		1	Eccentric Shaft	DD-90
		1	Eccentric Shaft	DD-90HF
5		1	Drum Drive	
6	RM 59600593	2	Tube Plug	
8	RM 59209361	1	Bearing Housing	
9	RM 59082867	1	Bearing Cover	
10	RM 58880360	2	Bearing	DD-90
	RM 59105072	1	Bearing	DD-90HF
11	RM 59090704	1	Cap	
12		1	Handwheel	
13	RM 59298331	1	Indicator	
14	RM 59900696	6	Rubber Damper	
15	RM 59090712	1	Sealing ring	
16	RM 58796038	3	Stud	
17	RM 59582239	3	Wheel nut	
22	RM 95989059	2	O-ring	
30	RM 59565044	6	Washer	
31	RM 95373585	6	Hexagon screw	
32	RM 95738779	6	Hexagon screw	
34	RM 95988952	1	O-ring	
35	RM 54618525	1	Sealing ring	
36	RM 95988770	1	O-ring	
38	RM 95371555	1	Pin	
40	RM 96702394	3	Hexagon screw	
41	RM 95428520	1	Retaining ring	
42	RM 95919585	48	Hexagon screw	
43	RM 95922399	96	Washer	
45	RM 95922902	48	Hexagon Nut	
46	RM 95531703	1	Key	
49	RM 95922324	3	Plain Washer	
50			-	

Front/Rear Drum Assembly

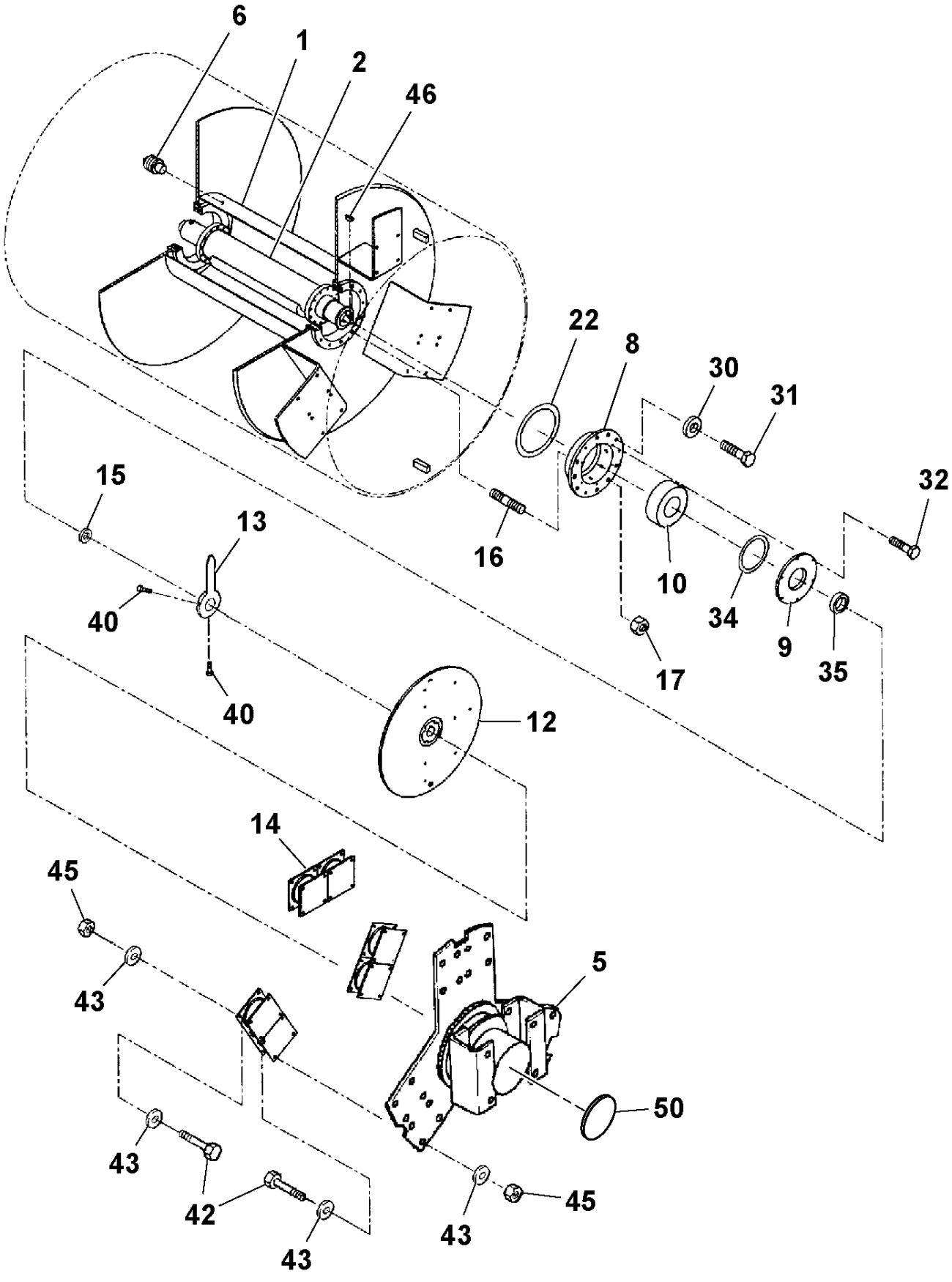

Eccentric Shaft Assembly

POS	PART NUMBER	QTY	PART NAME	NOTES
1	RM 59821736	1	Tube	
2	RM 59103507	1	Eccentric Shaft	
3	RM 59277962	1	Eccentric Wheel	
5	RM 59692319	2	Bearing	
6	RM 95223004	2	Retaining ring	
7	RM 58830662	24	Lock nut	
8	RM 59209312	1	Eccentric Shaft	
9	RM 59277921	1	Hub	
10	RM 59647404	1	Drive Sleeve	
11	RM 95373775	1	Key	
12	RM 95642831	24	Hexagon screw	
13	RM 59726380	1	Pin	
14	RM 59726398	1	Locking Pin	
15	RM 59647180	1	Spring	
16	RM 13480801	1	Drive Sleeve	
17	RM 59995126	48	Plain Washer	
18	RM 54606546	1	Wear Sleeve	S/N 167012 -

Eccentric Shaft Assembly

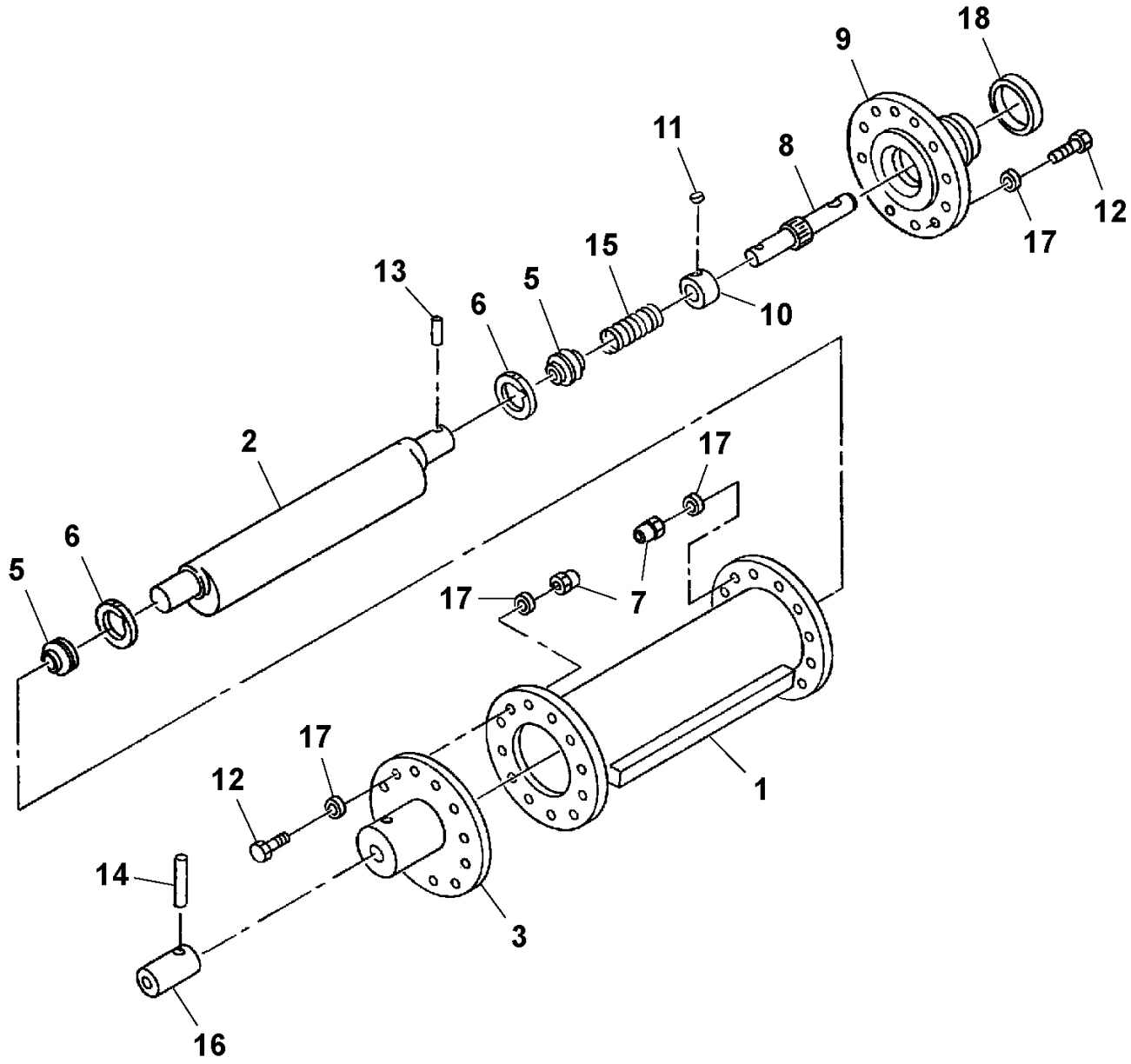

Eccentric Shaft Assembly

POS	PART NUMBER	QTY	PART NAME	NOTES
1	RM 59209346	1	Tube	
2	RM 59103531	1	Eccentric Shaft	
3	RM 59298752	1	Eccentric Wheel	
4	RM 59276543	1	Eccentric	
5	RM 59726398	2	Locking Pin	
6	RM 13480801	1	Drive Sleeve	
7	RM 59692319	2	Bearing	
8	RM 96701487	24	Hexagon screw	
9	RM 59209312	1	Eccentric Shaft	
10	RM 95223004	2	Retaining ring	
11	RM 59726380	2	Pin	
12	RM 59647180	1	Spring	
13	RM 59647404	1	Drive Sleeve	
14	RM 95373775	2	Key	
15	RM 54606538	1	Wear Sleeve	S/N 167014 -
	RM 59503409	1	Sleeve	S/N - 167013
16	RM 96704325	24	Washer	

Eccentric Shaft Assembly

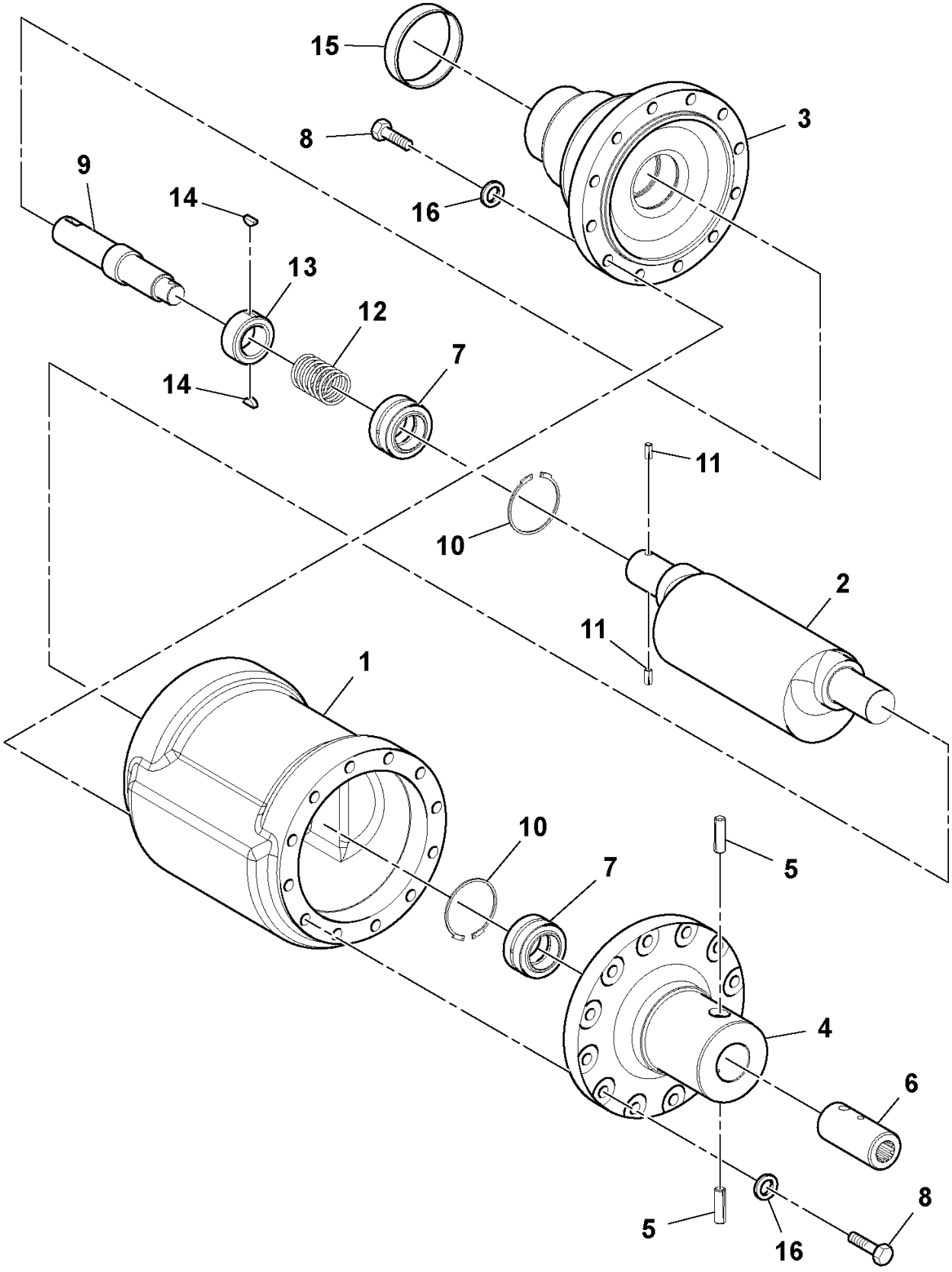

Carrier And Spindle Assembly

POS	PART NUMBER	QTY	PART NAME	NOTES
1	RM 59090738	1	Planet Carrier	
2	RM 59622175	1	Spindle	
3	RM 59918110	1	Retaining ring	
4	RM 59862573	4	Shim	
5	RM 59862581	4	Shim	
6	RM 59862599	4	Shim	
7	RM 59626580	2	Bearing	
8	RM 59626598	2	Bearing	
9	RM 59622258	2	Wear Sleeve	
10	RM 59622241	2	Sealing ring	
11	RM 95919239	8	Hexagon screw	
12	RM 59896506	4	Lock Plate	
13	RM 59478172	1	Dust Cover	

Carrier And Spindle Assembly

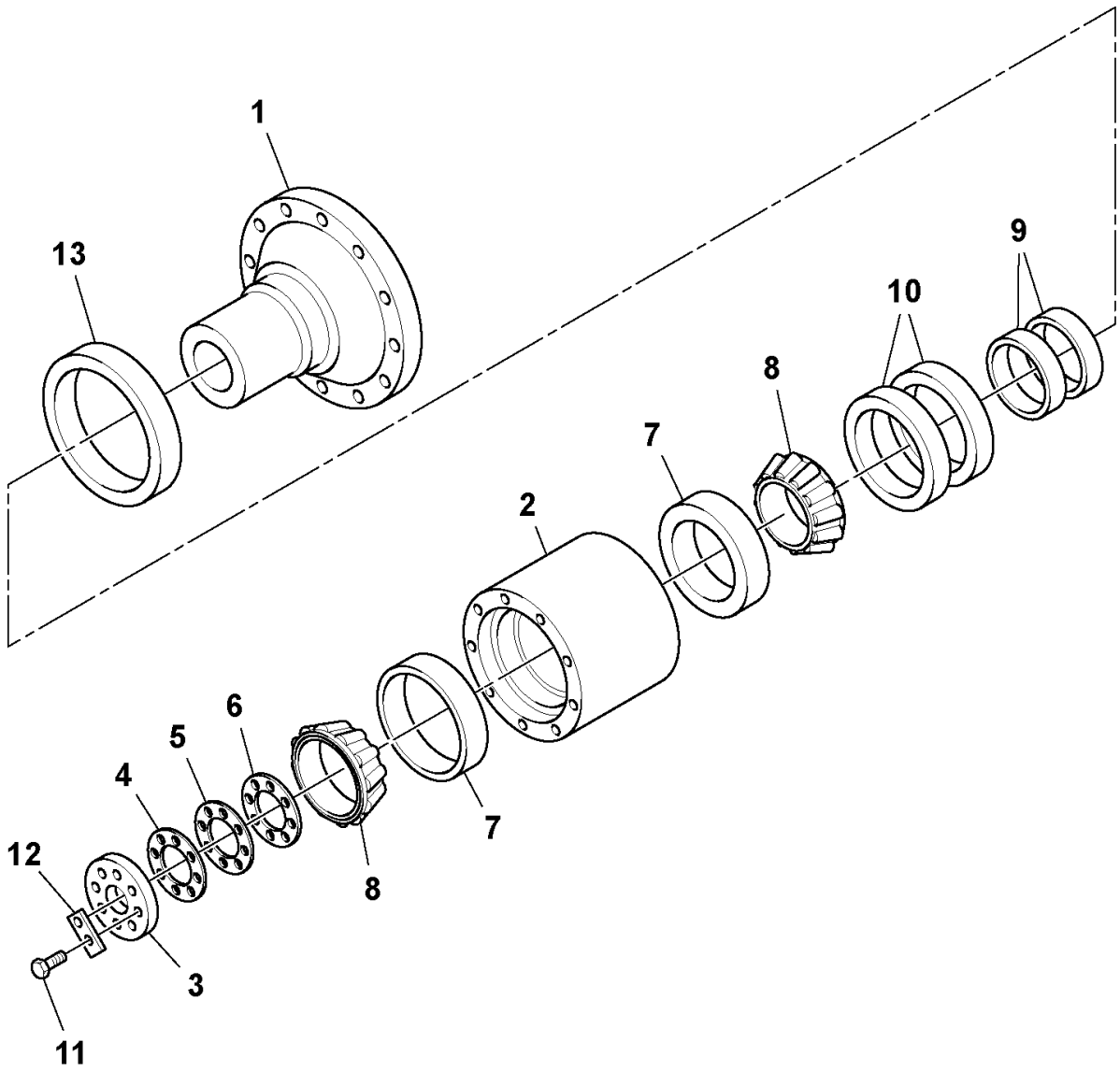

Carrier Assembly

POS	PART NUMBER	QTY	PART NAME	NOTES
1	RM 59682260	1	Plate	
2	RM 59418632	1	Drive Plate	
3	RM 59900696	6	Rubber Damper	
4	RM 95919585	48	Hexagon screw	
5	RM 95922399	96	Washer	
7	RM 59327866	48	Hexagon Nut	
8	RM 95033718	2	Plug	
9	RM 59600593	1	Tube Plug	
10	RM 59093351	1	Breather	S/N 164369 -
	RM 59093351	1	Breather	S/N - 164368
11	RM 95279998	1	Elbow	

Carrier Assembly

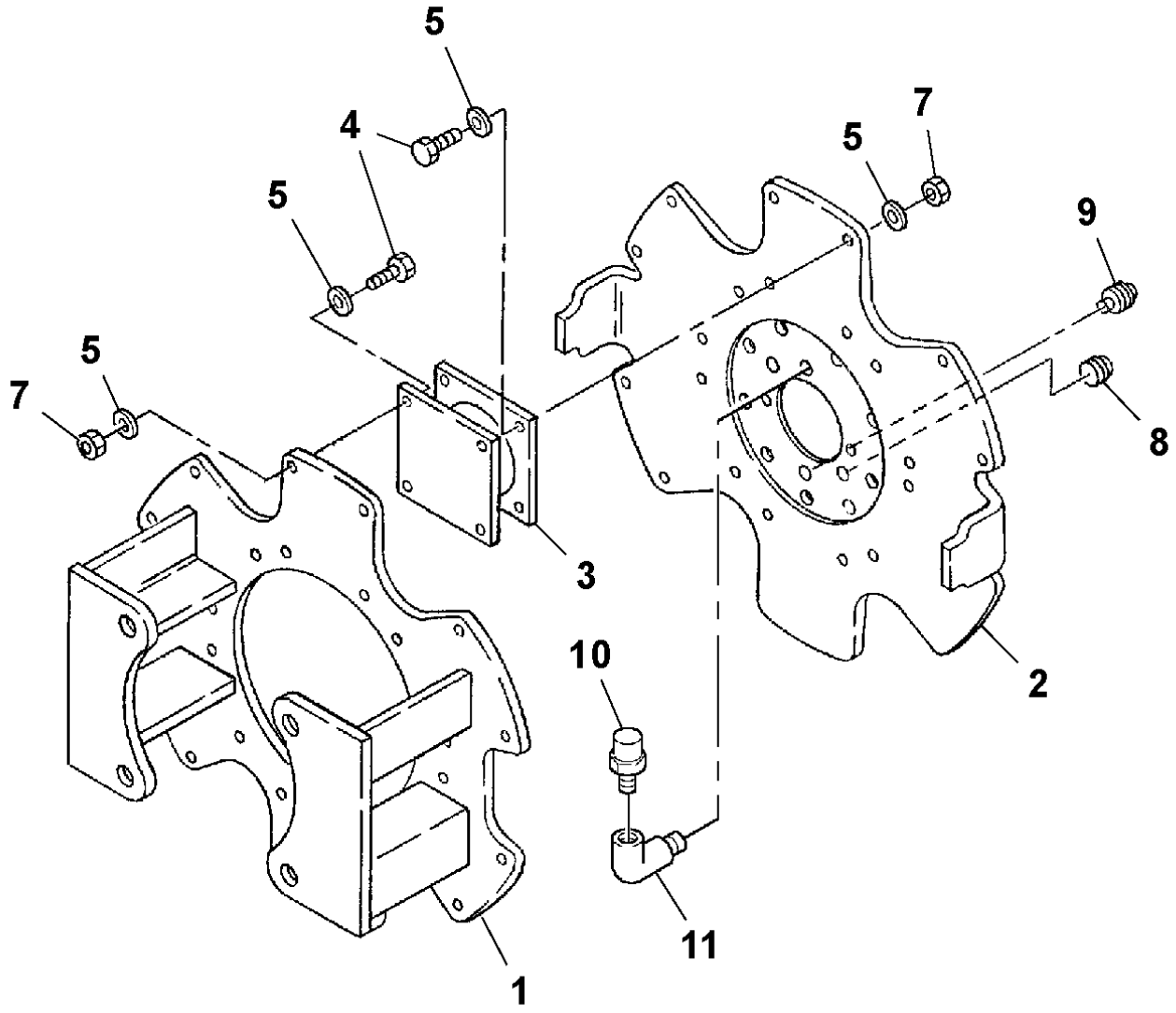

Vibration Motor Assembly

POS	PART NUMBER	QTY	PART NAME	NOTES
1		2	Hydraulic motor	
2	RM 95303350	2	Adapter	90 DEG
3	RM 95280186	4	Adapter	90 DEG

Vibration Motor Assembly

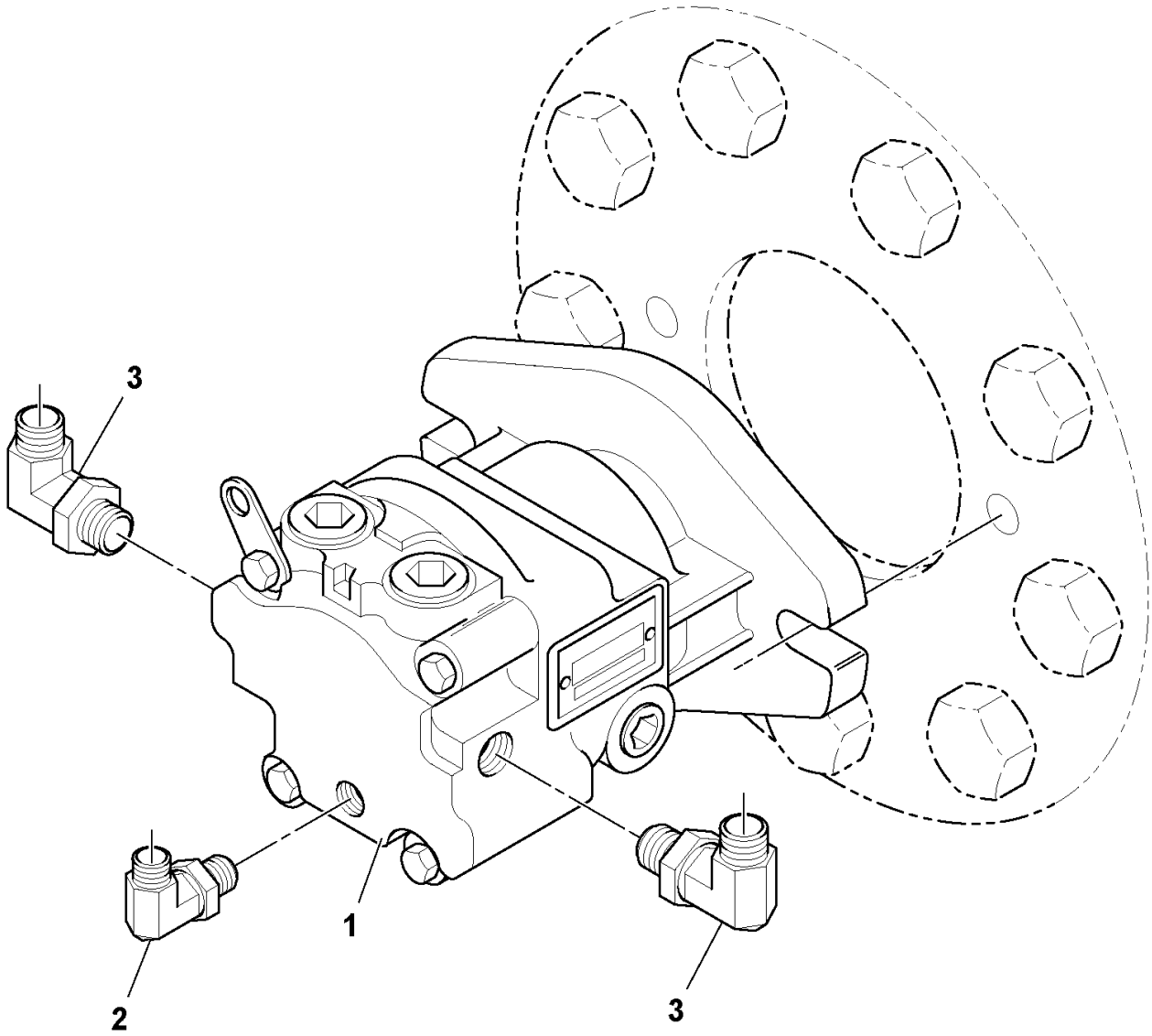

Vibration Motor Assembly

POS	PART NUMBER	QTY	PART NAME	NOTES
1		2	Hydraulic motor	S/N 168646 -
	RM 59247114	1	Hydraulic motor	ARC
		2	Hydraulic motor	S/N - 168647
	RM 59484162	1	Hydraulic motor	ARC
2	RM 95303335	2	Elbow	
3	RM 95366001	2	Adapter	
4	RM 95182705	2	Adapter	
5	RM 95302147	2	Elbow nipple	S/N 158530 -

Vibration Motor Assembly

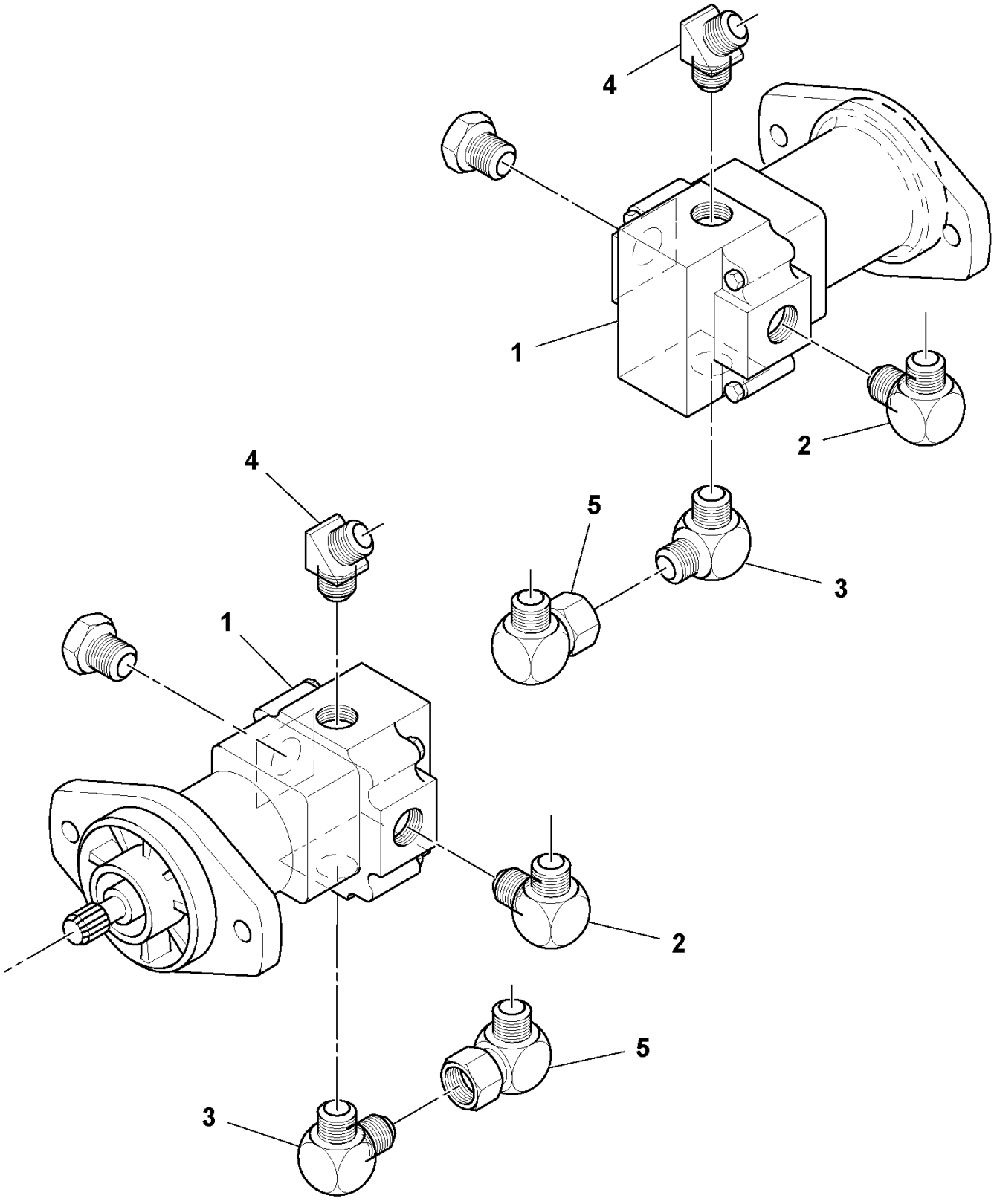

Vibration Motor Assembly

POS	PART NUMBER	QTY	PART NAME	NOTES
1		1	Hydraulic motor	
	RM 59140558	1	Hydraulic motor	ARC
2	RM 95285946	1	Adapter	
3	RM 95280186	2	Adapter	

Vibration Motor Assembly

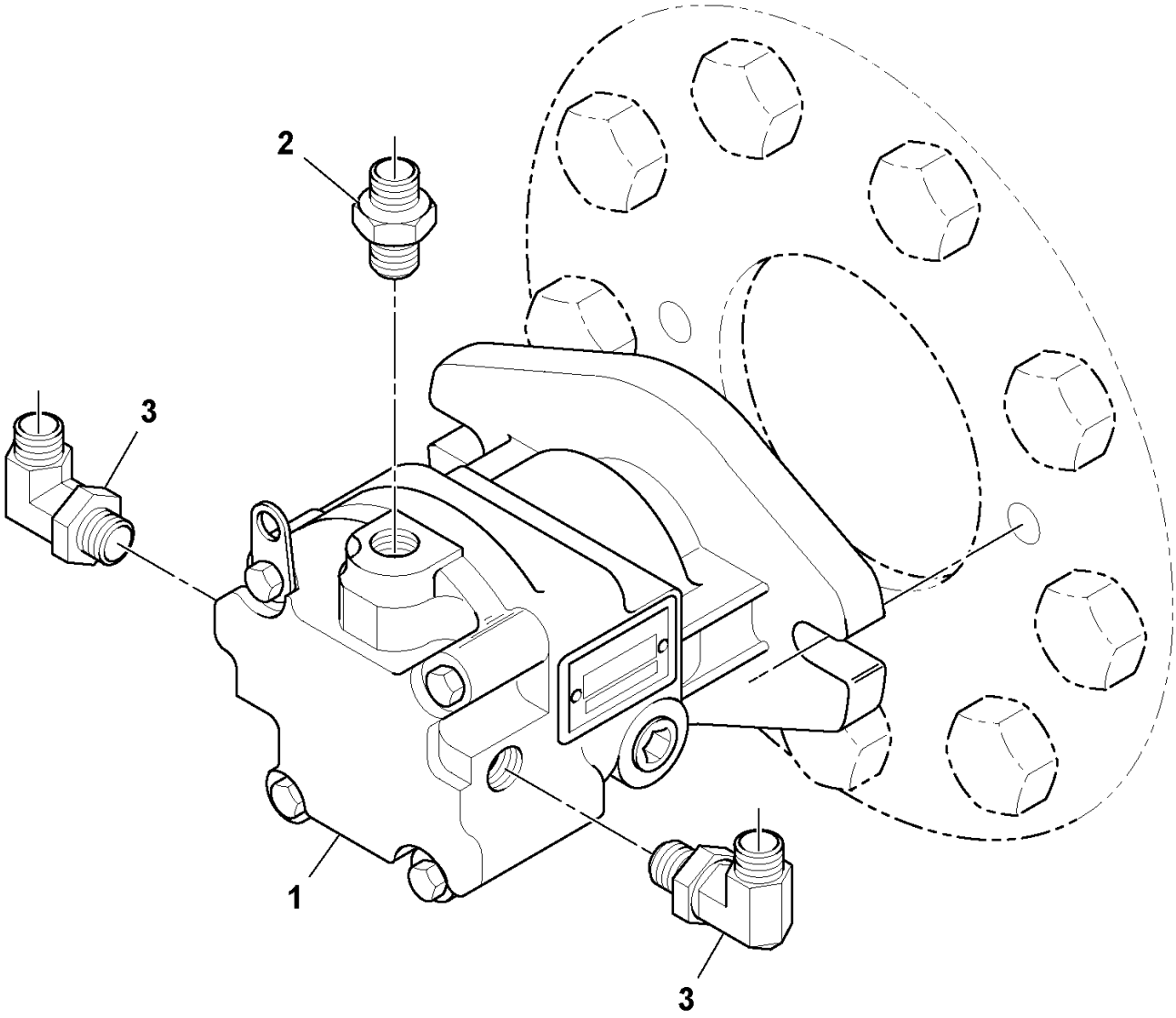

Vibration Motor

POS	PART NUMBER	QTY	PART NAME	NOTES
1	RM 50278019	2	O-ring	
2	RM 58220567	6	O-ring	
3	RM 59387605	2	Needle Bearing	
4	RM 59387498	2	Gasket	
5	RM 59086132	2	Shaft	13 TOOTH
6	RM 59785519	4	Ring	
7	RM 95200648	2	Ball Bearing	
8	RM 59861872	2	Ring	
9	RM 59941203	2	Sealing ring	
10	RM 59245209	2	Support Washer	
11	RM 13521760	2	Sealing Kit	

Vibration Motor

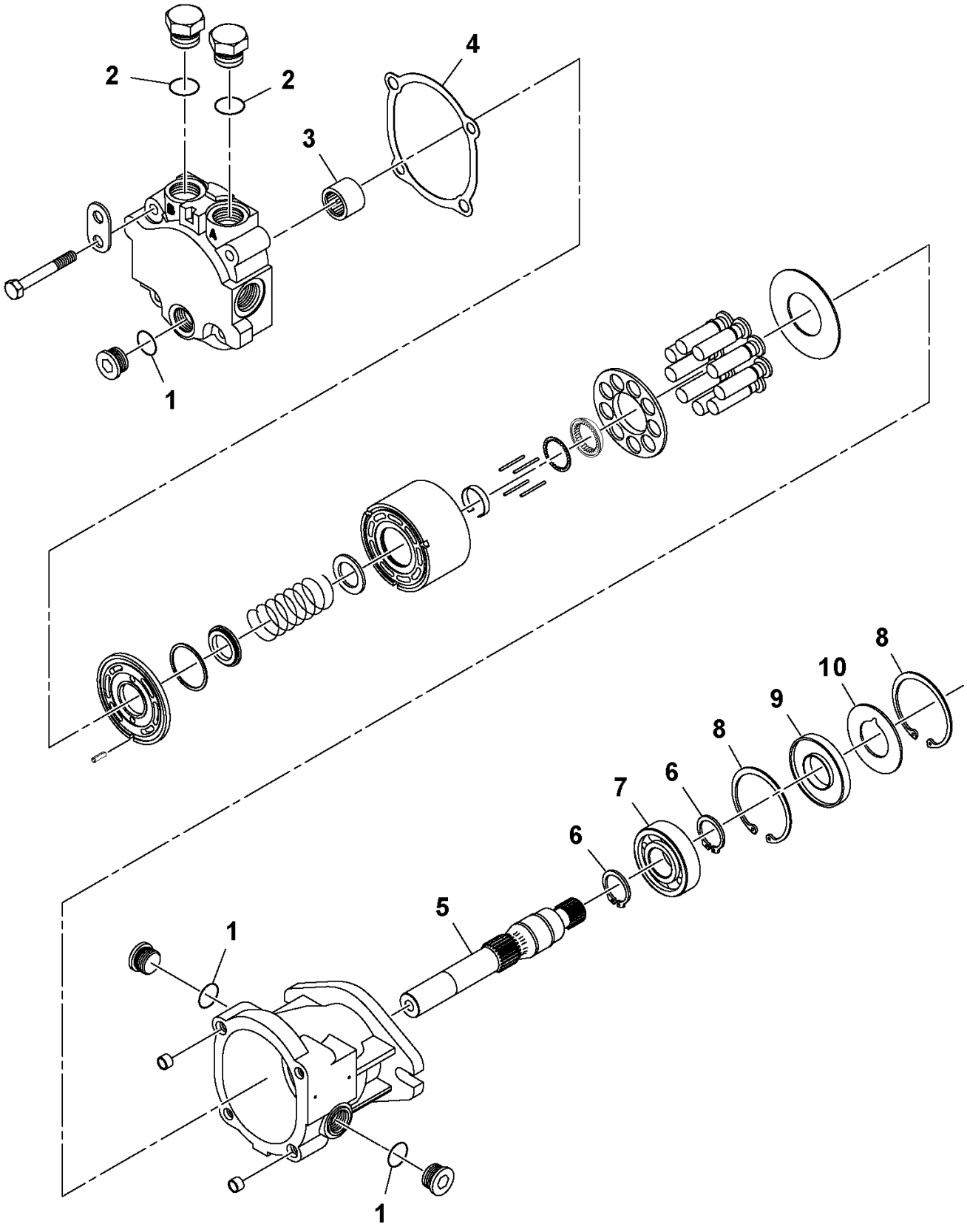

Vibration Motor

POS	PART NUMBER	QTY	PART NAME	NOTES
1	RM 59861872	2	Ring	
2	RM 59941203	1	Sealing ring	
3	RM 59785519	2	Ring	
4	RM 95200648	1	Ball Bearing	
5	RM 59432021	1	Shaft	
6	RM 59803478	1	Gasket	
7	RM 59785303	1	Bearing	

Vibration Motor

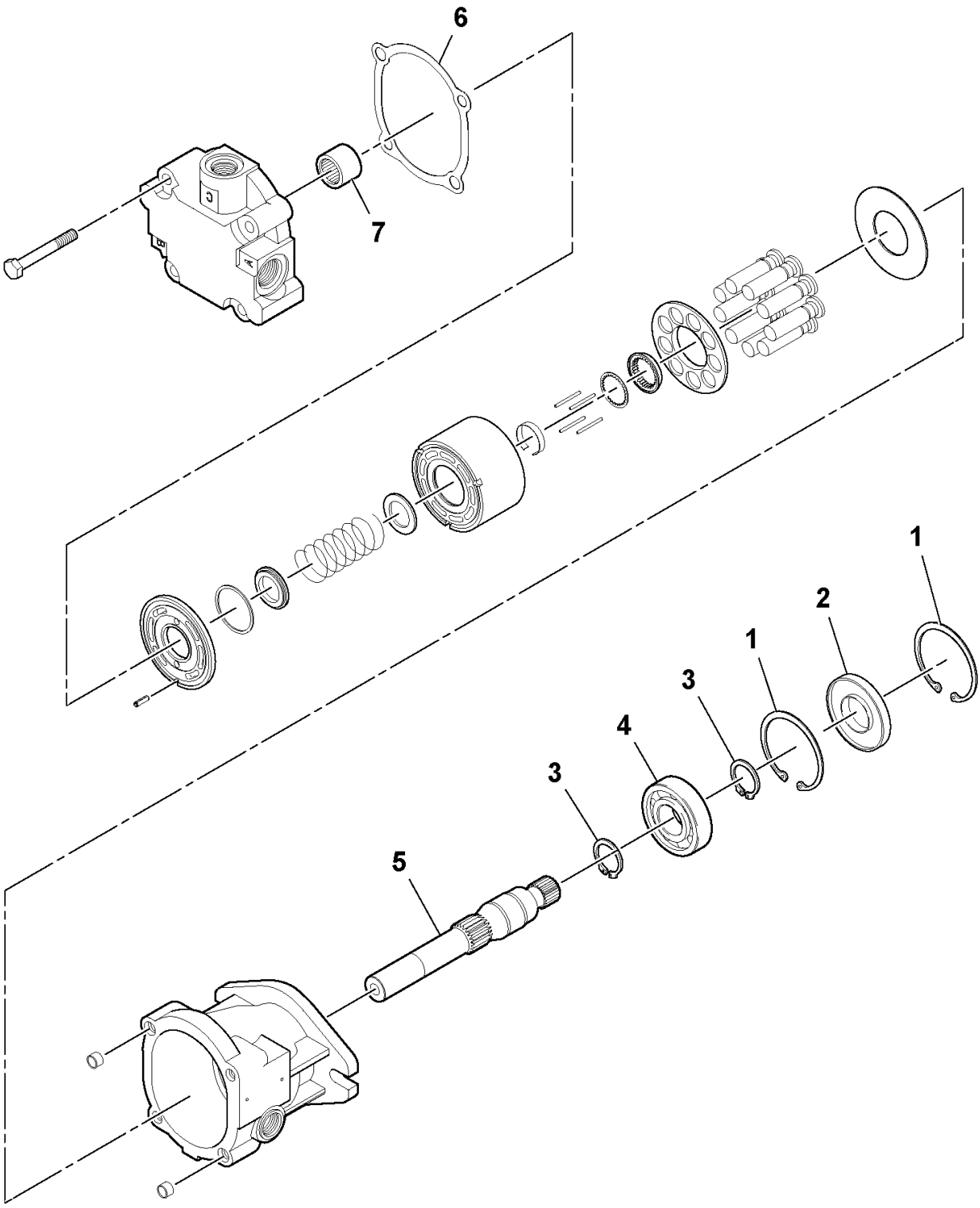

Vibration Motor

POS	PART NUMBER	QTY	PART NAME	NOTES
1	RM 59861872	2	Ring	
2	RM 59941203	1	Sealing ring	
3	RM 59785519	2	Ring	
4	RM 95200648	1	Ball Bearing	
5	RM 59432021	1	Shaft	
6	RM 59785303	1	Bearing	
7	RM 59803478	1	Gasket	

Vibration Motor

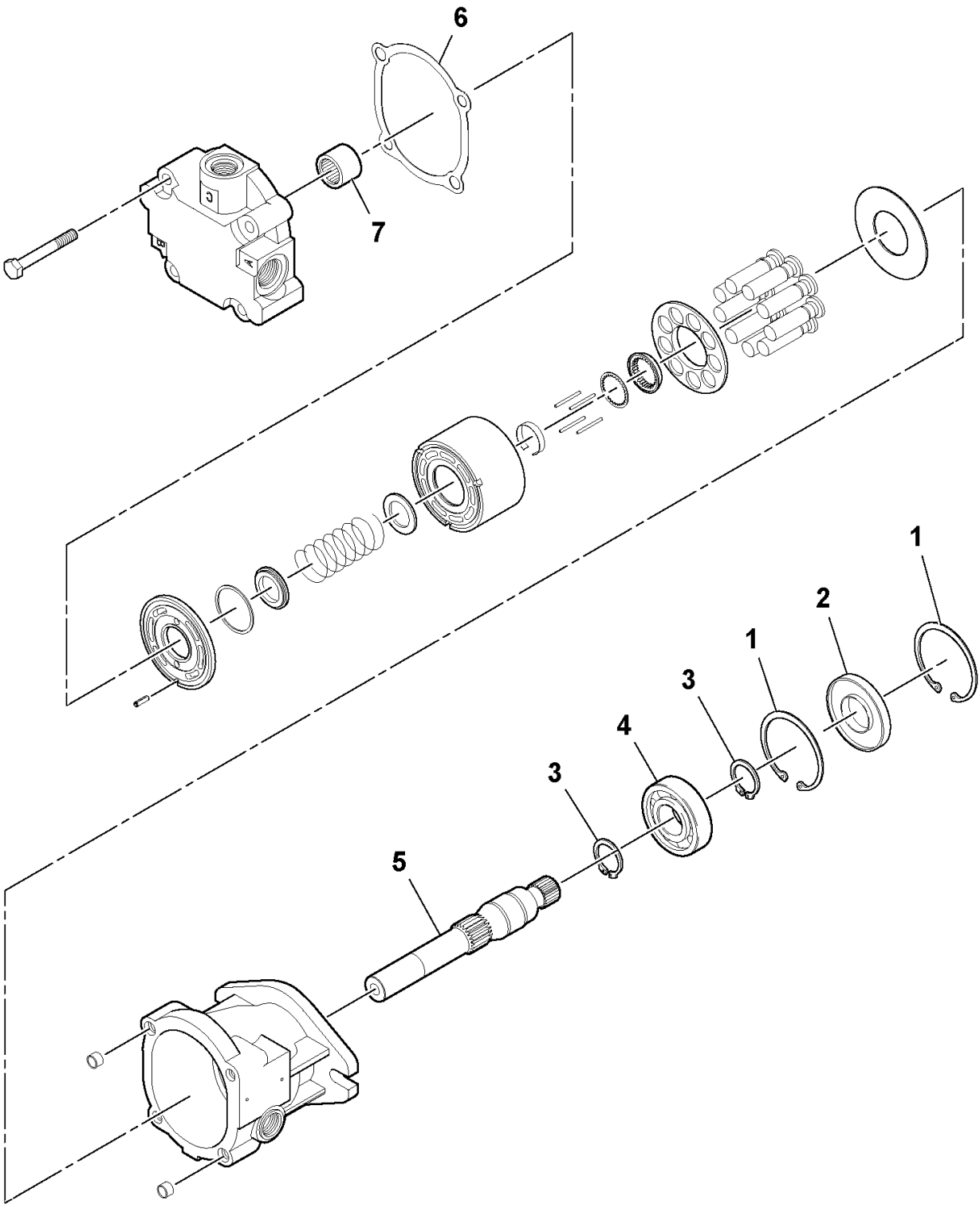

Vibration Motor

POS	PART NUMBER	QTY	PART NAME	NOTES
1	RM 59861872	2	Ring	
2	RM 59941203	1	Sealing ring	
3	RM 59785519	2	Ring	
4	RM 95200648	1	Ball Bearing	
5	RM 59432021	1	Shaft	
6	RM 59803478	1	Gasket	
7	RM 59785303	1	Bearing	

Vibration Motor

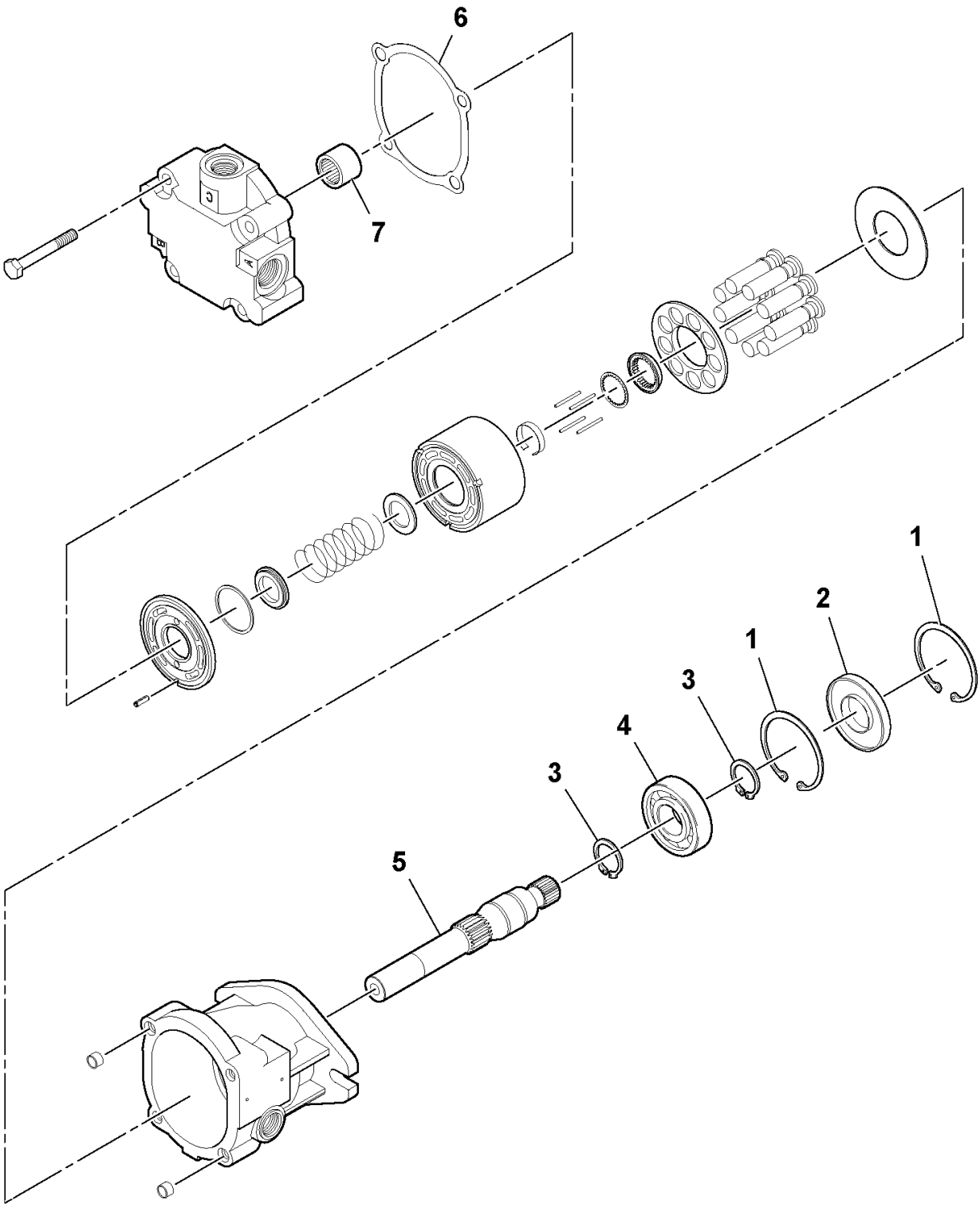

Vibration Motor

POS	PART NUMBER	QTY	PART NAME	NOTES
1	RM 59861872	2	Ring	
2	RM 59941203	1	Sealing ring	
3	RM 59785519	2	Ring	
4	RM 95200648	1	Ball Bearing	
5	RM 59432021	1	Shaft	
6	RM 59785303	1	Bearing	
7	RM 59803478	1	Gasket	

Vibration Motor

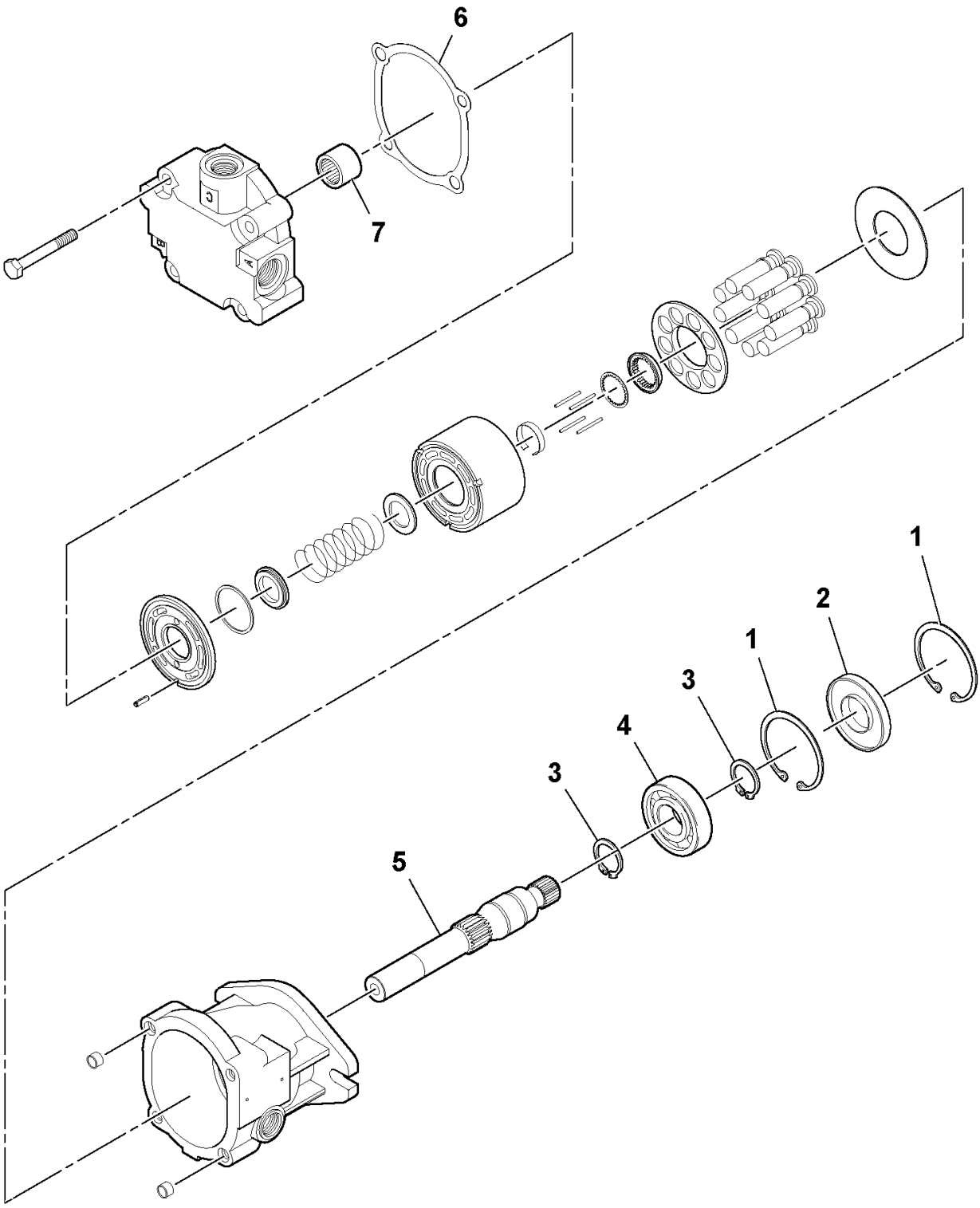

Vibration Motor

POS	PART NUMBER	QTY	PART NAME	NOTES
1	RM 59785303	1	Bearing	
2	RM 59803478	1	Gasket	
3	RM 59086132	1	Shaft	
4	RM 59785519	2	Ring	
5	RM 95200648	1	Ball Bearing	
6	RM 59861872	2	Ring	
7	RM 59941203	1	Sealing ring	
8	RM 59245209	1	Support Washer	

Vibration Motor

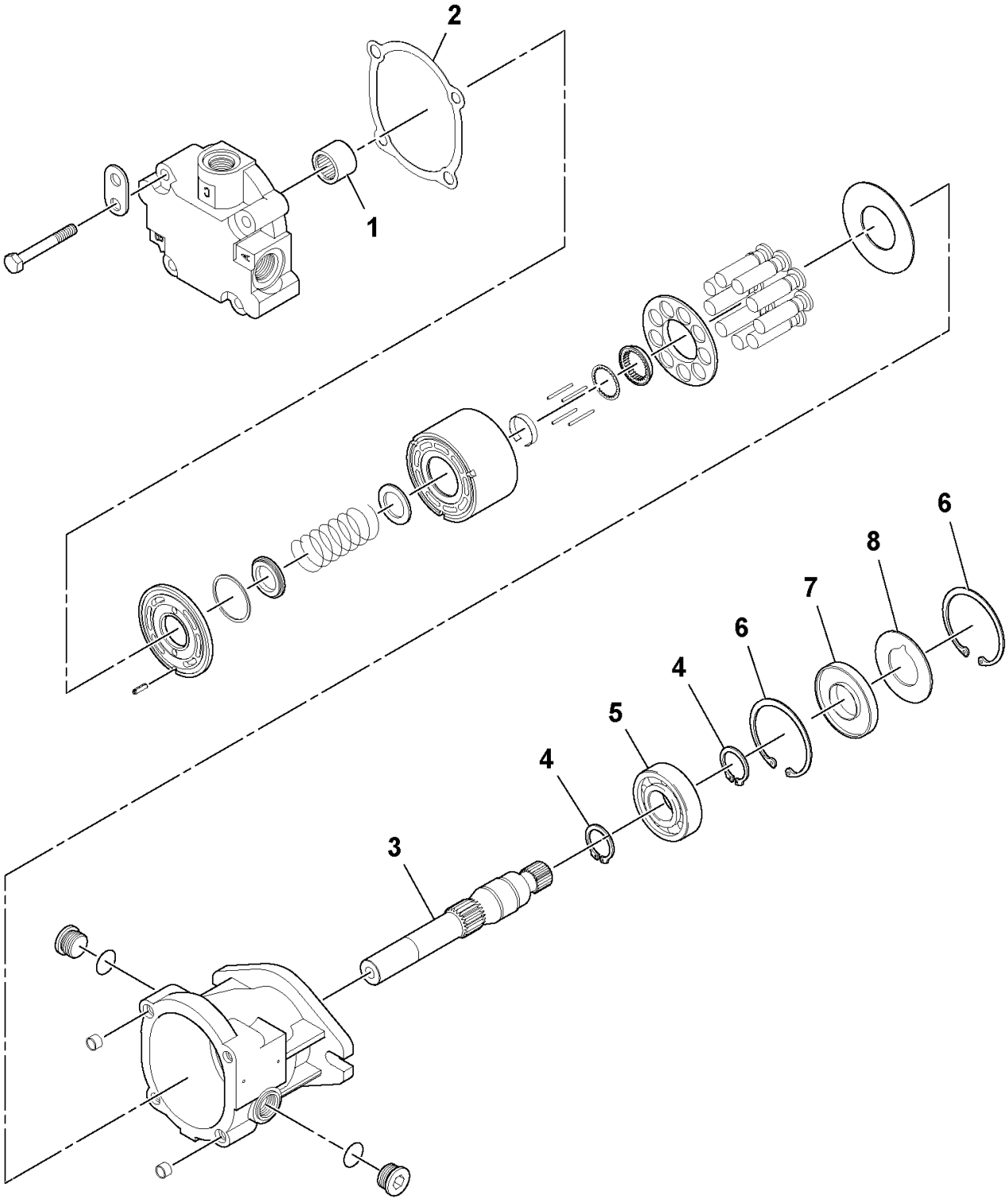

Handwheel Assembly

POS	PART NUMBER	QTY	PART NAME	NOTES
1	RM 59639203	1	Wheel	
2	RM 59639211	1	Bushing	
3	RM 59926733	1	Decal	VARIABLE AMPLITUDE
4	RM 59926527	8	Rivet	

Handwheel Assembly

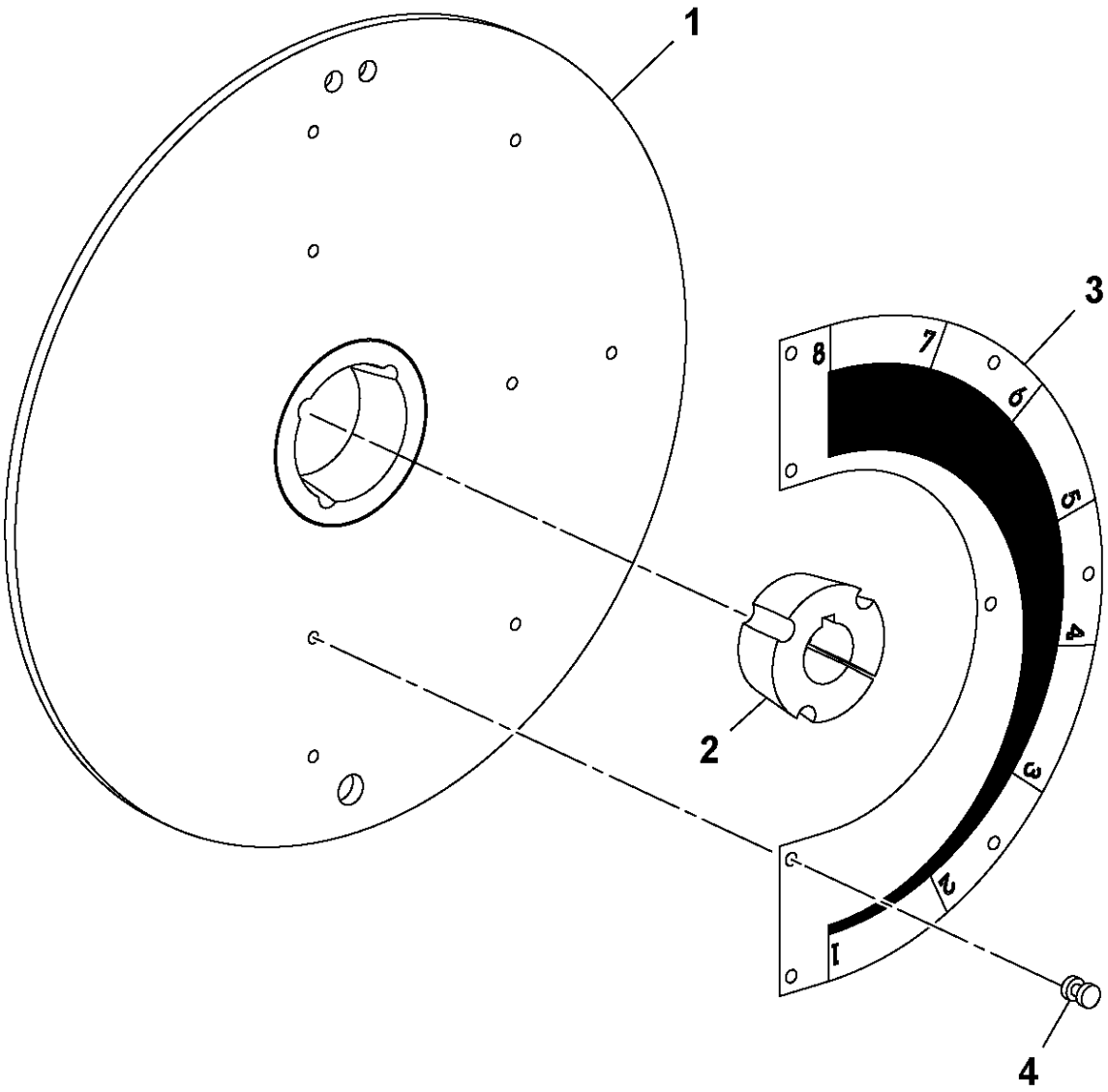

Inside Wiper Installation

POS	PART NUMBER	QTY	PART NAME	NOTES
2	RM 58783457	2	Crossbar	
3	RM 59480814	2	Rubber Plate	
	RM 58996703	2	Crossbar	OPTIONAL
4	RM 58776667	12	Clamp	
5	RM 59480830	8	Spring	
6	RM 59480855	8	Clevis Pin	
7	RM 95923926	8	Pin	
8	RM 59787937	24	Lock Screw	

Inside Wiper Installation

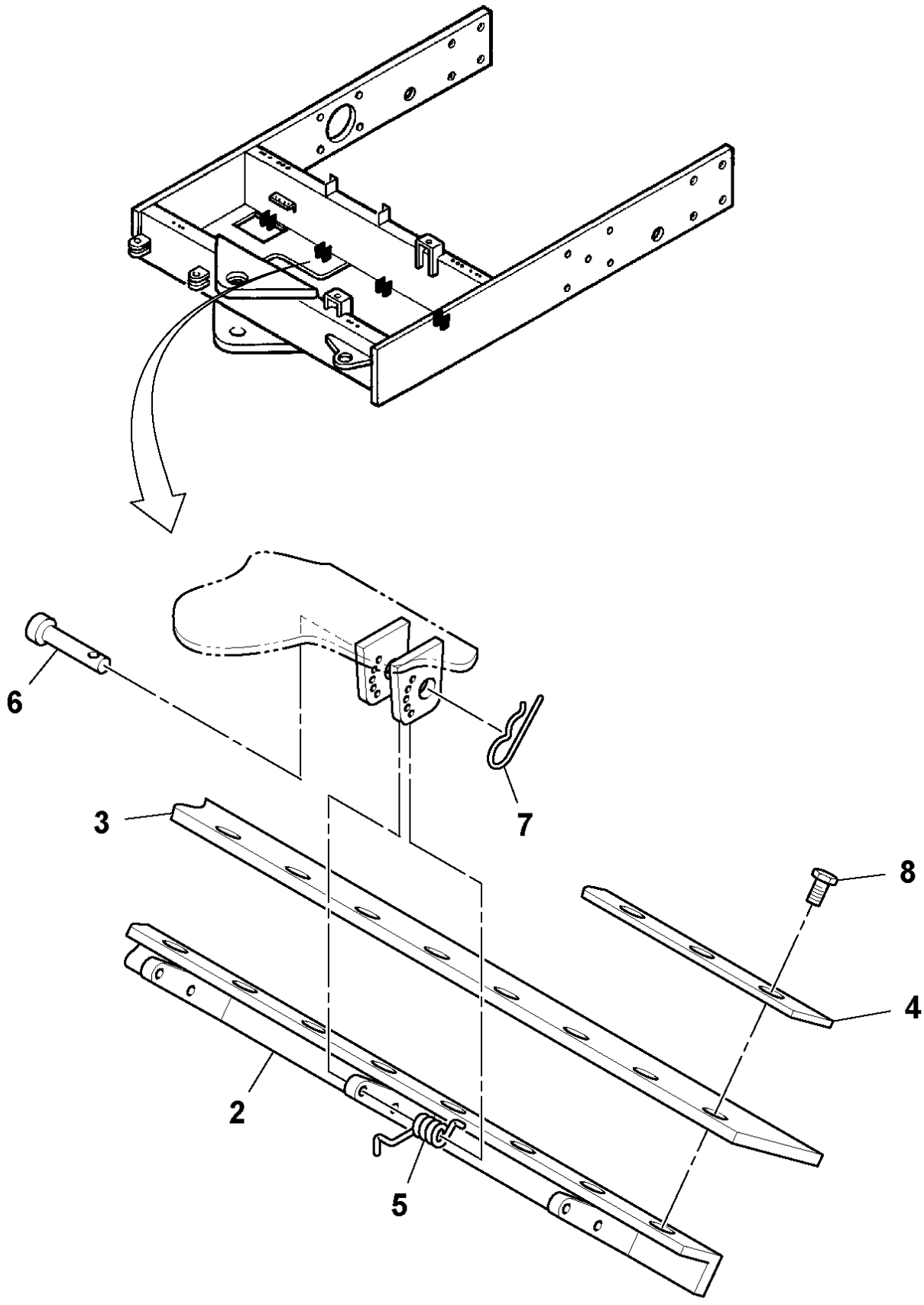

Cocoa Mat Installation

POS	PART NUMBER	QTY	PART NAME	NOTES
1	RM 13411301	2	Bracket	
2	RM 58928029	2	Coconut Fibre Mat	
3	RM 59233833	REQ	Tie Straps	
4	RM 59121707	2	Coconut Fibre Mat	
5	RM 59887182	8	Washer	
6	RM 95923371	8	Nut	
7	RM 59151969	2	Mounting Plate	
8	RM 13870944	2	Hydraulic fluid tank	
9	RM 59436725	2	Pin	
10	RM 59436741	2	Cable	
11	RM 59436758	4	Ferrule	
12	RM 95920153	4	Screw	
13	RM 95923363	4	Lock nut	
15	RM 59680983	4	Lock Screw	
16	RM 59807941	4	Nut	
17	RM 13411277	2	Bracket	

Cocoa Mat Installation

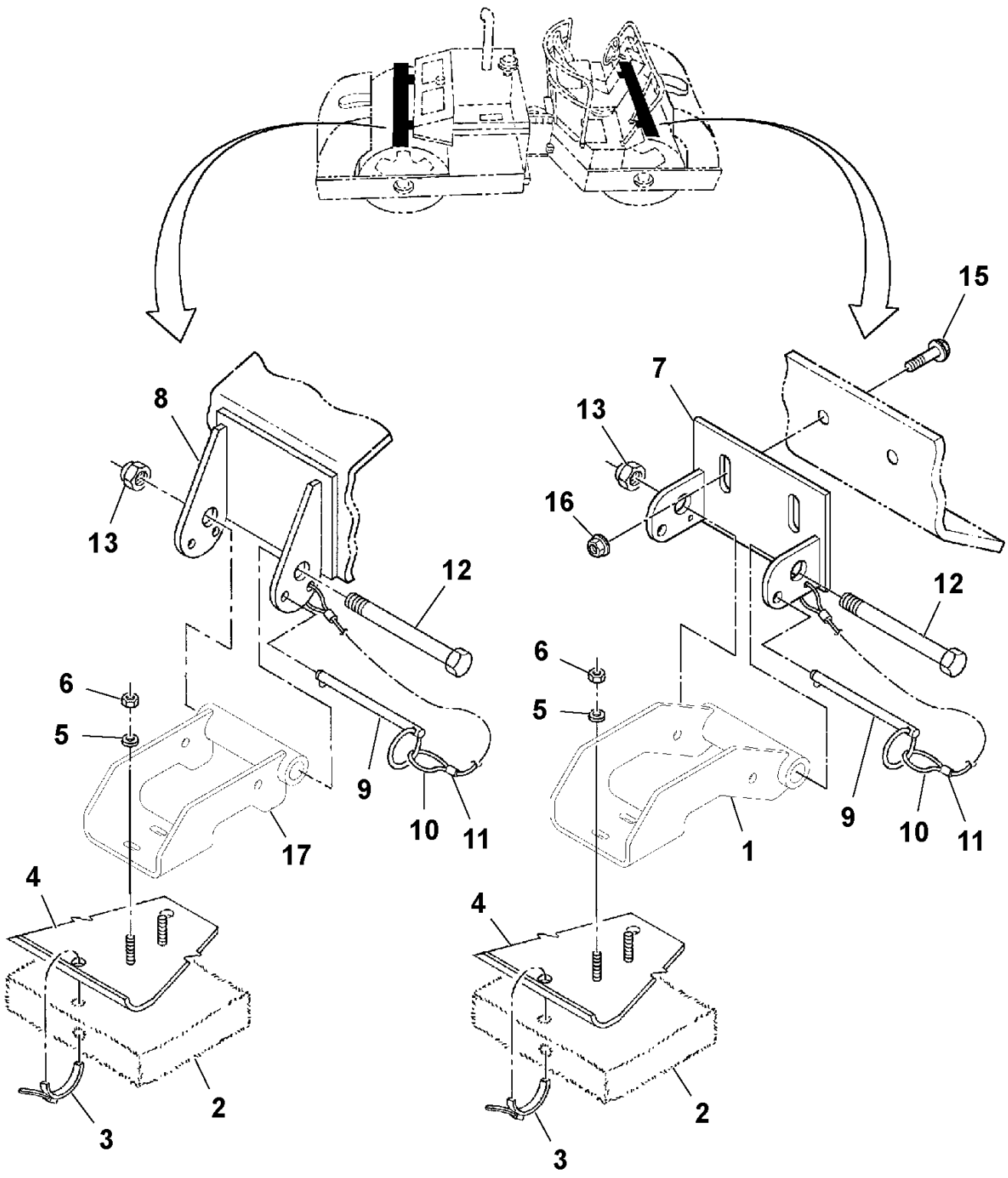

Deck Installation

POS	PART NUMBER	QTY	PART NAME	NOTES
2	RM 13250329	1	Deck Plate	
3	RM 58825464	1	Brake valve	
	RM 58911801	1	Solenoid	
	RM 58911819	1	Valve	
	RM 58911827	1	Nut	
	RM 58911835	1	Sealing Kit	
4	RM 59675827	4	Spacer	
5	RM 95920872	4	Hexagon screw	
6	RM 96704887	2	Hexagon screw	
7	RM 95920856	6	Screw	
8	RM 59537266	8	Plain Washer	
9	RM 59306522	1	Plate	
10	RM 96704598	2	Lock nut	
11	RM 96741053	2	Washer	
12	RM 59362327	8	Bolt	
13	RM 59232942	1	Fitting	
14	RM 59922864	1	Adapter	
15	RM 59822338	1	Sealing	
16	RM 59691675	2	Rubber Plate	
17	RM 59726885	6	Rubber Damper	
18	RM 95920849	2	Hexagon screw	
19	RM 59922823	1	Adapter	
20	RM 95293379	2	Adapter	
21	RM 59090878	1	Pressure Switch	
22	RM 59718817	1	Fuel Gauge	
23	RM 13159868	1	Bracket	S/N 166745 -
24	RM 96711965	3	Screw	S/N 166745 -
25	RM 96705504	2	Hexagon screw	S/N 166745 -
26	RM 96738612	10	Plain Washer	S/N 166745 -
27	RM 59636985	2	Grommet	S/N 166745 -
28	RM 96710470	6	Washer	S/N 166745 -
29	RM 96704705	3	Hexagon Nut	S/N 166745 -

Deck Installation

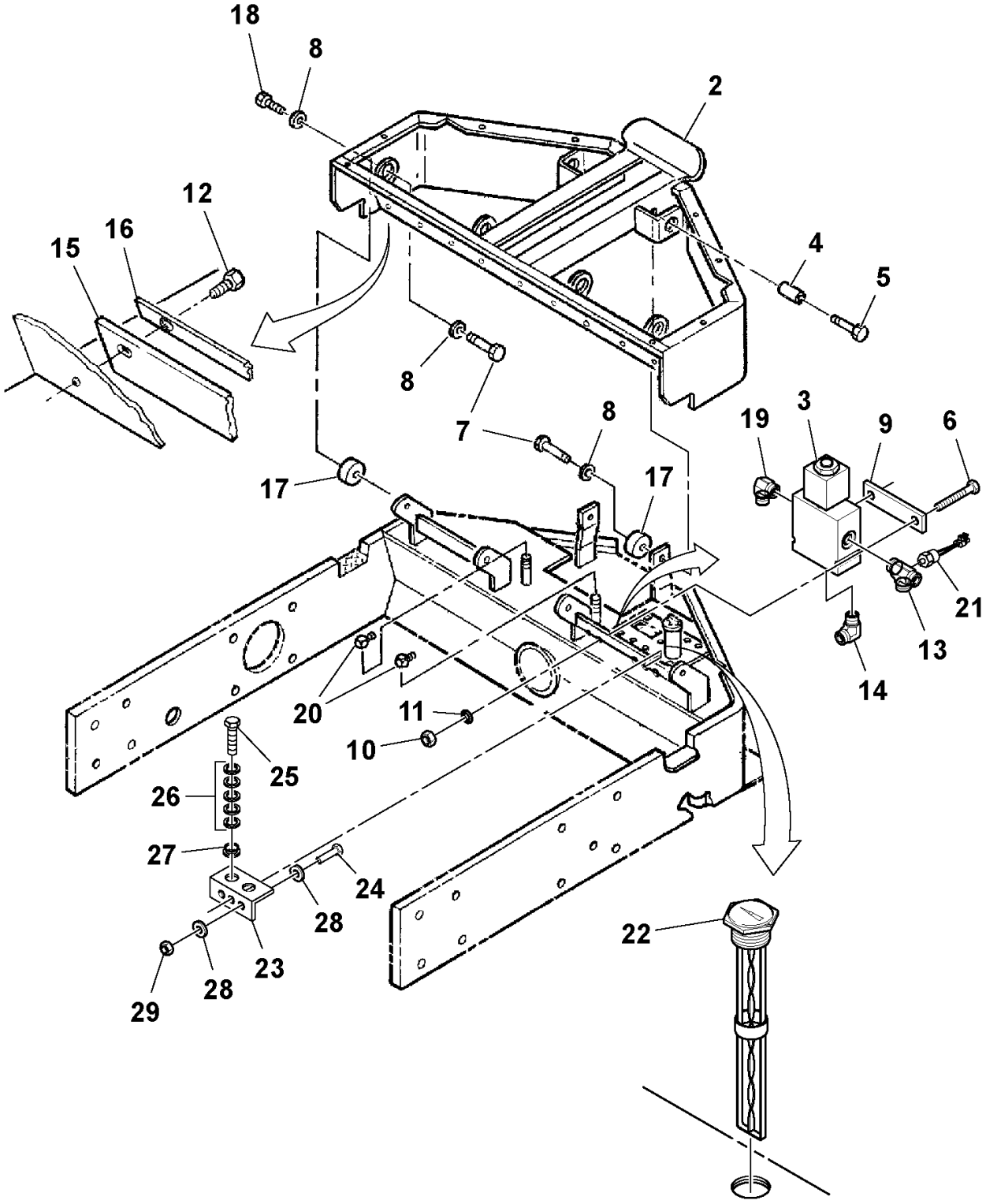

Flex Tread Installation

POS	PART NUMBER	QTY	PART NAME	NOTES
	RM 59077842	1	Slip protection	INCLUDES ITEMS 2-10
2	RM 59077768	2	Slip protection	FRONT
3	RM 59077776	2	Slip protection	SIDE
4	RM 59077784	2	Slip protection	DOOR
5	RM 59077800	1	Slip protection	LEFT
6	RM 59077818	1	Slip protection	LEFT
7	RM 59077792	1	Slip protection	RIGHT
8	RM 59077826	1	Slip protection	RIGHT
9	RM 59012302	1	Slip protection	FRONT
10	RM 59012377	1	Slip protection	CENTER

Flex Tread Installation

No graphic exists!
Absence d'illustration
Keine Abbildung vorhanden!
No hay gráfico
Grafisk framställning saknas!
没有图！
그래픽 없음!
図がありません。

Engine Cowling Installation

POS	PART NUMBER	QTY	PART NAME	NOTES
1	RM 13298344	1	Engine hood	
2	RM 13297353	1	Engine hood	
3	RM 59172338	1	Hinge	
8	RM 59187799	2	Handle	
9	RM 96728712	4	Screw	
10	RM 96705272	6	Hexagon screw	
11	RM 96704416	4	Lock nut	
12	RM 96704846	2	Lock nut	
13	RM 96702824	36	Hexagon screw	
15	RM 96702287	2	Hexagon screw	
17	RM 59162149	2	Latch	
19	RM 59189498	1	Cover	
21	RM 59163238	1	Lock Tab	RH
22	RM 13885355	1	Lock Tab	RH
23	RM 96733886	4	Screw	
24	RM 96704580	8	Lock nut	
25	RM 96741046	34	Plain Washer	
26	RM 96738554	8	Plain Washer	
27	RM 96703251	4	Screw	
28	RM 59475202	4	Ball Stud	
29	RM 59918573	2	Nut	
30	RM 58876475	2	Gas Spring	
31	RM 96741038	2	Washer	
32	RM 59813329	2	Plug	
33	RM 59876219	2	Plug	
35	RM 59165019	12	Spacer	
36	RM 96704739	6	Hexagon screw	

Engine Cowling Installation

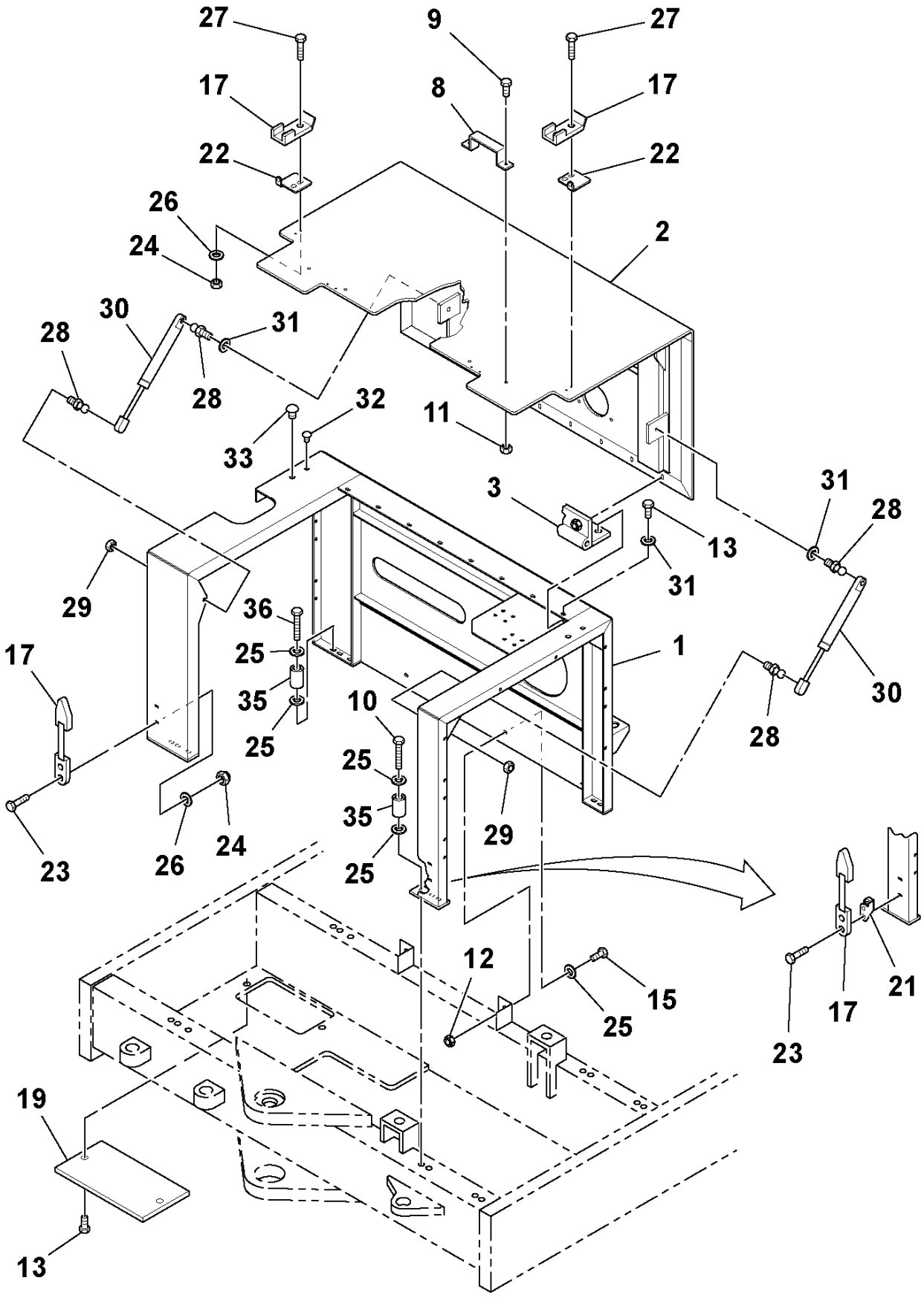

Engine Cowling Installation

POS	PART NUMBER	QTY	PART NAME	NOTES
4	RM 96713979	64	Washer	
5		1	Radiator and Oil Cooler	
6	RM 13299391	1	Cover Plate	RH
7	RM 13299409	1	Box	LH
13	RM 96702824	36	Hexagon screw	
14	RM 59189241	1	Mounting Plate	
16	RM 96702659	16	Hexagon screw	
18	RM 59215012	2	Cover Plate	
31	RM 96741038	38	Washer	
34	RM 96705587	10	Hexagon screw	

Engine Cowling Installation

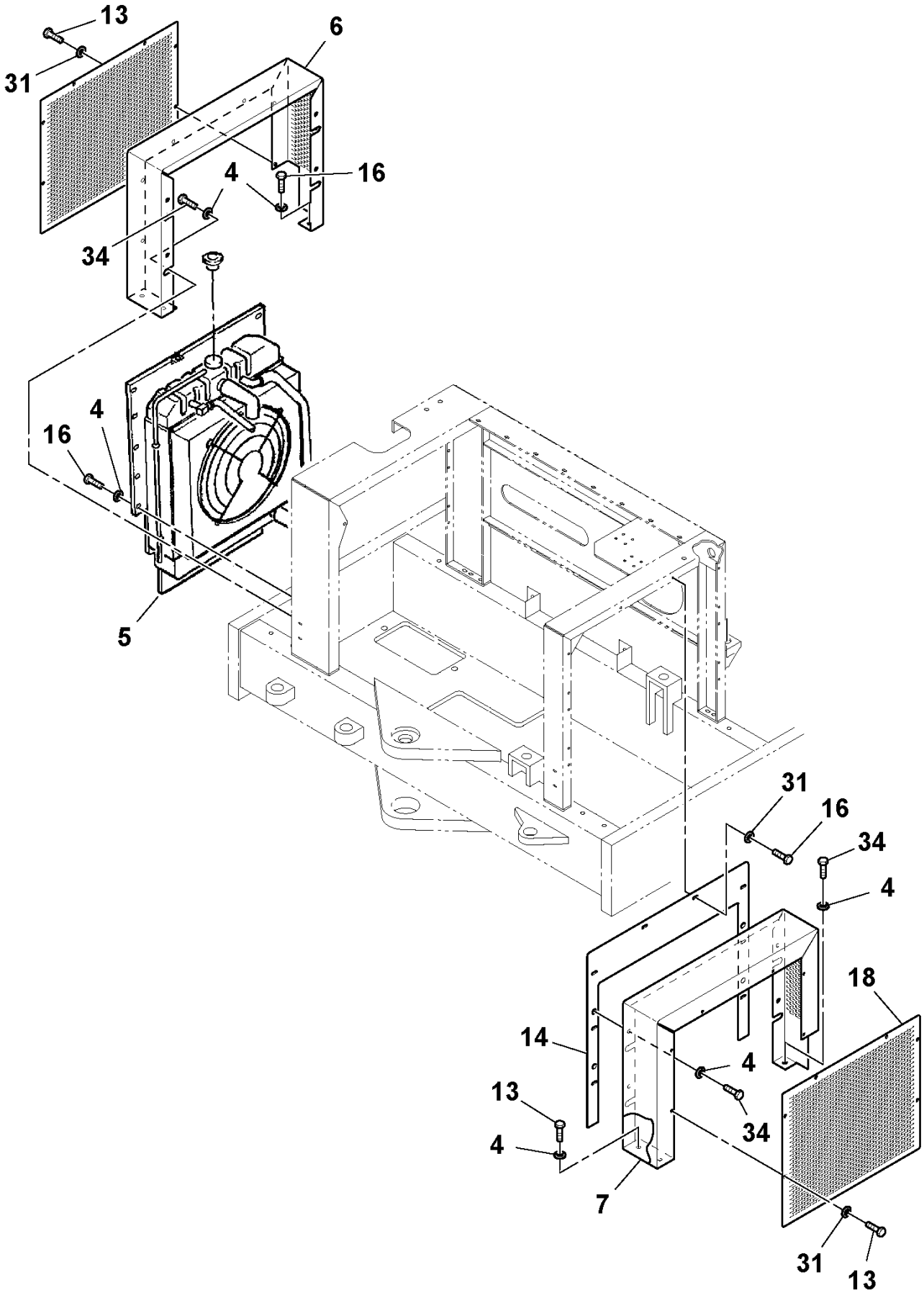

Engine Cowling Installation

POS	PART NUMBER	QTY	PART NAME	NOTES
2	RM 13297353	1	Engine hood	
3	RM 59172338	1	Hinge	
13	RM 96702824	36	Hexagon screw	
20	RM 35898477	10	Tape	
31	RM 96741038	38	Washer	

Engine Cowling Installation

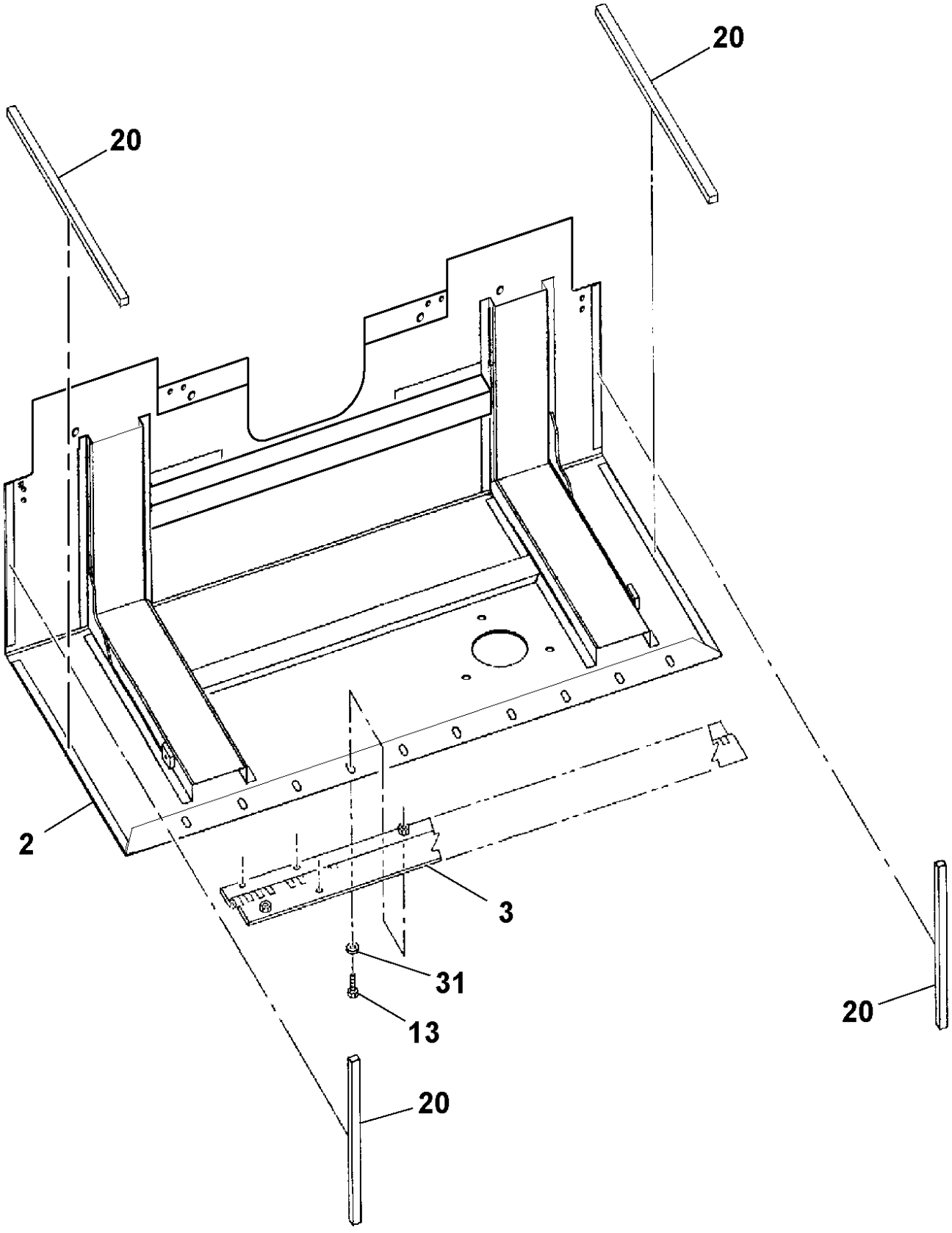

Engine Cowling Installation

POS	PART NUMBER	QTY	PART NAME	NOTES
37	RM 13169495	1	Plate	
38	RM 13169370	1	Casing	
39	RM 13169750	1	Sound Insulation	
40	RM 13169321	1	Insulator	
41	RM 13169339	1	Insulator	
42	RM 13169347	1	Insulating Compound	
43	RM 13169214	1	Insulator	RH
44	RM 13169222	1	Insulator	RH
45	RM 13169230	2	Insulator	
46	RM 13169248	2	Insulator	
47	RM 13169255	1	Insulator	LH
48	RM 13169263	2	Insulator	
49	RM 13169271	2	Sound Insulation	
50	RM 13169289	2	Insulator	
51	RM 13169727	4	Plate	
52	RM 96702824	12	Hexagon screw	
53	RM 96741038	12	Washer	
54	RM 96701370	8	Nut	
59	RM 13297882	35	Cap	

Engine Cowling Installation

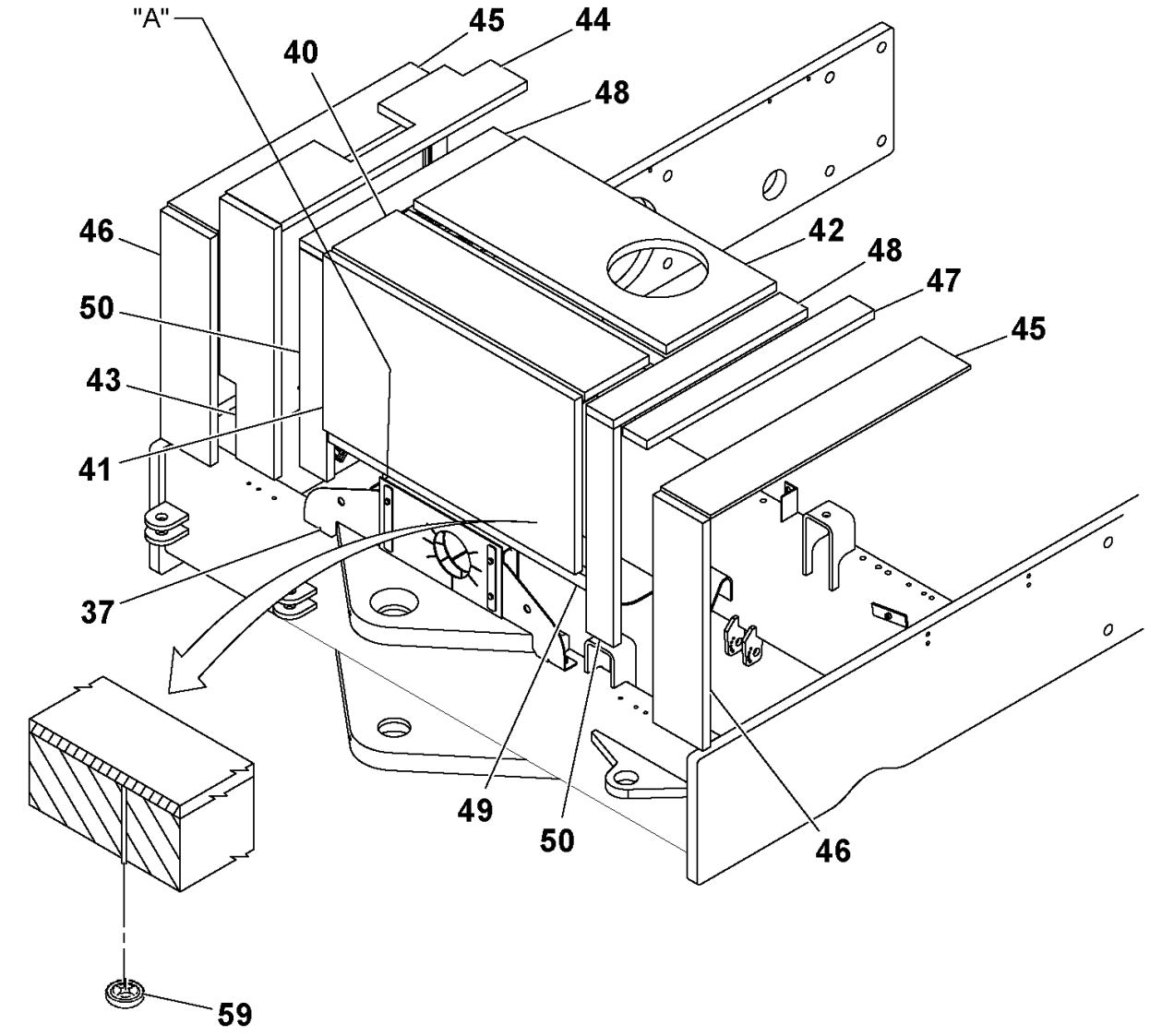

"B"

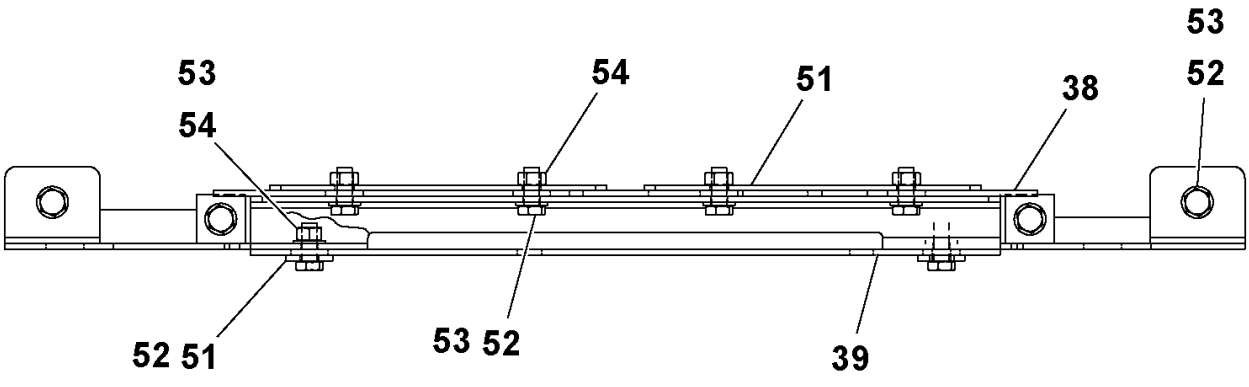

"A"

Engine Cowling and Hydraulic Tank Installation

POS	PART NUMBER	QTY	PART NAME	NOTES
1	RM 13163571	1	Cowl	
2	RM 13163613	1	Engine hood	
3	RM 59172338	1	Hinge	
11	RM 59187799	2	Handle	
12	RM 96728712	4	Screw	
13	RM 96705272	6	Hexagon screw	
17	RM 96704416	4	Lock nut	
19	RM 96704846	2	Lock nut	
20	RM 96702824	38	Hexagon screw	
26	RM 96702287	2	Hexagon screw	
28	RM 59162149	2	Latch	
	RM 59124461	2	Latch	
35	RM 59189498	1	Cover	
	RM 59717645	1	Cover	
37	RM 59163238	1	Lock Tab	RH
38	RM 13885355	1	Lock Tab	RH
40	RM 96733886	4	Screw	
41	RM 96704580	8	Lock nut	
42	RM 96741046	34	Plain Washer	
43	RM 96738554	8	Plain Washer	
44	RM 96703251	4	Screw	
45	RM 59475202	4	Ball Stud	
46	RM 59918573	2	Nut	
47	RM 58876475	2	Gas Spring	
48	RM 96741038	38	Washer	
49	RM 59813329	2	Plug	
50	RM 59876219	2	Plug	
60	RM 59165019	12	Spacer	
61	RM 96704739	6	Hexagon screw	

Engine Cowling and Hydraulic Tank Installation

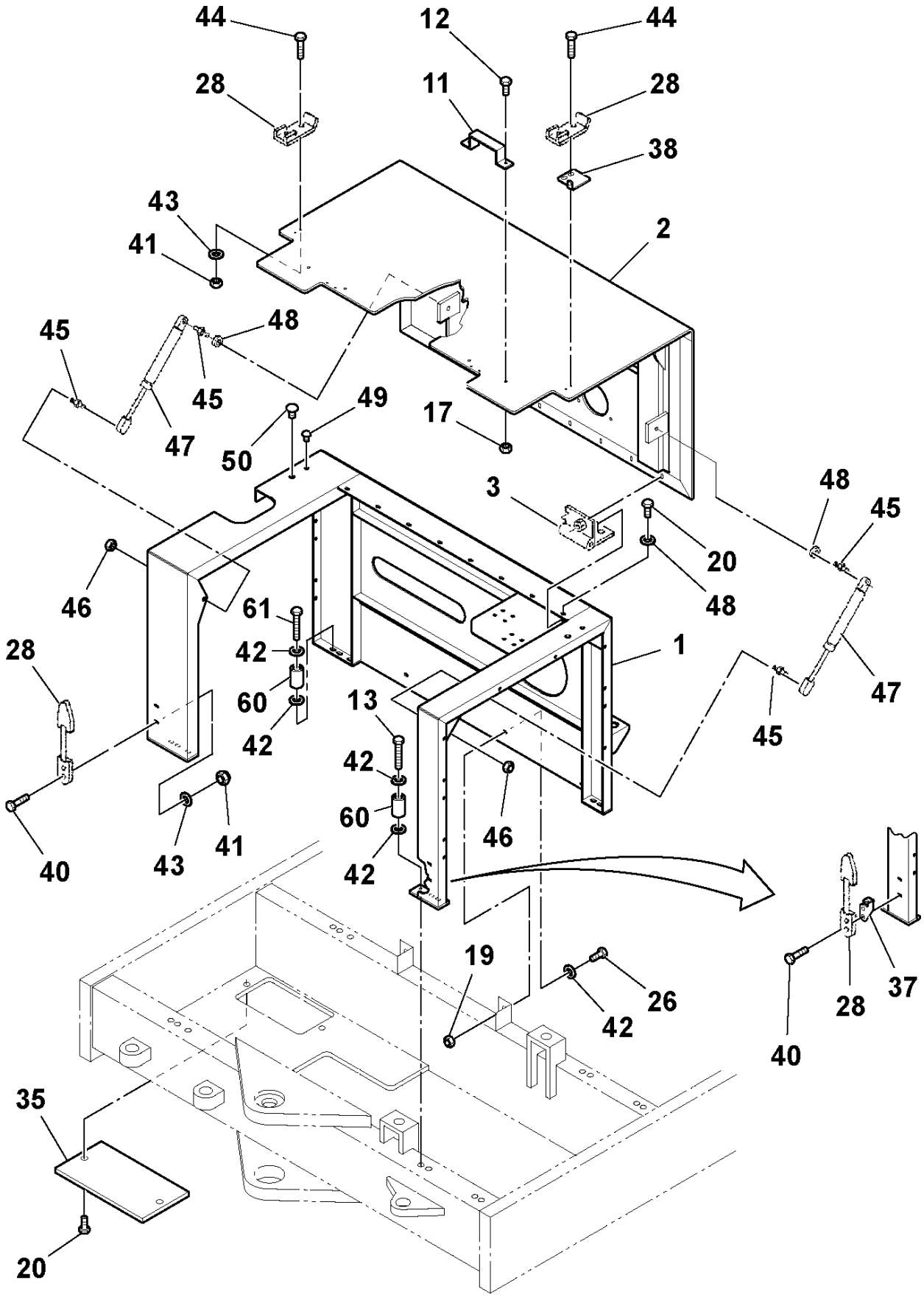

Engine Cowling and Hydraulic Tank Installation

POS	PART NUMBER	QTY	PART NAME	NOTES
4	RM 96713979	28	Washer	
5		1	Radiator and Oil Cooler	
6	RM 59210989	1	Cover Plate	RH
7	RM 59215004	1	Box	LH
8		1	Hydraulic tank	
9	RM 96738596	2	Washer	
10	RM 96714050	2	Hexagon screw	
14	RM 59217059	1	Bracket	
18	RM 59869917	8	Lock Screw	
20	RM 96702824	38	Hexagon screw	
21	RM 58965948	2	Stud	
22	RM 10344208	4	Engine anchorage	
23	RM 59653188	4	Washer	
24	RM 59189241	1	Mounting Plate	
25	RM 96704622	4	Hexagon Nut	
27	RM 96702659	16	Hexagon screw	
30		1	Filter	
	RM 59434779	1	Oil Filter	STEERING AND BRAKE
	RM 59490664	1	Oil Filter	STEERING AND BRAKE
	RM 95357570	1	Adapter	STRAIGHT
	RM 95330692	1	Adapter	90 DEG
31	RM 59965962	2	Screw	
32	RM 59215012	2	Cover Plate	
33		1	Filter	VIBRATION
	RM 59587188	1	Oil Filter	VIBRATION
	RM 59587196	1	Oil Filter	VIBRATION
	RM 95356986	1	Adapter	
	RM 95376133	1	Adapter	
	RM 95403325	1	T-nipple	
34		1	Filter	PROPULSION
	RM 59587188	1	Oil Filter	PROPULSION
	RM 59587196	1	Oil Filter	PROPULSION
	RM 95376133	1	Adapter	
	RM 95402830	1	Adapter	
42	RM 96741046	1	Plain Washer	
48	RM 96741038	38	Washer	
53	RM 59077602	1	Valve	
54	RM 96704960	2	Hexagon screw	
55	RM 96705587	10	Hexagon screw	
56	RM 96704614	4	Nut	
57	RM 95480109	1	Adapter	
	RM 59922880	1	Adapter	
58	RM 59919670	2	Adapter	
59	RM 96701917	2	Hexagon screw	

Engine Cowling and Hydraulic Tank Installation

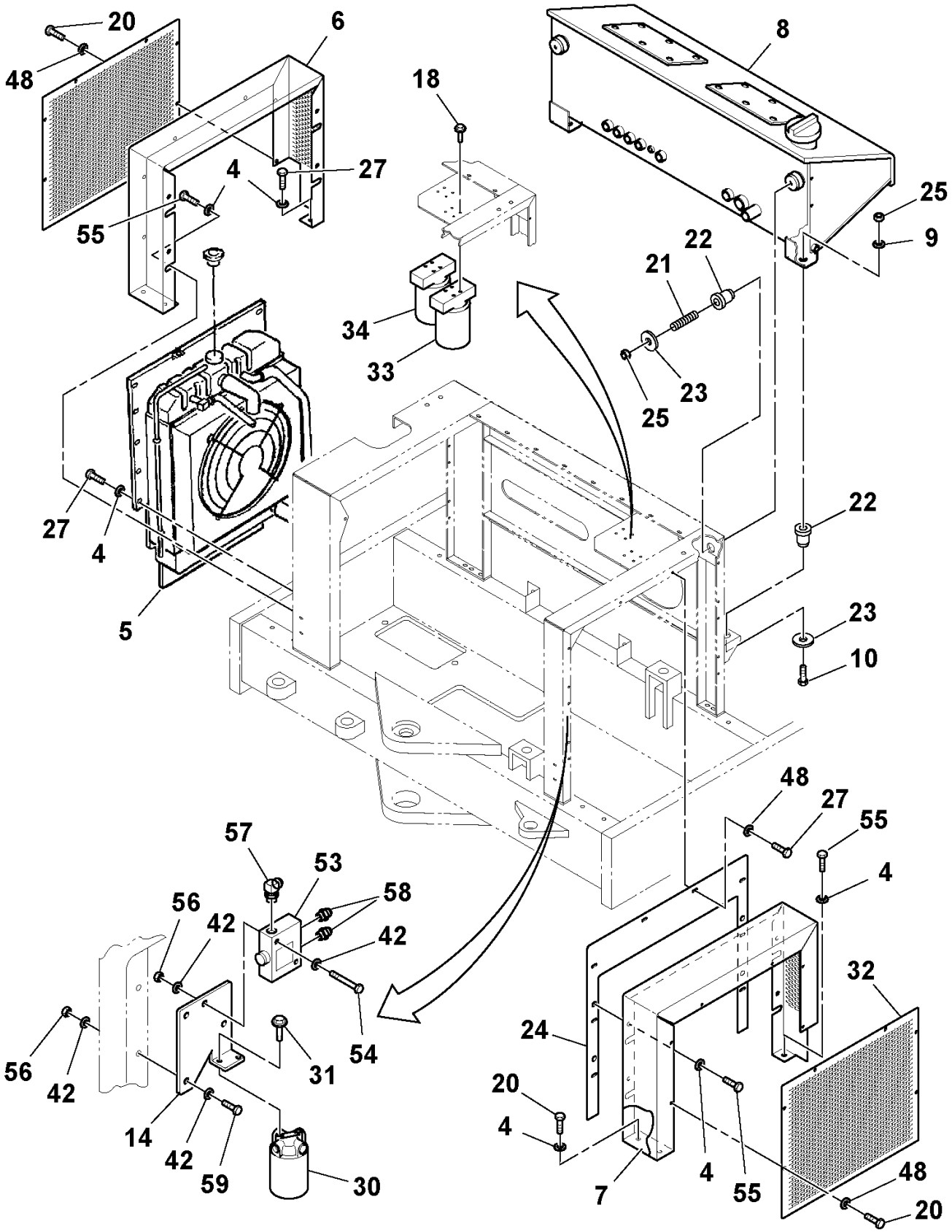

Engine Cowling and Hydraulic Tank Installation

POS	PART NUMBER	QTY	PART NAME	NOTES
2	RM 13163613	1	Engine hood	
3	RM 59172338	1	Hinge	
20	RM 96702824	38	Hexagon screw	
36	RM 35898477	10	Tape	
48	RM 96741038	38	Washer	

Engine Cowling and Hydraulic Tank Installation

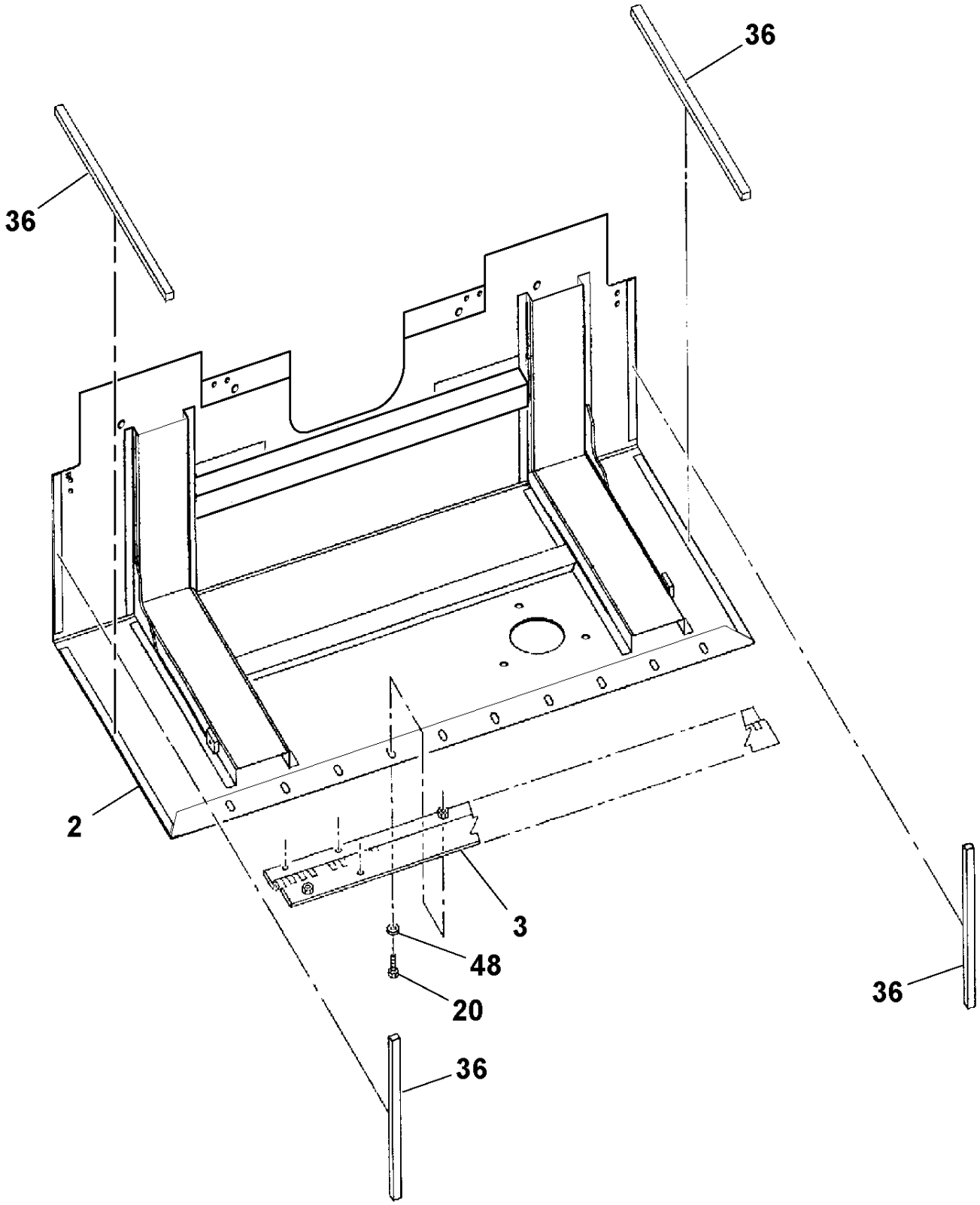

Spray Shield Installation

POS	PART NUMBER	QTY	PART NAME	NOTES
1	RM 59264101	1	Shield	
2	RM 59919761	6	Clamp	
3	RM 59583658	3	Cover Plate	
4	RM 95919312	1	Screw	
5	RM 59583625	3	Plate	
6	RM 59339770	1	Sealing	

Spray Shield Installation

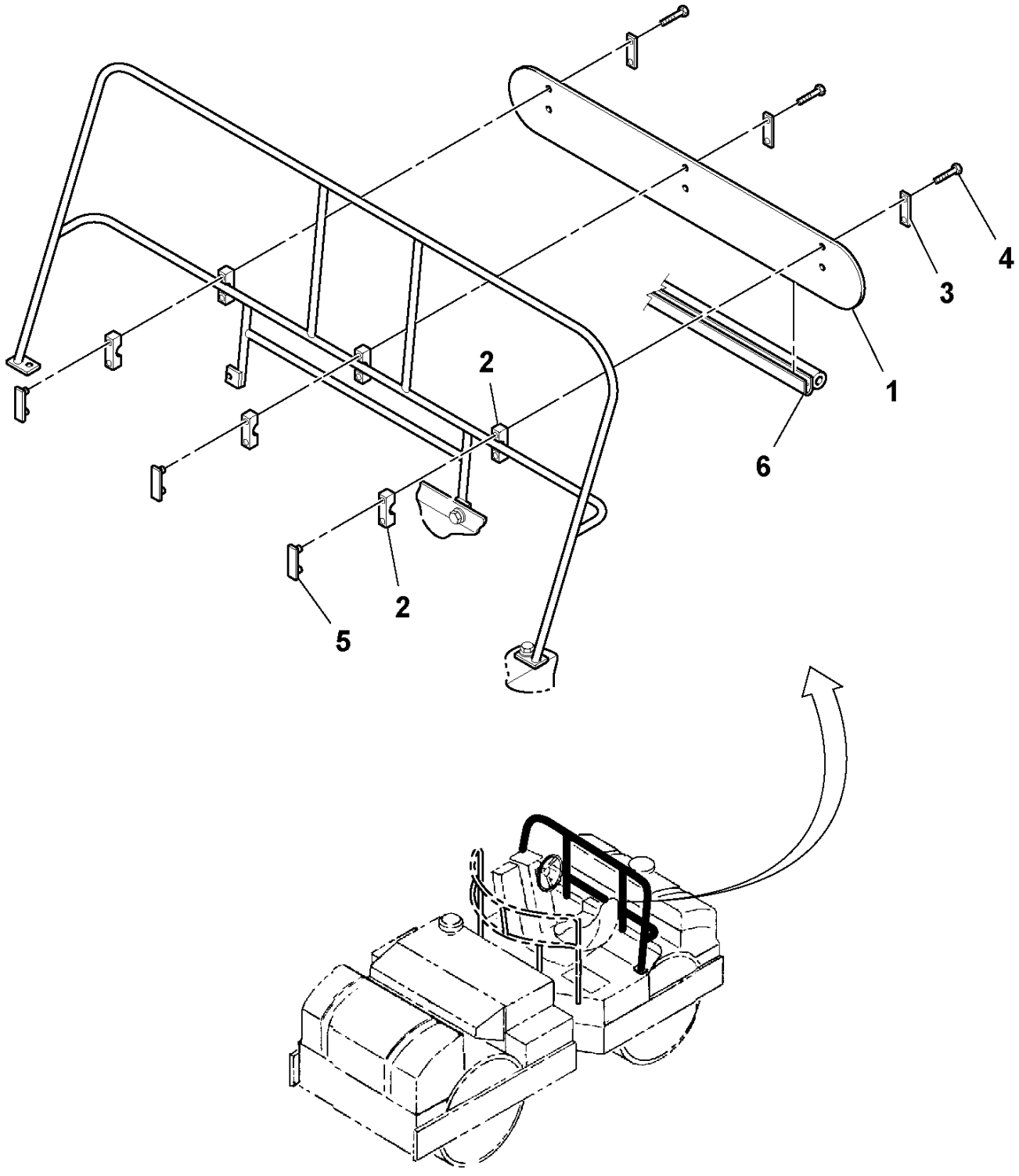

Railing Installation

POS	PART NUMBER	QTY	PART NAME	NOTES
1	RM 59216689	1	Hand Rail	
2	RM 59478131	1	Hand Rail	
3	RM 95919585	2	Hexagon screw	
4	RM 95922399	6	Washer	
5	RM 95923348	4	Lock nut	
6	RM 95920039	8	Hexagon screw	
7	RM 95923363	8	Lock nut	
8	RM 59544213	16	Washer	
9	RM 95919593	2	Screw	

Railing Installation

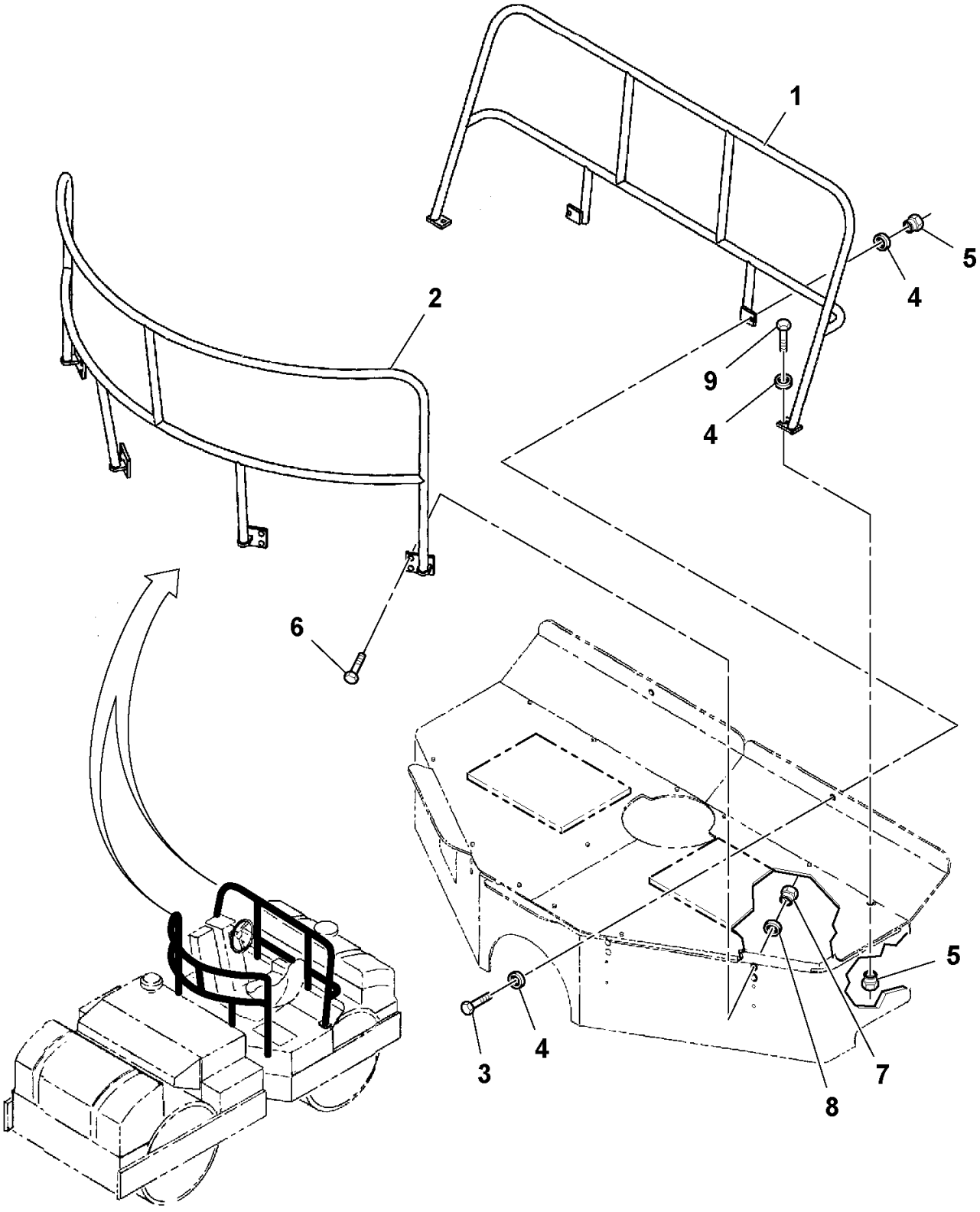

Console Installation

POS	PART NUMBER	QTY	PART NAME	NOTES
2		1	Console	
4	RM 59110114	1	Deck Plate	
5	RM 59693135	2	Door	
6	RM 59680983	8	Lock Screw	
7	RM 95919841	4	Hexagon screw	
8	RM 59434522	1	Plate	
9	RM 59717702	6	Screw	
10	RM 59918573	6	Nut	
11	RM 59807941	22	Nut	
12	RM 59110122	1	Deck Plate	
13	RM 59922153	14	Lock Screw	
14	RM 59565044	4	Washer	

Console Installation

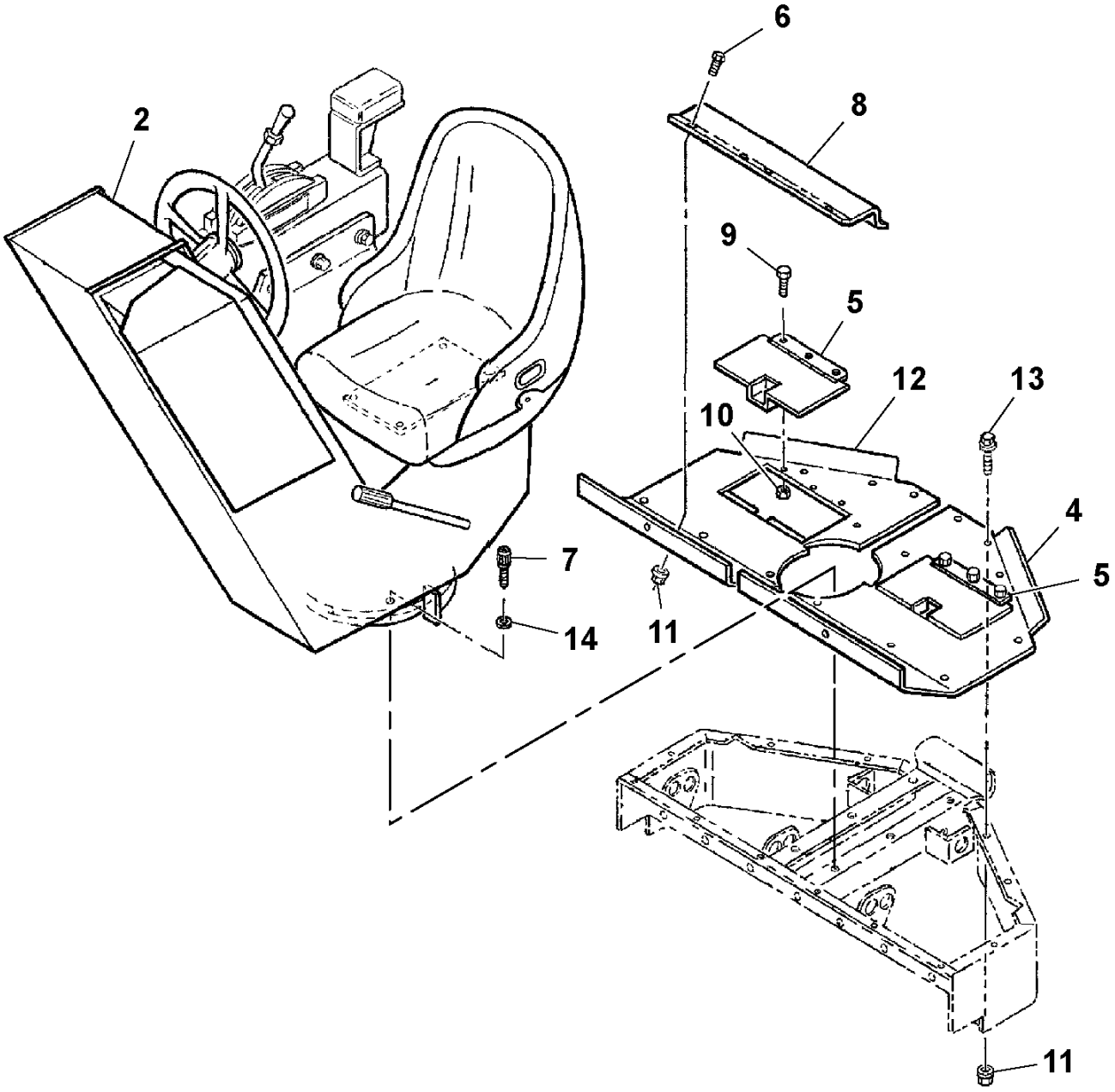

Suspension Seat (43844331)

POS	PART NUMBER	QTY	PART NAME	NOTES
2	RM 13167945	1	Seat	
	RM 13281332	1	Seat pan	
	RM 13198270	1	Contact	
	RM 13281365	1	Switch	
	RM 13281373	1	Screw	
10	RM 59195719	1	Seat	
13	RM 59154351	1	Handle	LATCHER W/HANDLE
19	RM 59154393	1	Bracket	
24	RM 13258934	1	Spring kit	
27	RM 54496377	1	Kit	
32	RM 54496385	1	Knob	

Suspension Seat (43844331)

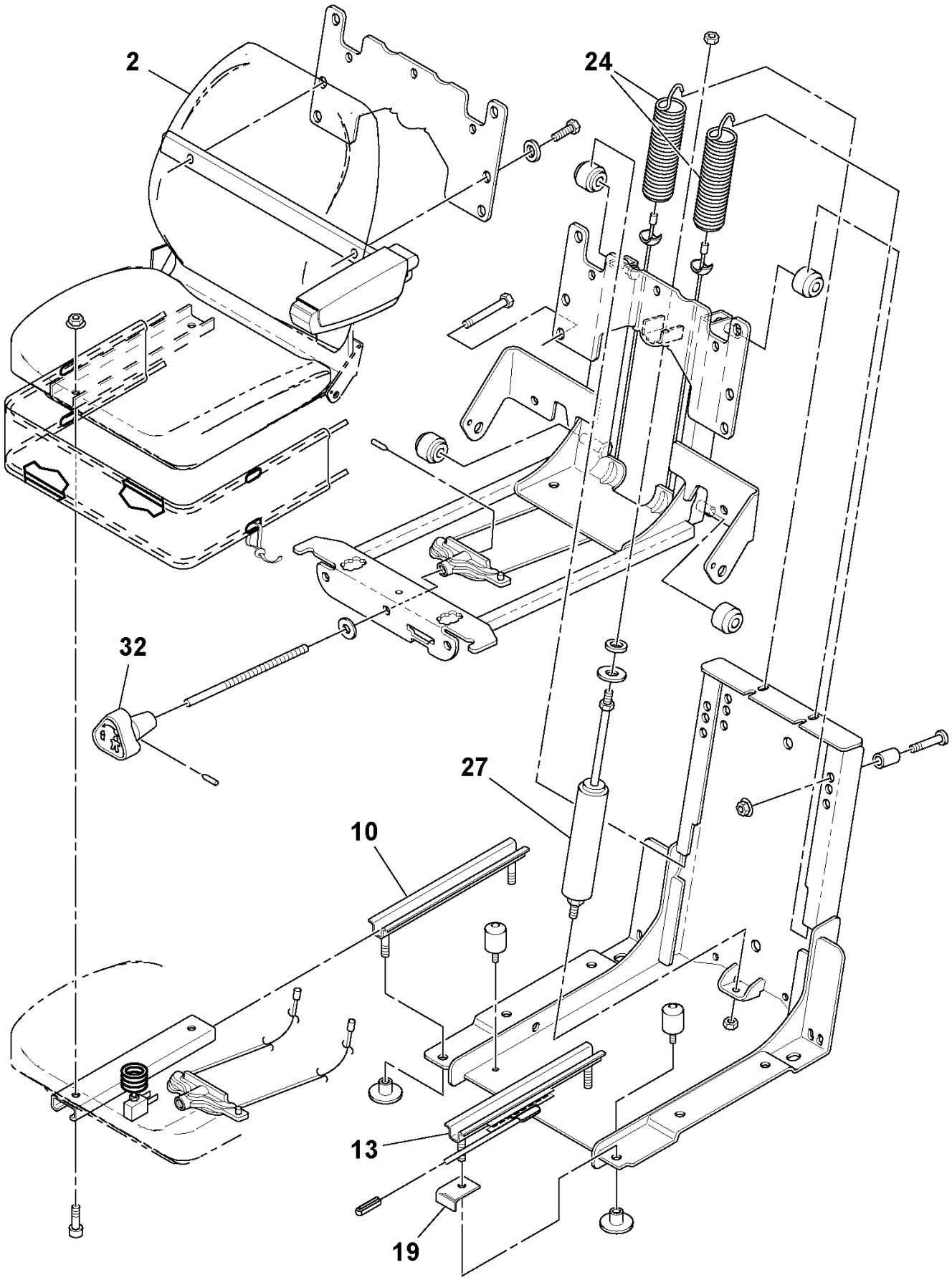

Suspension Seat (43844331)

POS	PART NUMBER	QTY	PART NAME	NOTES
2	RM 13167945	1	Seat	
	RM 13281332	1	Seat pan	
	RM 13198270	1	Contact	
	RM 13281365	1	Switch	
	RM 13281373	1	Screw	
10	RM 59195719	1	Seat	
13	RM 59154351	1	Handle	
19	RM 59154393	1	Bracket	
24	RM 13258934	1	Spring kit	
27	RM 54496377	1	Kit	
32	RM 54496385	1	Knob	
37	RM 13493077	1	Seat belt kit	

Suspension Seat (43844331)

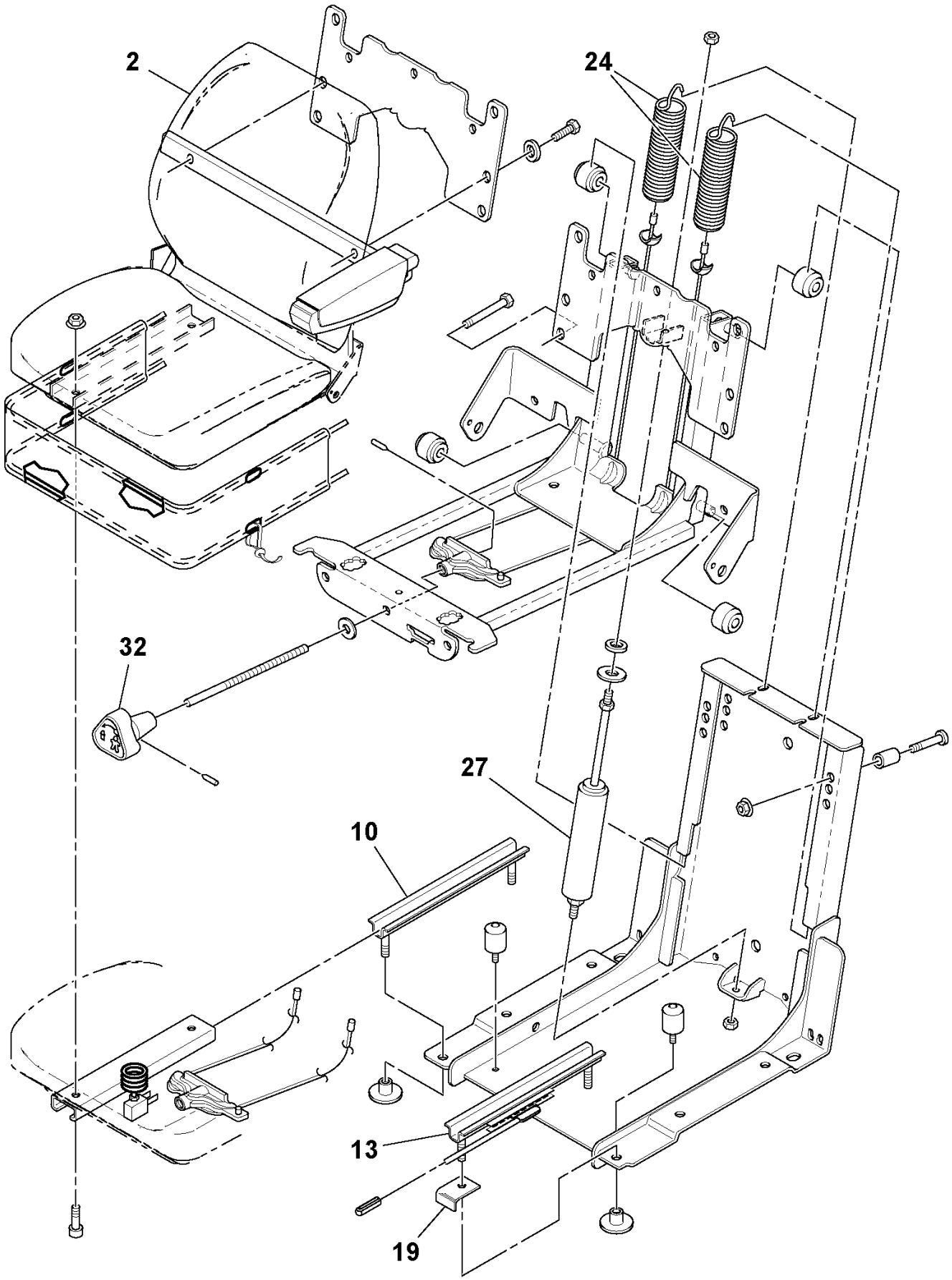

Suspension Seat (43844331)

POS	PART NUMBER	QTY	PART NAME	NOTES
2	RM 13167945	1	Seat	
	RM 13281332	1	Seat pan	
	RM 13198270	1	Contact	
	RM 13281365	1	Switch	
	RM 13281373	1	Screw	
10	RM 59195719	1	Seat	
13	RM 59154351	1	Handle	
19	RM 59154393	1	Bracket	
24	RM 13258934	1	Spring kit	
27	RM 54496377	1	Kit	
32	RM 54496385	1	Knob	
37	RM 13493077	1	Seat belt kit	

Suspension Seat (43844331)

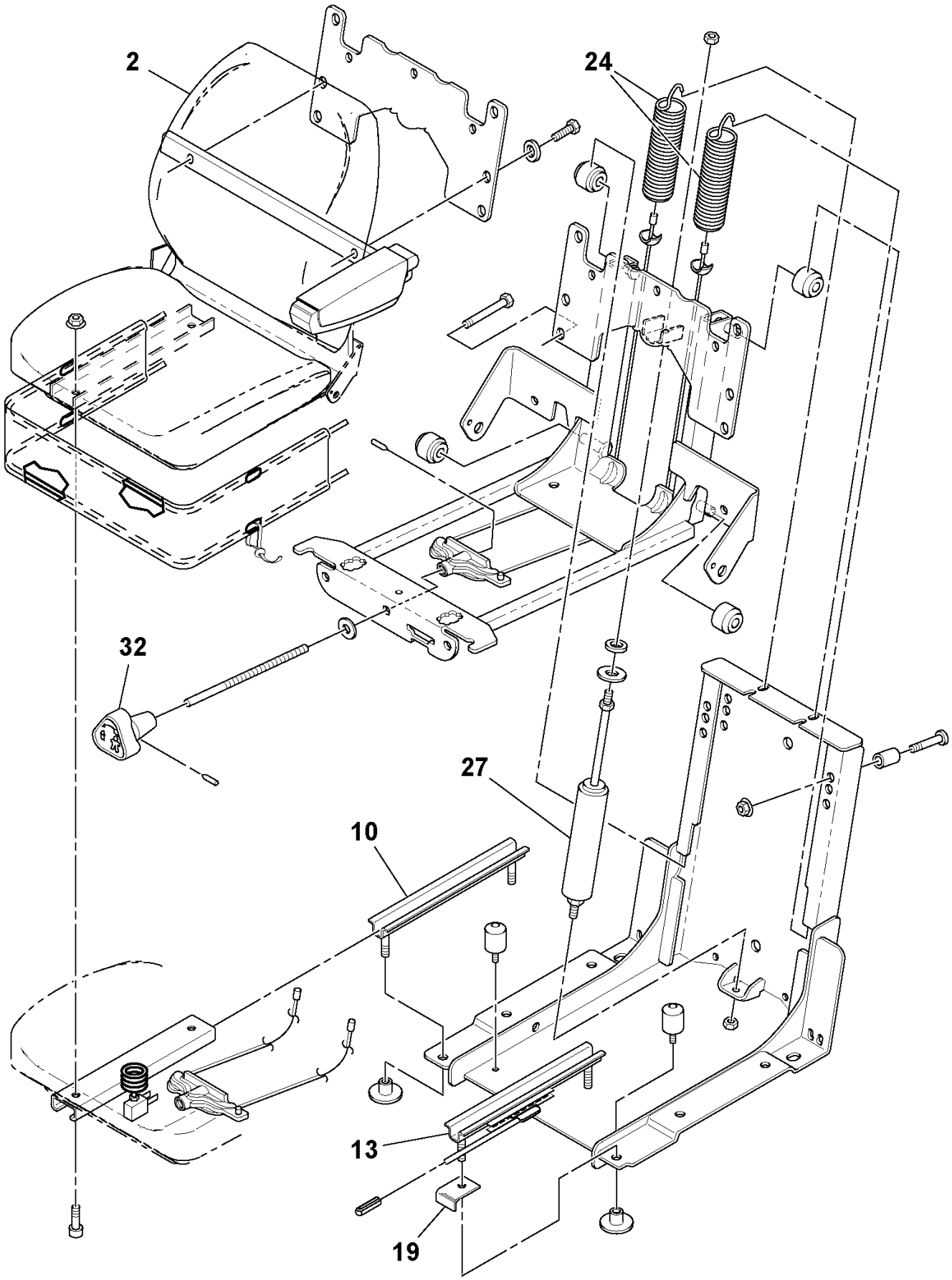

ROPS And Seat Belt Installation

POS	PART NUMBER	QTY	PART NAME	NOTES
1	RM 13167408	1	Roll-over Bar	DD-90
	RM 13167457	1	Roll-over Bar	DD-90HF
2	RM 95947396	8	Hexagon screw	
3	RM 59327940	8	Hexagon Nut	
4	RM 95922167	8	Plain Washer	
5	RM 58879917	1	Seat Belt Kit	
6	RM 58999020	1	Decal	ROLLOVER HAZARD
7	RM 96701495	2	Hexagon screw	
8	RM 96738596	2	Washer	
9	RM 96704291	2	Hexagon Nut	
10	RM 95919460	2	Hexagon screw	
11	RM 95922381	2	Plain Washer	
12	RM 95923330	2	Nut	
13	RM 59537266	2	Plain Washer	

ROPS And Seat Belt Installation

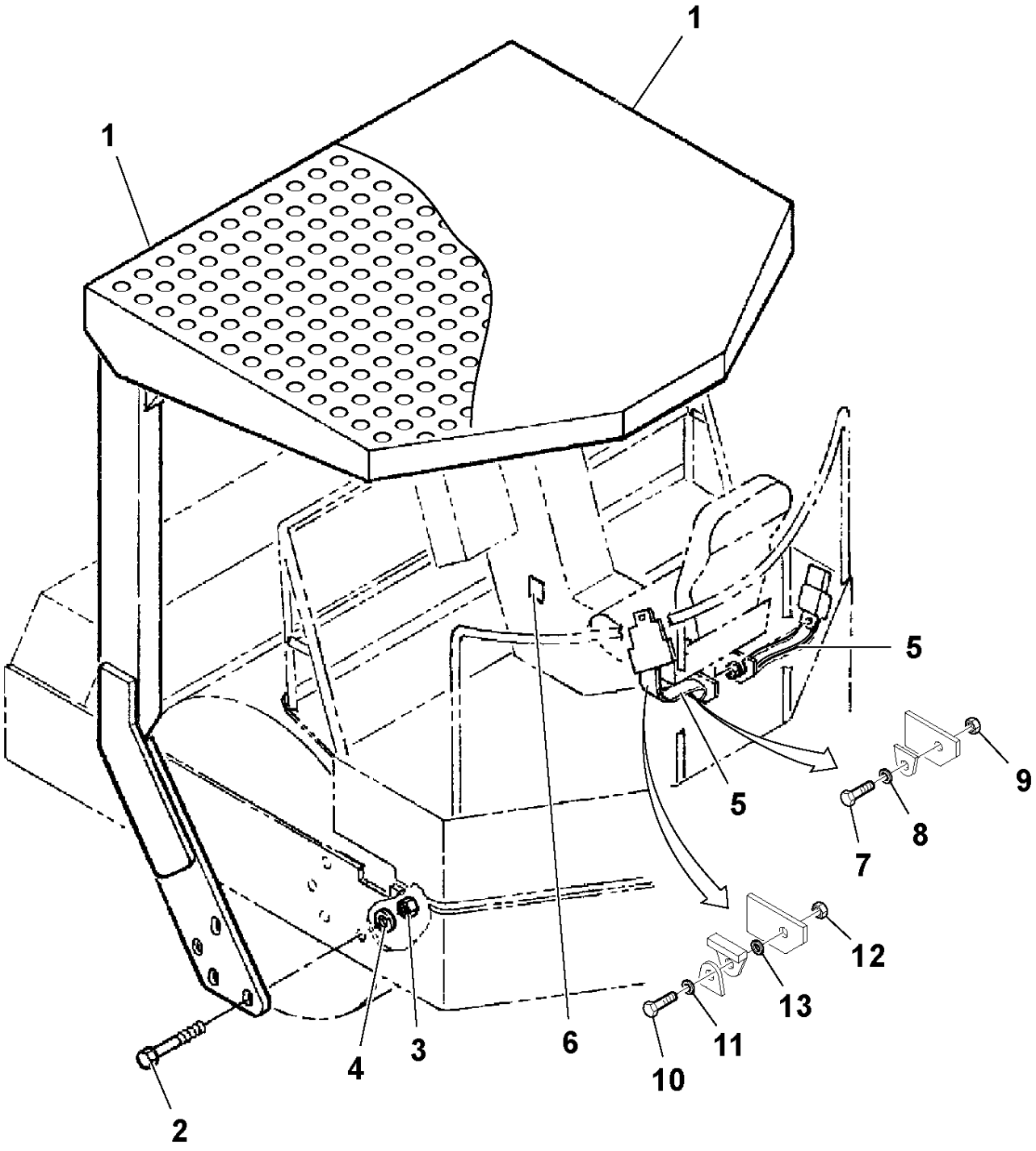

Umbrella Installation

POS	PART NUMBER	QTY	PART NAME	NOTES
1	RM 59950113	1	Canopy	
2	RM 95919445	2	Hexagon screw	
3	RM 95922381	4	Plain Washer	
4	RM 59950121	1	Bracket	
5	RM 59327858	2	Hexagon Nut	

Umbrella Installation

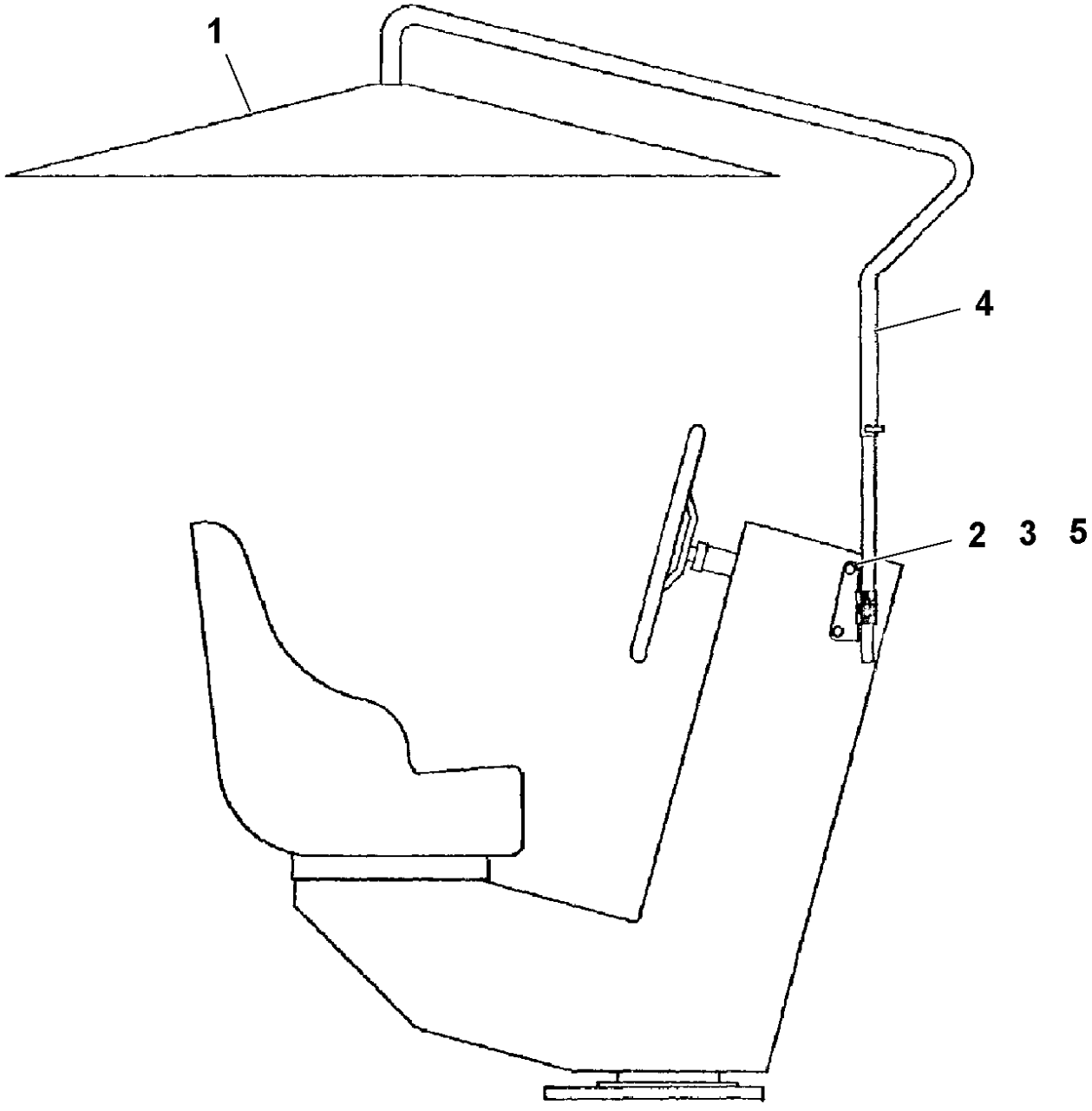

Vci Pre-cab Modification

POS	PART NUMBER	QTY	PART NAME	NOTES
5	RM 59818393	1	Relay	
6	RM 59480996	2	Screw	
7	RM 95922332	2	Plain Washer	
8	RM 95923124	2	Hexagon Nut	
24	RM 58952631	1	Roll-over Bar	

Vci Pre-cab Modification

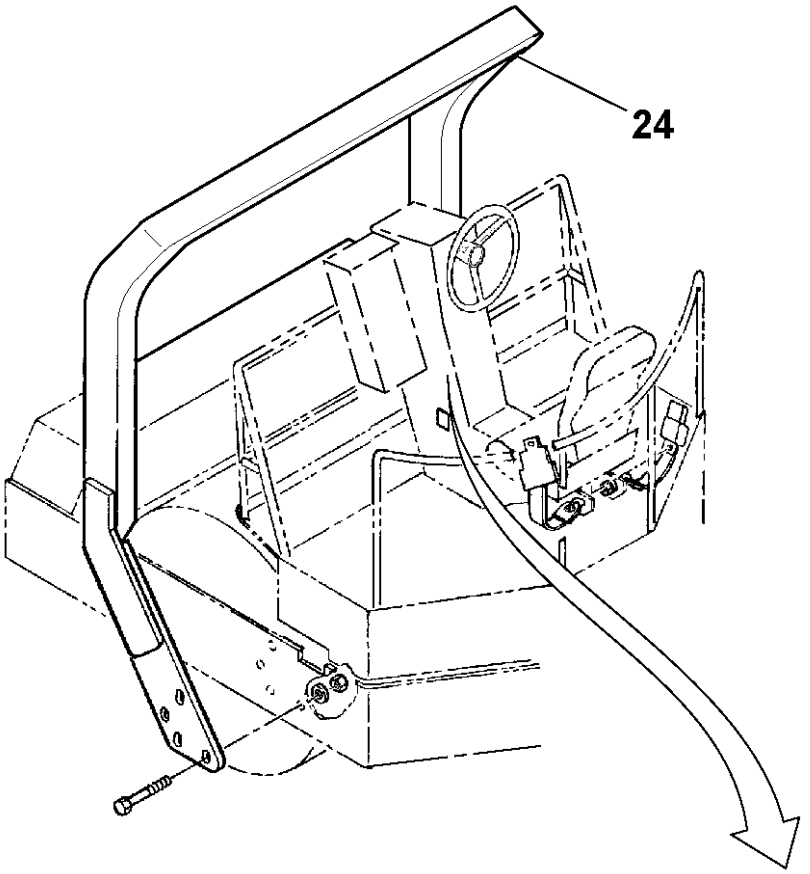

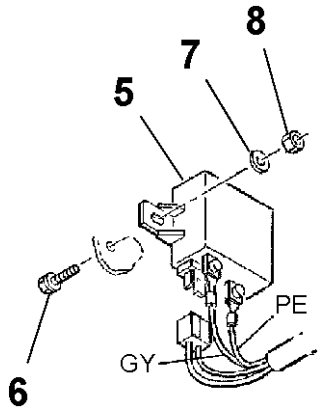

"A"

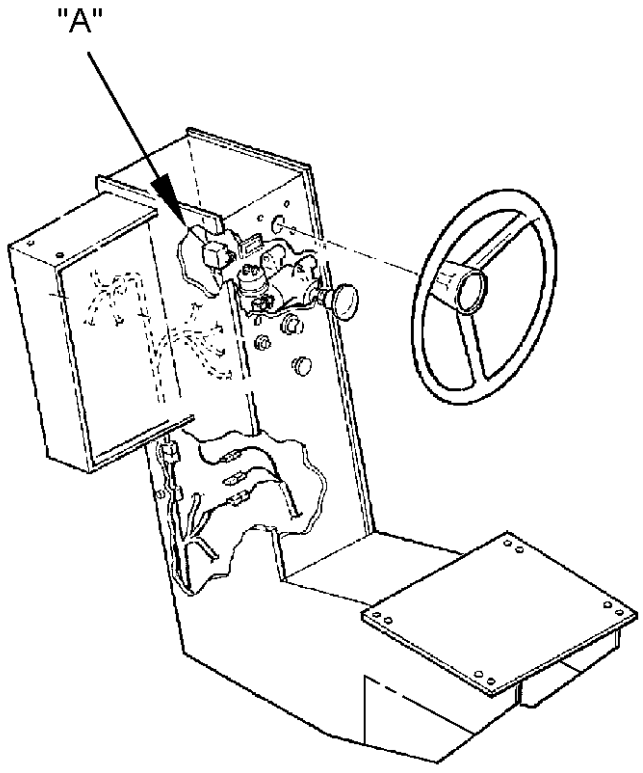

Vci Pre-cab Modification

POS	PART NUMBER	QTY	PART NAME	NOTES
1	RM 58830787	1	Hatch	
2	RM 58820150	1	Cover	
3	RM 59324392	1	Filter	
	RM 58877515	1	Gasket	
4	RM 59935742	1	Stud	
9	RM 59811364	1	Latch	
10	RM 58948514	1	Deck Plate	LH
11	RM 58948522	1	Deck Plate	RH
12	RM 59456269	2	Screw	
13	RM 59918573	2	Nut	
14	RM 59705202	3	Plate	
16	RM 58947433	1	Tab	
17	RM 59028779	2	Bracket	
18	RM 59028787	2	Bracket	
19	RM 59726885	2	Rubber Damper	
20	RM 95919593	8	Screw	
21	RM 59537266	12	Plain Washer	
22	RM 95923348	8	Lock nut	
23	RM 95920856	4	Screw	
25	RM 58820168	REQ	Locking Wire	

Vci Pre-cab Modification

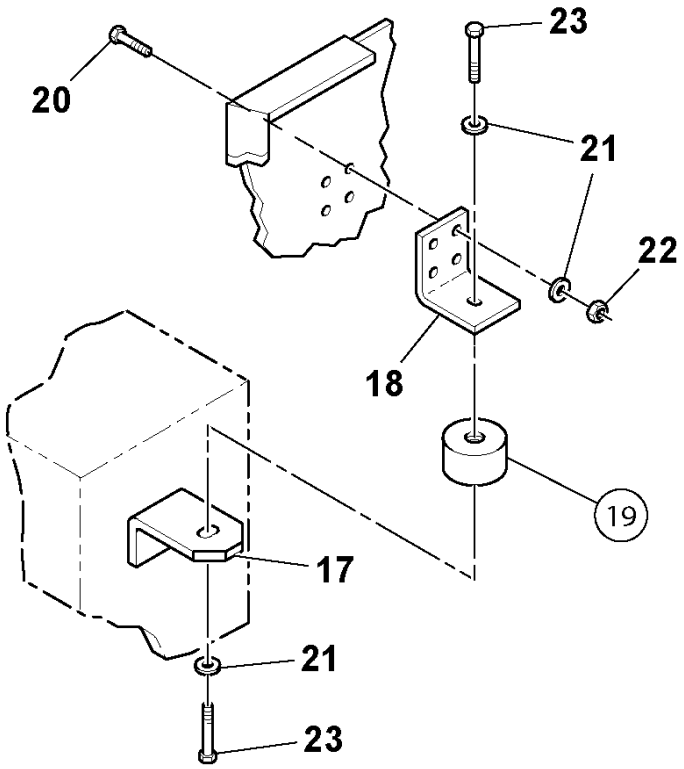

"C - C"

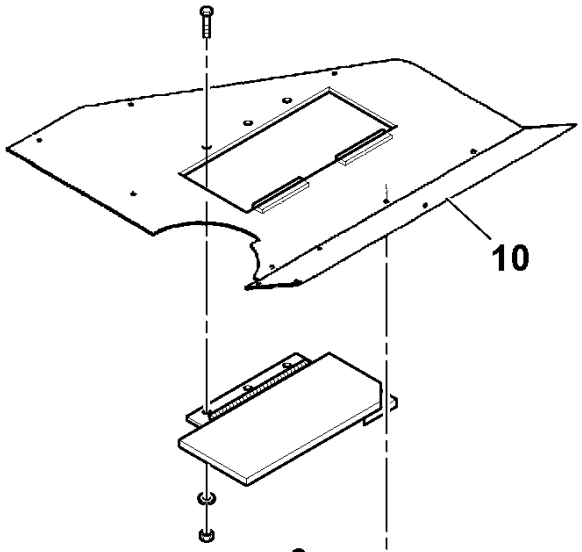

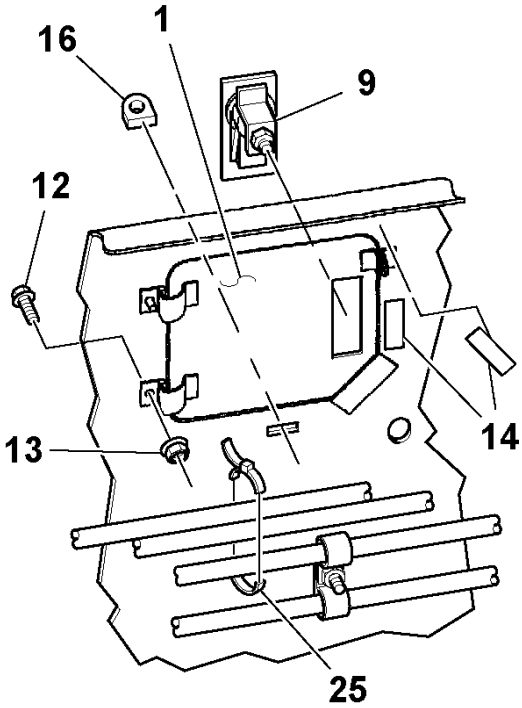

"D - D"

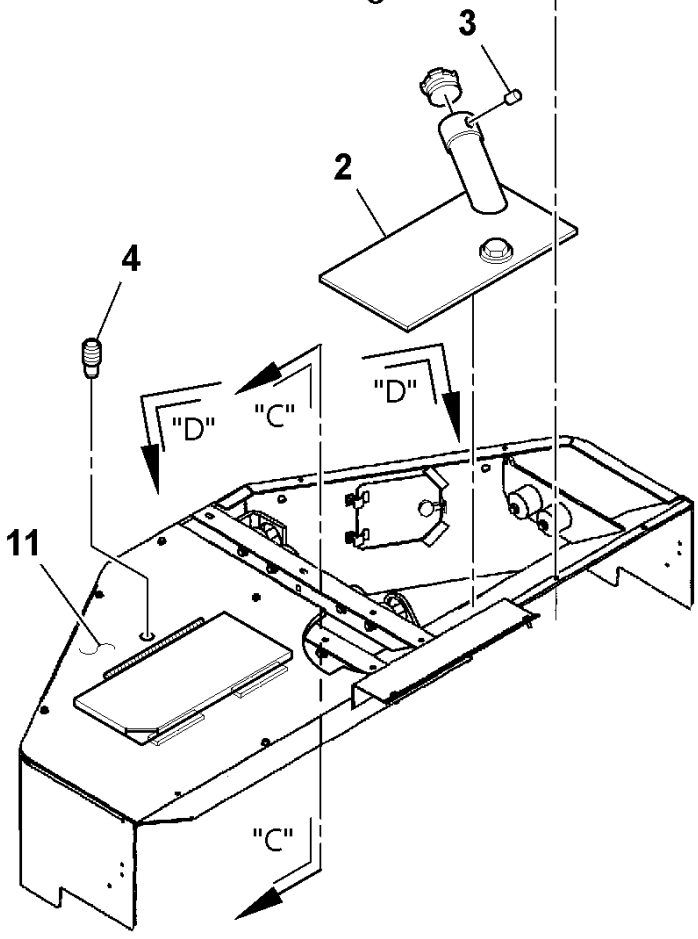

Vci Pre-cab Modification

POS	PART NUMBER	QTY	PART NAME	NOTES
26	RM 13198056	1	Engine hood	
27	RM 59233056	1	Mudflap	
28	RM 59233049	1	Mudflap	
29	RM 59233072	1	Backing Plate	
30	RM 59233064	1	Backing Plate	
31	RM 96704598	11	Lock nut	
32	RM 96718689	11	Hex. Socket Screw	
33	RM 96741053	11	Washer	

Vci Pre-cab Modification

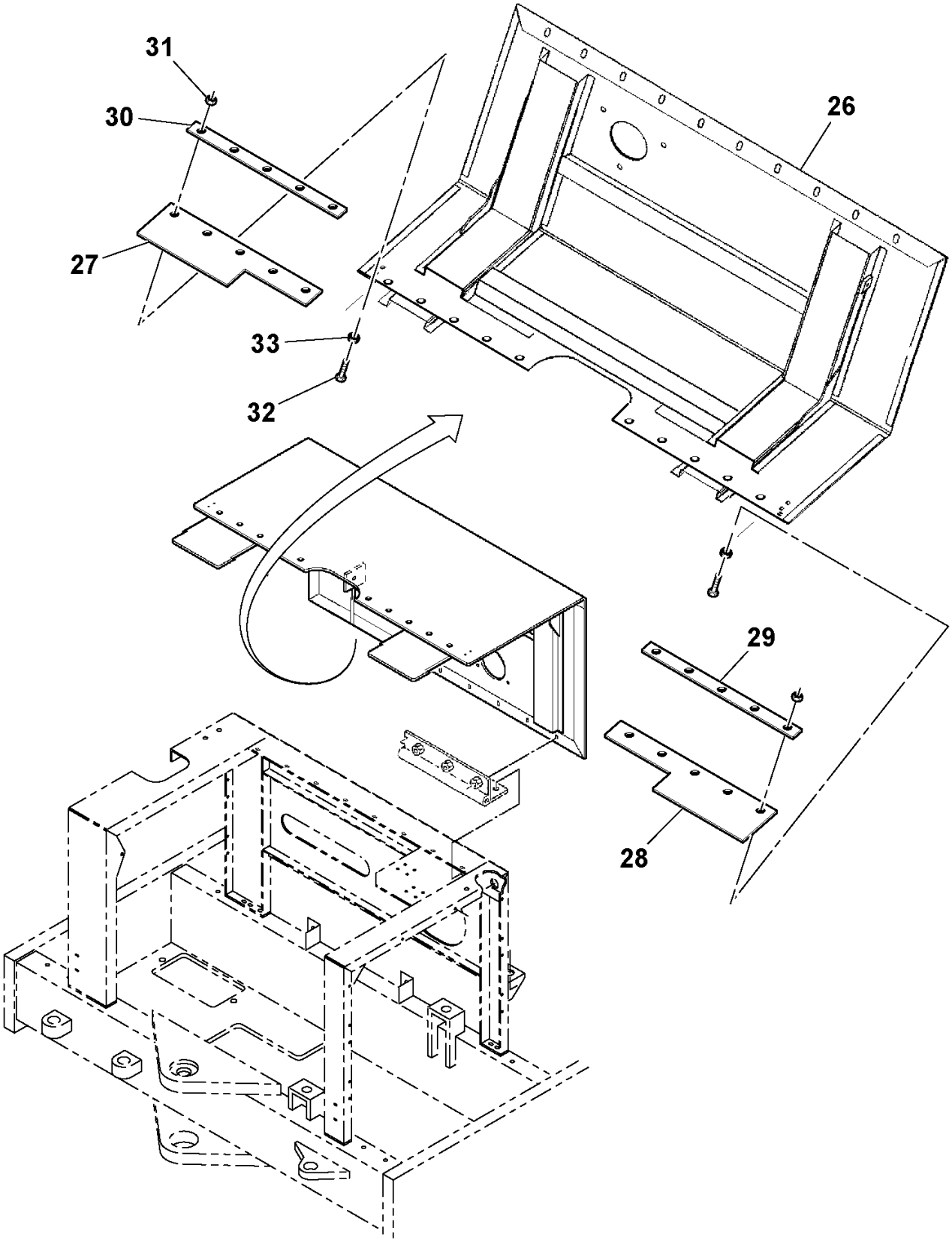

Cab Heater Installation

POS	PART NUMBER	QTY	PART NAME	NOTES
6	RM 95090106	4	Clamp	
7	RM 13161369	1	Hose	
12	RM 95048542	1	Nipple	
13	RM 95264966	1	T-nipple	
14	RM 58910720	2	Fitting	
15	RM 59564575	2	Ball Valve	
16	RM 95302311	2	Adapter	

Cab Heater Installation

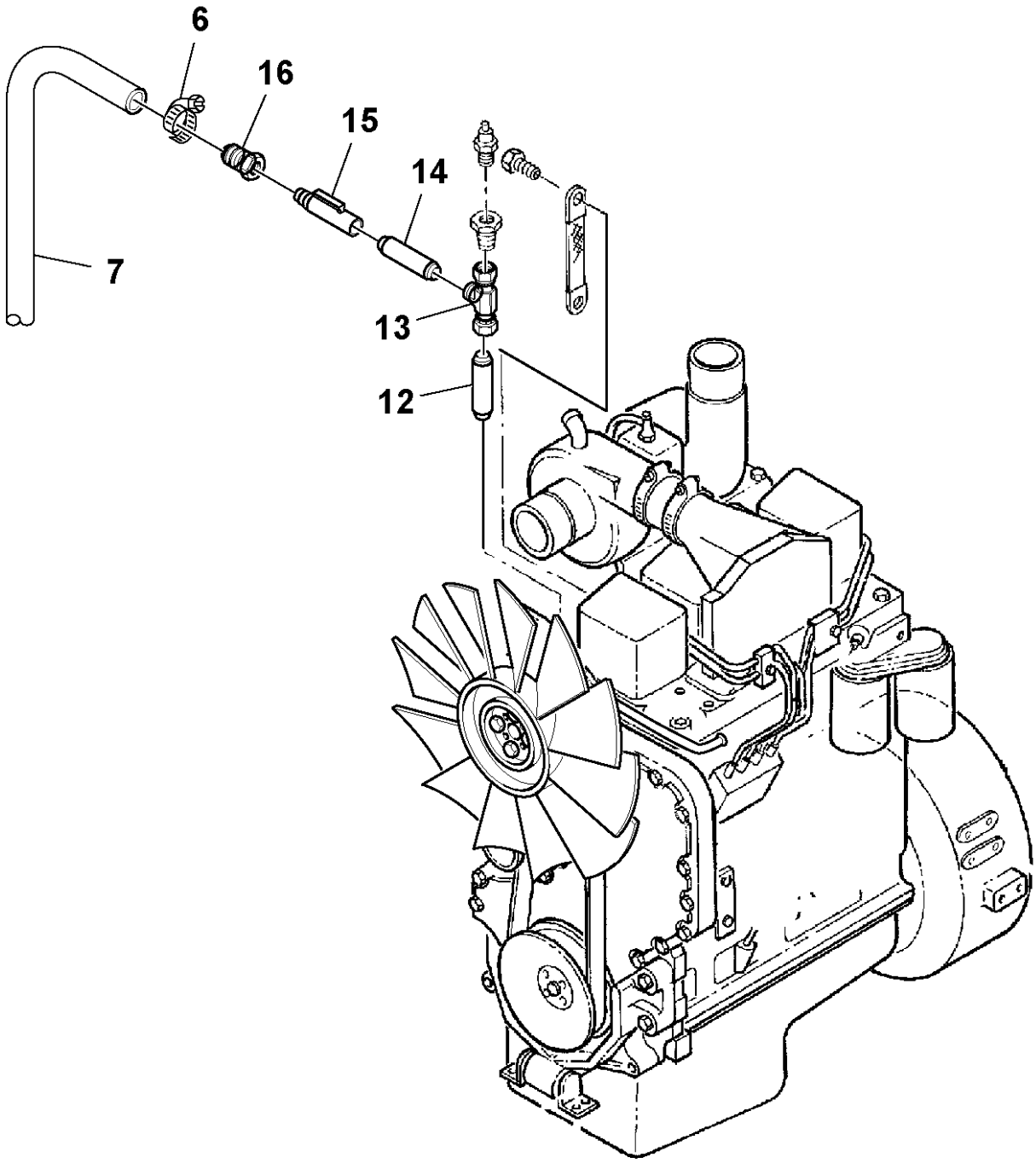

Cab Heater Installation

POS	PART NUMBER	QTY	PART NAME	NOTES
6	RM 95090106	4	Clamp	
8	RM 13161377	1	Hose	
14	RM 58910720	2	Fitting	
15	RM 59564575	2	Ball Valve	
16	RM 95302311	2	Adapter	

Cab Heater Installation

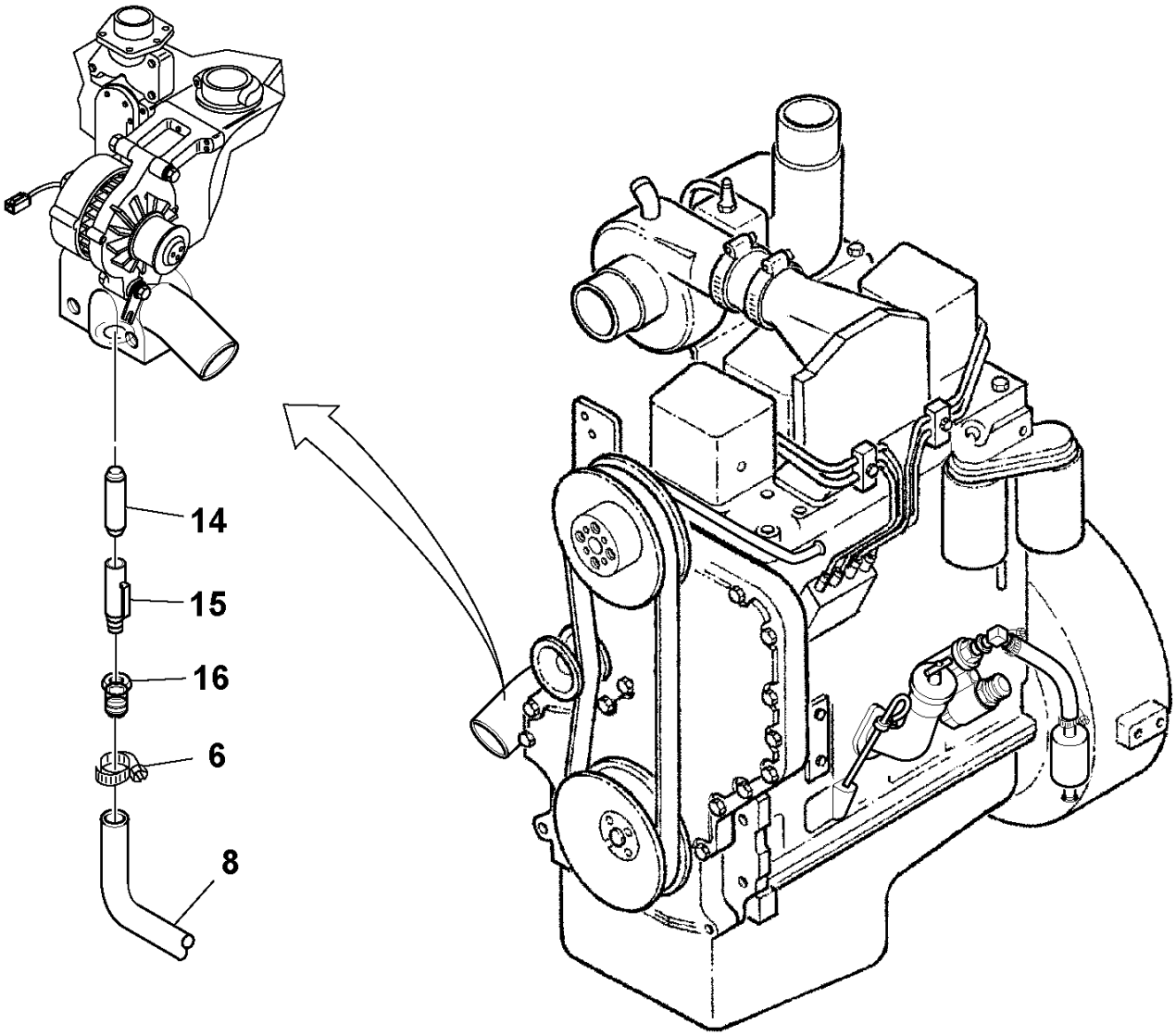

Cab Heater Installation

POS	PART NUMBER	QTY	PART NAME	NOTES
1	RM 13161351	1	Cable harness	
2	RM 59195941	1	Heater	
3	RM 59196436	1	Rocker Switch	
4	RM 13160585	1	Bracket	
5	RM 13160593	1	Plate	
6	RM 95090106	4	Clamp	
7	RM 13161369	1	Hose	
8	RM 13161377	1	Hose	
9	RM 96714472	4	Hexagon screw	
10	RM 95922324	8	Plain Washer	
11	RM 96704598	4	Lock nut	

Cab Heater Installation

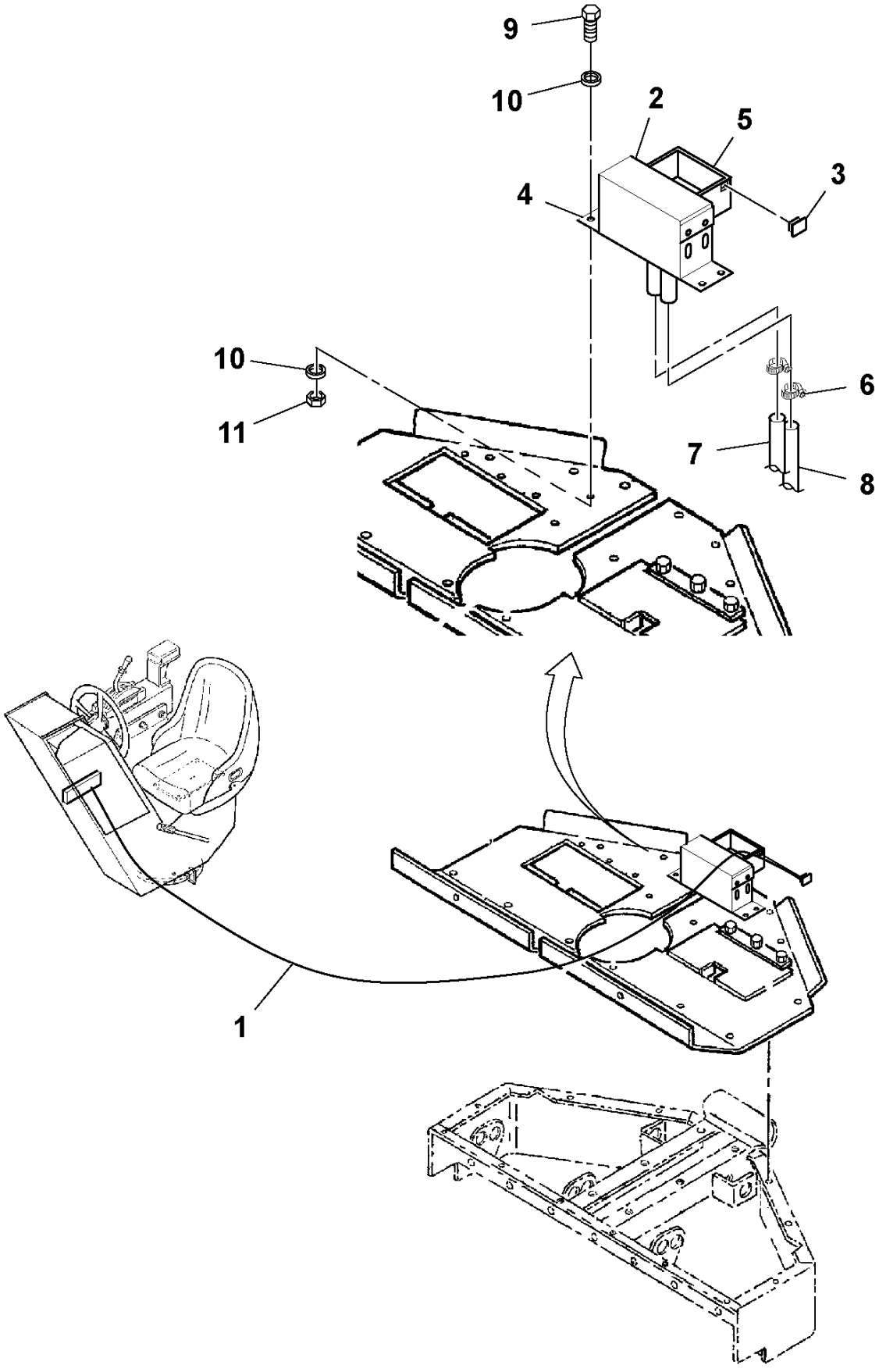

Safety Manual Pouch Installation

POS	PART NUMBER	QTY	PART NAME	NOTES
3	RM 59862938	1	Pocket	
4	RM 59787465	1	Lock Screw	
5	RM 95923298	1	Lock nut	
6	RM 95922183	1	Plain Washer	
7	RM 58874397	1	Washer	
8	RM 58880303	1	Ring	
9	RM 58880311	1	Chain	
10	RM 59146837	1	Safety manual	

Safety Manual Pouch Installation

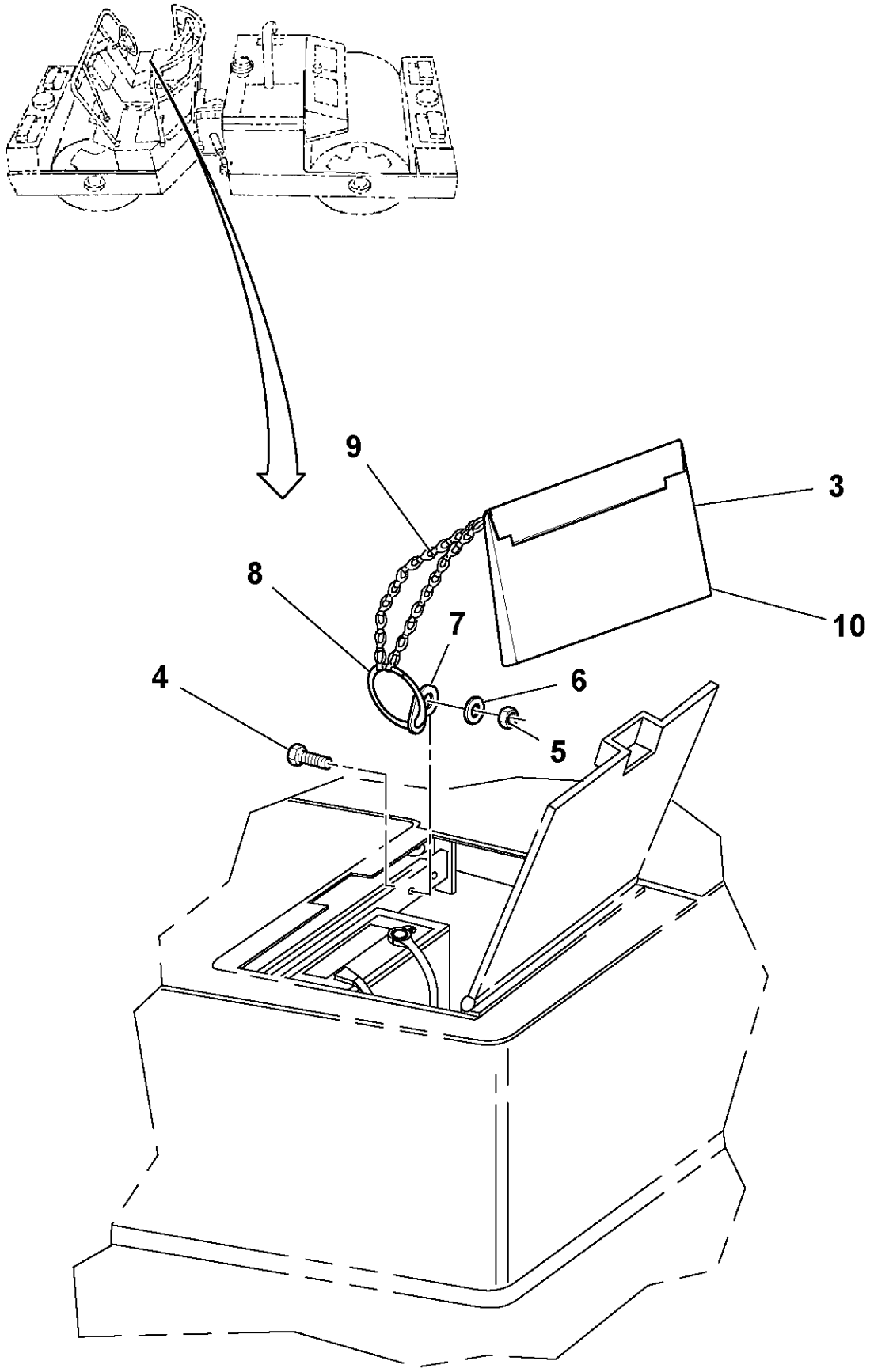

Decal Installation

POS	PART NUMBER	QTY	PART NAME	NOTES
1	RM 58999681	1	Decal	EMERGENCY STOP
2	RM 59132118	2	Warning Decal	OPERATION WARNING
3	RM 58965690	2	Decal	ROLL OVER HAZARD
4	RM 59086488	1	Decal	STRIPE
5	RM 13199344	1	Decal	HYDRAULIC OIL LEVEL
6	RM 59216663	1	Decal	LUBE CHART DD-90
	RM 59216671	1	Decal	LUBE CHART DD-90HF
7	RM 58965542	2	Warning Decal	CRUSH AREA
9	RM 59281006	1	Decal	CHECKLIST
10	RM 58999608	1	Decal	PARKING BRAKE
11	RM 59667287	4	Warning Decal	WARNING, DO NOT SIT ON
12	RM 59153379	1	Decal	OPERATORS MANUAL
13	RM 59087536	2	Decal	WATER
14	RM 59087528	2	Decal	AMPLITUDE ADJUSTMENT
	RM 59171702	1	Decal	AMPLITUDE ADJUSTMENT
15	RM 59246603	4	Decal	TIE DOWN
16	RM 59098079	1	Decal	THROTTLE
17	RM 13855580	2	Decal	SIGNATURE
18	RM 59087569	1	Decal	DIESEL FUEL
19	RM 13855572	2	Decal	SIGNATURE
20	RM 59246611	4	Decal	LIFT POINT
21	RM 58999582	1	Decal	HORN
23	RM 59288480	1	Decal	FUSE IDENTIFICATION
24	RM 59020040	1	Warning Decal	PRESSURE HAZARD WARNING
25	RM 59087759	1	Decal	GREASE CONSOLE BEARING
26	RM 13160981	1	Decal	TOWING, S/N 169449-
	RM 59216622	1	Decal	TOWING, S/N -169448
27	RM 59132142	1	Decal	ROTATING FAN
28			-	
29	RM 59086512	2	Decal	DD-90
	RM 59087411	2	Decal	DD-90HF
30			-	
31			-	
34	RM 59166272		Decal	DD-90HF ONLY
35			-	
37	RM 13451653	2	Decal	WARNING - CRUSH HAZARD
38		1	-	
39	RM 13870621	1	Decal	WARNING - CRUSH HAZARD
	RM 13457254		Decal Set	
	RM 59947507	1	Paint	
	RM 35304286	1	Spray Paint	

Decal Installation

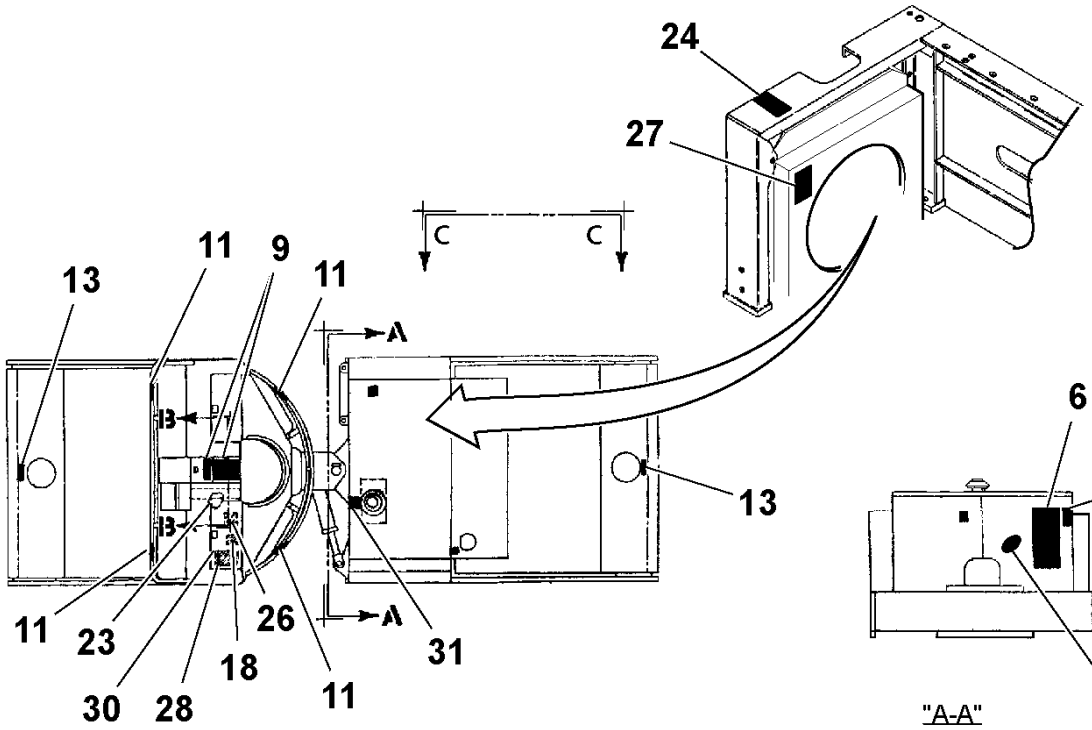

"A-A"

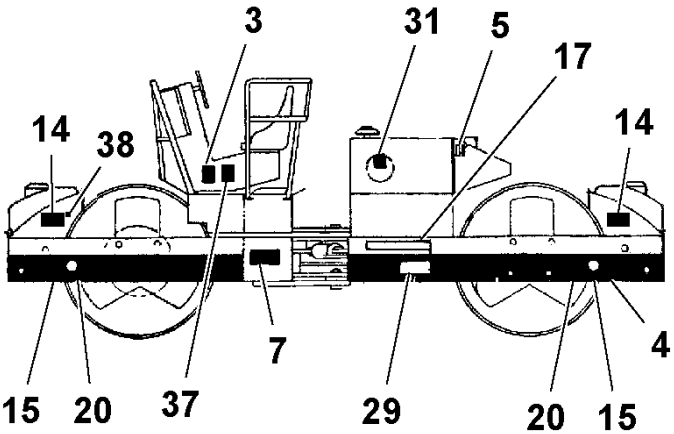

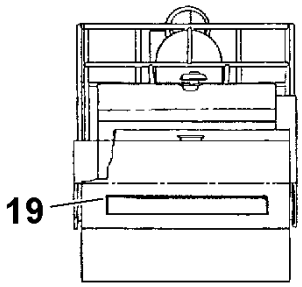

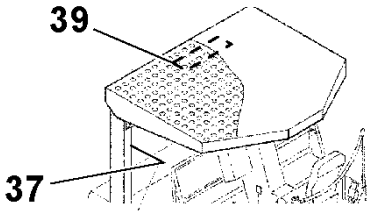

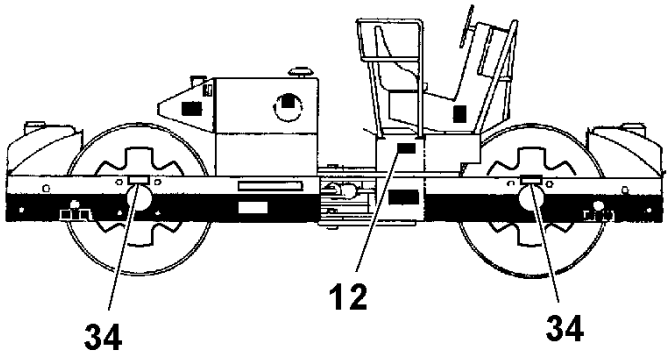

"C-C"

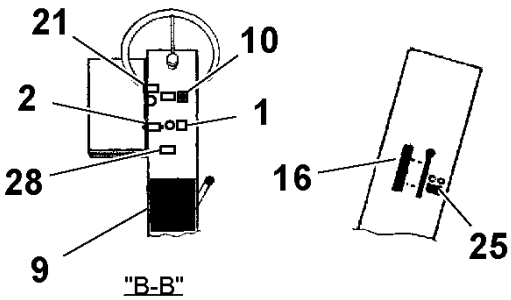

"B-B"

Decal Installation

POS	PART NUMBER	QTY	PART NAME	NOTES
1	RM 58999681	1	Decal	EMERGENCY STOP
2	RM 59132118	2	Warning Decal	OPERATION WARNING
3	RM 58965690	2	Decal	ROLL OVER HAZARD
4	RM 59086488	1	Decal	STRIPE
5	RM 59087551	1	Decal	HYDRAULIC OIL LEVEL
6	RM 59216663	1	Decal	LUBE CHART DD-90
	RM 59216671	1	Decal	LUBE CHART DD-90HF
7	RM 58965542	2	Warning Decal	CRUSH AREA
8			-	
9	RM 59281006	1	Decal	CHECKLIST
10	RM 59233668	1	Decal	PARKING BRAKE
11	RM 59667287	4	Warning Decal	WARNING, DO NOT SIT ON
12	RM 59153379	1	Decal	OPERATIONS MANUAL
13	RM 59087536	2	Decal	WATER
14	RM 59087528	2	Decal	AMPLITUDE ADJUSTMENT
	RM 59171702	1	Decal	AMPLITUDE ADJUSTMENT
15	RM 59246603	4	Decal	TIE DOWN
16	RM 59098079	1	Decal	THROTTLE
17	RM 13163340	2	Decal	SIGNATURE
18	RM 59087569	1	Decal	DIESEL FUEL
19	RM 13163340	2	Decal	SIGNATURE
20	RM 59246611	4	Decal	LIFT POINT
21	RM 58999582	1	Decal	HORN
23	RM 59288480	1	Decal	FUSE IDENTIF, S/N 165748-
	RM 59013177	1	Decal	FUSE IDENTIF, S/N -165747
24	RM 59020040	1	Warning Decal	PRESSURE HAZARD WARNING
25	RM 59087759	1	Decal	GREASE CONSOLE BEARING
26	RM 59216622	1	Decal	TOWING
27	RM 59051151	1	Warning Decal	WARNING
28			-	
29	RM 59086512	2	Decal	DD-90
	RM 59087411	2	Decal	DD-90HF
30			-	
31			-	
34	RM 59166272	2	Decal	OIL, DD-90HF ONLY
	RM 59947507	1	Paint	
	RM 35304286	1	Spray Paint	

Decal Installation

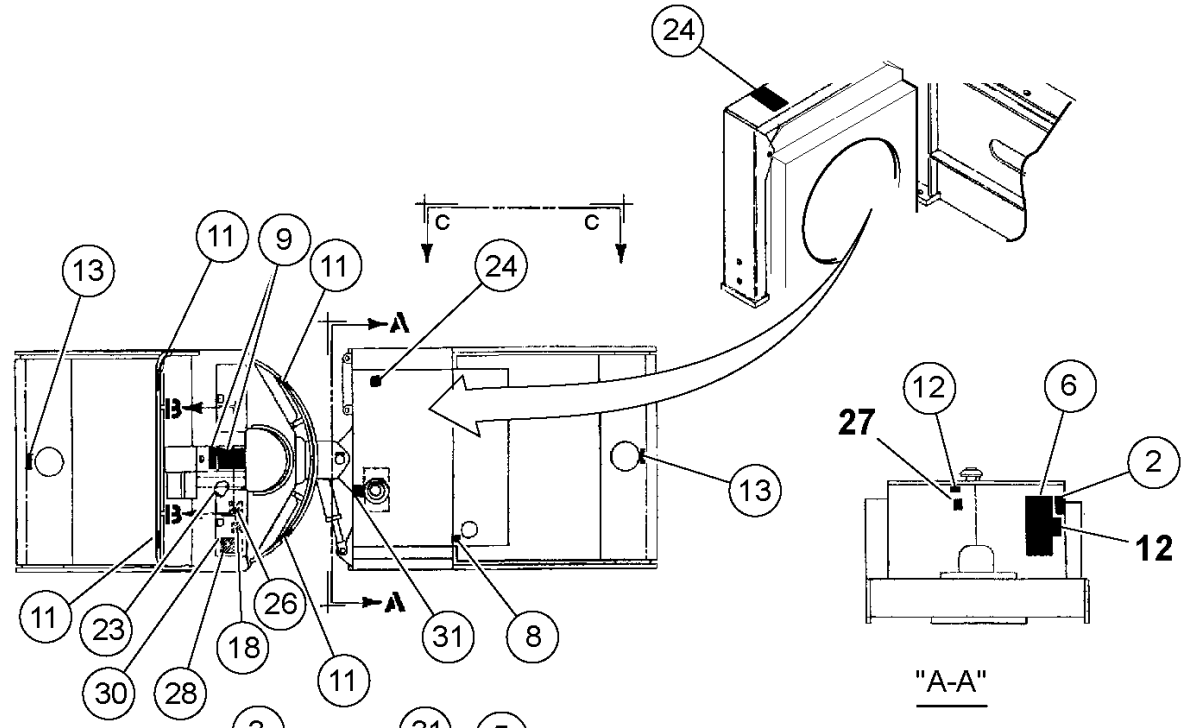

"A-A"

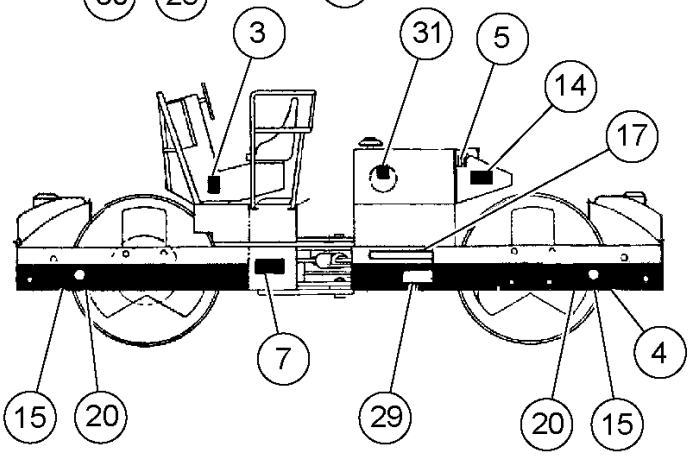

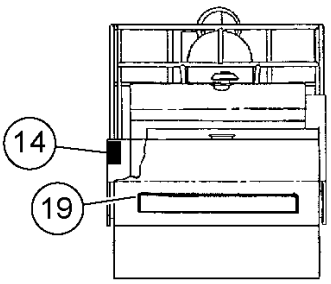

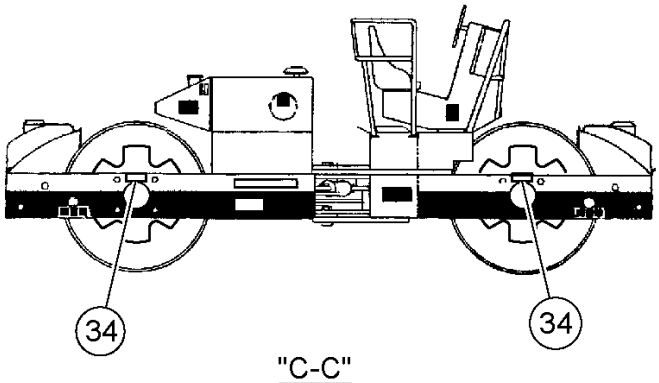

"C-C"

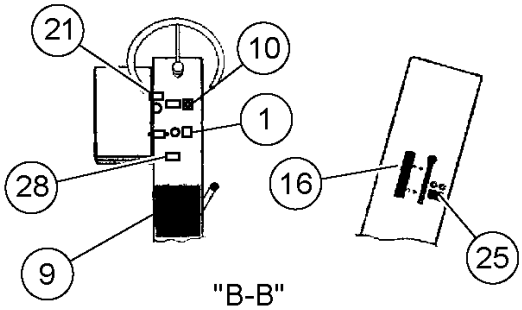

"B-B"

Hydraulic Tank Installation

POS	PART NUMBER	QTY	PART NAME	NOTES
1		1	Hydraulic tank	
2	RM 96738596	2	Washer	
3	RM 96714050	2	Hexagon screw	
4	RM 59217059	1	Bracket	
5	RM 59869917	8	Lock Screw	
6	RM 58965948	2	Stud	
7	RM 10344208	4	Engine anchorage	
8	RM 59653188	4	Washer	
9	RM 96704622	4	Hexagon Nut	
10		1	Filter	
	RM 59434779	1	Oil Filter	STEERING AND BRAKE
	RM 59490664	1	Oil Filter	STEERING AND BRAKE
	RM 95357570	1	Adapter	
	RM 95330692	1	Adapter	
11	RM 59965962	2	Screw	
12		1	Filter	
	RM 59587188	1	Oil Filter	VIBRATION
	RM 59587196	1	Oil Filter	VIBRATION
	RM 95356986	1	Adapter	
	RM 95376133	1	Adapter	
	RM 95403325	1	T-nipple	
13		1	Filter	
	RM 59587188	1	Oil Filter	PROPULSION
	RM 59587196	1	Oil Filter	PROPULSION
	RM 95376133	1	Adapter	
	RM 95402830	1	Adapter	
14	RM 96741046	8	Plain Washer	
15	RM 59077602	1	Valve	
16	RM 96704960	2	Hexagon screw	
17	RM 96704614	4	Nut	
18	RM 95480109	1	Adapter	90 DEG
19	RM 59919670	2	Adapter	STRAIGHT
20	RM 96701917	2	Hexagon screw	
22			-	

Hydraulic Tank Installation

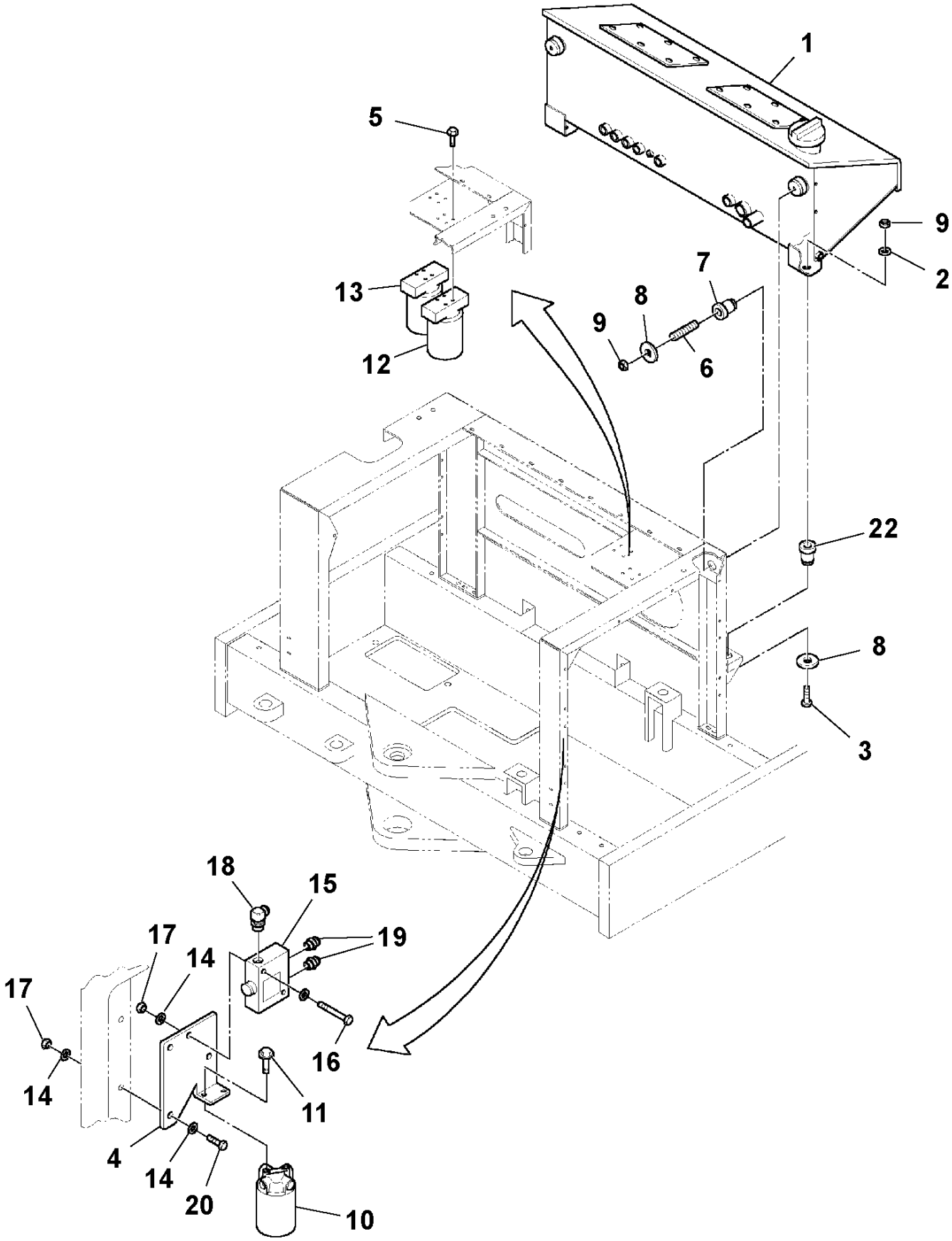

Hydraulic Tank Assembly

POS	PART NUMBER	QTY	PART NAME	NOTES
1	RM 13184114	1	Hydraulic fluid tank	
	RM 13305099	1	Gasket	
	RM 13184312	1	Lid	
	RM 96702816	12	Hexagon screw	
	RM 96741038	12	Washer	
2	RM 95323465	1	Plug	
3	RM 59847798	1	Adapter	
4	RM 95469128	1	Adapter	
5	RM 95357570	1	Adapter	
6	RM 95280186	2	Adapter	
7	RM 13356886	1	Strainer	
8	RM 95748562	1	Plug	
9	RM 59574228	1	Adapter	
11	RM 59919670	1	Adapter	
12	RM 59991992	1	Gauge	
13	RM 95739306	1	T-nipple	
14	RM 59672709	1	Adapter	
15	RM 95387338	1	Adapter	
16	RM 59922914	1	Adapter	
17	RM 59923797	1	T-nipple	
18	RM 59028258	1	Breather	

Hydraulic Tank Assembly

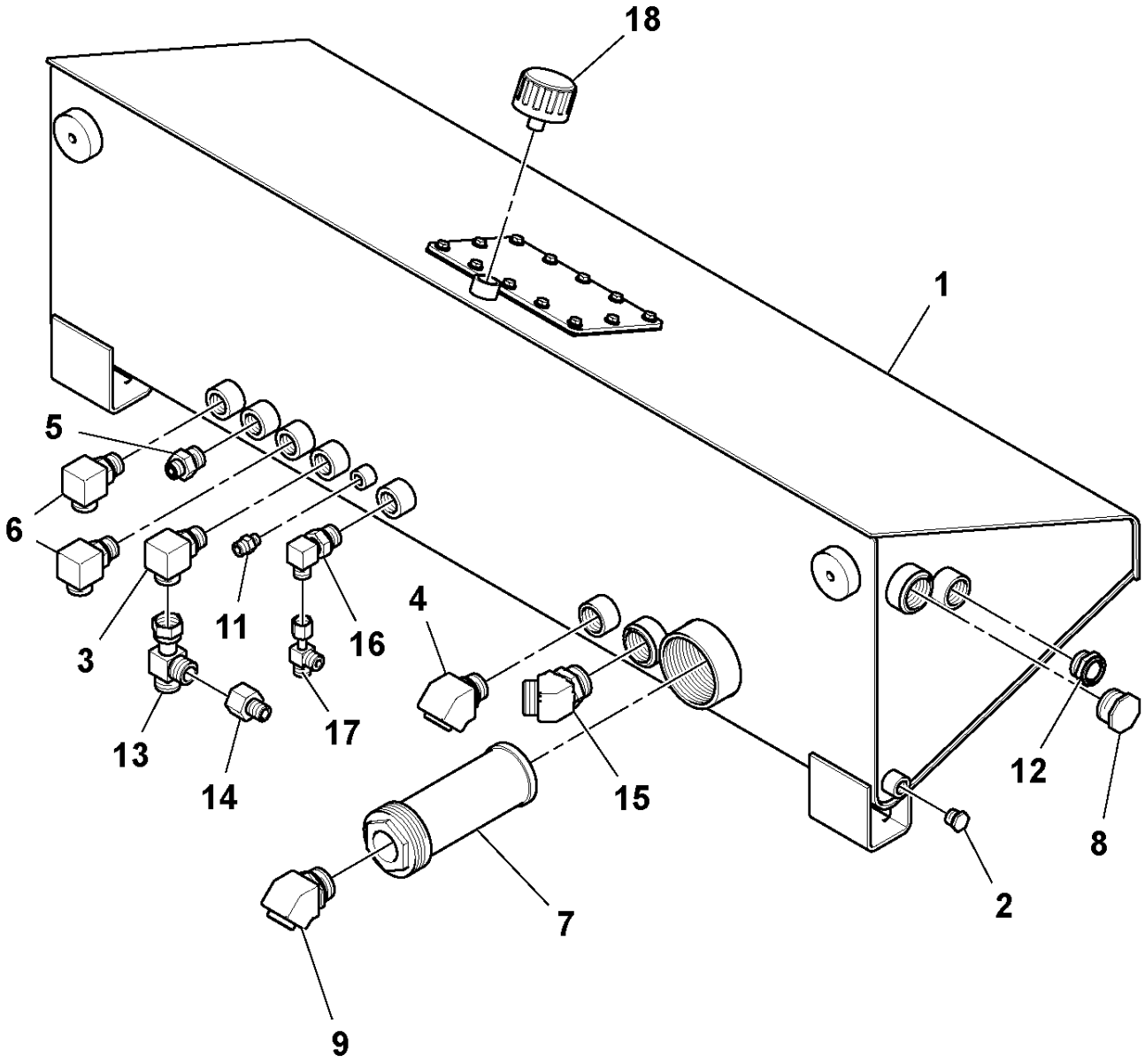

Hydraulic Tank Assembly

POS	PART NUMBER	QTY	PART NAME	NOTES
1	RM 59172320	1	Hydraulic fluid tank	
	RM 59896225	2	Gasket	
	RM 59896217	2	Cover plate	
	RM 59918573	48	Nut	
2	RM 95323465	1	Plug	
4	RM 95469128	1	Adapter	
5	RM 95357570	1	Adapter	
6	RM 95280186	3	Adapter	
7	RM 58901208	1	Filter	
8	RM 59978858	1	Fuel filler cap	
9	RM 95069464	1	Elbow	
11	RM 95371258	1	Adapter	
12	RM 58862665	1	Level gauge	
13	RM 95739306	1	T-nipple	
14	RM 59672709	1	Adapter	
15	RM 95387338	1	Adapter	
16	RM 59922914	1	Adapter	
17	RM 59923797	1	T-nipple	
18			-	

Hydraulic Tank Assembly

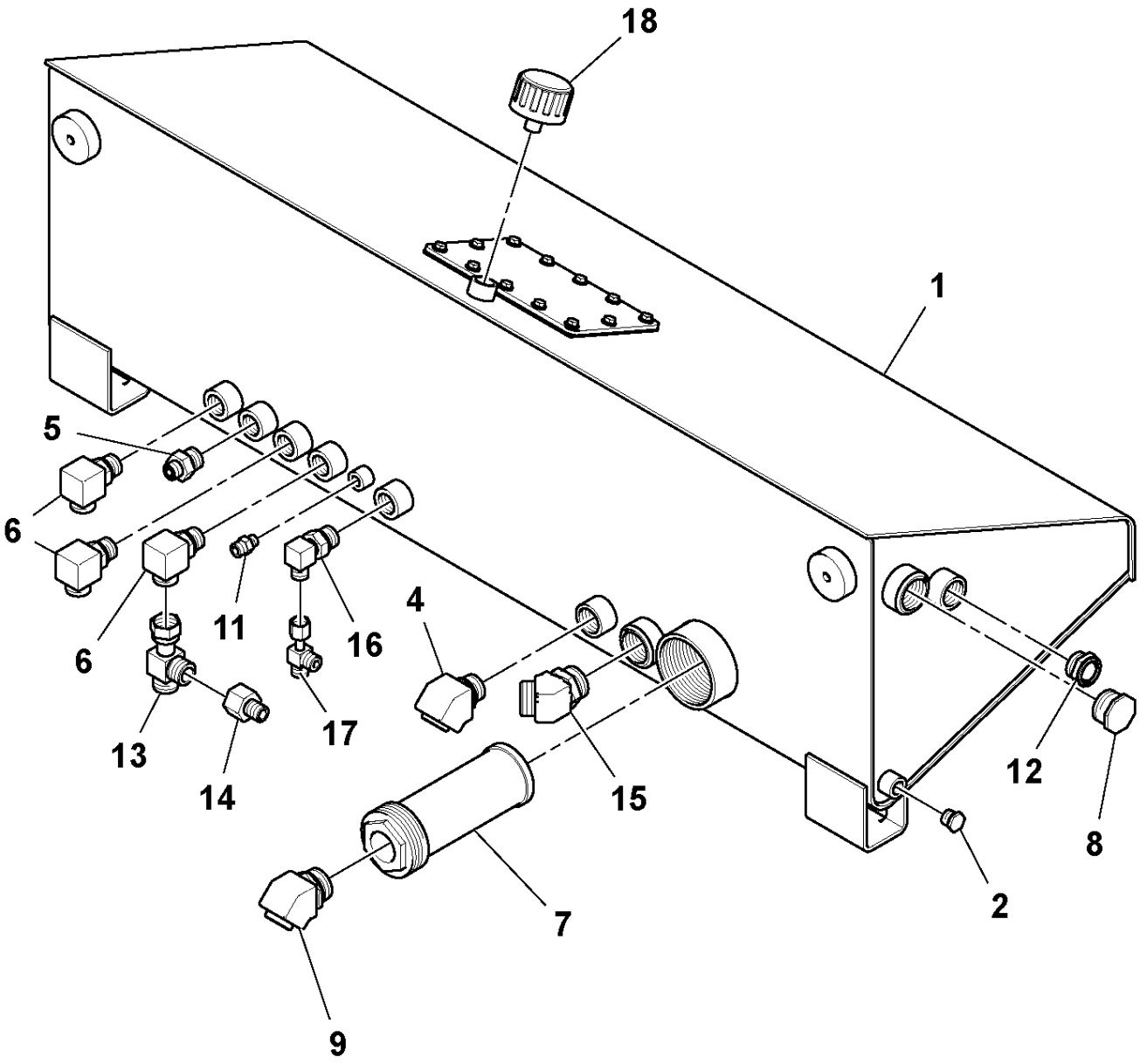

Vibration Hoses Installation

POS	PART NUMBER	QTY	PART NAME	NOTES
1	RM 58798927	1	Hose	
2	RM 59203620	1	Hose assembly	DD-90, S/N 174736-
	RM 59203695	1	Hose assembly	DD-90, S/N -174735
	RM 59203620	1	Hose assembly	DD-90HF
3	RM 59216838	2	Hose assembly	
5	RM 13040506	1	Hose	
6	RM 58791070	1	Hose assembly	DD-90, S/N 174736-
	RM 59203661	1	Hose assembly	DD-90, S/N -174735
	RM 58791070	1	Hose assembly	DD-90HF
7	RM 59203646	1	Hose assembly	DD-90, S/N 174736-
	RM 59203679	1	Hose assembly	DD-90, S/N -174735
	RM 59203646	1	Hose assembly	DD-90HF
8	RM 13288006	1	Hose assembly	DD-90, S/N 174736-
	RM 59043984	1	Hose assembly	DD-90, S/N -174735
	RM 59043984	1	Hose assembly	DD-90HF
9	RM 58791096	1	Hose	
16	RM 59845578	1	Hose assembly	DD-90, S/N 174736-
	RM 59203687	1	Hose assembly	DD-90, S/N -174735
	RM 59845578	1	Hose assembly	DD-90HF
18	RM 59203562	1	Hose assembly	
31	RM 59812826	2	Guard	
32	RM 95424586	REQ	Cable Tie	
33	RM 59203570	1	Hose assembly	

Vibration Hoses Installation

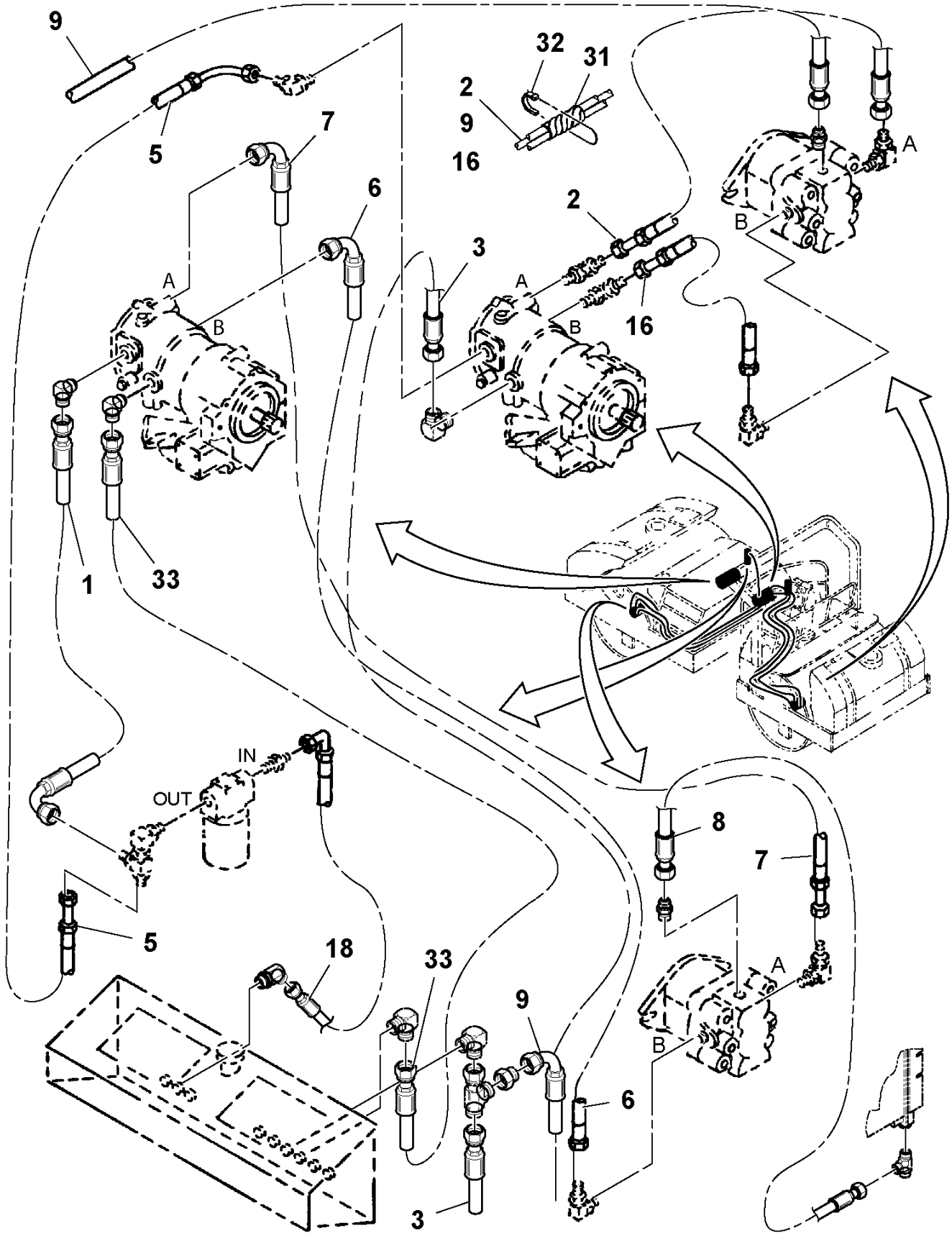

Vibration Hoses Installation

POS	PART NUMBER	QTY	PART NAME	NOTES
2	RM 59203620	1	Hose assembly	DD-90, S/N 174736-
	RM 59203695	1	Hose assembly	DD-90, S/N -174735
	RM 59203620	1	Hose assembly	DD-90HF
6	RM 58791070	1	Hose assembly	DD-90, S/N 174736-
	RM 59203661	1	Hose assembly	DD-90, S/N -174735
	RM 58791070	1	Hose assembly	DD-90HF
7	RM 59203646	1	Hose assembly	DD-90, S/N 174736-
	RM 59203679	1	Hose assembly	DD-90, S/N -174735
	RM 59203646	1	Hose assembly	DD-90HF
8	RM 13288006	1	Hose assembly	DD-90, S/N 174736-
	RM 59043984	1	Hose assembly	DD-90, S/N -174735
	RM 59043984	1	Hose assembly	DD-90HF
10	RM 59895540	2	Clamp	
11	RM 59587816	2	Cover Plate	
12	RM 95933298	2	Lock nut	
13	RM 95920567	2	Hexagon screw	
14	RM 95919205	3	Screw	
15	RM 95920443	8	Screw	
16	RM 59845578	1	Hose assembly	DD-90, S/N 174736-
	RM 59203687	1	Hose assembly	DD-90, S/N -174735
	RM 59845578	1	Hose assembly	DD-90HF
19	RM 95920443	1	Screw	
20	RM 95457586	1	Clamp	
21	RM 95922365	1	Washer	
22	RM 58874330	1	Mounting Plate	
25	RM 95301867	2	Clamp	
26	RM 95920583	4	Screw	
27	RM 95923314	8	Lock nut	
28	RM 95920542	3	Screw	
29	RM 59829432	14	Clamp	
30	RM 59656322	8	Cover Plate	
42	RM 59851253	2	Clamp	
43	RM 59583658	1	Cover Plate	
44	RM 95919312	2	Screw	

Vibration Hoses Installation

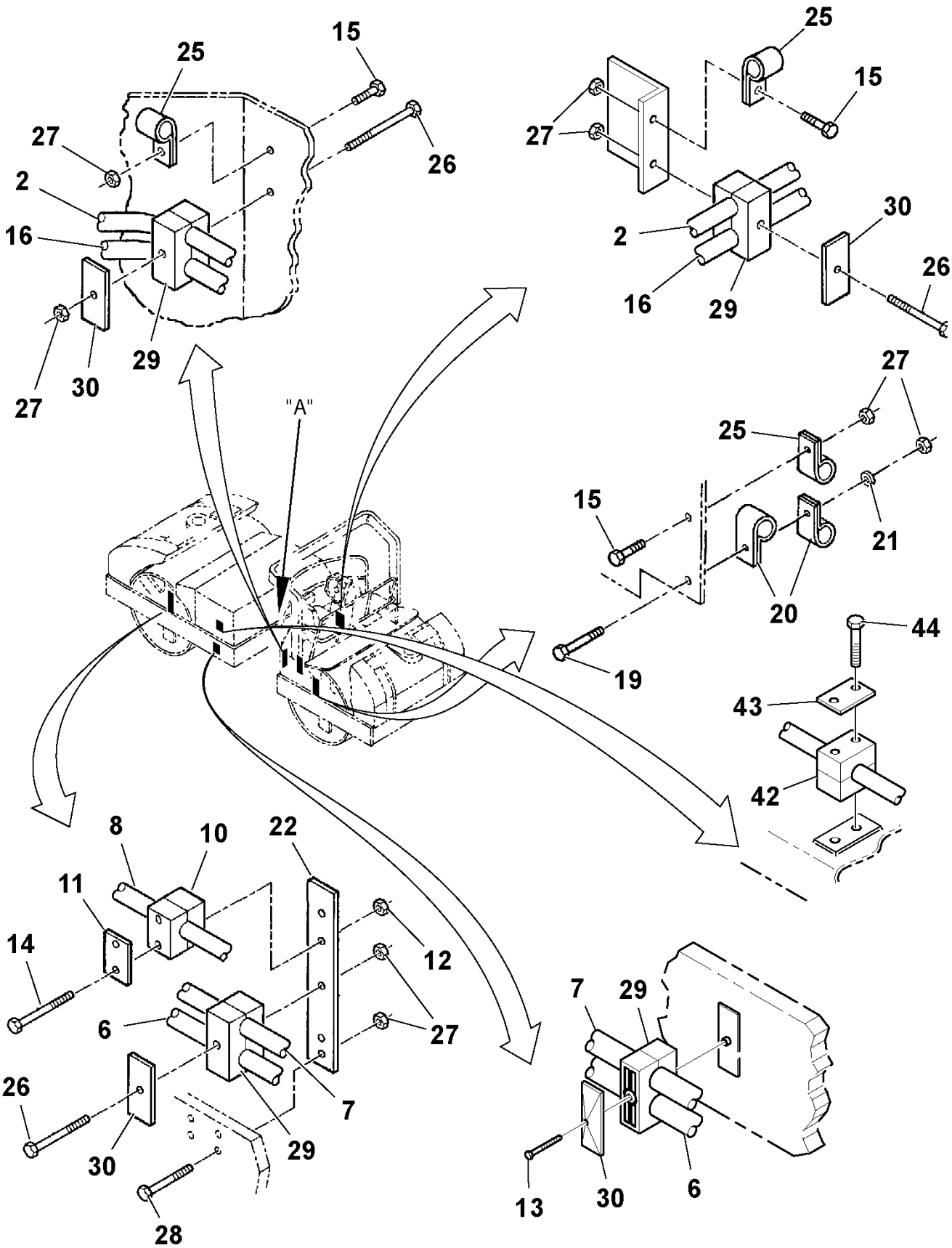

Vibration Hoses Installation

POS	PART NUMBER	QTY	PART NAME	NOTES
3	RM 59216838	2	Hose assembly	
6	RM 58791070	1	Hose assembly	DD-90, S/N 174736-
	RM 59203661	1	Hose assembly	DD-90, S/N -174735
	RM 58791070	1	Hose assembly	DD-90HF
7	RM 59203646	1	Hose assembly	DD-90, S/N 174736-
	RM 59203679	1	Hose assembly	DD-90, S/N -174735
	RM 59203646	1	Hose assembly	DD-90HF
13	RM 95920567	2	Hexagon screw	
21	RM 95922365	4	Washer	
28	RM 95920542	3	Screw	
29	RM 59829432	14	Clamp	
30	RM 59656322	8	Cover Plate	
33	RM 59203570	1	Hose assembly	
34	RM 95920575	3	Screw	
35	RM 95396776	2	Hose Clamp	
38	RM 59618579	2	Clamp	
39	RM 59583500	1	Plate	
40	RM 95301875	1	Hose Clamp	
45	RM 59812594	2	Clamp	
46	RM 95310231	1	Clamp	

Vibration Hoses Installation

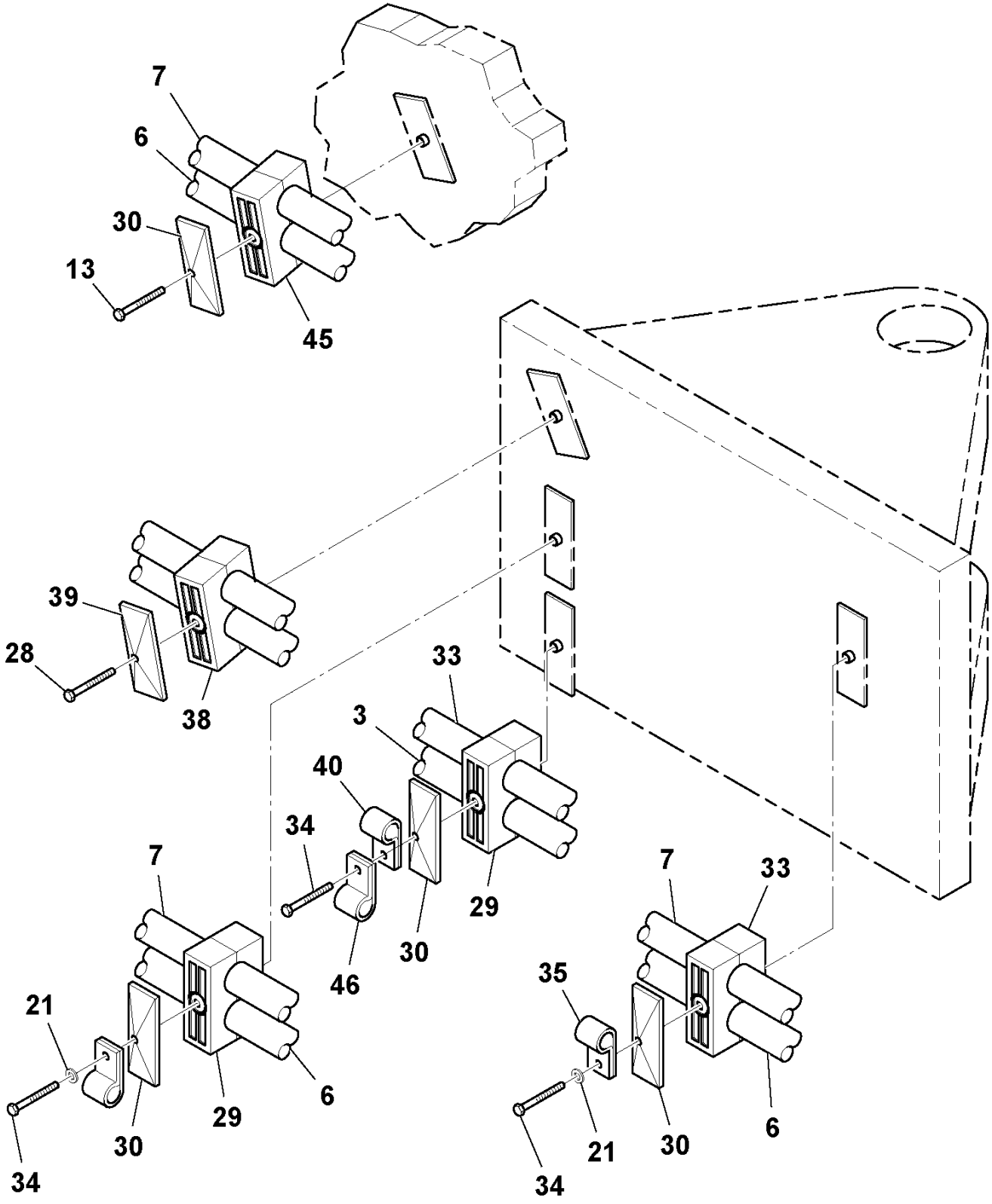

"A"

Traction Hoses Installation

POS	PART NUMBER	QTY	PART NAME	NOTES
1	RM 59203406	1	Hose assembly	
2	RM 59190215	1	Hose assembly	
3	RM 59203414	1	Hose assembly	
4	RM 59189092	1	Hose assembly	
5	RM 59203422	1	Hose assembly	
6	RM 59189050	1	Hose assembly	
7	RM 59190223	1	Hose assembly	
8	RM 59203430	1	Hose assembly	
9	RM 59203448	1	Hose assembly	
14	RM 95424586	REQ	Cable Tie	
17	RM 59203505	1	Hose assembly	
30	RM 59203463	1	Hose assembly	
31	RM 59216895	1	Hose assembly	
32	RM 59216903	1	Hose	

Traction Hoses Installation

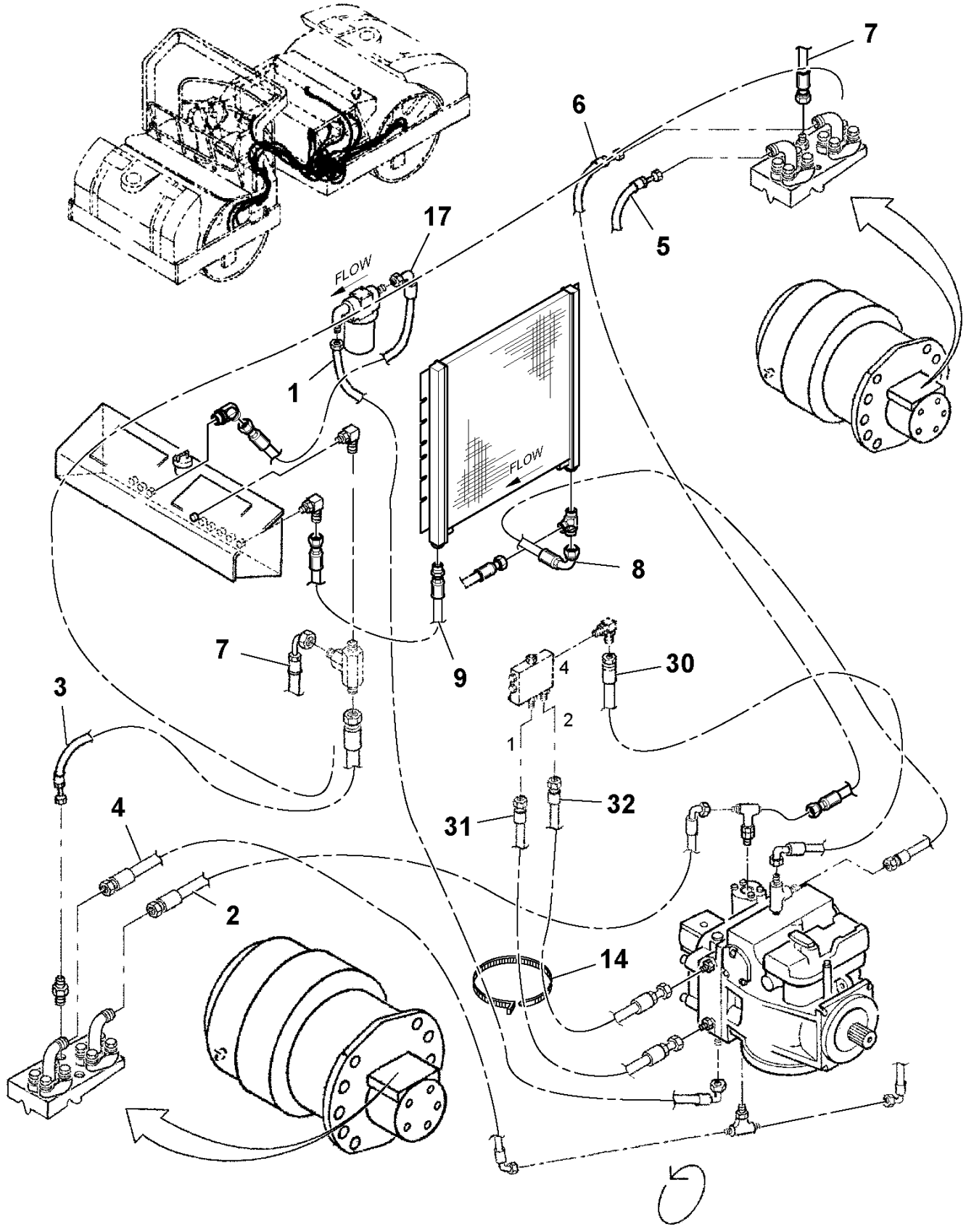

Traction Hoses Installation

POS	PART NUMBER	QTY	PART NAME	NOTES
5	RM 59203422	1	Hose assembly	
6	RM 59189050	1	Hose assembly	
7	RM 59190223	1	Hose assembly	
13	RM 95919205	6	Screw	
14	RM 95424586	REQ	Cable Tie	
15	RM 59185579	1	Mounting Plate	
16	RM 59190264	1	Mounting Plate	
18	RM 95301859	5	Hose Clamp	
19	RM 95923298	6	Lock nut	
20	RM 59829432	8	Clamp	
21	RM 59656322	5	Cover Plate	
22	RM 95923314	12	Lock nut	
23	RM 95920583	4	Screw	
25	RM 59895540	6	Clamp	
26	RM 59587816	3	Cover Plate	
27	RM 95920542	4	Screw	
28	RM 95301867	2	Clamp	
29	RM 95920443	3	Screw	
33	RM 95922365	1	Washer	
35	RM 95457586	2	Clamp	
36	RM 59812826	1	Guard	

Traction Hoses Installation

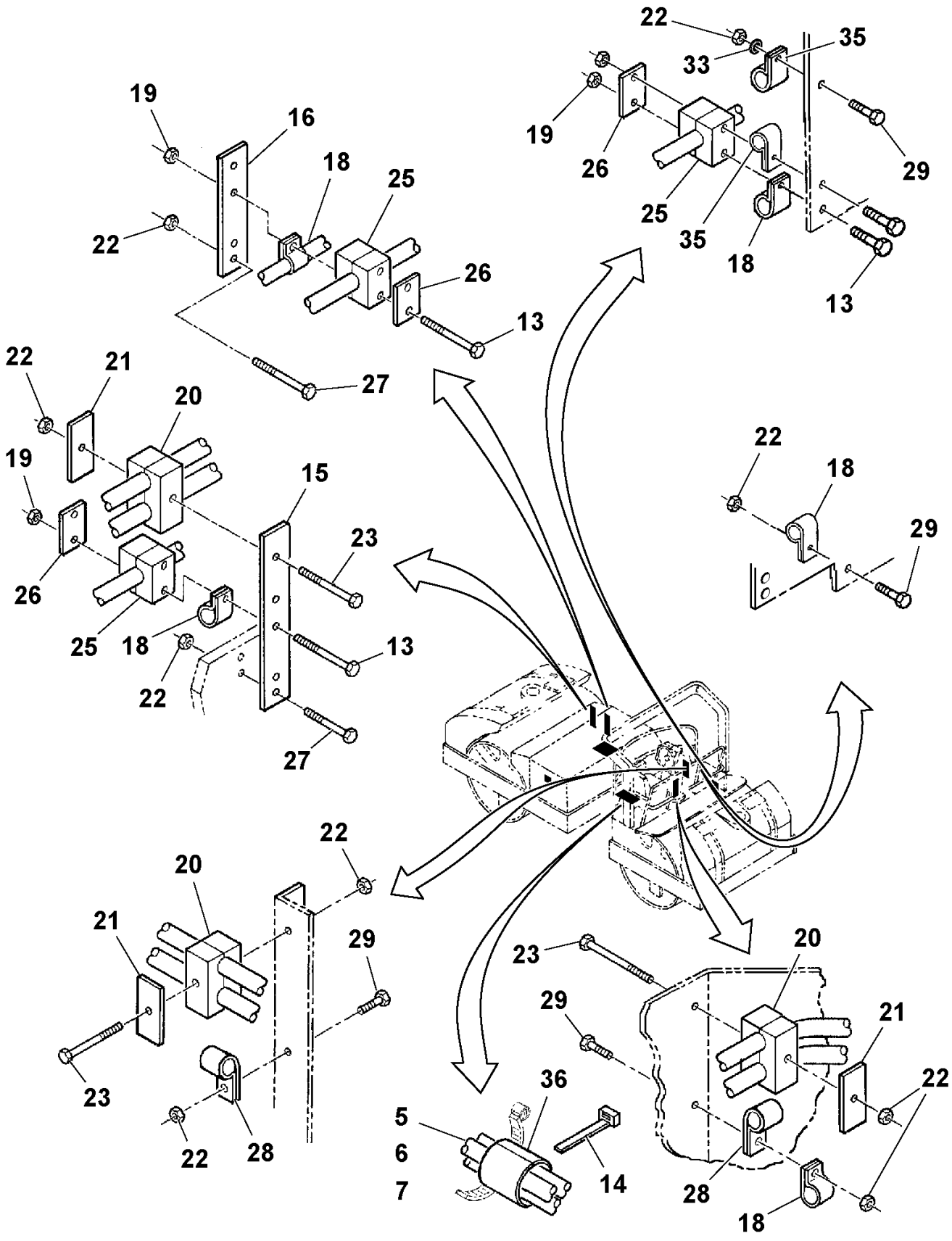

Brake Valve Assembly

POS	PART NUMBER	QTY	PART NAME	NOTES
1	RM 59939538	1	Brake valve	
	RM 59765974	1	Sealing Kit	
2	RM 59627315	1	Knob	
3	RM 56920929	1	Adapter	
4	RM 95043212	1	Reducing Bushing	
5	RM 95279931	1	T-nipple	
6	RM 95231023	1	Adapter	
7	RM 59090860	1	Pressure Switch	
8	RM 95922977	2	Hexagon Nut	
9	RM 95419594	2	Adapter	

Brake Valve Assembly

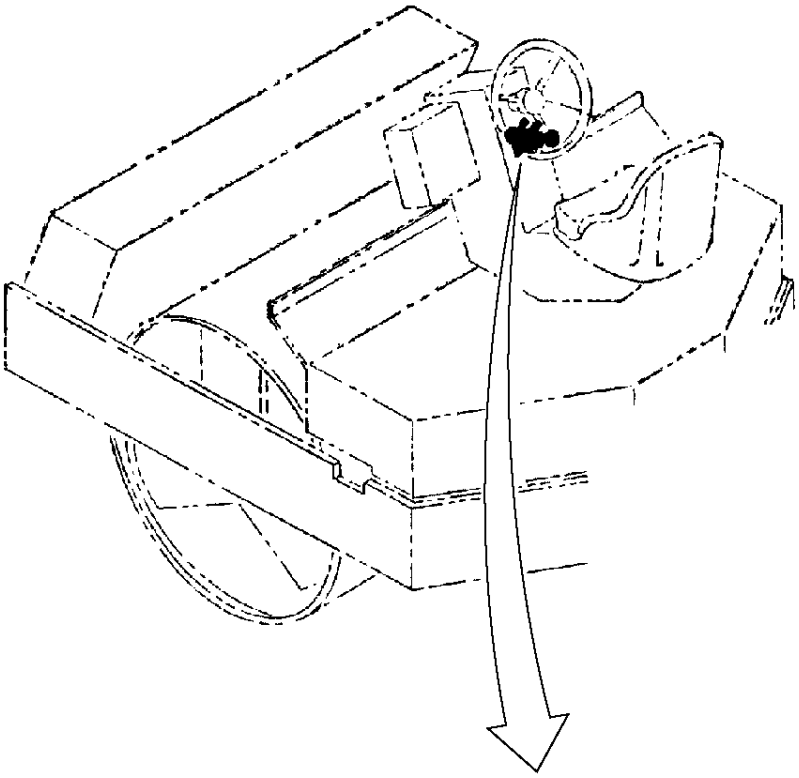

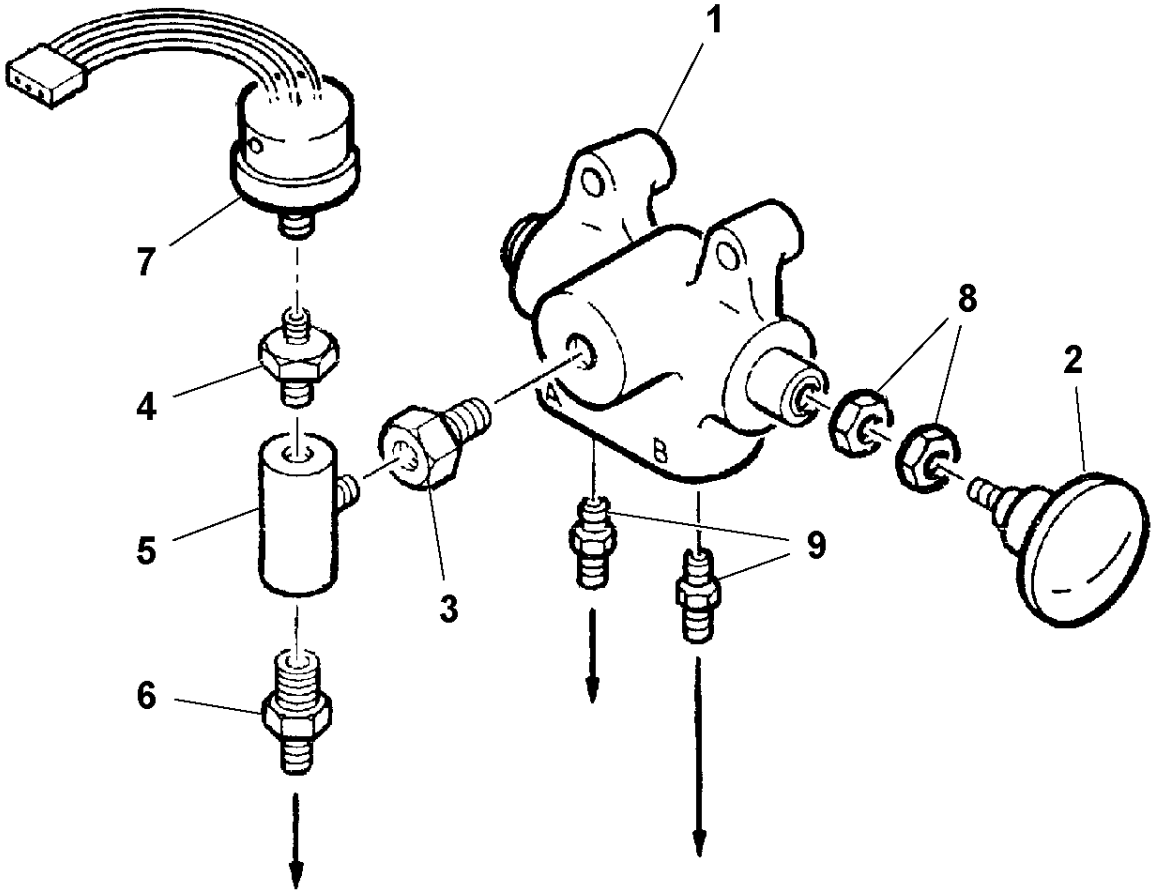

Vibration Pump Assembly

POS	PART NUMBER	QTY	PART NAME	NOTES
1		2	Piston pump	DD-90, S/N 174736-
	RM 19291475	2	Hydraulic Pump, Exch	DD-90, S/N 174736-
		2	Hydraulic Pump	
	RM 59140467	1	Hydraulic Pump, Exch	ARC
2	RM 95366001	4	Adapter	
3	RM 95280186	2	Adapter	90 DEG
4	RM 95280194	2	Adapter	

Vibration Pump Assembly

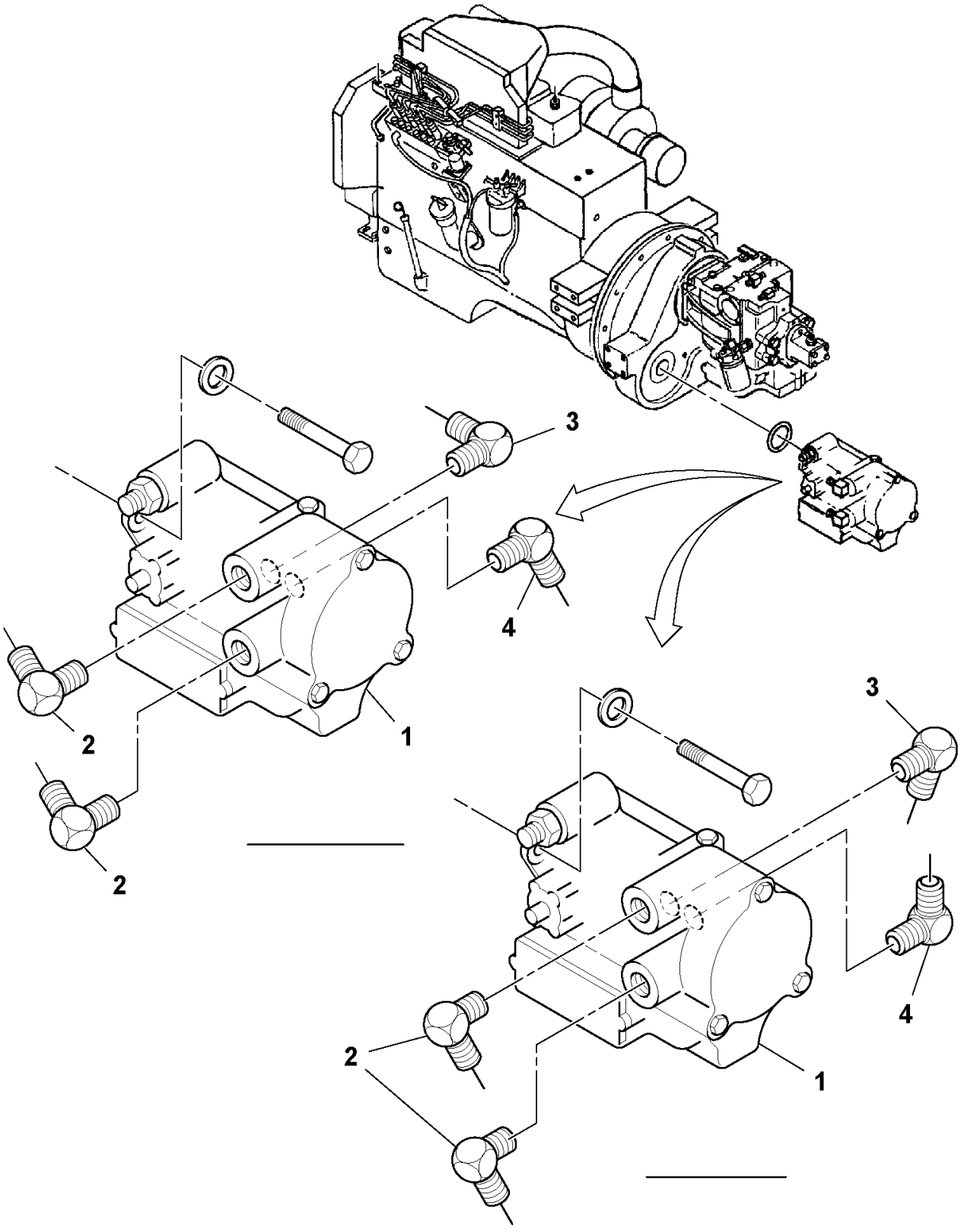

Vibration Pump

POS	PART NUMBER	QTY	PART NAME	NOTES
1	RM 59888297	2	Pump shaft	
2	RM 59785519	4	Ring	
3	RM 95200648	2	Ball Bearing	
4	RM 59785303	2	Bearing	
5	RM 59861872	4	Ring	
6	RM 59941203	2	Sealing ring	
7	RM 59949511	2	Gasket	
8	RM 58784281	4	Non-return valve	
9	RM 13263702	4	Spring	
10	RM 58220567	4	O-ring	
11	RM 59698811	6	O-ring	
12	RM 13521752	2	Valve	
13	RM 59986422	2	Back-up ring	
14	RM 13247358	2	O-ring	
15	RM 13423520	2	Plug Kit	
16	RM 50278019	2	O-ring	
17	RM 58220583	2	Shim Kit	
18	RM 59034348	2	Spring	
19	RM 58220633	2	Relief valve	

Vibration Pump

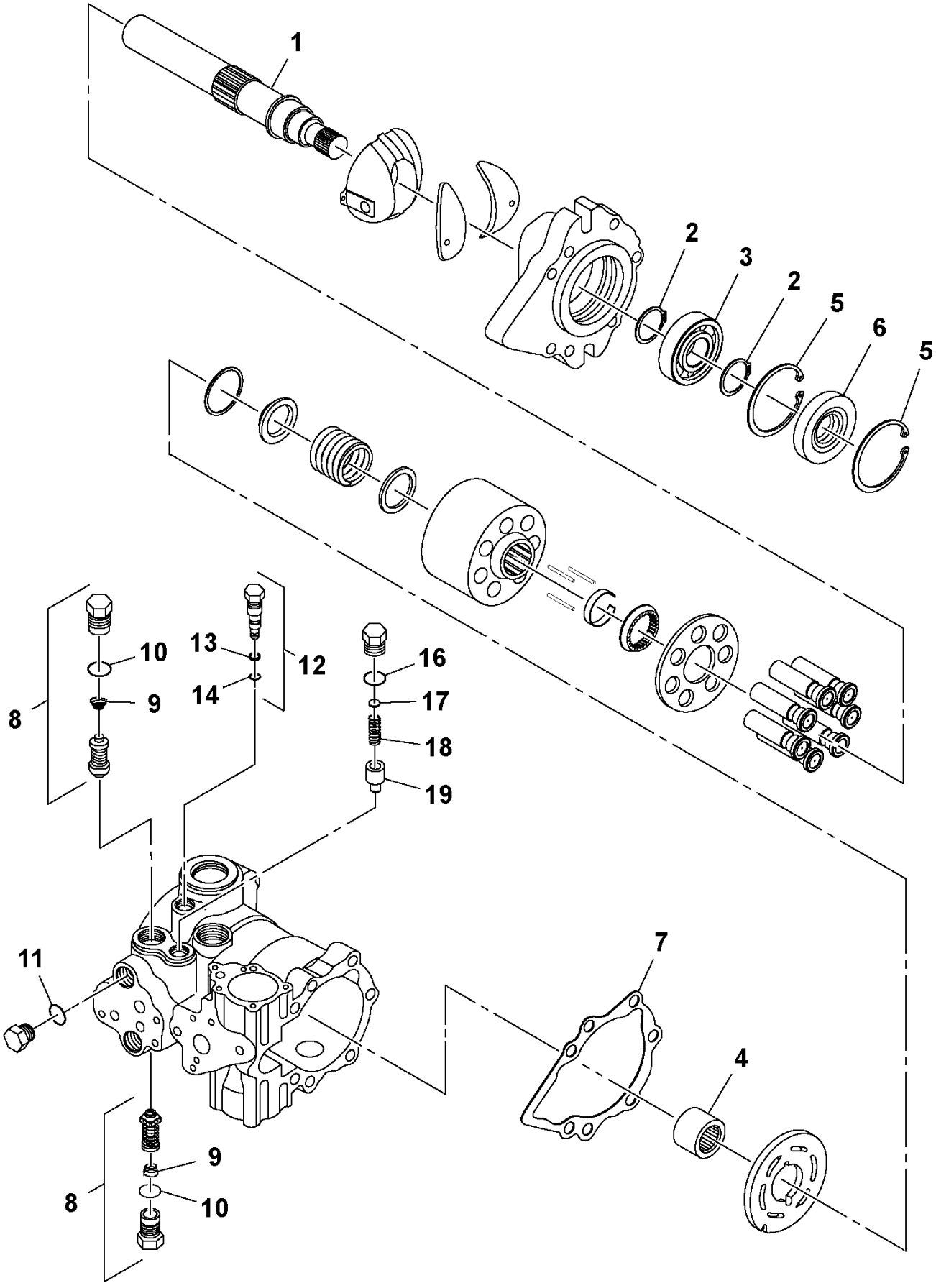

Vibration Pump

POS	PART NUMBER	QTY	PART NAME	NOTES
11	RM 59698811	6	O-ring	
20	RM 59785642	2	Ring	
21	RM 58903741	2	O-ring	
22	RM 58220567	4	O-ring	
23	RM 59698811	2	O-ring	
24	RM 59938373	4	Gasket	
25	RM 59698811	4	O-ring	
26	RM 95097663	4	O-ring	
27	RM 58815614	2	Adapter	
28	RM 58815622	2	Gasket	
29	RM 59972877	4	O-ring	
30	RM 59422907	4	Ring	
31	RM 95086062	2	O-ring	
32	RM 58813791	2	Sealing Kit	

Vibration Pump

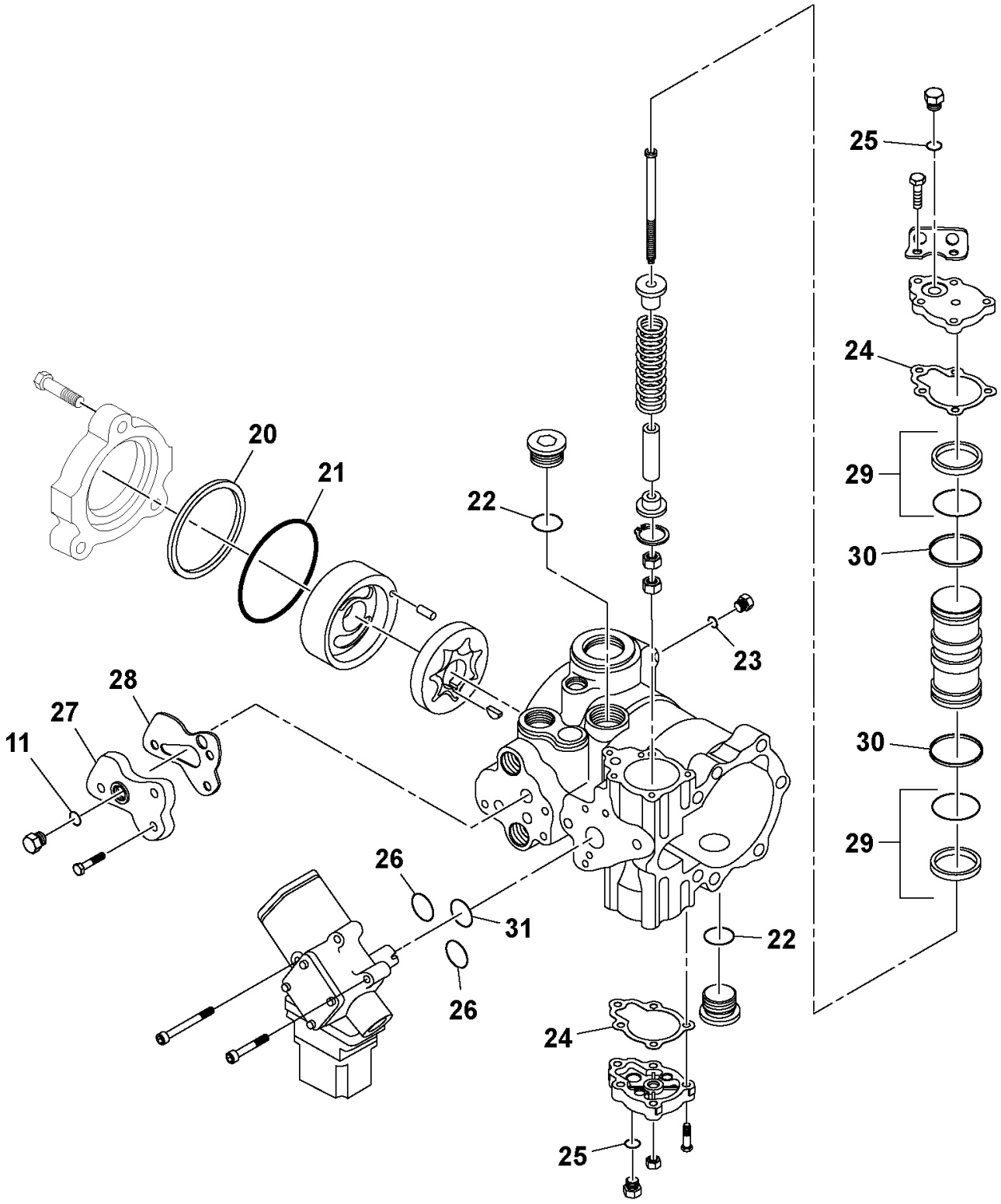

Vibration Pump

POS	PART NUMBER	QTY	PART NAME	NOTES
1	RM 59785642	2	Ring	
2	RM 58903741	2	O-ring	
3	RM 58815606	2	Pin	
4	RM 59785246	2	Pump Rotor	
5	RM 59949461	4	Plug	
6	RM 58220567	4	O-ring	
7	RM 58950783	2	Plug	
8	RM 59698811	2	O-ring	
9	RM 59933622	2	Plug	
10	RM 59698811	2	O-ring	
11	RM 59938373	2	Gasket	
12	RM 59972877	4	O-ring	
13	RM 59933622	2	Plug	
14	RM 59698811	2	O-ring	
15	RM 59123737	2	Valve	
	RM 43892116	2	Kit	
16	RM 59360925	4	O-ring	
17	RM 95086062	2	O-ring	
18	RM 59933622	2	Plug	
19	RM 59698811	2	O-ring	
20	RM 58815622	2	Gasket	
21	RM 59785311	2	Key	

Vibration Pump

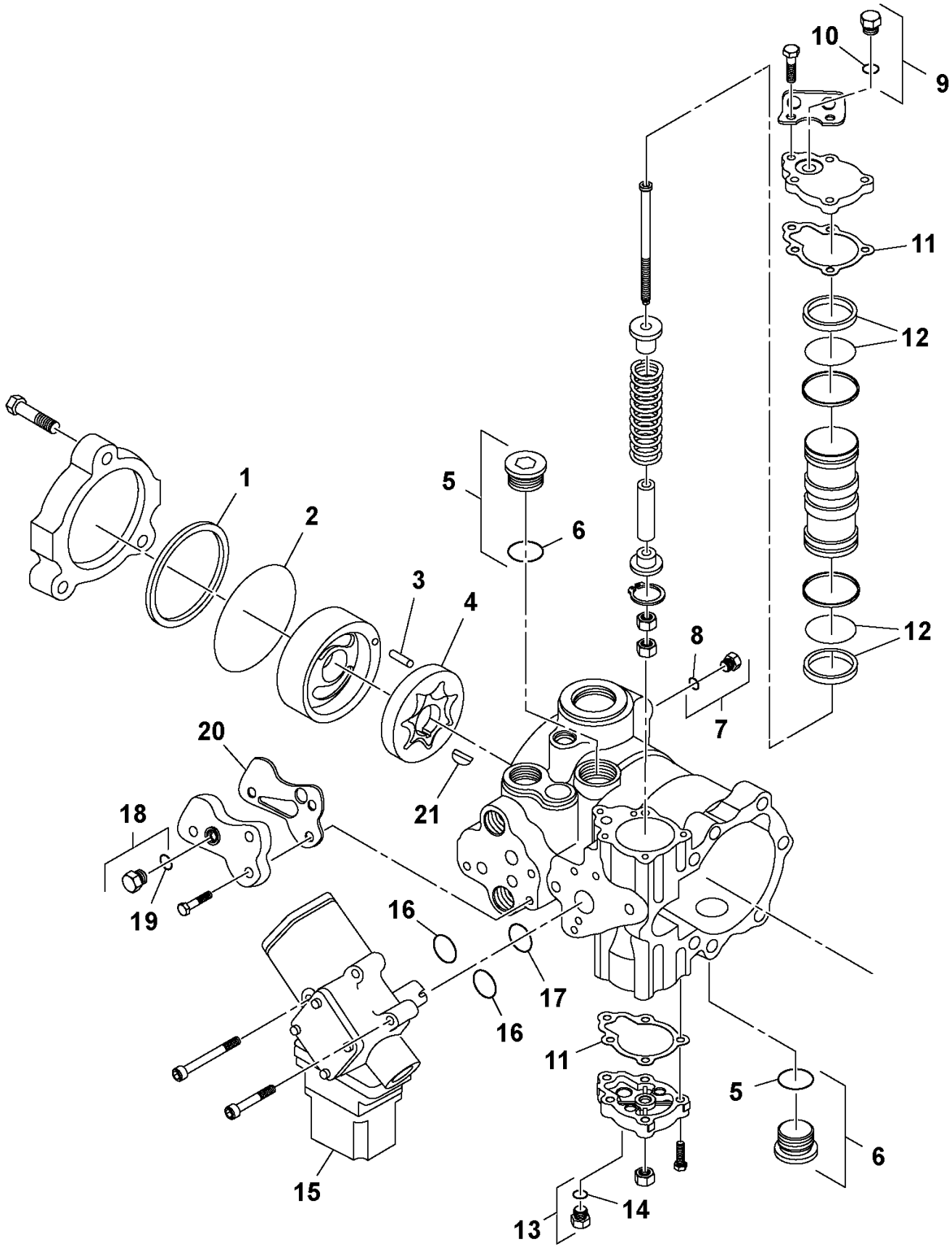

Vibration Pump

POS	PART NUMBER	QTY	PART NAME	NOTES
22	RM 59888297	2	Pump shaft	
23	RM 59785519	4	Ring	
24	RM 95200648	2	Ball Bearing	
25	RM 59861872	4	Ring	
26	RM 59941203	2	Sealing ring	
27	RM 58784281	2	Non-return valve	
28	RM 58220567	2	O-ring	
29	RM 13263702	2	Spring	
30	RM 59779918	2	Valve	
31	RM 59986422	2	Back-up ring	
32	RM 13247358	2	O-ring	
33	RM 59933614	2	Plug	
34	RM 50278019	2	O-ring	
35	RM 58220583	2	Shim Kit	
36	RM 59034348	2	Spring	
37	RM 58220633	2	Relief valve	
38	RM 59949511	2	Gasket	
39	RM 59785303	2	Bearing	

Vibration Pump

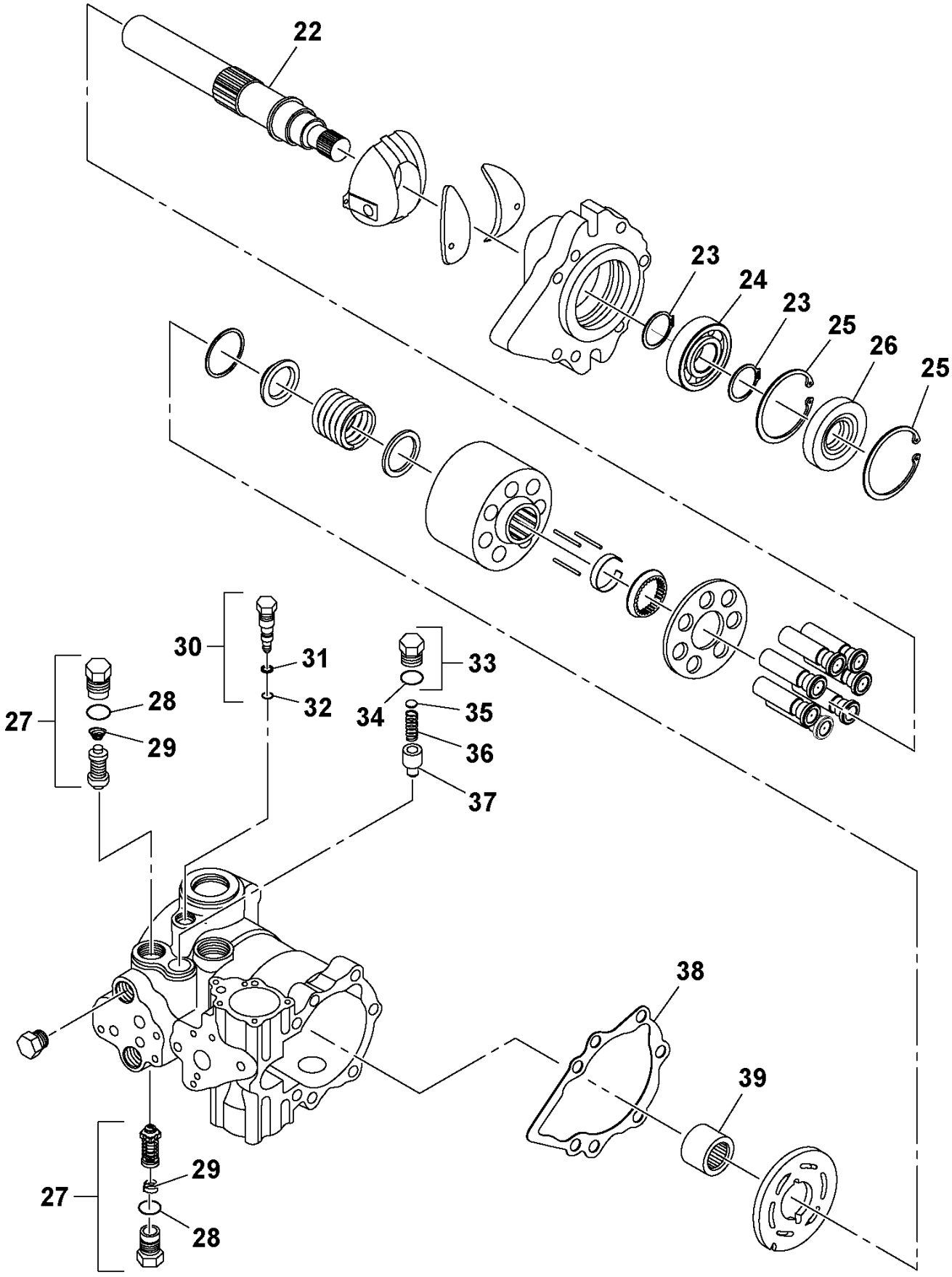

Steering Pump Assembly

POS	PART NUMBER	QTY	PART NAME	NOTES
1	RM 95330692	1	Adapter	
2	RM 95469128	1	Adapter	
3	RM 13504303	1	Gear Pump	

Steering Pump Assembly

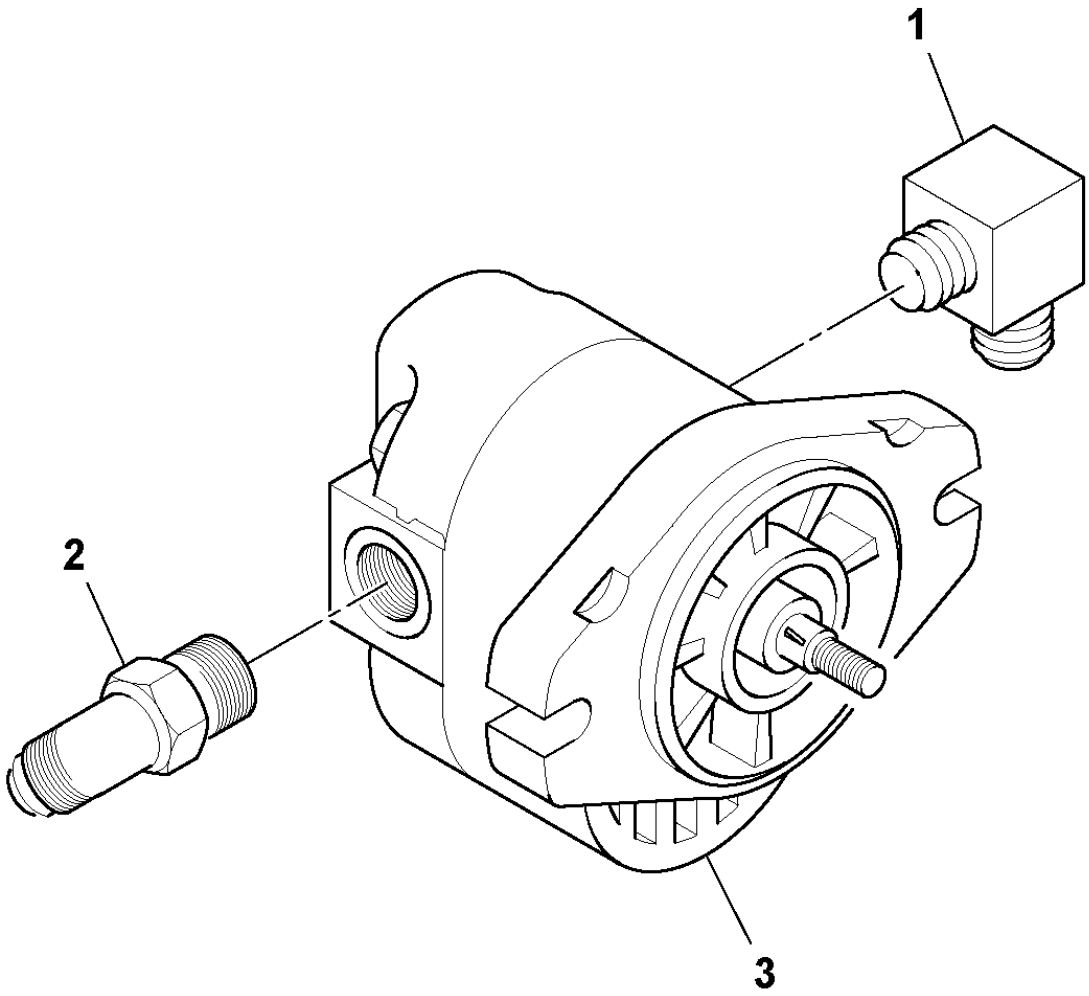

Vibration Motor

POS	PART NUMBER	QTY	PART NAME	NOTES
1	RM 59249284	2	Sensor	
2	RM 59698811	2	O-ring	
3	RM 50278019	6	O-ring	
4	RM 59086132	2	Shaft	
5	RM 59785519	4	Ring	
6	RM 95200648	2	Ball Bearing	
8	RM 59861872	2	Ring	
9	RM 59941203	2	Sealing ring	
10	RM 59245209	2	Support Washer	
11	RM 59861872	2	Ring	
12	RM 59387498	2	Gasket	
13	RM 59387605	2	Needle Bearing	
15	RM 58220567	4	O-ring	

Vibration Motor

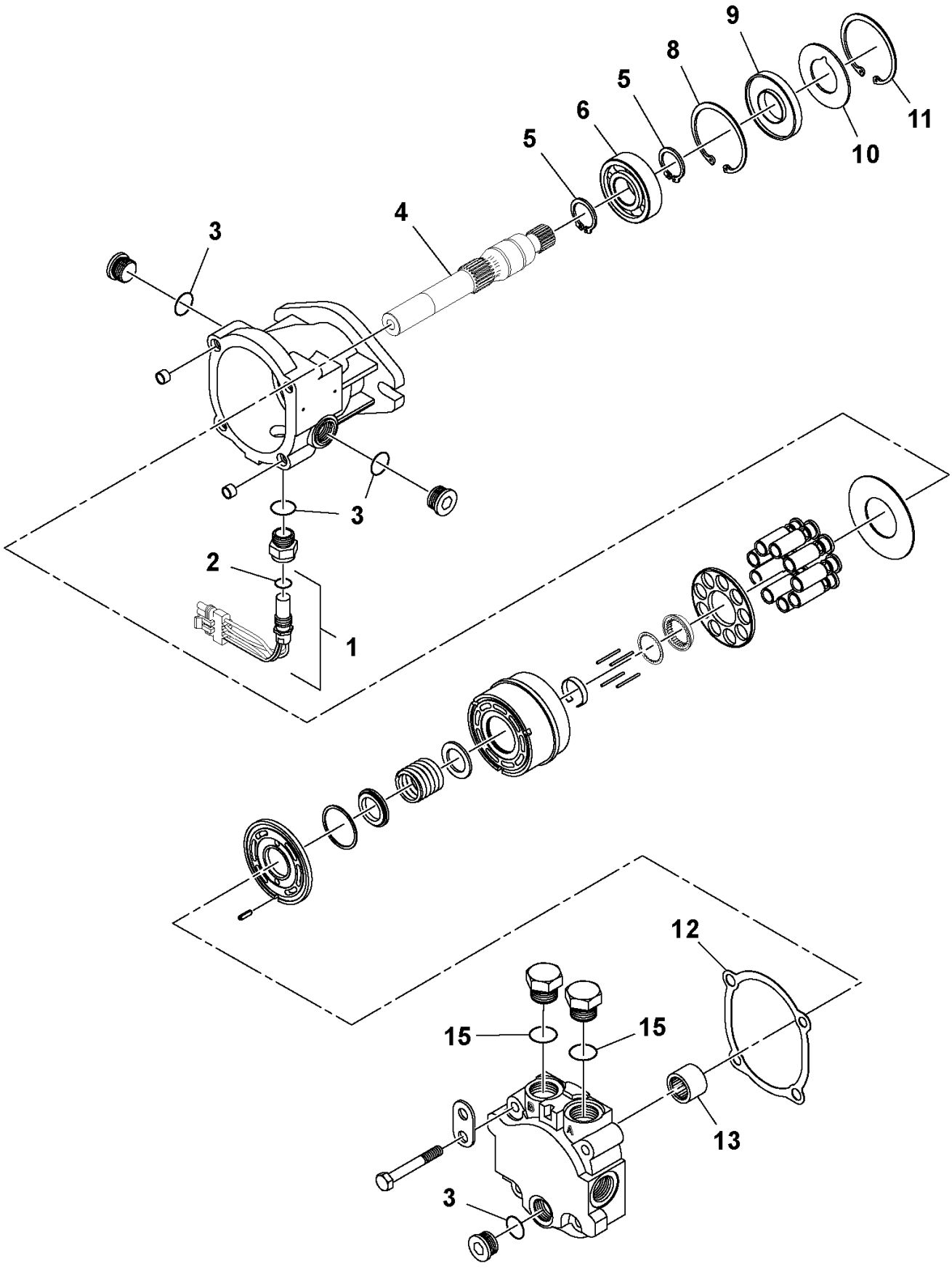

Vibration Motor

POS	PART NUMBER	QTY	PART NAME	NOTES
1	RM 59861872	2	Ring	
2	RM 59941203	1	Sealing ring	
3	RM 59785519	2	Ring	
4	RM 95200648	1	Ball Bearing	
5	RM 59432021	1	Shaft	
6	RM 59803478	1	Gasket	
7	RM 59785303	1	Bearing	

Vibration Motor

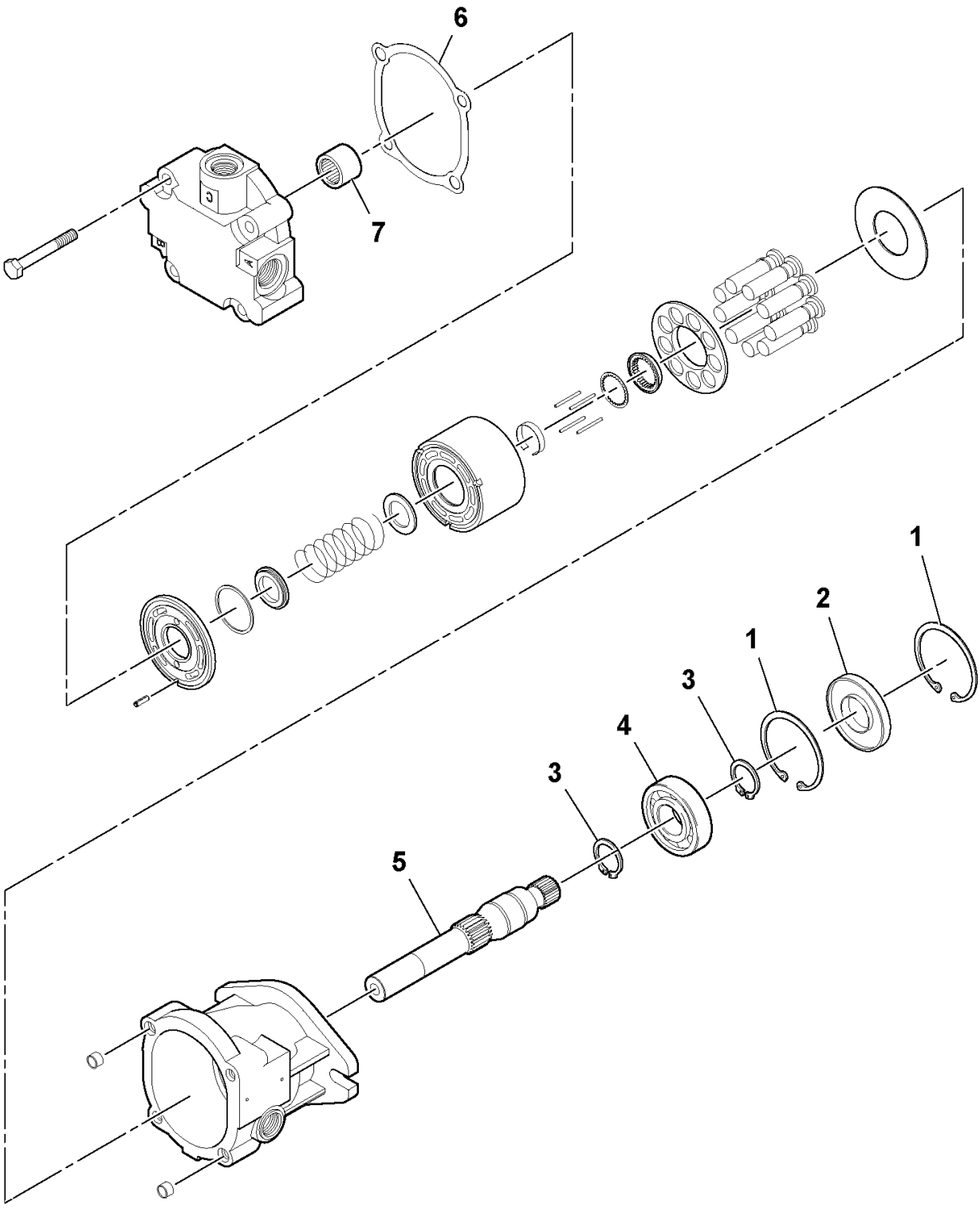

Vibration Motor

POS	PART NUMBER	QTY	PART NAME	NOTES
1	RM 59360610	1	O-ring	
2	RM 59387605	1	Needle Bearing	
3	RM 59387498	1	Gasket	
4	RM 59155176	2	O-ring	
5	RM 59086132	1	Shaft	
6	RM 59785519	2	Ring	
7	RM 95200648	1	Ball Bearing	
8	RM 59861872	1	Ring	
9	RM 59941203	1	Sealing ring	
10	RM 59245209	1	Support Washer	
11	RM 59861872	1	Ring	

Vibration Motor

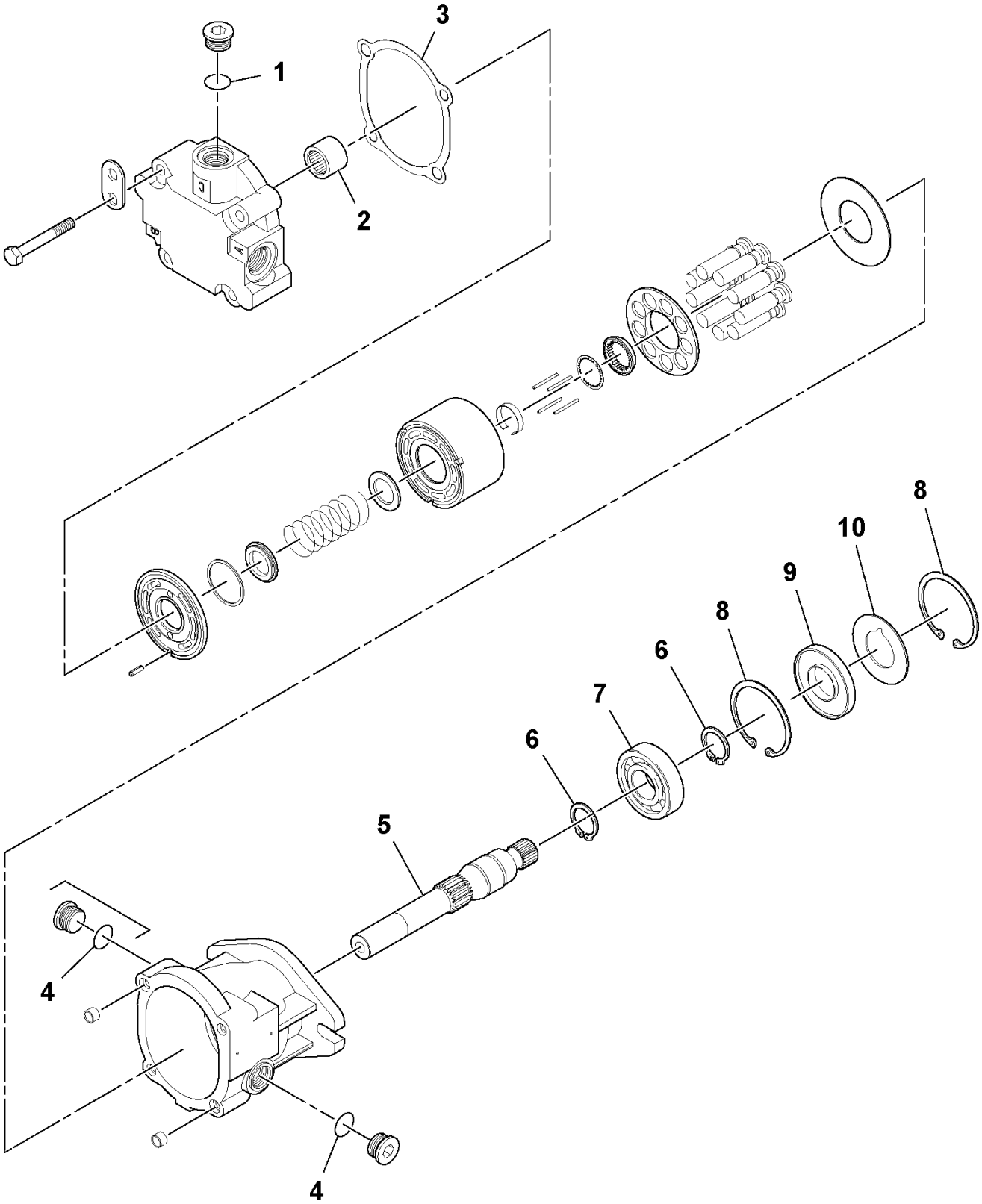

Hydraulic Oil Temperature Gauge Installation Optional

POS	PART NUMBER	QTY	PART NAME	NOTES
1	RM 59371807	1	Gauge	HYDRAULIC OIL TEMPERATURE
2	RM 59823369	1	Fitting	
3	RM 58820960	1	Adapter	
4	RM 59602987	1	Sensor	HYDRAULIC OIL TEMPERATURE
5	RM 95424586	REQ	Cable Tie	
6	RM 59804740	1	Cable harness	HYDRAULIC OIL TEMPERATURE
7	RM 95038055	1	Bushing	
8	RM 95403333	1	Fitting	S/N 160176 -
9	RM 59203406	1	Hose assembly	S/N 160176 -

Hydraulic Oil Temperature Gauge Installation Optional

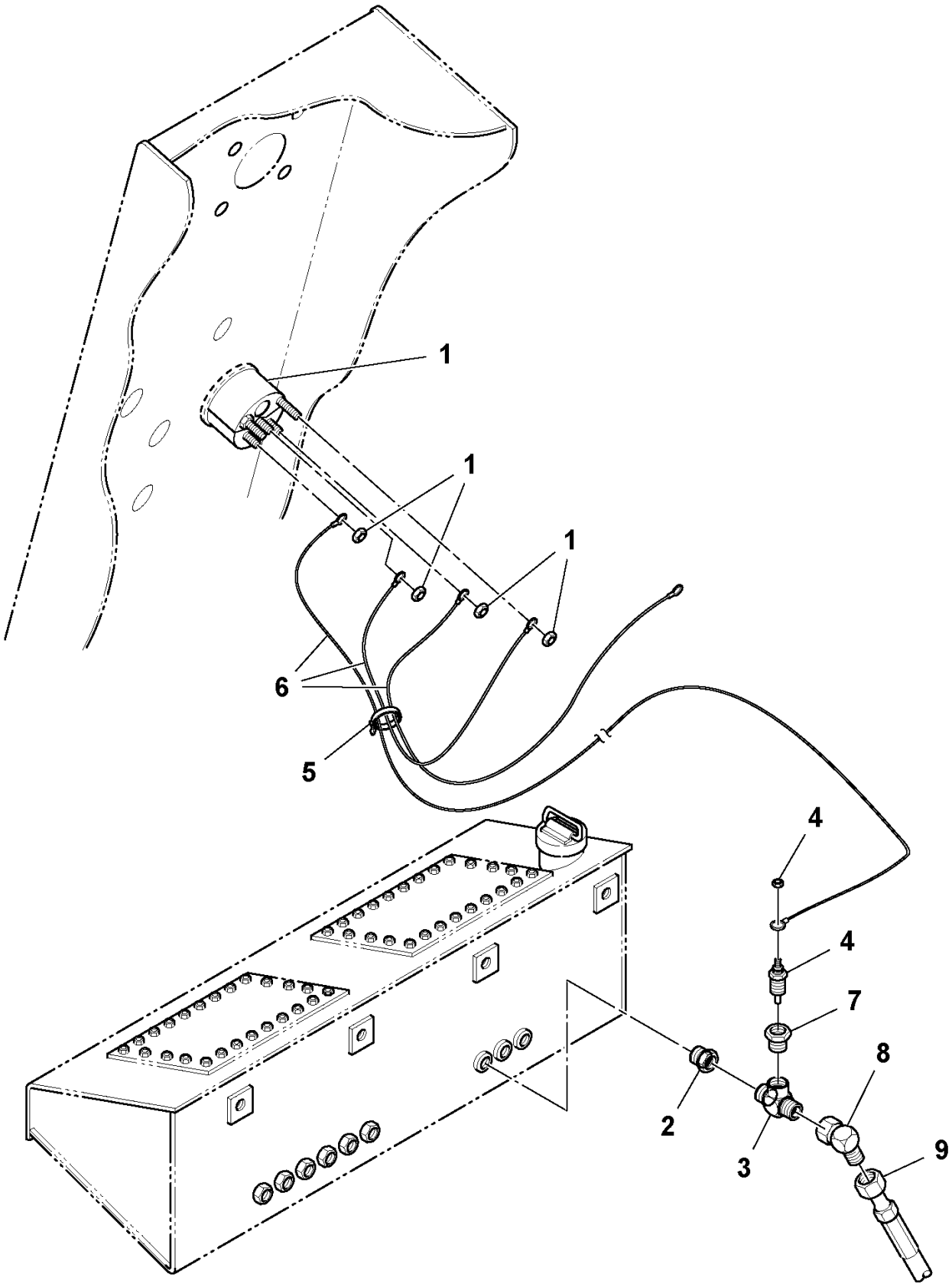

Speed Limiter Installation

POS	PART NUMBER	QTY	PART NAME	NOTES
1	RM 59092916	1	Bottom Plate	BOTTOM PLATE
2	RM 59092924	2	Lock nut	
3	RM 59092908	2	Plate	TOP PLATE
4	RM 59685271	1	Plate	

Speed Limiter Installation

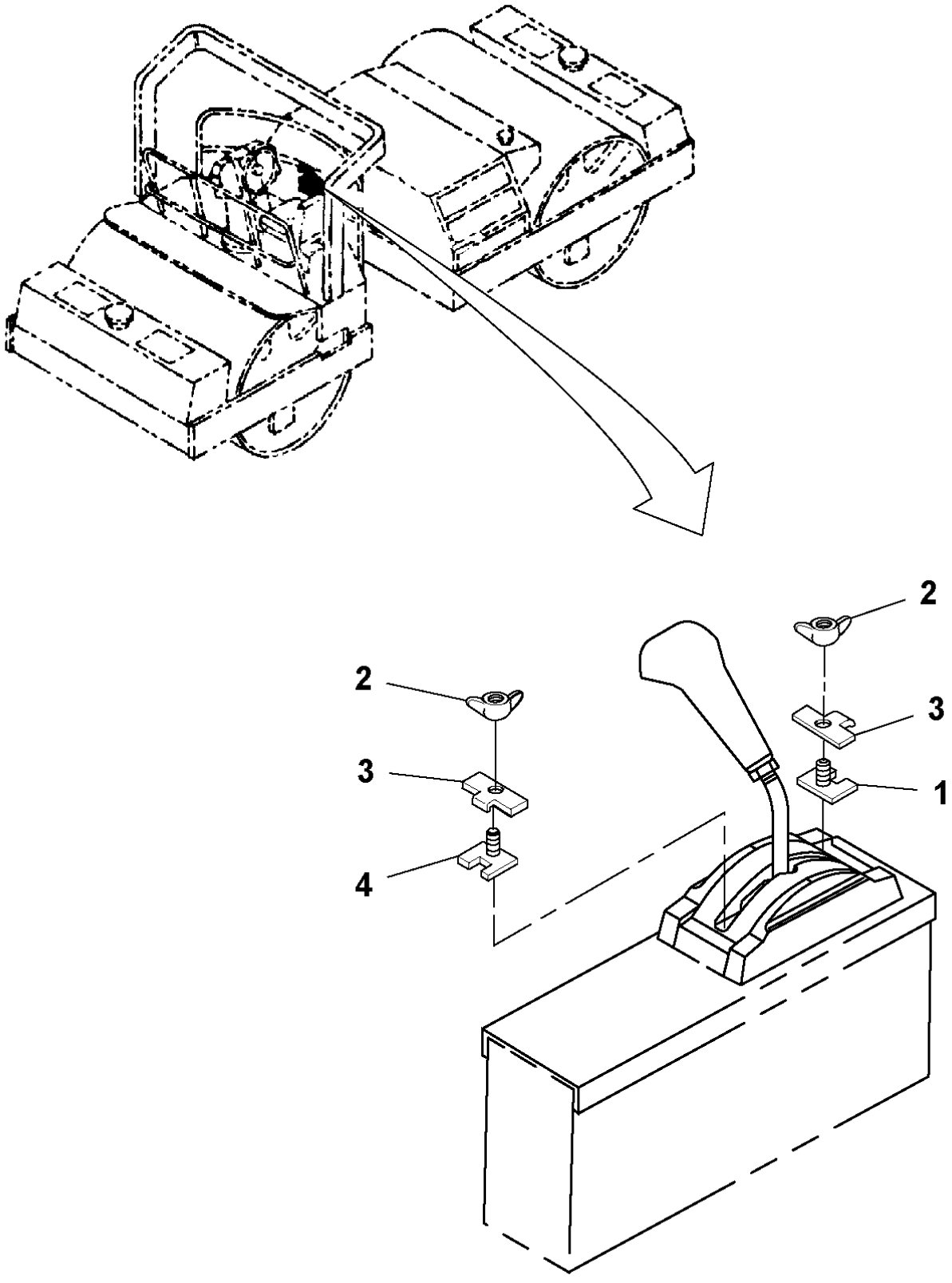

Water System Installation

POS	PART NUMBER	QTY	PART NAME	NOTES
1		2	Water Tank	
2		2	Water Hose	
3	RM 59049213	4	Shim	
4	RM 59049221	4	Shim	
5	RM 59049239	4	Shim	
6	RM 96720008	16	Hexagon screw	
7	RM 96738646	16	Plain Washer	
8	RM 59263095	1	Cable harness	FRONT , S/N 165140 -
9	RM 59263087	1	Cable harness	REAR , S/N 165140 -
10	RM 95261939	8	Screw	

Water System Installation

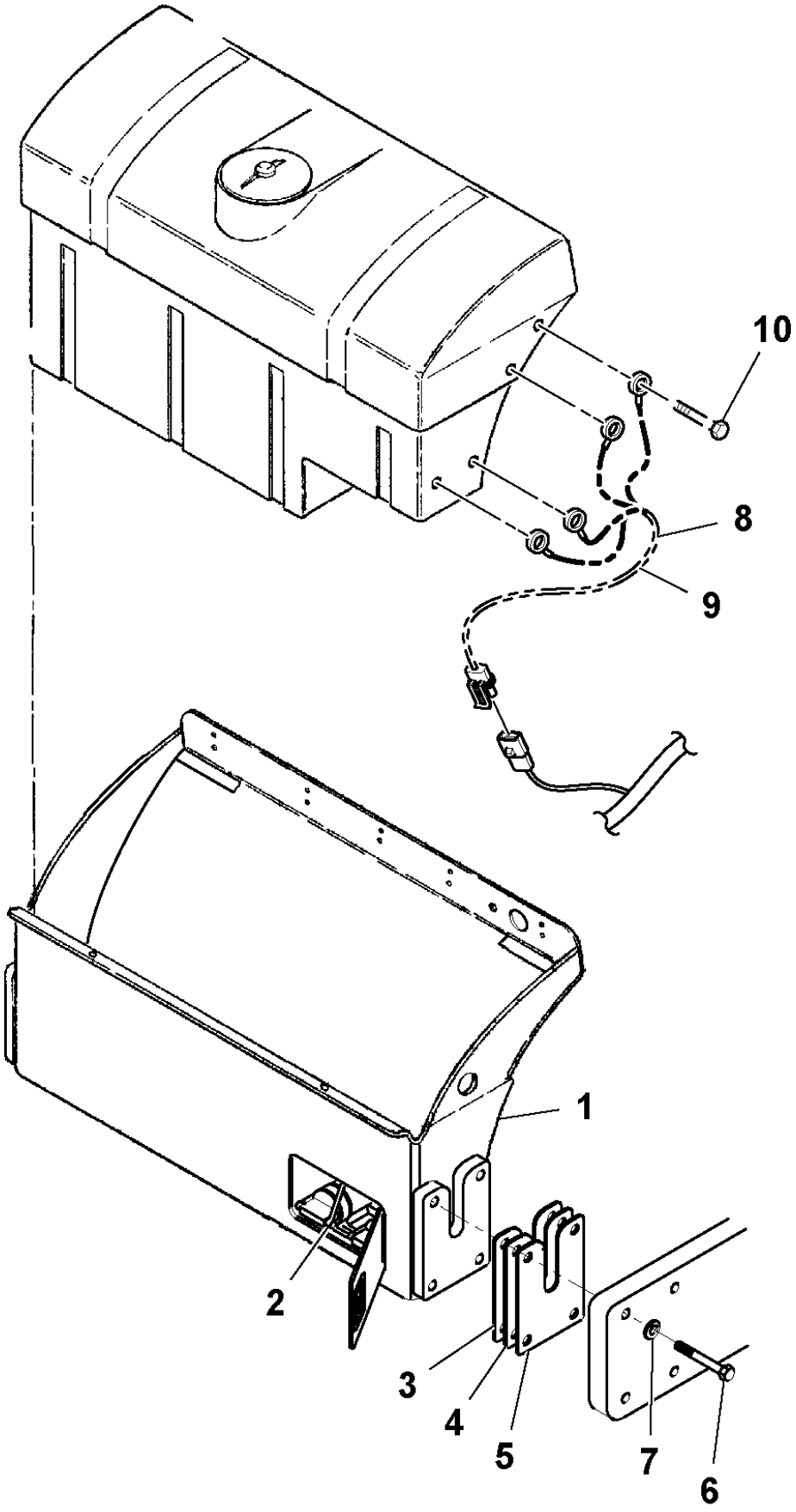

Water Tank Installation

POS	PART NUMBER	QTY	PART NAME	NOTES
1	RM 58776667	12	Clamp	
2	RM 58783457	2	Crossbar	
3	RM 59271171	2	Water Tank	
	RM 59133835	1	Cap	
	RM 58904814	1	Support	
	RM 58904798	1	Strainer	
	RM 59142737	2	Drain Plug	
4	RM 59044321	2	Strainer	
5	RM 59044339	2	Ball Valve	
6	RM 59098806	2	Rubber Spacer	
7	RM 97641046	16	Plain Washer	
8	RM 95923322	8	Lock nut	
9	RM 59049254	2	Rubber Spacer	
10	RM 59176727	4	Strap	
11		2	Spray Bar	
12	RM 59190991	2	Hatch	
13	RM 59124461	2	Latch	
14	RM 13355466	2	Support	
15	RM 96704606	4	Lock nut	
16	RM 96741038	8	Washer	
17	RM 59480814	2	Rubber Plate	
18	RM 59480830	8	Spring	
19	RM 59480855	8	Clevis Pin	
20	RM 59587816	14	Cover Plate	
21	RM 59587824	42	Clamp	
22	RM 59595066	4	U-bolt	
23	RM 59099846	4	Tape	
24	RM 59118240	2	Elbow	
25	RM 59642090	2	Elbow	
26	RM 59787937	24	Lock Screw	
27	RM 96720156	28	Hexagon screw	
28	RM 95923926	8	Pin	
29	RM 96704309	8	Hexagon screw	
30	RM 96704614	8	Nut	
31	RM 59120295	2	Trim moulding	
32	RM 96741053	28	Washer	
33	RM 96714423	28	Lock nut	
34	RM 96705587	4	Hexagon screw	

Water Tank Installation

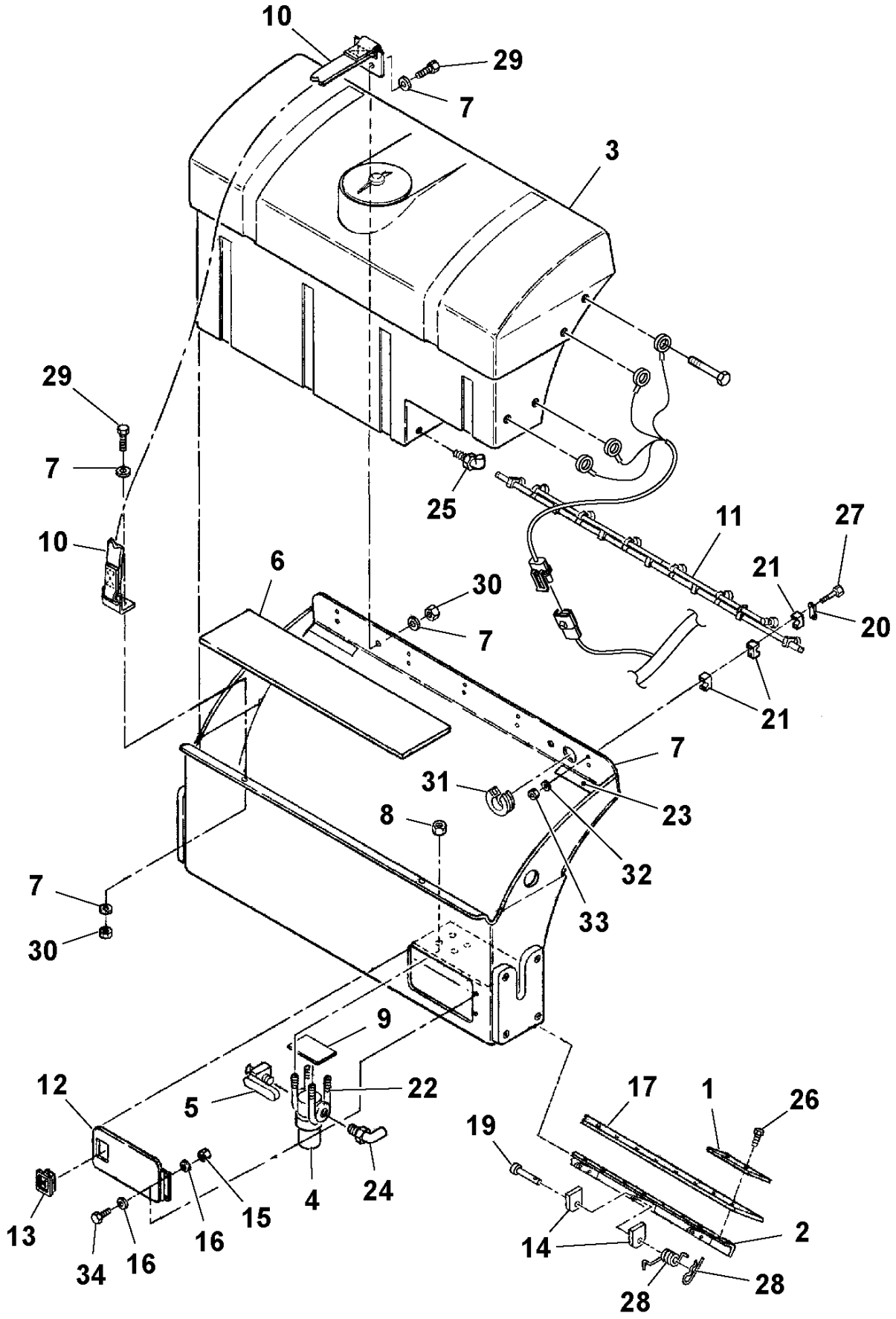

Spray Bar Assembly

POS	PART NUMBER	QTY	PART NAME	NOTES
1		1	Spray Bar Pipe	
2		1	Spray Bar Pipe	
3	RM 59579573	4	Adapter	
4	RM 59579599	4	Tube plug	
5	RM 70744511	4	Adapter	
6	RM 59966556	2	T-nipple	
7	RM 13447289	13	Eye	
8	RM 13447297	13	Screw	
9	RM 59727883	13	Strainer	
10	RM 59727891	13	Nozzle	
11	RM 70557194	13	Gasket	
12		1	Spray Bar Pipe	
13		1	Spray Bar Pipe	
14	RM 70692694	6	Clamp	
15	RM 96704564	6	Hexagon screw	
16	RM 97140594	12	Washer	
17	RM 14083448	6	Hexagon nut	

Spray Bar Assembly

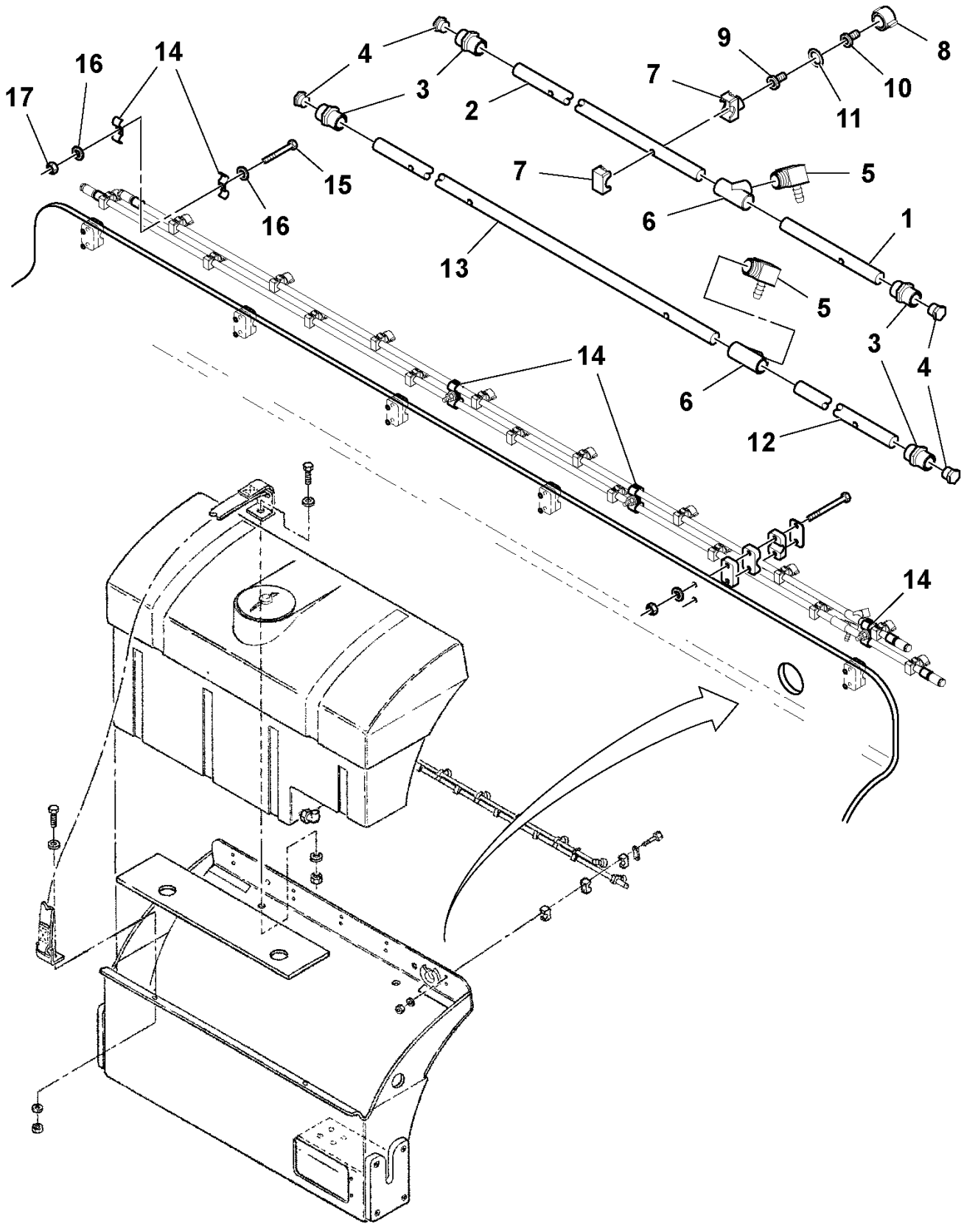

Water Hose Installation

POS	PART NUMBER	QTY	PART NAME	NOTES
1		2	Water Pump	
2	RM 96704564	8	Hexagon screw	
3	RM 96741053	8	Washer	
4	RM 59447185	2	Hose	
5	RM 59096099	2	Hose	
6	RM 58773433	2	Hose assembly	
7	RM 95526653	4	Hose Clamp	
10	RM 59937029	2	Hose	

Water Hose Installation

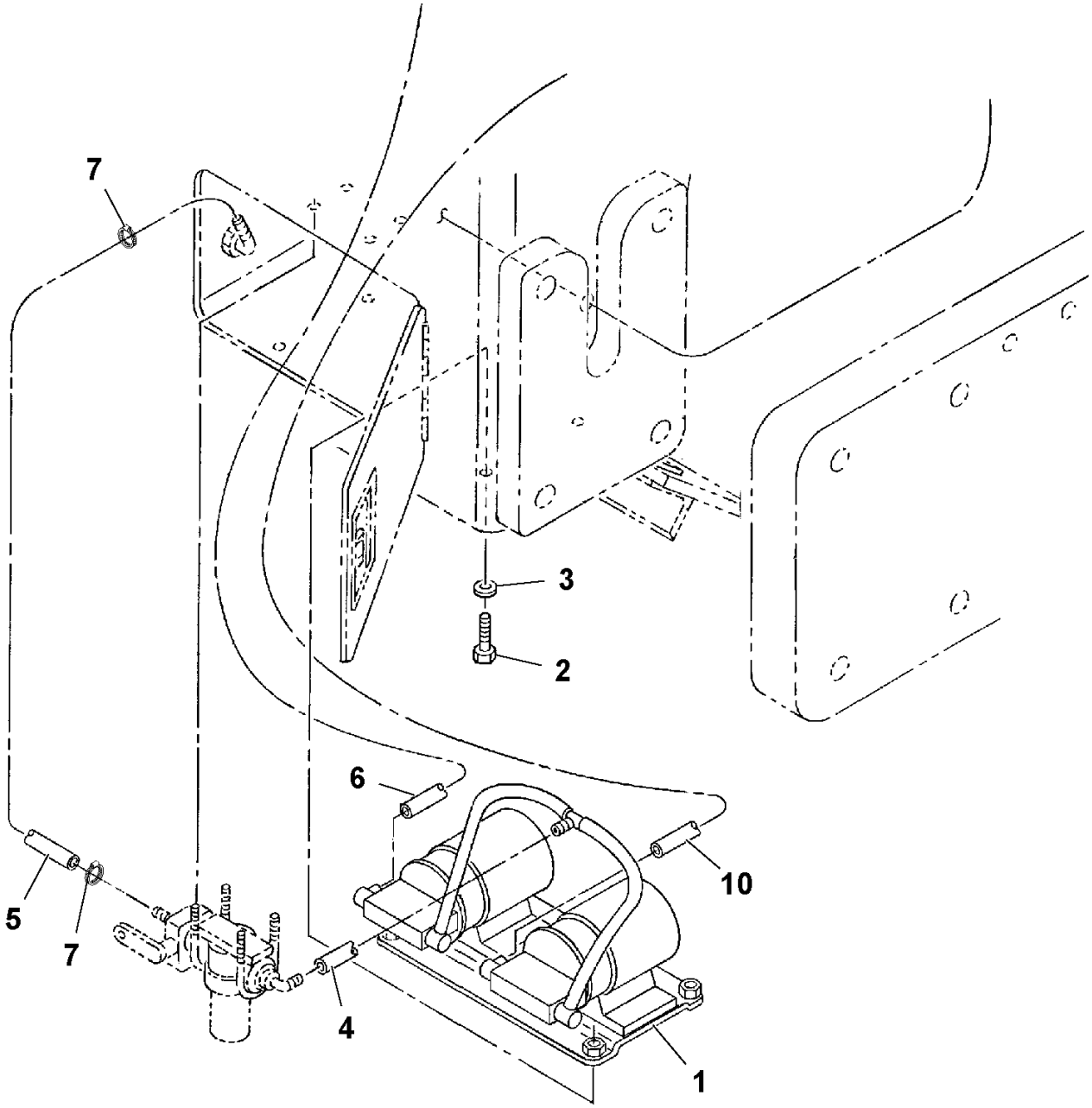

Water Pump Installation

POS	PART NUMBER	QTY	PART NAME	NOTES
1	RM 96704903	16	Hexagon screw	
2	RM 96704580	16	Lock nut	
3	RM 95922332	32	Plain Washer	
4	RM 59866483	4	Hose	
5	RM 59658377	2	T-nipple	
6		4	Water Pump	
7	RM 59331926	8	Elbow	
9	RM 59094086	2	Mounting Plate	

Water Pump Installation

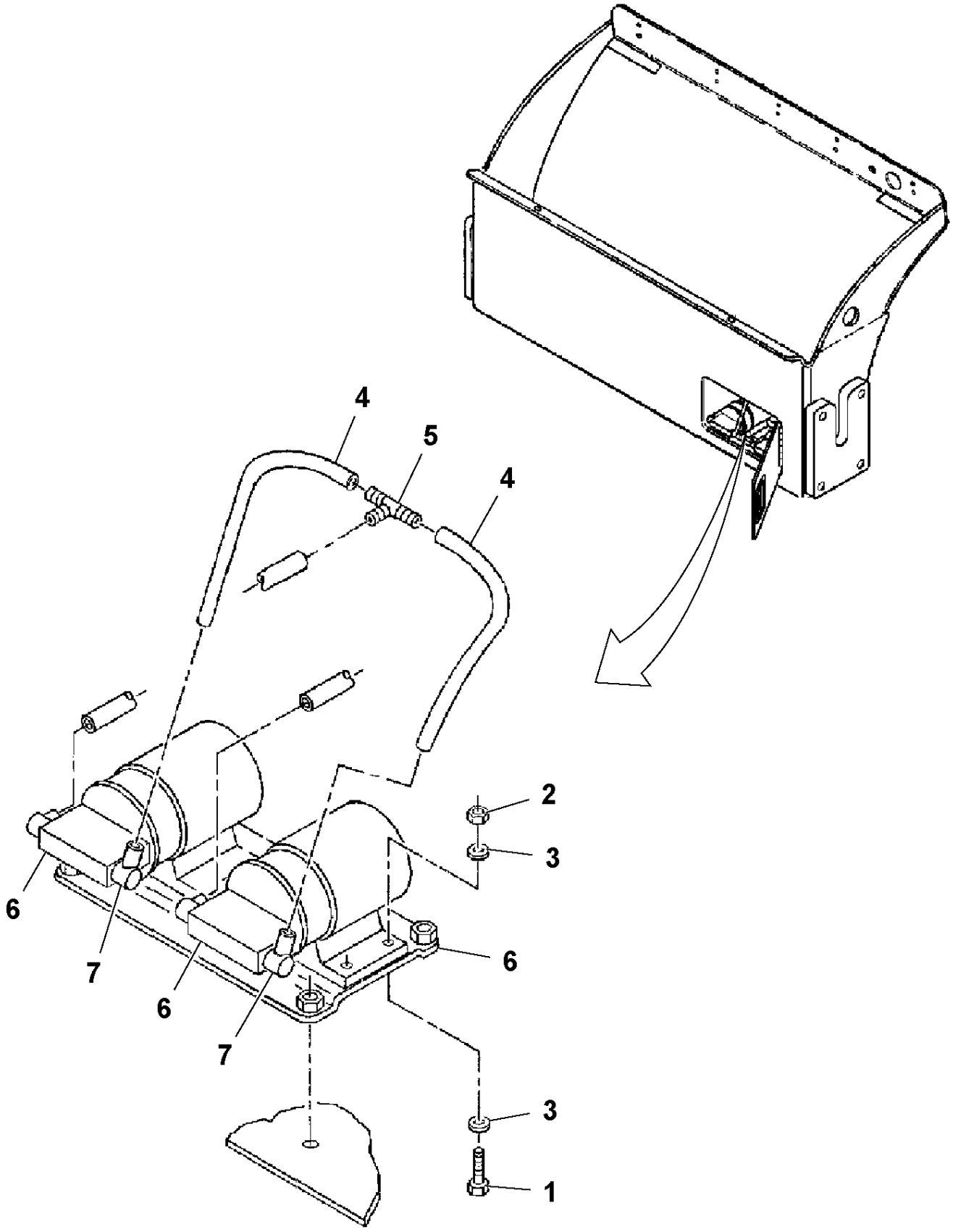

Water Pump Assembly

POS	PART NUMBER	QTY	PART NAME	NOTES
1		4	Water Pump	
2	RM 59436840	8	Contact Pin	
3			-	
4			-	
5	RM 59396366	3	Cable Tube	
6			-	

Water Pump Assembly

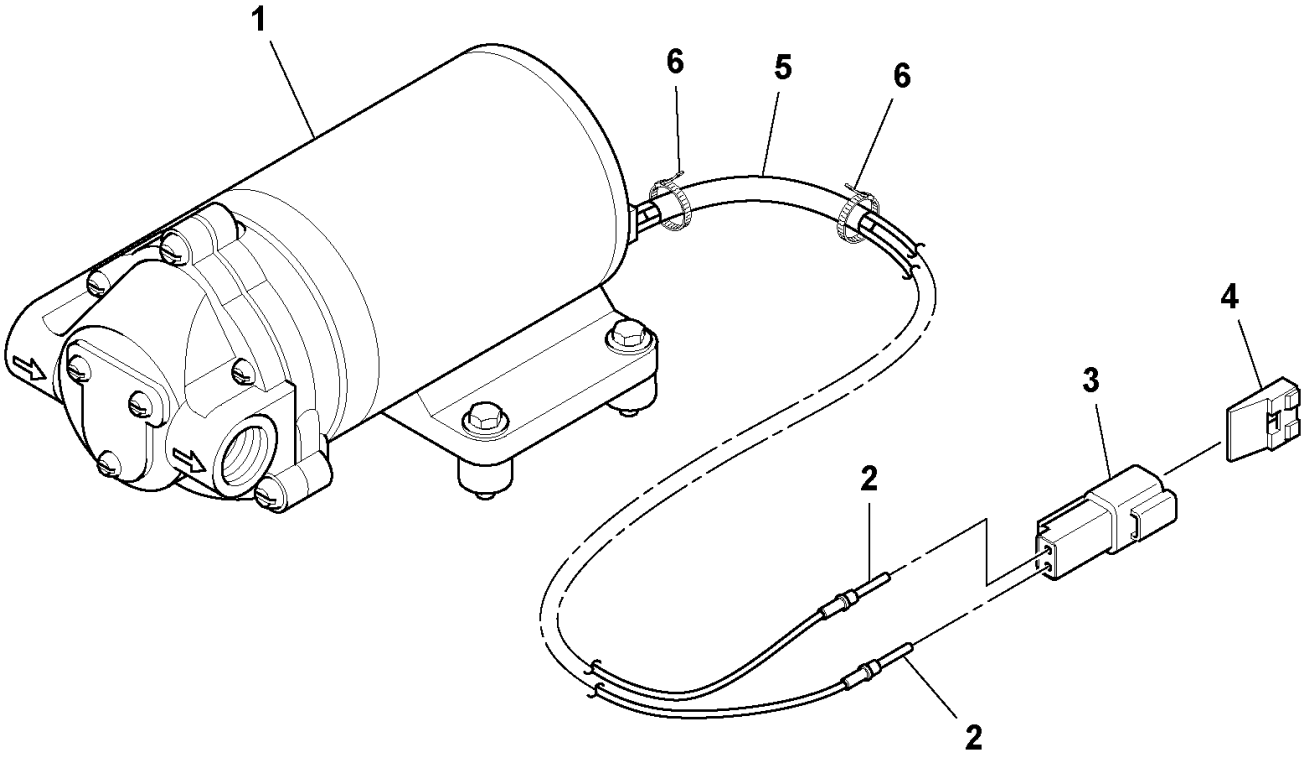

Water pump

POS	PART NUMBER	QTY	PART NAME	NOTES
1	RM 59123851	1	Valve	
2	RM 59123836	1	Plate	
3	RM 59123877	1	Drive Unit	
4	RM 54574579	1	Diaphragm Kit	

Water pump

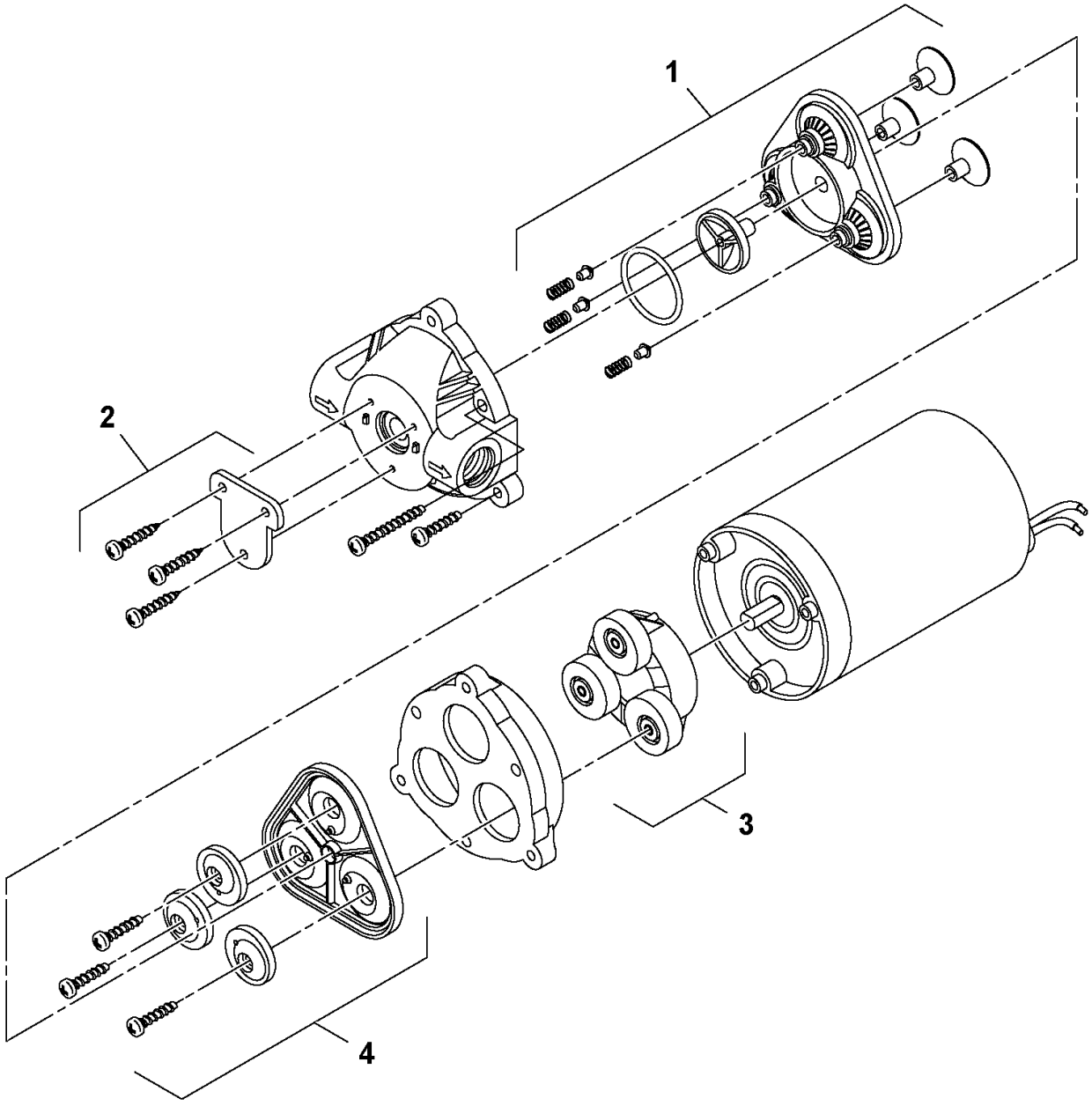

Edge Compactor/Cutter Installation

POS	PART NUMBER	QTY	PART NAME	NOTES
1	RM 95988713	1	O-ring	
2	RM 96702329	2	Hexagon screw	
3	RM 96701545	2	Washer	
5	RM 96741046	4	Plain Washer	
6	RM 96702162	2	Hex. Socket Screw	
7	RM 58992132	1	Hydraulic Pump	
	RM 59041772	1	Sealing Kit	
8	RM 95469128	1	Adapter	
9	RM 95303350	1	Adapter	
10	RM 95303335	2	Elbow	
11	RM 59252221	1	Hose	
12	RM 59449298	1	Valve Plate	
13	RM 59949107	1	Valve	
14	RM 96706825	4	Hexagon screw	
15	RM 96741053	4	Washer	
16	RM 96705546	4	Hexagon screw	
17	RM 95463691	1	Plug	
18	RM 58992231	1	Cable harness	
19	RM 58992249	1	Cable harness	
20	RM 58789306	1	Switch	
25	RM 59918649	1	Adapter	
27	RM 59918540	1	Adapter	
28	RM 59922724	1	Swivel	
30	RM 59240713	1	Hose assembly	DD-90, S/N 161188 -
	RM 58992215	1	Hose assembly	
31	RM 58811498	1	Hose assembly	
32	RM 59106757	1	Hose assembly	
33	RM 59106765	1	Hose assembly	
35	RM 58776568	1	Relief valve	
36	RM 96705140	1	Hexagon screw	
37	RM 96741020	1	Washer	
38	RM 96701370	1	Nut	
39	RM 59921031	2	Adapter	
40	RM 59922260	1	Adapter	
50	RM 58967084	1	Decal	EDGECUTTER
51	RM 95373973	REQ	Locking Wire	
52	RM 58992124	1	Drive Unit	
53	RM 95491841	4	Screw	
54	RM 95920542	1	Screw	
57	RM 59229138	1	Tube	
64	RM 13356670	1	Adapter	
65	RM 13356662	1	Hose assembly	

Edge Compactor/Cutter Installation

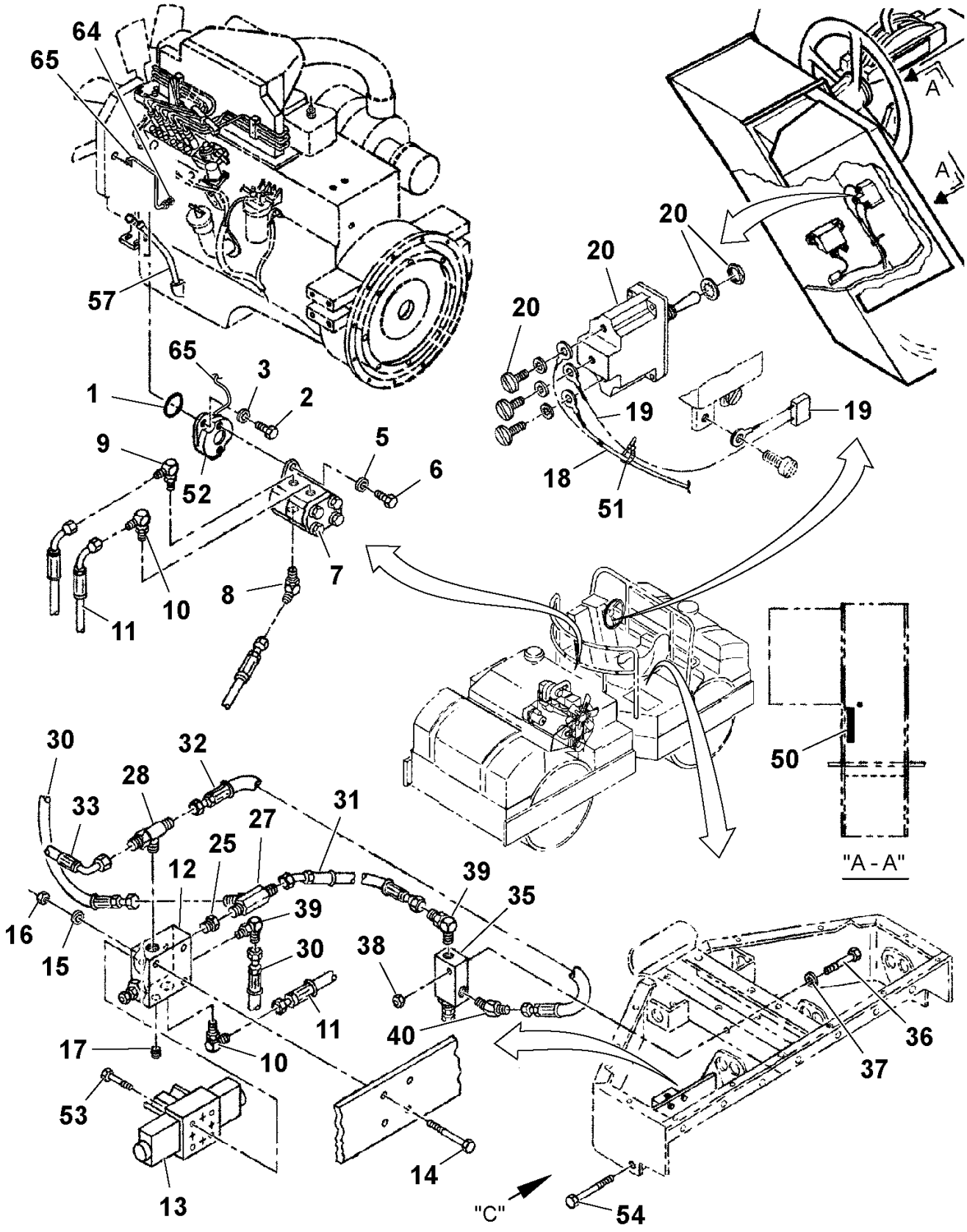

Edge Compactor/Cutter Installation

POS	PART NUMBER	QTY	PART NAME	NOTES
4	RM 95671285	4	Hose Clamp	
13	RM 59949107	1	Valve	
18	RM 58992231	1	Cable harness	
21	RM 10445765	1	Connector	
22	RM 59583427	1	Plate	
23	RM 59929026	4	Clamp	
24	RM 59583450	2	Cover Plate	
26	RM 95920492	1	Screw	
29	RM 58992199	1	Hose	S/N - 160744
30	RM 59240713	2	Hose assembly	DD-90HF, S/N -162587
	RM 58992215	1	Hose assembly	DD-90, S/N -161187
33	RM 59106765	1	Hose assembly	
34	RM 95416731	1	Nipple	
41	RM 58992108	1	Asphalt Cutter	
43	RM 58896580	2	Adapter	
44	RM 59106724	1	Mounting Plate	
45	RM 59372474	8	Screw	
46	RM 58821869	1	Nipple	
47	RM 95285144	3	Hose	
48	RM 58825498	1	Ball Valve	
49	RM 59937052	1	Hose assembly	
54	RM 95920542	1	Screw	
55	RM 59565028	1	Washer	
56	RM 95923314	1	Lock nut	
58	RM 96703723	1	Plug	
59	RM 59642132	1	Nipple	
60	RM 59895540	2	Clamp	
61	RM 59587808	1	Plate	
62	RM 59587816	1	Cover Plate	
63	RM 95920658	2	Hexagon screw	

Edge Compactor/Cutter Installation

